CATERPILLAR®

SEBP5492
October 2009

RUTHZIL TRATOR COMERCIAL DE PEÇAS LTDA 11 97083-6812 ROLANDO

Parts Manual

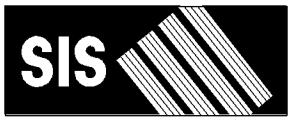

See "General Information" for New Parts Manual Features.

336D L & 336D LN Excavators

MYG1-Up (Machine)
PPN1-Up (Machine)
THX1-Up (Engine)
THY1-Up (Engine)

Powered By C9 Engine

Product and Dealer Information

Note: For product identification plate locations, see the section “Product Identification Information” in the Operation and Maintenance Manual.

Delivery Date: _____

Product Information

Model: _____

Product Identification Number: _____

Engine Serial Number: _____

Transmission Serial Number: _____

Generator Serial Number: _____

Attachment Serial Numbers: _____

Attachment Information: _____

Customer Equipment Number: _____

Dealer Equipment Number: _____

Dealer Information

Name: _____ Branch: _____

Address: _____

_____

_____

	Dealer Contact	Phone Number	Hours
Sales:	_____	_____	_____
Parts:	_____	_____	_____
Service:	_____	_____	_____

MEMORANDA

TABLE OF CONTENTS

Name	Page
GENERAL INFORMATION	A5
REPAIR ALTERNATIVES	A8
SUPPLEMENTAL COOLANT ADDITIVES	A9
MAINTENANCE PARTS	A10
INDEX	A12
MACHINE ARRANGEMENT	1
CHASSIS AR	1
DISTRIBUTION AR	2
GENERAL AR	4
OPTION AR-CONFIGURATION	4
OPTION AR-CONTROL	6
OPTION AR-HYDRAULIC	6
OPTION AR-LINKAGE	6
ENGINE ARRANGEMENT	10
ENGINE AR	10
ENGINE AR-CORE	13
INSTALLATION AR-ENGINE	15
BASIC ENGINE	16
CAMSHAFT GP	16
COVER GP-CYLINDER BLOCK	17
COVER GP-FLYWHEEL HOUSING	18
COVER GP-FRONT HOUSING	19
COVER GP-VALVE MECHANISM	21
CRANKSHAFT GP	22
CYLINDER BLOCK AS	23
CYLINDER BLOCK GP	27
CYLINDER HEAD AS	31
CYLINDER HEAD GP	35
DAMPER & PULLEY GP	41
DRIVE GP-ACCESSORY	42
DRIVE GP-FAN	44
FASTENER GP-CYLINDER HEAD	45
FASTENER GP-DAMPER	46
FASTENER GP-FRONT HOUSING	47
FASTENER GP-VALVE COVER	48
FASTENER GP-VALVE COVER BASE	49
FLYWHEEL GP	50
GEAR GP-FRONT	51
HOUSING GP-FLYWHEEL	53
HOUSING GP-FRONT	54
LIFTING GP-ENGINE	55
MOUNTING GP-ENGINE	56
PAN GP-OIL	58
PISTON & ROD GP	60
PLUG GP-ENGINE	62
ROCKER ARM GP	64
SEAL GP-CRANKSHAFT	66
VALVE MECHANISM GP	67
LUBRICATION SYSTEM	69
FILTER GP-ENGINE OIL	69
FUMES DISPOSAL GP	71
GAUGE GP-OIL LEVEL (DIPSTICK)	72
LINES GP-ENGINE OIL	74
LINES GP-ENGINE OIL DRAIN	75
LINES GP-TURBOCHARGER OIL	76
MOUNTING GP-ENGINE OIL FILTER	78
PUMP GP-ENGINE OIL	79
COOLING SYSTEM	80
COOLER GP-ENGINE OIL	80
FAN & MOTOR GP	81
FAN GP-SUCTION	82
HOUSING & REGULATOR GP	86
LINES GP-TURBOCHARGER WATER	87
LINES GP-WATER	88
MODULE GP-COOLING	89
PLUG GP-WATER LINES	92
PUMP GP-WATER	93
RADIATOR & HYD OIL COOLER GP	95
AIR INLET AND EXHAUST SYSTEM	98
AIR CLEANER & MOUNTING GP	98
AIR CLEANER AR	99
AIR CLEANER GP	100
ELBOW GP-AIR INLET	103
LINES GP-AIR	104
MANIFOLD GP-EXHAUST	107
MUFFLER GP	108
TURBOCHARGER GP	110
FUEL SYSTEM	112
FILTER GP-WATER SEP & FUEL	112
INJECTOR GP-FUEL	113
LINES GP-FUEL	114
PUMP & MOTOR GP-REFUELING	123
PUMP AR-FUEL TRANSFER	124
PUMP GP-FUEL INJECTION	125
PUMP GP-FUEL PRIMING	127
PUMP GP-FUEL PRM & PRIM FILTER	129
PUMP GP-FUEL PRM & WATER SEP	130
PUMP GP-REFUELING	131
PUMP GP-UNIT INJECTOR HYD	133
REGULATOR GP-FUEL PRESSURE	137
TANK & MTG GP-FUEL	139
TANK GP-FUEL	140
VALVE GP-FUEL BYPASS	145
VALVE GP-FUEL SHUTOFF	146
ELECTRICAL AND STARTING SYSTEM	147
ALARM GP	147
ALARM GP-TRAVEL	148
ALTERNATOR GP-CHARGING	149
BATTERY & WIRING GP	152

TABLE OF CONTENTS

Name	Page
BLOCK GP-JUNCTION	164
CAMERA & MOUNTING GP	165
CAMERA AR	168
CAMERA GP	169
CONTROL & MTG GP-COMMUNICATION	170
CONTROL & MTG GP-ENGINE ELEK	173
CONTROL & MTG GP-MACHINE	174
ELECTRONICS GP-COMMUNICATION	175
ELECTRONICS GP-MACHINE	175
ELECTRONICS GP-MONITOR	175
FASTENER GP-WIRING HARNESS	176
GRADE CONTROL AR	181
INSTALLATION AR-COMMUNICATION	181
INSTALLATION GP-SECURITY	182
LAMP GP-FLOOD	184
LIGHTING GP-CHASSIS	187
LIGHTING GP-FLOOD	188
PANEL & MTG GP-CIRCUIT BREAKER	193
PANEL GP-CIRCUIT BREAKER	194
PANEL GP-SWITCH	196
PLUG GP-CONNECTOR	200
SENSOR GP-ENGINE	201
SENSOR GP-LIQUID LEVEL	203
SENSOR GP-PRESSURE	205
SENSOR GP-SPEED	216
SENSOR GP-TEMPERATURE	219
STARTING AID GP	224
STARTING AID GP-ETHER	225
STARTING AR-COLD WEATHER	228
STARTING MOTOR GP-ELECTRIC	229
SWITCH GP-DISCONNECT	233
SWITCH GP-MAGNETIC	234
SWITCH GP-POSITION	236
SWITCH GP-PRESSURE	237
SWITCH GP-PUSH BUTTON	238
SWITCH GP-ROTARY	240
SWITCH GP-START	241
SWITCH GP-TOGGLE	242
VALVE GP-ETHER STARTING	243
WIRING GP-AUXILIARY CONTROL	244
WIRING GP-BOOM FLOAT	248
WIRING GP-CAB	250
WIRING GP-CAMERA	265
WIRING GP-CHASSIS	266
WIRING GP-COMMUNICATION	269
WIRING GP-CONSOLE	271
WIRING GP-CONVERTER	276
WIRING GP-ELECTRONIC CONTROL	277
WIRING GP-FINE SWING	281
WIRING GP-FUEL PUMP	282
WIRING GP-HEATER	284
WIRING GP-MEDIUM PRESSURE	285
WIRING GP-PLATFORM	286
WIRING GP-QUICK COUPLER	289
WIRING GP-REFUELING PUMP	291
WIRING GP-WINDOW WIPER	293
POWER TRAIN	294
FINAL DRIVE GP	294
DRIVE GP-FINAL	295
POWER TRAIN AR	298
SPROCKET GP	299
FRAME AND BODY	300
BOX & MTG GP-STORAGE	300
BOX GP-STORAGE	301
BUMPER GP-FRONT	303
COUNTERWEIGHT & MOUNTING GP	305
COUNTERWEIGHT GP	307
COVER AS-SOUND SUPPRESSION	310
DOOR AS-ACCESS	315
DOOR GP-ACCESS	316
FENDER & COVER GP	318
FRAME GP-UPPER	321
GEAR & BEARING GP-SWING	323
GUARD GP-BOTTOM	329
GUARD GP-SWIVEL	331
HANDRAIL GP	332
HOOD & GUARD GP	333
HOOD GP	339
HOOD GP-ENGINE	344
SHEET AS-SOUND SUPPRESSION	349
STEP GP	363
SUPPORT AS-ENCLOSURE	364
UNDERCARRIAGE	369
ADJUSTMENT GP-HYDRAULIC TRACK	369
FRAME AR-UNDERCARRIAGE	370
FRAME AS-UNDERCARRIAGE	371
GUARD GP-TRACK GUIDE	374
GUARD GP-TRAVEL MOTOR	377
IDLER GP-FRONT	379
LINK AS-TRACK	382
ROLLER AR-TRACK & CARRIER	384
ROLLER GP-TRACK CARRIER	386
ROLLER GP-TRACK-SINGLE FLANGE	387
SPRING GP-RECOIL	389
TRACK GP	390
HYDRAULIC SYSTEM	400
ACCUMULATOR GP-HYDRAULIC	400
ACTUATOR GP	406
BASE GP-OIL FILTER	407
CONTROL AR-AUXILIARY	408
CONTROL AR-BOOM	409
CONTROL AR-COUPLER	409
COUPLER GP-QUICK DISCONNECT	411

TABLE OF CONTENTS

Name	Page
COUPLING GP-PUMP	412
CYLINDER & LINES GP-BOOM	413
CYLINDER & LINES GP-BUCKET	413
CYLINDER & LINES GP-STICK	414
CYLINDER & SEAL GP-BOOM	415
CYLINDER & SEAL GP-BUCKET	416
CYLINDER & SEAL GP-STICK	418
CYLINDER GP-BOOM	419
CYLINDER GP-BUCKET	421
CYLINDER GP-COUPLER	425
CYLINDER GP-STICK	426
DRIVE GP-AUXILIARY PUMP	428
DRIVE GP-SWING	431
FASTENER GP-SWING & FINAL DR	434
FILTER & LINES GP-HYDRAULIC	436
FILTER & VALVE GP-PILOT	438
FILTER AR-HYDRAULIC	439
FILTER GP-OIL	440
GAUGE GP-SIGHT	446
HEAD GP-PUMP	447
HOSE GP-HYDRAULIC	451
HYDRAULIC AR	459
LINES GP-AUXILIARY HYDRAULIC	460
LINES GP-BOOM	474
LINES GP-BOOM CYLINDER	483
LINES GP-BUCKET CYLINDER	488
LINES GP-COUPLER	490
LINES GP-FRONT	499
LINES GP-HYDRAULIC OIL COOLER	519
LINES GP-PILOT	522
LINES GP-PUMP	560
LINES GP-RETURN	567
LINES GP-SENSOR	576
LINES GP-STICK	577
LINES GP-STICK CYLINDER	582
LINES GP-TRAVEL MOTOR	585
MANIFOLD GP-CONTROL	589
MOTOR & MTG GP-SWING	592
MOTOR & MTG GP-TRAVEL	593
MOTOR GP-PISTON	594
MOTOR GP-SWING	596
MOTOR GP-TRAVEL	599
MOUNTING GP-MAIN CONTROL VALVE	603
PLUG GP-CONTROL VALVE	604
PUMP & LINES GP-COOLING	608
PUMP & MTG GP-AUXILIARY	609
PUMP & MTG GP-MAIN HYDRAULIC	610
PUMP GP-GEAR	611
PUMP GP-MAIN HYDRAULIC	612
PUMP GP-PISTON	613
ROTATING GP-MOTOR	619
ROTATING GP-PUMP	620
SCREEN GP-HYDRAULIC	621
SWIVEL GP	622
TANK & FILTER GP-HYDRAULIC	624
TANK & MTG GP-HYDRAULIC	626
TANK GP-HYDRAULIC	627
VALVE & MTG GP-MAIN CONTROL	629
VALVE AR-LOAD CONTROL	631
VALVE AR-SWING	631
VALVE GP-CHECK	632
VALVE GP-CONTROL	633
VALVE GP-FLOW CONTROL	654
VALVE GP-LOAD CONTROL	655
VALVE GP-MAIN CONTROL	664
VALVE GP-MANUAL	665
VALVE GP-PILOT	667
VALVE GP-PILOT RELIEF	674
VALVE GP-PRESSURE REDUCING	675
VALVE GP-PRIORITY	678
VALVE GP-PUMP CONTROL	679
VALVE GP-RELIEF	681
VALVE GP-SHUTTLE	693
VALVE GP-SOLENOID	698
VALVE GP-SOLENOID & RELIEF	710
VALVE GP-SWING CUSHION	713
VALVE GP-TRAVEL COUNTERBALANCE	717
IMPLEMENTS	718
BOOM AR-1 PIECE LONG	718
BOOM AR-1 PIECE SHORT	718
BOOM GP	719
LINES GP-GREASE	725
LINKAGE AR-BUCKET	728
LINKAGE AR-FRONT	729
LINKAGE GP-BUCKET	730
STICK AR-HOE	736
STICK GP-HOE	738
WORK TOOLS	745
ADJUSTER GP-BUCKET	745
BUCKET & ADJUSTER GP	747
BUCKET GP-EXCAVATION	766
BUCKET GP-EXTREME EXCAVATION	784
BUCKET GP-ROCK	796
COUPLER AR-QUICK	805
COUPLER GP-QUICK	811
HOOK GP-LIFTING	812
LOCK GP-QUICK COUPLER	814
PROTECTOR GP-SIDE BAR	821
SIDECUTTER GP	822
TIP GP-DOUBLE SPIKE	823
TIP GP-EXTRA-DUTY	824
TIP GP-GENERAL PURPOSE	826
TIP GP-HEAVY ABRASION	828
TIP GP-HEAVY PENETRATION	829
TIP GP-PENETRATION	830
TIP GP-PENETRATION PLUS	832

TABLE OF CONTENTS

Name	Page
TIP GP-SPIKE	834
TIP GP-WIDE	835
OPERATOR STATION	836
AIR CONDITIONER & MOUNTING GP	836
AIR CONDITIONER AR	838
AIR CONDITIONER GP	839
ARMREST GP	841
CAB GP	843
CAMERA & MIRROR AR	853
COIL GP-EVAPORATOR	854
COMPRESSOR GP-REFRIGERANT	856
CONDENSER & MTG GP-REFRIGERANT	857
CONDENSER GP-REFRIGERANT	858
CONSOLE GP-OPERATOR	860
CONTROL & MTG GP-JOYSTICK	866
CONTROL & MTG GP-PEDAL	869
CONTROL GP-FOOT	870
CONTROL GP-HANDLE	871
CONTROL GP-HYDRAULIC PEDAL	876
CONTROL GP-PEDAL	877
CONTROL GP-PILOT OPERATED HYD	878
COVER GP-CAB	884
COVER GP-STORAGE	886
DOOR GP-CAB	887
DUCT GP-CAB AIR	889
FLOOR MAT	890
GUARD AR-OVERHEAD	895
GUARD GP-OVERHEAD	896
GUARD GP-WINDOW	897
HATCH GP-ROOF	901
HORN GP-ELECTRIC	904
HOUSING GP-AIR CONDITIONER	905
INSTALLATION AR	906
INSTALLATION AR-CAB	906
INSTALLATION GP-RADIO	907
KIT-SEAT SUSPENSION	909
LATCH GP-FRONT WINDOW	911
LEVER GP-CAB DOOR	912
LINES GP-AIR CONDITIONER	914
LITERATURE GP	917
MIRROR GP	917
MIRROR GP-DOWN VIEW	918
MIRROR GP-REAR VIEW	919
MONITOR & MTG GP-OPERATOR	923
MONITOR GP-OPERATOR	924
MOTOR AS-WINDOW WIPER	925
MOUNTING GP-ANTENNA	926
MOUNTING GP-MIRROR	930
MOUNTING GP-PLATFORM	931
MOUNTING GP-ROPS	932
OPERATOR AR	933
PEDAL AR-AUXILIARY	933
PLATFORM GP-OPERATOR	935
RADIO GP	936
RADIO GP-COMMUNICATION	937
SCREEN GP-SUN	938
SEAL GP-CAB	939
SEAT & MOUNTING GP	940
SEAT BELT GP	942
SEAT GP	943
SEAT GP-SUSPENSION	945
SERVICE GP-MONITOR	947
STRIKER GP-LATCH	948
SUPPORT AS	950
SUPPORT GP-SEAT	951
SUSPENSION GP-SEAT	952
TRIM GP-CAB	954
VISOR GP-PROTECTION	958
WASHER GP-WINDOW	959
WINDOW GP-CAB	961
WINDOW GP-DOOR	966
WINDOW GP-FRONT	967
WIPER AR-WINDOW	971
WIPER GP-WINDOW	972
SERVICE EQUIPMENT AND SUPPLIES	977
FILM GP	977
PLATE & FILM GP	986
PART NUMBER INDEX	B1

GENERAL INFORMATION

1. MACHINE IDENTIFICATION

Caterpillar machines are identified by Product Identification Numbers (PIN). Some components included in a machine may be identified by Serial Numbers (S/N). Typical components that will be serialized include engines, transmissions, bulldozers, and rippers. The machine and engine are further identified by arrangement numbers and in some cases modification numbers. These numbers are shown on the product identification plate(s) and on the master plate in the operator's compartment.

Caterpillar dealers need all of these numbers to determine accurate parts identification.

SIS *New Feature*

Effective First Quarter 2001 the Caterpillar Product Identification Number (PIN) changed from 8 to 17 characters. In an effort to provide uniform equipment identification, Caterpillar and other construction equipment manufacturers are moving to comply with the latest version of the product identification numbering standard. Non-road machine PINs are defined by ISO 10261. The new PIN format will apply to all Caterpillar machines and generator sets. The PIN plates and frame marking will display the 17 character PIN. The new format will look like the following:

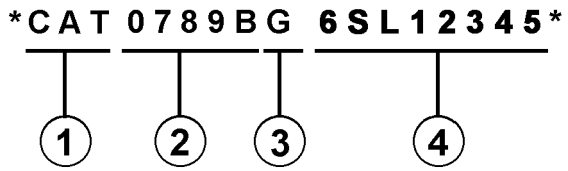

Where:

1. Caterpillar's World Manufacturing Code (characters 1-3)

2. Machine Descriptor (characters 4-8)

3. Check Character (character 9)

4. Machine Indicator Section (MIS) or Product Sequence Number (characters 10-17). These were previously referred to as the Serial Number.

Machines and generator sets produced before First Quarter 2001 will maintain their 8 character PIN format.

Components such as engines, transmissions, axles, etc. and work tools will continue to use an 8 character Serial Number (S/N).

2. ORDERING PARTS

⚠ WARNING

When replacement parts are required for this product Caterpillar recommends using Caterpillar replacement parts or parts with equivalent specifications including, but not limited to, physical dimensions, type, strength and material.

Failure to heed this warning can lead to premature failures, product damage, personal injury or death.

Quality Caterpillar replacement parts are available from Caterpillar dealers throughout the world. Their parts inventories are up to date and include all parts normally required to protect your investment in Caterpillar machines. Dealers may offer repair kits or remanufactured parts to allow selection of the most effective repair alternative for a particular situation. When ordering parts, your order should specify the quantity, part number, part name, and the serial number/product identification number of the machine for which the parts are needed.

3. PARTS MANUAL ORGANIZATION

Product information in this manual is presented as "information elements" that represent all of the components for the specific model. Engine Arrangement and Seat Group are examples of information elements. The information elements are organized alphabetically by part name and secondarily by part number within each major section of the manual.

4. TABLE OF CONTENTS

A table of contents (TOC) is found at the beginning of the manual. The TOC lists each section of the manual with a complete list of all information elements organized as they appear in the manual. Page numbers are provided for quick reference to detailed parts identification illustrations and serviceable consist lists.

5. MAINTENANCE PARTS INDEX

The Maintenance Parts Index, located near the beginning of the manual, references most frequently used maintenance part numbers, providing description, quantity, usage and page number. This information is organized alphabetically by part description.

GENERAL INFORMATION

6. INDEX

The index located near the front of the manual is an alphabetical listing of all information elements included in the manual. Page numbers are provided for quick reference to detailed parts identification illustrations and serviceable consist lists.

7. PART NUMBER INDEX

A numerical index listing all part numbers and the corresponding page number(s) appears at the back of the manual.

8. CAPTIONS

Captions located at the beginning of each information element identify the part number and part name along with additional descriptive information. PIN and S/N information found in each caption should be used to select correct information for a specific machine. Field replacement options, identification of optional attachment components, and where used ("part of") information is also provided.

The first line of a caption is shown in larger type font to indicate the beginning of an information element. Captions for additional pages that may be required to illustrate an information element will be shown in standard type font and will include the term *(contd.)* .

9. NON-SERVICED PARTS

In some instances it is necessary to display non-serviced parts that are a link to a lower level serviceable consist lists. These non-serviced part numbers are shown in *italic* type indicating that they are not available.

10. PARTS LIST REFERENCE NUMBERS

Numbers shown in the Ref No column correspond to numbers used in the associated graphic(s). An alphabetic suffix may be added to a reference number to identify lower level consist items. Numbers shown in the Graphic Ref column refer to the graphic number identifier displayed in the lower left corner of each illustration. The Graphic Ref number may be used in combination with the item Ref No to determine the correct part number. There may be intentional omission of a Ref No in a consist list as information is updated to reflect the latest serviceable part numbers.

11. INDENTED PART NAMES

When a part name is indented in a parts list, it is part of (included in) the group or assembly under which it is indented.

12. ILLUSTRATION REFERENCE LETTERS

When necessary, illustrations contain reference letters (A, B, C etc.) that are intended to track lines and harnesses from one point to another. They are also used to show where to reconnect illustrations that have been separated.

13. ABBREVIATIONS AND SYMBOLS

O.D. – Outside Diameter
I.D. – Inside Diameter
A – Not Part Of This Group
B – Use As Required
C – Change From Previous Type
D – Order By The Meter
E – Order By The Centimeter
F – Not Shown
G – Order By The Inch
I – Refer To Hydraulic Information System
M – Metric Part
R – Remfg Part May Be Available
Y – Separate Illustration
Z – Not Serviced Separately

SIS *New Feature*

14. DESCRIPTION OF TYPE CHANGES

Type - A type is defined as any configuration change that requires an additional Information Element for an Arrangement, Group, or Assembly. If serial number breaks for types are not available, a type # (Type 1, Type 2, etc.) will be displayed in the caption. These "type" changes are identified with a "C" note (change from previous type) in the Parts List. Only the "types" that apply to this Parts Manual will be included. Additional types may exist causing "C" notes to appear on an Information Element when no other types are shown.

15.<END>

This symbol indicates the end of an information element.

NOTE:

Continuing improvement and advancement of product design may cause changes to your machine which may not be included in this publication. Whenever a question arises regarding your Caterpillar product or this publication, please consult your Caterpillar dealer for the latest available information.

GENERAL INFORMATION

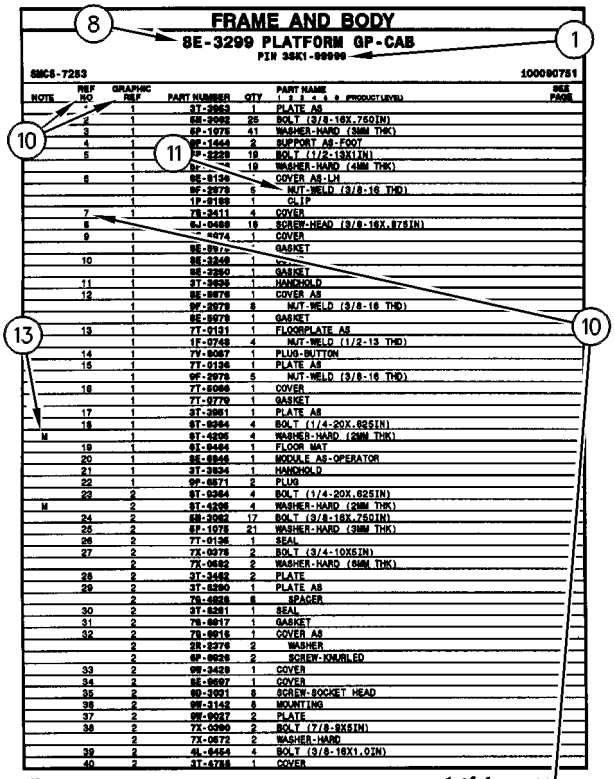

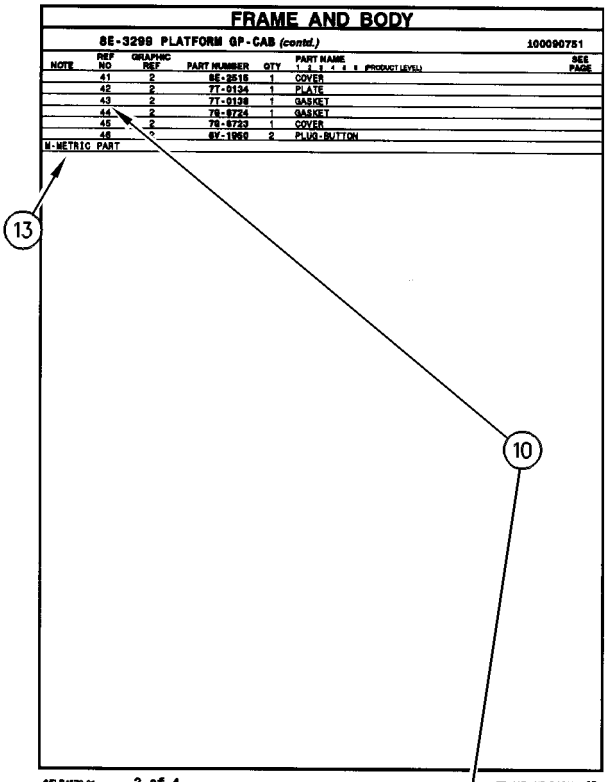

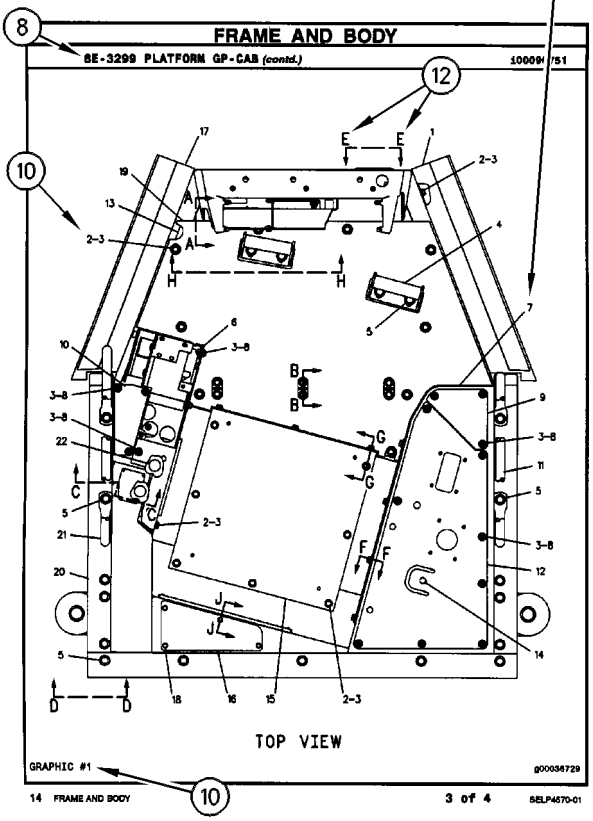

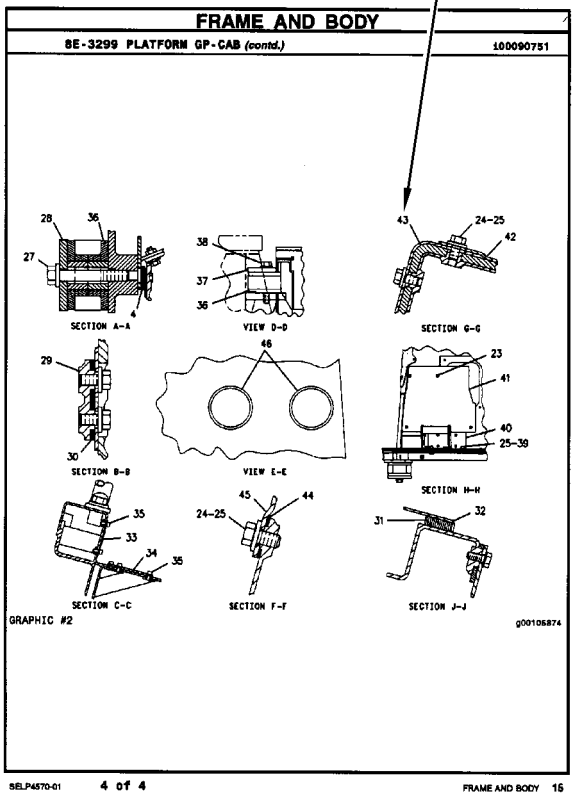

REPAIR ALTERNATIVES

REMANUFACTURED COMPONENTS

As an option when making repairs consider Caterpillar Remanufactured Components. Components that are available through the Caterpillar Remanufactured Program are identified three ways in the parts book:

- with the letter R in the note field of the parts list
- with an R* at the beginning of the first line of the caption
- with an *R at the end of the first line of the caption

Typical components included in the Remanufacturing Program include:

ALTERNATORS
CONNECTING RODS
CRANKSHAFTS - UNDERSIZE
CRANKSHAFTS - UPGRADE TO NEW
CYLINDER HEADS
ELECTRONIC CONTROL MODULES (ECM)
ELECTRONIC SENSORS
FUEL INJECTORS
FUEL NOZZLES
FUEL PUMPS
GOVERNORS
OIL PUMPS
PISTONS
SHORT BLOCKS
STARTERS
TURBOCHARGERS - COMPLETE
TURBOCHARGER CARTRIDGES
WATER PUMPS

Caterpillar Remanufactured engines for many engine arrangements are also available.

SUPPLEMENTAL COOLANT ADDITIVES

CUSTOMER BENEFITS:

Protects against cavitation, foam, erosion, corrosion, and scale buildup in cooling systems.

- Provides measured coolant conditioner.

DESCRIPTION:

Additives deplete from the coolant with normal operation. For this reason, Supplemental Coolant Additives (SCA) must be added to all heavy duty coolants at regular intervals. In addition, when not using a fully formulated, pre-charged antifreeze, like Caterpillar's DEAC, an initial charge of SCA must be added to the cooling system. The amount of SCA added to the system is dependent on the capacity of the system.

The SCA for initial fill is provided as a liquid. SCA's for maintenance intervals are available in liquid form and as a spin-on element. (No Spin-on available for 3600 Family of Engines)

NOTE:

The amount of SCA added at initial fill is not the same as the amount added at maintenance intervals.

The coolant additive elements can be used with any ethylene or propylene glycol type antifreeze which meets ASTM D4985 or ASTM D5345 Specifications.

NOTE:

For use with standard heavy duty coolant only, not for use with Extended Life Coolant.

PARTS NEEDED:

Cooling System Capacity		Liquid SCA at Initial Fill	Liquid SCA at Maintenance*	Spin-on SCA Maintenance Element*
Liters	Gallons			
22-30	(6-8)	3P-2044 (1)	6V-3542 (1)	111-2370 (1)
30-38	(8-10)	3P-2044 (1) 6V-3542 (1)	111-2372 (1)	111-2369 (1)
38-49	(10-13)	3P-2044 (1) 8T-1589 (1)	111-2372 (1)	111-2369 (1)
49-64	(13-17)	3P-2044 (2)	8T-1589 (1)	9N-3368 (1)
64-83	(17-22)	3P-2044 (2) 8T-1589 (1)	111-2372 (1) 6V-3542 (1)	111-2371 (1)
83-114	(22-30)	3P-2044 (3) 8T-1589 (1)	3P-2044 (1)	9N-3718 (1)
114-163	(30-43)	3P-2044 (5)	3P-2044 (1) 6V-3542 (1)	111-2371 (2)
163-242	(43-64)	3P-2044 (8)	3P-2044 (2)	9N-3718 (2)

** Normal maintenance period is 250 hrs. See your Operation and Maintenance Manual for complete coolant maintenance instructions.*

( ) Indicates quantity required.

MAINTENANCE PARTS

DESCRIPTION	PART NUMBER	QTY	WHERE USED	PAGE
AIR INLET AND EXHAUST SYSTEM				
FILTER ELEMENT AS-AIR (PRIMARY)	142-1339	1	AIR CLEANER GP	101
		1	AIR CLEANER GP	102
FILTER ELEMENT AS-AIR (PRIMARY, ULTRA HIGH EFFICIENCY)	220-0453	1	AIR CLEANER GP	102
FILTER ELEMENT AS-AIR (SECONDARY)	142-1404	1	AIR CLEANER GP	101
		1	AIR CLEANER GP	102
BASIC ENGINE				
BELT-SERPENTINE	183-4494	1	DRIVE GP-ACCESSORY	42
BREATHER AS (CRANKCASE)	240-0041	1	COVER GP-CYLINDER BLOCK	17
CAP AS-ENGINE OIL FILLER	227-4531	1	COVER GP-VALVE MECHANISM	21
PLUG-O-RING (FLYWHEEL HOUSING DRAIN)	9S-4185	2	HOUSING GP-FLYWHEEL	53
SEAL-VALVE COVER	285-4106	1	COVER GP-VALVE MECHANISM	21
SEAL-VALVE COVER (VALVE MECHANISM BASE)	268-3490	1	COVER GP-VALVE MECHANISM	21
COOLING SYSTEM				
CAP AS (COOLANT FILL)	204-0920	1	RADIATOR & HYD OIL COOLER GP	95
CAP AS (COOLANT OVERFLOW)	171-3370	1	RADIATOR & HYD OIL COOLER GP	95
CAP AS-RADIATOR	036-1865	1	MODULE GP-COOLING	89
GASKET (WATER REGULATOR HOUSING)	191-4457	1	HOUSING & REGULATOR GP	86
		1	LINES GP-WATER	88
HOSE-RADIATOR	230-2930	1	RADIATOR & HYD OIL COOLER GP	95
	230-2931	1	RADIATOR & HYD OIL COOLER GP	95
PLUG-O-RING	9S-4185	1	HOUSING & REGULATOR GP	86
		1	LINES GP-TURBOCHARGER WATER	87
REGULATOR-TEMPERATURE (92-DEG C) (COOLANT)	248-5513	1	HOUSING & REGULATOR GP	86
REGULATOR-WATER TEMPERATURE (98-DEG C) (COOLANT)	247-7133	1	LINES GP-WATER	88
ELECTRICAL AND STARTING SYSTEM				
BATTERY (12-VOLT, MAINTENANCE FREE)	263-9574	2	BATTERY & WIRING GP	153
		2	BATTERY & WIRING GP	162
CIRCUIT BREAKER AS (120-AMPERE)	216-4970	1	PANEL GP-CIRCUIT BREAKER	194
CIRCUIT BREAKER AS (80-AMPERE)	171-2210	2	PANEL GP-CIRCUIT BREAKER	194
FUSE (10-AMPERE)	113-8490	22	WIRING GP-CAB	257
FUSE (15-AMPERE)	113-8491	1	WIRING GP-CAB	250
		5	WIRING GP-CAB	257
FUSE (25-AMPERE)	113-8493	3	WIRING GP-CAB	257
FUSE (30-AMPERE)	124-3548	2	WIRING GP-CAB	257
FUSE (5-AMPERE)	141-2759	8	WIRING GP-CAB	257
KEY (BATTERY DISCONNECT)	8H-5306	1	SWITCH GP-DISCONNECT	233
KEY AS-ELECTRONIC (SECURITY)	206-5162	2	INSTALLATION GP-SECURITY	182
LAMP AS (24-VOLT, 3-WATT)	170-9324	1	PANEL GP-SWITCH	196
LAMP-HALOGEN (24-VOLT, 70-WATT)	9X-3463	1	LAMP GP-FLOOD	184
		1	LAMP GP-FLOOD	185
		1	LAMP GP-FLOOD	186
		1	LIGHTING GP-FLOOD	191

MAINTENANCE PARTS

DESCRIPTION	PART NUMBER	QTY	WHERE USED	PAGE
FUEL SYSTEM				
CAP AS-FILLER (FUEL TANK)	7X-7700	1	TANK GP-FUEL	141
		1	TANK GP-FUEL	143
FILTER AS-WATER SEP & FUEL (PRIMARY)	326-1644	1	FILTER GP-WATER SEP & FUEL	112
FILTER-FUEL (ADVANCED EFFICIENCY)	1R-0762	1	LINES GP-FUEL	116
		1	LINES GP-FUEL	119
GASKET	9Y-8389	1	LINES GP-FUEL	116
		1	LINES GP-FUEL	119
GASKET (FUEL PRIMING PUMP)	9Y-8389	1	PUMP GP-FUEL PRIMING	127
SEAL-RING	220-8678	1	FILTER GP-WATER SEP & FUEL	112
STRAINER AS-FUEL	229-1860	1	PUMP GP-REFUELING	131
STRAINER AS-FUEL (FLOAT GAUGE)	303-9933	1	TANK GP-FUEL	141
		1	TANK GP-FUEL	143
HYDRAULIC SYSTEM				
BREATHER (SWING DRIVE)	4H-6112	1	DRIVE GP-SWING	432
FILTER ELEMENT AS-OIL (STANDARD EFFICIENCY) (HYDRAULIC)	143-2849	1	FILTER GP-OIL	444
FILTER ELEMENT AS-OIL (ULTRA HIGH EFFICIENCY) (HYDRAULIC RETURN)	179-9806	1	FILTER GP-OIL	442
FILTER-OIL (ADVANCED EFFICIENCY) (HYDRAULIC)	093-7521	1	FILTER GP-OIL	445
	5I-8670	1	FILTER & VALVE GP-PILOT	438
PLUG-O-RING	9S-4185	1	LINES GP-BOOM CYLINDER	486
		1	LINES GP-PILOT	546
		1	LINES GP-RETURN	573
PLUG-OIL DRAIN (HYDRAULIC TANK)	6I-0723	1	TANK GP-HYDRAULIC	627
SCREEN AS (HYDRAULIC TANK)	131-9750	1	LINES GP-PUMP	560
		1	LINES GP-PUMP	563
	209-6000	1	SCREEN GP-HYDRAULIC	621
LUBRICATION SYSTEM				
FILTER-ENGINE OIL (ADVANCED EFFICIENCY)	1R-1808	1	FILTER GP-ENGINE OIL	69
OPERATOR STATION				
BLADE AS-WIPER (600-MM)	161-3670	1	WIPER GP-WINDOW	972
CAP AS (WINDOW WASHER)	178-5431	1	WASHER GP-WINDOW	959
FILTER ELEMENT-CAB AIR	245-7823	1	AIR CONDITIONER GP	839
FILTER ELEMENT-CAB AIR (AIR INTAKE)	327-6618	1	DUCT GP-CAB AIR	889
LAMP (24-VOLT, 10-WATT)	201-4417	1	CAB GP	843
RECEIVER-REFRIGERANT DRYER	176-1902	1	LINES GP-AIR CONDITIONER	914
SEAT BELT GP (RETRACTABLE, 43-MM)	327-6541	1	SEAT BELT GP	942

INDEX

Name	Page
A	
ACCUMULATOR GP-HYDRAULIC–CHARGED	400, 401, 402, 403, 404, 405
ACTUATOR GP	406
ADJUSTER GP-BUCKET–DB-FAMILY	746
ADJUSTER GP-BUCKET–TB-FAMILY	745
ADJUSTMENT GP-HYDRAULIC TRACK	369
AIR CLEANER & MOUNTING GP	98
AIR CLEANER AR	99
AIR CLEANER GP	101, 102
AIR CLEANER GP–WITH PRECLEANER	100
AIR CONDITIONER & MOUNTING GP	836
AIR CONDITIONER AR	838
AIR CONDITIONER GP	839
ALARM GP (BACKUP)	148
ALARM GP–FAULT	147
ALARM GP-TRAVEL–BACKUP	148
ALTERNATOR GP-CHARGING	149, 150
ARMREST GP–LH	842
ARMREST GP–RH	841
ATOMIZER GP-ETHER	225
B	
BASE AS (FUSE, RELAY PANEL)	258
BASE GP-OIL FILTER–HYDRAULIC	407
BASE GP-VALVE COVER	21
BATTERY & WIRING GP	152
BATTERY & WIRING GP–COLD WEATHER	162
BATTERY (12-VOLT, MAINTENANCE FREE)	153, 162
BELT TENSIONER GP	42
BELT-SERPENTINE	42
BLADE AS-WIPER (600-MM)	972
BLOCK GP-JUNCTION (BATTERY)	164
BLOCK GP-JUNCTION–BATTERY	164
BOOM AR-1 PIECE LONG–ACCUGRADE READY	718
BOOM AR-1 PIECE LONG–HEAVY-DUTY	718
BOOM AR-1 PIECE SHORT	718
BOOM GP	719, 721
BOOM GP–ACCUGRADE READY	723
BOX & MTG GP-STORAGE	300
BOX GP-STORAGE	301
BREATHER (SWING DRIVE)	432
BREATHER AS (CRANKCASE)	17
BREATHER GP (HYDRAULIC TANK)	627
BUCKET & ADJUSTER GP–EXCAVATION, DB-FAMILY	747, 748, 749, 750, 751, 752, 753
BUCKET & ADJUSTER GP–EXCAVATION, TB-FAMILY	761, 762
BUCKET & ADJUSTER GP–EXTREME EXCAVATION, DB-FAMILY	756, 757, 758, 759, 760
BUCKET & ADJUSTER GP–EXTREME EXCAVATION, TB-FAMILY	763
BUCKET & ADJUSTER GP–ROCK, DB-FAMILY	754, 755
BUCKET & ADJUSTER GP–ROCK, TB-FAMILY	764, 765
BUCKET GP-EXCAVATION–QUICK COUPLER	766, 767, 768, 769, 770, 771, 772, 773, 774, 775, 776, 777, 778, 779, 780, 781, 782, 783
BUCKET GP-EXTREME EXCAVATION–QUICK COUPLER	784, 785, 786, 787, 788, 789, 790, 791, 792

INDEX

Name	Page
	793
	794
	795
BUCKET GP-ROCK–QUICK COUPLER	796
	797
	798
	799
	800
	801
	802
	803
	804
BUMPER GP-FRONT	304
BUMPER GP-FRONT–WITHOUT LOWER WIPER	303
C	
CAB GP	845
	847
	849
	851
CAB GP–EXTERIOR	843
CAMERA & MIRROR AR	853
CAMERA & MOUNTING GP	167
CAMERA & MOUNTING GP–WORK AREA VISUAL SYSTEM, REAR	165
CAMERA AR–WORK AREA VISUAL SYSTEM, REAR	168
CAMERA GP	169
CAMSHAFT GP	16
CAP AS (COOLANT FILL)	95
CAP AS (COOLANT OVERFLOW)	95
CAP AS (WINDOW WASHER)	959
CAP AS-ENGINE OIL FILLER	21
CAP AS-FILLER (FUEL TANK)	141
	143
CAP AS-RADIATOR	89
CHASSIS AR	1
	2
CIRCUIT BREAKER AS (120-AMPERE)	194
CIRCUIT BREAKER AS (80-AMPERE)	194
COIL GP-EVAPORATOR	854
COMPRESSOR & MTG GP-REFRIG	856
COMPRESSOR GP-REFRIGERANT	856
CONDENSER & MTG GP-REFRIGERANT	857
CONDENSER GP-REFRIGERANT	858
CONSOLE GP-OPERATOR	860
CONSOLE GP-OPERATOR–LH	864
CONSOLE GP-OPERATOR–RH	862
CONTROL & MTG GP-COMMUNICATION–PRODUCT LINK 121SR	171
CONTROL & MTG GP-COMMUNICATION–PRODUCT LINK 321SR	170
CONTROL & MTG GP-ENGINE ELEK	173
CONTROL & MTG GP-JOYSTICK–2-BUTTON, SLIDE, TRIGGER SW	867
CONTROL & MTG GP-JOYSTICK–3-BUTTON, TRIGGER SWITCH	868
CONTROL & MTG GP-JOYSTICK–JOYSTICK, 2-BN, SLIDE, TRIG SW	866
CONTROL & MTG GP-JOYSTICK–JOYSTICK, 3-BUTTON, TRIGGER SW	866
CONTROL & MTG GP-MACHINE	174
CONTROL & MTG GP-PEDAL–LH	869
CONTROL AR-AUXILIARY–1-PUMP/2-PUMP, 1-WAY FLOW	408
CONTROL AR-AUXILIARY–COMBINED FCTN, MEDIUM PRESSURE	408
CONTROL AR-AUXILIARY–FOOT SWITCH	408
CONTROL AR-AUXILIARY–SYSTEM 17, COMBINED FN, MED PR	409
CONTROL AR-BOOM–BOOM FLOAT	409
CONTROL AR-COUPLER	409
	410
CONTROL GP-FOOT–LEFT ON/OFF SWITCH	870
CONTROL GP-HANDLE–JOYSTICK, LH	872
	874
CONTROL GP-HANDLE–JOYSTICK, RH	871
	873
CONTROL GP-HANDLE–LH	875
CONTROL GP-HYDRAULIC PEDAL	876
CONTROL GP-PEDAL–ELECTRIC	877
CONTROL GP-PILOT OPERATED HYD–LH	881
	883
CONTROL GP-PILOT OPERATED HYD–RH	880
	882
CONTROL GP-PILOT OPERATED HYD–TRAVEL	878
CONTROL GP-UNPROGRAMMED	173
	174
CONVERTER-POWER (24-VOLT TO 12-VOLT)	907
COOLER GP-ENGINE OIL	80
CORE AS-HEATER	839
CORE AS-OIL COOLER (ENGINE)	80
CORE AS-OIL COOLER (HYDRAULIC)	89
CORE AS-RADIATOR	89
COUNTERWEIGHT & MOUNTING GP	305
	306
COUNTERWEIGHT GP	307
	308
COUPLER AR-QUICK–HYDRAULIC	809
COUPLER AR-QUICK–HYDRAULIC, DB-FAMILY	806
	808
COUPLER AR-QUICK–MECHANICAL, DB-FAMILY	805
	807
COUPLER AR-QUICK–TB-FAMILY	810

INDEX

Name	Page
COUPLER AR-QUICK–WITH HOOK	810
COUPLER GP-QUICK DISCONNECT	411
COUPLER GP-QUICK–WITH HOOK	811
COUPLING GP-PUMP	412
COVER AS-SOUND SUPPRESSION	310
	311
	313
	314
COVER AS-SOUND SUPPRESSION–FUEL, HYDRAULIC TANKS	312
COVER GP-CAB–EXTERIOR	885
COVER GP-CAB–REAR	884
COVER GP-CYLINDER BLOCK–CRANKCASE	17
COVER GP-FLYWHEEL HOUSING	18
COVER GP-FRONT HOUSING	20
COVER GP-FRONT HOUSING–ACCESSORY DRIVE	19
COVER GP-STORAGE–CAB, REAR	886
COVER GP-VALVE MECHANISM	21
CRANKSHAFT GP	22
CYLINDER & LINES GP-BOOM–LH	413
CYLINDER & LINES GP-BOOM–RH	413
CYLINDER & LINES GP-BUCKET–DB-FAMILY	413
CYLINDER & LINES GP-BUCKET–TB1-FAMILY	413
CYLINDER & LINES GP-STICK	414
CYLINDER & SEAL GP-BOOM	415
CYLINDER & SEAL GP-BUCKET	416
	417
CYLINDER & SEAL GP-STICK–LH	418
CYLINDER BLOCK AS	23
	25
CYLINDER BLOCK GP	27
	28
	29
	30
CYLINDER GP-BOOM	419
CYLINDER GP-BUCKET	421
	423
CYLINDER GP-COUPLER	814
	819
CYLINDER GP-COUPLER–LOCK	425
CYLINDER GP-STICK	426
CYLINDER HEAD AS	31
	33
CYLINDER HEAD GP	35
	36
	38
	40

D

Name	Page
DAMPER & PULLEY GP	41
DISTRIBUTION AR	2
	3
DOOR AS-ACCESS–AIR CLEANER	315
DOOR GP-ACCESS–PUMP COMPARTMENT	317
DOOR GP-ACCESS–RADIATOR	316
DOOR GP-CAB	887
DRIVE GP-ACCESSORY	42
DRIVE GP-AUXILIARY PUMP	428
	429
DRIVE GP-FAN	44
DRIVE GP-FINAL–WITHOUT MOTOR	295
DRIVE GP-SWING–WITH MOTOR	431
DRIVE GP-SWING–WITHOUT MOTOR	432
DUCT GP-CAB AIR	889

E

Name	Page
ELBOW GP-AIR INLET	103
ELECTRONICS GP-COMMUNICATION–PRODUCT LINK 300	175
ELECTRONICS GP-MACHINE–HIGH POWER	175
ELECTRONICS GP-MONITOR	175
ENGINE AR	10
	12
ENGINE AR-CORE	13
	14

F

Name	Page
FAN & MOTOR GP	81
FAN GP-SUCTION	82
FASTENER GP-CYLINDER HEAD	45
FASTENER GP-DAMPER	46
FASTENER GP-FRONT HOUSING	47
FASTENER GP-SWING & FINAL DR	434
FASTENER GP-VALVE COVER	48
FASTENER GP-VALVE COVER BASE	49
FASTENER GP-WIRING HARNESS–FOOT SWITCH	179
FASTENER GP-WIRING HARNESS–HEAVY LIFT	177
FASTENER GP-WIRING HARNESS–JOYSTICK	180
FASTENER GP-WIRING HARNESS–PEDAL CONTROL	178
FASTENER GP-WIRING HARNESS–STRAIGHT TRAVEL	176
FENDER & COVER GP	318
	320
FILM GP–FUEL TRANSFER PUMP	982
FILM GP–HAMMER CONTROL, FOOT SWITCH	980
FILM GP–OPERATOR CONTROLS, NOTICE	977
	978
	979

INDEX

Name	Page
FILM GP–QUICK COUPLER	981
FILM GP–SMARTBOOM	983
FILM GP–WORK AREA VISUAL SYSTEM, REAR	985
FILM-IDENTIFICATION (FUEL)	282
FILM-INFORMATION (PRODUCT LINK, READ OMM)	171
FILM-INSTRUCTION (HYDRAULIC OIL RETURN FILTER)	442
FILM-INSTRUCTION (MACHINE SECURITY, CONSOLE)	198
FILM-INSTRUCTION (OPERATOR CONTROLS, READ OMM)	933 979
FILM-INSTRUCTION (REFUELING PUMP)	131
FILM-INSTRUCTION (TOP, AIR CLEANER COVER)	101 102
FILM-NOTICE (LIFT EYE LOCATION)	805 806 807 809 811
FILM-WARNING (HIGH PRESSURE CYLINDER)	404
FILM-WARNING (NO WELD, NO DRILL, READ OMM)	897
FILM-WARNING (PRODUCT LINK RADIO, INTL)	171
FILM-WARNING (PRODUCT LINK RADIO, U.S.)	171
FILM-WARNING (READ OMM)	805 806 807 809 811
FILTER & LINES GP-HYDRAULIC–FINE FILTRATION	436
FILTER & VALVE GP-PILOT–HYDRAULIC OIL	438
FILTER AR-HYDRAULIC–FINE FILTRATION	439
FILTER AS-WATER SEP & FUEL (PRIMARY)	112
FILTER ELEMENT AS-AIR (PRIMARY)	101 102
FILTER ELEMENT AS-AIR (PRIMARY, ULTRA HIGH EFFICIENCY)	102
FILTER ELEMENT AS-AIR (SECONDARY)	101 102
FILTER ELEMENT AS-OIL (STANDARD EFFICIENCY) (HYDRAULIC)	444
FILTER ELEMENT AS-OIL (ULTRA HIGH EFFICIENCY) (HYDRAULIC RETURN)	442
FILTER ELEMENT-CAB AIR	839
FILTER ELEMENT-CAB AIR (AIR INTAKE)	889
FILTER GP-AIR (AIR CONDITIONER)	839
FILTER GP-ENGINE OIL	69
FILTER GP-OIL–HYDRAULIC	444
FILTER GP-OIL–HYDRAULIC RETURN	440 442
FILTER GP-OIL–HYDRAULIC, CASE DRAIN	445
FILTER GP-WATER SEP & FUEL	112
FILTER-ENGINE OIL (ADVANCED EFFICIENCY)	69
FILTER-FUEL (ADVANCED EFFICIENCY)	116 119
FILTER-OIL (ADVANCED EFFICIENCY) (HYDRAULIC)	438 445
FINAL DRIVE GP	295
FINAL DRIVE GP–WITH MOTOR	294
FLOOR MAT	2 3 890 892 893 934
FLOOR MAT–ACCUGRADE READY	894
FLOOR MAT–PEDAL, RH	891
FLYWHEEL GP	50
FRAME AR-UNDERCARRIAGE	370
FRAME AS-UNDERCARRIAGE	371 373
FRAME GP-UPPER	321
FUMES DISPOSAL GP	71
FUSE (10-AMPERE)	257
FUSE (15-AMPERE)	250 257
FUSE (25-AMPERE)	257
FUSE (30-AMPERE)	257
FUSE (5-AMPERE)	257

G

GASKET	116 119
GASKET (FUEL PRIMING PUMP)	127
GASKET (WATER REGULATOR HOUSING)	86 88
GAUGE GP-OIL LEVEL (DIPSTICK)–ENGINE	72
GAUGE GP-SIGHT–HYDRAULIC OIL LEVEL	446
GAUGE-OIL LEVEL (SWING DRIVE)	432
GEAR & BEARING GP-SWING	323 324 325 326
GEAR GP-FRONT	51
GENERAL AR	4
GRADE CONTROL AR	181
GUARD AR-OVERHEAD–FALLING OBJECT	895
GUARD GP-BOTTOM	329

INDEX

Name	Page
GUARD GP-BOTTOM–HEAVY-DUTY	330
GUARD GP-OVERHEAD	896
GUARD GP-SWIVEL	331
GUARD GP-TRACK GUIDE–CENTER	376
GUARD GP-TRACK GUIDE–FULL LENGTH	374
GUARD GP-TRAVEL MOTOR	377
GUARD GP-TRAVEL MOTOR–HEAVY-DUTY	378
GUARD GP-WINDOW	897
	899
H	
HANDRAIL GP–FRONT, RH	332
HARNESS AS-AUXILIARY (WORK AREA VISUAL SYSTEM, REAR)	255
HARNESS AS-CAB	250
	257
HARNESS AS-CHASSIS	153
	248
HARNESS AS-CONSOLE (LH)	271
HARNESS AS-CONSOLE (RH)	196
	198
	274
HARNESS AS-CONTROL	244
	246
	266
	285
HARNESS AS-CONTROL (BODY TILT SENSOR, GPS RECEIVER)	266
HARNESS AS-CONTROL (DISPLAY, GPS RADIO)	266
HARNESS AS-CONTROL (PRODUCT LINK)	269
HARNESS AS-CONTROL (PRODUCT LINK, ANTENNA)	269
HARNESS AS-ENGINE	279
HARNESS AS-ENGINE (ELECTRONIC CONTROL MODULE)	277
HARNESS AS-ENGINE (UNIT INJECTOR)	277
	279
HARNESS AS-HEATER & AIR COND	836
	839
HARNESS AS-HEATER & AIR COND (CONTROL PANEL SWITCHES)	836
HARNESS AS-LIGHTING	188
	189
HARNESS AS-LIGHTING (CAB FLOODLIGHT)	190
	191
HARNESS AS-MOTOR (CONDENSER FAN)	858
HARNESS AS-OPERATOR CONTROLS	870
HARNESS AS-PLATFORM	286
HARNESS AS-PUMP	263
HARNESS AS-PUMP (FUEL PRIMING)	282
HARNESS AS-PUMP (REFUELING)	291
HARNESS AS-QUICK COUPLER	251
	289
HARNESS AS-RADIO	907
HARNESS AS-SENSOR (BOOM FLOAT)	253
HARNESS AS-SOLENOID (FINE SWING)	281
HARNESS AS-SWITCH	238
HARNESS AS-SWITCH (REFUELING PUMP, STOP)	239
HARNESS AS-SWITCH (SECONDARY SHUTDOWN)	286
HARNESS AS-WINDOW WIPER	293
HARNESS AS-WIRING	291
HARNESS AS-WIRING (CAB) (QUICK COUPLER)	251
HARNESS AS-WIRING (HORN)	904
HARNESS AS-WIRING (SERVICE CONNECTOR)	269
HARNESS AS-WIRING (WORK AREA VISUAL SYSTEM, REAR)	255
HATCH GP-ROOF	901
	902
HEAD GP-MOTOR	597
HEAD GP-PUMP	447
HOOD & GUARD GP	333
HOOD GP–ACCUGRADE READY	339
	340
HOOD GP–PRECLEANER	343
HOOD GP–RADIATOR	341
	342
HOOD GP-ENGINE	344
	345
	347
HOOK GP-LIFTING	813
HOOK GP-LIFTING–14-TON CAPACITY	812
HORN GP-ELECTRIC	904
HOSE GP-HYDRAULIC– CONTROL VALVE, BOOM	456
	457
	458
HOSE GP-HYDRAULIC– CONTROL VALVE, STICK	451
	452
	453
	454
	455
HOSE-RADIATOR	95
HOUSING & REGULATOR GP	86
HOUSING GP-AIR CONDITIONER–INLET AIR	905
HOUSING GP-FLYWHEEL	53
HOUSING GP-FRONT	54
HYDRAULIC AR	459
I	
IDLER GP-FRONT	379
	380

INDEX

Name	Page
	381
INDICATOR AS (HYDRAULIC RETURN FILTER)	440
INDICATOR AS-AIR FILTER CHANGE (AIR RESTRICTION)	106
INJECTOR GP-FUEL	113
INSTALLATION AR	906
INSTALLATION AR-CAB	906
INSTALLATION AR-COMMUNICATION–PRODUCT LINK 321SR	181
INSTALLATION AR-ENGINE	15
INSTALLATION GP-RADIO	907
INSTALLATION GP-SECURITY	182

K

KEY (BATTERY DISCONNECT)	233
KEY AS-ELECTRONIC (SECURITY)	182
KIT-RECEPTACLE (2-PIN)	277
KIT-SEAT SUSPENSION–AIR	910
KIT-SEAT SUSPENSION–MECHANICAL	909

L

LAMP (24-VOLT, 10-WATT)	843
LAMP AS (24-VOLT, 3-WATT)	196
LAMP GP-FLOOD	184
	186
LAMP GP-FLOOD (24-VOLT)	191
LAMP GP-FLOOD–FRONT, RH	185
LAMP-HALOGEN (24-VOLT, 70-WATT)	184
	185
	186
	191
LATCH GP-FRONT WINDOW	911
LEVER GP-CAB DOOR	912
	913
LIFTING GP-ENGINE	55
LIGHTING GP-CHASSIS–FRONT, RH	187
LIGHTING GP-FLOOD–BOOM	188
LIGHTING GP-FLOOD–CAB	190
LIGHTING GP-FLOOD–CAB GUARD	191
LIGHTING GP-FLOOD–MASS BOOM	189
LINES GP-AIR–AFTERCOOLER TO TURBOCHARGER	104
LINES GP-AIR–AIR CLEANER TO TURBOCHARGER	106
LINES GP-AIR CONDITIONER	914
LINES GP-AUXILIARY HYDRAULIC–BOOM, HIGH PRESSURE	460
LINES GP-AUXILIARY HYDRAULIC–BOOM, MEDIUM PRESSURE	462
LINES GP-AUXILIARY HYDRAULIC–MASS BOOM, HIGH PRESSURE	464
LINES GP-AUXILIARY HYDRAULIC–STICK, HIGH PRESSURE	466
	469
	470
	471
LINES GP-AUXILIARY HYDRAULIC–STICK, MEDIUM PRESSURE	467
	472
LINES GP-BOOM	478
	480
LINES GP-BOOM CYLINDER–BOOM LOWERING CONTROL	485
LINES GP-BOOM CYLINDER–LH	483
LINES GP-BOOM CYLINDER–RH	484
LINES GP-BOOM–MASS BOOM, STICK LOAD CONTROL	476
LINES GP-BOOM–REACH BOOM, STICK LOAD CONTROL	474
LINES GP-BUCKET CYLINDER	488
	489
LINES GP-COUPLER	492
	493
LINES GP-COUPLER–DB-FAMILY	495
LINES GP-COUPLER–REACH BOOM	490
LINES GP-COUPLER–TB-FAMILY	497
LINES GP-ENGINE OIL	74
LINES GP-ENGINE OIL DRAIN	75
LINES GP-FRONT–BOOM CYLINDER	512
LINES GP-FRONT–IMP, SWING, TRAVEL, WORK TOOL	509
LINES GP-FRONT–MEDIUM PRESSURE CIRCUIT	507
LINES GP-FRONT–QUICK COUPLER	514
LINES GP-FRONT–SYSTEM 16, 1-WAY, 2-PUMP	499
LINES GP-FRONT–SYSTEM 17, COMBINED FN, MED PR	503
LINES GP-FUEL	114
	116
LINES GP-FUEL–PRIMING PUMP	119
LINES GP-GREASE–BOOM	725
	726
LINES GP-HYDRAULIC OIL COOLER	519
LINES GP-PILOT–1-PUMP/2-PUMP, 1-WAY FLOW	537
LINES GP-PILOT–BOOM FLOAT	532
LINES GP-PILOT–CAB	556
LINES GP-PILOT–COMB FCTN, JOYSTK W/SLIDE CTL	540
LINES GP-PILOT–CONTROL VALVE	550
LINES GP-PILOT–CONTROL VALVE, TRAVEL VALVE	530
LINES GP-PILOT–HEAVY LIFT	526
LINES GP-PILOT–JOYSTICK, PEDALS	522
LINES GP-PILOT–MAIN PUMP	558

INDEX

Name	Page
LINES GP-PILOT–MEDIUM PRESSURE	544
LINES GP-PILOT–ROTATOR	546
LINES GP-PILOT–STICK LOWERING CONTROL	535
LINES GP-PILOT–THIRD PEDAL, PILOT VALVE	528
LINES GP-PILOT–TRAVEL	548
LINES GP-PUMP–1-PUMP/2-PUMP, 1-WAY FLOW	560
LINES GP-PUMP–HYDRAULIC OIL COOLER	563
LINES GP-PUMP–MAIN HYDRAULIC	565
LINES GP-RETURN–FILTERS	570
LINES GP-RETURN–LOAD CONTROL, BOOM CYLINDER	573
LINES GP-RETURN–REAR	567
LINES GP-SENSOR–OVERLOAD WARNING DEVICE	576
LINES GP-STICK–BUCKET CYLINDER	577 578 579 580
LINES GP-STICK CYLINDER	584
LINES GP-STICK CYLINDER–STICK LOWERING CONTROL	582
LINES GP-TRAVEL MOTOR	585 587
LINES GP-TURBOCHARGER OIL	76
LINES GP-TURBOCHARGER WATER	87
LINES GP-WATER	88
LINK AS-TRACK	382
LINK AS-TRACK–GREASE LUBRICATED	383
LINKAGE AR-BUCKET–DB-FAMILY, WITH LIFTING EYE	728
LINKAGE AR-BUCKET–TB1-FAMILY	728
LINKAGE AR-FRONT	729
LINKAGE GP-BUCKET–DB-FAMILY, ACCUGRADE READY	734
LINKAGE GP-BUCKET–DB-FAMILY, WITH LIFTING EYE	730
LINKAGE GP-BUCKET–TB-FAMILY, WITH LIFTING EYE	732
LITERATURE GP	917
LOCK GP-QUICK COUPLER–HYDRAULIC	814
LOCK GP-QUICK COUPLER–HYDRAULIC, CB-FAMILY	819
LOCK GP-QUICK COUPLER–MECHANICAL	815 817

M

Name	Page
MANIFOLD GP-CONTROL–PILOT OIL SUPPLY	589 590 591
MANIFOLD GP-EXHAUST	107
MIRROR GP	917
MIRROR GP-DOWN VIEW–FUEL TANK, RH	918
MIRROR GP-REAR VIEW	920 921 922
MIRROR GP-REAR VIEW–FRONT, RH	919
MODULE GP-COOLING	89
MODULE GP-INTERFACE (KEY)	182
MONITOR & MTG GP-OPERATOR	923
MONITOR GP-OPERATOR	924
MOTOR & MTG GP-SWING	592
MOTOR & MTG GP-TRAVEL	593
MOTOR AS-WINDOW WIPER	925
MOTOR GP-PISTON–HYDRAULIC FAN	594
MOTOR GP-SWING	596 597
MOTOR GP-TRAVEL	599
MOUNTING GP-ANTENNA–ACCUGRADE	928
MOUNTING GP-ANTENNA–PRODUCT LINK	926
MOUNTING GP-ENGINE	56
MOUNTING GP-ENGINE OIL FILTER	78
MOUNTING GP-MAIN CONTROL VALVE	603
MOUNTING GP-MIRROR	930
MOUNTING GP-PLATFORM	931
MOUNTING GP-ROPS	932
MUFFLER GP	108

O

Name	Page
OPERATOR AR	933
OPTION AR-CONFIGURATION	4 5
OPTION AR-CONTROL	6
OPTION AR-HYDRAULIC–BIO OIL, FINE FILTRATION	6
OPTION AR-LINKAGE	6 7 8 9

P

Name	Page
PADLOCK GP	139 333
PAN GP-OIL–ENGINE	58
PANEL & MTG GP-CIRCUIT BREAKER	193
PANEL GP-CIRCUIT BREAKER	194
PANEL GP-SWITCH–ENGINE SPEED, START	196 198
PEDAL AR-AUXILIARY	933
PEDAL AR-AUXILIARY–ACCUGRADE READY, RH	934
PEDAL AR-AUXILIARY–LH, RH	934
PEDAL AR-AUXILIARY–PEDAL, LH	933

INDEX

Name	Page
PEDAL AR-AUXILIARY– PEDAL, RH, FOOT SWITCH, LH	934
PEDAL AR-AUXILIARY–RH	934
PISTON & ROD GP	60
	61
PLATE & FILM GP	987
	989
PLATE & FILM GP–BIODEGRADABLE OIL	986
PLATE-CAUTION (OIL FILL)	599
PLATE-IDENTIFICATION (CAT)	747
	748
	749
	750
	751
	752
	753
	754
	755
	756
	757
	758
	759
	760
	761
	762
	763
	764
	765
	766
	767
	768
	769
	770
	771
	772
	773
	774
	775
	776
	777
	778
	779
	780
	781
	782
	783
	784
	785
	786
	787
	788
	789
	790
	791
	792

Name	Page
	793
	794
	795
	796
	797
	798
	799
	800
	801
	802
	803
	804
PLATE-WARNING (HIGH PRESSURE CYLINDER)	369
PLATFORM GP-OPERATOR	935
PLUG GP-CONNECTOR– ENGINE HARNESS, PROTECTIVE COVER	200
PLUG GP-CONTROL VALVE	604
	605
	606
	607
PLUG GP-ENGINE	62
	63
PLUG GP-WATER LINES–COOLANT	92
PLUG-O-RING	86
	87
	486
	546
	573
PLUG-O-RING (FLYWHEEL HOUSING DRAIN)	53
PLUG-OIL DRAIN (HYDRAULIC TANK)	627
PLUG-PIPE	92
	627
POWER TRAIN AR	298
PROTECTOR GP-SIDE BAR	821
PUMP & LINES GP-COOLING–AUXILIARY	608
PUMP & MOTOR GP-REFUELING	123
PUMP & MTG GP-AUXILIARY	609
PUMP & MTG GP-MAIN HYDRAULIC	610
PUMP AR-FUEL TRANSFER	124
PUMP GP-ENGINE OIL	79
PUMP GP-FUEL INJECTION	125
	126
PUMP GP-FUEL PRIMING	127
	128
PUMP GP-FUEL PRM & PRIM FILTER– WITH WATER SEPARATOR	129
PUMP GP-FUEL PRM & WATER SEP	130
PUMP GP-GEAR	611
	615
PUMP GP-GEROTOR	79
PUMP GP-MAIN HYDRAULIC	612
PUMP GP-PISTON	615
PUMP GP-PISTON–HYDRAULIC FAN	613

INDEX

Name	Page
PUMP GP-REFUELING	131
PUMP GP-UNIT INJECTOR HYD	133
	135
PUMP GP-WATER	93
	94

R

RADIATOR & HYD OIL COOLER GP	95
RADIO GP	936
RADIO GP-COMMUNICATION–PRODUCT LINK 121SR	937
RECEIVER-REFRIGERANT DRYER	914
REGULATOR AS-VOLTAGE (24-VOLT) (ALTERNATOR)	150
REGULATOR GP-FUEL PRESSURE	137
	138
REGULATOR-PRESSURE (FUEL)	129
REGULATOR-TEMPERATURE (92-DEG C) (COOLANT)	86
REGULATOR-WATER TEMPERATURE (98-DEG C) (COOLANT)	88
RELAY (24-VOLT)	251
RELAY (24-VOLT) (BOOM FLOAT DISABLE)	253
RELAY (24-VOLT) (BOOM LIGHT)	257
RELAY (24-VOLT) (CAB LIGHT)	257
RELAY (24-VOLT) (CHASSIS LIGHT)	257
RELAY (24-VOLT) (ETHER START)	257
RELAY (24-VOLT) (HORN)	257
RELAY (24-VOLT) (NEUTRAL START)	257
RELAY (24-VOLT) (PRIMING PUMP)	263
RELAY (24-VOLT) (REFUELING PUMP, START)	291
RELAY (24-VOLT) (REFUELING PUMP, STOP)	291
RELAY (24-VOLT) (SMARTBOOM, DOWN)	253
RELAY (24-VOLT) (SMARTBOOM, UP/DOWN)	253
RELAY (24-VOLT) (TRAVEL ALARM)	257
RELAY (BLOWER)	905
RELAY (COMPRESSOR CLUTCH)	905
RELAY (CONDENSER)	905
RELAY (CONDENSER, HIGH)	905
RELAY AS (UPPER) (WIPER)	972
ROCKER ARM GP–EXHAUST	64
ROCKER ARM GP–INLET	65
ROLLER AR-TRACK & CARRIER	384
	385
ROLLER GP-TRACK CARRIER	386
ROLLER GP-TRACK-SINGLE FLANGE	387
	388
ROTATING GP-MOTOR–HYDRAULIC FAN	619
ROTATING GP-PUMP	620

S

SCREEN AS (HYDRAULIC TANK)	560
	563
	621
SCREEN GP-HYDRAULIC–TANK	621
SCREEN GP-SUN	938
SEAL GP-CAB	939
SEAL GP-CRANKSHAFT	66
SEAL GP-DUO-CONE	387
SEAL-CRANKSHAFT	66
SEAL-RING	112
SEAL-VALVE COVER	21
SEAL-VALVE COVER (VALVE MECHANISM BASE)	21
SEAT & MOUNTING GP–HIGH BACK, TILT	940
SEAT & MOUNTING GP–HIGH BACK, WITH HEATER	941
SEAT BELT GP (RETRACTABLE, 43-MM)	942
SEAT BELT GP–RETRACTABLE, 43-MM	942
SEAT GP (HIGH BACK, TILT)	945
SEAT GP (HIGH BACK, WITH HEATER)	946
SEAT GP–HIGH BACK, TILT	943
SEAT GP–HIGH BACK, WITH HEATER	944
SEAT GP-SUSPENSION–HIGH BACK, TILT	945
SEAT GP-SUSPENSION–HIGH BACK, WITH HEATER	946
SENDER AS-FUEL LEVEL	141
	143
SENDER AS-TEMPERATURE (HYDRAULIC OIL)	627
SENSOR AS-LIQUID LEVEL (WATER IN FUEL)	203
SENSOR AS-PRESSURE	207
SENSOR AS-PRESSURE (OVERLOAD WARNING)	576
SENSOR AS-PRESSURE (PUMP CONTROL)	558
SENSOR AS-TEMPERATURE	220
	221
SENSOR AS-TEMPERATURE (AIR)	905
SENSOR AS-TEMPERATURE (AMBIENT AIR)	839
SENSOR AS-TEMPERATURE (COOLANT)	839
SENSOR GP-ENGINE	10
	201
	202
SENSOR GP-LIQUID LEVEL (WATER IN FUEL)	1
	2
	204
SENSOR GP-LIQUID LEVEL–WATER IN FUEL	204
SENSOR GP-LIQUID LEVEL–WATER SEPARATOR	203
SENSOR GP-PRESSURE	205
	206
	207
	208
	209

INDEX

Name	Page
	210
	211
	212
	213
	214
	215
SENSOR GP-PRESSURE (AIR INLET MANIFOLD)	201
SENSOR GP-PRESSURE (ATMOSPHERIC AIR)	201
SENSOR GP-PRESSURE (ATMOSPHERIC)	202
SENSOR GP-PRESSURE (ENGINE OIL)	201
	202
SENSOR GP-PRESSURE (FUEL)	116
	119
SENSOR GP-PRESSURE (INJECTION ACTUATION)	201
	202
SENSOR GP-PRESSURE (OUTLET AIR)	202
SENSOR GP-SPEED	10
	216
	217
	218
SENSOR GP-SPEED (ENGINE TIMING)	201
	202
SENSOR GP-SPEED–ENGINE TIMING	217
SENSOR GP-TEMPERATURE	219
	220
	221
	222
	223
SENSOR GP-TEMPERATURE (AMBIENT)	152
SENSOR GP-TEMPERATURE (COOLANT)	202
SENSOR GP-TEMPERATURE (FUEL)	116
	119
SENSOR GP-TEMPERATURE (INTAKE AIR TEMPERATURE)	202
SENSOR-TEMPERATURE (AMBIENT AIR)	836
SERVICE GP-MONITOR	947
SHEET AS-SOUND SUPPRESSION	349
	350
	351
	352
	353
	354
	355
	356
	357
	359
	360
	361
	362
SIDECUTTER GP–C-FAMILY, D-FAMILY	822
SOFTWARE GP-COMMUNICATION (PRODUCT LINK 121SR)	937
SOFTWARE GP-COMMUNICATION (PRODUCT LINK 300)	175
SOFTWARE GP-MONITOR	175
	947
SOLENOID AS-STARTING MOTOR (24-VOLT)	231
SPRING AS-GAS	899
SPRING AS-GAS (WINDOW)	897
SPRING GP-RECOIL	389
SPROCKET GP	299
STARTING AID GP–AIR INLET HEATER	224
STARTING AID GP-ETHER	225
STARTING AR-COLD WEATHER	228
STARTING MOTOR GP-ELECTRIC	229
	230
STEP GP	363
STICK AR-HOE	736
STICK AR-HOE–REACH, ACCUGRADE READY	737
STICK GP-HOE	738
	739
	741
	743
	744
STRAINER AS-FUEL	131
STRAINER AS-FUEL (FLOAT GAUGE)	141
	143
STRIKER GP-LATCH	948
SUPPORT AS–CAB AIR FILTER	950
SUPPORT AS-ENCLOSURE	364
	365
	366
	367
	368
SUPPORT GP-SEAT	951
SUSPENSION GP-SEAT (AIR)	946
SUSPENSION GP-SEAT (MECHANICAL)	945
SUSPENSION GP-SEAT–AIR	953
SUSPENSION GP-SEAT–MECHANICAL	952
SWITCH (WINDOW POSITION)	967
SWITCH AS (REFUELING PUMP, START)	238
SWITCH AS-FOOT (WORK TOOL)	870
SWITCH AS-LIMIT (NEUTRAL START)	236
SWITCH AS-LIQUID LEVEL (ENGINE OIL)	58
SWITCH AS-LIQUID LEVEL (FUEL TANK SHUTOFF)	131
SWITCH AS-LIQUID LEVEL (HYDRAULIC OIL)	627
SWITCH AS-MAGNETIC (24-VOLT) (MAIN RELAY)	257
	291
SWITCH AS-PRESSURE (BOOM CYLINDER, ROD END)	573
SWITCH AS-PRESSURE (BOOM FLOAT)	532
SWITCH AS-PRESSURE (IMPLEMENT, SWING)	522

INDEX

Name	Page
SWITCH AS-PRESSURE (REFRIGERANT)	914
SWITCH AS-PRESSURE (THIRD PEDAL, STRAIGHT TRAVEL)	528
SWITCH AS-PRESSURE (TRAVEL, LH)	522
SWITCH AS-PRESSURE (TRAVEL, RH)	522
SWITCH AS-ROCKER (BOOM FLOAT)	253
SWITCH AS-ROCKER (FINE SWING)	257
SWITCH AS-ROCKER (HEATED SEAT)	941
SWITCH AS-ROCKER (OVERLOAD WARNING)	253
SWITCH AS-ROCKER (RADIO MUTE)	907
SWITCH AS-TOGGLE (AUTO/MANUAL ENG SPEED CONTROL)	274
SWITCH AS-TOGGLE (MANUAL ENGINE SPEED CONTROL)	274
SWITCH AS-TOGGLE (QUICK COUPLER)	251
SWITCH AS-TOGGLE (SECONDARY SHUTDOWN)	287
SWITCH GP-DISCONNECT (BATTERY)	194
SWITCH GP-DISCONNECT–BATTERY	233
SWITCH GP-MAGNETIC	235
SWITCH GP-MAGNETIC–START RELAY	234
SWITCH GP-POSITION–HYDRAULIC LOCKOUT	236
SWITCH GP-PRESSURE (FUEL)	116 119
SWITCH GP-PRESSURE–FUEL	237
SWITCH GP-PUSH BUTTON (REFUELING PUMP, START)	291
SWITCH GP-PUSH BUTTON (REFUELING PUMP, STOP)	239 291
SWITCH GP-PUSH BUTTON–REFUELING PUMP, START	238
SWITCH GP-PUSH BUTTON–REFUELING PUMP, STOP	239
SWITCH GP-PUSHBUTTON (REFUELING PUMP, START)	238
SWITCH GP-ROTARY–THROTTLE POSITION	240
SWITCH GP-START–ENGINE, KEY	241
SWITCH GP-TOGGLE (FUEL PRIMING PUMP)	282
SWITCH GP-TOGGLE (QUICK COUPLER)	251
SWITCH GP-TOGGLE–FUEL PRIMING PUMP	242
SWITCH-PUSH BUTTON (REFUELING PUMP, STOP)	239
SWIVEL GP	622

T

Name	Page
TANK & FILTER GP-HYDRAULIC	624
TANK & MTG GP-FUEL	139
TANK & MTG GP-HYDRAULIC	626
TANK GP-FUEL	140 141 143
TANK GP-HYDRAULIC	627
TIP GP-DOUBLE SPIKE–K-110	823
TIP GP-EXTRA-DUTY–K-100	824
TIP GP-EXTRA-DUTY–K-110	825
TIP GP-GENERAL PURPOSE–K-100	826
TIP GP-GENERAL PURPOSE–K-110	827
TIP GP-HEAVY ABRASION–K-110	828
TIP GP-HEAVY PENETRATION–K-110	829
TIP GP-PENETRATION–K-100	830
TIP GP-PENETRATION–K-110	831
TIP GP-PENETRATION PLUS–K-100	832
TIP GP-PENETRATION PLUS–K-110	833
TIP GP-SPIKE–K-110	834
TIP GP-WIDE–K-110	835
TRACK GP–2-REQUIRED	390 392 393 394 396 397
TRACK GP–2-REQUIRED, HEAVY-DUTY	391 395 398 399
TRIM GP-CAB	955
TRIM GP-CAB–INTERIOR	954
TRIM GP-CAB–INTERIOR, RH	956
TURBOCHARGER GP	110 111

V

Name	Page
VALVE & MTG GP-MAIN CONTROL	629 630
VALVE AR-LOAD CONTROL–STICK CYLINDER	631
VALVE AR-LOAD CONTROL–STICK CYLINDER, MASS BOOM	631
VALVE AR-SWING–WITHOUT FINE SWING	631
VALVE GP-CHECK	632
VALVE GP-CHECK (OIL COOLER BYPASS) (CONTROL VALVE)	567
VALVE GP-CONTROL	638 647 702
VALVE GP-CONTROL (WITHOUT COVERS, HOUSINGS)	638
VALVE GP-CONTROL–AUXILIARY	636 651
VALVE GP-CONTROL–MEDIUM PRESSURE	653
VALVE GP-CONTROL–QUICK COUPLER	634
VALVE GP-CONTROL–WITHOUT COVERS, HOUSINGS	633

INDEX

Name	Page
	643
	645
VALVE GP-ETHER STARTING	243
VALVE GP-FLOW CONTROL	662
VALVE GP-FLOW CONTROL– BOOM FLOAT, PILOT OIL	654
VALVE GP-FUEL BYPASS–FILTER	145
VALVE GP-FUEL SHUTOFF	146
VALVE GP-LOAD CONTROL– BOOM DRIFT RED, LINE RELIEF	657
VALVE GP-LOAD CONTROL– BOOM LOWERING, DRIFT REDUCTION	662
VALVE GP-LOAD CONTROL– STICK DRIFT RED, LINE RELIEF	655
VALVE GP-LOAD CONTROL– STICK LOWER, DRIFT RED, RELIEF	659
VALVE GP-MAIN CONTROL–HEAVY LIFT	664
VALVE GP-MANUAL (AUXILIARY, SHUTOFF) (AUXILIARY, SHUTOFF)	469
VALVE GP-MANUAL–AUXILIARY, SHUTOFF	666
VALVE GP-MANUAL–BOOM LOWER	665
VALVE GP-PILOT	667
VALVE GP-PILOT–JOYSTICK, LH	670
VALVE GP-PILOT–JOYSTICK, RH	668
VALVE GP-PILOT RELIEF (HYDRAULIC FILTER)	438
VALVE GP-PILOT RELIEF– HYDRAULIC FILTER	674
VALVE GP-PILOT–TRAVEL	672
VALVE GP-PRESSURE REDUCING (BOOM UP PRIORITY)	550
VALVE GP-PRESSURE REDUCING (QUICK COUPLER)	634
VALVE GP-PRESSURE REDUCING– BOOM, SWING PRIORITY	675
	676
VALVE GP-PRIORITY (SWING)	638
VALVE GP-PRIORITY–SWING	678
VALVE GP-PUMP CONTROL– HYDRAULIC FAN	679
VALVE GP-RELIEF	681
	682
	683
	684
	685
	686
	687
	688
	689
	690
	692
VALVE GP-RELIEF (160-BAR (2321-PSI))	653
VALVE GP-RELIEF (80-BAR (1161-PSI))	653
VALVE GP-RELIEF (CROSSOVER)	717
VALVE GP-RELIEF (LINE)	662
VALVE GP-RELIEF (LINE) (AUXILIARY)	636
VALVE GP-RELIEF (LINE) (STICK)	638
VALVE GP-RELIEF (MAIN, HEAVY LIFT)	638
VALVE GP-SHUTTLE	693
	694
	695
	696
	697
	701
VALVE GP-SOLENOID	532
	698
	699
	700
	701
	702
	703
	704
	705
	706
	707
	708
	709
VALVE GP-SOLENOID & RELIEF	711
VALVE GP-SOLENOID & RELIEF (WITH BLOCK)	503
VALVE GP-SOLENOID & RELIEF– WITH BLOCK	710
VALVE GP-SOLENOID (BOOM FLOAT UP)	573
VALVE GP-SOLENOID (HEAVY LIFT)	526
VALVE GP-SOLENOID (HYDRAULIC LOCKOUT)	590
	591
VALVE GP-SOLENOID (NEG FLOW CONT, PROPN RED VALVE)	538
	541
VALVE GP-SOLENOID (PRESSURE REDUCING)	544
VALVE GP-SOLENOID (PRESSURE REDUCING) (1-PUMP/2-PUMP, 1-WAY FLOW)	537
VALVE GP-SOLENOID (PUMP CONTROL)	616
VALVE GP-SOLENOID (QUICK COUPLER)	634
VALVE GP-SOLENOID (STRAIGHT TRAVEL)	638
VALVE GP-SOLENOID (SWING BRAKE RELEASE)	590
	591
VALVE GP-SOLENOID (TRAVEL SPEED)	590
	591
VALVE GP-SOLENOID (WORK TOOL, 4-FUNCTION)	540
VALVE GP-SWING CUSHION	713
VALVE GP-SWING CUSHION (FINE SWING)	512
VALVE GP-SWING CUSHION–FINE SWING	714
	715
VALVE GP-TRAVEL COUNTERBALANCE	717
VALVE GP-UNLOADING (STICK CYLINDER)	638

INDEX

Name	Page
VALVE MECHANISM GP	67, 68
VALVE-SHUTOFF (HEATER, LINES)	914
VALVE-SHUTOFF (SWING DRIVE)	432
VISOR GP-PROTECTION–RAIN	958

W

Name	Page
WASHER GP-WINDOW–LOWER	959
WATER SEP & FUEL PRM PUMP GP	130
WINDOW GP-CAB	961
WINDOW GP-CAB–SIDE, REAR	962, 964
WINDOW GP-DOOR	966
WINDOW GP-FRONT	967, 969
WIPER AR-WINDOW–FRONT WINDOW, 1-PIECE	971
WIPER AR-WINDOW–FRONT WINDOW, 70/30-SPLIT	971
WIPER GP-WINDOW	972
WIPER GP-WINDOW–1-PIECE	975
WIPER GP-WINDOW–70/30-SPLIT	973
WIRING GP-AUXILIARY CONTROL	246
WIRING GP-AUXILIARY CONTROL–COMBINED FUNCTION, MEDIUM PRESSURE	244
WIRING GP-BOOM FLOAT	248
WIRING GP-CAB	257
WIRING GP-CAB–ACCUGRADE READY	250
WIRING GP-CAB–BOOM FLOAT	253
WIRING GP-CAB–COUPLER	251
WIRING GP-CAB–PRIMING PUMP	263
WIRING GP-CAB–WORK AREA VISUAL SYSTEM, REAR	255
WIRING GP-CAMERA–WORK AREA VISUAL SYSTEM, REAR	265
WIRING GP-CHASSIS–ACCUGRADE READY	266
WIRING GP-COMMUNICATION–PRODUCT LINK 321SR	269
WIRING GP-CONSOLE	273
WIRING GP-CONSOLE–LH	271
WIRING GP-CONSOLE–RH	274
WIRING GP-CONVERTER	276
WIRING GP-ELECTRONIC CONTROL	277, 279
WIRING GP-FINE SWING	281
WIRING GP-FUEL PUMP–PRIMING	282
WIRING GP-HEATER–AIR INLET MANIFOLD	284
WIRING GP-MEDIUM PRESSURE	285
WIRING GP-PLATFORM	286
WIRING GP-QUICK COUPLER	289
WIRING GP-REFUELING PUMP	291
WIRING GP-WINDOW WIPER	293

MACHINE ARRANGEMENT

343-1145 CHASSIS AR

S/N: PPN1-UP

PART OF 343-1142 GENERAL AR

SMCS-7000 **i03652229**

NOTE	PART NUMBER	QTY	PART NAME 1 2 3 4 5 6 (PRODUCT LEVEL)	SEE PAGE
Y	*336-6170*	1	BATTERY & WIRING GP	152
Y	*223-3040*	1	BOX & MTG GP-STORAGE	300
Y	*342-3588*	1	BUMPER GP-FRONT	303
Y	*237-8759*	1	COUNTERWEIGHT & MOUNTING GP	305
Y	*262-2595*	1	FENDER & COVER GP	318
Y	*337-1525*	1	FRAME GP-UPPER	321
Y	*342-1069*	1	GUARD GP-BOTTOM	329
Y	*256-1644*	1	HANDRAIL GP	332
Y	*342-1068*	1	HOOD & GUARD GP	333
Y	*277-9100*	1	HORN GP-ELECTRIC	904
Y	*4I-5409*	1	LIGHTING GP-CHASSIS (FRONT, RH)	187
Y	*235-9021*	1	LINES GP-AIR CONDITIONER	914
Y	*237-8752*	1	LINES GP-FUEL	116
Y	*7Y-0059*	1	LITERATURE GP	917
Y	*142-3836*	1	MIRROR GP-REAR VIEW (FRONT, RH)	919
Y	*305-0446*	1	MOUNTING GP-PLATFORM	931
Y	*316-8927*	1	MOUNTING GP-ROPS	932
Y	*340-6485*	1	OPERATOR AR	933
Y	*340-3825*	1	PLATE & FILM GP	987
Y	*233-1124*	1	SENSOR GP-LIQUID LEVEL (WATER IN FUEL)	204
Y	*237-8783*	1	TANK & MTG GP-FUEL	139
Y	*238-1568*	1	WIRING GP-FINE SWING	281

Y-SEPARATE ILLUSTRATION

<END>

MACHINE ARRANGEMENT

343-1146 CHASSIS AR

S/N: MYG1-UP

PART OF 343-1143 GENERAL AR

SMCS-7000 **i03652230**

NOTE	PART NUMBER	QTY	PART NAME 1 2 3 4 5 6 (PRODUCT LEVEL)	SEE PAGE
Y	*336-6170*	1	BATTERY & WIRING GP	152
Y	*223-3040*	1	BOX & MTG GP-STORAGE	300
Y	*342-3588*	1	BUMPER GP-FRONT	303
Y	*237-8759*	1	COUNTERWEIGHT & MOUNTING GP	305
Y	*262-2595*	1	FENDER & COVER GP	318
Y	*337-1525*	1	FRAME GP-UPPER	321
Y	*342-1069*	1	GUARD GP-BOTTOM	329
Y	*256-1644*	1	HANDRAIL GP	332
Y	*342-1068*	1	HOOD & GUARD GP	333
Y	*277-9100*	1	HORN GP-ELECTRIC	904
Y	*4I-5409*	1	LIGHTING GP-CHASSIS (FRONT, RH)	187
Y	*235-9021*	1	LINES GP-AIR CONDITIONER	914
Y	*237-8752*	1	LINES GP-FUEL	116
Y	*7Y-0059*	1	LITERATURE GP	917
Y	*142-3836*	1	MIRROR GP-REAR VIEW (FRONT, RH)	919
Y	*305-0446*	1	MOUNTING GP-PLATFORM	931
Y	*316-8927*	1	MOUNTING GP-ROPS	932
Y	*340-6485*	1	OPERATOR AR	933
Y	*343-1147*	1	PLATE & FILM GP	989
Y	*233-1124*	1	SENSOR GP-LIQUID LEVEL (WATER IN FUEL)	204
Y	*237-8783*	1	TANK & MTG GP-FUEL	139
Y	*238-1568*	1	WIRING GP-FINE SWING	281

Y-SEPARATE ILLUSTRATION

<END>

345-7571 DISTRIBUTION AR

S/N: MYG1-UP

AN ATTACHMENT

SMCS-7000 **i03676700**

NOTE	PART NUMBER	QTY	PART NAME 1 2 3 4 5 6 (PRODUCT LEVEL)	SEE PAGE
Y	*346-4594*	1	AIR CLEANER AR	99
Y	**340-6488**	1	FLOOR MAT	890
Y	*347-0295*	1	INSTALLATION AR (WORK AREA VISUAL SYSTEM, REAR)	906
Y	*336-6139*	1	INSTALLATION GP-RADIO	907
Y	*345-7497*	1	OPTION AR-CONFIGURATION	4
Y	*345-7583*	1	OPTION AR-CONFIGURATION	5
Y	*340-9468*	1	OPTION AR-CONTROL	6
Y	*340-9477*	1	OPTION AR-LINKAGE	8
Y	*251-0542*	1	PANEL GP-SWITCH (ENGINE SPEED, START)	196
Y	*229-1784*	1	PUMP AR-FUEL TRANSFER	124
Y	*216-4027*	2	TRACK GP (2-REQUIRED)	392
Y	*255-5868*	1	VALVE AR-LOAD CONTROL (REACH BOOM, STICK LOAD CONTROL)	631
Y	*316-8838*	1	VISOR GP-PROTECTION	958

Y-SEPARATE ILLUSTRATION

<END>

MACHINE ARRANGEMENT

348-8126 DISTRIBUTION AR

S/N: PPN1-UP

AN ATTACHMENT

SMCS-7000 **i03676703**

NOTE	PART NUMBER	QTY	PART NAME 1 2 3 4 5 6 (PRODUCT LEVEL)	SEE PAGE
Y	*346-4594*	1	AIR CLEANER AR	99
Y	**340-6488**	1	FLOOR MAT	890
Y	*347-0295*	1	INSTALLATION AR (WORK AREA VISUAL SYSTEM, REAR)	906
Y	*336-6139*	1	INSTALLATION GP-RADIO	907
Y	*345-7497*	1	OPTION AR-CONFIGURATION	4
Y	*345-7583*	1	OPTION AR-CONFIGURATION	5
Y	*340-9468*	1	OPTION AR-CONTROL	6
Y	*340-9477*	1	OPTION AR-LINKAGE	8
Y	*251-0542*	1	PANEL GP-SWITCH (ENGINE SPEED, START)	196
Y	*229-1784*	1	PUMP AR-FUEL TRANSFER	124
Y	*340-3839*	1	STARTING AR-COLD WEATHER	228
Y	**203-0860**	2	TRACK GP	390
Y	*255-5868*	1	VALVE AR-LOAD CONTROL (REACH BOOM, STICK LOAD CONTROL)	631

Y-SEPARATE ILLUSTRATION

<END>

352-2663 DISTRIBUTION AR

S/N: PPN1-UP

AN ATTACHMENT

SMCS-7000 **i03676704**

NOTE	PART NUMBER	QTY	PART NAME 1 2 3 4 5 6 (PRODUCT LEVEL)	SEE PAGE
Y	*346-4594*	1	AIR CLEANER AR	99
Y	*345-7579*	1	CONTROL AR-COUPLER	410
Y	**340-6488**	1	FLOOR MAT	890
Y	*189-3860*	1	GUARD GP-TRACK GUIDE	374
Y	*347-0295*	1	INSTALLATION AR (WORK AREA VISUAL SYSTEM, REAR)	906
Y	*336-6139*	1	INSTALLATION GP-RADIO	907
Y	*345-7498*	1	OPTION AR-CONFIGURATION	5
Y	*345-7583*	1	OPTION AR-CONFIGURATION	5
Y	*340-9468*	1	OPTION AR-CONTROL	6
Y	*340-9474*	1	OPTION AR-LINKAGE	7
Y	*251-0542*	1	PANEL GP-SWITCH (ENGINE SPEED, START)	196
Y	*229-1784*	1	PUMP AR-FUEL TRANSFER	124
Y	*340-3837*	1	PUMP GP-FUEL PRIMING	128
Y	*340-3839*	1	STARTING AR-COLD WEATHER	228
Y	*260-9452*	2	TRACK GP	394
Y	*316-8838*	1	VISOR GP-PROTECTION	958

Y-SEPARATE ILLUSTRATION

<END>

MACHINE ARRANGEMENT

343-1142 GENERAL AR

S/N: PPN1-UP

SMCS-7000 **i03653308**

NOTE	PART NUMBER	QTY	PART NAME 1 2 3 4 5 6 (PRODUCT LEVEL)	SEE PAGE
Y	*343-1145*	1	CHASSIS AR	1
Y	*297-4429*	1	ELECTRONICS GP-MACHINE (HIGH POWER)	175
Y	*221-8861*	1	ELECTRONICS GP-MONITOR	175
Y	*266-6311*	1	ENGINE AR	12
Y	*229-1898*	1	FRAME AR-UNDERCARRIAGE	370
Y	*259-7410*	1	HYDRAULIC AR	459
Y	*279-7825*	1	INSTALLATION AR-ENGINE	15
Y	*191-2576*	1	POWER TRAIN AR	298
Y-SEPARATE ILLUSTRATION				

<END>

343-1143 GENERAL AR

S/N: MYG1-UP

SMCS-7000 **i03653309**

NOTE	PART NUMBER	QTY	PART NAME 1 2 3 4 5 6 (PRODUCT LEVEL)	SEE PAGE
Y	*343-1146*	1	CHASSIS AR	2
Y	*297-4429*	1	ELECTRONICS GP-MACHINE (HIGH POWER)	175
Y	*221-8861*	1	ELECTRONICS GP-MONITOR	175
Y	*266-6311*	1	ENGINE AR	12
Y	*240-3887*	1	FRAME AR-UNDERCARRIAGE	370
Y	*259-7411*	1	HYDRAULIC AR	459
Y	*279-7825*	1	INSTALLATION AR-ENGINE	15
Y	*191-2576*	1	POWER TRAIN AR	298
Y-SEPARATE ILLUSTRATION				

<END>

345-7497 OPTION AR-CONFIGURATION

S/N: MYG1-UP; PPN1-UP
PART OF 345-7571, 348-8126 DISTRIBUTION AR
CANNOT BE USED WITH 345-7498—PAGE 5, 345-7499—PAGE 5
AN ATTACHMENT

SMCS-7000 **i03666639**

NOTE	PART NUMBER	QTY	PART NAME 1 2 3 4 5 6 (PRODUCT LEVEL)	SEE PAGE
Y	*340-6526*	1	AIR CONDITIONER AR	838
Y	*340-6600*	1	CAB GP	845
Y	**234-6500**	1	COVER GP-STORAGE (CAB, REAR)	886
Y	*336-1150*	1	SCREEN GP-SUN	938
Y	*327-6503*	1	SEAT & MOUNTING GP (HIGH BACK, WITH HEATER)	941
Y	*305-0467*	1	SEAT BELT GP (RETRACTABLE, 43-MM)	942
Y	*343-1195*	1	WIPER AR-WINDOW	971
Y	*251-0485*	1	WIRING GP-CONVERTER (12-VOLT, 7-AMPERE)	276
Y-SEPARATE ILLUSTRATION				

<END>

MACHINE ARRANGEMENT

345-7498 OPTION AR-CONFIGURATION

S/N: MYG1-UP; PPN1-UP
PART OF 352-2663 DISTRIBUTION AR
CANNOT BE USED WITH 345-7497—PAGE 4, 345-7499—PAGE 5
AN ATTACHMENT

SMCS-7000 **i03667650**

NOTE	PART NUMBER	QTY	PART NAME 1 2 3 4 5 6 (PRODUCT LEVEL)	SEE PAGE
Y	*340-6526*	1	AIR CONDITIONER AR	838
Y	*340-6606*	1	CAB GP	849
Y	**234-6500**	1	COVER GP-STORAGE (CAB, REAR)	886
Y	*336-1150*	1	SCREEN GP-SUN	938
Y	*327-6503*	1	SEAT & MOUNTING GP (HIGH BACK, WITH HEATER)	941
Y	*305-0467*	1	SEAT BELT GP (RETRACTABLE, 43-MM)	942
Y	*343-1196*	1	WIPER AR-WINDOW (FRONT WINDOW, 1-PIECE)	971
Y	*251-0485*	1	WIRING GP-CONVERTER (12-VOLT, 7-AMPERE)	276

Y-SEPARATE ILLUSTRATION

<END>

345-7499 OPTION AR-CONFIGURATION

S/N: MYG1-UP; PPN1-UP
CANNOT BE USED WITH 345-7497—PAGE 4, 345-7498—PAGE 5
AN ATTACHMENT

SMCS-7000 **i03667663**

NOTE	PART NUMBER	QTY	PART NAME 1 2 3 4 5 6 (PRODUCT LEVEL)	SEE PAGE
Y	*340-6526*	1	AIR CONDITIONER AR	838
Y	*340-6600*	1	CAB GP	845
Y	**234-6500**	1	COVER GP-STORAGE (CAB, REAR)	886
Y	*336-1150*	1	SCREEN GP-SUN	938
Y	*327-6501*	1	SEAT & MOUNTING GP (HIGH BACK, TILT)	940
Y	*305-0467*	1	SEAT BELT GP (RETRACTABLE, 43-MM)	942
Y	*343-1195*	1	WIPER AR-WINDOW	971
Y	*251-0485*	1	WIRING GP-CONVERTER (12-VOLT, 7-AMPERE)	276

Y-SEPARATE ILLUSTRATION

<END>

345-7583 OPTION AR-CONFIGURATION

S/N: MYG1-UP; PPN1-UP
PART OF 345-7571, 348-8126, 352-2663 DISTRIBUTION AR
AN ATTACHMENT

SMCS-7000 **i03714061**

NOTE	PART NUMBER	QTY	PART NAME 1 2 3 4 5 6 (PRODUCT LEVEL)	SEE PAGE
Y	*340-3835*	1	CAMERA & MIRROR AR	853
Y	*346-4449*	1	CONTROL AR-BOOM	409
Y	*342-1071*	1	GUARD GP-BOTTOM (HEAVY-DUTY)	330
Y	*134-8887*	1	GUARD GP-SWIVEL	331
Y	*241-7335*	1	GUARD GP-TRAVEL MOTOR (HEAVY-DUTY)	378
Y	*340-3831*	1	INSTALLATION AR-COMMUNICATION (PRODUCT LINK 321SR)	181
Y	*239-4352*	1	ROLLER AR-TRACK & CARRIER	385
Y	*247-7500*	1	VALVE AR-SWING (WITHOUT FINE SWING)	631

Y-SEPARATE ILLUSTRATION

<END>

MACHINE ARRANGEMENT

340-9468 OPTION AR-CONTROL

S/N: MYG1-UP; PPN1-UP
PART OF 345-7571, 348-8126, 352-2663 DISTRIBUTION AR
AN ATTACHMENT

SMCS-7000 **i03675460**

NOTE	PART NUMBER	QTY	PART NAME 1 2 3 4 5 6 (PRODUCT LEVEL)	SEE PAGE
Y	*270-5687*	1	CONTROL & MTG GP-JOYSTICK (JOYSTICK, 2-BN, SLIDE, TRIG SW)	866
Y	*255-5822*	1	CONTROL AR-AUXILIARY (MEDIUM PRESSURE)	408
Y	*297-0494*	1	CONTROL AR-AUXILIARY (SYSTEM 17, COMBINED FN, MED PR)	409
Y	*260-7863*	1	LINES GP-PILOT (ROTATOR)	546
Y-SEPARATE ILLUSTRATION				

<END>

340-9469 OPTION AR-CONTROL

S/N: MYG1-UP; PPN1-UP
AN ATTACHMENT

SMCS-7000 **i03675607**

NOTE	PART NUMBER	QTY	PART NAME 1 2 3 4 5 6 (PRODUCT LEVEL)	SEE PAGE
Y	*270-5688*	1	CONTROL & MTG GP-JOYSTICK (3-BUTTON, TRIGGER SWITCH)	866
Y	*255-5774*	1	CONTROL AR-AUXILIARY (SYSTEM 16, 1-WAY, 2-PUMP)	408
Y	*260-7863*	1	LINES GP-PILOT (ROTATOR)	546
Y	*255-5823*	1	PUMP & LINES GP-COOLING (AUXILIARY)	608
Y-SEPARATE ILLUSTRATION				

<END>

340-9484 OPTION AR-HYDRAULIC—BIO OIL, FINE FILTRATION

S/N: MYG1-UP; PPN1-UP
AN ATTACHMENT

SMCS-7000 **i03675924**

NOTE	PART NUMBER	QTY	PART NAME 1 2 3 4 5 6 (PRODUCT LEVEL)	SEE PAGE
Y	*273-7095*	1	FILTER AR-HYDRAULIC (FINE FILTRATION)	439
Y	*240-3768*	1	PLATE & FILM GP (BIODEGRADABLE OIL)	986
Y-SEPARATE ILLUSTRATION				

<END>

340-9472 OPTION AR-LINKAGE

S/N: MYG1-UP; PPN1-UP
AN ATTACHMENT

SMCS-7000 **i03675785**

NOTE	PART NUMBER	QTY	PART NAME 1 2 3 4 5 6 (PRODUCT LEVEL)	SEE PAGE
Y	*290-1843*	1	BOOM AR-1 PIECE LONG (HEAVY-DUTY)	718
Y	*290-1825*	1	LINKAGE AR-BUCKET (DB-FAMILY, WITH LIFTING EYE)	728
Y	*290-1820*	1	STICK AR-HOE (DB-FAMILY)	736
Y-SEPARATE ILLUSTRATION				

<END>

MACHINE ARRANGEMENT

340-9473 OPTION AR-LINKAGE

S/N: MYG1-UP; PPN1-UP
AN ATTACHMENT

SMCS-7000 **i03675787**

NOTE	PART NUMBER	QTY	PART NAME 1 2 3 4 5 6 (PRODUCT LEVEL)	SEE PAGE
Y	*290-1843*	1	BOOM AR-1 PIECE LONG (HEAVY-DUTY)	718
Y	*237-3191*	1	LINES GP-AUXILIARY HYDRAULIC (BOOM, HIGH PRESSURE)	460
Y	*253-6611*	1	LINES GP-AUXILIARY HYDRAULIC (STICK, HIGH PRESSURE)	471
Y	*290-1825*	1	LINKAGE AR-BUCKET (DB-FAMILY, WITH LIFTING EYE)	728
Y	*290-1820*	1	STICK AR-HOE (DB-FAMILY)	736
Y-SEPARATE ILLUSTRATION				

<END>

340-9474 OPTION AR-LINKAGE

S/N: MYG1-UP; PPN1-UP
PART OF 352-2663 DISTRIBUTION AR
AN ATTACHMENT

SMCS-7000 **i03675792**

NOTE	PART NUMBER	QTY	PART NAME 1 2 3 4 5 6 (PRODUCT LEVEL)	SEE PAGE
Y	*290-1843*	1	BOOM AR-1 PIECE LONG (HEAVY-DUTY)	718
Y	*237-3191*	1	LINES GP-AUXILIARY HYDRAULIC (BOOM, HIGH PRESSURE)	460
Y	*237-3192*	1	LINES GP-AUXILIARY HYDRAULIC (BOOM, MEDIUM PRESSURE)	462
Y	*253-6611*	1	LINES GP-AUXILIARY HYDRAULIC (STICK, HIGH PRESSURE)	471
Y	*262-3147*	1	LINES GP-AUXILIARY HYDRAULIC (STICK, MEDIUM PRESSURE)	472
Y	*290-1825*	1	LINKAGE AR-BUCKET (DB-FAMILY, WITH LIFTING EYE)	728
Y	*290-1820*	1	STICK AR-HOE (DB-FAMILY)	736
Y-SEPARATE ILLUSTRATION				

<END>

340-9475 OPTION AR-LINKAGE

S/N: MYG1-UP; PPN1-UP
AN ATTACHMENT

SMCS-7000 **i03675793**

NOTE	PART NUMBER	QTY	PART NAME 1 2 3 4 5 6 (PRODUCT LEVEL)	SEE PAGE
Y	*290-1843*	1	BOOM AR-1 PIECE LONG (HEAVY-DUTY)	718
Y	*290-1825*	1	LINKAGE AR-BUCKET (DB-FAMILY, WITH LIFTING EYE)	728
Y	*290-1821*	1	STICK AR-HOE (DB-FAMILY)	736
Y-SEPARATE ILLUSTRATION				

<END>

MACHINE ARRANGEMENT

340-9476 OPTION AR-LINKAGE

S/N: MYG1-UP; PPN1-UP

AN ATTACHMENT

SMCS-7000 **i03675796**

NOTE	PART NUMBER	QTY	PART NAME 1 2 3 4 5 6 (PRODUCT LEVEL)	SEE PAGE
Y	*290-1843*	1	BOOM AR-1 PIECE LONG (HEAVY-DUTY)	718
Y	*237-3191*	1	LINES GP-AUXILIARY HYDRAULIC (BOOM, HIGH PRESSURE)	460
Y	*253-6599*	1	LINES GP-AUXILIARY HYDRAULIC (STICK, HIGH PRESSURE)	466
Y	*290-1825*	1	LINKAGE AR-BUCKET (DB-FAMILY, WITH LIFTING EYE)	728
Y	*290-1821*	1	STICK AR-HOE (DB-FAMILY)	736
Y-SEPARATE ILLUSTRATION				

<END>

340-9477 OPTION AR-LINKAGE

S/N: MYG1-UP; PPN1-UP

PART OF 345-7571, 348-8126 DISTRIBUTION AR

AN ATTACHMENT

SMCS-7000 **i03675797**

NOTE	PART NUMBER	QTY	PART NAME 1 2 3 4 5 6 (PRODUCT LEVEL)	SEE PAGE
Y	*290-1843*	1	BOOM AR-1 PIECE LONG (HEAVY-DUTY)	718
Y	*237-3191*	1	LINES GP-AUXILIARY HYDRAULIC (BOOM, HIGH PRESSURE)	460
Y	*237-3192*	1	LINES GP-AUXILIARY HYDRAULIC (BOOM, MEDIUM PRESSURE)	462
Y	*253-6599*	1	LINES GP-AUXILIARY HYDRAULIC (STICK, HIGH PRESSURE)	466
Y	*253-6600*	1	LINES GP-AUXILIARY HYDRAULIC (STICK, MEDIUM PRESSURE)	467
Y	*290-1825*	1	LINKAGE AR-BUCKET (DB-FAMILY, WITH LIFTING EYE)	728
Y	*290-1821*	1	STICK AR-HOE (DB-FAMILY)	736
Y-SEPARATE ILLUSTRATION				

<END>

340-9478 OPTION AR-LINKAGE

S/N: MYG1-UP; PPN1-UP

AN ATTACHMENT

SMCS-7000 **i03675801**

NOTE	PART NUMBER	QTY	PART NAME 1 2 3 4 5 6 (PRODUCT LEVEL)	SEE PAGE
Y	*290-1818*	1	BOOM AR-1 PIECE SHORT	718
Y	*290-1826*	1	LINKAGE AR-BUCKET (TB1-FAMILY, WITH LIFTING EYE)	728
Y	*290-1823*	1	STICK AR-HOE (MASS)	736
Y-SEPARATE ILLUSTRATION				

<END>

MACHINE ARRANGEMENT

340-9479 OPTION AR-LINKAGE

S/N: MYG1-UP; PPN1-UP

AN ATTACHMENT

SMCS-7000 **i03714064**

NOTE	PART NUMBER	QTY	PART NAME 1 2 3 4 5 6 (PRODUCT LEVEL)	SEE PAGE
Y	*290-1818*	1	BOOM AR-1 PIECE SHORT	718
Y	*237-3195*	1	LINES GP-AUXILIARY HYDRAULIC (MASS BOOM, HIGH PRESSURE)	464
Y	*253-6603*	1	LINES GP-AUXILIARY HYDRAULIC (STICK, HIGH PRESSURE)	469
Y	*290-1826*	1	LINKAGE AR-BUCKET (TB1-FAMILY, WITH LIFTING EYE)	728
Y	*290-1823*	1	STICK AR-HOE (MASS)	736

Y-SEPARATE ILLUSTRATION

<END>

340-9480 OPTION AR-LINKAGE

S/N: MYG1-UP; PPN1-UP

AN ATTACHMENT

SMCS-7000 **i03675806**

NOTE	PART NUMBER	QTY	PART NAME 1 2 3 4 5 6 (PRODUCT LEVEL)	SEE PAGE
Y	*290-1818*	1	BOOM AR-1 PIECE SHORT	718
Y	*290-1826*	1	LINKAGE AR-BUCKET (TB1-FAMILY, WITH LIFTING EYE)	728
Y	*290-1824*	1	STICK AR-HOE (MASS)	736

Y-SEPARATE ILLUSTRATION

<END>

340-9481 OPTION AR-LINKAGE

S/N: MYG1-UP; PPN1-UP

AN ATTACHMENT

SMCS-7000 **i03714063**

NOTE	PART NUMBER	QTY	PART NAME 1 2 3 4 5 6 (PRODUCT LEVEL)	SEE PAGE
Y	*290-1818*	1	BOOM AR-1 PIECE SHORT	718
Y	*237-3195*	1	LINES GP-AUXILIARY HYDRAULIC (MASS BOOM, HIGH PRESSURE)	464
Y	*253-6607*	1	LINES GP-AUXILIARY HYDRAULIC (STICK, HIGH PRESSURE)	470
Y	*290-1826*	1	LINKAGE AR-BUCKET (TB1-FAMILY, WITH LIFTING EYE)	728
Y	*290-1824*	1	STICK AR-HOE (MASS)	736

Y-SEPARATE ILLUSTRATION

<END>

ENGINE ARRANGEMENT

224-9843 ENGINE AR

S/N: THX14533-UP; THY5575-UP
213 BRAKE KW (285 BHP) AT 1800 RPM
PART OF 266-6311 ENGINE AR

SMCS-1000 **i03706875**

NOTE	PART NUMBER	QTY	PART NAME 1 2 3 4 5 6 (PRODUCT LEVEL)	SEE PAGE
Y	*177-6972*	1	ALTERNATOR GP-CHARGING	149
Y	*276-3814*	1	COMPRESSOR GP-REFRIGERANT	856
Y	*253-4522*	1	CONTROL & MTG GP-ENGINE ELEK	173
Y	*202-3301*	1	COVER GP-CYLINDER BLOCK (CRANKCASE BREATHER)	17
Y	*127-5728*	1	COVER GP-FLYWHEEL HOUSING	18
Y	*118-1727*	1	COVER GP-FRONT HOUSING (ACCESSORY DRIVE)	19
Y	*211-3285*	1	COVER GP-FRONT HOUSING	20
Y	*235-8174*	1	COVER GP-VALVE MECHANISM	21
Y	*165-4557*	1	DAMPER & PULLEY GP	41
Y	*241-7605*	1	DRIVE GP-ACCESSORY	42
Y	*242-1934*	1	ELBOW GP-AIR INLET	103
Y	*229-2665*	1	ENGINE AR-CORE	13
			S/N: THX14533-22637; THY5575-UP	
Y	*348-2747*	1	ENGINE AR-CORE	14
			S/N: THX22638-UP	
Y	*218-0859*	1	FASTENER GP-DAMPER & PULLEY	46
Y	*116-4556*	1	FASTENER GP-FRONT HOUSING	47
Y	*236-7315*	1	FASTENER GP-VALVE COVER	48
Y	*233-0423*	1	FASTENER GP-VALVE COVER BASE	49
Y	*187-0474*	1	FILTER GP-ENGINE OIL	69
Y	*102-3596*	1	FLYWHEEL GP	50
Y	*196-1829*	1	FUMES DISPOSAL GP	71
Y	*242-1586*	1	GAUGE GP-OIL LEVEL (DIPSTICK) (ENGINE)	72
Y	*229-3568*	1	HOUSING GP-FLYWHEEL	53
Y	*191-3063*	1	LIFTING GP-ENGINE	55
Y	*202-6603*	1	LINES GP-ENGINE OIL	74
Y	*231-3039*	1	LINES GP-FUEL	114
Y	*165-4465*	1	LINES GP-TURBOCHARGER OIL	76
Y	*244-0989*	1	LINES GP-TURBOCHARGER WATER	87
Y	*248-8835*	1	HOUSING & REGULATOR GP	86
			S/N: THX14533-22637; THY5575-UP	
Y	*348-4301*	1	LINES GP-WATER	88
			S/N: THX22638-UP	
Y	*165-4444*	1	MANIFOLD GP-EXHAUST	107
Y	*187-0472*	1	PAN GP-OIL	58
Y	*235-8200*	1	PLUG GP-CONNECTOR (ENGINE HARNESS, PROT COVER)	200
Y	*169-3105*	1	PLUG GP-ENGINE	62
Y	*205-4013*	1	PLUG GP-WATER LINES	92
Y	*202-7674*	1	PUMP GP-WATER	93
Y	*178-3899*	1	SEAL GP-CRANKSHAFT	66
Y	*231-1978*	1	SENSOR GP-ENGINE	201
			S/N: THX14533-22179; THY5575-UP	
Y	*330-6034*	1	SENSOR GP-ENGINE	202
			S/N: THX22180-UP	
Y	*242-9982*	1	SENSOR GP-SPEED	218
Y	*238-3215*	1	STARTING AID GP	224
Y	*180-2435*	1	STARTING MOTOR GP-ELECTRIC	229
Y	*236-6226*	1	WIRING GP-ELECTRONIC CONTROL (ENGINE)	277
			S/N: THX14533-22179; THY5575-UP	
Y	*330-6018*	1	WIRING GP-ELECTRONIC CONTROL	279
			S/N: THX22180-UP	
Y	*269-3410*	1	WIRING GP-HEATER	284

224-9843 ENGINE AR *(contd.)* i03706875

NOTE	PART NUMBER	QTY	PART NAME 1 2 3 4 5 6 (PRODUCT LEVEL)	SEE PAGE
			PLEASE USE THE GASKET KIT LINK IN SIS OR CONTACT YOUR LOCAL DEALER FOR THE LATEST GASKET KIT INFORMATION	

Y-SEPARATE ILLUSTRATION

ENGINE ARRANGEMENT

266-6311 ENGINE AR

S/N: MYG1-UP; PPN1-UP

PART OF 343-1142, 343-1143 GENERAL AR

SMCS-1000 **i02788610**

NOTE	PART NUMBER	QTY	PART NAME 1 2 3 4 5 6 (PRODUCT LEVEL)	SEE PAGE
Y	**224-9843**	1	ENGINE AR	10
Y	*266-6312*	1	MUFFLER GP	108

Y-SEPARATE ILLUSTRATION

ENGINE ARRANGEMENT

229-2665 ENGINE AR-CORE

S/N: THX14533-22637; THY5575-UP

PART OF 224-9843 ENGINE AR

SMCS-1000 **i02560679**

NOTE	PART NUMBER	QTY	PART NAME 1 2 3 4 5 6 (PRODUCT LEVEL)	SEE PAGE
Y	*242-0674*	1	CAMSHAFT GP	16
Y	*188-3826*	1	COOLER GP-ENGINE OIL	80
Y	*164-6148*	1	CRANKSHAFT GP	22
Y	*161-3406*	1	CYLINDER BLOCK GP	27
Y	*242-0672*	1	CYLINDER HEAD GP	35
Y	*213-4363*	1	FASTENER GP-CYLINDER HEAD	45
Y	*205-1321*	1	GEAR GP-FRONT	51
Y	*245-3260*	1	HOUSING GP-FRONT	54
Y	*265-1400*	1	PISTON & ROD GP	60
Y	*195-8098*	1	PUMP GP-ENGINE OIL	79
Y	*267-3362*	1	PUMP GP-FUEL INJECTION	126
Y	*258-8745*	1	PUMP GP-UNIT INJECTOR HYD	133
Y	*258-8337*	1	TURBOCHARGER GP	111
Y	*242-0447*	1	VALVE MECHANISM GP	68
	272-9625	1	ELECTRONICS GP-ENGINE RATINGS	

Y-SEPARATE ILLUSTRATION

ENGINE ARRANGEMENT

348-2747 ENGINE AR-CORE

S/N: THX22638-UP

PART OF 224-9843 ENGINE AR

SMCS-1000 **i03670756**

NOTE	PART NUMBER	QTY	PART NAME 1 2 3 4 5 6 (PRODUCT LEVEL)	SEE PAGE
Y	*242-0674*	1	CAMSHAFT GP	16
Y	*188-3826*	1	COOLER GP-ENGINE OIL	80
Y	*164-6148*	1	CRANKSHAFT GP	22
Y	*161-3406*	1	CYLINDER BLOCK GP	27
Y	*345-8414*	1	CYLINDER HEAD GP	40
Y	*213-4363*	1	FASTENER GP-CYLINDER HEAD	45
Y	*205-1321*	1	GEAR GP-FRONT	51
Y	*245-3260*	1	HOUSING GP-FRONT	54
Y	*347-7908*	6	PISTON & ROD GP	61
Y	*195-8098*	1	PUMP GP-ENGINE OIL	79
Y	*267-3362*	1	PUMP GP-FUEL INJECTION	126
Y	*258-8745*	1	PUMP GP-UNIT INJECTOR HYD	133
Y	*258-8337*	1	TURBOCHARGER GP	111
Y	*242-0447*	1	VALVE MECHANISM GP	68
	272-9625	1	ELECTRONICS GP-ENGINE RATINGS	

Y-SEPARATE ILLUSTRATION

ENGINE ARRANGEMENT

279-7825 INSTALLATION AR-ENGINE

S/N: MYG1-UP; PPN1-UP

PART OF 343-1142, 343-1143 GENERAL AR

SMCS-1000 **i02478226**

NOTE	PART NUMBER	QTY	PART NAME 1 2 3 4 5 6 (PRODUCT LEVEL)	SEE PAGE
Y	*239-6407*	1	AIR CLEANER & MOUNTING GP	98
Y	*245-7940*	1	CONDENSER & MTG GP-REFRIGERANT	857
Y	*230-2899*	1	FAN GP-SUCTION	82
Y	*239-6409*	1	MOUNTING GP-ENGINE OIL FILTER	78
Y	*239-6406*	1	LINES GP-AIR (AIR CLEANER TO TURBOCHARGER)	106
Y	*230-2898*	1	LINES GP-AIR (AFTERCOOLER TO TURBOCHARGER)	104
Y	*239-6408*	1	LINES GP-ENGINE OIL DRAIN	75
Y	*239-6474*	1	MOUNTING GP-ENGINE	56
Y	*279-7820*	1	PLUG GP-ENGINE	63
Y	*230-2896*	1	RADIATOR & HYD OIL COOLER GP	95

Y-SEPARATE ILLUSTRATION

BASIC ENGINE

242-0674 CAMSHAFT GP

S/N: THX14533-UP; THY5575-UP

PART OF 229-2665, 348-2747 ENGINE AR-CORE

SMCS-1210 **i02176918**

NOTE	REF NO	GRAPHIC REF	PART NUMBER	QTY	PART NAME 1 2 3 4 5 6 (PRODUCT LEVEL)	SEE PAGE
	1	1	**107-7694**	1	PLATE-THRUST	
R	2	1	**242-0673**	1	CAMSHAFT AS	
	2A	1	**1B-8705**	1	KEY-WOODRUFF	
	2B	1	**224-3247**	1	GEAR (100-TEETH)	
M	3		**6V-3940**	2	BOLT (M8X1.25X25-MM)	

M-METRIC PART
R-REMFG PART MAY BE AVAILABLE

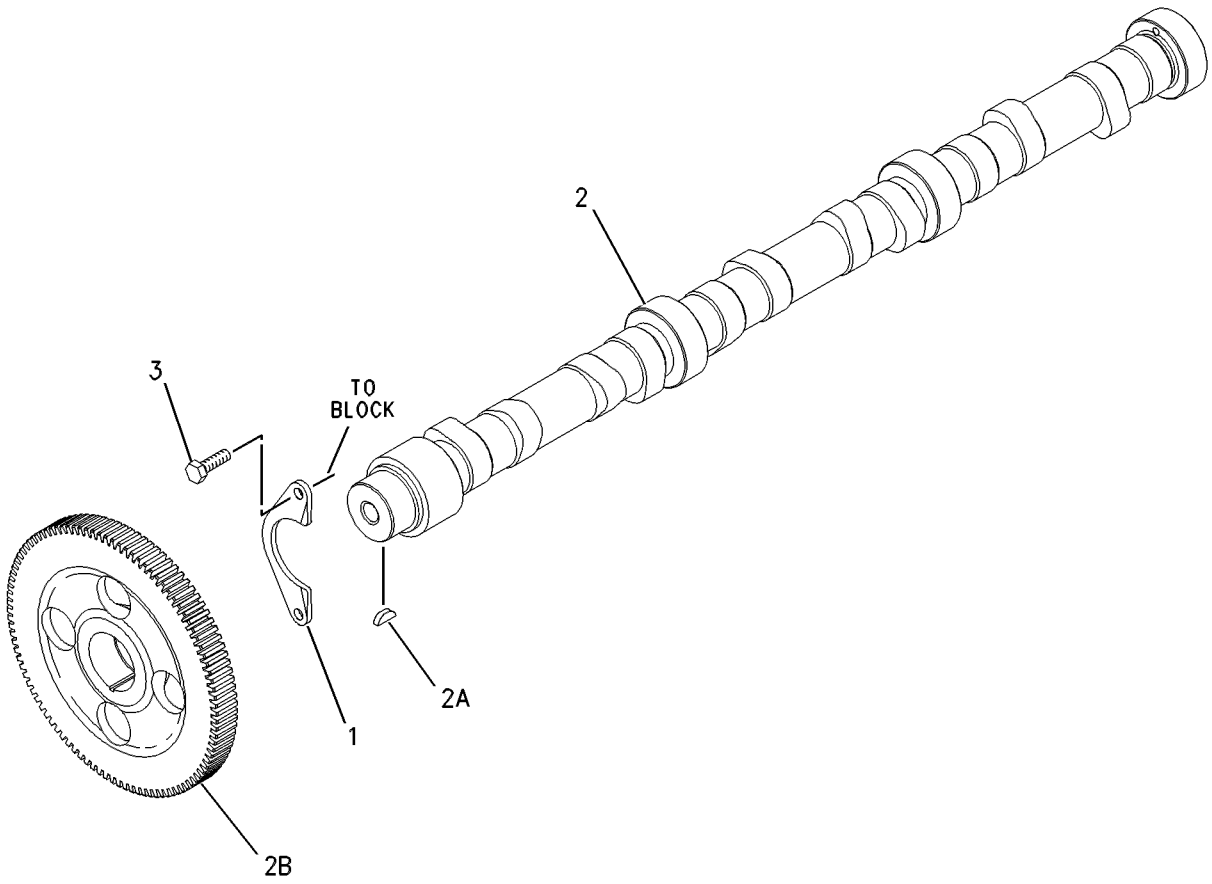

GRAPHIC #1 **<END>** g00626400

202-3301 COVER GP-CYLINDER BLOCK–CRANKCASE

S/N: THX14533-UP; THY5575-UP
PART OF 224-9843 ENGINE AR

SMCS-1201 **i02535200**

NOTE	REF NO	GRAPHIC REF	PART NUMBER	QTY	PART NAME 1 2 3 4 5 6 (PRODUCT LEVEL)	SEE PAGE
	1	1	**213-2411**	1	COVER	
	2	1	**213-2410**	1	GASKET	
	3	1	**240-0041**	1	BREATHER AS (CRANKCASE)	
M	4	1	**3E-8005**	1	BOLT (M8X1.25X160-MM)	
M	5	1	**6V-3918**	2	BOLT (M8X1.25X50-MM)	
M	6	1	**6V-3940**	9	BOLT (M8X1.25X25-MM)	
	7	1	**9F-4446**	1	SEAL-O-RING (CRANKCASE BREATHER)	
	8	1	**9M-1974**	11	WASHER-HARD (8.8X16X2-MM THK)	
	9	1	**5N-4185**	1	WASHER-SPECIAL	

M-METRIC PART

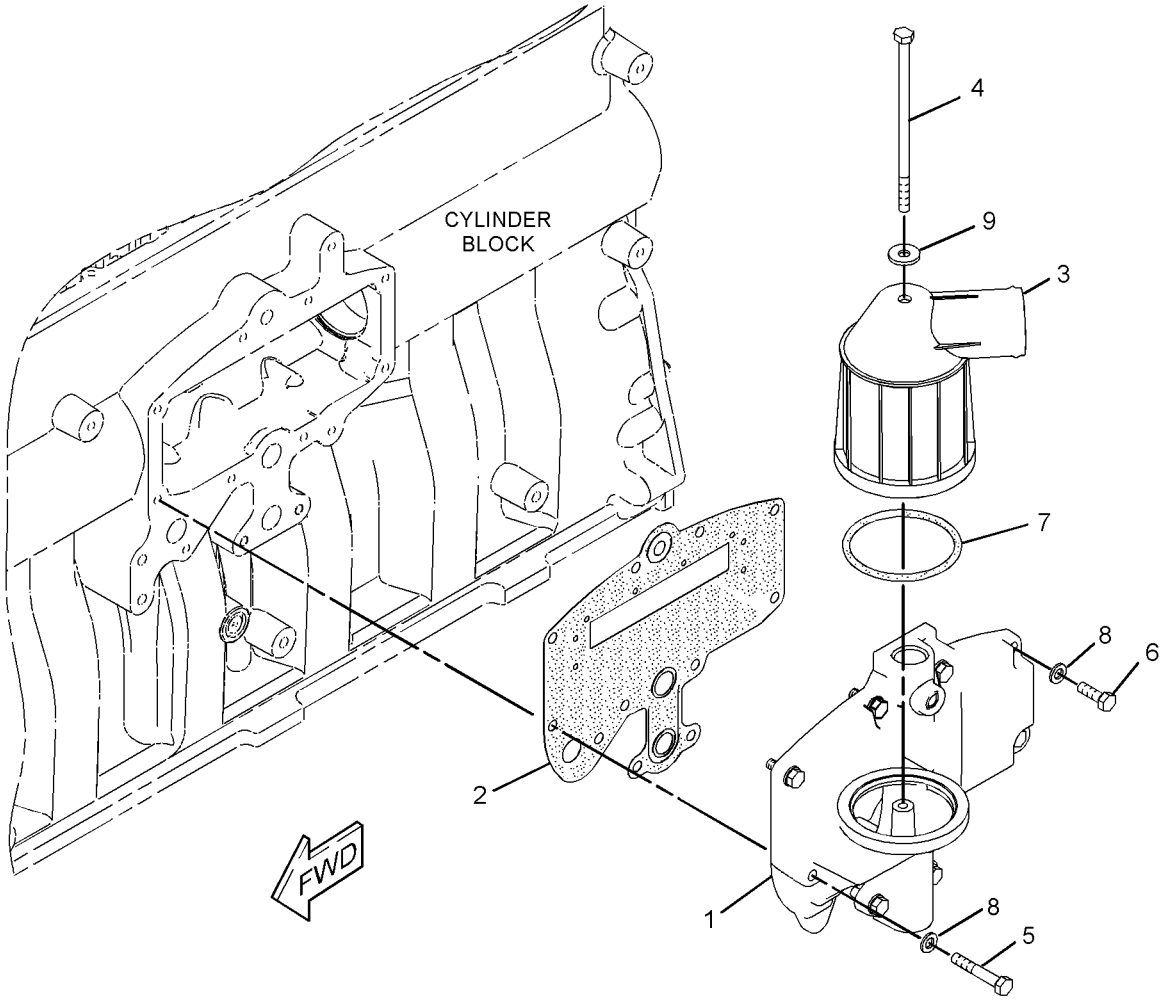

GRAPHIC #1 **<END>** g01216863

127-5728 COVER GP-FLYWHEEL HOUSING

S/N: THX14533-UP; THY5575-UP
LEFT STARTER BORE
PART OF 224-9843 ENGINE AR

SMCS-1157 **i00830240**

NOTE	REF NO	GRAPHIC REF	PART NUMBER	QTY	PART NAME 1 2 3 4 5 6 (PRODUCT LEVEL)	SEE PAGE
	1	1	**9Y-6089**	1	GASKET	
	2	1	**0S-1589**	3	BOLT (5/8-11X1.75-IN)	
	3	1	**4D-3704**	3	WASHER-HARD (17X30X5-MM THK)	
	4	1	**4N-1114**	1	COVER	

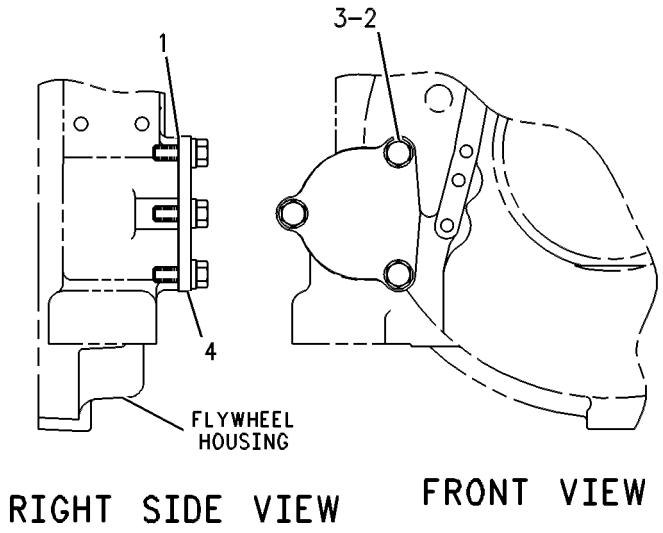

GRAPHIC #1 **<END>** g00262336

118-1727 COVER GP-FRONT HOUSING–ACCESSORY DRIVE

S/N: THX14533-UP; THY5575-UP
REQUIRED ON ENGINES WITH NO FACTORY INSTALLED AIR COMPRESSOR
PART OF 224-9843 ENGINE AR

SMCS-1150 **i02445680**

NOTE	REF NO	GRAPHIC REF	PART NUMBER	QTY	PART NAME 1 2 3 4 5 6 (PRODUCT LEVEL)	SEE PAGE
	1	1	**5P-8245**	4	WASHER-HARD (13.5X25.5X3-MM THK)	
M	2	1	**6V-5696**	2	BOLT (M12X1.75X80-MM)	
	3	1	**4W-2026**	1	COVER	
	4	1	**135-9819**	1	SEAL-INTEGRAL	
M	5	1	**6V-8149**	2	NUT (M12X1.75-THD)	

M-METRIC PART

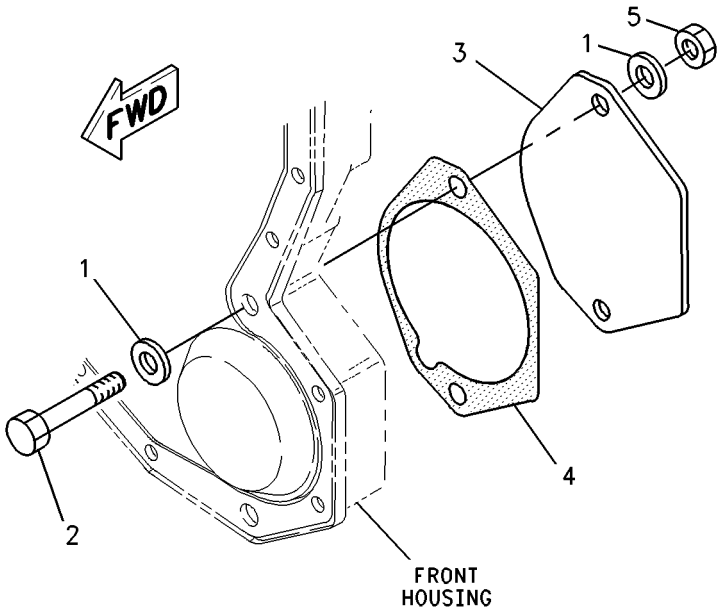

GRAPHIC #1 **<END>** g00897312

BASIC ENGINE

211-3285 COVER GP-FRONT HOUSING

S/N: THX14533-UP; THY5575-UP
PART OF 224-9843 ENGINE AR

SMCS-1150 **i01606450**

NOTE	REF NO	GRAPHIC REF	PART NUMBER	QTY	PART NAME 1 2 3 4 5 6 (PRODUCT LEVEL)	SEE PAGE
M	1	1	**9X-2099**	2	STUD (M8X1.25X52.75-MM)	
	2	1	**7C-1445**	1	COVER	
	3	1	**166-1776**	1	COVER AS-FRONT	
	3A	1	**126-1757**	2	WASHER (10.85X19.3X1.27-MM THK)	
	3B	1	**136-0822**	2	STUD	
	4	1	**166-1781**	1	GASKET	
	5	1	**061-9455**	1	SEAL-O-RING	
M	6	1	**5C-7261**	2	NUT (M8X1.25-THD)	
M	7	1	**6V-2317**	10	BOLT (M8X1.25X30-MM)	
M	8	1	**8T-0100**	2	BOLT (M8X1.25X60-MM)	
	9	1	**8T-4224**	2	WASHER-HARD (8.8X16X2-MM THK)	

M-METRIC PART

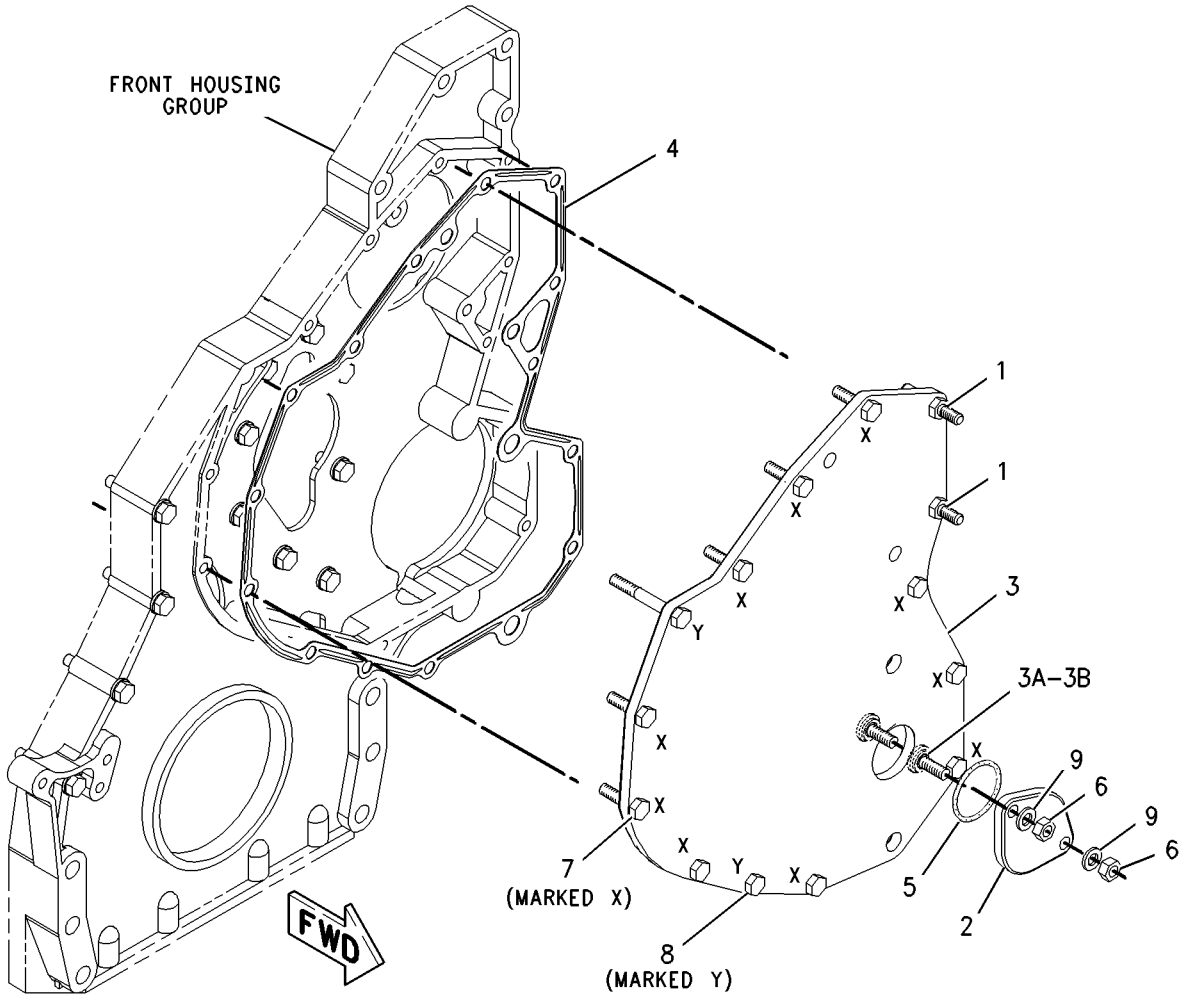

GRAPHIC #1 **<END>** g00833663

BASIC ENGINE

235-8174 COVER GP-VALVE MECHANISM

S/N: THX14533-UP; THY5575-UP
PART OF 224-9843 ENGINE AR

SMCS-1107 **i02735085**

NOTE	REF NO	GRAPHIC REF	PART NUMBER	QTY	PART NAME 1 2 3 4 5 6 (PRODUCT LEVEL)	SEE PAGE
	1	1	**227-4531**	1	CAP AS-ENGINE OIL FILLER	
	1A	1	**7F-8268**	1	SEAL-O-RING	
C	2	1	**273-2838**	11	SLEEVE-SPACER	
C	3	1	**263-7825**	1	COVER GP-VALVE MECHANISM	
	3A	1	**285-4106**	1	SEAL-VALVE COVER	
	4	1	**271-2418**	1	BASE GP-VALVE COVER	
	4A	1	**268-3490**	1	SEAL-VALVE COVER (VALVE MECHANISM BASE)	

C-CHANGE FROM PREVIOUS TYPE

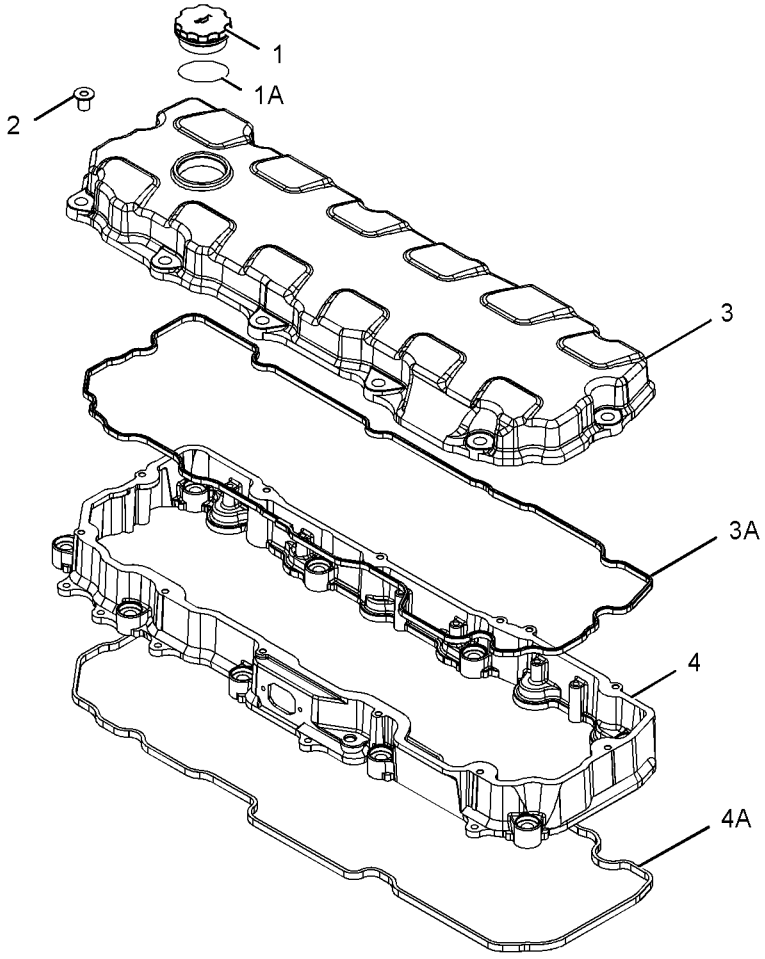

GRAPHIC #1 **<END>** g01277347

BASIC ENGINE

164-6148 CRANKSHAFT GP

S/N: THX14533-UP; THY5575-UP

PART OF 229-2665, 348-2747 ENGINE AR-CORE

SMCS-1202 **i03592341**

NOTE	REF NO	GRAPHIC REF	PART NUMBER	QTY	PART NAME 1 2 3 4 5 6 (PRODUCT LEVEL)	SEE PAGE
J	1	1	**151-2939**	7	BEARING-MAIN (STANDARD)	
AB			**282-1771**	7	BEARING-MAIN (0.25-MM US)	
AB			**282-1772**	7	BEARING-MAIN (0.51-MM US)	
R	2	1	**261-1544**	1	CRANKSHAFT AS	
	2A	1	**1B-8705**	1	KEY-WOODRUFF	
	2B	1	**2W-8147**	1	GEAR (50-TEETH)	
	2C	1	**9Y-0810**	1	SLEEVE-WEAR	
J	3	1	**246-3150**	2	PLATE-THRUST	
					AVAILABLE REPAIR KIT(S):	
AJ			**243-6716**		BEARING GP-MAIN (STANDARD)	
					(INCLUDES A COMPLETE SET OF MAIN BEARINGS AND THRUST PLATES)	

A-NOT PART OF THIS GROUP
B-USE AS REQUIRED
J-KIT MARKED J INCLUDES PARTS MARKED J
R-REMFG PART MAY BE AVAILABLE

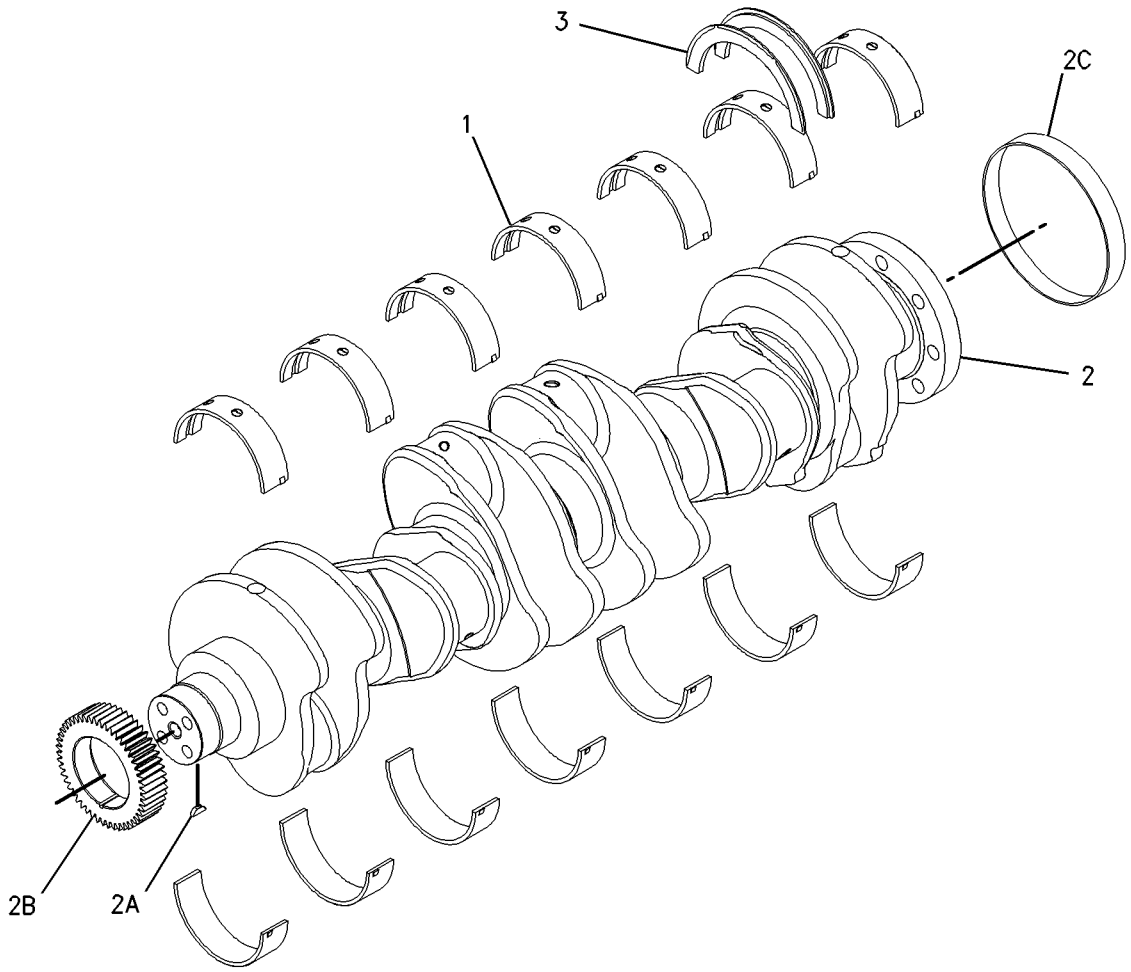

GRAPHIC #1 **<END>** g00789955

204-9538 CYLINDER BLOCK AS

S/N: THX14533-22637

PART OF 204-9539 CYLINDER BLOCK GP

SMCS-1201 **i02001218**

NOTE	REF NO	GRAPHIC REF	PART NUMBER	QTY	PART NAME 1 2 3 4 5 6 (PRODUCT LEVEL)	SEE PAGE
	1	1	**0L-1026**	2	PLUG-CUP	
	2	1	**216-5586**	1	BEARING-SLEEVE (CAMSHAFT)	
	3	1	**3B-0623**	2	PLUG-CUP	
	4	1	**4F-5695**	4	PLUG-CUP	
	5	1	**212-7002**	7	CAP-BEARING	
	6	1	**203-5805**	2	BEARING-SLEEVE	
	7	1	**203-6090**	1	BEARING-SLEEVE	
M	9	1	**175-0454**	14	BOLT	
	10	1	**9X-8268**	14	WASHER (17.5X30X3.5MM THK)	

M-METRIC PART

204-9538 CYLINDER BLOCK AS *(contd.)* **i02001218**

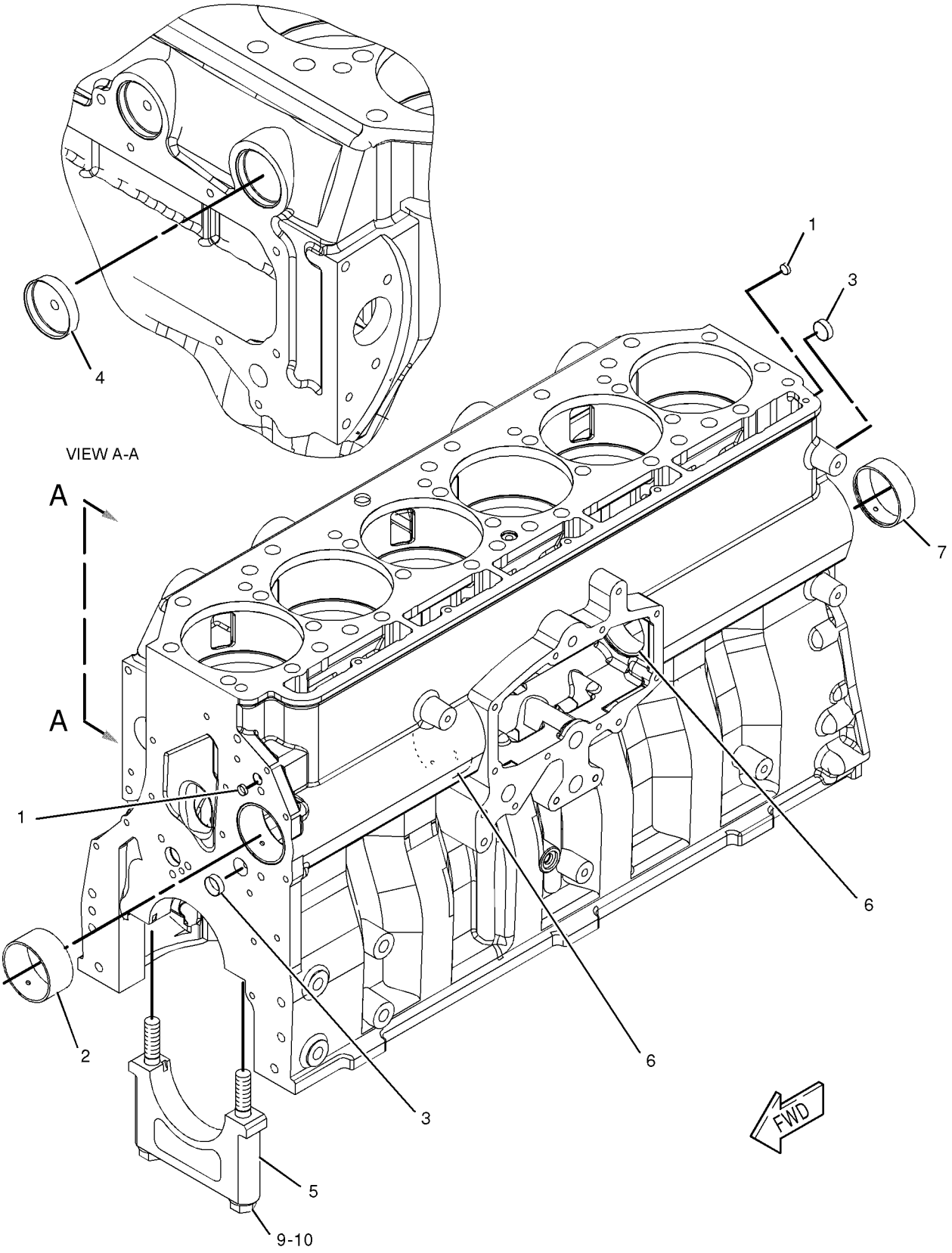

GRAPHIC #1 **<END>** g01035573

325-3915 CYLINDER BLOCK AS

S/N: THX14533-UP; THY5575-UP

PART OF 220-1952 CYLINDER BLOCK GP

SMCS-1201 **i03235785**

NOTE	REF NO	GRAPHIC REF	PART NUMBER	QTY	PART NAME 1 2 3 4 5 6 (PRODUCT LEVEL)	SEE PAGE
	1	1	**0L-1026**	2	PLUG-CUP	
	2	1	**3B-0623**	2	PLUG-CUP	
	3	1	**4F-5695**	4	PLUG-CUP	
M	4	1	**175-0454**	14	BOLT (M16X2X160-MM)	
	5	1	**203-5805**	2	BEARING-SLEEVE	
	6	1	**203-6090**	1	BEARING-SLEEVE	
	7	1	**212-7002**	7	CAP-BEARING	
	8	1	**216-5586**	1	BEARING-SLEEVE (CAMSHAFT)	
	10	1	**9X-8268**	14	WASHER (17.5X30X3.5-MM THK)	

M-METRIC PART

325-3915 CYLINDER BLOCK AS *(contd.)* **i03235785**

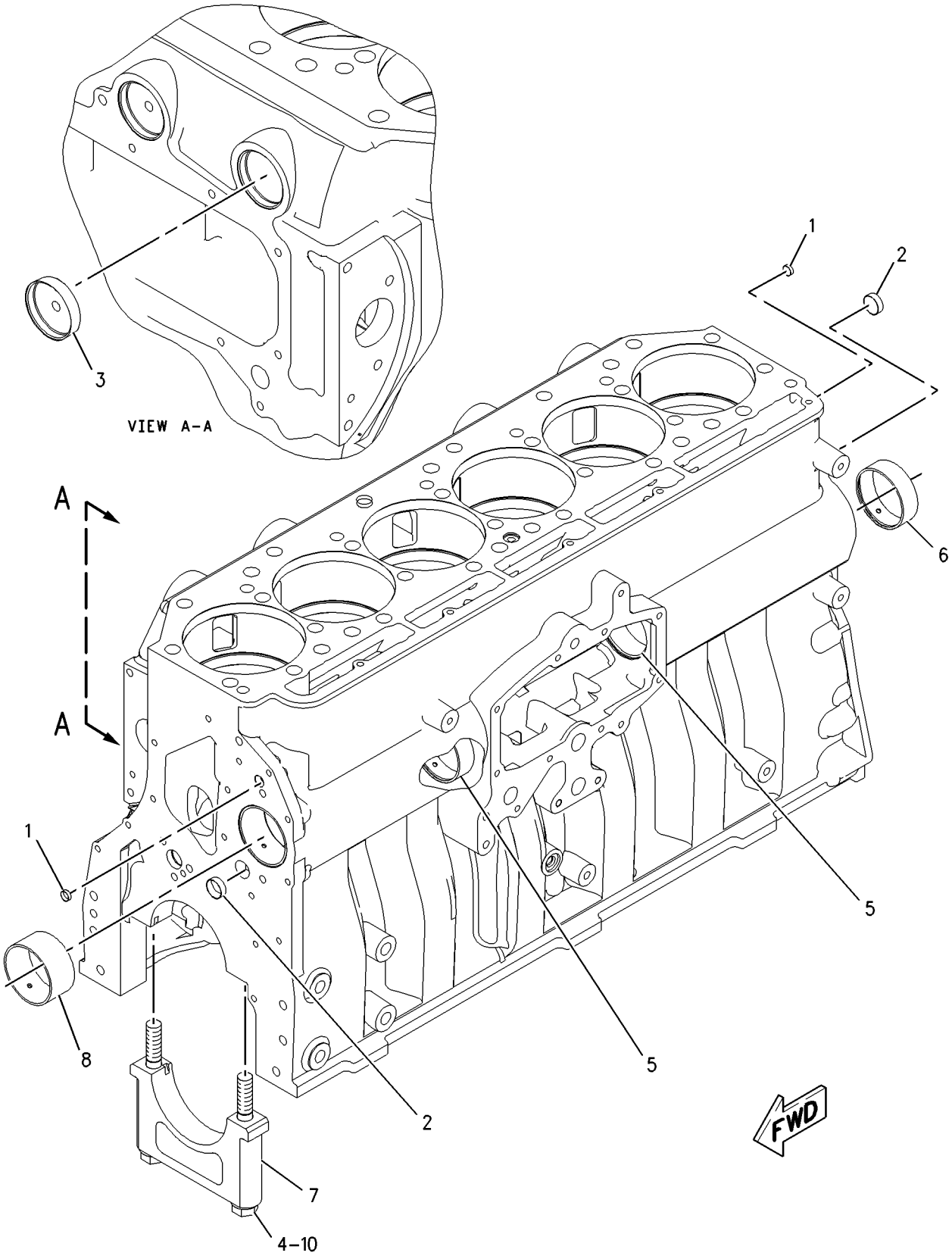

GRAPHIC #1 **<END>** g00920253

BASIC ENGINE

161-3406 CYLINDER BLOCK GP

S/N: THX14533-22637

PART OF 229-2665 ENGINE AR-CORE

SMCS-1201 **i01549674**

NOTE	REF NO	GRAPHIC REF	PART NUMBER	QTY	PART NAME 1 2 3 4 5 6 (PRODUCT LEVEL)	SEE PAGE
	1	1	**0S-0519**	1	PLUG-CUP	
	2	1	**1W-8407**	2	SLEEVE	
	3	1	**4G-4972**	1	SEAL-O-RING	
Y	4	1	*204-9539*	1	CYLINDER BLOCK GP	29
	5	1	**6V-3538**	2	DOWEL	
	6	1	**7N-5683**	2	DOWEL	

Y-SEPARATE ILLUSTRATION

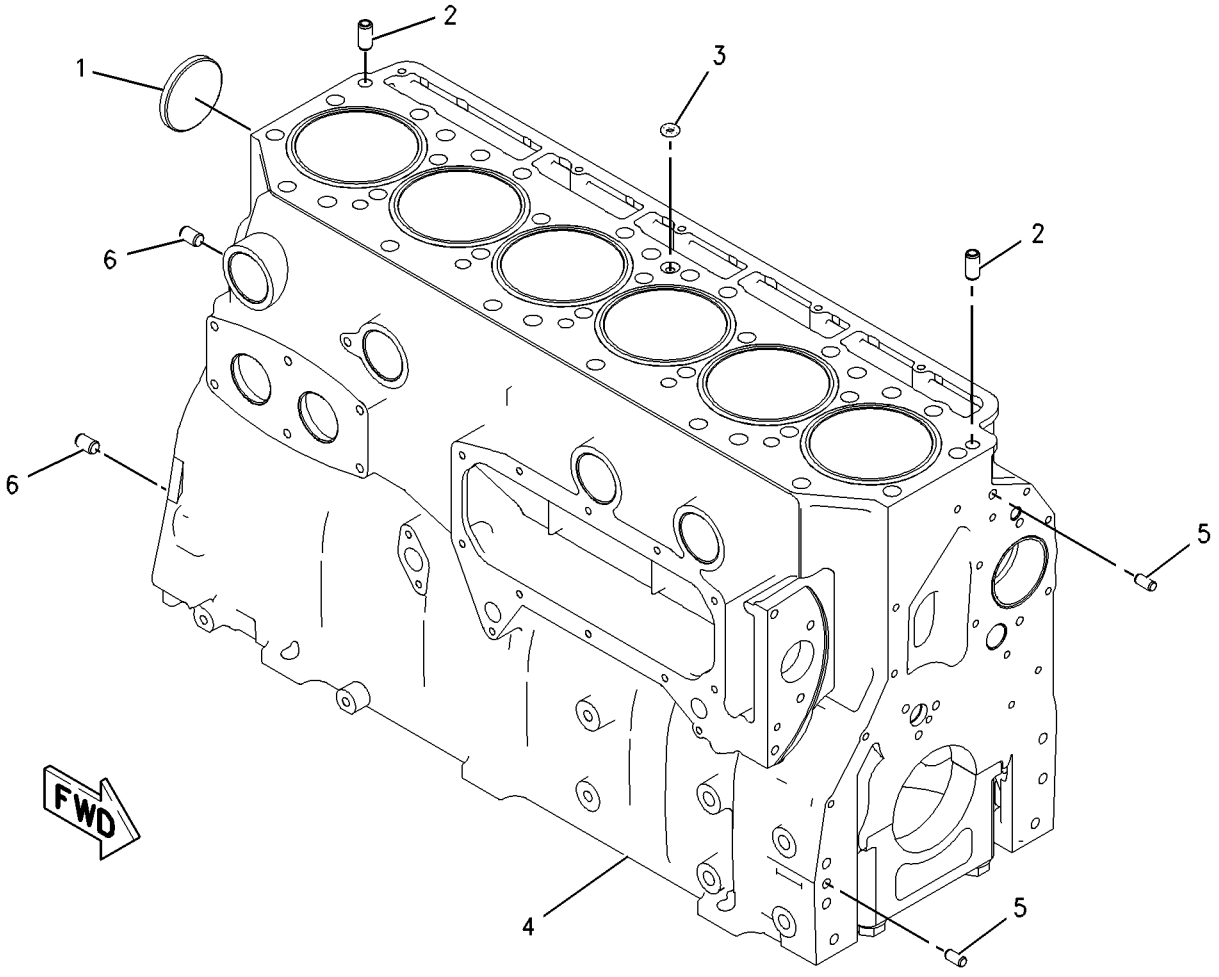

GRAPHIC #1 **<END>** g00806052

161-3406 CYLINDER BLOCK GP

S/N: THX22638-UP; THY5575-UP

PART OF 229-2665, 348-2747 ENGINE AR-CORE

SMCS-1201 **i01988027**

NOTE	REF NO	GRAPHIC REF	PART NUMBER	QTY	PART NAME 1 2 3 4 5 6 (PRODUCT LEVEL)	SEE PAGE
	1	1	**0S-0519**	1	PLUG-CUP	
	2	1	**1W-8407**	2	SLEEVE	
	3	1	**4G-4972**	1	SEAL-O-RING	
CY	4	1	*220-1952*	1	CYLINDER BLOCK GP	30
	5	1	**6V-3538**	2	DOWEL	
	6	1	**7N-5683**	2	DOWEL	

C-CHANGE FROM PREVIOUS TYPE
Y-SEPARATE ILLUSTRATION

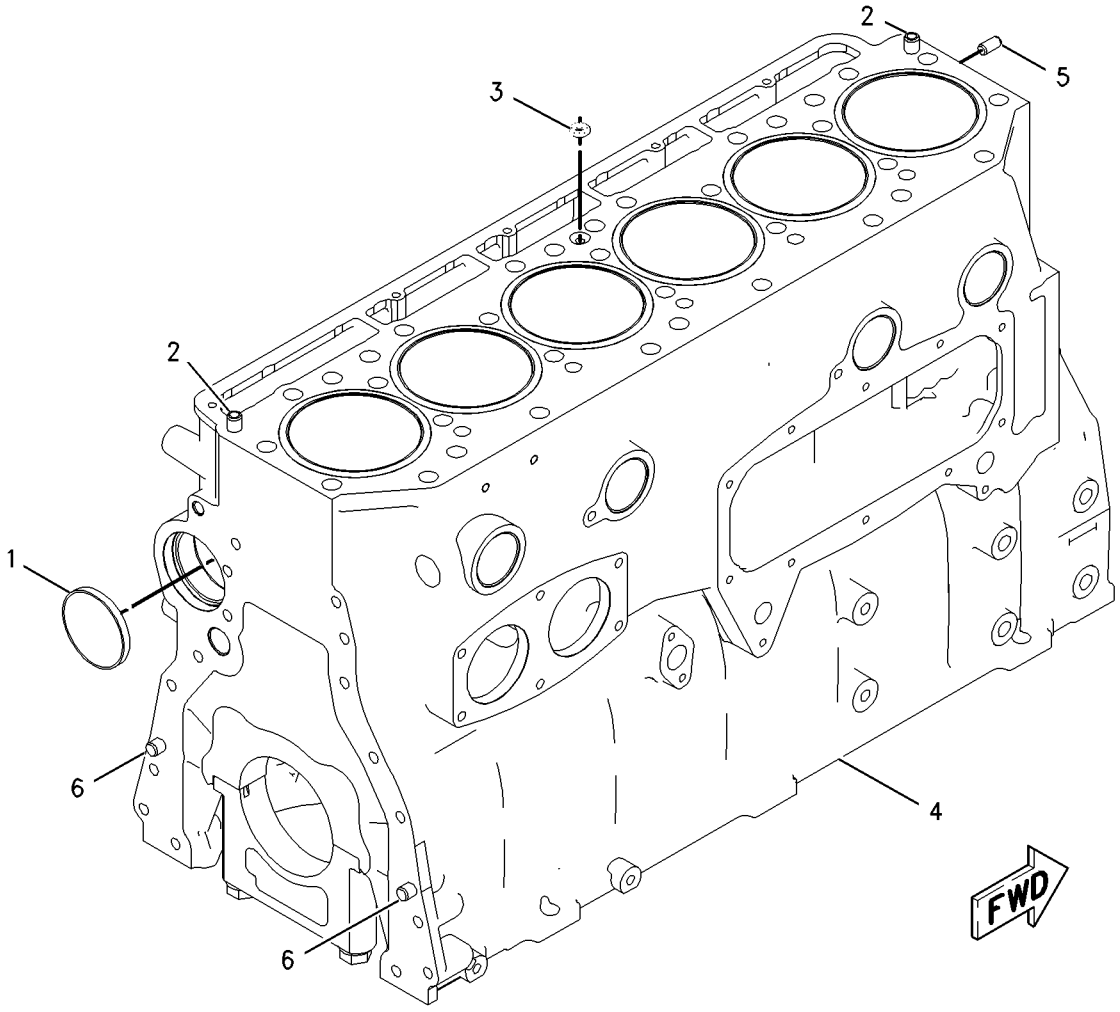

GRAPHIC #1 **<END>** g00838255

204-9539 CYLINDER BLOCK GP

S/N: THX14533-22637

PART OF 161-3406 CYLINDER BLOCK GP

SMCS-1201 **i01548045**

NOTE	REF NO	GRAPHIC REF	PART NUMBER	QTY	PART NAME 1 2 3 4 5 6 (PRODUCT LEVEL)	SEE PAGE
	1	1	**167-0024**	6	SEAL-LINER	
	2	1	**9S-8002**	1	PLUG-O-RING	
	2A	1	**033-5853**	1	SEAL-O-RING	
	3	1	**190-3562**	6	LINER-CYLINDER	
Y	4	1	**204-9538**	1	CYLINDER BLOCK AS	23

Y-SEPARATE ILLUSTRATION

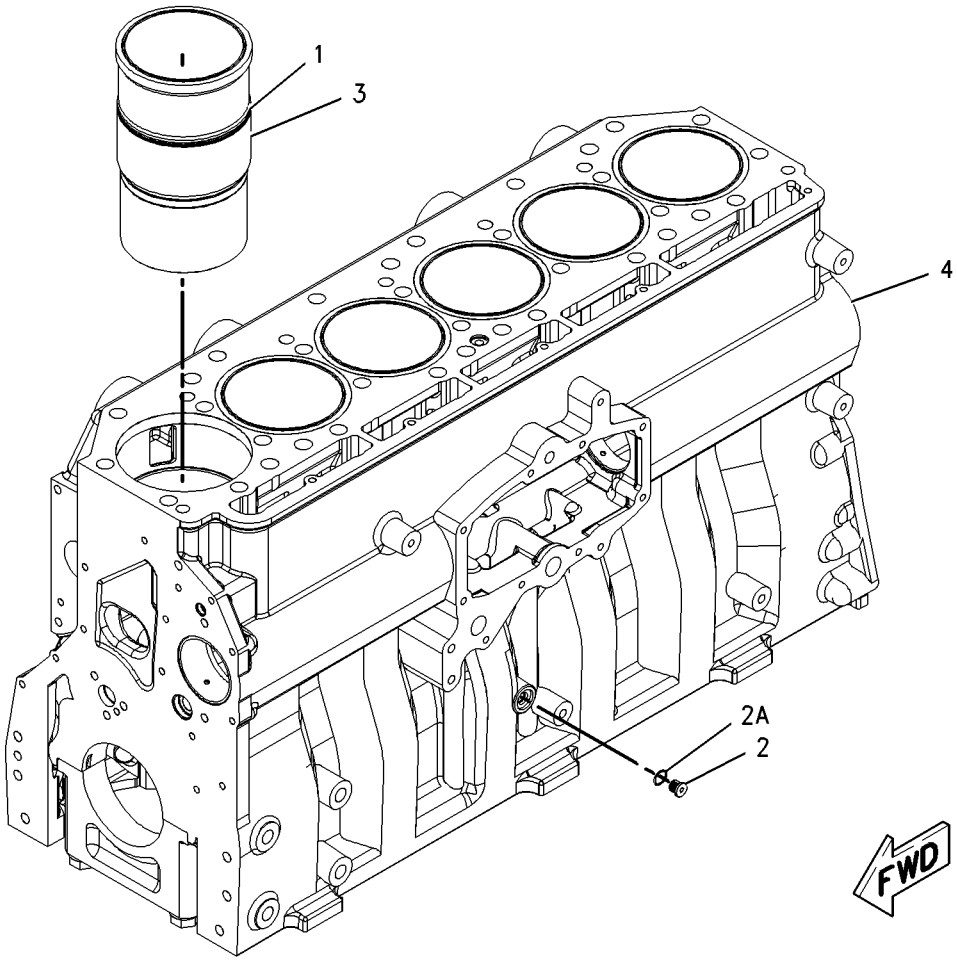

GRAPHIC #1 **<END>** g00809597

BASIC ENGINE

220-1952 CYLINDER BLOCK GP

S/N: THX14533-UP; THY5575-UP

PART OF 161-3406 CYLINDER BLOCK GP

SMCS-1201 **i03235608**

NOTE	REF NO	GRAPHIC REF	PART NUMBER	QTY	PART NAME 1 2 3 4 5 6 (PRODUCT LEVEL)	SEE PAGE
	1	1	**167-0024**	6	SEAL-LINER	
	2	1	**190-3562**	6	LINER-CYLINDER	
Y	3	1	**325-3915**	1	CYLINDER BLOCK AS	25

Y-SEPARATE ILLUSTRATION

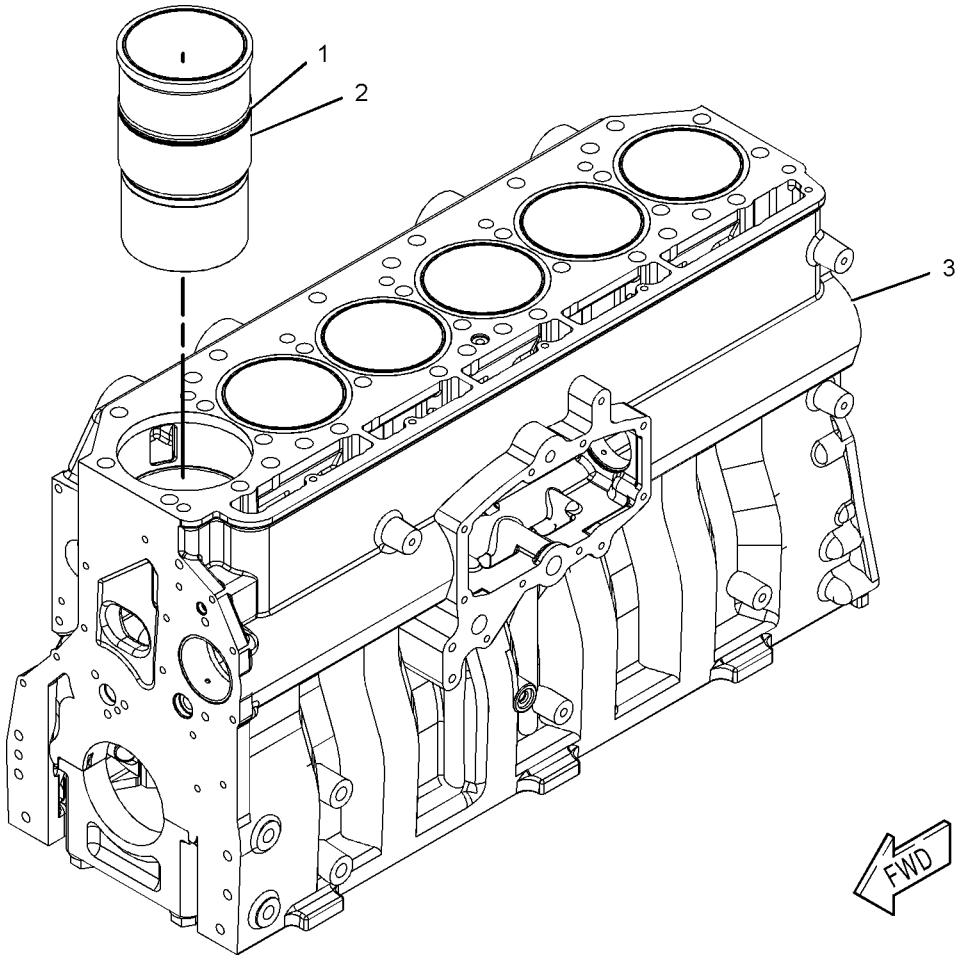

GRAPHIC #1 **<END>** g01032547

311-7229 CYLINDER HEAD AS

S/N: THX22638-UP

PART OF 344-2149 CYLINDER HEAD GP

SMCS-1100 **i03666862**

NOTE	REF NO	GRAPHIC REF	PART NUMBER	QTY	PART NAME 1 2 3 4 5 6 (PRODUCT LEVEL)	SEE PAGE
	1	1	**6V-7604**	6	PLUG-CUP	
	2	1	**8M-5860**	18	PLUG-CUP	
	3	1	**212-8917**	12	INSERT-VALVE SEAT (EXHAUST) (STANDARD)	
AB		1	**254-3947**		INSERT-VALVE SEAT (EXHAUST 0.508-MM OS OD)	
	4	1	**227-1200**	6	SLEEVE-INJECTOR	
	5	1	**241-8388**	12	INSERT-VALVE SEAT (INLET) (STANDARD)	
AB		1	**254-3946**		INSERT-VALVE SEAT (INLET 0.508-MM OS OD)	
	6	1	**310-7255**	6	SEAL-O-RING	
	7	1	**310-7257**	6	SEAL-O-RING	

A-NOT PART OF THIS GROUP
B-USE AS REQUIRED

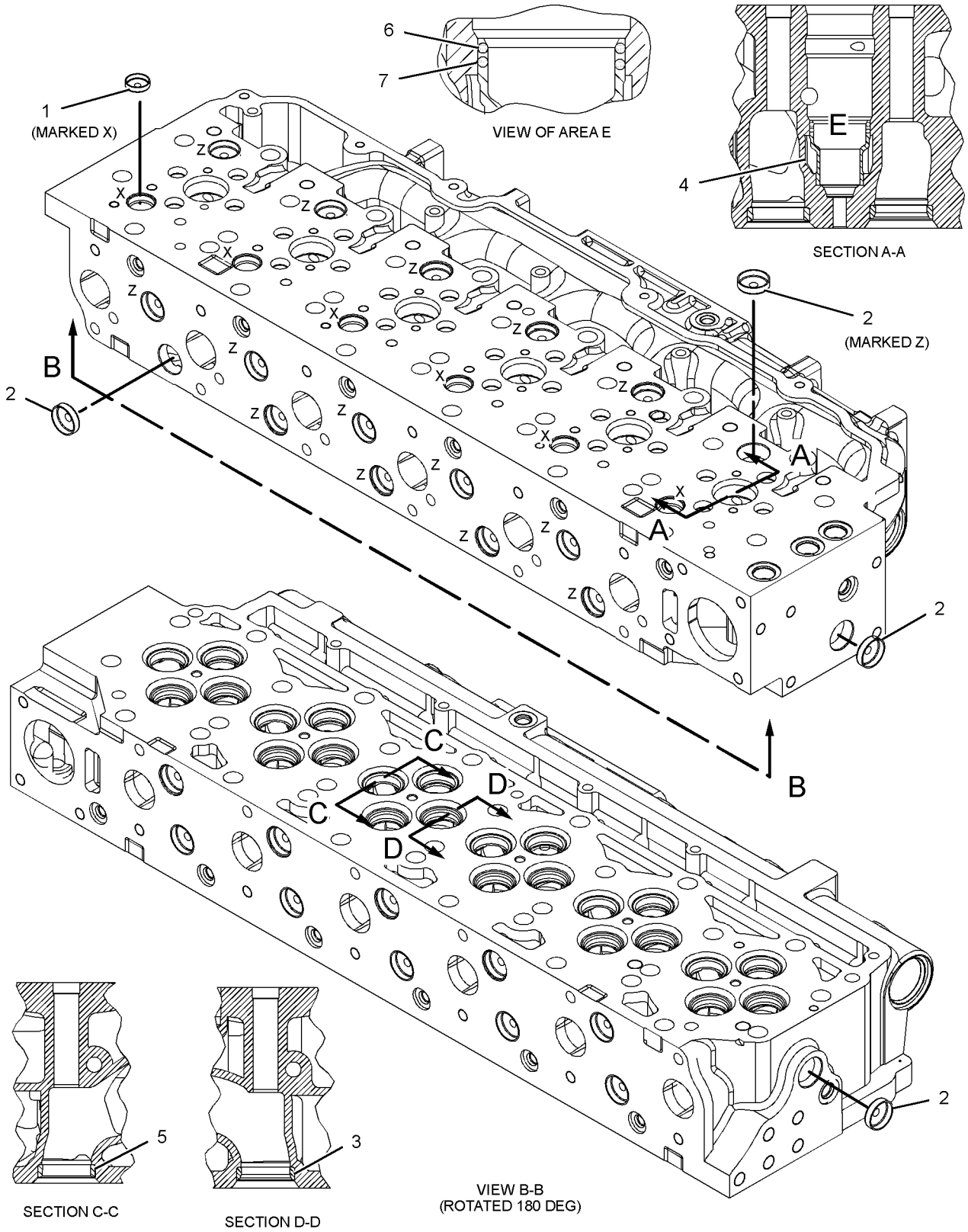

GRAPHIC #1 **<END>** g01414571

332-3619 CYLINDER HEAD AS

S/N: THX14533-UP; THY5575-UP

PART OF 252-8439 CYLINDER HEAD GP

SMCS-1100 **i03246484**

NOTE	REF NO	GRAPHIC REF	PART NUMBER	QTY	PART NAME 1 2 3 4 5 6 (PRODUCT LEVEL)	SEE PAGE
	1	1	**6V-7604**	6	PLUG-CUP	
	2	1	**8M-5860**	18	PLUG-CUP	
	3	1	**212-8917**	12	INSERT-VALVE SEAT (EXHAUST) (STANDARD)	
AB		1	**317-7210**		INSERT-VALVE SEAT (EXHAUST 0.127-MM OS OD)	
AB		1	**317-7211**		INSERT-VALVE SEAT (EXHAUST 0.254-MM OS OD)	
AB		1	**254-3947**		INSERT-VALVE SEAT (EXHAUST 0.508-MM OS OD)	
	4	1	**227-1200**	6	SLEEVE-INJECTOR	
	5	1	**241-8388**	12	INSERT-VALVE SEAT (INLET) (STANDARD)	
AB		1	**317-7212**		INSERT-VALVE SEAT (INLET 0.127-MM OS OD)	
AB		1	**317-7213**		INSERT-VALVE SEAT (INLET 0.254-MM OS OD)	
AB		1	**254-3946**		INSERT-VALVE SEAT (INLET 0.508-MM OS OD)	
	6	1	**310-7255**	6	SEAL-O-RING	
	7	1	**310-7257**	6	SEAL-O-RING	

A-NOT PART OF THIS GROUP
B-USE AS REQUIRED

332-3619 **CYLINDER HEAD AS** *(contd.)* **i03246484**

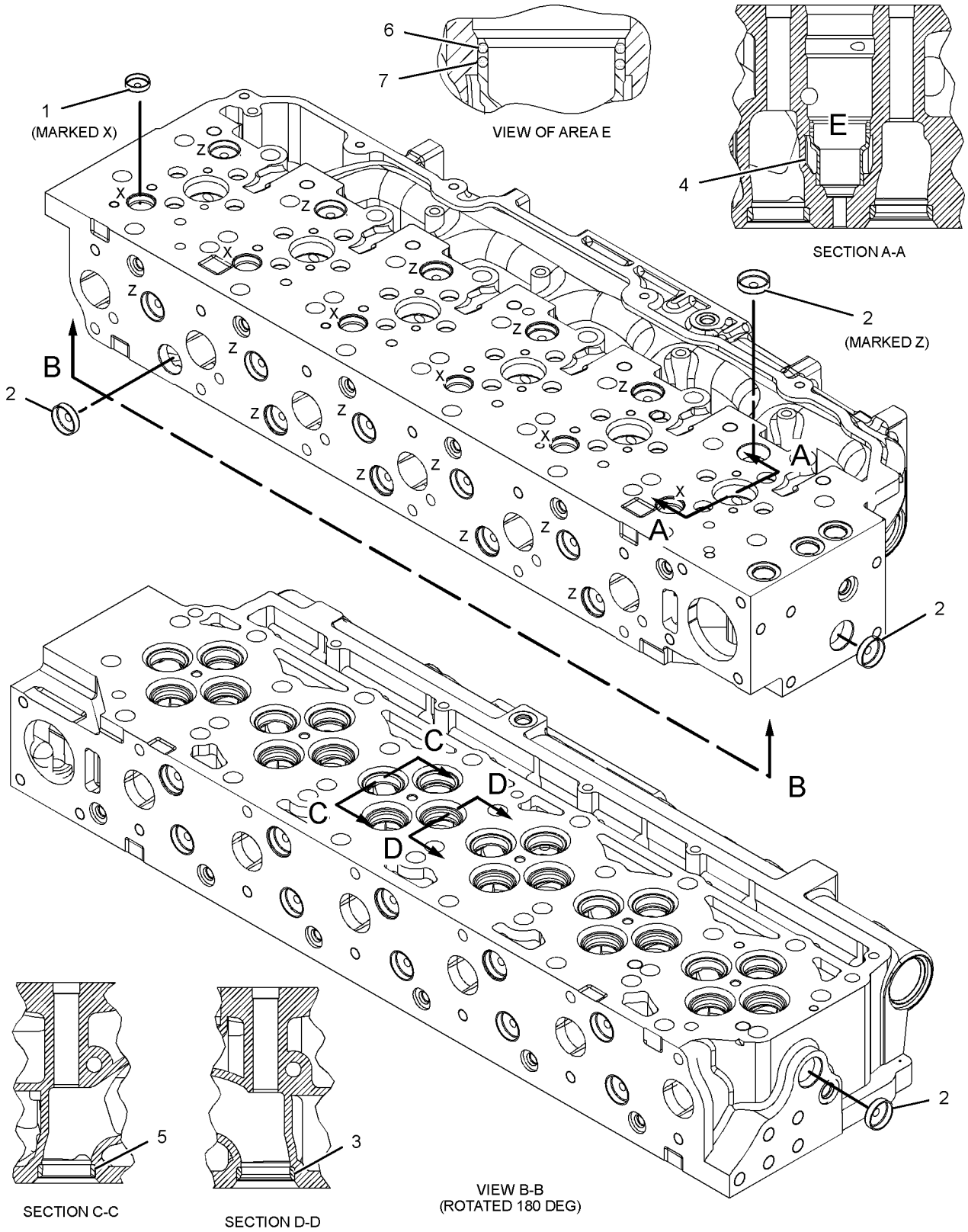

GRAPHIC #1 **<END>** g01414571

242-0672 CYLINDER HEAD GP

S/N: THX14533-22637; THY5575-UP
PART OF 229-2665 ENGINE AR-CORE
FOR USE WITH ENGINES THAT DO NOT REQUIRE SMART WASTE GATE

SMCS-1100 **i02721740**

NOTE	REF NO	GRAPHIC REF	PART NUMBER	QTY	PART NAME 1 2 3 4 5 6 (PRODUCT LEVEL)	SEE PAGE
	1	1	**2A-3746**	1	PLUG-CUP	
	2	1	**187-1315**	1	GASKET AS	
Y	3	1	**252-8439**	1	CYLINDER HEAD GP	36

Y-SEPARATE ILLUSTRATION

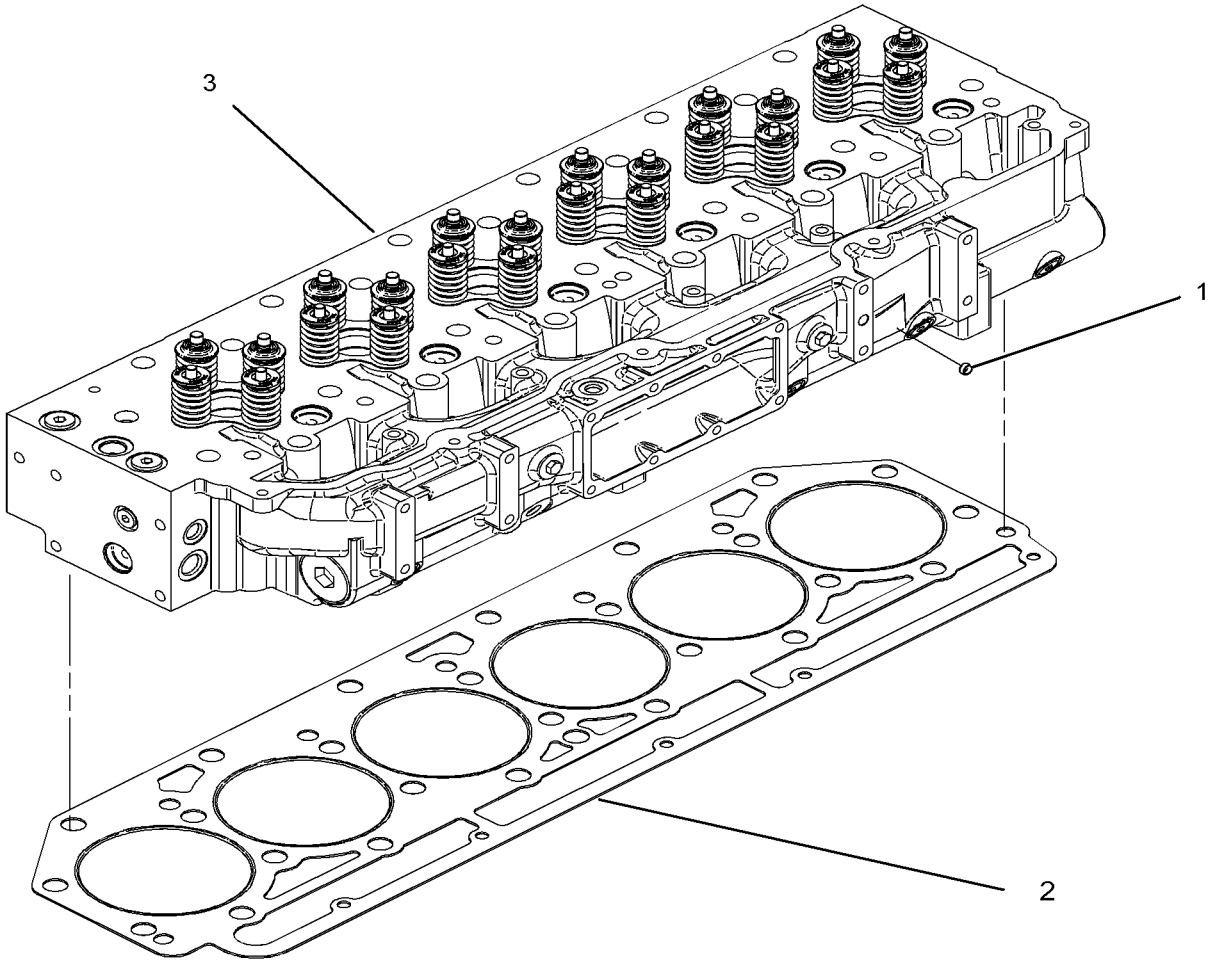

GRAPHIC #1 **<END>** g01305570

252-8439 CYLINDER HEAD GP*R

S/N: THX14533-22637; THY5575-UP
PART OF 242-0672 CYLINDER HEAD GP

SMCS-1100 **i03697787**

NOTE	REF NO	GRAPHIC REF	PART NUMBER	QTY	PART NAME 1 2 3 4 5 6 (PRODUCT LEVEL)	SEE PAGE
	1	1	**1W-2715**	24	LOCK-RETAINER	
	2	1	**2A-4429**	24	LOCK-RETAINER	
	3	1	**260-4856**	12	GUIDE-VALVE (STANDARD, EXHAUST)	
AB		1	**203-3237**	12	GUIDE-VALVE (0.13-MM OS OD)	
AB		1	**203-3238**	12	GUIDE-VALVE (0.5-MM OS OD)	
	4	1	**163-2478**	12	SEAL-VALVE STEM	
	5	1	*321-8638*	6	PLUG AS (MARKED Y)	
					(EACH INCLUDES)	
		1	**214-7568**	1	SEAL-O-RING	
	6	1	*319-6237*	2	PLUG AS (HEX HEAD)	
					(EACH INCLUDES)	
		1	**271-7442**	1	PLUG	
	6A	1	**228-7096**	1	SEAL-O-RING	
	8	1	**190-6115**	12	SPRING-VALVE (INNER)	
	9	1	**190-6117**	12	SPRING-VALVE (OUTER)	
	10	1	**211-2134**	12	RETAINER (VALVE SPRING)	
	11	1	**217-0609**	6	SEAT-VALVE SPRING	
	12	1	**241-8382**	12	VALVE-INLET	
	13	1	**241-8383**	12	VALVE-EXHAUST	
	14	1	**241-8384**	12	RETAINER (VALVE SPRING)	
	15	1	**241-8385**	12	SPRING-VALVE (OUTER)	
	16	1	**241-8386**	12	SPRING-VALVE (INNER)	
	17	1	**241-8387**	6	SEAT	
	18	1	**259-5829**	12	GUIDE-VALVE (STANDARD, INTAKE)	
AB		1	**254-3941**		GUIDE-VALVE (0.13-MM OS OD)	
AB		1	**254-3942**		GUIDE-VALVE (0.5-MM OS OD)	
	19	1	**241-8390**	12	SEAL-VALVE STEM	
CY	20	1	*332-3619*	1	CYLINDER HEAD AS	33
	21	1	*148-8395*	2	PLUG AS	
					(EACH INCLUDES)	
		1	**3K-0360**	1	SEAL-O-RING	
		1	**9S-8005**	1	PLUG-O-RING (HEX HEAD)	
	22	1	**9F-2247**	2	PLUG-PIPE	

A-NOT PART OF THIS GROUP
B-USE AS REQUIRED
C-CHANGE FROM PREVIOUS TYPE
Y-SEPARATE ILLUSTRATION

252-8439 CYLINDER HEAD GP *(contd.)*

i03697787

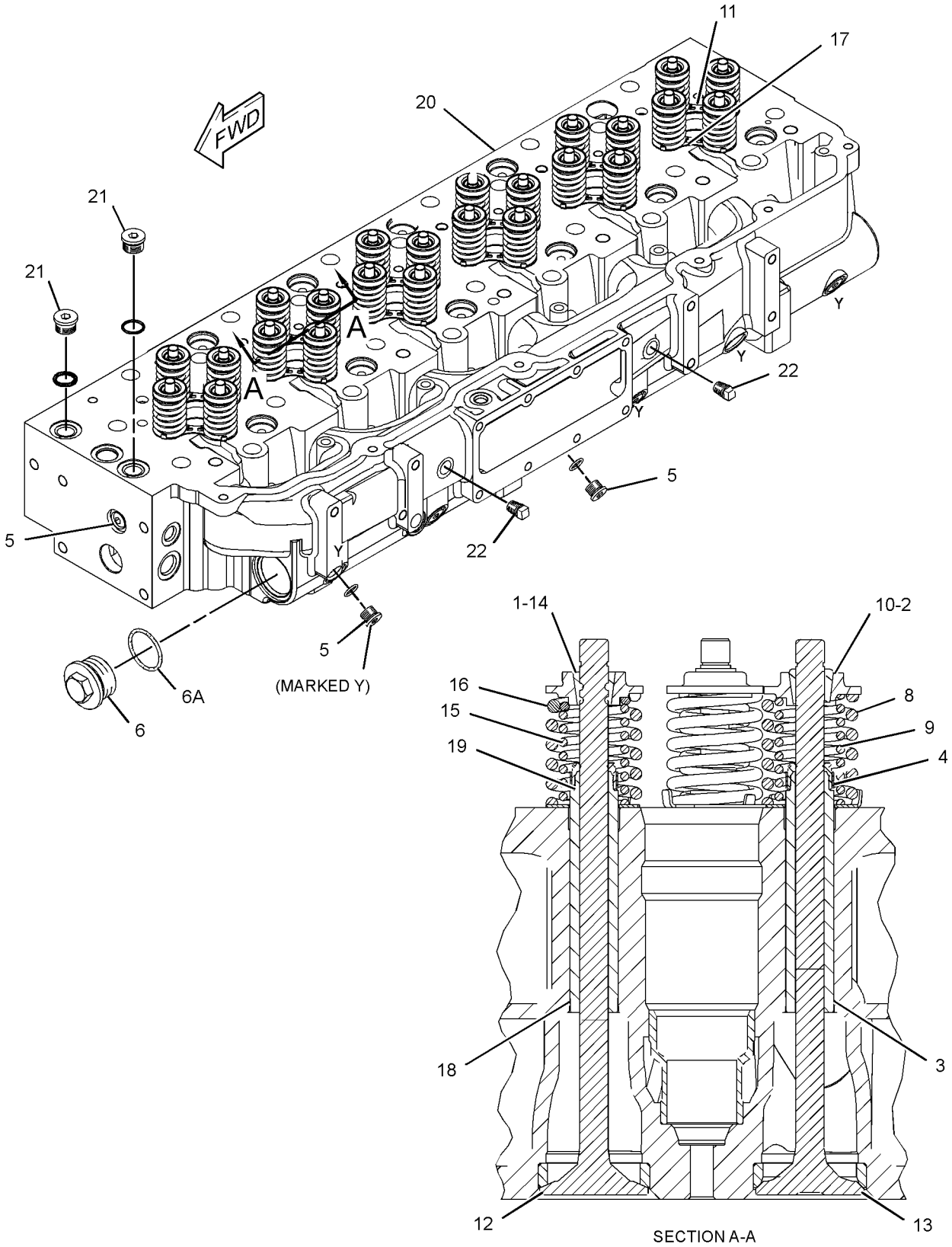

GRAPHIC #1

<END>

g01988815

BASIC ENGINE

344-2149 CYLINDER HEAD GP

S/N: THX22638-UP

PART OF 345-8414 CYLINDER HEAD GP

SMCS-1100 **i03671309**

NOTE	REF NO	GRAPHIC REF	PART NUMBER	QTY	PART NAME 1 2 3 4 5 6 (PRODUCT LEVEL)	SEE PAGE
	1	1	**1W-2715**	24	LOCK-RETAINER (INLET)	
	2	1	**2A-4429**	24	LOCK-RETAINER (EXHAUST)	
	3	1	**163-2478**	12	SEAL-VALVE STEM (EXHAUST)	
	4	1	**190-6115**	12	SPRING-VALVE (INNER)	
	5	1	**190-6117**	12	SPRING-VALVE (OUTER)	
	6	1	**211-2134**	12	RETAINER (VALVE SPRING)	
	7	1	**217-0609**	6	SEAT-VALVE SPRING	
	8	1	**241-8383**	12	VALVE-EXHAUST	
	9	1	**241-8384**	12	RETAINER (VALVE SPRING)	
	10	1	**241-8385**	12	SPRING-VALVE (OUTER)	
	11	1	**241-8386**	12	SPRING-VALVE (INNER)	
	12	1	**241-8387**	6	SEAT	
	13	1	**241-8390**	12	SEAL-VALVE STEM	
	14	1	**252-7803**	12	VALVE-INLET	
	15	1	**259-5829**	12	GUIDE-VALVE (STANDARD, INTAKE)	
	16	1	**260-4856**	12	GUIDE-VALVE (STANDARD, EXHAUST)	
Y	17	1	*311-7229*	1	CYLINDER HEAD AS	31
	18	1	*319-6237*	2	PLUG AS	
					(EACH INCLUDES)	
		1	**228-7096**	1	SEAL-O-RING	
		1	**271-7442**	1	PLUG	
	19	1	*321-8638*	6	PLUG AS	
					(EACH INCLUDES)	
		1	**214-7568**	1	SEAL-O-RING	
		1	**321-8635**	1	PLUG	
	20	1	*307-2673*	2	PLUG AS	
					(EACH INCLUDES)	
		1	**9S-8005**	1	PLUG-O-RING	
		1	**238-5080**	1	SEAL-O-RING	
	21	1	**8T-6764**	2	PLUG-PIPE (CYLINDER HEAD)	

Y-SEPARATE ILLUSTRATION

344-2149 CYLINDER HEAD GP *(contd.)* **i03671309**

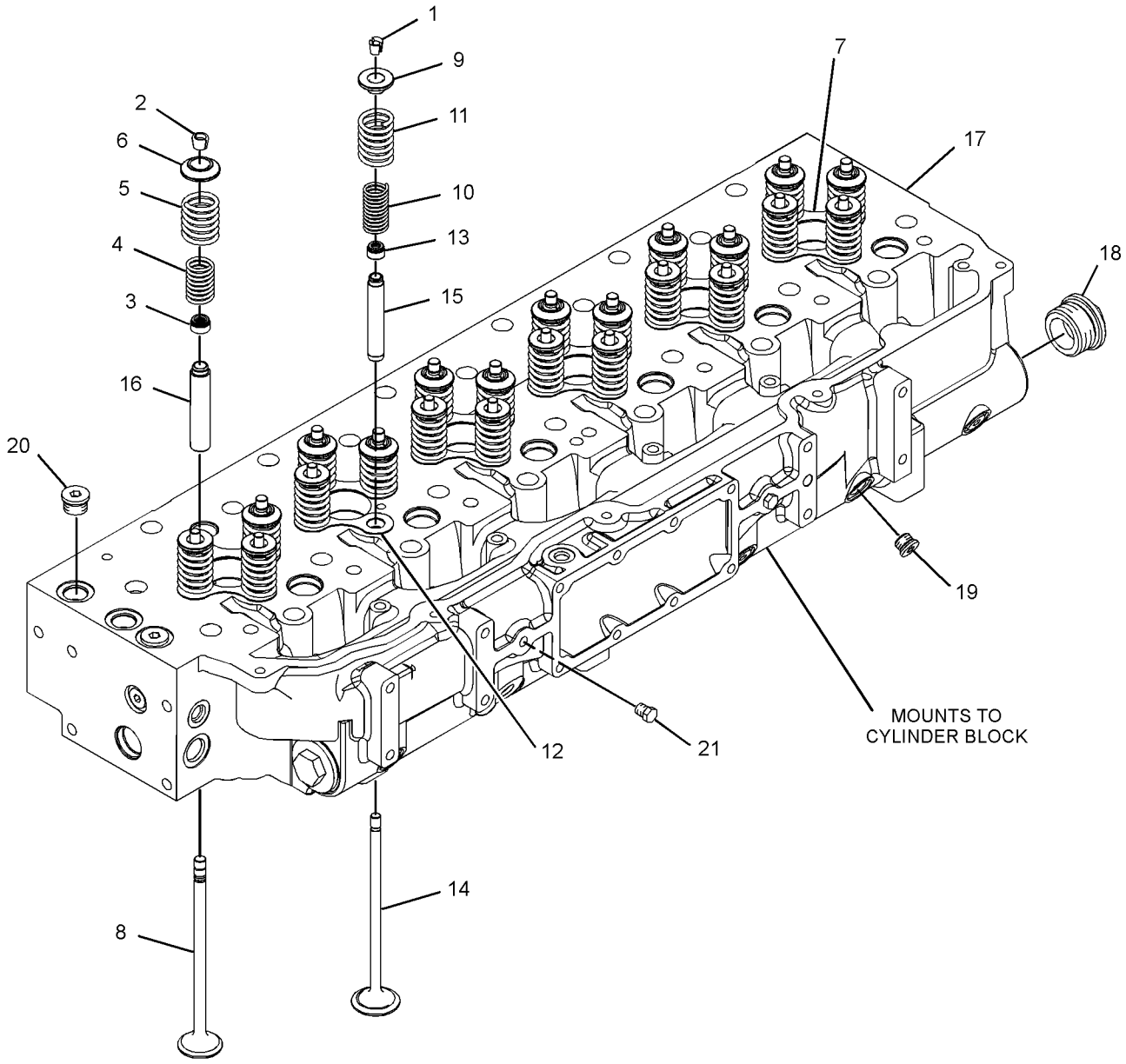

GRAPHIC #1 **<END>** g01979881

BASIC ENGINE

345-8414 CYLINDER HEAD GP

S/N: THX22638-UP

PART OF 348-2747 ENGINE AR-CORE

SMCS-1100 **i03670929**

NOTE	REF NO	GRAPHIC REF	PART NUMBER	QTY	PART NAME 1 2 3 4 5 6 (PRODUCT LEVEL)	SEE PAGE
	1	1	**2A-3746**	1	PLUG-CUP	
	2	1	**187-1315**	1	GASKET AS	
Y	3	1	**344-2149**	1	CYLINDER HEAD GP	38

Y-SEPARATE ILLUSTRATION

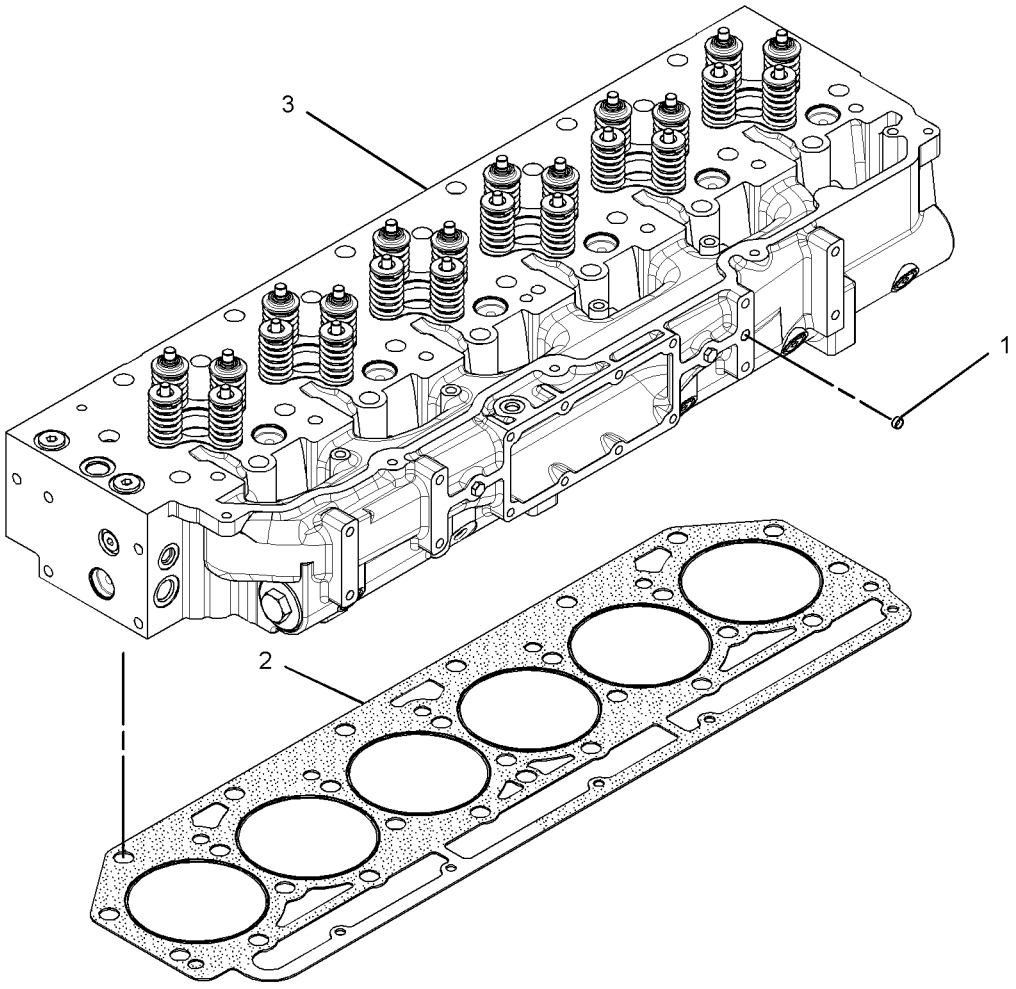

GRAPHIC #1 **<END>** g01979813

165-4557 DAMPER & PULLEY GP

S/N: THX14533-UP; THY5575-UP
PROVIDES VISCOUS DAMPER W/8 GROOVE POLY-RIB PULLEY
PART OF 224-9843 ENGINE AR

SMCS-1205 **i01615703**

NOTE	REF NO	GRAPHIC REF	PART NUMBER	QTY	PART NAME 1 2 3 4 5 6 (PRODUCT LEVEL)	SEE PAGE
	1	1	**2W-7381**	1	PLATE-CLAMP	
	2	1	**167-8121**	1	DAMPER AS	
	3	1	**153-1036**	1	PULLEY-CRANKSHAFT	
M	4	1	**8T-3666**	4	BOLT (M14X2X60-MM)	

M-METRIC PART

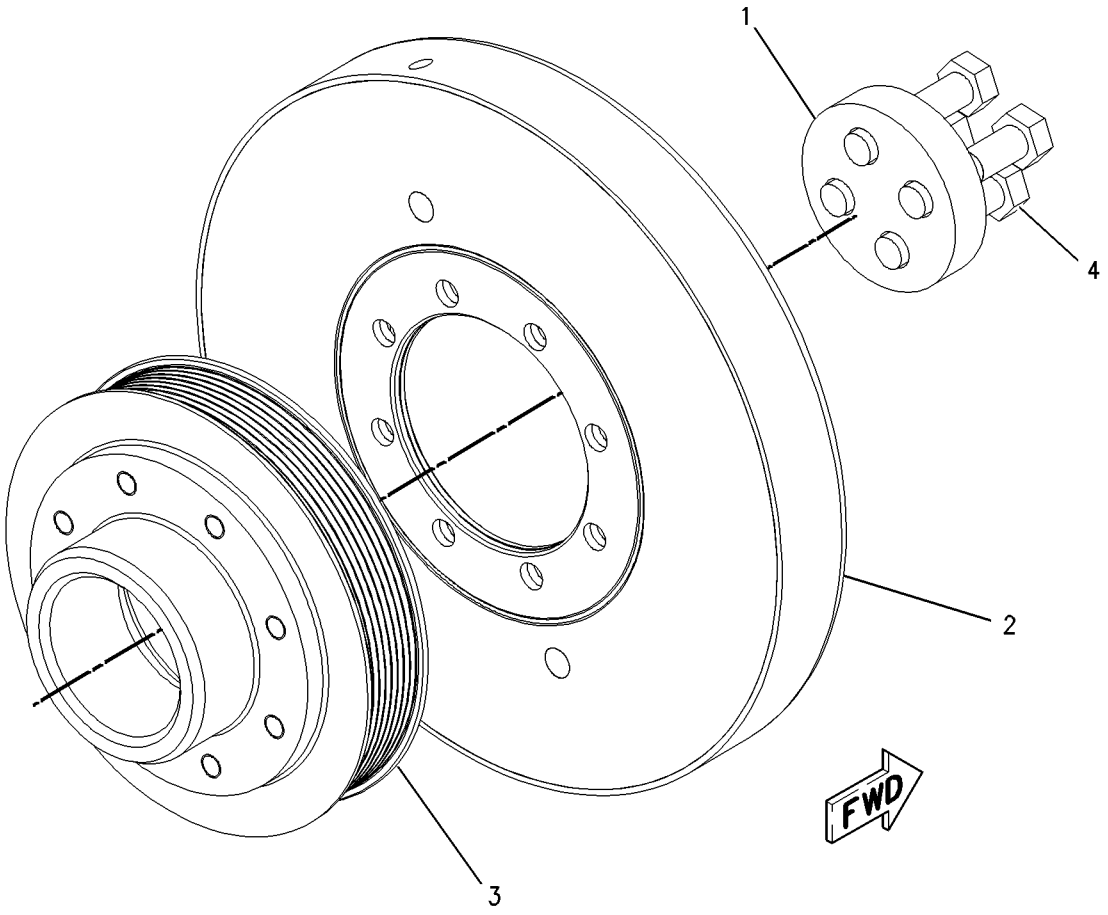

GRAPHIC #1 **<END>** g00836511

BASIC ENGINE

241-7605 DRIVE GP-ACCESSORY

S/N: THX14533-UP; THY5575-UP
PART OF 224-9843 ENGINE AR

SMCS-1207 **i02404830**

NOTE	REF NO	GRAPHIC REF	PART NUMBER	QTY	PART NAME 1 2 3 4 5 6 (PRODUCT LEVEL)	SEE PAGE
	1	1	**189-2449**	1	SUPPORT	
	2	1	**190-0643**	1	BELT TENSIONER GP	
	3	1	**197-9642**	1	PULLEY AS-IDLER (8-GROOVE)	
	4	1	**241-7604**	1	BRACKET	
	5	1	**183-4494**	1	BELT-SERPENTINE	
	6	1	**6E-5102**	1	PLATE	
M	7	1	**6V-5218**	4	BOLT (M8X1.25X35-MM)	
	8	1	**6V-5839**	7	WASHER (11X21X2.5-MM THK)	
M	9	1	**6V-5842**	6	BOLT (M10X1.5X40-MM)	
M	10	1	**8T-0643**	1	BOLT (M10X1.5X80-MM)	
	11	1	**9M-1974**	4	WASHER-HARD (8.8X16X2-MM THK)	

M-METRIC PART

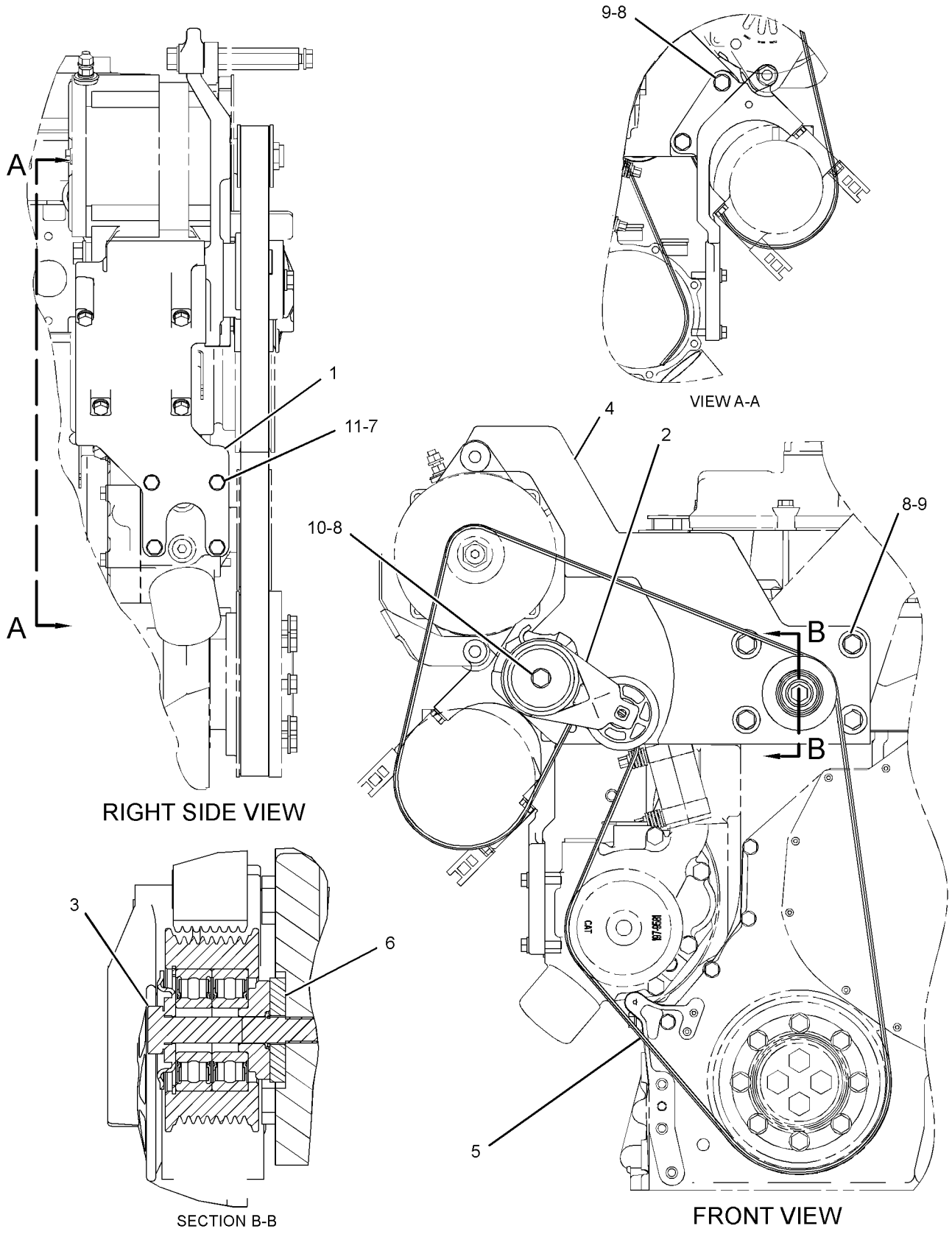

GRAPHIC #1 **<END>** g01186148

BASIC ENGINE

295-9439 DRIVE GP-FAN

S/N: MYG1-UP; PPN1-UP
PART OF 230-2899 FAN GP-SUCTION

SMCS-1359 **i03325241**

NOTE	REF NO	GRAPHIC REF	PART NUMBER	QTY	PART NAME 1 2 3 4 5 6 (PRODUCT LEVEL)	SEE PAGE
	1	1	**137-3746**	1	SHAFT	
	2	1	**129-7925**	1	SEAL-LIP TYPE	
	3	1	**200-3311**	1	HOUSING	
	4	1	**4B-3665**	2	BALL BEARING	
	5	1	**137-3749**	2	SPACER (45X53X10-MM THK)	
	6	1	**6V-5590**	1	RING-RETAINING	
	7	1	**095-7424**	1	RING-RETAINING	

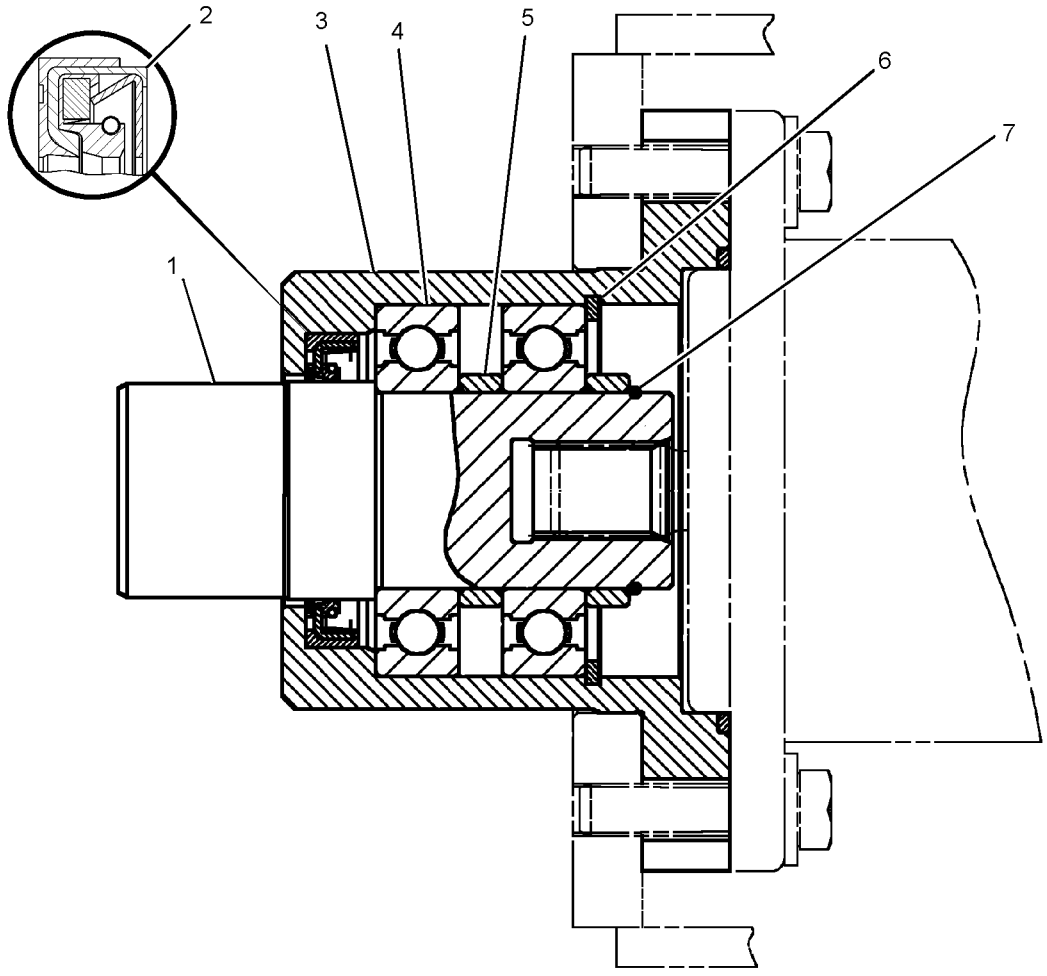

GRAPHIC #1 **<END>** g01538953

213-4363 FASTENER GP-CYLINDER HEAD

S/N: THX14533-UP; THY5575-UP

PART OF 229-2665, 348-2747 ENGINE AR-CORE

SMCS-1100 **i02747988**

NOTE	REF NO	GRAPHIC REF	PART NUMBER	QTY	PART NAME 1 2 3 4 5 6 (PRODUCT LEVEL)	SEE PAGE
C	1	1	*290-6884*	26	FASTENER GP-CYLINDER HEAD	
		1	**9X-8268**	26	WASHER (17.5X30X3.5-MM THK)	
M		1	**263-2915**	26	BOLT-12 POINT HEAD (M16X2X180-MM)	
M	2	1	**8C-4984**	5	BOLT (M8X1.25X150-MM)	
	3	1	**9M-1974**	5	WASHER-HARD (8.8X16X2-MM THK)	

C-CHANGE FROM PREVIOUS TYPE
M-METRIC PART

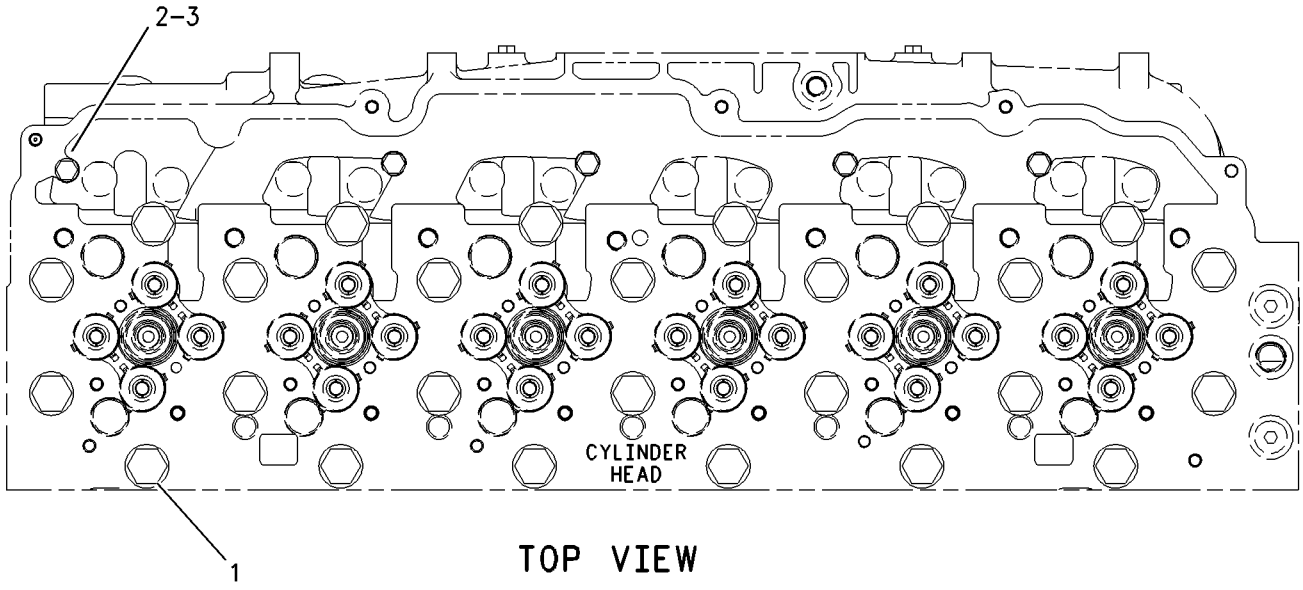

TOP VIEW

GRAPHIC #1 **<END>** g00919169

BASIC ENGINE

218-0859 FASTENER GP-DAMPER

S/N: THX14533-UP; THY5575-UP
PART OF 224-9843 ENGINE AR

SMCS-1205, 7553 **i02178303**

NOTE	REF NO	GRAPHIC REF	PART NUMBER	QTY	PART NAME 1 2 3 4 5 6 (PRODUCT LEVEL)	SEE PAGE
	1	1	**228-3621**	1	SPACER	
M	2	1	**6V-4249**	8	BOLT (M10X1.5X50-MM)	

M-METRIC PART

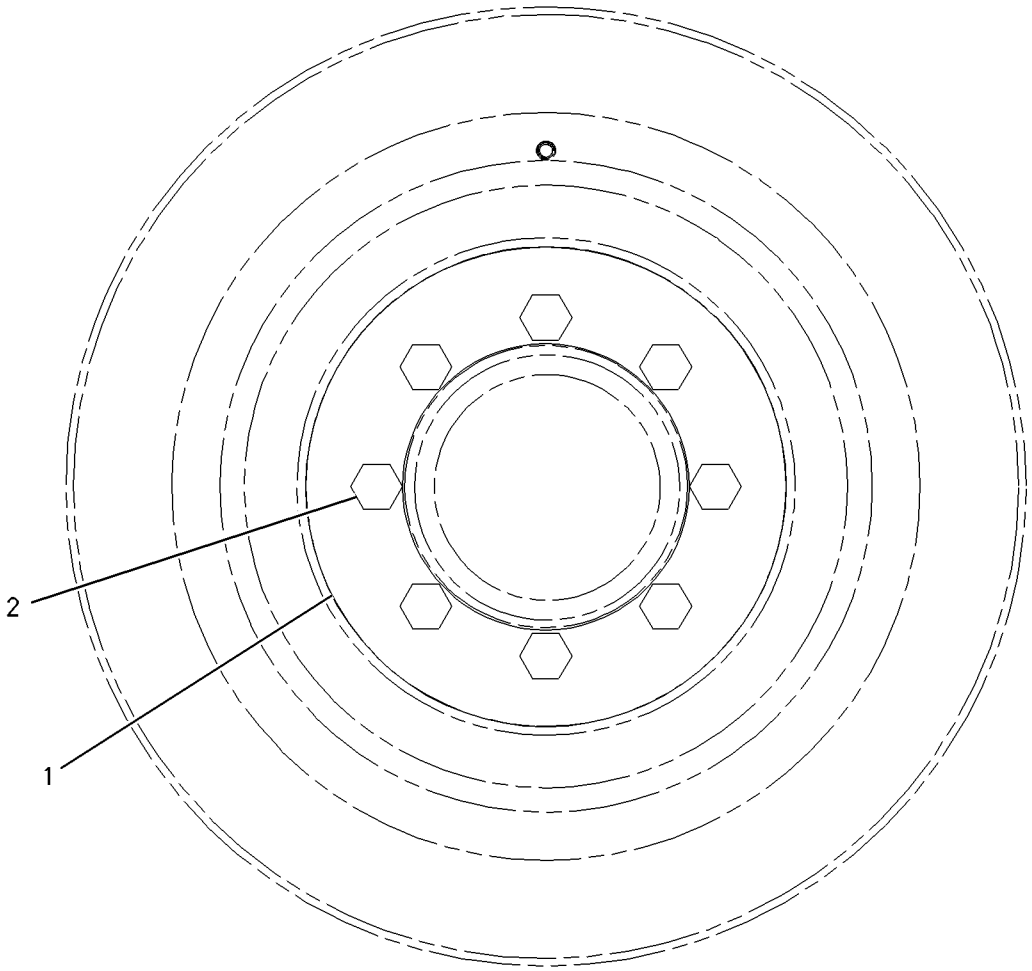

GRAPHIC #1 **<END>** g00919524

116-4556 FASTENER GP-FRONT HOUSING

S/N: THX14533-UP; THY5575-UP
PART OF 224-9843 ENGINE AR
CANNOT BE USED WITH FRONT ENGINE SUPPORT

SMCS-1162 **i00670220**

NOTE	REF NO	GRAPHIC REF	PART NUMBER	QTY	PART NAME 1 2 3 4 5 6 (PRODUCT LEVEL)	SEE PAGE
M	1	1	**6V-8336**	6	BOLT (M12X1.75X70-MM)	
		1	**5P-8245**	6	WASHER-HARD (13.5X25.5X3-MM THK)	

M-METRIC PART

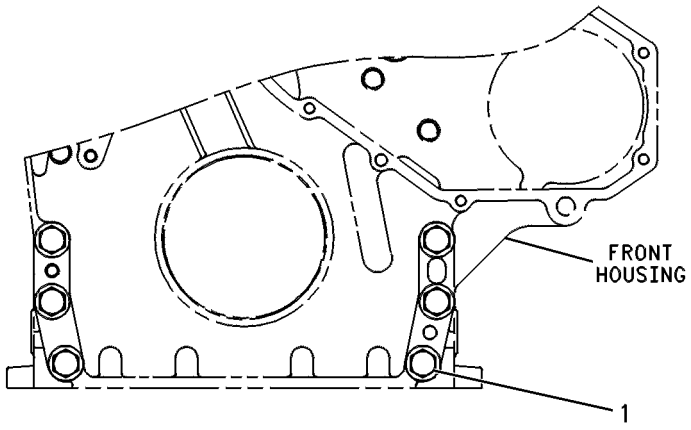

FRONT VIEW

GRAPHIC #1 **<END>** g00244671

BASIC ENGINE

236-7315 FASTENER GP-VALVE COVER

S/N: THX14533-UP; THY5575-UP
PART OF 224-9843 ENGINE AR

SMCS-1107 **i02407771**

NOTE	REF NO	GRAPHIC REF	PART NUMBER	QTY	PART NAME 1 2 3 4 5 6 (PRODUCT LEVEL)	SEE PAGE
M	1	1	**099-3649**	11	BOLT (M8X1.25X40-MM)	
	2	1	**8T-4224**	11	WASHER-HARD (8.8X16X2-MM THK)	

M-METRIC PART

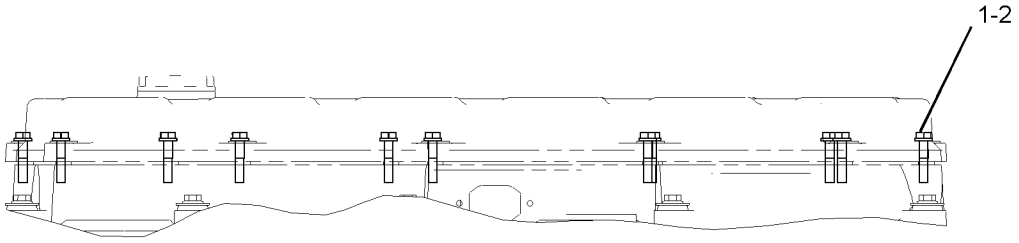

GRAPHIC #1 **<END>** g01013698

233-0423 FASTENER GP-VALVE COVER BASE

S/N: THX14533-UP; THY5575-UP
PART OF 224-9843 ENGINE AR

SMCS-1120 **i02406493**

NOTE	REF NO	GRAPHIC REF	PART NUMBER	QTY	PART NAME 1 2 3 4 5 6 (PRODUCT LEVEL)	SEE PAGE
C	1	1	**244-4500**	9	SPRING	
CM	2	1	**8T-0100**	9	BOLT (M8X1.25X60-MM)	
C	3	1	**9N-0869**	9	WASHER-HARD (8.8X25.5X2-MM THK)	

C-CHANGE FROM PREVIOUS TYPE
M-METRIC PART

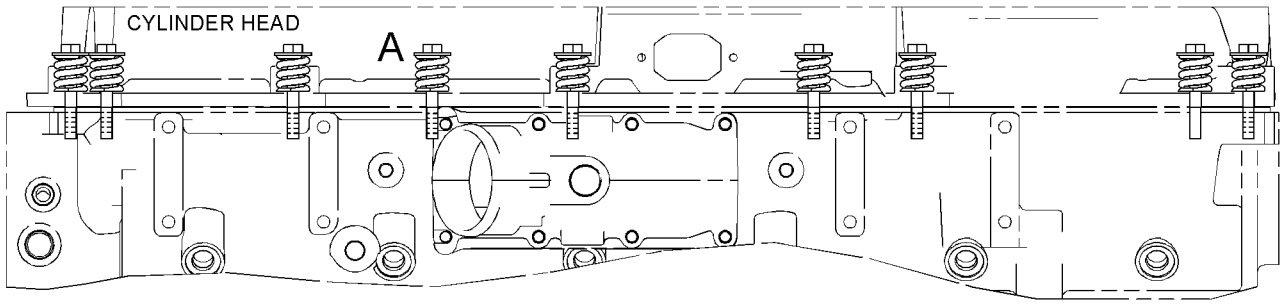

LEFT SIDE VIEW

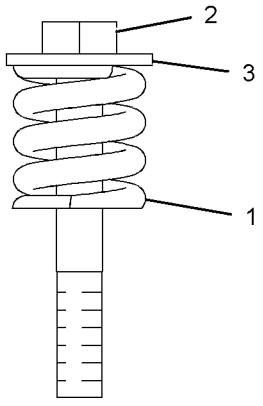

VIEW OF AREA A

GRAPHIC #1 **<END>** g01207018

BASIC ENGINE

102-3596 FLYWHEEL GP

S/N: THX14533-UP; THY5575-UP
PART OF 224-9843 ENGINE AR

SMCS-1156 **i02404829**

NOTE	REF NO	GRAPHIC REF	PART NUMBER	QTY	PART NAME 1 2 3 4 5 6 (PRODUCT LEVEL)	SEE PAGE
R	1	1	**163-0424**	1	FLYWHEEL AS	
	1A	1	**4N-2514**	1	GEAR (113-TEETH)	
M	2	1	**9X-2021**	8	BOLT-LOCKING (M16X2X45-MM)	
	3	1	**5P-8247**	8	WASHER-HARD (17X32X3.5-MM THK)	

M-METRIC PART
R-REMFG PART MAY BE AVAILABLE

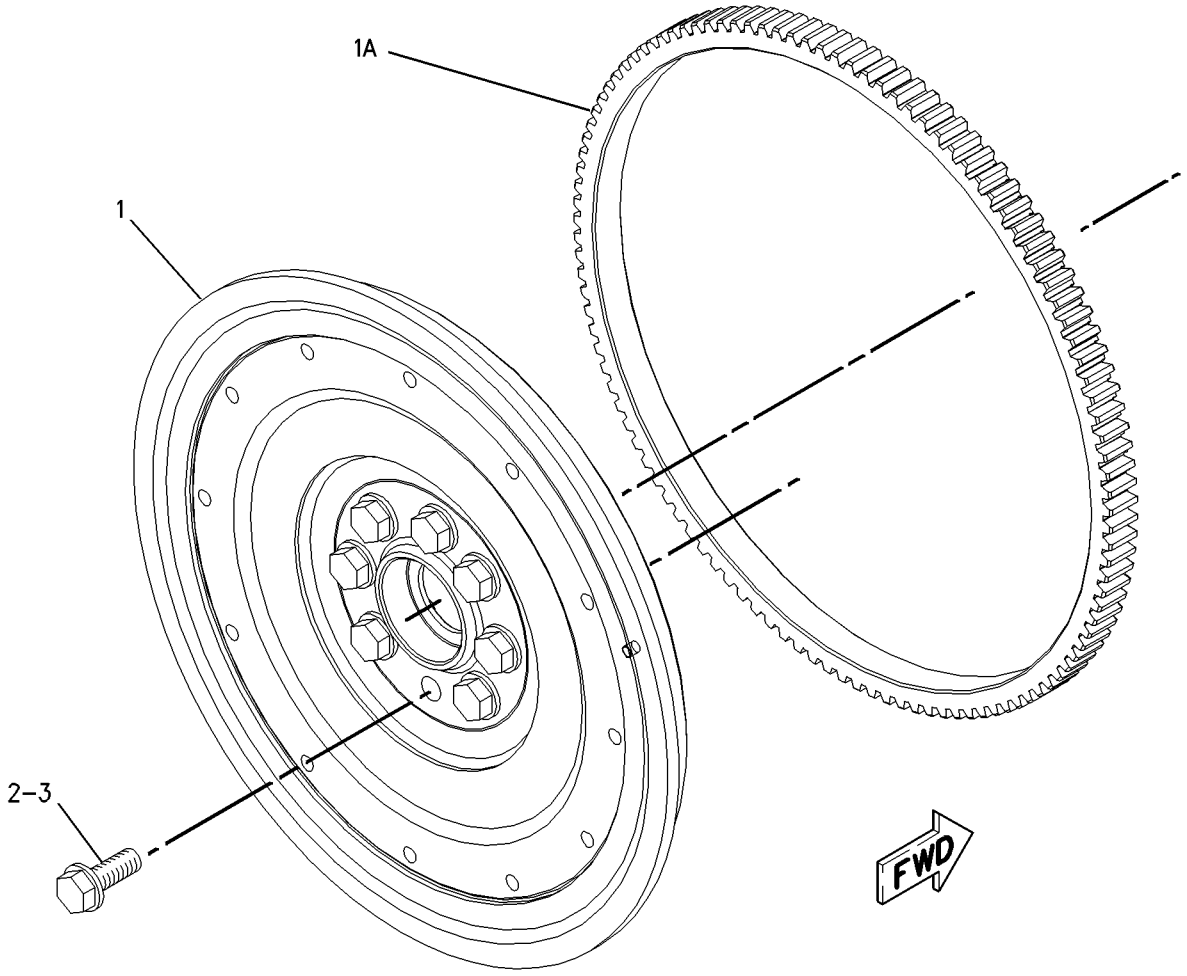

GRAPHIC #1 **<END>** g00779246

205-1321 GEAR GP-FRONT

S/N: THX14533-UP; THY5575-UP

PART OF 229-2665, 348-2747 ENGINE AR-CORE

SMCS-1151, 1162, 1206 **i01686025**

NOTE	REF NO	GRAPHIC REF	PART NUMBER	QTY	PART NAME 1 2 3 4 5 6 (PRODUCT LEVEL)	SEE PAGE
	1	1	**113-6069**	1	PLATE-THRUST	
	2	1	**115-4219**	1	PLATE-RETAINING	
	3	1	**200-4495**	1	SHAFT-IDLER	
	4	1	**205-1320**	1	GEAR AS-IDLER (50 TEETH)	
	4A	1	**115-4072**	1	BEARING	
M	5	1	**136-4183**	1	BOLT-12 POINT HEAD (M10X1.5X30MM)	
M	6	1	**6V-5843**	2	BOLT (M10X1.50X45MM)	

M-METRIC PART

205-1321 **GEAR GP-FRONT** *(contd.)* **i01686025**

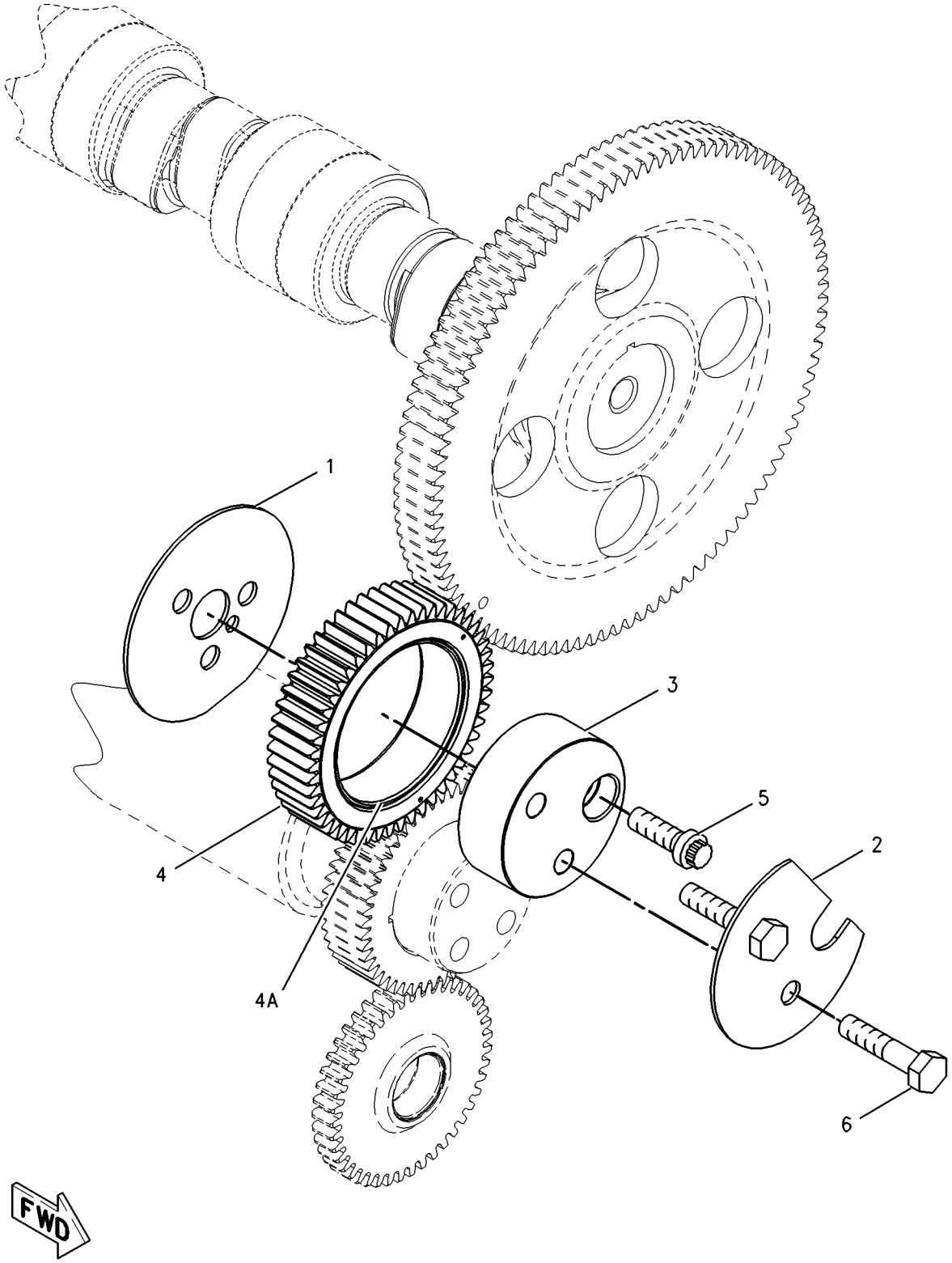

GRAPHIC #1 **<END>** g00870175

BASIC ENGINE

229-3568 HOUSING GP-FLYWHEEL

S/N: THX14533-UP; THY5575-UP
PART OF 224-9843 ENGINE AR

SMCS-1157 **i03171282**

NOTE	REF NO	GRAPHIC REF	PART NUMBER	QTY	PART NAME 1 2 3 4 5 6 (PRODUCT LEVEL)	SEE PAGE
	1	1	**7C-1445**	2	COVER	
	2	1	**229-3569**	1	HOUSING-FLYWHEEL	
	3	1	**061-9455**	1	SEAL-O-RING	
	4	1	**3K-8460**	1	PLUG	
	5	1	**5P-7701**	1	SEAL-O-RING	
	6	1	**5P-7814**	1	SEAL-O-RING	
	7	1	**5P-8245**	14	WASHER-HARD (13.5X25.5X3-MM THK)	
M	8	1	**6V-5219**	2	BOLT (M8X1.25X40-MM)	
M	9	1	**6V-8197**	14	BOLT (M12X1.75X40-MM)	
	10	1	**8L-2786**	2	SEAL-O-RING	
	11	1	**9M-1974**	2	WASHER-HARD (8.8X16X2-MM THK)	
	12	1	**9S-4185**	2	PLUG-O-RING (FLYWHEEL HOUSING DRAIN)	
	13	1	**9S-9334**	1	PLUG-O-RING	
BF			**1U-8846**		SEALANT-GASKET	

B-USE AS REQUIRED
F-NOT SHOWN
M-METRIC PART

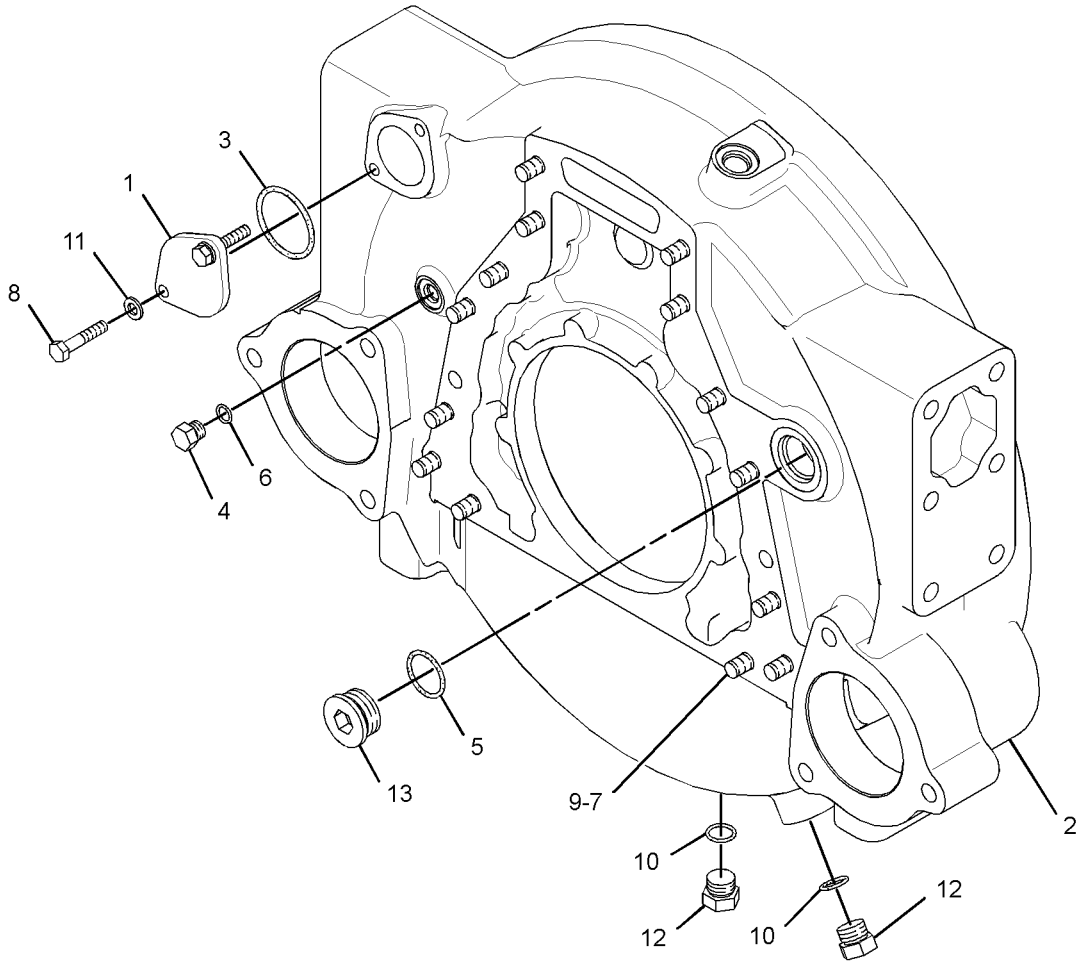

GRAPHIC #1 **<END>** g01623341

245-3260 HOUSING GP-FRONT

S/N: THX14533-UP; THY5575-UP

PART OF 229-2665, 348-2747 ENGINE AR-CORE

SMCS-1151, 1162, 1206 **i02297319**

NOTE	REF NO	GRAPHIC REF	PART NUMBER	QTY	PART NAME 1 2 3 4 5 6 (PRODUCT LEVEL)	SEE PAGE
	1	1	**245-3259**	1	HOUSING-FRONT	
M	2	1	**6V-3918**	4	BOLT (M8X1.25X50-MM)	
M	3	1	**6V-5217**	8	BOLT (M8X1.25X20-MM)	
	4	1	**9M-1974**	12	WASHER-HARD (8.8X16X2-MM THK)	
B	5	1	**1U-8846**		SEALANT-GASKET	

B-USE AS REQUIRED
M-METRIC PART

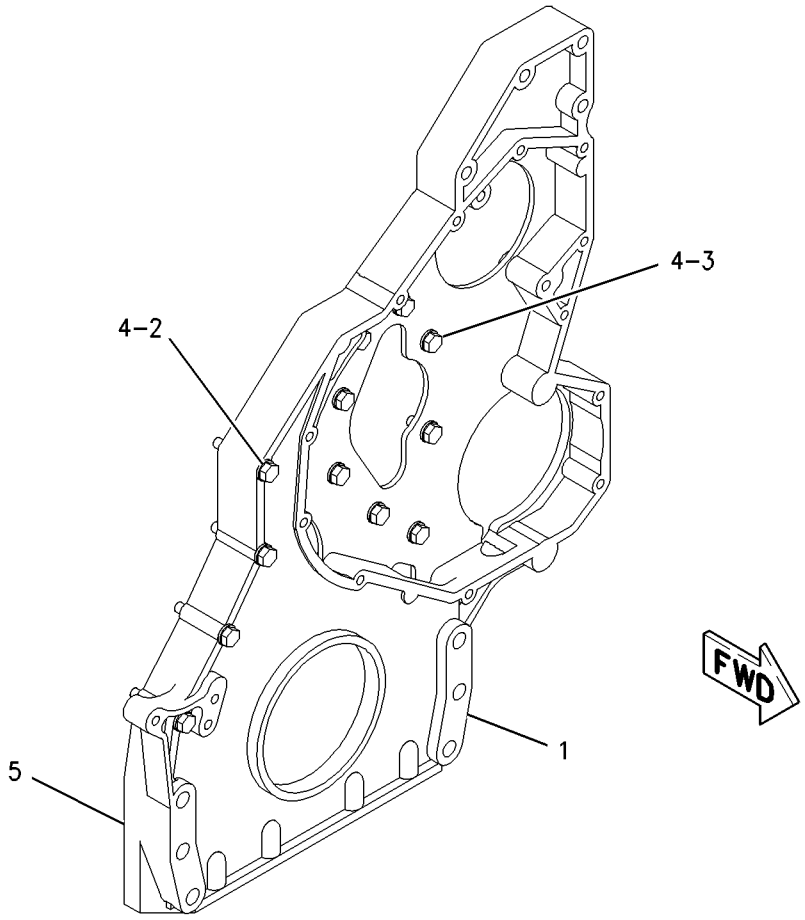

GRAPHIC #1 **<END>** g00713985

191-3063 LIFTING GP-ENGINE

S/N: THX14533-UP; THY5575-UP
PART OF 224-9843 ENGINE AR

SMCS-1122 **i02052455**

NOTE	REF NO	GRAPHIC REF	PART NUMBER	QTY	PART NAME 1 2 3 4 5 6 (PRODUCT LEVEL)	SEE PAGE
	1	1	**228-4766**	1	PLATE-LIFTING	
	2	1	**166-1785**	1	PLATE-LIFTING	
	3	1	**5P-8245**	3	WASHER-HARD (13.5X25.5X3-MM THK)	
M	4	1	**6V-8675**	3	BOLT (M12X1.75X35-MM)	

M-METRIC PART

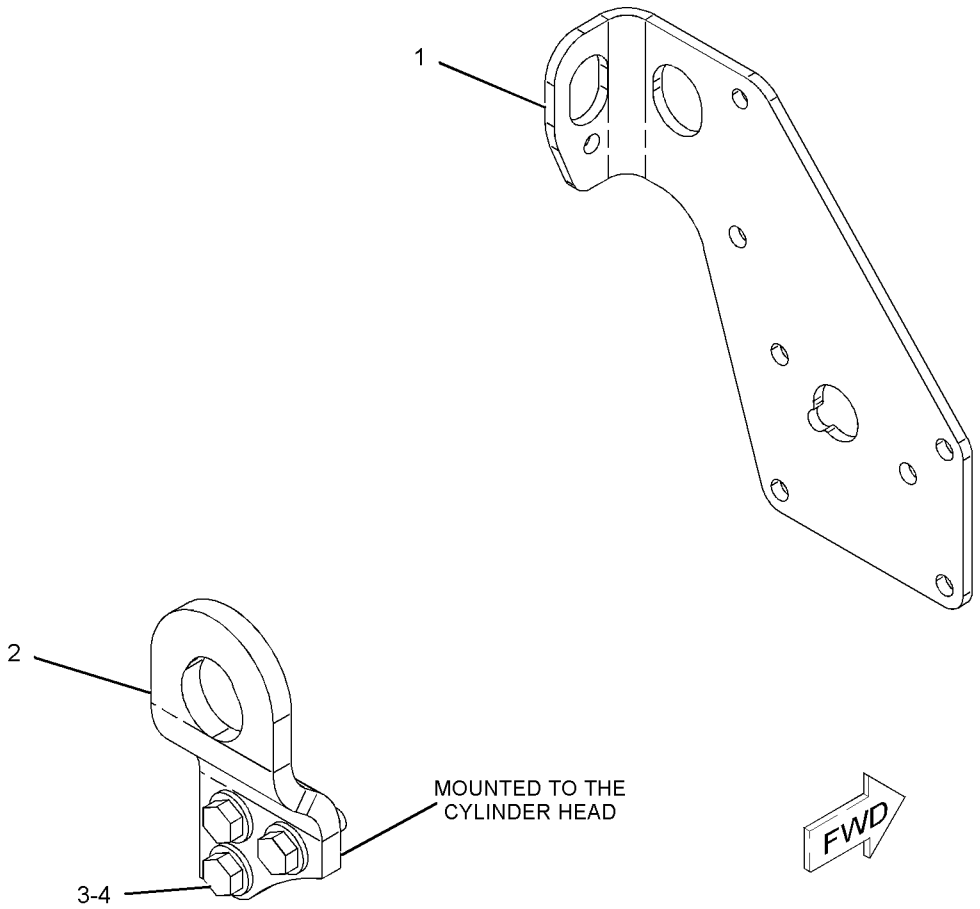

GRAPHIC #1 **<END>** g01057483

BASIC ENGINE

239-6474 MOUNTING GP-ENGINE

S/N: MYG1-UP; PPN1-UP

PART OF 279-7825 INSTALLATION AR-ENGINE

SMCS-1152 **i02861699**

NOTE	REF NO	GRAPHIC REF	PART NUMBER	QTY	PART NAME 1 2 3 4 5 6 (PRODUCT LEVEL)	SEE PAGE
	1	1	**109-9437**	4	WASHER (24.5X135X12-MM THK)	
	2	1	**139-8736**	2	MOUNT-FLEXIBLE	
	3	1	**139-8737**	2	MOUNT-FLEXIBLE	
M	4	1	**139-8873**	4	SUPPORT AS	
	5	1	**178-6473**	2	MOUNT-FLEXIBLE	
	6	1	**178-6474**	2	MOUNT-FLEXIBLE	
	7	1	**9X-8257**	16	WASHER (17.5X30X3.5-MM THK)	
	8	1	**239-6475**	2	BRACKET (FRONT, RH)	
	9	1	**287-0215**	1	BRACKET AS (REAR, RH)	
	10	1	**287-0216**	1	BRACKET AS (REAR, LH)	
M	11	1	**7X-2553**	4	BOLT (M16X2X40-MM)	
M	12	1	**7X-2554**	4	BOLT (M16X2X70-MM)	
M	13	1	**7X-2567**	4	BOLT (M24X3X160-MM)	
	14	1	**8T-1482**	4	WASHER-HARD (26X50X8-MM THK)	
	15	1	**8T-4167**	4	WASHER-HARD (26X44X4-MM THK)	
M	16	1	**8T-7338**	8	BOLT (M16X2X45-MM)	

M-METRIC PART

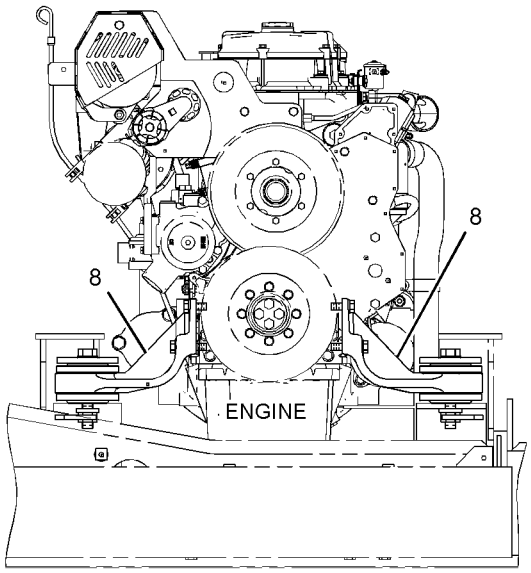

FRONT VIEW OF ENGINE

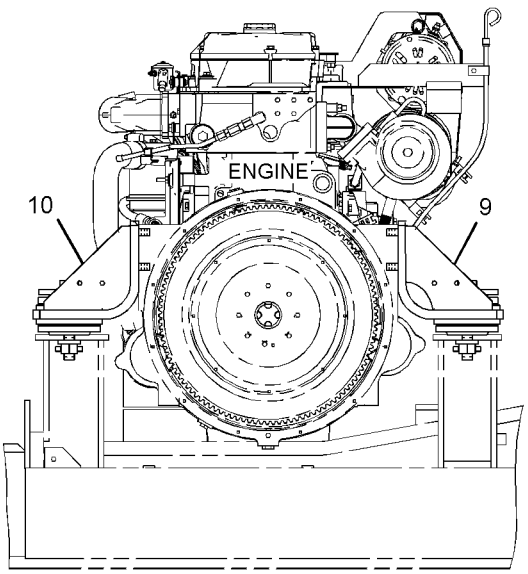

REAR VIEW OF ENGINE

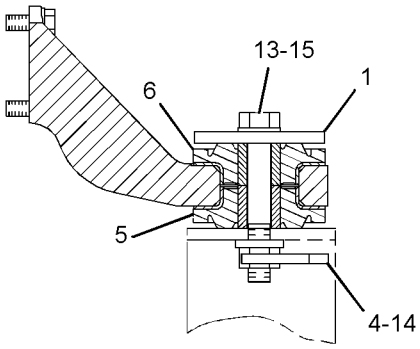

SECTION A-A

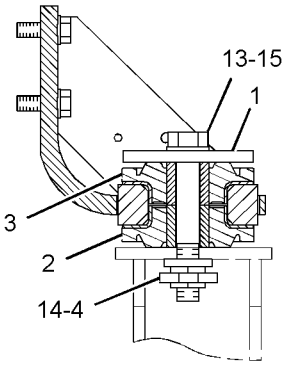

SECTION B-B

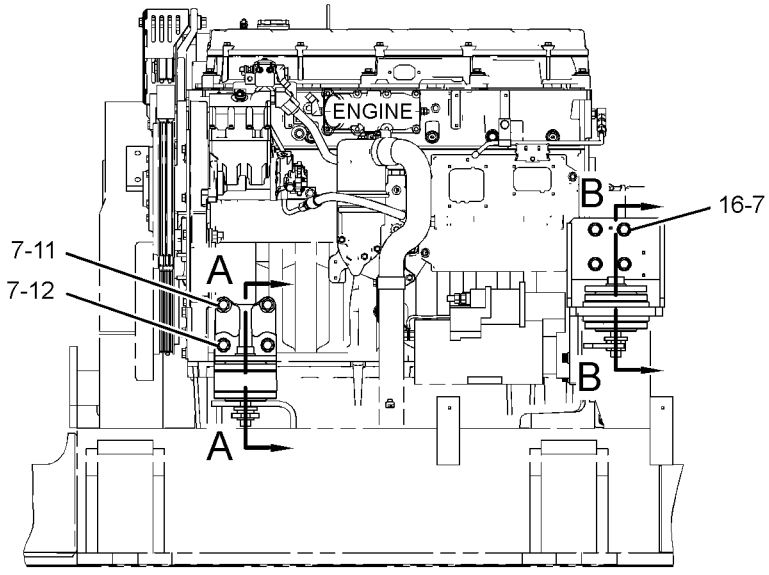

LEFT SIDE VIEW OF ENGINE

GRAPHIC #1

<END>

g01377974

BASIC ENGINE

187-0472 PAN GP-OIL—ENGINE

S/N: THX14533-UP; THY5575-UP
PART OF 224-9843 ENGINE AR

SMCS-1302 **i02896422**

NOTE	REF NO	GRAPHIC REF	PART NUMBER	QTY	PART NAME 1 2 3 4 5 6 (PRODUCT LEVEL)	SEE PAGE
	1	1	*148-8395*	1	PLUG AS	
		1	**3K-0360**	1	SEAL-O-RING	
		1	**9S-8005**	1	PLUG-O-RING	
	2	1	**6V-7238**	1	VALVE-SHUTOFF (ENGINE OIL PAN DRAIN)	
	3	1	**213-0677**	1	SWITCH AS-LIQUID LEVEL (ENGINE OIL)	
		1	**9X-3401**	2	PIN-CONNECTOR (16-GA TO 18-GA)	
					—OR—	
		1	**126-1767**	2	PIN-CONNECTOR (14-GA)	
	3A	1	**102-8802**	1	KIT-RECEPTACLE (2-PIN)	
					(INCLUDES PLUG AS & WEDGE)	
	4	1	**136-4303**	1	PLUG AS-CONNECTOR (2-PIN)	
		1	**8T-8737**	2	PLUG-SEAL	
		1	**155-2270**	1	KIT-CONNECTING PLUG (2-PIN)	
					(INCLUDES PLUG AS & WEDGE)	
	5	1	**189-9377**	1	SEAL-O-RING	
	6	1	**190-6114**	1	GASKET-OIL PAN (ENGINE)	
	7	1	**221-9806**	1	PAN-OIL	
	8	1	**3K-0360**	1	SEAL-O-RING	
M	9	1	**6V-3918**	32	BOLT (M8X1.25X50-MM)	
	10	1	**9M-1974**	32	WASHER-HARD (8.8X16X2-MM THK)	
B	11	1	**4C-9612**		SEALANT-SILICONE	

B-USE AS REQUIRED
M-METRIC PART

187-0472 **PAN GP-OIL** *(contd.)* **i02896422**

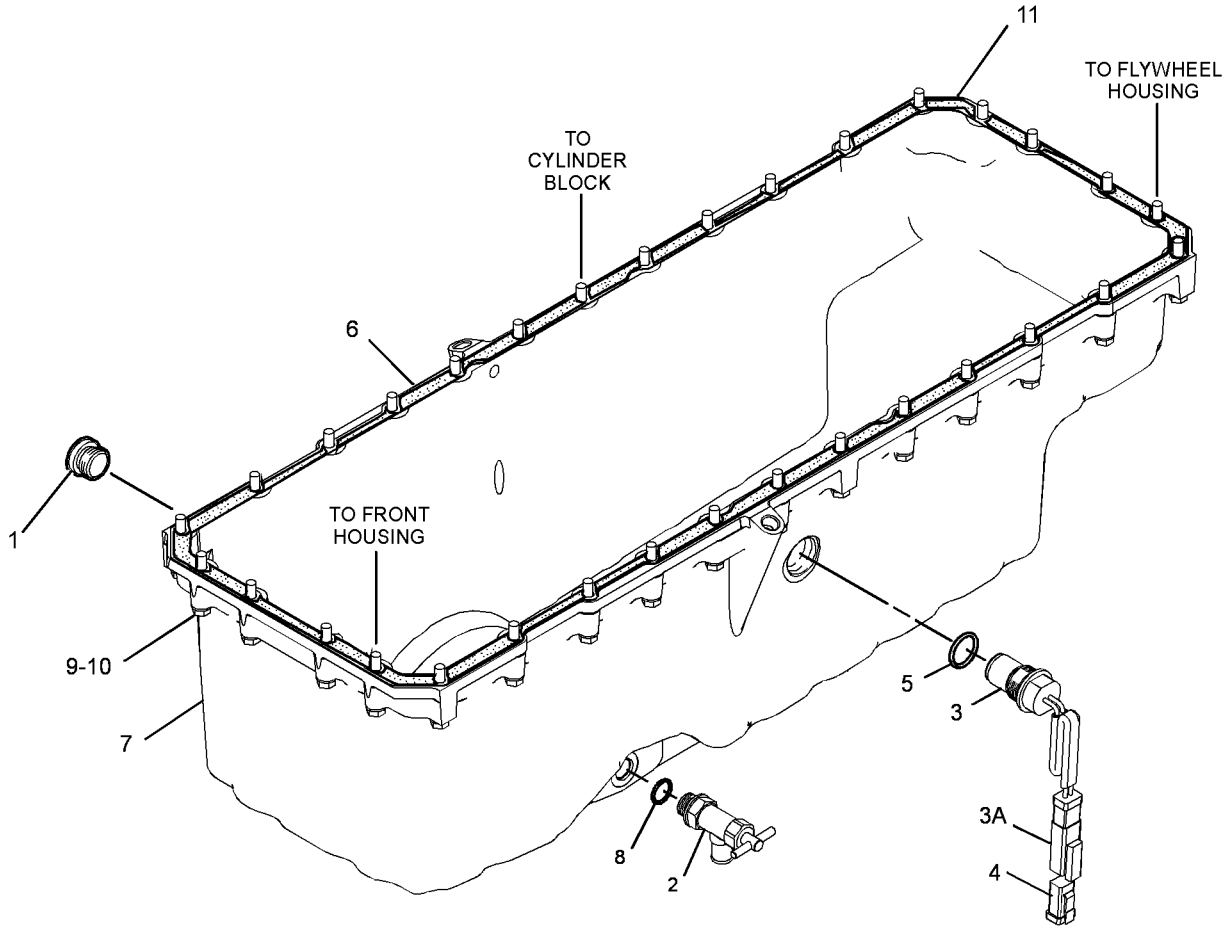

GRAPHIC #1 **<END>** g01430144

BASIC ENGINE

265-1400 PISTON & ROD GP

S/N: THX14533-22637; THY5575-UP
16.1:1 COMPRESSION RATIO
PART OF 229-2665 ENGINE AR-CORE

SMCS-1225 **i03706747**

NOTE	REF NO	GRAPHIC REF	PART NUMBER	QTY	PART NAME 1 2 3 4 5 6 (PRODUCT LEVEL)	SEE PAGE
	1	1	**213-3190**	1	BEARING (STANDARD)	
AB		1	**282-2478**		BEARING-CONNECTING ROD (0.25-MM US)	
AB		1	**282-2479**		BEARING-CONNECTING ROD (0.51-MM US)	
R	2	1	**160-8199**	1	ROD AS	
	2A	1	**160-8194**	1	BEARING	
M	2B	1	**160-8197**	2	BOLT	
	3	1	**166-3648**	1	PIN-PISTON	
	4	1	**168-7211**	1	RING-PISTON (OIL CONTROL)	
R	5	1	**265-1401**	1	CROWN AS-PISTON	
	6	1	**161-3424**	1	RING-PISTON (INTERMEDIATE)	
	7	1	**197-9367**	1	TUBE AS (PISTON COOLING JET)	
	8	1	**197-9392**	1	RING-PISTON (TOP)	
	9	1	**324-7380**	1	SKIRT-PISTON	
M	10	1	**6V-3940**	1	BOLT (M8X1.25X25-MM)	
	11	1	**7X-2908**	2	RING-RETAINING	

A-NOT PART OF THIS GROUP
B-USE AS REQUIRED
M-METRIC PART
R-REMFG PART MAY BE AVAILABLE

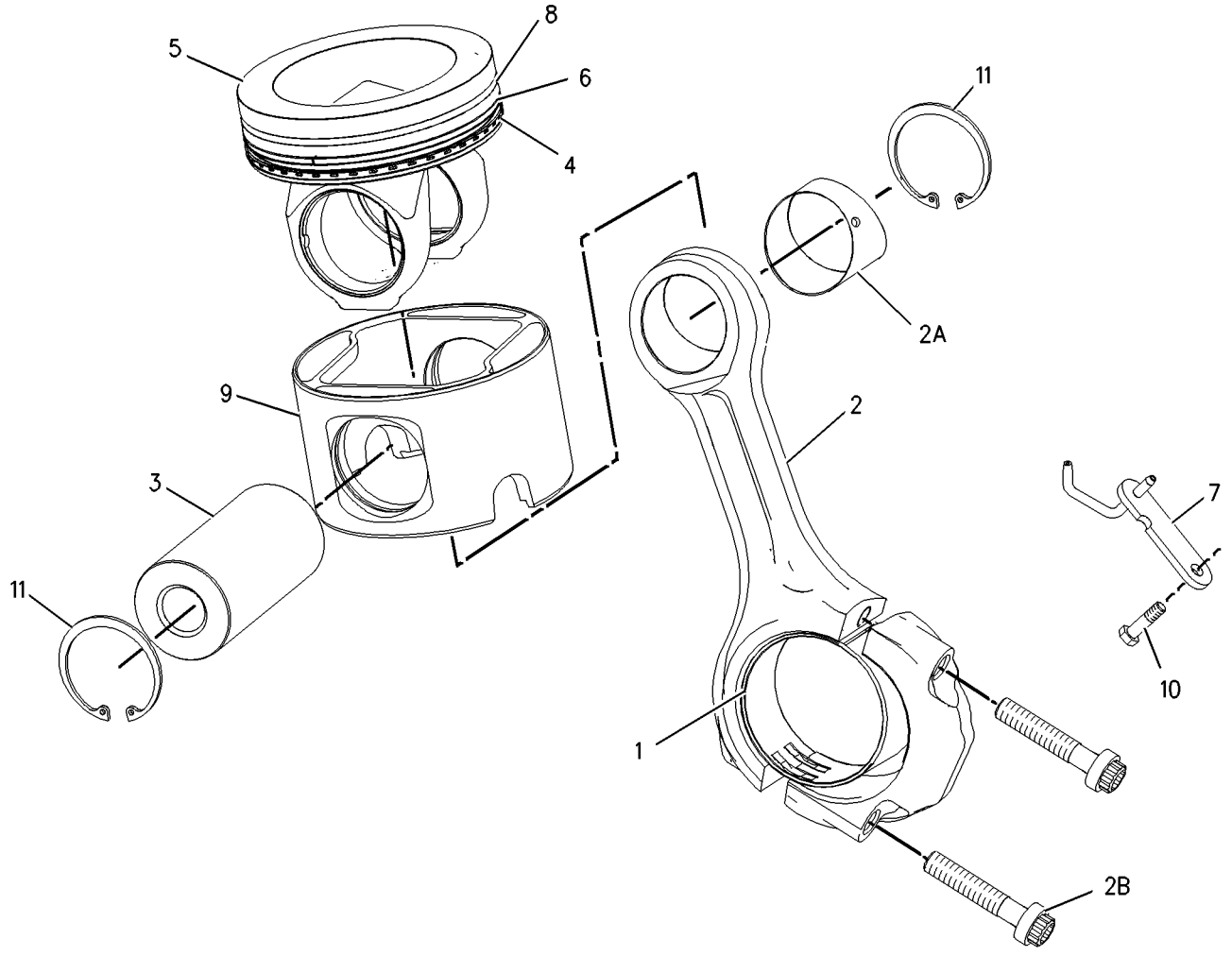

GRAPHIC #1 **<END>** g00922644

BASIC ENGINE

347-7908 PISTON & ROD GP

S/N: THX22638-UP

PART OF 348-2747 ENGINE AR-CORE

SMCS-1225 **i03706746**

NOTE	REF NO	GRAPHIC REF	PART NUMBER	QTY	PART NAME 1 2 3 4 5 6 (PRODUCT LEVEL)	SEE PAGE
	1	1	**213-3190**	1	BEARING (STANDARD)	
AB		1	**282-2478**		BEARING-CONNECTING ROD (0.25-MM US)	
AB		1	**282-2479**		BEARING-CONNECTING ROD (0.51-MM US)	
R	2	1	**160-8199**	1	ROD AS	
	2A	1	**160-8194**	1	BEARING	
M	2B	1	**160-8197**	2	BOLT	
	3	1	**166-3648**	1	PIN-PISTON	
	4	1	**347-2382**	1	RING-PISTON (OIL CONTROL)	
R	5	1	**265-1401**	1	CROWN AS-PISTON	
	6	1	**347-2381**	1	RING-PISTON (INTERMEDIATE)	
	7	1	**197-9367**	1	TUBE AS (PISTON COOLING JET)	
	8	1	**347-2380**	1	RING-PISTON-TOP	
	9	1	**324-7380**	1	SKIRT-PISTON	
M	10	1	**6V-3940**	1	BOLT (M8X1.25X25-MM)	
	11	1	**7X-2908**	2	RING-RETAINING	

A-NOT PART OF THIS GROUP
B-USE AS REQUIRED
M-METRIC PART
R-REMFG PART MAY BE AVAILABLE

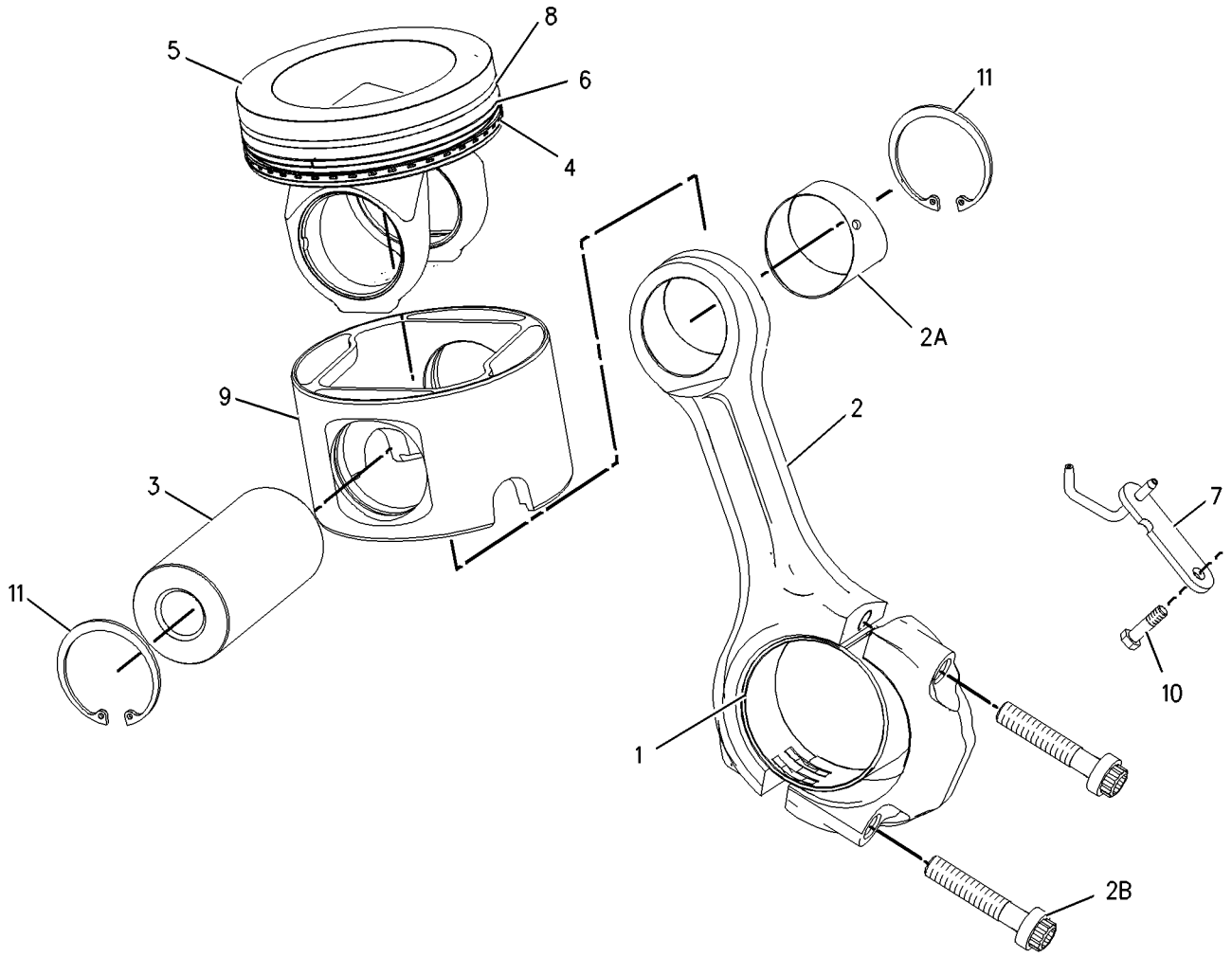

GRAPHIC #1 **<END>** g00922644

BASIC ENGINE

169-3105 PLUG GP-ENGINE

S/N: THX14533-UP; THY5575-UP
PART OF 224-9843 ENGINE AR

SMCS-1000 **i02795403**

NOTE	REF NO	GRAPHIC REF	PART NUMBER	QTY	PART NAME 1 2 3 4 5 6 (PRODUCT LEVEL)	SEE PAGE
	1	1	*183-3406*	2	PLUG AS	
					(EACH INCLUDES)	
		1	**9S-4191**	1	PLUG-O-RING	
	1A	1	**6V-5049**	1	SEAL-O-RING	
	2	1	*148-8408*	1	PLUG AS	
		1	**9S-4183**	1	PLUG-O-RING	
	2A	1	**3D-2824**	1	SEAL-O-RING	
	3	1	**8L-2786**	2	SEAL-O-RING	
	4	1	**9S-8005**	2	PLUG-O-RING	

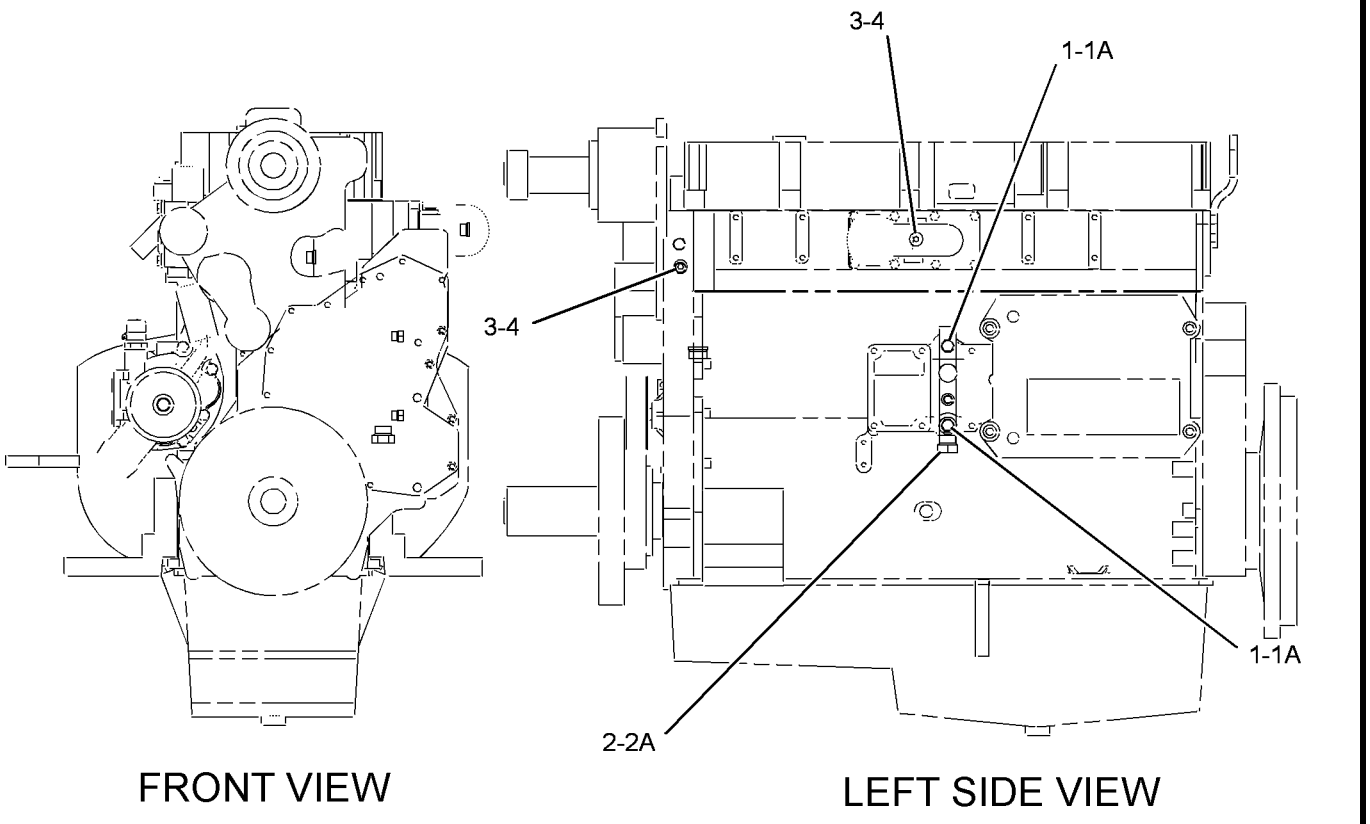

GRAPHIC #1 **<END>** g01395933

BASIC ENGINE

279-7820 PLUG GP-ENGINE

S/N: MYG1-UP; PPN1-UP

PART OF 279-7825 INSTALLATION AR-ENGINE

SMCS-1000 **i02478230**

NOTE	REF NO	GRAPHIC REF	PART NUMBER	QTY	PART NAME 1 2 3 4 5 6 (PRODUCT LEVEL)	SEE PAGE
	1	1	**3J-5390**	1	PLUG	

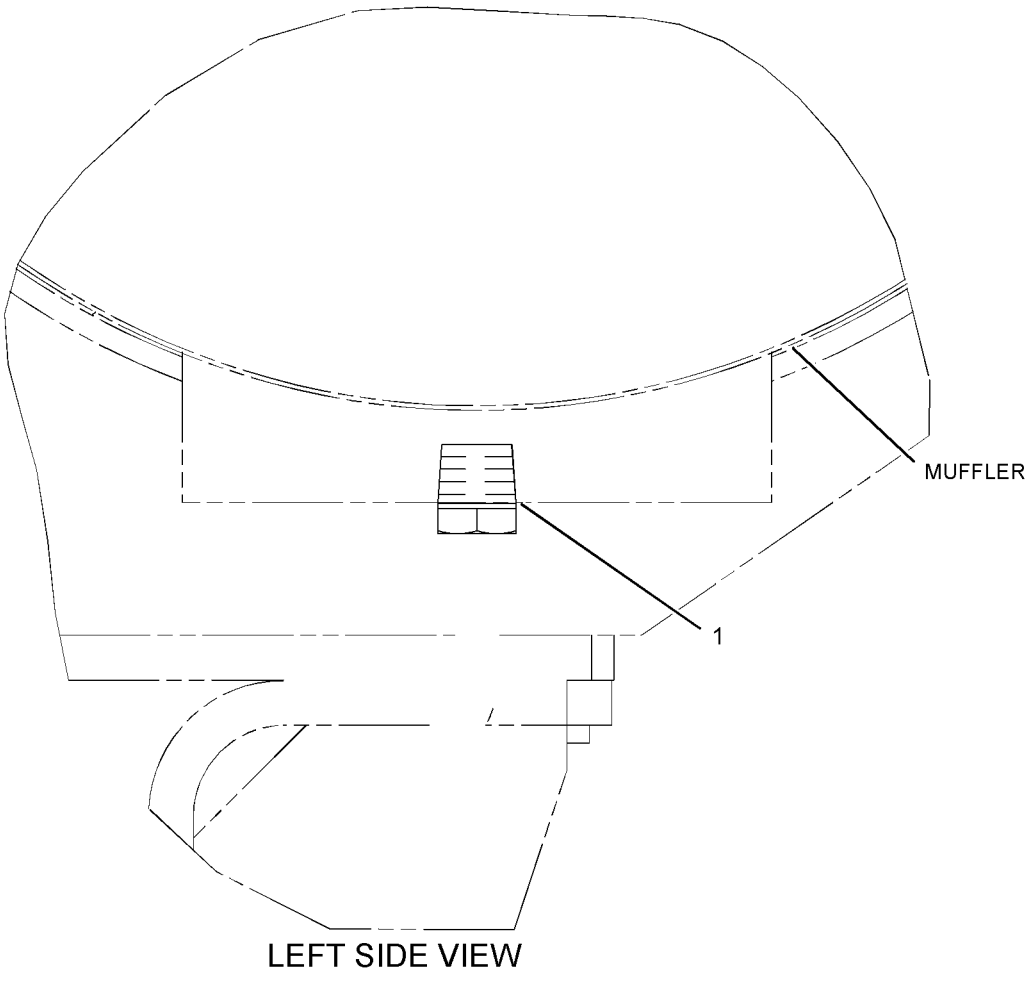

LEFT SIDE VIEW

GRAPHIC #1

<END>

g01239111

BASIC ENGINE

213-9320 ROCKER ARM GP–EXHAUST

S/N: THX14533-UP; THY5575-UP

PART OF 212-8926 VALVE MECHANISM GP

SMCS-1123 **i02585216**

NOTE	REF NO	GRAPHIC REF	PART NUMBER	QTY	PART NAME 1 2 3 4 5 6 (PRODUCT LEVEL)	SEE PAGE
R	1	1	**163-2447**	1	ROCKER ARM AS	
M	2	1	**260-7524**	1	SCREW-VALVE ADJUSTMENT (M10X1.5-THD)	
M	3	1	**2Y-5829**	1	NUT (M10X1.5-THD)	

M-METRIC PART
R-REMFG PART MAY BE AVAILABLE

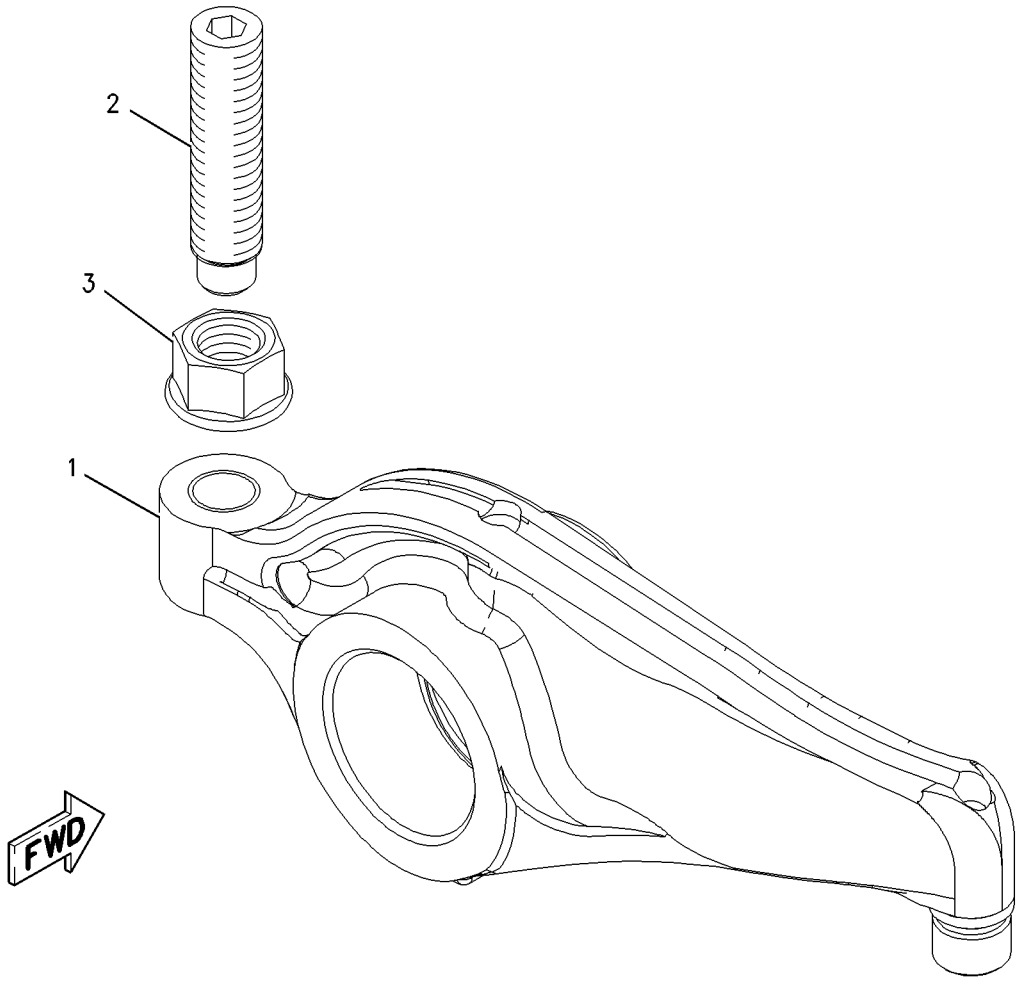

GRAPHIC #1 **<END>** g00848359

242-0329 ROCKER ARM GP–INLET

S/N: THX14533-UP; THY5575-UP
PART OF 212-8926 VALVE MECHANISM GP

SMCS-1123 **i02585523**

NOTE	REF NO	GRAPHIC REF	PART NUMBER	QTY	PART NAME 1 2 3 4 5 6 (PRODUCT LEVEL)	SEE PAGE
M	1	1	**260-7524**	1	SCREW-VALVE ADJUSTMENT (M10X1.5-THD)	
R	2	1	**242-0328**	1	ROCKER ARM AS	
M	3	1	**2Y-5829**	1	NUT (M10X1.5-THD)	

M-METRIC PART
R-REMFG PART MAY BE AVAILABLE

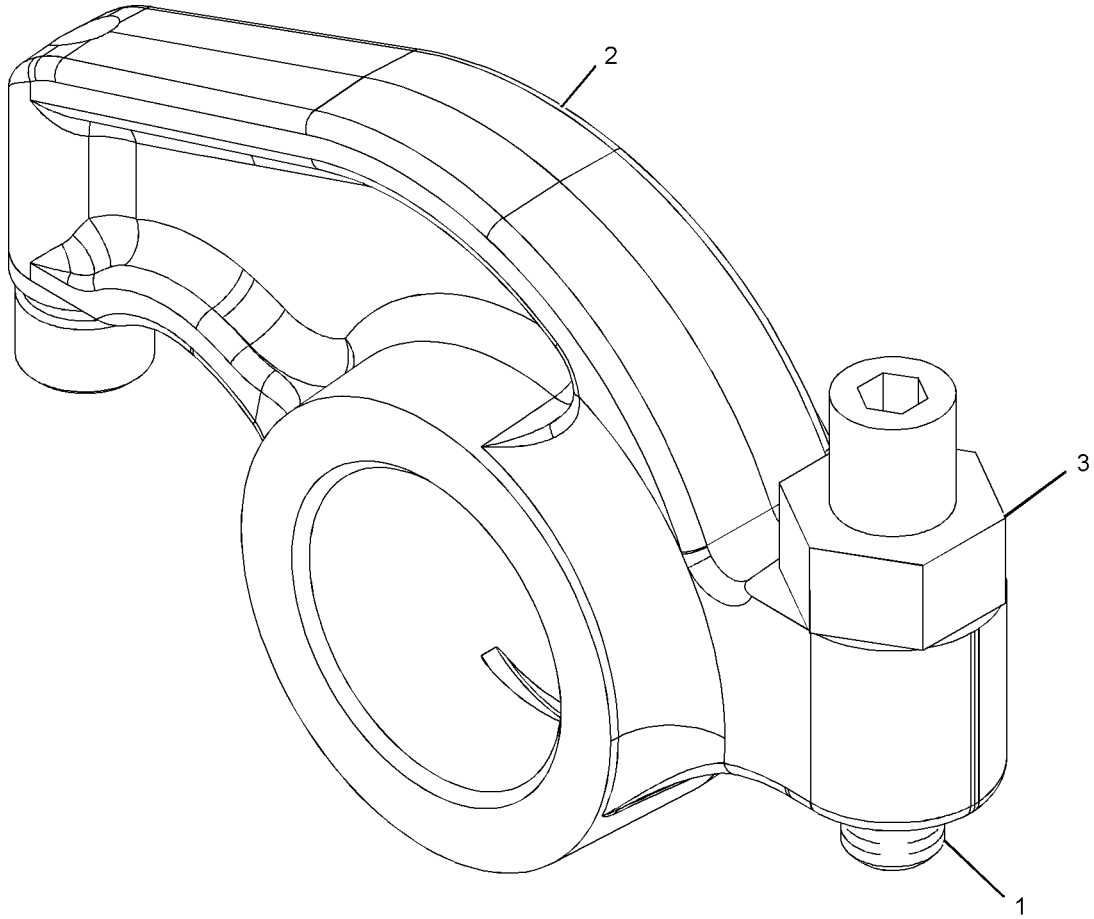

GRAPHIC #1 **<END>** g01056688

178-3899 SEAL GP-CRANKSHAFT

S/N: THX14533-UP; THY5575-UP
PART OF 224-9843 ENGINE AR

SMCS-1160, 1161 **i02893381**

NOTE	REF NO	GRAPHIC REF	PART NUMBER	QTY	PART NAME 1 2 3 4 5 6 (PRODUCT LEVEL)	SEE PAGE
	1	1	**4R-9999**	1	EXCLUDER-CRANKSHAFT SEAL	
M	2	1	**206-3719**	9	BOLT AS	
	3	1	**245-7339**	1	SEAL-CRANKSHAFT	
	4	1	**285-4073**	1	SEAL GP-CRANKSHAFT	

M-METRIC PART

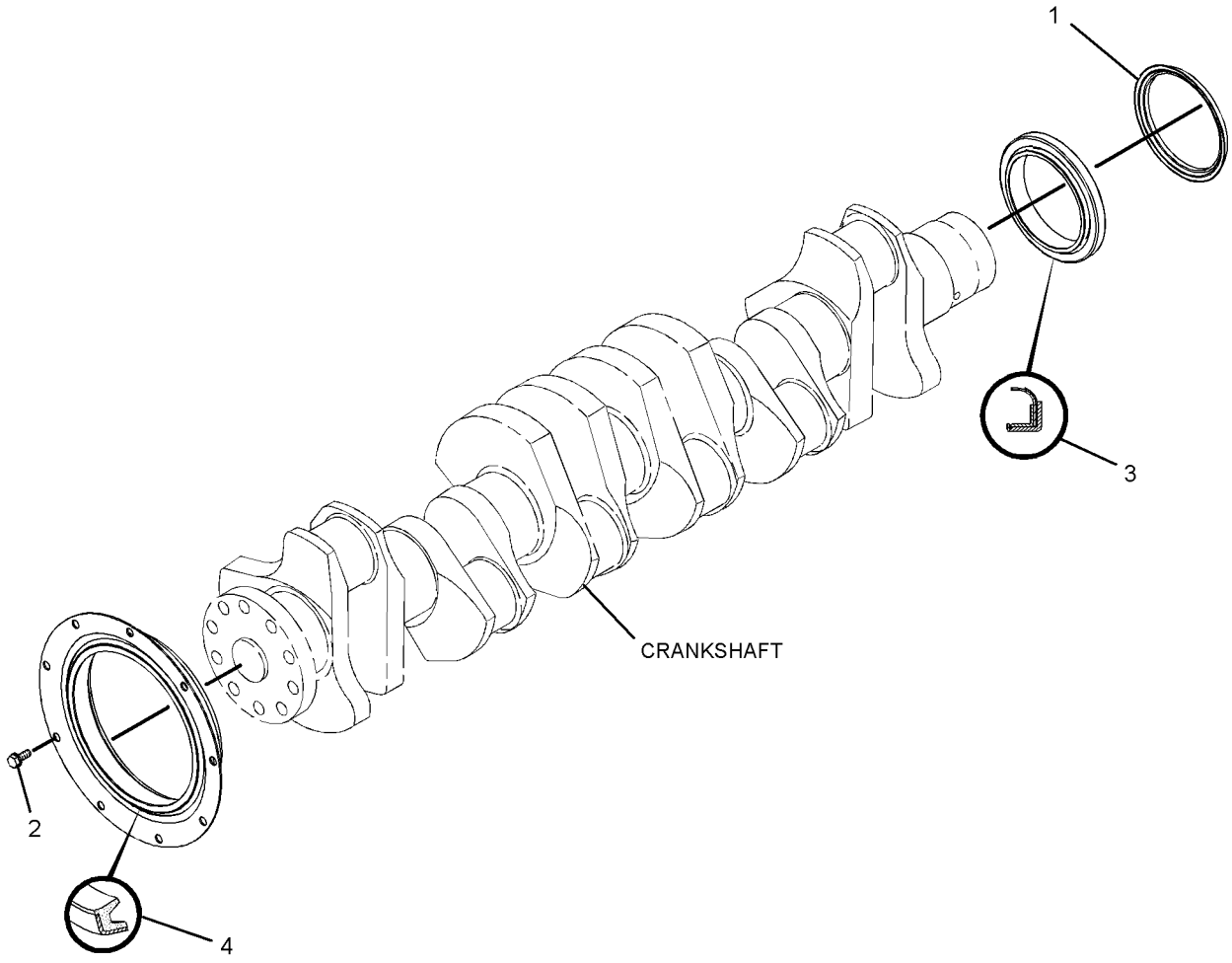

GRAPHIC #1 **<END>** g01439993

212-8926 VALVE MECHANISM GP

S/N: THX14533-UP; THY5575-UP

PART OF 242-0447 VALVE MECHANISM GP

SMCS-1209 **i02178521**

NOTE	REF NO	GRAPHIC REF	PART NUMBER	QTY	PART NAME 1 2 3 4 5 6 (PRODUCT LEVEL)	SEE PAGE
	1	1	**163-2445**	1	SHAFT AS-ROCKER ARM	
		1	**8F-6575**	2	PLUG-CUP	
	2	1	**163-2459**	6	SPRING	
	3	1	**164-5669**	2	STAND (END)	
	4	1	**176-5913**	4	STAND (MIDDLE)	
	5	1	**176-5914**	1	STAND (OIL)	
Y	6	1	*213-9320*	6	ROCKER ARM GP (EXHAUST)	64
Y	7	1	*242-0329*	6	ROCKER ARM GP (INLET)	65
	8	1	**5P-8245**	7	WASHER-HARD (13.5X25.5X3-MM THK)	
M	9	1	**8T-0646**	7	BOLT (M12X1.75X110-MM)	

M-METRIC PART
Y-SEPARATE ILLUSTRATION

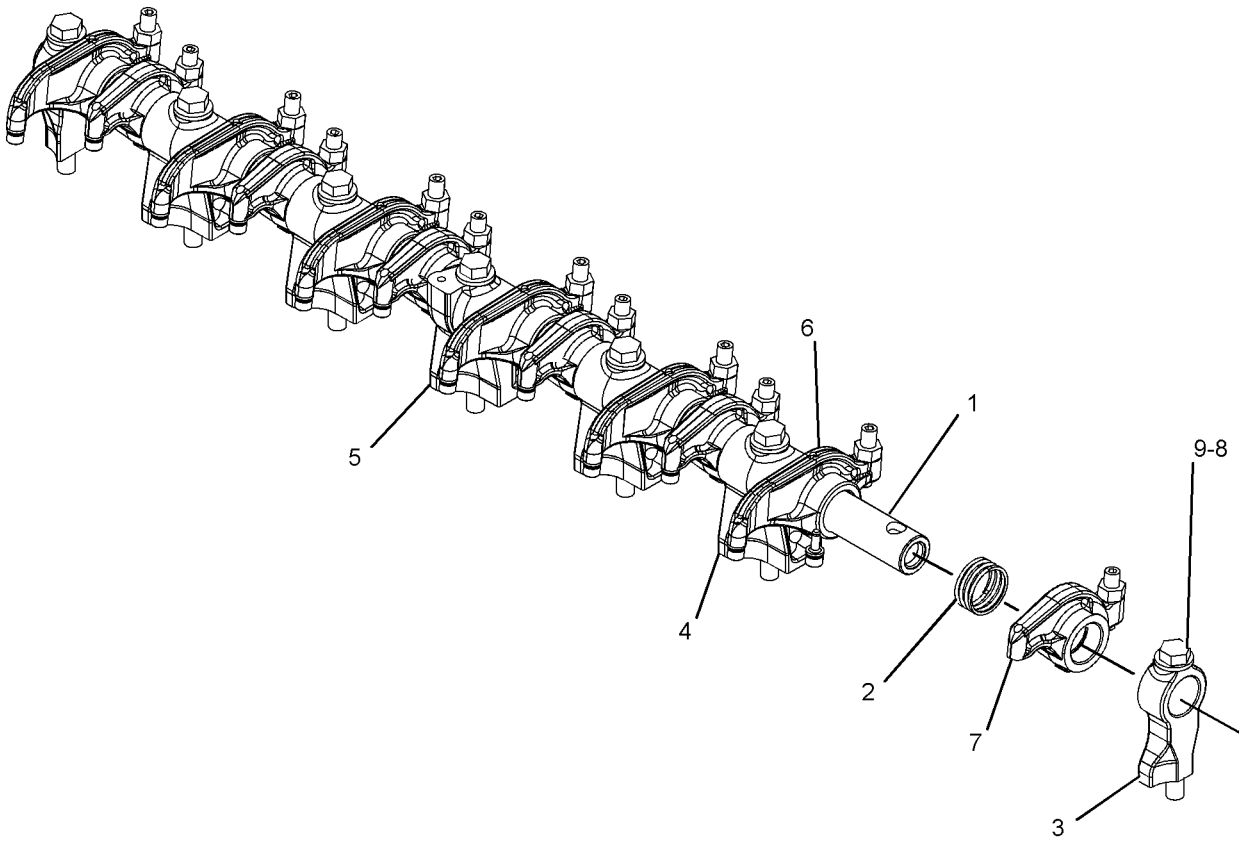

GRAPHIC #1 **<END>** g01069313

242-0447 VALVE MECHANISM GP

S/N: THX14533-UP; THY5575-UP

PART OF 229-2665, 348-2747 ENGINE AR-CORE

SMCS-1209 **i02748253**

NOTE	REF NO	GRAPHIC REF	PART NUMBER	QTY	PART NAME 1 2 3 4 5 6 (PRODUCT LEVEL)	SEE PAGE
	1	1	**304-5260**	12	SPRING-GUIDE	
	2	1	**264-6156**	12	ROD-VALVE PUSH	
	3	1	**163-2437**	12	LIFTER AS-VALVE	
Y	4	1	*212-8926*	1	VALVE MECHANISM GP	67
	5	1	**244-5891**	6	BRIDGE-VALVE	
	6	1	**255-8674**	6	BRIDGE-VALVE	

Y-SEPARATE ILLUSTRATION

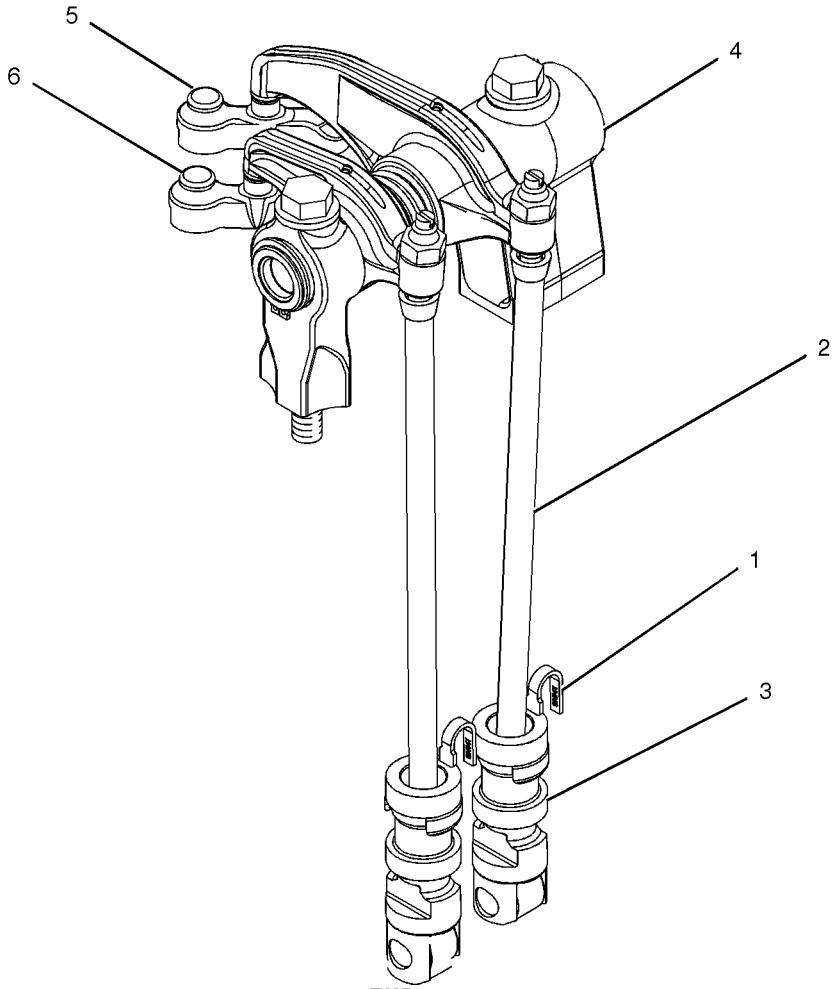

GRAPHIC #1 **<END>** g01043825

187-0474 FILTER GP-ENGINE OIL

S/N: THX14533-UP; THY5575-UP
PART OF 224-9843 ENGINE AR

SMCS-1308 **i03592580**

NOTE	REF NO	GRAPHIC REF	PART NUMBER	QTY	PART NAME 1 2 3 4 5 6 (PRODUCT LEVEL)	SEE PAGE
	1	1	**1R-1808**	1	FILTER-ENGINE OIL (ADVANCED EFFICIENCY)	
	2	1	**7C-1493**	2	VALVE AS-BYPASS (ENGINE OIL FILTER BASE)	
	3	1	**8C-3445**	1	CAP-DUST	
	4	1	**242-3864**	2	SPRING	
	5	1	**102-5828**	1	COVER	
	6	1	**102-5829**	1	ADAPTER	
C	7	1	**297-7920**	1	TEE	
	8	1	**275-6631**	1	BASE AS-OIL FILTER (ENGINE)	
	8A	1	**2P-4304**	1	STUD-HOLLOW	
	9	1	**209-7291**	1	BASE AS-OIL FILTER (ENGINE)	
	9A	1	**2P-4304**	1	STUD-HOLLOW	
	10	1	**209-7290**	1	GASKET	
C	11	1	**8T-7927**	1	CONNECTOR	
	12	1	**033-5853**	1	SEAL-O-RING	
	13	1	**106-9586**	2	SEAL-O-RING	
CI	14	1	**307-6480**	1	HOSE AS	
CI	15	1	**307-6481**	1	HOSE AS	
	16	1	**2M-9780**	2	SEAL-O-RING	
	17	1	**3J-7354**	1	SEAL-O-RING	
	18	1	**5P-7701**	4	SEAL-O-RING	
M	19	1	**5P-8196**	2	PLUG	
	20	1	**6V-3908**	2	SEAL-O-RING	
M	21	1	**6V-5218**	11	BOLT (M8X1.25X35-MM)	
	22	1	**6V-8635**	2	CONNECTOR	
	23	1	**8C-3446**	1	VALVE-FLUID SAMPLING (ENGINE OIL)	
	24	1	**9M-1974**	12	WASHER-HARD (8.8X16X2-MM THK)	
	25	1	**9S-4181**	1	PLUG-O-RING	
	26	1	**9S-4182**	1	PLUG-O-RING	
	27	1	**9X-7712**	1	SEAL-O-RING	
C	28	1	**228-7094**	2	SEAL-O-RING	
M	29	1	**145-2264**	1	STUD (M8X1.25X35-MM)	

C-CHANGE FROM PREVIOUS TYPE
I-REFER TO HYDRAULIC INFORMATION SYSTEM
M-METRIC PART

187-0474 **FILTER GP-ENGINE OIL** *(contd.)* **i03592580**

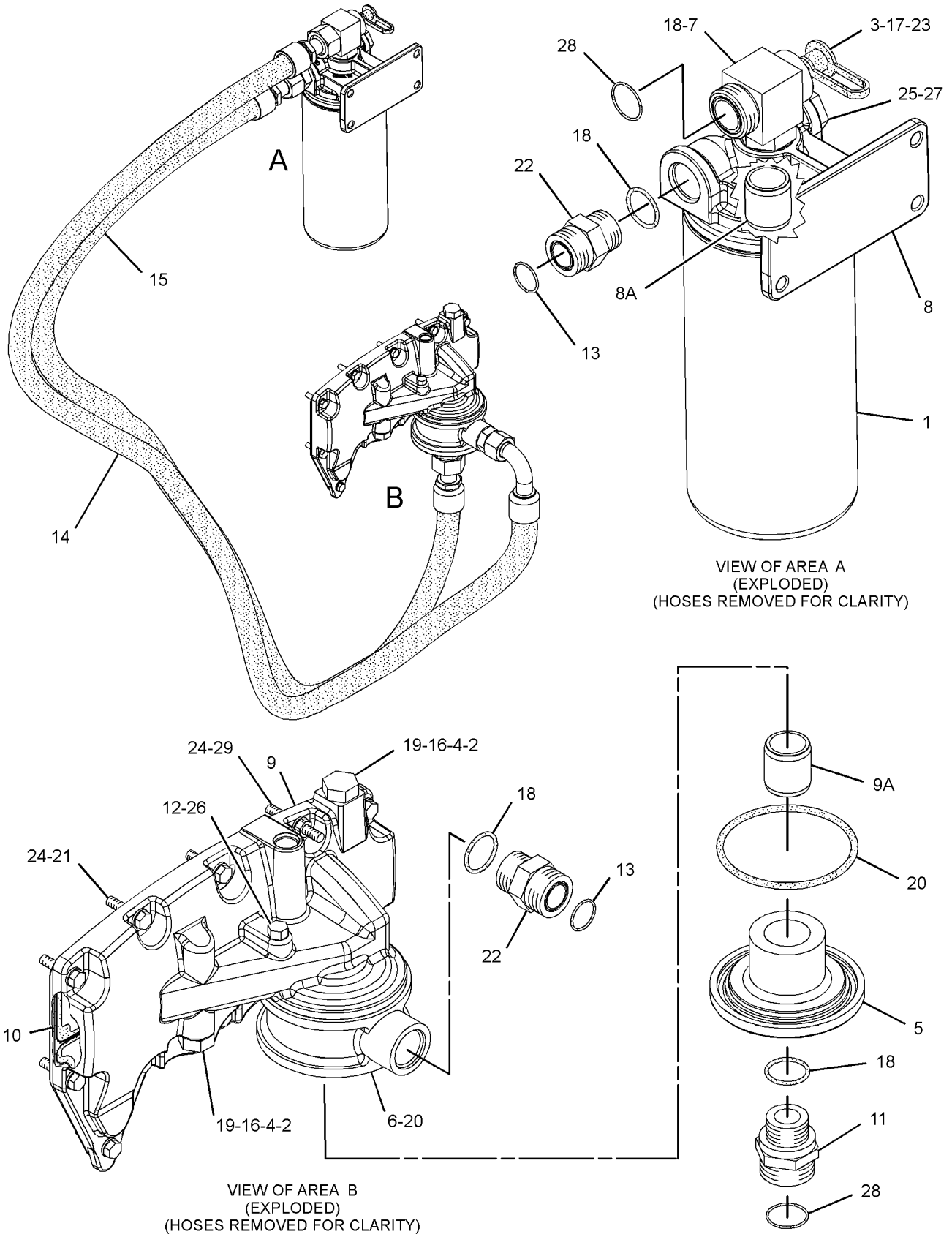

GRAPHIC #1 **<END>** g01712181

196-1829 FUMES DISPOSAL GP

S/N: THX14533-UP; THY5575-UP
PART OF 224-9843 ENGINE AR

SMCS-1317 **i02034217**

NOTE	REF NO	GRAPHIC REF	PART NUMBER	QTY	PART NAME 1 2 3 4 5 6 (PRODUCT LEVEL)	SEE PAGE
	1	1	**5P-0597**	1	CLAMP-HOSE	
	2	1	**196-1831**	1	HOSE-DISPOSAL (FUMES)	
	3	1	**220-1718**	1	BRACKET	
	4	1	**5P-4325**	1	CLIP	
M	5	1	**5P-7970**	1	NUT (M8X1.25-THD)	
M	6	1	**6V-5217**	1	BOLT (M8X1.25X20-MM)	
	7	1	**6V-5839**	1	WASHER (11X21X2.5-MM THK)	
M	8	1	**6V-6317**	1	BOLT (M10X1.5X20-MM)	
	9	1	**9M-1974**	2	WASHER-HARD (8.8X16X2-MM THK)	

M-METRIC PART

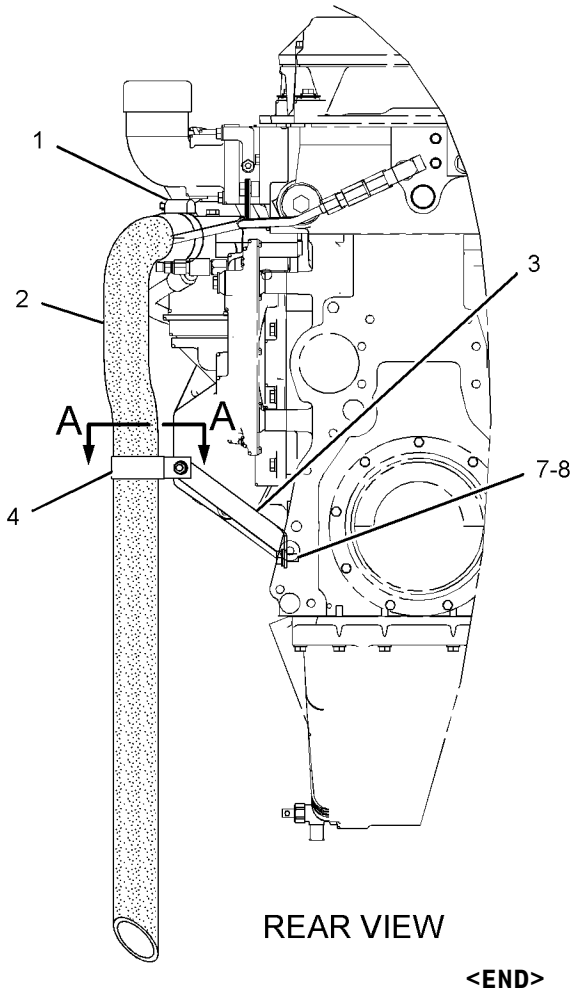

REAR VIEW

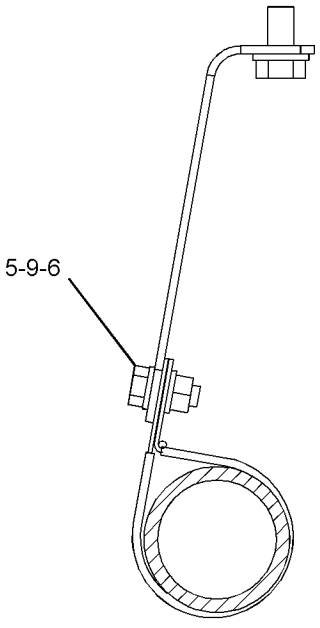

SECTION A-A

GRAPHIC #1 **<END>** g01058524

LUBRICATION SYSTEM

242-1586 GAUGE GP-OIL LEVEL (DIPSTICK)—ENGINE

S/N: THX14533-UP; THY5575-UP
PART OF 224-9843 ENGINE AR

SMCS-1326 **i02514050**

NOTE	REF NO	GRAPHIC REF	PART NUMBER	QTY	PART NAME 1 2 3 4 5 6 (PRODUCT LEVEL)	SEE PAGE
	1	1	**242-1598**	1	BRACKET AS	
	2	1	**242-1599**	1	TUBE AS	
C	3	1	**208-7474**	1	GAUGE-OIL LEVEL (ENGINE)	
C	4	1	**194-3526**	1	BRACKET AS	
	5	1	**5P-8245**	1	WASHER-HARD (13.5X25.5X3-MM THK)	
	6	1	**6V-3265**	2	CLIP	
	7	1	**6V-5839**	4	WASHER (11X21X2.5-MM THK)	
M	8	1	**6V-6317**	4	BOLT (M10X1.5X20-MM)	
M	9	1	**8T-0293**	1	BOLT (M12X1.75X20-MM)	

C-CHANGE FROM PREVIOUS TYPE
M-METRIC PART

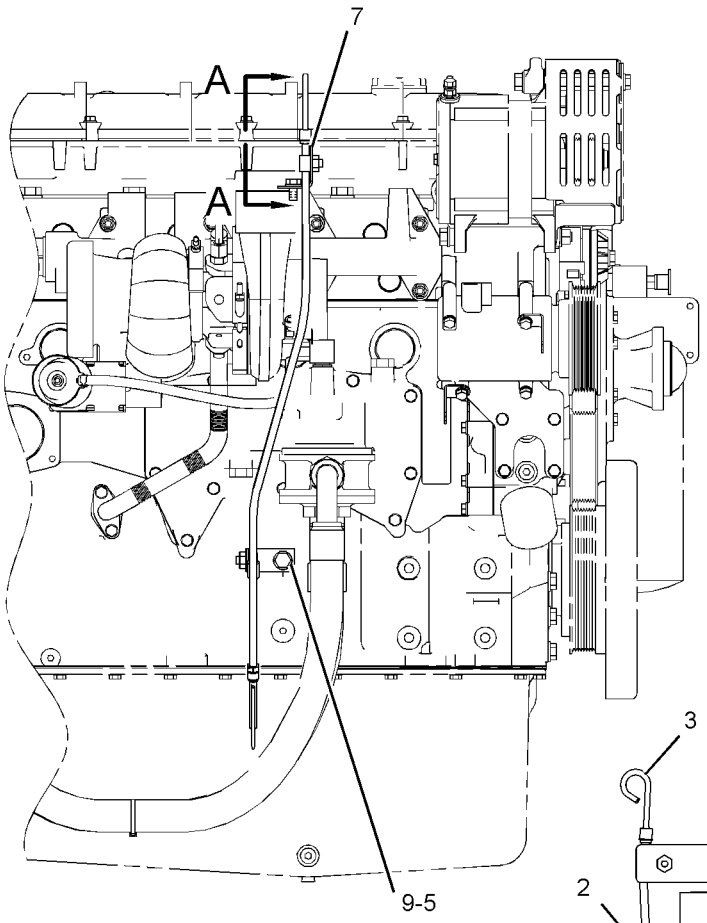

RIGHT SIDE VIEW

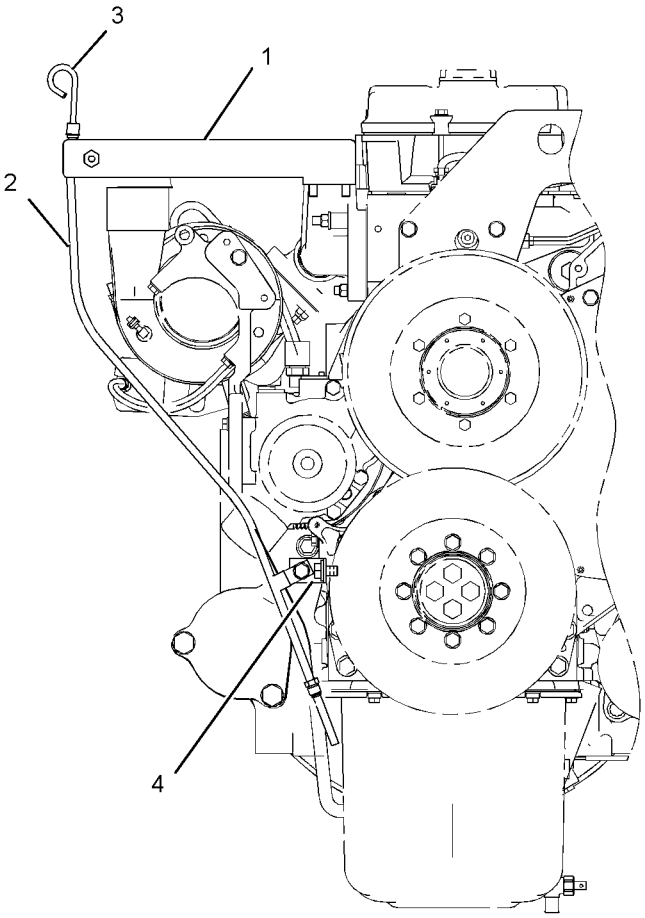

FRONT VIEW

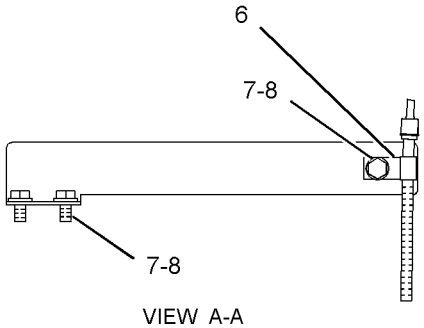

VIEW A-A

GRAPHIC #1 **<END>** g01257807

LUBRICATION SYSTEM

202-6603 LINES GP-ENGINE OIL

S/N: THX14533-UP; THY5575-UP
PART OF 224-9843 ENGINE AR

SMCS-1307 **i01964566**

NOTE	REF NO	GRAPHIC REF	PART NUMBER	QTY	PART NAME 1 2 3 4 5 6 (PRODUCT LEVEL)	SEE PAGE
	1	1	**234-0203**	1	ELBOW-OUTLET	
	2	1	**195-0452**	1	GASKET	
	3	1	**213-5213**	1	TUBE AS	
	4	1	**033-6034**	1	SEAL-O-RING	
M	5	1	**208-9282**	2	BOLT (M8X1.25X25-MM)	
	6	1	**5P-7530**	1	SEAL-O-RING	
M	7	1	**8T-0292**	1	BOLT (M8X1.25X90-MM)	
M	8	1	**6V-3940**	2	BOLT (M8X1.25X25-MM)	
	9	1	**9M-1974**	3	WASHER-HARD (8.8X16X2-MM THK)	

M-METRIC PART

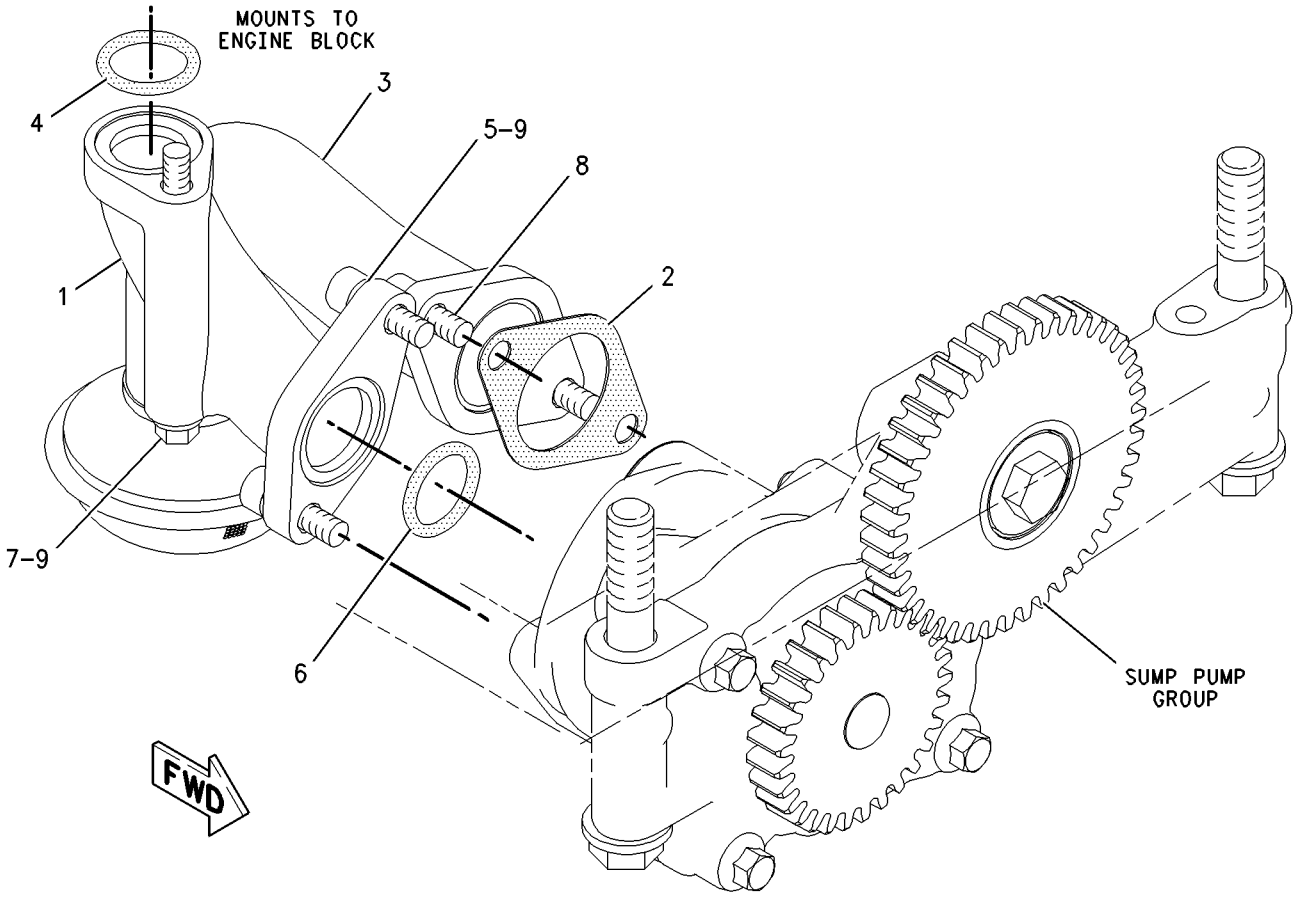

GRAPHIC #1 **<END>** g00833289

239-6408 LINES GP-ENGINE OIL DRAIN

S/N: MYG1-UP; PPN1-UP

PART OF 279-7825 INSTALLATION AR-ENGINE

SMCS-1307 **i02455749**

NOTE	REF NO	GRAPHIC REF	PART NUMBER	QTY	PART NAME 1 2 3 4 5 6 (PRODUCT LEVEL)	SEE PAGE
	1	1	**095-1388**	1	CLAMP-HOSE	
E	2	1	**5P-0743**		HOSE (27-CM)	

E-ORDER BY THE CENTIMETER

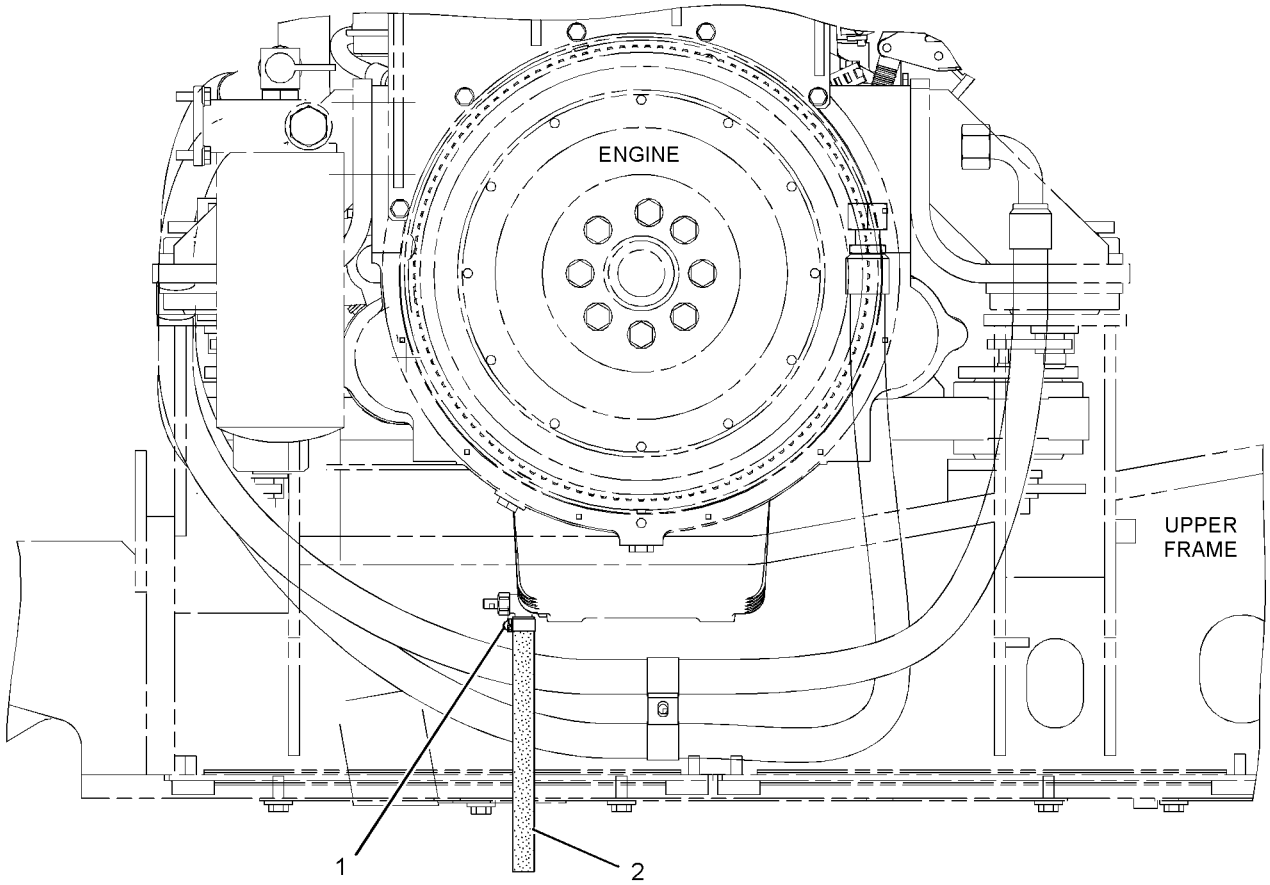

RIGHT SIDE VIEW

GRAPHIC #1

<END>

g01197323

LUBRICATION SYSTEM

165-4465 LINES GP-TURBOCHARGER OIL

S/N: THX14533-UP; THY5575-UP
PART OF 224-9843 ENGINE AR

SMCS-1052 **i02424979**

NOTE	REF NO	GRAPHIC REF	PART NUMBER	QTY	PART NAME 1 2 3 4 5 6 (PRODUCT LEVEL)	SEE PAGE
C	1	1	*183-3399*	1	CONNECTOR AS	
		1	**6V-8636**	1	CONNECTOR	
	1A	1	**214-7568**	1	SEAL-O-RING	
	1B	1	**221-3494**	1	SEAL-O-RING	
	2	1	**183-3404**	1	ELBOW AS	
		1	**6V-8723**	1	ELBOW	
	2A	1	**8L-2779**	1	SEAL-O-RING	
	2B	1	**8L-2786**	1	SEAL-O-RING	
C	3	1	**197-8419**	1	GASKET	
C	4	1	**246-6036**	1	HOSE	
	5	1	**249-9230**	1	HOSE AS	
C	6	1	**259-2993**	1	TUBE AS-DRAIN	
C	7	1	**259-2994**	1	TUBE AS-DRAIN	
C	8	1	**269-8788**	2	CLAMP-BAND	
C	9	1	**5P-7530**	1	SEAL-O-RING	
CM	10	1	**6V-3940**	2	BOLT (M8X1.25X25-MM)	
CM	11	1	**6V-5218**	2	BOLT (M8X1.25X35-MM)	
	12	1	**9M-1974**	4	WASHER-HARD (8.8X16X2-MM THK)	

C-CHANGE FROM PREVIOUS TYPE
M-METRIC PART

165-4465 **LINES GP-TURBOCHARGER OIL** *(contd.)* **i02424979**

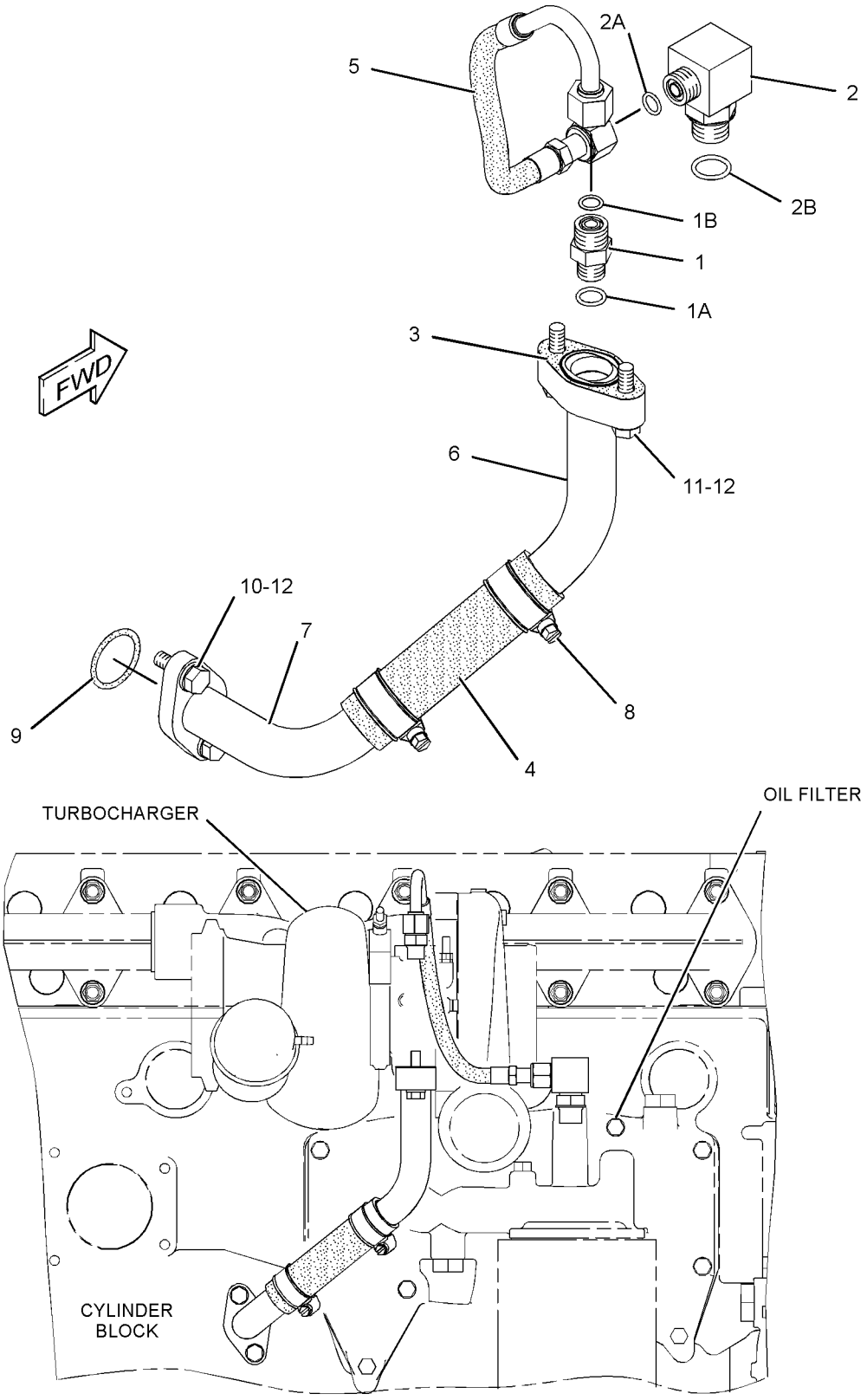

RIGHT SIDE VIEW

GRAPHIC #1 **<END>** g01197820

239-6409 MOUNTING GP-ENGINE OIL FILTER

S/N: MYG1-UP; PPN1-UP

PART OF 279-7825 INSTALLATION AR-ENGINE

SMCS-1308 **i02861694**

NOTE	REF NO	GRAPHIC REF	PART NUMBER	QTY	PART NAME 1 2 3 4 5 6 (PRODUCT LEVEL)	SEE PAGE
	1	1	**239-6500**	1	PLATE	
	2	1	**305-4903**	1	SUPPORT AS	
	3	1	**4D-7388**	6	CLIP	
	4	1	**7X-7729**	2	WASHER (11X25X3-MM THK)	
	5	1	**8T-4121**	10	WASHER-HARD (11X21X2.5-MM THK)	
M	6	1	**8T-4133**	1	NUT (M10X1.5-THD)	
M	7	1	**8T-4136**	3	BOLT (M10X1.5X25-MM)	
M	8	1	**8T-4186**	2	BOLT (M10X1.5X40-MM)	
M	9	1	**8T-4195**	5	BOLT (M10X1.5X30-MM)	
M	10	1	**8T-4196**	1	BOLT (M10X1.5X35-MM)	

M-METRIC PART

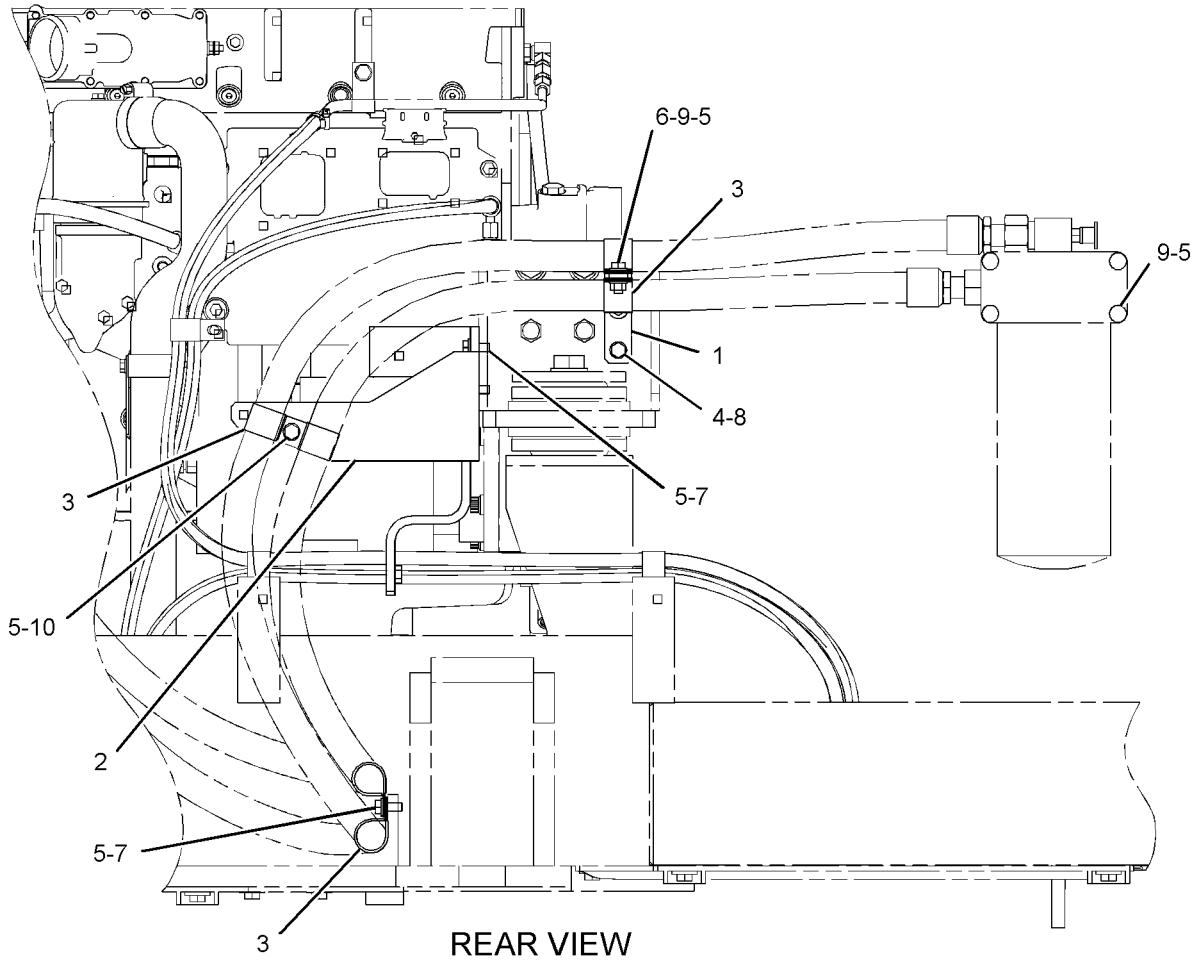

GRAPHIC #1 **<END>** g01378314

195-8098 PUMP GP-ENGINE OIL

S/N: THX14533-UP; THY5575-UP

PART OF 229-2665, 348-2747 ENGINE AR-CORE

SMCS-1304, 1315 **i03575306**

NOTE	REF NO	GRAPHIC REF	PART NUMBER	QTY	PART NAME 1 2 3 4 5 6 (PRODUCT LEVEL)	SEE PAGE
C	1	1	*331-8906*	1	PUMP GP-GEROTOR	
	1A	1	**221-0144**	1	GEAR AS (60-TEETH)	
		1	**331-8905**	1	PUMP AS-ENGINE OIL	
M	2	1	**6V-1819**	2	BOLT (M10X1.5X100-MM)	
	3	1	**6V-5839**	2	WASHER (11X21X2.5-MM THK)	

C-CHANGE FROM PREVIOUS TYPE
M-METRIC PART

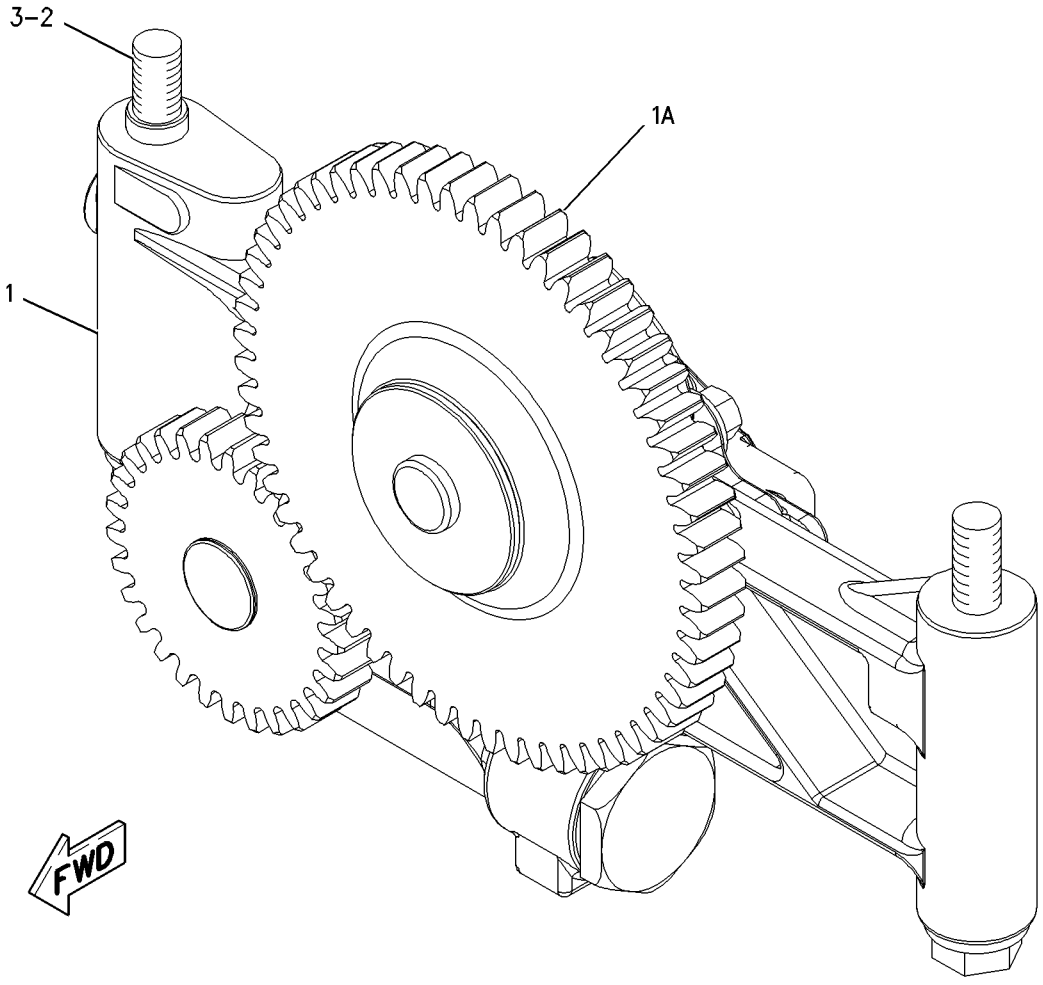

GRAPHIC #1 **<END>** g00909910

188-3826 COOLER GP-ENGINE OIL

S/N: THX14533-UP; THY5575-UP

PART OF 229-2665, 348-2747 ENGINE AR-CORE

SMCS-1378 **i02851832**

NOTE	REF NO	GRAPHIC REF	PART NUMBER	QTY	PART NAME 1 2 3 4 5 6 (PRODUCT LEVEL)	SEE PAGE
	1	1	**293-9367**	1	CORE AS-OIL COOLER (ENGINE)	
	2	1	**209-7293**	1	GASKET	

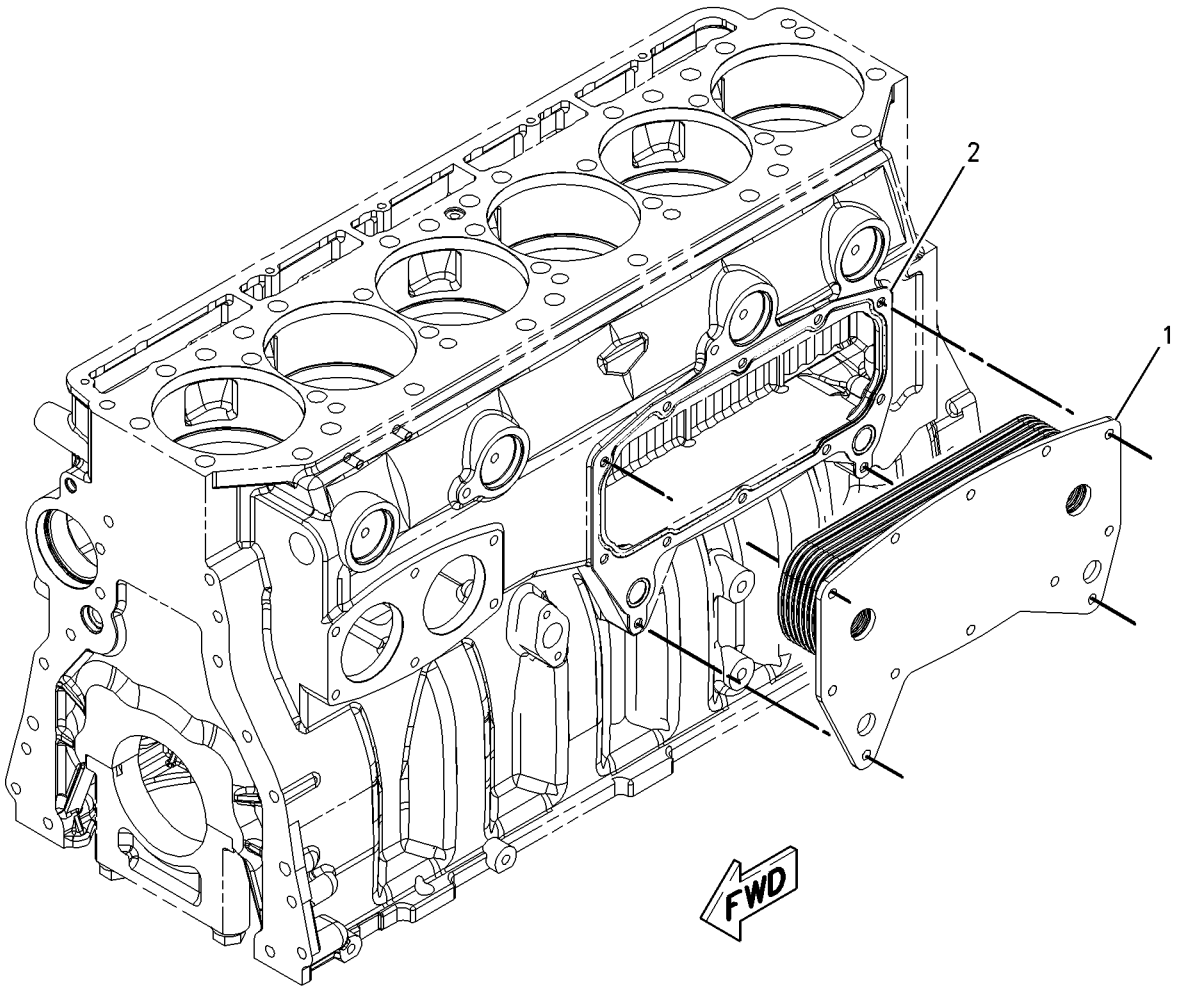

GRAPHIC #1 **<END>** g00837749

COOLING SYSTEM

336-1156 FAN & MOTOR GP

S/N: MYG1-UP; PPN1-UP

PART OF 334-6569 CONDENSER GP-REFRIGERANT

SMCS-1356, 1360, 1386, 5057 **i03653200**

NOTE	REF NO	GRAPHIC REF	PART NUMBER	QTY	PART NAME 1 2 3 4 5 6 (PRODUCT LEVEL)	SEE PAGE
	1	1	**161-3732**	1	MOTOR AS (HYDRAULIC FAN)	
	2	1	**161-3734**	1	RESISTOR AS (HYDRAULIC FAN)	
M	3	1	**164-0499**	1	NUT-FLANGE (M5X0.8-THD)	
M	4	1	**245-7877**	6	SCREW AS (M4X0.7X11-MM)	
M	5	1	**245-7903**	1	BOLT AS	
	6	1	**273-5307**	1	FAN AS-CONDENSER (4-BLADE)	
	7	1	**334-6572**	1	COVER	

M-METRIC PART

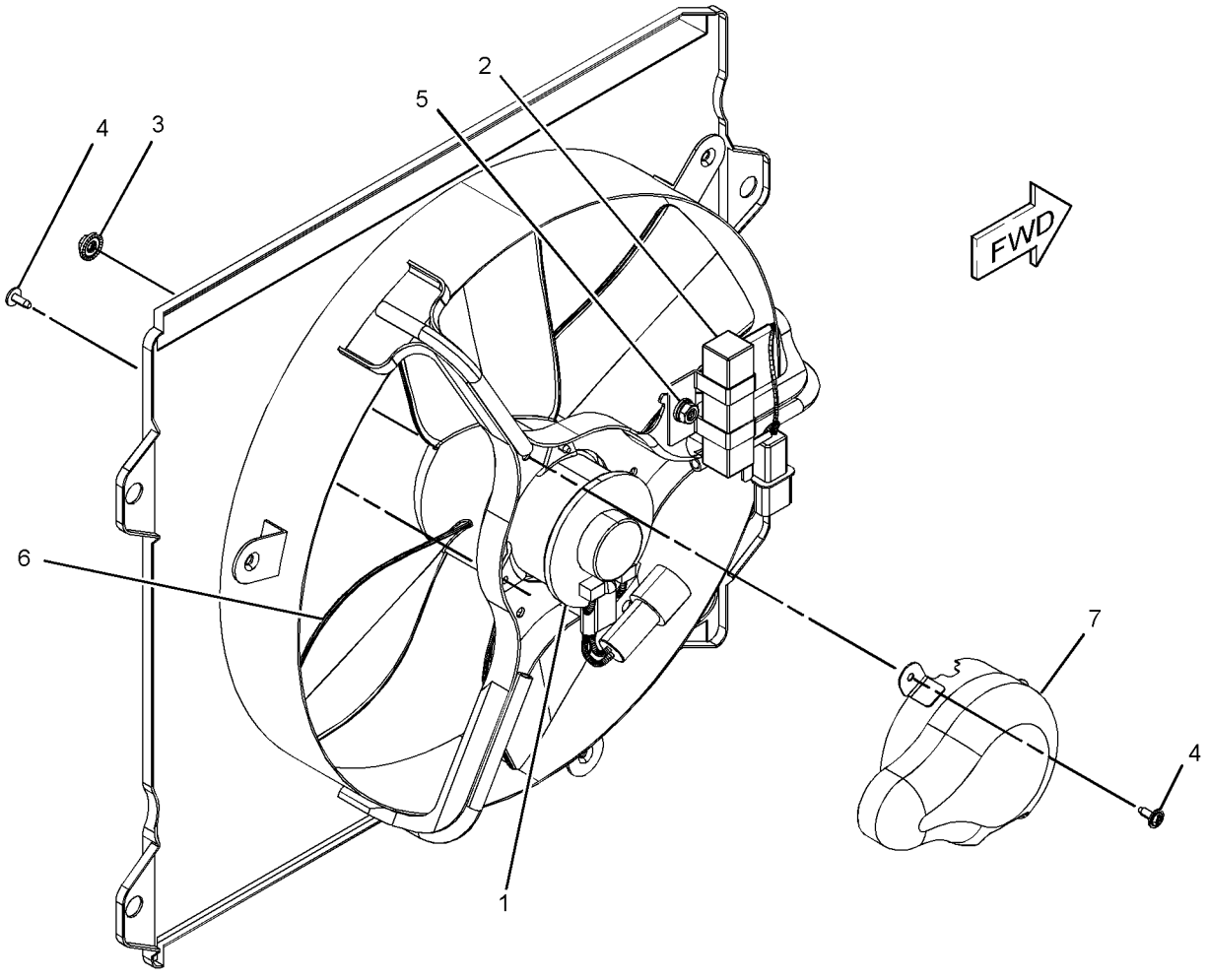

GRAPHIC #1 **<END>** g01750394

COOLING SYSTEM

230-2899 FAN GP-SUCTION

S/N: MYG1-UP; PPN1-UP

PART OF 279-7825 INSTALLATION AR-ENGINE

SMCS-1356 **i03325160**

NOTE	REF NO	GRAPHIC REF	PART NUMBER	QTY	PART NAME 1 2 3 4 5 6 (PRODUCT LEVEL)	SEE PAGE
CY	1	3	*295-9439*	1	DRIVE GP-FAN	44
M	2	3	**8T-4956**	8	BOLT (M12X1.75X35-MM)	
	3	3	**147-7170**	1	ADAPTER	
	4	1	**230-2946**	1	SUPPORT AS-FAN (LH)	
	5	1	**230-2953**	2	BRACE	
	6	1	**230-2956**	1	SUPPORT AS-FAN (RH)	
	7	3	**230-2960**	1	SUPPORT AS-FAN (RH, VERTICAL)	
YR	8	1	**234-4638**	1	MOTOR GP-PISTON (FAN)	594
	9	2	**245-9171**	1	SEAL	
	10	3	**245-9292**	1	SUPPORT AS-FAN (LH, VERTICAL)	
	11	1	**245-9293**	1	SPIDER AS (8-BLADE)	
	12	1	**245-9294**	2	GUARD AS-FAN	
	13	1	**281-3548**	1	SUPPORT AS-FAN (REAR)	
	14	2	**265-3552**	2	BRACE	
M	15	3	**136-4182**	2	BOLT (M16X2X100-MM)	
	16	3	**4M-0189**	1	SEAL-O-RING	
	17	3	**5P-1076**	18	WASHER-HARD (13.5X30X4-MM THK)	
	18	1,3	**7X-0515**	10	WASHER-HARD (17X35X5-MM THK)	
M	19	1,3	**7X-2553**	4	BOLT (M16X2X40-MM)	
	20	2	**7X-7729**	12	WASHER (11X25X3-MM THK)	
	21	3	**8T-4121**	8	WASHER-HARD (11X21X2.5-MM THK)	
M	22	3	**8T-4132**	2	NUT (M16X2-THD)	
M	23	2	**8T-4137**	12	BOLT (M10X1.5X20-MM)	
M	24	3	**8T-4139**	7	BOLT (M12X1.75X30-MM)	
M	25	3	**8T-4184**	4	BOLT (M12X1.75X45-MM)	
M	26	3	**8T-4194**	2	BOLT (M12X1.75X50-MM)	
M	27	3	**8T-4196**	8	BOLT (M10X1.5X35-MM)	
	28	3	**8T-4223**	9	WASHER-HARD (13.5X25.5X3-MM THK)	
M	29	3	**8T-4244**	6	NUT (M12X1.75-THD)	
M	30	1	**8T-4779**	6	BOLT (M16X2X35-MM)	

C-CHANGE FROM PREVIOUS TYPE
M-METRIC PART
R-REMFG PART MAY BE AVAILABLE
Y-SEPARATE ILLUSTRATION

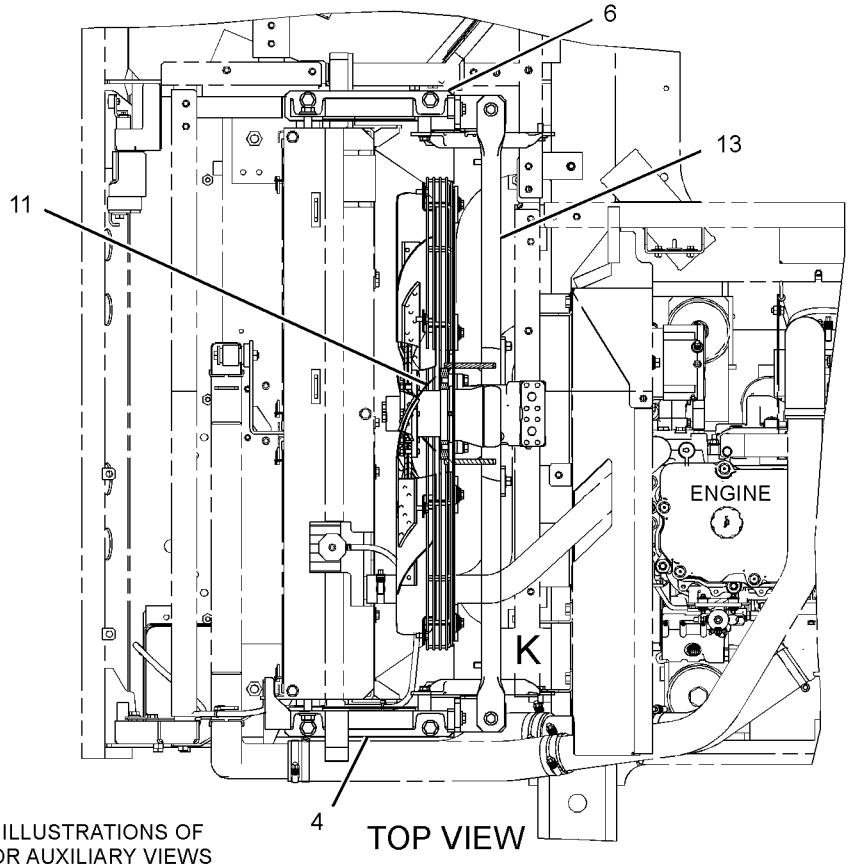

REFER TO ALL ILLUSTRATIONS OF THIS GROUP FOR AUXILIARY VIEWS

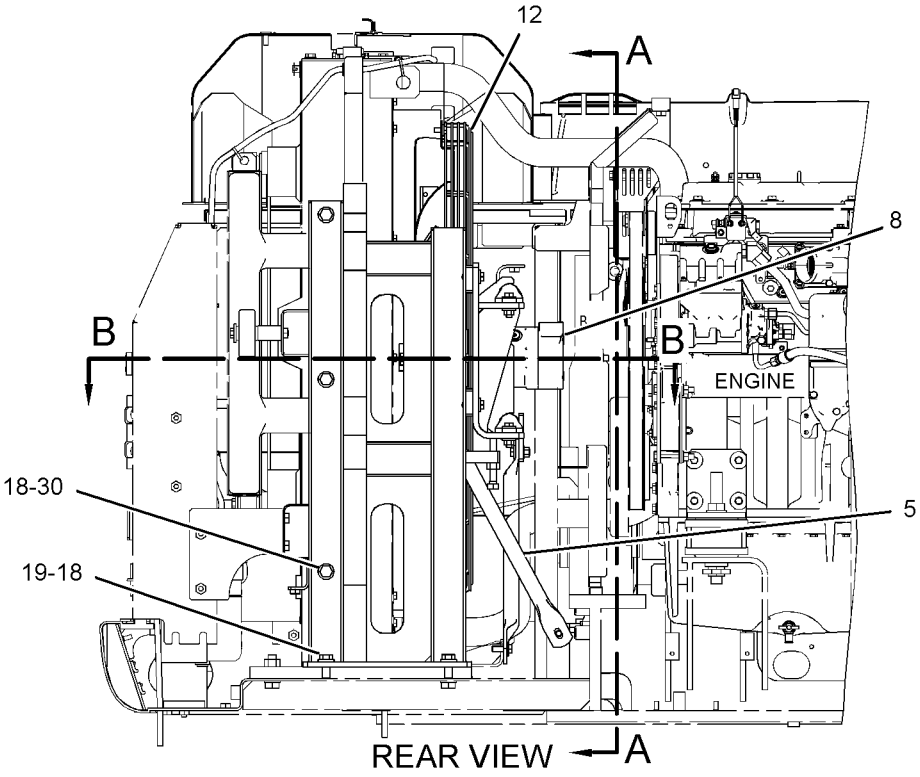

GRAPHIC #1 g01414961

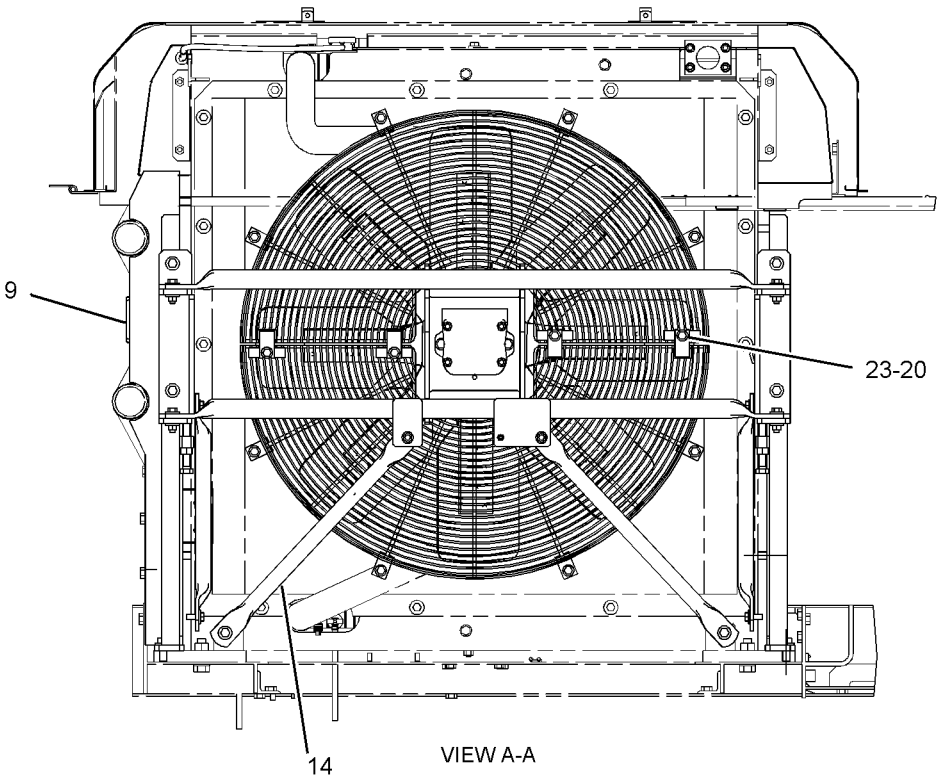

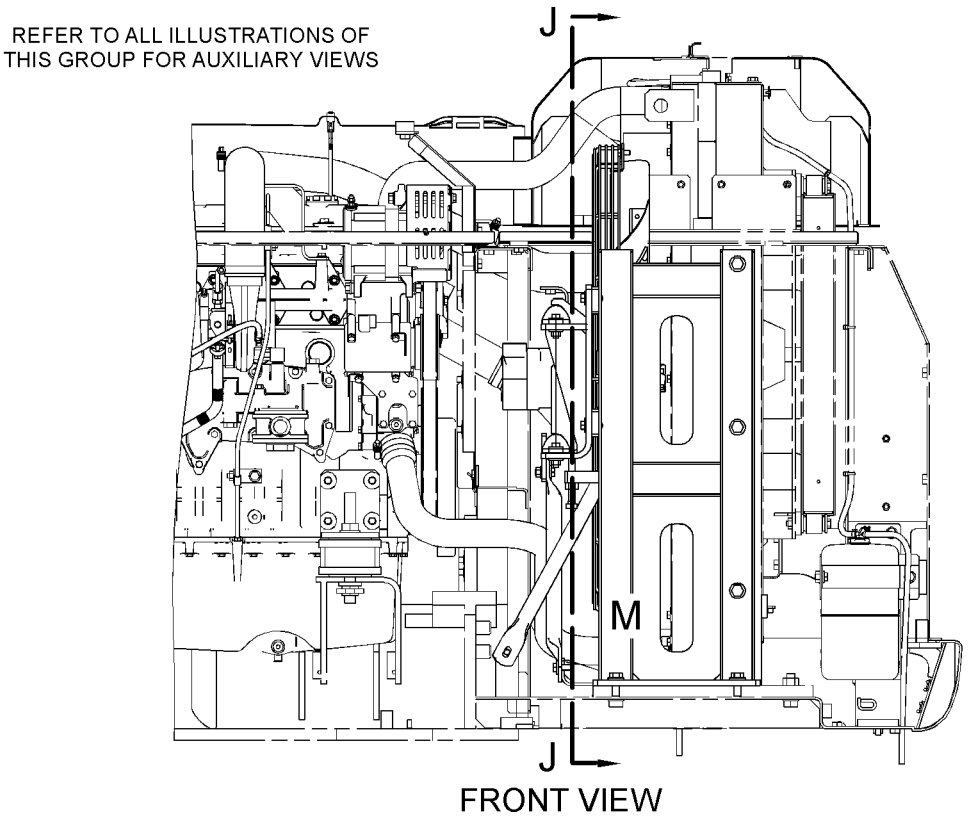

GRAPHIC #2 g01200694

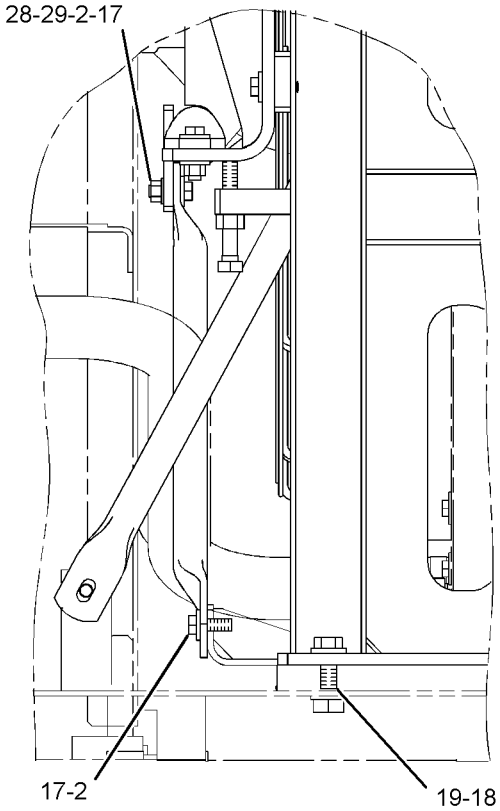

VIEW OF AREA M

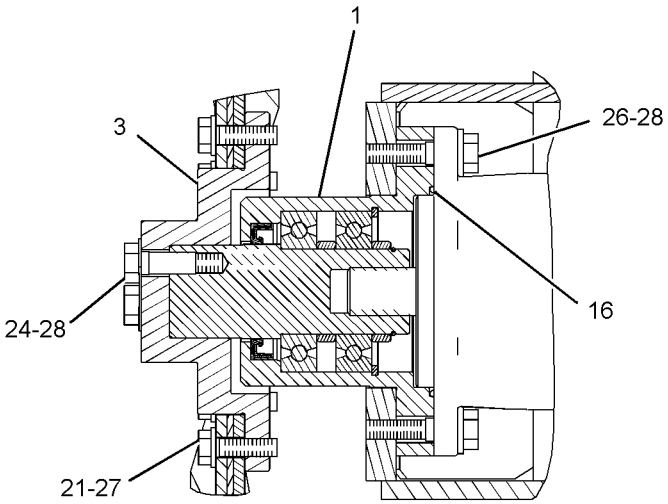

SECTION B-B

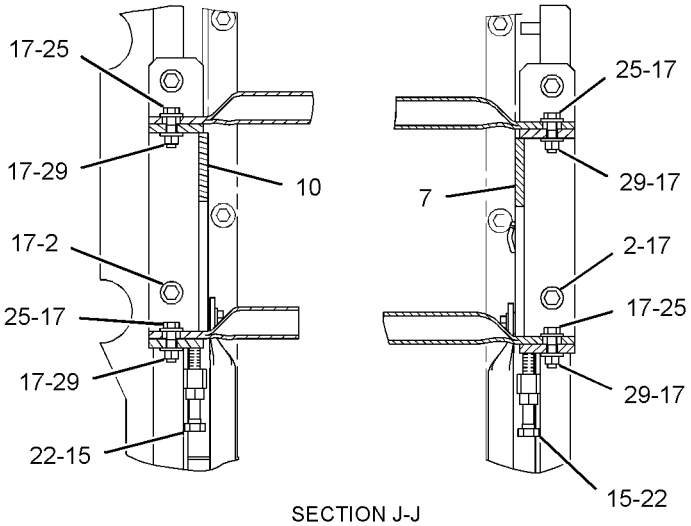

SECTION J-J

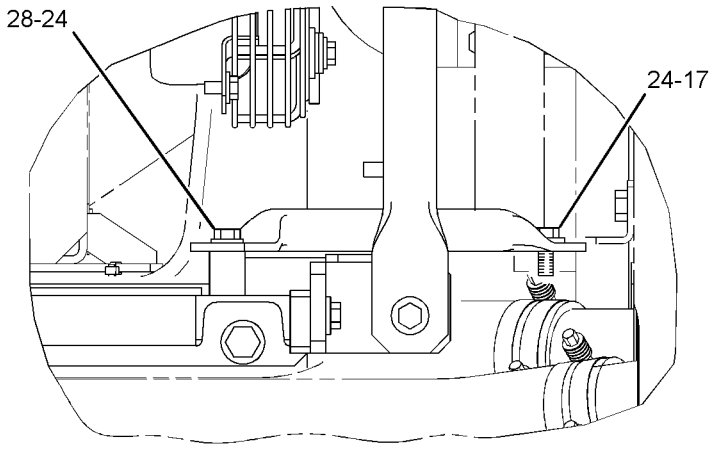

VIEW OF AREA K

GRAPHIC #3 **<END>** g01414963

248-8835 HOUSING & REGULATOR GP

S/N: THX14533-22637; THY5575-UP

PART OF 224-9843 ENGINE AR

SMCS-1355, 1393 **i02502290**

NOTE	REF NO	GRAPHIC REF	PART NUMBER	QTY	PART NAME 1 2 3 4 5 6 (PRODUCT LEVEL)	SEE PAGE
	1	1	**248-5513**	1	REGULATOR-TEMPERATURE (92-DEG C) (COOLANT)	
	2	1	**157-0670**	1	CAP-DUST	
	3	1	**280-6794**	1	HOSE	
	4	1	**217-5200**	1	HOUSING AS	
	4A	1	**3S-9643**	1	SEAL-LIP TYPE (WATER TEMPERATURE REGULATOR)	
	5	1	**191-4457**	1	GASKET (WATER REGULATOR HOUSING)	
	6	1	**237-5176**	2	CLAMP-BAND	
	7	1	*148-8411*	1	PLUG AS	
		1	**9S-4185**	1	PLUG-O-RING	
	7A	1	**3K-0360**	1	SEAL-O-RING	
	8	1	**154-9025**	1	VALVE-FLUID SAMPLING (COOLANT)	
	9	1	**4S-9191**	4	WASHER (12X22.5X5-MM THK)	
	10	1	**6B-5072**	1	BUSHING-REDUCING	
M	11	1	**8T-0644**	4	BOLT (M10X1.5X90-MM)	

M-METRIC PART

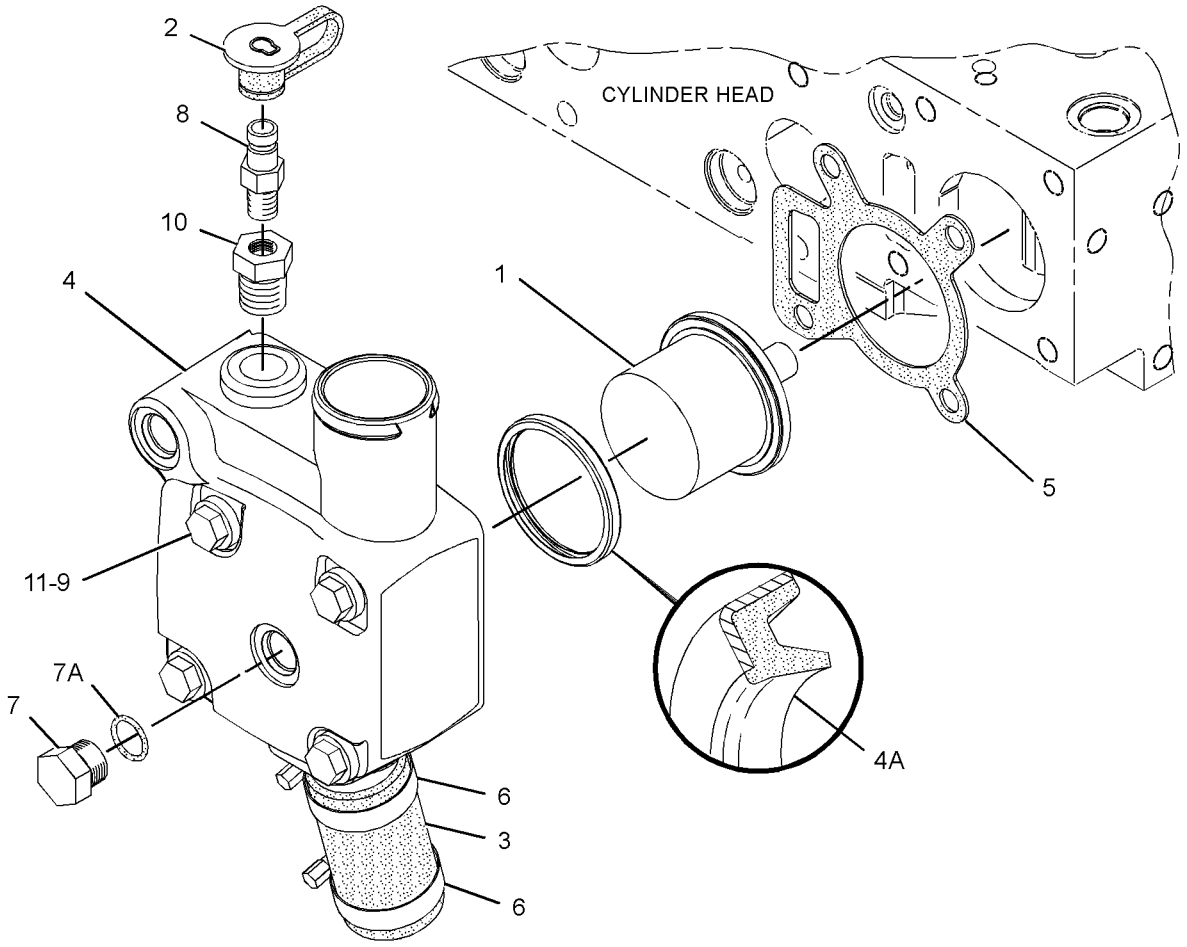

GRAPHIC #1 **<END>** g01256579

244-0989 LINES GP-TURBOCHARGER WATER

S/N: THX14533-UP; THY5575-UP
PART OF 224-9843 ENGINE AR

SMCS-1052 **i03434557**

NOTE	REF NO	GRAPHIC REF	PART NUMBER	QTY	PART NAME 1 2 3 4 5 6 (PRODUCT LEVEL)	SEE PAGE
	1	1	**118-0911**	1	TEE-O-RING PORT	
	2	1	**120-9127**	1	TEE	
	3	1	**3K-0360**	3	SEAL-O-RING	
M	4	1	**5C-7261**	1	NUT (M8X1.25-THD)	
	5	1	**7B-7501**	1	CLIP	
	6	1	**6V-6609**	2	SEAL-O-RING	
	7	1	**8M-0505**	2	CONNECTOR	
	8	1	**8T-1715**	1	ADAPTER	
	9	1	*148-8411*	2	PLUG AS	
					(EACH INCLUDES)	
		1	**3K-0360**	1	SEAL-O-RING	
		1	**9S-4185**	1	PLUG-O-RING	
	10	1	**164-5603**	1	CONNECTOR AS	
		1	**3K-0360**	1	SEAL-O-RING	
		1	**8M-0505**	1	CONNECTOR	
	11	1	**9M-1974**	1	WASHER-HARD (8.8X16X2-MM THK)	
	12	1	**244-0988**	2	HOSE AS	

M-METRIC PART

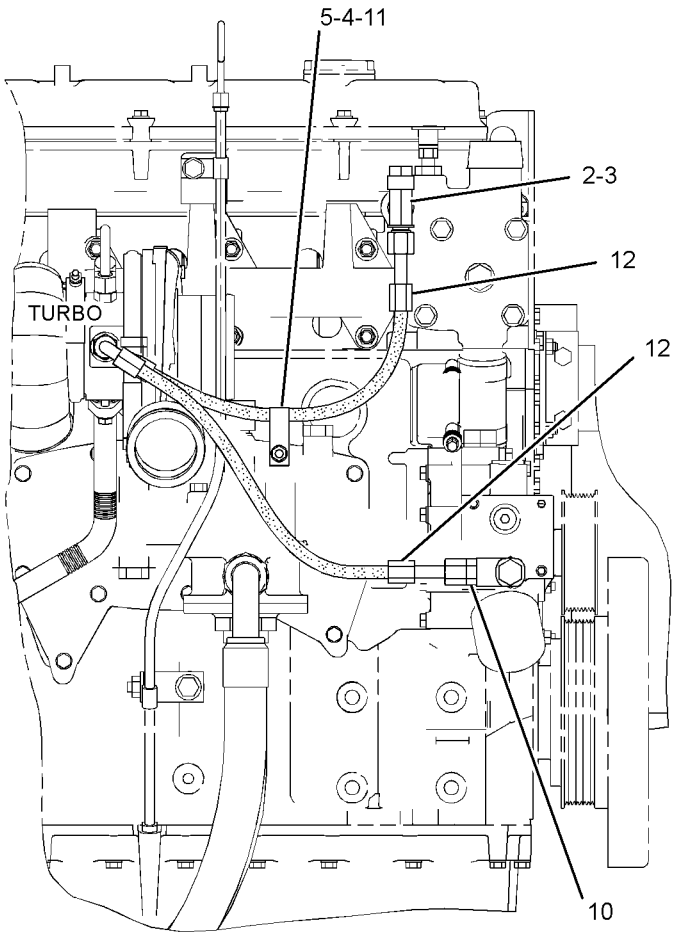

RIGHT SIDE VIEW OF ENGINE

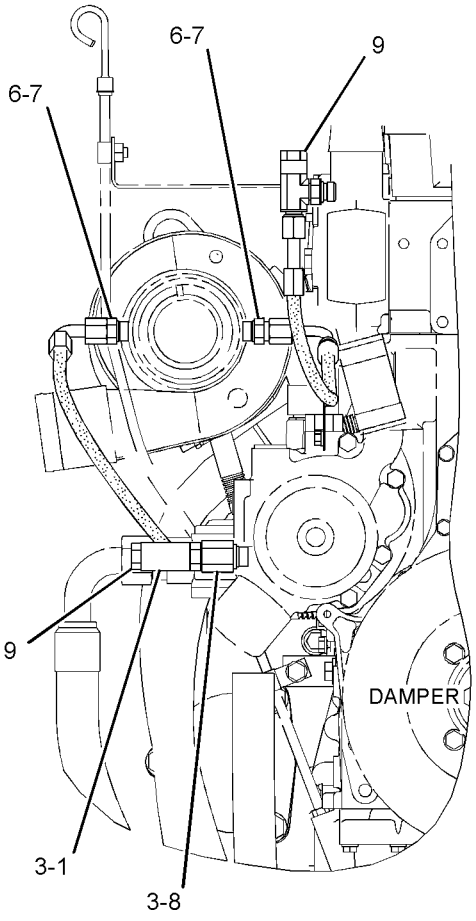

FRONT VIEW OF ENGINE

GRAPHIC #1 **<END>** g01716933

COOLING SYSTEM

348-4301 LINES GP-WATER

S/N: THX22638-UP

PART OF 224-9843 ENGINE AR

SMCS-1355, 1380 **i03670752**

NOTE	REF NO	GRAPHIC REF	PART NUMBER	QTY	PART NAME 1 2 3 4 5 6 (PRODUCT LEVEL)	SEE PAGE
	1	1	**280-6794**	1	HOSE	
	2	1	**157-0670**	1	CAP-DUST	
	3	1	**191-4457**	1	GASKET (WATER REGULATOR HOUSING)	
	4	1	**217-5200**	1	HOUSING AS	
		1	**3S-9643**	1	SEAL-LIP TYPE	
		1	**217-5199**	1	HOUSING	
	5	1	**237-5176**	2	CLAMP-BAND	
	6	1	**247-7133**	1	REGULATOR-WATER TEMPERATURE (98-DEG C) (COOLANT)	
	7	1	*341-0087*	1	PLUG AS	
		1	**6V-6609**	1	SEAL-O-RING	
		1	**9S-4185**	1	PLUG-O-RING	
	8	1	**154-9025**	1	VALVE-FLUID SAMPLING (ENGINE COOLANT)	
	9	1	**4S-9191**	4	WASHER (12X22.5X5-MM THK)	
	10	1	**6B-5072**	1	BUSHING-REDUCING	
M	11	1	**8T-0644**	4	BOLT (M10X1.5X90-MM)	

M-METRIC PART

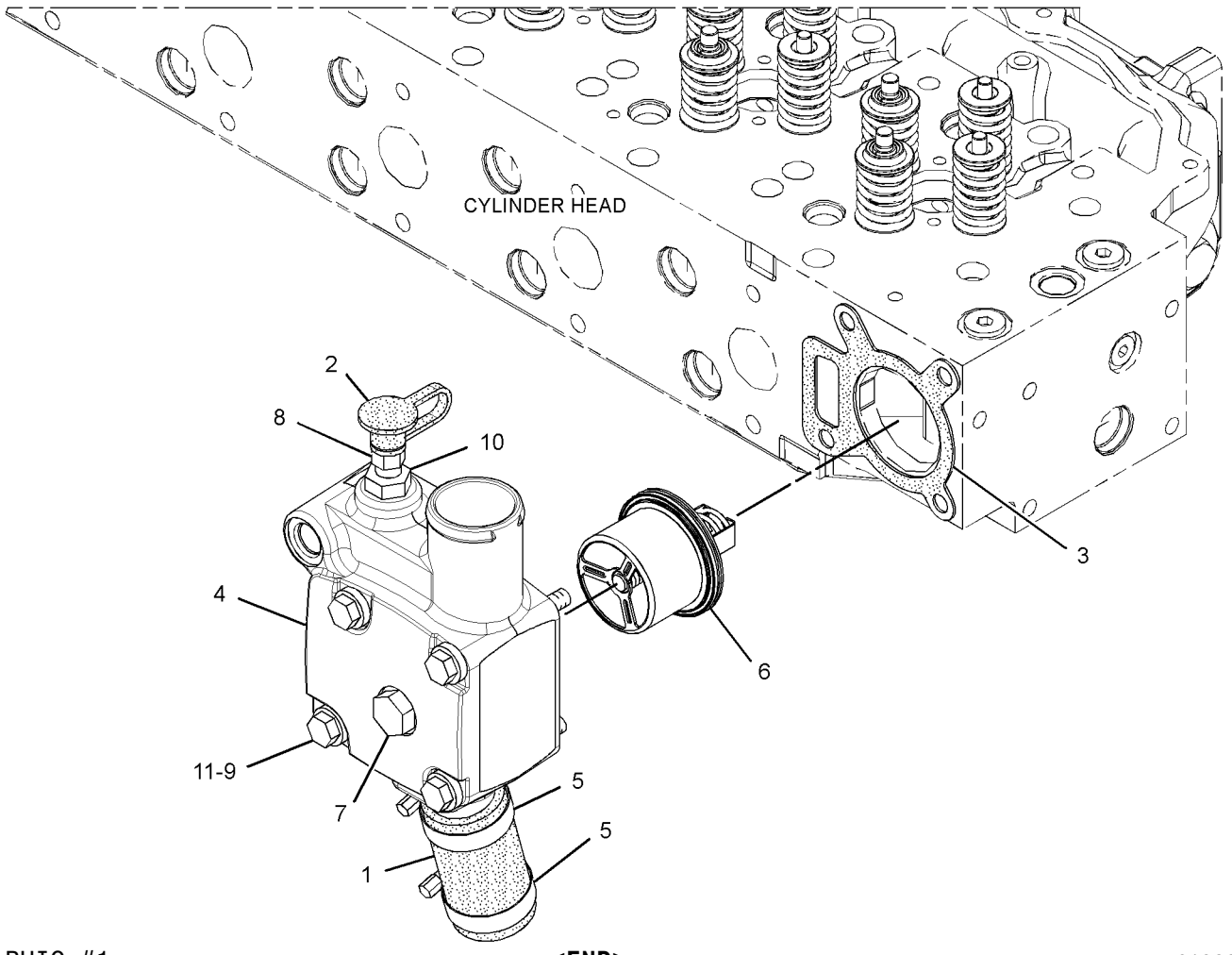

GRAPHIC #1 **<END>** g01966691

265-3553 MODULE GP-COOLING

S/N: MYG1-UP; PPN1-UP

PART OF 230-2896 RADIATOR & HYD OIL COOLER GP

SMCS-1064, 1350, 1374, 1375, 1378, 137T, 1712, 1811, 4346

i03483429

NOTE	REF NO	GRAPHIC REF	PART NUMBER	QTY	PART NAME 1 2 3 4 5 6 (PRODUCT LEVEL)	SEE PAGE
	1	2	**1P-5411**	3	SLEEVE	
	2	2	**1P-5412**	6	BUSHING-TERMINAL	
	3	1	**8T-0376**	1	VALVE (DRAIN)	
	4	1	**036-1865**	1	CAP AS-RADIATOR	
	5	1	**096-4035**	3	CLIP	
	6	2	**245-9359**	1	CORE AS-RADIATOR	
	7	2	**245-9360**	1	CORE AS-OIL COOLER (HYDRAULIC)	
	8	2	**326-3898**	1	AFTERCOOLER AS	
	9	1	**265-3534**	1	FRAME AS	
	10	1	**265-3535**	1	BRACKET AS	
	11	2	**265-3536**	1	BRACKET AS	
	12	1	**265-3537**	1	PLATE AS	
	13	1	**265-3539**	4	ISOLATOR	
	14	1	**265-3540**	2	SEAL	
	15	2	**265-3542**	1	SEAL	
	16	2	**265-3543**	1	SEAL	
	17	2	**265-3544**	1	SHROUD AS-RADIATOR	
	18	2	**7X-0618**	5	WASHER-HARD (13.5X40X5-MM THK)	
	19	1	**7X-7729**	16	WASHER (11X25X3-MM THK)	
M	20	1	**8T-4137**	16	BOLT (M10X1.5X20-MM)	
M	21	1,2	**8T-4139**	5	BOLT (M12X1.75X30-MM)	
M	22	2	**8T-4176**	2	BOLT (M12X1.75X90-MM)	
M	23	1,2	**8T-4192**	7	BOLT (M12X1.75X25-MM)	
	24	1,2	**8T-4223**	14	WASHER-HARD (13.5X25.5X3-MM THK)	
M	25	2	**8T-4956**	2	BOLT (M12X1.75X35-MM)	
M	26	2	**8T-5041**	1	BOLT (M12X1.75X120-MM)	
E	27	1	**7Y-1976**		HOSE-WATER (176-CM)	
E	27A	1	**7Y-1976**		HOSE-WATER (21-CM)	

E-ORDER BY THE CENTIMETER
M-METRIC PART

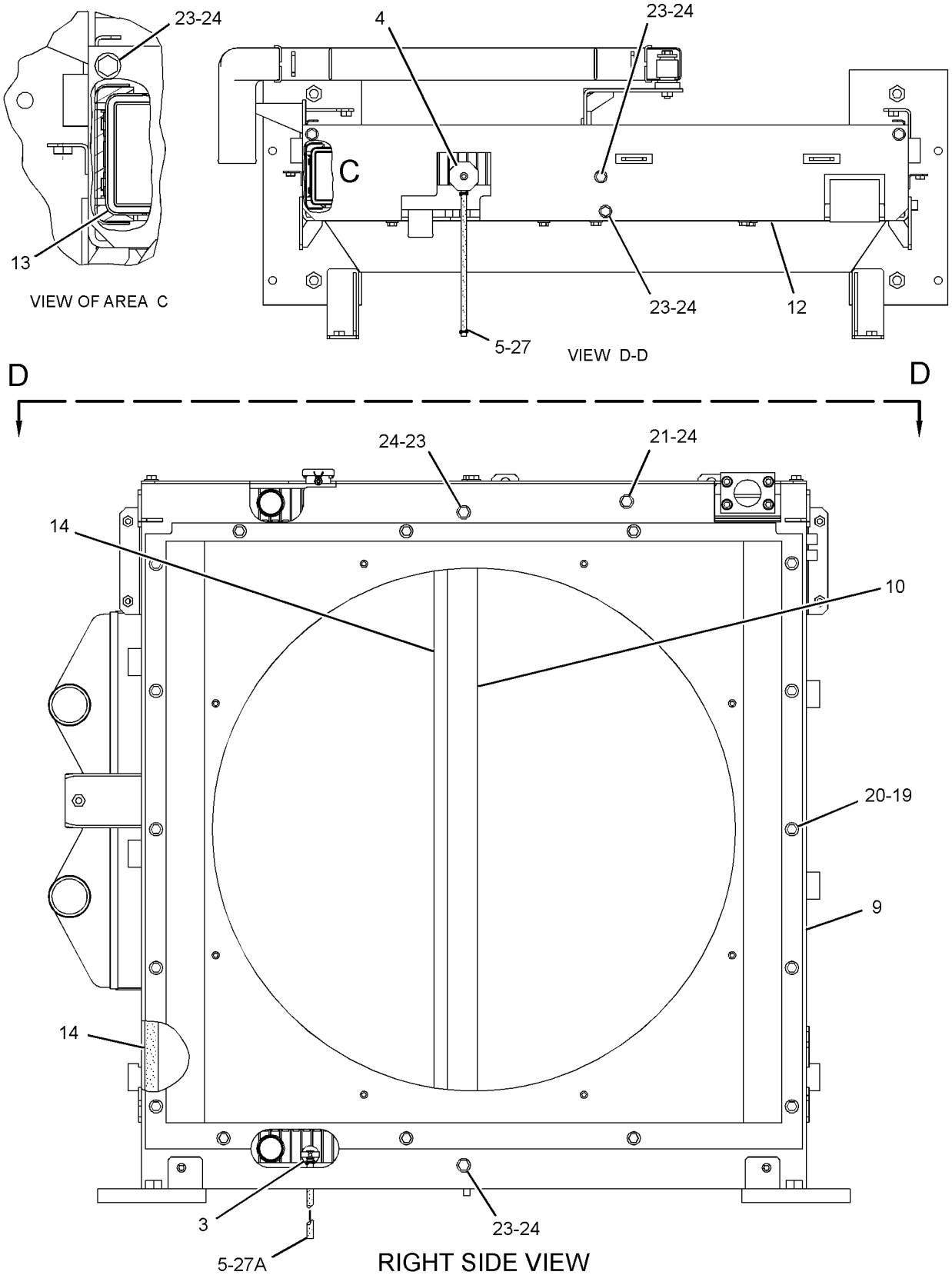

GRAPHIC #1 g01243551

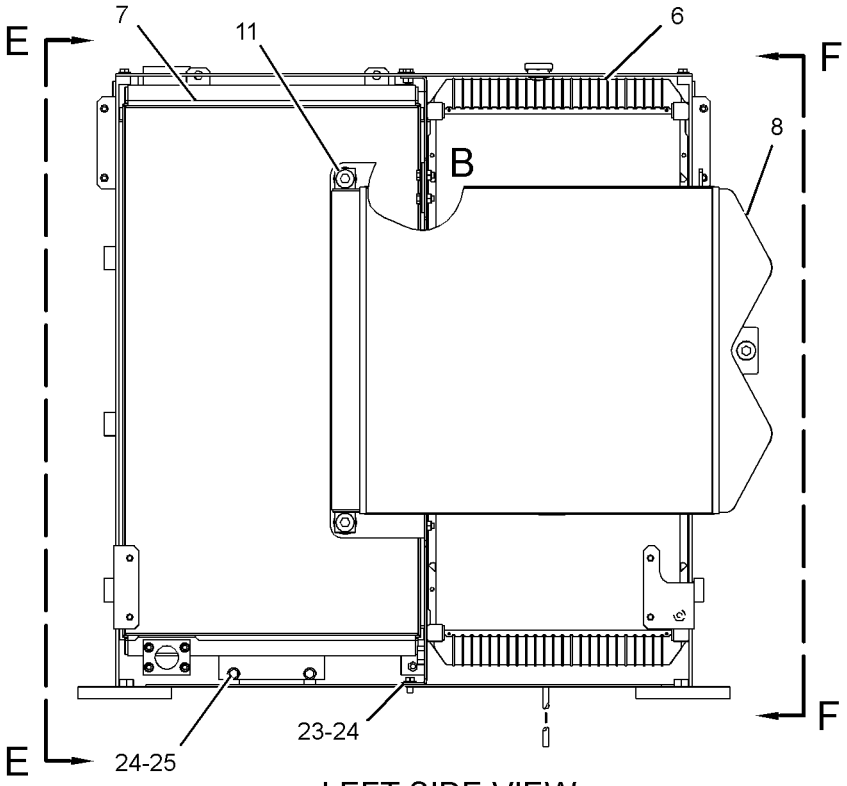

LEFT SIDE VIEW

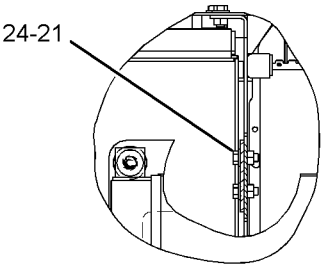

VIEW OF AREA B

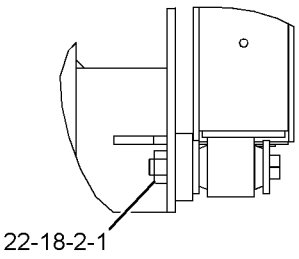

VIEW OF AREA A

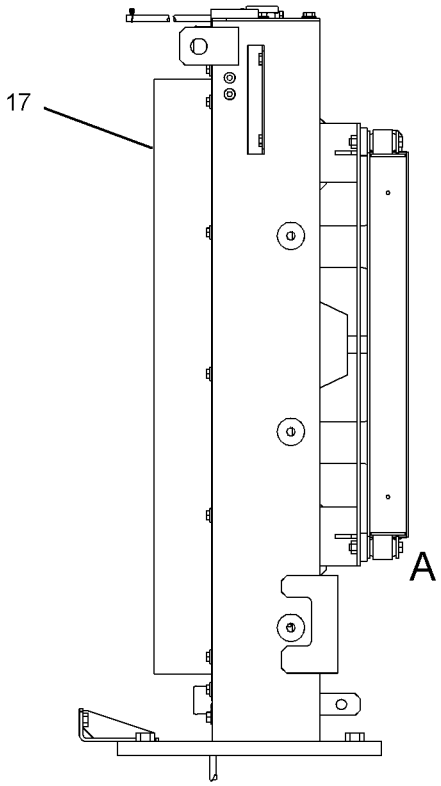

VIEW E-E

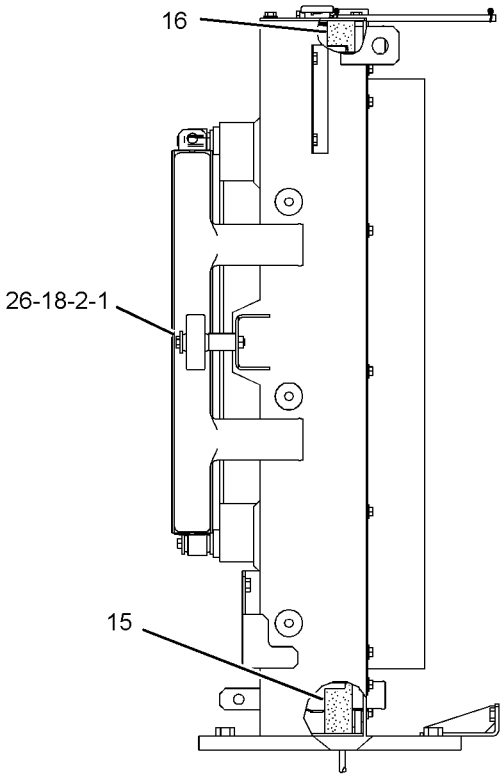

VIEW F-F

GRAPHIC #2 **<END>** g01243550

205-4013 PLUG GP-WATER LINES–COOLANT

S/N: THX14533-UP; THY5575-UP
PART OF 224-9843 ENGINE AR

SMCS-1393 **i01552293**

NOTE	REF NO	GRAPHIC REF	PART NUMBER	QTY	PART NAME 1 2 3 4 5 6 (PRODUCT LEVEL)	SEE PAGE
	1	1	**209-1434**	2	PLUG-CUP	
	2	1	**8T-6761**	1	PLUG-PIPE	

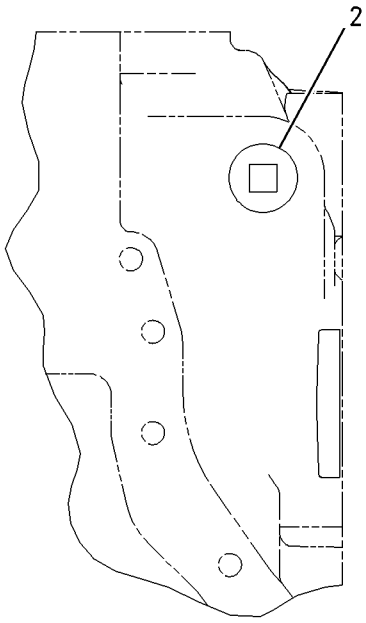

REAR VIEW

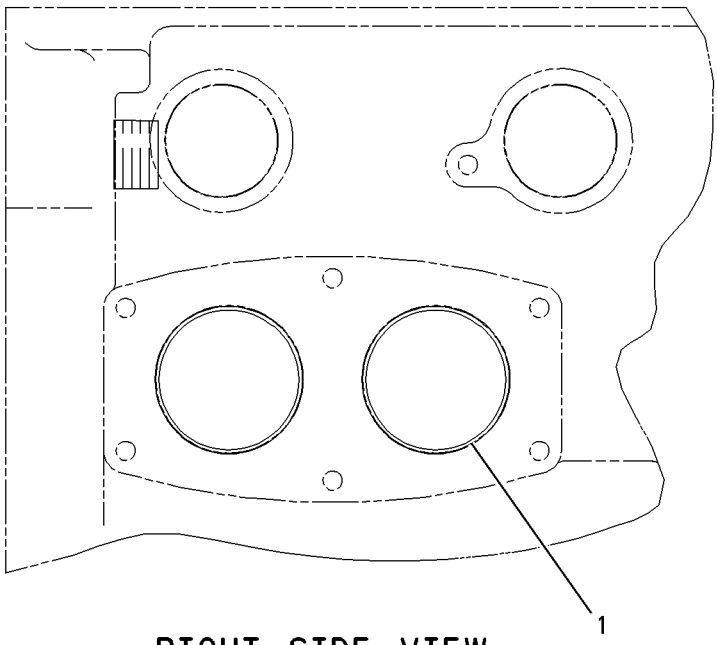

RIGHT SIDE VIEW

GRAPHIC #1 **<END>** g00797632

COOLING SYSTEM

202-7674 PUMP GP-WATER

S/N: THX14533-UP; THY5575-UP
PART OF 224-9843 ENGINE AR

SMCS-1361 **i02034907**

NOTE	REF NO	GRAPHIC REF	PART NUMBER	QTY	PART NAME 1 2 3 4 5 6 (PRODUCT LEVEL)	SEE PAGE
CY	1	1	**219-4452**	1	PUMP GP-WATER	94
	2	1	**2M-4453**	1	SEAL-O-RING	
	3	1	**4J-0525**	1	SEAL-O-RING	
M	5	1	**8T-0644**	4	BOLT (M10X1.5X90-MM)	

C-CHANGE FROM PREVIOUS TYPE
M-METRIC PART
Y-SEPARATE ILLUSTRATION

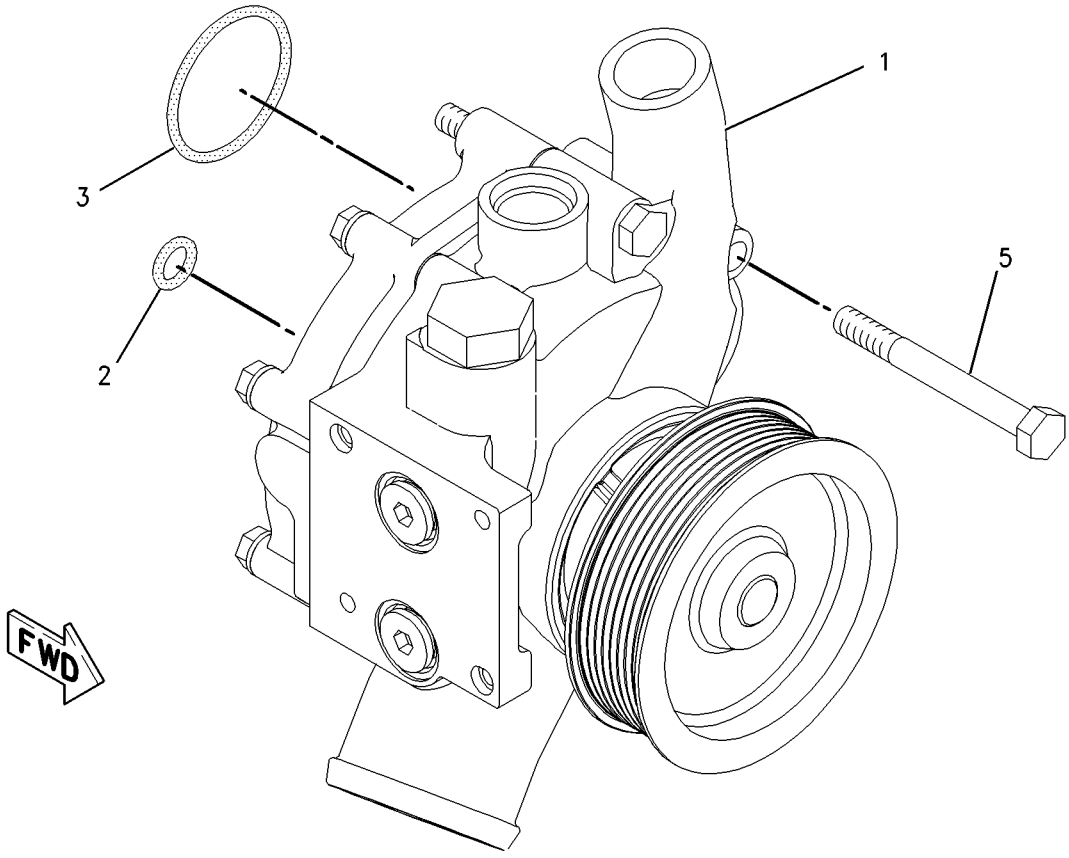

GRAPHIC #1 **<END>** g00787346

219-4452 PUMP GP-WATER*R

S/N: THX14533-UP; THY5575-UP

PART OF 202-7674 PUMP GP-WATER

SMCS-1361 **i01906206**

NOTE	REF NO	GRAPHIC REF	PART NUMBER	QTY	PART NAME 1 2 3 4 5 6 (PRODUCT LEVEL)	SEE PAGE
	1	1	**177-1044**	1	COVER	
M	2	1	**6V-3918**	4	BOLT (M8X1.25X50-MM)	
	2A	1	**9M-1974**	4	WASHER-HARD (8.8X16X2-MM THK)	
	3	1	**216-2942**	1	PUMP AS-WATER	
		1	**216-2941**	1	HOUSING-PUMP	
	3A	1	**177-1052**	1	SHAFT AS	
	3B	1	**177-1056**	1	IMPELLER-PUMP	
	3C	1	**197-9581**	1	PULLEY (8-GROOVE)	
	3D	1	**147-5088**	1	SEAL AS-WATER PUMP	
	4	1	**222-3901**	1	GASKET	
	5	1	**3K-0360**	2	SEAL-O-RING	
	6	1	**9S-8005**	2	PLUG-O-RING	

M-METRIC PART

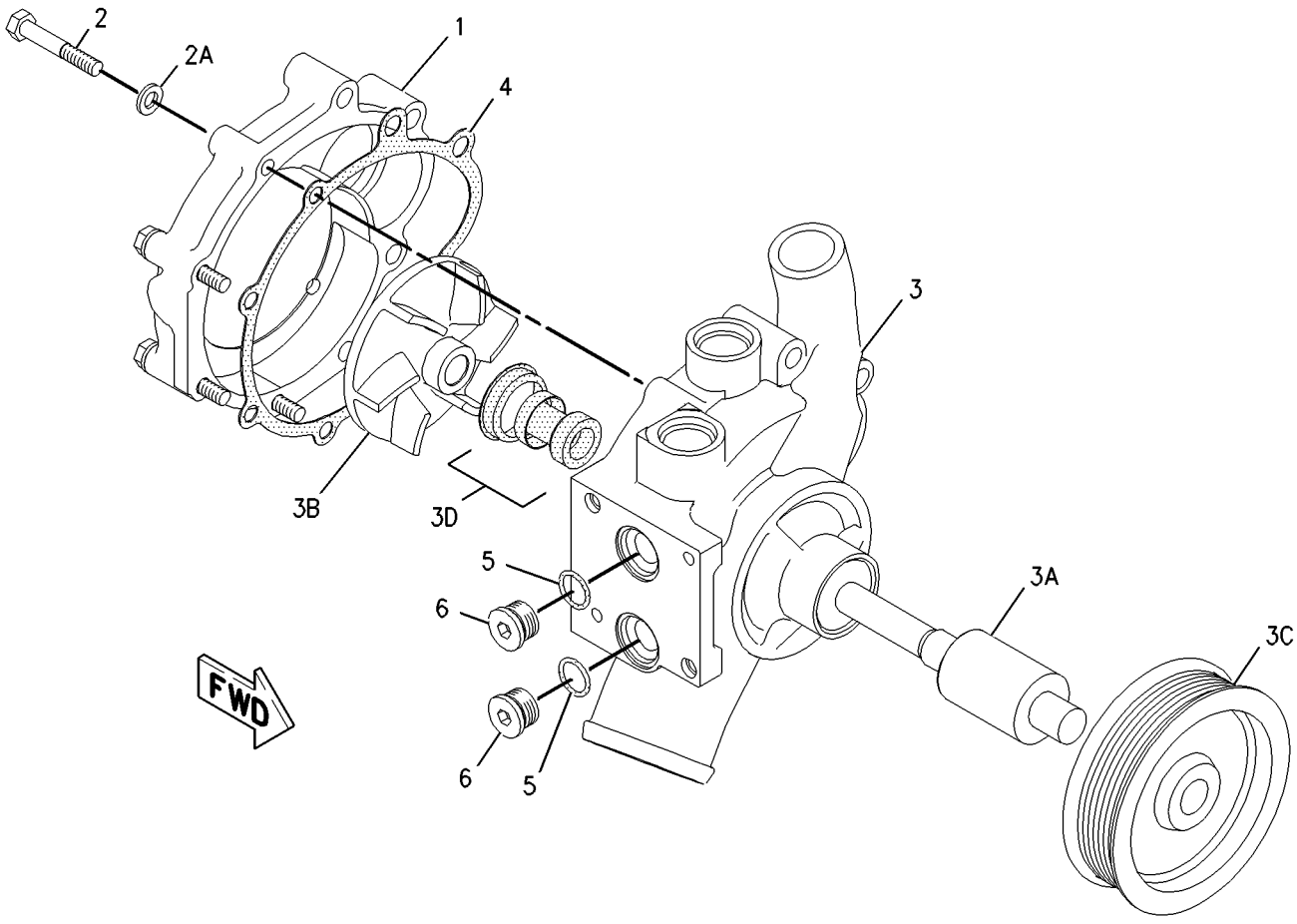

GRAPHIC #1 **<END>** g00941188

COOLING SYSTEM

230-2896 RADIATOR & HYD OIL COOLER GP

S/N: MYG1-UP; PPN1-UP

PART OF 279-7825 INSTALLATION AR-ENGINE

SMCS-1351 **i02899084**

NOTE	REF NO	GRAPHIC REF	PART NUMBER	QTY	PART NAME 1 2 3 4 5 6 (PRODUCT LEVEL)	SEE PAGE
	1	1	**7I-2673**	4	STRAP-CABLE	
	2	1	**8T-6703**	3	CLAMP-HOSE	
	3	1	**096-4035**	1	CLIP	
	4	1	**144-0367**	1	CLAMP-HOSE	
	5	2	**204-0909**	1	BAND	
	6	1	**230-2930**	1	HOSE-RADIATOR	
	7	1	**230-2931**	1	HOSE-RADIATOR	
	8	1	**245-9170**	1	SEAL	
	9	1	**245-9174**	1	SEAL	
	10	2	**245-9206**	1	TANK AS-EXPANSION (INCLUDES COOLANT LEVEL SWITCH)	
		2	**171-3370**	1	CAP AS (COOLANT OVERFLOW)	
		2	**204-0920**	1	CAP AS (COOLANT FILL)	
	11	1	**245-9287**	1	SEAL	
	12	1	**245-9288**	1	SEAL	
	13	1	**245-9289**	1	SEAL	
Y	14	1	**265-3553**	1	MODULE GP-COOLING	89
	15	2	**265-3595**	1	SUPPORT AS	
C	16	2	**281-3546**	1	PLATE AS	
C	17	2	**184-5394**	1	CLIP	
M	18	1	**7X-2563**	4	BOLT (M20X2.5X60-MM)	
C	19	2	**8T-4121**	3	WASHER-HARD (11X21X2.5-MM THK)	
	20	1	**8T-4123**	4	WASHER (22X35X3.5-MM THK)	
CM	21	2	**8T-4136**	1	BOLT (M10X1.5X25-MM)	
M	22	2	**8T-4183**	2	BOLT (M12X1.75X40-MM)	
M	23	2	**8T-4192**	3	BOLT (M12X1.75X25-MM)	
CM	24	2	**8T-4195**	2	BOLT (M10X1.5X30-MM)	
	25	2	**8T-4223**	5	WASHER-HARD (13.5X25.5X3-MM THK)	
	26	2	**9D-3769**	1	GROMMET	
E	27	1	**7Y-1976**		HOSE-WATER (56-CM)	

C-CHANGE FROM PREVIOUS TYPE
E-ORDER BY THE CENTIMETER
M-METRIC PART
Y-SEPARATE ILLUSTRATION

REFER TO ALL ILLUSTRATIONS OF THIS GROUP FOR AUXILIARY VIEWS

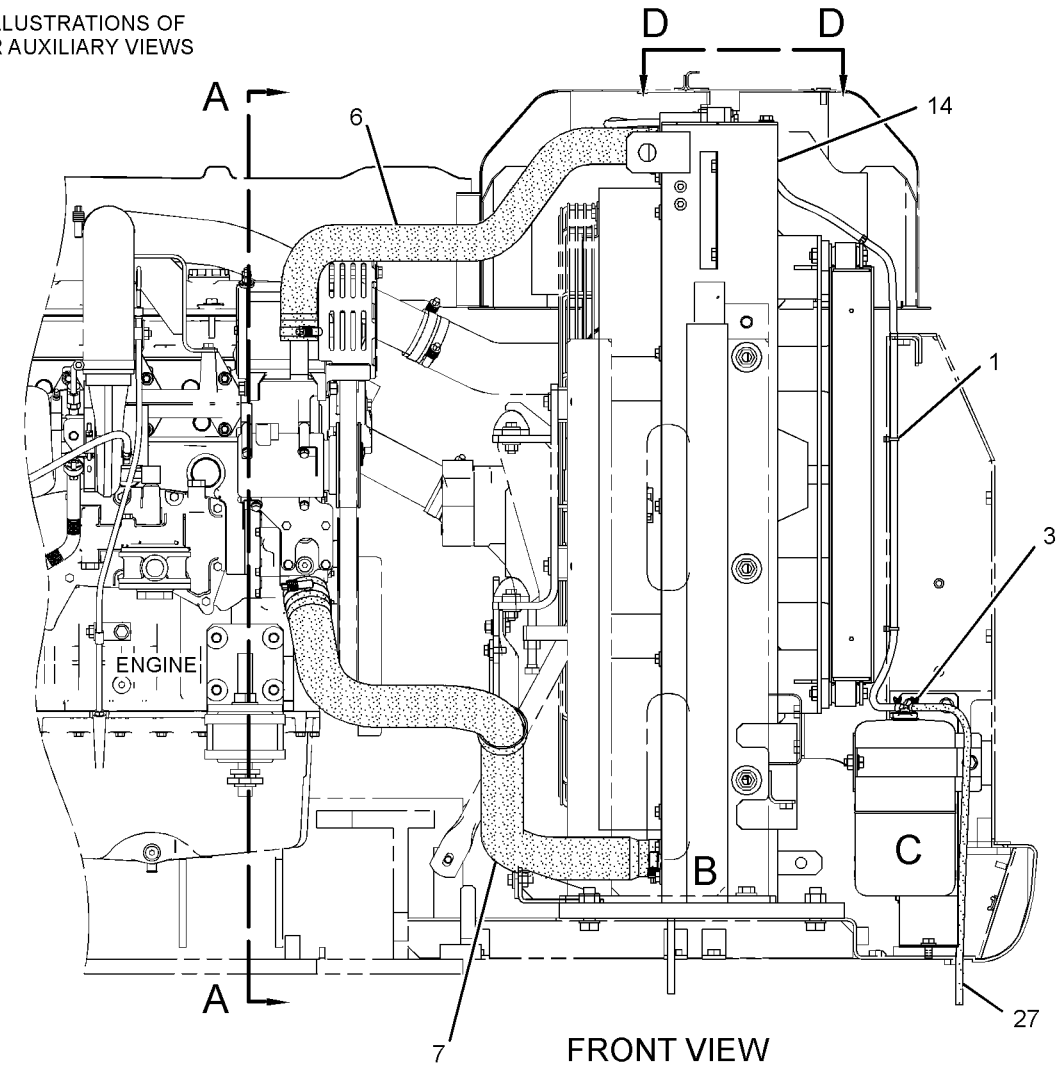

FRONT VIEW

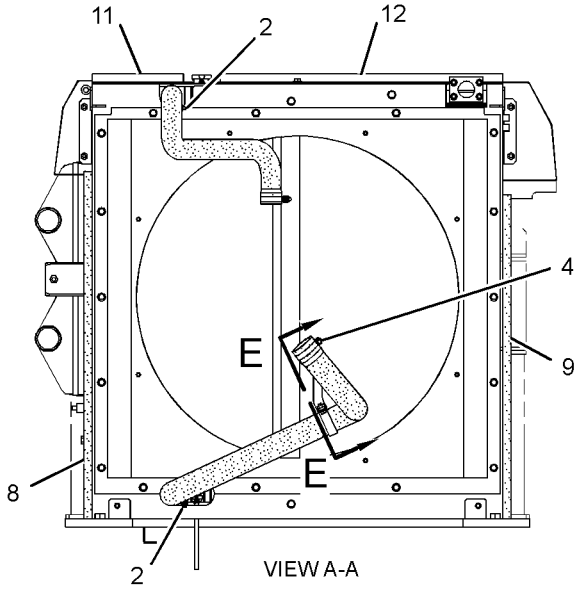

VIEW A-A

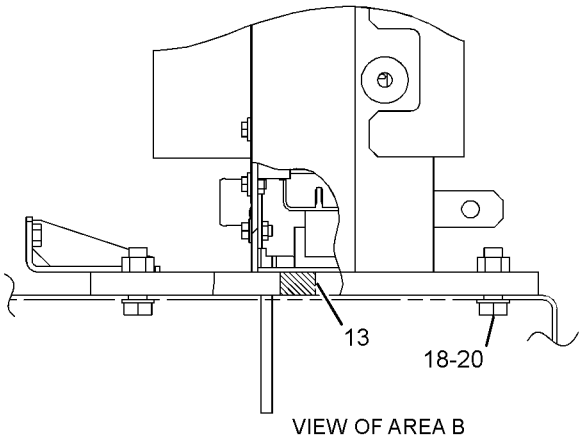

VIEW OF AREA B

GRAPHIC #1

g01302435

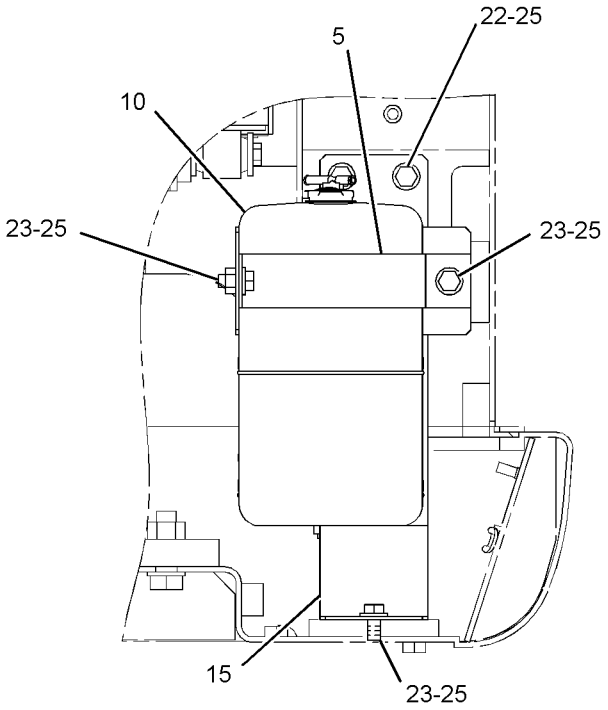

VIEW OF AREA C

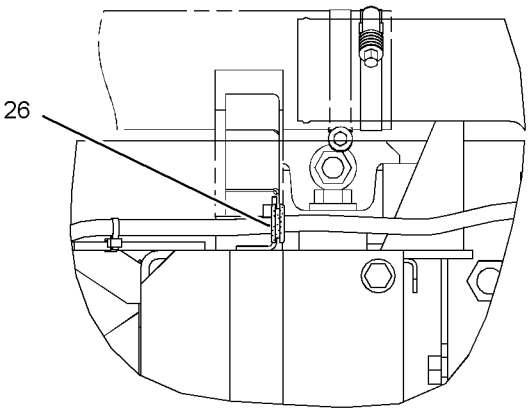

VIEW D-D

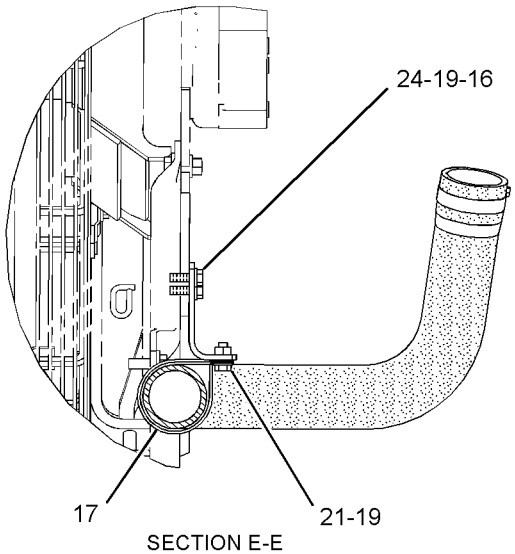

SECTION E-E

GRAPHIC #2 **<END>** g01302436

AIR INLET AND EXHAUST SYSTEM

239-6407 AIR CLEANER & MOUNTING GP

S/N: MYG1-UP; PPN1-UP

PART OF 279-7825 INSTALLATION AR-ENGINE

SMCS-1051, 1054, 7452 **i03652136**

NOTE	REF NO	GRAPHIC REF	PART NUMBER	QTY	PART NAME 1 2 3 4 5 6 (PRODUCT LEVEL)	SEE PAGE
CY	1	1	**324-4149**	1	AIR CLEANER GP	102
	2	1	**8T-4121**	4	WASHER-HARD (11X21X2.5-MM THK)	
M	3	1	**8T-4137**	4	BOLT (M10X1.5X20-MM)	

C-CHANGE FROM PREVIOUS TYPE
M-METRIC PART
Y-SEPARATE ILLUSTRATION

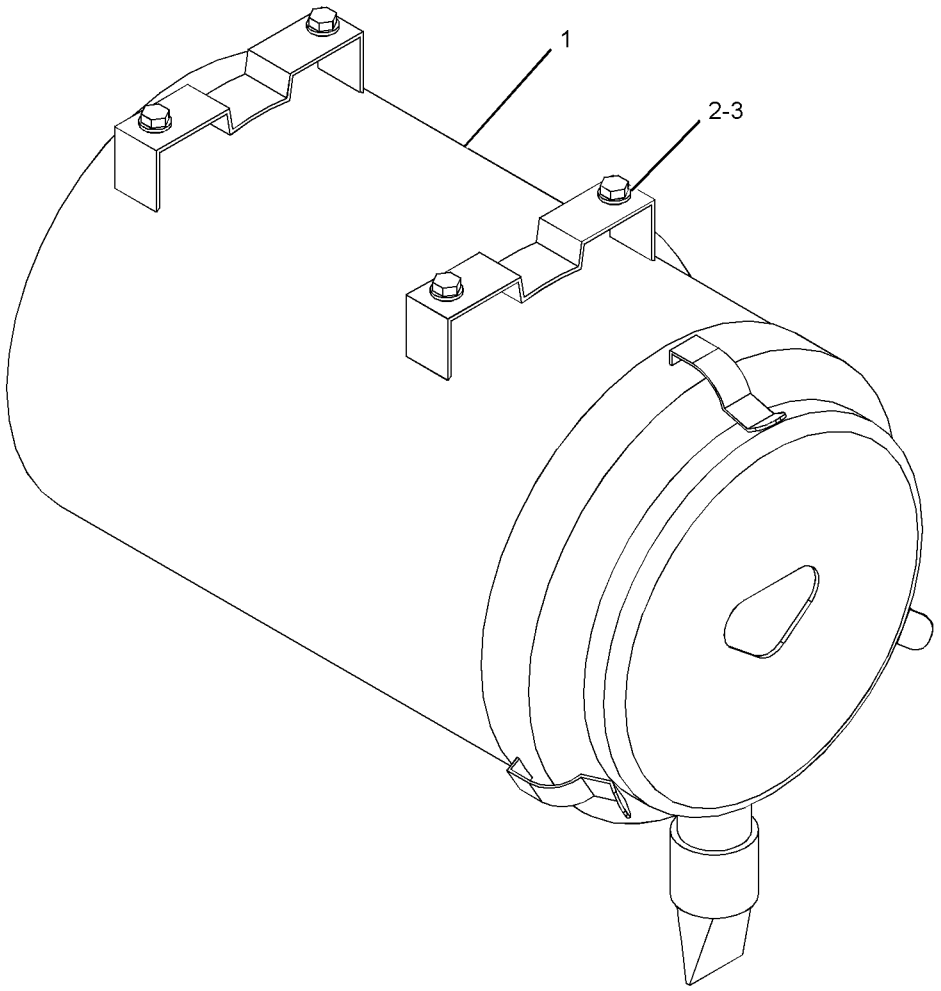

GRAPHIC #1 **<END>** g01199520

AIR INLET AND EXHAUST SYSTEM

346-4594 AIR CLEANER AR

S/N: MYG1-UP; PPN1-UP
PART OF 345-7571, 348-8126, 352-2663 DISTRIBUTION AR
AN ATTACHMENT

SMCS-1051 **i03676360**

NOTE	PART NUMBER	QTY	PART NAME 1 2 3 4 5 6 (PRODUCT LEVEL)	SEE PAGE
Y	*239-6411*	1	AIR CLEANER GP (WITH PRECLEANER)	100
Y	*342-1070*	1	HOOD GP	343

Y-SEPARATE ILLUSTRATION

<END>

AIR INLET AND EXHAUST SYSTEM

239-6411 AIR CLEANER GP–WITH PRECLEANER

S/N: MYG1-UP; PPN1-UP
PART OF 346-4594 AIR CLEANER AR
AN ATTACHMENT

SMCS-1051, 1054 **i03602601**

NOTE	REF NO	GRAPHIC REF	PART NUMBER	QTY	PART NAME 1 2 3 4 5 6 (PRODUCT LEVEL)	SEE PAGE
	1	1	**8T-4987**	1	CLAMP-HOSE	
	2	1	**130-3280**	1	PRECLEANER AS	
		1	**174-5415**	1	CLAMP	
	3	1	**255-2929**	1	TUBE AS	
	4	1	**266-6189**	1	HOSE	
Y	5	1	**266-6190**	1	AIR CLEANER GP	101
	6	1	**5P-1076**	4	WASHER-HARD (13.5X30X4-MM THK)	
	7	1	**7Y-1838**	1	CLAMP	
M	8	1	**8T-4133**	1	NUT (M10X1.5-THD)	
M	9	1	**8T-4185**	5	BOLT (M10X1.5X50-MM)	
M	10	1	**8T-4192**	4	BOLT (M12X1.75X25-MM)	
	11	1	**8T-4121**	4	WASHER-HARD (11X21X2.5-MM THK)	

M-METRIC PART
Y-SEPARATE ILLUSTRATION

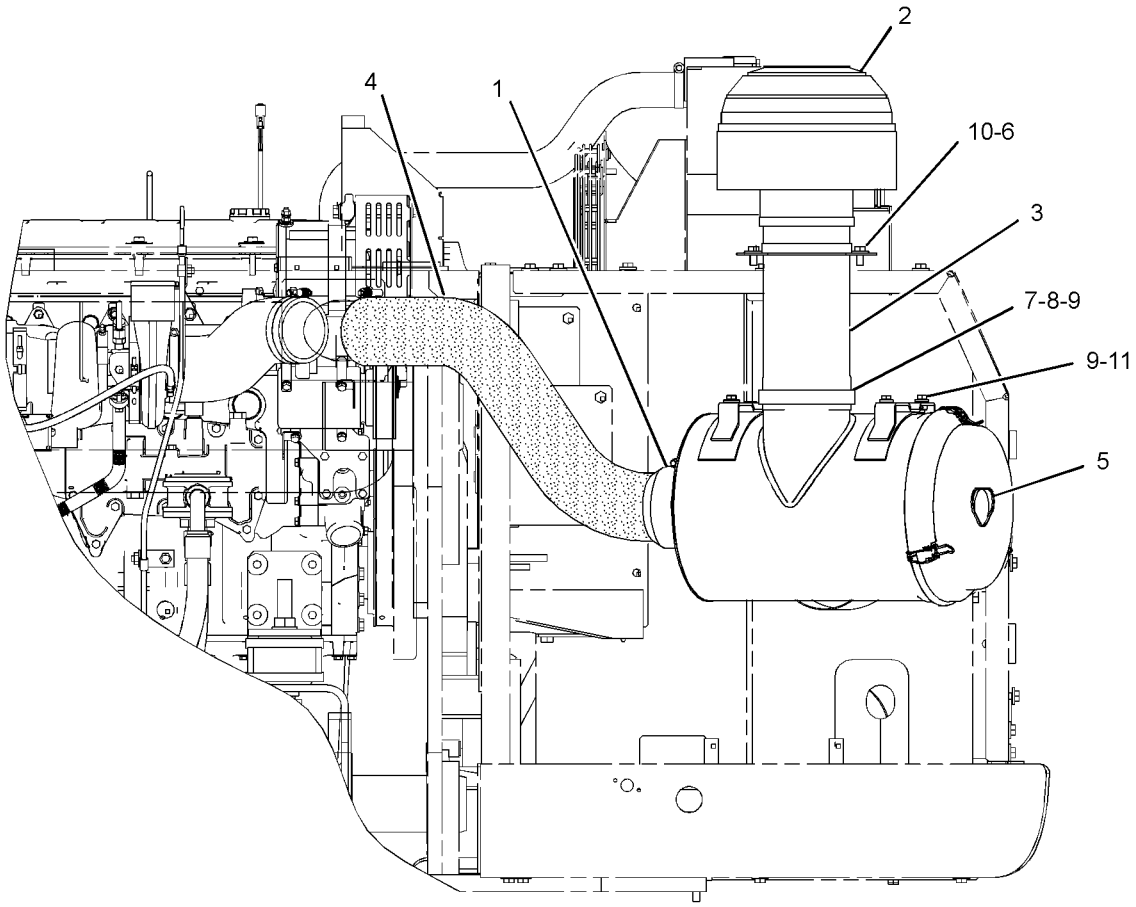

FRONT VIEW

GRAPHIC #1 **<END>** g01930894

266-6190 AIR CLEANER GP

S/N: MYG1-UP; PPN1-UP
PART OF 239-6411 AIR CLEANER GP
AN ATTACHMENT

SMCS-1051, 1054 **i02978492**

NOTE	REF NO	GRAPHIC REF	PART NUMBER	QTY	PART NAME 1 2 3 4 5 6 (PRODUCT LEVEL)	SEE PAGE
	1	1	**142-1404**	1	FILTER ELEMENT AS-AIR (SECONDARY)	
	2	1	**142-1339**	1	FILTER ELEMENT AS-AIR (PRIMARY)	
	3	1	**171-9892**	1	COVER AS	
	4	1	**1R-9953**	1	CAP	
	5	1	**5L-3233**	1	FITTING	
	6	1	**131-8826**	1	FILM-INSTRUCTION (TOP, AIR CLEANER COVER)	

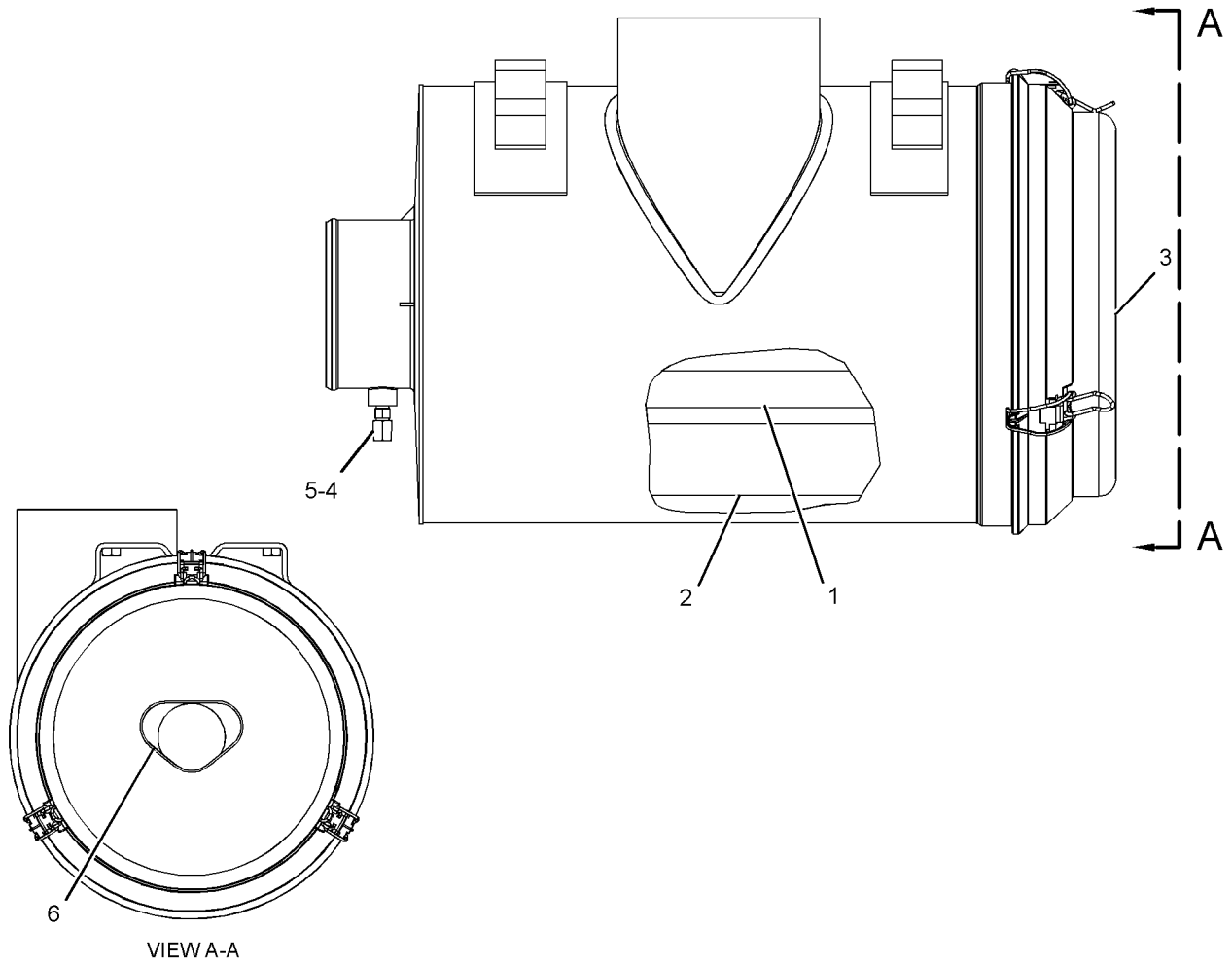

GRAPHIC #1 **<END>** g01199497

AIR INLET AND EXHAUST SYSTEM

324-4149 AIR CLEANER GP

S/N: MYG1-UP; PPN1-UP

PART OF 239-6407 AIR CLEANER & MOUNTING GP

SMCS-1051, 1054 **i03652137**

NOTE	REF NO	GRAPHIC REF	PART NUMBER	QTY	PART NAME 1 2 3 4 5 6 (PRODUCT LEVEL)	SEE PAGE
	1	1	**131-8826**	1	FILM-INSTRUCTION (TOP, AIR CLEANER COVER)	
	2	1	**131-8829**	1	VALVE-DUST (AIR CLEANER)	
	3	1	**142-1404**	1	FILTER ELEMENT AS-AIR (SECONDARY)	
	4	1	**142-1339**	1	FILTER ELEMENT AS-AIR (PRIMARY)	
					—OR—	
		1	**220-0453**	1	FILTER ELEMENT AS-AIR (PRIMARY, ULTRA HIGH EFFICIENCY)	
					(OPTIONAL SERVICE REPLACEMENT)	
	5	1	**159-7667**	1	SEAL-O-RING	
	6	1	**324-4150**	1	COVER AS	
	6A	1	**139-8794**	3	LATCH	
	7	1	**5L-3233**	1	FITTING	
	8	1	**1R-9953**	1	CAP	

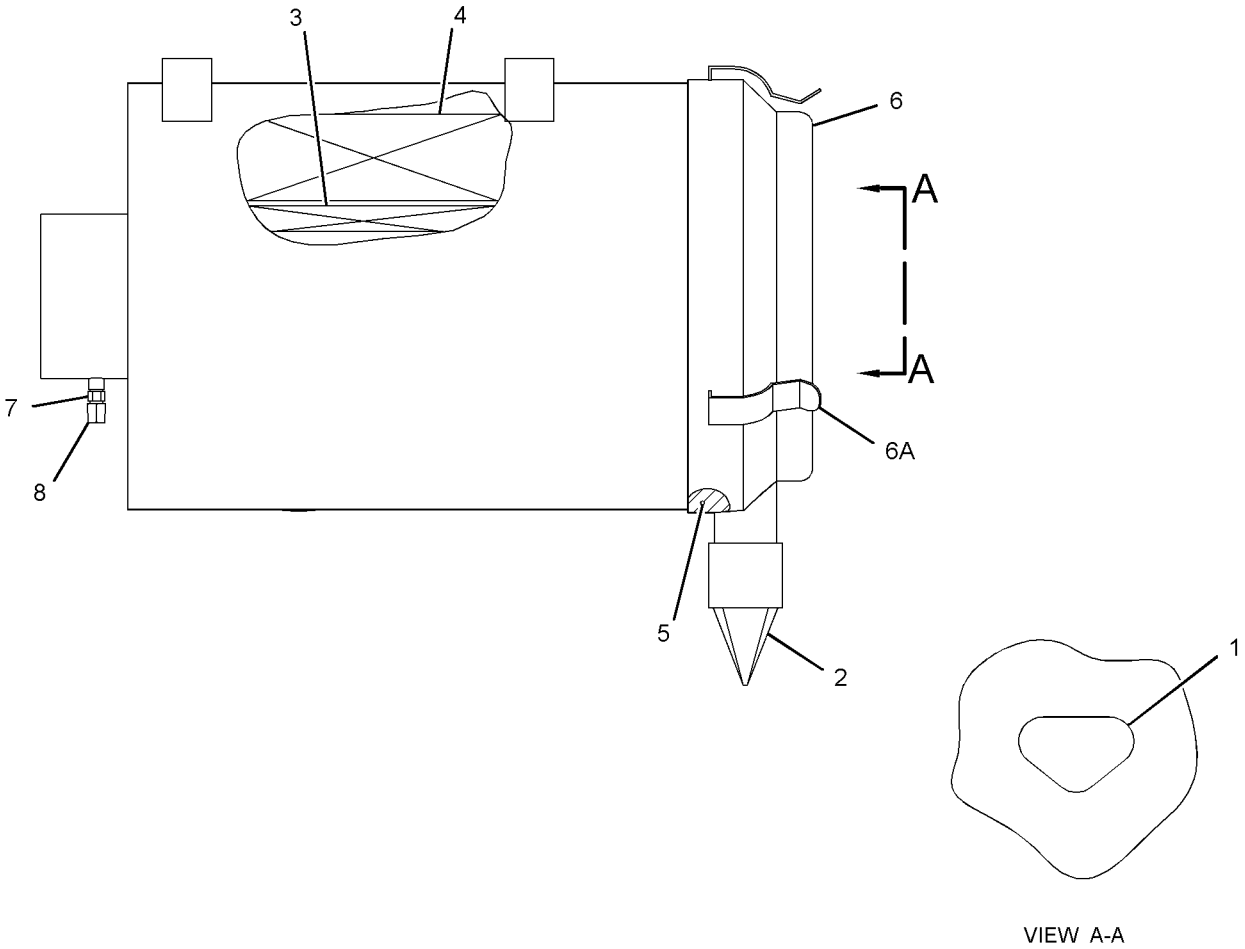

VIEW A-A

GRAPHIC #1 **<END>** g01967113

AIR INLET AND EXHAUST SYSTEM

242-1934 ELBOW GP-AIR INLET

S/N: THX14533-UP; THY5575-UP
PART OF 224-9843 ENGINE AR

SMCS-1058 **i03176082**

NOTE	REF NO	GRAPHIC REF	PART NUMBER	QTY	PART NAME 1 2 3 4 5 6 (PRODUCT LEVEL)	SEE PAGE
M	1	1	**131-0353**	2	STUD (M8X1.25X82.75-MM)	
	2	1	**221-6809**	1	ELBOW	
	3	1	**3E-4352**	2	WASHER-HARD (8.8X20.5X2.5-MM THK)	
M	4	1	**8C-5748**	5	BOLT (M8X1.25X55-MM)	
M	5	1	**8T-0100**	1	BOLT (M8X1.25X60-MM)	
	6	1	**9M-1974**	6	WASHER-HARD (8.8X16X2-MM THK)	
B	7	1	**1U-8846**		SEALANT-GASKET	

B-USE AS REQUIRED
M-METRIC PART

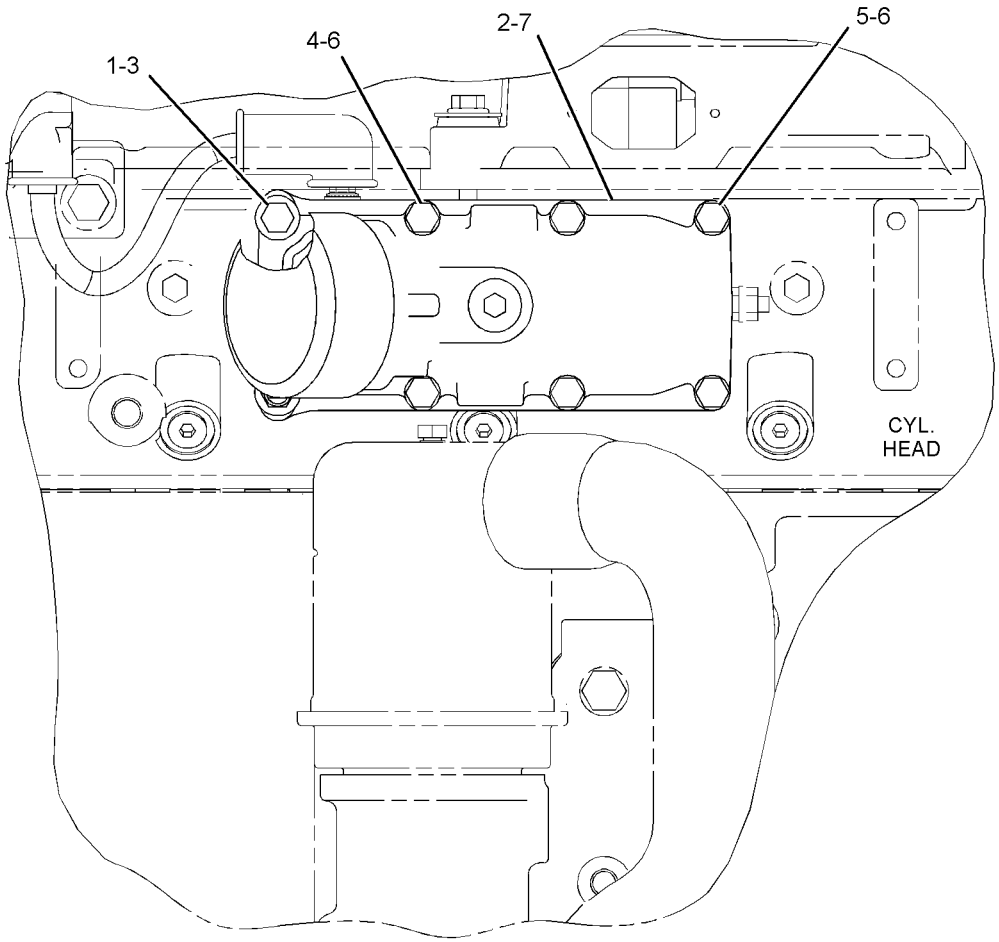

LEFT SIDE VIEW

GRAPHIC #1 **<END>** g01624587

AIR INLET AND EXHAUST SYSTEM

230-2898 LINES GP-AIR—AFTERCOOLER TO TURBOCHARGER

S/N: MYG1-UP; PPN1-UP

PART OF 279-7825 INSTALLATION AR-ENGINE

SMCS-1071 **i03252522**

NOTE	REF NO	GRAPHIC REF	PART NUMBER	QTY	PART NAME 1 2 3 4 5 6 (PRODUCT LEVEL)	SEE PAGE
	1	1	**144-0367**	12	CLAMP-HOSE	
	2	1	**230-2933**	1	HOSE	
C	3	1	**230-2866**	1	HOSE	
C	4	1	**281-3510**	1	TUBE AS	
	5	1	**230-2939**	1	BRACKET	
	6	1	**230-2940**	1	HOSE	
C	7	1	**281-3515**	1	HOSE	
C	8	1	**281-3512**	1	TUBE AS	
	9	1	**265-3561**	1	SEAL	
	10	1	**8T-4121**	1	WASHER-HARD (11X21X2.5-MM THK)	
M	11	1	**8T-4136**	7	BOLT (M10X1.5X25-MM)	
	12	1	**7X-7729**	6	WASHER (11X25X3-MM THK)	

C-CHANGE FROM PREVIOUS TYPE
M-METRIC PART

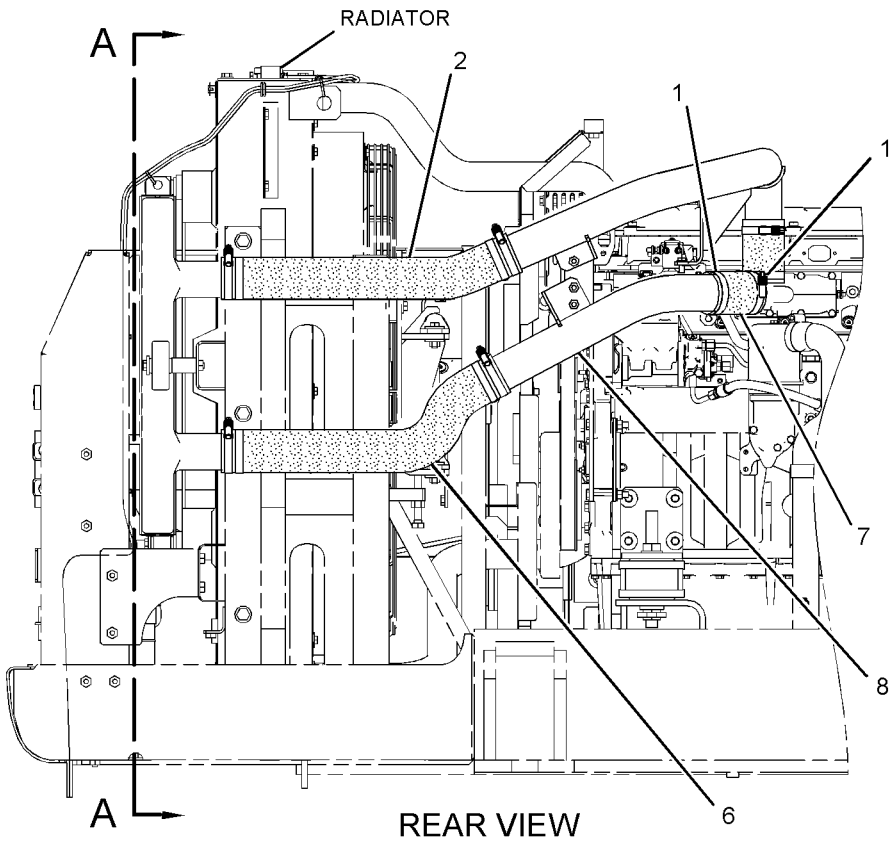

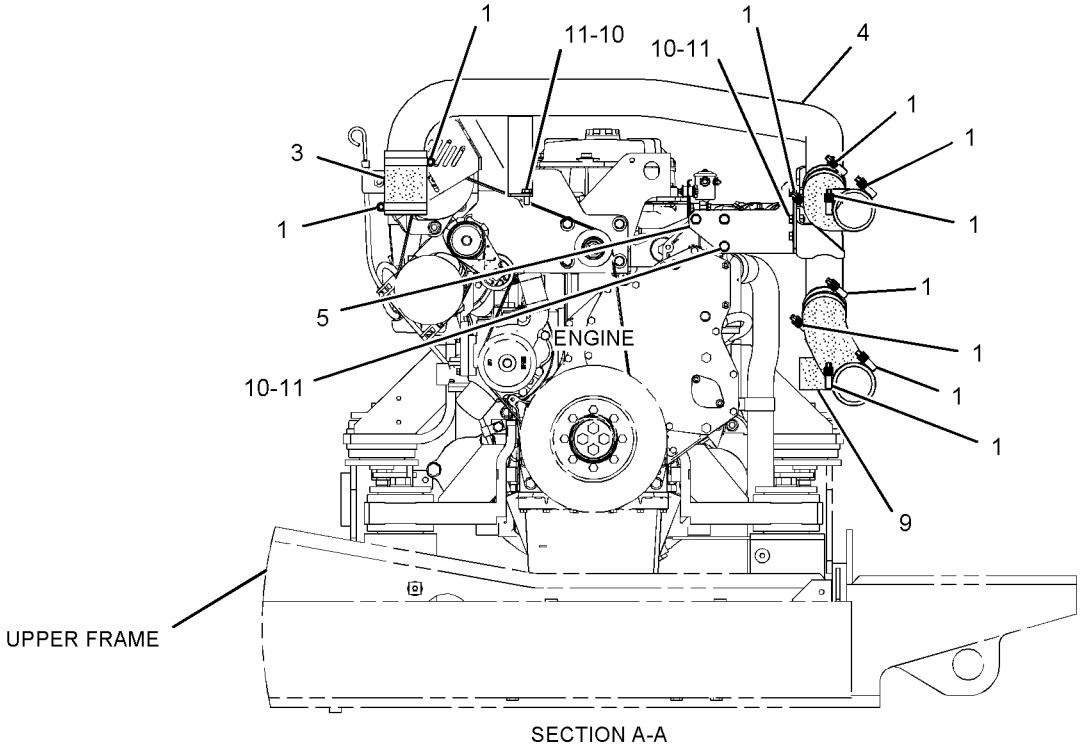

GRAPHIC #1 **<END>** g01335144

AIR INLET AND EXHAUST SYSTEM

239-6406 LINES GP-AIR—AIR CLEANER TO TURBOCHARGER

S/N: MYG1-UP; PPN1-UP

PART OF 279-7825 INSTALLATION AR-ENGINE

SMCS-1071 **i03652067**

NOTE	REF NO	GRAPHIC REF	PART NUMBER	QTY	PART NAME 1 2 3 4 5 6 (PRODUCT LEVEL)	SEE PAGE
	1	1	**5L-3233**	1	FITTING	
	2	1	**8T-4986**	3	CLAMP-HOSE	
	3	1	**8T-4987**	1	CLAMP-HOSE	
	4	1	**255-2966**	1	INDICATOR AS-AIR FILTER CHANGE (AIR RESTRICTION)	
	5	1	**324-4169**	1	HOSE	
	6	1	**266-6217**	1	HOSE	

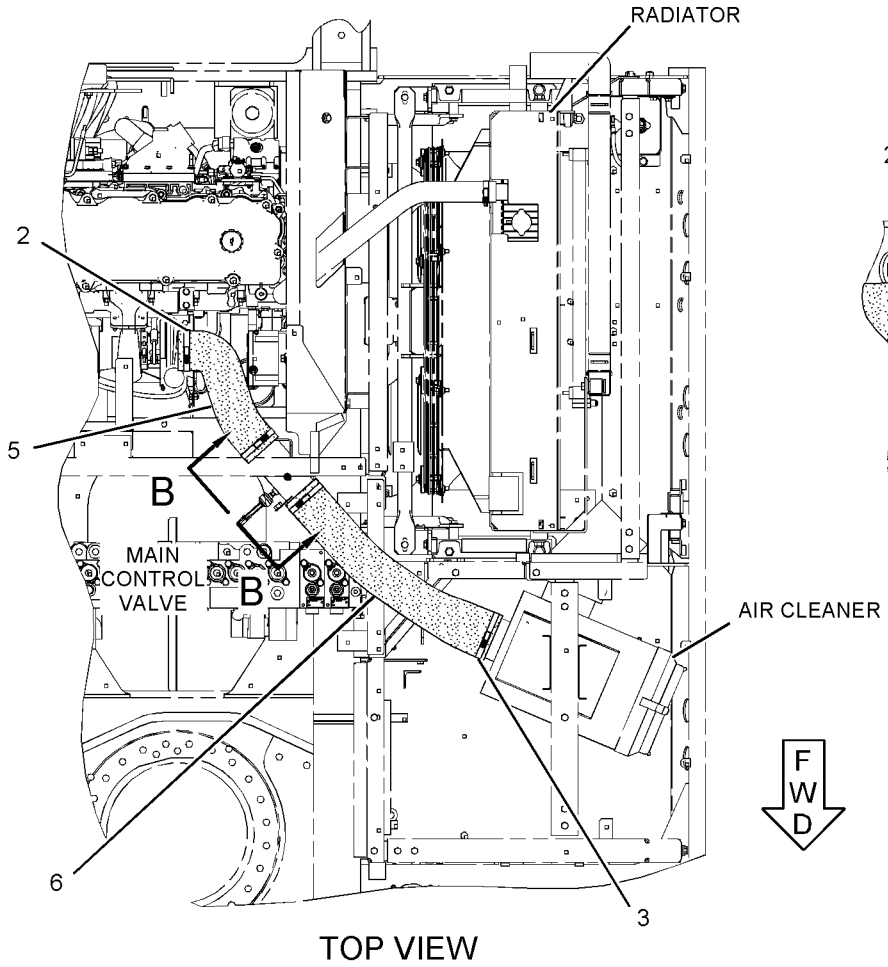

TOP VIEW

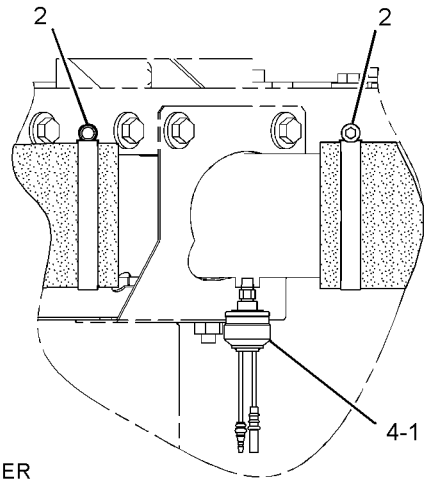

VIEW B-B

GRAPHIC #1 **<END>** g01199380

165-4444 MANIFOLD GP-EXHAUST

S/N: THX14533-UP; THY5575-UP
45 DEGREE DRY EXHAUST MANIFOLD WITH REAR TURBOCHARGER EXHAUST
PART OF 224-9843 ENGINE AR
FOR USE WITH 165-4465—PAGE 76

SMCS-1059 **i01761443**

NOTE	REF NO	GRAPHIC REF	PART NUMBER	QTY	PART NAME 1 2 3 4 5 6 (PRODUCT LEVEL)	SEE PAGE
M	1	1	**3E-8017**	12	LOCKNUT (M10X1.5-MM THD)	
	2	1	**161-3398**	1	MANIFOLD-EXHAUST	
	3	1	**161-3411**	6	GASKET	
	4	1	**192-4697**	1	MANIFOLD-EXHAUST	
	5	1	**203-7775**	1	MANIFOLD-EXHAUST	
M	6	1	**116-3715**	12	STUD-TAPERLOCK (M10X85-MM OAL)	
	7	1	**4P-4369**	6	SPACER (12X19X23.5-MM THK)	
	8	1	**6V-5839**	12	WASHER (11X21X2.5-MM THK)	
M	9	1	**8T-7044**	4	STUD-TAPERLOCK (M10X1.5X40-MM)	

M-METRIC PART

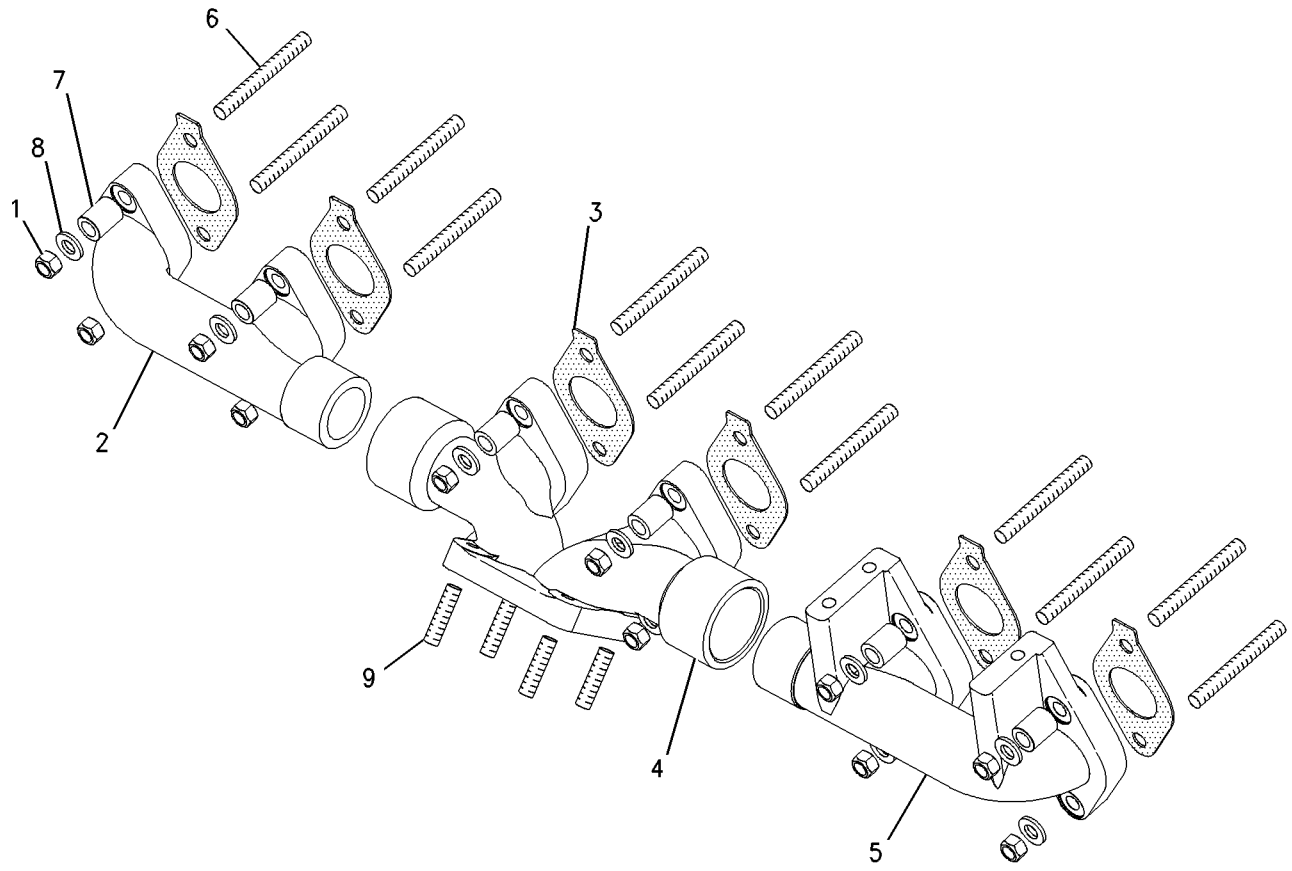

GRAPHIC #1 **<END>** g00786683

AIR INLET AND EXHAUST SYSTEM

266-6312 MUFFLER GP

S/N: MYG1-UP; PPN1-UP
PART OF 266-6311 ENGINE AR

SMCS-1062 **i03117922**

NOTE	REF NO	GRAPHIC REF	PART NUMBER	QTY	PART NAME 1 2 3 4 5 6 (PRODUCT LEVEL)	SEE PAGE
	1	1	**7E-6455**	1	CLAMP	
	2	1	**193-2839**	1	PIPE AS	
	3	1	**193-2844**	1	PLATE	
	4	1	**310-9725**	1	PLATE	
	5	1	**239-6494**	1	SUPPORT AS	
	6	1	**266-6240**	1	LINER	
	7	1	**305-4672**	1	MUFFLER AS	
	8	1	**310-9771**	1	BRACKET AS	
	9	1	**131-8847**	2	U-BOLT	
	10	1	**255-2900**	1	PIPE AS-EXHAUST	
	11	1	**9N-1941**	1	CLAMP-V-BAND	
M	12	1	**8T-4956**	3	BOLT (M12X1.75X35-MM)	
	13	1	**5P-1076**	3	WASHER-HARD (13.5X30X4-MM THK)	
	14	1	**7X-7729**	5	WASHER (11X25X3-MM THK)	
M	15	1	**8T-4244**	8	NUT (M12X1.75-THD)	
	16	1	**8T-4121**	5	WASHER-HARD (11X21X2.5-MM THK)	
M	17	1	**8T-4136**	2	BOLT (M10X1.5X25-MM)	
M	18	1	**8T-4184**	3	BOLT (M12X1.75X45-MM)	
M	19	1	**8T-4185**	5	BOLT (M10X1.5X50-MM)	
M	20	1	**8T-4196**	2	BOLT (M10X1.5X35-MM)	
	21	1	**8T-4223**	3	WASHER-HARD (13.5X25.5X3-MM THK)	
	22	1	**241-9265**	1	CLAMP-MUFFLER	
	23	1	**119-5708**	1	CLIP	
M	24	1	**8T-4137**	1	BOLT (M10X1.5X20-MM)	

M-METRIC PART

266-6312 **MUFFLER GP** *(contd.)* **i03117922**

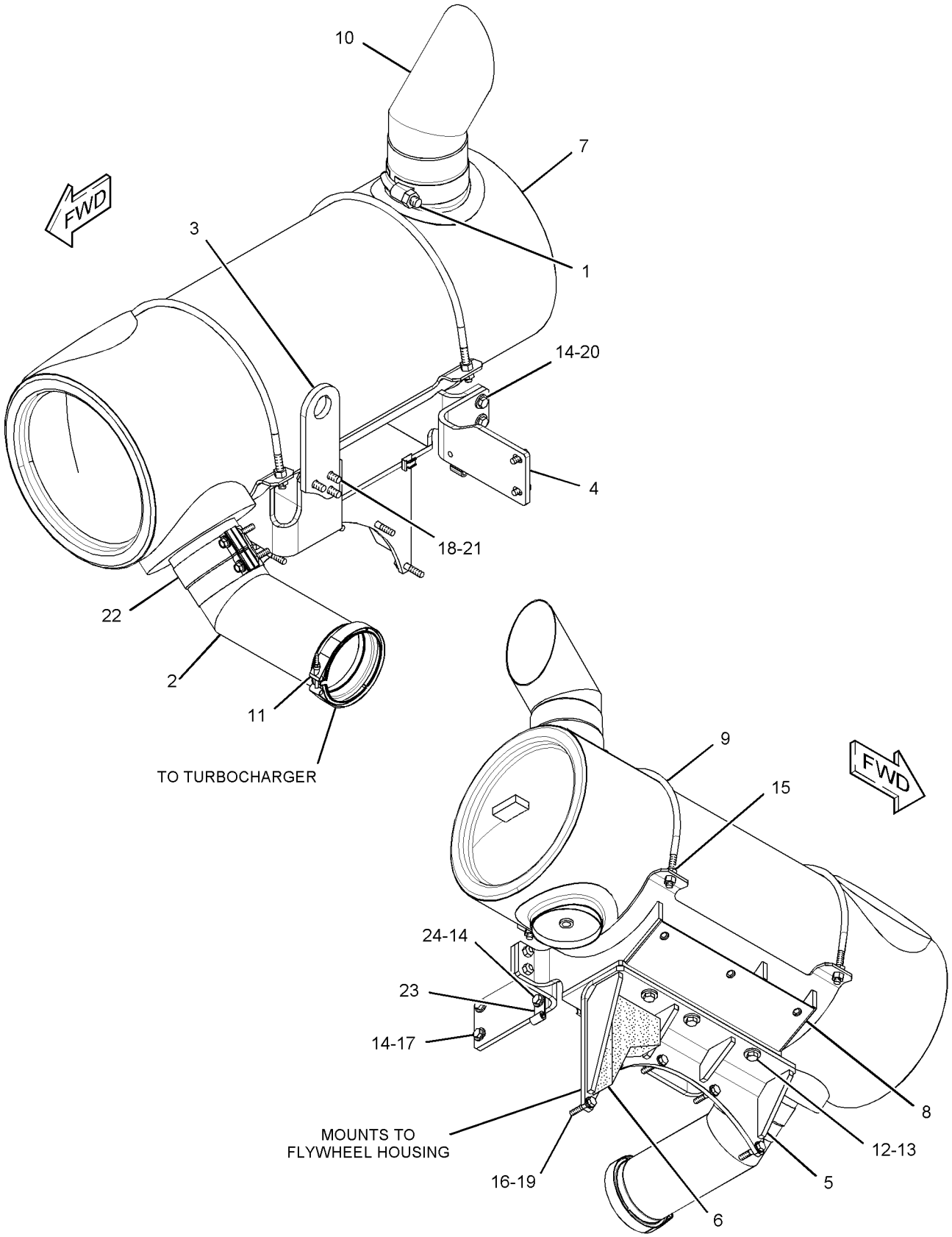

GRAPHIC #1 **<END>** g01600093

AIR INLET AND EXHAUST SYSTEM

250-7700 TURBOCHARGER GP

S/N: THX14533-UP; THY5575-UP

PART OF 258-8337 TURBOCHARGER GP

SMCS-1052, 1053 **i02713169**

NOTE	REF NO	GRAPHIC REF	PART NUMBER	QTY	PART NAME 1 2 3 4 5 6 (PRODUCT LEVEL)	SEE PAGE
	1	1	**248-5576**	1	CLAMP AS-V-BAND	
	2	1	**5P-4536**	1	ELBOW	
	3	1	**137-1602**	1	CLAMP AS (TURBINE)	
	4	1	**161-6963**	2	CLAMP	
	6	1	**235-5507**	1	CARTRIDGE GP-TURBOCHARGER	
E	7	1	**242-3360**		HOSE (23-CM)	

E-ORDER BY THE CENTIMETER

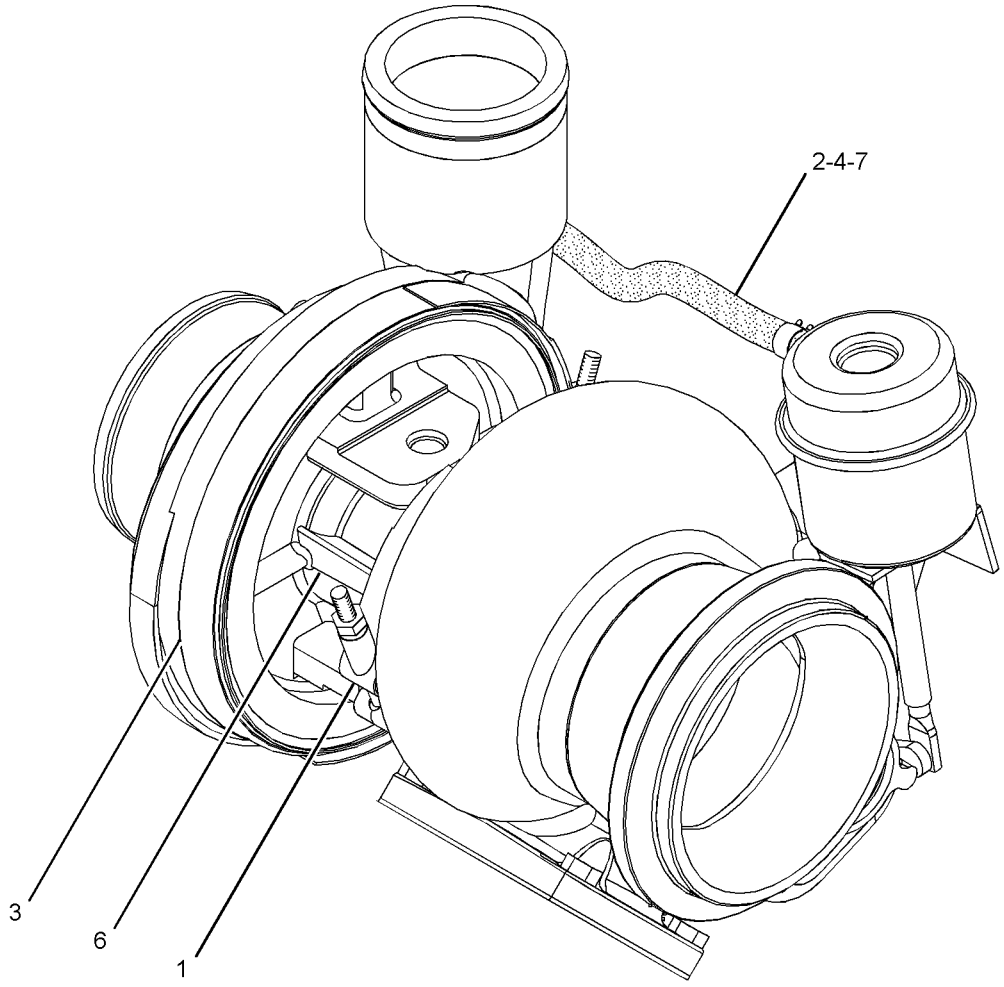

GRAPHIC #1 **<END>** g01364513

AIR INLET AND EXHAUST SYSTEM

258-8337 TURBOCHARGER GP

S/N: THX14533-UP; THY5575-UP

PART OF 229-2665, 348-2747 ENGINE AR-CORE

SMCS-1052, 1053 **i02404819**

NOTE	REF NO	GRAPHIC REF	PART NUMBER	QTY	PART NAME 1 2 3 4 5 6 (PRODUCT LEVEL)	SEE PAGE
	1	1	**1P-0451**	1	GASKET	
M	2	1	**3E-8017**	4	LOCKNUT (M10X1.5-MM-THD)	
Y	3	1	**250-7700**	1	TURBOCHARGER GP	110

M-METRIC PART
Y-SEPARATE ILLUSTRATION

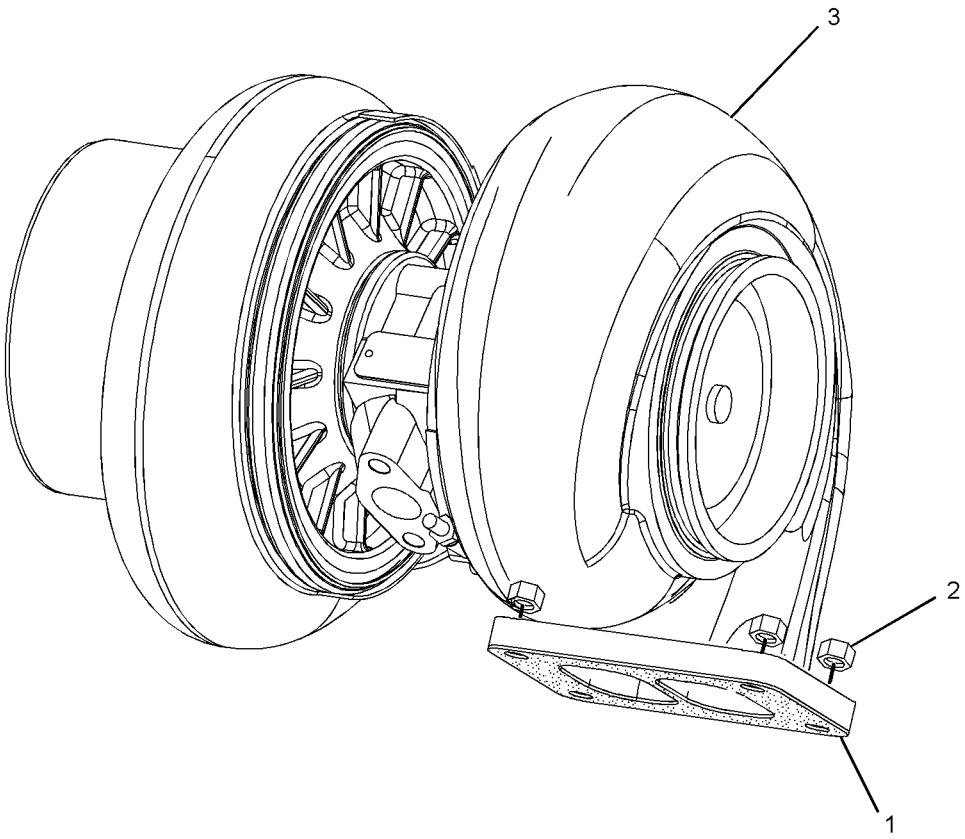

GRAPHIC #1 **<END>** g01187210

174-9570 FILTER GP-WATER SEP & FUEL

S/N: MYG1-UP; PPN1-UP
PART OF 237-8752 LINES GP-FUEL, 190-8977 PUMP GP-FUEL PRM & WATER SEP
ALSO AN ATTACHMENT

SMCS-1261, 1263 **i03652264**

NOTE	REF NO	GRAPHIC REF	PART NUMBER	QTY	PART NAME 1 2 3 4 5 6 (PRODUCT LEVEL)	SEE PAGE
	1	1	**326-1644**	1	FILTER AS-WATER SEP & FUEL (PRIMARY)	
	1A	1	**220-8678**	1	SEAL-RING	
	2	1	**343-5527**	1	BOWL AS	
	2A	1	**3J-1907**	1	SEAL-O-RING	
	2B	1	**5F-9144**	1	SEAL-O-RING	
	2C	1	**8F-7219**	1	SEAL-O-RING	
	2D	1	**9S-8004**	1	PLUG	

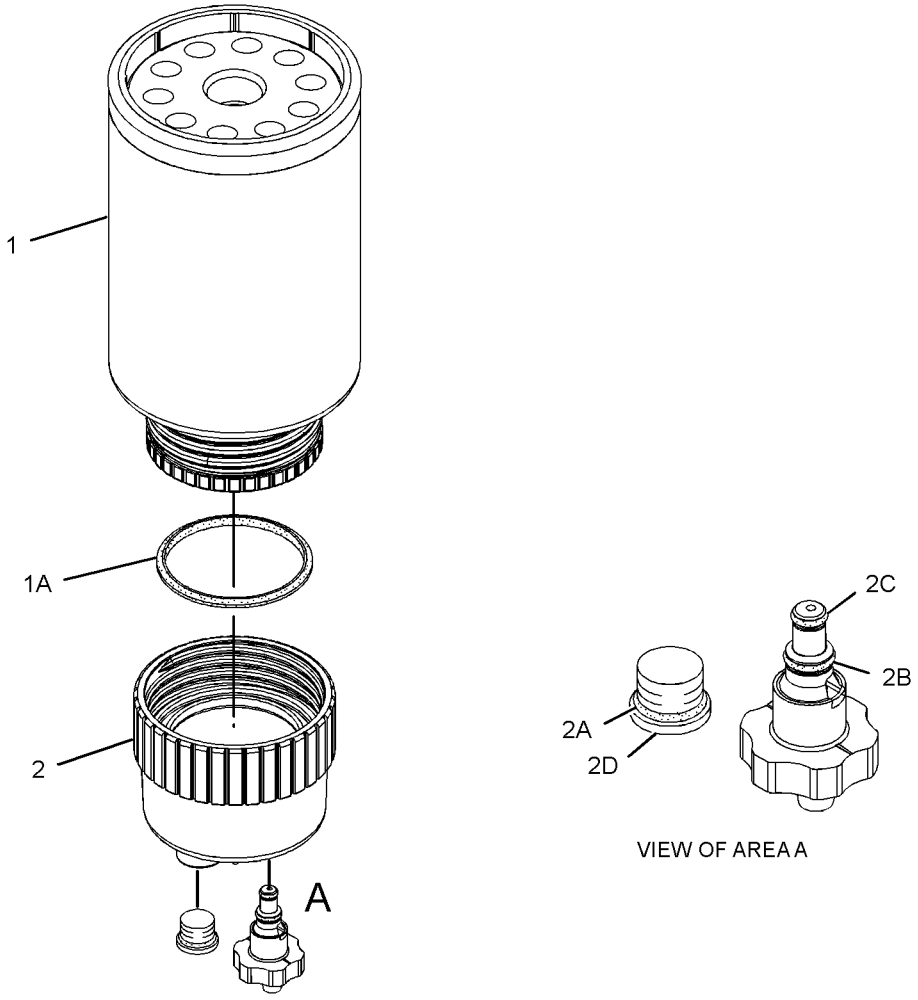

GRAPHIC #1 **<END>** g01960053

FUEL SYSTEM

328-2574 INJECTOR GP-FUEL*R

S/N: THX14533-UP; THY5575-UP

PART OF 267-3361 PUMP GP-FUEL INJECTION

SMCS-1251, 1254, 1290, 1713 **i03173623**

NOTE	REF NO	GRAPHIC REF	PART NUMBER	QTY	PART NAME 1 2 3 4 5 6 (PRODUCT LEVEL)	SEE PAGE
	1	1	**149-5240**	1	RING-BACKUP	
	2	1	**293-0730**	1	RING-BACKUP	
	3	1	**109-3207**	1	SEAL-O-RING	
	4	1	**148-2903**	2	SEAL-O-RING (FUEL SYSTEM)	

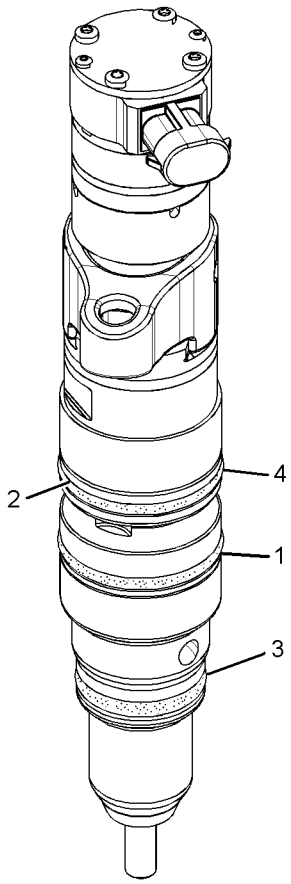

GRAPHIC #1 **<END>** g01624285

FUEL SYSTEM

231-3039 LINES GP-FUEL

S/N: THX14533-UP; THY5575-UP
PART OF 224-9843 ENGINE AR

SMCS-1274 **i03341120**

NOTE	REF NO	GRAPHIC REF	PART NUMBER	QTY	PART NAME 1 2 3 4 5 6 (PRODUCT LEVEL)	SEE PAGE
	1	1	**7W-3447**	1	SPACER (10.2X19.05X10.2-MM THK)	
	2	1	**309-0175**	1	TUBE AS	
I	3	1	**193-0158**	1	HOSE AS	
	4	1	**231-3043**	1	TUBE AS	
Y	6	1	*205-1306*	1	REGULATOR GP-FUEL PRESSURE	137
	7	1	**005-4362**	1	ELBOW	
	8	1	**030-8188**	1	CONNECTOR	
	9	1	*148-8336*	1	CONNECTOR AS	
		1	**3J-1907**	1	SEAL-O-RING	
		1	**6V-8397**	1	SEAL-O-RING	
		1	**6V-8636**	1	CONNECTOR	
	10	1	*148-8378*	1	ELBOW AS	
		1	**3J-1907**	1	SEAL-O-RING	
		1	**6V-8397**	1	SEAL-O-RING	
		1	**6V-8724**	1	ELBOW	
	11	1	**186-0359**	1	CLIP	
	12	1	**2R-6806**	2	CONNECTOR-O-RING	
	13	1	**3J-1907**	2	SEAL-O-RING	
	14	1	**3K-0360**	2	SEAL-O-RING	
	15	1	**5P-9297**	1	CLIP	
	16	1	**119-5708**	1	CLIP	
	17	1	**6V-5839**	1	WASHER (11X21X2.5-MM THK)	
M	18	1	**6V-3822**	1	BOLT (M10X1.5X35-MM)	

I-REFER TO HYDRAULIC INFORMATION SYSTEM
M-METRIC PART
Y-SEPARATE ILLUSTRATION

231-3039 **LINES GP-FUEL** *(contd.)* **i03341120**

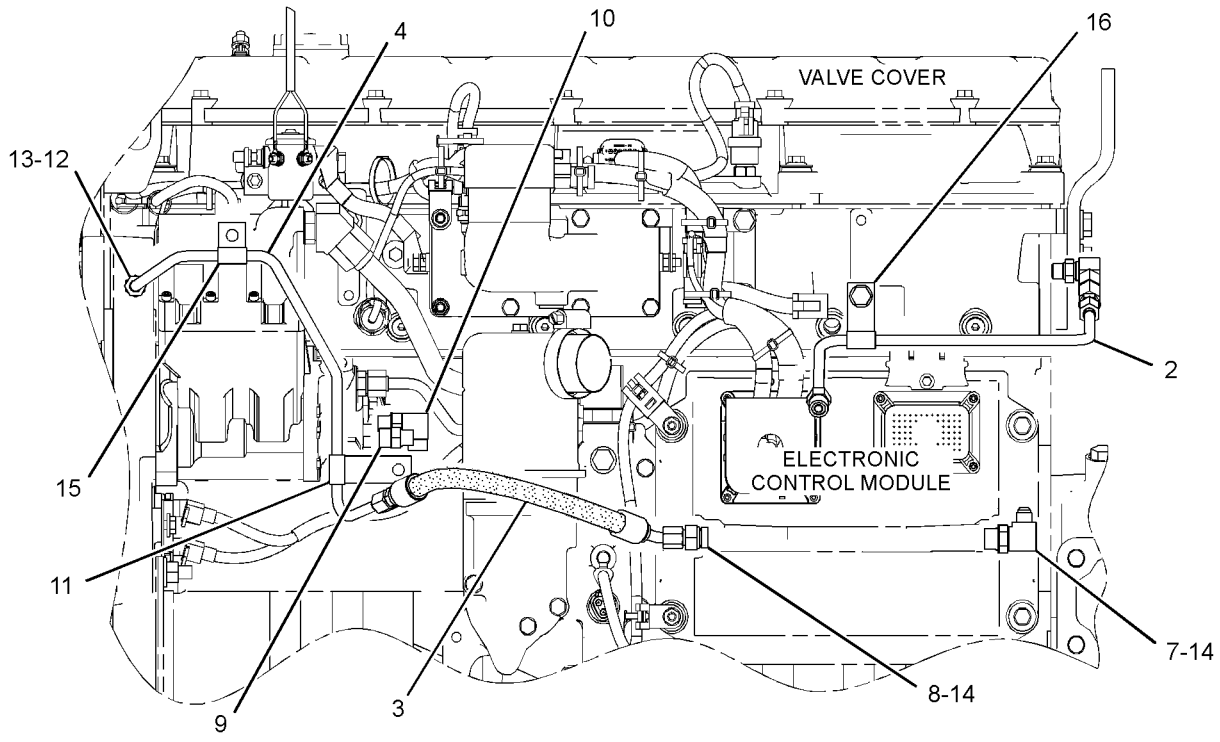

LEFT SIDE VIEW OF ENGINE

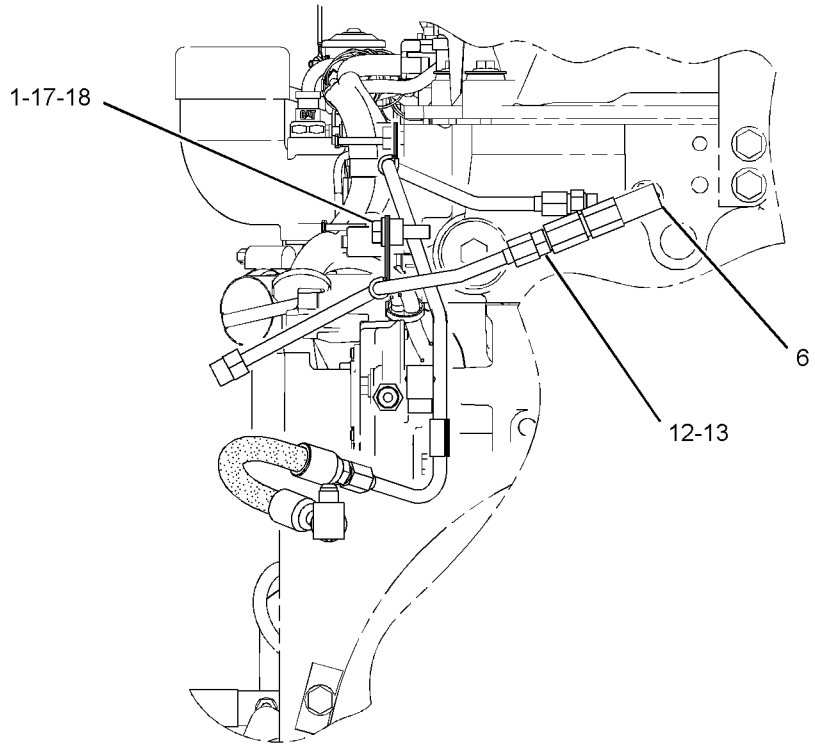

REAR VIEW OF ENGINE

GRAPHIC #1 **<END>** g01721633

FUEL SYSTEM

237-8752 LINES GP-FUEL

S/N: MYG1-UP; PPN1-UP

PART OF 343-1145, 343-1146 CHASSIS AR

SMCS-1274 **i03624350**

NOTE	REF NO	GRAPHIC REF	PART NUMBER	QTY	PART NAME 1 2 3 4 5 6 (PRODUCT LEVEL)	SEE PAGE
	1	2	**4I-0379**	1	VALVE-MANUAL (DRAIN, FUEL TANK)	
	2	2	**4N-9624**	1	ADAPTER-PRIMING PUMP	
	3	1	**7Y-8165**	1	GROMMET	
	4	2	**9Y-8389**	1	GASKET	
	5	2	**003-7764**	2	END-HOSE	
	6	1,2	**095-1386**	4	CLAMP-HOSE	
	7	2	**134-6852**	1	CONNECTOR	
M	8	2	**135-8575**	4	BOLT AS	
Y	9	2	**139-6873**	1	VALVE GP-FUEL BYPASS (FILTER)	145
	10	2	*164-5597*	1	CONNECTOR AS	
		2	**6V-8397**	1	SEAL-O-RING	
		2	**8C-6868**	1	CONNECTOR	
Y	11	2	*174-9570*	1	FILTER GP-WATER SEP & FUEL	112
	12	2	**177-9778**	1	BASE AS	
		2	**9S-4167**	1	STUD-HOLLOW (1-14X1.47-IN)	
Y	13	2	*197-8391*	1	SENSOR GP-TEMPERATURE (FUEL)	219
	14	2	*150-3036*	1	ELBOW AS	
		2	**6V-8397**	1	SEAL-O-RING	
		2	**8T-1905**	1	ELBOW	
		2	**3J-1907**	1	SEAL-O-RING	
	15	2	**229-0999**	1	HOSE	
	16	2	**237-9312**	1	BASE AS-FUEL FILTER	
		2	**9S-4167**	1	STUD-HOLLOW (1-14X1.47-IN)	
Y	17	2	*239-2396*	1	SENSOR GP-PRESSURE (FUEL)	211
Y	18	2	**258-0883**	1	SWITCH GP-PRESSURE (FUEL)	237
	19	2	**262-2598**	1	SUPPORT AS	
	20	1	*148-8371*	1	ELBOW AS	
		1	**8C-8988**	1	ELBOW	
		1	**6V-8397**	1	SEAL-O-RING	
Y	21	2	**298-3147**	1	VALVE GP-FUEL SHUTOFF	146
CI	22	1	**333-5089**	1	HOSE AS	
CI	23	1	**313-8154**	1	HOSE AS	
I	24	1	**313-8155**	1	HOSE AS	
CI	25	1	**333-5091**	1	HOSE AS	
CI	26	1	**333-5092**	1	HOSE AS	
C	27	1	**333-5093**	1	HOSE AS	
	28	2	*148-8311*	1	ADAPTER AS	
		2	**3K-0360**	1	SEAL-O-RING	
		2	**8T-1715**	1	ADAPTER	
	29	2	*148-8318*	1	CONNECTOR AS	
		2	**3K-0360**	1	SEAL-O-RING	
		2	**6V-8397**	1	SEAL-O-RING	
		2	**6V-8634**	1	CONNECTOR	
	30	2	*148-8383*	1	ELBOW AS	
		2	**3K-0360**	1	SEAL-O-RING	
		2	**6V-8397**	1	SEAL-O-RING	
		2	**8T-1683**	1	ELBOW	
Y	31	1	*165-9154*	1	PUMP GP-FUEL PRIMING	127
	32	2	**1R-0762**	1	FILTER-FUEL (ADVANCED EFFICIENCY)	
	33	1	**2D-1290**	3	GROMMET	
	34	2	**3J-1907**	5	SEAL-O-RING	
C	35	1,2	**4D-7733**	15	CLIP	
C	36	1,2	**333-5075**	1	BRACKET AS	
	37	2	**6V-4589**	1	SEAL-O-RING	
M	38	2	**6V-7357**	1	BOLT (M6X1X25-MM)	
	39	1,2	**6V-8397**	3	SEAL-O-RING	

237-8752 **LINES GP-FUEL** *(contd.)* **i03624350**

NOTE	REF NO	GRAPHIC REF	PART NUMBER	QTY	PART NAME 1 2 3 4 5 6 (PRODUCT LEVEL)	SEE PAGE
	40	2	**6V-8730**	1	UNION (FACE SEAL)	
	41	2	**8L-2786**	3	SEAL-O-RING	
	42	1	**8M-2773**	2	CLIP	
C	43	1,2	**8T-4121**	29	WASHER-HARD (11X21X2.5-MM THK)	
M	44	1	**8T-4133**	1	NUT (M10X1.5-THD)	
CM	45	1,2	**8T-4136**	6	BOLT (M10X1.5X25-MM)	
CM	46	1,2	**8T-4137**	16	BOLT (M10X1.5X20-MM)	
M	47	2	**8T-4195**	4	BOLT (M10X1.5X30-MM)	
M	48	2	**8T-4196**	2	BOLT (M10X1.5X35-MM)	
	49	2	**8T-4224**	1	WASHER-HARD (8.8X16X2-MM THK)	
M	50	2	**8T-4908**	1	BOLT (M8X1.25X25-MM)	
	51	1	**9D-1829**	2	CLIP	
C	52	1,2	**9M-8406**	7	CLIP	
	53	2	**9S-8004**	5	PLUG	
	54	2	**9S-8005**	2	PLUG-O-RING	
	55	2	**9X-8256**	1	WASHER (6.6X12X2-MM THK)	
CE	56	2	**5P-1442**		HOSE (210-CM)	
E	56A	2	**5P-1442**		HOSE (39-CM)	
	57	1	**7K-1181**	2	STRAP-CABLE	

C-CHANGE FROM PREVIOUS TYPE
E-ORDER BY THE CENTIMETER
I-REFER TO HYDRAULIC INFORMATION SYSTEM
M-METRIC PART
Y-SEPARATE ILLUSTRATION

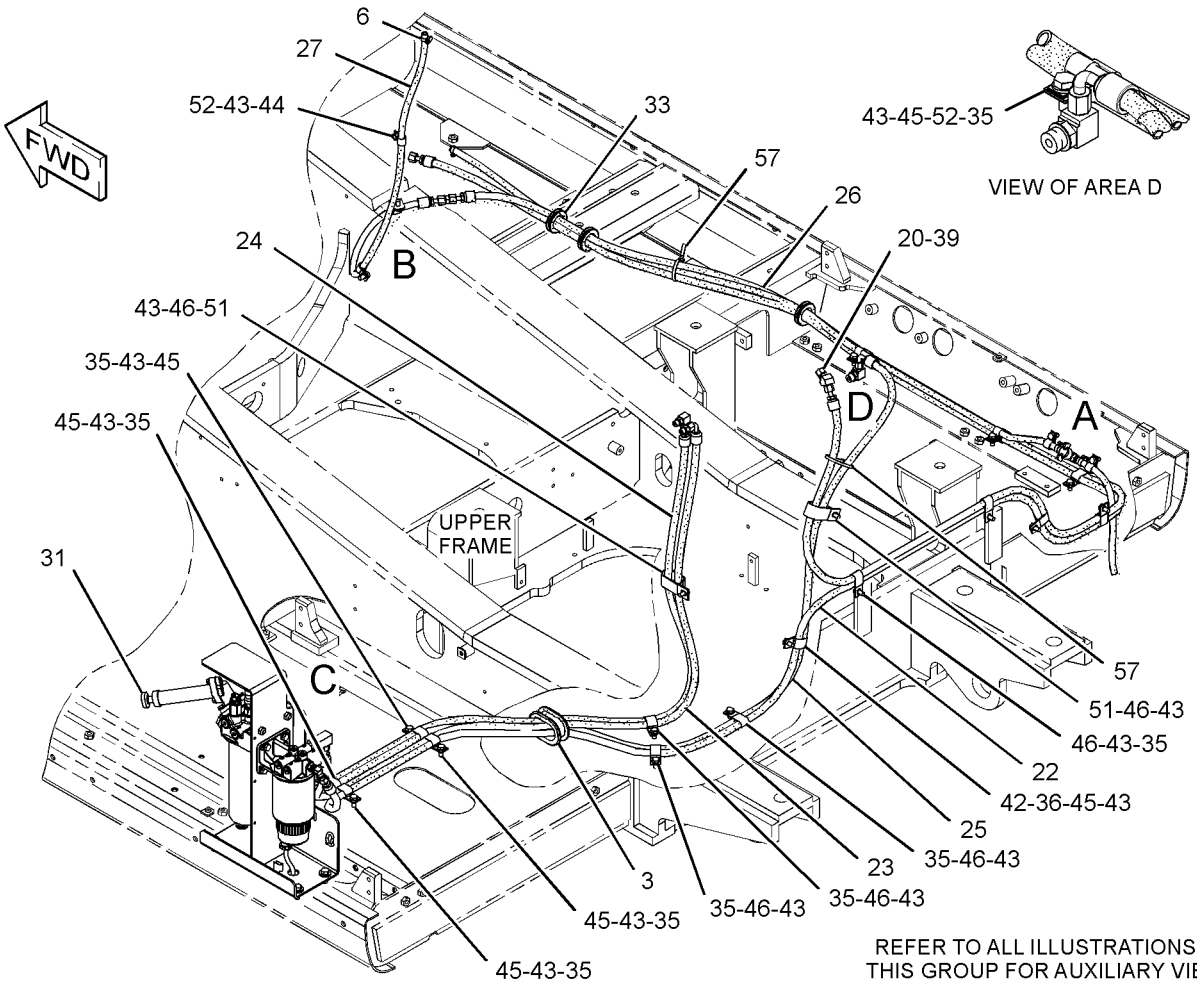

REFER TO ALL ILLUSTRATIONS OF THIS GROUP FOR AUXILIARY VIEWS

GRAPHIC #1 g01984813

237-8752 **LINES GP-FUEL** *(contd.)* **i03624350**

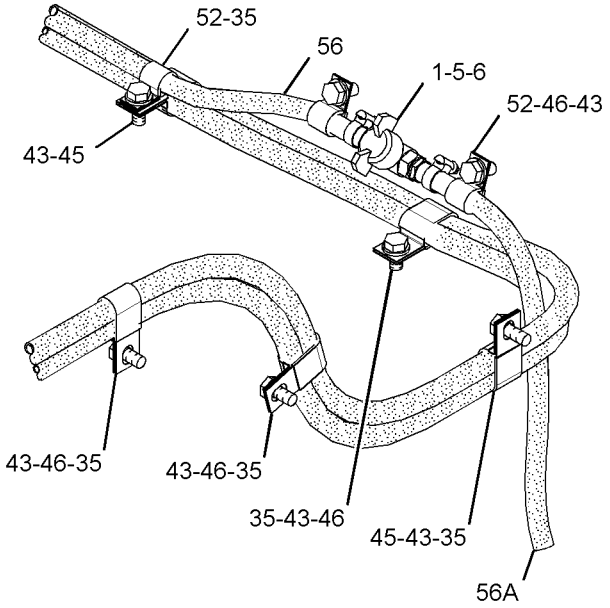

VIEW OF AREA A

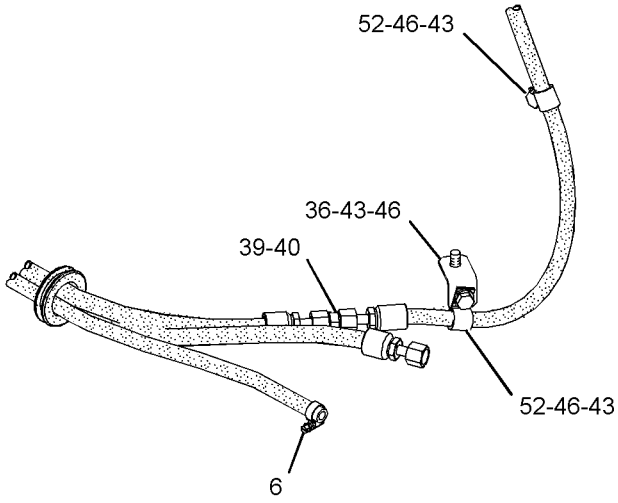

VIEW OF AREA B



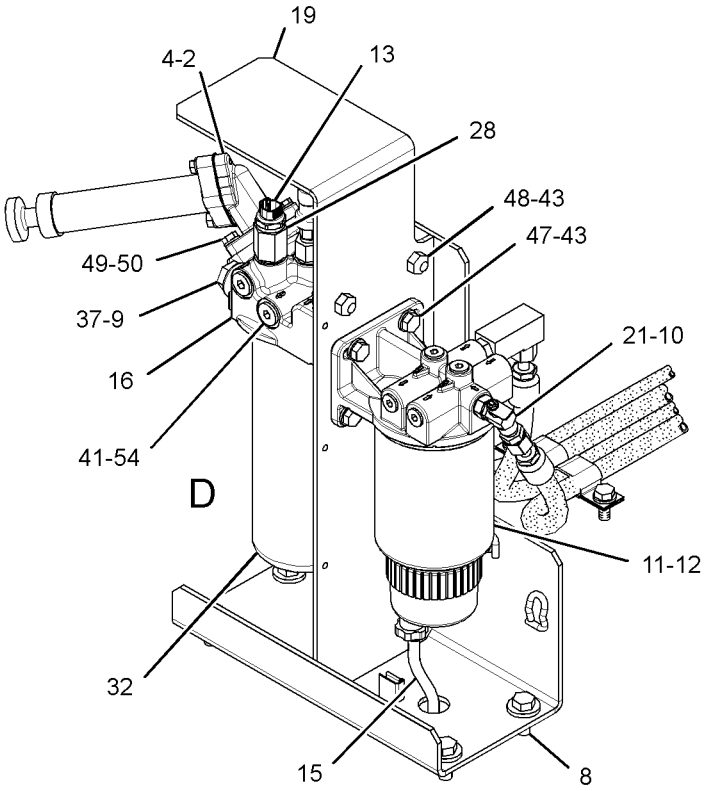

VIEW OF AREA C

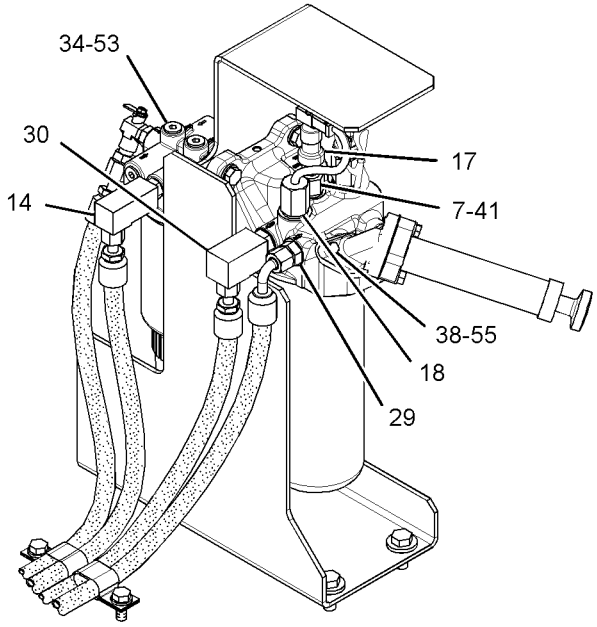

VIEW OF AREA D

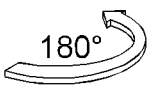

GRAPHIC #2 **<END>** g01984833

259-3918 LINES GP-FUEL–PRIMING PUMP

S/N: MYG1-UP; PPN1-UP
PART OF 340-3837 PUMP GP-FUEL PRIMING
AN ATTACHMENT

SMCS-1274 **i03586000**

NOTE	REF NO	GRAPHIC REF	PART NUMBER	QTY	PART NAME 1 2 3 4 5 6 (PRODUCT LEVEL)	SEE PAGE
	1	1	**4I-0379**	1	VALVE-MANUAL (DRAIN, FUEL TANK)	
	2	1	**7Y-8165**	1	GROMMET	
	3	2	**8T-9655**	6	MOUNT-ISOLATION	
	4	2	**9Y-8389**	1	GASKET	
	5	1	**003-7764**	2	END-HOSE	
	6	1	**095-1386**	4	CLAMP-HOSE	
	7	2	**134-6852**	1	CONNECTOR	
M	8	2	**135-8575**	4	BOLT AS	
	9	2	*164-5597*	1	CONNECTOR AS	
		2	**6V-8397**	1	SEAL-O-RING	
		2	**8C-6868**	1	CONNECTOR	
	10	2	*164-5619*	1	PLUG AS	
		2	**2M-9780**	1	SEAL-O-RING	
		2	**9S-8006**	1	PLUG-O-RING	
Y	11	2	*188-6121*	1	PUMP GP-FUEL PRM & PRIM FILTER (WITH WATER SEPARATOR)	129
	12	2	**191-1782**	1	SPACER (8.5X12.7X38.2-MM THK)	
	13	2	**191-1783**	2	SPACER (8.5X12.7X87.3-MM THK)	
Y	14	2	*197-8391*	1	SENSOR GP-TEMPERATURE (FUEL)	219
	15	2	**229-0999**	1	HOSE	
	16	2	**237-9312**	1	BASE AS-FUEL FILTER	
Y	17	2	*239-2396*	1	SENSOR GP-PRESSURE (FUEL)	211
Y	18	2	**258-0883**	1	SWITCH GP-PRESSURE (FUEL)	237
	19	2	**259-3915**	1	COVER	
	20	2	**262-2604**	1	SUPPORT AS	
Y	21	2	**298-3147**	1	VALVE GP-FUEL SHUTOFF	146
I	22	1	**313-8155**	1	HOSE AS	
C	23	1	**333-5075**	1	BRACKET AS	
CI	24	1	**333-5091**	1	HOSE AS	
CI	25	1	**333-5092**	1	HOSE AS	
C	26	1	**333-5093**	1	HOSE AS	
CI	27	1	**333-5094**	1	HOSE AS	
CI	28	1	**313-8232**	1	HOSE AS	
	29	2	*148-8311*	1	ADAPTER AS	
		2	**3K-0360**	1	SEAL-O-RING	
		2	**8T-1715**	1	ADAPTER	
	30	2	*148-8318*	1	CONNECTOR AS	
		2	**3K-0360**	1	SEAL-O-RING	
		2	**6V-8397**	1	SEAL-O-RING	
		2	**6V-8634**	1	CONNECTOR	
	31	2	*148-8319*	1	CONNECTOR AS	
		2	**2M-9780**	1	SEAL-O-RING	
		2	**6V-8397**	1	SEAL-O-RING	
		2	**6V-8715**	1	CONNECTOR	
C	32	1,2	*148-8367*	1	ELBOW AS	
		1,2	**6V-8397**	1	SEAL-O-RING	
		1,2	**6V-9850**	1	ELBOW	
	33	1	*148-8371*	1	ELBOW AS	
		1	**8C-8988**	1	ELBOW	
		1	**6V-8397**	1	SEAL-O-RING	
	34	2	*148-8383*	1	ELBOW AS	
		2	**3K-0360**	1	SEAL-O-RING	
		2	**6V-8397**	1	SEAL-O-RING	
		2	**8T-1683**	1	ELBOW	
	35	2	**1R-0762**	1	FILTER-FUEL (ADVANCED EFFICIENCY)	

259-3918 **LINES GP-FUEL** *(contd.)* **i03586000**

NOTE	REF NO	GRAPHIC REF	PART NUMBER	QTY	PART NAME 1 2 3 4 5 6 (PRODUCT LEVEL)	SEE PAGE
	36	1	**2D-1290**	3	GROMMET	
	37	2	**2M-9780**	1	SEAL-O-RING	
C	38	1	**4D-7733**	15	CLIP	
	39	2	**6V-2606**	1	ADAPTER	
M	40	2	**6V-7357**	1	BOLT (M6X1X25-MM)	
	41	1	**6V-8397**	3	SEAL-O-RING	
	42	1	**6V-8730**	1	UNION (FACE SEAL)	
	43	2	**7X-0579**	3	WASHER-HARD (8.8X25.5X2-MM THK)	
M	44	2	**7X-2539**	2	BOLT (M8X1.25X110-MM)	
	45	2	**8L-2786**	3	SEAL-O-RING	
C	46	1,2	**8T-4121**	25	WASHER-HARD (11X21X2.5-MM THK)	
M	47	1	**8T-4133**	1	NUT (M10X1.5-THD)	
CM	48	1	**8T-4136**	6	BOLT (M10X1.5X25-MM)	
CM	49	1	**8T-4137**	16	BOLT (M10X1.5X20-MM)	
M	50	2	**8T-4196**	2	BOLT (M10X1.5X35-MM)	
	51	2	**8T-4224**	1	WASHER-HARD (8.8X16X2-MM THK)	
M	52	2	**8T-4908**	1	BOLT (M8X1.25X25-MM)	
M	53	2	**8T-6869**	1	BOLT (M8X1.25X60-MM)	
	54	1	**9D-1829**	2	CLIP	
C	55	1	**9M-8406**	7	CLIP	
	56	2	**9S-8005**	2	PLUG-O-RING	
	57	2	**9X-8256**	1	WASHER (6.6X12X2-MM THK)	
CE	58	1	**5P-1442**		HOSE (210-CM)	
E	58A	1	**5P-1442**		HOSE (39-CM)	
	59	1	**7K-1181**	2	STRAP-CABLE	

C-CHANGE FROM PREVIOUS TYPE
E-ORDER BY THE CENTIMETER
I-REFER TO HYDRAULIC INFORMATION SYSTEM
M-METRIC PART
Y-SEPARATE ILLUSTRATION

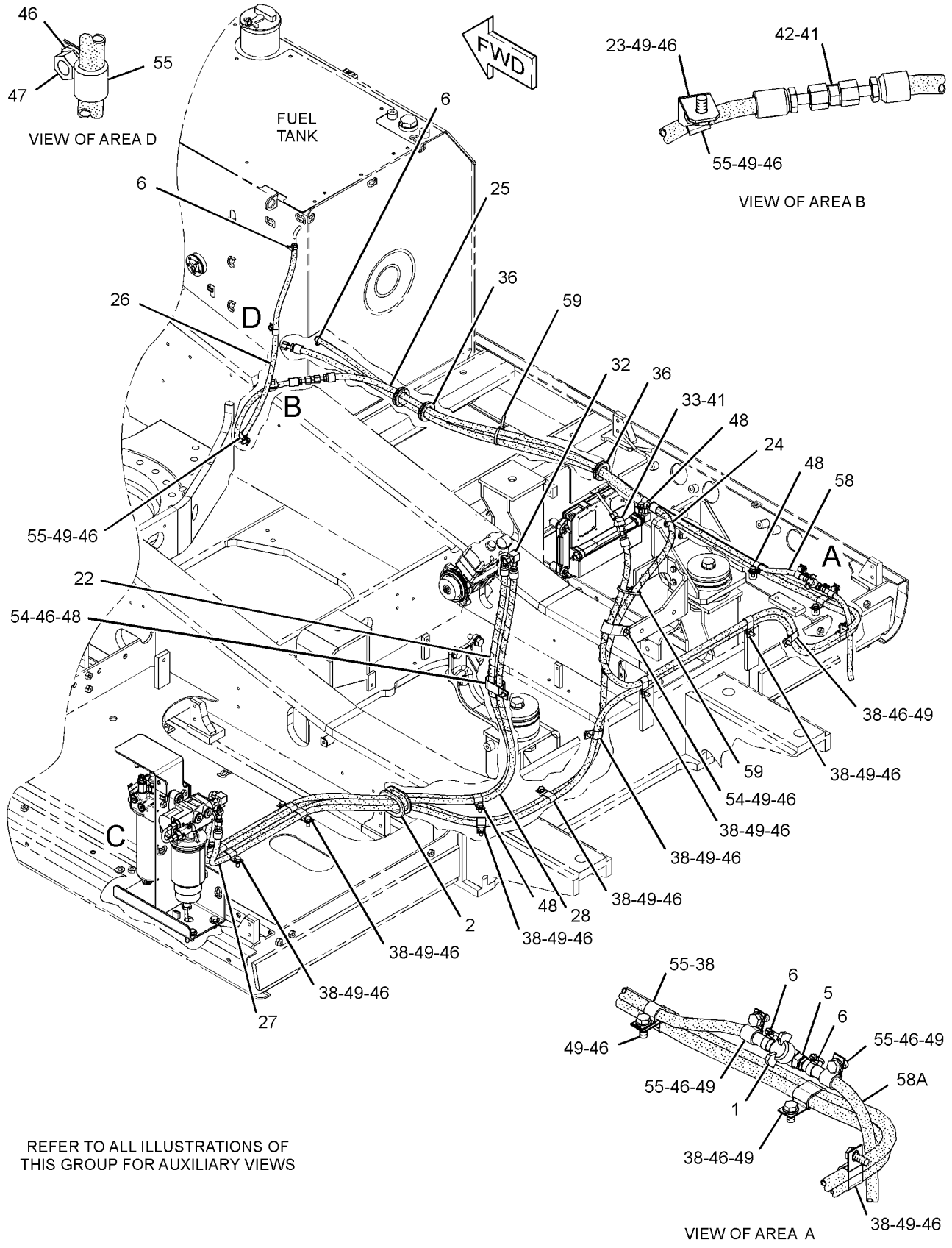

GRAPHIC #1

g01869660

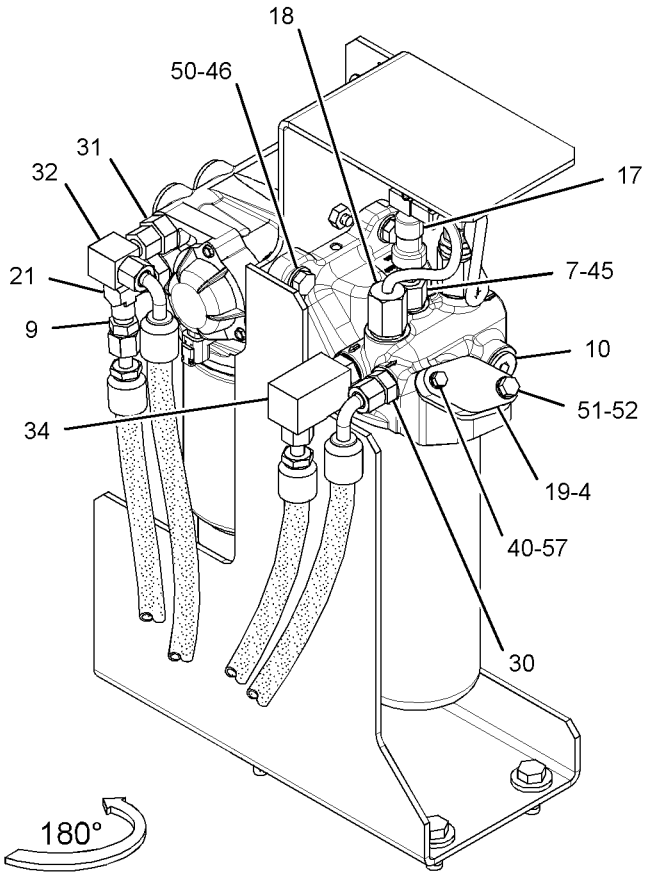

VIEW OF AREA C

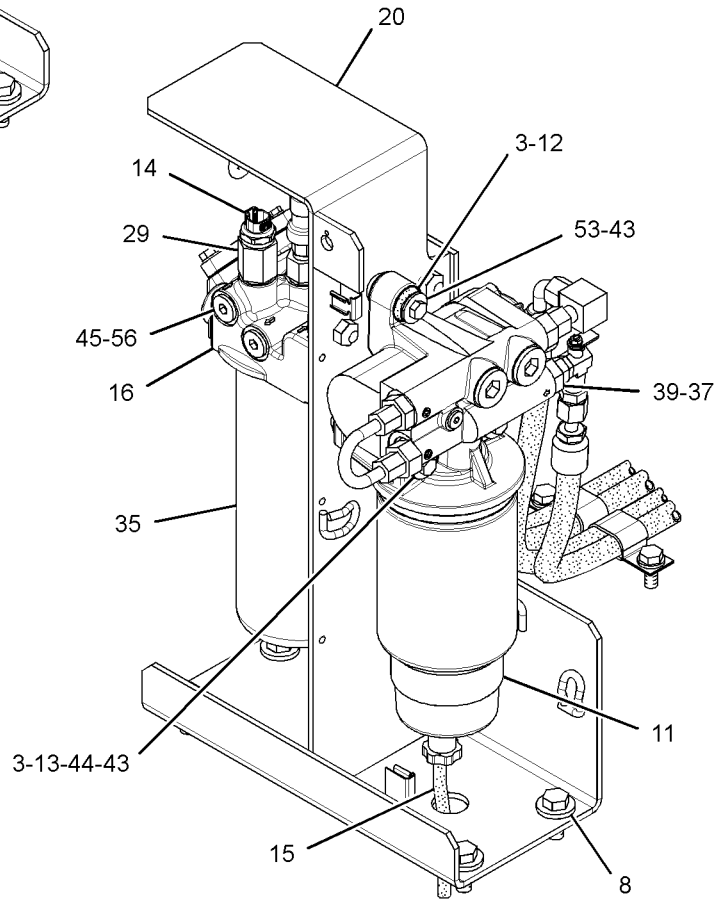

VIEW OF AREA C

GRAPHIC #2 **<END>** g01770556

229-1859 PUMP & MOTOR GP-REFUELING

S/N: MYG1-UP; PPN1-UP
PART OF 229-1785 PUMP GP-REFUELING
AN ATTACHMENT

SMCS-1295 **i02180311**

NOTE	REF NO	GRAPHIC REF	PART NUMBER	QTY	PART NAME 1 2 3 4 5 6 (PRODUCT LEVEL)	SEE PAGE
	1	1	**121-1038**	1	HOUSING-RECEPTACLE	
	2	1	**116-0128**	1	SEAL	
	3	1	**121-1039**	2	TERMINAL (MALE)	

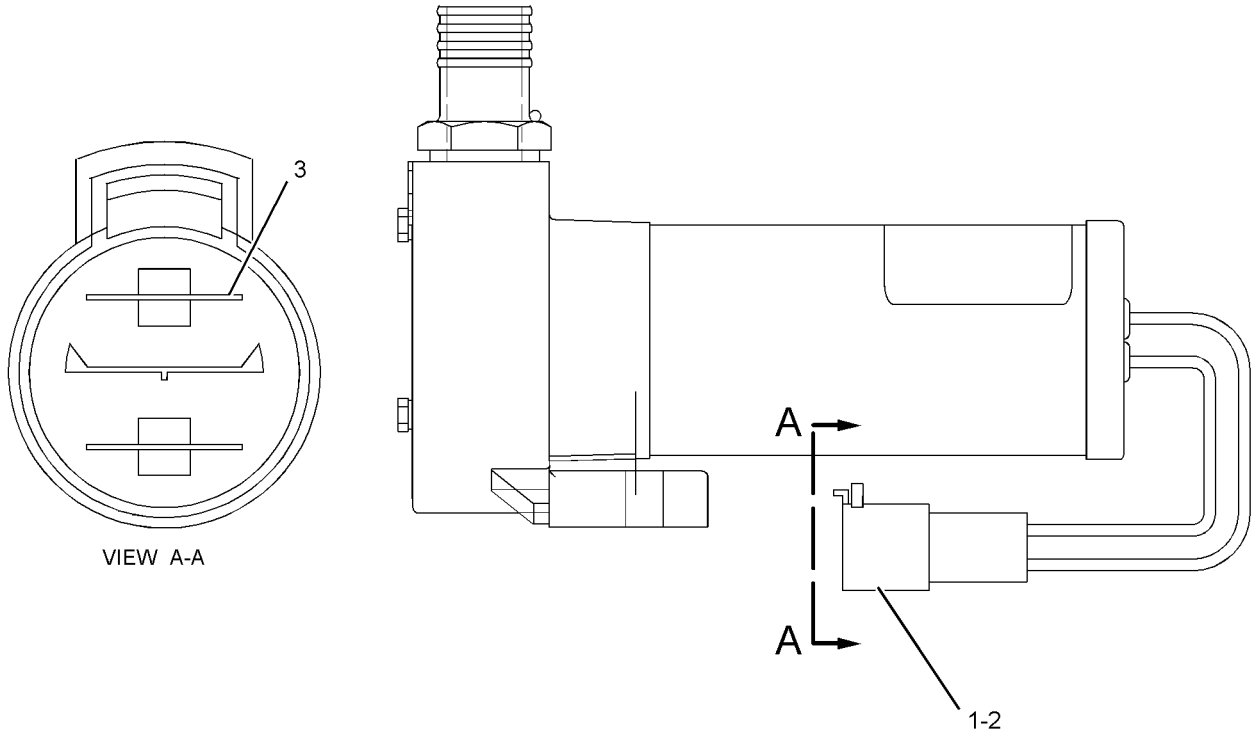

GRAPHIC #1 **<END>** g01104176

FUEL SYSTEM

229-1784 PUMP AR-FUEL TRANSFER

S/N: MYG1-UP; PPN1-UP
PART OF 345-7571, 348-8126, 352-2663 DISTRIBUTION AR
AN ATTACHMENT

SMCS-1256 **i02880222**

NOTE	PART NUMBER	QTY	PART NAME 1 2 3 4 5 6 (PRODUCT LEVEL)	SEE PAGE
Y	*298-4258*	1	FILM GP (FUEL TRANSFER PUMP)	982
Y	*229-1785*	1	PUMP GP-REFUELING	131
Y	*238-1570*	1	WIRING GP-REFUELING PUMP	291

Y-SEPARATE ILLUSTRATION

<END>

267-3361 PUMP GP-FUEL INJECTION

S/N: THX14533-UP; THY5575-UP

PART OF 267-3362 PUMP GP-FUEL INJECTION

SMCS-1251, 1290 **i03173463**

NOTE	REF NO	GRAPHIC REF	PART NUMBER	QTY	PART NAME 1 2 3 4 5 6 (PRODUCT LEVEL)	SEE PAGE
	1	1	**235-9651**	2	BOLT-SOCKET HEAD (M8X1.25X65-MM)	
CYR	2	1	**328-2574**	1	INJECTOR GP-FUEL	113

C-CHANGE FROM PREVIOUS TYPE
R-REMFG PART MAY BE AVAILABLE
Y-SEPARATE ILLUSTRATION

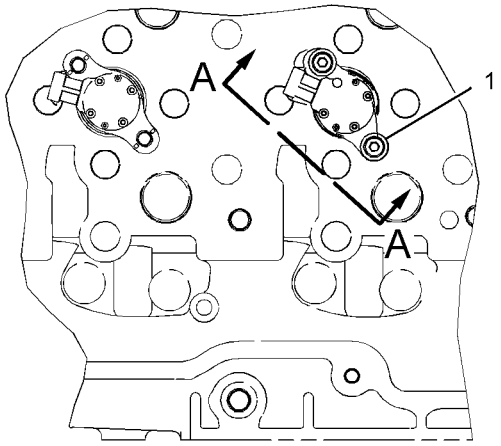

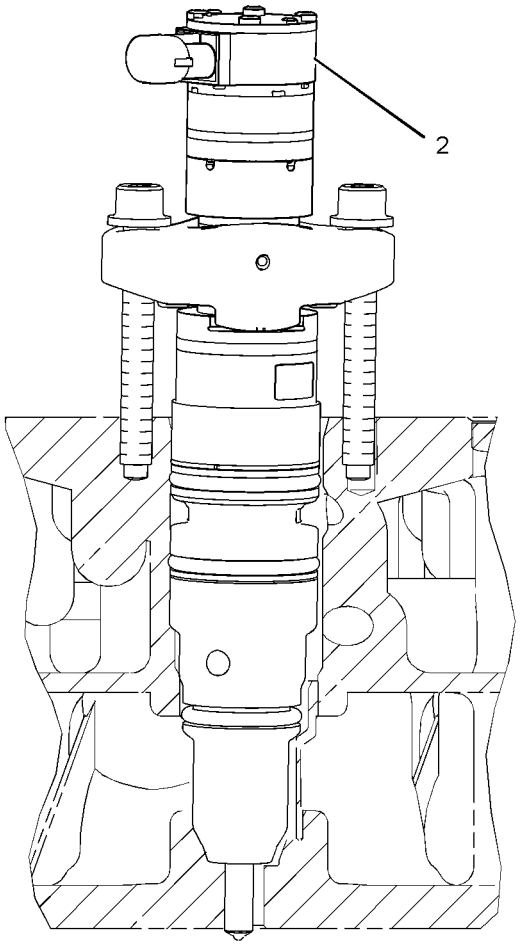

VIEW A-A
ROTATED 48° CCW

GRAPHIC #1 **<END>** g01147295

267-3362 PUMP GP-FUEL INJECTION

S/N: THX14533-UP; THY5575-UP

PART OF 229-2665, 348-2747 ENGINE AR-CORE

SMCS-1251, 1290 **i02299731**

NOTE	REF NO	GRAPHIC REF	PART NUMBER	QTY	PART NAME 1 2 3 4 5 6 (PRODUCT LEVEL)	SEE PAGE
Y	1	1	**267-3361**	6	PUMP GP-FUEL INJECTION	125

Y-SEPARATE ILLUSTRATION

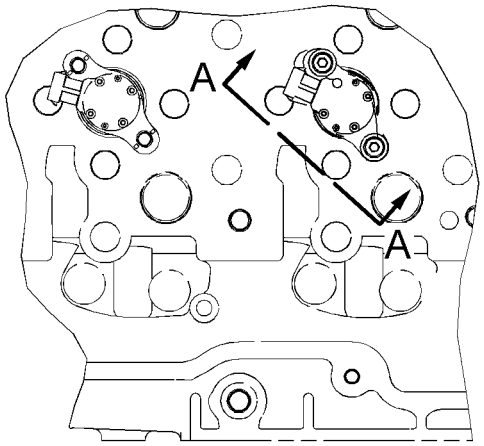

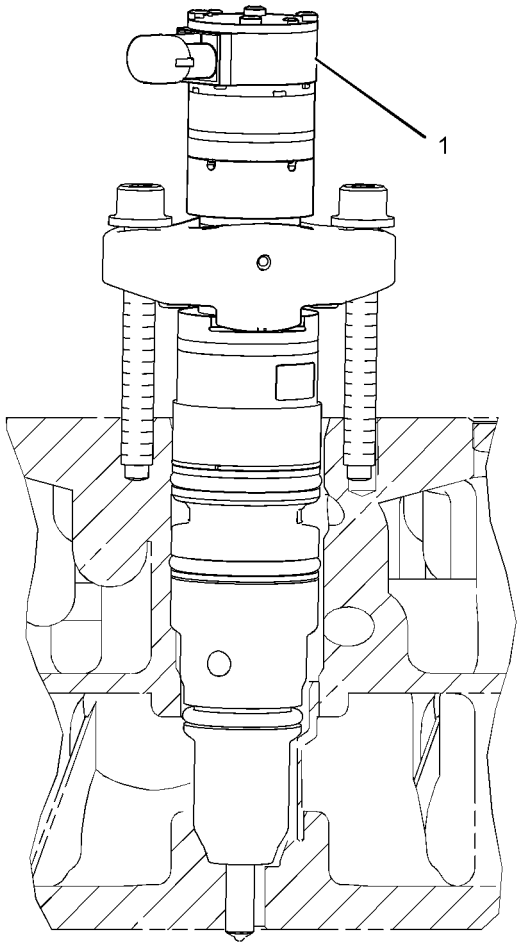

VIEW A-A
ROTATED 48° CCW

GRAPHIC #1 **<END>** g01147347

165-9154 PUMP GP-FUEL PRIMING

S/N: MYG1-UP; PPN1-UP

PART OF 237-8752 LINES GP-FUEL

SMCS-1258 **i02100390**

NOTE	REF NO	GRAPHIC REF	PART NUMBER	QTY	PART NAME 1 2 3 4 5 6 (PRODUCT LEVEL)	SEE PAGE
	1	1	**9Y-8389**	1	GASKET (FUEL PRIMING PUMP)	
	2	1	**183-2823**	1	PUMP AS-FUEL PRIMING	
	3	1	**8C-6561**	1	BOLT (5/16-18X1.375-IN)	
	4	1	**8T-4205**	1	WASHER-HARD (7.2X14.5X2-MM THK)	
	5	1	**7X-2501**	1	BOLT (1/4-20X1.25-IN)	
	6	1	**8T-4224**	1	WASHER-HARD (8.8X16X2-MM THK)	

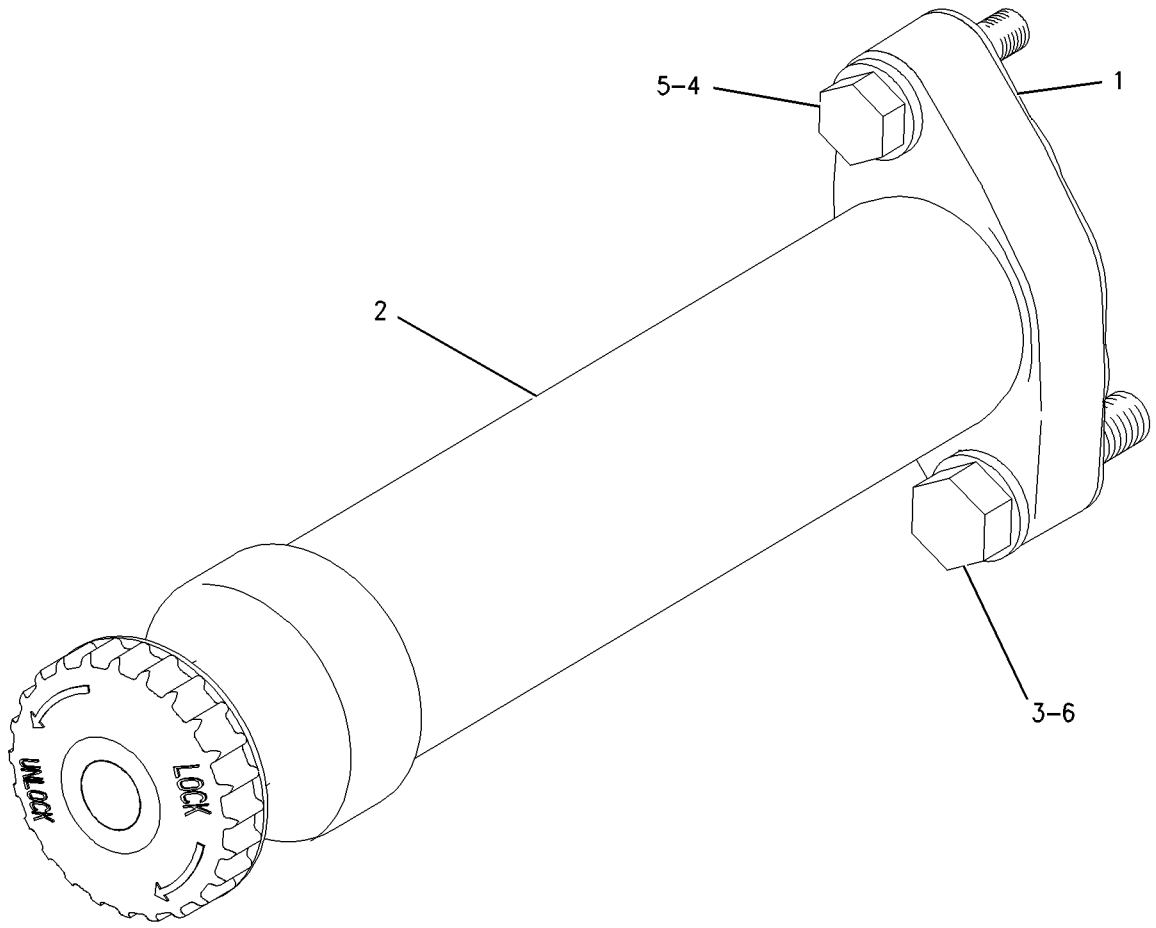

GRAPHIC #1 **<END>** g00655069

FUEL SYSTEM

340-3837 PUMP GP-FUEL PRIMING

S/N: MYG1-UP; PPN1-UP
PART OF 352-2663 DISTRIBUTION AR
AN ATTACHMENT

SMCS-1258 **i03675201**

NOTE	PART NUMBER	QTY	PART NAME 1 2 3 4 5 6 (PRODUCT LEVEL)	SEE PAGE
Y	*259-3918*	1	LINES GP-FUEL	119
Y	*336-6220*	1	WIRING GP-CAB (PRIMING PUMP)	263
Y	*336-6149*	1	WIRING GP-FUEL PUMP	282

Y-SEPARATE ILLUSTRATION

<END>

188-6121 PUMP GP-FUEL PRM & PRIM FILTER–
WITH WATER SEPARATOR
S/N: MYG1-UP; PPN1-UP
PART OF 259-3918 LINES GP-FUEL
AN ATTACHMENT

SMCS-1258 **i02522166**

NOTE	REF NO	GRAPHIC REF	PART NUMBER	QTY	PART NAME 1 2 3 4 5 6 (PRODUCT LEVEL)	SEE PAGE
Y	1	1	**190-8977**	1	PUMP GP-FUEL PRM & WATER SEP	130
	2	1	**209-9234**	1	REGULATOR-PRESSURE (FUEL)	
	3	1	**211-7730**	1	TUBE AS	
	4	1	**030-8194**	1	CONNECTOR	
	5	1	**136-7227**	2	SEAL-O-RING	

Y-SEPARATE ILLUSTRATION

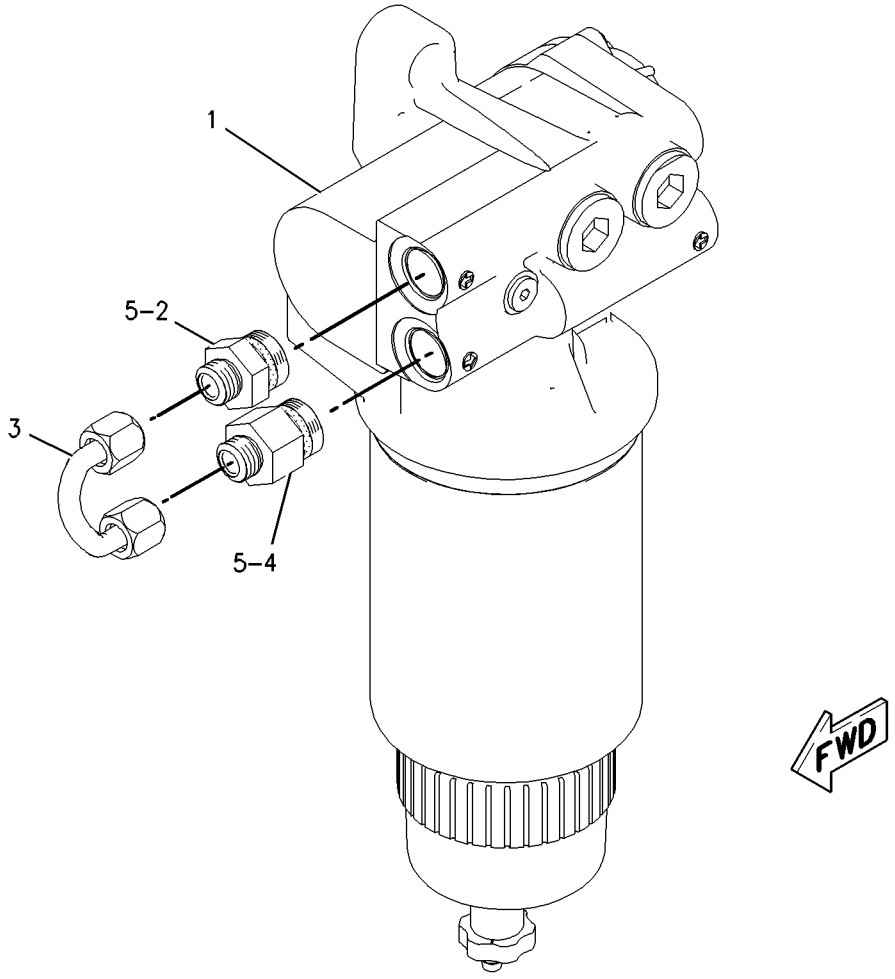

GRAPHIC #1 **<END>** g00850001

190-8977 PUMP GP-FUEL PRM & WATER SEP

S/N: MYG1-UP; PPN1-UP
PART OF 188-6121 PUMP GP-FUEL PRM & PRIM FILTER
AN ATTACHMENT

SMCS-1258, 1261, 1263 **i01934930**

NOTE	REF NO	GRAPHIC REF	PART NUMBER	QTY	PART NAME 1 2 3 4 5 6 (PRODUCT LEVEL)	SEE PAGE
Y	1	1	*174-9570*	1	FILTER GP-WATER SEP & FUEL (PRIMARY)	112
	2	1	**190-8970**	1	PUMP AS-FUEL PRIMING	

Y-SEPARATE ILLUSTRATION

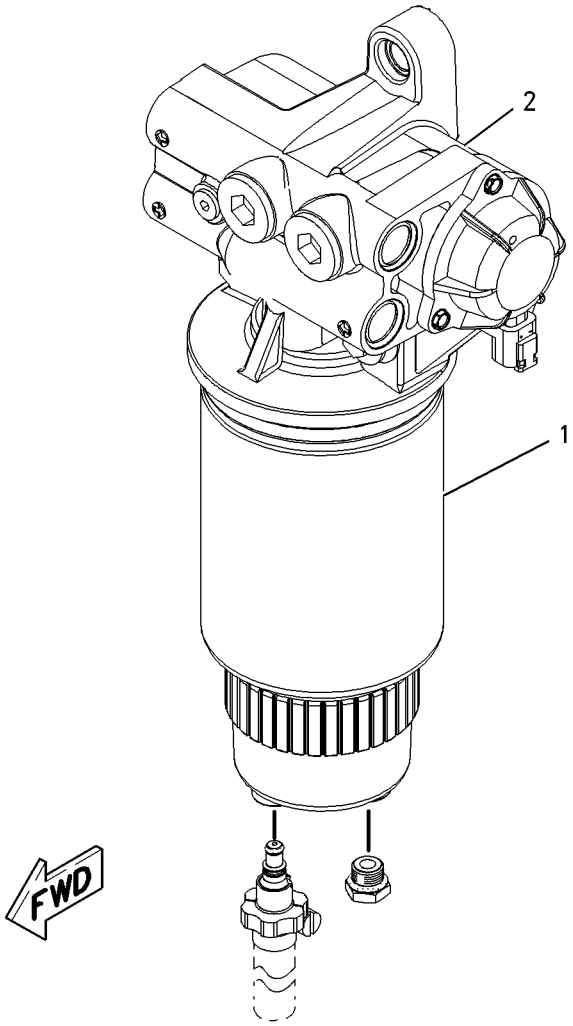

GRAPHIC #1 **<END>** g00904493

229-1785 PUMP GP-REFUELING

S/N: MYG1-UP; PPN1-UP
PART OF 229-1784 PUMP AR-FUEL TRANSFER
AN ATTACHMENT

SMCS-1295 **i03161321**

NOTE	REF NO	GRAPHIC REF	PART NUMBER	QTY	PART NAME 1 2 3 4 5 6 (PRODUCT LEVEL)	SEE PAGE
C	1	1	**312-2645**	1	SWITCH AS-LIQUID LEVEL (FUEL TANK SHUTOFF)	
		1	**2S-4078**	1	SEAL-O-RING	
		1	**186-3735**	2	PIN-CONNECTOR (16-GA TO 18-GA)	
		1	**243-4505**	1	RECEPTACLE AS-CONNECTOR (2-PIN)	
	2	1	**7K-1181**	1	STRAP-CABLE	
	3	1	**9M-7958**	4	CLAMP-HOSE	
	4	1	**120-5114**	1	FILM-INSTRUCTION (REFUELING PUMP)	
C	5	1	**324-5761**	1	COVER AS	
M	6	1	**135-8572**	2	BOLT AS	
M	7	1	**135-8573**	4	BOLT AS	
Y	8	1	**229-1859**	1	PUMP & MOTOR GP-REFUELING	123
	9	1	**229-1860**	1	STRAINER AS-FUEL	
	10	1	**229-1861**	1	CONNECTOR-HOSE	
	11	1	**266-2724**	1	SUPPORT AS	
M	12	1	**8T-4183**	2	BOLT (M12X1.75X40-MM)	
	13	1	**8T-4223**	4	WASHER-HARD (13.5X25.5X3-MM THK)	
E	14	1	**229-1857**		HOSE (430-CM)	
E	14A	1	**229-1857**		HOSE (38-CM)	

C-CHANGE FROM PREVIOUS TYPE
E-ORDER BY THE CENTIMETER
M-METRIC PART
Y-SEPARATE ILLUSTRATION

229-1785 **PUMP GP-REFUELING** *(contd.)* **i03161321**

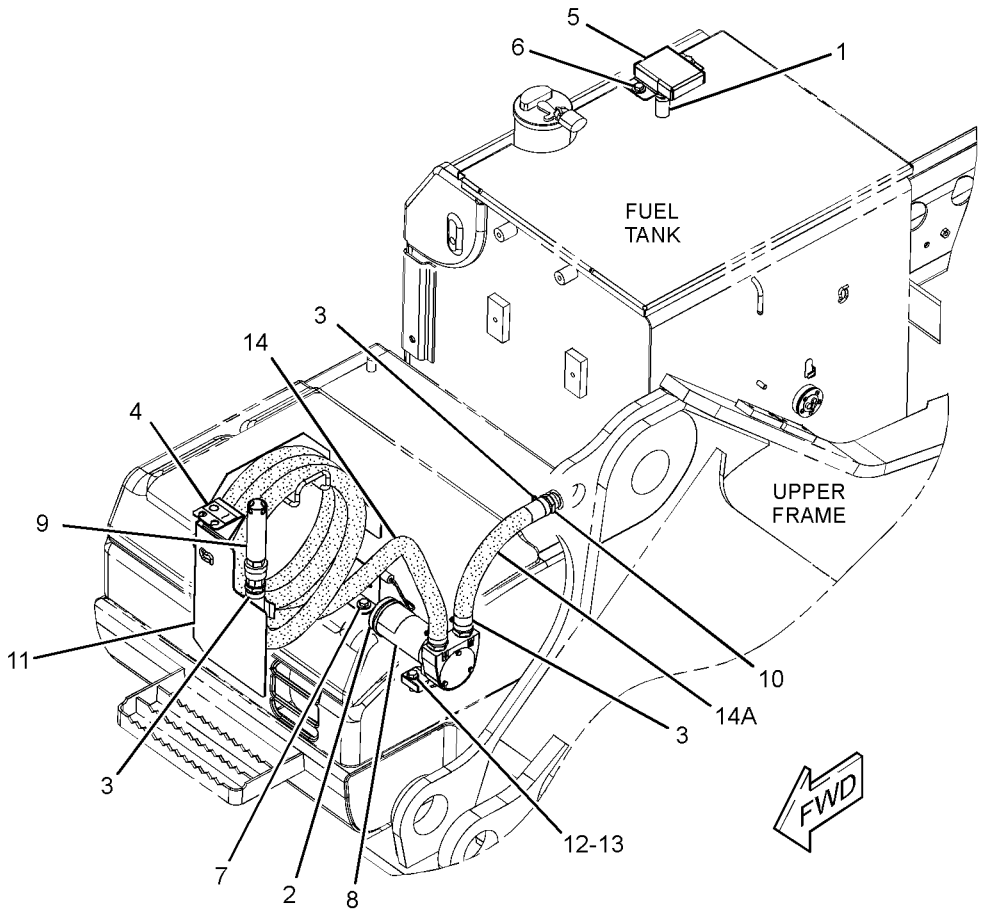

GRAPHIC #1 **<END>** g01624361

258-8745 PUMP GP-UNIT INJECTOR HYD

S/N: THX14533-UP; THY5575-UP

PART OF 229-2665, 348-2747 ENGINE AR-CORE

SMCS-1714 **i03028841**

NOTE	REF NO	GRAPHIC REF	PART NUMBER	QTY	PART NAME 1 2 3 4 5 6 (PRODUCT LEVEL)	SEE PAGE
	1	1	**262-6074**	1	TUBE AS	
	2	1	*183-3399*	2	CONNECTOR AS	
					(EACH INCLUDES)	
		1	**6V-8636**	1	CONNECTOR	
		1	**214-7568**	1	SEAL-O-RING	
		1	**221-3494**	1	SEAL-O-RING	
	3	1	**193-2162**	1	TUBE AS	
	4	1	**227-5904**	1	SEAL-O-RING	
CYR	5	1	**319-0677**	1	PUMP GP-UNIT INJECTOR HYD	135
	6	1	**030-7950**	1	ELBOW	
	7	1	*183-3407*	1	PLUG AS	
		1	**9S-8004**	1	PLUG	
		1	**153-4906**	1	SEAL-O-RING	
	8	1	**3E-9412**	1	DOWEL	
	9	1	**5P-3264**	1	ELBOW	
	10	1	**6V-4589**	1	SEAL-O-RING	
	11	1	**6V-5050**	1	SEAL-O-RING	
	12	1	**6V-5839**	2	WASHER (11X21X2.5-MM THK)	
M	13	1	**6V-7981**	2	BOLT (M10X1.5X70-MM)	

C-CHANGE FROM PREVIOUS TYPE
M-METRIC PART
R-REMFG PART MAY BE AVAILABLE
Y-SEPARATE ILLUSTRATION

258-8745 **PUMP GP-UNIT INJECTOR HYD** *(contd.)* **i03028841**

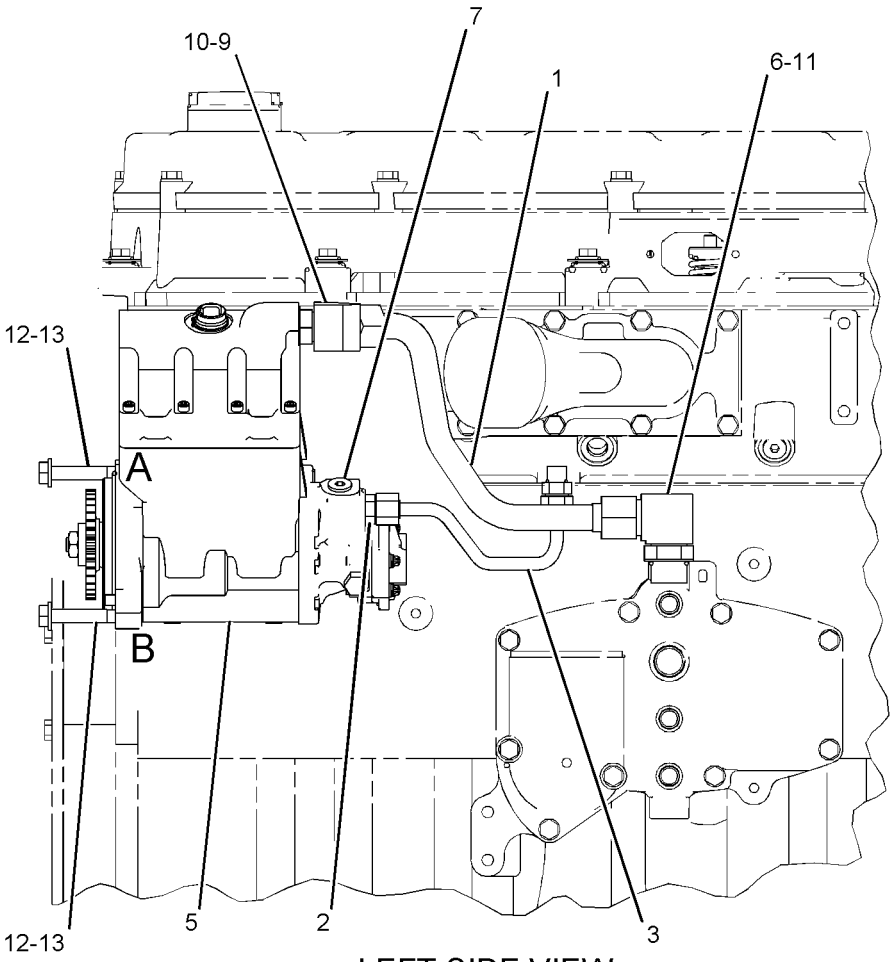

LEFT SIDE VIEW

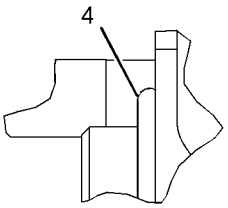

VIEW OF AREA A

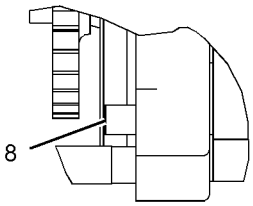

VIEW OF AREA B

GRAPHIC #1 **<END>** g01146833

319-0677 PUMP GP-UNIT INJECTOR HYD*R

S/N: THX14533-UP; THY5575-UP

PART OF 258-8745 PUMP GP-UNIT INJECTOR HYD

SMCS-1714 **i03293378**

NOTE	REF NO	GRAPHIC REF	PART NUMBER	QTY	PART NAME 1 2 3 4 5 6 (PRODUCT LEVEL)	SEE PAGE
	1	1	**313-4620**	3	SCREW-PAN HEAD	
	2	1	**318-6357**	1	PUMP GP-FUEL TRANSFER	
	3	1	**179-8128**	1	SEAL-O-RING (FUEL SYSTEM)	
	4	1	**262-0284**	1	RING-RETAINING	
M	5	1	**228-5897**	4	BOLT-TORX (M8X1.25X136.7-MM)	
	6	1	**239-2402**	3	SEAL-O-RING	
	7	1	**1F-7960**	1	WASHER (13.5X32X6-MM THK)	
	8	1	**1N-8062**	1	BEARING AS-NEEDLE	
M	9	1	**5C-2890**	1	NUT (M6X1-THD)	
	10	1	**8C-6711**	1	NUT-RETAINER (1/2-20-THD)	
	11	1	**9X-8267**	1	WASHER (6.6X12X2-MM THK)	
	12	1	**153-7036**	1	SPOOL	
	13	1	**260-5716**	1	SPOOL	

M-METRIC PART

319-0677 PUMP GP-UNIT INJECTOR HYD *(contd.)* i03293378

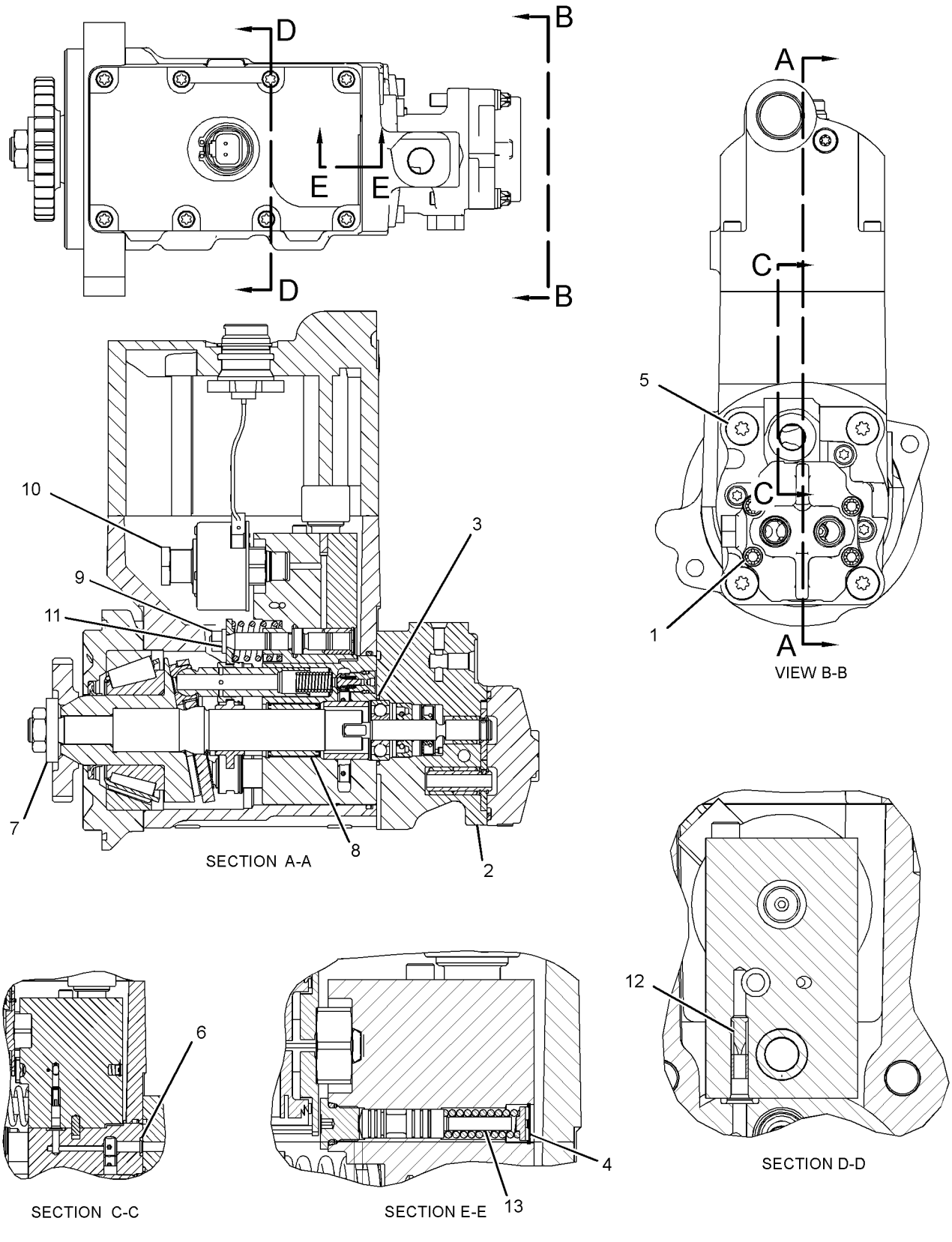

GRAPHIC #1 **<END>** g01689934

205-1306 REGULATOR GP-FUEL PRESSURE

S/N: THX14533-UP; THY5575-UP
PART OF 231-3039 LINES GP-FUEL

SMCS-1715 **i02684183**

NOTE	REF NO	GRAPHIC REF	PART NUMBER	QTY	PART NAME 1 2 3 4 5 6 (PRODUCT LEVEL)	SEE PAGE
	1	1	*295-1803*	1	ELBOW AS	
	1A	1	**6V-5049**	1	SEAL-O-RING	
		1	**196-6838**		ELBOW	
Y	2	1	*232-0343*	1	REGULATOR GP-FUEL PRESSURE	138

Y-SEPARATE ILLUSTRATION

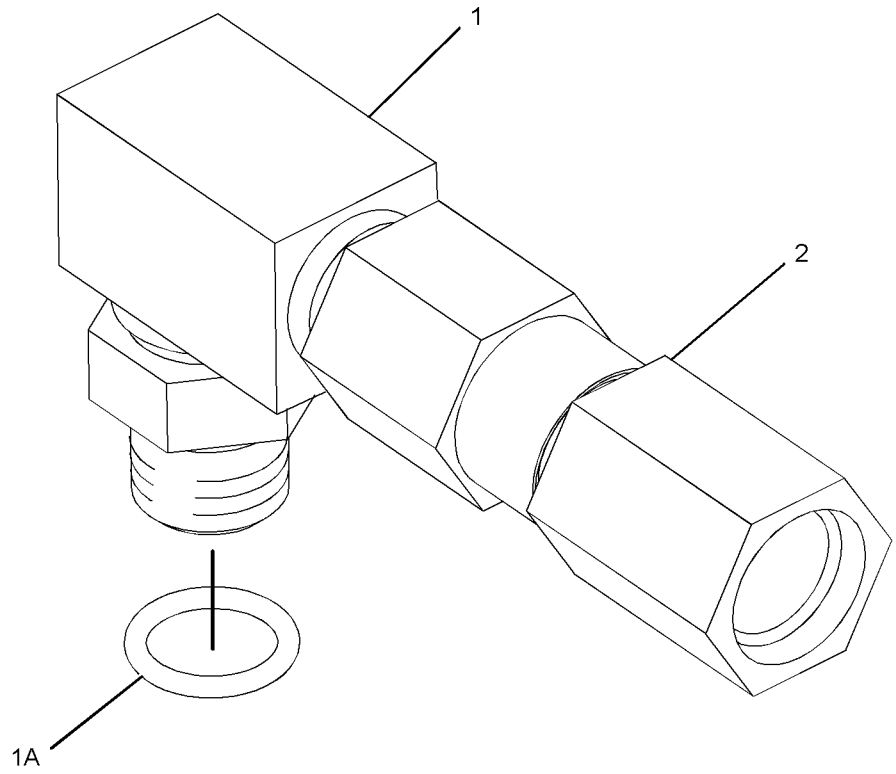

GRAPHIC #1 **<END>** g01349154

232-0343 REGULATOR GP-FUEL PRESSURE

S/N: THX14533-UP; THY5575-UP

PART OF 205-1306 REGULATOR GP-FUEL PRESSURE

SMCS-1715 **i02676268**

NOTE	REF NO	GRAPHIC REF	PART NUMBER	QTY	PART NAME 1 2 3 4 5 6 (PRODUCT LEVEL)	SEE PAGE
	1	1	**6V-5049**	1	SEAL-O-RING	
	2	1	**294-8620**	1	REGULATOR AS (FUEL PRESSURE)	

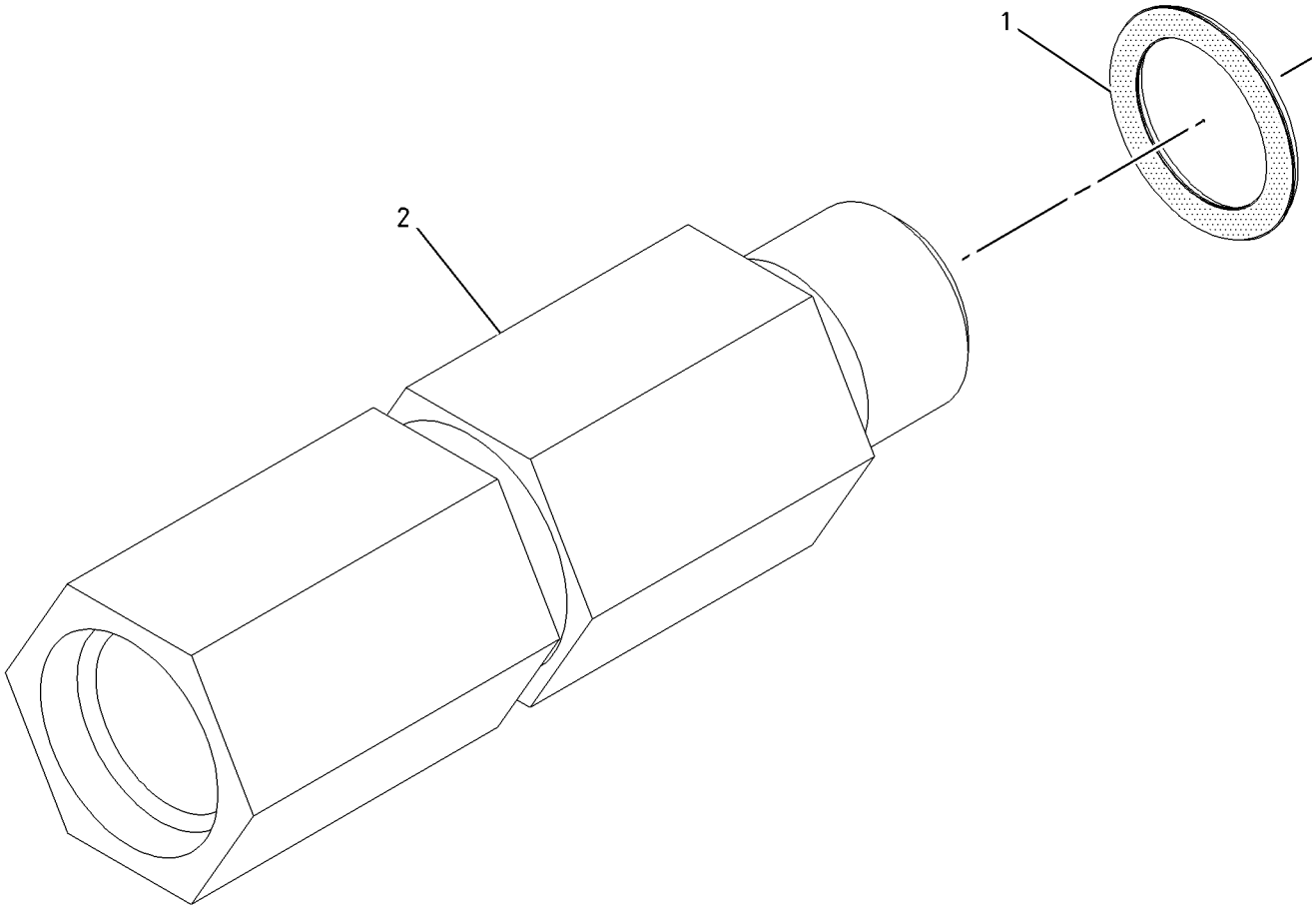

GRAPHIC #1 **<END>** g01004480

FUEL SYSTEM

237-8783 TANK & MTG GP-FUEL

S/N: MYG1-UP; PPN1-UP

PART OF 343-1145, 343-1146 CHASSIS AR

SMCS-1273 **i03148082**

NOTE	REF NO	GRAPHIC REF	PART NUMBER	QTY	PART NAME 1 2 3 4 5 6 (PRODUCT LEVEL)	SEE PAGE
	1	1	**246-2641**	1	PADLOCK GP	
		1	**5P-8500**	1	KEY	
M	2	1	**135-8572**	2	BOLT AS	
CY	3	1	**327-3333**	1	TANK GP-FUEL	140
	4	1	**085-9310**	4	SPACER (16.6X32X26-MM THK)	
M	5	1	**8T-4140**	4	BOLT (M16X2X60-MM)	

C-CHANGE FROM PREVIOUS TYPE
M-METRIC PART
Y-SEPARATE ILLUSTRATION

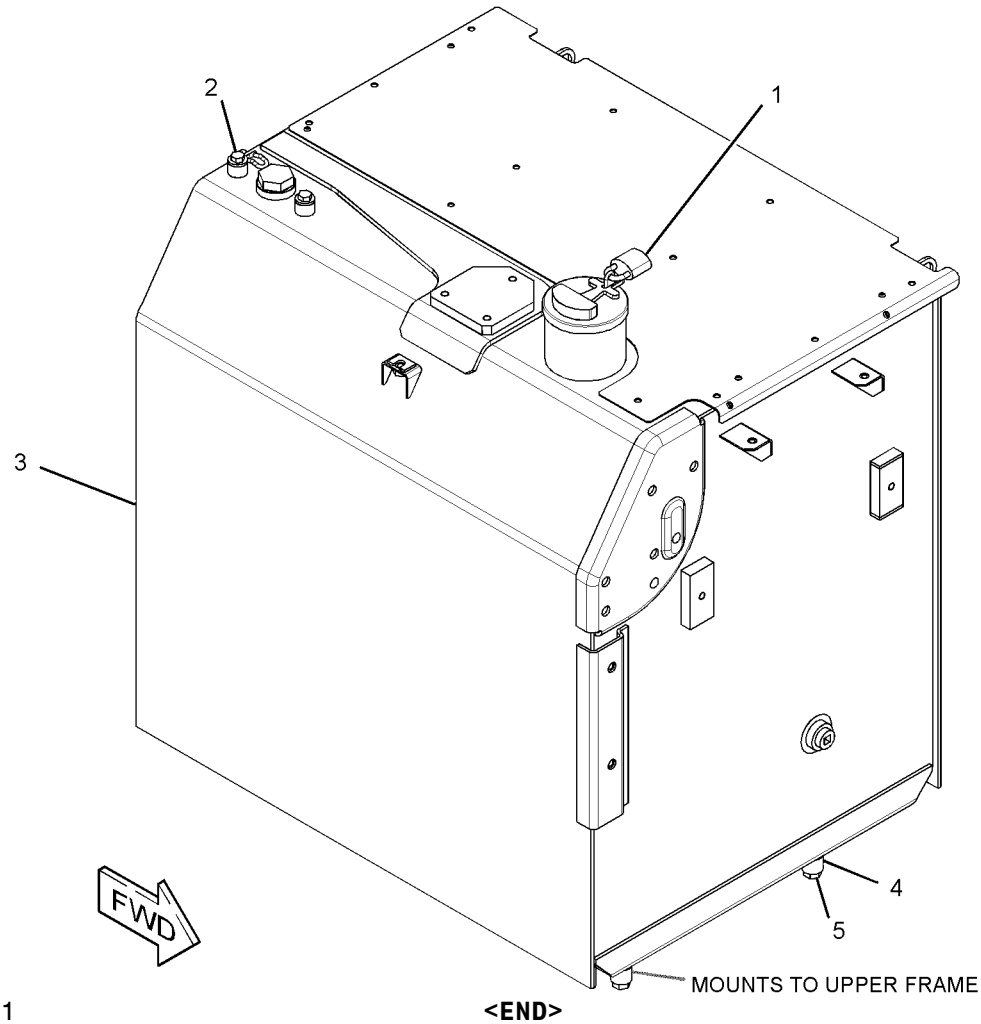

GRAPHIC #1 **<END>** g01620274

FUEL SYSTEM

327-3333 TANK GP-FUEL

S/N: MYG1-UP; PPN1-UP
615-L (163-US GAL)
PART OF 237-8783 TANK & MTG GP-FUEL

SMCS-1273 **i03148627**

NOTE	PART NUMBER	QTY	PART NAME 1 2 3 4 5 6 (PRODUCT LEVEL)	SEE PAGE
Y	*327-3334*	1	TANK GP-FUEL	141
			—OR—	
Y	*327-3335*	1	TANK GP-FUEL	143

Y-SEPARATE ILLUSTRATION

<END>

FUEL SYSTEM

327-3334 TANK GP-FUEL

S/N: MYG1-UP; PPN1-UP
615-L (163-US GAL)
PART OF 327-3333 TANK GP-FUEL

SMCS-1273 **i03714503**

NOTE	REF NO	GRAPHIC REF	PART NUMBER	QTY	PART NAME 1 2 3 4 5 6 (PRODUCT LEVEL)	SEE PAGE
	1	1	**4I-0378**	1	GASKET-RUBBER	
	2	1	**5P-4924**	1	ELBOW	
	3	1	**7X-7700**	1	CAP AS-FILLER (FUEL TANK)	
		1	**9X-2205**	1	KIT-CAP FILTER (FUEL TANK)	
					(INCLUDES FILTER AS, SCREWS, GASKETS, & VALVE)	
		1	**9X-8600**	1	SEAL-O-RING	
	4	1	**128-4411**	1	VALVE AS (FUEL SHUTOFF)	
	5	1	**341-1842**	1	SENDER AS-FUEL LEVEL	
		1	**186-3735**	2	PIN-CONNECTOR (16-GA TO 18-GA)	
		1	**102-8802**	1	KIT-RECEPTACLE (2-PIN)	
					(INCLUDES RECEPTACLE AS & WEDGE)	
	6	1	*203-2059*	1	CONNECTOR AS	
		1	**6V-8397**	1	SEAL-O-RING	
		1	**8C-6869**	1	CONNECTOR	
J	7	1	**303-9933**	1	STRAINER AS-FUEL (FLOAT GAUGE)	
M	9	1	**095-0736**	5	SCREW-MACHINE (M5X0.8X10-MM)	
	10	1	**2S-4078**	1	SEAL-O-RING	
	11	1	**3B-0551**	1	PLUG-PIPE	
	12	1	**3J-1907**	1	SEAL-O-RING	
	13	1	**8T-0328**	5	WASHER-HARD (5.5X10X1-MM THK)	
	14	1	**9S-6130**	1	PLUG	
M	15	1	**135-8579**	3	BOLT AS	
					AVAILABLE REPAIR KIT(S):	
J			**303-9937**		KIT-GAUGE (FUEL STRAINER)	
					(INCLUDES STOPPER & GAUGE)	

J-KIT MARKED J SERVICES PART(S) MARKED J
M-METRIC PART

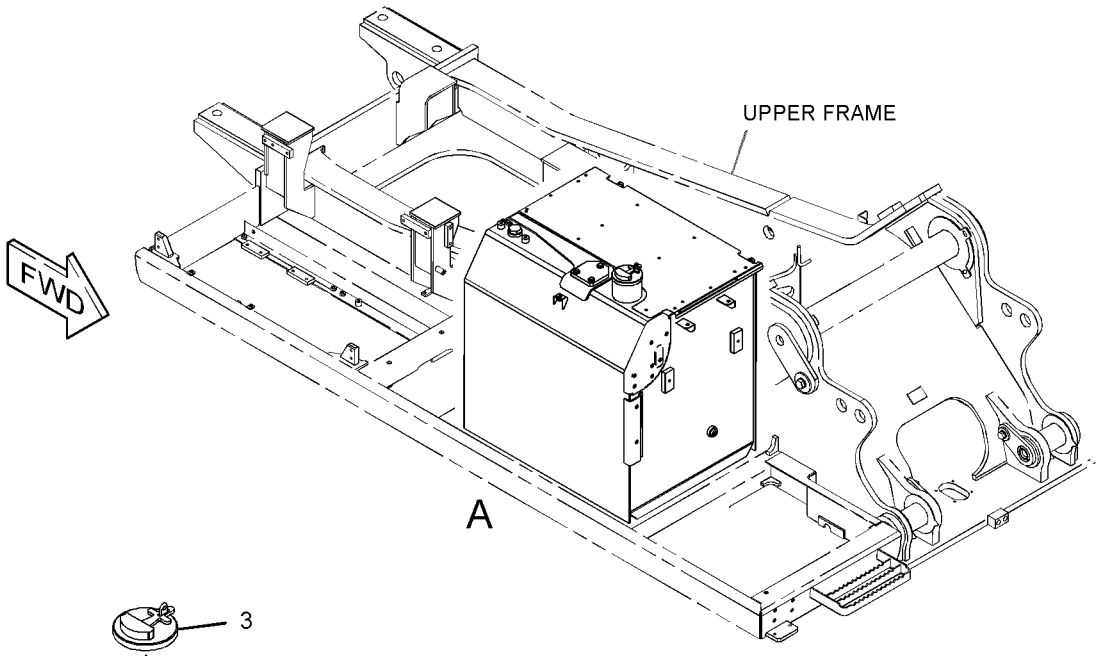

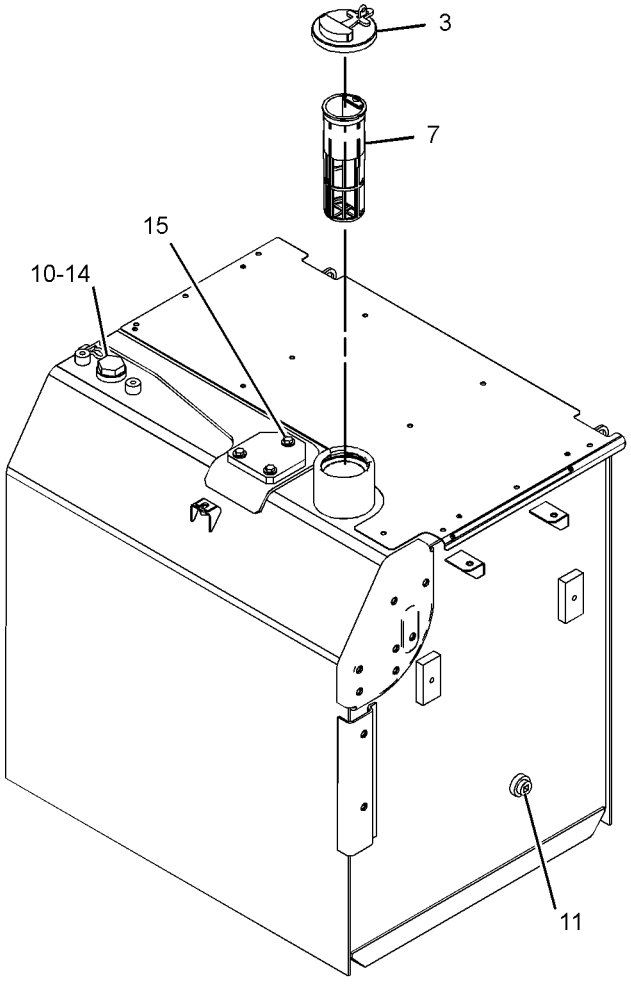

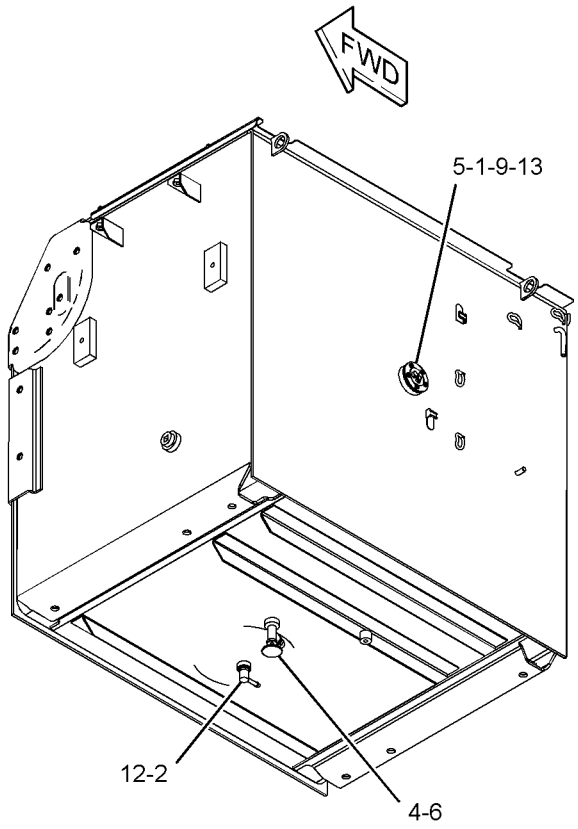

VIEW OF AREA A

GRAPHIC #1 **<END>** g01801757

FUEL SYSTEM

327-3335 TANK GP-FUEL

S/N: MYG1-UP; PPN1-UP
615-L (163-US GAL)
PART OF 327-3333 TANK GP-FUEL

SMCS-1273 **i03712951**

NOTE	REF NO	GRAPHIC REF	PART NUMBER	QTY	PART NAME 1 2 3 4 5 6 (PRODUCT LEVEL)	SEE PAGE
	1	1	**4I-0378**	1	GASKET-RUBBER	
	2	1	**5P-4924**	2	ELBOW	
	3	1	**7X-7700**	1	CAP AS-FILLER (FUEL TANK)	
		1	**9X-2205**	1	KIT-CAP FILTER (FUEL TANK)	
					(INCLUDES FILTER AS, SCREWS, GASKETS, & VALVE)	
		1	**9X-8600**	1	SEAL-O-RING	
	4	1	**128-4411**	1	VALVE AS (FUEL SHUTOFF)	
	5	1	**341-1842**	1	SENDER AS-FUEL LEVEL	
		1	**186-3735**	2	PIN-CONNECTOR (16-GA TO 18-GA)	
		1	**102-8802**	1	KIT-RECEPTACLE (2-PIN)	
					(INCLUDES RECEPTACLE AS & WEDGE)	
	6	1	*203-2059*	1	CONNECTOR AS	
		1	**6V-8397**	1	SEAL-O-RING	
		1	**8C-6869**	1	CONNECTOR	
J	7	1	**303-9933**	1	STRAINER AS-FUEL (FLOAT GAUGE)	
M	9	1	**095-0736**	5	SCREW-MACHINE (M5X0.8X10-MM)	
	10	1	**2S-4078**	1	SEAL-O-RING	
	11	1	**3B-0551**	1	PLUG-PIPE	
	12	1	**3J-1907**	2	SEAL-O-RING	
	13	1	**8T-0328**	5	WASHER-HARD (5.5X10X1-MM THK)	
	14	1	**9S-6130**	1	PLUG	
M	15	1	**135-8579**	3	BOLT AS	
					PARTS SHOWN IN GRAPHIC(S) WITHOUT A REFERENCE NUMBER ARE NOT SERVICED SEPARATELY	
					AVAILABLE REPAIR KIT(S):	
J			**303-9937**	1	KIT-GAUGE (FUEL STRAINER)	
					(INCLUDES STOPPER & GAUGE)	

J-KIT MARKED J SERVICES PART(S) MARKED J
M-METRIC PART

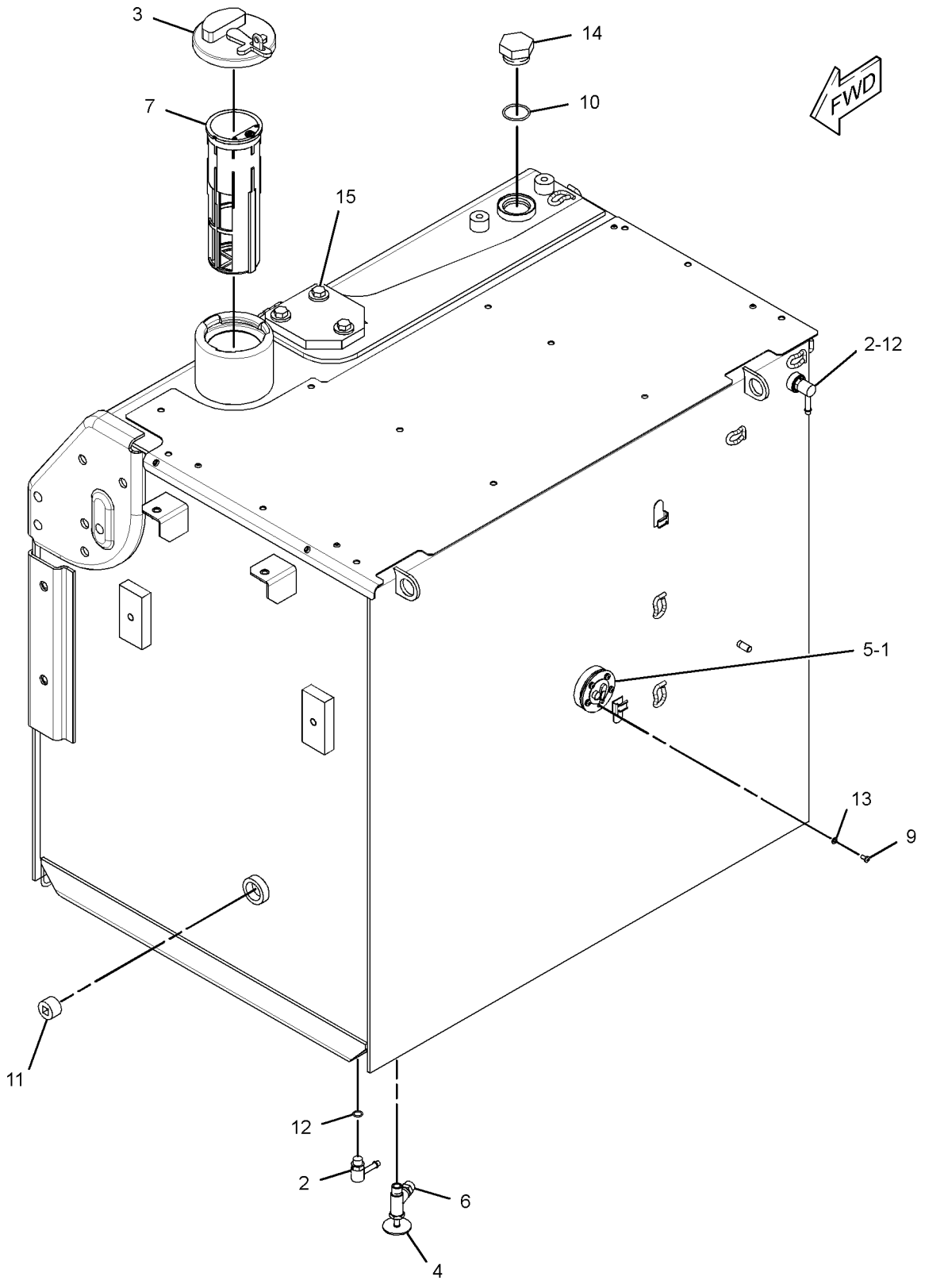

GRAPHIC #1 **<END>** g01999973

139-6873 VALVE GP-FUEL BYPASS–FILTER

S/N: MYG1-UP; PPN1-UP

PART OF 237-8752 LINES GP-FUEL

SMCS-1250, 1261, 1715 **i02100587**

NOTE	REF NO	GRAPHIC REF	PART NUMBER	QTY	PART NAME 1 2 3 4 5 6 (PRODUCT LEVEL)	SEE PAGE
	1	1	**9X-7737**	1	SEAL-O-RING	

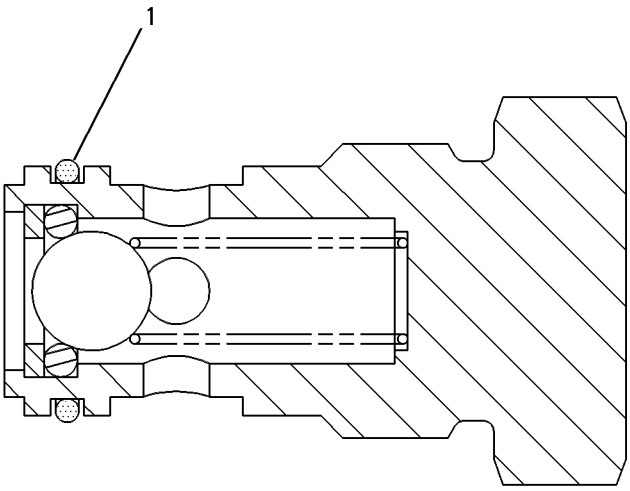

GRAPHIC #1 **<END>** g00266124

FUEL SYSTEM

298-3147 VALVE GP-FUEL SHUTOFF

S/N: MYG1-UP; PPN1-UP
PART OF 237-8752, 259-3918 LINES GP-FUEL
ALSO AN ATTACHMENT

SMCS-1273 **i02810063**

NOTE	REF NO	GRAPHIC REF	PART NUMBER	QTY	PART NAME 1 2 3 4 5 6 (PRODUCT LEVEL)	SEE PAGE
	1	1	**298-3257**	1	STOP	
	2	1	**298-3258**	1	LEVER	
M	3	1	**260-6692**	1	NUT (M5X0.8-THD)	
	4	1	**3J-1907**	1	SEAL-O-RING	
	5	1	**8T-0328**	1	WASHER-HARD (5.5X10X1-MM THK)	
					PARTS SHOWN IN GRAPHIC(S) WITHOUT A REFERENCE NUMBER ARE NOT SERVICED SEPARATELY	

M-METRIC PART

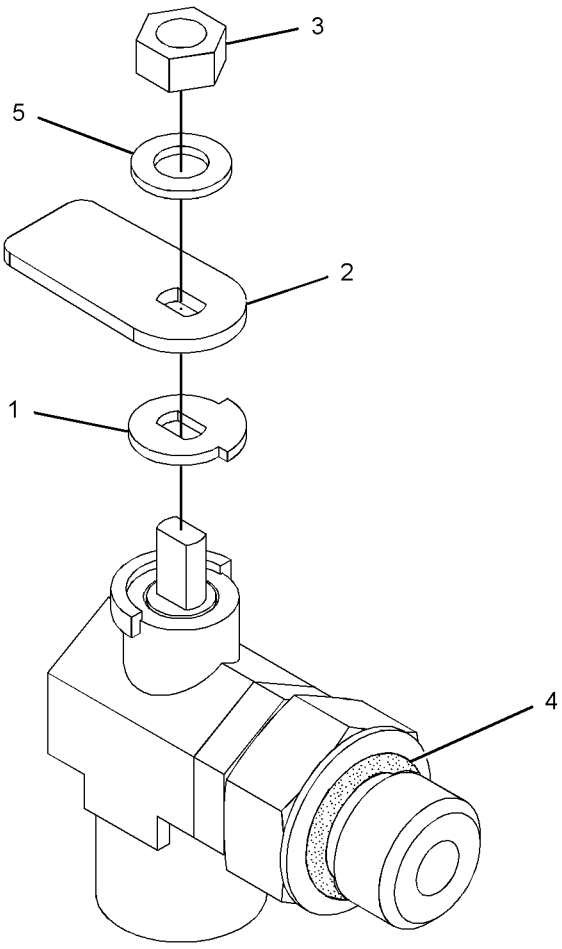

GRAPHIC #1 **<END>** g01377343

132-1829 ALARM GP–FAULT

S/N: MYG1-UP; PPN1-UP
24-VOLT
PART OF 336-6174 WIRING GP-CAB

SMCS-7400, 7402, 7407 **i01454019**

NOTE	REF NO	GRAPHIC REF	PART NUMBER	QTY	PART NAME 1 2 3 4 5 6 (PRODUCT LEVEL)	SEE PAGE
	1	1	**102-8802**	1	KIT-RECEPTACLE (2-PIN)	
					(INCLUDES RECEPTACLE AS & WEDGE)	
	2	1	**186-3735**	2	PIN-CONNECTOR (16-GA TO 18-GA)	

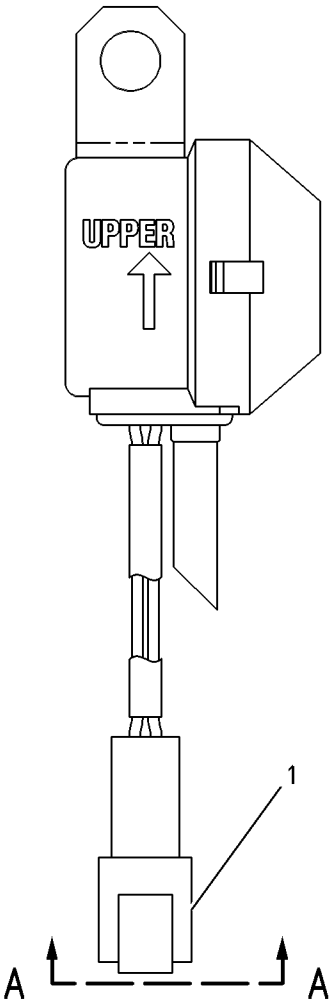

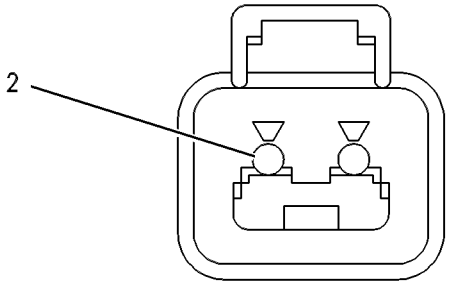

VIEW A-A

GRAPHIC #1 **<END>** g00272185

231-1771 ALARM GP-TRAVEL–BACKUP

S/N: MYG1-UP; PPN1-UP
AN ATTACHMENT

SMCS-7429 **i03267821**

NOTE	REF NO	GRAPHIC REF	PART NUMBER	QTY	PART NAME 1 2 3 4 5 6 (PRODUCT LEVEL)	SEE PAGE
	1	1	**213-9100**	1	ALARM GP (BACKUP)	
		1	**102-8802**	1	KIT-RECEPTACLE (2-PIN)	
					(INCLUDES RECEPTACLE AS & WEDGE)	
		1	**186-3735**	2	PIN-CONNECTOR (16-GA TO 18-GA)	
E		1	**9X-1813**		SLEEVE (29-CM)	
M	2	1	**8T-4189**	2	BOLT (M8X1.25X20-MM)	
	3	1	**5P-4116**	2	WASHER-HARD (8.8X20.5X2-MM THK)	

E-ORDER BY THE CENTIMETER
M-METRIC PART

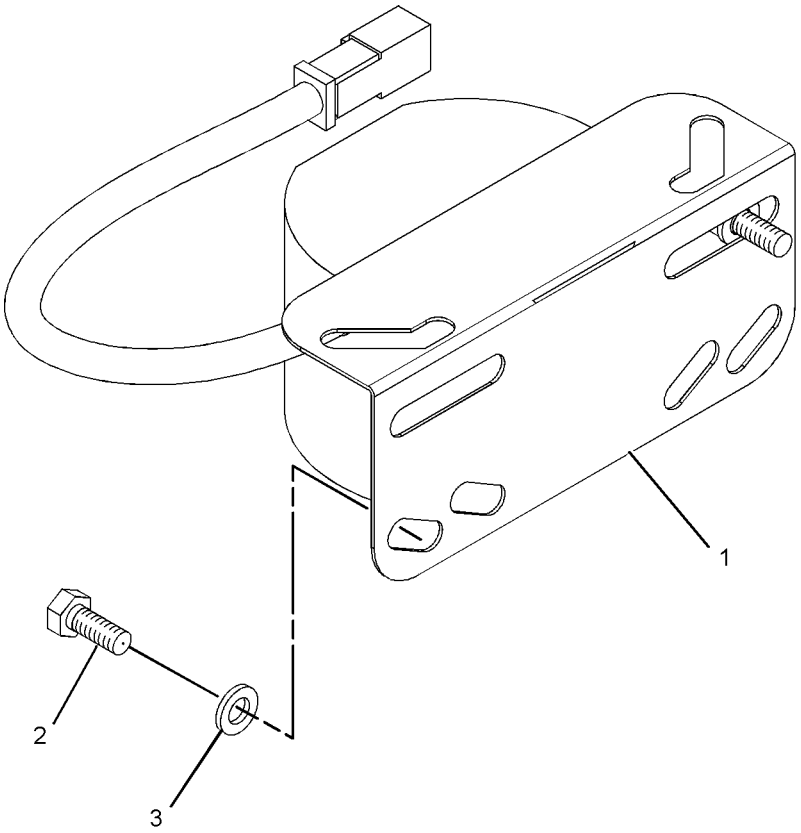

GRAPHIC #1 **<END>** g01071794

177-6972 ALTERNATOR GP-CHARGING

S/N: THX14533-UP; THY5575-UP
24-VOLT, 65-AMPERE
PART OF 224-9843 ENGINE AR

SMCS-1405 **i03579600**

NOTE	REF NO	GRAPHIC REF	PART NUMBER	QTY	PART NAME 1 2 3 4 5 6 (PRODUCT LEVEL)	SEE PAGE
	1	1	**129-5096**	1	PULLEY-ALTERNATOR (8-GROOVE)	
YR	2	1	**185-5294**	1	ALTERNATOR GP-CHARGING (24-VOLT)	150
	3	1	**203-0199**	1	SPACER (19.05-MM THK)	
	4	1	**258-7531**	1	GUARD AS	
M		1	**6V-8214**	7	BOLT (M6X1X20-MM)	
M		1	**6V-8225**	7	NUT (M6X1-THD)	
		1	**9X-8267**	14	WASHER (6.6X12X2-MM THK)	
	5	1	**5P-2424**	1	BOLT (1/2-13X2.25-IN)	
	6	1	**6V-8188**	1	NUT (1/2-13-THD)	
	7	1	**7X-0339**	1	BOLT (1/2-13X6.25-IN)	
	8	1	**8T-4121**	1	WASHER-HARD (11X21X2.5-MM THK)	
M	9	1	**8T-4136**	1	BOLT (M10X1.5X25-MM)	
	10	1	**8T-4223**	3	WASHER-HARD (13.5X25.5X3-MM THK)	

M-METRIC PART
R-REMFG PART MAY BE AVAILABLE
Y-SEPARATE ILLUSTRATION

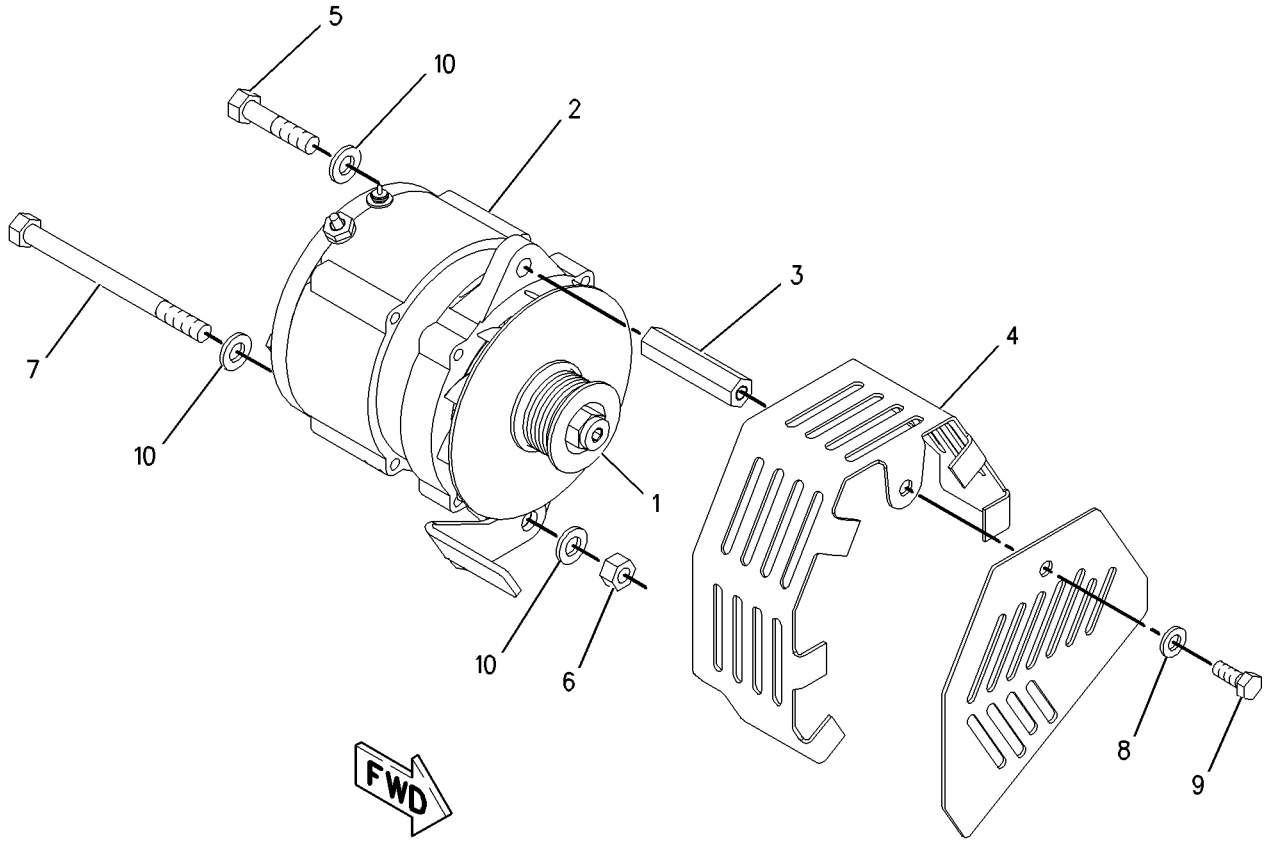

GRAPHIC #1 **<END>** g00775601

185-5294 ALTERNATOR GP-CHARGING*R

S/N: THX14533-UP; THY5575-UP
24-VOLT, 65-AMPERE
PART OF 177-6972 ALTERNATOR GP-CHARGING

SMCS-1405 **i02703714**

NOTE	REF NO	GRAPHIC REF	PART NUMBER	QTY	PART NAME 1 2 3 4 5 6 (PRODUCT LEVEL)	SEE PAGE
	1	1	**185-2653**	1	FRAME	
	2	1	**5S-7349**	1	BOLT (1/4-20X0.5-IN)	
	3	1	**185-2639**	1	FAN AS	
	4	1	**1H-3244**	1	LOCKWASHER	
	5	1	**185-2645**	1	FRAME	
	6	1	**2K-4821**	1	LOCKNUT (5/8-18-THD)	
	7	1	**5P-8247**	1	WASHER-HARD (17X32X3.5-MM THK)	
	8	1	**185-2651**	1	COVER	
	9	1	**8T-4205**	1	WASHER-HARD (7.2X14.5X2-MM THK)	
	10	1	**185-2647**	1	GROMMET	
	11	1	**9L-6770**	1	CAP-DUST	
	12	1	**185-2642**	1	STATOR AS	
	13	1	**185-2638**	2	COLLAR	
	14	1	**185-2654**	1	PLATE	
	15	1	**185-2650**	1	ROTOR AS	
	16	1	**185-2644**	1	COIL AS	
	17	1	**185-2648**	1	REGULATOR AS-VOLTAGE (24-VOLT) (ALTERNATOR)	
	18	1	**6V-8189**	1	NUT (5/16-18-THD)	
	19	1	**8T-4224**	1	WASHER-HARD (8.8X16X2-MM THK)	
	20	1	**3F-9556**	1	LOCKWASHER	
					AVAILABLE REPAIR KIT(S):	
			185-2655	1	KIT-BEARING (ALTERNATOR)	
					(INCLUDES 2 BEARINGS)	
			199-8436	1	KIT-TERMINAL (ALTERNATOR)	
					(INCLUDES HOLDER AS, PLATE INSULATOR, PIN, BOLT KIT, GROMMET, AND NUT)	
			199-7891	1	KIT-TERMINAL (ALTERNATOR)	
					(INCLUDES INSULATORS, WASHERS, AND NUTS)	
			185-2658	1	KIT-HARDWARE (ALTERNATOR)	
					INCLUDES BOLTS)	

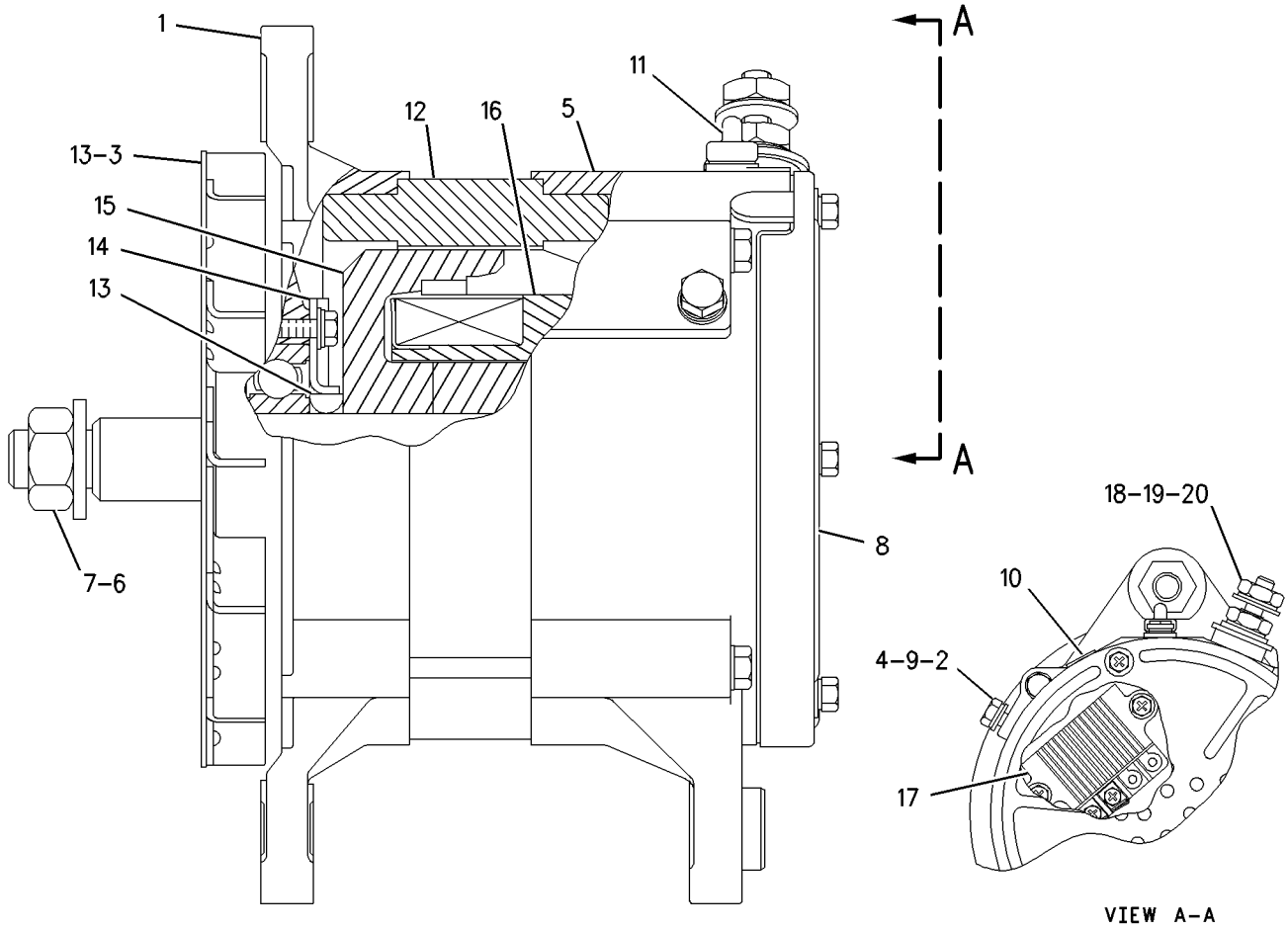

GRAPHIC #1 **<END>** g00789053

ELECTRICAL AND STARTING SYSTEM

336-6170 BATTERY & WIRING GP

S/N: MYG1-UP; PPN1-UP

PART OF 343-1145, 343-1146 CHASSIS AR

SMCS-1401, 1402, 1408 **i03714065**

NOTE	REF NO	GRAPHIC REF	PART NUMBER	QTY	PART NAME 1 2 3 4 5 6 (PRODUCT LEVEL)	SEE PAGE
	1	3	**2G-8767**	2	WASHER (10.5X60X3-MM THK)	
	2	1,2,3, 4,5,6	**3S-2093**	42	STRAP-CABLE	
	3	3	**4N-0205**	1	SPACER (0.42X0.75X0.6-IN THK)	
	4	2	**5I-8270**	1	COVER-BATTERY	
	5	3	**6G-2256**	2	CLAMP	
	6	3	**6G-2263**	2	SPACER (10.5X19X28.5-MM THK)	
	7	2	**6W-6005**	1	HOLD-DOWN-BATTERY	
	8	5	**7I-2673**	5	STRAP-CABLE	
	9	1,2,4, 5,6	**7K-1181**	21	STRAP-CABLE	
	10	5,6	**7Y-8165**	2	GROMMET	
	11	3	**087-4587**	1	GROMMET	
	12	4	**091-9035**	1	SPACER (11X25X20-MM THK)	
	13	1	**107-8618**	1	SENSOR GP-TEMPERATURE (AMBIENT)	
		1	**102-8803**	1	KIT-RECEPTACLE (3-PIN)	
					(INCLUDES RECEPTACLE AS & WEDGE)	
		1	**8T-8729**	3	PIN-CONNECTOR (16-GA TO 18-GA)	
E		1	**112-4550**		SLEEVE (31-CM)	
	14	2,5,6	**111-4836**	9	CLIP	
	15	1,4,5, 6	**111-4837**	11	CLIP	
	16	1,2,3, 4	**111-4838**	17	CLIP	
	17	1,2,3, 4	**111-4839**	16	STRAP	
	18	1,2,4, 5,6	**116-0118**	14	CLIP	
	19	4	**128-8886**	1	STRAP AS-GROUND	
	20	4	**130-1433**	1	SPACER (11X25X17-MM THK)	
	21	2	**134-3344**	1	STRAP AS	
	22	2	**136-0207**	1	STRAP-CABLE	
	23	1	**170-6929**	1	CABLE AS	
E		1	**5P-0761**		CABLE (00-GA, RED) (31-CM)	
		1	**9G-0002**	1	COVER-TERMINAL (RED)	
		1	**8L-8413**	1	STRAP-CABLE	
		1	**9G-0005**	1	COVER-TERMINAL (BLACK)	
		1	**8L-8413**	1	STRAP-CABLE	
		1	**8C-5918**	1	TERMINAL AS (NEGATIVE)	
		1	**1M-6119**	1	BOLT (5/16-18X1.375-IN)	
		1	**1M-6120**	1	NUT (5/16-18-THD)	
		1	**8T-9756**	1	TERMINAL AS (POSITIVE)	
		1	**1M-6119**	1	BOLT (5/16-18X1.375-IN)	
		1	**1M-6120**	1	NUT (5/16-18-THD)	
	24	4	**204-1611**	1	STRAP-CABLE	
	25	4	**204-1673**	1	STRAP-CABLE	
	26	2	**238-2501**	1	KNOB	
	27	2	**238-2528**	1	ROD	
	28	6	**251-0153**	1	BRACKET AS	
	29	3	**259-5127**	1	CABLE AS	
		3	**1S-7251**	2	TERMINAL-CABLE (00-GA, 1/2-IN SCREW)	
E		3	**5P-0761**		CABLE (00-GA, RED) (365-CM)	
		3	**8N-0869**	1	COVER-TERMINAL (RED) (STARTING MOTOR)	
		3	**301-0091**	1	COVER-TERMINAL (RED) (JUNCTION BLOCK)	
	30	3	**259-5128**	1	CABLE AS	
		3	**1S-7251**	1	TERMINAL-CABLE (00-GA, 1/2-IN SCREW)	
E		3	**5P-0761**		CABLE (00-GA, RED) (44-CM)	

336-6170 **BATTERY & WIRING GP** *(contd.)* **i03714065**

NOTE	REF NO	GRAPHIC REF	PART NUMBER	QTY	PART NAME 1 2 3 4 5 6 (PRODUCT LEVEL)	SEE PAGE
		3	**9G-0004**	1	COVER-TERMINAL (RED) (BATTERY)	
		3	**8L-8413**	1	STRAP-CABLE	
		3	**8C-5917**	1	TERMINAL AS-BATTERY (POSITIVE)	
		1	**1M-6119**	1	BOLT (5/16-18X1.375-IN)	
		1	**1M-6120**	1	NUT (5/16-18-THD)	
		3	**301-0091**	1	COVER-TERMINAL (RED) (JUNCTION BLOCK)	
	31	6	**259-5130**	1	BRACKET AS	
	32	6	**259-5132**	1	BRACKET AS	
	33	3	**259-5206**	1	BRACKET AS	
	34	2	**263-9574**	2	BATTERY (12-VOLT, MAINTENANCE FREE)	
	35	4	**291-7780**	1	BRACKET AS	
	36	2	**306-8526**	1	GROMMET	
	37	6	**306-8803**	1	BRACKET AS	
	38	2	**336-6305**	1	BRACKET AS	
	39	2	**336-6307**	1	BRACKET AS	
	40	2	**336-6309**	2	GROMMET	
	41	3	**342-3063**	1	HARNESS AS-CHASSIS	
		3	**102-8802**	4	KIT-RECEPTACLE (2-PIN)	
		3	**102-8803**	3	KIT-RECEPTACLE (3-PIN)	
		3	**102-8804**	1	KIT-RECEPTACLE (4-PIN)	
		3	**102-8806**	1	KIT-RECEPTACLE (8-PIN)	
					(EACH RECEPTACLE KIT INCLUDES RECEPTACLE AS & WEDGE)	
		3	**8T-8729**	8	PIN-CONNECTOR (16-GA TO 18-GA)	
		3	**8T-8730**	54	SOCKET-CONNECTOR (16-GA TO 18-GA)	
		3	**3S-2093**	32	STRAP-CABLE	
		3	**3T-4688**	1	TERMINAL-RING (4-GA, 7/16-IN SCREW)	
		3	**9X-0196**	2	TERMINAL AS	
		3	**7Y-3962**	1	TERMINAL-BULLET (MALE) (MALE)	
		3	**7Y-3963**	1	TERMINAL-BULLET (FEMALE) (FEMALE)	
		3	**8N-1547**	1	SOCKET-CONNECTOR (6-GA)	
		3	**8T-8737**	167	PLUG-SEAL	
		3	**8T-8827**	2	BOOT (RED)	
		3	**110-8769**	1	WIRE AS	
E		3	**103-2529**		HOSE (80-CM)	
		3	**9W-0852**	17	PIN-CONNECTOR (14-GA)	
		3	**9W-0844**	13	SOCKET-CONNECTOR (14-GA)	
		3	**116-0126**	1	HOUSING-PLUG	
		3	**116-0128**	2	SEAL	
		3	**116-0255**	2	TERMINAL-BLADE (10-GA TO 20-GA) (FEMALE)	
BE		3	**119-3662**		TUBE-HEAT SHRINK (10.85-MM DIA)	
		3	**121-1038**	1	HOUSING-RECEPTACLE	
		3	**121-1039**	1	TERMINAL (MALE)	
BE		3	**125-7874**		TUBE-HEAT SHRINK (5.72-MM DIA)	
BE		3	**125-7875**		TUBE-HEAT SHRINK (7.44-MM DIA)	
		3	**9X-3402**	120	SOCKET-CONNECTOR (16-GA TO 18-GA)	
					—OR—	
		3	**126-1768**	120	SOCKET-CONNECTOR (14-GA)	
		3	**126-1768**	10	SOCKET-CONNECTOR (14-GA)	
		3	**127-5483**	1	PLUG AS-CONNECTOR (1-PIN)	
		3	**9G-4343**	3	TERMINAL-RING (4-GA, 1/4-IN SCREW)	
		3	**5P-3454**	1	TERMINAL-RING (4-GA, 5/16-IN SCREW)	
		3	**9G-4336**	1	TERMINAL-RING (4-GA)	
		3	**2L-8049**	1	TERMINAL-RING (6-GA, NO. 10 SCREW)	
					—OR—	
		3	**2L-8057**	1	TERMINAL-RING (8-GA, NO. 10 SCREW)	
		3	**2L-8050**	2	TERMINAL-RING (6-GA, 1/4-IN SCREW)	
					—OR—	
		3	**2L-8058**	2	TERMINAL-RING (8-GA, 1/4-IN SCREW)	
		3	**2L-8069**	7	TERMINAL-RING (2-GA TO 10-GA, 3/8-IN SCREW)	

336-6170 **BATTERY & WIRING GP** *(contd.)* **i03714065**

NOTE	REF NO	GRAPHIC REF	PART NUMBER	QTY	PART NAME 1 2 3 4 5 6 (PRODUCT LEVEL)	SEE PAGE
		3	**2L-8075**	4	TERMINAL-RING (14-GA TO 16-GA, NO. 8 SCREW)	
		3	**2L-8079**	1	TERMINAL-RING (14-GA TO 16-GA, 3/8-IN SCREW)	
		3	**134-3297**	1	SEAL	
		3	**9X-3401**	58	PIN-CONNECTOR (16-GA TO 18-GA)	
		3	**176-9299**	2	KIT-RECEPTACLE (3-PIN)	
					(EACH INCLUDES RECEPTACLE AS & WEDGE)	
		3	**153-2620**	1	PLUG AS-CONNECTOR (54-PIN, BLACK)	
		3	**163-6759**	1	SEAL	
		3	**153-2630**	1	PLUG AS-CONNECTOR (54-PIN, BROWN)	
		3	**163-6759**	1	SEAL	
		3	**155-2260**	2	KIT-CONNECTING PLUG (3-PIN)	
		3	**155-2270**	20	KIT-CONNECTING PLUG (2-PIN)	
		3	**155-2271**	1	KIT-CONNECTING PLUG (4-PIN)	
					(EACH PLUG KIT INCLUDES PLUG AS, WEDGE, & INTERFACE SEAL)	
		3	**160-7689**	1	PLUG AS-CONNECTOR (70-PIN)	
		3	**159-9322**	1	SEAL-O-RING	
		3	**163-6637**	1	RECEPTACLE AS-CONNECTOR (54-PIN, BLACK)	
		3	**174-3016**	2	PLUG AS-CONNECTOR (3-PIN)	
		3	**197-4385**	1	DIODE	
		3	**230-4009**	2	PLUG AS-CONNECTOR (12-PIN)	
					(EACH INCLUDES)	
		3	**264-7034**	1	SEAL-CONNECTOR	
		3	**230-4011**	8	PLUG AS-CONNECTOR (2-PIN)	
					(EACH INCLUDES)	
		3	**264-7029**	1	SEAL-CONNECTOR	
		3	**230-4013**	4	PLUG AS-CONNECTOR (3-PIN)	
					(EACH INCLUDES)	
		3	**264-7030**	1	SEAL-CONNECTOR	
		3	**230-5010**	2	PLUG AS-CONNECTOR (6-PIN)	
					(EACH INCLUDES)	
		3	**264-7032**	1	SEAL-CONNECTOR	
		3	**231-2295**	1	PLUG AS-CONNECTOR (8-PIN)	
		3	**264-7033**	1	SEAL-CONNECTOR	
		3	**243-4505**	7	RECEPTACLE AS-CONNECTOR (2-PIN)	
		3	**243-4506**	2	RECEPTACLE AS-CONNECTOR (3-PIN)	
		3	**243-4508**	2	RECEPTACLE AS-CONNECTOR (6-PIN)	
		3	**243-4509**	1	RECEPTACLE AS-CONNECTOR (8-PIN)	
		3	**243-4510**	2	RECEPTACLE AS-CONNECTOR (12-PIN)	
	42	2	**342-3064**	1	CABLE AS	
		2	**1S-7251**	1	TERMINAL-CABLE (00-GA, 1/2-IN SCREW)	
		2	**030-1706**	1	TERMINAL-RING (00-GA, 1/4-IN SCREW)	
E		2	**159-8049**		CABLE (00-GA, RED) (129-CM)	
		2	**301-0091**	2	COVER-TERMINAL (RED)	
	43	2	**342-3065**	1	CABLE AS	
		2	**1S-7252**	1	TERMINAL-CABLE (00-GA, 3/8-IN SCREW)	
		2	**9G-0003**	1	COVER-TERMINAL (BLACK) (BATTERY)	
		2	**8L-8413**	1	STRAP-CABLE	
		2	**9G-8909**	1	COVER-TERMINAL (BLACK) (DISCONNECT SWITCH)	
		2	**8T-9757**	1	TERMINAL AS-BATTERY (NEGATIVE)	
E		2	**159-8050**		CABLE (00-GA, BLACK) (31-CM)	
	44	2,4,6	**132-5789**	9	CLIP	
	45	4	**148-5018**	1	GROMMET	
	46	3	**4K-8864**	2	CLIP	
	47	5,6	**4P-7428**	2	CLIP	
M	48	2	**5C-7261**	1	NUT (M8X1.25-THD)	
M	49	2	**5C-7883**	4	BOLT-SOCKET HEAD (M6X1X16-MM)	
	50	6	**5I-8748**	1	SPACER (11X18X5-MM THK)	
	51	6	**5P-4116**	2	WASHER-HARD (8.8X20.5X2-MM THK)	

336-6170 **BATTERY & WIRING GP** *(contd.)* **i03714065**

NOTE	REF NO	GRAPHIC REF	PART NUMBER	QTY	PART NAME 1 2 3 4 5 6 (PRODUCT LEVEL)	SEE PAGE
	52	4	**5P-8439**	1	GROMMET	
	53	3,4	**6K-8178**	6	CLIP	
M	54	6	**7X-2548**	1	BOLT (M12X1.75X16-MM)	
M	55	1,2,4	**7X-2621**	5	BOLT (M10X1.5X12-MM)	
	56	6	**8B-6561**	1	SPACER (5.56X22.22X55.58-MM THK)	
	57	2	**8M-2770**	1	CLIP	
	58	2	**8T-1889**	1	CLIP (SLOT)	
	59	2	**8T-1890**	1	CLIP (TAB)	
	60	1,2,3, 4,5,6	**8T-4121**	69	WASHER-HARD (11X21X2.5-MM THK)	
M	61	2	**8T-4133**	1	NUT (M10X1.5-THD)	
M	62	1,2,3, 4,6	**8T-4136**	18	BOLT (M10X1.5X25-MM)	
M	63	1,2,3, 5,6	**8T-4137**	20	BOLT (M10X1.5X20-MM)	
M	64	6	**8T-4172**	1	BOLT (M10X1.5X80-MM)	
M	65	4	**8T-4182**	1	BOLT (M10X1.5X45-MM)	
M	66	2,3,4, 5,6	**8T-4191**	11	BOLT (M10X1.5X16-MM)	
M	67	1,6	**8T-4195**	4	BOLT (M10X1.5X30-MM)	
M	68	3,4	**8T-4196**	7	BOLT (M10X1.5X35-MM)	
M	69	6	**8T-4199**	1	BOLT (M8X1.25X12-MM)	
	70	6	**8T-4223**	1	WASHER-HARD (13.5X25.5X3-MM THK)	
	71	2	**8T-4226**	1	WASHER-PLATED (10.5X45X3-MM THK)	
M	72	3	**8T-5005**	1	BOLT (M10X1.5X70-MM)	
M	73	3	**8T-6466**	1	BOLT (M10X1.5X60-MM)	
Y	74	3	**9W-0742**	1	BLOCK GP-JUNCTION (BATTERY)	164
	75	2	**9X-8256**	4	WASHER (6.6X12X2-MM THK)	

B-USE AS REQUIRED
E-ORDER BY THE CENTIMETER
M-METRIC PART
Y-SEPARATE ILLUSTRATION

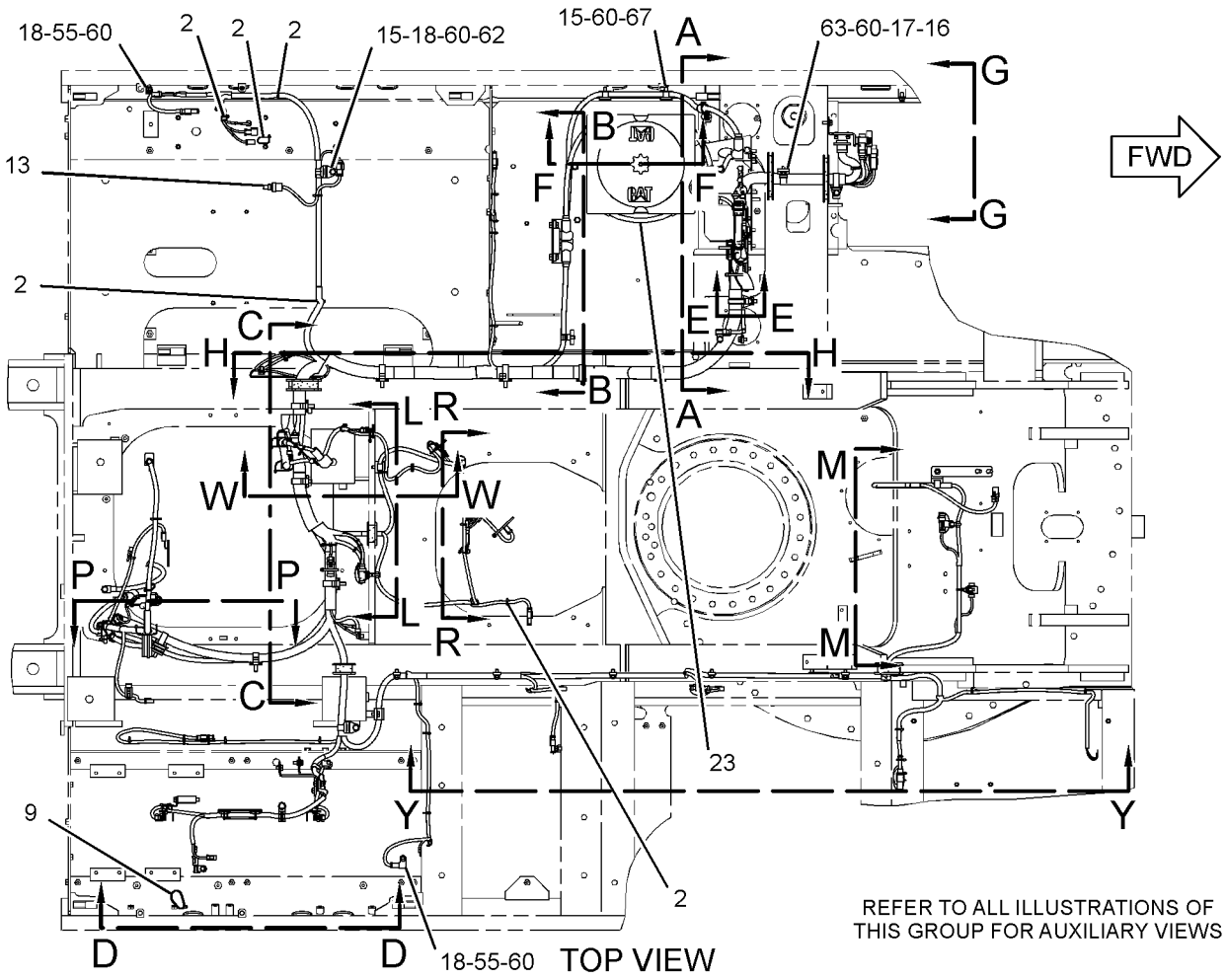

GRAPHIC #1 g01974115

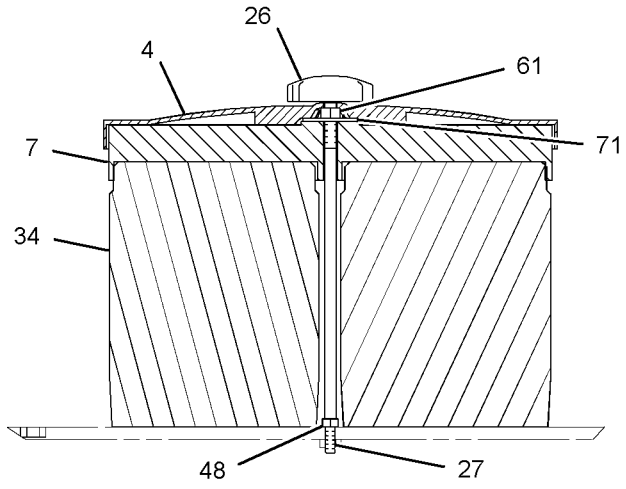

SECTION F-F

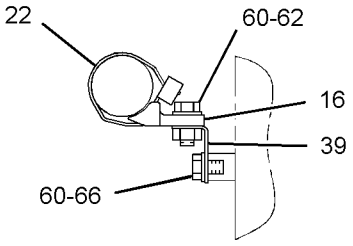

SECTION E-E

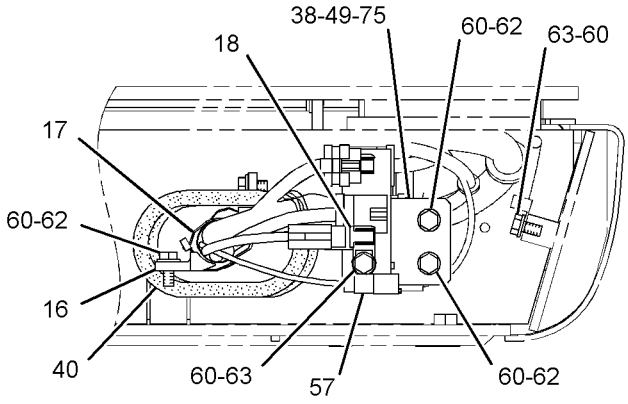

VIEW G-G

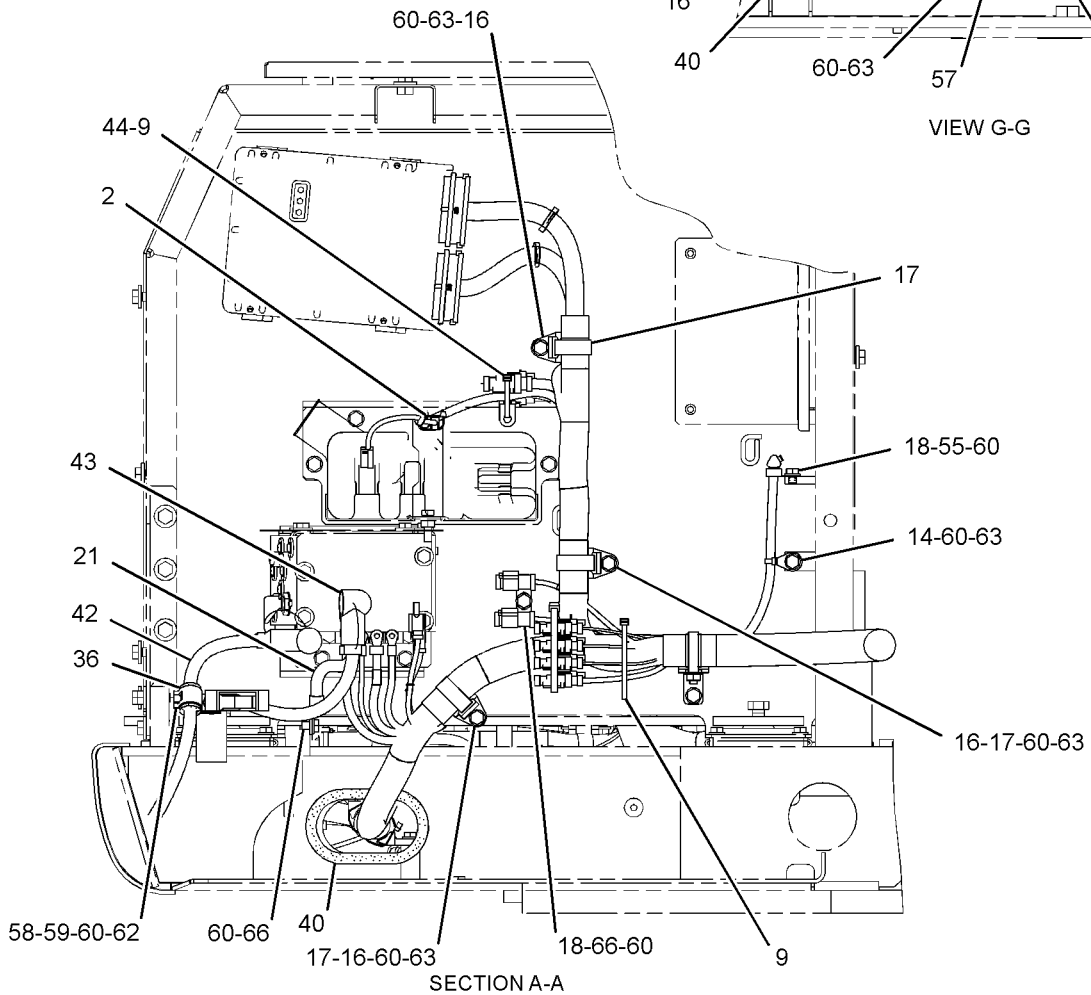

SECTION A-A

GRAPHIC #2

g01969753

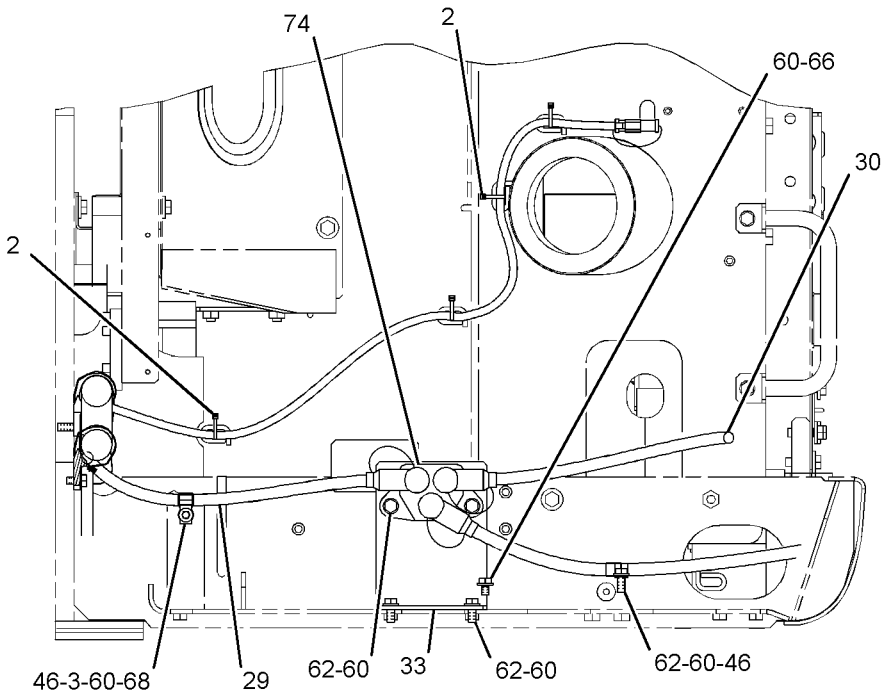

SECTION B-B

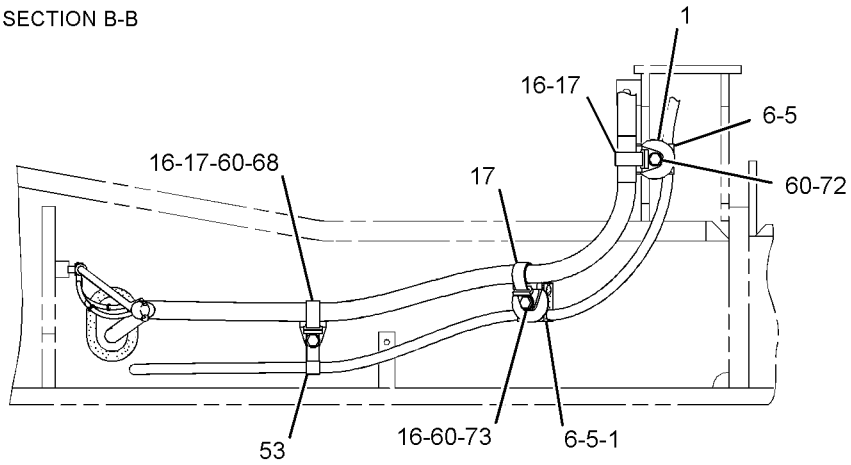

SECTION P-P

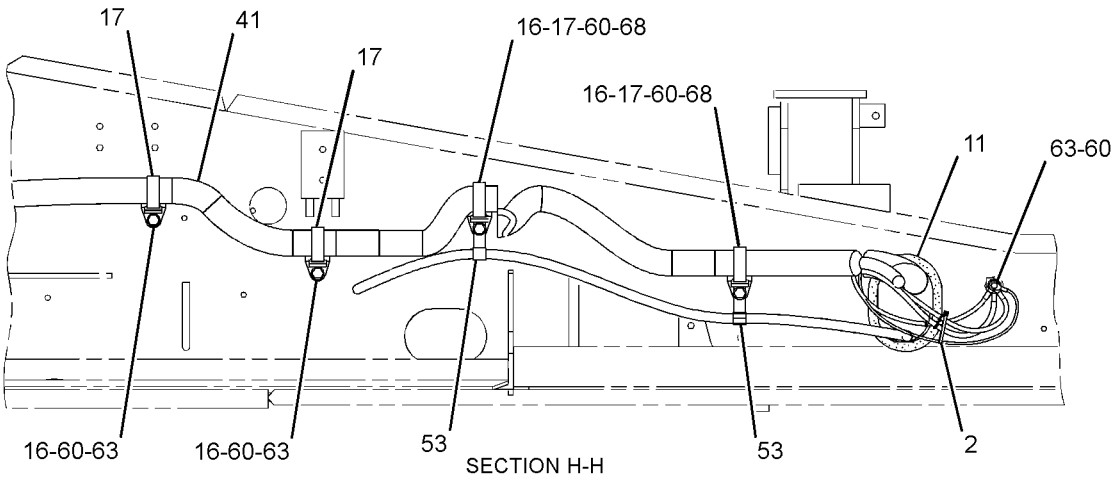

SECTION H-H

GRAPHIC #3

g01969773

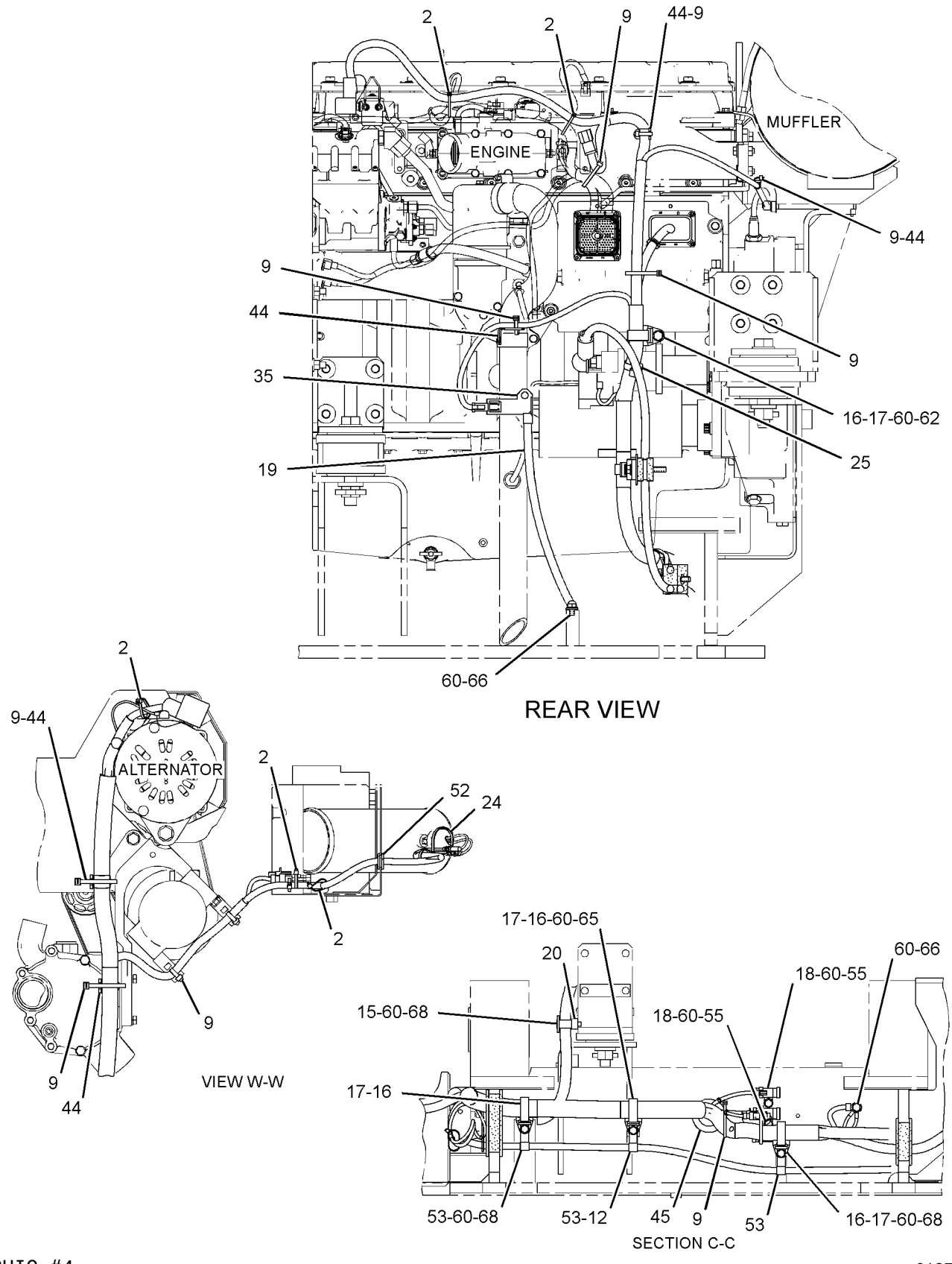

GRAPHIC #4

g01970322

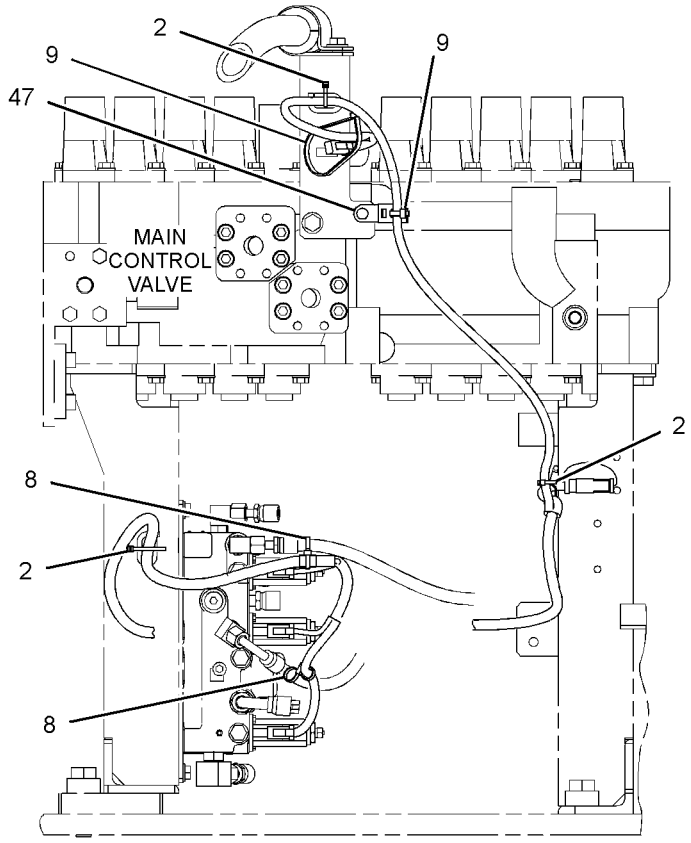

SECTION R-R

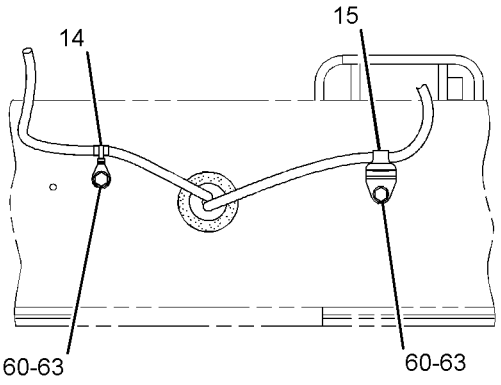

SECTION L-L

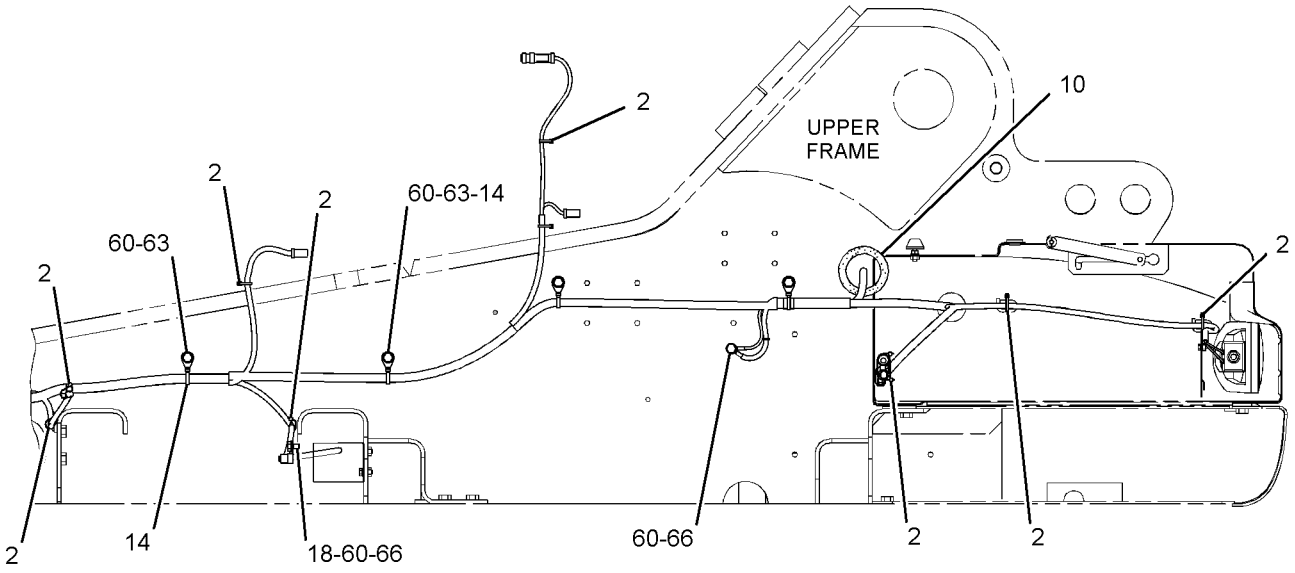

SECTION Y-Y

GRAPHIC #5

g01971013

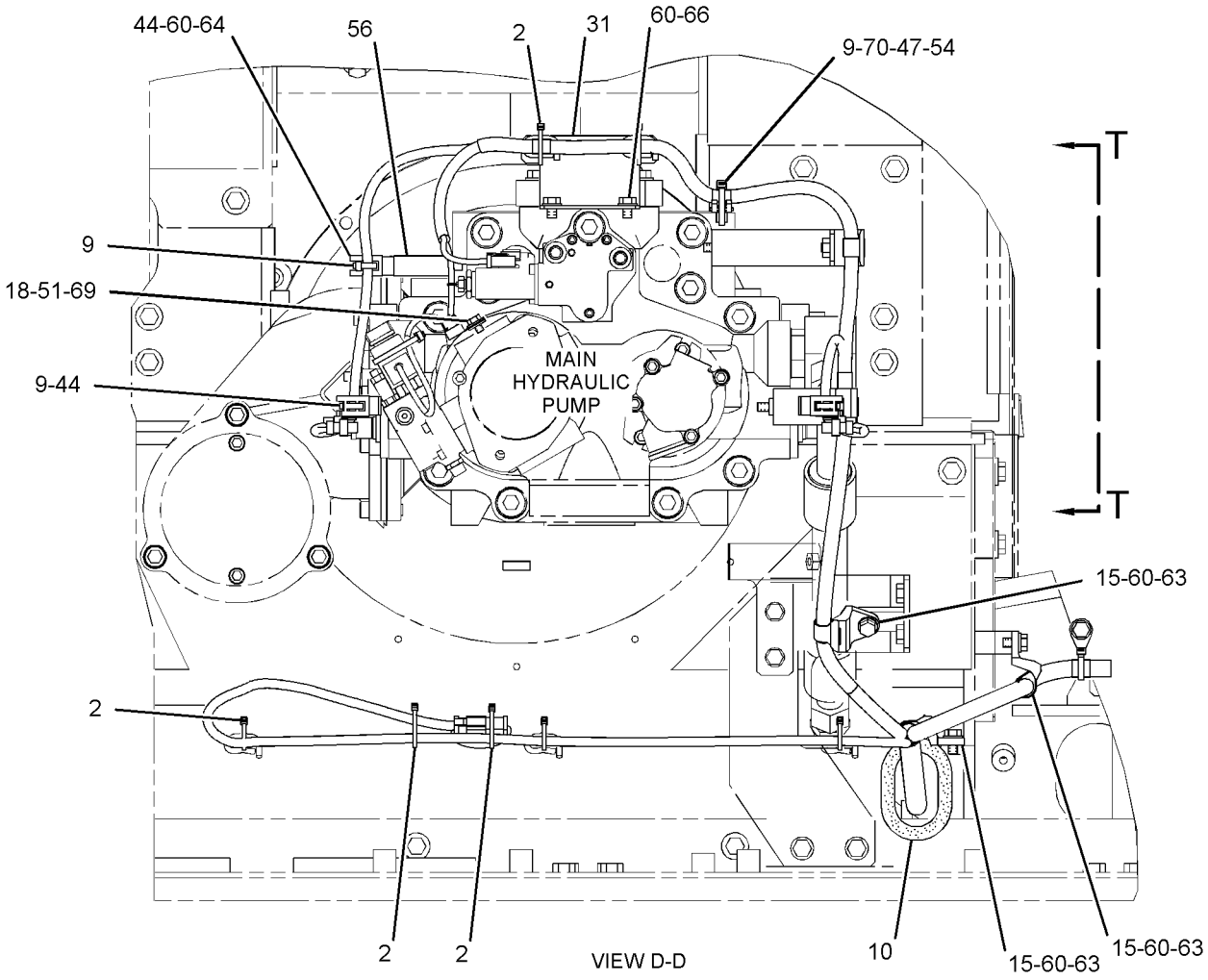

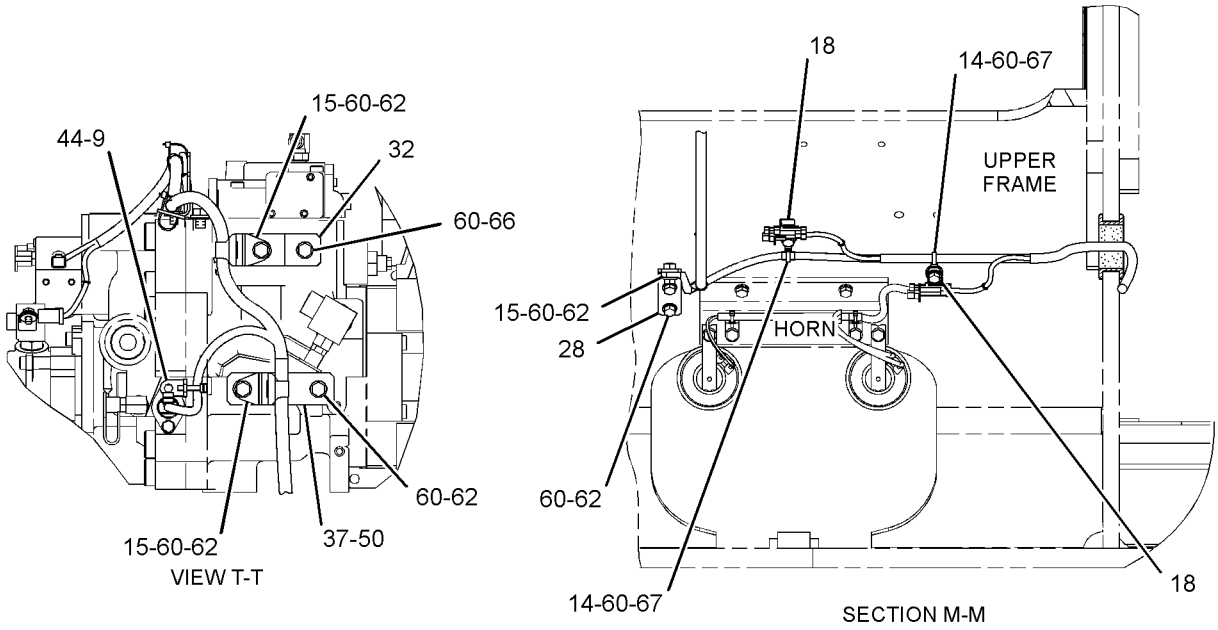

GRAPHIC #6 **<END>** g01971153

336-6212 BATTERY & WIRING GP–COLD WEATHER

S/N: MYG1-UP; PPN1-UP
PART OF 340-3839 STARTING AR-COLD WEATHER
AN ATTACHMENT

SMCS-1401, 1402, 1408 **i03675406**

NOTE	REF NO	GRAPHIC REF	PART NUMBER	QTY	PART NAME 1 2 3 4 5 6 (PRODUCT LEVEL)	SEE PAGE
	1	1	**5I-8270**	1	COVER-BATTERY	
	2	1	**6W-6005**	1	HOLD-DOWN-BATTERY	
	3	1	**170-6929**	1	CABLE AS	
E		1	**5P-0761**		CABLE (00-GA, RED) (31-CM)	
		1	**9G-0002**	1	COVER-TERMINAL (RED)	
		1	**8L-8413**	1	STRAP-CABLE	
		1	**9G-0005**	1	COVER-TERMINAL (BLACK)	
		1	**8L-8413**	1	STRAP-CABLE	
		1	**8C-5918**	1	TERMINAL AS (NEGATIVE)	
		1	**1M-6119**	1	BOLT (5/16-18X1.375-IN)	
		1	**1M-6120**	1	NUT (5/16-18-THD)	
		1	**8T-9756**	1	TERMINAL AS (POSITIVE)	
		1	**1M-6119**	1	BOLT (5/16-18X1.375-IN)	
		1	**1M-6120**	1	NUT (5/16-18-THD)	
	4	1	**204-1673**	2	STRAP-CABLE	
	5	1	**238-2501**	1	KNOB	
	6	1	**238-2528**	1	ROD	
	7	1	**259-5126**	1	CABLE AS	
		1	**1S-7251**	1	TERMINAL-CABLE (00-GA, 1/2-IN SCREW)	
E		1	**5P-0761**		CABLE (00-GA, RED) (356-CM)	
BE		1	**6V-2722**		TUBE-HEAT SHRINK	
		1	**9G-0004**	1	COVER-TERMINAL (RED)	
		1	**8L-8413**	1	STRAP-CABLE	
		1	**8C-5917**	1	TERMINAL AS-BATTERY (POSITIVE)	
		1	**1M-6119**	1	BOLT (5/16-18X1.375-IN)	
		1	**1M-6120**	1	NUT (5/16-18-THD)	
	8	1	**263-9574**	2	BATTERY (12-VOLT, MAINTENANCE FREE)	
	9	1	**350-8037**	1	CABLE AS	
		1	**1S-7252**	1	TERMINAL-CABLE (00-GA, 3/8-IN SCREW)	
E		1	**159-8050**		CABLE (00-GA, BLACK) (49-CM)	
BE		1	**6V-2722**		TUBE-HEAT SHRINK	
		1	**7N-5274**	1	COVER-TERMINAL (BLACK)	
		1	**8L-8413**	1	STRAP-CABLE	
		1	**3S-6050**	1	TERMINAL AS-BATTERY (NEGATIVE)	
		1	**1M-6119**	1	BOLT (5/16-18X1.375-IN)	
		1	**1M-6120**	1	NUT (5/16-18-THD)	
	10	1	**4K-8864**	6	CLIP	
M	11	1	**5C-7261**	1	NUT (M8X1.25-THD)	
	12	1	**6K-8178**	1	CLIP	
M	13	1	**8T-4133**	1	NUT (M10X1.5-THD)	
	14	1	**8T-4226**	1	WASHER-PLATED (10.5X45X3-MM THK)	

B-USE AS REQUIRED
E-ORDER BY THE CENTIMETER
M-METRIC PART

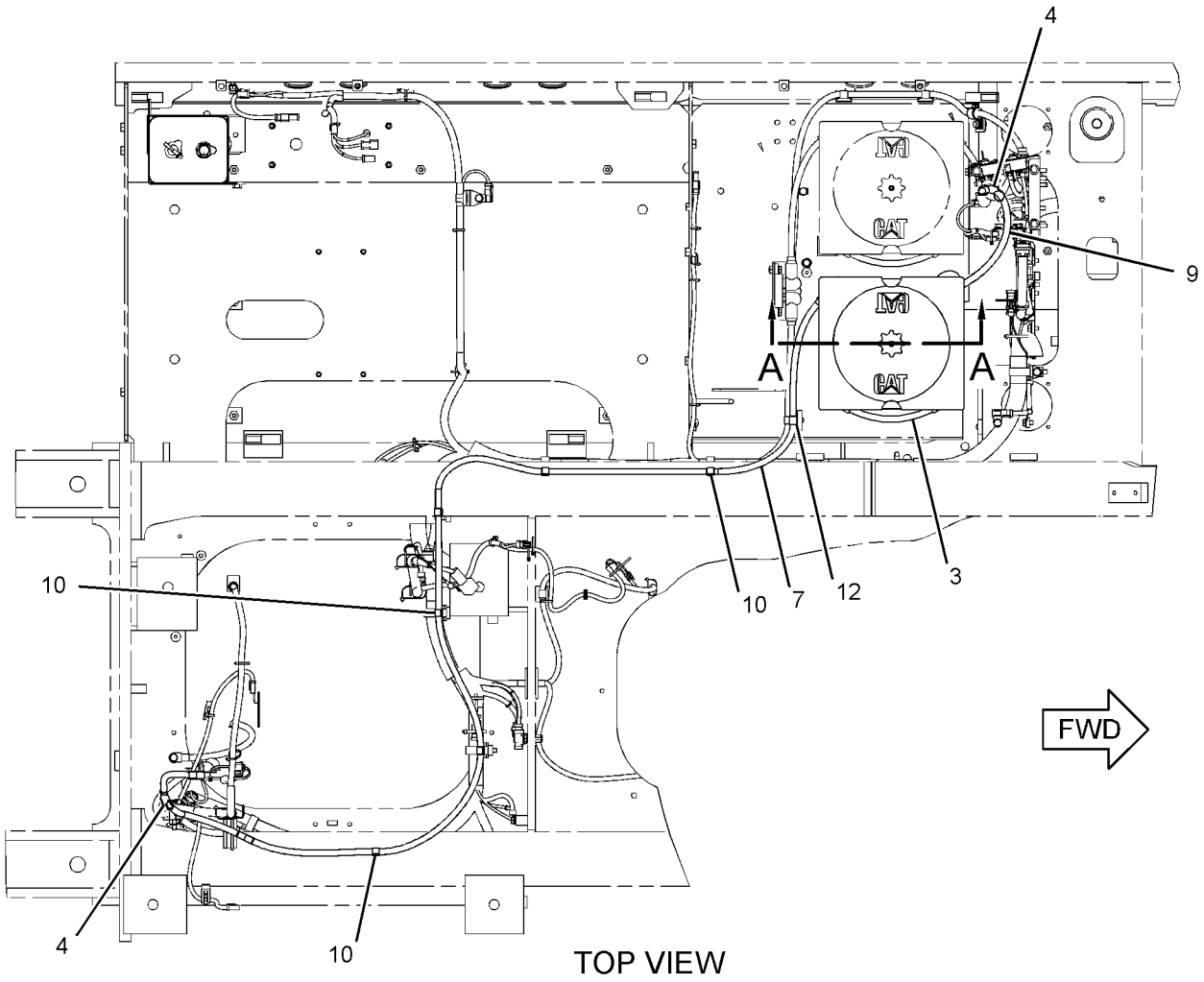

TOP VIEW

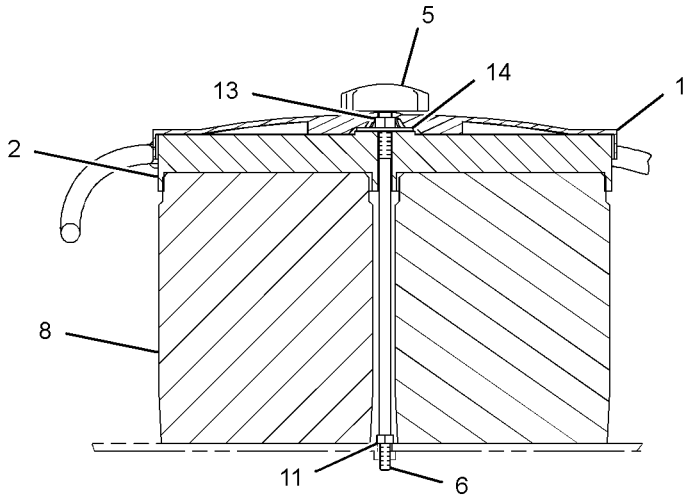

SECTION A-A

GRAPHIC #1 **<END>** g01977834

9W-0742 BLOCK GP-JUNCTION–BATTERY

S/N: MYG1-UP; PPN1-UP

PART OF 336-6170 BATTERY & WIRING GP

SMCS-7426 **i01863967**

NOTE	REF NO	GRAPHIC REF	PART NUMBER	QTY	PART NAME 1 2 3 4 5 6 (PRODUCT LEVEL)	SEE PAGE
	1	1	**8C-6358**	1	BLOCK GP-JUNCTION (BATTERY)	
	1A	1	**8T-3519**	3	BOLT-BRONZE (1/2-13X2-IN)	
BD	2	1	**6V-2722**		TUBE-HEAT SHRINK	
	3	1	**7F-0560**	6	WASHER (0.516X0.938X0.101-IN THK)	
	4	1	**8T-3518**	6	NUT-FULL (1/2-13-THD)	

B-USE AS REQUIRED
D-ORDER BY THE METER

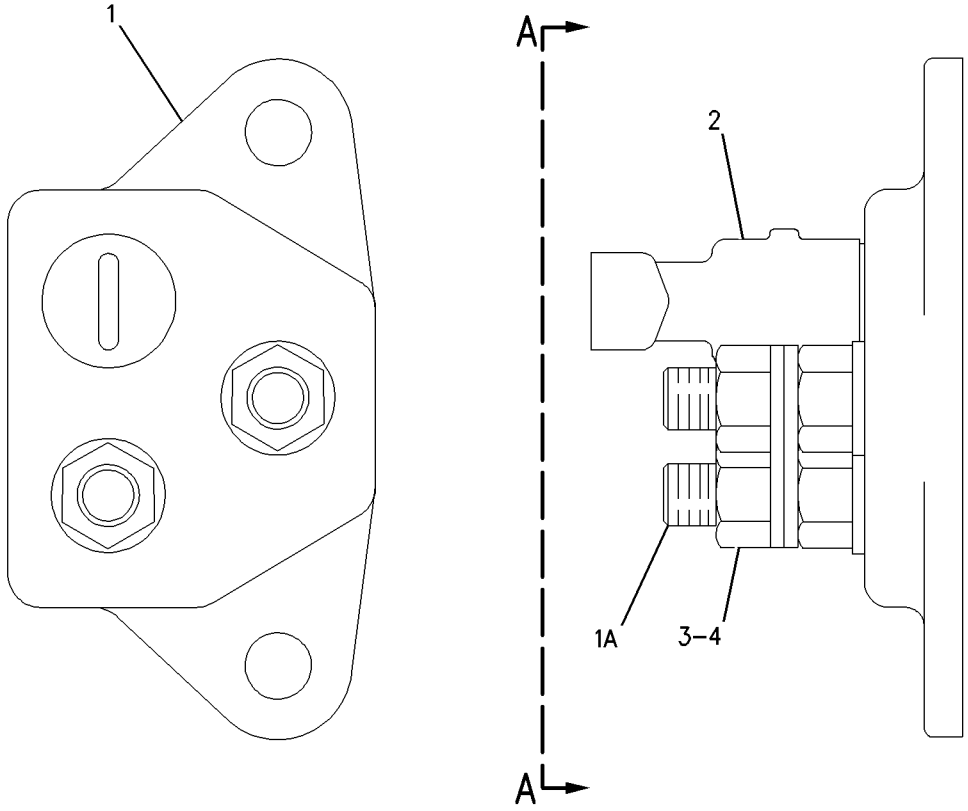

VIEW A-A

GRAPHIC #1 **<END>** g00650721

313-7833 CAMERA & MOUNTING GP–

WORK AREA VISUAL SYSTEM, REAR

S/N: MYG1-UP; PPN1-UP

PART OF 327-3329 CAMERA & MOUNTING GP

AN ATTACHMENT

SMCS-7348 **i03669321**

NOTE	REF NO	GRAPHIC REF	PART NUMBER	QTY	PART NAME 1 2 3 4 5 6 (PRODUCT LEVEL)	SEE PAGE
	1	1	**3S-2093**	1	STRAP-CABLE	
Y	2	1	**286-4271**	1	CAMERA GP (12-VOLT, 24-VOLT)	169
	3	1	**320-5392**	1	BRACKET AS	
M	4	1	**5C-9553**	2	BOLT (M6X1X16-MM)	
	5	1	**9X-8256**	2	WASHER (6.6X12X2-MM THK)	

M-METRIC PART
Y-SEPARATE ILLUSTRATION

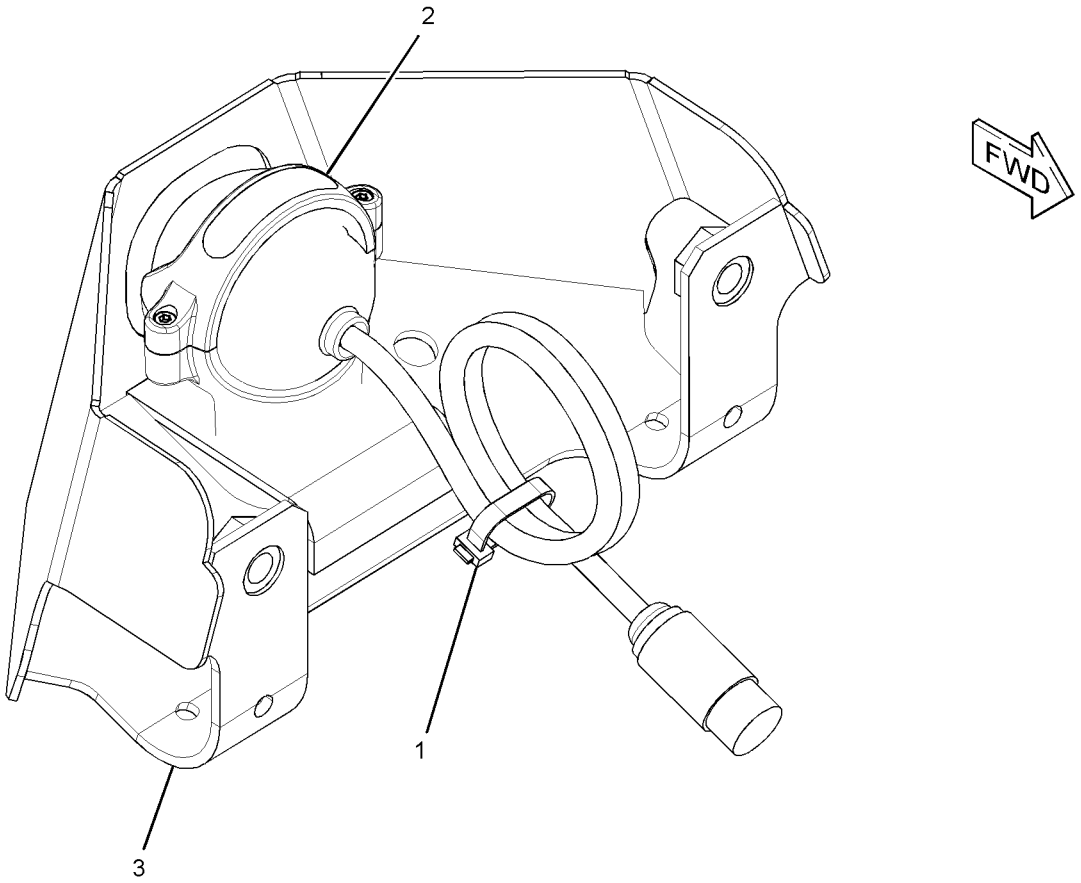

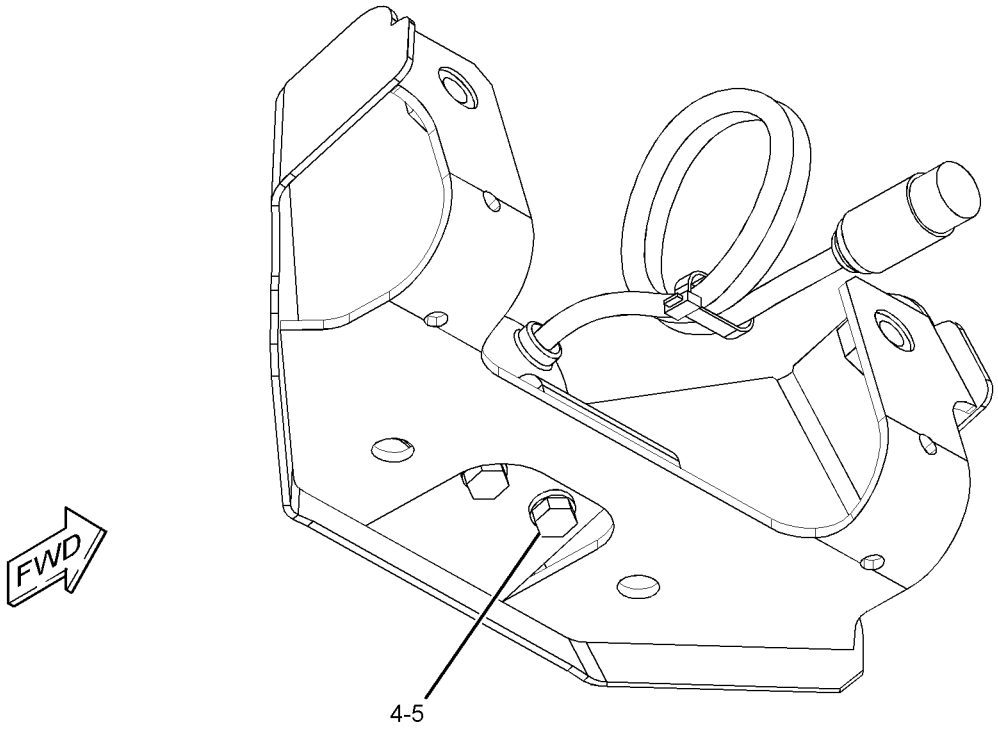

GRAPHIC #1 **<END>** g01515863

327-3329 CAMERA & MOUNTING GP

S/N: MYG1-UP; PPN1-UP
PART OF 340-3773 CAMERA AR
AN ATTACHMENT

SMCS-7348 **i03139402**

NOTE	REF NO	GRAPHIC REF	PART NUMBER	QTY	PART NAME 1 2 3 4 5 6 (PRODUCT LEVEL)	SEE PAGE
Y	1	1	*313-7833*	1	CAMERA & MOUNTING GP (WORK AREA VISUAL SYSTEM, REAR)	165
	2	1	**320-5396**	1	COVER	
	3	1	**8T-4121**	4	WASHER-HARD (11X21X2.5-MM THK)	
M	4	1	**8T-4137**	4	BOLT (M10X1.5X20-MM)	

M-METRIC PART
Y-SEPARATE ILLUSTRATION

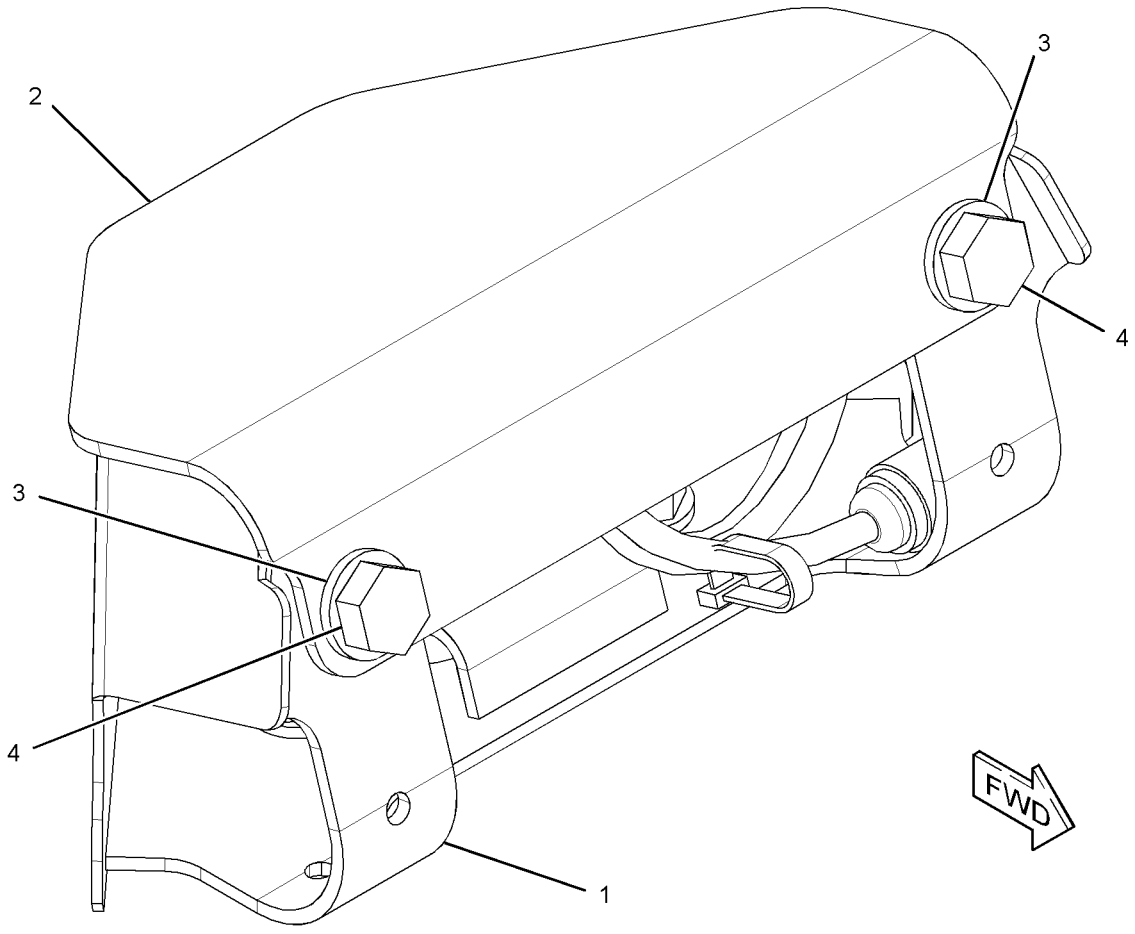

GRAPHIC #1 **<END>** g01609019

340-3773 CAMERA AR–WORK AREA VISUAL SYSTEM, REAR

S/N: MYG1-UP; PPN1-UP
PART OF 340-3835 CAMERA & MIRROR AR
AN ATTACHMENT

SMCS-7348 **i03675000**

NOTE	PART NUMBER	QTY	PART NAME 1 2 3 4 5 6 (PRODUCT LEVEL)	SEE PAGE
Y	*327-3329*	1	CAMERA & MOUNTING GP (WORK AREA VISUAL SYSTEM, REAR)	167
Y	*303-2787*	1	FILM GP (WORK AREA VISUAL SYSTEM, REAR)	985
Y	*336-6159*	1	WIRING GP-CAB (WORK AREA VISUAL SYSTEM, REAR)	255
Y	*342-3015*	1	WIRING GP-CAMERA (WORK AREA VISUAL SYSTEM, REAR)	265

Y-SEPARATE ILLUSTRATION

<END>

286-4271 CAMERA GP

S/N: MYG1-UP; PPN1-UP
PART OF 313-7833 CAMERA & MOUNTING GP
AN ATTACHMENT

SMCS-7348 **i03173962**

NOTE	REF NO	GRAPHIC REF	PART NUMBER	QTY	PART NAME 1 2 3 4 5 6 (PRODUCT LEVEL)	SEE PAGE
					AVAILABLE REPAIR KIT(S):	
			251-4162	1	KIT-BRACKET (CAMERA)	
					(INCLUDES BRACKET, BOLTS, LOCKNUTS, GASKET, & ALLEN KEY)	

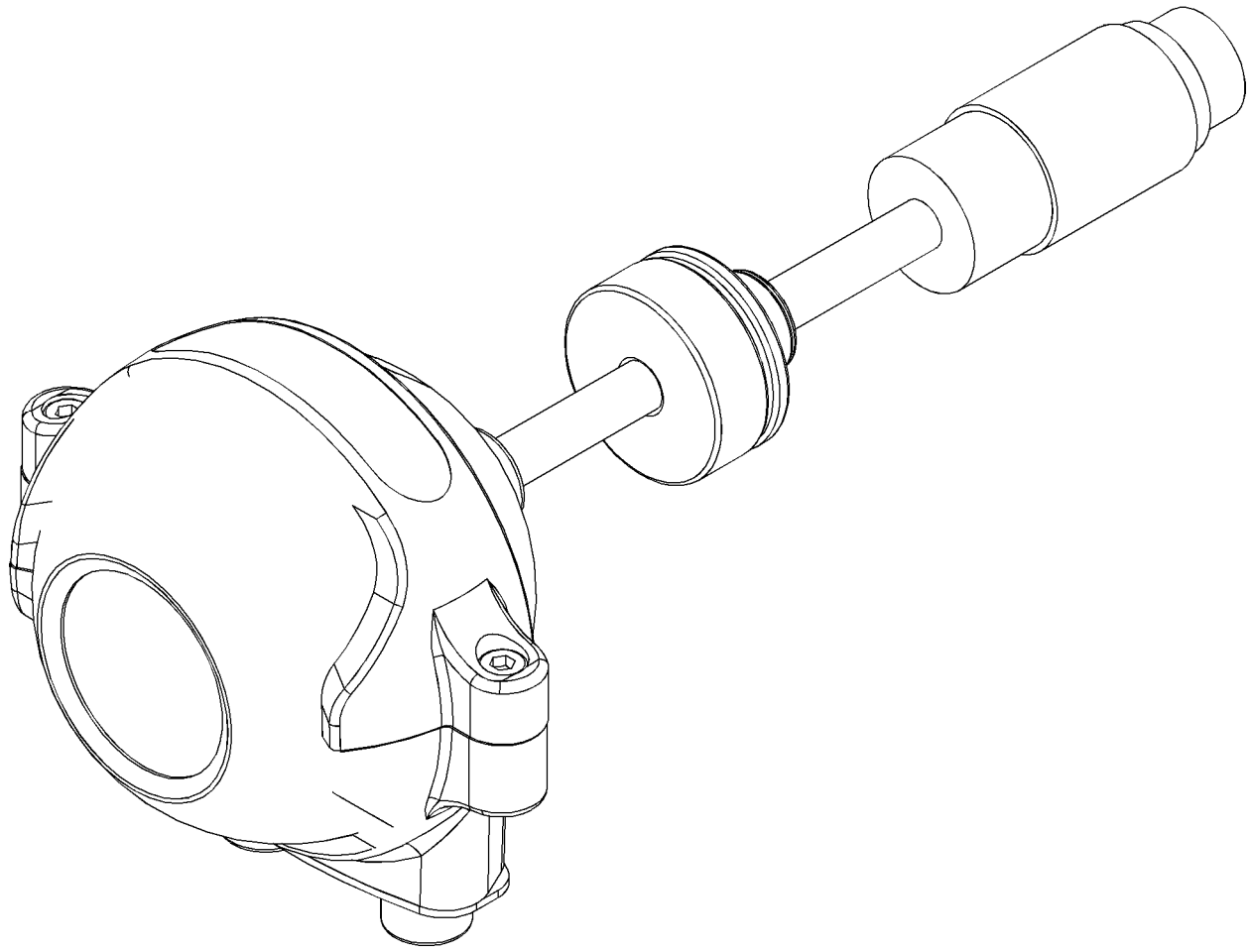

GRAPHIC #1 **<END>** g01519836

309-5842 CONTROL & MTG GP-COMMUNICATION–

PRODUCT LINK 321SR

S/N: MYG1-UP; PPN1-UP

PART OF 340-3831 INSTALLATION AR-COMMUNICATION

AN ATTACHMENT

SMCS-7606 **i02960252**

NOTE	REF NO	GRAPHIC REF	PART NUMBER	QTY	PART NAME 1 2 3 4 5 6 (PRODUCT LEVEL)	SEE PAGE
	1	1	**8C-5608**	4	SPACER (6.5X9.5X25.4-MM THK)	
	2	1	**9X-9896**	8	MOUNT (ISOLATION)	
	3	1	**260-2042**	1	BRACKET AS	
Y	4	1	*262-1421*	1	ELECTRONICS GP-COMMUNICATION (PRODUCT LINK 300)	175
M	5	1	**8C-8451**	4	BOLT (M6X1X40-MM)	
	6	1	**9X-6165**	4	WASHER (6.5X22X2.5-MM THK)	

M-METRIC PART
Y-SEPARATE ILLUSTRATION

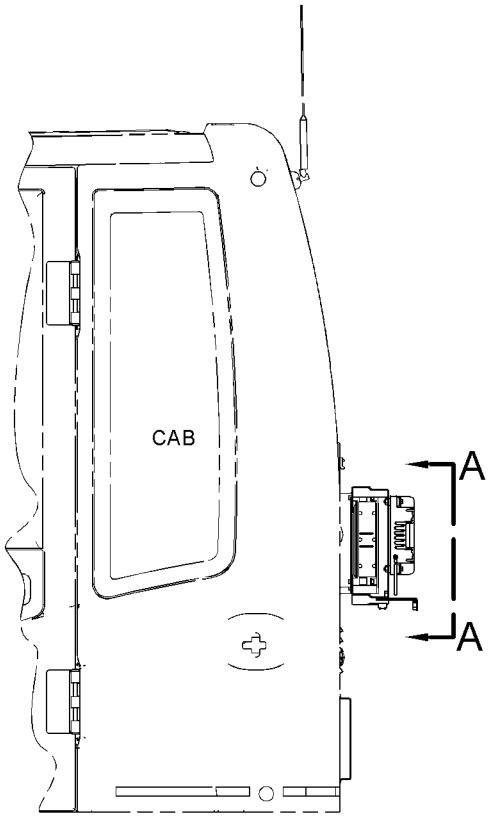

LEFT SIDE VIEW

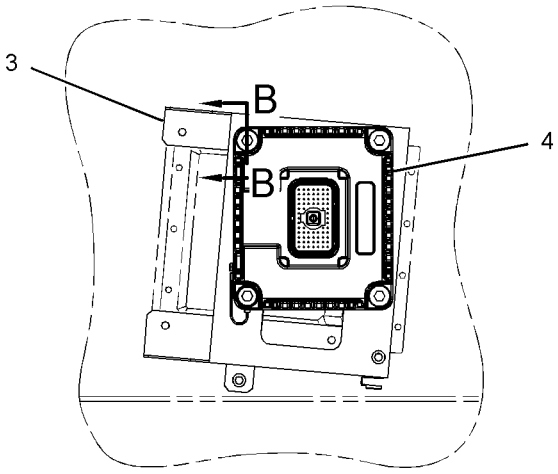

VIEW A-A

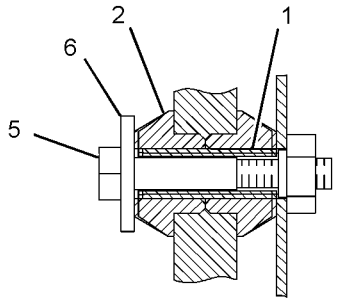

SECTION B-B

GRAPHIC #1 **<END>** g01447041

338-6891 CONTROL & MTG GP-COMMUNICATION–

PRODUCT LINK 121SR

S/N: MYG1-UP; PPN1-UP

PART OF 340-3831 INSTALLATION AR-COMMUNICATION

AN ATTACHMENT

SMCS-7606 **i03674860**

NOTE	REF NO	GRAPHIC REF	PART NUMBER	QTY	PART NAME 1 2 3 4 5 6 (PRODUCT LEVEL)	SEE PAGE
	1	1	**3S-2093**	5	STRAP-CABLE	
	2	1	**7K-1181**	8	STRAP-CABLE	
Y	3	1	**263-9088**	1	RADIO GP-COMMUNICATION (PRODUCT LINK 121SR)	937
	4	1	**270-5455**	1	BRACKET AS	
M	5	1	**8T-4138**	4	BOLT (M6X1X20-MM)	
M	6	1	**8T-4179**	4	BOLT (M12X1.75X20-MM)	
	7	1	**8T-4223**	4	WASHER-HARD (13.5X25.5X3-MM THK)	
	8	1	**9X-8256**	4	WASHER (6.6X12X2-MM THK)	
	9	1	**230-1340**	1	FILM-WARNING (PRODUCT LINK RADIO, U.S.)	
					–OR–	
			230-1341	1	FILM-WARNING (PRODUCT LINK RADIO, INTL)	
	10	1	**307-0047**	1	FILM-INFORMATION (PRODUCT LINK, READ OMM)	

M-METRIC PART
Y-SEPARATE ILLUSTRATION

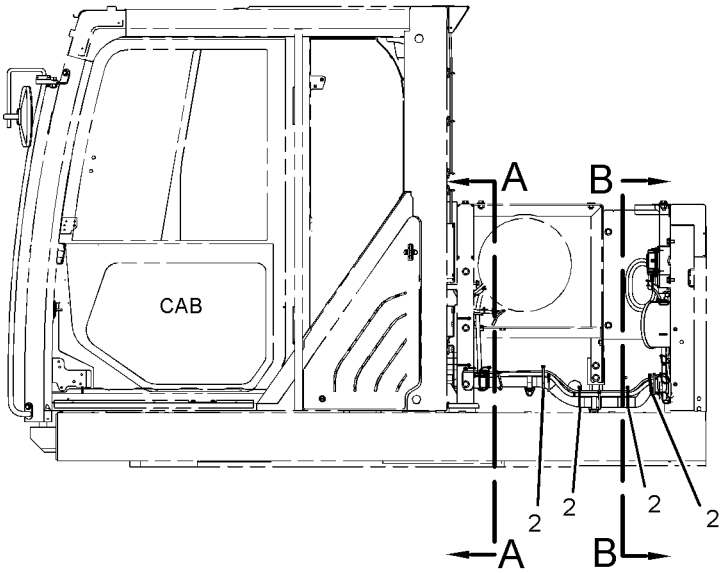

LEFT SIDE VIEW

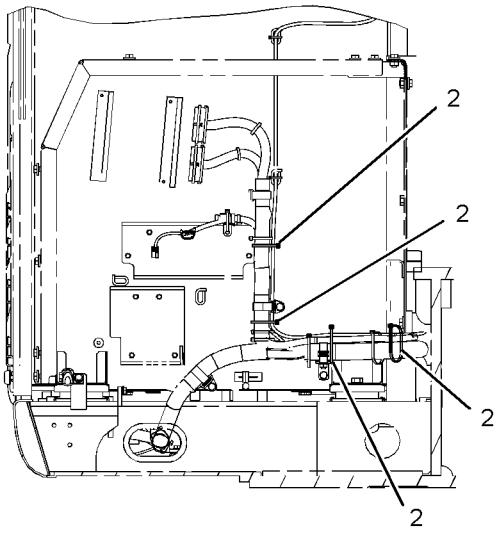

VIEW A-A

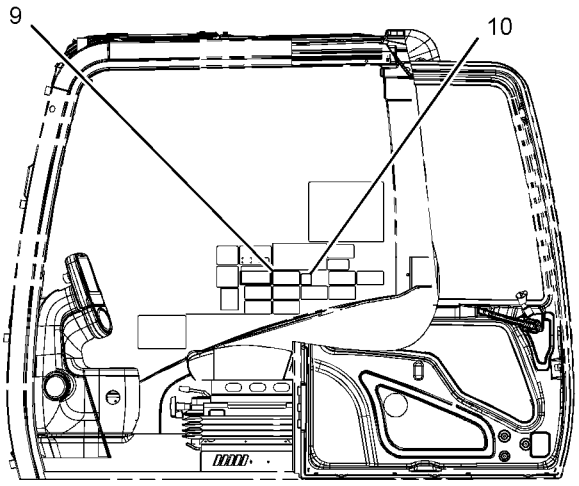

VIEW C-C

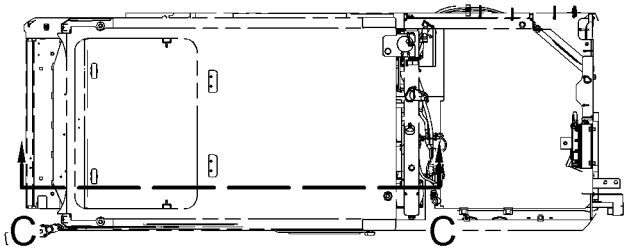

TOP VIEW

FWD

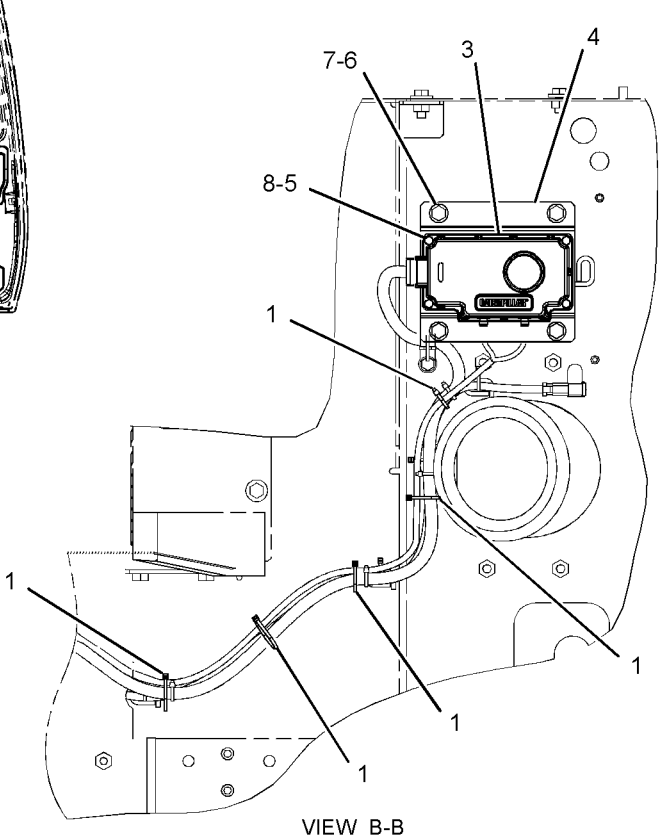

VIEW B-B

GRAPHIC #1 **<END>** g01989293

253-4522 CONTROL & MTG GP-ENGINE ELEK

S/N: THX14533-UP; THY5575-UP
PART OF 224-9843 ENGINE AR

SMCS-1901 **i02404143**

NOTE	REF NO	GRAPHIC REF	PART NUMBER	QTY	PART NAME 1 2 3 4 5 6 (PRODUCT LEVEL)	SEE PAGE
	1	1	**8T-9655**	8	MOUNT-ISOLATION	
	2	1	**101-3128**	4	SPACER-SPECIAL	
M	3	1	**143-9392**	2	STUD (M8X1.25-THD)	
R	5	1	**255-5285**	1	CONTROL GP-UNPROGRAMMED	
	6	1	**233-0891**	1	BRACKET AS	
M	7	1	**5P-8347**	2	BOLT (M8X1.25X70-MM)	
	8	1	**9M-1974**	4	WASHER-HARD (8.8X16X2-MM THK)	
	9	1	**9N-0869**	4	WASHER-HARD (8.8X25.5X2-MM THK)	

M-METRIC PART
R-REMFG PART MAY BE AVAILABLE

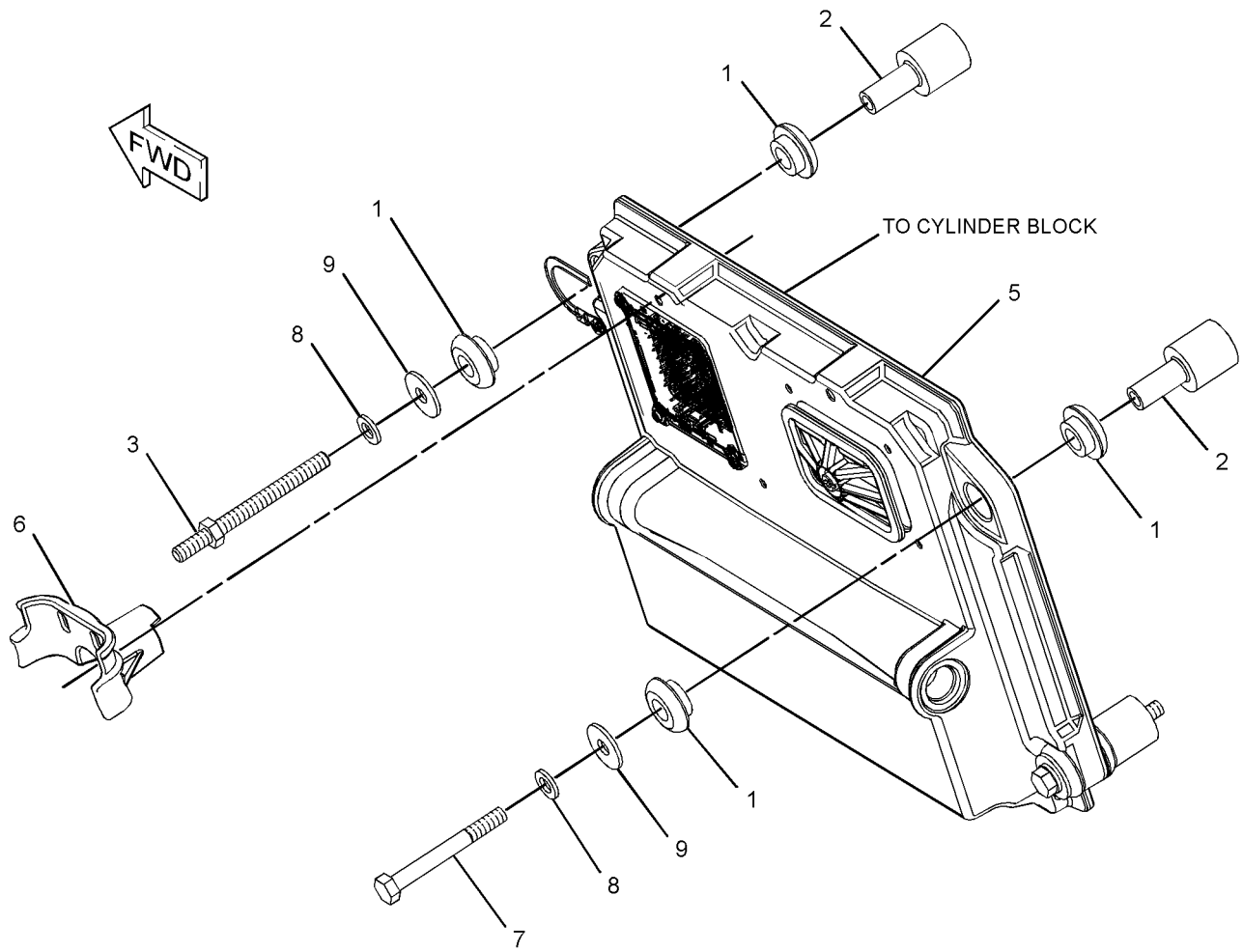

GRAPHIC #1 **<END>** g01178433

221-8872 CONTROL & MTG GP-MACHINE

S/N: MYG1-UP; PPN1-UP

PART OF 340-6485 OPERATOR AR

SMCS-1931, 7600 **i02296102**

NOTE	REF NO	GRAPHIC REF	PART NUMBER	QTY	PART NAME 1 2 3 4 5 6 (PRODUCT LEVEL)	SEE PAGE
	1	1	**221-8874**	1	CONTROL GP-UNPROGRAMMED	
M	2	1	**9X-2480**	4	BOLT (M6X1X45-MM)	
	3	1	**9X-8256**	4	WASHER (6.6X12X2-MM THK)	

M-METRIC PART

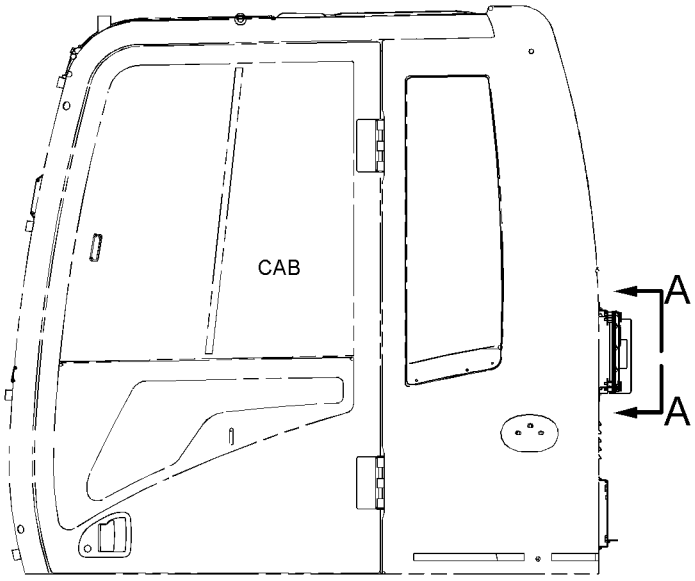

LEFT SIDE VIEW

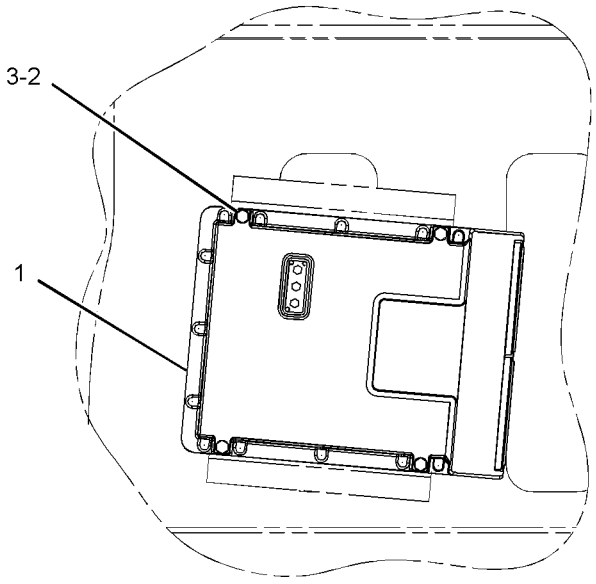

VIEW A-A

GRAPHIC #1 **<END>** g01150750

262-1421 ELECTRONICS GP-COMMUNICATION–
PRODUCT LINK 300
S/N: MYG1-UP; PPN1-UP
PART OF 309-5842 CONTROL & MTG GP-COMMUNICATION
AN ATTACHMENT

SMCS-7606, 7610, 7620 **i03183442**

NOTE	PART NUMBER	QTY	PART NAME 1 2 3 4 5 6 (PRODUCT LEVEL)	SEE PAGE
	330-3409	1	SOFTWARE GP-COMMUNICATION (PRODUCT LINK 300)	
			-OR-	
	330-3410	1	SERVICE GP-COMMUNICATION (PRODUCT LINK 300)	
			(OPTIONAL SERVICE REPLACEMENT)(INCLUDES CONTROL GP & SOFTWARE)	

<END>

297-4429 ELECTRONICS GP-MACHINE–HIGH POWER
S/N: MYG1-UP; PPN1-UP
PART OF 343-1142, 343-1143 GENERAL AR

SMCS-7610, 7620 **i03700601**

NOTE	PART NUMBER	QTY	PART NAME 1 2 3 4 5 6 (PRODUCT LEVEL)	SEE PAGE
	327-7533	1	SOFTWARE GP-MACHINE	
			–OR–	
	327-7534	1	SERVICE GP-MACHINE	
			(OPTIONAL SERVICE REPLACEMENT)(INCLUDES CONTROL GP & SOFTWARE)	

<END>

221-8861 ELECTRONICS GP-MONITOR
S/N: MYG1-UP; PPN1-UP
PART OF 343-1142, 343-1143 GENERAL AR

SMCS-7490, 7601, 7610, 7620 **i03649396**

NOTE	PART NUMBER	QTY	PART NAME 1 2 3 4 5 6 (PRODUCT LEVEL)	SEE PAGE
	338-6920	1	SOFTWARE GP-MONITOR	
			–OR–	
Y	**338-6921**	1	SERVICE GP-MONITOR	947
			(OPTIONAL SERVICE REPLACEMENT)(INCLUDES CONTROL GP & SOFTWARE)	

Y-SEPARATE ILLUSTRATION

<END>

251-0526 FASTENER GP-WIRING HARNESS–STRAIGHT TRAVEL

S/N: MYG1-UP; PPN1-UP
PART OF 342-3650 PEDAL AR-AUXILIARY
AN ATTACHMENT

SMCS-1408, 7553 **i02390346**

NOTE	REF NO	GRAPHIC REF	PART NUMBER	QTY	PART NAME 1 2 3 4 5 6 (PRODUCT LEVEL)	SEE PAGE
	1	1	**3S-2093**	1	STRAP-CABLE	
	2	1	**116-0118**	1	CLIP	
M	3	1	**7X-2621**	1	BOLT (M10X1.5X12-MM)	
	4	1	**8T-4121**	1	WASHER-HARD (11X21X2.5-MM THK)	

M-METRIC PART

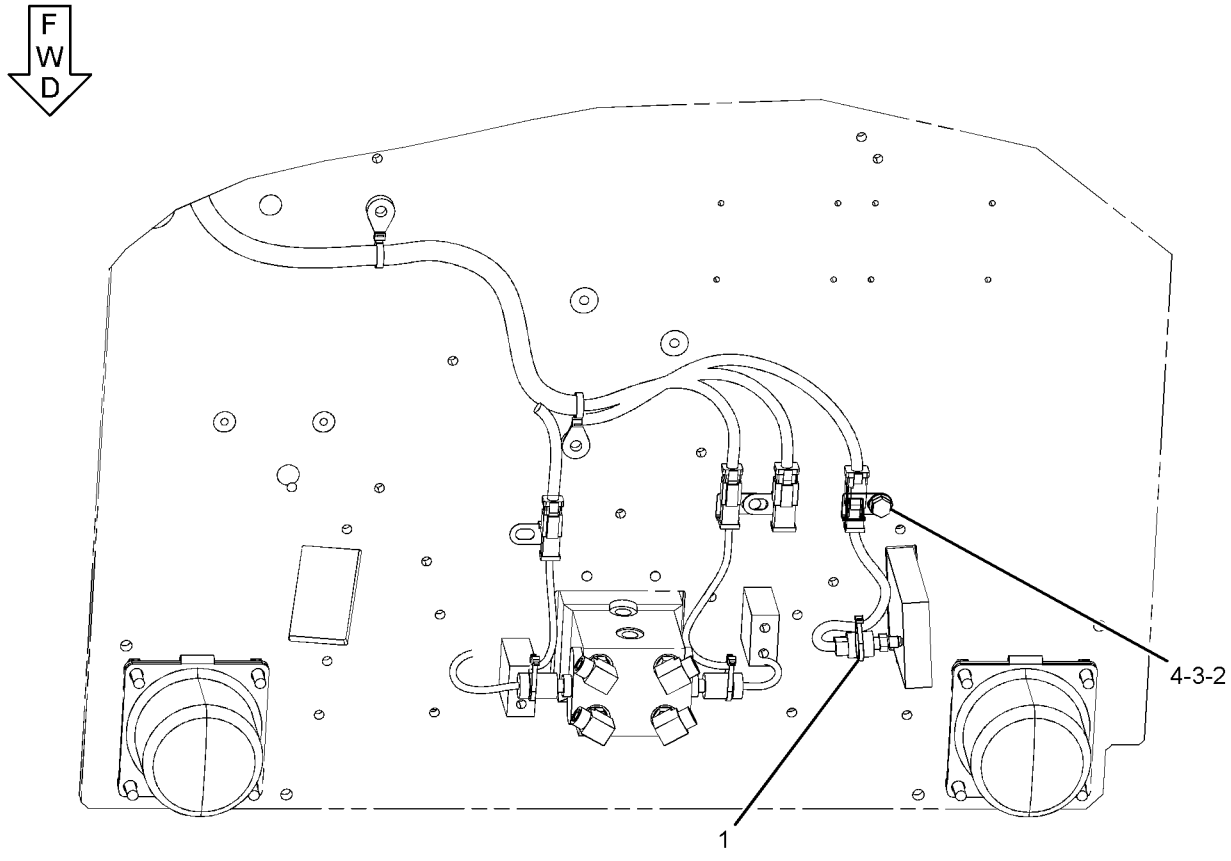

BOTTOM VIEW

GRAPHIC #1 **<END>** g01190326

259-5237 FASTENER GP-WIRING HARNESS–HEAVY LIFT

S/N: MYG1-UP; PPN1-UP

PART OF 259-7410, 259-7411 HYDRAULIC AR

SMCS-1408, 7553 **i02403957**

NOTE	REF NO	GRAPHIC REF	PART NUMBER	QTY	PART NAME 1 2 3 4 5 6 (PRODUCT LEVEL)	SEE PAGE
	1	1	**7I-2673**	1	STRAP - CABLE	

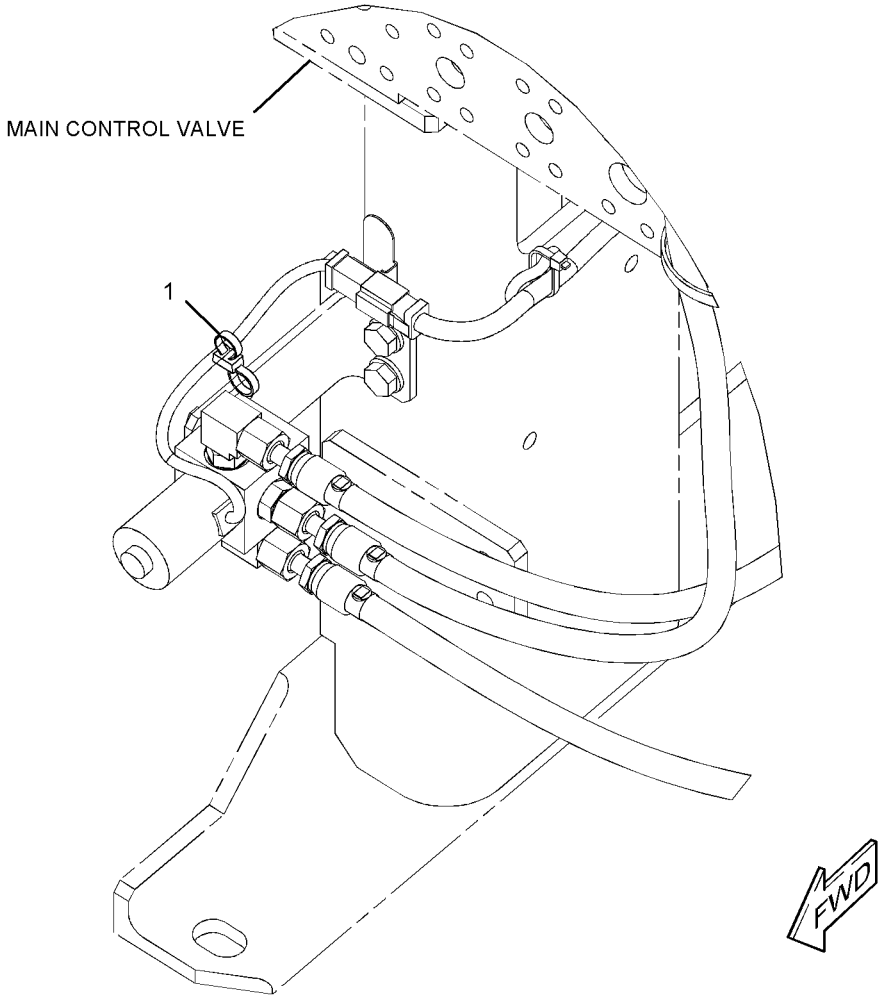

GRAPHIC #1 **<END>** g01200808

259-5293 FASTENER GP-WIRING HARNESS–PEDAL CONTROL

S/N: MYG1-UP; PPN1-UP
PART OF 335-0497 PEDAL AR-AUXILIARY
AN ATTACHMENT

SMCS-1408, 7553 **i02527274**

NOTE	REF NO	GRAPHIC REF	PART NUMBER	QTY	PART NAME 1 2 3 4 5 6 (PRODUCT LEVEL)	SEE PAGE
	1	1	**116-0118**	1	CLIP	
M	2	1	**7X-2621**	1	BOLT (M10X1.5X12-MM)	
	3	1	**8T-4121**	1	WASHER-HARD (11X21X2.5-MM THK)	

M-METRIC PART

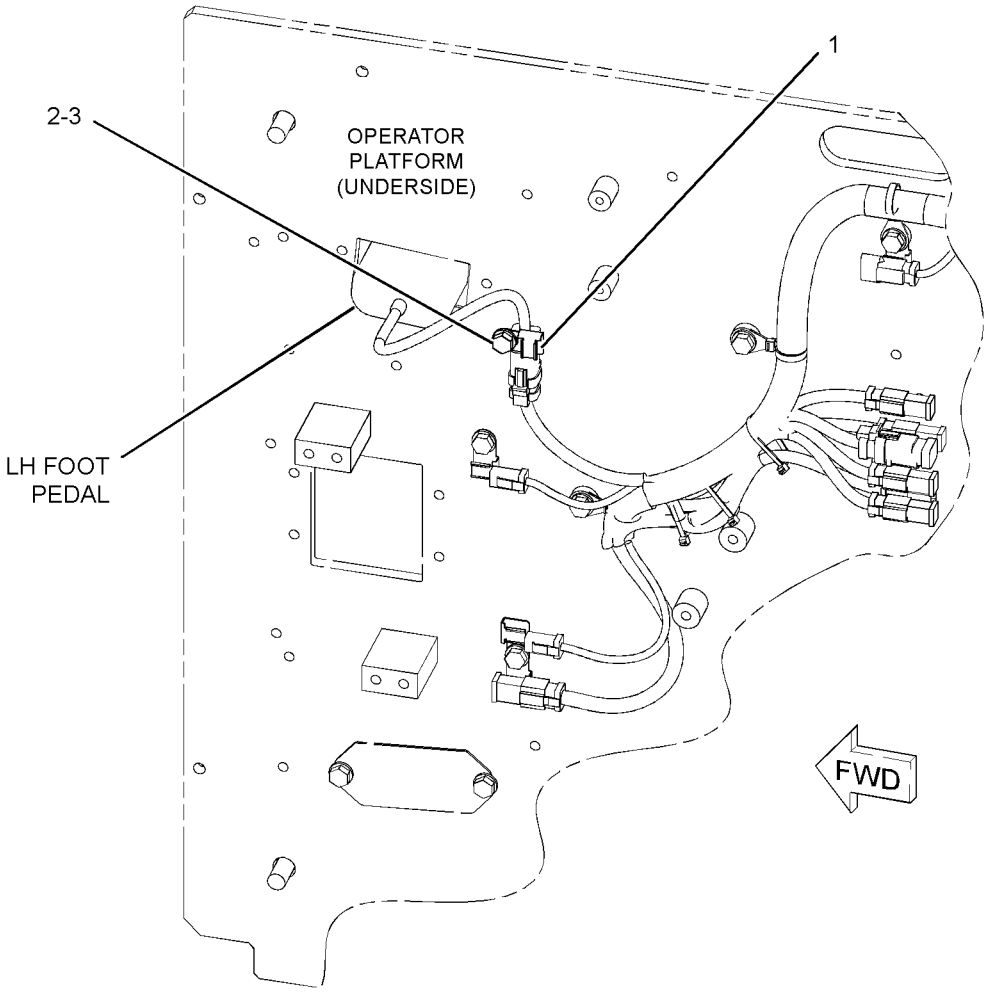

GRAPHIC #1 **<END>** g01264273

259-5294 FASTENER GP-WIRING HARNESS–FOOT SWITCH

S/N: MYG1-UP; PPN1-UP
PART OF 270-6106 CONTROL AR-AUXILIARY
AN ATTACHMENT

SMCS-1408, 7553 **i02305424**

NOTE	REF NO	GRAPHIC REF	PART NUMBER	QTY	PART NAME 1 2 3 4 5 6 (PRODUCT LEVEL)	SEE PAGE
	1	1	**116-0118**	1	CLIP	
M	2	1	**7X-2621**	1	BOLT (M10X1.5X12-MM)	
	3	1	**8T-4121**	1	WASHER-HARD (11X21X2.5-MM THK)	

M-METRIC PART

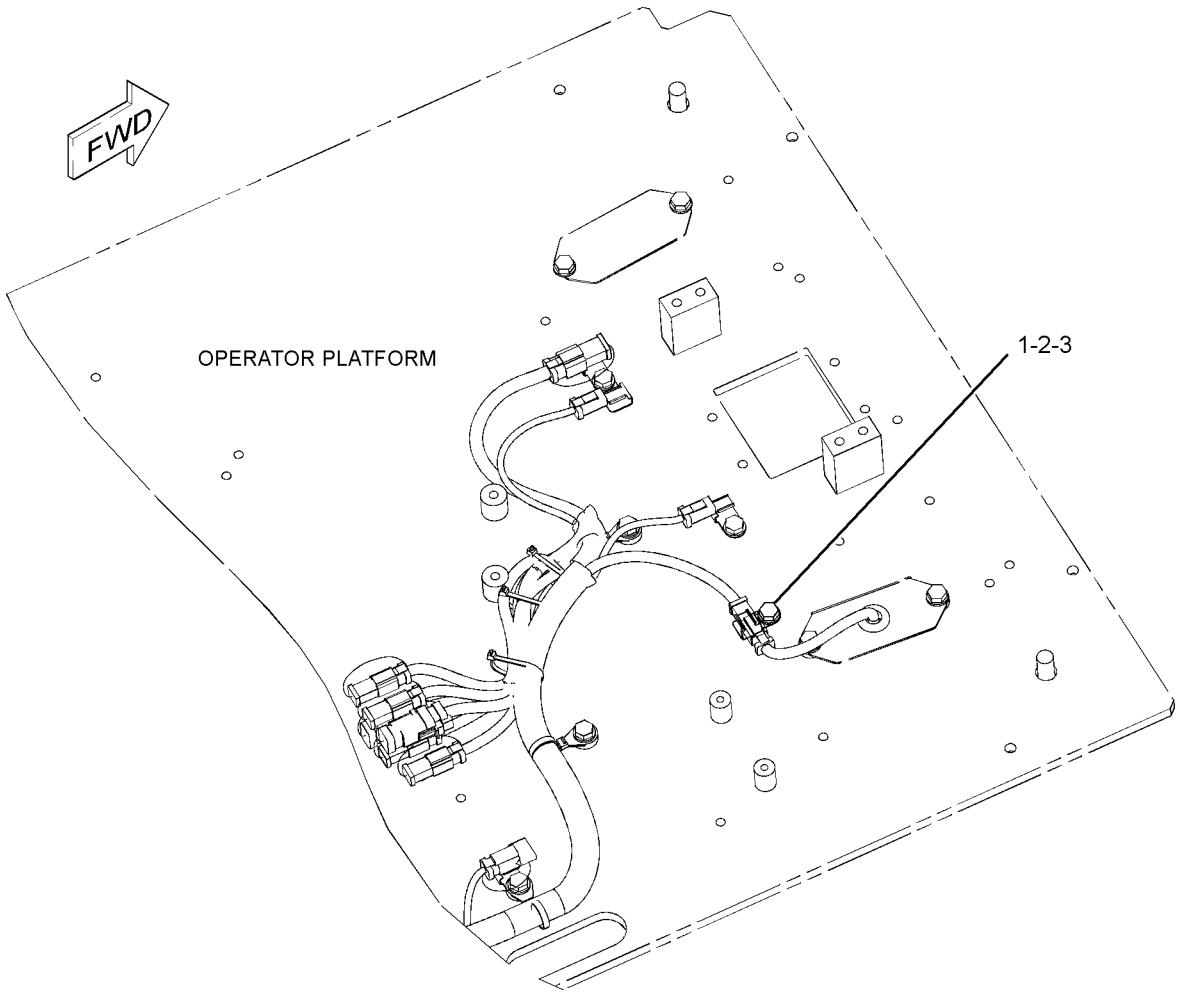

GRAPHIC #1 **<END>** g01156526

259-5295 FASTENER GP-WIRING HARNESS–JOYSTICK

S/N: MYG1-UP; PPN1-UP
PART OF 270-5687, 270-5688 CONTROL & MTG GP-JOYSTICK
AN ATTACHMENT

SMCS-1408, 7553 **i02304936**

NOTE	REF NO	GRAPHIC REF	PART NUMBER	QTY	PART NAME 1 2 3 4 5 6 (PRODUCT LEVEL)	SEE PAGE
	1	1	**3S-2093**	2	STRAP-CABLE	

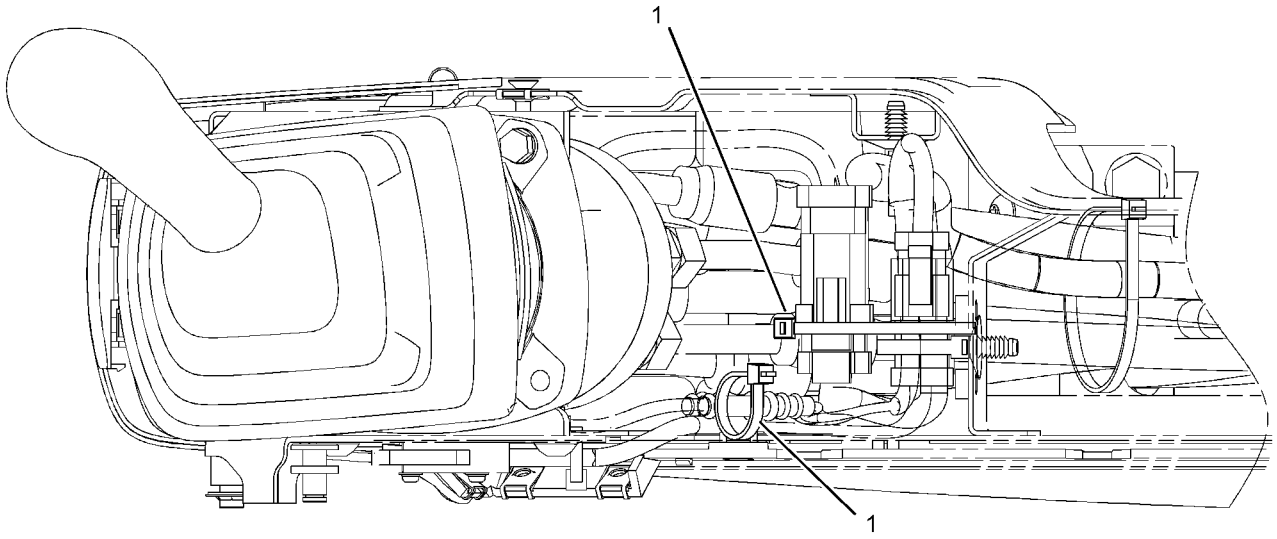

GRAPHIC #1 **<END>** g01160306

346-4602 GRADE CONTROL AR

S/N: MYG1-UP; PPN1-UP
AN ATTACHMENT

SMCS-7220 **i03676022**

NOTE	PART NUMBER	QTY	PART NAME 1 2 3 4 5 6 (PRODUCT LEVEL)	SEE PAGE
Y	*293-6867*	1	HOOD GP (ACCUGRADE READY)	339
Y	*338-6937*	1	MOUNTING GP-ANTENNA (ACCUGRADE)	928
Y	*306-8349*	1	WIRING GP-CAB (ACCUGRADE READY)	250
Y	*342-3149*	1	WIRING GP-CHASSIS (ACCUGRADE READY)	266

Y-SEPARATE ILLUSTRATION

<END>

346-4603 GRADE CONTROL AR

S/N: MYG1-UP; PPN1-UP
PART OF 345-3787 LINKAGE AR-FRONT
AN ATTACHMENT

SMCS-7220 **i03676020**

NOTE	PART NUMBER	QTY	PART NAME 1 2 3 4 5 6 (PRODUCT LEVEL)	SEE PAGE
Y	*293-6985*	1	HOOD GP (ACCUGRADE READY)	340
Y	*338-6937*	1	MOUNTING GP-ANTENNA (ACCUGRADE)	928
Y	*306-8349*	1	WIRING GP-CAB (ACCUGRADE READY)	250
Y	*342-3149*	1	WIRING GP-CHASSIS (ACCUGRADE READY)	266

Y-SEPARATE ILLUSTRATION

<END>

340-3831 INSTALLATION AR-COMMUNICATION–

PRODUCT LINK 321SR
S/N: MYG1-UP; PPN1-UP
PART OF 345-7583 OPTION AR-CONFIGURATION
AN ATTACHMENT

SMCS-7606 **i03674768**

NOTE	PART NUMBER	QTY	PART NAME 1 2 3 4 5 6 (PRODUCT LEVEL)	SEE PAGE
Y	*309-5842*	1	CONTROL & MTG GP-COMMUNICATION (PRODUCT LINK 321SR)	170
Y	*338-6891*	1	CONTROL & MTG GP-COMMUNICATION (PRODUCT LINK 121SR)	171
Y	*338-6881*	1	MOUNTING GP-ANTENNA (PRODUCT LINK)	926
Y	*336-6242*	1	WIRING GP-COMMUNICATION (PRODUCT LINK 321SR)	269

Y-SEPARATE ILLUSTRATION

<END>

ELECTRICAL AND STARTING SYSTEM

227-7581 INSTALLATION GP-SECURITY

S/N: MYG1-UP; PPN1-UP
CANNOT BE USED WITH 251-0542—PAGE 196
AN ATTACHMENT

SMCS-7631 **i02388834**

NOTE	REF NO	GRAPHIC REF	PART NUMBER	QTY	PART NAME 1 2 3 4 5 6 (PRODUCT LEVEL)	SEE PAGE
	1	1	**8C-5607**	4	MOUNT-ISOLATION	
	2	1	**8C-5608**	2	SPACER (6.5X9.5X25.4-MM THK)	
	3	1	**206-5162**	2	KEY AS-ELECTRONIC (SECURITY)	
	4	1	**218-0404**	1	MODULE GP-INTERFACE (KEY)	
	5	1	**219-6314**	2	KEY RING (IDENTIFICATION)	
Y	7	1	*251-0544*	1	PANEL GP-SWITCH (ENGINE SPEED, START)	198
M	8	1	**7X-2533**	2	BOLT (M6X1X35-MM)	
	9	1	**9X-6165**	2	WASHER (6.5X22X2.5-MM THK)	

M-METRIC PART
Y-SEPARATE ILLUSTRATION

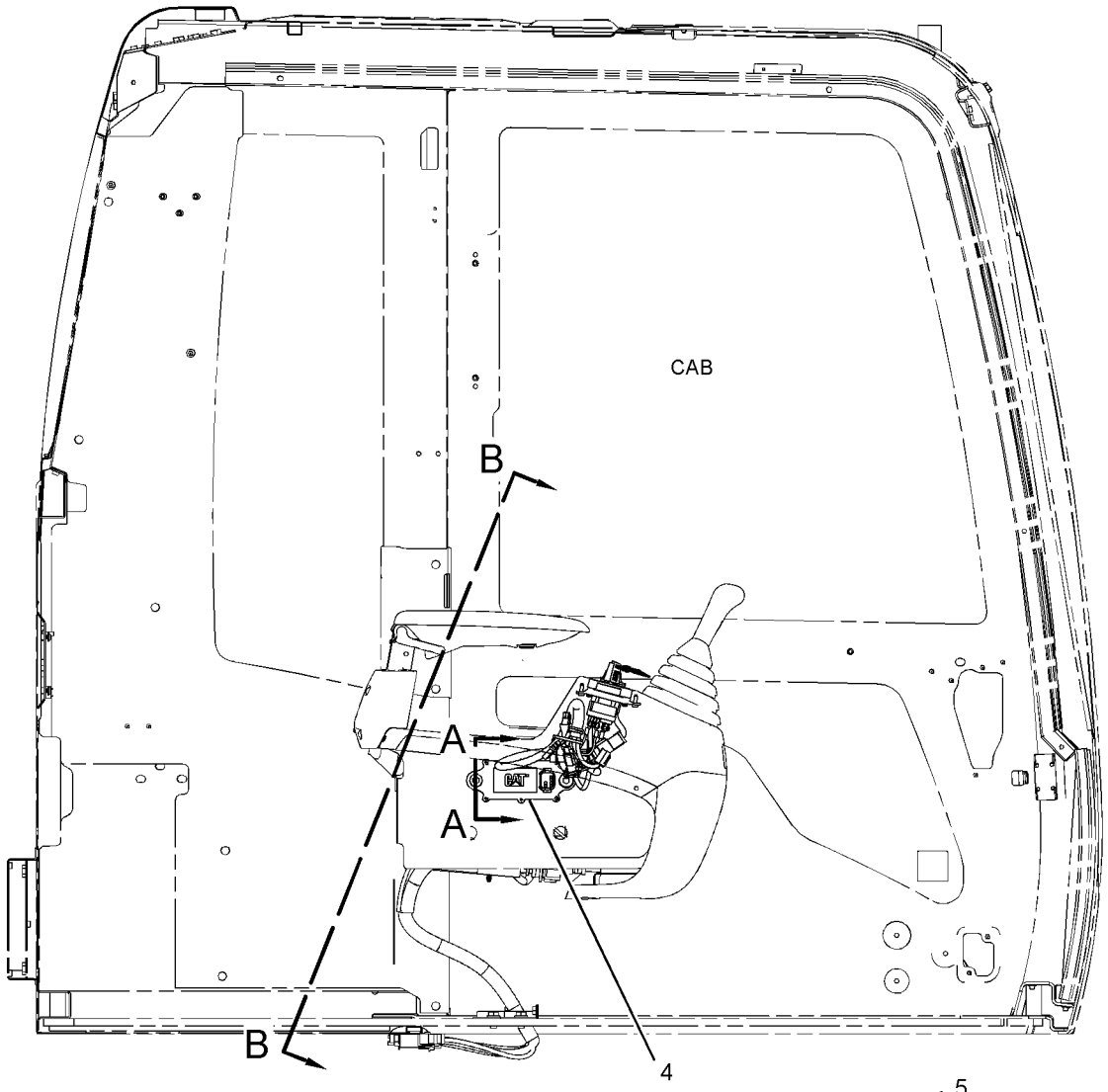

RIGHT SIDE VIEW

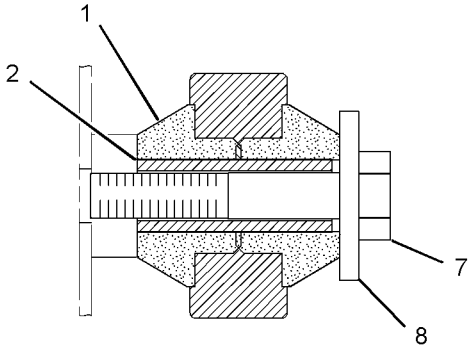

SECTION A-A

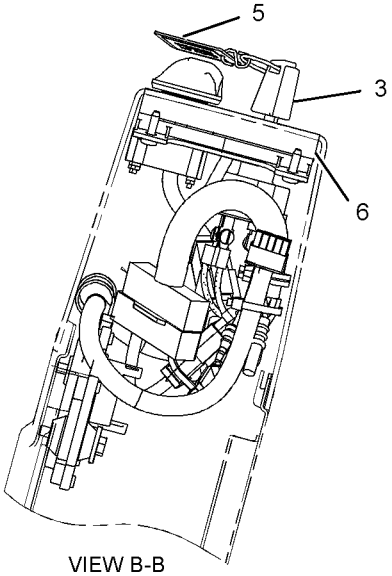

VIEW B-B

GRAPHIC #1 **<END>** g01196691

153-2521 LAMP GP-FLOOD

S/N: MYG1-UP; PPN1-UP
24-VOLT
PART OF 238-1584, 238-1586 LIGHTING GP-FLOOD
AN ATTACHMENT

SMCS-1434 **i03626397**

NOTE	REF NO	GRAPHIC REF	PART NUMBER	QTY	PART NAME 1 2 3 4 5 6 (PRODUCT LEVEL)	SEE PAGE
M	1	1	**6V-5210**	2	SCREW-MACHINE (M4X0.7X10-MM)	
	2	1	**3B-4501**	2	LOCKWASHER	
	3	1	**9X-3463**	1	LAMP-HALOGEN (24-VOLT, 70-WATT)	
	4	1	**8T-4223**	1	WASHER-HARD (13.5X25.5X3-MM THK)	
M	5	1	**8T-4244**	1	NUT (M12X1.75-THD)	
M	6	1	**174-7791**	1	SCREW-TAPPING	
	7	1	**5C-2889**	1	LOCKWASHER	
	8	1	**170-6993**	1	COVER	
M	9	1	**180-3861**	4	SCREW-TAPPING	
	10	1	**170-9417**	1	LENS AS (FLOOD)	
	11	1	**170-9418**	1	BAND	

M-METRIC PART

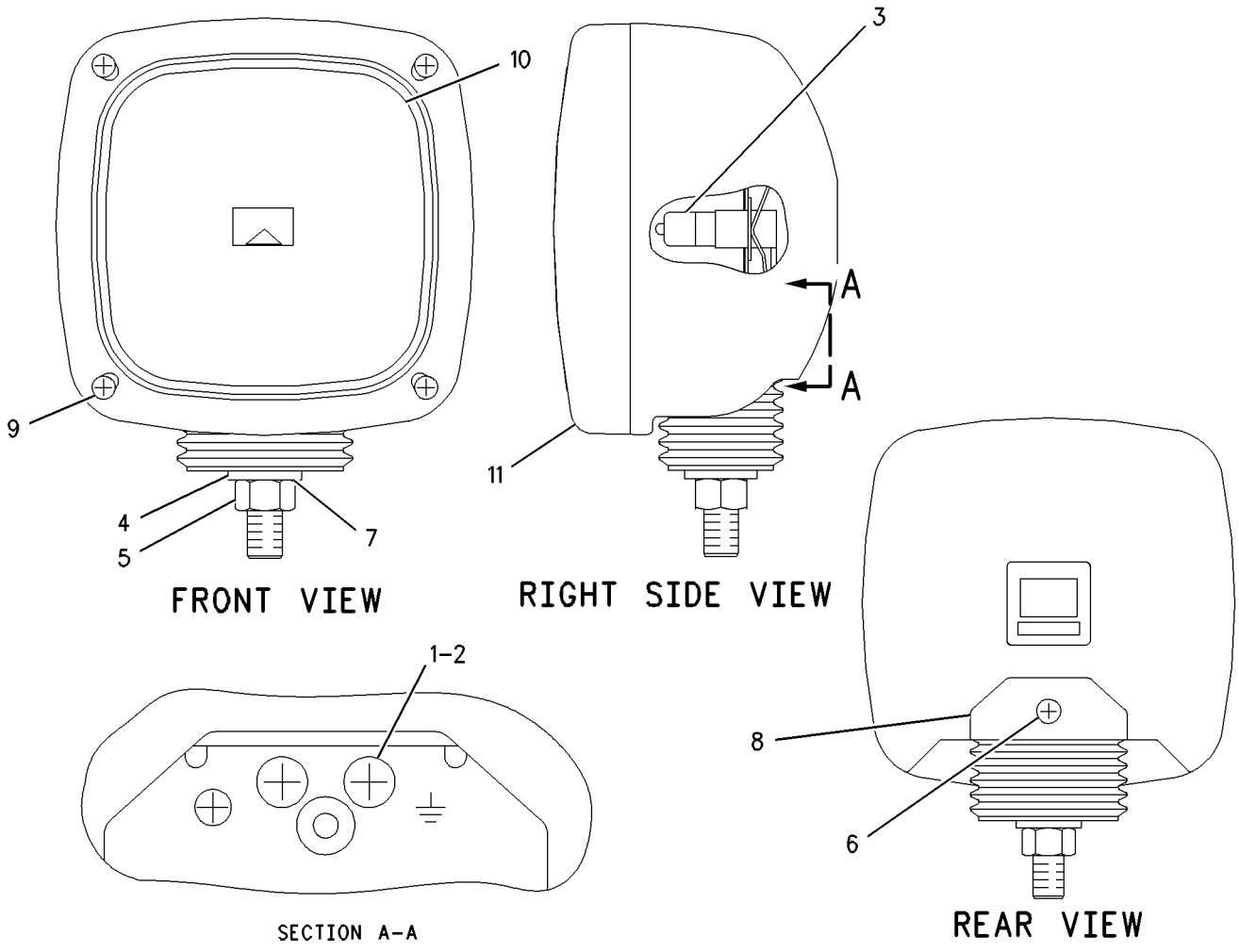

GRAPHIC #1 **<END>** g00646000

153-2523 LAMP GP-FLOOD–FRONT, RH

S/N: MYG1-UP; PPN1-UP
24-VOLT
PART OF 4I-5409 LIGHTING GP-CHASSIS

SMCS-1434 **i02635978**

NOTE	REF NO	GRAPHIC REF	PART NUMBER	QTY	PART NAME 1 2 3 4 5 6 (PRODUCT LEVEL)	SEE PAGE
M	1	1	**6V-5210**	2	SCREW-MACHINE (M4X0.7X10-MM)	
	2	1	**3B-4501**	2	LOCKWASHER	
	3	1	**9X-3463**	1	LAMP-HALOGEN (24-VOLT, 70-WATT)	
	4	1	**8T-4223**	1	WASHER-HARD (13.5X25.5X3-MM THK)	
M	5	1	**8T-4244**	1	NUT (M12X1.75-THD)	
M	6	1	**174-7791**	1	SCREW-TAPPING	
	7	1	**5C-2889**	1	LOCKWASHER	
	8	1	**170-6993**	1	COVER	
	9	1	**170-9417**	1	LENS AS (FLOOD)	
M	10	1	**180-3861**	4	SCREW-TAPPING	
	11	1	**170-9418**	1	BAND	

M-METRIC PART

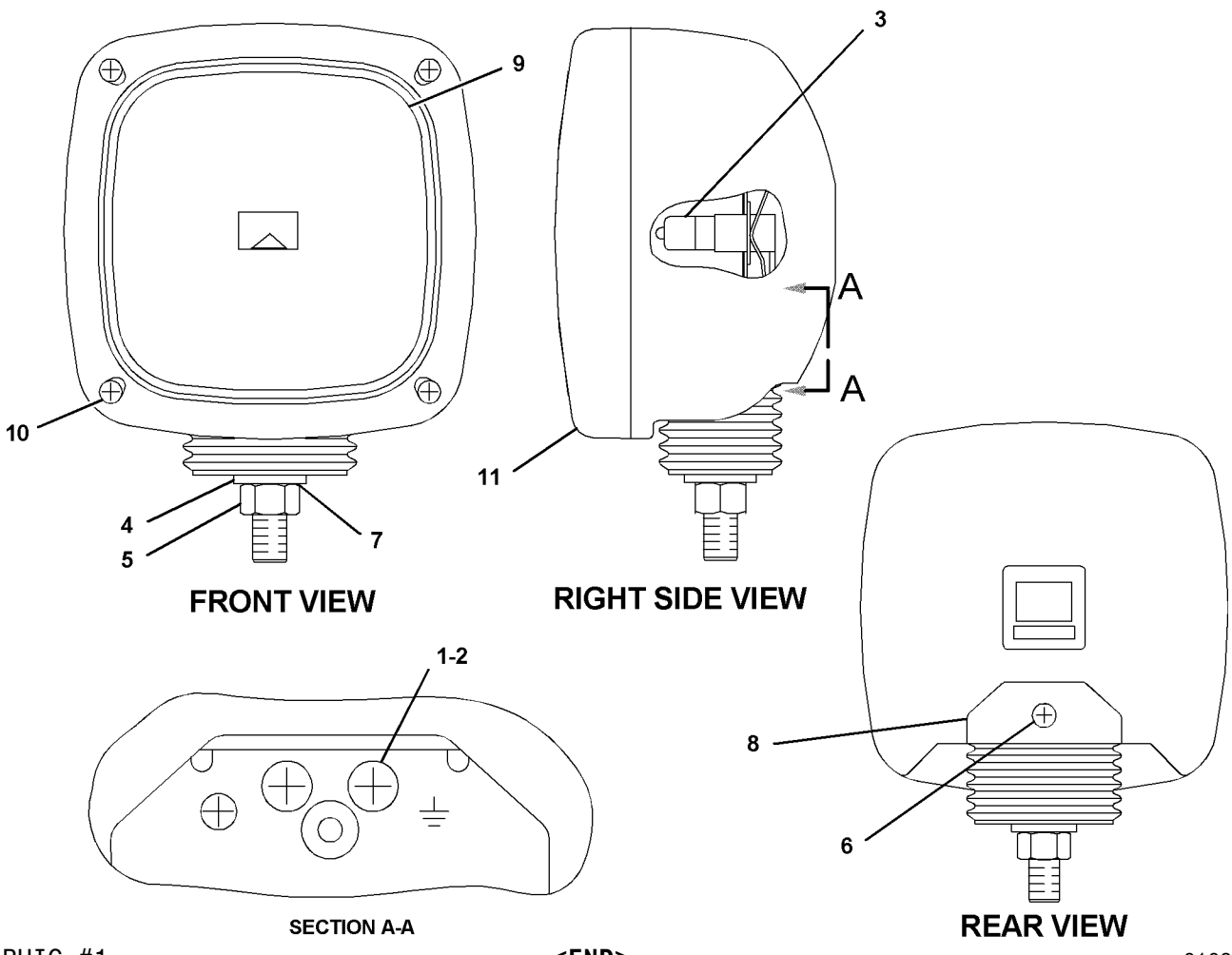

GRAPHIC #1 **<END>** g01084899

167-3441 LAMP GP-FLOOD

S/N: MYG1-UP; PPN1-UP
24-VOLT
PART OF 336-6071 LIGHTING GP-FLOOD
AN ATTACHMENT

SMCS-1434 **i02635981**

NOTE	REF NO	GRAPHIC REF	PART NUMBER	QTY	PART NAME 1 2 3 4 5 6 (PRODUCT LEVEL)	SEE PAGE
	1	1	**9X-3463**	1	LAMP-HALOGEN (24-VOLT, 70-WATT)	

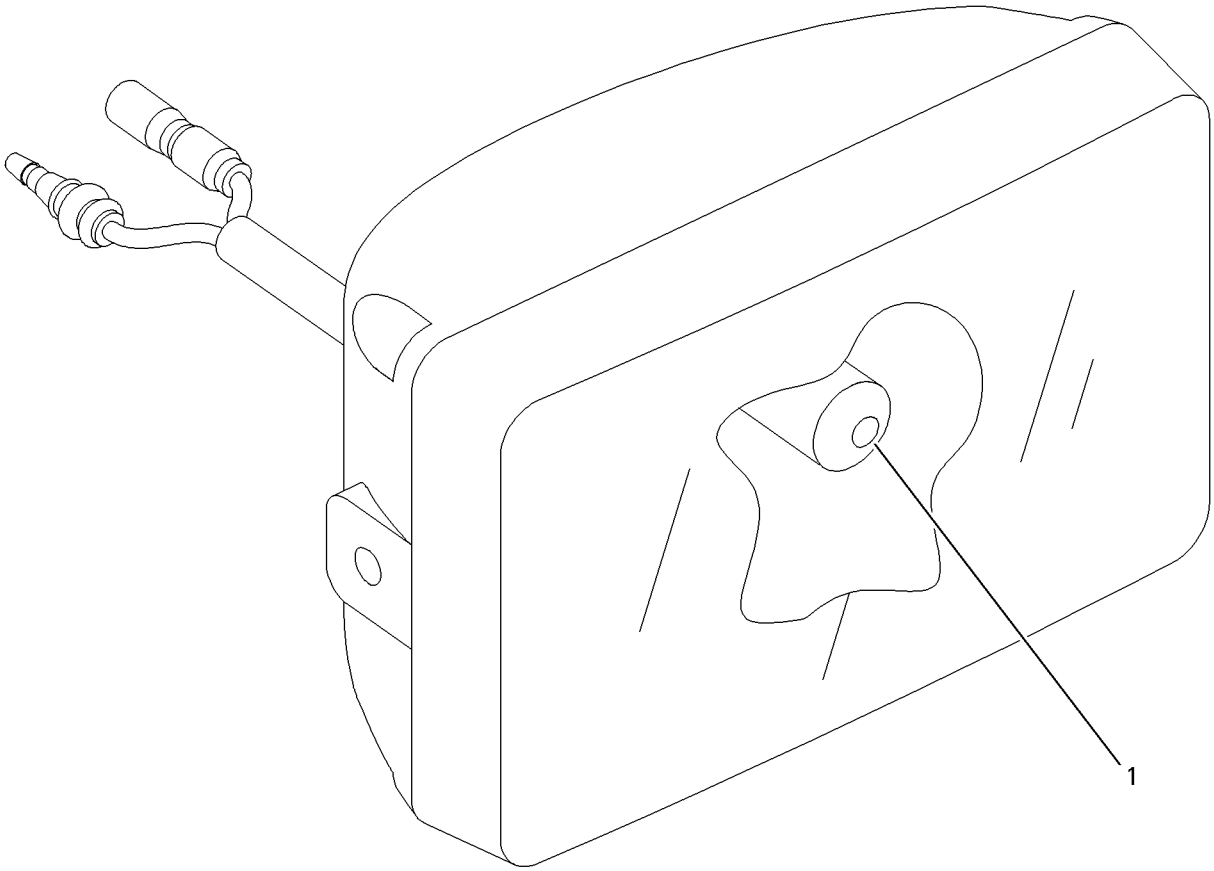

GRAPHIC #1 **<END>** g00692317

4I-5409 LIGHTING GP-CHASSIS–FRONT, RH

S/N: MYG1-UP; PPN1-UP

PART OF 343-1145, 343-1146 CHASSIS AR

SMCS-1429 **i02434953**

NOTE	REF NO	GRAPHIC REF	PART NUMBER	QTY	PART NAME 1 2 3 4 5 6 (PRODUCT LEVEL)	SEE PAGE
Y	1	1	**153-2523**	1	LAMP GP-FLOOD (24-VOLT) (CHASSIS)	185

Y-SEPARATE ILLUSTRATION

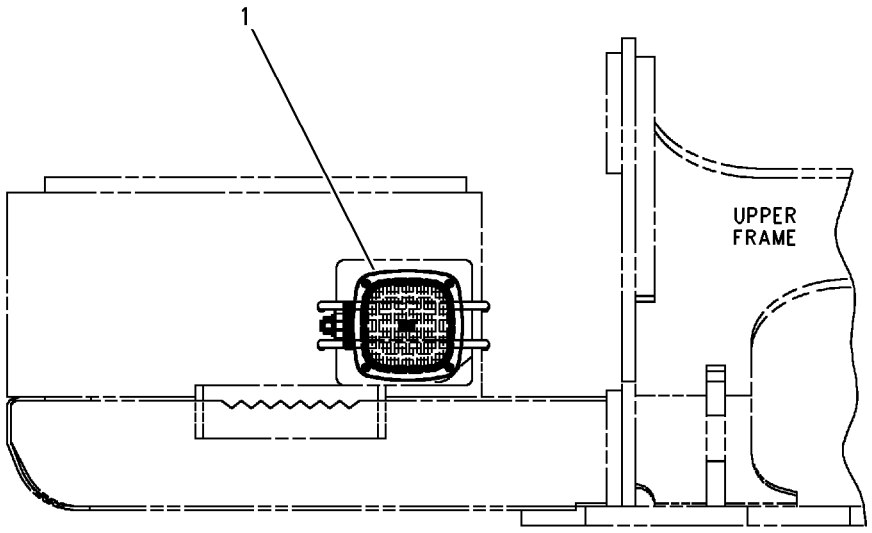

FRONT VIEW

GRAPHIC #1 **<END>** g00918298

238-1584 LIGHTING GP-FLOOD–BOOM

S/N: MYG1-UP; PPN1-UP
PART OF 290-1843, 314-3615 BOOM AR-1 PIECE LONG
AN ATTACHMENT

SMCS-1434 **i02522187**

NOTE	REF NO	GRAPHIC REF	PART NUMBER	QTY	PART NAME 1 2 3 4 5 6 (PRODUCT LEVEL)	SEE PAGE
	1	1	**7I-2673**	2	STRAP-CABLE	
	2	1	**111-4836**	10	CLIP	
	3	1	**111-4837**	1	CLIP	
	4	1	**116-0118**	1	CLIP	
Y	5	1	**153-2521**	2	LAMP GP-FLOOD (24-VOLT) (BOOM)	184
	6	1	**238-1585**	1	HARNESS AS-LIGHTING	
E		1	**125-7875**		TUBE-HEAT SHRINK (7.44-MM DIA) (10-CM)	
		1	**243-4505**	1	RECEPTACLE AS-CONNECTOR (2-PIN)	
	7	1	**134-3284**	2	BRACKET	
	8	1	**6V-3265**	2	CLIP	
	9	1	**8T-4121**	10	WASHER-HARD (11X21X2.5-MM THK)	
M	10	1	**8T-4133**	10	NUT (M10X1.5-THD)	
M	11	1	**8T-4190**	2	BOLT (M16X2X25-MM)	
	12	1	**9X-8257**	2	WASHER (17.5X30X3.5-MM THK)	

E-ORDER BY THE CENTIMETER
M-METRIC PART
Y-SEPARATE ILLUSTRATION

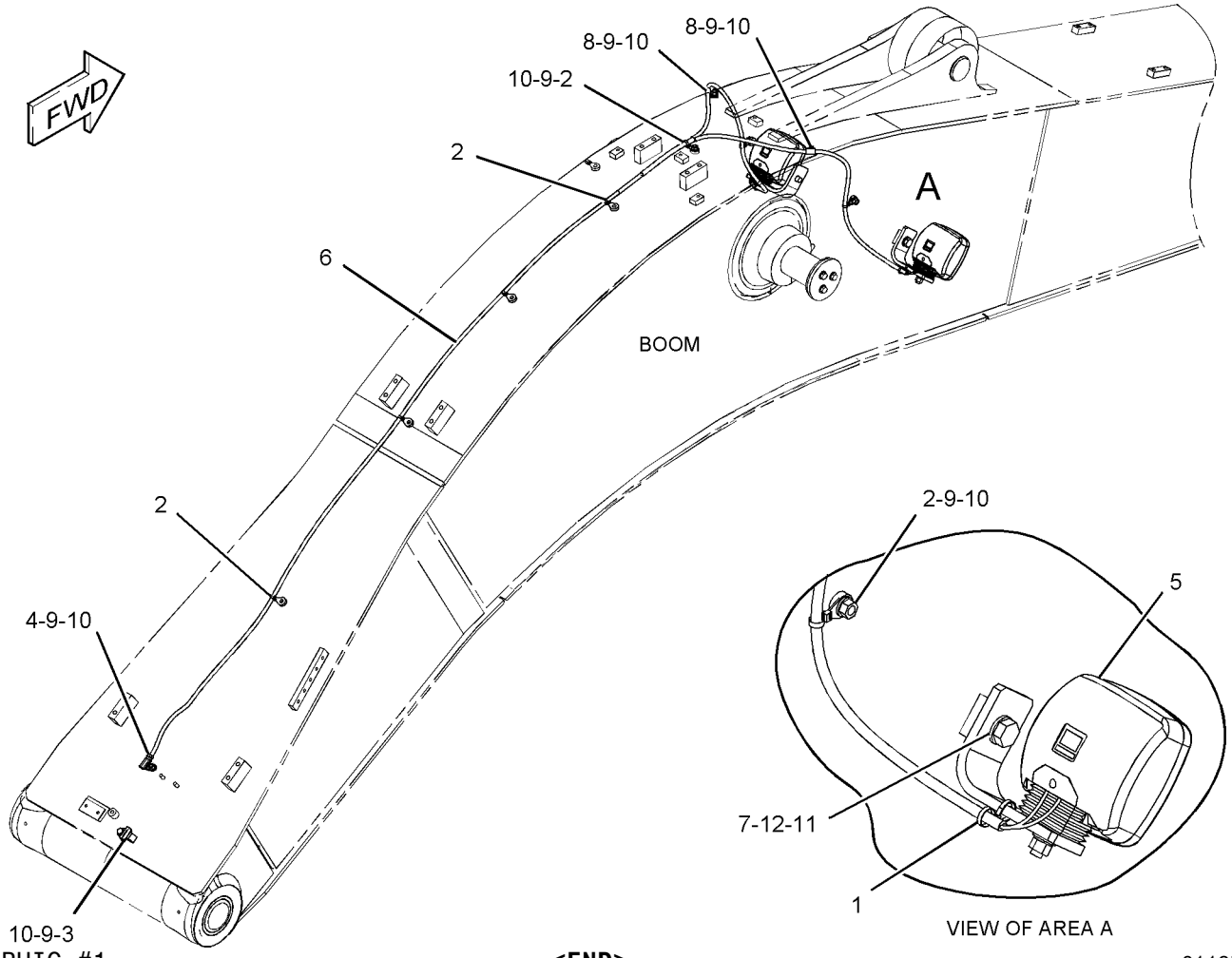

GRAPHIC #1

<END>

g01197782

ELECTRICAL AND STARTING SYSTEM

238-1586 LIGHTING GP-FLOOD—MASS BOOM

S/N: MYG1-UP; PPN1-UP
PART OF 290-1818 BOOM AR-1 PIECE SHORT
AN ATTACHMENT

SMCS-1434 **i02475532**

NOTE	REF NO	GRAPHIC REF	PART NUMBER	QTY	PART NAME 1 2 3 4 5 6 (PRODUCT LEVEL)	SEE PAGE
	1	1	**7I-2673**	2	STRAP-CABLE	
	2	1	**111-4836**	11	CLIP	
	3	1	**111-4837**	1	CLIP	
	4	1	**116-0118**	1	CLIP	
Y	5	1	**153-2521**	2	LAMP GP-FLOOD (24-VOLT)	184
	6	1	**238-1587**	1	HARNESS AS-LIGHTING	
		1	**243-4505**	1	RECEPTACLE AS-CONNECTOR (2-PIN)	
		1	**125-7875**		TUBE-HEAT SHRINK (7.44-MM DIA) (10-CM)	
	7	1	**134-3284**	2	BRACKET	
	8	1	**6V-3265**	2	CLIP	
	9	1	**8T-4121**	12	WASHER-HARD (11X21X2.5-MM THK)	
M	10	1	**8T-4133**	12	NUT (M10X1.5-THD)	
M	11	1	**8T-4190**	2	BOLT (M16X2X25-MM)	
	12	1	**9X-8257**	2	WASHER (17.5X30X3.5-MM THK)	

M-METRIC PART
Y-SEPARATE ILLUSTRATION

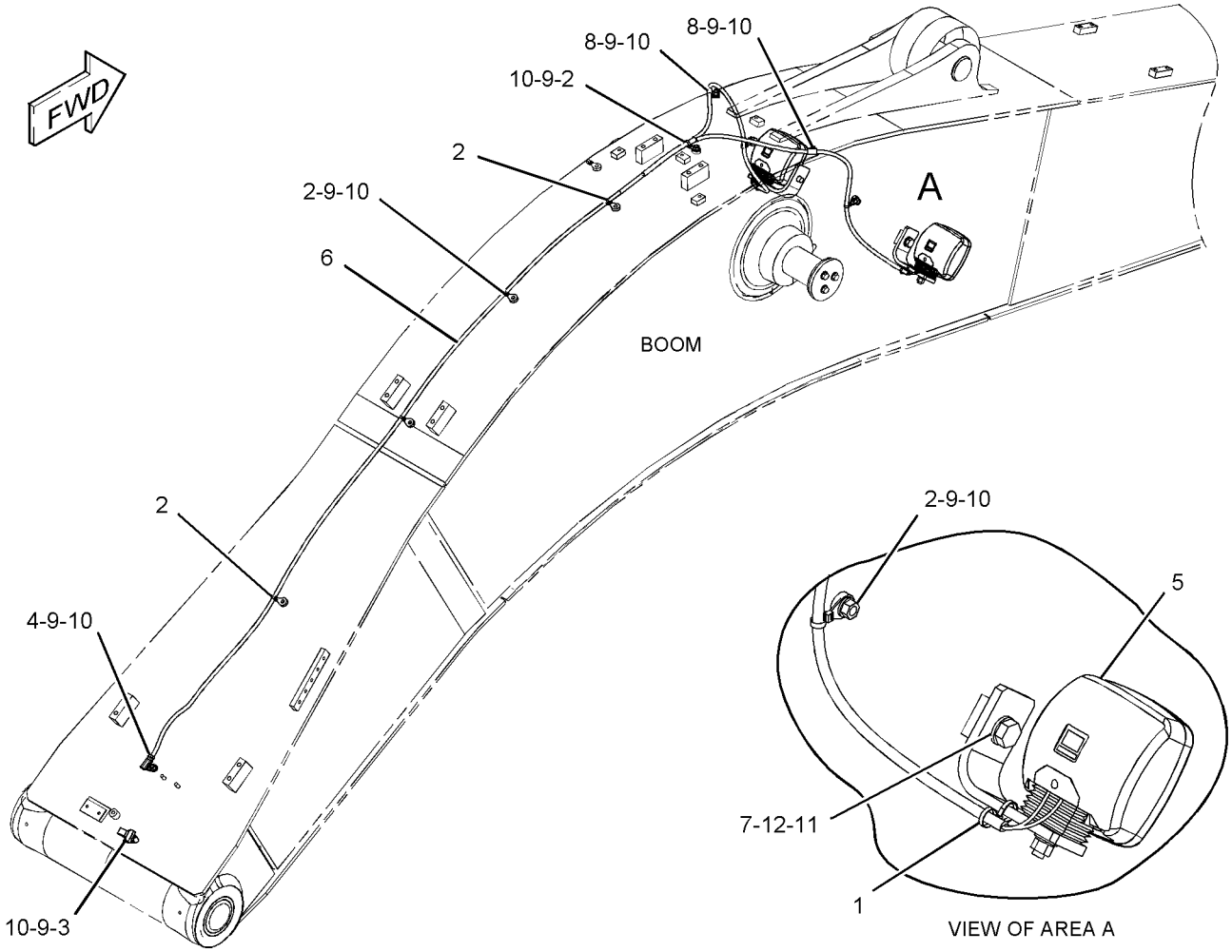

GRAPHIC #1 **<END>** g01236777

336-6071 LIGHTING GP-FLOOD–CAB

S/N: MYG1-UP; PPN1-UP
PART OF 347-0295 INSTALLATION AR-CAB
AN ATTACHMENT

SMCS-1434 **i03659097**

NOTE	REF NO	GRAPHIC REF	PART NUMBER	QTY	PART NAME 1 2 3 4 5 6 (PRODUCT LEVEL)	SEE PAGE
	1	1	**336-6103**	1	BRACKET AS (RH)	
	2	1	**336-6105**	1	BRACKET AS (LH)	
	3	1	**163-6795**	2	STRAP-CABLE	
Y	4	1	**167-3441**	2	LAMP GP-FLOOD (24-VOLT)	186
	5	1	**336-6095**	2	HARNESS AS-LIGHTING (CAB FLOODLIGHT)	
					(EACH INCLUDES)	
		1	**7Y-3962**	2	TERMINAL-BULLET (MALE)	
		1	**7Y-3963**	2	TERMINAL-BULLET (FEMALE)	
	6	1	**4P-7581**	2	CLIP	
	7	1	**7K-1181**	2	STRAP-CABLE	
	8	1	**8T-4121**	4	WASHER-HARD (11X21X2.5-MM THK)	
M	9	1	**8T-4137**	2	BOLT (M10X1.5X20-MM)	
M	10	1	**8T-4190**	2	BOLT (M16X2X25-MM)	
M	11	1	**8T-4191**	2	BOLT (M10X1.5X16-MM)	
M	12	1	**8T-4970**	4	BOLT (M6X1X14-MM)	
	13	1	**9X-8256**	4	WASHER (6.6X12X2-MM THK)	
	14	1	**9X-8257**	2	WASHER (17.5X30X3.5-MM THK)	

M-METRIC PART
Y-SEPARATE ILLUSTRATION

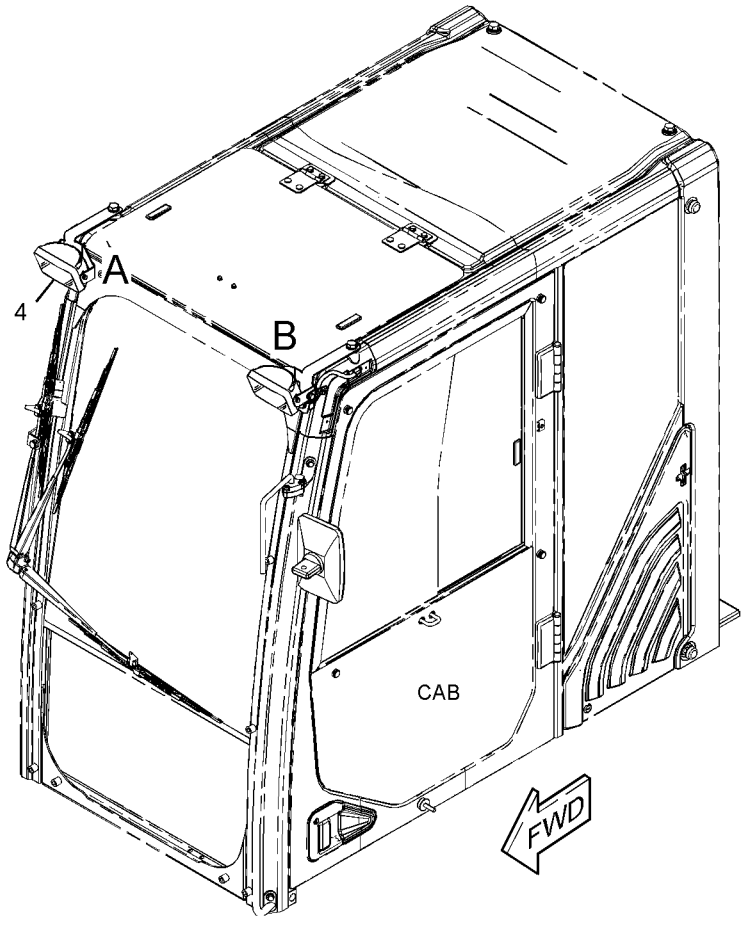

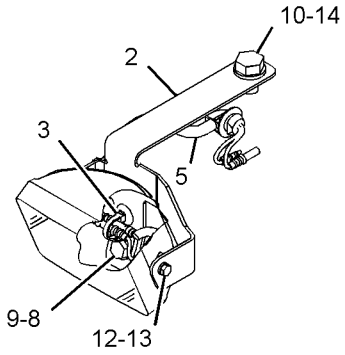

VIEW OF AREA A

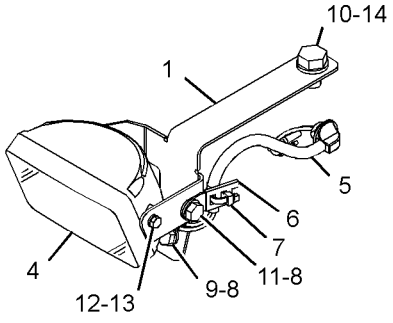

VIEW OF AREA B

GRAPHIC #1 **<END>** g01962964

336-6072 LIGHTING GP-FLOOD—CAB GUARD

S/N: MYG1-UP; PPN1-UP
PART OF 347-0297, 347-0361 INSTALLATION AR-CAB
AN ATTACHMENT

SMCS-1434 **i03659106**

NOTE	REF NO	GRAPHIC REF	PART NUMBER	QTY	PART NAME 1 2 3 4 5 6 (PRODUCT LEVEL)	SEE PAGE
	1	1	**7K-1181**	4	STRAP-CABLE	
	2	1	**183-1035**	2	LAMP GP-FLOOD (24-VOLT)	
					(EACH INCLUDES)	
		1	**9X-3463**	1	LAMP-HALOGEN (24-VOLT, 70-WATT)	
	3	1	**336-6096**	2	HARNESS AS-LIGHTING (CAB FLOODLIGHT)	
		1	**7Y-3962**	2	TERMINAL-BULLET (MALE) (MALE)	
		1	**7Y-3963**	2	TERMINAL-BULLET (FEMALE) (FEMALE)	
	4	1	**132-5789**	2	CLIP	
	5	1	**4P-7581**	2	CLIP	
	6	1	**8T-4121**	8	WASHER-HARD (11X21X2.5-MM THK)	
M	7	1	**8T-4133**	2	NUT (M10X1.5-THD)	
M	8	1	**8T-4136**	2	BOLT (M10X1.5X25-MM)	
M	9	1	**8T-4191**	4	BOLT (M10X1.5X16-MM)	

M-METRIC PART

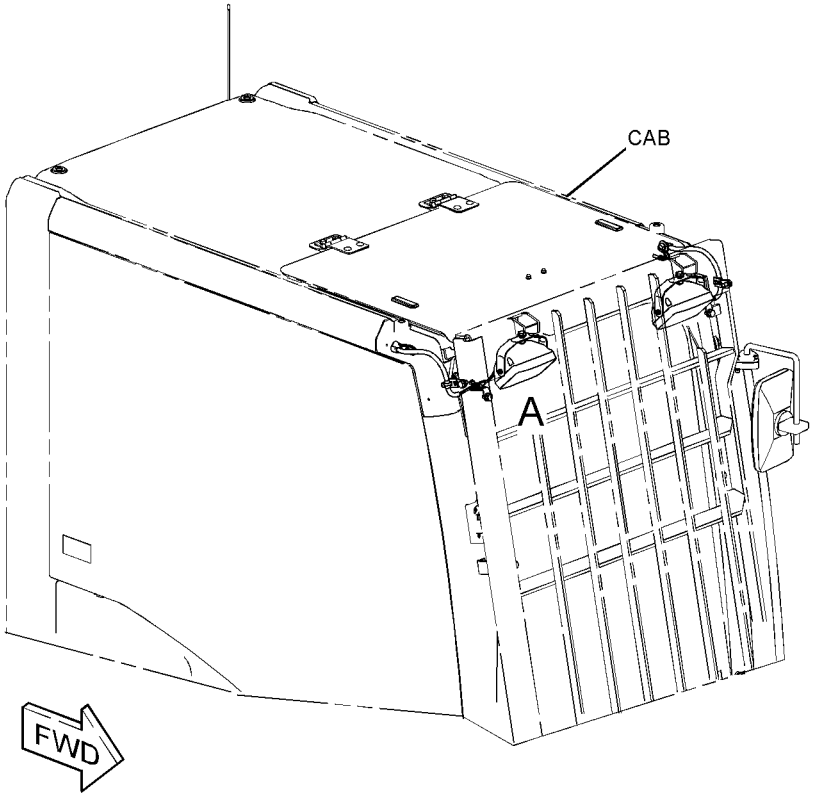

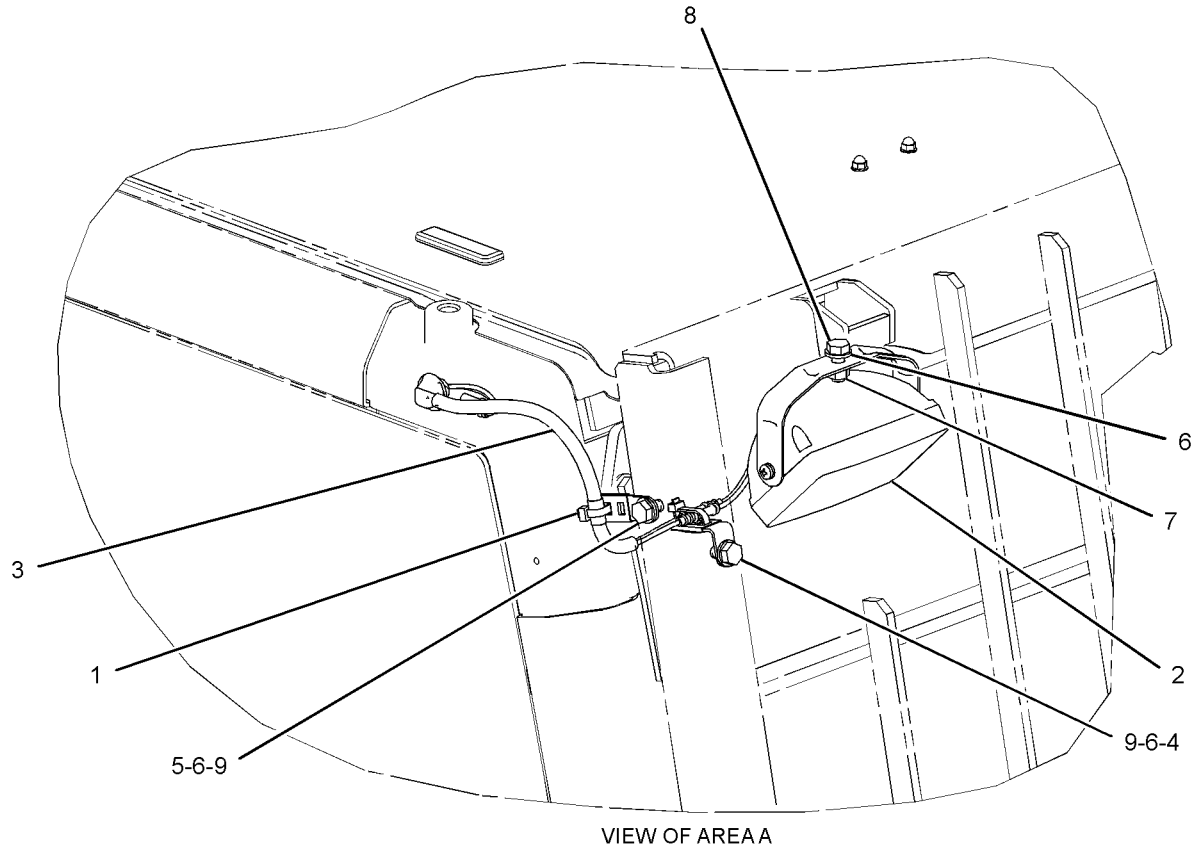

VIEW OF AREA A

GRAPHIC #1 **<END>** g01960466

336-6179 PANEL & MTG GP-CIRCUIT BREAKER

S/N: MYG1-UP; PPN1-UP
PART OF 340-6485 OPERATOR AR

SMCS-1417, 1420 **i03710064**

NOTE	REF NO	GRAPHIC REF	PART NUMBER	QTY	PART NAME 1 2 3 4 5 6 (PRODUCT LEVEL)	SEE PAGE
Y	1	1	*336-6180*	1	PANEL GP-CIRCUIT BREAKER	194
	2	1	**8T-4121**	4	WASHER-HARD (11X21X2.5-MM THK)	
M	3	1	**8T-4137**	4	BOLT (M10X1.5X20-MM)	

M-METRIC PART
Y-SEPARATE ILLUSTRATION

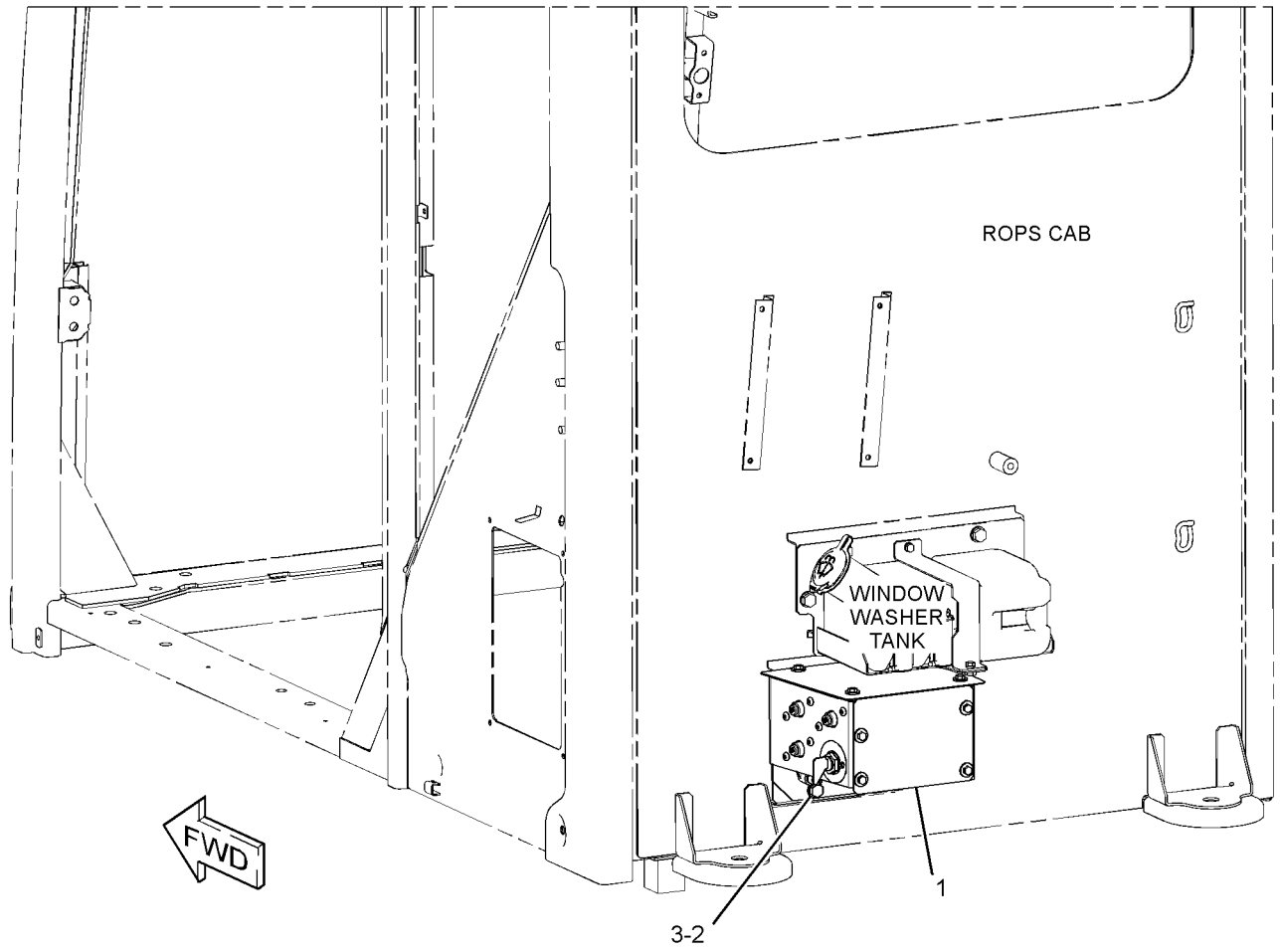

GRAPHIC #1 **<END>** g01967215

ELECTRICAL AND STARTING SYSTEM

336-6180 PANEL GP-CIRCUIT BREAKER

S/N: MYG1-UP; PPN1-UP

PART OF 336-6179 PANEL & MTG GP-CIRCUIT BREAKER

SMCS-1417 **i03652836**

NOTE	REF NO	GRAPHIC REF	PART NUMBER	QTY	PART NAME 1 2 3 4 5 6 (PRODUCT LEVEL)	SEE PAGE
	1	1	**3E-8320**	1	PLATE-INSTRUCTION (BATTERY)	
Y	2	1	**7N-0719**	1	SWITCH GP-DISCONNECT (BATTERY)	233
	3	1	**7Y-5499**	1	BLOCK AS-TERMINAL	
	4	1	**9G-8451**	1	BLOCK AS	
		1	**1H-3244**	1	LOCKWASHER	
		1	**4B-4276**	2	WASHER (7X16X1.6-MM THK)	
		1	**4L-7124**	1	BOLT (1/4-20X1.25-IN)	
		1	**6V-8185**	2	NUT (1/4-20-THD)	
Y	5	1	**125-1302**	1	SWITCH GP-MAGNETIC (24-VOLT) (START RELAY)	234
	6	1	**171-2210**	2	CIRCUIT BREAKER AS (80-AMPERE)	
					(EACH INCLUDES)	
		1	**6V-8187**	2	NUT (1/4-28-THD)	
		1	**8T-4205**	2	WASHER-HARD (7.2X14.5X2-MM THK)	
		1	**253-2111**	2	LOCKWASHER	
	7	1	**216-4970**	1	CIRCUIT BREAKER AS (120-AMPERE)	
		1	**6V-8187**	2	NUT (1/4-28-THD)	
		1	**8T-4205**	2	WASHER-HARD (7.2X14.5X2-MM THK)	
		1	**253-2111**	2	LOCKWASHER	
	8	1	**234-1037**	1	WIRE AS	
	9	1	**234-1038**	1	WIRE AS	
	10	1	**238-2279**	1	BAR-BUS	
	11	1	**238-2280**	1	WIRE AS	
	12	1	**251-0303**	1	CABLE AS	
D		1	**6V-2369**		CABLE (4-GA, BLACK) (0.2-M)	
		1	**9G-4343**	2	TERMINAL-RING (4-GA, 1/4-IN SCREW)	
	13	1	**251-0304**	1	CABLE AS	
D		1	**6V-2369**		CABLE (4-GA, BLACK) (0.2-M)	
		1	**9G-4343**	2	TERMINAL-RING (4-GA, 1/4-IN SCREW)	
	14	1	**342-2826**	1	COVER	
	15	1	**342-2827**	1	COVER	
	16	1	**342-2981**	1	BRACKET AS-PANEL	
	17	1	**342-2982**	1	CABLE AS	
D		1	**6V-2369**		CABLE (4-GA, BLACK) (0.3-M)	
		1	**9G-4343**	2	TERMINAL-RING (4-GA, 1/4-IN SCREW)	
M	18	1	**5C-9553**	4	BOLT (M6X1X16-MM)	
	19	1	**5P-4115**	8	WASHER-HARD (7.2X19X2-MM THK)	
	20	1	**6V-5645**	6	SCREW-MACHINE (10-32X0.87-IN)	
	21	1	**8T-0328**	6	WASHER-HARD (5.5X10X1-MM THK)	
M	22	1	**8T-4171**	4	BOLT (M6X1X12-MM)	
M	23	1	**8T-4970**	10	BOLT (M6X1X14-MM)	
	24	1	**9X-8256**	12	WASHER (6.6X12X2-MM THK)	

D-ORDER BY THE METER
M-METRIC PART
Y-SEPARATE ILLUSTRATION

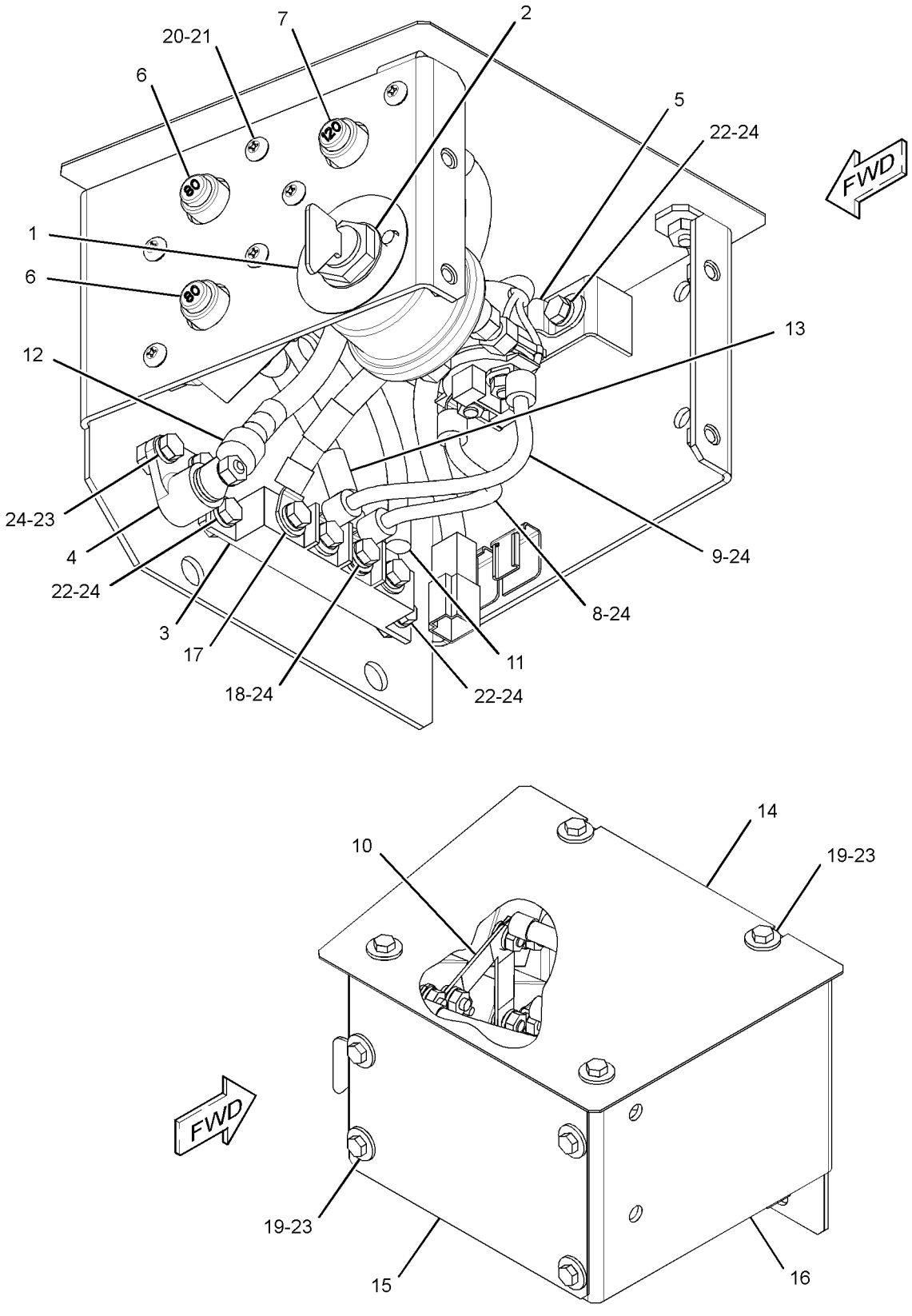

GRAPHIC #1 **<END>** g01967727

251-0542 PANEL GP-SWITCH—ENGINE SPEED, START

S/N: MYG1-UP; PPN1-UP
PART OF 345-7571, 348-8126, 352-2663 DISTRIBUTION AR
CANNOT BE USED WITH 227-7581—PAGE 182
AN ATTACHMENT

SMCS-1408, 1429, 7332, 7451 **i03631049**

NOTE	REF NO	GRAPHIC REF	PART NUMBER	QTY	PART NAME 1 2 3 4 5 6 (PRODUCT LEVEL)	SEE PAGE
	1	1	**3S-2093**	4	STRAP-CABLE	
Y	2	1	**9G-7641**	1	SWITCH GP-START (ENGINE, KEY)	241
CY	3	1	**319-4420**	1	SWITCH GP-ROTARY (THROTTLE POSITION)	240
	4	1	**170-9324**	1	LAMP AS (24-VOLT, 3-WATT)	
	5	1	**185-9208**	1	KNOB AS (THROTTLE POSITION)	
	6	1	**234-1156**	1	COVER	
	7	1	**234-1158**	1	COVER	
	8	1	**267-7976**	1	PANEL	
C	9	1	**328-0021**	1	HARNESS AS-CONSOLE (RH)	
		1	**102-8802**	1	KIT-RECEPTACLE (2-PIN)	
					(INCLUDES RECEPTACLE AS & WEDGE)	
		1	**3S-2093**	3	STRAP-CABLE	
		1	**7Y-3951**	2	TERMINAL-BLADE (14-GA)	
		1	**7Y-3952**	1	CONNECTOR-PLUG	
		1	**7Y-3962**	1	TERMINAL-BULLET (MALE)	
		1	**7Y-3963**	1	TERMINAL-BULLET (FEMALE)	
		1	**8T-8737**	3	PLUG-SEAL	
		1	**121-1168**	1	CONNECTOR-RECEPTACLE	
		1	**121-1173**	14	TERMINAL (MALE)	
		1	**9X-3402**	7	SOCKET-CONNECTOR (16-GA TO 18-GA)	
					—OR—	
		1	**126-1768**	7	SOCKET-CONNECTOR (14-GA)	
		1	**2L-8075**	4	TERMINAL-RING (14-GA TO 16-GA, NO. 8 SCREW)	
		1	**153-2540**	10	TERMINAL	
		1	**153-2541**	1	CONNECTOR-PLUG	
		1	**155-2270**	1	KIT-CONNECTING PLUG (2-PIN)	
					(INCLUDES PLUG AS, WEDGE, & INTERFACE SEAL)	
		1	**230-5010**	1	PLUG AS-CONNECTOR (6-PIN)	
		1	**238-2366**	7	TERMINAL (MALE)	
	10	1	**096-6166**	4	WASHER-HARD (4.5X9X1-MM THK)	
	11	1	**119-5026**	4	SCREW-PAN HEAD (10-16X0.63-IN)	
M	12	1	**6V-9491**	4	SCREW-MACHINE (M4X0.7X20-MM)	

C-CHANGE FROM PREVIOUS TYPE
M-METRIC PART
Y-SEPARATE ILLUSTRATION

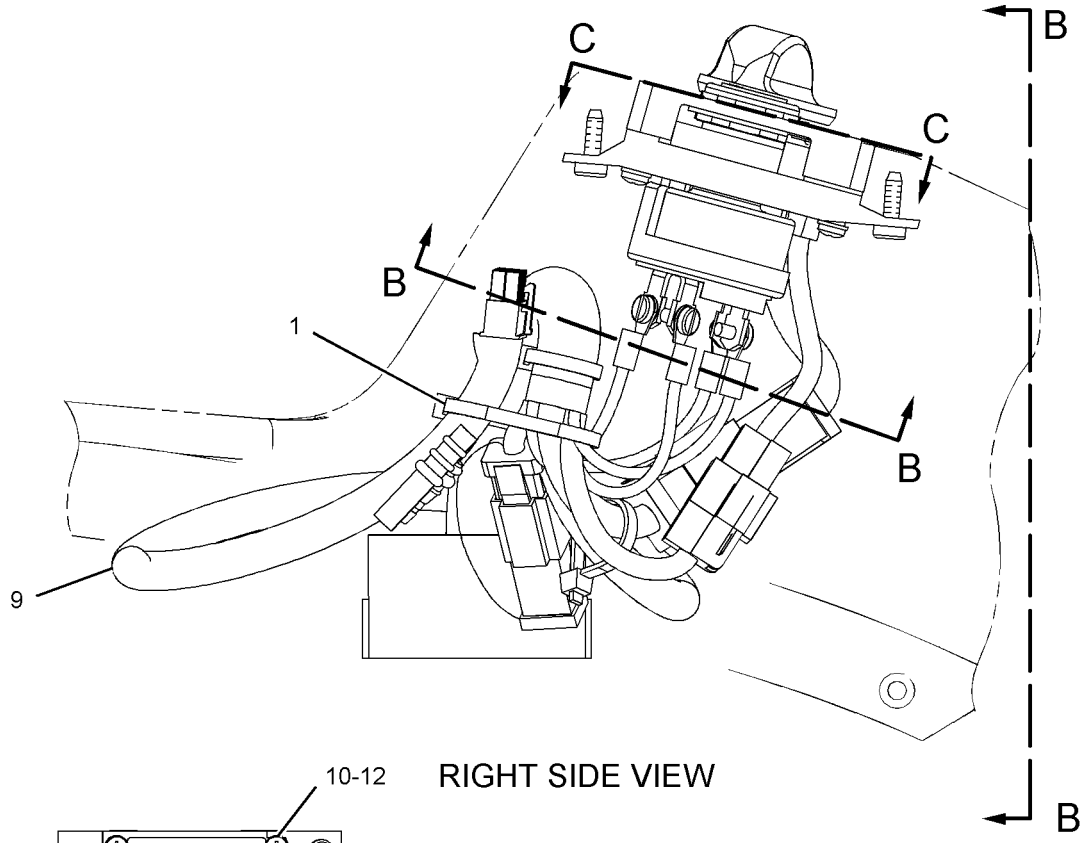

RIGHT SIDE VIEW

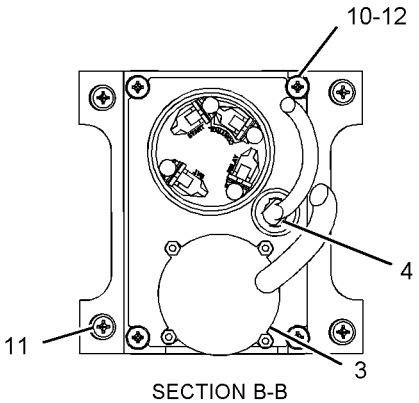

SECTION B-B

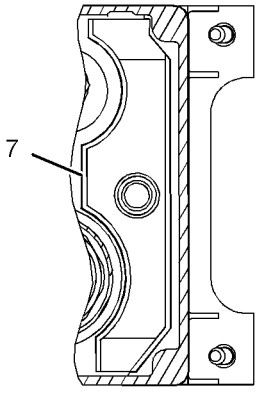

VIEW C-C

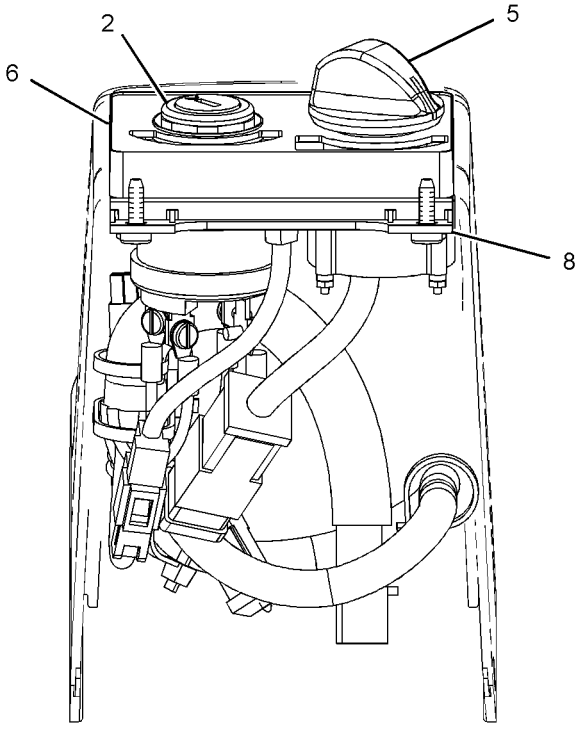

VIEW B-B

GRAPHIC #1 **<END>** g01112022

251-0544 PANEL GP-SWITCH–ENGINE SPEED, START

S/N: MYG1-UP; PPN1-UP
PART OF 227-7581 INSTALLATION GP-SECURITY
AN ATTACHMENT

SMCS-1408, 1429, 7332, 7451 **i03505800**

NOTE	REF NO	GRAPHIC REF	PART NUMBER	QTY	PART NAME 1 2 3 4 5 6 (PRODUCT LEVEL)	SEE PAGE
	1	1	**3S-2093**	5	STRAP-CABLE	
Y	2	1	**9G-7641**	1	SWITCH GP-START (ENGINE, KEY)	241
CY	3	1	**319-4420**	1	SWITCH GP-ROTARY (THROTTLE POSITION)	240
	4	1	**185-9208**	1	KNOB AS (THROTTLE POSITION)	
	5	1	**205-0826**	1	FILM-INSTRUCTION (MACHINE SECURITY, CONSOLE)	
	6	1	**205-8257**	1	COIL AS (EXCITER)	
		1	**186-3735**	2	PIN-CONNECTOR (16-GA TO 18-GA)	
	7	1	**234-1156**	1	COVER	
	8	1	**267-7977**	1	PANEL	
C	9	1	**328-0021**	1	HARNESS AS-CONSOLE (RH)	
	10	1	**096-6166**	4	WASHER-HARD (4.5X9X1-MM THK)	
	11	1	**119-5026**	4	SCREW-PAN HEAD (10-16X0.63-IN)	
M	12	1	**6V-9491**	4	SCREW-MACHINE (M4X0.7X20-MM)	

C-CHANGE FROM PREVIOUS TYPE
M-METRIC PART
Y-SEPARATE ILLUSTRATION

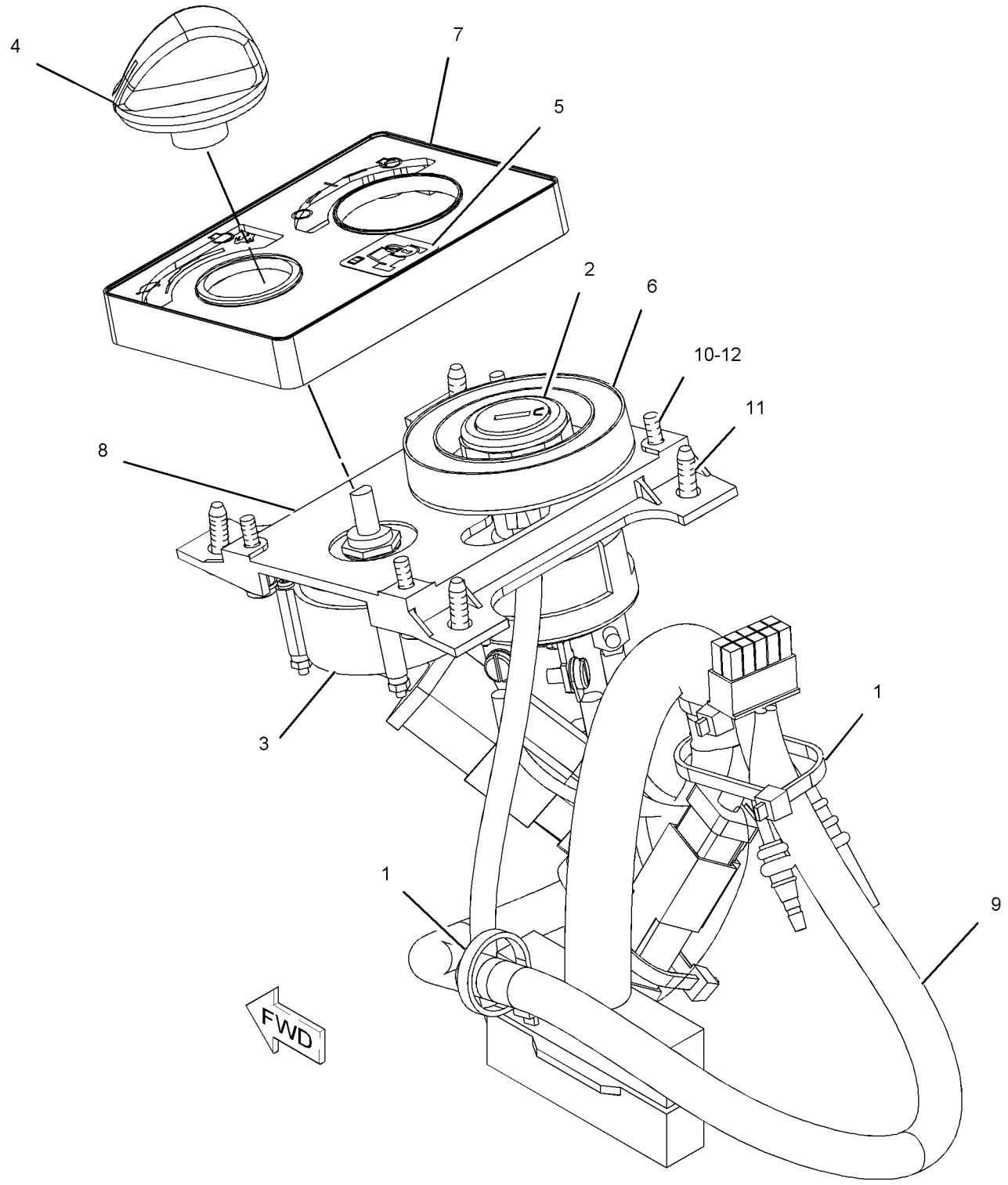

GRAPHIC #1 **<END>** g01123869

235-8200 PLUG GP-CONNECTOR–
ENGINE HARNESS, PROTECTIVE COVER
S/N: THX14533-UP; THY5575-UP
PART OF 224-9843 ENGINE AR

SMCS-1403, 1408 **i02951918**

NOTE	REF NO	GRAPHIC REF	PART NUMBER	QTY	PART NAME 1 2 3 4 5 6 (PRODUCT LEVEL)	SEE PAGE
	1	1	**246-9353**	1	PLUG AS	
	1A	1	**8T-8737**	8	PLUG-SEAL	
	1B	1	**102-8806**	1	KIT-RECEPTACLE (8-PIN)	
					(INCLUDES RECEPTACLE AS & WEDGE)	
	2	1	**3S-2093**	1	STRAP-CABLE	

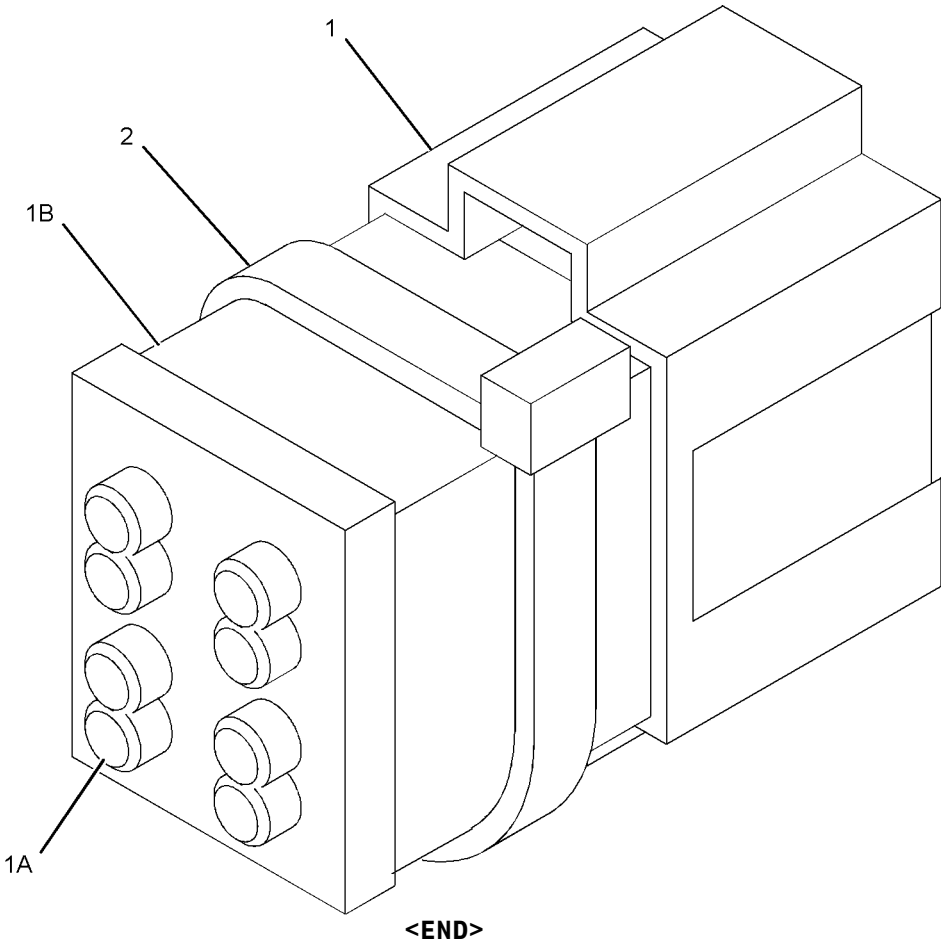

GRAPHIC #1 **<END>** g01105455

231-1978 SENSOR GP-ENGINE

S/N: THX14533-22179; THY5575-UP
PART OF 224-9843 ENGINE AR

SMCS-1000, 1906, 1907, 1924, 7422 **i02703719**

NOTE	REF NO	GRAPHIC REF	PART NUMBER	QTY	PART NAME 1 2 3 4 5 6 (PRODUCT LEVEL)	SEE PAGE
	1	1	**9X-0262**	1	ADAPTER	
Y	2	1	*274-7395*	1	SENSOR GP-TEMPERATURE (AIR INLET MANIFOLD)	222
Y	3	1	*274-7396*	1	SENSOR GP-TEMPERATURE (WATER, COOLANT)	223
Y	4	1	*197-8393*	1	SENSOR GP-PRESSURE (ATMOSPHERIC AIR)	206
Y	5	1	*197-8394*	1	SENSOR GP-PRESSURE (ENGINE OIL)	207
Y	6	1	*210-1747*	1	SENSOR GP-PRESSURE (AIR INLET MANIFOLD)	208
Y	7	1	*236-6220*	1	SENSOR GP-PRESSURE (INJECTION ACTUATION)	210
Y	8	1	*236-6221*	1	SENSOR GP-SPEED (ENGINE TIMING)	217
	9	1	**3E-4352**	1	WASHER-HARD (8.8X20.5X2.5-MM THK)	
M	10	1	**6V-3940**	1	BOLT (M8X1.25X25-MM)	
	11	1	**6V-5048**	1	SEAL-O-RING	
	12	1	**6V-5049**	1	SEAL-O-RING	
	13	1	**9X-0261**	1	ADAPTER	

M-METRIC PART
Y-SEPARATE ILLUSTRATION

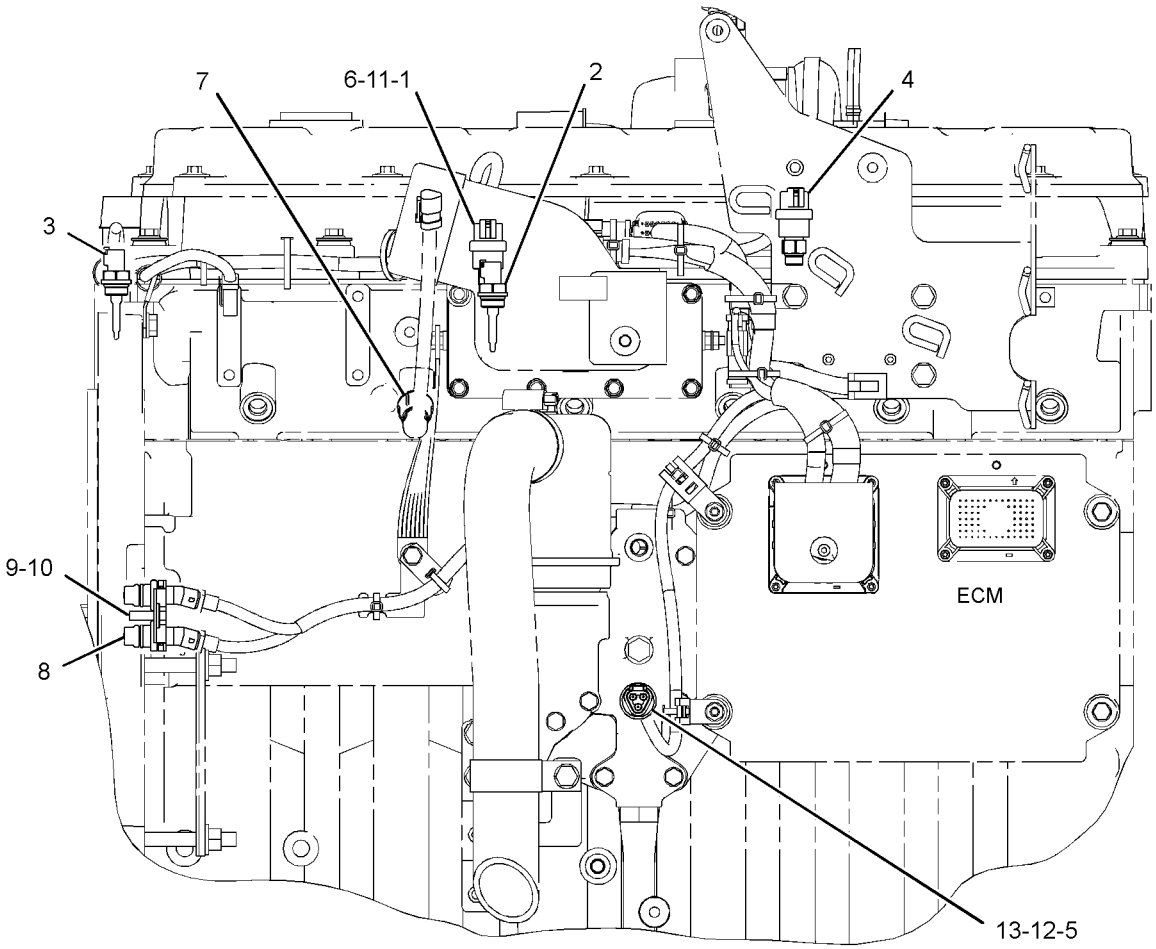

LEFT SIDE VIEW

GRAPHIC #1 **<END>** g01199708

ELECTRICAL AND STARTING SYSTEM

330-6034 SENSOR GP-ENGINE

S/N: THX22180-UP

PART OF 224-9843 ENGINE AR

SMCS-1000, 1906, 1907, 1924, 7422 **i03615700**

NOTE	REF NO	GRAPHIC REF	PART NUMBER	QTY	PART NAME 1 2 3 4 5 6 (PRODUCT LEVEL)	SEE PAGE
Y	1	1	*234-5012*	1	SENSOR GP-TEMPERATURE (COOLANT)	220
Y	2	1	*234-5013*	1	SENSOR GP-TEMPERATURE (INTAKE AIR TEMPERATURE)	221
Y	3	1	*236-6221*	1	SENSOR GP-SPEED (ENGINE TIMING)	217
Y	4	1	*266-8650*	1	SENSOR GP-PRESSURE (OUTLET AIR)	212
Y	5	1	*267-1402*	1	SENSOR GP-PRESSURE (INJECTION ACTUATION)	213
Y	6	1	*276-9067*	1	SENSOR GP-PRESSURE (ENGINE OIL)	214
Y	7	1	*303-3357*	1	SENSOR GP-PRESSURE (ATMOSPHERIC)	215
	8	1	**214-7568**	1	SEAL-O-RING	
	9	1	**3E-4352**	1	WASHER-HARD (8.8X20.5X2.5-MM THK)	
M	10	1	**6V-3940**	1	BOLT (M8X1.25X25-MM)	
	11	1	**6V-5048**	1	SEAL-O-RING	
	12	1	**9X-0261**	1	ADAPTER	
	13	1	**9X-0262**	1	ADAPTER	

M-METRIC PART
Y-SEPARATE ILLUSTRATION

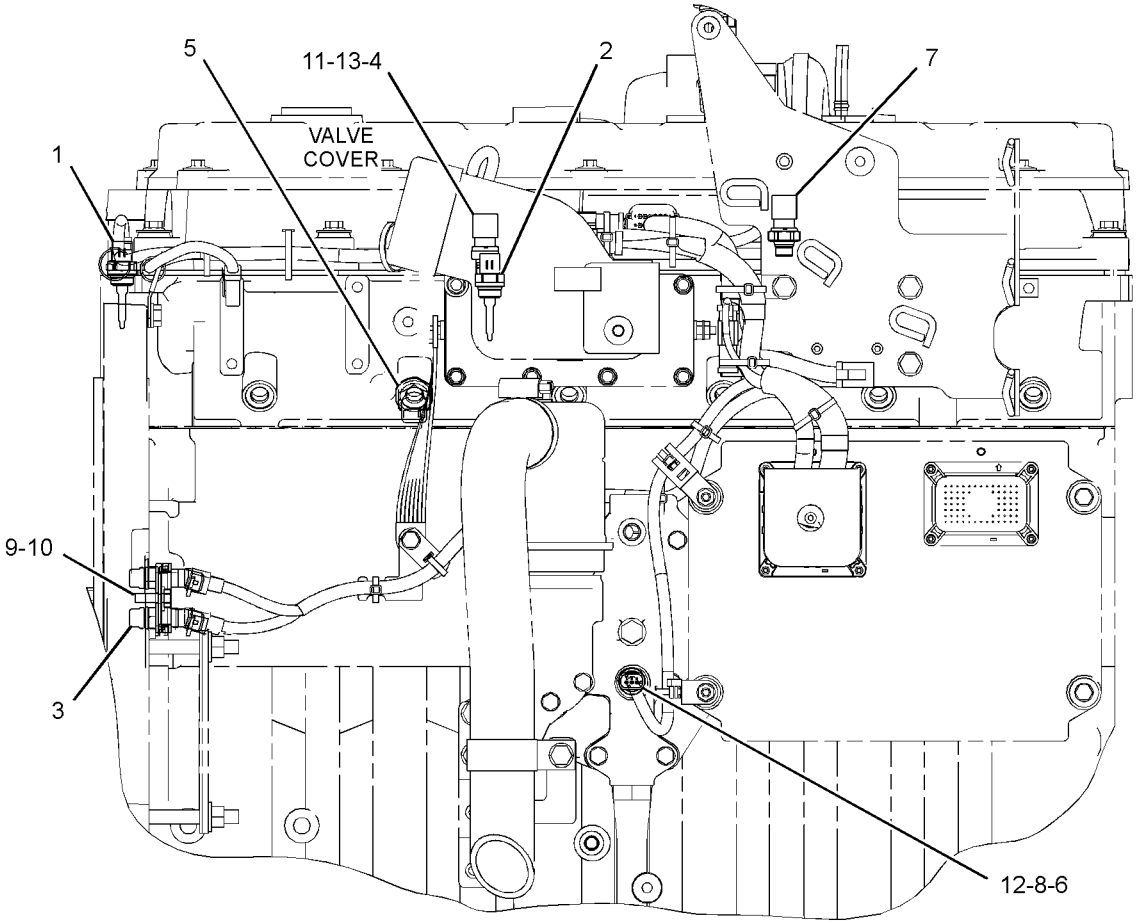

LEFT SIDE VIEW OF ENGINE

GRAPHIC #1 **<END>** g01913363

178-2345 SENSOR GP-LIQUID LEVEL–WATER SEPARATOR

S/N: MYG1-UP; PPN1-UP

PART OF 233-1124 SENSOR GP-LIQUID LEVEL

SMCS-7422 **i03202240**

NOTE	REF NO	GRAPHIC REF	PART NUMBER	QTY	PART NAME 1 2 3 4 5 6 (PRODUCT LEVEL)	SEE PAGE
	1	1	**178-2334**	1	PROBE AS-LIQUID LEVEL (WATER IN FUEL)	
		1	**3J-1907**	1	SEAL-O-RING	
	2	1	**178-2335**	1	SENSOR AS-LIQUID LEVEL (WATER IN FUEL)	
		1	**102-8804**	1	KIT-RECEPTACLE (4-PIN)	
					(INCLUDES RECEPTACLE AS & WEDGE)	
		1	**155-2270**	1	KIT-CONNECTING PLUG (2-PIN)	
					(INCLUDES PLUG AS, WEDGE & INTERFACE SEAL)	
		1	**186-3735**	4	PIN-CONNECTOR (16-GA TO 18-GA)	
		1	**186-3736**	2	SOCKET-CONNECTOR (16-GA TO 18-GA)	

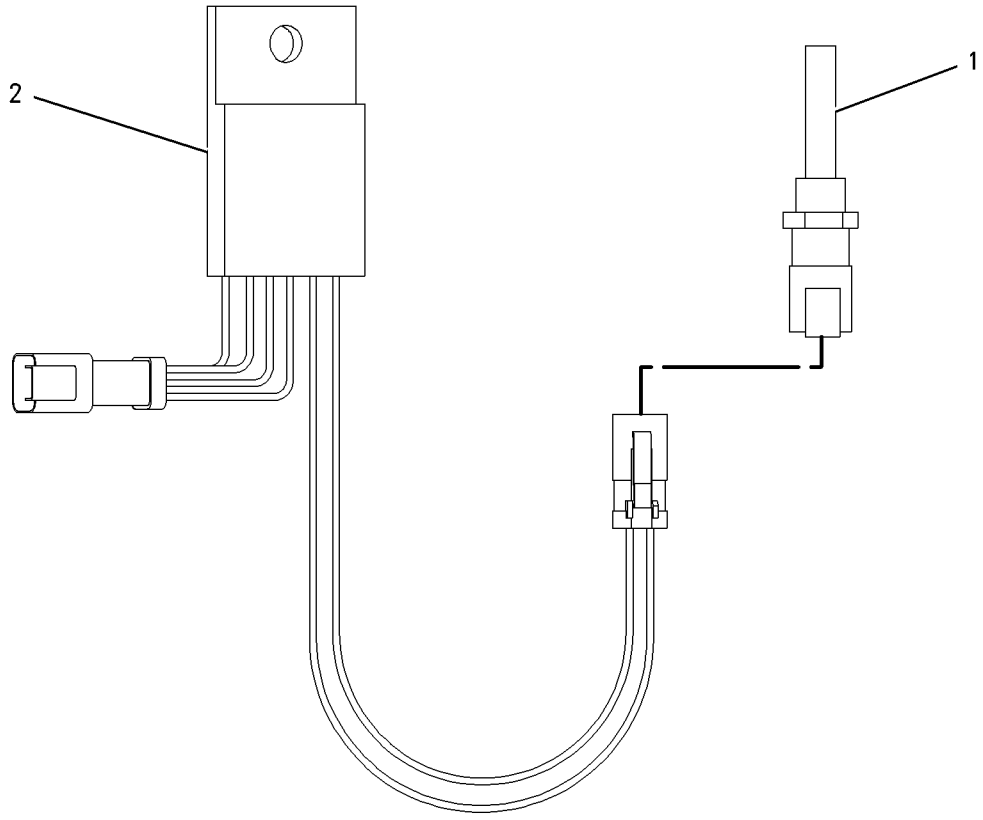

GRAPHIC #1 **<END>** g00816289

233-1124 SENSOR GP-LIQUID LEVEL–WATER IN FUEL

S/N: MYG1-UP; PPN1-UP

PART OF 343-1145, 343-1146 CHASSIS AR

SMCS-7422 **i02296261**

NOTE	REF NO	GRAPHIC REF	PART NUMBER	QTY	PART NAME 1 2 3 4 5 6 (PRODUCT LEVEL)	SEE PAGE
	1	1	**096-0061**	2	STRAP-CABLE	
Y	2	1	**178-2345**	1	SENSOR GP-LIQUID LEVEL (WATER IN FUEL)	203
	3	1	**6V-5049**	1	SEAL-O-RING	
	4	1	**8T-4121**	1	WASHER-HARD (11X21X2.5-MM THK)	
M	5	1	**8T-4137**	1	BOLT (M10X1.5X20-MM)	

M-METRIC PART
Y-SEPARATE ILLUSTRATION

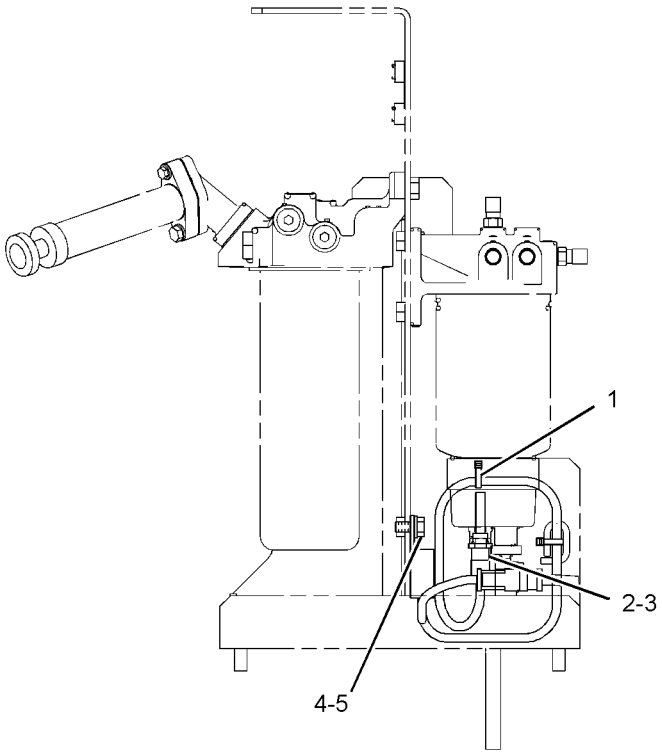

LEFT SIDE VIEW

GRAPHIC #1 **<END>** g01150641

194-6725 SENSOR GP-PRESSURE

S/N: MYG1-UP; PPN1-UP
PART OF 239-2396 SENSOR GP-PRESSURE
ALSO AN ATTACHMENT

SMCS-1439, 1916, 1917, 1923, 1924 **i03579874**

NOTE	REF NO	GRAPHIC REF	PART NUMBER	QTY	PART NAME 1 2 3 4 5 6 (PRODUCT LEVEL)	SEE PAGE
E	1	1	**9X-1813**		SLEEVE (34-CM)	
	2	1	**155-2260**	1	KIT-CONNECTING PLUG (3-PIN)	
					(INCLUDES PLUG AS & WEDGE)	
	3	1	**180-9340**	3	SOCKET-CONNECTOR (14-GA TO 18-GA)	
	4	1	**3E-3368**	1	WEDGE-PLUG LOCK (3-PIN)	

E-ORDER BY THE CENTIMETER

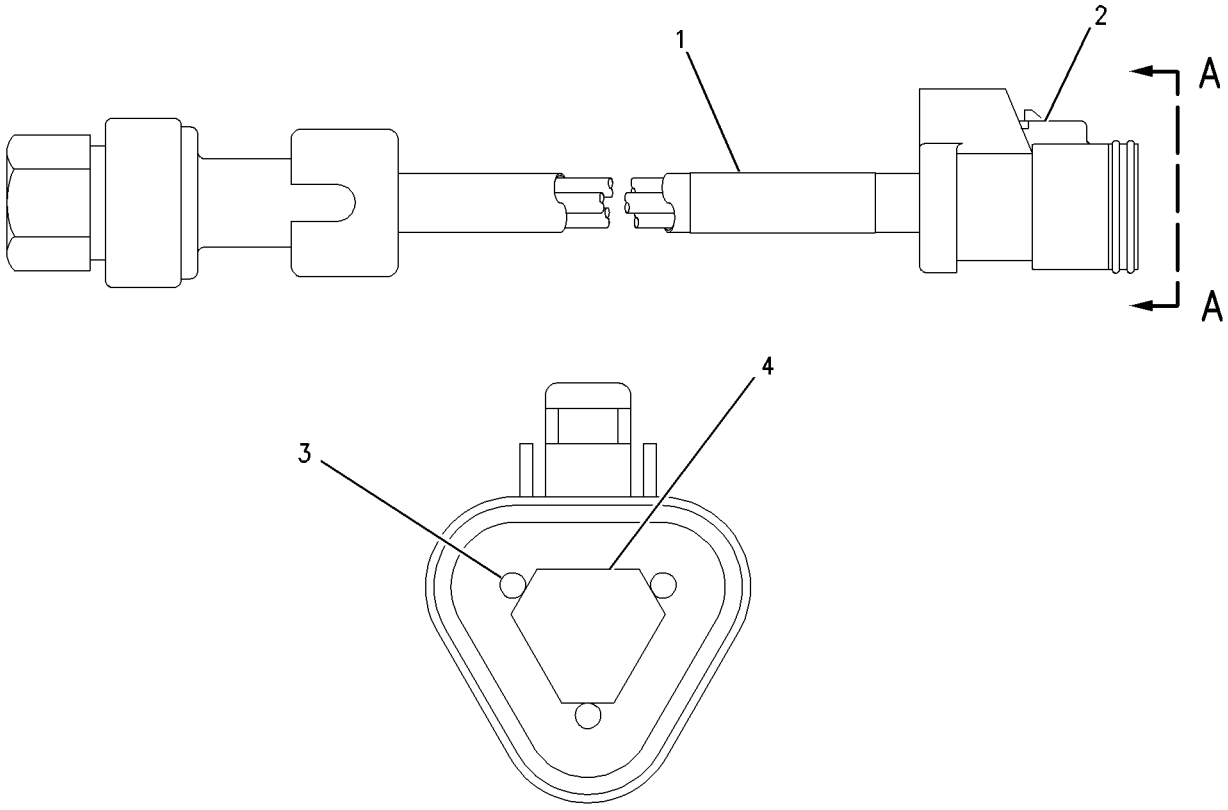

VIEW A-A

GRAPHIC #1 **<END>** g00851220

ELECTRICAL AND STARTING SYSTEM

197-8393 SENSOR GP-PRESSURE

S/N: THX14533-22179; THY5575-UP
PART OF 231-1978 SENSOR GP-ENGINE

SMCS-1439, 1916, 1917, 1923, 1924 **i02343514**

NOTE	REF NO	GRAPHIC REF	PART NUMBER	QTY	PART NAME 1 2 3 4 5 6 (PRODUCT LEVEL)	SEE PAGE
	1	1	**161-1703**	1	SENSOR GP-PRESSURE	
	2	1	**6V-5049**	1	SEAL-O-RING	

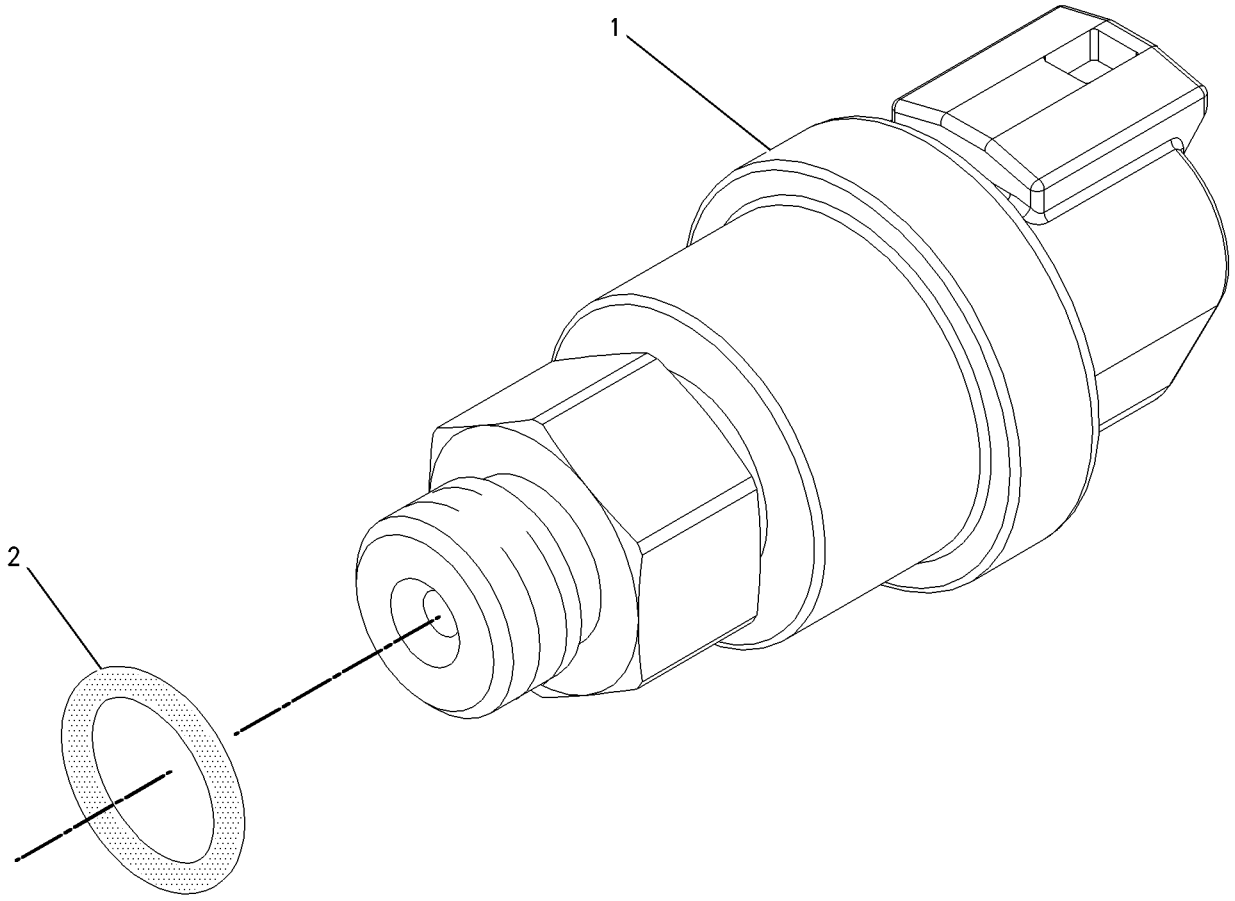

GRAPHIC #1 **<END>** g00855973

197-8394 SENSOR GP-PRESSURE

S/N: THX14533-22179; THY5575-UP
PART OF 231-1978 SENSOR GP-ENGINE

SMCS-1439, 1916, 1917, 1923, 1924 **i02846366**

NOTE	REF NO	GRAPHIC REF	PART NUMBER	QTY	PART NAME 1 2 3 4 5 6 (PRODUCT LEVEL)	SEE PAGE
	1	1	**161-1705**	1	SENSOR AS-PRESSURE	
	2	1	**6V-5048**	1	SEAL-O-RING	

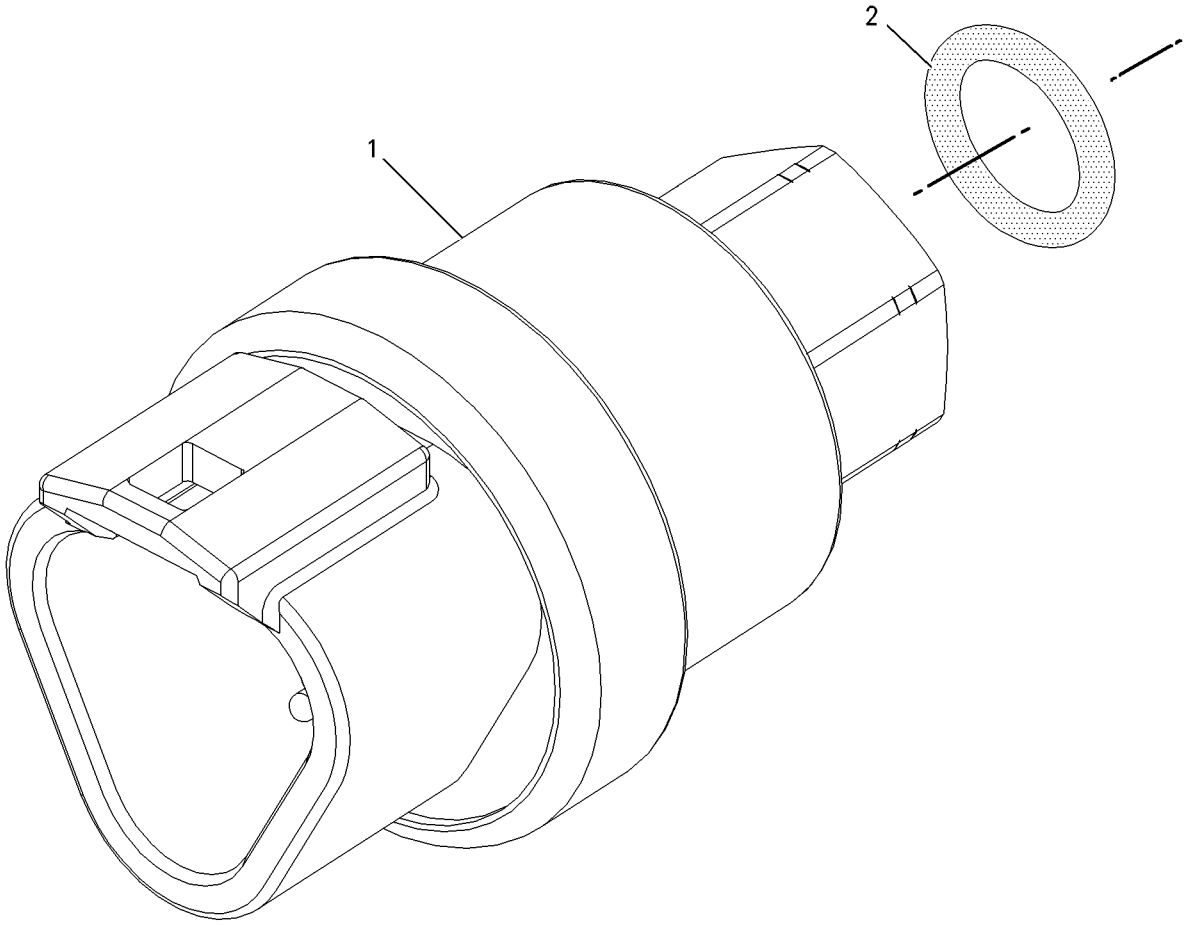

GRAPHIC #1 **<END>** g00856107

210-1747 SENSOR GP-PRESSURE

S/N: THX14533-22179; THY5575-UP
PART OF 231-1978 SENSOR GP-ENGINE

SMCS-1439, 1916, 1917, 1923, 1924 **i02343512**

NOTE	REF NO	GRAPHIC REF	PART NUMBER	QTY	PART NAME 1 2 3 4 5 6 (PRODUCT LEVEL)	SEE PAGE
	1	1	**161-1704**	1	SENSOR GP-PRESSURE	
	2	1	**6V-5048**	1	SEAL-O-RING	

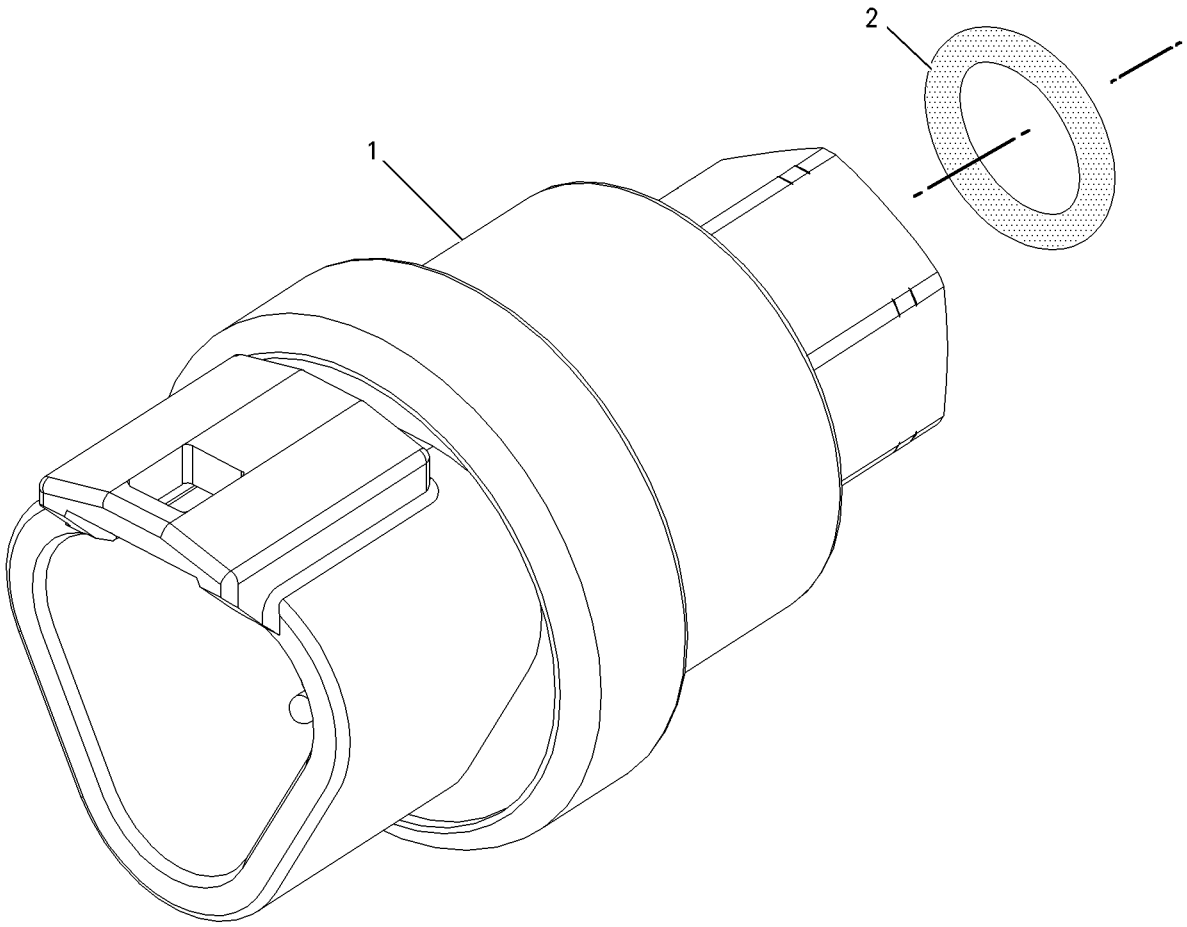

GRAPHIC #1 **<END>** g00856107

224-4536 SENSOR GP-PRESSURE

S/N: THX14533-22179; THY5575-UP

PART OF 236-6220 SENSOR GP-PRESSURE

SMCS-1439, 1916, 1917, 1923, 1924 **i03579878**

NOTE	REF NO	GRAPHIC REF	PART NUMBER	QTY	PART NAME 1 2 3 4 5 6 (PRODUCT LEVEL)	SEE PAGE
E	1	1	**9X-1813**		SLEEVE (35-CM)	
	2	1	**155-2260**	1	KIT-CONNECTING PLUG (3-PIN)	
					(INCLUDED PLUG AS & WEDGE)	
	3	1	**194-5226**	1	WIRE AS	
					—OR—	
		1	**194-5227**	1	WIRE AS (14-GA)	
	4	1	**155-2276**	1	WEDGE-PLUG LOCK (3-PIN)	

E-ORDER BY THE CENTIMETER

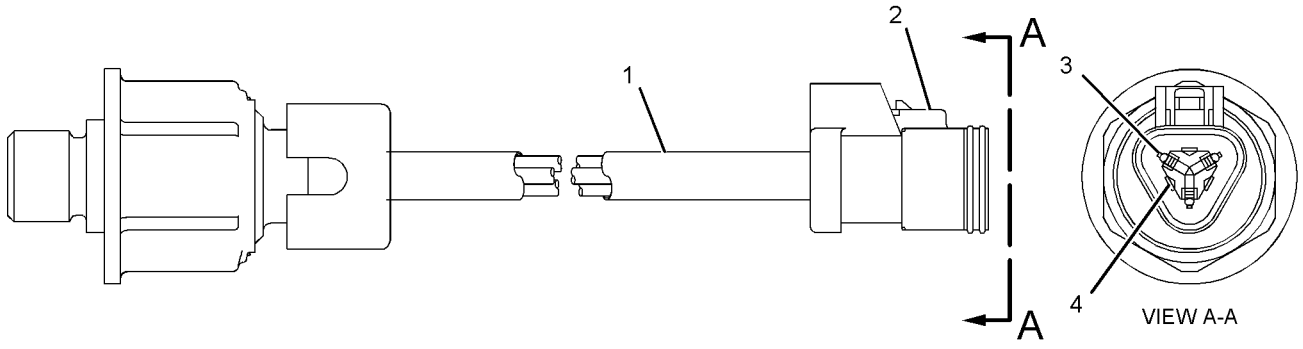

GRAPHIC #1 **<END>** g01040301

236-6220 SENSOR GP-PRESSURE

S/N: THX14533-22179; THY5575-UP
PART OF 231-1978 SENSOR GP-ENGINE

SMCS-1439, 1916, 1917, 1923, 1924 **i02502178**

NOTE	REF NO	GRAPHIC REF	PART NUMBER	QTY	PART NAME 1 2 3 4 5 6 (PRODUCT LEVEL)	SEE PAGE
	1	1	**214-7567**	1	SEAL-O-RING	
Y	2	1	**224-4536**	1	SENSOR GP-PRESSURE	209

Y-SEPARATE ILLUSTRATION

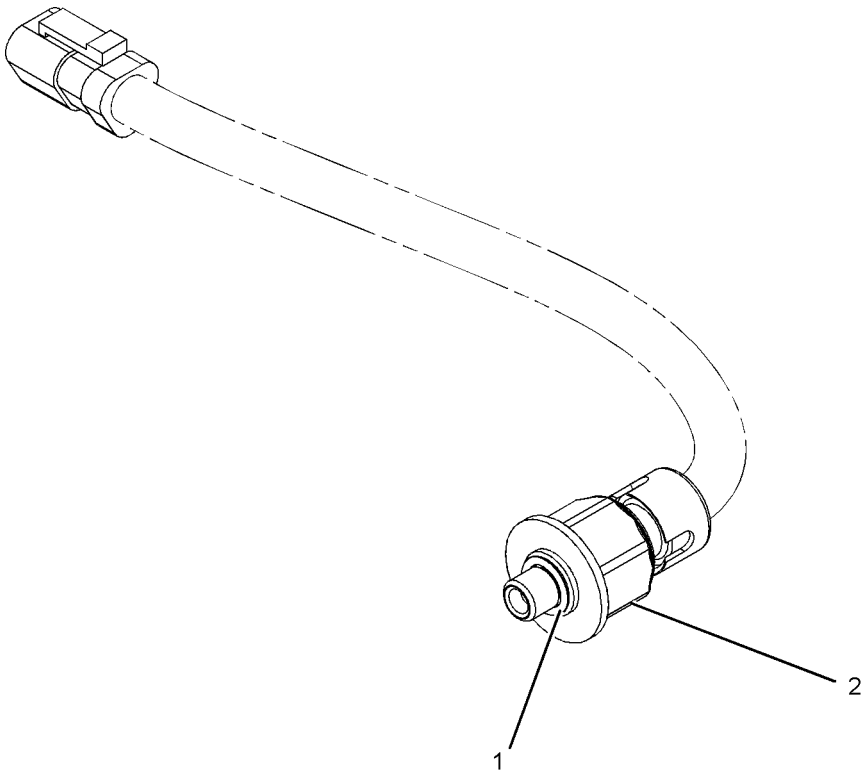

GRAPHIC #1 **<END>** g01054528

239-2396 SENSOR GP-PRESSURE

S/N: MYG1-UP; PPN1-UP
PART OF 237-8752, 259-3918 LINES GP-FUEL
ALSO AN ATTACHMENT

SMCS-1439, 1916, 1917, 1923, 1924 **i02799351**

NOTE	REF NO	GRAPHIC REF	PART NUMBER	QTY	PART NAME 1 2 3 4 5 6 (PRODUCT LEVEL)	SEE PAGE
Y	1	1	**194-6725**	1	SENSOR GP-PRESSURE	205
	2	1	**6V-5048**	1	SEAL-O-RING	

Y-SEPARATE ILLUSTRATION

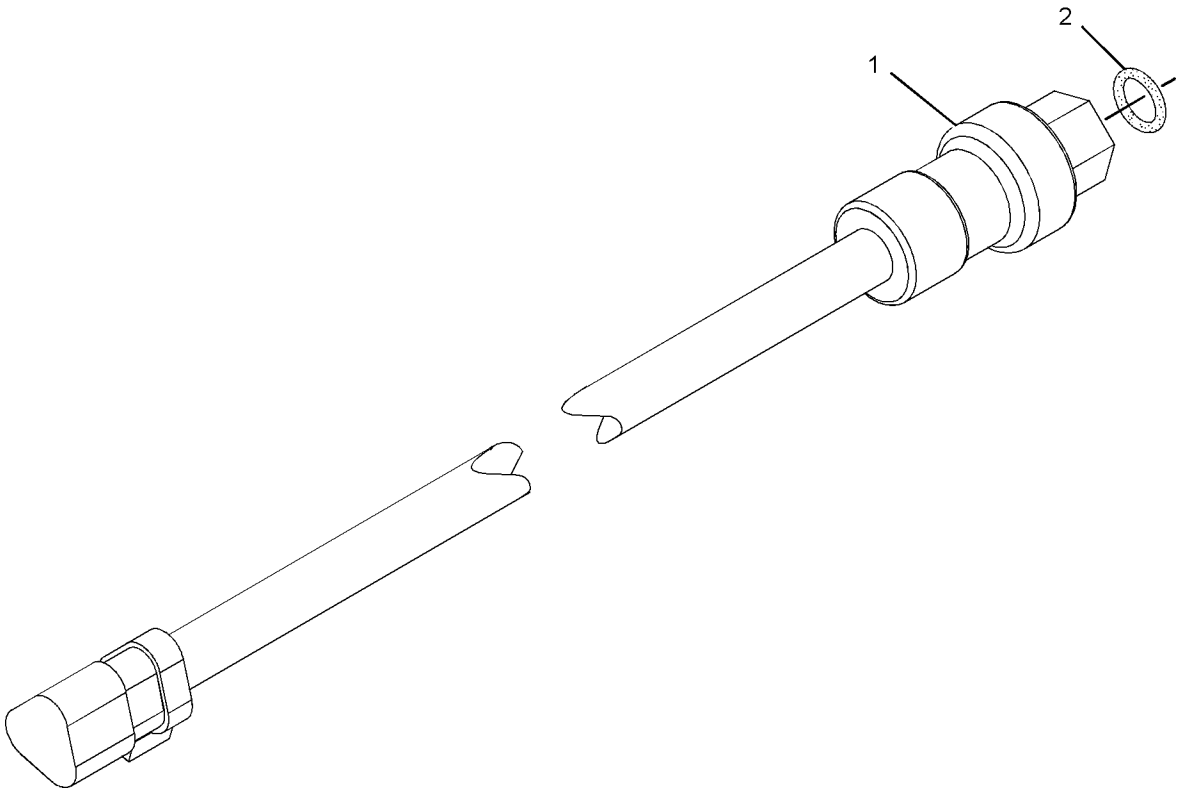

GRAPHIC #1 **<END>** g01057563

266-8650 SENSOR GP-PRESSURE

S/N: THX22180-UP

PART OF 330-6034 SENSOR GP-ENGINE

SMCS-1439, 1916, 1917, 1923, 1924 **i03708903**

NOTE	REF NO	GRAPHIC REF	PART NUMBER	QTY	PART NAME 1 2 3 4 5 6 (PRODUCT LEVEL)	SEE PAGE
	1	1	**276-6793**	1	SENSOR GP-PRESSURE	
	2	1	**6V-5048**	1	SEAL-O-RING	

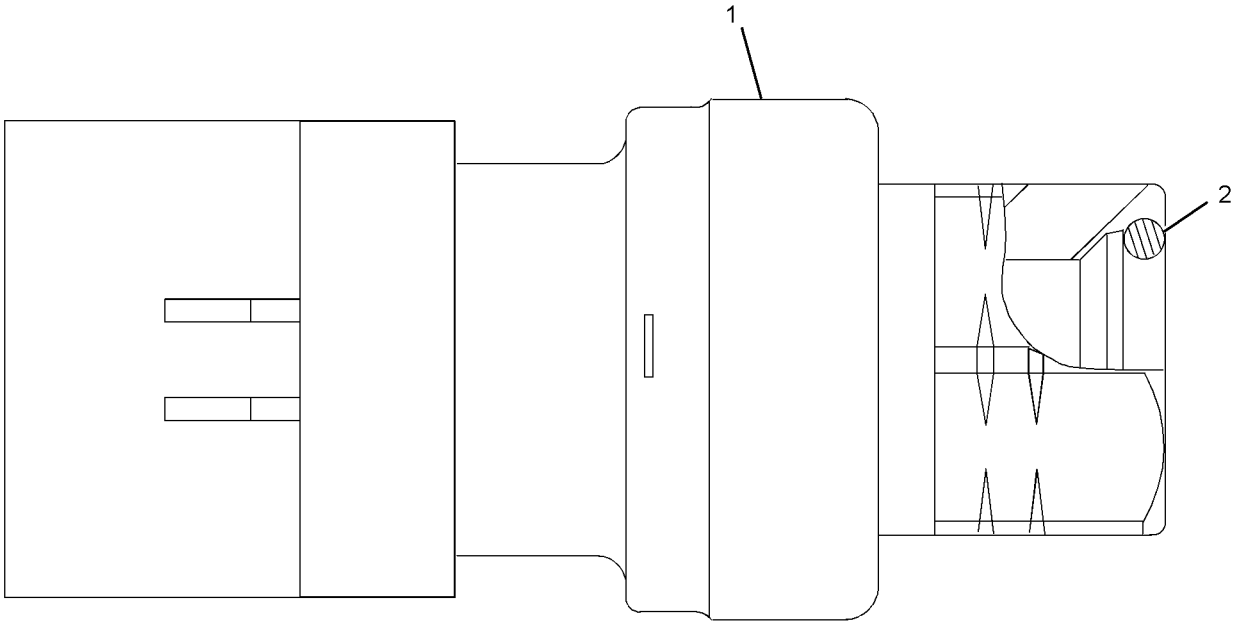

GRAPHIC #1 **<END>** g01164254

267-1402 SENSOR GP-PRESSURE

S/N: THX22180-UP
AMPSEAL CONNECTOR
PART OF 330-6034 SENSOR GP-ENGINE

SMCS-1439, 1916, 1917, 1923, 1924 **i02508399**

NOTE	REF NO	GRAPHIC REF	PART NUMBER	QTY	PART NAME 1 2 3 4 5 6 (PRODUCT LEVEL)	SEE PAGE
	1	1	**214-7567**	1	SEAL-O-RING	
	2	1	**248-2169**	1	SENSOR GP-PRESSURE	

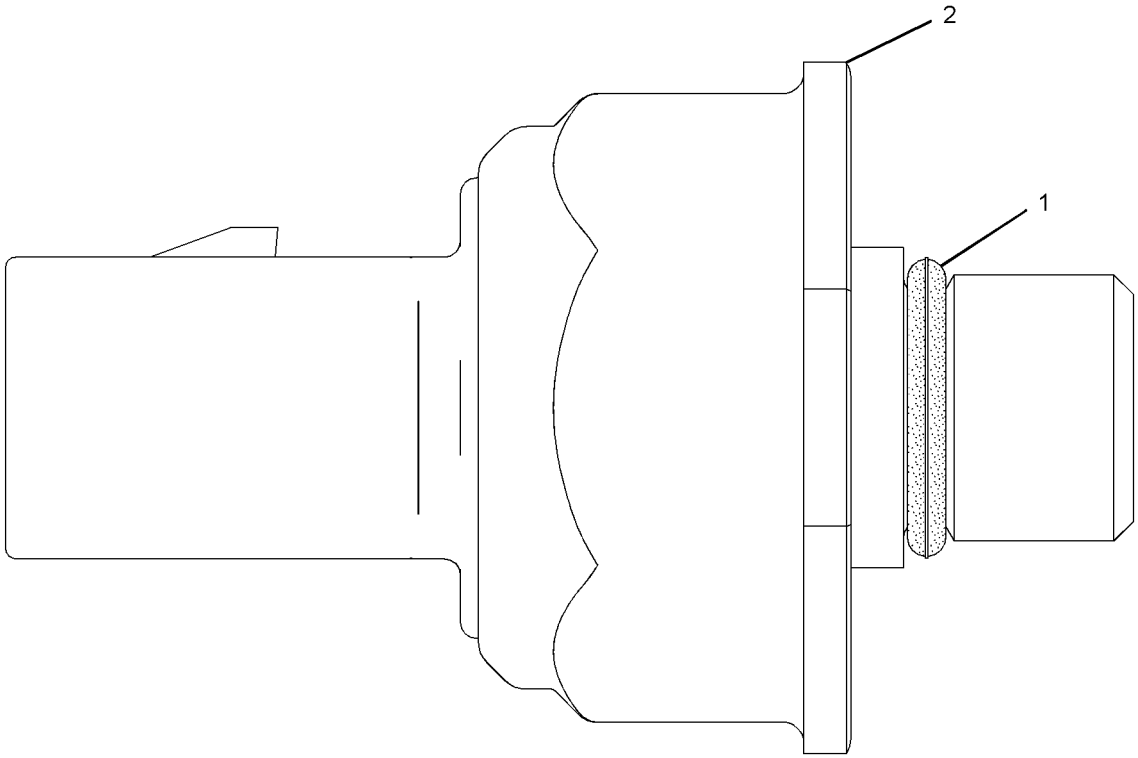

GRAPHIC #1 **<END>** g01164283

ELECTRICAL AND STARTING SYSTEM

276-9067 SENSOR GP-PRESSURE

S/N: THX22180-UP

PART OF 330-6034 SENSOR GP-ENGINE

SMCS-1439, 1916, 1917, 1923, 1924 **i03703691**

NOTE	REF NO	GRAPHIC REF	PART NUMBER	QTY	PART NAME 1 2 3 4 5 6 (PRODUCT LEVEL)	SEE PAGE
	1	1	**274-6719**	1	SENSOR GP-PRESSURE	
	2	1	**214-7566**	1	SEAL-O-RING	

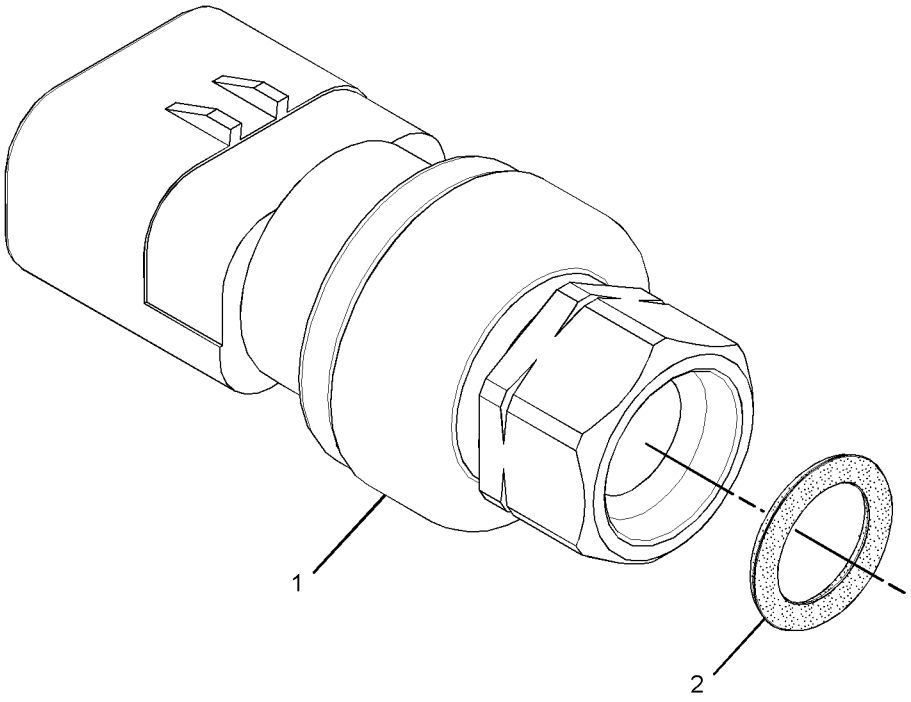

GRAPHIC #1 **<END>** g01994176

ELECTRICAL AND STARTING SYSTEM

303-3357 SENSOR GP-PRESSURE

S/N: THX22180-UP

PART OF 330-6034 SENSOR GP-ENGINE

SMCS-1439, 1916, 1917, 1923, 1924 **i03618623**

NOTE	REF NO	GRAPHIC REF	PART NUMBER	QTY	PART NAME 1 2 3 4 5 6 (PRODUCT LEVEL)	SEE PAGE
	1	1	**296-8060**	1	SENSOR GP-PRESSURE	
	2	1	**6V-5049**	1	SEAL-O-RING	

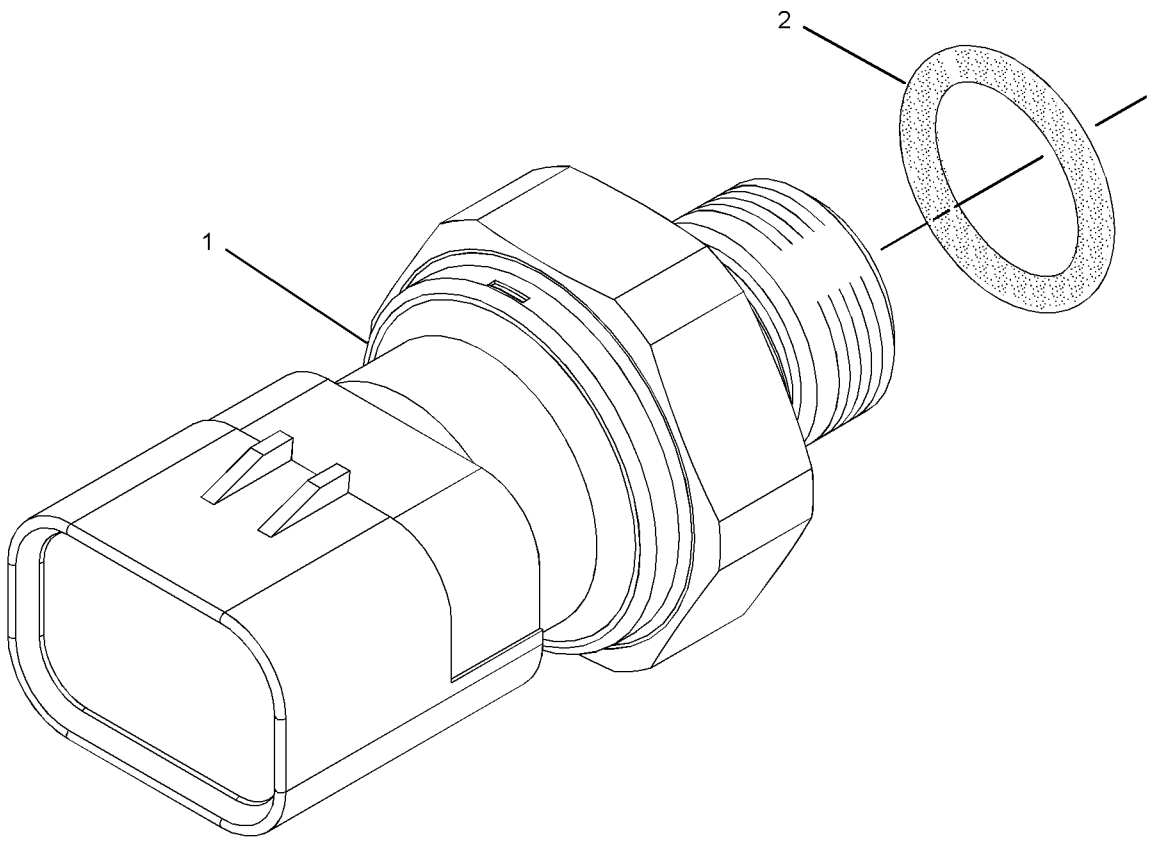

GRAPHIC #1 **<END>** g01331369

4P-5820 SENSOR GP-SPEED

S/N: THX14533-UP; THY5575-UP
PART OF 242-9982 SENSOR GP-SPEED

SMCS-1907, 1912, 4803, 7493 **i02487666**

NOTE	REF NO	GRAPHIC REF	PART NUMBER	QTY	PART NAME 1 2 3 4 5 6 (PRODUCT LEVEL)	SEE PAGE
	1	1	**171-5349**	1	STRAP-MARKER	
	2	1	**102-8802**	2	KIT-RECEPTACLE (2-PIN)	
					(INCLUDES RECEPTACLE AS AND WEDGE)	
	3	1	**186-3735**	2	PIN-CONNECTOR (16-GA TO 18-GA)	
E	4	1	**9X-1386**		SLEEVE (14-CM)	

E-ORDER BY THE CENTIMETER

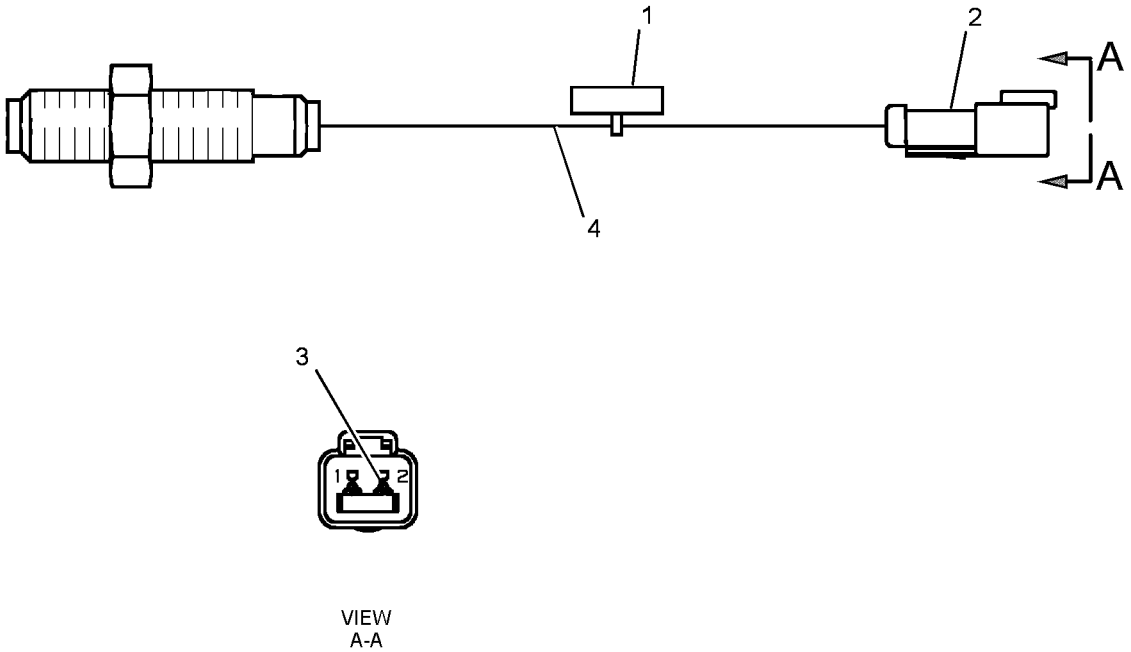

GRAPHIC #1 **<END>** g01242242

236-6221 SENSOR GP-SPEED–ENGINE TIMING

S/N: THX14533-UP; THY5575-UP

PART OF 231-1978, 330-6034 SENSOR GP-ENGINE

SMCS-1907, 1912, 4803, 7493 **i03594245**

NOTE	REF NO	GRAPHIC REF	PART NUMBER	QTY	PART NAME 1 2 3 4 5 6 (PRODUCT LEVEL)	SEE PAGE
	1	1	**3P-0647**	2	SEAL-O-RING	
	2	1	**245-4630**	1	SENSOR GP-SPEED	

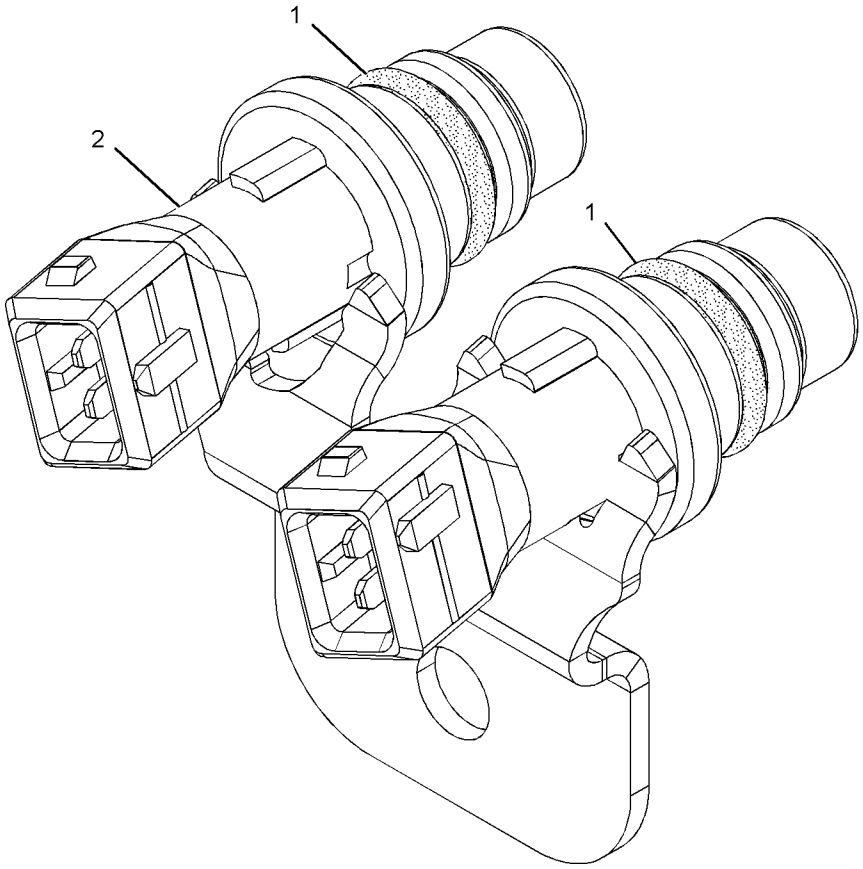

GRAPHIC #1 **<END>** g01013894

242-9982 SENSOR GP-SPEED

S/N: THX14533-UP; THY5575-UP
PART OF 224-9843 ENGINE AR

SMCS-1907, 1912, 4803, 7493 **i02404836**

NOTE	REF NO	GRAPHIC REF	PART NUMBER	QTY	PART NAME 1 2 3 4 5 6 (PRODUCT LEVEL)	SEE PAGE
Y	1	1	**4P-5820**	1	SENSOR GP-SPEED	216
	2	1	**188-2128**	1	PLUG AS	
		1	**8T-8737**	2	PLUG-SEAL	
		1	**155-2270**	1	KIT-CONNECTING PLUG (2-PIN) (INCLUDES PLUG AS AND WEDGE)	

Y-SEPARATE ILLUSTRATION

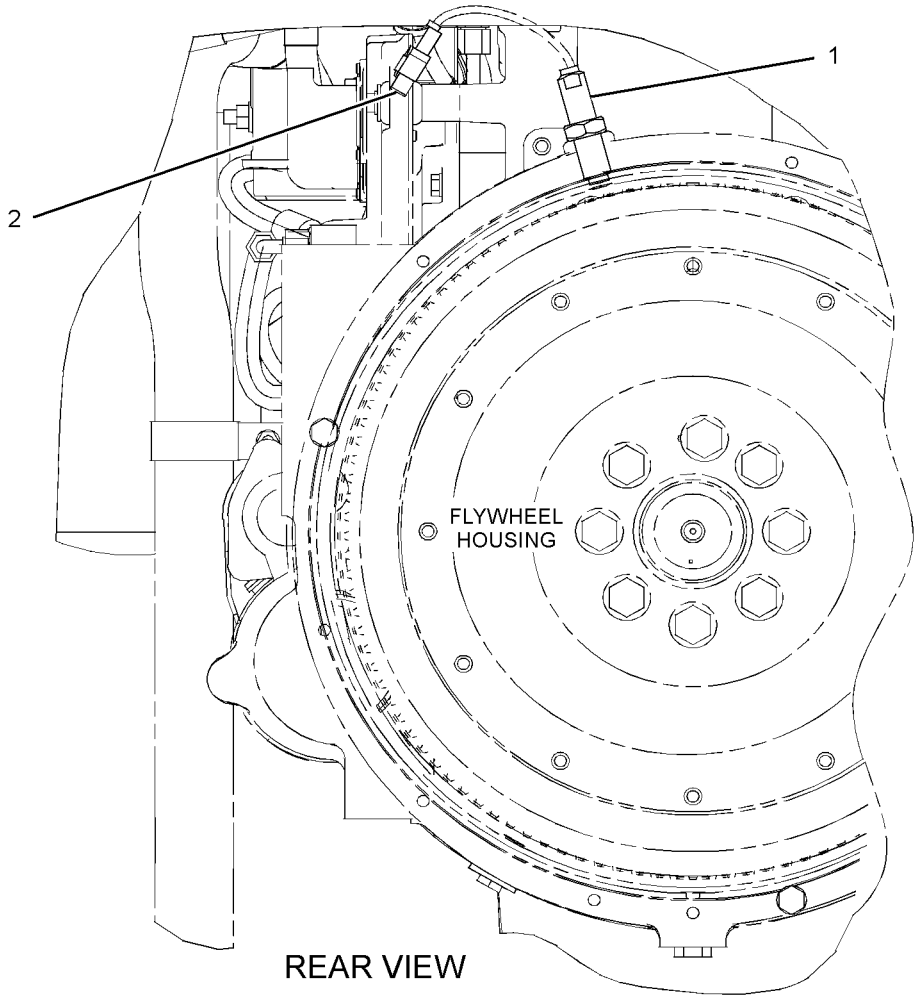

GRAPHIC #1 **<END>** g01186058

197-8391 SENSOR GP-TEMPERATURE

S/N: MYG1-UP; PPN1-UP
PART OF 237-8752, 259-3918 LINES GP-FUEL
ALSO AN ATTACHMENT

SMCS-1906, 1921, 1922, 1928, 1929, 3290, 7344 **i02796023**

NOTE	REF NO	GRAPHIC REF	PART NUMBER	QTY	PART NAME 1 2 3 4 5 6 (PRODUCT LEVEL)	SEE PAGE
C	1	1	**264-4297**	1	SENSOR GP-TEMPERATURE	
		1	**137-6645**		PAD	
	2	1	**8L-2786**	1	SEAL-O-RING	

C-CHANGE FROM PREVIOUS TYPE

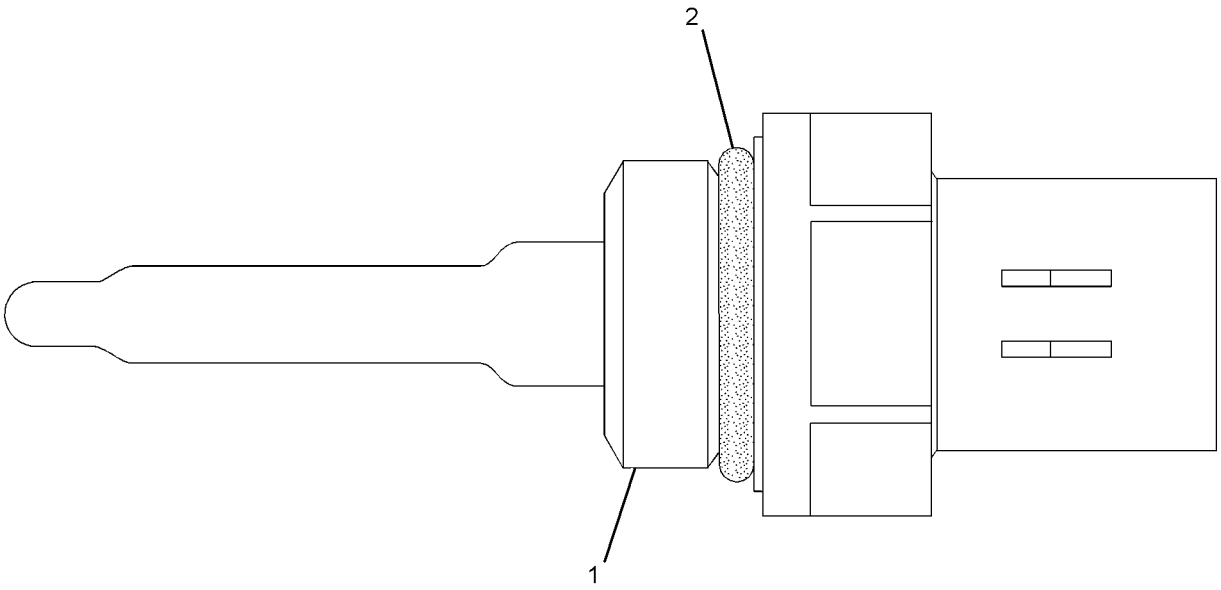

GRAPHIC #1 **<END>** g01164268

234-5012 SENSOR GP-TEMPERATURE

S/N: THX22180-UP
AMPSEAL CONNECTOR
PART OF 330-6034 SENSOR GP-ENGINE

SMCS-1906, 1921, 1922, 1928, 1929, 3290, 7344 **i02508099**

NOTE	REF NO	GRAPHIC REF	PART NUMBER	QTY	PART NAME 1 2 3 4 5 6 (PRODUCT LEVEL)	SEE PAGE
	1	1	**256-6453**	1	SENSOR AS-TEMPERATURE	
	2	1	**6V-6609**	1	SEAL-O-RING	

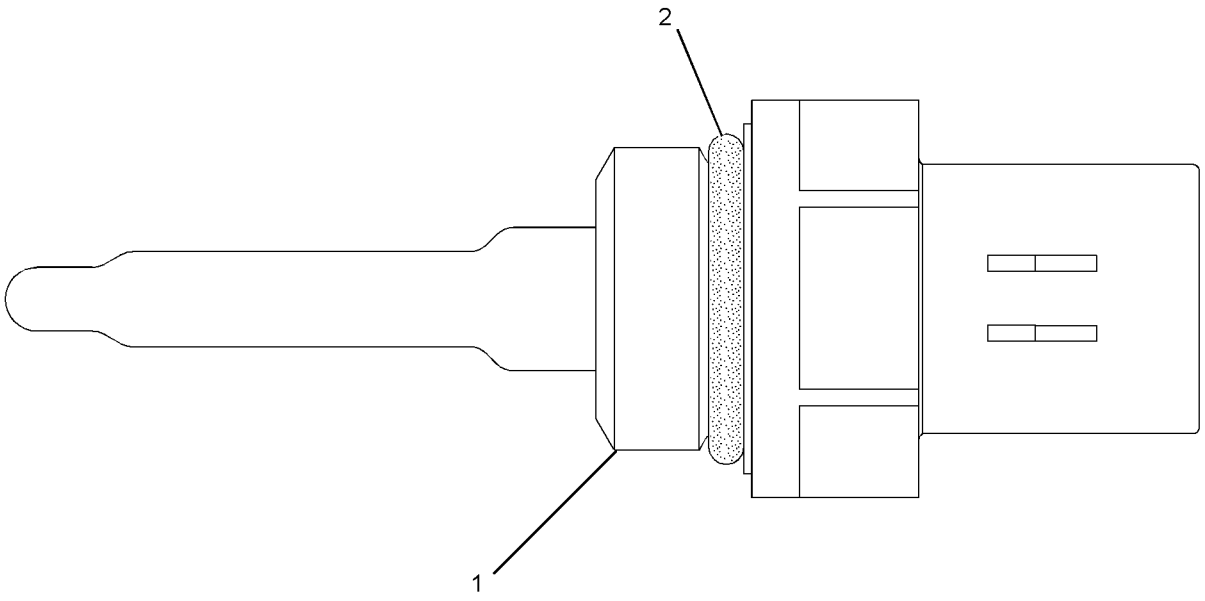

GRAPHIC #1 **<END>** g01164284

234-5013 SENSOR GP-TEMPERATURE

S/N: THX22180-UP

PART OF 330-6034 SENSOR GP-ENGINE

SMCS-1906, 1921, 1922, 1928, 1929, 3290, 7344 **i03671799**

NOTE	REF NO	GRAPHIC REF	PART NUMBER	QTY	PART NAME 1 2 3 4 5 6 (PRODUCT LEVEL)	SEE PAGE
	1	1	**256-6453**	1	SENSOR AS-TEMPERATURE	
	2	1	**238-5080**	1	SEAL-O-RING	

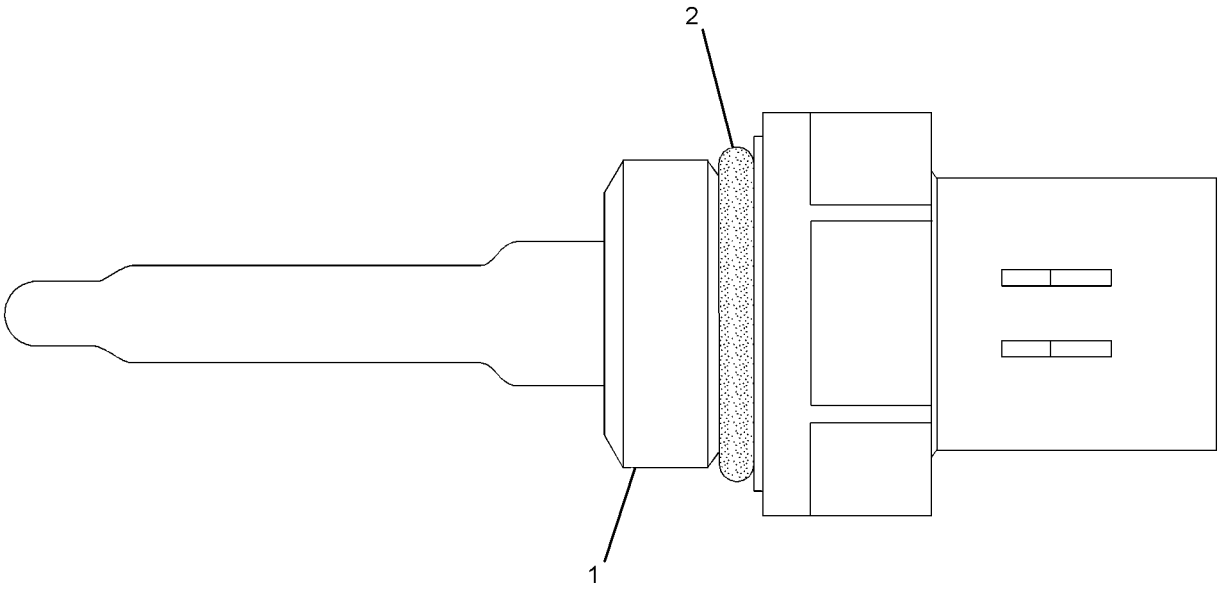

GRAPHIC #1 **<END>** g01164268

ELECTRICAL AND STARTING SYSTEM

274-7395 SENSOR GP-TEMPERATURE

S/N: THX14533-22179; THY5575-UP

PART OF 231-1978 SENSOR GP-ENGINE

SMCS-1906, 1921, 1922, 1928, 1929, 3290, 7344 **i02515124**

NOTE	REF NO	GRAPHIC REF	PART NUMBER	QTY	PART NAME 1 2 3 4 5 6 (PRODUCT LEVEL)	SEE PAGE
	1		**264-4297**	1	SENSOR GP-TEMPERATURE	
	2	1	**8L-2786**	1	SEAL-O-RING	

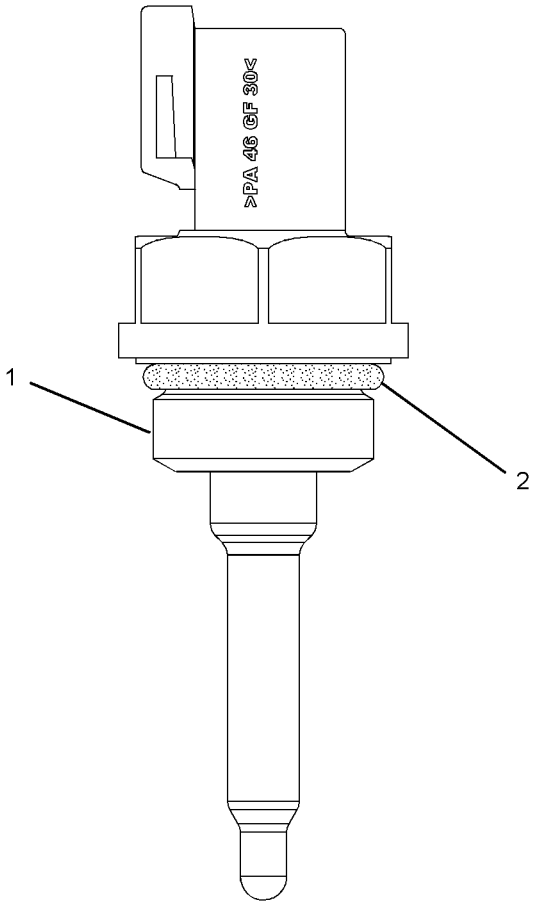

GRAPHIC #1 **<END>** g01193032

274-7396 SENSOR GP-TEMPERATURE

S/N: THX14533-22179; THY5575-UP
PART OF 231-1978 SENSOR GP-ENGINE

SMCS-1906, 1921, 1922, 1928, 1929, 3290, 7344 **i02515155**

NOTE	REF NO	GRAPHIC REF	PART NUMBER	QTY	PART NAME 1 2 3 4 5 6 (PRODUCT LEVEL)	SEE PAGE
	1	1	**264-4297**	1	SENSOR GP-TEMPERATURE	
	2	1	**6V-6609**	1	SEAL-O-RING	

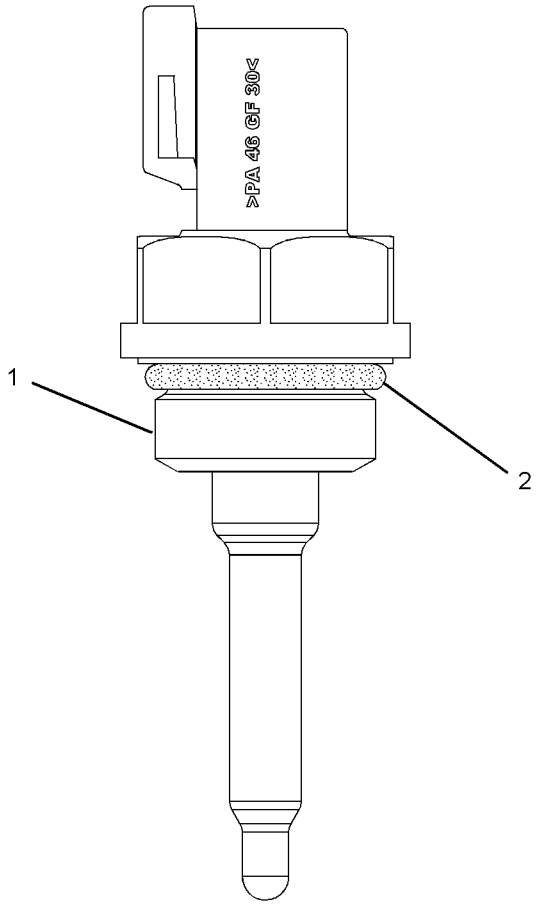

GRAPHIC #1 **<END>** g01193032

ELECTRICAL AND STARTING SYSTEM

238-3215 STARTING AID GP—AIR INLET HEATER

S/N: THX14533-UP; THY5575-UP
PART OF 224-9843 ENGINE AR

SMCS-1090 **i02425022**

NOTE	REF NO	GRAPHIC REF	PART NUMBER	QTY	PART NAME 1 2 3 4 5 6 (PRODUCT LEVEL)	SEE PAGE
	1	1	**7E-5714**	1	STRAP-GROUNDING	
	2	1	**238-3216**	1	HEATER AS (STARTING AID)	
M	3	1	**5C-2890**	2	NUT (M6X1-THD)	
	4	1	**9X-8256**	2	WASHER (6.6X12X2-MM THK)	
B	5	1	**1U-8846**		SEALANT-GASKET (1-ML)	

B-USE AS REQUIRED
M-METRIC PART

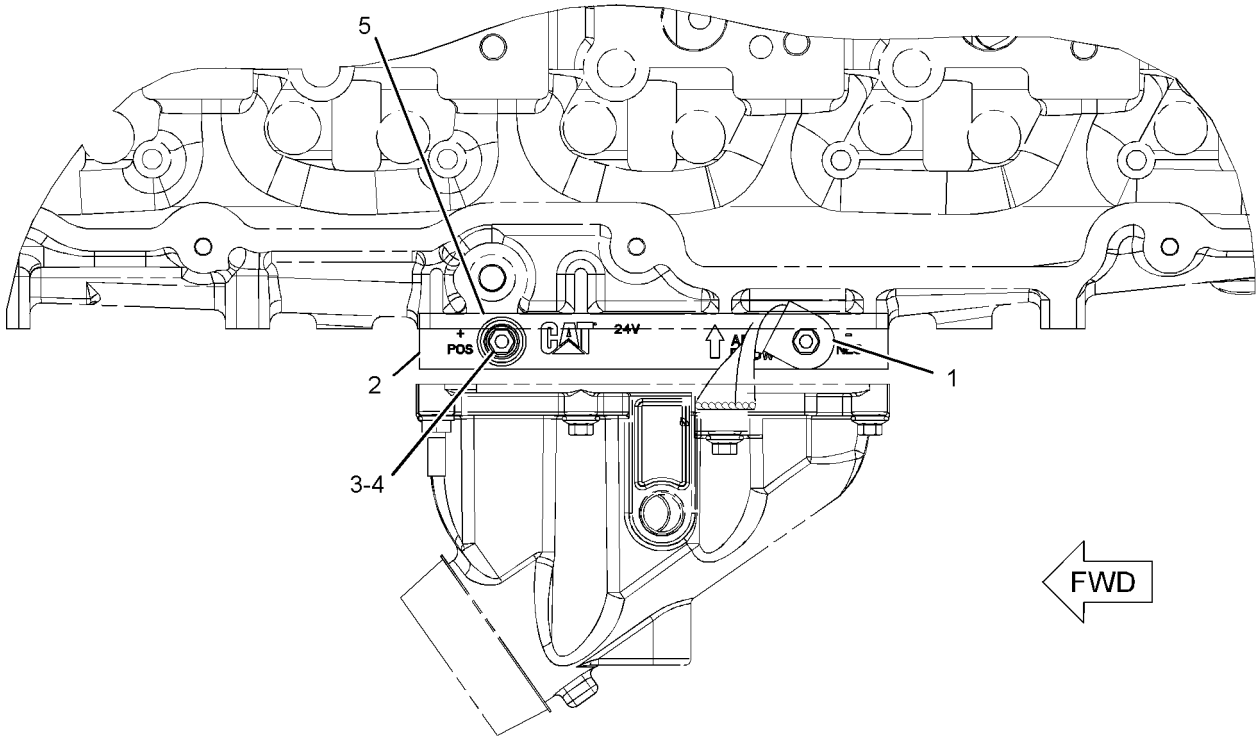

TOP VIEW

GRAPHIC #1 **<END>** g01057610

239-6677 STARTING AID GP-ETHER

S/N: MYG1-UP; PPN1-UP
PART OF 340-3839 STARTING AR-COLD WEATHER
AN ATTACHMENT

SMCS-1456 **i02778597**

NOTE	REF NO	GRAPHIC REF	PART NUMBER	QTY	PART NAME 1 2 3 4 5 6 (PRODUCT LEVEL)	SEE PAGE
	1	1	**5P-6312**	2	UNION	
	2	1,2	**5P-6313**	5	NUT (5/16-24-THD)	
	3	1,2	**5P-6314**	5	SLEEVE	
	4	2	**6H-4746**	1	ADAPTER	
		2	**4B-9044**	1	PLUG-TRANSFER PUMP	
	5	1	**7N-0140**	1	TUBE AS-COIL	
	6	2	**7N-2059**	1	CLAMP AS	
Y	7	2	**239-1134**	1	VALVE GP-ETHER STARTING (24-VOLT)	243
	8	2	**241-4194**	1	FITTING AS (CONTROL)	
		2	**236-4545**	1	NUT-SLEEVE (5/16-24-THD)	
	9	1	**255-2991**	1	PLATE AS	
	10	2	**279-7887**	1	TUBE	
	11	1	**279-7888**	1	TUBE	
	12	2	**297-6828**	1	ATOMIZER GP-ETHER	
		2	**236-4545**	1	NUT-SLEEVE (5/16-24-THD)	
C	13	1	**297-7710**	1	TUBE	
C	14	1	**297-7711**	1	TUBE	
C	15	2	**297-7713**	1	PLATE AS	
C	16	1,2	**1B-3581**	4	CLIP	
	17	2	**2M-9780**	1	SEAL-O-RING	
C	18	1,2	**3D-5102**	10	GROMMET	
C	19	2	**3L-2875**	1	CLIP	
	20	2	**5K-0430**	2	CLIP	
C	21	2	**5P-1075**	1	WASHER-HARD (10.2X22.5X3-MM THK)	
	22	2	**8K-5440**	3	CLIP	
C	23	1,2	**8T-4121**	3	WASHER-HARD (11X21X2.5-MM THK)	
CM	24	1,2	**8T-4136**	3	BOLT (M10X1.5X25-MM)	
CM	25	2	**8T-4137**	1	BOLT (M10X1.5X20-MM)	
CM	26	2	**8T-4139**	1	BOLT (M12X1.75X30-MM)	
CM	27	2	**8T-4179**	1	BOLT (M12X1.75X20-MM)	
M	28	2	**8T-4189**	4	BOLT (M8X1.25X20-MM)	
CM	29	1,2	**8T-4192**	7	BOLT (M12X1.75X25-MM)	
C	30	1,2	**8T-4223**	9	WASHER-HARD (13.5X25.5X3-MM THK)	
	31	2	**8T-4224**	4	WASHER-HARD (8.8X16X2-MM THK)	
A			**7N-0296**	1	CYLINDER AS-ETHER	
					(MUST BE PROCURED LOCALLY FROM YOUR CATERPILLAR DEALER)	

A-NOT PART OF THIS GROUP
C-CHANGE FROM PREVIOUS TYPE
M-METRIC PART
Y-SEPARATE ILLUSTRATION

239-6677 **STARTING AID GP-ETHER** *(contd.)* **i02778597**

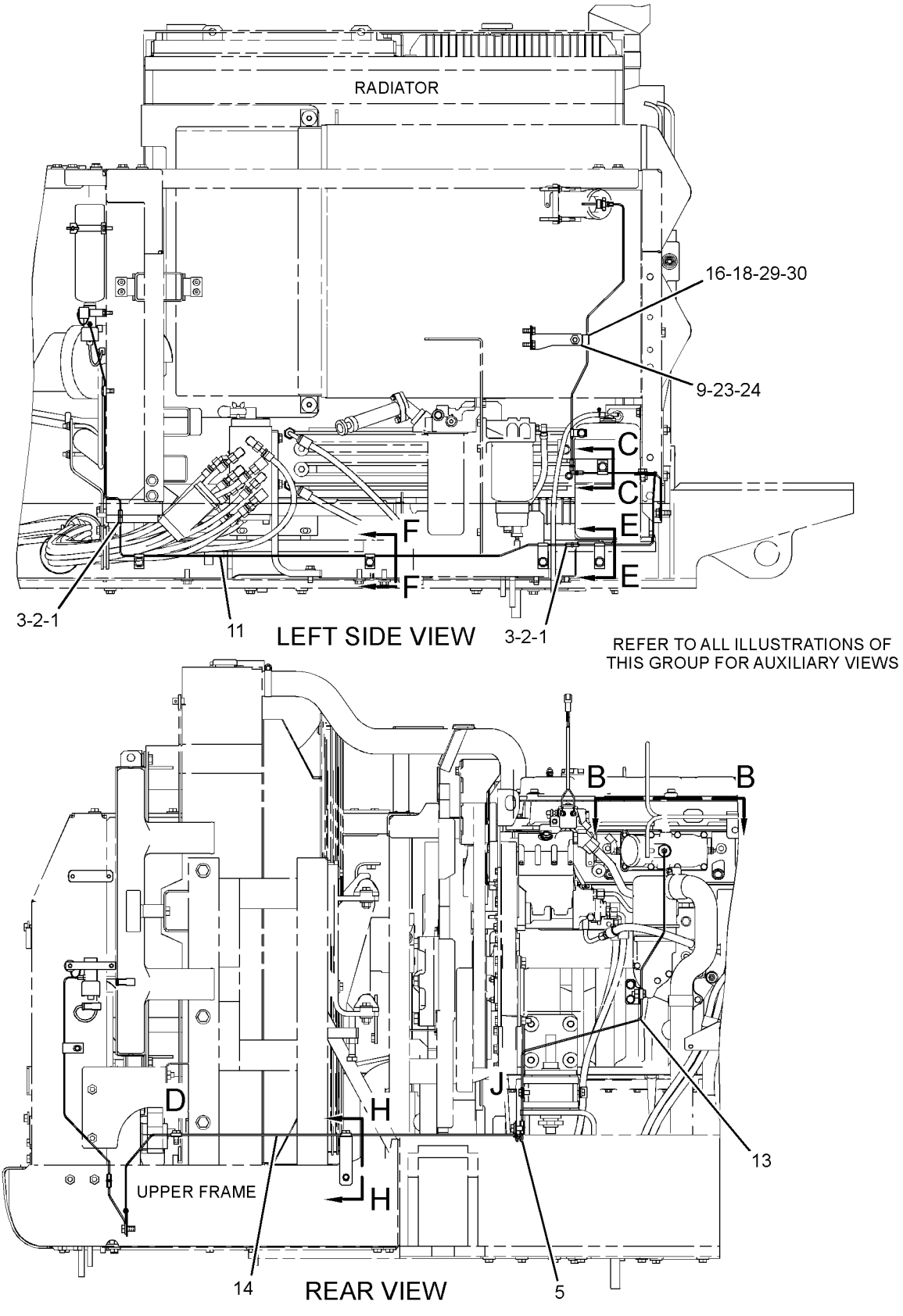

GRAPHIC #1

g01391532

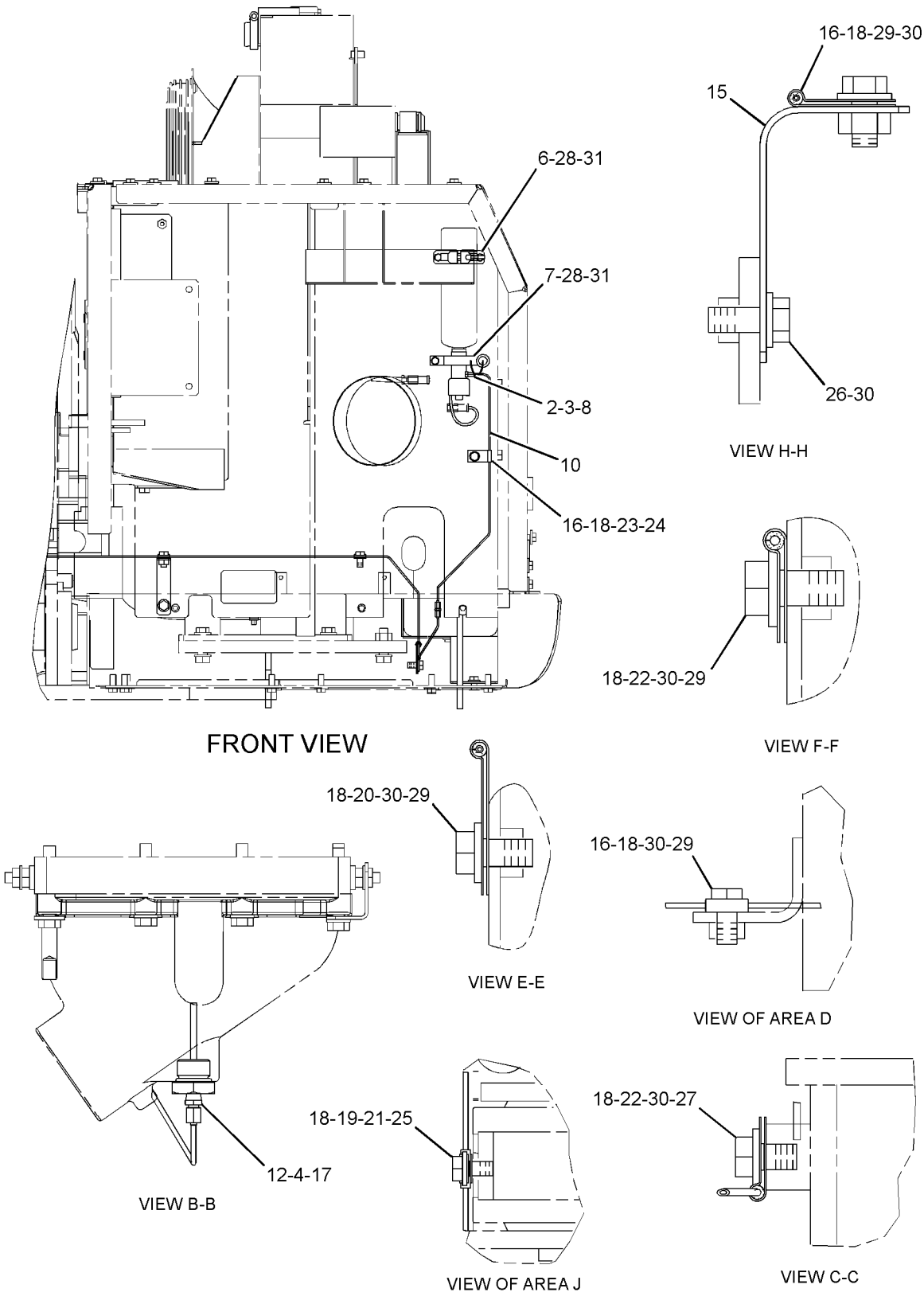

GRAPHIC #2 **<END>** g01391533

ELECTRICAL AND STARTING SYSTEM

340-3839 STARTING AR-COLD WEATHER

S/N: MYG1-UP; PPN1-UP
PART OF 348-8126, 352-2663 DISTRIBUTION AR
AN ATTACHMENT

SMCS-1450 **i03675360**

NOTE	PART NUMBER	QTY	PART NAME 1 2 3 4 5 6 (PRODUCT LEVEL)	SEE PAGE
Y	*336-6212*	1	BATTERY & WIRING GP (COLD WEATHER)	162
Y	*239-6677*	1	STARTING AID GP-ETHER	225

Y-SEPARATE ILLUSTRATION

<END>

180-2435 STARTING MOTOR GP-ELECTRIC

S/N: THX14533-UP; THY5575-UP
PART OF 224-9843 ENGINE AR

SMCS-1453 **i02061348**

NOTE	REF NO	GRAPHIC REF	PART NUMBER	QTY	PART NAME 1 2 3 4 5 6 (PRODUCT LEVEL)	SEE PAGE
	1	1	**8S-2332**	3	BOLT-12 POINT HEAD (5/8-11X1.75-IN)	
YR	2	1	**237-1962**	1	STARTING MOTOR GP-ELECTRIC (24-VOLT)	230
	3	1	**4N-1059**	1	GASKET	
	4	1	**8Y-9603**	1	CABLE AS-STARTING MOTOR	
		1	**1S-7251**	1	TERMINAL-CABLE (00-GA, 1/2-IN BOLT)	
		1	**1S-7252**	1	TERMINAL-CABLE (00-GA, 3/8-IN BOLT)	
E		1	**5P-0747**		CABLE (00-GA, BLACK) (28 CM)	

E-ORDER BY THE CENTIMETER
R-REMFG PART MAY BE AVAILABLE
Y-SEPARATE ILLUSTRATION

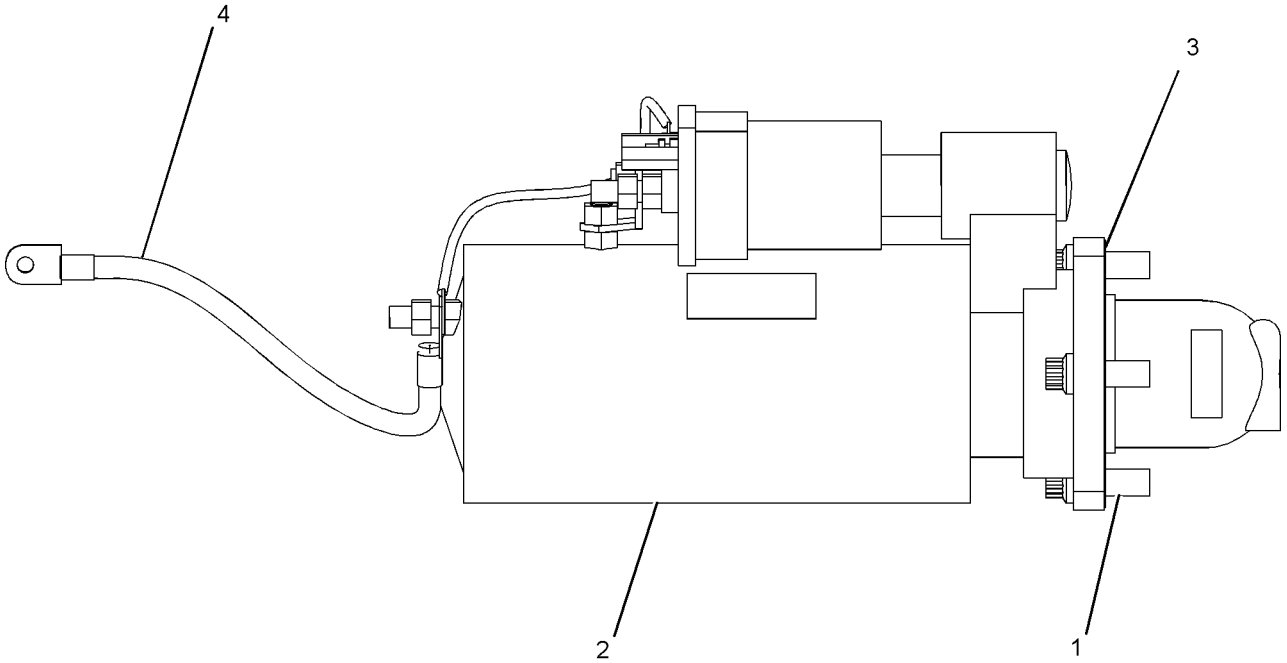

GRAPHIC #1 **<END>** g01061029

ELECTRICAL AND STARTING SYSTEM

237-1962 STARTING MOTOR GP-ELECTRIC*R

S/N: THX14533-UP; THY5575-UP

24-VOLT

PART OF 180-2435 STARTING MOTOR GP-ELECTRIC

SMCS-1453 **i03630205**

NOTE	REF NO	GRAPHIC REF	PART NUMBER	QTY	PART NAME 1 2 3 4 5 6 (PRODUCT LEVEL)	SEE PAGE
	1	1	**7M-0326**	1	CONNECTOR	
	2	1	**9H-3757**	2	WASHER (0.516X1X0.094-IN THK)	
	3	1	**1S-7446**	3	SCREW-MACHINE (8-32X0.437-IN)	
	4	1	**8C-9660**	3	WASHER (4.6X7.9X0.8-MM THK)	
	5	1	**9S-2544**	9	SCREW-HEX HEAD (8-32X11.13-MM)	
	6	1	**7M-0327**	1	WASHER-THRUST (17.4X25.4X1.6-MM THK)	
	7	1	**3T-3418**	1	FRAME AS-END	
		1	**3T-3423**	1	CUP	
		1	**3T-3424**	1	PLUG-FELT	
		1	**9G-4101**	1	BUSHING-END	
	8	1	**3T-9525**	1	PLATE AS-BRUSH	
	8A	1	**6T-0371**	1	INSULATOR	
	8B	1	**5P-6298**	12	SCREW-MACHINE (10-32X0.5-IN)	
		1	**9F-5599**	12	LOCKWASHER	
	8C	1	**7F-3525**	6	WASHER-BUSHING (0.207X0.39X0.09-IN THK)	
	8D	1	**6T-0372**	1	PLATE	
	8E	1	**3T-4709**	3	PLATE	
	8F	1	**2L-6679**	3	PLATE-INSULATOR	
	8G	1	**3T-4710**	3	PLATE	
	8H	1	**6T-0363**	6	HOLDER AS-BRUSH (STARTING MOTOR)	
					(EACH INCLUDES)	
	8J	1	**3T-9494**	1	SPRING	
	9	1	**1T-0808**	2	WASHER (0.516X0.812X0.09-IN THK)	
	10	1	**3T-3422**	1	WIRE AS (STARTING MOTOR)	
	11	1	**2J-8163**	2	SEAL-O-RING	
	12	1	**7X-3373**	1	BOLT (5/16-18X0.88-IN)	
	13	1	**3T-3434**	6	PLUG	
	14	1	**5J-5314**	5	BOLT (5/16-18X1.5-IN)	
	15	1	**3L-3380**	1	BUSHING-TERMINAL	
	16	1	**036-9821**	1	WASHER	
	17	1	**4M-1828**	1	RETAINER-SPRING	
	18	1	**306-3998**	1	BOOT-RUBBER	
	19	1	**9M-7609**	1	SPRING (SHIFT LEVER)	
	20	1	**4M-1827**	1	RETAINER-SPRING	
	21	1	**8C-3089**	1	SEAL-O-RING	
	22	1	**4M-1853**	1	LEVER AS-SHIFT	
	23	1	**5M-3034**	1	LOCKNUT (5/16-24-THD)	
	24	1	**7L-2894**	4	GASKET	
	25	1	**4M-1831**	4	PLUG-LEVER HOUSING	
	26	1	**4M-1854**	1	SHAFT-LEVER	
	27	1	**1H-1023**	1	SEAL-O-RING	
	28	1	**2D-6392**	1	SEAL-O-RING	
	29	1	**7T-3974**	1	HOUSING AS-DRIVE	
	30	1	**6N-3826**	1	DRIVE AS-MOTOR	
	31	1	**2H-3429**	2	RING-RETAINING	
	32	1	**6V-1322**	4	BOLT (1/4-20X0.375-IN)	
	33	1	**8T-4205**	4	WASHER-HARD (7.2X14.5X2-MM THK)	
	34	1	**6N-3279**	1	INSULATOR	
	35	1	**0S-1597**	13	BOLT (1/4-28X1-IN)	
	36	1	**1M-9971**	1	SPACER (0.835X1.72X0.188-IN THK)	
	37	1	**1H-2629**	3	STRIP-INSULATION	
	38	1	**7M-0324**	1	COIL AS-FIELD	
	39	1	**3R-8797**	12	SCREW & WASHER AS (3/8-24X0.72-IN)	
	40	1	**7F-3488**	6	SHOE-POLE	
	41	1	**7M-8651**	1	ARMATURE AS	

237-1962 STARTING MOTOR GP-ELECTRIC *(contd.)* i03630205

NOTE	REF NO	GRAPHIC REF	PART NUMBER	QTY	PART NAME 1 2 3 4 5 6 (PRODUCT LEVEL)	SEE PAGE
	42	1	**7M-0325**	1	INSULATOR	
	43	1	**3T-9524**	6	BRUSH AS	
	44	1	**3N-3763**	1	KIT-TERMINAL (STARTING MOTOR)	
					(INCLUDES BUSHINGS & WASHERS)	
	45	1	**125-6537**	1	INSULATOR	
	46	1	**3R-8801**	1	CLAMP	
	47	1	**8F-1434**	2	LOCKWASHER	
	48	1	**6V-8188**	6	NUT (1/2-13-THD)	
	49	1	**7X-0562**	6	WASHER-HARD (13.5X19X0.8-MM THK)	
	50	1	**4B-2049**	6	NUT (10-32-THD)	
	51	1	**8T-0328**	10	WASHER-HARD (5.5X10X1-MM THK)	
	52	1	**3T-9494**	6	SPRING (STARTING MOTOR)	
	53	1	**3E-7771**	1	HOUSING AS (STARTING MOTOR)	
	54	1	**9G-4101**	1	BUSHING-END	
	55	1	**3T-3424**	3	PLUG-FELT	
	56	1	**3T-3423**	3	CUP	
	57	1	**1M-9968**	1	BUSHING	
	58	1	**2F-6678**	1	SEAL-LIP TYPE	
	59	1	**4L-2729**	1	WASHER (0.844X1.9X0.188-IN THK)	
	60	1	**4M-1896**	1	BUSHING-TERMINAL	
	61	1	**045-4065**	4	SCREW-MACHINE (10-32X0.75-IN)	
	62	1	**125-6535**	1	COVER-STARTING MOTOR	
	63	1	**7T-9123**	1	GASKET-PLATE	
	64	1	**318-2082**	1	SOLENOID AS-STARTING MOTOR (24-VOLT)	
	65	1	**125-6536**	1	TERMINAL AS	

237-1962 STARTING MOTOR GP-ELECTRIC *(contd.)* i03630205

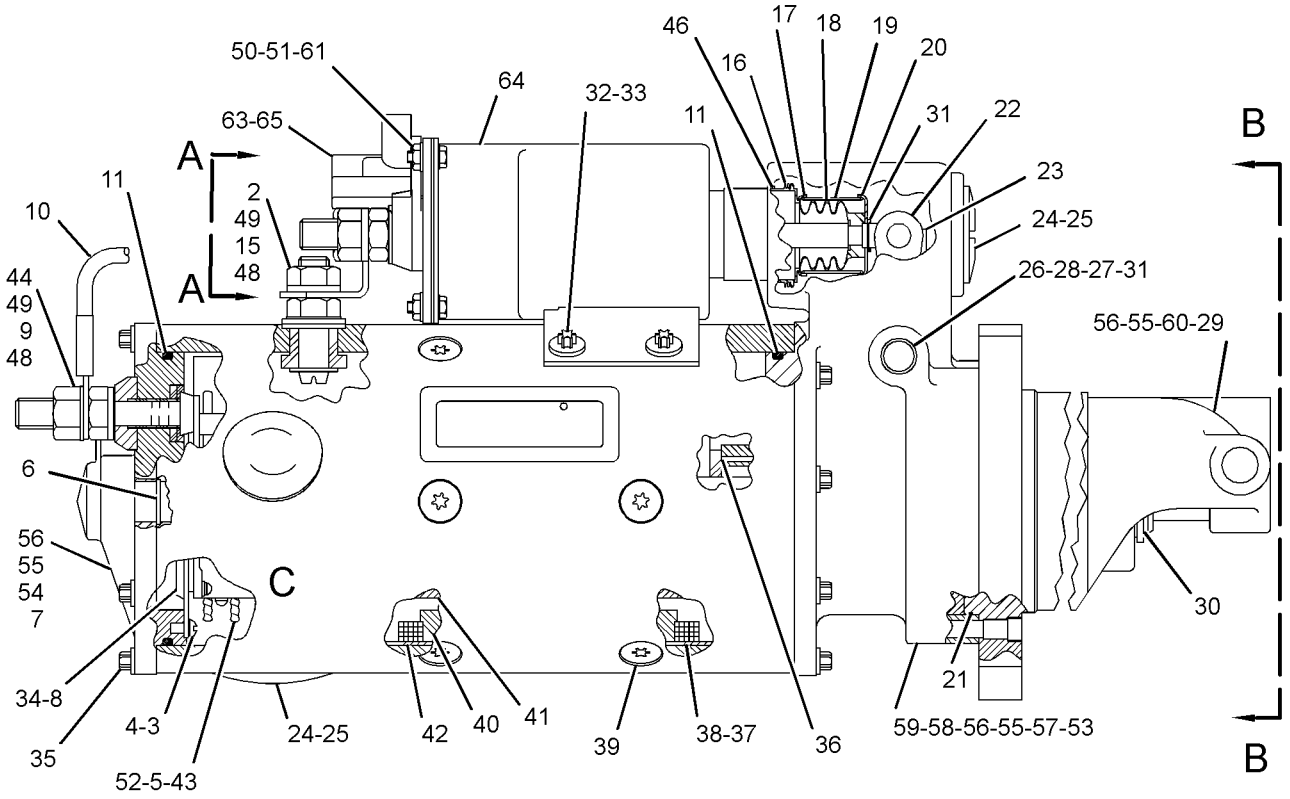

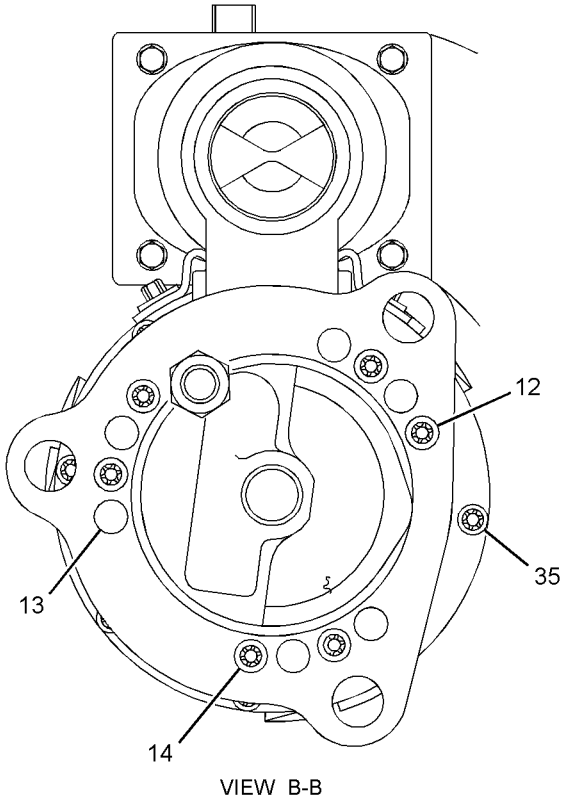

VIEW B-B

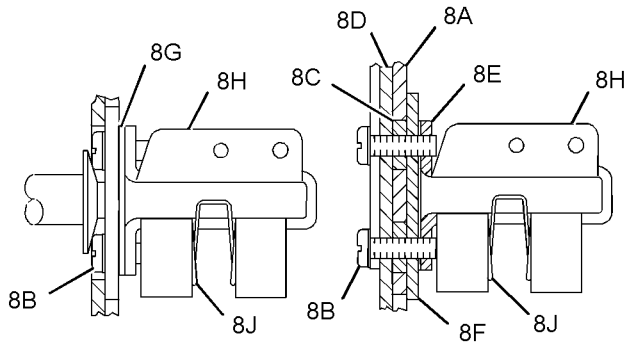

VIEW OF AREA C

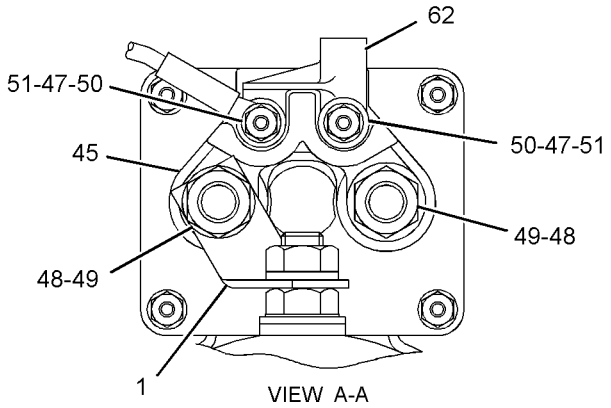

VIEW A-A

GRAPHIC #1 **<END>** g01453239

7N-0719 SWITCH GP-DISCONNECT–BATTERY

S/N: MYG1-UP; PPN1-UP

PART OF 336-6180 PANEL GP-CIRCUIT BREAKER

SMCS-1411 **i02490079**

NOTE	REF NO	GRAPHIC REF	PART NUMBER	QTY	PART NAME 1 2 3 4 5 6 (PRODUCT LEVEL)	SEE PAGE
	1	1	**8H-5306**	1	KEY (BATTERY DISCONNECT)	
	2	1	**8H-5303**	1	NUT (3/4-16-THD)	
	3	1	**2H-3922**	2	LOCKWASHER	
	4	1	**9F-5644**	2	LOCKWASHER	
	5	1	**6F-7045**	2	NUT-FULL (3/8-24-THD)	

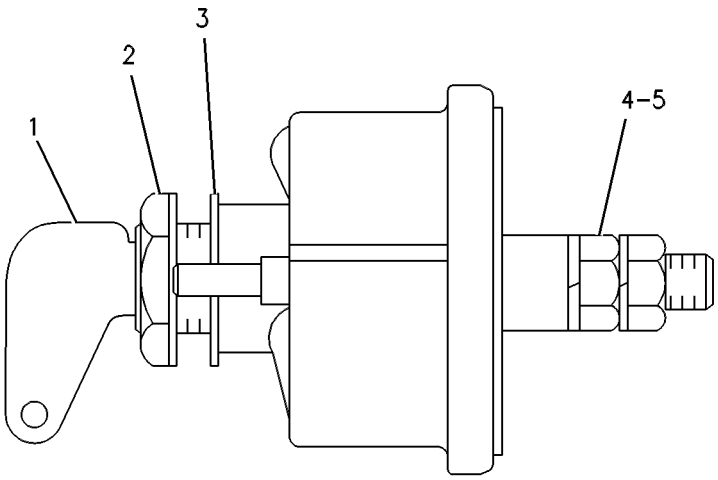

GRAPHIC #1 **<END>** g00272142

125-1302 SWITCH GP-MAGNETIC–START RELAY

S/N: MYG1-UP; PPN1-UP
24-VOLT
PART OF 336-6180 PANEL GP-CIRCUIT BREAKER

SMCS-7499 **i03276825**

NOTE	REF NO	GRAPHIC REF	PART NUMBER	QTY	PART NAME 1 2 3 4 5 6 (PRODUCT LEVEL)	SEE PAGE
	1	1	**102-8802**	1	KIT-RECEPTACLE (2-PIN)	
					(INCLUDES RECEPTACLE AS & WEDGE)	
	2	1	**186-3735**	2	PIN-CONNECTOR (16-GA TO 18-GA)	
	3	1	**1H-3338**	2	LOCKWASHER (EXTERNAL TOOTH)	
	4	1	**012-0380**	2	LOCKWASHER	
M	5	1	**5C-2890**	2	NUT (M6X1-THD)	
E	6	1	**9X-1813**		SLEEVE (16-CM)	

E-ORDER BY THE CENTIMETER
M-METRIC PART

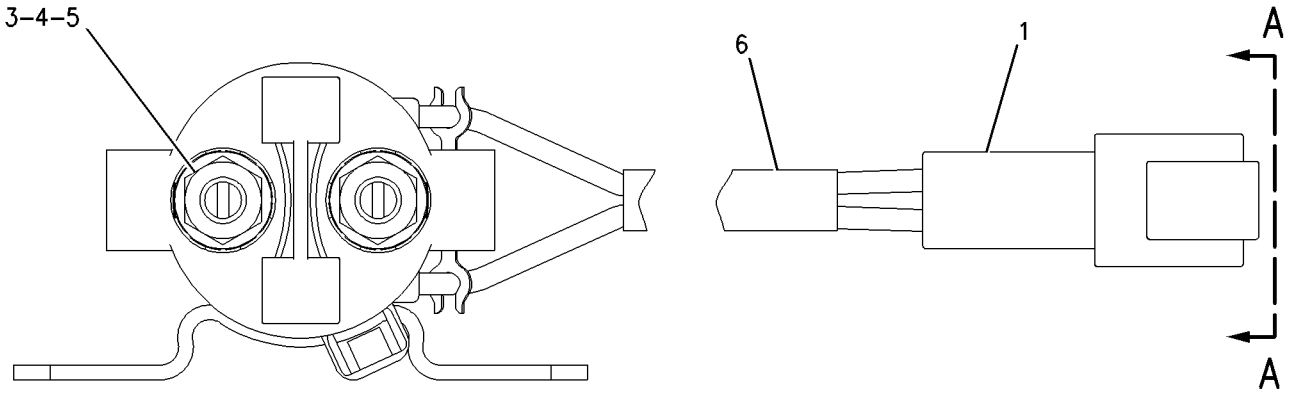

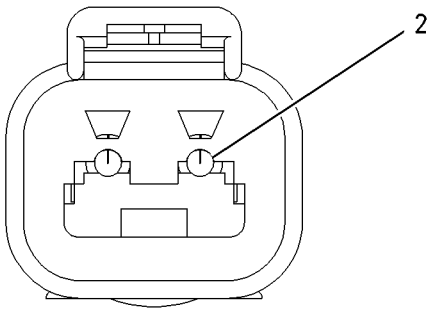

VIEW A–A

GRAPHIC #1 **<END>** g00988004

209-5582 SWITCH GP-MAGNETIC

S/N: THX14533-UP; THY5575-UP

PART OF 269-3410 WIRING GP-HEATER

SMCS-7499 **i02575187**

NOTE	REF NO	GRAPHIC REF	PART NUMBER	QTY	PART NAME 1 2 3 4 5 6 (PRODUCT LEVEL)	SEE PAGE
	1	1	**102-8802**	1	KIT-RECEPTACLE (2-PIN)	
					(INCLUDES RECEPTACLE AS & WEDGE)	
	2	1	**186-3735**	2	PIN-CONNECTOR (16-GA TO 18-GA)	
	3	1	**3F-9556**	2	LOCKWASHER	
	4	1	**6V-8186**	2	NUT-FULL (5/16-24-THD)	
	5	1	**6V-8378**	2	NUT (10-32-THD)	
	6	1	**8F-1434**	2	LOCKWASHER	

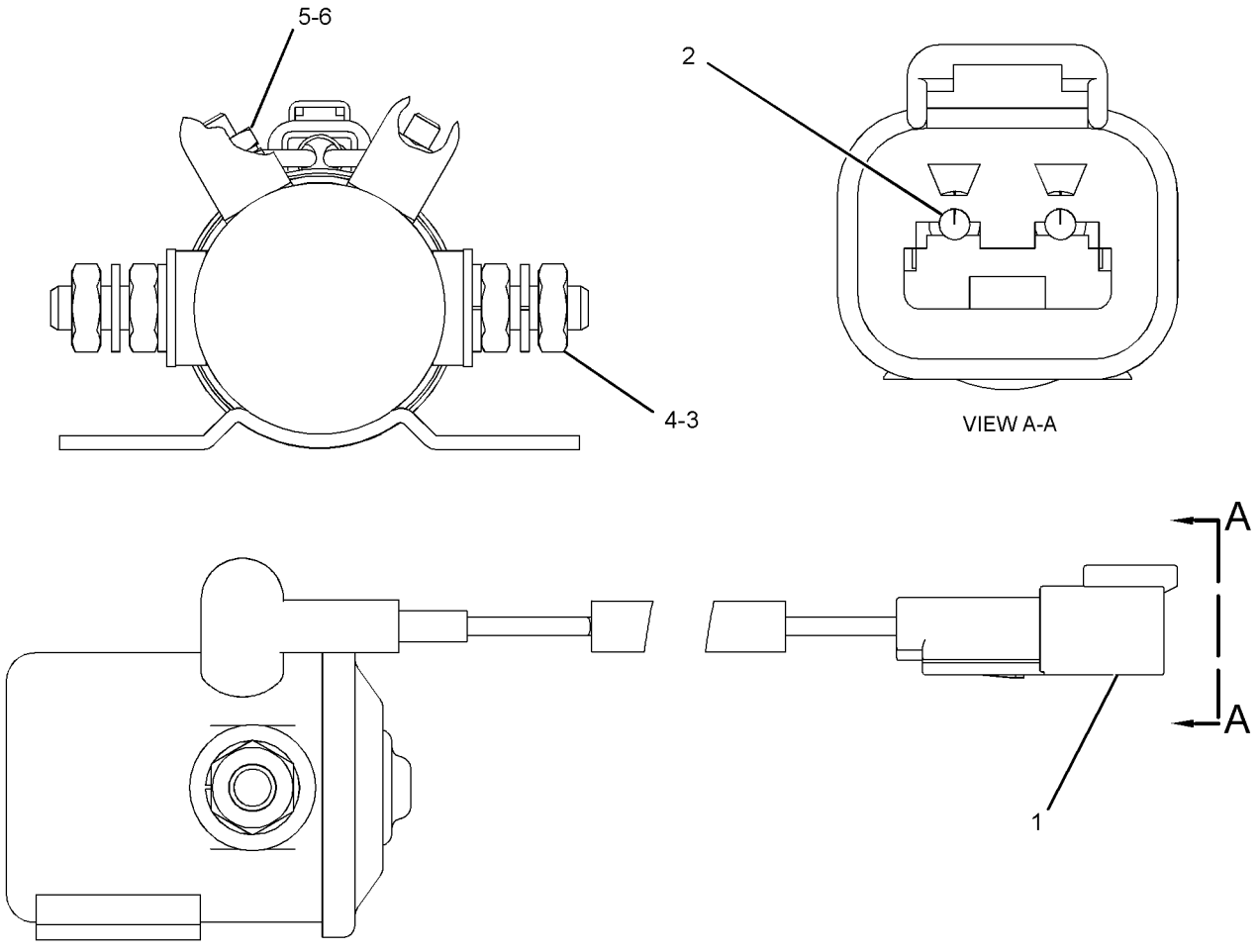

GRAPHIC #1 **<END>** g01279452

234-6613 SWITCH GP-POSITION—HYDRAULIC LOCKOUT

S/N: MYG1-UP; PPN1-UP

PART OF 259-7349 CONSOLE GP-OPERATOR

SMCS-1408, 1435 **i03496041**

NOTE	REF NO	GRAPHIC REF	PART NUMBER	QTY	PART NAME 1 2 3 4 5 6 (PRODUCT LEVEL)	SEE PAGE
	1	1	**3S-2093**	1	STRAP-CABLE	
	2	1	**4I-3038**	2	WASHER (3.3X8X0.5-MM THK)	
	3	1	**111-4799**	1	SWITCH AS-LIMIT (NEUTRAL START)	
		1	**102-8803**	1	KIT-RECEPTACLE (3-PIN)	
					(INCLUDES RECEPTACLE AS & WEDGE)	
		1	**186-3735**	3	PIN-CONNECTOR (16-GA TO 18-GA)	
D		1	**5P-5998**		TUBE (0.3-M)	
M	4	1	**185-8286**	2	SCREW-MACHINE (M4X0.7X8-MM)	
	5	1	**234-6615**	1	KNOB	
	6	1	**087-4683**	2	LOCKWASHER	
M	7	1	**120-9027**	2	SCREW-PAN HEAD (M3X0.5X16-MM)	

D-ORDER BY THE METER
M-METRIC PART

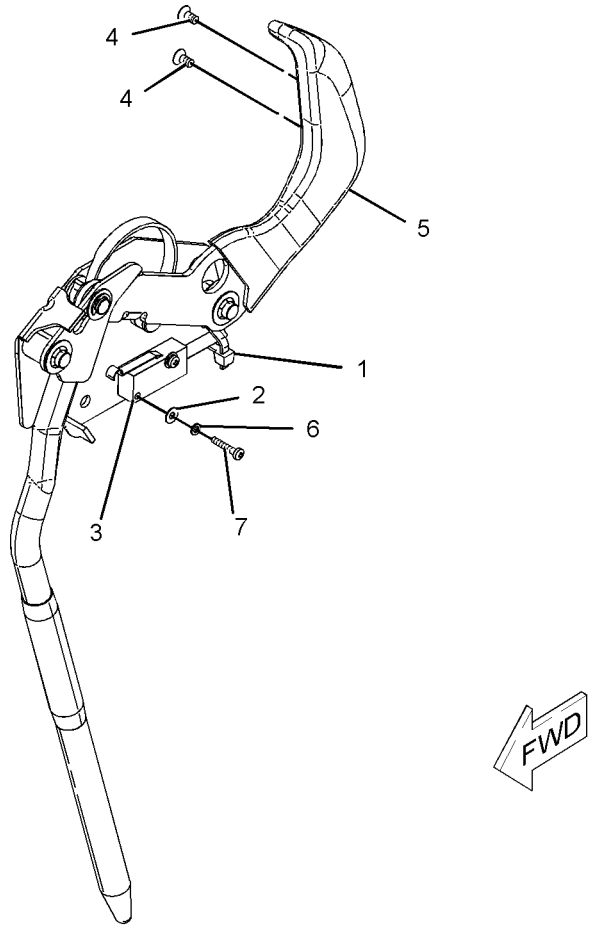

GRAPHIC #1 **<END>** g01076610

258-0883 SWITCH GP-PRESSURE–FUEL

S/N: MYG1-UP; PPN1-UP
PART OF 237-8752, 259-3918 LINES GP-FUEL
ALSO AN ATTACHMENT

SMCS-1435 **i03652333**

NOTE	REF NO	GRAPHIC REF	PART NUMBER	QTY	PART NAME 1 2 3 4 5 6 (PRODUCT LEVEL)	SEE PAGE
	1	1	**102-8802**	1	KIT-RECEPTACLE (2-PIN)	
					(INCLUDES RECEPTACLE AS & WEDGE)	
	2	1	**9X-7737**	1	SEAL-O-RING	
	3	1	**8T-8729**	2	PIN-CONNECTOR (16-GA TO 18-GA)	
E	4	1	**9X-1813**		SLEEVE (14-CM)	
	5	1	**6V-4589**	1	SEAL-O-RING	

E-ORDER BY THE CENTIMETER

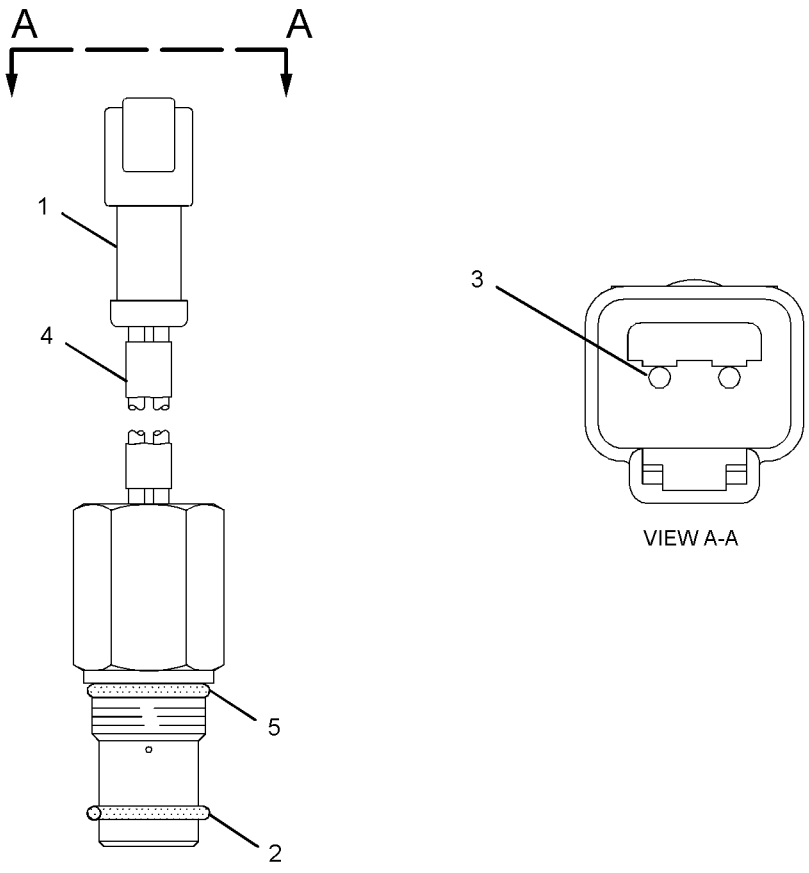

GRAPHIC #1 **<END>** g01960393

238-1594 SWITCH GP-PUSH BUTTON–REFUELING PUMP, START

S/N: MYG1-UP; PPN1-UP
PART OF 238-1570 WIRING GP-REFUELING PUMP
AN ATTACHMENT

SMCS-1435, 7332 **i03631719**

NOTE	REF NO	GRAPHIC REF	PART NUMBER	QTY	PART NAME 1 2 3 4 5 6 (PRODUCT LEVEL)	SEE PAGE
	1	1	**6T-9442**	1	SWITCH GP-PUSHBUTTON (REFUELING PUMP, START)	
		1	**1S-0812**	2	SCREW-TAPPING	
		1	**3K-0835**	1	NUT (5/8-24-THD)	
		1	**6F-0253**	1	LOCKWASHER	
		1	**8T-8748**	1	ADAPTER-MOUNT	
		1	**9W-0625**	1	SWITCH AS (REFUELING PUMP, START)	
	2	1	**238-1595**	1	HARNESS AS-SWITCH	
		1	**186-3735**	2	PIN-CONNECTOR (16-GA TO 18-GA)	
		1	**243-4505**	1	RECEPTACLE AS-CONNECTOR (2-PIN)	
BCE	3	1	**125-7875**		TUBE-HEAT SHRINK (7.44-MM DIA)	

B-USE AS REQUIRED
C-CHANGE FROM PREVIOUS TYPE
E-ORDER BY THE CENTIMETER

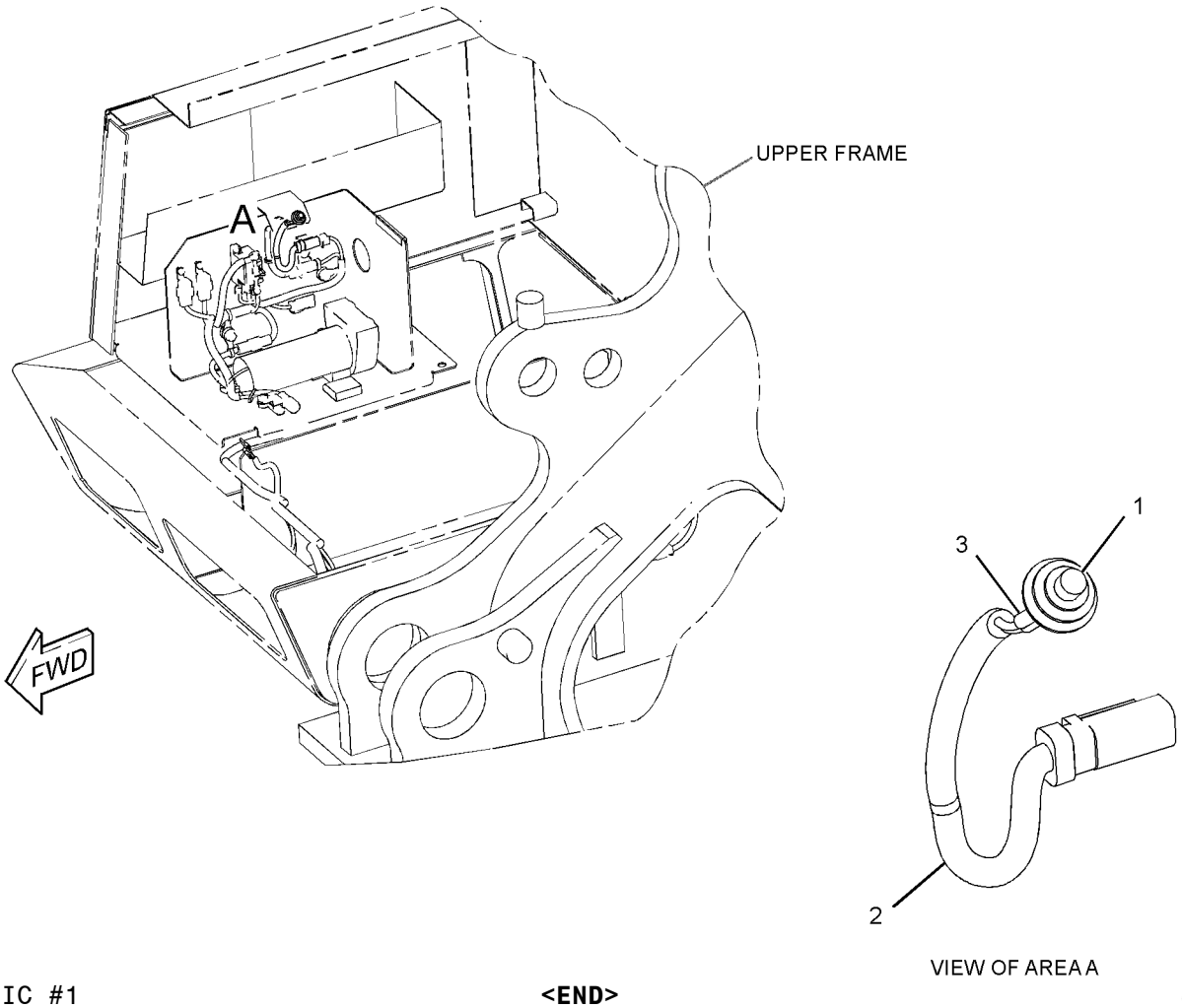

GRAPHIC #1 **<END>** g01560235

238-1596 SWITCH GP-PUSH BUTTON—REFUELING PUMP, STOP

S/N: MYG1-UP; PPN1-UP
PART OF 238-1570 WIRING GP-REFUELING PUMP
AN ATTACHMENT

SMCS-1435, 7332 **i03631723**

NOTE	REF NO	GRAPHIC REF	PART NUMBER	QTY	PART NAME 1 2 3 4 5 6 (PRODUCT LEVEL)	SEE PAGE
	1	1	*9X-4184*	1	SWITCH GP-PUSH BUTTON (REFUELING PUMP, STOP)	
		1	**1S-0812**	2	SCREW-TAPPING	
		1	**3E-7389**	1	SWITCH-PUSH BUTTON (REFUELING PUMP, STOP)	
		1	**3K-0835**	1	NUT (5/8-24-THD)	
		1	**6F-0253**	1	LOCKWASHER	
		1	**8T-8748**	1	ADAPTER-MOUNT	
	2	1	**238-1597**	1	HARNESS AS-SWITCH (REFUELING PUMP, STOP)	
		1	**8T-8730**	2	SOCKET-CONNECTOR (16-GA TO 18-GA)	
		1	**230-4011**	1	PLUG AS-CONNECTOR (2-PIN)	
		1	**264-7029**	1	SEAL-CONNECTOR	
BE	3	1	**125-7875**		TUBE-HEAT SHRINK (7.44-MM DIA)	

B-USE AS REQUIRED
E-ORDER BY THE CENTIMETER

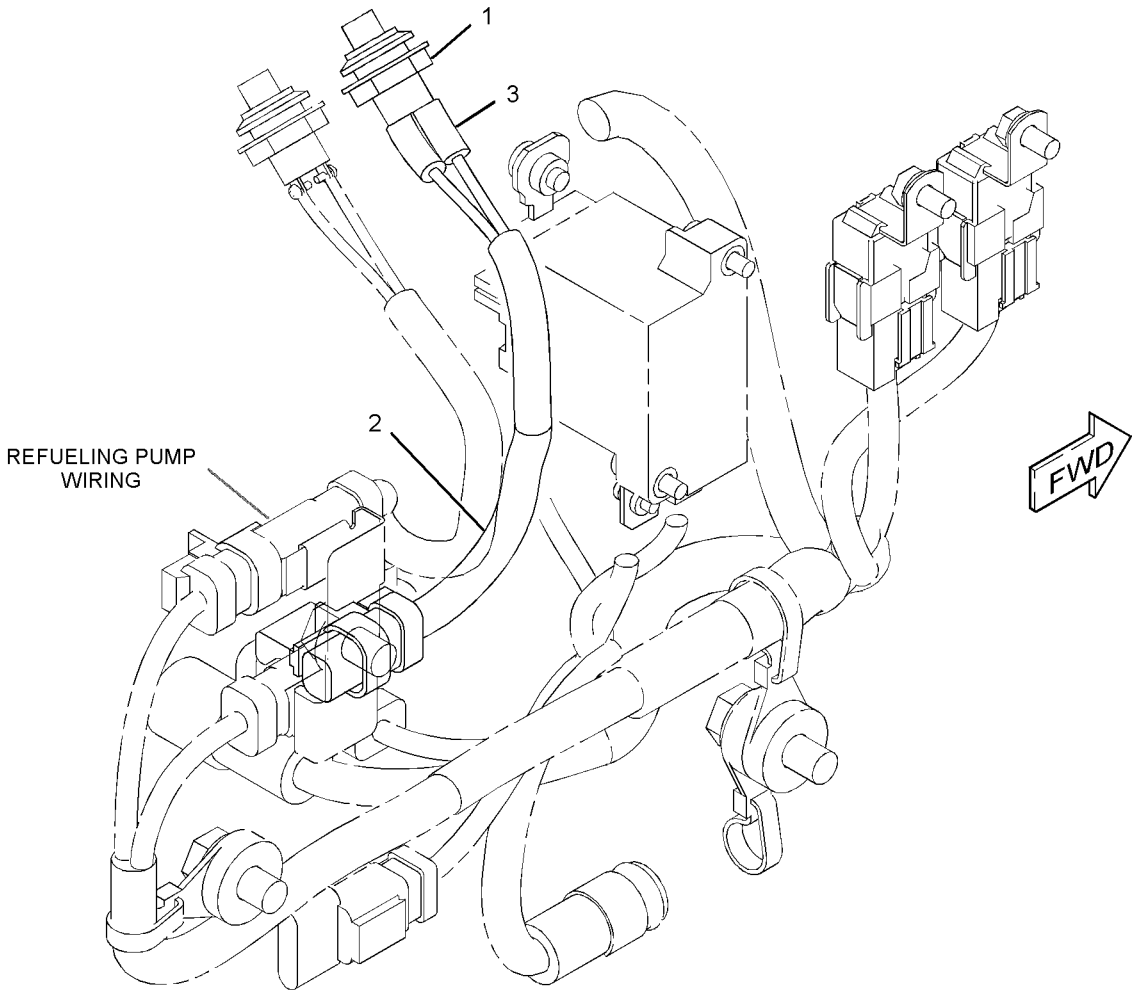

GRAPHIC #1 **<END>** g01560319

319-4420 SWITCH GP-ROTARY–THROTTLE POSITION

S/N: MYG1-UP; PPN1-UP
PART OF 251-0542, 251-0544 PANEL GP-SWITCH
AN ATTACHMENT

SMCS-7332 **i03401061**

NOTE	REF NO	GRAPHIC REF	PART NUMBER	QTY	PART NAME 1 2 3 4 5 6 (PRODUCT LEVEL)	SEE PAGE
	1	1	**243-4508**	1	RECEPTACLE AS-CONNECTOR (6-PIN)	
	2	1	**9X-3401**	5	PIN-CONNECTOR (16-GA TO 18-GA)	
					–OR–	
		1	**126-1767**	5	PIN-CONNECTOR (14-GA)	
	3	1	**8T-8737**	1	PLUG-SEAL	
M	4	1	**7Y-5458**	1	NUT (M12X1-THD)	
	5	1	**7Y-5464**	1	WASHER (12.2X15.4X0.5-MM THK)	
	6	1	**106-0210**	1	SEAL	

M-METRIC PART

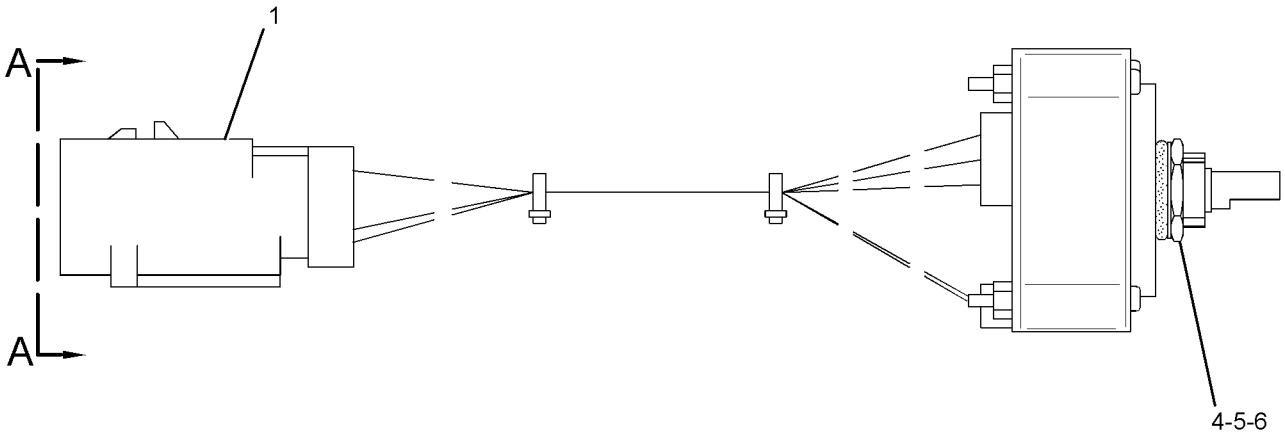

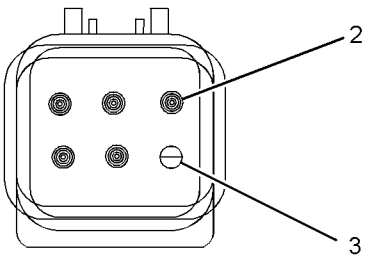

VIEW A-A

GRAPHIC #1 **<END>** g01588034

9G-7641 SWITCH GP-START–ENGINE, KEY

S/N: MYG1-UP; PPN1-UP
PART OF 251-0542, 251-0544 PANEL GP-SWITCH
AN ATTACHMENT

SMCS-1416 **i01943219**

NOTE	REF NO	GRAPHIC REF	PART NUMBER	QTY	PART NAME 1 2 3 4 5 6 (PRODUCT LEVEL)	SEE PAGE
	1	1	**6V-8362**	4	SCREW-MACHINE (8-32X0.31-IN)	
	2	1	**9B-7233**	4	LOCKWASHER	
	3	1	**7T-6799**	1	NUT-MOUNTING (1-32-THD)	
AF			**5P-8500**	1	KEY (IGNITION)	

A-NOT PART OF THIS GROUP
F-NOT SHOWN

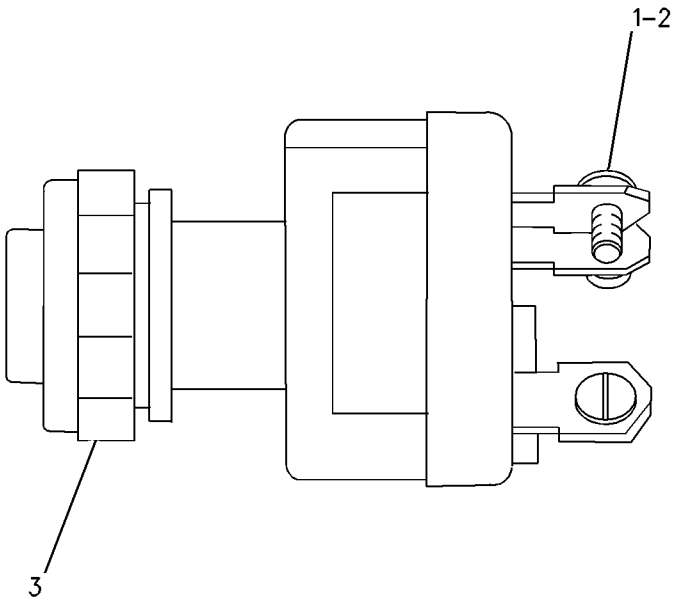

GRAPHIC #1 **<END>** g00699802

165-5970 SWITCH GP-TOGGLE–FUEL PRIMING PUMP

S/N: MYG1-UP; PPN1-UP
PART OF 336-6149 WIRING GP-FUEL PUMP
AN ATTACHMENT

SMCS-7332 **i02409114**

NOTE	REF NO	GRAPHIC REF	PART NUMBER	QTY	PART NAME 1 2 3 4 5 6 (PRODUCT LEVEL)	SEE PAGE
	1	1	**6T-3631**	2	NUT-HEX (15/32-32-THD)	
	2	1	**6T-3632**	1	LOCKWASHER	
	3	1	**6T-3633**	1	RING-LOCKING	
	4	1	**102-8803**	1	KIT-RECEPTACLE (3-PIN)	
					(INCLUDES RECEPTACLE AS & WEDGE)	
	5	1	**186-3735**	3	PIN-CONNECTOR (16-GA TO 18-GA)	

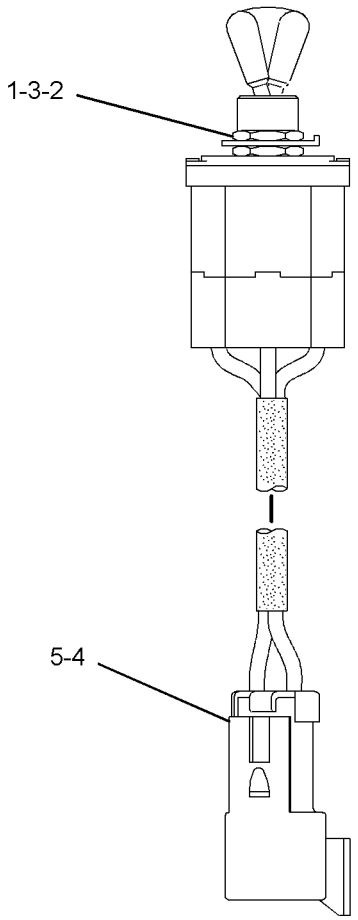

GRAPHIC #1 **<END>** g01203825

239-1134 VALVE GP-ETHER STARTING

S/N: MYG1-UP; PPN1-UP
24-VOLT
PART OF 239-6677 STARTING AID GP-ETHER
AN ATTACHMENT

SMCS-1456 **i02743312**

NOTE	REF NO	GRAPHIC REF	PART NUMBER	QTY	PART NAME 1 2 3 4 5 6 (PRODUCT LEVEL)	SEE PAGE
	1	1	**7N-9801**	1	GASKET	
	2	1	**102-8802**	1	KIT-RECEPTACLE (2-PIN)	
					(INCLUDES RECEPTACLE AS & WEDGE)	
	3	1	**186-3735**	2	PIN-CONNECTOR (16-GA TO 18-GA)	

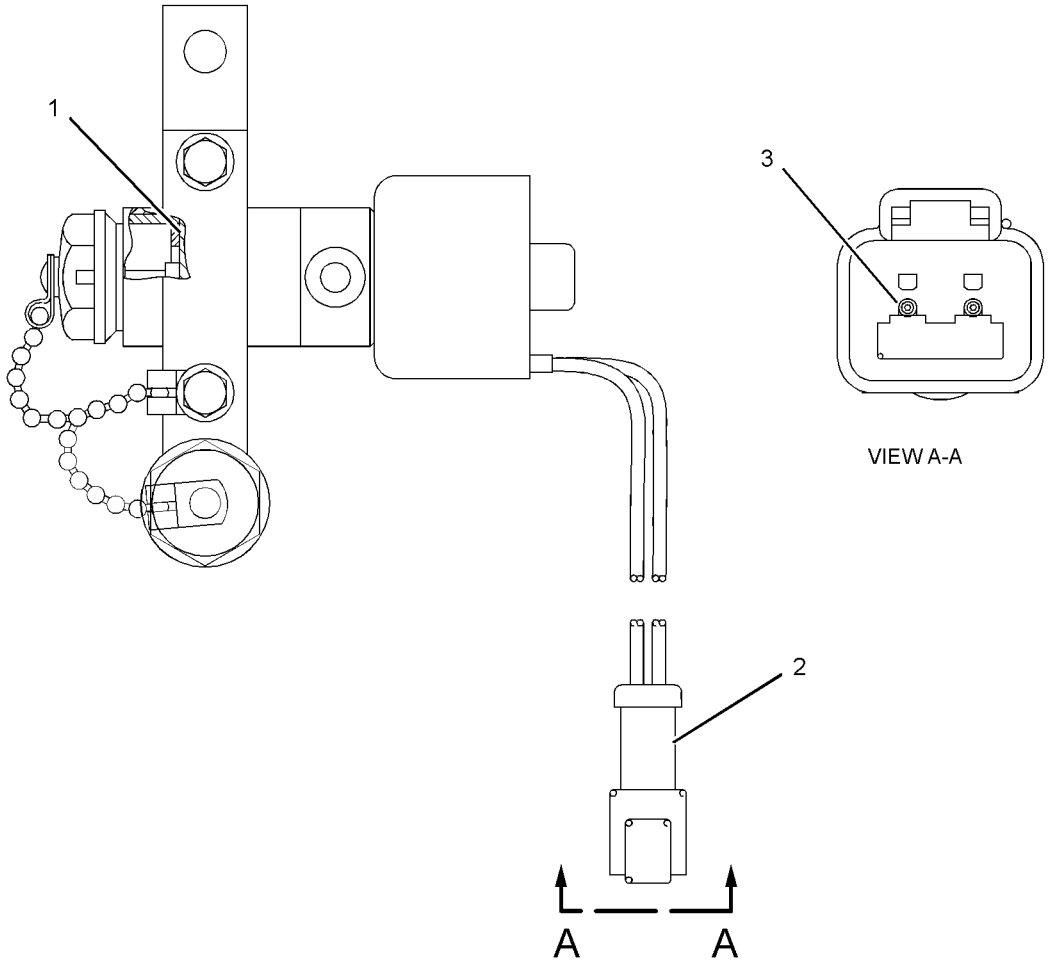

GRAPHIC #1 **<END>** g01375620

251-0623 WIRING GP-AUXILIARY CONTROL–

COMBINED FUNCTION, MEDIUM PRESSURE

S/N: MYG1-UP; PPN1-UP

PART OF 297-0494 CONTROL AR-AUXILIARY

AN ATTACHMENT

SMCS-1408 **i02489676**

NOTE	REF NO	GRAPHIC REF	PART NUMBER	QTY	PART NAME 1 2 3 4 5 6 (PRODUCT LEVEL)	SEE PAGE
	1	1	**3S-2093**	20	STRAP-CABLE	
C	2	1	**7I-2673**	2	STRAP-CABLE	
	3	1	**7K-1181**	7	STRAP-CABLE	
	4	1	**204-1611**	5	STRAP-CABLE	
	5	1	**259-5071**	2	BRACKET AS	
	6	1	**259-5075**	1	BRACKET AS	
C	7	1	**267-7867**	1	BRACKET AS	
	8	1	**275-6936**	1	HARNESS AS-CONTROL	
		1	**102-8802**	8	KIT-RECEPTACLE (2-PIN)	
		1	**102-8803**	1	KIT-RECEPTACLE (3-PIN)	
					(EACH RECEPTACLE KIT INCLUDES RECEPTACLE AS & WEDGE)	
		1	**155-2270**	9	KIT-CONNECTING PLUG (2-PIN)	
		1	**155-2260**	1	KIT-CONNECTING PLUG (3-PIN)	
					(EACH PLUG KIT INCLUDES PLUG AS, WEDGE & INTERFACE SEAL)	
		1	**243-4509**	1	RECEPTACLE AS-CONNECTOR (8-PIN)	
		1	**243-4510**	1	RECEPTACLE AS-CONNECTOR (12-PIN)	
		1	**3S-2093**	4	STRAP-CABLE	
E		1	**125-7874**		TUBE-HEAT SHRINK (5.72-MM DIA) (15-CM)	
E		1	**125-7875**		TUBE-HEAT SHRINK (7.44-MM DIA) (5-CM)	
	9	1	**111-4836**	2	CLIP	
	10	1	**132-5789**	2	CLIP	
	11	1	**4P-7581**	1	CLIP	
	12	1	**8T-4121**	9	WASHER-HARD (11X21X2.5-MM THK)	
M	13	1	**8T-4137**	3	BOLT (M10X1.5X20-MM)	
M	14	1	**8T-4179**	4	BOLT (M12X1.75X20-MM)	
M	15	1	**8T-4191**	6	BOLT (M10X1.5X16-MM)	
	16	1	**8T-4223**	4	WASHER-HARD (13.5X25.5X3-MM THK)	

C-CHANGE FROM PREVIOUS TYPE
E-ORDER BY THE CENTIMETER
M-METRIC PART

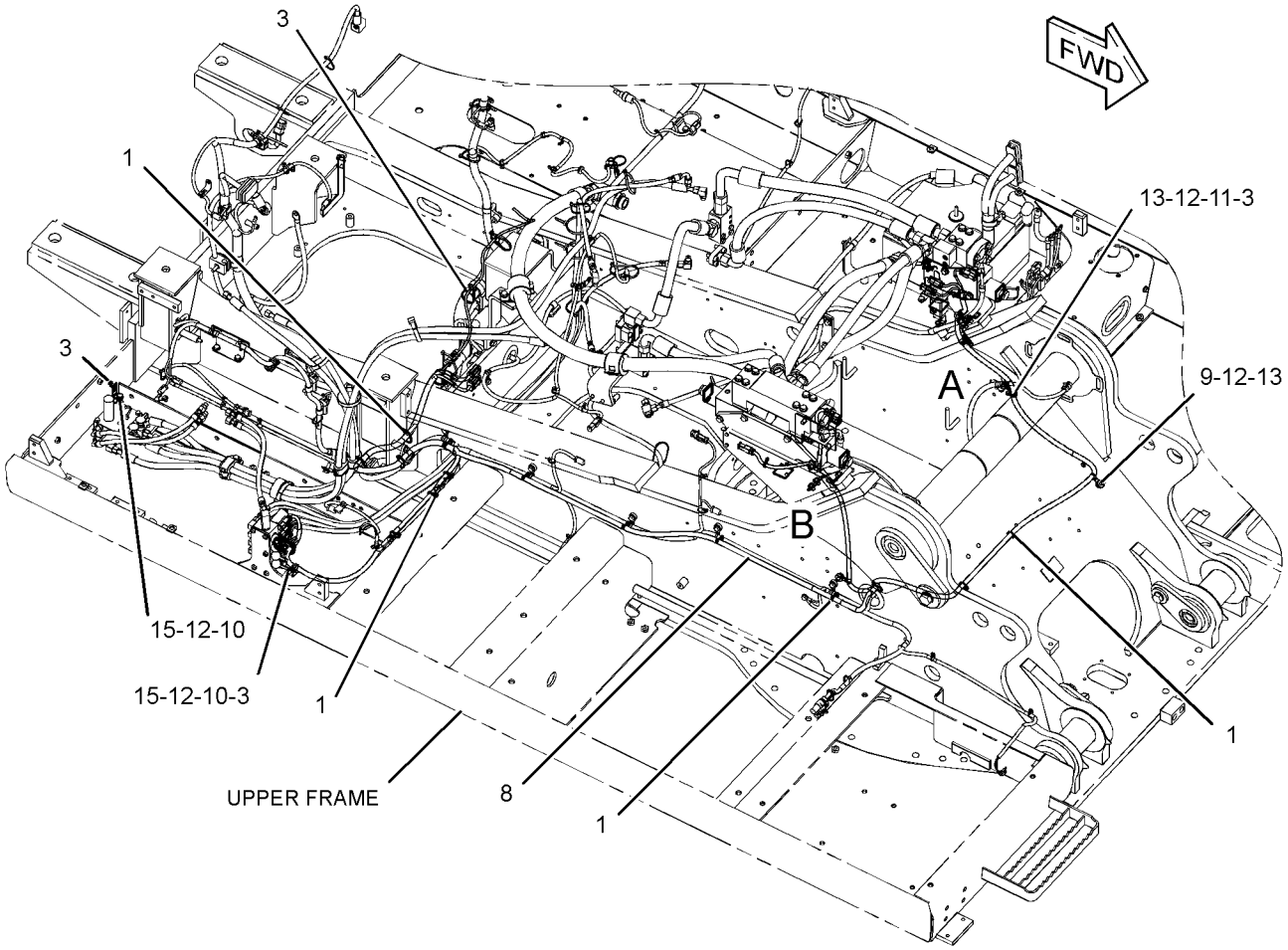

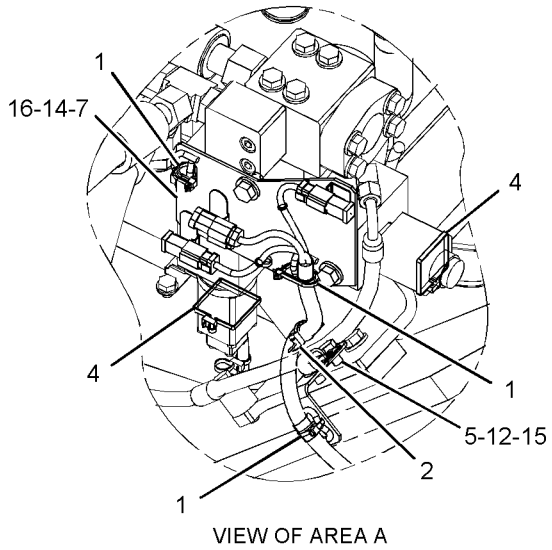

VIEW OF AREA A

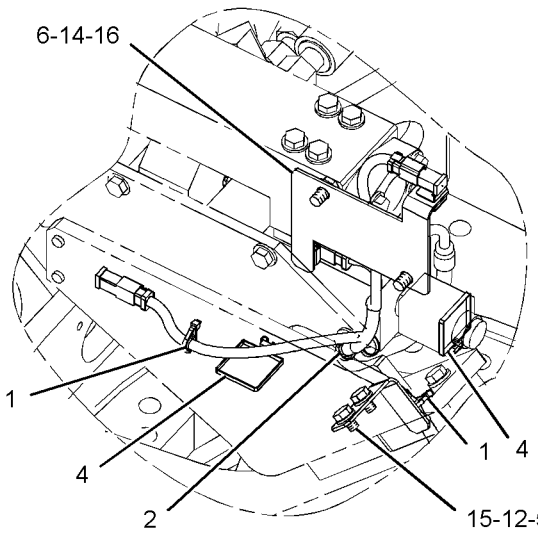

VIEW OF AREA B

GRAPHIC #1 **<END>** g01243047

259-4963 WIRING GP-AUXILIARY CONTROL

S/N: MYG1-UP; PPN1-UP
PART OF 255-5774 CONTROL AR-AUXILIARY
AN ATTACHMENT

SMCS-1408 **i02480206**

NOTE	REF NO	GRAPHIC REF	PART NUMBER	QTY	PART NAME 1 2 3 4 5 6 (PRODUCT LEVEL)	SEE PAGE
C	1	1	**3S-2093**	5	STRAP-CABLE	
C	2	1	**7K-1181**	6	STRAP-CABLE	
C	3	1	**275-6937**	1	HARNESS AS-CONTROL	
		1	**3S-2093**	2	STRAP-CABLE	
		1	**155-2270**	2	KIT-CONNECTING PLUG (2-PIN)	
					(EACH PLUG KIT INCLUDES PLUG AS, WEDGE, & INTERFACE SEAL)	
		1	**243-4509**	1	RECEPTACLE AS-CONNECTOR (8-PIN)	
	4	1	**132-5789**	2	CLIP	
	5	1	**8T-4121**	2	WASHER-HARD (11X21X2.5-MM THK)	
M	6	1	**8T-4191**	2	BOLT (M10X1.5X16-MM)	

C-CHANGE FROM PREVIOUS TYPE
M-METRIC PART

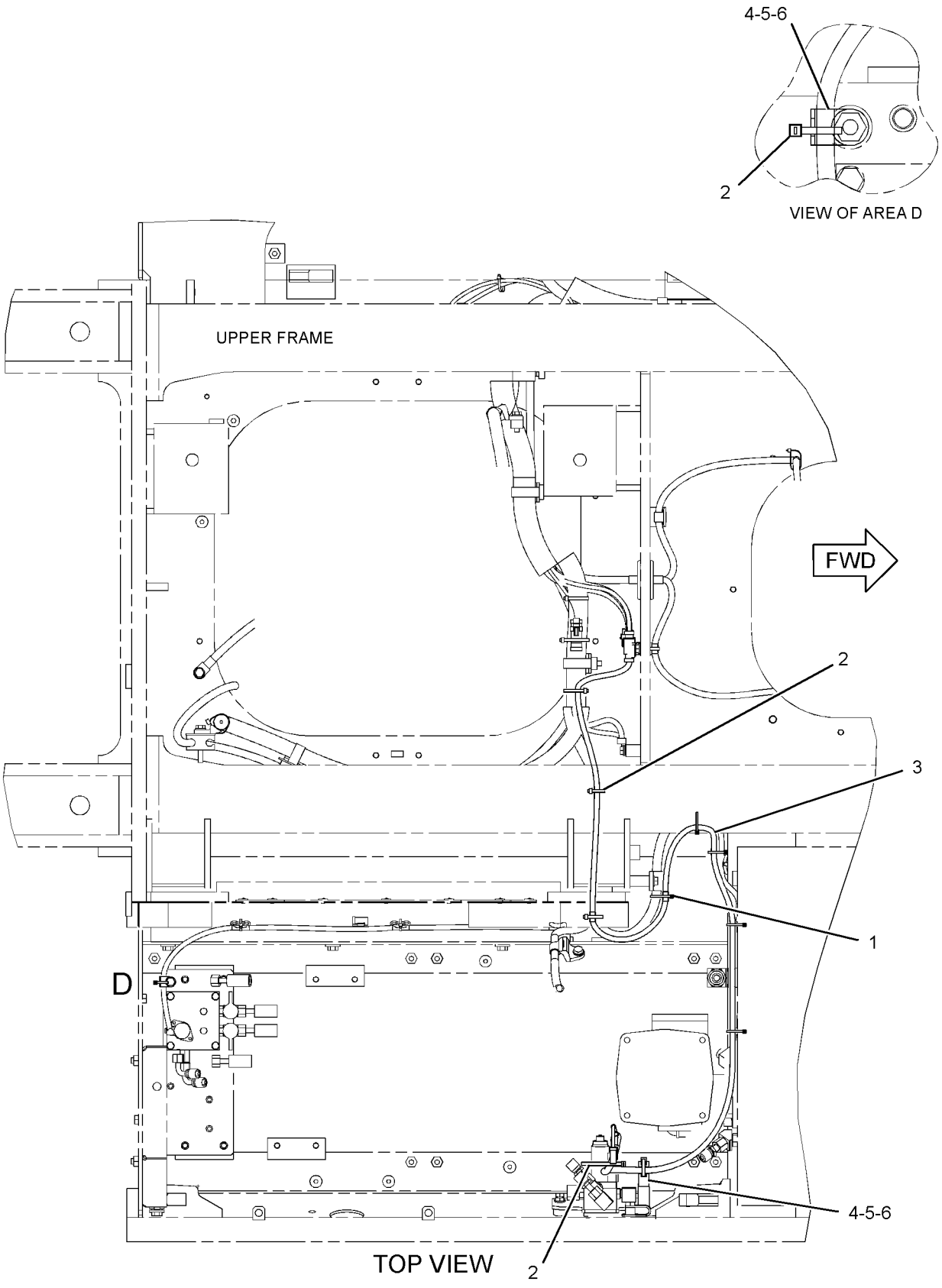

GRAPHIC #1

<END>

g01243211

336-6206 WIRING GP-BOOM FLOAT

S/N: MYG1-UP; PPN1-UP
PART OF 346-4449 CONTROL AR-BOOM
AN ATTACHMENT

SMCS-1408 **i03676324**

NOTE	REF NO	GRAPHIC REF	PART NUMBER	QTY	PART NAME 1 2 3 4 5 6 (PRODUCT LEVEL)	SEE PAGE
	1	1	**3S-2093**	21	STRAP-CABLE	
	2	1	**7I-2673**	9	STRAP-CABLE	
	3	1	**7K-1181**	16	STRAP-CABLE	
	4	1	**111-4836**	1	CLIP	
	5	1	**116-0118**	1	CLIP	
	6	1	**204-1611**	1	STRAP-CABLE	
	7	1	**342-3145**	1	HARNESS AS-CHASSIS	
		1	**8T-8729**	4	PIN-CONNECTOR (16-GA TO 18-GA)	
		1	**8T-8730**	10	SOCKET-CONNECTOR (16-GA TO 18-GA)	
		1	**3S-2093**	1	STRAP-CABLE	
BE		1	**125-7874**		TUBE-HEAT SHRINK (5.72-MM DIA)	
BE		1	**125-7875**		TUBE-HEAT SHRINK (7.44-MM DIA)	
		1	**9X-3402**	3	SOCKET-CONNECTOR (16-GA TO 18-GA)	
		1	**2L-8079**	1	TERMINAL-RING (14-GA TO 16-GA, 3/8-IN SCREW)	
		1	**9X-3401**	3	PIN-CONNECTOR (16-GA TO 18-GA)	
		1	**155-2270**	5	KIT-CONNECTING PLUG (2-PIN)	
		1	**155-2260**	1	KIT-CONNECTING PLUG (3-PIN)	
					(EACH PLUG KIT INCLUDES PLUG AS, WEDGE & INTERFACE SEAL)	
		1	**243-4506**	1	RECEPTACLE AS-CONNECTOR (3-PIN)	
		1	**243-4507**	1	RECEPTACLE AS-CONNECTOR (4-PIN)	
	8	1	**8T-4121**	1	WASHER-HARD (11X21X2.5-MM THK)	
M	9	1	**8T-4137**	1	BOLT (M10X1.5X20-MM)	

B-USE AS REQUIRED
E-ORDER BY THE CENTIMETER
M-METRIC PART

336-6206 **WIRING GP-BOOM FLOAT** *(contd.)* **i03676324**

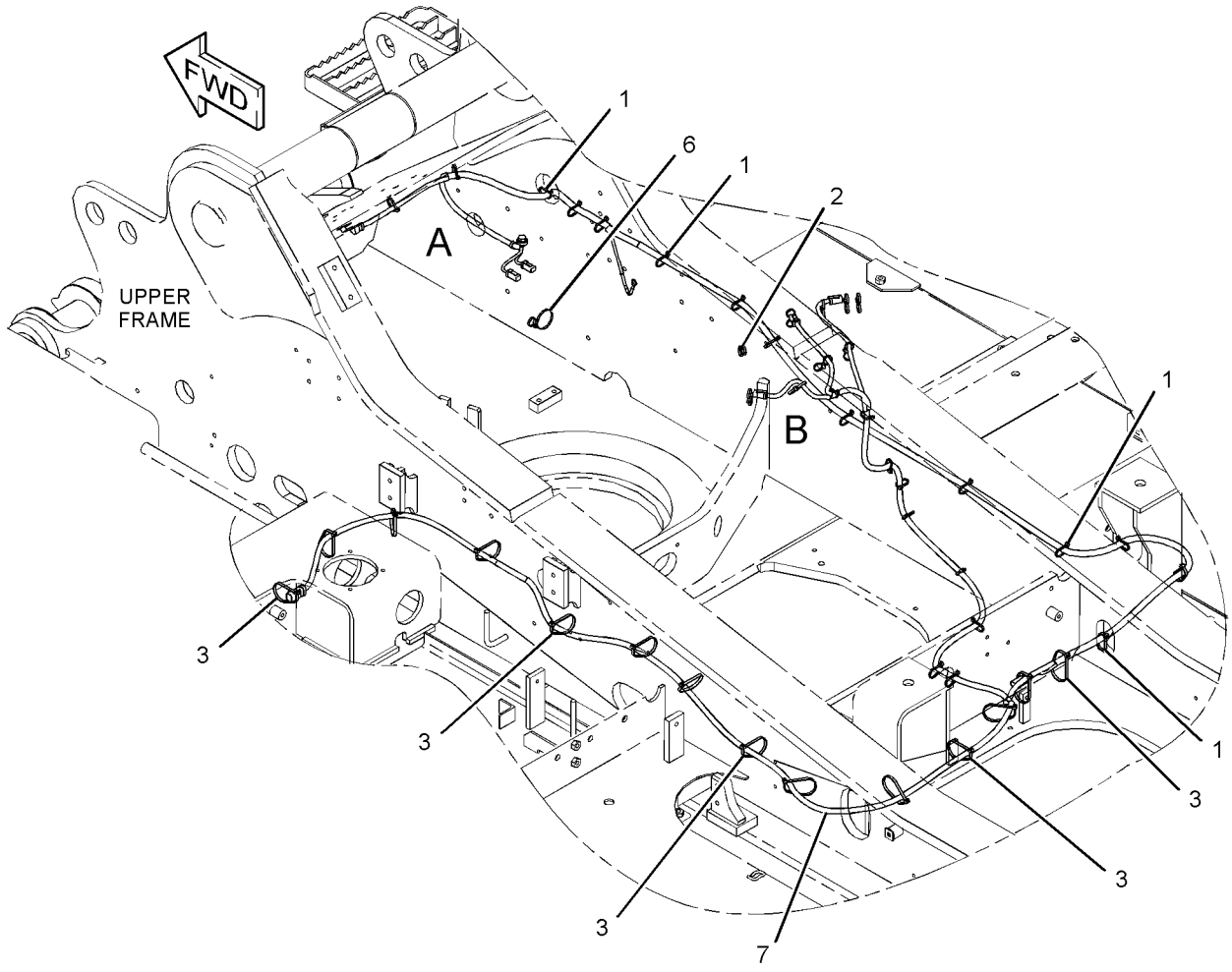

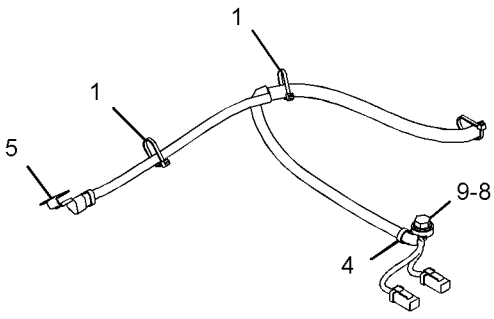

VIEW OF AREA A

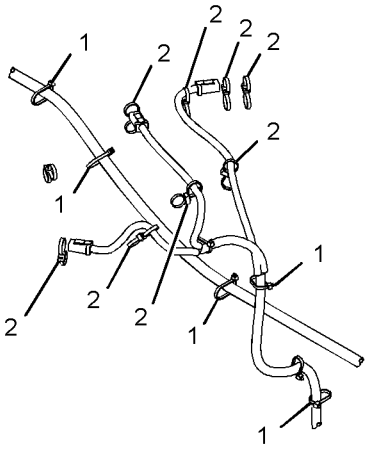

VIEW OF AREA B

GRAPHIC #1 **<END>** g01981955

306-8349 WIRING GP-CAB–ACCUGRADE READY

S/N: MYG1-UP; PPN1-UP
PART OF 346-4602, 346-4603 GRADE CONTROL AR
AN ATTACHMENT

SMCS-1408, 7301 **i02789737**

NOTE	REF NO	GRAPHIC REF	PART NUMBER	QTY	PART NAME 1 2 3 4 5 6 (PRODUCT LEVEL)	SEE PAGE
	1	1	**7K-1181**	7	STRAP-CABLE	
	2	1	**113-8491**	1	FUSE (15-AMPERE)	
	3	1	**306-8350**	1	HARNESS AS-CAB	

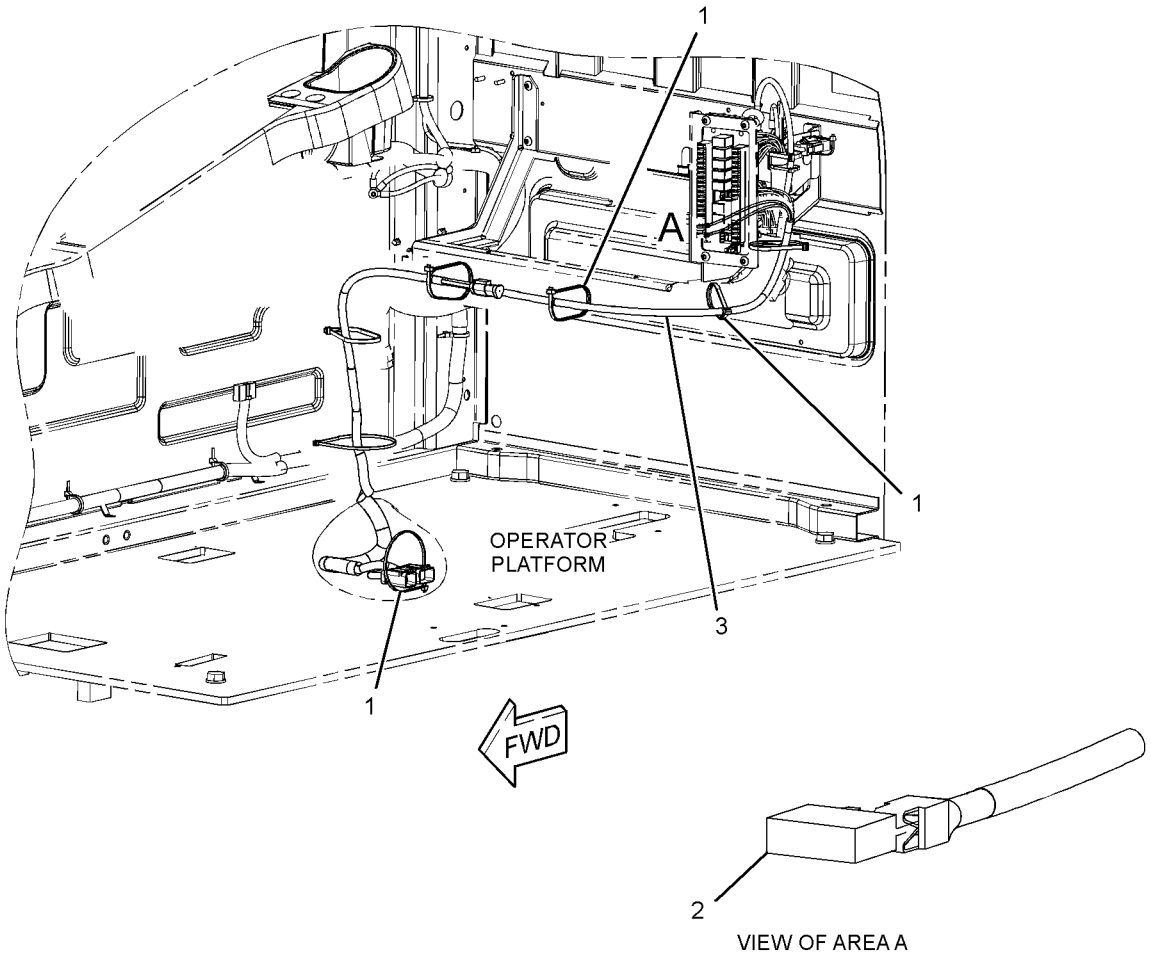

GRAPHIC #1 **<END>** g01398198

336-6137 WIRING GP-CAB–COUPLER

S/N: MYG1-UP; PPN1-UP
PART OF 344-4124 CONTROL AR-COUPLER
AN ATTACHMENT

SMCS-1408, 7301 **i03666080**

NOTE	REF NO	GRAPHIC REF	PART NUMBER	QTY	PART NAME 1 2 3 4 5 6 (PRODUCT LEVEL)	SEE PAGE
	1	1	**7K-1181**	15	STRAP-CABLE	
	2	1	**149-5050**	4	RELAY (24-VOLT)	
	3	1	**259-4884**	1	BRACKET AS	
	4	1	**259-7220**	1	COVER	
	5	1	*267-7671*	1	SWITCH GP-TOGGLE (QUICK COUPLER)	
		1	**105-5175**	1	SWITCH AS-TOGGLE (QUICK COUPLER)	
		1	**3L-8187**	6	LOCKWASHER	
		1	**6T-3631**	2	NUT-HEX (15/32-32-THD)	
		1	**6T-3632**	1	LOCKWASHER	
		1	**6T-3633**	1	RING-LOCKING	
		1	**6V-8374**	6	SCREW-MACHINE (6-32X0.25-IN)	
		1	**267-7672**		HARNESS AS-WIRING (CAB) (QUICK COUPLER)	
		1	**3S-2093**	1	STRAP-CABLE	
		1	**121-1173**	3	TERMINAL (MALE)	
		1	**5P-2321**	3	TERMINAL-FORK (14-GA TO 16-GA, NO. 6 SCREW)	
		1	**167-3542**	1	CONNECTOR-RECEPTACLE	
		1	**9X-8081**	1	TERMINAL-RING (10-GA TO 12-GA, NO. 6 SCREW) (SNAP RING)	
	6	1	**267-7676**	1	BRACKET AS	
	7	1	**336-6356**	1	HARNESS AS-QUICK COUPLER	
		1	**8T-8730**	2	SOCKET-CONNECTOR (16-GA TO 18-GA)	
		1	**3S-2093**	15	STRAP-CABLE	
		1	**7Y-3950**	2	TERMINAL-BLADE (14-GA TO 20-GA)	
		1	**7Y-3953**	1	CONNECTOR-RECEPTACLE	
		1	**102-7965**	3	TERMINAL (FEMALE)	
		1	**9W-0844**	2	SOCKET-CONNECTOR (14-GA)	
BE		1	**125-7874**		TUBE-HEAT SHRINK (5.72-MM DIA)	
BE		1	**125-7875**		TUBE-HEAT SHRINK (7.44-MM DIA)	
		1	**149-5051**	4	CONNECTOR-RECEPTACLE	
		1	**149-5069**	9	TERMINAL-BLADE (14-GA TO 20-GA)	
		1	**149-5070**	9	TERMINAL-BLADE (16-GA TO 20-GA)	
		1	**163-6803**	1	CONNECTOR-PLUG	
		1	**167-3487**	1	WEDGE-PLUG LOCK	
		1	**230-5008**	1	PLUG AS-CONNECTOR (4-PIN)	
M	8	1	**9X-2042**	7	SCREW-TRUSS HEAD (M6X1X12-MM)	

B-USE AS REQUIRED
E-ORDER BY THE CENTIMETER
M-METRIC PART

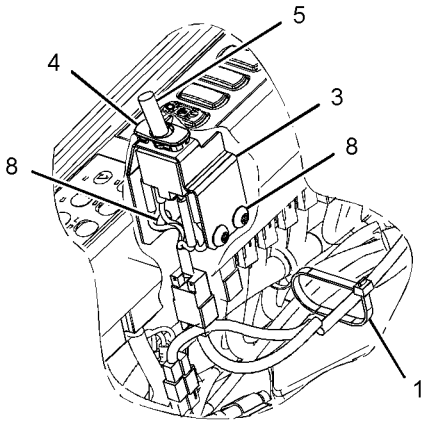

VIEW OF AREA A

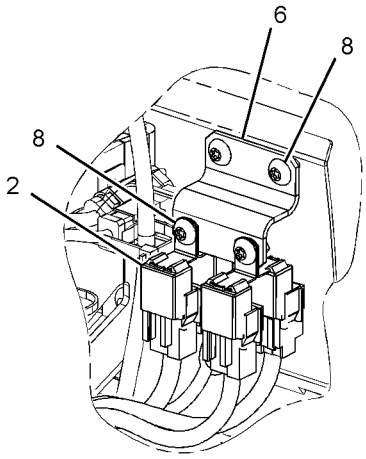

VIEW OF AREA B

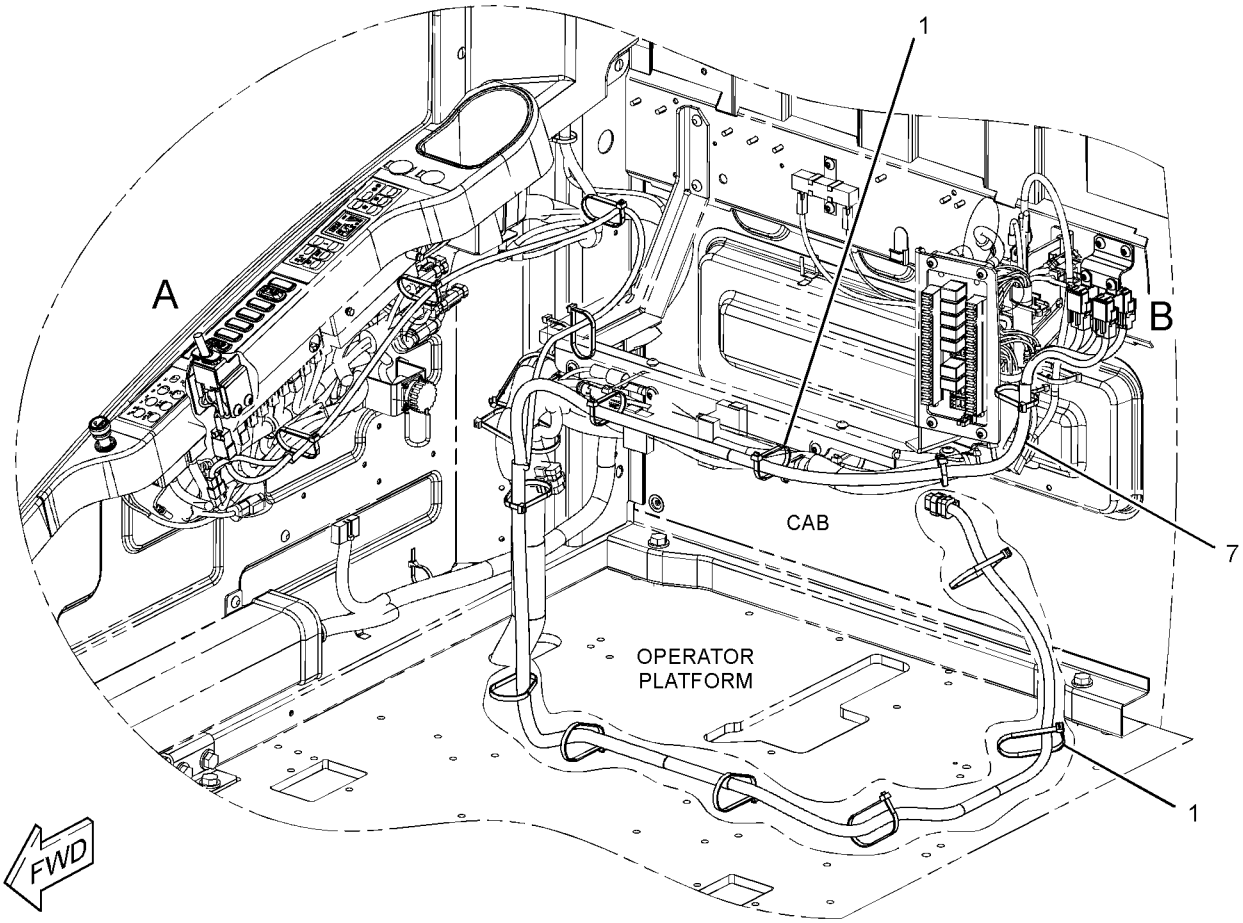

GRAPHIC #1 **<END>** g01953073

336-6156 WIRING GP-CAB—BOOM FLOAT

S/N: MYG1-UP; PPN1-UP
PART OF 346-4449 CONTROL AR-BOOM
AN ATTACHMENT

SMCS-1408, 7301 **i03668008**

NOTE	REF NO	GRAPHIC REF	PART NUMBER	QTY	PART NAME 1 2 3 4 5 6 (PRODUCT LEVEL)	SEE PAGE
	1	1	**3S-2093**	1	STRAP-CABLE	
	2	1	**7K-1181**	16	STRAP-CABLE	
	3	1	**149-5050**	1	RELAY (24-VOLT) (BOOM FLOAT DISABLE)	
	3A	1	**149-5050**	1	RELAY (24-VOLT) (SMARTBOOM, DOWN)	
	3B	1	**149-5050**	1	RELAY (24-VOLT) (SMARTBOOM, UP/DOWN)	
	4	1	**163-6795**	1	STRAP-CABLE	
	5	1	**238-2214**	1	SWITCH AS-ROCKER (BOOM FLOAT)	
		1	**167-3542**	1	CONNECTOR-RECEPTACLE	
		1	**167-3543**	5	TERMINAL (MALE)	
	6	1	**328-0028**	1	SWITCH AS-ROCKER (OVERLOAD WARNING)	
		1	**167-3542**	1	CONNECTOR-RECEPTACLE	
		1	**167-3543**	4	TERMINAL (MALE)	
	7	1	**342-2859**	1	HARNESS AS-SENSOR (BOOM FLOAT)	
		1	**8T-8730**	7	SOCKET-CONNECTOR (16-GA TO 18-GA)	
		1	**3S-2093**	27	STRAP-CABLE	
		1	**7Y-3962**	1	TERMINAL-BULLET (MALE)	
		1	**8T-8737**	1	PLUG-SEAL	
BE		1	**125-7874**		TUBE-HEAT SHRINK (5.72-MM DIA)	
		1	**9X-3402**	3	SOCKET-CONNECTOR (16-GA TO 18-GA)	
		1	**9X-3401**	4	PIN-CONNECTOR (16-GA TO 18-GA)	
		1	**149-5051**	3	CONNECTOR-RECEPTACLE	
		1	**149-5069**	5	TERMINAL-BLADE (14-GA TO 20-GA)	
		1	**149-5070**	8	TERMINAL-BLADE (16-GA TO 20-GA)	
		1	**230-4013**	1	PLUG AS-CONNECTOR (3-PIN)	
		1	**264-7030**	1	SEAL-CONNECTOR	
		1	**230-5008**	2	PLUG AS-CONNECTOR (4-PIN)	
					(EACH INCLUDES)	
		1	**264-7031**	1	SEAL-CONNECTOR	
		1	**243-4507**	1	RECEPTACLE AS-CONNECTOR (4-PIN)	
M	8	1	**5C-2890**	3	NUT (M6X1-THD)	
	9	1	**9X-8256**	3	WASHER (6.6X12X2-MM THK)	

B-USE AS REQUIRED
E-ORDER BY THE CENTIMETER
M-METRIC PART

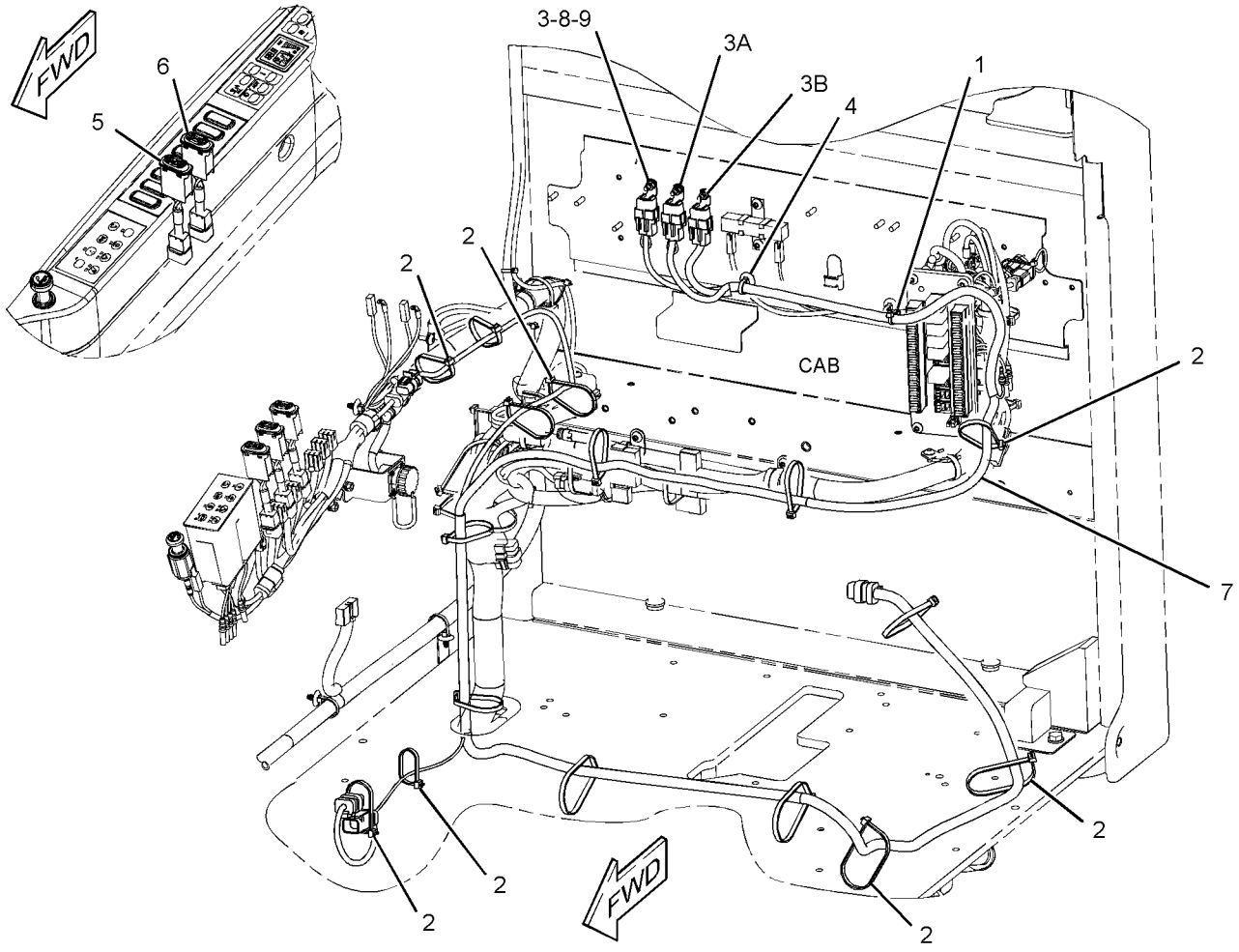

GRAPHIC #1 **<END>** g01987673

336-6159 WIRING GP-CAB—WORK AREA VISUAL SYSTEM, REAR

S/N: MYG1-UP; PPN1-UP
PART OF 340-3773 CAMERA AR
AN ATTACHMENT

SMCS-1408, 7301 **i03668760**

NOTE	REF NO	GRAPHIC REF	PART NUMBER	QTY	PART NAME 1 2 3 4 5 6 (PRODUCT LEVEL)	SEE PAGE
	1	1	**3S-2093**	13	STRAP-CABLE	
	2	1	**7K-1181**	14	STRAP-CABLE	
	3	1	**306-8590**	1	HARNESS AS-WIRING (WORK AREA VISUAL SYSTEM, REAR)	
	4	1	**327-9998**	1	HARNESS AS-AUXILIARY (WORK AREA VISUAL SYSTEM, REAR)	
		1	**3S-2093**	1	STRAP-CABLE	
		1	**7Y-3962**	1	TERMINAL-BULLET (MALE) (MALE)	
		1	**7Y-3963**	1	TERMINAL-BULLET (FEMALE) (FEMALE)	
BE		1	**125-7875**		TUBE-HEAT SHRINK (7.44-MM DIA)	

B-USE AS REQUIRED
E-ORDER BY THE CENTIMETER

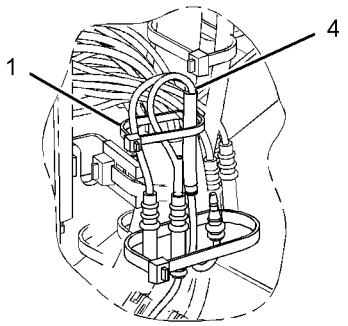

VIEW OF AREA A

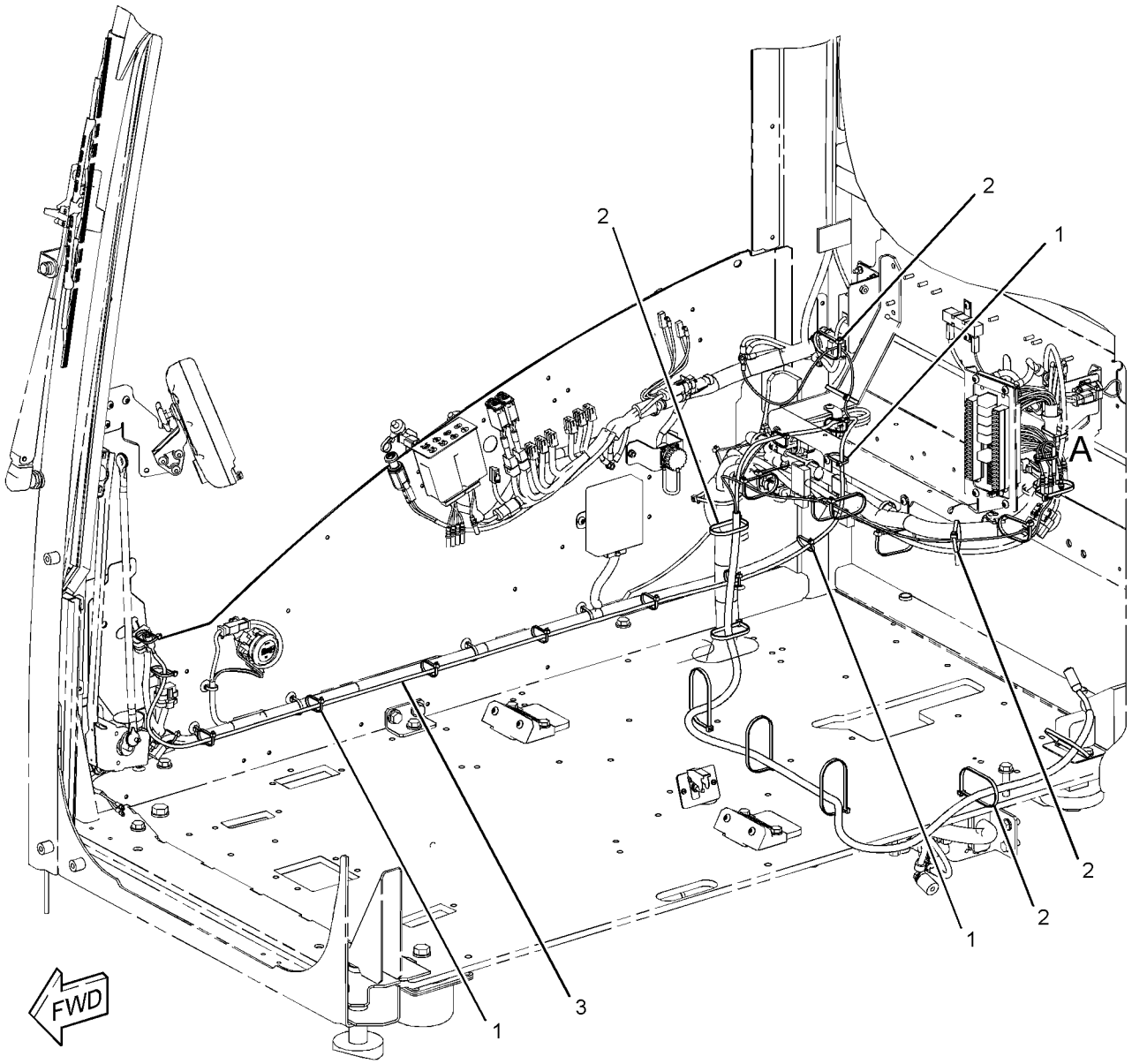

GRAPHIC #1 **<END>** g01951976

336-6174 WIRING GP-CAB

S/N: MYG1-UP; PPN1-UP

PART OF 340-6485 OPERATOR AR

SMCS-1408, 7301 **i03652801**

NOTE	REF NO	GRAPHIC REF	PART NUMBER	QTY	PART NAME 1 2 3 4 5 6 (PRODUCT LEVEL)	SEE PAGE
	1	1,2	**3S-2093**	6	STRAP-CABLE	
	2	3	**7I-2673**	2	STRAP-CABLE	
	4	2,3	**7K-1181**	10	STRAP-CABLE	
	5	3	**7Y-5505**	2	SPEAKER AS	
					(EACH INCLUDES)	
		3	**7Y-3951**	2	TERMINAL-BLADE (14-GA)	
		3	**7Y-3954**	1	CONNECTOR-PLUG	
	8	2	**102-8016**	1	RESISTOR AS	
	9	3	**113-8490**	22	FUSE (10-AMPERE)	
	10	3	**113-8491**	5	FUSE (15-AMPERE)	
	11	3	**113-8493**	3	FUSE (25-AMPERE)	
	12	3	**124-3548**	2	FUSE (30-AMPERE)	
Y	13	1	**132-1829**	1	ALARM GP (24-VOLT) (FAULT)	147
	14	3	**141-2759**	8	FUSE (5-AMPERE)	
	16	2	**161-3128**	1	RELAY (24-VOLT) (BOOM LIGHT)	
	16A	2	**161-3128**	1	RELAY (24-VOLT) (CHASSIS LIGHT)	
	16B	2	**161-3128**	1	RELAY (24-VOLT) (CAB LIGHT)	
	16C	2	**161-3128**	1	RELAY (24-VOLT) (HORN)	
	16D	2	**161-3128**	1	RELAY (24-VOLT) (NEUTRAL START)	
	16E	2	**161-3128**	1	RELAY (24-VOLT) (TRAVEL ALARM)	
	16F	2	**161-3128**	1	RELAY (24-VOLT) (ETHER START)	
	17	1	**301-7292**	1	KIT-SERVICE METER (32-VOLT DC)	
					(INCLUDES METER & FILM)	
	18	2	**163-6758**	1	WIRE AS	
	19	1,2,3	**163-6795**	15	STRAP-CABLE	
	20	2	**167-3593**	1	STRAP	
	21	3	**170-6888**	1	PULLER-FUSE	
	22	2	**213-0772**	1	SWITCH AS-MAGNETIC (24-VOLT) (MAIN RELAY)	
	23	2	**227-7575**	1	PANEL-CONTROL (SWITCH)	
	24	2	**234-1097**	1	BRACKET	
	25	2	**238-2212**	1	SWITCH AS-ROCKER (FINE SWING)	
		2	**167-3542**	1	CONNECTOR-RECEPTACLE	
		2	**167-3543**	5	TERMINAL (MALE)	
	26	2	**238-2318**	1	LIGHTER AS-CIGAR (24-VOLT)	
					—OR—	
		2	**9W-0335**	1	LIGHTER AS-CIGAR (24-VOLT)	
	27	2	**238-2390**	1	CABLE AS	
D		2	**6V-2369**		CABLE (4-GA, BLACK) (0.3-M)	
		2	**9G-4343**	2	TERMINAL-RING (4-GA, 1/4-IN SCREW)	
	28	2	**238-2391**	1	CABLE AS	
D		2	**6V-2369**		CABLE (4-GA, BLACK) (0.3-M)	
		2	**9G-4343**	2	TERMINAL-RING (4-GA, 1/4-IN SCREW)	
	29	2	**251-0637**	1	INSULATION	
	30	3	**342-3067**	1	ANTENNA AS	
	31	1	**342-2856**	1	HARNESS AS-CAB	
		1	**102-8803**	3	KIT-RECEPTACLE (3-PIN)	
					(EACH INCLUDES RECEPTACLE AS & WEDGE)	
		1	**8T-8729**	3	PIN-CONNECTOR (16-GA TO 18-GA)	
		1	**8T-8730**	6	SOCKET-CONNECTOR (16-GA TO 18-GA)	
		1	**3S-2093**	96	STRAP-CABLE	
		1	**7Y-3950**	4	TERMINAL-BLADE (14-GA TO 20-GA) (MALE)	
		1	**7Y-3951**	11	TERMINAL-BLADE (14-GA) (FEMALE)	
		1	**7Y-3952**	3	CONNECTOR-PLUG	
		1	**7Y-3955**	2	CONNECTOR-RECEPTACLE	
		1	**7Y-3958**	1	CONNECTOR-PLUG	
		1	**7Y-3962**	2	TERMINAL-BULLET (MALE) (MALE)	

336-6174 **WIRING GP-CAB** *(contd.)* **i03652801**

NOTE	REF NO	GRAPHIC REF	PART NUMBER	QTY	PART NAME 1 2 3 4 5 6 (PRODUCT LEVEL)	SEE PAGE
		1	**7Y-3963**	12	TERMINAL-BULLET (FEMALE) (FEMALE)	
		1	**8C-6354**	1	CAP-RECEPTACLE	
		1	**8T-8737**	22	PLUG-SEAL	
		1	**5P-6271**	1	CONNECTOR AS	
		1	**9W-1951**	1	RECEPTACLE-CONNECTOR (9-PIN)	
		1	**102-7964**	2	CONNECTOR-PLUG	
		1	**102-7965**	79	TERMINAL (FEMALE)	
		1	**9W-0844**	3	SOCKET-CONNECTOR (14-GA)	
		1	**111-4816**	1	CONNECTOR-PLUG	
		1	**116-0255**	1	TERMINAL-BLADE (10-GA TO 20-GA) (FEMALE)	
BE		1	**119-3662**		TUBE-HEAT SHRINK (10.85-MM DIA)	
		1	**121-1022**	2	DIODE	
		1	**121-1168**	1	CONNECTOR-RECEPTACLE	
		1	**121-1173**	13	TERMINAL (MALE)	
		1	**125-4840**	1	WEDGE-PLUG LOCK (13-PIN)	
		1	**125-4841**	2	WEDGE-PLUG LOCK (21-PIN)	
BE		1	**125-7874**		TUBE-HEAT SHRINK (5.72-MM DIA)	
BE		1	**125-7875**		TUBE-HEAT SHRINK (7.44-MM DIA)	
		1	**9X-3402**	15	SOCKET-CONNECTOR (16-GA TO 18-GA)	
					—OR—	
		1	**126-1768**	15	SOCKET-CONNECTOR (14-GA)	
		1	**2L-8065**	3	TERMINAL-RING (10-GA TO 12-GA, NO. 8 SCREW)	
		1	**2L-8067**	8	TERMINAL-RING (10-GA TO 12-GA, 1/4-IN SCREW)	
		1	**2L-8075**	3	TERMINAL-RING (14-GA TO 16-GA, NO. 8 SCREW)	
		1	**128-8950**	1	CONNECTOR-RECEPTACLE	
		1	**5P-2321**	1	TERMINAL-FORK (14-GA TO 16-GA, NO. 6 SCREW)	
		1	**134-3296**	1	HOUSING-PLUG	
		1	**134-3297**	1	SEAL	
		1	**176-9299**	2	KIT-RECEPTACLE (3-PIN)	
					(EACH INCLUDES RECEPTACLE AS & WEDGE)	
		1	**9X-3401**	12	PIN-CONNECTOR (16-GA TO 18-GA)	
		1	**149-5069**	8	TERMINAL-BLADE (14-GA TO 20-GA) (FEMALE)	
		1	**149-5070**	16	TERMINAL-BLADE (16-GA TO 20-GA) (FEMALE)	
		1	**149-5071**	8	TERMINAL-BLADE (12-GA TO 14-GA) (FEMALE)	
		1	**153-2602**	5	CONNECTOR-RECEPTACLE	
		1	**153-2631**	5	TERMINAL (FEMALE)	
		1	**155-2260**	1	KIT-CONNECTING PLUG (3-PIN)	
		1	**155-2270**	2	KIT-CONNECTING PLUG (2-PIN)	
					(EACH PLUG KIT INCLUDES PLUG AS, WEDGE, & INTERFACE SEAL)	
		1	**163-6659**	1	CONNECTOR-PLUG	
		1	**163-6699**	1	CONNECTOR-PLUG	
		1	**163-6790**	23	TERMINAL (FEMALE)	
		1	**163-6803**	8	CONNECTOR-PLUG	
		1	**167-3487**	8	WEDGE-PLUG LOCK	
		1	**167-3630**	1	CONNECTOR-PLUG	
		1	**167-3631**	2	TERMINAL (FEMALE)	
		1	**170-6890**	5	TERMINAL-BLADE (14-GA)	
		1	**170-6891**	24	TERMINAL-BLADE (16-GA TO 18-GA)	
		1	**174-3016**	2	PLUG AS-CONNECTOR (3-PIN)	
		1	**230-4009**	1	PLUG AS-CONNECTOR (12-PIN)	
		1	**264-7034**	1	SEAL-CONNECTOR	
		1	**230-4011**	1	PLUG AS-CONNECTOR (2-PIN)	
		1	**264-7029**	1	SEAL-CONNECTOR	
		1	**230-4013**	1	PLUG AS-CONNECTOR (3-PIN)	
		1	**264-7030**	1	SEAL-CONNECTOR	
		1	**238-2319**	1	BASE AS (FUSE, RELAY PANEL)	
		1	**238-2363**	6	TERMINAL (FEMALE)	
		1	**238-2366**	10	TERMINAL (MALE)	

336-6174 **WIRING GP-CAB** ***(contd.)*** **i03652801**

NOTE	REF NO	GRAPHIC REF	PART NUMBER	QTY	PART NAME 1 2 3 4 5 6 (PRODUCT LEVEL)	SEE PAGE
		1	**239-7356**	1	PLUG AS-CONNECTOR (12-PIN)	
		1	**264-7034**	1	SEAL-CONNECTOR	
		1	**243-4505**	2	RECEPTACLE AS-CONNECTOR (2-PIN)	
		1	**243-4506**	1	RECEPTACLE AS-CONNECTOR (3-PIN)	
	32	3	**342-3601**	1	COVER AS	
M	33	2	**095-0723**	3	SCREW (M3X0.5X10-MM)	
	34	2	**096-5962**	3	WASHER-HARD (3.4X7X0.8-MM THK)	
	35	3	**096-6166**	2	WASHER-HARD (4.5X9X1-MM THK)	
	36	2,3	**156-6175**	9	CLIP	
	37	2	**4P-7581**	1	CLIP	
M	38	2	**5C-2890**	3	NUT (M6X1-THD)	
M	39	3	**6V-9491**	2	SCREW-MACHINE (M4X0.7X20-MM)	
	40	2	**8T-0328**	2	WASHER-HARD (5.5X10X1-MM THK)	
M	41	3	**8T-0337**	6	SCREW-MACHINE (M4X0.7X12-MM)	
M	42	2	**8T-4127**	2	SCREW-MACHINE (M5X0.8X20-MM)	
M	43	1,2,3	**9X-2042**	14	SCREW-TRUSS HEAD (M6X1X12-MM)	
M	44	2,3	**9X-2044**	5	SCREW-TRUSS HEAD (M6X1X16-MM)	
	45	2	**9X-8256**	3	WASHER (6.6X12X2-MM THK)	
L	46	3	**163-6795**	15	STRAP-CABLE	
E	47	3	**101-2846**		GUARD (9-CM EACH)	

B-USE AS REQUIRED
D-ORDER BY THE METER
E-ORDER BY THE CENTIMETER
L-USED ON ALL MODELS EXCEPT 336D
M-METRIC PART
Y-SEPARATE ILLUSTRATION

REFER TO ALL ILLUSTRATIONS OF
THIS GROUP FOR AUXILIARY VIEWS

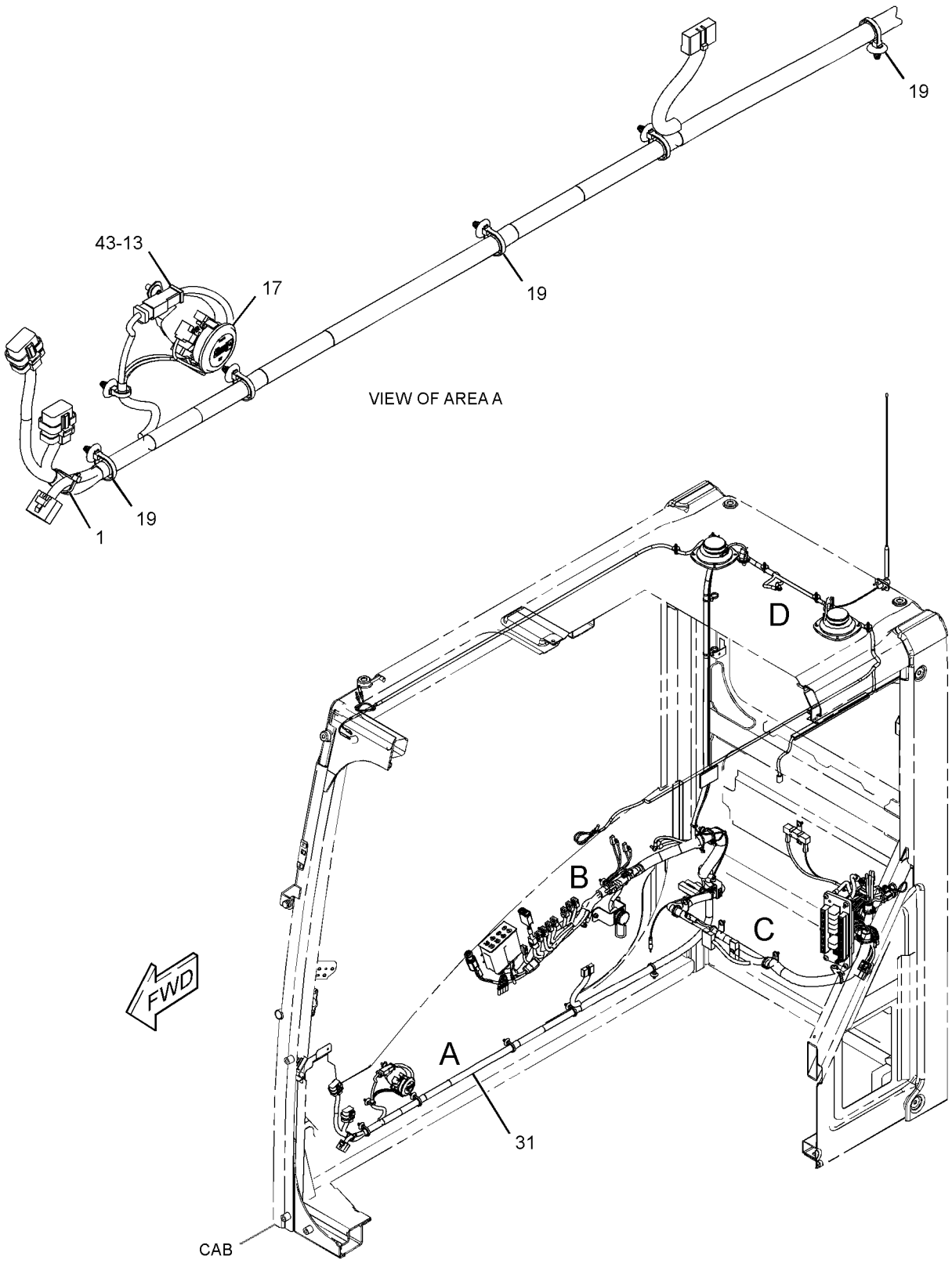

GRAPHIC #1 g01987959

REFER TO ALL ILLUSTRATIONS OF
THIS GROUP FOR AUXILIARY VIEWS

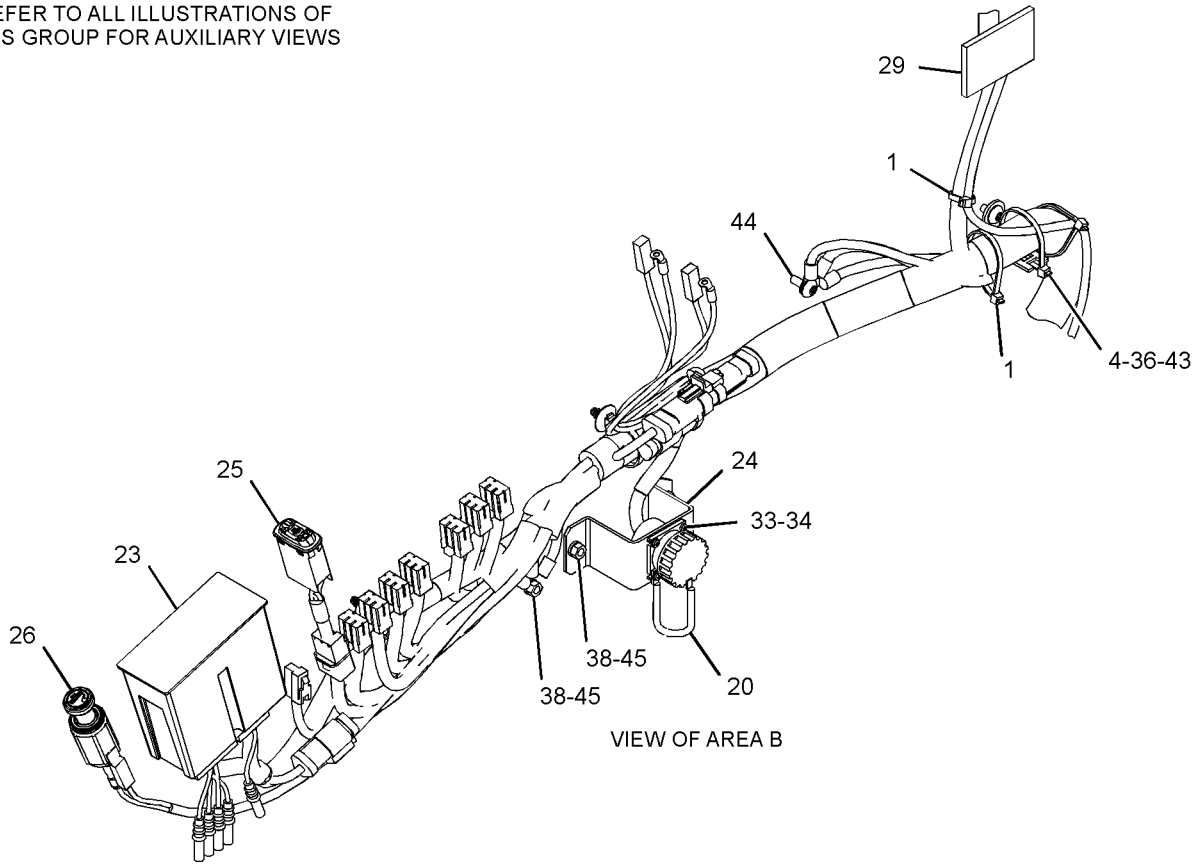

VIEW OF AREA B

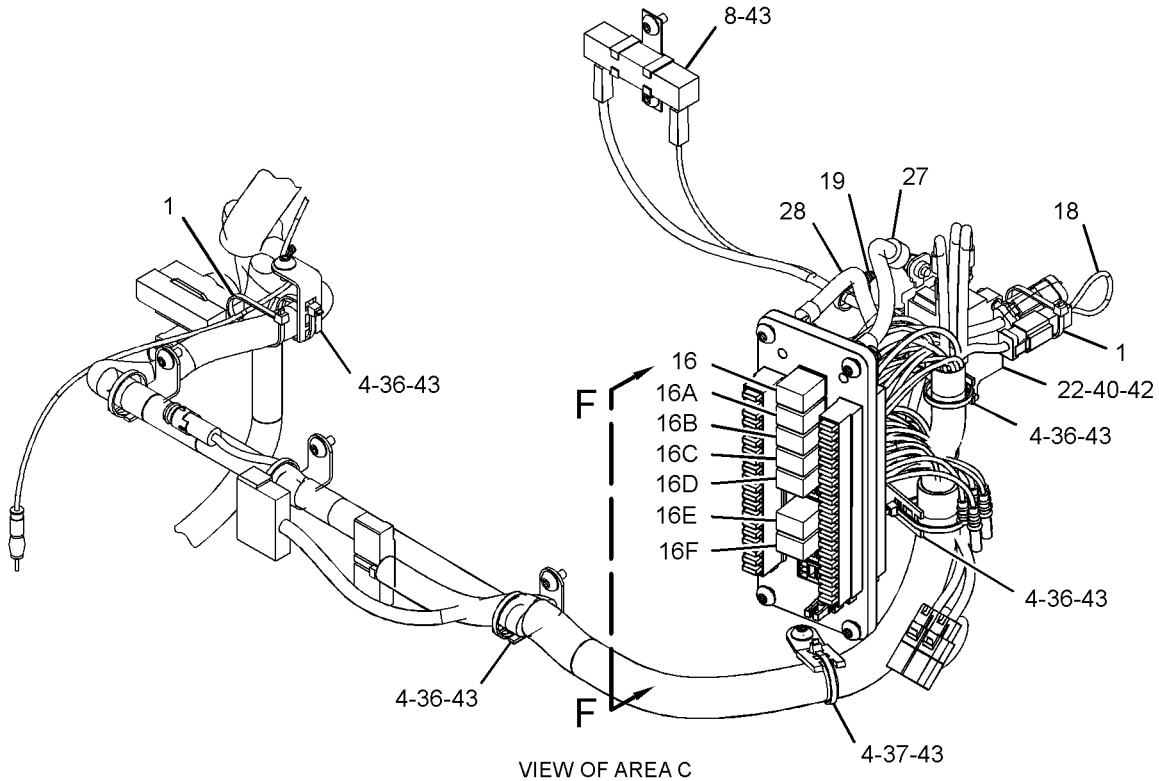

VIEW OF AREA C

GRAPHIC #2 g01987973

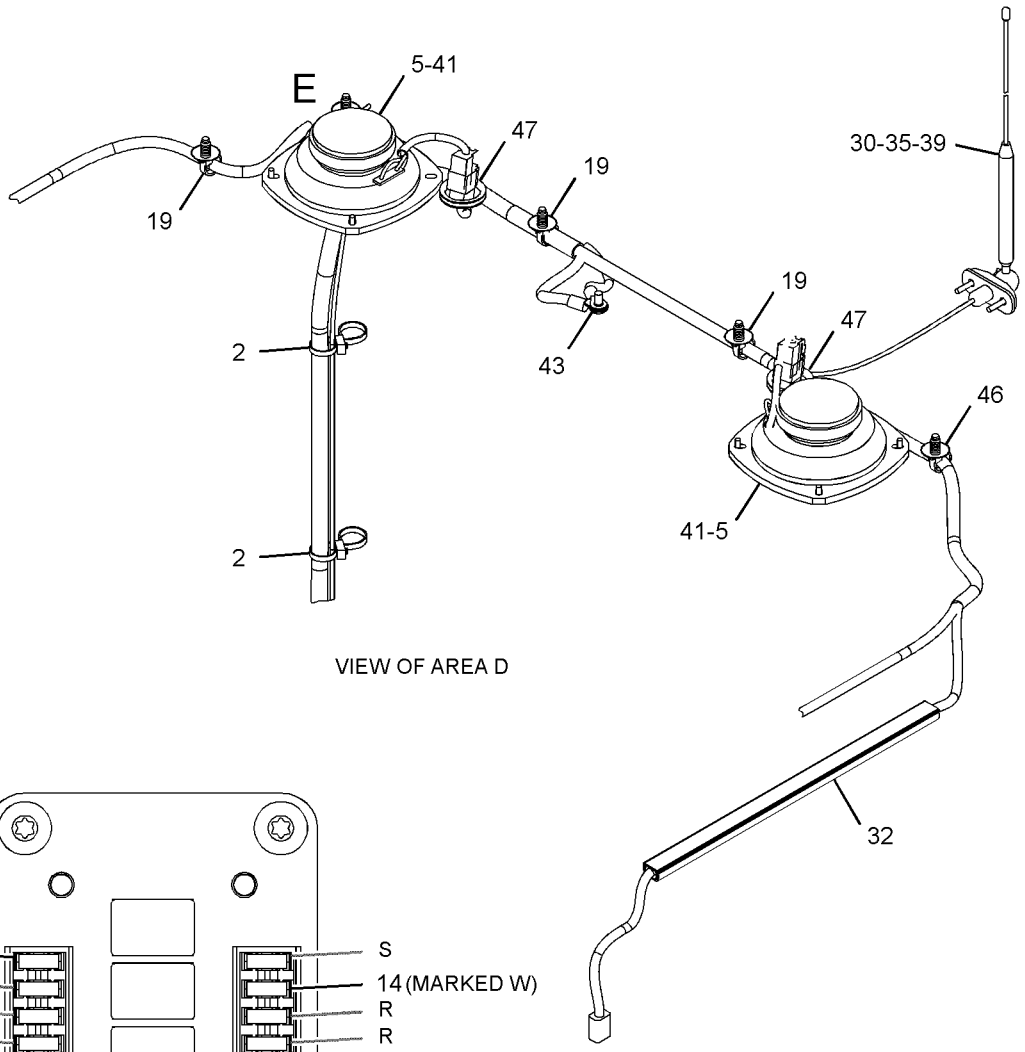

VIEW OF AREA D

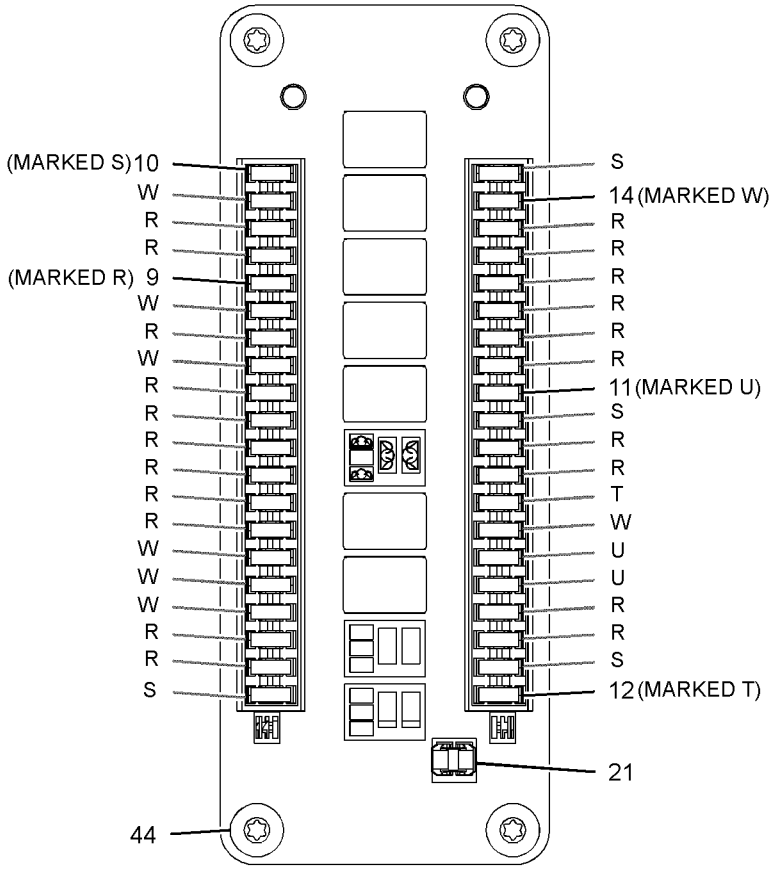

VIEW F-F

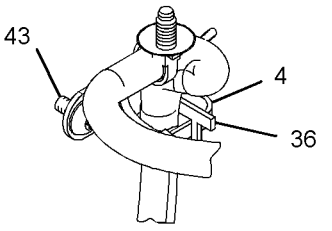

VIEW OF AREA E
(SPEAKER REMOVED FOR CLARITY)

GRAPHIC #3 **<END>** g01987960

336-6220 WIRING GP-CAB—PRIMING PUMP

S/N: MYG1-UP; PPN1-UP
PART OF 340-3837 PUMP GP-FUEL PRIMING
AN ATTACHMENT

SMCS-1408, 7301 **i03667967**

NOTE	REF NO	GRAPHIC REF	PART NUMBER	QTY	PART NAME 1 2 3 4 5 6 (PRODUCT LEVEL)	SEE PAGE
	1	1	**3S-2093**	5	STRAP-CABLE	
	2	1	**7K-1181**	9	STRAP-CABLE	
	3	1	**149-5050**	1	RELAY (24-VOLT) (PRIMING PUMP)	
	4	1	**342-3126**	1	HARNESS AS-PUMP	
		1	**8T-8730**	1	SOCKET-CONNECTOR (16-GA TO 18-GA)	
		1	**3S-2093**	2	STRAP-CABLE	
		1	**8T-8737**	1	PLUG-SEAL	
		1	**9W-0852**	1	PIN-CONNECTOR (14-GA)	
		1	**9W-0844**	3	SOCKET-CONNECTOR (14-GA)	
		1	**149-5051**	1	CONNECTOR-RECEPTACLE	
		1	**149-5069**	2	TERMINAL-BLADE (14-GA TO 20-GA)	
		1	**149-5070**	2	TERMINAL-BLADE (16-GA TO 20-GA)	
		1	**170-6891**	1	TERMINAL-BLADE (16-GA TO 18-GA)	
		1	**230-5008**	1	PLUG AS-CONNECTOR (4-PIN)	
		1	**264-7031**	1	SEAL-CONNECTOR	
		1	**243-4505**	1	RECEPTACLE AS-CONNECTOR (2-PIN)	
M	5	1	**5C-2890**	1	NUT (M6X1-THD)	
	6	1	**9X-8256**	1	WASHER (6.6X12X2-MM THK)	

M-METRIC PART

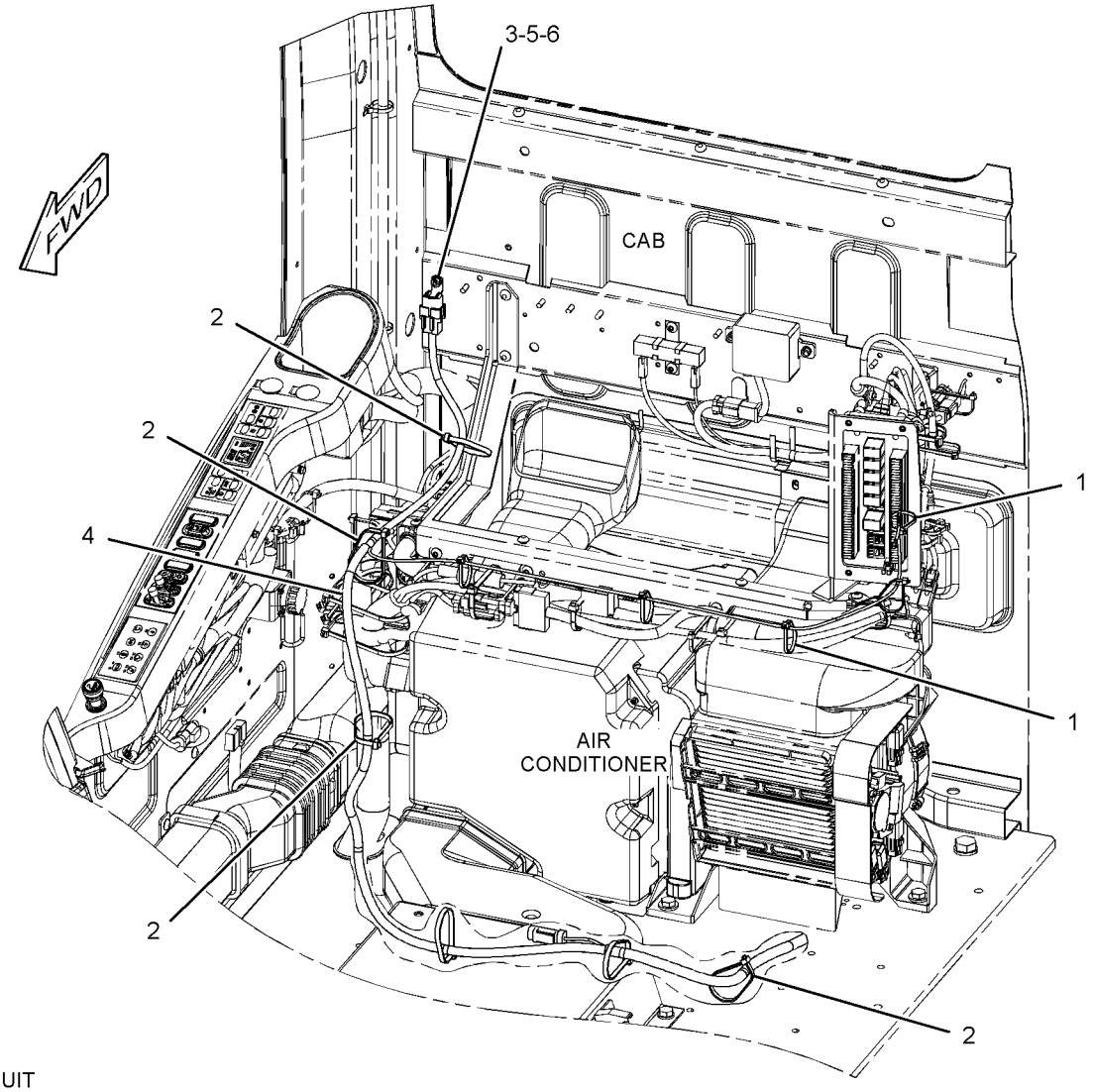

GRAPHIC #1 **<END>** g01985095

342-3015 WIRING GP-CAMERA–WORK AREA VISUAL SYSTEM, REAR

S/N: MYG1-UP; PPN1-UP
PART OF 340-3773 CAMERA AR
AN ATTACHMENT

SMCS-1408, 7348 **i03675143**

NOTE	REF NO	GRAPHIC REF	PART NUMBER	QTY	PART NAME 1 2 3 4 5 6 (PRODUCT LEVEL)	SEE PAGE
	1	1	**3S-2093**	14	STRAP-CABLE	
	2	1	**7K-1181**	9	STRAP-CABLE	
	3	1	**268-8643**	1	CABLE AS	
	4	1	**132-5789**	3	CLIP	
	5	1	**3V-4791**	1	GROMMET	
	6	1	**8T-4121**	3	WASHER-HARD (11X21X2.5-MM THK)	
M	7	1	**8T-4191**	3	BOLT (M10X1.5X16-MM)	

M-METRIC PART

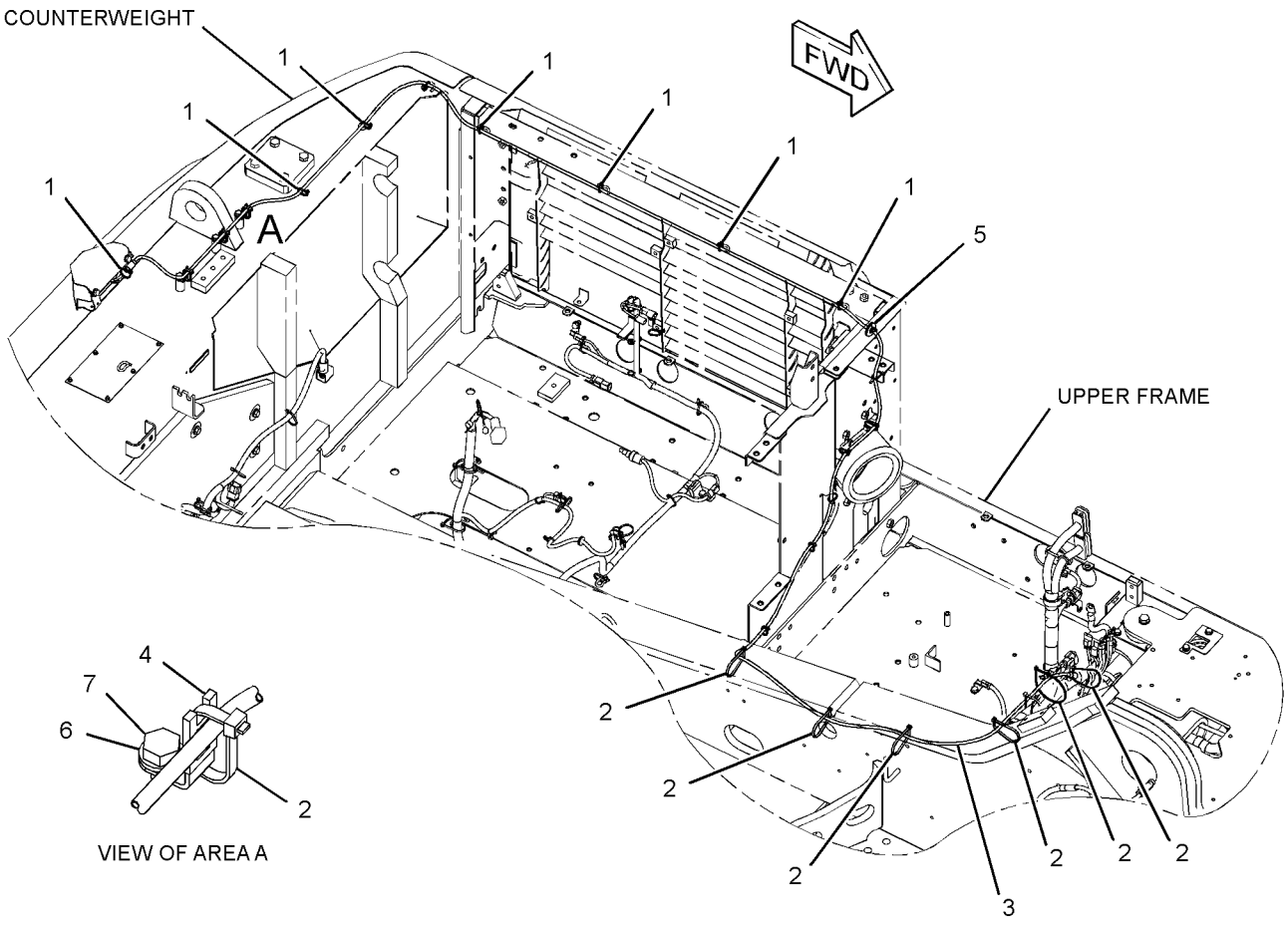

GRAPHIC #1 **<END>** g01983213

342-3149 WIRING GP-CHASSIS–ACCUGRADE READY

S/N: MYG1-UP; PPN1-UP

PART OF 346-4602, 346-4603 GRADE CONTROL AR

AN ATTACHMENT

SMCS-1408 **i03676021**

NOTE	REF NO	GRAPHIC REF	PART NUMBER	QTY	PART NAME 1 2 3 4 5 6 (PRODUCT LEVEL)	SEE PAGE
	1	1	**7K-1181**	44	STRAP-CABLE	
	2	1	**177-7707**	2	BOSS	
	3	1	**275-6841**	1	HARNESS AS-CONTROL (BODY TILT SENSOR, GPS RECEIVER)	
		1	**8T-8737**	16	PLUG-SEAL	
BE		1	**125-7874**		TUBE-HEAT SHRINK (5.72-MM DIA)	
		1	**9X-3402**	12	SOCKET-CONNECTOR (16-GA TO 18-GA)	
		1	**9X-3401**	8	PIN-CONNECTOR (16-GA TO 18-GA)	
		1	**230-4009**	1	PLUG AS-CONNECTOR (12-PIN)	
		1	**264-7034**	1	SEAL-CONNECTOR	
		1	**239-7356**	1	PLUG AS-CONNECTOR (12-PIN)	
		1	**264-7034**	1	SEAL-CONNECTOR	
		1	**243-4510**	1	RECEPTACLE AS-CONNECTOR (12-PIN)	
	4	1	**275-6842**	1	HARNESS AS-CONTROL (DISPLAY, GPS RADIO)	
		1	**8T-8737**	6	PLUG-SEAL	
		1	**9X-3401**	6	PIN-CONNECTOR (16-GA TO 18-GA)	
		1	**167-8987**	1	PLUG AS-CONNECTOR (8-PIN)	
		1	**243-4510**	1	RECEPTACLE AS-CONNECTOR (12-PIN)	
	5	1	**279-7609**	1	BRACKET AS	
		1	**7T-1099**	1	LINK	
	6	1	**342-3235**	1	HARNESS AS-CONTROL	
		1	**102-8803**	1	KIT-RECEPTACLE (3-PIN)	
					(INCLUDES RECEPTACLE AS & WEDGE)	
		1	**3R-9965**	1	PLUG AS-CONNECTOR (8-PIN)	
		1	**3S-2093**	1	STRAP-CABLE	
		1	**6D-5257**	1	PLUG AS-CONNECTOR (8-PIN)	
		1	**8L-8413**	3	STRAP-CABLE	
		1	**8T-8737**	21	PLUG-SEAL	
		1	**104-6871**	2	CAP-DUST	
		1	**9W-0844**	3	SOCKET-CONNECTOR (14-GA)	
BE		1	**119-3662**		TUBE-HEAT SHRINK (10.85-MM DIA)	
BE		1	**125-7874**		TUBE-HEAT SHRINK (5.72-MM DIA)	
BE		1	**125-7875**		TUBE-HEAT SHRINK (7.44-MM DIA)	
		1	**9X-3402**	32	SOCKET-CONNECTOR (16-GA TO 18-GA)	
		1	**2L-8069**	1	TERMINAL-RING (2-GA TO 10-GA, 3/8-IN SCREW)	
		1	**134-2540**	1	RESISTOR AS-CONNECTION (3-PIN)	
		1	**9X-3401**	21	PIN-CONNECTOR (16-GA TO 18-GA)	
		1	**174-0503**	2	KIT-CONNECTING PLUG (3-PIN)	
		1	**155-2260**	2	KIT-CONNECTING PLUG (3-PIN)	
					(EACH PLUG KIT INCLUDES PLUG AS, WEDGE, & INTERFACE SEAL)	
		1	**230-4009**	3	PLUG AS-CONNECTOR (12-PIN)	
					(EACH INCLUDES)	
		1	**264-7034**	1	SEAL-CONNECTOR	
		1	**231-2295**	1	PLUG AS-CONNECTOR (8-PIN)	
		1	**264-7033**	1	SEAL-CONNECTOR	
		1	**243-4510**	1	RECEPTACLE AS-CONNECTOR (12-PIN)	
		1	**243-5362**	1	CAP-DUST	
		1	**253-2695**	1	PLUG AS-CONNECTOR	
		1	**272-5000**	1	RECEPTACLE AS-CONNECTOR (12-PIN)	
	7	1	**2S-1647**	2	GROMMET	
	8	1	**4P-7428**	1	CLIP	
	9	1	**4P-7581**	1	CLIP	
	10	1	**8T-4121**	1	WASHER-HARD (11X21X2.5-MM THK)	
M	11	1	**8T-4191**	1	BOLT (M10X1.5X16-MM)	

342-3149 **WIRING GP-CHASSIS** *(contd.)* **i03676021**

NOTE	REF NO	GRAPHIC REF	PART NUMBER	QTY	PART NAME 1 2 3 4 5 6 (PRODUCT LEVEL)	SEE PAGE
	12	1	**8T-4223**	2	WASHER-HARD (13.5X25.5X3-MM THK)	
M	13	1	**8T-4648**	2	BOLT (M12X1.75X70-MM)	

B-USE AS REQUIRED
E-ORDER BY THE CENTIMETER
M-METRIC PART

342-3149 **WIRING GP-CHASSIS** *(contd.)* **i03676021**

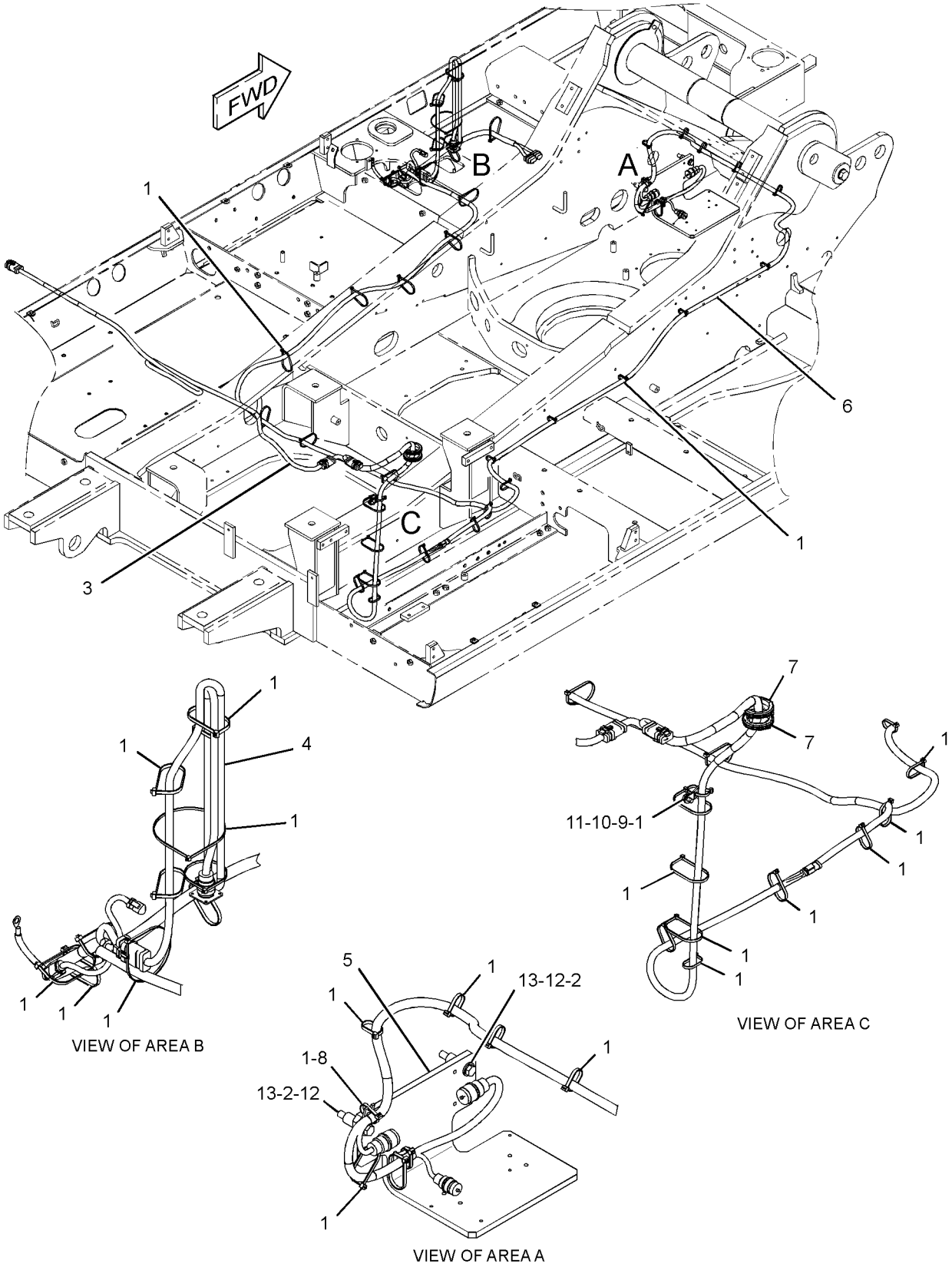

GRAPHIC #1 **<END>** g01991635

336-6242 WIRING GP-COMMUNICATION—PRODUCT LINK 321SR

S/N: MYG1-UP; PPN1-UP
PART OF 340-3831 INSTALLATION AR-COMMUNICATION
AN ATTACHMENT

SMCS-1408 **i03674820**

NOTE	REF NO	GRAPHIC REF	PART NUMBER	QTY	PART NAME 1 2 3 4 5 6 (PRODUCT LEVEL)	SEE PAGE
	1	1	**3S-2093**	5	STRAP-CABLE	
	2	1	**4I-7889**	1	SPACER (11X25X45-MM THK)	
	3	1	**7K-1181**	12	STRAP-CABLE	
	4	1	**9X-3495**	1	CLIP AS	
	5	1	**116-0118**	1	CLIP	
	6	1	**259-4887**	1	HARNESS AS-CONTROL (PRODUCT LINK)	
		1	**8T-8729**	1	PIN-CONNECTOR (16-GA TO 18-GA)	
		1	**8T-8730**	1	SOCKET-CONNECTOR (16-GA TO 18-GA)	
		1	**3S-2093**	2	STRAP-CABLE	
		1	**8T-8737**	62	PLUG-SEAL	
		1	**9W-0852**	1	PIN-CONNECTOR (14-GA)	
		1	**9W-0844**	1	SOCKET-CONNECTOR (14-GA)	
BE		1	**125-7874**		TUBE-HEAT SHRINK (5.72-MM DIA)	
BE		1	**125-7875**		TUBE-HEAT SHRINK (7.44-MM DIA)	
		1	**9X-3402**	19	SOCKET-CONNECTOR (16-GA TO 18-GA)	
		1	**126-1774**	1	COVER-CONNECTOR	
		1	**2L-8077**	1	TERMINAL (14-GA TO 16-GA, 1/4-IN SCREW)	
		1	**9X-3401**	9	PIN-CONNECTOR (16-GA TO 18-GA)	
		1	**160-7690**	1	PLUG AS-CONNECTOR (70-PIN)	
		1	**159-9322**	1	SEAL-O-RING	
		1	**230-5010**	2	PLUG AS-CONNECTOR (6-PIN)	
					(EACH INCLUDES)	
		1	**264-7032**	1	SEAL-CONNECTOR	
		1	**243-4508**	2	RECEPTACLE AS-CONNECTOR (6-PIN)	
	7	1	**259-4940**	1	HARNESS AS-WIRING (SERVICE CONNECTOR)	
		1	**8T-8731**	1	PLUG-CONNECTOR (3-PIN)	
		1	**8T-8732**	1	RECEPTACLE (3-PIN)	
		1	**8T-8737**	6	PLUG-SEAL	
		1	**9X-3401**	6	PIN-CONNECTOR (16-GA TO 18-GA)	
		1	**243-4508**	1	RECEPTACLE AS-CONNECTOR (6-PIN)	
	8	1	**267-7813**	1	HARNESS AS-CONTROL (PRODUCT LINK, ANTENNA)	
		1	**8T-8729**	1	PIN-CONNECTOR (16-GA TO 18-GA)	
		1	**8T-8737**	6	PLUG-SEAL	
		1	**9W-0852**	1	PIN-CONNECTOR (14-GA)	
		1	**9X-3402**	14	SOCKET-CONNECTOR (16-GA TO 18-GA)	
		1	**9X-3401**	2	PIN-CONNECTOR (16-GA TO 18-GA)	
		1	**155-2255**	1	KIT-CONNECTING PLUG (12-PIN)	
					(INCLUDES PLUG AS, WEDGE & INTERFACE SEAL)	
		1	**230-5010**	1	PLUG AS-CONNECTOR (6-PIN)	
		1	**264-7032**	1	SEAL-CONNECTOR	
		1	**243-4508**	1	RECEPTACLE AS-CONNECTOR (6-PIN)	
	9	1	**111-4837**	1	CLIP	
	10	1	**132-5789**	2	CLIP	
	11	1	**8T-4121**	3	WASHER-HARD (11X21X2.5-MM THK)	
M	12	1	**8T-4136**	2	BOLT (M10X1.5X25-MM)	
M	13	1	**8T-4191**	2	BOLT (M10X1.5X16-MM)	
M	14	1	**8T-5005**	1	BOLT (M10X1.5X70-MM)	

B-USE AS REQUIRED
E-ORDER BY THE CENTIMETER
M-METRIC PART

336-6242 **WIRING GP-COMMUNICATION** *(contd.)* **i03674820**

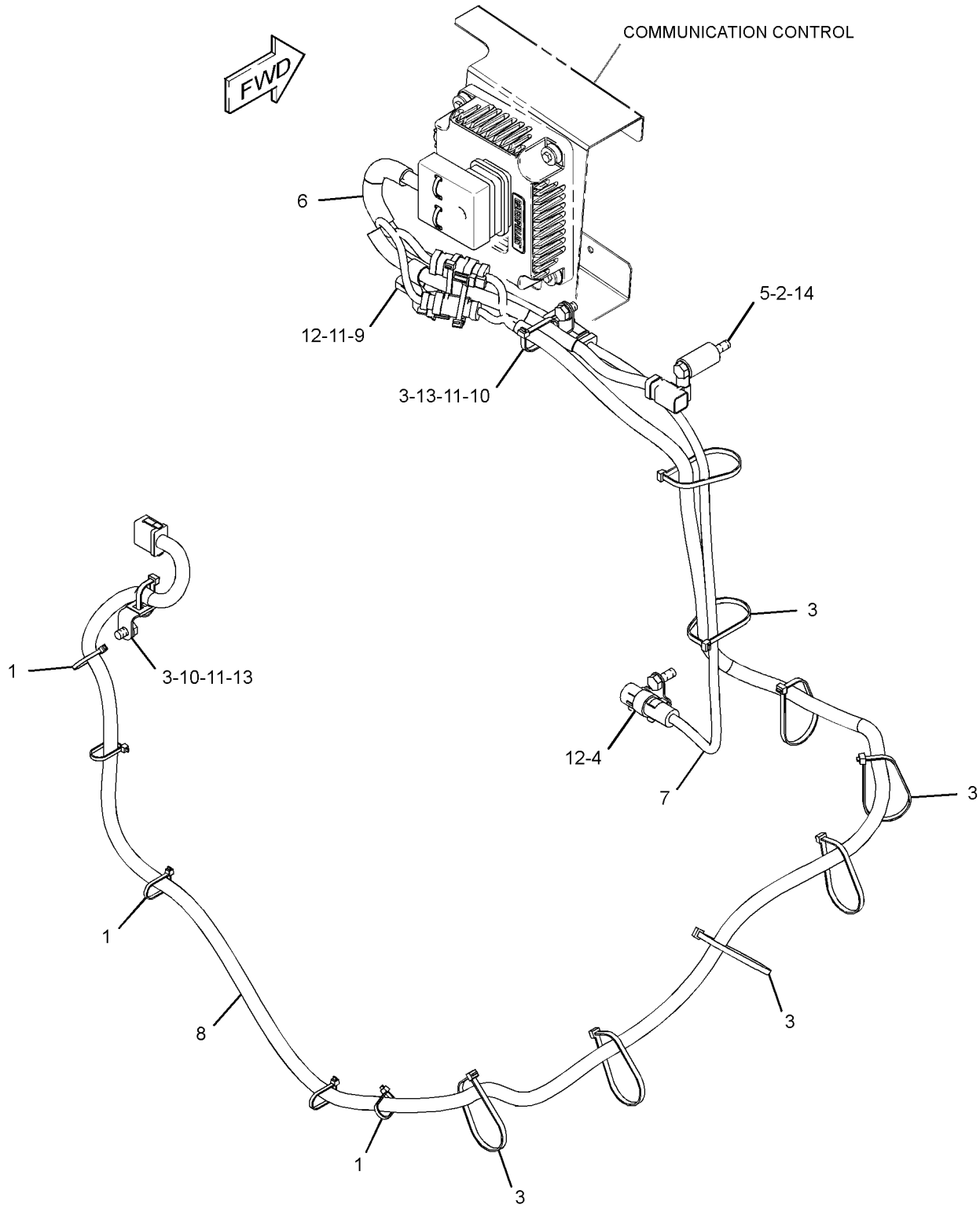

GRAPHIC #1 **<END>** g01981696

231-1836 WIRING GP-CONSOLE–LH

S/N: MYG1-UP; PPN1-UP

PART OF 251-0433 WIRING GP-CONSOLE

SMCS-1408 **i03631873**

NOTE	REF NO	GRAPHIC REF	PART NUMBER	QTY	PART NAME 1 2 3 4 5 6 (PRODUCT LEVEL)	SEE PAGE
	1	1	**3S-2093**	2	STRAP-CABLE	
	2	1	**7K-1181**	1	STRAP-CABLE	
	3	1	**163-6795**	2	STRAP-CABLE	
	4	1	**251-0580**	1	HARNESS AS-CONSOLE (LH)	
		1	**186-3735**	4	PIN-CONNECTOR (16-GA TO 18-GA)	
		1	**8T-8730**	3	SOCKET-CONNECTOR (16-GA TO 18-GA)	
		1	**3S-2093**	9	STRAP-CABLE	
		1	**7Y-3963**	2	TERMINAL-BULLET (FEMALE)	
		1	**8T-8737**	9	PLUG-SEAL	
		1	**9W-0852**	2	PIN-CONNECTOR (14-GA)	
		1	**9W-0844**	2	SOCKET-CONNECTOR (14-GA)	
BE		1	**125-7874**		TUBE-HEAT SHRINK (5.72-MM DIA)	
BE		1	**125-7875**		TUBE-HEAT SHRINK (7.44-MM DIA)	
		1	**9X-3402**	11	SOCKET-CONNECTOR (16-GA TO 18-GA)	
					–OR–	
		1	**126-1768**	11	SOCKET-CONNECTOR (14-GA)	
		1	**155-2260**	1	KIT-CONNECTING PLUG (3-PIN)	
					(INCLUDES PLUG AS, WEDGE & INTERFACE SEAL)	
		1	**230-4011**	1	PLUG AS-CONNECTOR (2-PIN)	
		1	**264-7029**	1	SEAL-CONNECTOR	
		1	**230-5010**	1	PLUG AS-CONNECTOR (6-PIN)	
		1	**264-7032**	1	SEAL-CONNECTOR	
		1	**239-7352**	1	PLUG AS-CONNECTOR (6-PIN)	
		1	**264-7032**	1	SEAL-CONNECTOR	
		1	**243-4505**	1	RECEPTACLE AS-CONNECTOR (2-PIN)	
		1	**243-4508**	1	RECEPTACLE AS-CONNECTOR (6-PIN)	
		1	**247-2693**	1	RECEPTACLE AS-CONNECTOR (6-PIN)	

B-USE AS REQUIRED
E-ORDER BY THE CENTIMETER

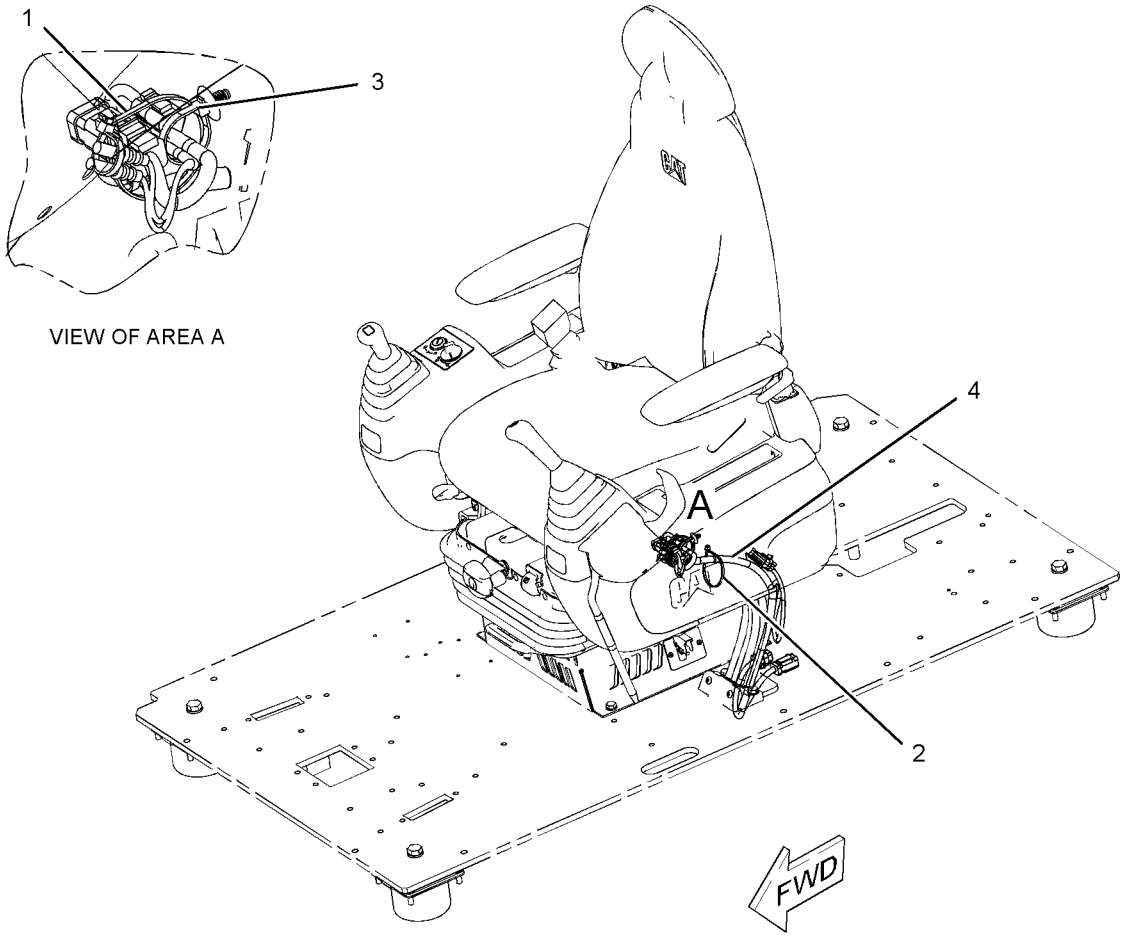

GRAPHIC #1 **<END>** g01150799

251-0433 WIRING GP-CONSOLE

S/N: MYG1-UP; PPN1-UP

PART OF 340-6485 OPERATOR AR

SMCS-1408 **i02437135**

NOTE	PART NUMBER	QTY	PART NAME 1 2 3 4 5 6 (PRODUCT LEVEL)	SEE PAGE
Y	*231-1836*	1	WIRING GP-CONSOLE (LH)	271
Y	*251-0435*	1	WIRING GP-CONSOLE (RH)	274

Y-SEPARATE ILLUSTRATION

<END>

251-0435 WIRING GP-CONSOLE–RH

S/N: MYG1-UP; PPN1-UP

PART OF 251-0433 WIRING GP-CONSOLE

SMCS-1408 **i03641491**

NOTE	REF NO	GRAPHIC REF	PART NUMBER	QTY	PART NAME 1 2 3 4 5 6 (PRODUCT LEVEL)	SEE PAGE
	1	1	**3S-2093**	3	STRAP-CABLE	
	2	1	**7K-1181**	1	STRAP-CABLE	
	3	1	**283-3074**	1	SWITCH AS-TOGGLE (AUTO/MANUAL ENG SPEED CONTROL)	
	4	1	**163-6711**	1	SWITCH AS-TOGGLE (MANUAL ENGINE SPEED CONTROL)	
	5	1	**163-6795**	3	STRAP-CABLE	
	6	1	**251-0602**	1	BRACKET	
	7	1	**259-4877**	1	HARNESS AS-CONSOLE (RH)	
		1	**102-8806**	1	KIT-RECEPTACLE (8-PIN)	
					(INCLUDES RECEPTACLE AS & WEDGE)	
		1	**186-3735**	9	PIN-CONNECTOR (16-GA TO 18-GA)	
		1	**8T-8730**	9	SOCKET-CONNECTOR (16-GA TO 18-GA)	
		1	**3S-2093**	10	STRAP-CABLE	
		1	**7Y-3963**	2	TERMINAL-BULLET (FEMALE)	
		1	**8T-8737**	20	PLUG-SEAL	
		1	**102-7964**	1	CONNECTOR-PLUG	
		1	**102-7965**	14	TERMINAL (FEMALE)	
		1	**9W-0852**	1	PIN-CONNECTOR (14-GA)	
		1	**9W-0844**	7	SOCKET-CONNECTOR (14-GA)	
		1	**125-4841**	1	WEDGE-PLUG LOCK (21-PIN)	
BE		1	**125-7875**		TUBE-HEAT SHRINK (7.44-MM DIA)	
		1	**9X-3402**	26	SOCKET-CONNECTOR (16-GA TO 18-GA)	
					–OR–	
		1	**126-1768**	26	SOCKET-CONNECTOR (14-GA)	
		1	**2L-8074**	2	TERMINAL-RING (14-GA TO 16-GA, NO. 6 SCREW)	
		1	**5P-2766**	12	TERMINAL-RING (18-GA TO 22-GA, NO. 6 SCREW)	
		1	**9X-3401**	2	PIN-CONNECTOR (16-GA TO 18-GA)	
					–OR–	
		1	**126-1767**	2	PIN-CONNECTOR (14-GA)	
		1	**155-2265**	1	KIT-CONNECTING PLUG (8-PIN)	
					(INCLUDES PLUG AS, WEDGE & INTERFACE SEAL)	
		1	**230-4009**	1	PLUG AS-CONNECTOR (12-PIN)	
		1	**264-7034**	1	SEAL-CONNECTOR	
		1	**230-4011**	1	PLUG AS-CONNECTOR (2-PIN)	
		1	**264-7029**	1	SEAL-CONNECTOR	
		1	**230-5008**	1	PLUG AS-CONNECTOR (4-PIN)	
		1	**264-7031**	1	SEAL-CONNECTOR	
		1	**230-5010**	1	PLUG AS-CONNECTOR (6-PIN)	
		1	**264-7032**	1	SEAL-CONNECTOR	
		1	**231-2295**	1	PLUG AS-CONNECTOR (8-PIN)	
		1	**264-7033**	1	SEAL-CONNECTOR	
		1	**238-2363**	7	TERMINAL (FEMALE)	
		1	**239-7352**	1	PLUG AS-CONNECTOR (6-PIN)	
		1	**264-7032**	1	SEAL-CONNECTOR	
		1	**243-4505**	1	RECEPTACLE AS-CONNECTOR (2-PIN)	
		1	**243-4510**	1	RECEPTACLE AS-CONNECTOR (12-PIN)	
		1	**247-2693**	1	RECEPTACLE AS-CONNECTOR (6-PIN)	
M	8	1	**9X-2042**	3	SCREW-TRUSS HEAD (M6X1X12-MM)	

B-USE AS REQUIRED
E-ORDER BY THE CENTIMETER
M-METRIC PART

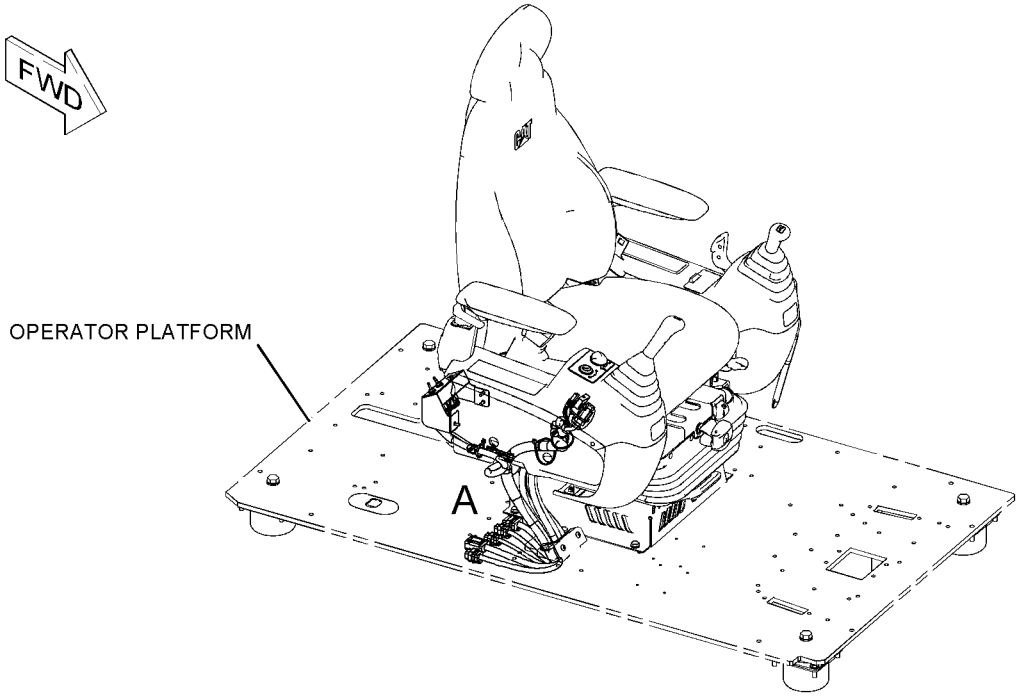

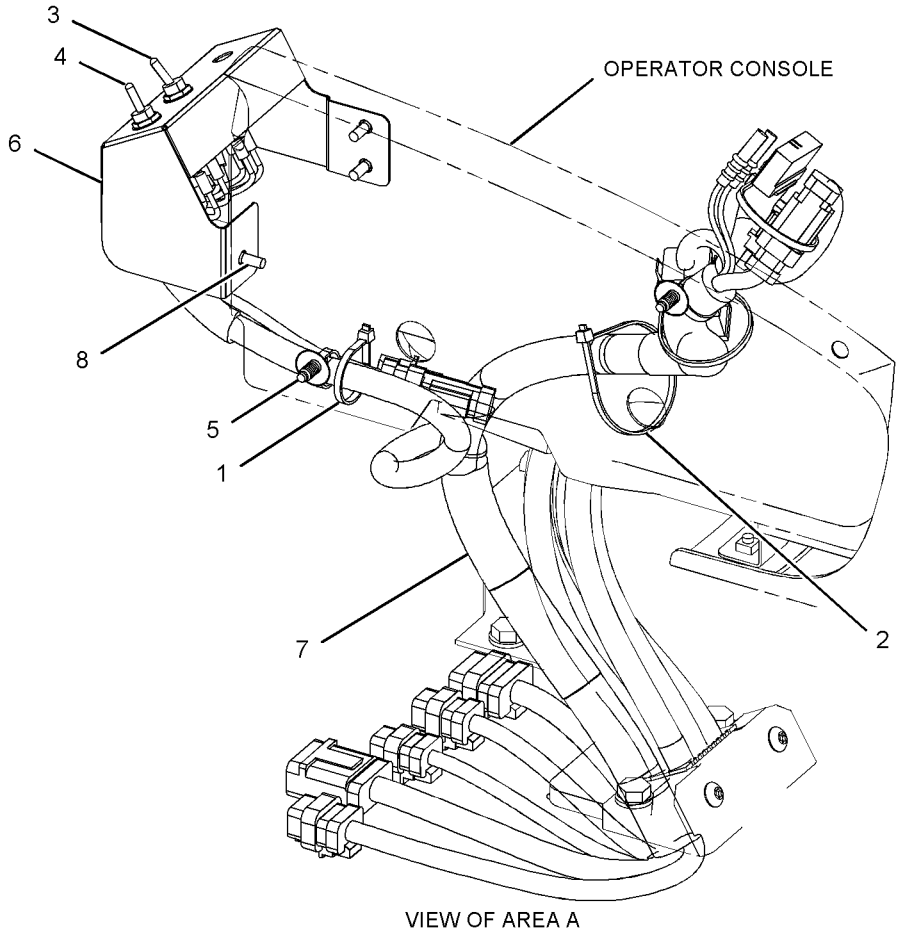

VIEW OF AREA A

GRAPHIC #1 **<END>** g01231684

251-0485 WIRING GP-CONVERTER

S/N: MYG1-UP; PPN1-UP
12-VOLT, 7-AMPERE
PART OF 345-7497, 345-7498, 345-7499 OPTION AR-CONFIGURATION
AN ATTACHMENT

SMCS-1421 **i02475129**

NOTE	REF NO	GRAPHIC REF	PART NUMBER	QTY	PART NAME 1 2 3 4 5 6 (PRODUCT LEVEL)	SEE PAGE
	1	1	**121-0987**	2	SOCKET (12-VOLT, 7-AMPERE)	
	2	1	**245-3109**	2	CONVERTER-POWER (24-VOLT TO 12-VOLT)	
	3	1	**251-0483**	2	BRACKET	
	4	1	**8T-4121**	4	WASHER-HARD (11X21X2.5-MM THK)	
M	5	1	**8T-4136**	4	BOLT (M10X1.5X25-MM)	
M	6	1	**8T-4171**	8	BOLT (M6X1X12-MM)	
	7	1	**9X-8256**	8	WASHER (6.6X12X2-MM THK)	

M-METRIC PART

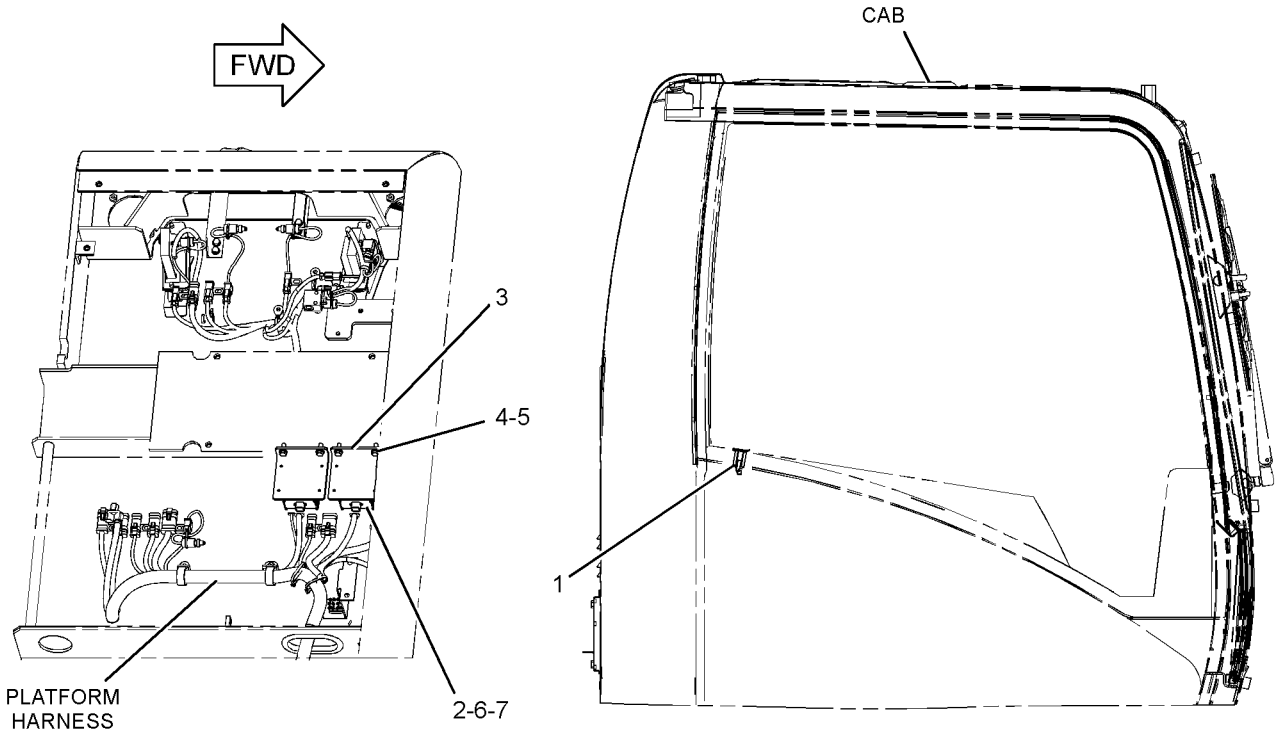

GRAPHIC #1 **<END>** g01155779

ELECTRICAL AND STARTING SYSTEM

236-6226 WIRING GP-ELECTRONIC CONTROL

S/N: THX14533-UP; THY5575-UP
PART OF 224-9843 ENGINE AR

SMCS-1408 **i03026743**

NOTE	REF NO	GRAPHIC REF	PART NUMBER	QTY	PART NAME 1 2 3 4 5 6 (PRODUCT LEVEL)	SEE PAGE
	1	1	**3S-2093**	19	STRAP-CABLE	
	3	1	**215-3249**	1	HARNESS AS-ENGINE (UNIT INJECTOR)	
		1	**3S-2093**	5	STRAP-CABLE	
		1	**105-1797**	5	MOUNT	
		1	**191-7823**	1	RECEPTACLE AS	
	4	1	**235-8202**	1	HARNESS AS-ENGINE (ELECTRONIC CONTROL MODULE)	
		1	**102-8802**	1	KIT-RECEPTACLE (2-PIN)	
					(INCLUDES RECEPTACLE AS AND WEDGE)	
		1	**102-8803**	1	KIT-RECEPTACLE (3-PIN)	
					(INCLUDES RECEPTACLE AS AND WEDGE)	
		1	**100-3320**	1	PLUG AS-CONNECTOR (2-PIN)	
		1	**126-5011**	1	SEAL-CONNECTOR	
		1	**111-2416**	1	PLUG AS-CONNECTOR (2-PIN)	
		1	**126-5011**	1	SEAL-CONNECTOR	
		1	**155-2265**	1	KIT-CONNECTING PLUG (8-PIN)	
					(INCLUDES PLUG AS AND WEDGE)	
		1	**155-2260**	1	KIT-CONNECTING PLUG (3-PIN)	
					(INCLUDES PLUG AS AND WEDGE)	
		1	**155-2270**	5	KIT-CONNECTING PLUG (2-PIN)	
					(EACH INCLUDES PLUG AS AND WEDGE)	
		1	**172-6062**	1	PLUG AS-CONNECTOR (18-PIN)	
		1	**227-4002**	1	PLUG AS-CONNECTOR (108-PIN)	
C	5	1	**4P-7581**	5	CLIP	
	6	1	**4P-8134**	2	CLIP	
M	7	1	**5P-7970**	3	NUT (M8X1.25-THD)	
	8	1	**6V-4369**	1	CLIP	
M	9	1	**6V-5217**	1	BOLT (M8X1.25X20-MM)	
	10	1	**6V-5839**	3	WASHER (11X21X2.5-MM THK)	
M	11	1	**6V-6317**	2	BOLT (M10X1.5X20-MM)	
M	12	1	**7I-2272**	2	BOLT (M5X0.8X12-MM)	
	13	1	**8T-0328**	2	WASHER-HARD (5.5X10X1-MM THK)	
M	14	1	**8T-4137**	1	BOLT (M10X1.5X20-MM)	
	15	1	**8T-4205**	1	WASHER-HARD (7.2X14.5X2-MM THK)	
M	16	1	**8T-5451**	1	BOLT (M6X1X12-MM)	
	17	1	**9M-1974**	3	WASHER-HARD (8.8X16X2-MM THK)	

C-CHANGE FROM PREVIOUS TYPE
M-METRIC PART

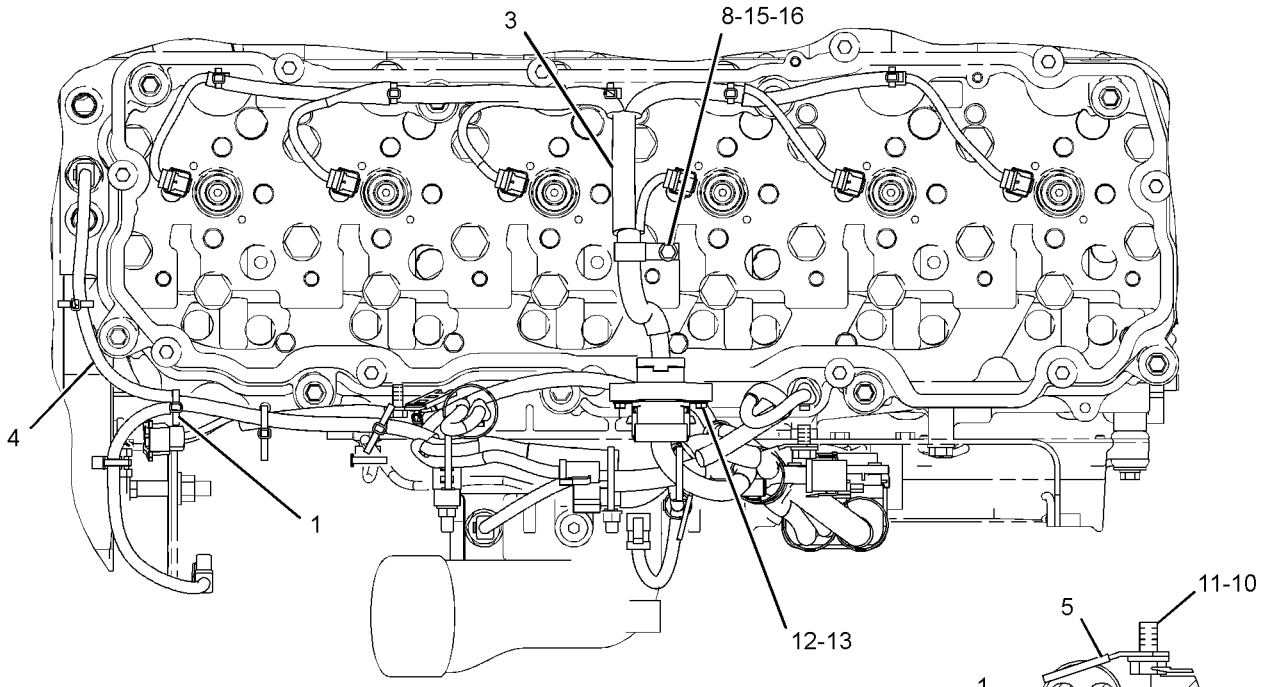

TOP VIEW OF ENGINE

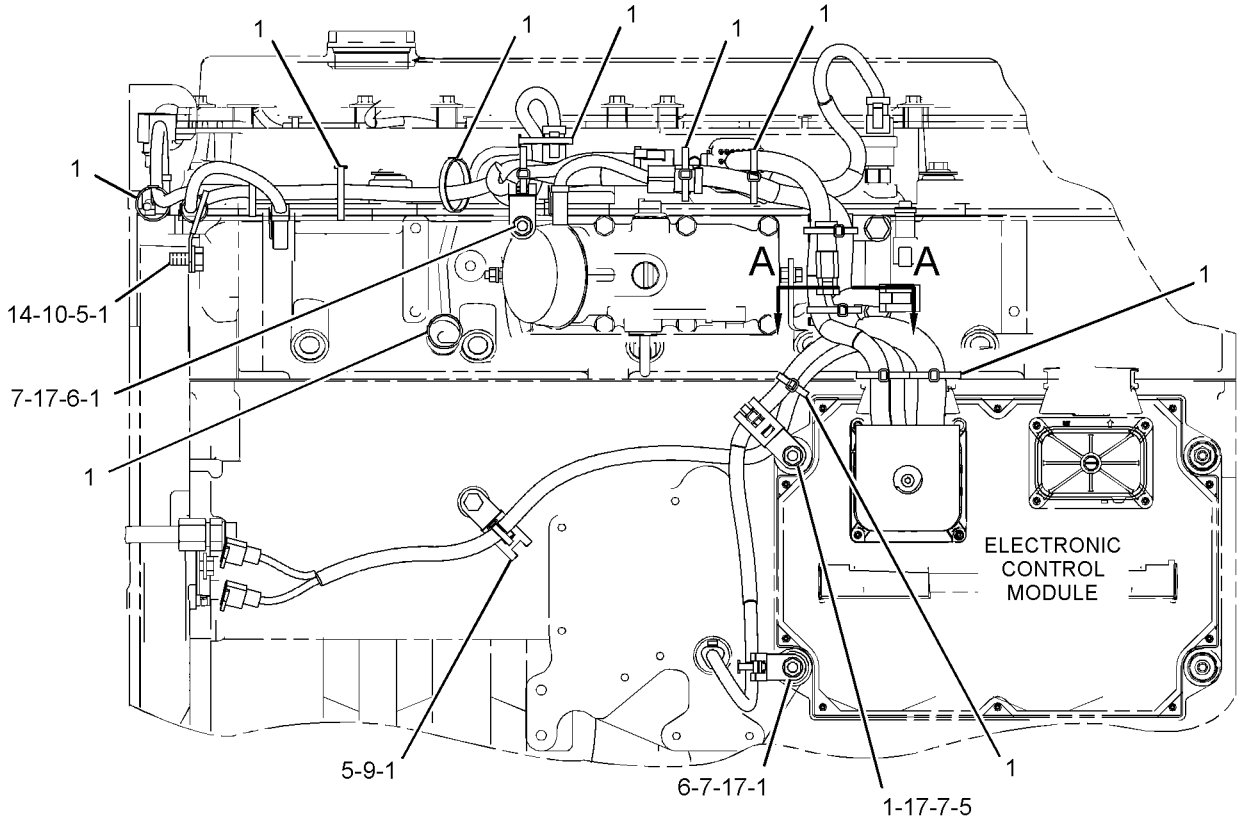

LEFT SIDE VIEW OF ENGINE

GRAPHIC #1 **<END>** g01336539

ELECTRICAL AND STARTING SYSTEM

330-6018 WIRING GP-ELECTRONIC CONTROL

S/N: THX22180-UP

PART OF 224-9843 ENGINE AR

SMCS-1408 **i03614962**

NOTE	REF NO	GRAPHIC REF	PART NUMBER	QTY	PART NAME 1 2 3 4 5 6 (PRODUCT LEVEL)	SEE PAGE
	1	1	**3S-2093**	18	STRAP-CABLE	
	2	1	**215-3249**	1	HARNESS AS-ENGINE (UNIT INJECTOR)	
		1	**3S-2093**	5	STRAP-CABLE	
		1	**105-1797**	5	MOUNT	
		1	**9X-3401**	12	PIN-CONNECTOR (16-GA TO 18-GA)	
					—OR—	
		1	**126-1767**	12	PIN-CONNECTOR (14-GA)	
		1	**172-6064**	1	WEDGE-RECEPTACLE LOCK	
		1	**191-7823**	1	RECEPTACLE AS	
		1	**307-8428**	1	GASKET	
	3	1	**323-9140**	1	HARNESS AS-ENGINE	
		1	**102-8802**	1	KIT-RECEPTACLE (2-PIN)	
					(EACH RECEPTACLE KIT INCLUDES RECEPTACLE AS & WEDGE)	
		1	**8T-8737**	95	PLUG-SEAL	
		1	**100-3320**	1	PLUG AS-CONNECTOR (2-PIN)	
		1	**126-5011**	1	SEAL-CONNECTOR	
		1	**305-5362**	4	TERMINAL AS (18-GA)	
		1	**111-2416**	1	PLUG AS-CONNECTOR (2-PIN)	
		1	**126-5011**	1	SEAL-CONNECTOR	
E		1	**125-7874**		TUBE-HEAT SHRINK (5.72-MM DIA) (25-CM)	
E		1	**125-7875**		TUBE-HEAT SHRINK (7.44-MM DIA) (15-CM)	
		1	**155-2270**	3	KIT-CONNECTING PLUG (2-PIN)	
		1	**155-2265**	1	KIT-CONNECTING PLUG (8-PIN)	
					(EACH PLUG KIT INCLUDES PLUG AS & WEDGE)	
		1	**172-6062**	1	PLUG AS-CONNECTOR (18-PIN)	
		1	**172-6065**	1	WEDGE-PLUG LOCK	
		1	**211-6807**	1	COVER (CONNECTOR)	
		1	**230-4011**	2	PLUG AS-CONNECTOR (2-PIN)	
					(EACH INCLUDES)	
		1	**264-7029**	1	SEAL-CONNECTOR	
		1	**230-4013**	1	PLUG AS-CONNECTOR (3-PIN)	
		1	**264-7030**	1	SEAL-CONNECTOR	
		1	**237-0227**	3	PLUG AS-CONNECTOR (3-PIN)	
					(EACH INCLUDES)	
		1	**264-7030**	1	SEAL-CONNECTOR	
		1	**264-5732**	1	PLUG AS-CONNECTOR (12O-PIN)	
		1	**288-7324**	1	SEAL-CONNECTOR	
	4	1	**4P-7581**	5	CLIP	
	5	1	**4P-8134**	2	CLIP	
M	6	1	**5P-7970**	3	NUT (M8X1.25-THD)	
M	7	1	**6V-5217**	1	BOLT (M8X1.25X2O-MM)	
	8	1	**6V-5839**	3	WASHER (11X21X2.5-MM THK)	
M	9	1	**6V-6317**	2	BOLT (M1OX1.5X2O-MM)	
M	10	1	**7I-2272**	2	BOLT (M5XO.8X12-MM)	
	11	1	**8T-0328**	2	WASHER-HARD (5.5X1OX1-MM THK)	
M	12	1	**8T-4137**	1	BOLT (M1OX1.5X2O-MM)	
	13	1	**8T-4205**	1	WASHER-HARD (7.2X14.5X2-MM THK)	
M	14	1	**8T-5451**	1	BOLT (M6X1X12-MM)	
	15	1	**9M-1974**	3	WASHER-HARD (8.8X16X2-MM THK)	
	16	1	**9X-2332**	1	CLIP	

E-ORDER BY THE CENTIMETER
M-METRIC PART

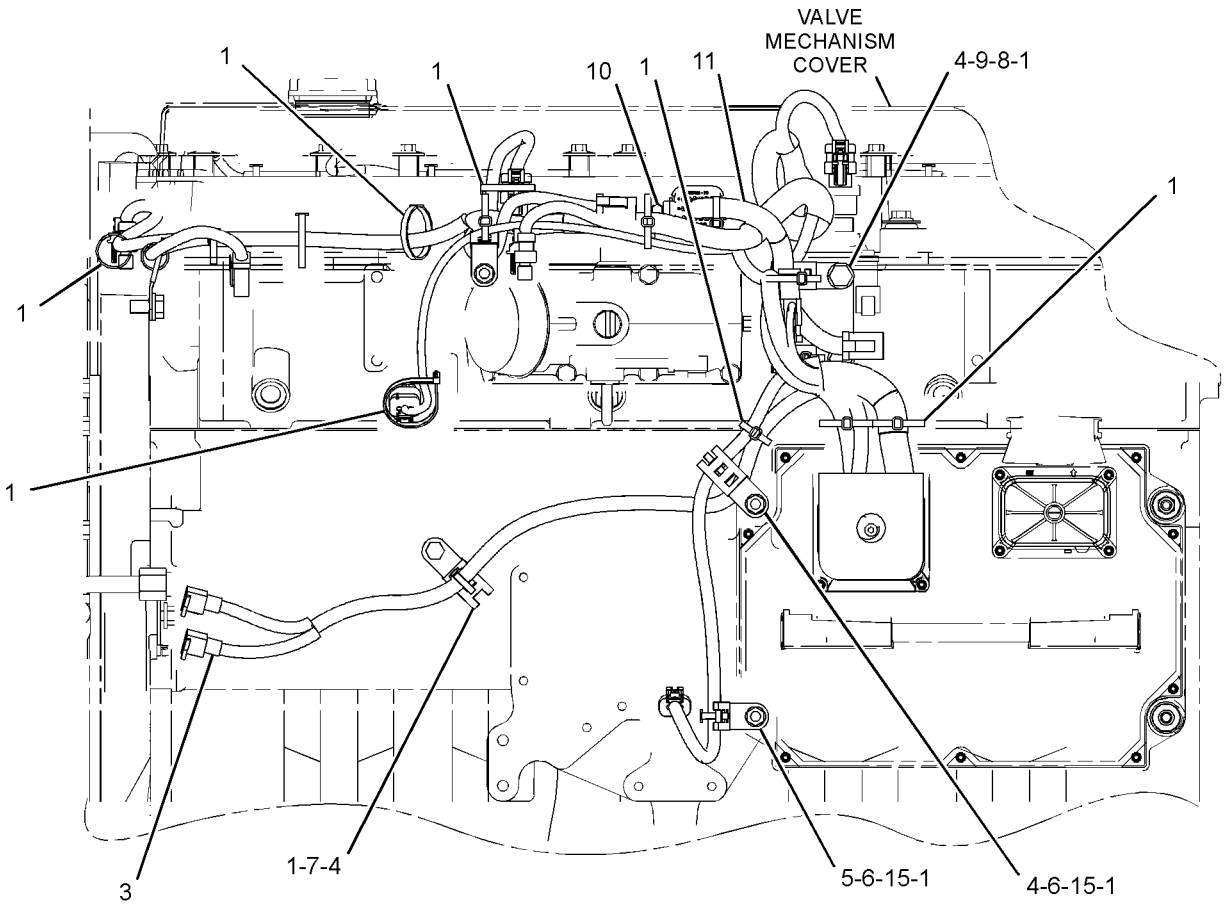

LEFT SIDE VIEW OF ENGINE

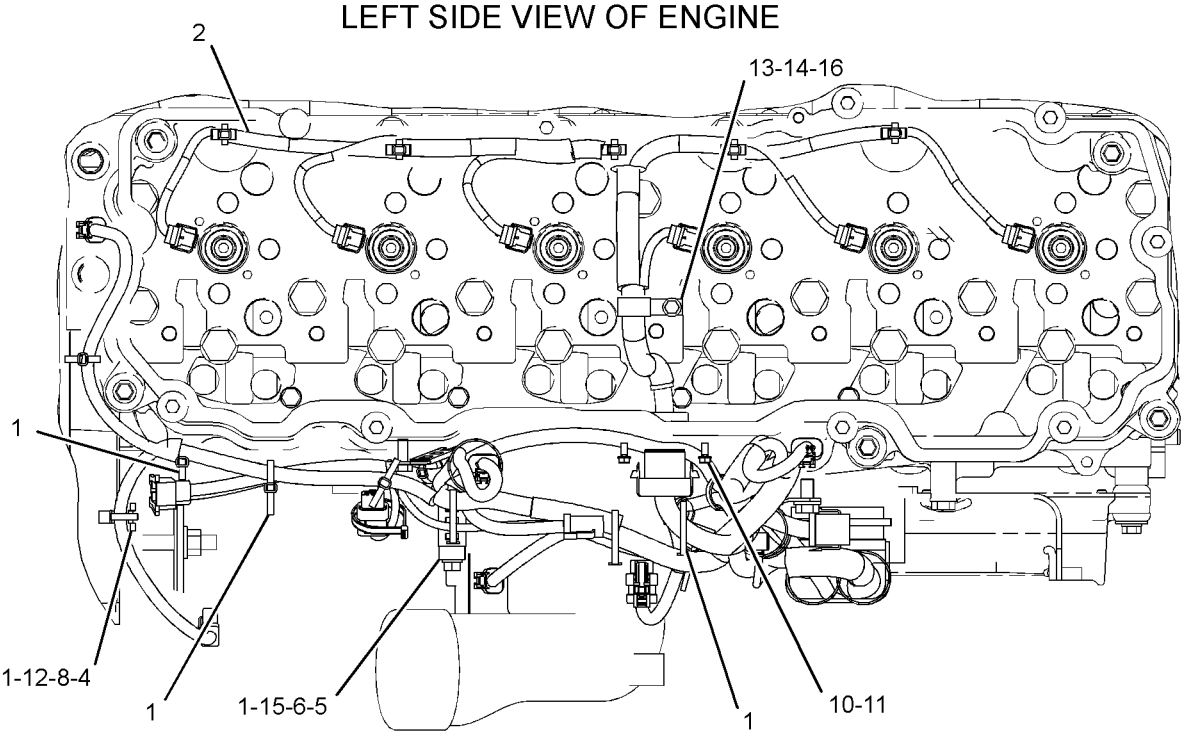

TOP VIEW OF ENGINE

GRAPHIC #1 **<END>** g01941313

238-1568 WIRING GP-FINE SWING

S/N: MYG1-UP; PPN1-UP

PART OF 343-1145, 343-1146 CHASSIS AR

SMCS-1408 **i02958060**

NOTE	REF NO	GRAPHIC REF	PART NUMBER	QTY	PART NAME 1 2 3 4 5 6 (PRODUCT LEVEL)	SEE PAGE
	1	1	**111-4836**	4	CLIP	
	2	1	**111-4837**	3	CLIP	
	3	1	**275-6865**	1	HARNESS AS-SOLENOID (FINE SWING)	
	4	1	**238-2171**	1	BRACKET AS	
	5	1	**8T-4121**	7	WASHER-HARD (11X21X2.5-MM THK)	
M	6	1	**8T-4136**	1	BOLT (M10X1.5X25-MM)	
M	7	1	**8T-4137**	6	BOLT (M10X1.5X20-MM)	

M-METRIC PART

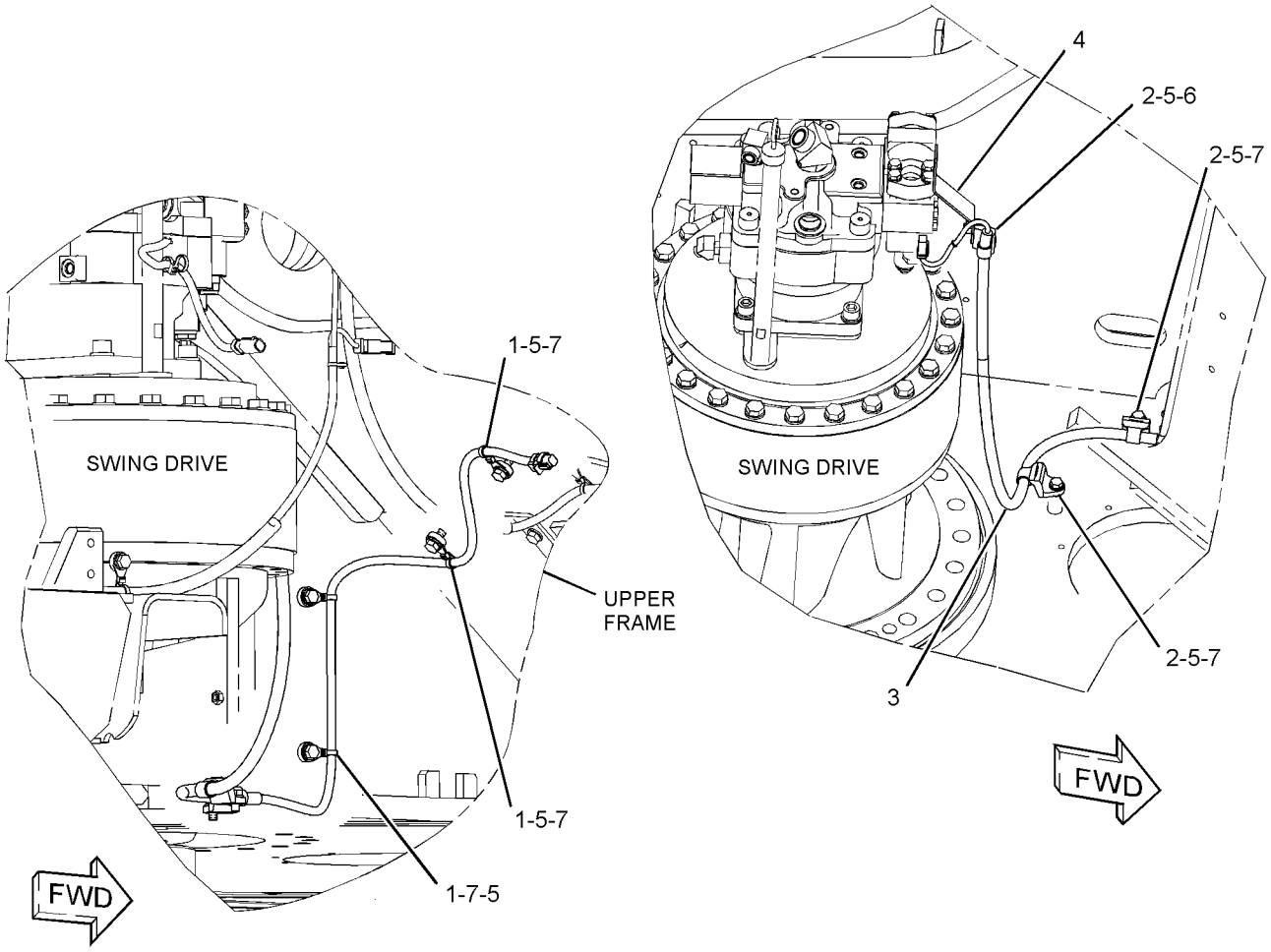

GRAPHIC #1 **<END>** g01520390

336-6149 WIRING GP-FUEL PUMP–PRIMING

S/N: MYG1-UP; PPN1-UP
PART OF 340-3837 PUMP GP-FUEL PRIMING
AN ATTACHMENT

SMCS-1256, 1258, 1408 **i03675321**

NOTE	REF NO	GRAPHIC REF	PART NUMBER	QTY	PART NAME 1 2 3 4 5 6 (PRODUCT LEVEL)	SEE PAGE
	1	1	**3S-2093**	10	STRAP-CABLE	
	2	1	**7K-1181**	15	STRAP-CABLE	
	3	1	**137-6606**	1	FILM-IDENTIFICATION (FUEL)	
Y	4	1	**165-5970**	1	SWITCH GP-TOGGLE (FUEL PRIMING PUMP)	242
	5	1	**342-3146**	1	HARNESS AS-PUMP (FUEL PRIMING)	
		1	**8T-8729**	1	PIN-CONNECTOR (16-GA TO 18-GA)	
		1	**8T-8737**	1	PLUG-SEAL	
		1	**9W-0852**	3	PIN-CONNECTOR (14-GA)	
		1	**9W-0844**	4	SOCKET-CONNECTOR (14-GA)	
		1	**2L-8079**	1	TERMINAL-RING (14-GA TO 16-GA, 3/8-IN SCREW)	
		1	**155-2260**	1	KIT-CONNECTING PLUG (3-PIN)	
		1	**155-2270**	1	KIT-CONNECTING PLUG (2-PIN)	
					(EACH PLUG KIT INCLUDES PLUG AS, WEDGE, & INTERFACE SEAL)	
		1	**243-4507**	1	RECEPTACLE AS-CONNECTOR (4-PIN)	

Y-SEPARATE ILLUSTRATION

336-6149 **WIRING GP-FUEL PUMP** *(contd.)* **i03675321**

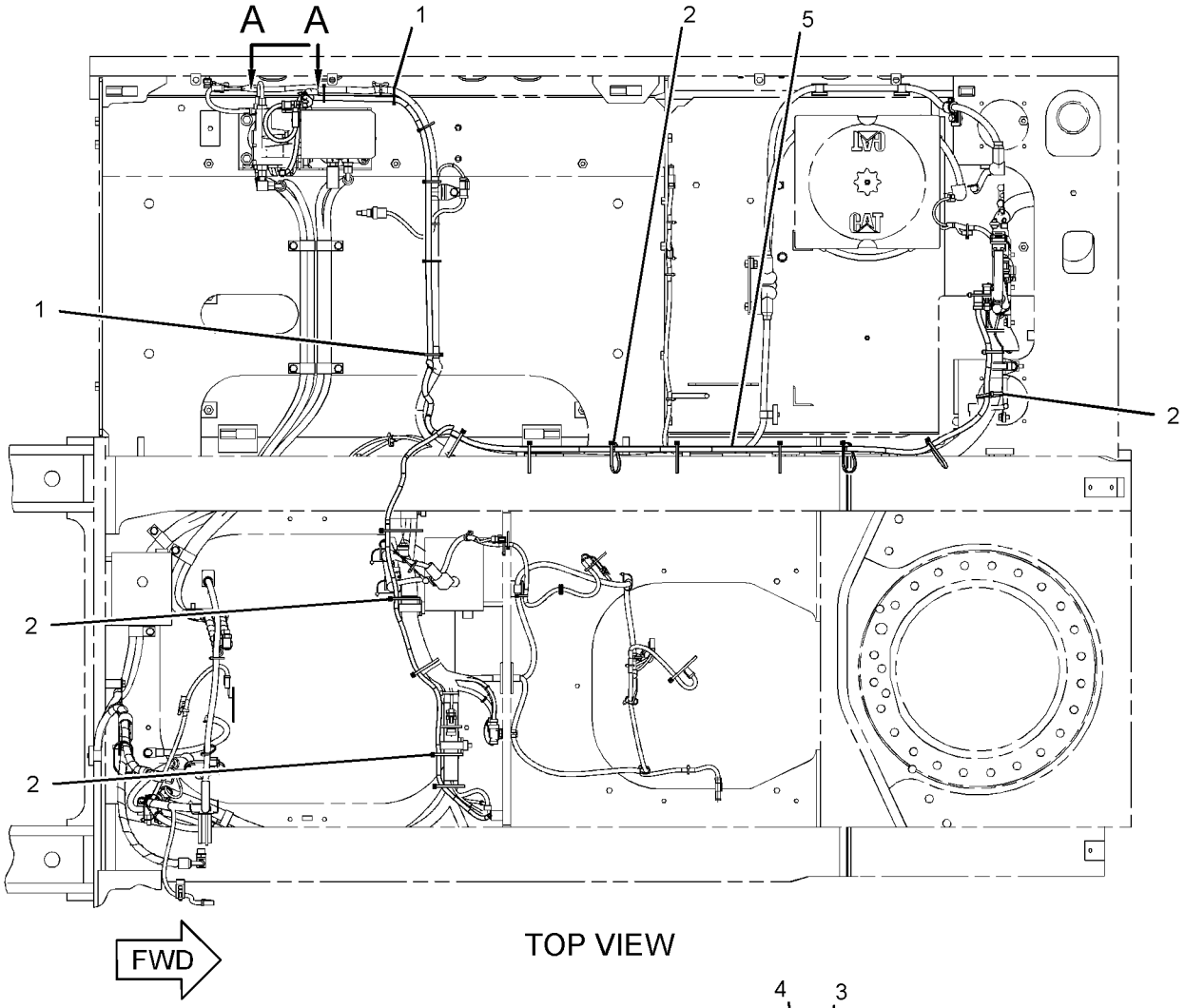

TOP VIEW

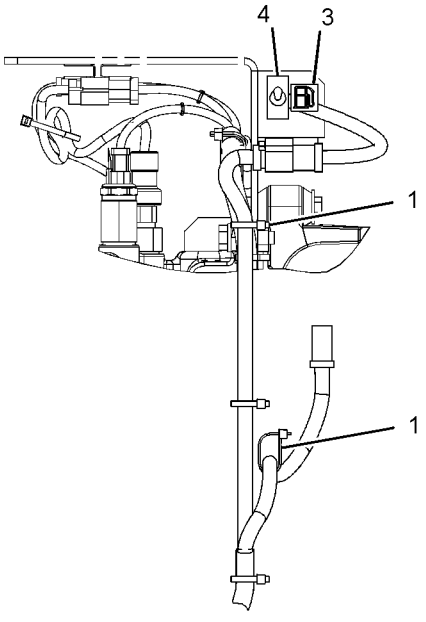

VIEW A-A

GRAPHIC #1 **<END>** g01977274

269-3410 WIRING GP-HEATER–AIR INLET MANIFOLD

S/N: THX14533-UP; THY5575-UP
PART OF 224-9843 ENGINE AR

SMCS-7304 **i03347962**

NOTE	REF NO	GRAPHIC REF	PART NUMBER	QTY	PART NAME 1 2 3 4 5 6 (PRODUCT LEVEL)	SEE PAGE
	1	1	**3S-2093**	1	STRAP-CABLE	
Y	2	1	**209-5582**	1	SWITCH GP-MAGNETIC (24-VOLT) (STARTING AID HEATER)	235
	3	1	**224-1377**	1	WIRE AS	
		1	**2L-0273**	2	FITTING (RUBBER)	
		1	**5P-3454**	1	TERMINAL-RING (4-GA, 5/16-IN SCREW)	
		1	**178-2513**	1	RING-TERMINAL	
	4	1	**283-1226**	1	BRACKET AS	
	5	1	**208-9277**	2	BOLT-FLANGE HEAD (M8X1X25-MM)	
	6	1	**6V-5839**	2	WASHER (11X21X2.5-MM THK)	
M	7	1	**6V-6317**	2	BOLT (M10X1.5X20-MM)	

M-METRIC PART
Y-SEPARATE ILLUSTRATION

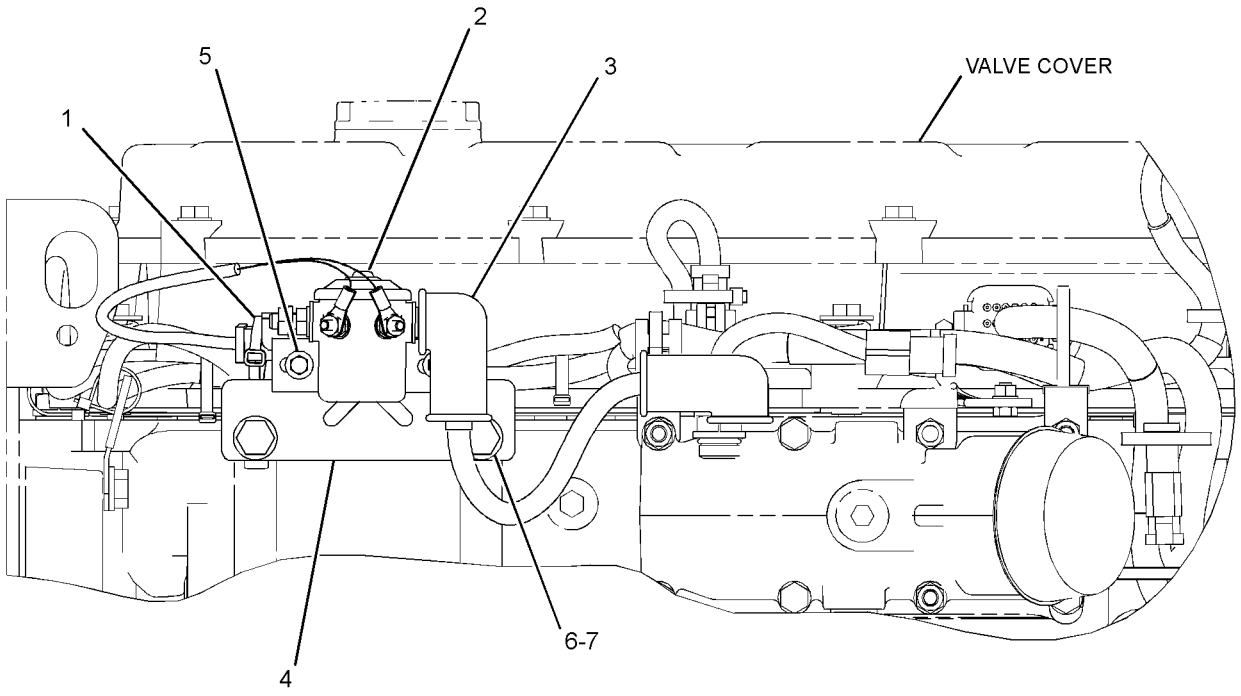

LEFT SIDE VIEW OF ENGINE

GRAPHIC #1 **<END>** g01724439

259-4964 WIRING GP-MEDIUM PRESSURE

S/N: MYG1-UP; PPN1-UP
PART OF 255-5822 CONTROL AR-AUXILIARY
AN ATTACHMENT

SMCS-1408 **i02389279**

NOTE	REF NO	GRAPHIC REF	PART NUMBER	QTY	PART NAME 1 2 3 4 5 6 (PRODUCT LEVEL)	SEE PAGE
	1	1	**3S-2093**	6	STRAP-CABLE	
	2	1	**7K-1181**	3	STRAP-CABLE	
	3	1	**102-7886**	1	SLEEVE	
	4	1	**204-1611**	1	STRAP-CABLE	
	5	1	**259-5125**	1	HARNESS AS-CONTROL	
		1	**155-2270**	1	KIT-CONNECTING PLUG (2-PIN)	
					(INCLUDES PLUG AS, WEDGE, AND INTERFACE SEAL)	
		1	**243-4508**	1	RECEPTACLE AS-CONNECTOR (6-PIN)	
	6	1	**132-5789**	1	CLIP	
	7	1	**8T-4121**	1	WASHER-HARD (11X21X2.5-MM THK)	
M	8	1	**8T-4198**	1	BOLT (M10X1.5X100-MM)	

M-METRIC PART

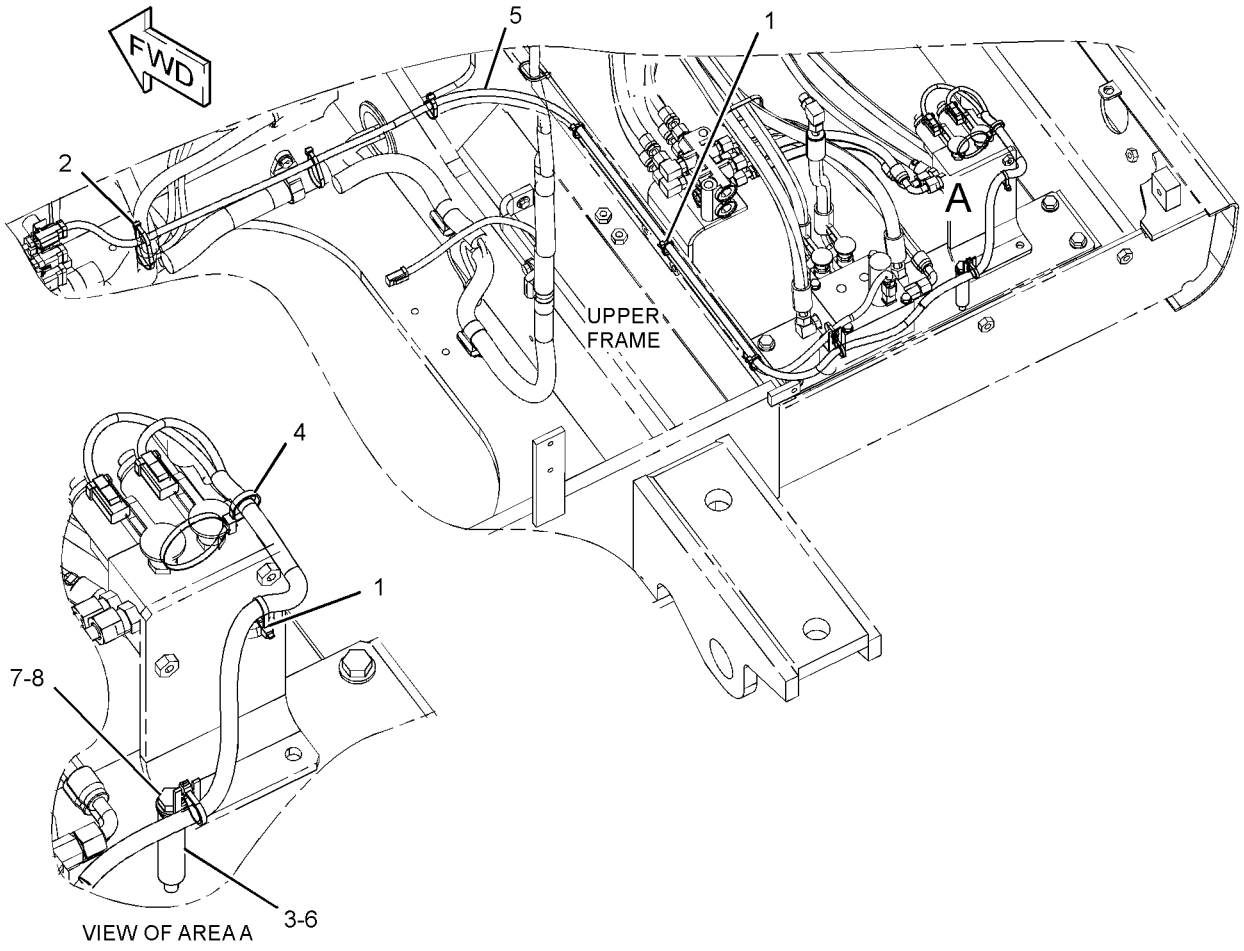

GRAPHIC #1 **<END>** g01154974

ELECTRICAL AND STARTING SYSTEM

336-5982 WIRING GP-PLATFORM

S/N: MYG1-UP; PPN1-UP

PART OF 340-6485 OPERATOR AR

SMCS-1408 **i03652742**

NOTE	REF NO	GRAPHIC REF	PART NUMBER	QTY	PART NAME 1 2 3 4 5 6 (PRODUCT LEVEL)	SEE PAGE
	1	1	**1S-2342**	1	STRAP AS-GROUND	
	2	1	**3E-5169**	1	GUARD-SWITCH	
	3	1	**3S-2093**	7	STRAP-CABLE	
	4	1	**7K-1181**	16	STRAP-CABLE	
	5	1	**111-4836**	5	CLIP	
	6	1	**111-4838**	2	CLIP	
	7	1	**111-4839**	2	STRAP	
	8	1	**116-0118**	14	CLIP	
	9	1	**234-1122**	1	COVER	
	10	1	**251-0299**	1	HARNESS AS-SWITCH (SECONDARY SHUTDOWN)	
		1	**2L-8074**	2	TERMINAL-RING (14-GA TO 16-GA, NO. 6 SCREW)	
		1	**9X-3401**	2	PIN-CONNECTOR (16-GA TO 18-GA)	
		1	**243-4505**	1	RECEPTACLE AS-CONNECTOR (2-PIN)	
	11	1	**336-5966**	1	HARNESS AS-PLATFORM	
		1	**102-8802**	5	KIT-RECEPTACLE (2-PIN)	
		1	**102-8804**	1	KIT-RECEPTACLE (4-PIN)	
					(EACH RECEPTACLE KIT INCLUDES RECEPTACLE AS & WEDGE)	
		1	**8T-8729**	13	PIN-CONNECTOR (16-GA TO 18-GA)	
		1	**8T-8730**	26	SOCKET-CONNECTOR (16-GA TO 18-GA)	
		1	**3S-2093**	21	STRAP-CABLE	
		1	**8N-1546**	1	PIN-CONNECTOR (6-GA)	
		1	**8T-8737**	54	PLUG-SEAL	
		1	**102-7964**	1	CONNECTOR-PLUG	
		1	**102-7965**	13	TERMINAL (FEMALE)	
		1	**9W-0852**	7	PIN-CONNECTOR (14-GA)	
		1	**9W-0844**	38	SOCKET-CONNECTOR (14-GA)	
		1	**116-0255**	1	TERMINAL-BLADE (10-GA TO 20-GA) (FEMALE)	
BE		1	**119-3662**		TUBE-HEAT SHRINK (10.85-MM DIA)	
		1	**121-1039**	1	TERMINAL (MALE)	
		1	**121-1168**	2	CONNECTOR-RECEPTACLE	
		1	**121-1173**	33	TERMINAL (MALE)	
		1	**125-4766**	1	CONNECTOR-PLUG	
		1	**125-4841**	1	WEDGE-PLUG LOCK (21-PIN)	
BE		1	**125-7874**		TUBE-HEAT SHRINK (5.72-MM DIA)	
BE		1	**125-7875**		TUBE-HEAT SHRINK (7.44-MM DIA)	
		1	**9X-3402**	66	SOCKET-CONNECTOR (16-GA TO 18-GA)	
					—OR—	
		1	**126-1768**	66	SOCKET-CONNECTOR (14-GA)	
		1	**127-5484**	1	RECEPTACLE AS-CONNECTOR (1-PIN)	
		1	**2L-8050**	1	TERMINAL-RING (6-GA, 1/4-IN SCREW)	
		1	**2L-8052**	2	TERMINAL-RING (6-GA, 3/8-IN SCREW)	
					—OR—	
		1	**2L-8060**	2	TERMINAL-RING (8-GA, 3/8-IN SCREW)	
		1	**2L-8069**	2	TERMINAL-RING (2-GA TO 10-GA, 3/8-IN SCREW)	
		1	**134-3296**	1	HOUSING-PLUG	
		1	**134-3297**	2	SEAL	
		1	**9X-3401**	26	PIN-CONNECTOR (16-GA TO 18-GA)	
					—OR—	
		1	**126-1767**	26	PIN-CONNECTOR (14-GA)	
		1	**153-2620**	1	PLUG AS-CONNECTOR (54-PIN, BLACK)	
		1	**163-6759**	1	SEAL	
		1	**155-2270**	10	KIT-CONNECTING PLUG (2-PIN)	
		1	**155-2271**	1	KIT-CONNECTING PLUG (4-PIN)	
					(EACH PLUG KIT INCLUDES PLUG AS, WEDGE, & INTERFACE SEAL)	

336-5982 **WIRING GP-PLATFORM** ***(contd.)*** **i03652742**

NOTE	REF NO	GRAPHIC REF	PART NUMBER	QTY	PART NAME 1 2 3 4 5 6 (PRODUCT LEVEL)	SEE PAGE
		1	**197-4385**	2	DIODE	
		1	**230-4009**	3	PLUG AS-CONNECTOR (12-PIN)	
					(EACH INCLUDES)	
		1	**264-7034**	1	SEAL-CONNECTOR	
		1	**230-4011**	4	PLUG AS-CONNECTOR (2-PIN)	
					(EACH INCLUDES)	
		1	**264-7029**	1	SEAL-CONNECTOR	
		1	**230-5010**	3	PLUG AS-CONNECTOR (6-PIN)	
					(EACH INCLUDES)	
		1	**264-7032**	1	SEAL-CONNECTOR	
		1	**238-2363**	10	TERMINAL (FEMALE)	
		1	**238-2366**	6	TERMINAL (MALE)	
		1	**239-7352**	1	PLUG AS-CONNECTOR (6-PIN)	
		1	**264-7032**	1	SEAL-CONNECTOR	
		1	**243-4505**	2	RECEPTACLE AS-CONNECTOR (2-PIN)	
		1	**243-4507**	1	RECEPTACLE AS-CONNECTOR (4-PIN)	
		1	**243-4508**	4	RECEPTACLE AS-CONNECTOR (6-PIN)	
		1	**243-4509**	1	RECEPTACLE AS-CONNECTOR (8-PIN)	
		1	**243-4510**	2	RECEPTACLE AS-CONNECTOR (12-PIN)	
		1	**247-2693**	1	RECEPTACLE AS-CONNECTOR (6-PIN)	
	12	1	**096-6166**	2	WASHER-HARD (4.5X9X1-MM THK)	
	13	1	**4D-1836**	1	SWITCH AS-TOGGLE (SECONDARY SHUTDOWN)	
M	14	1	**7X-2621**	7	BOLT (M10X1.5X12-MM)	
M	15	1	**8T-0337**	2	SCREW-MACHINE (M4X0.7X12-MM)	
	16	1	**8T-4121**	15	WASHER-HARD (11X21X2.5-MM THK)	
M	17	1	**8T-4137**	8	BOLT (M10X1.5X20-MM)	

B-USE AS REQUIRED
E-ORDER BY THE CENTIMETER
M-METRIC PART

336-5982 **WIRING GP-PLATFORM** *(contd.)* **i03652742**

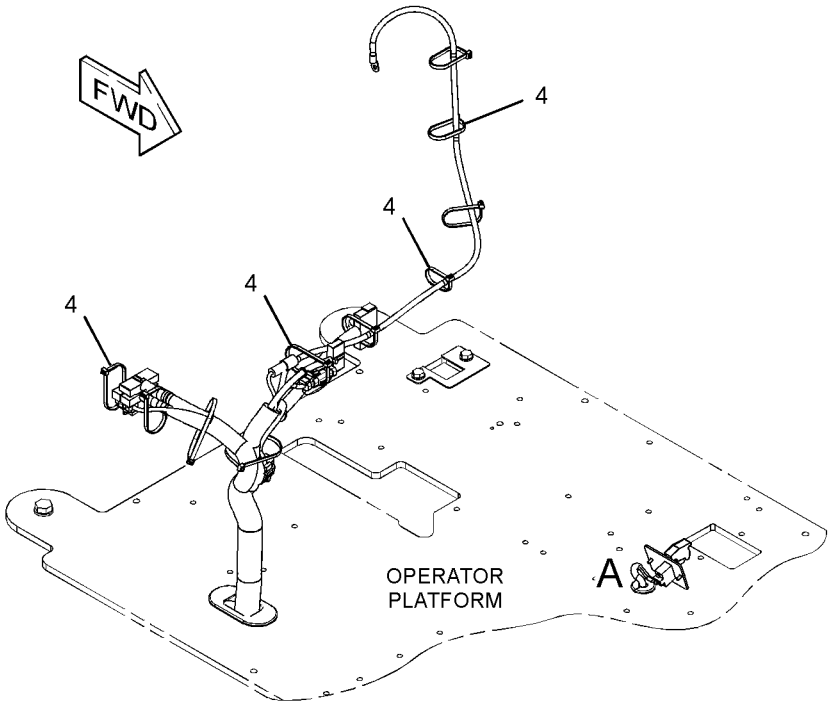

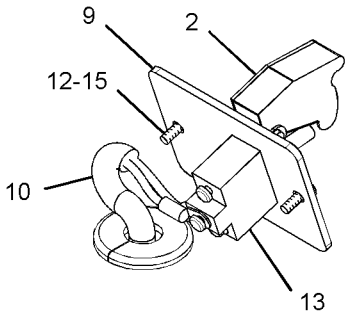

VIEW OF AREA A

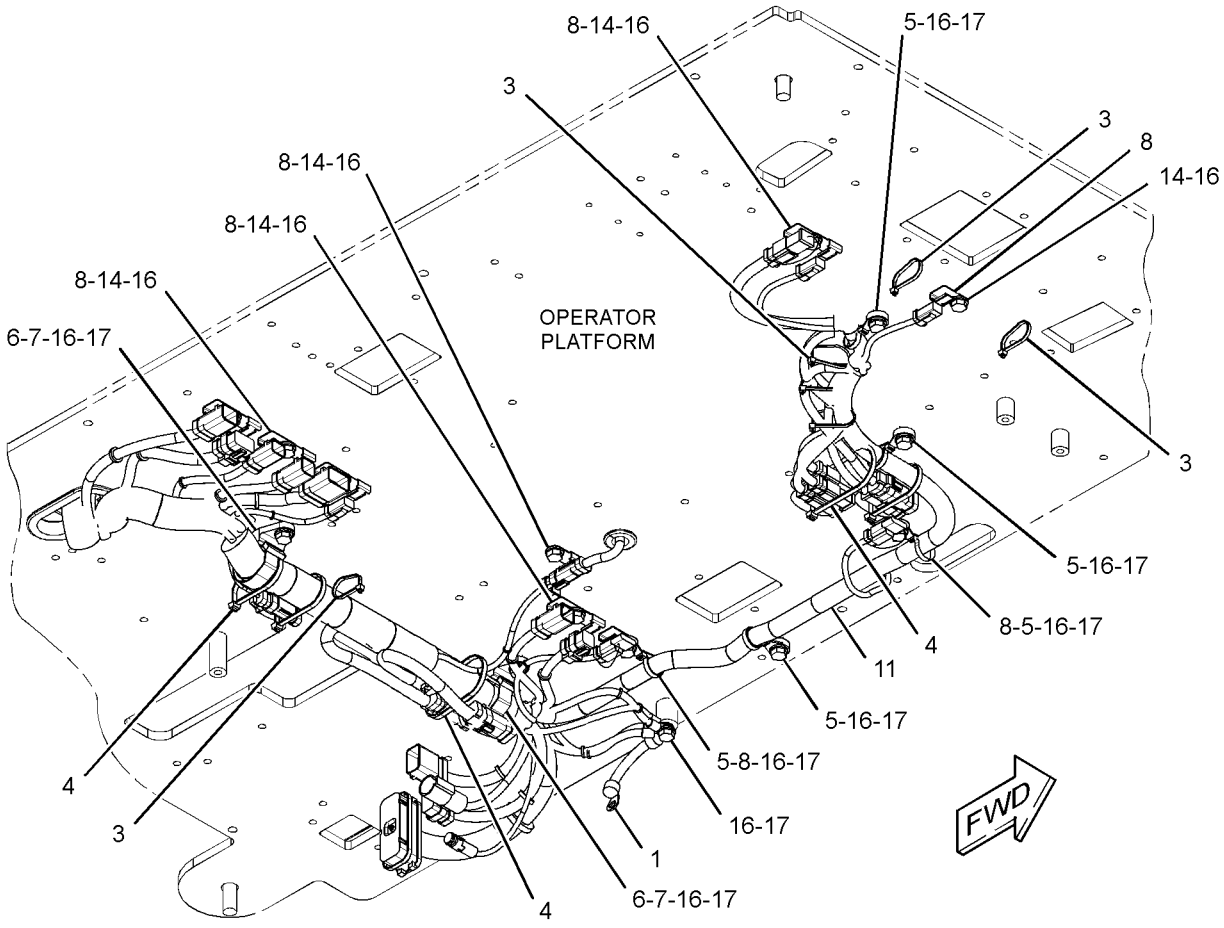

GRAPHIC #1 **<END>** g01967247

336-6194 WIRING GP-QUICK COUPLER

S/N: MYG1-UP; PPN1-UP
PART OF 344-4124 CONTROL AR-COUPLER
AN ATTACHMENT

SMCS-1408, 6129 **i03676003**

NOTE	REF NO	GRAPHIC REF	PART NUMBER	QTY	PART NAME 1 2 3 4 5 6 (PRODUCT LEVEL)	SEE PAGE
	1	1	**3S-2093**	20	STRAP-CABLE	
	2	1	**7K-1181**	19	STRAP-CABLE	
	3	1	**204-1611**	2	STRAP-CABLE	
	4	1	**342-3144**	1	HARNESS AS-QUICK COUPLER	
		1	**102-8802**	1	KIT-RECEPTACLE (2-PIN)	
					(INCLUDES RECEPTACLE AS & WEDGE)	
		1	**8T-8729**	4	PIN-CONNECTOR (16-GA TO 18-GA)	
		1	**8T-8730**	4	SOCKET-CONNECTOR (16-GA TO 18-GA)	
		1	**9W-0852**	2	PIN-CONNECTOR (14-GA)	
		1	**9W-0844**	2	SOCKET-CONNECTOR (14-GA)	
BE		1	**125-7874**		TUBE-HEAT SHRINK (5.72-MM DIA)	
		1	**2L-8079**	1	TERMINAL-RING (14-GA TO 16-GA, 3/8-IN SCREW)	
		1	**155-2270**	3	KIT-CONNECTING PLUG (2-PIN)	
					(EACH KIT INCLUDES PLUG AS, WEDGE & INTERFACE SEAL)	
		1	**243-4507**	1	RECEPTACLE AS-CONNECTOR (4-PIN)	
	5	1	**4P-7581**	1	CLIP	
	6	1	**8T-4121**	1	WASHER-HARD (11X21X2.5-MM THK)	
M	7	1	**8T-4136**	1	BOLT (M10X1.5X25-MM)	

B-USE AS REQUIRED
E-ORDER BY THE CENTIMETER
M-METRIC PART

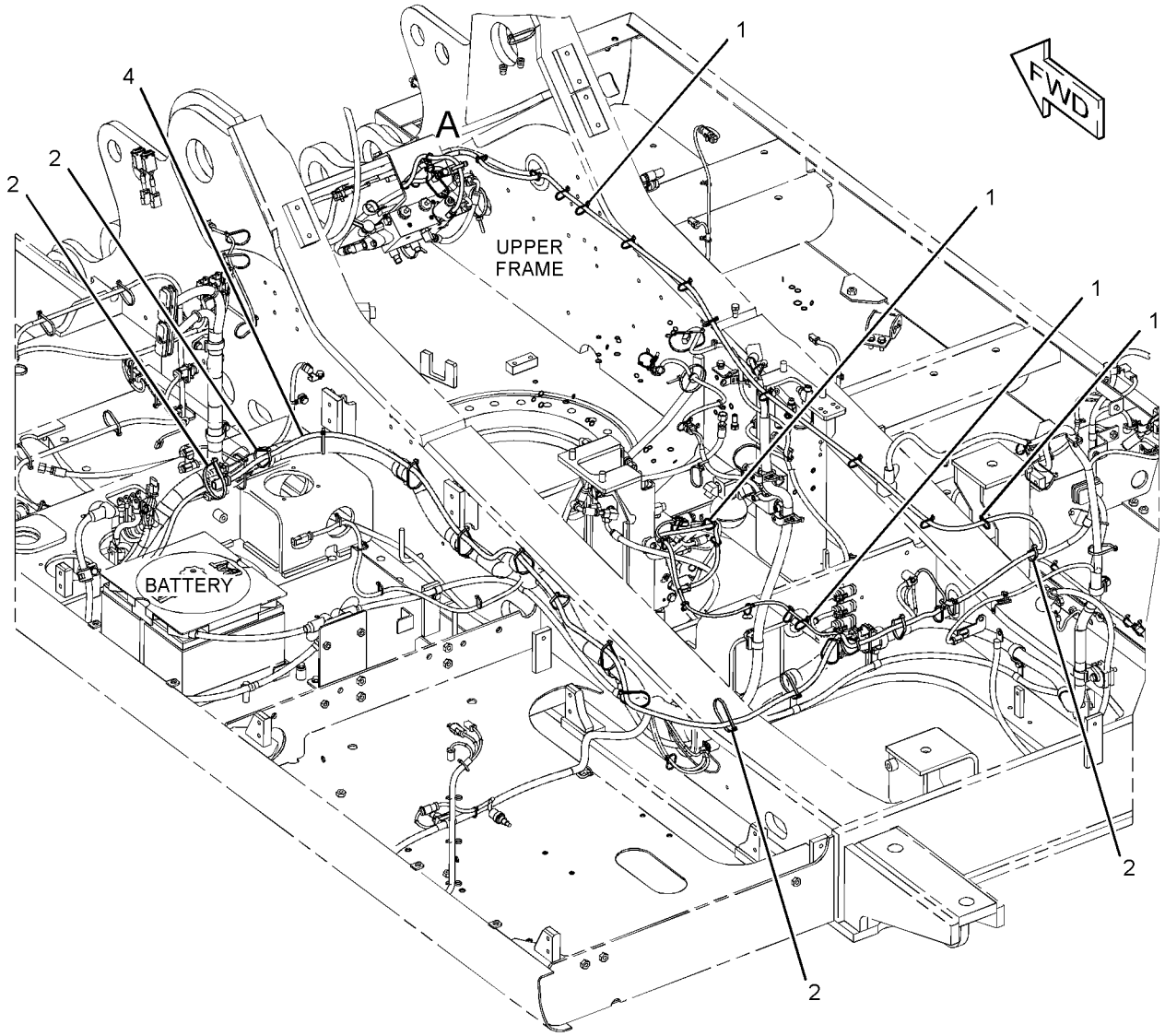

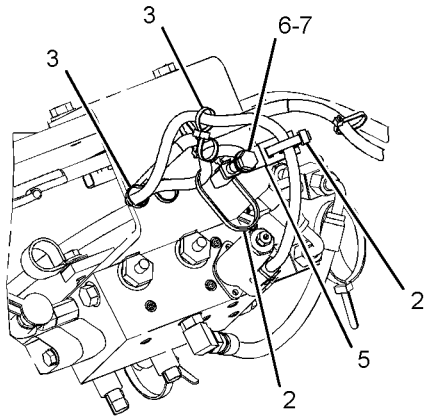

VIEW OF AREA A

GRAPHIC #1 **<END>** g01978157

ELECTRICAL AND STARTING SYSTEM

238-1570 WIRING GP-REFUELING PUMP

S/N: MYG1-UP; PPN1-UP
PART OF 229-1784 PUMP AR-FUEL TRANSFER
AN ATTACHMENT

SMCS-1408 **i03631906**

NOTE	REF NO	GRAPHIC REF	PART NUMBER	QTY	PART NAME 1 2 3 4 5 6 (PRODUCT LEVEL)	SEE PAGE
	1	1	**3S-2093**	16	STRAP-CABLE	
	2	1	**9X-3495**	1	CLIP AS	
	3	1	**149-5050**	1	RELAY (24-VOLT) (REFUELING PUMP, STOP)	
	3A	1	**149-5050**	1	RELAY (24-VOLT) (REFUELING PUMP, START)	
	4	1	**213-0772**	1	SWITCH AS-MAGNETIC (24-VOLT) (MAIN RELAY)	
	5	1	**238-1579**	1	HARNESS AS-PUMP (REFUELING)	
		1	**8T-8729**	2	PIN-CONNECTOR (16-GA TO 18-GA)	
		1	**8T-8730**	5	SOCKET-CONNECTOR (16-GA TO 18-GA)	
		1	**3S-2093**	3	STRAP-CABLE	
		1	**8T-8737**	1	PLUG-SEAL	
		1	**116-0126**	1	HOUSING-PLUG	
		1	**116-0128**	2	SEAL	
		1	**116-0255**	2	TERMINAL-BLADE (10-GA TO 20-GA)	
BE		1	**119-3662**		TUBE-HEAT SHRINK (10.85-MM DIA)	
		1	**121-1038**	1	HOUSING-RECEPTACLE	
		1	**121-1039**	2	TERMINAL (MALE)	
BE		1	**125-7875**		TUBE-HEAT SHRINK (7.44-MM DIA)	
		1	**2L-8065**	1	TERMINAL-RING (10-GA TO 12-GA, NO. 8 SCREW)	
		1	**2L-8067**	2	TERMINAL-RING (10-GA TO 12-GA, 1/4-IN SCREW)	
		1	**2L-8075**	1	TERMINAL-RING (14-GA TO 16-GA, NO. 8 SCREW)	
		1	**2L-8077**	1	TERMINAL (14-GA TO 16-GA, 1/4-IN SCREW)	
		1	**149-5051**	2	CONNECTOR-RECEPTACLE	
		1	**149-5069**	4	TERMINAL-BLADE (14-GA TO 20-GA)	
		1	**149-5070**	4	TERMINAL-BLADE (16-GA TO 20-GA)	
		1	**155-2270**	1	KIT-CONNECTING PLUG (2-PIN)	
					(INCLUDES PLUG AS, WEDGE & INTERFACE SEAL)	
		1	**197-4385**	1	DIODE	
		1	**230-4011**	2	PLUG AS-CONNECTOR (2-PIN)	
		1	**243-4505**	1	RECEPTACLE AS-CONNECTOR (2-PIN)	
C	6	1	**319-1335**	1	HARNESS AS-WIRING	
		1	**8T-8730**	3	SOCKET-CONNECTOR (16-GA TO 18-GA)	
		1	**8T-8737**	1	PLUG-SEAL	
		1	**2L-8079**	1	TERMINAL-RING (14-GA TO 16-GA, 3/8-IN SCREW)	
		1	**230-4011**	2	PLUG AS-CONNECTOR (2-PIN)	
Y	7	1	**238-1594**	1	SWITCH GP-PUSH BUTTON (REFUELING PUMP, START)	238
Y	8	1	**238-1596**	1	SWITCH GP-PUSH BUTTON (REFUELING PUMP, STOP)	239
M	9	1	**096-2591**	2	SCREW-MACHINE (M5X0.8X35-MM)	
M	10	1	**7X-2619**	2	BOLT (M6X1X10-MM)	
C	11	1	**8T-0328**	2	WASHER-HARD (5.5X10X1-MM THK)	
M	12	1	**8T-4199**	1	BOLT (M8X1.25X12-MM)	
	13	1	**8T-4224**	1	WASHER-HARD (8.8X16X2-MM THK)	
	14	1	**9X-8256**	2	WASHER (6.6X12X2-MM THK)	
	15	1	**275-6993**	1	COVER	
C	16	1	**7K-1181**	11	STRAP-CABLE	

B-USE AS REQUIRED
C-CHANGE FROM PREVIOUS TYPE
E-ORDER BY THE CENTIMETER
M-METRIC PART
Y-SEPARATE ILLUSTRATION

238-1570 **WIRING GP-REFUELING PUMP** *(contd.)* **i03631906**

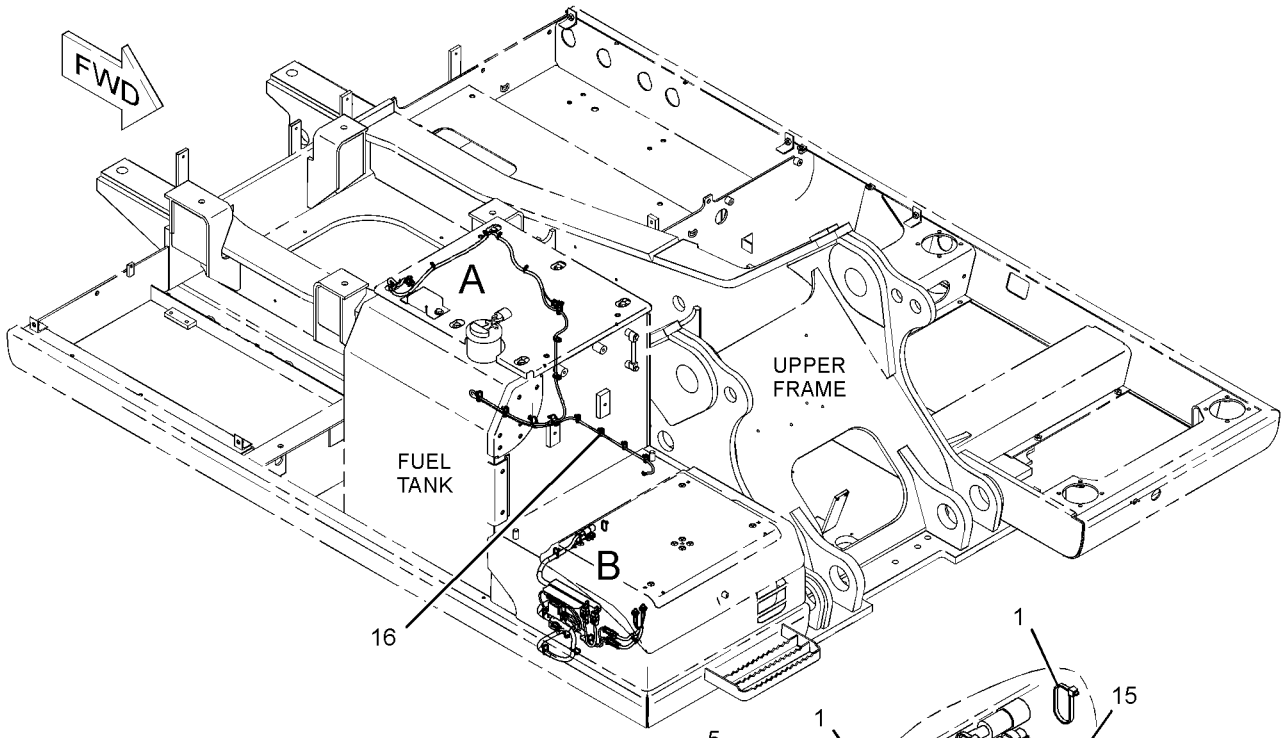

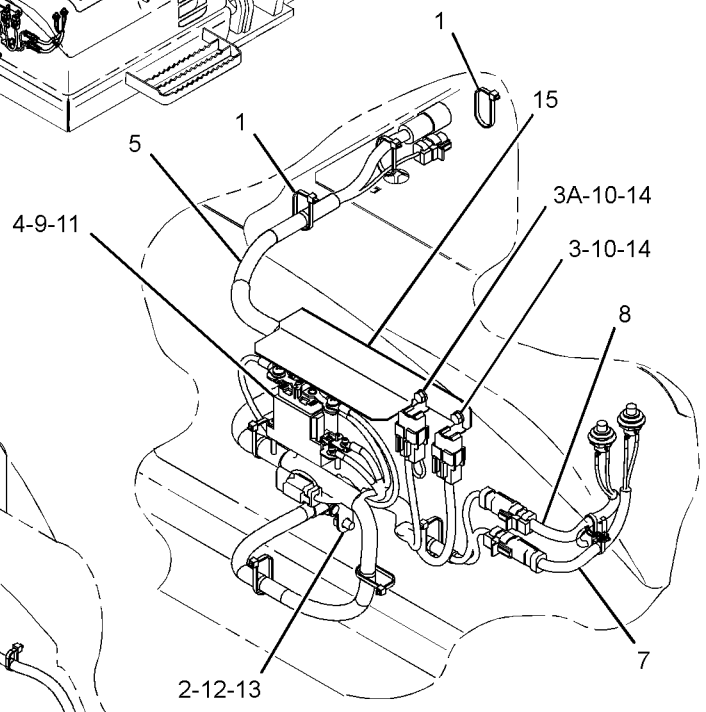

VIEW OF AREA B

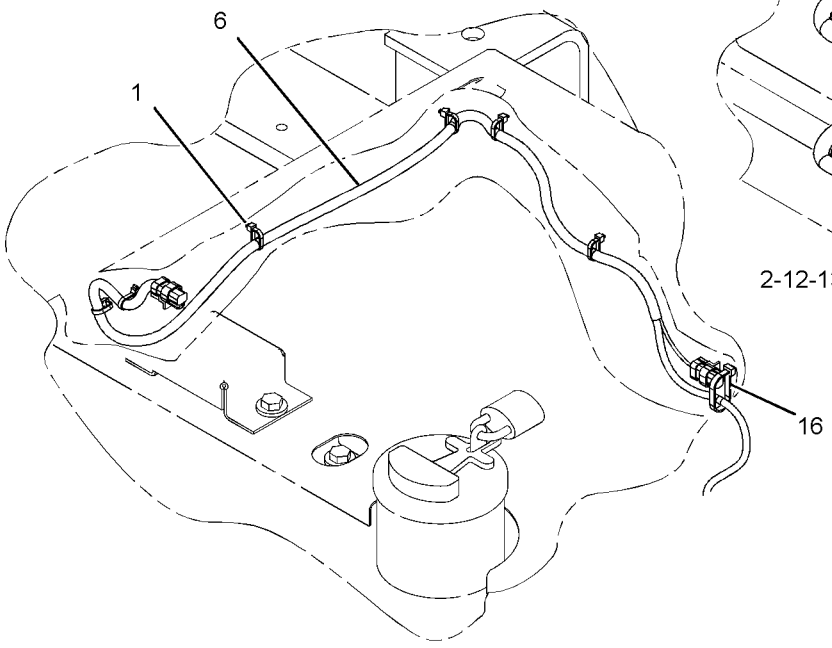

VIEW OF AREA A

GRAPHIC #1 **<END>** g01620056

342-3108 WIRING GP-WINDOW WIPER

S/N: MYG1-UP; PPN1-UP
PART OF 343-1195, 343-1196 WIPER AR-WINDOW
AN ATTACHMENT

SMCS-1408 **i03666401**

NOTE	REF NO	GRAPHIC REF	PART NUMBER	QTY	PART NAME 1 2 3 4 5 6 (PRODUCT LEVEL)	SEE PAGE
	1	1	**7K-1181**	14	STRAP-CABLE	
	2	1	**342-3109**	1	HARNESS AS-WINDOW WIPER	
		1	**3S-2093**	6	STRAP-CABLE	
		1	**102-7965**	12	TERMINAL (FEMALE)	
		1	**9W-0844**	4	SOCKET-CONNECTOR (14-GA)	
		1	**111-4816**	1	CONNECTOR-PLUG	
		1	**121-1173**	8	TERMINAL (MALE)	
		1	**125-4840**	1	WEDGE-PLUG LOCK (13-PIN)	
		1	**230-5008**	1	PLUG AS-CONNECTOR (4-PIN)	
		1	**264-7031**	1	SEAL-CONNECTOR	

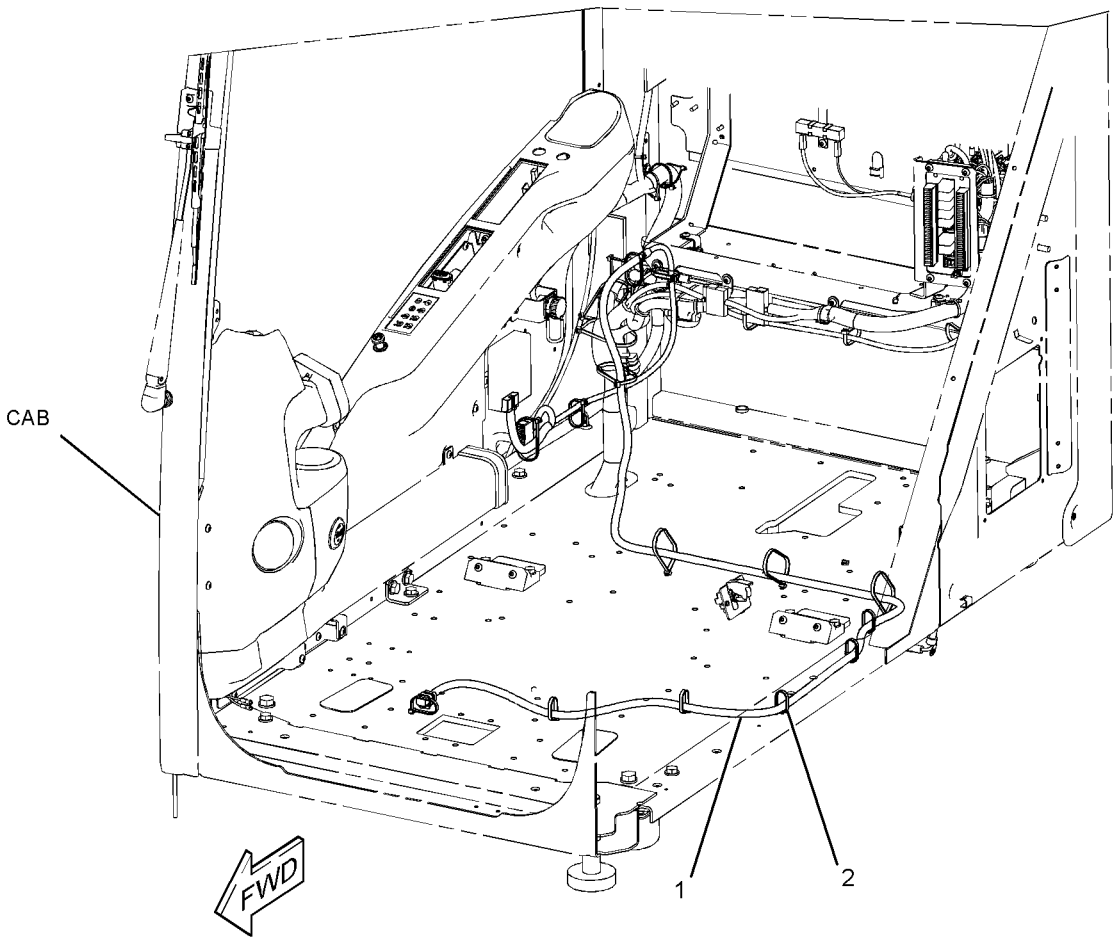

GRAPHIC #1 **<END>** g01982878

296-6217 FINAL DRIVE GP—WITH MOTOR

S/N: MYG1-UP; PPN1-UP

PART OF 191-2576 POWER TRAIN AR

SMCS-4050 **i02946278**

NOTE	PART NUMBER	QTY	PART NAME 1 2 3 4 5 6 (PRODUCT LEVEL)	SEE PAGE
Y	**296-6218**	1	FINAL DRIVE GP (WITHOUT MOTOR)	295
Y	*191-5606*	1	MOTOR & MTG GP-TRAVEL	593

Y-SEPARATE ILLUSTRATION

<END>

POWER TRAIN

296-6218 DRIVE GP-FINAL—WITHOUT MOTOR

S/N: MYG1-UP; PPN1-UP

PART OF 296-6217 DRIVE GP-FINAL

SMCS-4050 **i02946635**

NOTE	REF NO	GRAPHIC REF	PART NUMBER	QTY	PART NAME 1 2 3 4 5 6 (PRODUCT LEVEL)	SEE PAGE
	1	1	**3E-2338**	2	PLUG-PIPE	
	2	1	**7Y-0639**	1	GEAR-SUN (21-TEETH)	
	3	1	**7Y-0642**	1	GEAR-RING (63-TEETH)	
	4	1	**7Y-0643**	1	CARRIER	
	5	1	**7Y-0645**	1	CARRIER	
	6	1	**7Y-0659**	3	GEAR-PLANETARY (22-TEETH)	
	7	1	**7Y-0661**	3	SHAFT-PLANETARY	
	8	1	**7Y-0662**	4	SHAFT-PLANETARY	
	9	1	**7Y-0663**	4	GEAR-PLANETARY (20-TEETH)	
	10	1	**7Y-0667**	1	RING-RETAINING	
	11	1	**7Y-0673**	1	GEAR-RING (73-TEETH)	
	12	1	**7Y-0676**	3	GEAR-PLANETARY (24-TEETH)	
	13	1	**7Y-0731**	1	CARRIER AS	
	13A	1	**7Y-0656**	3	SHAFT-PLANETARY	
BJ	14	1	**7Y-1056**	1	SHIM (0.8-MM THK)	
BJ		1	**7Y-1057**	1	SHIM (1-MM THK)	
BJ		1	**267-6809**	1	SHIM (0.75-MM THK)	
BJ		1	**267-6810**	1	SHIM (0.85-MM THK)	
BJ		1	**267-6811**	1	SHIM (0.9-MM THK)	
BJ		1	**267-6812**	1	SHIM (0.95-MM THK)	
BJ		1	**267-6813**	1	SHIM (1.2-MM THK)	
BJ		1	**267-6814**	1	SHIM (1.4-MM THK)	
BJ		1	**267-6815**	1	SHIM (1.8-MM THK)	
BJ		1	**267-6816**	1	SHIM (2-MM THK)	
BJ		1	**267-6817**	1	SHIM (2.3-MM THK)	
M	16	1	**7Y-1094**	14	WASHER (66X102X1-MM THK)	
M	17	1	**7Y-5235**	20	BOLT (M24X3X190-MM)	
	18	1	**094-0577**	1	PLATE (7-MM THK)	
	19	1	**094-0578**	1	PLATE (8-MM THK)	
	20	1	**094-0579**	1	PLATE (9-MM THK)	
	21	1	**094-0580**	1	PLATE (10-MM THK)	
	22	1	**110-7231**	1	GEAR-SUN (18-TEETH)	
J	23	1	**114-1541**	6	PIN-DOWEL	
	24	1	**191-2521**	1	GEAR-SUN (23-TEETH)	
	25	1	**191-2526**	1	COVER	
	26	1	**199-4582**	3	BEARING AS	
	27	1	**199-4583**	11	BEARING AS	
J	28	1	**227-6190**	1	HOUSING-MOTOR	
J	29	1	**227-6191**	1	HOUSING	
J	30	1	**227-6192**	1	GEAR-COUPLING (66-TEETH)	
J	31	1	**255-2272**	1	SEAL GP-DUO-CONE	
		1	**205-9114**	2	RING-TORIC	
J	41	1	**279-0344**	2	BEARING AS-TAPERED ROLLER	
	42	1	**093-1731**	1	RING-RETAINING	
	43	1	**094-0584**	6	WASHER (40.3X72X1-MM THK)	
	44	1	**095-0891**	7	PIN-SPRING	
M	45	1	**096-3216**	2	SETSCREW-SOCKET (M12X1.75X12-MM)	
	46	1	**191-2645**	1	COUPLING	
	47	1	**2P-3628**	1	SEAL-O-RING	
JM	48	1	**6V-8133**	10	BOLT (M24X3X80-MM)	
J	49	1	**6V-8237**	10	WASHER (26X44X4-MM THK)	
	50	1	**7M-8485**	2	SEAL-O-RING	
	51	1	**7Y-0595**	2	SPACER (58X79.6X6-MM THK)	
	52	1	**7Y-0644**	1	SPACER (163X190X8-MM THK)	
	53	1	**8T-4167**	20	WASHER-HARD (26X44X4-MM THK)	
	54	1	**8T-4240**	3	RING-RETAINING	

296-6218 DRIVE GP-FINAL *(contd.)* i02946635

NOTE	REF NO	GRAPHIC REF	PART NUMBER	QTY	PART NAME 1 2 3 4 5 6 (PRODUCT LEVEL)	SEE PAGE
M	55	1	**9X-6032**	12	BOLT-SOCKET HEAD (M10X1.5X30-MM)	
B	56	1	**1U-8846**		SEALANT-GASKET	
					AVAILABLE REPAIR KIT(S):	
J			**296-6219**	1	KIT-HOUSING (FINAL DRIVE)	
					(ALSO INCLUDES HARD WASHER, BOLTS,COVER, & PLATE AS)	

B-USE AS REQUIRED
J-KIT MARKED J SERVICES PART(S) MARKED J
M-METRIC PART

296-6218 DRIVE GP-FINAL *(contd.)* **i02946635**

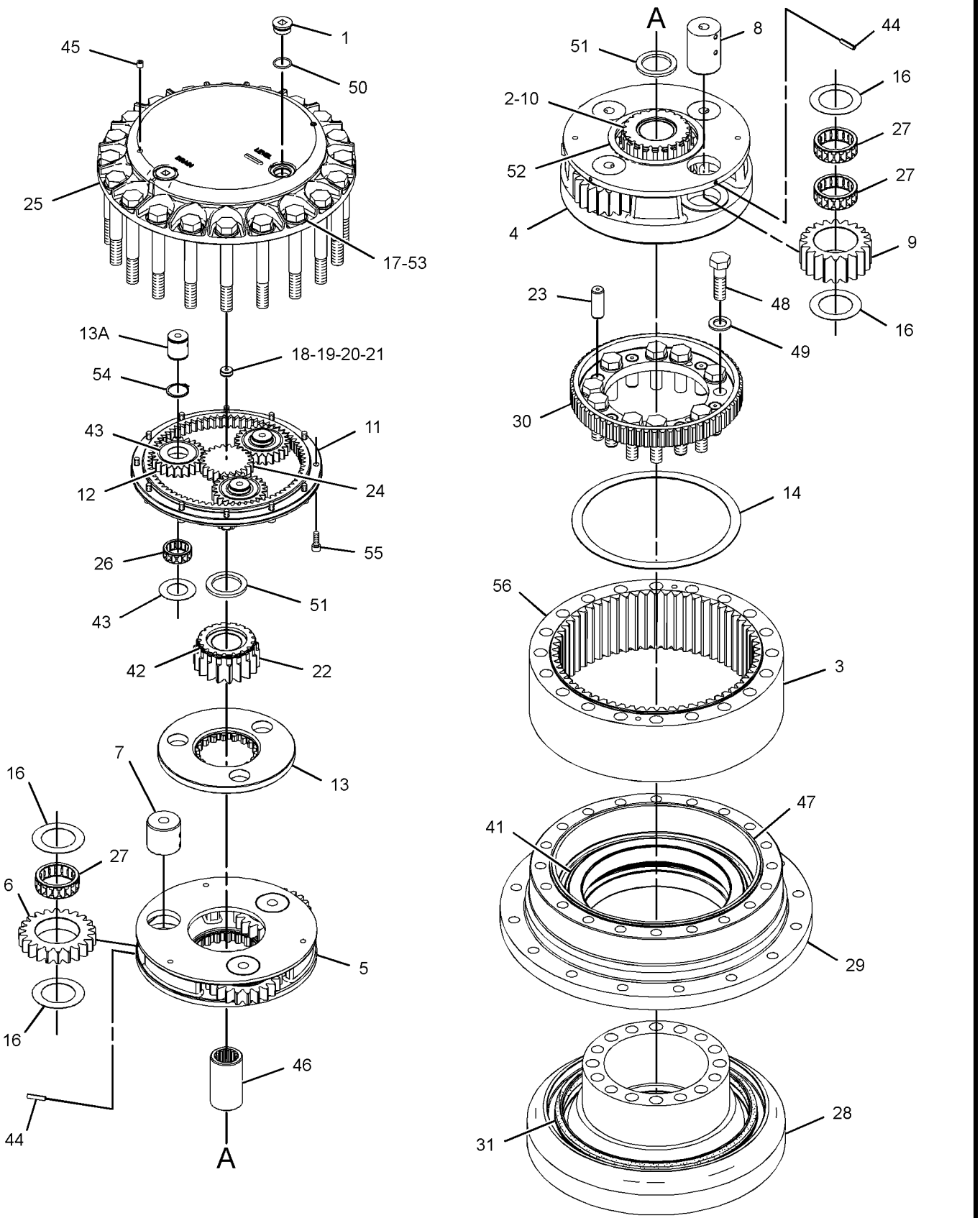

GRAPHIC #1 **<END>** g01378433

POWER TRAIN

191-2576 POWER TRAIN AR

S/N: MYG1-UP; PPN1-UP

PART OF 343-1142, 343-1143 GENERAL AR

SMCS-3000, 4000 **i03648480**

NOTE	PART NUMBER	QTY	PART NAME 1 2 3 4 5 6 (PRODUCT LEVEL)	SEE PAGE
Y	*199-4538*	1	DRIVE GP-SWING (WITH MOTOR)	
Y	*333-2958*	1	DRIVE GP-SWING (WITH MOTOR)	431
Y	*191-2577*	1	FASTENER GP-SWING & FINAL DR	434
Y	**296-6217**	2	DRIVE GP-FINAL (WITH MOTOR)	294
Y	*168-6727*	2	SPROCKET GP	299

Y-SEPARATE ILLUSTRATION

<END>

POWER TRAIN

168-6727 SPROCKET GP

S/N: MYG1-UP; PPN1-UP
NON-SEGMENTED
PART OF 191-2576 POWER TRAIN AR

SMCS-4164 **i01710802**

NOTE	REF NO	GRAPHIC REF	PART NUMBER	QTY	PART NAME 1 2 3 4 5 6 (PRODUCT LEVEL)	SEE PAGE
M	1	1	**7X-2575**	16	BOLT (M24X3X60MM)	
	2	1	**6Y-5685**	1	SPROCKET-TRACK	

M-METRIC PART

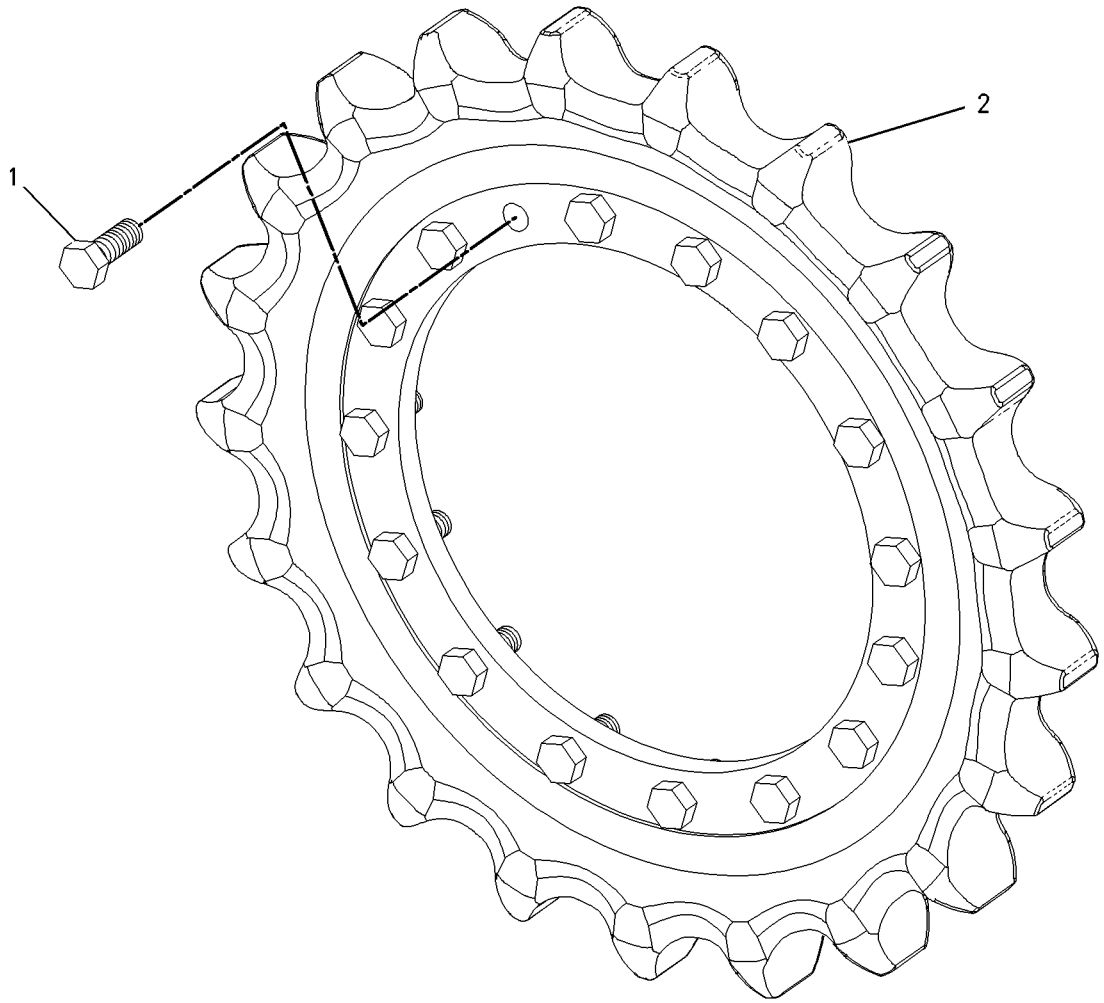

GRAPHIC #1 **<END>** g00735057

FRAME AND BODY

223-3040 BOX & MTG GP-STORAGE

S/N: MYG1-UP; PPN1-UP

PART OF 343-1145, 343-1146 CHASSIS AR

SMCS-7268 **i02295976**

NOTE	REF NO	GRAPHIC REF	PART NUMBER	QTY	PART NAME 1 2 3 4 5 6 (PRODUCT LEVEL)	SEE PAGE
Y	1	1	**223-3041**	1	BOX GP-STORAGE	301
M	2	1	**135-8577**	4	BOLT AS	

M-METRIC PART
Y-SEPARATE ILLUSTRATION

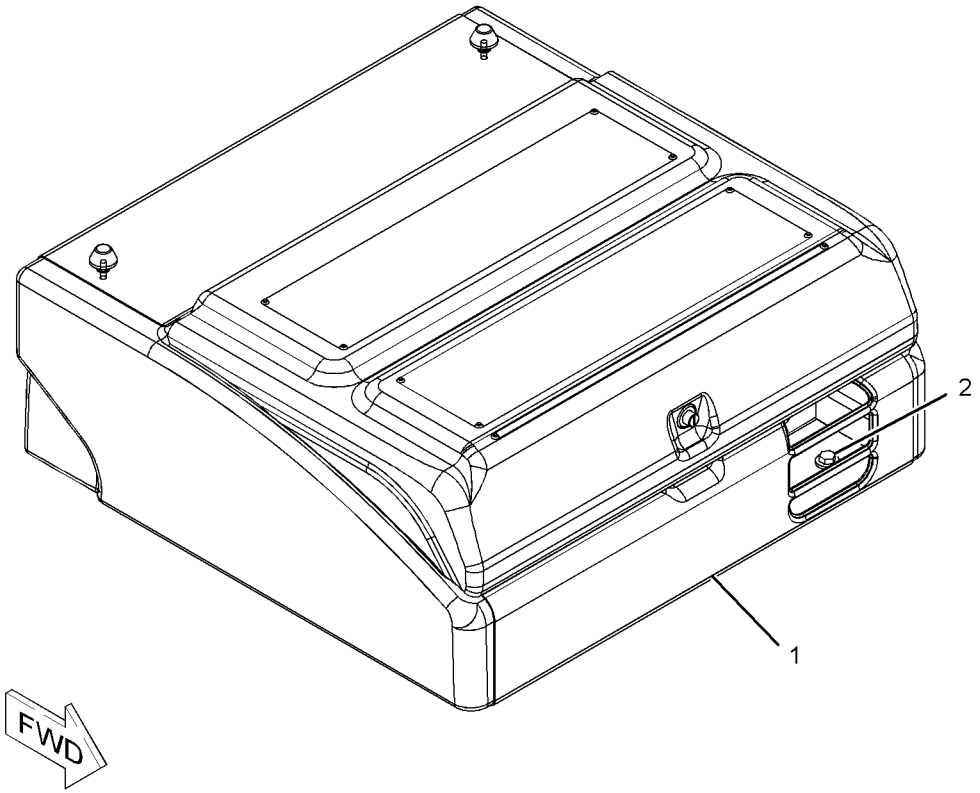

GRAPHIC #1 **<END>** g01150412

223-3041 BOX GP-STORAGE

S/N: MYG1-UP; PPN1-UP

PART OF 223-3040 BOX & MTG GP-STORAGE

SMCS-7268 **i03652270**

NOTE	REF NO	GRAPHIC REF	PART NUMBER	QTY	PART NAME 1 2 3 4 5 6 (PRODUCT LEVEL)	SEE PAGE
	1	1	**4I-2187**	1	SUPPORT AS	
J	2	1	**342-1110**	1	LOCK AS	
	3	1	**236-3670**	1	STRIKER AS	
	4	1	**236-3671**	1	SEAL	
	5	1	**236-9435**	1	BOX AS	
	6	1	**236-9437**	1	COVER AS	
	6A	1	**3D-9143**	2	HINGE-BUTT	
	7	1	**236-9438**	1	PLUNGER AS	
	8	1	**236-9440**	1	SHEET	
	9	1	**273-7964**	2	MOUNT	
	10	1	**095-0843**	1	PIN-COTTER	
	11	1	**096-3780**	1	PIN-CLEVIS	
M	12	1	**105-3487**	4	BOLT-SOCKET HEAD (M6X1X20-MM)	
	13	1	**170-9360**	1	GROMMET	
M	15	1	**5C-9553**	3	BOLT (M6X1X16-MM)	
	16	1	**5P-1075**	4	WASHER-HARD (10.2X22.5X3-MM THK)	
	17	1	**5P-4116**	1	WASHER-HARD (8.8X20.5X2-MM THK)	
M	18	1	**8T-4133**	4	NUT (M10X1.5-THD)	
M	19	1	**8T-4200**	2	BOLT (M8X1.25X16-MM)	
	20	1	**8T-4224**	2	WASHER-HARD (8.8X16X2-MM THK)	
	21	1	**9X-8256**	7	WASHER (6.6X12X2-MM THK)	
	22	1	**278-3581**	4	CUSHION	
B	23	1	**8T-4223**	2	WASHER-HARD (13.5X25.5X3-MM THK)	

B-USE AS REQUIRED
J-REQUIRES CORPORATE KEY
M-METRIC PART

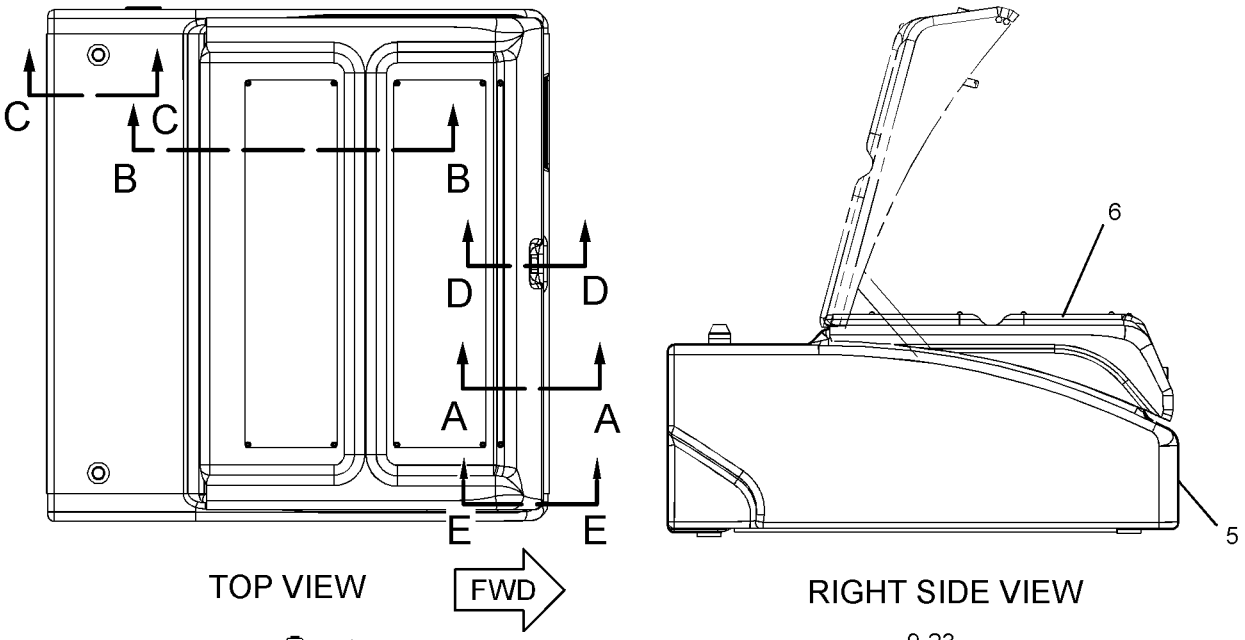

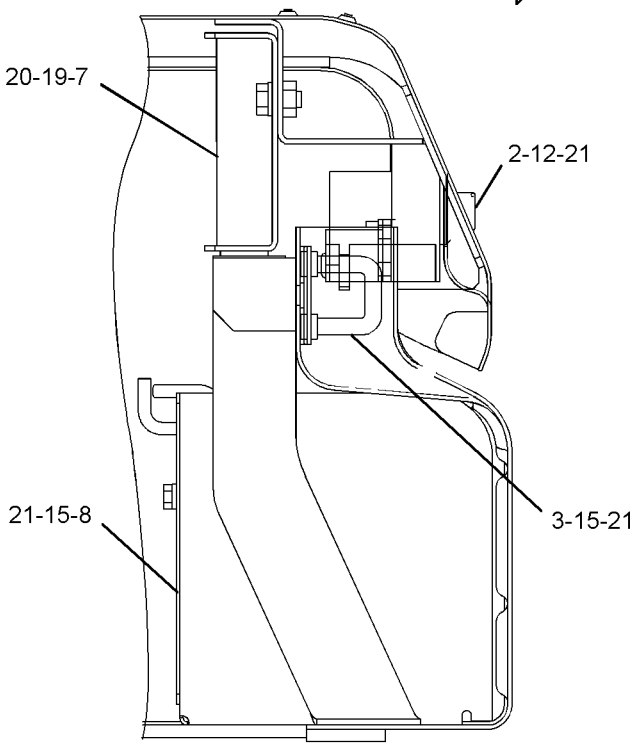

SECTION A-A

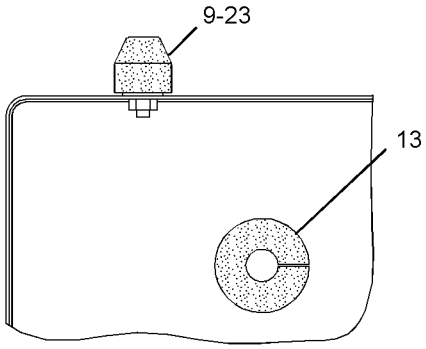

SECTION C-C

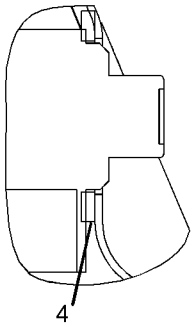

SECTION D-D

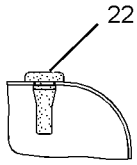

SECTION E-E

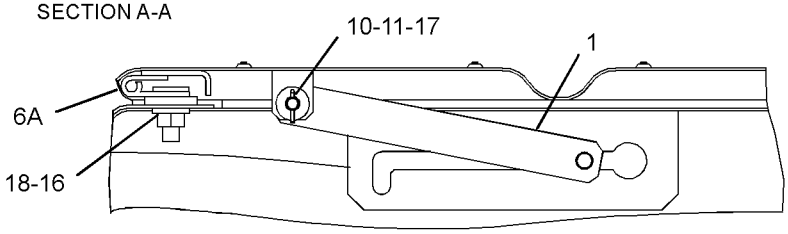

SECTION B-B

GRAPHIC #1 **<END>** g01238343

342-3588 BUMPER GP-FRONT—WITHOUT LOWER WIPER

S/N: MYG1-UP; PPN1-UP

PART OF 343-1145, 343-1146 CHASSIS AR

SMCS-7156 **i03640886**

NOTE	REF NO	GRAPHIC REF	PART NUMBER	QTY	PART NAME 1 2 3 4 5 6 (PRODUCT LEVEL)	SEE PAGE
	1	1	**342-3589**	1	BUMPER AS	
M	2	1	**7X-2550**	2	BOLT (M12X1.75X110-MM)	
	3	1	**8T-4223**	2	WASHER-HARD (13.5X25.5X3-MM THK)	

M-METRIC PART

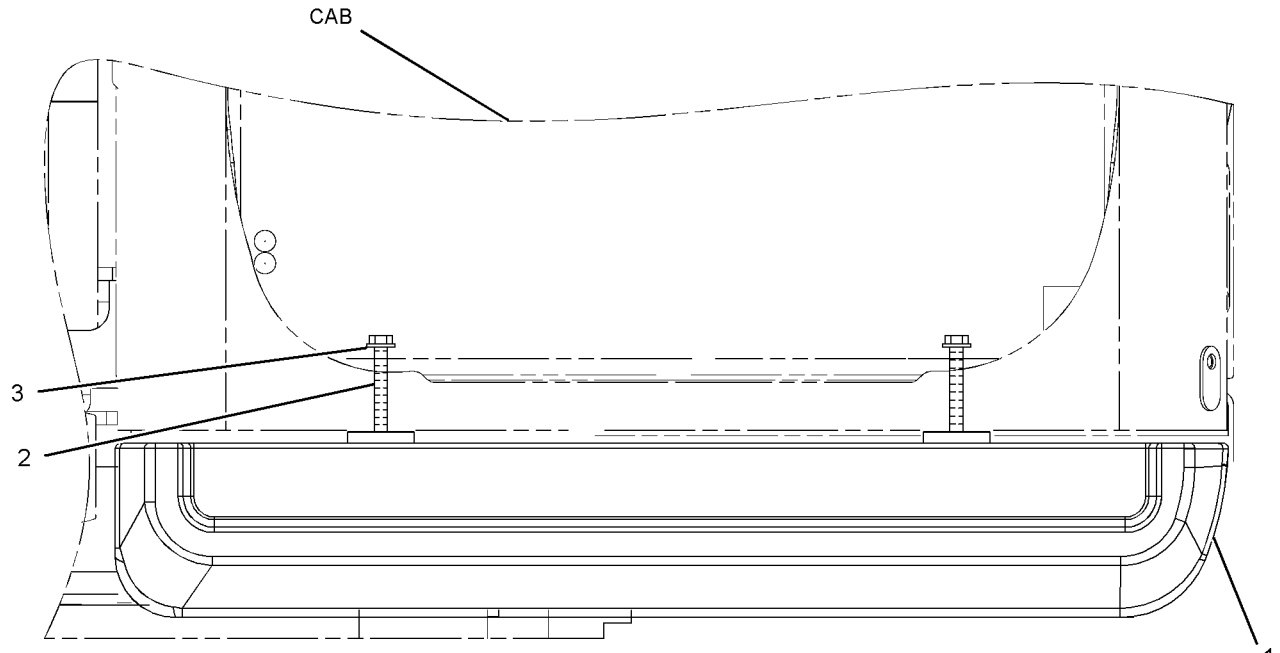

FRONT VIEW

GRAPHIC #1 **<END>** g01957301

342-3664 BUMPER GP-FRONT

S/N: MYG1-UP; PPN1-UP
PART OF 343-1195, 343-1196 WIPER AR-WINDOW
AN ATTACHMENT

SMCS-7156 **i03666402**

NOTE	REF NO	GRAPHIC REF	PART NUMBER	QTY	PART NAME 1 2 3 4 5 6 (PRODUCT LEVEL)	SEE PAGE
	1	1	**346-7446**	1	BUMPER AS	
M	2	1	**7X-2549**	2	BOLT (M12X1.75X100-MM)	
	3	1	**8T-4223**	2	WASHER-HARD (13.5X25.5X3-MM THK)	

M-METRIC PART

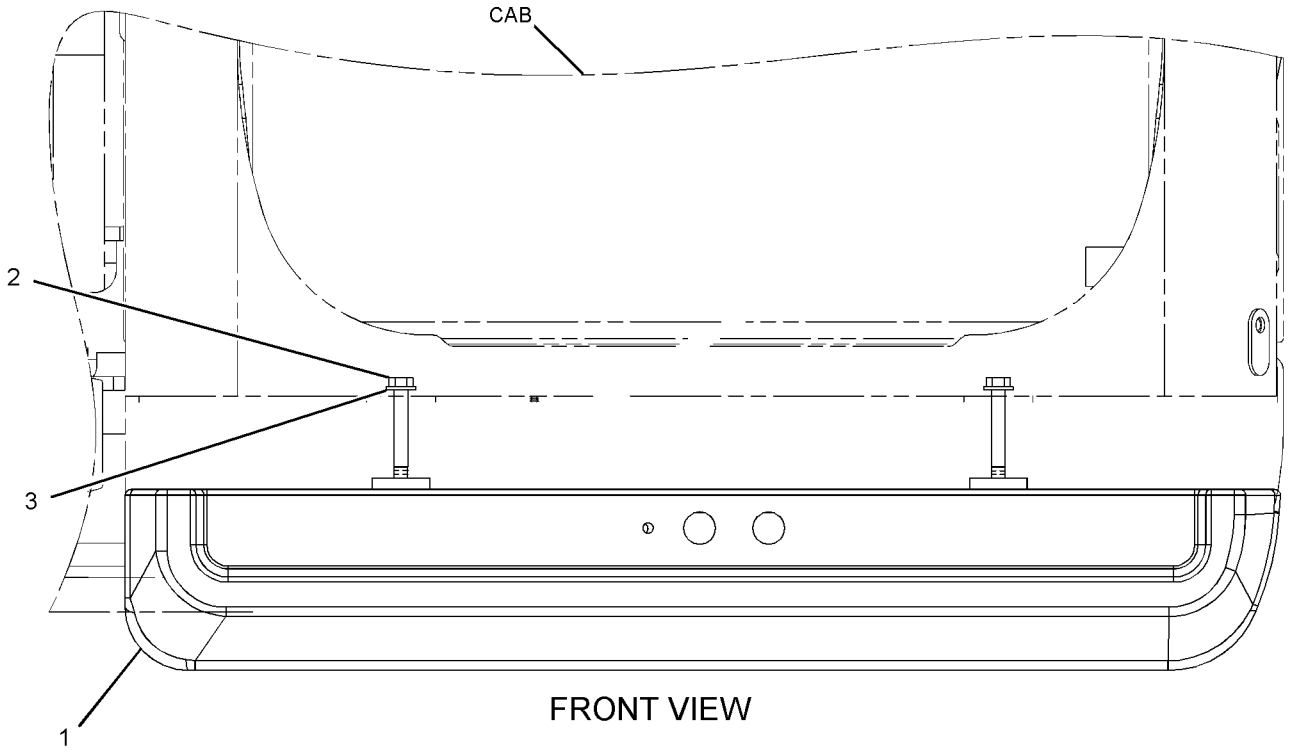

FRONT VIEW

GRAPHIC #1 **<END>** g01975536

FRAME AND BODY

237-8759 COUNTERWEIGHT & MOUNTING GP

S/N: MYG1-UP; PPN1-UP

PART OF 343-1145, 343-1146 CHASSIS AR

SMCS-7056 **i03136326**

NOTE	REF NO	GRAPHIC REF	PART NUMBER	QTY	PART NAME 1 2 3 4 5 6 (PRODUCT LEVEL)	SEE PAGE
CY	1	1	*330-1278*	1	COUNTERWEIGHT GP	307
	2	1	**248-9337**	4	SPACER (39X75X20-MM THK)	
M	3	1	**4I-0191**	4	BOLT (M36X4X181-MM)	

C-CHANGE FROM PREVIOUS TYPE
M-METRIC PART
Y-SEPARATE ILLUSTRATION

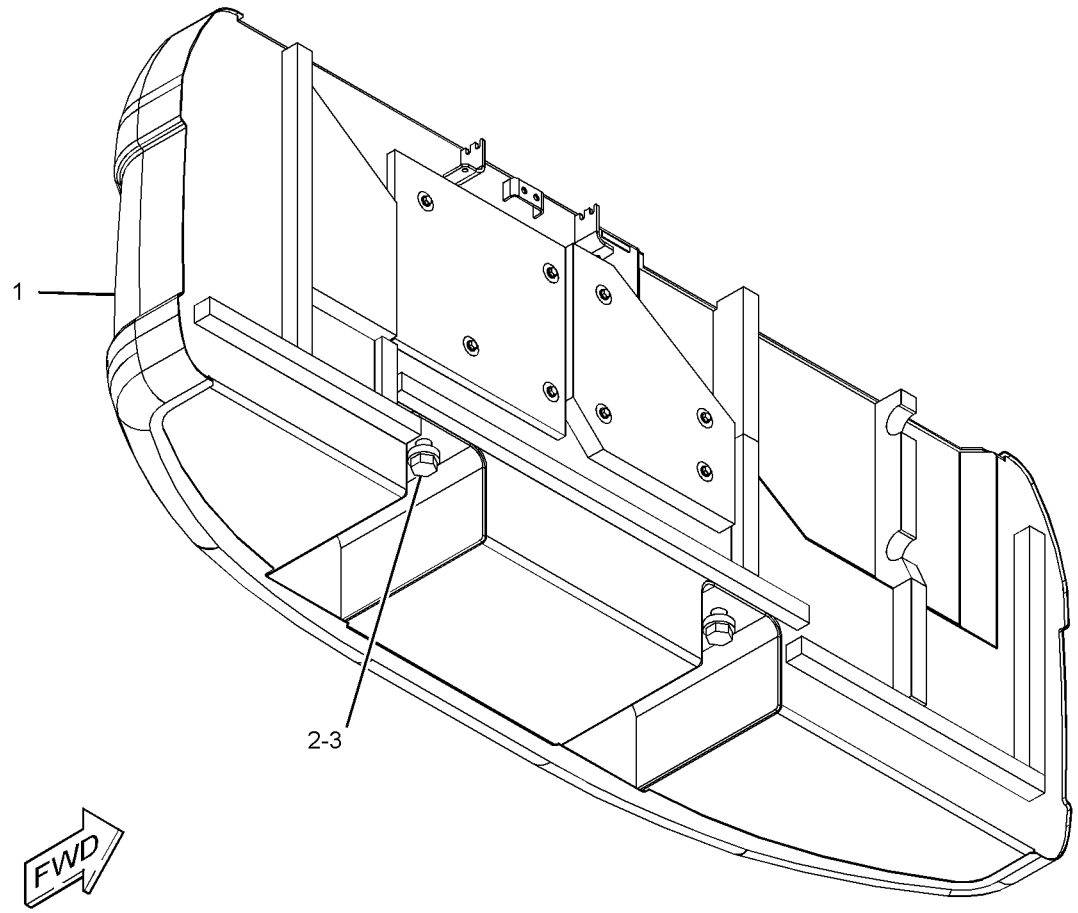

GRAPHIC #1 **<END>** g01198186

278-3932 COUNTERWEIGHT & MOUNTING GP

S/N: MYG1-UP; PPN1-UP
PART OF 345-3787 LINKAGE AR-FRONT
AN ATTACHMENT

SMCS-7056 **i03152140**

NOTE	REF NO	GRAPHIC REF	PART NUMBER	QTY	PART NAME 1 2 3 4 5 6 (PRODUCT LEVEL)	SEE PAGE
	1	1	**248-9337**	4	SPACER (39X75X20-MM THK)	
CY	2	1	*330-1284*	1	COUNTERWEIGHT GP	308
M	3	1	**4I-0191**	4	BOLT (M36X4X181-MM)	
M	4	1	**8T-4190**	8	BOLT (M16X2X25-MM)	

C-CHANGE FROM PREVIOUS TYPE
M-METRIC PART
Y-SEPARATE ILLUSTRATION

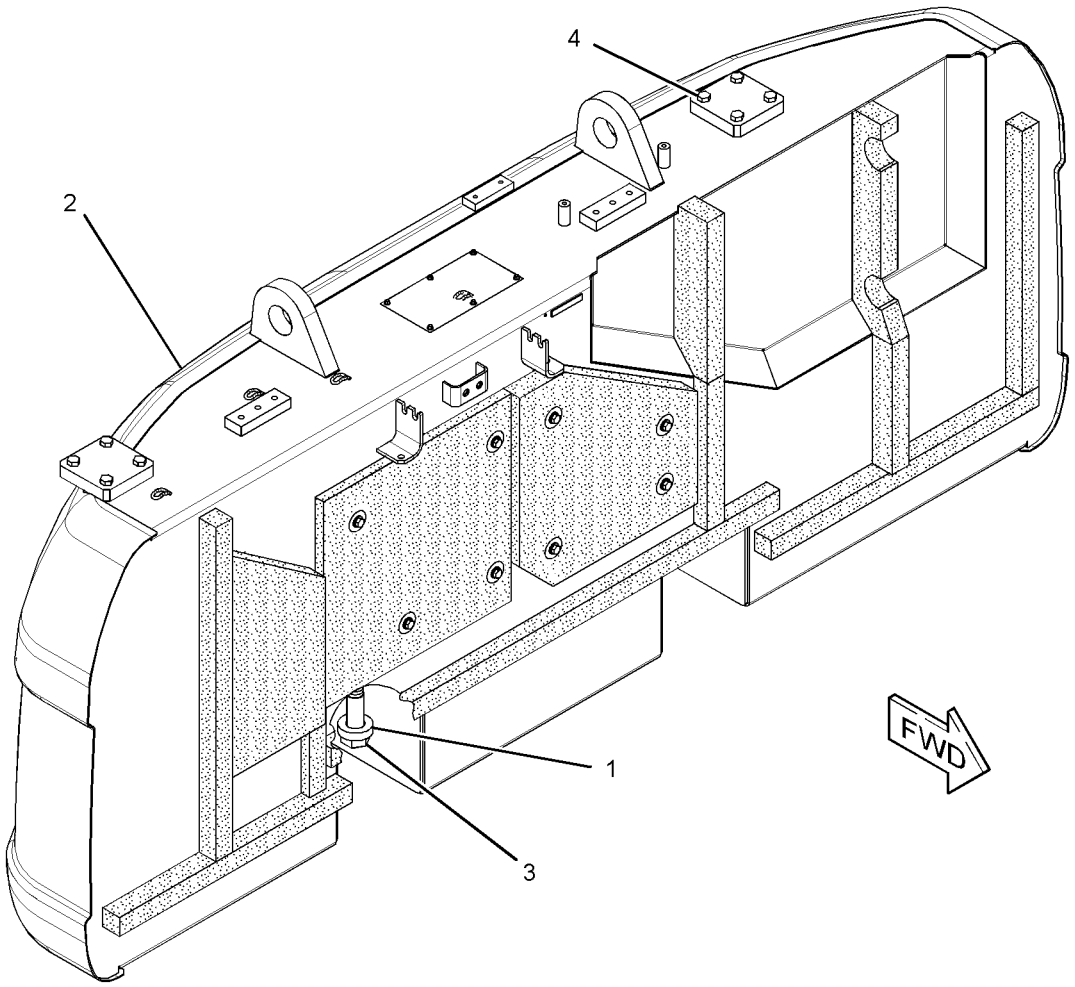

GRAPHIC #1 **<END>** g01620172

FRAME AND BODY

330-1278 COUNTERWEIGHT GP

S/N: MYG1-UP; PPN1-UP
6252-KG (13783-LB)
PART OF 237-8759 COUNTERWEIGHT & MOUNTING GP

SMCS-7056 **i03288890**

NOTE	REF NO	GRAPHIC REF	PART NUMBER	QTY	PART NAME 1 2 3 4 5 6 (PRODUCT LEVEL)	SEE PAGE
	1	1	**7I-0717**	1	LINER	
	2	1	**081-6344**	4	SPACER (13.3X21.3X25-MM THK)	
	3	1	**129-3399**	1	LINER	
	4	1	**184-8722**	1	LINER	
	5	1	**193-9389**	1	LINER	
	6	1	**241-2365**	1	LINER	
	7	1	**241-2366**	1	LINER	
	8	1	**241-2367**	1	LINER	
	9	1	**241-2368**	1	LINER	
	10	1	**244-8045**	1	LINER	
	11	1	**244-8046**	1	LINER	
	12	1	**259-3865**	1	LINER	
	13	1	**270-9626**	1	INSULATION	
	14	1	**270-9627**	1	INSULATION	
	15	1	**330-1279**	1	COUNTERWEIGHT AS	
	16	1	**7Y-2292**	8	WASHER (13X50X2-MM THK)	
M	17	1	**8T-4179**	4	BOLT (M12X1.75X20-MM)	
M	18	1	**8T-4184**	4	BOLT (M12X1.75X45-MM)	
	19	1	**8T-4223**	8	WASHER-HARD (13.5X25.5X3-MM THK)	

M-METRIC PART

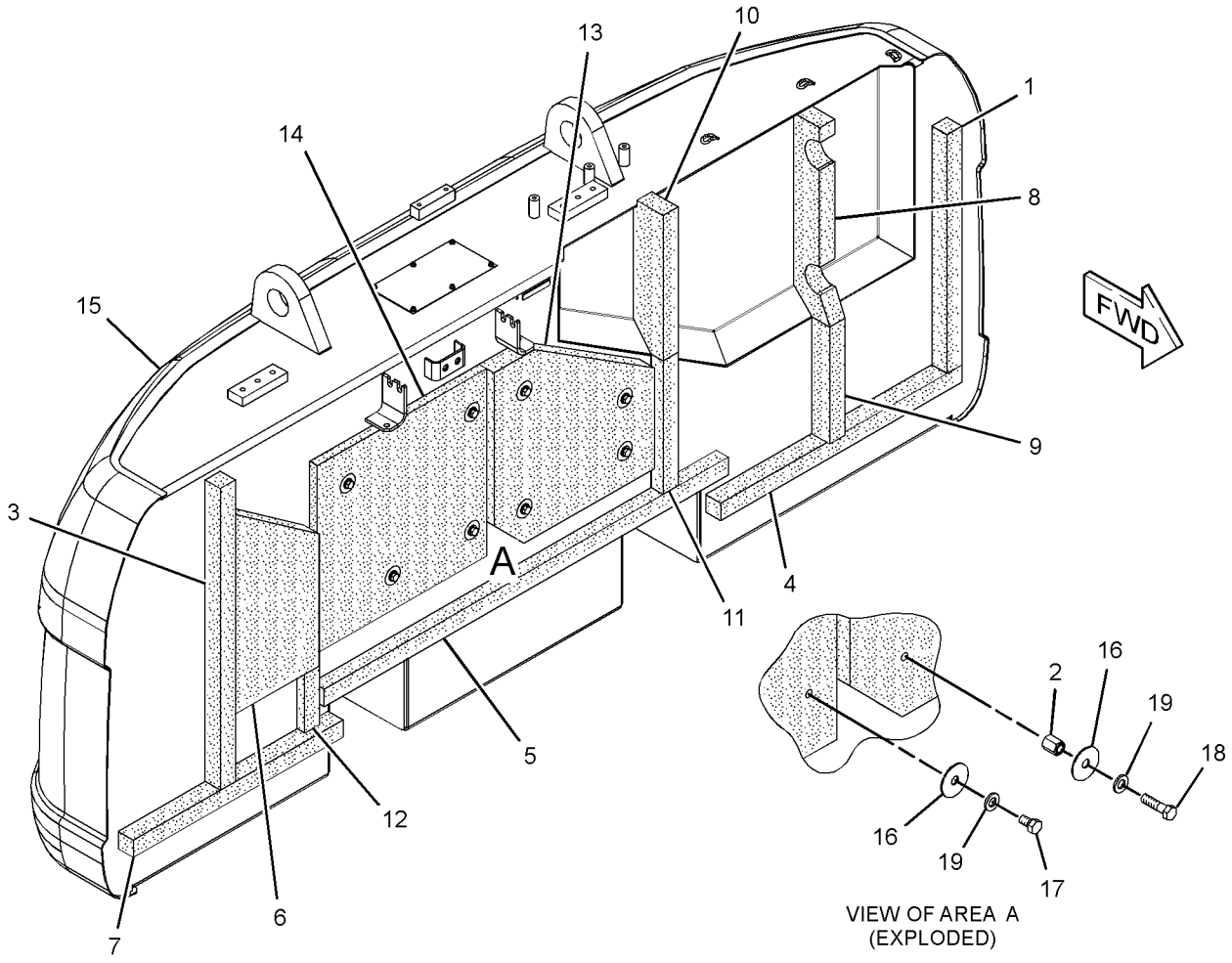

VIEW OF AREA A
(EXPLODED)

GRAPHIC #1 **<END>** g01675119

330-1284 COUNTERWEIGHT GP

S/N: MYG1-UP; PPN1-UP
6252-KG (13783-LB)
PART OF 278-3932 COUNTERWEIGHT & MOUNTING GP
AN ATTACHMENT

SMCS-7056 **i03152142**

NOTE	REF NO	GRAPHIC REF	PART NUMBER	QTY	PART NAME 1 2 3 4 5 6 (PRODUCT LEVEL)	SEE PAGE
	1	1	**7I-0717**	1	LINER	
	2	1	**081-6344**	4	SPACER (13.3X21.3X25-MM THK)	
	3	1	**129-3399**	1	LINER	
	4	1	**184-8722**	1	LINER	
	5	1	**193-9389**	1	LINER	
	6	1	**241-2365**	1	LINER	
	7	1	**241-2366**	1	LINER	
	8	1	**241-2367**	1	LINER	
	9	1	**241-2368**	1	LINER	
	10	1	**244-8045**	1	LINER	
	11	1	**244-8046**	1	LINER	
	12	1	**259-3865**	1	LINER	
	13	1	**270-9626**	1	INSULATION	
	14	1	**270-9627**	1	INSULATION	
	15	1	**330-1285**	1	COUNTERWEIGHT GP	
	16	1	**7Y-2292**	8	WASHER (13X50X2-MM THK)	
M	17	1	**8T-4179**	4	BOLT (M12X1.75X20-MM)	
M	18	1	**8T-4184**	4	BOLT (M12X1.75X45-MM)	
	19	1	**8T-4223**	8	WASHER-HARD (13.5X25.5X3-MM THK)	

M-METRIC PART

330-1284 **COUNTERWEIGHT GP** *(contd.)* **i03152142**

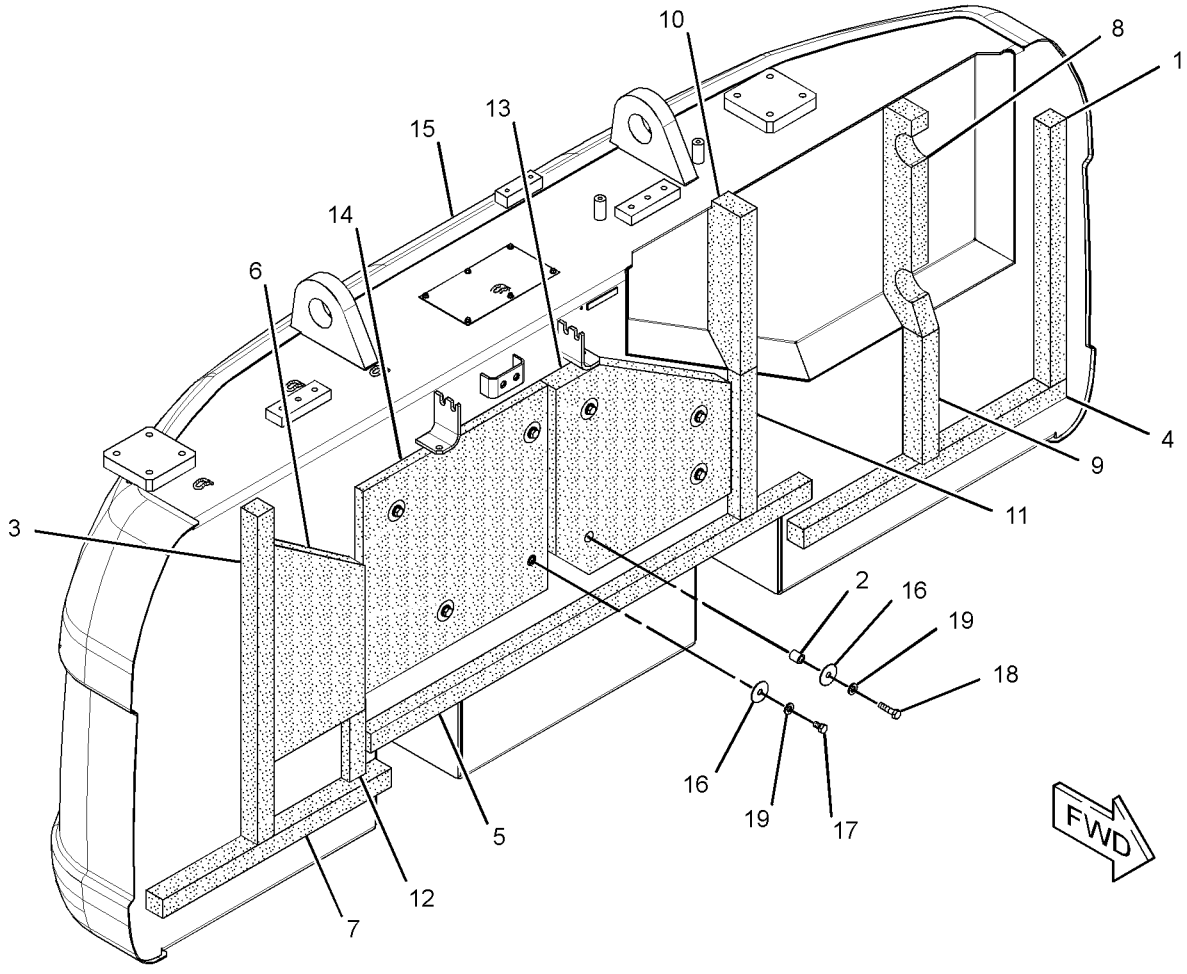

GRAPHIC #1 **<END>** g01620164

FRAME AND BODY

259-3552 COVER AS-SOUND SUPPRESSION

S/N: MYG1-UP; PPN1-UP

PART OF 342-1068 HOOD & GUARD GP

SMCS-7253, 7263, 7276, 795C **i02439989**

NOTE	REF NO	GRAPHIC REF	PART NUMBER	QTY	PART NAME 1 2 3 4 5 6 (PRODUCT LEVEL)	SEE PAGE
	1	1	**4I-7924**	4	WASHER (4.5X40X1.2-MM THK)	
	2	1	**6P-2216**	4	CAP	
Z	3	1		1	COVER AS	
	4	1	**259-3557**	1	LINER	
	5	1	**268-0507**	1	INSULATION	
	6	1	**268-0508**	1	INSULATION	

Z-NOT SERVICED SEPARATELY

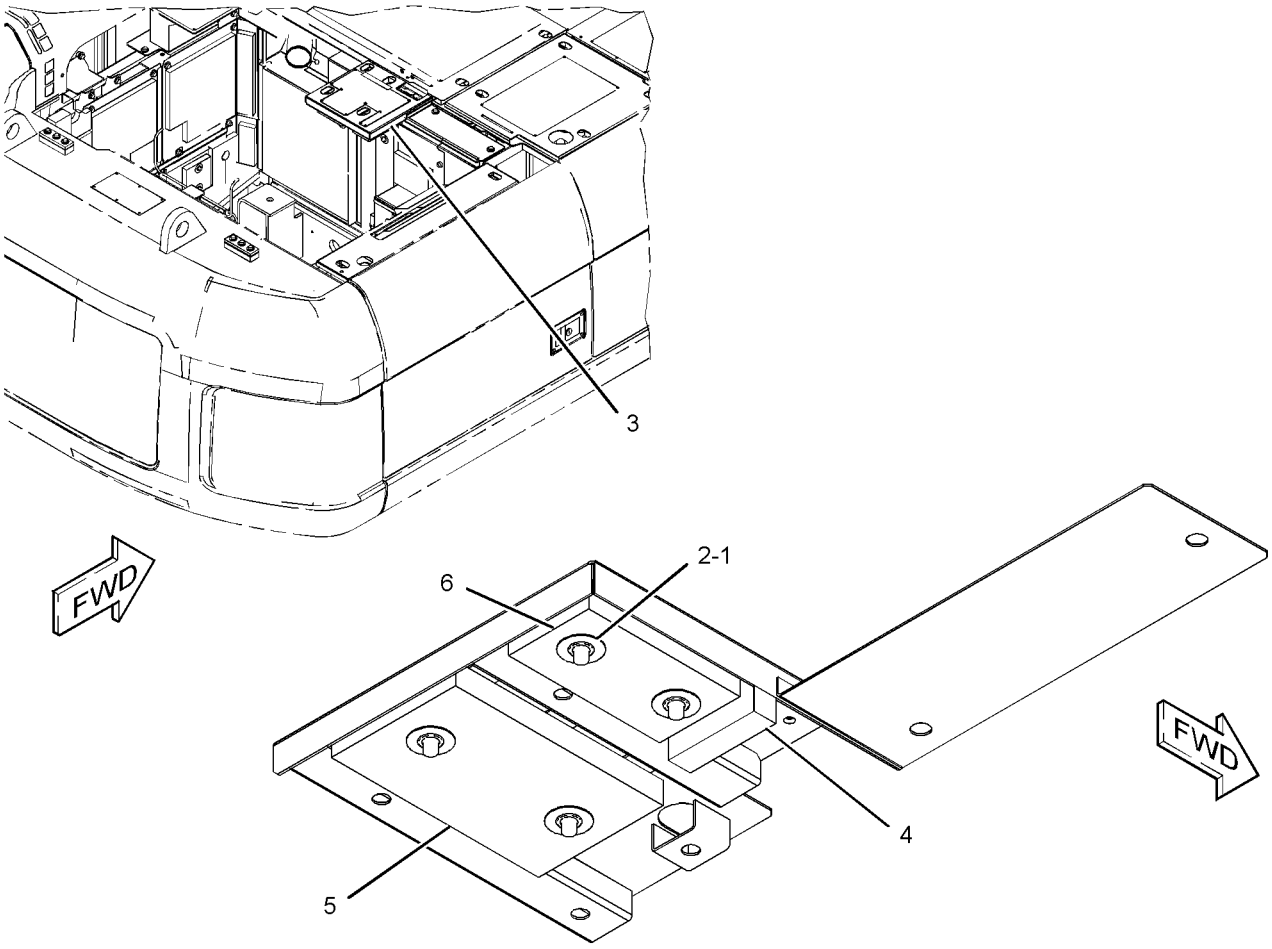

GRAPHIC #1 **<END>** g01238319

273-7903 COVER AS-SOUND SUPPRESSION

S/N: MYG1-UP; PPN1-UP

PART OF 342-1068 HOOD & GUARD GP

SMCS-7253, 7263, 7276, 795C **i02445975**

NOTE	REF NO	GRAPHIC REF	PART NUMBER	QTY	PART NAME 1 2 3 4 5 6 (PRODUCT LEVEL)	SEE PAGE
	1	1	**262-2578**	1	INSULATION	
Z	2	1		1	COVER AS	
	3	1	**273-7902**	3	LINER	
	4	1	**273-7904**	1	INSULATION	

Z-NOT SERVICED SEPARATELY

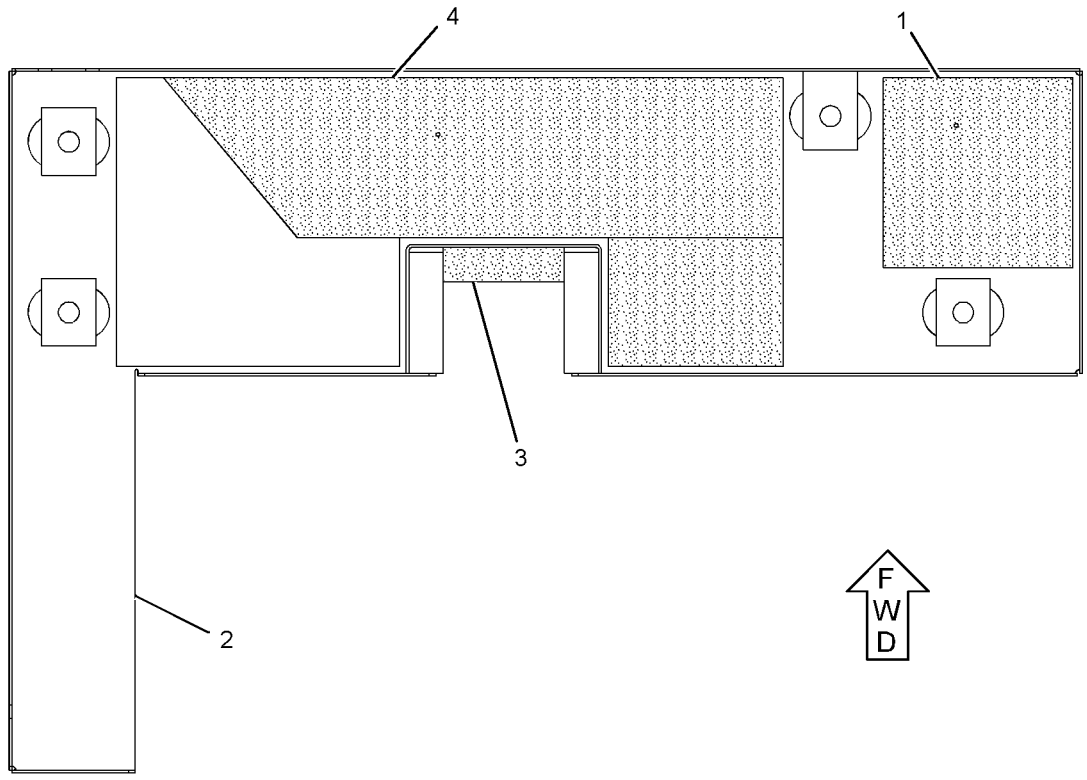

BOTTOM VIEW

GRAPHIC #1 **<END>** g01236562

330-1423 COVER AS-SOUND SUPPRESSION–
FUEL, HYDRAULIC TANKS
S/N: MYG1-UP; PPN1-UP
PART OF 342-1068 HOOD & GUARD GP

SMCS-7253, 7263, 7276, 795C **i03565846**

NOTE	REF NO	GRAPHIC REF	PART NUMBER	QTY	PART NAME 1 2 3 4 5 6 (PRODUCT LEVEL)	SEE PAGE
	1	1	**170-3015**	1	BUMPER	
	2	1	**177-5739**	1	LINER	
	3	1	**203-4927**	1	LINER	
	4	1	**236-9568**	1	LINER	
	5	1	**240-2978**	3	LINER	
	6	1	**241-2325**	1	LINER	

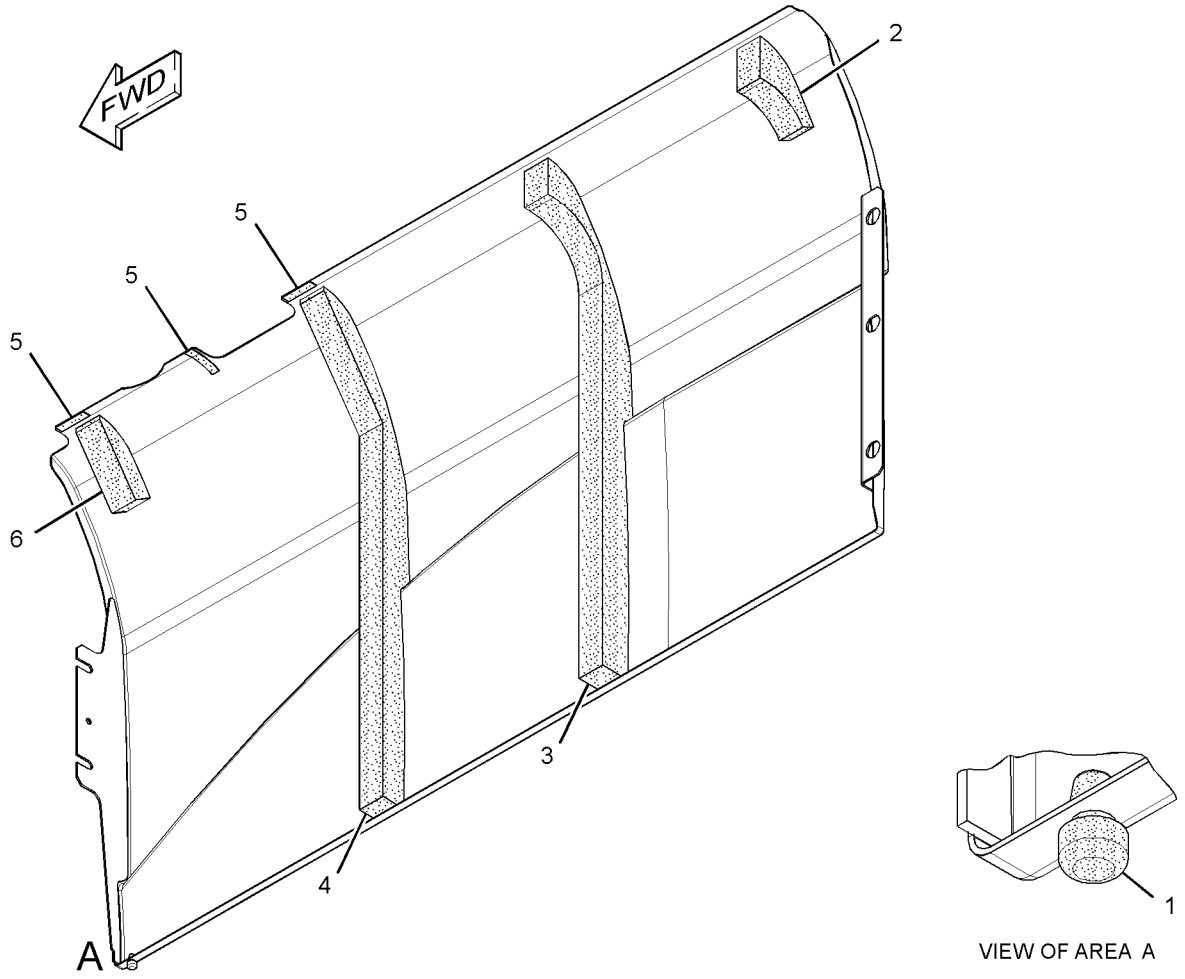

VIEW OF AREA A

GRAPHIC #1 **<END>** g01890435

346-2703 COVER AS-SOUND SUPPRESSION

S/N: MYG1-UP; PPN1-UP

PART OF 342-1068 HOOD & GUARD GP

SMCS-7253, 7263, 7276, 795C **i03652876**

NOTE	REF NO	GRAPHIC REF	PART NUMBER	QTY	PART NAME 1 2 3 4 5 6 (PRODUCT LEVEL)	SEE PAGE
	1	1	**262-2571**	1	INSULATION	
	2	1	**262-2572**	1	INSULATION	
	3	1	**262-2573**	1	INSULATION	
	4	1	**262-2574**	1	INSULATION	
	5	1	**262-2575**	1	INSULATION	

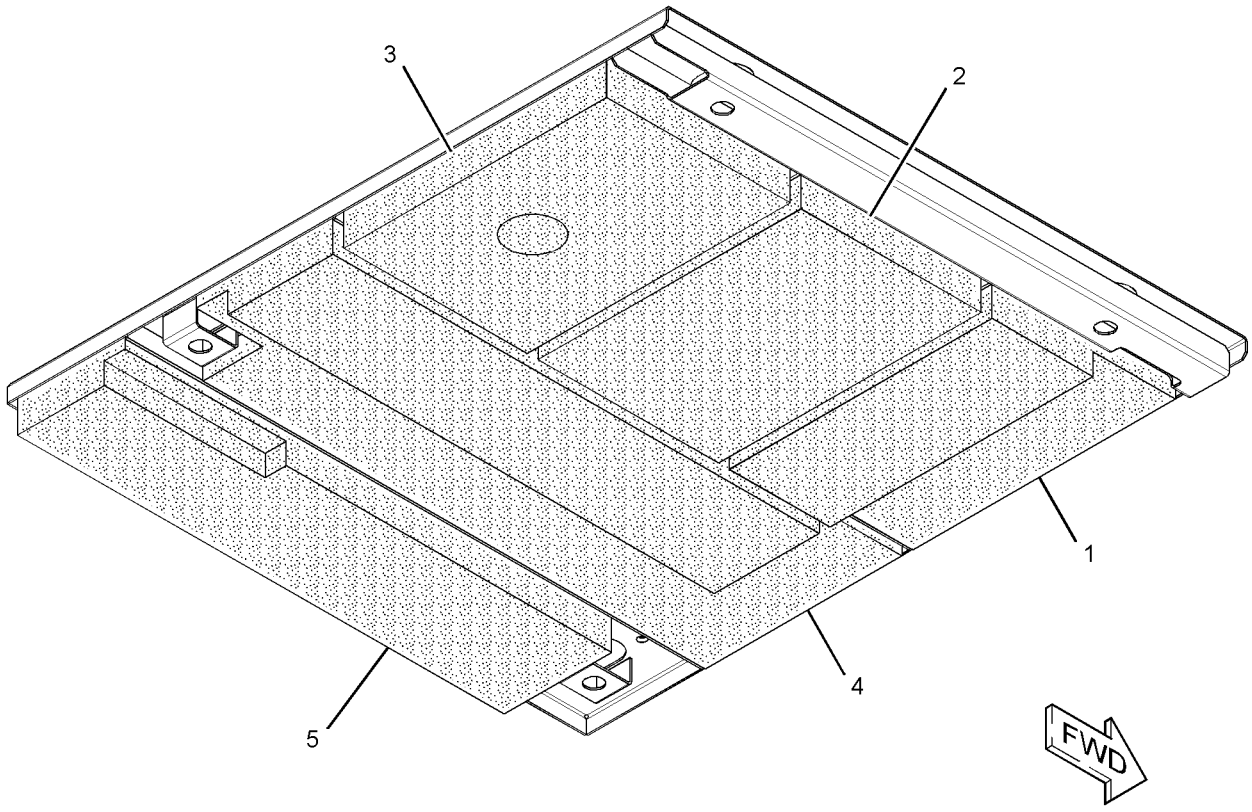

GRAPHIC #1 **<END>** g01967236

FRAME AND BODY

346-2713 COVER AS-SOUND SUPPRESSION

S/N: MYG1-UP; PPN1-UP
PART OF 342-1070 HOOD GP
AN ATTACHMENT

SMCS-7253, 7263, 7276, 795C **i03676401**

NOTE	REF NO	GRAPHIC REF	PART NUMBER	QTY	PART NAME 1 2 3 4 5 6 (PRODUCT LEVEL)	SEE PAGE
	1	1	**262-2571**	1	INSULATION	
	2	1	**262-2572**	1	INSULATION	
	3	1	**262-2573**	1	INSULATION	
	4	1	**278-3820**	1	INSULATION	

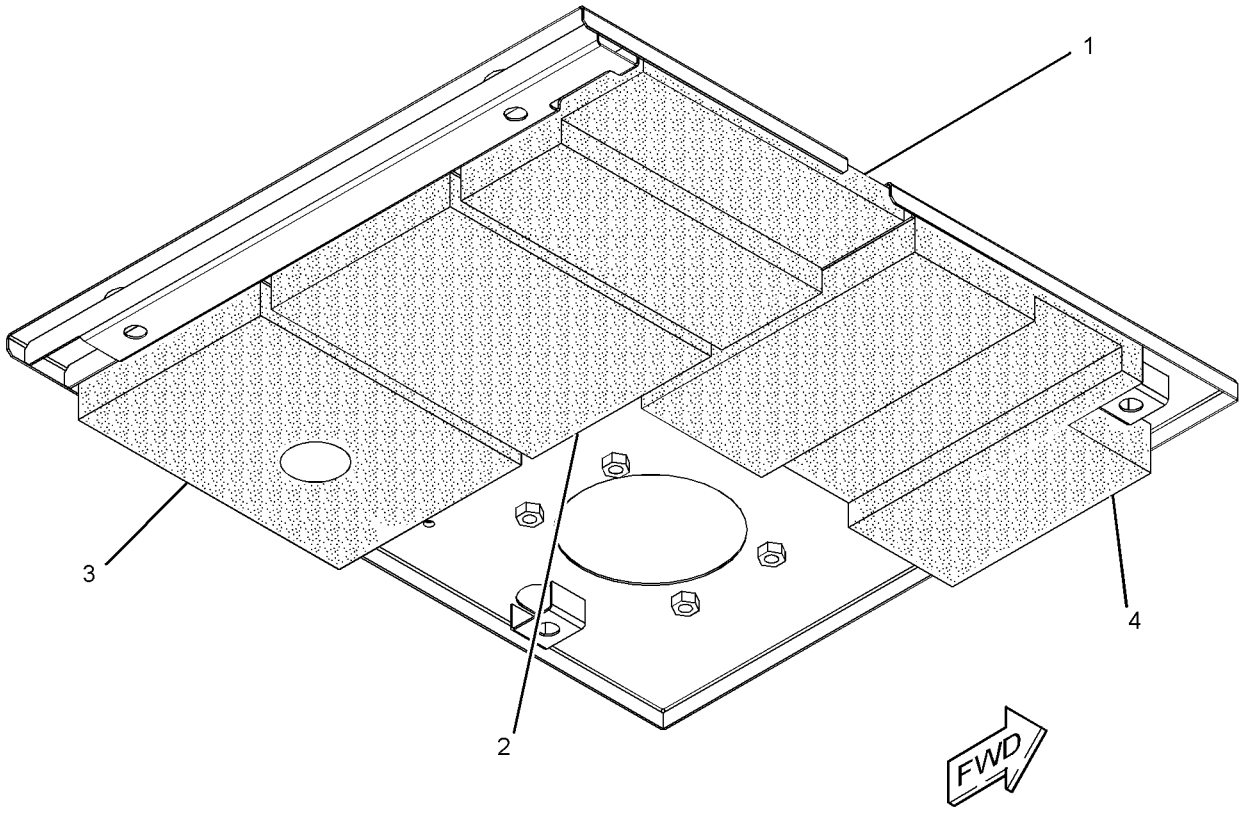

GRAPHIC #1 **<END>** g01979133

298-3225 DOOR AS-ACCESS—AIR CLEANER

S/N: MYG1-UP; PPN1-UP

PART OF 342-1068 HOOD & GUARD GP

SMCS-7273 **i02816618**

NOTE	REF NO	GRAPHIC REF	PART NUMBER	QTY	PART NAME 1 2 3 4 5 6 (PRODUCT LEVEL)	SEE PAGE
	1	1	**241-2139**	1	INSULATION	
	2	1	**244-7980**	1	INSULATION	
	3	1	**262-2157**	1	LINER	
	4	1	**262-2566**	1	INSULATION	
	5	1	**262-2567**	1	INSULATION	
	6	1	*298-2974*	1	DOOR AS-ACCESS	
	6A	1	**165-2976**	2	HINGE	
	7	1	**208-4289**	1	CUSHION	

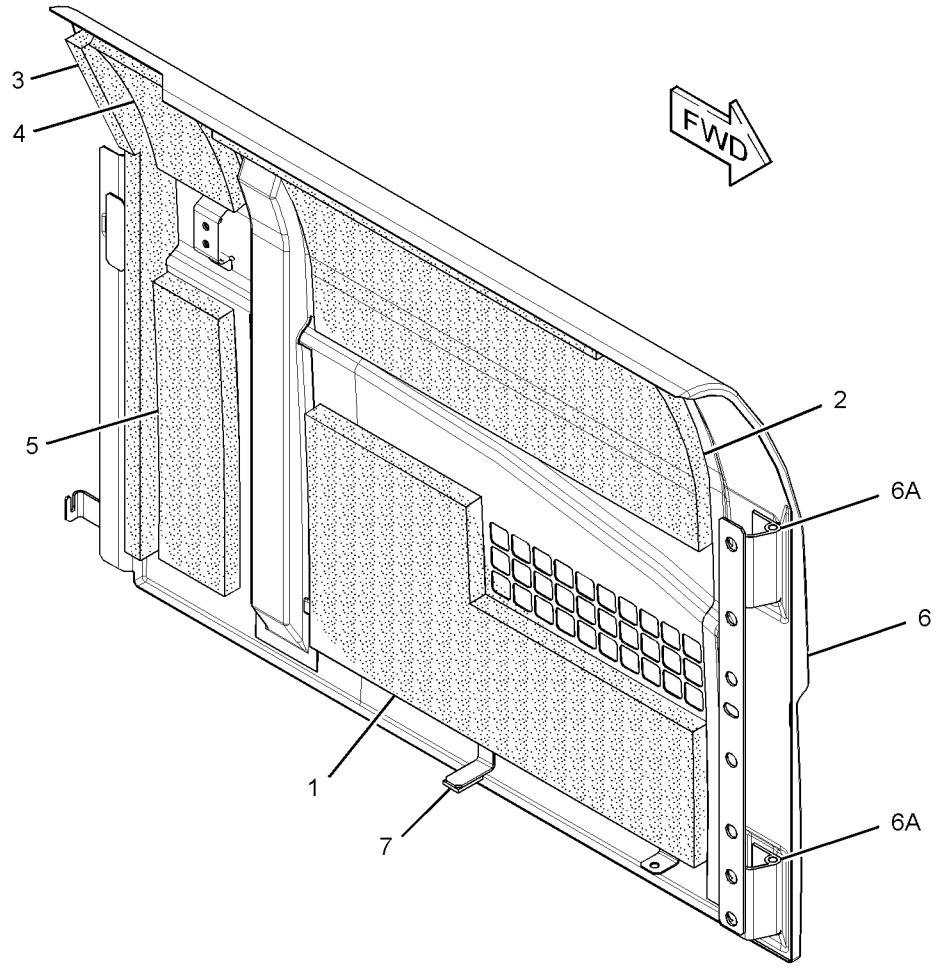

GRAPHIC #1 **<END>** g01407463

289-6893 DOOR GP-ACCESS–RADIATOR

S/N: MYG1-UP; PPN1-UP

PART OF 342-1068 HOOD & GUARD GP

SMCS-7273 **i02736185**

NOTE	REF NO	GRAPHIC REF	PART NUMBER	QTY	PART NAME 1 2 3 4 5 6 (PRODUCT LEVEL)	SEE PAGE
M	1	1	**099-6418**	4	NUT (M6X1-THD)	
	2	1	**122-4101**	1	RUBBER	
	3	1	**177-6395**	1	LINER	
	4	1	**208-4289**	1	CUSHION	
J	5	1	**298-2942**	1	LOCK AS	
	6	1	*289-6894*	1	DOOR AS-ACCESS	
	6A	1	**165-2976**	2	HINGE	

J-REQUIRES CORPORATE KEY
M-METRIC PART

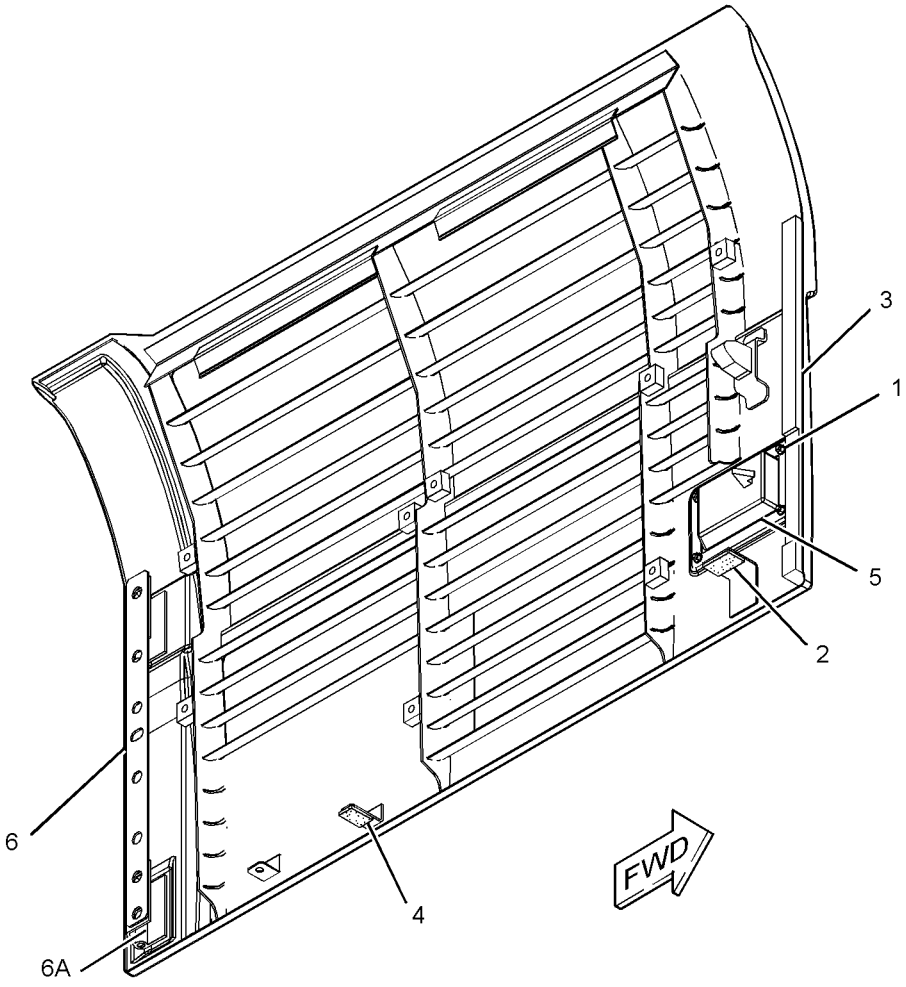

GRAPHIC #1 **<END>** g01330819

289-6897 DOOR GP-ACCESS–PUMP COMPARTMENT

S/N: MYG1-UP; PPN1-UP

PART OF 342-1068 HOOD & GUARD GP

SMCS-7273 **i02735700**

NOTE	REF NO	GRAPHIC REF	PART NUMBER	QTY	PART NAME 1 2 3 4 5 6 (PRODUCT LEVEL)	SEE PAGE
M	1	1	**099-6418**	4	NUT (M6X1-THD)	
	2	1	**184-8862**	1	COVER	
	3	1	**262-2561**	1	INSULATION	
	4	1	**262-2562**	1	INSULATION	
	5	1	**262-2563**	1	INSULATION	
	6	1	**262-2564**	1	INSULATION	
	7	1	**270-9790**	1	INSULATION	
	8	1	**273-7668**	1	LINER	
	9	1	*289-6896*	1	DOOR AS-ACCESS	
	9A	1	**165-2976**	2	HINGE	
J	10	1	**298-2942**	1	LOCK AS	

J-REQUIRES CORPORATE KEY
M-METRIC PART

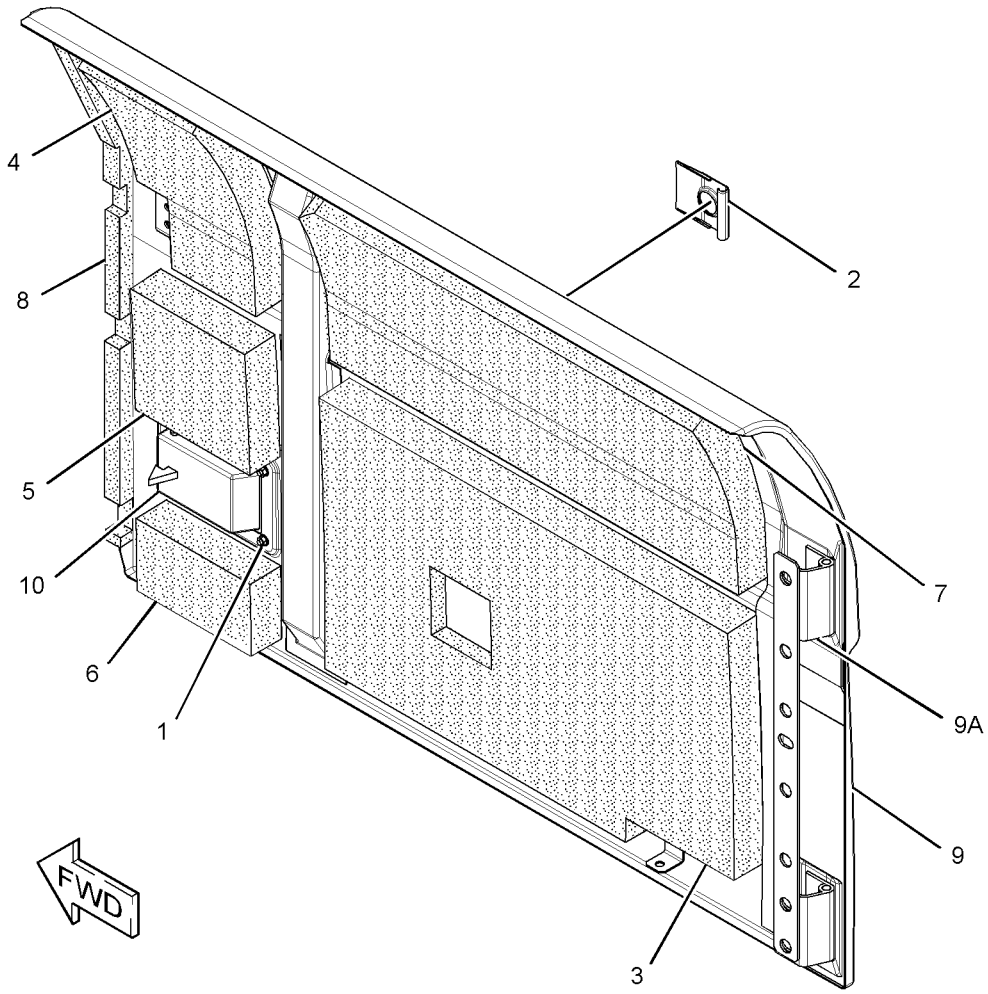

GRAPHIC #1 **<END>** g01374082

FRAME AND BODY

262-2595 FENDER & COVER GP

S/N: MYG1-UP; PPN1-UP

PART OF 343-1145, 343-1146 CHASSIS AR

SMCS-7252 **i02479455**

NOTE	REF NO	GRAPHIC REF	PART NUMBER	QTY	PART NAME 1 2 3 4 5 6 (PRODUCT LEVEL)	SEE PAGE
M	1	1	**135-8573**	2	BOLT AS	
	2	1	**236-3702**	2	SPACER (15X35X11-MM THK)	
	3	1	**236-3703**	2	WASHER (25X35X4-MM THK)	
	4	1	**259-3543**	1	STEP AS	
	5	1	**262-2596**	1	COVER AS-FENDER	
		1	**278-3818**	1	LINER	
	6	1	**5P-1075**	2	WASHER-HARD (10.2X22.5X3-MM THK)	
M	7	1	**8T-4195**	2	BOLT (M10X1.5X30-MM)	

M-METRIC PART

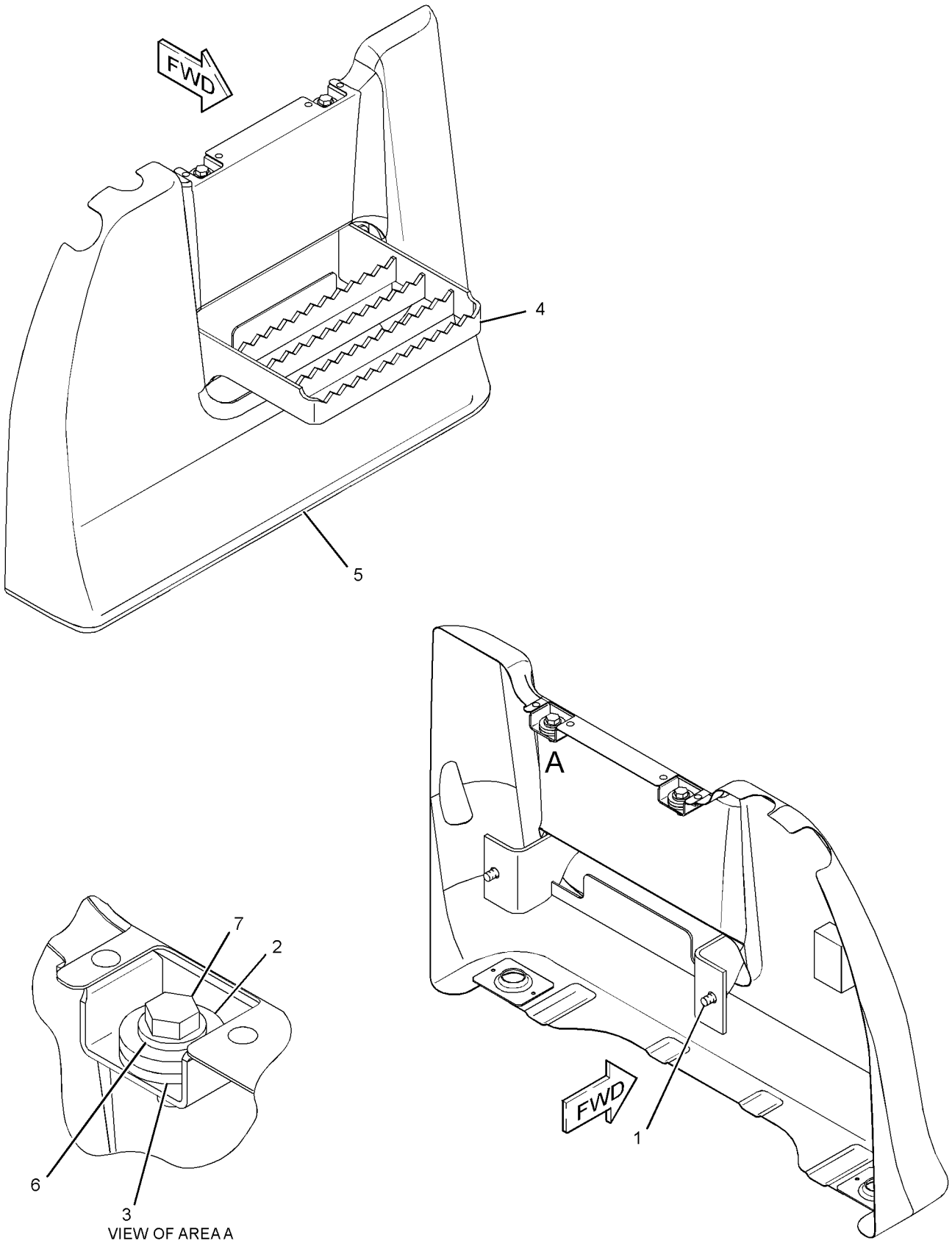

GRAPHIC #1 **<END>** g01199510

330-1169 FENDER & COVER GP

S/N: MYG1-UP; PPN1-UP
PART OF 330-1354 MIRROR GP
AN ATTACHMENT

SMCS-7252 **i03149023**

NOTE	REF NO	GRAPHIC REF	PART NUMBER	QTY	PART NAME 1 2 3 4 5 6 (PRODUCT LEVEL)	SEE PAGE
	1	1	**330-1170**	1	COVER AS	
		1	**278-3818**	1	LINER	

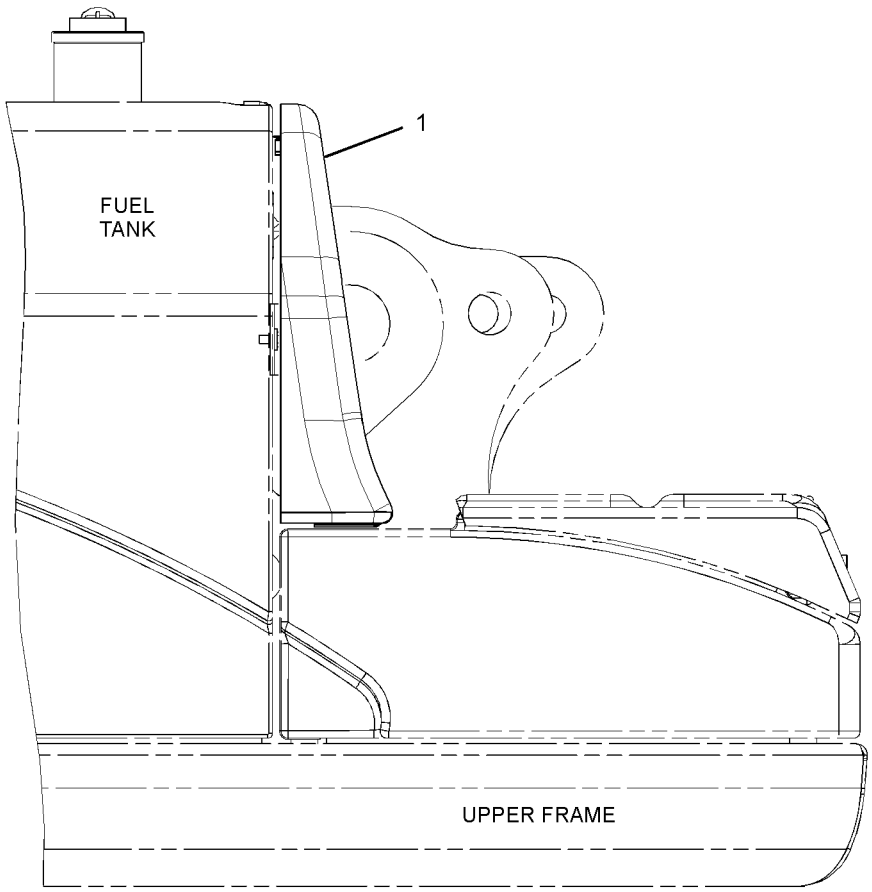

RIGHT SIDE VIEW

GRAPHIC #1 **<END>** g01601093

337-1525 FRAME GP-UPPER

S/N: MYG1-UP; PPN1-UP

PART OF 343-1145, 343-1146 CHASSIS AR

SMCS-7051 **i03652507**

NOTE	REF NO	GRAPHIC REF	PART NUMBER	QTY	PART NAME 1 2 3 4 5 6 (PRODUCT LEVEL)	SEE PAGE
B	1	1	**093-0090**	4	SHIM (1-MM THK)	
B	2	1	**133-2427**	2	SHIM (0.5-MM THK)	
	3	1	**166-1488**	4	SHIM (2-MM THK)	
	4	1	**201-2771**	1	WASHER (26X90X8-MM THK)	
	5	1	**212-2841**	2	SHIM (2-MM THK)	
	6	1	**251-2542**	1	PIN AS	
B	7	1	**308-8784**	1	SHIM (0.5-MM THK)	
B	8	1	**308-8785**	2	SHIM (1-MM THK)	
B	9	1	**308-8786**	1	SHIM (2-MM THK)	
	10	1	**337-1526**	1	FRAME AS-UPPER	
	10A	1	**7Y-1113**	1	BOSS	
	10B	1	**163-3729**	1	STEP AS	
	11	1	**093-0364**	2	SPACER (103X140X12-MM THK)	
	12	1	**096-6467**	2	WASHER (22X60X8-MM THK)	
	13	1	**117-5435**	2	PIN AS	
M	14	1	**7X-2572**	1	BOLT (M24X3X35-MM)	
	15	1	**8T-4123**	2	WASHER (22X35X3.5-MM THK)	
	16	1	**8T-4167**	1	WASHER-HARD (26X44X4-MM THK)	
M	17	1	**8T-4780**	2	BOLT (M20X2.5X30-MM)	

B-USE AS REQUIRED
M-METRIC PART

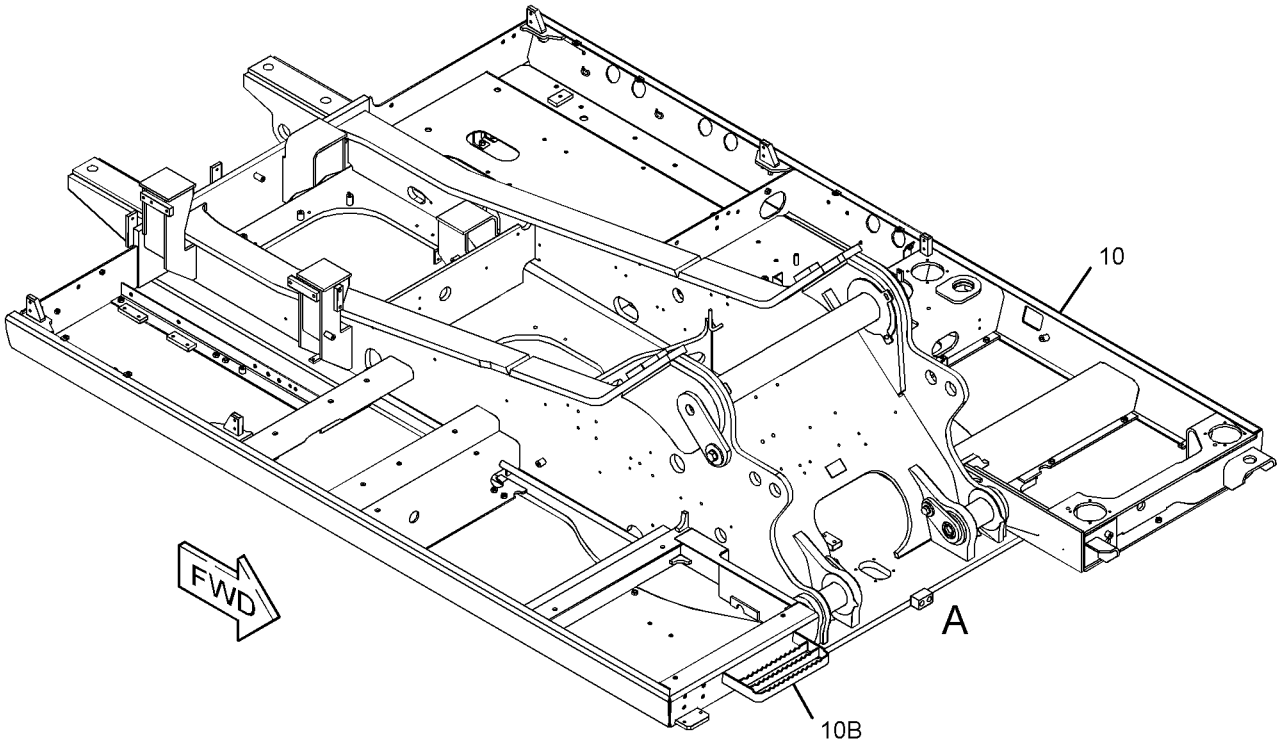

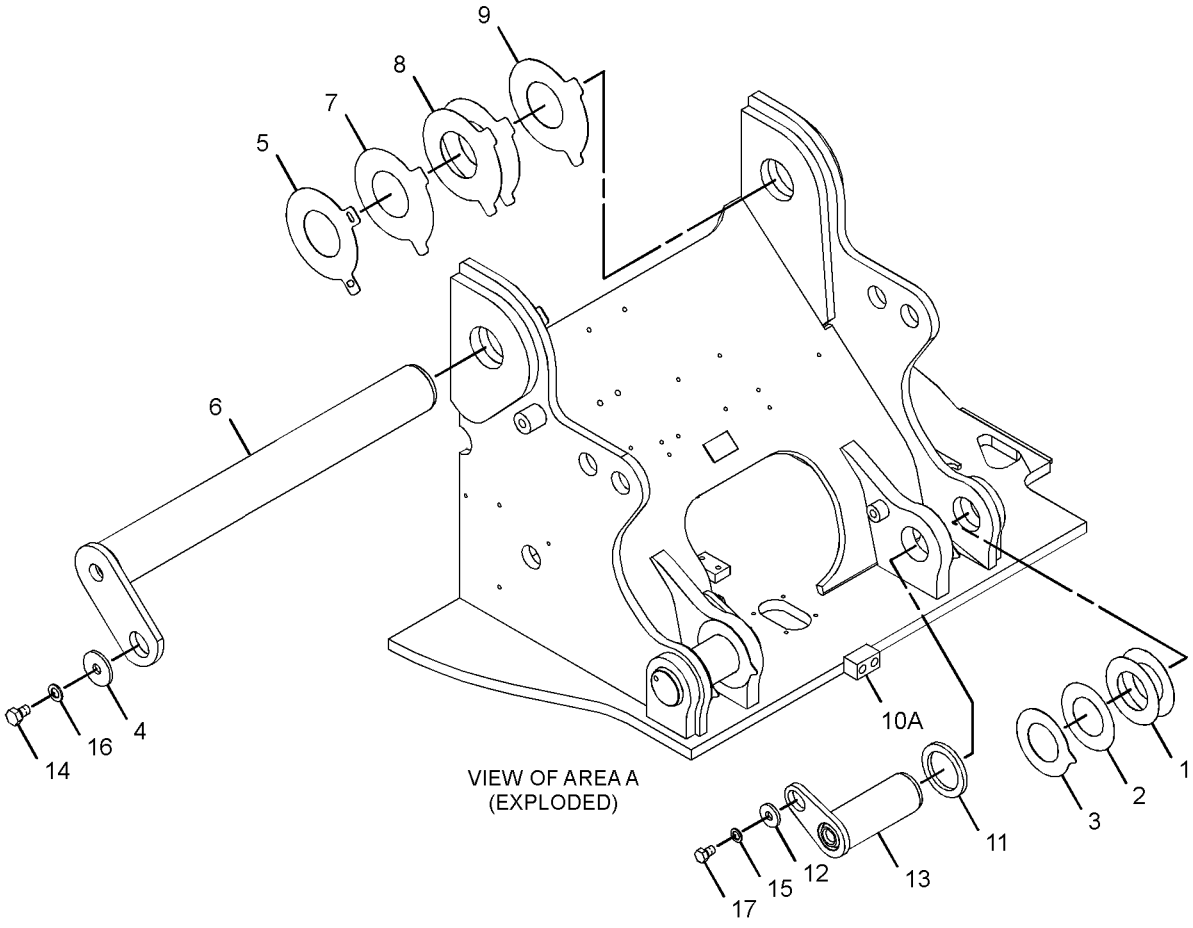

VIEW OF AREA A
(EXPLODED)

GRAPHIC #1 **<END>** g01967614

FRAME AND BODY

199-4559 GEAR & BEARING GP-SWING

S/N: MYG1-UP; PPN1-UP

PART OF 227-6089 GEAR & BEARING GP-SWING

SMCS-7063 **i02523417**

NOTE	REF NO	GRAPHIC REF	PART NUMBER	QTY	PART NAME 1 2 3 4 5 6 (PRODUCT LEVEL)	SEE PAGE
BE	1	1	**110-7183**		SEAL	
	2	1	**3B-8489**	1	FITTING-GREASE	

B-USE AS REQUIRED
E-ORDER BY THE CENTIMETER

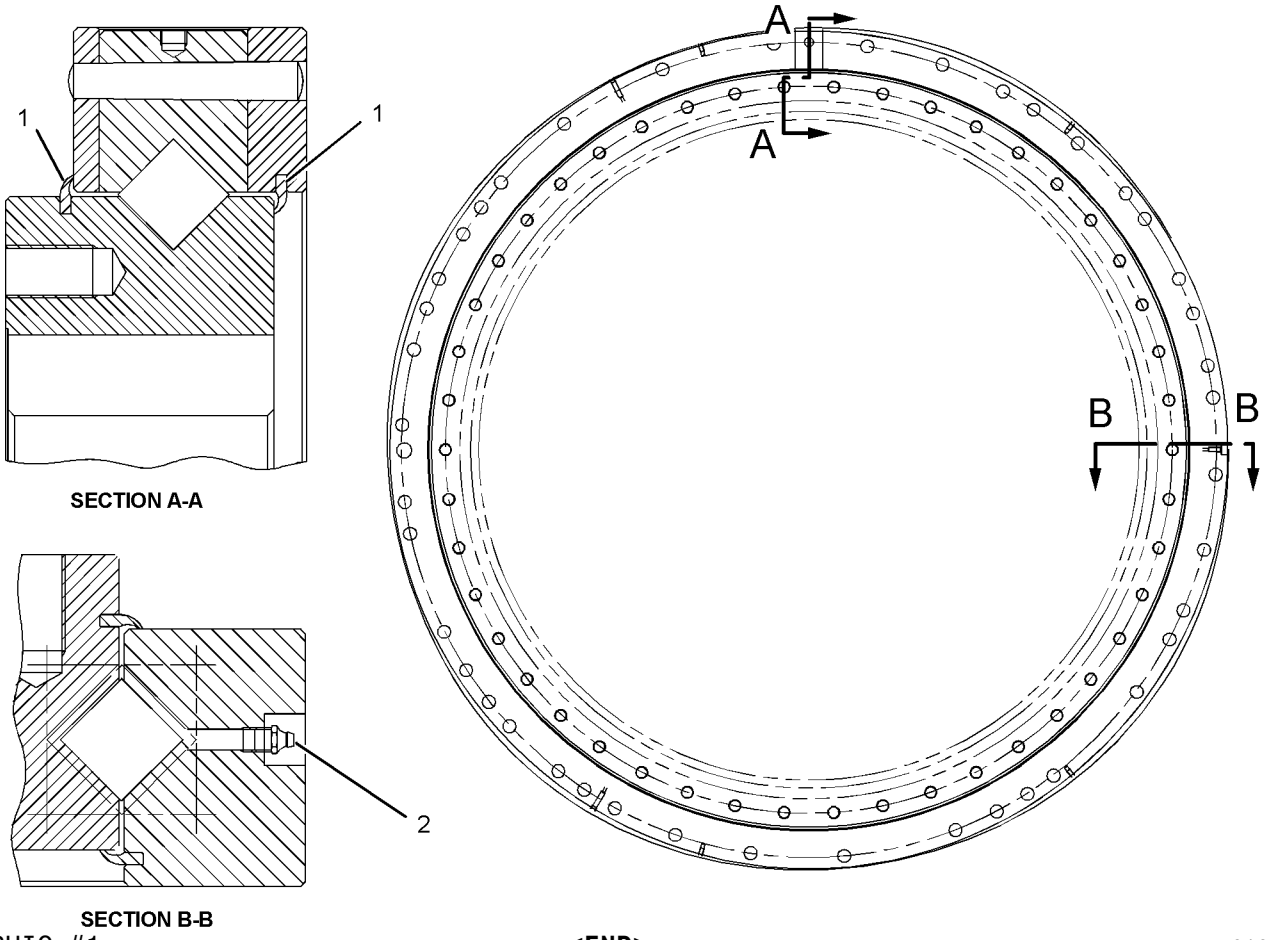

SECTION A-A

SECTION B-B

GRAPHIC #1 **<END>** g01083133

227-6089 GEAR & BEARING GP-SWING

S/N: MYG1-UP; PPN1-UP

PART OF 227-6145 GEAR & BEARING GP-SWING

SMCS-7063 **i02283999**

NOTE	PART NUMBER	QTY	PART NAME 1 2 3 4 5 6 (PRODUCT LEVEL)	SEE PAGE
Y	*199-4559*	1	GEAR & BEARING GP-SWING (114-BEARING)	323
			—OR—	
Y	*227-6090*	1	GEAR & BEARING GP-SWING (92-BEARING)	325

Y-SEPARATE ILLUSTRATION

<END>

227-6090 GEAR & BEARING GP-SWING

S/N: MYG1-UP; PPN1-UP

PART OF 227-6089 GEAR & BEARING GP-SWING

SMCS-7063 **i03282024**

NOTE	REF NO	GRAPHIC REF	PART NUMBER	QTY	PART NAME 1 2 3 4 5 6 (PRODUCT LEVEL)	SEE PAGE
Z	1	1		92	ROLLER	
Z	2	1		32	SEPARATOR	
Z	3	1		60	SEPARATOR	
Z	4	1		1	RACE-BEARING	
	5	1	**227-6074**	1	SEAL-DUST	
Z	6	1		1	RACE AS-OUTER	
	7	1	**3B-8489**	1	FITTING-GREASE	
E	8	1	**148-4685**		SEAL (465-CM)	

E-ORDER BY THE CENTIMETER
Z-NOT SERVICED SEPARATELY

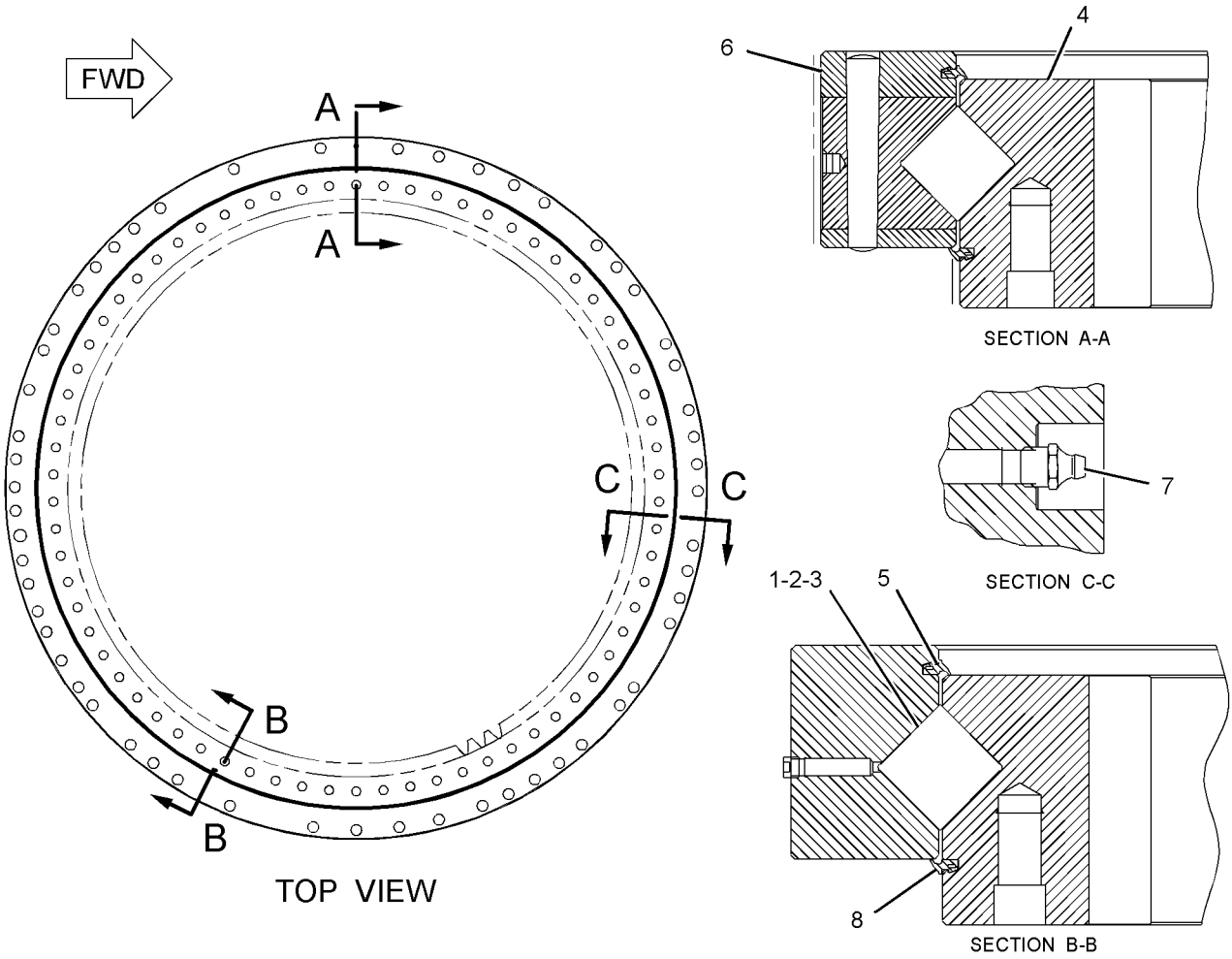

GRAPHIC #1 **<END>** g01671637

FRAME AND BODY

227-6145 GEAR & BEARING GP-SWING

S/N: MYG1-UP; PPN1-UP

PART OF 229-1898, 240-3887 FRAME AR-UNDERCARRIAGE

SMCS-7063 **i02475528**

NOTE	REF NO	GRAPHIC REF	PART NUMBER	QTY	PART NAME 1 2 3 4 5 6 (PRODUCT LEVEL)	SEE PAGE
	1	2	**2B-7561**	2	CORK	
	2	1,2	**5K-9243**	4	ELBOW-FLARED	
	3	2	**6C-9140**	46	SPACER	
	4	1	**7Y-1647**	1	GASKET	
	5	2	**7Y-1650**	1	CLAMP-HOSE	
	6	2	**199-4523**	1	TUBE AS (RH)	
	7	1	**199-4524**	1	TUBE AS (LH)	
Y	8	2	**227-6089**	1	GEAR & BEARING GP-SWING	324
	9	2	**227-6105**	1	BOOT	
	10	2	**227-6106**	1	RETAINER	
M	11	2	**112-3930**	42	BOLT (M24X3X140-MM)	
M	12	2	**112-3931**	46	BOLT (M24X3X120-MM)	
	13	1	**148-4703**	1	COVER	
	14	1	**148-4704**	1	GASKET	
	15	1	**3B-8489**	2	FITTING-GREASE	
	16	2	**4N-9170**	4	CLIP	
	17	2	**7Y-1095**	1	DOWEL	
	18	1	**7Y-1648**	1	STRIP	
	19	1,2	**8T-4121**	14	WASHER-HARD (11X21X2.5-MM THK)	
M	20	1,2	**8T-4136**	12	BOLT (M10X1.5X25-MM)	
	21	2	**8T-4167**	42	WASHER-HARD (26X44X4-MM THK)	
M	22	2	**8T-4199**	4	BOLT (M8X1.25X12-MM)	
B	23	2	**1U-8846**		SEALANT-GASKET	
M	24	1	**8T-4137**	2	BOLT (M10X1.5X20-MM)	

B-USE AS REQUIRED
M-METRIC PART
Y-SEPARATE ILLUSTRATION

227-6145 **GEAR & BEARING GP-SWING** *(contd.)* **i02475528**

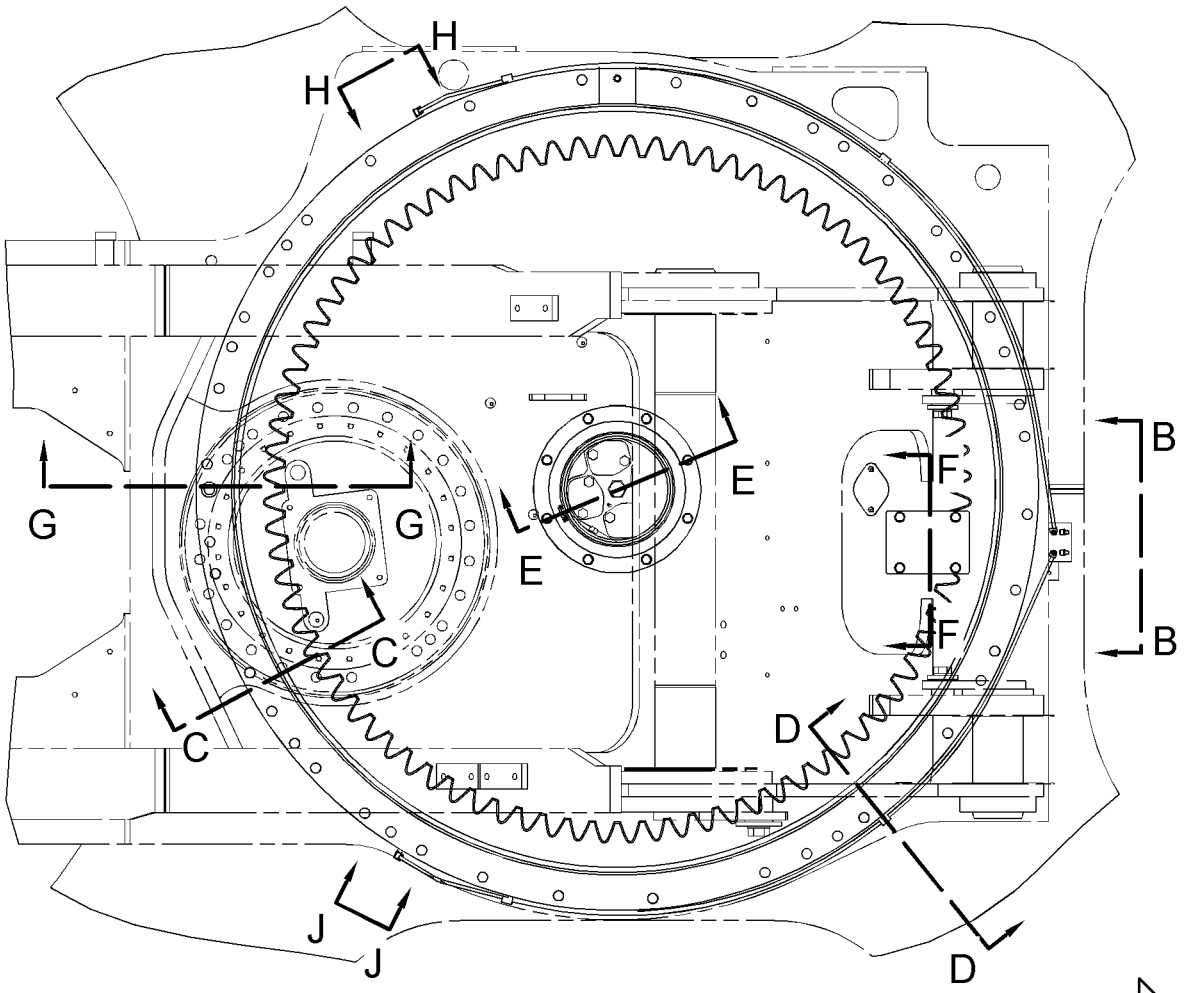

REFER TO ALL ILLUSTRATIONS OF THIS GROUP FOR AUXILIARY VIEWS

TOP VIEW

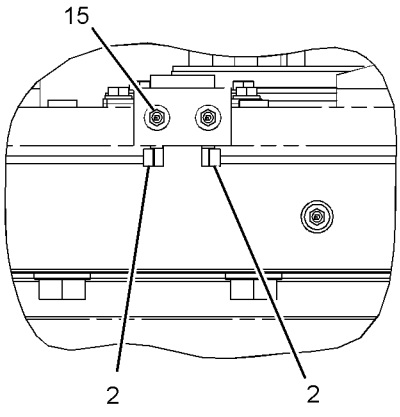

VIEW B-B

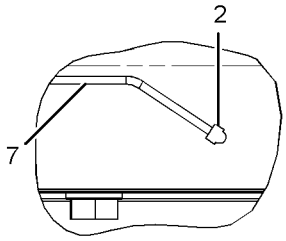

VIEW H-H

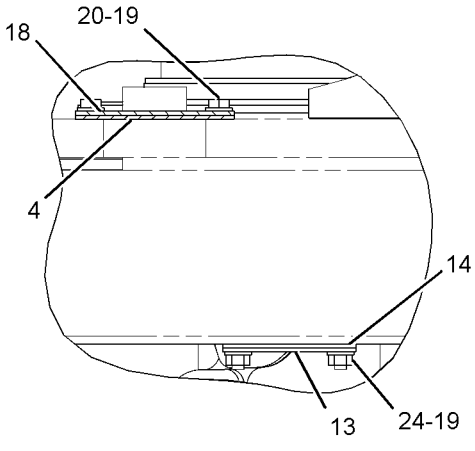

SECTION F-F

GRAPHIC #1

g01237266

227-6145 **GEAR & BEARING GP-SWING** *(contd.)* **i02475528**

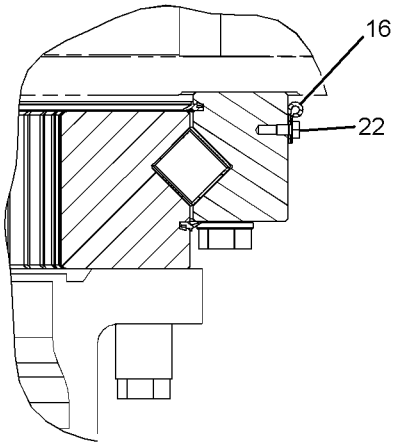

SECTION D-D

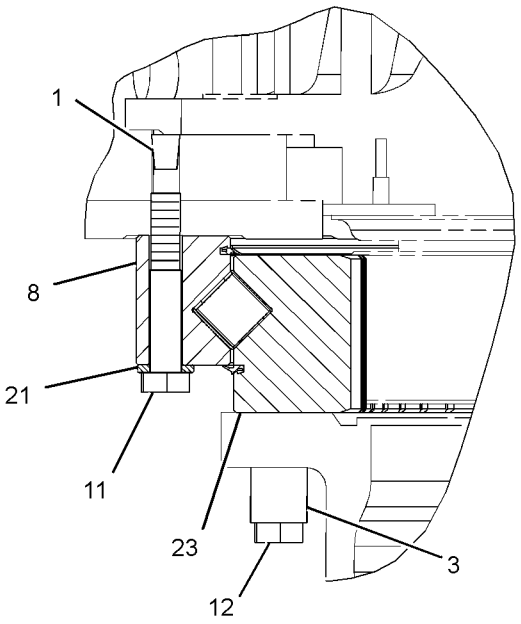

SECTION C-C

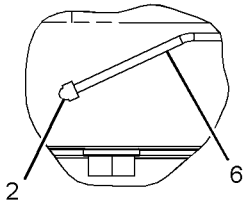

VIEW J-J

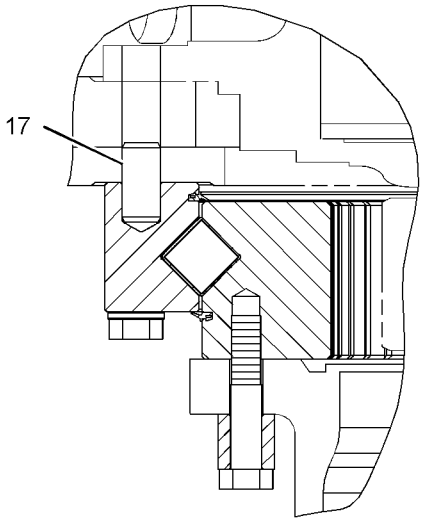

SECTION G-G

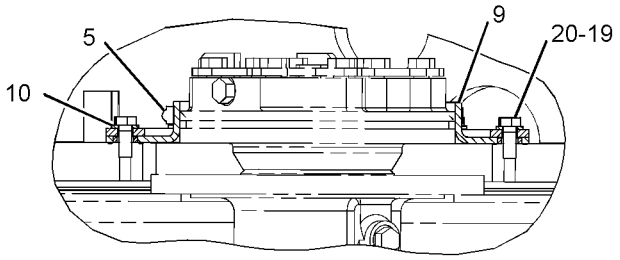

SECTION E-E

GRAPHIC #2 **<END>** g01192780

342-1069 GUARD GP-BOTTOM

S/N: MYG1-UP; PPN1-UP

PART OF 343-1145, 343-1146 CHASSIS AR

SMCS-7153 **i03653099**

NOTE	REF NO	GRAPHIC REF	PART NUMBER	QTY	PART NAME 1 2 3 4 5 6 (PRODUCT LEVEL)	SEE PAGE
M	1	1	**135-8576**	55	BOLT AS-LOCKING (M12X1.75X30-MM)	
	2	1	**190-7050**	1	SHEET	
	3	1	**237-8877**	1	SHEET	
	4	1	**241-1904**	1	SHEET	
	5	1	**256-1939**	1	SHEET	
	6	1	**259-3513**	1	PLATE	
	7	1	**262-2360**	1	PLATE AS-GUARD	
		1	**099-7857**	1	HINGE	
	8	1	**270-9617**	1	PLATE AS	
	9	1	**270-9619**	1	PLATE AS	
	10	1	**270-9622**	1	PLATE AS	
	11	1	**303-9626**	1	SHEET	
	12	1	**337-1139**	1	SHEET	
	13	1	**337-1140**	1	SHEET	
	14	1	**2D-0388**	1	GROMMET	

M-METRIC PART

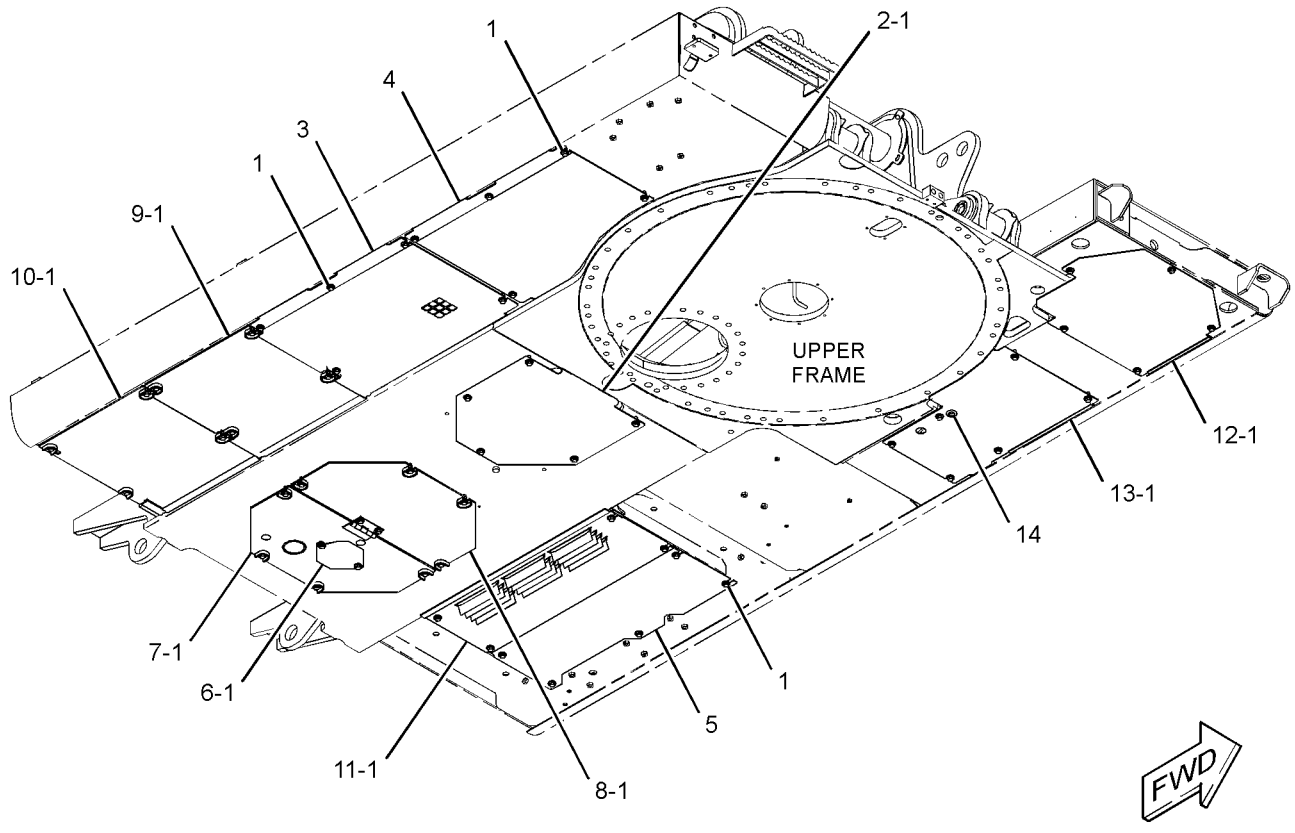

GRAPHIC #1 **<END>** g01967715

342-1071 GUARD GP-BOTTOM—HEAVY-DUTY

S/N: MYG1-UP; PPN1-UP
PART OF 345-7583 OPTION AR-CONFIGURATION
AN ATTACHMENT

SMCS-7153 **i03675934**

NOTE	REF NO	GRAPHIC REF	PART NUMBER	QTY	PART NAME 1 2 3 4 5 6 (PRODUCT LEVEL)	SEE PAGE
	1	1	**190-7062**	1	PLATE AS	
	2	1	**241-1900**	1	PLATE AS	
	3	1	**241-1902**	1	PLATE AS	
	4	1	**259-3509**	1	PLATE AS	
	5	1	**303-9627**	1	PLATE AS	
	6	1	**342-0820**	1	PLATE AS	
	7	1	**342-0822**	1	PLATE AS	
	8	1	**3D-6209**	1	GROMMET	

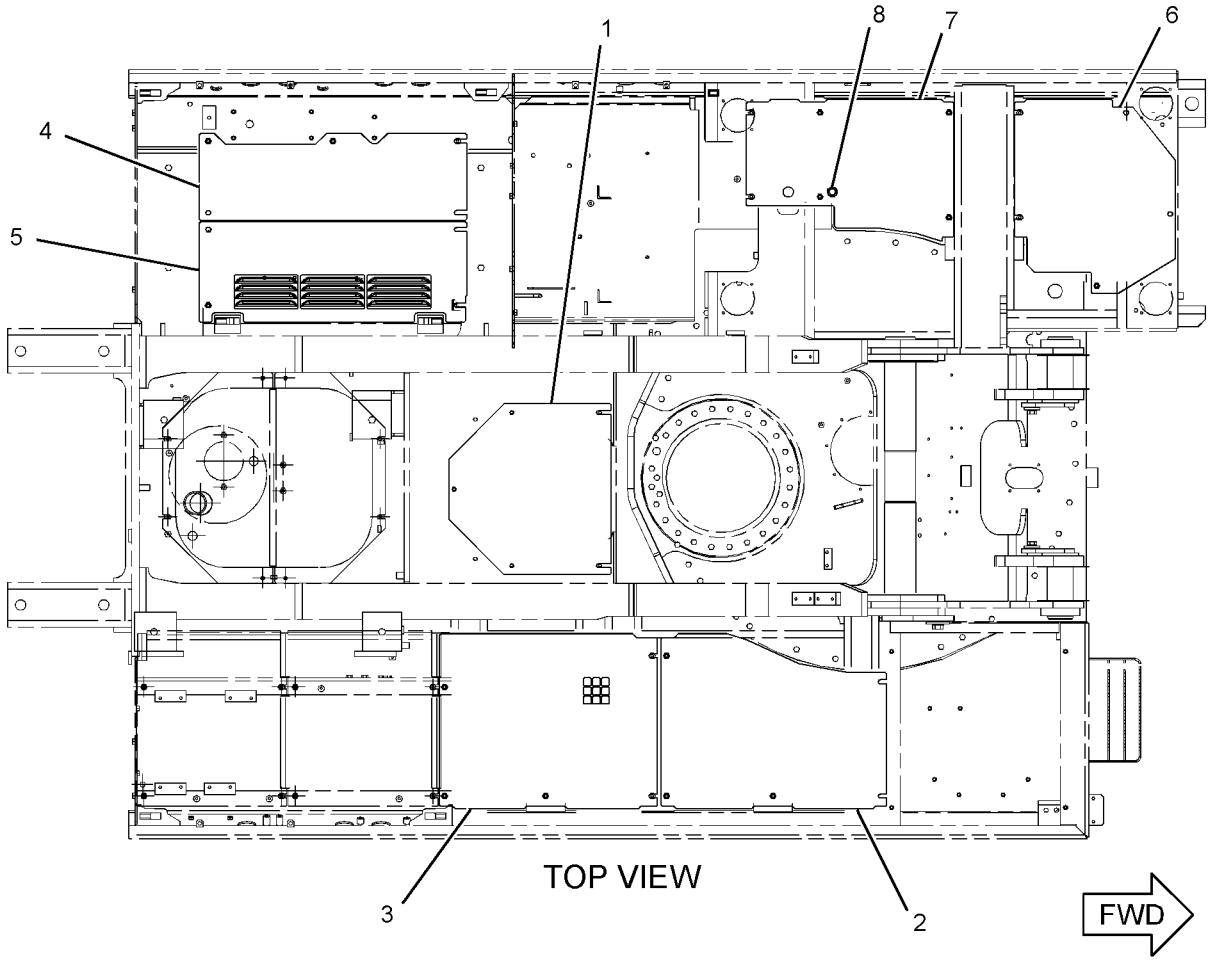

GRAPHIC #1 **<END>** g01976634

134-8887 GUARD GP-SWIVEL

S/N: MYG1-UP; PPN1-UP
PART OF 345-7583 OPTION AR-CONFIGURATION
AN ATTACHMENT

SMCS-7183 **i02789842**

NOTE	REF NO	GRAPHIC REF	PART NUMBER	QTY	PART NAME 1 2 3 4 5 6 (PRODUCT LEVEL)	SEE PAGE
	1	1	**134-8888**	1	PLATE AS	
	2	1	**134-8891**	1	PLATE AS	
M	3	1	**8C-8992**	6	BOLT-LOCKING (M12X1.75X30-MM)	
	4	1	**5P-1076**	6	WASHER-HARD (13.5X30X4-MM THK)	

M-METRIC PART

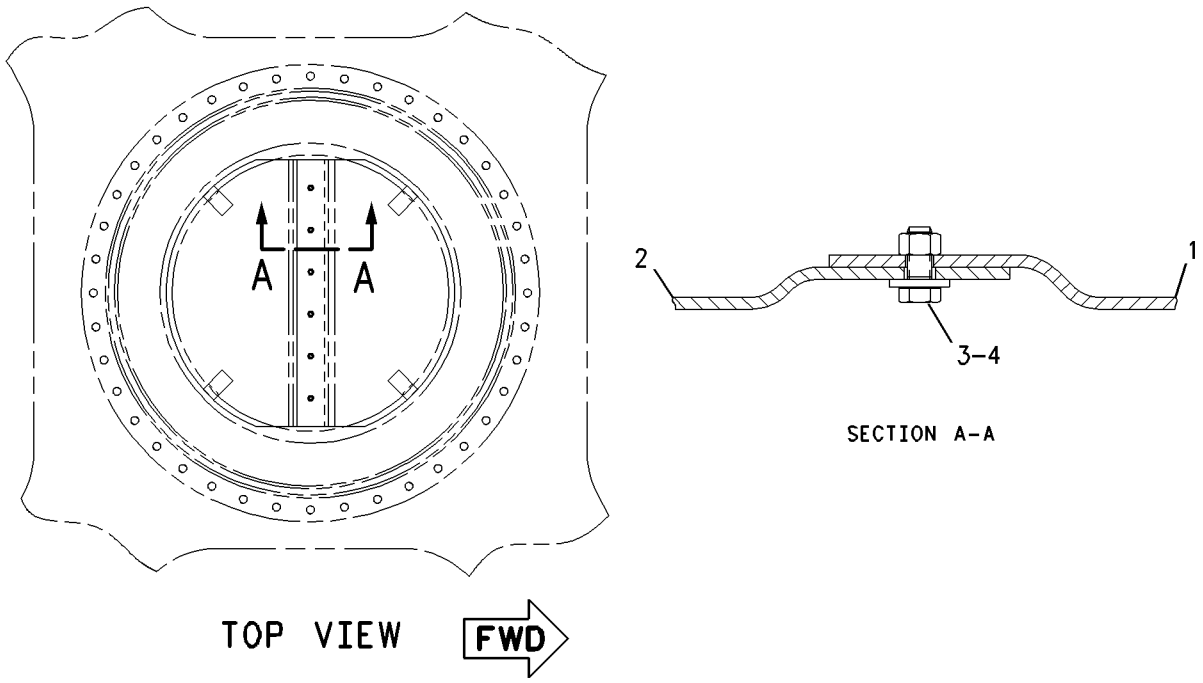

GRAPHIC #1 **<END>** g00790525

256-1644 HANDRAIL GP–FRONT, RH

S/N: MYG1-UP; PPN1-UP

PART OF 343-1145, 343-1146 CHASSIS AR

SMCS-7256 **i02296016**

NOTE	REF NO	GRAPHIC REF	PART NUMBER	QTY	PART NAME 1 2 3 4 5 6 (PRODUCT LEVEL)	SEE PAGE
M	1	1	**135-8573**	2	BOLT AS	
M	2	1	**135-8578**	3	BOLT AS	
	3	1	**177-5879**	2	CLAMP	
	4	1	**177-5880**	4	SLEEVE	
	5	1	**262-2209**	1	HANDRAIL AS	
M	6	1	**8T-4192**	2	BOLT (M12X1.75X25-MM)	
	7	1	**8T-4223**	2	WASHER-HARD (13.5X25.5X3-MM THK)	

M-METRIC PART

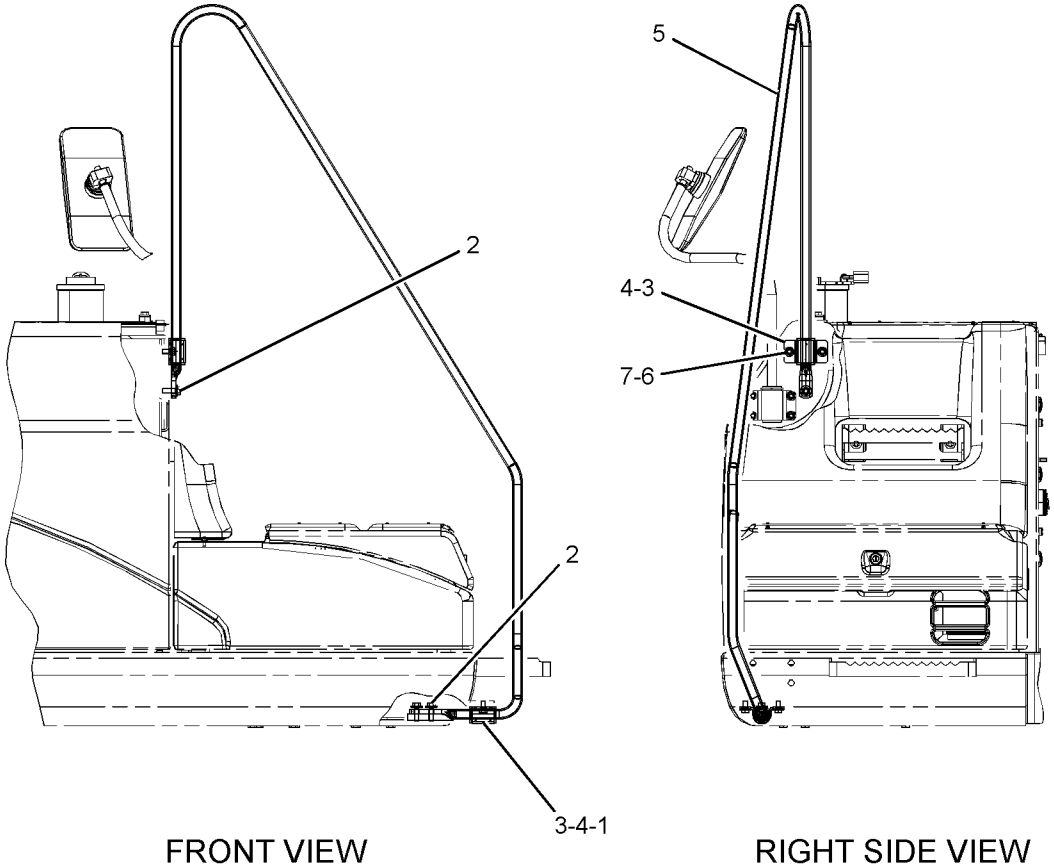

FRONT VIEW RIGHT SIDE VIEW

GRAPHIC #1 **<END>** g01152512

FRAME AND BODY

342-1068 HOOD & GUARD GP

S/N: MYG1-UP; PPN1-UP

PART OF 343-1145, 343-1146 CHASSIS AR

SMCS-7251, 7276 **i03714062**

NOTE	REF NO	GRAPHIC REF	PART NUMBER	QTY	PART NAME 1 2 3 4 5 6 (PRODUCT LEVEL)	SEE PAGE
	1	1	**1R-9958**	1	FASTENER	
	2	1	**4I-0117**	1	FASTENER	
	3	2	**4I-0118**	2	HOOK AS	
	4	1,3	**4I-0232**	2	STRIKER	
	5	3	**4I-2599**	1	SOCKET	
	6	1	**4I-8019**	2	SUPPORT	
	7	3	**5P-0372**	1	LOCK PIN	
	8	1	**246-2641**	1	PADLOCK GP	
		1	**5P-8500**	1	KEY	
	9	1	**6I-6033**	2	STOP	
	10	1	**7I-1418**	2	SUPPORT AS	
					(EACH INCLUDES)	
		1	**7I-0894**	1	ANGLE	
	11	1	**7Y-2853**	3	SPACER (13X38X5-MM THK)	
	12	1,3	**087-3908**	2	SHIM (1-MM THK)	
	13	1,3	**087-3909**	2	SHIM (2-MM THK)	
	14	2	**122-3979**	1	BAND	
	15	2	**122-3980**	1	ROD	
	16	1	**122-4120**	3	ROD	
M	17	2	**135-8572**	1	BOLT AS	
M	18	1,2,3	**135-8573**	114	BOLT AS	
M	19	2,3	**135-8574**	9	BOLT AS	
M	20	1,2,3	**135-8575**	70	BOLT AS	
M	21	2	**135-8577**	10	BOLT AS	
M	22	1,2	**135-8578**	18	BOLT AS	
	23	1	**170-3016**	12	SPACER (19X32X2-MM THK)	
	24	3	**212-5185**	1	SUPPORT AS	
	25	3	**214-8310**	1	PLATE	
	26	2	**241-2163**	1	SUPPORT AS	
	27	3	**241-2320**	1	PLATE AS	
	28	3	**241-2323**	1	SPRING	
	29	3	**241-2324**	1	SPRING	
Y	30	2	**256-1802**	1	SHEET AS-SOUND SUPPRESSION	349
Y	31	3	**256-1826**	1	SHEET AS-SOUND SUPPRESSION	350
Y	32	2	**256-1830**	1	SUPPORT AS-ENCLOSURE	364
Y	33	3	**256-1853**	1	SHEET AS-SOUND SUPPRESSION	351
	34	2	**256-1886**	1	SUPPORT AS	
Y	35	3	**256-1890**	1	SHEET AS-SOUND SUPPRESSION	352
	36	2	**256-1894**	1	SHEET AS	
	37	3	**256-1907**	1	SHEET AS	
		3	**256-1911**	1	LINER	
D		3	**5P-8309**		SEAL (1-M)	
Y	38	3	**256-1912**	1	SHEET AS-SOUND SUPPRESSION	353
Y	39	3	**256-1919**	1	SHEET AS-SOUND SUPPRESSION	354
	40	2	**259-3549**	1	SUPPORT AS	
Y	41	1	**259-3552**	1	COVER AS-SOUND SUPPRESSION	310
	42	2	**259-3559**	1	SUPPORT AS	
	43	2	**259-3563**	1	SUPPORT AS	
Y	44	1	**259-3591**	1	SHEET AS-SOUND SUPPRESSION	355
	45	3	**259-3629**	1	SHEET AS	
		3	**259-3633**	1	LINER	
	46	3	**259-3631**	1	SHEET AS	
		3	**259-3633**	1	LINER	
	47	1	**259-3634**	1	SHEET AS	
	48	2	**259-3669**	1	SHEET	
	49	2	**259-3953**	1	SUPPORT AS	

342-1068 **HOOD & GUARD GP** *(contd.)* **i03714062**

NOTE	REF NO	GRAPHIC REF	PART NUMBER	QTY	PART NAME 1 2 3 4 5 6 (PRODUCT LEVEL)	SEE PAGE
	50	3	**262-2145**	1	SHEET AS	
Y	51	2	**262-2543**	1	SHEET AS-SOUND SUPPRESSION	356
Y	52	3	**262-2550**	1	SHEET AS-SOUND SUPPRESSION	357
Y	53	3	**262-2553**	1	SHEET AS-SOUND SUPPRESSION	359
Y	54	1	**262-2555**	1	SUPPORT AS-ENCLOSURE	365
	55	1	**262-2568**	1	COVER AS	
		1	**262-2569**	2	INSULATION	
	56	3	**262-2592**	1	SHEET AS	
	57	1	**265-3505**	1	SCREEN AS	
	58	1	**265-3506**	1	SCREEN AS	
	59	1	**265-3571**	1	SCREEN AS	
Y	60	1	**270-9645**	1	SHEET AS-SOUND SUPPRESSION	360
	61	2	**273-7836**	1	SHEET AS	
	62	2	**273-7852**	1	SUPPORT AS	
	63	2	**273-7854**	1	SUPPORT AS	
	64	2	**273-7856**	1	SUPPORT AS	
	65	2	**273-7859**	1	SUPPORT AS	
	66	2	**273-7864**	1	SUPPORT AS	
	67	3	**273-7867**	1	SUPPORT AS	
		3	**259-3815**	1	INSULATION	
Y	68	1	**273-7903**	1	COVER AS-SOUND SUPPRESSION	311
	69	2	**273-7933**	1	SHEET AS	
		2	**273-7934**	1	LINER	
	70	2	**273-7946**	1	SUPPORT AS	
	71	1	**278-4016**	1	SHEET AS	
	72	3	**278-4018**	1	SHEET AS	
Y	73	1	**289-6754**	1	HOOD GP-ENGINE (HINGED)	344
	74	1	**289-6758**	1	COVER AS	
		1	**289-6761**	1	INSULATION	
	75	1	**289-6762**	1	SUPPORT AS	
	76	2	**289-6765**	1	SHEET AS	
		2	**289-6766**	1	LINER	
D		2	**5P-8309**		SEAL (1-M)	
Y	77	1	**289-6893**	1	DOOR GP-ACCESS (RADIATOR)	316
Y	78	1	**289-6897**	1	DOOR GP-ACCESS (PUMP COMPARTMENT)	317
	79	1	**298-3111**	1	HANDLE AS	
	80	2	**298-3112**	1	HANDHOLD	
Y	81	1	**298-3225**	1	DOOR AS-ACCESS (AIR CLEANER)	315
Y	82	3	**330-1408**	1	SUPPORT AS-ENCLOSURE	367
Y	83	1	**330-1412**	1	HOOD GP (RADIATOR)	341
Y	84	1	**330-1423**	1	COVER AS-SOUND SUPPRESSION (FUEL, HYDRAULIC TANKS)	312
	85	1	**330-1442**	1	COVER AS	
Y	86	2	**336-4509**	1	SHEET AS-SOUND SUPPRESSION	361
	87	2	**336-4513**	1	SHEET AS	
		2	**4I-7924**	6	WASHER (4.5X40X1.2-MM THK)	
		2	**6P-2216**	6	CAP	
		2	**303-9959**	1	INSULATION	
Y	88	2	**336-4514**	1	SHEET AS-SOUND SUPPRESSION	362
	89	2	**342-0817**	1	SUPPORT AS	
	90	2	**342-0819**	1	SUPPORT	
Y	91	1	**346-2703**	1	COVER AS-SOUND SUPPRESSION	313
	92	1	**3B-4618**	3	PIN-COTTER	
M	93	3	**096-4884**	2	LOCKNUT (M12X1.75-THD)	
M	94	1	**105-3487**	4	BOLT-SOCKET HEAD (M6X1X20-MM)	
	95	1	**114-6285**	2	BAR	
M	96	2	**5C-9553**	2	BOLT (M6X1X16-MM)	
	97	3	**5P-1076**	5	WASHER-HARD (13.5X30X4-MM THK)	
	98	1,3	**5P-4115**	12	WASHER-HARD (7.2X19X2-MM THK)	
	99	1	**7Y-2854**	3	SPACER (24X38X3-MM THK)	

342-1068 **HOOD & GUARD GP** ***(contd.)*** **i03714062**

NOTE	REF NO	GRAPHIC REF	PART NUMBER	QTY	PART NAME 1 2 3 4 5 6 (PRODUCT LEVEL)	SEE PAGE
	100	3	**7Y-2916**	1	PIN-CLEVIS	
	101	1,2	**8T-4121**	7	WASHER-HARD (11X21X2.5-MM THK)	
M	102	1,3	**8T-4138**	8	BOLT (M6X1X20-MM)	
M	103	1	**8T-4171**	4	BOLT (M6X1X12-MM)	
M	104	1,2	**8T-4189**	8	BOLT (M8X1.25X20-MM)	
M	105	1,2	**8T-4195**	4	BOLT (M10X1.5X30-MM)	
	106	3	**8T-4223**	2	WASHER-HARD (13.5X25.5X3-MM THK)	
	107	1,2	**8T-4224**	8	WASHER-HARD (8.8X16X2-MM THK)	
M	108	3	**8T-4648**	2	BOLT (M12X1.75X70-MM)	
	109	1,2	**9X-8256**	6	WASHER (6.6X12X2-MM THK)	

D-ORDER BY THE METER
M-METRIC PART
Y-SEPARATE ILLUSTRATION

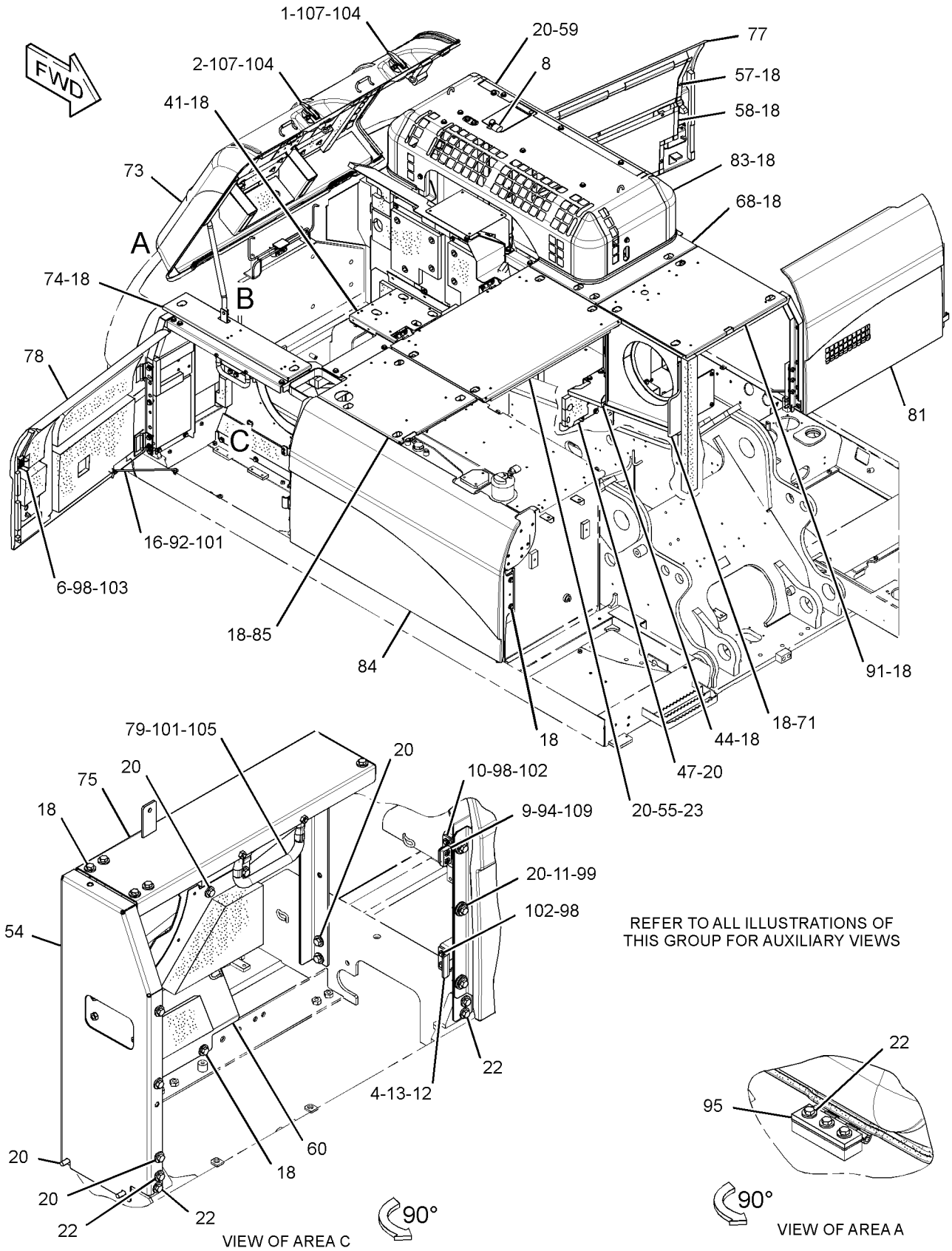

REFER TO ALL ILLUSTRATIONS OF THIS GROUP FOR AUXILIARY VIEWS

GRAPHIC #1

g01967815

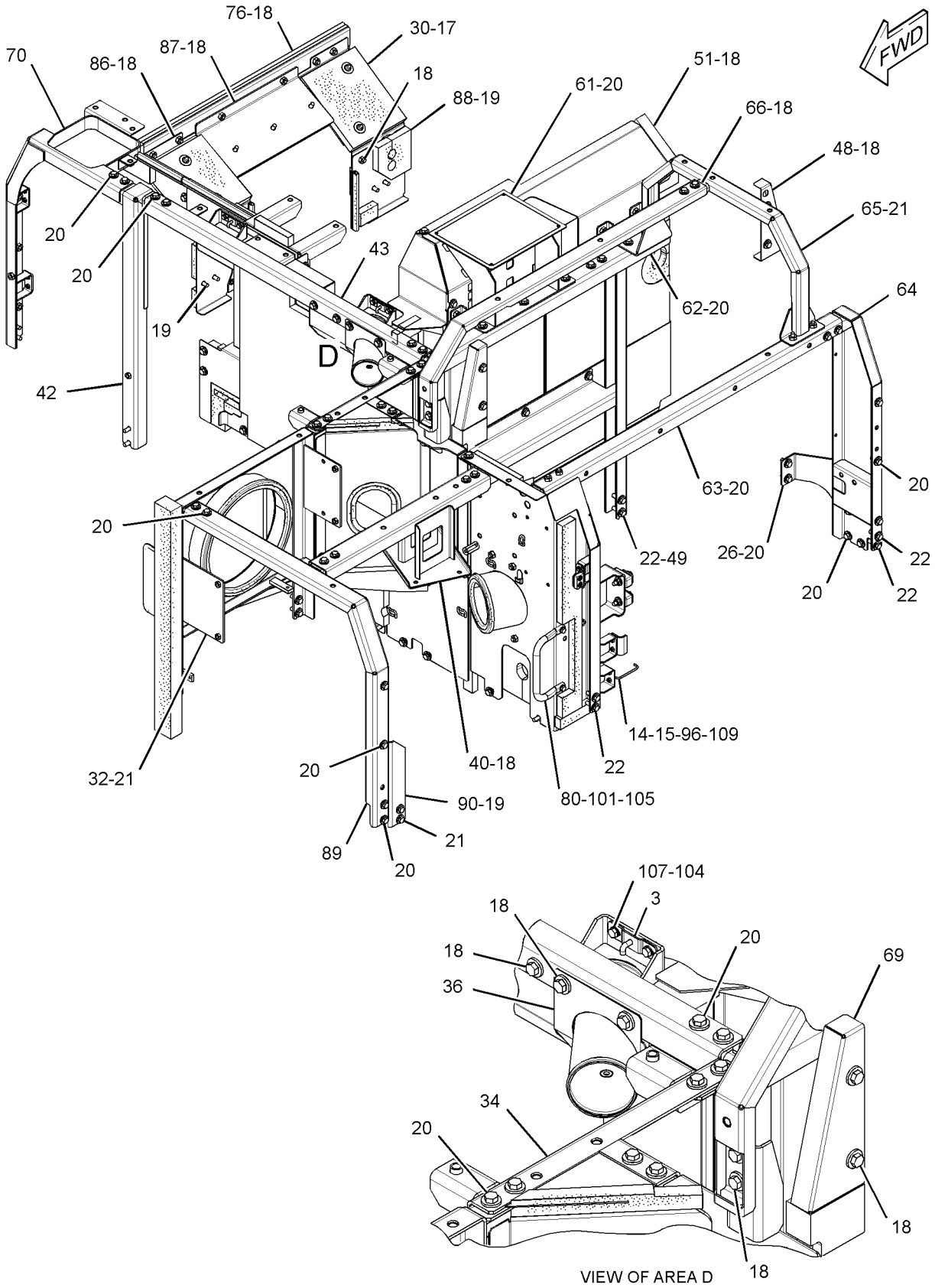

GRAPHIC #2

g01967816

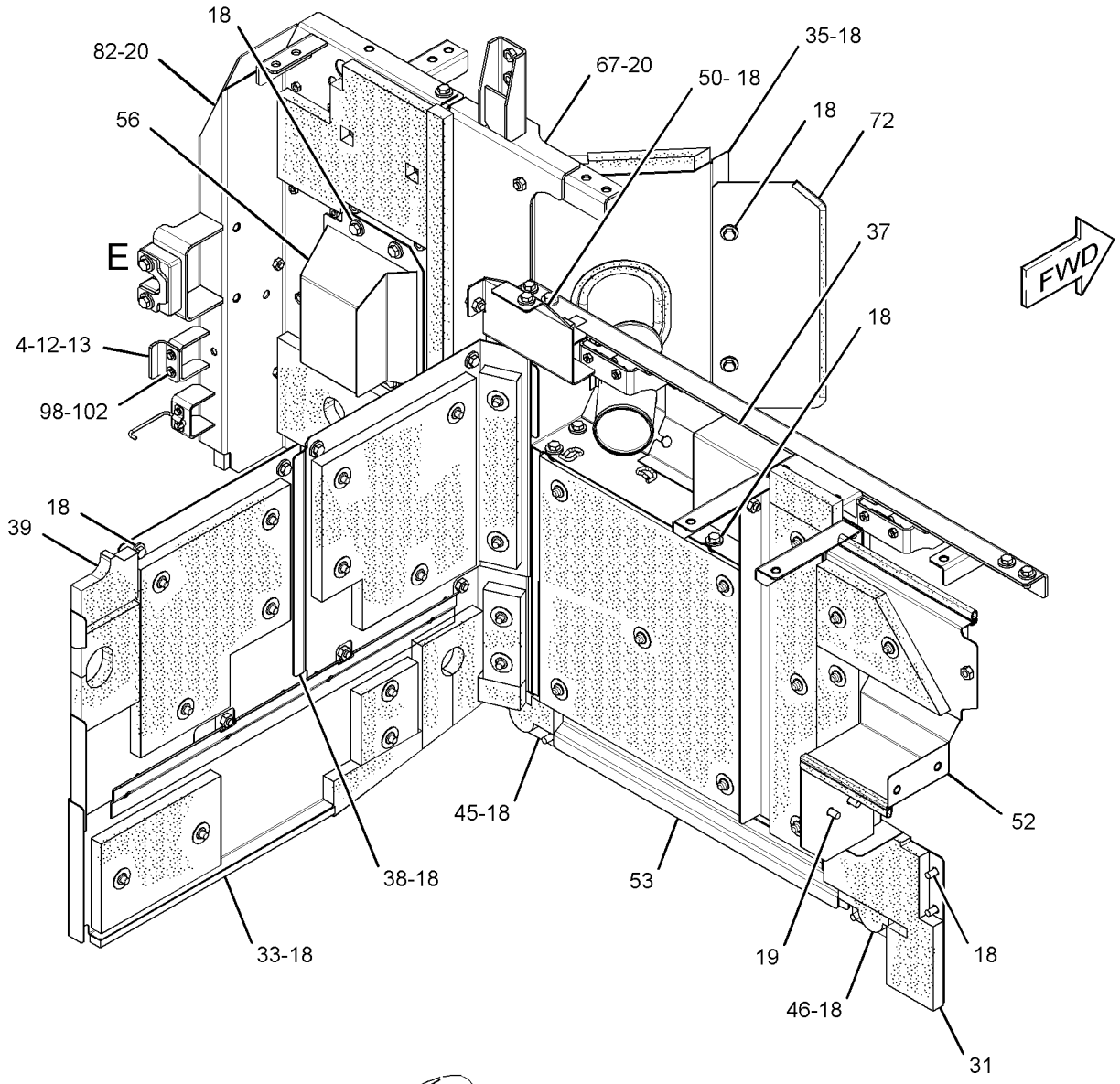

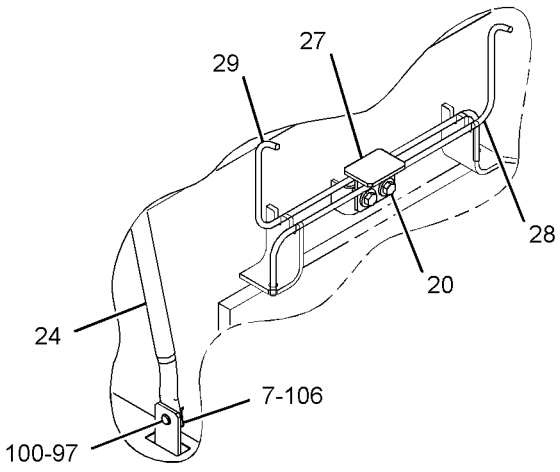

VIEW OF AREA B

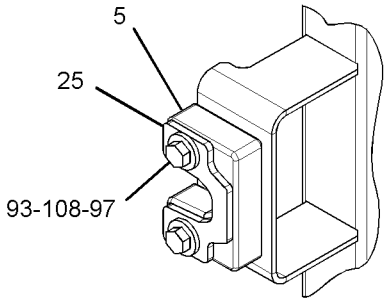

VIEW OF AREA E

GRAPHIC #3 **<END>** g01969278

293-6867 HOOD GP–ACCUGRADE READY

S/N: MYG1-UP; PPN1-UP
PART OF 346-4602 GRADE CONTROL AR
AN ATTACHMENT

SMCS-7251 **i03676023**

NOTE	REF NO	GRAPHIC REF	PART NUMBER	QTY	PART NAME 1 2 3 4 5 6 (PRODUCT LEVEL)	SEE PAGE
CY	1	1	**330-1417**	1	HOOD GP (RADIATOR)	342
Y	2	1	**293-6873**	1	HOOD GP-ENGINE	345
	3	1	**293-6895**	1	SUPPORT AS	
	4	1	**293-6931**	1	COVER AS	
		1	**293-6960**	1	INSULATION	
	5	1	**293-6935**	1	SUPPORT AS	

C-CHANGE FROM PREVIOUS TYPE
Y-SEPARATE ILLUSTRATION

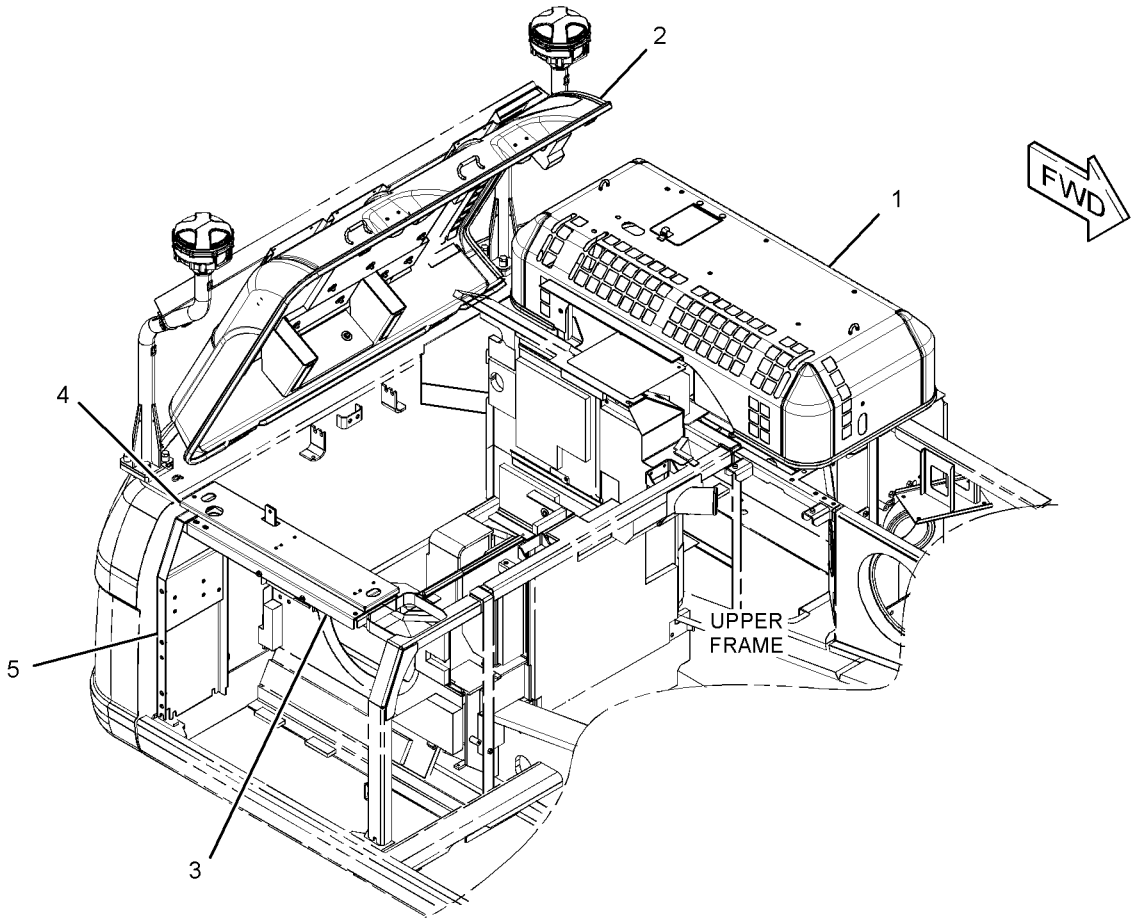

GRAPHIC #1 **<END>** g01369162

293-6985 HOOD GP–ACCUGRADE READY

S/N: MYG1-UP; PPN1-UP
PART OF 346-4603 GRADE CONTROL AR
AN ATTACHMENT

SMCS-7251 **i03170822**

NOTE	REF NO	GRAPHIC REF	PART NUMBER	QTY	PART NAME 1 2 3 4 5 6 (PRODUCT LEVEL)	SEE PAGE
CY	1	1	**330-1417**	1	HOOD GP (RADIATOR)	342
Y	2	1	*293-6881*	1	HOOD GP-ENGINE	347
	3	1	**293-6895**	1	SUPPORT AS	
	4	1	**293-6931**	1	COVER AS	
		1	**293-6960**	1	INSULATION	
Y	5	1	**293-6934**	1	SUPPORT AS-ENCLOSURE	366

C-CHANGE FROM PREVIOUS TYPE
Y-SEPARATE ILLUSTRATION

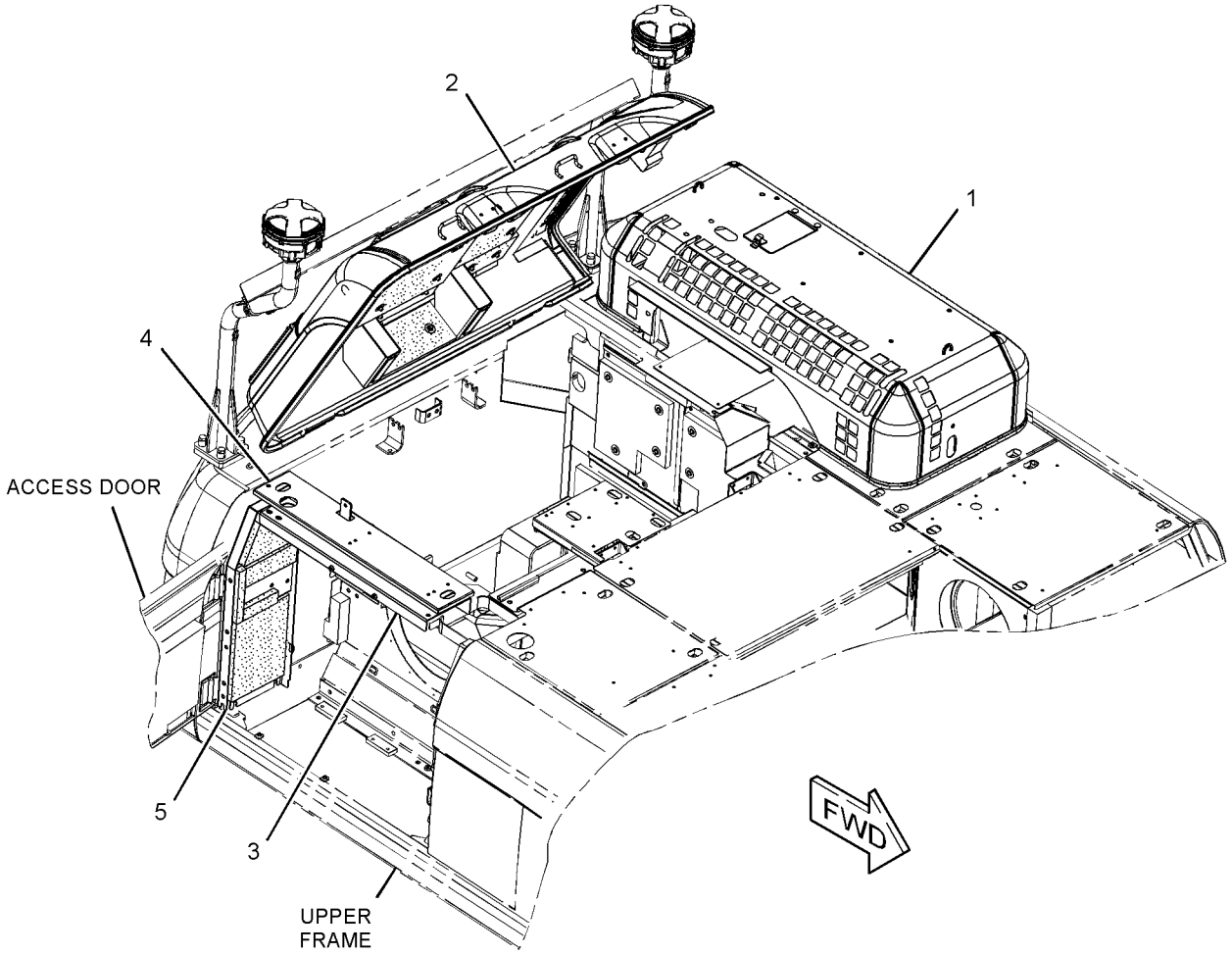

GRAPHIC #1 **<END>** g01485614

330-1412 HOOD GP–RADIATOR

S/N: MYG1-UP; PPN1-UP

PART OF 342-1068 HOOD & GUARD GP

SMCS-7251 **i03565840**

NOTE	REF NO	GRAPHIC REF	PART NUMBER	QTY	PART NAME 1 2 3 4 5 6 (PRODUCT LEVEL)	SEE PAGE
	1	1	**1K-8850**	1	SPRING	
	2	1	**5V-3854**	2	BUMPER	
	3	1	**7Y-8876**	1	DOOR AS	
		1	**4K-8501**	2	CLIP	
		1	**6S-6649**	1	PLATE	
	3A	1	**9V-3659**	1	HINGE	
	4	1	**262-2176**	1	LINER	
	5	1	**262-2435**	1	SHEET-RUBBER	
	6	1	**273-7918**	1	LINER	
	7	1	**273-7919**	1	LINER	
	8	1	**273-7920**	1	LINER	
	9	1	**273-7921**	1	LINER	
	11	1	**8T-4121**	2	WASHER-HARD (11X21X2.5-MM THK)	
M	12	1	**8T-4133**	2	NUT (M10X1.5-THD)	
D	13	1	**5P-5952**		SEAL (0.1-M)	
D	14	1	**5P-8309**		SEAL (0.9-M)	
	14A	1	**5P-8309**		SEAL (0.1-M)	
	14B	1	**5P-8309**		SEAL (1.3-M)	

D-ORDER BY THE METER
M-METRIC PART

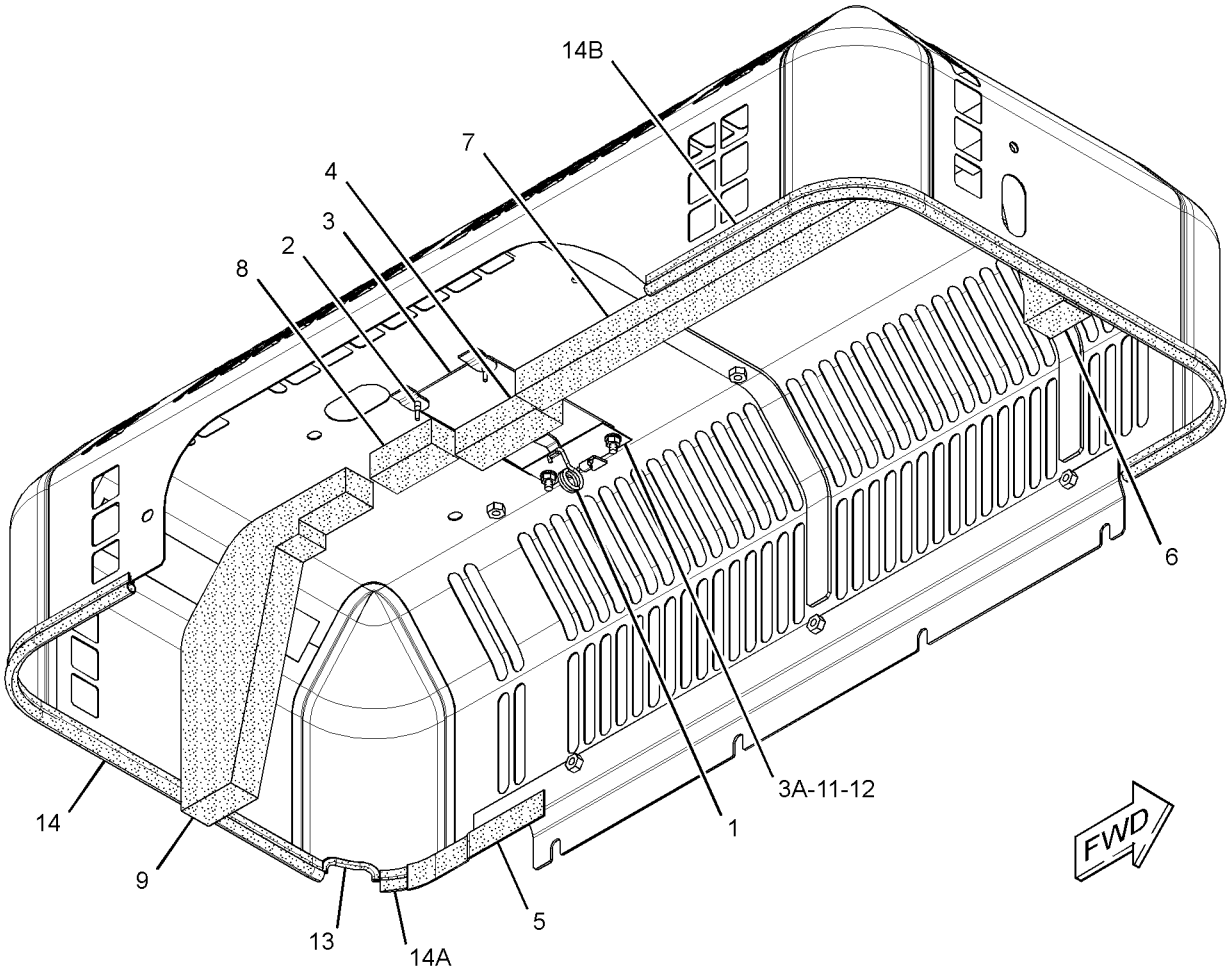

GRAPHIC #1 **<END>** g01890353

FRAME AND BODY

330-1417 HOOD GP—RADIATOR

S/N: MYG1-UP; PPN1-UP
PART OF 293-6867, 293-6985 HOOD GP
AN ATTACHMENT

SMCS-7251 **i03170849**

NOTE	REF NO	GRAPHIC REF	PART NUMBER	QTY	PART NAME 1 2 3 4 5 6 (PRODUCT LEVEL)	SEE PAGE
	1	1	**1K-8850**	1	SPRING	
	2	1	**5V-3854**	2	BUMPER	
	3	1	**7Y-8876**	1	DOOR AS	
	3A	1	**9V-3659**	1	HINGE	
	4	1	**262-2176**	1	LINER	
	5	1	**262-2435**	1	SHEET-RUBBER	
	6	1	**273-7918**	1	LINER	
	7	1	**273-7919**	1	LINER	
	8	1	**273-7920**	1	LINER	
	9	1	**273-7921**	1	LINER	
	11	1	**8T-4121**	2	WASHER-HARD (11X21X2.5-MM THK)	
M	12	1	**8T-4133**	2	NUT (M10X1.5-THD)	
D	13	1	**5P-5952**		SEAL (0.1-M)	
D	14	1	**5P-8309**		SEAL (1.2-M)	
D	14A	1	**5P-8309**		SEAL (0.9-M)	
D	14B	1	**5P-8309**		SEAL (0.04-M)	

D-ORDER BY THE METER
M-METRIC PART

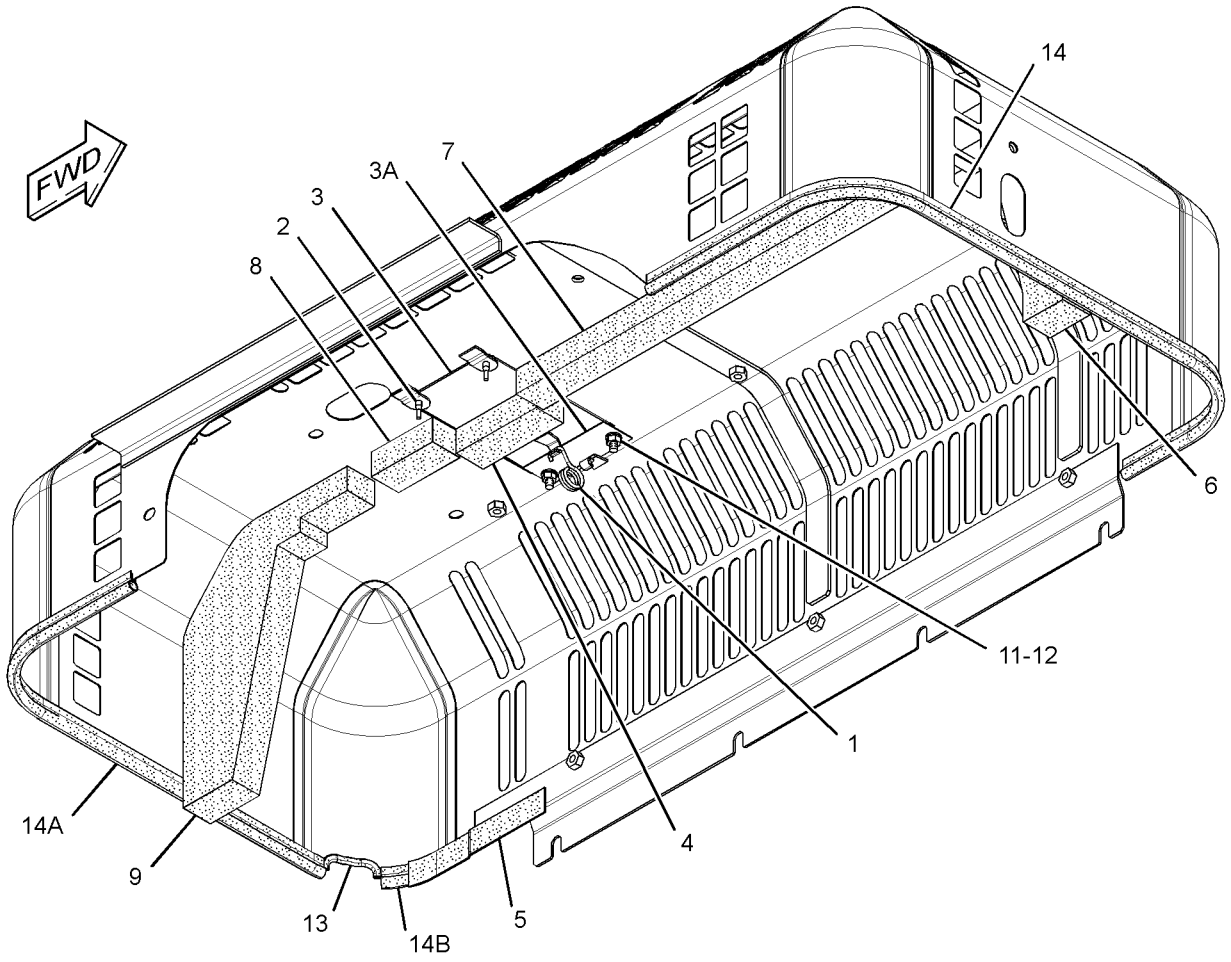

GRAPHIC #1 **<END>** g01615560

342-1070 HOOD GP–PRECLEANER

S/N: MYG1-UP; PPN1-UP
PART OF 346-4594 AIR CLEANER AR
AN ATTACHMENT

SMCS-7251 **i03676382**

NOTE	REF NO	GRAPHIC REF	PART NUMBER	QTY	PART NAME 1 2 3 4 5 6 (PRODUCT LEVEL)	SEE PAGE
	1	1	**259-3662**	1	SUPPORT AS	
Y	2	1	**330-1444**	1	SUPPORT AS-ENCLOSURE (AIR CLEANER)	368
Y	3	1	**346-2713**	1	COVER AS-SOUND SUPPRESSION	314

Y-SEPARATE ILLUSTRATION

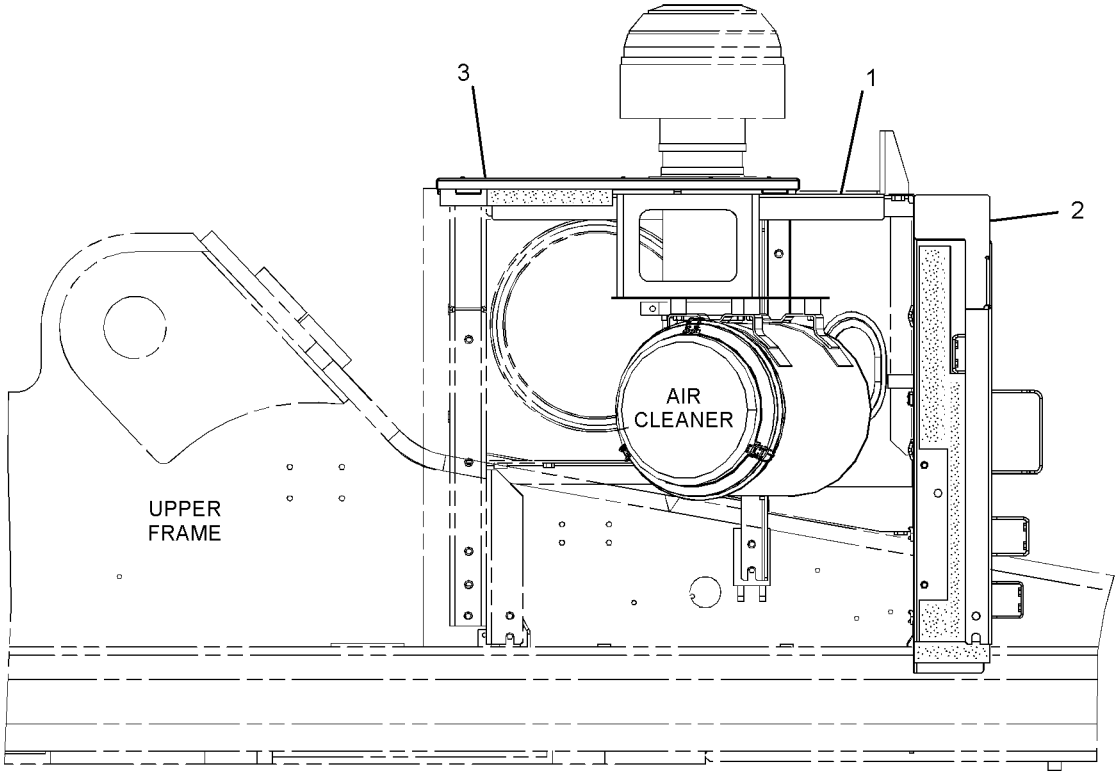

LEFT SIDE VIEW

GRAPHIC #1 **<END>** g01982024

FRAME AND BODY

289-6754 HOOD GP-ENGINE

S/N: MYG1-UP; PPN1-UP
PART OF 342-1068 HOOD & GUARD GP

SMCS-7251 **i02735633**

NOTE	REF NO	GRAPHIC REF	PART NUMBER	QTY	PART NAME 1 2 3 4 5 6 (PRODUCT LEVEL)	SEE PAGE
	1	1	**4I-7924**	24	WASHER (4.5X40X1.2-MM THK)	
	2	1	**6P-2216**	24	CAP	
	3	1	**096-4129**	2	CUSHION	
	4	1	**203-5057**	1	LINER	
	5	1	**259-3696**	2	LINER	
	6	1	**259-3697**	1	LINER	
	7	1	**259-3699**	1	LINER	
	8	1	**259-3700**	1	LINER	
	9	1	**259-3701**	1	LINER	
	10	1	**262-2179**	1	LINER	
	11	1	**262-2582**	1	LINER	
	12	1	**262-2583**	1	LINER	
	13	1	**262-2590**	1	LINER	
	14	1	**289-6755**	1	HOOD AS-ENGINE	
	14A	1	**114-6289**	2	HINGE	
	15	1	**8T-0328**	4	WASHER-HARD (5.5X10X1-MM THK)	
M	16	1	**8T-6693**	4	SCREW-MACHINE (M5X0.8X16-MM)	
D	17	1	**5P-8309**		SEAL (1.6-M)	
D	18	1	**101-9848**		SEAL (4.7-M)	

D-ORDER BY THE METER
M-METRIC PART

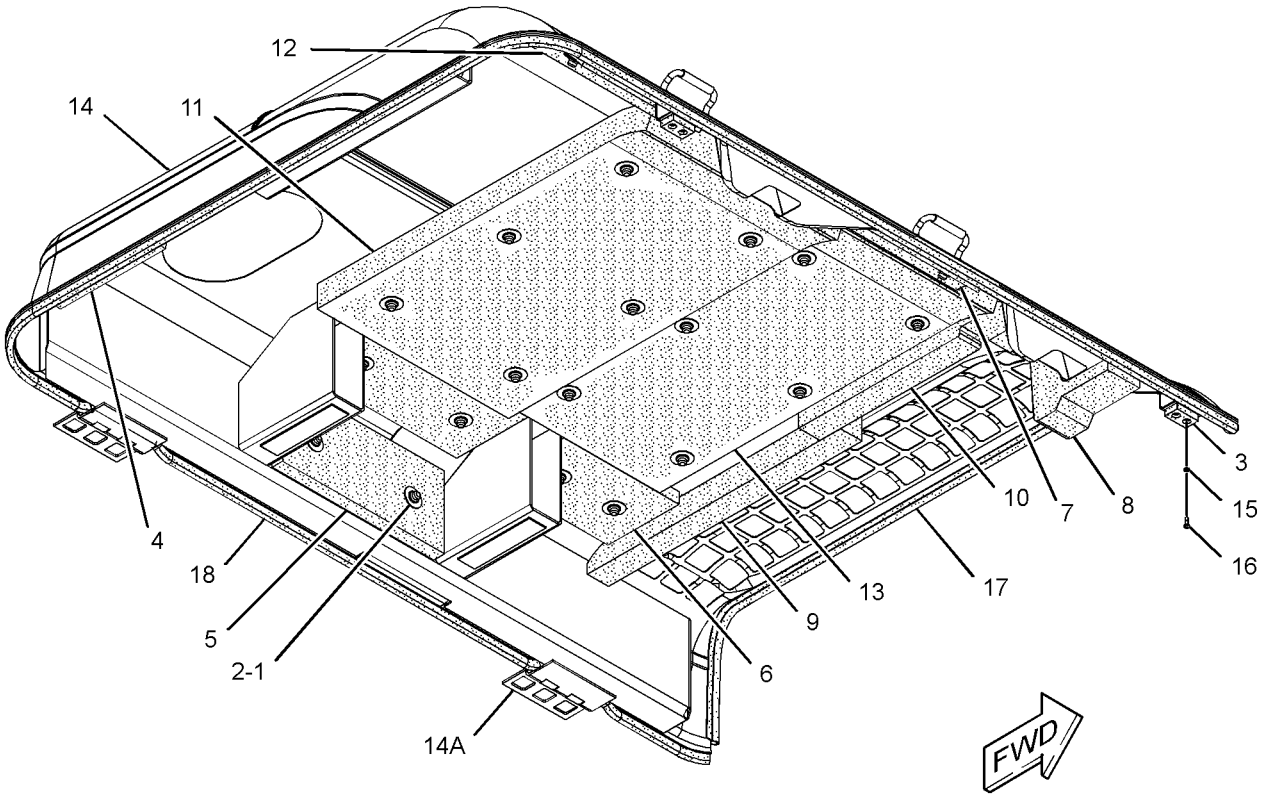

GRAPHIC #1 **<END>** g01375039

293-6873 HOOD GP-ENGINE

S/N: MYG1-UP; PPN1-UP
PART OF 293-6867 HOOD GP
AN ATTACHMENT

SMCS-7251 **i03676024**

NOTE	REF NO	GRAPHIC REF	PART NUMBER	QTY	PART NAME 1 2 3 4 5 6 (PRODUCT LEVEL)	SEE PAGE
	1	1	**4I-7924**	19	WASHER (4.5X40X1.2-MM THK)	
	2	1	**6P-2216**	19	CAP	
	3	1	**096-4129**	2	CUSHION	
	4	1	**203-5057**	1	LINER	
	5	1	**259-3696**	2	LINER	
	6	1	**259-3697**	1	LINER	
	7	1	**259-3698**	1	LINER	
	8	1	**259-3699**	1	LINER	
	9	1	**259-3700**	1	LINER	
	10	1	**259-3701**	1	LINER	
	11	1	**262-2179**	1	LINER	
	12	1	**307-7862**	1	HOOD AS-ENGINE	
	12A	1	**114-6289**	2	HINGE	
	12B	1	**146-4936**	2	HANDLE AS	
		1	**6C-3679**	80	RIVET-POP	
	13	1	**8T-0328**	4	WASHER-HARD (5.5X10X1-MM THK)	
M	14	1	**8T-6693**	4	SCREW-MACHINE (M5X0.8X16-MM)	
D	15	1	**5P-8309**		SEAL (1.6-M)	
D	16	1	**101-9848**		SEAL (4.7-M)	
E	17	1	**184-8580**		SEAL (35-CM)	
E	17A	1	**184-8580**		SEAL (41-CM)	

D-ORDER BY THE METER
E-ORDER BY THE CENTIMETER
M-METRIC PART

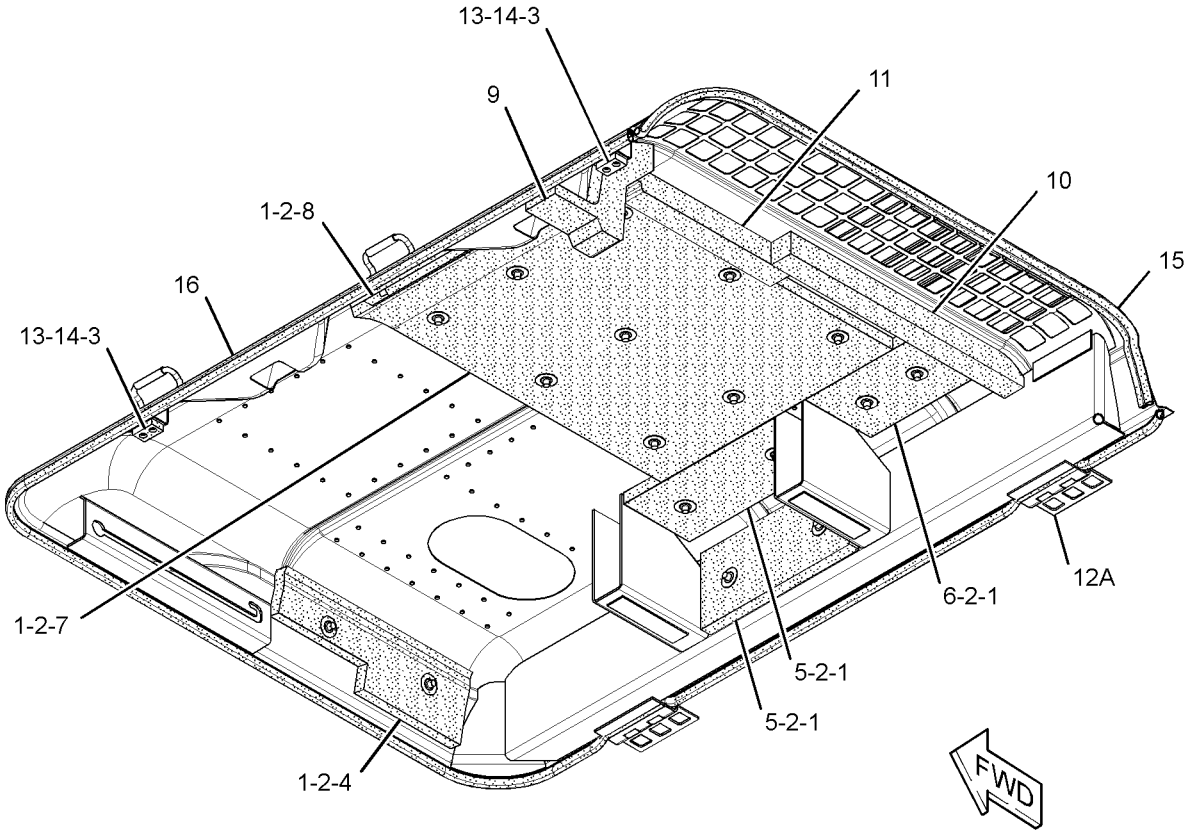

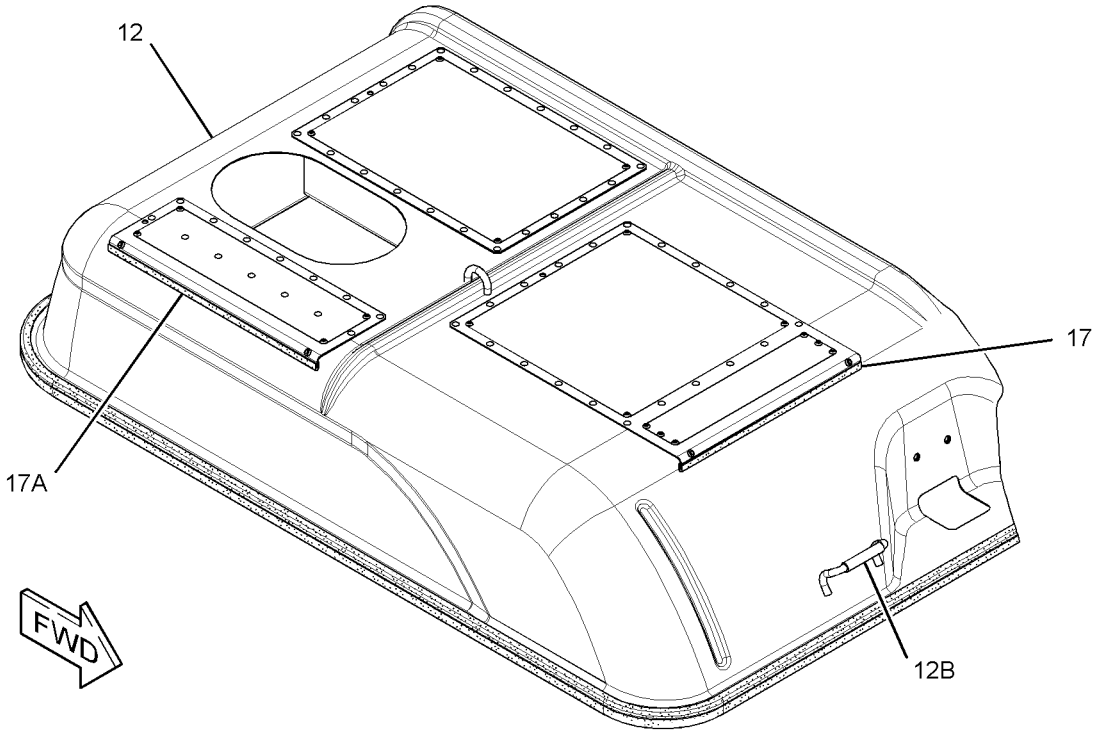

GRAPHIC #1 **<END>** g01619925

293-6881 HOOD GP-ENGINE

S/N: MYG1-UP; PPN1-UP
PART OF 293-6985 HOOD GP
AN ATTACHMENT

SMCS-7251 **i02898219**

NOTE	REF NO	GRAPHIC REF	PART NUMBER	QTY	PART NAME 1 2 3 4 5 6 (PRODUCT LEVEL)	SEE PAGE
	1	1	**4I-7924**	24	WASHER (4.5X40X1.2-MM THK)	
	2	1	**6P-2216**	24	CAP	
	3	1	**096-4129**	2	CUSHION	
	4	1	**203-5057**	1	LINER	
	5	1	**259-3696**	2	LINER	
	6	1	**259-3697**	1	LINER	
	7	1	**259-3699**	1	LINER	
	8	1	**259-3700**	1	LINER	
	9	1	**259-3701**	1	LINER	
	10	1	**262-2179**	1	LINER	
	11	1	**262-2582**	1	LINER	
	12	1	**262-2583**	1	LINER	
	13	1	**262-2590**	1	LINER	
	14	1	**307-7860**	1	HOOD AS-ENGINE	
	15	1	**8T-0328**	4	WASHER-HARD (5.5X10X1-MM THK)	
M	16	1	**8T-6693**	4	SCREW-MACHINE (M5X0.8X16-MM)	
D	17	1	**5P-8309**		SEAL (1.6-M)	
D	18	1	**101-9848**		SEAL (4.7-M)	
E	19	1	**184-8580**		SEAL (80-CM)	

D-ORDER BY THE METER
E-ORDER BY THE CENTIMETER
M-METRIC PART

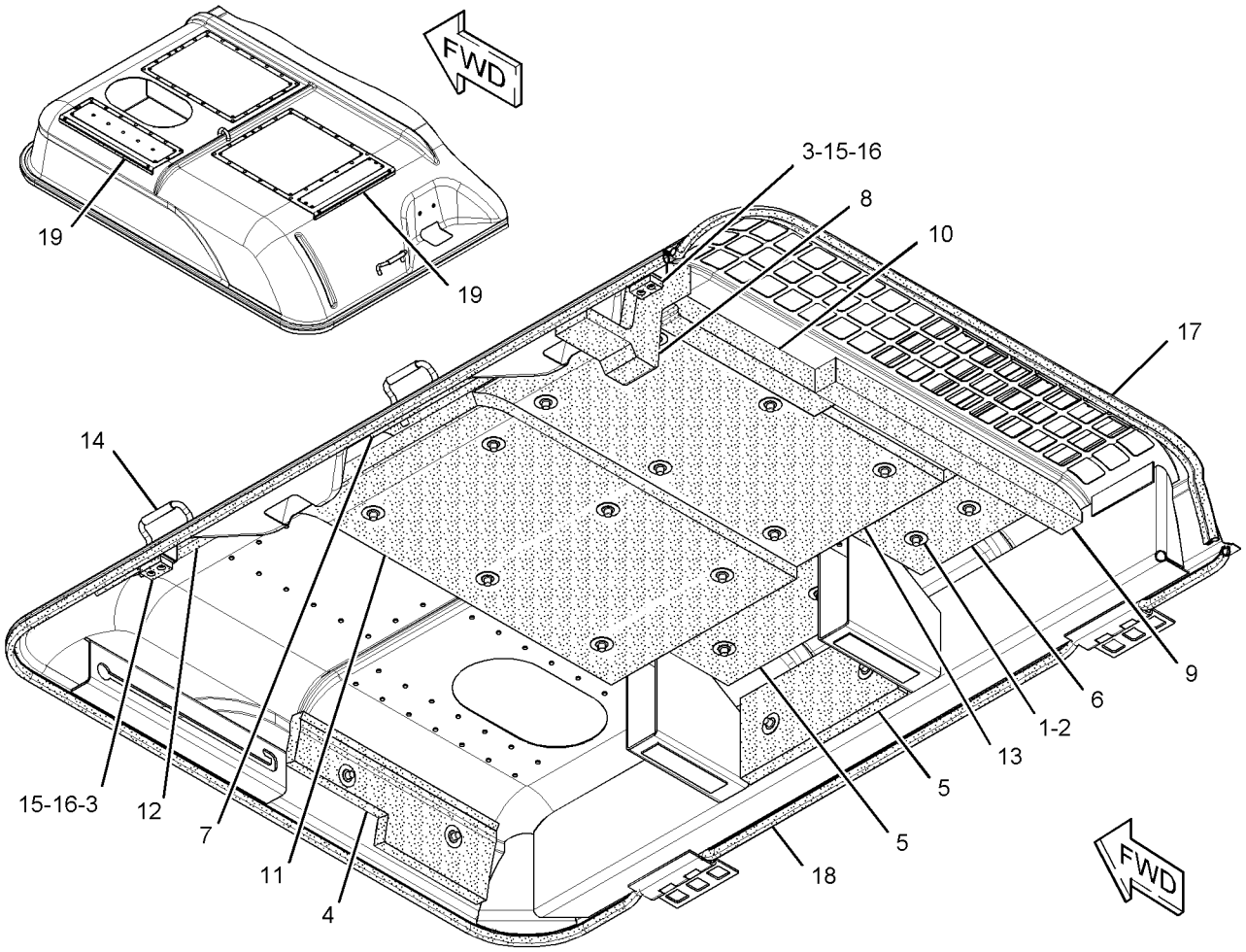

GRAPHIC #1 **<END>** g01485613

256-1802 SHEET AS-SOUND SUPPRESSION

S/N: MYG1-UP; PPN1-UP

PART OF 342-1068 HOOD & GUARD GP

SMCS-1801, 7076, 7251, 7267 **i02443968**

NOTE	REF NO	GRAPHIC REF	PART NUMBER	QTY	PART NAME 1 2 3 4 5 6 (PRODUCT LEVEL)	SEE PAGE
	1	1	**4I-7924**	2	WASHER (4.5X40X1.2-MM THK)	
	2	1	**6P-2216**	2	CAP	
Z	3	1		1	SHEET AS	
	4	1	**256-1805**	1	INSULATION	
	5	1	**256-1806**	1	INSULATION	

Z-NOT SERVICED SEPARATELY

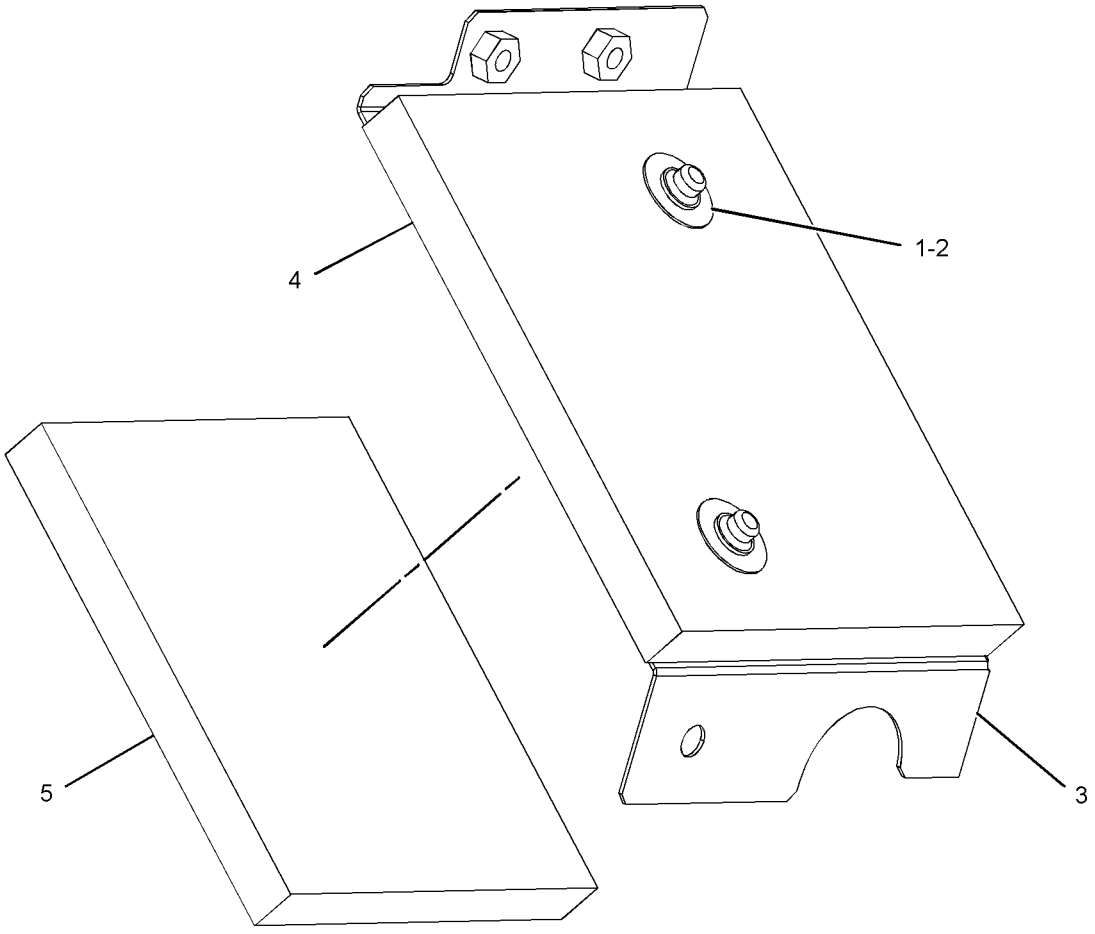

GRAPHIC #1 **<END>** g01236338

256-1826 SHEET AS-SOUND SUPPRESSION

S/N: MYG1-UP; PPN1-UP

PART OF 342-1068 HOOD & GUARD GP

SMCS-1801, 7076, 7251, 7267 **i02444131**

NOTE	REF NO	GRAPHIC REF	PART NUMBER	QTY	PART NAME 1 2 3 4 5 6 (PRODUCT LEVEL)	SEE PAGE
Z	1	1		1	SHEET	
	2	1	**256-1828**	1	LINER	
	3	1	**256-1829**	1	LINER	

Z-NOT SERVICED SEPARATELY

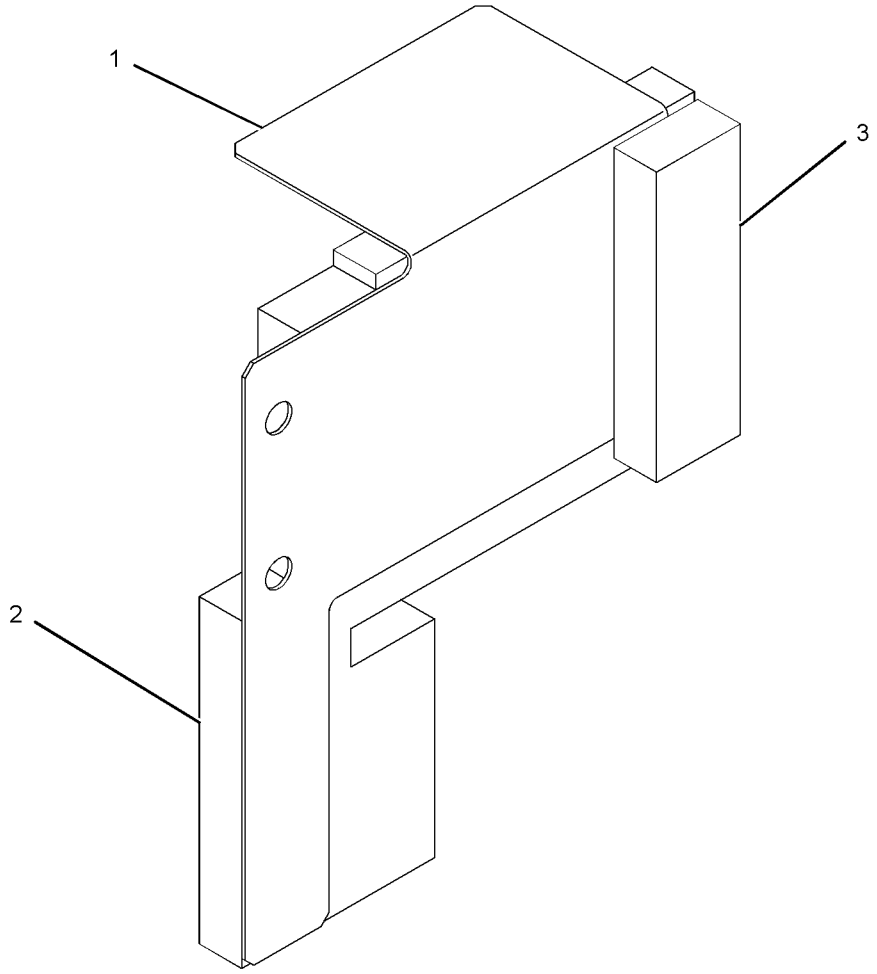

GRAPHIC #1 **<END>** g01236638

FRAME AND BODY

256-1853 SHEET AS-SOUND SUPPRESSION

S/N: MYG1-UP; PPN1-UP

PART OF 342-1068 HOOD & GUARD GP

SMCS-1801, 7076, 7251, 7267 **i02789900**

NOTE	REF NO	GRAPHIC REF	PART NUMBER	QTY	PART NAME 1 2 3 4 5 6 (PRODUCT LEVEL)	SEE PAGE
	1	1	**4I-7924**	6	WASHER (4.5X40X1.2-MM THK)	
	2	1	**6P-2216**	6	CAP	
Z	3	1		1	SHEET AS	
	4	1	**256-1858**	1	LINER	
	5	1	**256-1859**	1	INSULATION	
	6	1	**256-1860**	1	INSULATION	
	7	1	**256-1861**	1	LINER	
	8	1	**256-1863**	1	LINER	
	9	1	**256-1864**	1	LINER	
	10	1	**256-1865**	1	INSULATION	
	11	1	**256-1866**	3	SHEET-RUBBER	
	12	1	**262-2440**	1	LINER	

Z-NOT SERVICED SEPARATELY

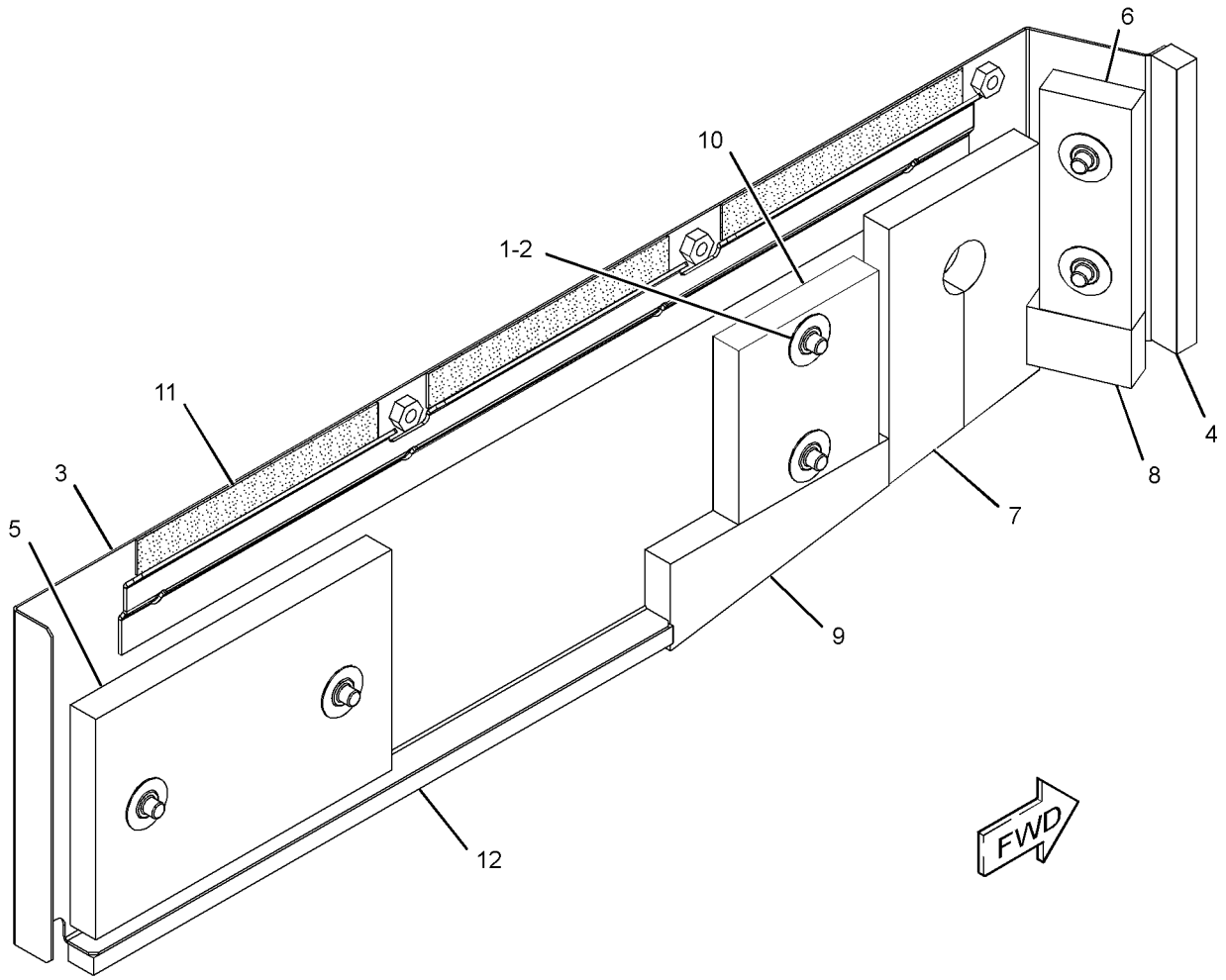

GRAPHIC #1 **<END>** g01198245

256-1890 SHEET AS-SOUND SUPPRESSION

S/N: MYG1-UP; PPN1-UP

PART OF 342-1068 HOOD & GUARD GP

SMCS-1801, 7076, 7251, 7267 **i02444314**

NOTE	REF NO	GRAPHIC REF	PART NUMBER	QTY	PART NAME 1 2 3 4 5 6 (PRODUCT LEVEL)	SEE PAGE
Z	1	1		1	SHEET	
	2	1	**256-1892**	1	LINER	
	3	1	**256-1893**	1	LINER	
D	4	1	**5P-8309**		SEAL (0.57-M)	

D-ORDER BY THE METER
Z-NOT SERVICED SEPARATELY

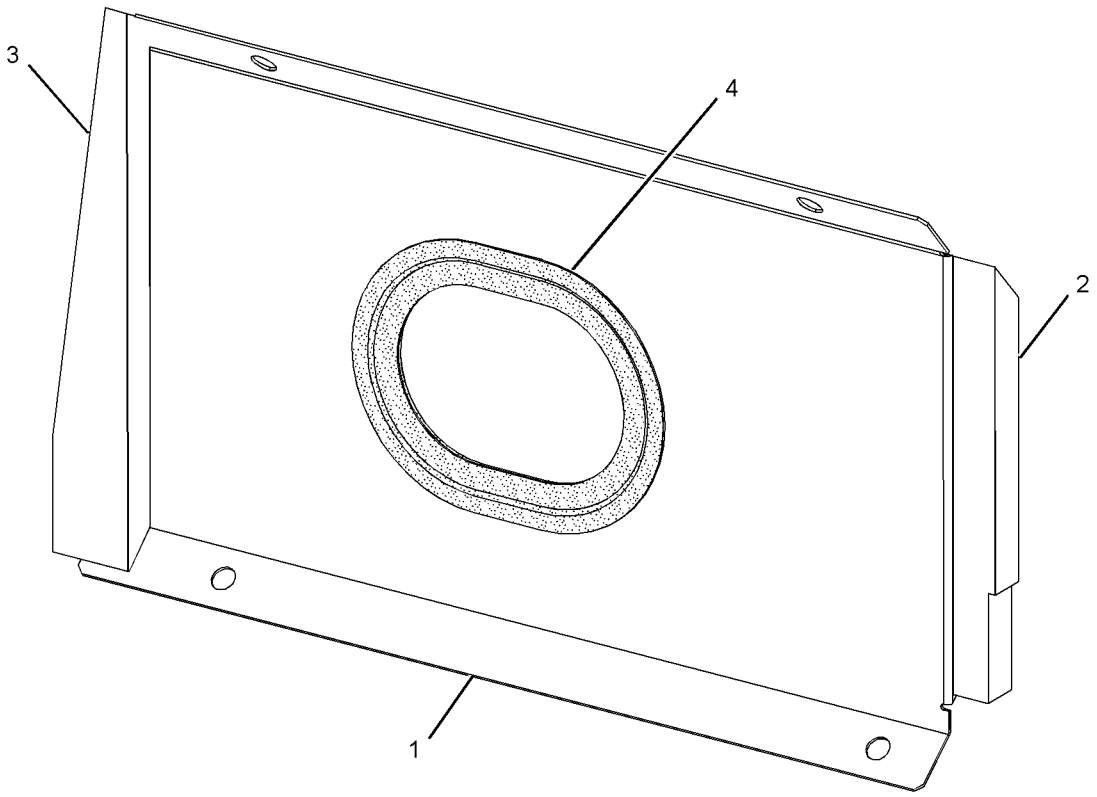

GRAPHIC #1 **<END>** g01236720

FRAME AND BODY

256-1912 SHEET AS-SOUND SUPPRESSION

S/N: MYG1-UP; PPN1-UP

PART OF 342-1068 HOOD & GUARD GP

SMCS-1801, 7076, 7251, 7267 **i02388195**

NOTE	REF NO	GRAPHIC REF	PART NUMBER	QTY	PART NAME 1 2 3 4 5 6 (PRODUCT LEVEL)	SEE PAGE
	1	1	**4I-7924**	6	WASHER (4.5X40X1.2-MM THK)	
	2	1	**6P-2216**	6	CAP	
	3	1	*256-1913*	1	SHEET AS	
		1	**6P-2215**	6	PIN-WELD	
	4	1	**256-1915**	1	LINER	
	5	1	**256-1916**	1	INSULATION	
	6	1	**256-1917**	1	INSULATION	
	7	1	**256-1918**	1	LINER	

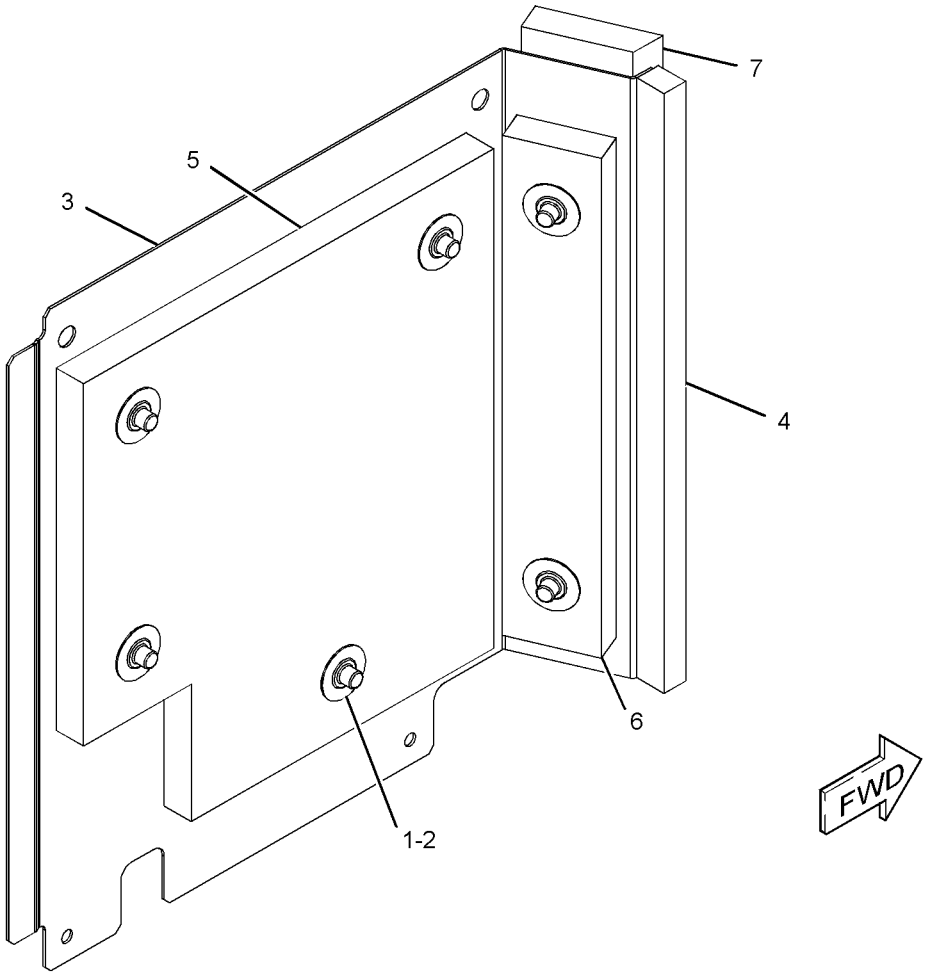

GRAPHIC #1 **<END>** g01198296

FRAME AND BODY

256-1919 SHEET AS-SOUND SUPPRESSION

S/N: MYG1-UP; PPN1-UP

PART OF 342-1068 HOOD & GUARD GP

SMCS-1801, 7076, 7251, 7267 **i02395962**

NOTE	REF NO	GRAPHIC REF	PART NUMBER	QTY	PART NAME 1 2 3 4 5 6 (PRODUCT LEVEL)	SEE PAGE
	1	1	**4I-7924**	4	WASHER (4.5X40X1.2-MM THK)	
	2	1	**6P-2216**	4	CAP	
Z	3	1		1	SHEET AS	
	4	1	**256-1922**	1	INSULATION	
	5	1	**256-1923**	1	LINER	
	6	1	**256-1924**	1	LINER	

Z-NOT SERVICED SEPARATELY

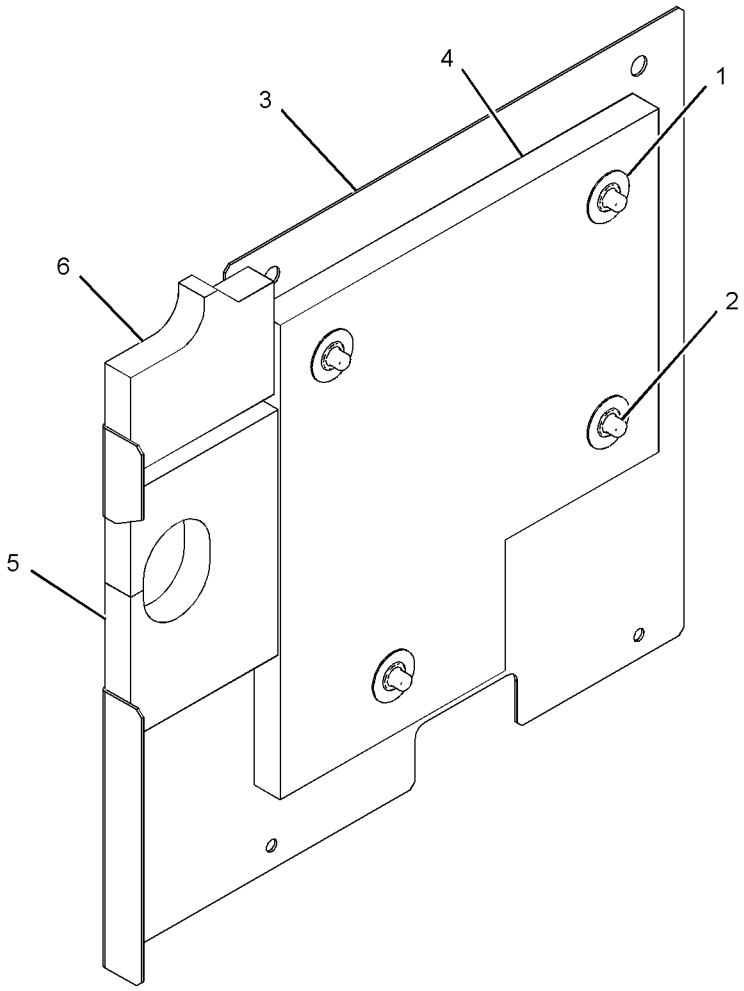

GRAPHIC #1 **<END>** g01199363

259-3591 SHEET AS-SOUND SUPPRESSION

S/N: MYG1-UP; PPN1-UP

PART OF 342-1068 HOOD & GUARD GP

SMCS-1801, 7076, 7251, 7267 **i02444365**

NOTE	REF NO	GRAPHIC REF	PART NUMBER	QTY	PART NAME 1 2 3 4 5 6 (PRODUCT LEVEL)	SEE PAGE
Z	1	1		1	SHEET	
	2	1	**259-3593**	1	LINER	
	3	1	**259-3637**	1	LINER	

Z-NOT SERVICED SEPARATELY

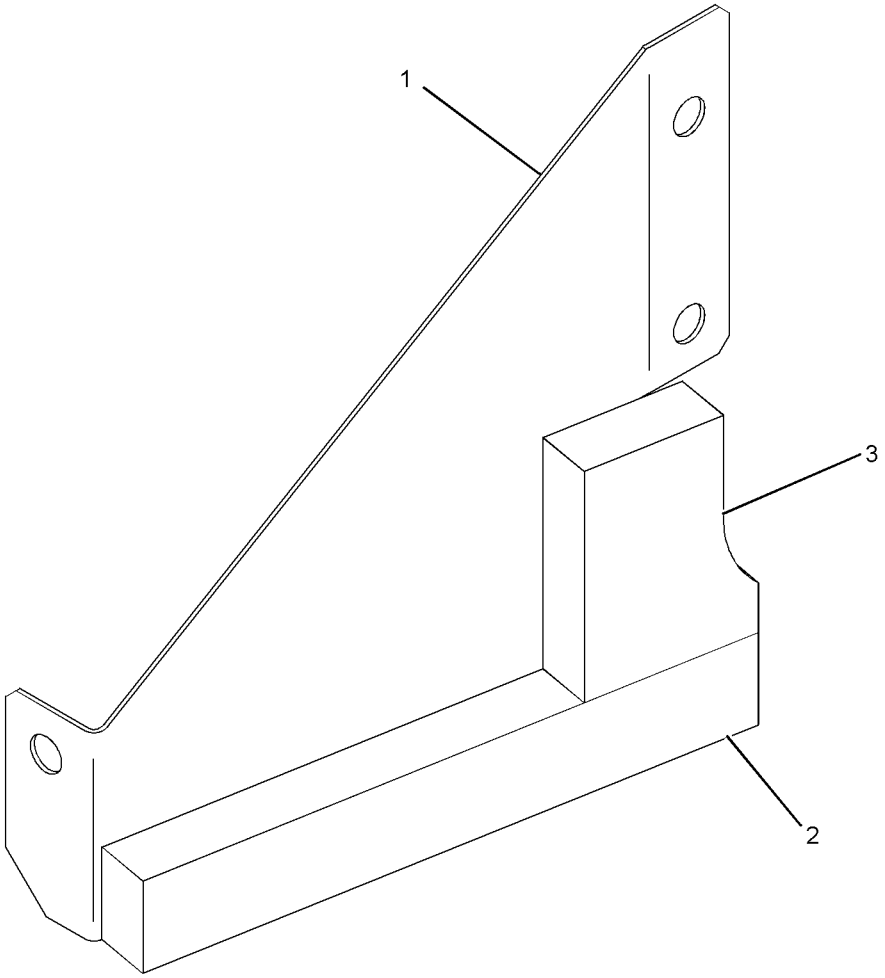

GRAPHIC #1 **<END>** g01236509

262-2543 SHEET AS-SOUND SUPPRESSION

S/N: MYG1-UP; PPN1-UP

PART OF 342-1068 HOOD & GUARD GP

SMCS-1801, 7076, 7251, 7267 **i02480675**

NOTE	REF NO	GRAPHIC REF	PART NUMBER	QTY	PART NAME 1 2 3 4 5 6 (PRODUCT LEVEL)	SEE PAGE
	1	1	**4I-7924**	5	WASHER (4.5X40X1.2-MM THK)	
	2	1	**6P-2216**	5	CAP	
	3	1	**262-2137**	1	LINER	
	4	1	**262-2138**	1	LINER	
	5	1	**262-2139**	1	LINER	
	6	1	**262-2140**	1	LINER	
	7	1	**262-2141**	1	LINER	
	8	1	**262-2546**	1	INSULATION	
	9	1	**262-2545**	1	INSULATION	
	10	1	**262-2435**	1	SHEET-RUBBER	
Z	11	1		1	SHEET AS	

Z-NOT SERVICED SEPARATELY

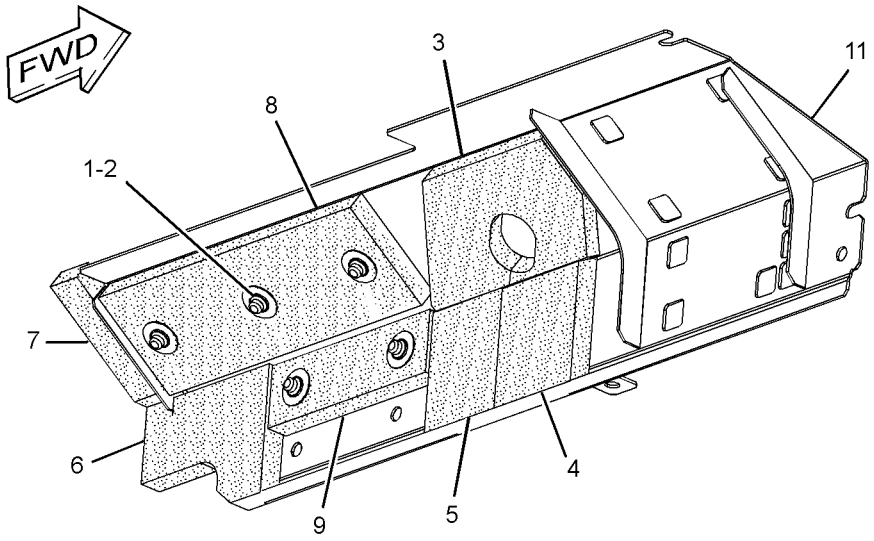

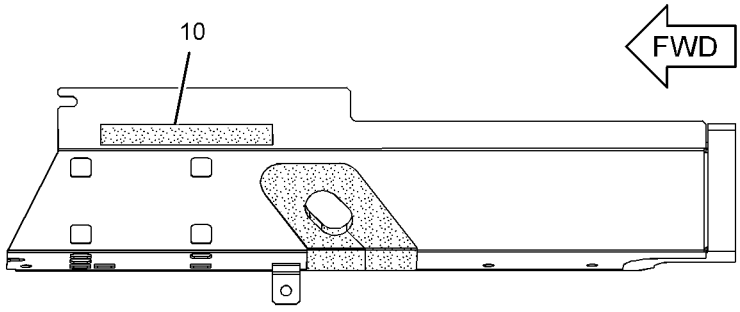

TOP VIEW

GRAPHIC #1 **<END>** g01240747

FRAME AND BODY

262-2550 SHEET AS-SOUND SUPPRESSION

S/N: MYG1-UP; PPN1-UP

PART OF 342-1068 HOOD & GUARD GP

SMCS-1801, 7076, 7251, 7267 **i02789906**

NOTE	REF NO	GRAPHIC REF	PART NUMBER	QTY	PART NAME 1 2 3 4 5 6 (PRODUCT LEVEL)	SEE PAGE
	1	1	**4I-7924**	4	WASHER (4.5X40X1.2-MM THK)	
	2	1	**6P-2216**	4	CAP	
	3	1	**256-1824**	1	LINER	
	4	1	**262-2552**	1	INSULATION	
Z	5	1		1	SHEET AS	
	6	1	**270-9642**	1	LINER	
	7	1	**270-9643**	1	INSULATION	
	8	1	**270-9644**	1	INSULATION	
D	9	1	**5P-8309**		SEAL (0.52-M)	
D	10	1	**101-9848**		SEAL (0.33-M)	
D	10A		**101-9848**		SEAL (0.21-M)	

D-ORDER BY THE METER
Z-NOT SERVICED SEPARATELY

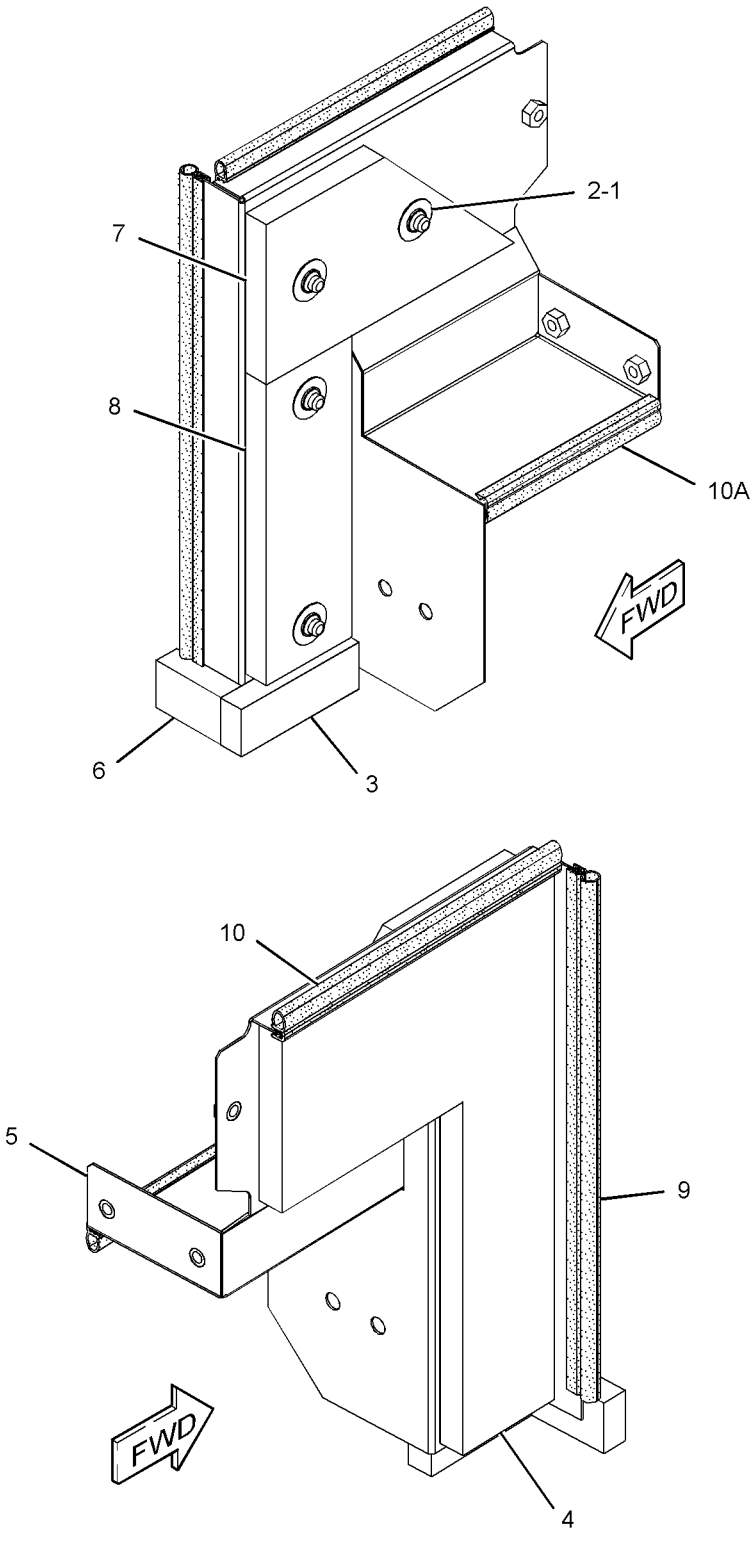

GRAPHIC #1 **<END>** g01393714

FRAME AND BODY

262-2553 SHEET AS-SOUND SUPPRESSION

S/N: MYG1-UP; PPN1-UP

PART OF 342-1068 HOOD & GUARD GP

SMCS-1801, 7076, 7251, 7267 **i02789901**

NOTE	REF NO	GRAPHIC REF	PART NUMBER	QTY	PART NAME 1 2 3 4 5 6 (PRODUCT LEVEL)	SEE PAGE
Z	1	1		1	SHEET AS	
	2	1	**4I-7924**	8	WASHER (4.5X40X1.2-MM THK)	
	3	1	**6P-2216**	8	CAP	
	4	1	**259-3546**	1	LINER	
	5	1	**259-3547**	1	INSULATION	
	6	1	**259-3548**	1	LINER	
	7	1	**262-2554**	1	INSULATION	

Z-NOT SERVICED SEPARATELY

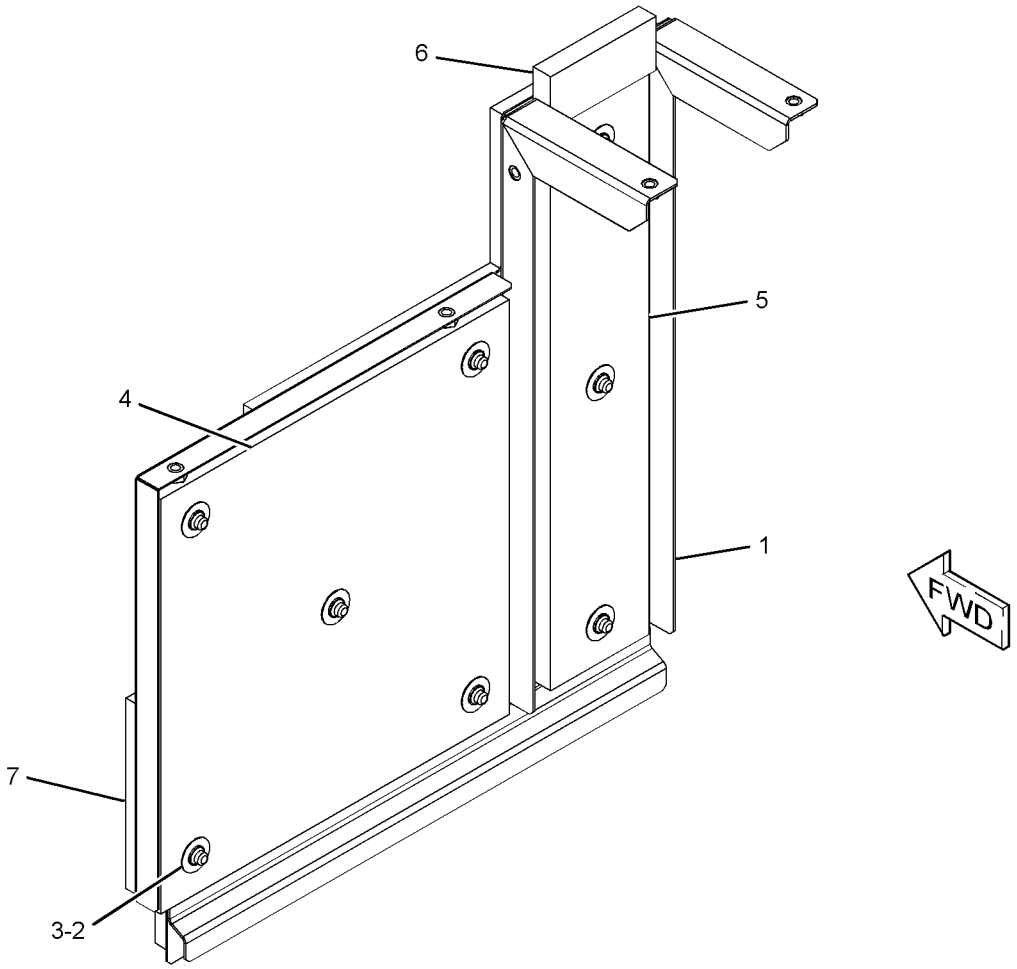

GRAPHIC #1 **<END>** g01198188

270-9645 SHEET AS-SOUND SUPPRESSION

S/N: MYG1-UP; PPN1-UP

PART OF 342-1068 HOOD & GUARD GP

SMCS-1801, 7076, 7251, 7267 **i03437268**

NOTE	REF NO	GRAPHIC REF	PART NUMBER	QTY	PART NAME 1 2 3 4 5 6 (PRODUCT LEVEL)	SEE PAGE
	1	1	**4I-7924**	3	WASHER (4.5X40X1.2-MM THK)	
	2	1	**6P-2216**	3	CAP	
	3	1	**9M-5732**	7	RIVET-POP	
	5	1	**256-1810**	1	SHEET-RUBBER	
	6	1	**256-1811**	1	INSULATION	
	7	1	**256-1814**	1	INSULATION	
	8	1	**273-7943**	1	INSULATION	
	9	1	**273-7944**	1	INSULATION	
	10	1	**9M-2307**	7	WASHER (5.2X19X2-MM THK)	
D	11	1	**5P-8309**		SEAL (0.19-M)	
D	11A	1	**5P-8309**		SEAL (0.20-M)	

D-ORDER BY THE METER

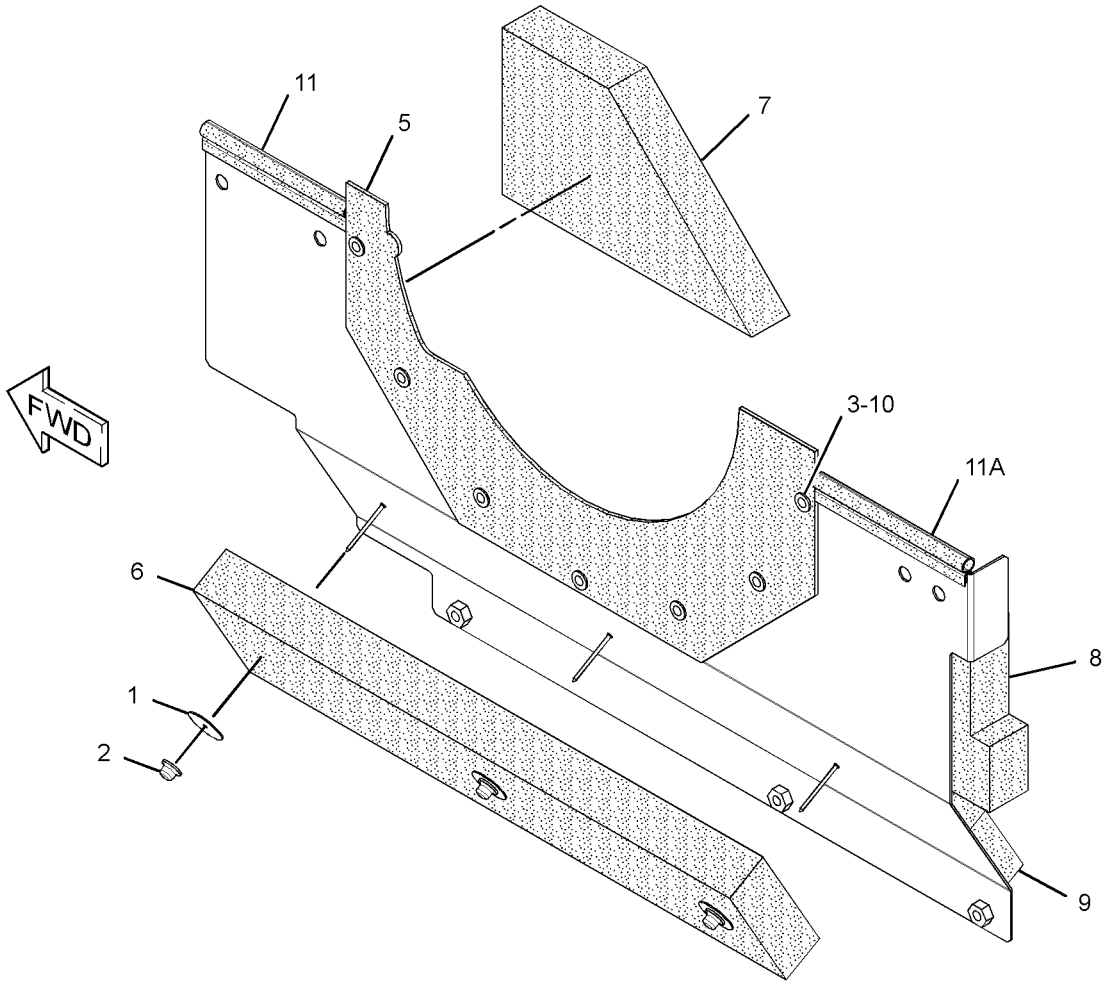

GRAPHIC #1 **<END>** g01794380

FRAME AND BODY

336-4509 SHEET AS-SOUND SUPPRESSION

S/N: MYG1-UP; PPN1-UP

PART OF 342-1068 HOOD & GUARD GP

SMCS-1801, 7076, 7251, 7267 **i03607700**

NOTE	REF NO	GRAPHIC REF	PART NUMBER	QTY	PART NAME 1 2 3 4 5 6 (PRODUCT LEVEL)	SEE PAGE
	1	1	**4I-7924**	2	WASHER (4.5X40X1.2-MM THK)	
	2	1	**6P-2216**	2	CAP	
	3	1	**9M-5732**	2	RIVET-POP	
	4	1	**256-1797**	1	SHEET-RUBBER	
	5	1	**256-1799**	1	INSULATION	
	7	1	**270-9647**	1	INSULATION	
	8	1	**270-9783**	1	INSULATION	
	9	1	**336-4510**	1	LINER	
	10	1	**336-4511**	1	LINER	
	11	1	**336-4512**	1	LINER	
	12	1	**9M-2307**	2	WASHER (5.2X19X2-MM THK)	
D	13	1	**101-9848**		SEAL (0.3-M)	
D	13A	1	**101-9848**		SEAL (0.2-M)	

D-ORDER BY THE METER

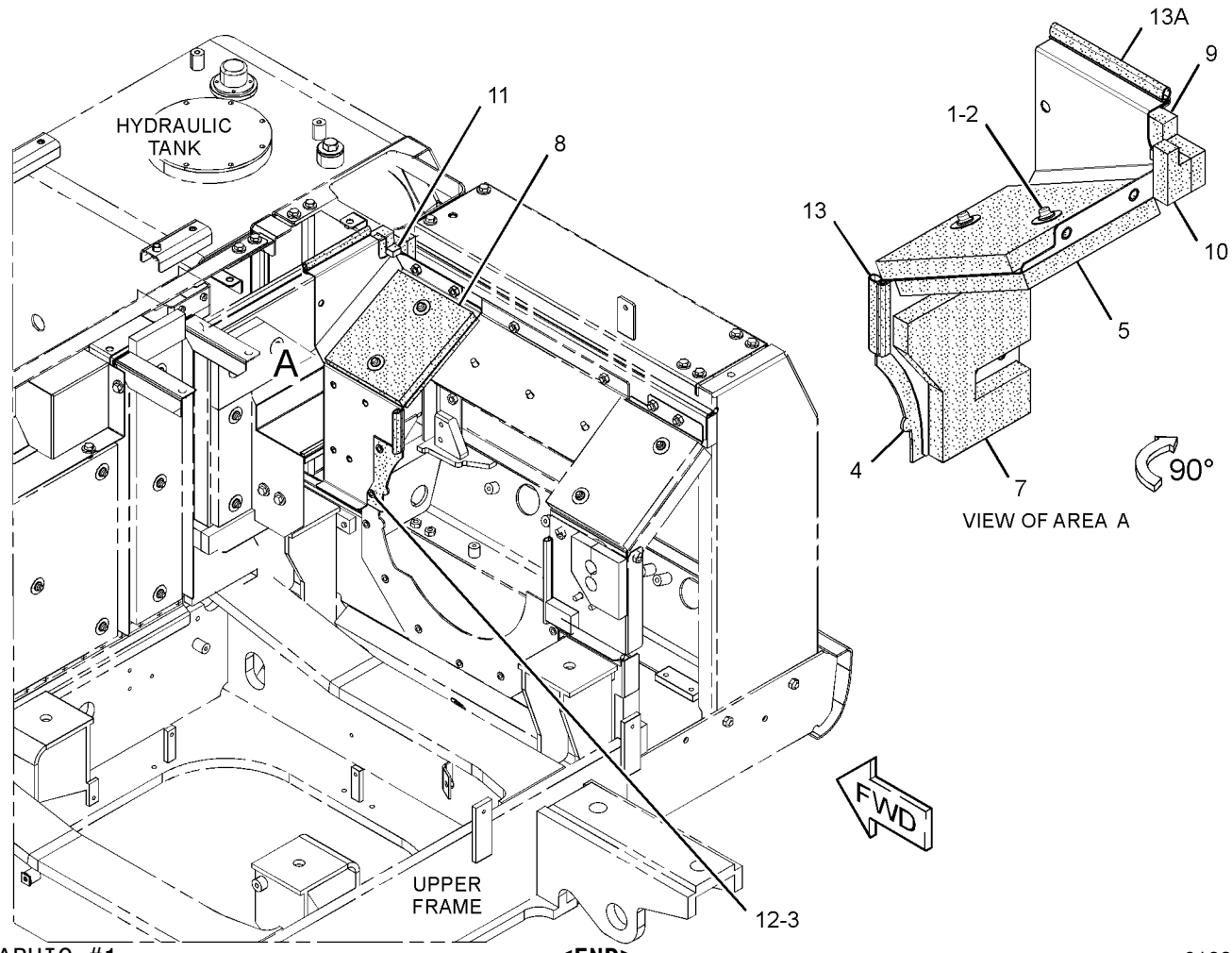

GRAPHIC #1 **<END>** g01935223

FRAME AND BODY

336-4514 SHEET AS-SOUND SUPPRESSION

S/N: MYG1-UP; PPN1-UP

PART OF 342-1068 HOOD & GUARD GP

SMCS-1801, 7076, 7251, 7267 **i03607684**

NOTE	REF NO	GRAPHIC REF	PART NUMBER	QTY	PART NAME 1 2 3 4 5 6 (PRODUCT LEVEL)	SEE PAGE
	1	1	**270-9649**	1	LINER	
	2	1	**336-4501**	1	LINER	
D	3	1	**101-9848**		SEAL (0.3-M)	
	4	1	**336-4508**	1	LINER	

D-ORDER BY THE METER

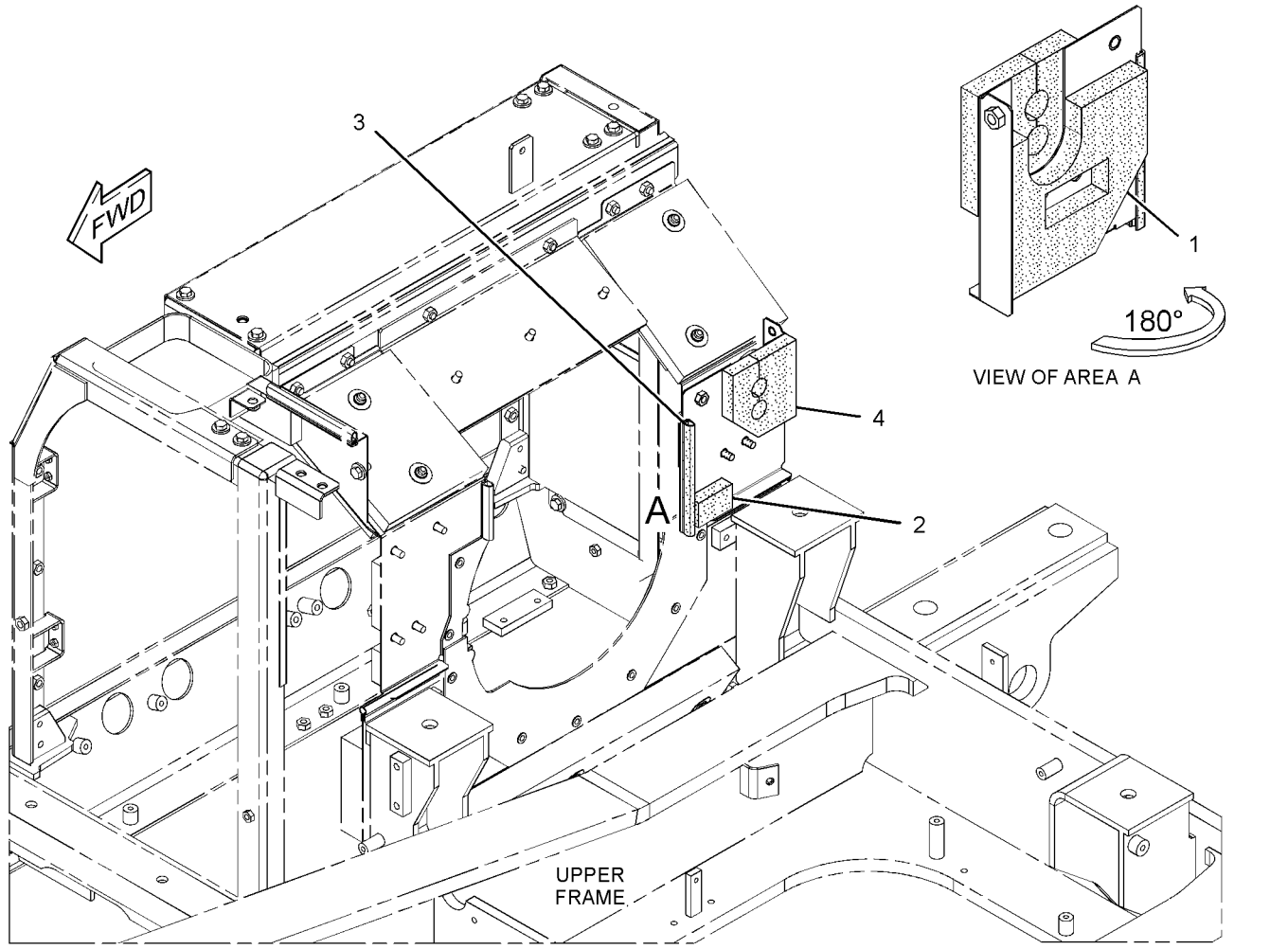

GRAPHIC #1 **<END>** g01935157

235-7764 STEP GP

S/N: PPN1-UP
PART OF 264-8495 TRACK GP
FOR USE WITH 800-MM (31.5-IN) SHOE
AN ATTACHMENT

SMCS-7254 **i02408037**

NOTE	REF NO	GRAPHIC REF	PART NUMBER	QTY	PART NAME 1 2 3 4 5 6 (PRODUCT LEVEL)	SEE PAGE
	1	1	**235-7765**	2	STEP	
M	2	1	**8T-7338**	4	BOLT (M16X2X45-MM)	
	3	1	**9X-8257**	4	WASHER (17.5X30X3.5-MM THK)	

M-METRIC PART

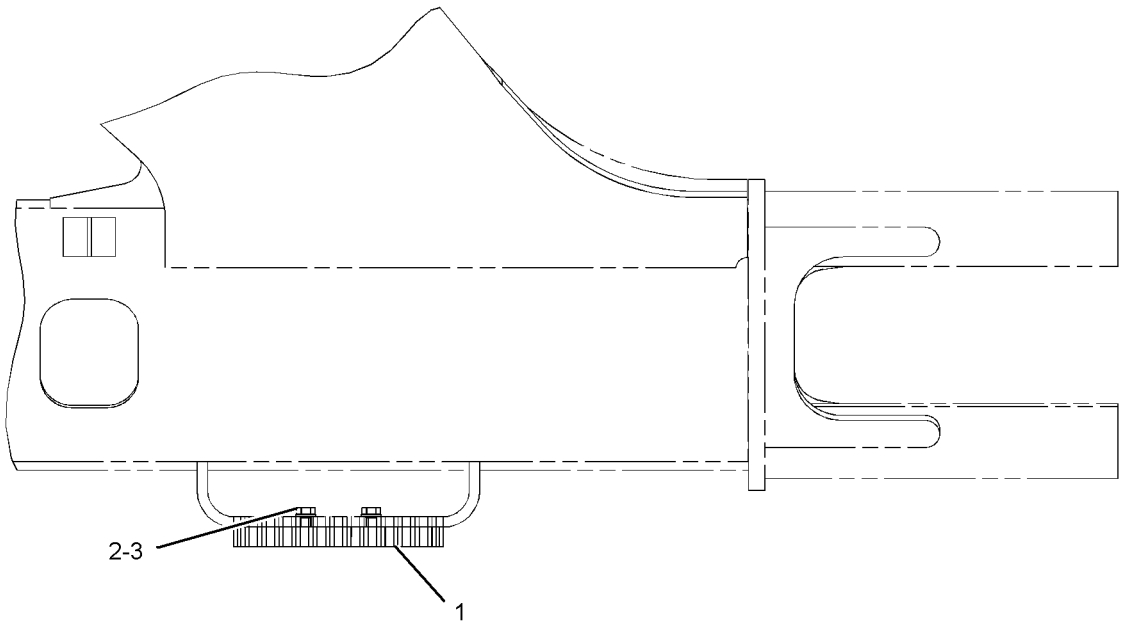

TOP VIEW

GRAPHIC #1 **<END>** g01150668

FRAME AND BODY

256-1830 SUPPORT AS-ENCLOSURE

S/N: MYG1-UP; PPN1-UP

PART OF 342-1068 HOOD & GUARD GP

SMCS-0635, 1801, 7076, 7251, 7263, 7267, 7272, 7276 **i02444296**

NOTE	REF NO	GRAPHIC REF	PART NUMBER	QTY	PART NAME 1 2 3 4 5 6 (PRODUCT LEVEL)	SEE PAGE
Z	1	1		1	SUPPORT AS	
	2	1	**256-1841**	1	LINER	
	3	1	**259-3595**	1	INSULATION	
D	4	1	**101-9848**		SEAL (1.3-M)	

D-ORDER BY THE METER
Z-NOT SERVICED SEPARATELY

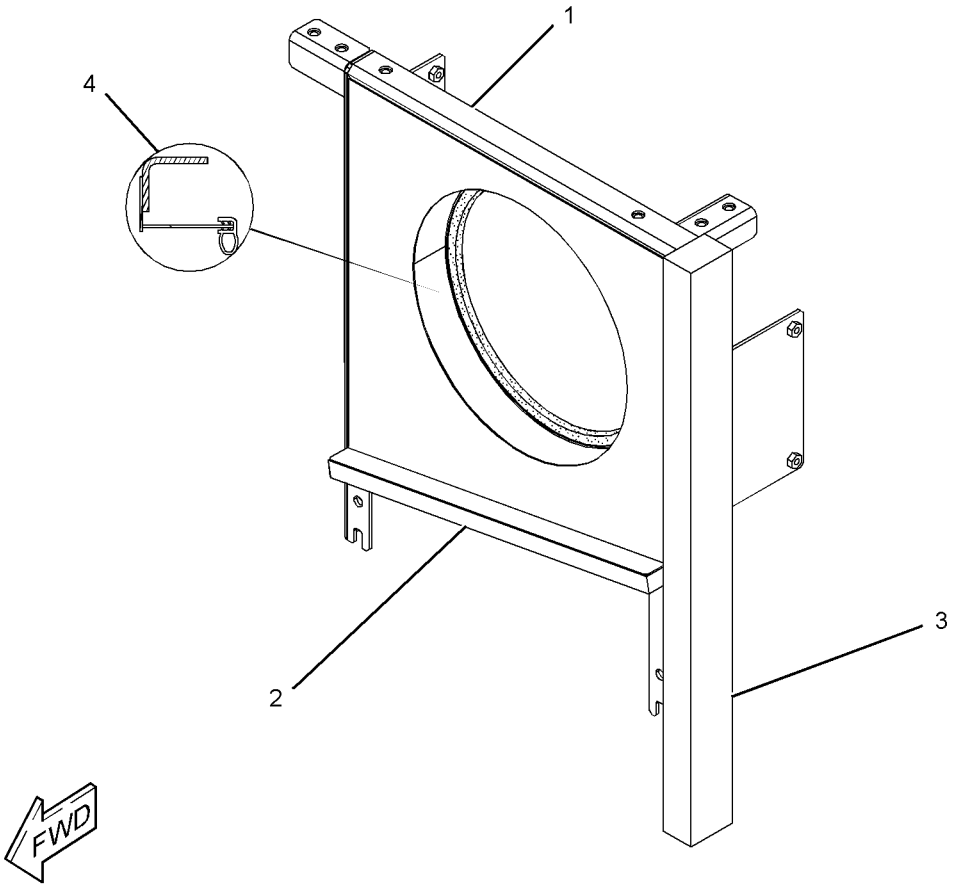

GRAPHIC #1 **<END>** g01236570

262-2555 SUPPORT AS-ENCLOSURE

S/N: MYG1-UP; PPN1-UP

PART OF 342-1068 HOOD & GUARD GP

SMCS-0635, 1801, 7076, 7251, 7263, 7267, 7272, 7276 **i03450400**

NOTE	REF NO	GRAPHIC REF	PART NUMBER	QTY	PART NAME 1 2 3 4 5 6 (PRODUCT LEVEL)	SEE PAGE
	1	1	**270-9789**	1	INSULATION	
	2	1	**262-2556**	1	INSULATION	
	3	1	**262-2557**	1	INSULATION	
	4	1	**270-9787**	1	INSULATION	
	5	1	**270-9788**	1	INSULATION	

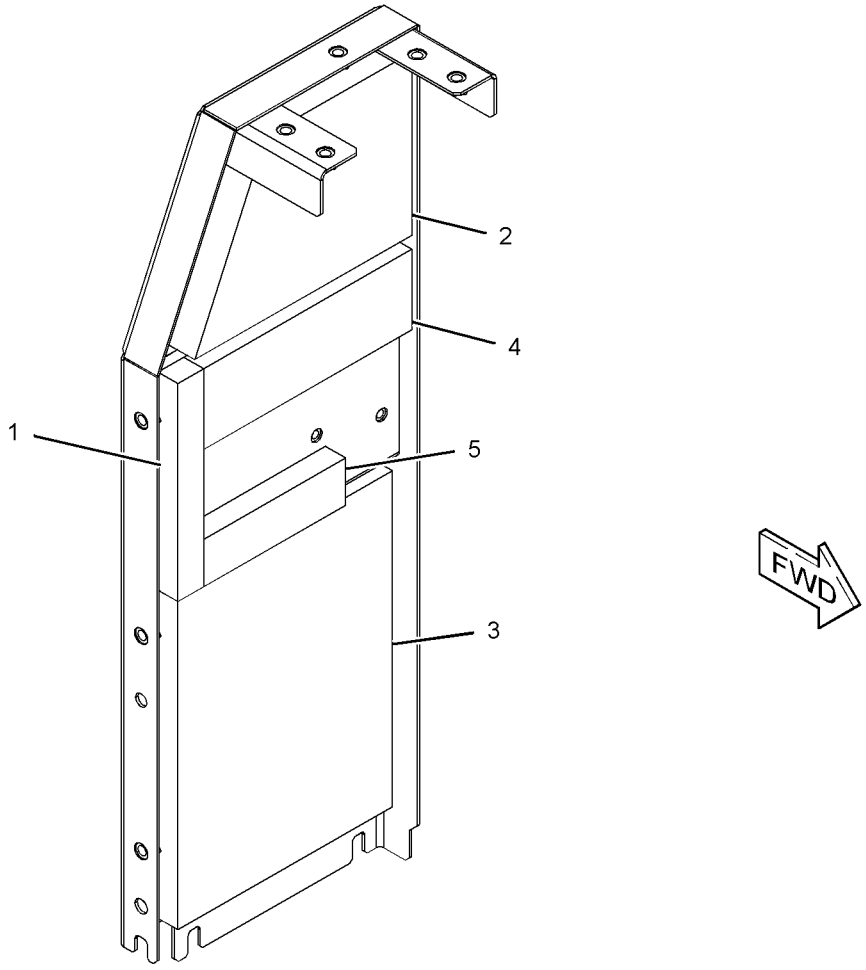

GRAPHIC #1

<END>

g01795856

293-6934 SUPPORT AS-ENCLOSURE

S/N: MYG1-UP; PPN1-UP
PART OF 293-6985 HOOD GP
AN ATTACHMENT

SMCS-0635, 1801, 7076, 7251, 7263, 7267, 7272, 7276 **i02898220**

NOTE	REF NO	GRAPHIC REF	PART NUMBER	QTY	PART NAME 1 2 3 4 5 6 (PRODUCT LEVEL)	SEE PAGE
	1	1	**262-2556**	1	INSULATION	
	2	1	**262-2557**	1	INSULATION	
	3	1	**270-9787**	1	INSULATION	
	4	1	**270-9788**	1	INSULATION	
	5	1	**270-9789**	1	INSULATION	
	6	1	**293-6935**	1	SUPPORT AS	

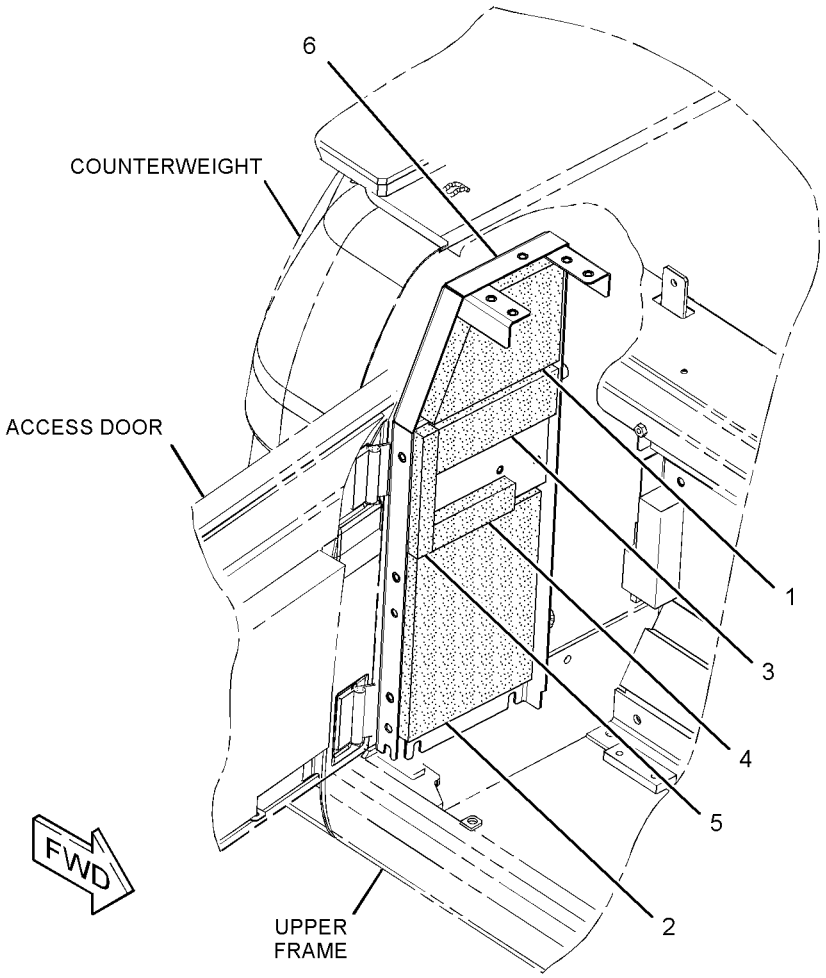

GRAPHIC #1 **<END>** g01482434

330-1408 SUPPORT AS-ENCLOSURE

S/N: MYG1-UP; PPN1-UP

PART OF 342-1068 HOOD & GUARD GP

SMCS-0635, 1801, 7076, 7251, 7263, 7267, 7272, 7276 **i03565820**

NOTE	REF NO	GRAPHIC REF	PART NUMBER	QTY	PART NAME 1 2 3 4 5 6 (PRODUCT LEVEL)	SEE PAGE
	1	1	**259-3609**	1	LINER	
	2	1	**259-3610**	1	LINER	
	3	1	**262-2559**	1	INSULATION	
	5	1	**330-1411**	1	INSULATION	
D	6	1	**101-9848**	1	SEAL (0.6-M)	

D-ORDER BY THE METER

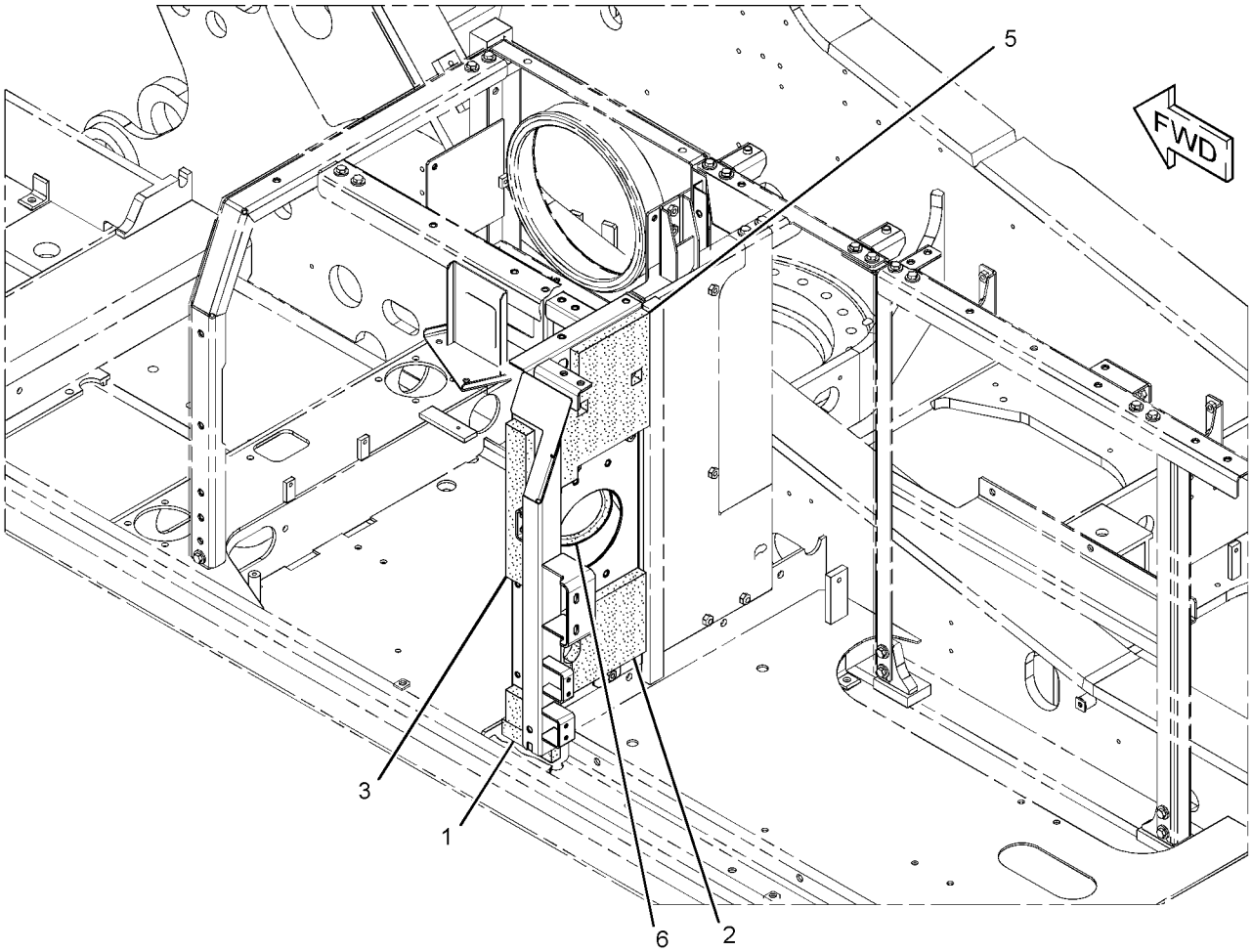

GRAPHIC #1 **<END>** g01890436

330-1444 SUPPORT AS-ENCLOSURE

S/N: MYG1-UP; PPN1-UP
PART OF 342-1070 HOOD GP
AN ATTACHMENT

SMCS-0635, 1801, 7076, 7251, 7263, 7267, 7272, 7276 **i03171005**

NOTE	REF NO	GRAPHIC REF	PART NUMBER	QTY	PART NAME 1 2 3 4 5 6 (PRODUCT LEVEL)	SEE PAGE
	1	1	**259-3609**	1	LINER	
	2	1	**262-2559**	1	INSULATION	
	3	1	**330-1447**	1	INSULATION	

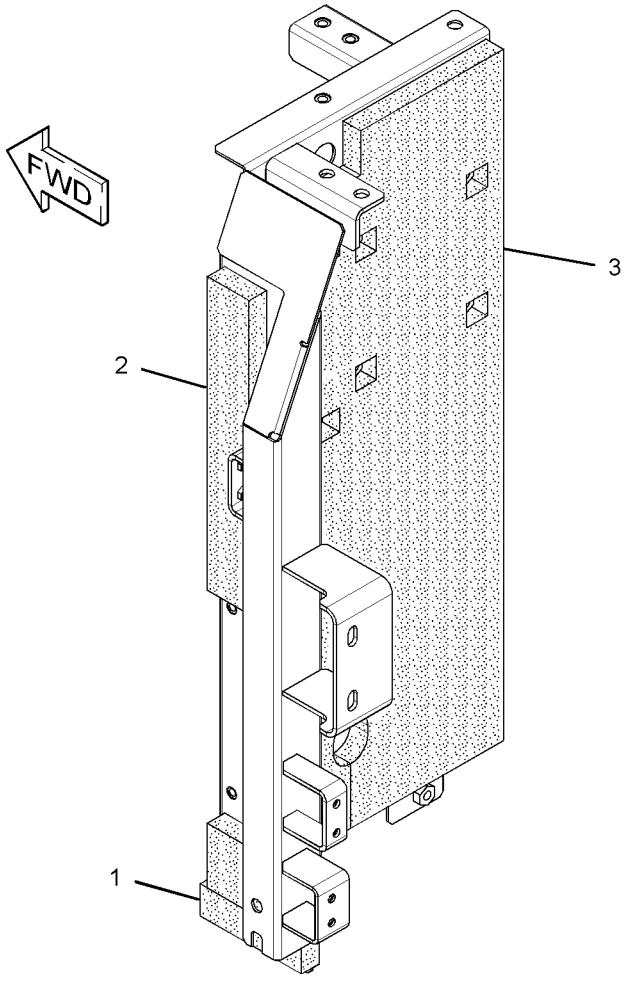

GRAPHIC #1 **<END>** g01618959

UNDERCARRIAGE

297-9151 ADJUSTMENT GP-HYDRAULIC TRACK

S/N: MYG1-UP; PPN1-UP

PART OF 239-4320 IDLER GP-FRONT

SMCS-4157 **i02961176**

NOTE	REF NO	GRAPHIC REF	PART NUMBER	QTY	PART NAME 1 2 3 4 5 6 (PRODUCT LEVEL)	SEE PAGE
	1	1	**2S-5926**	1	VALVE-RELIEF (TRACK TENSION CYLINDER)	
	2	1	**095-2927**	1	VALVE-FILL (TRACK TENSION CYLINDER)	
	3	1	**113-2824**	1	PLATE AS	
	3A	1	**4B-4158**	4	SCREW-DRIVE (NO 4X0.25-IN)	
	3B	1	**253-1346**	1	PLATE-WARNING (HIGH PRESSURE CYLINDER)	
	3C	1	**113-2825**	1	PLATE	
	4	1	**179-3044**	1	CYLINDER	
	5	1	**179-3046**	1	SEAL-LIP TYPE	
	6	1	**179-3047**	2	RING-BACKUP (BLACK)	
	7	1	**179-3048**	2	RING-BACKUP (BROWN)	
	8	1	**248-7177**	2	SEAL-O-RING	
	9	1	**297-9156**	1	PISTON	
M	10	1	**8T-4191**	2	BOLT (M10X1.5X16-MM)	

M-METRIC PART

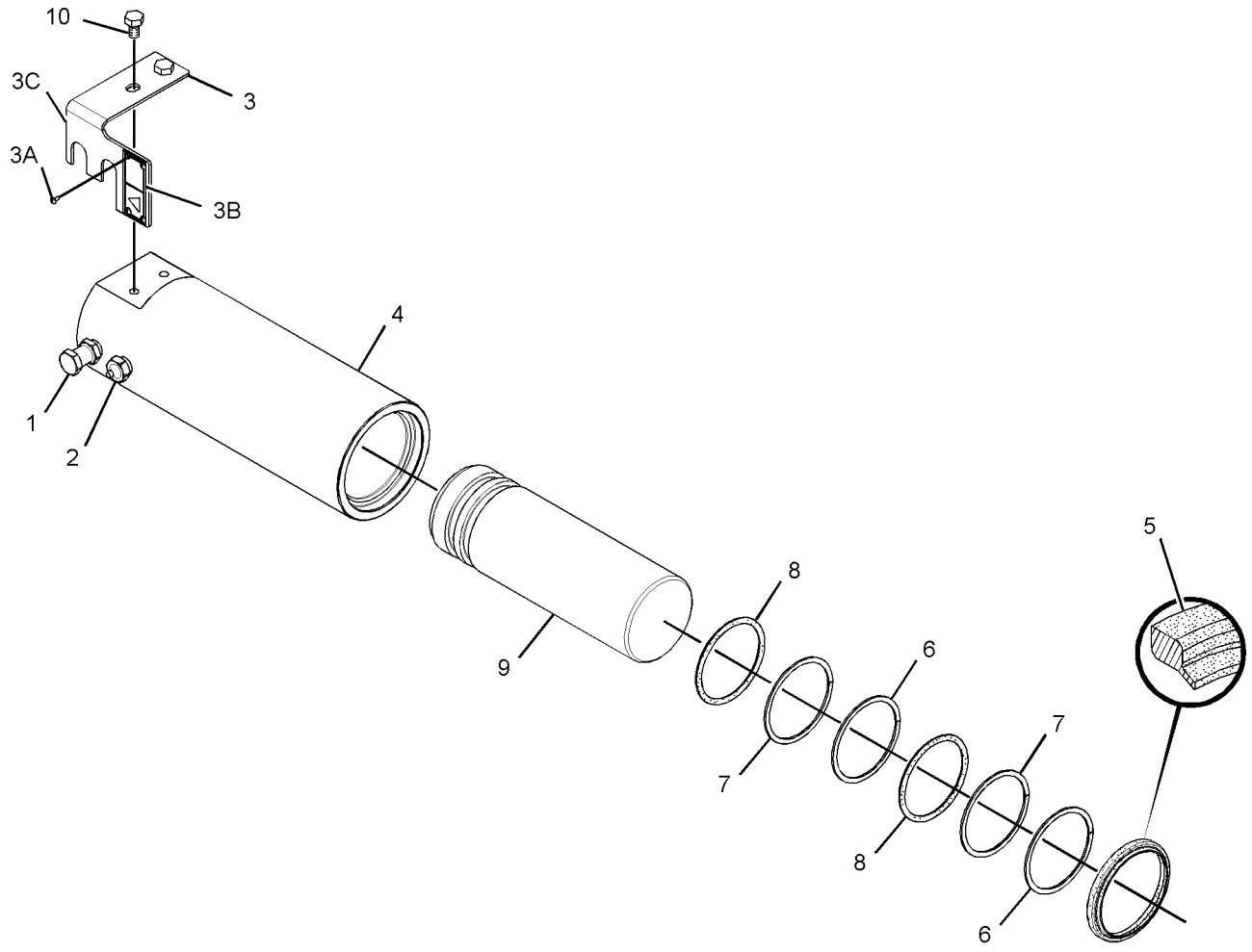

GRAPHIC #1 **<END>** g01481242

UNDERCARRIAGE

229-1898 FRAME AR-UNDERCARRIAGE

S/N: PPN1-UP

PART OF 343-1142 GENERAL AR

SMCS-4151 **i03278621**

NOTE	PART NUMBER	QTY	PART NAME 1 2 3 4 5 6 (PRODUCT LEVEL)	SEE PAGE
Y	**236-8335**	1	FRAME AS-UNDERCARRIAGE	371
Y	*227-6145*	1	GEAR & BEARING GP-SWING	326
Y	*192-8302*	1	GUARD GP-TRACK GUIDE	376
Y	*241-7333*	1	GUARD GP-TRAVEL MOTOR	377
Y	*239-4320*	1	IDLER GP-FRONT	380
Y	*176-4853*	1	ROLLER AR-TRACK & CARRIER	384

Y-SEPARATE ILLUSTRATION

<END>

240-3887 FRAME AR-UNDERCARRIAGE

S/N: MYG1-UP

PART OF 343-1143 GENERAL AR

SMCS-4151 **i02656712**

NOTE	PART NUMBER	QTY	PART NAME 1 2 3 4 5 6 (PRODUCT LEVEL)	SEE PAGE
Y	**236-8336**	1	FRAME AS-UNDERCARRIAGE	373
Y	*227-6145*	1	GEAR & BEARING GP-SWING	326
Y	*192-8302*	1	GUARD GP-TRACK GUIDE	376
Y	*241-7333*	1	GUARD GP-TRAVEL MOTOR	377
Y	*239-4320*	1	IDLER GP-FRONT	380
Y	*176-4853*	1	ROLLER AR-TRACK & CARRIER	384

Y-SEPARATE ILLUSTRATION

<END>

UNDERCARRIAGE

236-8335 FRAME AS-UNDERCARRIAGE

S/N: PPN1-UP

PART OF 229-1898 FRAME AR-UNDERCARRIAGE

SMCS-4150, 7062 **i03278622**

NOTE	REF NO	GRAPHIC REF	PART NUMBER	QTY	PART NAME 1 2 3 4 5 6 (PRODUCT LEVEL)	SEE PAGE
	1	1	*315-7670*	1	FRAME AS-TRACK ROLLER (LH)	
	1A	1	**117-5372**	2	BRACKET	
	1B	1	**267-0120**	2	STEP	
	2	1	*315-7671*	1	FRAME AS-TRACK ROLLER (RH)	
	2A	1	**117-5372**	2	BRACKET	
	2B	1	**267-0120**	2	STEP	

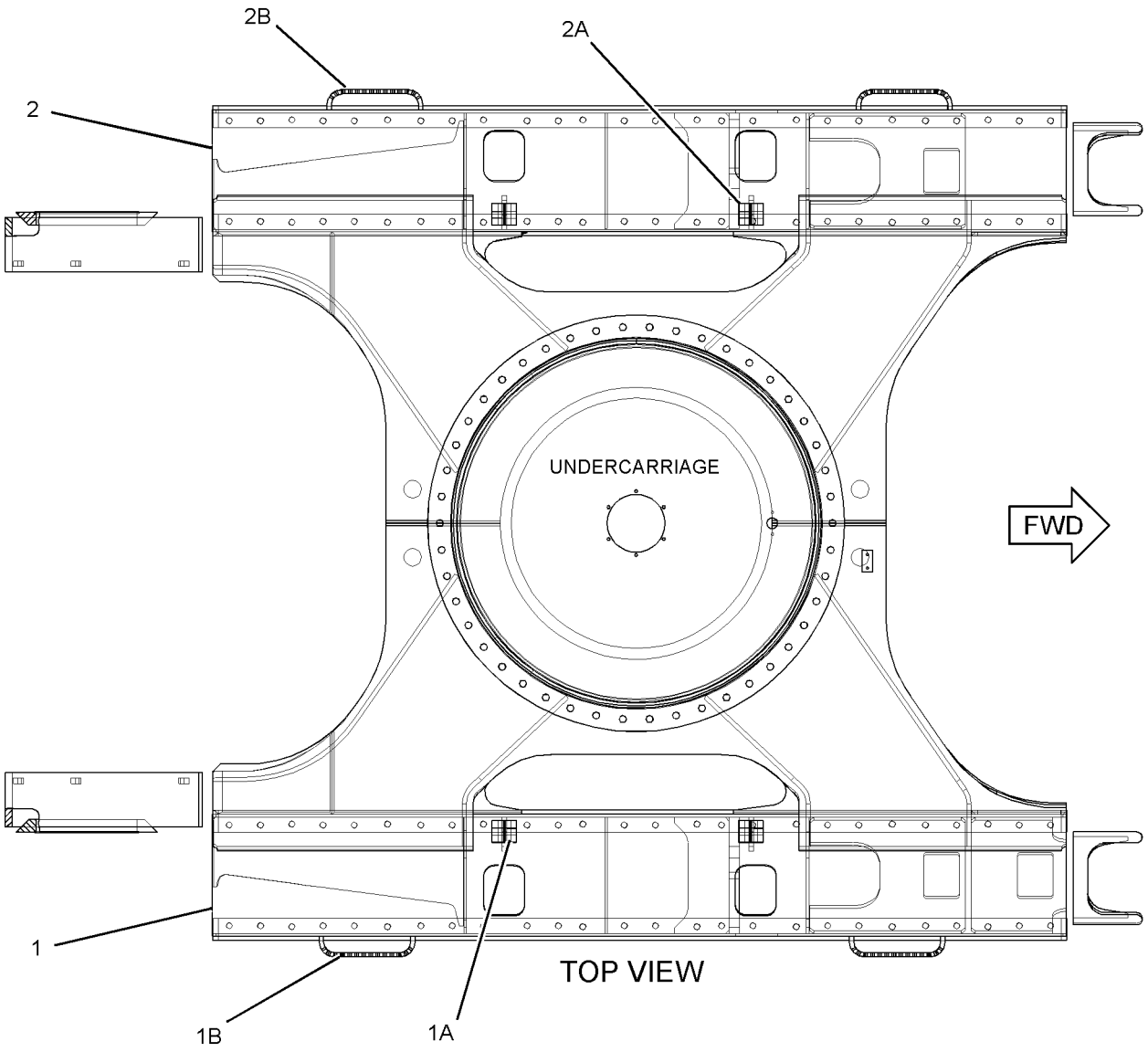

GRAPHIC #1 **<END>** g01677241

UNDERCARRIAGE

236-8336 FRAME AS-UNDERCARRIAGE

S/N: MYG1-UP

PART OF 240-3887 FRAME AR-UNDERCARRIAGE

SMCS-4150, 7062 **i02644157**

NOTE	REF NO	GRAPHIC REF	PART NUMBER	QTY	PART NAME 1 2 3 4 5 6 (PRODUCT LEVEL)	SEE PAGE
	1	1	*236-8338*	1	FRAME AS-TRACK ROLLER	
	1A	1	**117-5372**	2	BRACKET	
	1B	1	**267-0120**	2	STEP	
	2	1	*236-8339*	1	FRAME AS-TRACK ROLLER	
	2A	1	**117-5372**	2	BRACKET	
	2B	1	**267-0120**	2	STEP	

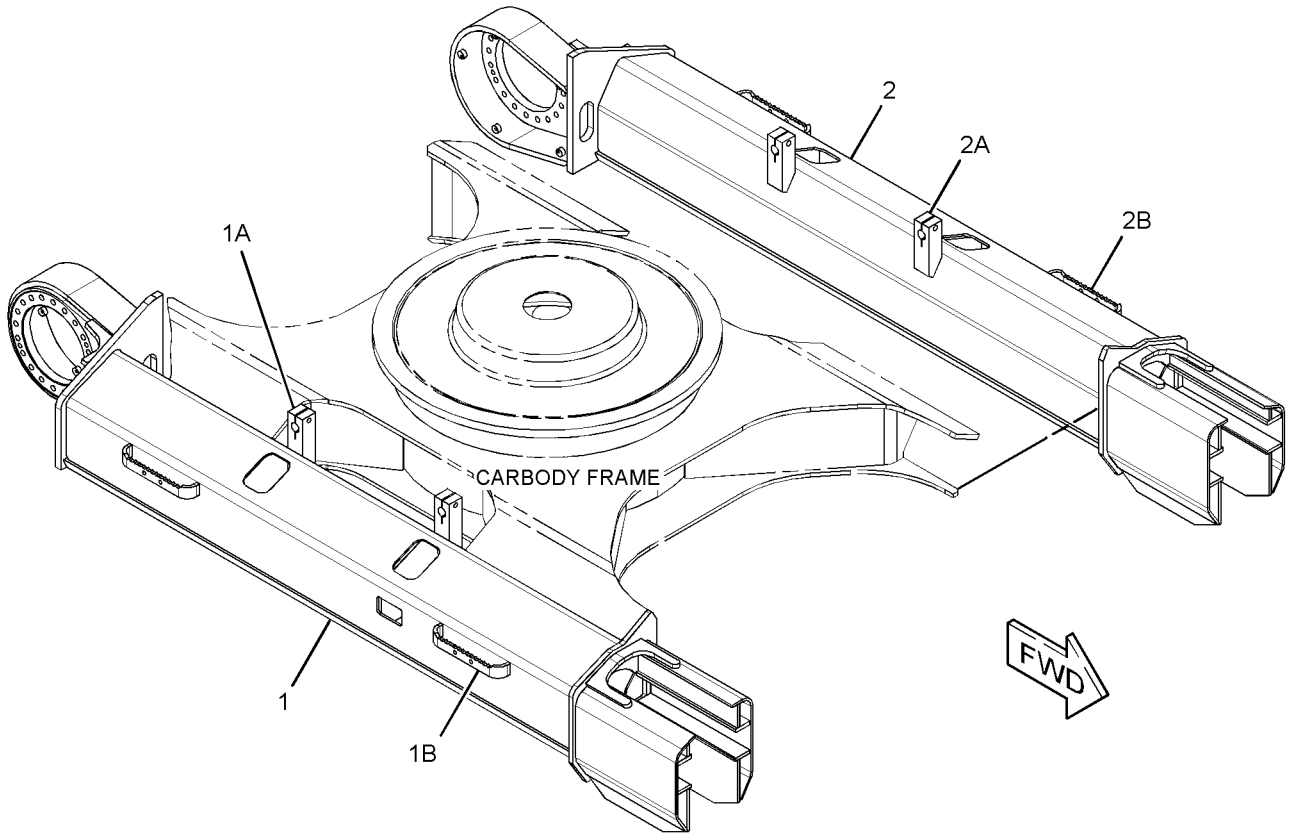

GRAPHIC #1 **<END>** g01333481

UNDERCARRIAGE

189-3860 GUARD GP-TRACK GUIDE—FULL LENGTH

S/N: MYG1-UP; PPN1-UP
PART OF 352-2663 DISTRIBUTION AR
AN ATTACHMENT

SMCS-4177 **i02790546**

NOTE	REF NO	GRAPHIC REF	PART NUMBER	QTY	PART NAME 1 2 3 4 5 6 (PRODUCT LEVEL)	SEE PAGE
	1	1	**105-6324**	16	SUPPORT AS	
	2	1	**189-3861**	4	GUARD AS-TRACK GUIDE	
	3	1	**189-3862**	4	GUARD AS-TRACK GUIDE	
	4	1	**192-8358**	16	PIPE	
M	5	1	**140-3048**	16	BOLT (M24X3X350-MM)	
	6	1	**8T-4167**	64	WASHER-HARD (26X44X4-MM THK)	
M	7	1	**8T-5379**	32	BOLT (M24X3X50-MM)	

QUANTITIES SHOWN ARE THOSE REQUIRED FOR BOTH LH AND RH SIDES
M-METRIC PART

189-3860 **GUARD GP-TRACK GUIDE** *(contd.)* **i02790546**

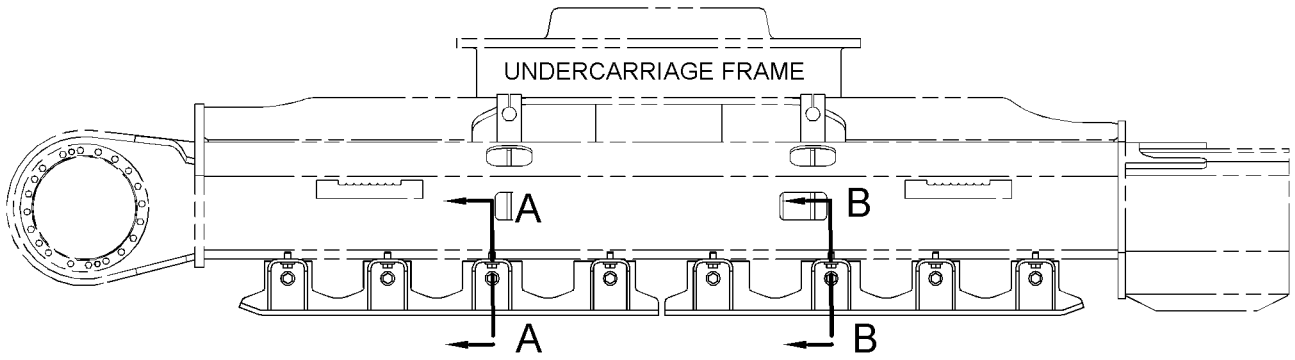

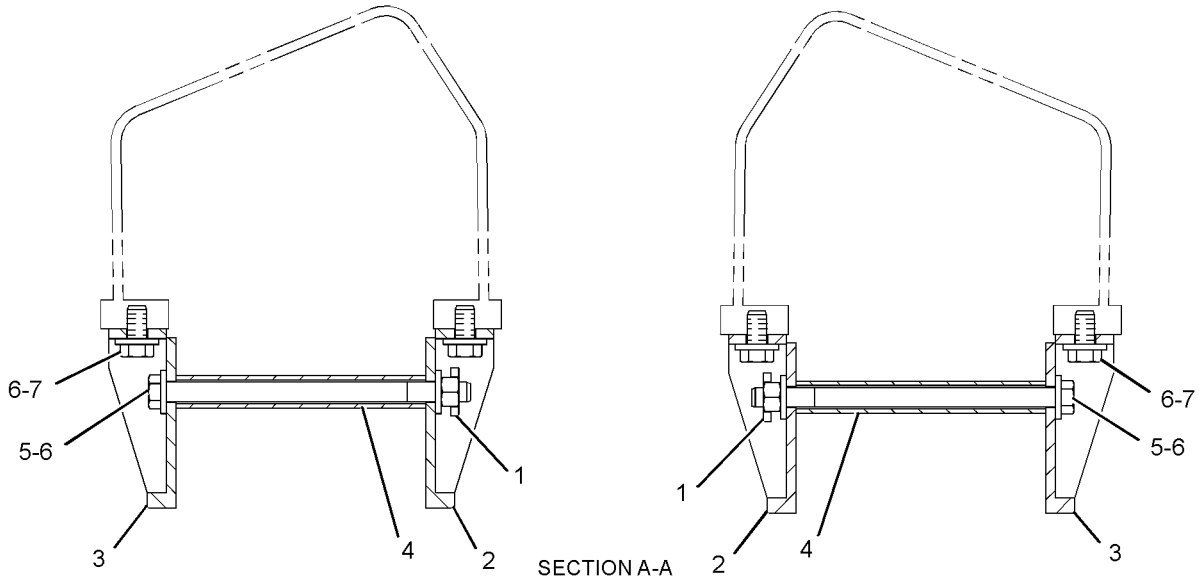

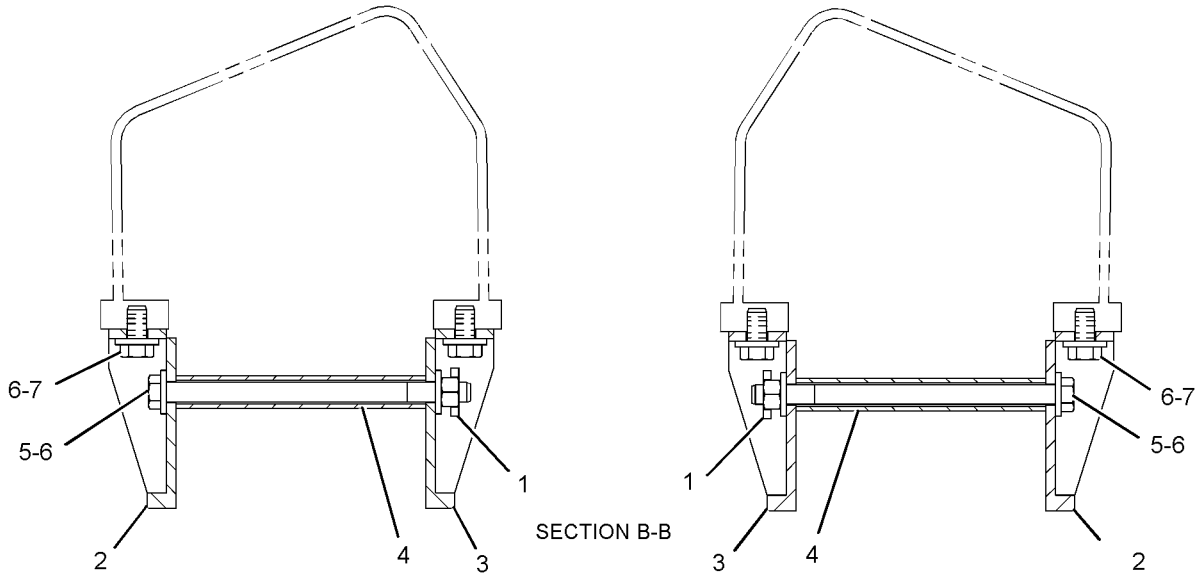

GRAPHIC #1 **<END>** g01394239

192-8302 GUARD GP-TRACK GUIDE–CENTER

S/N: MYG1-UP; PPN1-UP

PART OF 229-1898, 240-3887 FRAME AR-UNDERCARRIAGE

SMCS-4177 **i01755923**

NOTE	REF NO	GRAPHIC REF	PART NUMBER	QTY	PART NAME 1 2 3 4 5 6 (PRODUCT LEVEL)	SEE PAGE
	1	1	**192-8303**	2	GUARD AS-TRACK GUIDE	
M	2	1	**8T-5379**	8	BOLT (M24X3X50MM)	
	3	1	**8T-4167**	8	WASHER-HARD (26X44X4MM THK)	

QUANTITIES SHOWN ARE THOSE REQUIRED FOR BOTH LH AND RH SIDES
M-METRIC PART

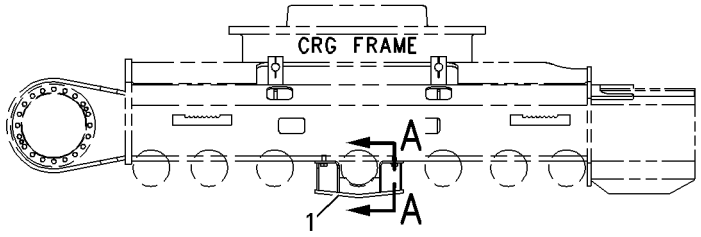

RIGHT SIDE VIEW

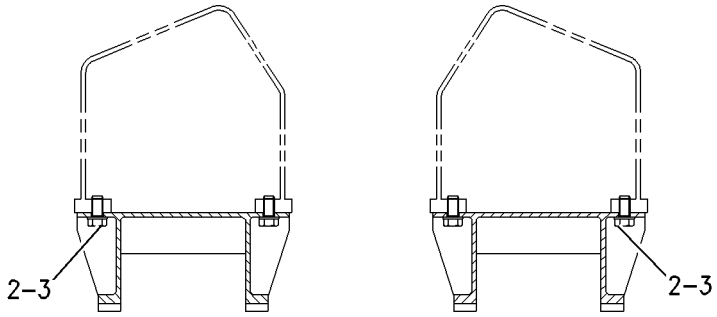

SECTION A-A

GRAPHIC #1 **<END>** g00898486

UNDERCARRIAGE

241-7333 GUARD GP-TRAVEL MOTOR

S/N: MYG1-UP; PPN1-UP

PART OF 229-1898, 240-3887 FRAME AR-UNDERCARRIAGE

SMCS-7163 **i02387850**

NOTE	REF NO	GRAPHIC REF	PART NUMBER	QTY	PART NAME 1 2 3 4 5 6 (PRODUCT LEVEL)	SEE PAGE
	1	1	**241-7334**	2	PLATE	
	2	1	**5P-1076**	10	WASHER-HARD (13.5X30X4-MM THK)	
M	3	1	**8C-8992**	10	BOLT-LOCKING (M12X1.75X30-MM)	

QUANTITIES SHOWN ARE THOSE REQUIRED FOR BOTH LH AND RH SIDES
M-METRIC PART

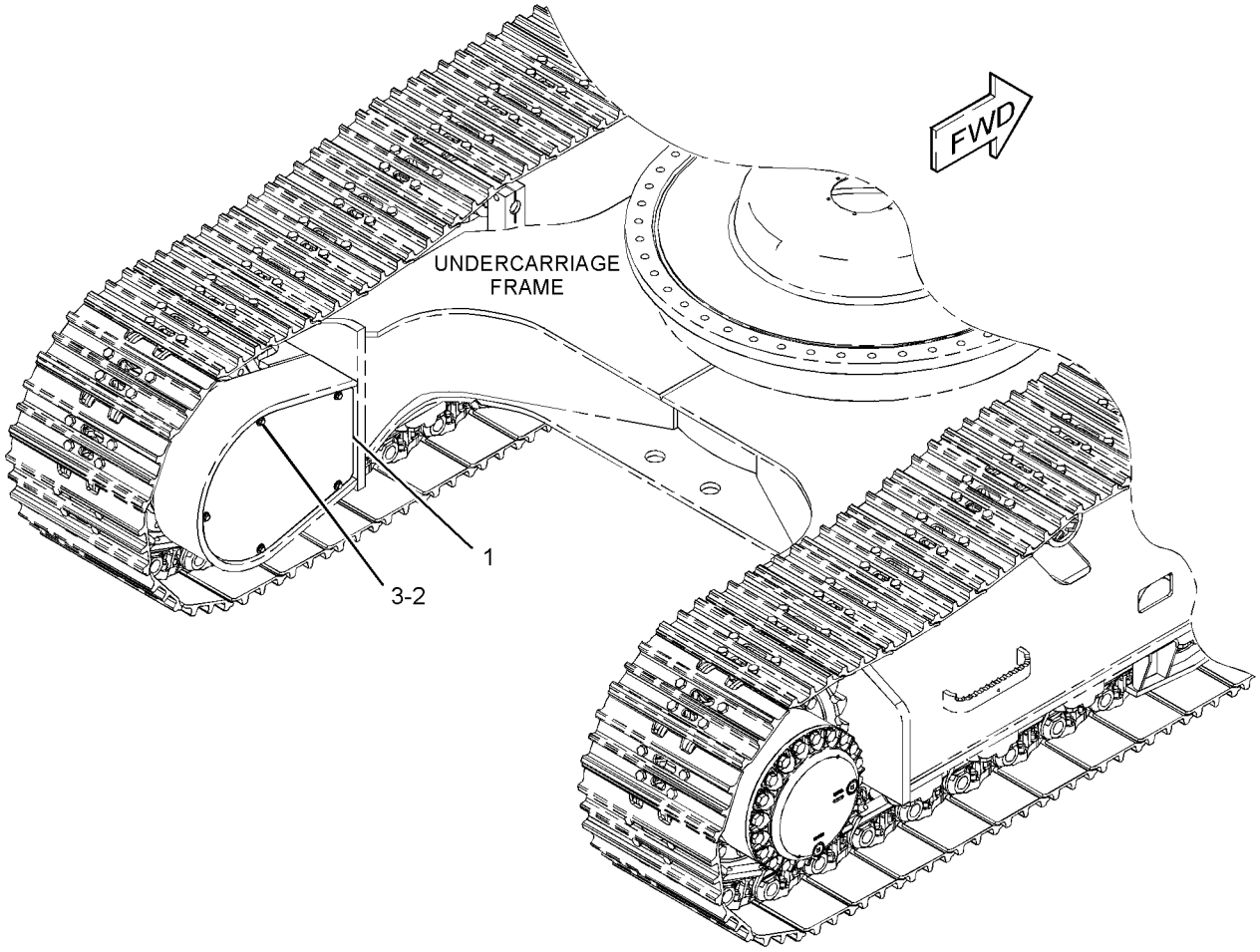

GRAPHIC #1 **<END>** g01199090

UNDERCARRIAGE

241-7335 GUARD GP-TRAVEL MOTOR—HEAVY-DUTY

S/N: MYG1-UP; PPN1-UP
PART OF 345-7583 OPTION AR-CONFIGURATION
AN ATTACHMENT

SMCS-7163 **i02388830**

NOTE	REF NO	GRAPHIC REF	PART NUMBER	QTY	PART NAME 1 2 3 4 5 6 (PRODUCT LEVEL)	SEE PAGE
	1	1	**241-7336**	1	COVER AS-ACCESS (LH) (LH)	
	2	1	**241-7337**	1	COVER AS-ACCESS (RH) (RH)	
	3	1	**5P-1076**	10	WASHER-HARD (13.5X30X4-MM THK)	
M	4	1	**8C-8992**	10	BOLT-LOCKING (M12X1.75X30-MM)	

QUANTITIES SHOWN ARE THOSE REQUIRED FOR BOTH LH AND RH SIDES
M-METRIC PART

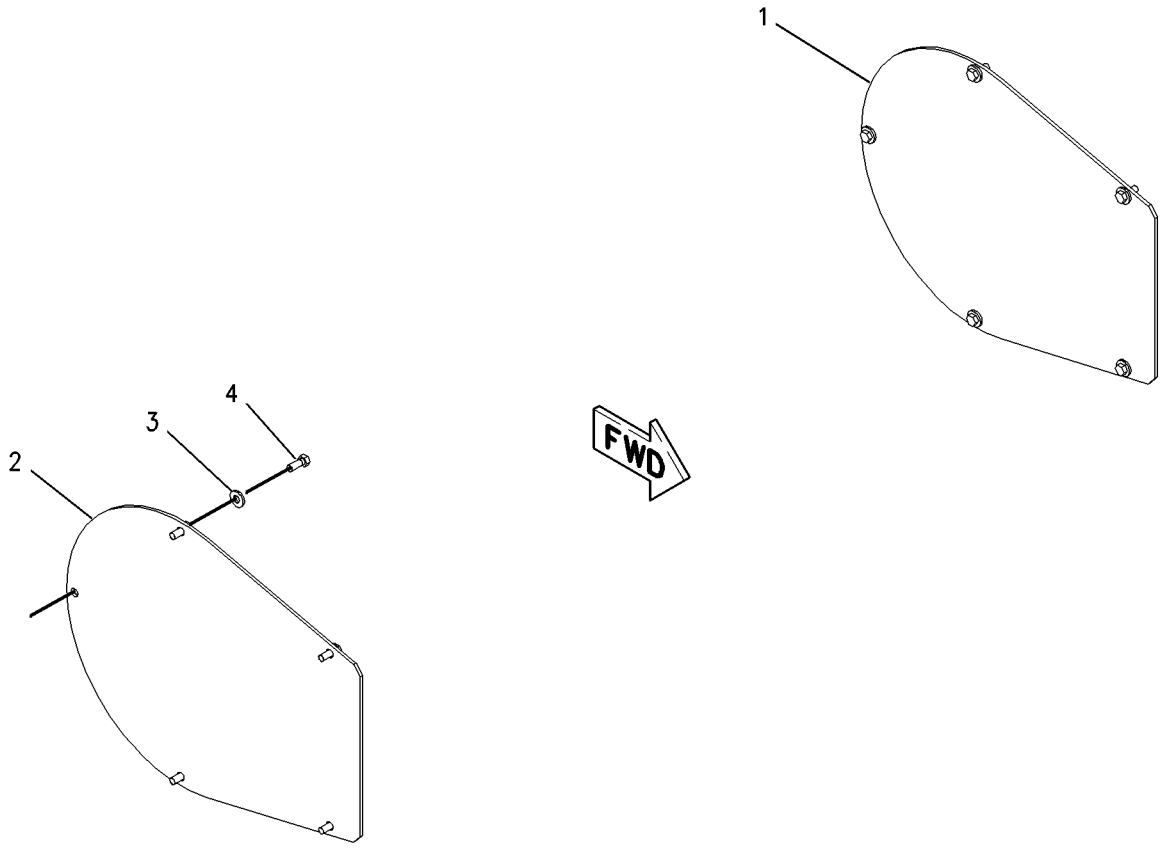

GRAPHIC #1 **<END>** g00850211

136-2422 IDLER GP-FRONT

S/N: MYG1-UP; PPN1-UP

PART OF 239-4321 IDLER GP-FRONT

SMCS-4159 **i01788897**

NOTE	REF NO	GRAPHIC REF	PART NUMBER	QTY	PART NAME 1 2 3 4 5 6 (PRODUCT LEVEL)	SEE PAGE
	1	1	**136-3847**	1	IDLER AS	
	2	1	**6Y-8023**	2	BEARING-IDLER	
	3	1	**109-0881**	2	SEAL GP-DUO-CONE	
					(EACH INCLUDES)	
		1	**5P-9120**	2	RING-SEALING	
	4	1	**1H-7339**	2	SEAL-O-RING	
	5	1	**6Y-8028**	1	SHAFT-IDLER	
	6	1	**115-3699**	2	BEARING-FRONT	
	7	1	**7H-3171**	1	PLUG-PIPE	
	8	1	**6Y-8029**	2	PIN-SPRING	

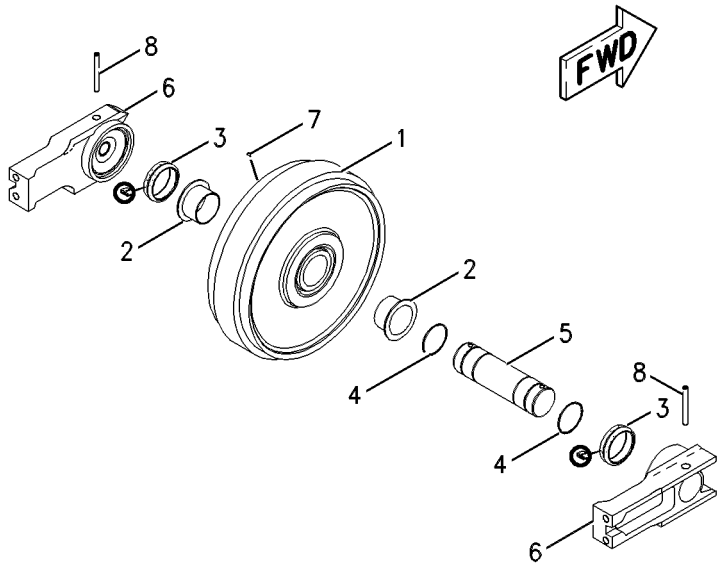

GRAPHIC #1 **<END>** g00519375

UNDERCARRIAGE

239-4320 IDLER GP-FRONT

S/N: MYG1-UP; PPN1-UP

PART OF 229-1898, 240-3887 FRAME AR-UNDERCARRIAGE

SMCS-4159 **i03021843**

NOTE	REF NO	GRAPHIC REF	PART NUMBER	QTY	PART NAME 1 2 3 4 5 6 (PRODUCT LEVEL)	SEE PAGE
CY	1	1	**297-9151**	2	ADJUSTMENT GP-HYDRAULIC TRACK	369
Y	2	1	*239-4321*	2	IDLER GP-FRONT	381
M	3	1	**7X-2563**	4	BOLT (M20X2.5X60-MM)	

C-CHANGE FROM PREVIOUS TYPE
M-METRIC PART
Y-SEPARATE ILLUSTRATION

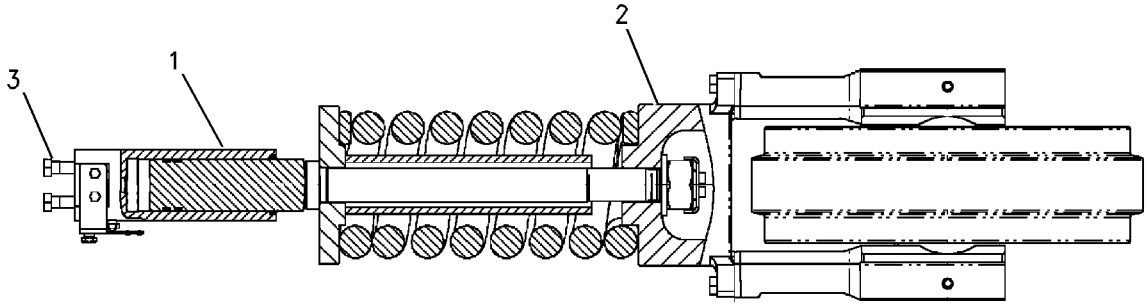

GRAPHIC #1 **<END>** g00837066

UNDERCARRIAGE

239-4321 IDLER GP-FRONT

S/N: MYG1-UP; PPN1-UP

PART OF 239-4320 IDLER GP-FRONT

SMCS-4159 **i02387847**

NOTE	REF NO	GRAPHIC REF	PART NUMBER	QTY	PART NAME 1 2 3 4 5 6 (PRODUCT LEVEL)	SEE PAGE
Y	1	1	**136-2422**	1	IDLER GP-FRONT	379
Y	2	1	*239-4322*	1	SPRING GP-RECOIL	389
M	3	1	**8T-6430**	4	BOLT (M20X2.5X50-MM)	

M-METRIC PART
Y-SEPARATE ILLUSTRATION

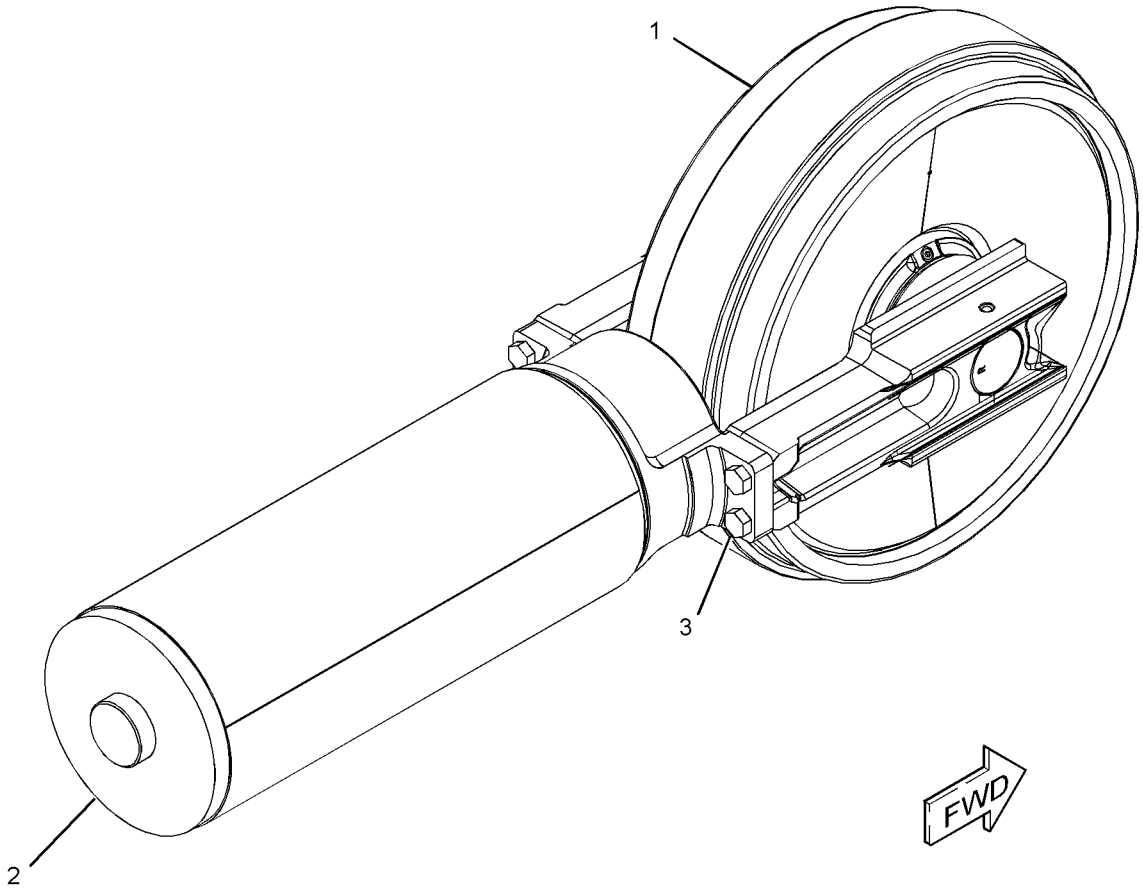

GRAPHIC #1 **<END>** g01196931

201-9119 LINK AS-TRACK

S/N: MYG1-UP; PPN1-UP
GREASE LUBRICATED TRACK
PART OF 203-0860, 203-0862, 216-4027, 241-0985, 260-9452 TRACK GP
AN ATTACHMENT

SMCS-4169, 4171 **i01536102**

NOTE	REF NO	GRAPHIC REF	PART NUMBER	QTY	PART NAME 1 2 3 4 5 6 (PRODUCT LEVEL)	SEE PAGE
	1	1	**6Y-2590**	48	LINK-TRACK (LH)	
	2	1	**095-7944**	1	PIN-COTTER	
	3	1	**118-7303**	1	LINK-TRACK MASTER (LH)	
	4	1	**201-0828**	1	BUSHING-TRACK MASTER	
	5	1	**118-7302**	1	LINK-TRACK MASTER (RH)	
	6	1	**188-3066**	1	PIN-TRACK MASTER	
	7	1	**179-3428**	2	SEAL-TRACK MASTER	
	8	1	**6Y-2589**	48	LINK-TRACK (RH)	
	9	1	**6Y-2751**	48	PIN-TRACK	
	10	1	**179-3426**	96	SEAL-TRACK	
	11	1	**201-0827**	48	BUSHING-TRACK	

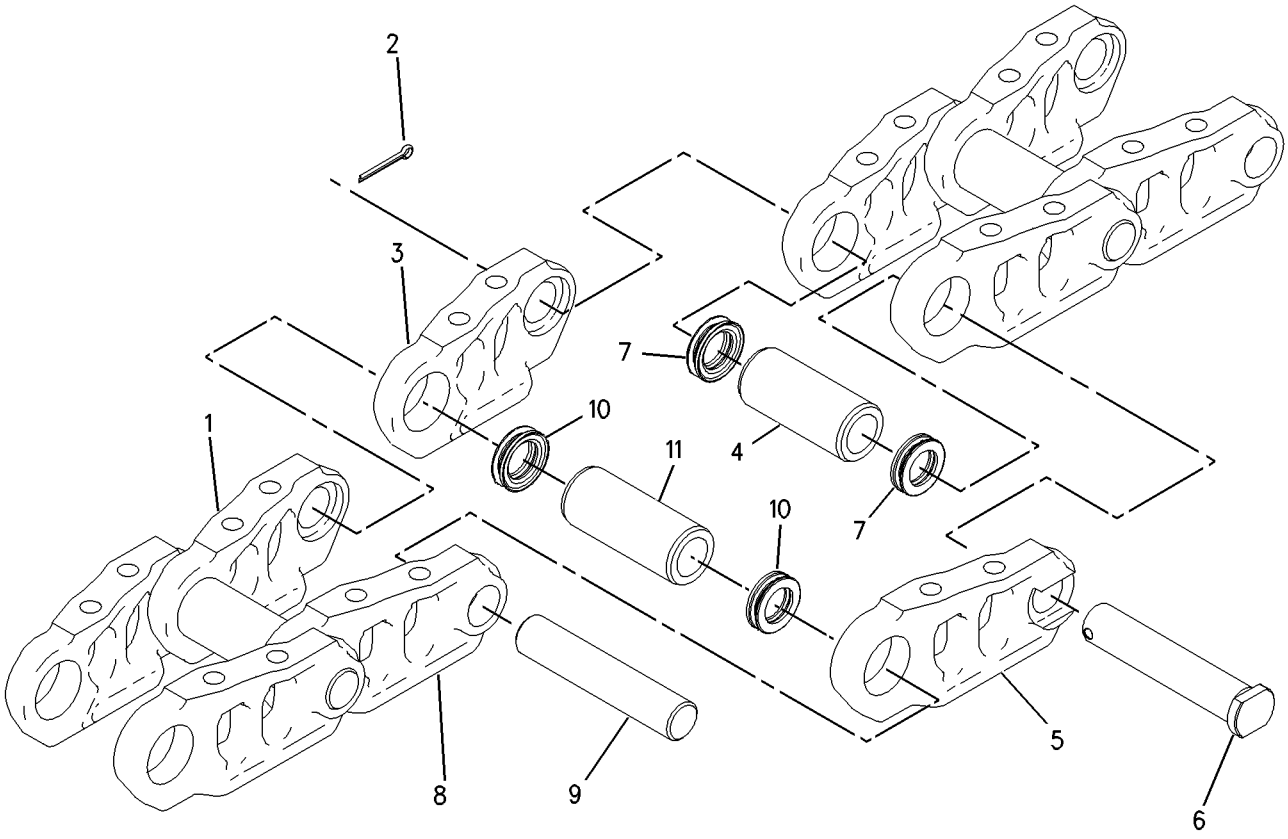

GRAPHIC #1 **<END>** g00793250

213-1971 LINK AS-TRACK—GREASE LUBRICATED

S/N: MYG1-UP; PPN1-UP

PART OF 331-7388, 347-2343, 347-2345, 347-2346 TRACK GP

AN ATTACHMENT

SMCS-4169, 4171 **i03674724**

NOTE	REF NO	GRAPHIC REF	PART NUMBER	QTY	PART NAME 1 2 3 4 5 6 (PRODUCT LEVEL)	SEE PAGE
	1	1	**201-0828**	1	BUSHING-TRACK MASTER	
	2	1	**321-1463**	48	BUSHING-TRACK	
	3	1	**6Y-2589**	49	LINK-TRACK (RH)	
	4	1	**6Y-2590**	49	LINK-TRACK (LH)	
	5	1	**6Y-2748**	1	PIN-TRACK MASTER	
	6	1	**6Y-2751**	48	PIN-TRACK	
	7	1	**179-3428**	2	SEAL-TRACK MASTER	
	8	1	**179-3426**	96	SEAL-TRACK	

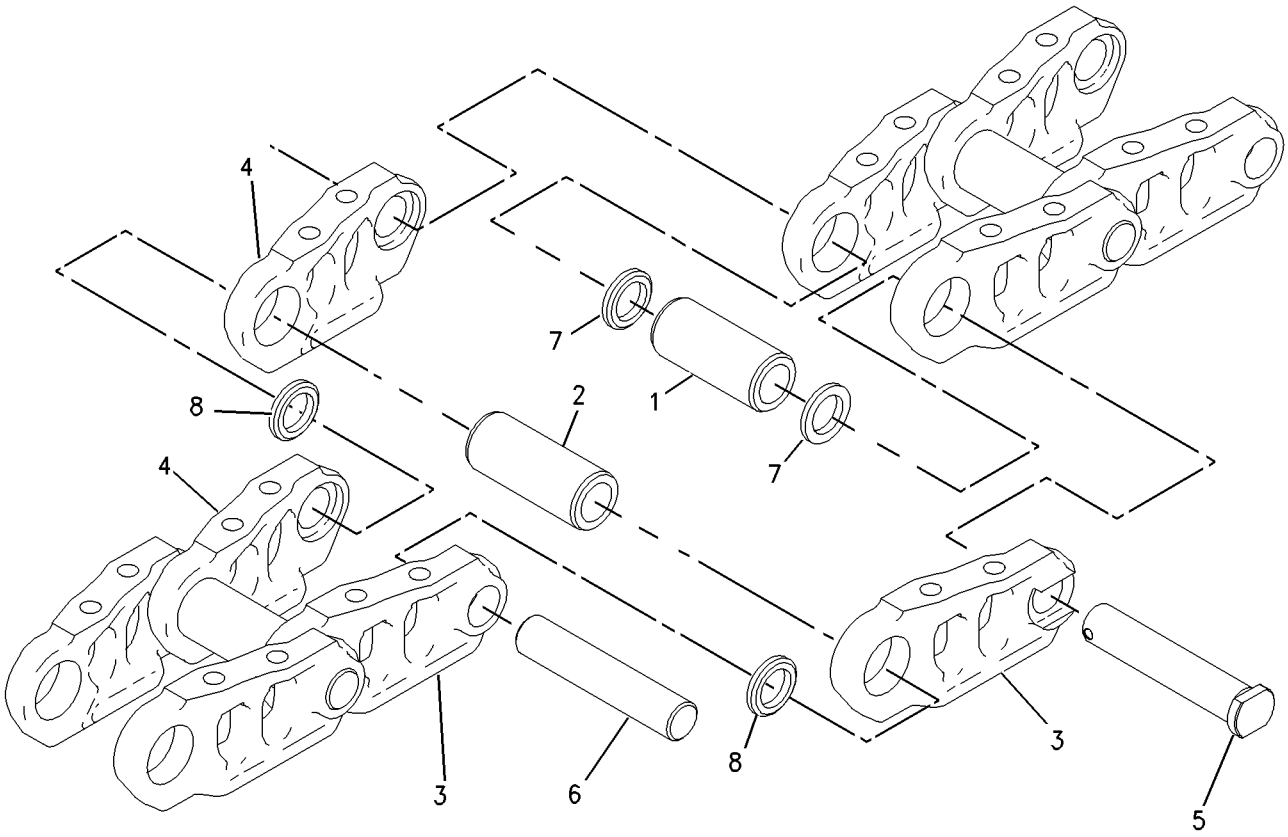

GRAPHIC #1 **<END>** g00936963

176-4853 ROLLER AR-TRACK & CARRIER

S/N: MYG1-UP; PPN1-UP

PART OF 229-1898, 240-3887 FRAME AR-UNDERCARRIAGE

SMCS-4154, 4180 **i02375317**

NOTE	REF NO	GRAPHIC REF	PART NUMBER	QTY	PART NAME 1 2 3 4 5 6 (PRODUCT LEVEL)	SEE PAGE
M	1	1	**7X-2577**	4	BOLT (M24X3X90-MM)	
Y	2	1	**6Y-5323**	4	ROLLER GP-TRACK CARRIER	386
YR	3	1	**179-1486**	18	ROLLER GP-TRACK-SINGLE FLANGE	387
M	4	1	**7X-2454**	72	BOLT (M24X3X110-MM)	
	5	1	**8T-4167**	72	WASHER-HARD (26X44X4-MM THK)	

QUANTITIES SHOWN ARE THOSE REQUIRED FOR BOTH LH AND RH SIDES
M-METRIC PART
R-REMFG PART MAY BE AVAILABLE
Y-SEPARATE ILLUSTRATION

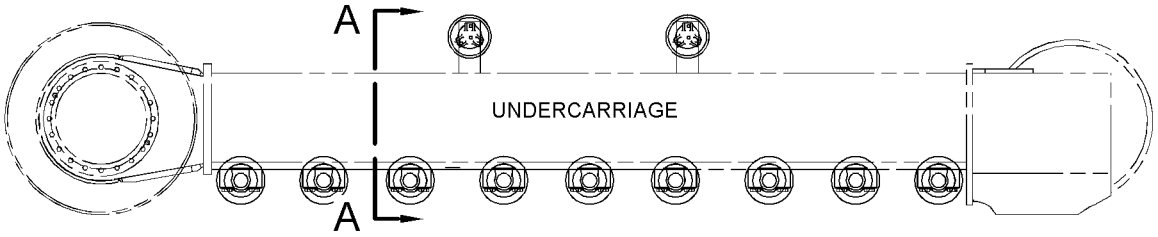

RIGHT SIDE VIEW

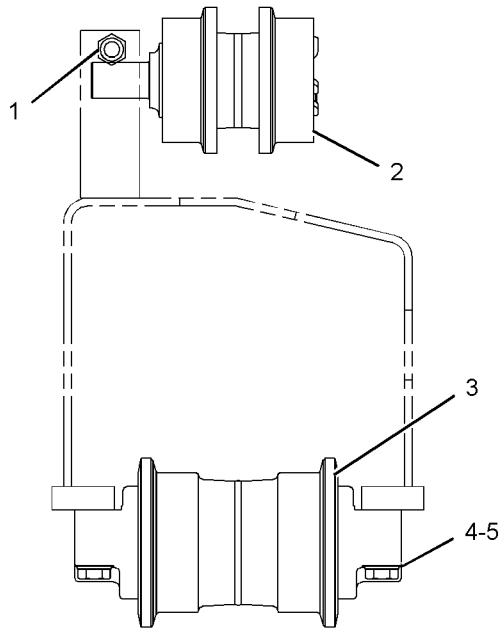

VIEW A-A

GRAPHIC #1 **<END>** g01193919

239-4352 ROLLER AR-TRACK & CARRIER

S/N: MYG1-UP; PPN1-UP
PART OF 345-7583 OPTION AR-CONFIGURATION
AN ATTACHMENT

SMCS-4154, 4180 **i02358156**

NOTE	REF NO	GRAPHIC REF	PART NUMBER	QTY	PART NAME 1 2 3 4 5 6 (PRODUCT LEVEL)	SEE PAGE
Y	1	1	**6Y-5323**	4	ROLLER GP-TRACK CARRIER	386
Y	2	1	**183-2874**	18	ROLLER GP-TRACK-SINGLE FLANGE	388
M	3	1	**7X-2454**	72	BOLT (M24X3X110-MM)	
M	4	1	**7X-2577**	4	BOLT (M24X3X90-MM)	
	5	1	**8T-4167**	72	WASHER-HARD (26X44X4-MM THK)	

QUANTITIES SHOWN ARE THOSE REQUIRED FOR BOTH LH AND RH SIDES
M-METRIC PART
Y-SEPARATE ILLUSTRATION

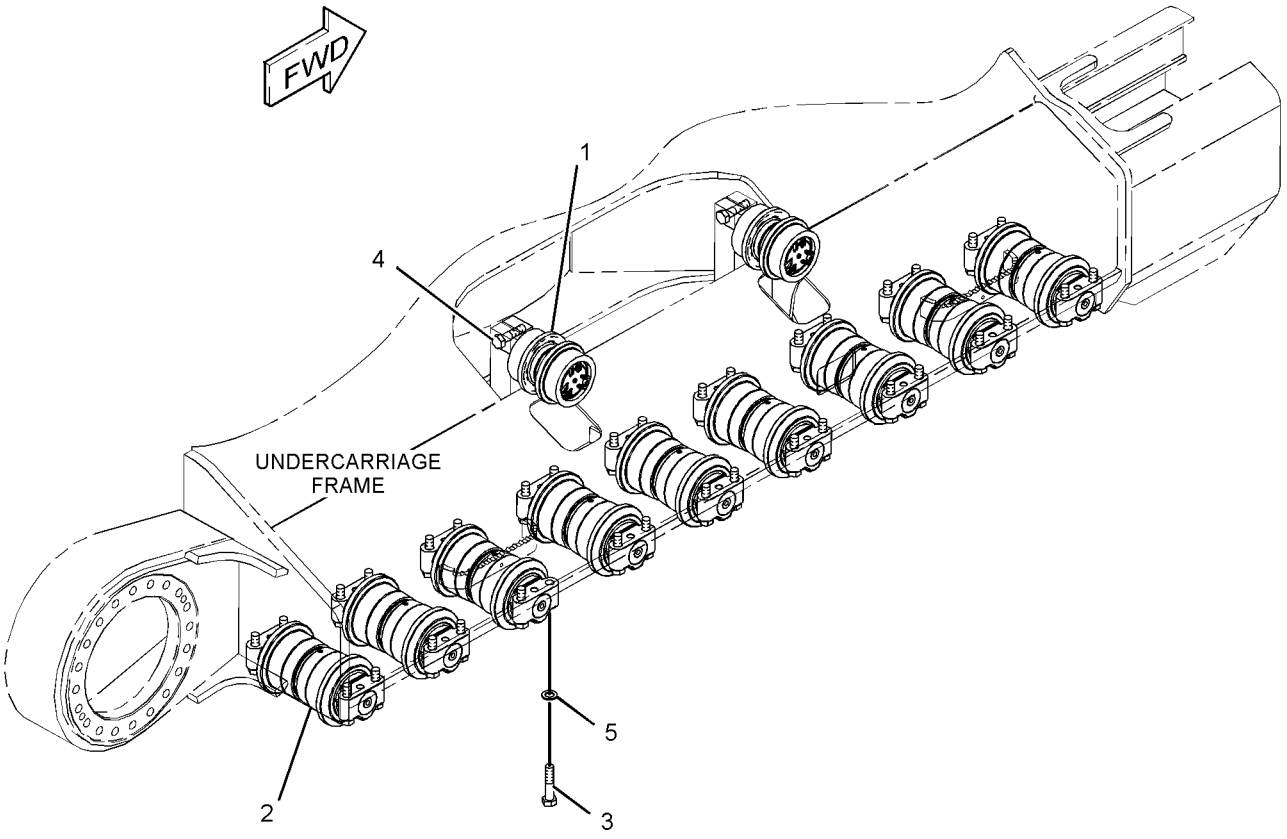

GRAPHIC #1 **<END>** g01201603

6Y-5323 ROLLER GP-TRACK CARRIER

S/N: MYG1-UP; PPN1-UP
PART OF 176-4853, 239-4352 ROLLER AR-TRACK & CARRIER
ALSO AN ATTACHMENT

SMCS-4154 **i01516587**

NOTE	REF NO	GRAPHIC REF	PART NUMBER	QTY	PART NAME 1 2 3 4 5 6 (PRODUCT LEVEL)	SEE PAGE
	1	1	**6Y-9858**	1	SHAFT AS-TRACK ROLLER	
	2	1	**179-1292**	1	SEAL GP-DUO-CONE	
		1	**1M-3097**	1	RING-SEALING	
	3	1	**6Y-9859**	1	ROLLER & BEARING AS	
	4	1	**6Y-9855**	1	BEARING-CARRIER ROLLER	
	5	1	**6Y-9856**	1	BEARING-CARRIER ROLLER	
	6	1	**5H-8848**	1	SEAL-O-RING	
M	7	1	**8T-1159**	5	BOLT-SOCKET HEAD (M10X1.5X25MM)	
	8	1	**6Y-8077**	1	COVER-CARRIER ROLLER	
	9	1	**7H-3171**	1	PLUG-PIPE	
	10	1	**6Y-8075**	1	RETAINER	
	11	1	**6Y-8076**	1	WASHER-THRUST	

M-METRIC PART

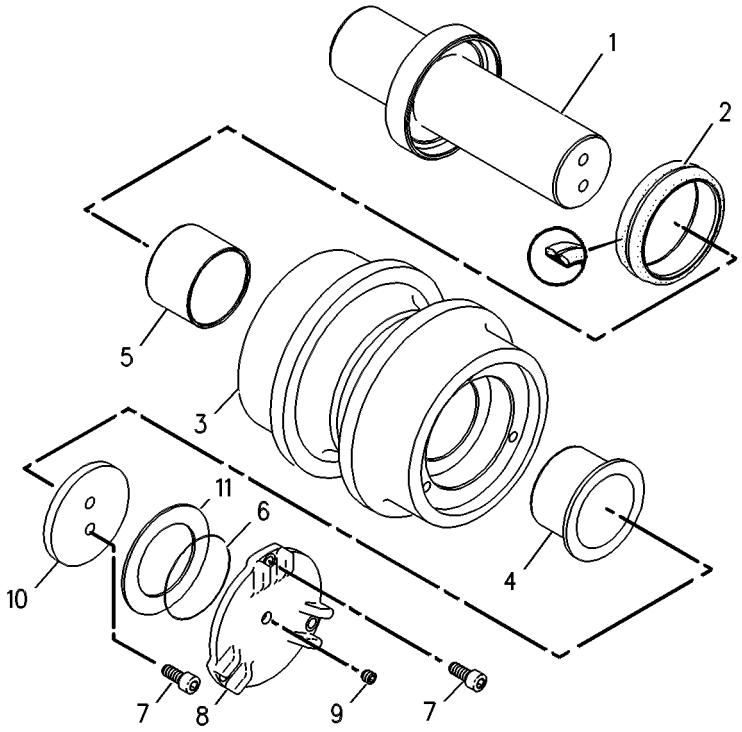

GRAPHIC #1 **<END>** g00266981

179-1486 ROLLER GP-TRACK-SINGLE FLANGE*R

S/N: MYG1-UP; PPN1-UP

PART OF 176-4853 ROLLER AR-TRACK & CARRIER

SMCS-4180 **i01241830**

NOTE	REF NO	GRAPHIC REF	PART NUMBER	QTY	PART NAME 1 2 3 4 5 6 (PRODUCT LEVEL)	SEE PAGE
	1	1	**8F-8882**	2	SEAL-O-RING	
	2	1	**9W-2146**	1	PLUG	
	3	1	**148-3533**	2	SEAL GP-DUO-CONE	
	4	1	**179-1488**	1	ROLLER & BEARING AS	
	4A	1	**6Y-2792**	2	BEARING	
	5	1	**179-1497**	2	COLLAR-TRACK ROLLER	
	6	1	**179-1498**	1	SHAFT-TRACK ROLLER	
	7	1	**179-1499**	2	DOWEL	

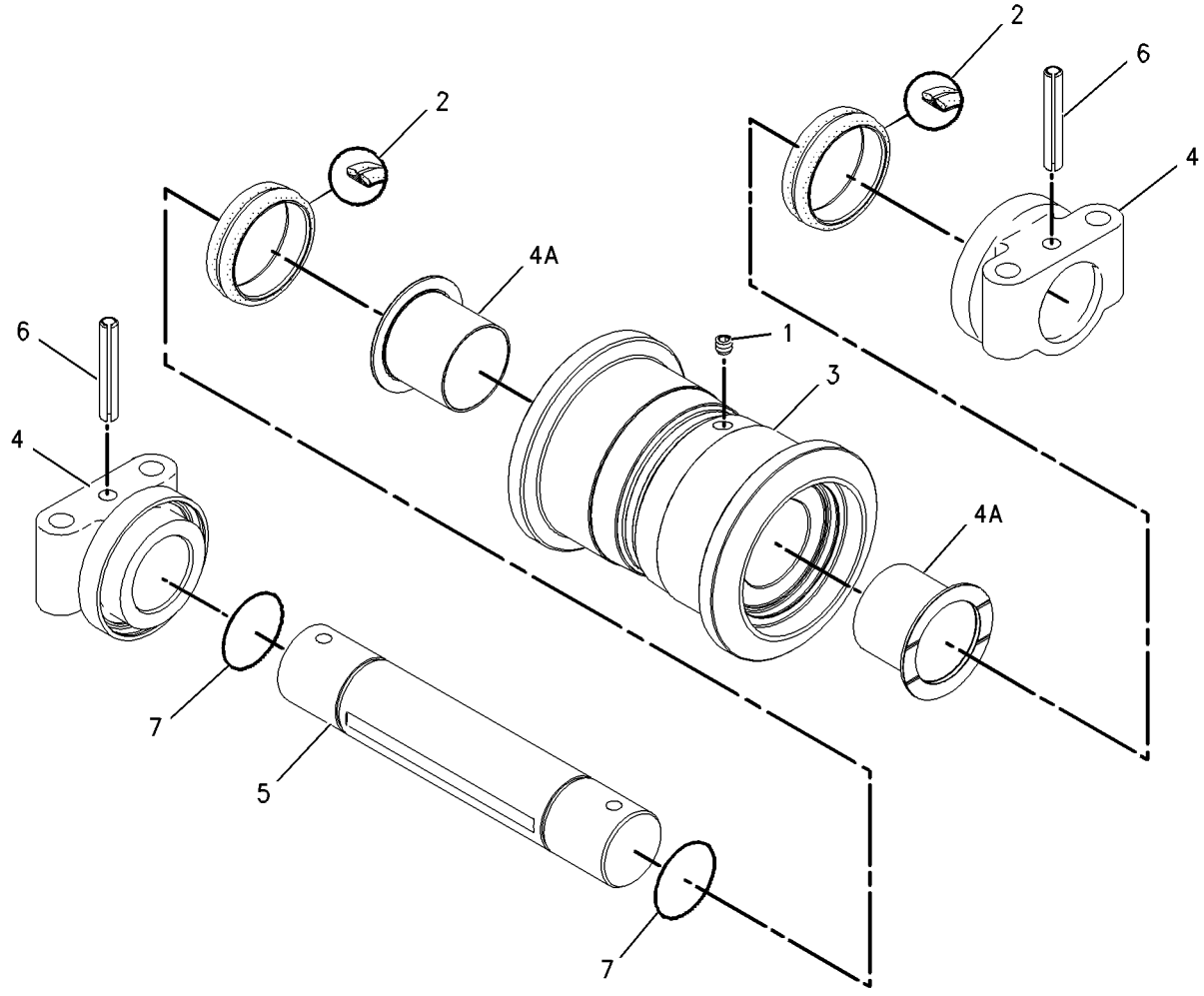

GRAPHIC #1 **<END>** g00684780

183-2874 ROLLER GP-TRACK-SINGLE FLANGE

S/N: MYG1-UP; PPN1-UP
PART OF 239-4352 ROLLER AR-TRACK & CARRIER
AN ATTACHMENT

SMCS-4180 **i01273568**

NOTE	REF NO	GRAPHIC REF	PART NUMBER	QTY	PART NAME 1 2 3 4 5 6 (PRODUCT LEVEL)	SEE PAGE
	1	1	**183-2875**	1	ROLLER & BEARING AS	
	1A	1	**6Y-2792**	2	BEARING	
	2	1	**9W-2146**	1	PLUG	
	3	1	**148-3533**	2	SEAL GP-DUO-CONE	
					(EACH INCLUDES)	
		1	**160-6631**	2	RING-TORIC	
	4	1	**179-1497**	2	COLLAR-TRACK ROLLER	
	5	1	**179-1499**	2	DOWEL	
	6	1	**183-2883**	1	SHAFT-TRACK ROLLER	
	7	1	**8F-8882**	2	SEAL-O-RING	

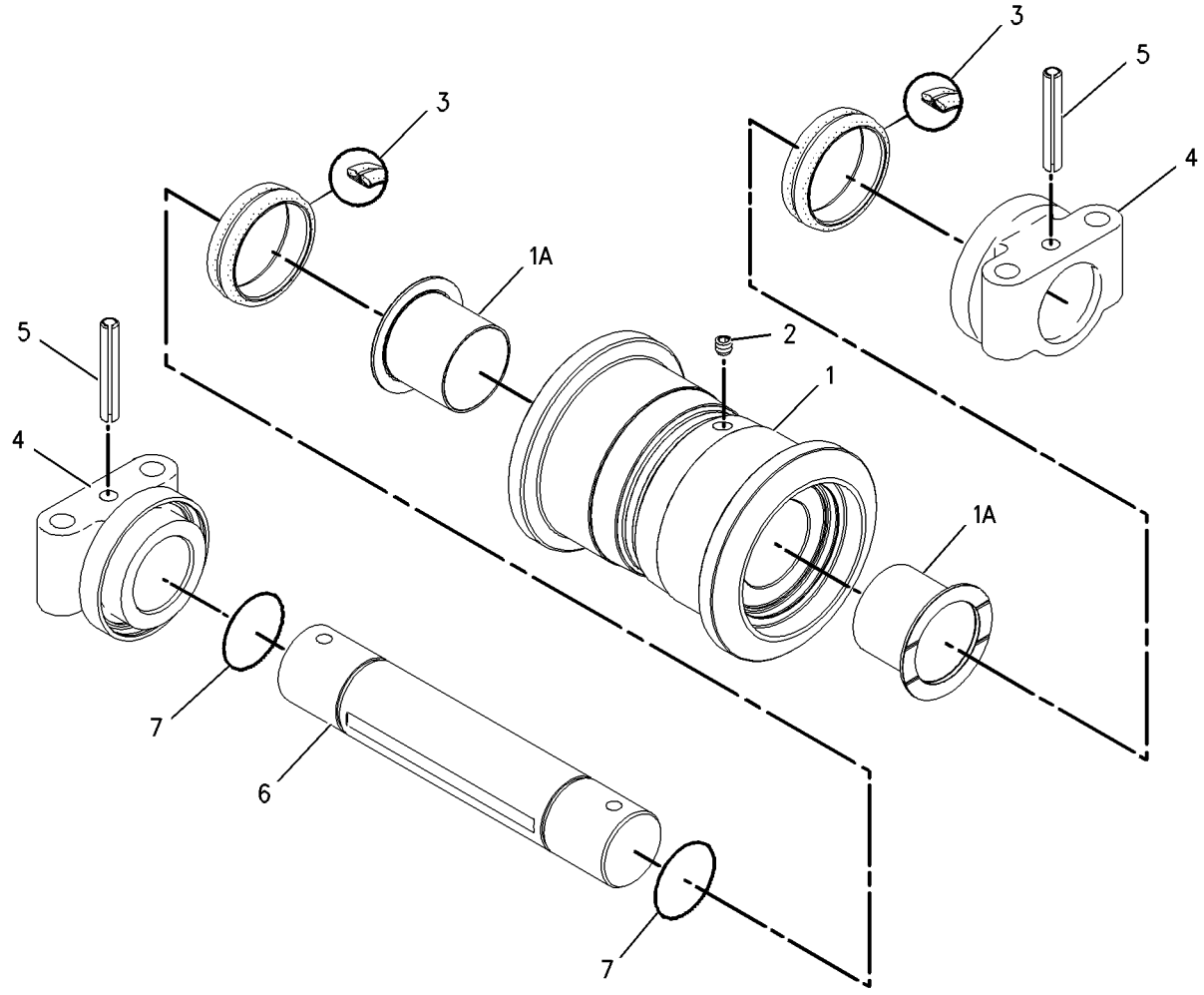

GRAPHIC #1 **<END>** g00686090

239-4322 SPRING GP-RECOIL

S/N: MYG1-UP; PPN1-UP

PART OF 239-4321 IDLER GP-FRONT

SMCS-4158 **i02387848**

NOTE	REF NO	GRAPHIC REF	PART NUMBER	QTY	PART NAME 1 2 3 4 5 6 (PRODUCT LEVEL)	SEE PAGE
	1	1	**179-3037**	1	WASHER (62X105X10-MM THK)	
	2	1	**179-3038**	1	NUT (M56X5.5-THD)	
	3	1	**179-3040**	1	STRIP	
	4	1	**239-4323**	1	SPRING	
	5	1	**239-4324**	1	ROD	
	6	1	**239-4326**	1	SUPPORT AS	
	7	1	**239-4330**	1	SUPPORT	
M	8	1	**8T-9080**	2	BOLT-SOCKET HEAD (M12X1.75X20-MM)	

M-METRIC PART

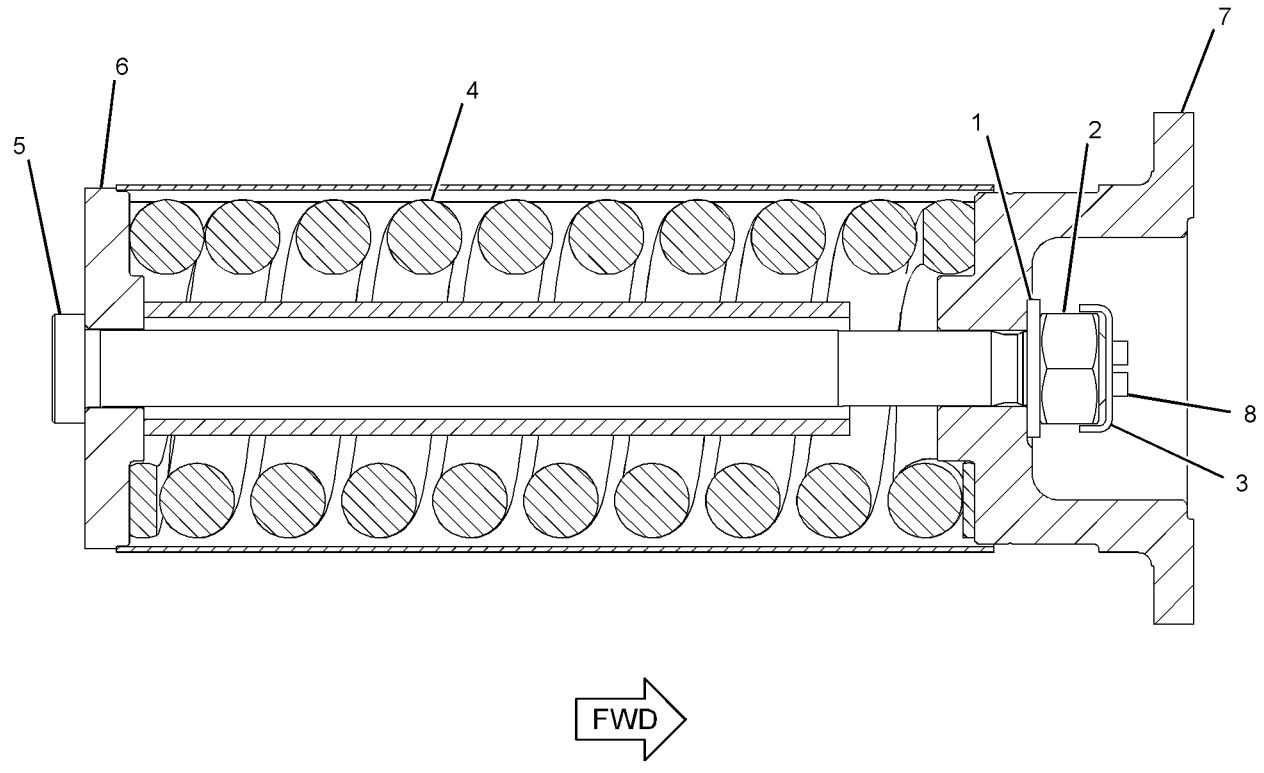

GRAPHIC #1 **<END>** g01196933

203-0860 TRACK GP–2-REQUIRED

S/N: MYG1-UP; PPN1-UP
600-MM (23.6-IN) TRIPLE GROUSER SHOE. GREASE LUBRICATED TRACK, HEAVY-DUTY
PART OF 348-8126 DISTRIBUTION AR
AN ATTACHMENT

SMCS-4170 **i03101728**

NOTE	REF NO	GRAPHIC REF	PART NUMBER	QTY	PART NAME 1 2 3 4 5 6 (PRODUCT LEVEL)	SEE PAGE
Y	1	1	**201-9119**	1	LINK AS-TRACK	382
	2	1	**121-0140**	49	SHOE-TRACK	
M	3	1	**318-2558**	196	BOLT-TRACK (M22X1.5X73-MM)	
M	4	1	**311-8150**	196	NUT-TRACK (M22X1.5-THD)	

M-METRIC PART
Y-SEPARATE ILLUSTRATION

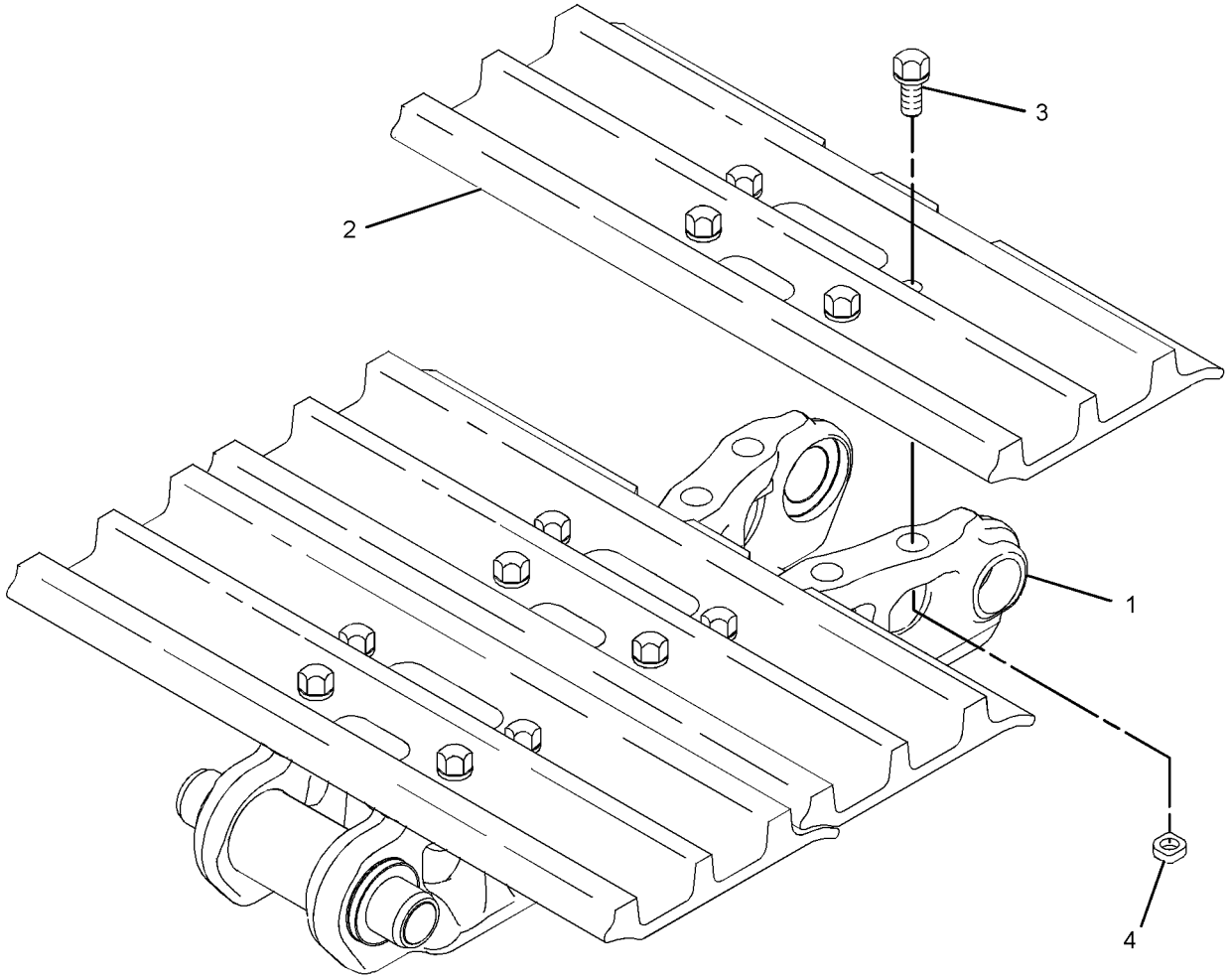

GRAPHIC #1 **<END>** g01525345

203-0862 TRACK GP—2-REQUIRED, HEAVY-DUTY

S/N: PPN1-UP
850-MM (33.5-IN) TRIPLE GROUSER SHOE. GREASE LUBRICATED TRACK
PART OF 264-8495 TRACK GP
REPLACED BY 264-8495—PAGE 395
AN ATTACHMENT

SMCS-4170 **i03119840**

NOTE	REF NO	GRAPHIC REF	PART NUMBER	QTY	PART NAME 1 2 3 4 5 6 (PRODUCT LEVEL)	SEE PAGE
Y	1	1	**201-9119**	1	LINK AS-TRACK	382
	2	1	**139-0246**	49	SHOE-TRACK	
M	3	1	**318-2558**	196	BOLT-TRACK (M22X1.5X73-MM)	
M	4	1	**311-8150**	196	NUT-TRACK (M22X1.5-THD)	

M-METRIC PART
Y-SEPARATE ILLUSTRATION

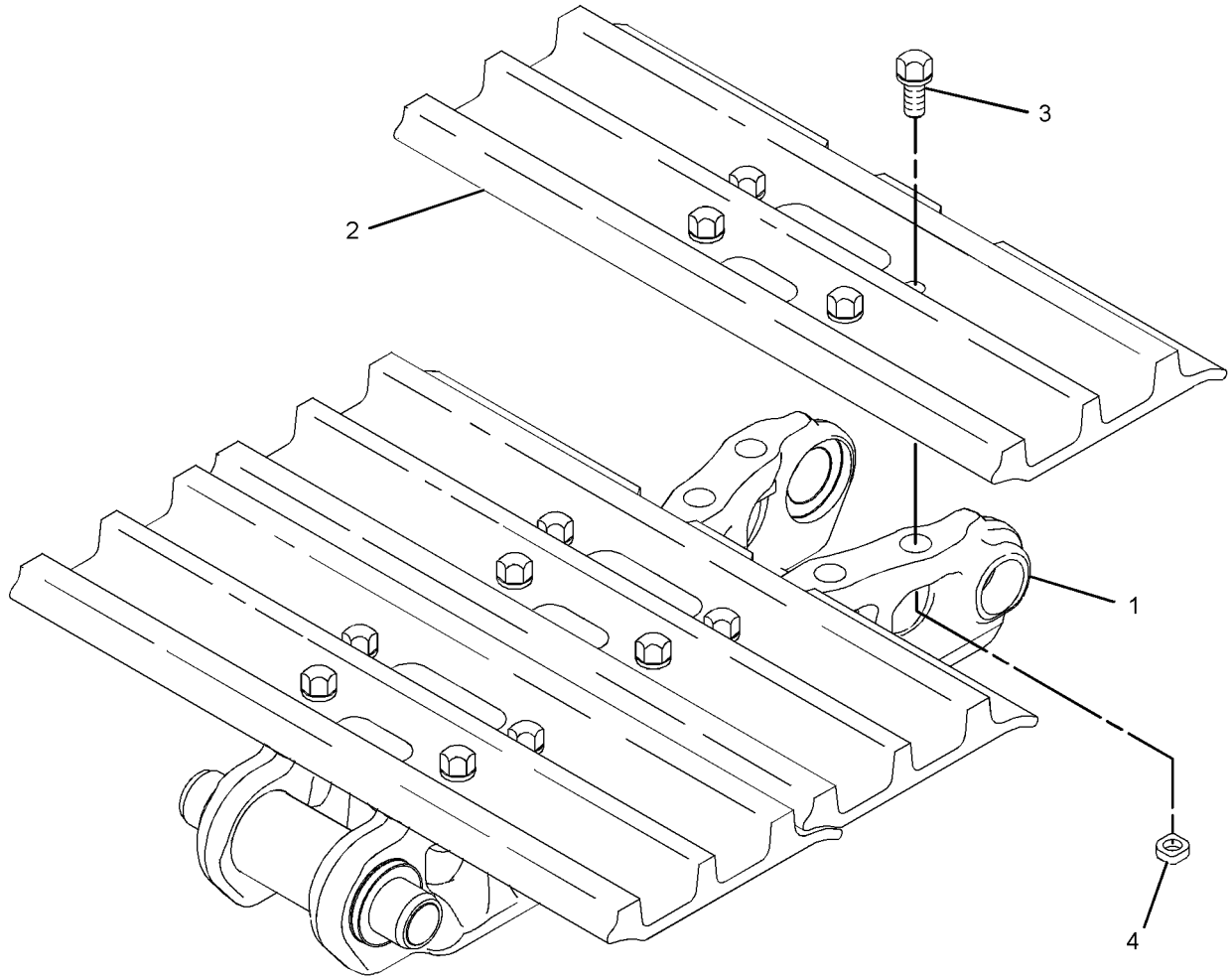

GRAPHIC #1 **<END>** g01525345

216-4027 TRACK GP–2-REQUIRED

S/N: MYG1-UP; PPN1-UP
600-MM (23.6-IN). TRIPLE GROUSER SHOE, GREASE LUBRICATED TRACK
PART OF 345-7571 DISTRIBUTION AR
AN ATTACHMENT

SMCS-4170 **i03144480**

NOTE	REF NO	GRAPHIC REF	PART NUMBER	QTY	PART NAME 1 2 3 4 5 6 (PRODUCT LEVEL)	SEE PAGE
Y	1	1	**201-9119**	1	LINK AS-TRACK	382
	2	1	**126-5066**	49	SHOE-TRACK	
M	3	1	**318-2559**	196	BOLT-TRACK (M22X1.5X67-MM)	
M	4	1	**311-8150**	196	NUT-TRACK (M22X1.5-THD)	

M-METRIC PART
Y-SEPARATE ILLUSTRATION

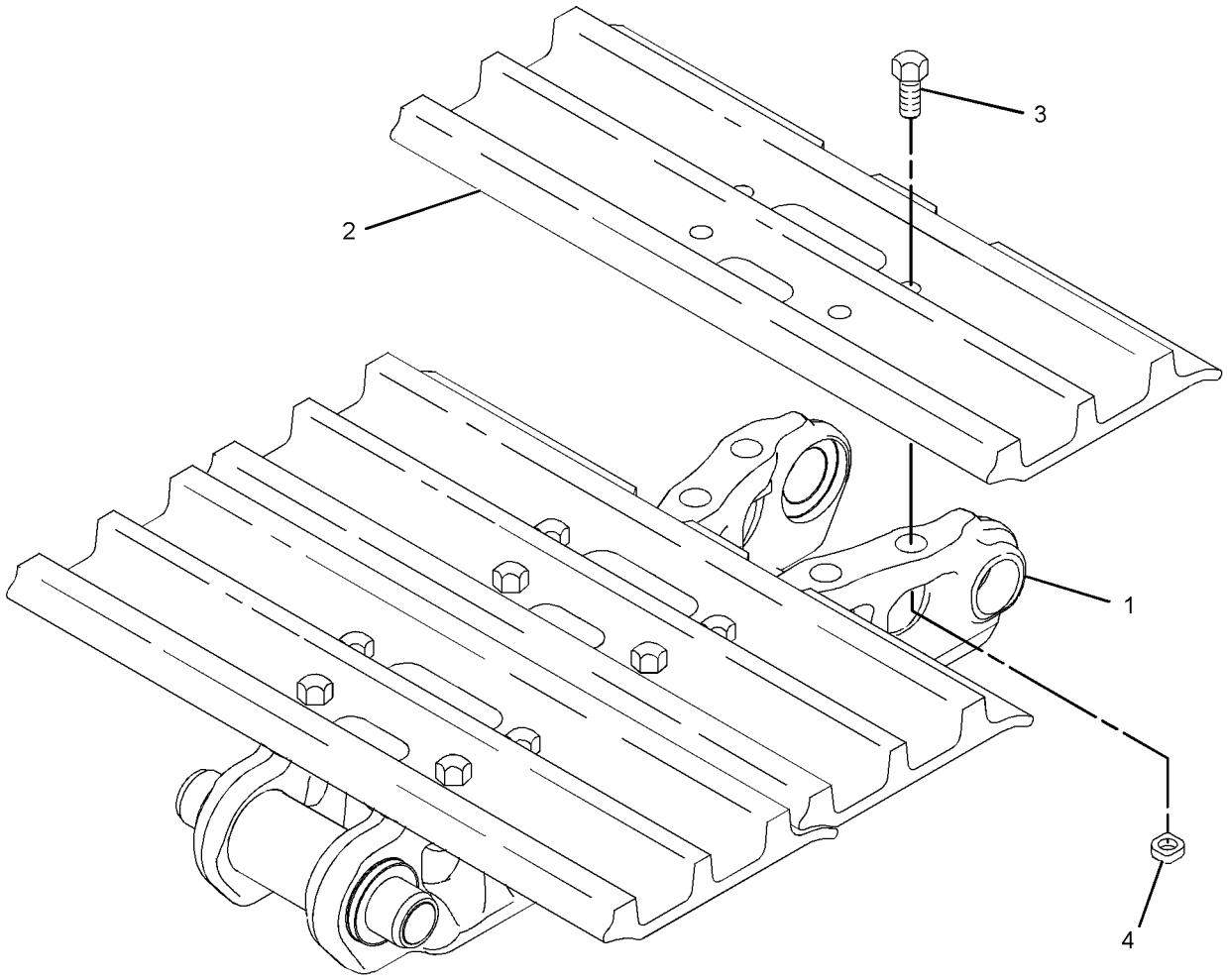

GRAPHIC #1 **<END>** g01201614

241-0985 TRACK GP–2-REQUIRED

S/N: MYG1-UP; PPN1-UP

700-MM (27.6-IN). TRIPLE GROUSER SHOE, GREASE LUBRICATED TRACK

AN ATTACHMENT

SMCS-4170 **i03041623**

NOTE	REF NO	GRAPHIC REF	PART NUMBER	QTY	PART NAME 1 2 3 4 5 6 (PRODUCT LEVEL)	SEE PAGE
Y	1	1	**201-9119**	1	LINK AS-TRACK	382
	2	1	**238-8591**	49	SHOE-TRACK	
M	3	1	**318-2559**	196	BOLT-TRACK (M22X1.5X67-MM)	
M	4	1	**311-8150**	196	NUT-TRACK (M22X1.5-THD)	

M-METRIC PART
Y-SEPARATE ILLUSTRATION

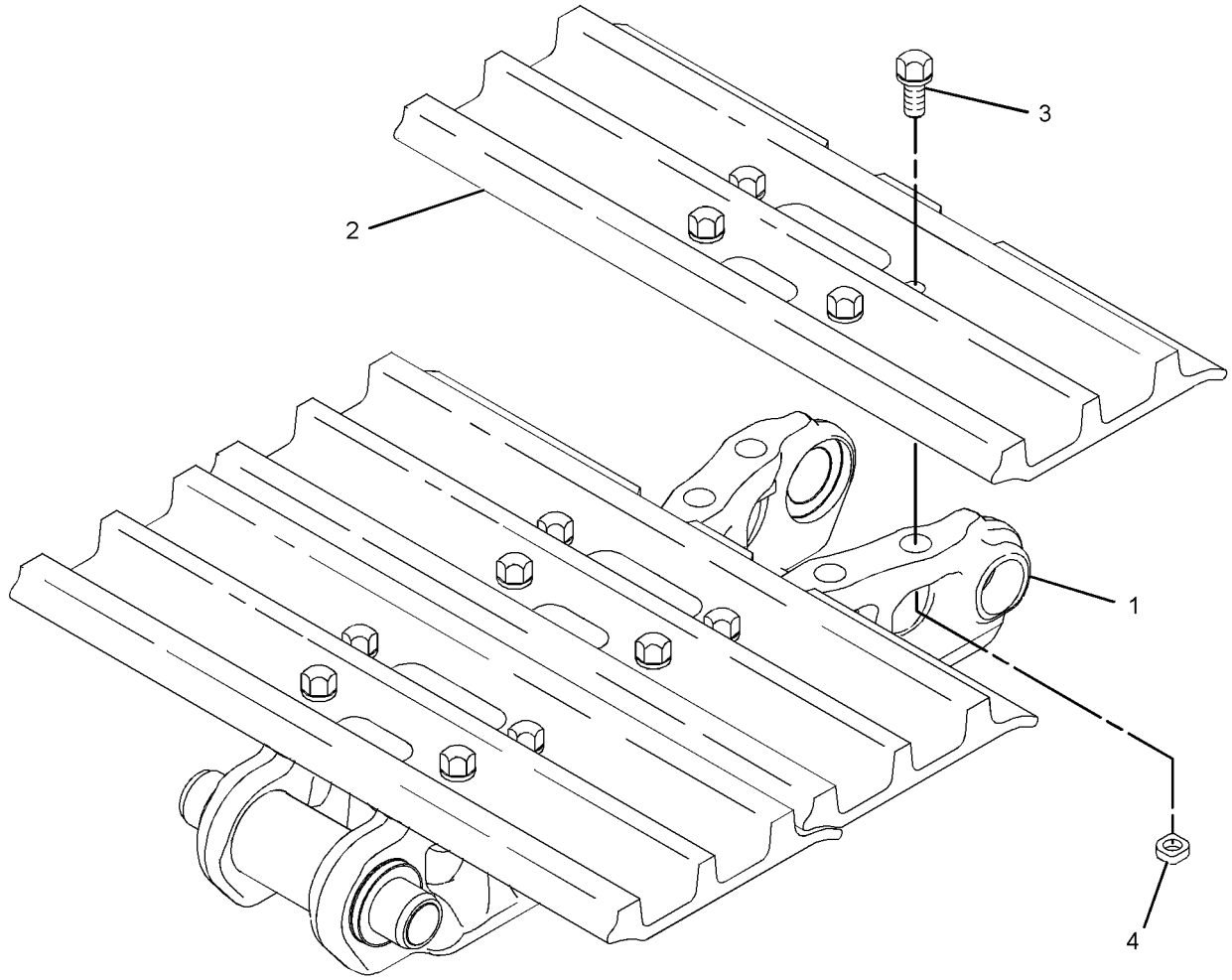

GRAPHIC #1 **<END>** g01525345

260-9452 TRACK GP–2-REQUIRED

S/N: MYG1-UP; PPN1-UP
600-MM (23.6-IN) DOUBLE GROUSER SHOE. GREASE LUBRICATED TRACK
PART OF 352-2663 DISTRIBUTION AR
AN ATTACHMENT

SMCS-4170 **i03625969**

NOTE	REF NO	GRAPHIC REF	PART NUMBER	QTY	PART NAME 1 2 3 4 5 6 (PRODUCT LEVEL)	SEE PAGE
Y	1	1	**201-9119**	1	LINK AS-TRACK	382
	2	1	**6I-8454**	49	SHOE-TRACK	
M	3	1	**318-2558**	196	BOLT-TRACK (M22X1.5X73-MM)	
M	4	1	**311-8150**	196	NUT-TRACK (M22X1.5-THD)	

M-METRIC PART
Y-SEPARATE ILLUSTRATION

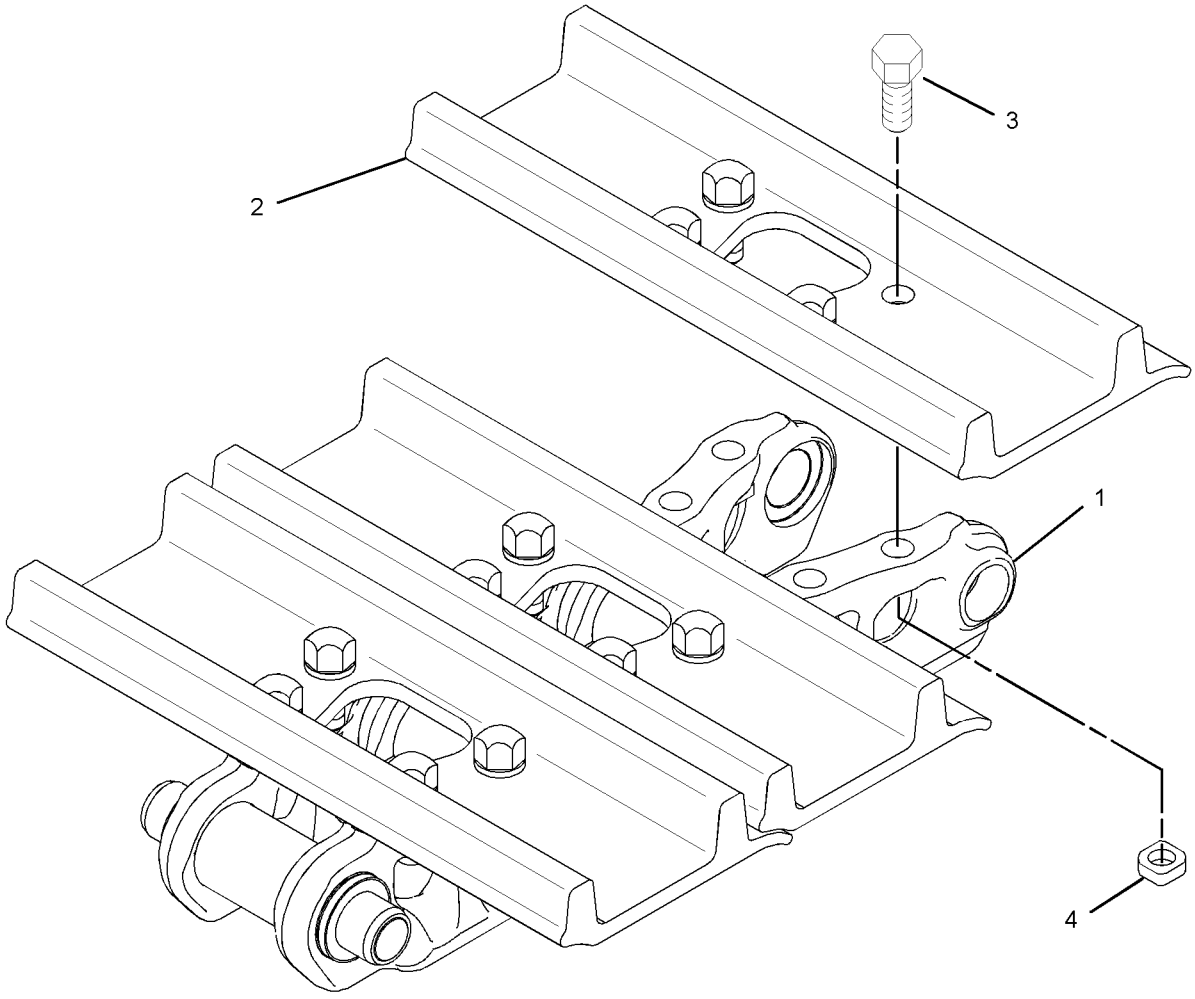

GRAPHIC #1 **<END>** g01946362

264-8495 TRACK GP—2-REQUIRED, HEAVY-DUTY

S/N: PPN1-UP

850-MM (33.5-IN) TRIPLE GROUSER SHOE. GREASE LUBRICATED TRACK

AN ATTACHMENT

SMCS-4170 **i02673186**

NOTE	PART NUMBER	QTY	PART NAME 1 2 3 4 5 6 (PRODUCT LEVEL)	SEE PAGE
Y	*235-7764*	1	STEP GP	363
Y	**203-0862**	1	TRACK GP	391

Y-SEPARATE ILLUSTRATION

<END>

UNDERCARRIAGE

331-7388 TRACK GP–2-REQUIRED

S/N: MYG1-UP; PPN1-UP

700-MM (27.6-IN) TRIPLE GROUSER SHOE. GREASE LUBRICATED TRACK

AN ATTACHMENT

SMCS-4170 **i03674682**

NOTE	REF NO	GRAPHIC REF	PART NUMBER	QTY	PART NAME 1 2 3 4 5 6 (PRODUCT LEVEL)	SEE PAGE
Y	1	1	**213-1971**	1	LINK AS-TRACK	383
	2	1	**238-8591**	49	SHOE-TRACK	
M	3	1	**318-2559**	196	BOLT-TRACK (M22X1.5X67-MM)	
M	4	1	**311-8150**	196	NUT-TRACK (M22X1.5-THD)	

M-METRIC PART
Y-SEPARATE ILLUSTRATION

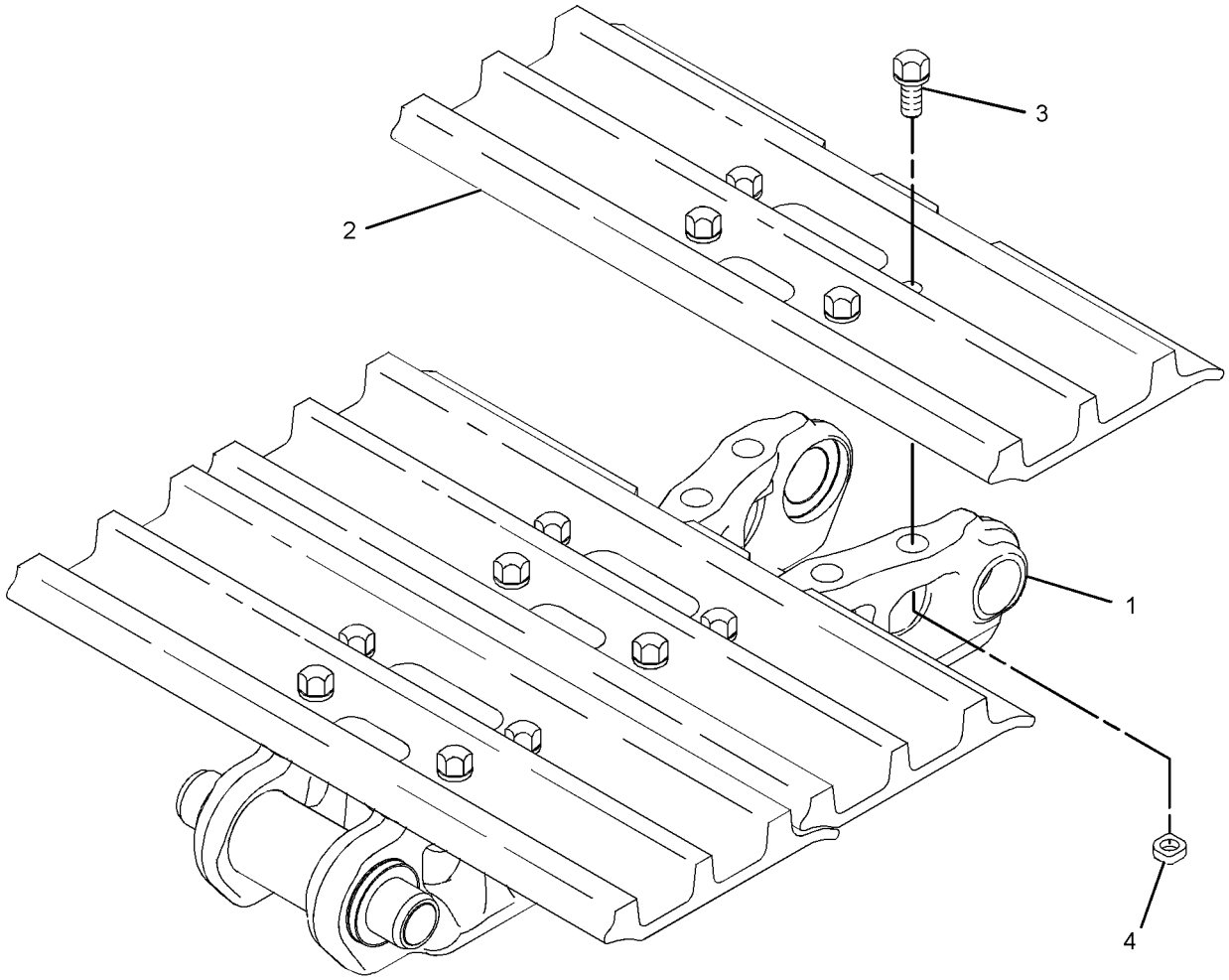

GRAPHIC #1 **<END>** g01525345

347-2343 TRACK GP–2-REQUIRED

S/N: MYG1-UP; PPN1-UP

600-MM (23.6-IN) TRIPLE GROUSER SHOE, TRAPEZOIDAL. GREASE LUBRICATED TRACK AN ATTACHMENT

SMCS-4170 **i03676600**

NOTE	REF NO	GRAPHIC REF	PART NUMBER	QTY	PART NAME 1 2 3 4 5 6 (PRODUCT LEVEL)	SEE PAGE
Y	1	1	**213-1971**	1	LINK AS-TRACK	383
	2	1	**126-5066**	49	SHOE-TRACK	
M	3	1	**318-2559**	196	BOLT-TRACK (M22X1.5X67-MM)	
M	4	1	**311-8150**	196	NUT-TRACK (M22X1.5-THD)	

M-METRIC PART
Y-SEPARATE ILLUSTRATION

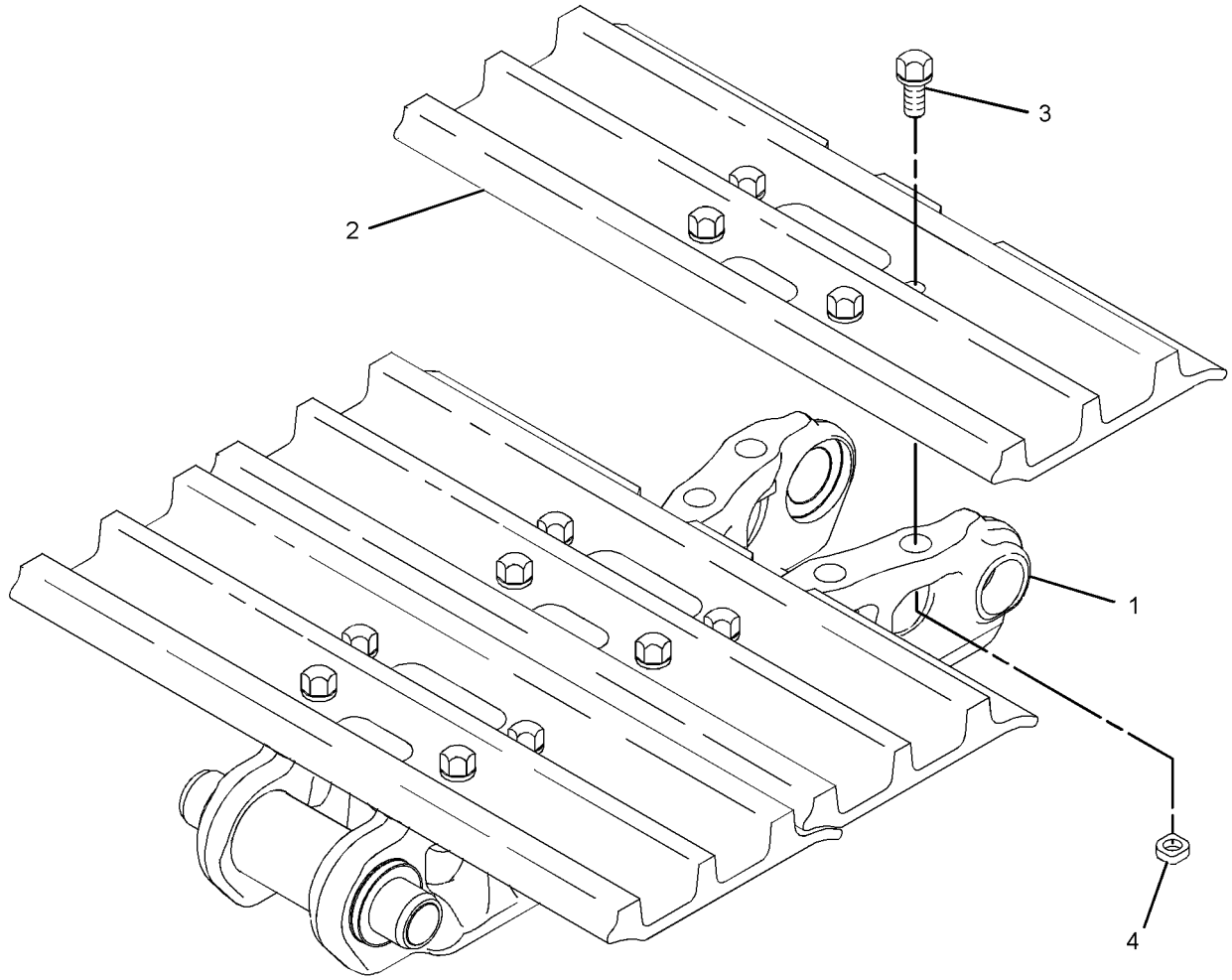

GRAPHIC #1 **<END>** g01525345

347-2345 TRACK GP–2-REQUIRED, HEAVY-DUTY

S/N: MYG1-UP; PPN1-UP
600-MM (23.6-IN) DOUBLE GROUSER SHOE. GREASE LUBRICATED TRACK
AN ATTACHMENT

SMCS-4170 **i03676602**

NOTE	REF NO	GRAPHIC REF	PART NUMBER	QTY	PART NAME 1 2 3 4 5 6 (PRODUCT LEVEL)	SEE PAGE
Y	1	1	**213-1971**	1	LINK AS-TRACK	383
	2	1	**6I-8454**	49	SHOE-TRACK	
M	3	1	**318-2558**	196	BOLT-TRACK (M22X1.5X73-MM)	
M	4	1	**311-8150**	196	NUT-TRACK (M22X1.5-THD)	

M-METRIC PART
Y-SEPARATE ILLUSTRATION

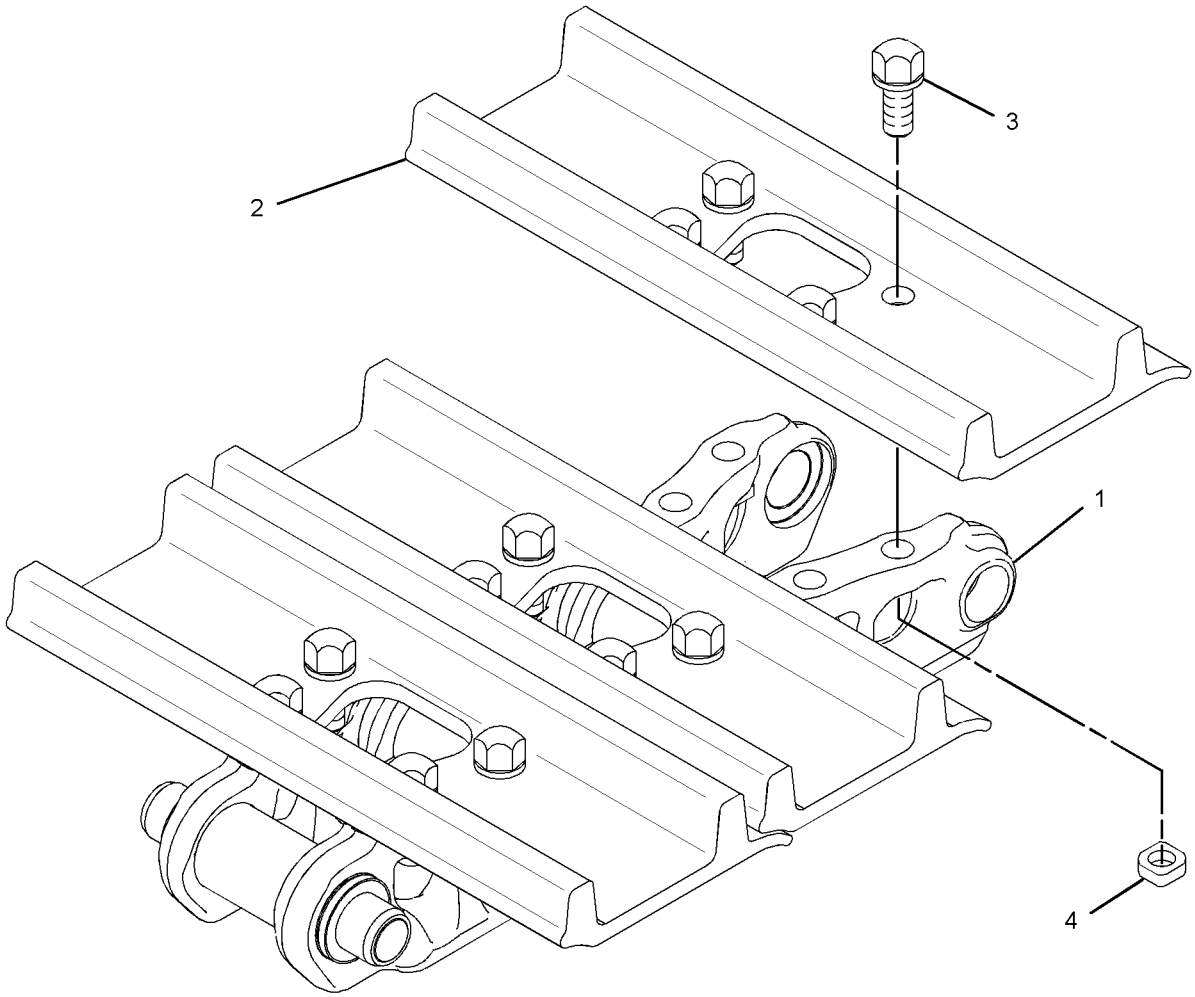

GRAPHIC #1 **<END>** g01528686

347-2346 TRACK GP–2-REQUIRED, HEAVY-DUTY

S/N: MYG1-UP; PPN1-UP

600-MM (23.6-IN) TRIPLE GROUSER SHOE, TRAPEZOIDAL. GREASE LUBRICATED TRACK AN ATTACHMENT

SMCS-4170 **i03676601**

NOTE	REF NO	GRAPHIC REF	PART NUMBER	QTY	PART NAME 1 2 3 4 5 6 (PRODUCT LEVEL)	SEE PAGE
Y	1	1	**213-1971**	1	LINK AS-TRACK	383
	2	1	**121-0140**	49	SHOE-TRACK	
M	3	1	**318-2558**	196	BOLT-TRACK (M22X1.5X73-MM)	
M	4	1	**311-8150**	196	NUT-TRACK (M22X1.5-THD)	

M-METRIC PART
Y-SEPARATE ILLUSTRATION

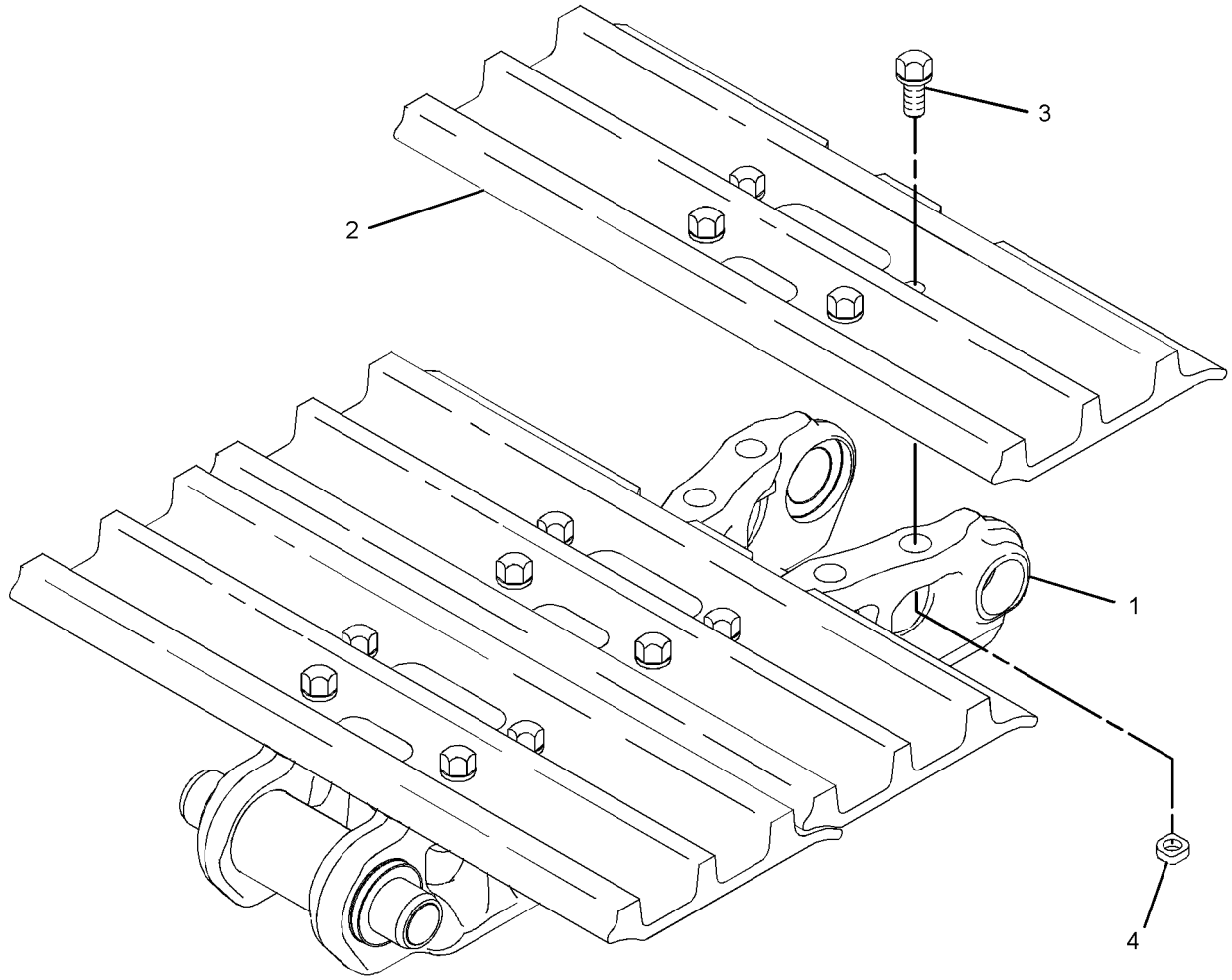

GRAPHIC #1 **<END>** g01525345

HYDRAULIC SYSTEM

4I-1536 ACCUMULATOR GP-HYDRAULIC—CHARGED

S/N: MYG1-UP; PPN1-UP

PART OF 087-4456 ACCUMULATOR GP-HYDRAULIC

SMCS-5077 **i00988837**

NOTE	REF NO	GRAPHIC REF	PART NUMBER	QTY	PART NAME 1 2 3 4 5 6 (PRODUCT LEVEL)	SEE PAGE
	1	1	**4I-5862**	1	CAP	
	2	1	**4I-1539**	1	CORE	

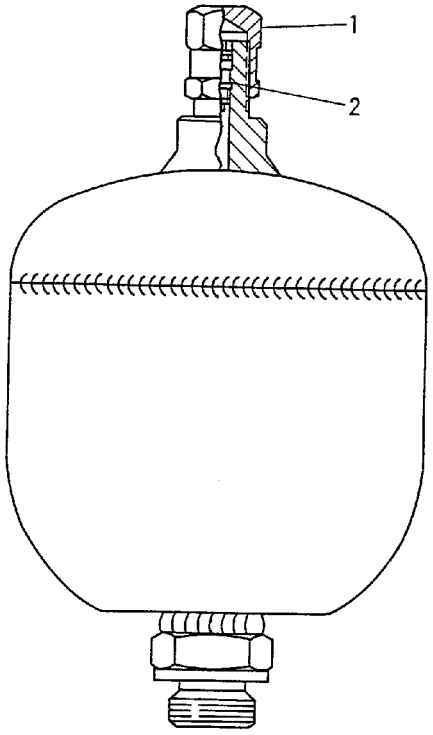

GRAPHIC #1 **<END>** g00222004

5I-8416 ACCUMULATOR GP-HYDRAULIC—CHARGED

S/N: MYG1-UP; PPN1-UP

PART OF 087-4456 ACCUMULATOR GP-HYDRAULIC

SMCS-5077 **i01005795**

NOTE	REF NO	GRAPHIC REF	PART NUMBER	QTY	PART NAME 1 2 3 4 5 6 (PRODUCT LEVEL)	SEE PAGE
	1	1	**4I-8267**	1	CAP	
Y	2	1	*087-4454*	2	ACCUMULATOR GP-HYDRAULIC (CHARGED)	402

Y-SEPARATE ILLUSTRATION

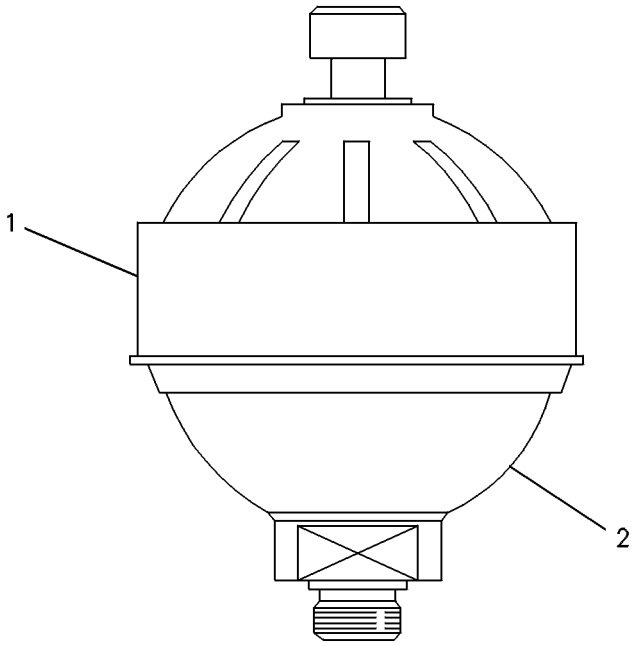

GRAPHIC #1 **<END>** g00237219

087-4454 ACCUMULATOR GP-HYDRAULIC—CHARGED

S/N: MYG1-UP; PPN1-UP

PART OF 5I-8416 ACCUMULATOR GP-HYDRAULIC

SMCS-5077 **i00611628**

NOTE	REF NO	GRAPHIC REF	PART NUMBER	QTY	PART NAME 1 2 3 4 5 6 (PRODUCT LEVEL)	SEE PAGE
	1	1	**087-4577**	1	SEAL	
	2	1	**087-4576**	1	CAP	
	3	1	**087-4575**	1	CORE	

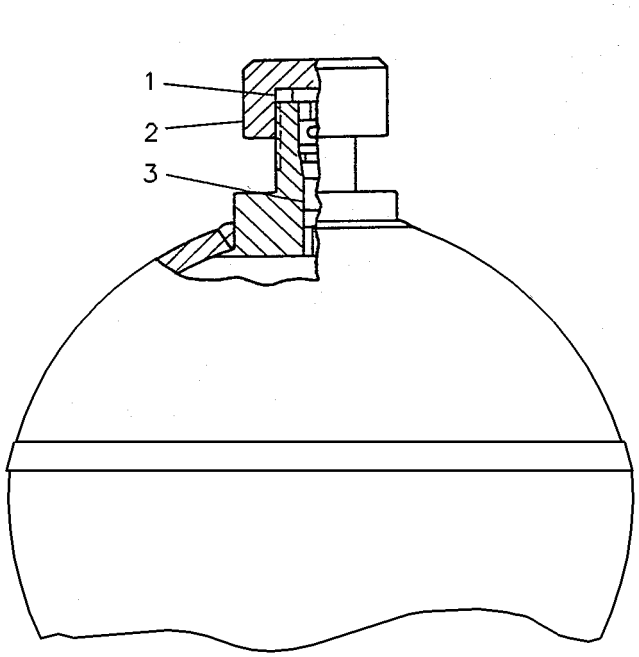

GRAPHIC #1 **<END>** g00221492

087-4456 ACCUMULATOR GP-HYDRAULIC—CHARGED

S/N: MYG1-UP; PPN1-UP

PART OF 164-6981 ACCUMULATOR GP-HYDRAULIC

SMCS-5077 **i02297973**

NOTE	PART NUMBER	QTY	PART NAME 1 2 3 4 5 6 (PRODUCT LEVEL)	SEE PAGE
Y	*4I-1536*	1	ACCUMULATOR GP-HYDRAULIC (CHARGED)	400
			-OR-	
Y	*5I-8416*	1	ACCUMULATOR GP-HYDRAULIC (CHARGED)	401
			-OR-	
Y	*145-5106*	1	ACCUMULATOR GP-HYDRAULIC (CHARGED)	404

Y-SEPARATE ILLUSTRATION

<END>

HYDRAULIC SYSTEM

145-5106 ACCUMULATOR GP-HYDRAULIC—CHARGED

S/N: MYG1-UP; PPN1-UP

PART OF 087-4456 ACCUMULATOR GP-HYDRAULIC

SMCS-5077 **i02571227**

NOTE	REF NO	GRAPHIC REF	PART NUMBER	QTY	PART NAME 1 2 3 4 5 6 (PRODUCT LEVEL)	SEE PAGE
	1	1	**159-4700**	1	FILM-WARNING (HIGH PRESSURE CYLINDER)	

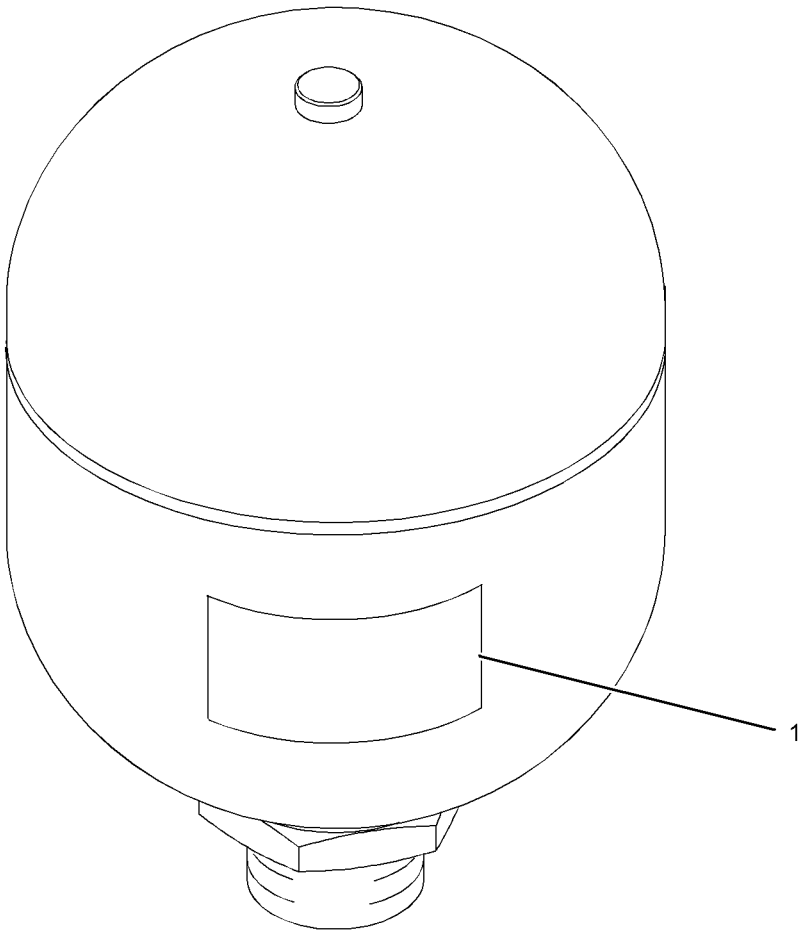

GRAPHIC #1 **<END>** g01288209

164-6981 ACCUMULATOR GP-HYDRAULIC—CHARGED

S/N: MYG1-UP; PPN1-UP

PART OF 260-7867 LINES GP-PILOT

SMCS-5077 **i01391238**

NOTE	PART NUMBER	QTY	PART NAME 1 2 3 4 5 6 (PRODUCT LEVEL)	SEE PAGE
Y	**087-4456**	1	ACCUMULATOR GP-HYDRAULIC (CHARGED)	403
	3K-0360	1	SEAL-O-RING	

Y-SEPARATE ILLUSTRATION

<END>

HYDRAULIC SYSTEM

209-5982 ACTUATOR GP

S/N: MYG1-UP; PPN1-UP

PART OF 259-0815 PUMP GP-PISTON

SMCS-5078 **i02404415**

NOTE	REF NO	GRAPHIC REF	PART NUMBER	QTY	PART NAME 1 2 3 4 5 6 (PRODUCT LEVEL)	SEE PAGE
	1	1	**155-9141**	1	PISTON	
	2	1	**155-9142**	1	GUIDE	
	3	1	**155-9143**	1	SPRING	
	4	1	**191-7584**	1	GUIDE	
	5	1	**155-9139**	1	PISTON	

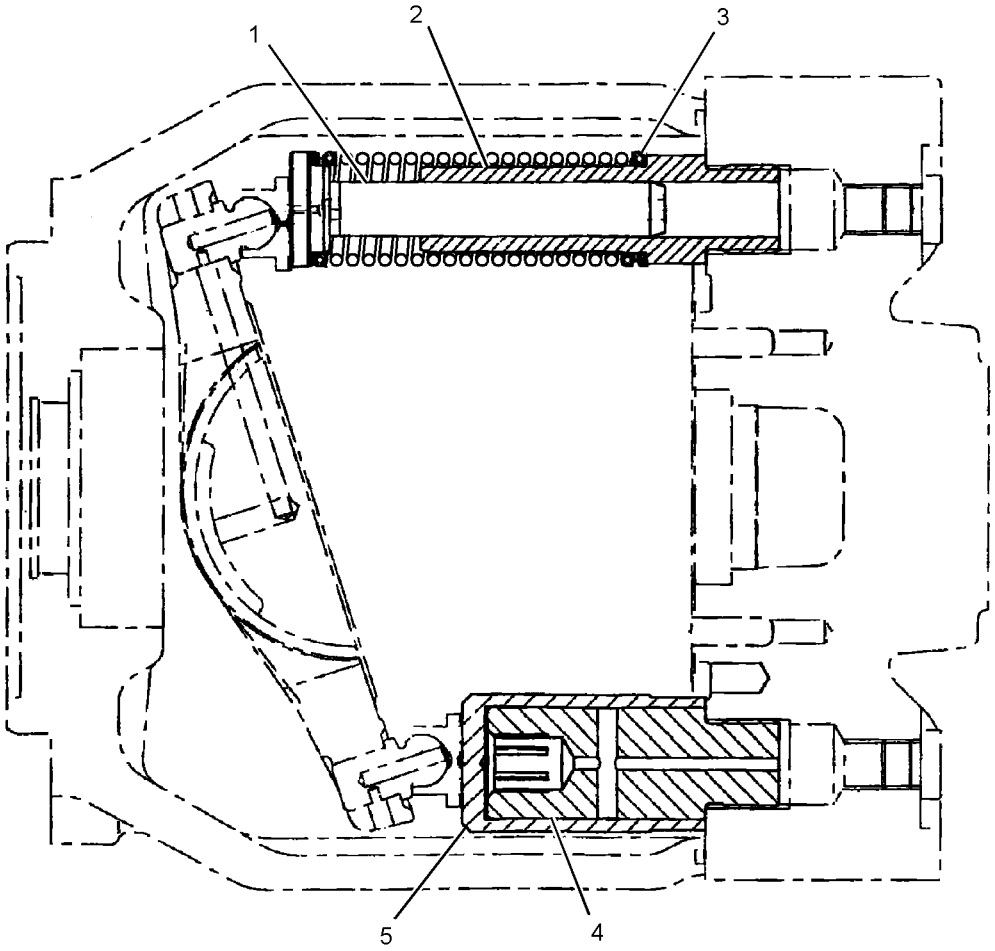

GRAPHIC #1 **<END>** g01201563

173-3503 BASE GP-OIL FILTER–HYDRAULIC

S/N: MYG1-UP; PPN1-UP

PART OF 188-4140 FILTER GP-OIL

SMCS-5068 **i02553552**

NOTE	REF NO	GRAPHIC REF	PART NUMBER	QTY	PART NAME 1 2 3 4 5 6 (PRODUCT LEVEL)	SEE PAGE
C	1	1	**204-2763**	1	BLOCK	
	2	1	**5L-4758**	1	SEAL-O-RING	
C	3	1	**177-2619**	2	PACKING	
	4	1	**173-3505**	1	PLATE-SLIDE	
	5	1	**137-3631**	1	PACKING	
M	6	1	**137-3626**	1	BOLT-SHOULDER (M6X1X28.75-MM)	
	7	1	**173-3506**	1	PLUG AS	
	8	1	**3J-1907**	1	SEAL-O-RING	
	9	1	**7Y-5272**	2	PIN-SPRING	
	10	1	**137-3628**	1	SHIM (0.1-MM THK)	

C-CHANGE FROM PREVIOUS TYPE
M-METRIC PART

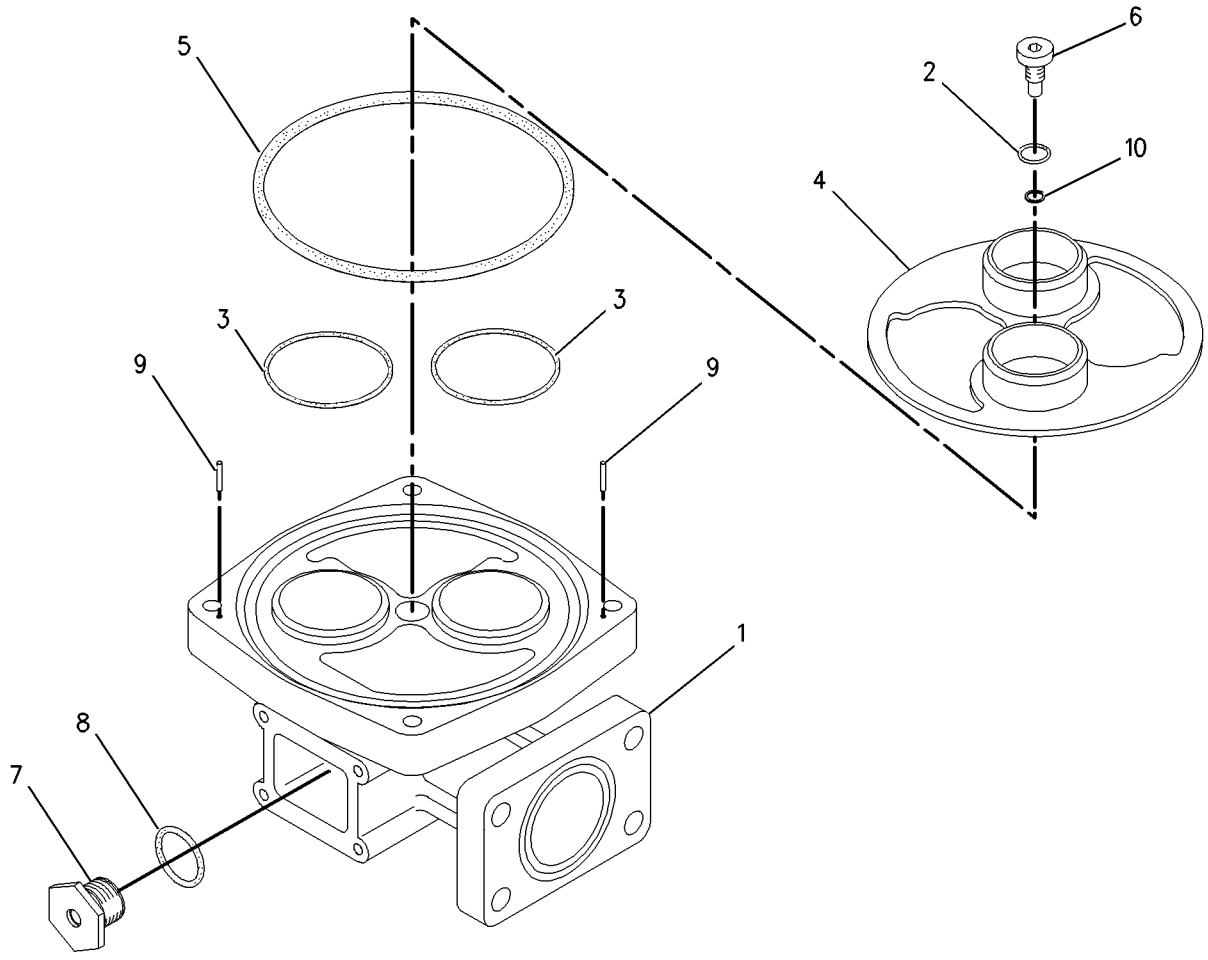

GRAPHIC #1 **<END>** g00669130

255-5774 CONTROL AR-AUXILIARY–
1-PUMP/2-PUMP, 1-WAY FLOW
S/N: MYG1-UP; PPN1-UP
PART OF 340-9469 OPTION AR-CONTROL
AN ATTACHMENT

SMCS-5051 **i03714620**

NOTE	PART NUMBER	QTY	PART NAME 1 2 3 4 5 6 (PRODUCT LEVEL)	SEE PAGE
Y	*255-1923*	1	LINES GP-FRONT	499
Y	*260-7855*	1	LINES GP-PILOT (1-PUMP/2-PUMP, 1-WAY FLOW)	537
Y	*282-2743*	1	VALVE & MTG GP-MAIN CONTROL	629
Y	*291-8635*	1	VALVE & MTG GP-MAIN CONTROL	630
Y	*259-4963*	1	WIRING GP-AUXILIARY CONTROL	246

Y-SEPARATE ILLUSTRATION

<END>

255-5822 CONTROL AR-AUXILIARY–
COMBINED FCTN, MEDIUM PRESSURE
S/N: MYG1-UP; PPN1-UP
PART OF 340-9468 OPTION AR-CONTROL
AN ATTACHMENT

SMCS-5051 **i02430251**

NOTE	PART NUMBER	QTY	PART NAME 1 2 3 4 5 6 (PRODUCT LEVEL)	SEE PAGE
Y	**234-4620**	1	DRIVE GP-AUXILIARY PUMP	428
Y	*255-1926*	1	LINES GP-FRONT (MEDIUM PRESSURE CIRCUIT)	507
Y	*260-7861*	1	LINES GP-PILOT (MEDIUM PRESSURE)	544
Y	*260-7862*	1	LINES GP-PUMP (AUXILIARY)	560
Y	*259-0682*	1	PUMP & MTG GP-AUXILIARY	609
Y	*259-4964*	1	WIRING GP-MEDIUM PRESSURE	285

Y-SEPARATE ILLUSTRATION

<END>

270-6106 CONTROL AR-AUXILIARY–FOOT SWITCH
S/N: MYG1-UP; PPN1-UP
PART OF 347-0290 PEDAL AR-AUXILIARY
FOR USE WITH CONTROL AR-AUX(CONFIG 16), CONTROL AR-AUX(CONFIG 17). CANNOT BE USED WITH CONTROL AR-AUX (FOOT PEDAL)
AN ATTACHMENT

SMCS-5051 **i02790987**

NOTE	PART NUMBER	QTY	PART NAME 1 2 3 4 5 6 (PRODUCT LEVEL)	SEE PAGE
Y	*270-6107*	1	CONTROL GP-FOOT (LEFT ON/OFF SWITCH)	870
Y	*259-5294*	1	FASTENER GP-WIRING HARNESS (FOOT SWITCH)	179
Y	*247-7465*	1	FILM GP (HAMMER CONTROL, FOOT SWITCH)	980

Y-SEPARATE ILLUSTRATION

<END>

HYDRAULIC SYSTEM

297-0494 CONTROL AR-AUXILIARY–
SYSTEM 17, COMBINED FN, MED PR
S/N: MYG1-UP; PPN1-UP
PART OF 340-9468 OPTION AR-CONTROL
AN ATTACHMENT

SMCS-5051 **i02759808**

NOTE	PART NUMBER	QTY	PART NAME 1 2 3 4 5 6 (PRODUCT LEVEL)	SEE PAGE
Y	*255-1924*	1	LINES GP-FRONT	503
Y	*260-7857*	1	LINES GP-PILOT (SYSTEM 14, SYSTEM 17)	540
Y	*282-2743*	1	VALVE & MTG GP-MAIN CONTROL	629
Y	*251-0623*	1	WIRING GP-AUXILIARY CONTROL	244
Y-SEPARATE ILLUSTRATION				

<END>

346-4449 CONTROL AR-BOOM–BOOM FLOAT
S/N: MYG1-UP; PPN1-UP
PART OF 345-7583 OPTION AR-CONFIGURATION
AN ATTACHMENT

SMCS-5063, 6501 **i03676041**

NOTE	PART NUMBER	QTY	PART NAME 1 2 3 4 5 6 (PRODUCT LEVEL)	SEE PAGE
Y	*298-4341*	1	FILM GP (SMARTBOOM)	983
Y	*239-1632*	1	LINES GP-BOOM CYLINDER	485
Y	*255-1853*	1	LINES GP-PILOT (BOOM FLOAT)	532
Y	*275-1495*	1	LINES GP-PILOT (CAB)	556
Y	*255-2078*	1	LINES GP-RETURN (LOAD CONTROL, BOOM CYLINDER)	573
Y	*245-5080*	1	LINES GP-SENSOR (OVERLOAD WARNING DEVICE)	576
Y	*336-6206*	1	WIRING GP-BOOM FLOAT	248
Y	*336-6156*	1	WIRING GP-CAB (BOOM FLOAT)	253
Y-SEPARATE ILLUSTRATION				

<END>

344-4124 CONTROL AR-COUPLER
S/N: MYG1-UP; PPN1-UP
PART OF 345-7579, 345-7582 CONTROL AR-COUPLER
AN ATTACHMENT

SMCS-6129 **i03675963**

NOTE	PART NUMBER	QTY	PART NAME 1 2 3 4 5 6 (PRODUCT LEVEL)	SEE PAGE
Y	*268-6816*	1	FILM GP (QUICK COUPLER)	981
Y	*269-9562*	1	LINES GP-FRONT (QUICK COUPLER)	514
Y	*336-6137*	1	WIRING GP-CAB (COUPLER)	251
Y	*336-6194*	1	WIRING GP-QUICK COUPLER	289
Y-SEPARATE ILLUSTRATION				

<END>

HYDRAULIC SYSTEM

345-7579 CONTROL AR-COUPLER

S/N: MYG1-UP; PPN1-UP
PART OF 352-2663 DISTRIBUTION AR
AN ATTACHMENT

SMCS-6129 **i03676026**

NOTE	PART NUMBER	QTY	PART NAME 1 2 3 4 5 6 (PRODUCT LEVEL)	SEE PAGE
Y	*344-4124*	1	CONTROL AR-COUPLER	409
Y	*237-3194*	1	LINES GP-COUPLER (REACH BOOM)	490
Y	*253-6495*	1	LINES GP-COUPLER (STICK)	492

Y-SEPARATE ILLUSTRATION

<END>

345-7582 CONTROL AR-COUPLER

S/N: MYG1-UP; PPN1-UP
AN ATTACHMENT

SMCS-6129 **i03676025**

NOTE	PART NUMBER	QTY	PART NAME 1 2 3 4 5 6 (PRODUCT LEVEL)	SEE PAGE
Y	*344-4124*	1	CONTROL AR-COUPLER	409
Y	*237-3194*	1	LINES GP-COUPLER (REACH BOOM)	490
Y	*253-6601*	1	LINES GP-COUPLER	493

Y-SEPARATE ILLUSTRATION

<END>

HYDRAULIC SYSTEM

239-6692 COUPLER GP-QUICK DISCONNECT

S/N: MYG1-UP; PPN1-UP
AN ATTACHMENT

SMCS-5057 **i02023943**

NOTE	REF NO	GRAPHIC REF	PART NUMBER	QTY	PART NAME 1 2 3 4 5 6 (PRODUCT LEVEL)	SEE PAGE
C	1	1	**241-3661**	2	COUPLING AS	
					(EACH INCLUDES)	
		1	**3K-0360**	1	SEAL-O-RING	
		1	**239-3482**	1	KIT-REPAIR (QUICK DISCONNECT)	
C	2	1	**8U-8009**	2	CAP-PROTECTION	

C-CHANGE FROM PREVIOUS TYPE

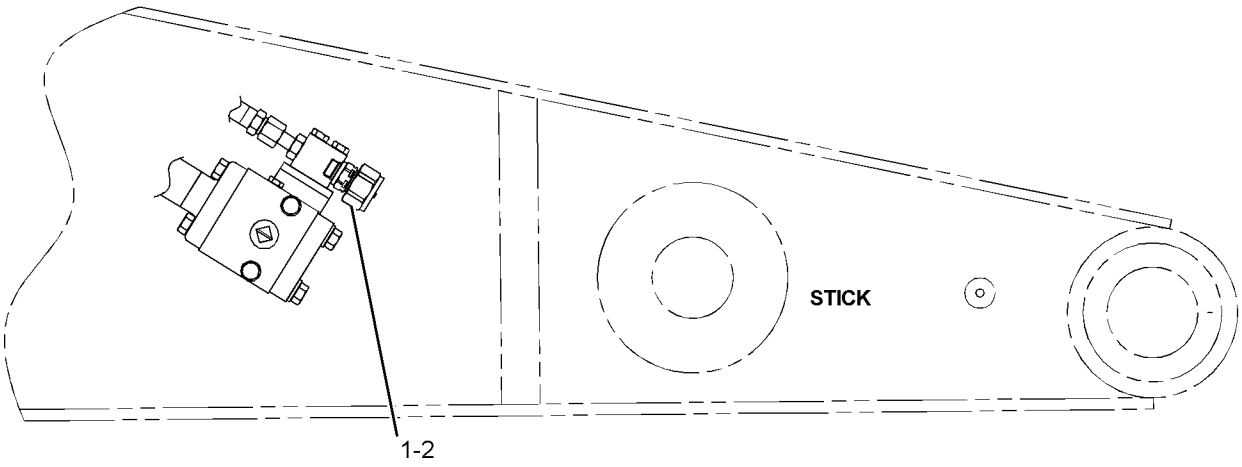

RIGHT SIDE VIEW

GRAPHIC #1 **<END>** g01080907

272-4669 COUPLING GP-PUMP

S/N: MYG1-UP; PPN1-UP

PART OF 310-9486 PUMP & MTG GP-MAIN HYDRAULIC

SMCS-5062 **i02528831**

NOTE	REF NO	GRAPHIC REF	PART NUMBER	QTY	PART NAME 1 2 3 4 5 6 (PRODUCT LEVEL)	SEE PAGE
	1	1	**287-0169**	1	COUPLING GP-FLEXIBLE	
	2	1	**272-4650**	1	PLATE	
	3	1	**099-8111**	4	PIN-SPRING	
M	4	1	**169-6064**	4	BOLT-SOCKET HEAD (M20X2.5X55-MM)	
	5	1	**8T-4223**	12	WASHER-HARD (13.5X25.5X3-MM THK)	
	6	1	**8T-8920**	12	BOLT (1/2-13X3.25-IN)	

M-METRIC PART

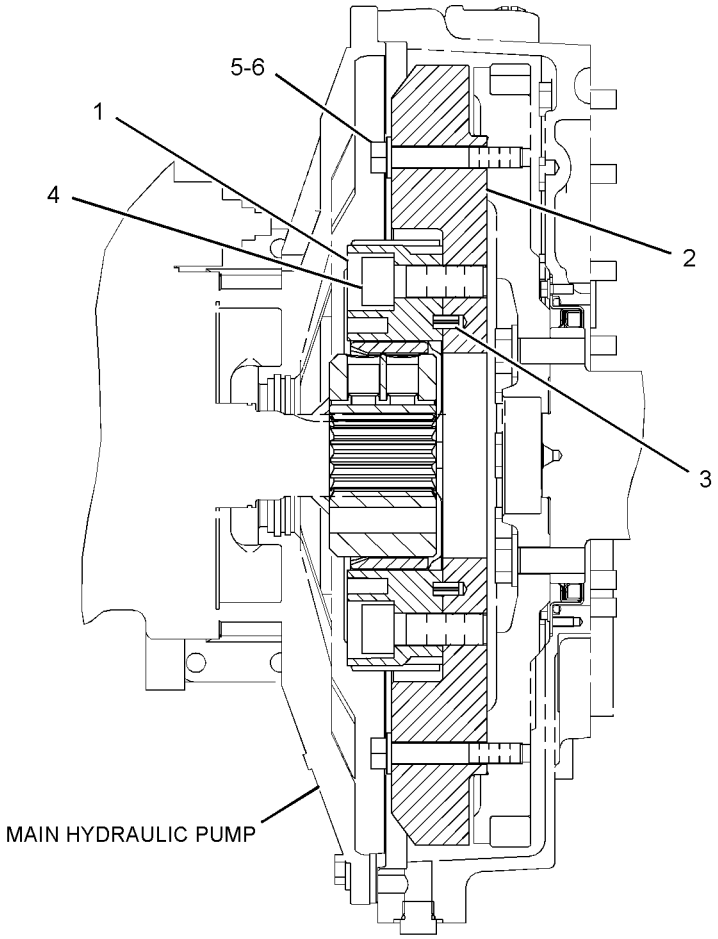

FRONT VIEW

GRAPHIC #1 **<END>** g01266179

289-8018 CYLINDER & LINES GP-BOOM—LH

S/N: MYG1-UP; PPN1-UP
PART OF 290-1843, 314-3615 BOOM AR-1 PIECE LONG, 290-1818 BOOM AR-1 PIECE SHORT
AN ATTACHMENT

SMCS-5456, 7562 **i02759347**

NOTE	PART NUMBER	QTY	PART NAME 1 2 3 4 5 6 (PRODUCT LEVEL)	SEE PAGE
Y	**289-8020**	1	CYLINDER & SEAL GP-BOOM	415
Y	*192-6908*	1	LINES GP-BOOM CYLINDER	483
Y-SEPARATE ILLUSTRATION				

<END>

289-8019 CYLINDER & LINES GP-BOOM—RH

S/N: MYG1-UP; PPN1-UP
PART OF 290-1843, 314-3615 BOOM AR-1 PIECE LONG, 290-1818 BOOM AR-1 PIECE SHORT
AN ATTACHMENT

SMCS-5456, 7562 **i02759348**

NOTE	PART NUMBER	QTY	PART NAME 1 2 3 4 5 6 (PRODUCT LEVEL)	SEE PAGE
Y	**289-8020**	1	CYLINDER & SEAL GP-BOOM	415
Y	*192-6909*	1	LINES GP-BOOM CYLINDER (RH)	484
Y-SEPARATE ILLUSTRATION				

<END>

289-8010 CYLINDER & LINES GP-BUCKET—DB-FAMILY

S/N: MYG1-UP; PPN1-UP
PART OF 290-1825, 290-1830 LINKAGE AR-BUCKET
AN ATTACHMENT

SMCS-5457 **i02721683**

NOTE	PART NUMBER	QTY	PART NAME 1 2 3 4 5 6 (PRODUCT LEVEL)	SEE PAGE
Y	**289-8011**	1	CYLINDER & SEAL GP-BUCKET	416
Y	*239-1627*	1	LINES GP-BUCKET CYLINDER	489
Y-SEPARATE ILLUSTRATION				

<END>

289-8039 CYLINDER & LINES GP-BUCKET—TB1-FAMILY

S/N: MYG1-UP; PPN1-UP
PART OF 290-1826 LINKAGE AR-BUCKET
AN ATTACHMENT

SMCS-5457 **i02759803**

NOTE	PART NUMBER	QTY	PART NAME 1 2 3 4 5 6 (PRODUCT LEVEL)	SEE PAGE
Y	**289-8040**	1	CYLINDER & SEAL GP-BUCKET	417
Y	*115-8694*	1	LINES GP-BUCKET CYLINDER	488
Y-SEPARATE ILLUSTRATION				

<END>

HYDRAULIC SYSTEM

289-8029 CYLINDER & LINES GP-STICK

S/N: MYG1-UP; PPN1-UP

PART OF 290-1843, 314-3615 BOOM AR-1 PIECE LONG, 290-1818 BOOM AR-1 PIECE SHORT

AN ATTACHMENT

SMCS-5458 **i02759349**

NOTE	PART NUMBER	QTY	PART NAME 1 2 3 4 5 6 (PRODUCT LEVEL)	SEE PAGE
Y	**289-8030**	1	CYLINDER & SEAL GP-STICK	418
Y	*239-1876*	1	LINES GP-STICK CYLINDER	584

Y-SEPARATE ILLUSTRATION

<END>

289-8020 CYLINDER & SEAL GP-BOOM

S/N: MYG1-UP; PPN1-UP

PART OF 289-8018, 289-8019 CYLINDER & LINES GP-BOOM

AN ATTACHMENT

SMCS-5456 **i03021296**

NOTE	REF NO	GRAPHIC REF	PART NUMBER	QTY	PART NAME 1 2 3 4 5 6 (PRODUCT LEVEL)	SEE PAGE
	1	1	**3B-8489**	1	FITTING-GREASE	
	2	1	**166-1497**	2	SEAL-LIP TYPE	
CY	3	1	**311-9526**	1	CYLINDER GP-BOOM	419
	4	1	**9X-4597**	2	SEAL-LIP TYPE	

C-CHANGE FROM PREVIOUS TYPE
Y-SEPARATE ILLUSTRATION

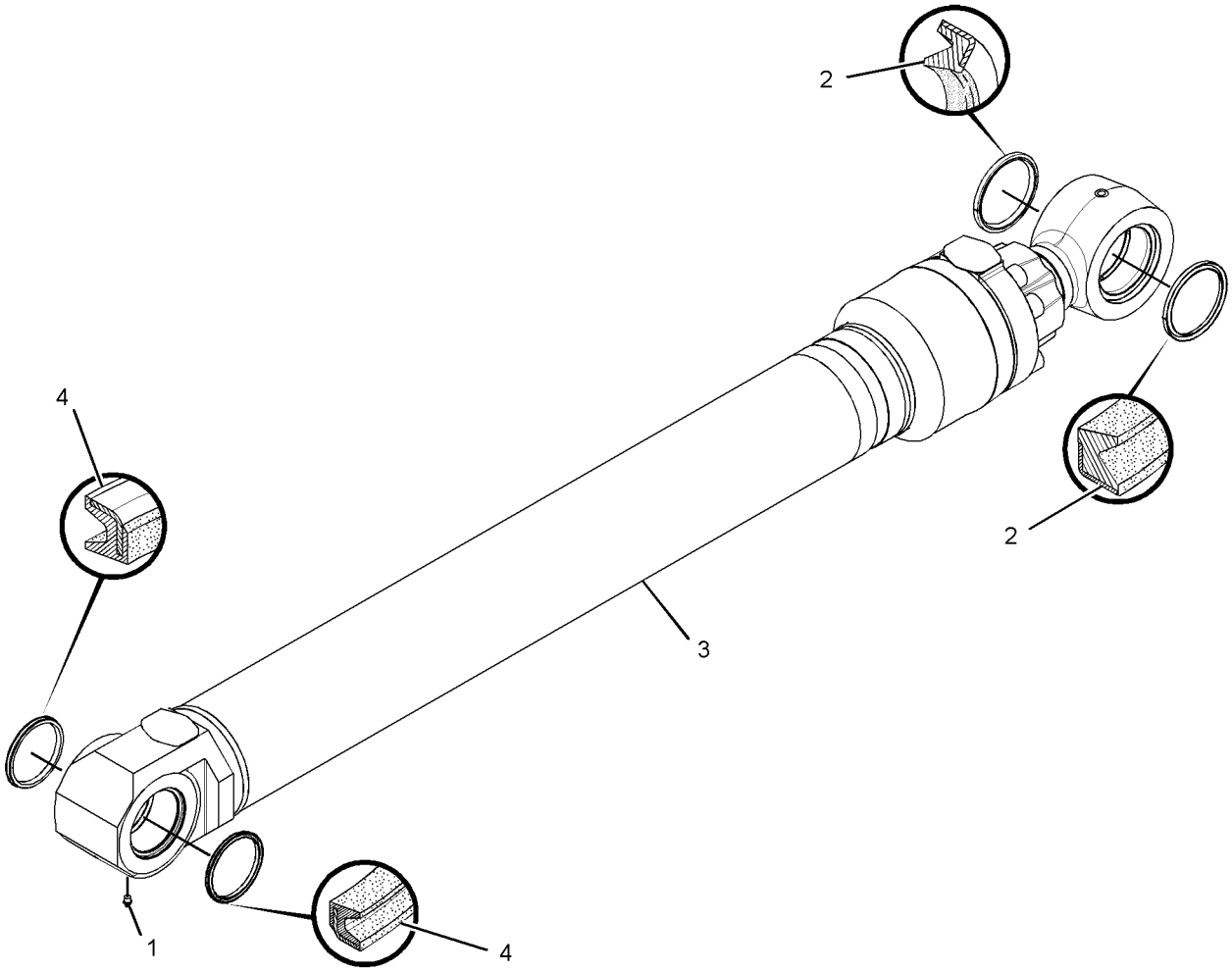

GRAPHIC #1 **<END>** g01361958

289-8011 CYLINDER & SEAL GP-BUCKET

S/N: MYG1-UP; PPN1-UP
PART OF 289-8010 CYLINDER & LINES GP-BUCKET
AN ATTACHMENT

SMCS-5457 **i03006496**

NOTE	REF NO	GRAPHIC REF	PART NUMBER	QTY	PART NAME 1 2 3 4 5 6 (PRODUCT LEVEL)	SEE PAGE
	1	1	**3B-8489**	2	FITTING-GREASE (HYDRAULIC)	
	2	1	**166-1496**	2	SEAL-LIP TYPE	
CY	3	1	**315-4451**	1	CYLINDER GP-BUCKET	421
	4	1	**166-1494**	2	SEAL-LIP TYPE	

C-CHANGE FROM PREVIOUS TYPE
Y-SEPARATE ILLUSTRATION

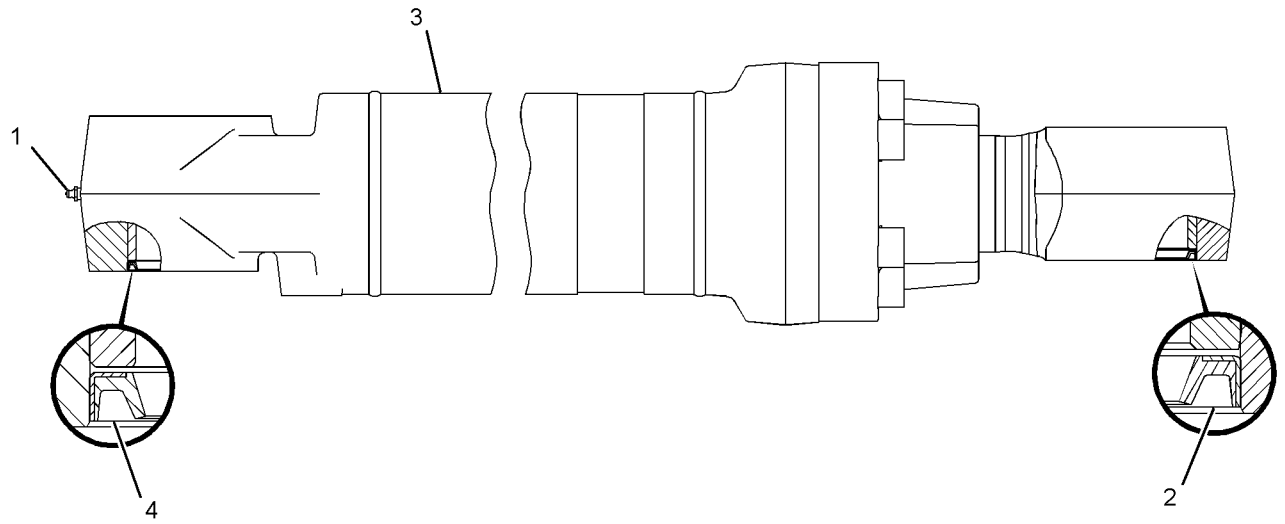

GRAPHIC #1 **<END>** g01373594

289-8040 CYLINDER & SEAL GP-BUCKET

S/N: MYG1-UP; PPN1-UP
PART OF 289-8039 CYLINDER & LINES GP-BUCKET
AN ATTACHMENT

SMCS-5457 **i02984048**

NOTE	REF NO	GRAPHIC REF	PART NUMBER	QTY	PART NAME 1 2 3 4 5 6 (PRODUCT LEVEL)	SEE PAGE
	1	1	**3B-8489**	2	FITTING-GREASE	
	2	1	**7X-4803**	2	SEAL-LIP TYPE	
CY	3	1	**315-4473**	1	CYLINDER GP-BUCKET	423
	4	1	**9X-4597**	2	SEAL-LIP TYPE	

C-CHANGE FROM PREVIOUS TYPE
Y-SEPARATE ILLUSTRATION

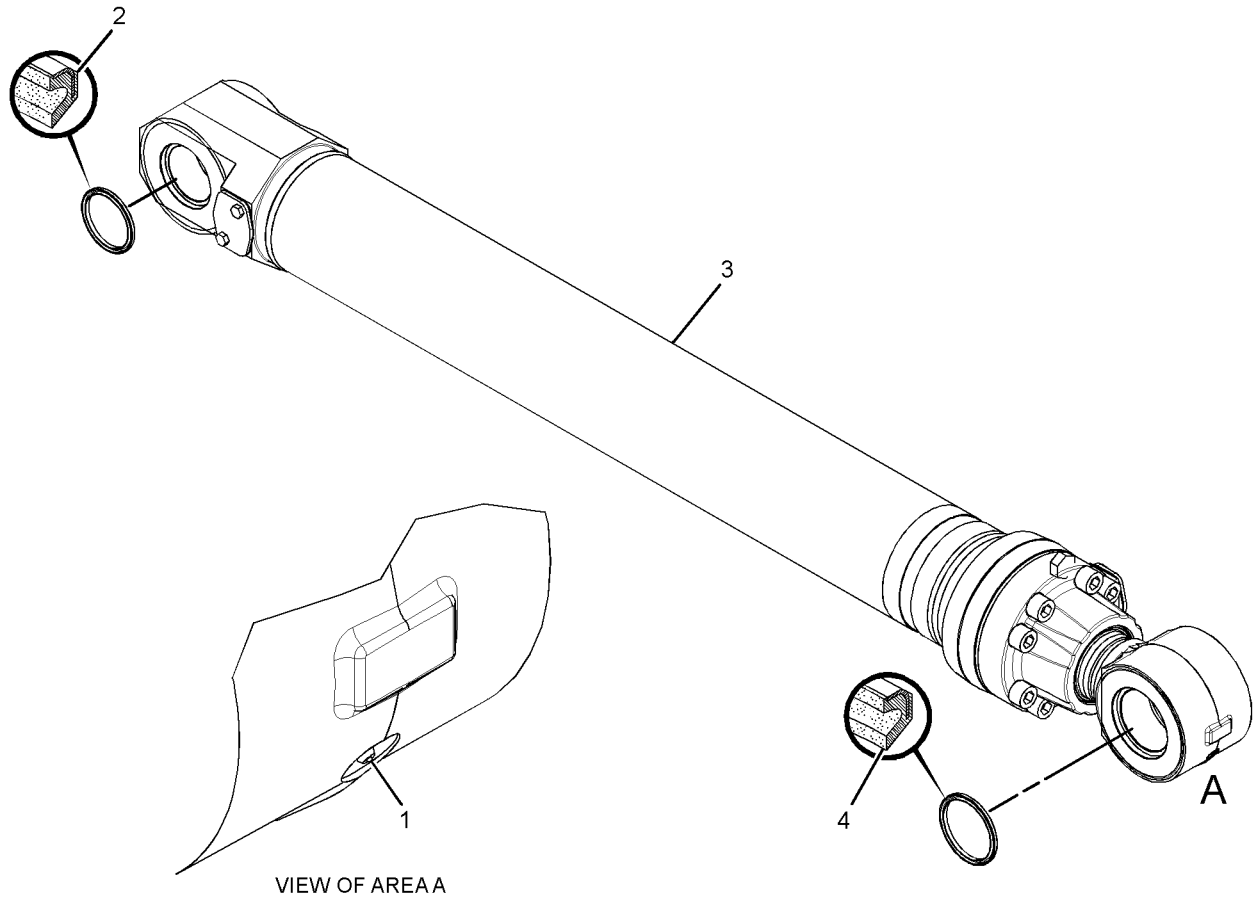

VIEW OF AREA A

GRAPHIC #1 **<END>** g01369509

289-8030 CYLINDER & SEAL GP-STICK–LH

S/N: MYG1-UP; PPN1-UP
PART OF 289-8029 CYLINDER & LINES GP-STICK
AN ATTACHMENT

SMCS-5458 **i02759605**

NOTE	REF NO	GRAPHIC REF	PART NUMBER	QTY	PART NAME 1 2 3 4 5 6 (PRODUCT LEVEL)	SEE PAGE
	1	1	**7X-4803**	4	SEAL-LIP TYPE	
Y	2	1	**289-8031**	1	CYLINDER GP-STICK	426
	3	1	**3B-8489**	1	FITTING-GREASE	

Y-SEPARATE ILLUSTRATION

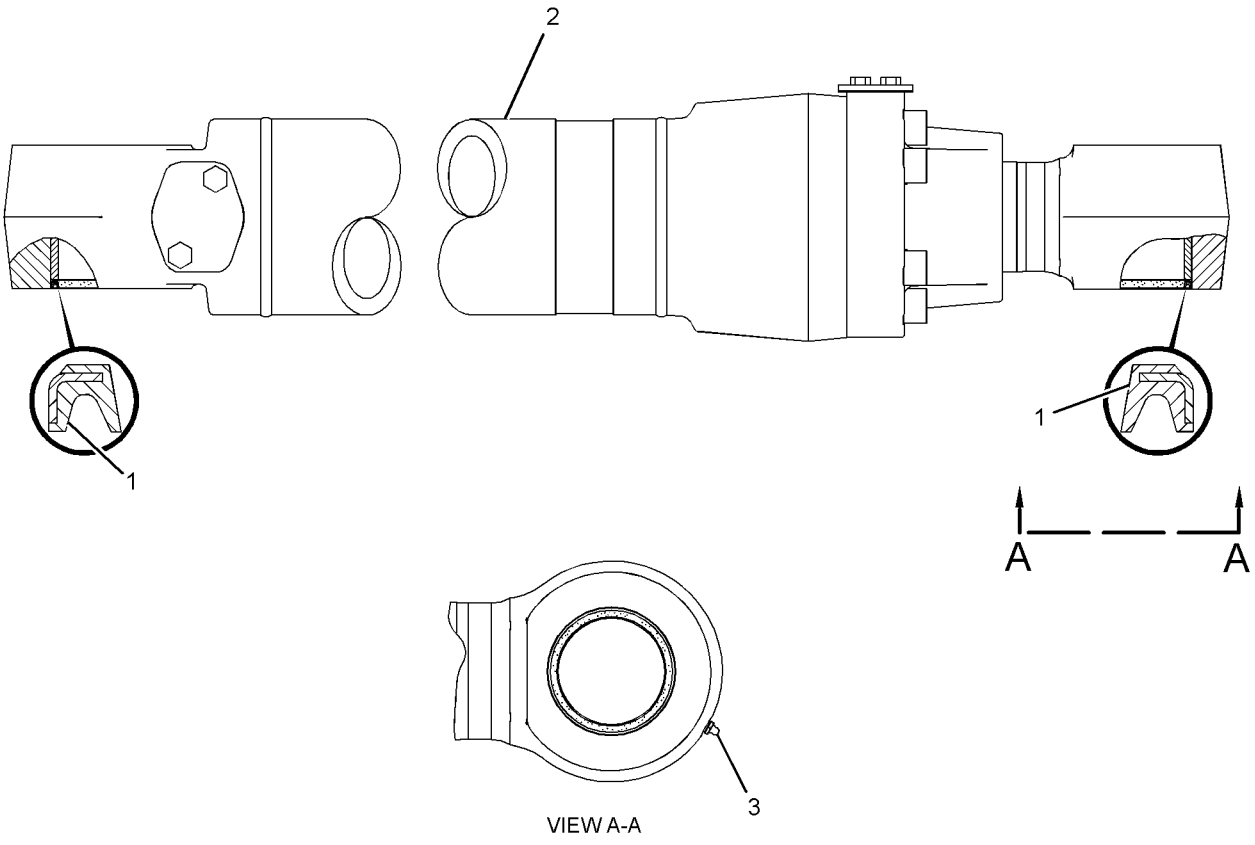

VIEW A-A

GRAPHIC #1 **<END>** g01347858

311-9526 CYLINDER GP-BOOM

S/N: MYG1-UP; PPN1-UP
150-MM (5.9-IN) BORE X 1440-MM (56.7-IN) STROKE
PART OF 289-8020 CYLINDER & SEAL GP-BOOM
AN ATTACHMENT

SMCS-5456 **i03025901**

NOTE	REF NO	GRAPHIC REF	PART NUMBER	QTY	PART NAME 1 2 3 4 5 6 (PRODUCT LEVEL)	SEE PAGE
	1	1	**6I-6798**	1	STOP	
	2	1	**7Y-4660**	1	HEAD	
J	3	1	**7Y-4669**	1	RING-BACKUP	
M	4	1	**7Y-4695**	1	LOCKNUT (M80X2-THD)	
J	5	1	**9X-3601**	1	SEAL AS	
J	6	1	**128-9265**	1	SEAL-BUFFER	
	7	1	**188-4216**	1	PISTON	
J	8	1	**188-4218**	1	RING	
J	9	1	**242-6833**	1	RING-SEAL	
	10	1	**289-8027**	1	ROD AS	
	10A	1	**241-7341**	1	BEARING-SLEEVE	
	11	1	**311-9527**	1	CYLINDER AS	
	11A	1	**241-7340**	1	BEARING-SLEEVE	
	12	1	**7Y-4672**	1	RING-RETAINING	
J	13	1	**165-9290**	1	SEAL-LIP TYPE	
J	14	1	**170-9864**	1	SEAL-U-CUP	
J	15	1	**188-4217**	2	RING	
J	16	1	**095-1633**	1	SEAL-O-RING	
	17	1	**114-0760**	1	BEARING-SLEEVE	
J	18	1	**7Y-4673**	1	RING-BACKUP	
M	19	1	**7Y-5215**	8	BOLT-SOCKET HEAD (M24X3X90-MM)	
					AVAILABLE REPAIR KIT(S):	
J			**242-6840**	1	KIT-SEAL (BOOM CYLINDER)	

J-KIT MARKED J SERVICES PART(S) MARKED J
M-METRIC PART

311-9526 CYLINDER GP-BOOM *(contd.)* i03025901

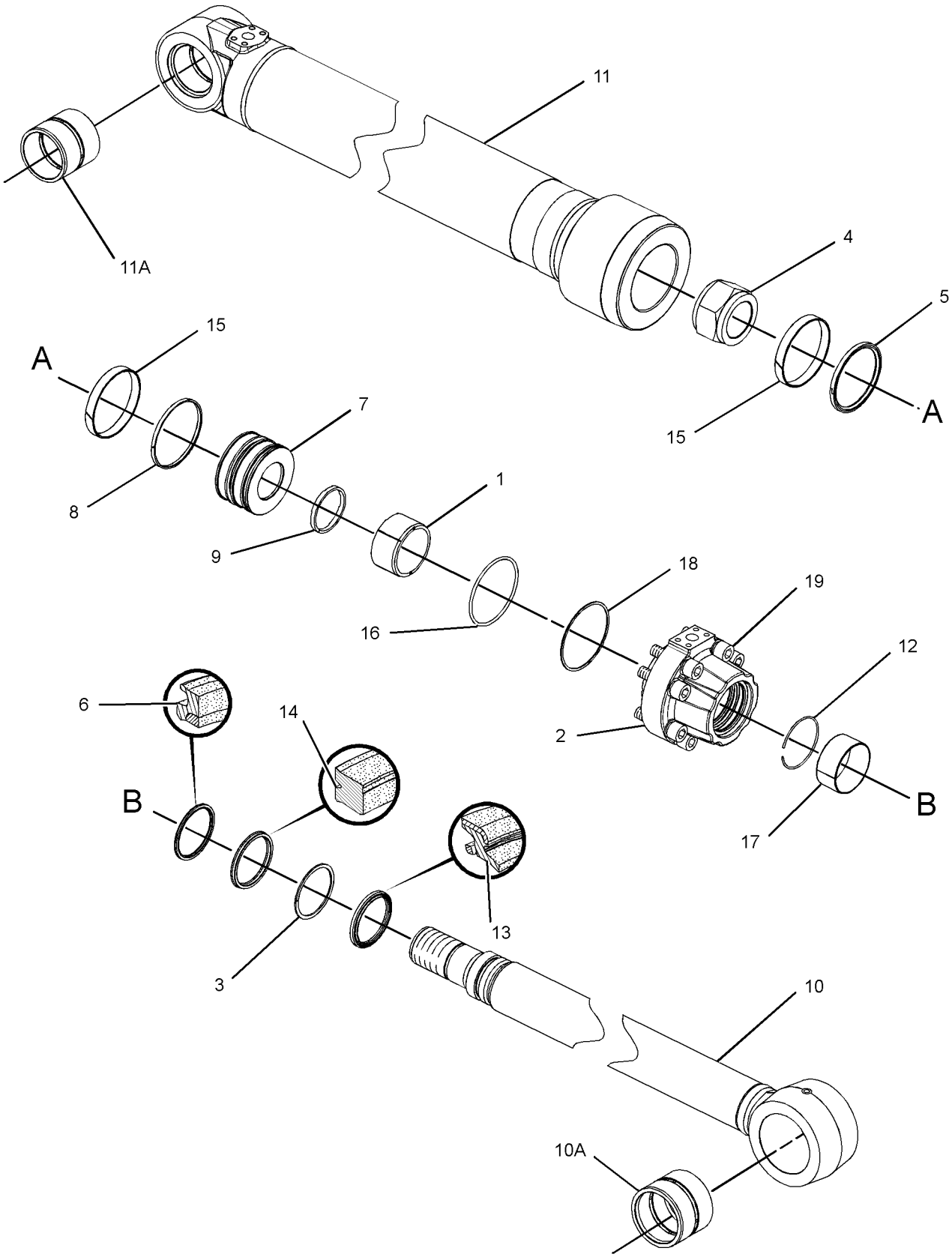

GRAPHIC #1 **<END>** g01515335

315-4451 CYLINDER GP-BUCKET

S/N: MYG1-UP; PPN1-UP
150-MM (5.9-IN) BORE X 1151-MM (45.3-IN) STROKE
PART OF 289-8011 CYLINDER & SEAL GP-BUCKET
AN ATTACHMENT

SMCS-5457 **i03632222**

NOTE	REF NO	GRAPHIC REF	PART NUMBER	QTY	PART NAME 1 2 3 4 5 6 (PRODUCT LEVEL)	SEE PAGE
	1	1	**7Y-4660**	1	HEAD	
J	2	1	**7Y-4669**	1	RING-BACKUP	
M	3	1	**7Y-4695**	1	LOCKNUT (M80X2-THD)	
J	4	1	**9X-3601**	1	SEAL AS	
J	5	1	**128-9265**	1	SEAL-BUFFER	
	6	1	**188-4216**	1	PISTON	
J	7	1	**188-4218**	1	RING	
	8	1	**242-6787**	1	ROD AS	
	8A	1	**228-5617**	1	BEARING-SLEEVE	
	9	1	**315-4452**	1	CYLINDER AS	
	9A	1	**235-7770**	1	BEARING-SLEEVE	
	10	1	**7Y-4672**	1	RING-RETAINING	
J	11	1	**165-9290**	1	SEAL-LIP TYPE	
J	12	1	**170-9864**	1	SEAL-U-CUP	
J	13	1	**188-4217**	2	RING	
J	14	1	**095-1633**	1	SEAL-O-RING	
	15	1	**114-0760**	1	BEARING-SLEEVE	
J	16	1	**7Y-4673**	1	RING-BACKUP	
M	17	1	**7Y-5215**	8	BOLT-SOCKET HEAD (M24X3X90-MM)	
					AVAILABLE REPAIR KIT(S):	
J			**191-5619**	1	KIT-SEAL (BUCKET CYLINDER)	
					(ALSO INCLUDES A SEAL RING)	

J-KIT MARKED J SERVICES PART(S) MARKED J
M-METRIC PART

315-4451 CYLINDER GP-BUCKET *(contd.)* **i03632222**

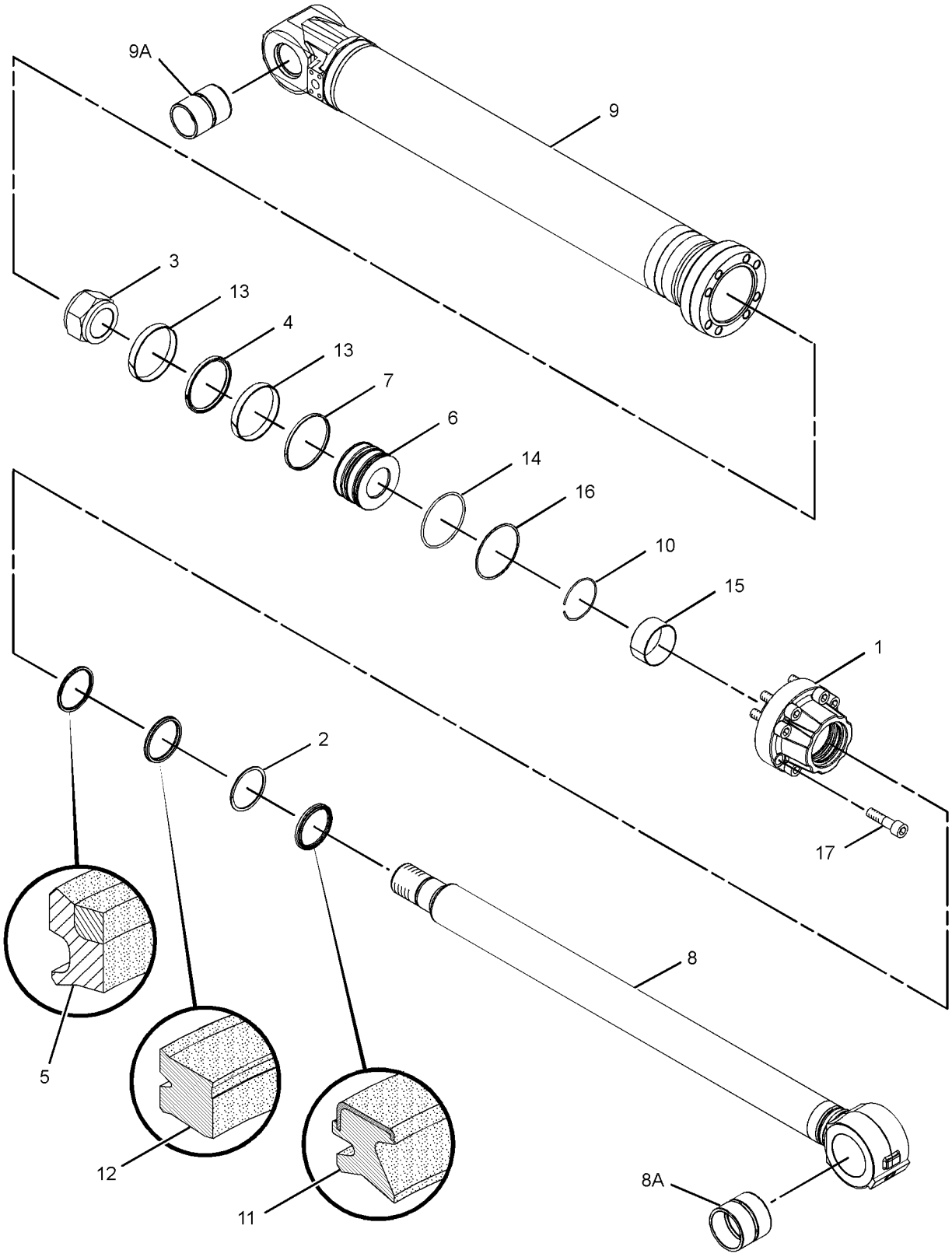

GRAPHIC #1 **<END>** g01504733

HYDRAULIC SYSTEM

315-4473 CYLINDER GP-BUCKET

S/N: MYG1-UP; PPN1-UP
160-MM (6.3-IN) BORE X 1356-MM (53.4-IN) STROKE
PART OF 289-8040 CYLINDER & SEAL GP-BUCKET
AN ATTACHMENT

SMCS-5457 **i02984053**

NOTE	REF NO	GRAPHIC REF	PART NUMBER	QTY	PART NAME 1 2 3 4 5 6 (PRODUCT LEVEL)	SEE PAGE
J	1	1	**9X-3604**	1	SEAL AS	
		1	**9X-3602**	1	RING-SEAL	
		1	**9X-3603**	1	RING-EXPANDER	
M	2	1	**123-2112**	1	LOCKNUT-SPECIAL (M90X2-THD)	
J	3	1	**185-0230**	2	RING	
	4	1	**185-0232**	1	PISTON	
R	5	1	**247-8904**	1	ROD AS	
	5A	1	**087-5548**	1	BEARING-SLEEVE	
	6	1	**315-4475**	1	CYLINDER AS	
	6A	1	**260-2552**	1	BEARING-SLEEVE	
	7	1	**7Y-4944**	1	RING-RETAINING	
	8	1	**087-5551**	1	HEAD	
J	9	1	**128-9266**	1	SEAL-BUFFER	
J	10	1	**165-9291**	1	SEAL-LIP TYPE	
J	11	1	**185-0231**	1	RING	
J	12	1	**087-5550**	1	RING-BACKUP	
J	13	1	**095-1635**	1	SEAL-O-RING	
	14	1	**114-0762**	1	BEARING-SLEEVE	
J	15	1	**170-9865**	1	SEAL-U-CUP	
J	16	1	**7Y-4941**	1	RING-BACKUP	
M	17	1	**7Y-5239**	8	BOLT-SOCKET HEAD (M24X3X100-MM)	
					AVAILABLE REPAIR KIT(S):	
J			**225-4625**	1	KIT-SEAL (BUCKET CYLINDER)	
					(ALSO INCLUDES A SEAL RING)	

J-KIT MARKED J SERVICES PART(S) MARKED J
M-METRIC PART
R-REMFG PART MAY BE AVAILABLE

315-4473 CYLINDER GP-BUCKET *(contd.)* **i02984053**

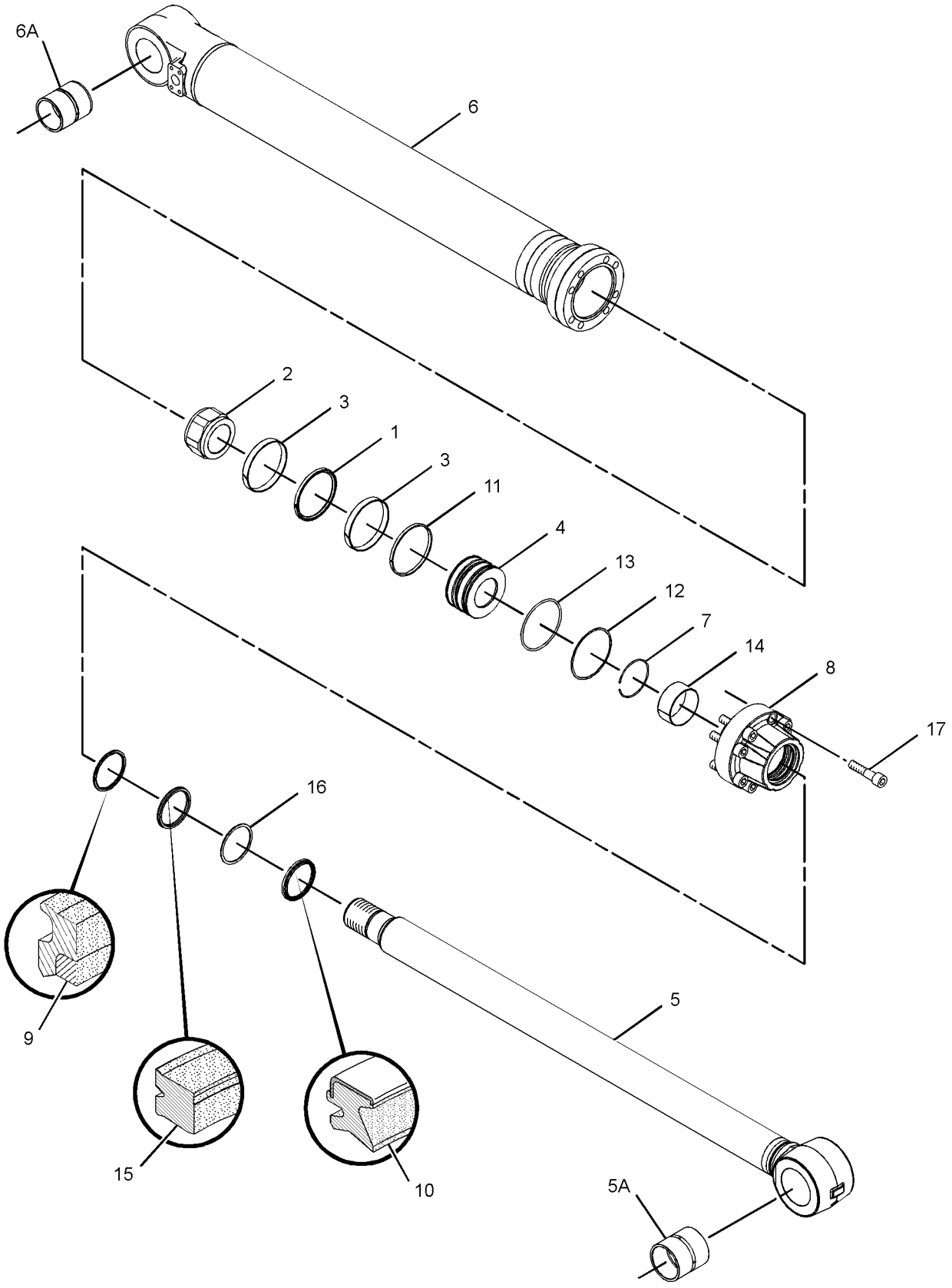

GRAPHIC #1 **<END>** g01541497

169-0753 CYLINDER GP-COUPLER–LOCK

S/N: MYG1-UP; PPN1-UP
70-MM (2.8-IN) BORE X 130-MM (5.1-IN) STROKE
PART OF 169-0751 LOCK GP-QUICK COUPLER
AN ATTACHMENT

SMCS-5133 **i03646942**

NOTE	REF NO	GRAPHIC REF	PART NUMBER	QTY	PART NAME 1 2 3 4 5 6 (PRODUCT LEVEL)	SEE PAGE
	1	1	**169-3923**	1	KIT-VALVE (QUICK COUPLER)	
					AVAILABLE REPAIR KIT(S):	
			219-1322	1	KIT-SEAL (QUICK COUPLER LOCK CYLINDER)	

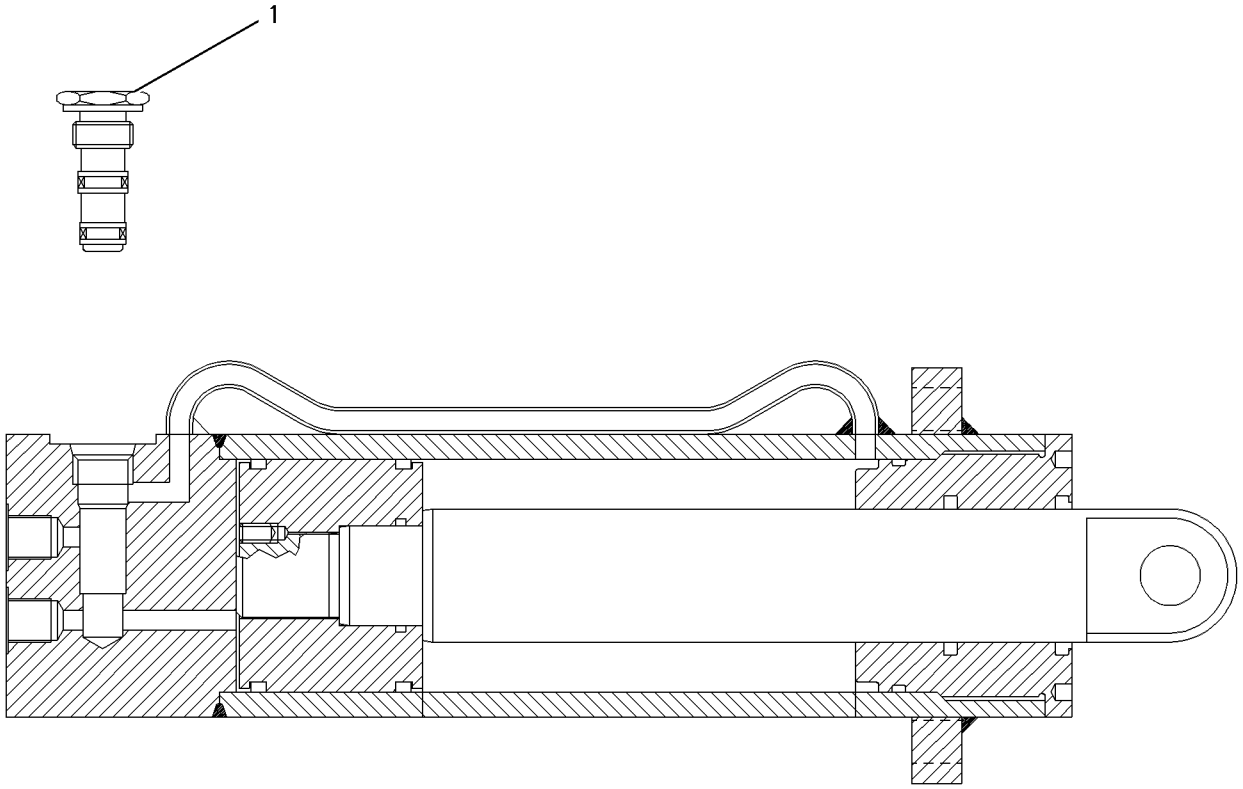

GRAPHIC #1 **<END>** g00562763

HYDRAULIC SYSTEM

289-8031 CYLINDER GP-STICK

S/N: MYG1-UP; PPN1-UP
170-MM (6.7-IN) BORE X 1738-MM (68.4-IN) STROKE
PART OF 289-8030 CYLINDER & SEAL GP-STICK
AN ATTACHMENT

SMCS-5458 **i02759807**

NOTE	REF NO	GRAPHIC REF	PART NUMBER	QTY	PART NAME 1 2 3 4 5 6 (PRODUCT LEVEL)	SEE PAGE
M	1	1	**7Y-4956**	1	LOCKNUT (M90X2-THD)	
J	2	1	**9X-3607**	1	SEAL AS	
	3	1	**103-8345**	1	RING-RETAINING	
	4	1	**107-6579**	1	RING	
	5	1	**107-6933**	1	STOP	
	6	1	**191-5603**	1	PISTON	
J	7	1	**191-5605**	1	RING	
J	8	1	**231-6843**	1	RING-SEAL	
	9	1	**289-8032**	1	CYLINDER AS-HYDRAULIC	
	9A	1	**241-7342**	1	BEARING-SLEEVE	
	10	1	**289-8037**	1	ROD AS	
	10A	1	**241-7342**	1	BEARING-SLEEVE	
	11	1	**191-5602**	1	HEAD	
J	12	1	**191-5604**	2	RING	
	13	1	**191-5643**	1	RING-RETAINING	
J	14	1	**191-5645**	1	SEAL-BUFFER	
J	15	1	**191-5647**	1	RING-BACKUP	
J	16	1	**191-5648**	1	SEAL-LIP TYPE	
	17	1	**191-5705**	1	STOP	
	18	1	**095-0930**	2	RING-RETAINING (EXTERNAL)	
J	19	1	**095-1726**	1	SEAL-O-RING	
	20	1	**191-5644**	1	BEARING-SLEEVE	
J	21	1	**191-5646**	1	SEAL-U-CUP	
J	22	1	**7Y-4945**	1	RING-BACKUP	
M	23	1	**7Y-5239**	8	BOLT-SOCKET HEAD (M24X3X100-MM)	
					AVAILABLE REPAIR KIT(S):	
J			**231-6844**	1	KIT-SEAL (STICK CYLINDER)	

J-KIT MARKED J SERVICES PARTS MARKED J
M-METRIC PART

289-8031 **CYLINDER GP-STICK** *(contd.)* **i02759807**

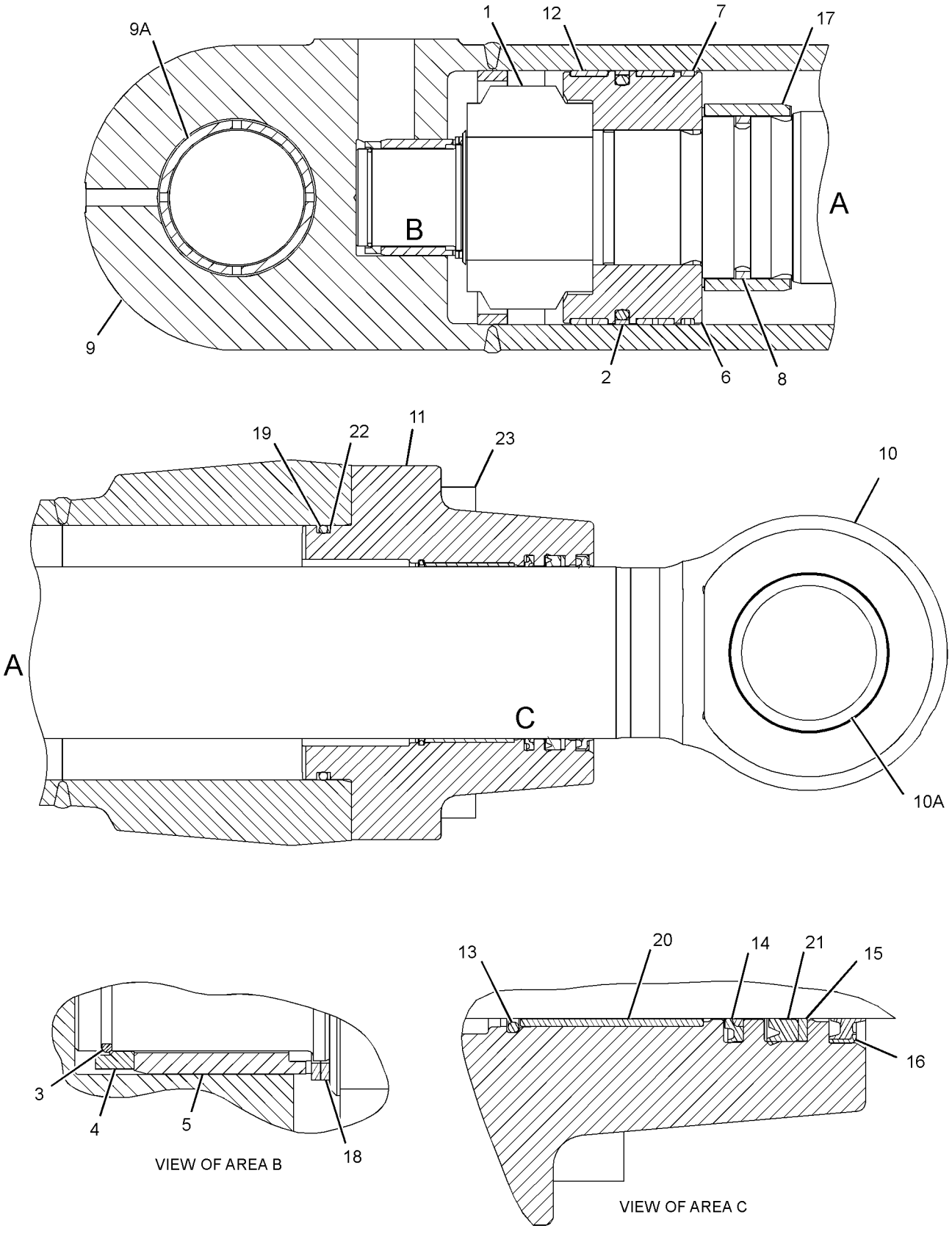

GRAPHIC #1 **<END>** g01363056

HYDRAULIC SYSTEM

234-4620 DRIVE GP-AUXILIARY PUMP

S/N: MYG1-UP; PPN1-UP
PART OF 255-5822 CONTROL AR-AUXILIARY, 255-5823 PUMP & LINES GP-COOLING AN ATTACHMENT

SMCS-3108 **i03584960**

NOTE	REF NO	GRAPHIC REF	PART NUMBER	QTY	PART NAME 1 2 3 4 5 6 (PRODUCT LEVEL)	SEE PAGE
Y	1	1	**295-9441**	1	DRIVE GP-AUXILIARY PUMP (ACCESSORY DRIVE)	429
M	2	1	**108-1781**	8	BOLT-SOCKET HEAD (M12X1.75X35-MM)	

M-METRIC PART
Y-SEPARATE ILLUSTRATION

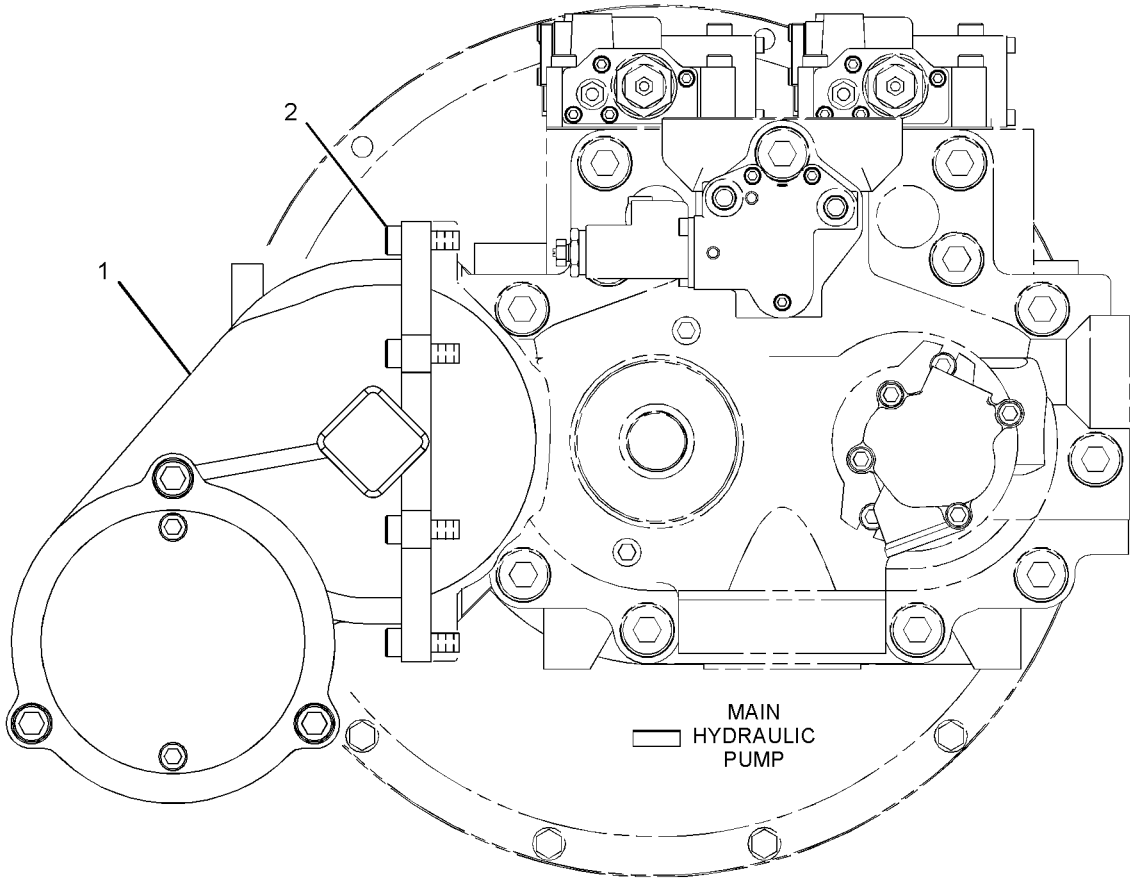

RIGHT SIDE VIEW

GRAPHIC #1 **<END>** g01415575

HYDRAULIC SYSTEM

295-9441 DRIVE GP-AUXILIARY PUMP

S/N: MYG1-UP; PPN1-UP
PART OF 234-4620 DRIVE GP-AUXILIARY PUMP
AN ATTACHMENT

SMCS-3108 **i02711123**

NOTE	REF NO	GRAPHIC REF	PART NUMBER	QTY	PART NAME 1 2 3 4 5 6 (PRODUCT LEVEL)	SEE PAGE
	1	1	**5I-8754**	3	SPACER-BEARING	
	2	1	**170-9964**	1	BEARING	
	3	1	**2W-1145**	1	RING-RETAINING	
	4	1	**206-9298**	1	SEAL-O-RING	
	5	1	**8T-9597**	1	RING-RETAINING	
	6	1	**236-6919**	1	SEAL-O-RING	
	7	1	**8H-5352**	2	BALL BEARING	
M	8	1	**8T-9080**	2	BOLT-SOCKET HEAD (M12X1.75X20-MM)	
	9	1	**249-6670**	1	SEAL-O-RING	
	10	1	**225-4517**	1	PLATE	
M	11	1	**8T-4944**	3	BOLT-SOCKET HEAD (M16X2X40-MM)	

M-METRIC PART

295-9441 DRIVE GP-AUXILIARY PUMP *(contd.)* i02711123

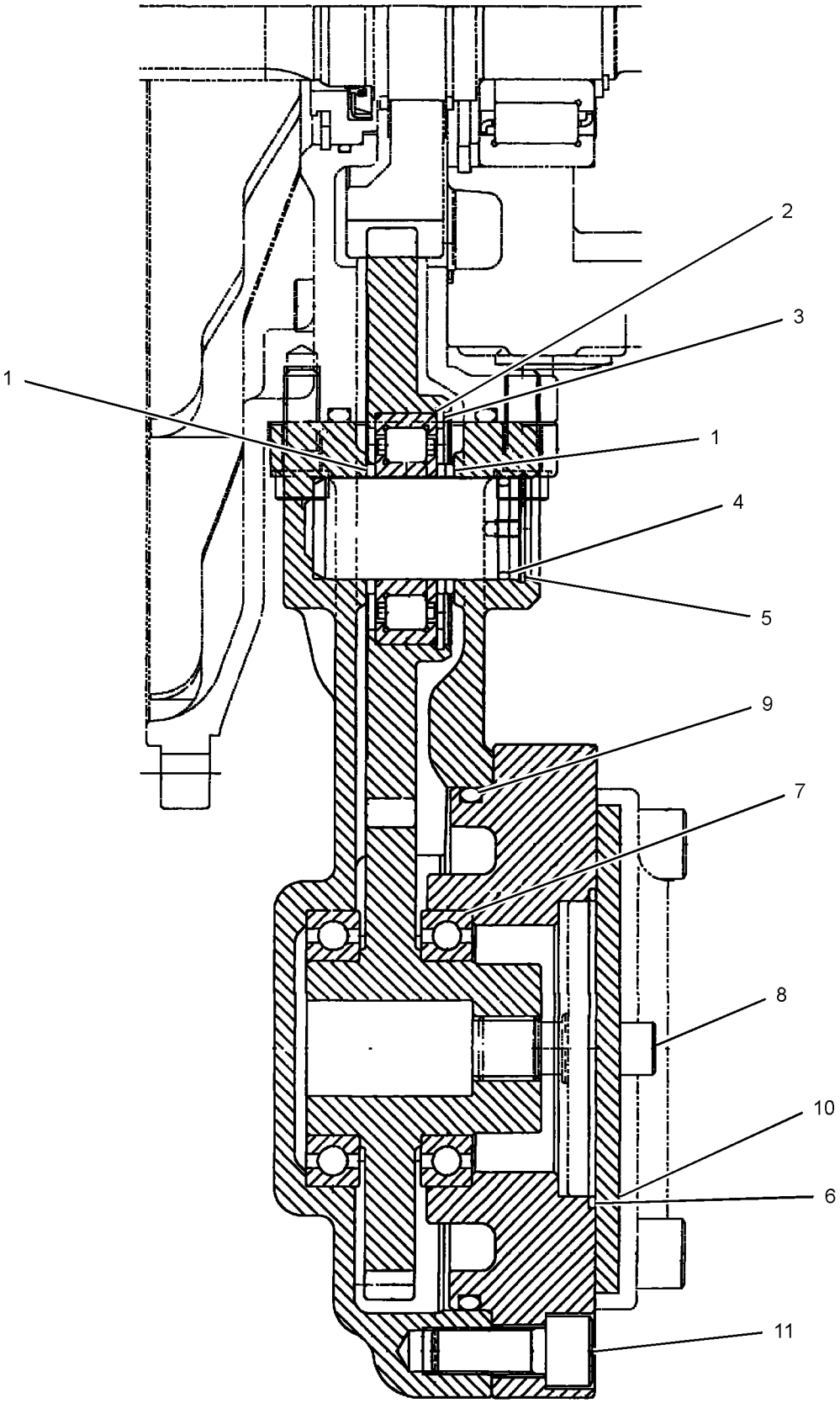

GRAPHIC #1 **<END>** g01348494

HYDRAULIC SYSTEM

333-2958 DRIVE GP-SWING—WITH MOTOR

S/N: MYG1-UP; PPN1-UP

PART OF 191-2576 POWER TRAIN AR

SMCS-5459 **i03648718**

NOTE	REF NO	GRAPHIC REF	PART NUMBER	QTY	PART NAME 1 2 3 4 5 6 (PRODUCT LEVEL)	SEE PAGE
Y	1	1	*200-3372*	1	MOTOR & MTG GP-SWING	592
Y	2	1	**333-2959**	1	DRIVE GP-SWING (WITHOUT MOTOR)	432

Y-SEPARATE ILLUSTRATION

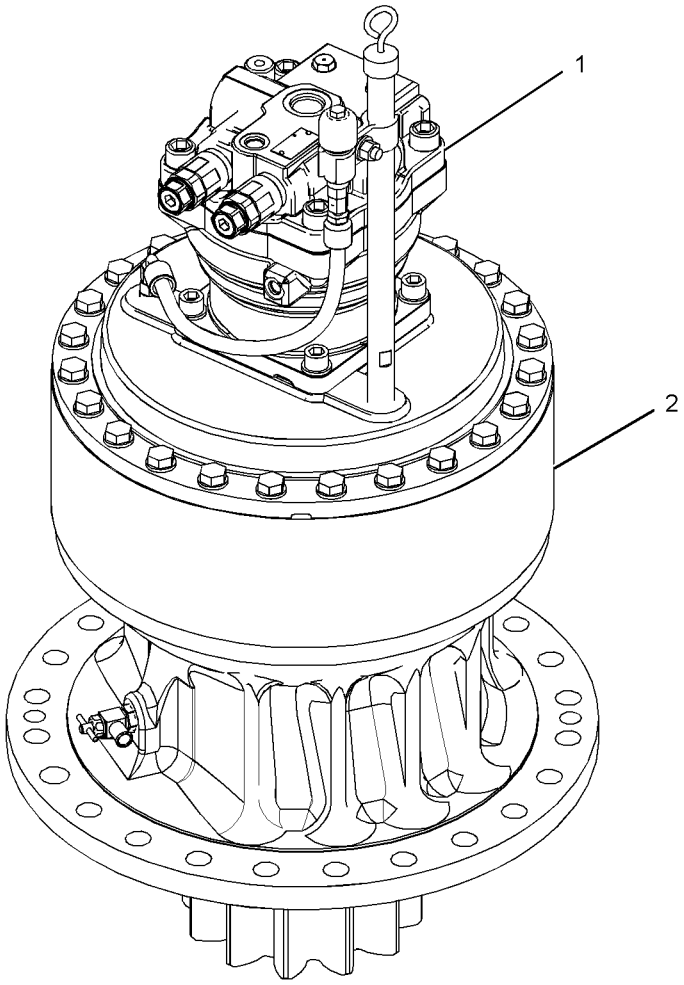

GRAPHIC #1 **<END>** g01948717

HYDRAULIC SYSTEM

333-2959 DRIVE GP-SWING—WITHOUT MOTOR

S/N: MYG1-UP; PPN1-UP

PART OF 333-2958 DRIVE GP-SWING

SMCS-5459 **i03648724**

NOTE	REF NO	GRAPHIC REF	PART NUMBER	QTY	PART NAME 1 2 3 4 5 6 (PRODUCT LEVEL)	SEE PAGE
	1	1	**4H-6112**	1	BREATHER (SWING DRIVE)	
	2	1	**6V-7238**	1	VALVE-SHUTOFF (SWING DRIVE)	
	3	1	**7I-7611**	1	CAGE	
	4	1	**7I-7619**	1	BEARING-ROLLER	
M	5	1	**7I-7684**	2	SPACER (50X79.6X6-MM THK)	
	6	1	**9U-8693**	1	BEARING-ROLLER	
	7	1	**093-1730**	1	RING-RETAINING	
M	8	1	**094-1528**	8	WASHER (53X84X1-MM THK)	
	9	1	**096-1441**	1	RING-RETAINING	
	10	1	**110-7149**	1	RING-RETAINING	
	11	1	**114-1322**	1	RING-RETAINING	
	12	1	**114-1398**	1	GAUGE-OIL LEVEL (SWING DRIVE)	
	13	1	**114-1399**	1	PIPE-GAUGE	
I	14	1	**127-3872**	1	HOSE AS	
	15	1	**136-2802**	2	CONNECTOR	
	16	1	**136-2803**	2	CLIP	
	17	1	**148-4600**	1	GEAR-SUN (17-TEETH)	
	18	1	**148-4601**	1	GEAR-SUN (17-TEETH)	
	19	1	**148-4602**	4	GEAR-PLANETARY (24-TEETH)	
	20	1	**148-4603**	4	GEAR-PLANETARY (24-TEETH)	
	21	1	**148-4604**	1	GEAR-RING (67-TEETH)	
	22	1	**148-4605**	1	SHAFT-PINION	
	23	1	**148-4607**	1	CARRIER-PLANETARY	
	24	1	**148-4608**	4	SHAFT-PLANETARY	
	25	1	**148-4609**	4	SHAFT-PLANETARY	
	26	1	**148-4611**	8	WASHER (71.3X112X1-MM THK)	
	27	1	**171-9413**	1	SPACER (140.5X160X103.2-MM THK)	
	28	1	**191-2511**	1	CARRIER-PLANETARY	
	29	1	**191-2513**	4	BEARING AS-ROLLER	
	30	1	**191-2514**	8	BEARING AS	
	31	1	**191-2524**	1	HOUSING	
	32	1	**199-4540**	1	COVER-HOUSING	
	33	1	**227-6215**	1	BOSS	
	34	1	**099-5194**	8	PIN-SPRING	
	35	1	**128-9170**	2	SEAL-LIP TYPE	
	36	1	**3K-0360**	1	SEAL-O-RING	
	37	1	**5M-4454**	1	SEAL-O-RING	
M	38	1	**8T-4183**	10	BOLT (M12X1.75X40-MM)	
	39	1	**8T-4223**	12	WASHER-HARD (13.5X25.5X3-MM THK)	
M	40	1	**8T-4244**	1	NUT (M12X1.75-THD)	
M	41	1	**8T-4956**	1	BOLT (M12X1.75X35-MM)	
M	42	1	**8T-6383**	24	BOLT (M16X2X200-MM)	
	43	1	**9X-8257**	24	WASHER (17.5X30X3.5-MM THK)	
B	44	1	**1U-8846**		SEALANT-GASKET	

B-USE AS REQUIRED
I-REFER TO HYDRAULIC INFORMATION SYSTEM
M-METRIC PART

333-2959 DRIVE GP-SWING *(contd.)* **i03648724**

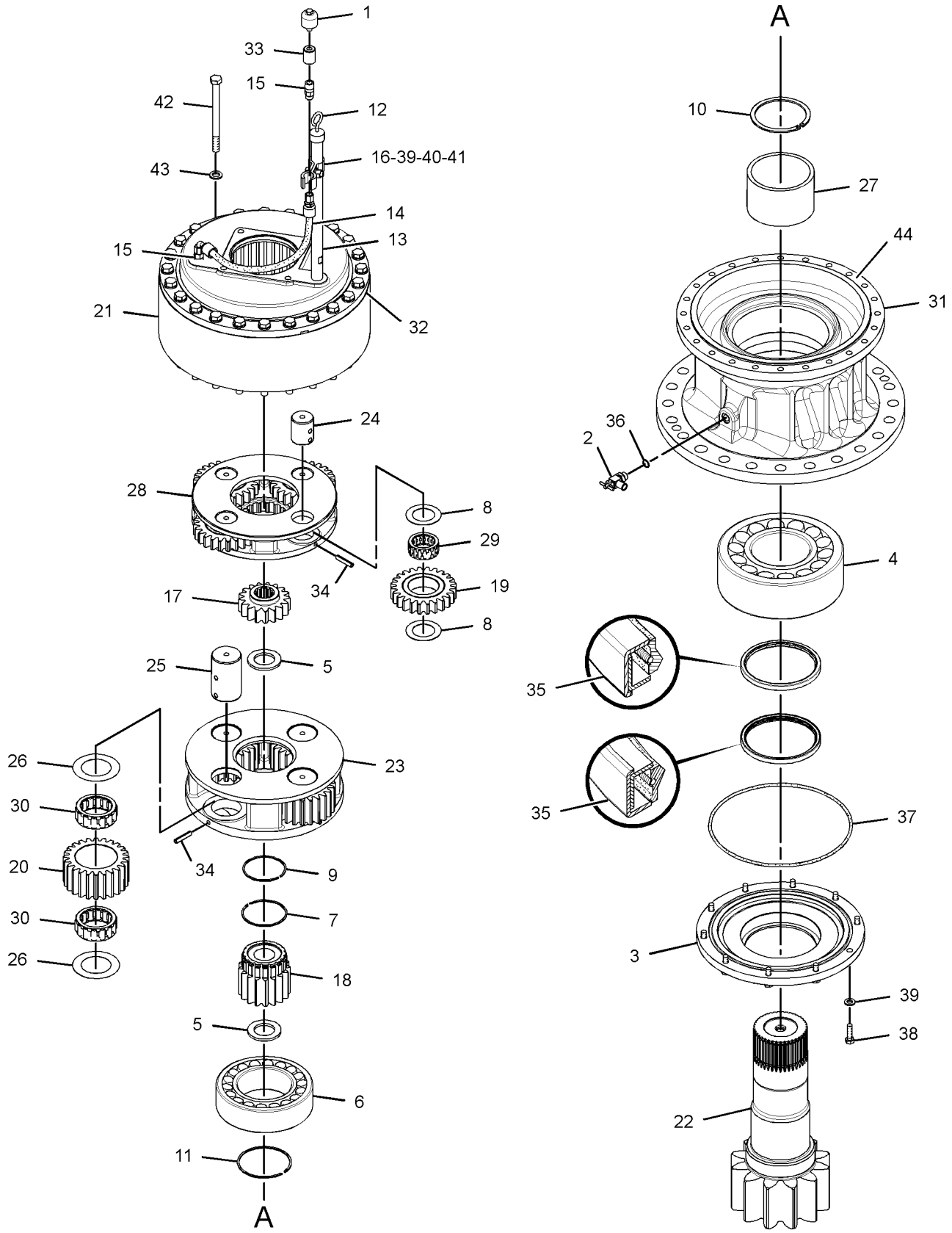

GRAPHIC #1 **<END>** g01959134

HYDRAULIC SYSTEM

191-2577 FASTENER GP-SWING & FINAL DR

S/N: MYG1-UP; PPN1-UP

PART OF 191-2576 POWER TRAIN AR

SMCS-4050, 5459 **i02790066**

NOTE	REF NO	GRAPHIC REF	PART NUMBER	QTY	PART NAME 1 2 3 4 5 6 (PRODUCT LEVEL)	SEE PAGE
M	1	1	**8T-5878**	40	BOLT (M24X3X80-MM)	
	2	1	**8T-4167**	63	WASHER-HARD (26X44X4-MM THK)	
M	3	1	**7X-2576**	23	BOLT (M24X3X70-MM)	
B	4	1	**1U-8846**		SEALANT-GASKET	
E	5	1	**5P-0767**		HOSE (90-CM)	
	6	1	**2B-7561**	2	CORK	
	7	1	**096-4755**	1	PIN	
	8	1	**5D-1026**	1	CLAMP-BAND	

B-USE AS REQUIRED
E-ORDER BY THE CENTIMETER
M-METRIC PART

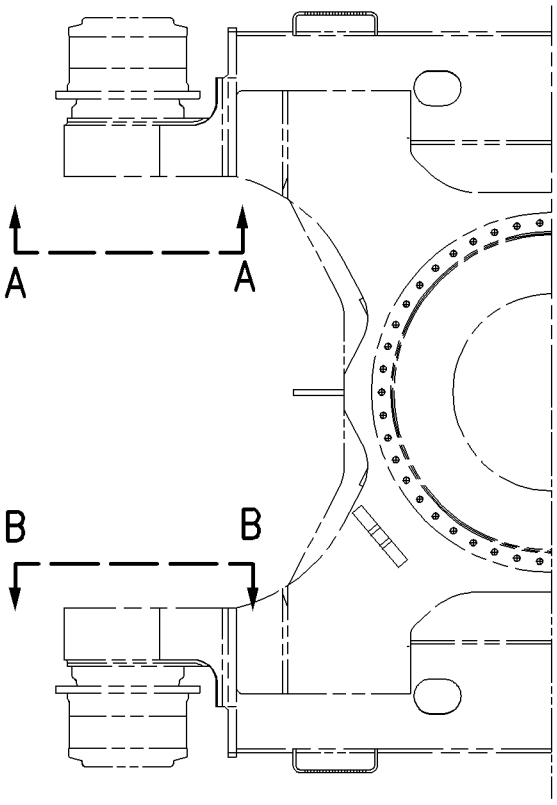

TOP VIEW

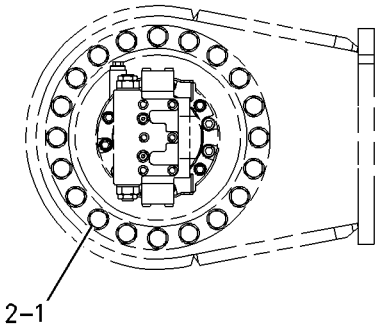

VIEW A-A

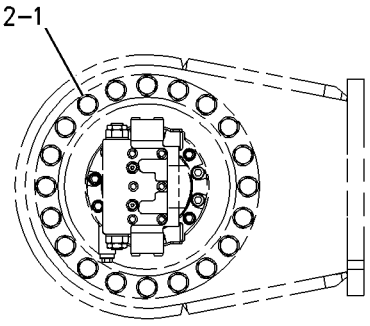

VIEW B-B

FWD

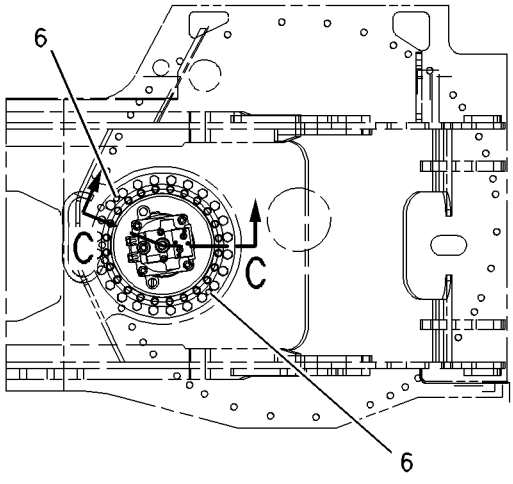

TOP VIEW

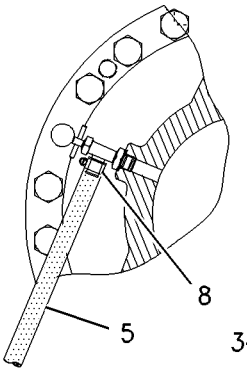

SECTION D-D

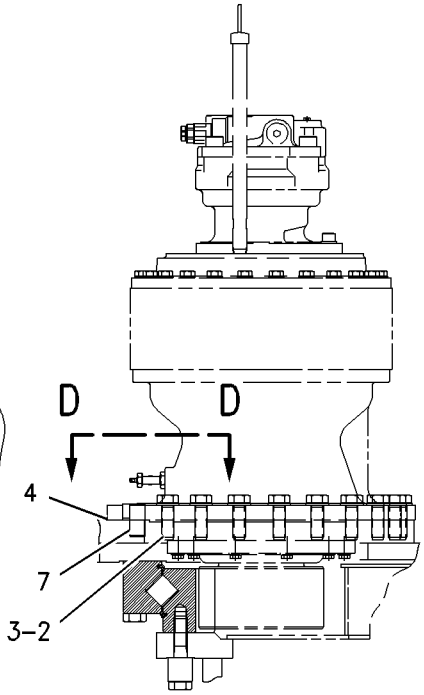

VIEW C-C

GRAPHIC #1 **<END>** g00791607

HYDRAULIC SYSTEM

267-1123 FILTER & LINES GP-HYDRAULIC–

FINE FILTRATION

S/N: MYG1-UP; PPN1-UP

PART OF 273-7095 FILTER AR-HYDRAULIC

AN ATTACHMENT

SMCS-5057, 5068 **i03411384**

NOTE	REF NO	GRAPHIC REF	PART NUMBER	QTY	PART NAME 1 2 3 4 5 6 (PRODUCT LEVEL)	SEE PAGE
	1	1	**6V-0852**	1	CAP-DUST	
I	2	1	**154-9355**	1	HOSE AS	
I	3	1	**187-7067**	1	HOSE AS	
Y	4	1	**250-0728**	1	FILTER GP-OIL (HYDRAULIC)	444
	5	1	**271-4374**	1	PLATE	
	6	1	**318-8811**	1	PLATE	
	7	1	*148-8345*	1	CONNECTOR AS	
		1	**2M-9780**	1	SEAL-O-RING	
		1	**6V-8398**	1	SEAL-O-RING	
		1	**6V-8638**	1	CONNECTOR	
	8	1	*148-8365*	1	ELBOW AS	
		1	**3J-1907**	1	SEAL-O-RING	
		1	**6V-8398**	1	SEAL-O-RING	
		1	**8T-6876**	1	ELBOW	
	9	1	*148-8436*	1	TEE AS	
		1	**3K-0360**	1	SEAL-O-RING	
		1	**6V-8398**	2	SEAL-O-RING	
		1	**6V-8775**	1	TEE-FACE SEAL	
C	10	1	*148-8428*	1	TEE AS	
		1	**3K-0360**	1	SEAL-O-RING	
		1	**6V-8398**	2	SEAL-O-RING	
		1	**6V-8782**	1	TEE	
	11	1	**3J-1907**	2	SEAL-O-RING	
	12	1	**6V-3965**	1	FITTING (QUICK DISCONNECT)	
	13	1	**6V-8076**	1	ELBOW	
C	14	1	**7K-1181**	2	STRAP-CABLE	
	15	1	**8T-4121**	4	WASHER-HARD (11X21X2.5-MM THK)	
M	16	1	**8T-4183**	2	BOLT (M12X1.75X40-MM)	
	17	1	**8T-4223**	4	WASHER-HARD (13.5X25.5X3-MM THK)	
M	18	1	**8T-4244**	2	NUT (M12X1.75-THD)	
M	19	1	**8T-4908**	4	BOLT (M8X1.25X25-MM)	
M	20	1	**8T-4186**	4	BOLT (M10X1.5X40-MM)	
	21	1	**8T-4224**	4	WASHER-HARD (8.8X16X2-MM THK)	
CI	22	1	**275-1361**	1	HOSE AS	
C	23	1	*148-8364*	1	ELBOW AS	
		1	**3K-0360**	1	SEAL-O-RING	
		1	**6V-8398**	1	SEAL-O-RING	
		1	**6V-8625**	1	ELBOW	

C-CHANGE FROM PREVIOUS TYPE
I-REFER TO HYDRAULIC INFORMATION SYSTEM
M-METRIC PART
Y-SEPARATE ILLUSTRATION

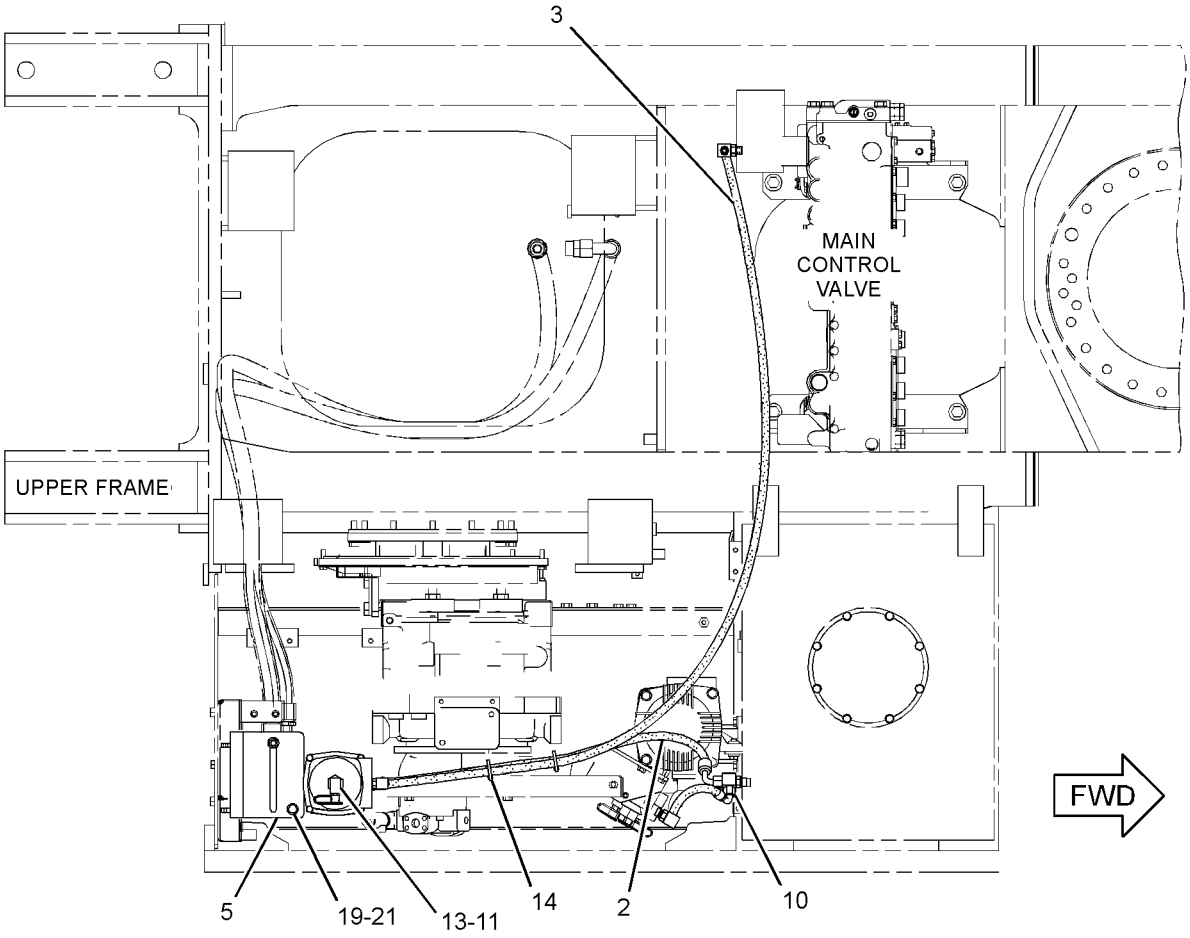

TOP VIEW

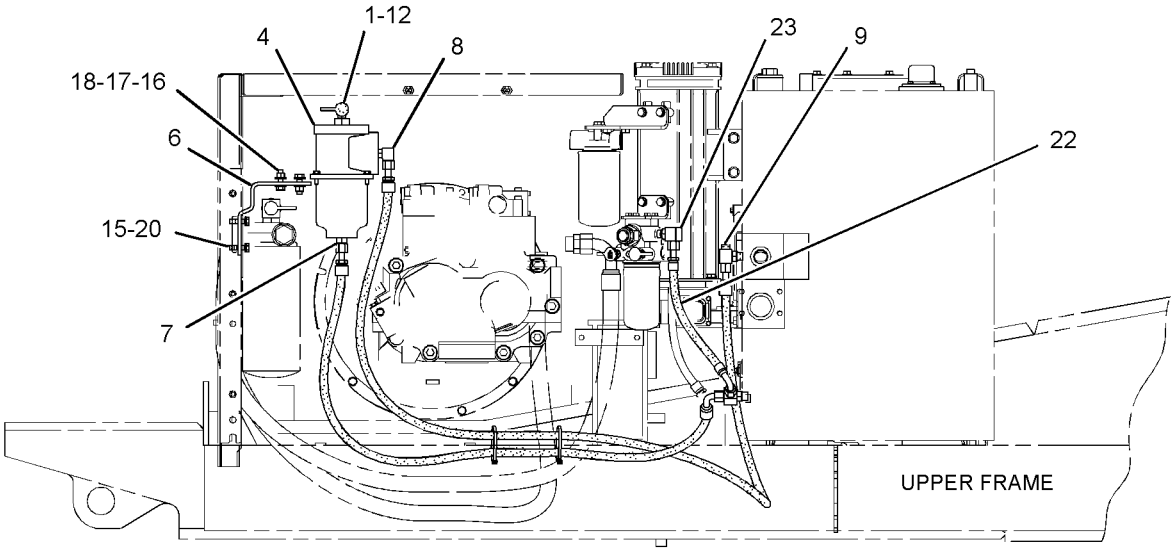

RIGHT SIDE VIEW

GRAPHIC #1 **<END>** g01791856

158-8987 FILTER & VALVE GP-PILOT—HYDRAULIC OIL

S/N: MYG1-UP; PPN1-UP

PART OF 239-1611 TANK & FILTER GP-HYDRAULIC

SMCS-5072, 5092 **i03021105**

NOTE	REF NO	GRAPHIC REF	PART NUMBER	QTY	PART NAME 1 2 3 4 5 6 (PRODUCT LEVEL)	SEE PAGE
C	1	1	**5I-8670**	1	FILTER-OIL (ADVANCED EFFICIENCY) (HYDRAULIC)	
CY	2	1	**215-4909**	1	VALVE GP-PILOT RELIEF (HYDRAULIC FILTER)	674

C-CHANGE FROM PREVIOUS TYPE
Y-SEPARATE ILLUSTRATION

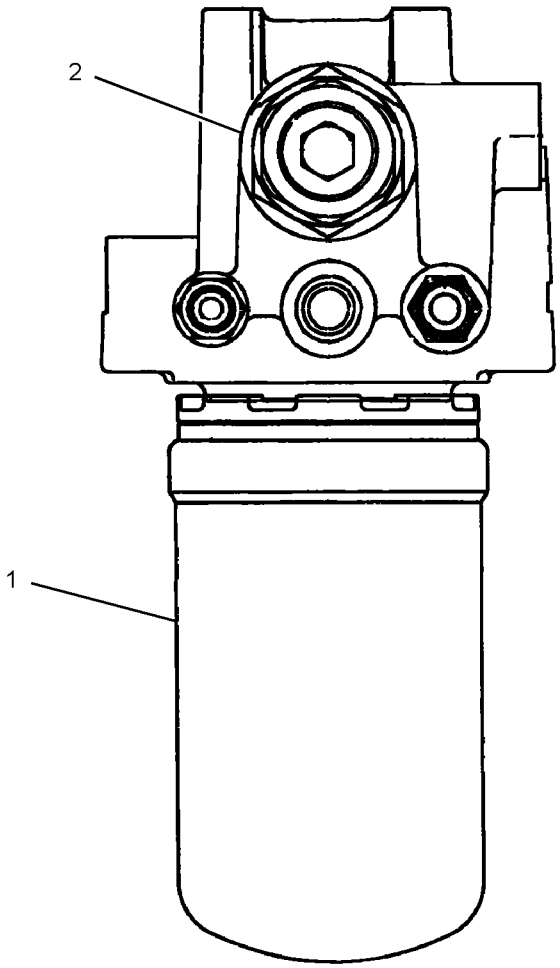

GRAPHIC #1 **<END>** g01504695

HYDRAULIC SYSTEM

273-7095 FILTER AR-HYDRAULIC—FINE FILTRATION

S/N: MYG1-UP; PPN1-UP

PART OF 340-9484 OPTION AR-HYDRAULIC

AN ATTACHMENT

SMCS-5068 **i02437640**

NOTE	PART NUMBER	QTY	PART NAME 1 2 3 4 5 6 (PRODUCT LEVEL)	SEE PAGE
Y	*267-1123*	1	FILTER & LINES GP-HYDRAULIC	436

Y-SEPARATE ILLUSTRATION

<END>

HYDRAULIC SYSTEM

188-4140 FILTER GP-OIL—HYDRAULIC RETURN

S/N: MYG1-UP; PPN1-UP

PART OF 239-1611 TANK & FILTER GP-HYDRAULIC

SMCS-3004, 4295, 431F, 5068, 5091, 5092 **i01853611**

NOTE	REF NO	GRAPHIC REF	PART NUMBER	QTY	PART NAME 1 2 3 4 5 6 (PRODUCT LEVEL)	SEE PAGE
Y	1	1	**173-3503**	1	BASE GP-OIL FILTER (HYDRAULIC)	407
	2	1	**129-8034**	1	VALVE AS-BYPASS	
	3	1	**123-2003**	2	SEAL-O-RING	
	4	1	**173-3507**	1	HOUSING AS	
M	5	1	**8T-4194**	8	BOLT (M12X1.75X50-MM)	
	6	1	**8T-4223**	8	WASHER-HARD (13.5X25.5X3-MM THK)	
Y	7	1	**188-4142**	1	FILTER GP-OIL (HYDRAULIC RETURN)	442
	8	1	**173-3510**	1	COVER	
	9	1	**173-3518**	1	INDICATOR AS (HYDRAULIC RETURN FILTER)	
	10	1	**159-7784**	1	SEAL-O-RING	
M	11	1	**6V-4298**	4	BOLT (M5X0.8X16-MM)	
	12	1	**8T-0328**	4	WASHER-HARD (5.5X10X1-MM THK)	
M	13	1	**8T-6693**	4	SCREW-MACHINE (M5X0.8X16-MM)	

M-METRIC PART
Y-SEPARATE ILLUSTRATION

188-4140 **FILTER GP-OIL** *(contd.)* **i01853611**

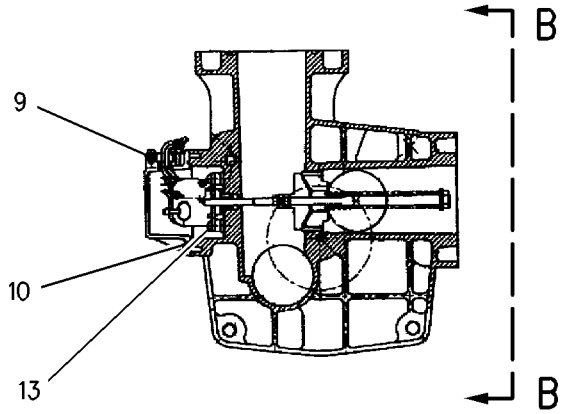

SECTION A-A

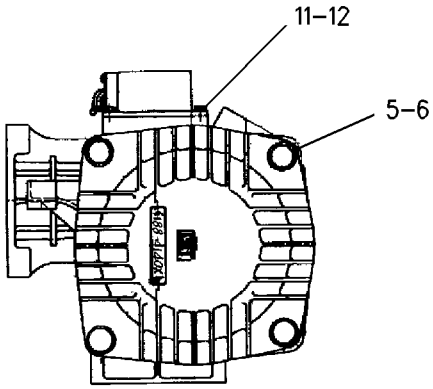

VIEW B-B

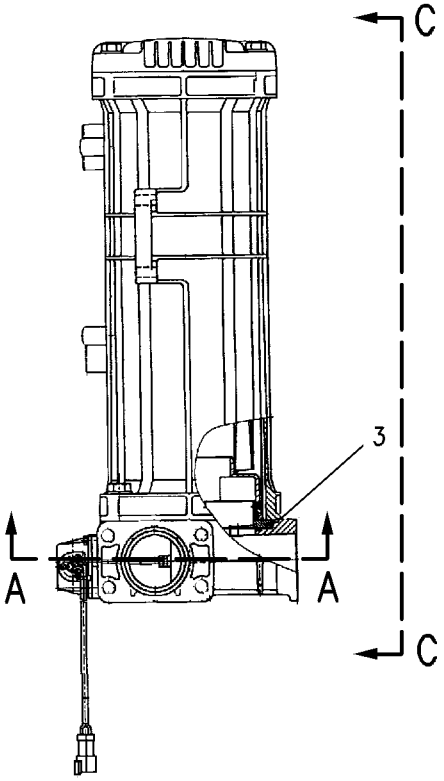

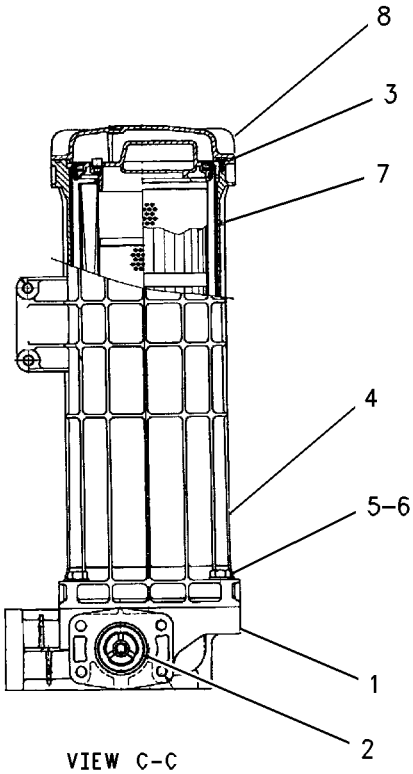

VIEW C-C

GRAPHIC #1 **<END>** g00792787

HYDRAULIC SYSTEM

188-4142 FILTER GP-OIL—HYDRAULIC RETURN

S/N: MYG1-UP; PPN1-UP

PART OF 188-4140 FILTER GP-OIL

SMCS-3004, 4295, 431F, 5068, 5091, 5092 **i03493360**

NOTE	REF NO	GRAPHIC REF	PART NUMBER	QTY	PART NAME 1 2 3 4 5 6 (PRODUCT LEVEL)	SEE PAGE
	1	1	**204-2762**	1	PLATE	
JM	2	1	**173-3529**	6	BOLT (M6X1X15-MM)	
J	3	1	**3T-7528**	6	SEAL-O-RING	
	4	1	**173-3513**	1	BASE	
J	5	1	**3E-4297**	2	SEAL-O-RING	
M	6	1	**137-3626**	1	BOLT-SHOULDER (M6X1X28.75-MM)	
	7	1	**188-4143**	1	FILM-INSTRUCTION (HYDRAULIC OIL RETURN FILTER)	
	8	1	**179-9806**	1	FILTER ELEMENT AS-OIL (ULTRA HIGH EFFICIENCY) (HYDRAULIC RETURN)	
J	9	1	**137-3623**	4	SEAL-O-RING	
J	10	1	**6V-7658**	2	SEAL-O-RING	
J	11	1	**177-2553**	1	SEAL	
J	12	1	**095-1681**	1	SEAL-O-RING	
	13	1	**173-3515**	1	RING-RETAINING	
	14	1	**173-3516**	1	HANDLE	
J	15	1	**4J-7533**	1	SEAL-O-RING	
J	16	1	**9S-4180**	1	PLUG	
JM	17	1	**137-3624**	8	SCREW (M3X0.5X5-MM)	
J	18	1	**137-3625**	2	PAD	
	19	1	**173-3517**	1	PLATE	
J	20	1	**137-3628**	1	SHIM (0.1-MM THK)	
					AVAILABLE REPAIR KIT(S):	
J			**201-9299**	1	KIT-SERVICE (HYDRAULIC FILTER)	

J-KIT MARKED J SERVICES PARTS MARKED J
M-METRIC PART

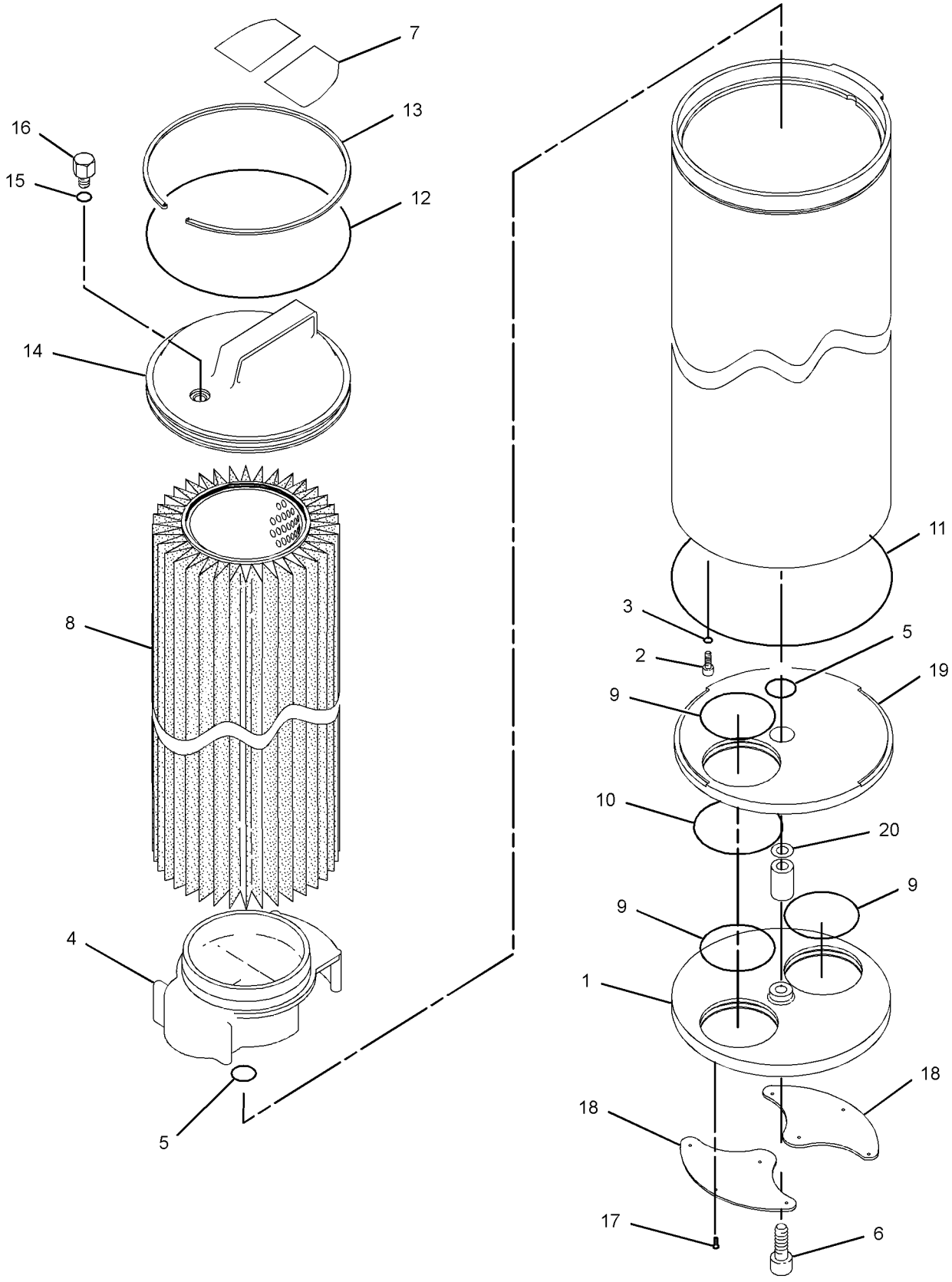

GRAPHIC #1 **<END>** g01830153

HYDRAULIC SYSTEM

250-0728 FILTER GP-OIL—HYDRAULIC

S/N: MYG1-UP; PPN1-UP
PART OF 267-1123 FILTER & LINES GP-HYDRAULIC
AN ATTACHMENT

SMCS-3004, 4295, 431F, 5068, 5091, 5092 **i02518284**

NOTE	REF NO	GRAPHIC REF	PART NUMBER	QTY	PART NAME 1 2 3 4 5 6 (PRODUCT LEVEL)	SEE PAGE
	1	1	**143-2849**	1	FILTER ELEMENT AS-OIL (STANDARD EFFICIENCY) (HYDRAULIC)	
	2	1	**250-6965**	1	COVER	
M	3	1	**8T-4136**	4	BOLT (M10X1.5X25-MM)	
	4	1	**155-4038**	1	SEAL-O-RING	
	5	1	**155-4039**	1	SEAL-O-RING	
	7	1	**155-4041**	1	SEAL-O-RING	

M-METRIC PART

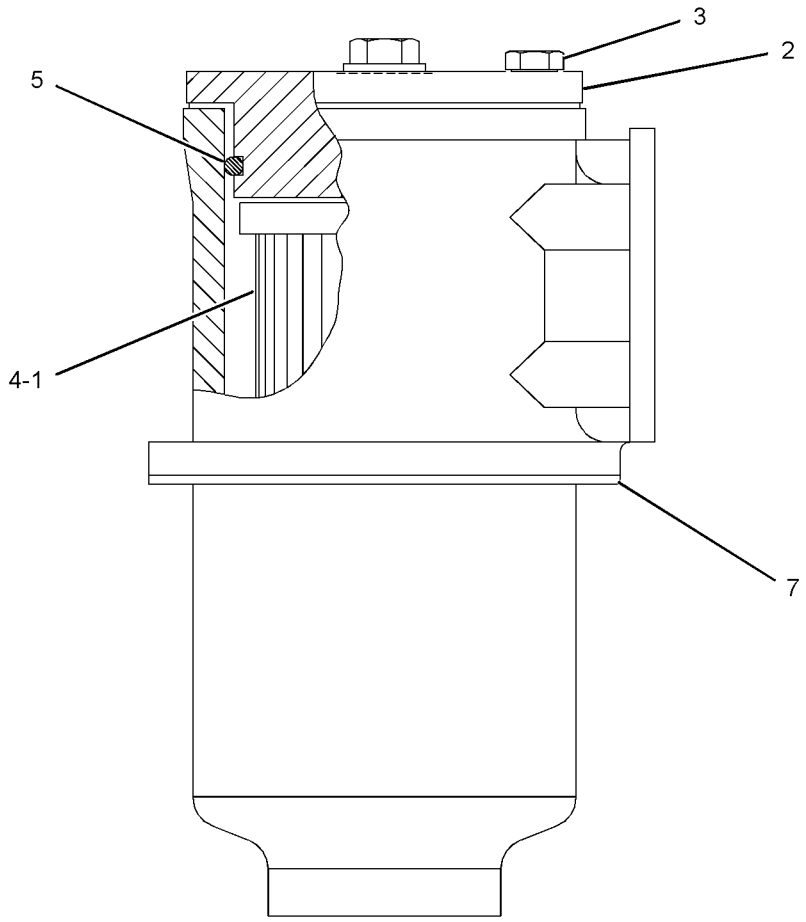

GRAPHIC #1 **<END>** g01073136

289-8194 FILTER GP-OIL–HYDRAULIC, CASE DRAIN

S/N: MYG1-UP; PPN1-UP

PART OF 239-1611 TANK & FILTER GP-HYDRAULIC

SMCS-3004, 4295, 431F, 5068, 5091, 5092 **i02815310**

NOTE	REF NO	GRAPHIC REF	PART NUMBER	QTY	PART NAME 1 2 3 4 5 6 (PRODUCT LEVEL)	SEE PAGE
	1	1	**093-7521**	1	FILTER-OIL (ADVANCED EFFICIENCY) (HYDRAULIC)	
	2	1	**289-8195**	1	HEAD AS-FILTER	

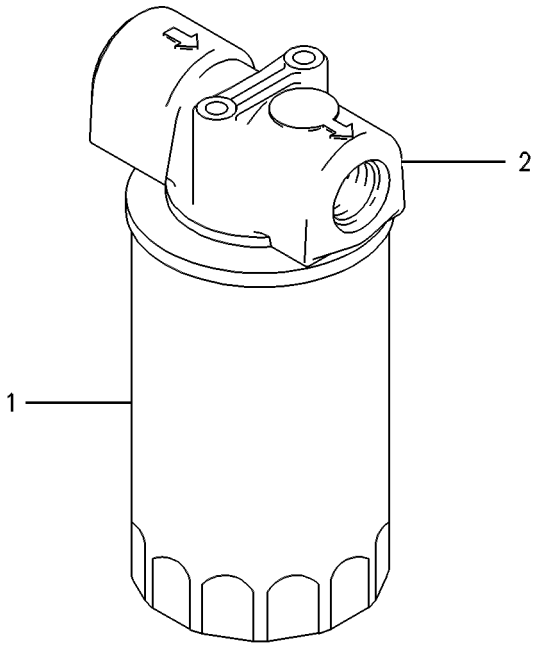

GRAPHIC #1 **<END>** g00258224

227-0620 GAUGE GP-SIGHT—HYDRAULIC OIL LEVEL

S/N: MYG1-UP; PPN1-UP

PART OF 289-5565 TANK GP-HYDRAULIC

SMCS-7479 **i02553818**

NOTE	REF NO	GRAPHIC REF	PART NUMBER	QTY	PART NAME 1 2 3 4 5 6 (PRODUCT LEVEL)	SEE PAGE
	1	1	**236-3258**	2	BLOCK	
M	2	1	**236-3259**	2	BOLT-SPECIAL	
	3	1	**236-3257**	1	PIPE	
	4	1	**095-1519**	4	SEAL-O-RING	
	5	1	**6F-4855**	4	SEAL-O-RING	

M-METRIC PART

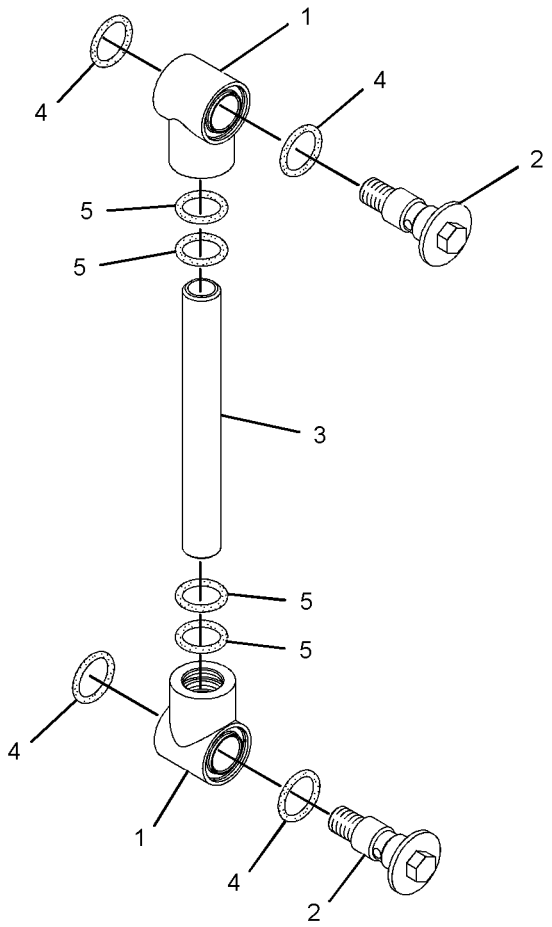

GRAPHIC #1 **<END>** g01091508

HYDRAULIC SYSTEM

295-9660 HEAD GP-PUMP

S/N: MYG1-UP; PPN1-UP

PART OF 322-8733 PUMP GP-PISTON

SMCS-3222, 5070, 5086 **i03281443**

NOTE	REF NO	GRAPHIC REF	PART NUMBER	QTY	PART NAME 1 2 3 4 5 6 (PRODUCT LEVEL)	SEE PAGE
	1	2	**289-8180**	1	SPRING-PILOT	
M	2	1,2	**8T-0269**	10	BOLT-SOCKET HEAD (M6X1X20-MM)	
M	3	2	**5I-8820**	1	SETSCREW (M8X20-MM)	
M	4	2	**5C-7261**	1	NUT (M8X1.25-THD)	
	5	2	**206-9295**	1	SEAL-O-RING	
	6	2	**289-8179**	1	RETAINER	
	7	2	**295-9577**	1	SEAT	
	8	2	**206-9300**	1	SEAL-O-RING	
	9	2	**295-9578**	1	PISTON	
	10	2	**206-9297**	1	SEAL-O-RING	
M	11	1	**3E-8025**	2	BOLT-SOCKET HEAD (M8X1.25X50-MM)	
	12	1	**5I-8815**	1	PIN	
	13	1	**249-6661**	2	SEAL-O-RING	
M	14	1	**099-2374**	4	BOLT-SOCKET HEAD (M5X0.8X12-MM)	
	15	1	**5I-8790**	1	PLUG	
	16	2	**096-2323**	1	RING-RETAINING (EXTERNAL)	
	17	2	**5I-8802**	1	COVER-PILOT	
	18	2	**5I-8811**	1	SPRING	
	19	2	**249-6659**	1	SEAL-O-RING	
	20	2	**5I-8809**	1	SEAT-SPRING	
	21	2	**5I-8810**	1	SPRING-RETURN	
	22	2	**5I-8813**	1	RING-RETAINING	
	23	2	**247-8737**	1	SLEEVE	
	24	2	**5I-8808**	1	SPOOL	
	25	2	**295-9583**	1	SEAT	
	26	2	**5I-8799**	1	COVER	
	27	2	**5I-8800**	1	LOCKNUT (M30X1.5-THD)	
	28	2	**295-9580**	1	SCREW	
	29	2	**247-8738**	1	SETSCREW (M8X19.5-MM)	
	30	2	**295-9579**	1	SETSCREW	
	31	2	**206-9294**	1	SEAL-O-RING	
	32	2	**206-9301**	1	SEAL-O-RING	
	33	2	**206-9299**	1	SEAL-O-RING	
	34	2	**247-8736**	1	SPRING	
	35	2	**129-7971**	1	SPRING	
	36	2	**295-9584**	1	ROD	
	37	2	**5I-8791**	1	PISTON-COMPENSATOR	
	38	2	**129-7970**	1	SLEEVE	
	39	2	**206-9296**	1	SEAL-O-RING	
	40	2	**129-7973**	1	SLEEVE	
	41	2	**129-7974**	1	PIN	
	42	1	**249-6660**	1	SEAL-O-RING	
M	43	1	**6V-8213**	2	BOLT-SOCKET HEAD (M8X1.25X70-MM)	
M	44	1	**8T-8442**	2	BOLT-SOCKET HEAD (M6X1X30-MM)	
	45	1	**206-9291**	1	SEAL-O-RING	
	46	1	**206-9290**	9	SEAL-O-RING	
	47	1	**7I-8084**	5	PLUG	
	48	1	**249-6658**	3	SEAL-O-RING	
	49	1	**5I-8812**	1	COVER-BLOCK	
	50	2	**247-8929**	1	BODY AS	
	51	1	**247-8732**	1	LEVER AS	
	52	1	**247-8733**	1	LEVER AS	
	53	1	**247-8734**	1	LEVER AS	
	54	1	**247-8735**	1	PIN AS	
	55	1	**247-8928**	1	COVER	
	56	2	**295-9574**	1	NUT	

295-9660 HEAD GP-PUMP *(contd.)* i03281443

NOTE	REF NO	GRAPHIC REF	PART NUMBER	QTY	PART NAME 1 2 3 4 5 6 (PRODUCT LEVEL)	SEE PAGE
	57	2	**295-9575**	1	SEAL-O-RING	
M-METRIC PART						

295-9660 HEAD GP-PUMP *(contd.)* **i03281443**

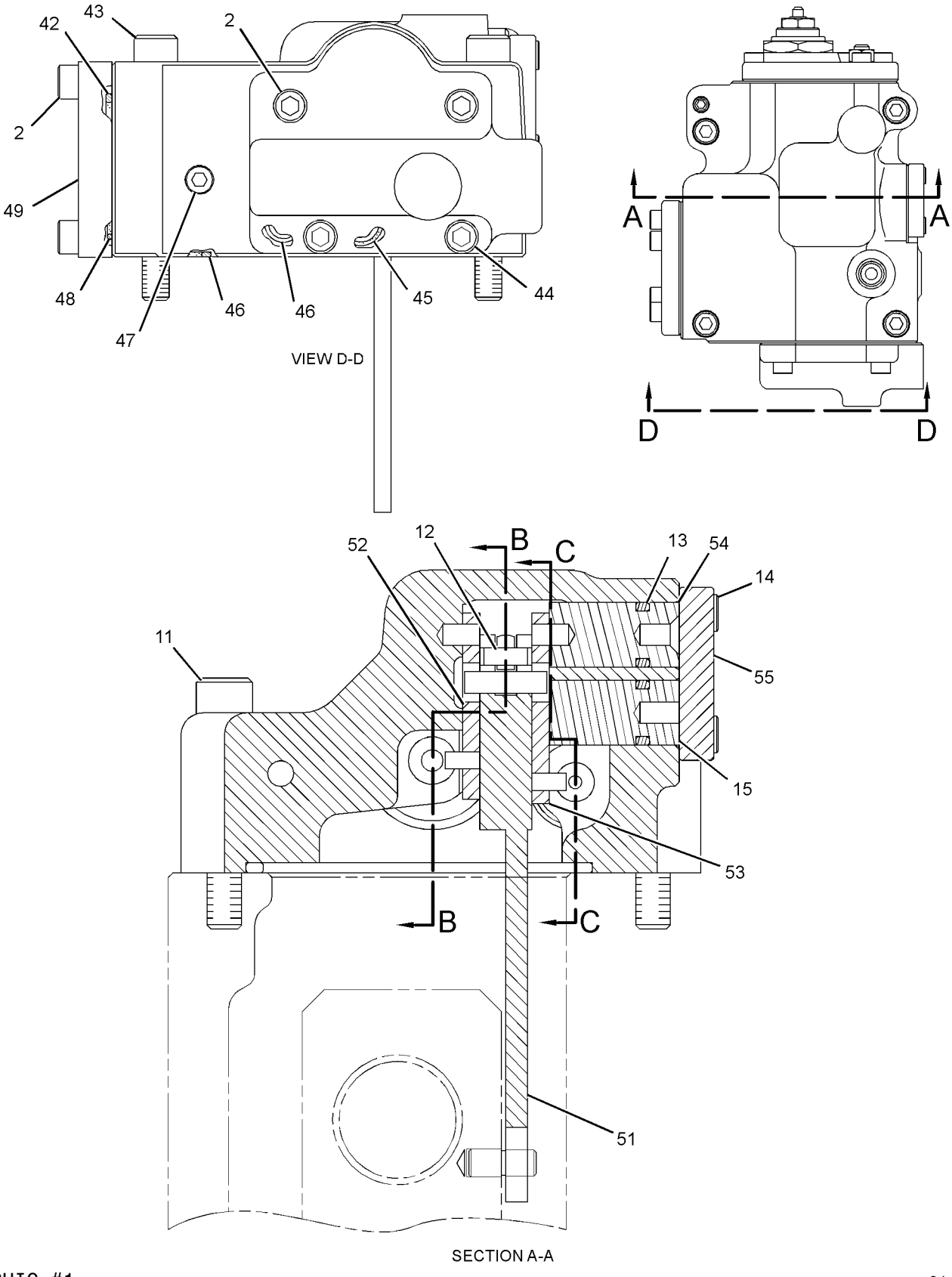

GRAPHIC #1

g01436032

295-9660 HEAD GP-PUMP *(contd.)* **i03281443**

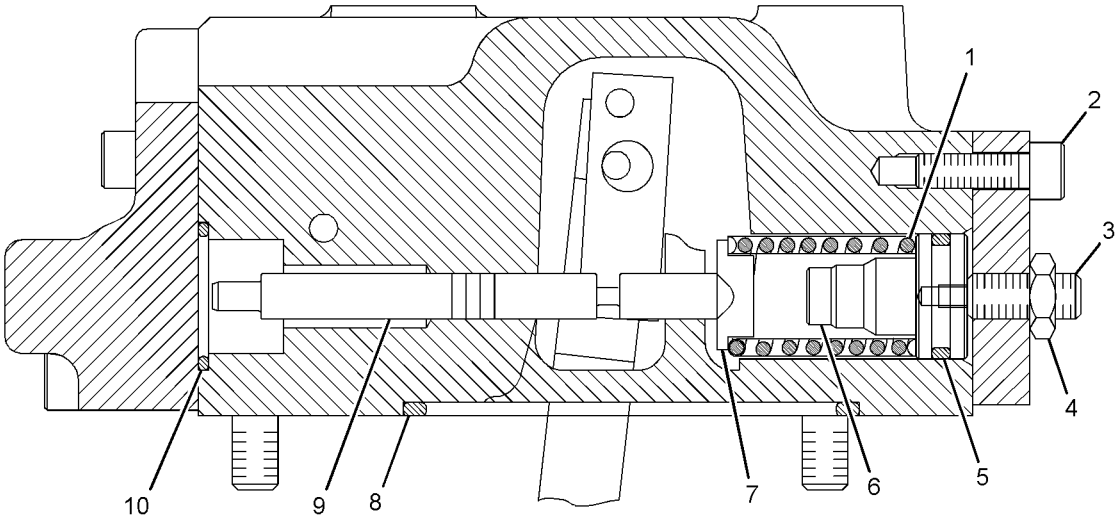

SECTION C-C

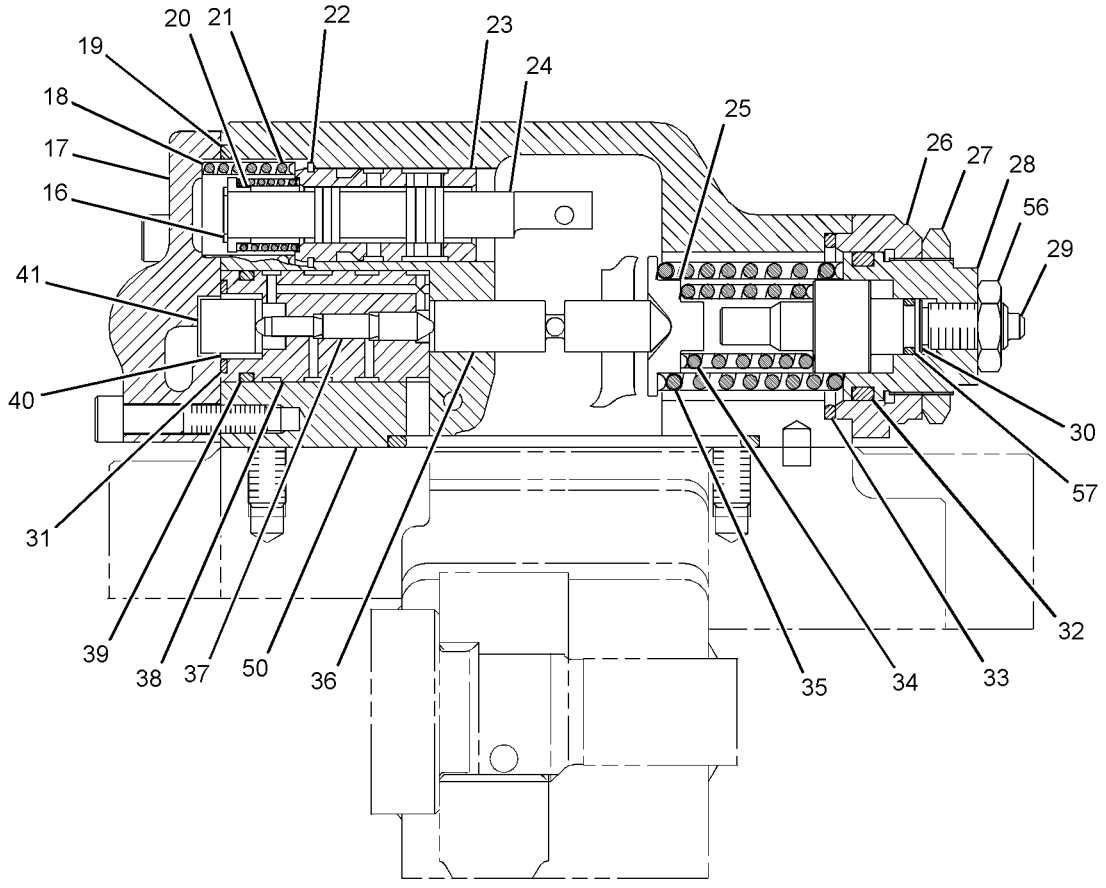

SECTION B-B

GRAPHIC #2 **<END>** g01434820

194-0174 HOSE GP-HYDRAULIC—CONTROL VALVE, STICK

S/N: MYG1-UP; PPN1-UP

PART OF 260-7869 LINES GP-FRONT

SMCS-5057 **i03569673**

NOTE	PART NUMBER	QTY	PART NAME 1 2 3 4 5 6 (PRODUCT LEVEL)	SEE PAGE
Y	*194-0176*	1	HOSE GP-HYDRAULIC (CONTROL VALVE, STICK)	452
			-OR-	
	168-9760	1	HOSE GP-HYDRAULIC (CONTROL VALVE, STICK)	

Y-SEPARATE ILLUSTRATION

<END>

194-0176 HOSE GP-HYDRAULIC—CONTROL VALVE, STICK

S/N: MYG1-UP; PPN1-UP

PART OF 194-0174 HOSE GP-HYDRAULIC

SMCS-5057 **i02014955**

NOTE	REF NO	GRAPHIC REF	PART NUMBER	QTY	PART NAME 1 2 3 4 5 6 (PRODUCT LEVEL)	SEE PAGE
	1	1	**142-7765**	1	TUBE AS	
	2	1	**5K-9090**	1	SEAL-O-RING	
I	3	1	**165-3165**	1	HOSE AS	

I-REFER TO HYDRAULIC INFORMATION SYSTEM

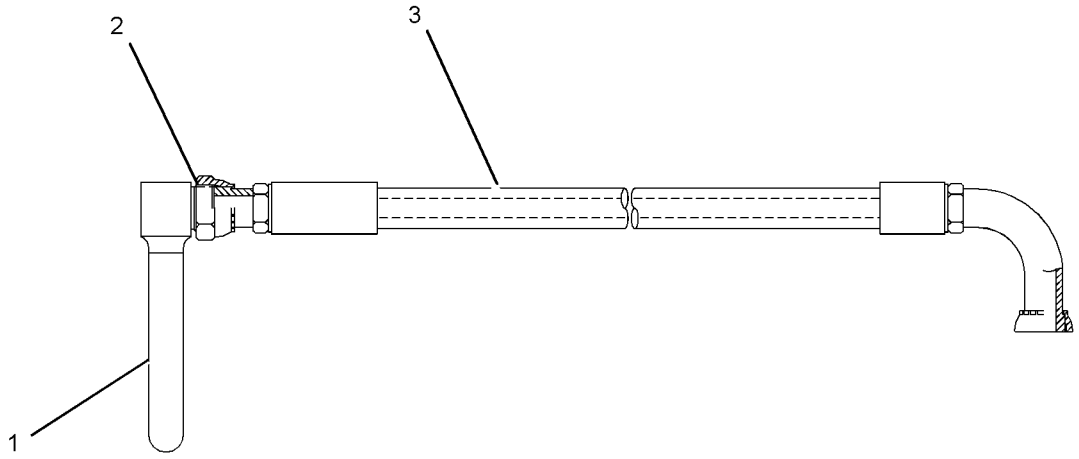

GRAPHIC #1 **<END>** g01041998

194-0177 HOSE GP-HYDRAULIC—CONTROL VALVE, STICK

S/N: MYG1-UP; PPN1-UP

PART OF 260-7869 LINES GP-FRONT

SMCS-5057 **i03493422**

NOTE	PART NUMBER	QTY	PART NAME 1 2 3 4 5 6 (PRODUCT LEVEL)	SEE PAGE
Y	*194-0178*	1	HOSE GP-HYDRAULIC (CONTROL VALVE, STICK)	454
			—OR—	
Y	*194-0179*	1	HOSE GP-HYDRAULIC (CONTROL VALVE, STICK)	455

Y-SEPARATE ILLUSTRATION

<END>

194-0178 HOSE GP-HYDRAULIC–CONTROL VALVE, STICK

S/N: MYG1-UP; PPN1-UP

PART OF 194-0177 HOSE GP-HYDRAULIC

SMCS-5057 **i03649409**

NOTE	REF NO	GRAPHIC REF	PART NUMBER	QTY	PART NAME 1 2 3 4 5 6 (PRODUCT LEVEL)	SEE PAGE
	1	1	**260-7912**	1	HOSE AS	
	2	1	**8C-3206**	2	FLANGE-HALF	
	3	1	**4J-0520**	1	SEAL-O-RING	

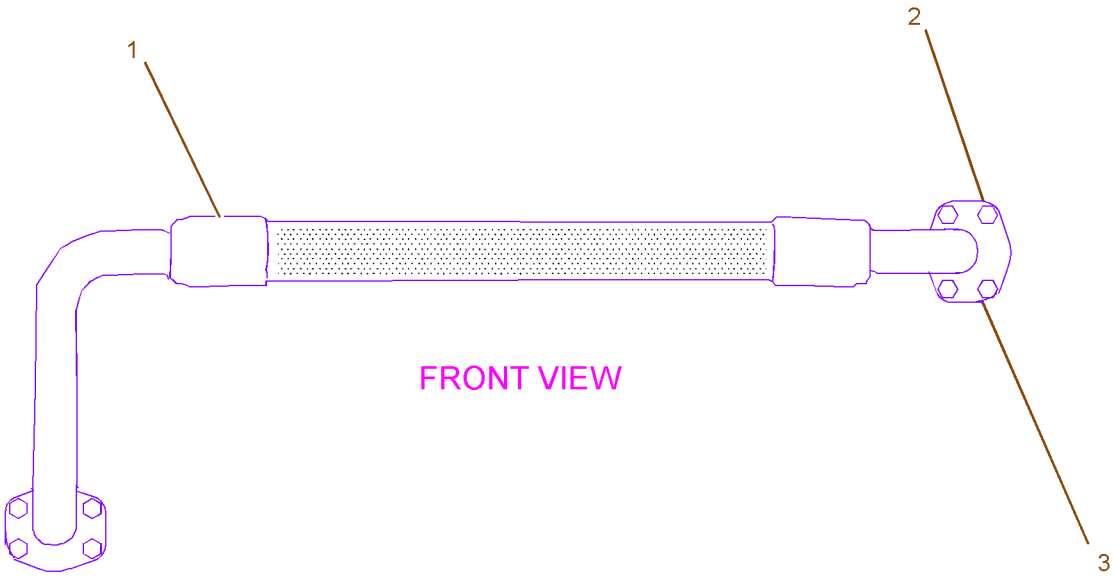

GRAPHIC #1 **<END>** g01042973

194-0179 HOSE GP-HYDRAULIC–CONTROL VALVE, STICK

S/N: MYG1-UP; PPN1-UP

PART OF 194-0177 HOSE GP-HYDRAULIC

SMCS-5057 **i02012262**

NOTE	REF NO	GRAPHIC REF	PART NUMBER	QTY	PART NAME 1 2 3 4 5 6 (PRODUCT LEVEL)	SEE PAGE
I	1	1	**165-3169**	1	HOSE AS	
	2	1	**142-7764**	1	TUBE AS	
	3	1	**7Y-3731**	1	FLANGE	
	4	1	**1P-3703**	1	SEAL-RECTANGULAR	
	5	1	**5K-9090**	2	SEAL-O-RING	

I-REFER TO HYDRAULIC INFORMATION SYSTEM

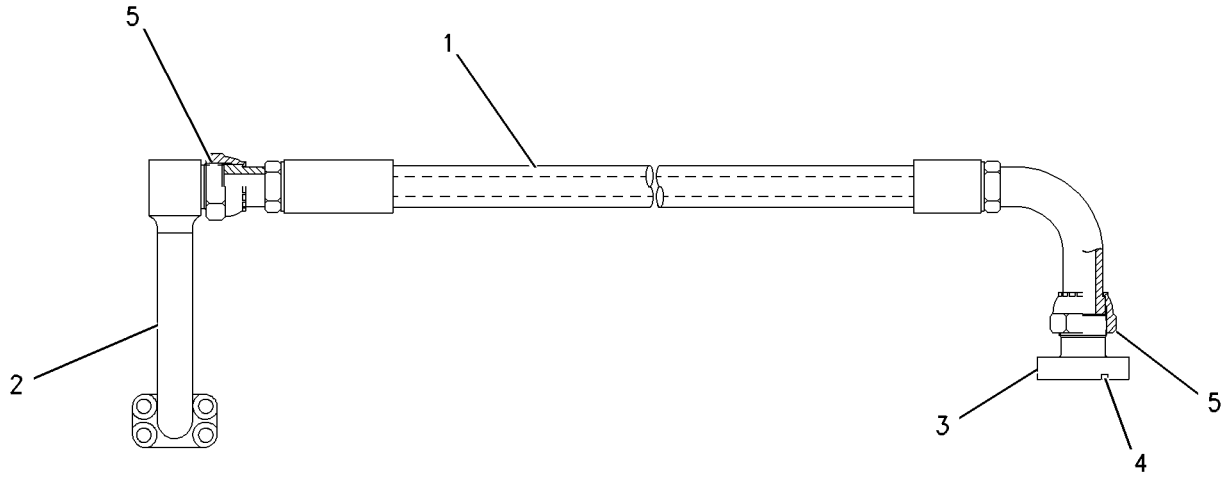

GRAPHIC #1 **<END>** g00834658

194-0180 HOSE GP-HYDRAULIC—CONTROL VALVE, BOOM

S/N: MYG1-UP; PPN1-UP

PART OF 260-7869 LINES GP-FRONT

SMCS-5057 **i03493425**

NOTE	PART NUMBER	QTY	PART NAME 1 2 3 4 5 6 (PRODUCT LEVEL)	SEE PAGE
Y	*194-0181*	1	HOSE GP-HYDRAULIC (CONTROL VALVE, BOOM)	457
			—OR—	
Y	*194-0182*	1	HOSE GP-HYDRAULIC (CONTROL VALVE, BOOM)	458

Y-SEPARATE ILLUSTRATION

<END>

194-0181 HOSE GP-HYDRAULIC—CONTROL VALVE, BOOM

S/N: MYG1-UP; PPN1-UP

PART OF 194-0180 HOSE GP-HYDRAULIC

SMCS-5057 **i03649632**

NOTE	REF NO	GRAPHIC REF	PART NUMBER	QTY	PART NAME 1 2 3 4 5 6 (PRODUCT LEVEL)	SEE PAGE
	1	1	**168-9762**	1	HOSE AS	
	2	1	**8C-3206**	2	FLANGE-HALF	
	3	1	**4J-0520**	1	SEAL-O-RING	



GRAPHIC #1 **<END>** g01049500

194-0182 HOSE GP-HYDRAULIC—CONTROL VALVE, BOOM

S/N: MYG1-UP; PPN1-UP

PART OF 194-0180 HOSE GP-HYDRAULIC

SMCS-5057 **i02011155**

NOTE	REF NO	GRAPHIC REF	PART NUMBER	QTY	PART NAME 1 2 3 4 5 6 (PRODUCT LEVEL)	SEE PAGE
I	1	1	**165-3173**	1	HOSE AS	
	2	1	**168-9523**	1	TUBE AS	
	3	1	**113-6479**	1	FLANGE-SPECIAL	
	4	1	**5K-9090**	2	SEAL-O-RING	
	5	1	**1P-3703**	1	SEAL-RECTANGULAR	

I-REFER TO HYDRAULIC INFORMATION SYSTEM

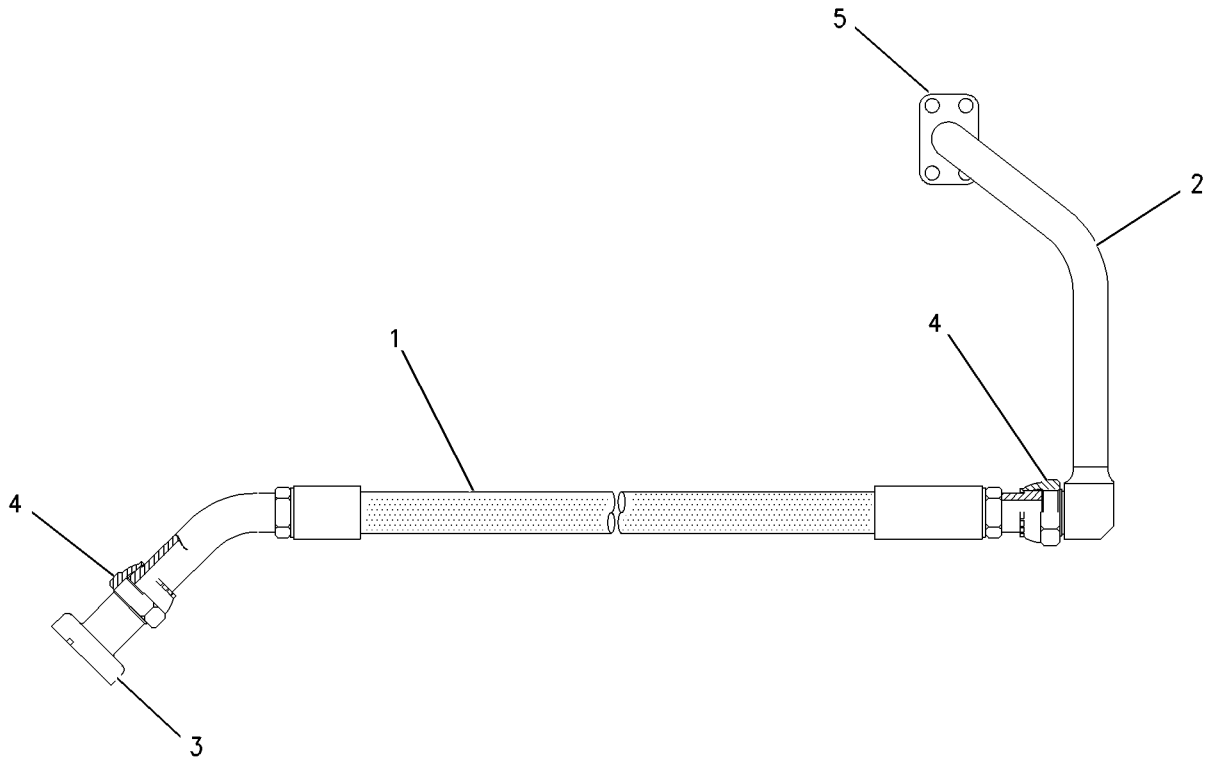

GRAPHIC #1 **<END>** g00834662

HYDRAULIC SYSTEM

259-7410 HYDRAULIC AR

S/N: PPN1-UP

PART OF 343-1142 GENERAL AR

SMCS-5050 **i02863465**

NOTE	PART NUMBER	QTY	PART NAME 1 2 3 4 5 6 (PRODUCT LEVEL)	SEE PAGE
Y	*259-5237*	1	FASTENER GP-WIRING HARNESS (HEAVY LIFT)	177
Y	*248-9838*	1	LINES GP-RETURN (REAR)	567
Y	*260-7869*	1	LINES GP-FRONT (IMPL, SWING, TRAVEL, WORK TOOL)	509
Y	*260-7870*	1	LINES GP-FRONT (BOOM CYLINDER)	512
Y	*248-9840*	1	LINES GP-HYDRAULIC OIL COOLER	519
Y	*248-9825*	1	LINES GP-PILOT (JOYSTICK, PEDALS)	522
Y	*307-5106*	1	LINES GP-PILOT (MAIN HYDRAULIC)	558
Y	*255-1659*	1	LINES GP-PILOT (HEAVY LIFT)	526
Y	*260-7866*	1	LINES GP-PILOT (TRAVEL)	548
Y	*260-7867*	1	LINES GP-PILOT (CONTROL VALVE)	550
Y	*307-5122*	1	LINES GP-PUMP (MAIN HYDRAULIC)	565
Y	*239-1618*	1	LINES GP-TRAVEL MOTOR (LONG UNDERCARRIAGE)	585
Y	*266-1161*	1	MOUNTING GP-MAIN CONTROL VALVE	603
Y	*310-9486*	1	PUMP & MTG GP-MAIN HYDRAULIC	610
Y	*269-9757*	1	TANK & MTG GP-HYDRAULIC	626
Y	**285-1345**	1	VALVE GP-MAIN CONTROL (HEAVY LIFT)	664

Y-SEPARATE ILLUSTRATION

<END>

259-7411 HYDRAULIC AR

S/N: MYG1-UP

PART OF 343-1143 GENERAL AR

SMCS-5050 **i02863466**

NOTE	PART NUMBER	QTY	PART NAME 1 2 3 4 5 6 (PRODUCT LEVEL)	SEE PAGE
Y	*259-5237*	1	FASTENER GP-WIRING HARNESS (HEAVY LIFT)	177
Y	*248-9838*	1	LINES GP-RETURN (REAR)	567
Y	*260-7869*	1	LINES GP-FRONT (IMPL, SWING, TRAVEL, WORK TOOL)	509
Y	*260-7870*	1	LINES GP-FRONT (BOOM CYLINDER)	512
Y	*248-9840*	1	LINES GP-HYDRAULIC OIL COOLER	519
Y	*248-9825*	1	LINES GP-PILOT (JOYSTICK, PEDALS)	522
Y	*307-5106*	1	LINES GP-PILOT (MAIN HYDRAULIC)	558
Y	*255-1659*	1	LINES GP-PILOT (HEAVY LIFT)	526
Y	*260-7866*	1	LINES GP-PILOT (TRAVEL)	548
Y	*260-7867*	1	LINES GP-PILOT (CONTROL VALVE)	550
Y	*307-5122*	1	LINES GP-PUMP (MAIN HYDRAULIC)	565
Y	*239-1619*	1	LINES GP-TRAVEL MOTOR	587
Y	*266-1161*	1	MOUNTING GP-MAIN CONTROL VALVE	603
Y	*310-9486*	1	PUMP & MTG GP-MAIN HYDRAULIC	610
Y	*269-9757*	1	TANK & MTG GP-HYDRAULIC	626
Y	**285-1345**	1	VALVE GP-MAIN CONTROL (HEAVY LIFT)	664

Y-SEPARATE ILLUSTRATION

<END>

HYDRAULIC SYSTEM

237-3191 LINES GP-AUXILIARY HYDRAULIC–

BOOM, HIGH PRESSURE

S/N: MYG1-UP; PPN1-UP

PART OF 345-3787 LINKAGE AR-FRONT, 340-9473, 340-9474, 340-9476, 340-9477

OPTION AR-LINKAGE

AN ATTACHMENT

SMCS-5057 **i02759800**

NOTE	REF NO	GRAPHIC REF	PART NUMBER	QTY	PART NAME 1 2 3 4 5 6 (PRODUCT LEVEL)	SEE PAGE
M	1	1	**8T-4139**	12	BOLT (M12X1.75X30-MM)	
M	2	1	**8T-4174**	8	BOLT (M16X2X120-MM)	
M	3	1	**8T-4183**	16	BOLT (M12X1.75X40-MM)	
M	4	1	**8T-4184**	4	BOLT (M12X1.75X45-MM)	
M	5	1	**8T-4194**	20	BOLT (M12X1.75X50-MM)	
	6	1	**173-7916**	16	CLAMP-HALF	
	7	1	**1P-5767**	8	FLANGE-HALF	
I	8	1	**202-6758**	2	HOSE AS	
	9	1	**216-6578**	2	PLATE	
	10	1	**253-6434**	2	PLATE	
	11	1	**253-6441**	4	PLATE	
	12	1	**1P-3704**	4	SEAL-RECTANGULAR	
	13	1	**1P-3705**	4	SEAL-RECTANGULAR	
	14	1	**193-6648**	1	TUBE AS	
	15	1	**193-6650**	1	TUBE AS	
	16	1	**197-2100**	1	TUBE AS	
	17	1	**197-2101**	1	TUBE AS	
	18	1	**216-6579**	1	TUBE AS	
	19	1	**216-6580**	1	TUBE AS	
	20	1	**9X-8257**	8	WASHER (17.5X30X3.5-MM THK)	
	21	1	**8T-4223**	36	WASHER-HARD (13.5X25.5X3-MM THK)	

I-REFER TO HYDRAULIC INFORMATION SYSTEM
M-METRIC PART

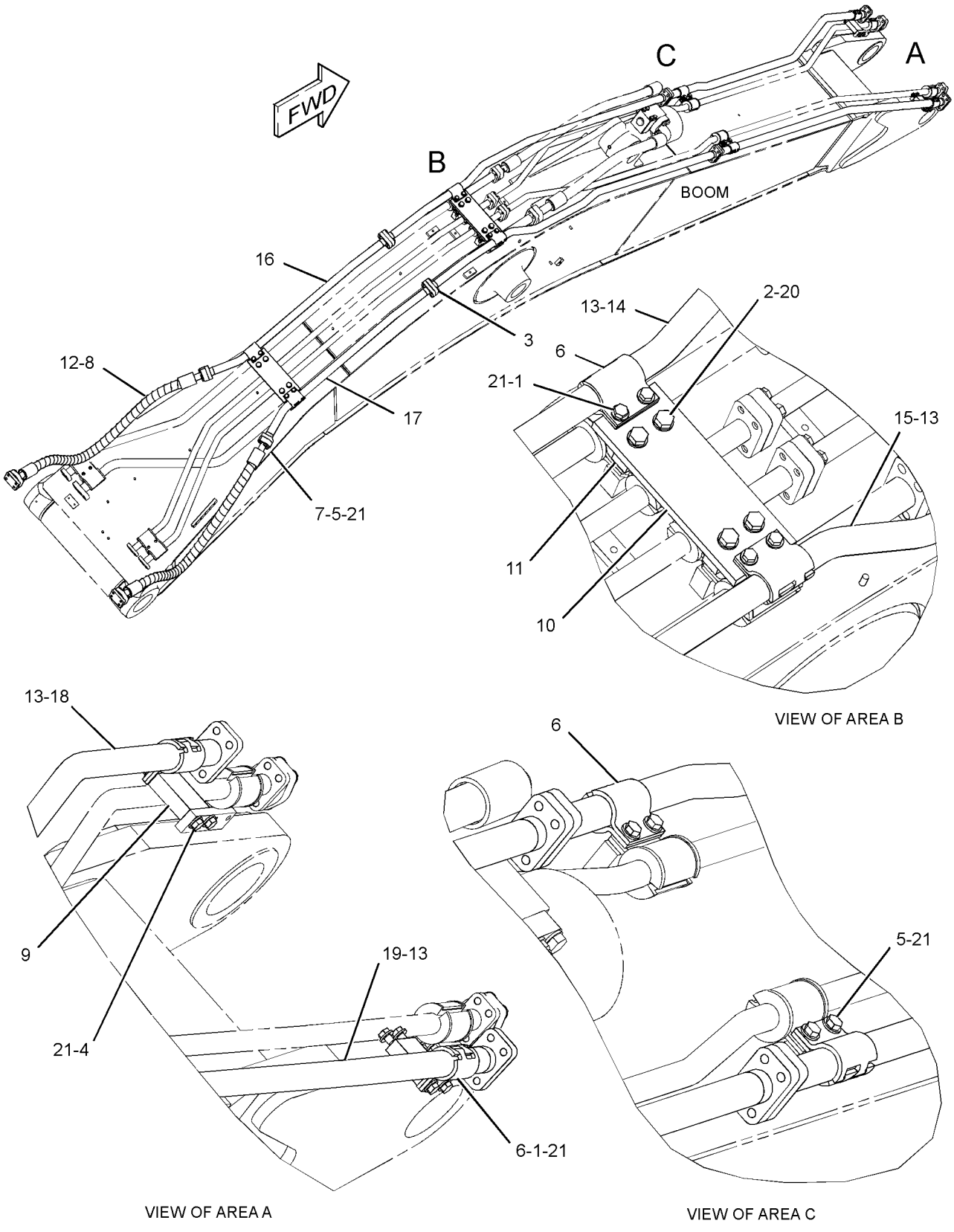

GRAPHIC #1 **<END>** g01237559

HYDRAULIC SYSTEM

237-3192 LINES GP-AUXILIARY HYDRAULIC–BOOM, MEDIUM PRESSURE

S/N: MYG1-UP; PPN1-UP

PART OF 345-3787 LINKAGE AR-FRONT, 340-9474, 340-9477 OPTION AR-LINKAGE AN ATTACHMENT

SMCS-5057 **i03714883**

NOTE	REF NO	GRAPHIC REF	PART NUMBER	QTY	PART NAME 1 2 3 4 5 6 (PRODUCT LEVEL)	SEE PAGE
	1	1	**187-9833**	1	PLATE	
	2	1	**193-6662**	1	PLATE	
	3	1	**202-7021**	2	CLIP	
	4	1	**245-2184**	1	TUBE AS	
	5	1	**245-2187**	1	TUBE AS	
	6	1	**245-2190**	1	TUBE AS	
	7	1	**245-2193**	1	TUBE AS	
	8	1	**245-2196**	1	TUBE AS	
	9	1	**245-2199**	1	TUBE AS	
	10	1	**253-6458**	1	CLIP AS	
	11	1	**268-7112**	8	CLIP	
C	12	1	**294-3794**	2	CLIP AS	
C	13	1	**294-3795**	2	CLIP AS	
C	14	1	**294-3798**	1	PLATE	
C	15	1	**294-3799**	1	PLATE	
	16	1	**288-7641**	1	CLIP AS	
	17	1	**093-1291**	2	CLAMP	
	18	1	**6V-8398**	4	SEAL-O-RING	
	19	1	**7J-9108**	4	SEAL-O-RING	
M	20	1	**7X-2555**	2	BOLT (M16X2X80-MM)	
	21	1	**7Y-3732**	2	CLIP	
	22	1	**8T-4121**	2	WASHER-HARD (11X21X2.5-MM THK)	
M	23	1	**8T-4133**	2	NUT (M10X1.5-THD)	
M	24	1	**8T-4139**	12	BOLT (M12X1.75X30-MM)	
M	25	1	**8T-4184**	4	BOLT (M12X1.75X45-MM)	
M	26	1	**8T-4185**	2	BOLT (M10X1.5X50-MM)	
M	27	1	**8T-4194**	4	BOLT (M12X1.75X50-MM)	
	28	1	**8T-4223**	22	WASHER-HARD (13.5X25.5X3-MM THK)	
M	29	1	**8T-4244**	12	NUT (M12X1.75-THD)	
M	30	1	**8T-4648**	2	BOLT (M12X1.75X70-MM)	
	31	1	**9X-8257**	2	WASHER (17.5X30X3.5-MM THK)	

C-CHANGE FROM PREVIOUS TYPE
M-METRIC PART

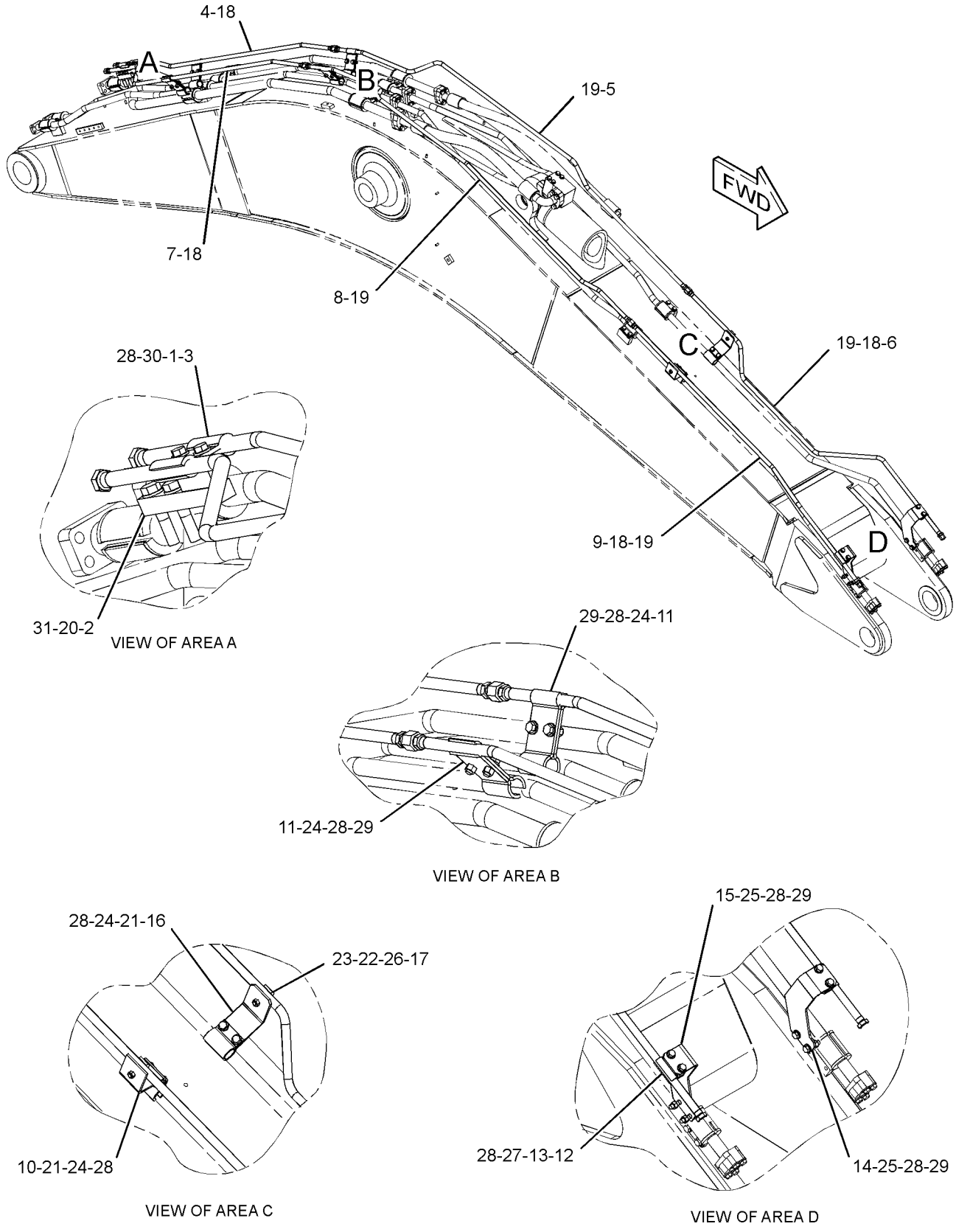

GRAPHIC #1 **<END>** g01340079

237-3195 LINES GP-AUXILIARY HYDRAULIC–
MASS BOOM, HIGH PRESSURE
S/N: MYG1-UP; PPN1-UP
PART OF 340-9479, 340-9481 OPTION AR-LINKAGE
AN ATTACHMENT

SMCS-5057 **i02789437**

NOTE	REF NO	GRAPHIC REF	PART NUMBER	QTY	PART NAME 1 2 3 4 5 6 (PRODUCT LEVEL)	SEE PAGE
M	1	1	**8T-4139**	12	BOLT (M12X1.75X30-MM)	
M	2	1	**8T-4174**	8	BOLT (M16X2X120-MM)	
M	3	1	**8T-4183**	16	BOLT (M12X1.75X40-MM)	
M	4	1	**8T-4184**	4	BOLT (M12X1.75X45-MM)	
M	5	1	**8T-4194**	20	BOLT (M12X1.75X50-MM)	
	6	1	**173-7916**	16	CLAMP-HALF	
	7	1	**1P-5767**	8	FLANGE-HALF	
I	8	1	**202-6758**	2	HOSE AS	
	9	1	**216-6578**	2	PLATE	
	10	1	**253-6434**	2	PLATE	
	11	1	**253-6441**	4	PLATE	
	12	1	**1P-3704**	4	SEAL-RECTANGULAR	
	13	1	**1P-3705**	4	SEAL-RECTANGULAR	
	14	1	**202-6857**	2	TUBE AS	
	15	1	**202-6858**	1	TUBE AS	
	16	1	**202-6859**	1	TUBE AS	
	17	1	**216-6579**	1	TUBE AS	
	18	1	**216-6580**	1	TUBE AS	
	19	1	**9X-8257**	8	WASHER (17.5X30X3.5-MM THK)	
	20	1	**8T-4223**	36	WASHER-HARD (13.5X25.5X3-MM THK)	

I-REFER TO HYDRAULIC INFORMATION SYSTEM
M-METRIC PART

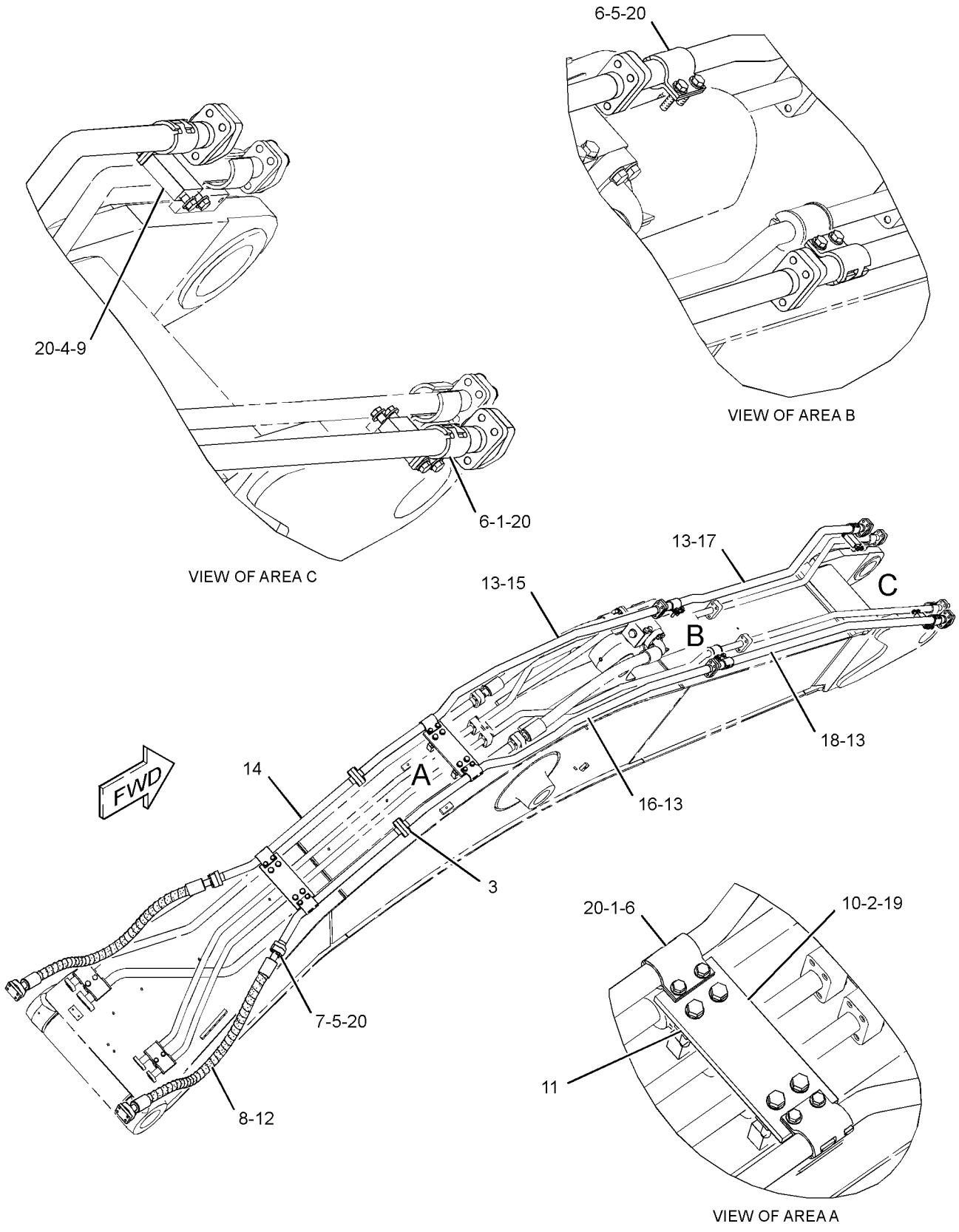

GRAPHIC #1 **<END>** g01236442

253-6599 LINES GP-AUXILIARY HYDRAULIC–
STICK, HIGH PRESSURE
S/N: MYG1-UP; PPN1-UP
PART OF 340-9476, 340-9477 OPTION AR-LINKAGE
FOR USE WITH 2.8-M (9.2-FT) STICK
AN ATTACHMENT

SMCS-5057 **i02784797**

NOTE	REF NO	GRAPHIC REF	PART NUMBER	QTY	PART NAME 1 2 3 4 5 6 (PRODUCT LEVEL)	SEE PAGE
M	1	1	**8T-4183**	8	BOLT (M12X1.75X40-MM)	
M	2	1	**8T-4194**	16	BOLT (M12X1.75X50-MM)	
M	3	1	**8T-6685**	4	BOLT (M10X1.5X110-MM)	
M	4	1	**8C-8992**	8	BOLT-LOCKING (M12X1.75X30-MM)	
	5	1	**173-7916**	8	CLAMP-HALF	
	6	1	**1P-5767**	8	FLANGE-HALF	
I	7	1	**253-6489**	2	HOSE AS	
	8	1	**1P-3704**	6	SEAL-RECTANGULAR	
	9	1	**262-3169**	2	TUBE AS	
CY	10	1	**277-0954**	2	VALVE GP-MANUAL	666
	11	1	**8T-4121**	4	WASHER-HARD (11X21X2.5-MM THK)	
	12	1	**8T-4223**	24	WASHER-HARD (13.5X25.5X3-MM THK)	

C-CHANGE FROM PREVIOUS TYPE
I-REFER TO HYDRAULIC INFORMATION SYSTEM
M-METRIC PART
Y-SEPARATE ILLUSTRATION

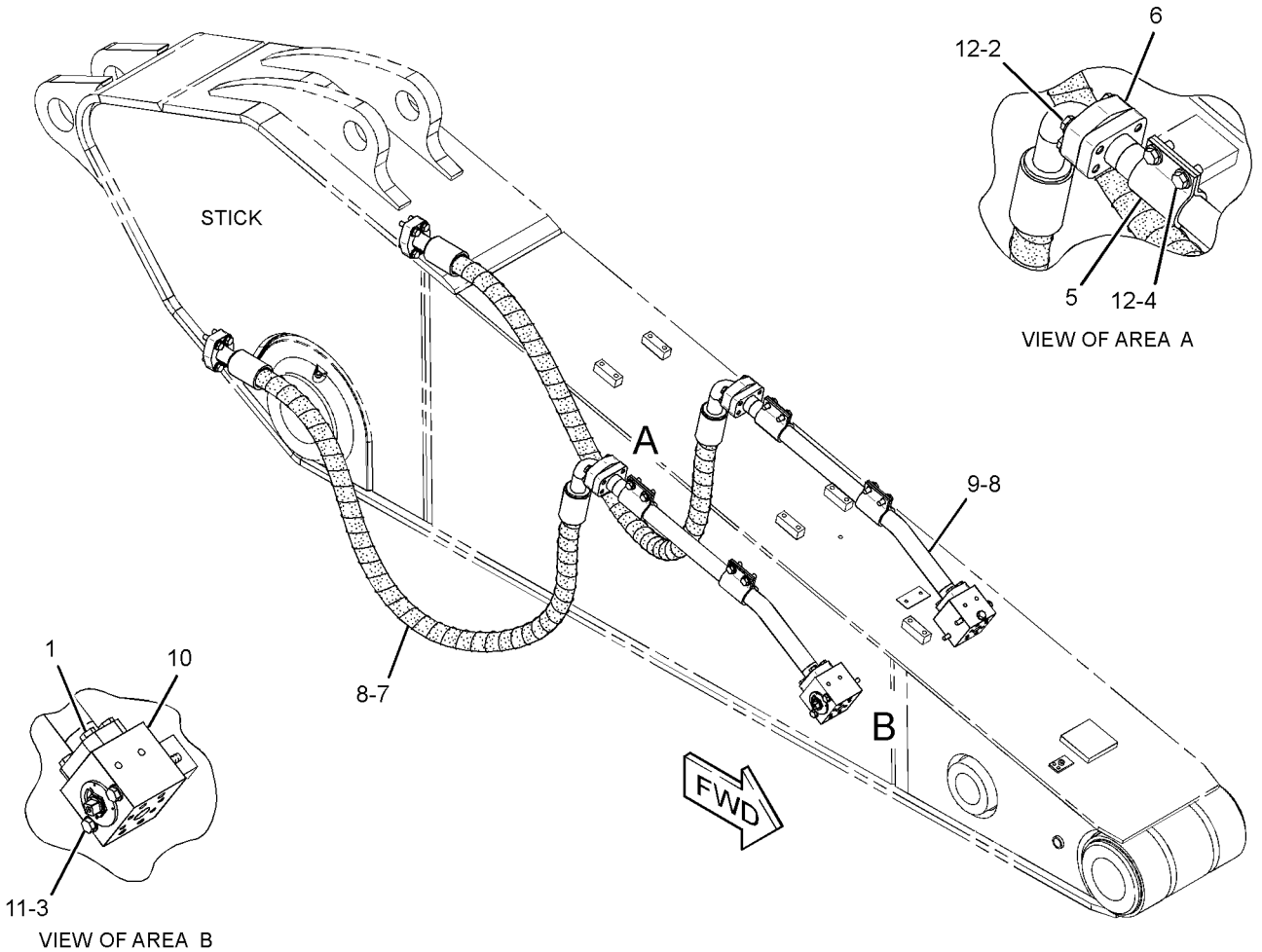

GRAPHIC #1 **<END>** g01395954

HYDRAULIC SYSTEM

253-6600 LINES GP-AUXILIARY HYDRAULIC–STICK, MEDIUM PRESSURE

S/N: MYG1-UP; PPN1-UP
PART OF 340-9477 OPTION AR-LINKAGE
FOR USE WITH 2.8-M (9.2-FT) STICK
AN ATTACHMENT

SMCS-5057 **i02784799**

NOTE	REF NO	GRAPHIC REF	PART NUMBER	QTY	PART NAME 1 2 3 4 5 6 (PRODUCT LEVEL)	SEE PAGE
	1	1	*250-1440*	2	ADAPTER AS	
					(EACH INCLUDES)	
		1	**3K-0360**	1	SEAL-O-RING	
		1	**7X-3164**	1	ADAPTER-SWIVEL	
M	2	1	**8T-4136**	4	BOLT (M10X1.5X25-MM)	
M	3	1	**8T-4139**	16	BOLT (M12X1.75X30-MM)	
M	4	1	**8T-4185**	4	BOLT (M10X1.5X50-MM)	
	5	1	**202-7001**	8	CLIP	
I	6	1	**177-8506**	2	HOSE AS	
	7	1	**6C-6760**	2	MANIFOLD	
	8	1	**202-7002**	2	PLATE	
	9	1	**6V-8398**	4	SEAL-O-RING	
	10	1	**187-9981**	2	SUPPORT AS	
	11	1	**197-2384**	2	SUPPORT AS	
	12	1	**202-7056**	2	TUBE AS	
	13	1	**8T-4121**	4	WASHER-HARD (11X21X2.5-MM THK)	
	14	1	**8T-4223**	16	WASHER-HARD (13.5X25.5X3-MM THK)	
JM	15	1	**3E-8004**	8	BOLT (M12X1.75X45-MM)	
JM	16	1	**7X-2543**	4	BOLT (M10X1.5X120-MM)	
J	17	1	**8T-7971**	8	WASHER-HARD (13.5X25.5X5-MM THK)	

I-REFER TO HYDRAULIC INFORMATION SYSTEM
J-WHEN USED WITH HYDRAULIC HIGH PRESSURE LINES
M-METRIC PART

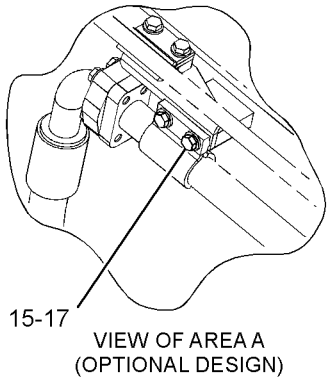

VIEW OF AREA A
(OPTIONAL DESIGN)

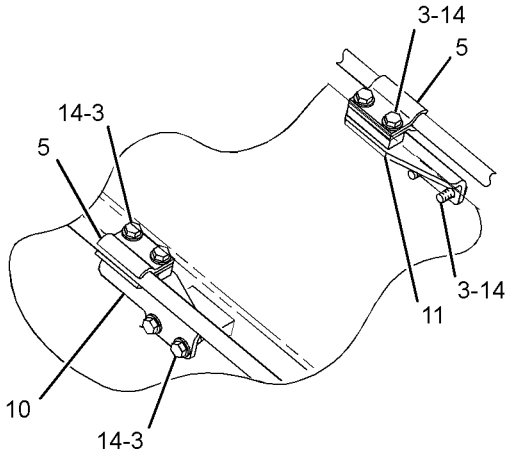

VIEW OF AREA A

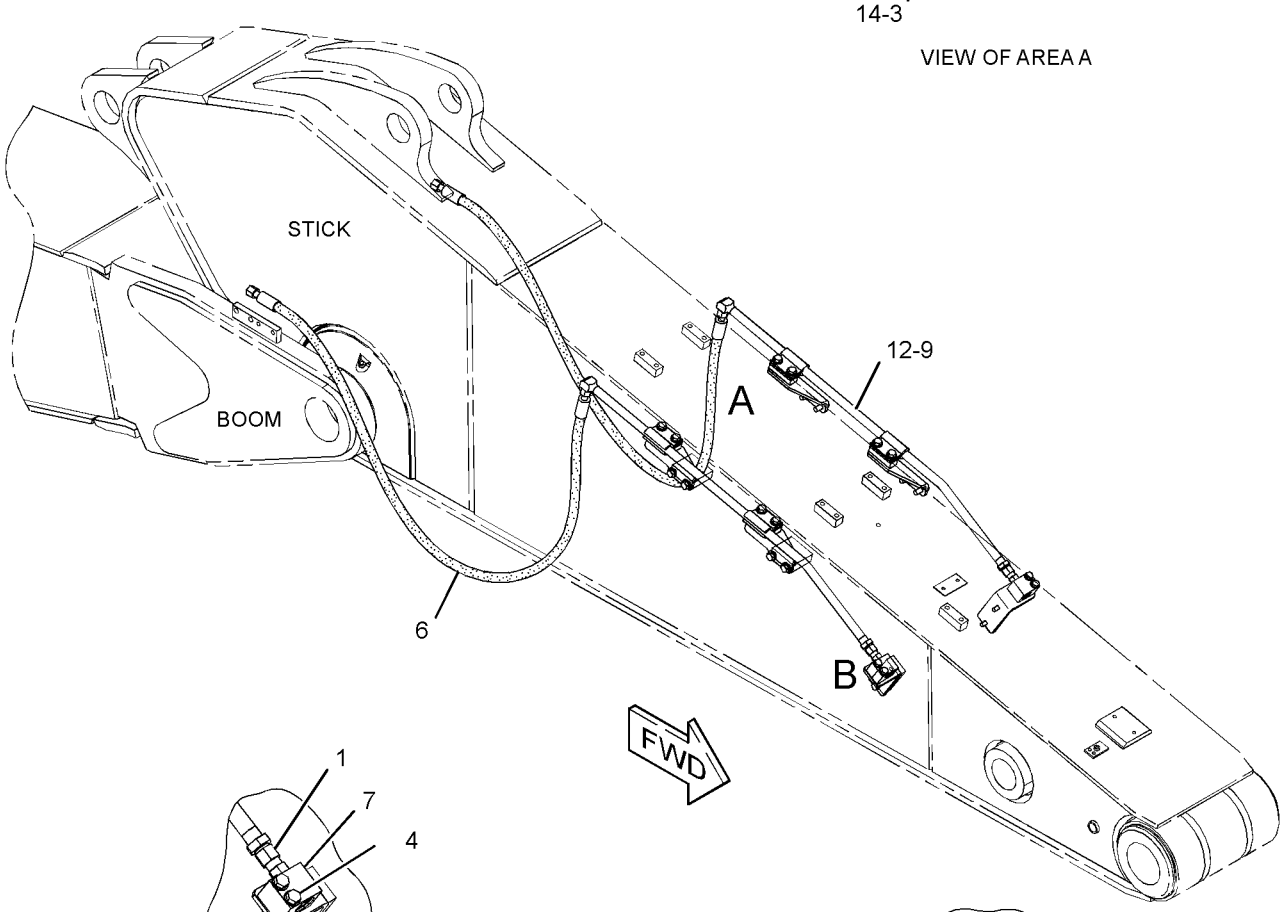

VIEW OF AREA B

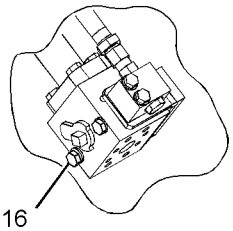

VIEW OF AREA B
(OPTIONAL DESIGN)

GRAPHIC #1 **<END>** g01333739

253-6603 LINES GP-AUXILIARY HYDRAULIC–STICK, HIGH PRESSURE

S/N: MYG1-UP; PPN1-UP
PART OF 340-9479 OPTION AR-LINKAGE
FOR USE WITH 2.55-M (8.4-FT) STICK
AN ATTACHMENT

SMCS-5057 **i02784800**

NOTE	REF NO	GRAPHIC REF	PART NUMBER	QTY	PART NAME 1 2 3 4 5 6 (PRODUCT LEVEL)	SEE PAGE
	1	1	**173-7916**	8	CLAMP-HALF	
CY	2	1	**277-0954**	2	VALVE GP-MANUAL (AUXILIARY, SHUTOFF) (AUXILIARY, SHUTOFF)	666
I	3	1	**262-3225**	2	HOSE AS	
	4	1	**262-3347**	2	TUBE AS	
	5	1	**1P-3704**	6	SEAL-RECTANGULAR	
	6	1	**1P-5767**	8	FLANGE-HALF	
M	7	1	**8C-8992**	8	BOLT-LOCKING (M12X1.75X30-MM)	
	8	1	**8T-4121**	4	WASHER-HARD (11X21X2.5-MM THK)	
M	9	1	**8T-4183**	8	BOLT (M12X1.75X40-MM)	
M	10	1	**8T-4194**	16	BOLT (M12X1.75X50-MM)	
	11	1	**8T-4223**	24	WASHER-HARD (13.5X25.5X3-MM THK)	
M	12	1	**8T-6685**	4	BOLT (M10X1.5X110-MM)	

C-CHANGE FROM PREVIOUS TYPE
I-REFER TO HYDRAULIC INFORMATION SYSTEM
M-METRIC PART
Y-SEPARATE ILLUSTRATION

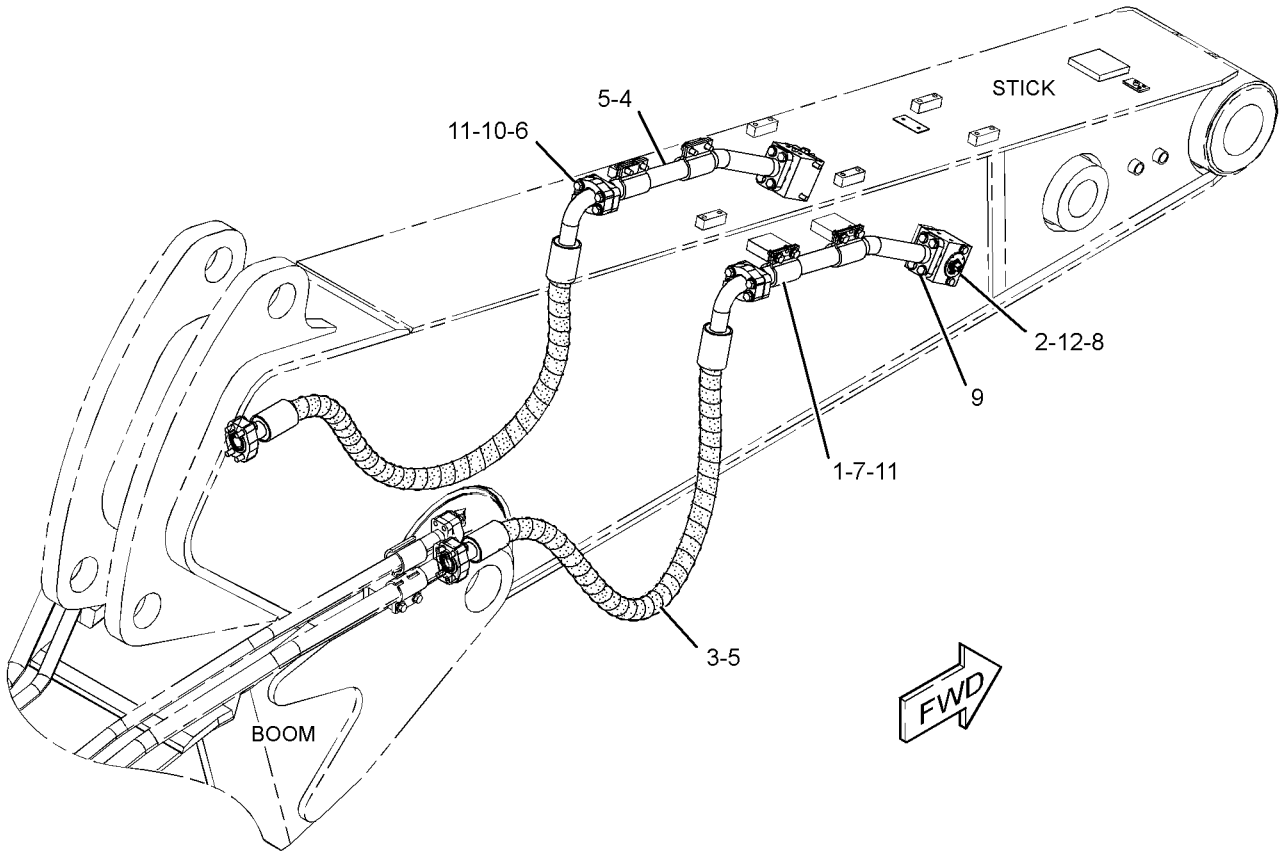

GRAPHIC #1 **<END>** g01396007

253-6607 LINES GP-AUXILIARY HYDRAULIC–
STICK, HIGH PRESSURE
S/N: MYG1-UP; PPN1-UP
PART OF 340-9481 OPTION AR-LINKAGE
FOR USE WITH 2.15-M (7.1-FT) STICK
AN ATTACHMENT

SMCS-5057 **i02529349**

NOTE	REF NO	GRAPHIC REF	PART NUMBER	QTY	PART NAME 1 2 3 4 5 6 (PRODUCT LEVEL)	SEE PAGE
CY	1	1	**277-0954**	2	VALVE GP-MANUAL (AUXILIARY, SHUTOFF)	666
I	2	1	**253-6682**	2	HOSE AS	
	3	1	**1P-3704**	4	SEAL-RECTANGULAR	
	4	1	**1P-5767**	8	FLANGE-HALF	
	5	1	**8T-4121**	4	WASHER-HARD (11X21X2.5-MM THK)	
M	6	1	**8T-4194**	16	BOLT (M12X1.75X50-MM)	
	7	1	**8T-4223**	16	WASHER-HARD (13.5X25.5X3-MM THK)	
M	8	1	**8T-6685**	4	BOLT (M10X1.5X110-MM)	

C-CHANGE FROM PREVIOUS TYPE
I-REFER TO HYDRAULIC INFORMATION SYSTEM
M-METRIC PART
Y-SEPARATE ILLUSTRATION

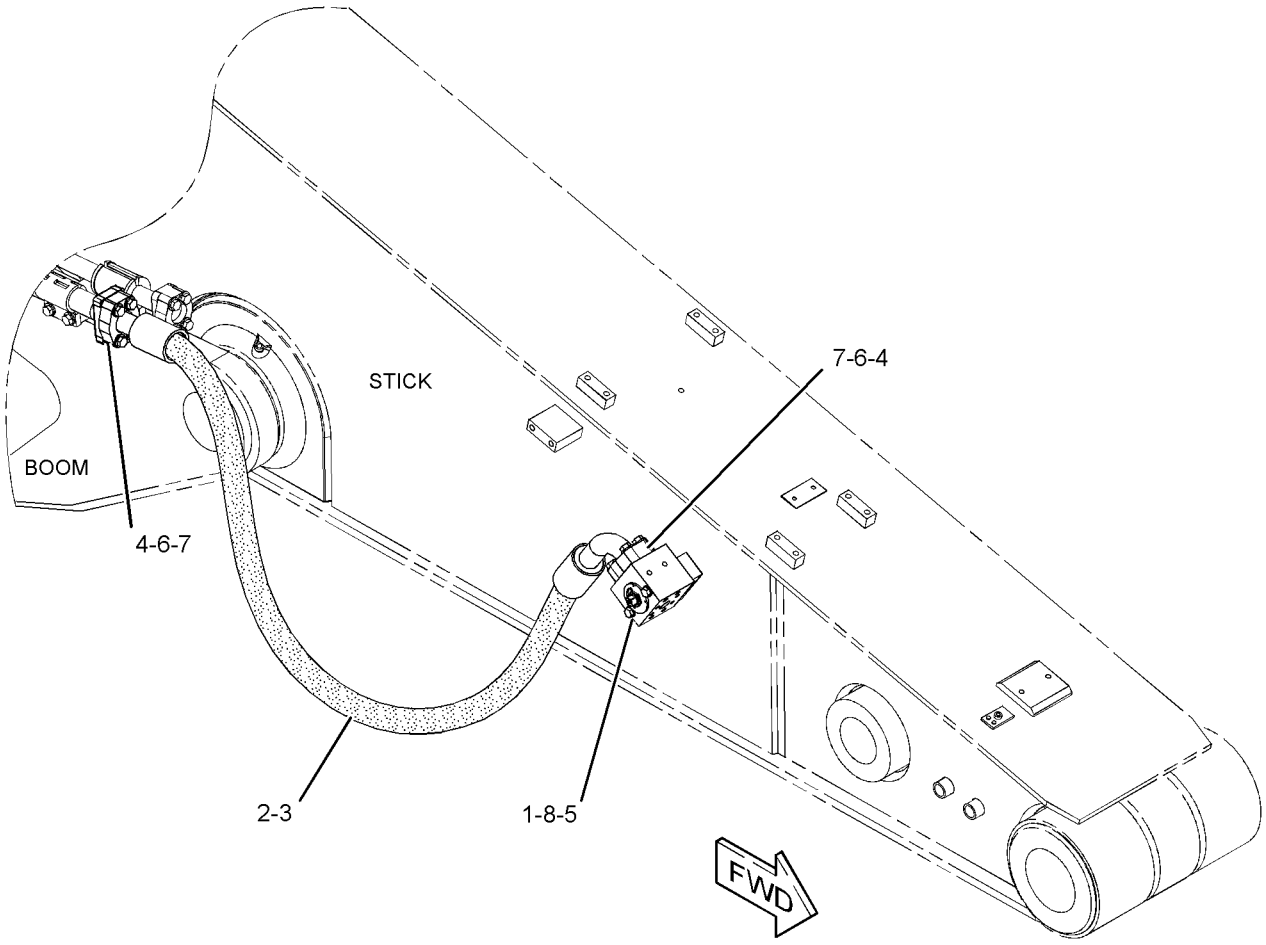

GRAPHIC #1 **<END>** g01269785

253-6611 LINES GP-AUXILIARY HYDRAULIC–STICK, HIGH PRESSURE

S/N: MYG1-UP; PPN1-UP

PART OF 345-3787 LINKAGE AR-FRONT, 340-9473, 340-9474 OPTION AR-LINKAGE FOR USE WITH 3.2-M (10.5-FT) STICK AN ATTACHMENT

SMCS-5057 **i02687058**

NOTE	REF NO	GRAPHIC REF	PART NUMBER	QTY	PART NAME 1 2 3 4 5 6 (PRODUCT LEVEL)	SEE PAGE
	1	1	**173-7916**	8	CLAMP-HALF	
CY	2	1	**277-0954**	2	VALVE GP-MANUAL	666
	3	1	**253-6454**	2	TUBE AS	
I	4	1	**253-6562**	2	HOSE AS	
	5	1	**1P-3704**	6	SEAL-RECTANGULAR	
	6	1	**1P-5767**	8	FLANGE-HALF	
M	7	1	**8C-8992**	8	BOLT-LOCKING (M12X1.75X30-MM)	
	8	1	**8T-4121**	4	WASHER-HARD (11X21X2.5-MM THK)	
M	9	1	**8T-4183**	8	BOLT (M12X1.75X40-MM)	
M	10	1	**8T-4194**	16	BOLT (M12X1.75X50-MM)	
	11	1	**8T-4223**	24	WASHER-HARD (13.5X25.5X3-MM THK)	
M	12	1	**8T-6685**	4	BOLT (M10X1.5X110-MM)	

C-CHANGE FROM PREVIOUS TYPE
I-REFER TO HYDRAULIC INFORMATION SYSTEM
M-METRIC PART
Y-SEPARATE ILLUSTRATION

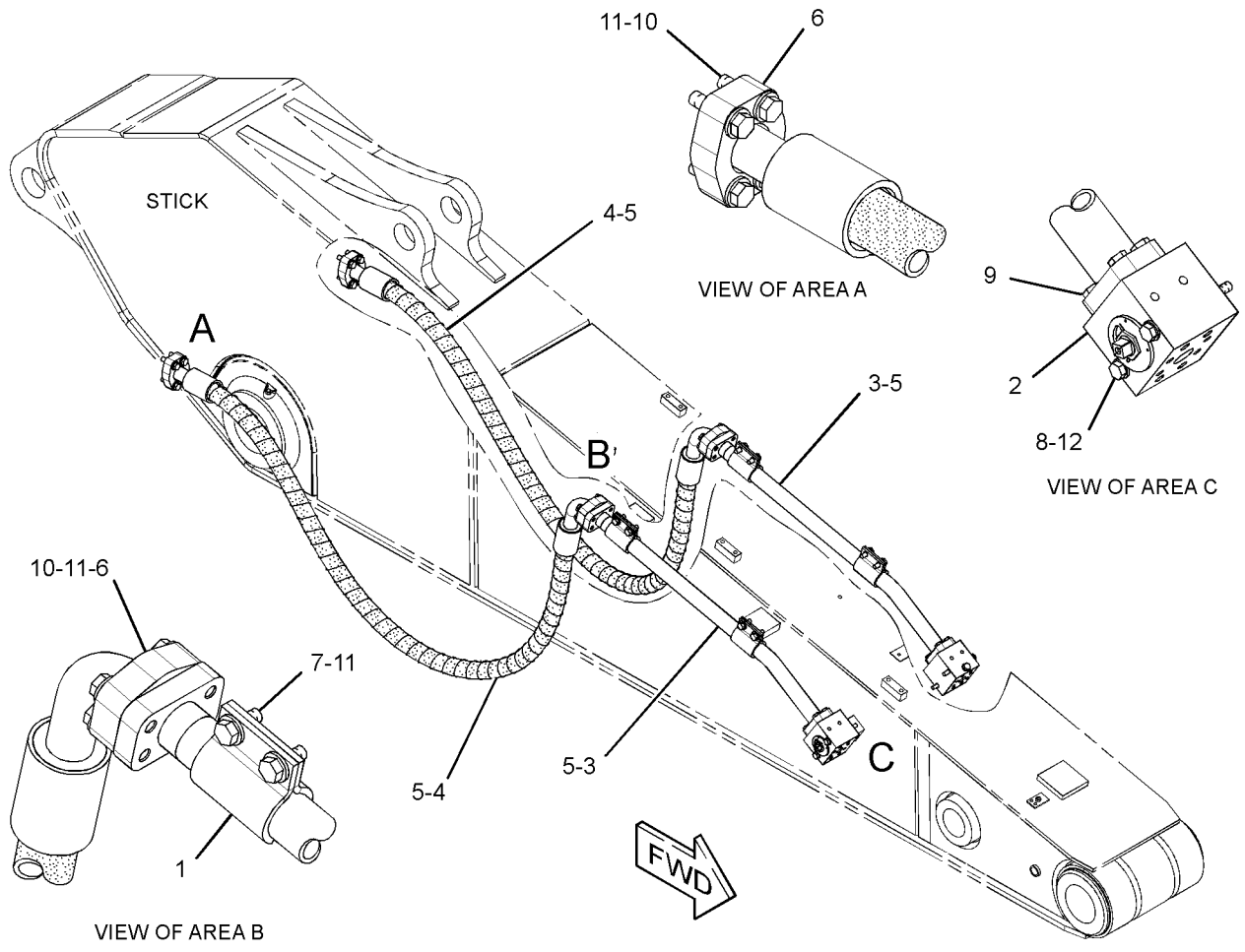

GRAPHIC #1 **<END>** g01351676

262-3147 LINES GP-AUXILIARY HYDRAULIC–STICK, MEDIUM PRESSURE

S/N: MYG1-UP; PPN1-UP

PART OF 345-3787 LINKAGE AR-FRONT, 340-9474 OPTION AR-LINKAGE

FOR USE WITH 3.2-M (10.5-FT) STICK

AN ATTACHMENT

SMCS-5057 **i02784936**

NOTE	REF NO	GRAPHIC REF	PART NUMBER	QTY	PART NAME 1 2 3 4 5 6 (PRODUCT LEVEL)	SEE PAGE
	1	1	**6C-6760**	2	MANIFOLD	
	2	1	**187-9981**	2	SUPPORT AS	
	3	1	**197-2384**	2	SUPPORT AS	
	4	1	**202-7001**	8	CLIP	
	5	1	*250-1440*	2	ADAPTER AS	
					(EACH INCLUDES)	
		1	**3K-0360**	1	SEAL-O-RING	
		1	**7X-3164**	1	ADAPTER-SWIVEL	
	6	1	**253-6455**	2	TUBE AS	
I	7	1	**253-6566**	2	HOSE AS	
	8	1	**202-7002**	2	PLATE	
	9	1	**6V-8398**	4	SEAL-O-RING	
	10	1	**8T-4121**	4	WASHER-HARD (11X21X2.5-MM THK)	
M	11	1	**8T-4136**	4	BOLT (M10X1.5X25-MM)	
M	12	1	**8T-4139**	16	BOLT (M12X1.75X30-MM)	
	13	1	**8T-4223**	16	WASHER-HARD (13.5X25.5X3-MM THK)	
M	14	1	**8T-4185**	4	BOLT (M10X1.5X50-MM)	
JM	15	1	**3E-8004**	8	BOLT (M12X1.75X45-MM)	
JM	16	1	**7X-2543**	4	BOLT (M10X1.5X120-MM)	
J	17	1	**8T-7971**	8	WASHER-HARD (13.5X25.5X5-MM THK)	

I-REFER TO HYDRAULIC INFORMATION SYSTEM
J-USE WITH HIGH PRESSURE AUXILIARY HYDRAULIC LINES
M-METRIC PART

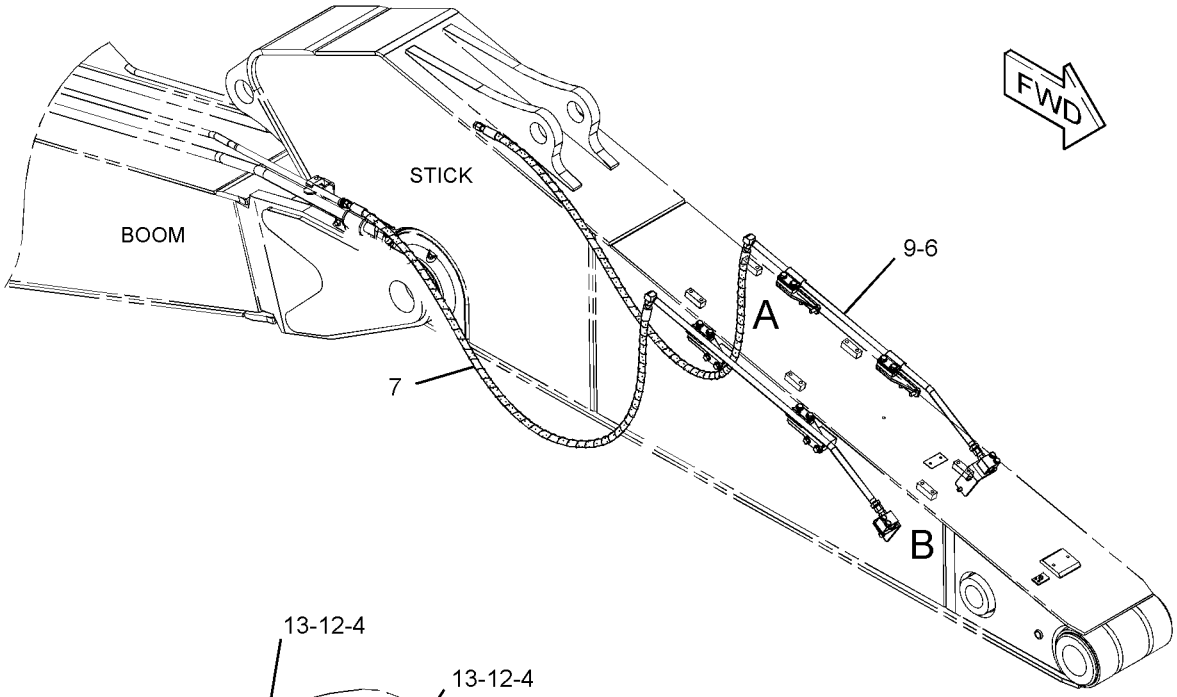

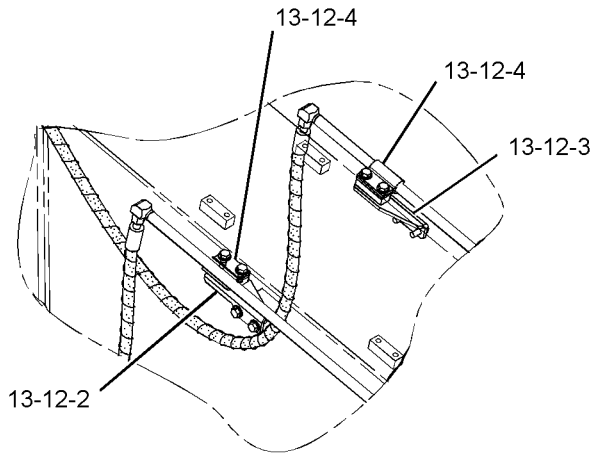

VIEW OF AREA A

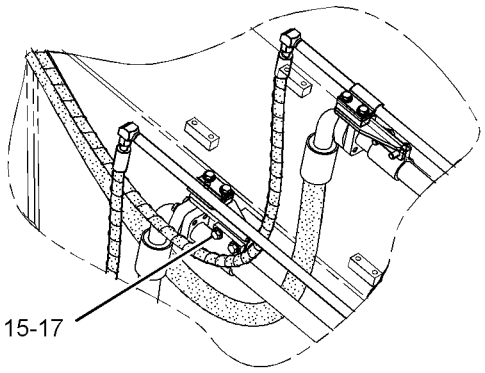

VIEW OF AREA A
(OPTIONAL DESIGN)

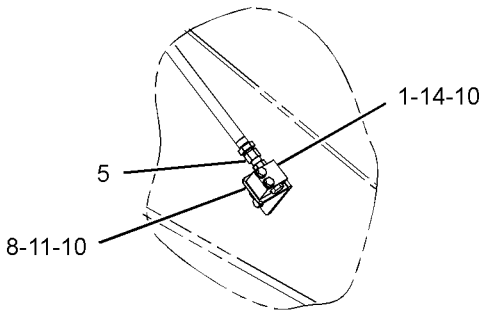

VIEW OF AREA B

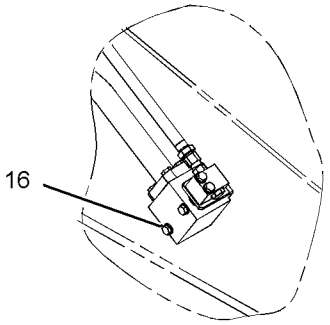

VIEW OF AREA B
(OPTIONAL DESIGN)

GRAPHIC #1 **<END>** g01356053

HYDRAULIC SYSTEM

237-3200 LINES GP-BOOM—REACH BOOM, STICK LOAD CONTROL

S/N: MYG1-UP; PPN1-UP
PART OF 255-5868 VALVE AR-LOAD CONTROL
AN ATTACHMENT

SMCS-5057 **i02972086**

NOTE	REF NO	GRAPHIC REF	PART NUMBER	QTY	PART NAME 1 2 3 4 5 6 (PRODUCT LEVEL)	SEE PAGE
I	1	1	**5I-4393**	1	HOSE AS	
C	2	1	**7K-1181**	5	STRAP-CABLE	
	4	1	**179-5235**	8	CLIP	
	5	1	**179-5254**	2	PLATE	
	6	1	**193-6662**	1	PLATE	
I	7	1	**212-5419**	2	HOSE AS	
	8	1	**282-5717**	1	PLATE	
	9	1	**282-5718**	1	TUBE AS	
	10	1	**149-5452**	2	UNION AS	
					(EACH INCLUDES)	
		1	**6V-8397**	2	SEAL-O-RING	
		1	**6V-8994**	1	UNION	
	11	1	**5Q-4212**	2	CLIP	
	12	1	**6V-8398**	2	SEAL-O-RING	
	13	1	**6V-9168**	2	NUT (11/16-16-THD)	
M	14	1	**8T-4139**	8	BOLT (M12X1.75X30-MM)	
M	15	1	**8T-4175**	2	BOLT (M16X2X90-MM)	
	16	1	**8T-4223**	10	WASHER-HARD (13.5X25.5X3-MM THK)	
M	17	1	**8T-4244**	8	NUT (M12X1.75-THD)	
M	18	1	**8T-5001**	2	BOLT (M12X1.75X130-MM)	
	19	1	**9X-8257**	2	WASHER (17.5X30X3.5-MM THK)	

C-CHANGE FROM PREVIOUS TYPE
I-REFER TO HYDRAULIC INFORMATION SYSTEM
M-METRIC PART

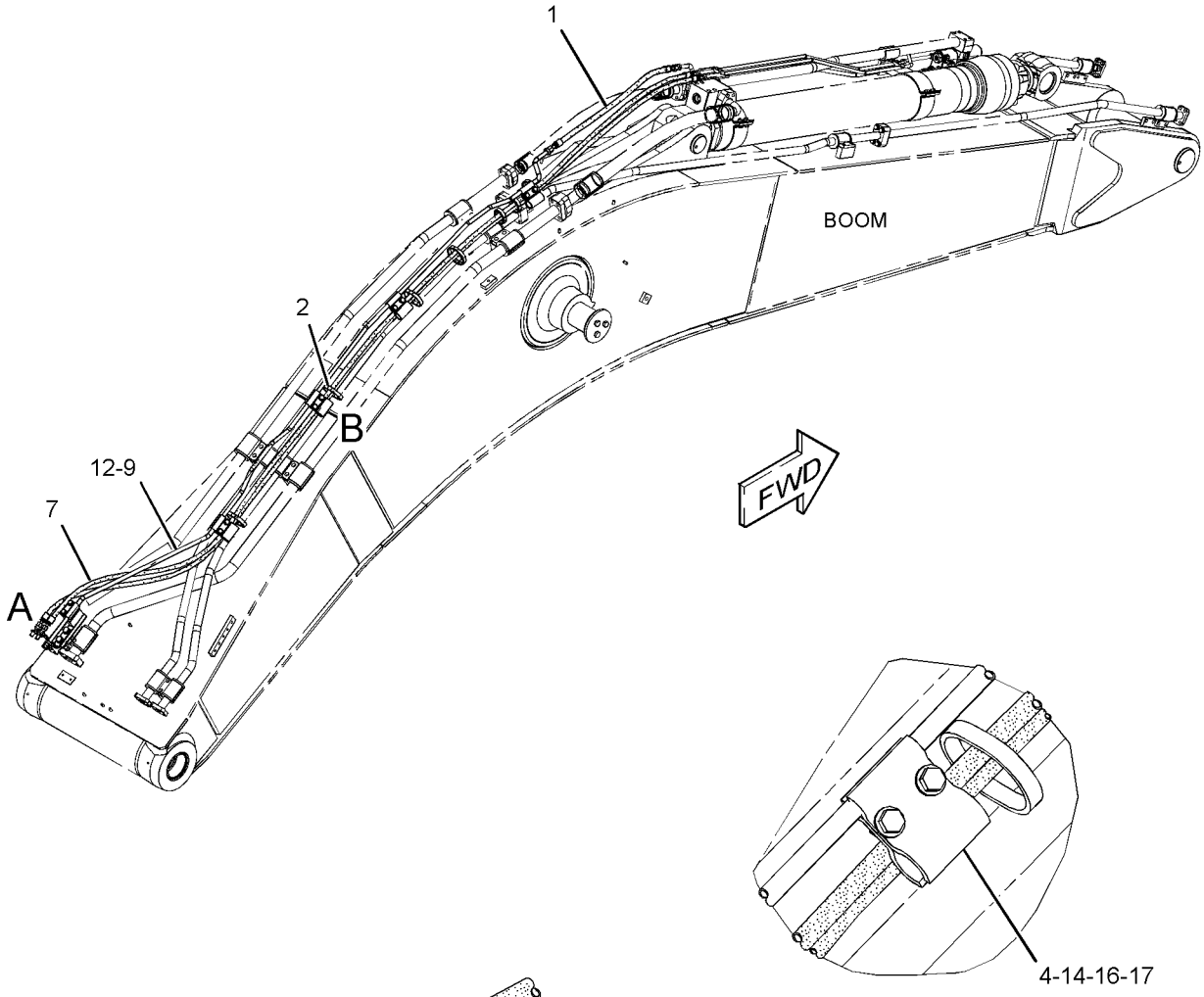

VIEW OF AREA B

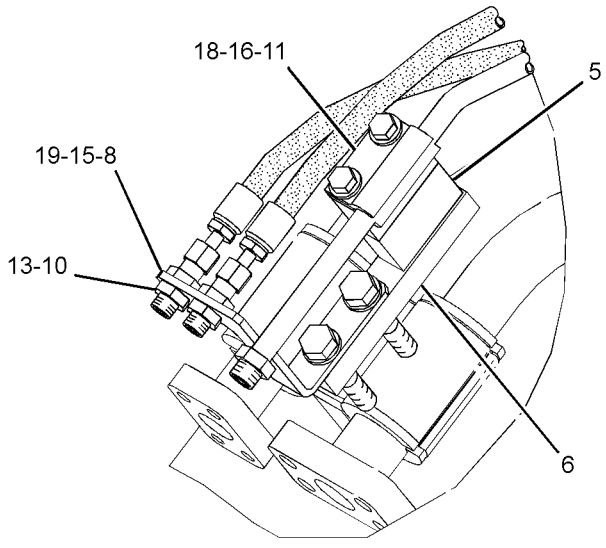

VIEW OF AREA A

GRAPHIC #1 **<END>** g01348816

HYDRAULIC SYSTEM

237-3202 LINES GP-BOOM—MASS BOOM, STICK LOAD CONTROL

S/N: MYG1-UP; PPN1-UP
PART OF 259-7416 VALVE AR-LOAD CONTROL
AN ATTACHMENT

SMCS-5057 **i02657209**

NOTE	REF NO	GRAPHIC REF	PART NUMBER	QTY	PART NAME 1 2 3 4 5 6 (PRODUCT LEVEL)	SEE PAGE
I	1	1	**5I-4393**	1	HOSE AS	
C	2	1	**7K-1181**	4	STRAP-CABLE	
I	4	1	**143-4294**	2	HOSE AS	
	5	1	**179-5235**	6	CLIP	
	6	1	**179-5254**	2	PLATE	
	7	1	**193-6662**	1	PLATE	
	8	1	**282-5717**	1	PLATE	
	9	1	**282-5722**	1	TUBE AS	
	10	1	*149-5452*	2	UNION AS	
					(EACH INCLUDES)	
		1	**6V-8397**	2	SEAL-O-RING	
		1	**6V-8994**	1	UNION	
	11	1	**5Q-4212**	2	CLIP	
	12	1	**6V-8398**	2	SEAL-O-RING	
	13	1	**6V-9168**	2	NUT (11/16-16-THD)	
M	14	1	**8T-4139**	6	BOLT (M12X1.75X30-MM)	
M	15	1	**8T-4175**	2	BOLT (M16X2X90-MM)	
	16	1	**8T-4223**	8	WASHER-HARD (13.5X25.5X3-MM THK)	
M	17	1	**8T-4244**	6	NUT (M12X1.75-THD)	
M	18	1	**8T-5001**	2	BOLT (M12X1.75X130-MM)	
	19	1	**9X-8257**	2	WASHER (17.5X30X3.5-MM THK)	

C-CHANGE FROM PREVIOUS TYPE
I-REFER TO HYDRAULIC INFORMATION SYSTEM
M-METRIC PART

237-3202 **LINES GP-BOOM** *(contd.)* **i02657209**

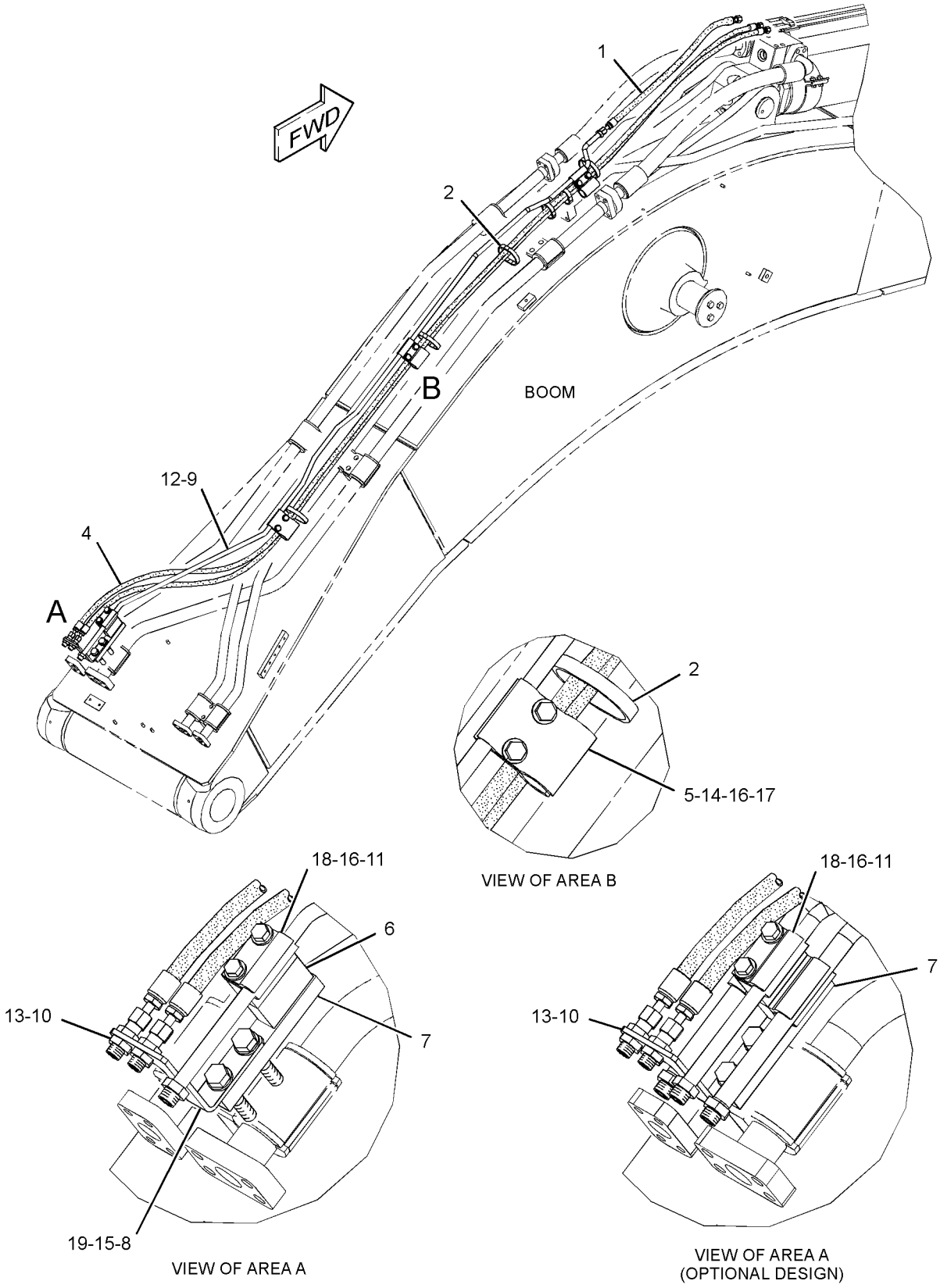

GRAPHIC #1 **<END>** g01343475

HYDRAULIC SYSTEM

239-1626 LINES GP-BOOM

S/N: MYG1-UP; PPN1-UP
PART OF 290-1818 BOOM AR-1 PIECE SHORT
AN ATTACHMENT

SMCS-5057 **i02959714**

NOTE	REF NO	GRAPHIC REF	PART NUMBER	QTY	PART NAME 1 2 3 4 5 6 (PRODUCT LEVEL)	SEE PAGE
	1	1	**124-1107**	3	GROMMET	
	2	1	**129-5874**	10	GROMMET	
	3	1	**138-5709**	3	GROMMET	
	4	1	**196-0482**	8	CLIP	
	5	1	**296-7352**	1	TUBE AS	
C	6	1	**317-4882**	1	TUBE AS	
	7	1	**296-7354**	1	TUBE AS	
	8	1	**296-7355**	1	TUBE AS	
J	9	1	**212-5580**	1	TUBE GP-HYDRAULIC (BOOM)	
L	9A	1	**204-8210**	1	TUBE AS	
L	9B	1	**196-0478**	1	TUBE AS	
L	9C	1	**1P-3704**	1	SEAL-RECTANGULAR	
LM	9D	1	**8T-4183**	4	BOLT (M12X1.75X40-MM)	
L		1	**8T-4223**	4	WASHER-HARD (13.5X25.5X3-MM THK)	
J	10	1	**212-5583**	1	TUBE GP-HYDRAULIC (BOOM)	
L	10A	1	**196-0481**	1	TUBE AS	
L	10B	1	**204-8212**	1	TUBE AS	
L	10C	1	**1P-3704**	1	SEAL-RECTANGULAR	
LM	10D	1	**8T-4183**	4	BOLT (M12X1.75X40-MM)	
L		1	**8T-4223**	4	WASHER-HARD (13.5X25.5X3-MM THK)	
I	11	1	**223-6915**	1	HOSE AS	
I	12	1	**239-1872**	1	HOSE AS	
	13	1	**124-1106**	2	CLIP	
	14	1	**124-1108**	8	CLIP	
	15	1	**124-1109**	2	CLIP	
	16	1	**1P-3704**	4	SEAL-RECTANGULAR	
	17	1	**1P-3705**	2	SEAL-RECTANGULAR	
	18	1	**1P-5767**	4	FLANGE-HALF	
	19	1	**5P-8077**	4	FLANGE-HALF	
M	20	1	**8T-4139**	4	BOLT (M12X1.75X30-MM)	
M	21	1	**8T-4140**	18	BOLT (M16X2X60-MM)	
M	22	1	**8T-4183**	8	BOLT (M12X1.75X40-MM)	
M	23	1	**8T-4194**	8	BOLT (M12X1.75X50-MM)	
	24	1	**8T-4223**	26	WASHER-HARD (13.5X25.5X3-MM THK)	
M	25	1	**8T-4956**	6	BOLT (M12X1.75X35-MM)	
	26	1	**9X-8257**	18	WASHER (17.5X30X3.5-MM THK)	
	27	1	**9F-2167**	4	SCREW-PURGE (3/8-24X1.164-IN)	

C-CHANGE FROM PREVIOUS TYPE
I-REFER TO HYDRAULIC INFORMATION SYSTEM
J-TUBE MAY BE 1-PIECE OR 2-PIECE DESIGN (2-PIECE SHOWN)
L-PARTS REQUIRED ONLY WITH 2-PIECE TUBE DESIGN
M-METRIC PART

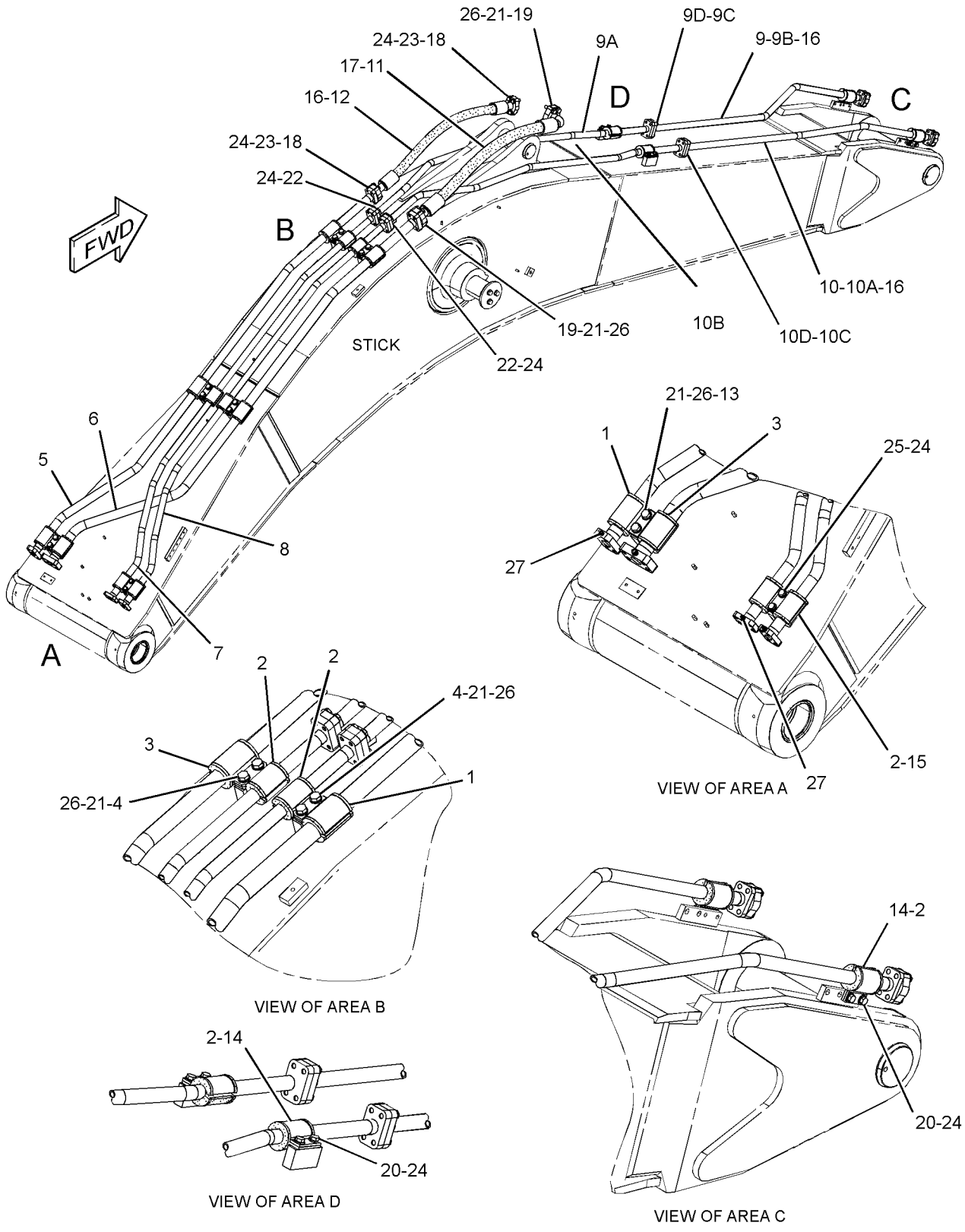

GRAPHIC #1 **<END>** g01368209

HYDRAULIC SYSTEM

260-7871 LINES GP-BOOM

S/N: MYG1-UP; PPN1-UP
PART OF 290-1843, 314-3615 BOOM AR-1 PIECE LONG
AN ATTACHMENT

SMCS-5057 **i02981468**

NOTE	REF NO	GRAPHIC REF	PART NUMBER	QTY	PART NAME 1 2 3 4 5 6 (PRODUCT LEVEL)	SEE PAGE
	1	2	**124-1107**	3	GROMMET	
	2	1,2	**129-5874**	10	GROMMET	
	3	2	**138-5709**	3	GROMMET	
C	4	1	**296-7348**	1	TUBE AS	
C	5	1	**317-4881**	1	TUBE AS	
C	6	1	**296-7350**	1	TUBE AS	
C	7	1	**296-7351**	1	TUBE AS	
	8	2	**196-0482**	8	CLIP	
J	9	1	**207-6395**	1	TUBE GP-HYDRAULIC (BOOM)	
L	9A	1	**196-0477**	1	TUBE AS	
L	9B	1	**196-0478**	1	TUBE AS	
L	9C	1	**1P-3704**	1	SEAL-RECTANGULAR	
LM	9D	1	**8T-4183**	4	BOLT (M12X1.75X40-MM)	
L		1	**8T-4223**	4	WASHER-HARD (13.5X25.5X3-MM THK)	
J	10	1	**207-6398**	1	TUBE GP-HYDRAULIC (BOOM)	
L	10A	1	**196-0481**	1	TUBE AS	
L	10B	1	**196-0480**	1	TUBE AS	
L	10C	1	**1P-3704**	1	SEAL-RECTANGULAR	
LM	10D	1	**8T-4183**	4	BOLT (M12X1.75X40-MM)	
L		1	**8T-4223**	4	WASHER-HARD (13.5X25.5X3-MM THK)	
I	11	1	**223-6915**	1	HOSE AS	
I	12	1	**239-1872**	1	HOSE AS	
	13	2	**124-1106**	2	CLIP	
	14	1,2	**124-1108**	8	CLIP	
	15	2	**124-1109**	2	CLIP	
	16	1	**1P-3704**	4	SEAL-RECTANGULAR	
	17	1	**1P-3705**	2	SEAL-RECTANGULAR	
	18	1	**1P-5767**	4	FLANGE-HALF	
	19	1	**5P-8077**	4	FLANGE-HALF	
M	20	1	**8T-4139**	4	BOLT (M12X1.75X30-MM)	
M	21	1,2	**8T-4140**	18	BOLT (M16X2X60-MM)	
M	22	1	**8T-4183**	8	BOLT (M12X1.75X40-MM)	
M	23	1	**8T-4194**	8	BOLT (M12X1.75X50-MM)	
	24	1,2	**8T-4223**	26	WASHER-HARD (13.5X25.5X3-MM THK)	
M	25	2	**8T-4956**	6	BOLT (M12X1.75X35-MM)	
	26	1,2	**9X-8257**	18	WASHER (17.5X30X3.5-MM THK)	
C	27	2	**9F-2167**	4	SCREW-PURGE (3/8-24X1.164-IN)	

C-CHANGE FROM PREVIOUS TYPE
I-REFER TO HYDRAULIC INFORMATION SYSTEM
J-TUBE MAY BE 1-PIECE OR 2-PIECE DESIGN (2-PIECE SHOWN)
L-PARTS REQUIRED ONLY WITH 2-PIECE TUBE DESIGN
M-METRIC PART

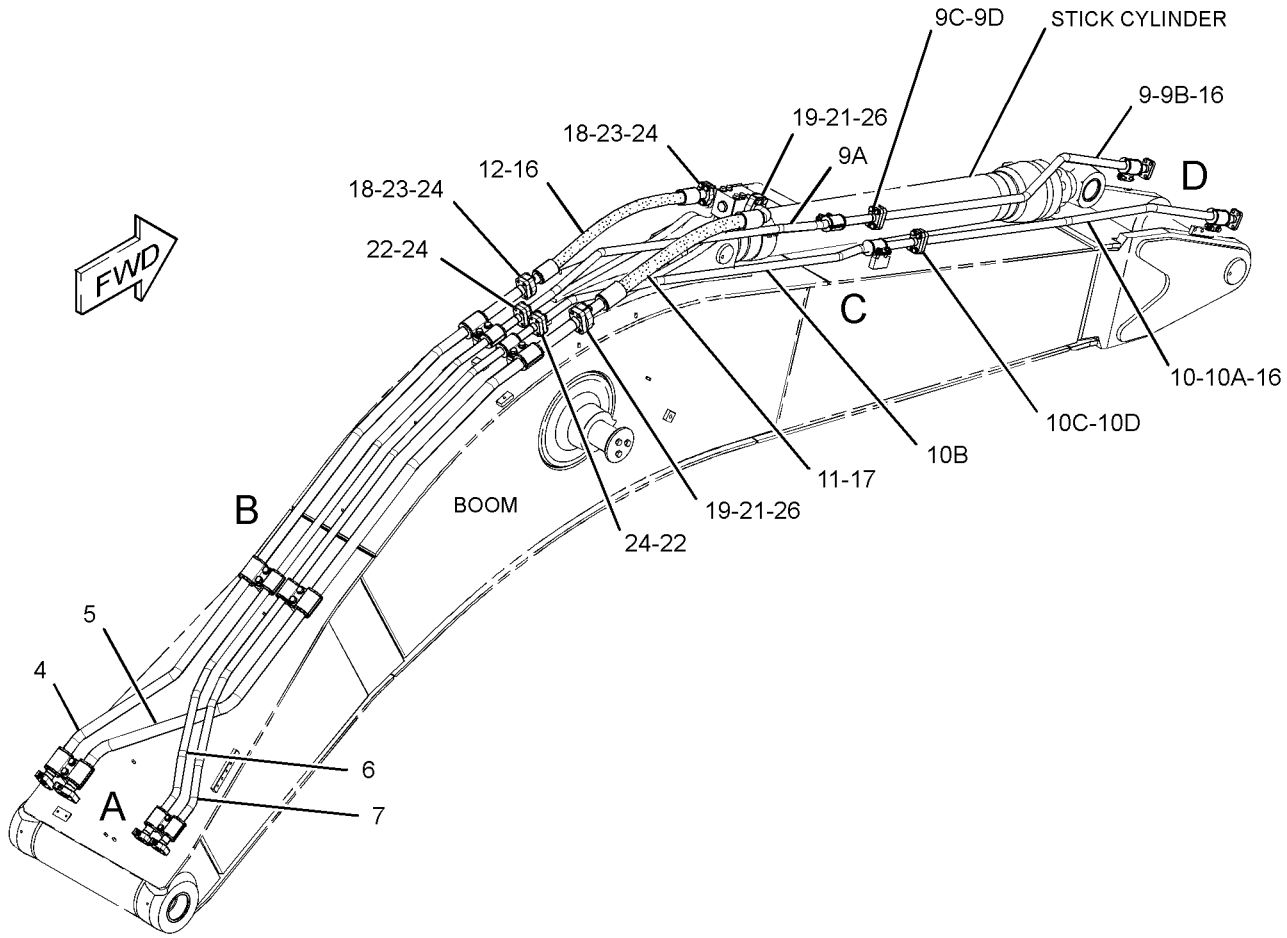

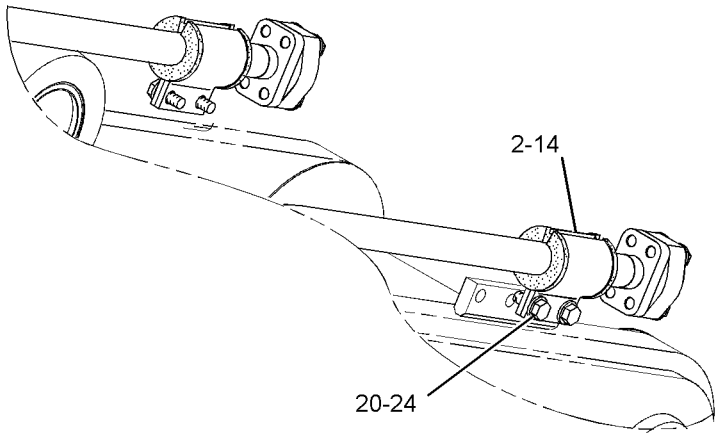

VIEW OF AREA D

REFER TO ALL ILLUSTRATIONS OF
THIS GROUP FOR AUXILIARY VIEWS

GRAPHIC #1 g01398531

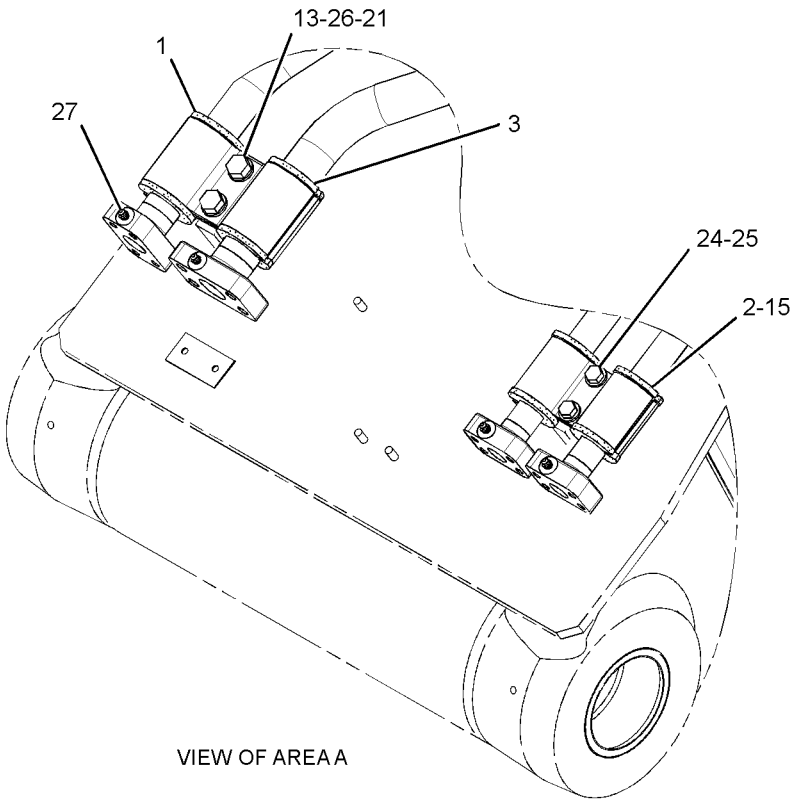

VIEW OF AREA A

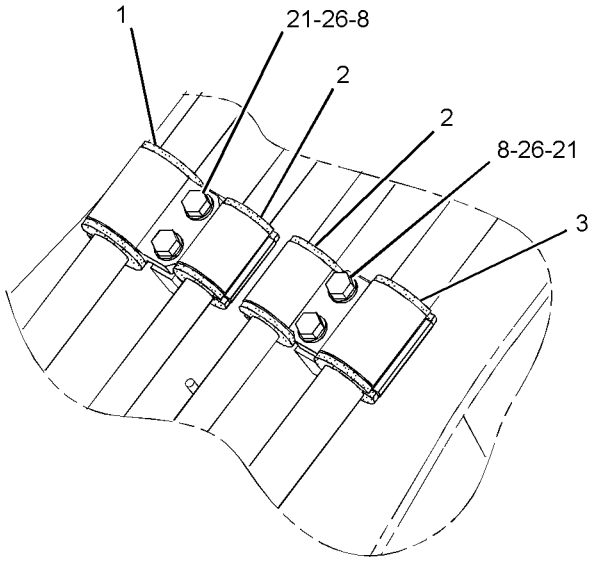

VIEW OF AREA B

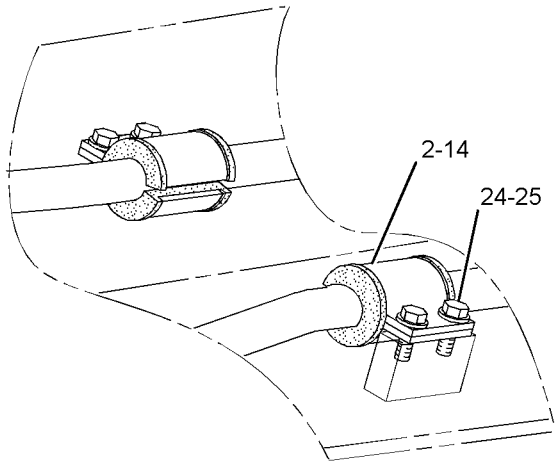

VIEW OF AREA C

GRAPHIC #2 **<END>** g01398532

192-6908 LINES GP-BOOM CYLINDER–LH

S/N: MYG1-UP; PPN1-UP
PART OF 289-8018 CYLINDER & LINES GP-BOOM
AN ATTACHMENT

SMCS-5057, 5456 **i02173534**

NOTE	REF NO	GRAPHIC REF	PART NUMBER	QTY	PART NAME 1 2 3 4 5 6 (PRODUCT LEVEL)	SEE PAGE
	1	1	**1P-3703**	2	SEAL-RECTANGULAR	
M	2	1	**8T-4910**	8	BOLT (M12X1.75X60-MM)	
	3	1	**204-8358**	1	TUBE AS	
	4	1	**204-8359**	1	TUBE AS	
	5	1	**8T-4223**	2	WASHER-HARD (13.5X25.5X3-MM THK)	
M	6	1	**8T-4139**	2	BOLT (M12X1.75X30-MM)	
	7	1	**124-0887**	1	SUPPORT AS	
	8	1	**108-7550**	2	CLIP	
	9	1	**115-8856**	1	SUPPORT AS	
	10	1	**8T-4121**	4	WASHER-HARD (11X21X2.5-MM THK)	
M	11	1	**8T-4196**	4	BOLT (M10X1.5X35-MM)	
	12	1	**5K-9090**	2	SEAL-O-RING	

M-METRIC PART

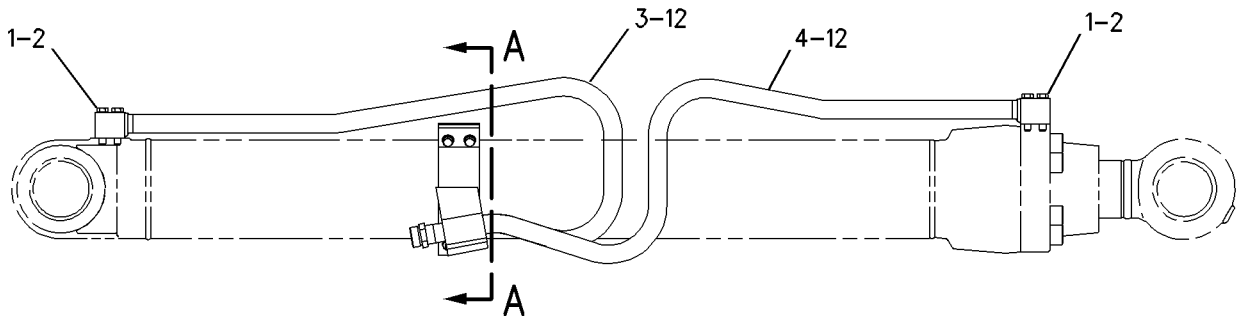

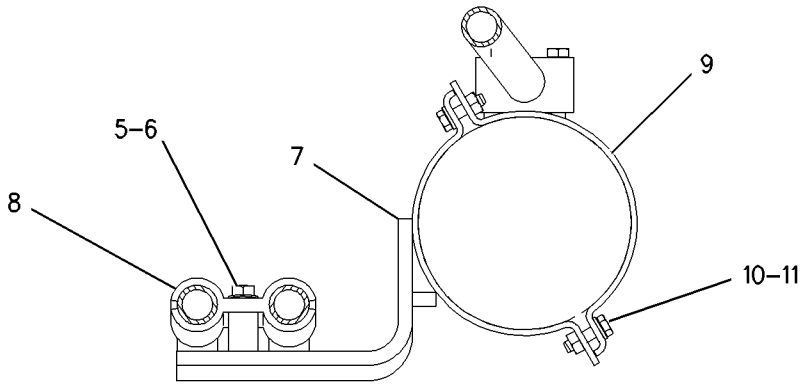

SECTION A–A

GRAPHIC #1 **<END>** g00800558

192-6909 LINES GP-BOOM CYLINDER–RH

S/N: MYG1-UP; PPN1-UP
PART OF 289-8019 CYLINDER & LINES GP-BOOM
AN ATTACHMENT

SMCS-5057, 5456 **i02345922**

NOTE	REF NO	GRAPHIC REF	PART NUMBER	QTY	PART NAME 1 2 3 4 5 6 (PRODUCT LEVEL)	SEE PAGE
	1	1	**1P-3703**	2	SEAL-RECTANGULAR	
M	2	1	**8T-4910**	8	BOLT (M12X1.75X60-MM)	
	3	1	**204-8360**	1	TUBE AS	
	4	1	**204-8361**	1	TUBE AS	
	5	1	**115-8856**	1	SUPPORT AS	
	6	1	**124-0891**	1	SUPPORT AS	
	7	1	**8T-4223**	2	WASHER-HARD (13.5X25.5X3-MM THK)	
M	8	1	**8T-4139**	2	BOLT (M12X1.75X30-MM)	
	9	1	**108-7550**	2	CLIP	
	10	1	**8T-4121**	4	WASHER-HARD (11X21X2.5-MM THK)	
M	11	1	**8T-4196**	4	BOLT (M10X1.5X35-MM)	
	12	1	**5K-9090**	2	SEAL-O-RING	

M-METRIC PART

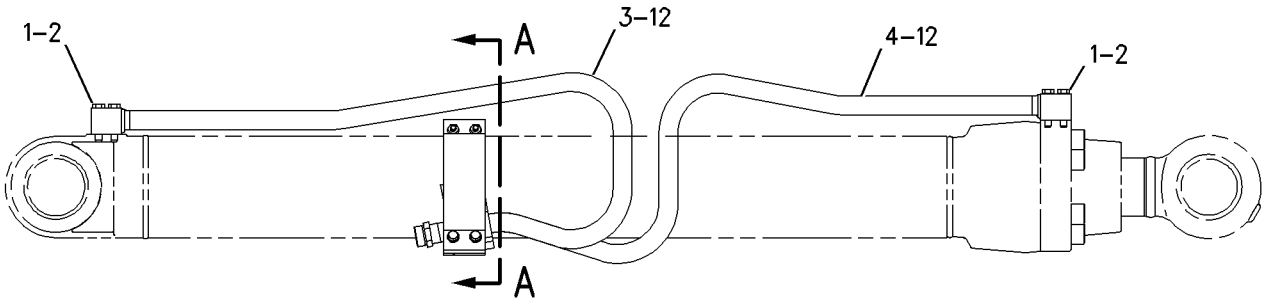

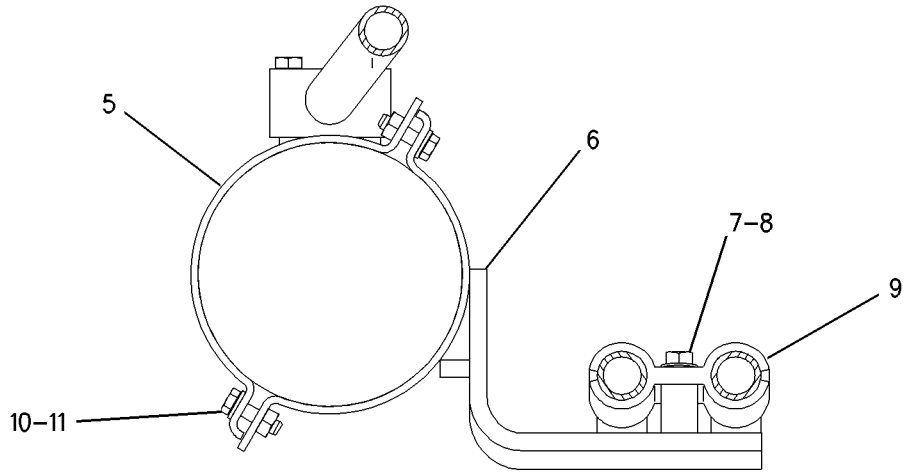

SECTION A-A

GRAPHIC #1 **<END>** g00800575

239-1632 LINES GP-BOOM CYLINDER—BOOM LOWERING CONTROL

S/N: MYG1-UP; PPN1-UP
PART OF 346-4449 CONTROL AR-BOOM
AN ATTACHMENT

SMCS-5057, 5456 **i02825531**

NOTE	REF NO	GRAPHIC REF	PART NUMBER	QTY	PART NAME 1 2 3 4 5 6 (PRODUCT LEVEL)	SEE PAGE
	1	1	**7K-1181**	22	STRAP-CABLE	
	2	2	**108-7550**	4	CLIP	
	3	2	**115-8856**	2	SUPPORT AS	
	4	1	**4I-9525**	2	BAND-MARKER (ORANGE, R1)	
	5	2	**149-1738**	4	CLIP	
	6	1	**207-6228**	1	TUBE AS	
	7	1	**207-6229**	1	TUBE AS	
	8	1	**223-7098**	1	TUBE AS	
	9	2	**223-7100**	1	SUPPORT AS	
	10	1	**223-7103**	1	TUBE AS	
	11	2	**223-7105**	1	SUPPORT AS	
I	12	1	**245-5110**	2	HOSE AS	
I	13	1	**245-5113**	2	HOSE AS	
I	14	1	**245-5116**	2	HOSE AS	
	15	1	**245-5120**	1	SUPPORT AS	
	16	1	**245-5122**	1	BLOCK	
Y	17	2	**270-5692**	1	VALVE GP-MANUAL (BOOM LOWER)	665
I	18	1	**260-8278**	2	HOSE AS	
Y	19	1	**263-1962**	2	VALVE GP-LOAD CONTROL (BOOM LOWERING, DRIFT REDUCTION)	662
	20	1	*148-8336*	8	CONNECTOR AS	
					(EACH INCLUDES)	
		1	**3J-1907**	1	SEAL-O-RING	
		1	**6V-8397**	1	SEAL-O-RING	
		1	**6V-8636**	1	CONNECTOR	
	21	1,2	*148-8341*	4	CONNECTOR AS	
					(EACH INCLUDES)	
		1,2	**3D-2824**	1	SEAL-O-RING	
		1,2	**6V-8713**	1	CONNECTOR	
		1,2	**7J-9108**	1	SEAL-O-RING	
	22	2	*148-8347*	1	ELBOW AS	
		2	**3D-2824**	1	SEAL-O-RING	
		2	**6V-9007**	1	ELBOW	
		2	**6V-9746**	1	SEAL-O-RING	
	23	2	*148-8361*	2	ELBOW AS	
					(EACH INCLUDES)	
		2	**3J-7354**	1	SEAL-O-RING	
		2	**6V-8397**	1	SEAL-O-RING	
		2	**6V-9200**	1	ELBOW	
	24	1,2	*148-8378*	4	ELBOW AS	
					(EACH INCLUDES)	
		1,2	**3J-1907**	1	SEAL-O-RING	
		1,2	**6V-8397**	1	SEAL-O-RING	
		1,2	**6V-8724**	1	ELBOW	
	25	1	**1P-3703**	2	SEAL-RECTANGULAR	
	26	1	**1P-3704**	2	SEAL-RECTANGULAR	
	27	1	**5K-9090**	2	SEAL-O-RING	
	28	1,2	**8T-4121**	10	WASHER-HARD (11X21X2.5-MM THK)	
M	29	2	**8T-4139**	8	BOLT (M12X1.75X30-MM)	
M	30	2	**8T-4176**	2	BOLT (M12X1.75X90-MM)	
M	31	1	**8T-4185**	2	BOLT (M10X1.5X50-MM)	
M	32	2	**8T-4196**	8	BOLT (M10X1.5X35-MM)	
	33	2	**8T-4223**	10	WASHER-HARD (13.5X25.5X3-MM THK)	
M	34	1	**8T-4648**	8	BOLT (M12X1.75X70-MM)	
M	35	1	**8T-4910**	8	BOLT (M12X1.75X60-MM)	

239-1632 **LINES GP-BOOM CYLINDER** *(contd.)* **i02825531**

NOTE	REF NO	GRAPHIC REF	PART NUMBER	QTY	PART NAME 1 2 3 4 5 6 (PRODUCT LEVEL)	SEE PAGE
	36	2	*148-8411*	1	PLUG AS	
		2	**3K-0360**	1	SEAL-O-RING	
		2	**9S-4185**	1	PLUG-O-RING	
	37	1	**7J-9108**	1	SEAL-O-RING	
	38	1	**4I-9521**	2	BAND-MARKER (RED, L1)	
	39	1	**4I-9522**	2	BAND-MARKER (YELLOW, L2)	
	40	1	**4I-9526**	2	BAND-MARKER (WHITE, R2)	

I-REFER TO HYDRAULIC INFORMATION SYSTEM
M-METRIC PART
Y-SEPARATE ILLUSTRATION

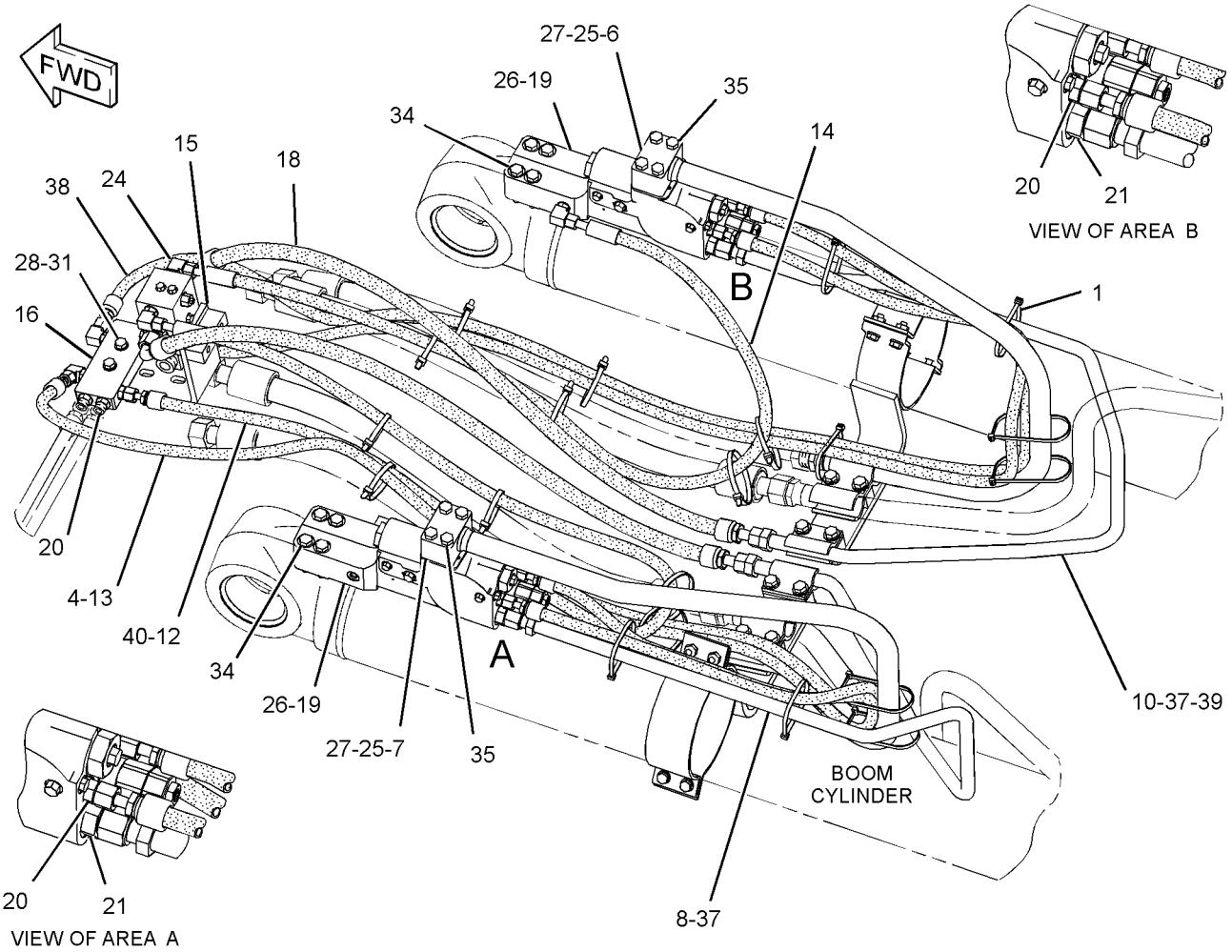

GRAPHIC #1 g01421779

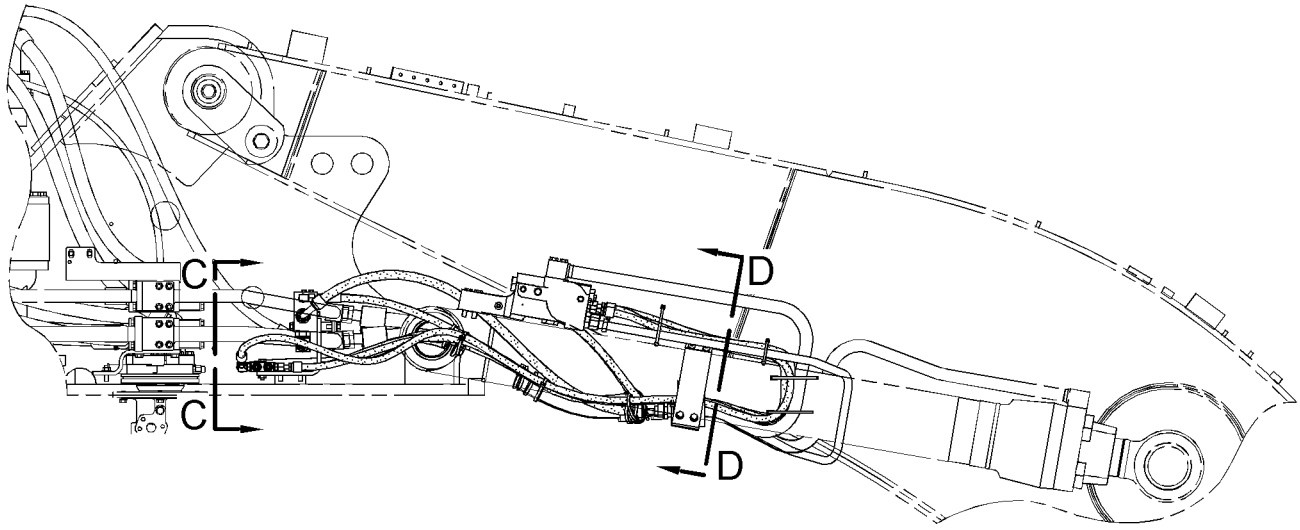

RIGHT SIDE VIEW

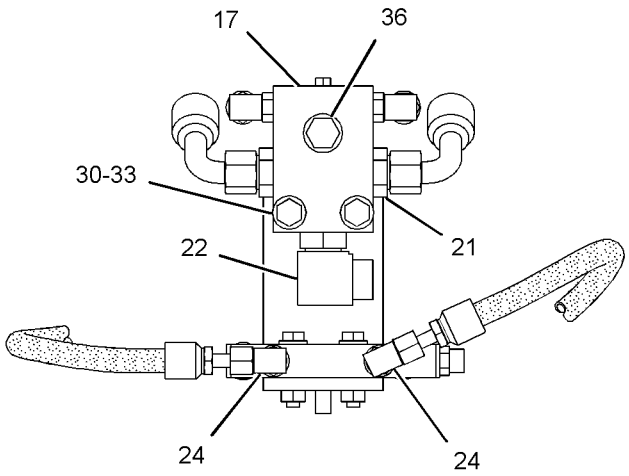

VIEW C-C

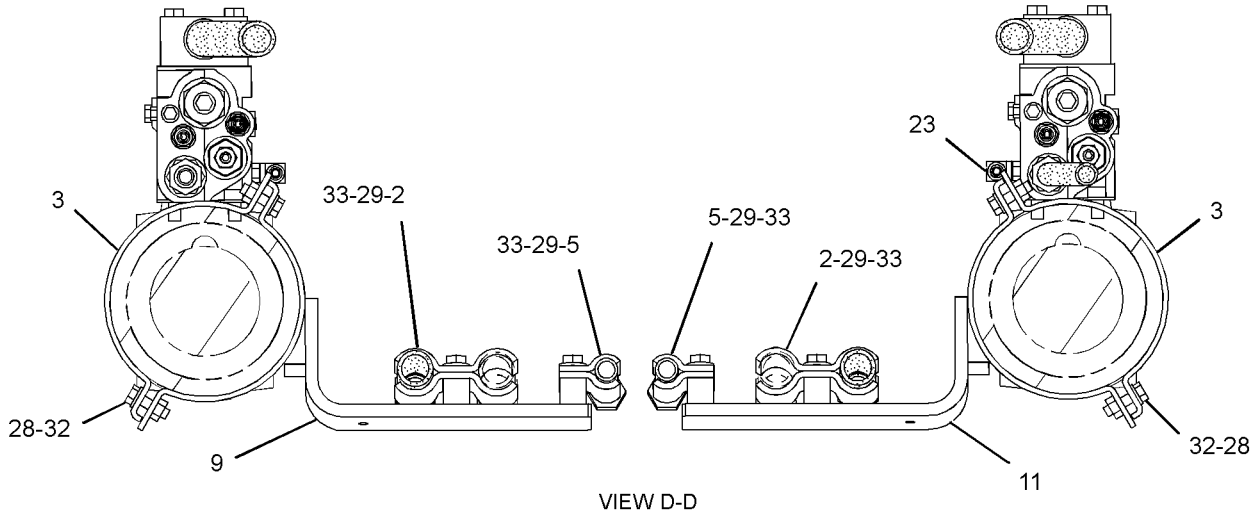

VIEW D-D

GRAPHIC #2 **<END>** g01239784

115-8694 LINES GP-BUCKET CYLINDER

S/N: MYG1-UP; PPN1-UP
PART OF 289-8039 CYLINDER & LINES GP-BUCKET
AN ATTACHMENT

SMCS-5457 **i01893022**

NOTE	REF NO	GRAPHIC REF	PART NUMBER	QTY	PART NAME 1 2 3 4 5 6 (PRODUCT LEVEL)	SEE PAGE
	1	1	**115-8961**	1	TUBE AS	
	2	1	**1P-3704**	1	SEAL-RECTANGULAR	
M	3	1	**8T-4910**	4	BOLT (M12X1.75X60-MM)	
M	4	1	**8T-4139**	4	BOLT (M12X1.75X30-MM)	
	5	1	**8T-4223**	4	WASHER-HARD (13.5X25.5X3-MM THK)	
	6	1	**7Y-3732**	4	CLIP	
	7	1	**223-6876**	2	SUPPORT AS	
	8	1	**8T-4121**	8	WASHER-HARD (11X21X2.5-MM THK)	
M	9	1	**8T-4196**	8	BOLT (M10X1.5X35-MM)	
	10	1	**124-0911**	2	SUPPORT AS	

M-METRIC PART

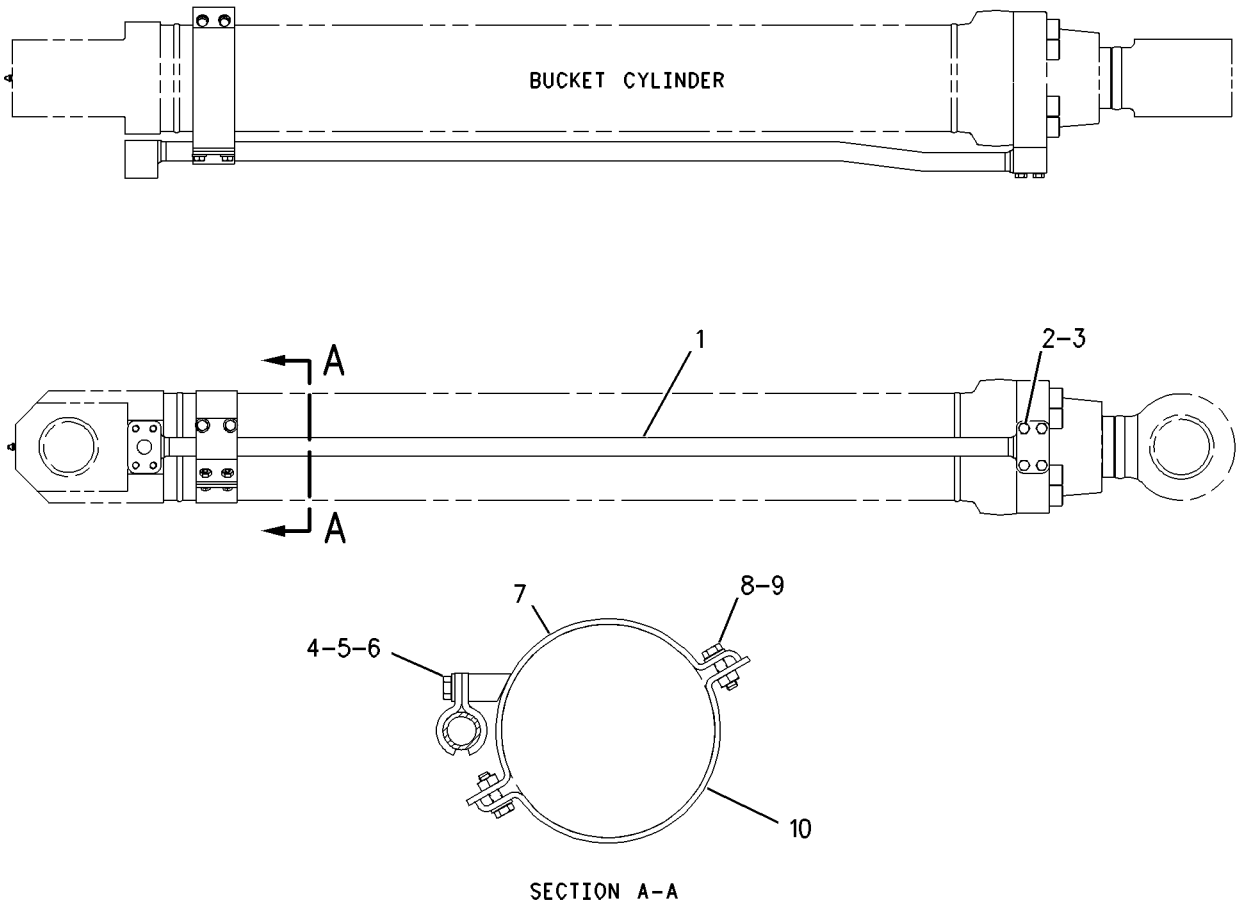

SECTION A-A

GRAPHIC #1 **<END>** g00850187

239-1627 LINES GP-BUCKET CYLINDER

S/N: MYG1-UP; PPN1-UP
PART OF 289-8010 CYLINDER & LINES GP-BUCKET
AN ATTACHMENT

SMCS-5457 **i02302228**

NOTE	REF NO	GRAPHIC REF	PART NUMBER	QTY	PART NAME 1 2 3 4 5 6 (PRODUCT LEVEL)	SEE PAGE
	1	1	**7Y-3732**	2	CLIP	
	2	1	**119-2378**	1	SUPPORT AS	
	3	1	**119-2379**	1	SUPPORT AS	
	4	1	**239-1986**	1	TUBE AS	
	5	1	**1P-3703**	1	SEAL-RECTANGULAR	
	6	1	**8T-4121**	4	WASHER-HARD (11X21X2.5-MM THK)	
M	7	1	**8T-4139**	2	BOLT (M12X1.75X30-MM)	
M	8	1	**8T-4196**	4	BOLT (M10X1.5X35-MM)	
	9	1	**8T-4223**	2	WASHER-HARD (13.5X25.5X3-MM THK)	
M	10	1	**8T-4910**	4	BOLT (M12X1.75X60-MM)	

M-METRIC PART

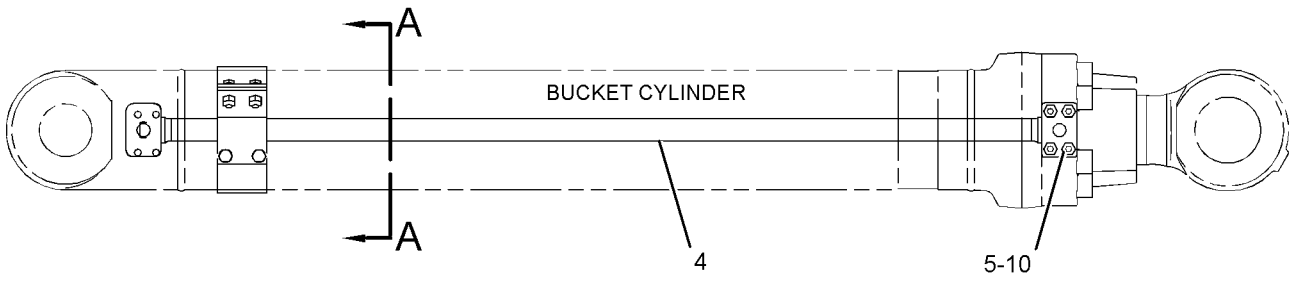

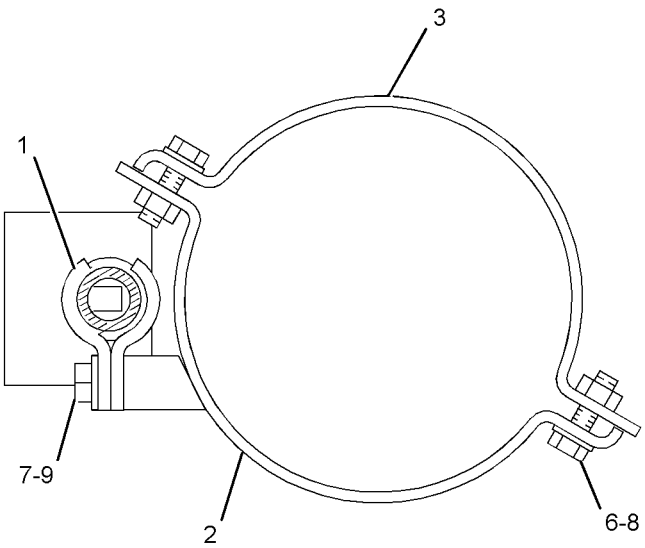

GRAPHIC #1 **<END>** g01154022

HYDRAULIC SYSTEM

237-3194 LINES GP-COUPLER—REACH BOOM

S/N: MYG1-UP; PPN1-UP
PART OF 345-7579, 345-7582 CONTROL AR-COUPLER
AN ATTACHMENT

SMCS-5057, 5133 **i02983520**

NOTE	REF NO	GRAPHIC REF	PART NUMBER	QTY	PART NAME 1 2 3 4 5 6 (PRODUCT LEVEL)	SEE PAGE
M	1	1	**8T-4139**	14	BOLT (M12X1.75X30-MM)	
CM	2	1	**7X-2550**	2	BOLT (M12X1.75X110-MM)	
M	3	1	**8T-4184**	4	BOLT (M12X1.75X45-MM)	
M	4	1	**8T-4956**	4	BOLT (M12X1.75X35-MM)	
	5	1	**179-5235**	6	CLIP	
	6	1	**253-6444**	8	CLIP	
	7	1	**135-3980**	2	CLIP	
	8	1	**5Q-4212**	4	CLIP	
M	9	1	**8T-4244**	18	NUT (M12X1.75-THD)	
C	10	1	**157-9338**	1	PLATE	
	11	1	**6V-8398**	8	SEAL-O-RING	
	12	1	**253-6635**	2	SUPPORT AS	
C	13	1	**316-3915**	1	TUBE AS	
	14	1	**288-7643**	1	TUBE AS	
C	15	1	**316-3918**	1	TUBE AS	
	16	1	**245-2223**	1	TUBE AS	
	17	1	**288-7646**	1	TUBE AS	
	18	1	**245-2294**	1	TUBE AS	
	19	1	**8T-4223**	24	WASHER-HARD (13.5X25.5X3-MM THK)	

C-CHANGE FROM PREVIOUS TYPE
M-METRIC PART

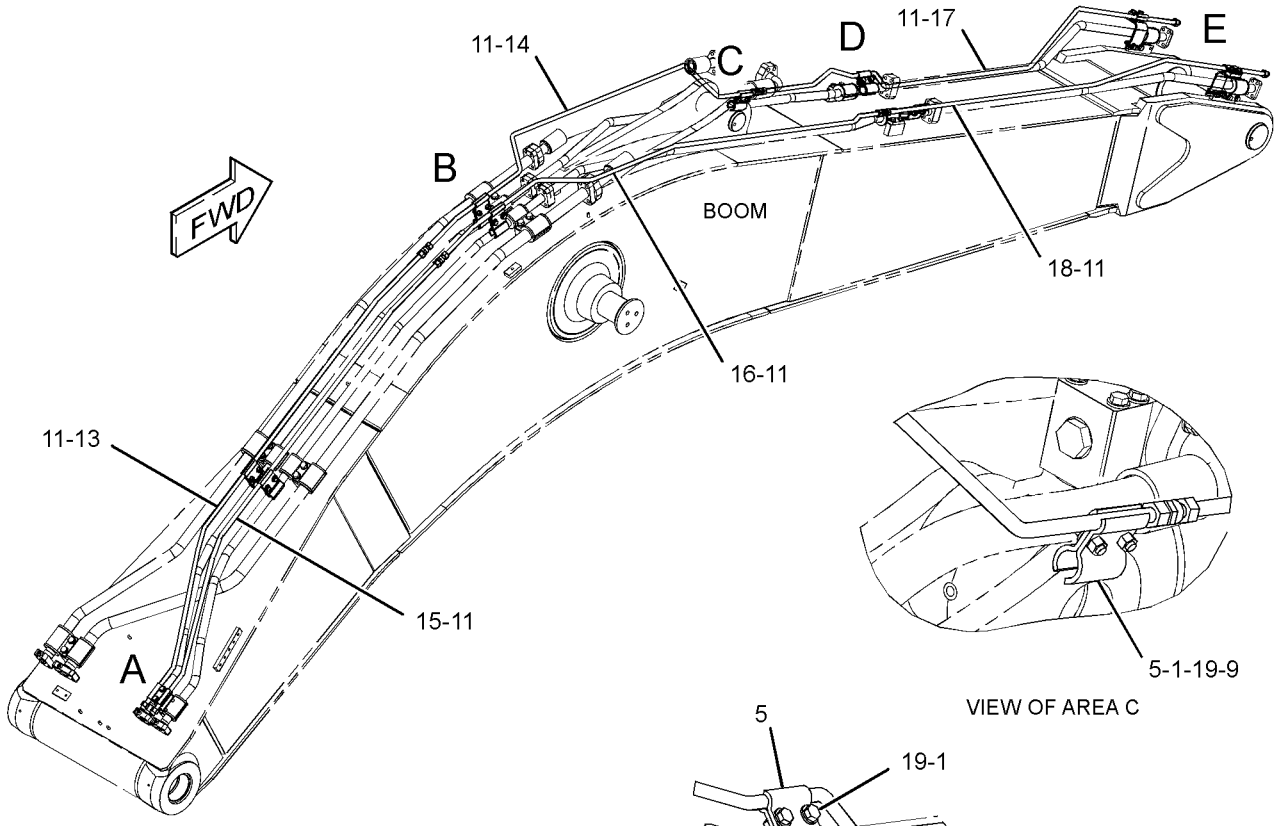

VIEW OF AREA C

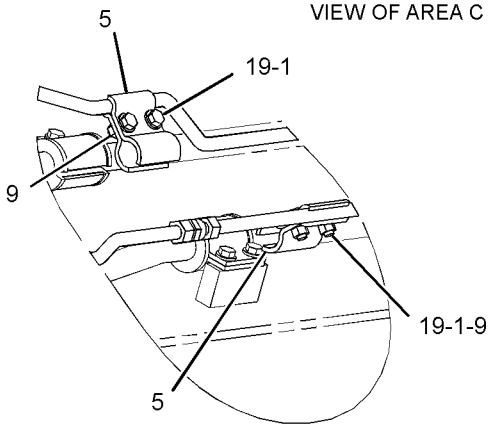

VIEW OF AREA D

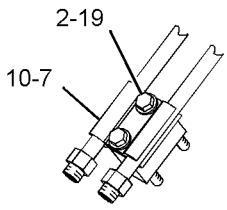

VIEW OF AREA A

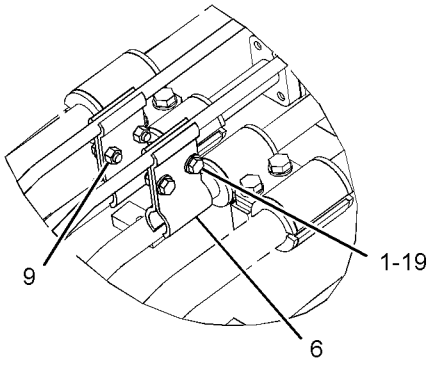

VIEW OF AREA B

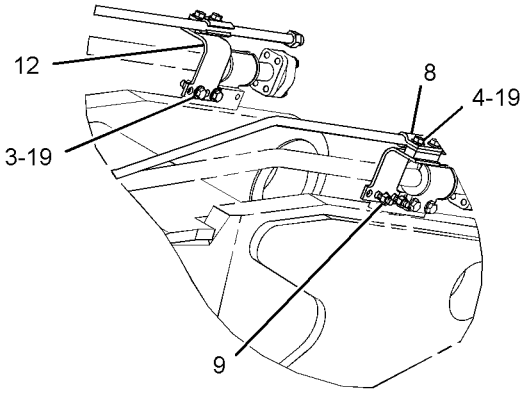

VIEW OF AREA E

GRAPHIC #1

<END>

g01560554

HYDRAULIC SYSTEM

253-6495 LINES GP-COUPLER

S/N: MYG1-UP; PPN1-UP
PART OF 345-7579 CONTROL AR-COUPLER
FOR USE WITH 3.2-M (10.5-FT) STICK
AN ATTACHMENT

SMCS-5057, 5133 **i02302565**

NOTE	REF NO	GRAPHIC REF	PART NUMBER	QTY	PART NAME 1 2 3 4 5 6 (PRODUCT LEVEL)	SEE PAGE
	1	1	**9X-6582**	1	NUT (13/16-16-THD)	
	2	1	**253-6548**	1	TUBE AS	
	3	1	**253-6551**	1	TUBE AS	
I	4	1	**253-6554**	2	HOSE AS	
	5	1	*148-8415*	1	REDUCER AS	
		1	**6V-8397**	1	SEAL-O-RING	
		1	**6V-8936**	1	REDUCER	
	6	1	*148-8419*	1	REDUCER AS	
		1	**4J-5477**	1	SEAL-O-RING	
		1	**6V-8935**	1	REDUCER-O-RING	
	7	1	**5Q-4212**	12	CLIP	
	8	1	**6V-8398**	4	SEAL-O-RING	
	9	1	**8T-4223**	12	WASHER-HARD (13.5X25.5X3-MM THK)	
M	10	1	**8T-4956**	12	BOLT (M12X1.75X35-MM)	

I-REFER TO HYDRAULIC INFORMATION SYSTEM
M-METRIC PART

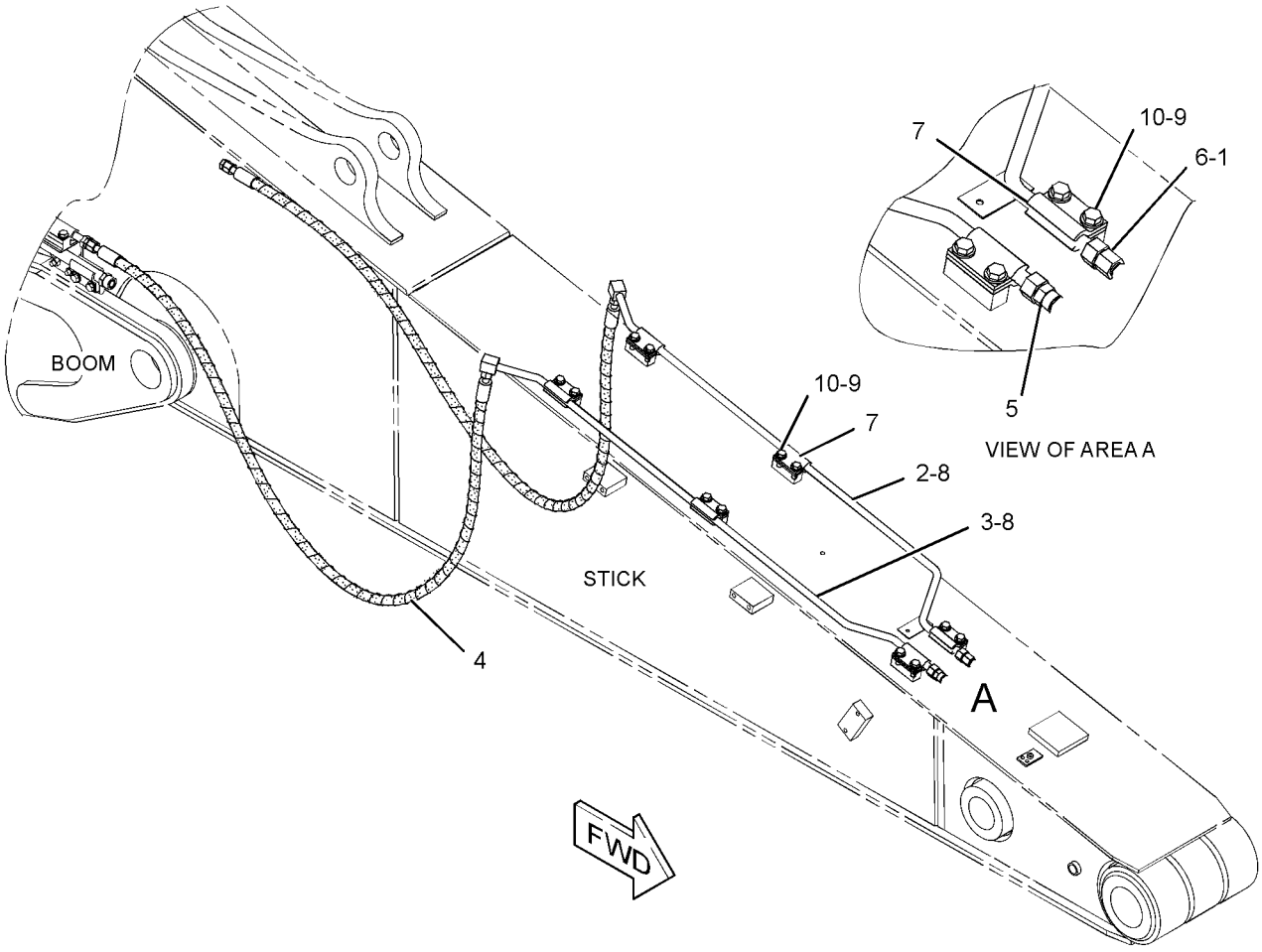

GRAPHIC #1 **<END>** g01156036

HYDRAULIC SYSTEM

253-6601 LINES GP-COUPLER

S/N: MYG1-UP; PPN1-UP
PART OF 345-7582 CONTROL AR-COUPLER
FOR USE WITH 2.8-M (9.2-FT) STICK
AN ATTACHMENT

SMCS-5057, 5133 **i02388828**

NOTE	REF NO	GRAPHIC REF	PART NUMBER	QTY	PART NAME 1 2 3 4 5 6 (PRODUCT LEVEL)	SEE PAGE
M	1	1	**8T-4956**	10	BOLT (M12X1.75X35-MM)	
	2	1	**135-3980**	2	CLIP	
	3	1	**5Q-4212**	8	CLIP	
I	4	1	**177-8572**	2	HOSE AS	
	5	1	**9X-6582**	1	NUT (13/16-16-THD)	
	6	1	*148-8415*	1	REDUCER AS	
		1	**6V-8397**	1	SEAL-O-RING	
		1	**6V-8936**	1	REDUCER	
	7	1	*148-8419*	1	REDUCER AS	
		1	**4J-5477**	1	SEAL-O-RING	
		1	**6V-8935**	1	REDUCER-O-RING	
	8	1	**6V-8398**	4	SEAL-O-RING	
	9	1	**207-5542**	1	TUBE AS	
	10	1	**207-5549**	1	TUBE AS	
	11	1	**8T-4223**	10	WASHER-HARD (13.5X25.5X3-MM THK)	

I-REFER TO HYDRAULIC INFORMATION SYSTEM
M-METRIC PART

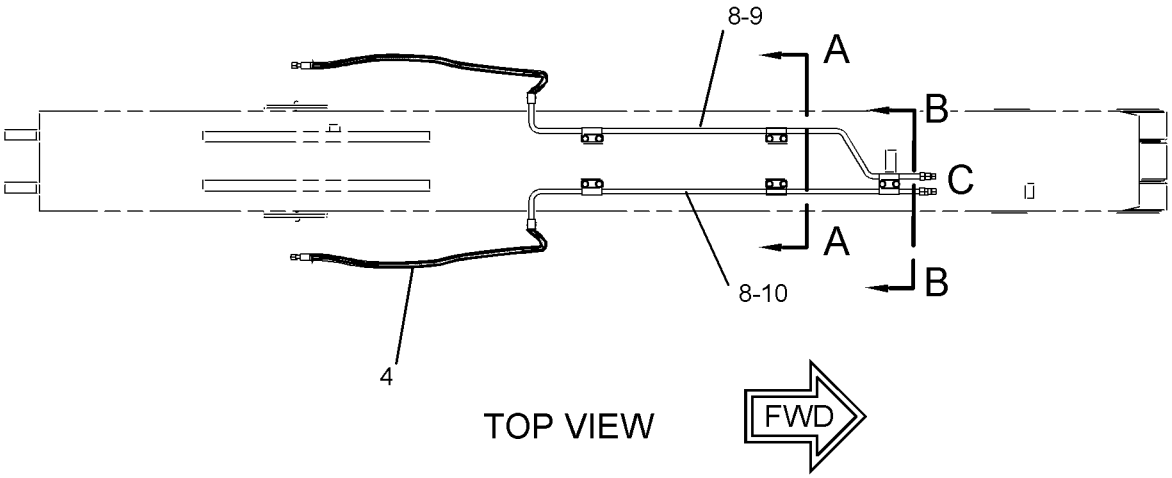

TOP VIEW

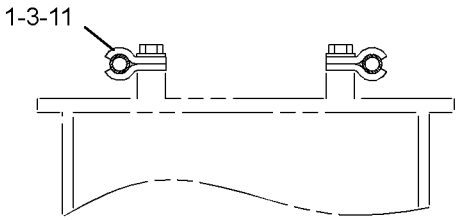

SECTION A-A

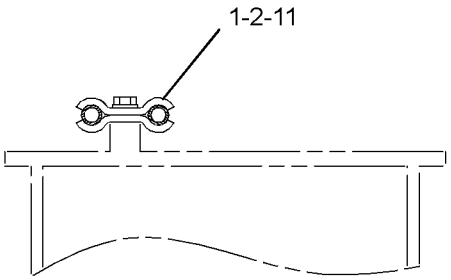

SECTION B-B

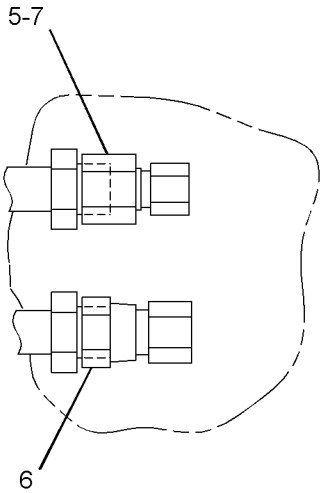

VIEW OF AREA C

GRAPHIC #1 **<END>** g01197433

HYDRAULIC SYSTEM

274-7163 LINES GP-COUPLER—DB-FAMILY

S/N: MYG1-UP

PART OF 274-7162 COUPLER AR-QUICK

AN ATTACHMENT

SMCS-5057, 5133 **i02428009**

NOTE	REF NO	GRAPHIC REF	PART NUMBER	QTY	PART NAME 1 2 3 4 5 6 (PRODUCT LEVEL)	SEE PAGE
	1	1	*148-8419*	1	REDUCER AS	
		1	**4J-5477**	1	SEAL-O-RING	
		1	**6V-8935**	1	REDUCER-O-RING	
	2	1	**6V-8554**	1	NUT (13/16-16-THD)	
	3	1	**7K-1181**	4	STRAP-CABLE	
	4	1	**6V-0405**	2	SEAL-BONDED	
	5	1	**8T-7910**	2	ADAPTER	
	6	1	**8T-8887**	2	CONNECTOR	
	7	1	**3J-1907**	2	SEAL-O-RING	
	8	1	**6V-8397**	2	SEAL-O-RING	
	9	1	*148-8384*	2	ELBOW AS	
					(EACH INCLUDES)	
		1	**4J-5477**	2	SEAL-O-RING	
		1	**6V-8979**	1	ELBOW	
	10	1	**2P-1279**	2	LOCKNUT (9/16-18-THD)	
M	11	1	**8T-4137**	2	BOLT (M10X1.5X20-MM)	
	12	1	**8T-4121**	2	WASHER-HARD (11X21X2.5-MM THK)	
	13	1	**277-6304**	1	BRACKET AS	
I	14	1	**277-9864**	2	HOSE AS	
I	15	1	**277-9865**	2	HOSE AS	

I-REFER TO HYDRAULIC INFORMATION SYSTEM
M-METRIC PART

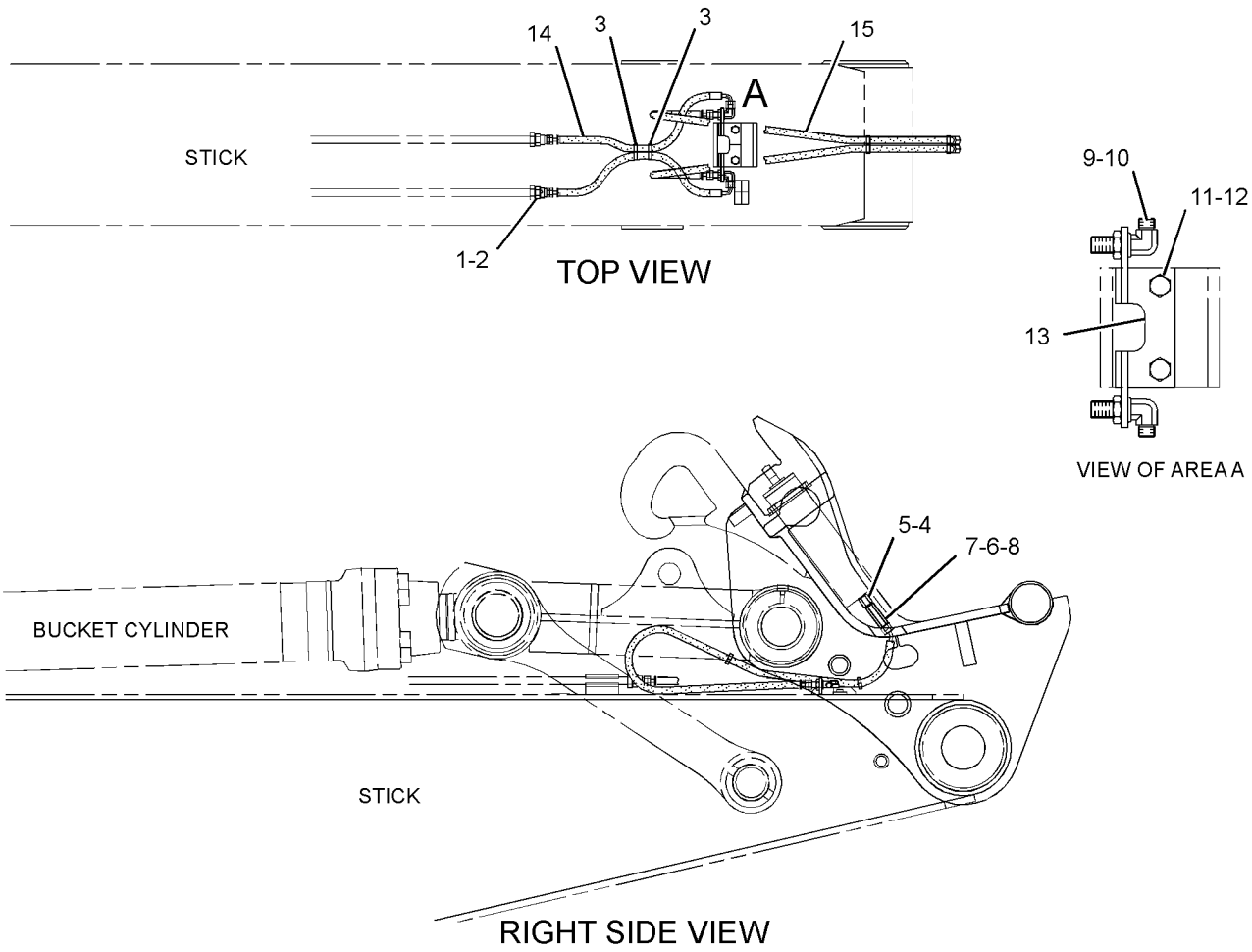

GRAPHIC #1

<END>

g01218867

HYDRAULIC SYSTEM

275-7738 LINES GP-COUPLER—TB-FAMILY

S/N: MYG1-UP; PPN1-UP

PART OF 275-7742, 275-7752 COUPLER AR-QUICK

AN ATTACHMENT

SMCS-5057, 5133 **i02994445**

NOTE	REF NO	GRAPHIC REF	PART NUMBER	QTY	PART NAME 1 2 3 4 5 6 (PRODUCT LEVEL)	SEE PAGE
	1	1	*148-8419*	1	REDUCER AS	
		1	**4J-5477**	1	SEAL-O-RING	
		1	**6V-8935**	1	REDUCER-O-RING	
	2	1	**6V-8554**	1	NUT (13/16-16-THD)	
	3	1	**7K-1181**	4	STRAP-CABLE	
	4	1	**6V-0405**	2	SEAL-BONDED	
	5	1	**8T-7910**	2	ADAPTER	
	6	1	**8T-8887**	2	CONNECTOR	
	7	1	**3J-1907**	2	SEAL-O-RING	
	8	1	**6V-8397**	2	SEAL-O-RING	
	9	1	*148-8384*	2	ELBOW AS	
					(EACH INCLUDES)	
		1	**4J-5477**	2	SEAL-O-RING	
		1	**6V-8979**	1	ELBOW	
	10	1	**2P-1279**	2	LOCKNUT (9/16-18-THD)	
M	11	1	**8T-4137**	2	BOLT (M10X1.5X20-MM)	
	12	1	**8T-4121**	2	WASHER-HARD (11X21X2.5-MM THK)	
	13	1	**277-6304**	1	BRACKET AS	
I	14	1	**277-9864**	2	HOSE AS	
I	15	1	**277-9865**	2	HOSE AS	

I-REFER TO HYDRAULIC INFORMATION SYSTEM
M-METRIC PART

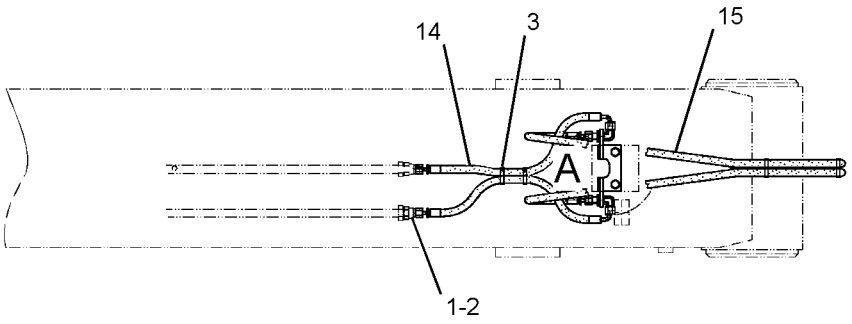

TOP VIEW

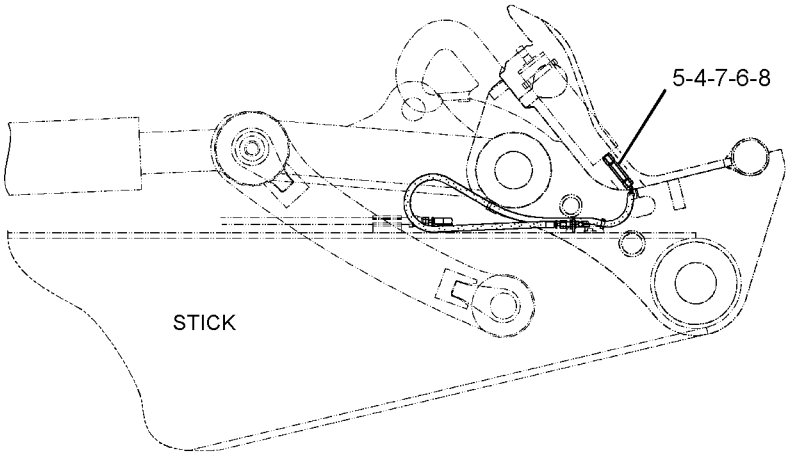

RIGHT SIDE VIEW

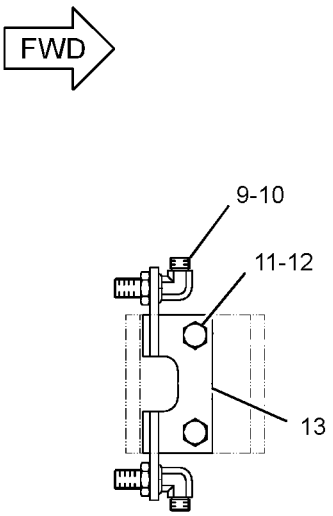

VIEW OF AREA A

GRAPHIC #1 **<END>** g01260761

HYDRAULIC SYSTEM

255-1923 LINES GP-FRONT—SYSTEM 16, 1-WAY, 2-PUMP

S/N: MYG1-UP; PPN1-UP
PART OF 255-5774 CONTROL AR-AUXILIARY
AN ATTACHMENT

SMCS-5057 **i02480202**

NOTE	REF NO	GRAPHIC REF	PART NUMBER	QTY	PART NAME 1 2 3 4 5 6 (PRODUCT LEVEL)	SEE PAGE
	1	2	**7Y-3731**	1	FLANGE	
M	2	2	**105-3477**	4	BOLT-SOCKET HEAD (M10X1.5X45-MM)	
I	3	1	**141-1313**	1	HOSE AS	
Y	4	2	**177-2653**	1	VALVE GP-RELIEF (WITH BLOCK)	683
	5	2	**187-5853**	2	BLOCK	
I	6	2	**207-6443**	1	HOSE AS	
	7	2	**212-5148**	1	BLOCK	
	8	1	**255-1892**	1	SUPPORT	
	9	1	**255-1894**	1	SUPPORT	
	10	2	**255-1936**	1	BLOCK	
	11	2	**260-7959**	2	BRACKET	
	12	2	**260-8030**	1	SUPPORT	
	13	2	**260-8098**	1	SUPPORT	
	14	1	**260-8193**	1	TUBE AS	
	15	2	**266-1278**	1	BLOCK	
	16	2	**266-1279**	1	FLANGE	
I	17	1	**266-1303**	1	HOSE AS	
I	18	1	**275-1384**	1	HOSE AS	
	19	2	**275-1439**	1	BLOCK	
	20	2	**099-8232**	1	SEAL-O-RING	
M	21	2	**101-7401**	4	BOLT-SOCKET HEAD (M10X1.5X20-MM)	
M	22	2	**101-7404**	4	BOLT-SOCKET HEAD (M10X1.5X30-MM)	
M	23	1	**108-3819**	4	BOLT-SOCKET HEAD (M12X1.75X70-MM)	
	24	2	*148-8330*	1	CONNECTOR AS	
		2	**5K-9090**	1	SEAL-O-RING	
		2	**7M-8485**	1	SEAL-O-RING	
		2	**8T-0198**	1	CONNECTOR	
	25	2	*148-8335*	2	CONNECTOR AS	
					(EACH INCLUDES)	
		2	**5K-9090**	1	SEAL-O-RING	
		2	**6V-8635**	1	CONNECTOR	
		2	**7M-8485**	1	SEAL-O-RING	
	26	2	*148-8347*	1	ELBOW AS	
		2	**3D-2824**	1	SEAL-O-RING	
		2	**6V-9007**	1	ELBOW	
		2	**6V-9746**	1	SEAL-O-RING	
	27	2	*148-8356*	1	ELBOW AS	
		2	**2S-4078**	1	SEAL-O-RING	
		2	**6V-8400**	1	SEAL-O-RING	
		2	**6V-9009**	1	ELBOW	
	28	2	*153-6237*	1	ELBOW AS	
		2	**3D-2824**	1	SEAL-O-RING	
		2	**6V-9004**	1	ELBOW	
		2	**6V-9746**	1	SEAL-O-RING	
	29	2	*164-4180*	1	PLUG AS	
		2	**7M-8485**	1	SEAL-O-RING	
		2	**9S-4181**	1	PLUG-O-RING	
	30	2	**1P-3702**	3	SEAL-RECTANGULAR	
	31	2	**1P-3703**	3	SEAL-RECTANGULAR	
	32	2	**1P-4578**	2	FLANGE-HALF	
	33	2	**4J-0522**	1	SEAL-O-RING	
	34	2	**5K-9090**	1	SEAL-O-RING	
	35	1,2	**5P-7470**	2	CLIP (SLOT)	
	36	1,2	**5P-7471**	2	CLIP (TAB)	
	37	1,2	**5P-8182**	2	GROMMET	

255-1923 **LINES GP-FRONT** *(contd.)* **i02480202**

NOTE	REF NO	GRAPHIC REF	PART NUMBER	QTY	PART NAME 1 2 3 4 5 6 (PRODUCT LEVEL)	SEE PAGE
	38	1	**6J-2680**	1	SEAL-O-RING	
	39	1,2	**8T-4121**	6	WASHER-HARD (11X21X2.5-MM THK)	
M	40	1	**8T-4136**	2	BOLT (M10X1.5X25-MM)	
M	41	2	**8T-4139**	10	BOLT (M12X1.75X30-MM)	
M	42	2	**8T-4176**	4	BOLT (M12X1.75X90-MM)	
M	43	2	**8T-4196**	4	BOLT (M10X1.5X35-MM)	
	44	1,2	**8T-4223**	30	WASHER-HARD (13.5X25.5X3-MM THK)	
M	45	1,2	**8T-4956**	8	BOLT (M12X1.75X35-MM)	
M	46	2	**8T-5092**	8	BOLT (M12X1.75X150-MM)	
M	47	2	**280-2747**	4	BOLT-SOCKET HEAD (M10X1.5X60-MM)	

I-REFER TO HYDRAULIC INFORMATION SYSTEM
M-METRIC PART
Y-SEPARATE ILLUSTRATION

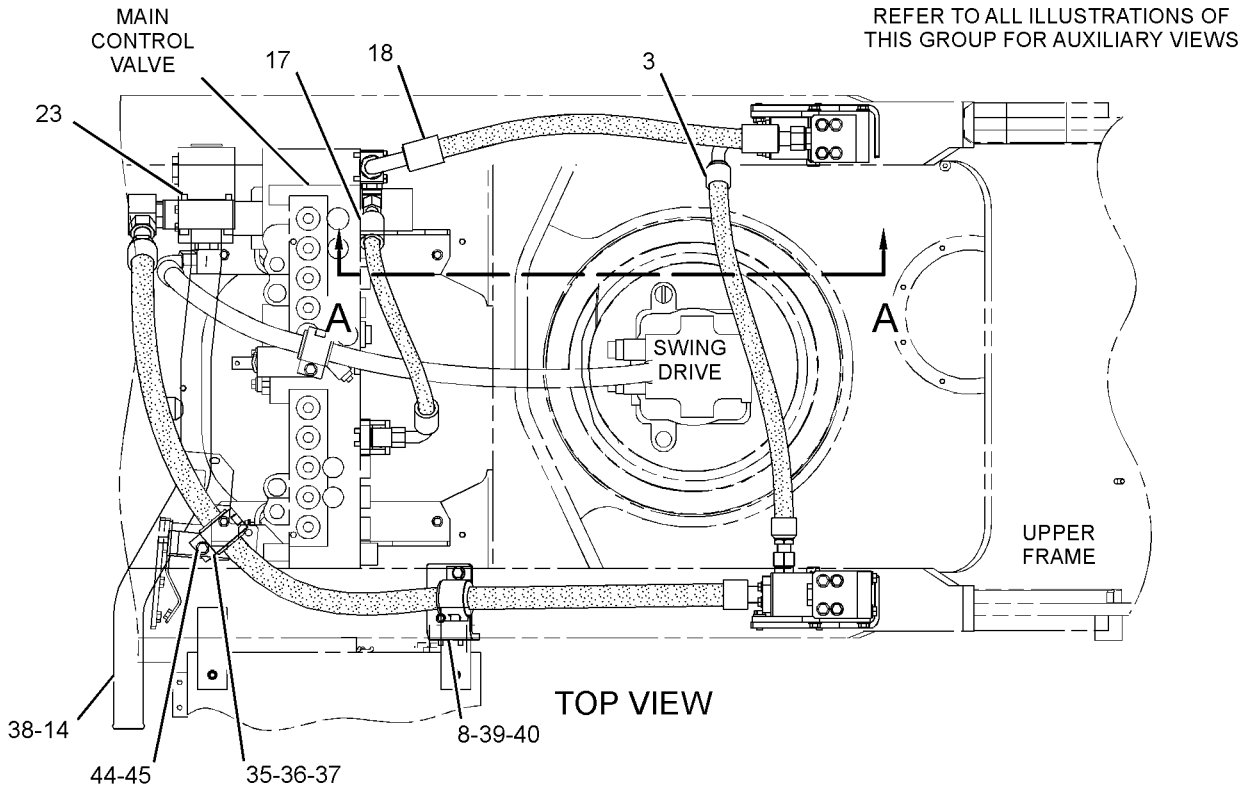

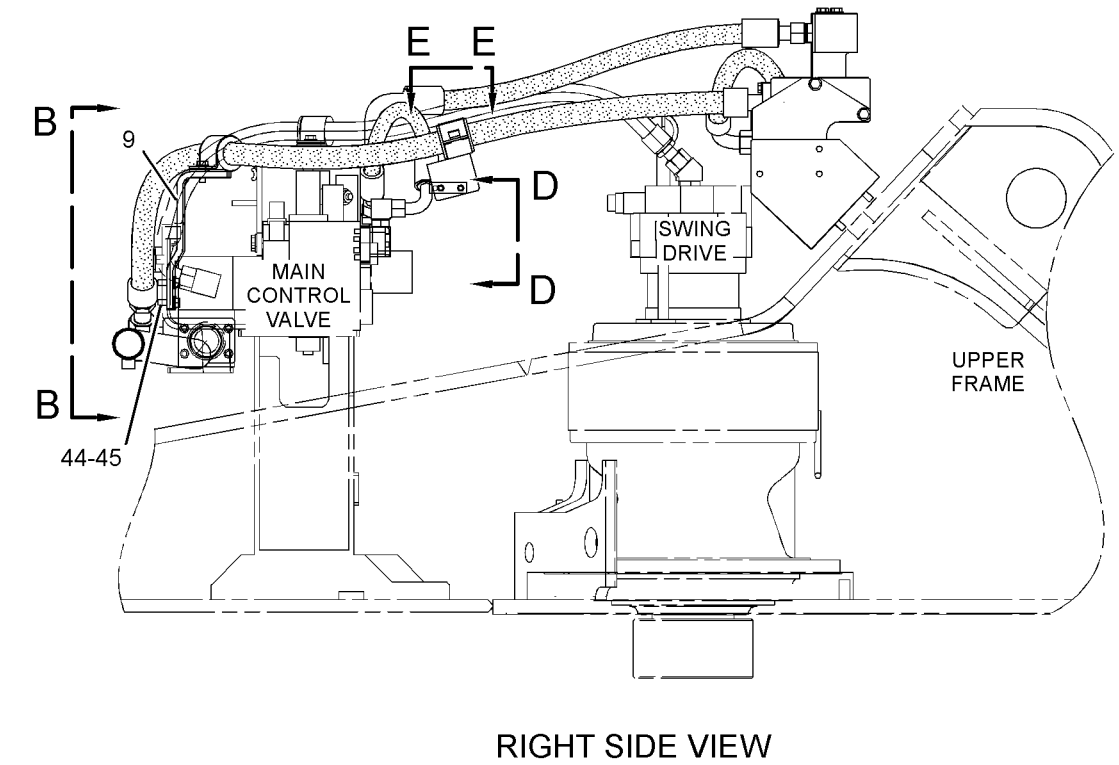

GRAPHIC #1 g01202887

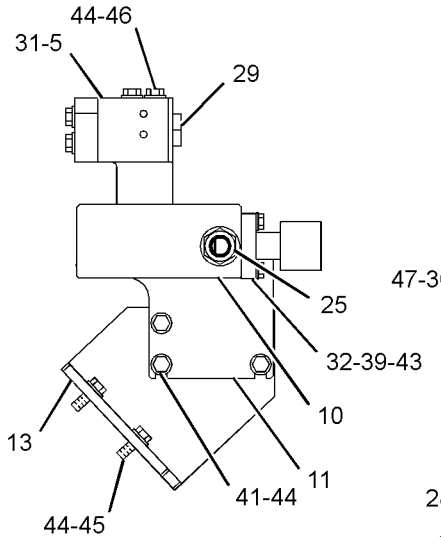

SECTION C-C

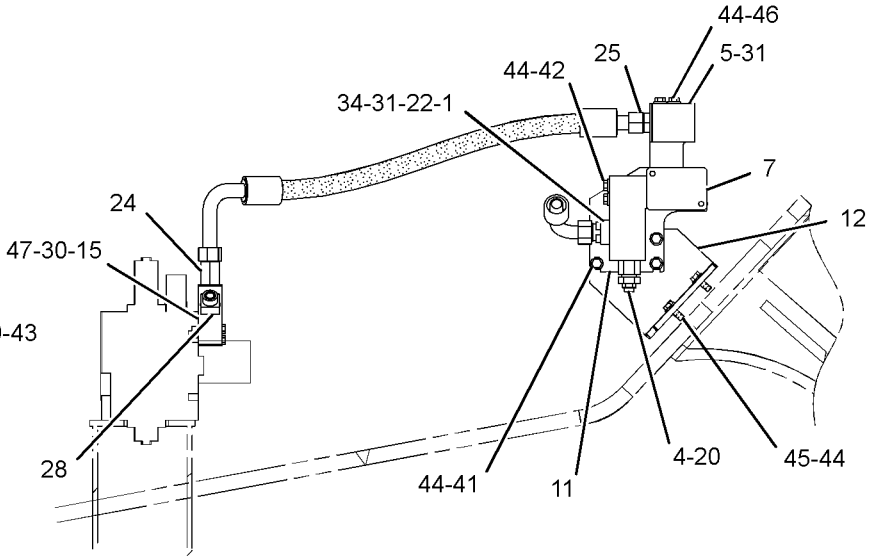

SECTION A-A

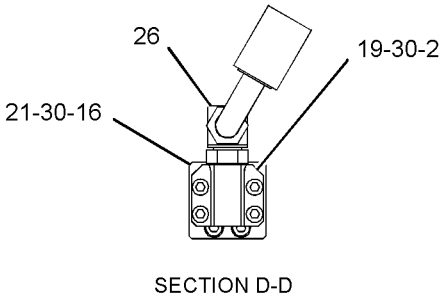

SECTION D-D

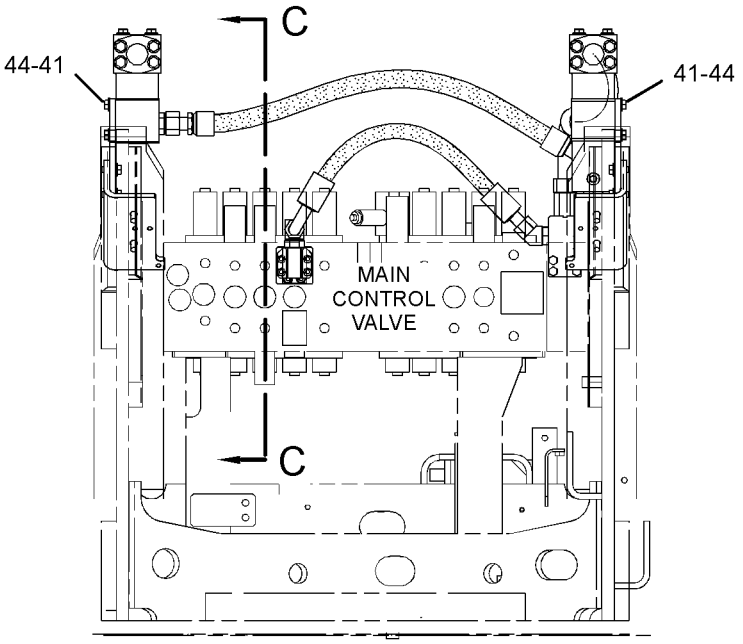

REAR VIEW

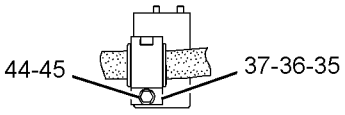

SECTION E-E

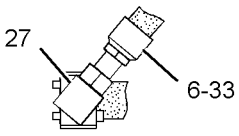

SECTION B-B

GRAPHIC #2 **<END>** g01202888

HYDRAULIC SYSTEM

255-1924 LINES GP-FRONT—SYSTEM 17, COMBINED FN, MED PR

S/N: MYG1-UP; PPN1-UP
PART OF 297-0494 CONTROL AR-AUXILIARY
AN ATTACHMENT

SMCS-5057 **i03675488**

NOTE	REF NO	GRAPHIC REF	PART NUMBER	QTY	PART NAME 1 2 3 4 5 6 (PRODUCT LEVEL)	SEE PAGE
	1	1	**7Y-3729**	1	FLANGE	
	2	2	**7Y-3731**	1	FLANGE	
M	3	1,2	**105-3477**	6	BOLT-SOCKET HEAD (M10X1.5X45-MM)	
M	4	1	**105-3479**	4	BOLT-SOCKET HEAD (M10X1.5X90-MM)	
I	5	1	**184-9508**	1	HOSE AS	
	6	2	**187-6720**	1	BLOCK	
I	7	1	**193-9994**	1	HOSE AS	
I	8	1	**204-8428**	1	HOSE AS	
	9	1	**218-1002**	1	HOSE AS	
CY	10	1,2	**323-7558**	2	VALVE GP-SOLENOID & RELIEF (WITH BLOCK)	710
	11	1	**255-1892**	1	SUPPORT	
	12	1	**255-1894**	1	SUPPORT	
	13	1	**260-7959**	1	BRACKET	
	14	2	**260-8027**	1	SUPPORT AS	
	15	1	**260-8030**	1	SUPPORT	
	16	2	**260-8045**	1	BRACKET AS	
	17	1	**260-8193**	1	TUBE AS	
	18	1	**266-0953**	1	BLOCK	
	19	2	**266-0954**	1	BLOCK	
	20	2	**266-1278**	1	BLOCK	
	21	2	**266-1279**	2	FLANGE	
I	22	1	**266-1303**	1	HOSE AS	
I	23	1	**275-1384**	1	HOSE AS	
I	24	1	**275-1388**	1	HOSE AS	
I	25	1	**275-1392**	1	HOSE AS	
	26	2	**275-1439**	1	BLOCK	
	27	2	**275-1440**	1	BLOCK	
	28	1	**275-1540**	1	BLOCK	
Y	29	1,2	**297-0370**	3	VALVE GP-CHECK	632
	30	1,2	**099-8232**	2	SEAL-O-RING	
M	31	2	**101-7401**	8	BOLT-SOCKET HEAD (M10X1.5X20-MM)	
M	32	1,2	**101-7404**	8	BOLT-SOCKET HEAD (M10X1.5X30-MM)	
M	33	2	**105-3485**	4	BOLT-SOCKET HEAD (M12X1.75X60-MM)	
M	34	1	**108-3819**	4	BOLT-SOCKET HEAD (M12X1.75X70-MM)	
M	35	2	**108-4282**	4	BOLT-SOCKET HEAD (M10X1.5X100-MM)	
	36	1	*148-8317*	1	CONNECTOR AS	
		1	**3D-2824**	1	SEAL-O-RING	
		1	**5K-9090**	1	SEAL-O-RING	
		1	**6V-8714**	1	CONNECTOR	
	37	2	*148-8330*	1	CONNECTOR AS	
		2	**5K-9090**	1	SEAL-O-RING	
		2	**7M-8485**	1	SEAL-O-RING	
		2	**8T-0198**	1	CONNECTOR	
	38	1,2	*148-8335*	2	CONNECTOR AS	
					(EACH INCLUDES)	
		1,2	**5K-9090**	1	SEAL-O-RING	
		1,2	**6V-8635**	1	CONNECTOR	
		1,2	**7M-8485**	1	SEAL-O-RING	
	39	2	*148-8339*	1	CONNECTOR AS	
		2	**6V-8716**	1	CONNECTOR	
		2	**6V-9746**	1	SEAL-O-RING	
		2	**7M-8485**	1	SEAL-O-RING	
	40	2	*148-8347*	1	ELBOW AS	
		2	**3D-2824**	1	SEAL-O-RING	
		2	**6V-9007**	1	ELBOW	

255-1924 **LINES GP-FRONT** *(contd.)* **i03675488**

NOTE	REF NO	GRAPHIC REF	PART NUMBER	QTY	PART NAME 1 2 3 4 5 6 (PRODUCT LEVEL)	SEE PAGE
		2	**6V-9746**	1	SEAL-O-RING	
	41	1	*148-8356*	1	ELBOW AS	
		1	**2S-4078**	1	SEAL-O-RING	
		1	**6V-8400**	1	SEAL-O-RING	
		1	**6V-9009**	1	ELBOW	
	42	1	*148-8362*	1	ELBOW AS	
		1	**3D-2824**	1	SEAL-O-RING	
		1	**5K-9090**	1	SEAL-O-RING	
		1	**8T-6684**	1	ELBOW	
	43	2	*153-6237*	2	ELBOW AS	
					(EACH INCLUDES)	
		2	**3D-2824**	1	SEAL-O-RING	
		2	**6V-9004**	1	ELBOW	
		2	**6V-9746**	1	SEAL-O-RING	
	44	2	*164-4180*	1	PLUG AS	
		2	**7M-8485**	1	SEAL-O-RING	
		2	**9S-4181**	1	PLUG-O-RING	
	45	1	*164-5574*	1	TEE AS	
		1	**3D-2824**	1	SEAL-O-RING	
		1	**6V-8784**	1	TEE-FACE SEAL	
		1	**6V-9746**	2	SEAL-O-RING	
	46	2	*164-5606*	1	CONNECTOR AS	
		2	**3D-2824**	1	SEAL-O-RING	
		2	**6V-9746**	1	SEAL-O-RING	
		2	**8T-0078**	1	CONNECTOR	
	47	1	**199-1918**	1	FLANGE	
	48	1,2	**1P-3702**	6	SEAL-RECTANGULAR	
	49	1,2	**1P-3703**	3	SEAL-RECTANGULAR	
	50	2	**1P-3704**	3	SEAL-RECTANGULAR	
	51	2	**1P-4578**	2	FLANGE-HALF	
M	52	2	**280-2747**	4	BOLT-SOCKET HEAD (M10X1.5X60-MM)	
	53	1	**4J-0522**	1	SEAL-O-RING	
	54	2	**5K-9090**	1	SEAL-O-RING	
	55	1	**5P-7470**	2	CLIP (SLOT)	
	56	1	**5P-7471**	2	CLIP (TAB)	
	57	1	**5P-8182**	2	GROMMET	
	58	1	**6J-2680**	1	SEAL-O-RING	
	59	1	**6V-9746**	1	SEAL-O-RING	
	60	1,2	**8T-4121**	6	WASHER-HARD (11X21X2.5-MM THK)	
M	61	1	**8T-4136**	2	BOLT (M10X1.5X25-MM)	
M	62	1	**8T-4139**	9	BOLT (M12X1.75X30-MM)	
M	63	1,2	**8T-4176**	8	BOLT (M12X1.75X90-MM)	
M	64	2	**8T-4186**	4	BOLT (M10X1.5X40-MM)	
	65	1,2	**8T-4223**	43	WASHER-HARD (13.5X25.5X3-MM THK)	
M	66	1,2	**8T-4956**	14	BOLT (M12X1.75X35-MM)	
M	67	1,2	**8T-5092**	8	BOLT (M12X1.75X150-MM)	
M	68	2	**8T-5412**	4	BOLT (M12X1.75X140-MM)	

C-CHANGE FROM PREVIOUS TYPE
I-REFER TO HYDRAULIC INFORMATION SYSTEM
M-METRIC PART
Y-SEPARATE ILLUSTRATION

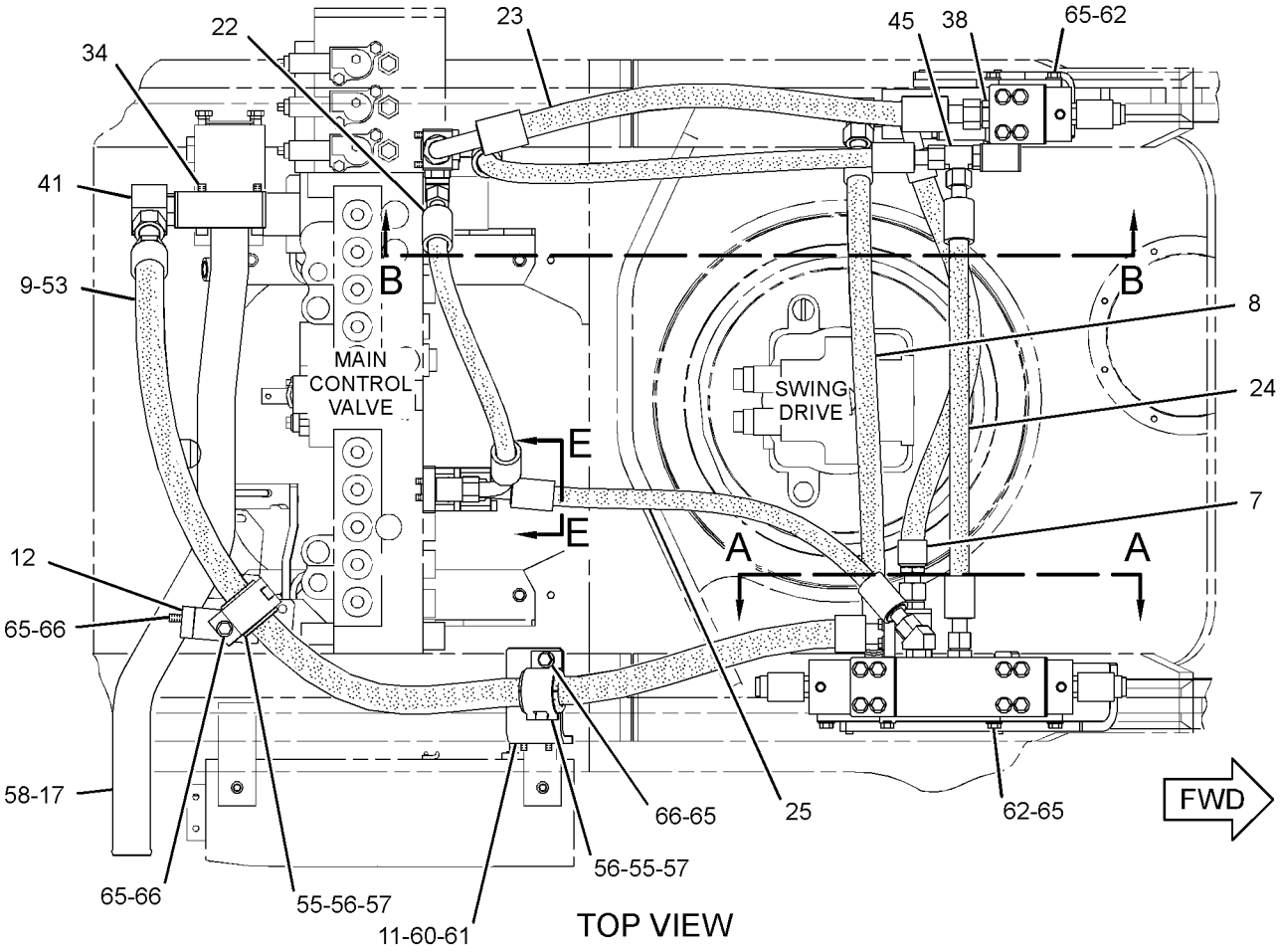

TOP VIEW

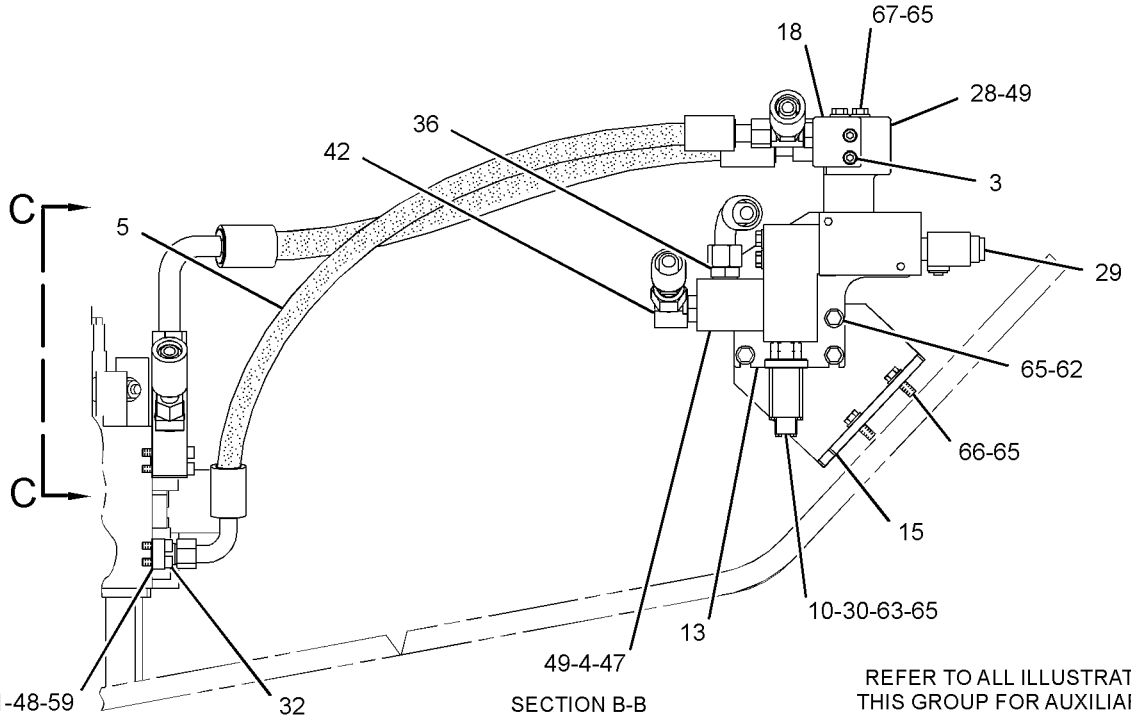

SECTION B-B

REFER TO ALL ILLUSTRATIONS OF THIS GROUP FOR AUXILIARY VIEWS

GRAPHIC #1

g01574093

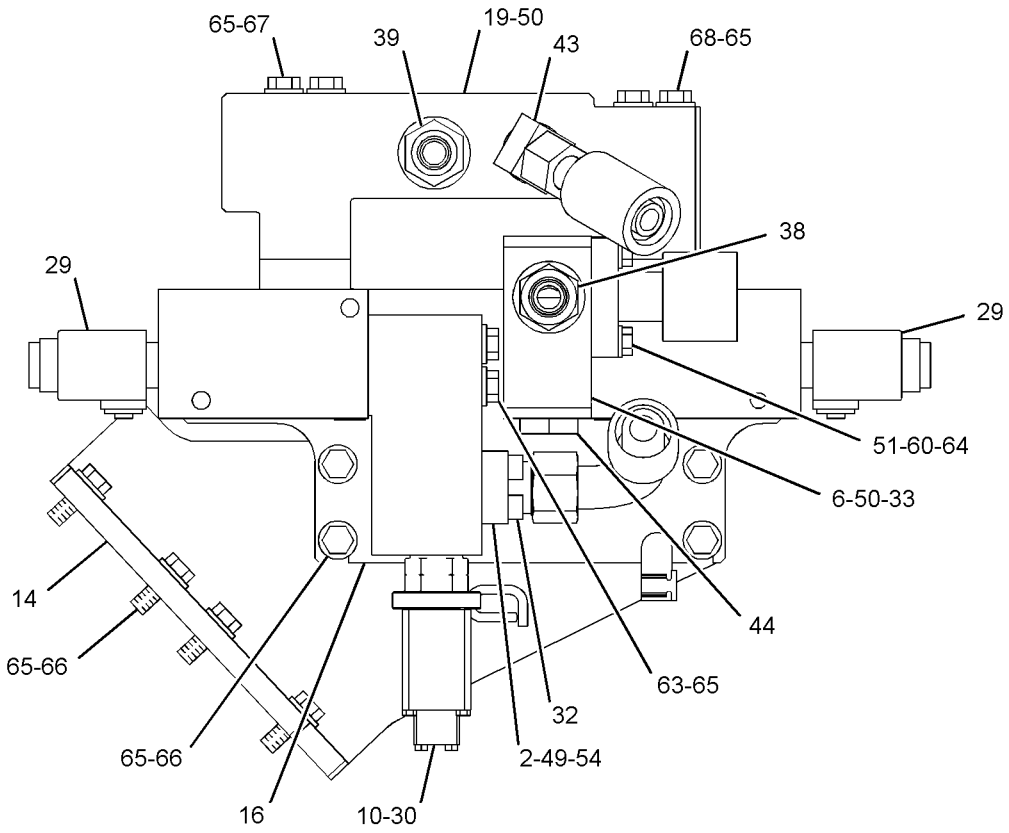

SECTION A-A

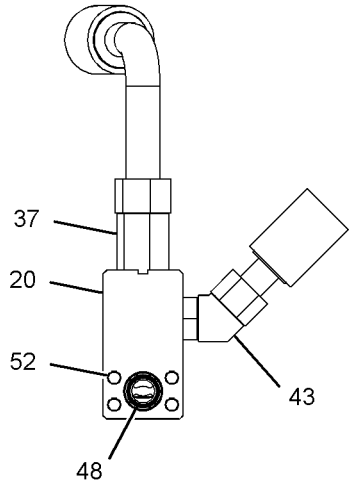

VIEW C-C

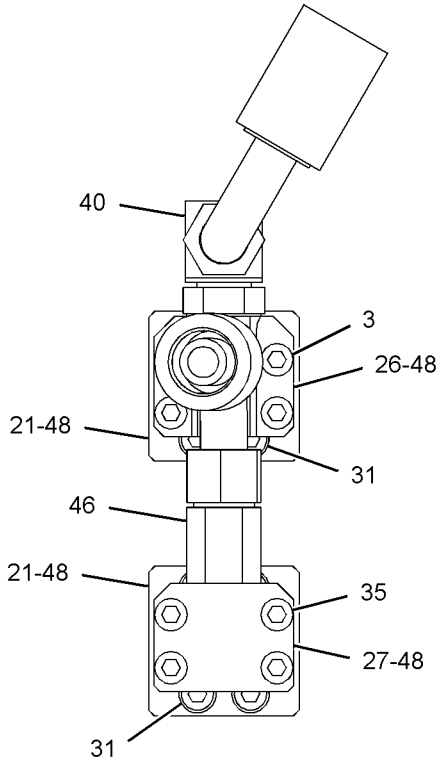

SECTION E-E

GRAPHIC #2 **<END>** g01574653

255-1926 LINES GP-FRONT—MEDIUM PRESSURE CIRCUIT

S/N: MYG1-UP; PPN1-UP
PART OF 255-5822 CONTROL AR-AUXILIARY
AN ATTACHMENT

SMCS-5057 **i03110594**

NOTE	REF NO	GRAPHIC REF	PART NUMBER	QTY	PART NAME 1 2 3 4 5 6 (PRODUCT LEVEL)	SEE PAGE
	1	1	**6V-0852**	1	CAP-DUST	
I	2	1	**207-6231**	2	HOSE AS	
CY	3	1	**285-1531**	1	VALVE GP-CONTROL (MEDIUM PRESSURE)	653
	4	1	**255-1826**	2	SPACER (13.5X25X75.8-MM THK)	
	5	1	*270-0012*	1	ELBOW AS	
		1	**2M-9780**	1	SEAL-O-RING	
		1	**6V-8398**	1	SEAL-O-RING	
		1	**270-0013**	1	ELBOW	
	6	1	**325-9029**	1	SUPPORT AS	
	7	1	*270-0014*	1	ELBOW AS	
		1	**2M-9780**	1	SEAL-O-RING	
		1	**6V-8398**	1	SEAL-O-RING	
		1	**270-0015**	1	ELBOW	
	8	1	*164-5567*	1	COUPLER AS-QUICK DISCONNECT	
		1	**3J-1907**	1	SEAL-O-RING	
		1	**6V-3965**	1	FITTING (QUICK DISCONNECT)	
	9	1	*168-1969*	1	ADAPTER AS	
		1	**1J-9671**	1	SEAL-O-RING	
		1	**5P-1318**	1	ADAPTER	
	10	1	**6V-5782**	4	BOLT (5/16-18X1.125-IN)	
M	11	1	**7X-2550**	4	BOLT (M12X1.75X110-MM)	
	12	1	**8T-4223**	4	WASHER-HARD (13.5X25.5X3-MM THK)	
	13	1	**8T-4224**	4	WASHER-HARD (8.8X16X2-MM THK)	

C-CHANGE FROM PREVIOUS TYPE
I-REFER TO HYDRAULIC INFORMATION SYSTEM
M-METRIC PART
Y-SEPARATE ILLUSTRATION

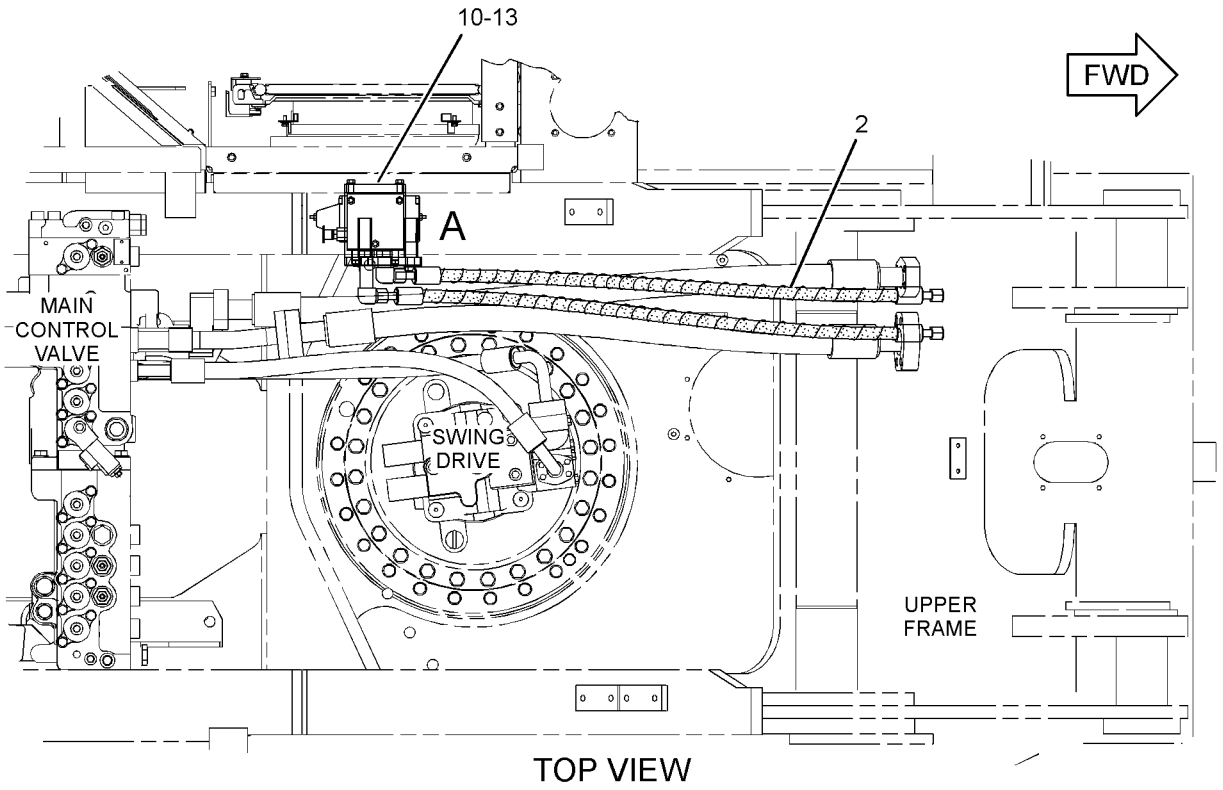

TOP VIEW

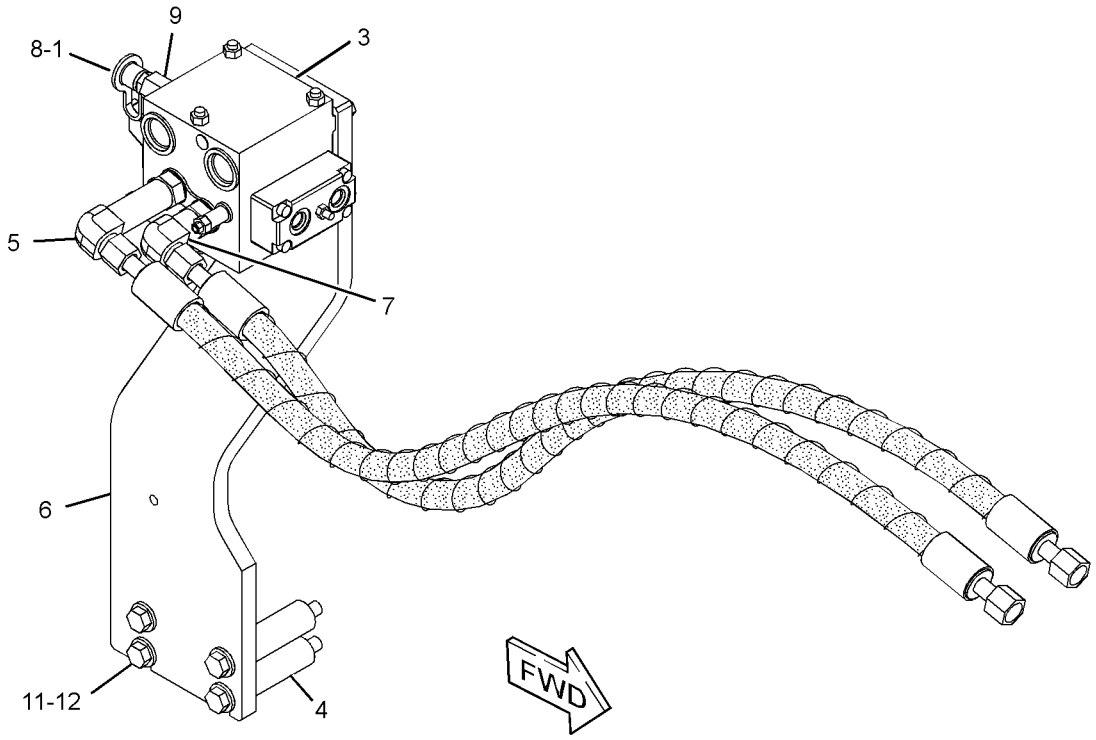

VIEW OF AREA A

GRAPHIC #1 **<END>** g01239265

260-7869 LINES GP-FRONT—IMP, SWING, TRAVEL, WORK TOOL

S/N: MYG1-UP; PPN1-UP

PART OF 259-7410, 259-7411 HYDRAULIC AR

SMCS-5057 **i03478312**

NOTE	REF NO	GRAPHIC REF	PART NUMBER	QTY	PART NAME 1 2 3 4 5 6 (PRODUCT LEVEL)	SEE PAGE
	1	2	**7Y-3730**	2	FLANGE-SPECIAL	
I	2	1	**087-4932**	1	HOSE AS	
I	3	1	**087-4935**	1	HOSE AS	
M	4	2	**101-7403**	2	BOLT-SOCKET HEAD (M10X1.5X80-MM)	
M	5	2	**105-3477**	8	BOLT-SOCKET HEAD (M10X1.5X45-MM)	
M	6	2	**105-3483**	2	BOLT-SOCKET HEAD (M10X1.5X70-MM)	
	7	2	**113-6479**	2	FLANGE-SPECIAL	
I	8	1	**337-1165**	1	HOSE AS	
I	9	1	**194-0101**	1	HOSE AS	
CI	10	1	**319-9702**	1	HOSE AS	
	11	2	**194-0115**	2	TUBE AS	
Y	12	1	**194-0174**	1	HOSE GP-HYDRAULIC (CONTROL VALVE, STICK)	451
Y	13	1	**194-0177**	1	HOSE GP-HYDRAULIC (CONTROL VALVE, STICK)	453
Y	14	1	**194-0180**	1	HOSE GP-HYDRAULIC (CONTROL VALVE, BOOM)	456
	15	2	**194-0280**	1	BLOCK	
	16	2	**218-1128**	1	TUBE AS	
I	17	1	**337-1161**	1	HOSE AS	
I	18	1	**255-1745**	1	HOSE AS	
I	19	1	**255-1749**	1	HOSE AS	
I	20	1	**337-1157**	1	HOSE AS	
Y	21	2	**255-5680**	1	VALVE GP-LOAD CONTROL (STICK DRIFT RED, LINE RELIEF)	655
Y	22	2	**255-5683**	1	VALVE GP-LOAD CONTROL (BOOM DRIFT RED, LINE RELIEF)	657
I	23	1	**260-8197**	1	HOSE AS	
M	24	1,2	**101-7397**	16	BOLT-SOCKET HEAD (M12X1.75X50-MM)	
M	25	2	**101-7404**	42	BOLT-SOCKET HEAD (M10X1.5X30-MM)	
	26	1	*148-8335*	1	CONNECTOR AS	
		1	**5K-9090**	1	SEAL-O-RING	
		1	**6V-8635**	1	CONNECTOR	
		1	**7M-8485**	1	SEAL-O-RING	
	27	2	*164-4180*	1	PLUG AS	
		2	**7M-8485**	1	SEAL-O-RING	
		2	**9S-4181**	1	PLUG-O-RING	
M	28	2	**199-1286**	6	BOLT-SOCKET HEAD (M10X1.5X150-MM)	
	29	1	**1P-3702**	4	SEAL-RECTANGULAR	
	30	1,2	**1P-3703**	11	SEAL-RECTANGULAR	
C	31	1,2	**1P-3704**	5	SEAL-RECTANGULAR	
C	33	1,2	**1P-5767**	8	FLANGE-HALF	
	34	1,2	**4J-5267**	10	SEAL-O-RING	
	35	2	**4J-5268**	1	SEAL-O-RING	
	36	2	**5K-9090**	4	SEAL-O-RING	
	38	1	**6V-0400**	8	FLANGE-HALF	
	39	2	**8T-4121**	8	WASHER-HARD (11X21X2.5-MM THK)	
CM	41	1	**8T-4194**	16	BOLT (M12X1.75X50-MM)	
C	42	1,2	**8T-4223**	36	WASHER-HARD (13.5X25.5X3-MM THK)	
M	43	2	**105-3485**	4	BOLT-SOCKET HEAD (M12X1.75X60-MM)	
	44	2	**8T-9403**	4	FLANGE-HALF	

C-CHANGE FROM PREVIOUS TYPE
I-REFER TO HYDRAULIC INFORMATION SYSTEM
M-METRIC PART
Y-SEPARATE ILLUSTRATION

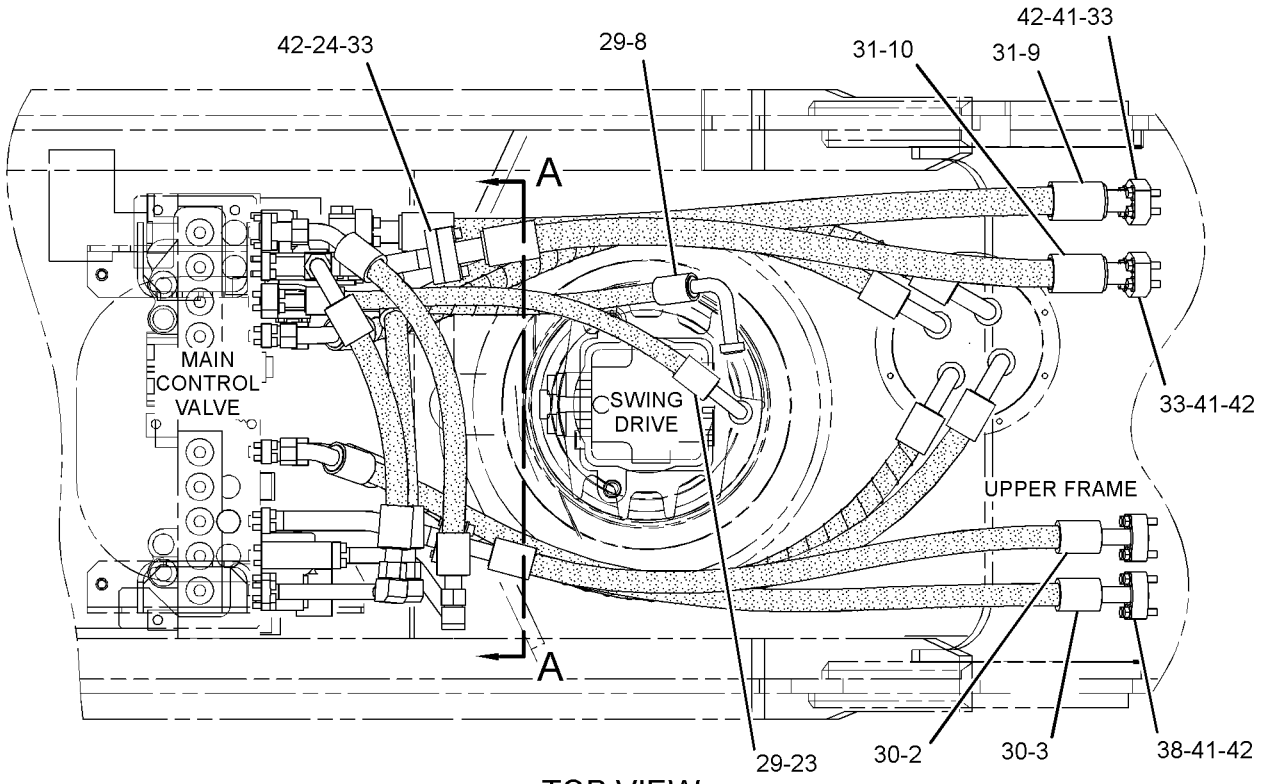

TOP VIEW

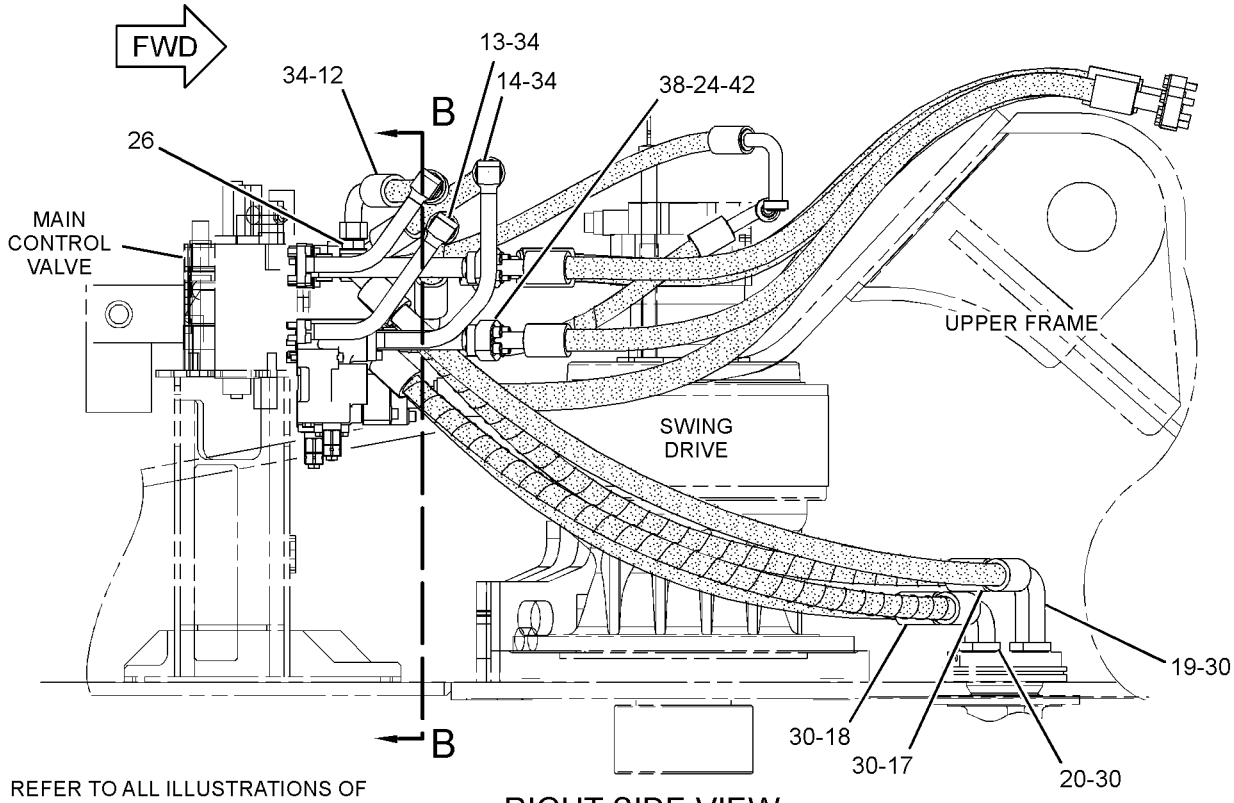

REFER TO ALL ILLUSTRATIONS OF THIS GROUP FOR AUXILIARY VIEWS

RIGHT SIDE VIEW

GRAPHIC #1

g01819993

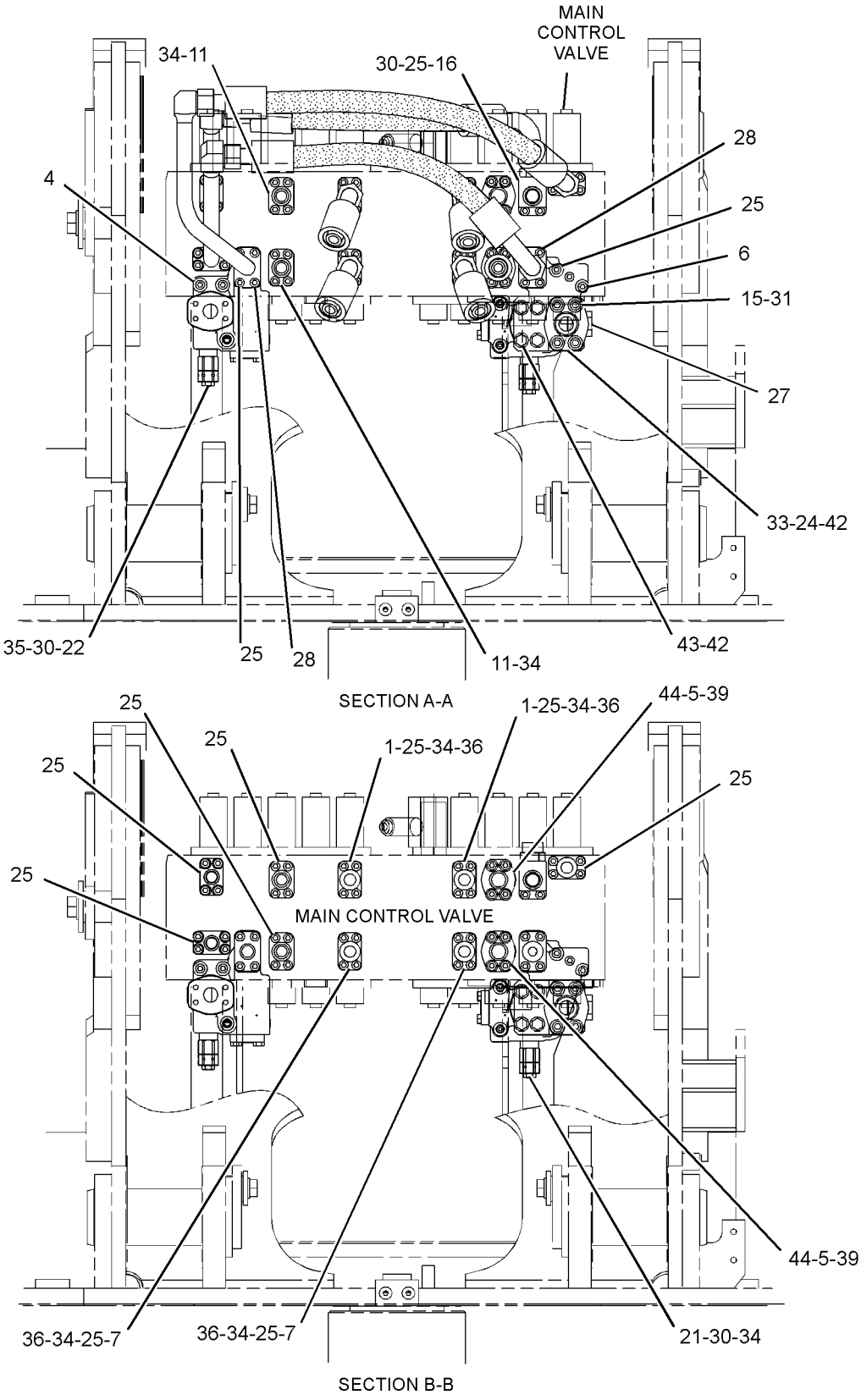

GRAPHIC #2 **<END>** g01199672

HYDRAULIC SYSTEM

260-7870 LINES GP-FRONT—BOOM CYLINDER

S/N: MYG1-UP; PPN1-UP

PART OF 259-7410, 259-7411 HYDRAULIC AR

SMCS-5057 **i03110622**

NOTE	REF NO	GRAPHIC REF	PART NUMBER	QTY	PART NAME 1 2 3 4 5 6 (PRODUCT LEVEL)	SEE PAGE
	1	1	**9F-2167**	1	SCREW-PURGE (3/8-24X1.164-IN)	
M	2	1	**101-7398**	4	BOLT-SOCKET HEAD (M10X1.5X40-MM)	
	3	1	**108-7550**	2	CLIP	
I	4	1	**115-8739**	4	HOSE AS	
	5	1	**131-9547**	1	CLIP	
	6	1	**131-9548**	1	SUPPORT AS	
CY	7	1	**322-8716**	1	VALVE GP-SWING CUSHION (FINE SWING)	715
	8	1	**207-6683**	1	TUBE AS	
	9	1	**212-5443**	1	TUBE AS	
	10	1	**234-4492**	1	SUPPORT	
I	11	1	**269-9761**	1	HOSE AS	
	12	1	*285-2520*	1	CONNECTOR AS	
		1	**3D-2824**	1	SEAL-O-RING	
		1	**6V-9746**	1	SEAL-O-RING	
		1	**236-2839**	1	TUBE AS	
M	13	1	**101-7404**	4	BOLT-SOCKET HEAD (M10X1.5X30-MM)	
	14	1	**123-2809**	1	SUPPORT AS	
	15	1	*148-8336*	1	CONNECTOR AS	
		1	**3J-1907**	1	SEAL-O-RING	
		1	**6V-8397**	11	SEAL-O-RING	
		1	**6V-8636**	1	CONNECTOR	
	16	1	*148-8353*	1	ELBOW AS	
		1	**3J-1907**	1	SEAL-O-RING	
		1	**6V-8397**	1	SEAL-O-RING	
		1	**6V-9001**	1	ELBOW	
	17	1	*148-8355*	1	ELBOW AS	
		1	**5K-9090**	1	SEAL-O-RING	
		1	**6V-9005**	1	ELBOW	
		1	**7M-8485**	1	SEAL-O-RING	
	18	1	*148-8367*	1	ELBOW AS	
		1	**6V-9850**	1	ELBOW	
		1	**6V-8397**	1	SEAL-O-RING	
	19	1	*148-8414*	1	REDUCER AS	
		1	**6V-8943**	1	REDUCER	
		1	**7J-9108**	1	SEAL-O-RING	
	20	1	*148-8449*	1	TEE AS-SWIVEL	
		1	**6V-9746**	2	SEAL-O-RING	
		1	**6V-9839**	1	TEE-SWIVEL	
	21	1	*150-4048*	1	ELBOW AS	
		1	**3K-0360**	1	SEAL-O-RING	
		1	**7J-9108**	1	SEAL-O-RING	
		1	**6V-8722**	1	ELBOW	
	22	1	**1P-3703**	2	SEAL-RECTANGULAR	
	23	1	**5K-9090**	4	SEAL-O-RING	
	24	1	**5P-1076**	2	WASHER-HARD (13.5X30X4-MM THK)	
	25	1	**8T-4121**	8	WASHER-HARD (11X21X2.5-MM THK)	
M	26	1	**8T-4139**	4	BOLT (M12X1.75X30-MM)	
M	27	1	**8T-4178**	6	BOLT (M10X1.5X90-MM)	
M	28	1	**8T-4182**	8	BOLT (M10X1.5X45-MM)	
	29	1	**8T-4223**	6	WASHER-HARD (13.5X25.5X3-MM THK)	
M	30	1	**8T-4648**	4	BOLT (M12X1.75X70-MM)	
	31	1	**8T-9403**	4	FLANGE-HALF	

C-CHANGE FROM PREVIOUS TYPE
I-REFER TO HYDRAULIC INFORMATION SYSTEM
M-METRIC PART
Y-SEPARATE ILLUSTRATION

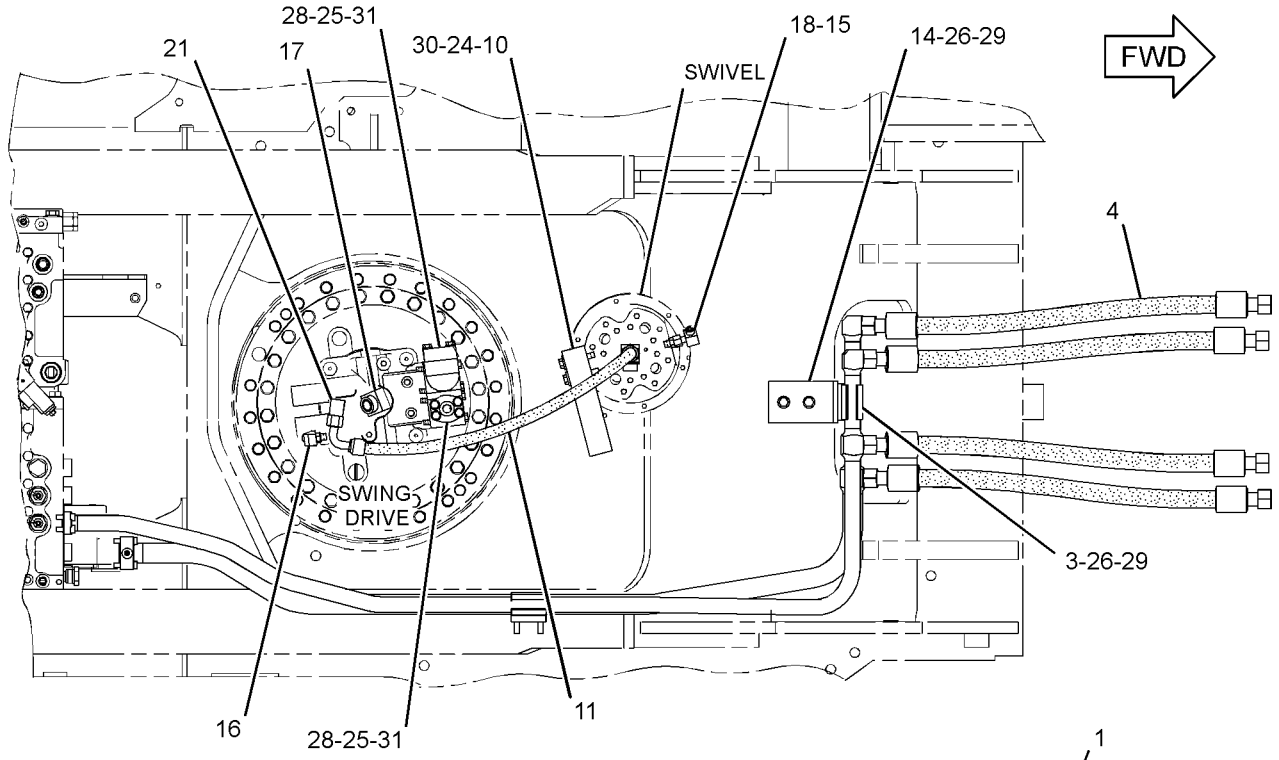

TOP VIEW

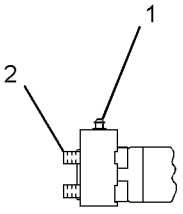

VIEW OF AREA A

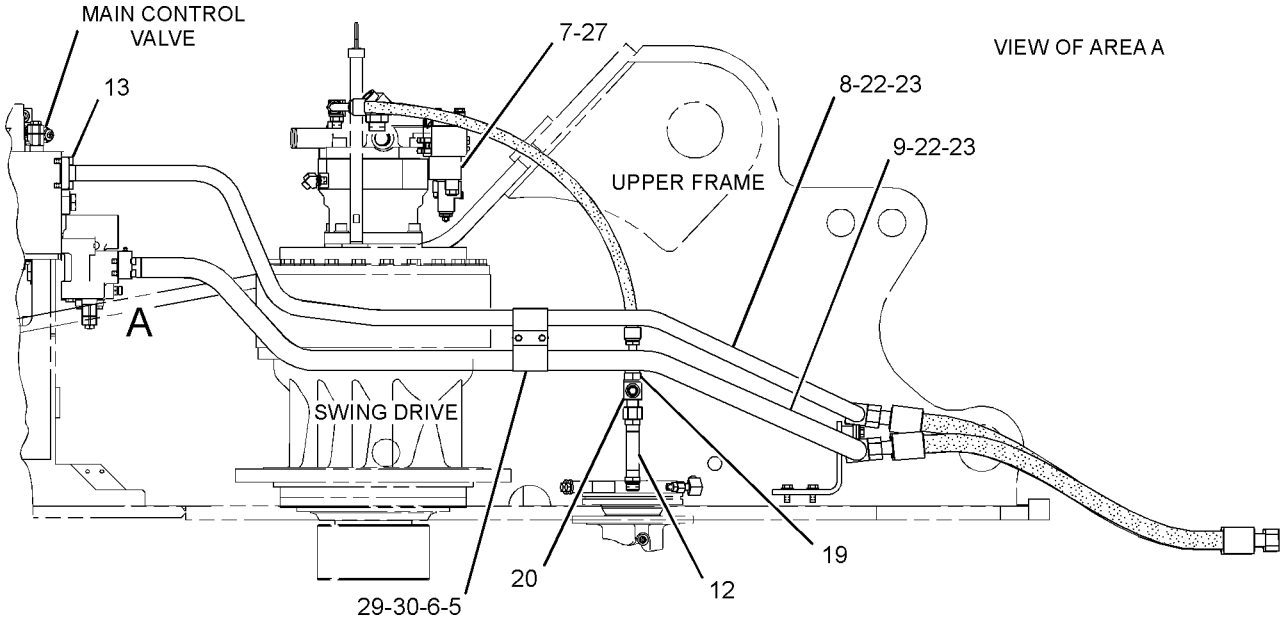

RIGHT SIDE VIEW

GRAPHIC #1 **<END>** g01352686

HYDRAULIC SYSTEM

269-9562 LINES GP-FRONT—QUICK COUPLER

S/N: MYG1-UP; PPN1-UP
PART OF 344-4124 CONTROL AR-COUPLER
AN ATTACHMENT

SMCS-5057 **i03675977**

NOTE	REF NO	GRAPHIC REF	PART NUMBER	QTY	PART NAME 1 2 3 4 5 6 (PRODUCT LEVEL)	SEE PAGE
I	1	3	**4I-1025**	1	HOSE AS	
I	2	3	**4I-1704**	1	HOSE AS	
	3	2	**4I-9521**	6	BAND-MARKER (RED, L1)	
	4	3	**4I-9522**	6	BAND-MARKER (YELLOW, L2)	
	5	2	**4I-9523**	2	BAND-MARKER (BLUE, L3)	
	6	2	**4I-9525**	2	BAND-MARKER (ORANGE, R1)	
	7	2	**4I-9527**	2	BAND-MARKER (GREEN, R3)	
	8	2	**5I-4376**	1	FITTING	
I	9	3	**5I-4387**	1	HOSE AS	
	10	1	**7K-1181**	11	STRAP-CABLE	
I	11	3	**7Y-4387**	1	HOSE AS	
I	12	2	**7Y-4390**	1	HOSE AS	
	13	1	**9X-6582**	2	NUT (13/16-16-THD)	
	14	1	**103-1384**	1	GUARD	
I	15	2	**108-7387**	1	HOSE AS	
I	16	2	**111-6752**	1	HOSE AS	
CY	17	2	**164-6980**	1	VALVE GP-SHUTTLE	696
	18	2	**124-1035**	1	FITTING-ORFS	
	19	3	**213-3745**	2	ELBOW	
Y	20	3	**254-3080**	1	VALVE GP-CONTROL (QUICK COUPLER)	634
Y	21	3	**258-6749**	1	VALVE GP-SOLENOID (QUICK COUPLER)	705
	22	3	**269-9864**	1	BRACKET AS	
I	23	1	**269-9952**	2	HOSE AS	
I	24	1	**269-9955**	1	HOSE AS	
I	25	2	**275-1663**	1	HOSE AS	
	26	2	**123-4750**	1	VALVE-CHECK (QUICK COUPLER SOLENOID)	
	27	3	*148-8325*	1	CONNECTOR AS	
		3	**3J-1907**	2	SEAL-O-RING	
		3	**4J-5477**	2	SEAL-O-RING	
		3	**6V-8641**	2	CONNECTOR	
	28	2	*148-8336*	3	CONNECTOR AS	
					(EACH INCLUDES)	
		2	**3J-1907**	1	SEAL-O-RING	
		2	**6V-8397**	1	SEAL-O-RING	
		2	**6V-8636**	1	CONNECTOR	
	29	2,3	*148-8338*	2	CONNECTOR AS	
					(EACH INCLUDES)	
		2,3	**3J-1907**	1	SEAL-O-RING	
		2,3	**6V-8397**	1	SEAL-O-RING	
		2,3	**8T-0075**	1	CONNECTOR	
	30	2	*148-8353*	1	ELBOW AS	
		2	**3J-1907**	1	SEAL-O-RING	
		2	**6V-8397**	1	SEAL-O-RING	
		2	**6V-9001**	1	ELBOW	
	31	3	*148-8368*	2	ELBOW AS	
					(EACH INCLUDES)	
		3	**3J-1907**	1	SEAL-O-RING	
		3	**4J-5477**	1	SEAL-O-RING	
		3	**6V-8627**	1	ELBOW	
	32	3	*148-8378*	4	ELBOW AS	
					(EACH INCLUDES)	
		3	**3J-1907**	1	SEAL-O-RING	
		3	**6V-8397**	1	SEAL-O-RING	
		3	**6V-8724**	1	ELBOW	
	33	2	*148-8393*	1	ELBOW AS	

269-9562 **LINES GP-FRONT** ***(contd.)*** **i03675977**

NOTE	REF NO	GRAPHIC REF	PART NUMBER	QTY	PART NAME 1 2 3 4 5 6 (PRODUCT LEVEL)	SEE PAGE
		2	**6V-9852**	1	ELBOW	
		2	**7J-9108**	1	SEAL-O-RING	
	34	1,2	*148-8414*	2	REDUCER AS	
					(EACH INCLUDES)	
		1,2	**6V-8943**	1	REDUCER	
		1,2	**7J-9108**	1	SEAL-O-RING	
	35	2	*148-8415*	1	REDUCER AS	
		2	**6V-8397**	1	SEAL-O-RING	
		2	**6V-8936**	1	REDUCER	
	36	1	*148-8419*	2	REDUCER AS	
					(EACH INCLUDES)	
		1	**4J-5477**	1	SEAL-O-RING	
		1	**6V-8935**	1	REDUCER-O-RING	
	37	1	*148-8421*	1	TEE AS	
		1	**3D-2824**	1	SEAL-O-RING	
		1	**6V-8397**	1	SEAL-O-RING	
		1	**6V-9746**	1	SEAL-O-RING	
		1	**8T-2883**	1	TEE	
	38	3	*148-8434*	1	TEE AS	
		3	**6V-8397**	2	SEAL-O-RING	
		3	**6V-9843**	1	TEE-SWIVEL	
	39	3	*148-8435*	2	TEE AS	
					(EACH INCLUDES)	
		3	**3J-1907**	1	SEAL-O-RING	
		3	**6V-8397**	2	SEAL-O-RING	
		3	**6V-8781**	1	TEE-FACE SEAL	
	40	2	*148-8444*	1	TEE AS-SWIVEL	
		2	**6V-8398**	2	SEAL-O-RING	
		2	**6V-9837**	1	TEE-SWIVEL	
	41	3	*150-3036*	1	ELBOW AS	
		3	**3J-1907**	1	SEAL-O-RING	
		3	**6V-8397**	1	SEAL-O-RING	
		3	**8T-1905**	1	ELBOW	
	42	2	*150-4033*	1	TEE AS	
		2	**6V-9746**	2	SEAL-O-RING	
		2	**6V-9846**	1	TEE-SWIVEL	
	43	3	*164-9640*	1	CONNECTOR AS	
		3	**3J-1907**	1	SEAL-O-RING	
		3	**4J-5477**	1	SEAL-O-RING	
		3	**145-2237**	1	CONNECTOR	
	44	2	*162-0177*	1	PLUG AS	
		2	**3J-1907**	1	SEAL-O-RING	
		2	**9S-8004**	1	PLUG	
	45	2,3	*164-5567*	3	COUPLER AS-QUICK DISCONNECT	
					(EACH INCLUDES)	
		2,3	**3J-1907**	1	SEAL-O-RING	
		2,3	**6V-3965**	1	FITTING (QUICK DISCONNECT)	
	46	2	**3J-1907**	1	SEAL-O-RING	
	48	2,3	**6V-0852**	3	CAP-DUST	
	49	3	**6V-1889**	1	CLIP	
C	50	2	**6V-8397**	1	SEAL-O-RING	
	51	3	**8T-4121**	5	WASHER-HARD (11X21X2.5-MM THK)	
M	52	3	**8T-4136**	4	BOLT (M10X1.5X25-MM)	
M	53	3	**8T-4137**	1	BOLT (M10X1.5X20-MM)	
M	54	3	**8T-4139**	2	BOLT (M12X1.75X30-MM)	
	55	3	**8T-4223**	2	WASHER-HARD (13.5X25.5X3-MM THK)	
	56	3	*148-8321*	1	CONNECTOR AS	
		3	**3J-1907**	1	SEAL-O-RING	
		3	**6V-8397**	1	SEAL-O-RING	

269-9562 **LINES GP-FRONT** *(contd.)* **i03675977**

NOTE	REF NO	GRAPHIC REF	PART NUMBER	QTY	PART NAME 1 2 3 4 5 6 (PRODUCT LEVEL)	SEE PAGE
		3	**8C-0564**	1	CONNECTOR	
BJ	57	1	*148-8336*	1	CONNECTOR AS	
		1	**3J-1907**	1	SEAL-O-RING	
		1	**6V-8397**	1	SEAL-O-RING	
		1	**6V-8636**	1	CONNECTOR	

B-USE AS REQUIRED
C-CHANGE FROM PREVIOUS TYPE
I-REFER TO HYDRAULIC INFORMATION SYSTEM
J-OPTIONAL STICK LOAD CONTROL VALVE DESIGN
M-METRIC PART
Y-SEPARATE ILLUSTRATION

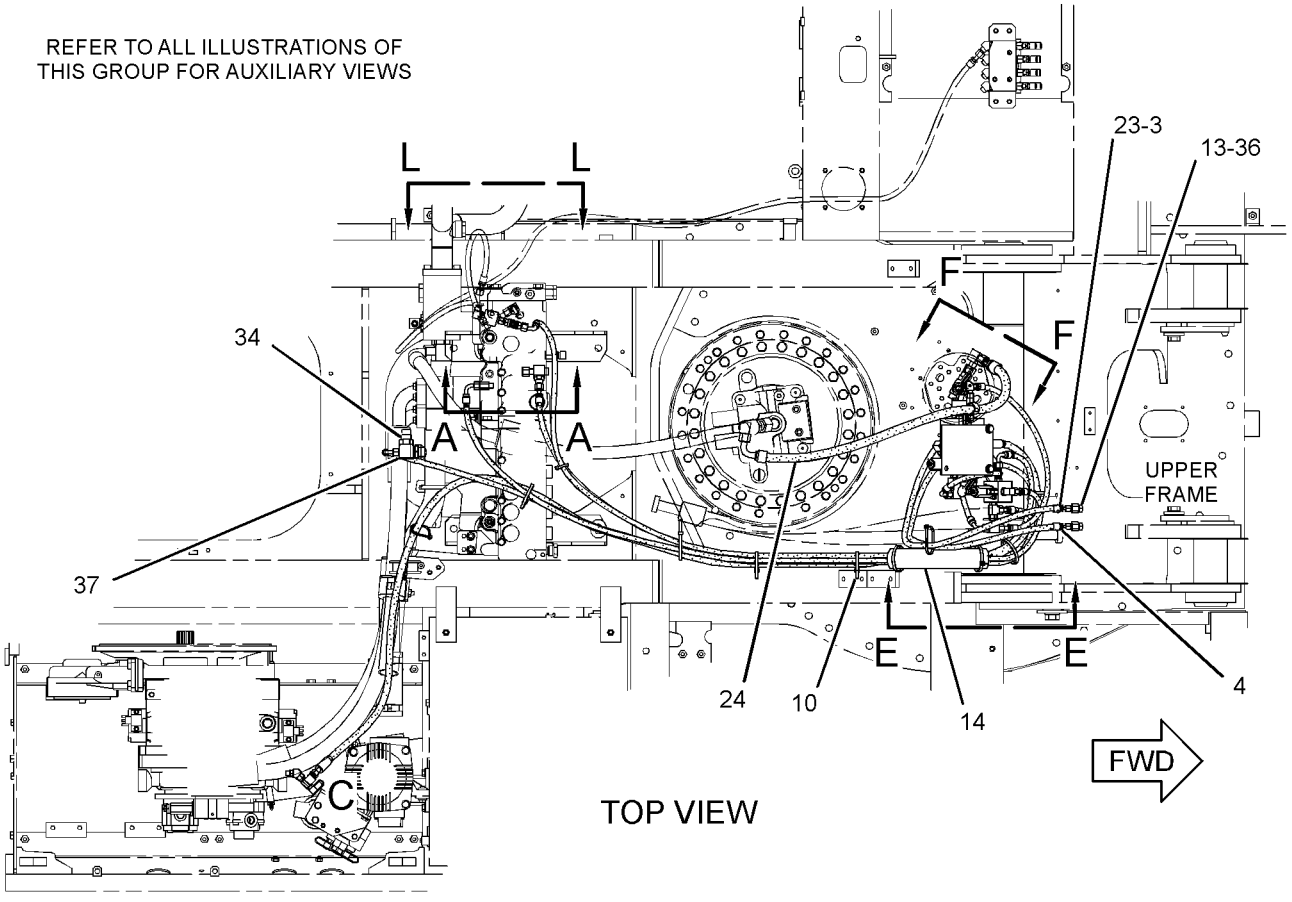

GRAPHIC #1 g01947171

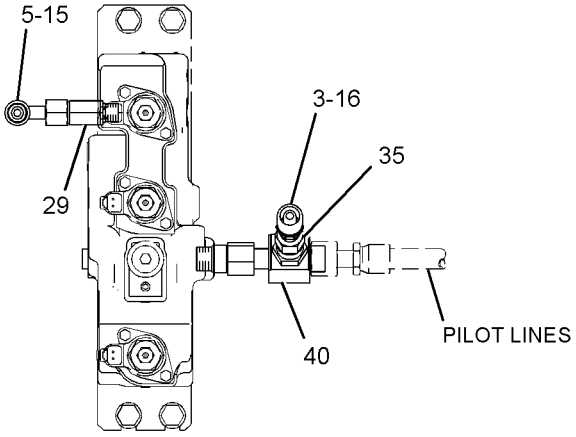

SECTION A-A

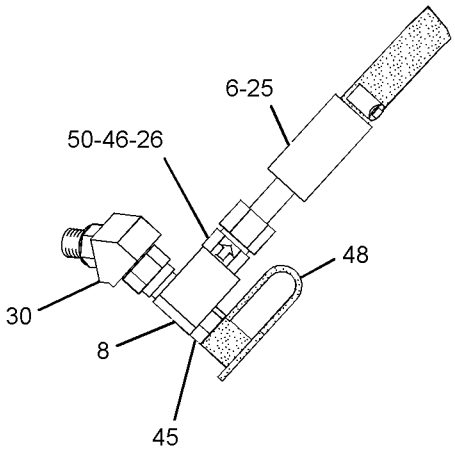

VIEW OF AREA C

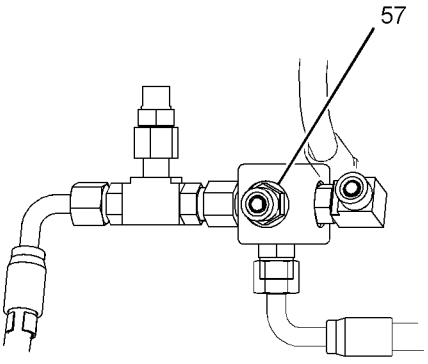

VIEW OF AREA M
(OPTIONAL DESIGN)

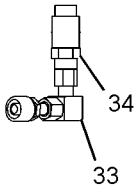

VIEW K-K

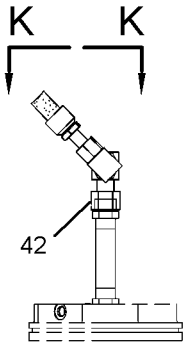

VIEW F-F

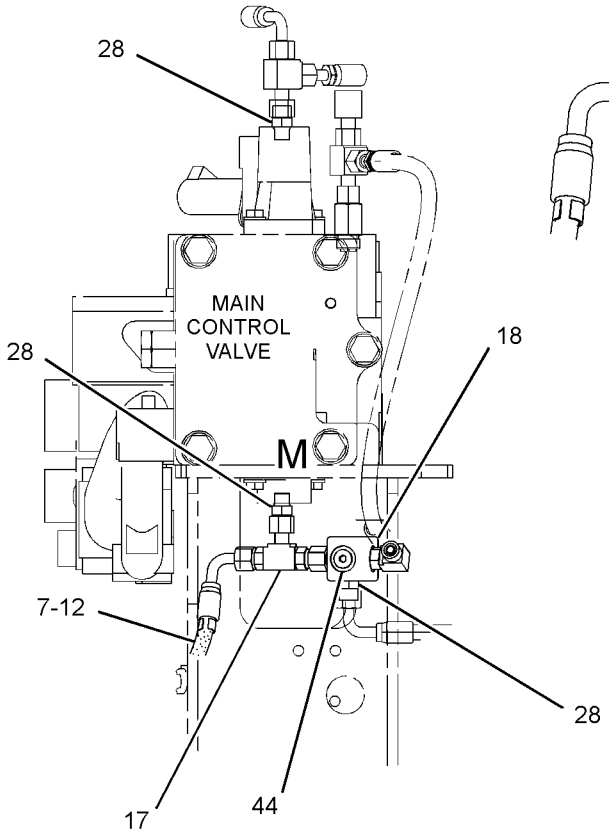

VIEW L-L

GRAPHIC #2

g01984359

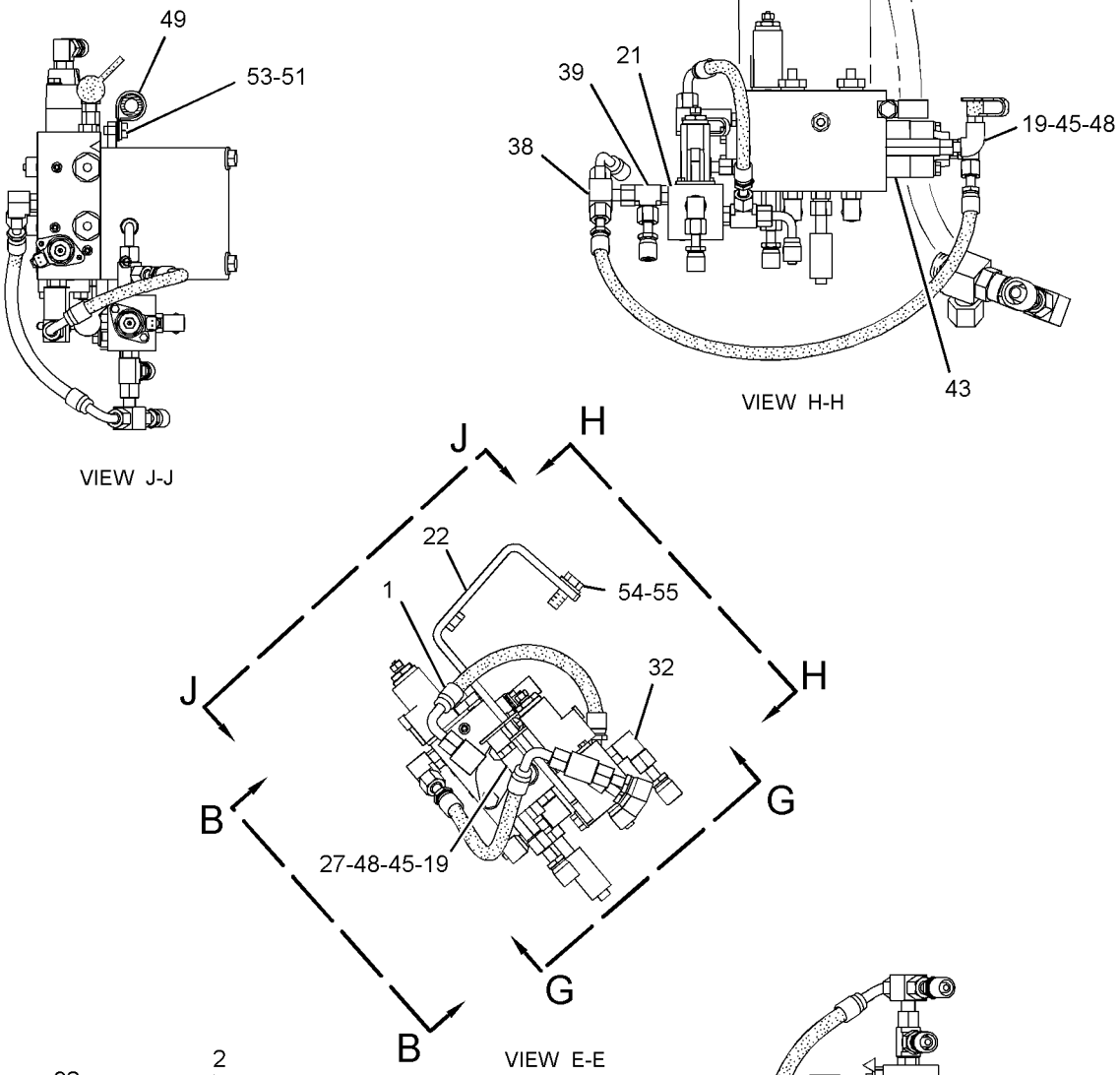

GRAPHIC #3 **<END>** g01947170

HYDRAULIC SYSTEM

248-9840 LINES GP-HYDRAULIC OIL COOLER

S/N: MYG1-UP; PPN1-UP

PART OF 259-7410, 259-7411 HYDRAULIC AR

SMCS-1374 **i03108403**

NOTE	REF NO	GRAPHIC REF	PART NUMBER	QTY	PART NAME 1 2 3 4 5 6 (PRODUCT LEVEL)	SEE PAGE
CM	1	1	**8T-4185**	1	BOLT (M10X1.5X50-MM)	
M	2	2	**101-7396**	6	BOLT-SOCKET HEAD (M10X1.5X50-MM)	
I	3	1	**131-9453**	1	HOSE AS	
	4	1	**144-0367**	8	CLAMP-HOSE	
	5	1	**236-6339**	2	HOSE	
C	6	1	**296-6980**	1	SPACER (11X25X30-MM THK)	
	7	2	**282-7373**	2	SUPPORT	
	8	1	**289-5355**	1	TUBE AS	
	9	1	**255-2021**	1	TUBE AS	
I	10	2	**255-2025**	1	HOSE AS	
I	11	2	**255-2028**	1	HOSE AS	
	12	2	**259-0824**	1	BLOCK	
	13	2	**325-9220**	1	HOSE AS	
	14	1	**260-7895**	1	SUPPORT	
C	15	1,2	**275-1739**	3	CLIP (TAB)	
C	16	1,2	**275-1740**	3	CLIP (SLOT)	
C	17	1,2	**275-1741**	3	GROMMET	
	18	1	**282-7106**	3	GROMMET	
M	19	1,2	**096-4883**	6	LOCKNUT (M10X1.5-THD)	
M	20	1	**101-7402**	8	BOLT-SOCKET HEAD (M12X1.75X30-MM)	
	21	2	*148-8315*	1	CONNECTOR AS	
		2	**2M-9780**	1	SEAL-O-RING	
		2	**6V-8642**	1	CONNECTOR	
		2	**7J-9108**	1	SEAL-O-RING	
	22	2	*148-8340*	1	CONNECTOR AS	
		2	**3K-0360**	1	SEAL-O-RING	
		2	**6V-8398**	1	SEAL-O-RING	
		2	**6V-8639**	1	CONNECTOR	
	23	2	*148-8390*	1	ELBOW AS	
		2	**2M-9780**	1	SEAL-O-RING	
		2	**6V-8626**	1	ELBOW	
		2	**7J-9108**	1	SEAL-O-RING	
	24	1	*148-8393*	1	ELBOW AS	
		1	**6V-9852**	1	ELBOW	
		1	**7J-9108**	1	SEAL-O-RING	
	25	1	**4J-0527**	2	SEAL-O-RING	
	26	2	**4J-5267**	2	SEAL-O-RING	
CM	27	1	**8T-4137**	1	BOLT (M10X1.5X20-MM)	
M	28	2	**8T-4956**	4	BOLT (M12X1.75X35-MM)	
	29	2	**8T-4223**	4	WASHER-HARD (13.5X25.5X3-MM THK)	
	30	1,2	**6D-4246**	3	CLIP	
	31	1	**7K-1181**	6	STRAP-CABLE	
M	32	1,2	**7Y-5247**	3	U-BOLT	
C	33	1,2	**8T-4121**	14	WASHER-HARD (11X21X2.5-MM THK)	
M	34	1,2	**8T-4136**	5	BOLT (M10X1.5X25-MM)	

C-CHANGE FROM PREVIOUS TYPE
I-REFER TO HYDRAULIC INFORMATION SYSTEM
M-METRIC PART

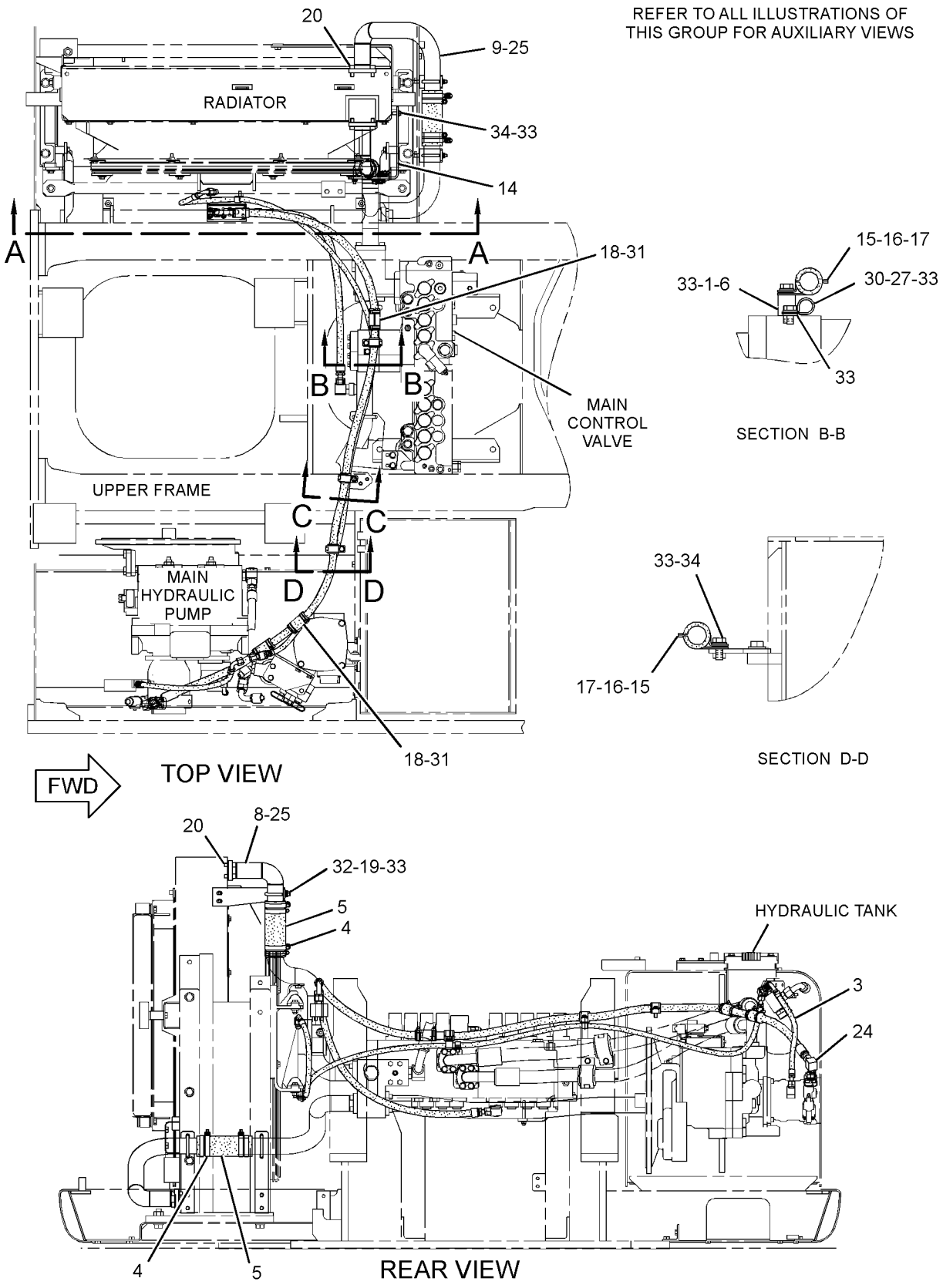

GRAPHIC #1

g01601873

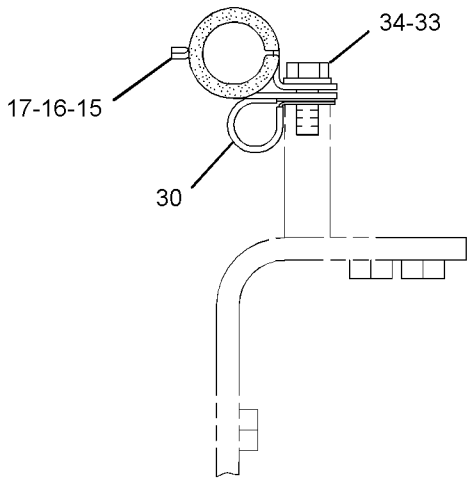

SECTION C-C

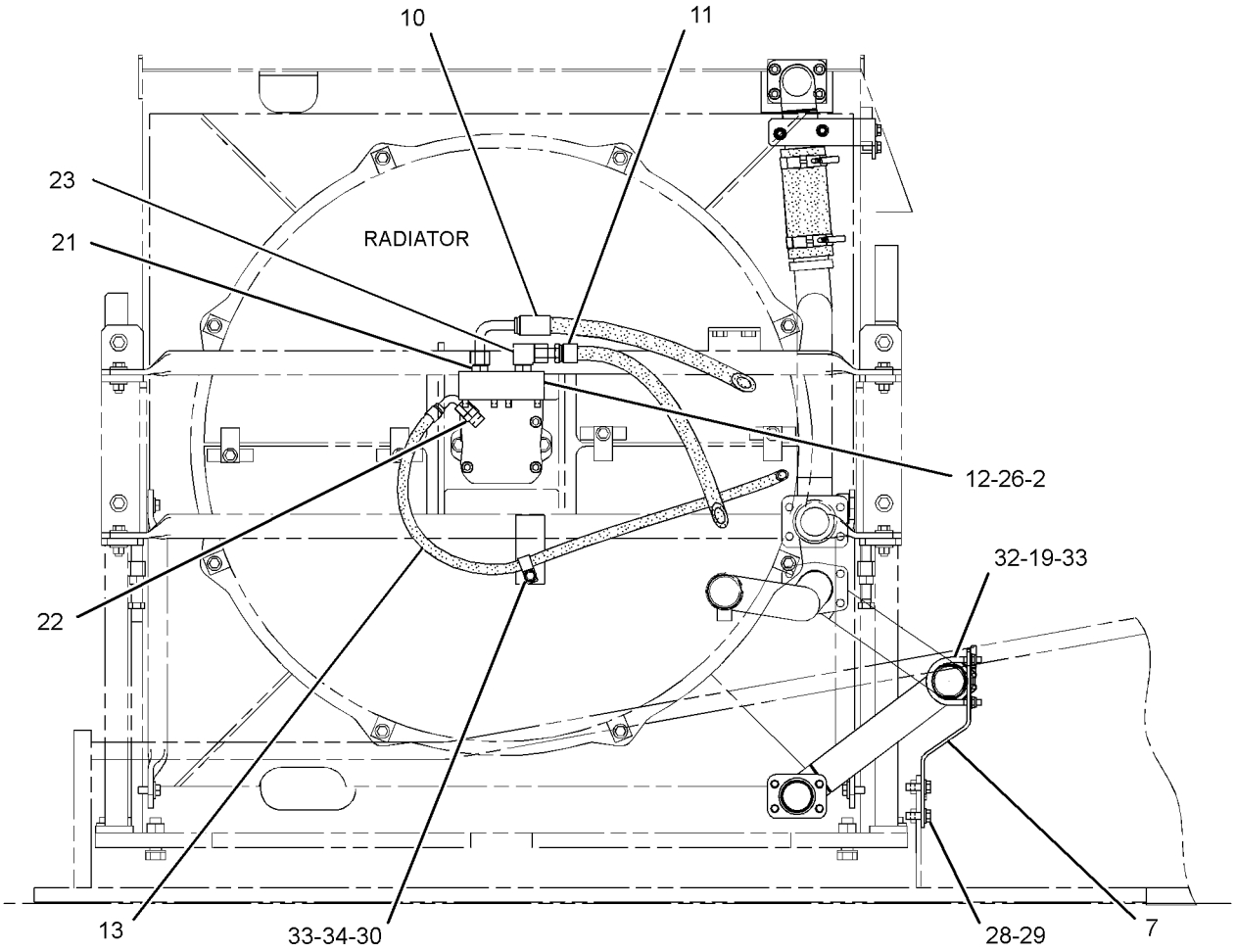

SECTION A-A

GRAPHIC #2 **<END>** g01378549

HYDRAULIC SYSTEM

248-9825 LINES GP-PILOT—JOYSTICK, PEDALS

S/N: MYG1-UP; PPN1-UP

PART OF 259-7410, 259-7411 HYDRAULIC AR

SMCS-5057, 5059 **i03571287**

NOTE	REF NO	GRAPHIC REF	PART NUMBER	QTY	PART NAME 1 2 3 4 5 6 (PRODUCT LEVEL)	SEE PAGE
	1	2	**4I-9521**	2	BAND-MARKER (RED, L1)	
	2	2	**4I-9522**	2	BAND-MARKER (YELLOW, L2)	
	3	2	**4I-9523**	2	BAND-MARKER (BLUE, L3)	
	4	2	**4I-9524**	2	BAND-MARKER (BROWN, L4)	
	5	2	**4I-9525**	2	BAND-MARKER (ORANGE, R1)	
	6	2	**4I-9526**	2	BAND-MARKER (WHITE, R2)	
	7	2	**4I-9527**	2	BAND-MARKER (GREEN, R3)	
	8	2	**4I-9528**	2	BAND-MARKER (PURPLE, R4)	
	9	1	**7K-1181**	3	STRAP-CABLE	
I	10	1	**087-4402**	2	HOSE AS	
	11	2	**133-5813**	4	BAND-MARKER (GRAY, P)	
	12	1	**309-5769**	1	SWITCH AS-PRESSURE (IMPLEMENT, SWING)	
	12A	1	**309-5769**	1	SWITCH AS-PRESSURE (TRAVEL, LH)	
	12B	2	**309-5769**	1	SWITCH AS-PRESSURE (TRAVEL, RH)	
					(EACH SWITCH AS INCLUDES)	
		1,2	**102-8802**	1	KIT-RECEPTACLE (2-PIN)	
					(INCLUDES RECEPTACLE AS & WEDGE)	
		1,2	**9X-3401**	2	PIN-CONNECTOR (16-GA TO 18-GA)	
					—OR—	
		1,2	**126-1767**	2	PIN-CONNECTOR (14-GA)	
	13	2	**168-9759**	1	BLOCK	
	14	1,2	**184-9336**	4	SUPPORT	
	15	2	**185-0383**	1	BRACKET	
Y	16	2	**185-0462**	1	VALVE GP-SHUTTLE	697
	17	2	**236-2843**	4	HOSE AS	
	18	2	**236-2844**	3	HOSE AS	
	19	2	**236-2848**	1	HOSE AS	
	20	2	**245-5079**	1	HOSE AS	
	21	2	**255-1665**	1	HOSE AS	
	22	2	**255-1666**	1	HOSE AS	
CY	23	1	**310-0414**	1	VALVE GP-PILOT (TRAVEL)	672
	24	1,2	*148-8336*	23	CONNECTOR AS	
					(EACH INCLUDES)	
		1,2	**3J-1907**	1	SEAL-O-RING	
		1,2	**6V-8397**	1	SEAL-O-RING	
		1,2	**6V-8636**	1	CONNECTOR	
	25	2	*148-8353*	8	ELBOW AS	
					(EACH INCLUDES)	
		2	**3J-1907**	1	SEAL-O-RING	
		2	**6V-8397**	1	SEAL-O-RING	
		2	**6V-9001**	1	ELBOW	
	26	2	*148-8354*	2	ELBOW AS	
					(EACH INCLUDES)	
		2	**3K-0360**	1	SEAL-O-RING	
		2	**6V-8398**	1	SEAL-O-RING	
		2	**6V-9002**	1	ELBOW	
	27	1,2	*148-8378*	6	ELBOW AS	
					(EACH INCLUDES)	
		1,2	**3J-1907**	1	SEAL-O-RING	
		1,2	**6V-8397**	1	SEAL-O-RING	
		1,2	**6V-8724**	1	ELBOW	
	28	2	*148-8407*	4	PLUG AS	
					(EACH INCLUDES)	
		2	**3J-1907**	1	SEAL-O-RING	
		2	**9S-4191**	1	PLUG-O-RING	

248-9825 **LINES GP-PILOT** *(contd.)* **i03571287**

NOTE	REF NO	GRAPHIC REF	PART NUMBER	QTY	PART NAME 1 2 3 4 5 6 (PRODUCT LEVEL)	SEE PAGE
	29	1,2	*164-5628*	3	CONNECTOR AS	
					(EACH INCLUDES)	
		1,2	**3J-1907**	1	SEAL-O-RING	
		1,2	**6V-8397**	1	SEAL-O-RING	
		1,2	**107-6631**	1	CONNECTOR-FILTER	
	30	1,2	**8T-4121**	20	WASHER-HARD (11X21X2.5-MM THK)	
M	31	1	**8T-4136**	4	BOLT (M10X1.5X25-MM)	
M	32	1,2	**8T-4137**	15	BOLT (M10X1.5X20-MM)	
M	33	2	**8T-4198**	2	BOLT (M10X1.5X100-MM)	
	34	2	**289-5657**	1	HOSE AS	
	35	2	**4P-7581**	1	CLIP	

C-CHANGE FROM PREVIOUS TYPE
I-REFER TO HYDRAULIC INFORMATION SYSTEM
M-METRIC PART
Y-SEPARATE ILLUSTRATION

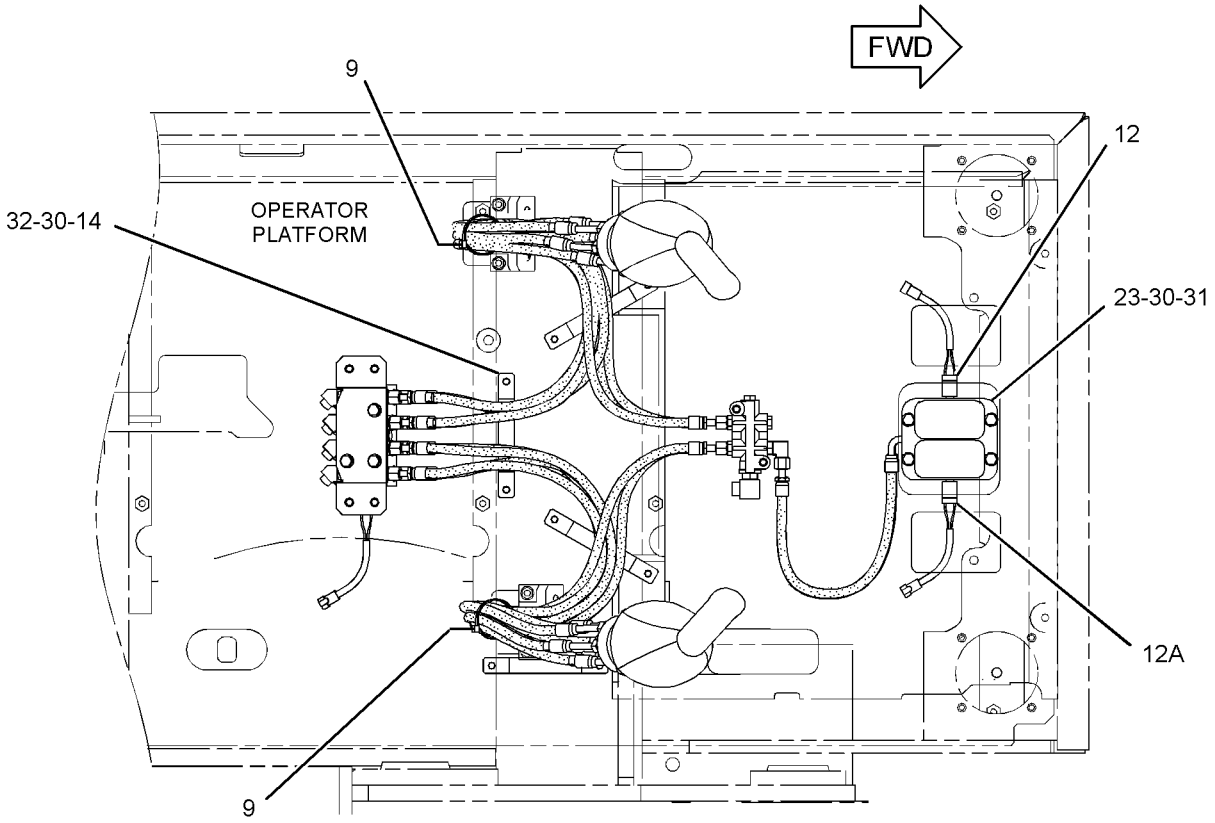

TOP VIEW

REFER TO ALL ILLUSTRATIONS OF
THIS GROUP FOR AUXILIARY VIEWS

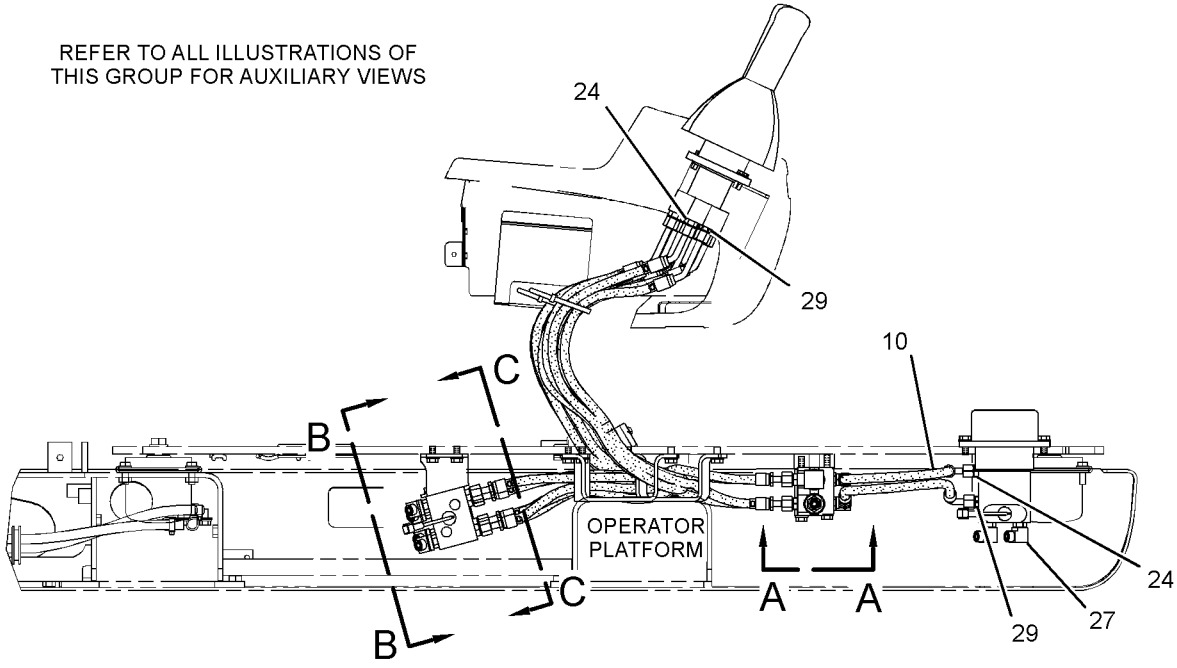

RIGHT SIDE VIEW

GRAPHIC #1

g01269086

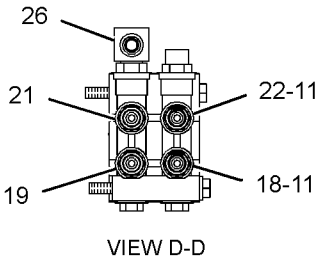

VIEW D-D

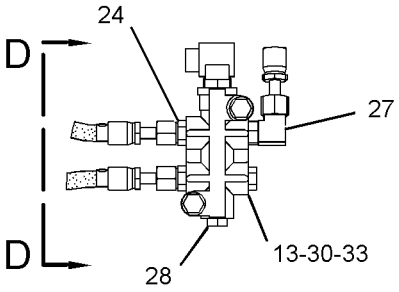

VIEW A-A

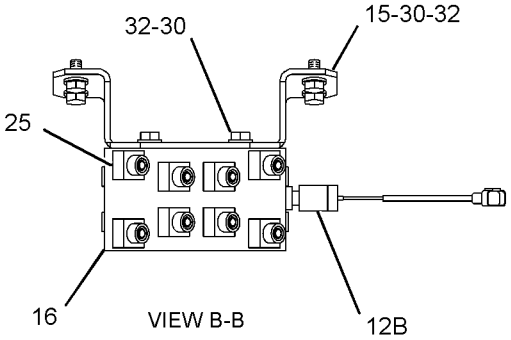

VIEW B-B

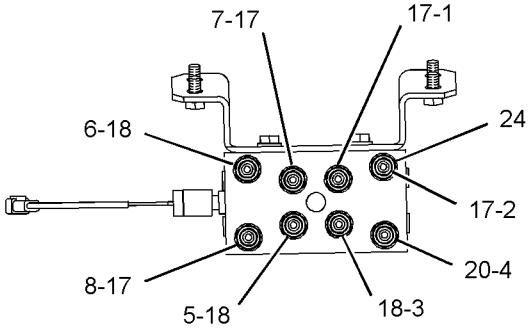

SECTION C-C

GRAPHIC #2 **<END>** g01269087

HYDRAULIC SYSTEM

255-1659 LINES GP-PILOT—HEAVY LIFT

S/N: MYG1-UP; PPN1-UP

PART OF 259-7410, 259-7411 HYDRAULIC AR

SMCS-5057, 5059 **i03525860**

NOTE	REF NO	GRAPHIC REF	PART NUMBER	QTY	PART NAME 1 2 3 4 5 6 (PRODUCT LEVEL)	SEE PAGE
I	1	1	**087-4402**	1	HOSE AS	
CI	2	1	**087-5772**	1	HOSE AS	
	3	1	**4I-9522**	2	BAND-MARKER (YELLOW, L2)	
	4	1	**4I-9523**	2	BAND-MARKER (BLUE, L3)	
	5	1	**4I-9524**	2	BAND-MARKER (BROWN, L4)	
	6	1	**7K-1181**	2	STRAP-CABLE	
I	7	1	**087-5766**	1	HOSE AS	
Y	8	1	**121-6303**	1	VALVE GP-SOLENOID (HEAVY LIFT)	700
	9	1	**269-9919**	1	PLATE	
	10	1	*148-8336*	2	CONNECTOR AS	
					(EACH INCLUDES)	
		1	**3J-1907**	1	SEAL-O-RING	
		1	**6V-8397**	1	SEAL-O-RING	
		1	**6V-8636**	1	CONNECTOR	
	11	1	*148-8338*	1	CONNECTOR AS	
		1	**3J-1907**	1	SEAL-O-RING	
		1	**6V-8397**	1	SEAL-O-RING	
		1	**8T-0075**	1	CONNECTOR	
	13	1	*148-8378*	2	ELBOW AS	
					(EACH INCLUDES)	
		1	**3J-1907**	1	SEAL-O-RING	
		1	**6V-8397**	1	SEAL-O-RING	
		1	**6V-8724**	1	ELBOW	
	14	1	*148-8435*	1	TEE AS	
		1	**3J-1907**	1	SEAL-O-RING	
		1	**6V-8397**	2	SEAL-O-RING	
		1	**6V-8781**	1	TEE-FACE SEAL	
	15	1	**8T-4121**	2	WASHER-HARD (11X21X2.5-MM THK)	
M	16	1	**8T-4136**	2	BOLT (M10X1.5X25-MM)	
M	17	1	**8T-4970**	2	BOLT (M6X1X14-MM)	
	18	1	**9X-8256**	2	WASHER (6.6X12X2-MM THK)	

C-CHANGE FROM PREVIOUS TYPE
I-REFER TO HYDRAULIC INFORMATION SYSTEM
M-METRIC PART
Y-SEPARATE ILLUSTRATION

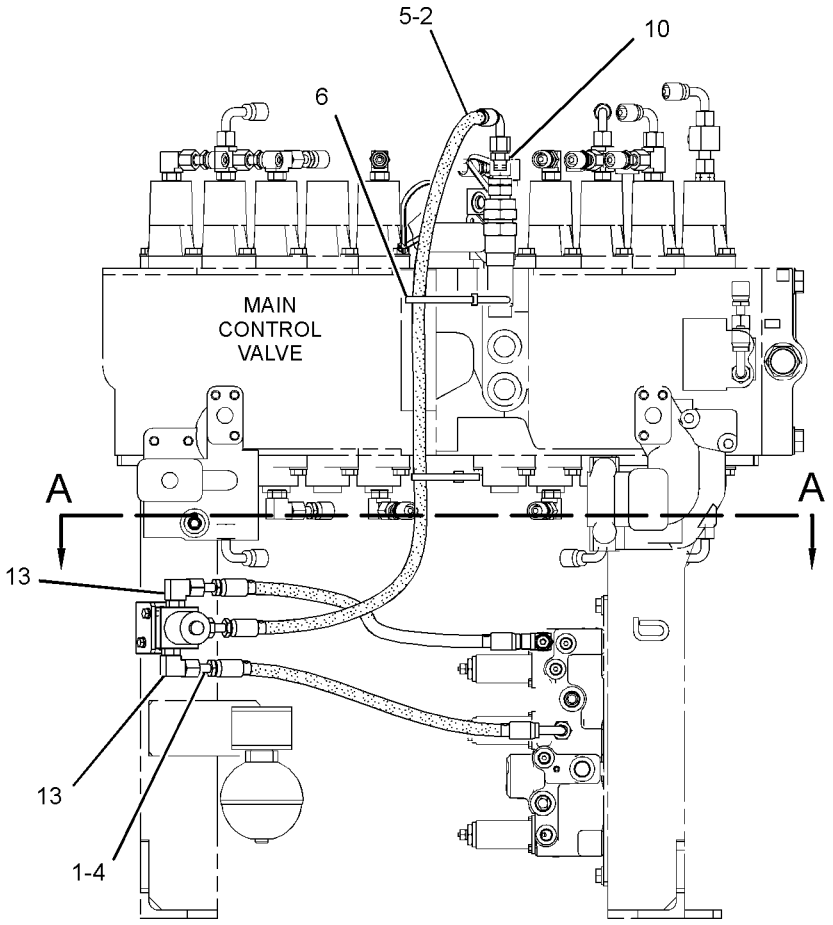

FRONT VIEW

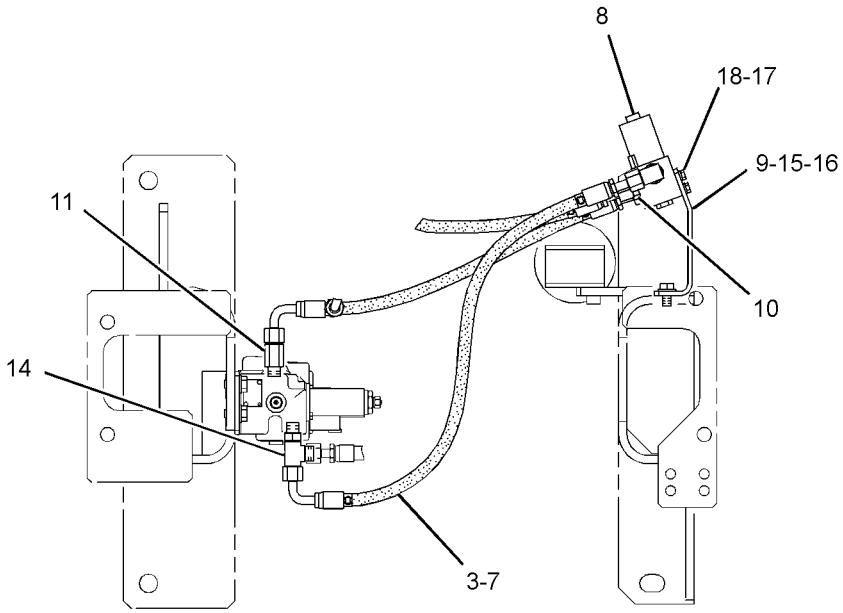

SECTION A-A

GRAPHIC #1 **<END>** g01511702

HYDRAULIC SYSTEM

255-1843 LINES GP-PILOT—THIRD PEDAL, PILOT VALVE

S/N: MYG1-UP; PPN1-UP
PART OF 342-3650 PEDAL AR-AUXILIARY
AN ATTACHMENT

SMCS-5057, 5059 **i02981510**

NOTE	REF NO	GRAPHIC REF	PART NUMBER	QTY	PART NAME 1 2 3 4 5 6 (PRODUCT LEVEL)	SEE PAGE
CI	1	1	**4I-1704**	1	HOSE AS	
I	2	1	**087-4402**	1	HOSE AS	
I	3	1	**087-5762**	1	HOSE AS	
I	4	1	**087-5765**	2	HOSE AS	
I	5	1	**087-5766**	1	HOSE AS	
	6	1	*164-5629*	1	FITTING AS	
		1	**3J-1907**	1	SEAL-O-RING	
		1	**108-7516**	1	FITTING	
I	7	1	**179-7456**	2	HOSE AS	
Y	8	1	**112-0083**	1	VALVE GP-SHUTTLE	693
	9	1	*148-8336*	3	CONNECTOR AS	
					(EACH INCLUDES)	
		1	**3J-1907**	1	SEAL-O-RING	
		1	**6V-8397**	1	SEAL-O-RING	
		1	**6V-8636**	1	CONNECTOR	
	10	1	*148-8353*	6	ELBOW AS	
					(EACH INCLUDES)	
		1	**3J-1907**	1	SEAL-O-RING	
		1	**6V-8397**	1	SEAL-O-RING	
		1	**6V-9001**	1	ELBOW	
	11	1	*148-8378*	4	ELBOW AS	
					(EACH INCLUDES)	
		1	**3J-1907**	1	SEAL-O-RING	
		1	**6V-8397**	1	SEAL-O-RING	
		1	**6V-8724**	1	ELBOW	
	12	1	*150-3036*	1	ELBOW AS	
		1	**3J-1907**	1	SEAL-O-RING	
		1	**6V-8397**	1	SEAL-O-RING	
		1	**8T-1905**	1	ELBOW	
	13	1	*150-4044*	1	CONNECTOR AS	
		1	**3J-1907**	1	SEAL-O-RING	
		1	**6V-8397**	1	SEAL-O-RING	
		1	**8T-1779**	1	CONNECTOR	
	14	1	*164-5628*	1	CONNECTOR AS	
		1	**3J-1907**	1	SEAL-O-RING	
		1	**6V-8397**	1	SEAL-O-RING	
		1	**107-6631**	1	CONNECTOR-FILTER	
	15	1	**309-5769**	1	SWITCH AS-PRESSURE (THIRD PEDAL, STRAIGHT TRAVEL)	
		1	**9X-3401**	2	PIN-CONNECTOR (16-GA TO 18-GA)	
					—OR—	
		1	**126-1767**	2	PIN-CONNECTOR (14-GA)	
		1	**102-8802**	1	KIT-RECEPTACLE (2-PIN)	
					(INCLUDES RECEPTACLE AS & WEDGE)	
	16	1	**4I-7889**	2	SPACER (11X25X45-MM THK)	
M	17	1	**8T-4178**	2	BOLT (M10X1.5X90-MM)	

C-CHANGE FROM PREVIOUS TYPE
I-REFER TO HYDRAULIC INFORMATION SYSTEM
M-METRIC PART
Y-SEPARATE ILLUSTRATION

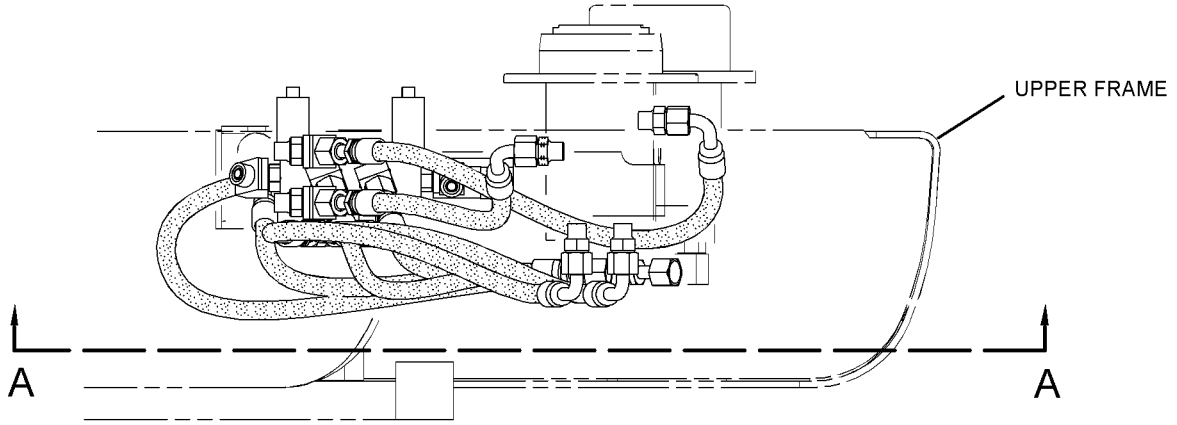

RIGHT SIDE VIEW

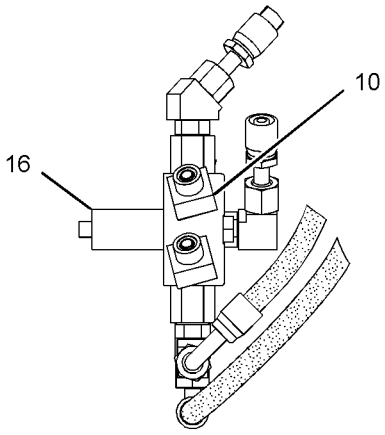

VIEW B-B

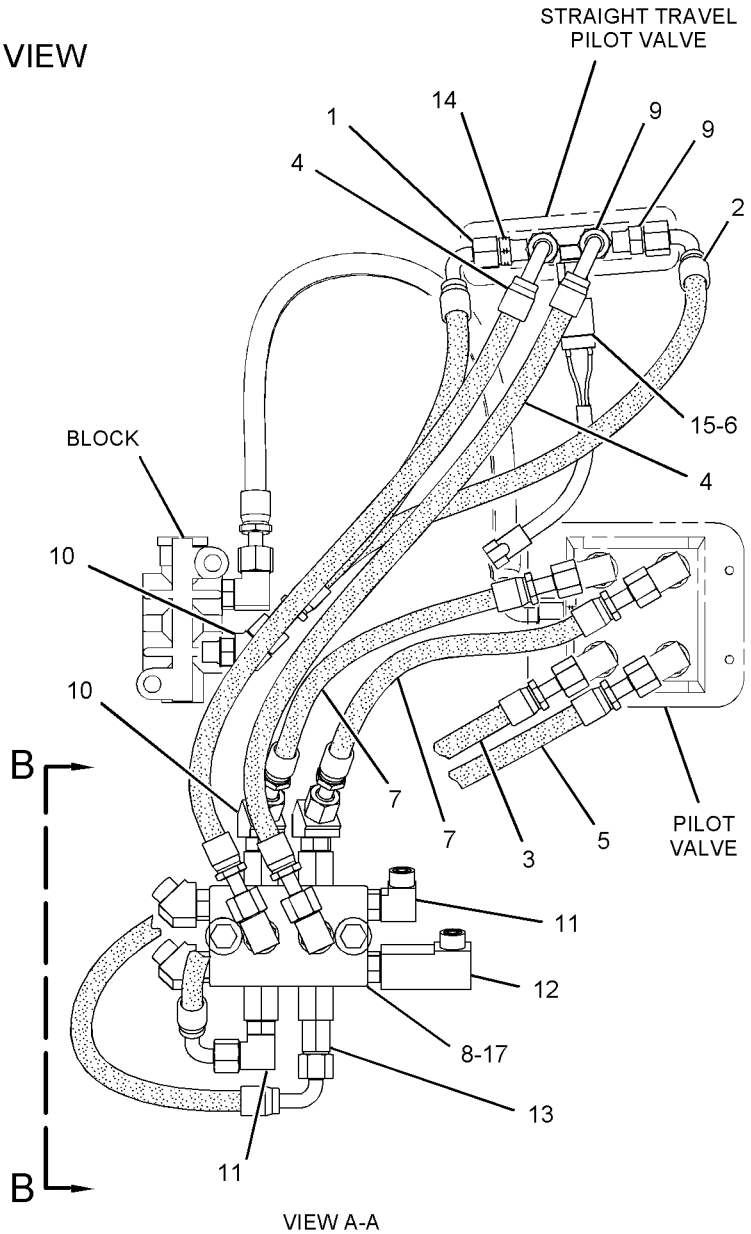

VIEW A-A

GRAPHIC #1

<END>

g01338160

HYDRAULIC SYSTEM

255-1844 LINES GP-PILOT—CONTROL VALVE, TRAVEL VALVE

S/N: MYG1-UP; PPN1-UP
PART OF 342-3650 PEDAL AR-AUXILIARY
AN ATTACHMENT

SMCS-5057, 5059 **i02390411**

NOTE	REF NO	GRAPHIC REF	PART NUMBER	QTY	PART NAME 1 2 3 4 5 6 (PRODUCT LEVEL)	SEE PAGE
	1	1	**4I-9521**	4	BAND-MARKER (RED, L1)	
	2	1	**4I-9522**	4	BAND-MARKER (YELLOW, L2)	
	3	1	**4I-9525**	4	BAND-MARKER (ORANGE, R1)	
	4	1	**4I-9526**	4	BAND-MARKER (WHITE, R2)	
	5	1	**7K-1181**	7	STRAP-CABLE	
I	6	1	**087-6584**	2	HOSE AS	
I	7	1	**218-1059**	2	HOSE AS	

I-REFER TO HYDRAULIC INFORMATION SYSTEM

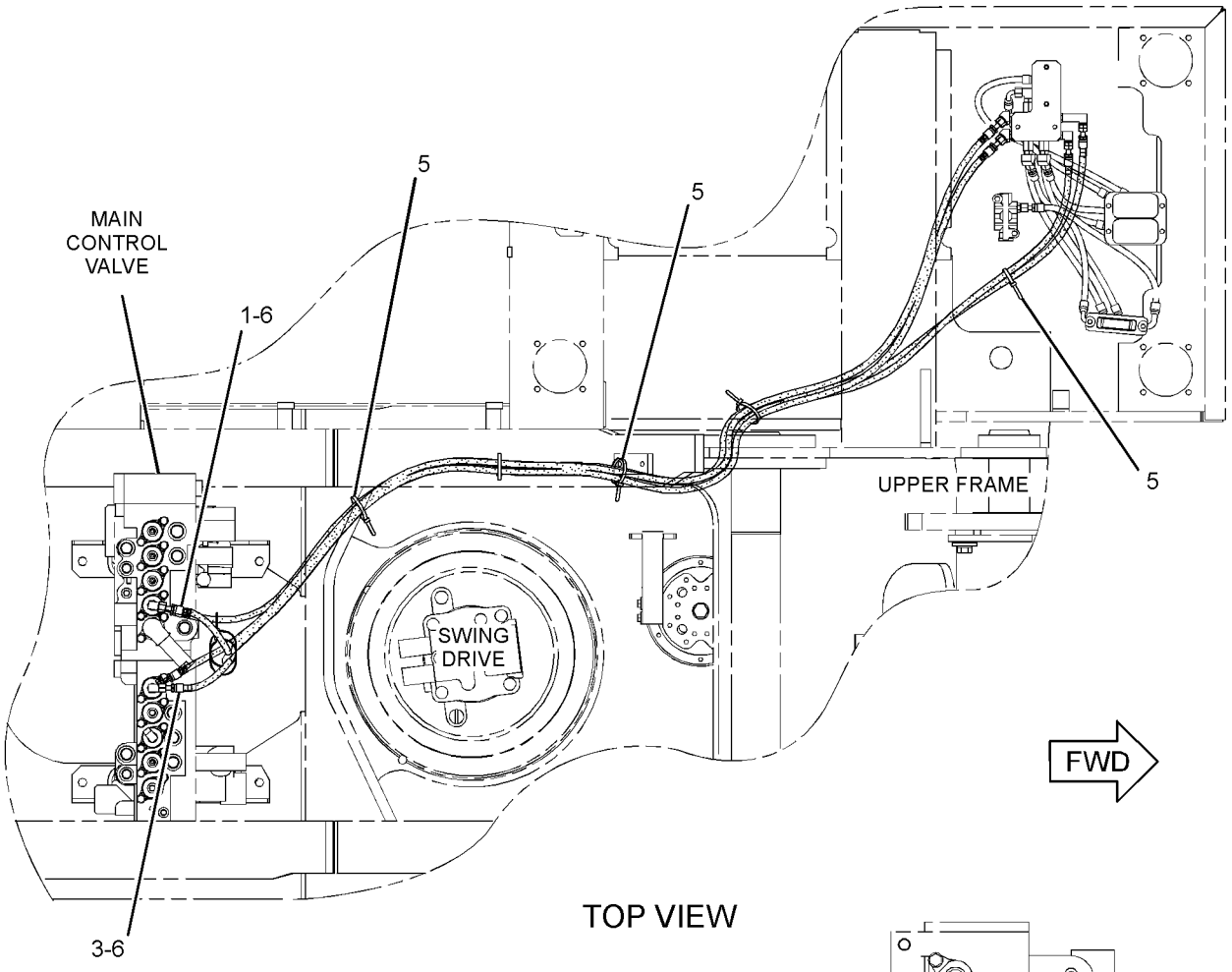

TOP VIEW

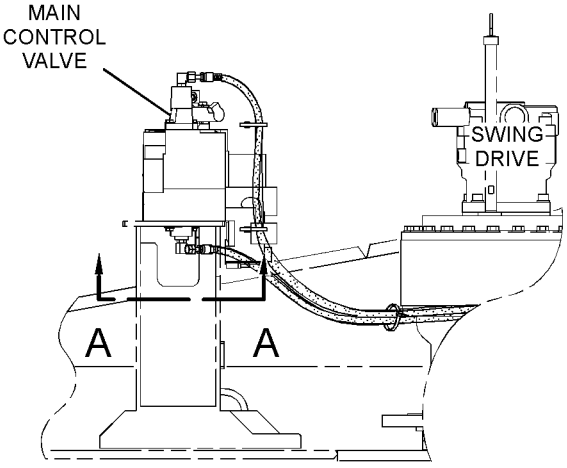

RIGHT SIDE VIEW

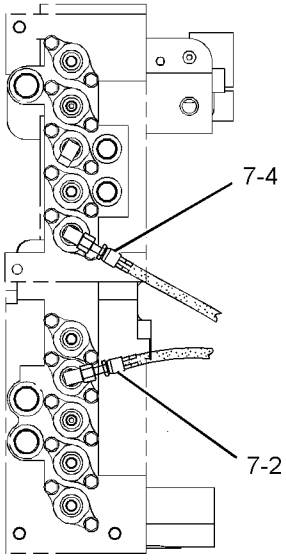

VIEW A-A

GRAPHIC #1 **<END>** g01203716

HYDRAULIC SYSTEM

255-1853 LINES GP-PILOT—BOOM FLOAT

S/N: MYG1-UP; PPN1-UP
PART OF 346-4449 CONTROL AR-BOOM
AN ATTACHMENT

SMCS-5057, 5059 **i03127445**

NOTE	REF NO	GRAPHIC REF	PART NUMBER	QTY	PART NAME 1 2 3 4 5 6 (PRODUCT LEVEL)	SEE PAGE
I	1	2	**4I-0800**	1	HOSE AS	
	2	2	**4I-9527**	2	BAND-MARKER (GREEN, R3)	
	3	2	**7K-1181**	9	STRAP-CABLE	
I	4	2	**087-5771**	1	HOSE AS	
I	5	2	**087-6583**	1	HOSE AS	
I	6	2	**104-8976**	1	HOSE AS	
I	7	2	**108-7369**	1	HOSE AS	
I	8	2	**108-7387**	1	HOSE AS	
I	9	2	**111-0985**	1	HOSE AS	
I	10	2	**113-6738**	1	HOSE AS	
	11	2	**133-5813**	2	BAND-MARKER (GRAY, P)	
	12	2	*164-5547*	1	CONNECTOR AS	
		2	**3J-1907**	1	SEAL-O-RING	
		2	**4I-1694**	1	CONNECTOR	
	13	2	*164-5629*	1	FITTING AS	
		2	**3J-1907**	1	SEAL-O-RING	
		2	**108-7516**	1	FITTING	
	14	2	*164-6874*	1	FITTING AS-ELBOW	
		2	**3J-1907**	1	SEAL-O-RING	
		2	**085-7356**	1	FITTING	
I	15	2	**179-7616**	1	HOSE AS	
Y	16	2	**185-0472**	1	VALVE GP-SOLENOID	702
	17	2	**199-2002**	1	SUPPORT AS	
	18	2	**199-2004**	1	BRACKET	
Y	19	2	**201-9236**	1	VALVE GP-FLOW CONTROL (BOOM FLOAT, PILOT OIL)	654
I	20	2	**202-3762**	1	HOSE AS	
	21	2	**266-0982**	1	GUARD	
	22	2	*148-8363*	1	ELBOW AS	
		2	**3K-0360**	1	SEAL-O-RING	
		2	**6V-8397**	1	SEAL-O-RING	
		2	**6V-9876**	1	ELBOW	
	23	2	*148-8378*	3	ELBOW AS	
					(EACH INCLUDES)	
		2	**3J-1907**	1	SEAL-O-RING	
		2	**6V-8397**	1	SEAL-O-RING	
		2	**6V-8724**	1	ELBOW	
	24	2	*148-8413*	1	REDUCER AS	
		2	**4J-5477**	1	SEAL-O-RING	
		2	**6V-8934**	1	REDUCER AS	
	25	2	*148-8433*	2	TEE AS	
					(EACH INCLUDES)	
		2	**6V-8397**	2	SEAL-O-RING	
		2	**6V-9836**	1	TEE-SWIVEL	
	26	2	*148-8439*	2	TEE AS	
					(EACH INCLUDES)	
		2	**3J-1907**	1	SEAL-O-RING	
		2	**6V-8397**	2	SEAL-O-RING	
		2	**6V-8774**	1	TEE	
	27	2	*150-4027*	1	TEE AS	
		2	**3E-2310**	1	TEE	
		2	**3J-1907**	1	SEAL-O-RING	
		2	**6V-8397**	1	SEAL-O-RING	
	28	2	**309-5769**	1	SWITCH AS-PRESSURE (BOOM FLOAT)	
		2	**102-8802**	1	KIT-RECEPTACLE (2-PIN)	
					(INCLUDES RECEPTACLE AS & WEDGE)	

255-1853 **LINES GP-PILOT** *(contd.)* **i03127445**

NOTE	REF NO	GRAPHIC REF	PART NUMBER	QTY	PART NAME 1 2 3 4 5 6 (PRODUCT LEVEL)	SEE PAGE
		2	**9X-3401**	2	PIN-CONNECTOR (16-GA TO 18-GA)	
					—OR—	
		2	**126-1767**	2	PIN-CONNECTOR (14-GA)	
	29	2	**3J-1907**	1	SEAL-O-RING	
M	30	2	**5C-9553**	2	BOLT (M6X1X16-MM)	
	31	2	**6V-8397**	1	SEAL-O-RING	
M	32	2	**8T-4139**	2	BOLT (M12X1.75X30-MM)	
M	33	2	**8T-4189**	2	BOLT (M8X1.25X20-MM)	
	34	2	**8T-4223**	2	WASHER-HARD (13.5X25.5X3-MM THK)	
	35	2	**8T-4224**	2	WASHER-HARD (8.8X16X2-MM THK)	
	36	2	**9X-8256**	2	WASHER (6.6X12X2-MM THK)	
C	37	2	*148-8371*	1	ELBOW AS	
		2	**6V-8397**	1	SEAL-O-RING	
		2	**8C-8988**	1	ELBOW	

C-CHANGE FROM PREVIOUS TYPE
I-REFER TO HYDRAULIC INFORMATION SYSTEM
M-METRIC PART
Y-SEPARATE ILLUSTRATION

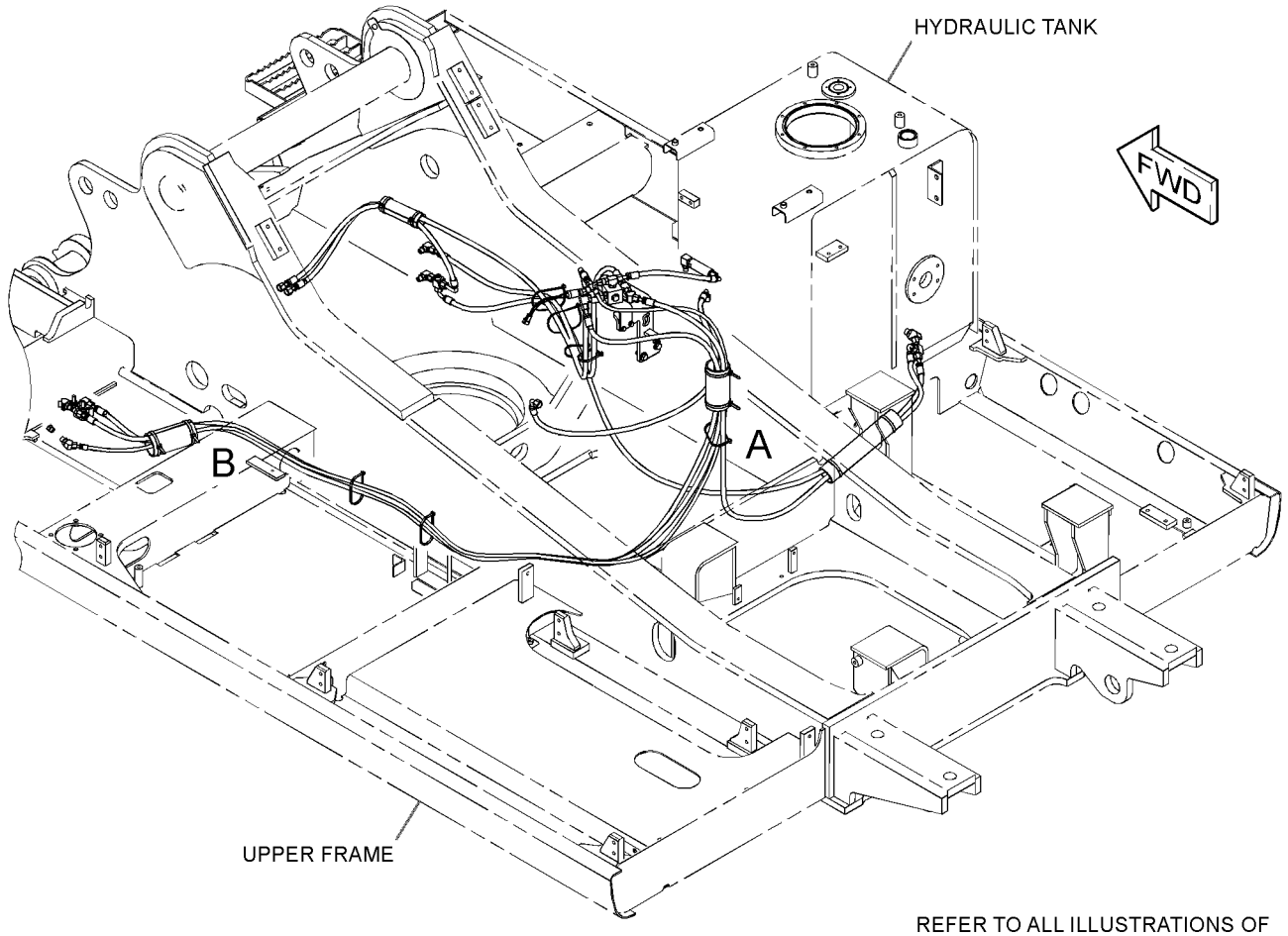

REFER TO ALL ILLUSTRATIONS OF THIS GROUP FOR AUXILIARY VIEWS

GRAPHIC #1

g01624401

255-1853 **LINES GP-PILOT** *(contd.)* **i03127445**

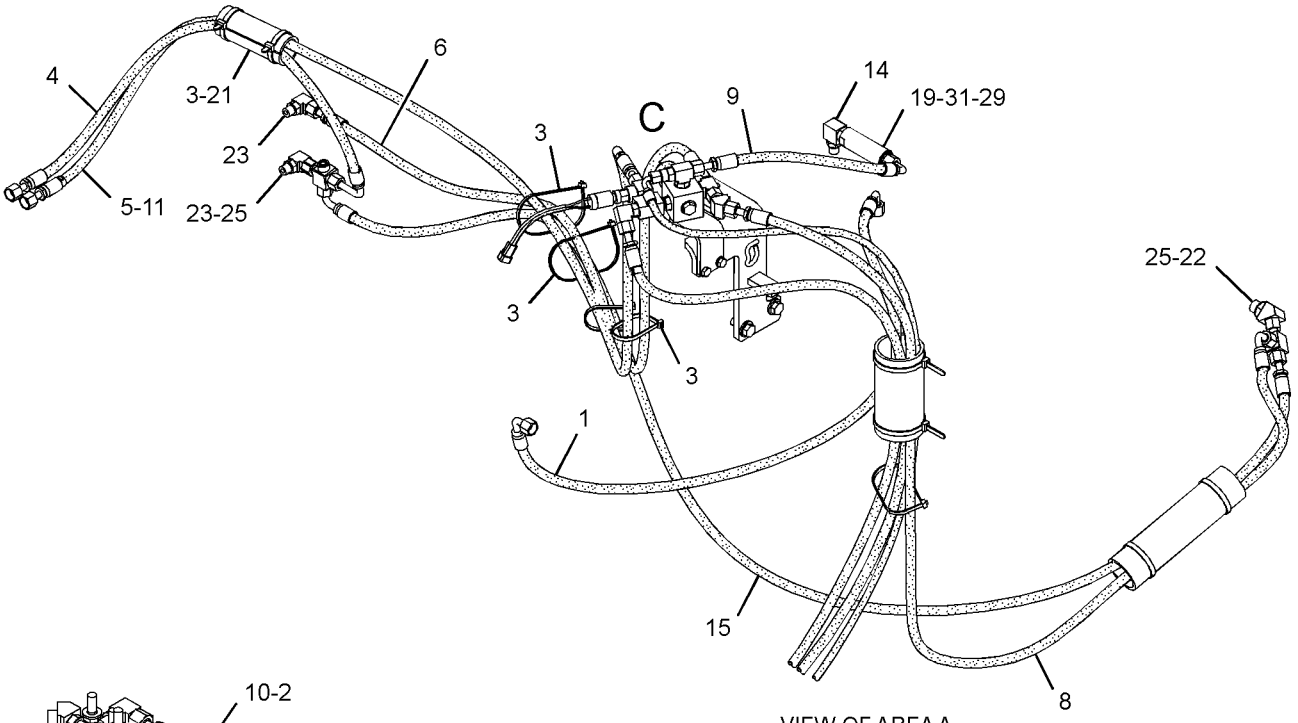

VIEW OF AREA A

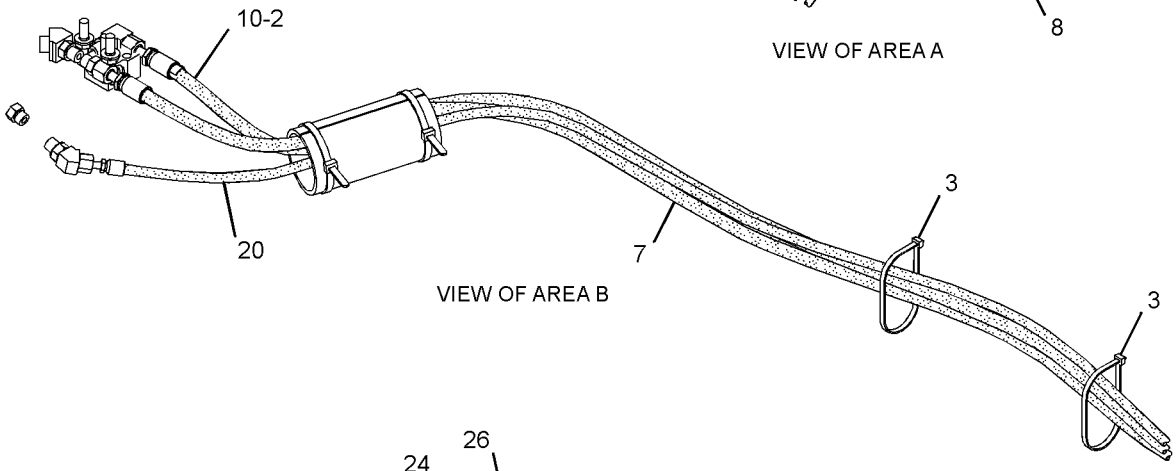

VIEW OF AREA B

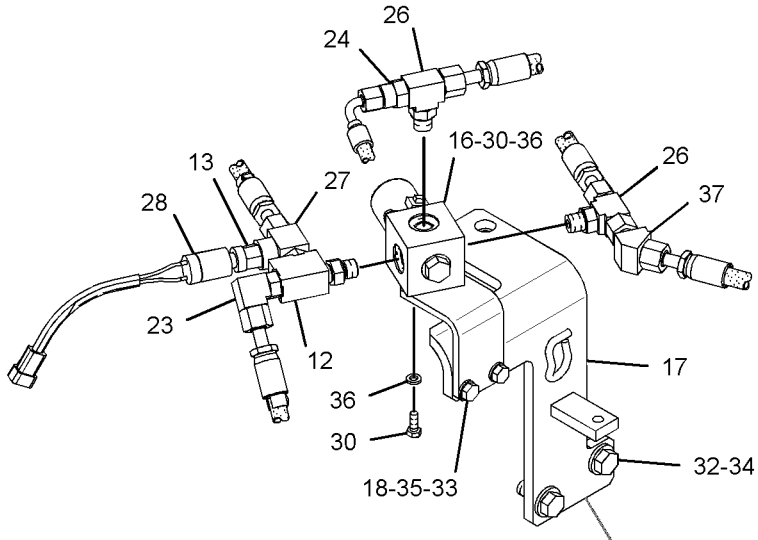

VIEW OF AREA C
(EXPLODED)

TO MAIN CONTROL VALVE

GRAPHIC #2 **<END>** g01624402

HYDRAULIC SYSTEM

255-1854 LINES GP-PILOT—STICK LOWERING CONTROL

S/N: MYG1-UP; PPN1-UP

PART OF 255-5868, 259-7416 VALVE AR-LOAD CONTROL

AN ATTACHMENT

SMCS-5057, 5059 **i03639074**

NOTE	REF NO	GRAPHIC REF	PART NUMBER	QTY	PART NAME 1 2 3 4 5 6 (PRODUCT LEVEL)	SEE PAGE
	1	1	**7K-1181**	9	STRAP-CABLE	
	2	1	**201-9379**	1	BLOCK	
	3	1	**269-9944**	1	HOSE AS	
	4	1	**285-2591**	1	HOSE AS	
	5	1	**285-2592**	1	HOSE AS	
C	6	1	*148-8336*	1	CONNECTOR AS	
		1	**3J-1907**	1	SEAL-O-RING	
		1	**6V-8397**	1	SEAL-O-RING	
		1	**6V-8636**	1	CONNECTOR	
	7	1	*148-8364*	1	ELBOW AS	
		1	**3K-0360**	1	SEAL-O-RING	
		1	**6V-8398**	1	SEAL-O-RING	
		1	**6V-8625**	1	ELBOW	
	8	1	*148-8433*	2	TEE AS	
					(EACH INCLUDES)	
		1	**6V-8397**	2	SEAL-O-RING	
		1	**6V-9836**	1	TEE-SWIVEL	
	9	1	**133-5813**	2	BAND-MARKER (GRAY, P)	
	10	1	**4I-9523**	4	BAND-MARKER (BLUE, L3)	
C	11	1	*148-8378*	1	ELBOW AS	
		1	**3J-1907**	1	SEAL-O-RING	
		1	**6V-8397**	1	SEAL-O-RING	
		1	**6V-8724**	1	ELBOW	

C-CHANGE FROM PREVIOUS TYPE

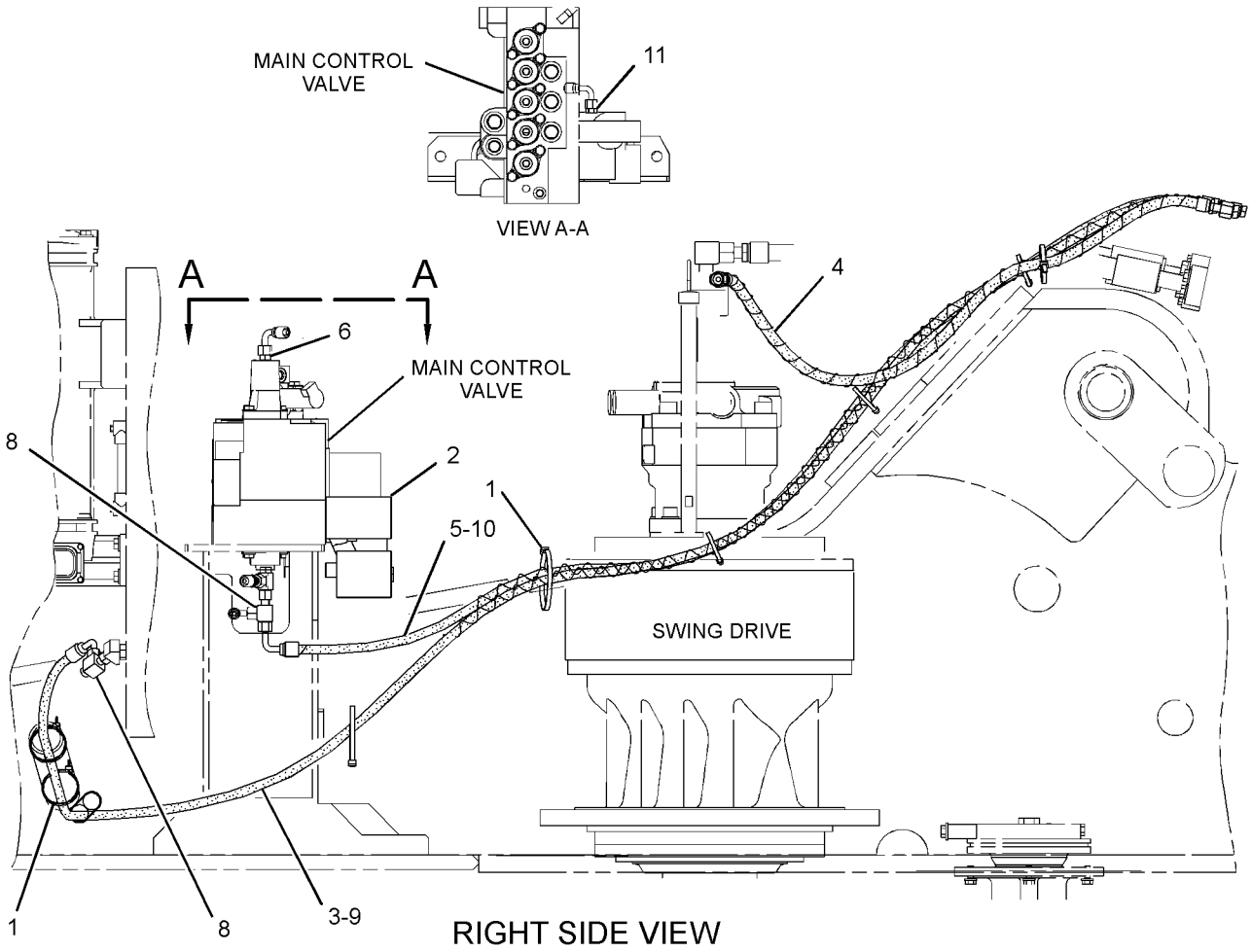

GRAPHIC #1

<END>

g01956960

HYDRAULIC SYSTEM

260-7855 LINES GP-PILOT—1-PUMP/2-PUMP, 1-WAY FLOW

S/N: MYG1-UP; PPN1-UP
PART OF 255-5774 CONTROL AR-AUXILIARY
AN ATTACHMENT

SMCS-5057, 5059 **i02981591**

NOTE	REF NO	GRAPHIC REF	PART NUMBER	QTY	PART NAME 1 2 3 4 5 6 (PRODUCT LEVEL)	SEE PAGE
I	1	1	**4I-1688**	2	HOSE AS	
	2	2	**4I-9521**	2	BAND-MARKER (RED, L1)	
	3	2	**4I-9522**	2	BAND-MARKER (YELLOW, L2)	
	4	1,2	**4I-9523**	4	BAND-MARKER (BLUE, L3)	
	5	2	**4I-9524**	2	BAND-MARKER (BROWN, L4)	
	6	2	**4I-9525**	2	BAND-MARKER (ORANGE, R1)	
	7	1,2	**4I-9527**	4	BAND-MARKER (GREEN, R3)	
I	8	2	**5I-4396**	1	HOSE AS	
	9	2	**7K-1181**	6	STRAP-CABLE	
I	10	2	**7Y-4387**	1	HOSE AS	
I	11	2	**087-6583**	1	HOSE AS	
	12	2	**136-0207**	4	STRAP-CABLE	
	13	2	*164-6874*	2	FITTING AS-ELBOW	
					(EACH INCLUDES)	
		2	**3J-1907**	1	SEAL-O-RING	
		2	**085-7356**		FITTING	
CI	14	2	**4I-1671**	1	HOSE AS	
Y	15	2	**259-7430**	1	VALVE GP-SOLENOID (PRESSURE REDUCING) (1-PUMP/2-PUMP, 1-WAY FLOW)	707
	16	2	**286-6556**	1	SUPPORT AS	
	17	2	**275-1442**	4	CLIP (TAB)	
	18	2	**275-1443**	4	CLIP (SLOT)	
	19	2	**275-1444**	4	GROMMET	
	21	2	**275-1693**	1	SUPPORT AS	
	22	2	**275-1818**	2	HOSE AS	
C	23	1,2	*148-8336*	4	CONNECTOR AS	
					(EACH INCLUDES)	
		1,2	**3J-1907**	1	SEAL-O-RING	
		1,2	**6V-8397**	1	SEAL-O-RING	
		1,2	**6V-8636**	1	CONNECTOR	
C	24	1	*148-8338*	2	CONNECTOR AS	
					(EACH INCLUDES)	
		1	**3J-1907**	1	SEAL-O-RING	
		1	**6V-8397**	1	SEAL-O-RING	
		1	**8T-0075**	1	CONNECTOR	
	25	1,2	*148-8378*	9	ELBOW AS	
					(EACH INCLUDES)	
		1,2	**3J-1907**	1	SEAL-O-RING	
		1,2	**6V-8397**	1	SEAL-O-RING	
		1,2	**6V-8724**	1	ELBOW	
	26	1	*148-8433*	1	TEE AS	
		1	**6V-8397**	2	SEAL-O-RING	
		1	**6V-9836**	1	TEE-SWIVEL	
	27	2	*150-3036*	1	ELBOW AS	
		2	**3J-1907**	1	SEAL-O-RING	
		2	**6V-8397**	1	SEAL-O-RING	
		2	**8T-1905**	1	ELBOW	
	28	2	*150-4027*	2	TEE AS	
					(EACH INCLUDES)	
		2	**3E-2310**	1	TEE	
		2	**3J-1907**	1	SEAL-O-RING	
		2	**6V-8397**	1	SEAL-O-RING	
	29	2	*164-5567*	4	COUPLER AS-QUICK DISCONNECT	
					(EACH INCLUDES)	
		2	**3J-1907**	1	SEAL-O-RING	

260-7855 **LINES GP-PILOT** *(contd.)* **i02981591**

NOTE	REF NO	GRAPHIC REF	PART NUMBER	QTY	PART NAME 1 2 3 4 5 6 (PRODUCT LEVEL)	SEE PAGE
		2	**6V-3965**	1	FITTING (QUICK DISCONNECT)	
Y	30	2	**171-0188**	1	VALVE GP-SOLENOID (NEG FLOW CONT, PROPN RED VALVE)	701
I	31	1	**282-7566**	1	HOSE AS	
I	32	1	**289-5283**	1	HOSE AS	
I	33	2	**289-5286**	1	HOSE AS	
I	34	2	**289-5289**	1	HOSE AS	
	35	2	**3P-9847**	1	CLIP	
	36	2	**6V-0852**	4	CAP-DUST	
	37	2	**8T-4121**	6	WASHER-HARD (11X21X2.5-MM THK)	
M	38	2	**8T-4136**	5	BOLT (M10X1.5X25-MM)	
M	39	2	**8T-4177**	4	BOLT (M8X1.25X90-MM)	
M	40	2	**8T-4195**	1	BOLT (M10X1.5X30-MM)	
	41	2	**8T-4223**	2	WASHER-HARD (13.5X25.5X3-MM THK)	
	42	2	**8T-4224**	4	WASHER-HARD (8.8X16X2-MM THK)	
M	43	2	**8T-4956**	2	BOLT (M12X1.75X35-MM)	
M	44	2	**8T-6870**	2	BOLT (M8X1.25X70-MM)	

C-CHANGE FROM PREVIOUS TYPE
I-REFER TO HYDRAULIC INFORMATION SYSTEM
M-METRIC PART
Y-SEPARATE ILLUSTRATION

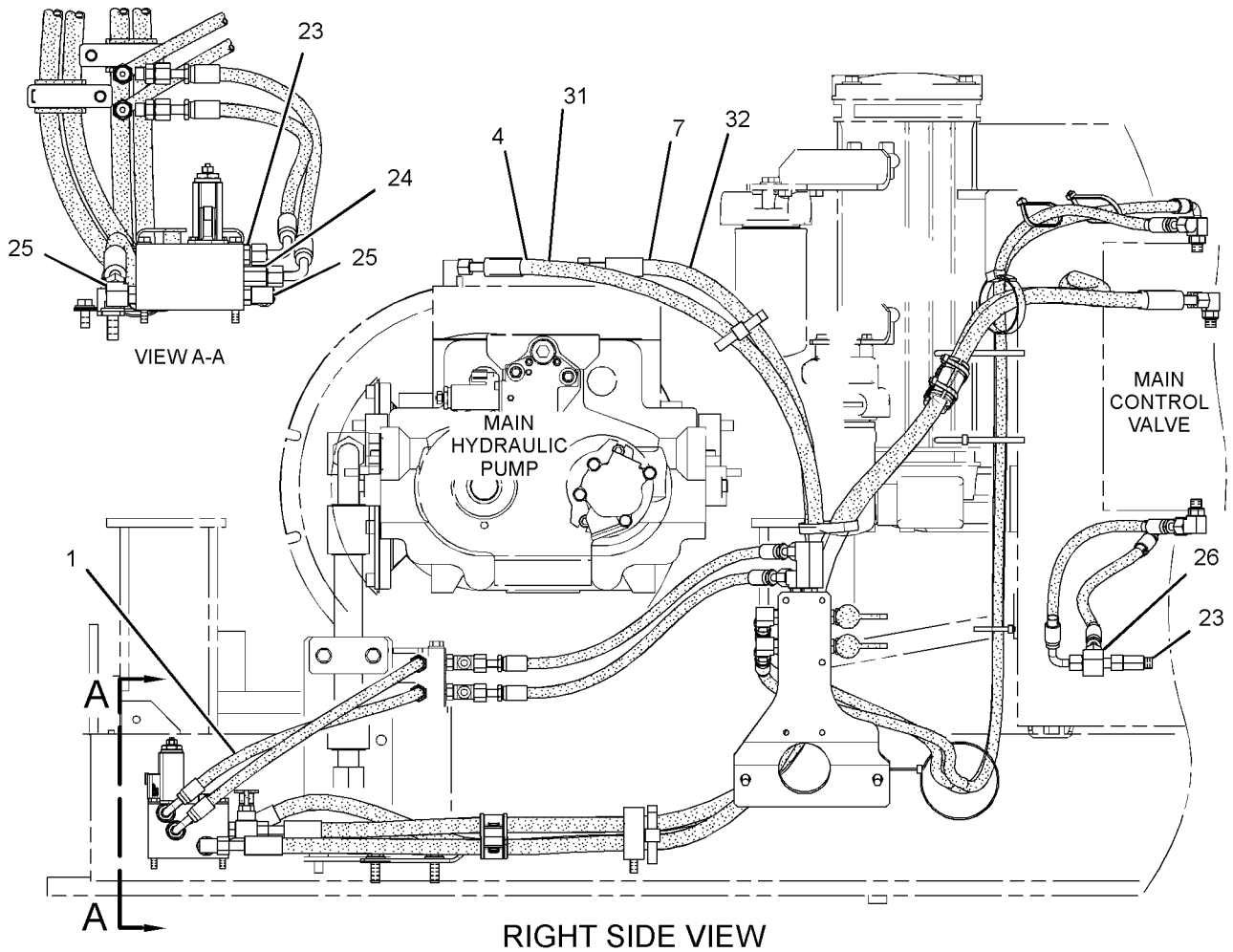

RIGHT SIDE VIEW

GRAPHIC #1 g01446956

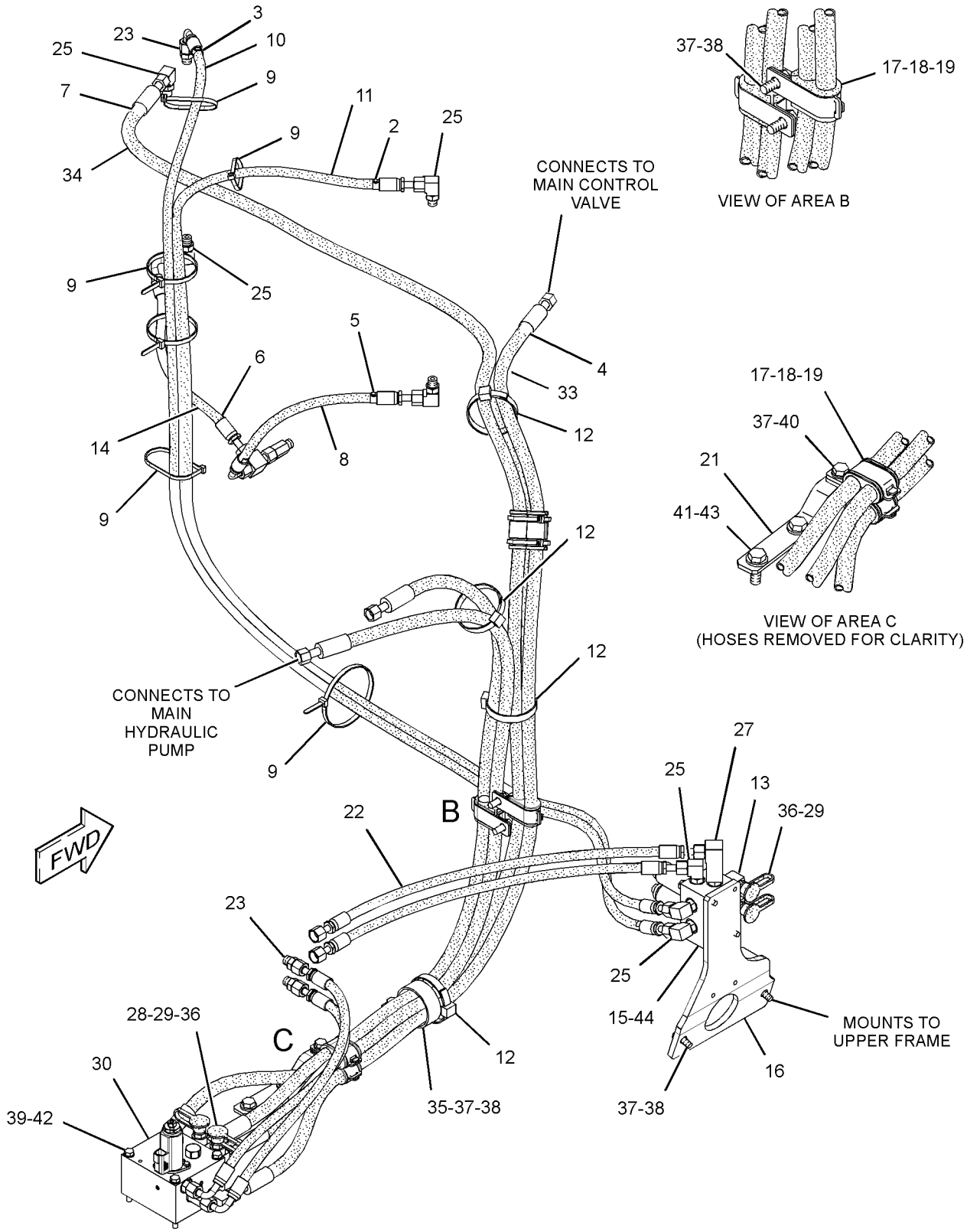

GRAPHIC #2 **<END>** g01446957

HYDRAULIC SYSTEM

260-7857 LINES GP-PILOT—COMB FCTN, JOYSTK W/SLIDE CTL

S/N: MYG1-UP; PPN1-UP
PART OF 297-0494 CONTROL AR-AUXILIARY
AN ATTACHMENT

SMCS-5057, 5059 **i02983888**

NOTE	REF NO	GRAPHIC REF	PART NUMBER	QTY	PART NAME 1 2 3 4 5 6 (PRODUCT LEVEL)	SEE PAGE
I	1	1	**4I-0806**	1	HOSE AS	
I	2	2	**4I-1688**	2	HOSE AS	
	3	1	**4I-9521**	2	BAND-MARKER (RED, L1)	
	4	1	**4I-9522**	2	BAND-MARKER (YELLOW, L2)	
	5	1,2	**4I-9523**	4	BAND-MARKER (BLUE, L3)	
	6	1	**4I-9524**	2	BAND-MARKER (BROWN, L4)	
	7	1	**4I-9525**	2	BAND-MARKER (ORANGE, R1)	
	8	1,2	**4I-9527**	4	BAND-MARKER (GREEN, R3)	
	9	1	**7K-1181**	10	STRAP-CABLE	
I	10	1	**7Y-4387**	1	HOSE AS	
I	11	1	**087-5306**	1	HOSE AS	
I	12	1	**087-6583**	1	HOSE AS	
I	13	1	**104-8783**	1	HOSE AS	
I	14	1	**087-4411**	1	HOSE AS	
	15	1,2	**136-0207**	4	STRAP-CABLE	
	16	1	*164-6874*	4	FITTING AS-ELBOW	
					(EACH INCLUDES)	
		1	**3J-1907**	1	SEAL-O-RING	
		1	**085-7356**	1	FITTING	
	17	1	**255-1826**	2	SPACER (13.5X25X75.8-MM THK)	
Y	18	2	**259-7429**	1	VALVE GP-SOLENOID (WORK TOOL, 4-FUNCTION)	706
	19	2	**260-8148**	1	PLATE	
	20	2	**286-6556**	1	SUPPORT AS	
	21	1,2	**275-1442**	4	CLIP (TAB)	
	22	1,2	**275-1443**	4	CLIP (SLOT)	
	23	1,2	**275-1444**	4	GROMMET (13.5X25X75.8-MM THK)	
	24	1,2	**9M-8406**	2	CLIP	
I	25	2	**282-7566**	1	HOSE AS	
I	26	2	**289-5283**	1	HOSE AS	
I	27	1	**289-5286**	1	HOSE AS	
I	28	1	**289-5289**	1	HOSE AS	
	29	2	**275-1693**	1	SUPPORT AS	
	30	1	**275-1818**	2	HOSE AS	
	31	1,2	*148-8336*	4	CONNECTOR AS	
					(EACH INCLUDES)	
		1,2	**3J-1907**	1	SEAL-O-RING	
		1,2	**6V-8397**	1	SEAL-O-RING	
		1,2	**6V-8636**	1	CONNECTOR	
	32	2	*148-8338*	1	CONNECTOR AS	
		2	**3J-1907**	1	SEAL-O-RING	
		2	**6V-8397**	1	SEAL-O-RING	
		2	**8T-0075**	1	CONNECTOR	
	33	1	*148-8367*	1	ELBOW AS	
		1	**6V-8397**	1	SEAL-O-RING	
		1	**6V-9850**	1	ELBOW	
	34	1,2	*148-8378*	14	ELBOW AS	
					(EACH INCLUDES)	
		1,2	**3J-1907**	1	SEAL-O-RING	
		1,2	**6V-8397**	1	SEAL-O-RING	
		1,2	**6V-8724**	1	ELBOW	
	35	2	*148-8433*	1	TEE AS	
		2	**6V-8397**	2	SEAL-O-RING	
		2	**6V-9836**	1	TEE-SWIVEL	
	36	1	*148-8434*	1	TEE AS	
		1	**6V-8397**	2	SEAL-O-RING	

260-7857 **LINES GP-PILOT** *(contd.)* **i02983888**

NOTE	REF NO	GRAPHIC REF	PART NUMBER	QTY	PART NAME 1 2 3 4 5 6 (PRODUCT LEVEL)	SEE PAGE
		1	**6V-9843**	1	TEE-SWIVEL	
	37	2	*150-3036*	1	ELBOW AS	
		2	**3J-1907**	1	SEAL-O-RING	
		2	**6V-8397**	1	SEAL-O-RING	
		2	**8T-1905**	1	ELBOW	
	38	2	*150-4027*	2	TEE AS	
					(EACH INCLUDES)	
		2	**3E-2310**	1	TEE	
		2	**3J-1907**	1	SEAL-O-RING	
		2	**6V-8397**	1	SEAL-O-RING	
	39	1,2	*164-5567*	6	COUPLER AS-QUICK DISCONNECT	
					(EACH INCLUDES)	
		1,2	**3J-1907**	1	SEAL-O-RING	
		1,2	**6V-3965**	1	FITTING (QUICK DISCONNECT)	
Y	40	2	**171-0188**	1	VALVE GP-SOLENOID (NEG FLOW CONT, PROPN RED VALVE)	701
	41	2	**3P-9847**	1	CLIP	
	42	1,2	**6D-3479**	3	CLIP	
	43	1,2	**6E-1435**	2	SPACER (11X30X29-MM THK)	
	44	1,2	**6V-0852**	6	CAP-DUST	
M	45	2	**7X-2549**	2	BOLT (M12X1.75X100-MM)	
C	46	1,2	**8T-4121**	9	WASHER-HARD (11X21X2.5-MM THK)	
CM	47	1,2	**8T-4136**	5	BOLT (M10X1.5X25-MM)	
M	48	2	**8T-4137**	1	BOLT (M10X1.5X20-MM)	
M	49	2	**8T-4177**	4	BOLT (M8X1.25X90-MM)	
M	50	1,2	**8T-4185**	2	BOLT (M10X1.5X50-MM)	
M	51	2	**8T-4195**	1	BOLT (M10X1.5X30-MM)	
	52	2	**8T-4223**	4	WASHER-HARD (13.5X25.5X3-MM THK)	
	53	2	**8T-4224**	4	WASHER-HARD (8.8X16X2-MM THK)	
M	54	2	**8T-4956**	2	BOLT (M12X1.75X35-MM)	
M	55	2	**8T-6870**	4	BOLT (M8X1.25X70-MM)	
I	56	1	**134-6918**	1	HOSE AS	

C-CHANGE FROM PREVIOUS TYPE
I-REFER TO HYDRAULIC INFORMATION SYSTEM
M-METRIC PART
Y-SEPARATE ILLUSTRATION

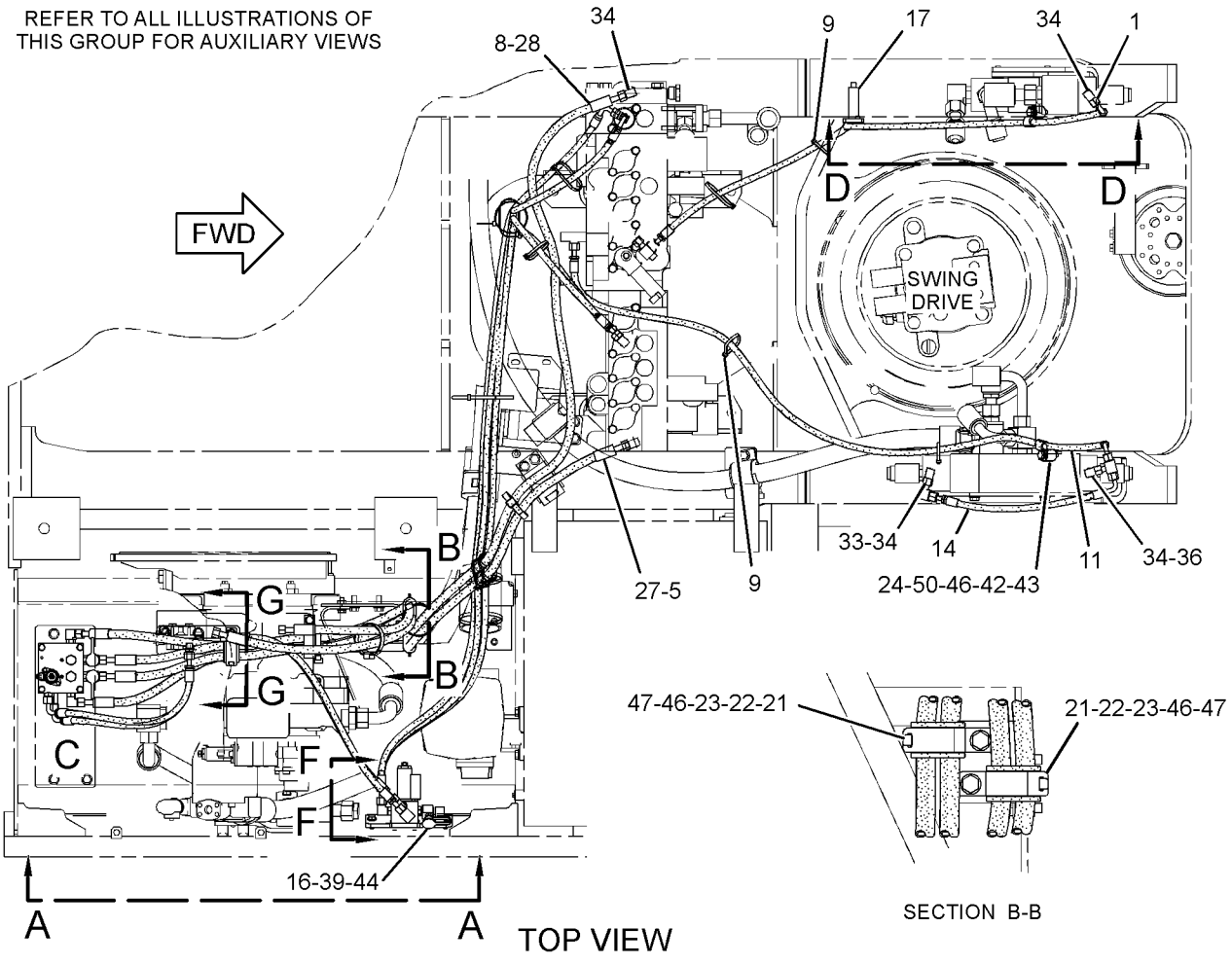

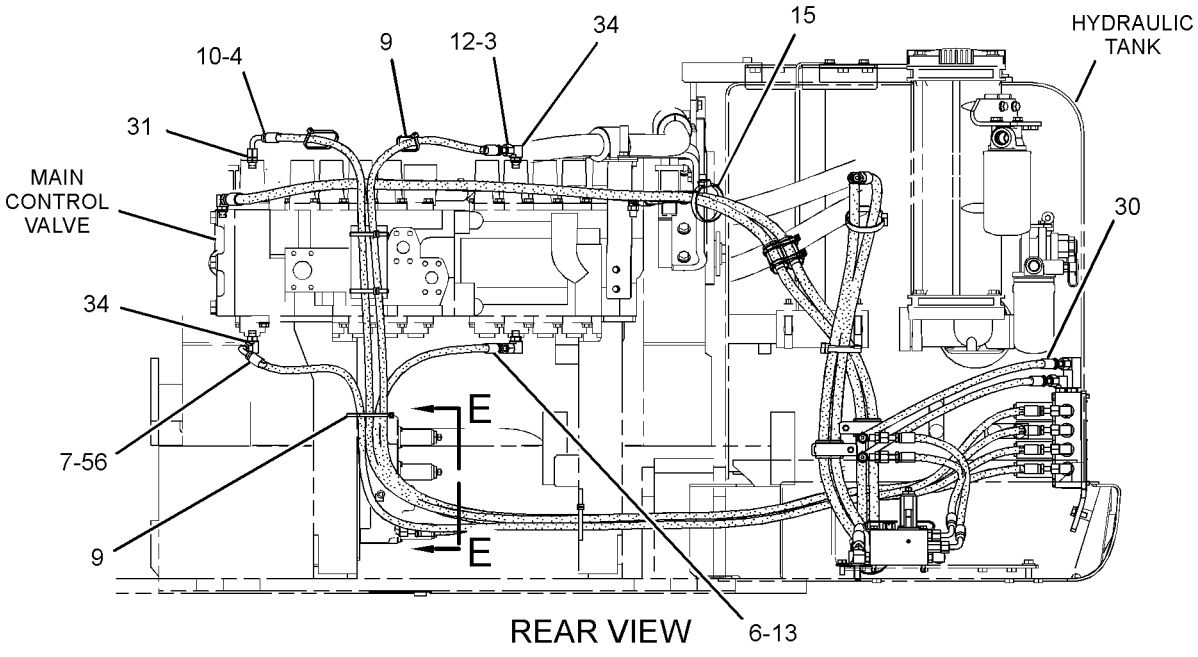

GRAPHIC #1 g01502241

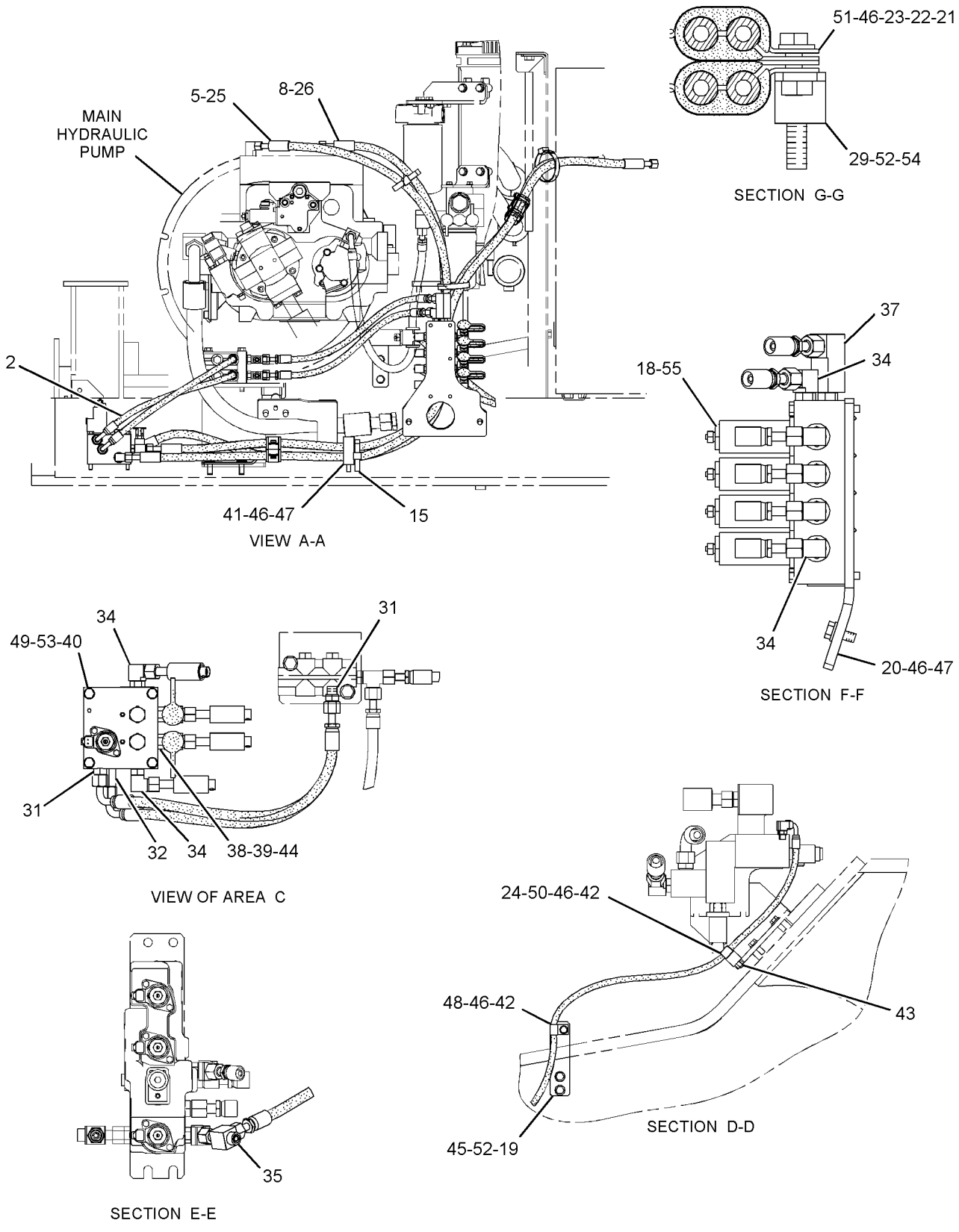

GRAPHIC #2 **<END>** g01502244

HYDRAULIC SYSTEM

260-7861 LINES GP-PILOT—MEDIUM PRESSURE

S/N: MYG1-UP; PPN1-UP
PART OF 255-5822 CONTROL AR-AUXILIARY
AN ATTACHMENT

SMCS-5057, 5059 **i02985112**

NOTE	REF NO	GRAPHIC REF	PART NUMBER	QTY	PART NAME 1 2 3 4 5 6 (PRODUCT LEVEL)	SEE PAGE
	1	1	**4I-9523**	2	BAND-MARKER (BLUE, L3)	
	2	1	**4I-9526**	2	BAND-MARKER (WHITE, R2)	
	3	1	**7K-1181**	4	STRAP-CABLE	
I	5	1	**269-9754**	2	HOSE AS	
	6	1	*165-4931*	2	ELBOW AS	
					(EACH INCLUDES)	
		1	**3J-1907**	1	SEAL-O-RING	
		1	**6V-8077**	1	ELBOW	
CI	7	1	**5I-4396**	2	HOSE AS	
C	8	1	**314-8113**	1	SUPPORT AS	
Y	9	1	**259-7430**	1	VALVE GP-SOLENOID (PRESSURE REDUCING)	707
C	10	1	*148-8336*	4	CONNECTOR AS	
					(EACH INCLUDES)	
		1	**3J-1907**	1	SEAL-O-RING	
		1	**6V-8397**	1	SEAL-O-RING	
		1	**6V-8636**	1	CONNECTOR	
	11	1	*148-8338*	1	CONNECTOR AS	
		1	**3J-1907**	1	SEAL-O-RING	
		1	**6V-8397**	1	SEAL-O-RING	
		1	**8T-0075**	1	CONNECTOR	
	12	1	*148-8378*	3	ELBOW AS	
					(EACH INCLUDES)	
		1	**3J-1907**	1	SEAL-O-RING	
		1	**6V-8397**	1	SEAL-O-RING	
		1	**6V-8724**	1	ELBOW	
	14	1	*164-5567*	2	COUPLER AS-QUICK DISCONNECT	
					(EACH INCLUDES)	
		1	**3J-1907**	1	SEAL-O-RING	
		1	**6V-3965**	1	FITTING (QUICK DISCONNECT)	
	15	1	**5K-8451**	1	CLIP	
	16	1	**6D-1641**	1	CLIP	
	17	1	**6V-0852**	2	CAP-DUST	
	18	1	**8T-4121**	3	WASHER-HARD (11X21X2.5-MM THK)	
M	19	1	**8T-4136**	2	BOLT (M10X1.5X25-MM)	
M	20	1	**8T-4137**	1	BOLT (M10X1.5X20-MM)	
M	21	1	**8T-6870**	2	BOLT (M8X1.25X70-MM)	

C-CHANGE FROM PREVIOUS TYPE
I-REFER TO HYDRAULIC INFORMATION SYSTEM
M-METRIC PART
Y-SEPARATE ILLUSTRATION

260-7861 **LINES GP-PILOT** *(contd.)* **i02985112**

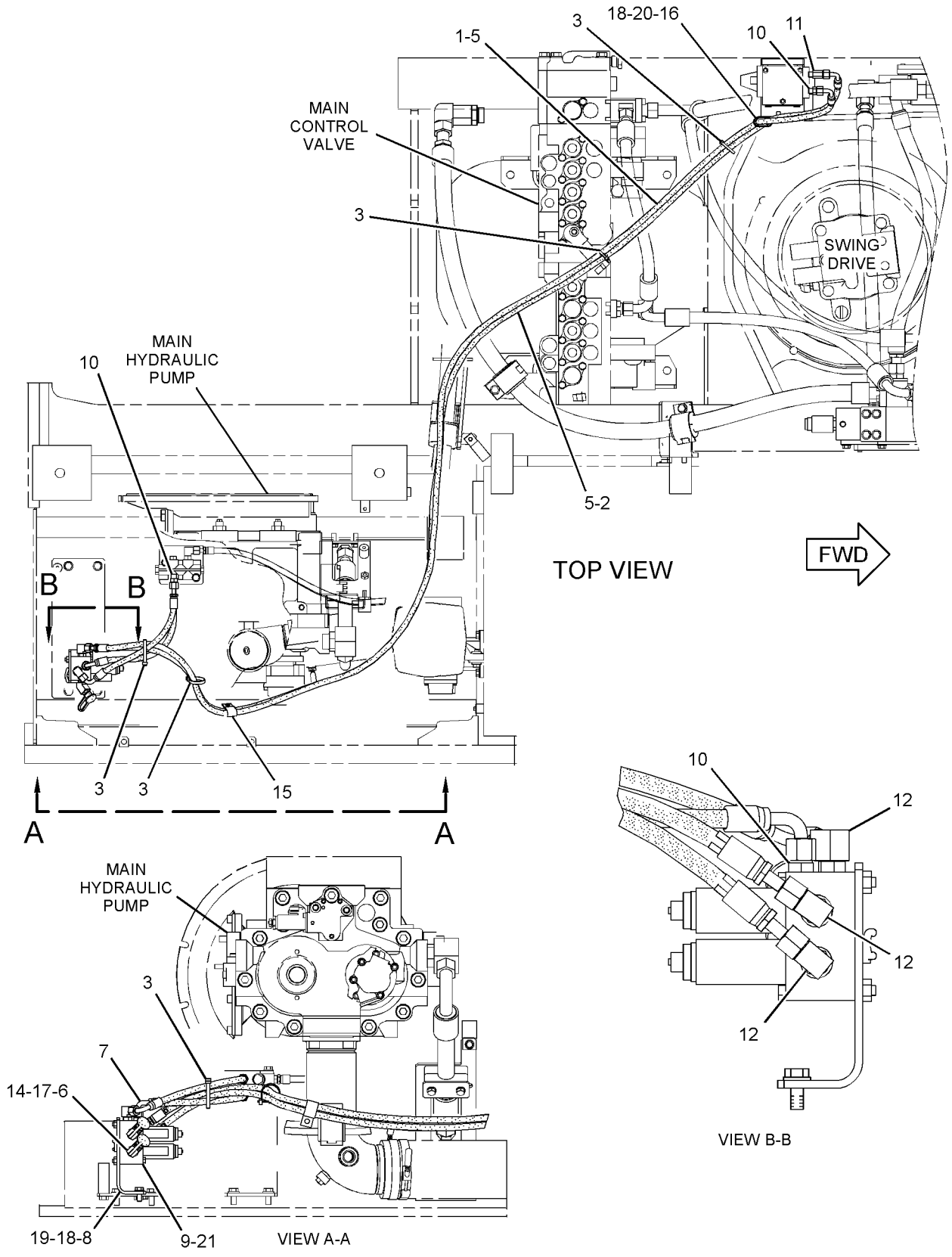

GRAPHIC #1 **<END>** g01558994

HYDRAULIC SYSTEM

260-7863 LINES GP-PILOT–ROTATOR

S/N: MYG1-UP; PPN1-UP
PART OF 340-9468, 340-9469 OPTION AR-CONTROL
FOR USE WITH SYSTEM 12,16 & 17
AN ATTACHMENT

SMCS-5057, 5059 **i03335099**

NOTE	REF NO	GRAPHIC REF	PART NUMBER	QTY	PART NAME 1 2 3 4 5 6 (PRODUCT LEVEL)	SEE PAGE
	1	1	**7K-1181**	6	STRAP-CABLE	
I	2	1	**104-8771**	1	HOSE AS	
I	3	1	**111-6752**	1	HOSE AS	
	4	1	**168-9759**	1	BLOCK	
	5	1	**255-1900**	1	SUPPORT AS	
	6	1	**124-1008**	2	GUARD	
	7	1	*148-8336*	1	CONNECTOR AS	
		1	**3J-1907**	1	SEAL-O-RING	
		1	**6V-8397**	1	SEAL-O-RING	
		1	**6V-8636**	1	CONNECTOR	
	8	1	*148-8338*	1	CONNECTOR AS	
		1	**3J-1907**	1	SEAL-O-RING	
		1	**6V-8397**	1	SEAL-O-RING	
		1	**8T-0075**	1	CONNECTOR	
B	9	1	*148-8407*	8	PLUG AS	
					(EACH INCLUDES)	
		1	**3J-1907**	1	SEAL-O-RING	
		1	**9S-4191**	1	PLUG-O-RING	
	10	1	*148-8411*	2	PLUG AS	
					(EACH INCLUDES)	
		1	**3K-0360**	1	SEAL-O-RING	
		1	**9S-4185**	1	PLUG-O-RING	
	11	1	*148-8433*	2	TEE AS	
					(EACH INCLUDES)	
		1	**6V-8397**	2	SEAL-O-RING	
		1	**6V-9836**	1	TEE-SWIVEL	
	12	1	*148-8435*	2	TEE AS	
					(EACH INCLUDES)	
		1	**3J-1907**	1	SEAL-O-RING	
		1	**6V-8397**	2	SEAL-O-RING	
		1	**6V-8781**	1	TEE-FACE SEAL	
	13	1	**5K-8451**	1	CLIP	
B	14	1	**6V-9829**	4	CAP AS	
	15	1	**333-7060**	1	SPACER (11X25X105-MM THK)	
	16	1	**8T-4121**	3	WASHER-HARD (11X21X2.5-MM THK)	
M	17	1	**8T-4139**	4	BOLT (M12X1.75X30-MM)	
M	18	1	**8T-5436**	1	BOLT (M10X1.5X130-MM)	
M	19	1	**8T-4198**	2	BOLT (M10X1.5X100-MM)	
	20	1	**8T-4223**	4	WASHER-HARD (13.5X25.5X3-MM THK)	
	21	1	**4I-9526**	2	BAND-MARKER (WHITE, R2)	
	22	1	**4I-9527**	2	BAND-MARKER (GREEN, R3)	

B-USE AS REQUIRED
I-REFER TO HYDRAULIC INFORMATION SYSTEM
M-METRIC PART

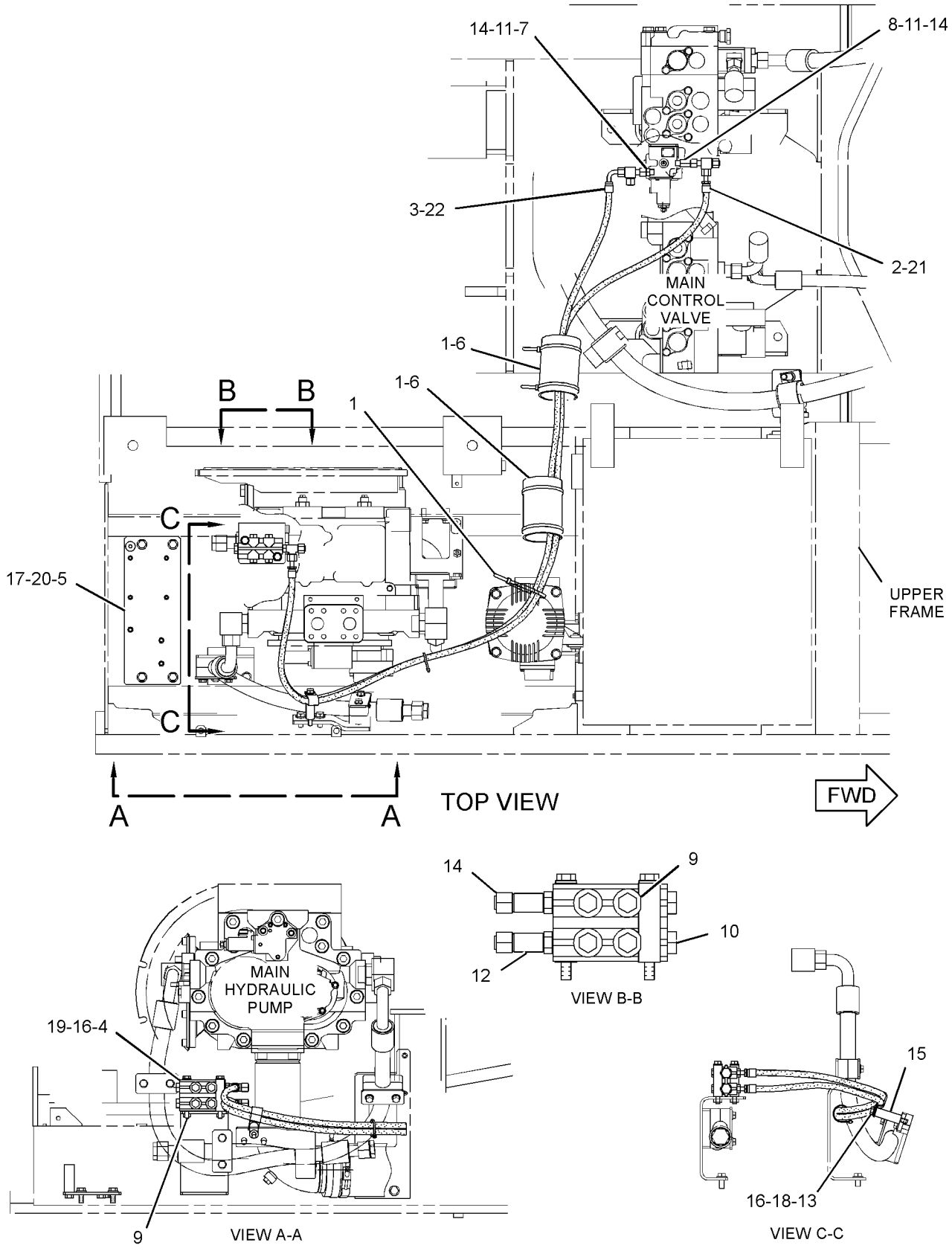

GRAPHIC #1 **<END>** g01342428

HYDRAULIC SYSTEM

260-7866 LINES GP-PILOT–TRAVEL

S/N: MYG1-UP; PPN1-UP

PART OF 259-7410, 259-7411 HYDRAULIC AR

SMCS-5057, 5059 **i03712982**

NOTE	REF NO	GRAPHIC REF	PART NUMBER	QTY	PART NAME 1 2 3 4 5 6 (PRODUCT LEVEL)	SEE PAGE
I	1	1	**4I-0716**	1	HOSE AS	
I	2	1	**4I-3511**	1	HOSE AS	
I	3	1	**4I-6030**	1	HOSE AS	
I	4	1	**4I-8799**	2	HOSE AS	
	5	1	**4I-9521**	6	BAND-MARKER (RED, L1)	
	6	1	**4I-9522**	6	BAND-MARKER (YELLOW, L2)	
	7	1	**4I-9523**	2	BAND-MARKER (BLUE, L3)	
	8	1	**4I-9524**	2	BAND-MARKER (BROWN, L4)	
	9	1	**4I-9525**	6	BAND-MARKER (ORANGE, R1)	
	10	1	**4I-9526**	6	BAND-MARKER (WHITE, R2)	
	11	1	**4I-9527**	2	BAND-MARKER (GREEN, R3)	
	12	1	**4I-9528**	2	BAND-MARKER (PURPLE, R4)	
	13	1	**7K-1181**	14	STRAP-CABLE	
I	14	1	**7Y-4387**	1	HOSE AS	
I	15	1	**7Y-4399**	1	HOSE AS	
I	16	1	**108-7203**	1	HOSE AS	
I	17	1	**172-0907**	1	HOSE AS	
	18	1	**176-4708**	1	GROMMET	
I	19	1	**218-1059**	2	HOSE AS	
I	20	1	**223-6768**	1	HOSE AS	
	21	1	**115-8645**	3	GUARD	
	22	1	*148-8378*	5	ELBOW AS	
					(EACH INCLUDES)	
		1	**3J-1907**	1	SEAL-O-RING	
		1	**6V-8397**	1	SEAL-O-RING	
		1	**6V-8724**	1	ELBOW	
	23	1	*148-8435*	6	TEE AS	
					(EACH INCLUDES)	
		1	**3J-1907**	1	SEAL-O-RING	
		1	**6V-8397**	2	SEAL-O-RING	
		1	**6V-8781**	1	TEE-FACE SEAL	
	24	1	**176-4746**	1	GROMMET	
	25	1	**337-1205**	2	GROMMET	
J	26	1	**337-1205**	1	GROMMET	

I-REFER TO HYDRAULIC INFORMATION SYSTEM
J-FOR USE ON D-ROPS MODEL 336D

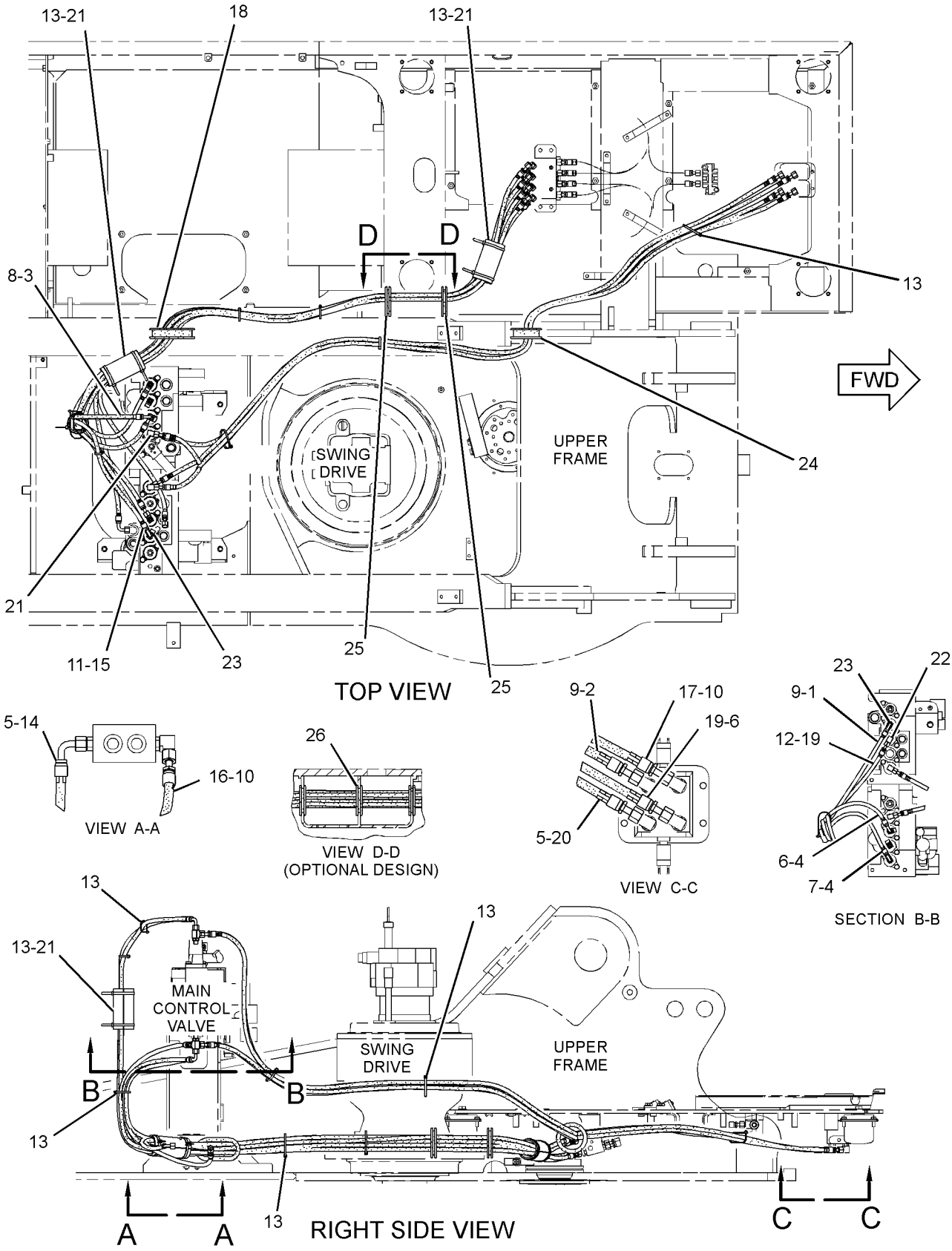

GRAPHIC #1 **<END>** g02000034

HYDRAULIC SYSTEM

260-7867 LINES GP-PILOT—CONTROL VALVE

S/N: MYG1-UP; PPN1-UP

PART OF 259-7410, 259-7411 HYDRAULIC AR

SMCS-5057, 5059 **i03684320**

NOTE	REF NO	GRAPHIC REF	PART NUMBER	QTY	PART NAME 1 2 3 4 5 6 (PRODUCT LEVEL)	SEE PAGE
I	1	2	**4I-0821**	1	HOSE AS	
I	2	2	**4I-0836**	1	HOSE AS	
I	3	2	**4I-1739**	1	HOSE AS	
I	4	2	**4I-5900**	1	HOSE AS	
I	5	2	**4I-5906**	1	HOSE AS	
	6	2	**4I-9521**	4	BAND-MARKER (RED, L1)	
	7	1,2	**4I-9522**	6	BAND-MARKER (YELLOW, L2)	
	8	1,2	**4I-9523**	4	BAND-MARKER (BLUE, L3)	
	9	1,2	**4I-9524**	6	BAND-MARKER (BROWN, L4)	
	10	2	**4I-9525**	2	BAND-MARKER (ORANGE, R1)	
	11	2	**4I-9526**	2	BAND-MARKER (WHITE, R2)	
	12	2	**4I-9527**	4	BAND-MARKER (GREEN, R3)	
	13	2,3	**4I-9528**	4	BAND-MARKER (PURPLE, R4)	
I	14	3	**5I-4396**	1	HOSE AS	
I	15	2	**5I-8708**	1	HOSE AS	
	16	1,2	**7K-1181**	19	STRAP-CABLE	
I	17	1,2	**7Y-4199**	2	HOSE AS	
I	18	2	**7Y-7955**	1	HOSE AS	
I	19	2	**102-1157**	1	HOSE AS	
I	20	2	**087-4411**	1	HOSE AS	
I	21	3	**087-4441**	1	HOSE AS	
I	22	2	**087-4531**	3	HOSE AS	
I	23	2	**087-4534**	1	HOSE AS	
I	24	2	**087-5760**	1	HOSE AS	
I	25	2	**087-5762**	1	HOSE AS	
I	26	2	**087-5765**	1	HOSE AS	
I	27	2	**087-5772**	1	HOSE AS	
I	28	1	**087-5773**	1	HOSE AS	
I	29	2	**087-5774**	2	HOSE AS	
I	31	3	**104-8838**	1	HOSE AS	
	32	2	**104-8903**	1	GUARD	
I	33	2	**104-8950**	1	HOSE AS	
I	34	2	**110-5496**	1	HOSE AS	
Y	35	3	**310-0210**	1	VALVE GP-PRESSURE REDUCING (BOOM, SWING PRIORITY)	676
I	36	2	**143-4254**	2	HOSE AS	
	37	2	*285-1399*	1	CONNECTOR AS	
		2	**285-1465**	1	CONNECTOR	
		2	**6V-8397**	1	SEAL-O-RING	
		2	**3J-1907**	1	SEAL-O-RING	
Y	38	3	*164-6981*	1	ACCUMULATOR GP-HYDRAULIC (CHARGED)	405
I	39	2	**164-8977**	1	HOSE AS	
I	40	2	**164-8983**	1	HOSE AS	
	41	3	**176-4463**	1	PLATE	
	42	3	**176-4469**	1	BLOCK	
I	43	3	**176-4755**	1	HOSE AS	
I	44	3	**184-9593**	1	HOSE AS	
I	45	2	**184-9595**	1	HOSE AS	
I	46	2	**4I-6121**	1	HOSE AS	
	47	2	**176-4708**	1	GROMMET	
	48	3	**206-3354**	1	VALVE GP-PRESSURE REDUCING (BOOM UP PRIORITY)	
		3	**6V-8398**	1	SEAL-O-RING	
		3	**095-1586**	1	SEAL-O-RING	
		3	**095-1750**	1	SEAL-O-RING	
		3	**095-1751**	1	SEAL-O-RING	
I	49	2	**207-6418**	1	HOSE AS	

260-7867 **LINES GP-PILOT** *(contd.)* **i03684320**

NOTE	REF NO	GRAPHIC REF	PART NUMBER	QTY	PART NAME 1 2 3 4 5 6 (PRODUCT LEVEL)	SEE PAGE
I	50	1	**302-3208**	2	HOSE AS	
Y	51	3	**215-5037**	1	MANIFOLD GP-CONTROL (PILOT OIL SUPPLY)	589
Y	52	3	**232-4102**	1	VALVE GP-PRESSURE REDUCING (BOOM, SWING PRIORITY)	675
	53	2	*239-9097*	1	PLUG AS	
		2	**3J-1907**	1	SEAL-O-RING	
		2	**239-9117**	1	PLUG	
	54	2	*239-9098*	1	PLUG AS	
		2	**3J-1907**	1	SEAL-O-RING	
		2	**239-9118**	1	PLUG	
I	55	2	**275-1624**	1	HOSE AS	
I	56	2	**330-2316**	1	HOSE AS	
I	57	2	**282-7569**	1	HOSE AS	
M	58	3	**099-3649**	2	BOLT (M8X1.25X40-MM)	
	59	2	**103-1384**	1	GUARD	
M	60	3	**105-3484**	2	BOLT-SOCKET HEAD (M10X1.5X25-MM)	
CY	61	3	**164-6979**	1	VALVE GP-SHUTTLE	695
	62	2,3	*148-8336*	11	CONNECTOR AS	
					(EACH INCLUDES)	
		2,3	**3J-1907**	1	SEAL-O-RING	
		2,3	**6V-8397**	1	SEAL-O-RING	
		2,3	**6V-8636**	1	CONNECTOR	
	63	3	*148-8340*	3	CONNECTOR AS	
					(EACH INCLUDES)	
		3	**3K-0360**	1	SEAL-O-RING	
		3	**6V-8398**	1	SEAL-O-RING	
		3	**6V-8639**	1	CONNECTOR	
	64	2,3	*148-8353*	5	ELBOW AS	
					(EACH INCLUDES)	
		2,3	**3J-1907**	1	SEAL-O-RING	
		2,3	**6V-8397**	1	SEAL-O-RING	
		2,3	**6V-9001**	1	ELBOW	
	65	3	*148-8354*	1	ELBOW AS	
		3	**3K-0360**	1	SEAL-O-RING	
		3	**6V-8398**	1	SEAL-O-RING	
		3	**6V-9002**	1	ELBOW	
	66	3	*148-8364*	2	ELBOW AS	
					(EACH INCLUDES)	
		3	**3K-0360**	1	SEAL-O-RING	
		3	**6V-8398**	1	SEAL-O-RING	
		3	**6V-8625**	1	ELBOW	
	67	2,3	*148-8367*	2	ELBOW AS	
					(EACH INCLUDES)	
		2,3	**6V-8397**	1	SEAL-O-RING	
		2,3	**6V-9850**	1	ELBOW	
	68	1,2,3	*148-8378*	14	ELBOW AS	
					(EACH INCLUDES)	
		1,2,3	**3J-1907**	1	SEAL-O-RING	
		1,2,3	**6V-8397**	1	SEAL-O-RING	
		1,2,3	**6V-8724**	1	ELBOW	
	69	3	*148-8407*	3	PLUG AS	
					(EACH INCLUDES)	
		3	**3J-1907**	1	SEAL-O-RING	
		3	**9S-4191**	1	PLUG-O-RING	
	70	2,3	*148-8433*	4	TEE AS	
					(EACH INCLUDES)	
		2,3	**6V-8397**	2	SEAL-O-RING	
		2,3	**6V-9836**	1	TEE-SWIVEL	
	71	2,3	*148-8435*	6	TEE AS	
					(EACH INCLUDES)	

260-7867 **LINES GP-PILOT** *(contd.)* **i03684320**

NOTE	REF NO	GRAPHIC REF	PART NUMBER	QTY	PART NAME 1 2 3 4 5 6 (PRODUCT LEVEL)	SEE PAGE
		2,3	**3J-1907**	1	SEAL-O-RING	
		2,3	**6V-8397**	2	SEAL-O-RING	
		2,3	**6V-8781**	1	TEE-FACE SEAL	
	72	2	*148-8439*	2	TEE AS	
					(EACH INCLUDES)	
		2	**3J-1907**	1	SEAL-O-RING	
		2	**6V-8397**	2	SEAL-O-RING	
		2	**6V-8774**	1	TEE	
	73	2,3	*150-4044*	4	CONNECTOR AS	
					(EACH INCLUDES)	
		2,3	**3J-1907**	1	SEAL-O-RING	
		2,3	**6V-8397**	1	SEAL-O-RING	
		2,3	**8T-1779**	1	CONNECTOR	
	74	2	*164-5608*	1	CONNECTOR AS	
		2	**3K-0360**	1	SEAL-O-RING	
		2	**6V-8398**	1	SEAL-O-RING	
		2	**8T-1687**	1	CONNECTOR	
	75	1	**3G-8054**	1	CLIP (TAB)	
	76	1	**3G-8057**	1	CLIP (SLOT)	
	77	1	**4K-8864**	1	CLIP	
	78	1	**5P-7462**	1	CLIP (SLOT)	
	79	1	**5P-7463**	1	CLIP (TAB)	
	80	1	**6V-0683**	1	GROMMET	
	81	1	**6V-0974**	1	GROMMET	
C	82	2,3	**6V-8397**	2	SEAL-O-RING	
	83	1,3	**8T-4121**	11	WASHER-HARD (11X21X2.5-MM THK)	
M	84	1	**8T-4136**	1	BOLT (M10X1.5X25-MM)	
M	85	3	**8T-4137**	4	BOLT (M10X1.5X20-MM)	
M	86	3	**8T-4172**	4	BOLT (M10X1.5X80-MM)	
M	87	3	**8T-4192**	3	BOLT (M12X1.75X25-MM)	
M	88	1	**8T-4195**	2	BOLT (M10X1.5X30-MM)	
M	89	3	**8T-4200**	2	BOLT (M8X1.25X16-MM)	
	90	3	**8T-4223**	3	WASHER-HARD (13.5X25.5X3-MM THK)	
	91	3	**8T-4224**	2	WASHER-HARD (8.8X16X2-MM THK)	
	92	1	**282-7092**	2	GROMMET	

C-CHANGE FROM PREVIOUS TYPE
I-REFER TO HYDRAULIC INFORMATION SYSTEM
M-METRIC PART
Y-SEPARATE ILLUSTRATION

REFER TO ALL ILLUSTRATIONS OF
THIS GROUP FOR AUXILIARY VIEWS

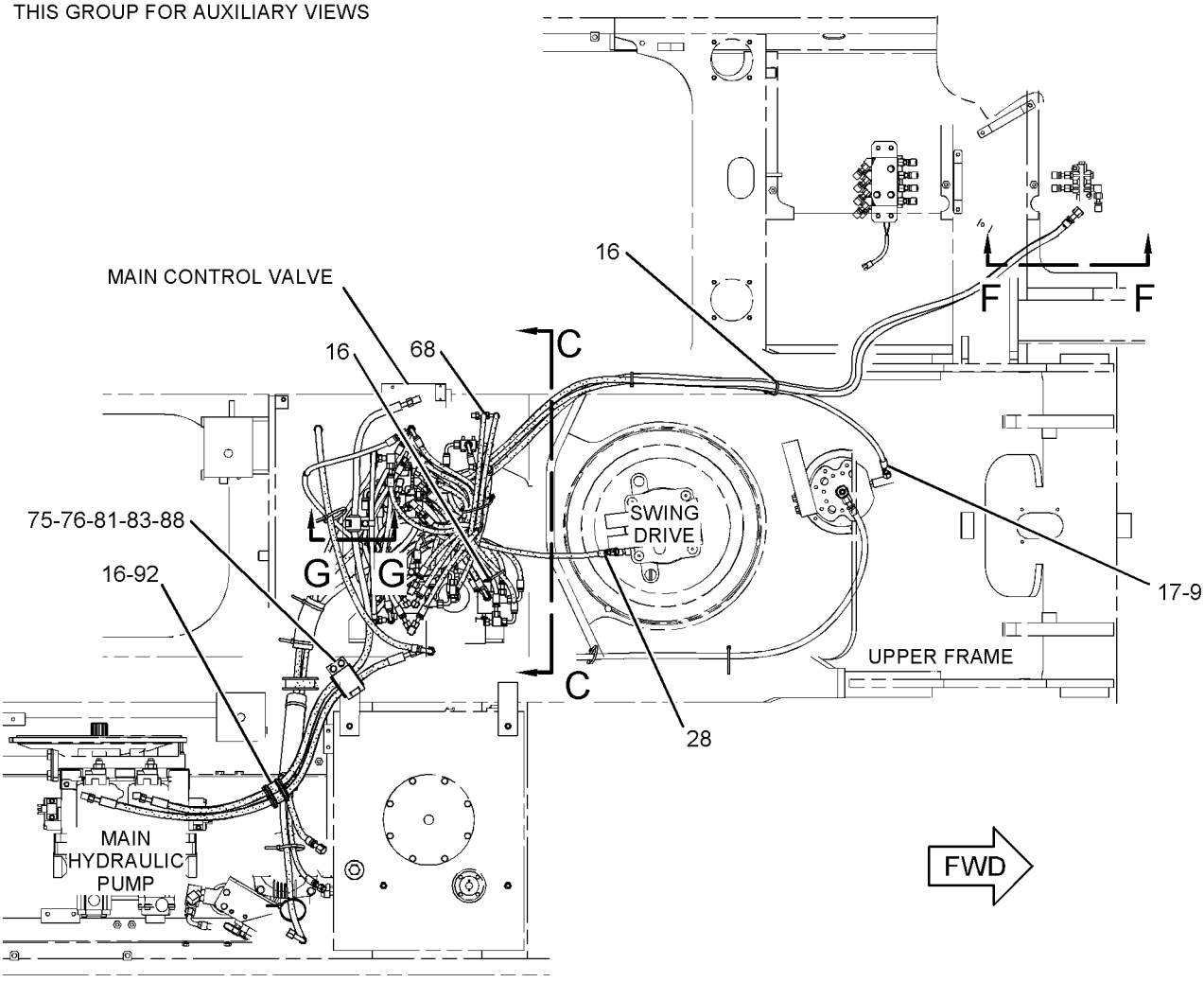

TOP VIEW

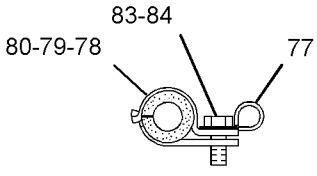

SECTION G-G

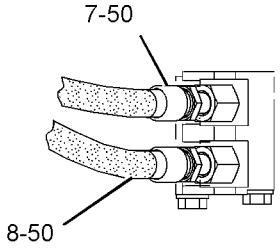

VIEW F-F

GRAPHIC #1

g01566433

260-7867 **LINES GP-PILOT** *(contd.)* **i03684320**

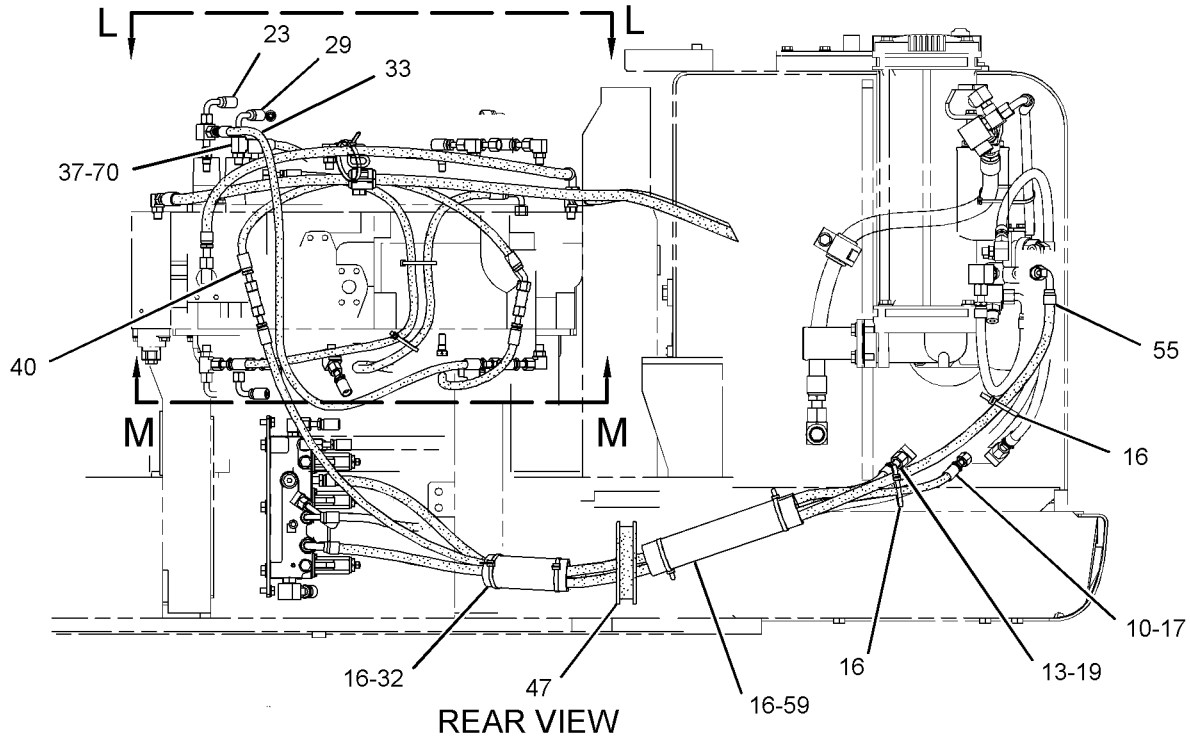

REAR VIEW

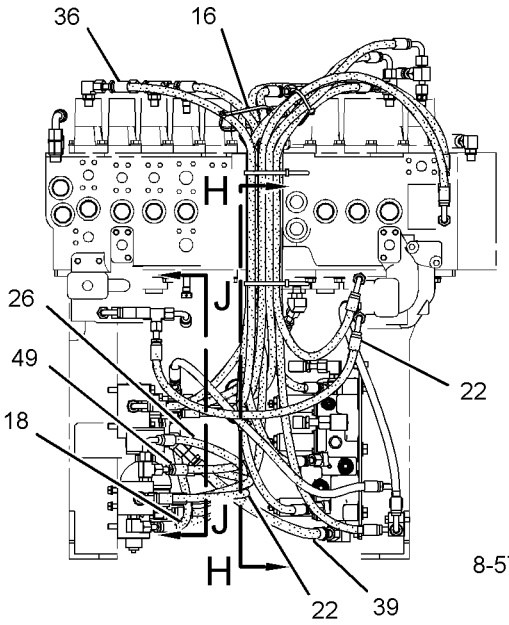

SECTION C-C

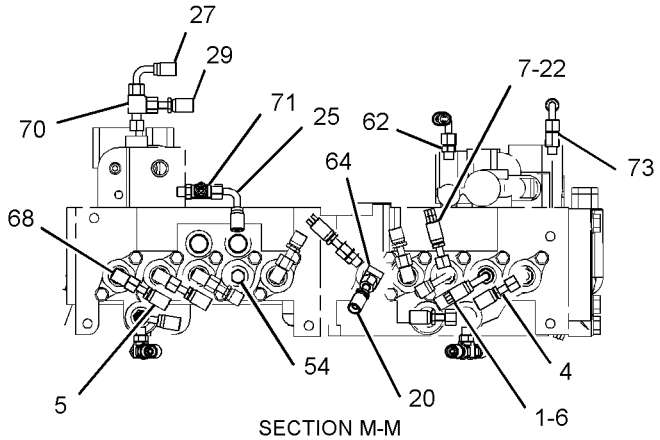

SECTION M-M

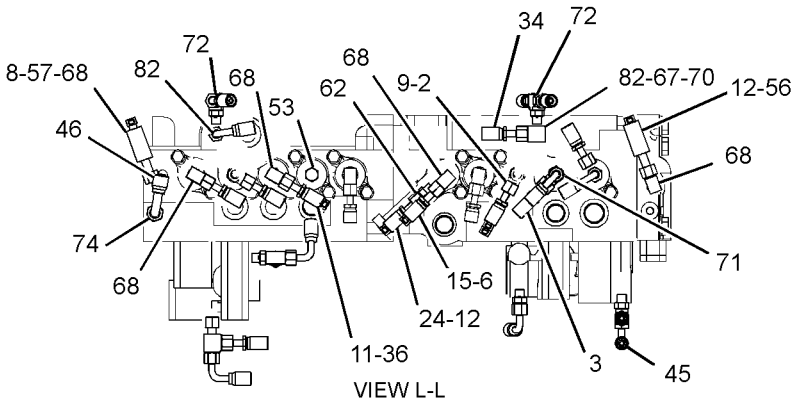

VIEW L-L

REFER TO ALL ILLUSTRATIONS OF THIS GROUP FOR AUXILIARY VIEWS

GRAPHIC #2

g01564733

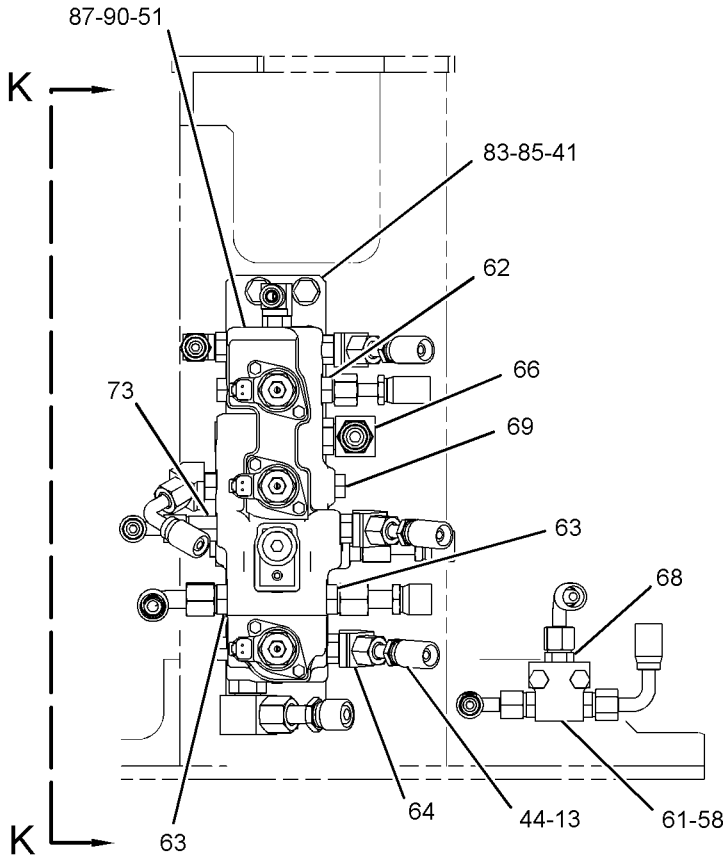

SECTION H-H

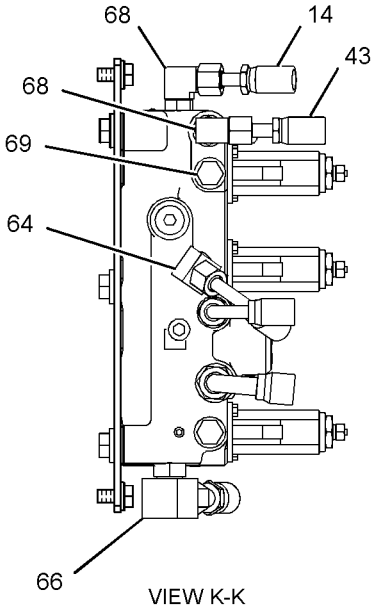

VIEW K-K

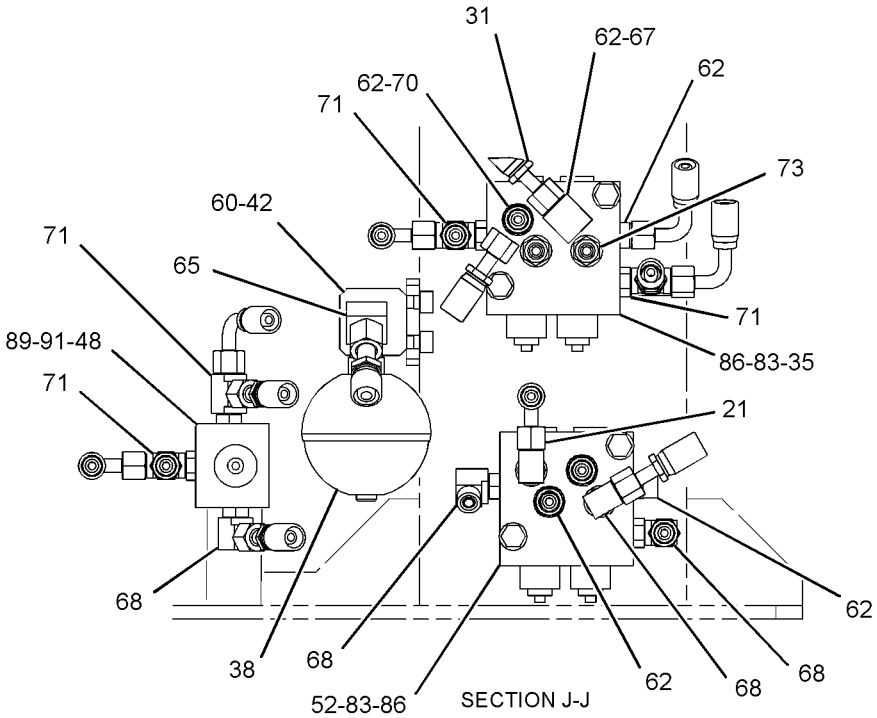

SECTION J-J

GRAPHIC #3

<END>

g01983356

HYDRAULIC SYSTEM

275-1495 LINES GP-PILOT–CAB

S/N: MYG1-UP; PPN1-UP
PART OF 346-4449 CONTROL AR-BOOM
AN ATTACHMENT

SMCS-5057, 5059 **i02392107**

NOTE	REF NO	GRAPHIC REF	PART NUMBER	QTY	PART NAME 1 2 3 4 5 6 (PRODUCT LEVEL)	SEE PAGE
	1	1	**123-2431**	1	BODY-VALVE	
	2	1	**260-8145**	1	BRACKET AS	
	3	1	*148-8336*	1	CONNECTOR AS	
		1	**3J-1907**	1	SEAL-O-RING	
		1	**6V-8397**	1	SEAL-O-RING	
		1	**6V-8636**	1	CONNECTOR	
	4	1	*148-8353*	1	ELBOW AS	
		1	**3J-1907**	1	SEAL-O-RING	
		1	**6V-8397**	1	SEAL-O-RING	
		1	**6V-9001**	1	ELBOW	
	5	1	*148-8378*	1	ELBOW AS	
		1	**3J-1907**	1	SEAL-O-RING	
		1	**6V-8397**	1	SEAL-O-RING	
		1	**6V-8724**	1	ELBOW	
	6	1	*148-8407*	1	PLUG AS	
		1	**3J-1907**	1	SEAL-O-RING	
		1	**9S-4191**	1	PLUG-O-RING	
	7	1	*150-3033*	1	ELBOW AS	
		1	**3J-1907**	1	SEAL-O-RING	
		1	**4J-5477**	1	SEAL-O-RING	
		1	**8T-0164**	1	ELBOW	
M	8	1	**7X-0818**	2	BOLT (M8X1.25X45-MM)	
	9	1	**8T-4121**	2	WASHER-HARD (11X21X2.5-MM THK)	
M	10	1	**8T-4136**	2	BOLT (M10X1.5X25-MM)	
	11	1	**8T-4224**	2	WASHER-HARD (8.8X16X2-MM THK)	

M-METRIC PART

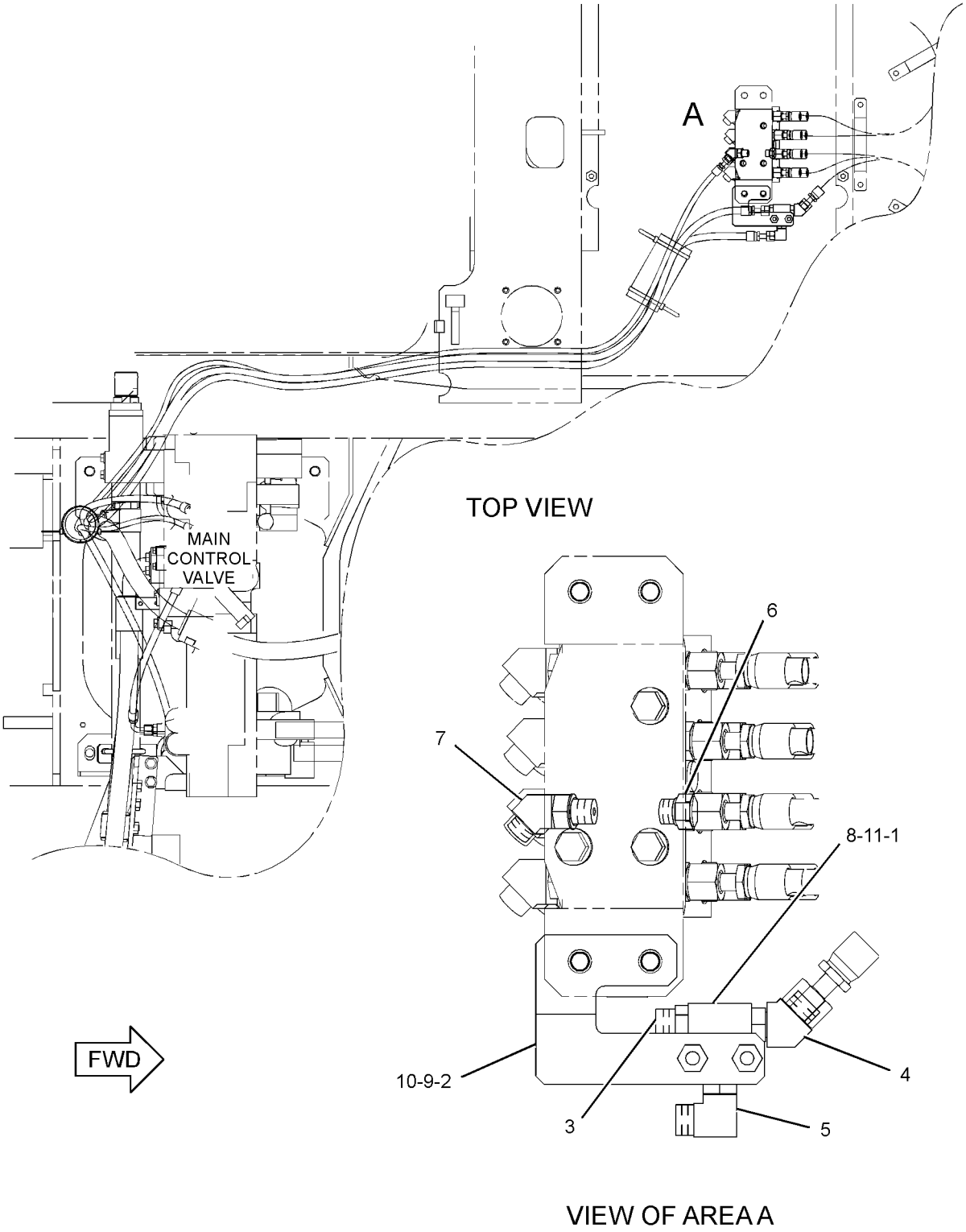

GRAPHIC #1 **<END>** g01206540

HYDRAULIC SYSTEM

307-5106 LINES GP-PILOT—MAIN PUMP

S/N: MYG1-UP; PPN1-UP

PART OF 259-7410, 259-7411 HYDRAULIC AR

SMCS-5057, 5059 **i03650062**

NOTE	REF NO	GRAPHIC REF	PART NUMBER	QTY	PART NAME 1 2 3 4 5 6 (PRODUCT LEVEL)	SEE PAGE
	1	1	**6V-0852**	4	CAP-DUST	
	2	1	*148-8347*	1	ELBOW AS	
		1	**3D-2824**	1	SEAL-O-RING	
		1	**6V-9007**	1	ELBOW	
		1	**6V-9746**	1	SEAL-O-RING	
	3	1	*164-6874*	1	FITTING AS-ELBOW	
		1	**3J-1907**	1	SEAL-O-RING	
		1	**085-7356**	1	FITTING	
	4	1	**221-8912**	2	FLANGE	
	5	1	**260-2180**	2	SENSOR AS-PRESSURE (PUMP CONTROL)	
					(EACH INCLUDES)	
		1	**095-1777**	1	RING-BACKUP	
		1	**260-2191**	1	SEAL-O-RING	
I	6	1	**269-9714**	1	HOSE AS	
	7	1	**282-7050**	1	HOSE AS	
	9	1	*148-8372*	1	ELBOW AS	
		1	**2M-9780**	1	SEAL-O-RING	
		1	**6V-8398**	1	SEAL-O-RING	
		1	**6V-8721**	1	ELBOW	
	10	1	*148-8378*	2	ELBOW AS	
					(EACH INCLUDES)	
		1	**3J-1907**	1	SEAL-O-RING	
		1	**6V-8397**	1	SEAL-O-RING	
		1	**6V-8724**	1	ELBOW	
	11	1	*326-4405*	1	CONNECTOR AS	
		1	**3J-1907**	1	SEAL-O-RING	
		1	**6V-8398**	1	SEAL-O-RING	
		1	**141-7251**	1	CONNECTOR-FILTER	
	12	1	*164-5567*	4	COUPLER AS-QUICK DISCONNECT	
					(EACH INCLUDES)	
		1	**3J-1907**	1	SEAL-O-RING	
		1	**6V-3965**	1	FITTING (QUICK DISCONNECT)	
C	14	1	**275-1740**	1	CLIP (SLOT)	
C	15	1	**275-1739**	1	CLIP (TAB)	
C	16	1	**333-7059**	1	GROMMET	
	18	1	**8T-4121**	1	WASHER-HARD (11X21X2.5-MM THK)	
M	19	1	**8T-4189**	4	BOLT (M8X1.25X20-MM)	
CM	20	1	**8T-4136**	1	BOLT (M10X1.5X25-MM)	
	21	1	**8T-4224**	4	WASHER-HARD (8.8X16X2-MM THK)	

C-CHANGE FROM PREVIOUS TYPE
I-REFER TO HYDRAULIC INFORMATION SYSTEM
M-METRIC PART

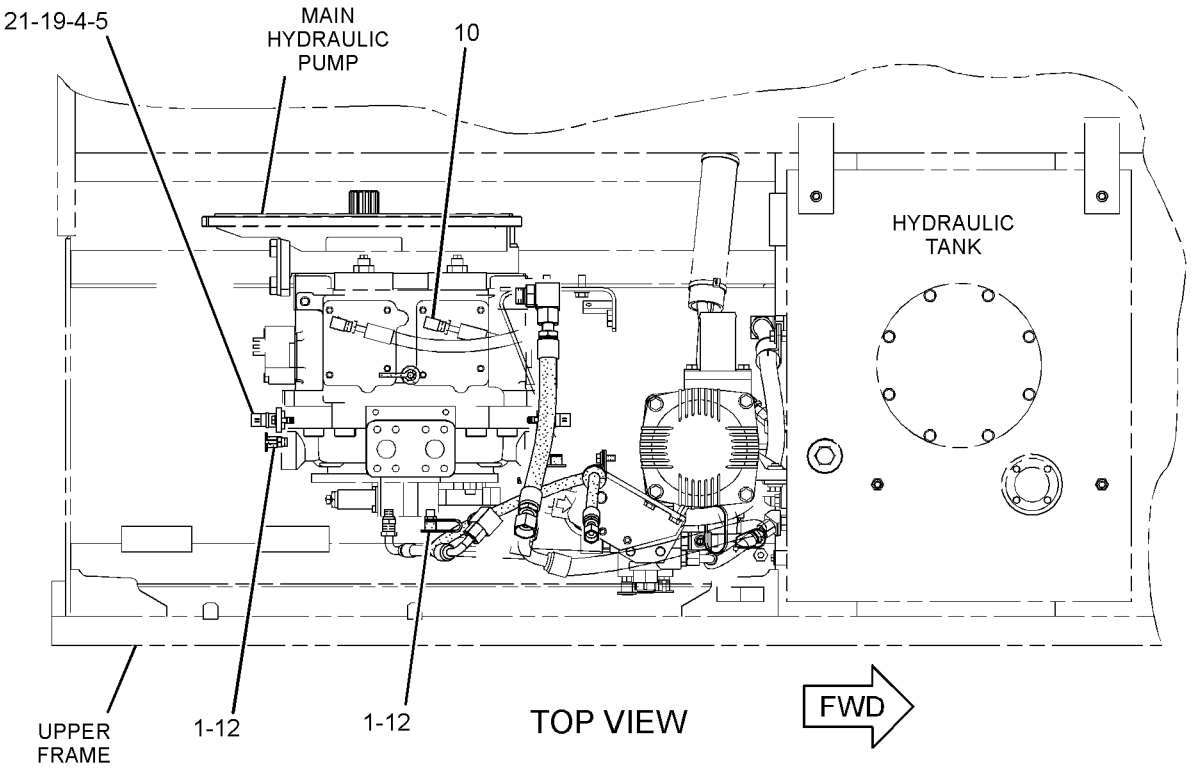

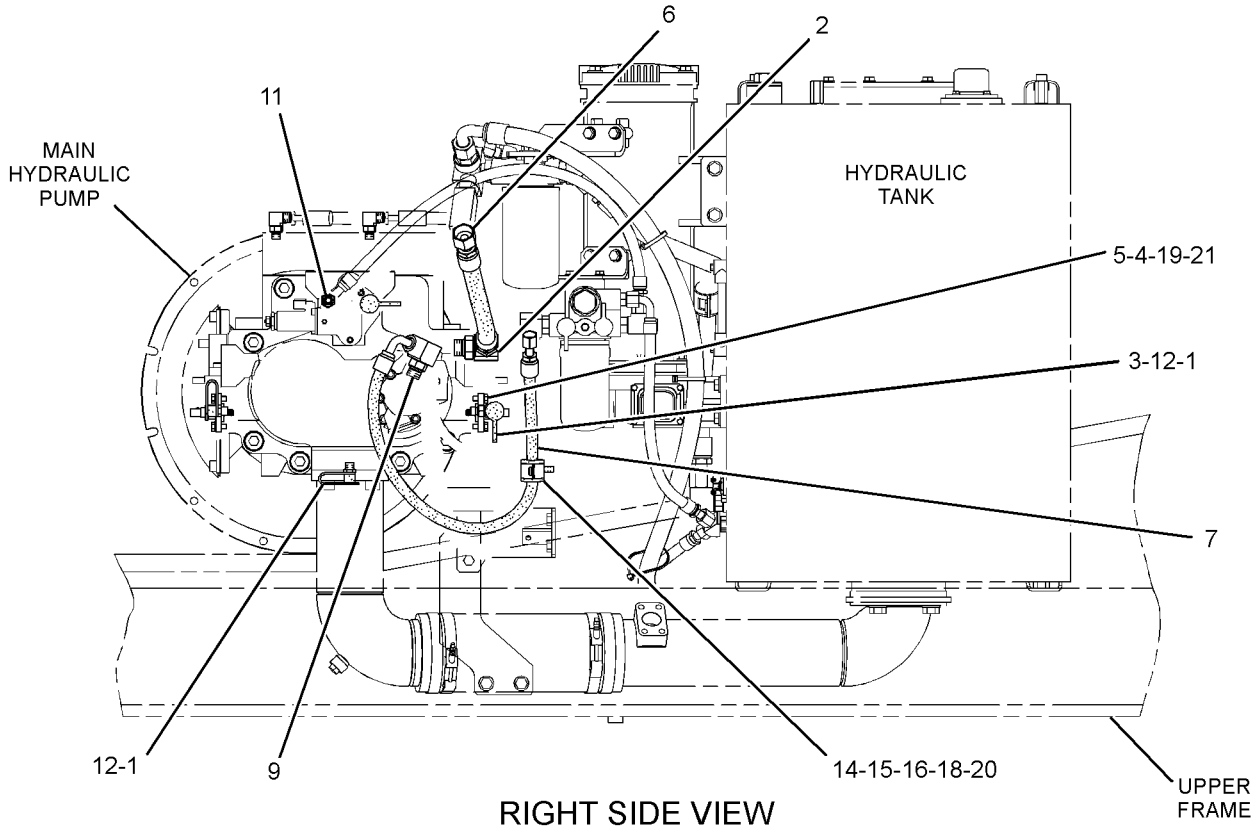

GRAPHIC #1 **<END>** g01967175

HYDRAULIC SYSTEM

260-7862 LINES GP-PUMP—1-PUMP/2-PUMP, 1-WAY FLOW

S/N: MYG1-UP; PPN1-UP
PART OF 255-5822 CONTROL AR-AUXILIARY
AN ATTACHMENT

SMCS-5057 **i02985160**

NOTE	REF NO	GRAPHIC REF	PART NUMBER	QTY	PART NAME 1 2 3 4 5 6 (PRODUCT LEVEL)	SEE PAGE
	1	2	**4I-7889**	1	SPACER (11X25X45-MM THK)	
	2	2	**126-1913**	1	PLATE	
	3	2	**131-9750**	1	SCREEN AS (HYDRAULIC TANK)	
M	4	2	**170-8553**	4	BOLT-SOCKET HEAD (M12X1.75X40-MM)	
	5	2	**260-7840**	1	FLANGE	
	6	1	**260-7841**	1	GROMMET	
	7	1	**260-7842**	1	SUPPORT AS-PUMP	
I	8	2	**260-7845**	1	HOSE AS	
I	9	2	**319-9771**	1	HOSE AS	
I	10	1	**260-7956**	1	HOSE AS	
	11	1	*148-8327*	1	CONNECTOR AS	
		1	**3D-2824**	1	SEAL-O-RING	
		1	**6V-8637**	1	CONNECTOR	
		1	**6V-9746**	1	SEAL-O-RING	
	12	1	*148-8339*	1	CONNECTOR AS	
		1	**6V-8716**	1	CONNECTOR	
		1	**6V-9746**	1	SEAL-O-RING	
		1	**7M-8485**	1	SEAL-O-RING	
	13	2	*148-8360*	1	ELBOW AS	
		2	**6V-9182**	1	ELBOW	
		2	**6V-9746**	1	SEAL-O-RING	
		2	**7M-8485**	1	SEAL-O-RING	
	14	2	**1P-4578**	4	FLANGE-HALF	
	15	1	**275-1680**	1	FLANGE	
	16	2	**4J-0522**	3	SEAL-O-RING	
	17	2	**4J-0527**	1	SEAL-O-RING	
	18	1	**5I-8748**	1	SPACER (11X18X5-MM THK)	
	19	1	**5P-1075**	1	WASHER-HARD (10.2X22.5X3-MM THK)	
	20	1,2	**5P-7468**	3	CLIP (SLOT)	
	21	1,2	**5P-7469**	3	CLIP (TAB)	
	22	1	**5P-7470**	1	CLIP (SLOT)	
	23	1	**5P-7471**	1	CLIP (TAB)	
	24	1	**5P-8182**	1	GROMMET	
	25	1,2	**6V-1874**	3	GROMMET	
	26	2	**6V-6707**	1	SEAL-O-RING	
M	27	2	**8T-5005**	5	BOLT (M10X1.5X70-MM)	
	28	1	*106-8715*	1	ELBOW AS	
		1	**3D-2824**	1	SEAL-O-RING	
		1	**6V-9746**	1	SEAL-O-RING	
		1	**8C-8400**	1	ELBOW	
	29	1,2	**8T-4121**	16	WASHER-HARD (11X21X2.5-MM THK)	
M	30	1,2	**8T-4136**	7	BOLT (M10X1.5X25-MM)	
M	31	1	**8T-4139**	1	BOLT (M12X1.75X30-MM)	
M	32	1	**8T-4192**	1	BOLT (M12X1.75X25-MM)	
M	33	1	**8T-4195**	1	BOLT (M10X1.5X30-MM)	
M	34	2	**8T-4196**	4	BOLT (M10X1.5X35-MM)	
	35	1	**8T-4223**	2	WASHER-HARD (13.5X25.5X3-MM THK)	

I-REFER TO HYDRAULIC INFORMATION SYSTEM
M-METRIC PART

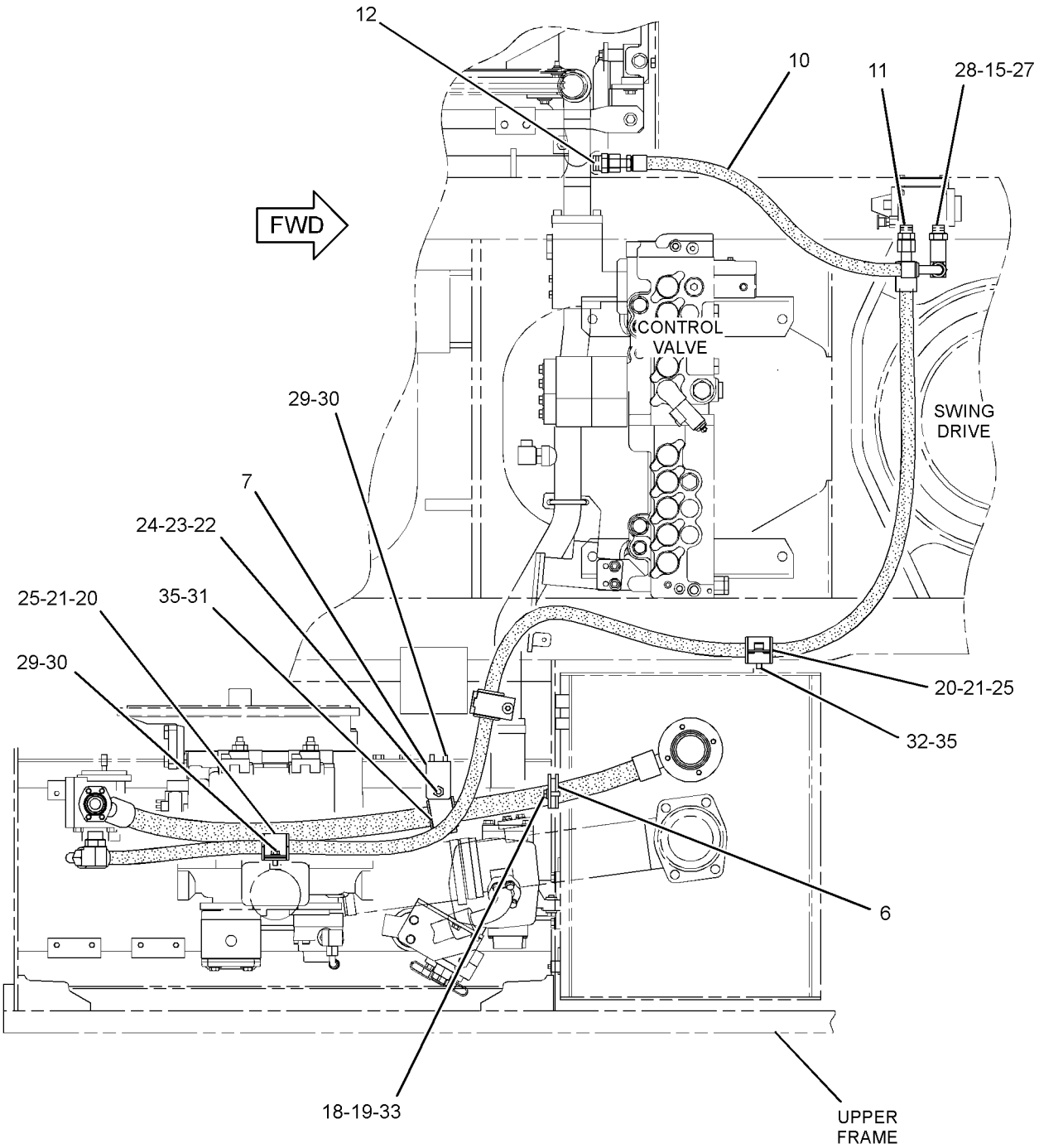

TOP VIEW

GRAPHIC #1

g01203387

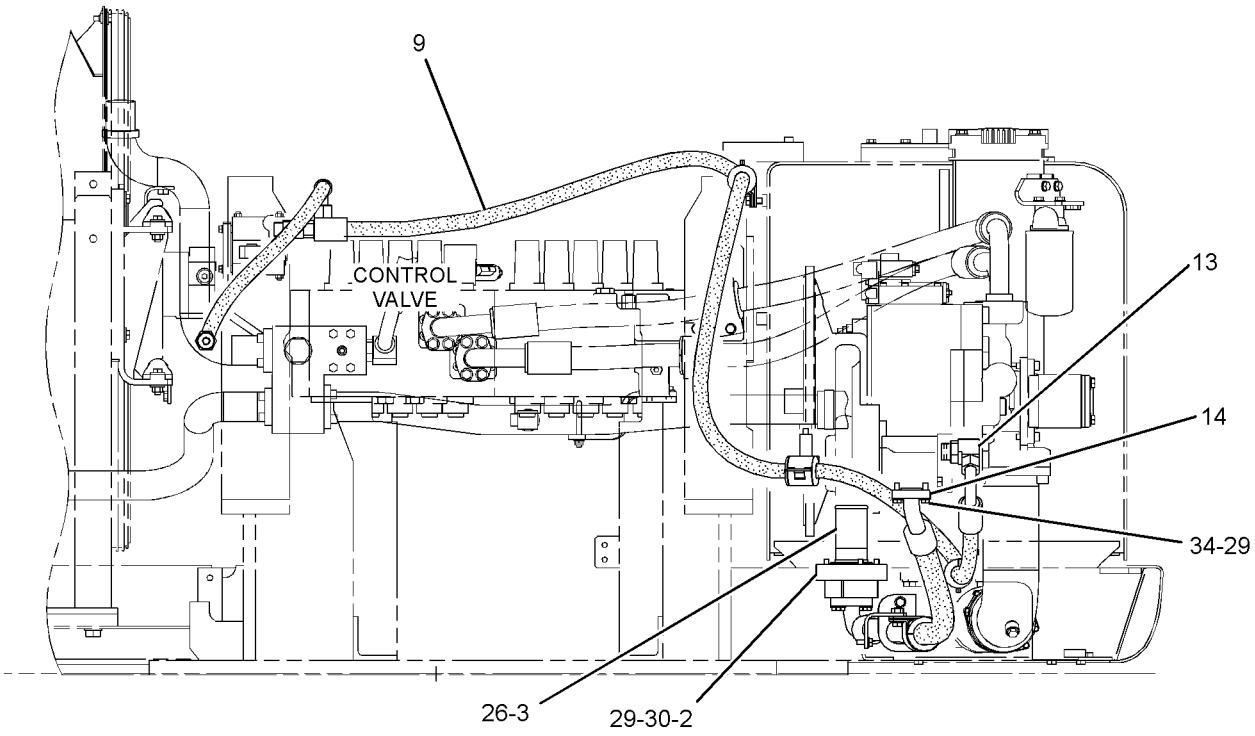

REAR VIEW

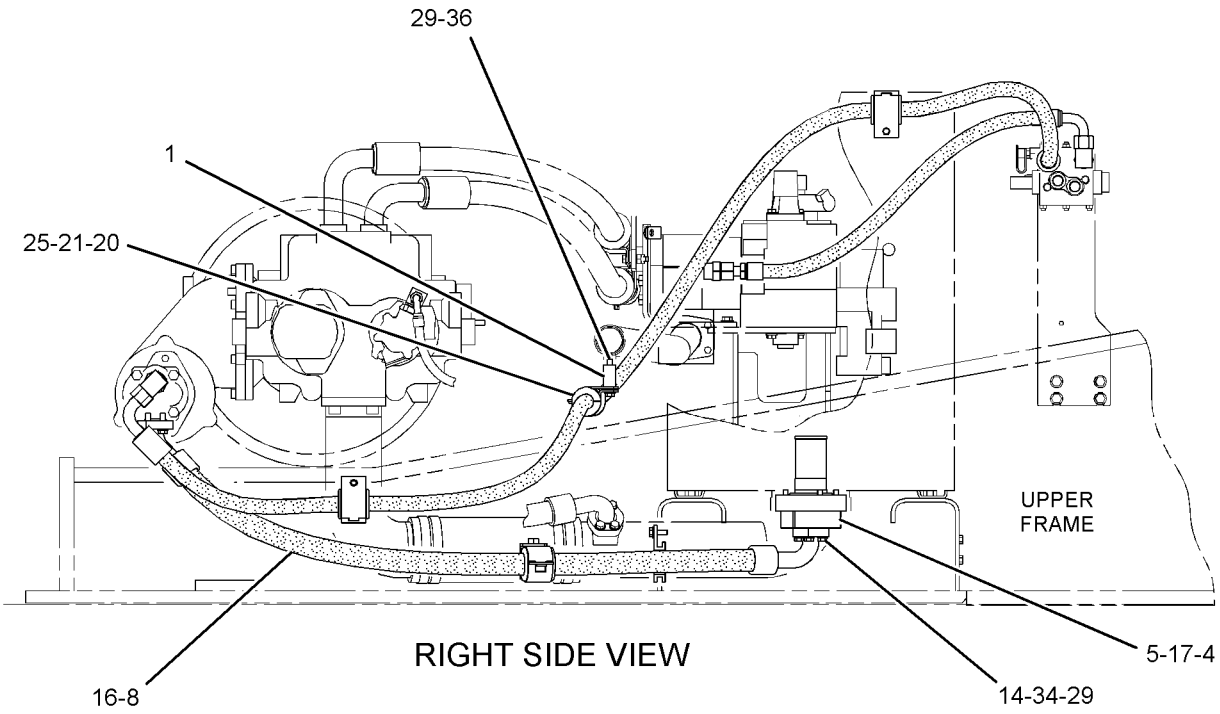

RIGHT SIDE VIEW

GRAPHIC #2 **<END>** g01203834

HYDRAULIC SYSTEM

260-7864 LINES GP-PUMP–HYDRAULIC OIL COOLER

S/N: MYG1-UP; PPN1-UP
PART OF 255-5823 PUMP & LINES GP-COOLING
AN ATTACHMENT

SMCS-5057 **i02480204**

NOTE	REF NO	GRAPHIC REF	PART NUMBER	QTY	PART NAME 1 2 3 4 5 6 (PRODUCT LEVEL)	SEE PAGE
	1	1	**4I-7889**	1	SPACER (11X25X45-MM THK)	
	2	1	**126-1913**	1	PLATE	
	3	1	**131-9750**	1	SCREEN AS (HYDRAULIC TANK)	
M	4	1	**170-8553**	4	BOLT-SOCKET HEAD (M12X1.75X40-MM)	
	5	1	*275-1722*	1	ELBOW GP	
		1	**2S-4078**	1	SEAL-O-RING	
		1	**5K-9090**	1	SEAL-O-RING	
		1	**255-2024**	1	ELBOW	
	6	1	**260-7840**	1	FLANGE	
	7	1	**260-7841**	1	GROMMET	
	8	1	**260-7842**	1	SUPPORT AS-PUMP	
I	9	1	**260-7845**	1	HOSE AS	
I	10	1	**266-1029**	1	HOSE AS	
	11	1	*148-8357*	1	ELBOW AS	
		1	**5K-9090**	1	SEAL-O-RING	
		1	**6V-9008**	1	ELBOW	
		1	**7M-8485**	1	SEAL-O-RING	
	12	1	**1P-4578**	4	FLANGE-HALF	
	13	1	**275-1680**	1	FLANGE	
	14	1	**4J-0522**	3	SEAL-O-RING	
	15	1	**4J-0527**	1	SEAL-O-RING	
	16	1	**5I-8748**	1	SPACER (11X18X5-MM THK)	
M	17	1	**8T-5005**	5	BOLT (M10X1.5X70-MM)	
	18	1	**5P-1075**	1	WASHER-HARD (10.2X22.5X3-MM THK)	
	19	1	**5P-7468**	2	CLIP (SLOT)	
	20	1	**5P-7469**	2	CLIP (TAB)	
	21	1	**5P-7470**	1	CLIP (SLOT)	
	22	1	**5P-7471**	1	CLIP (TAB)	
	23	1	**5P-8182**	1	GROMMET	
	24	1	**6V-0545**	2	GROMMET	
	25	1	**6V-6707**	1	SEAL-O-RING	
	26	1	**8T-4121**	16	WASHER-HARD (11X21X2.5-MM THK)	
M	27	1	**8T-4136**	7	BOLT (M10X1.5X25-MM)	
M	28	1	**8T-4139**	1	BOLT (M12X1.75X30-MM)	
M	29	1	**8T-4195**	1	BOLT (M10X1.5X30-MM)	
M	30	1	**8T-4196**	4	BOLT (M10X1.5X35-MM)	
	31	1	**8T-4223**	1	WASHER-HARD (13.5X25.5X3-MM THK)	

I-REFER TO HYDRAULIC INFORMATION SYSTEM
M-METRIC PART

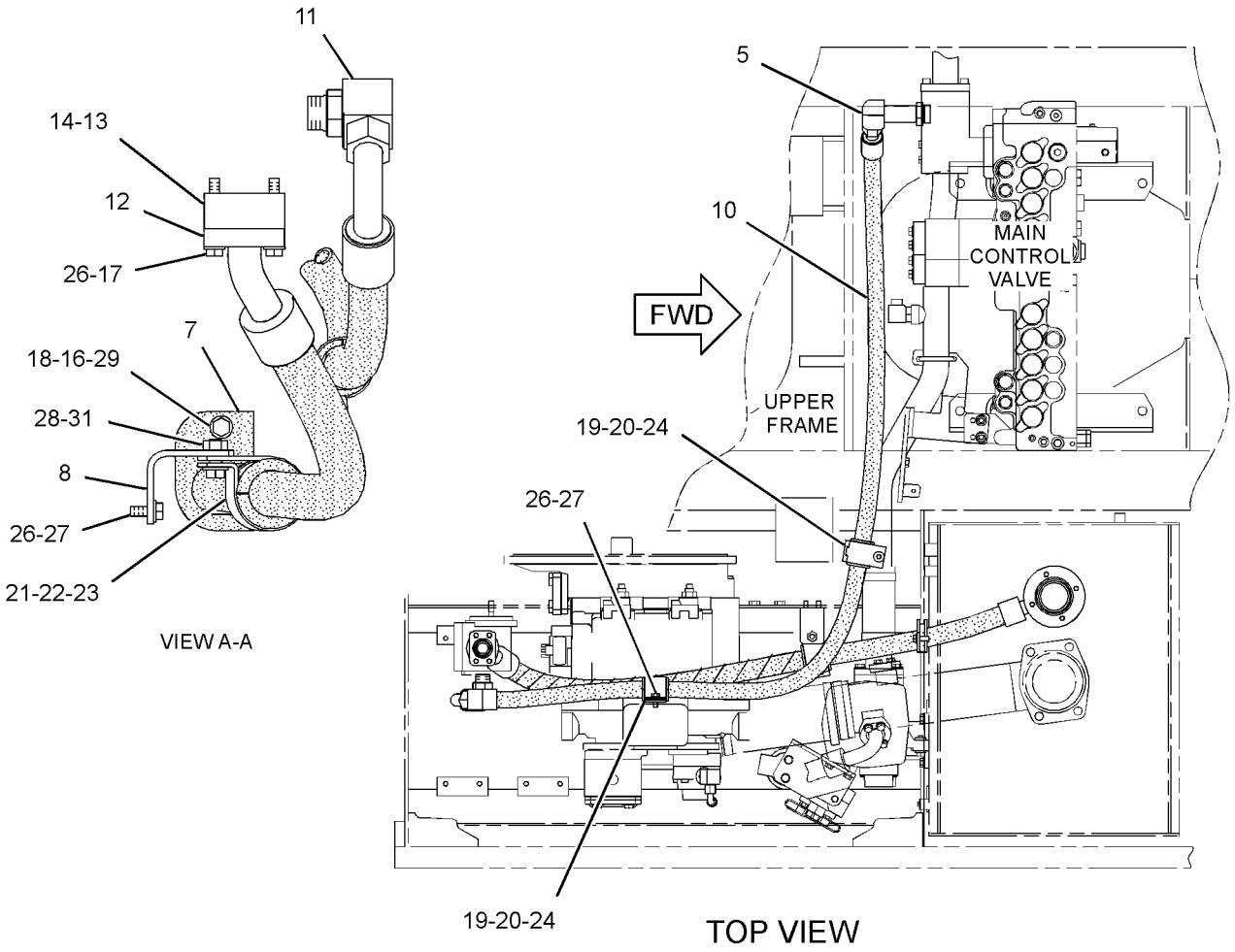

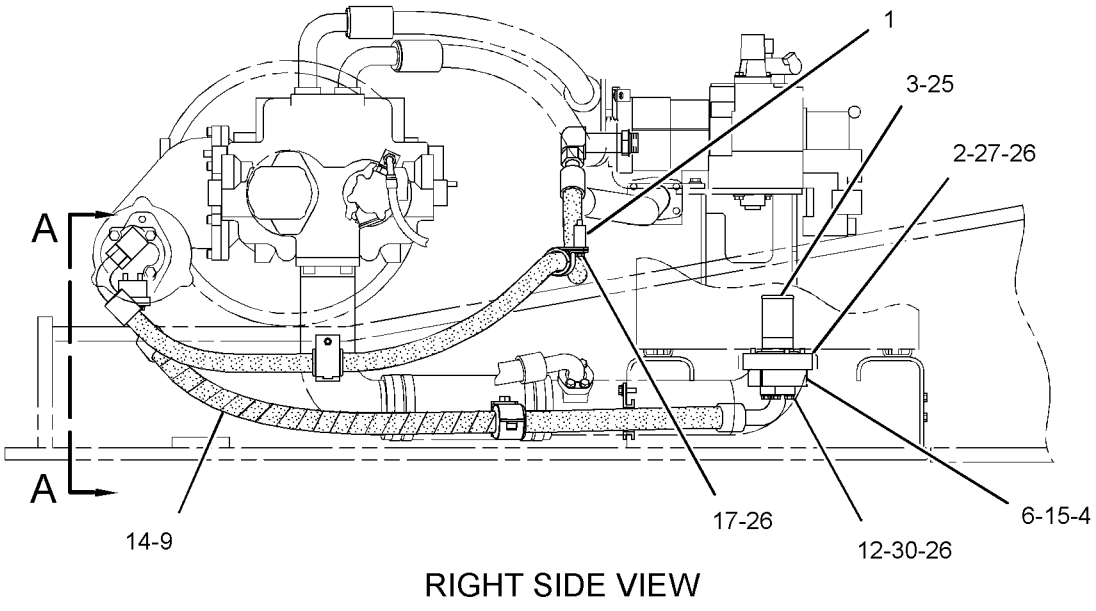

GRAPHIC #1 **<END>** g01240799

HYDRAULIC SYSTEM

307-5122 LINES GP-PUMP—MAIN HYDRAULIC

S/N: MYG1-UP; PPN1-UP

PART OF 259-7410, 259-7411 HYDRAULIC AR

SMCS-5057 **i03650439**

NOTE	REF NO	GRAPHIC REF	PART NUMBER	QTY	PART NAME 1 2 3 4 5 6 (PRODUCT LEVEL)	SEE PAGE
	1	1	**9X-6654**	4	CLAMP-HOSE	
	2	1	**087-4944**	1	HOSE	
	3	1	**108-7191**	1	FLANGE-SPECIAL	
M	4	1	**113-2003**	4	BOLT-SOCKET HEAD (M16X2X40-MM)	
	5	1	**124-1067**	2	PLATE	
	6	1	**124-1253**	4	GROMMET	
	7	1	**255-1939**	1	TUBE AS	
	8	1	**255-1941**	1	TUBE AS	
I	9	1	**255-1947**	1	HOSE AS	
	10	1	**269-9932**	1	SUPPORT AS	
I	11	1	**286-6528**	2	HOSE AS	
	12	1	**296-7079**	1	SUPPORT AS	
C	13	1	**333-7057**	1	SUPPORT AS	
	14	1	**307-5123**	1	SUPPORT AS	
M	15	1	**101-7404**	4	BOLT-SOCKET HEAD (M10X1.5X30-MM)	
	16	1	*307-5129*	1	CONNECTOR AS	
		1	**2S-4078**	1	SEAL-O-RING	
		1	**5K-9090**	1	SEAL-O-RING	
		1	**307-5130**	1	CONNECTOR	
	17	1	*148-8346*	1	ELBOW AS	
		1	**3K-0360**	1	SEAL-O-RING	
		1	**6V-8398**	1	SEAL-O-RING	
		1	**8T-1686**	1	ELBOW	
	18	1	*148-8391*	1	ELBOW AS	
		1	**2S-4078**	1	SEAL-O-RING	
		1	**5K-9090**	1	SEAL-O-RING	
		1	**8T-8987**	1	ELBOW	
	19	1	*148-8407*	1	PLUG AS	
		1	**3J-1907**	1	SEAL-O-RING	
		1	**9S-4191**	1	PLUG-O-RING	
	20	1	*150-3073*	2	PLUG AS	
					(EACH INCLUDES)	
		1	**5K-9090**	1	SEAL-O-RING	
		1	**6V-9512**	1	PLUG (1-7/16-12-THD)	
	21	1	**1P-4578**	4	FLANGE-HALF	
	22	1	**1P-5767**	4	FLANGE-HALF	
	23	1	**4J-0522**	2	SEAL-O-RING	
	24	1	**4J-5267**	1	SEAL-O-RING	
	25	1	**7J-9108**	1	SEAL-O-RING	
	26	1	**8T-4121**	14	WASHER-HARD (11X21X2.5-MM THK)	
M	27	1	**8T-4136**	4	BOLT (M10X1.5X25-MM)	
M	28	1	**8T-4139**	6	BOLT (M12X1.75X30-MM)	
M	29	1	**8T-4194**	8	BOLT (M12X1.75X50-MM)	
M	30	1	**8T-4195**	2	BOLT (M10X1.5X30-MM)	
M	31	1	**8T-4196**	8	BOLT (M10X1.5X35-MM)	
	32	1	**8T-4223**	14	WASHER-HARD (13.5X25.5X3-MM THK)	
M	33	1	**8T-7338**	4	BOLT (M16X2X45-MM)	
	34	1	**9F-7283**	1	SEAL-O-RING	
	35	1	**9M-3786**	1	SEAL-O-RING	
	36	1	**9X-8257**	4	WASHER (17.5X30X3.5-MM THK)	

C-CHANGE FROM PREVIOUS TYPE
I-REFER TO HYDRAULIC INFORMATION SYSTEM
M-METRIC PART

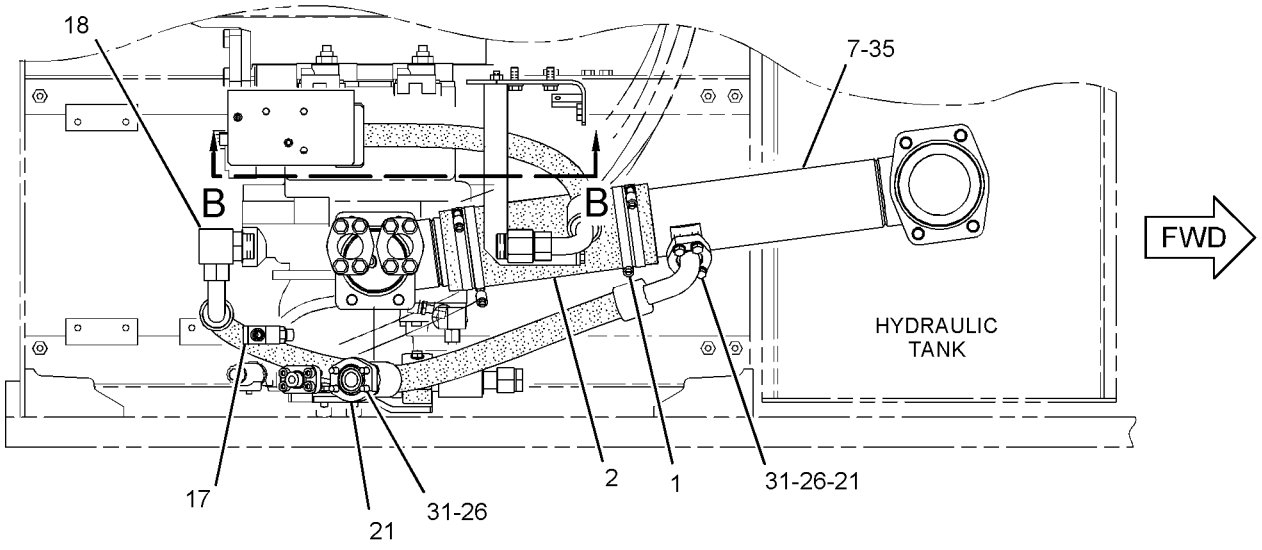

TOP VIEW

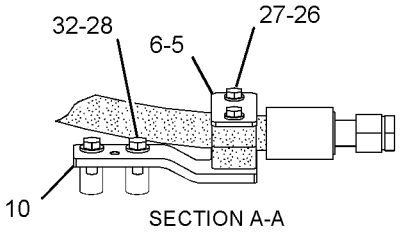

SECTION A-A

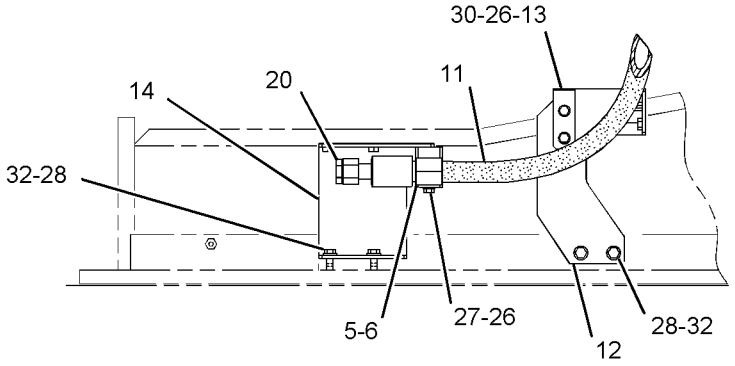

SECTION B-B

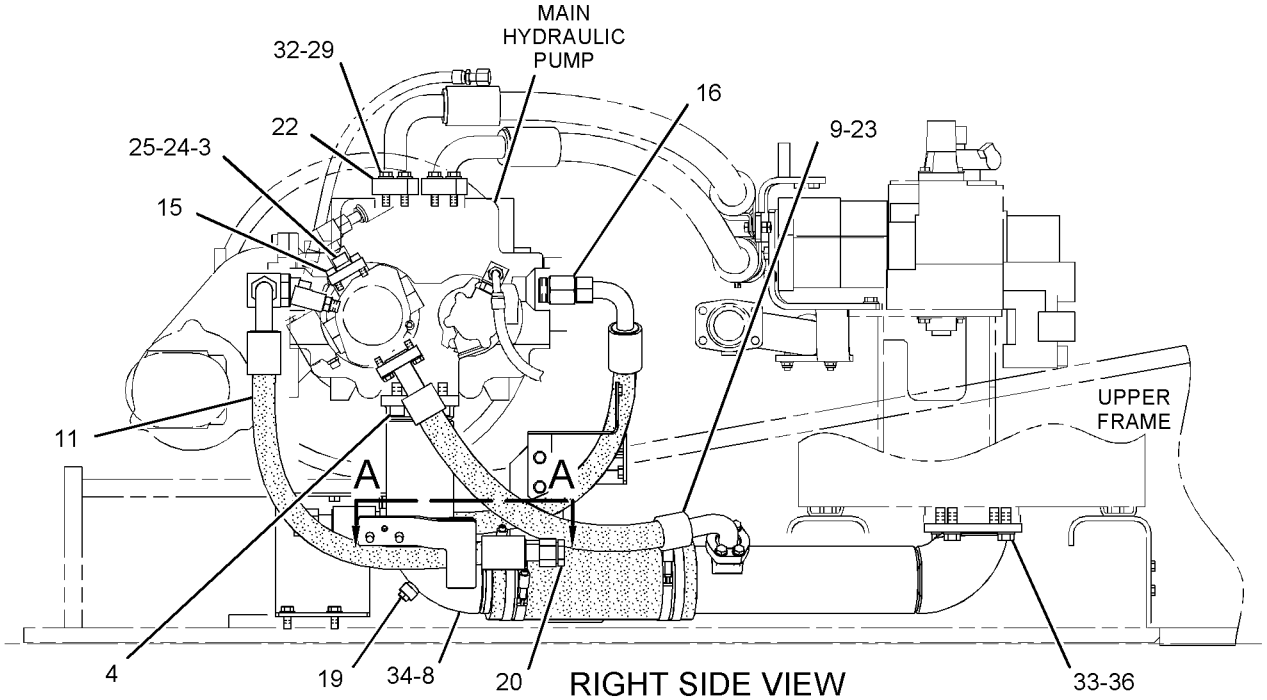

RIGHT SIDE VIEW

GRAPHIC #1 **<END>** g01967214

HYDRAULIC SYSTEM

248-9838 LINES GP-RETURN–REAR

S/N: MYG1-UP; PPN1-UP

PART OF 259-7410, 259-7411 HYDRAULIC AR

SMCS-5057 **i02656907**

NOTE	REF NO	GRAPHIC REF	PART NUMBER	QTY	PART NAME 1 2 3 4 5 6 (PRODUCT LEVEL)	SEE PAGE
M	1	1	**8T-4956**	1	BOLT (M12X1.75X35-MM)	
	2	2	**173-4816**	1	SUPPORT AS	
	3	2	**190-7745**	1	VALVE GP-CHECK (OIL COOLER BYPASS) (CONTROL VALVE)	
	4	2	**194-0242**	2	FLANGE	
	5	2	**194-0243**	1	FLANGE	
	6	2	**144-0367**	2	CLAMP-HOSE	
	7	2	**227-0428**	1	HOSE	
	8	2	**255-1971**	1	TUBE AS	
	9	2	**289-5347**	1	TUBE AS	
	10	2	**255-1979**	1	TUBE AS	
	11	1	**255-1981**	1	SUPPORT AS	
	12	2	**292-7223**	1	FLANGE	
I	13	2	**255-1986**	1	HOSE AS	
I	14	2	**255-1989**	1	HOSE AS	
I	15	1	**275-1675**	1	HOSE AS	
M	16	2	**096-4883**	2	LOCKNUT (M10X1.5-THD)	
M	17	2	**101-7402**	12	BOLT-SOCKET HEAD (M12X1.75X30-MM)	
	18	2	*148-8357*	1	ELBOW AS	
		2	**5K-9090**	1	SEAL-O-RING	
		2	**6V-9008**	1	ELBOW	
		2	**7M-8485**	1	SEAL-O-RING	
	19	1	*148-8364*	1	ELBOW AS	
		1	**3K-0360**	1	SEAL-O-RING	
		1	**6V-8398**	1	SEAL-O-RING	
		1	**6V-8625**	1	ELBOW	
	20	2	*148-8382*	1	ELBOW AS	
		2	**3D-2824**	1	SEAL-O-RING	
		2	**7J-9108**	1	SEAL-O-RING	
		2	**8T-0404**	1	ELBOW	
	21	1	*164-4180*	1	PLUG AS	
		1	**7M-8485**	1	SEAL-O-RING	
		1	**9S-4181**	1	PLUG-O-RING	
	22	2	*164-5616*	1	PLUG AS	
		2	**2S-4078**	1	SEAL-O-RING	
		2	**9S-6130**	1	PLUG	
	23	2	**1P-3703**	4	SEAL-RECTANGULAR	
	24	2	**1P-3704**	4	SEAL-RECTANGULAR	
	25	1	**1P-5767**	4	FLANGE-HALF	
	26	2	**4J-0524**	1	SEAL-O-RING	
	27	2	**4J-0527**	1	SEAL-O-RING	
	28	1	**5P-7468**	1	CLIP (SLOT)	
	29	1	**5P-7469**	1	CLIP (TAB)	
	30	1	**5P-8444**	1	GROMMET	
	31	2	**6J-2680**	2	SEAL-O-RING	
	32	2	**6V-1572**	2	CLIP (SLOT)	
	33	2	**6V-1573**	2	CLIP (TAB)	
	34	2	**6V-1875**	2	GROMMET	
M	35	2	**7X-2546**	4	BOLT (M10X1.5X180-MM)	
M	36	2	**7Y-5247**	1	U-BOLT	
M	37	2	**105-3489**	16	BOLT-SOCKET HEAD (M12X1.75X80-MM)	
	38	2	**8T-4121**	8	WASHER-HARD (11X21X2.5-MM THK)	
M	39	1,2	**8T-4139**	4	BOLT (M12X1.75X30-MM)	
M	40	2	**8T-4186**	2	BOLT (M10X1.5X40-MM)	
M	41	1	**8T-4194**	8	BOLT (M12X1.75X50-MM)	
	42	1,2	**8T-4223**	13	WASHER-HARD (13.5X25.5X3-MM THK)	

248-9838 **LINES GP-RETURN** *(contd.)* **i02656907**

I-REFER TO HYDRAULIC INFORMATION SYSTEM
M-METRIC PART

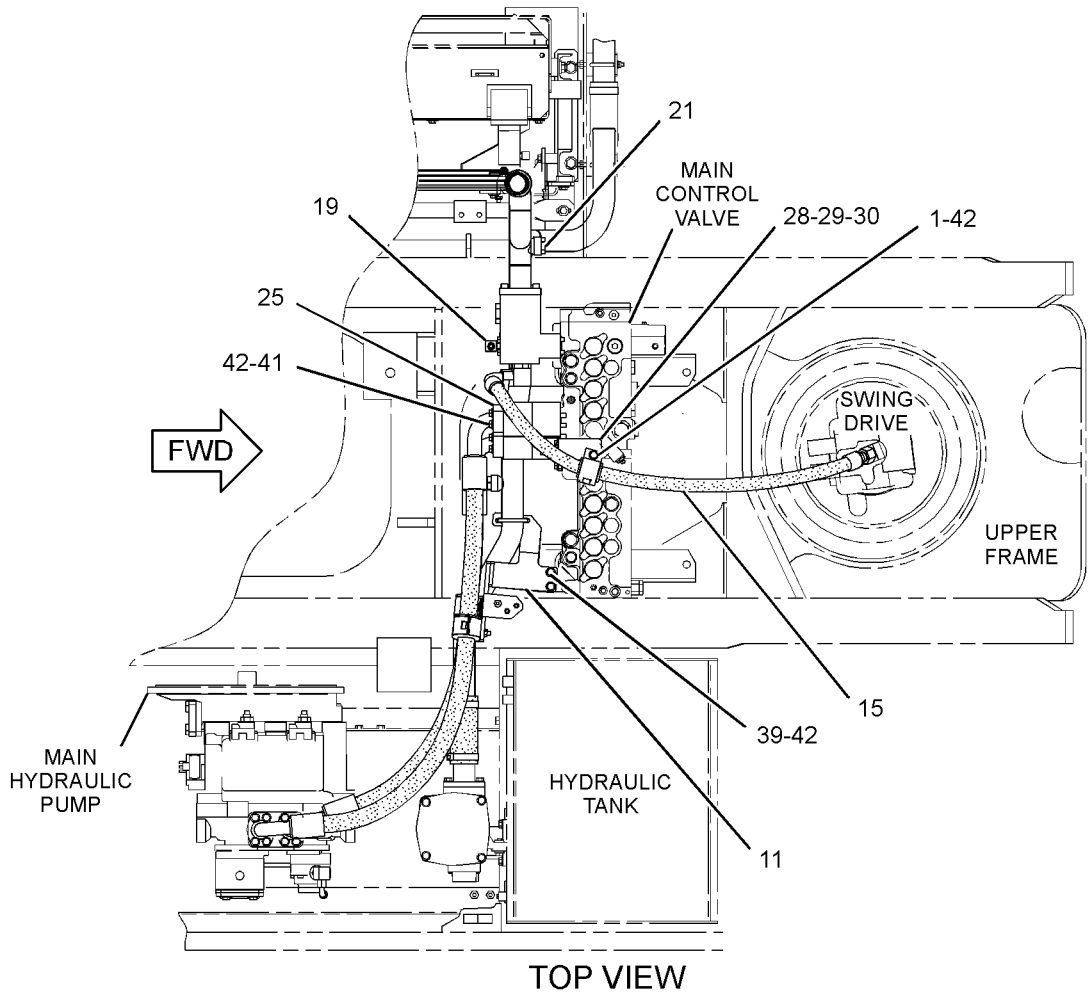

GRAPHIC #1 g01274190

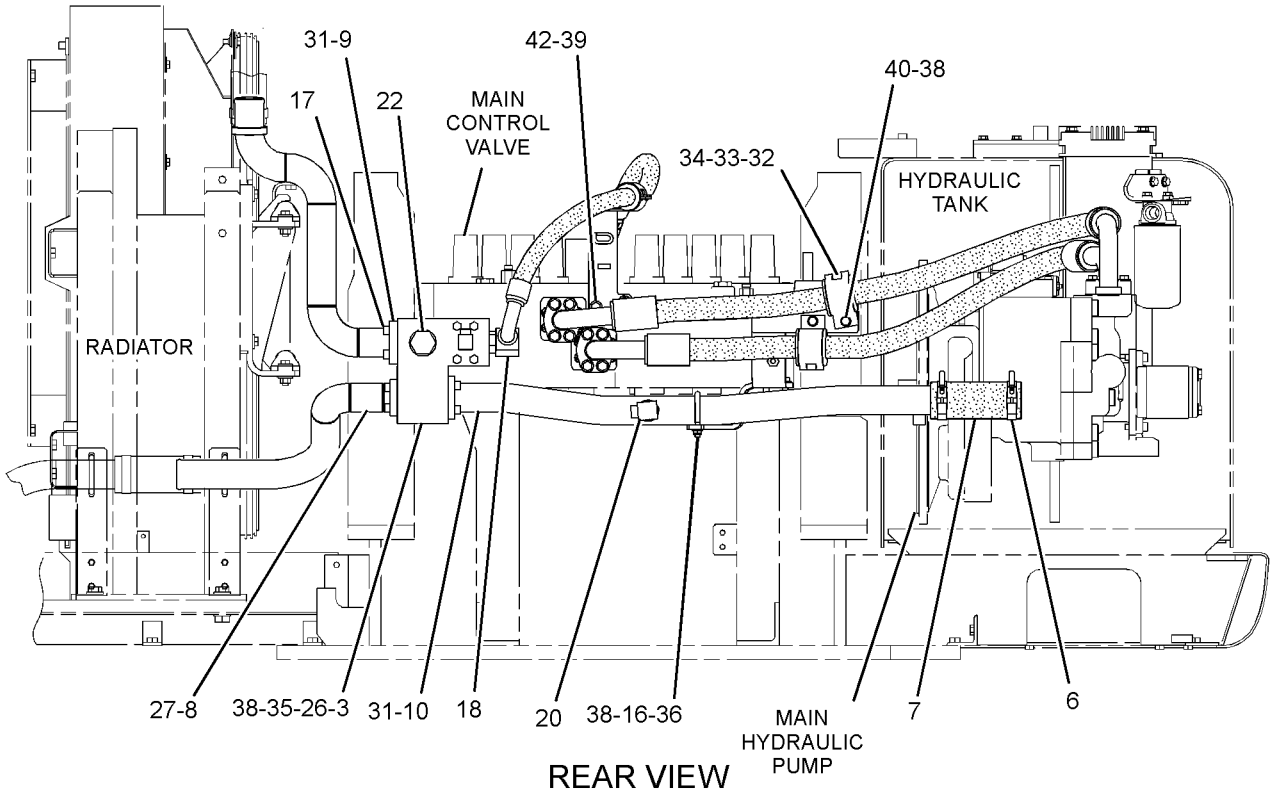

REAR VIEW

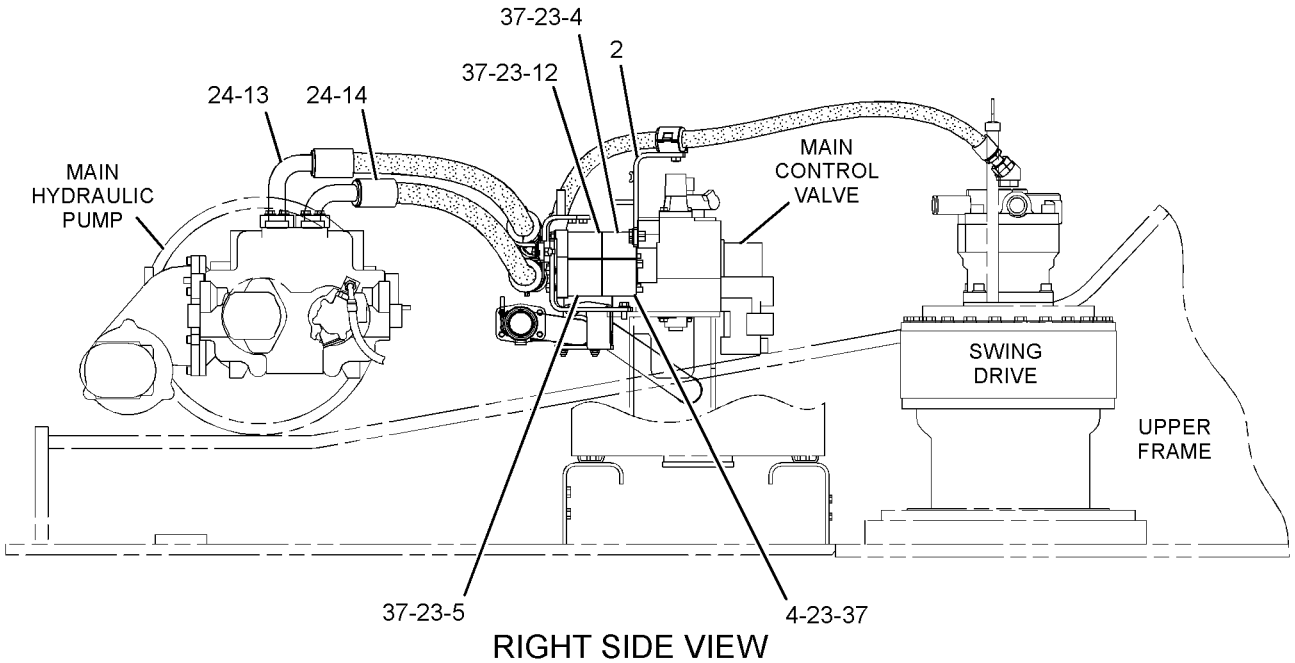

RIGHT SIDE VIEW

GRAPHIC #2

<END>

g01340858

HYDRAULIC SYSTEM

248-9845 LINES GP-RETURN–FILTERS

S/N: MYG1-UP; PPN1-UP

PART OF 269-9757 TANK & MTG GP-HYDRAULIC

SMCS-5057 **i03649789**

NOTE	REF NO	GRAPHIC REF	PART NUMBER	QTY	PART NAME 1 2 3 4 5 6 (PRODUCT LEVEL)	SEE PAGE
M	1	1	**8T-4956**	4	BOLT (M12X1.75X35-MM)	
I	2	1	**5I-4390**	1	HOSE AS	
	3	1	**5P-5148**	2	STRAP-TIE	
	4	1	**7K-1181**	10	STRAP-CABLE	
I	5	1	**275-1361**	1	HOSE AS	
I	6	1	**176-4770**	1	HOSE AS	
	7	1	**282-7106**	2	GROMMET	
CI	8	1	**333-4533**	1	HOSE AS	
	9	1	*278-6523*	1	FITTING AS	
		1	**3D-2824**	1	SEAL-O-RING	
		1	**275-1731**	1	FITTING	
	11	1	*148-8340*	1	CONNECTOR AS	
		1	**3K-0360**	1	SEAL-O-RING	
		1	**6V-8398**	1	SEAL-O-RING	
		1	**6V-8639**	1	CONNECTOR	
	12	1	*148-8347*	1	ELBOW AS	
		1	**3D-2824**	1	SEAL-O-RING	
		1	**6V-9007**	1	ELBOW	
		1	**6V-9746**	1	SEAL-O-RING	
	13	1	*148-8354*	2	ELBOW AS	
					(EACH INCLUDES)	
		1	**3K-0360**	1	SEAL-O-RING	
		1	**6V-8398**	1	SEAL-O-RING	
		1	**6V-9002**	1	ELBOW	
	14	1	*148-8363*	1	ELBOW AS	
		1	**3K-0360**	1	SEAL-O-RING	
		1	**6V-8397**	1	SEAL-O-RING	
		1	**6V-9876**	1	ELBOW	
	15	1	*148-8372*	1	ELBOW AS	
		1	**2M-9780**	1	SEAL-O-RING	
		1	**6V-8398**	1	SEAL-O-RING	
		1	**6V-8721**	1	ELBOW	
	16	1	*148-8411*	1	PLUG AS	
		1	**3K-0360**	1	SEAL-O-RING	
		1	**9S-4185**	1	PLUG-O-RING	
	17	1	*148-8436*	1	TEE AS	
		1	**3K-0360**	1	SEAL-O-RING	
		1	**6V-8398**	2	SEAL-O-RING	
		1	**6V-8775**	1	TEE-FACE SEAL	
	18	1	*153-6237*	1	ELBOW AS	
		1	**3D-2824**	1	SEAL-O-RING	
		1	**6V-9004**	1	ELBOW	
		1	**6V-9746**	1	SEAL-O-RING	
	19	1	*153-6241*	1	ELBOW AS	
		1	**6V-8398**	1	SEAL-O-RING	
		1	**8C-8989**	1	ELBOW	
	20	1	*164-6872*	1	TEE AS	
		1	**2M-9780**	1	SEAL-O-RING	
		1	**6V-8398**	2	SEAL-O-RING	
		1	**115-8634**	1	TEE-O-RING	
	21	1	**165-3260**	1	PIPE AS	
	22	1	**5P-7464**	1	CLIP (SLOT)	
	23	1	**5P-7465**	1	CLIP (TAB)	
	24	1	**6J-2680**	1	SEAL-O-RING	
	25	1	**8T-2920**	1	GROMMET	
M	26	1	**8T-4139**	1	BOLT (M12X1.75X30-MM)	

248-9845 **LINES GP-RETURN** *(contd.)* **i03649789**

NOTE	REF NO	GRAPHIC REF	PART NUMBER	QTY	PART NAME 1 2 3 4 5 6 (PRODUCT LEVEL)	SEE PAGE
	27	1	**8T-4223**	5	WASHER-HARD (13.5X25.5X3-MM THK)	
C	28	1	*106-8715*	2	ELBOW AS	
					(EACH INCLUDES)	
		1	**3D-2824**	1	SEAL-O-RING	
		1	**6V-9746**	1	SEAL-O-RING	
		1	**8C-8400**	1	ELBOW	

C-CHANGE FROM PREVIOUS TYPE
I-REFER TO HYDRAULIC INFORMATION SYSTEM
M-METRIC PART

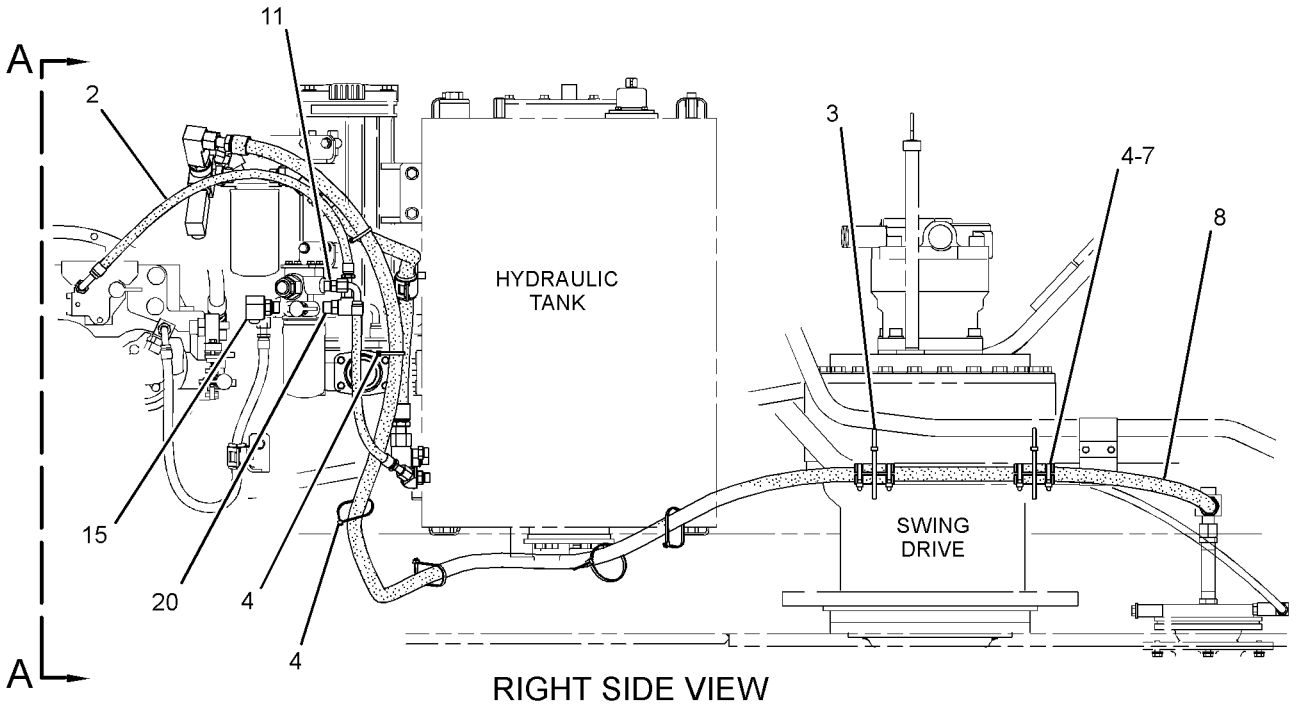

RIGHT SIDE VIEW

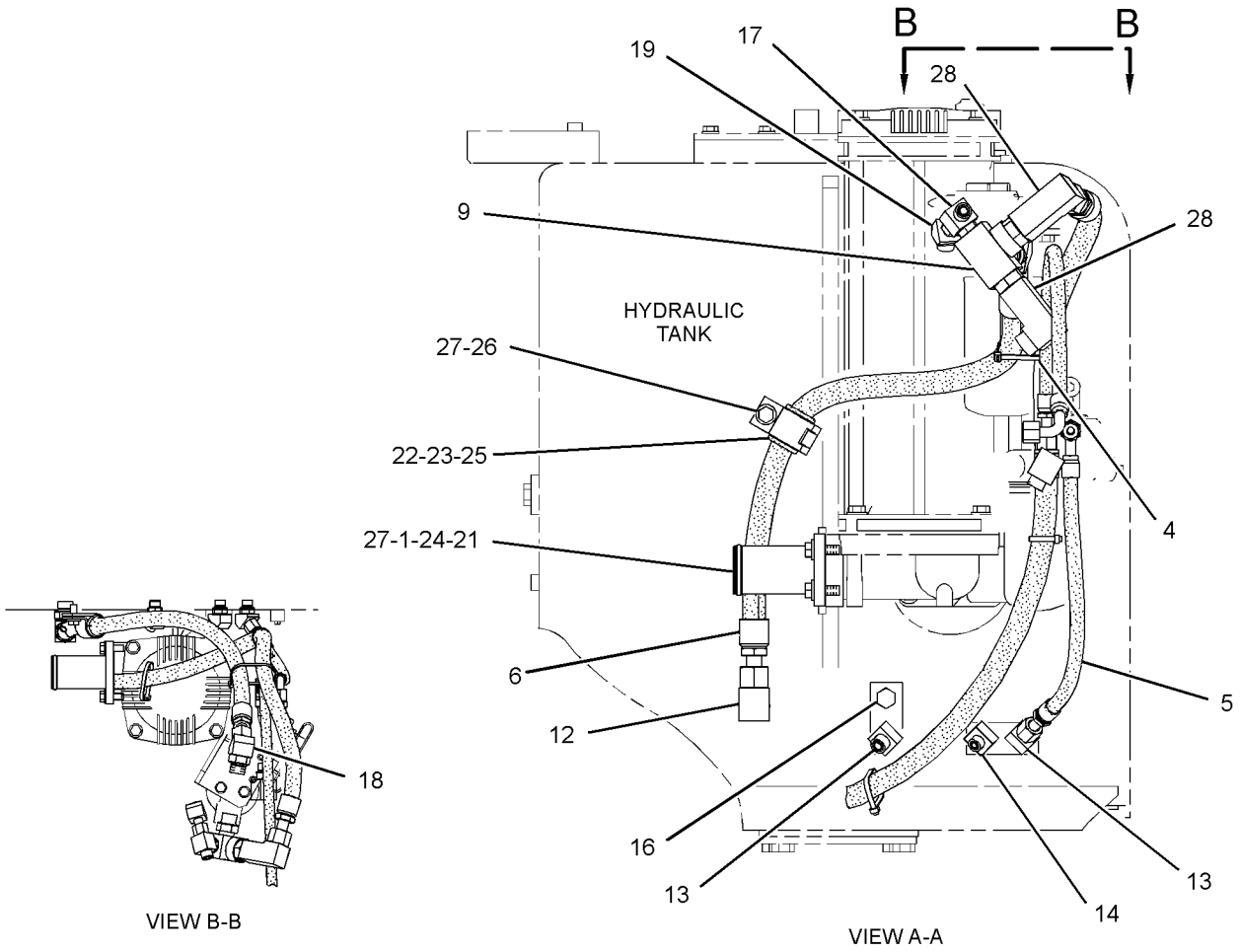

VIEW B-B

VIEW A-A

GRAPHIC #1 **<END>** g01959179

HYDRAULIC SYSTEM

255-2078 LINES GP-RETURN—LOAD CONTROL, BOOM CYLINDER

S/N: MYG1-UP; PPN1-UP
PART OF 346-4449 CONTROL AR-BOOM
AN ATTACHMENT

SMCS-5057 **i02983637**

NOTE	REF NO	GRAPHIC REF	PART NUMBER	QTY	PART NAME 1 2 3 4 5 6 (PRODUCT LEVEL)	SEE PAGE
	1	1	**7K-1181**	4	STRAP-CABLE	
M	2	1	**105-3477**	4	BOLT-SOCKET HEAD (M10X1.5X45-MM)	
I	3	1	**194-0354**	1	HOSE AS	
	4	1	**199-2012**	1	PLATE	
	5	1	**202-9002**	1	SWITCH AS-PRESSURE (BOOM CYLINDER, ROD END)	
		1	**102-8802**	1	KIT-RECEPTACLE (2-PIN)	
					(INCLUDES RECEPTACLE AS & WEDGE)	
		1	**186-3735**	1	PIN-CONNECTOR (16-GA TO 18-GA)	
CY	6	1	**297-0370**	1	VALVE GP-CHECK (BOOM FLOAT, LOAD CONTROL)	632
CY	7	1	**297-0371**	1	VALVE GP-SOLENOID (BOOM FLOAT UP)	708
	8	1	**218-1125**	1	BLOCK	
	9	1	**218-1126**	1	BLOCK	
	10	1	**218-1130**	1	BLOCK	
	11	1	**218-1172**	1	TUBE AS	
	12	1	**218-1173**	1	TUBE AS	
	13	1	**218-1174**	1	TUBE AS	
	14	1	**218-1175**	1	TUBE AS	
	15	1	**223-6748**	1	SUPPORT AS	
	16	1	**244-6715**	1	PLATE	
	17	1	**260-8281**	1	SUPPORT	
I	18	1	**275-1418**	1	HOSE AS	
I	19	1	**275-1422**	1	HOSE AS	
I	20	1	**275-1425**	1	HOSE AS	
I	21	1	**275-1475**	1	HOSE AS	
M	22	1	**107-2724**	4	BOLT-SOCKET HEAD (M12X1.75X100-MM)	
M	23	1	**108-1782**	4	BOLT-SOCKET HEAD (M12X1.75X90-MM)	
	24	1	*148-8335*	1	CONNECTOR AS	
		1	**5K-9090**	1	SEAL-O-RING	
		1	**6V-8635**	1	CONNECTOR	
		1	**7M-8485**	1	SEAL-O-RING	
	25	1	*148-8352*	1	ELBOW AS	
		1	**5K-9090**	1	SEAL-O-RING	
		1	**6V-9854**	1	ELBOW	
	26	1	*148-8357*	3	ELBOW AS	
					(EACH INCLUDES)	
		1	**5K-9090**	1	SEAL-O-RING	
		1	**6V-9008**	1	ELBOW	
		1	**7M-8485**	1	SEAL-O-RING	
	27	1	*148-8392*	1	ELBOW AS	
		1	**6V-9746**	1	SEAL-O-RING	
		1	**6V-9853**	1	ELBOW	
	28	1	*148-8411*	1	PLUG AS	
		1	**3K-0360**	1	SEAL-O-RING	
		1	**9S-4185**	1	PLUG-O-RING	
	29	1	*148-8431*	1	TEE AS	
		1	**5K-9090**	2	SEAL-O-RING	
		1	**6V-8785**	1	TEE	
		1	**7M-8485**	1	SEAL-O-RING	
	30	1	**185-0488**	1	BLOCK	
	31	1	**1P-3702**	2	SEAL-RECTANGULAR	
	32	1	**1P-3703**	4	SEAL-RECTANGULAR	
	33	1	**1P-3704**	5	SEAL-RECTANGULAR	
	34	1	**1P-3705**	1	SEAL-RECTANGULAR	
	35	1	**3J-1907**	1	SEAL-O-RING	
	36	1	**4J-5268**	1	SEAL-O-RING	

255-2078 **LINES GP-RETURN** *(contd.)* **i02983637**

NOTE	REF NO	GRAPHIC REF	PART NUMBER	QTY	PART NAME 1 2 3 4 5 6 (PRODUCT LEVEL)	SEE PAGE
	37	1	**5K-9090**	4	SEAL-O-RING	
	38	1	**6V-9746**	1	SEAL-O-RING	
	39	1	**7M-8485**	1	SEAL-O-RING	
M	40	1	**8T-4139**	8	BOLT (M12X1.75X30-MM)	
M	41	1	**8T-4192**	2	BOLT (M12X1.75X25-MM)	
	42	1	**8T-4223**	26	WASHER-HARD (13.5X25.5X3-MM THK)	
M	43	1	**8T-4956**	8	BOLT (M12X1.75X35-MM)	
M	44	1	**8T-5005**	4	BOLT (M10X1.5X70-MM)	
M	45	1	**8T-6868**	8	BOLT (M12X1.75X80-MM)	

C-CHANGE FROM PREVIOUS TYPE
I-REFER TO HYDRAULIC INFORMATION SYSTEM
M-METRIC PART
Y-SEPARATE ILLUSTRATION

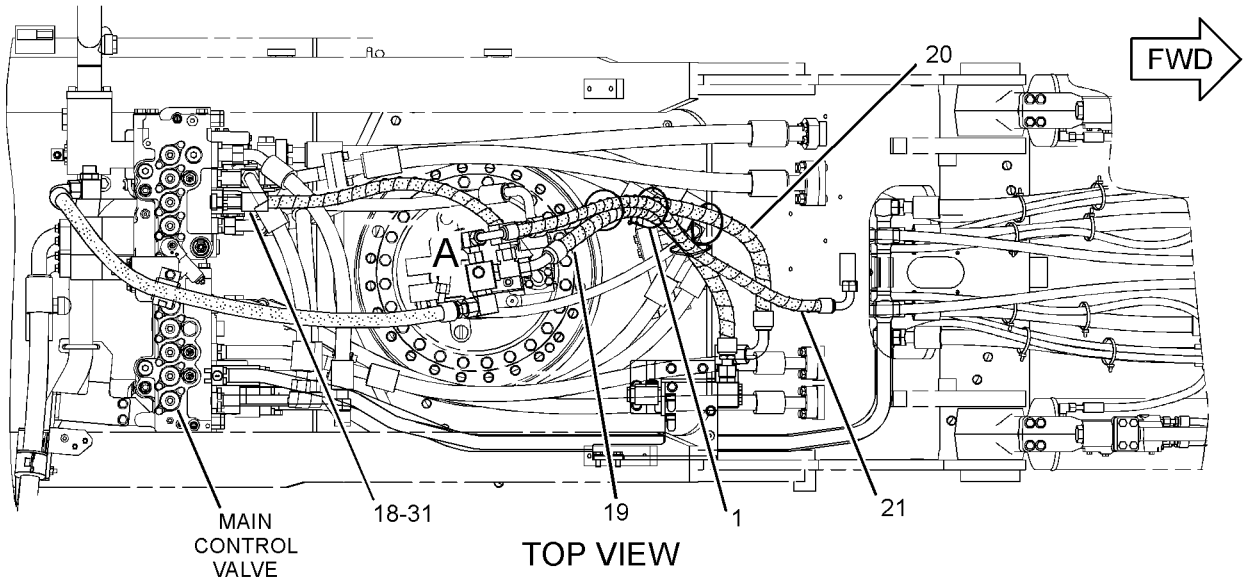

TOP VIEW

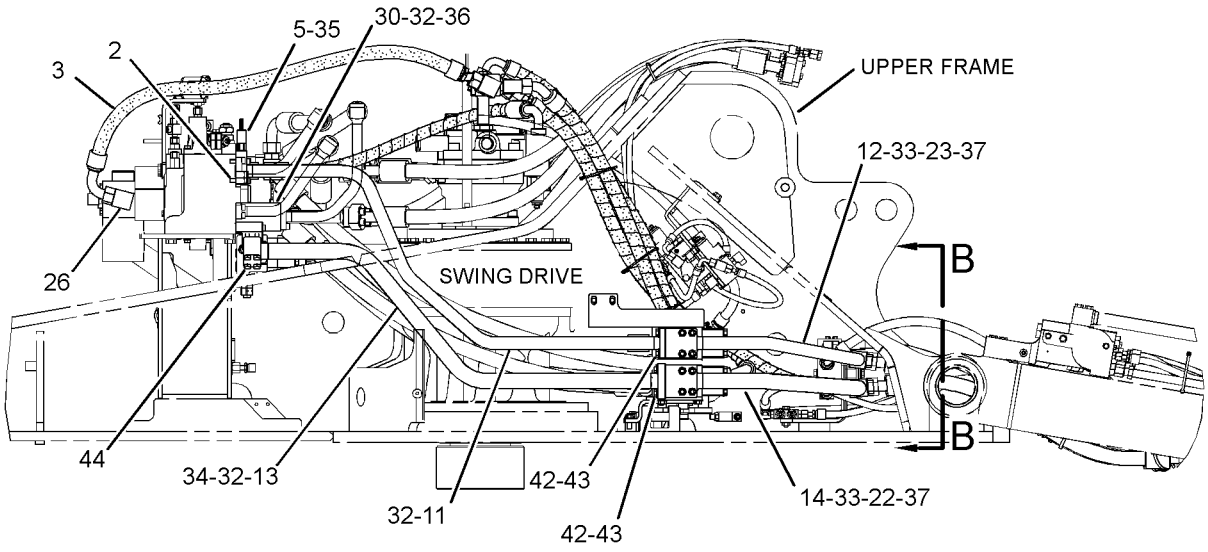

RIGHT SIDE VIEW

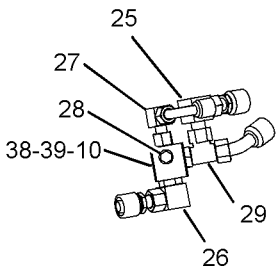

VIEW OF AREA A

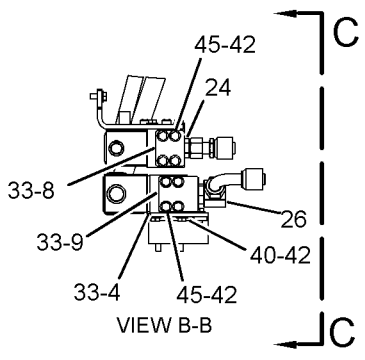

VIEW B-B

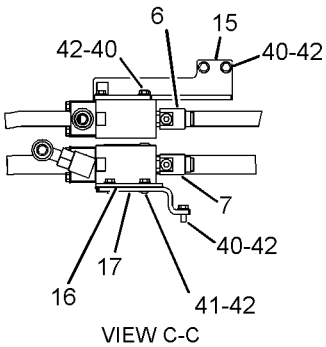

VIEW C-C

GRAPHIC #1 **<END>** g01236539

HYDRAULIC SYSTEM

245-5080 LINES GP-SENSOR—OVERLOAD WARNING DEVICE

S/N: MYG1-UP; PPN1-UP
PART OF 346-4449 CONTROL AR-BOOM
AN ATTACHMENT

SMCS-1439, 5057 **i02522361**

NOTE	REF NO	GRAPHIC REF	PART NUMBER	QTY	PART NAME 1 2 3 4 5 6 (PRODUCT LEVEL)	SEE PAGE
	1	1	**221-8859**	1	SENSOR AS-PRESSURE (OVERLOAD WARNING)	

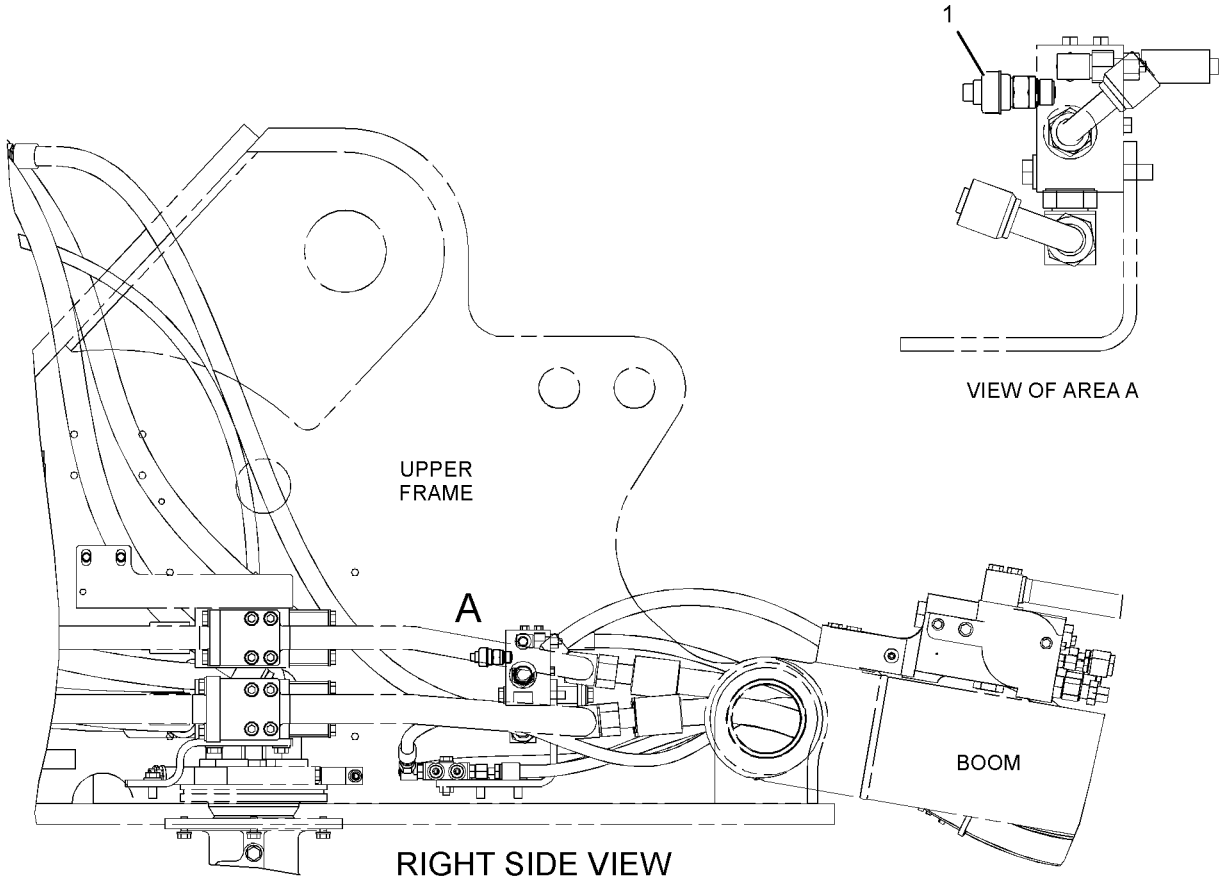

GRAPHIC #1 **<END>** g01238576

113-6853 LINES GP-STICK–BUCKET CYLINDER

S/N: MYG1-UP; PPN1-UP
D-FAMILY
PART OF 290-1820, 290-1829 STICK AR-HOE
FOR USE WITH 3.2-M (10.5-FT) STICK
AN ATTACHMENT

SMCS-5057, 5458 **i00613717**

NOTE	REF NO	GRAPHIC REF	PART NUMBER	QTY	PART NAME 1 2 3 4 5 6 (PRODUCT LEVEL)	SEE PAGE
	1	1	**6V-0400**	8	FLANGE-HALF	
	2	1	**1P-3703**	5	SEAL-RECTANGULAR	
	3	1	**8T-4223**	16	WASHER-HARD (13.5X25.5X3-MM THK)	
M	4	1	**8T-4184**	12	BOLT (M12X1.75X45-MM)	
I	5	1	**087-6643**	2	HOSE AS	
	6	1	**087-5661**	1	BLOCK	
M	7	1	**8T-5001**	4	BOLT (M12X1.75X130-MM)	

I-REFER TO HYDRAULIC INFORMATION SYSTEM
M-METRIC PART

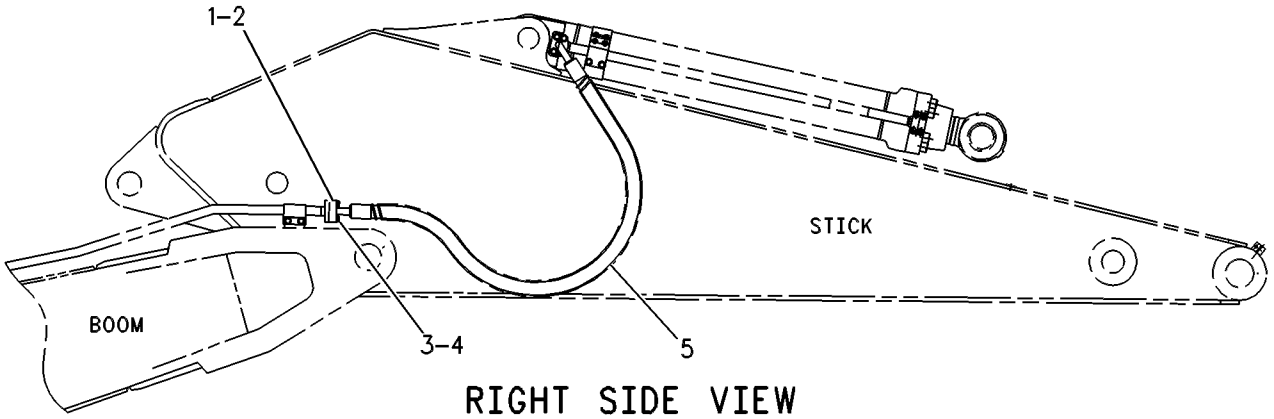

RIGHT SIDE VIEW

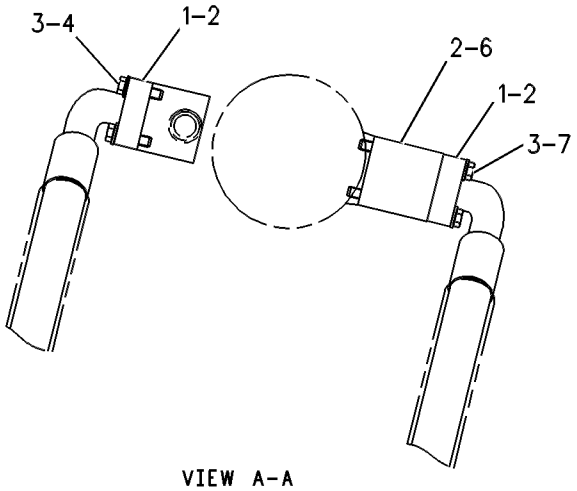

VIEW A-A

GRAPHIC #1 **<END>** g00261905

HYDRAULIC SYSTEM

113-6859 LINES GP-STICK–BUCKET CYLINDER

S/N: MYG1-UP; PPN1-UP
E-FAMILY
PART OF 290-1823 STICK AR-HOE
FOR USE WITH 2.55-M (8.4-FT) STICK
AN ATTACHMENT

SMCS-5057, 5458 **i00613757**

NOTE	REF NO	GRAPHIC REF	PART NUMBER	QTY	PART NAME 1 2 3 4 5 6 (PRODUCT LEVEL)	SEE PAGE
I	1	1	**5I-3088**	2	HOSE AS	
	2	1	**1P-3703**	2	SEAL-RECTANGULAR	
	3	1	**6V-0400**	4	FLANGE-HALF	
	4	1	**8T-4223**	16	WASHER-HARD (13.5X25.5X3-MM THK)	
M	5	1	**8T-4184**	12	BOLT (M12X1.75X45-MM)	
	6	1	**1P-5767**	4	FLANGE-HALF	
	7	1	**1P-3704**	3	SEAL-RECTANGULAR	
	8	1	**4I-6046**	1	BLOCK	
M	9	1	**8T-5041**	4	BOLT (M12X1.75X120-MM)	

I-REFER TO HYDRAULIC INFORMATION SYSTEM
M-METRIC PART

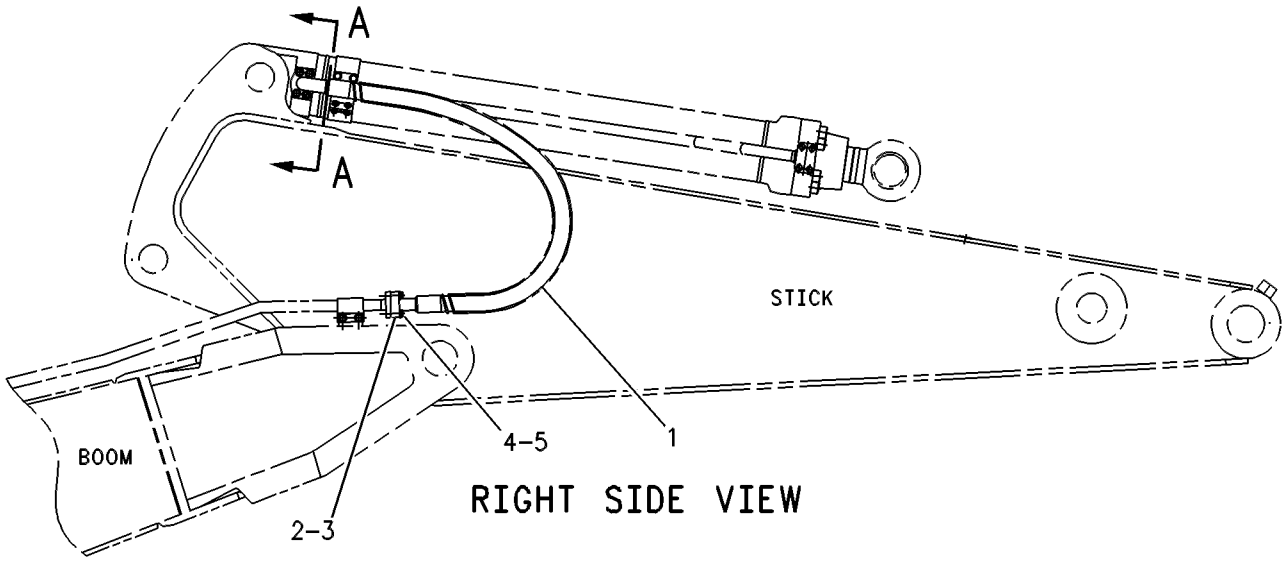

RIGHT SIDE VIEW

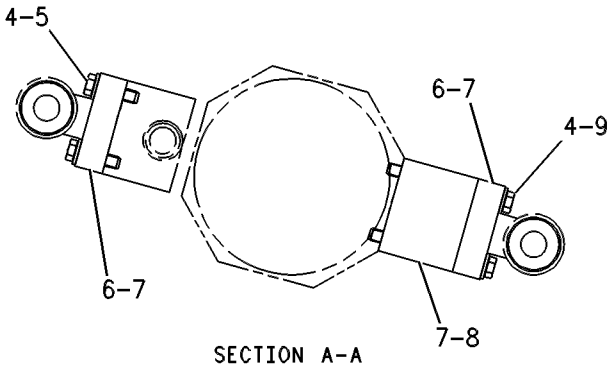

SECTION A-A

GRAPHIC #1 **<END>** g00261907

192-6901 LINES GP-STICK–BUCKET CYLINDER

S/N: MYG1-UP; PPN1-UP
D-FAMILY
PART OF 290-1821 STICK AR-HOE
FOR USE WITH 2.8-M (9.2-FT) STICK
AN ATTACHMENT

SMCS-5057, 5458 **i01632884**

NOTE	REF NO	GRAPHIC REF	PART NUMBER	QTY	PART NAME 1 2 3 4 5 6 (PRODUCT LEVEL)	SEE PAGE
	1	1	**6V-0400**	8	FLANGE-HALF	
	2	1	**1P-3703**	5	SEAL-RECTANGULAR	
	3	1	**8T-4223**	16	WASHER-HARD (13.5X25.5X3-MM THK)	
M	4	1	**8T-4184**	12	BOLT (M12X1.75X45-MM)	
I	5	1	**207-6282**	2	HOSE AS	
	6	1	**087-5661**	1	BLOCK	
M	7	1	**8T-5001**	4	BOLT (M12X1.75X130-MM)	

I-REFER TO HYDRAULIC INFORMATION SYSTEM
M-METRIC PART

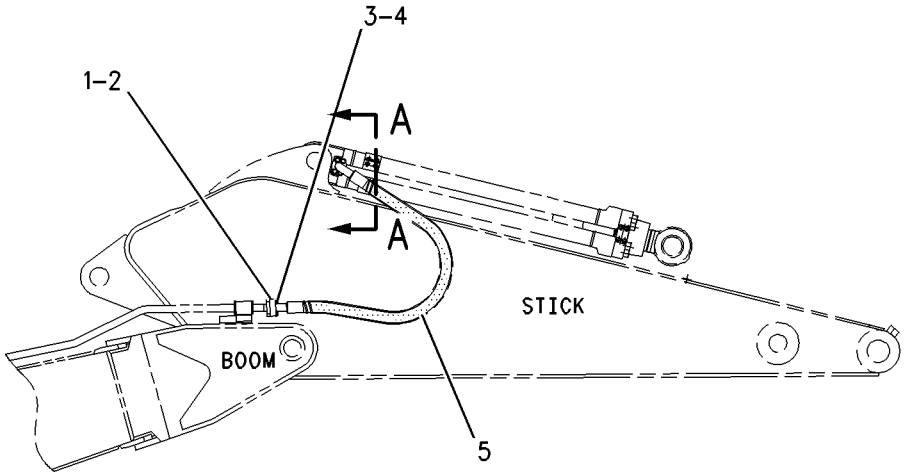

RIGHT SIDE VIEW

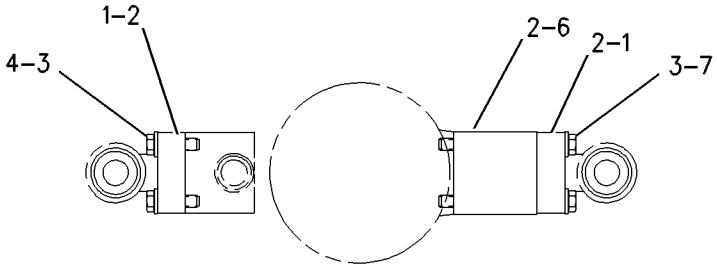

SECTION A–A

GRAPHIC #1 **<END>** g00838474

HYDRAULIC SYSTEM

260-8254 LINES GP-STICK—BUCKET CYLINDER

S/N: MYG1-UP; PPN1-UP
2.15-M (7.1-FT) STICK. TB1-FAMILY
PART OF 290-1824 STICK AR-HOE
AN ATTACHMENT

SMCS-5057, 5458 **i02406155**

NOTE	REF NO	GRAPHIC REF	PART NUMBER	QTY	PART NAME 1 2 3 4 5 6 (PRODUCT LEVEL)	SEE PAGE
	1	1	**4I-6046**	1	BLOCK	
I	2	1	**4I-6130**	2	HOSE AS	
	3	1	**1P-3703**	2	SEAL-RECTANGULAR	
	4	1	**1P-3704**	3	SEAL-RECTANGULAR	
	5	1	**1P-5767**	4	FLANGE-HALF	
	6	1	**6V-0400**	4	FLANGE-HALF	
M	7	1	**8T-4184**	12	BOLT (M12X1.75X45-MM)	
	8	1	**8T-4223**	16	WASHER-HARD (13.5X25.5X3-MM THK)	
M	9	1	**8T-5041**	4	BOLT (M12X1.75X120-MM)	

I-REFER TO HYDRAULIC INFORMATION SYSTEM
M-METRIC PART

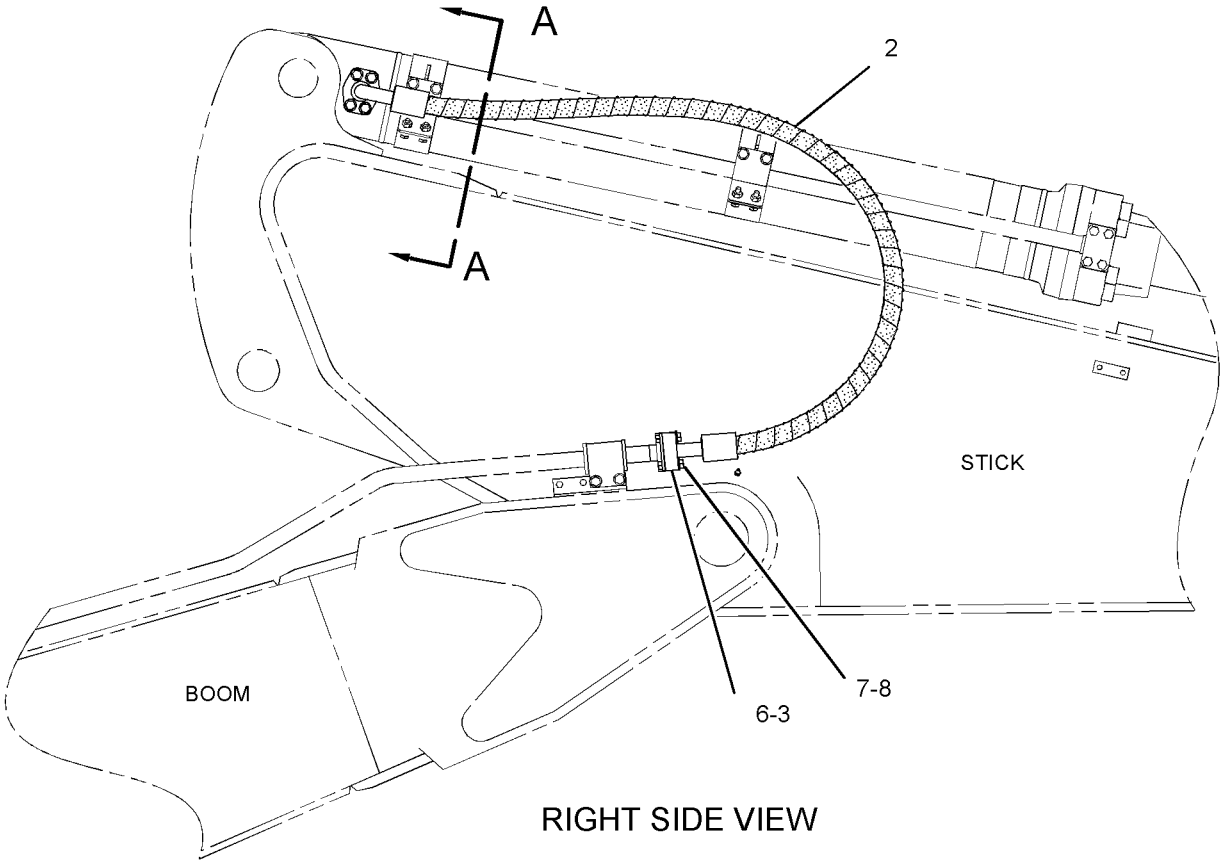

RIGHT SIDE VIEW

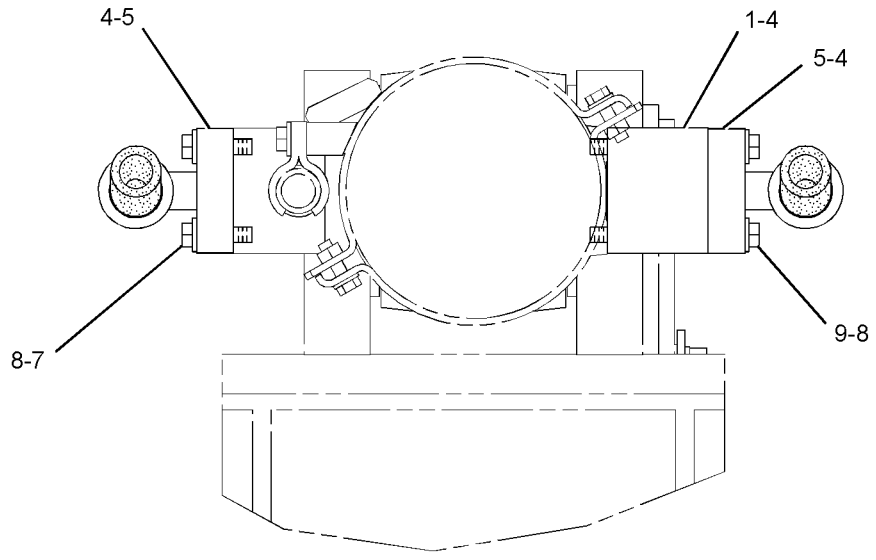

SECTION A-A

GRAPHIC #1 **<END>** g01201986

HYDRAULIC SYSTEM

237-3199 LINES GP-STICK CYLINDER–

STICK LOWERING CONTROL

S/N: MYG1-UP; PPN1-UP

PART OF 255-5868, 259-7416 VALVE AR-LOAD CONTROL

AN ATTACHMENT

SMCS-5458 **i02475537**

NOTE	REF NO	GRAPHIC REF	PART NUMBER	QTY	PART NAME 1 2 3 4 5 6 (PRODUCT LEVEL)	SEE PAGE
	1	1	**093-1290**	1	CLAMP	
	2	1	**093-1294**	2	CLAMP	
	3	1	**124-0903**	1	SUPPORT AS	
	4	1	**202-6752**	1	SUPPORT AS	
	5	1	**216-6513**	1	SUPPORT AS	
	6	1	**216-6515**	2	CLIP	
Y	7	1	**259-7692**	1	VALVE GP-LOAD CONTROL (DRIFT REDUCTION, VAR ADJ BOOM)	659
	8	1	**268-7208**	1	TUBE AS	
	9	1	**268-7209**	1	TUBE AS	
	10	1	**268-7211**	1	TUBE AS	
	11	1	**268-7213**	1	TUBE AS	
M	12	1	**108-1782**	4	BOLT-SOCKET HEAD (M12X1.75X90-MM)	
	13	1	*148-8328*	1	CONNECTOR AS	
		1	**3D-2824**	1	SEAL-O-RING	
		1	**6V-8398**	1	SEAL-O-RING	
		1	**6V-8633**	1	CONNECTOR	
	14	1	*148-8368*	2	ELBOW AS	
					(EACH INCLUDES)	
		1	**3J-1907**	1	SEAL-O-RING	
		1	**4J-5477**	1	SEAL-O-RING	
		1	**6V-8627**	1	ELBOW	
	15	1	**1P-3705**	2	SEAL-RECTANGULAR	
	16	1	**6V-8397**	2	SEAL-O-RING	
	17	1	**6V-8398**	1	SEAL-O-RING	
M	18	1	**7X-2555**	2	BOLT (M16X2X80-MM)	
	19	1	**8T-4121**	7	WASHER-HARD (11X21X2.5-MM THK)	
M	20	1	**8T-4186**	3	BOLT (M10X1.5X40-MM)	
M	21	1	**8T-4193**	2	BOLT (M16X2X50-MM)	
M	22	1	**8T-4196**	4	BOLT (M10X1.5X35-MM)	
	23	1	**8T-4223**	4	WASHER-HARD (13.5X25.5X3-MM THK)	
M	24	1	**8T-6868**	4	BOLT (M12X1.75X80-MM)	
	25	1	**9X-8257**	4	WASHER (17.5X30X3.5-MM THK)	

M-METRIC PART
Y-SEPARATE ILLUSTRATION

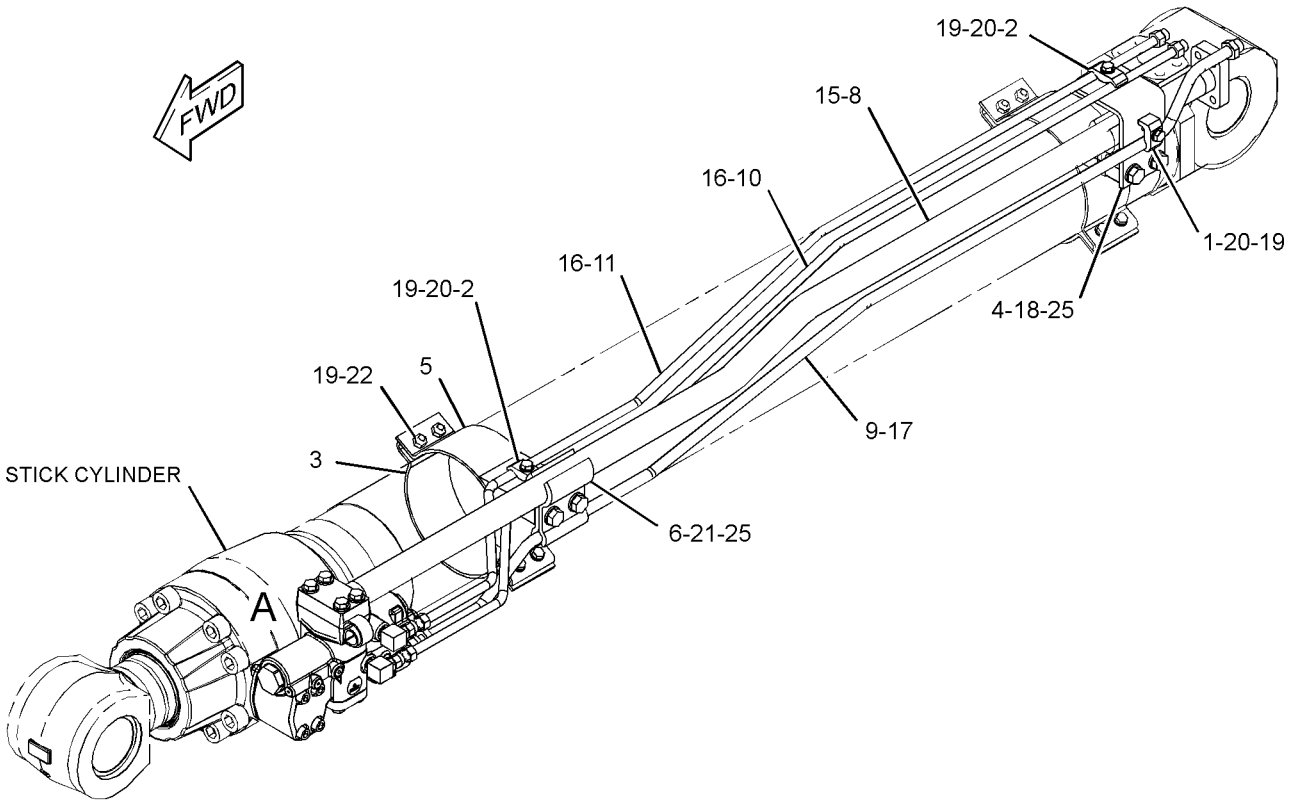

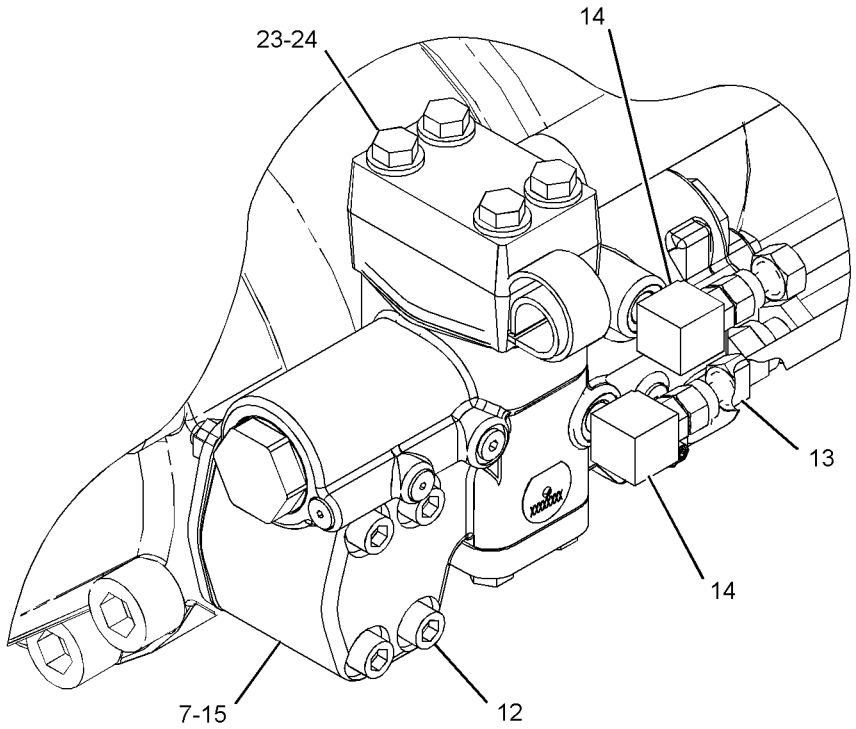

VIEW OF AREA A

GRAPHIC #1 **<END>** g01237050

HYDRAULIC SYSTEM

239-1876 LINES GP-STICK CYLINDER

S/N: MYG1-UP; PPN1-UP
PART OF 289-8029 CYLINDER & LINES GP-STICK
AN ATTACHMENT

SMCS-5458 **i02389756**

NOTE	REF NO	GRAPHIC REF	PART NUMBER	QTY	PART NAME 1 2 3 4 5 6 (PRODUCT LEVEL)	SEE PAGE
	1	1	**124-0903**	1	SUPPORT AS	
	2	1	**239-1877**	1	TUBE AS	
	3	1	**239-1878**	1	SUPPORT AS	
	4	1	**255-1933**	1	BLOCK	
	5	1	**124-0909**	2	CLIP	
	6	1	*164-4180*	1	PLUG AS	
		1	**7M-8485**	1	SEAL-O-RING	
		1	**9S-4181**	1	PLUG-O-RING	
	7	1	**1P-3705**	1	SEAL-RECTANGULAR	
	8	1	**1P-3706**	1	SEAL-RECTANGULAR	
M	9	1	**7X-2553**	2	BOLT (M16X2X40-MM)	
M	10	1	**7X-2557**	4	BOLT (M16X2X140-MM)	
	11	1	**8T-4121**	4	WASHER-HARD (11X21X2.5-MM THK)	
M	12	1	**8T-4196**	4	BOLT (M10X1.5X35-MM)	
M	13	1	**8T-4648**	4	BOLT (M12X1.75X70-MM)	
	14	1	**9X-8257**	6	WASHER (17.5X30X3.5-MM THK)	

M-METRIC PART

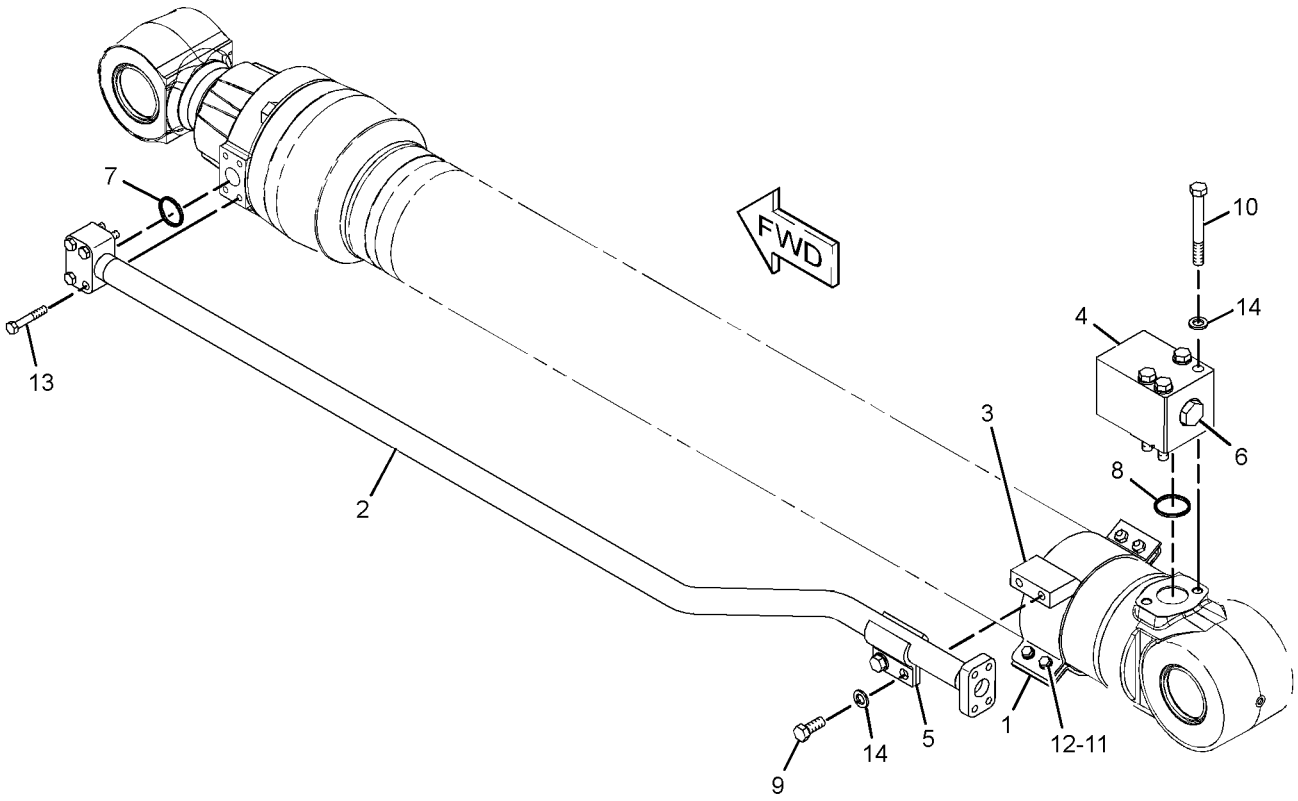

GRAPHIC #1 **<END>** g01197557

HYDRAULIC SYSTEM

239-1618 LINES GP-TRAVEL MOTOR

S/N: PPN1-UP

PART OF 259-7410 HYDRAULIC AR

SMCS-5057, 5058 **i03257555**

NOTE	REF NO	GRAPHIC REF	PART NUMBER	QTY	PART NAME 1 2 3 4 5 6 (PRODUCT LEVEL)	SEE PAGE
I	1	1	**4I-0812**	2	HOSE AS	
	2	1	**7K-1181**	4	STRAP-CABLE	
C	3	1	**108-7118**	2	GROMMET	
Y	4	1	**234-4440**	1	SWIVEL GP	622
I	5	1	**239-1892**	4	HOSE AS	
CI	6	1	**286-6824**	2	HOSE AS	
C	7	1	**296-7072**	2	GROMMET	
	8	1	*148-8336*	2	CONNECTOR AS	
					(EACH INCLUDES)	
		1	**3J-1907**	1	SEAL-O-RING	
		1	**6V-8397**	1	SEAL-O-RING	
		1	**6V-8636**	1	CONNECTOR	
	9	1	*148-8388*	1	ELBOW AS	
		1	**2M-9780**	1	SEAL-O-RING	
		1	**6V-8629**	1	ELBOW	
		1	**6V-9746**	1	SEAL-O-RING	
B	10	1	**1U-8846**	1	SEALANT-GASKET	
	11	1	*150-4033*	1	TEE AS	
		1	**6V-9846**	1	TEE-SWIVEL	
		1	**6V-9746**	2	SEAL-O-RING	
	12	1	*150-4044*	2	CONNECTOR AS	
					(EACH INCLUDES)	
		1	**3J-1907**	1	SEAL-O-RING	
		1	**6V-8397**	1	SEAL-O-RING	
		1	**8T-1779**	1	CONNECTOR	
C	13	1	*148-8327*	2	CONNECTOR AS	
					(EACH INCLUDES)	
		1	**3D-2824**	1	SEAL-O-RING	
		1	**6V-8637**	1	CONNECTOR	
		1	**6V-9746**	1	SEAL-O-RING	
	14	1	**1P-3703**	8	SEAL-RECTANGULAR	
	15	1	**6V-0400**	24	FLANGE-HALF	
	16	1	**8T-4121**	6	WASHER-HARD (11X21X2.5-MM THK)	
M	17	1	**8T-4136**	6	BOLT (M10X1.5X25-MM)	
M	18	1	**8T-4184**	48	BOLT (M12X1.75X45-MM)	
	19	1	**8T-4223**	48	WASHER-HARD (13.5X25.5X3-MM THK)	

B-USE AS REQUIRED
C-CHANGE FROM PREVIOUS TYPE
I-REFER TO HYDRAULIC INFORMATION SYSTEM
M-METRIC PART
Y-SEPARATE ILLUSTRATION

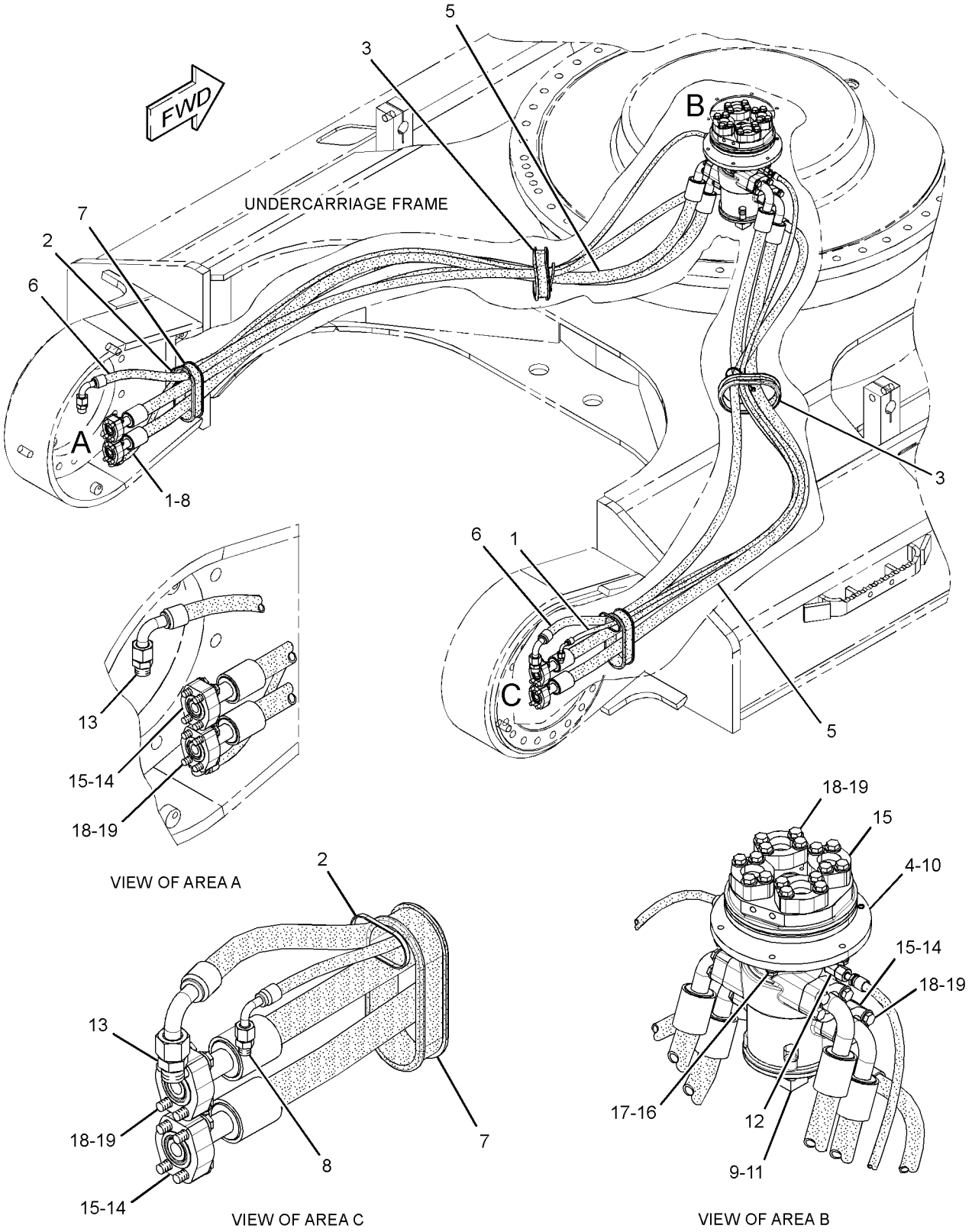

GRAPHIC #1 **<END>** g01366801

HYDRAULIC SYSTEM

239-1619 LINES GP-TRAVEL MOTOR

S/N: MYG1-UP

PART OF 259-7411 HYDRAULIC AR

SMCS-5057, 5058 **i02880150**

NOTE	REF NO	GRAPHIC REF	PART NUMBER	QTY	PART NAME 1 2 3 4 5 6 (PRODUCT LEVEL)	SEE PAGE
	1	1	**7K-1181**	4	STRAP-CABLE	
	2	1	**296-7072**	2	GROMMET	
I	3	1	**179-7616**	2	HOSE AS	
I	4	1	**227-0674**	4	HOSE AS	
Y	5	1	**234-4440**	1	SWIVEL GP	622
I	6	1	**286-6824**	2	HOSE AS	
	7	1	*148-8336*	2	CONNECTOR AS	
					(EACH INCLUDES)	
		1	**3J-1907**	1	SEAL-O-RING	
		1	**6V-8397**	1	SEAL-O-RING	
		1	**6V-8636**	1	CONNECTOR	
	8	1	*148-8327*	2	CONNECTOR AS	
					(EACH INCLUDES)	
		1	**3D-2824**	1	SEAL-O-RING	
		1	**6V-8637**	1	CONNECTOR	
		1	**6V-9746**	1	SEAL-O-RING	
	9	1	*148-8388*	1	ELBOW AS	
		1	**2M-9780**	1	SEAL-O-RING	
		1	**6V-8629**	1	ELBOW	
		1	**6V-9746**	1	SEAL-O-RING	
	10	1	*150-4033*	1	TEE AS	
		1	**6V-9846**	1	TEE-SWIVEL	
		1	**6V-9746**	2	SEAL-O-RING	
	11	1	*150-4044*	2	CONNECTOR AS	
					(EACH INCLUDES)	
		1	**3J-1907**	1	SEAL-O-RING	
		1	**6V-8397**	1	SEAL-O-RING	
		1	**8T-1779**	1	CONNECTOR	
	12	1	**1P-3703**	8	SEAL-RECTANGULAR	
	13	1	**6V-0400**	24	FLANGE-HALF	
	14	1	**8T-4121**	6	WASHER-HARD (11X21X2.5-MM THK)	
M	15	1	**8T-4136**	6	BOLT (M10X1.5X25-MM)	
M	16	1	**8T-4184**	48	BOLT (M12X1.75X45-MM)	
	17	1	**8T-4223**	48	WASHER-HARD (13.5X25.5X3-MM THK)	
B	18	1	**1U-8846**	1	SEALANT-GASKET	
C	19	1	**108-7118**	2	GROMMET	

B-USE AS REQUIRED
C-CHANGE FROM PREVIOUS TYPE
I-REFER TO HYDRAULIC INFORMATION SYSTEM
M-METRIC PART
Y-SEPARATE ILLUSTRATION

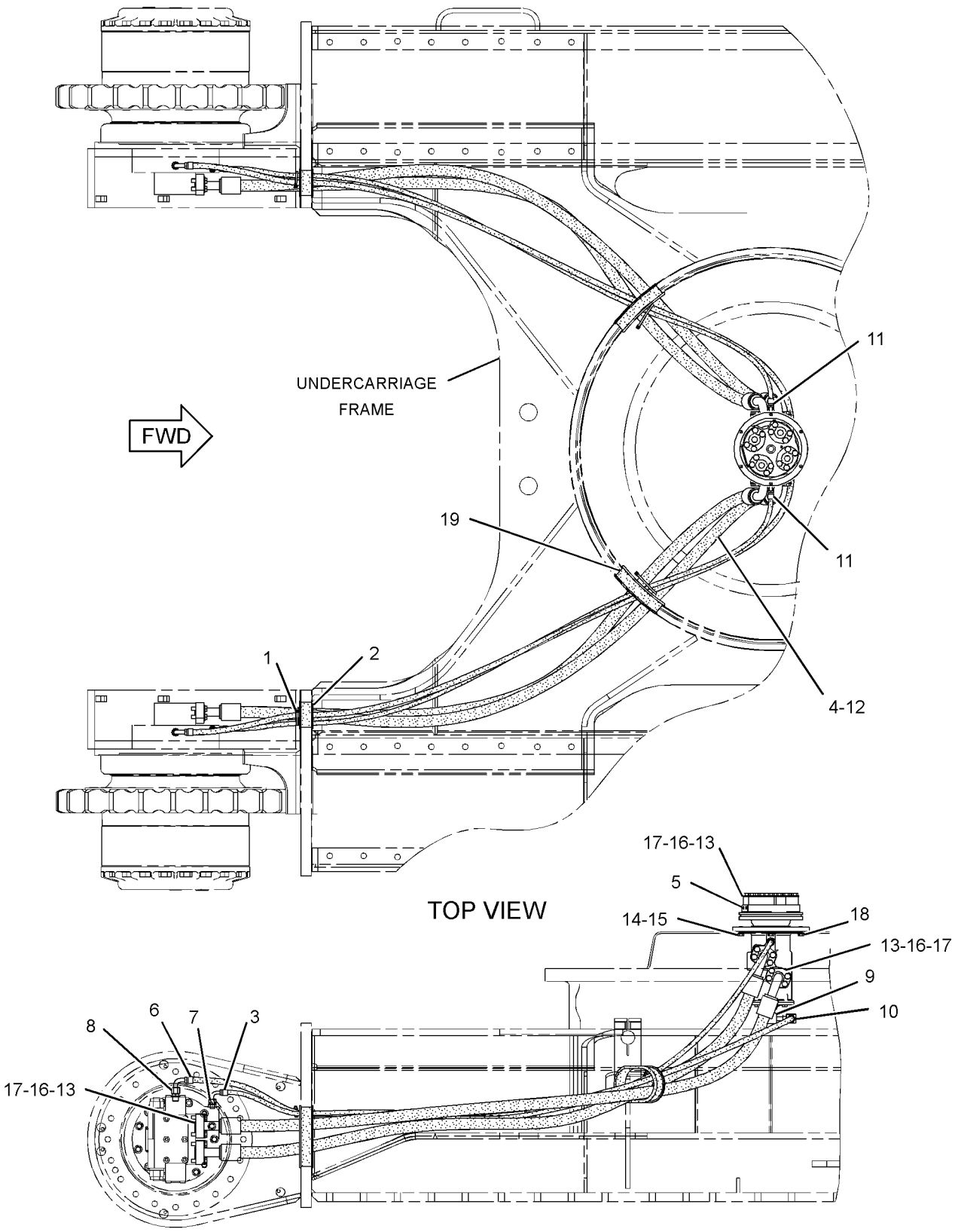

GRAPHIC #1

<END>

g01437910

215-5037 MANIFOLD GP-CONTROL–PILOT OIL SUPPLY

S/N: MYG1-UP; PPN1-UP

PART OF 260-7867 LINES GP-PILOT

SMCS-5264 **i03572052**

NOTE	PART NUMBER	QTY	PART NAME 1 2 3 4 5 6 (PRODUCT LEVEL)	SEE PAGE
Y	**239-8998**	1	MANIFOLD GP-CONTROL (PILOT OIL SUPPLY) (STEEL BODY)	591
			-OR-	
Y	**239-8697**	1	MANIFOLD GP-CONTROL (PILOT OIL SUPPLY) (ALUMINUM BODY)	590

Y-SEPARATE ILLUSTRATION

<END>

239-8697 MANIFOLD GP-CONTROL—PILOT OIL SUPPLY

S/N: MYG1-UP; PPN1-UP
ALUMINUM BODY
PART OF 215-5037 MANIFOLD GP-CONTROL

SMCS-5264 **i03572091**

NOTE	REF NO	GRAPHIC REF	PART NUMBER	QTY	PART NAME 1 2 3 4 5 6 (PRODUCT LEVEL)	SEE PAGE
Y	1	1	**121-1491**	1	VALVE GP-SOLENOID (SWING BRAKE RELEASE)	699
Y	1A	1	**121-1491**	1	VALVE GP-SOLENOID (HYDRAULIC LOCKOUT)	699
Y	1B	1	**121-1491**	1	VALVE GP-SOLENOID (TRAVEL SPEED)	699
	4	1	**197-0196**	1	VALVE-CHECK	
	5	1	**197-0199**	1	SPRING	
	6	1	**197-0273**	1	SPRING	
	7	1	**9S-8005**	4	PLUG-O-RING	
	8	1	**3J-1907**	1	SEAL-O-RING	
	9	1	**3K-0360**	4	SEAL-O-RING	
	10	1	**4J-7533**	6	SEAL-O-RING	
M	11	1	**7I-2272**	6	BOLT (M5X0.8X12-MM)	
	12	1	**9S-8001**	6	PLUG-O-RING	
	13	1	**9S-8004**	1	PLUG	

M-METRIC PART
Y-SEPARATE ILLUSTRATION

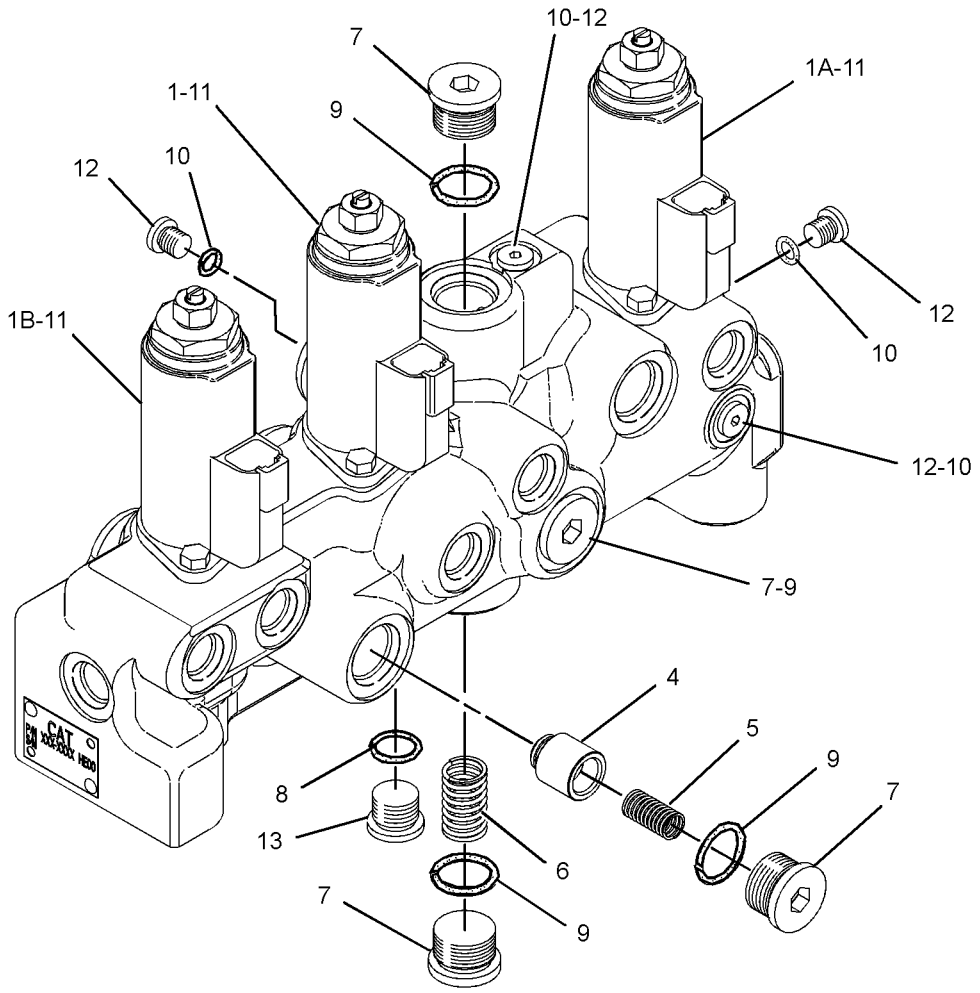

GRAPHIC #1 **<END>** g01901007

239-8998 MANIFOLD GP-CONTROL—PILOT OIL SUPPLY

S/N: MYG1-UP; PPN1-UP
STEEL BODY
PART OF 215-5037 MANIFOLD GP-CONTROL

SMCS-5264 **i03572090**

NOTE	REF NO	GRAPHIC REF	PART NUMBER	QTY	PART NAME 1 2 3 4 5 6 (PRODUCT LEVEL)	SEE PAGE
Y	1	1	**121-1491**	1	VALVE GP-SOLENOID (SWING BRAKE RELEASE)	699
Y	1A	1	**121-1491**	1	VALVE GP-SOLENOID (HYDRAULIC LOCKOUT)	699
Y	1B	1	**121-1491**	1	VALVE GP-SOLENOID (TRAVEL SPEED)	699
	4	1	**197-0196**	1	VALVE-CHECK	
	5	1	**9S-8005**	3	PLUG-O-RING	
	6	1	**197-0199**	1	SPRING	
	7	1	**197-0273**	1	SPRING	
	8	1	**3K-0360**	3	SEAL-O-RING	
M	9	1	**7I-2272**	6	BOLT (M5X0.8X12-MM)	
	10	1	**7M-7410**	2	PLUG-PIPE	
	11	1	**8T-6759**	6	PLUG-PIPE	

M-METRIC PART
Y-SEPARATE ILLUSTRATION

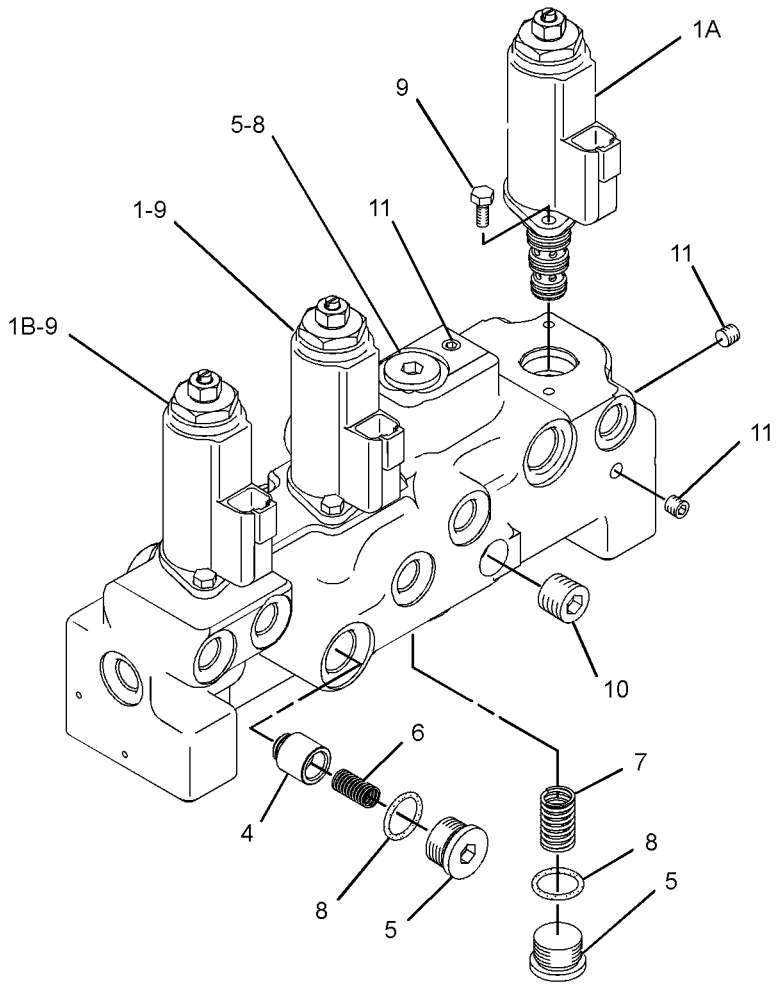

GRAPHIC #1 **<END>** g01901020

200-3372 MOTOR & MTG GP-SWING

S/N: MYG1-UP; PPN1-UP
PART OF 333-2958 DRIVE GP-SWING

SMCS-5058 **i03648782**

NOTE	REF NO	GRAPHIC REF	PART NUMBER	QTY	PART NAME 1 2 3 4 5 6 (PRODUCT LEVEL)	SEE PAGE
CY	1	1	**334-9973**	1	MOTOR GP-SWING	596
	2	1	**8T-6404**	1	SEAL-O-RING	
	3	1	**6V-5204**	1	RING-RETAINING	
	4	1	**9X-8257**	4	WASHER (17.5X30X3.5-MM THK)	
M	5	1	**6V-8201**	4	BOLT-SOCKET HEAD (M16X2X45-MM)	

C-CHANGE FROM PREVIOUS TYPE
M-METRIC PART
Y-SEPARATE ILLUSTRATION

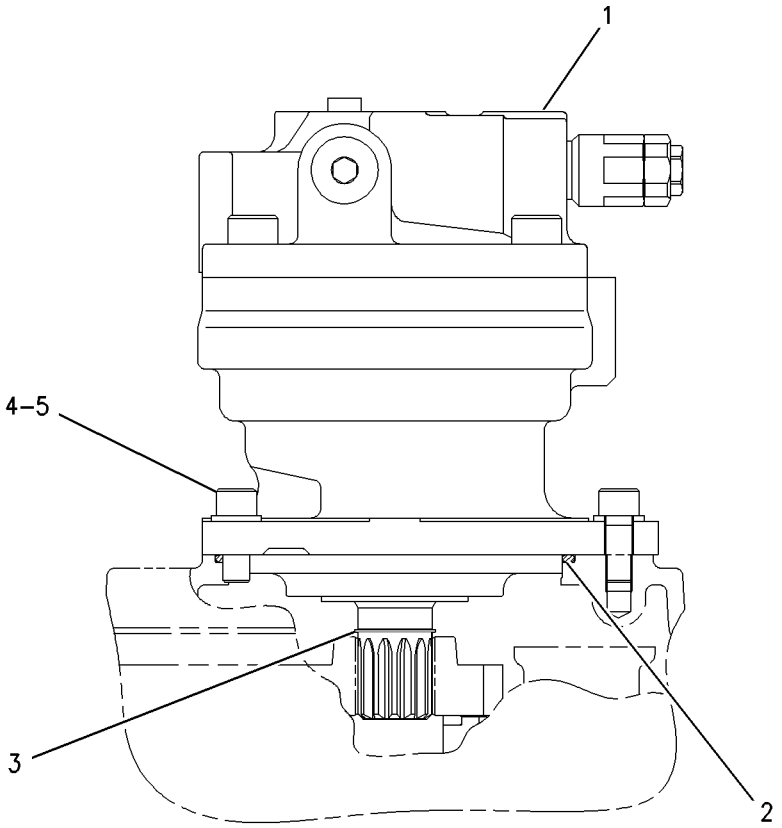

GRAPHIC #1 **<END>** g00835356

HYDRAULIC SYSTEM

191-5606 MOTOR & MTG GP-TRAVEL

S/N: MYG1-UP; PPN1-UP

PART OF 296-6217 DRIVE GP-FINAL

SMCS-4351 **i03629822**

NOTE	REF NO	GRAPHIC REF	PART NUMBER	QTY	PART NAME 1 2 3 4 5 6 (PRODUCT LEVEL)	SEE PAGE
Y	1	1	**204-2819**	1	VALVE GP-TRAVEL COUNTERBALANCE	717
CYR	2	1	**271-6376**	1	MOTOR GP-TRAVEL	599
M	3	1	**096-0008**	4	BOLT-SOCKET HEAD (M16X2X140-MM)	
M	4	1	**3E-6910**	6	BOLT-SOCKET HEAD (M12X1.75X70-MM)	
	5	1	**3F-1547**	1	SEAL-O-RING	

C-CHANGE FROM PREVIOUS TYPE
M-METRIC PART
R-REMFG PART MAY BE AVAILABLE
Y-SEPARATE ILLUSTRATION

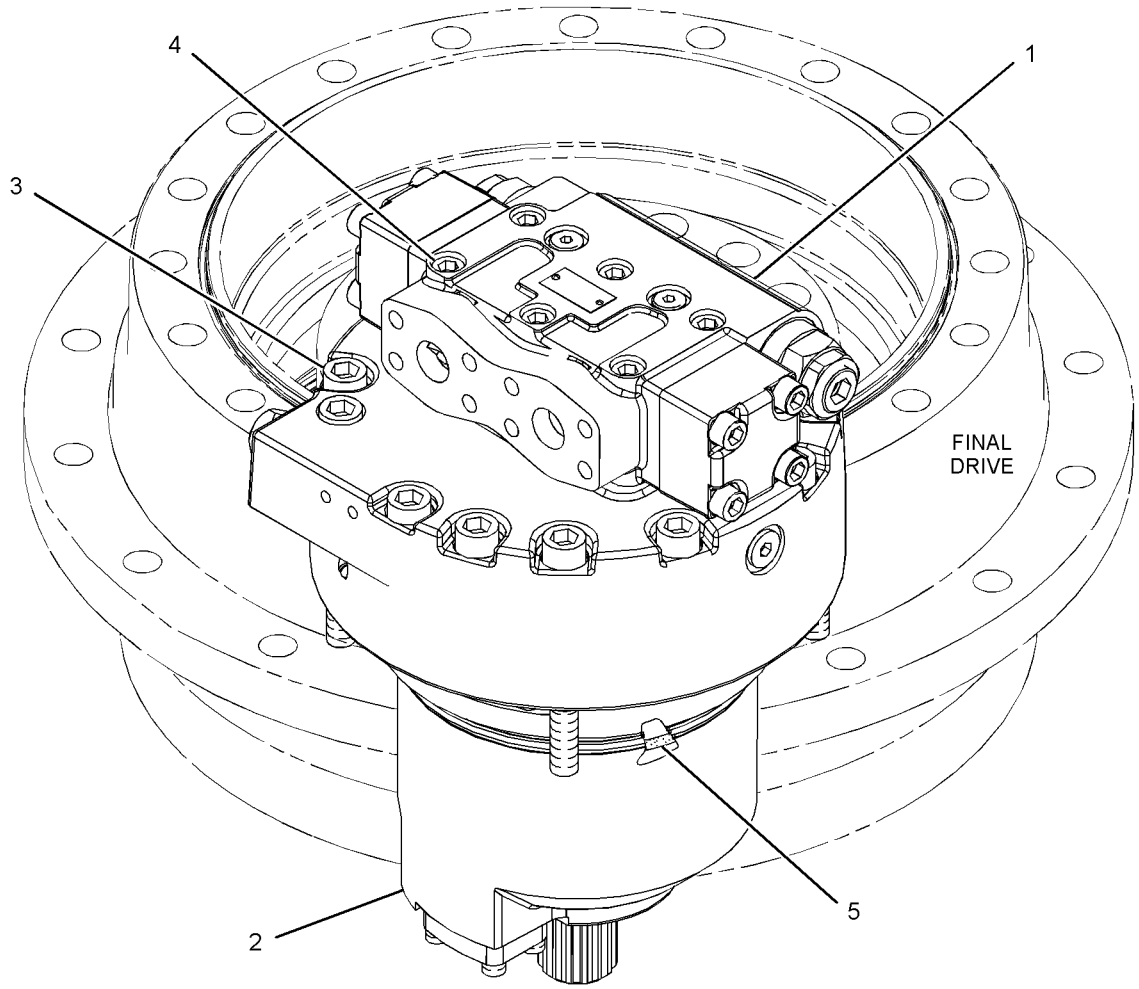

GRAPHIC #1 **<END>** g01951502

234-4638 MOTOR GP-PISTON—HYDRAULIC FAN

S/N: MYG1-UP; PPN1-UP

PART OF 230-2899 FAN GP-SUCTION

SMCS-5058 **i03298162**

NOTE	REF NO	GRAPHIC REF	PART NUMBER	QTY	PART NAME 1 2 3 4 5 6 (PRODUCT LEVEL)	SEE PAGE
	1	1	**8T-9597**	1	RING-RETAINING	
	2	1	**185-0303**	1	SEAL-OIL	
	3	1	**271-6432**	1	BEARING AS-TAPERED ROLLER	
	4	1	**155-9122**	1	SWASHPLATE	
	5	1	**295-9552**	1	HOUSING	
	6	1	**191-7582**	1	SHIM (2.5-MM THK)	
	7	1	**191-7583**	1	BEARING AS-ROLLER	
	8	1	**295-9553**	1	COVER	
M	9	1	**8T-0341**	4	BOLT-SOCKET HEAD (M10X1.5X60-MM)	
	10	1	**9X-8979**	1	DOWEL	
	11	1	**231-4707**	1	SEAL-O-RING	
Y	12	1	**233-2530**	1	ROTATING GP-MOTOR (HYDRAULIC FAN)	619
	13	1	**9S-8005**	1	PLUG-O-RING	
	14	1	**3K-0360**	1	SEAL-O-RING	
	15	1	**9X-6419**	2	DOWEL	
	16	1	**194-9473**	1	RING	
	17	1	**295-9554**	1	SHAFT-DRIVE	
	18	1	**197-2471**	1	PLUG AS	
		1	**197-2472**	1	SEAL	
	19	1	**295-9555**	1	SLEEVE	
	20	1	**197-2474**	1	VALVE AS	

M-METRIC PART
Y-SEPARATE ILLUSTRATION

234-4638 MOTOR GP-PISTON *(contd.)* **i03298162**

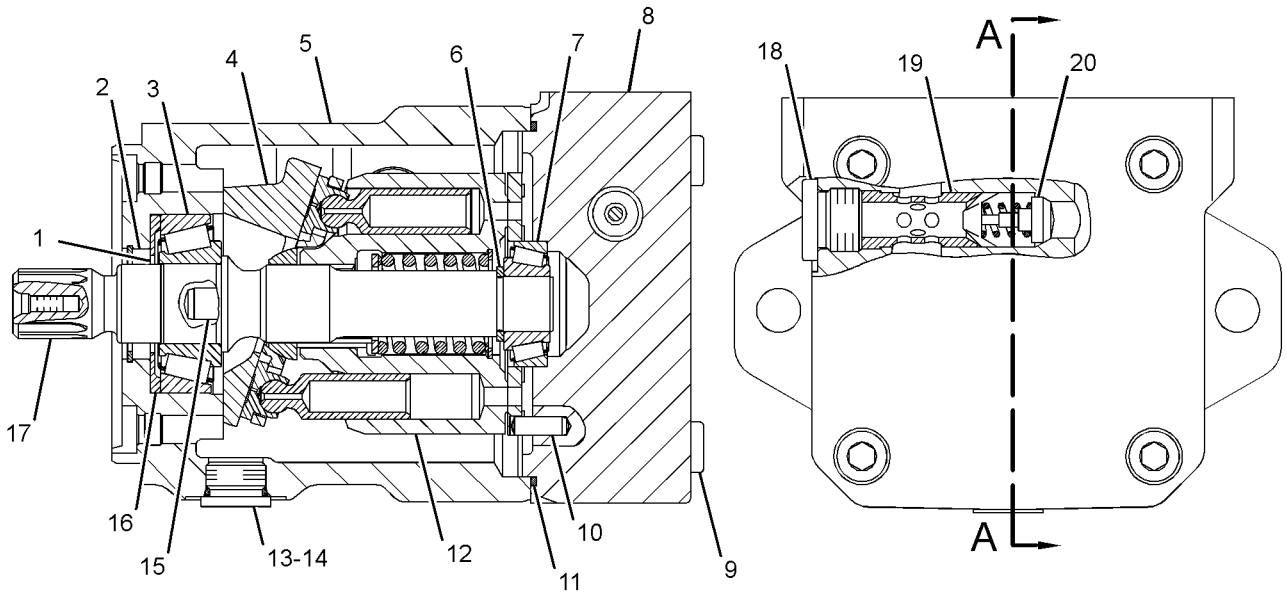

SECTION A-A

GRAPHIC #1 **<END>** g01366619

HYDRAULIC SYSTEM

334-9973 MOTOR GP-SWING

S/N: MYG1-UP; PPN1-UP

PART OF 200-3372 MOTOR & MTG GP-SWING

SMCS-5058 **i03651989**

NOTE	REF NO	GRAPHIC REF	PART NUMBER	QTY	PART NAME 1 2 3 4 5 6 (PRODUCT LEVEL)	SEE PAGE
Y	1	1	**204-2678**	2	VALVE GP-RELIEF (SWING MOTOR)	684
Y	2	1	**334-9979**	1	MOTOR GP-SWING	597

Y-SEPARATE ILLUSTRATION

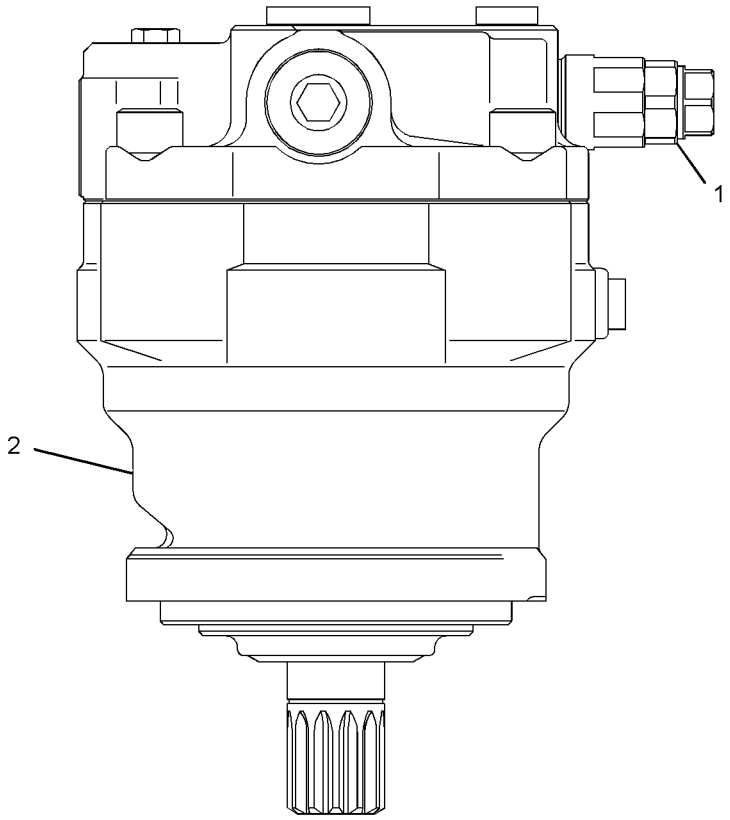

LEFT SIDE VIEW

GRAPHIC #1 **<END>** g01959636

HYDRAULIC SYSTEM

334-9979 MOTOR GP-SWING

S/N: MYG1-UP; PPN1-UP

PART OF 334-9973 MOTOR GP-SWING

SMCS-5058 **i03648828**

NOTE	REF NO	GRAPHIC REF	PART NUMBER	QTY	PART NAME 1 2 3 4 5 6 (PRODUCT LEVEL)	SEE PAGE
	1	1	**188-4163**	1	SHAFT	
J	2	1	**096-1533**	1	SEAL-LIP TYPE	
	3	1	**188-4170**	1	BEARING	
	4	1	**204-2676**	1	BODY	
	5	1	**188-4165**	1	PLATE	
	6	1	**188-4167**	1	PLATE	
	7	1	**334-9982**	1	PISTON AS	
	8	1	**188-4166**	1	PLATE	
	9	1	**188-4164**	1	BARREL	
	10	1	**188-4172**	3	PLATE-FRICTION	
	11	1	**188-4173**	4	PLATE-SEPARATOR	
	12	1	**184-3835**	1	PISTON	
J	13	1	**5J-2383**	1	SEAL-O-RING	
J	14	1	**7Y-4294**	1	SEAL-O-RING	
J	15	1	**4I-5849**	1	SEAL-O-RING	
	16	1	**123-2139**	20	SPRING	
	17	1	**188-4162**	1	HEAD GP-MOTOR	
		1	**099-8111**	2	PIN-SPRING	
J	18	1	**3J-1907**	2	SEAL-O-RING	
	19	1	**110-5525**	2	PLUG	
	20	1	**204-2677**	1	PLATE-VALVE	
	21	1	**188-4171**	1	BEARING	
	22	1	**170-9996**	2	PLUG	
	23	1	**170-9985**	2	VALVE	
M	24	1	**7Y-5221**	4	BOLT-SOCKET HEAD (M20X2.5X45-MM)	
	25	1	**170-9986**	2	SPRING	
J	26	1	**095-1600**	2	SEAL-O-RING	
					AVAILABLE REPAIR KIT(S):	
J			**188-4176**	1	KIT-SEAL (SWING MOTOR)	

J-KIT MARKED J INCLUDES PART(S) MARKED J
M-METRIC PART

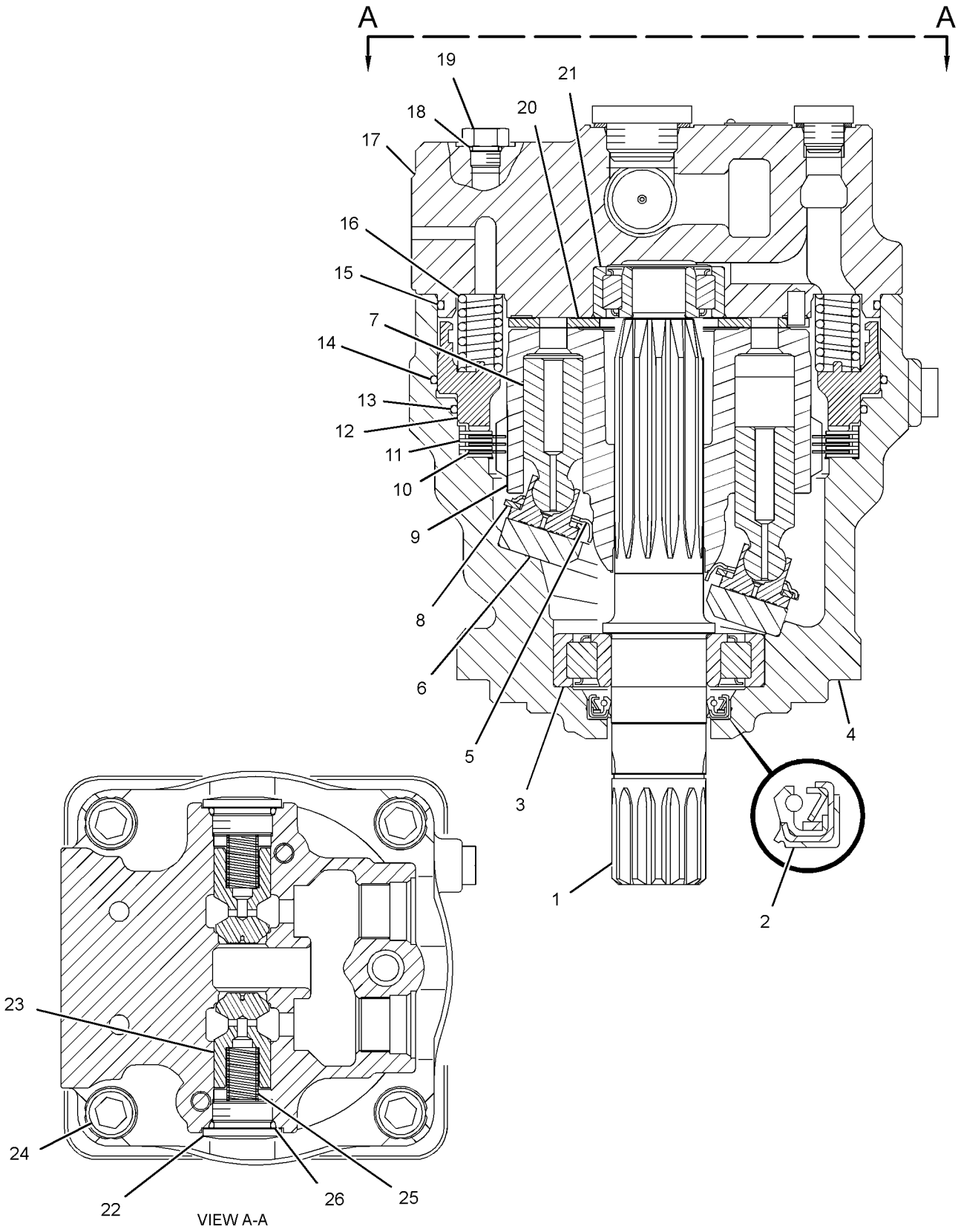

GRAPHIC #1 **<END>** g01768361

HYDRAULIC SYSTEM

271-6376 MOTOR GP-TRAVEL*R

S/N: MYG1-UP; PPN1-UP

PART OF 191-5606 MOTOR & MTG GP-TRAVEL

SMCS-4351, 5058 **i03629821**

NOTE	REF NO	GRAPHIC REF	PART NUMBER	QTY	PART NAME 1 2 3 4 5 6 (PRODUCT LEVEL)	SEE PAGE
	1	2	**1T-0936**	1	PLUG-PIPE	
	2	1	**4B-4158**	4	SCREW-DRIVE (NO 4X0.25-IN)	
J	3	1	**6V-3382**	1	SEAL-LIP TYPE	
	4	1	**8J-2559**	1	PLATE-CAUTION (OIL FILL)	
	5	2	**087-4786**	1	ADAPTER	
	6	1	**108-6503**	9	PISTON AS	
	7	1	**118-4057**	9	SPRING	
	8	2	**124-1541**	2	PIN	
	9	2	**124-1561**	20	SPRING-BRAKE	
	10	2	**137-3708**	1	RETAINER	
	11	1	**167-3855**	1	SHAFT	
	12	2	**167-3857**	1	KEY	
	13	2	**167-3858**	1	KEY	
	14	1	**167-3859**	1	PLATE-CAM	
	15	1	**167-3862**	1	PLATE-RETAINER	
	16	1	**167-3863**	1	BALL	
	17	1	**167-3865**	5	PLATE-SEPARATOR	
	18	1	**167-3866**	4	PLATE-FRICTION	
	19	1	**167-3867**	1	PLATE-PORT	
	20	2	**167-3868**	1	PISTON-BRAKE	
	21	2	**167-3872**	1	SPOOL	
J	22	2	**170-1612**	2	SEAL	
J	23	2	**170-1626**	1	RING-BACKUP	
J	24	2	**170-1627**	1	RING-BACKUP	
	25	1	**173-4063**	1	BARREL AS-MOTOR	
	26	1	**173-4066**	1	SPACER (63.05X79.8X7-MM THK)	
	27	2	**175-7436**	1	VALVE	
	28	1	**175-7887**	2	DOWEL	
	29	1	**180-6769**	1	BEARING AS	
	30	1	**180-6770**	1	BEARING AS	
	31	1	**186-5175**	1	PLUG	
	32	1	**189-3189**	1	RING-SEAL	
	33	1	**193-7901**	1	BODY AS	
	34	1	**196-4987**	1	PISTON-ACTUATOR	
	35	1	**271-6377**	1	HEAD AS	
	36	2	**274-4512**	1	SEAT	
	37	1	**274-4513**	2	RETAINER	
J	38	1	**095-1572**	2	SEAL-O-RING	
J	39	2	**095-1585**	1	SEAL-O-RING	
J	40	1	**095-1596**	1	SEAL-O-RING	
J	41	1	**095-1700**	2	SEAL-O-RING	
	42	2	**095-7380**	1	SPRING	
	44	2	**096-3978**	1	SPRING	
J	45	1	**096-5919**	2	RING-BACKUP	
J	46	1	**099-7030**	1	RING-BACKUP	
J	47	2	**170-1616**	1	SEAL	
	48	1	**2D-6642**	2	BALL	
J	49	2	**2M-9780**	1	SEAL-O-RING	
	50	1	**2R-1236**	1	RING-RETAINING (LOCK, INTERNAL)	
J	51	1	**3D-2824**	2	SEAL-O-RING	
J	53	1	**3K-0360**	2	SEAL-O-RING	
	54	1	**4K-4284**	1	RING-RETAINING	
M	55	1	**6V-5192**	4	BOLT-SOCKET HEAD (M8X1.25X30-MM)	
J	56	2	**7Y-5219**	2	SEAL-O-RING	
M	57	1	**8T-2393**	8	BOLT-SOCKET HEAD (M16X2X60-MM)	
	58	1	**9S-8005**	2	PLUG-O-RING	

271-6376 MOTOR GP-TRAVEL *(contd.)* i03629821

NOTE	REF NO	GRAPHIC REF	PART NUMBER	QTY	PART NAME 1 2 3 4 5 6 (PRODUCT LEVEL)	SEE PAGE
	59	1	**9S-8008**	2	PLUG-O-RING	
					AVAILABLE REPAIR KIT(S):	
J			**272-0290**	1	KIT-SEAL (TRAVEL MOTOR)	
					(ALSO INCLUDES O-RING SEALS)	

J-KIT MARKED J SERVICES PART(S) MARKED J
M-METRIC PART

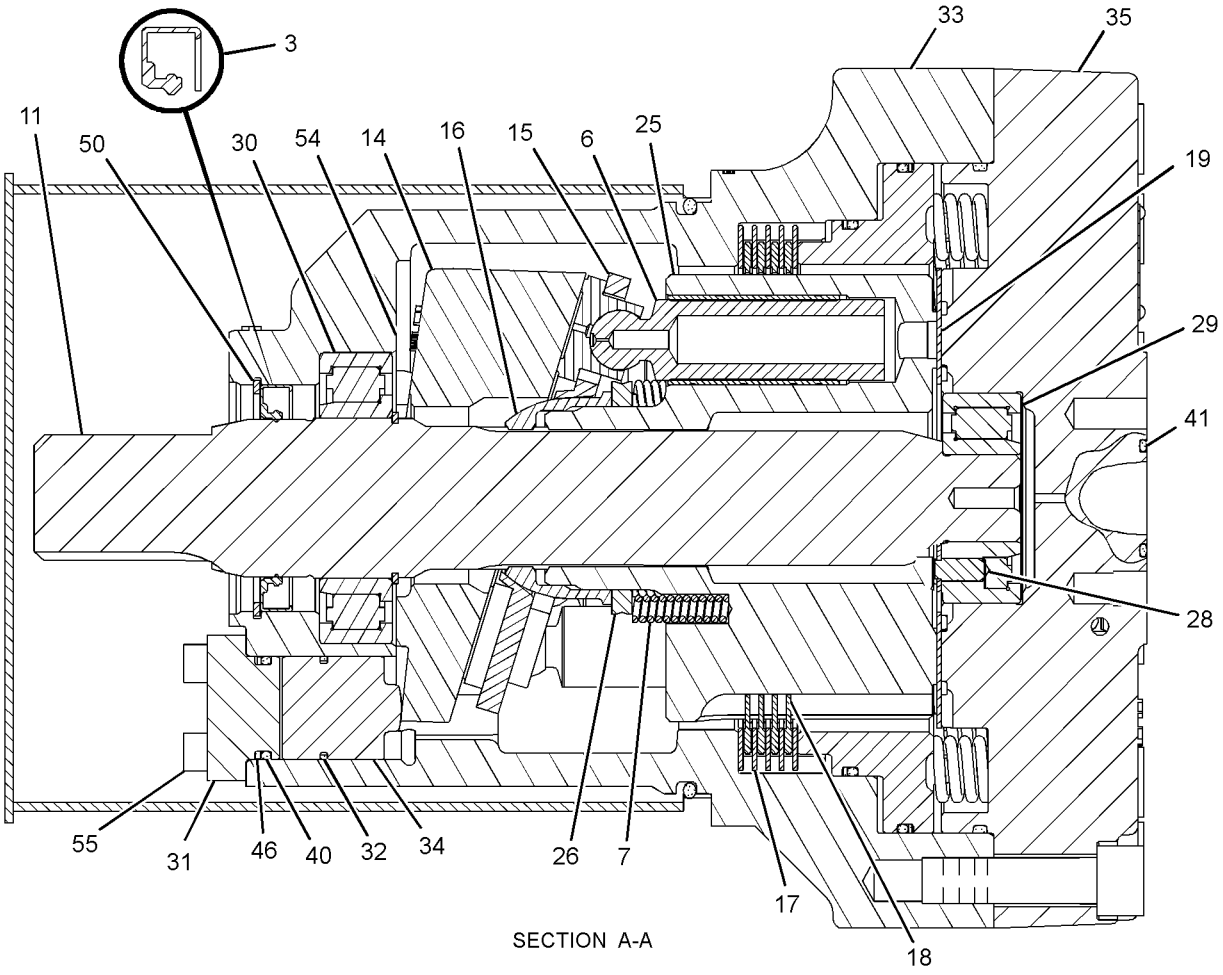

SECTION A-A

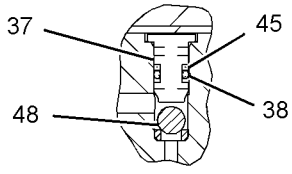

SECTION G-G

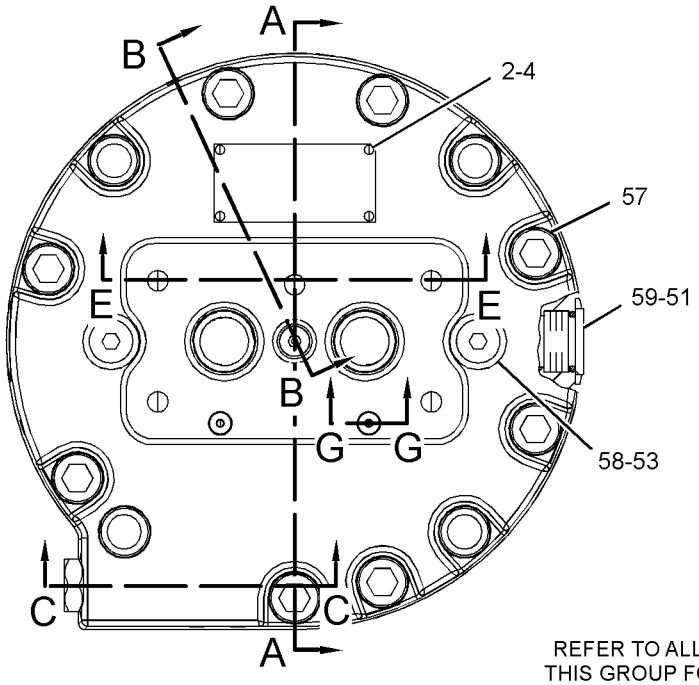

REFER TO ALL ILLUSTRATIONS OF THIS GROUP FOR AUXILIARY VIEWS

GRAPHIC #1

g01949702

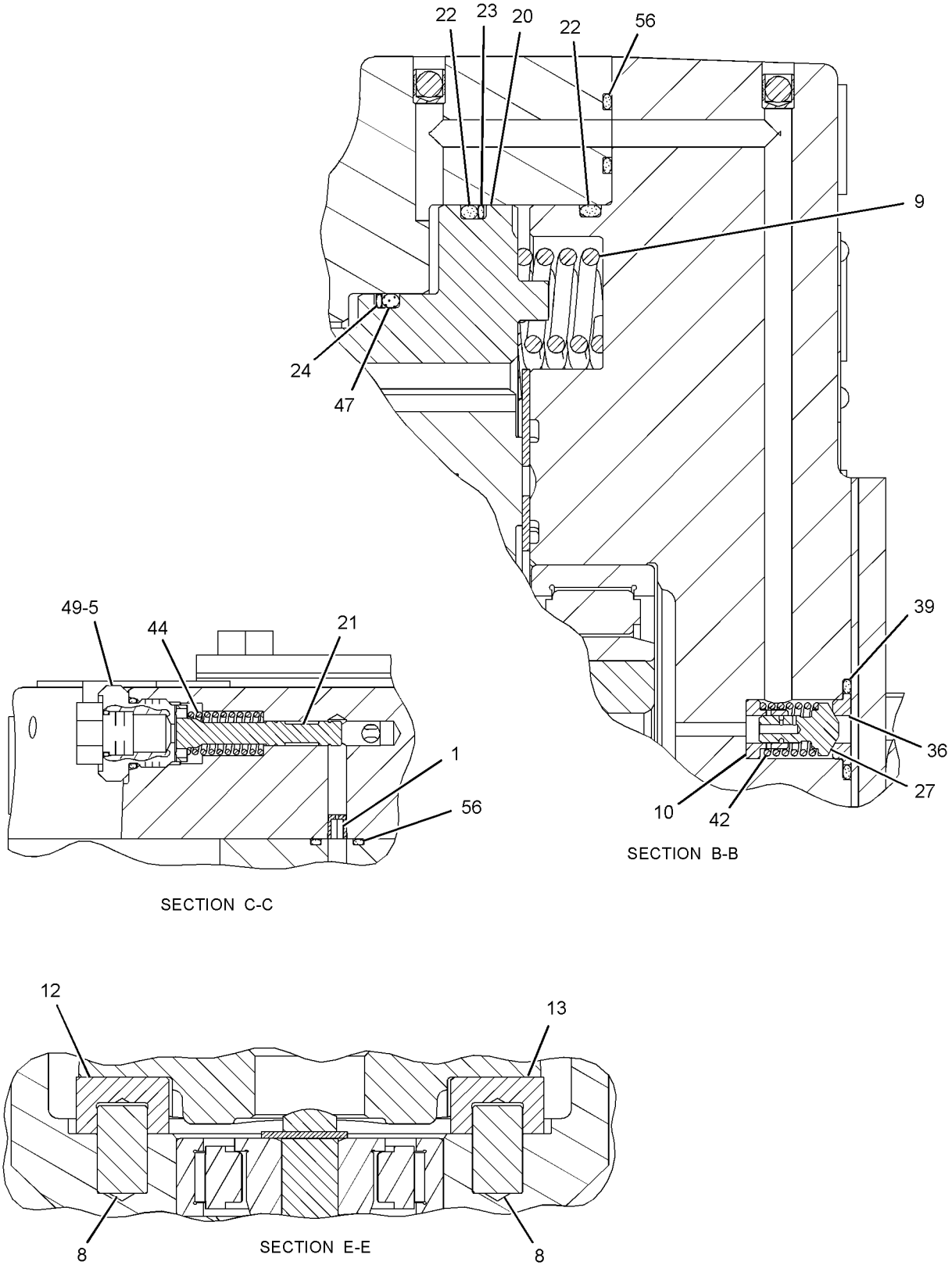

GRAPHIC #2 **<END>** g01245798

266-1161 MOUNTING GP-MAIN CONTROL VALVE

S/N: MYG1-UP; PPN1-UP

PART OF 259-7410, 259-7411 HYDRAULIC AR

SMCS-5051 **i02387824**

NOTE	REF NO	GRAPHIC REF	PART NUMBER	QTY	PART NAME 1 2 3 4 5 6 (PRODUCT LEVEL)	SEE PAGE
	1	1	**260-7904**	1	SUPPORT AS	
	2	1	**266-1162**	1	SUPPORT AS	
M	3	1	**100-3866**	8	BOLT-SELF-LOCKING (M16X2X40-MM)	
	4	1	**9X-8257**	4	WASHER (17.5X30X3.5-MM THK)	
	5	1	**196-0711**	4	WASHER (17X40X8-MM THK)	

M-METRIC PART

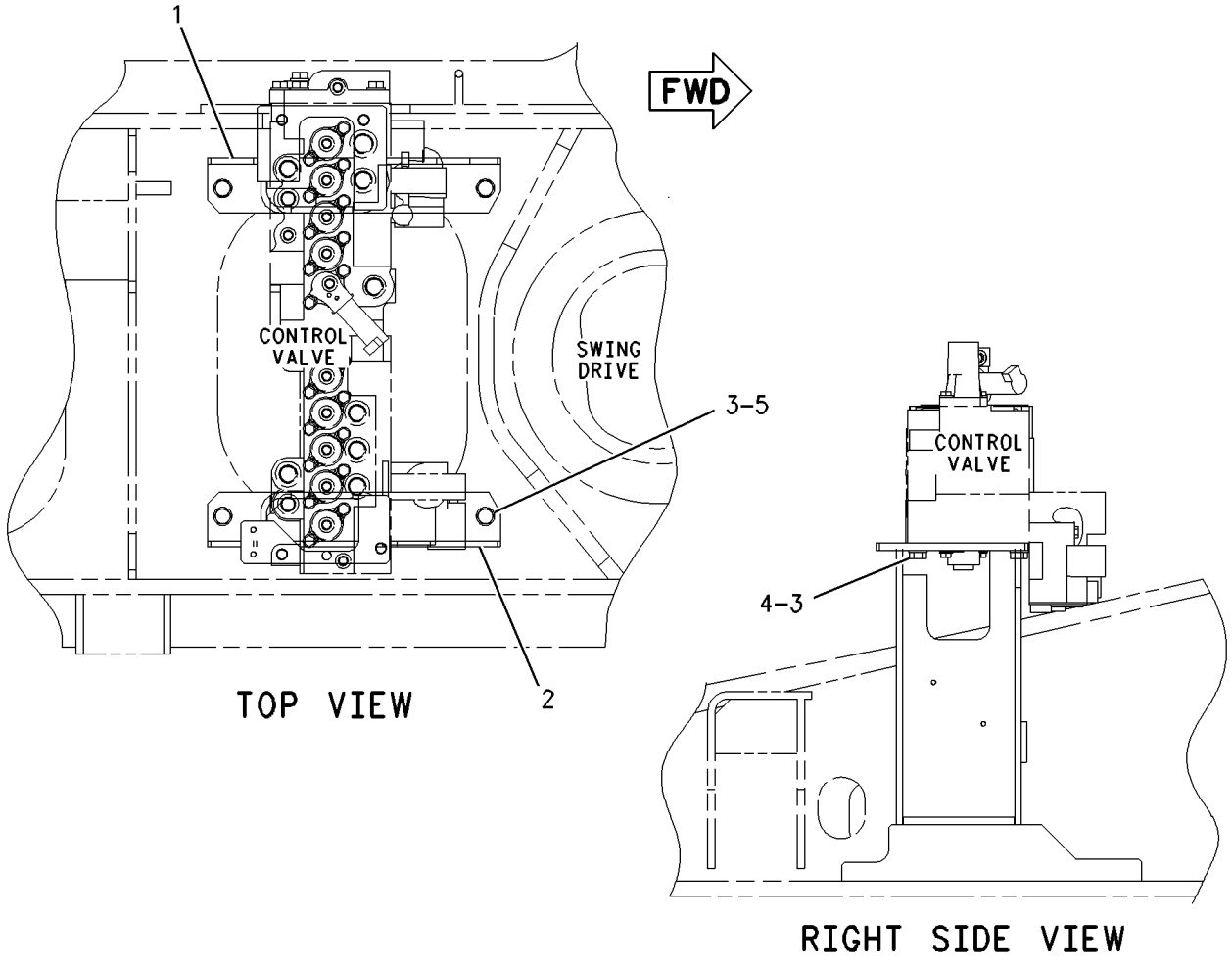

GRAPHIC #1 **<END>** g00676425

6E-2746 PLUG GP-CONTROL VALVE

S/N: MYG1-UP; PPN1-UP
PART OF 6E-4816 PLUG GP-CONTROL VALVE
ALSO AN ATTACHMENT

SMCS-5051 **i00615114**

NOTE	REF NO	GRAPHIC REF	PART NUMBER	QTY	PART NAME 1 2 3 4 5 6 (PRODUCT LEVEL)	SEE PAGE
	1	1	**6E-2745**	1	SEAL-O-RING	
	2	1	**9T-4506**	1	PLUG	

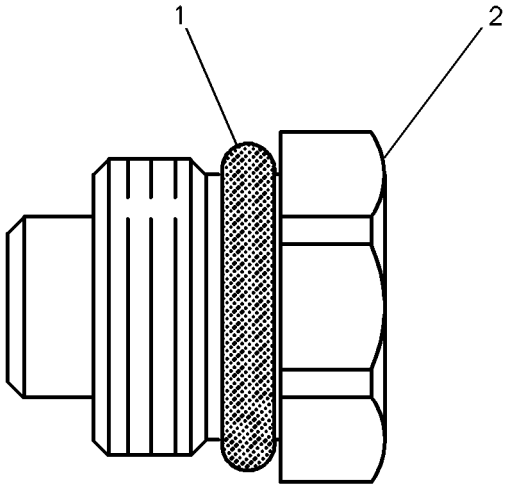

GRAPHIC #1 **<END>** g00228739

6E-4793 PLUG GP-CONTROL VALVE

S/N: MYG1-UP; PPN1-UP
PART OF 6E-4816 PLUG GP-CONTROL VALVE
ALSO AN ATTACHMENT

SMCS-5051 **i01745364**

NOTE	REF NO	GRAPHIC REF	PART NUMBER	QTY	PART NAME 1 2 3 4 5 6 (PRODUCT LEVEL)	SEE PAGE
	1	1	**6E-4815**	1	PLUG	
	2	1	**3D-2824**	1	SEAL-O-RING	
	3	1	**9J-0705**	1	RING-BACKUP	
	4	1	**6M-5062**	1	SEAL-O-RING	

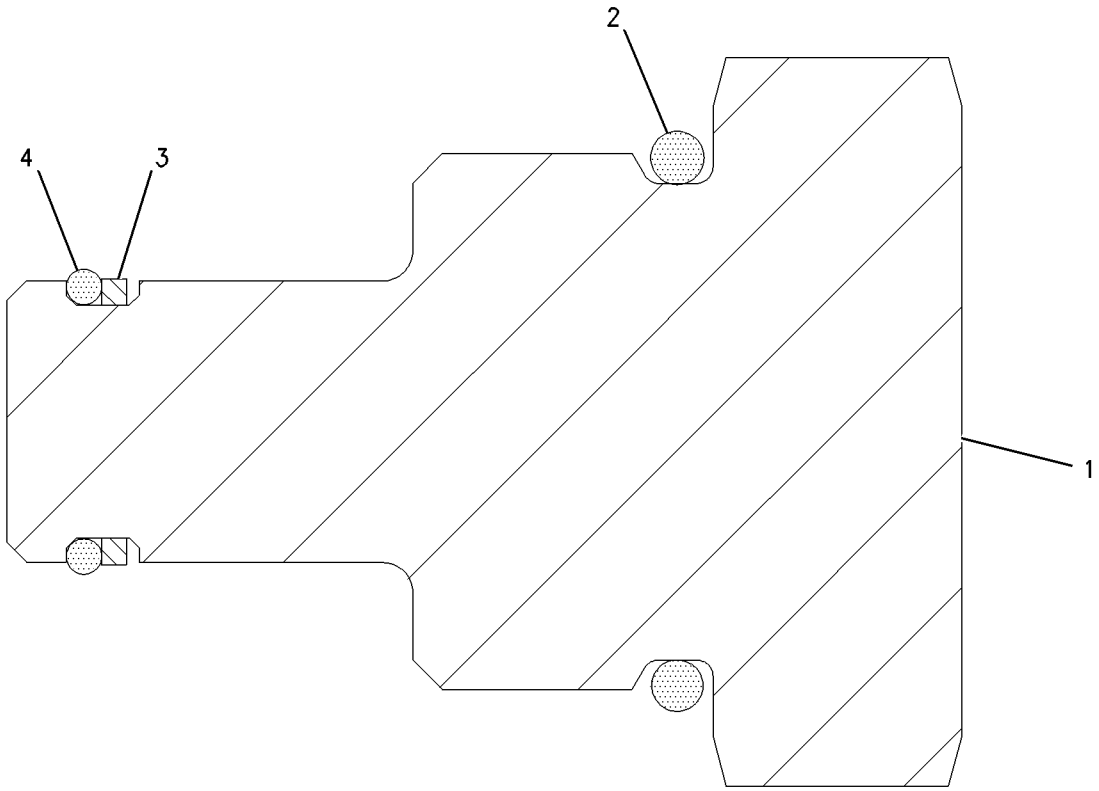

GRAPHIC #1 **<END>** g00893533

6E-4816 PLUG GP-CONTROL VALVE

S/N: MYG1-UP; PPN1-UP
PART OF 285-1362, 285-1375 VALVE GP-CONTROL
ALSO AN ATTACHMENT

SMCS-5051 **i01990991**

NOTE	PART NUMBER	QTY	PART NAME 1 2 3 4 5 6 (PRODUCT LEVEL)	SEE PAGE
Y	*106-6248*	1	PLUG GP-CONTROL VALVE	607
			-OR-	
Y	*6E-4793*	1	PLUG GP-CONTROL VALVE	605
			-OR-	
Y	*6E-2746*	1	PLUG GP-CONTROL VALVE	604

Y-SEPARATE ILLUSTRATION

<END>

106-6248 PLUG GP-CONTROL VALVE

S/N: MYG1-UP; PPN1-UP
PART OF 6E-4816 PLUG GP-CONTROL VALVE
ALSO AN ATTACHMENT

SMCS-5051 **i00611700**

NOTE	REF NO	GRAPHIC REF	PART NUMBER	QTY	PART NAME 1 2 3 4 5 6 (PRODUCT LEVEL)	SEE PAGE
	1	1	**6E-2745**	1	SEAL-O-RING	
	2	1	**9T-4506**	1	PLUG	

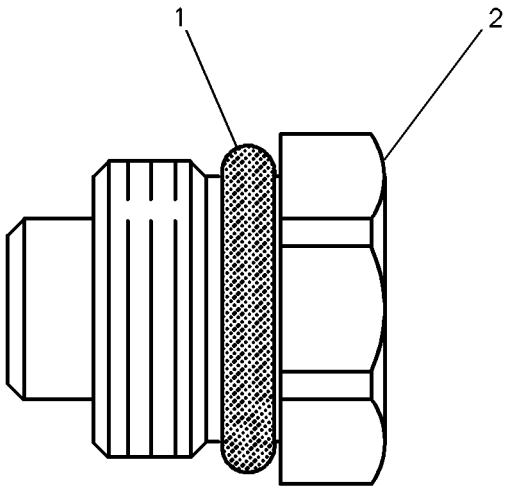

GRAPHIC #1 **<END>** g00228739

HYDRAULIC SYSTEM

255-5823 PUMP & LINES GP-COOLING—AUXILIARY

S/N: MYG1-UP; PPN1-UP
PART OF 340-9469 OPTION AR-CONTROL
AN ATTACHMENT

SMCS-1374, 5057, 5073 **i02430252**

NOTE	PART NUMBER	QTY	PART NAME 1 2 3 4 5 6 (PRODUCT LEVEL)	SEE PAGE
Y	**234-4620**	1	DRIVE GP-AUXILIARY PUMP	428
Y	*260-7864*	1	LINES GP-PUMP (HYDRAULIC OIL COOLER)	563
Y	*259-0682*	1	PUMP & MTG GP-AUXILIARY	609

Y-SEPARATE ILLUSTRATION

<END>

HYDRAULIC SYSTEM

259-0682 PUMP & MTG GP-AUXILIARY

S/N: MYG1-UP; PPN1-UP
PART OF 255-5822 CONTROL AR-AUXILIARY, 255-5823 PUMP & LINES GP-COOLING AN ATTACHMENT

SMCS-5070, 5073 **i02389292**

NOTE	REF NO	GRAPHIC REF	PART NUMBER	QTY	PART NAME 1 2 3 4 5 6 (PRODUCT LEVEL)	SEE PAGE
Y	1	1	**207-8235**	1	PUMP GP-GEAR	611
	2	1	**236-6919**	1	SEAL-O-RING	
	3	1	**8T-4223**	2	WASHER-HARD (13.5X25.5X3-MM THK)	
M	4	1	**8T-4956**	2	BOLT (M12X1.75X35-MM)	

M-METRIC PART
Y-SEPARATE ILLUSTRATION

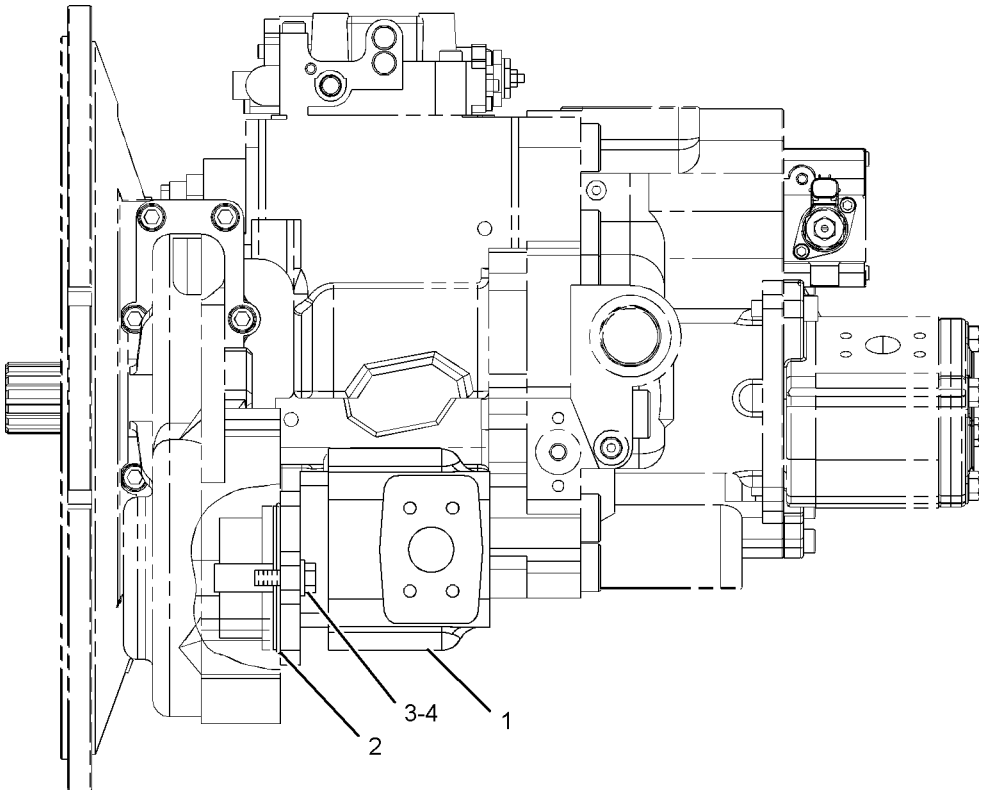

GRAPHIC #1 **<END>** g01098752

HYDRAULIC SYSTEM

310-9486 PUMP & MTG GP-MAIN HYDRAULIC

S/N: MYG1-UP; PPN1-UP

PART OF 259-7410, 259-7411 HYDRAULIC AR

SMCS-5070 **i03281419**

NOTE	REF NO	GRAPHIC REF	PART NUMBER	QTY	PART NAME 1 2 3 4 5 6 (PRODUCT LEVEL)	SEE PAGE
Y	1	1	*272-4669*	1	COUPLING GP-PUMP	412
Y	2	1	*295-9674*	1	PUMP GP-MAIN HYDRAULIC	612
	3	1	**8T-4121**	7	WASHER-HARD (11X21X2.5-MM THK)	
M	4	1	**8T-4186**	7	BOLT (M10X1.5X40-MM)	

M-METRIC PART
Y-SEPARATE ILLUSTRATION

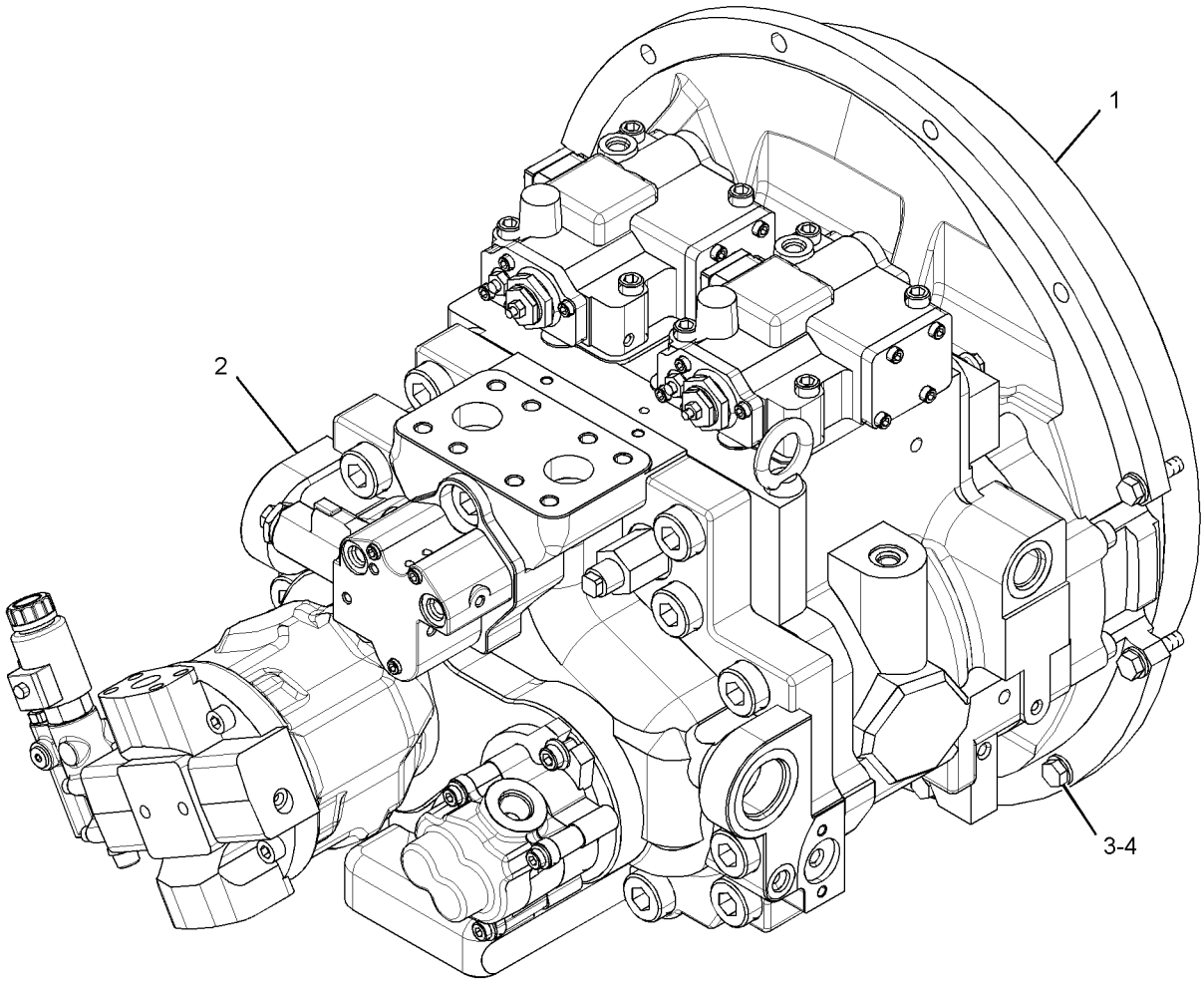

GRAPHIC #1 **<END>** g01430021

HYDRAULIC SYSTEM

207-8235 PUMP GP-GEAR

S/N: MYG1-UP; PPN1-UP
PART OF 259-0682 PUMP & MTG GP-AUXILIARY
AN ATTACHMENT

SMCS-5073 **i03040880**

NOTE	REF NO	GRAPHIC REF	PART NUMBER	QTY	PART NAME 1 2 3 4 5 6 (PRODUCT LEVEL)	SEE PAGE
J	1	1	**109-1641**	2	RING-SNAP	
J	2	1	**204-7368**	2	SEAL-LIP TYPE	
	3	1	**136-3842**	1	FLANGE	
J	4	1	**6V-3551**	2	SEAL-O-RING	
	5	1	**099-3095**	4	DOWEL	
	6	1	**209-5011**	1	COVER	
M	7	1	**8T-0646**	4	BOLT (M12X1.75X110-MM)	
					AVAILABLE REPAIR KIT(S):	
J			**204-7369**	1	KIT-SEAL (GEAR PUMP)	

J-KIT MARKED J SERVICES PARTS MARKED J
M-METRIC PART

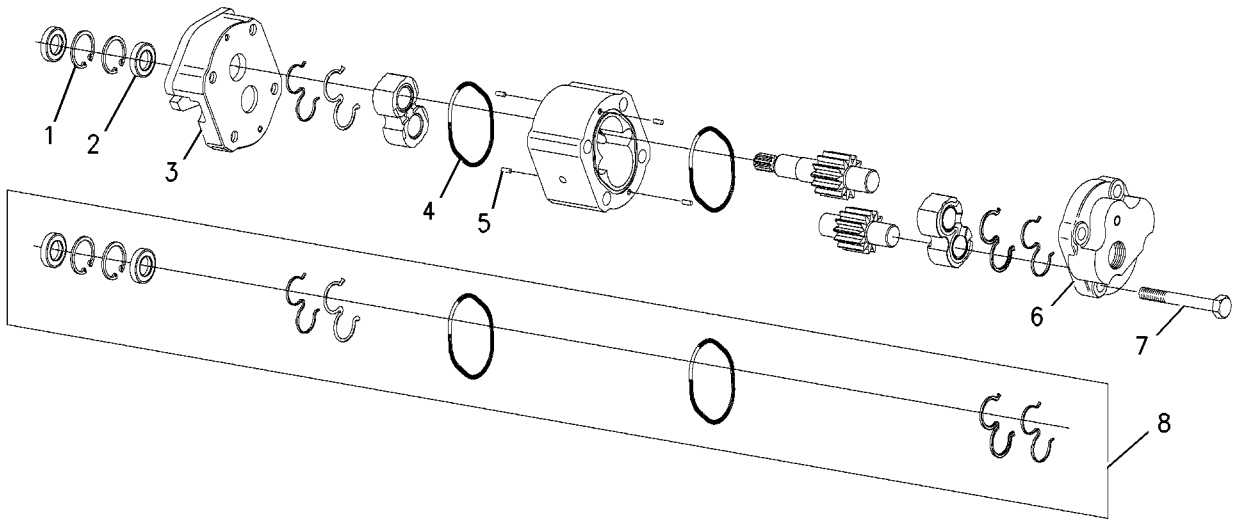

GRAPHIC #1 **<END>** g00847141

295-9674 PUMP GP-MAIN HYDRAULIC

S/N: MYG1-UP; PPN1-UP

PART OF 310-9486 PUMP & MTG GP-MAIN HYDRAULIC

SMCS-5070 **i03246176**

NOTE	REF NO	GRAPHIC REF	PART NUMBER	QTY	PART NAME 1 2 3 4 5 6 (PRODUCT LEVEL)	SEE PAGE
	1	1	**236-6919**	1	SEAL-O-RING	
YR	2	1	**259-0815**	1	PUMP GP-PISTON	613
CYR	3	1	**322-8733**	1	PUMP GP-PISTON	615
M	4	1	**108-1781**	2	BOLT-SOCKET HEAD (M12X1.75X35-MM)	

C-CHANGE FROM PREVIOUS TYPE
M-METRIC PART
R-REMFG PART MAY BE AVAILABLE
Y-SEPARATE ILLUSTRATION

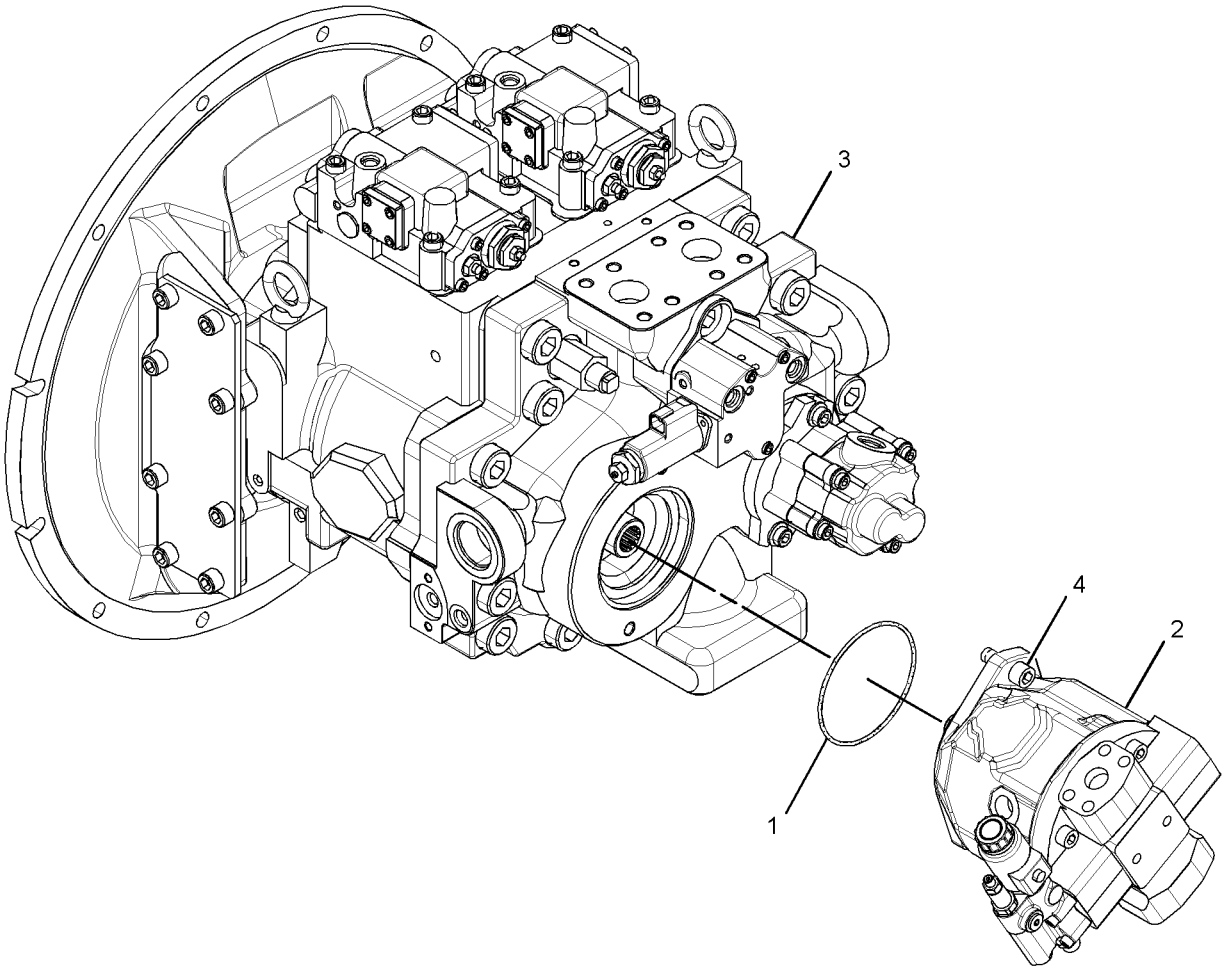

GRAPHIC #1 **<END>** g01431921

259-0815 PUMP GP-PISTON—HYDRAULIC FAN*R

S/N: MYG1-UP; PPN1-UP

PART OF 295-9674 PUMP GP-MAIN HYDRAULIC

SMCS-5070 **i02387773**

NOTE	REF NO	GRAPHIC REF	PART NUMBER	QTY	PART NAME 1 2 3 4 5 6 (PRODUCT LEVEL)	SEE PAGE
	1	1	**191-7581**	1	SHAFT	
	2	1	**8T-9597**	1	RING-RETAINING	
	3	1	**194-9473**	1	RING	
	4	1	**155-9125**	1	BEARING AS-ROLLER	
	5	1	**213-9250**	4	SEAL-O-RING	
M	6	1	**9X-6032**	4	BOLT-SOCKET HEAD (M10X1.5X30-MM)	
	7	1	**191-7583**	1	BEARING AS-ROLLER	
	8	1	**213-9248**	1	SEAL-O-RING	
	9	1	**191-7582**	1	SHIM (2.5-MM THK)	
Y	10	1	**266-7833**	1	ROTATING GP-PUMP	620
	11	1	**9S-8005**	1	PLUG-O-RING	
	12	1	**3K-0360**	1	SEAL-O-RING	
	13	1	**155-9134**	2	PLATE	
	14	1	**155-9127**	1	SEAL	
	15	1	**155-9131**	1	SWASHPLATE	
Y	16	1	**209-5982**	1	ACTUATOR GP	406
	17	1	**266-7835**	1	COVER	
	18	1	**120-4394**	1	PLUG-BREAK OFF	
	19	1	**137-3780**	2	PLUG	
	20	1	**259-0908**	2	SEAL	
	21	1	**204-2799**	1	DOWEL	
	22	1	**266-7834**	1	HOUSING	
	23	1	**9X-7680**	3	SEAL-O-RING	
M	24	1	**8T-8442**	4	BOLT-SOCKET HEAD (M6X1X30-MM)	
Y	25	1	**259-0907**	1	VALVE GP-PUMP CONTROL (HYDRAULIC FAN)	679

M-METRIC PART
Y-SEPARATE ILLUSTRATION

259-0815 PUMP GP-PISTON *(contd.)* **i02387773**

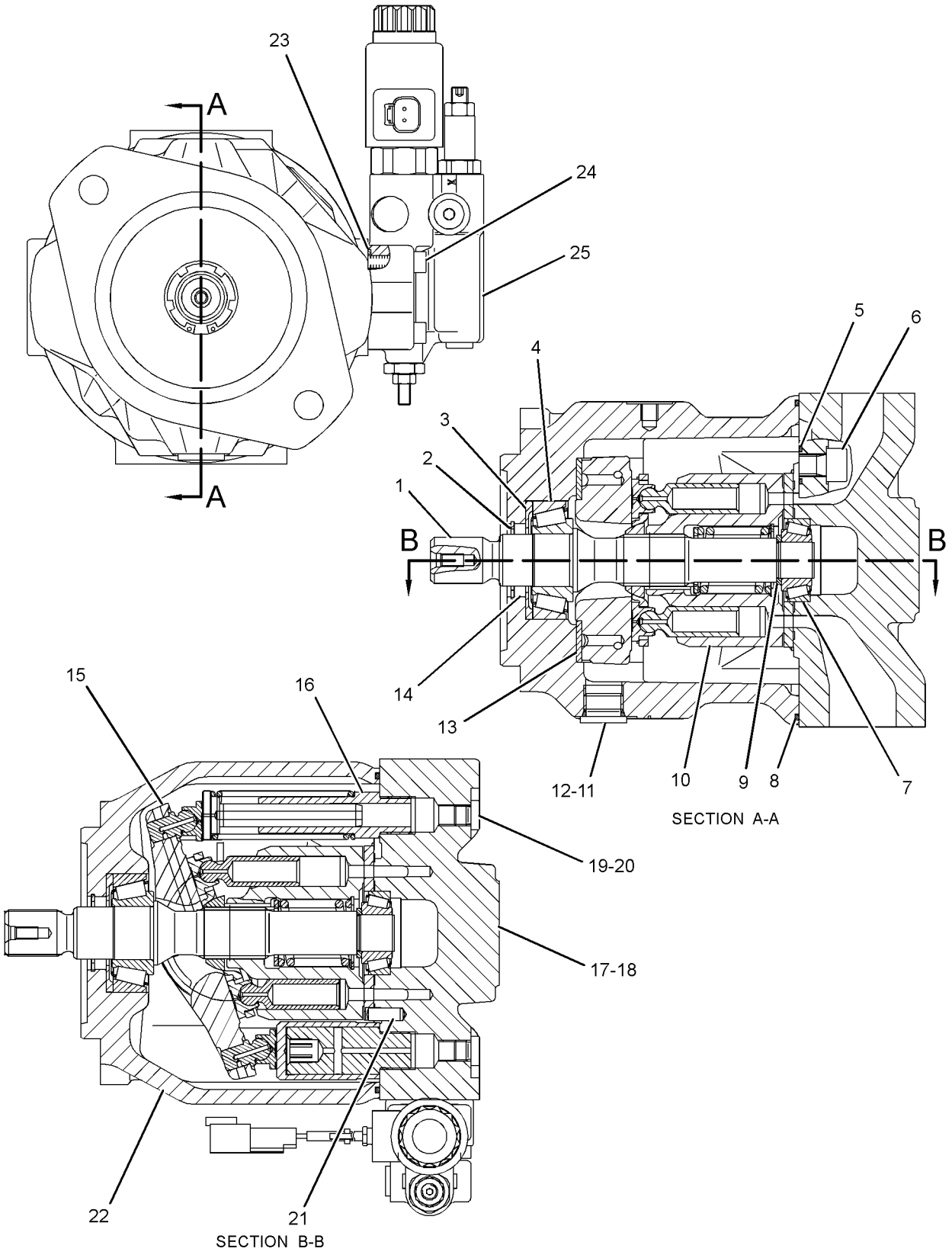

GRAPHIC #1 **<END>** g01201557

HYDRAULIC SYSTEM

322-8733 PUMP GP-PISTON*R

S/N: MYG1-UP; PPN1-UP

PART OF 295-9674 PUMP GP-MAIN HYDRAULIC

SMCS-5070 **i03246285**

NOTE	REF NO	GRAPHIC REF	PART NUMBER	QTY	PART NAME 1 2 3 4 5 6 (PRODUCT LEVEL)	SEE PAGE
	1	1	**289-7917**	1	PUMP GP-GEAR	
		1	**246-9867**	1	SEAL-O-RING	
M		1	**247-8841**	2	BOLT (M10X1.5X30-MM)	
M	2	3	**242-6920**	8	BOLT (M8X30-MM)	
	3	3	**247-8985**	4	DOWEL	
	4	3	**247-8729**	2	COVER	
M	5	3	**242-6919**	2	SETSCREW (M20X2.5X56-MM)	
M	6	3	**8T-4131**	2	NUT (M20X2.5-THD)	
M	7	3	**6V-8200**	8	BOLT-SOCKET HEAD (M12X1.75X35-MM)	
	8	3	**7I-8166**	2	STOPPER	
	9	3	**109-1296**	2	SEAL-O-RING	
	10	3	**7I-8172**	2	RING-BACKUP	
	11	3	**242-6914**	2	PISTON-SERVO	
	12	3	**247-8712**	2	PIN AS	
	13	3	**7I-8152**	18	SPRING-CYLINDER	
	14	3	**109-1294**	2	SEAL-O-RING	
	15	3	**7I-8171**	2	RING-BACKUP	
	16	3	**242-6915**	2	STOPPER	
	17	3	**095-0965**	11	PLUG	
	18	3	**095-0966**	2	PLUG	
M	19	3	**242-6918**	2	NUT (M20X2.5-THD)	
M	20	3	**200-3292**	2	SETSCREW (M20X2.5X90-MM)	
	21	3	**264-8266**	1	BOLT-SOCKET HEAD (M22X2.5X130-MM)	
	22	3	**234-4539**	2	DOWEL	
M	23	3	**249-1306**	10	BOLT-SOCKET HEAD (M22X2.5X60-MM)	
	24	2,3	**242-6916**	2	GASKET	
	25	2,3	**110-5525**	4	PLUG	
	26	2,3	**153-4906**	4	SEAL-O-RING	
	27	3	**295-9656**	2	PISTON AS	
	28	3	**7I-8154**	2	PLATE	
	29	3	**242-6912**	2	PLATE	
	30	3	**242-6913**	2	RETAINER-BALL	
	31	3	**289-8172**	2	SWASHPLATE AS	
	32	2,3	**7I-8084**	20	PLUG	
	33	3	**311-9548**	4	PLUG	
	34	3	**247-8725**	2	PLATE	
	35	3	**095-0882**	4	PIN-SPRING	
	36	3	**247-8786**	2	DOWEL	
	37	3	**206-9290**	9	SEAL-O-RING	
	38	2	**295-9695**	1	SEAL-LIP TYPE	
	39	2	**095-0944**	1	RING-RETAINING	
	40	2	**249-6657**	1	SEAL-O-RING	
	41	2	**289-8174**	1	GEAR-DRIVE	
	42	2	**289-8175**	1	GEAR-DRIVEN	
	43	2	**6V-5204**	1	RING-RETAINING	
	44	2	**247-8718**	1	SPACER (44.5X68X3-MM THK)	
	45	2	**289-8173**	1	FLANGE	
M	46	2	**8T-0343**	11	BOLT-SOCKET HEAD (M12X1.75X55-MM)	
	47	2	**8T-4241**	3	RING-RETAINING	
	48	2	**247-8787**	2	RING-RETAINING	
	49	2	**247-8719**	3	SPACER (50X64X3-MM THK)	
	50	2	**322-8734**	1	BODY	
	51	2	**295-9658**	1	BARREL AS	
	52	2	**259-0832**	1	SHAFT-DRIVEN	
	53	2	**247-8715**	2	BEARING-NEEDLE	
	54	2	**295-9659**	1	BLOCK-PORT	

322-8733 **PUMP GP-PISTON** *(contd.)* **i03246285**

NOTE	REF NO	GRAPHIC REF	PART NUMBER	QTY	PART NAME 1 2 3 4 5 6 (PRODUCT LEVEL)	SEE PAGE
	55	2	**295-9657**	1	BARREL AS	
M	56	2	**249-1307**	2	BOLT-SOCKET HEAD (M22X2.5X95-MM)	
	57	2	**247-8713**	2	BEARING-ROLLER	
M	58	2	**8T-9080**	8	BOLT-SOCKET HEAD (M12X1.75X20-MM)	
	59	2	**225-4516**	1	PLATE	
	60	2	**249-6670**	1	SEAL-O-RING	
	61	2	**247-8720**	2	SPACER (95X110X3.2-MM THK)	
	62	2	**247-8717**	2	SPACER (65X90X1-MM THK)	
	63	2	**095-0929**	2	RING-RETAINING	
	64	2	**247-8726**	1	COVER	
	65	2	**259-0831**	1	SHAFT-DRIVE	
	66	3	**206-9291**	2	SEAL-O-RING	
Y	67	1	**225-4518**	1	VALVE GP-SOLENOID (PUMP CONTROL)	703
Y	68	1	**295-9660**	2	HEAD GP-PUMP	447

M-METRIC PART
Y-SEPARATE ILLUSTRATION

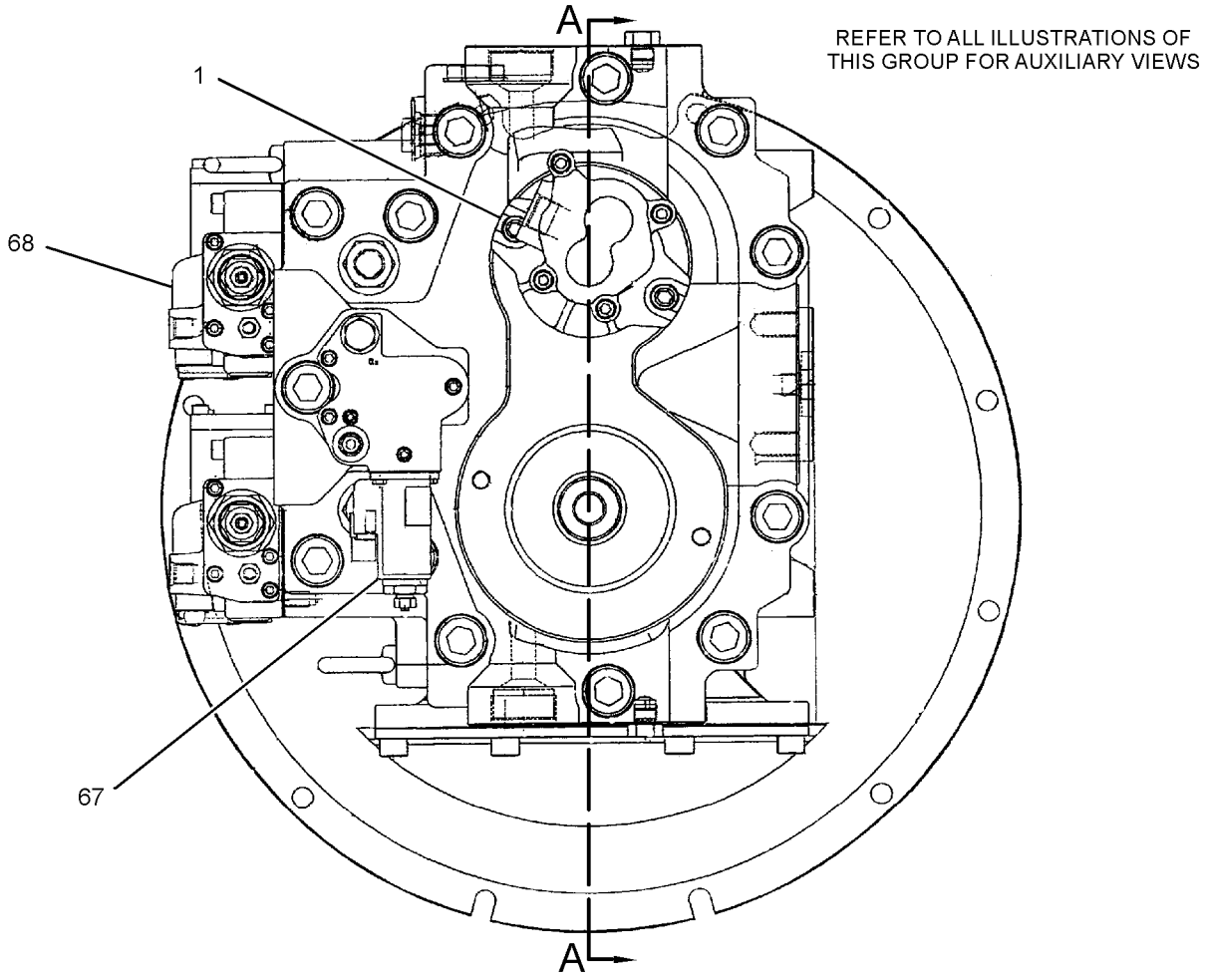

GRAPHIC #1 g01497233

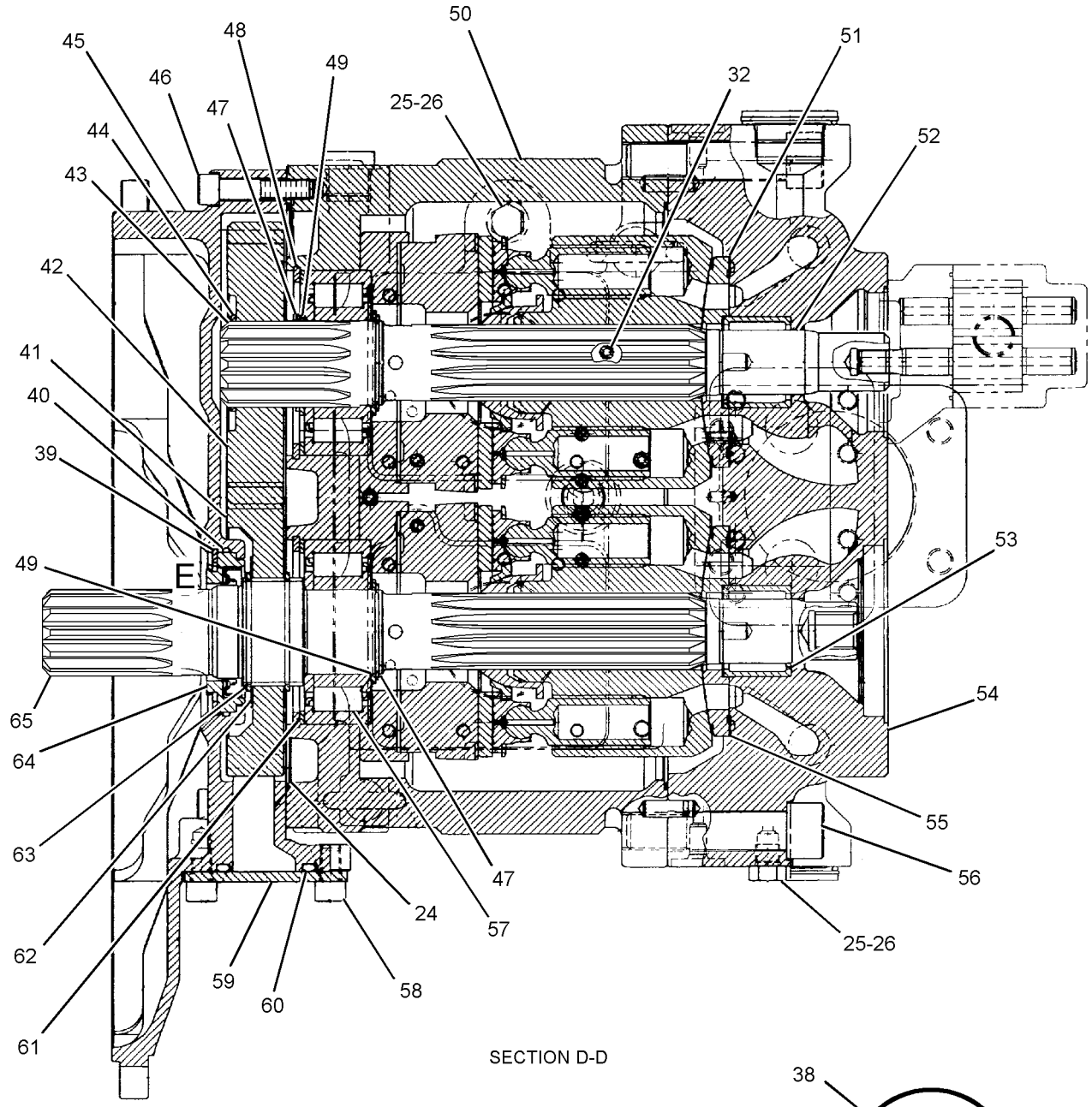

GRAPHIC #2

g01497253

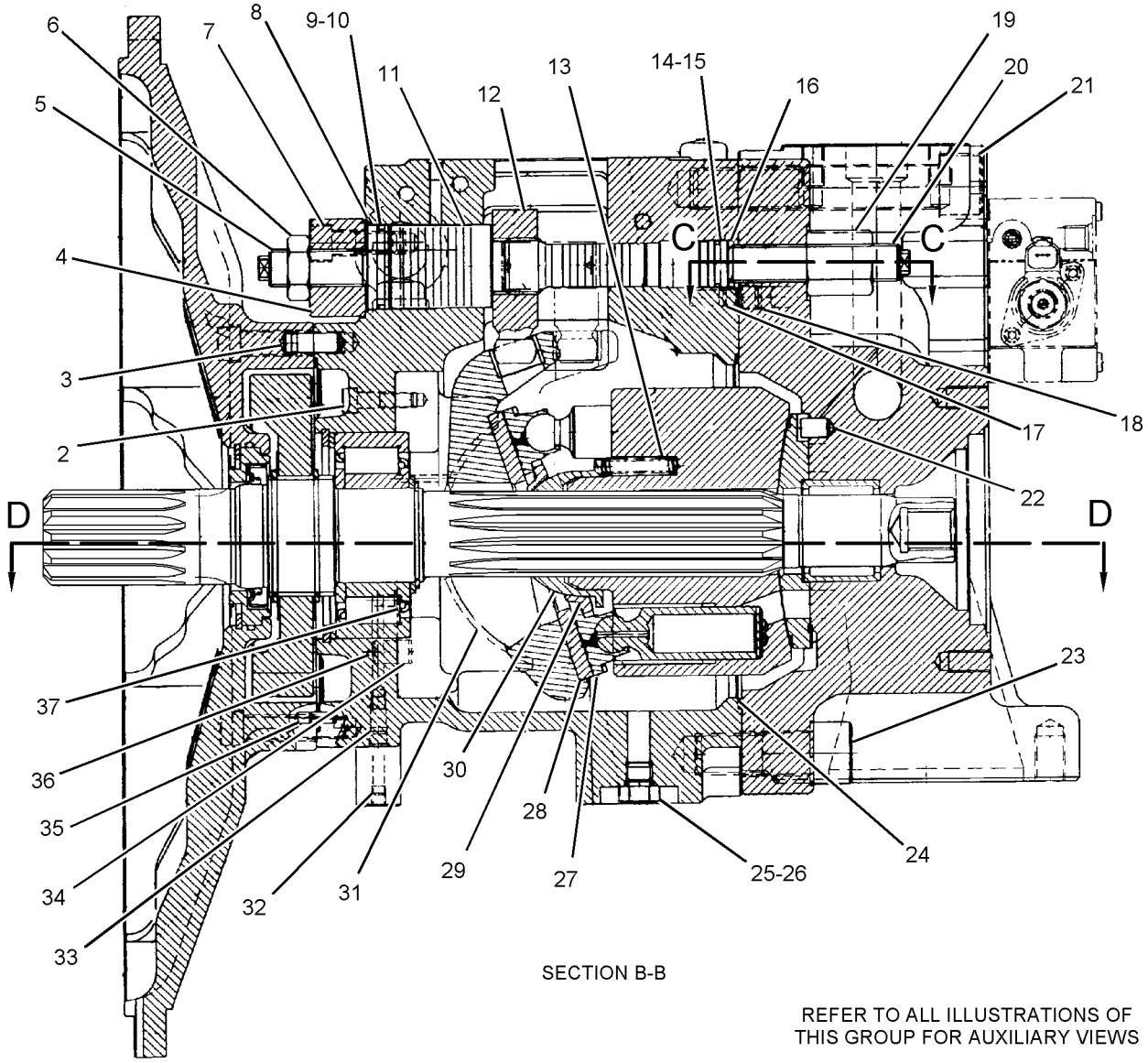

SECTION B-B

REFER TO ALL ILLUSTRATIONS OF THIS GROUP FOR AUXILIARY VIEWS

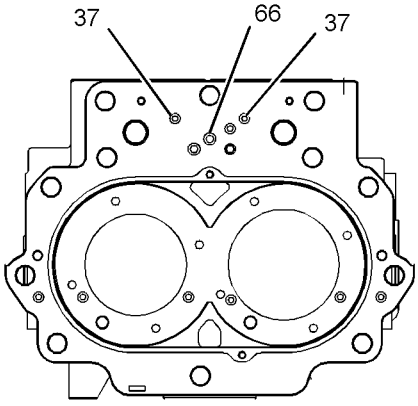

SECTION C-C

GRAPHIC #3 **<END>** g01502727

233-2530 ROTATING GP-MOTOR–HYDRAULIC FAN

S/N: MYG1-UP; PPN1-UP

PART OF 234-4638 MOTOR GP-PISTON

SMCS-5058 **i03651255**

NOTE	REF NO	GRAPHIC REF	PART NUMBER	QTY	PART NAME 1 2 3 4 5 6 (PRODUCT LEVEL)	SEE PAGE
	1	1	**259-5501**	9	PISTON AS (ROTATING)	
	2	1	**233-4885**	1	BARREL	
	3	1	**233-2535**	1	PLATE (VALVE)	
	4	1	**259-5503**	1	PLATE	
	5	1	**295-9540**	1	RETAINER-BALL	
	6	1	**233-5125**	1	SPRING	
	7	1	**194-9479**	3	PIN	
	8	1	**194-9480**	1	RING-RETAINING	
	9	1	**194-9481**	1	DISC-THRUST	

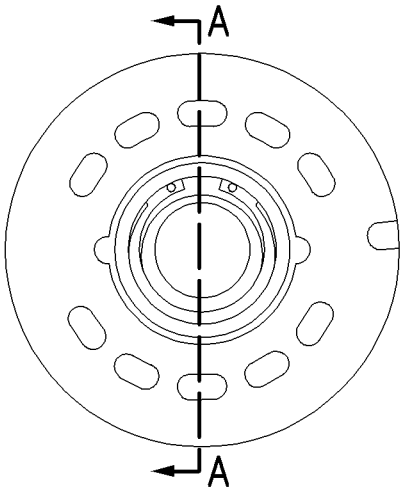

LEFT SIDE VIEW

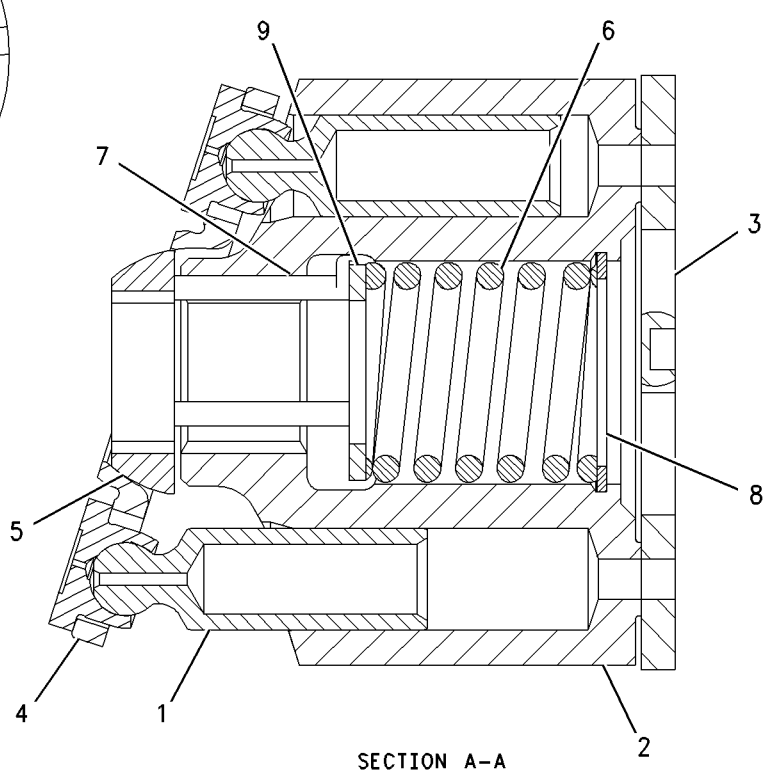

SECTION A–A

GRAPHIC #1 **<END>** g01001863

HYDRAULIC SYSTEM

266-7833 ROTATING GP-PUMP

S/N: MYG1-UP; PPN1-UP

PART OF 259-0815 PUMP GP-PISTON

SMCS-5070 **i02404411**

NOTE	REF NO	GRAPHIC REF	PART NUMBER	QTY	PART NAME 1 2 3 4 5 6 (PRODUCT LEVEL)	SEE PAGE
	1	1	**155-9137**	1	PLATE	
	2	1	**194-9480**	1	RING-RETAINING	
	3	1	**266-7836**	1	BARREL	
	4	1	**155-9117**	1	SPRING	
	5	1	**194-9481**	1	DISC-THRUST	
	6	1	**194-9479**	3	PIN	
	7	1	**233-4880**	9	PISTON AS	
	8	1	**266-7837**	1	PLATE	
	9	1	**266-7838**	1	GUIDE	

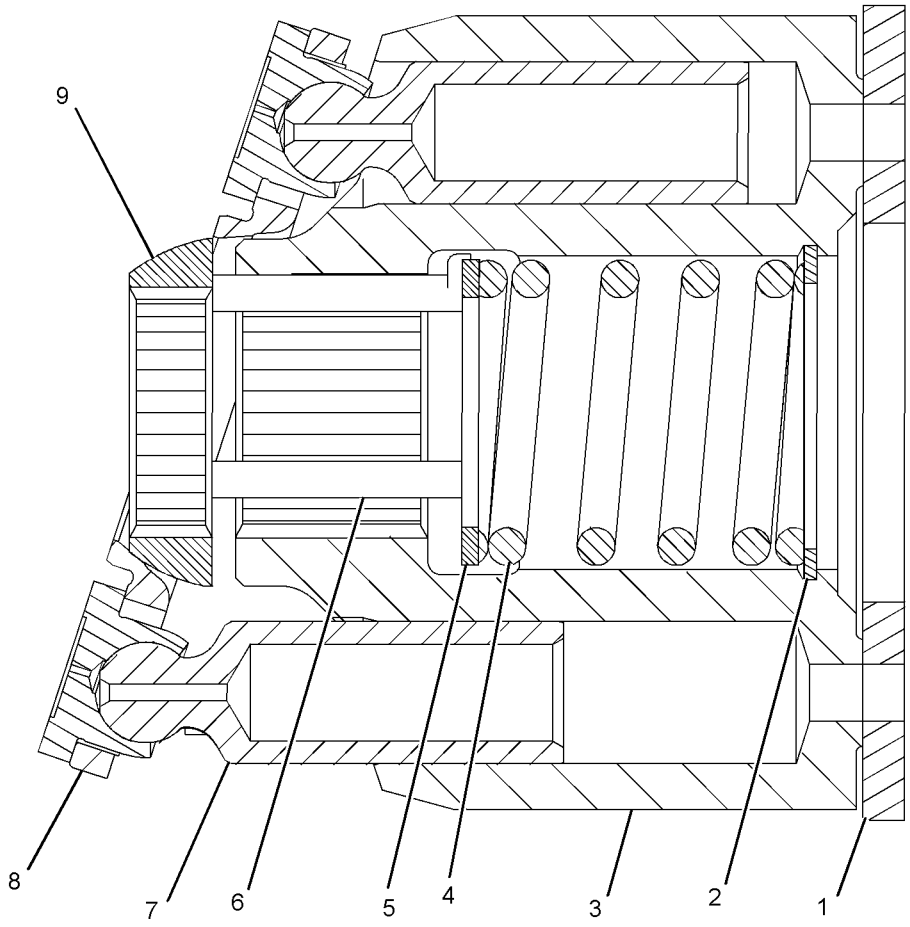

GRAPHIC #1 **<END>** g01201440

259-0922 SCREEN GP-HYDRAULIC–TANK

S/N: MYG1-UP; PPN1-UP

PART OF 289-5565 TANK GP-HYDRAULIC

SMCS-5068 **i02387123**

NOTE	REF NO	GRAPHIC REF	PART NUMBER	QTY	PART NAME 1 2 3 4 5 6 (PRODUCT LEVEL)	SEE PAGE
	1	1	**209-6000**	1	SCREEN AS (HYDRAULIC TANK)	
	2	1	**259-0918**	1	GUIDE	
	3	1	**095-6639**	1	SPRING	
	4	1	**129-7784**	1	ROD	
	5	1	**5H-5672**	1	SEAL-O-RING	
M	6	1	**8T-4133**	2	NUT (M10X1.5-THD)	

M-METRIC PART

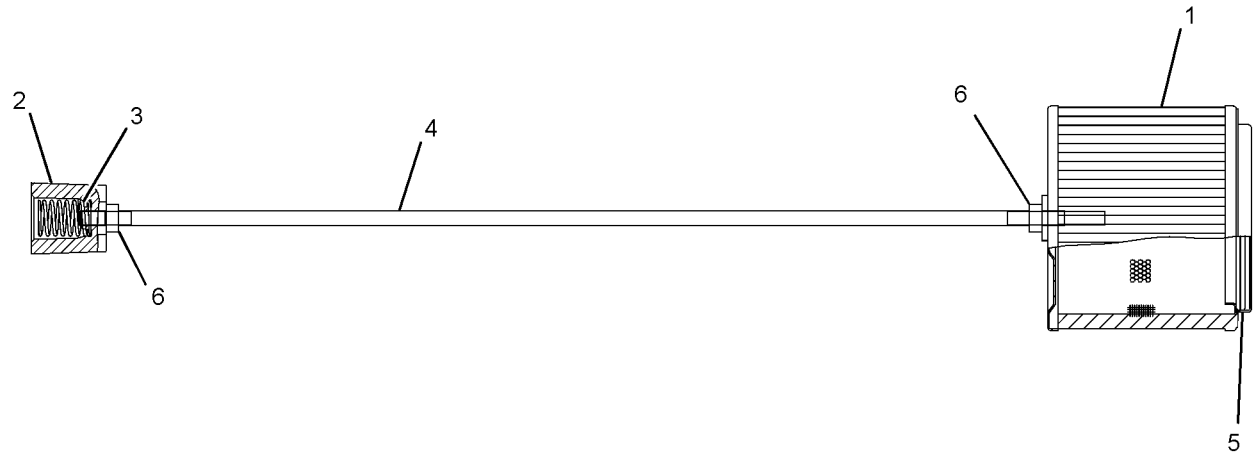

GRAPHIC #1 **<END>** g01202910

HYDRAULIC SYSTEM

234-4440 SWIVEL GP

S/N: MYG1-UP; PPN1-UP

PART OF 239-1618, 239-1619 LINES GP-TRAVEL MOTOR

SMCS-5060 **i02738926**

NOTE	REF NO	GRAPHIC REF	PART NUMBER	QTY	PART NAME 1 2 3 4 5 6 (PRODUCT LEVEL)	SEE PAGE
	1	1	**7I-7131**	1	RETAINER	
	2	1	**7Y-4817**	1	COVER	
	3	1	**159-7782**	5	SEAL	
	4	1	**225-4548**	1	HOUSING	
	5	1	**225-4549**	1	ROTOR	
	6	1	**095-1625**	3	SEAL-O-RING	
	7	1	**095-1716**	1	SEAL-O-RING	
	8	1	**8T-4121**	2	WASHER-HARD (11X21X2.5-MM THK)	
M	9	1	**8T-4136**	6	BOLT (M10X1.5X25-MM)	
	10	1	**8T-6759**	1	PLUG-PIPE	

M-METRIC PART

234-4440 SWIVEL GP *(contd.)* **i02738926**

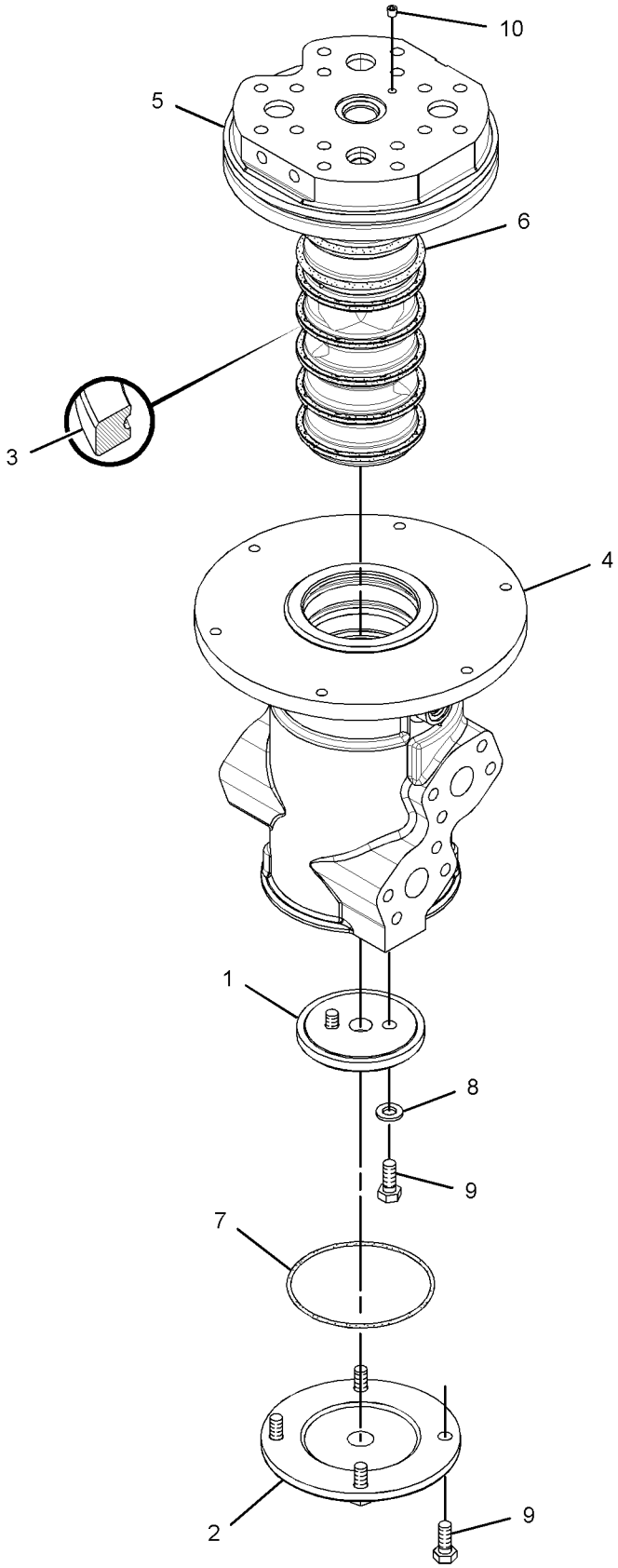

GRAPHIC #1

<END>

g01373464

HYDRAULIC SYSTEM

239-1611 TANK & FILTER GP-HYDRAULIC

S/N: MYG1-UP; PPN1-UP
310-L (82-US GAL)
PART OF 269-9757 TANK & MTG GP-HYDRAULIC

SMCS-5056, 5068 **i03649788**

NOTE	REF NO	GRAPHIC REF	PART NUMBER	QTY	PART NAME 1 2 3 4 5 6 (PRODUCT LEVEL)	SEE PAGE
	1	1	**337-1277**	1	PLATE	
Y	3	1	**289-5565**	1	TANK GP-HYDRAULIC	627
	4	1	**275-1362**	1	BRACKET	
Y	5	1	**289-8194**	1	FILTER GP-OIL (HYDRAULIC, CASE DRAIN)	445
Y	6	1	**158-8987**	1	FILTER & VALVE GP-PILOT (HYDRAULIC OIL)	438
	7	1	*164-5567*	1	COUPLER AS-QUICK DISCONNECT	
		1	**3J-1907**	1	SEAL-O-RING	
		1	**6V-3965**	1	FITTING (QUICK DISCONNECT)	
	8	1	*164-5590*	1	VALVE AS-FLUID SAMPLING (PILOT OIL)	
		1	**3J-7354**	1	SEAL-O-RING	
		1	**8C-3446**	1	VALVE-FLUID SAMPLING	
Y	9	1	*188-4140*	1	FILTER GP-OIL (HYDRAULIC RETURN)	440
	10	1	**8T-7971**	2	WASHER-HARD (13.5X25.5X5-MM THK)	
	11	1	**6J-2680**	1	SEAL-O-RING	
	12	1	**6V-0852**	1	CAP-DUST	
	13	1	**8C-3451**	1	CAP-DUST	
	14	1	**8T-4121**	7	WASHER-HARD (11X21X2.5-MM THK)	
M	15	1	**8T-4136**	3	BOLT (M10X1.5X25-MM)	
CM	16	1	**8T-4183**	6	BOLT (M12X1.75X40-MM)	
M	18	1	**8T-4195**	4	BOLT (M10X1.5X30-MM)	
C	19	1	**8T-4223**	4	WASHER-HARD (13.5X25.5X3-MM THK)	
	20	1	**8T-4224**	4	WASHER-HARD (8.8X16X2-MM THK)	
M	21	1	**8T-4908**	4	BOLT (M8X1.25X25-MM)	

C-CHANGE FROM PREVIOUS TYPE
M-METRIC PART
Y-SEPARATE ILLUSTRATION

239-1611 TANK & FILTER GP-HYDRAULIC *(contd.)* i03649788

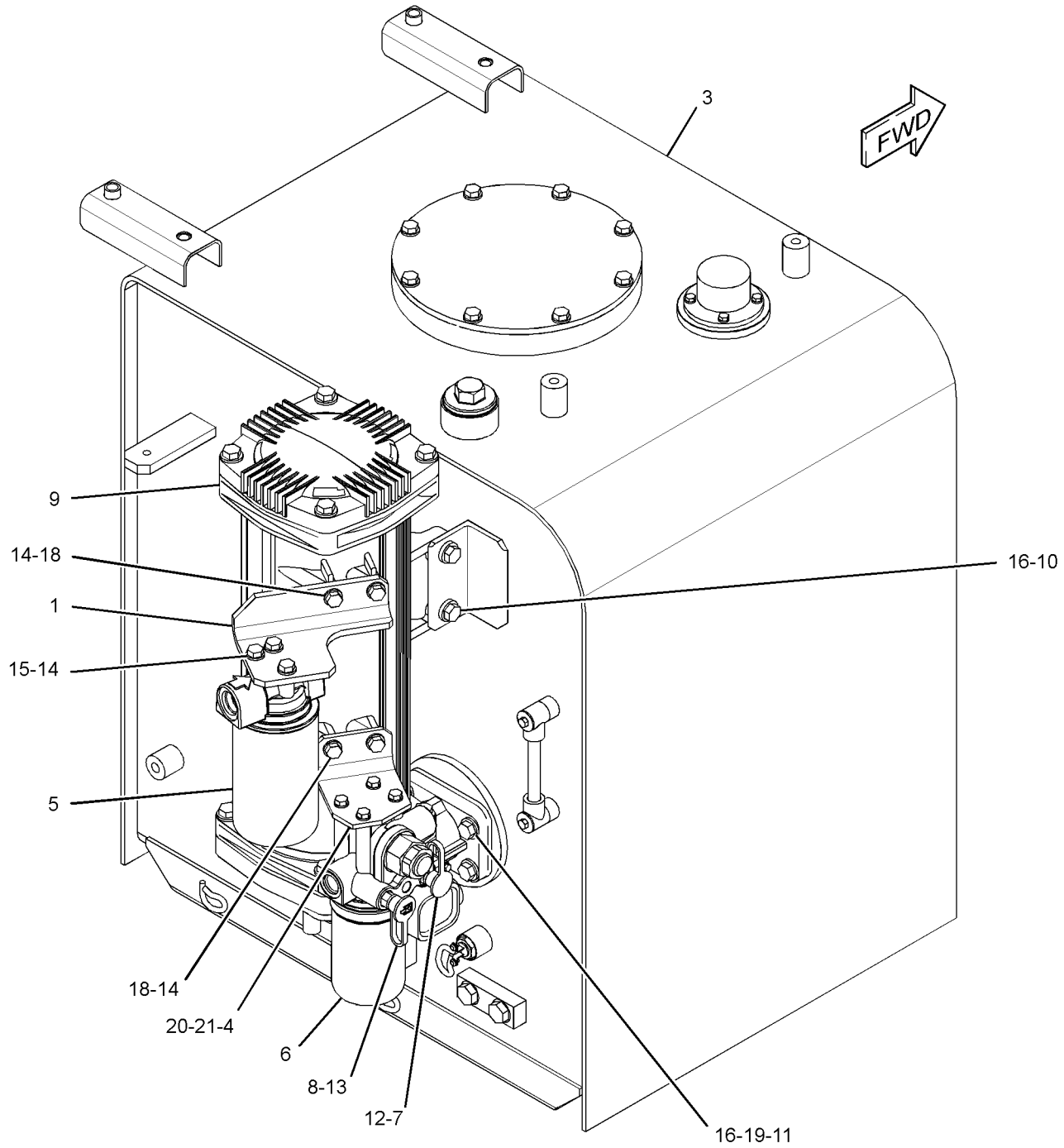

GRAPHIC #1 **<END>** g01967134

HYDRAULIC SYSTEM

269-9757 TANK & MTG GP-HYDRAULIC

S/N: MYG1-UP; PPN1-UP

PART OF 259-7410, 259-7411 HYDRAULIC AR

SMCS-5056 **i02387825**

NOTE	REF NO	GRAPHIC REF	PART NUMBER	QTY	PART NAME 1 2 3 4 5 6 (PRODUCT LEVEL)	SEE PAGE
Y	1	1	**239-1611**	1	TANK & FILTER GP-HYDRAULIC	624
Y	2	1	*248-9845*	1	LINES GP-RETURN	570
	3	1	**269-9758**	1	INSULATION GP-SOUND SUPPR (HYDRAULIC TANK)	
		1	**269-9759**	1	INSULATION	
		1	**269-9760**	1	INSULATION	
	4	1	**085-9310**	6	SPACER (16.6X32X26-MM THK)	
M	5	1	**8T-4140**	6	BOLT (M16X2X60-MM)	

M-METRIC PART
Y-SEPARATE ILLUSTRATION

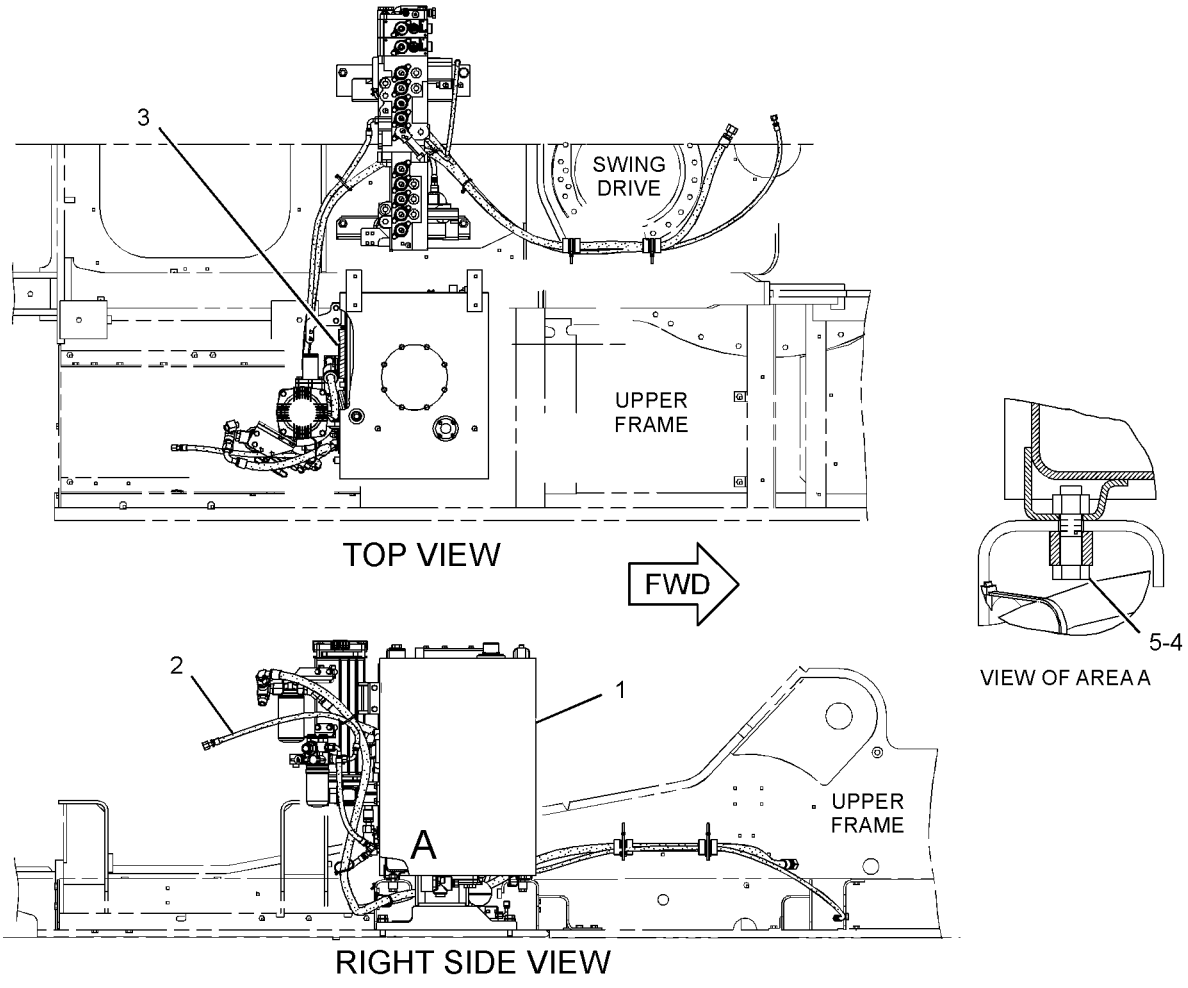

GRAPHIC #1 **<END>** g01192630

HYDRAULIC SYSTEM

289-5565 TANK GP-HYDRAULIC

S/N: MYG1-UP; PPN1-UP

PART OF 239-1611 TANK & FILTER GP-HYDRAULIC

SMCS-5056, 5068, 7479 **i03202583**

NOTE	REF NO	GRAPHIC REF	PART NUMBER	QTY	PART NAME 1 2 3 4 5 6 (PRODUCT LEVEL)	SEE PAGE
	1	1	**4I-5394**	1	SENDER AS-TEMPERATURE (HYDRAULIC OIL)	
M		1	**4I-5490**	2	SCREW-MACHINE (M4X0.7X6-MM)	
		1	**095-0826**	2	LOCKWASHER	
	2	1	**119-5162**	1	COVER	
	3	1	**213-0677**	1	SWITCH AS-LIQUID LEVEL (HYDRAULIC OIL)	
		1	**102-8802**	1	KIT-RECEPTACLE (2-PIN)	
					(INCLUDES RECEPTACLE AS & WEDGE)	
		1	**9X-3401**	1	PIN-CONNECTOR (16-GA TO 18-GA)	
	4	1	**227-0590**	1	BREATHER GP (HYDRAULIC TANK)	
Y	5	1	**227-0620**	1	GAUGE GP-SIGHT (HYDRAULIC OIL LEVEL)	446
	6	1	**236-3170**	1	COVER AS	
Y	8	1	**259-0922**	1	SCREEN GP-HYDRAULIC (TANK)	621
	9	1	**207-6403**	1	PLUG	
	10	1	**207-6404**	1	WASHER (49.5X60.5X1.5-MM THK)	
	11	1	**095-1608**	1	SEAL-O-RING	
	12	1	**095-1735**	1	SEAL-O-RING	
	13	1	**165-3256**	1	PIPE AS	
	14	1	**3D-2824**	1	SEAL-O-RING	
	15	1	**3K-0360**	1	SEAL-O-RING	
	16	1	**4J-0527**	1	SEAL-O-RING	
M	17	1	**5C-9553**	4	BOLT (M6X1X16-MM)	
	18	1	**5P-8068**	1	SEAL-O-RING	
	19	1	**6D-9157**	1	SEAL-O-RING	
	20	1	**6I-0723**	1	PLUG-OIL DRAIN (HYDRAULIC TANK)	
	21	1	**6I-0724**	1	ADAPTER-PLUG	
	22	1	**6V-6707**	1	SEAL-O-RING	
M	23	1	**8T-0267**	2	BOLT-SOCKET HEAD (M6X1X12-MM)	
	24	1	**8T-4121**	12	WASHER-HARD (11X21X2.5-MM THK)	
M	25	1	**8T-4137**	12	BOLT (M10X1.5X20-MM)	
	26	1	**8T-4223**	2	WASHER-HARD (13.5X25.5X3-MM THK)	
M	27	1	**8T-4956**	2	BOLT (M12X1.75X35-MM)	
	28	1	**8T-6761**	1	PLUG-PIPE	
	29	1	**9X-8256**	4	WASHER (6.6X12X2-MM THK)	

M-METRIC PART
Y-SEPARATE ILLUSTRATION

289-5565 TANK GP-HYDRAULIC *(contd.)* i03202583

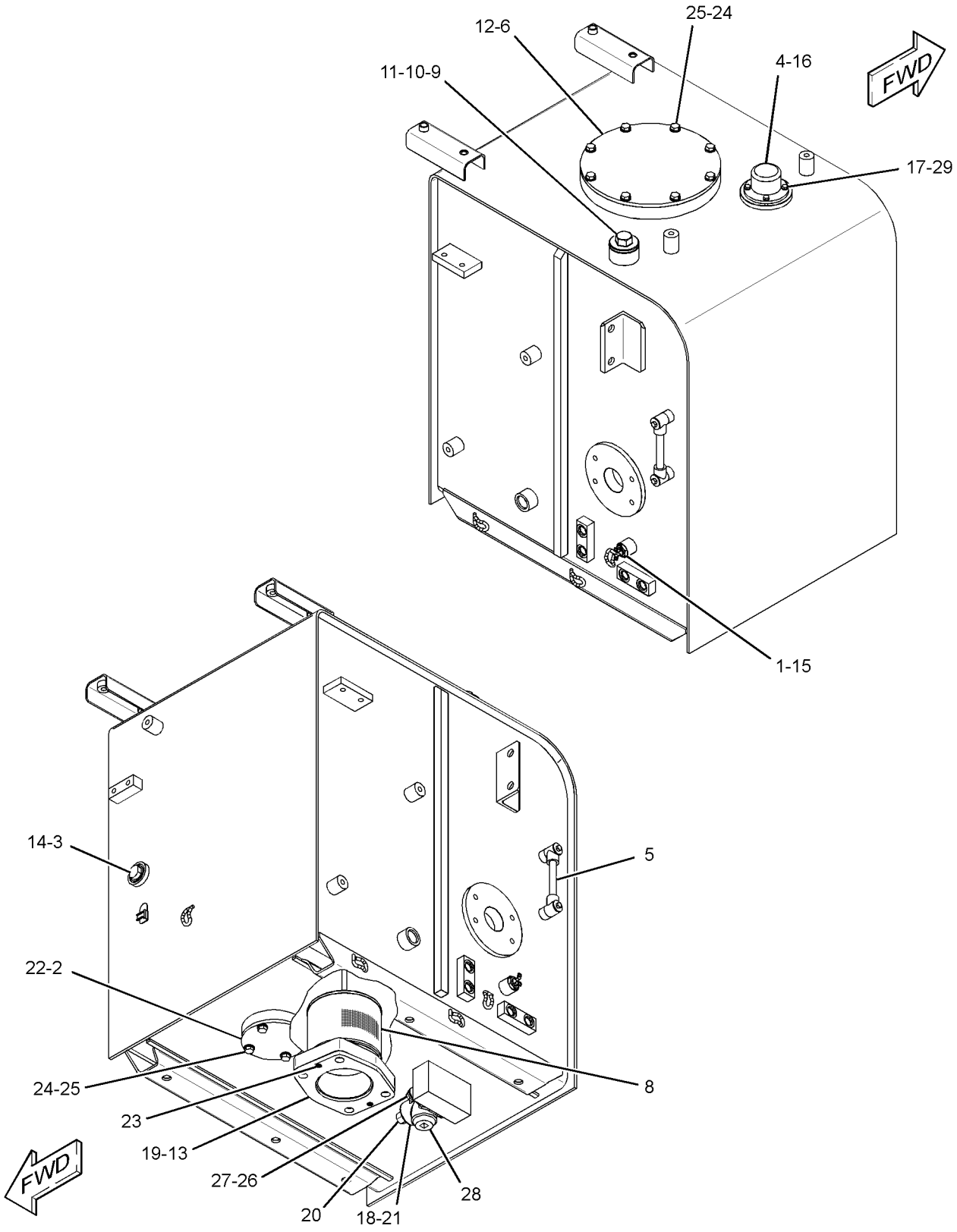

GRAPHIC #1 **<END>** g01526534

282-2743 VALVE & MTG GP-MAIN CONTROL

S/N: MYG1-UP; PPN1-UP
PART OF 297-0494 CONTROL AR-AUXILIARY
AN ATTACHMENT

SMCS-5051 **i02983921**

NOTE	REF NO	GRAPHIC REF	PART NUMBER	QTY	PART NAME 1 2 3 4 5 6 (PRODUCT LEVEL)	SEE PAGE
Y	1	1	**259-7378**	1	VALVE GP-CONTROL (AUXILIARY)	636
M	2	1	**7X-2475**	5	BOLT (M16X2X130-MM)	
CY	3	1	**285-1345**	1	VALVE GP-MAIN CONTROL (HEAVY LIFT)	664
	4	1	**1P-3702**	2	SEAL-RECTANGULAR	
	5	1	**4J-8998**	2	SEAL-O-RING	

C-CHANGE FROM PREVIOUS TYPE
M-METRIC PART
Y-SEPARATE ILLUSTRATION

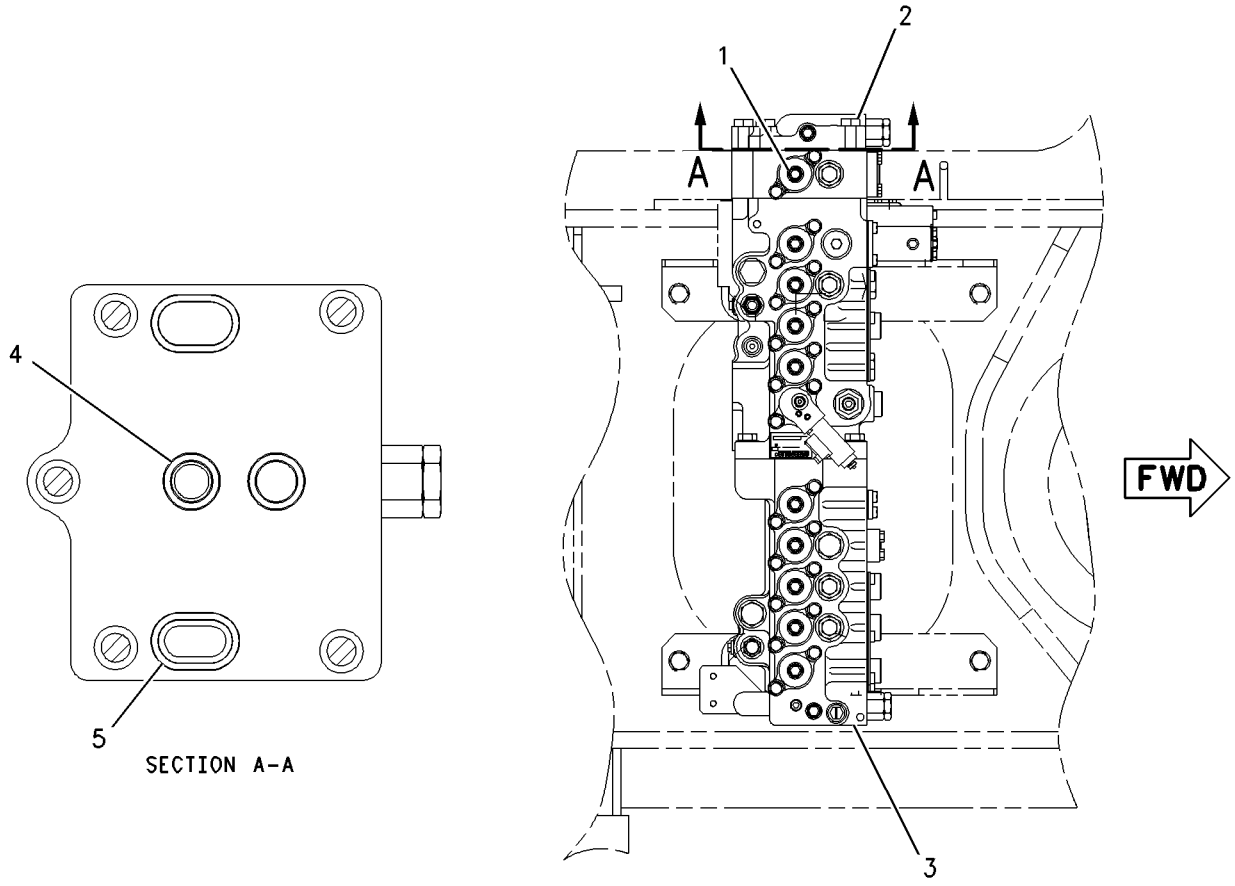

SECTION A-A

GRAPHIC #1 **<END>** g00848291

HYDRAULIC SYSTEM

291-8635 VALVE & MTG GP-MAIN CONTROL

S/N: MYG1-UP; PPN1-UP
PART OF 255-5774 CONTROL AR-AUXILIARY
AN ATTACHMENT

SMCS-5051 **i02983797**

NOTE	REF NO	GRAPHIC REF	PART NUMBER	QTY	PART NAME 1 2 3 4 5 6 (PRODUCT LEVEL)	SEE PAGE
Y	1	1	**285-1375**	1	VALVE GP-CONTROL	651
M	2	1	**7X-2475**	5	BOLT (M16X2X130-MM)	
Y	3	1	**285-1345**	1	VALVE GP-MAIN CONTROL (HEAVY LIFT)	664
	4	1	**1P-3702**	2	SEAL-RECTANGULAR	
	5	1	**4J-8998**	2	SEAL-O-RING	

M-METRIC PART
Y-SEPARATE ILLUSTRATION

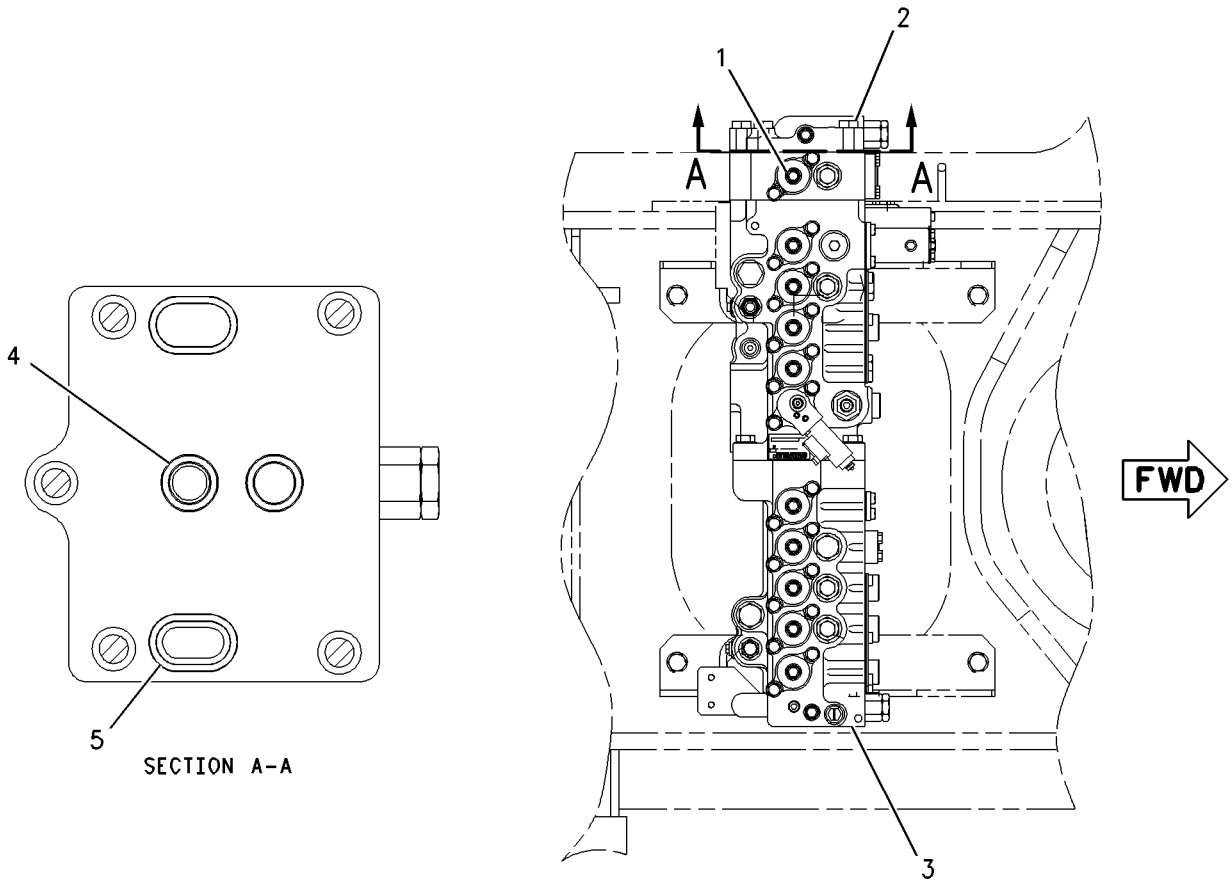

GRAPHIC #1 **<END>** g00848291

255-5868 VALVE AR-LOAD CONTROL—STICK CYLINDER

S/N: MYG1-UP; PPN1-UP
PART OF 345-7571, 348-8126 DISTRIBUTION AR
AN ATTACHMENT

SMCS-5067, 5117, 5147, 5811 **i02522369**

NOTE	PART NUMBER	QTY	PART NAME 1 2 3 4 5 6 (PRODUCT LEVEL)	SEE PAGE
Y	*237-3200*	1	LINES GP-BOOM (REACH BOOM, STICK LOAD CONTROL)	474
Y	*255-1854*	1	LINES GP-PILOT (STICK LOWERING CONTROL)	535
Y	*237-3199*	1	LINES GP-STICK CYLINDER	582

Y-SEPARATE ILLUSTRATION

<END>

259-7416 VALVE AR-LOAD CONTROL—STICK CYLINDER, MASS BOOM

S/N: MYG1-UP; PPN1-UP
AN ATTACHMENT

SMCS-5067, 5117, 5147, 5811 **i02438274**

NOTE	PART NUMBER	QTY	PART NAME 1 2 3 4 5 6 (PRODUCT LEVEL)	SEE PAGE
Y	*237-3202*	1	LINES GP-BOOM (MASS BOOM, STICK LOAD CONTROL)	476
Y	*255-1854*	1	LINES GP-PILOT (STICK LOWERING CONTROL)	535
Y	*237-3199*	1	LINES GP-STICK CYLINDER	582

Y-SEPARATE ILLUSTRATION

<END>

247-7500 VALVE AR-SWING—WITHOUT FINE SWING

S/N: MYG1-UP; PPN1-UP
PART OF 345-7583 OPTION AR-CONFIGURATION
AN ATTACHMENT

SMCS-5480 **i03156382**

NOTE	PART NUMBER	QTY	PART NAME 1 2 3 4 5 6 (PRODUCT LEVEL)	SEE PAGE
Y	*259-0680*	1	VALVE GP-SWING CUSHION	714

Y-SEPARATE ILLUSTRATION

<END>

HYDRAULIC SYSTEM

297-0370 VALVE GP-CHECK

S/N: MYG1-UP; PPN1-UP
PART OF 255-1924 LINES GP-FRONT, 255-2078 LINES GP-RETURN
AN ATTACHMENT

SMCS-5067 **i03634310**

NOTE	REF NO	GRAPHIC REF	PART NUMBER	QTY	PART NAME 1 2 3 4 5 6 (PRODUCT LEVEL)	SEE PAGE
	1	1	**095-1585**	1	SEAL-O-RING	
	2	1	**225-4804**	3	PLUG	
	3	1	**4J-7533**	3	SEAL-O-RING	
	4	1	**095-1602**	1	SEAL-O-RING	
	5	1	**232-4113**	1	RING	
	6	1	**095-1601**	1	SEAL-O-RING	
	7	1	**8T-3008**	1	RING-BACKUP	
	8	1	**095-1700**	1	SEAL-O-RING	
	9	1	**7M-8485**	1	SEAL-O-RING	
	10	1	**095-1657**	1	SEAL-O-RING	
	11	1	**232-4114**	2	RING	
					PARTS SHOWN IN GRAPHIC(S) WITHOUT A REFERENCE NUMBER ARE NOT SERVICED SEPARATELY	

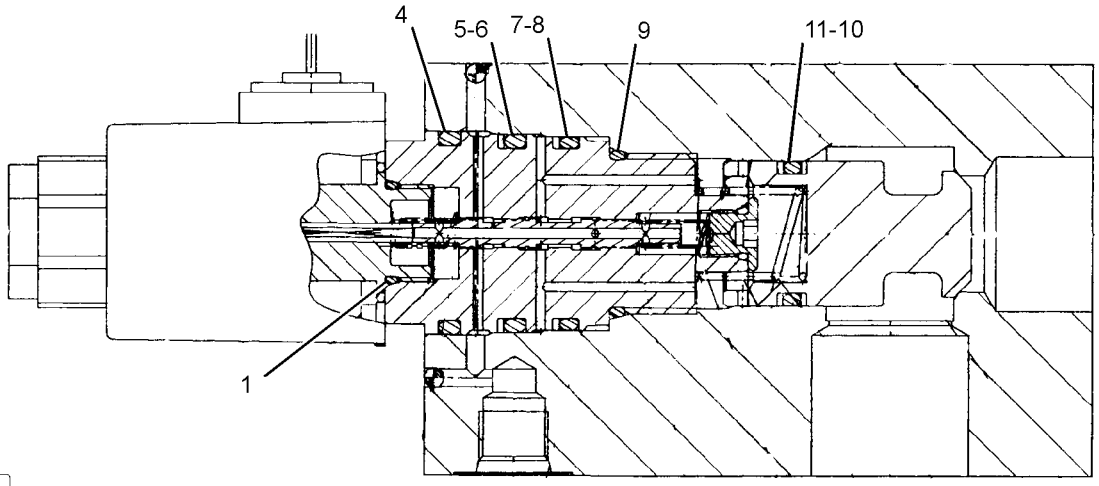

SECTION A-A

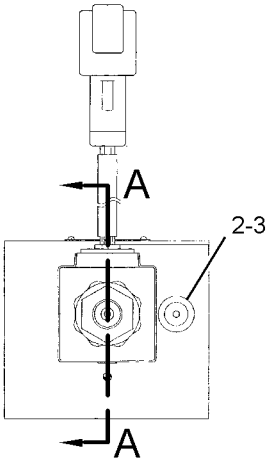

SECTION C-C

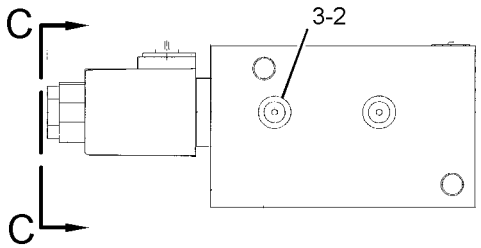

GRAPHIC #1 **<END>** g01950574

244-8400 VALVE GP-CONTROL—WITHOUT COVERS, HOUSINGS

S/N: MYG1-UP; PPN1-UP
PART OF 259-7378, 285-1375 VALVE GP-CONTROL
AN ATTACHMENT

SMCS-5051 **i03634326**

NOTE	REF NO	GRAPHIC REF	PART NUMBER	QTY	PART NAME 1 2 3 4 5 6 (PRODUCT LEVEL)	SEE PAGE
	1	1	**104-7293**	1	SPRING	
M	2	1	**153-5276**	1	BOLT-SPECIAL	
	3	1	**6E-2271**	2	RETAINER	

M-METRIC PART

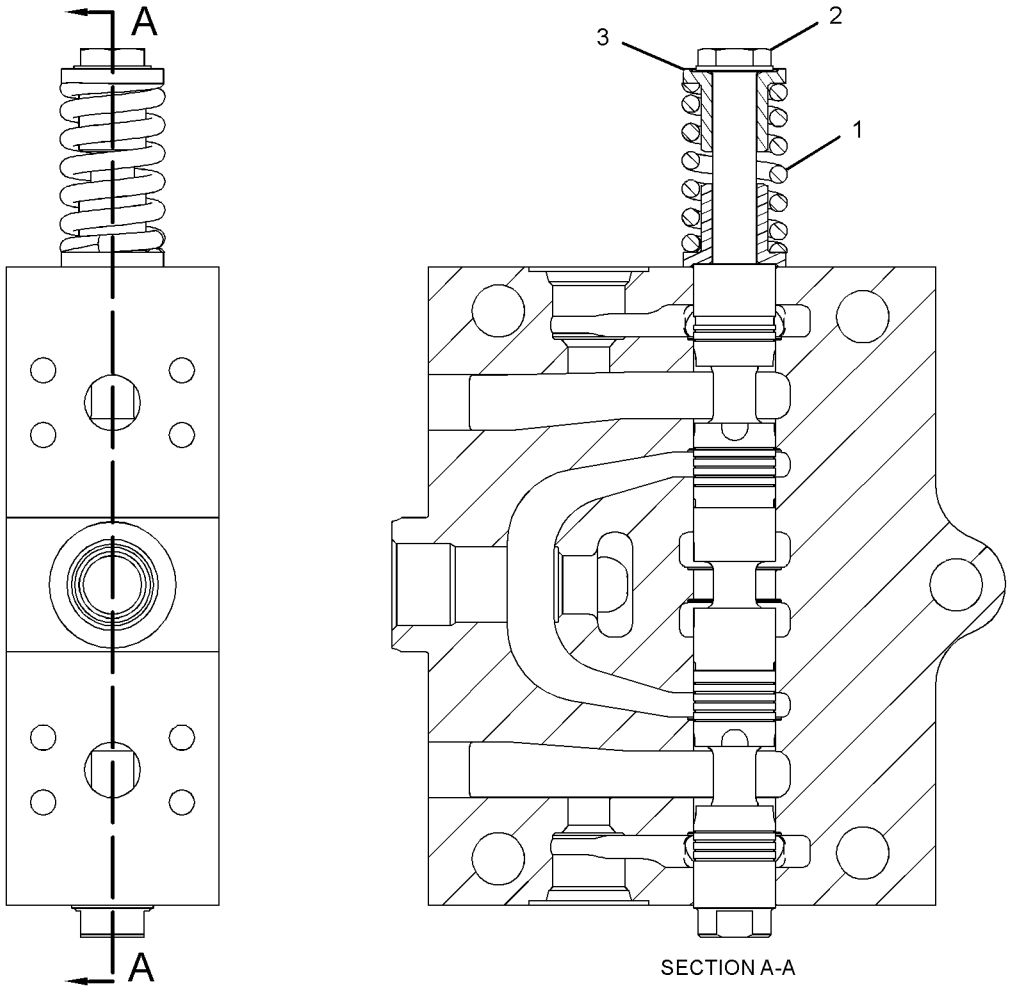

SECTION A-A

GRAPHIC #1 **<END>** g01950575

HYDRAULIC SYSTEM

254-3080 VALVE GP-CONTROL—QUICK COUPLER

S/N: MYG1-UP; PPN1-UP
PART OF 269-9562 LINES GP-FRONT
AN ATTACHMENT

SMCS-5051 **i02490711**

NOTE	REF NO	GRAPHIC REF	PART NUMBER	QTY	PART NAME 1 2 3 4 5 6 (PRODUCT LEVEL)	SEE PAGE
	1	1	**287-2352**	1	RETAINER-SPRING	
	2	1	**6E-5438**	1	SPRING	
	3	1	**6E-5439**	1	SPRING	
Y	4	1	**121-1491**	1	VALVE GP-SOLENOID (QUICK COUPLER)	699
	5	1	**247-7587**	2	VALVE GP-PRESSURE REDUCING (QUICK COUPLER)	
					(EACH INCLUDES)	
		1	**172-4432**	1	KIT-SEAL (QUICK COUPLER VALVE)	
Z	6	1		1	BODY-VALVE	
Z	7	1		1	STEM	
	8	1	*148-8407*	2	PLUG AS	
					(EACH INCLUDES)	
		1	**3J-1907**	1	SEAL-O-RING	
		1	**9S-4191**	1	PLUG-O-RING	
	9	1	**4J-5267**	1	SEAL-O-RING	
	10	1	**6E-2313**	1	COVER	
	11	1	**6E-5431**	5	SHIM (0.5-MM THK)	
	12	1	**6E-5434**	1	HOUSING-PILOT	
M	13	1	**7I-2272**	2	BOLT (M5X0.8X12-MM)	
	14	1	**8F-0212**	1	SEAL-O-RING	
M	15	1	**8T-4195**	2	BOLT (M10X1.5X30-MM)	
	16	1	**8T-4224**	2	WASHER-HARD (8.8X16X2-MM THK)	
	17	1	**8T-6759**	12	PLUG-PIPE	
M	18	1	**8T-6870**	2	BOLT (M8X1.25X70-MM)	

M-METRIC PART
Y-SEPARATE ILLUSTRATION
Z-NOT SERVICED SEPARATELY

254-3080 VALVE GP-CONTROL *(contd.)* **i02490711**

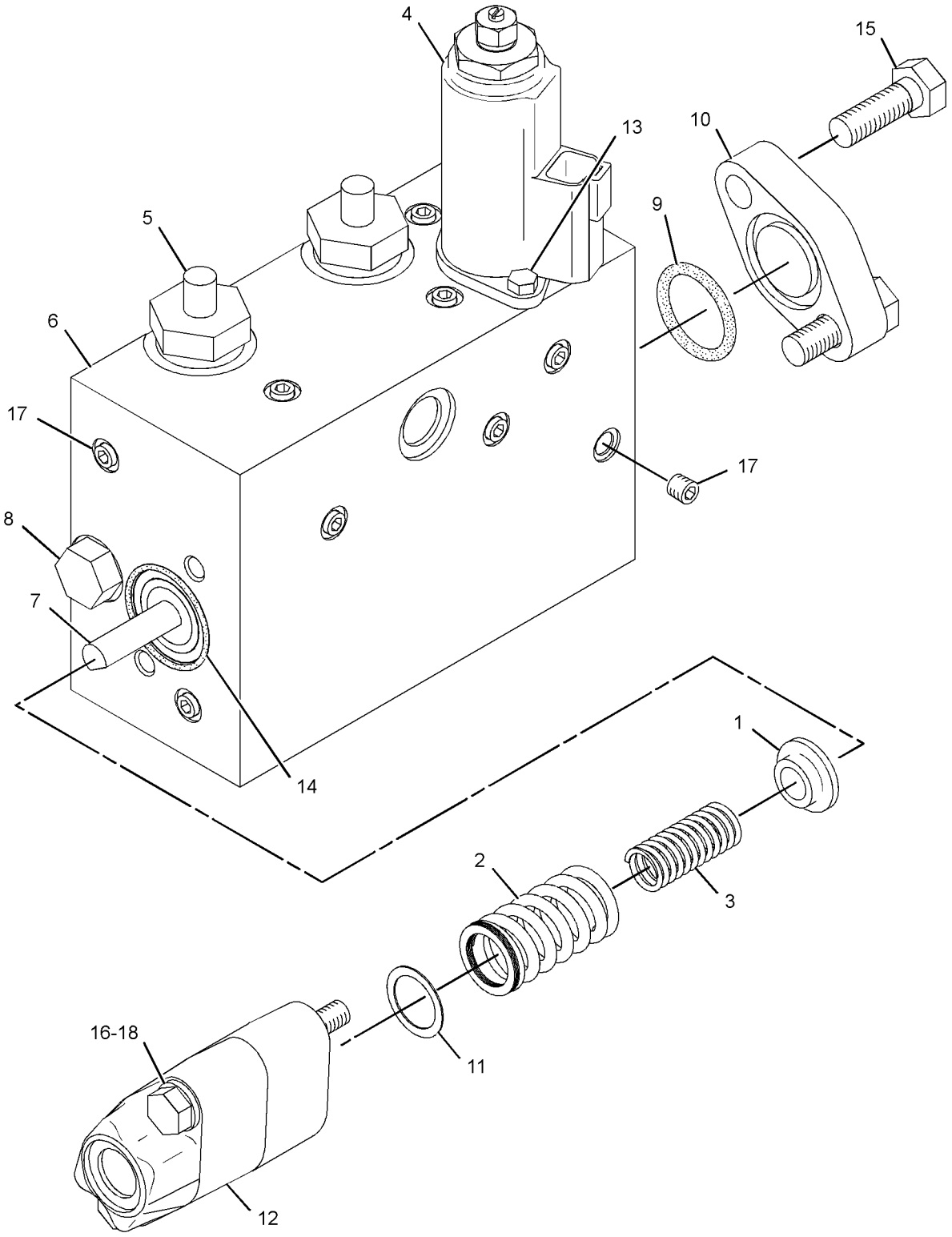

GRAPHIC #1 **<END>** g01245214

HYDRAULIC SYSTEM

259-7378 VALVE GP-CONTROL–AUXILIARY

S/N: MYG1-UP; PPN1-UP
PART OF 282-2743 VALVE & MTG GP-MAIN CONTROL
AN ATTACHMENT

SMCS-5051 **i02502485**

NOTE	REF NO	GRAPHIC REF	PART NUMBER	QTY	PART NAME 1 2 3 4 5 6 (PRODUCT LEVEL)	SEE PAGE
M	1	1	**8T-4195**	12	BOLT (M10X1.5X30-MM)	
	2	1	**4J-8998**	2	SEAL-O-RING	
	3	1	**6E-5731**	1	VALVE (LOAD CHECK)	
	4	1	**7I-1248**	1	SPRING	
	5	1	**171-0150**	2	COVER	
	6	1	**236-6419**	1	PLUG	
Y	7	1	*244-8400*	1	VALVE GP-CONTROL (WITHOUT COVERS, HOUSINGS)	633
Y	8	1	**255-5661**	2	VALVE GP-RELIEF (LINE) (AUXILIARY)	687
	9	1	**8T-4121**	4	WASHER-HARD (11X21X2.5-MM THK)	
	10	1	**095-1590**	1	SEAL-O-RING	
	11	1	**095-1787**	1	RING-BACKUP	
	12	1	**158-8159**	1	HOUSING	
	13	1	**1P-3702**	4	SEAL-RECTANGULAR	
	14	1	**6E-2274**	1	COVER	
	15	1	**6V-5597**	2	SEAL-O-RING	

M-METRIC PART
Y-SEPARATE ILLUSTRATION

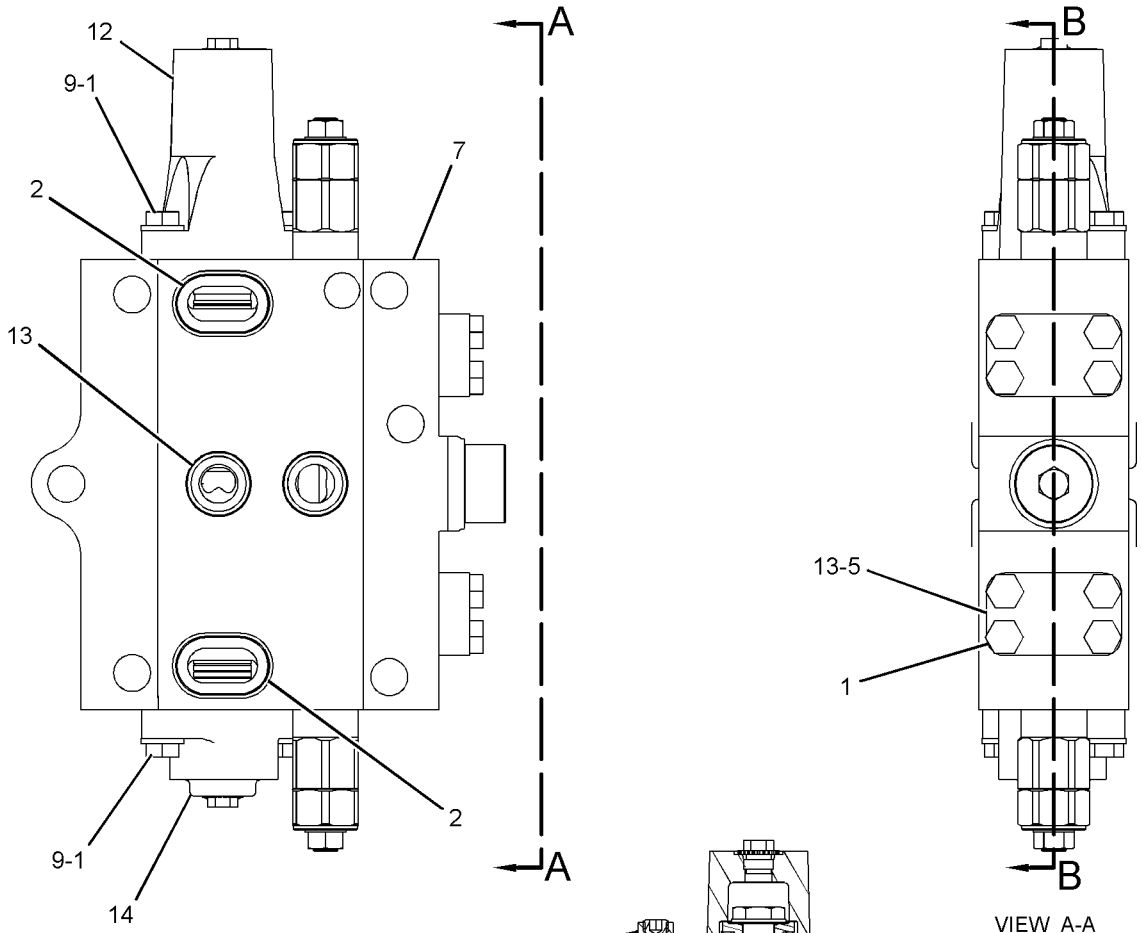

GRAPHIC #1 **<END>** g01219416

HYDRAULIC SYSTEM

285-1347 VALVE GP-CONTROL

S/N: MYG1-UP; PPN1-UP
PART OF 285-1345 VALVE GP-MAIN CONTROL
ALSO AN ATTACHMENT

SMCS-5051 **i03637552**

NOTE	REF NO	GRAPHIC REF	PART NUMBER	QTY	PART NAME 1 2 3 4 5 6 (PRODUCT LEVEL)	SEE PAGE
	1	2,3	**4T-3148**	3	SPRING	
	2	1	**6E-2274**	5	COVER	
	3	3	**6E-5169**	1	SPRING	
	4	2	**7I-1248**	1	SPRING	
Y	5	1	**121-1491**	1	VALVE GP-SOLENOID (STRAIGHT TRAVEL)	699
	6	3	**153-5288**	1	SPRING	
	7	3	**153-5289**	1	GUIDE	
	8	3	**153-5290**	2	PLUG	
	9	3	**153-5291**	1	CONNECTOR	
	10	3	**153-5292**	1	VALVE-CHECK	
	11	3	**153-5293**	1	SPRING	
CY	12	2	**323-7898**	1	VALVE GP-PRIORITY (SWING)	678
	13	2	**153-5298**	1	SLEEVE	
	14	2	**153-5299**	1	VALVE	
	15	2	**153-5306**	1	SPRING	
	16	3	**153-5309**	1	SLEEVE	
	17	3	**153-5311**	1	SPRING	
	18	3	**158-8150**	1	VALVE GP-UNLOADING (STICK CYLINDER)	
	19	1	**158-8159**	4	HOUSING	
	20	1	**158-8206**	1	HOUSING	
	21	3	**158-8207**	1	STOPPER	
C	22	2	**323-7897**	1	COVER	
	23	3	**201-9263**	2	PLUG	
	24	2	*222-4737*	3	PLUG AS	
					(EACH INCLUDES)	
		2	**4J-7533**	1	SEAL-O-RING	
		2	**9S-4180**	1	PLUG	
	25	2	**236-6419**	1	PLUG	
	26	3	**236-6421**	1	PLUG	
	27	2	**264-9961**	1	PLUG	
Y	28	1	*285-1348*	1	VALVE GP-CONTROL (WITHOUT COVERS, HOUSINGS)	643
Y	29	3	**310-0393**	1	VALVE GP-RELIEF (MAIN, HEAVY LIFT)	690
	30	2	**250-2446**	1	PLUG	
	31	3	**250-2447**	1	PLUG	
Y	32	2	**255-5661**	1	VALVE GP-RELIEF (LINE) (STICK)	687
	33	3	**095-1575**	1	SEAL-O-RING	
	34	2,3	**095-1590**	3	SEAL-O-RING	
	35	3	**095-1603**	1	SEAL-O-RING	
	36	3	**095-1778**	1	RING-BACKUP	
	37	2,3	**095-1787**	3	RING-BACKUP	
C	38	2	**255-5594**	1	SEAL-O-RING	
	39	3	**103-8177**	1	ADAPTER	
	40	3	**123-2485**	1	PLUG	
	41	3	**2M-9780**	1	SEAL-O-RING	
	42	3	**3J-1907**	1	SEAL-O-RING	
	43	1	**4I-3569**	1	RING-BACKUP	
	44	3	**4I-6397**	3	RING-BACKUP	
	45	2	**4J-5309**	1	SEAL-O-RING	
	46	2	**4T-5074**	1	RING-BACKUP	
	47	1	**6E-3653**	1	PLUG	
	48	2,3	**6E-5643**	3	VALVE (LOAD CHECK)	
	49	2	**6E-5731**	1	VALVE (LOAD CHECK)	
	50	3	**6V-3922**	3	SEAL-O-RING	
	51	3	**6V-5393**	1	SEAL-O-RING	
	52	2	**6V-5556**	1	SEAL-O-RING	

285-1347 VALVE GP-CONTROL *(contd.)* i03637552

NOTE	REF NO	GRAPHIC REF	PART NUMBER	QTY	PART NAME 1 2 3 4 5 6 (PRODUCT LEVEL)	SEE PAGE
	53	2,3	**6V-5597**	9	SEAL-O-RING	
M	54	1	**7I-2272**	2	BOLT (M5X0.8X12-MM)	
	55	3	**7M-8485**	2	SEAL-O-RING	
M	56	2	**7X-2621**	1	BOLT (M10X1.5X12-MM)	
	57	1	**7Y-5219**	1	SEAL-O-RING	
	58	1,2	**8T-4121**	24	WASHER-HARD (11X21X2.5-MM THK)	
M	59	1	**8T-4195**	20	BOLT (M10X1.5X30-MM)	
M	60	2	**8T-6685**	4	BOLT (M10X1.5X110-MM)	
	61	1	**8T-6759**	2	PLUG-PIPE	

C-CHANGE FROM PREVIOUS TYPE
M-METRIC PART
Y-SEPARATE ILLUSTRATION

REFER TO ALL ILLUSTRATIONS OF
THIS GROUP FOR AUXILIARY VIEWS

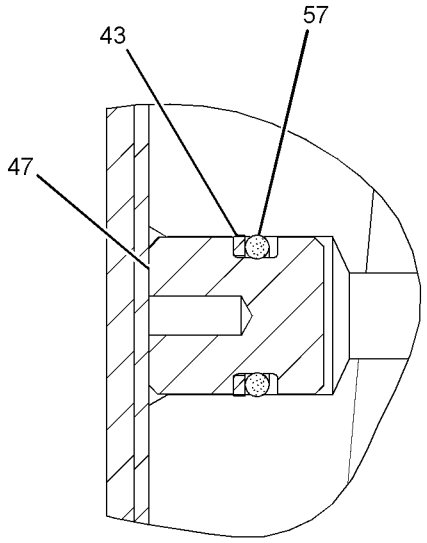

SECTION H-H

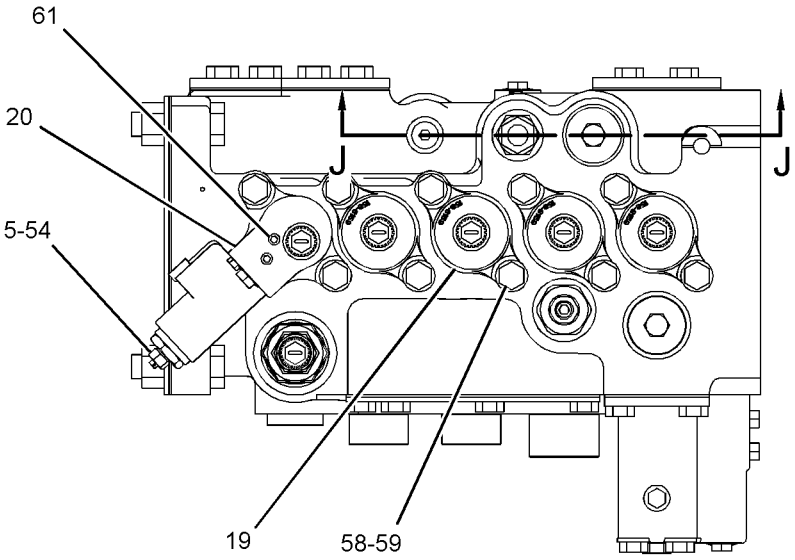

VIEW F-F

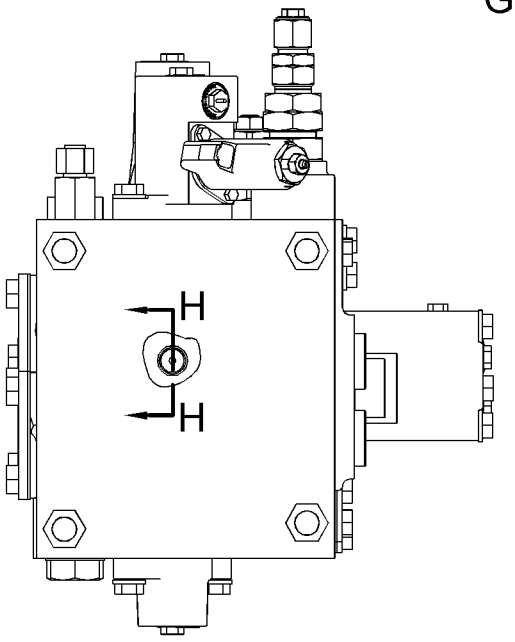

VIEW G-G

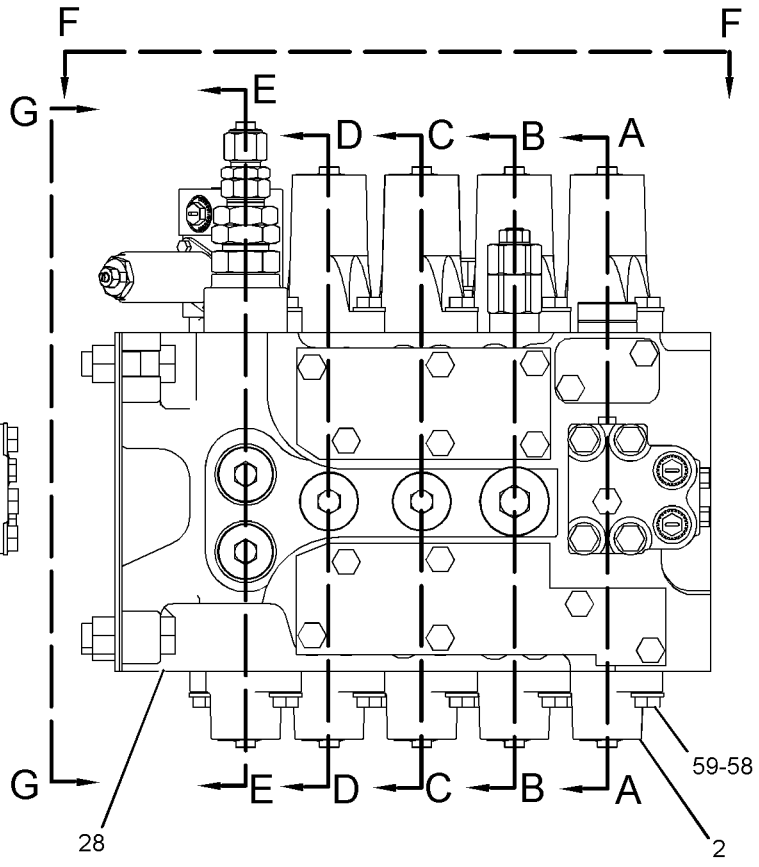

GRAPHIC #1

g01201307

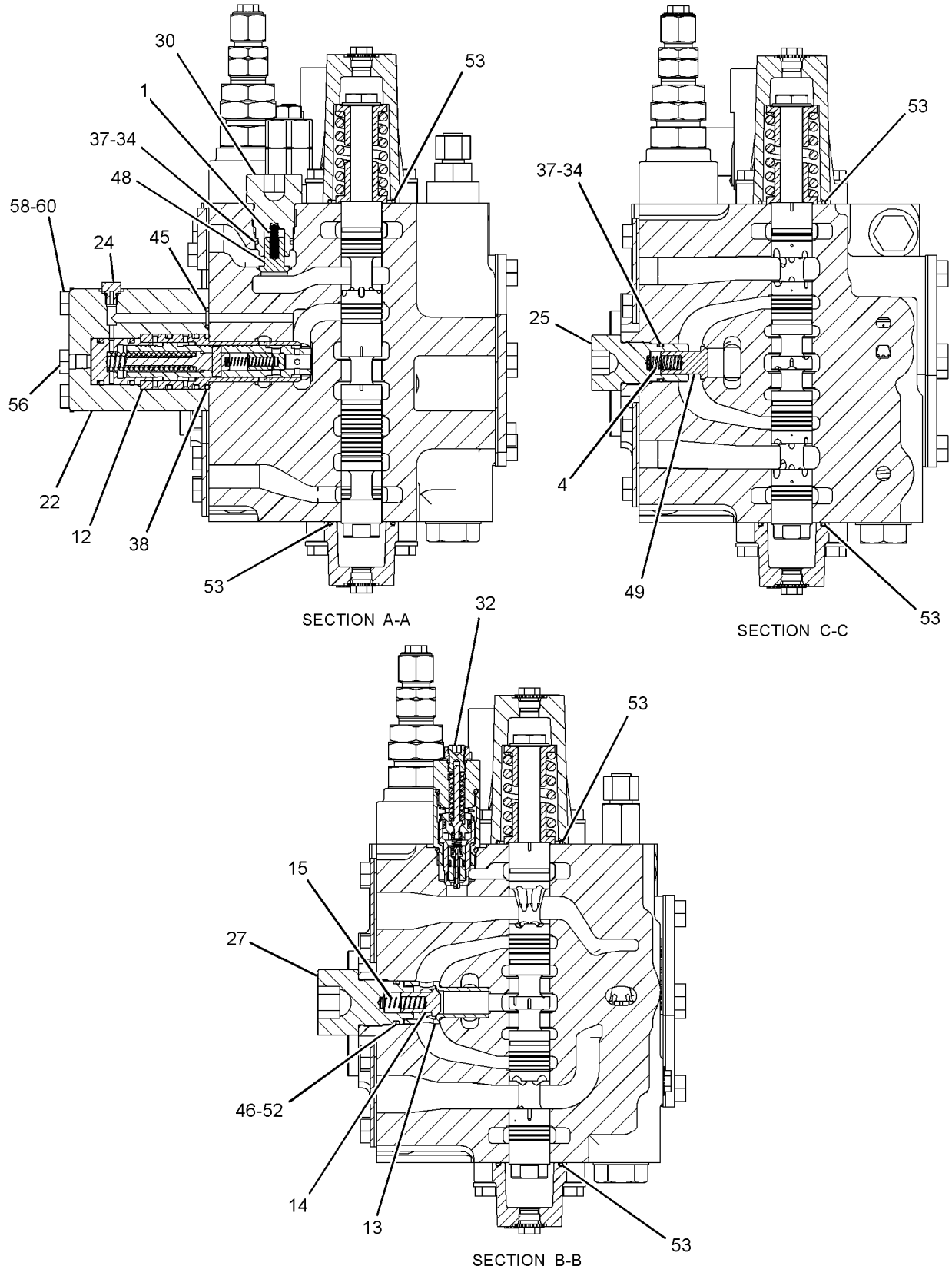

GRAPHIC #2

g01201308

285-1347 VALVE GP-CONTROL *(contd.)* i03637552

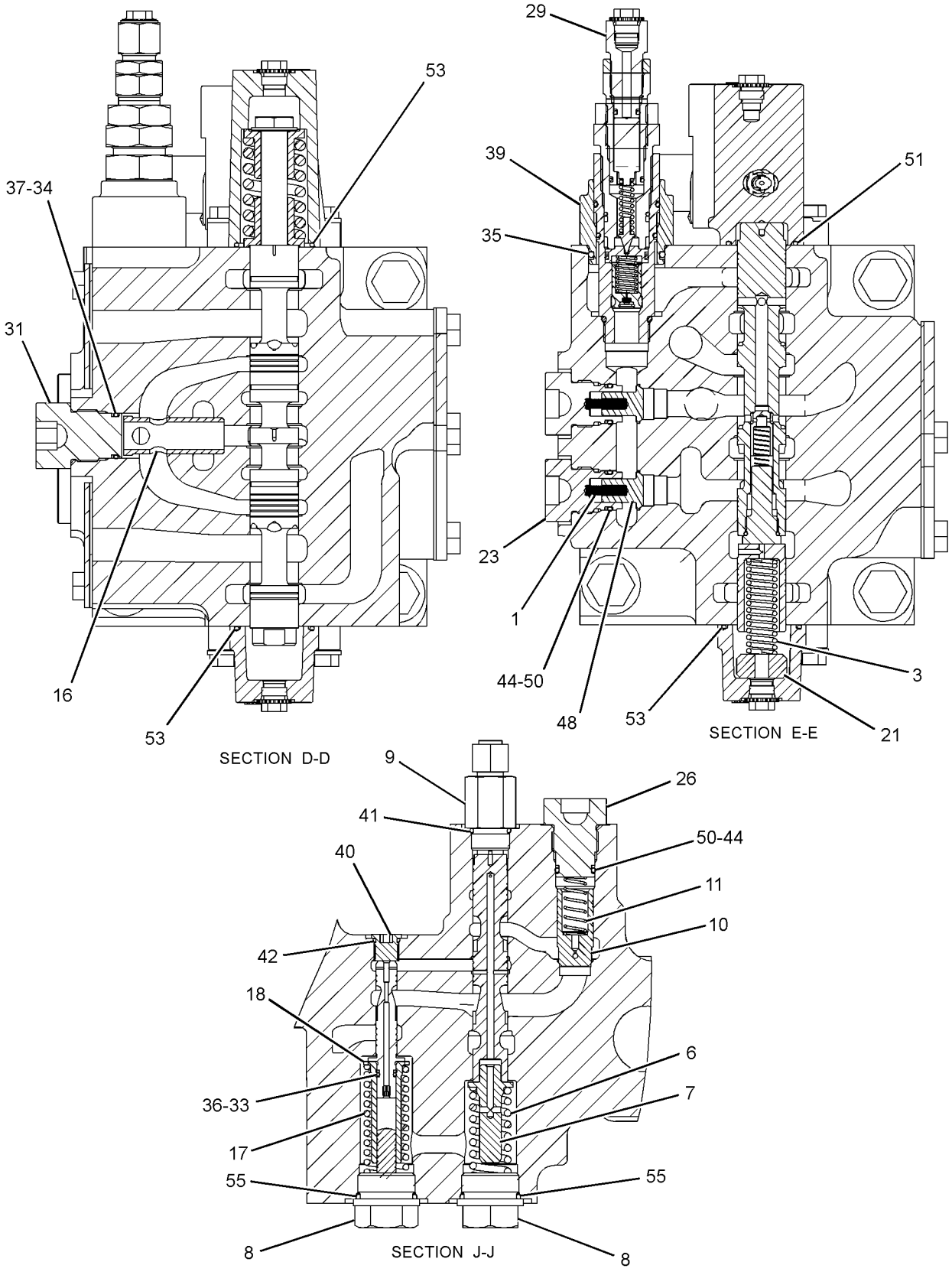

GRAPHIC #3 **<END>** g01361056

285-1348 VALVE GP-CONTROL—WITHOUT COVERS, HOUSINGS

S/N: MYG1-UP; PPN1-UP
PART OF 285-1347 VALVE GP-CONTROL
ALSO AN ATTACHMENT

SMCS-5051 **i02710615**

NOTE	REF NO	GRAPHIC REF	PART NUMBER	QTY	PART NAME 1 2 3 4 5 6 (PRODUCT LEVEL)	SEE PAGE
	1	1	**2S-2596**	1	SPRING	
	2	1	**6E-2163**	1	VALVE-CHECK	
	3	1	**6E-2271**	8	RETAINER	
	4	1	**104-7293**	2	SPRING	
	5	1	**104-7294**	1	SPRING	
	6	1	**104-7296**	1	SPRING	
Z	7	1		1	PISTON	
Z	8	1		1	GUIDE	
Z	9	1		1	VALVE AS	
Z	10	1		1	STEM-TRAVEL	
Z	11	1		1	BODY-VALVE	
Z	12	1		1	STEM-STRAIGHT TRAVEL	
Z	13	1		1	STEM-STICK	
Z	14	1		1	STEM	
Z	15	1		1	STEM-BOOM 2	
	16	1	**153-5276**	4	BOLT-SPECIAL	
Z	17	1		1	STEM-SWING	
	18	1	**3K-0360**	1	SEAL-O-RING	

Z-NOT SERVICED SEPARATELY

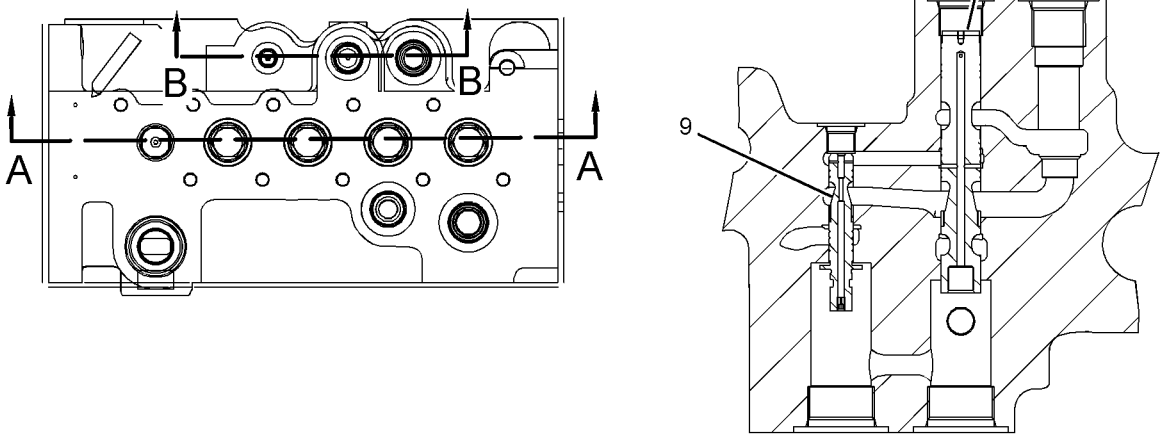

SECTION B-B

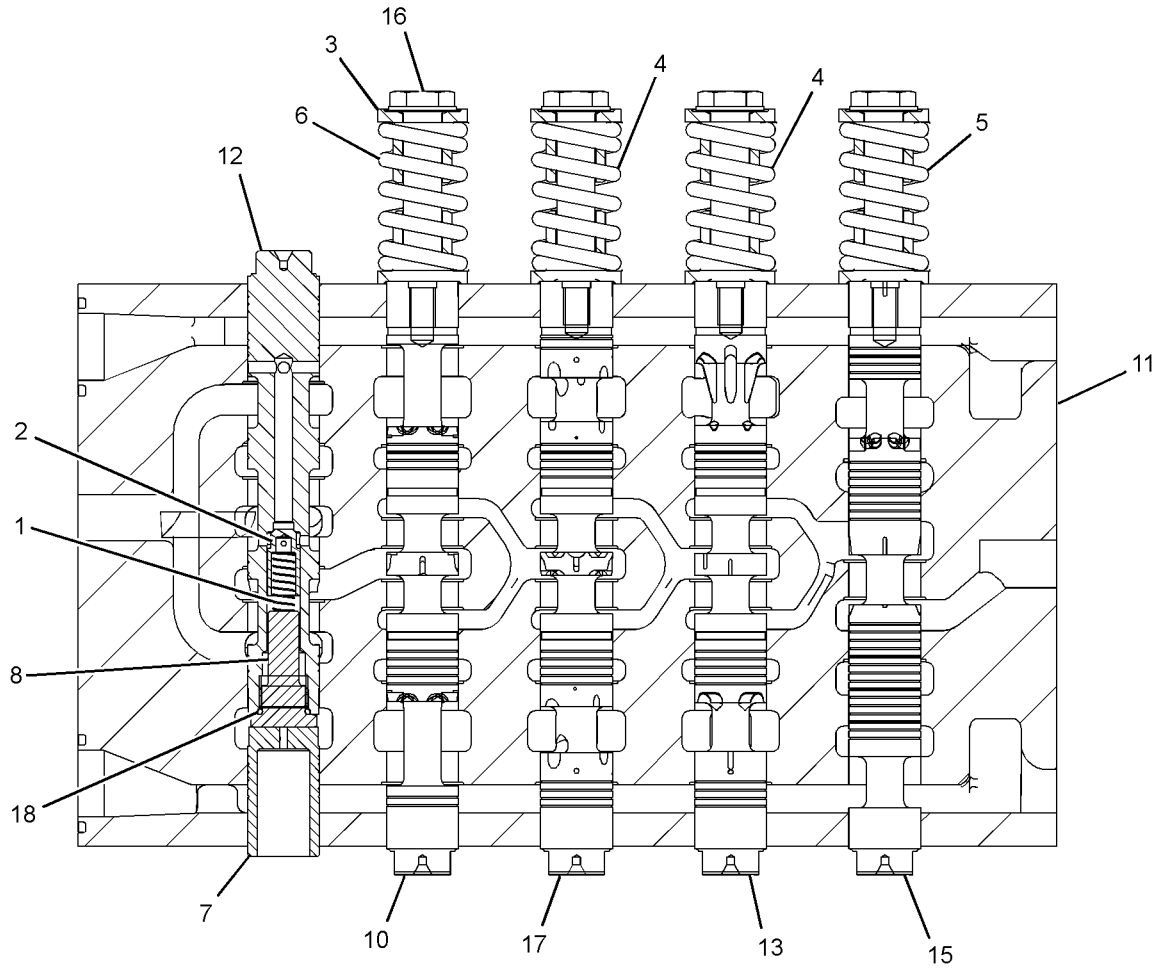

SECTION A-A

GRAPHIC #1 **<END>** g01240060

285-1357 VALVE GP-CONTROL—WITHOUT COVERS, HOUSINGS

S/N: MYG1-UP; PPN1-UP
PART OF 285-1362 VALVE GP-CONTROL
ALSO AN ATTACHMENT

SMCS-5051 **i02710617**

NOTE	REF NO	GRAPHIC REF	PART NUMBER	QTY	PART NAME 1 2 3 4 5 6 (PRODUCT LEVEL)	SEE PAGE
	1	1	**104-7293**	3	SPRING	
	2	1	**104-7294**	1	SPRING	
	3	1	**104-7296**	1	SPRING	
Z	4	1		1	BODY-VALVE	
Z	5	1		1	STEM-AUXILIARY	
Z	6	1		1	STEM-STICK	
Z	7	1		1	STEM-BOOM	
Z	8	1		1	STEM-BUCKET	
Z	9	1		1	STEM-TRAVEL	
	10	1	**153-5276**	5	BOLT-SPECIAL	
Z	11	1		1	STEM	
	12	1	**6E-2271**	10	RETAINER	

Z-NOT SERVICED SEPARATELY

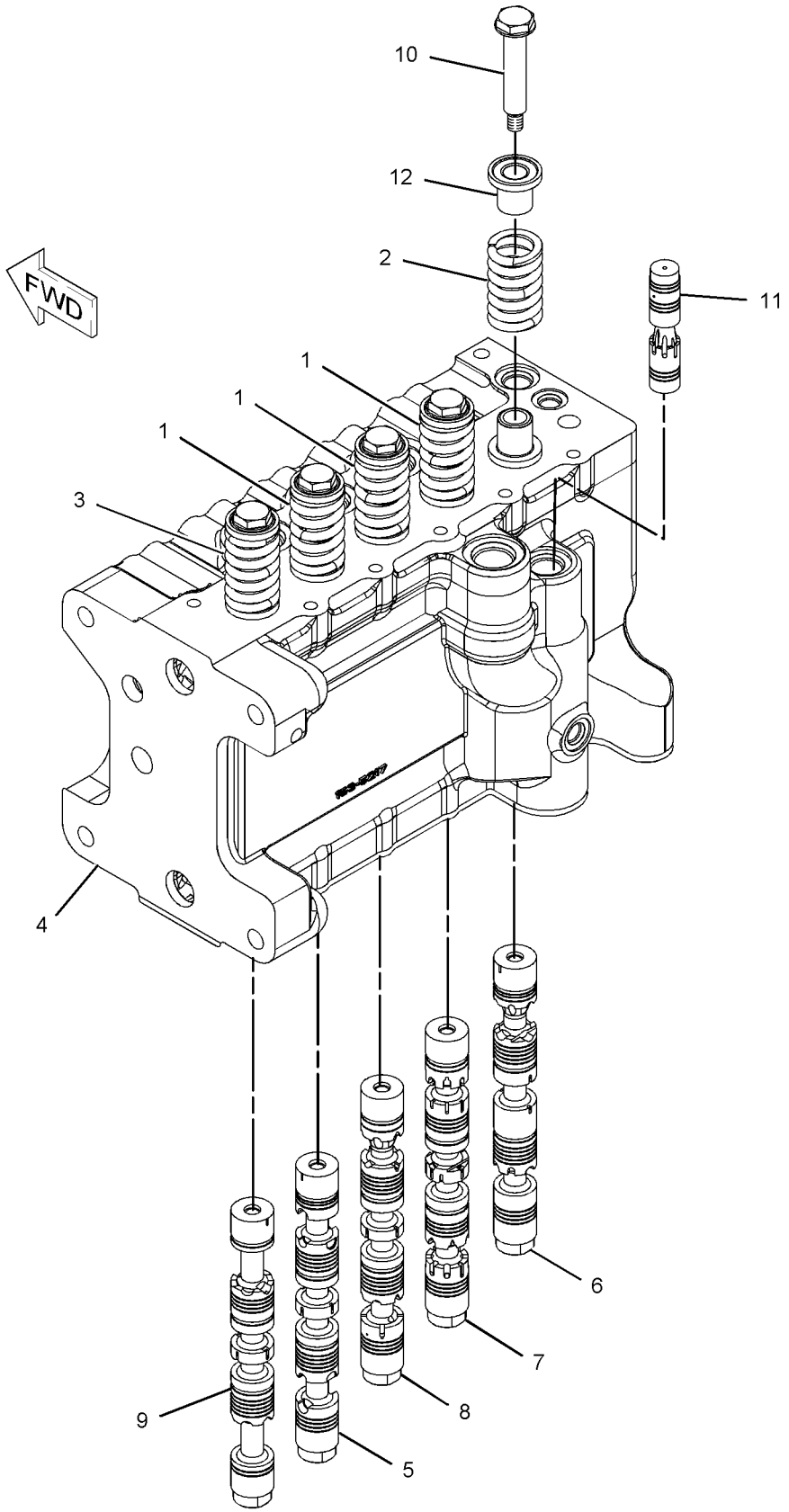

GRAPHIC #1 **<END>** g01063351

HYDRAULIC SYSTEM

285-1362 VALVE GP-CONTROL

S/N: MYG1-UP; PPN1-UP
PART OF 285-1345 VALVE GP-MAIN CONTROL
ALSO AN ATTACHMENT

SMCS-5051 **i02710613**

NOTE	REF NO	GRAPHIC REF	PART NUMBER	QTY	PART NAME 1 2 3 4 5 6 (PRODUCT LEVEL)	SEE PAGE
	1	1	**6E-2274**	5	COVER	
	2	2,3	**6E-5731**	4	VALVE (LOAD CHECK)	
	3	2,3	**7I-1248**	5	SPRING	
Y	4	3	**147-4163**	1	VALVE GP-RELIEF (NEGATIVE FLOW CONTROL)	682
	5	3	**153-5286**	1	VALVE (LOAD CHECK)	
	6	3	**153-5288**	1	SPRING	
	7	3	**153-5289**	1	GUIDE	
	8	3	**153-5290**	1	PLUG	
	9	3	**153-5291**	1	CONNECTOR	
	10	3	**153-5292**	1	VALVE-CHECK	
	11	3	**153-5293**	1	SPRING	
	12	1	**158-8159**	5	HOUSING	
	13	2,3	**236-6419**	5	PLUG	
	14	3	**236-6421**	1	PLUG	
Y	15	1	*285-1357*	1	VALVE GP-CONTROL (WITHOUT COVERS, HOUSINGS)	645
Y	16	2,3	**255-5661**	3	VALVE GP-RELIEF (LINE) (BOOM, BUCKET)	687
	17	2,3	**095-1590**	5	SEAL-O-RING	
	18	2,3	**095-1787**	5	RING-BACKUP	
	19	1	**111-9959**	1	PLUG-PIPE	
	20	3	**2M-9780**	1	SEAL-O-RING	
	21	3	**4I-6397**	1	RING-BACKUP	
	22	2	**4J-0520**	2	SEAL-O-RING	
Y	23	2	**6E-4816**	2	PLUG GP-CONTROL VALVE	606
	24	3	**6V-3922**	1	SEAL-O-RING	
	25	2,3	**6V-5597**	10	SEAL-O-RING	
	26	3	**7M-8485**	1	SEAL-O-RING	
	27	2	**7Y-8099**	2	COVER	
	28	1	**8T-4121**	20	WASHER-HARD (11X21X2.5-MM THK)	
M	29	1,2	**8T-4195**	28	BOLT (M10X1.5X30-MM)	

M-METRIC PART
Y-SEPARATE ILLUSTRATION

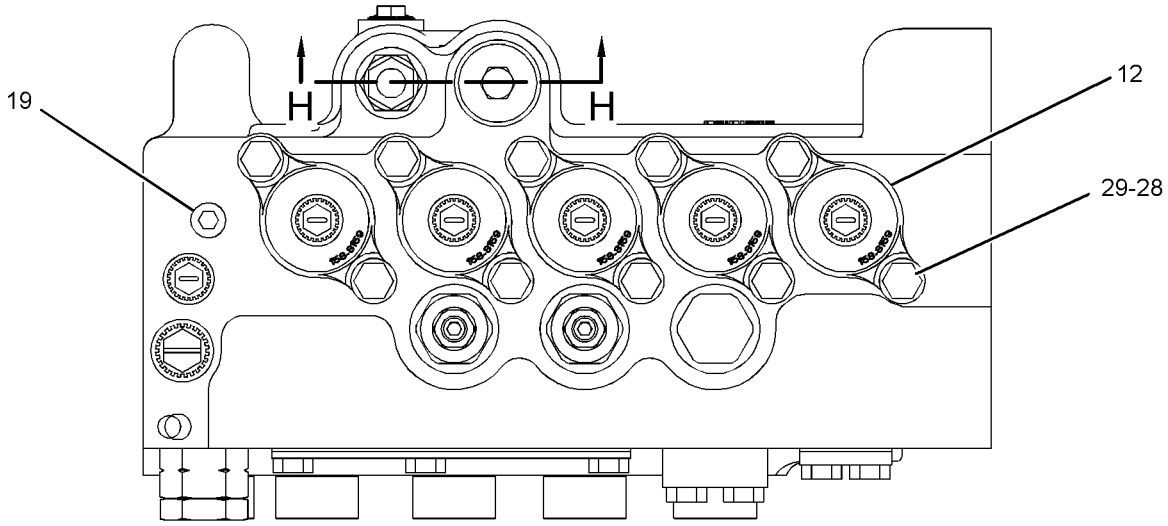

VIEW G-G

REFER TO ALL ILLUSTRATIONS OF THIS GROUP FOR AUXILIARY VIEWS

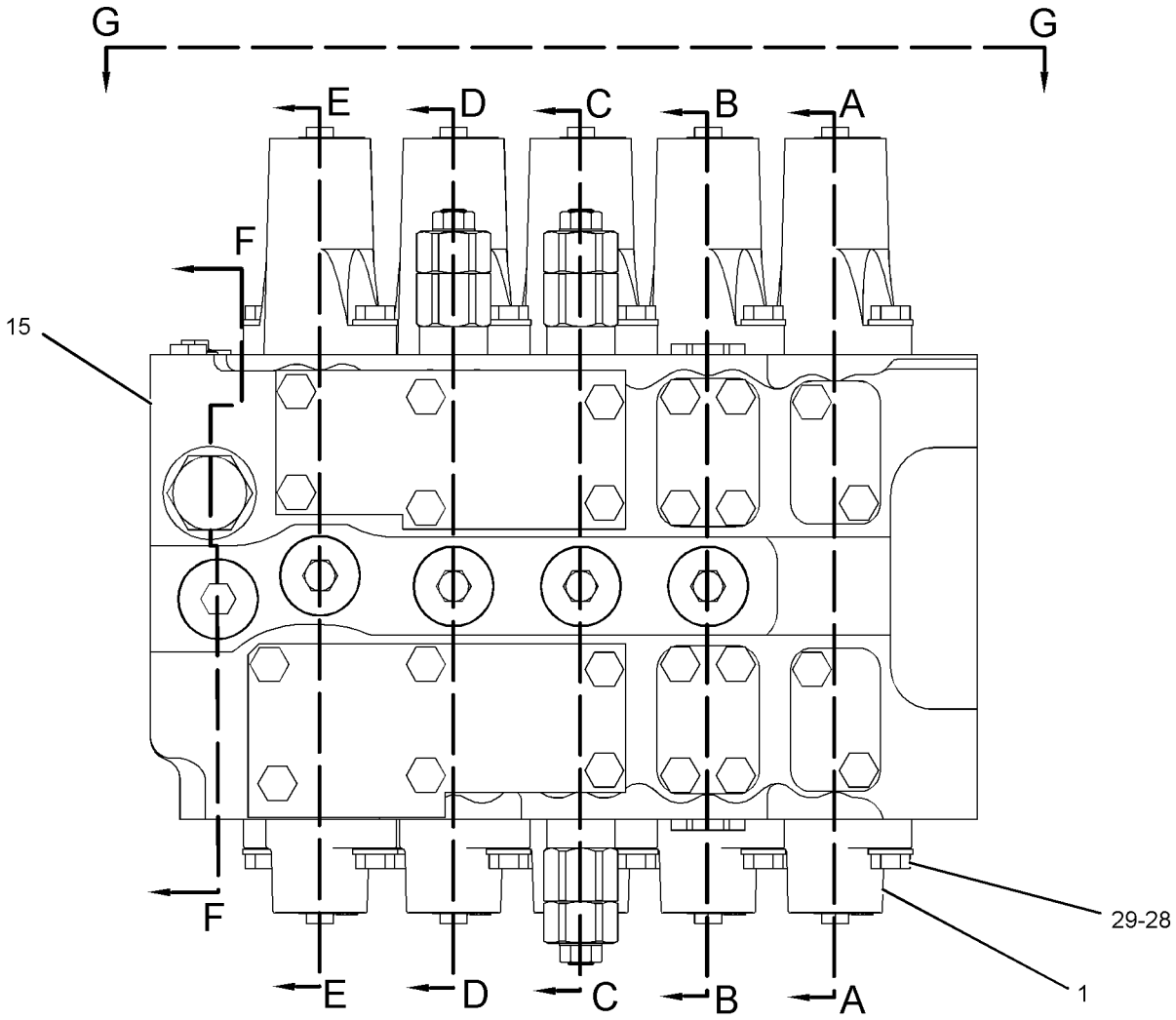

GRAPHIC #1

g01201247

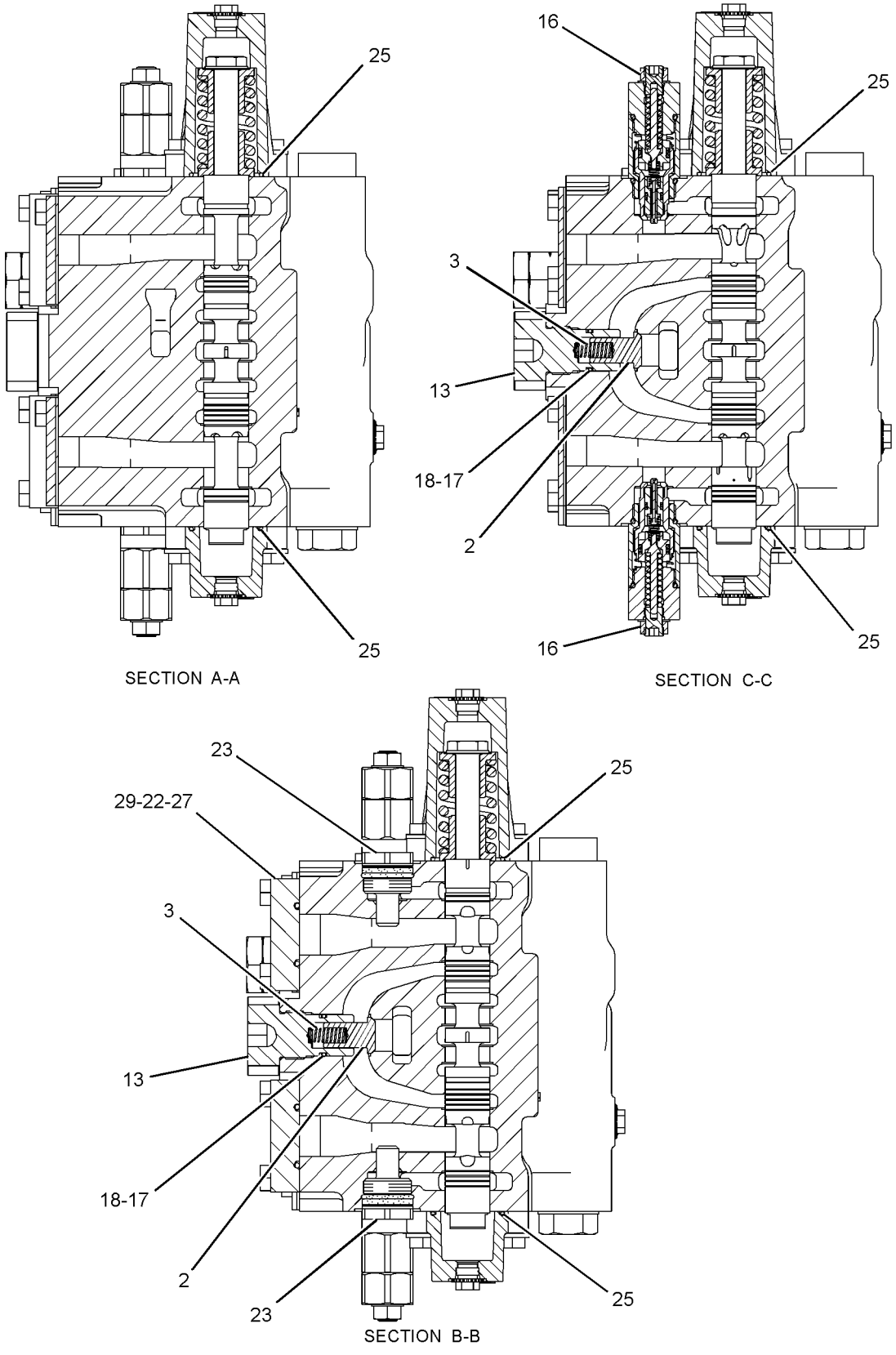

GRAPHIC #2

g01201248

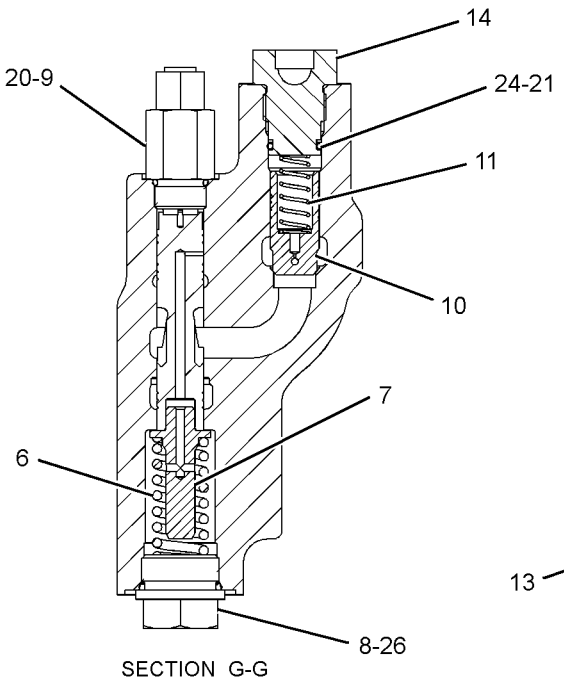

SECTION G-G

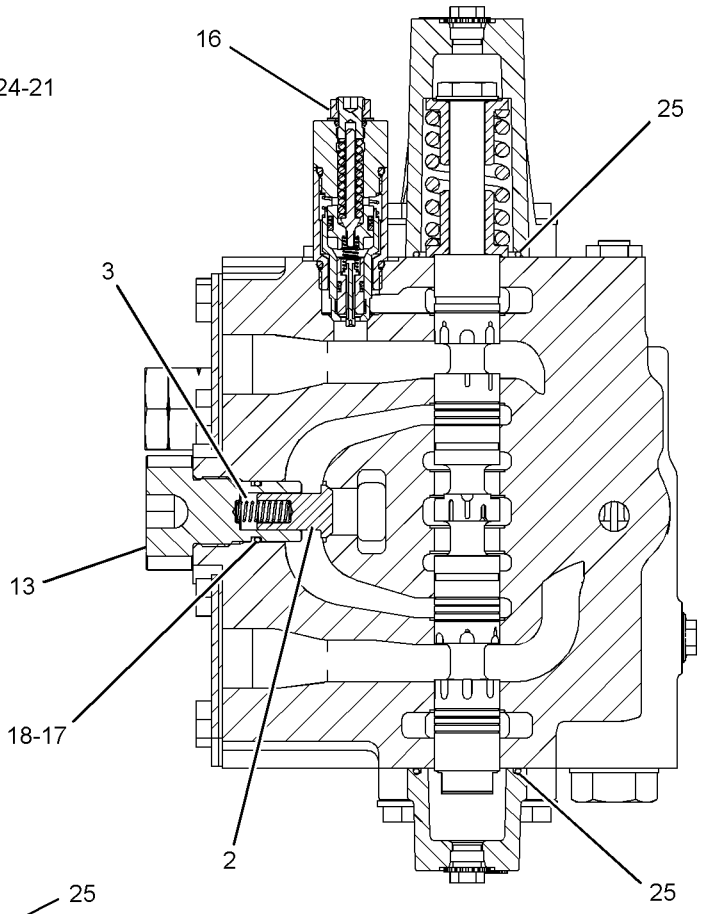

SECTION D-D

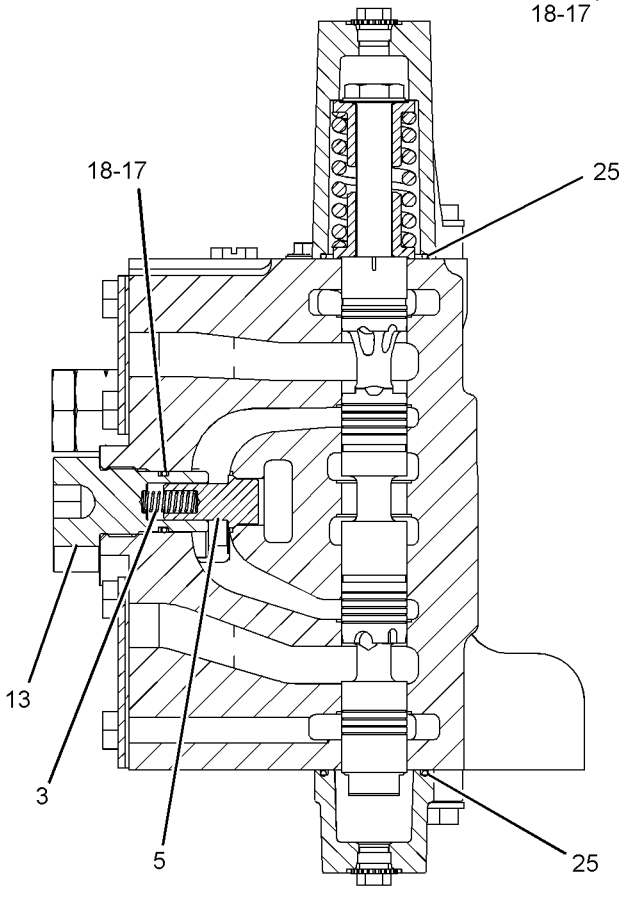

SECTION E-E

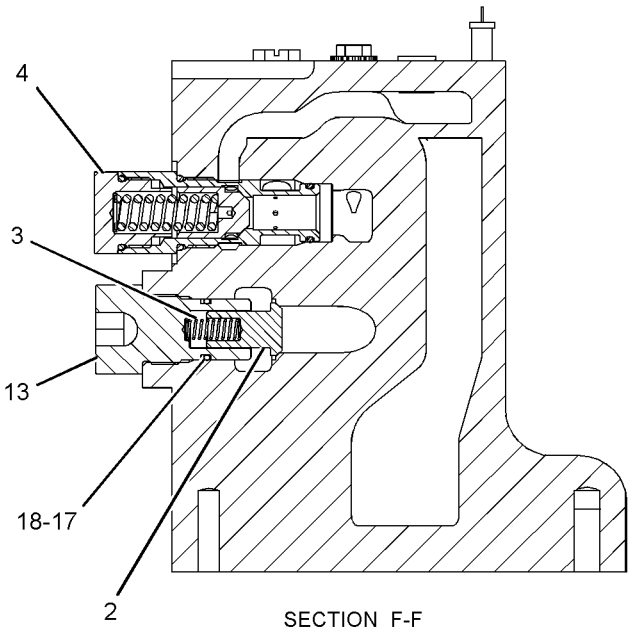

SECTION F-F

GRAPHIC #3 **<END>** g01201249

HYDRAULIC SYSTEM

285-1375 VALVE GP-CONTROL–AUXILIARY

S/N: MYG1-UP; PPN1-UP
PART OF 291-8635 VALVE & MTG GP-MAIN CONTROL
AN ATTACHMENT

SMCS-5051 **i02685336**

NOTE	REF NO	GRAPHIC REF	PART NUMBER	QTY	PART NAME 1 2 3 4 5 6 (PRODUCT LEVEL)	SEE PAGE
M	1	1	**8T-4195**	12	BOLT (M10X1.5X30-MM)	
	2	1	**4J-8998**	2	SEAL-O-RING	
	3	1	**6E-2274**	1	COVER	
	4	1	**6E-5731**	1	VALVE (LOAD CHECK)	
	5	1	**7I-1248**	1	SPRING	
	6	1	**171-0150**	2	COVER	
	7	1	**236-6419**	1	PLUG	
Y	8	1	*244-8400*	1	VALVE GP-CONTROL (WITHOUT COVERS, HOUSINGS)	633
	9	1	**8T-4121**	4	WASHER-HARD (11X21X2.5-MM THK)	
	10	1	**095-1590**	1	SEAL-O-RING	
	11	1	**095-1787**	1	RING-BACKUP	
	12	1	**158-8159**	1	HOUSING	
	13	1	**1P-3702**	4	SEAL-RECTANGULAR	
Y	14	1	**6E-4816**	2	PLUG GP-CONTROL VALVE	606
	15	1	**6V-5597**	2	SEAL-O-RING	

M-METRIC PART
Y-SEPARATE ILLUSTRATION

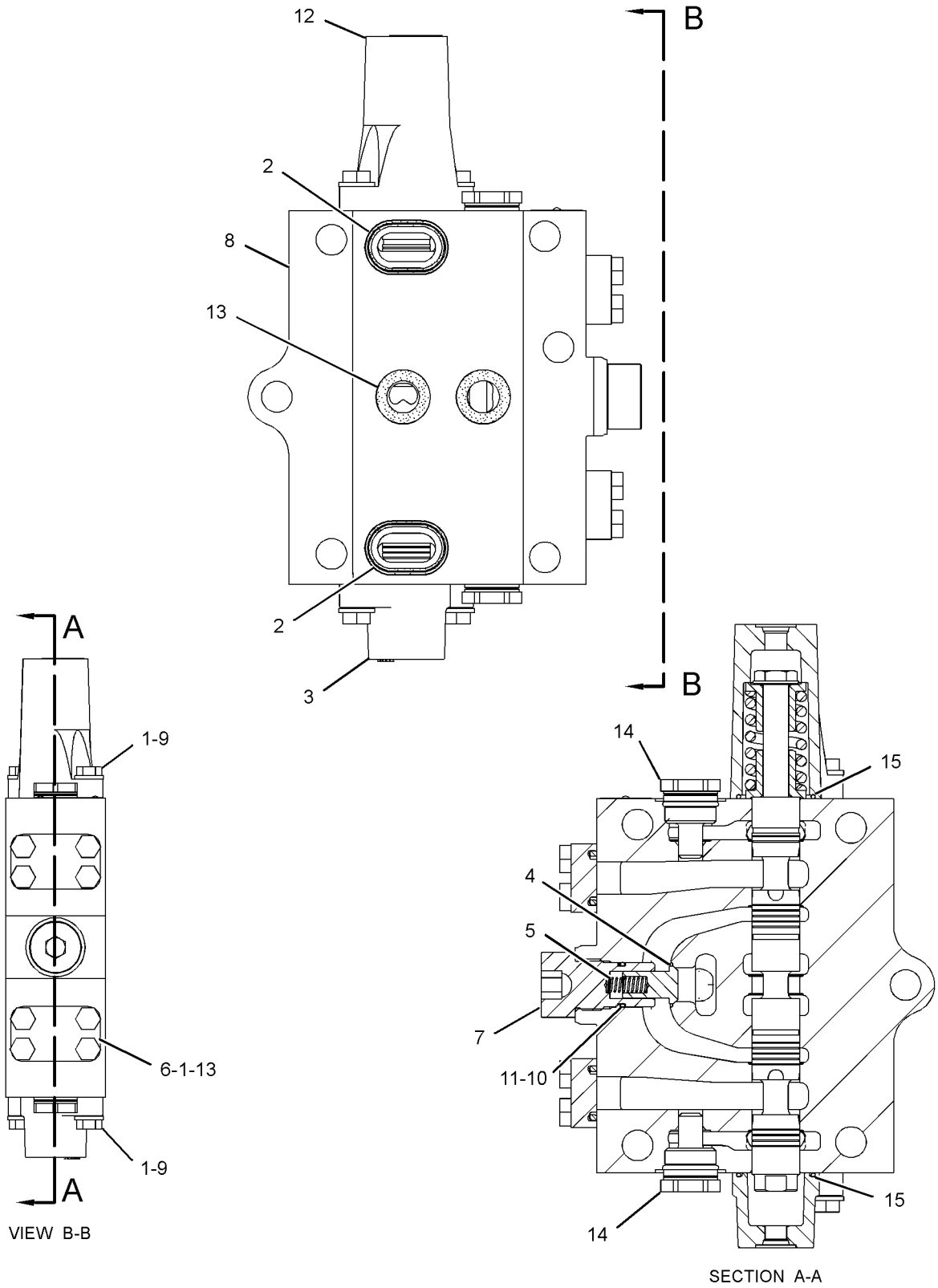

GRAPHIC #1 **<END>** g01264519

HYDRAULIC SYSTEM

285-1531 VALVE GP-CONTROL–MEDIUM PRESSURE

S/N: MYG1-UP; PPN1-UP
PART OF 255-1926 LINES GP-FRONT
AN ATTACHMENT

SMCS-5051 **i02877234**

NOTE	REF NO	GRAPHIC REF	PART NUMBER	QTY	PART NAME 1 2 3 4 5 6 (PRODUCT LEVEL)	SEE PAGE
	1	1	**285-1777**	2	VALVE GP-RELIEF (230-BAR (3336-PSI))	
					–OR–	
A			**260-3003**	2	VALVE GP-RELIEF (160-BAR (2321-PSI))	
					(OPTIONAL SERVICE REPLACEMENT)	
					–OR–	
A			**309-9941**	2	VALVE GP-RELIEF (80-BAR (1161-PSI))	
					(OPTIONAL SERVICE REPLACEMENT)	

A-NOT PART OF THIS GROUP

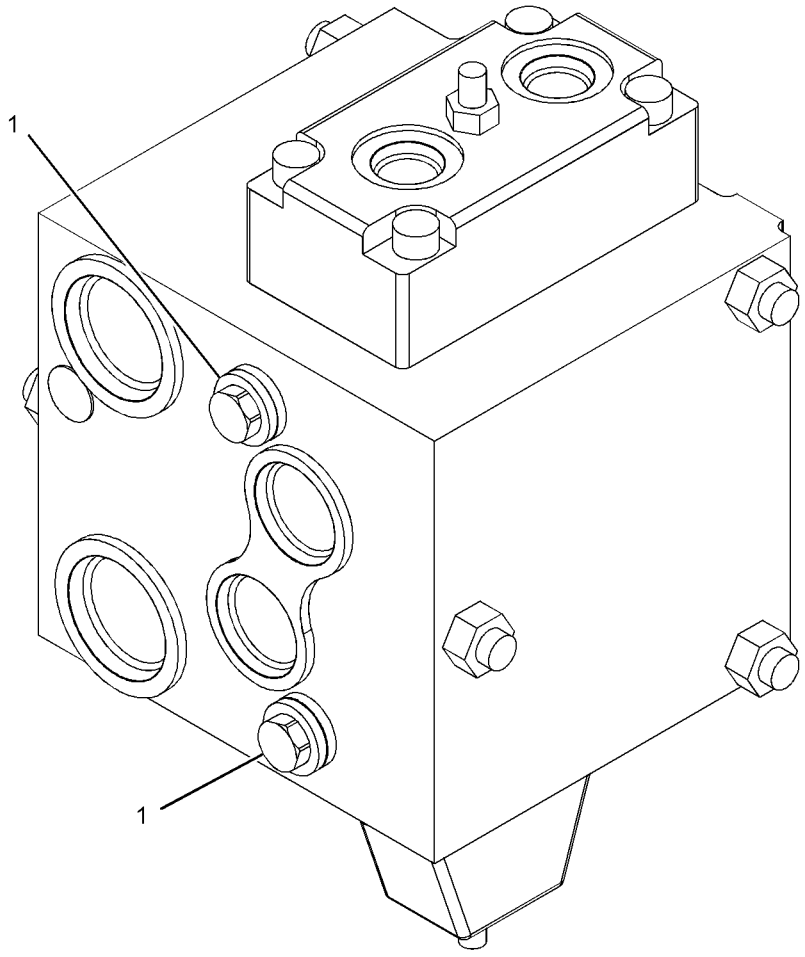

GRAPHIC #1 **<END>** g01384393

201-9236 VALVE GP-FLOW CONTROL–BOOM FLOAT, PILOT OIL

S/N: MYG1-UP; PPN1-UP
PART OF 255-1853 LINES GP-PILOT
AN ATTACHMENT

SMCS-5137 **i01522401**

NOTE	REF NO	GRAPHIC REF	PART NUMBER	QTY	PART NAME 1 2 3 4 5 6 (PRODUCT LEVEL)	SEE PAGE
	1	1	**6I-6904**	1	CONNECTOR	
	2	1	**095-1582**	1	SEAL-O-RING	
	3	1	**6I-6905**	1	BODY	
	4	1	**099-0365**	2	SPRING	
	5	1	**5I-6881**	1	PLUNGER AS	
	6	1	**6I-6907**	1	SLEEVE	
	7	1	**095-1522**	2	SEAL-O-RING	
	8	1	**6V-8754**	1	RING-RETAINING	

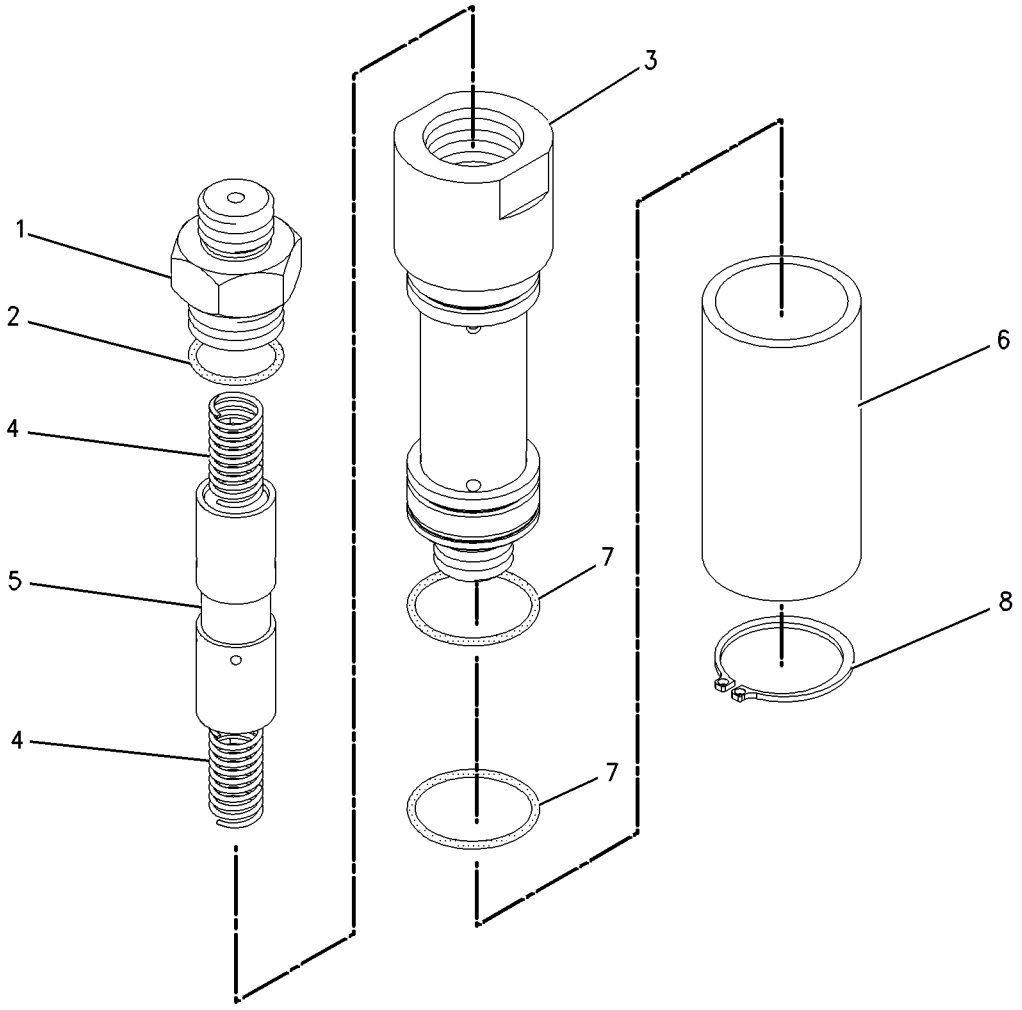

GRAPHIC #1 **<END>** g00807794

HYDRAULIC SYSTEM

255-5680 VALVE GP-LOAD CONTROL–
STICK DRIFT RED, LINE RELIEF
S/N: MYG1-UP; PPN1-UP
PART OF 260-7869 LINES GP-FRONT

SMCS-5067, 5117, 5147, 5811 **i03493603**

NOTE	REF NO	GRAPHIC REF	PART NUMBER	QTY	PART NAME 1 2 3 4 5 6 (PRODUCT LEVEL)	SEE PAGE
	1	1	*162-0177*	1	PLUG AS	
		1	**3J-1907**	1	SEAL-O-RING	
		1	**9S-8004**	1	PLUG	
	2	1	**4I-8965**	1	GUIDE	
	3	1	**5I-8511**	1	SPRING	
	4	1	**087-5166**	1	SPRING	
	5	1	**118-4044**	1	COVER	
	7	1	**147-4184**	1	PLUG	
	8	1	*225-4818*	2	PLUG AS	
					(EACH INCLUDES)	
		1	**4J-7533**	1	SEAL-O-RING	
		1	**225-4804**	1	PLUG	
Y	9	1	**255-5662**	1	VALVE GP-RELIEF (LINE)	688
M	10	1	**8T-4136**	4	BOLT (M10X1.5X25-MM)	
	11	1	**095-1594**	1	SEAL-O-RING	
	12	1	**095-1789**	1	RING	
	13	1	*148-8395*	1	PLUG AS	
		1	**3K-0360**	1	SEAL-O-RING	
		1	**9S-8005**	1	PLUG-O-RING	

M-METRIC PART
Y-SEPARATE ILLUSTRATION

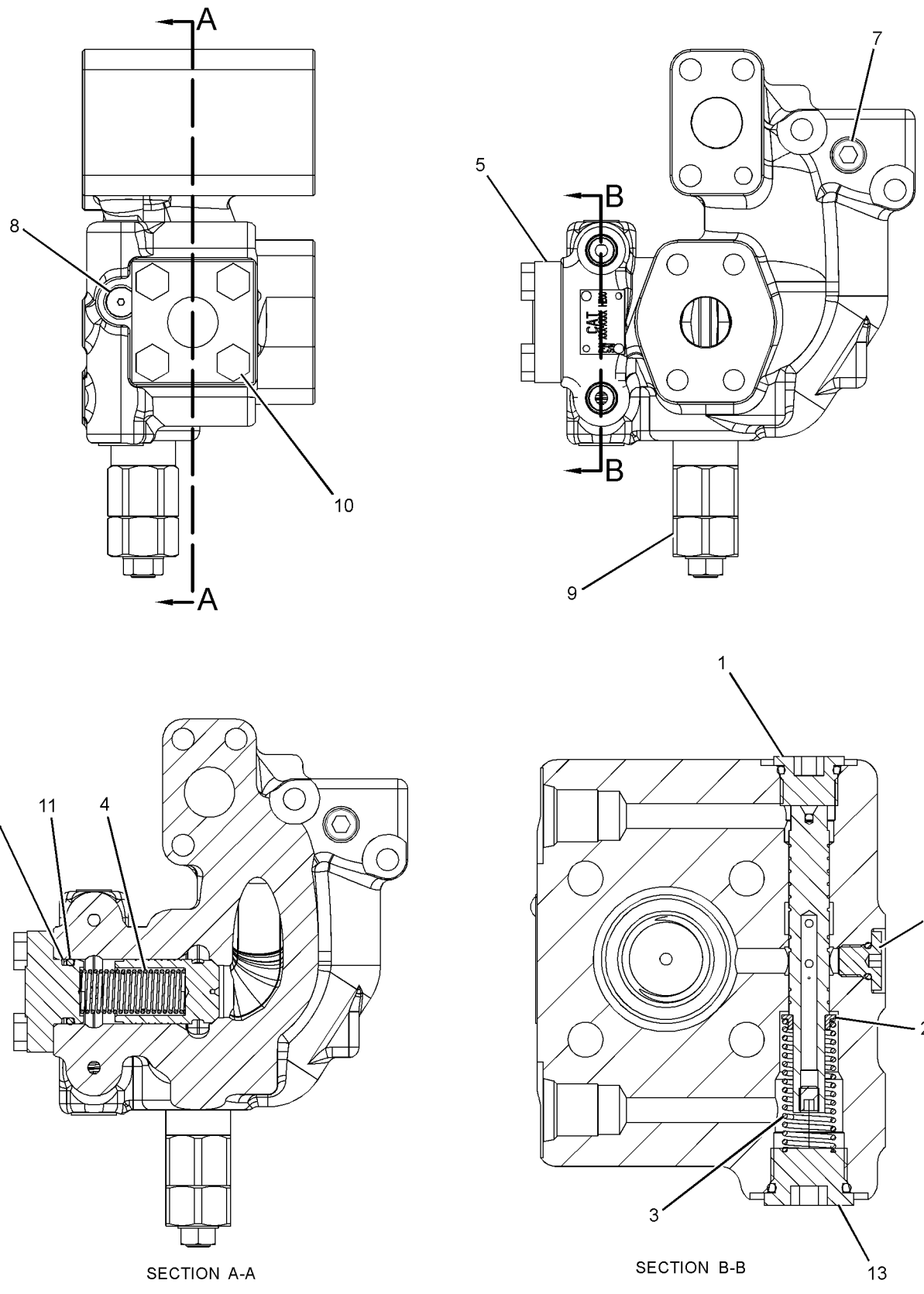

GRAPHIC #1 **<END>** g01830353

HYDRAULIC SYSTEM

255-5683 VALVE GP-LOAD CONTROL–
BOOM DRIFT RED, LINE RELIEF
S/N: MYG1-UP; PPN1-UP
PART OF 260-7869 LINES GP-FRONT

SMCS-5067, 5117, 5147, 5811 **i03493620**

NOTE	REF NO	GRAPHIC REF	PART NUMBER	QTY	PART NAME 1 2 3 4 5 6 (PRODUCT LEVEL)	SEE PAGE
	1	1	**6V-8397**	1	SEAL-O-RING	
	2	1	**4I-8965**	1	GUIDE	
	3	1	**5I-8511**	1	SPRING	
	4	1	**087-5166**	1	SPRING	
	5	1	**118-4044**	1	COVER	
	6	1	**3J-1907**	1	SEAL-O-RING	
	7	1	*225-4818*	2	PLUG AS	
					(EACH INCLUDES)	
	7A	1	**4J-7533**	1	SEAL-O-RING	
		1	**225-4804**	1	PLUG	
Y	8	1	**255-5662**	1	VALVE GP-RELIEF (LINE)	688
M	9	1	**8T-4136**	4	BOLT (M10X1.5X25-MM)	
	10	1	**095-1594**	1	SEAL-O-RING	
	11	1	**095-1789**	1	RING	
	12	1	*148-8395*	1	PLUG AS	
	12A	1	**3K-0360**	1	SEAL-O-RING	
		1	**9S-8005**	1	PLUG-O-RING	
	13	1	*148-8407*	1	PLUG AS	
	13A	1	**3J-1907**	1	SEAL-O-RING	
		1	**9S-4191**	1	PLUG-O-RING	
	14	1	**190-7865**	1	CONNECTOR	

M-METRIC PART
Y-SEPARATE ILLUSTRATION

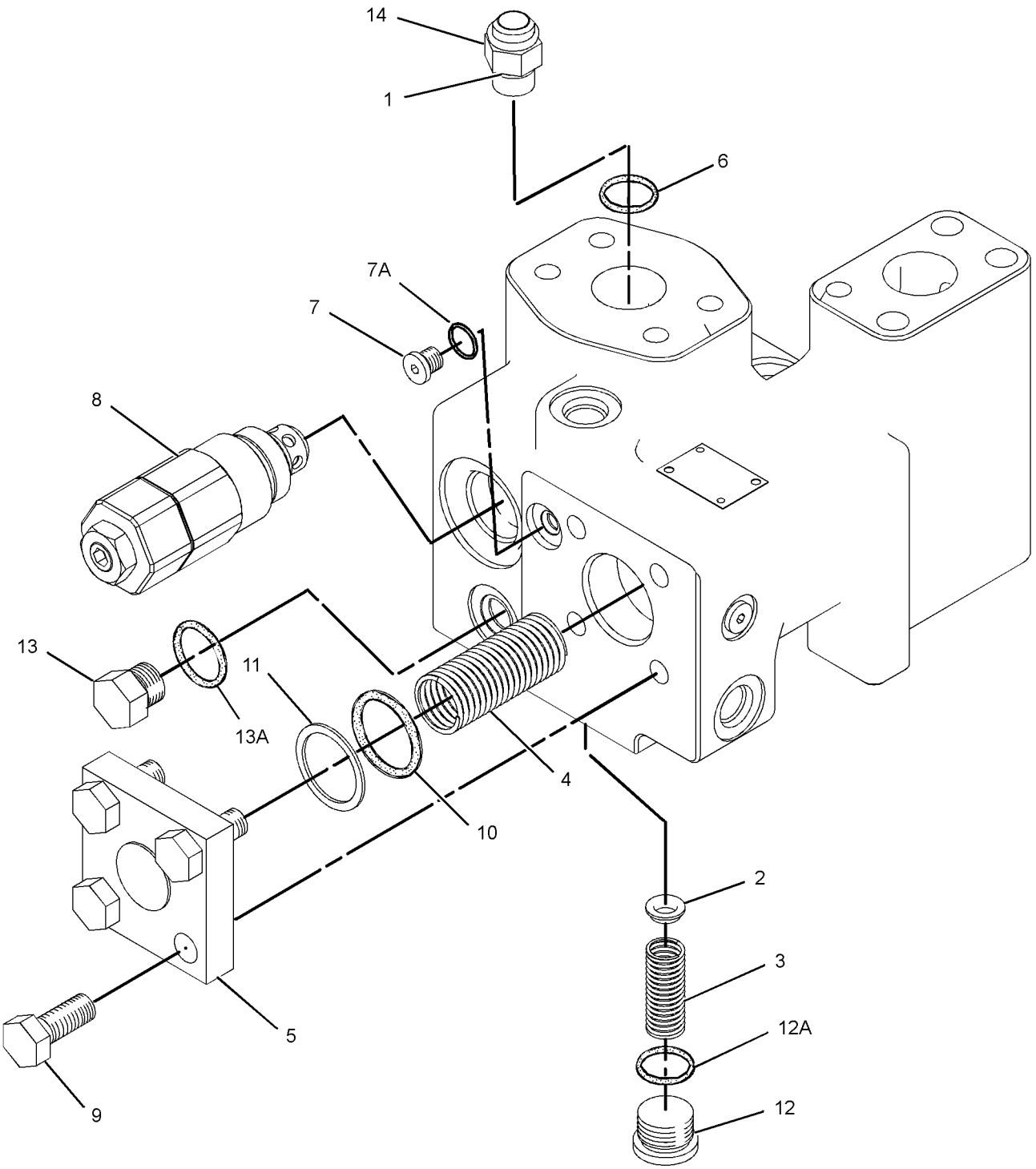

GRAPHIC #1 **<END>** g01830373

259-7692 VALVE GP-LOAD CONTROL–
STICK LOWER, DRIFT RED, RELIEF
S/N: MYG1-UP; PPN1-UP
PART OF 237-3199 LINES GP-STICK CYLINDER
AN ATTACHMENT

SMCS-5067, 5117, 5147, 5811 **i03563403**

NOTE	REF NO	GRAPHIC REF	PART NUMBER	QTY	PART NAME 1 2 3 4 5 6 (PRODUCT LEVEL)	SEE PAGE
	1	2	**2S-2596**	1	SPRING	
M	2	1	**8T-4139**	4	BOLT (M12X1.75X30-MM)	
	3	2	**9T-1614**	1	VALVE	
	4	1	**8J-6815**	1	PLUG-ORIFICE	
	5	1	**165-9513**	1	SEAT	
	6	1	**165-9514**	1	PLUG	
	7	2	**225-4787**	1	VALVE	
	8	2	**225-4789**	1	VALVE	
	9	2	**225-4790**	1	SPRING	
	10	2	**225-4791**	1	GUIDE	
	11	2	**225-4792**	1	PLUG	
	12	2	**225-4793**	1	VALVE AS	
	13	2	**225-4796**	1	PISTON	
	14	2	**225-4797**	1	VALVE AS	
	15	2	**259-7788**	1	GUIDE AS	
		2	**4T-0987**	1	BEARING-SLEEVE	
	16	1	**225-4803**	1	COVER	
	17	1,2	*225-4818*	6	PLUG AS	
					(EACH INCLUDES)	
		1,2	**4J-7533**	1	SEAL-O-RING	
		1,2	**225-4804**	1	PLUG	
	18	1,2	*225-4820*	2	PLUG AS	
					(EACH INCLUDES)	
		1,2	**3J-7354**	1	SEAL-O-RING	
		1,2	**225-4821**	1	PLUG	
B	19	2	**225-4830**	1	SHIM (1.0-MM THK)	
B	20	2	**225-4831**	2	SHIM (0.5-MM THK)	
B	21	2	**225-4832**	2	SHIM (0.2-MM THK)	
B	22	2	**225-4833**	1	SHIM (0.1-MM THK)	
Y	23	1	**255-5662**	1	VALVE GP-RELIEF (LINE)	688
	25	2	**8T-6759**	1	PLUG-PIPE	
	26	2	**095-1594**	2	SEAL-O-RING	
	27	2	**095-1789**	2	RING	
	28	2	**122-7797**	2	RING	
	29	1	**2D-6642**	1	BALL	
	30	1	**3H-0442**	1	SEAL-O-RING	
	31	1,2	**3J-1907**	2	SEAL-O-RING	
	32	2	**6V-5326**	2	SEAL-O-RING	
M	33	1	**7Y-5226**	1	NUT (M5X0.8-THD)	

B-USE AS REQUIRED
M-METRIC PART
Y-SEPARATE ILLUSTRATION

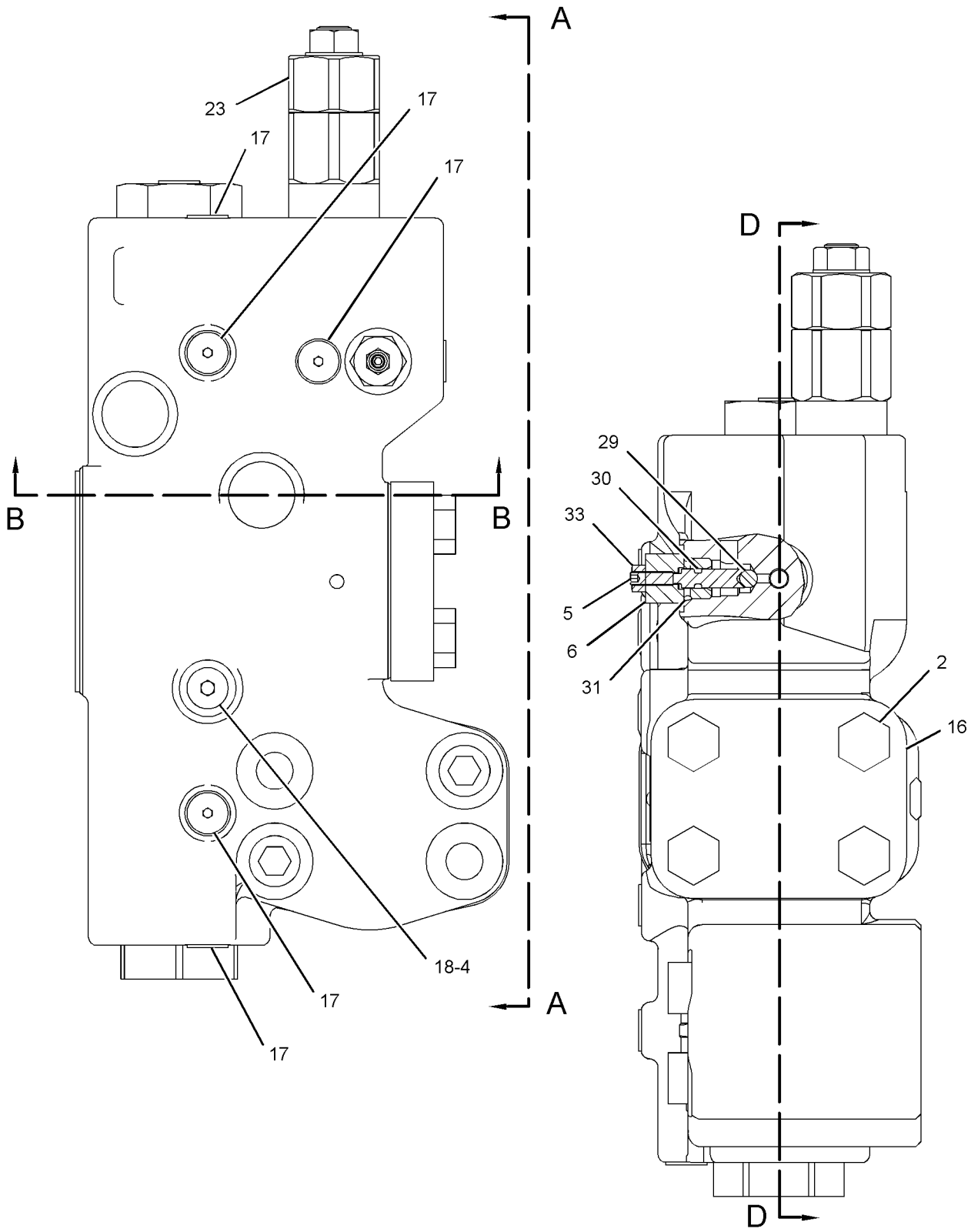

REFER TO ALL ILLUSTRATIONS OF
THIS GROUP FOR AUXILIARY VIEWS

VIEW A-A

GRAPHIC #1

g01887535

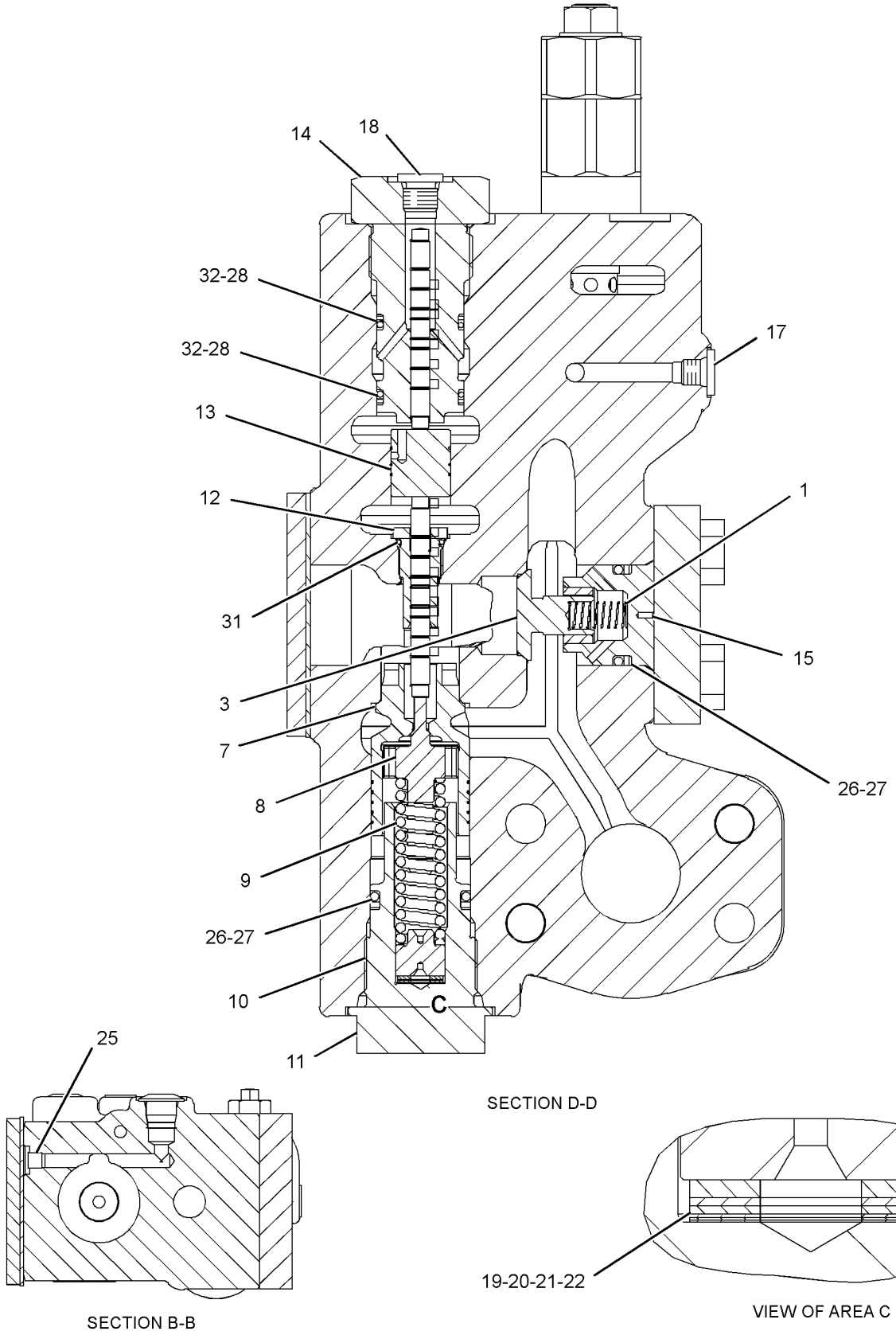

GRAPHIC #2 **<END>** g01239182

HYDRAULIC SYSTEM

263-1962 VALVE GP-LOAD CONTROL–

BOOM LOWERING, DRIFT REDUCTION

S/N: MYG1-UP; PPN1-UP

PART OF 239-1632 LINES GP-BOOM CYLINDER

AN ATTACHMENT

SMCS-5067, 5117, 5147, 5811 **i03183100**

NOTE	REF NO	GRAPHIC REF	PART NUMBER	QTY	PART NAME 1 2 3 4 5 6 (PRODUCT LEVEL)	SEE PAGE
	1	1	**2S-2596**	1	SPRING	
	2	1	**9T-1614**	1	VALVE	
	3	1	**8J-6815**	3	PLUG-ORIFICE	
C	4	1	**293-0653**	1	GUIDE AS	
	5	1	**157-0935**	3	SHIM (0.1-MM THK)	
	6	1	**194-4741**	1	PLUG AS	
Z	7	1		1	BODY-VALVE	
	8	1	**201-3145**	1	PLUG	
	9	1	**201-3146**	1	PISTON	
	10	1	**203-2076**	1	SPRING	
	11	1	**8T-6759**	1	PLUG-PIPE	
	12	1	**211-4185**	1	POPPET	
Y	13	1	**255-5747**	1	VALVE GP-RELIEF (LINE)	689
	14	1	**221-5138**	1	RETAINER	
	15	1	**221-7155**	1	POPPET	
	16	1	**222-0298**	1	GUIDE	
	17	1	**222-3347**	1	VALVE GP-FLOW CONTROL	
	18	1	**122-7797**	1	RING	
C	19	1	*225-4818*	4	PLUG AS	
					(EACH INCLUDES)	
		1	**4J-7533**	1	SEAL-O-RING	
		1	**225-4804**	1	PLUG	
C	20	1	*225-4820*	4	PLUG AS	
					(EACH INCLUDES)	
		1	**3J-7354**	1	SEAL-O-RING	
		1	**225-4821**	1	PLUG	
	21	1	**1P-3704**	1	SEAL-RECTANGULAR	
	22	1	**3J-1907**	1	SEAL-O-RING	
B	23	1	**5M-9624**	9	SHIM (0.25-MM THK)	
B	24	1	**6J-6855**	9	SHIM (0.12-MM THK)	
	25	1	**6V-5326**	1	SEAL-O-RING	
	26	1	**7M-8485**	3	SEAL-O-RING	

B-USE AS REQUIRED
C-CHANGE FROM PREVIOUS TYPE
Y-SEPARATE ILLUSTRATION
Z-NOT SERVICED SEPARATELY

263-1962 VALVE GP-LOAD CONTROL *(contd.)* **i03183100**

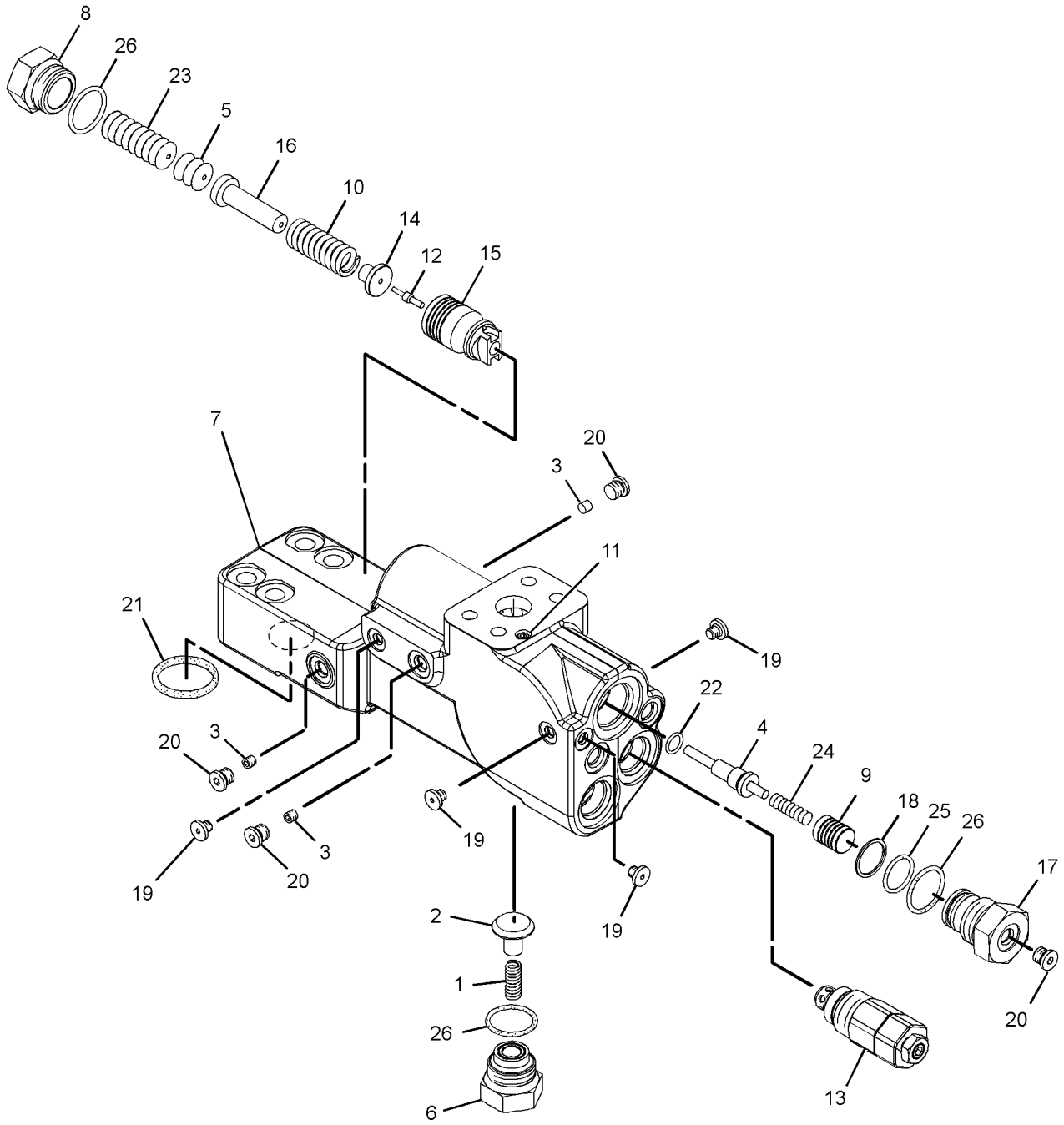

GRAPHIC #1 **<END>** g01525645

285-1345 VALVE GP-MAIN CONTROL–HEAVY LIFT

S/N: MYG1-UP; PPN1-UP
PART OF 259-7410, 259-7411 HYDRAULIC AR, 282-2743, 291-8635 VALVE & MTG
GP-MAIN CONTROL
ALSO AN ATTACHMENT

SMCS-5051 **i03281464**

NOTE	REF NO	GRAPHIC REF	PART NUMBER	QTY	PART NAME 1 2 3 4 5 6 (PRODUCT LEVEL)	SEE PAGE
M	1	1	**8T-4193**	4	BOLT (M16X2X50-MM)	
Y	2	1	*206-3164*	1	VALVE GP-RELIEF (NEGATIVE FLOW CONTROL)	686
Y	3	1	**285-1362**	1	VALVE GP-CONTROL (RH)	647
Y	4	1	**285-1347**	1	VALVE GP-CONTROL (LH)	638
	5	1	**9X-8257**	9	WASHER (17.5X30X3.5-MM THK)	
	6	1	**1P-3702**	2	SEAL-RECTANGULAR	
	7	1	**4J-0519**	2	SEAL-O-RING	
M	8	1	**8T-4140**	5	BOLT (M16X2X60-MM)	

M-METRIC PART
Y-SEPARATE ILLUSTRATION

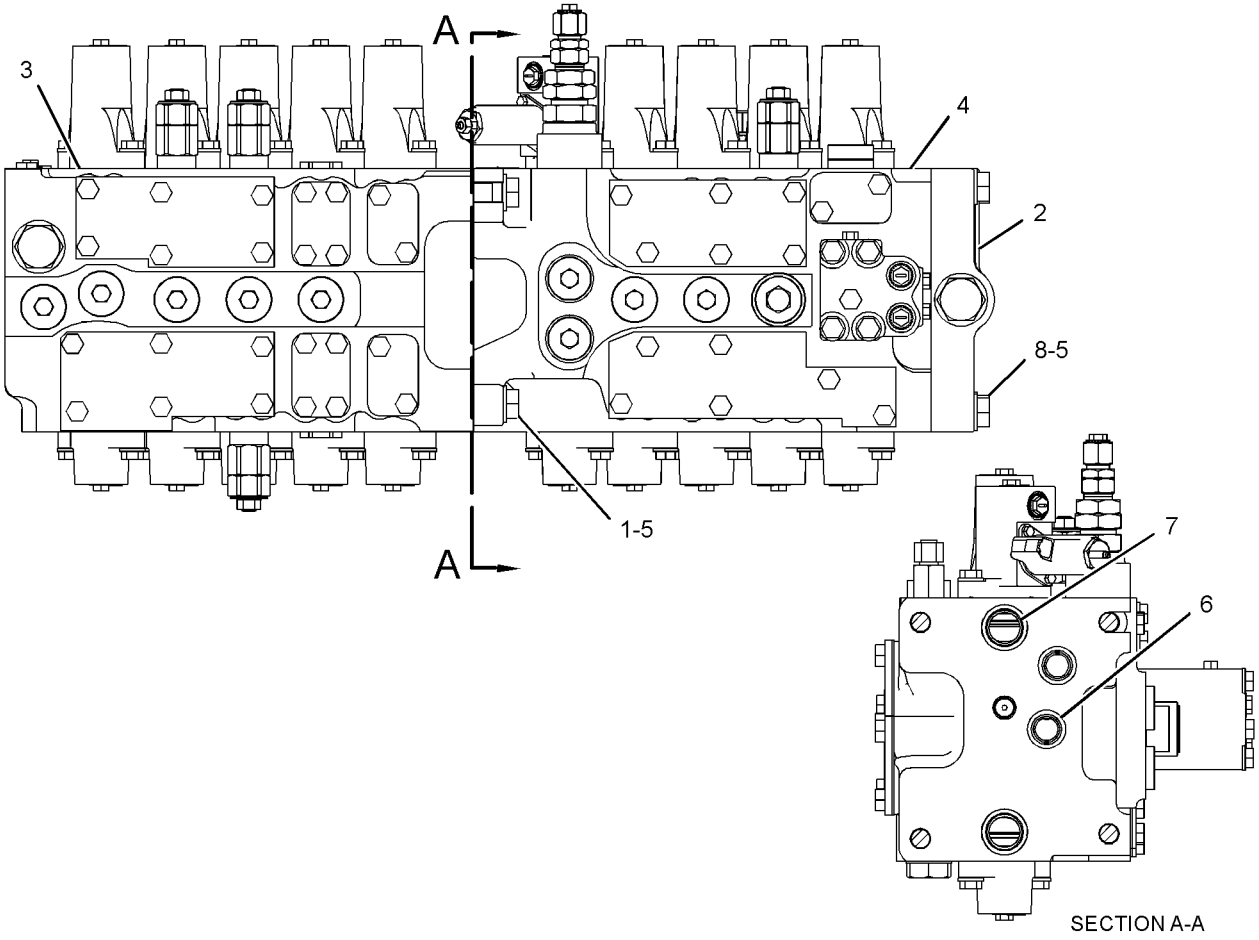

GRAPHIC #1 **<END>** g01360865

HYDRAULIC SYSTEM

270-5692 VALVE GP-MANUAL–BOOM LOWER

S/N: MYG1-UP; PPN1-UP
PART OF 239-1632 LINES GP-BOOM CYLINDER
AN ATTACHMENT

SMCS-1329, 5001, 5130 **i02466135**

NOTE	REF NO	GRAPHIC REF	PART NUMBER	QTY	PART NAME 1 2 3 4 5 6 (PRODUCT LEVEL)	SEE PAGE
	1	1	**165-9513**	1	SEAT	
	2	1	**165-9514**	1	PLUG	
	3	1	*222-4737*	3	PLUG AS	
					(EACH INCLUDES)	
		1	**4J-7533**	1	SEAL-O-RING	
		1	**9S-4180**	1	PLUG	
	4	1	**270-5693**	1	BLOCK	
	5	1	**2D-6642**	1	BALL	
	6	1	**3H-0442**	1	SEAL-O-RING	
	7	1	**3J-1907**	1	SEAL-O-RING	
M	8	1	**7Y-5226**	1	NUT (M5X0.8-THD)	

M-METRIC PART

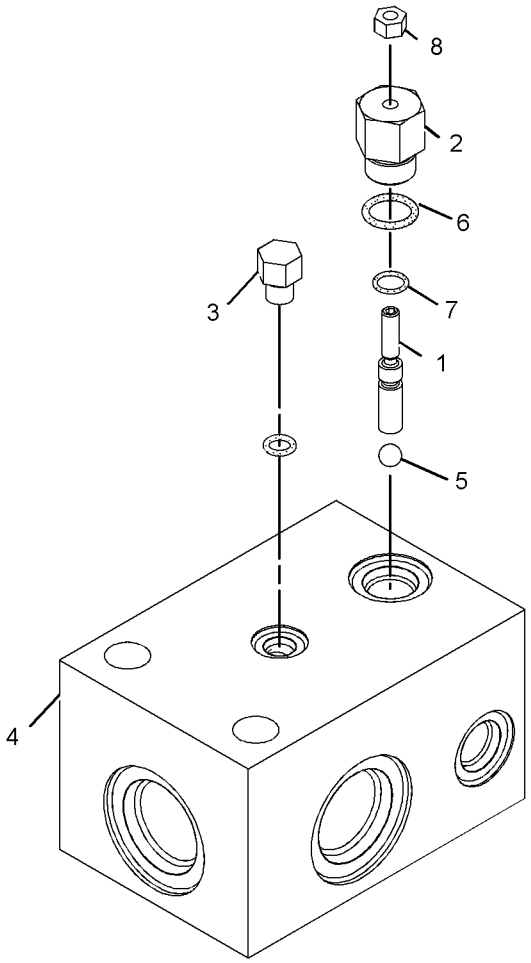

GRAPHIC #1

<END>

g01193347

277-0954 VALVE GP-MANUAL–AUXILIARY, SHUTOFF

S/N: MYG1-UP; PPN1-UP

PART OF 253-6599, 253-6603, 253-6607, 253-6611 LINES GP-AUXILIARY HYDRAULIC AN ATTACHMENT

SMCS-1329, 5001, 5130 **i02710811**

NOTE	REF NO	GRAPHIC REF	PART NUMBER	QTY	PART NAME 1 2 3 4 5 6 (PRODUCT LEVEL)	SEE PAGE
	1	1	**302-9466**	1	HANDLE	
	2	1	**3J-1907**	1	SEAL-O-RING	
	3	1	**9S-4191**	1	PLUG-O-RING	

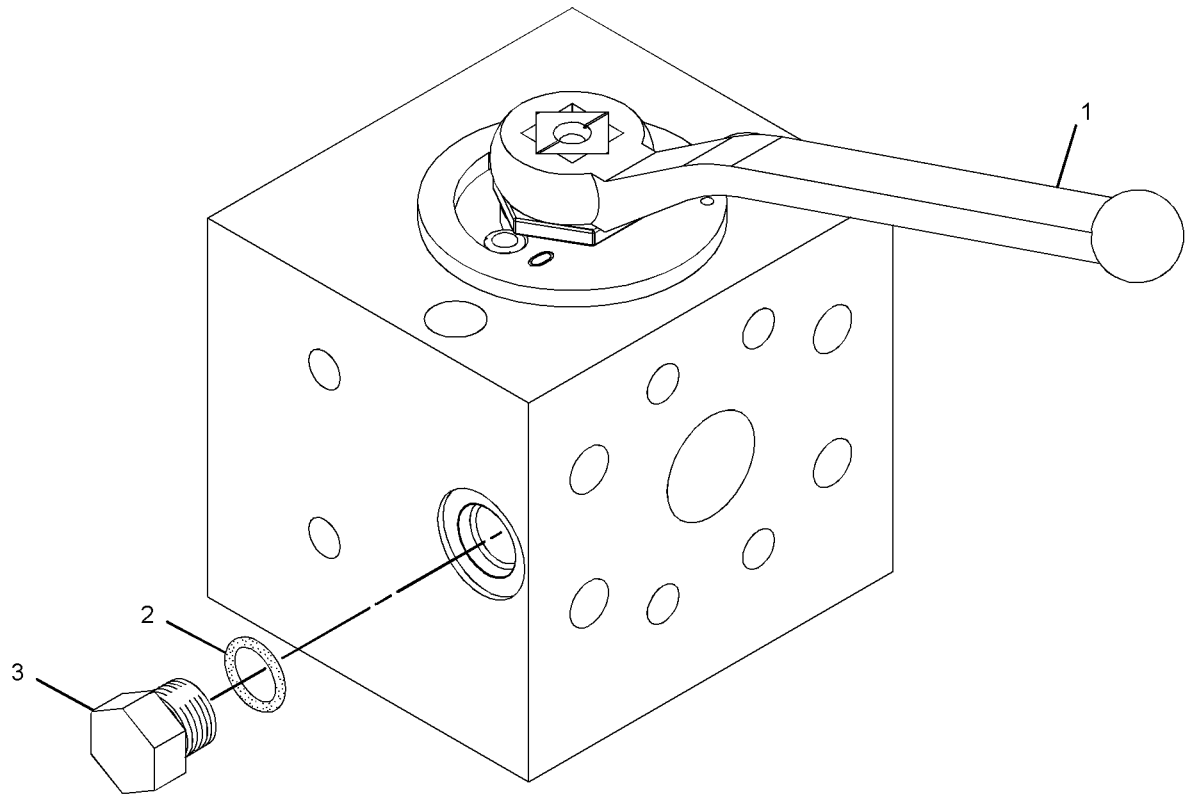

GRAPHIC #1 **<END>** g01269164

HYDRAULIC SYSTEM

206-3336 VALVE GP-PILOT

S/N: MYG1-UP; PPN1-UP
PART OF 316-8842 CONTROL GP-HYDRAULIC PEDAL
AN ATTACHMENT

SMCS-5059 **i03664986**

NOTE	REF NO	GRAPHIC REF	PART NUMBER	QTY	PART NAME 1 2 3 4 5 6 (PRODUCT LEVEL)	SEE PAGE
	1	1	**107-6479**	1	PLUG (M12X1.5-THD)	
	2	1	**190-7819**	2	SPRING	
	3	1	**335-0136**	1	BELLOWS	
	4	1	**335-0138**	2	PACKING	
	5	1	**095-1575**	1	SEAL-O-RING	
	6	1	**095-1578**	2	SEAL-O-RING	
	7	1	**095-1579**	1	SEAL-O-RING	
	8	1	**095-1584**	1	SEAL-O-RING	
	9	1	**6V-8399**	2	SEAL-O-RING	
	10	1	**9M-5590**	1	BALL	

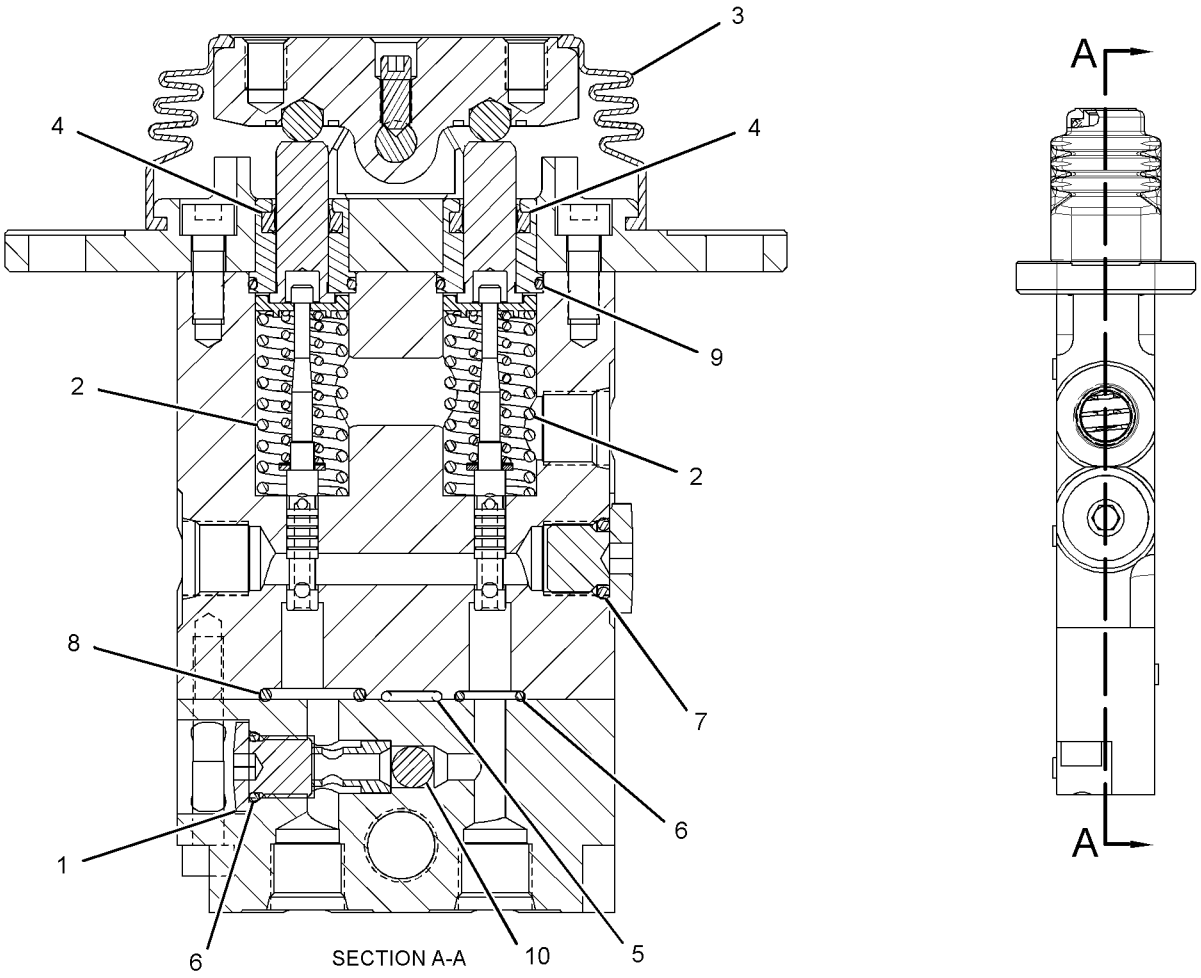

GRAPHIC #1 **<END>** g01952872

HYDRAULIC SYSTEM

297-0530 VALVE GP-PILOT–JOYSTICK, RH

S/N: MYG1-UP; PPN1-UP

PART OF 297-0538, 297-0540 CONTROL GP-PILOT OPERATED HYD AN ATTACHMENT

SMCS-5059 **i03278565**

NOTE	REF NO	GRAPHIC REF	PART NUMBER	QTY	PART NAME 1 2 3 4 5 6 (PRODUCT LEVEL)	SEE PAGE
	1	1	**4I-6365**	1	JOINT	
	2	1	**094-0876**	4	SEAL	
	3	1	**095-1586**	4	SEAL-O-RING	
	4	1	**096-1628**	4	PLUG	
B	5	1	**099-6137**	4	WASHER (6.1X9X0.2-MM THK)	
	6	1	**118-4086**	4	ROD	
	7	1	**118-4087**	4	SPRING	
M	8	1	**131-5915**	1	NUT-SPECIAL	
	9	1	**165-9431**	1	PLATE	
	10	1	**165-9435**	2	SEAT	
	11	1	**165-9436**	2	SEAT	
	12	1	**165-9438**	1	PLATE	
	13	1	**165-9442**	2	SPRING	
	14	1	**165-9443**	2	SEAT-SPRING	
	15	1	**165-9444**	2	SEAT-SPRING	
	16	1	**165-9460**	1	SPRING	
	17	1	**171-0087**	1	BELLOWS	
	18	1	**190-7750**	4	SPRING	
	19	1	**225-4815**	1	SPRING	

B-USE AS REQUIRED
M-METRIC PART

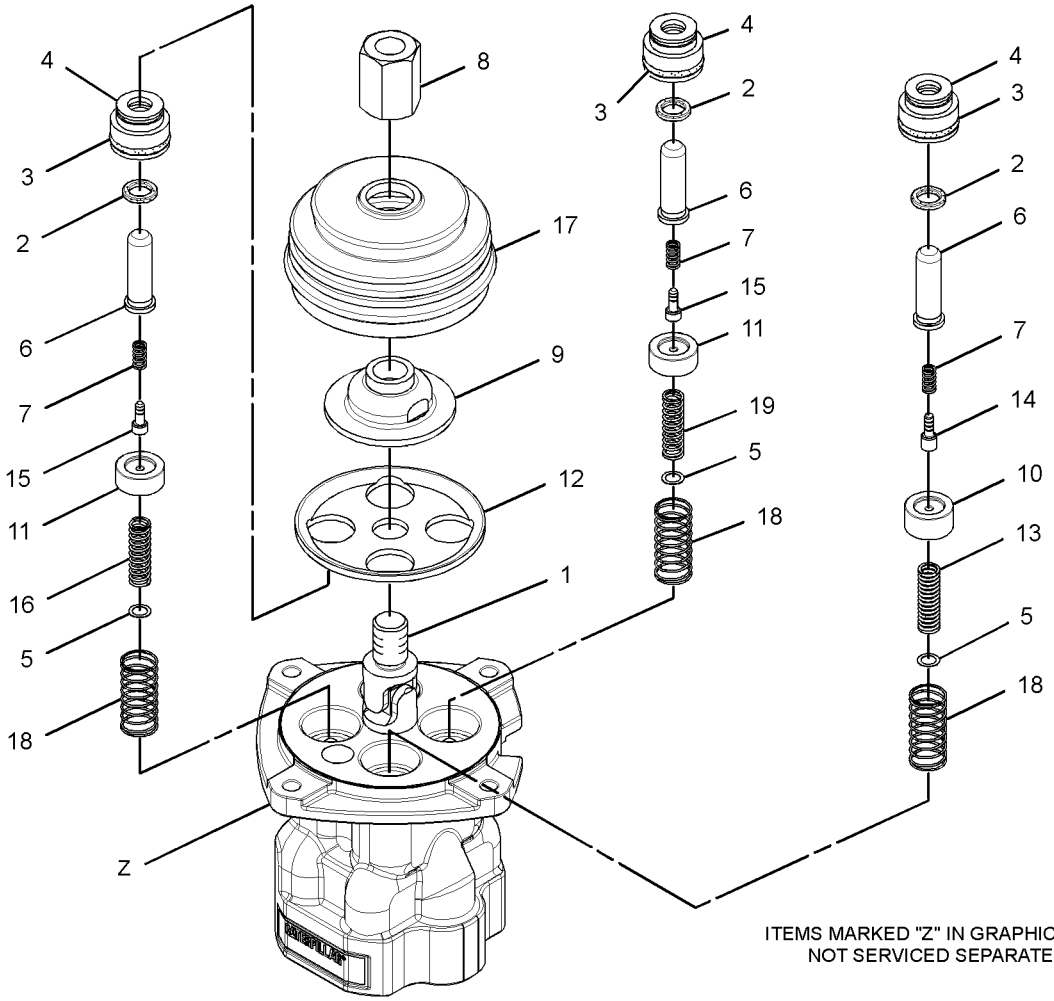

ITEMS MARKED "Z" IN GRAPHICS ARE
NOT SERVICED SEPARATELY

GRAPHIC #1 **<END>** g01515022

HYDRAULIC SYSTEM

297-0531 VALVE GP-PILOT–JOYSTICK, LH

S/N: MYG1-UP; PPN1-UP
PART OF 297-0539, 297-0541 CONTROL GP-PILOT OPERATED HYD
AN ATTACHMENT

SMCS-5059 **i03278567**

NOTE	REF NO	GRAPHIC REF	PART NUMBER	QTY	PART NAME 1 2 3 4 5 6 (PRODUCT LEVEL)	SEE PAGE
	1	1	**4I-6365**	1	JOINT	
	2	1	**094-0876**	4	SEAL	
	3	1	**095-1586**	4	SEAL-O-RING	
	4	1	**096-1628**	4	PLUG	
B	5	1	**099-6137**	4	WASHER (6.1X9X0.2-MM THK)	
	6	1	**118-4086**	4	ROD	
	7	1	**118-4087**	4	SPRING	
M	8	1	**131-5915**	1	NUT-SPECIAL	
	9	1	**165-9431**	1	PLATE	
	10	1	**165-9435**	2	SEAT	
	11	1	**165-9436**	2	SEAT	
	12	1	**165-9438**	1	PLATE	
	13	1	**165-9442**	2	SPRING	
	14	1	**165-9443**	2	SEAT-SPRING	
	15	1	**165-9444**	2	SEAT-SPRING	
	16	1	**165-9460**	1	SPRING	
	17	1	**171-0087**	1	BELLOWS	
	18	1	**190-7750**	4	SPRING	
	19	1	**225-4815**	1	SPRING	

B-USE AS REQUIRED
M-METRIC PART

297-0531 **VALVE GP-PILOT** *(contd.)* **i03278567**

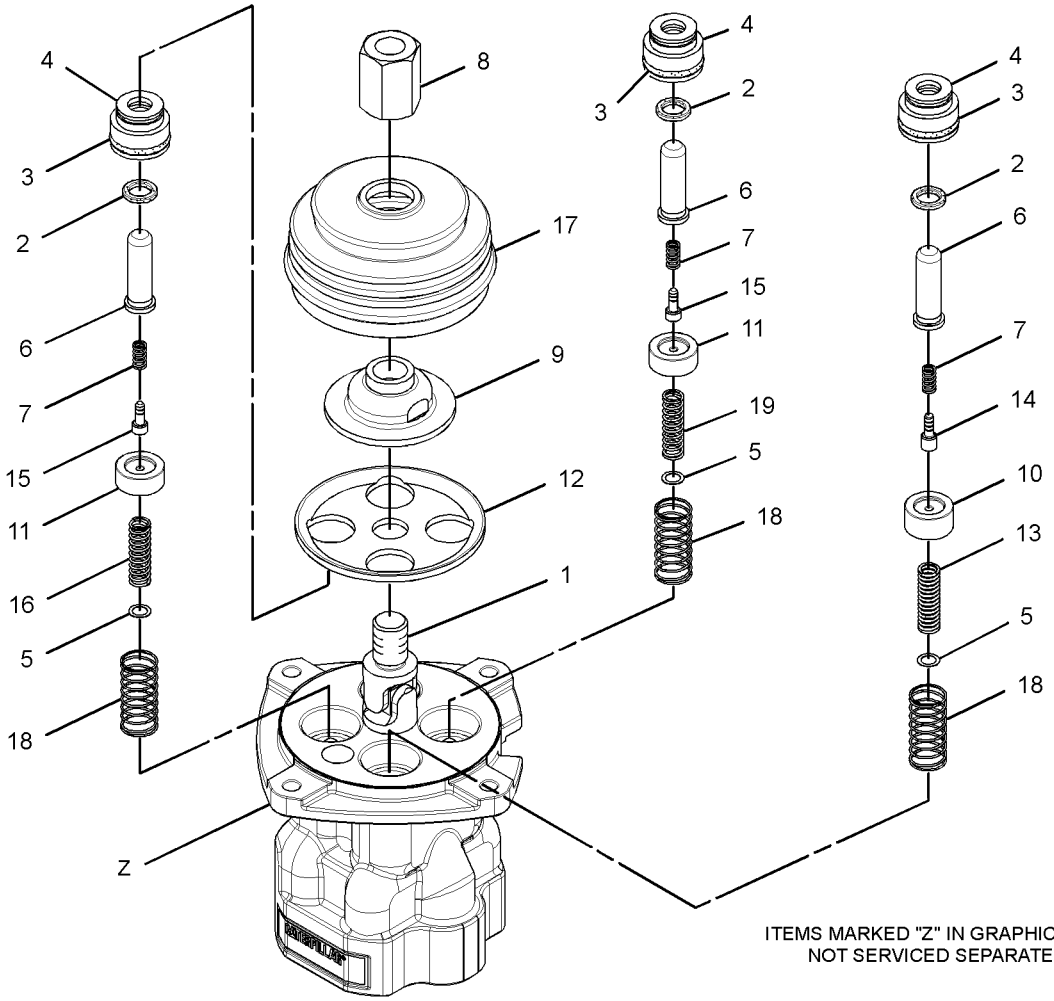

GRAPHIC #1 **<END>** g01515022

HYDRAULIC SYSTEM

310-0414 VALVE GP-PILOT–TRAVEL

S/N: MYG1-UP; PPN1-UP

PART OF 248-9825 LINES GP-PILOT

SMCS-5059 **i03571446**

NOTE	REF NO	GRAPHIC REF	PART NUMBER	QTY	PART NAME 1 2 3 4 5 6 (PRODUCT LEVEL)	SEE PAGE
	1	1	**087-5708**	2	PEDAL	
M	2	1	**095-0673**	2	BOLT-SOCKET HEAD (M12X1.75X60-MM)	
	3	1	**099-6137**	4	WASHER (6.1X9X0.2-MM THK)	
	4	1	**099-6141**	4	WASHER (6.1X11X1.5-MM THK)	
	5	1	**099-6144**	4	BUSHING-TERMINAL	
	6	1	**099-6145**	2	CAMSHAFT	
	7	1	**119-5388**	4	CAP	
	8	1	**119-5389**	4	PACKING	
	9	1	**119-5391**	4	SEAT	
	10	1	**126-1865**	4	SPRING	
	11	1	**126-1866**	4	SPRING	
	12	1	**131-5818**	4	SPRING	
	13	1	**147-4131**	2	BOOT-PROTECTION	
	14	1	**153-5223**	12	BALL	
	15	1	**165-9463**	2	COVER	
	16	1	**165-9552**	4	PUSHROD	
	17	1	**165-9553**	1	COVER	
	18	1	**165-9554**	4	PLUG	
	19	1	**196-3784**	2	PLUG	
	20	1	**270-5949**	4	PISTON	
	21	1	**270-5950**	4	SPRING	
	22	1	**310-0419**	4	SEAT	
	23	1	**310-0420**	4	SEAL-O-RING	
	24	1	**310-0421**	2	BUSHING	
	25	1	**310-0422**	2	SEAT	
	26	1	**323-7770**	2	ADAPTER	
M	27	1	**087-4710**	4	SETSCREW (M10X21-MM)	
M	28	1	**095-1260**	2	SETSCREW-SOCKET (M6X1X6-MM)	
	29	1	**095-1575**	4	SEAL-O-RING	
	30	1	**3J-7354**	2	SEAL-O-RING	
	31	1	**3Y-9267**	2	BALL	
	32	1	**6V-8400**	4	SEAL-O-RING	
M	33	1	**8C-6965**	2	BOLT-SOCKET HEAD (M6X1X45-MM)	
M	34	1	**8T-1158**	2	BOLT-SOCKET HEAD (M8X1.25X20-MM)	
M	35	1	**8T-4133**	4	NUT (M10X1.5-THD)	
	36	1	**8T-6759**	4	PLUG-PIPE	

M-METRIC PART

310-0414 VALVE GP-PILOT *(contd.)* **i03571446**

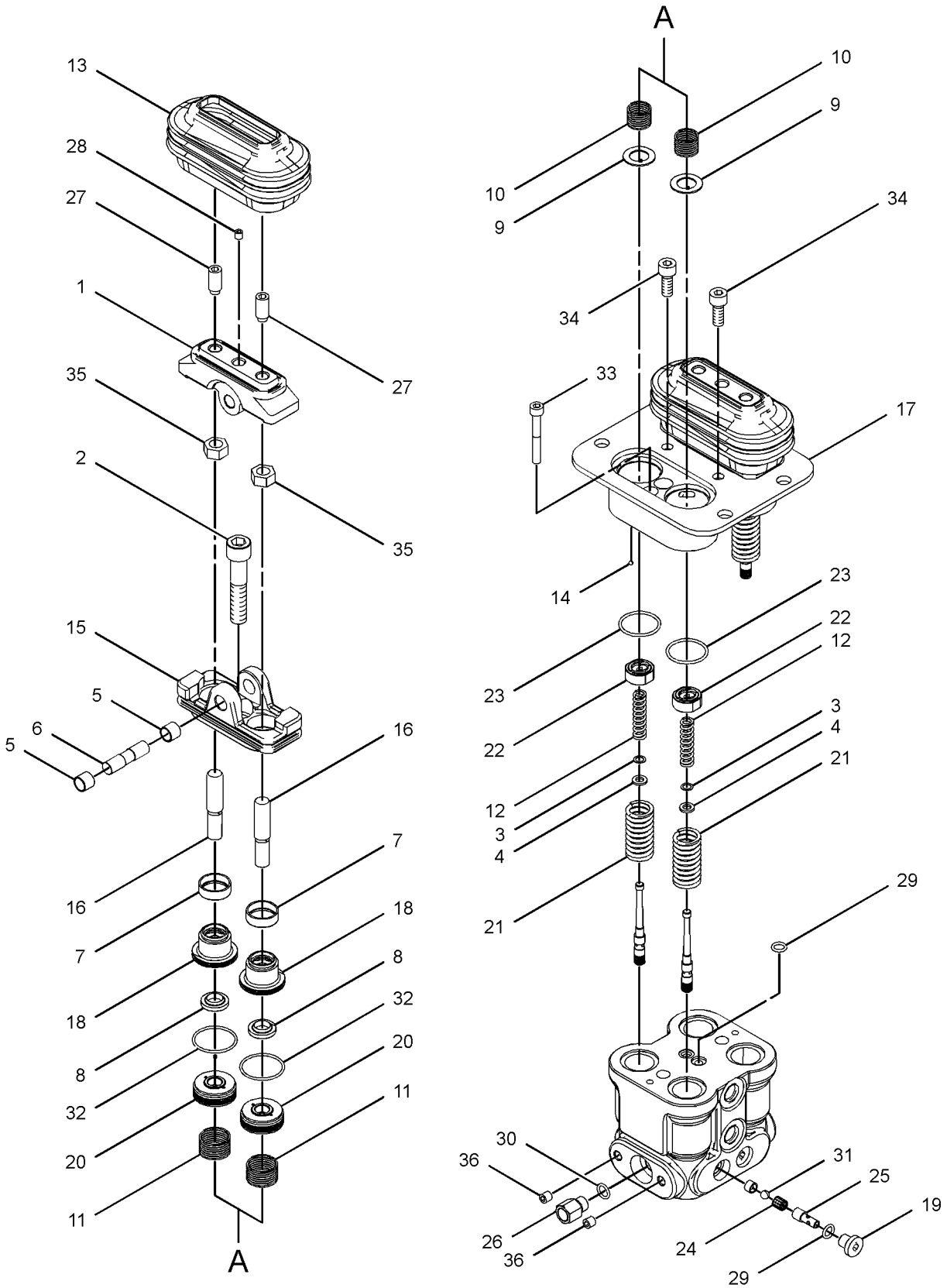

GRAPHIC #1 **<END>** g01622941

215-4909 VALVE GP-PILOT RELIEF—HYDRAULIC FILTER

S/N: MYG1-UP; PPN1-UP

PART OF 158-8987 FILTER & VALVE GP-PILOT

SMCS-5072 **i01854474**

NOTE	REF NO	GRAPHIC REF	PART NUMBER	QTY	PART NAME 1 2 3 4 5 6 (PRODUCT LEVEL)	SEE PAGE
	1	1	**095-1584**	1	SEAL-O-RING	
	2	1	**095-1590**	1	SEAL-O-RING	
	3	1	**095-1596**	1	SEAL-O-RING	

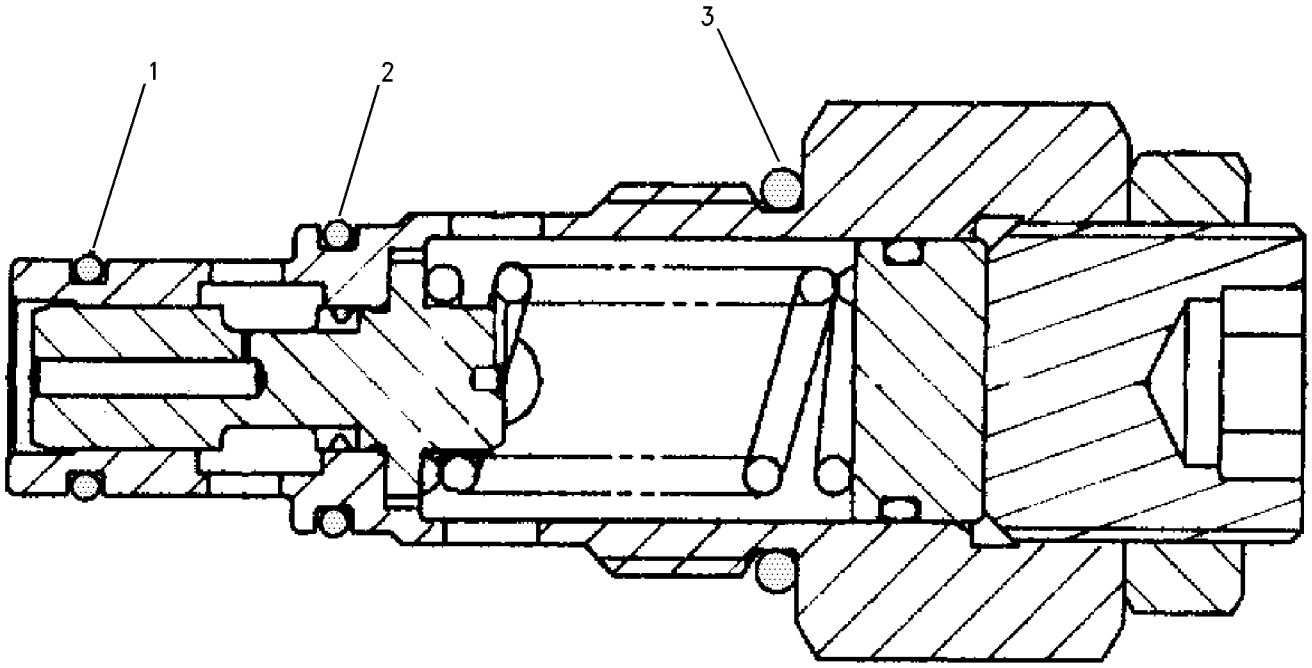

GRAPHIC #1 **<END>** g00671122

232-4102 VALVE GP-PRESSURE REDUCING–

BOOM, SWING PRIORITY

S/N: MYG1-UP; PPN1-UP

PART OF 260-7867 LINES GP-PILOT

SMCS-5117 **i01990134**

NOTE	REF NO	GRAPHIC REF	PART NUMBER	QTY	PART NAME 1 2 3 4 5 6 (PRODUCT LEVEL)	SEE PAGE
	1	1	**111-9998**	2	PLUG	
	2	1	**095-1582**	2	SEAL-O-RING	
	3	1	**171-0127**	2	SEAT-SPRING	
	4	1	**185-0423**	2	STOP	
	5	1	**171-0126**	2	SEAT-SPRING	
	6	1	**171-0123**	2	PLUG	
M	7	1	**5C-7261**	2	NUT (M8X1.25-THD)	
M	8	1	**171-0124**	2	SETSCREW (M8X1.25X18-MM)	
	9	1	**095-1580**	2	SEAL-O-RING	
	10	1	**095-1590**	2	SEAL-O-RING	
	11	1	**171-0128**	2	SPRING	

M-METRIC PART

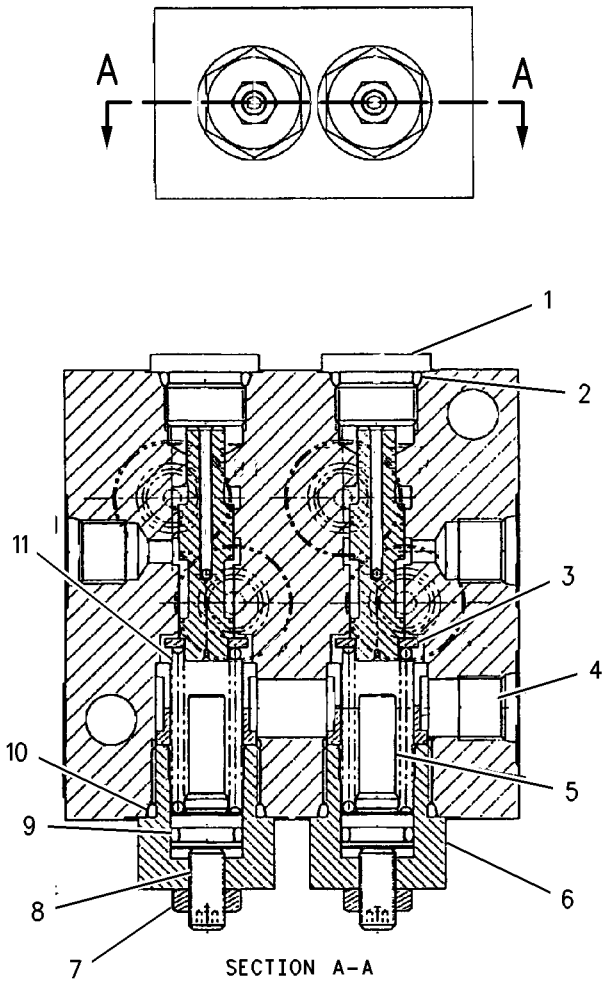

GRAPHIC #1 **<END>** g00850459

310-0210 VALVE GP-PRESSURE REDUCING–
BOOM, SWING PRIORITY
S/N: MYG1-UP; PPN1-UP
PART OF 260-7867 LINES GP-PILOT

SMCS-5117 **i03022526**

NOTE	REF NO	GRAPHIC REF	PART NUMBER	QTY	PART NAME 1 2 3 4 5 6 (PRODUCT LEVEL)	SEE PAGE
	1	1	**111-9998**	2	PLUG	
	2	1	**171-0123**	2	PLUG	
M	3	1	**171-0124**	2	SETSCREW (M8X1.25X18-MM)	
	4	1	**171-0126**	2	SEAT-SPRING	
	5	1	**171-0127**	2	SEAT-SPRING	
	6	1	**171-0128**	2	SPRING	
	7	1	**185-0423**	2	STOP	
	8	1	**095-1580**	2	SEAL-O-RING	
	9	1	**095-1582**	2	SEAL-O-RING	
	10	1	**095-1590**	2	SEAL-O-RING	
M	11	1	**5C-7261**	2	NUT (M8X1.25-THD)	

M-METRIC PART

310-0210 VALVE GP-PRESSURE REDUCING *(contd.)* **i03022526**

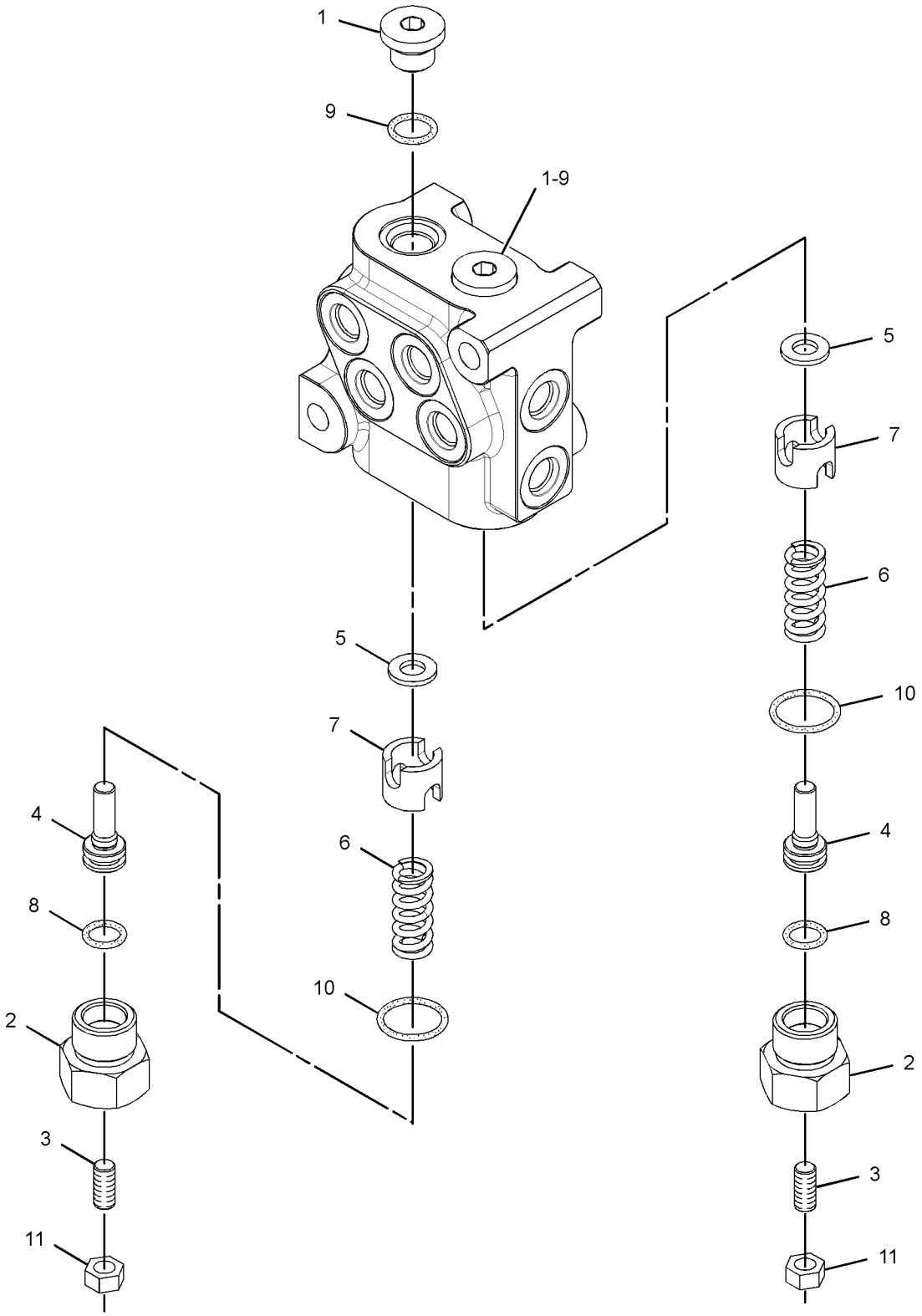

GRAPHIC #1 **<END>** g01506435

HYDRAULIC SYSTEM

323-7898 VALVE GP-PRIORITY–SWING

S/N: MYG1-UP; PPN1-UP
PART OF 285-1347 VALVE GP-CONTROL
ALSO AN ATTACHMENT

SMCS-506P **i03423240**

NOTE	REF NO	GRAPHIC REF	PART NUMBER	QTY	PART NAME 1 2 3 4 5 6 (PRODUCT LEVEL)	SEE PAGE
	1	1	**140-0674**	1	VALVE	
	2	1	**158-8186**	1	SPRING	
	3	1	**255-5594**	2	SEAL-O-RING	
	4	1	**297-0483**	2	SEAL-O-RING	
	5	1	**140-0677**	1	PIN	

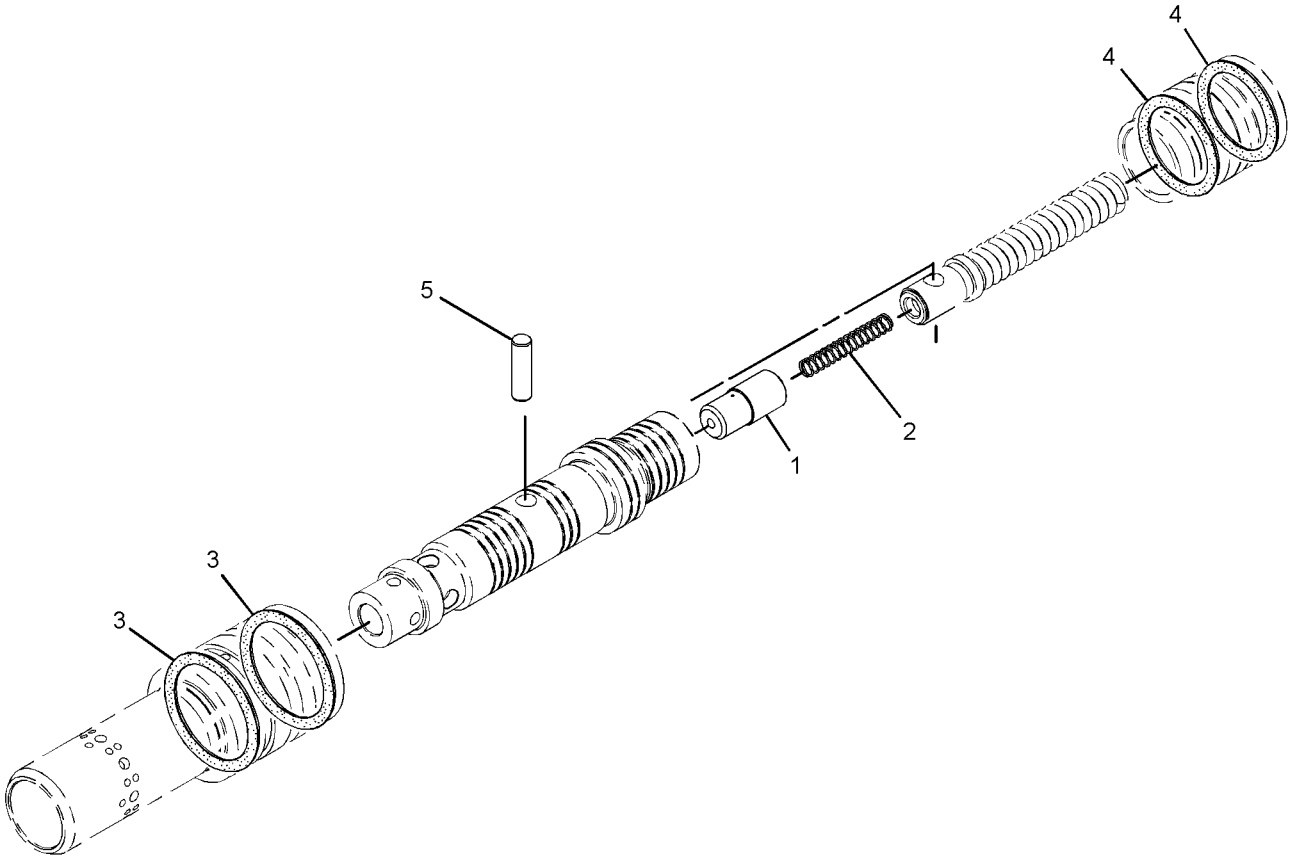

GRAPHIC #1 **<END>** g01682914

259-0907 VALVE GP-PUMP CONTROL–HYDRAULIC FAN

S/N: MYG1-UP; PPN1-UP

PART OF 259-0815 PUMP GP-PISTON

SMCS-5455 **i02404407**

NOTE	REF NO	GRAPHIC REF	PART NUMBER	QTY	PART NAME 1 2 3 4 5 6 (PRODUCT LEVEL)	SEE PAGE
	1	1	**134-7489**	1	PLUG	
	2	1	**6E-6528**	1	SEAL	
	3	1	**033-5853**	2	SEAL-O-RING	
	4	1	**213-9244**	1	SEAL-O-RING	
	5	1	**209-6003**	1	RING	
	6	1	**209-5941**	1	PLUG	
M	7	1	**5C-7261**	1	NUT (M8X1.25-THD)	
	8	1	**213-9242**	1	SEAL-O-RING	
	9	1	**213-9247**	1	SEAL-O-RING	
	10	1	**209-6004**	1	RING	
	11	1	**213-9243**	1	SEAL-O-RING	
	12	1	**209-5940**	1	ORIFICE	
	13	1	**9S-8002**	2	PLUG-O-RING	
	14	1	**213-9246**	1	SEAL-O-RING	
	15	1	**033-6043**	1	SEAL-O-RING	
	16	1	**209-6005**	1	RING	
	17	1	**209-5942**	1	PLUG	
M	18	1	**5C-2890**	1	NUT (M6X1-THD)	

M-METRIC PART

259-0907 VALVE GP-PUMP CONTROL *(contd.)* i02404407

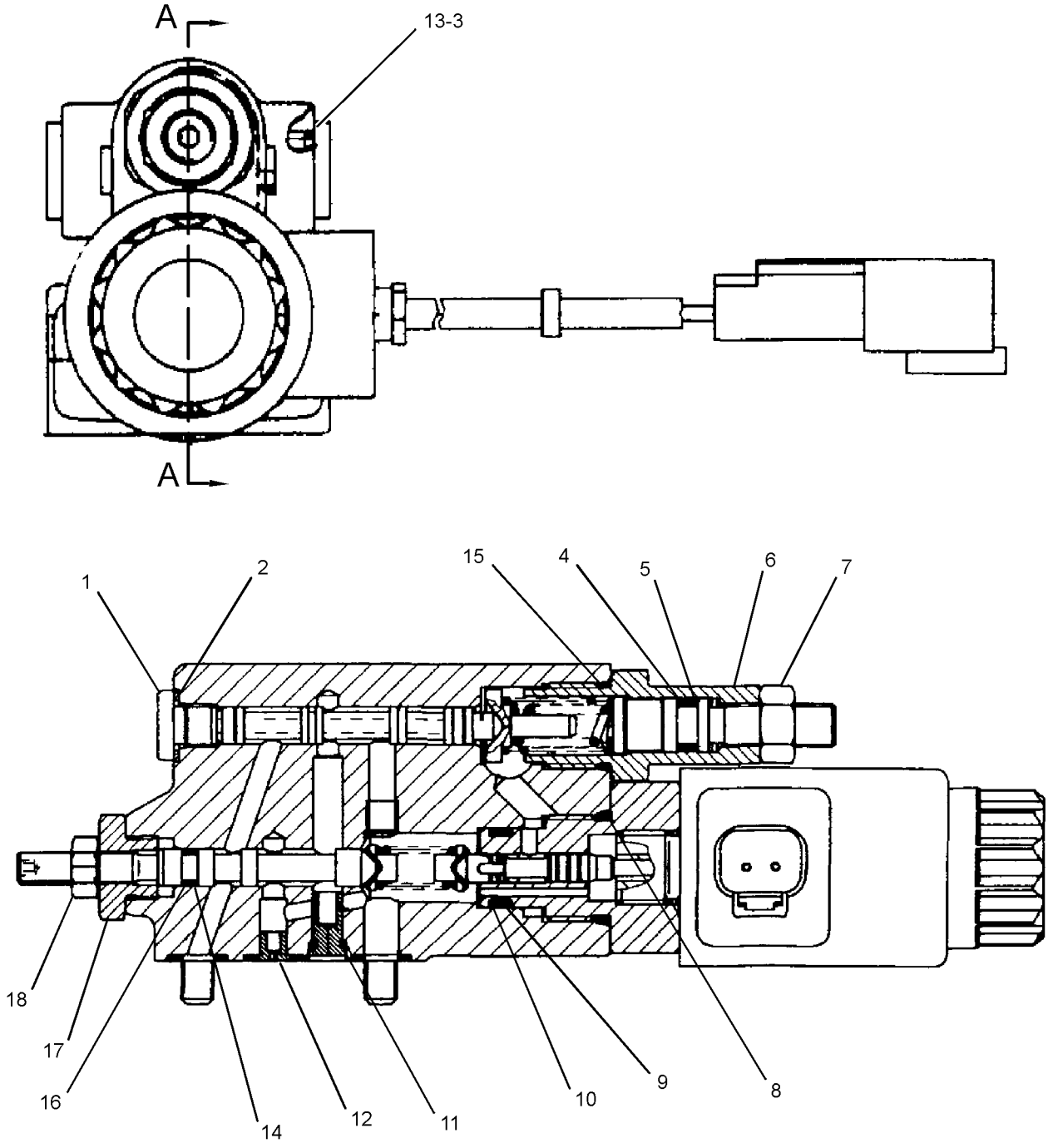

SECTION A-A

GRAPHIC #1 **<END>** g01201080

HYDRAULIC SYSTEM

147-4161 VALVE GP-RELIEF

S/N: MYG1-UP; PPN1-UP
PART OF 206-3164 VALVE GP-RELIEF
ALSO AN ATTACHMENT

SMCS-5069, 5117 **i01790172**

NOTE	REF NO	GRAPHIC REF	PART NUMBER	QTY	PART NAME 1 2 3 4 5 6 (PRODUCT LEVEL)	SEE PAGE
	1	1	**5I-4111**	1	PLUG	
Z	2	1		1	BODY-VALVE	
	3	1	**107-6370**	1	SPRING	
	4	1	**107-6371**	1	VALVE	
	5	1	**4K-1388**	2	SEAL-O-RING	
B	6	1	**4J-7385**	1	SHIM (0.048-IN THK)	
B	7	1	**4J-7386**	1	SHIM (0.01-IN THK)	
	8	1	**5P-3108**	1	SEAL-O-RING	

B-USE AS REQUIRED
Z-NOT SERVICED SEPARATELY

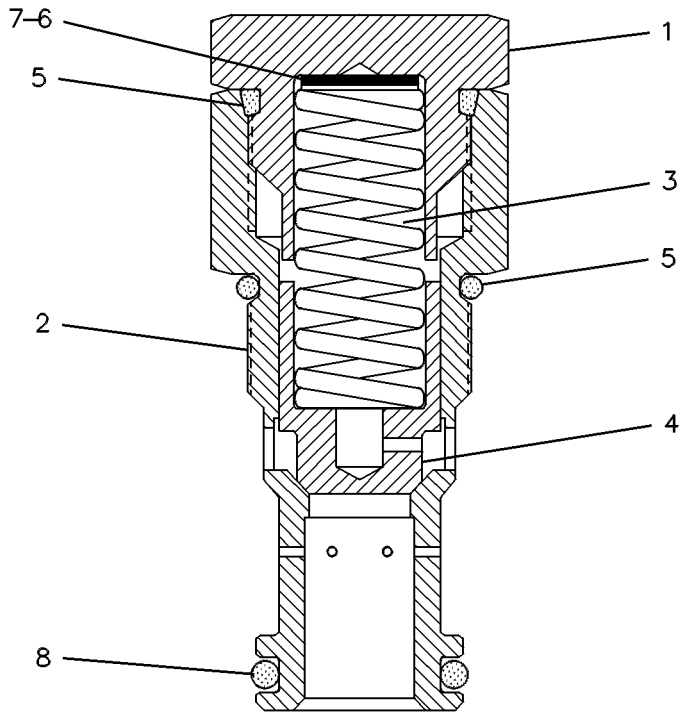

GRAPHIC #1 **<END>** g00242585

HYDRAULIC SYSTEM

147-4163 VALVE GP-RELIEF

S/N: MYG1-UP; PPN1-UP
PART OF 285-1362 VALVE GP-CONTROL
ALSO AN ATTACHMENT

SMCS-5069, 5117 **i01201425**

NOTE	REF NO	GRAPHIC REF	PART NUMBER	QTY	PART NAME 1 2 3 4 5 6 (PRODUCT LEVEL)	SEE PAGE
	1	1	**5I-4111**	1	PLUG	
	2	1	**5P-3108**	1	SEAL-O-RING	
	3	1	**107-6370**	1	SPRING	
	4	1	**4K-1388**	2	SEAL-O-RING	
	5	1	**107-6371**	1	VALVE	
B	6	1	**4J-7386**	1	SHIM (0.01-IN THK)	
B	7	1	**4J-7385**	1	SHIM (0.048-IN THK)	

B-USE AS REQUIRED

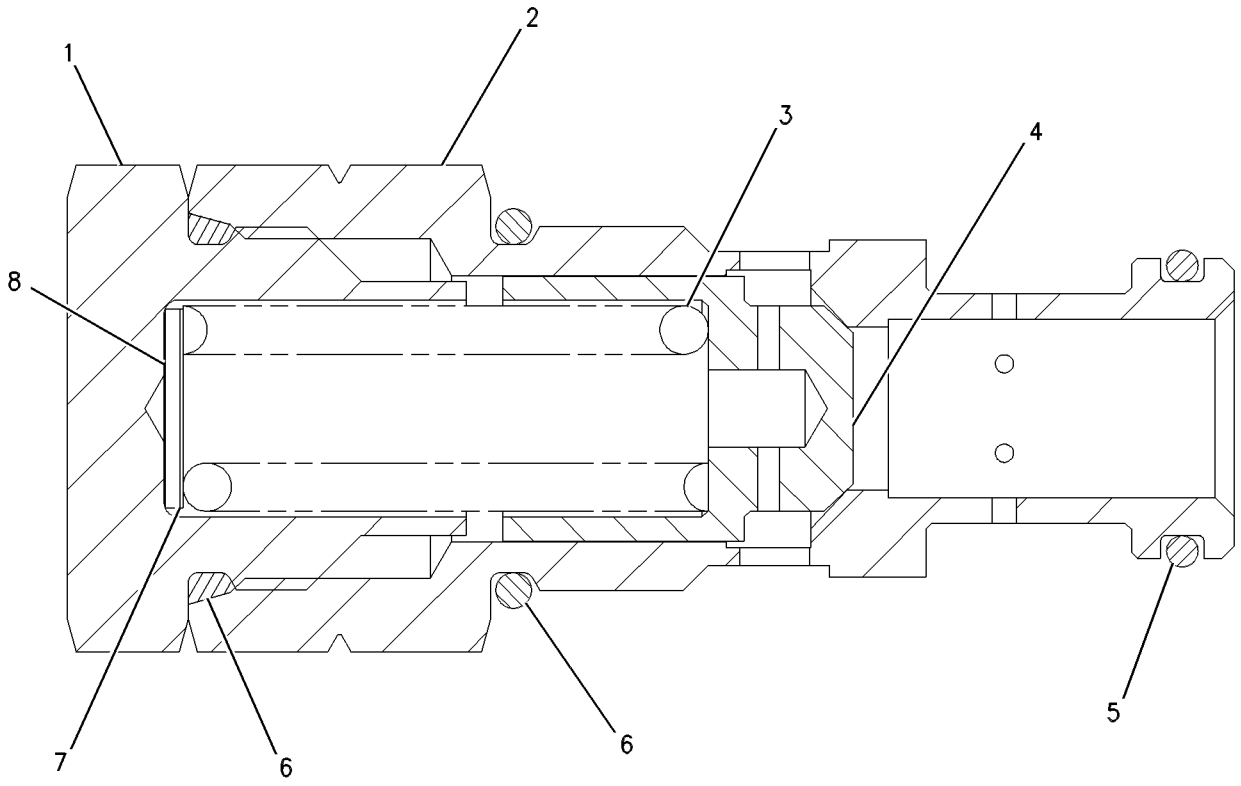

GRAPHIC #1 **<END>** g00361859

177-2653 VALVE GP-RELIEF

S/N: MYG1-UP; PPN1-UP
PART OF 255-1923 LINES GP-FRONT
AN ATTACHMENT

SMCS-5069, 5117 **i02986876**

NOTE	REF NO	GRAPHIC REF	PART NUMBER	QTY	PART NAME 1 2 3 4 5 6 (PRODUCT LEVEL)	SEE PAGE
CY	1	1	**310-0394**	1	VALVE GP-RELIEF	692
Z	2	1		1	BLOCK	

C-CHANGE FROM PREVIOUS TYPE
Y-SEPARATE ILLUSTRATION
Z-NOT SERVICED SEPARATELY

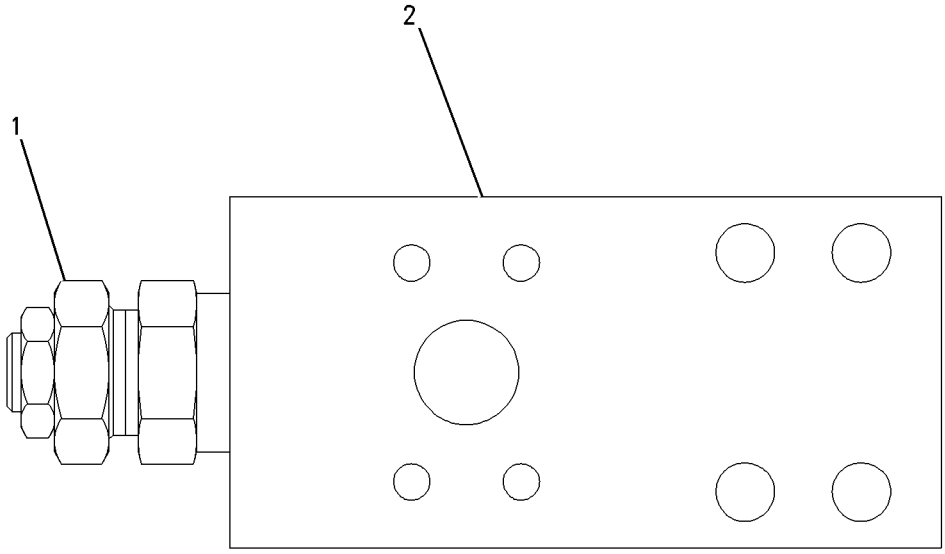

GRAPHIC #1 **<END>** g00684155

HYDRAULIC SYSTEM

204-2678 VALVE GP-RELIEF

S/N: MYG1-UP; PPN1-UP

PART OF 334-9973 MOTOR GP-SWING

SMCS-5069, 5117 **i01921835**

NOTE	REF NO	GRAPHIC REF	PART NUMBER	QTY	PART NAME 1 2 3 4 5 6 (PRODUCT LEVEL)	SEE PAGE
	1	1	**168-0765**	1	RING-BACKUP	
	2	1	**7J-9933**	1	SEAL-O-RING	
	3	1	**7I-0966**	1	RING-BACKUP	
	4	1	**6V-5556**	1	SEAL-O-RING	
	5	1	**095-1698**	1	SEAL-O-RING	

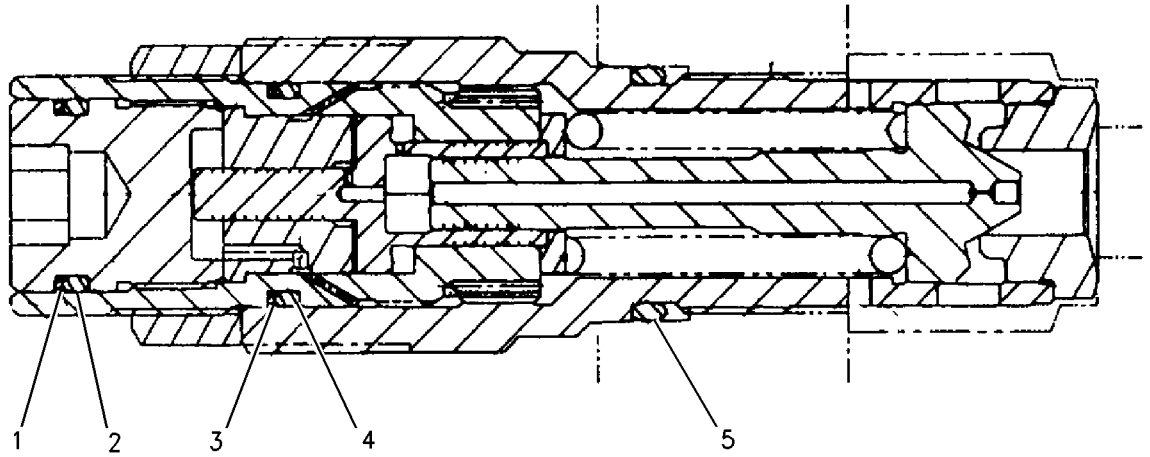

GRAPHIC #1 **<END>** g00766908

204-2755 VALVE GP-RELIEF

S/N: MYG1-UP; PPN1-UP

PART OF 204-2819 VALVE GP-TRAVEL COUNTERBALANCE

SMCS-5069, 5117 **i02069519**

NOTE	REF NO	GRAPHIC REF	PART NUMBER	QTY	PART NAME 1 2 3 4 5 6 (PRODUCT LEVEL)	SEE PAGE
M	1	1	**7Y-8436**	1	SETSCREW (M27X2X27-MM)	
M	2	1	**7Y-8437**	1	NUT (M27X2-THD)	
	3	1	**095-1601**	1	SEAL-O-RING	
	4	1	**095-1787**	2	RING-BACKUP	
	5	1	**095-1590**	1	SEAL-O-RING	
	6	1	**121-1459**	2	RING-BACKUP	
	7	1	**095-1586**	2	SEAL-O-RING	
	8	1	**095-1785**	1	RING-BACKUP	

M-METRIC PART

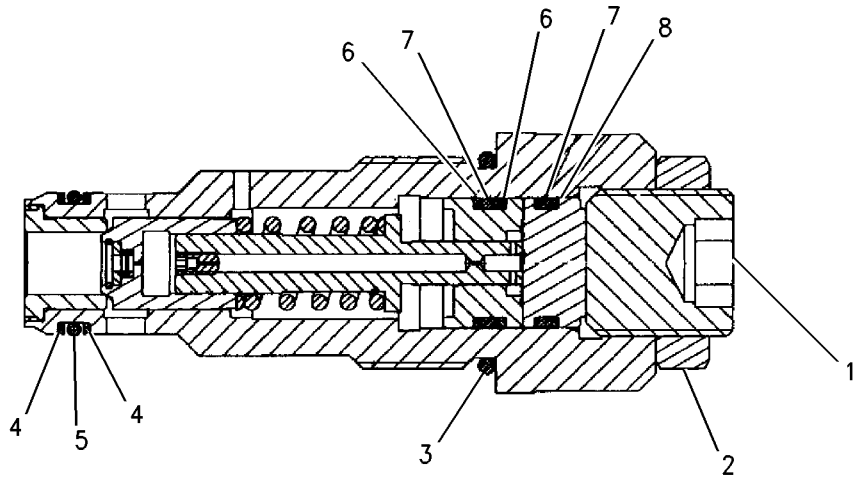

GRAPHIC #1 **<END>** g00826520

206-3164 VALVE GP-RELIEF

S/N: MYG1-UP; PPN1-UP
PART OF 285-1345 VALVE GP-MAIN CONTROL
ALSO AN ATTACHMENT

SMCS-5069, 5117 **i01631493**

NOTE	REF NO	GRAPHIC REF	PART NUMBER	QTY	PART NAME 1 2 3 4 5 6 (PRODUCT LEVEL)	SEE PAGE
	1	1	**153-5239**	1	COVER	
Y	2	1	**147-4161**	1	VALVE GP-RELIEF	681
	3	1	**1P-3702**	2	SEAL-RECTANGULAR	
	4	1	**4J-8998**	2	SEAL-O-RING	

Y-SEPARATE ILLUSTRATION

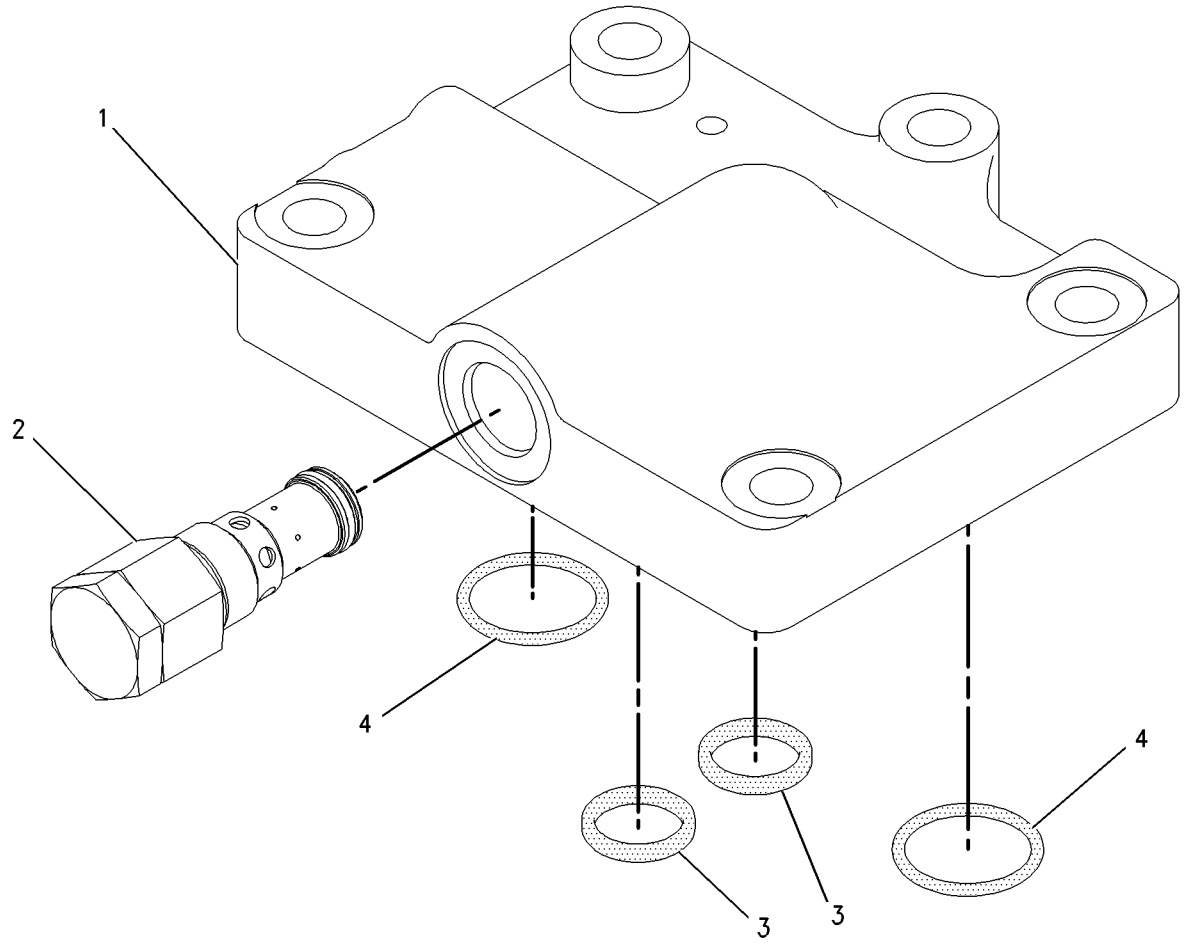

GRAPHIC #1 **<END>** g00743238

HYDRAULIC SYSTEM

255-5661 VALVE GP-RELIEF

S/N: MYG1-UP; PPN1-UP
PART OF 259-7378, 285-1347, 285-1362 VALVE GP-CONTROL
ALSO AN ATTACHMENT

SMCS-5069, 5117 **i02301542**

NOTE	REF NO	GRAPHIC REF	PART NUMBER	QTY	PART NAME 1 2 3 4 5 6 (PRODUCT LEVEL)	SEE PAGE
	1	1	**095-1578**	1	SEAL-O-RING	
	2	1	**103-8252**	2	RING	
	3	1	**103-8253**	2	RING	
	4	1	**103-8254**	1	SEAL-O-RING	
	5	1	**103-8255**	1	SEAL-O-RING	
	6	1	**3D-2824**	2	SEAL-O-RING	

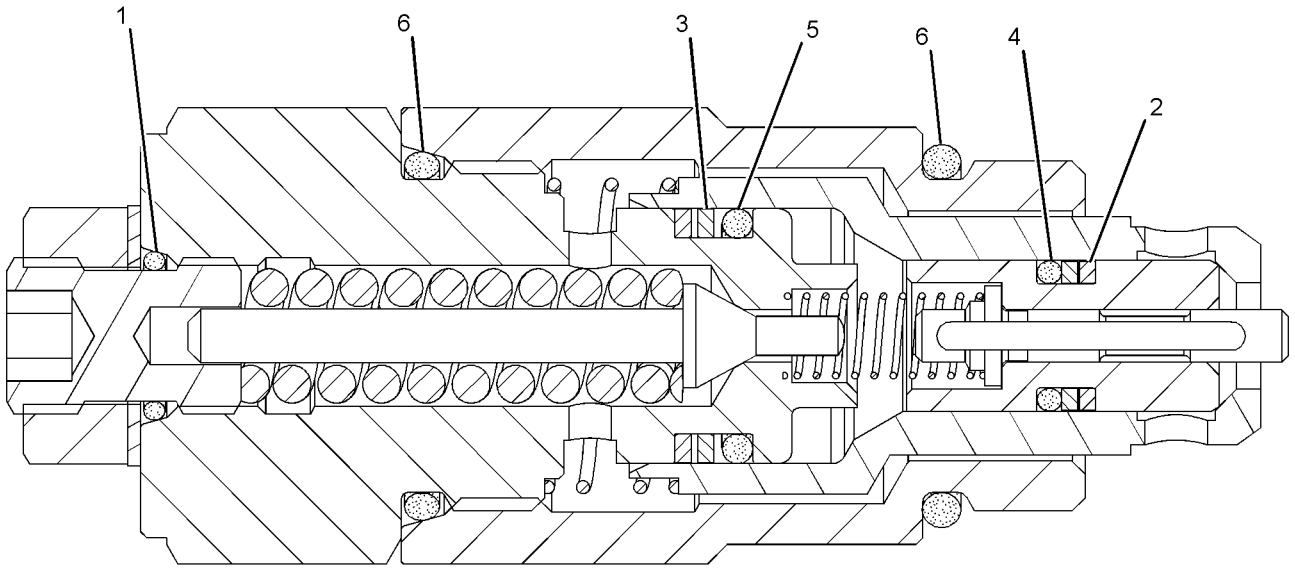

GRAPHIC #1 **<END>** g01160548

HYDRAULIC SYSTEM

255-5662 VALVE GP-RELIEF

S/N: MYG1-UP; PPN1-UP
PART OF 255-5680, 255-5683, 259-7692 VALVE GP-LOAD CONTROL
ALSO AN ATTACHMENT

SMCS-5069, 5117 **i03631889**

NOTE	REF NO	GRAPHIC REF	PART NUMBER	QTY	PART NAME 1 2 3 4 5 6 (PRODUCT LEVEL)	SEE PAGE
	1	1	**095-1578**	1	SEAL-O-RING	
	2	1	**103-8252**	2	RING	
	3	1	**103-8253**	2	RING	
	4	1	**103-8254**	1	SEAL-O-RING	
	5	1	**103-8255**	1	SEAL-O-RING	
	6	1	**3D-2824**	2	SEAL-O-RING	

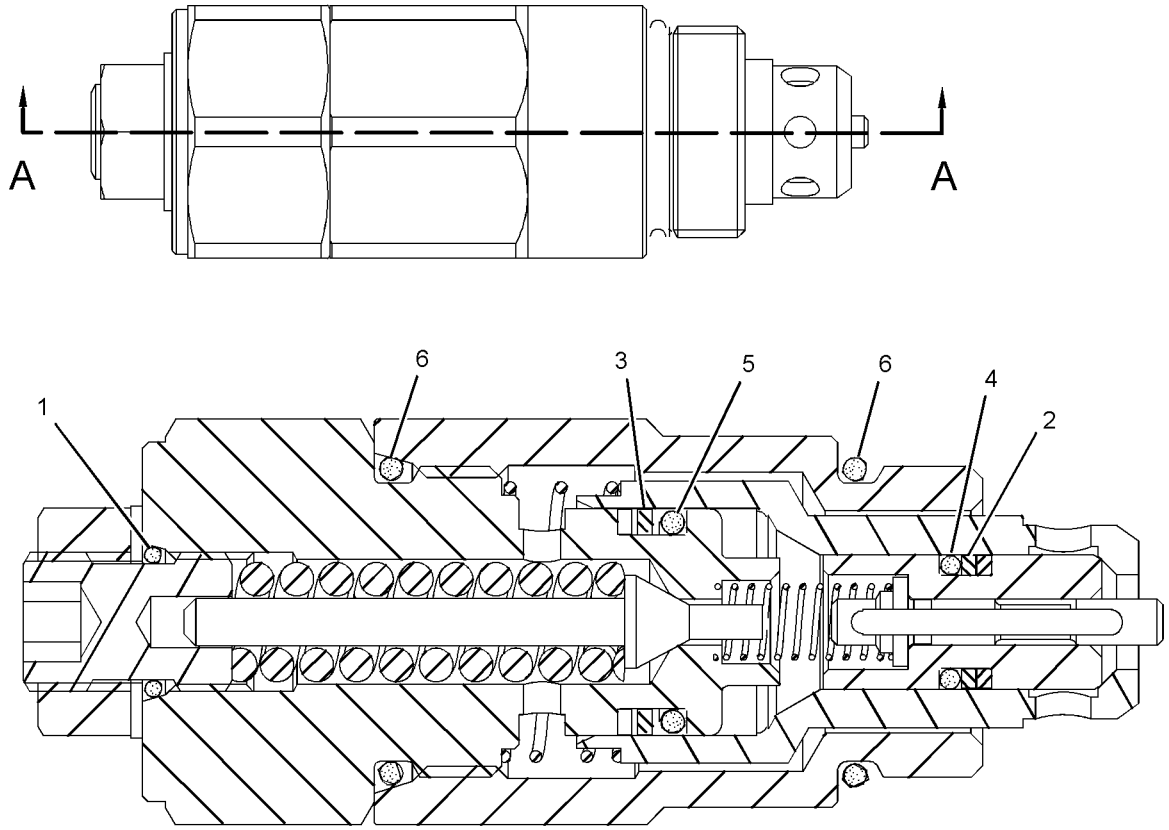

SECTION A-A

GRAPHIC #1 **<END>** g01948015

255-5747 VALVE GP-RELIEF

S/N: MYG1-UP; PPN1-UP
PART OF 263-1962 VALVE GP-LOAD CONTROL
AN ATTACHMENT

SMCS-5069, 5117 **i02292126**

NOTE	REF NO	GRAPHIC REF	PART NUMBER	QTY	PART NAME 1 2 3 4 5 6 (PRODUCT LEVEL)	SEE PAGE
	1	1	**095-1578**	1	SEAL-O-RING	
	2	1	**3D-2824**	2	SEAL-O-RING	
	3	1	**103-8255**	1	SEAL-O-RING	
	4	1	**103-8252**	2	RING	
	5	1	**103-8254**	1	SEAL-O-RING	
	6	1	**103-8253**	2	RING	

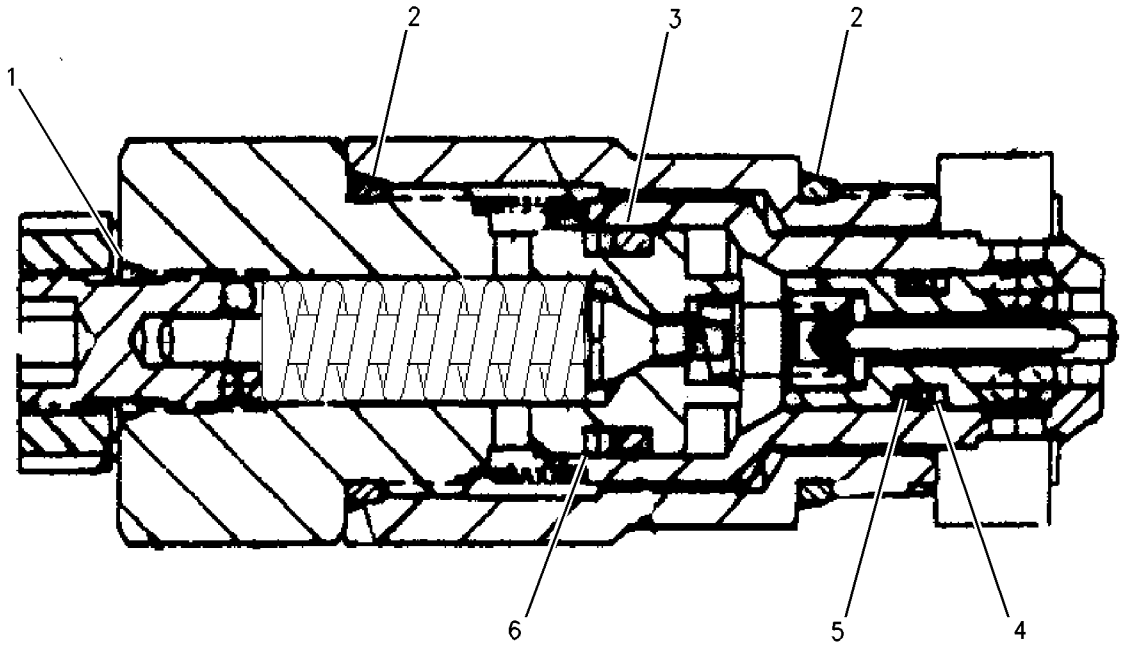

GRAPHIC #1 **<END>** g00862849

HYDRAULIC SYSTEM

310-0393 VALVE GP-RELIEF

S/N: MYG1-UP; PPN1-UP
PART OF 285-1347 VALVE GP-CONTROL
ALSO AN ATTACHMENT

SMCS-5069, 5117 **i03021883**

NOTE	REF NO	GRAPHIC REF	PART NUMBER	QTY	PART NAME 1 2 3 4 5 6 (PRODUCT LEVEL)	SEE PAGE
	1	1	**4I-3510**	1	SPRING	
	2	1	**4I-7714**	1	NUT (3/4-16-THD)	
	3	1	**6I-6795**	1	SPRING	
	4	1	**095-1786**	1	RING-BACKUP	
	5	1	**107-6540**	1	COLLAR	
	6	1	**107-6541**	1	RING-RETAINING	
	7	1	**119-5398**	1	SCREEN	
	8	1	**171-0034**	1	SEAT	
	9	1	**171-0037**	1	VALVE	
	10	1	**259-7848**	1	SLEEVE	
	11	1	**259-7849**	1	PISTON	
	12	1	**259-7850**	1	SLEEVE	
	13	1	**259-7851**	1	ADJUSTER	
M	14	1	**259-7852**	1	NUT (M24X2-THD)	
	16	1	**095-1579**	1	SEAL-O-RING	
	17	1	**095-1584**	1	SEAL-O-RING	
	18	1	**095-1587**	1	SEAL-O-RING	
	19	1	**095-1590**	1	SEAL-O-RING	
	20	1	**3D-2824**	1	SEAL-O-RING	
	21	1	**6V-8218**	1	SEAL-O-RING	
	22	1	**6V-8978**	1	SEAL-O-RING	

M-METRIC PART

310-0393 VALVE GP-RELIEF *(contd.)* **i03021883**

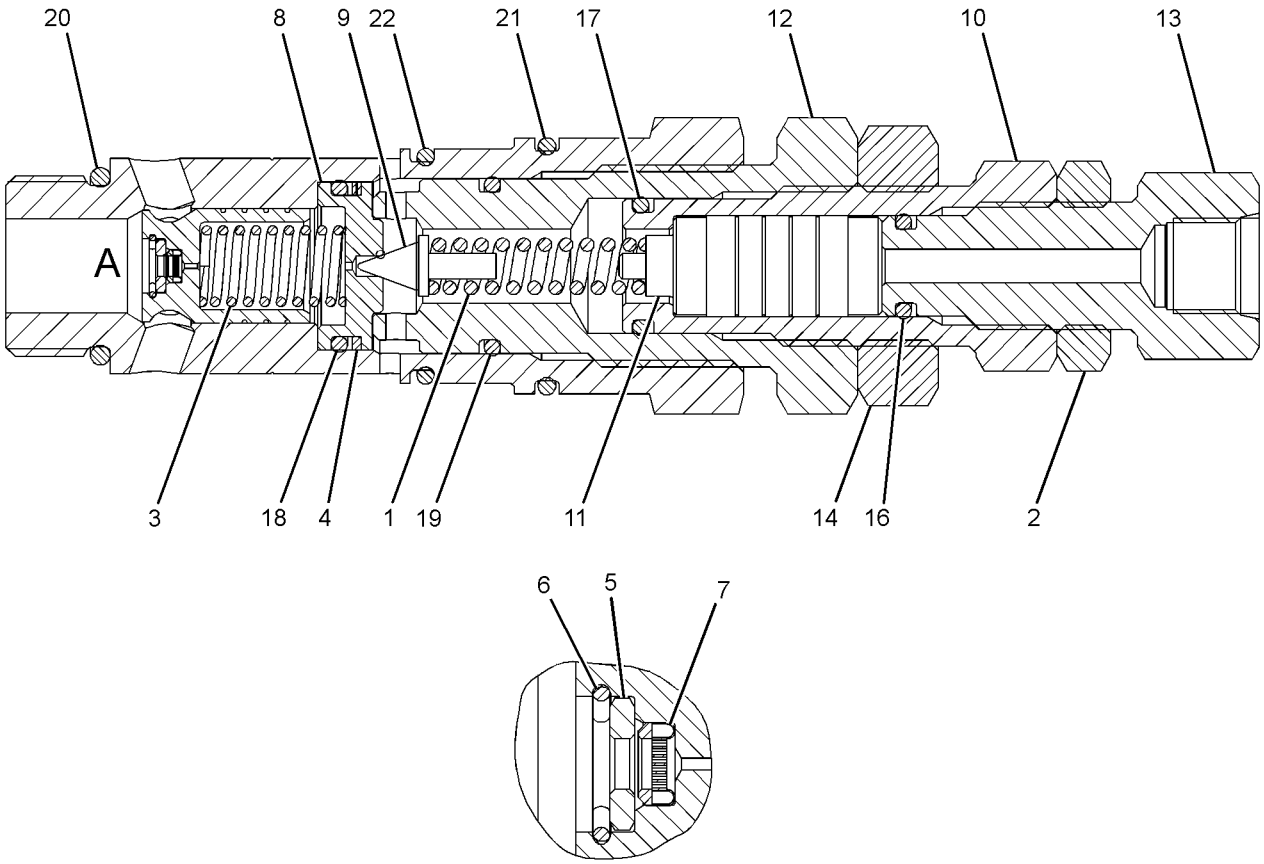

VIEW OF AREA A

GRAPHIC #1 **<END>** g01460589

HYDRAULIC SYSTEM

310-0394 VALVE GP-RELIEF

S/N: MYG1-UP; PPN1-UP
PART OF 177-2653 VALVE GP-RELIEF
AN ATTACHMENT

SMCS-5069, 5117 **i02986910**

NOTE	REF NO	GRAPHIC REF	PART NUMBER	QTY	PART NAME 1 2 3 4 5 6 (PRODUCT LEVEL)	SEE PAGE
Z	1	1		1	VALVE GP-RELIEF	
	2	1	**6I-6795**	1	SPRING	
	3	1	**171-0034**	1	SEAT	
	4	1	**171-0037**	1	VALVE	
	5	1	**4I-3510**	1	SPRING	
	6	1	**171-0035**	1	HOLDER	
	7	1	**222-0085**	1	NUT (3/4-16-THD)	
	8	1	**171-0036**	1	ADJUSTER	
	9	1	**095-1579**	1	SEAL-O-RING	
	10	1	**6V-8218**	1	SEAL-O-RING	
	11	1	**095-1590**	1	SEAL-O-RING	
	12	1	**6V-8978**	1	SEAL-O-RING	
	13	1	**095-1786**	1	RING-BACKUP	
	14	1	**095-1587**	1	SEAL-O-RING	
	15	1	**3D-2824**	1	SEAL-O-RING	

Z-NOT SERVICED SEPARATELY

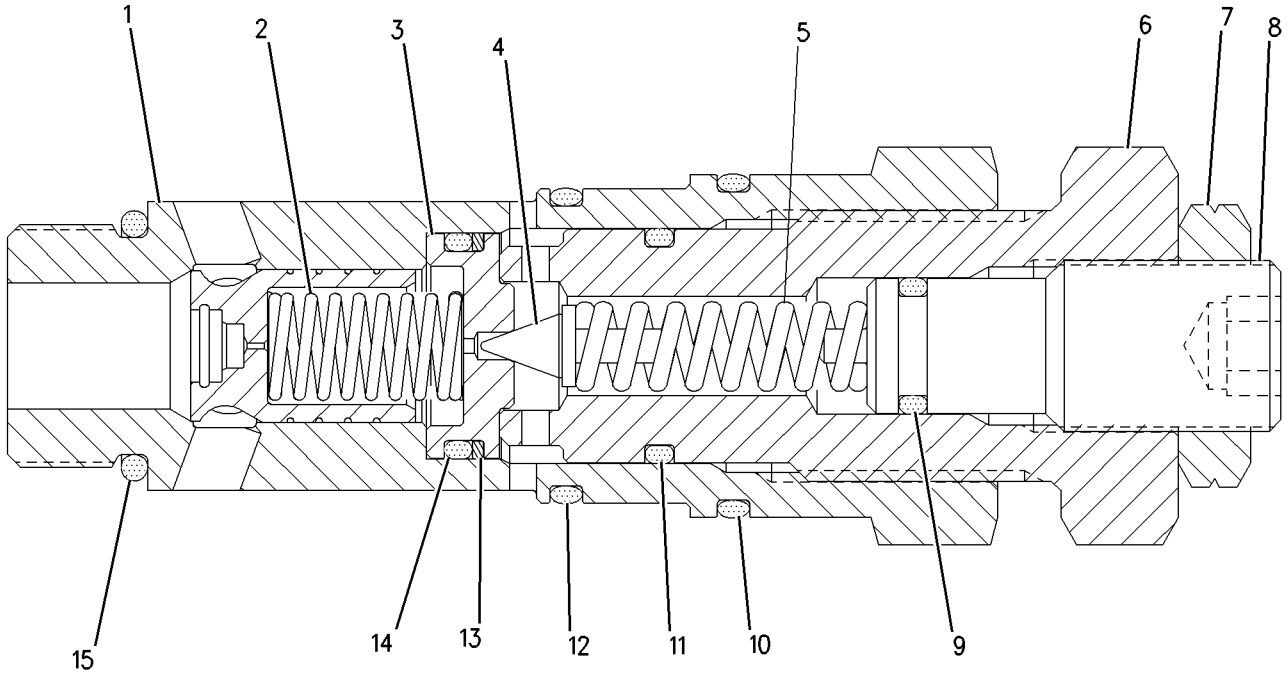

GRAPHIC #1 **<END>** g00927977

112-0083 VALVE GP-SHUTTLE

S/N: MYG1-UP; PPN1-UP
PART OF 255-1843 LINES GP-PILOT
AN ATTACHMENT

SMCS-5079 **i02554214**

NOTE	REF NO	GRAPHIC REF	PART NUMBER	QTY	PART NAME 1 2 3 4 5 6 (PRODUCT LEVEL)	SEE PAGE
	1	1	**2D-6642**	4	BALL	
	2	1	**112-0085**	4	PLUG	
	3	1	**3J-1907**	4	SEAL-O-RING	

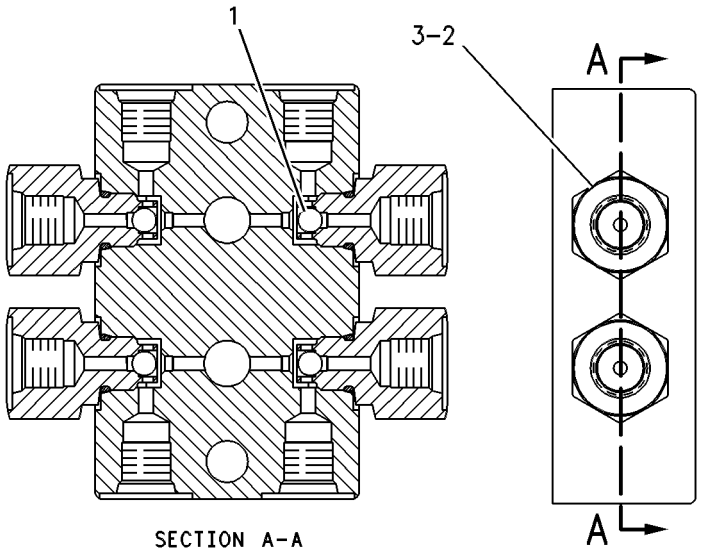

GRAPHIC #1 **<END>** g00258739

HYDRAULIC SYSTEM

123-2549 VALVE GP-SHUTTLE

S/N: MYG1-UP; PPN1-UP
PART OF 164-6980 VALVE GP-SHUTTLE
AN ATTACHMENT

SMCS-5079 **i02554220**

NOTE	REF NO	GRAPHIC REF	PART NUMBER	QTY	PART NAME 1 2 3 4 5 6 (PRODUCT LEVEL)	SEE PAGE
	1	1	**123-2511**	1	TEE	
	2	1	**4B-9783**	1	BALL	
	3	1	**123-2552**	2	CONNECTOR	
	4	1	**3J-1907**	2	SEAL-O-RING	

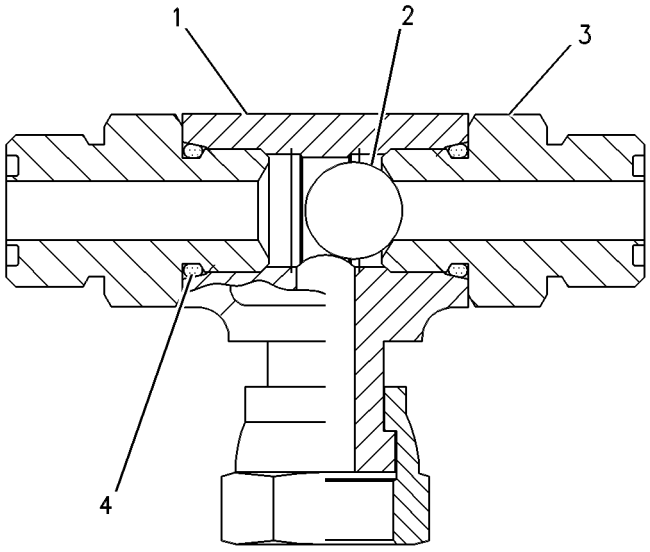

GRAPHIC #1 **<END>** g00258223

HYDRAULIC SYSTEM

164-6979 VALVE GP-SHUTTLE

S/N: MYG1-UP; PPN1-UP

PART OF 260-7867 LINES GP-PILOT

SMCS-5079 **i03659216**

NOTE	REF NO	GRAPHIC REF	PART NUMBER	QTY	PART NAME 1 2 3 4 5 6 (PRODUCT LEVEL)	SEE PAGE
	1	1	**123-2431**	1	BODY-VALVE	
	2	1	**4B-9783**	1	BALL	
	3	1	*175-4430*	2	CONNECTOR AS	
					(EACH INCLUDES)	
		1	**3J-1907**	1	SEAL-O-RING	
		1	**6V-8397**	1	SEAL-O-RING	
		1	**123-2552**	1	CONNECTOR	

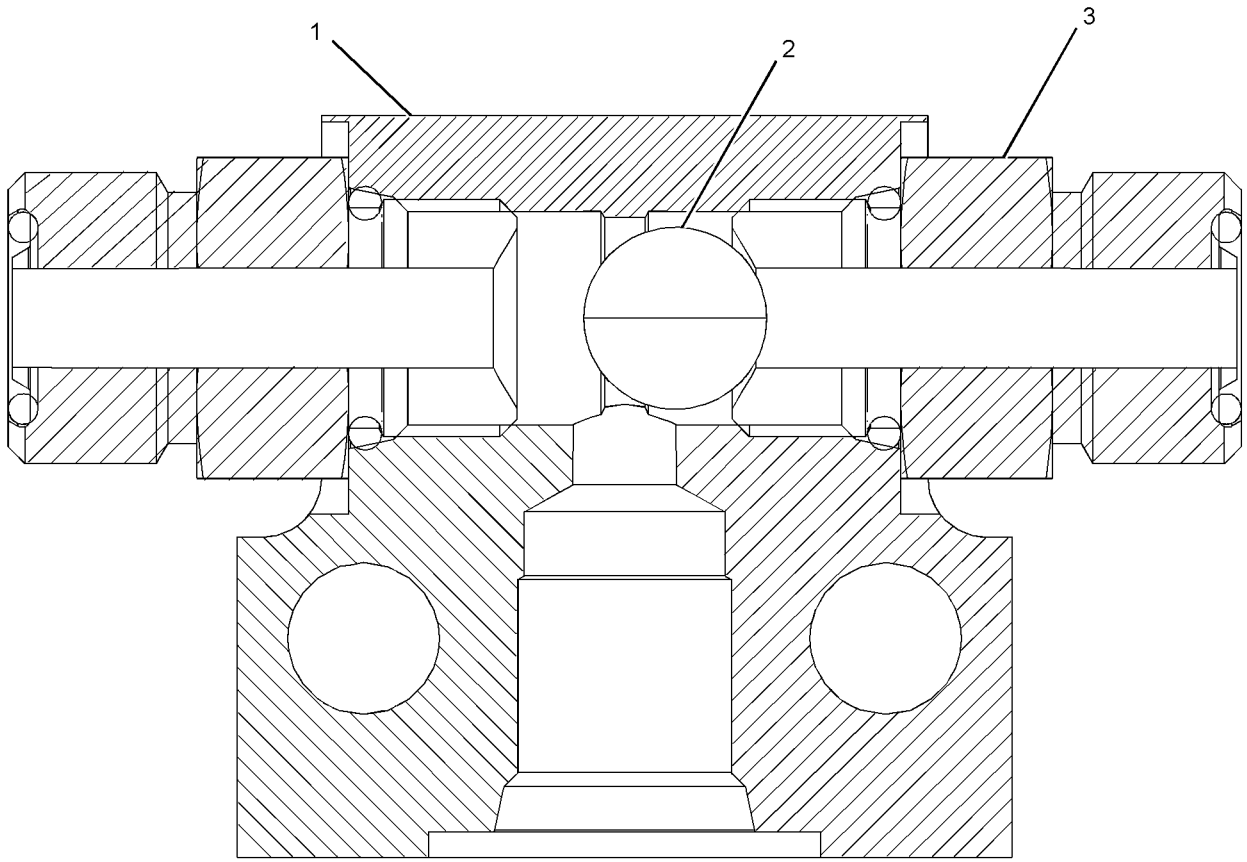

GRAPHIC #1 **<END>** g01972413

HYDRAULIC SYSTEM

164-6980 VALVE GP-SHUTTLE

S/N: MYG1-UP; PPN1-UP
PART OF 269-9562 LINES GP-FRONT
AN ATTACHMENT

SMCS-5079 **i01349638**

NOTE	PART NUMBER	QTY	PART NAME 1 2 3 4 5 6 (PRODUCT LEVEL)	SEE PAGE
	6V-8397	2	SEAL-O-RING	
Y	**123-2549**	1	VALVE GP-SHUTTLE	694
Y-SEPARATE ILLUSTRATION				

<END>

185-0462 VALVE GP-SHUTTLE

S/N: MYG1-UP; PPN1-UP

PART OF 248-9825 LINES GP-PILOT

SMCS-5079 **i01903481**

NOTE	REF NO	GRAPHIC REF	PART NUMBER	QTY	PART NAME 1 2 3 4 5 6 (PRODUCT LEVEL)	SEE PAGE
	1	1	**7I-8084**	4	PLUG	
	2	1	**185-0463**	1	SEAT	
	3	1	**4B-9880**	7	BALL	
	4	1	**165-9464**	6	SEAT	
	5	1	**095-1578**	7	SEAL-O-RING	
	6	1	**107-6479**	7	PLUG	

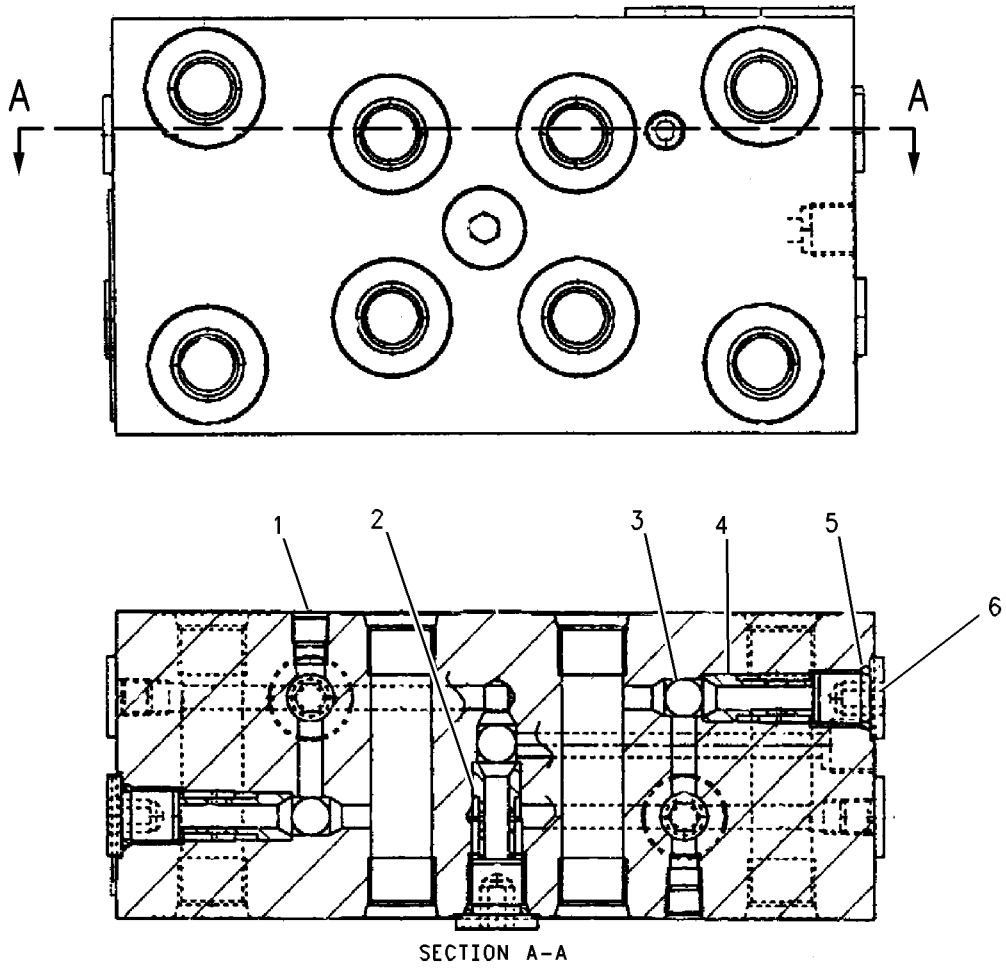

SECTION A-A

GRAPHIC #1 **<END>** g00683437

HYDRAULIC SYSTEM

111-9916 VALVE GP-SOLENOID

S/N: MYG1-UP; PPN1-UP
PART OF 171-0188, 259-7429, 259-7430 VALVE GP-SOLENOID
AN ATTACHMENT

SMCS-5479 **i02668929**

NOTE	REF NO	GRAPHIC REF	PART NUMBER	QTY	PART NAME 1 2 3 4 5 6 (PRODUCT LEVEL)	SEE PAGE
	1	1	**095-1750**	1	SEAL-O-RING	
	2	1	**6V-8398**	1	SEAL-O-RING	
	3	1	**095-1751**	1	SEAL-O-RING	
	4	1	**095-1586**	1	SEAL-O-RING	
M	5	1	**114-0623**	1	NUT AS (M6X1-THD)	

M-METRIC PART

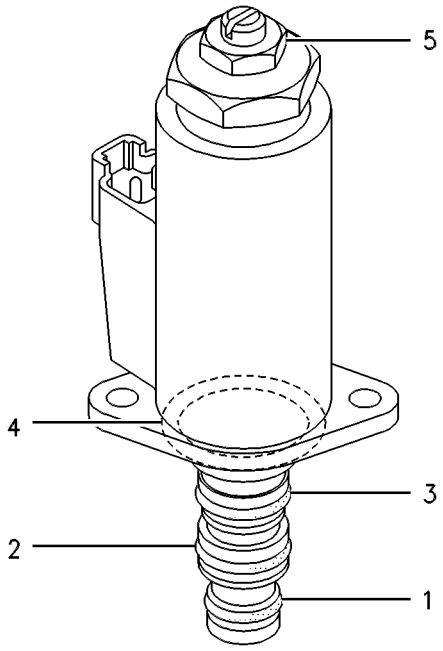

GRAPHIC #1 **<END>** g00258219

121-1491 VALVE GP-SOLENOID

S/N: MYG1-UP; PPN1-UP
PART OF 239-8697, 239-8998 MANIFOLD GP-CONTROL, 254-3080, 285-1347 VALVE GP-CONTROL, 258-6749 VALVE GP-SOLENOID
ALSO AN ATTACHMENT

SMCS-5479 **i02195437**

NOTE	REF NO	GRAPHIC REF	PART NUMBER	QTY	PART NAME 1 2 3 4 5 6 (PRODUCT LEVEL)	SEE PAGE
	1	1	**095-1750**	1	SEAL-O-RING	
	2	1	**6V-8398**	1	SEAL-O-RING	
	3	1	**095-1751**	1	SEAL-O-RING	
	4	1	**095-1586**	1	SEAL-O-RING	
M	5	1	**114-0623**	1	NUT AS (M6X1-THD)	

M-METRIC PART

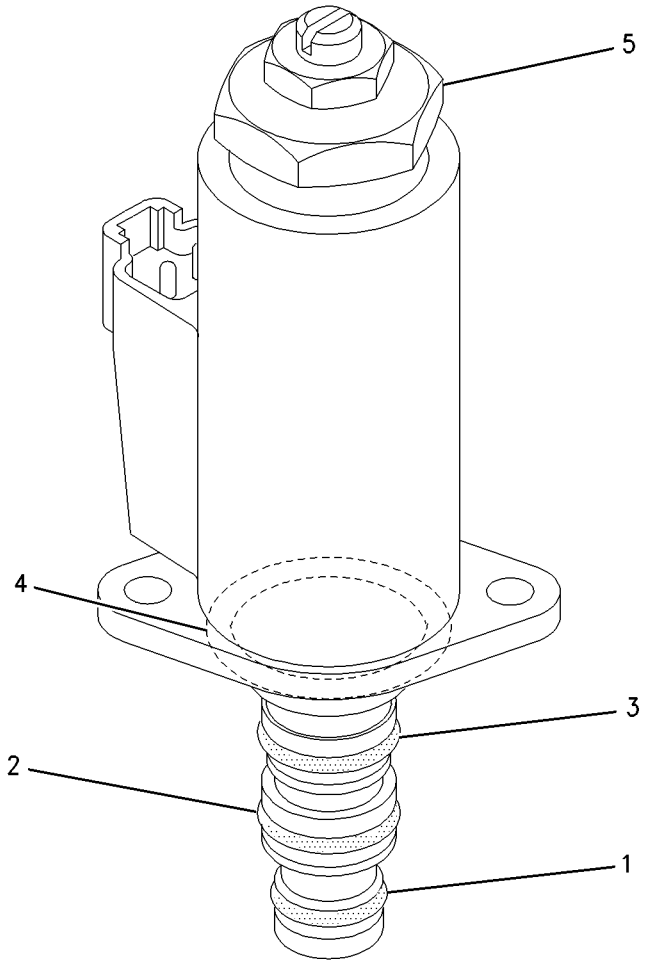

GRAPHIC #1 **<END>** g00928680

HYDRAULIC SYSTEM

121-6303 VALVE GP-SOLENOID

S/N: MYG1-UP; PPN1-UP

PART OF 255-1659 LINES GP-PILOT

SMCS-5479 **i00615017**

NOTE	REF NO	GRAPHIC REF	PART NUMBER	QTY	PART NAME 1 2 3 4 5 6 (PRODUCT LEVEL)	SEE PAGE
	1	1	**095-1578**	1	SEAL-O-RING	
	2	1	**121-6304**	1	COIL GP	
M	3	1	**099-0822**	2	BOLT-SOCKET HEAD (M5X0.8X10-MM)	
	4	1	**095-1519**	1	SEAL-O-RING	
	5	1	**7I-0986**	1	PLUG	
	6	1	**7I-7403**	1	SPRING	

M-METRIC PART

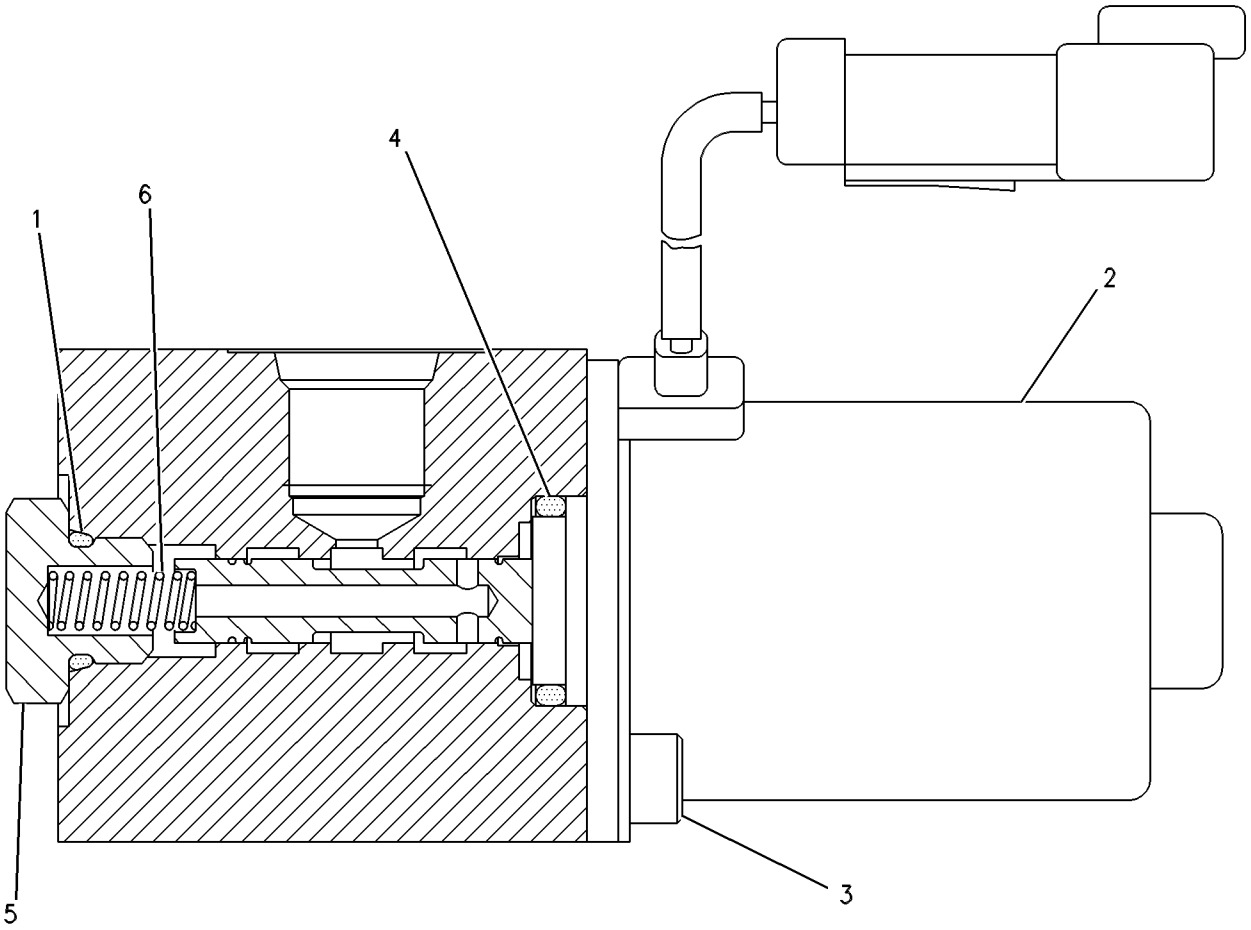

GRAPHIC #1 **<END>** g00262869

HYDRAULIC SYSTEM

171-0188 VALVE GP-SOLENOID

S/N: MYG1-UP; PPN1-UP
PART OF 260-7855, 260-7857 LINES GP-PILOT
AN ATTACHMENT

SMCS-5479 **i03634760**

NOTE	REF NO	GRAPHIC REF	PART NUMBER	QTY	PART NAME 1 2 3 4 5 6 (PRODUCT LEVEL)	SEE PAGE
Y	1	1	**111-9916**	1	VALVE GP-SOLENOID	698
M	2	1	**8T-0288**	2	BOLT (M5X0.8X12-MM)	
	3	1	**171-0198**	2	VALVE GP-SHUTTLE	
					(EACH INCLUDES)	
J		1	**6V-8399**	2	SEAL-O-RING	
J		1	**095-1751**	1	SEAL-O-RING	
J		1	**185-0407**	1	KIT-SEAL (SHUTTLE VALVE)	
					(KIT ALSO INCLUDES 3 BACKUP RINGS)	
	4	1	**7I-8084**	6	PLUG	

J-KIT MARKED J INCLUDES PART(S) MARKED J
M-METRIC PART
Y-SEPARATE ILLUSTRATION

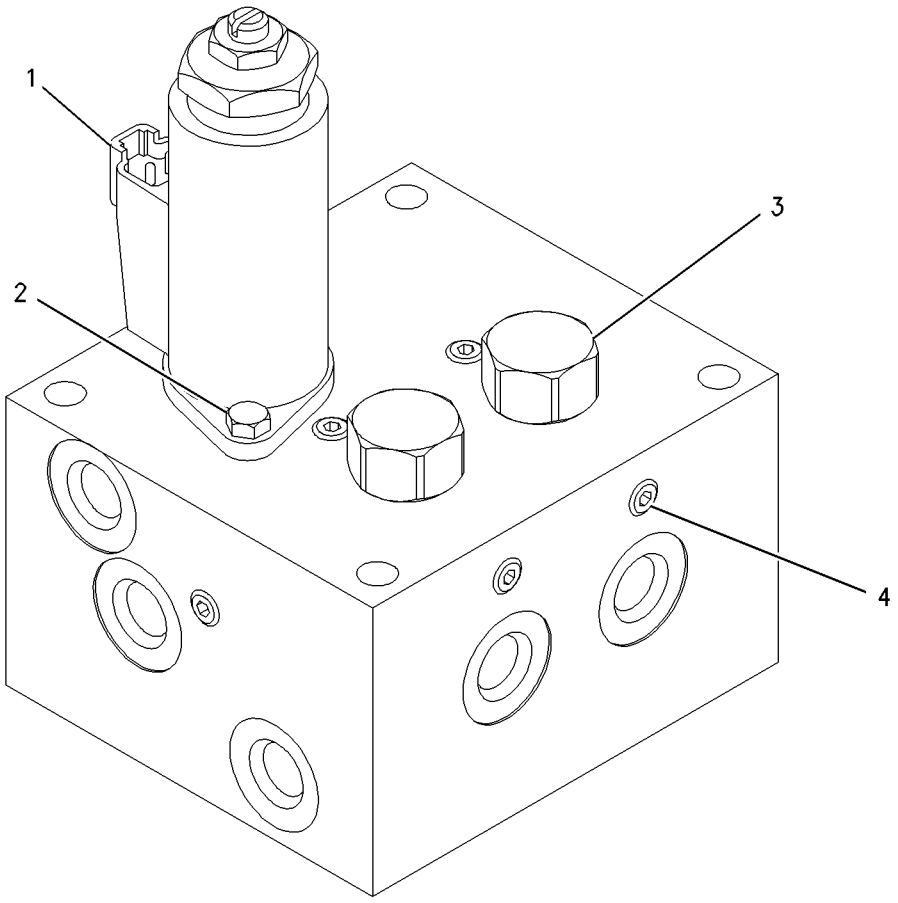

GRAPHIC #1 **<END>** g00681111

HYDRAULIC SYSTEM

185-0472 VALVE GP-SOLENOID

S/N: MYG1-UP; PPN1-UP
PART OF 255-1853 LINES GP-PILOT
AN ATTACHMENT

SMCS-5479 **i02623556**

NOTE	REF NO	GRAPHIC REF	PART NUMBER	QTY	PART NAME 1 2 3 4 5 6 (PRODUCT LEVEL)	SEE PAGE
	1	1	**185-0473**	1	VALVE GP-CONTROL	
	2	1	**121-6304**	1	COIL GP	
M	3	1	**099-0822**	2	BOLT-SOCKET HEAD (M5X0.8X10-MM)	
	4	1	**095-1519**	1	SEAL-O-RING	
	5	1	**7I-0986**	1	PLUG	
	6	1	**7I-7403**	1	SPRING	
	7	1	**095-1578**	1	SEAL-O-RING	

M-METRIC PART

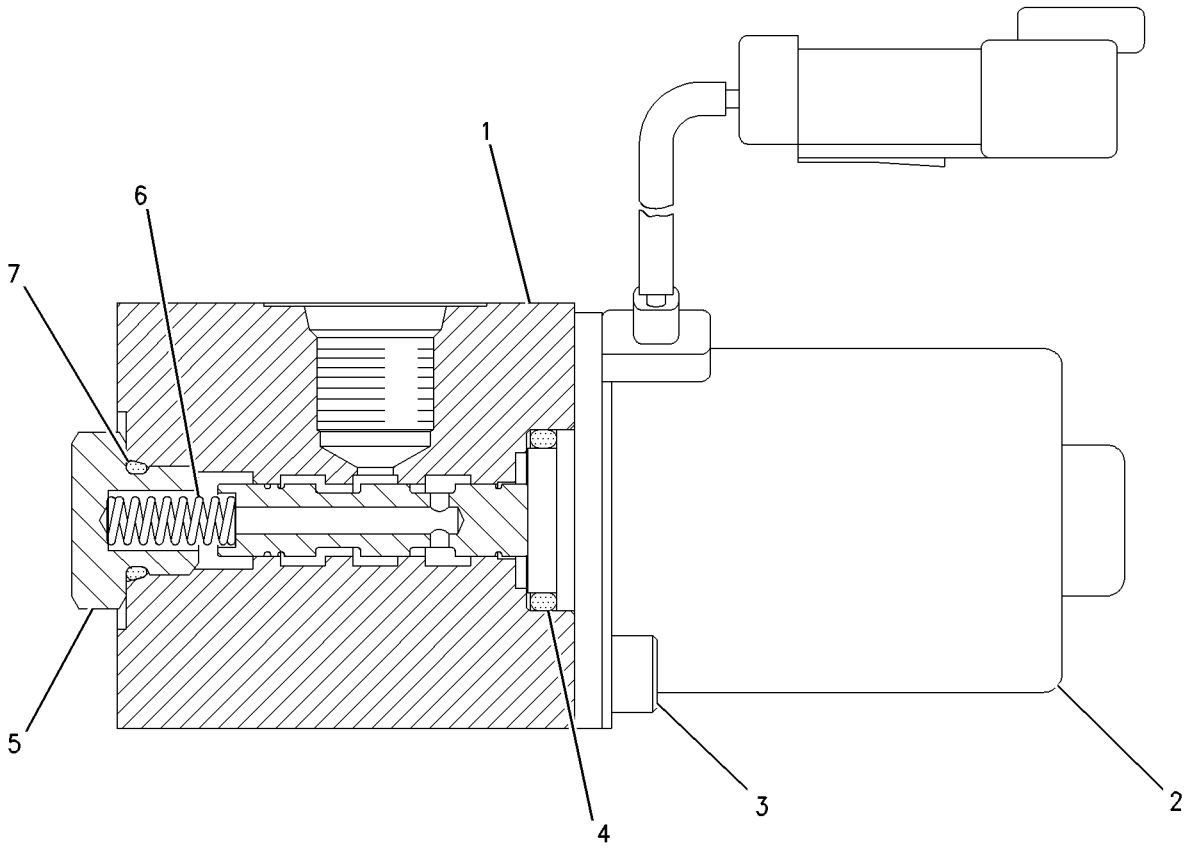

GRAPHIC #1 **<END>** g00804262

HYDRAULIC SYSTEM

225-4518 VALVE GP-SOLENOID

S/N: MYG1-UP; PPN1-UP

PART OF 322-8733 PUMP GP-PISTON

SMCS-5479 **i02179738**

NOTE	REF NO	GRAPHIC REF	PART NUMBER	QTY	PART NAME 1 2 3 4 5 6 (PRODUCT LEVEL)	SEE PAGE
Z	1	1		1	BODY	
M	2	1	**8T-2922**	3	BOLT-SOCKET HEAD (M6X1X65-MM)	
M	3	1	**8T-0288**	2	BOLT (M5X0.8X12-MM)	
	4	1	**110-5525**	1	PLUG	
	5	1	**7I-8084**	11	PLUG	
	6	1	**206-9290**	4	SEAL-O-RING	
	7	1	**153-4906**	1	SEAL-O-RING	
Y	8	1	**225-4558**	1	VALVE GP-SOLENOID	704

M-METRIC PART
Y-SEPARATE ILLUSTRATION
Z-NOT SERVICED SEPARATELY

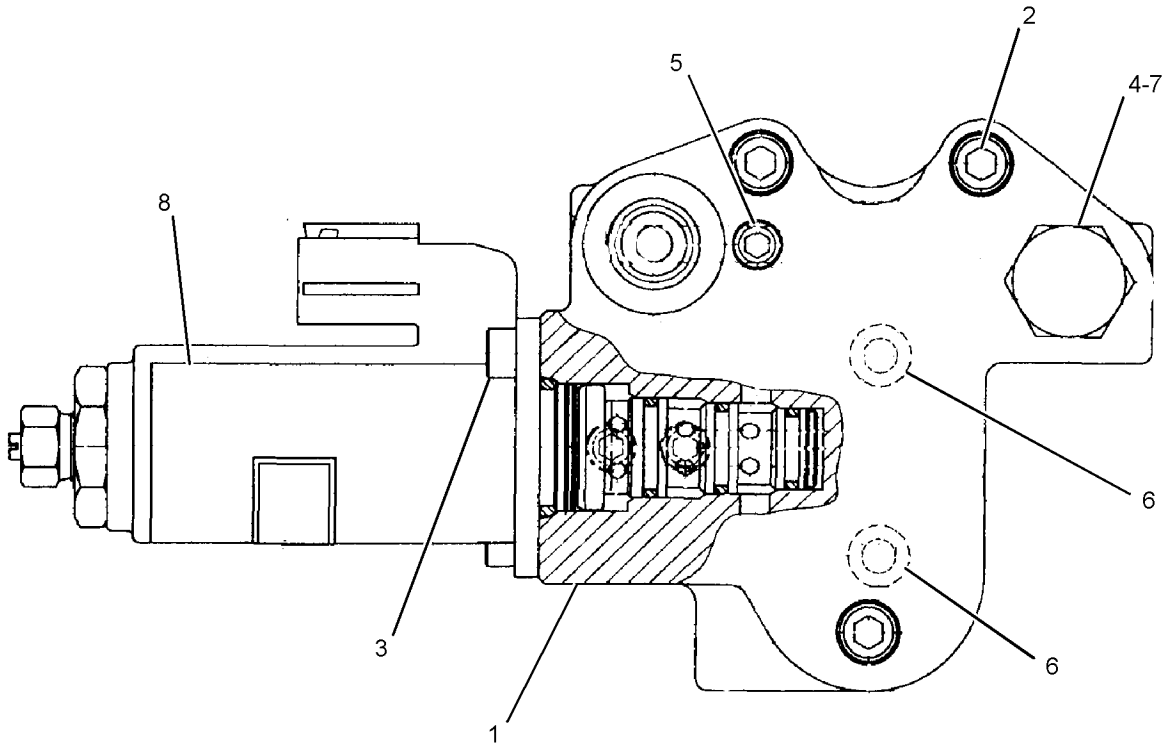

GRAPHIC #1 **<END>** g01098210

HYDRAULIC SYSTEM

225-4558 VALVE GP-SOLENOID

S/N: MYG1-UP; PPN1-UP

PART OF 225-4518 VALVE GP-SOLENOID

SMCS-5479 **i02179744**

NOTE	REF NO	GRAPHIC REF	PART NUMBER	QTY	PART NAME 1 2 3 4 5 6 (PRODUCT LEVEL)	SEE PAGE
	1	1	**4K-2039**	1	SEAL-O-RING	
	2	1	**5L-4758**	1	SEAL-O-RING	
	3	1	**6M-5062**	1	SEAL-O-RING	
	4	1	**095-1586**	1	SEAL-O-RING	
M	5	1	**114-0623**	1	NUT AS (M6X1-THD)	

M-METRIC PART

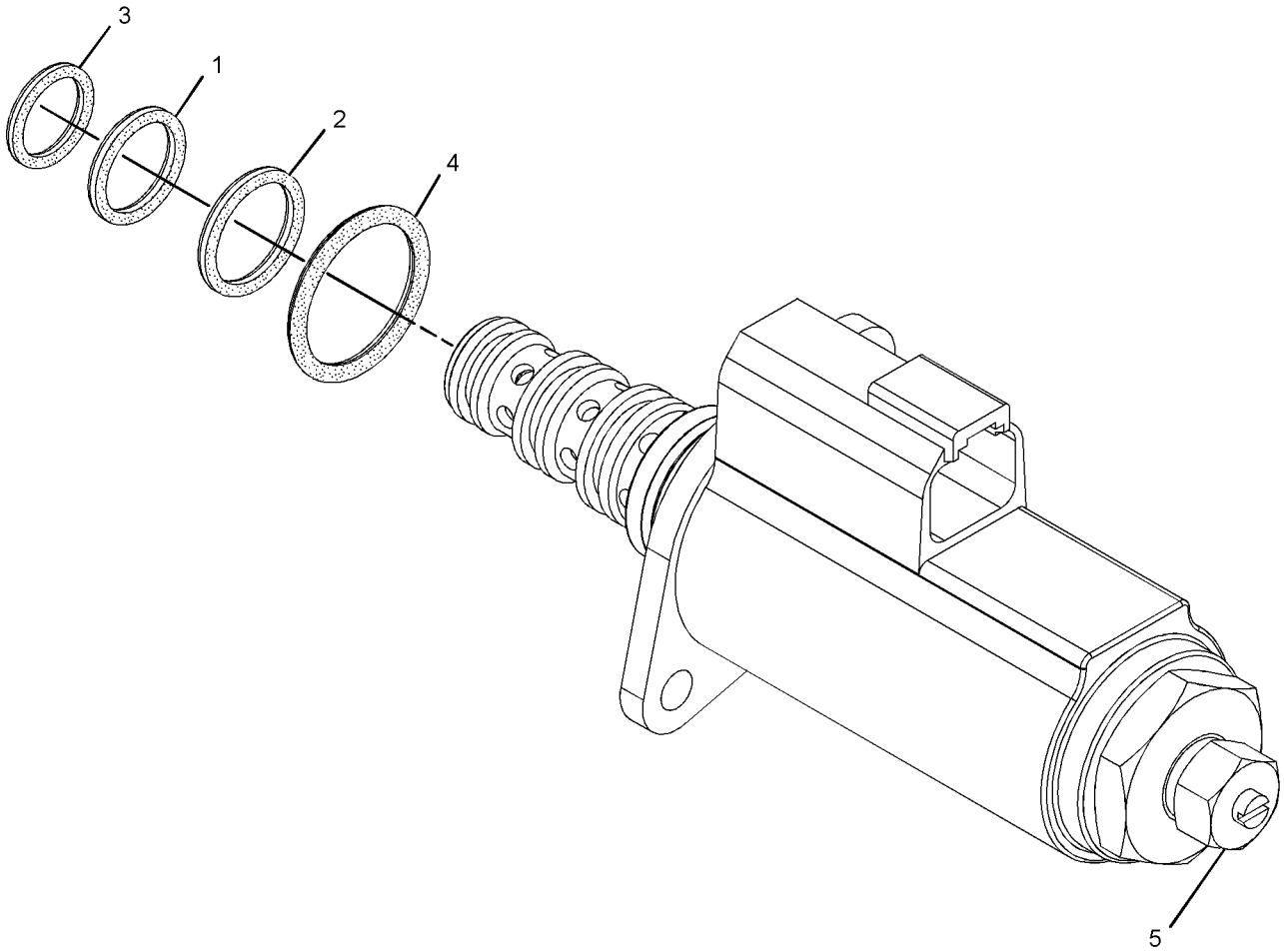

GRAPHIC #1 **<END>** g01098138

HYDRAULIC SYSTEM

258-6749 VALVE GP-SOLENOID

S/N: MYG1-UP; PPN1-UP
PART OF 269-9562 LINES GP-FRONT
AN ATTACHMENT

SMCS-5479 **i02941777**

NOTE	REF NO	GRAPHIC REF	PART NUMBER	QTY	PART NAME 1 2 3 4 5 6 (PRODUCT LEVEL)	SEE PAGE
Y	1	1	**121-1491**	1	VALVE GP-SOLENOID	699
Z	2	1		1	BODY-VALVE	
M	3	1	**8T-0288**	2	BOLT (M5X0.8X12-MM)	

M-METRIC PART
Y-SEPARATE ILLUSTRATION
Z-NOT SERVICED SEPARATELY

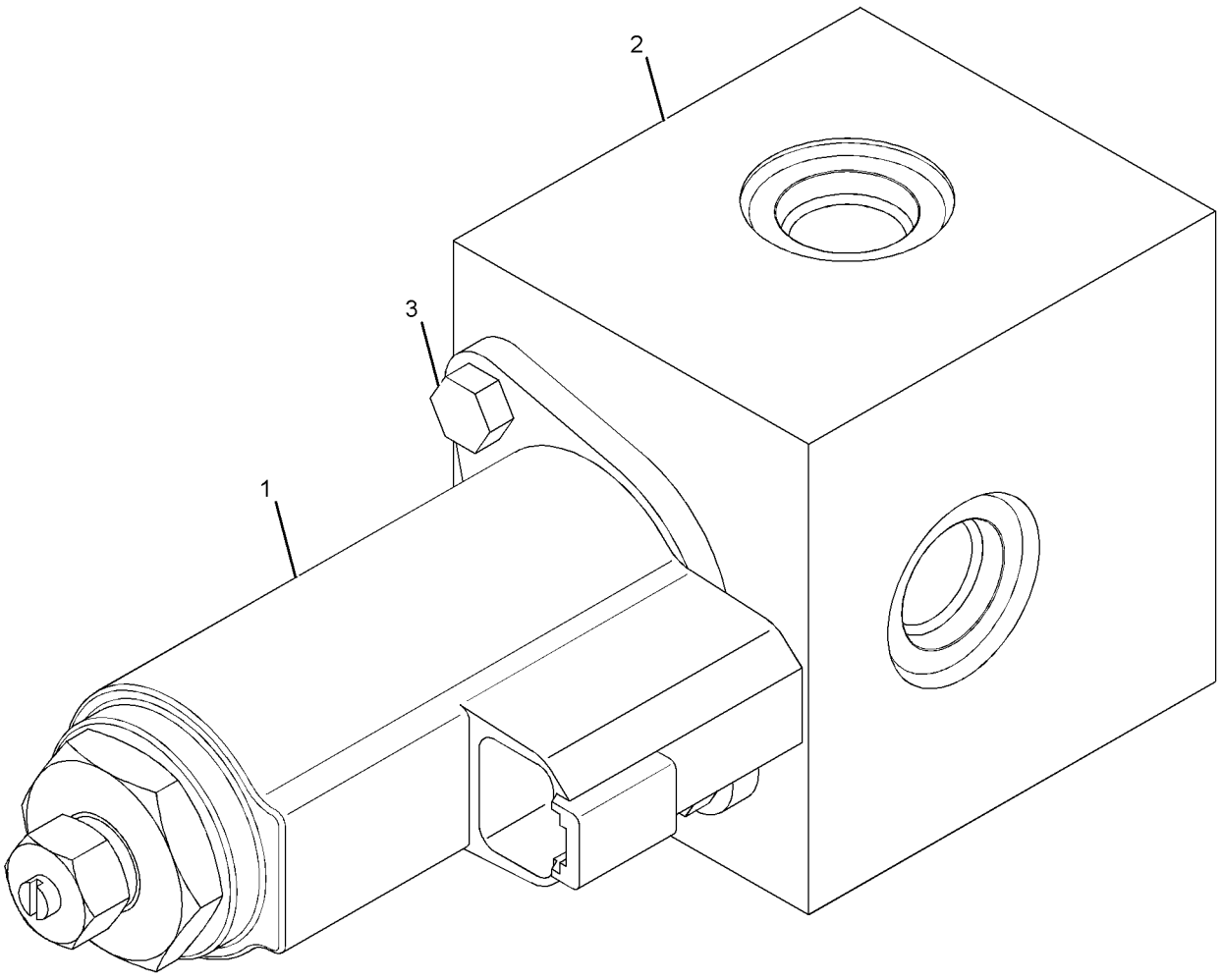

GRAPHIC #1 **<END>** g01137453

HYDRAULIC SYSTEM

259-7429 VALVE GP-SOLENOID

S/N: MYG1-UP; PPN1-UP
PART OF 260-7857 LINES GP-PILOT
AN ATTACHMENT

SMCS-5479 **i02644774**

NOTE	REF NO	GRAPHIC REF	PART NUMBER	QTY	PART NAME 1 2 3 4 5 6 (PRODUCT LEVEL)	SEE PAGE
M	1	1	**8T-0288**	8	BOLT (M5X0.8X12-MM)	
Y	2	1	**111-9916**	4	VALVE GP-SOLENOID	698

M-METRIC PART
Y-SEPARATE ILLUSTRATION

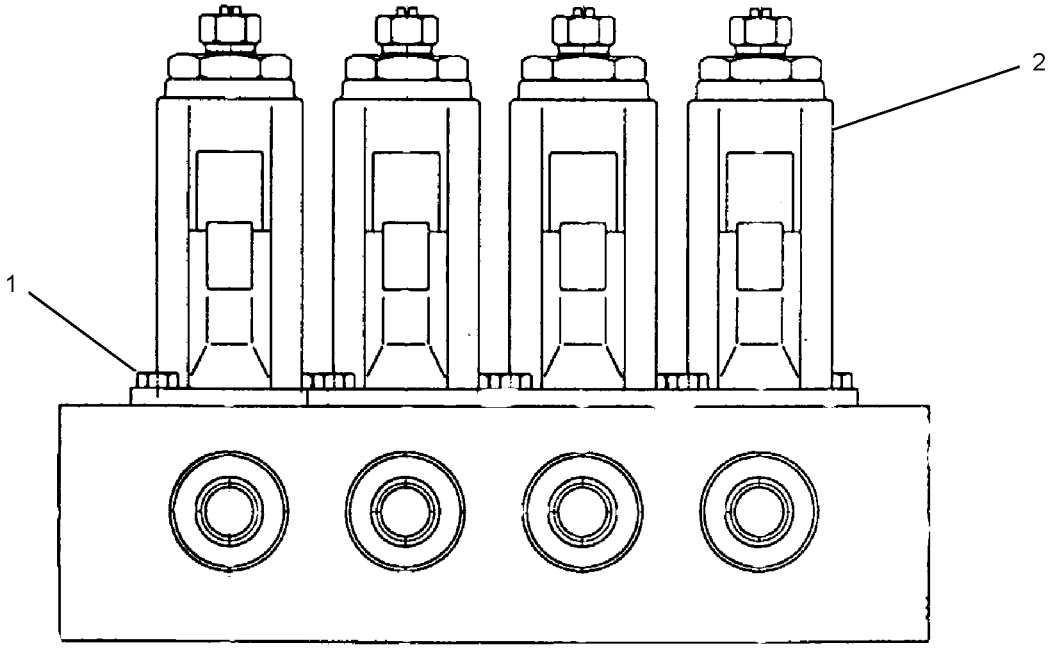

GRAPHIC #1 **<END>** g01014124

HYDRAULIC SYSTEM

259-7430 VALVE GP-SOLENOID

S/N: MYG1-UP; PPN1-UP
PART OF 260-7855, 260-7861 LINES GP-PILOT
AN ATTACHMENT

SMCS-5479 **i02738366**

NOTE	REF NO	GRAPHIC REF	PART NUMBER	QTY	PART NAME 1 2 3 4 5 6 (PRODUCT LEVEL)	SEE PAGE
M	1	1	**8T-0288**	4	BOLT (M5X0.8X12-MM)	
Y	2	1	**111-9916**	2	VALVE GP-SOLENOID	698

M-METRIC PART
Y-SEPARATE ILLUSTRATION

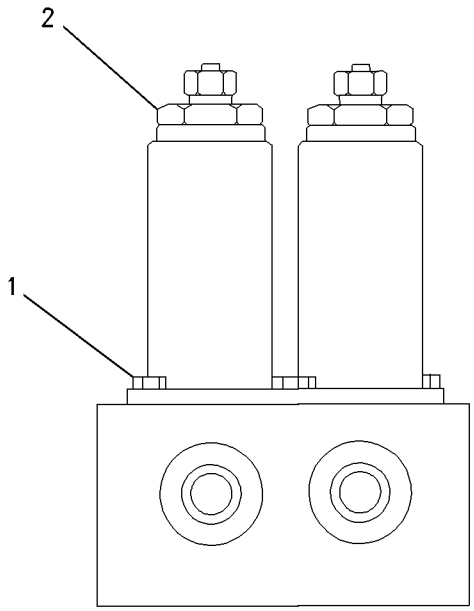

GRAPHIC #1 **<END>** g00785417

HYDRAULIC SYSTEM

297-0371 VALVE GP-SOLENOID

S/N: MYG1-UP; PPN1-UP
PART OF 255-2078 LINES GP-RETURN
AN ATTACHMENT

SMCS-5479 **i02875127**

NOTE	REF NO	GRAPHIC REF	PART NUMBER	QTY	PART NAME 1 2 3 4 5 6 (PRODUCT LEVEL)	SEE PAGE
	1	1	**095-1657**	1	SEAL-O-RING	
	2	1	**225-4804**	3	PLUG	
	3	1	**4J-7533**	3	SEAL-O-RING	
	4	1	**095-1602**	1	SEAL-O-RING	
	5	1	**232-4113**	1	RING	
	6	1	**095-1601**	1	SEAL-O-RING	
	7	1	**8T-3008**	1	RING-BACKUP	
	8	1	**095-1700**	1	SEAL-O-RING	
	9	1	**7M-8485**	1	SEAL-O-RING	
	10	1	**095-1575**	1	SEAL-O-RING	
	11	1	**232-4114**	2	RING	

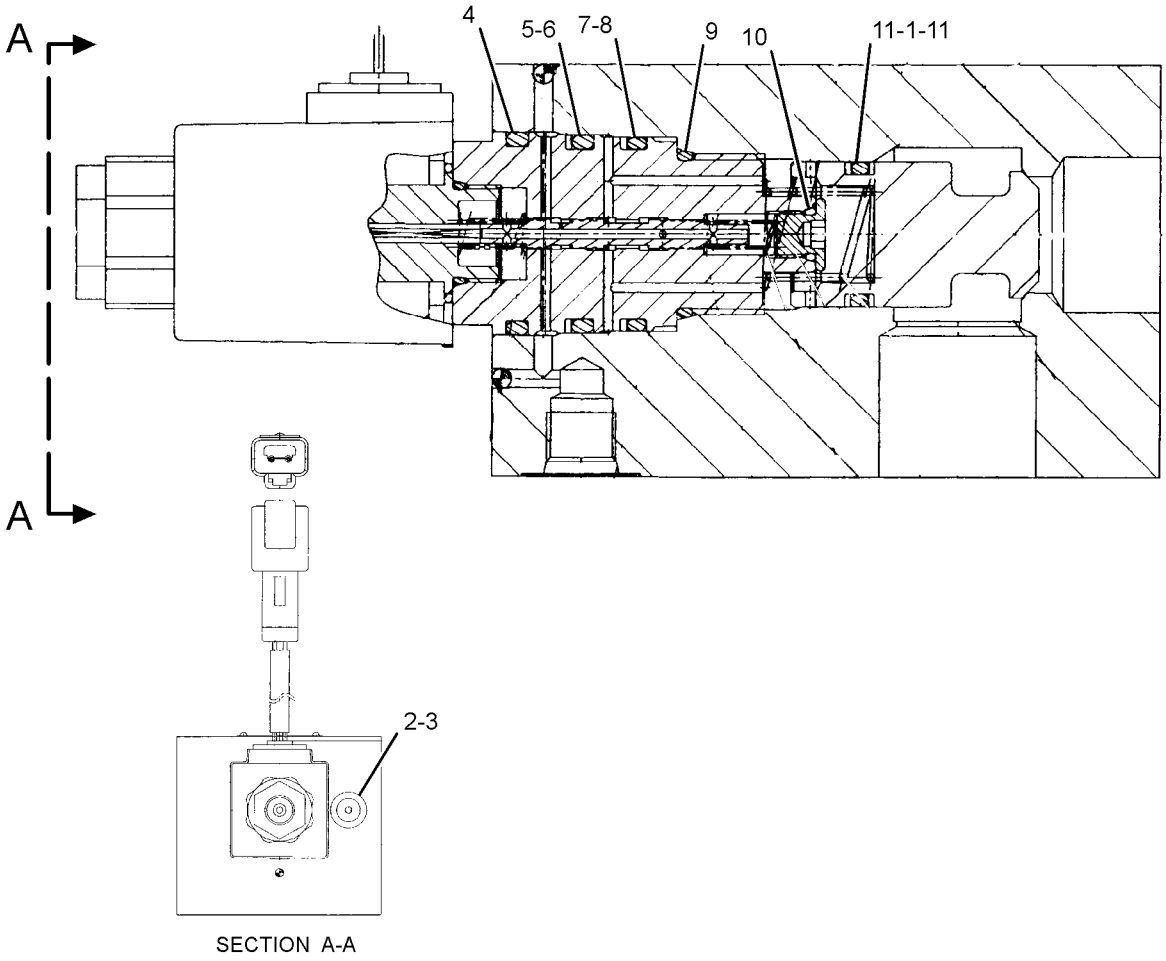

SECTION A-A

GRAPHIC #1 **<END>** g01430982

315-4412 VALVE GP-SOLENOID

S/N: MYG1-UP; PPN1-UP

PART OF 322-8716 VALVE GP-SWING CUSHION

SMCS-5479 **i03021374**

NOTE	REF NO	GRAPHIC REF	PART NUMBER	QTY	PART NAME 1 2 3 4 5 6 (PRODUCT LEVEL)	SEE PAGE
	1	1	**126-6514**	1	SEAL-O-RING	
	2	1	**126-6515**	1	SEAL-O-RING	
	3	1	**126-6516**	1	SEAL-O-RING	
	4	1	**095-1586**	1	SEAL-O-RING	

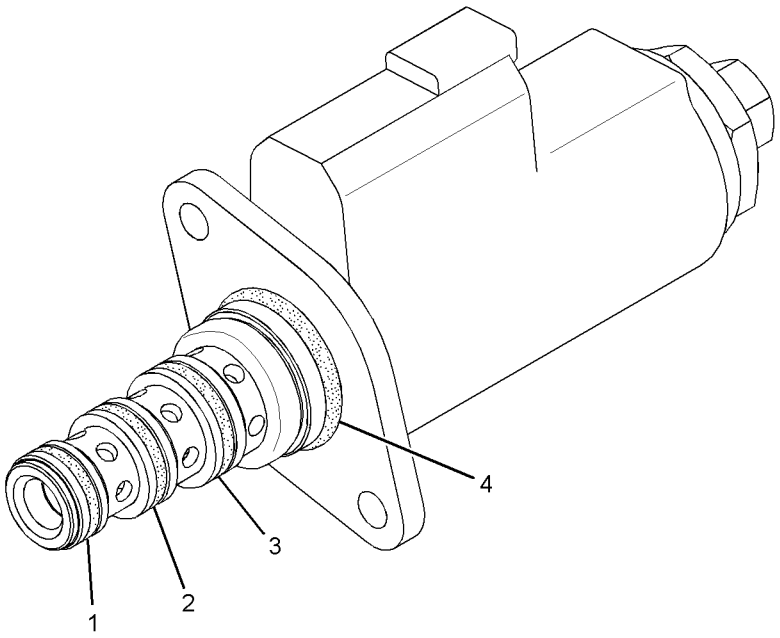

GRAPHIC #1 **<END>** g01456627

HYDRAULIC SYSTEM

323-7558 VALVE GP-SOLENOID & RELIEF—WITH BLOCK

S/N: MYG1-UP; PPN1-UP
PART OF 255-1924 LINES GP-FRONT
AN ATTACHMENT

SMCS-5571 **i03712781**

NOTE	REF NO	GRAPHIC REF	PART NUMBER	QTY	PART NAME 1 2 3 4 5 6 (PRODUCT LEVEL)	SEE PAGE
Y	1	1	**323-7559**	1	VALVE GP-SOLENOID & RELIEF	711

Y-SEPARATE ILLUSTRATION

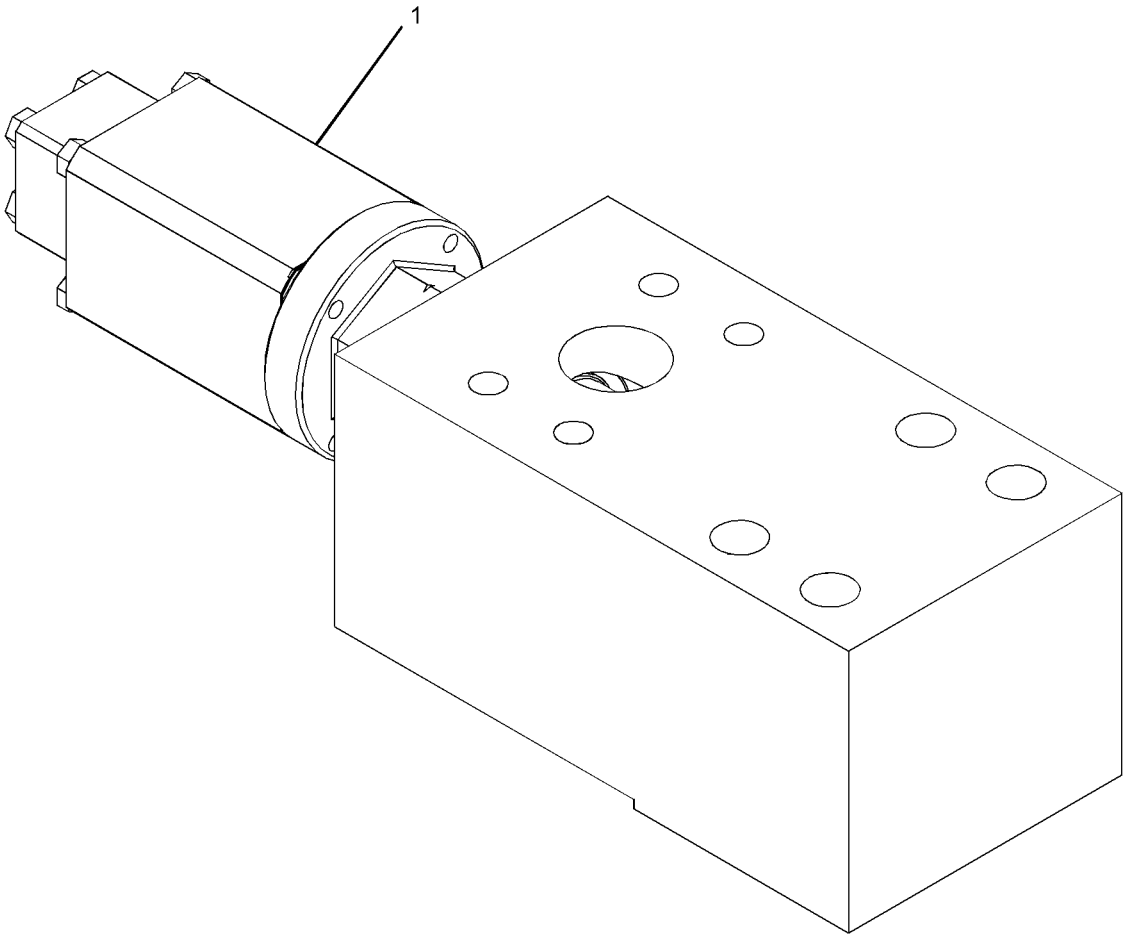

GRAPHIC #1 **<END>** g01586597

HYDRAULIC SYSTEM

323-7559 VALVE GP-SOLENOID & RELIEF

S/N: MYG1-UP; PPN1-UP
PART OF 323-7558 VALVE GP-SOLENOID & RELIEF
AN ATTACHMENT

SMCS-5571 **i03635113**

NOTE	REF NO	GRAPHIC REF	PART NUMBER	QTY	PART NAME 1 2 3 4 5 6 (PRODUCT LEVEL)	SEE PAGE
	1	1	**107-6541**	1	RING-RETAINING	
	2	1	**107-7017**	1	SPRING	
B	3	1	**111-9977**	2	SHIM (0.1-MM THK)	
	4	1	**111-9985**	1	RING	
	5	1	**112-0090**	1	COIL AS	
	6	1	**119-5259**	1	VALVE	
	7	1	**119-5260**	1	ADAPTER	
B	8	1	**119-5262**	2	SHIM (0.2-MM THK)	
B	9	1	**123-2516**	2	SHIM (0.15-MM THK)	
	10	1	**171-0023**	1	SEAT	
B	11	1	**197-0252**	2	SHIM (0.5-MM THK)	
	12	1	**6V-9746**	1	SEAL-O-RING	
	13	1	**323-7772**	1	COLLAR	
	15	1	**085-7538**	1	SEAL-O-RING	
	16	1	**107-7018**	1	RING-BACKUP	
	17	1	**111-9986**	1	SEAL-O-RING	
M	18	1	**114-0489**	4	BOLT (M5X0.8X75-MM)	
	19	1	**3D-2824**	1	SEAL-O-RING	

PARTS SHOWN IN GRAPHIC(S) WITHOUT A REFERENCE NUMBER ARE NOT SERVICED SEPARATELY

B-USE AS REQUIRED
M-METRIC PART

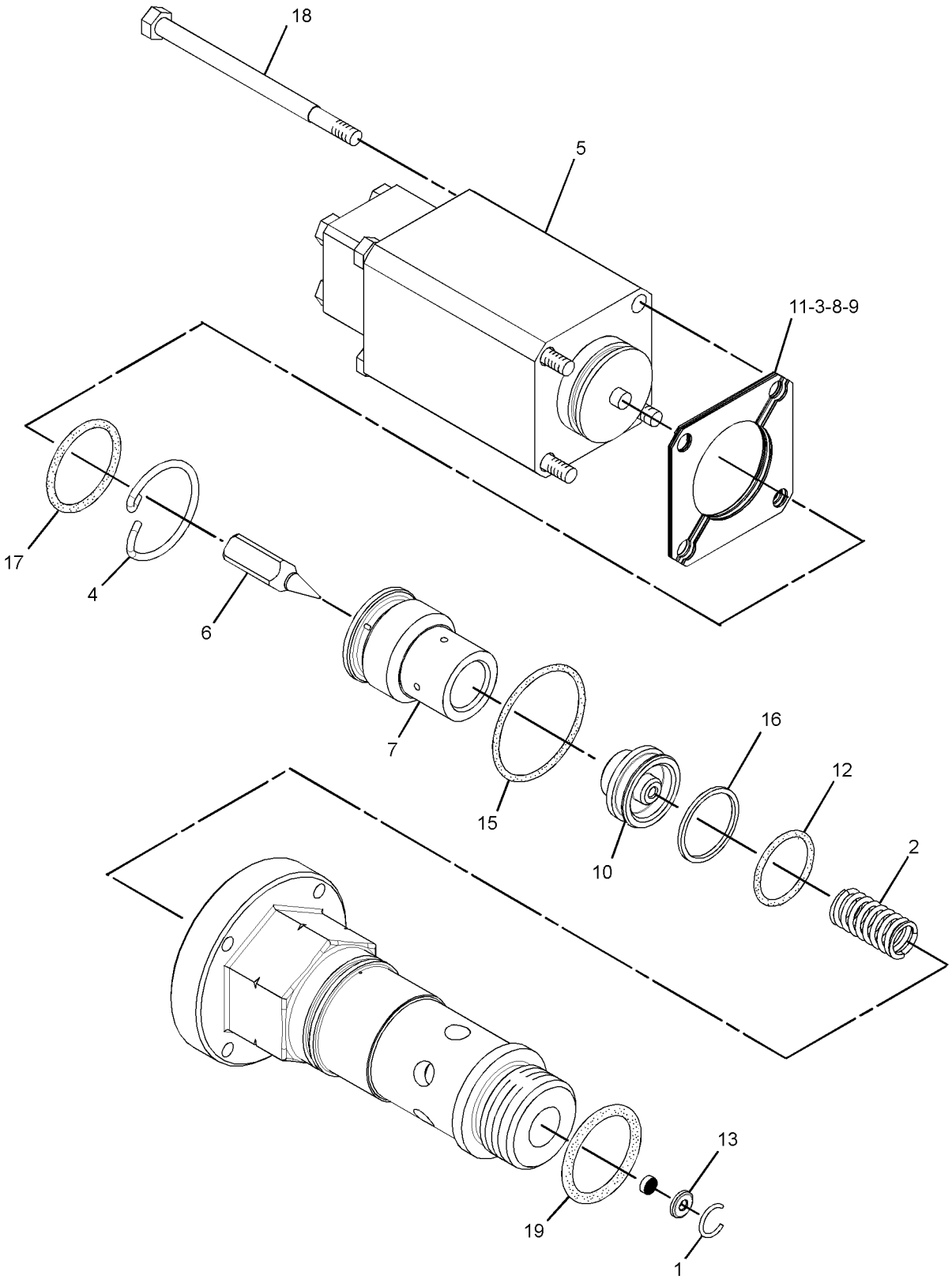

GRAPHIC #1 **<END>** g01950696

HYDRAULIC SYSTEM

158-9085 VALVE GP-SWING CUSHION

S/N: MYG1-UP; PPN1-UP
PART OF 259-0680 VALVE GP-SWING CUSHION
AN ATTACHMENT

SMCS-5480 **i03277652**

NOTE	REF NO	GRAPHIC REF	PART NUMBER	QTY	PART NAME 1 2 3 4 5 6 (PRODUCT LEVEL)	SEE PAGE
	1	1	**8T-6759**	4	PLUG-PIPE	
	2	1	**095-1576**	1	SEAL-O-RING	
	3	1	**173-3536**	2	VALVE GP-RELIEF	
					(EACH INCLUDES)	
		1	**095-1586**	1	SEAL-O-RING	
		1	**095-1785**	1	RING-BACKUP	
	4	1	**095-1698**	2	SEAL-O-RING	

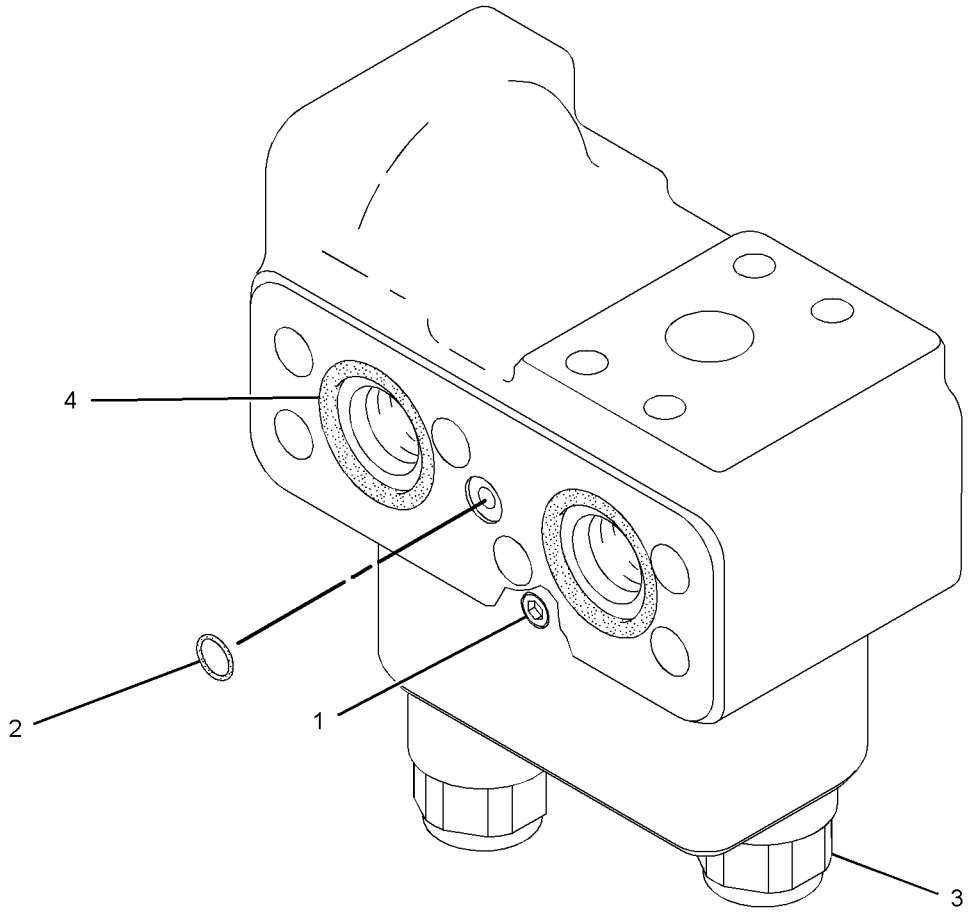

GRAPHIC #1 **<END>** g01668493

HYDRAULIC SYSTEM

259-0680 VALVE GP-SWING CUSHION—FINE SWING

S/N: MYG1-UP; PPN1-UP
PART OF 247-7500 VALVE AR-SWING
AN ATTACHMENT

SMCS-5480 **i02669521**

NOTE	REF NO	GRAPHIC REF	PART NUMBER	QTY	PART NAME 1 2 3 4 5 6 (PRODUCT LEVEL)	SEE PAGE
Y	1	1	**158-9085**	1	VALVE GP-SWING CUSHION (FINE SWING)	713

Y-SEPARATE ILLUSTRATION

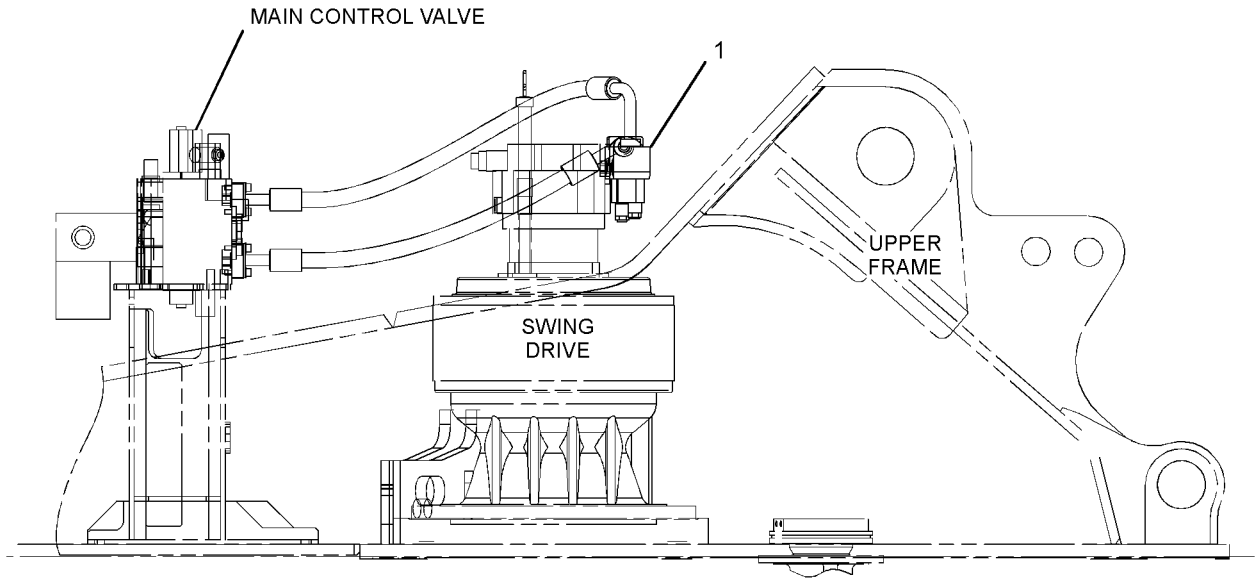

RIGHT SIDE VIEW

GRAPHIC #1 **<END>** g01212011

HYDRAULIC SYSTEM

322-8716 VALVE GP-SWING CUSHION—FINE SWING

S/N: MYG1-UP; PPN1-UP

PART OF 260-7870 LINES GP-FRONT

SMCS-5480 **i03140445**

NOTE	REF NO	GRAPHIC REF	PART NUMBER	QTY	PART NAME 1 2 3 4 5 6 (PRODUCT LEVEL)	SEE PAGE
Y	1	1	**315-4412**	1	VALVE GP-SOLENOID (FINE SWING)	709
	2	1	**173-3536**	2	VALVE GP-RELIEF	
		1	**095-1785**	1	RING-BACKUP	
		1	**095-1586**	1	SEAL-O-RING	
	3	1	**095-1698**	2	SEAL-O-RING	
M	4	1	**8T-0288**	2	BOLT (M5X0.8X12-MM)	
	5	1	**133-6788**	2	ORIFICE	
	6	1	**8T-6759**	6	PLUG-PIPE	
	7	1	**095-1576**	1	SEAL-O-RING	

M-METRIC PART
Y-SEPARATE ILLUSTRATION

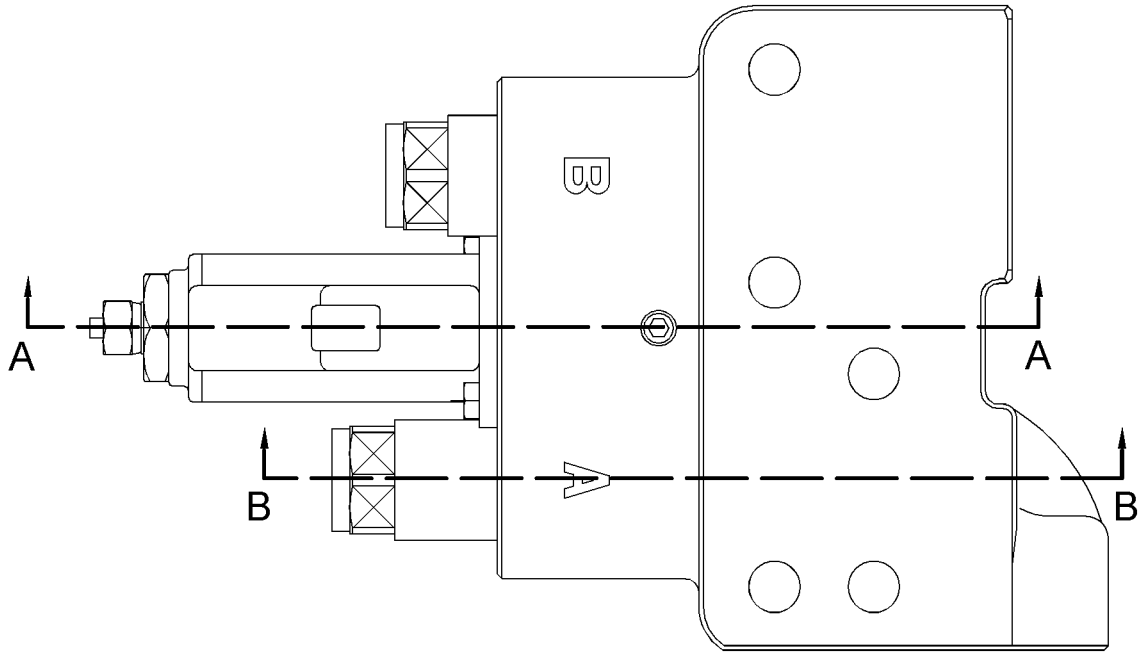

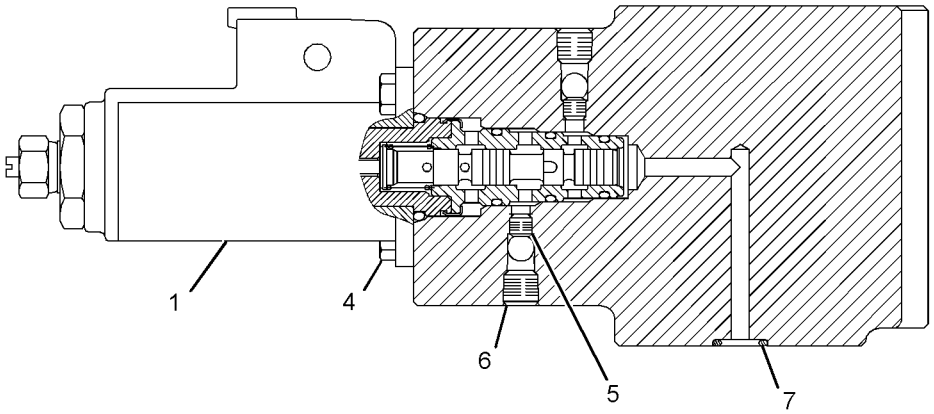

SECTION A-A

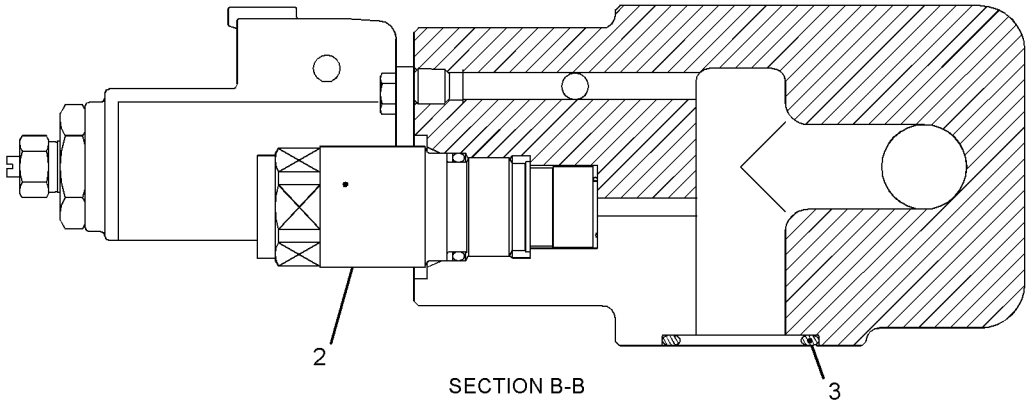

SECTION B-B

GRAPHIC #1 **<END>** g01572033

204-2819 VALVE GP-TRAVEL COUNTERBALANCE

S/N: MYG1-UP; PPN1-UP

PART OF 191-5606 MOTOR & MTG GP-TRAVEL

SMCS-5811 **i03493726**

NOTE	REF NO	GRAPHIC REF	PART NUMBER	QTY	PART NAME 1 2 3 4 5 6 (PRODUCT LEVEL)	SEE PAGE
	1	1	**5P-2568**	2	SEAL-O-RING	
Y	2	1	**204-2755**	2	VALVE GP-RELIEF (CROSSOVER)	685
	3	1	**9S-8004**	2	PLUG	
	4	1	**3J-1907**	2	SEAL-O-RING	
	5	1	**096-1545**	2	WASHER (28.5X37X2-MM THK)	
	6	1	**209-5920**	2	SPRING	
	7	1	**204-2756**	2	COVER	
M	8	1	**8T-7811**	8	BOLT-SOCKET HEAD (M12X1.75X50-MM)	

M-METRIC PART
Y-SEPARATE ILLUSTRATION

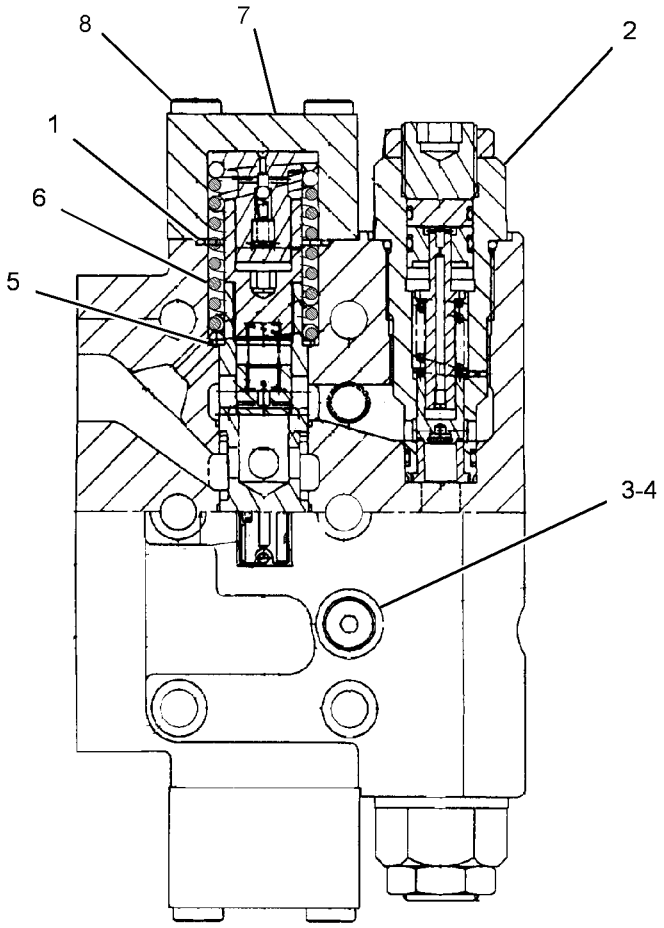

GRAPHIC #1 **<END>** g01830497

IMPLEMENTS

290-1843 BOOM AR-1 PIECE LONG—HEAVY-DUTY

S/N: MYG1-UP; PPN1-UP
6.5-M (21.3-FT)
PART OF 340-9472, 340-9473, 340-9474, 340-9475, 340-9476, 340-9477 OPTION AR-LINKAGE
AN ATTACHMENT

SMCS-6501 **i03130701**

NOTE	PART NUMBER	QTY	PART NAME 1 2 3 4 5 6 (PRODUCT LEVEL)	SEE PAGE
Y	*290-9236*	1	BOOM GP	719
Y	*289-8018*	1	CYLINDER & LINES GP-BOOM (LH)	413
Y	*289-8019*	1	CYLINDER & LINES GP-BOOM (RH)	413
Y	*289-8029*	1	CYLINDER & LINES GP-STICK	414
Y	*238-1584*	1	LIGHTING GP-FLOOD (BOOM)	188
Y	*260-7871*	1	LINES GP-BOOM	480
Y	*192-8320*	1	LINES GP-GREASE	725

Y-SEPARATE ILLUSTRATION

<END>

314-3615 BOOM AR-1 PIECE LONG—ACCUGRADE READY

S/N: MYG1-UP; PPN1-UP
6.5-M (21.3-FT)
PART OF 345-3787 LINKAGE AR-FRONT
FOR USE WITH 290-1829—PAGE 737, 290-1830—PAGE 728, 278-3932—PAGE 306
AN ATTACHMENT

SMCS-6501 **i03126944**

NOTE	PART NUMBER	QTY	PART NAME 1 2 3 4 5 6 (PRODUCT LEVEL)	SEE PAGE
Y	*324-1093*	1	BOOM GP	723
Y	*289-8018*	1	CYLINDER & LINES GP-BOOM (LH)	413
Y	*289-8019*	1	CYLINDER & LINES GP-BOOM (RH)	413
Y	*289-8029*	1	CYLINDER & LINES GP-STICK	414
Y	*238-1584*	1	LIGHTING GP-FLOOD (BOOM)	188
Y	*260-7871*	1	LINES GP-BOOM	480
Y	*192-8320*	1	LINES GP-GREASE	725

Y-SEPARATE ILLUSTRATION

<END>

290-1818 BOOM AR-1 PIECE SHORT

S/N: MYG1-UP; PPN1-UP
6.18-M (20.3-FT)
PART OF 340-9478, 340-9479, 340-9480, 340-9481 OPTION AR-LINKAGE
AN ATTACHMENT

SMCS-6501 **i02763679**

NOTE	PART NUMBER	QTY	PART NAME 1 2 3 4 5 6 (PRODUCT LEVEL)	SEE PAGE
Y	*290-9248*	1	BOOM GP	721
Y	*289-8018*	1	CYLINDER & LINES GP-BOOM (LH)	413
Y	*289-8019*	1	CYLINDER & LINES GP-BOOM (RH)	413
Y	*289-8029*	1	CYLINDER & LINES GP-STICK	414
Y	*238-1586*	1	LIGHTING GP-FLOOD (MASS BOOM)	189
Y	*239-1626*	1	LINES GP-BOOM	478
Y	*201-2816*	1	LINES GP-GREASE (GREASE)	726

Y-SEPARATE ILLUSTRATION

<END>

IMPLEMENTS

290-9236 BOOM GP

S/N: MYG1-UP; PPN1-UP
6.5-M (21.3-FT)
PART OF 290-1843 BOOM AR-1 PIECE LONG
AN ATTACHMENT

SMCS-6301, 6302, 6460, 6501, 6516, 6521, 6535, 6536 **i03130901**

NOTE	REF NO	GRAPHIC REF	PART NUMBER	QTY	PART NAME 1 2 3 4 5 6 (PRODUCT LEVEL)	SEE PAGE
	1	1	**093-0074**	1	SHIM (1-MM THK)	
	2	1	**093-0349**	1	WASHER (22X60X6-MM THK)	
	3	1	**166-1489**	2	SHIM (2-MM THK)	
	4	1	**192-8321**	1	PIN	
	5	1	**201-2771**	1	WASHER (26X90X8-MM THK)	
	6	1	**251-2547**	1	PIN AS	
	7	1	**290-9237**	1	BOOM & BEARING AS	
	7A	1	**236-8561**	2	BEARING-SLEEVE	
	8	1	**093-0366**	1	SPACER (93X130X12-MM THK)	
	9	1	**103-5246**	1	SPACER (123X150X14-MM THK)	
	10	1	**113-2963**	1	PIN AS	
B	11	1	**147-3957**	1	SHIM (0.5-MM THK)	
	12	1	**166-1490**	2	SHIM (2-MM THK)	
	13	1	**166-1498**	2	SEAL-LIP TYPE	
	14	1	**4I-4978**	2	SPACER (113X150X8-MM THK)	
	15	1	**4I-5005**	2	PLATE	
M	16	1	**7X-2573**	1	BOLT (M24X3X40-MM)	
	17	1	**8T-4123**	1	WASHER (22X35X3.5-MM THK)	
	18	1	**8T-4167**	1	WASHER-HARD (26X44X4-MM THK)	
M	19	1	**8T-4779**	6	BOLT (M16X2X35-MM)	
M	20	1	**8T-4780**	1	BOLT (M20X2.5X30-MM)	
	21	1	**9X-8257**	6	WASHER (17.5X30X3.5-MM THK)	

B-USE AS REQUIRED
M-METRIC PART

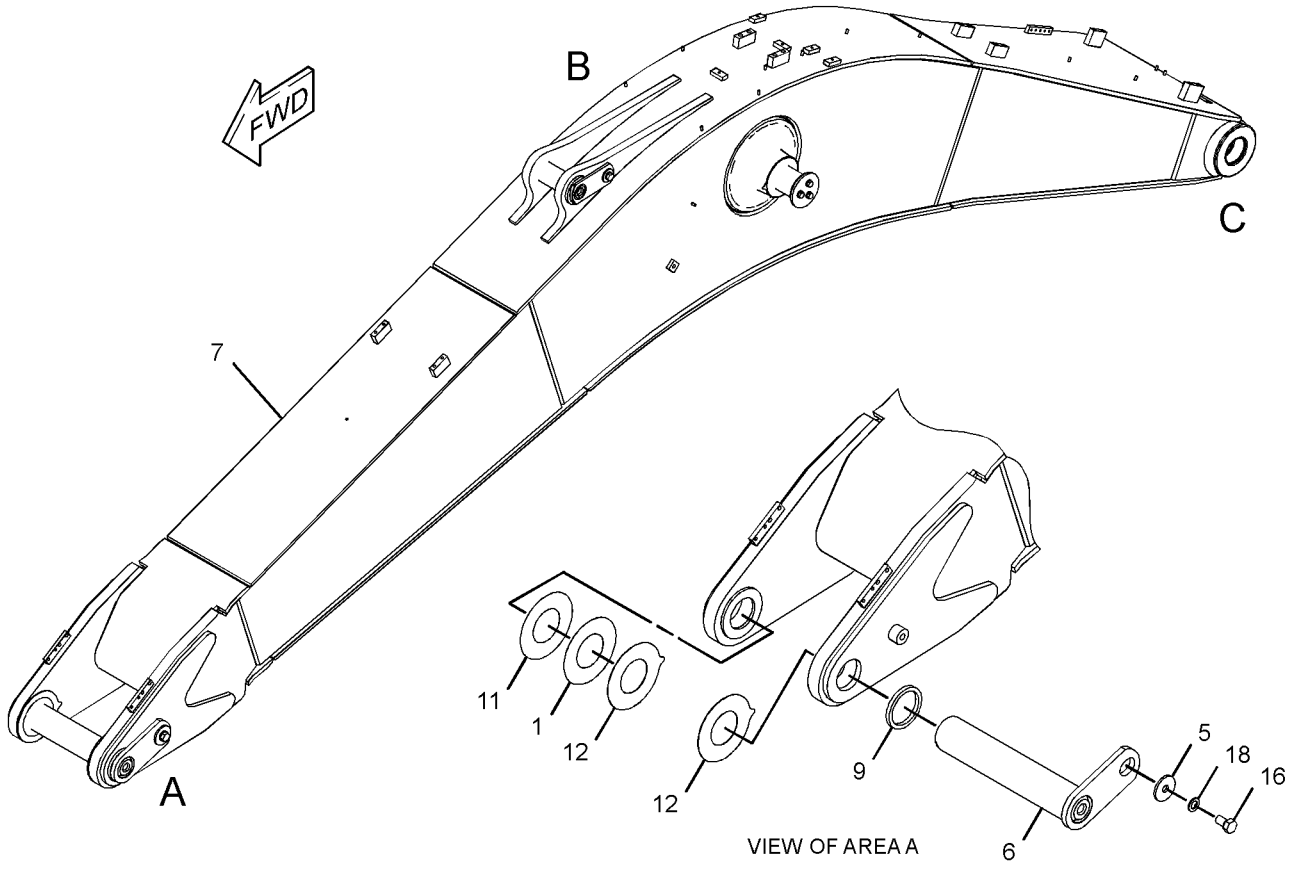

VIEW OF AREA A

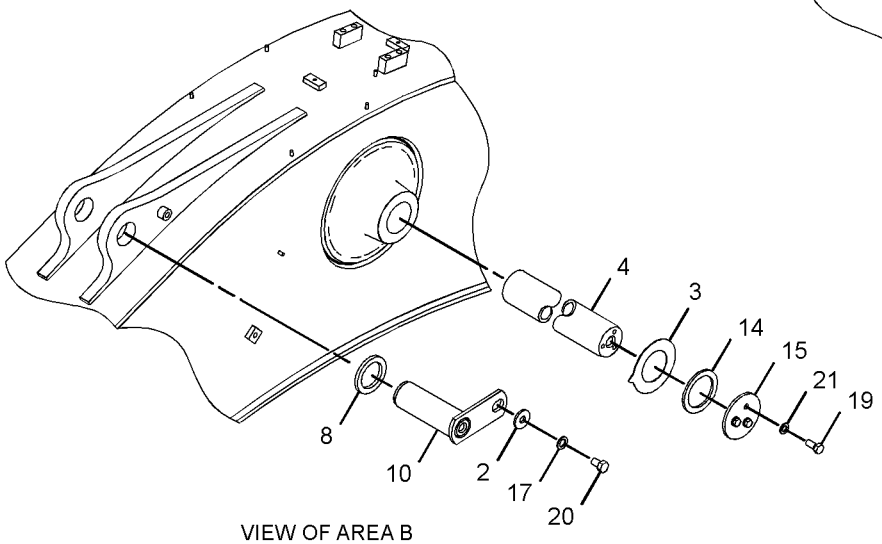

VIEW OF AREA B

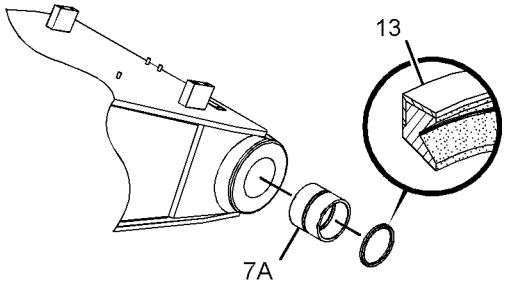

VIEW OF AREA C

GRAPHIC #1 **<END>** g01620059

IMPLEMENTS

290-9248 BOOM GP

S/N: MYG1-UP; PPN1-UP
6.18-M (20.3-FT)
PART OF 290-1818 BOOM AR-1 PIECE SHORT
AN ATTACHMENT

SMCS-6301, 6302, 6460, 6501, 6516, 6521, 6535, 6536 **i02766640**

NOTE	REF NO	GRAPHIC REF	PART NUMBER	QTY	PART NAME 1 2 3 4 5 6 (PRODUCT LEVEL)	SEE PAGE
	1	1	**093-0074**	1	SHIM (1-MM THK)	
	2	1	**093-0349**	1	WASHER (22X60X6-MM THK)	
	3	1	**166-1489**	2	SHIM (2-MM THK)	
	4	1	**192-8321**	1	PIN	
	5	1	**201-2771**	1	WASHER (26X90X8-MM THK)	
	6	1	**251-2547**	1	PIN AS	
	7	1	**290-9249**	1	BOOM & BEARING AS	
	7A	1	**236-8561**	2	BEARING-SLEEVE	
	8	1	**093-0366**	1	SPACER (93X130X12-MM THK)	
	9	1	**103-5246**	1	SPACER (123X150X14-MM THK)	
	10	1	**113-2963**	1	PIN AS	
B	11	1	**147-3957**	1	SHIM (0.5-MM THK)	
	12	1	**166-1490**	2	SHIM (2-MM THK)	
	13	1	**166-1498**	2	SEAL-LIP TYPE	
	14	1	**4I-4978**	2	SPACER (113X150X8-MM THK)	
	15	1	**4I-5005**	2	PLATE	
M	16	1	**7X-2573**	1	BOLT (M24X3X40-MM)	
	17	1	**8T-4123**	1	WASHER (22X35X3.5-MM THK)	
	18	1	**8T-4167**	1	WASHER-HARD (26X44X4-MM THK)	
M	19	1	**8T-4779**	6	BOLT (M16X2X35-MM)	
M	20	1	**8T-4780**	1	BOLT (M20X2.5X30-MM)	
	21	1	**9X-8257**	6	WASHER (17.5X30X3.5-MM THK)	

B-USE AS REQUIRED
M-METRIC PART

290-9248 **BOOM GP** *(contd.)* **i02766640**

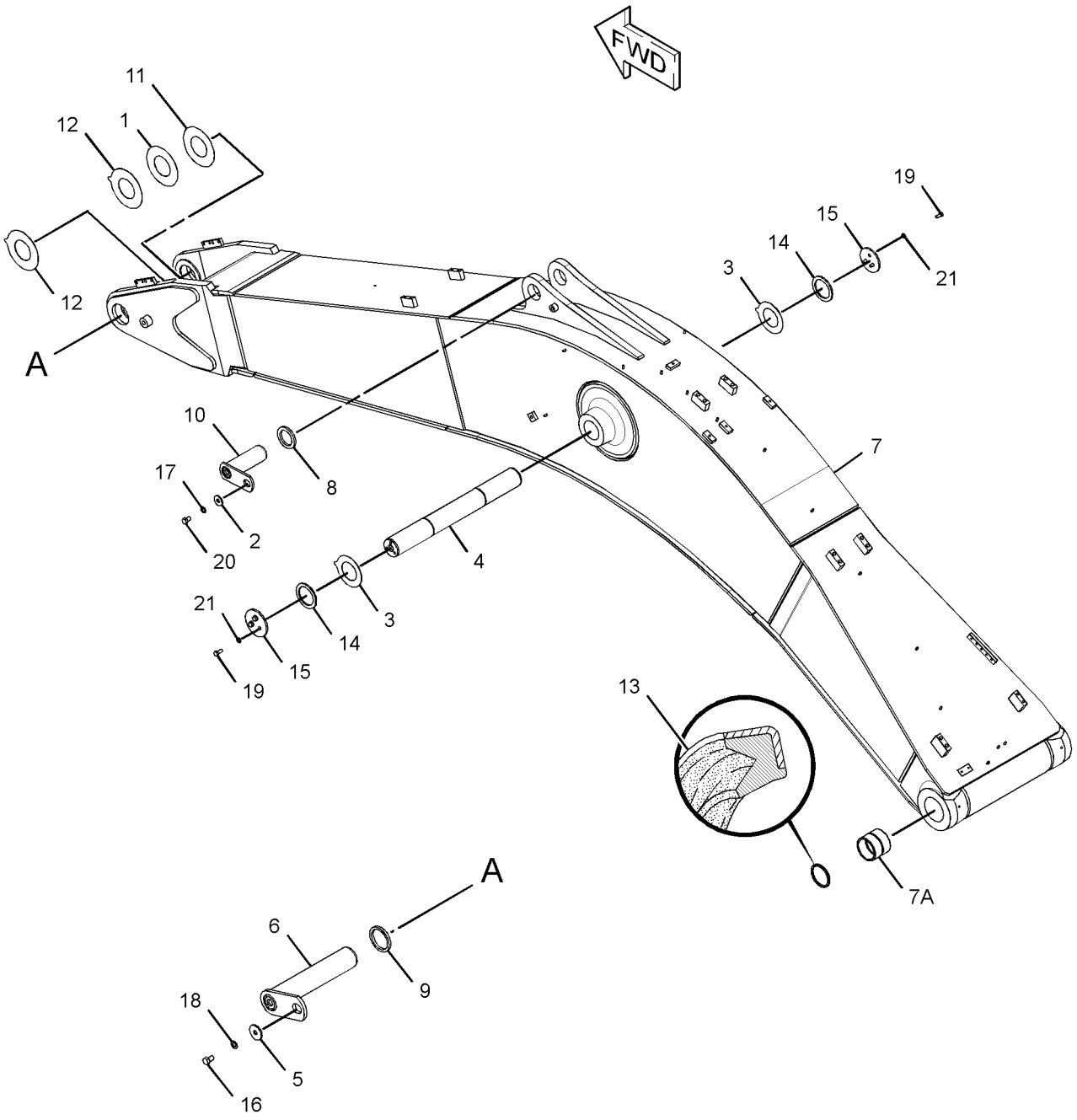

GRAPHIC #1 **<END>** g01394486

324-1093 BOOM GP–ACCUGRADE READY

S/N: MYG1-UP; PPN1-UP
6.5-M (21.3-FT)
PART OF 314-3615 BOOM AR-1 PIECE LONG
AN ATTACHMENT

SMCS-6301, 6302, 6460, 6501, 6516, 6521, 6535, 6536 **i03126945**

NOTE	REF NO	GRAPHIC REF	PART NUMBER	QTY	PART NAME 1 2 3 4 5 6 (PRODUCT LEVEL)	SEE PAGE
	1	1	**093-0074**	1	SHIM (1-MM THK)	
	2	1	**093-0349**	1	WASHER (22X60X6-MM THK)	
	3	1	**166-1489**	2	SHIM (2-MM THK)	
	4	1	**192-8321**	1	PIN	
	5	1	**201-2771**	1	WASHER (26X90X8-MM THK)	
	6	1	**251-2547**	1	PIN AS	
	7	1	**324-1094**	1	BOOM & BEARING AS	
	7A	1	**236-8561**	2	BEARING-SLEEVE	
	8	1	**093-0366**	1	SPACER (93X130X12-MM THK)	
	9	1	**103-5246**	1	SPACER (123X150X14-MM THK)	
	10	1	**113-2963**	1	PIN AS	
B	11	1	**147-3957**	1	SHIM (0.5-MM THK)	
	12	1	**166-1490**	2	SHIM (2-MM THK)	
	13	1	**166-1498**	2	SEAL-LIP TYPE	
	14	1	**4I-4978**	2	SPACER (113X150X8-MM THK)	
	15	1	**4I-5005**	2	PLATE	
M	16	1	**7X-2573**	1	BOLT (M24X3X40-MM)	
	17	1	**8T-4123**	1	WASHER (22X35X3.5-MM THK)	
	18	1	**8T-4167**	1	WASHER-HARD (26X44X4-MM THK)	
M	19	1	**8T-4779**	6	BOLT (M16X2X35-MM)	
M	20	1	**8T-4780**	1	BOLT (M20X2.5X30-MM)	
	21	1	**9X-8257**	6	WASHER (17.5X30X3.5-MM THK)	

B-USE AS REQUIRED
M-METRIC PART

324-1093 **BOOM GP** *(contd.)* **i03126945**

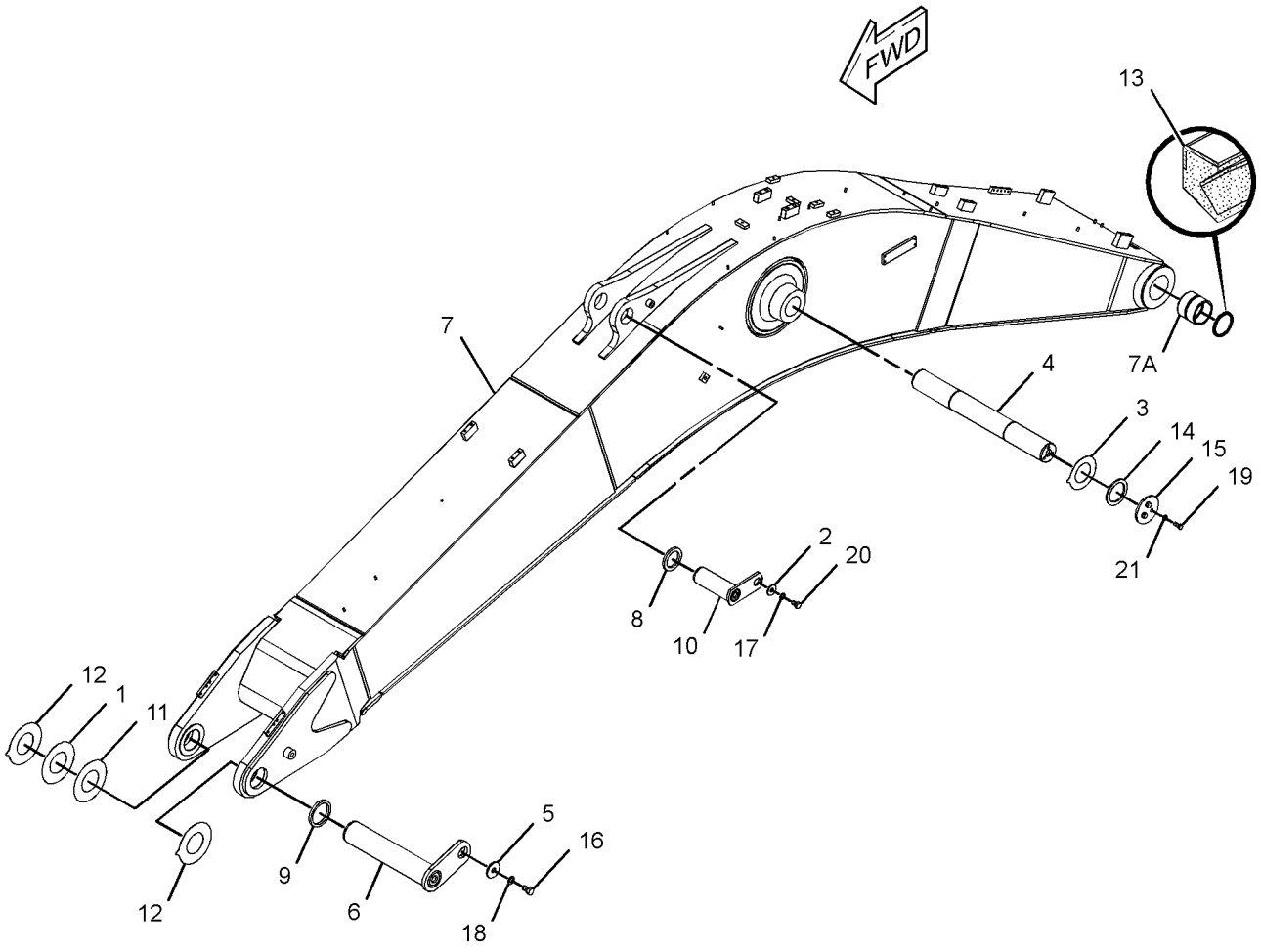

GRAPHIC #1 **<END>** g01371850

192-8320 LINES GP-GREASE–BOOM

S/N: MYG1-UP; PPN1-UP
PART OF 290-1843, 314-3615 BOOM AR-1 PIECE LONG
FOR USE WITH 6.5-M (21.3-FT) BOOM
AN ATTACHMENT

SMCS-7510 **i01714776**

NOTE	REF NO	GRAPHIC REF	PART NUMBER	QTY	PART NAME 1 2 3 4 5 6 (PRODUCT LEVEL)	SEE PAGE
	1	1	**3B-8489**	5	FITTING-GREASE	
	2	1	**5K-9243**	2	ELBOW-FLARED	
	3	1	**134-9137**	1	HOSE AS	
	4	1	**141-3538**	1	HOSE AS	
	5	1	**166-1579**	4	CLIP	
I	6	1	**195-5320**	1	HOSE AS	
	7	1	**212-2829**	1	TUBE AS	
	8	1	**212-2830**	1	TUBE AS	
	9	1	**033-8248**	5	CLIP	
	10	1	**6L-3616**	2	CONNECTOR	
	11	1	**8M-2772**	2	CLIP	
	12	1	**8T-4121**	11	WASHER-HARD (11X21X2.5-MM THK)	
M	13	1	**8T-4133**	6	NUT (M10X1.5-THD)	
M	14	1	**8T-4191**	5	BOLT (M10X1.5X16-MM)	

I-REFER TO HYDRAULIC INFORMATION SYSTEM
M-METRIC PART

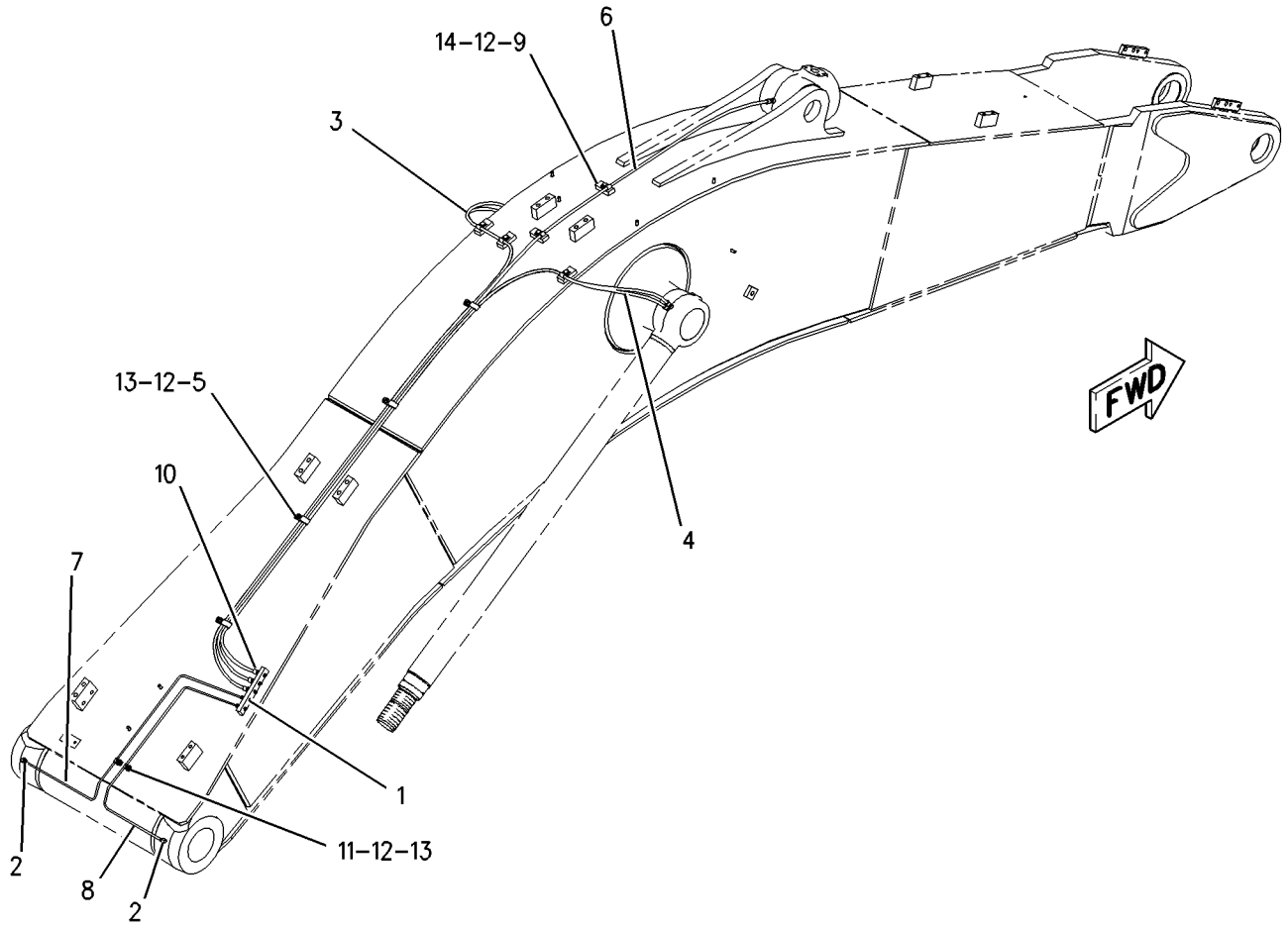

GRAPHIC #1 **<END>** g00885150

201-2816 LINES GP-GREASE–BOOM

S/N: MYG1-UP; PPN1-UP
PART OF 290-1818 BOOM AR-1 PIECE SHORT
FOR USE WITH 6.2-M (20.3-FT) BOOM
AN ATTACHMENT

SMCS-7510 **i01715269**

NOTE	REF NO	GRAPHIC REF	PART NUMBER	QTY	PART NAME 1 2 3 4 5 6 (PRODUCT LEVEL)	SEE PAGE
	1	1	**3B-8489**	5	FITTING-GREASE	
	2	1	**5K-9243**	2	ELBOW-FLARED	
	3	1	**130-4410**	1	HOSE AS	
	4	1	**141-3538**	1	HOSE AS	
I	5	1	**154-0690**	1	HOSE AS	
	6	1	**166-1579**	3	CLIP	
	7	1	**212-2829**	1	TUBE AS	
	8	1	**212-2830**	1	TUBE AS	
	9	1	**033-8248**	4	CLIP	
	10	1	**6L-3616**	2	CONNECTOR	
	11	1	**8M-2772**	2	CLIP	
	12	1	**8T-4121**	9	WASHER-HARD (11X21X2.5-MM THK)	
M	13	1	**8T-4133**	5	NUT (M10X1.5-THD)	
M	14	1	**8T-4191**	4	BOLT (M10X1.5X16-MM)	

I-REFER TO HYDRAULIC INFORMATION SYSTEM
M-METRIC PART

201-2816 **LINES GP-GREASE** *(contd.)* **i01715269**

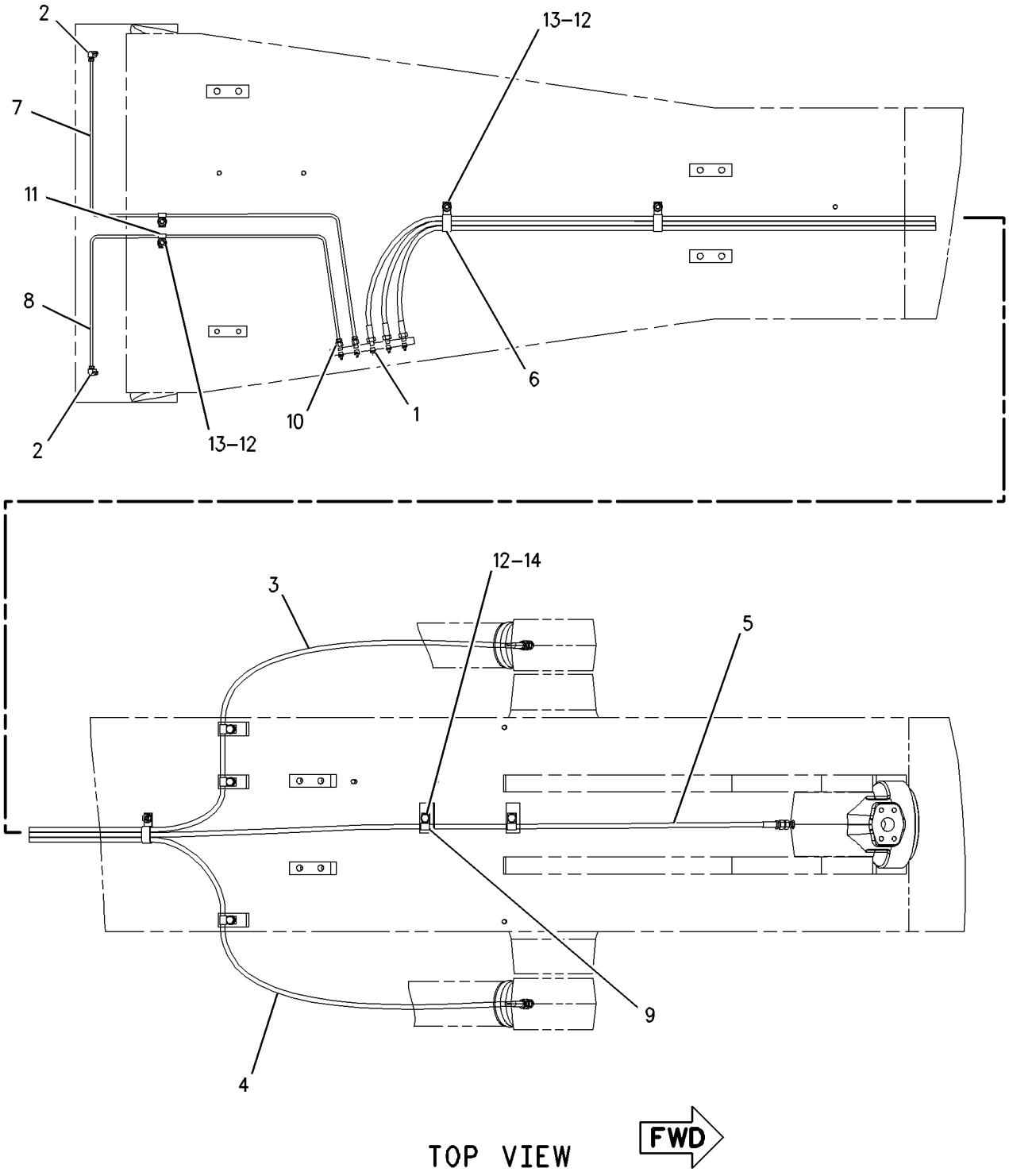

GRAPHIC #1 **<END>** g00885089

IMPLEMENTS

290-1825 LINKAGE AR-BUCKET—DB-FAMILY, WITH LIFTING EYE

S/N: MYG1-UP; PPN1-UP
PART OF 340-9472, 340-9473, 340-9474, 340-9475, 340-9476, 340-9477 OPTION AR-LINKAGE
AN ATTACHMENT

SMCS-6513 **i02721681**

NOTE	PART NUMBER	QTY	PART NAME 1 2 3 4 5 6 (PRODUCT LEVEL)	SEE PAGE
Y	*289-8010*	1	CYLINDER & LINES GP-BUCKET	413
Y	*236-8415*	1	LINKAGE GP-BUCKET	730

Y-SEPARATE ILLUSTRATION

<END>

290-1826 LINKAGE AR-BUCKET—TB1-FAMILY

S/N: MYG1-UP; PPN1-UP
PART OF 340-9478, 340-9479, 340-9480, 340-9481 OPTION AR-LINKAGE
AN ATTACHMENT

SMCS-6513 **i02759802**

NOTE	PART NUMBER	QTY	PART NAME 1 2 3 4 5 6 (PRODUCT LEVEL)	SEE PAGE
Y	**289-8039**	1	CYLINDER & LINES GP-BUCKET	413
Y	*251-2651*	1	LINKAGE GP-BUCKET (TB-FAMILY, WITH LIFTING EYE)	732

Y-SEPARATE ILLUSTRATION

<END>

290-1830 LINKAGE AR-BUCKET—DB-FAMILY, WITH LIFTING EYE

S/N: MYG1-UP; PPN1-UP
3.9-M (12.8-FT). ACCUGRADE READY
PART OF 345-3787 LINKAGE AR-FRONT
AN ATTACHMENT

SMCS-6513 **i03005772**

NOTE	PART NUMBER	QTY	PART NAME 1 2 3 4 5 6 (PRODUCT LEVEL)	SEE PAGE
Y	*289-8010*	1	CYLINDER & LINES GP-BUCKET	413
Y	*282-4566*	1	LINKAGE GP-BUCKET	734

Y-SEPARATE ILLUSTRATION

<END>

IMPLEMENTS

345-3787 LINKAGE AR-FRONT

S/N: MYG1-UP; PPN1-UP

AN ATTACHMENT

SMCS-6107 **i03676004**

NOTE	PART NUMBER	QTY	PART NAME 1 2 3 4 5 6 (PRODUCT LEVEL)	SEE PAGE
Y	*314-3615*	1	BOOM AR-1 PIECE LONG (ACCUGRADE READY)	718
Y	*278-3932*	1	COUNTERWEIGHT & MOUNTING GP	306
Y	*346-4603*	1	GRADE CONTROL AR	181
Y	*237-3191*	1	LINES GP-AUXILIARY HYDRAULIC (BOOM, HIGH PRESSURE)	460
Y	*237-3192*	1	LINES GP-AUXILIARY HYDRAULIC (BOOM, MEDIUM PRESSURE)	462
Y	*253-6611*	1	LINES GP-AUXILIARY HYDRAULIC (STICK, HIGH PRESSURE)	471
Y	*262-3147*	1	LINES GP-AUXILIARY HYDRAULIC (STICK, MEDIUM PRESSURE)	472
Y	*290-1830*	1	LINKAGE AR-BUCKET (DB-FAMILY, WITH LIFTING EYE)	728
Y	*290-1829*	1	STICK AR-HOE	737

Y-SEPARATE ILLUSTRATION

<END>

236-8415 LINKAGE GP-BUCKET—DB-FAMILY, WITH LIFTING EYE

S/N: MYG1-UP; PPN1-UP

PART OF 290-1825 LINKAGE AR-BUCKET

AN ATTACHMENT

SMCS-6513 **i02524032**

NOTE	REF NO	GRAPHIC REF	PART NUMBER	QTY	PART NAME 1 2 3 4 5 6 (PRODUCT LEVEL)	SEE PAGE
	1	1	**3B-8489**	5	FITTING-GREASE	
	2	1	**093-0349**	1	WASHER (22X60X6-MM THK)	
	3	1	**166-1496**	4	SEAL-LIP TYPE	
	4	1	**189-3922**	1	PIN	
	5	1	**201-2771**	1	WASHER (26X90X8-MM THK)	
M	6	1	**201-2836**	1	BOLT (M24X3X200-MM)	
	7	1	**241-7129**	1	LINK	
	8	1	**241-7150**	1	LINK AS	
	9	1	**251-2552**	1	PIN AS	
	10	1	**251-2557**	1	PIN	
	11	1	**251-2558**	1	PIN AS	
	12	1	**254-3025**	1	LINK & BEARING AS	
	12A	1	**241-7280**	2	BEARING-SLEEVE	
	12B	1	**228-5615**	2	BEARING-SLEEVE	
	13	1	**093-1345**	2	SEAL-O-RING	
	14	1	**093-1349**	2	SEAL-O-RING	
	15	1	**166-1488**	2	SHIM (2-MM THK)	
	16	1	**166-1495**	2	SEAL-LIP TYPE	
M	17	1	**186-5649**	1	BOLT (M20X2.5X160-MM)	
M	18	1	**8T-4001**	2	NUT (M24X3-THD)	
	19	1	**8T-4123**	1	WASHER (22X35X3.5-MM THK)	
M	20	1	**8T-4131**	2	NUT (M20X2.5-THD)	
	21	1	**8T-4167**	1	WASHER-HARD (26X44X4-MM THK)	
M	22	1	**8T-5379**	1	BOLT (M24X3X50-MM)	
M	23	1	**8T-5460**	1	BOLT (M20X2.5X40-MM)	

M-METRIC PART

236-8415 **LINKAGE GP-BUCKET** *(contd.)* **i02524032**

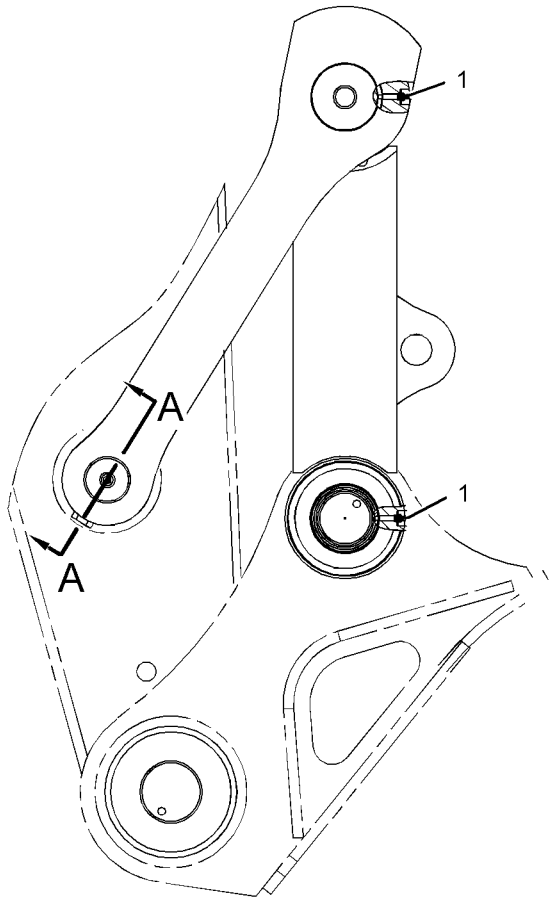

RIGHT SIDE VIEW

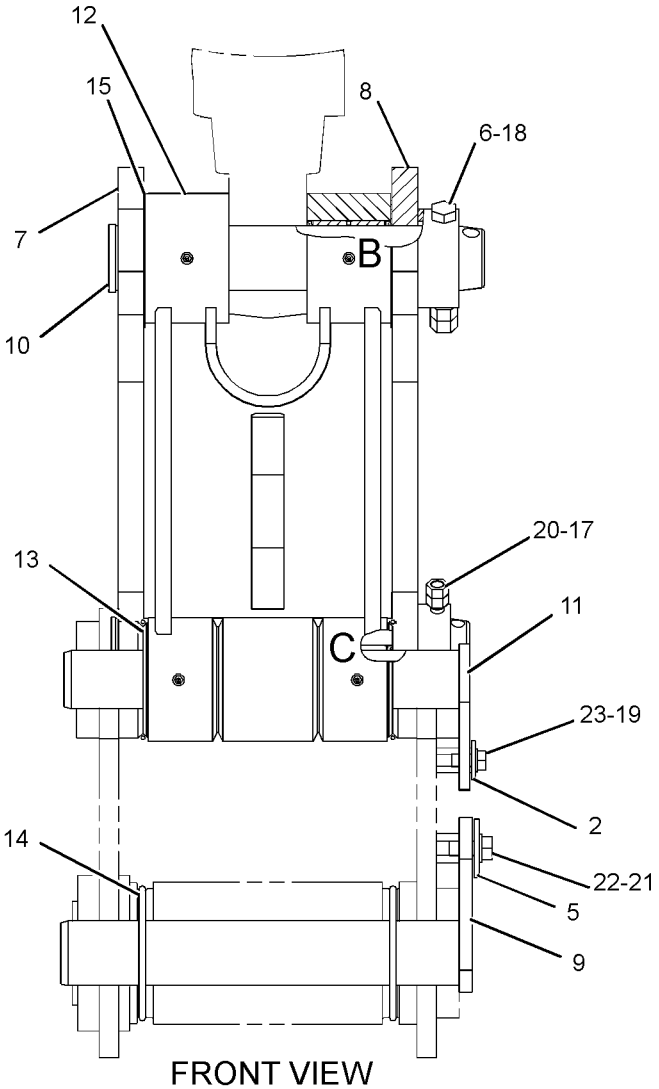

FRONT VIEW

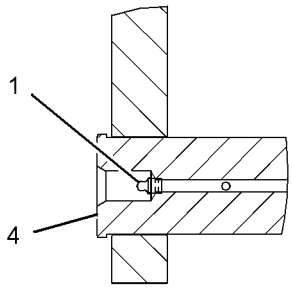

SECTION A-A

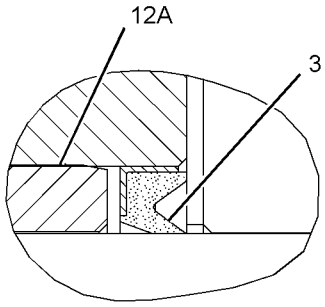

VIEW OF AREA B

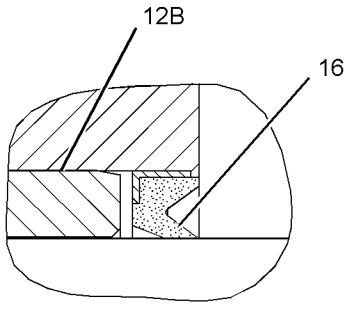

VIEW OF AREA C

GRAPHIC #1 **<END>** g01262517

251-2651 LINKAGE GP-BUCKET—TB-FAMILY, WITH LIFTING EYE

S/N: MYG1-UP; PPN1-UP
PART OF 290-1826 LINKAGE AR-BUCKET
AN ATTACHMENT

SMCS-6513 **i03645786**

NOTE	REF NO	GRAPHIC REF	PART NUMBER	QTY	PART NAME 1 2 3 4 5 6 (PRODUCT LEVEL)	SEE PAGE
	1	1	**3B-8489**	4	FITTING-GREASE	
	2	1	**5B-0651**	1	FITTING-STRAIGHT	
	3	1	**093-1347**	2	SEAL-O-RING	
	4	1	**341-5272**	1	PLATE	
	5	1	**201-2771**	2	WASHER (26X90X8-MM THK)	
	6	1	**341-5135**	1	PLATE	
	7	1	**235-7626**	1	LINK AS	
	8	1	**235-7627**	1	LINK	
	9	1	**235-7628**	1	PIN AS	
	10	1	**235-7636**	1	PIN AS	
	11	1	**235-7639**	1	PIN AS	
	12	1	**235-7642**	1	PIN AS	
	13	1	**251-2652**	1	LINK & BEARING AS	
	13A	1	**7Y-2397**	2	BEARING-SLEEVE	
	13B	1	**087-5548**	2	BEARING-SLEEVE	
	14	1	**9X-4597**	6	SEAL-LIP TYPE	
	15	1	**093-1345**	2	SEAL-O-RING	
M	16	1	**8T-4140**	6	BOLT (M16X2X60-MM)	
	17	1	**8T-4167**	2	WASHER-HARD (26X44X4-MM THK)	
M	18	1	**8T-5379**	2	BOLT (M24X3X50-MM)	
	19	1	**7X-0513**	6	WASHER-HARD (17X30X5-MM THK)	

M-METRIC PART

251-2651 **LINKAGE GP-BUCKET** *(contd.)* **i03645786**

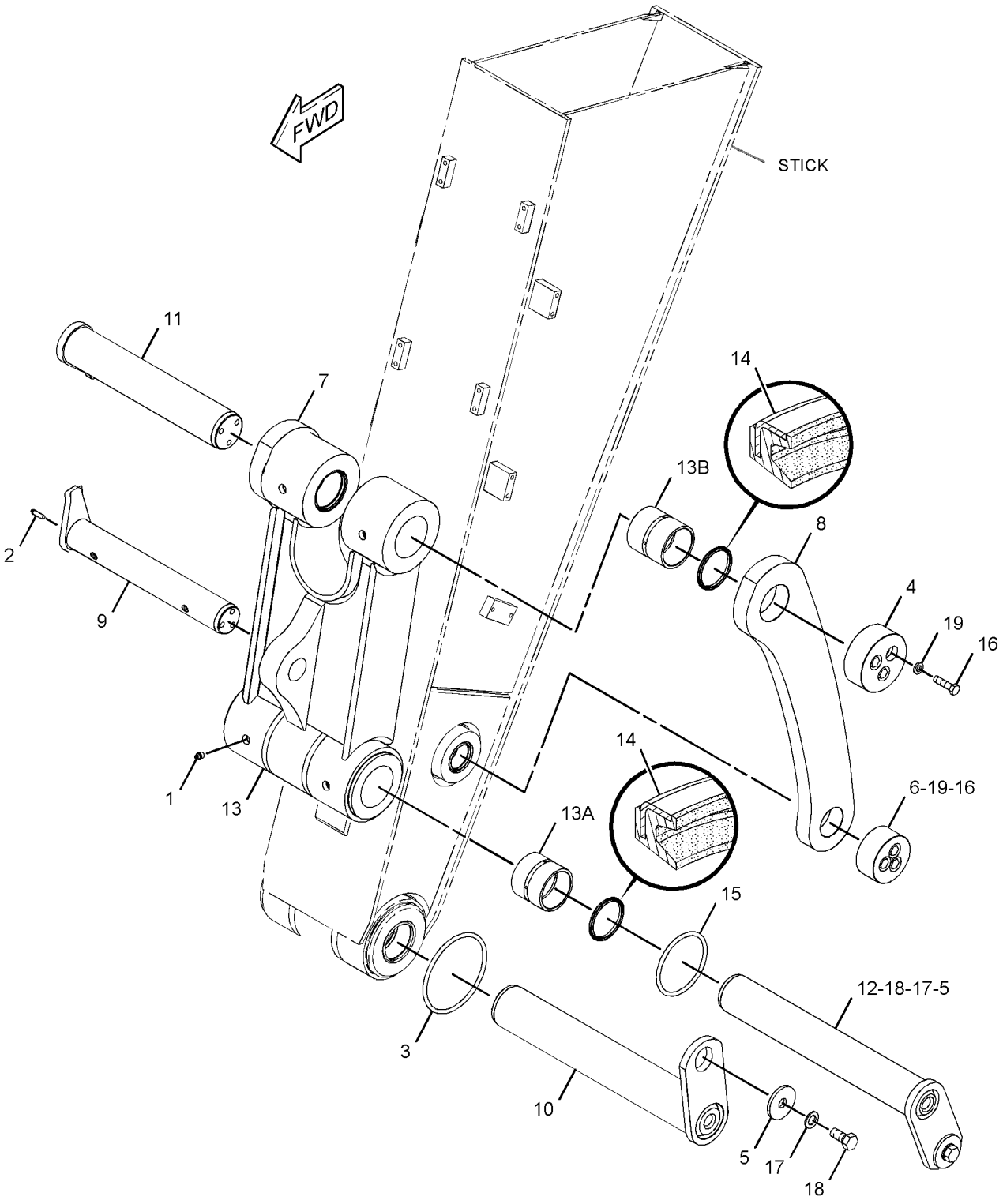

GRAPHIC #1 **<END>** g01955054

282-4566 LINKAGE GP-BUCKET—DB-FAMILY, ACCUGRADE READY

S/N: MYG1-UP; PPN1-UP
PART OF 290-1830 LINKAGE AR-BUCKET
AN ATTACHMENT

SMCS-6513 **i03005915**

NOTE	REF NO	GRAPHIC REF	PART NUMBER	QTY	PART NAME 1 2 3 4 5 6 (PRODUCT LEVEL)	SEE PAGE
	1	1	**3B-8489**	5	FITTING-GREASE	
	2	1	**093-0349**	1	WASHER (22X60X6-MM THK)	
	3	1	**166-1496**	4	SEAL-LIP TYPE	
	4	1	**189-3922**	1	PIN	
	5	1	**201-2771**	1	WASHER (26X90X8-MM THK)	
M	6	1	**201-2836**	1	BOLT (M24X3X200-MM)	
	7	1	**241-7129**	1	LINK	
	8	1	**282-4567**	1	LINK AS-BUCKET	
	9	1	**251-2552**	1	PIN AS	
	10	1	**251-2557**	1	PIN	
	11	1	**251-2558**	1	PIN AS	
	12	1	**254-3025**	1	LINK & BEARING AS	
		1	**228-5615**	2	BEARING-SLEEVE	
		1	**241-7280**	2	BEARING-SLEEVE	
	13	1	**093-1345**	2	SEAL-O-RING	
	14	1	**093-1349**	2	SEAL-O-RING	
	15	1	**166-1488**	2	SHIM (2-MM THK)	
	16	1	**166-1495**	2	SEAL-LIP TYPE	
M	17	1	**186-5649**	1	BOLT (M20X2.5X160-MM)	
M	18	1	**8T-4001**	2	NUT (M24X3-THD)	
	19	1	**8T-4123**	1	WASHER (22X35X3.5-MM THK)	
M	20	1	**8T-4131**	2	NUT (M20X2.5-THD)	
	21	1	**8T-4167**	1	WASHER-HARD (26X44X4-MM THK)	
M	22	1	**8T-5379**	1	BOLT (M24X3X50-MM)	
M	23	1	**8T-5460**	1	BOLT (M20X2.5X40-MM)	

M-METRIC PART

282-4566 **LINKAGE GP-BUCKET** *(contd.)* **i03005915**

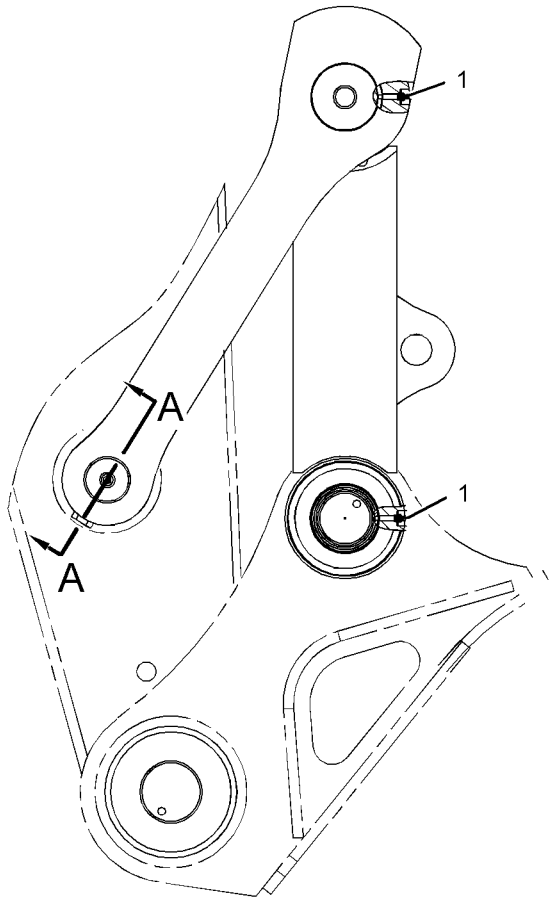

RIGHT SIDE VIEW

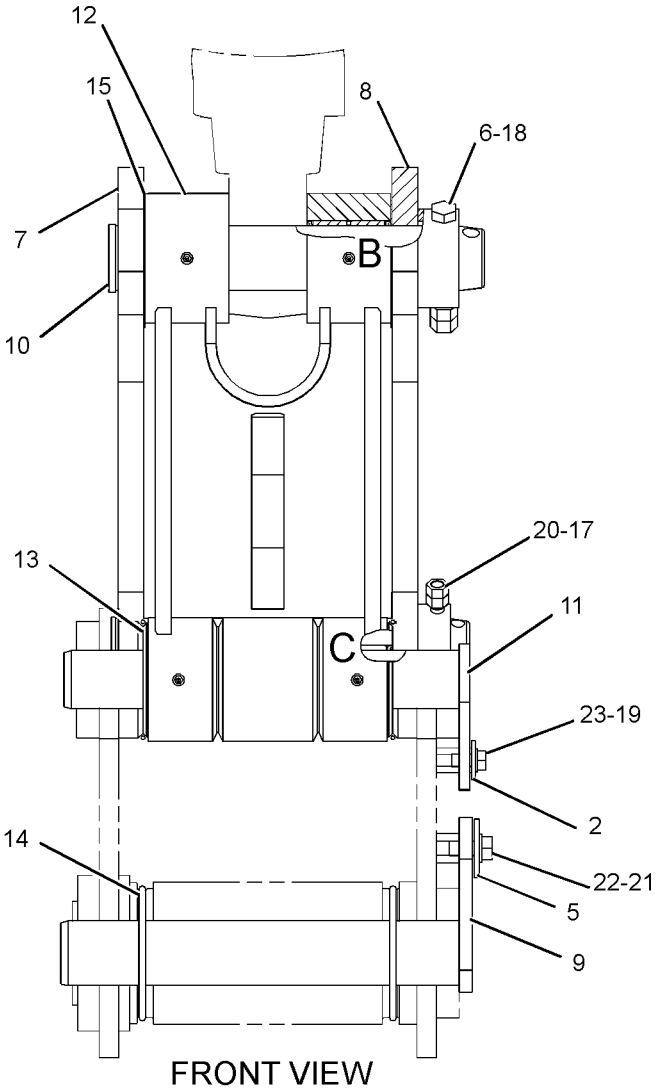

FRONT VIEW

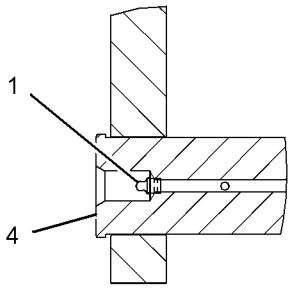

SECTION A-A

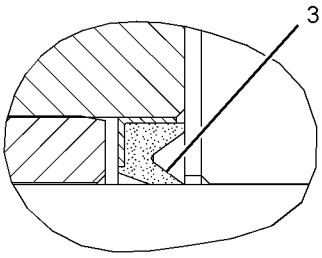

VIEW OF AREA B

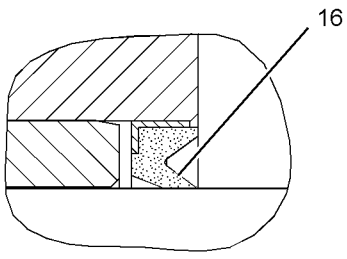

VIEW OF AREA C

GRAPHIC #1 **<END>** g01330313

IMPLEMENTS

290-1820 STICK AR-HOE

S/N: MYG1-UP; PPN1-UP
3.2-M (10.5-FT). DB-FAMILY
PART OF 340-9472, 340-9473, 340-9474 OPTION AR-LINKAGE
AN ATTACHMENT

SMCS-6502 **i02759367**

NOTE	PART NUMBER	QTY	PART NAME 1 2 3 4 5 6 (PRODUCT LEVEL)	SEE PAGE
Y	*113-6853*	1	LINES GP-STICK (BUCKET CYLINDER)	577
Y	*290-9263*	1	STICK GP-HOE	738

Y-SEPARATE ILLUSTRATION

<END>

290-1821 STICK AR-HOE

S/N: MYG1-UP; PPN1-UP
2.8-M (9.2-FT). DB-FAMILY
PART OF 340-9475, 340-9476, 340-9477 OPTION AR-LINKAGE
AN ATTACHMENT

SMCS-6502 **i02759371**

NOTE	PART NUMBER	QTY	PART NAME 1 2 3 4 5 6 (PRODUCT LEVEL)	SEE PAGE
Y	*192-6901*	1	LINES GP-STICK (BUCKET CYLINDER)	579
Y	*290-9275*	1	STICK GP-HOE	739

Y-SEPARATE ILLUSTRATION

<END>

290-1823 STICK AR-HOE

S/N: MYG1-UP; PPN1-UP
2.55-M (8.4-FT). TB1-FAMILY
PART OF 340-9478, 340-9479 OPTION AR-LINKAGE
AN ATTACHMENT

SMCS-6502 **i02763602**

NOTE	PART NUMBER	QTY	PART NAME 1 2 3 4 5 6 (PRODUCT LEVEL)	SEE PAGE
Y	*113-6859*	1	LINES GP-STICK (BUCKET CYLINDER)	578
Y	*290-9287*	1	STICK GP-HOE	741

Y-SEPARATE ILLUSTRATION

<END>

290-1824 STICK AR-HOE

S/N: MYG1-UP; PPN1-UP
2.15-M (7.05-FT). TB1-FAMILY
PART OF 340-9480, 340-9481 OPTION AR-LINKAGE
AN ATTACHMENT

SMCS-6502 **i02763544**

NOTE	PART NUMBER	QTY	PART NAME 1 2 3 4 5 6 (PRODUCT LEVEL)	SEE PAGE
Y	*260-8254*	1	LINES GP-STICK (BUCKET CYLINDER)	580
Y	*290-9318*	1	STICK GP-HOE	743

Y-SEPARATE ILLUSTRATION

<END>

290-1829 STICK AR-HOE—REACH, ACCUGRADE READY

S/N: MYG1-UP; PPN1-UP
3.2-M (10.5-FT). DB-FAMILY
PART OF 345-3787 LINKAGE AR-FRONT
FOR USE WITH 290-1830—PAGE 728, OR, 278-3932—PAGE 306
AN ATTACHMENT

SMCS-6502 **i03008995**

NOTE	PART NUMBER	QTY	PART NAME 1 2 3 4 5 6 (PRODUCT LEVEL)	SEE PAGE
Y	*113-6853*	1	LINES GP-STICK (BUCKET CYLINDER)	577
Y	*294-1507*	1	STICK GP-HOE	744

Y-SEPARATE ILLUSTRATION

<END>

IMPLEMENTS

290-9263 STICK GP-HOE

S/N: MYG1-UP; PPN1-UP
3.2-M (10.5-FT)
PART OF 290-1820 STICK AR-HOE
AN ATTACHMENT

SMCS-6502 **i03257590**

NOTE	REF NO	GRAPHIC REF	PART NUMBER	QTY	PART NAME 1 2 3 4 5 6 (PRODUCT LEVEL)	SEE PAGE
	1	1	**3B-8489**	3	FITTING-GREASE	
	2	1	**5I-3299**	1	PIN AS	
	3	1	**093-0349**	2	WASHER (22X60X6-MM THK)	
	4	1	**093-0363**	1	SPACER (83X120X12-MM THK)	
	5	1	**166-1496**	2	SEAL-LIP TYPE	
	6	1	**235-7679**	2	SEAL-LIP TYPE	
	7	1	**290-9264**	1	STICK & BEARING AS	
	7A	1	**228-5617**	2	BEARING-SLEEVE	
	7B	1	**236-8561**	2	BEARING-SLEEVE	
	7C	1	**241-7231**	2	BEARING-SLEEVE	
	8	1	**093-0366**	1	SPACER (93X130X12-MM THK)	
	9	1	**113-2963**	1	PIN AS	
	10	1	**166-1487**	2	SHIM (2-MM THK)	
	11	1	**166-1498**	2	SEAL-LIP TYPE	
	12	1	**8T-4123**	2	WASHER (22X35X3.5-MM THK)	
M	13	1	**8T-4780**	2	BOLT (M20X2.5X30-MM)	

M-METRIC PART

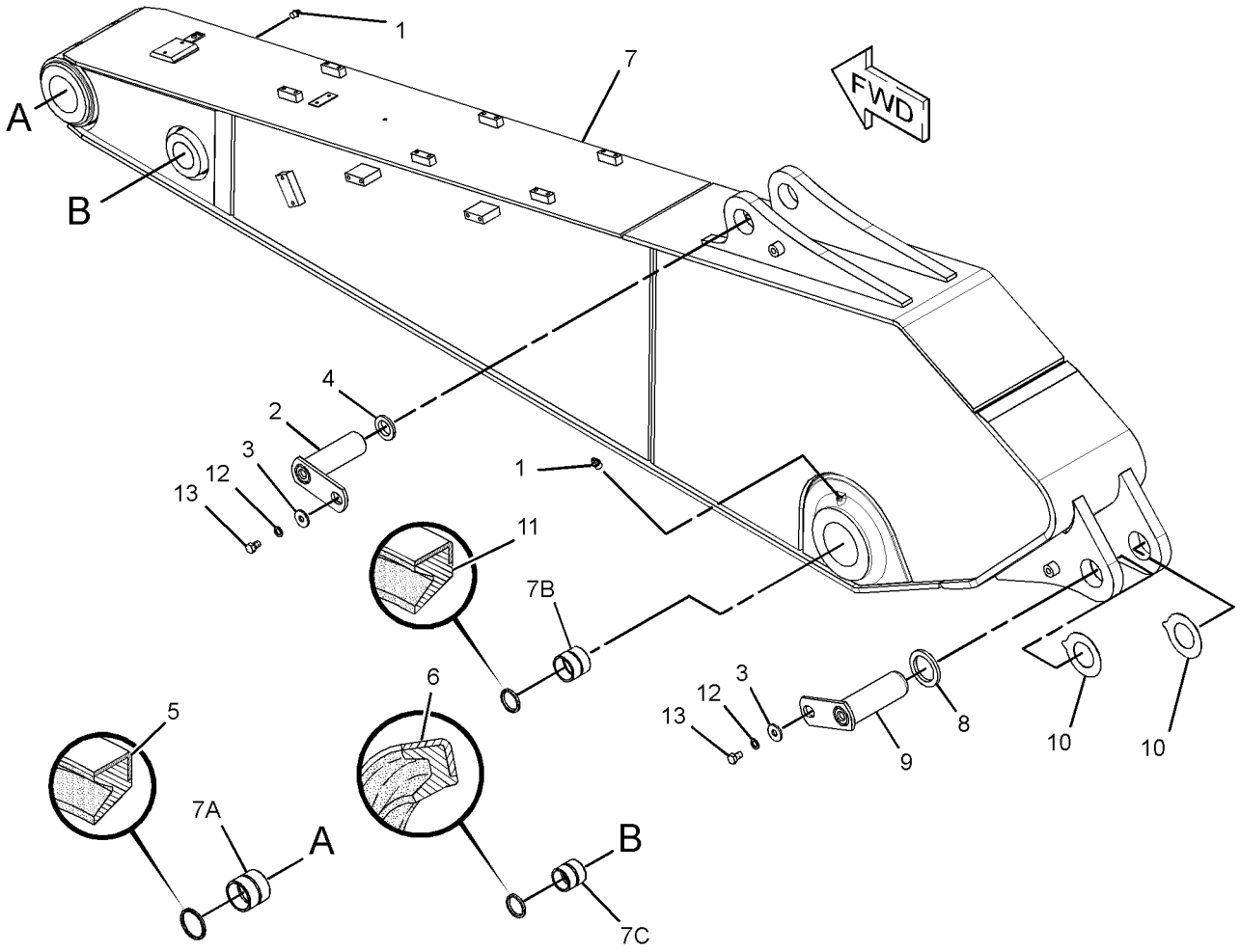

GRAPHIC #1 **<END>** g01658715

290-9275 STICK GP-HOE

S/N: MYG1-UP; PPN1-UP
2.8-M (9.2-FT)
PART OF 290-1821 STICK AR-HOE
AN ATTACHMENT

SMCS-6502 **i02759370**

NOTE	REF NO	GRAPHIC REF	PART NUMBER	QTY	PART NAME 1 2 3 4 5 6 (PRODUCT LEVEL)	SEE PAGE
	1	1	**3B-8489**	3	FITTING-GREASE	
	2	1	**5I-3299**	1	PIN AS	
	3	1	**093-0349**	2	WASHER (22X60X6-MM THK)	
	4	1	**093-0363**	1	SPACER (83X120X12-MM THK)	
	5	1	**166-1496**	2	SEAL-LIP TYPE	
	6	1	**235-7679**	2	SEAL-LIP TYPE	
	7	1	**290-9276**	1	STICK & BEARING AS	
	7A	1	**241-7231**	2	BEARING-SLEEVE	
	7B	1	**236-8561**	2	BEARING-SLEEVE	
	7C	1	**228-5617**	2	BEARING-SLEEVE	
	8	1	**093-0366**	1	SPACER (93X130X12-MM THK)	
	9	1	**113-2963**	1	PIN AS	
	10	1	**166-1487**	2	SHIM (2-MM THK)	
	11	1	**166-1498**	2	SEAL-LIP TYPE	
	12	1	**8T-4123**	2	WASHER (22X35X3.5-MM THK)	
M	13	1	**8T-4780**	2	BOLT (M20X2.5X30-MM)	

M-METRIC PART

290-9275 **STICK GP-HOE** *(contd.)* **i02759370**

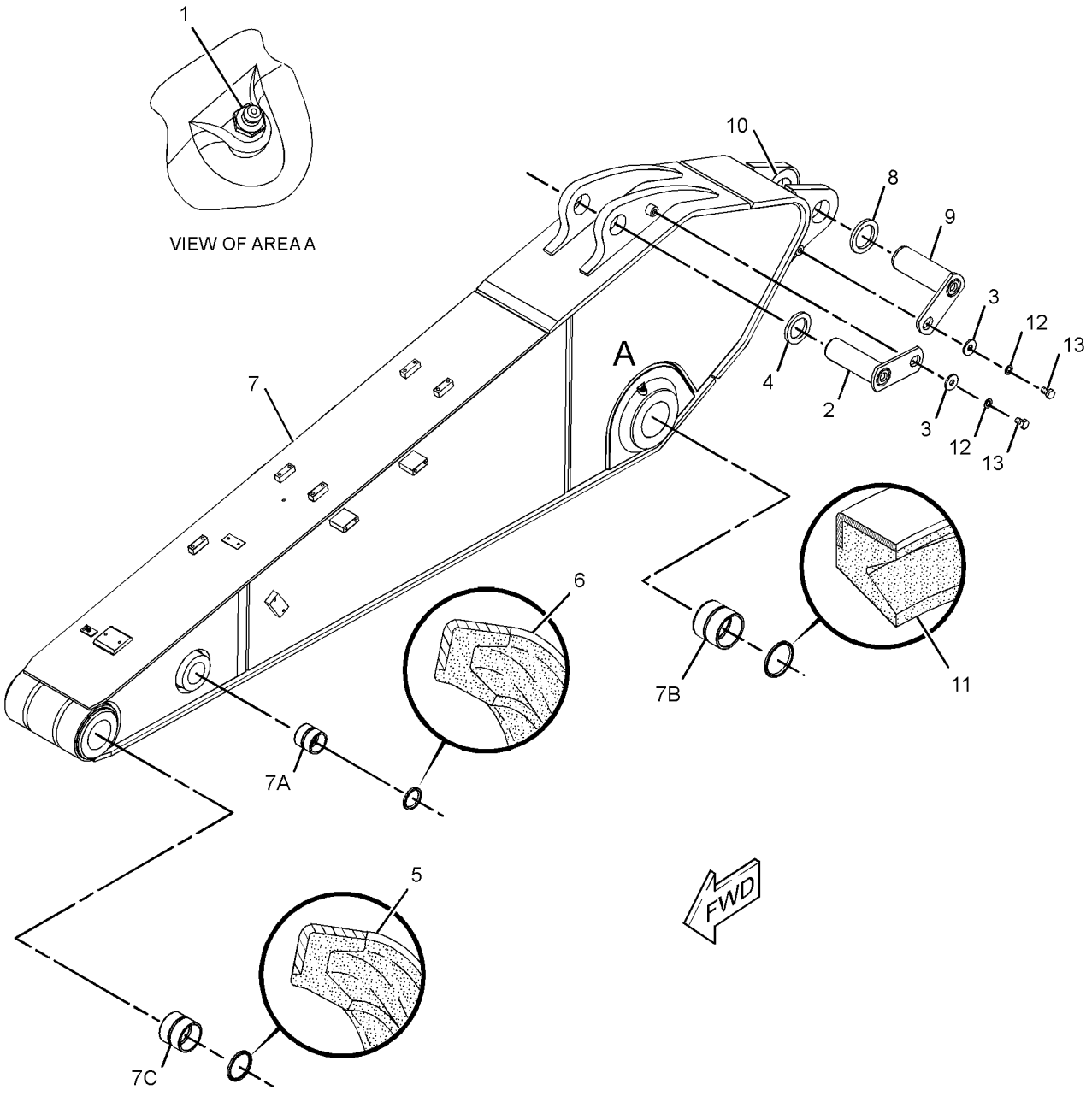

GRAPHIC #1 **<END>** g01198647

290-9287 STICK GP-HOE

S/N: MYG1-UP; PPN1-UP
2.55-M (8.4-FT). TB1-FAMILY
PART OF 290-1823 STICK AR-HOE
AN ATTACHMENT

SMCS-6502 **i03645470**

NOTE	REF NO	GRAPHIC REF	PART NUMBER	QTY	PART NAME 1 2 3 4 5 6 (PRODUCT LEVEL)	SEE PAGE
	1	1	**3B-8489**	4	FITTING-GREASE	
	2	1	**9X-4598**	2	SEAL-LIP TYPE	
	3	1	**093-0349**	2	WASHER (22X60X6-MM THK)	
	4	1	**148-3386**	2	PIN AS	
	5	1	**201-3003**	2	SPACER (92X160X7-MM THK)	
	6	1	**290-9288**	1	STICK & BEARING AS	
	6A	1	**4I-6897**	2	BEARING-SLEEVE	
	6B	1	**228-5619**	2	BEARING-SLEEVE	
	6C	1	**236-8561**	2	BEARING-SLEEVE	
	7	1	**093-0366**	2	SPACER (93X130X12-MM THK)	
	8	1	**166-1487**	2	SHIM (2-MM THK)	
	9	1	**166-1494**	2	SEAL-LIP TYPE	
	10	1	**166-1498**	2	SEAL-LIP TYPE	
	11	1	**8T-4123**	2	WASHER (22X35X3.5-MM THK)	
M	12	1	**8T-4780**	2	BOLT (M20X2.5X30-MM)	

M-METRIC PART

290-9287 **STICK GP-HOE** *(contd.)* **i03645470**

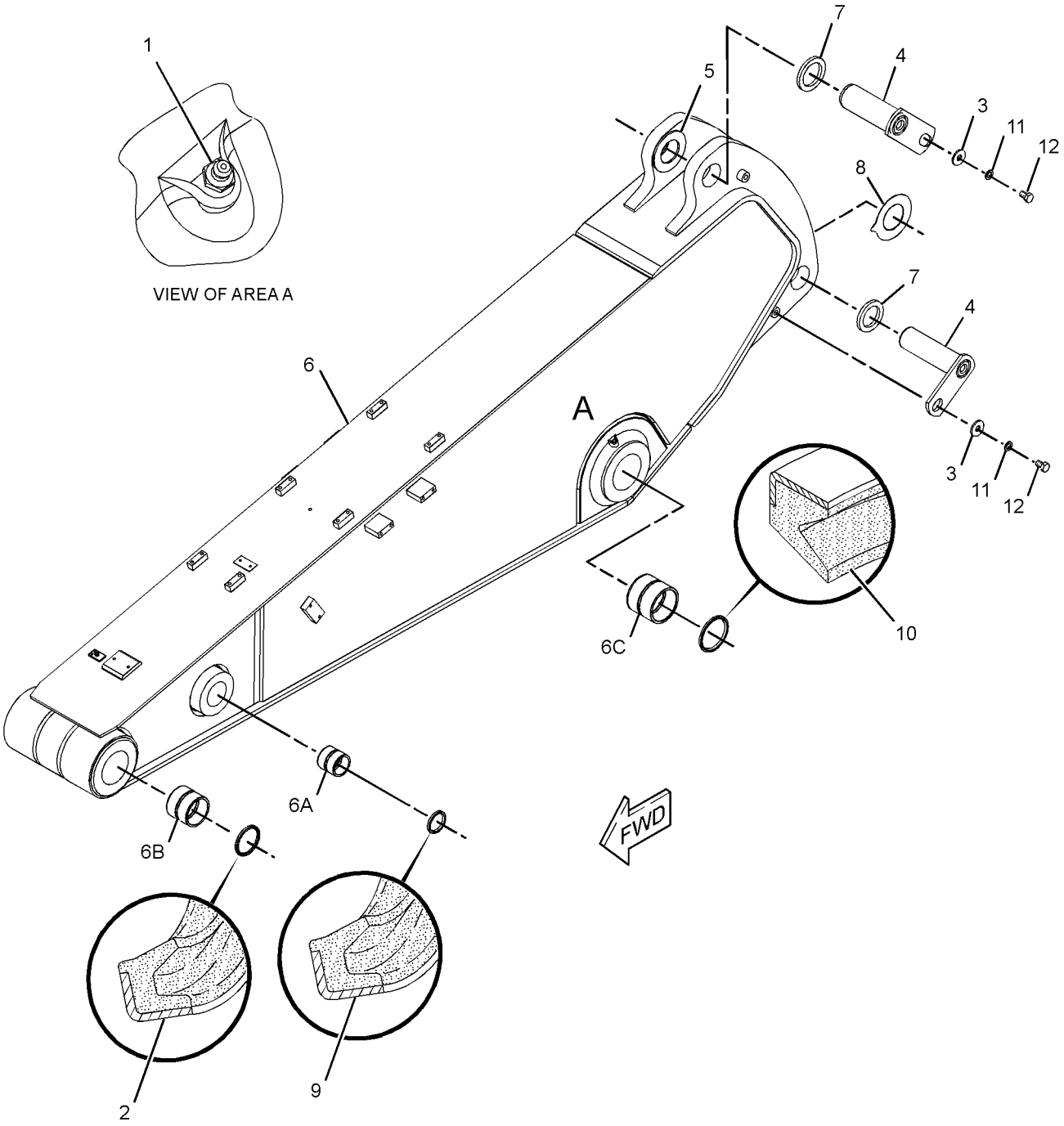

GRAPHIC #1 **<END>** g01198593

290-9318 STICK GP-HOE

S/N: MYG1-UP; PPN1-UP
2.15-M (7.05-FT). TB1-FAMILY
PART OF 290-1824 STICK AR-HOE
AN ATTACHMENT

SMCS-6502 **i03700980**

NOTE	REF NO	GRAPHIC REF	PART NUMBER	QTY	PART NAME 1 2 3 4 5 6 (PRODUCT LEVEL)	SEE PAGE
	1	1	**3B-8489**	4	FITTING-GREASE	
	2	1	**9X-4598**	2	SEAL-LIP TYPE	
	3	1	**093-0349**	2	WASHER (22X60X6-MM THK)	
	4	1	**148-3386**	2	PIN AS	
	5	1	**201-3003**	2	SPACER (92X160X7-MM THK)	
	6	1	**290-9319**	1	STICK & BEARING AS	
	6A	1	**4I-6897**	2	BEARING-SLEEVE	
	6B	1	**228-5619**	2	BEARING-SLEEVE	
	6C	1	**236-8561**	2	BEARING-SLEEVE	
	7	1	**093-0366**	2	SPACER (93X130X12-MM THK)	
	8	1	**166-1487**	2	SHIM (2-MM THK)	
	9	1	**166-1494**	2	SEAL-LIP TYPE	
	10	1	**166-1498**	2	SEAL-LIP TYPE	
	11	1	**8T-4123**	2	WASHER (22X35X3.5-MM THK)	
M	12	1	**8T-4780**	2	BOLT (M20X2.5X30-MM)	

M-METRIC PART

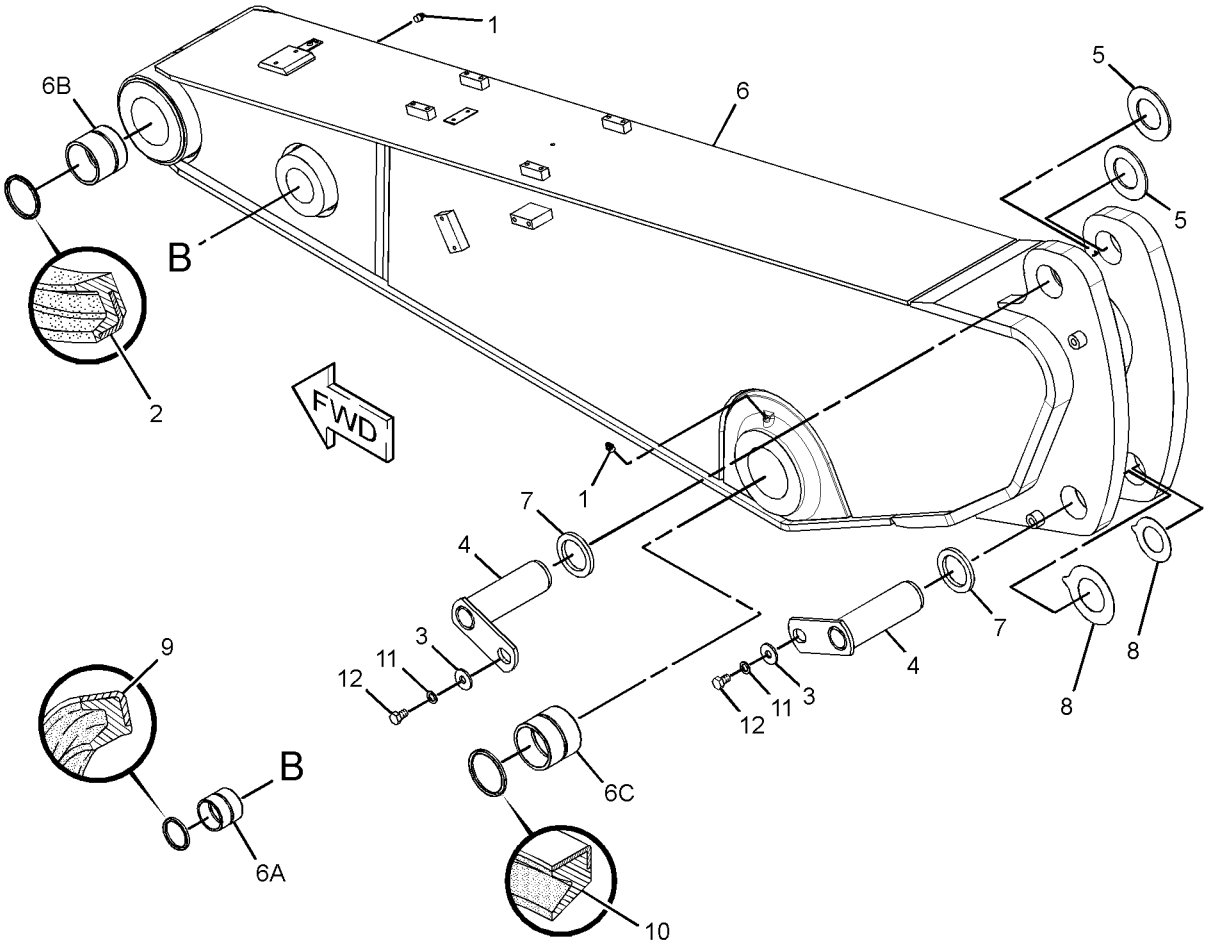

GRAPHIC #1 **<END>** g01386513

IMPLEMENTS

294-1507 STICK GP-HOE

S/N: MYG1-UP; PPN1-UP
3.2-M (10.5-FT)
PART OF 290-1829 STICK AR-HOE
AN ATTACHMENT

SMCS-6502 **i03009004**

NOTE	REF NO	GRAPHIC REF	PART NUMBER	QTY	PART NAME 1 2 3 4 5 6 (PRODUCT LEVEL)	SEE PAGE
	1	1	**3B-8489**	3	FITTING-GREASE	
	2	1	**5I-3299**	1	PIN AS	
	3	1	**093-0349**	2	WASHER (22X60X6-MM THK)	
	4	1	**093-0363**	1	SPACER (83X120X12-MM THK)	
	5	1	**166-1496**	2	SEAL-LIP TYPE	
	6	1	**235-7679**	2	SEAL-LIP TYPE	
	7	1	**294-1508**	1	STICK & BEARING AS	
	7A	1	**228-5617**	2	BEARING-SLEEVE	
	7B	1	**236-8561**	2	BEARING-SLEEVE	
	7C	1	**241-7231**	2	BEARING-SLEEVE	
	8	1	**093-0366**	1	SPACER (93X130X12-MM THK)	
	9	1	**113-2963**	1	PIN AS	
	10	1	**166-1487**	2	SHIM (2-MM THK)	
	11	1	**166-1498**	2	SEAL-LIP TYPE	
	12	1	**8T-4123**	2	WASHER (22X35X3.5-MM THK)	
M	13	1	**8T-4780**	2	BOLT (M20X2.5X30-MM)	

M-METRIC PART

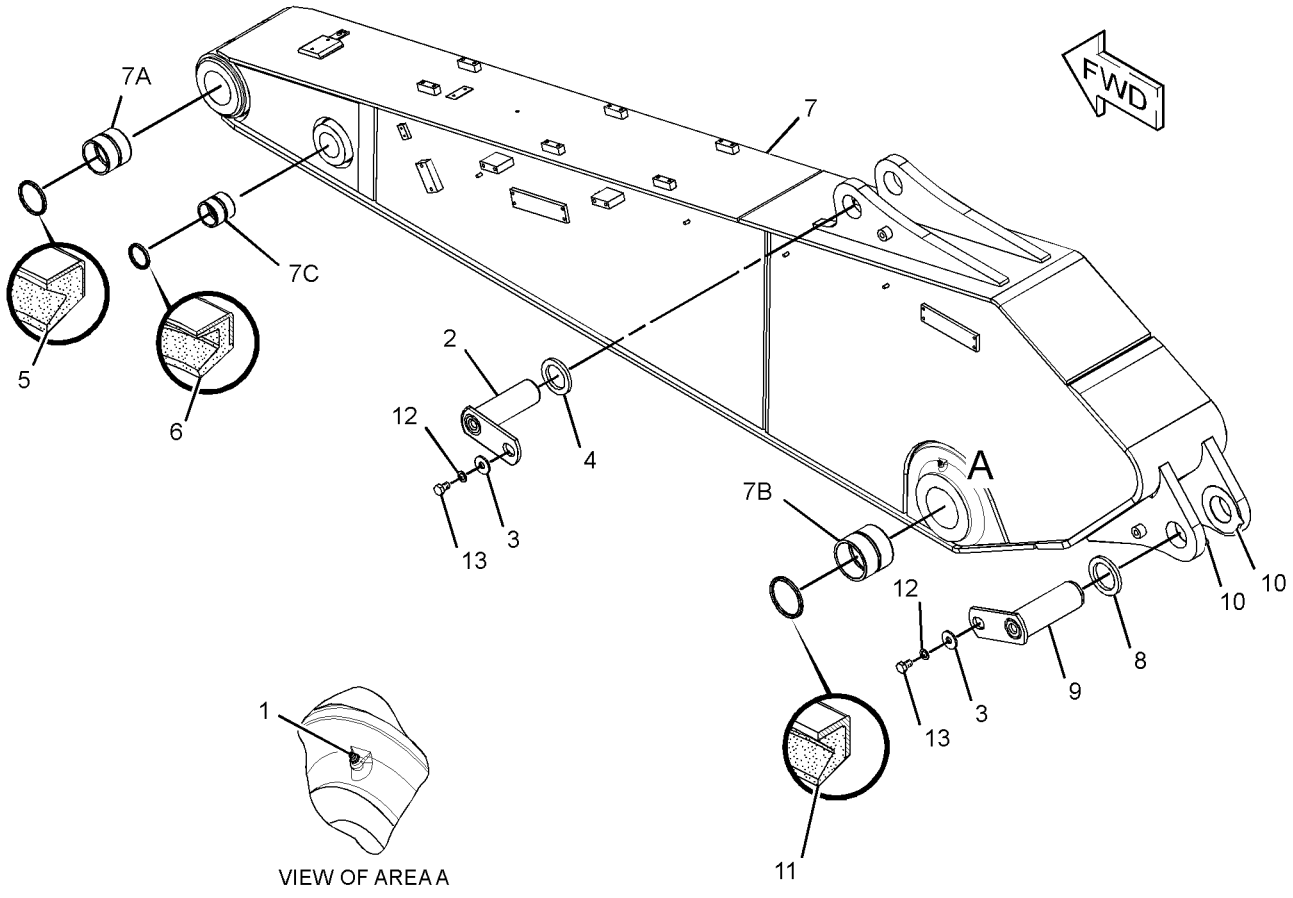

GRAPHIC #1 **<END>** g01371444

4I-4070 ADJUSTER GP-BUCKET—TB-FAMILY

S/N: MYG1-UP; PPN1-UP

PART OF 276-1600, 276-1602, 276-1604, 276-1606, 276-1608 BUCKET & ADJUSTER GP

AN ATTACHMENT

SMCS-6513, 6700 **i01070194**

NOTE	REF NO	GRAPHIC REF	PART NUMBER	QTY	PART NAME 1 2 3 4 5 6 (PRODUCT LEVEL)	SEE PAGE
B	1	1	**4I-4039**	6	SHIM (1-MM THK)	
B	2	1	**4I-4043**	4	SHIM (0.5-MM THK)	
	3	1	**4I-6626**	1	PIN	
	4	1	**134-8952**	1	PLATE	
M	5	1	**7X-2563**	6	BOLT (M20X2.5X60-MM)	
	6	1	**8T-4123**	6	WASHER (22X35X3.5-MM THK)	
	7	1	**163-3493**	1	FLANGE	

B-USE AS REQUIRED
M-METRIC PART

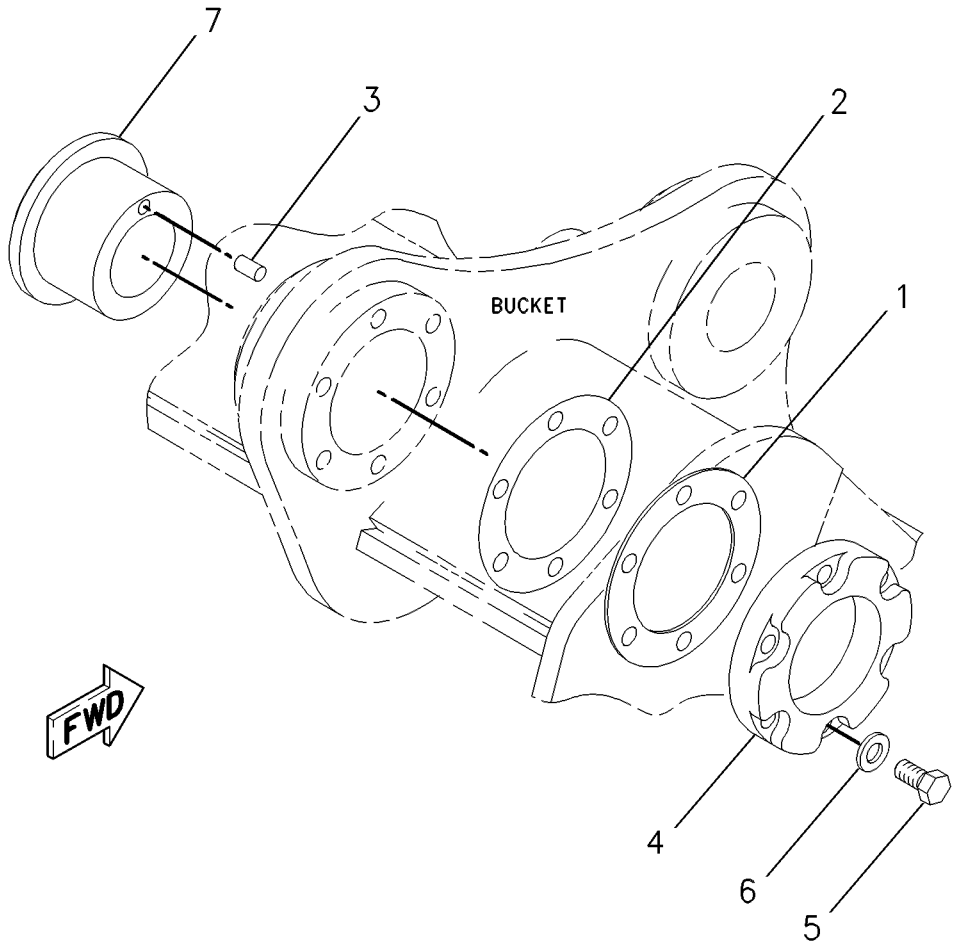

GRAPHIC #1 **<END>** g00540240

250-6430 ADJUSTER GP-BUCKET—DB-FAMILY

S/N: MYG1-UP; PPN1-UP
PART OF 270-1282, 270-1283, 270-1284, 270-1285, 270-1286, 270-1292, 270-1295, 270-1303, 270-1304, 270-1307, 270-1309, 270-1310, 270-1312, 270-1313 BUCKET & ADJUSTER GP
AN ATTACHMENT

SMCS-6513, 6700 **i02486735**

NOTE	REF NO	GRAPHIC REF	PART NUMBER	QTY	PART NAME 1 2 3 4 5 6 (PRODUCT LEVEL)	SEE PAGE
B	1	1	**4I-6605**	6	SHIM (1-MM THK)	
B	2	1	**4I-6604**	4	SHIM (0.5-MM THK)	
	3	1	**4I-6626**	1	PIN	
	4	1	**134-8951**	1	PLATE	
M	5	1	**7X-2563**	5	BOLT (M20X2.5X60-MM)	
	6	1	**8T-4123**	5	WASHER (22X35X3.5-MM THK)	
	7	1	**250-6457**	1	FLANGE	

B-USE AS REQUIRED
M-METRIC PART

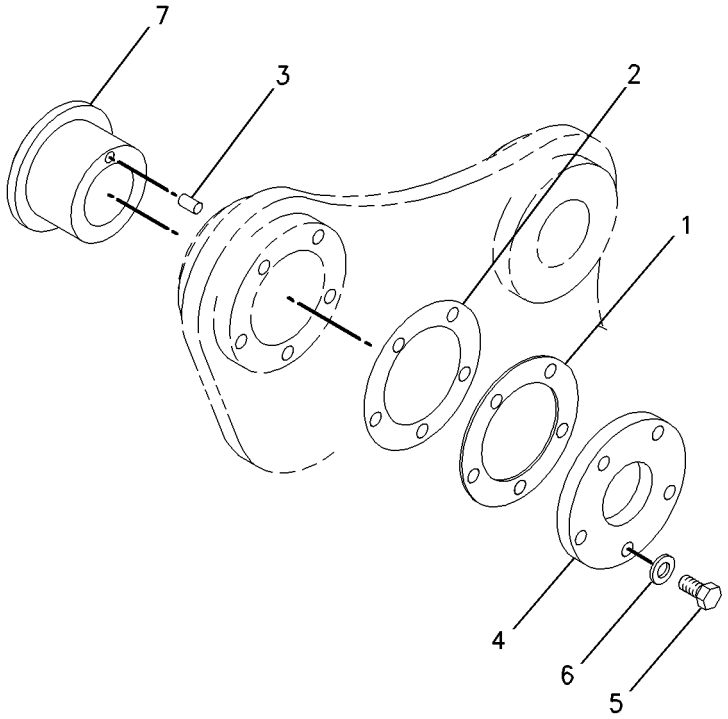

GRAPHIC #1 **<END>** g00728105

270-1282 BUCKET & ADJUSTER GP–EXCAVATION, DB-FAMILY

S/N: MYG1-UP; PPN1-UP
1000-MM (39-IN) WIDE X 1.11 CU M (1.5 CU YD) CAPACITY.
K-100 ADAPTERS, QTY OF 4
AN ATTACHMENT

SMCS-6503, 6513 **i02763042**

NOTE	REF NO	GRAPHIC REF	PART NUMBER	QTY	PART NAME 1 2 3 4 5 6 (PRODUCT LEVEL)	SEE PAGE
	1	1	**264-2663**	1	EDGE AS	
	1A	1	**220-9106**	1	ADAPTER-TIP (K-100, 2-STRAP, LH)	
	1B	1	**220-9104**	2	ADAPTER-TIP (K-100, 2-STRAP, CENTER)	
	1C	1	**220-9105**	1	ADAPTER-TIP (K-100, 2-STRAP, RH)	
	1D	1	**8P-9770**	1	PLATE	
	2	1	**270-1319**	1	PLATE AS-BOX	
	3	1	**264-2703**	2	PLATE-WEAR	
	4	1	**264-2691**	6	PLATE-WEAR	
	5	1	**2C-9259**	2	PLATE-IDENTIFICATION (CAT)	
Y	6	1	**250-6430**	1	ADJUSTER GP-BUCKET (DB-FAMILY)	746

Y-SEPARATE ILLUSTRATION

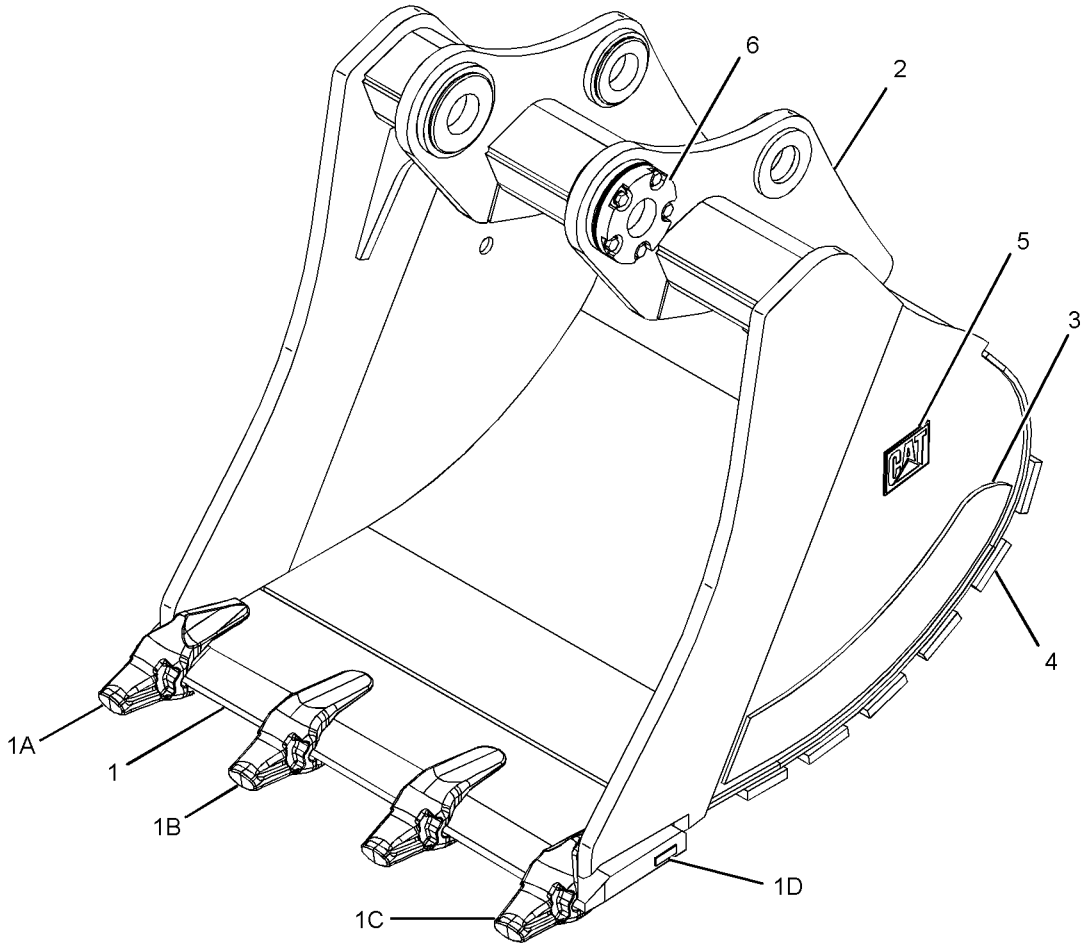

GRAPHIC #1 **<END>** g01246494

270-1283 BUCKET & ADJUSTER GP–EXCAVATION, DB-FAMILY

S/N: MYG1-UP; PPN1-UP
1350-MM (53-IN) WIDE X 1.62-CU M (2.1-CU YD) CAPACITY.
K-100 ADAPTERS, QTY OF 4
AN ATTACHMENT

SMCS-6503, 6513 **i02763043**

NOTE	REF NO	GRAPHIC REF	PART NUMBER	QTY	PART NAME 1 2 3 4 5 6 (PRODUCT LEVEL)	SEE PAGE
	1	1	**250-9679**	1	EDGE AS	
	1A	1	**220-9106**	1	ADAPTER-TIP (K-100, 2-STRAP, LH)	
	1B	1	**220-9104**	2	ADAPTER-TIP (K-100, 2-STRAP, CENTER)	
	1C	1	**220-9105**	1	ADAPTER-TIP (K-100, 2-STRAP, RH)	
	1D	1	**8P-9770**	1	PLATE	
	2	1	**270-1320**	1	PLATE AS-BOX	
	3	1	**264-2703**	2	PLATE-WEAR	
	4	1	**264-2692**	6	PLATE-WEAR	
	5	1	**2C-9259**	2	PLATE-IDENTIFICATION (CAT)	
Y	6	1	**250-6430**	1	ADJUSTER GP-BUCKET (DB-FAMILY)	746

Y-SEPARATE ILLUSTRATION

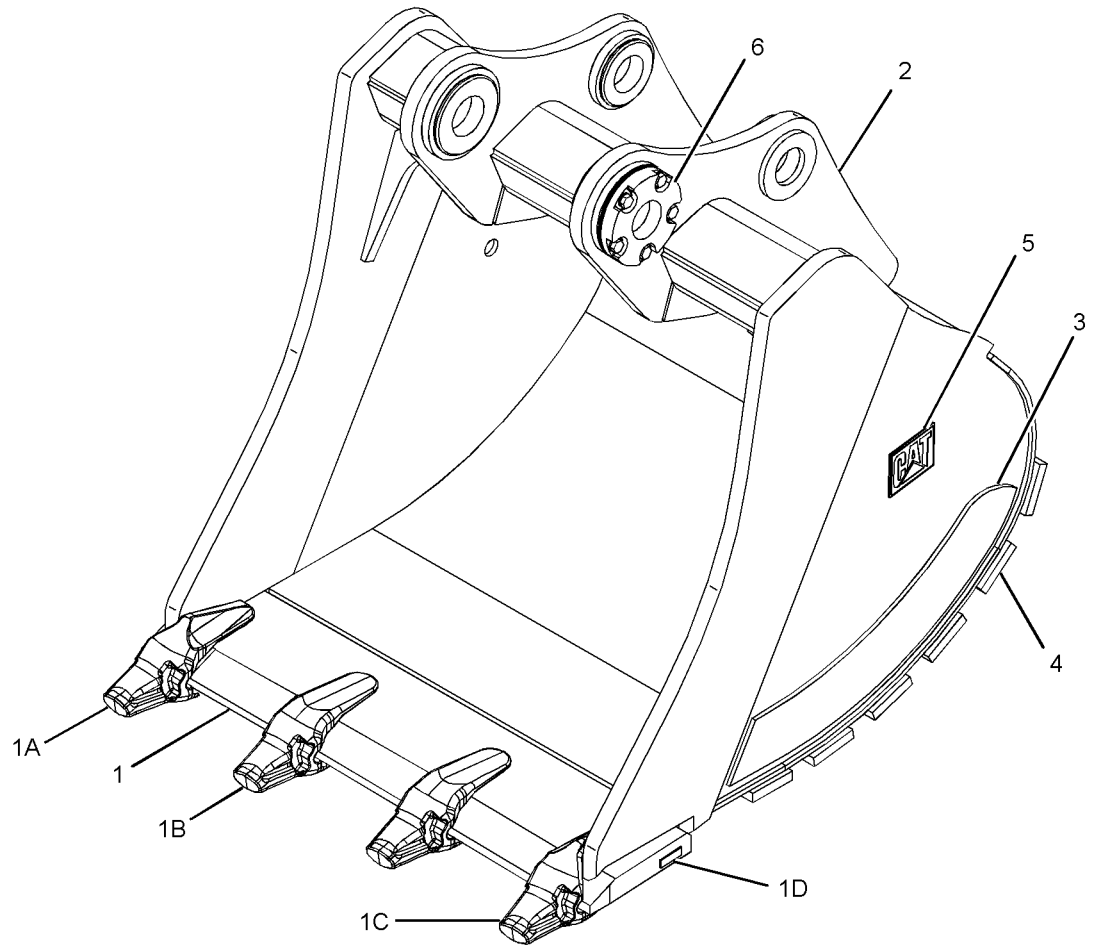

GRAPHIC #1 **<END>** g01246494

270-1284 BUCKET & ADJUSTER GP–EXCAVATION, DB-FAMILY

S/N: MYG1-UP; PPN1-UP
1500-MM (59-IN) WIDE X 1.84-CU M (2.4-CU YD) CAPACITY.
K-100 ADAPTERS, QTY OF 4
AN ATTACHMENT

SMCS-6503, 6513 **i02763044**

NOTE	REF NO	GRAPHIC REF	PART NUMBER	QTY	PART NAME 1 2 3 4 5 6 (PRODUCT LEVEL)	SEE PAGE
	1	1	**250-9681**	1	EDGE AS	
	1A	1	**220-9106**	1	ADAPTER-TIP (K-100, 2-STRAP, LH)	
	1B	1	**220-9104**	3	ADAPTER-TIP (K-100, 2-STRAP, CENTER)	
	1C	1	**220-9105**	1	ADAPTER-TIP (K-100, 2-STRAP, RH)	
	1D	1	**8P-9770**	1	PLATE	
	2	1	**270-1321**	1	PLATE AS-BOX	
	3	1	**264-2703**	2	PLATE-WEAR	
	4	1	**264-2693**	6	PLATE-WEAR	
	5	1	**2C-9259**	2	PLATE-IDENTIFICATION (CAT)	
Y	6	1	**250-6430**	1	ADJUSTER GP-BUCKET (DB-FAMILY)	746

Y-SEPARATE ILLUSTRATION

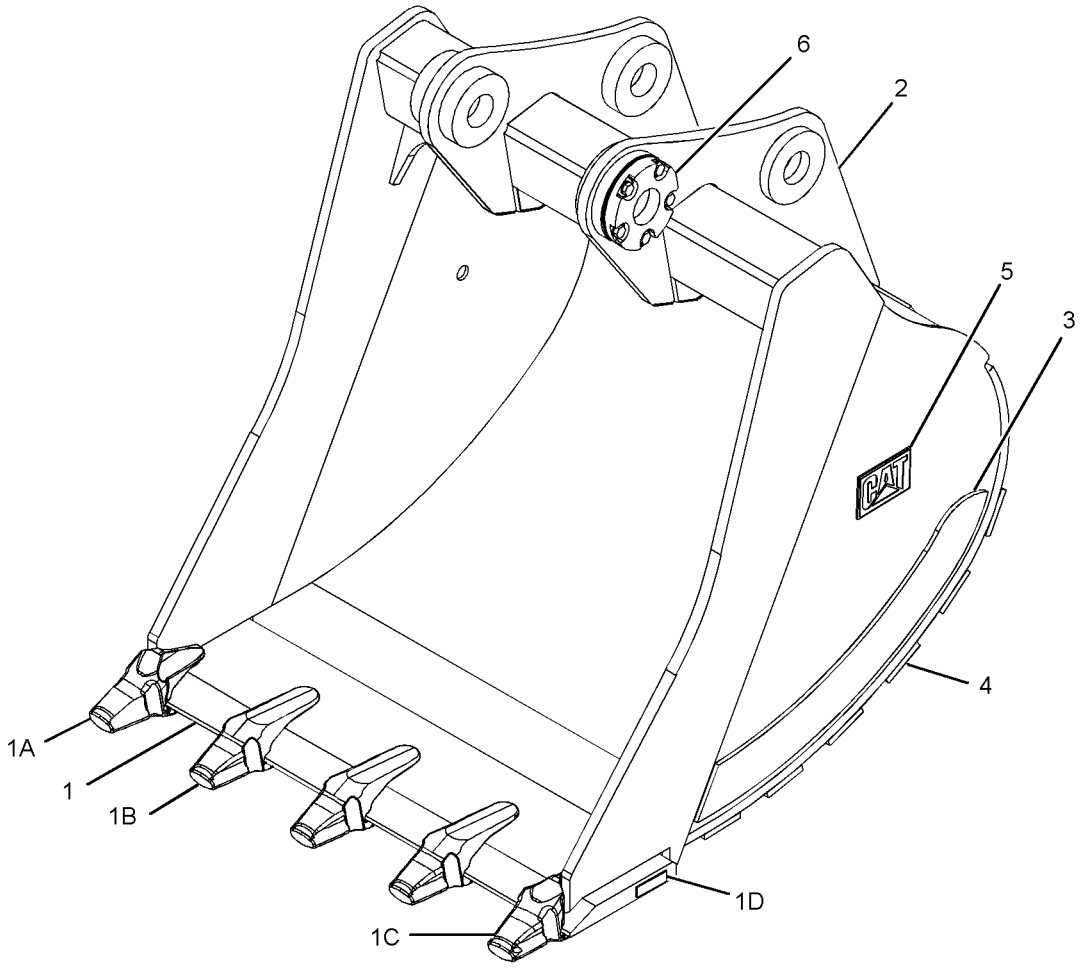

GRAPHIC #1 **<END>** g01260247

WORK TOOLS

270-1285 BUCKET & ADJUSTER GP—EXCAVATION, DB-FAMILY

S/N: MYG1-UP; PPN1-UP
1600-MM (63-IN) WIDE X 1.99-CU M (2.6-CU YD) CAPACITY.
K-100 ADAPTERS, QTY OF 5
AN ATTACHMENT

SMCS-6503, 6513 **i02763045**

NOTE	REF NO	GRAPHIC REF	PART NUMBER	QTY	PART NAME 1 2 3 4 5 6 (PRODUCT LEVEL)	SEE PAGE
	1	1	**250-9682**	1	EDGE AS	
	1A	1	**220-9106**	1	ADAPTER-TIP (K-100, 2-STRAP, LH)	
	1B	1	**220-9104**	3	ADAPTER-TIP (K-100, 2-STRAP, CENTER)	
	1C	1	**220-9105**	1	ADAPTER-TIP (K-100, 2-STRAP, RH)	
	1D	1	**8P-9770**	1	PLATE	
	2	1	**270-1322**	1	PLATE AS-BOX	
	3	1	**264-2703**	2	PLATE-WEAR	
	4	1	**264-2694**	6	PLATE-WEAR	
	5	1	**2C-9259**	2	PLATE-IDENTIFICATION (CAT)	
Y	6	1	**250-6430**	1	ADJUSTER GP-BUCKET (DB-FAMILY)	746

Y-SEPARATE ILLUSTRATION

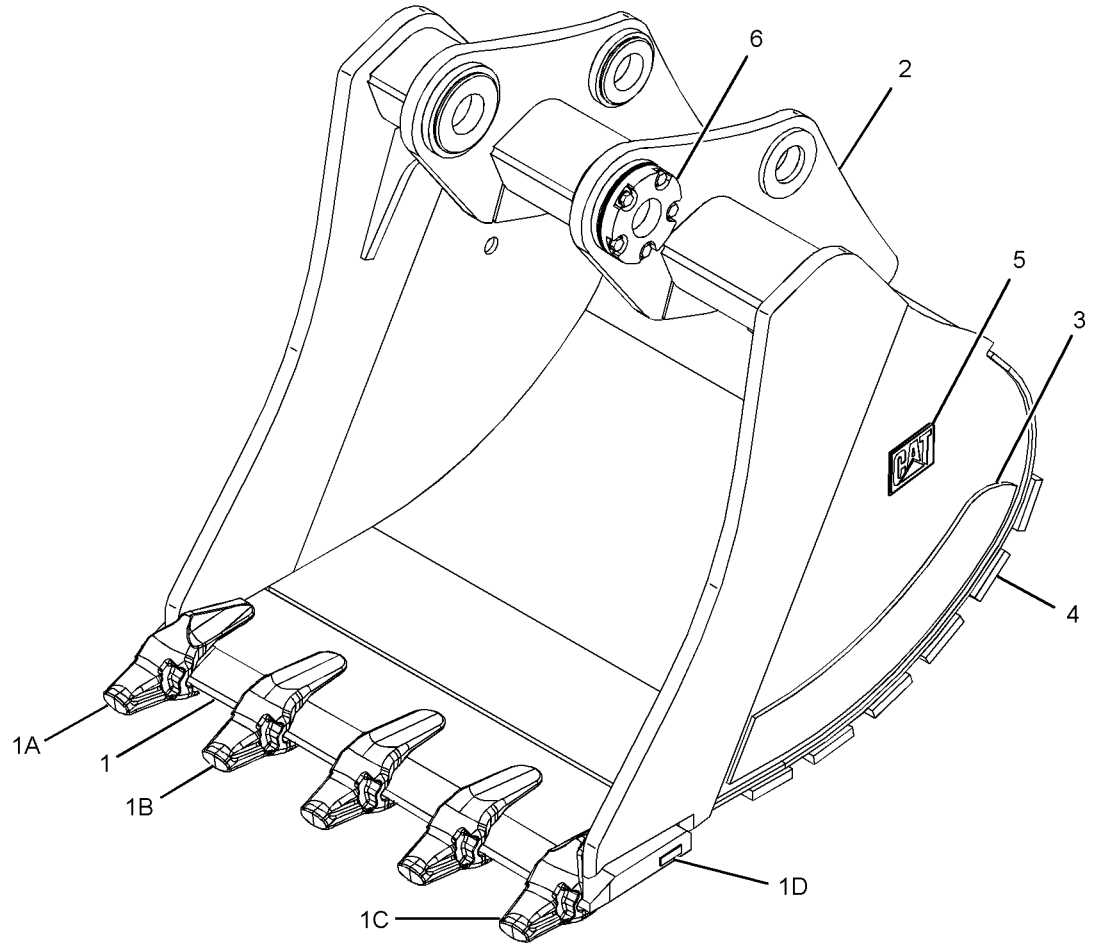

GRAPHIC #1 **<END>** g01260437

270-1286 BUCKET & ADJUSTER GP–EXCAVATION, DB-FAMILY

S/N: MYG1-UP; PPN1-UP
1650-MM (65-IN) WIDE X 2.07-CU M (2.7-CU YD) CAPACITY.
K-100 ADAPTERS, QTY OF 5
AN ATTACHMENT

SMCS-6503, 6513 **i02763046**

NOTE	REF NO	GRAPHIC REF	PART NUMBER	QTY	PART NAME 1 2 3 4 5 6 (PRODUCT LEVEL)	SEE PAGE
	1	1	**264-2664**	1	EDGE AS	
	1A	1	**220-9106**	1	ADAPTER-TIP (K-100, 2-STRAP, LH)	
	1B	1	**220-9104**	3	ADAPTER-TIP (K-100, 2-STRAP, CENTER)	
	1C	1	**220-9105**	1	ADAPTER-TIP (K-100, 2-STRAP, RH)	
	1D	1	**8P-9770**	1	PLATE	
	2	1	**270-1323**	1	PLATE AS-BOX	
	3	1	**264-2703**	2	PLATE-WEAR	
	4	1	**264-2695**	6	PLATE-WEAR	
	5	1	**2C-9259**	2	PLATE-IDENTIFICATION (CAT)	
Y	6	1	**250-6430**	1	ADJUSTER GP-BUCKET (DB-FAMILY)	746

Y-SEPARATE ILLUSTRATION

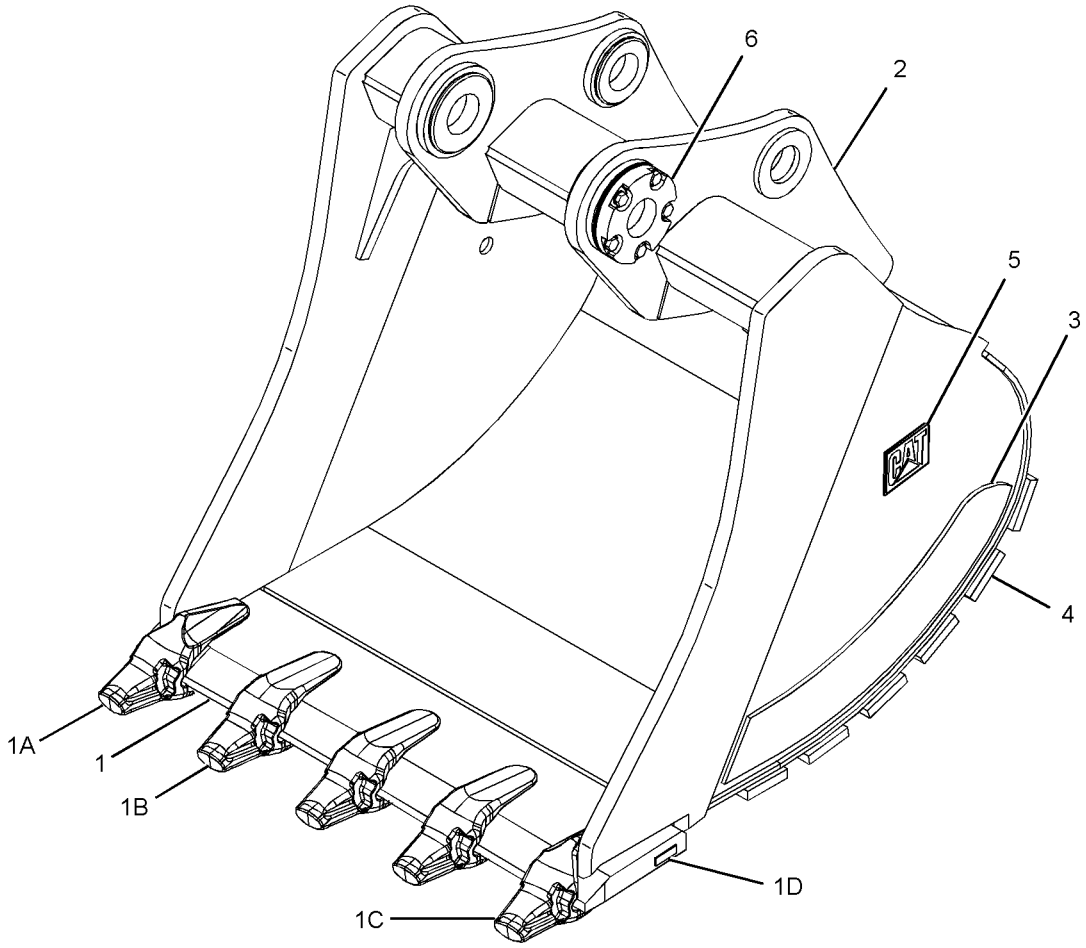

GRAPHIC #1 **<END>** g01260437

WORK TOOLS

270-1292 BUCKET & ADJUSTER GP—EXCAVATION, DB-FAMILY

S/N: MYG1-UP; PPN1-UP
1700-MM (67-IN) WIDE X 2.14-CU M (2.8-CU YD) CAPACITY.
K-100 ADAPTERS, QTY OF 5
AN ATTACHMENT

SMCS-6503, 6513 **i02763159**

NOTE	REF NO	GRAPHIC REF	PART NUMBER	QTY	PART NAME 1 2 3 4 5 6 (PRODUCT LEVEL)	SEE PAGE
	1	1	**264-2665**	1	EDGE AS-CUTTING	
	1A	1	**220-9106**	1	ADAPTER-TIP (K-100, 2-STRAP, LH)	
	1B	1	**220-9104**	3	ADAPTER-TIP (K-100, 2-STRAP, CENTER)	
	1C	1	**220-9105**	1	ADAPTER-TIP (K-100, 2-STRAP, RH)	
	1D	1	**8P-9770**	1	PLATE	
	2	1	**270-1324**	1	PLATE AS-BOX	
	3	1	**264-2703**	2	PLATE-WEAR	
	4	1	**264-2696**	6	PLATE-WEAR	
	5	1	**2C-9259**	2	PLATE-IDENTIFICATION (CAT)	
Y	6	1	**250-6430**	1	ADJUSTER GP-BUCKET (DB-FAMILY)	746

Y-SEPARATE ILLUSTRATION

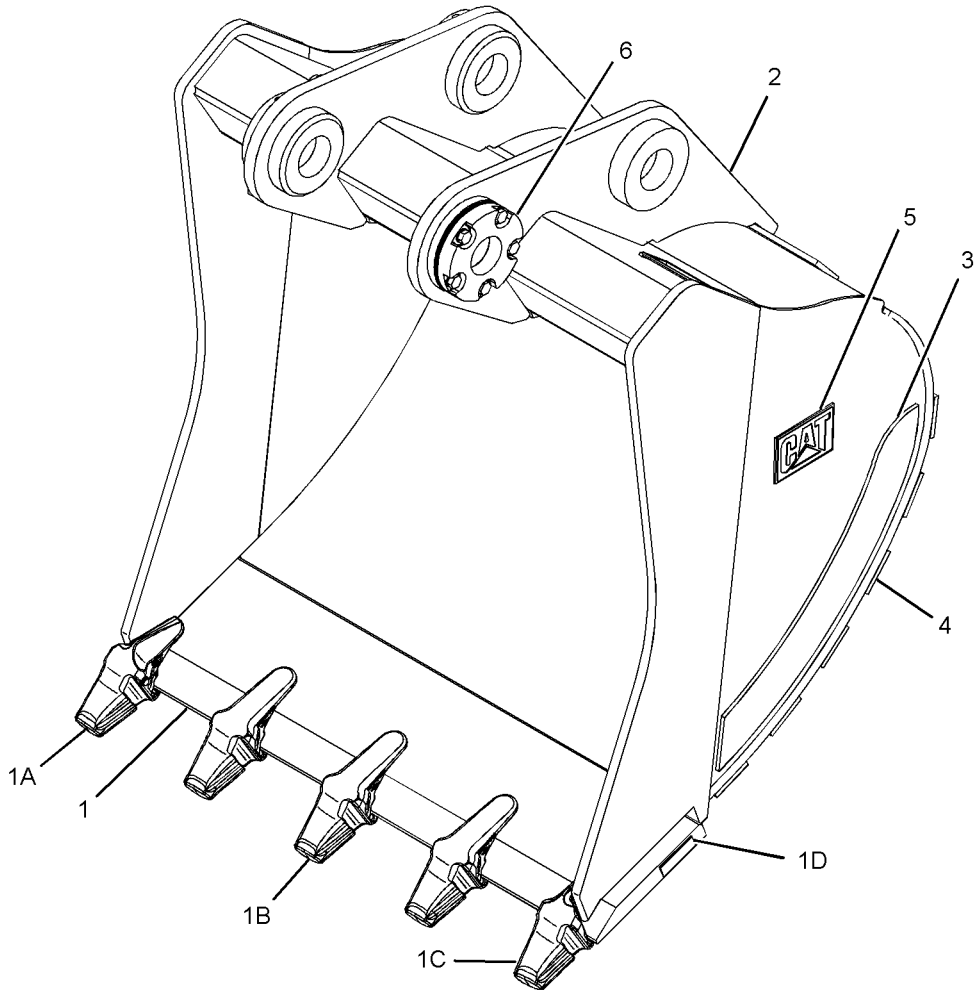

GRAPHIC #1 **<END>** g01260517

270-1295 BUCKET & ADJUSTER GP–EXCAVATION, DB-FAMILY

S/N: MYG1-UP; PPN1-UP
1800-MM (71-IN) WIDE X 2.29-CU M (3.0-CU YD) CAPACITY.
K-100 ADAPTERS, QTY OF 5
AN ATTACHMENT

SMCS-6503, 6513 **i02763162**

NOTE	REF NO	GRAPHIC REF	PART NUMBER	QTY	PART NAME 1 2 3 4 5 6 (PRODUCT LEVEL)	SEE PAGE
	1	1	**264-2666**	1	EDGE AS-CUTTING	
	1A	1	**220-9106**	1	ADAPTER-TIP (K-100, 2-STRAP, LH)	
	1B	1	**220-9104**	3	ADAPTER-TIP (K-100, 2-STRAP, CENTER)	
	1C	1	**220-9105**	1	ADAPTER-TIP (K-100, 2-STRAP, RH)	
	1D	1	**8P-9770**	1	PLATE	
	2	1	**270-1325**	1	PLATE AS-BOX	
	3	1	**264-2703**	2	PLATE-WEAR	
	4	1	**264-2697**	6	PLATE-WEAR	
	5	1	**2C-9259**	2	PLATE-IDENTIFICATION (CAT)	
Y	6	1	**250-6430**	1	ADJUSTER GP-BUCKET (DB-FAMILY)	746

Y-SEPARATE ILLUSTRATION

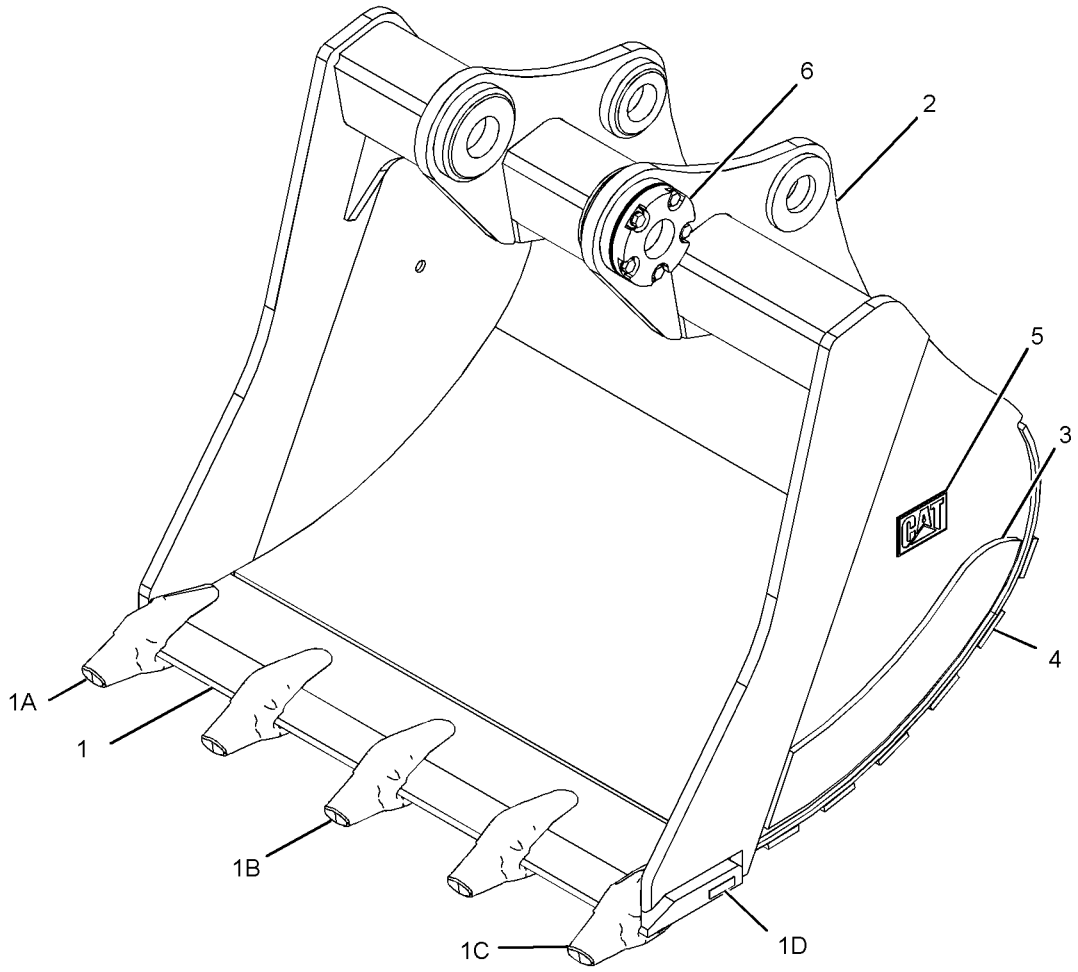

GRAPHIC #1 **<END>** g01260560

WORK TOOLS

270-1303 BUCKET & ADJUSTER GP—ROCK, DB-FAMILY

S/N: MYG1-UP; PPN1-UP
1000-MM (39-IN) WIDE X 1.11-CU M (1.5-CU YD) CAPACITY.
K-110 ADAPTERS, QTY OF 3
AN ATTACHMENT

SMCS-6503, 6513 **i02763265**

NOTE	REF NO	GRAPHIC REF	PART NUMBER	QTY	PART NAME 1 2 3 4 5 6 (PRODUCT LEVEL)	SEE PAGE
	1	1	**264-2670**	1	EDGE AS-CUTTING	
	1A	1	**232-0116**	1	ADAPTER-TIP (K-110, 2-STRAP, LH)	
	1B	1	**232-0114**	1	ADAPTER-TIP (K-110, 2-STRAP, CENTER)	
	1C	1	**232-0115**	1	ADAPTER-TIP (K-110, 2-STRAP, RH)	
	1D	1	**8P-9770**	1	PLATE	
	2	1	**270-1319**	1	PLATE AS-BOX	
	3	1	**264-2705**	2	PLATE-WEAR (SIDE)	
	4	1	**264-2701**	6	PLATE-WEAR	
	5	1	**2C-9259**	2	PLATE-IDENTIFICATION (CAT)	
Y	6	1	**250-6430**	1	ADJUSTER GP-BUCKET (DB-FAMILY)	746

Y-SEPARATE ILLUSTRATION

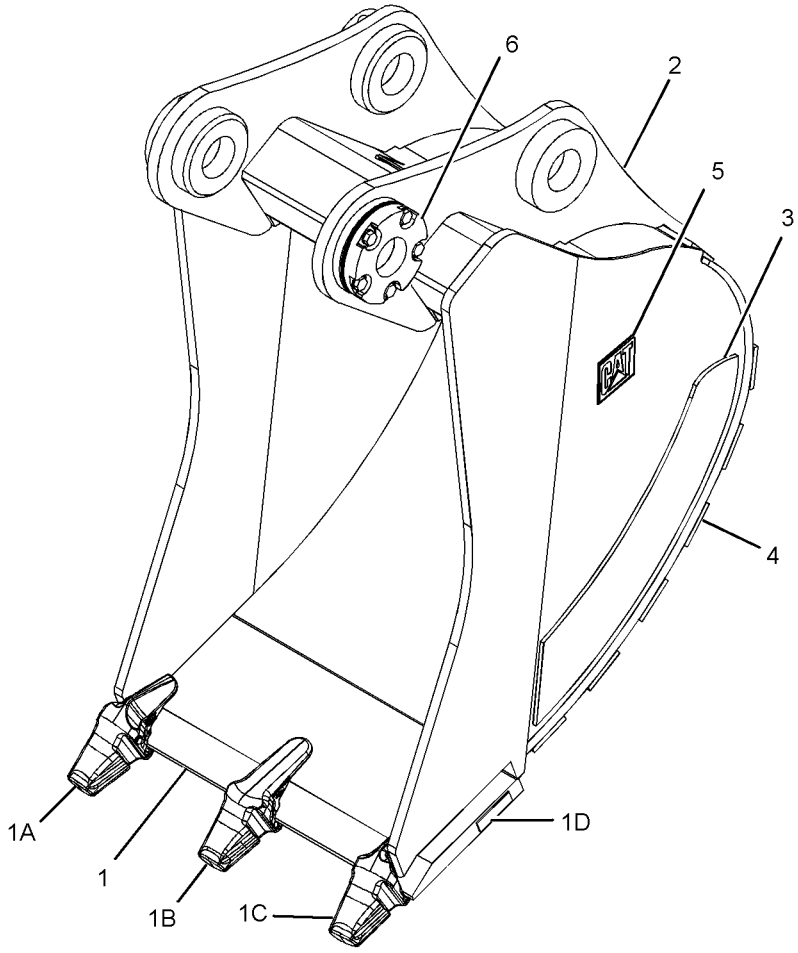

GRAPHIC #1 **<END>** g01260642

270-1304 BUCKET & ADJUSTER GP–ROCK, DB-FAMILY

S/N: MYG1-UP; PPN1-UP
1650-MM (65-IN) WIDE X 2.07-CU M (2.7-CU YD) CAPACITY.
K-110 ADAPTERS, QTY OF 5
AN ATTACHMENT

SMCS-6503, 6513 **i02763270**

NOTE	REF NO	GRAPHIC REF	PART NUMBER	QTY	PART NAME 1 2 3 4 5 6 (PRODUCT LEVEL)	SEE PAGE
	1	1	**264-5423**	1	EDGE AS-CUTTING	
	1A	1	**232-0116**	1	ADAPTER-TIP (K-110, 2-STRAP, LH)	
	1B	1	**232-0114**	3	ADAPTER-TIP (K-110, 2-STRAP, CENTER)	
	1C	1	**232-0115**	1	ADAPTER-TIP (K-110, 2-STRAP, RH)	
	1D	1	**8P-9770**	1	PLATE	
	2	1	**270-1323**	1	PLATE AS-BOX	
	3	1	**264-2705**	2	PLATE-WEAR (SIDE)	
	4	1	**264-2702**	6	PLATE-WEAR	
	5	1	**2C-9259**	2	PLATE-IDENTIFICATION (CAT)	
Y	6	1	**250-6430**	1	ADJUSTER GP-BUCKET (DB-FAMILY)	746

Y-SEPARATE ILLUSTRATION

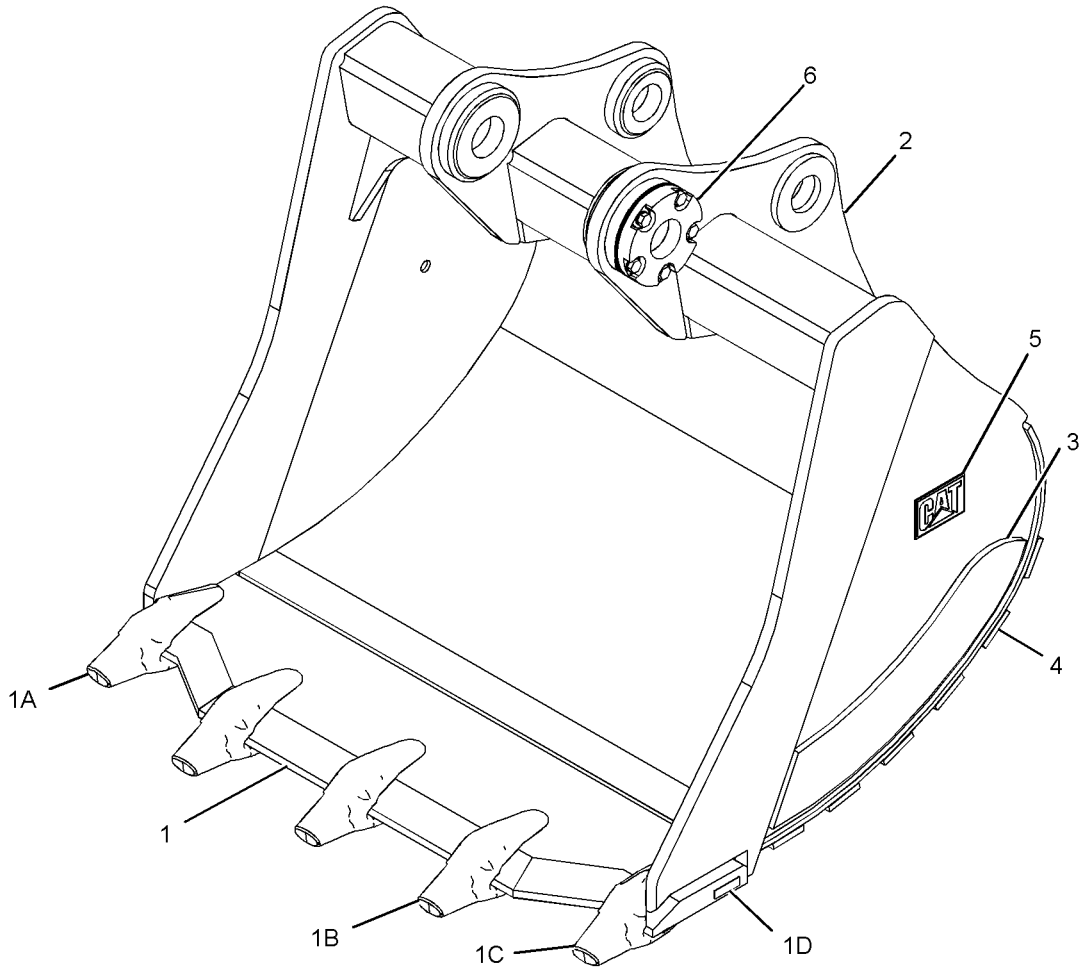

GRAPHIC #1 **<END>** g01260684

270-1307 BUCKET & ADJUSTER GP–
EXTREME EXCAVATION, DB-FAMILY
S/N: MYG1-UP; PPN1-UP
1350-MM (53-IN) WIDE X 1.62-CU M (2.1-CU YD)CAPACITY.
K-110 ADAPTERS, QTY OF 4
AN ATTACHMENT

SMCS-6503, 6513 **i02763038**

NOTE	REF NO	GRAPHIC REF	PART NUMBER	QTY	PART NAME 1 2 3 4 5 6 (PRODUCT LEVEL)	SEE PAGE
	1	1	**268-9958**	1	EDGE AS-CUTTING	
	1A	1	**232-0116**	1	ADAPTER-TIP (K-110, 2-STRAP, LH)	
	1B	1	**232-0114**	2	ADAPTER-TIP (K-110, 2-STRAP, CENTER)	
	1C	1	**232-0115**	1	ADAPTER-TIP (K-110, 2-STRAP, RH)	
	1D	1	**8P-9770**	1	PLATE	
	2	1	**270-1320**	1	PLATE AS-BOX	
	3	1	**264-2704**	2	PLATE-WEAR	
	4	1	**268-9956**	6	PLATE-WEAR	
	5	1	**2C-9259**	2	PLATE-IDENTIFICATION (CAT)	
Y	6	1	**250-6430**	1	ADJUSTER GP-BUCKET (DB-FAMILY)	746

Y-SEPARATE ILLUSTRATION

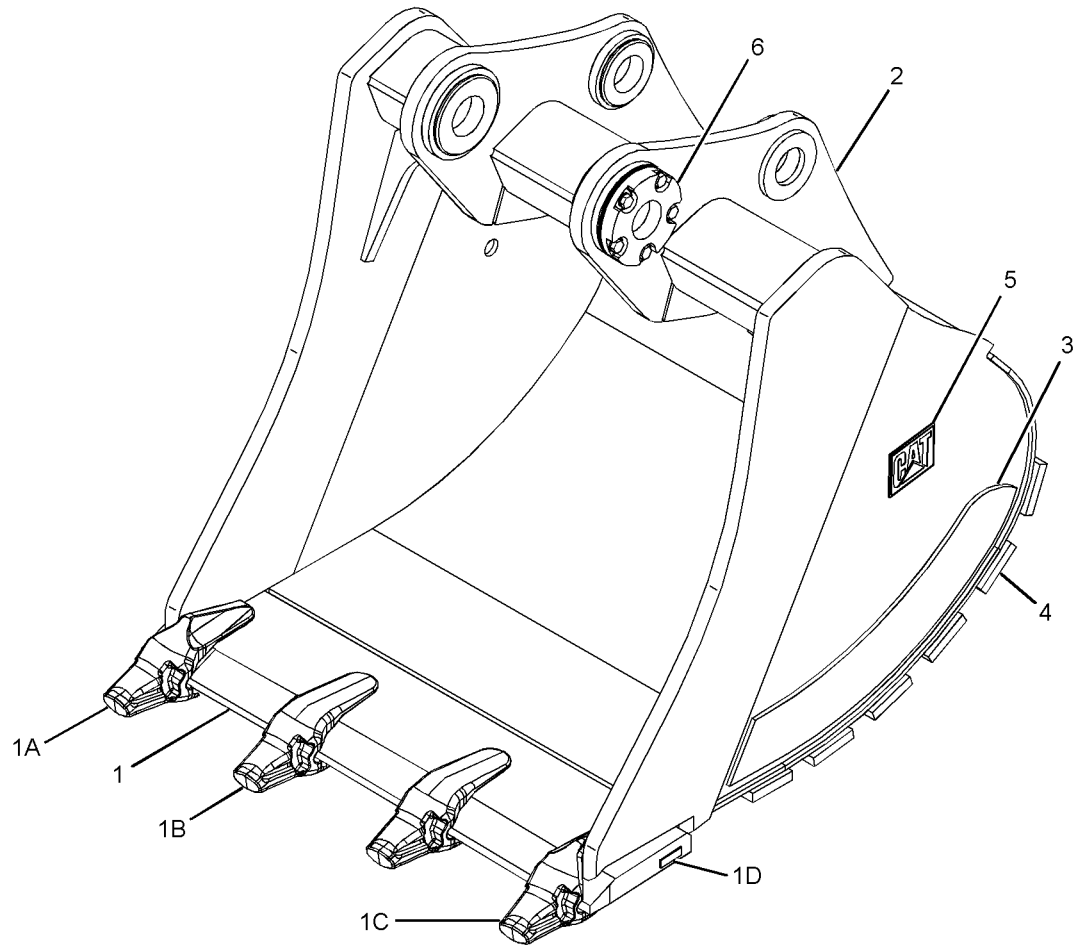

GRAPHIC #1 **<END>** g01260801

270-1309 BUCKET & ADJUSTER GP–
EXTREME EXCAVATION, DB-FAMILY
S/N: MYG1-UP; PPN1-UP
1500-MM (59-IN) WIDE X 1.84-CU M (2.4-CU YD) CAPACITY.
K-110 ADAPTERS, QTY OF 4
AN ATTACHMENT

SMCS-6503, 6513 **i02763037**

NOTE	REF NO	GRAPHIC REF	PART NUMBER	QTY	PART NAME 1 2 3 4 5 6 (PRODUCT LEVEL)	SEE PAGE
	1	1	**266-8402**	1	EDGE AS	
	1A	1	**232-0116**	1	ADAPTER-TIP (K-110, 2-STRAP, LH)	
	1B	1	**232-0114**	2	ADAPTER-TIP (K-110, 2-STRAP, CENTER)	
	1C	1	**232-0115**	1	ADAPTER-TIP (K-110, 2-STRAP, RH)	
	1D	1	**8P-9770**	1	PLATE	
	2	1	**270-1321**	1	PLATE AS-BOX	
	3	1	**264-2704**	2	PLATE-WEAR	
	4	1	**268-9957**	6	PLATE-WEAR	
	5	1	**2C-9259**	2	PLATE-IDENTIFICATION (CAT)	
Y	6	1	**250-6430**	1	ADJUSTER GP-BUCKET (DB-FAMILY)	746

Y-SEPARATE ILLUSTRATION

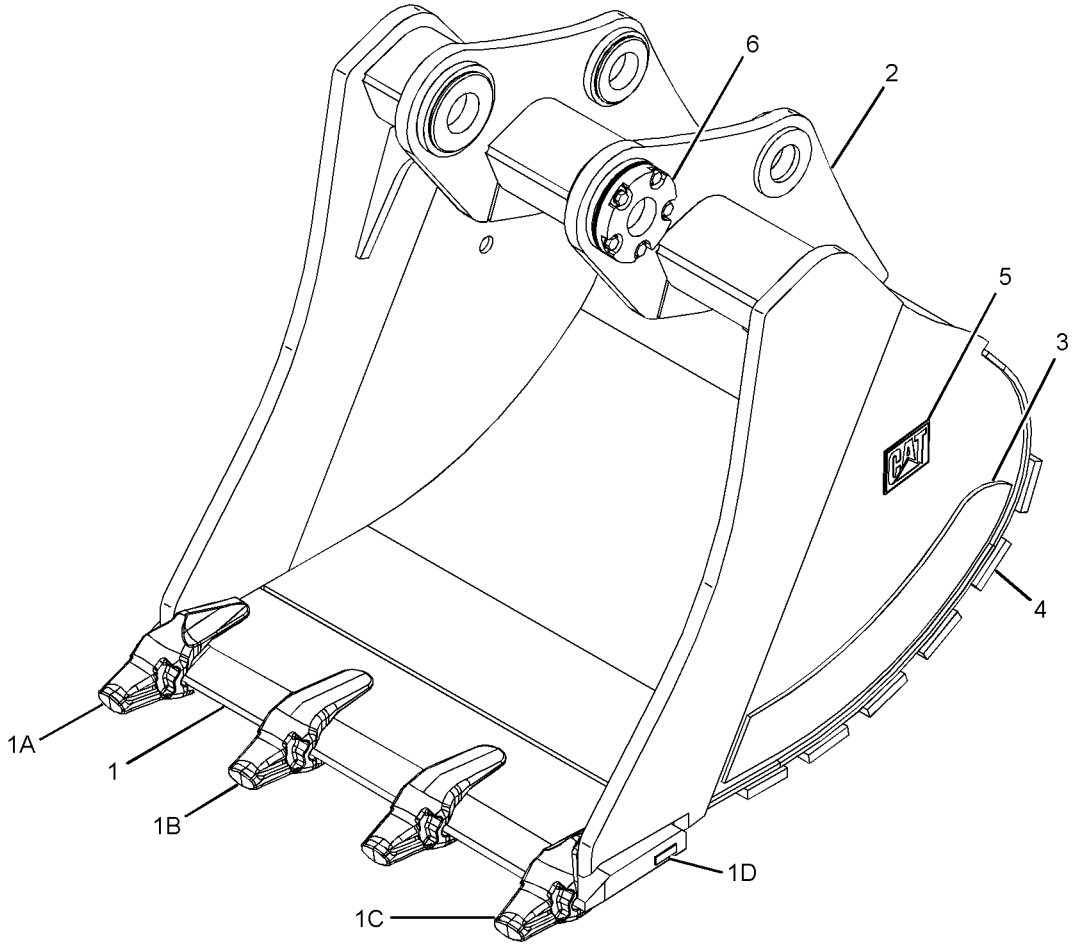

GRAPHIC #1 **<END>** g01260801

270-1310 BUCKET & ADJUSTER GP–
EXTREME EXCAVATION, DB-FAMILY
S/N: MYG1-UP; PPN1-UP
1600-MM (63-IN) WIDE X 1.99-CU M (2.6-CU YD) CAPACITY.
K-110 ADAPTERS, QTY OF 5
AN ATTACHMENT

SMCS-6503, 6513 **i02763036**

NOTE	REF NO	GRAPHIC REF	PART NUMBER	QTY	PART NAME 1 2 3 4 5 6 (PRODUCT LEVEL)	SEE PAGE
	1	1	**264-2667**	1	EDGE AS-CUTTING	
	1A	1	**232-0116**	1	ADAPTER-TIP (K-110, 2-STRAP, LH)	
	1B	1	**232-0114**	3	ADAPTER-TIP (K-110, 2-STRAP, CENTER)	
	1C	1	**232-0115**	1	ADAPTER-TIP (K-110, 2-STRAP, RH)	
	1D	1	**8P-9770**	1	PLATE	
	2	1	**270-1322**	1	PLATE AS-BOX	
	3	1	**264-2704**	2	PLATE-WEAR	
	4	1	**264-2698**	6	PLATE-WEAR	
	5	1	**2C-9259**	2	PLATE-IDENTIFICATION (CAT)	
Y	6	1	**250-6430**	1	ADJUSTER GP-BUCKET (DB-FAMILY)	746

Y-SEPARATE ILLUSTRATION

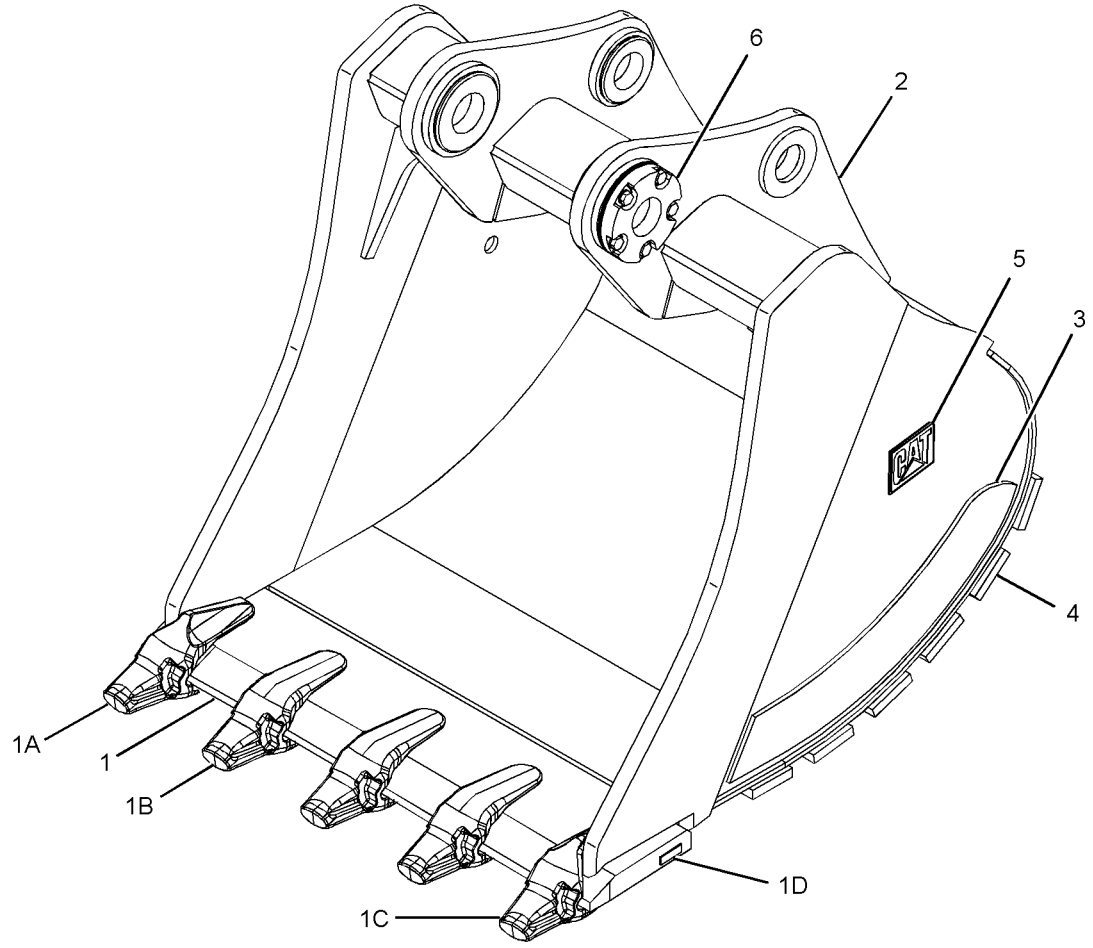

GRAPHIC #1 **<END>** g01260856

270-1312 BUCKET & ADJUSTER GP–
EXTREME EXCAVATION, DB-FAMILY
S/N: MYG1-UP; PPN1-UP
1650-MM (65-IN) WIDE X 2.07-CU M (2.7-CU YD) CAPACITY.
K-110 ADAPTERS, QTY OF 5
AN ATTACHMENT

SMCS-6503, 6513 **i02763035**

NOTE	REF NO	GRAPHIC REF	PART NUMBER	QTY	PART NAME 1 2 3 4 5 6 (PRODUCT LEVEL)	SEE PAGE
	1	1	**264-2668**	1	EDGE AS-CUTTING	
	1A	1	**232-0116**	1	ADAPTER-TIP (K-110, 2-STRAP, LH)	
	1B	1	**232-0114**	3	ADAPTER-TIP (K-110, 2-STRAP, CENTER)	
	1C	1	**232-0115**	1	ADAPTER-TIP (K-110, 2-STRAP, RH)	
	1D	1	**8P-9770**	1	PLATE	
	2	1	**270-1323**	1	PLATE AS-BOX	
	3	1	**264-2704**	2	PLATE-WEAR	
	4	1	**264-2699**	6	PLATE-WEAR	
	5	1	**2C-9259**	2	PLATE-IDENTIFICATION (CAT)	
Y	6	1	**250-6430**	1	ADJUSTER GP-BUCKET (DB-FAMILY)	746

Y-SEPARATE ILLUSTRATION

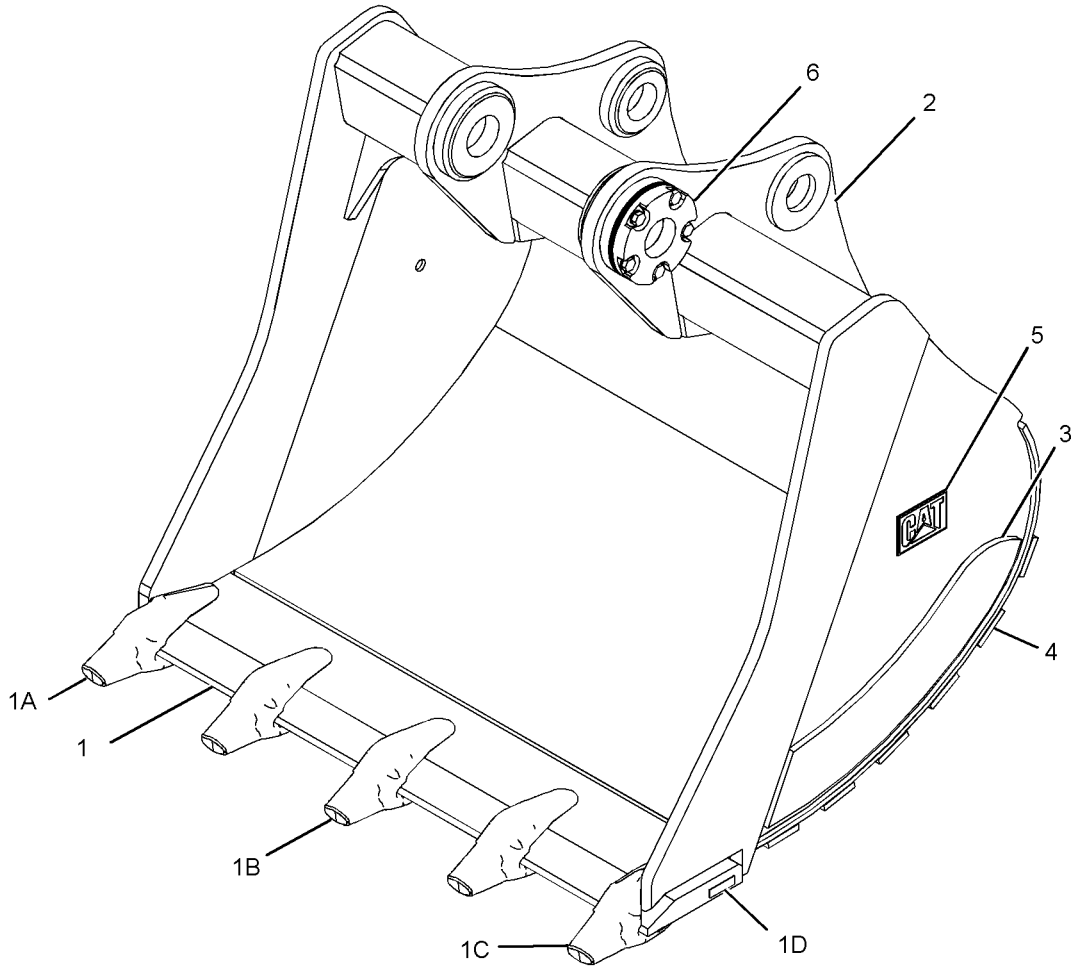

GRAPHIC #1 **<END>** g01260894

270-1313 BUCKET & ADJUSTER GP–
EXTREME EXCAVATION, DB-FAMILY
S/N: MYG1-UP; PPN1-UP
1700-MM (67-IN) WIDE X 2.14-CU M (2.8-CU YD) CAPACITY.
K-110 ADAPTERS, QTY OF 5
AN ATTACHMENT

SMCS-6503, 6513 **i02763034**

NOTE	REF NO	GRAPHIC REF	PART NUMBER	QTY	PART NAME 1 2 3 4 5 6 (PRODUCT LEVEL)	SEE PAGE
	1	1	**264-2669**	1	EDGE AS	
	1A	1	**232-0116**	1	ADAPTER-TIP (K-110, 2-STRAP, LH)	
	1B	1	**232-0114**	3	ADAPTER-TIP (K-110, 2-STRAP, CENTER)	
	1C	1	**232-0115**	1	ADAPTER-TIP (K-110, 2-STRAP, RH)	
	1D	1	**8P-9770**	1	PLATE	
	2	1	**270-1324**	1	PLATE AS-BOX	
	3	1	**264-2704**	2	PLATE-WEAR	
	4	1	**264-2700**	6	PLATE-WEAR	
	5	1	**2C-9259**	2	PLATE-IDENTIFICATION (CAT)	
Y	6	1	**250-6430**	1	ADJUSTER GP-BUCKET (DB-FAMILY)	746

Y-SEPARATE ILLUSTRATION

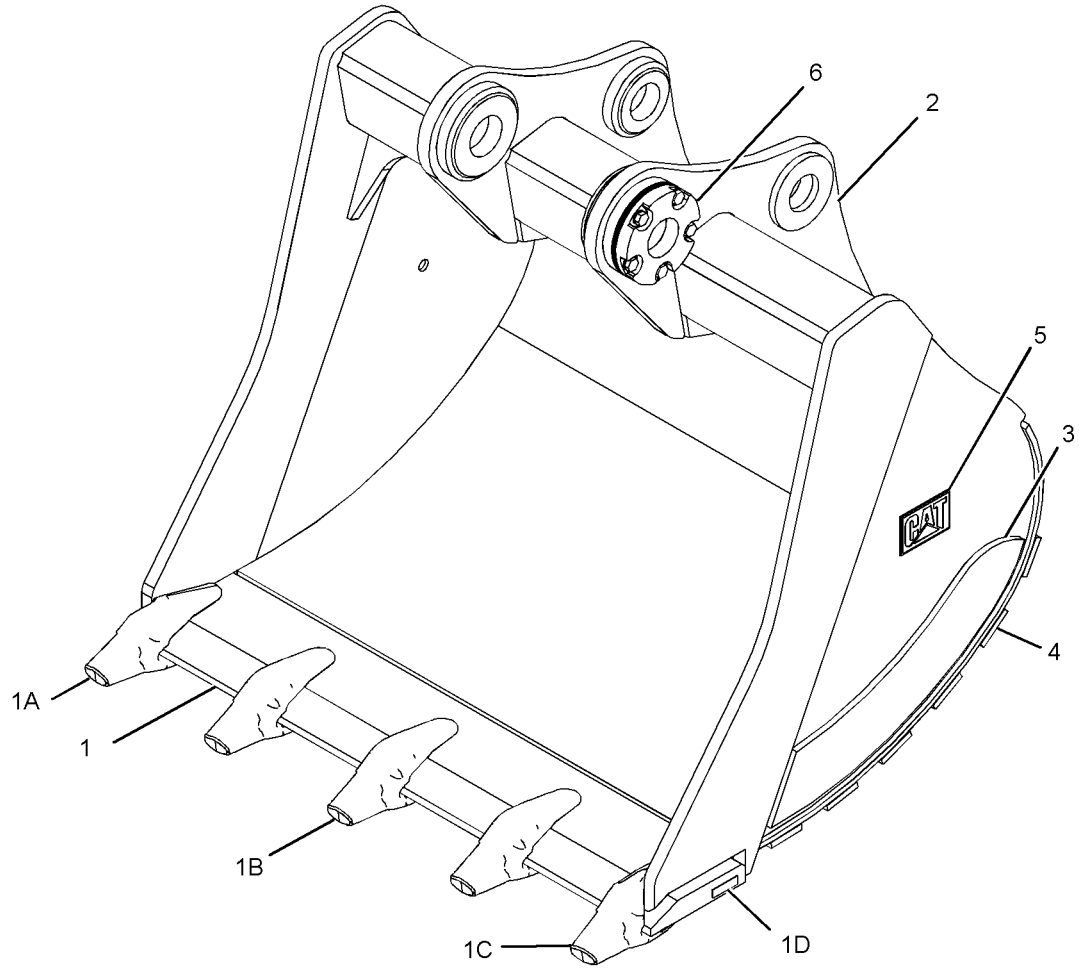

GRAPHIC #1 **<END>** g01260894

276-1600 BUCKET & ADJUSTER GP–EXCAVATION, TB-FAMILY

S/N: MYG1-UP; PPN1-UP
1500-MM (59-IN) WIDE X 1.93-CU M (2.5-CU YD) CAPACITY.
K-110 ADAPTERS, QTY OF 4
AN ATTACHMENT

SMCS-6503, 6513 **i02445691**

NOTE	REF NO	GRAPHIC REF	PART NUMBER	QTY	PART NAME 1 2 3 4 5 6 (PRODUCT LEVEL)	SEE PAGE
	1	1	**266-8402**	1	EDGE AS	
	1A	1	**232-0116**	1	ADAPTER-TIP (K-110, 2-STRAP, LH)	
	1B	1	**232-0114**	2	ADAPTER-TIP (K-110, 2-STRAP, CENTER)	
	1C	1	**232-0115**	1	ADAPTER-TIP (K-110, 2-STRAP, RH)	
	1D	1	**8P-9770**	1	PLATE	
	2	1	**276-1610**	1	PLATE AS-BOX	
	3	1	**266-8423**	2	PLATE-WEAR	
	4	1	**264-2693**	6	PLATE-WEAR	
	5	1	**2C-9259**	2	PLATE-IDENTIFICATION (CAT)	
Y	6	1	*4I-4070*	1	ADJUSTER GP-BUCKET (G/U/V/TB-FAMILY)	745

Y-SEPARATE ILLUSTRATION

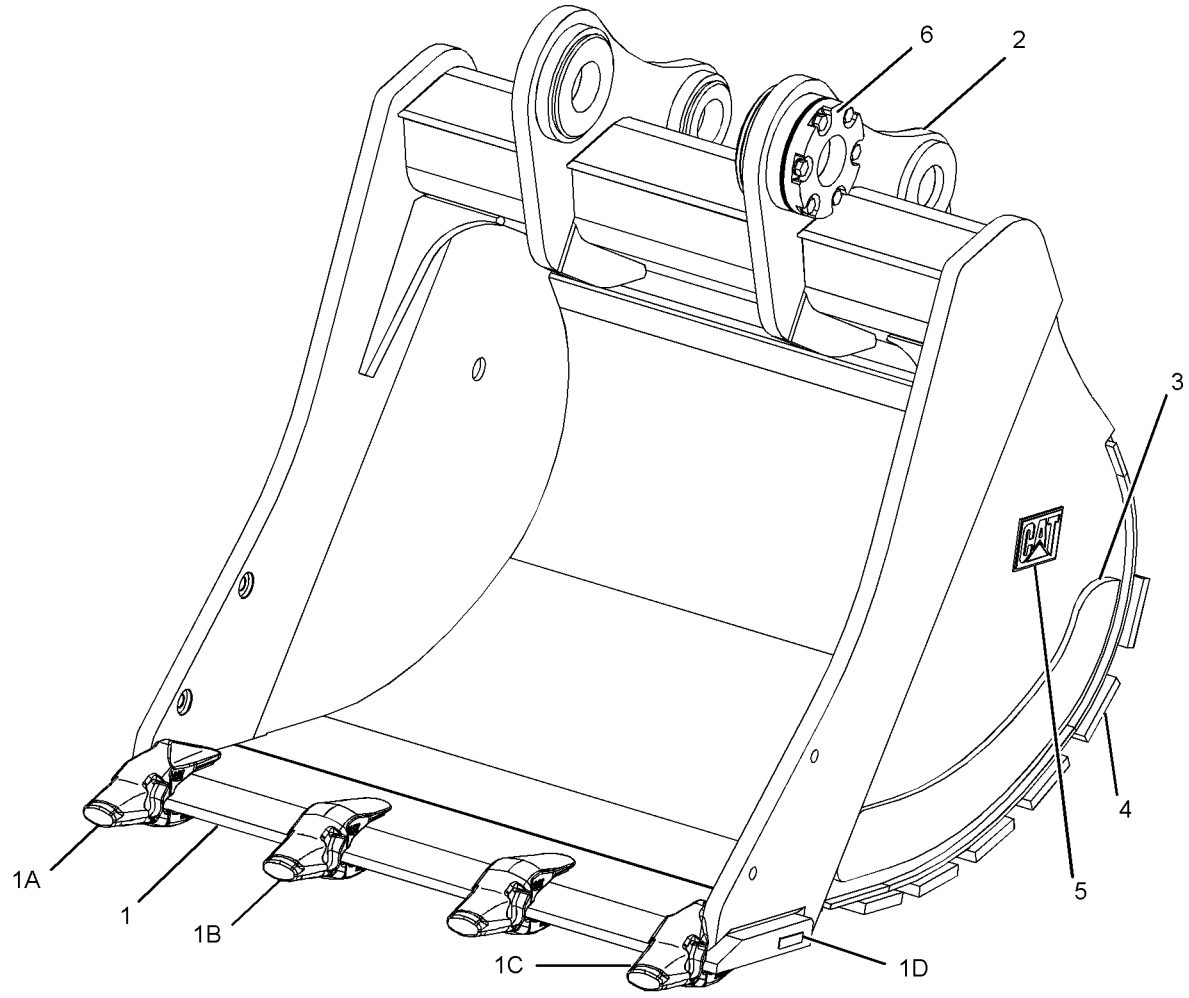

GRAPHIC #1 **<END>** g01228257

WORK TOOLS

276-1602 BUCKET & ADJUSTER GP–EXCAVATION, TB-FAMILY

S/N: MYG1-UP; PPN1-UP
1700-MM (67-IN) WIDE X 2.24-CU M (2.9-CU YD) CAPACITY.
K-110 ADAPTERS, QTY OF 5
AN ATTACHMENT

SMCS-6503, 6513 **i02491708**

NOTE	REF NO	GRAPHIC REF	PART NUMBER	QTY	PART NAME 1 2 3 4 5 6 (PRODUCT LEVEL)	SEE PAGE
	1	1	**264-2669**	1	EDGE AS	
	1A	1	**232-0116**	1	ADAPTER-TIP (K-110, 2-STRAP, LH)	
	1B	1	**232-0114**	3	ADAPTER-TIP (K-110, 2-STRAP, CENTER)	
	1C	1	**232-0115**	1	ADAPTER-TIP (K-110, 2-STRAP, RH)	
	1D	1	**8P-9770**	1	PLATE	
	2	1	**276-1611**	1	PLATE AS-BOX	
	3	1	**266-8423**	2	PLATE-WEAR	
	4	1	**264-2696**	6	PLATE-WEAR	
	5	1	**2C-9259**	2	PLATE-IDENTIFICATION (CAT)	
Y	6	1	*4I-4070*	1	ADJUSTER GP-BUCKET (G/U/V/TB-FAMILY)	745

Y-SEPARATE ILLUSTRATION

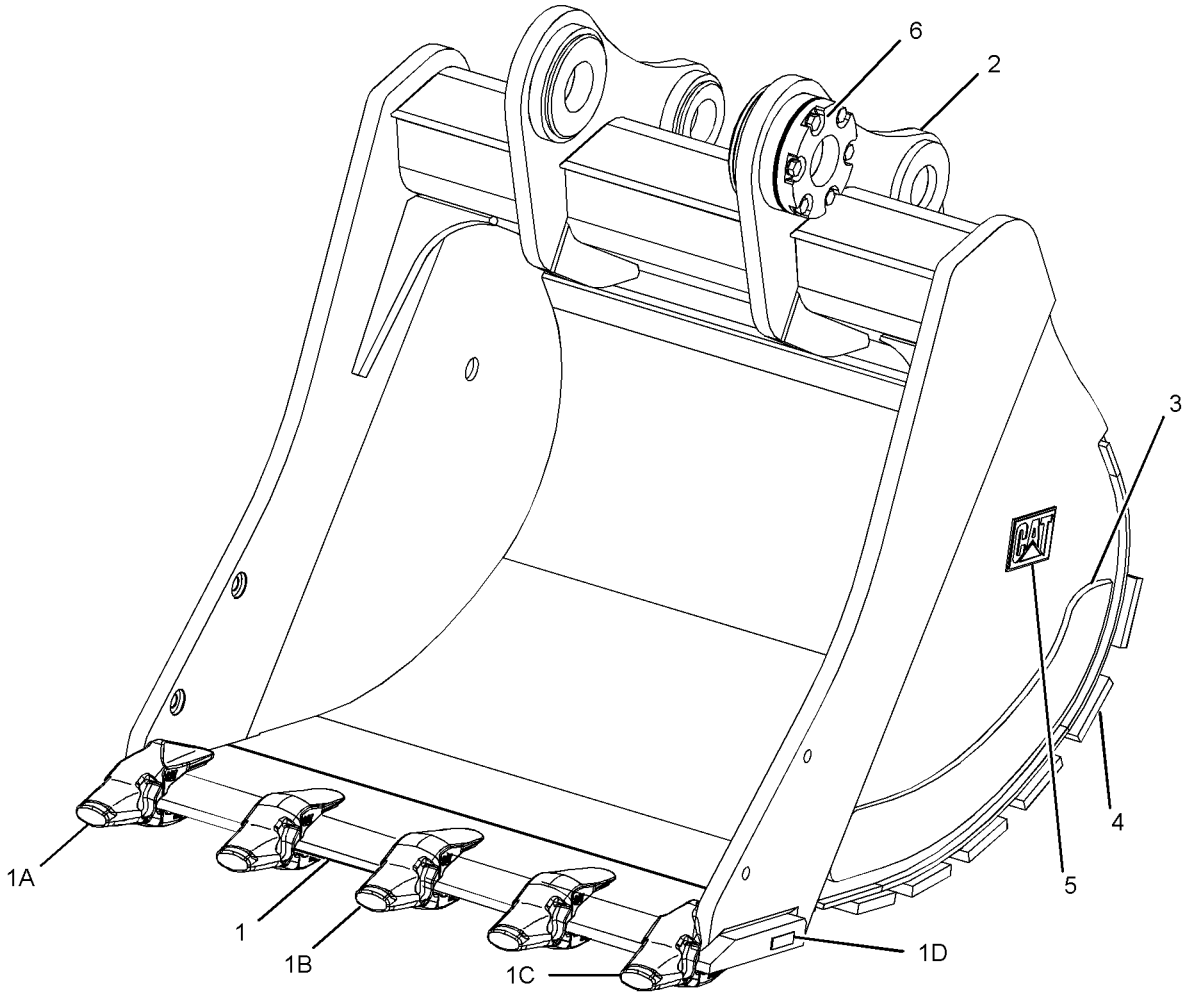

GRAPHIC #1 **<END>** g01228336

276-1604 BUCKET & ADJUSTER GP–
EXTREME EXCAVATION, TB-FAMILY
S/N: MYG1-UP; PPN1-UP
1700-MM (67-IN) WIDE X 2.24-CU M (2.9-CU YD) CAPACITY.
K-110 ADAPTERS, QTY OF 5
AN ATTACHMENT

SMCS-6503, 6513 **i02445778**

NOTE	REF NO	GRAPHIC REF	PART NUMBER	QTY	PART NAME 1 2 3 4 5 6 (PRODUCT LEVEL)	SEE PAGE
	1	1	**264-2669**	1	EDGE AS	
	1A	1	**232-0116**	1	ADAPTER-TIP (K-110, 2-STRAP, LH)	
	1B	1	**232-0114**	3	ADAPTER-TIP (K-110, 2-STRAP, CENTER)	
	1C	1	**232-0115**	1	ADAPTER-TIP (K-110, 2-STRAP, RH)	
	1D	1	**8P-9770**	1	PLATE	
	2	1	**276-1611**	1	PLATE AS-BOX	
	3	1	**266-8424**	2	PLATE-WEAR	
	4	1	**264-2700**	6	PLATE-WEAR	
	5	1	**2C-9259**	2	PLATE-IDENTIFICATION (CAT)	
Y	6	1	*4I-4070*	1	ADJUSTER GP-BUCKET (G/U/V/TB-FAMILY)	745

Y-SEPARATE ILLUSTRATION

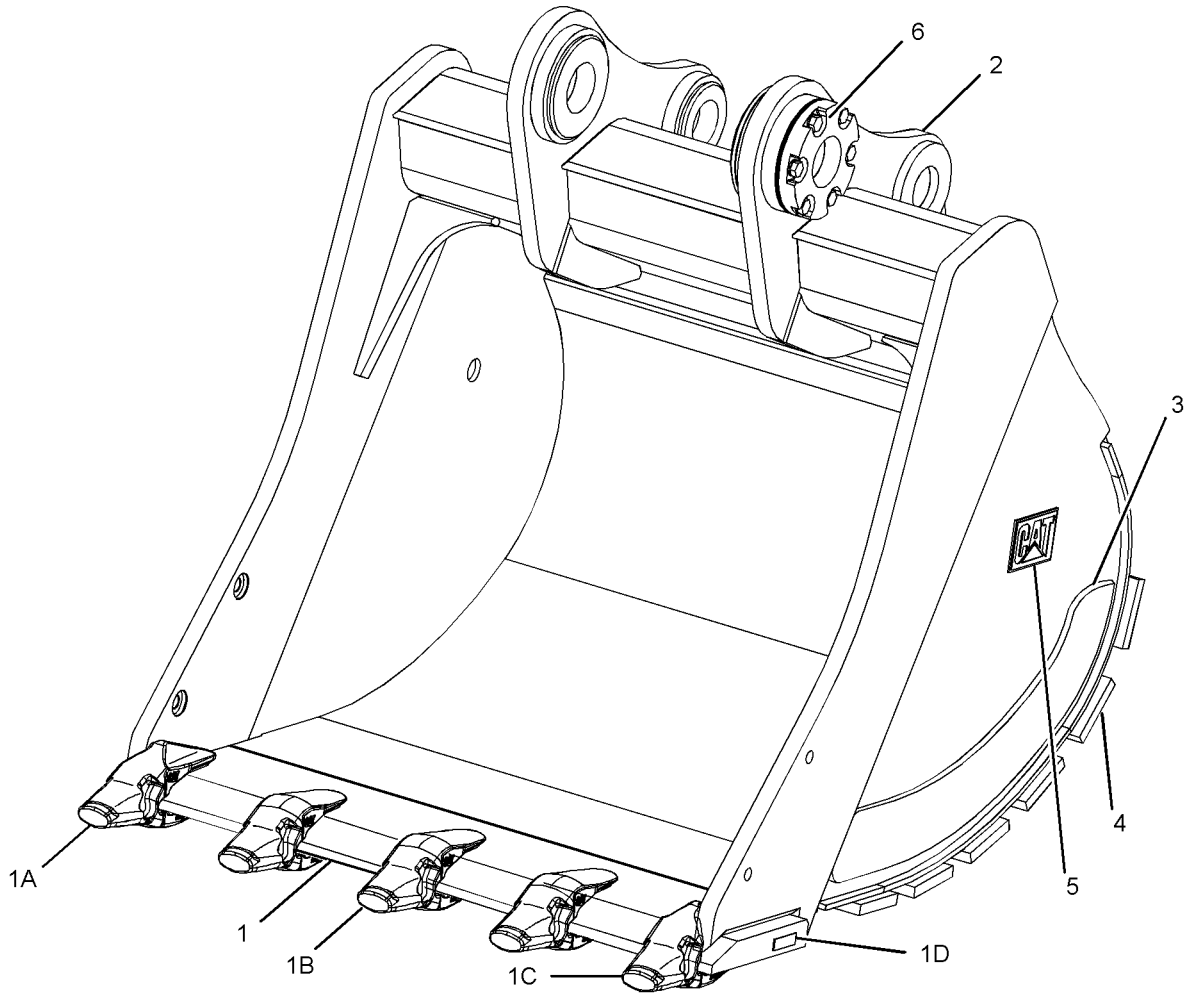

GRAPHIC #1 **<END>** g01228336

WORK TOOLS

276-1606 BUCKET & ADJUSTER GP–ROCK, TB-FAMILY

S/N: MYG1-UP; PPN1-UP
1500-MM (59-IN) WIDE X 1.93-CU M (2.5-CU YD) CAPACITY.
K-110 ADAPTERS, QTY OF 4
AN ATTACHMENT

SMCS-6503, 6513 **i02445780**

NOTE	REF NO	GRAPHIC REF	PART NUMBER	QTY	PART NAME 1 2 3 4 5 6 (PRODUCT LEVEL)	SEE PAGE
	1	1	**266-8403**	1	EDGE AS-CUTTING	
	1A	1	**232-0116**	1	ADAPTER-TIP (K-110, 2-STRAP, LH)	
	1B	1	**232-0114**	2	ADAPTER-TIP (K-110, 2-STRAP, CENTER)	
	1C	1	**232-0115**	1	ADAPTER-TIP (K-110, 2-STRAP, RH)	
	1D	1	**8P-9770**	1	PLATE	
	2	1	**276-1610**	1	PLATE AS-BOX	
	3	1	**266-8425**	2	PLATE-WEAR	
	4	1	**266-8816**	6	PLATE-WEAR	
	5	1	**2C-9259**	2	PLATE-IDENTIFICATION (CAT)	
Y	6	1	*4I-4070*	1	ADJUSTER GP-BUCKET (G/U/V/TB-FAMILY)	745

Y-SEPARATE ILLUSTRATION

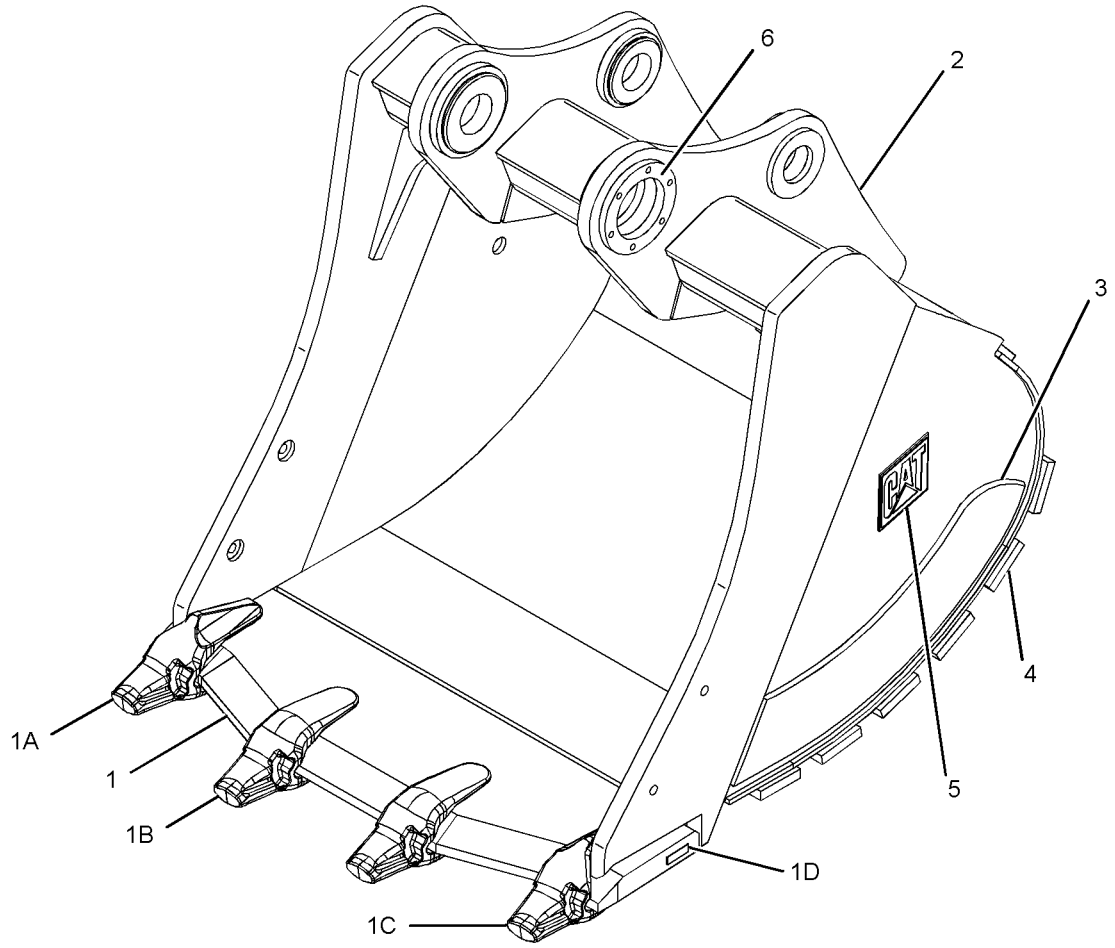

GRAPHIC #1 **<END>** g01228454

276-1608 BUCKET & ADJUSTER GP—ROCK, TB-FAMILY

S/N: MYG1-UP; PPN1-UP
1800-MM (71-IN) WIDE X 2.4-CU M(3.1-CU YD) CAPACITY.
K-110 ADAPTERS, QTY OF 5
AN ATTACHMENT

SMCS-6503, 6513 **i02445785**

NOTE	REF NO	GRAPHIC REF	PART NUMBER	QTY	PART NAME 1 2 3 4 5 6 (PRODUCT LEVEL)	SEE PAGE
	1	1	**266-8404**	1	EDGE AS-CUTTING	
	1A	1	**232-0116**	1	ADAPTER-TIP (K-110, 2-STRAP, LH)	
	1B	1	**232-0114**	3	ADAPTER-TIP (K-110, 2-STRAP, CENTER)	
	1C	1	**232-0115**	1	ADAPTER-TIP (K-110, 2-STRAP, RH)	
	1D	1	**8P-9770**	1	PLATE	
	2	1	**276-1612**	1	PLATE AS-BOX	
	3	1	**266-8425**	2	PLATE-WEAR	
	4	1	**266-8817**	6	PLATE-WEAR	
	5	1	**2C-9259**	2	PLATE-IDENTIFICATION (CAT)	
Y	6	1	*4I-4070*	1	ADJUSTER GP-BUCKET (G/U/V/TB-FAMILY)	745

Y-SEPARATE ILLUSTRATION

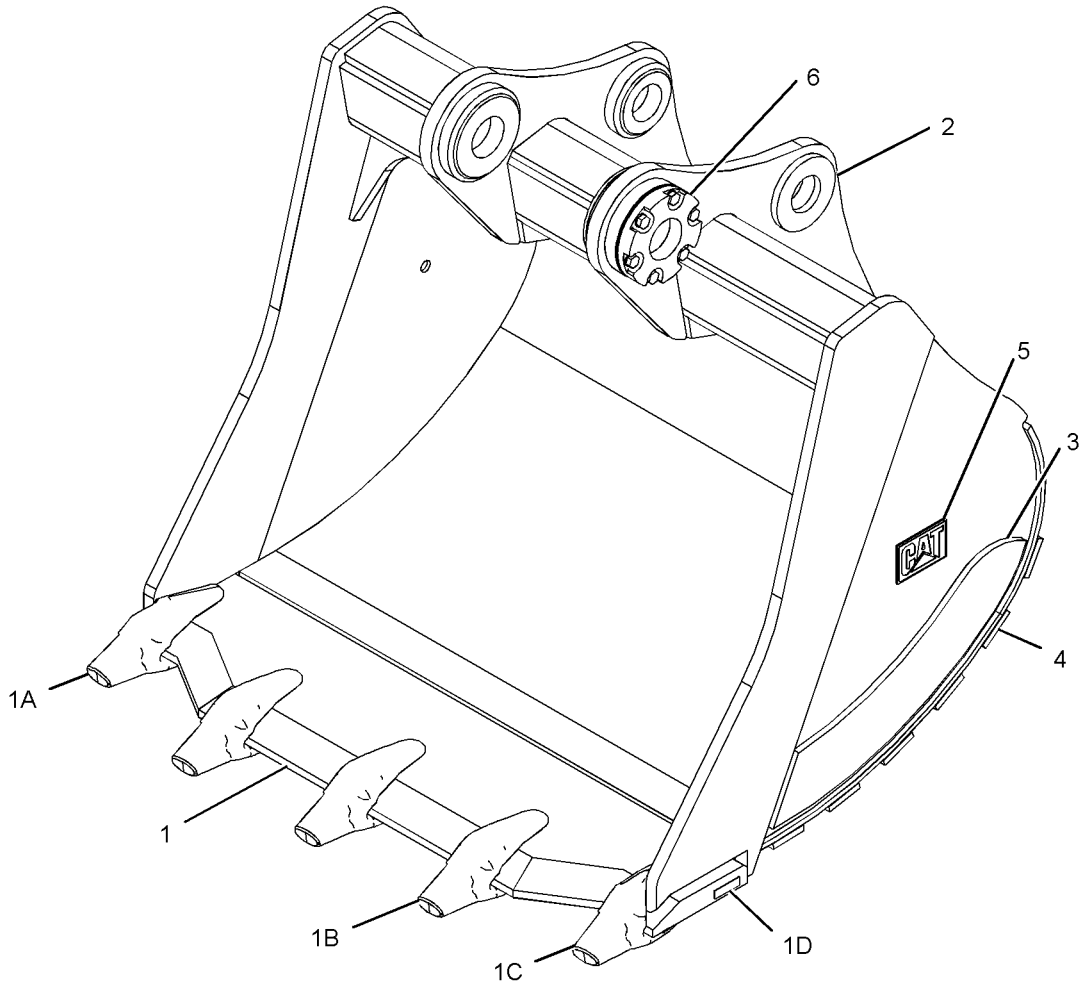

GRAPHIC #1

<END>

g01238021

WORK TOOLS

264-2556 BUCKET GP-EXCAVATION–QUICK COUPLER

S/N: MYG1-UP; PPN1-UP
1000-MM (39-IN) WIDE X 1.11-CU M (1.5-CU YD) CAPACITY.
K-100 ADAPTERS, QTY OF 4
AN ATTACHMENT

SMCS-6523 **i02763016**

NOTE	REF NO	GRAPHIC REF	PART NUMBER	QTY	PART NAME 1 2 3 4 5 6 (PRODUCT LEVEL)	SEE PAGE
	1	1	**264-2663**	1	EDGE AS	
	1A	1	**220-9106**	1	ADAPTER-TIP (K-100, 2-STRAP, LH)	
	1B	1	**220-9104**	2	ADAPTER-TIP (K-100, 2-STRAP, CENTER)	
	1C	1	**220-9105**	1	ADAPTER-TIP (K-100, 2-STRAP, RH)	
	1D	1	**8P-9770**	1	PLATE	
	2	1	**264-2649**	1	PLATE AS-BOX	
	3	1	**264-2703**	2	PLATE-WEAR	
	4	1	**264-2691**	6	PLATE-WEAR	
	5	1	**2C-9259**	2	PLATE-IDENTIFICATION (CAT)	

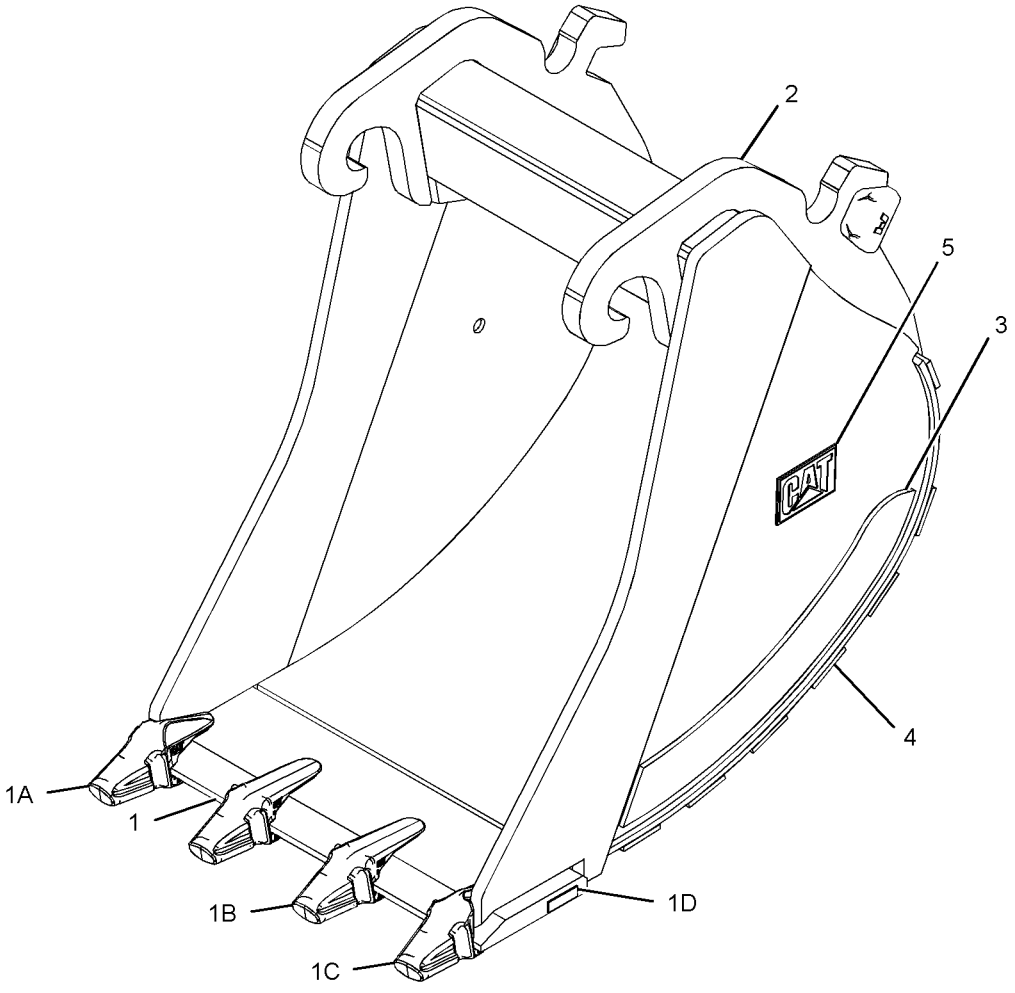

GRAPHIC #1 **<END>** g01262574

264-2557 BUCKET GP-EXCAVATION–QUICK COUPLER

S/N: MYG1-UP; PPN1-UP
1000-MM (39-IN) WIDE X 1.11-CU M (1.5-CU YD) CAPACITY.
K-100 ADAPTERS, QTY OF 4
AN ATTACHMENT

SMCS-6523 **i02763017**

NOTE	REF NO	GRAPHIC REF	PART NUMBER	QTY	PART NAME 1 2 3 4 5 6 (PRODUCT LEVEL)	SEE PAGE
	1	1	**264-2663**	1	EDGE AS	
	1A	1	**220-9106**	1	ADAPTER-TIP (K-100, 2-STRAP, LH)	
	1B	1	**220-9104**	2	ADAPTER-TIP (K-100, 2-STRAP, CENTER)	
	1C	1	**220-9105**	1	ADAPTER-TIP (K-100, 2-STRAP, RH)	
	1D	1	**8P-9770**	1	PLATE	
	2	1	**264-2650**	1	PLATE AS-BOX	
	3	1	**264-2703**	2	PLATE-WEAR	
	4	1	**264-2691**	6	PLATE-WEAR	
	5	1	**2C-9259**	2	PLATE-IDENTIFICATION (CAT)	

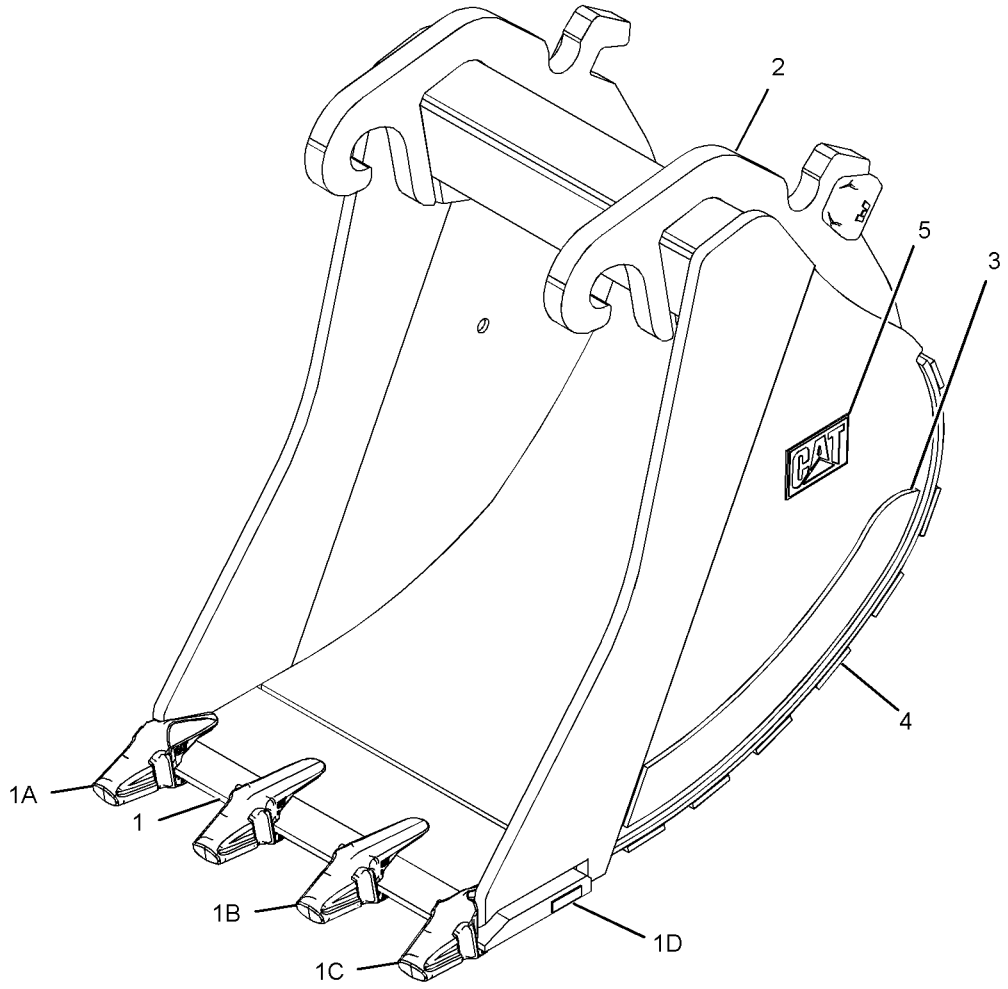

GRAPHIC #1 **<END>** g01262657

264-2558 BUCKET GP-EXCAVATION–QUICK COUPLER

S/N: MYG1-UP; PPN1-UP
1350-MM (53-IN) WIDE X 1.62-CU M (2.1-CU YD) CAPACITY.
K-100 ADAPTERS, QTY OF 4
AN ATTACHMENT

SMCS-6523 **i02763019**

NOTE	REF NO	GRAPHIC REF	PART NUMBER	QTY	PART NAME 1 2 3 4 5 6 (PRODUCT LEVEL)	SEE PAGE
	1	1	**250-9679**	1	EDGE AS	
	1A	1	**220-9106**	1	ADAPTER-TIP (K-100, 2-STRAP, LH)	
	1B	1	**220-9104**	2	ADAPTER-TIP (K-100, 2-STRAP, CENTER)	
	1C	1	**220-9105**	1	ADAPTER-TIP (K-100, 2-STRAP, RH)	
	1D	1	**8P-9770**	1	PLATE	
	2	1	**264-2651**	1	PLATE AS-BOX	
	3	1	**264-2703**	2	PLATE-WEAR	
	4	1	**264-2692**	6	PLATE-WEAR	
	5	1	**2C-9259**	2	PLATE-IDENTIFICATION (CAT)	

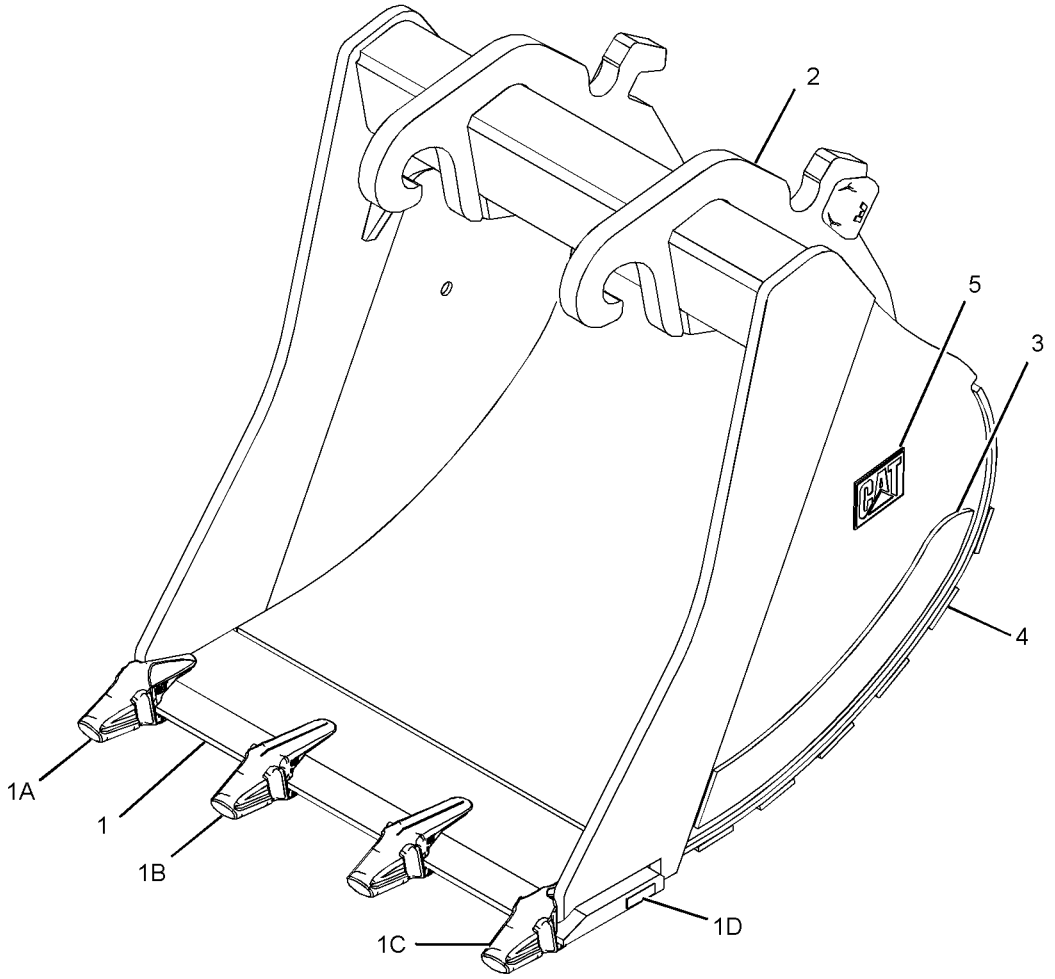

GRAPHIC #1 **<END>** g01262706

264-2559 BUCKET GP-EXCAVATION—QUICK COUPLER

S/N: MYG1-UP; PPN1-UP
1350-MM (53-IN) WIDE X 1.62-CU M (2.1-CU YD) CAPACITY.
K-100 ADAPTERS, QTY OF 4
AN ATTACHMENT

SMCS-6523 **i02763020**

NOTE	REF NO	GRAPHIC REF	PART NUMBER	QTY	PART NAME 1 2 3 4 5 6 (PRODUCT LEVEL)	SEE PAGE
	1	1	**250-9679**	1	EDGE AS	
	1A	1	**220-9106**	1	ADAPTER-TIP (K-100, 2-STRAP, LH)	
	1B	1	**220-9104**	2	ADAPTER-TIP (K-100, 2-STRAP, CENTER)	
	1C	1	**220-9105**	1	ADAPTER-TIP (K-100, 2-STRAP, RH)	
	1D	1	**8P-9770**	1	PLATE	
	2	1	**264-2652**	1	PLATE AS-BOX	
	3	1	**264-2703**	2	PLATE-WEAR	
	4	1	**264-2692**	6	PLATE-WEAR	
	5	1	**2C-9259**	2	PLATE-IDENTIFICATION (CAT)	

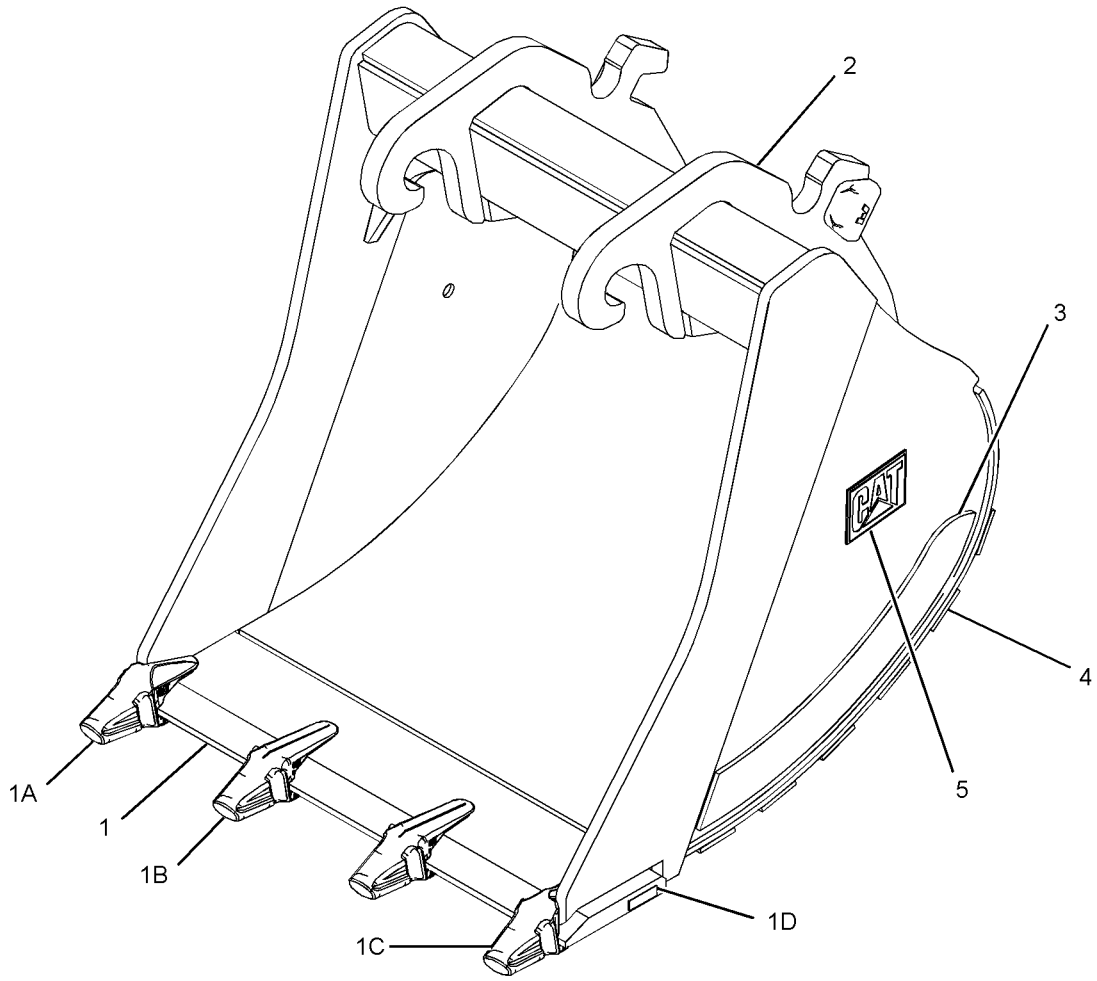

GRAPHIC #1 **<END>** g01226354

WORK TOOLS

264-2560 BUCKET GP-EXCAVATION–QUICK COUPLER

S/N: MYG1-UP; PPN1-UP
1500-MM (59-IN) WIDE X 1.84-CU M (2.4-CU YD) CAPACITY.
K-100 ADAPTERS, QTY OF 4
AN ATTACHMENT

SMCS-6523 **i02763021**

NOTE	REF NO	GRAPHIC REF	PART NUMBER	QTY	PART NAME 1 2 3 4 5 6 (PRODUCT LEVEL)	SEE PAGE
	1	1	**250-9681**	1	EDGE AS	
	1A	1	**220-9106**	1	ADAPTER-TIP (K-100, 2-STRAP, LH)	
	1B	1	**220-9104**	3	ADAPTER-TIP (K-100, 2-STRAP, CENTER)	
	1C	1	**220-9105**	1	ADAPTER-TIP (K-100, 2-STRAP, RH)	
	1D	1	**8P-9770**	1	PLATE	
	2	1	**264-2653**	1	PLATE AS-BOX	
	3	1	**264-2703**	2	PLATE-WEAR	
	4	1	**264-2693**	6	PLATE-WEAR	
	5	1	**2C-9259**	2	PLATE-IDENTIFICATION (CAT)	

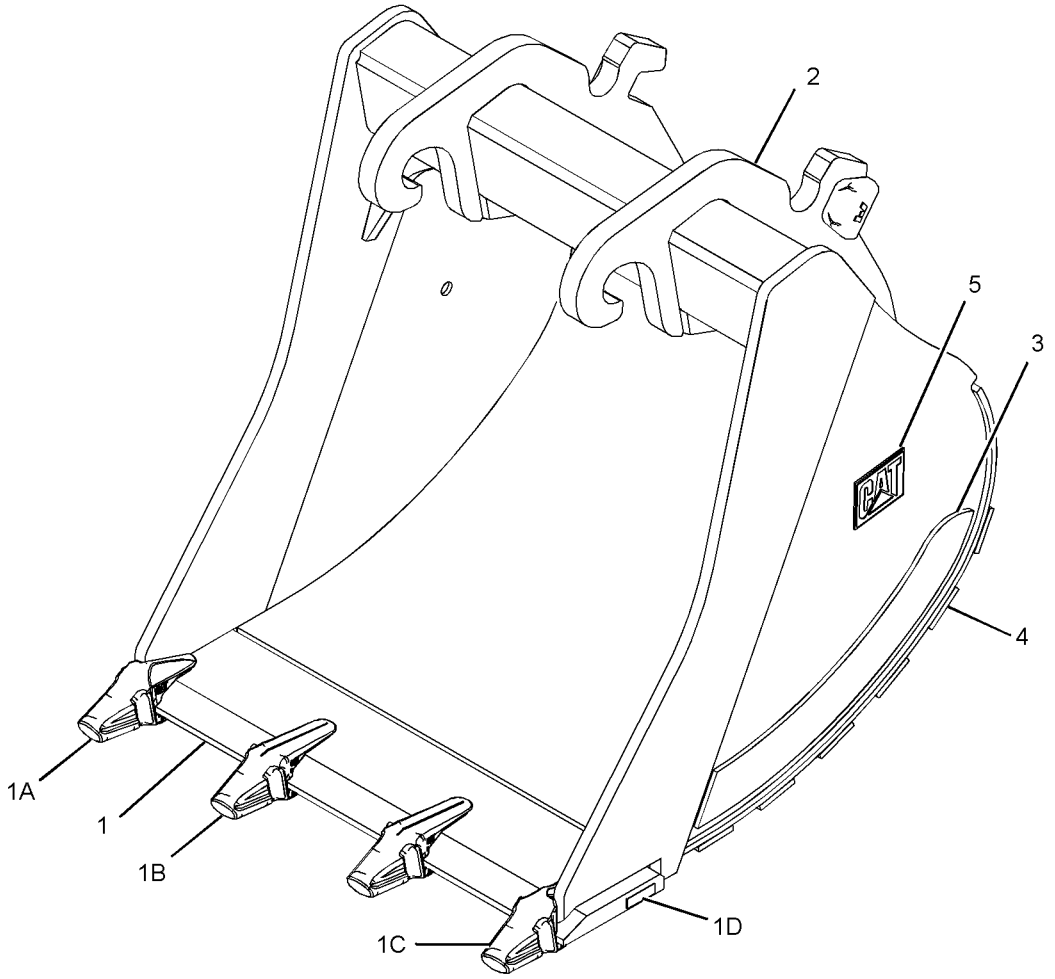

GRAPHIC #1 **<END>** g01262706

WORK TOOLS

264-2561 BUCKET GP-EXCAVATION—QUICK COUPLER

S/N: MYG1-UP; PPN1-UP
1500-MM (59-IN) WIDE X 1.84-CU M (2.4-CU YD) CAPACITY.
K-100 ADAPTERS, QTY OF 4
AN ATTACHMENT

SMCS-6523 **i02763022**

NOTE	REF NO	GRAPHIC REF	PART NUMBER	QTY	PART NAME 1 2 3 4 5 6 (PRODUCT LEVEL)	SEE PAGE
	1	1	**250-9681**	1	EDGE AS	
	1A	1	**220-9106**	1	ADAPTER-TIP (K-100, 2-STRAP, LH)	
	1B	1	**220-9104**	3	ADAPTER-TIP (K-100, 2-STRAP, CENTER)	
	1C	1	**220-9105**	1	ADAPTER-TIP (K-100, 2-STRAP, RH)	
	1D	1	**8P-9770**	1	PLATE	
	2	1	**264-2654**	1	PLATE AS-BOX	
	3	1	**264-2703**	2	PLATE-WEAR	
	4	1	**264-2693**	6	PLATE-WEAR	
	5	1	**2C-9259**	2	PLATE-IDENTIFICATION (CAT)	

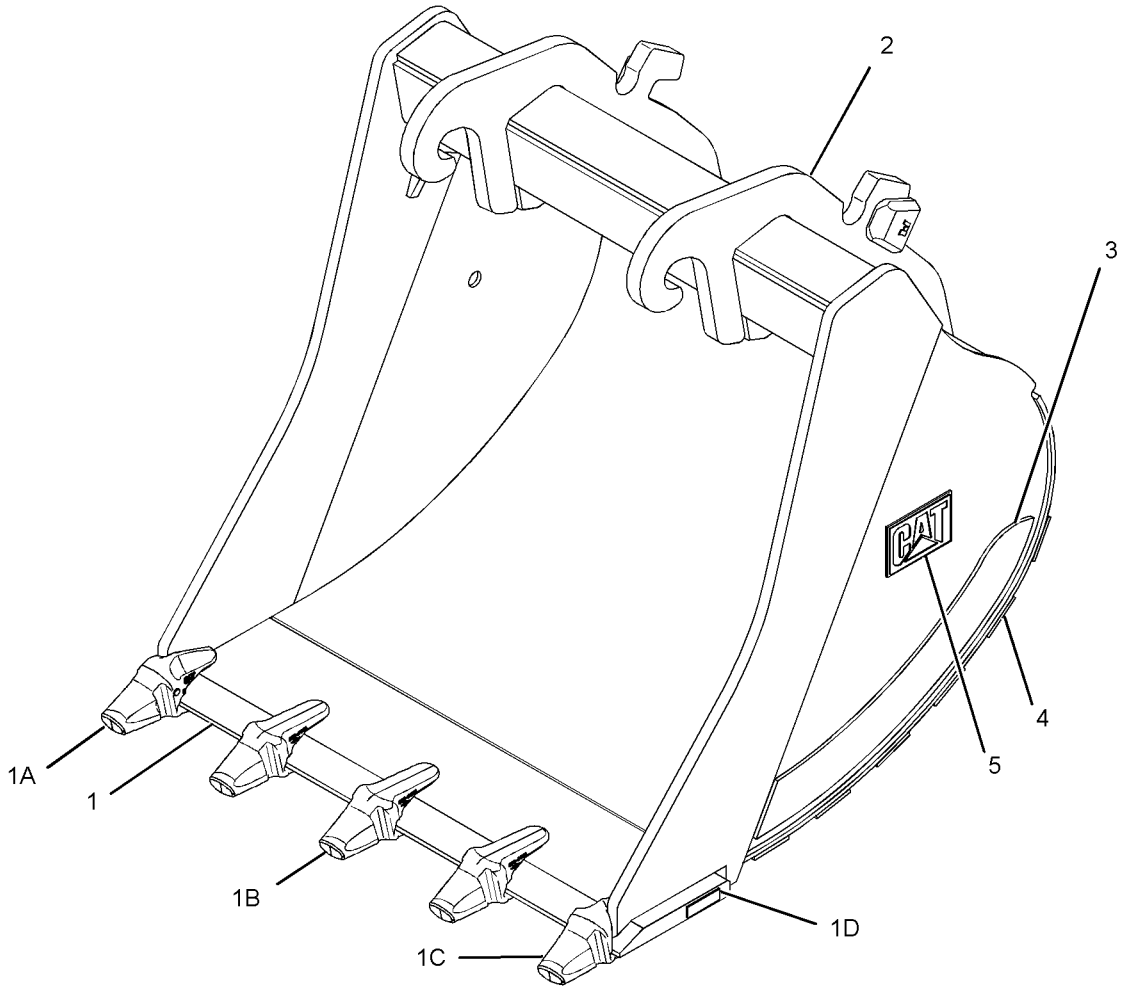

GRAPHIC #1 **<END>** g01226735

WORK TOOLS

264-2562 BUCKET GP-EXCAVATION–QUICK COUPLER

S/N: MYG1-UP; PPN1-UP
1600-MM (63-IN) WIDE X 1.99-CU M (2.6-CU YD) CAPACITY.
K-100 ADAPTERS, QTY OF 5
AN ATTACHMENT

SMCS-6523 **i02763023**

NOTE	REF NO	GRAPHIC REF	PART NUMBER	QTY	PART NAME 1 2 3 4 5 6 (PRODUCT LEVEL)	SEE PAGE
	1	1	**250-9682**	1	EDGE AS	
	1A	1	**220-9106**	1	ADAPTER-TIP (K-100, 2-STRAP, LH)	
	1B	1	**220-9104**	3	ADAPTER-TIP (K-100, 2-STRAP, CENTER)	
	1C	1	**220-9105**	1	ADAPTER-TIP (K-100, 2-STRAP, RH)	
	1D	1	**8P-9770**	1	PLATE	
	2	1	**264-2655**	1	PLATE AS-BOX	
	3	1	**264-2703**	2	PLATE-WEAR	
	4	1	**264-2694**	6	PLATE-WEAR	
	5	1	**2C-9259**	2	PLATE-IDENTIFICATION (CAT)	

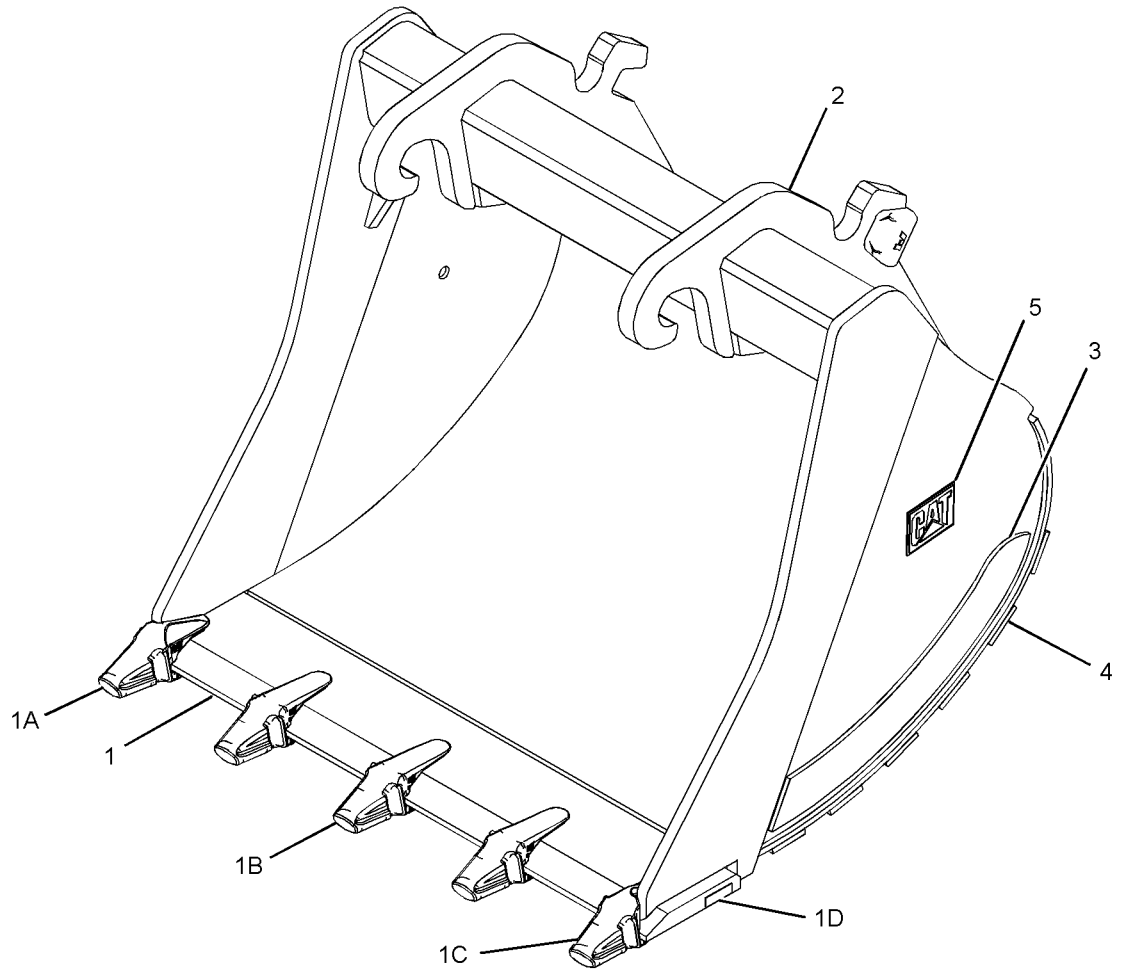

GRAPHIC #1 **<END>** g01262791

264-2563 BUCKET GP-EXCAVATION—QUICK COUPLER

S/N: MYG1-UP; PPN1-UP
1600-MM (63-IN) WIDE X 1.99-CU M (2.6-CU YD) CAPACITY.
K-100 ADAPTERS, QTY OF 5
AN ATTACHMENT

SMCS-6523 **i02763024**

NOTE	REF NO	GRAPHIC REF	PART NUMBER	QTY	PART NAME 1 2 3 4 5 6 (PRODUCT LEVEL)	SEE PAGE
	1	1	**250-9682**	1	EDGE AS	
	1A	1	**220-9106**	1	ADAPTER-TIP (K-100, 2-STRAP, LH)	
	1B	1	**220-9104**	3	ADAPTER-TIP (K-100, 2-STRAP, CENTER)	
	1C	1	**220-9105**	1	ADAPTER-TIP (K-100, 2-STRAP, RH)	
	1D	1	**8P-9770**	1	PLATE	
	2	1	**264-2656**	1	PLATE AS-BOX	
	3	1	**264-2703**	2	PLATE-WEAR	
	4	1	**264-2694**	6	PLATE-WEAR	
	5	1	**2C-9259**	2	PLATE-IDENTIFICATION (CAT)	

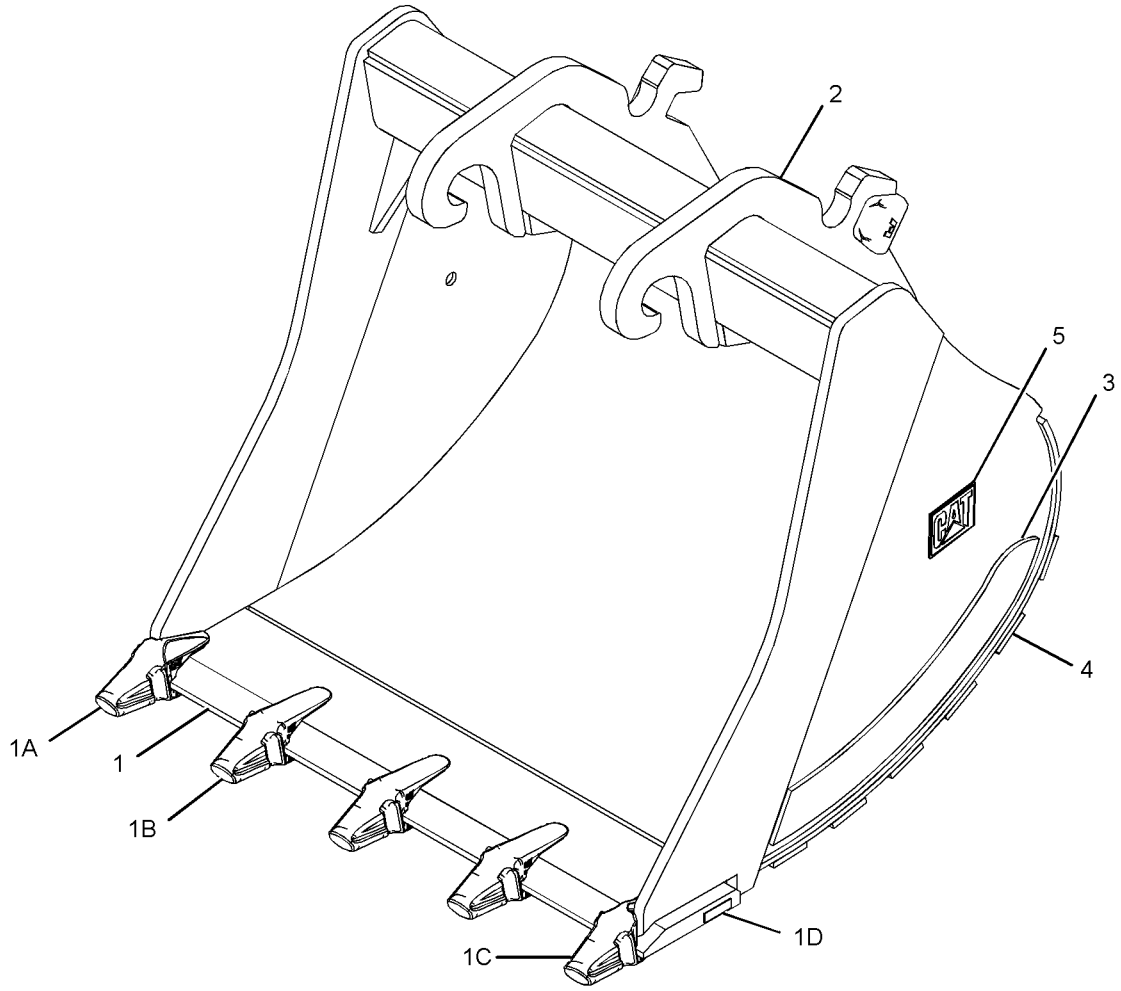

GRAPHIC #1 **<END>** g01262982

WORK TOOLS

264-2565 BUCKET GP-EXCAVATION—QUICK COUPLER

S/N: MYG1-UP; PPN1-UP
1650-MM (65-IN) WIDE X 2.07-CU M (2.7-CU YD) CAPACITY.
K-100 ADAPTERS, QTY OF 5
AN ATTACHMENT

SMCS-6523 **i02763028**

NOTE	REF NO	GRAPHIC REF	PART NUMBER	QTY	PART NAME 1 2 3 4 5 6 (PRODUCT LEVEL)	SEE PAGE
	1	1	**264-2664**	1	EDGE AS	
	1A	1	**220-9106**	1	ADAPTER-TIP (K-100, 2-STRAP, LH)	
	1B	1	**220-9104**	3	ADAPTER-TIP (K-100, 2-STRAP, CENTER)	
	1C	1	**220-9105**	1	ADAPTER-TIP (K-100, 2-STRAP, RH)	
	1D	1	**8P-9770**	1	PLATE	
	2	1	**264-2658**	1	PLATE AS-BOX	
	3	1	**264-2703**	2	PLATE-WEAR	
	4	1	**264-2695**	6	PLATE-WEAR	
	5	1	**2C-9259**	2	PLATE-IDENTIFICATION (CAT)	

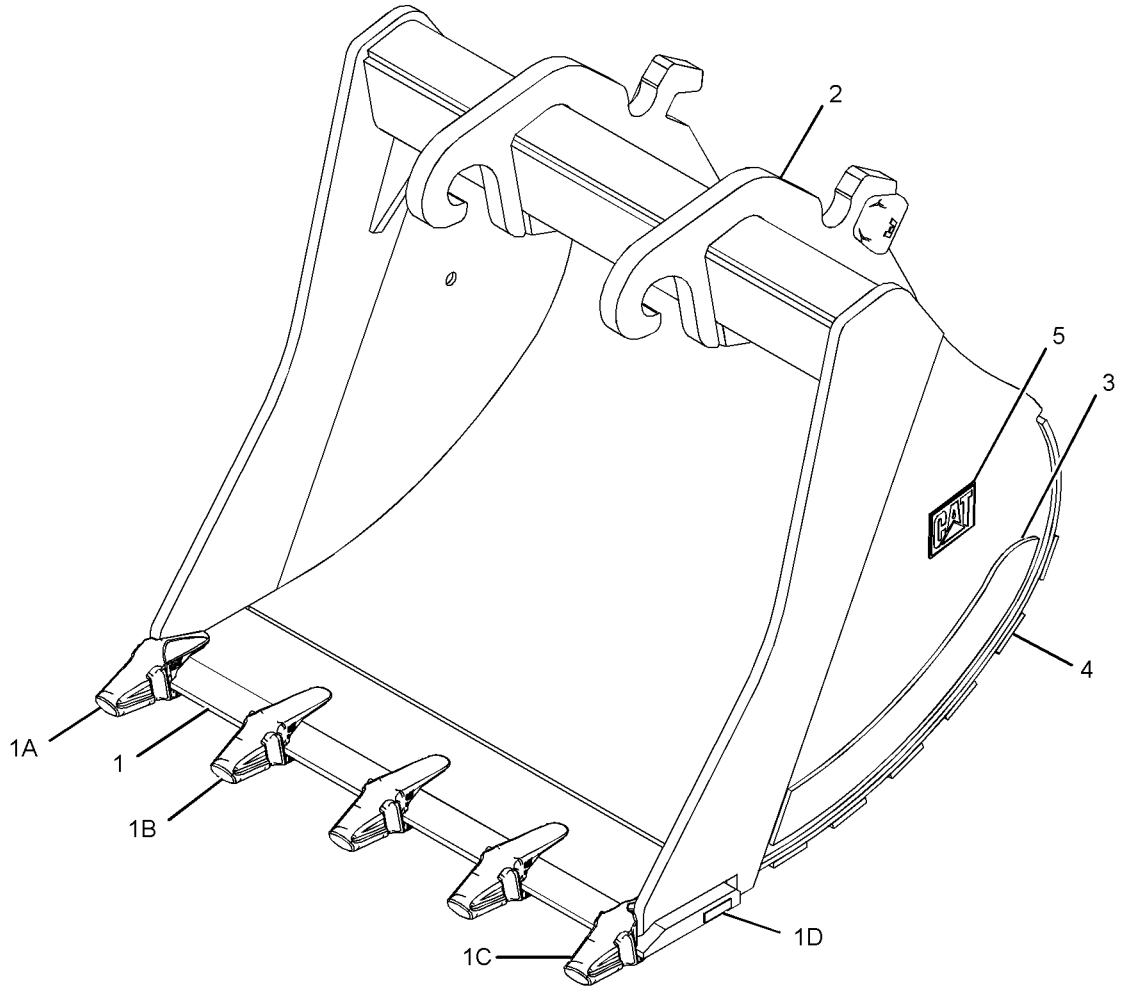

GRAPHIC #1 **<END>** g01262982

264-2567 BUCKET GP-EXCAVATION—QUICK COUPLER

S/N: MYG1-UP; PPN1-UP
1700-MM (67-IN) WIDE X 2.14-CU M (2.8-CU YD) CAPACITY.
K-100 ADAPTERS, QTY OF 5
AN ATTACHMENT

SMCS-6523 **i02763029**

NOTE	REF NO	GRAPHIC REF	PART NUMBER	QTY	PART NAME 1 2 3 4 5 6 (PRODUCT LEVEL)	SEE PAGE
	1	1	**264-2665**	1	EDGE AS-CUTTING	
	1A	1	**220-9106**	1	ADAPTER-TIP (K-100, 2-STRAP, LH)	
	1B	1	**220-9104**	3	ADAPTER-TIP (K-100, 2-STRAP, CENTER)	
	1C	1	**220-9105**	1	ADAPTER-TIP (K-100, 2-STRAP, RH)	
	1D	1	**8P-9770**	1	PLATE	
	2	1	**264-2659**	1	PLATE AS-BOX	
	3	1	**264-2703**	2	PLATE-WEAR	
	4	1	**264-2696**	6	PLATE-WEAR	
	5	1	**2C-9259**	2	PLATE-IDENTIFICATION (CAT)	

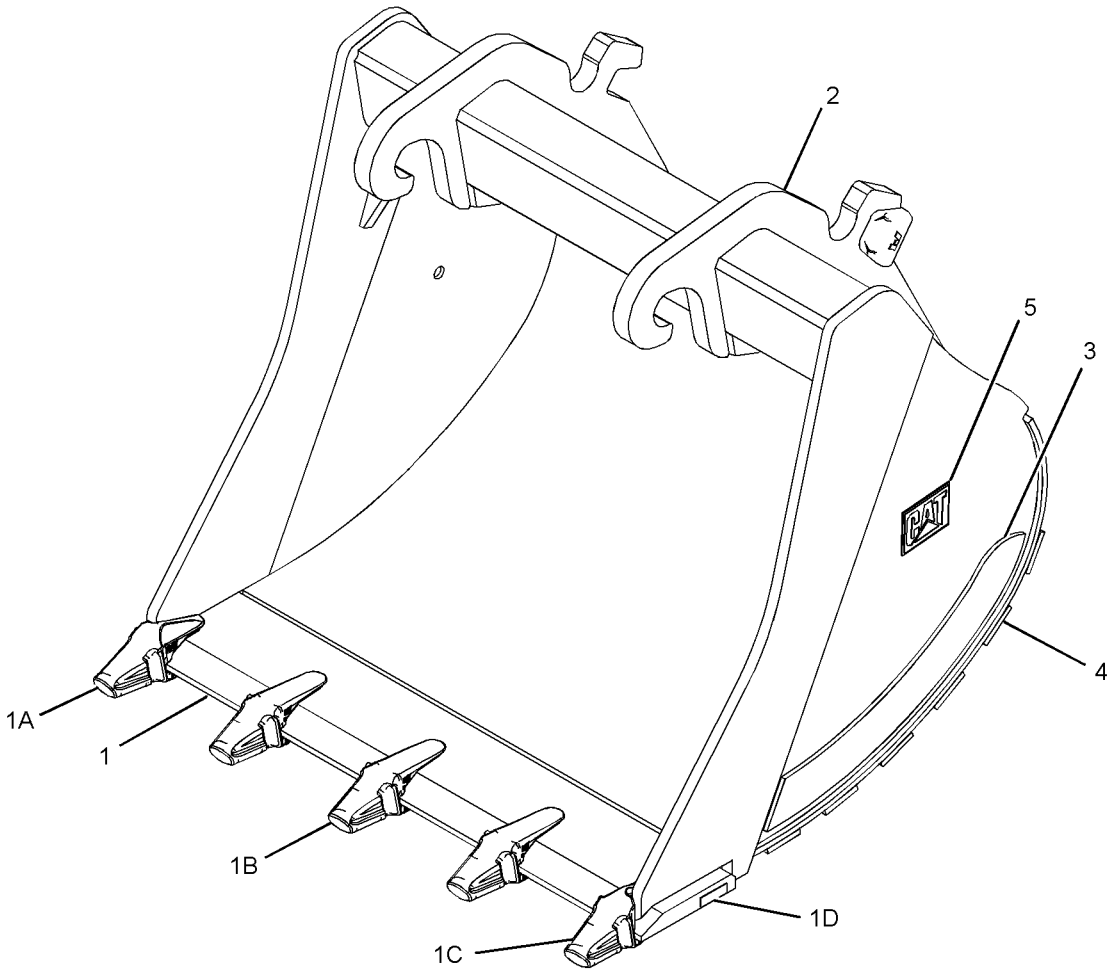

GRAPHIC #1 **<END>** g01262791

WORK TOOLS

264-2568 BUCKET GP-EXCAVATION—QUICK COUPLER

S/N: MYG1-UP; PPN1-UP
1700-MM (67-IN) WIDE X 2.14-CU M (2.8-CU YD) CAPACITY.
K-100 ADAPTERS, QTY OF 5
AN ATTACHMENT

SMCS-6523 **i02763030**

NOTE	REF NO	GRAPHIC REF	PART NUMBER	QTY	PART NAME 1 2 3 4 5 6 (PRODUCT LEVEL)	SEE PAGE
	1	1	**264-2665**	1	EDGE AS-CUTTING	
	1A	1	**220-9106**	1	ADAPTER-TIP (K-100, 2-STRAP, LH)	
	1B	1	**220-9104**	3	ADAPTER-TIP (K-100, 2-STRAP, CENTER)	
	1C	1	**220-9105**	1	ADAPTER-TIP (K-100, 2-STRAP, RH)	
	1D	1	**8P-9770**	1	PLATE	
	2	1	**264-2660**	1	PLATE AS-BOX	
	3	1	**264-2703**	2	PLATE-WEAR	
	4	1	**264-2696**	6	PLATE-WEAR	
	5	1	**2C-9259**	2	PLATE-IDENTIFICATION (CAT)	

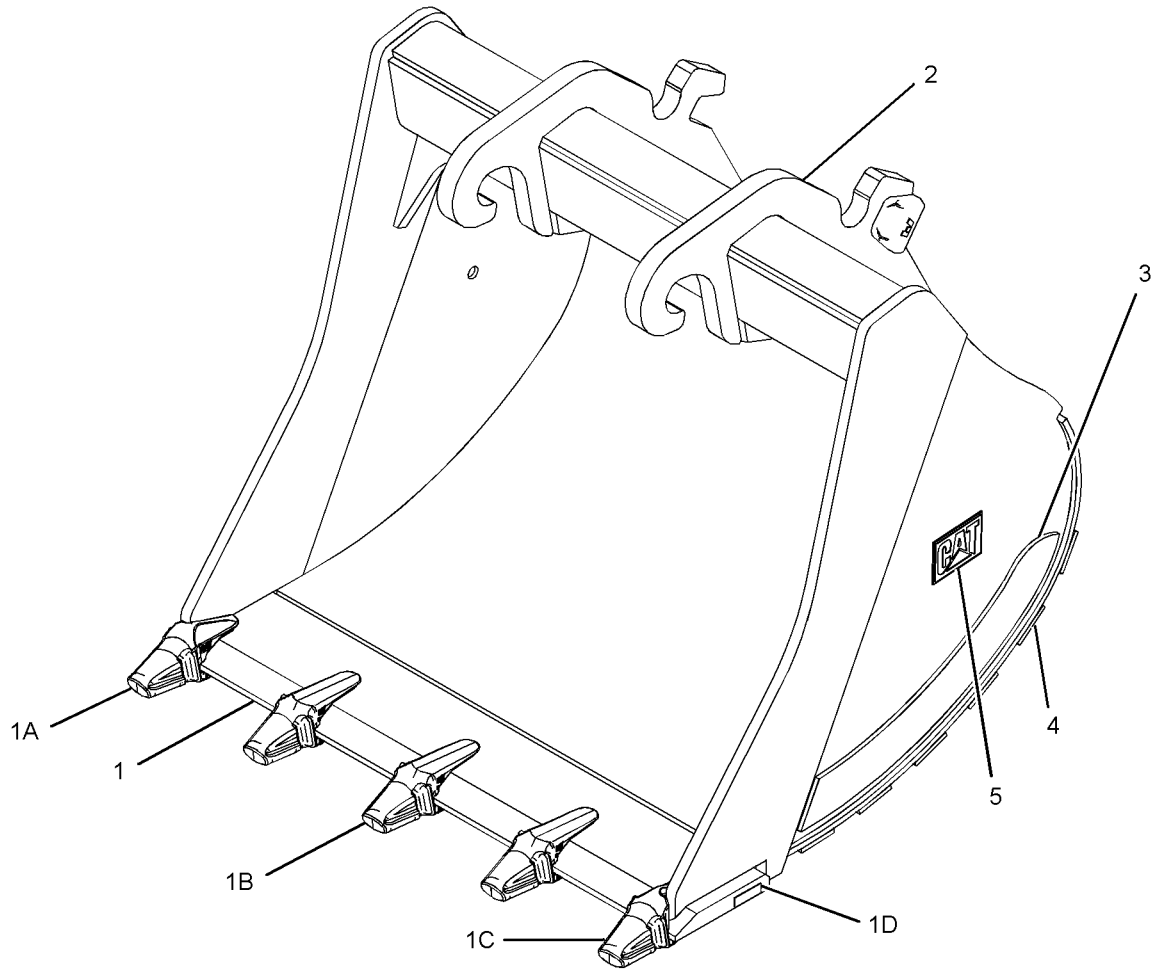

GRAPHIC #1 **<END>** g01234434

WORK TOOLS

264-2570 BUCKET GP-EXCAVATION—QUICK COUPLER

S/N: MYG1-UP; PPN1-UP
1800-MM (71-IN) WIDE X 2.29-CU M (3.0-CU YD) CAPACITY.
K-100 ADAPTERS, QTY OF 5
AN ATTACHMENT

SMCS-6523 **i02763031**

NOTE	REF NO	GRAPHIC REF	PART NUMBER	QTY	PART NAME 1 2 3 4 5 6 (PRODUCT LEVEL)	SEE PAGE
	1	1	**264-2666**	1	EDGE AS-CUTTING	
	1A	1	**220-9106**	1	ADAPTER-TIP (K-100, 2-STRAP, LH)	
	1B	1	**220-9104**	3	ADAPTER-TIP (K-100, 2-STRAP, CENTER)	
	1C	1	**220-9105**	1	ADAPTER-TIP (K-100, 2-STRAP, RH)	
	1D	1	**8P-9770**	1	PLATE	
	2	1	**264-2661**	1	PLATE AS-BOX	
	3	1	**264-2703**	2	PLATE-WEAR	
	4	1	**264-2697**	6	PLATE-WEAR	
	5	1	**2C-9259**	2	PLATE-IDENTIFICATION (CAT)	

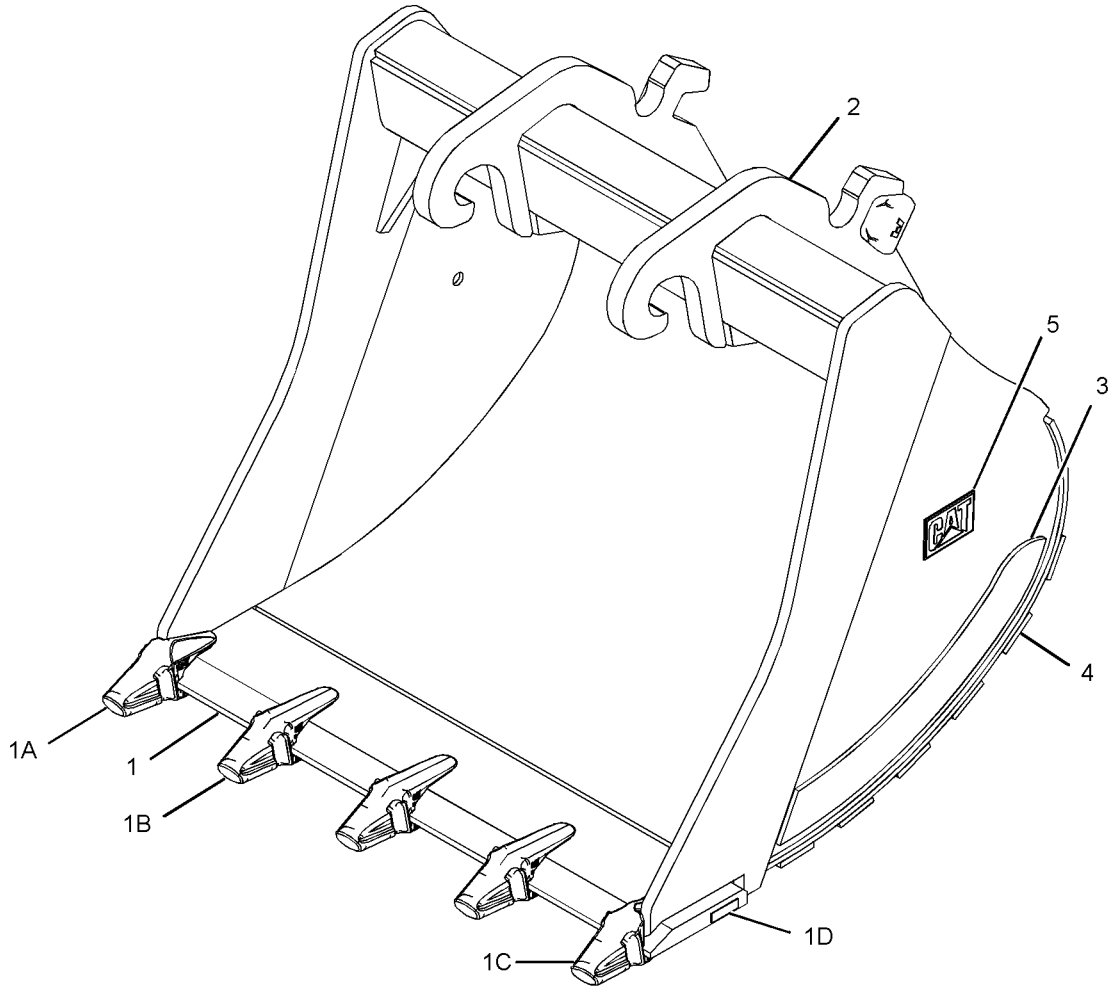

GRAPHIC #1 **<END>** g01263102

WORK TOOLS

264-2571 BUCKET GP-EXCAVATION–QUICK COUPLER

S/N: MYG1-UP; PPN1-UP
1800-MM (71-IN) WIDE X 2.29-CU M (3.0-CU YD) CAPACITY.
K-100 ADAPTERS, QTY OF 5
AN ATTACHMENT

SMCS-6523 **i02763033**

NOTE	REF NO	GRAPHIC REF	PART NUMBER	QTY	PART NAME 1 2 3 4 5 6 (PRODUCT LEVEL)	SEE PAGE
	1	1	**264-2666**	1	EDGE AS-CUTTING	
	1A	1	**220-9106**	1	ADAPTER-TIP (K-100, 2-STRAP, LH)	
	1B	1	**220-9104**	3	ADAPTER-TIP (K-100, 2-STRAP, CENTER)	
	1C	1	**220-9105**	1	ADAPTER-TIP (K-100, 2-STRAP, RH)	
	1D	1	**8P-9770**	1	PLATE	
	2	1	**264-2662**	1	PLATE AS-BOX	
	3	1	**264-2703**	2	PLATE-WEAR	
	4	1	**264-2697**	6	PLATE-WEAR	
	5	1	**2C-9259**	2	PLATE-IDENTIFICATION (CAT)	

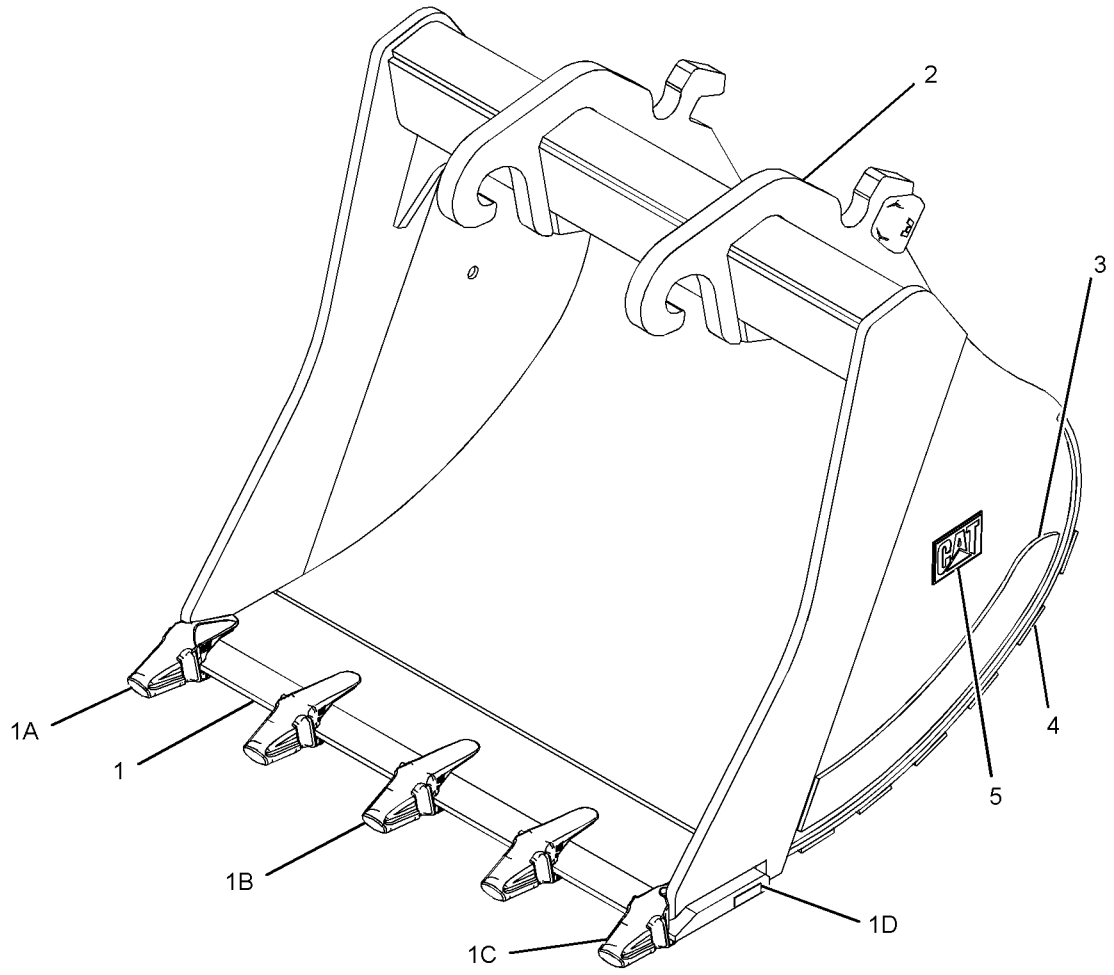

GRAPHIC #1 **<END>** g01227705

264-8025 BUCKET GP-EXCAVATION—QUICK COUPLER

S/N: MYG1-UP; PPN1-UP
1500-MM (59-IN) WIDE X 1.93-CU M (2.5-CU YD) CAPACITY.
K-110 ADAPTERS, QTY OF 4
AN ATTACHMENT

SMCS-6523 **i02444686**

NOTE	REF NO	GRAPHIC REF	PART NUMBER	QTY	PART NAME 1 2 3 4 5 6 (PRODUCT LEVEL)	SEE PAGE
	1	1	**266-8402**	1	EDGE AS	
	1A	1	**232-0116**	1	ADAPTER-TIP (K-110, 2-STRAP, LH)	
	1B	1	**232-0114**	2	ADAPTER-TIP (K-110, 2-STRAP, CENTER)	
	1C	1	**232-0115**	1	ADAPTER-TIP (K-110, 2-STRAP, RH)	
	1D	1	**8P-9770**	1	PLATE	
	2	1	**266-8429**	1	PLATE AS-BOX	
	3	1	**266-8423**	2	PLATE-WEAR	
	4	1	**264-2693**	6	PLATE-WEAR	
	5	1	**2C-9259**	2	PLATE-IDENTIFICATION (CAT)	

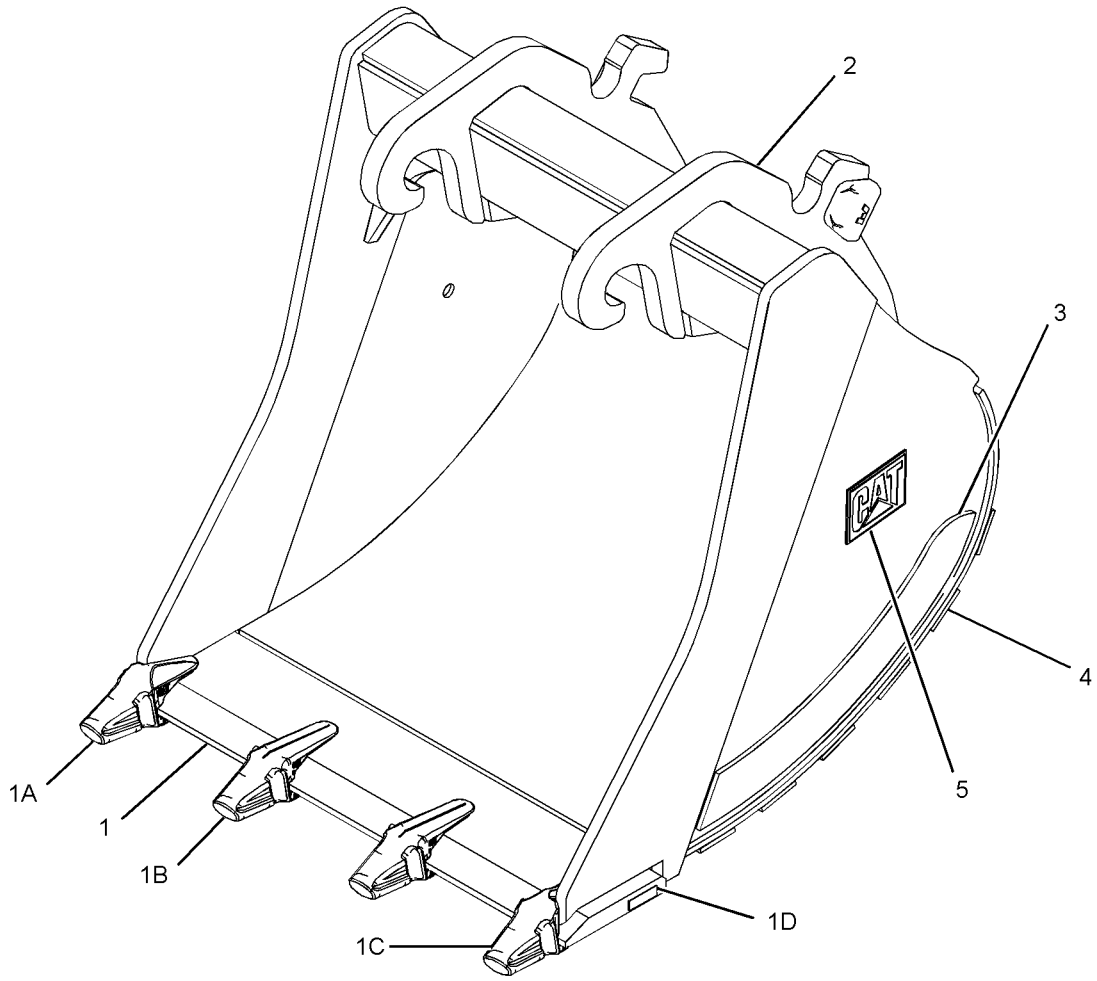

GRAPHIC #1 **<END>** g01226354

WORK TOOLS

264-8026 BUCKET GP-EXCAVATION–QUICK COUPLER

S/N: MYG1-UP; PPN1-UP
1700-MM (67-IN) WIDE X 2.24-CU M (2.9-CU YD) CAPACITY.
K-110 ADAPTERS, QTY OF 5
AN ATTACHMENT

SMCS-6523 **i02444796**

NOTE	REF NO	GRAPHIC REF	PART NUMBER	QTY	PART NAME 1 2 3 4 5 6 (PRODUCT LEVEL)	SEE PAGE
	1	1	**264-2669**	1	EDGE AS	
	1A	1	**232-0116**	1	ADAPTER-TIP (K-110, 2-STRAP, LH)	
	1B	1	**232-0114**	3	ADAPTER-TIP (K-110, 2-STRAP, CENTER)	
	1C	1	**232-0115**	1	ADAPTER-TIP (K-110, 2-STRAP, RH)	
	1D	1	**8P-9770**	1	PLATE	
	2	1	**266-8430**	1	PLATE AS-BOX	
	3	1	**266-8423**	2	PLATE-WEAR	
	4	1	**264-2696**	6	PLATE-WEAR	
	5	1	**2C-9259**	2	PLATE-IDENTIFICATION (CAT)	

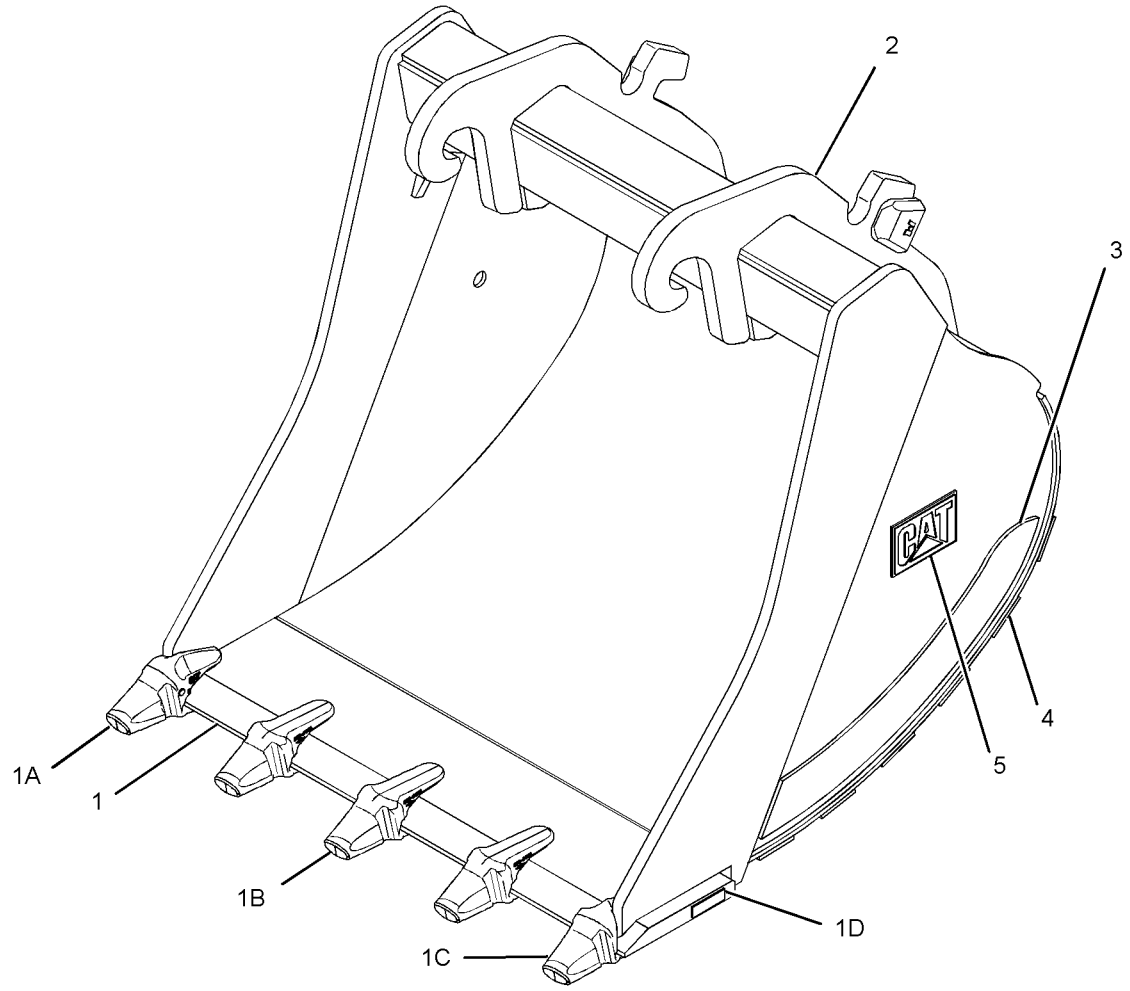

GRAPHIC #1 **<END>** g01226735

WORK TOOLS

264-8030 BUCKET GP-EXCAVATION—QUICK COUPLER

S/N: MYG1-UP; PPN1-UP
1500-MM (59-IN) WIDE X 1.93-CU M (2.5-CU YD) CAPACITY.
K-110 ADAPTERS, QTY OF 4
AN ATTACHMENT

SMCS-6523 **i02445048**

NOTE	REF NO	GRAPHIC REF	PART NUMBER	QTY	PART NAME 1 2 3 4 5 6 (PRODUCT LEVEL)	SEE PAGE
	1	1	**266-8402**	1	EDGE AS	
	1A	1	**232-0116**	1	ADAPTER-TIP (K-110, 2-STRAP, LH)	
	1B	1	**232-0114**	2	ADAPTER-TIP (K-110, 2-STRAP, CENTER)	
	1C	1	**232-0115**	1	ADAPTER-TIP (K-110, 2-STRAP, RH)	
	1D	1	**8P-9770**	1	PLATE	
	2	1	**266-8432**	1	PLATE AS-BOX	
	3	1	**266-8423**	2	PLATE-WEAR	
	4	1	**264-2693**	6	PLATE-WEAR	
	5	1	**2C-9259**	2	PLATE-IDENTIFICATION (CAT)	

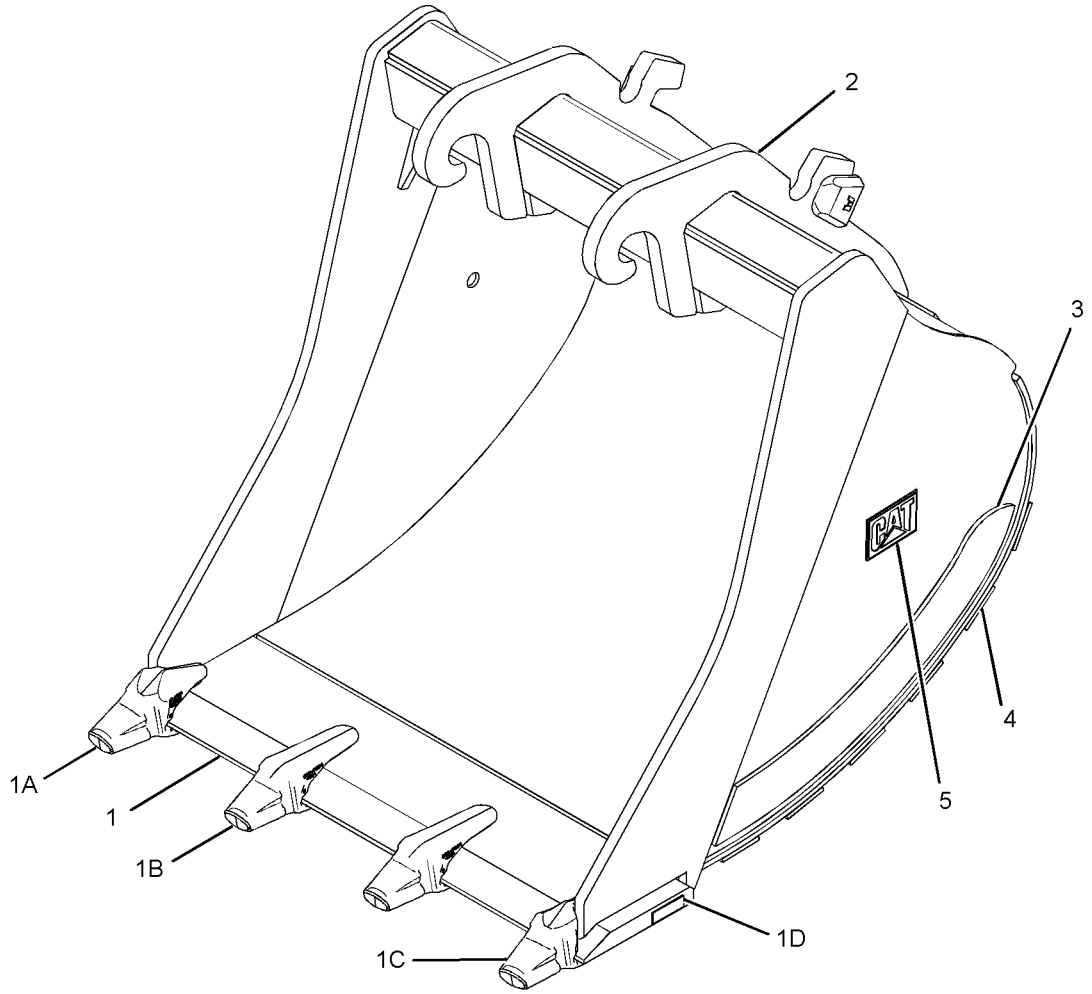

GRAPHIC #1 **<END>** g01227686

WORK TOOLS

264-8031 BUCKET GP-EXCAVATION—QUICK COUPLER

S/N: MYG1-UP; PPN1-UP
1700-MM (67-IN) WIDE X 2.24-CU M (2.9-CU YD) CAPACITY.
K-110 ADAPTERS, QTY OF 5
AN ATTACHMENT

SMCS-6523 **i02445415**

NOTE	REF NO	GRAPHIC REF	PART NUMBER	QTY	PART NAME 1 2 3 4 5 6 (PRODUCT LEVEL)	SEE PAGE
	1	1	**264-2669**	1	EDGE AS	
	1A	1	**232-0116**	1	ADAPTER-TIP (K-110, 2-STRAP, LH)	
	1B	1	**232-0114**	3	ADAPTER-TIP (K-110, 2-STRAP, CENTER)	
	1C	1	**232-0115**	1	ADAPTER-TIP (K-110, 2-STRAP, RH)	
	1D	1	**8P-9770**	1	PLATE	
	2	1	**266-8433**	1	PLATE AS-BOX	
	3	1	**266-8423**	2	PLATE-WEAR	
	4	1	**264-2696**	6	PLATE-WEAR	
	5	1	**2C-9259**	2	PLATE-IDENTIFICATION (CAT)	

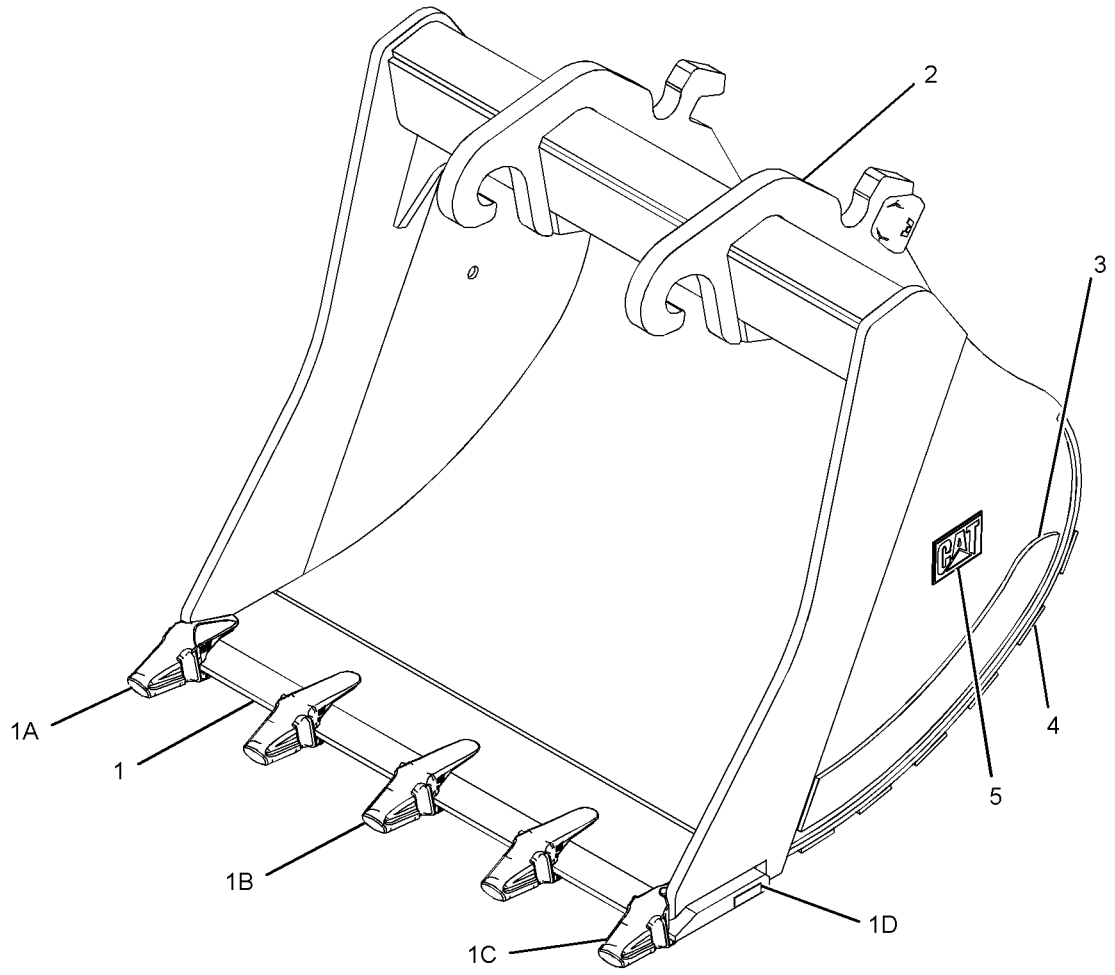

GRAPHIC #1 **<END>** g01227705

264-8032 BUCKET GP-EXCAVATION—QUICK COUPLER

S/N: MYG1-UP; PPN1-UP
1700-MM (67-IN) WIDE X 2.24-CU M (2.9-CU YD) CAPACITY.
K-110 ADAPTERS, QTY OF 5
AN ATTACHMENT

SMCS-6523 **i02445642**

NOTE	REF NO	GRAPHIC REF	PART NUMBER	QTY	PART NAME 1 2 3 4 5 6 (PRODUCT LEVEL)	SEE PAGE
	1	1	**264-2669**	1	EDGE AS	
	1A	1	**232-0116**	1	ADAPTER-TIP (K-110, 2-STRAP, LH)	
	1B	1	**232-0114**	3	ADAPTER-TIP (K-110, 2-STRAP, CENTER)	
	1C	1	**232-0115**	1	ADAPTER-TIP (K-110, 2-STRAP, RH)	
	1D	1	**8P-9770**	1	PLATE	
	2	1	**266-8433**	1	PLATE AS-BOX	
	3	1	**266-8424**	2	PLATE-WEAR	
	4	1	**264-2700**	6	PLATE-WEAR	
	5	1	**2C-9259**	2	PLATE-IDENTIFICATION (CAT)	

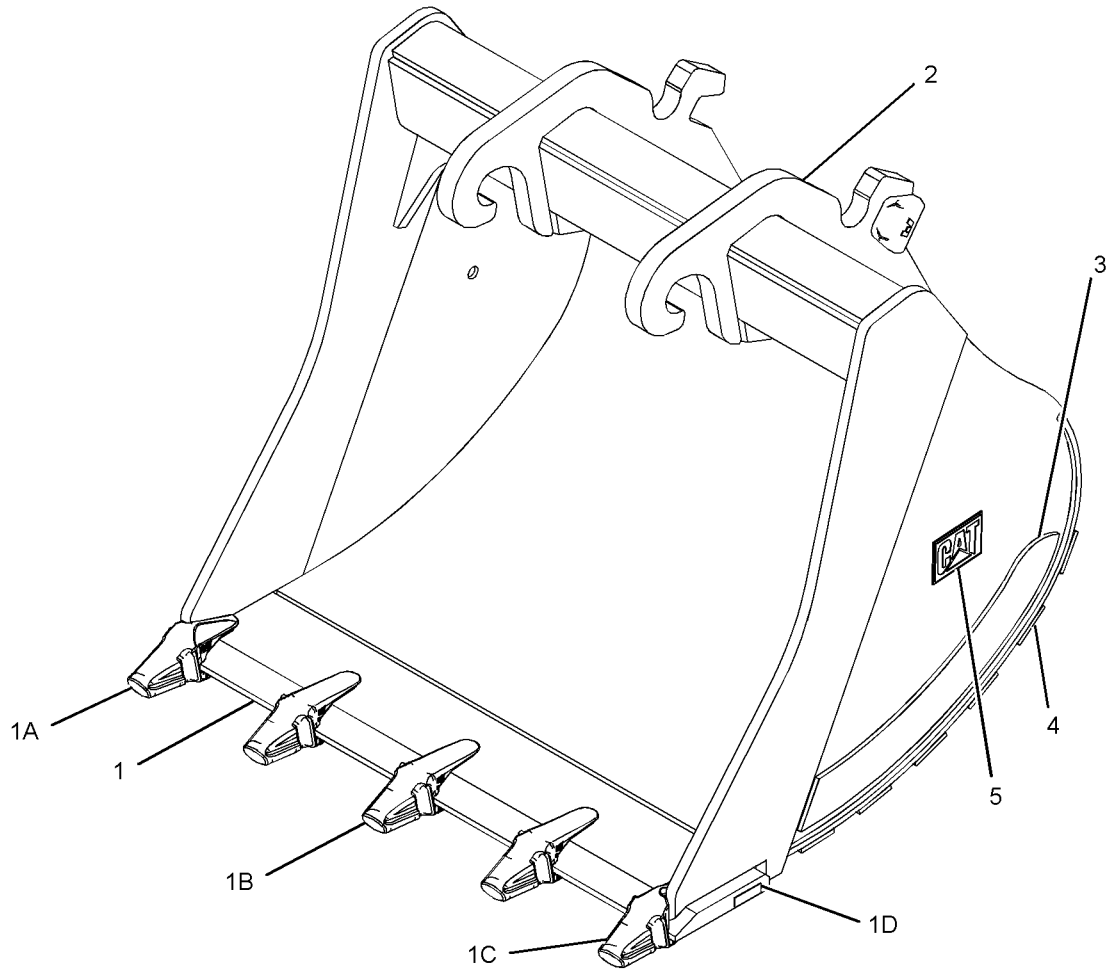

GRAPHIC #1 **<END>** g01227705

WORK TOOLS

264-2564 BUCKET GP-EXTREME EXCAVATION—QUICK COUPLER

S/N: MYG1-UP; PPN1-UP; THY1-UP
1650-MM (65-IN) WIDE X 2.07-CU M (2.7-CU YD) CAPACITY.
K-100 ADAPTERS, QTY OF 5
AN ATTACHMENT

SMCS-6523, 6529 **i02763027**

NOTE	REF NO	GRAPHIC REF	PART NUMBER	QTY	PART NAME 1 2 3 4 5 6 (PRODUCT LEVEL)	SEE PAGE
	1	1	**264-2664**	1	EDGE AS	
	1A	1	**220-9106**	1	ADAPTER-TIP (K-100, 2-STRAP, LH)	
	1B	1	**220-9104**	3	ADAPTER-TIP (K-100, 2-STRAP, CENTER)	
	1C	1	**220-9105**	1	ADAPTER-TIP (K-100, 2-STRAP, RH)	
	1D	1	**8P-9770**	1	PLATE	
	2	1	**264-2657**	1	PLATE AS-BOX	
	3	1	**264-2703**	2	PLATE-WEAR	
	4	1	**264-2695**	6	PLATE-WEAR	
	5	1	**2C-9259**	2	PLATE-IDENTIFICATION (CAT)	

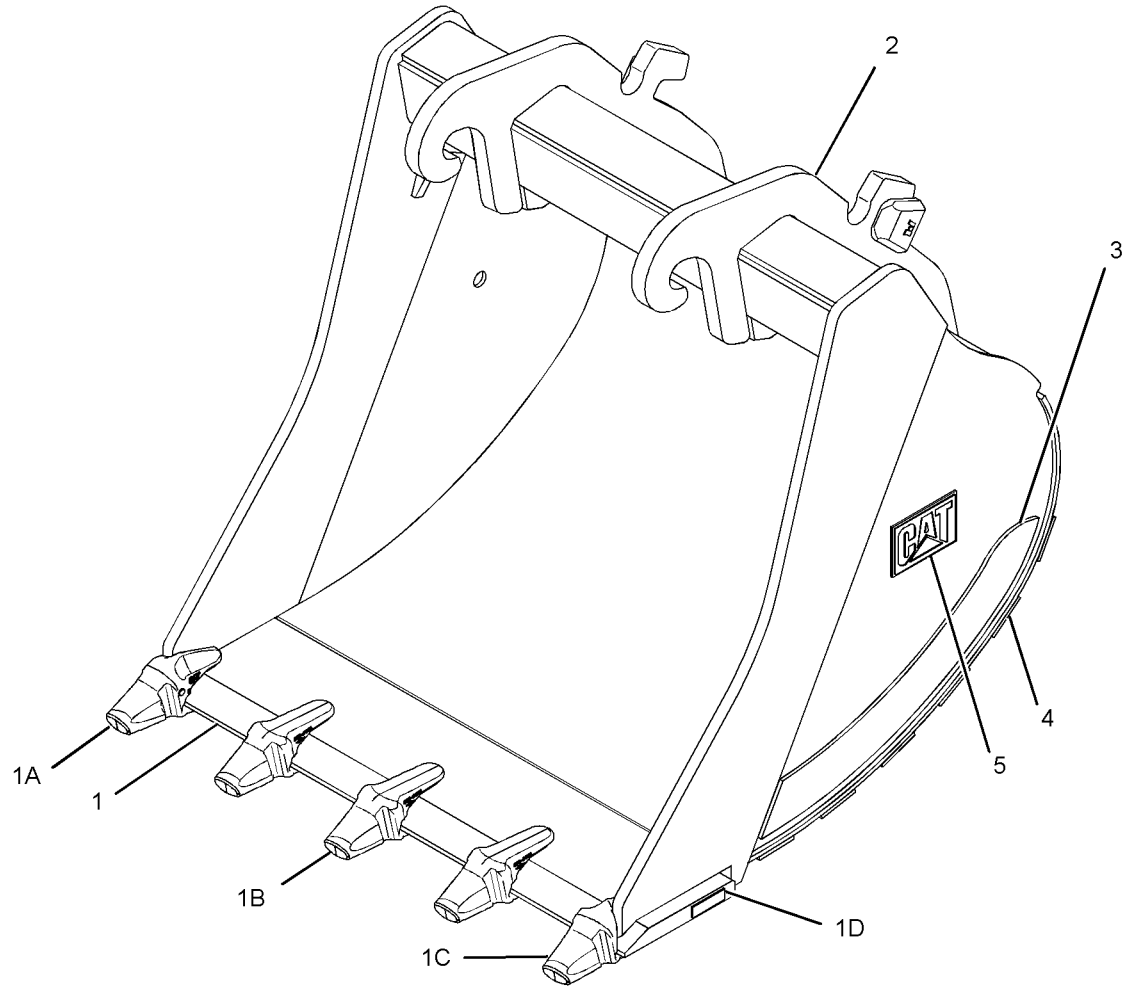

GRAPHIC #1 **<END>** g01226735

264-2572 BUCKET GP-EXTREME EXCAVATION–QUICK COUPLER

S/N: MYG1-UP; PPN1-UP
1600-MM (63-IN) WIDE X 1.99-CU M (2.6-CU YD) CAPACITY.
K-110 ADAPTERS, QTY OF 5
AN ATTACHMENT

SMCS-6523, 6529 **i02763168**

NOTE	REF NO	GRAPHIC REF	PART NUMBER	QTY	PART NAME 1 2 3 4 5 6 (PRODUCT LEVEL)	SEE PAGE
	1	1	**264-2667**	1	EDGE AS-CUTTING	
	1A	1	**232-0116**	1	ADAPTER-TIP (K-110, 2-STRAP, LH)	
	1B	1	**232-0114**	3	ADAPTER-TIP (K-110, 2-STRAP, CENTER)	
	1C	1	**232-0115**	1	ADAPTER-TIP (K-110, 2-STRAP, RH)	
	1D	1	**8P-9770**	1	PLATE	
	2	1	**264-2655**	1	PLATE AS-BOX	
	3	1	**264-2704**	2	PLATE-WEAR	
	4	1	**264-2698**	6	PLATE-WEAR	
	5	1	**2C-9259**	2	PLATE-IDENTIFICATION (CAT)	

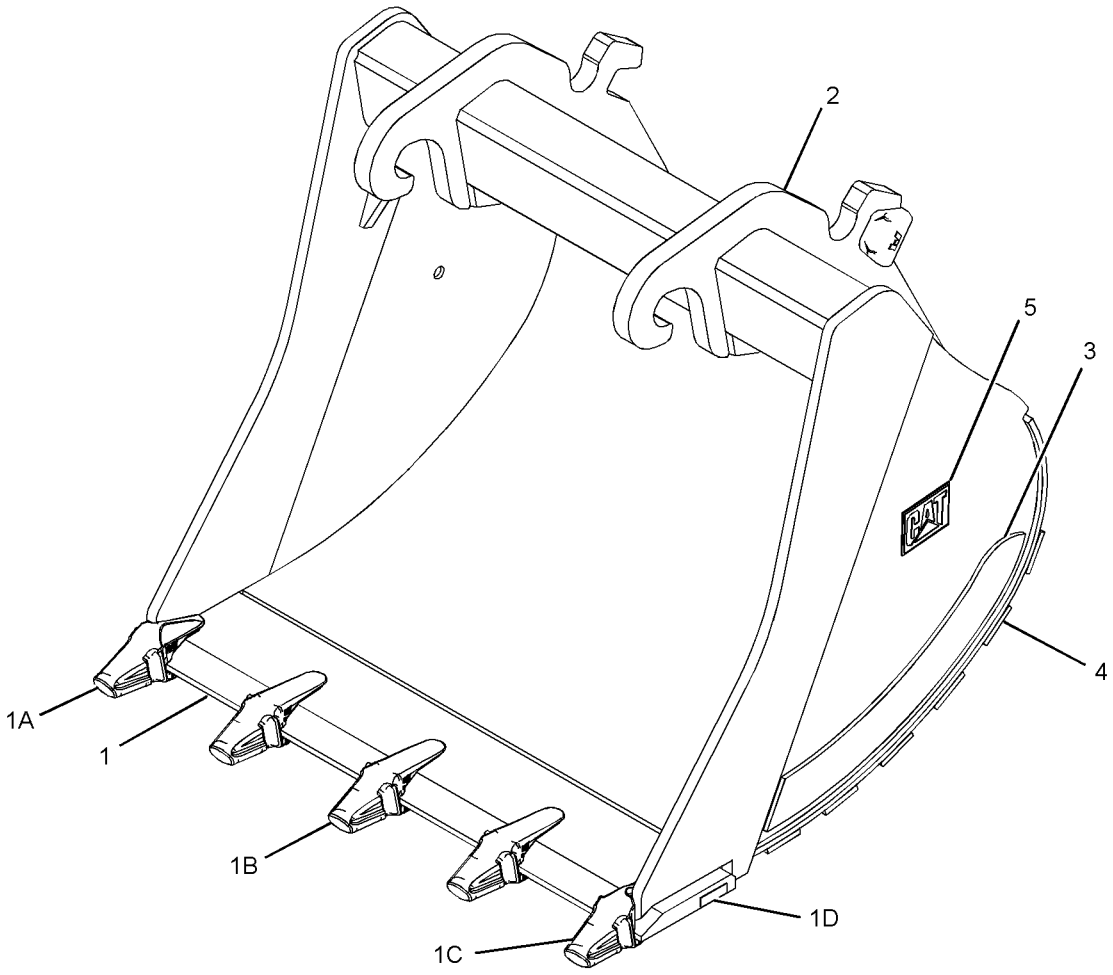

GRAPHIC #1 **<END>** g01262791

WORK TOOLS

264-2573 BUCKET GP-EXTREME EXCAVATION—QUICK COUPLER

S/N: MYG1-UP; PPN1-UP
1600-MM (63-IN) WIDE X 1.99-CU M (2.6-CU YD) CAPACITY.
K-110 ADAPTERS, QTY OF 5
AN ATTACHMENT

SMCS-6523, 6529 **i02763163**

NOTE	REF NO	GRAPHIC REF	PART NUMBER	QTY	PART NAME 1 2 3 4 5 6 (PRODUCT LEVEL)	SEE PAGE
	1	1	**264-2667**	1	EDGE AS-CUTTING	
	1A	1	**232-0116**	1	ADAPTER-TIP (K-110, 2-STRAP, LH)	
	1B	1	**232-0114**	3	ADAPTER-TIP (K-110, 2-STRAP, CENTER)	
	1C	1	**232-0115**	1	ADAPTER-TIP (K-110, 2-STRAP, RH)	
	1D	1	**8P-9770**	1	PLATE	
	2	1	**264-2656**	1	PLATE AS-BOX	
	3	1	**264-2704**	2	PLATE-WEAR	
	4	1	**264-2698**	6	PLATE-WEAR	
	5	1	**2C-9259**	2	PLATE-IDENTIFICATION (CAT)	

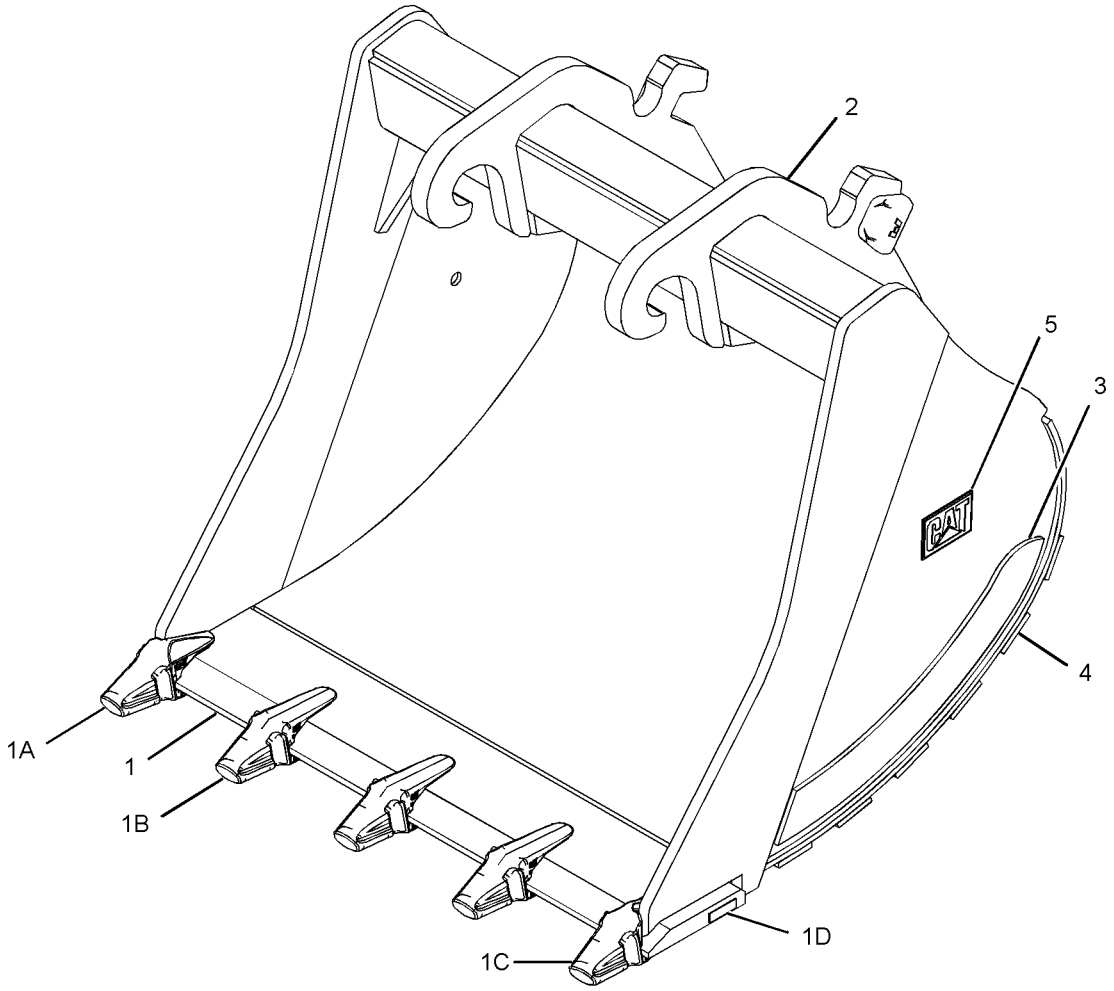

GRAPHIC #1 **<END>** g01263102

264-2574 BUCKET GP-EXTREME EXCAVATION–QUICK COUPLER

S/N: MYG1-UP; PPN1-UP
1650-MM (65-IN) WIDE X 2.07-CU M (2.7-CU YD) CAPACITY.
K-110 ADAPTERS, QTY OF 5
AN ATTACHMENT

SMCS-6523, 6529 **i02763170**

NOTE	REF NO	GRAPHIC REF	PART NUMBER	QTY	PART NAME 1 2 3 4 5 6 (PRODUCT LEVEL)	SEE PAGE
	1	1	**264-2668**	1	EDGE AS-CUTTING	
	1A	1	**232-0116**	1	ADAPTER-TIP (K-110, 2-STRAP, LH)	
	1B	1	**232-0114**	3	ADAPTER-TIP (K-110, 2-STRAP, CENTER)	
	1C	1	**232-0115**	1	ADAPTER-TIP (K-110, 2-STRAP, RH)	
	1D	1	**8P-9770**	1	PLATE	
	2	1	**264-2657**	1	PLATE AS-BOX	
	3	1	**264-2704**	2	PLATE-WEAR	
	4	1	**264-2699**	6	PLATE-WEAR	
	5	1	**2C-9259**	2	PLATE-IDENTIFICATION (CAT)	

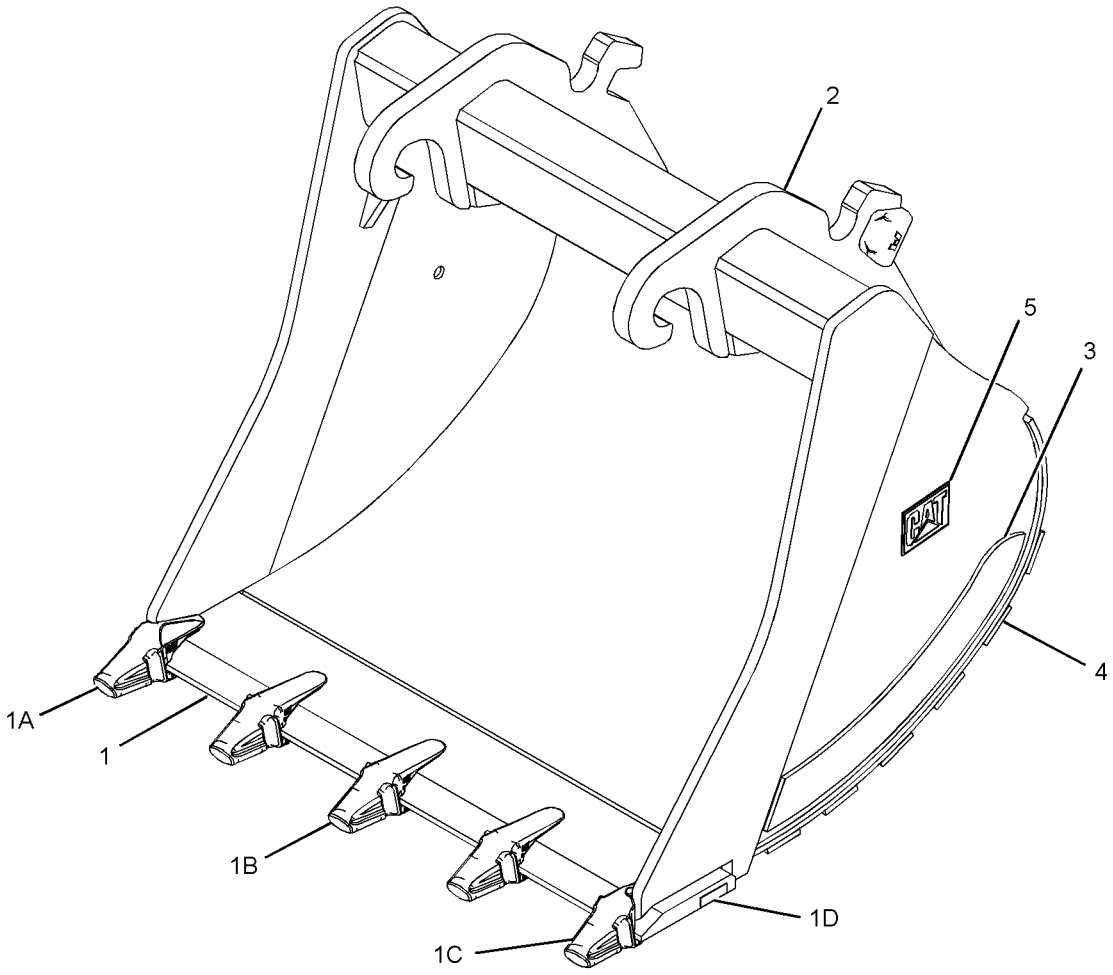

GRAPHIC #1 **<END>** g01262791

WORK TOOLS

264-2575 BUCKET GP-EXTREME EXCAVATION—QUICK COUPLER

S/N: MYG1-UP; PPN1-UP
1650-MM (65-IN) WIDE X 2.07-CU M (2.7-CU YD) CAPACITY.
K-110 ADAPTERS, QTY OF 5
AN ATTACHMENT

SMCS-6523, 6529 **i02763176**

NOTE	REF NO	GRAPHIC REF	PART NUMBER	QTY	PART NAME 1 2 3 4 5 6 (PRODUCT LEVEL)	SEE PAGE
	1	1	**264-2668**	1	EDGE AS-CUTTING	
	1A	1	**232-0116**	1	ADAPTER-TIP (K-110, 2-STRAP, LH)	
	1B	1	**232-0114**	3	ADAPTER-TIP (K-110, 2-STRAP, CENTER)	
	1C	1	**232-0115**	1	ADAPTER-TIP (K-110, 2-STRAP, RH)	
	1D	1	**8P-9770**	1	PLATE	
	2	1	**264-2658**	1	PLATE AS-BOX	
	3	1	**264-2704**	2	PLATE-WEAR	
	4	1	**264-2699**	6	PLATE-WEAR	
	5	1	**2C-9259**	2	PLATE-IDENTIFICATION (CAT)	

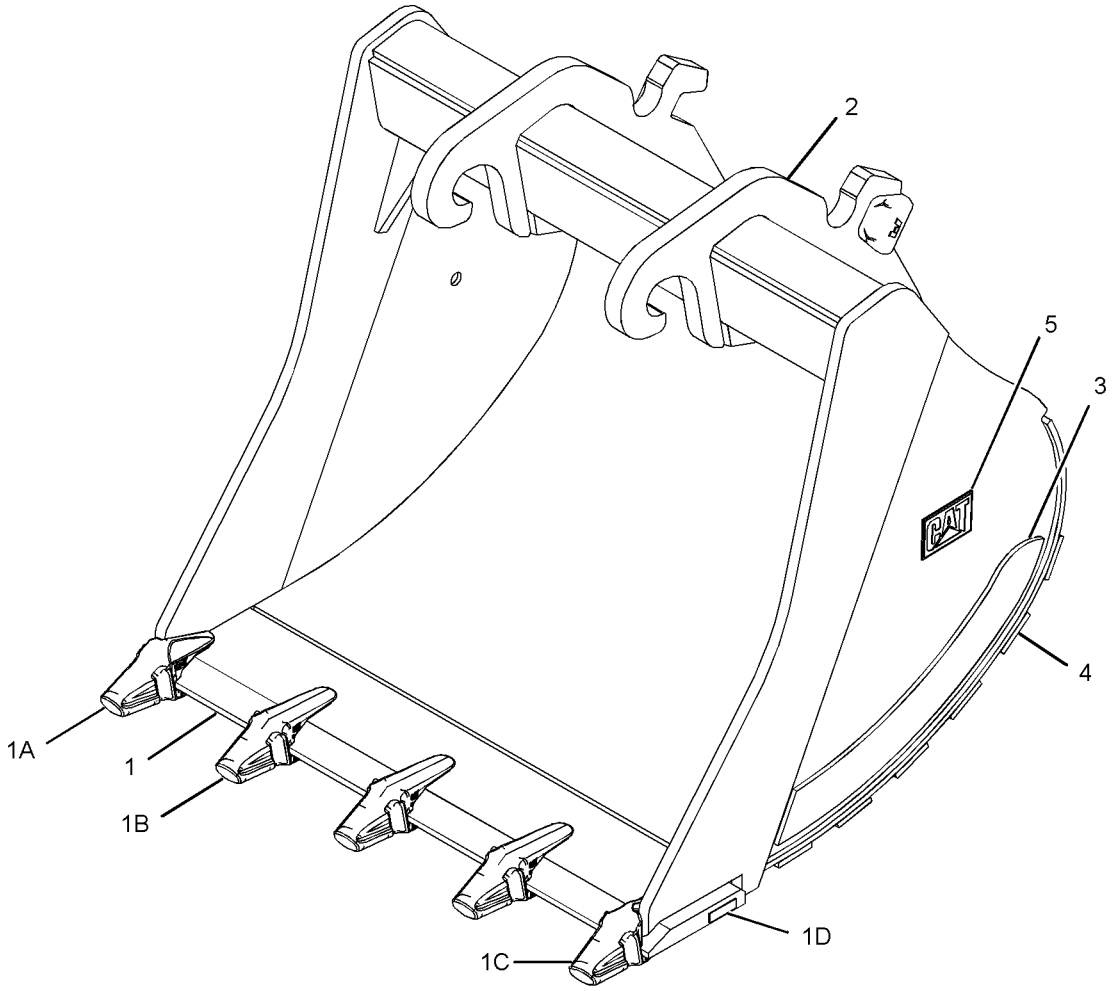

GRAPHIC #1 **<END>** g01263102

264-2576 BUCKET GP-EXTREME EXCAVATION–QUICK COUPLER

S/N: MYG1-UP; PPN1-UP
1700-MM (67-IN) WIDE X 2.14-CU M (2.8-CU YD) CAPACITY.
K-110 ADAPTERS, QTY OF 5
AN ATTACHMENT

SMCS-6523, 6529 **i02763039**

NOTE	REF NO	GRAPHIC REF	PART NUMBER	QTY	PART NAME 1 2 3 4 5 6 (PRODUCT LEVEL)	SEE PAGE
	1	1	**264-2669**	1	EDGE AS	
	1A	1	**232-0116**	1	ADAPTER-TIP (K-110, 2-STRAP, LH)	
	1B	1	**232-0114**	3	ADAPTER-TIP (K-110, 2-STRAP, CENTER)	
	1C	1	**232-0115**	1	ADAPTER-TIP (K-110, 2-STRAP, RH)	
	1D	1	**8P-9770**	1	PLATE	
	2	1	**264-2659**	1	PLATE AS-BOX	
	3	1	**264-2704**	2	PLATE-WEAR	
	4	1	**264-2700**	6	PLATE-WEAR	
	5	1	**2C-9259**	2	PLATE-IDENTIFICATION (CAT)	

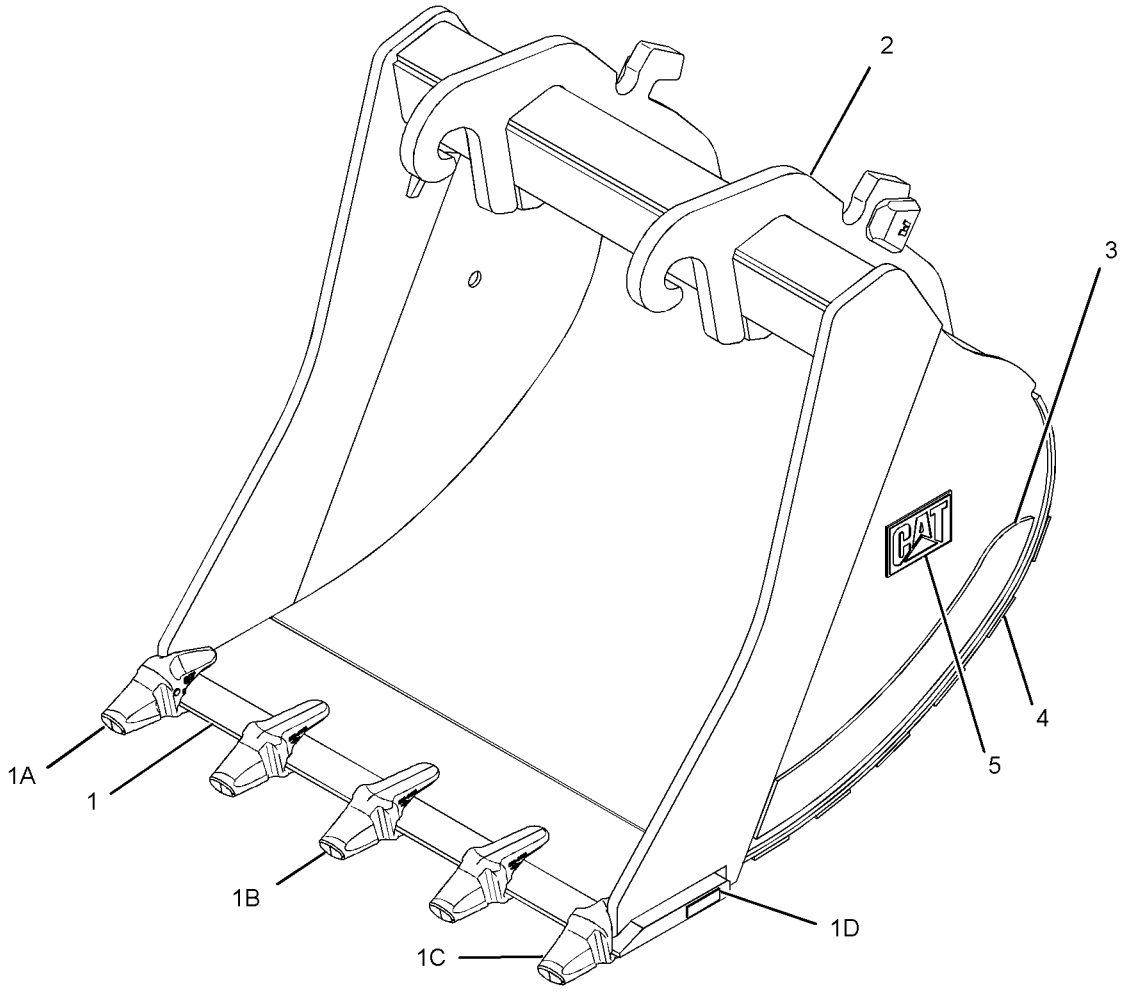

GRAPHIC #1 **<END>** g01226735

WORK TOOLS

264-2578 BUCKET GP-EXTREME EXCAVATION–QUICK COUPLER

S/N: MYG1-UP; PPN1-UP
1700-MM (67-IN) WIDE X 2.14-CU M (2.8-CU YD) CAPACITY.
K-110 ADAPTERS, QTY OF 5
AN ATTACHMENT

SMCS-6523, 6529 **i02763040**

NOTE	REF NO	GRAPHIC REF	PART NUMBER	QTY	PART NAME 1 2 3 4 5 6 (PRODUCT LEVEL)	SEE PAGE
	1	1	**264-2669**	1	EDGE AS	
	1A	1	**232-0116**	1	ADAPTER-TIP (K-110, 2-STRAP, LH)	
	1B	1	**232-0114**	3	ADAPTER-TIP (K-110, 2-STRAP, CENTER)	
	1C	1	**232-0115**	1	ADAPTER-TIP (K-110, 2-STRAP, RH)	
	1D	1	**8P-9770**	1	PLATE	
	2	1	**264-2660**	1	PLATE AS-BOX	
	3	1	**264-2704**	2	PLATE-WEAR	
	4	1	**264-2700**	6	PLATE-WEAR	
	5	1	**2C-9259**	2	PLATE-IDENTIFICATION (CAT)	

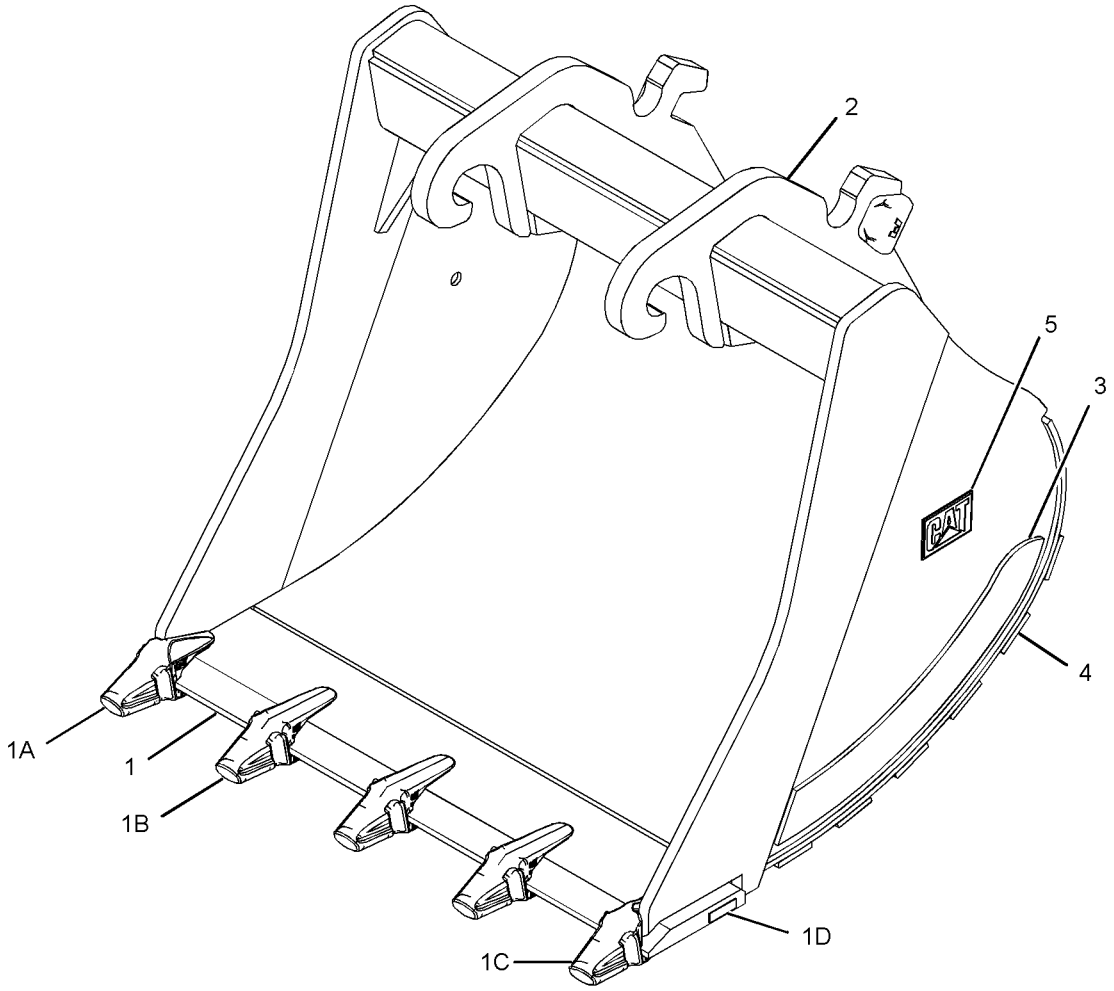

GRAPHIC #1 **<END>** g01263102

WORK TOOLS

264-8027 BUCKET GP-EXTREME EXCAVATION–QUICK COUPLER

S/N: MYG1-UP; PPN1-UP
1700-MM (67-IN) WIDE X 2.24-CU M (2.9-CU YD) CAPACITY.
K-110 ADAPTERS, QTY OF 5
AN ATTACHMENT

SMCS-6523, 6529 **i02450282**

NOTE	REF NO	GRAPHIC REF	PART NUMBER	QTY	PART NAME 1 2 3 4 5 6 (PRODUCT LEVEL)	SEE PAGE
	1	1	**264-2669**	1	EDGE AS	
	1A	1	**232-0116**	1	ADAPTER-TIP (K-110, 2-STRAP, LH)	
	1B	1	**232-0114**	3	ADAPTER-TIP (K-110, 2-STRAP, CENTER)	
	1C	1	**232-0115**	1	ADAPTER-TIP (K-110, 2-STRAP, RH)	
	1D	1	**8P-9770**	1	PLATE	
	2	1	**266-8430**	1	PLATE AS-BOX	
	3	1	**266-8424**	2	PLATE-WEAR	
	4	1	**264-2700**	6	PLATE-WEAR	
	5	1	**2C-9259**	2	PLATE-IDENTIFICATION (CAT)	

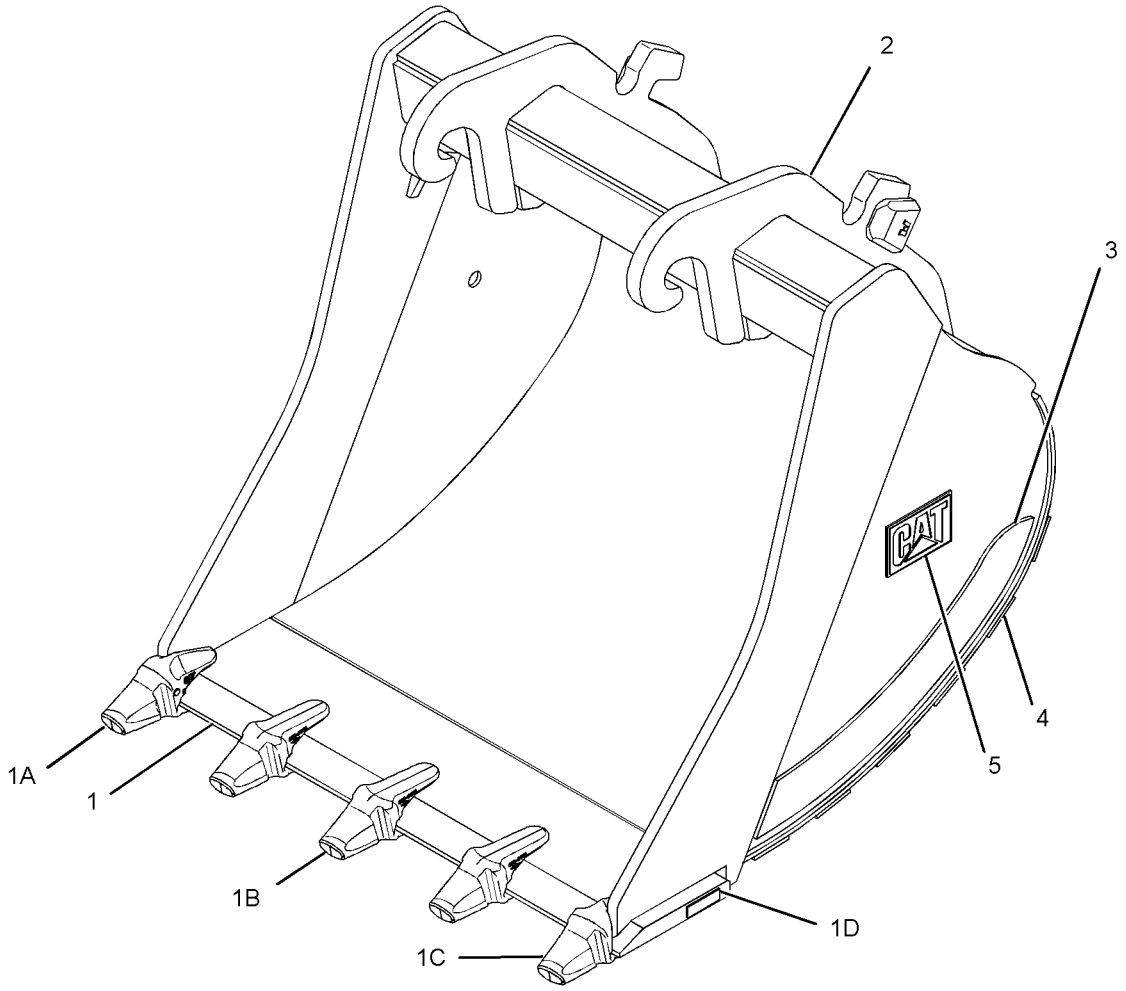

GRAPHIC #1 **<END>** g01226735

268-9931 BUCKET GP-EXTREME EXCAVATION—QUICK COUPLER

S/N: MYG1-UP; PPN1-UP
1350-MM (53-IN) WIDE X 1.62-CU M (2.1-CU YD) CAPACITY.
K-110 ADAPTERS, QTY OF 4
AN ATTACHMENT

SMCS-6523, 6529 **i02763174**

NOTE	REF NO	GRAPHIC REF	PART NUMBER	QTY	PART NAME 1 2 3 4 5 6 (PRODUCT LEVEL)	SEE PAGE
	1	1	**268-9958**	1	EDGE AS-CUTTING	
	1A	1	**232-0116**	1	ADAPTER-TIP (K-110, 2-STRAP, LH)	
	1B	1	**232-0114**	2	ADAPTER-TIP (K-110, 2-STRAP, CENTER)	
	1C	1	**232-0115**	1	ADAPTER-TIP (K-110, 2-STRAP, RH)	
	1D	1	**8P-9770**	1	PLATE	
	2	1	**264-2651**	1	PLATE AS-BOX	
	3	1	**264-2704**	2	PLATE-WEAR	
	4	1	**268-9956**	6	PLATE-WEAR	
	5	1	**2C-9259**	2	PLATE-IDENTIFICATION (CAT)	

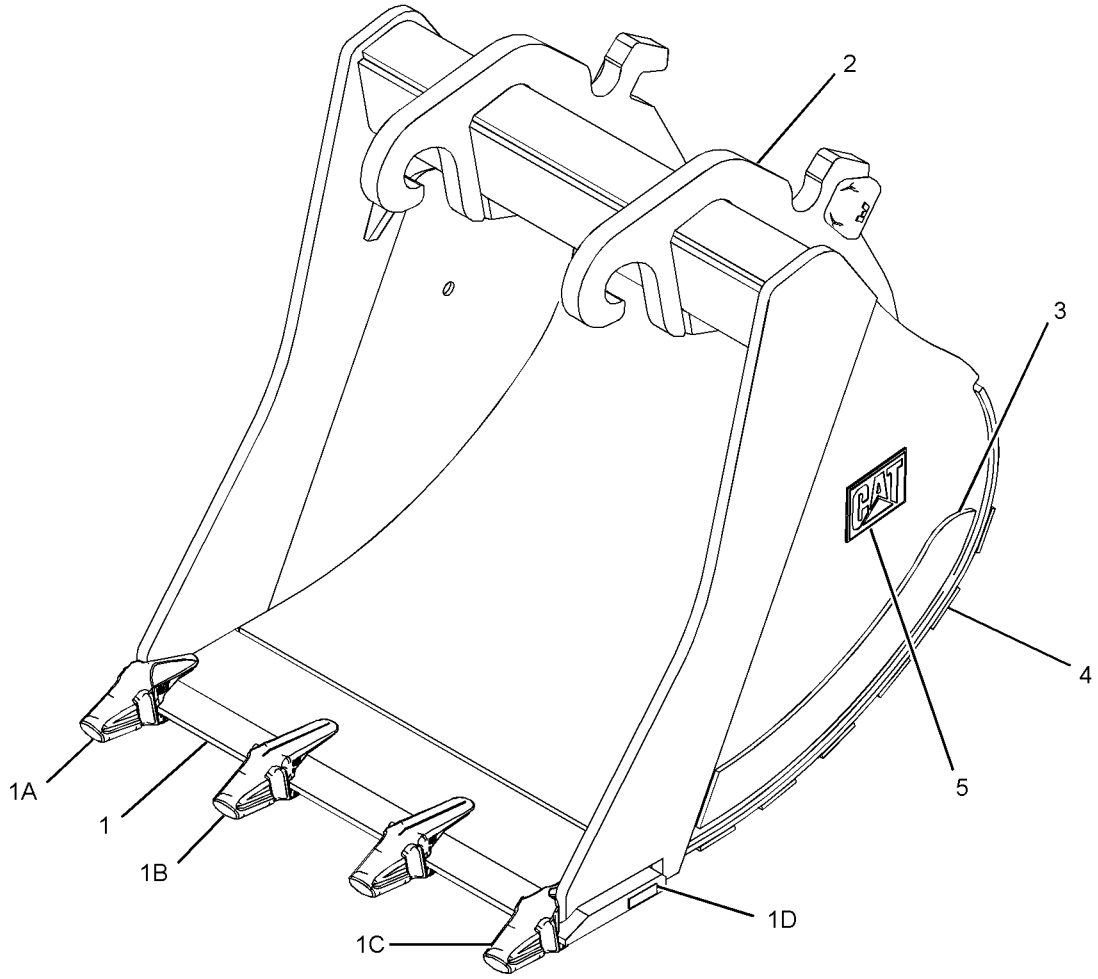

GRAPHIC #1 **<END>** g01226354

WORK TOOLS

268-9932 BUCKET GP-EXTREME EXCAVATION–QUICK COUPLER

S/N: MYG1-UP; PPN1-UP
1350-MM (53-IN) WIDE X 1.62-CU M (2.1-CU YD) CAPACITY.
K-110 ADAPTERS, QTY OF 4
AN ATTACHMENT

SMCS-6523, 6529 **i02763172**

NOTE	REF NO	GRAPHIC REF	PART NUMBER	QTY	PART NAME 1 2 3 4 5 6 (PRODUCT LEVEL)	SEE PAGE
	1	1	**268-9958**	1	EDGE AS-CUTTING	
	1A	1	**232-0116**	1	ADAPTER-TIP (K-110, 2-STRAP, LH)	
	1B	1	**232-0114**	2	ADAPTER-TIP (K-110, 2-STRAP, CENTER)	
	1C	1	**232-0115**	1	ADAPTER-TIP (K-110, 2-STRAP, RH)	
	1D	1	**8P-9770**	1	PLATE	
	2	1	**264-2652**	1	PLATE AS-BOX	
	3	1	**264-2704**	2	PLATE-WEAR	
	4	1	**268-9956**	6	PLATE-WEAR	
	5	1	**2C-9259**	2	PLATE-IDENTIFICATION (CAT)	

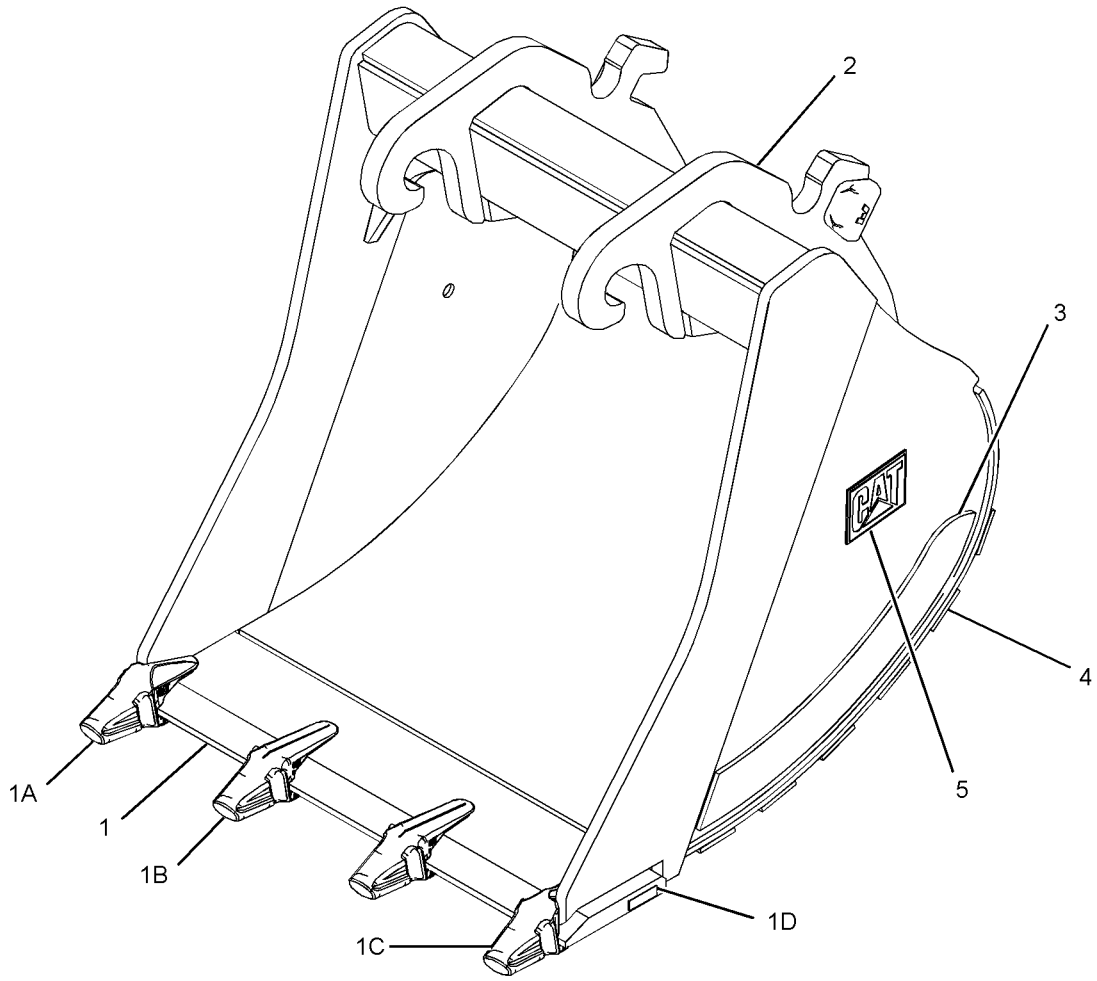

GRAPHIC #1 **<END>** g01226354

WORK TOOLS

268-9936 BUCKET GP-EXTREME EXCAVATION—QUICK COUPLER

S/N: MYG1-UP; PPN1-UP
1500-MM (59-IN) WIDE X 1.84-CU M (2.4-CU YD) CAPACITY.
K-110 ADAPTERS, QTY OF 4
AN ATTACHMENT

SMCS-6523, 6529 **i02763047**

NOTE	REF NO	GRAPHIC REF	PART NUMBER	QTY	PART NAME 1 2 3 4 5 6 (PRODUCT LEVEL)	SEE PAGE
	1	1	**266-8402**	1	EDGE AS	
	1A	1	**232-0116**	1	ADAPTER-TIP (K-110, 2-STRAP, LH)	
	1B	1	**232-0114**	2	ADAPTER-TIP (K-110, 2-STRAP, CENTER)	
	1C	1	**232-0115**	1	ADAPTER-TIP (K-110, 2-STRAP, RH)	
	1D	1	**8P-9770**	1	PLATE	
	2	1	**264-2653**	1	PLATE AS-BOX	
	3	1	**264-2704**	2	PLATE-WEAR	
	4	1	**268-9957**	6	PLATE-WEAR	
	5	1	**2C-9259**	2	PLATE-IDENTIFICATION (CAT)	

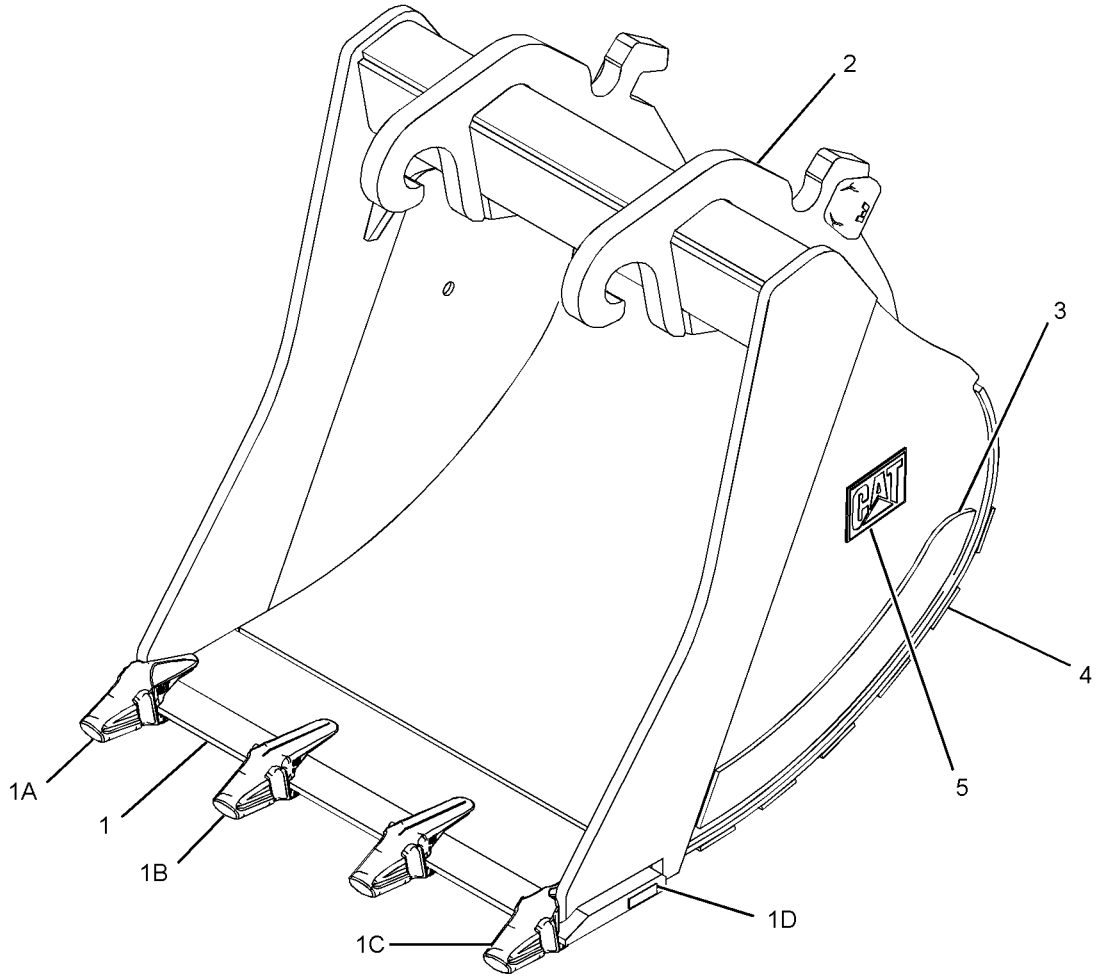

GRAPHIC #1 **<END>** g01226354

WORK TOOLS

268-9937 BUCKET GP-EXTREME EXCAVATION–QUICK COUPLER

S/N: MYG1-UP; PPN1-UP
1500-MM (59-IN) WIDE X 1.84-CU M (2.4-CU YD) CAPACITY.
K-110 ADAPTERS, QTY OF 4
AN ATTACHMENT

SMCS-6523, 6529 **i02763165**

NOTE	REF NO	GRAPHIC REF	PART NUMBER	QTY	PART NAME 1 2 3 4 5 6 (PRODUCT LEVEL)	SEE PAGE
	1	1	**266-8402**	1	EDGE AS	
	1A	1	**232-0116**	1	ADAPTER-TIP (K-110, 2-STRAP, LH)	
	1B	1	**232-0114**	2	ADAPTER-TIP (K-110, 2-STRAP, CENTER)	
	1C	1	**232-0115**	1	ADAPTER-TIP (K-110, 2-STRAP, RH)	
	1D	1	**8P-9770**	1	PLATE	
	2	1	**264-2654**	1	PLATE AS-BOX	
	3	1	**264-2704**	2	PLATE-WEAR	
	4	1	**268-9957**	6	PLATE-WEAR	
	5	1	**2C-9259**	2	PLATE-IDENTIFICATION (CAT)	

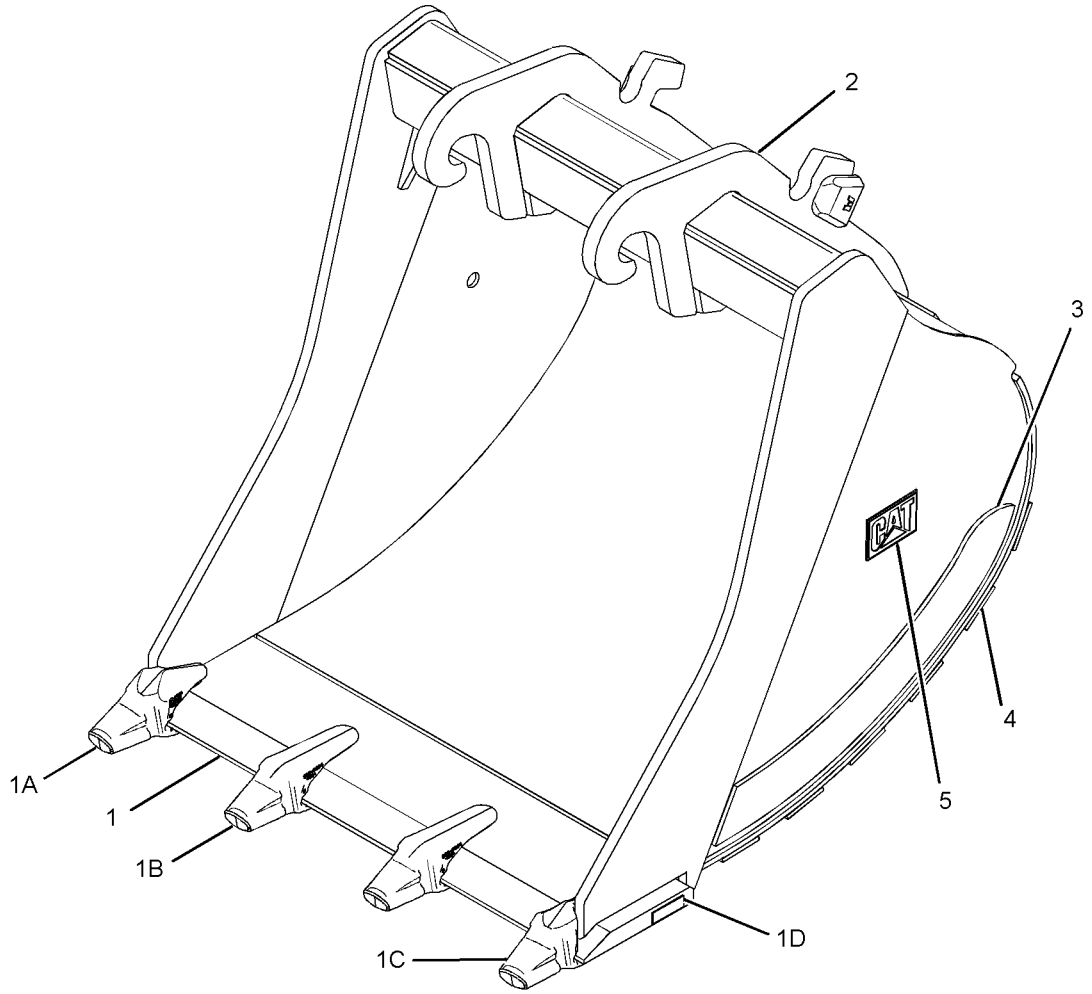

GRAPHIC #1 **<END>** g01227686

264-2579 BUCKET GP-ROCK–QUICK COUPLER

S/N: MYG1-UP; PPN1-UP
1000-MM (39-IN) WIDE X 1.11-CU M (1.5-CU YD) CAPACITY.
K-110 ADAPTERS, QTY OF 3
AN ATTACHMENT

SMCS-6102 **i02763041**

NOTE	REF NO	GRAPHIC REF	PART NUMBER	QTY	PART NAME 1 2 3 4 5 6 (PRODUCT LEVEL)	SEE PAGE
	1	1	**264-2670**	1	EDGE AS-CUTTING	
	1A	1	**232-0116**	1	ADAPTER-TIP (K-110, 2-STRAP, LH)	
	1B	1	**232-0114**	1	ADAPTER-TIP (K-110, 2-STRAP, CENTER)	
	1C	1	**232-0115**	1	ADAPTER-TIP (K-110, 2-STRAP, RH)	
	1D	1	**8P-9770**	1	PLATE	
	2	1	**264-2649**	1	PLATE AS-BOX	
	3	1	**264-2705**	2	PLATE-WEAR (SIDE)	
	4	1	**264-2701**	6	PLATE-WEAR	
	5	1	**2C-9259**	2	PLATE-IDENTIFICATION (CAT)	

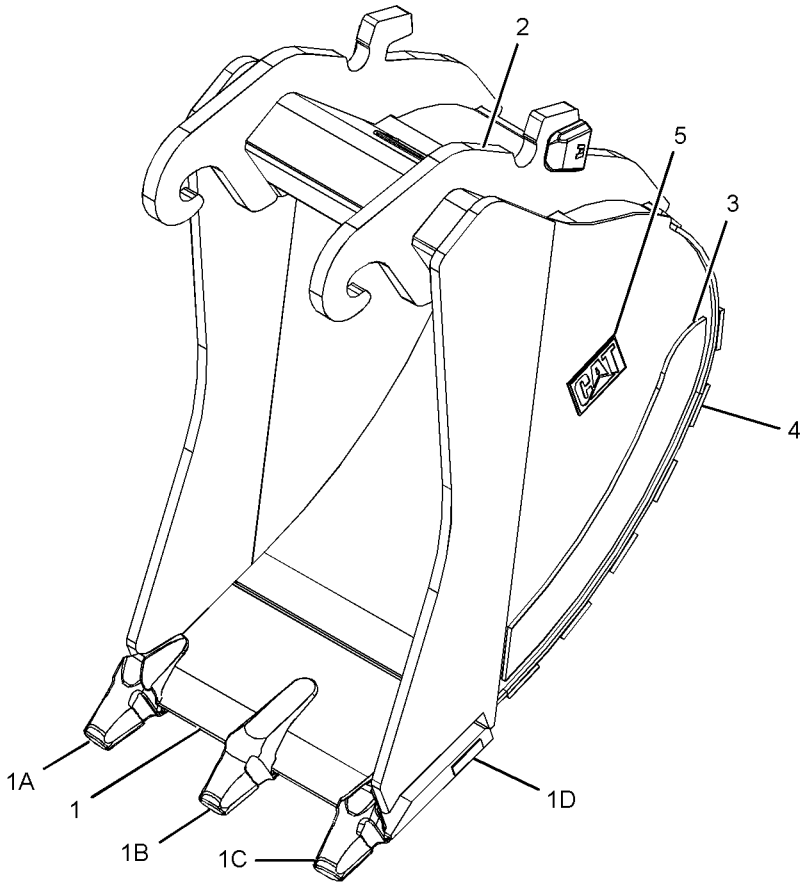

GRAPHIC #1 **<END>** g01263299

WORK TOOLS

264-2580 BUCKET GP-ROCK–QUICK COUPLER

S/N: MYG1-UP; PPN1-UP
1000-MM (39-IN) WIDE X 1.11-CU M (1.5-CU YD) CAPACITY.
K-110 ADAPTERS, QTY OF 3
AN ATTACHMENT

SMCS-6102 **i02763050**

NOTE	REF NO	GRAPHIC REF	PART NUMBER	QTY	PART NAME 1 2 3 4 5 6 (PRODUCT LEVEL)	SEE PAGE
	1	1	**264-2670**	1	EDGE AS-CUTTING	
	1A	1	**232-0116**	1	ADAPTER-TIP (K-110, 2-STRAP, LH)	
	1B	1	**232-0114**	1	ADAPTER-TIP (K-110, 2-STRAP, CENTER)	
	1C	1	**232-0115**	1	ADAPTER-TIP (K-110, 2-STRAP, RH)	
	1D	1	**8P-9770**	1	PLATE	
	2	1	**264-2650**	1	PLATE AS-BOX	
	3	1	**264-2705**	2	PLATE-WEAR (SIDE)	
	4	1	**264-2701**	6	PLATE-WEAR	
	5	1	**2C-9259**	2	PLATE-IDENTIFICATION (CAT)	

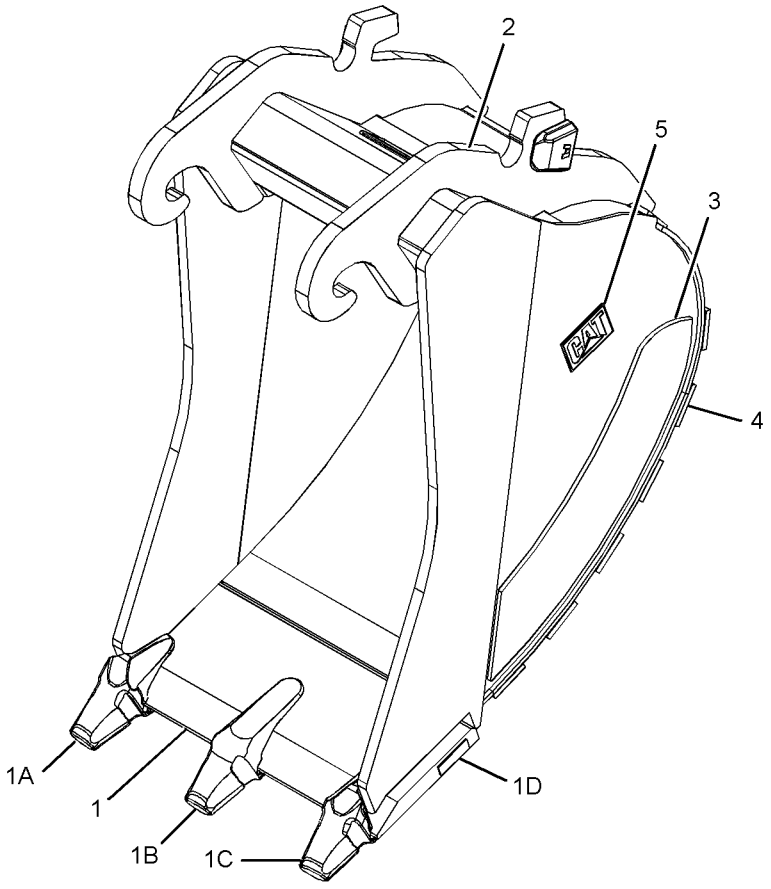

GRAPHIC #1 **<END>** g01263589

264-2581 BUCKET GP-ROCK–QUICK COUPLER

S/N: MYG1-UP; PPN1-UP
1650-MM (65-IN) WIDE X 2.07-CU M (2.7-CU YD) CAPACITY.
K-110 ADAPTERS, QTY OF 5
AN ATTACHMENT

SMCS-6102 **i02763049**

NOTE	REF NO	GRAPHIC REF	PART NUMBER	QTY	PART NAME 1 2 3 4 5 6 (PRODUCT LEVEL)	SEE PAGE
	1	1	**264-5423**	1	EDGE AS-CUTTING	
	1A	1	**232-0116**	1	ADAPTER-TIP (K-110, 2-STRAP, LH)	
	1B	1	**232-0114**	3	ADAPTER-TIP (K-110, 2-STRAP, CENTER)	
	1C	1	**232-0115**	1	ADAPTER-TIP (K-110, 2-STRAP, RH)	
	1D	1	**8P-9770**	1	PLATE	
	2	1	**264-2657**	1	PLATE AS-BOX	
	3	1	**264-2705**	2	PLATE-WEAR (SIDE)	
	4	1	**264-2702**	6	PLATE-WEAR	
	5	1	**2C-9259**	2	PLATE-IDENTIFICATION (CAT)	

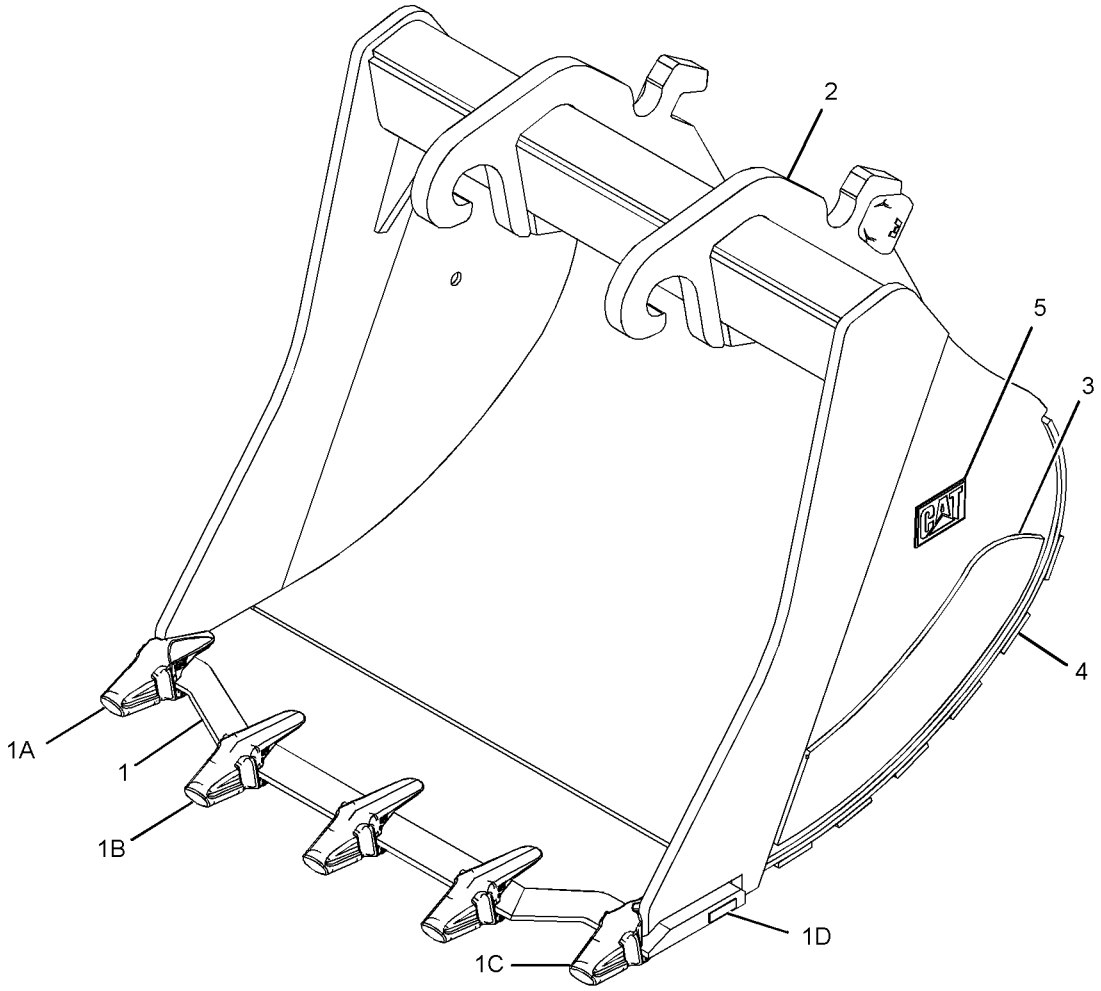

GRAPHIC #1 **<END>** g01263816

264-2582 BUCKET GP-ROCK–QUICK COUPLER

S/N: MYG1-UP; PPN1-UP
1650-MM (65-IN) WIDE X 2.07-CU M (2.7-CU YD) CAPACITY.
K-110 ADAPTERS, QTY OF 5
AN ATTACHMENT

SMCS-6102 **i02763048**

NOTE	REF NO	GRAPHIC REF	PART NUMBER	QTY	PART NAME 1 2 3 4 5 6 (PRODUCT LEVEL)	SEE PAGE
	1	1	**264-5423**	1	EDGE AS-CUTTING	
	1A	1	**232-0116**	1	ADAPTER-TIP (K-110, 2-STRAP, LH)	
	1B	1	**232-0114**	3	ADAPTER-TIP (K-110, 2-STRAP, CENTER)	
	1C	1	**232-0115**	1	ADAPTER-TIP (K-110, 2-STRAP, RH)	
	1D	1	**8P-9770**	1	PLATE	
	2	1	**264-2658**	1	PLATE AS-BOX	
	3	1	**264-2705**	2	PLATE-WEAR (SIDE)	
	4	1	**264-2702**	6	PLATE-WEAR	
	5	1	**2C-9259**	2	PLATE-IDENTIFICATION (CAT)	

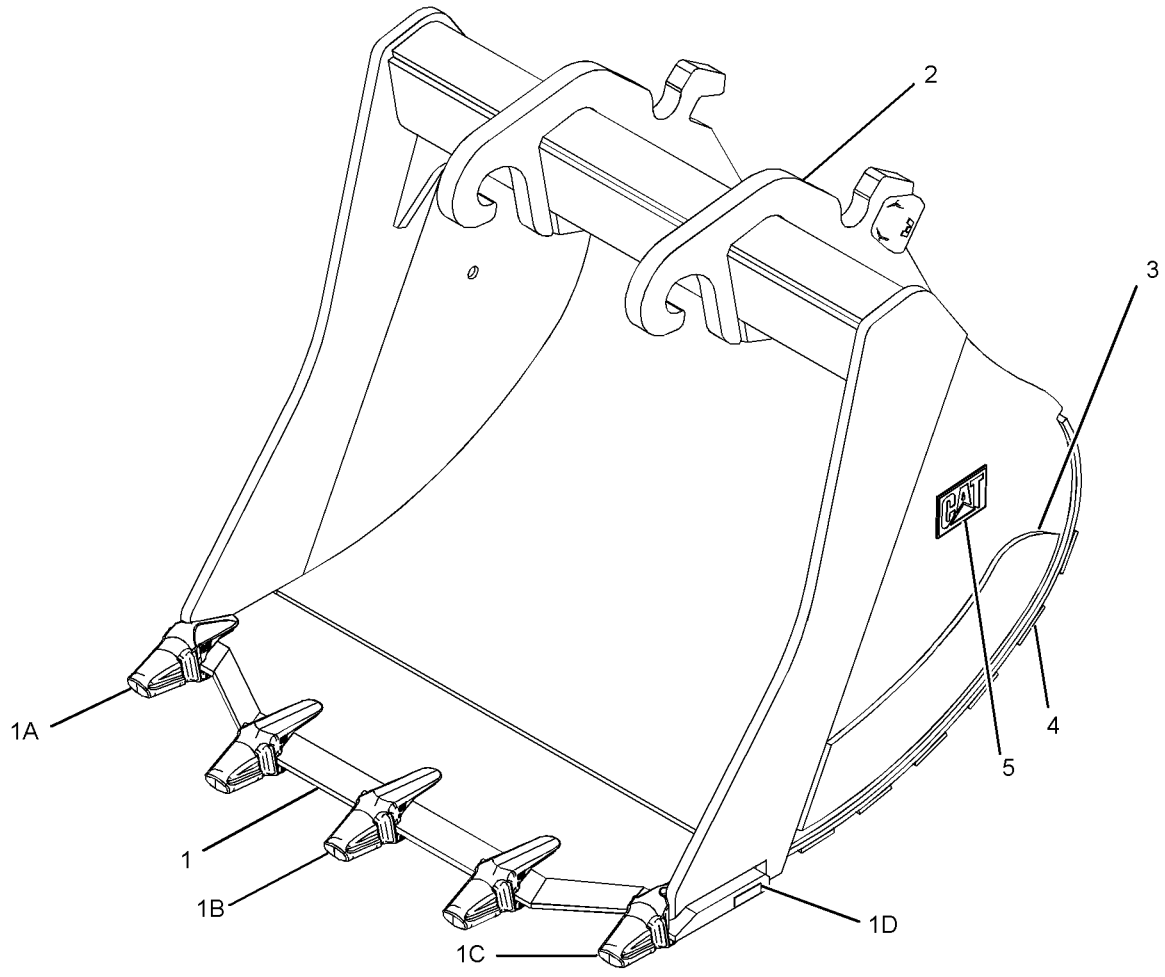

GRAPHIC #1 **<END>** g01235062

264-8028 BUCKET GP-ROCK—QUICK COUPLER

S/N: MYG1-UP; PPN1-UP
1500-MM (59-IN) WIDE X 1.93-CU M (2.5-CU YD) CAPACITY.
K-110 ADAPTERS, QTY OF 4
AN ATTACHMENT

SMCS-6102 **i02568179**

NOTE	REF NO	GRAPHIC REF	PART NUMBER	QTY	PART NAME 1 2 3 4 5 6 (PRODUCT LEVEL)	SEE PAGE
	1	1	**266-8403**	1	EDGE AS-CUTTING	
	1A	1	**232-0116**	1	ADAPTER-TIP (K-110, 2-STRAP, LH)	
	1B	1	**232-0114**	2	ADAPTER-TIP (K-110, 2-STRAP, CENTER)	
	1C	1	**232-0115**	1	ADAPTER-TIP (K-110, 2-STRAP, RH)	
	1D	1	**8P-9770**	1	PLATE	
	2	1	**266-8429**	1	PLATE AS-BOX	
	3	1	**266-8425**	2	PLATE-WEAR	
	4	1	**266-8816**	6	PLATE-WEAR	
	5	1	**2C-9259**	2	PLATE-IDENTIFICATION (CAT)	

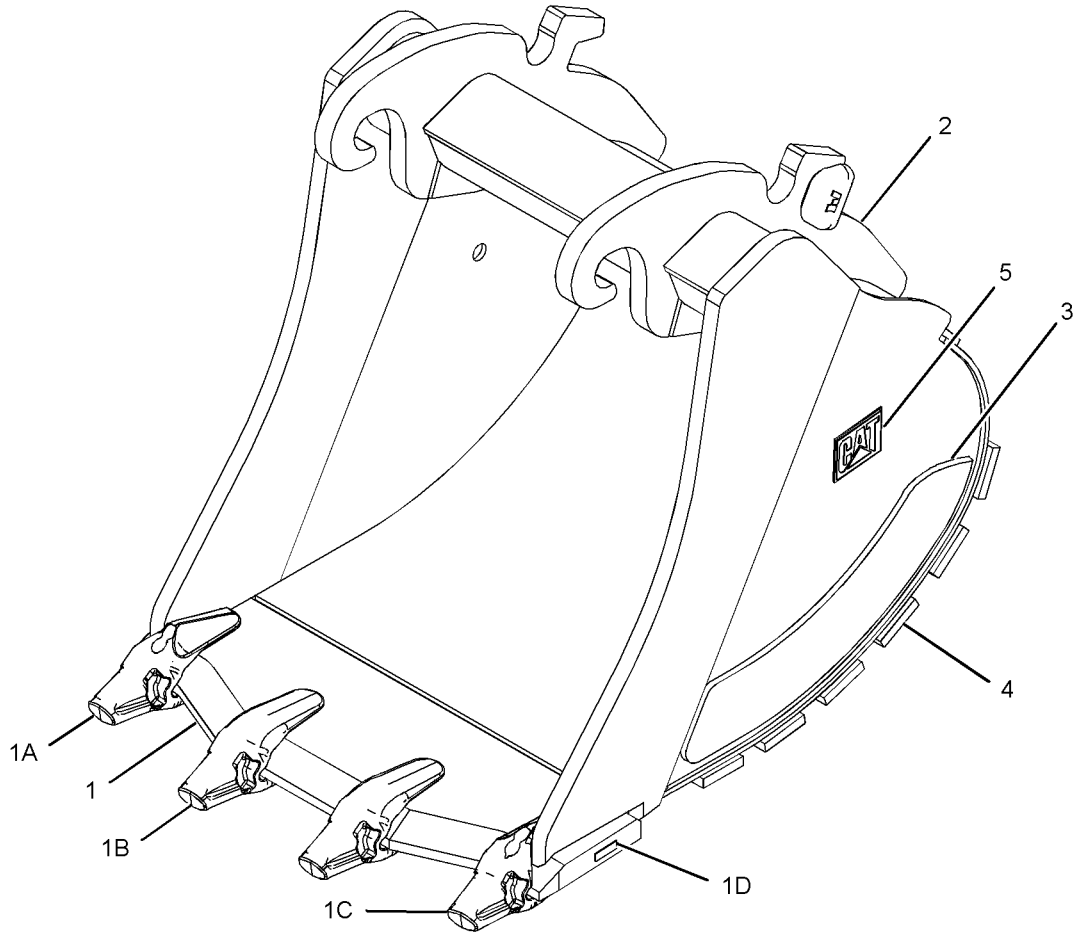

GRAPHIC #1 **<END>** g01286449

264-8029 BUCKET GP-ROCK–QUICK COUPLER

S/N: MYG1-UP; PPN1-UP
1800-MM (71-IN) WIDE X 2.4-CU M (3.1-CU YD)CAPACITY.
K-110 ADAPTERS, QTY OF 5
AN ATTACHMENT

SMCS-6102 **i02444989**

NOTE	REF NO	GRAPHIC REF	PART NUMBER	QTY	PART NAME 1 2 3 4 5 6 (PRODUCT LEVEL)	SEE PAGE
	1	1	**266-8404**	1	EDGE AS-CUTTING	
	1A	1	**232-0116**	1	ADAPTER-TIP (K-110, 2-STRAP, LH)	
	1B	1	**232-0114**	3	ADAPTER-TIP (K-110, 2-STRAP, CENTER)	
	1C	1	**232-0115**	1	ADAPTER-TIP (K-110, 2-STRAP, RH)	
	1D	1	**8P-9770**	1	PLATE	
	2	1	**266-8431**	1	PLATE AS-BOX	
	3	1	**266-8425**	2	PLATE-WEAR	
	4	1	**266-8817**	6	PLATE-WEAR	
	5	1	**2C-9259**	2	PLATE-IDENTIFICATION (CAT)	

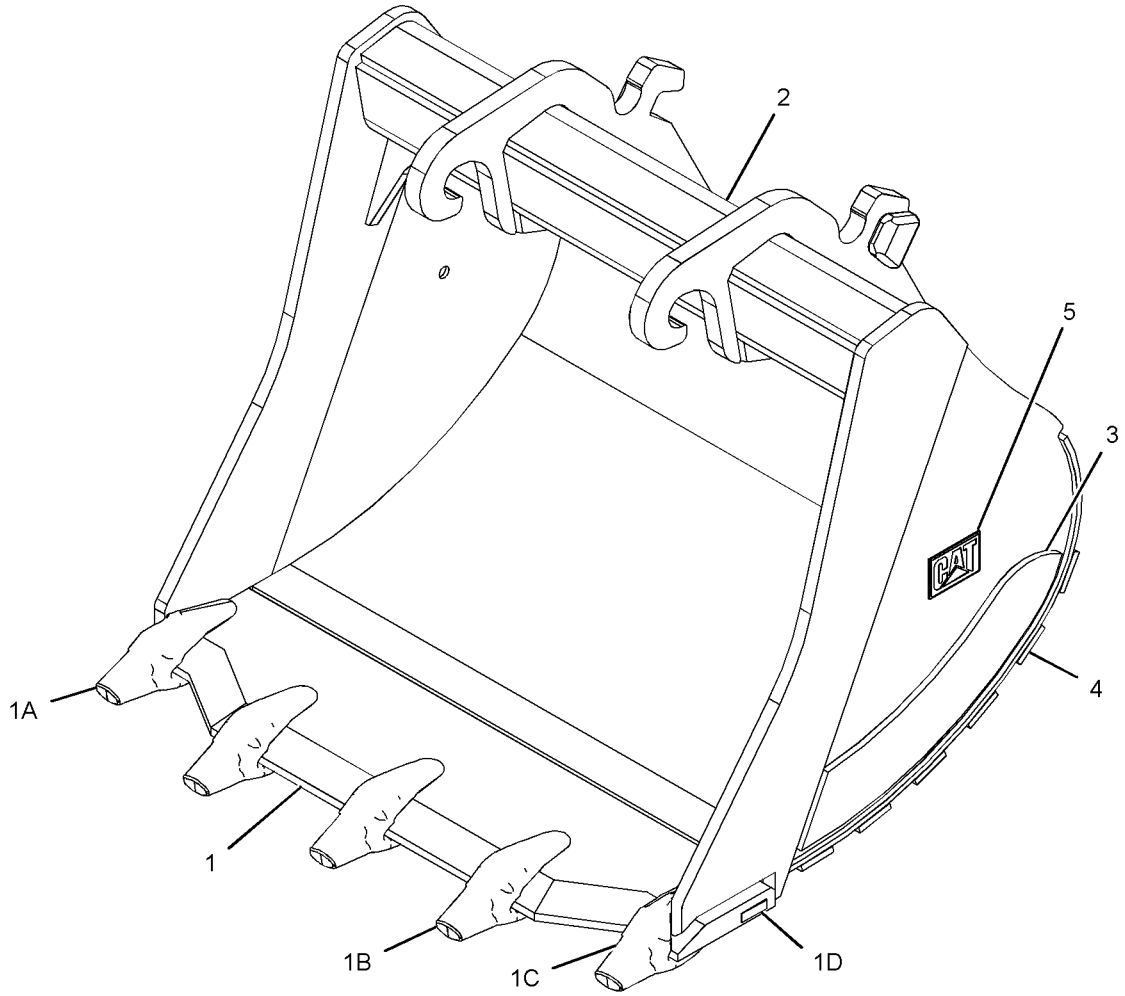

GRAPHIC #1 **<END>** g01238005

264-8033 BUCKET GP-ROCK–QUICK COUPLER

S/N: MYG1-UP; PPN1-UP
1500-MM (59-IN) WIDE X 1.93-CU M (2.9-CU YD) CAPACITY.
K-110 ADAPTERS, QTY OF 4
AN ATTACHMENT

SMCS-6102 **i02445662**

NOTE	REF NO	GRAPHIC REF	PART NUMBER	QTY	PART NAME 1 2 3 4 5 6 (PRODUCT LEVEL)	SEE PAGE
	1	1	**266-8403**	1	EDGE AS-CUTTING	
	1A	1	**232-0116**	1	ADAPTER-TIP (K-110, 2-STRAP, LH)	
	1B	1	**232-0114**	2	ADAPTER-TIP (K-110, 2-STRAP, CENTER)	
	1C	1	**232-0115**	1	ADAPTER-TIP (K-110, 2-STRAP, RH)	
	1D	1	**8P-9770**	1	PLATE	
	2	1	**266-8432**	1	PLATE AS-BOX	
	3	1	**266-8425**	2	PLATE-WEAR	
	4	1	**266-8816**	6	PLATE-WEAR	
	5	1	**2C-9259**	2	PLATE-IDENTIFICATION (CAT)	

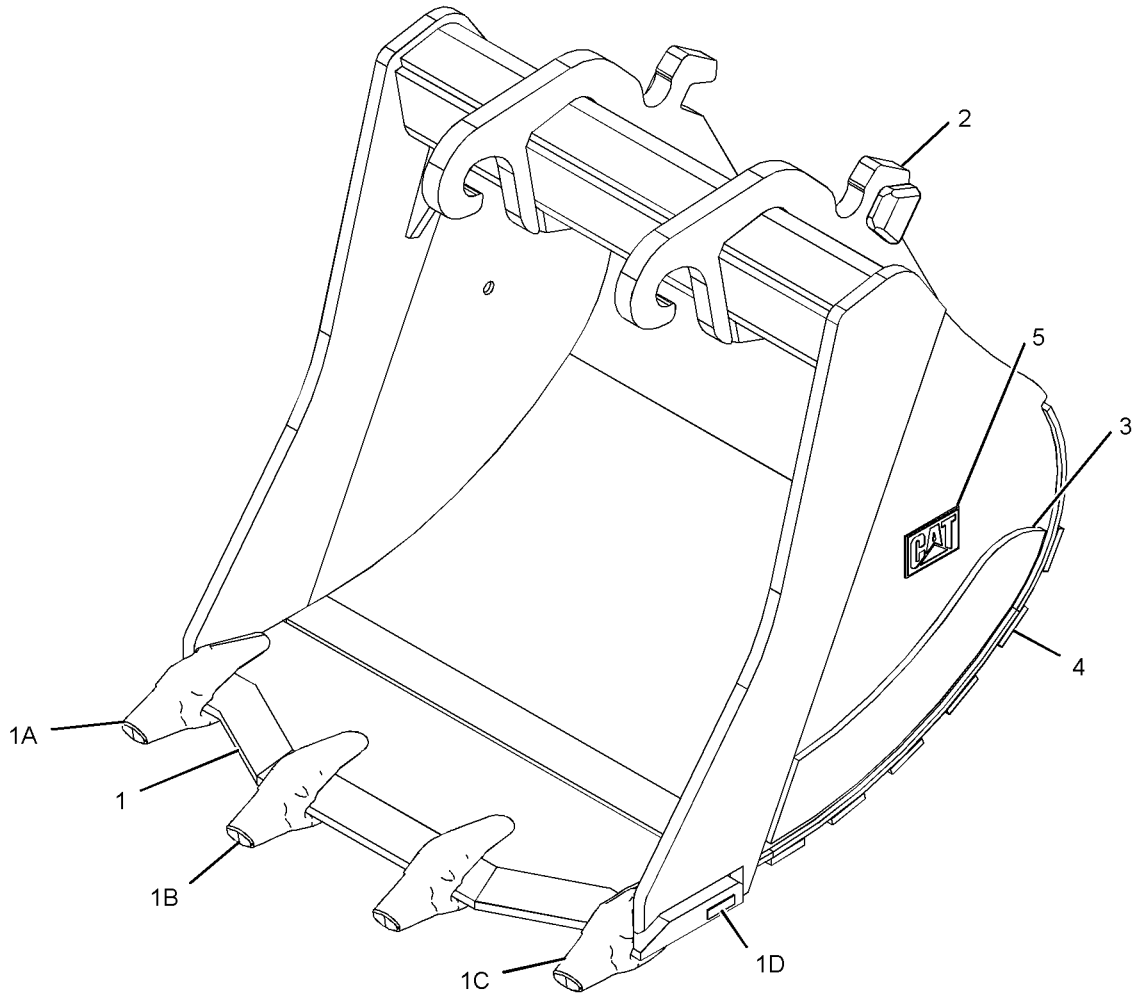

GRAPHIC #1 **<END>** g01237960

264-8034 BUCKET GP-ROCK–QUICK COUPLER

S/N: MYG1-UP; PPN1-UP
1800-MM (71-IN) WIDE X 2.4-CU M (3.1-CU YD) CAPACITY.
K-110 ADAPTERS, QTY OF 5
AN ATTACHMENT

SMCS-6102 **i02470070**

NOTE	REF NO	GRAPHIC REF	PART NUMBER	QTY	PART NAME 1 2 3 4 5 6 (PRODUCT LEVEL)	SEE PAGE
	1	1	**266-8404**	1	EDGE AS-CUTTING	
	1A	1	**232-0116**	1	ADAPTER-TIP (K-110, 2-STRAP, LH)	
	1B	1	**232-0114**	3	ADAPTER-TIP (K-110, 2-STRAP, CENTER)	
	1C	1	**232-0115**	1	ADAPTER-TIP (K-110, 2-STRAP, RH)	
	1D	1	**8P-9770**	1	PLATE	
	2	1	**266-8434**	1	PLATE AS-BOX	
	3	1	**266-8425**	2	PLATE-WEAR	
	4	1	**266-8817**	6	PLATE-WEAR	
	5	1	**2C-9259**	2	PLATE-IDENTIFICATION (CAT)	

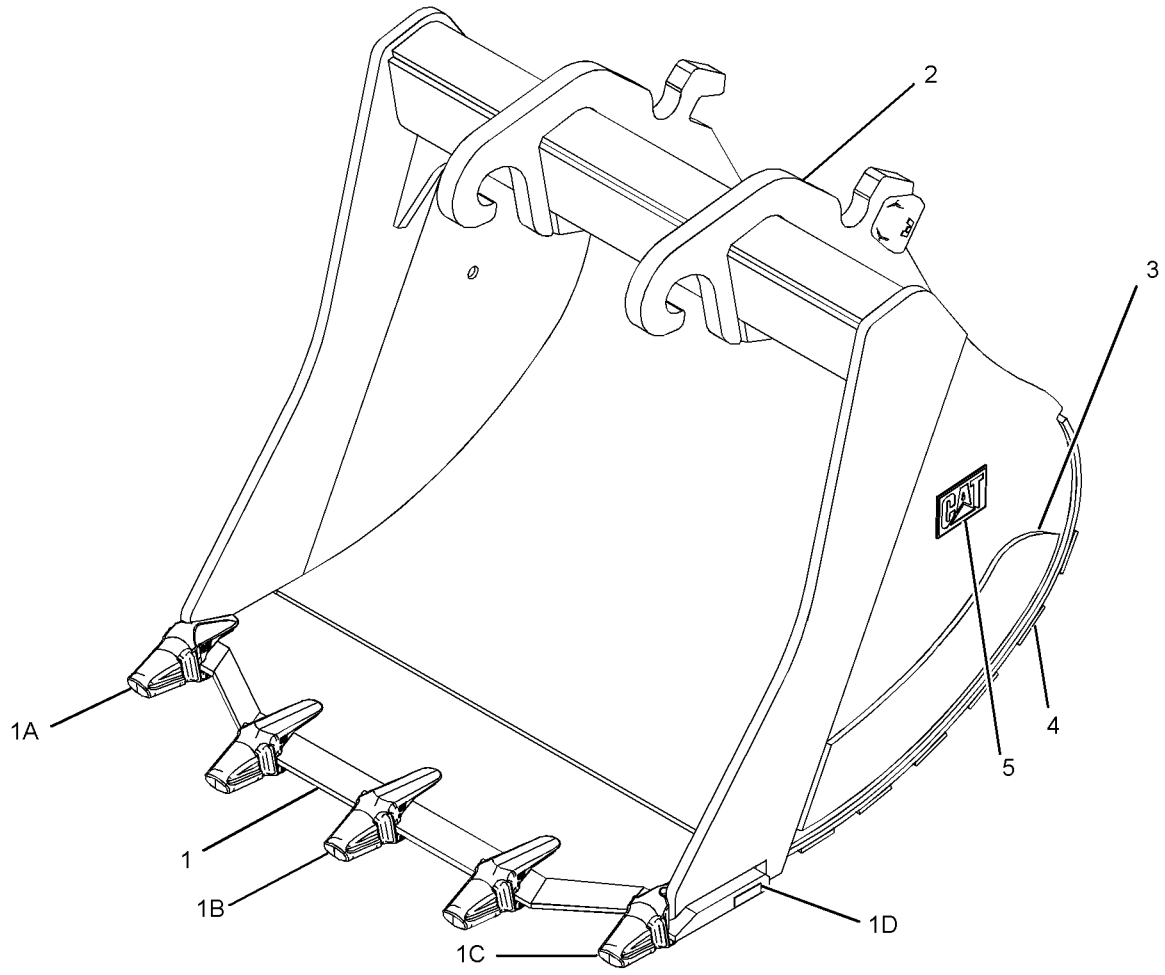

GRAPHIC #1 **<END>** g01235062

WORK TOOLS

275-0713 BUCKET GP-ROCK–QUICK COUPLER

S/N: MYG1-UP; PPN1-UP
1250-MM (49.2-IN) WIDE X 1.5-CU M (1.96-CU YD) CAPACITY.
K-110 ADAPTERS, QTY OF 4
AN ATTACHMENT

SMCS-6102 **i03645034**

NOTE	REF NO	GRAPHIC REF	PART NUMBER	QTY	PART NAME 1 2 3 4 5 6 (PRODUCT LEVEL)	SEE PAGE
	1	1	**275-3257**	1	EDGE AS	
	1A	1	**8P-9770**	1	PLATE	
	1B	1	**309-1117**	1	ADAPTER-TIP (K-110, 2-STRAP, RH)	
	1C	1	**309-1114**	2	ADAPTER-TIP (K-110, 2-STRAP, CENTER)	
	1D	1	**309-1118**	1	ADAPTER-TIP (K-110, 2-STRAP, LH)	
	2	1	**275-3255**	1	PLATE AS-BOX	
	3	1	**2C-9259**	2	PLATE-IDENTIFICATION (CAT)	
	4	1	**264-2705**	2	PLATE-WEAR (SIDE)	
	5	1	**275-3259**	6	PLATE-WEAR	

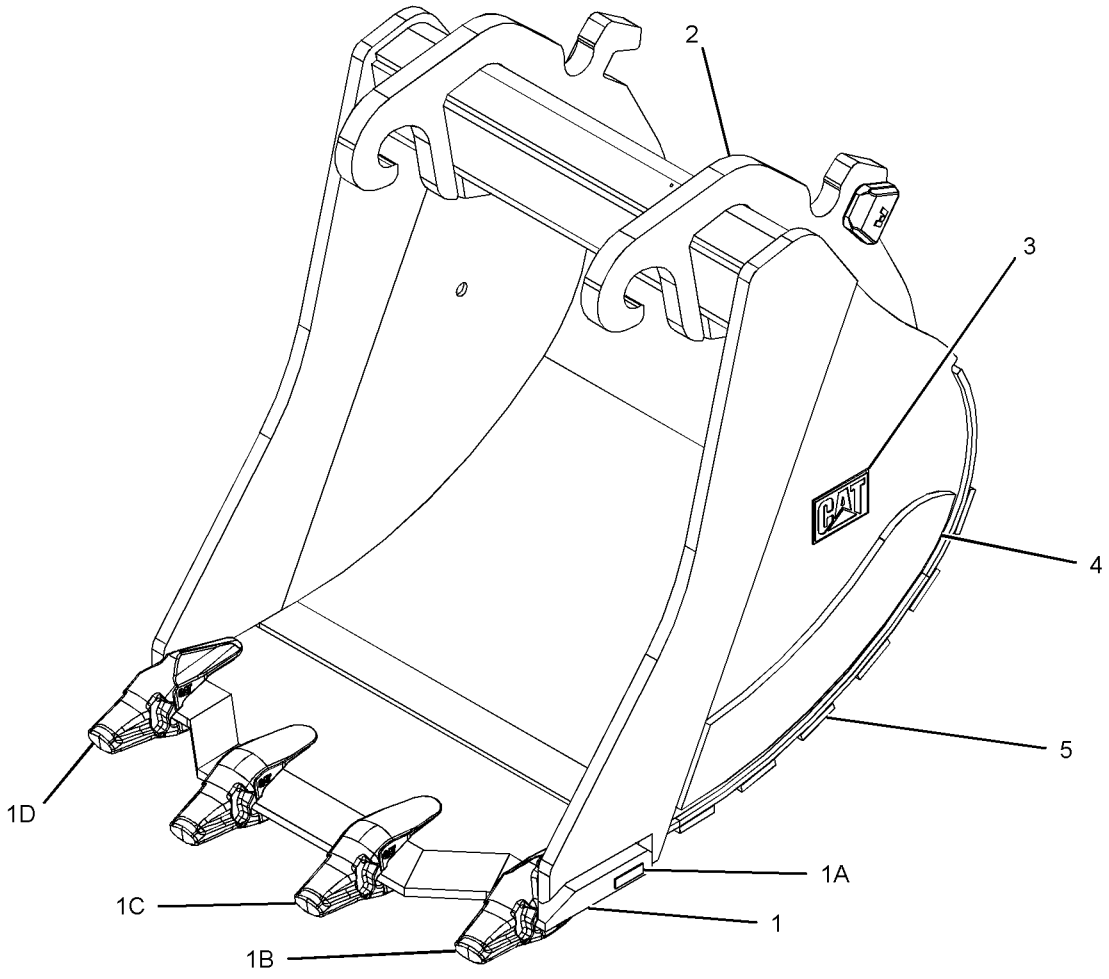

GRAPHIC #1 **<END>** g01958003

272-9580 COUPLER AR-QUICK—MECHANICAL, DB-FAMILY

S/N: MYG1-UP

AN ATTACHMENT

SMCS-1408, 5057, 6129 **i02522366**

NOTE	REF NO	GRAPHIC REF	PART NUMBER	QTY	PART NAME 1 2 3 4 5 6 (PRODUCT LEVEL)	SEE PAGE
Y	1	1	*171-8612*	1	LOCK GP-QUICK COUPLER (MECHANICAL)	815
	2	1	*173-9957*	1	HOOK GP-LIFTING	
	2A	1	**173-9971**	1	KIT-LATCH	
					(KIT INCLUDES SPRING, LATCH AND BOLT)	
	3	1	**159-8036**	2	FILM-WARNING (READ OMM)	
	4	1	**150-8896**	2	FILM-NOTICE (LIFT EYE LOCATION)	

Y-SEPARATE ILLUSTRATION

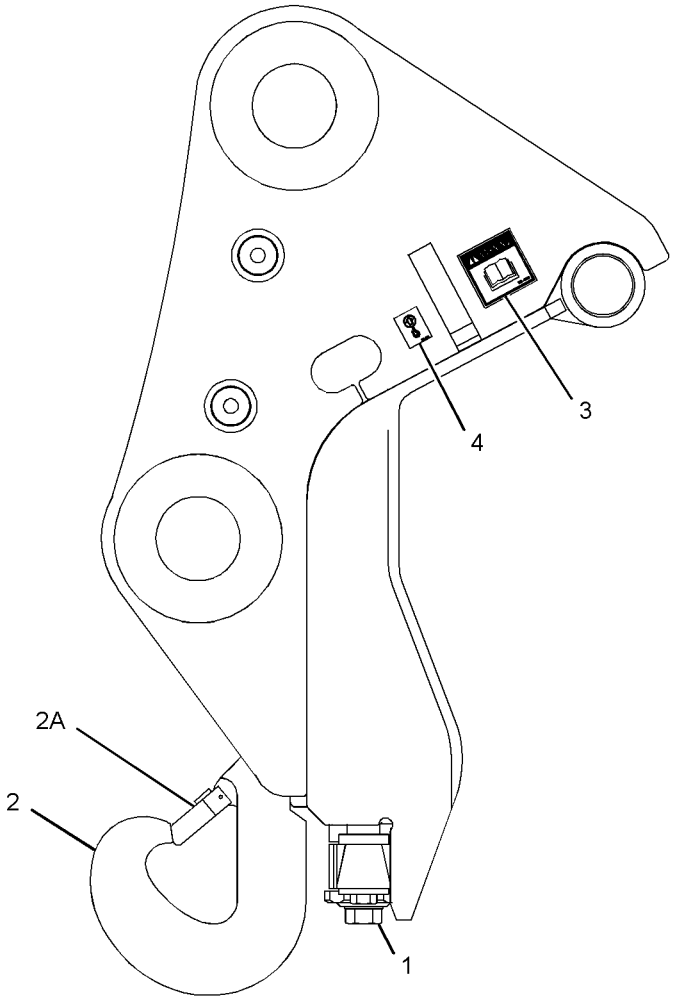

GRAPHIC #1 **<END>** g01213411

272-9583 COUPLER AR-QUICK–HYDRAULIC, DB-FAMILY

S/N: MYG1-UP

PART OF 274-7162 COUPLER AR-QUICK

AN ATTACHMENT

SMCS-1408, 5057, 6129 **i02445226**

NOTE	REF NO	GRAPHIC REF	PART NUMBER	QTY	PART NAME 1 2 3 4 5 6 (PRODUCT LEVEL)	SEE PAGE
Y	1	1	*169-0751*	1	LOCK GP-QUICK COUPLER (HYDRAULIC)	814
	2	1	*173-9957*	1	HOOK GP-LIFTING	
	2A	1	**173-9971**	1	KIT-LATCH	
	3	1	**159-8036**	2	FILM-WARNING (READ OMM)	
	4	1	**150-8896**	2	FILM-NOTICE (LIFT EYE LOCATION)	

Y-SEPARATE ILLUSTRATION

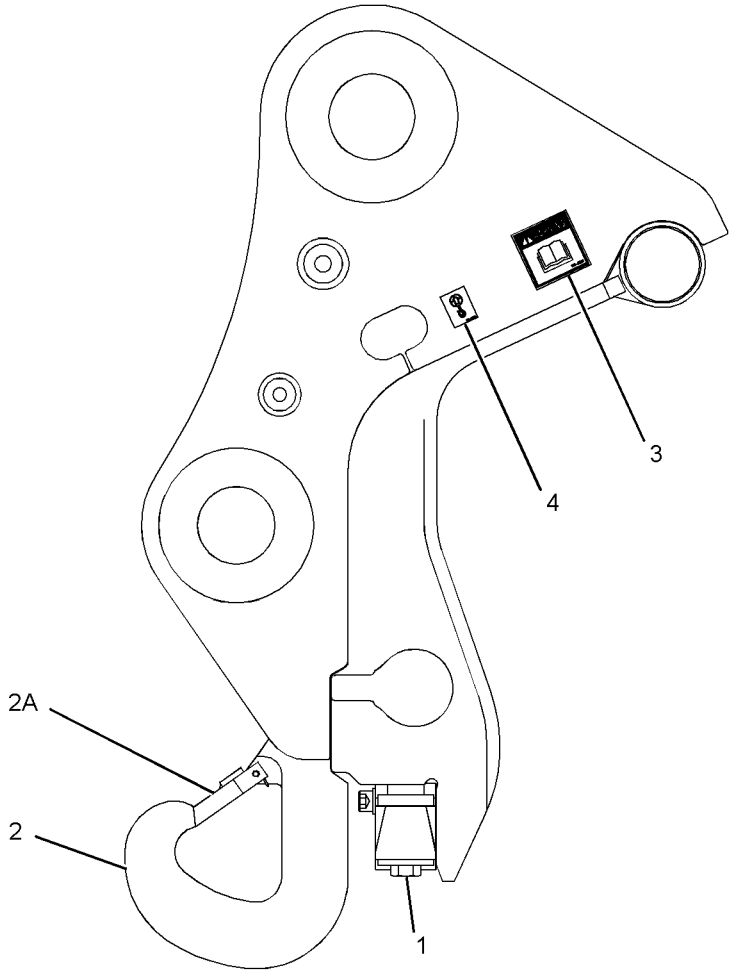

GRAPHIC #1 **<END>** g01213401

272-9585 COUPLER AR-QUICK—MECHANICAL, DB-FAMILY

S/N: MYG1-UP

AN ATTACHMENT

SMCS-1408, 5057, 6129 **i02445227**

NOTE	REF NO	GRAPHIC REF	PART NUMBER	QTY	PART NAME 1 2 3 4 5 6 (PRODUCT LEVEL)	SEE PAGE
	1	1	*272-9581*	1	HOUSING AS-COUPLER	
Y	2	1	*171-8613*	1	LOCK GP-QUICK COUPLER (MECHANICAL)	817
	3	1	*173-9957*	1	HOOK GP-LIFTING	
	3A	1	**173-9971**	1	KIT-LATCH	
					(KIT INCLUDES SPRING, LATCH AND BOLT)	
	4	1	**159-8036**	2	FILM-WARNING (READ OMM)	
	5	1	**150-8896**	2	FILM-NOTICE (LIFT EYE LOCATION)	

Y-SEPARATE ILLUSTRATION

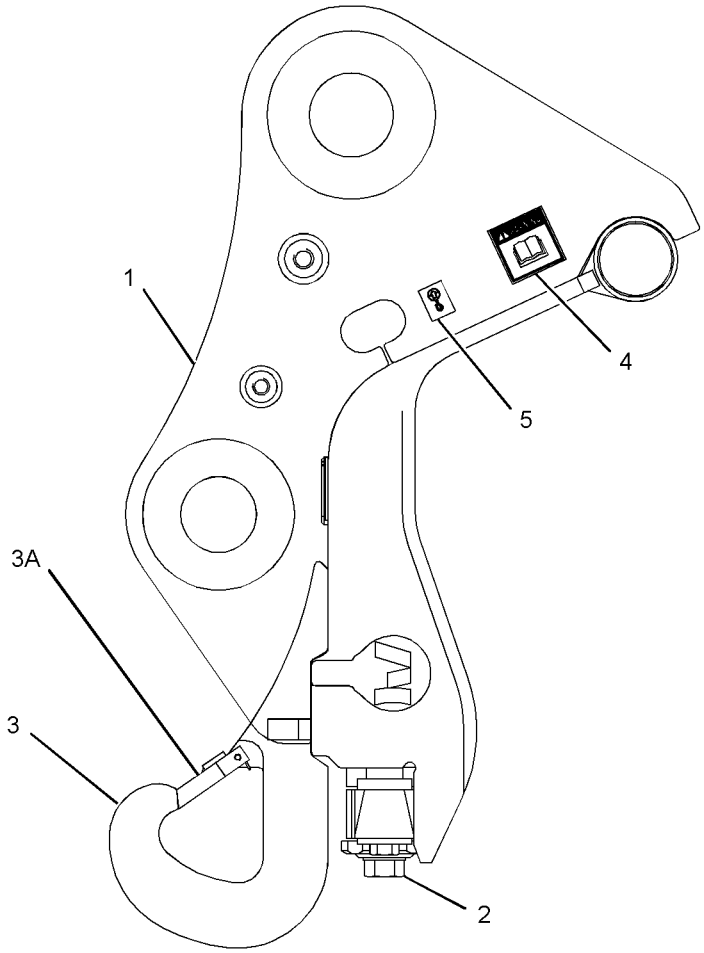

GRAPHIC #1 **<END>** g01218882

WORK TOOLS

274-7162 COUPLER AR-QUICK—HYDRAULIC, DB-FAMILY

S/N: MYG1-UP

AN ATTACHMENT

SMCS-1408, 5057, 6129 **i02427704**

NOTE	PART NUMBER	QTY	PART NAME 1 2 3 4 5 6 (PRODUCT LEVEL)	SEE PAGE
Y	*272-9583*	1	COUPLER AR-QUICK (HYDRAULIC, DB-FAMILY)	806
Y	*274-7163*	1	LINES GP-COUPLER	495

Y-SEPARATE ILLUSTRATION

<END>

275-7635 COUPLER AR-QUICK–HYDRAULIC

S/N: PPN1-UP
TB-FAMILY
PART OF 275-7742 COUPLER AR-QUICK
FOR USE WITH CW-45 QUICK COUPLER
AN ATTACHMENT

SMCS-1408, 5057, 6129 **i02994449**

NOTE	REF NO	GRAPHIC REF	PART NUMBER	QTY	PART NAME 1 2 3 4 5 6 (PRODUCT LEVEL)	SEE PAGE
	1	1	**150-8896**	2	FILM-NOTICE (LIFT EYE LOCATION)	
Y	2	1	*169-0751*	1	LOCK GP-QUICK COUPLER (HYDRAULIC)	814
Y	3	1	*173-9957*	1	HOOK GP-LIFTING	812
	4	1	**159-8036**	2	FILM-WARNING (READ OMM)	

Y-SEPARATE ILLUSTRATION

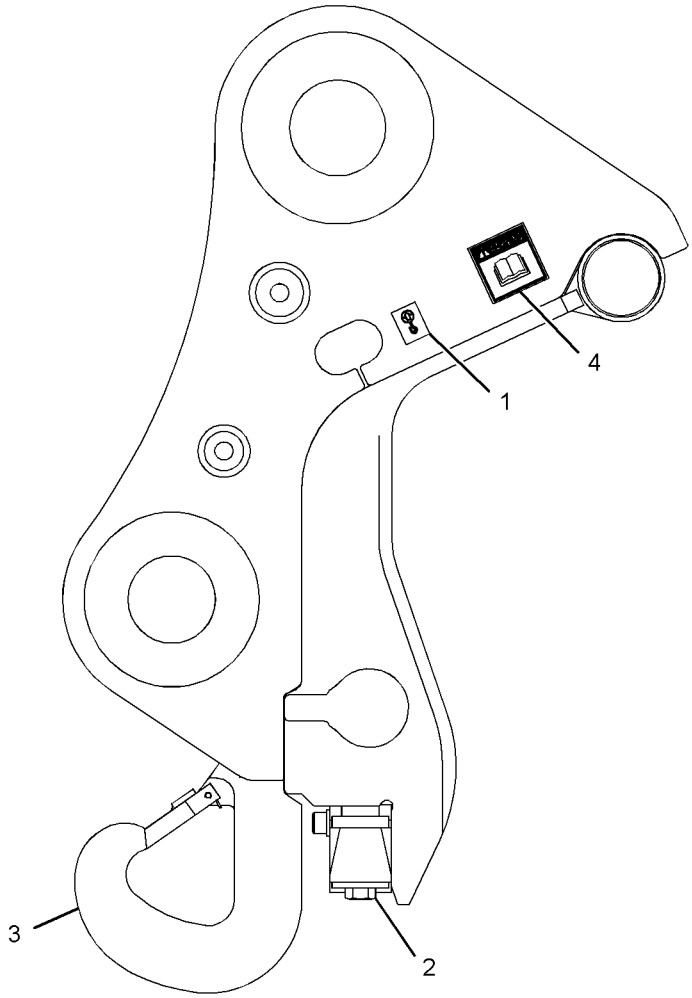

GRAPHIC #1 **<END>** g01416196

275-7742 COUPLER AR-QUICK—TB-FAMILY

S/N: PPN1-UP
AN ATTACHMENT

SMCS-1408, 5057, 6129 **i02472551**

NOTE	PART NUMBER	QTY	PART NAME 1 2 3 4 5 6 (PRODUCT LEVEL)	SEE PAGE
Y	*275-7635*	1	COUPLER AR-QUICK	809
Y	*275-7738*	1	LINES GP-COUPLER (QUICK, HOOK)	497

Y-SEPARATE ILLUSTRATION

<END>

275-7752 COUPLER AR-QUICK—WITH HOOK

S/N: MYG1-UP; PPN1-UP
FOR USE WITH TB-FAMILY LINKAGE
AN ATTACHMENT

SMCS-1408, 5057, 6129 **i02472552**

NOTE	PART NUMBER	QTY	PART NAME 1 2 3 4 5 6 (PRODUCT LEVEL)	SEE PAGE
Y	*275-6321*	1	COUPLER GP-QUICK (WITH HOOK)	811
Y	*275-7738*	1	LINES GP-COUPLER (QUICK, HOOK)	497

Y-SEPARATE ILLUSTRATION

<END>

WORK TOOLS

275-6321 COUPLER GP-QUICK–WITH HOOK

S/N: MYG1-UP; PPN1-UP
PART OF 275-7752 COUPLER AR-QUICK
FOR USE WITH TB-FAMILY LINKAGE
AN ATTACHMENT

SMCS-1408, 5057, 6129 **i02994421**

NOTE	REF NO	GRAPHIC REF	PART NUMBER	QTY	PART NAME 1 2 3 4 5 6 (PRODUCT LEVEL)	SEE PAGE
Y	1	1	*209-3464*	1	LOCK GP-QUICK COUPLER (HYDRAULIC)	819
CY	2	1	*306-8887*	1	HOOK GP-LIFTING	813
M	3	1	**136-0155**	2	SETSCREW (M4X0.7X8-MM)	
	4	1	**159-8036**	2	FILM-WARNING (READ OMM)	
	5	1	**150-8896**	2	FILM-NOTICE (LIFT EYE LOCATION)	
Z	6	1		1	HOUSING AS-COUPLER	

C-CHANGE FROM PREVIOUS TYPE
M-METRIC PART
Y-SEPARATE ILLUSTRATION
Z-NOT SERVICED SEPARATELY

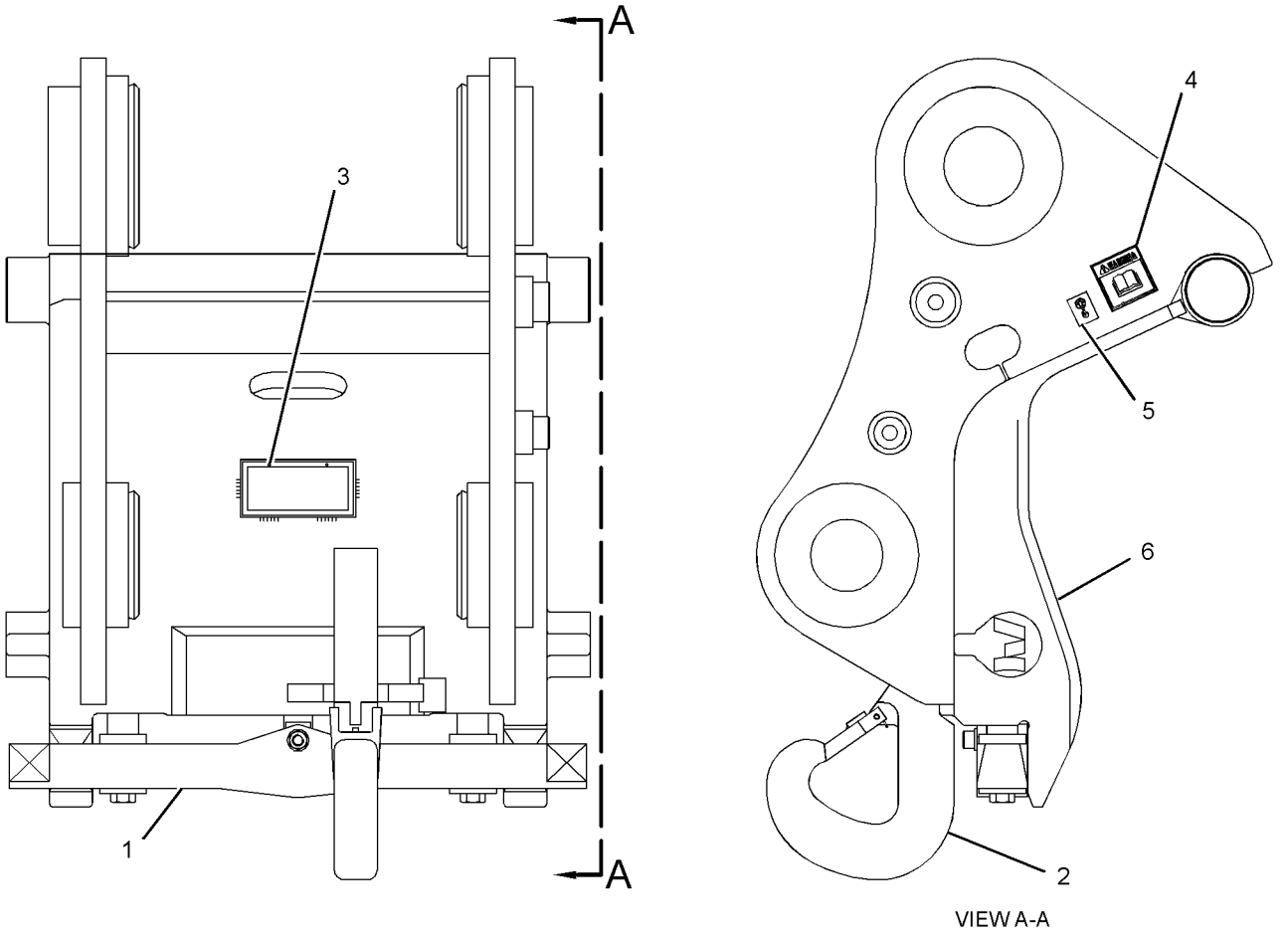

VIEW A-A

GRAPHIC #1 **<END>** g01517962

173-9957 HOOK GP-LIFTING—14-TON CAPACITY

S/N: MYG1-UP; PPN1-UP
PART OF 275-7635 COUPLER AR-QUICK, 306-8887 HOOK GP-LIFTING
AN ATTACHMENT

SMCS-6459 **i01517394**

NOTE	REF NO	GRAPHIC REF	PART NUMBER	QTY	PART NAME 1 2 3 4 5 6 (PRODUCT LEVEL)	SEE PAGE
	1	1	**173-9971**	1	KIT-LATCH	

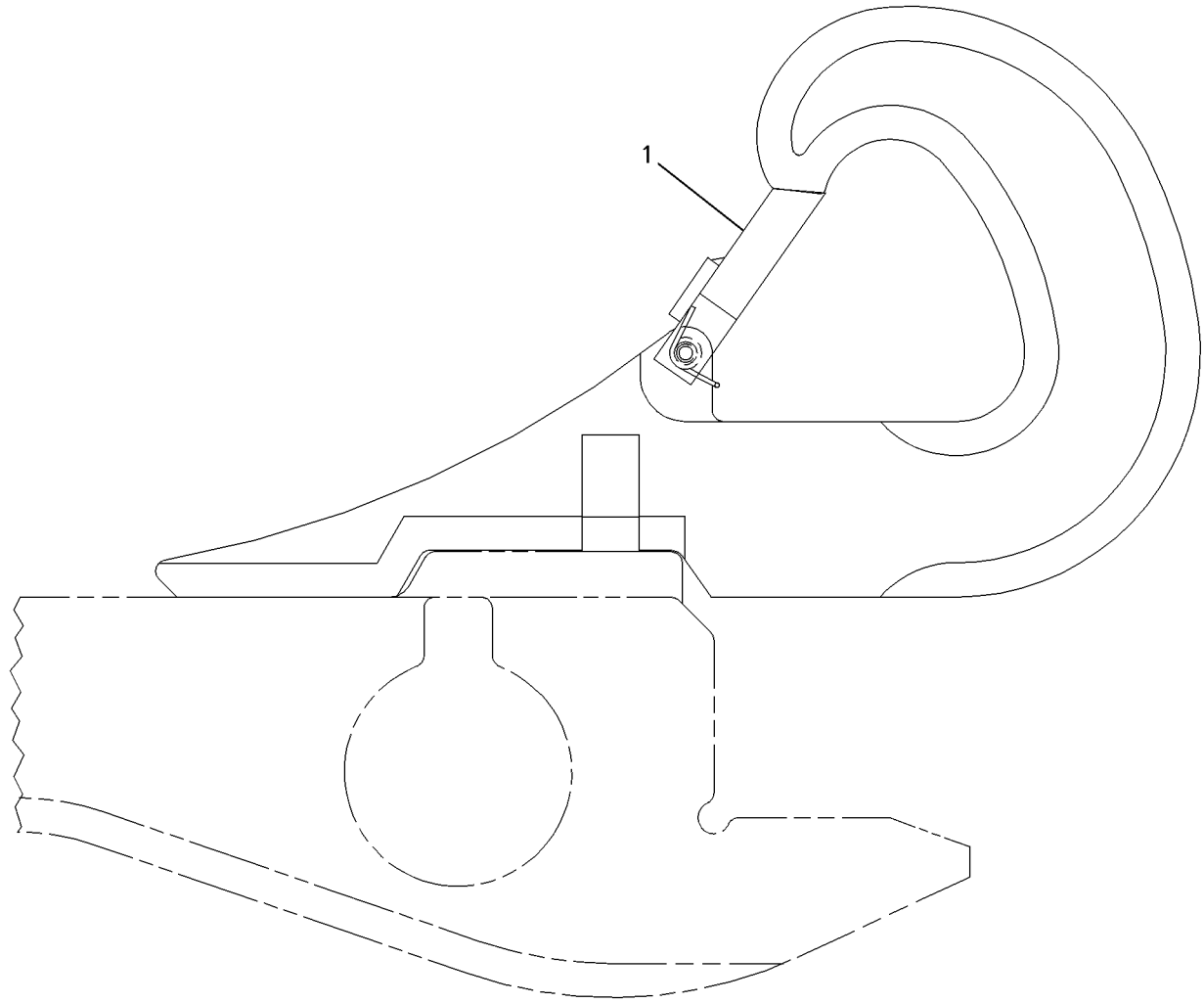

GRAPHIC #1 **<END>** g00576288

WORK TOOLS

306-8887 HOOK GP-LIFTING

S/N: MYG1-UP; PPN1-UP
PART OF 275-6321 COUPLER GP-QUICK
AN ATTACHMENT

SMCS-6459 **i02994443**

NOTE	PART NUMBER	QTY	PART NAME 1 2 3 4 5 6 (PRODUCT LEVEL)	SEE PAGE
Y	**173-9957**	1	HOOK GP-LIFTING	812

Y-SEPARATE ILLUSTRATION

<END>

WORK TOOLS

169-0751 LOCK GP-QUICK COUPLER—HYDRAULIC

S/N: MYG1-UP; PPN1-UP
PART OF 272-9583, 275-7635 COUPLER AR-QUICK
AN ATTACHMENT

SMCS-6129 **i03644996**

NOTE	REF NO	GRAPHIC REF	PART NUMBER	QTY	PART NAME 1 2 3 4 5 6 (PRODUCT LEVEL)	SEE PAGE
Y	1	1	**169-0753**	1	CYLINDER GP-COUPLER	425
M	2	1	**8T-4183**	4	BOLT (M12X1.75X40-MM)	
	3	1	**8T-4223**	4	WASHER-HARD (13.5X25.5X3-MM THK)	
M	4	1	**095-0705**	1	BOLT-SOCKET HEAD (M16X2X100-MM)	
M	5	1	**098-5747**	2	NUT (M16X2-THD)	
	6	1	**9X-8257**	2	WASHER (17.5X30X3.5-MM THK)	
	7	1	**169-0756**	2	SPACER (26.4X42.4X75-MM THK)	
	8	1	**169-0737**	2	SHAFT AS	
	9	1	**169-0738**	2	SPRING	
	10	1	**169-0739**	2	RING	
	11	1	**169-0740**	2	RING	
	12	1	**169-0741**	1	WEDGE	
	13	1	**169-0745**	2	PLATE (LOCK)	
M	14	1	**8T-4141**	2	BOLT (M20X2.5X70-MM)	
M	15	1	**169-2519**	2	BOLT (M24X3X180-MM)	

M-METRIC PART
Y-SEPARATE ILLUSTRATION

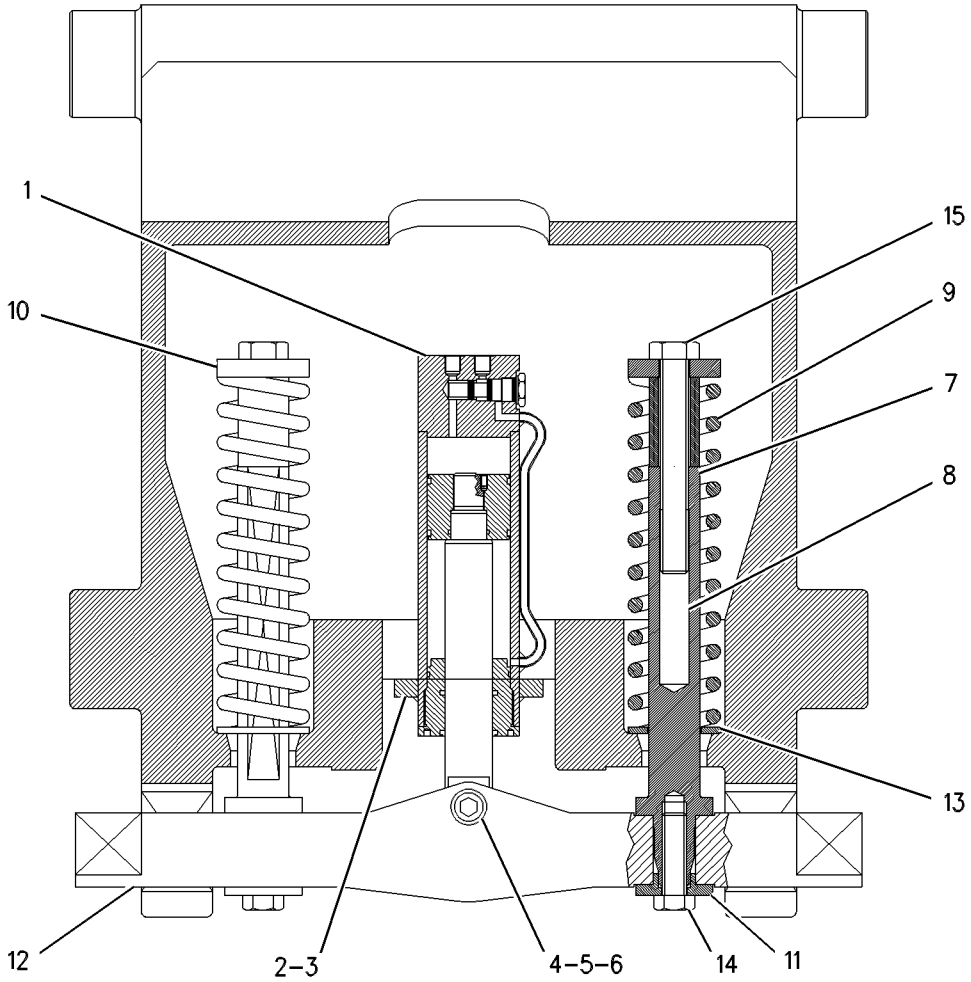

GRAPHIC #1 **<END>** g00566929

171-8612 LOCK GP-QUICK COUPLER—MECHANICAL

S/N: MYG1-UP

PART OF 272-9580 COUPLER AR-QUICK

AN ATTACHMENT

SMCS-6129 **i03644923**

NOTE	REF NO	GRAPHIC REF	PART NUMBER	QTY	PART NAME 1 2 3 4 5 6 (PRODUCT LEVEL)	SEE PAGE
	1	1	**171-8617**	1	WEDGE	
	2	1	**171-8622**	1	SPINDLE	
	3	1	**171-8625**	1	SPINDLE AS-HOUSING	
	4	1	**171-8629**	1	RING	
	5	1	**171-8639**	1	CLAMP	
	6	1	**171-8659**	2	SHAFT	
	7	1	**169-0740**	2	RING	
M	8	1	**8T-4141**	2	BOLT (M20X2.5X70-MM)	
	9	1	**169-0739**	2	RING	
M	10	1	**7X-2575**	2	BOLT (M24X3X60-MM)	
	11	1	**095-0948**	2	FITTING	
M	12	1	**8T-4183**	4	BOLT (M12X1.75X40-MM)	
	13	1	**174-6946**	2	BOLT-SHOULDER (M12X1.75X18-MM)	
M	14	1	**8T-0338**	2	BOLT-SOCKET HEAD (M8X1.25X45-MM)	
	15	1	**174-5160**	4	WASHER-SPRING	
	16	1	**171-8630**	2	RING	
	17	1	**171-8669**	1	PLATE AS	
	18	1	**095-1393**	2	CLAMP-HOSE	
	19	1	**171-8671**	1	COLLAR	
	20	1	**6V-5204**	1	RING-RETAINING	
	21	1	**8T-4223**	4	WASHER-HARD (13.5X25.5X3-MM THK)	
M	22	1	**5C-7261**	2	NUT (M8X1.25-THD)	
	23	1	**171-8675**	1	BOLT-SPECIAL	

M-METRIC PART

171-8612 **LOCK GP-QUICK COUPLER** *(contd.)* **i03644923**

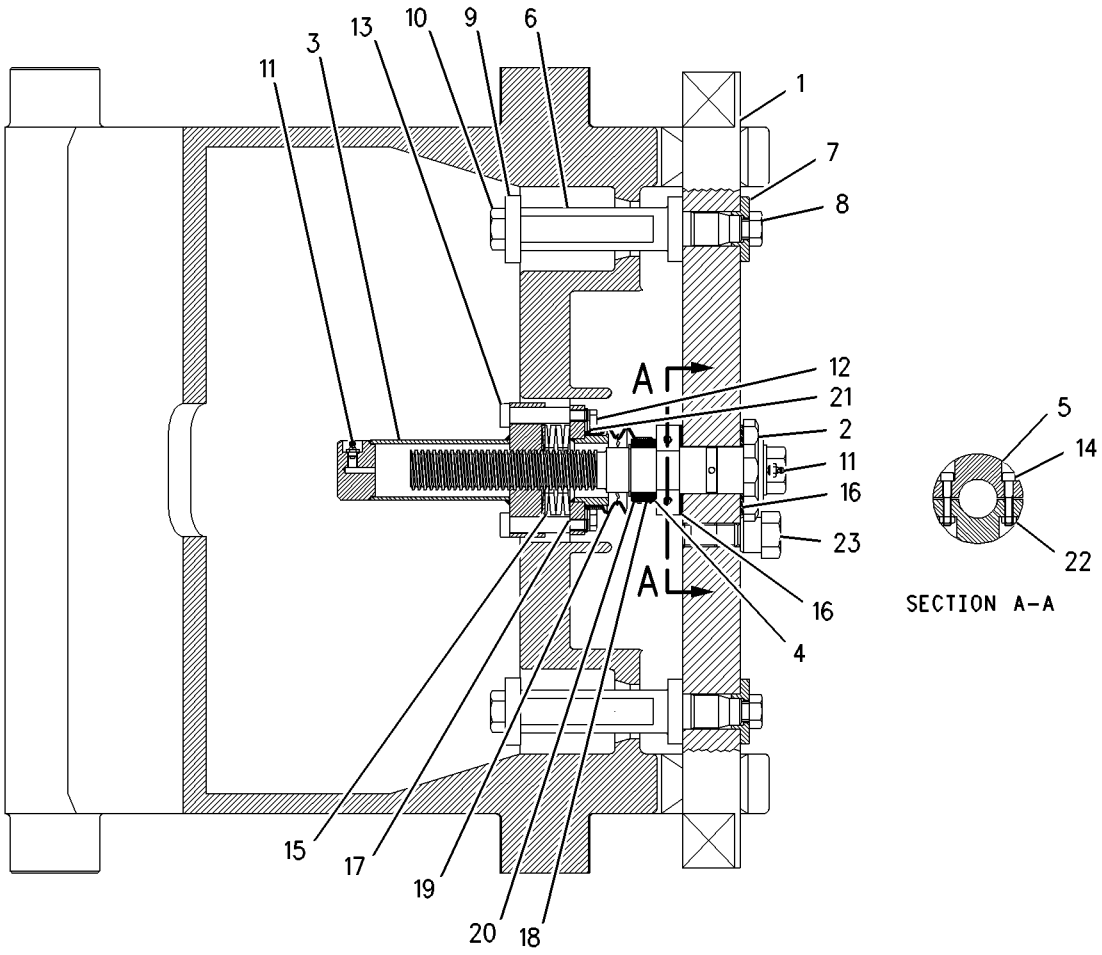

GRAPHIC #1 **<END>** g00950243

WORK TOOLS

171-8613 LOCK GP-QUICK COUPLER—MECHANICAL

S/N: MYG1-UP

PART OF 272-9585 COUPLER AR-QUICK

AN ATTACHMENT

SMCS-6129 **i03644925**

NOTE	REF NO	GRAPHIC REF	PART NUMBER	QTY	PART NAME 1 2 3 4 5 6 (PRODUCT LEVEL)	SEE PAGE
	1	1	**171-8618**	1	WEDGE	
	2	1	**171-8622**	1	SPINDLE	
	3	1	**171-8625**	1	SPINDLE AS-HOUSING	
	4	1	**171-8629**	1	RING	
	5	1	**171-8639**	1	CLAMP	
	6	1	**171-8659**	2	SHAFT	
	7	1	**169-0740**	2	RING	
M	8	1	**8T-4141**	2	BOLT (M20X2.5X70-MM)	
	9	1	**169-0739**	2	RING	
M	10	1	**7X-2575**	2	BOLT (M24X3X60-MM)	
	11	1	**095-0948**	2	FITTING	
M	12	1	**8T-4183**	4	BOLT (M12X1.75X40-MM)	
	13	1	**174-6946**	2	BOLT-SHOULDER (M12X1.75X18-MM)	
M	14	1	**8T-0338**	2	BOLT-SOCKET HEAD (M8X1.25X45-MM)	
	15	1	**174-5160**	4	WASHER-SPRING	
	16	1	**171-8630**	2	RING	
	17	1	**171-8669**	1	PLATE AS	
	18	1	**095-1393**	2	CLAMP-HOSE	
	19	1	**171-8671**	1	COLLAR	
	20	1	**6V-5204**	1	RING-RETAINING	
	21	1	**8T-4223**	4	WASHER-HARD (13.5X25.5X3-MM THK)	
M	22	1	**5C-7261**	2	NUT (M8X1.25-THD)	
	23	1	**171-8675**	1	BOLT-SPECIAL	

M-METRIC PART

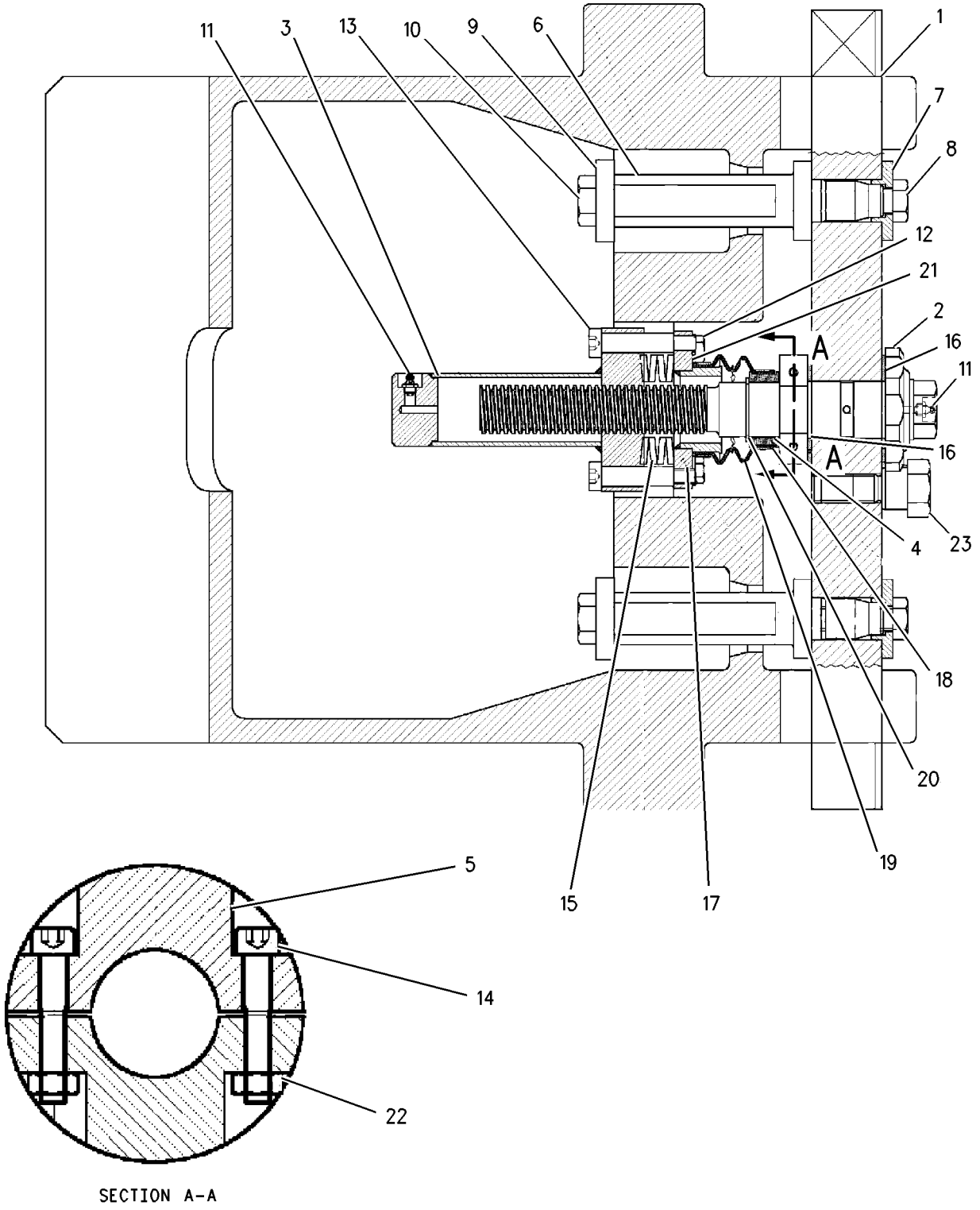

GRAPHIC #1 **<END>** g00836059

209-3464 LOCK GP-QUICK COUPLER—HYDRAULIC, CB-FAMILY

S/N: MYG1-UP; PPN1-UP
PART OF 275-6321 COUPLER GP-QUICK
AN ATTACHMENT

SMCS-6129 **i02940930**

NOTE	REF NO	GRAPHIC REF	PART NUMBER	QTY	PART NAME 1 2 3 4 5 6 (PRODUCT LEVEL)	SEE PAGE
J	1	1	**169-0753**	1	CYLINDER GP-COUPLER	
M	2	1	**8T-4183**	4	BOLT (M12X1.75X40-MM)	
	3	1	**8T-4223**	4	WASHER-HARD (13.5X25.5X3-MM THK)	
M	4	1	**095-0705**	1	BOLT-SOCKET HEAD (M16X2X100-MM)	
M	5	1	**098-5747**	2	NUT (M16X2-THD)	
	6	1	**9X-8257**	2	WASHER (17.5X30X3.5-MM THK)	
	7	1	**169-0756**	2	SPACER (26.4X42.4X75-MM THK)	
	8	1	**169-0737**	2	SHAFT AS	
	9	1	**169-0738**	2	SPRING	
	10	1	**169-0739**	2	RING	
	11	1	**169-0740**	2	RING	
	12	1	**209-3466**	1	WEDGE	
	13	1	**169-0745**	2	PLATE (LOCK)	
M	14	1	**8T-4141**	2	BOLT (M20X2.5X70-MM)	
M	15	1	**169-2519**	2	BOLT (M24X3X180-MM)	
					AVAILABLE REPAIR KIT(S):	
J			**169-3923**	1	KIT-VALVE (QUICK COUPLER) (LOCK)	
J			**219-1322**	1	KIT-SEAL (QUICK COUPLER LOCK)	

J-KIT(S) MARKED J SERVICES PART9S) MARKED J
M-METRIC PART

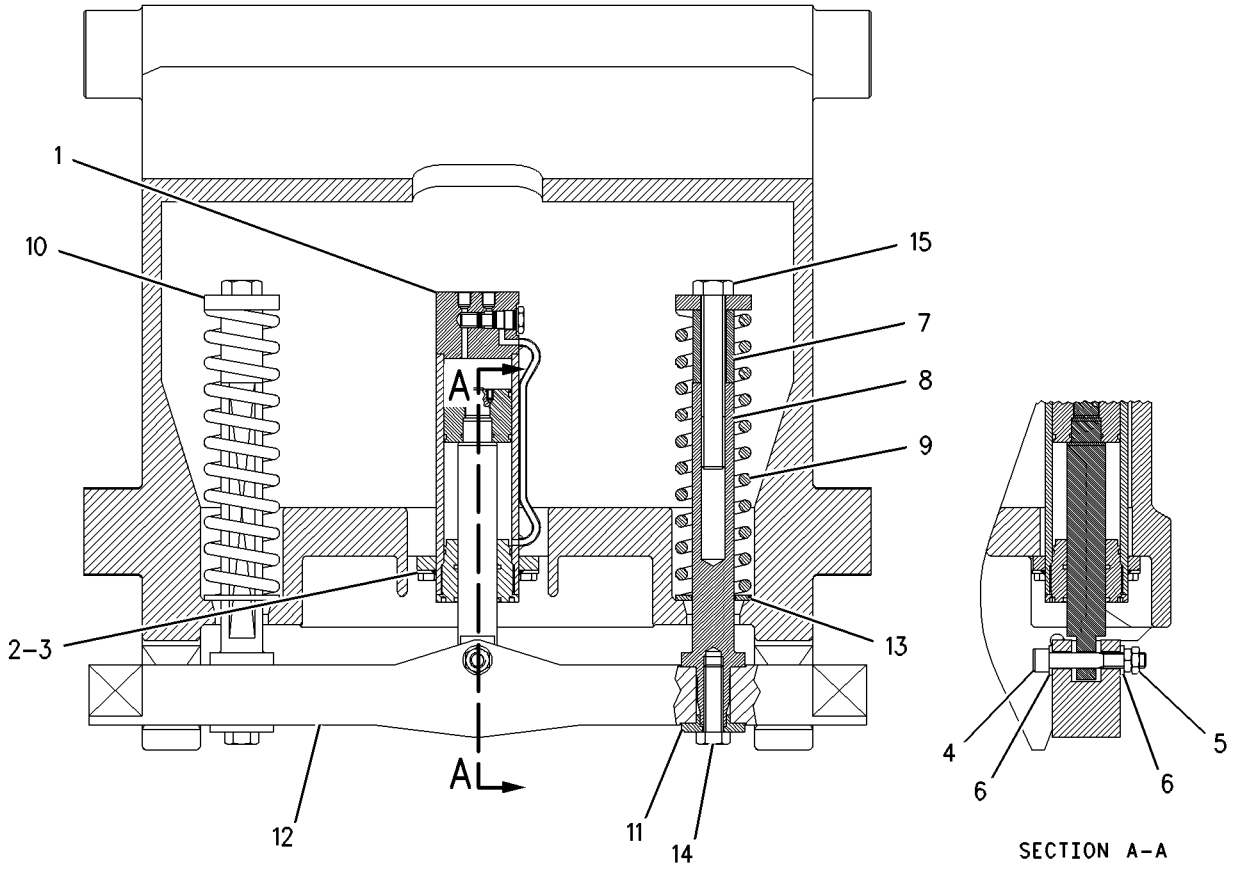

GRAPHIC #1 **<END>** g00950212

112-2482 PROTECTOR GP-SIDE BAR

S/N: PPN1-UP; THX1-UP
FOR USE WITH B, C, D, & S FAMILIES
AN ATTACHMENT

SMCS-6817 **i03671060**

NOTE	REF NO	GRAPHIC REF	PART NUMBER	QTY	PART NAME 1 2 3 4 5 6 (PRODUCT LEVEL)	SEE PAGE
	1	1	**112-2489**	2	PROTECTOR-SIDE BAR	
	2	1	**275-5982**	4	PIN	
	3	1	**132-0999**	4	RETAINER AS	

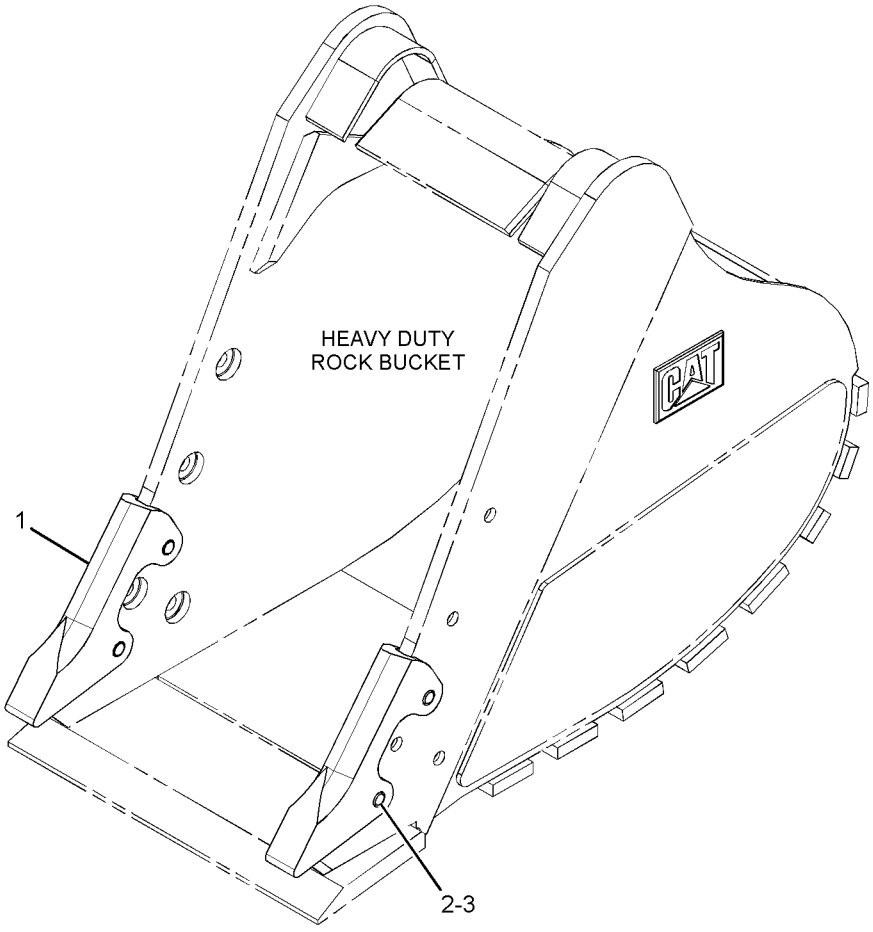

GRAPHIC #1 **<END>** g01432367

WORK TOOLS

7Y-0366 SIDECUTTER GP—C-FAMILY, D-FAMILY

S/N: PPN1-UP; THX1-UP

AN ATTACHMENT

SMCS-6813 **i03670921**

NOTE	REF NO	GRAPHIC REF	PART NUMBER	QTY	PART NAME 1 2 3 4 5 6 (PRODUCT LEVEL)	SEE PAGE
	1	1	**7Y-0357**	1	SIDECUTTER-RH	
	2	1	**7Y-0358**	1	SIDECUTTER-LH	
	3	1	**6I-6371**	6	BOLT (1-8X2.5-IN)	
	4	1	**2J-3507**	6	NUT-FULL (1-8-THD)	

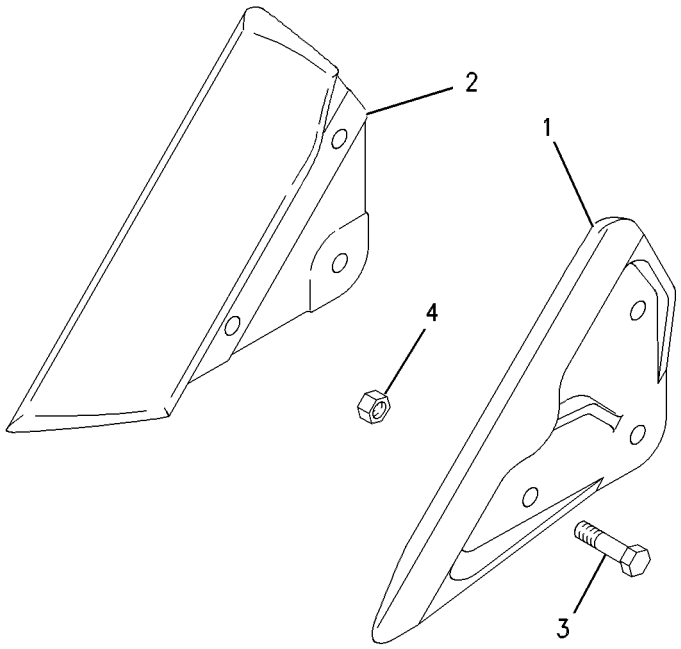

GRAPHIC #1 **<END>** g00312593

WORK TOOLS

309-1126 TIP GP-DOUBLE SPIKE–K-110

S/N: MYG1-UP; PPN1-UP

AN ATTACHMENT

SMCS-6805 **i02958685**

NOTE	REF NO	GRAPHIC REF	PART NUMBER	QTY	PART NAME 1 2 3 4 5 6 (PRODUCT LEVEL)	SEE PAGE
	1	1	**286-2110**	1	RETAINER-G.E.T.	
	2	1	**286-2116**	1	TIP-DOUBLE SPIKE	

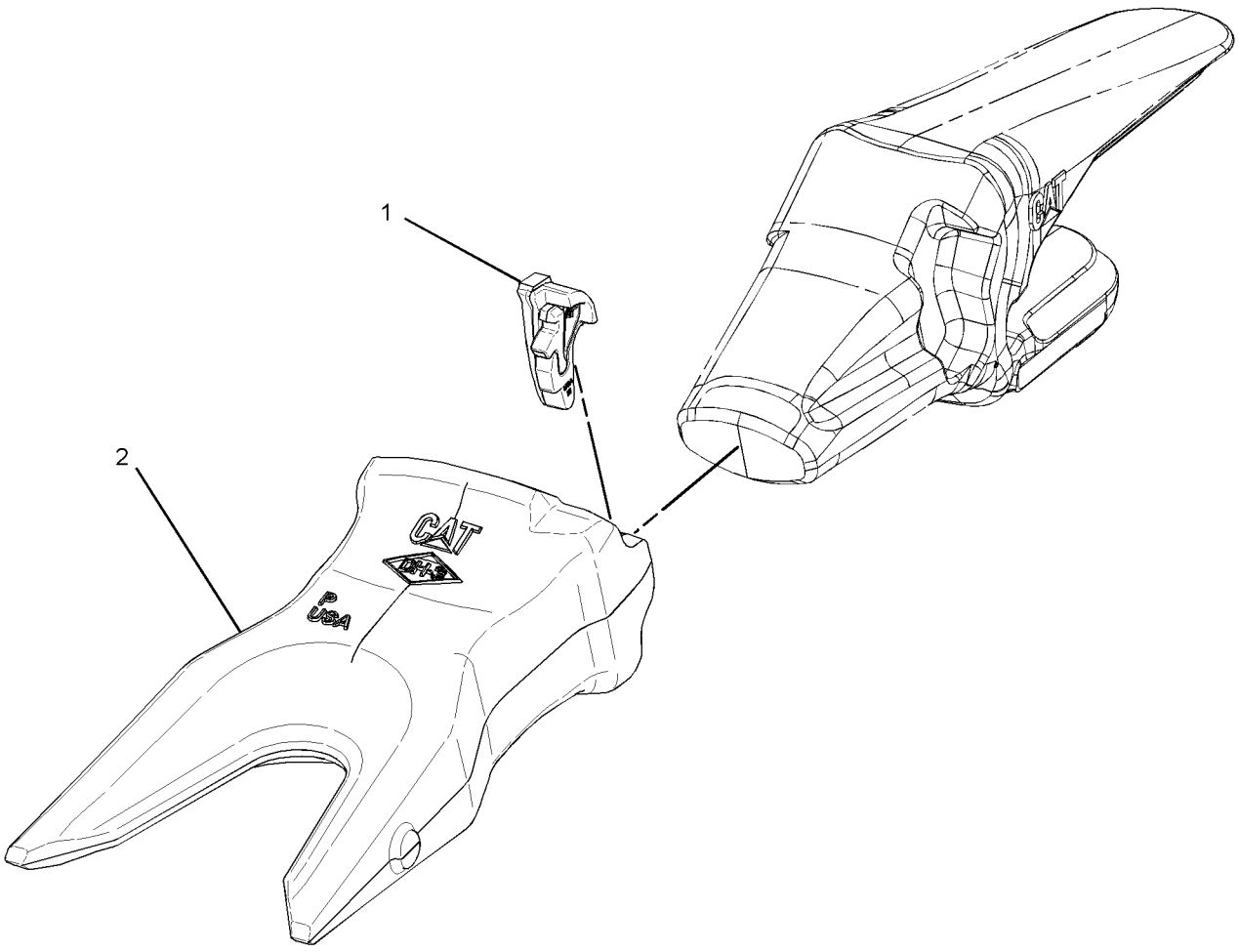

GRAPHIC #1 **<END>** g01519225

WORK TOOLS

229-6973 TIP GP-EXTRA-DUTY–K-100

S/N: MYG1-UP; PPN1-UP

AN ATTACHMENT

SMCS-6805 **i02390313**

NOTE	REF NO	GRAPHIC REF	PART NUMBER	QTY	PART NAME 1 2 3 4 5 6 (PRODUCT LEVEL)	SEE PAGE
	1	1	**220-9090**	1	RETAINER-G.E.T.	
	2	1	**220-9101**	1	TIP-EXTRA-DUTY (K-100)	

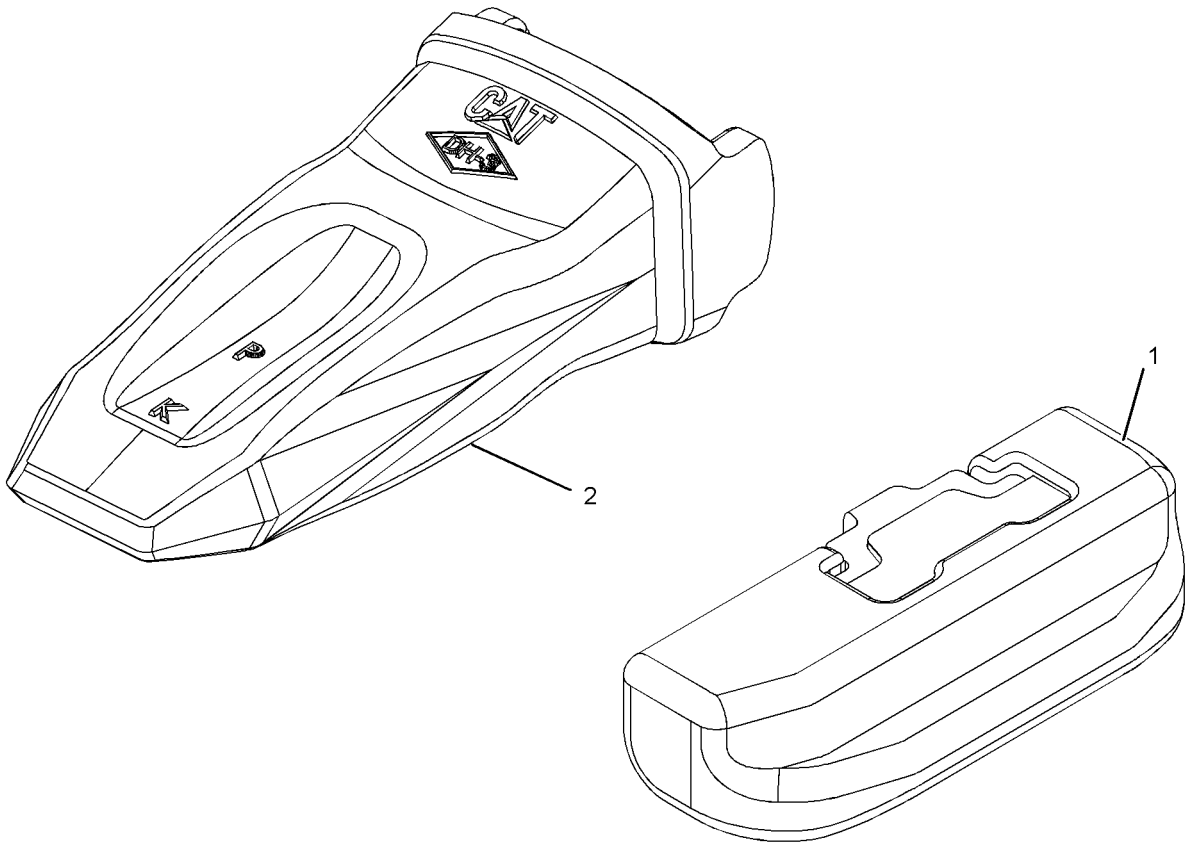

GRAPHIC #1 **<END>** g01143666

WORK TOOLS

309-1122 TIP GP-EXTRA-DUTY–K-110

S/N: MYG1-UP; PPN1-UP

AN ATTACHMENT

SMCS-6805 **i02958742**

NOTE	REF NO	GRAPHIC REF	PART NUMBER	QTY	PART NAME 1 2 3 4 5 6 (PRODUCT LEVEL)	SEE PAGE
	1	1	**286-2110**	1	RETAINER-G.E.T.	
	2	1	**286-2112**	1	TIP-EXTRA-DUTY	

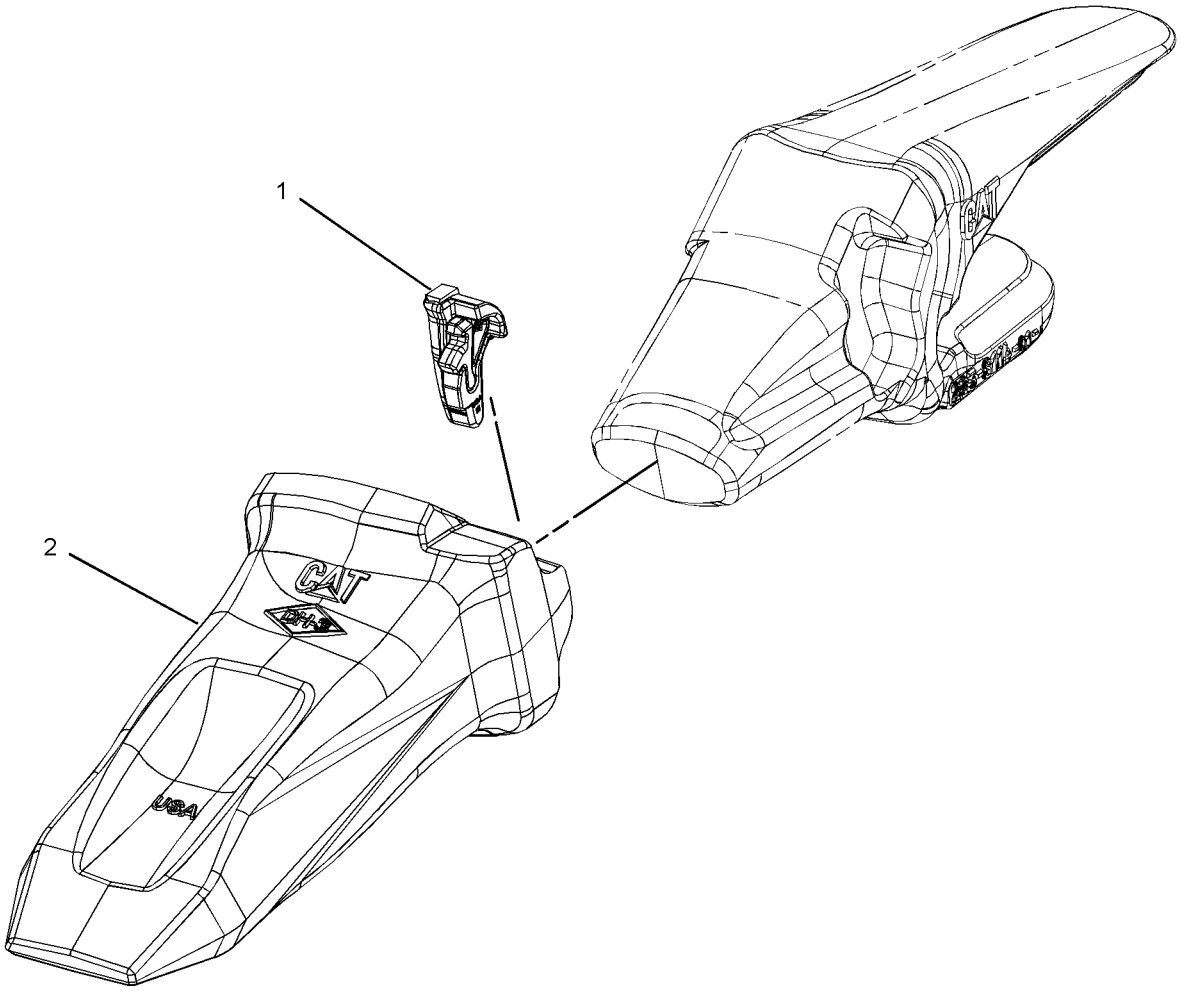

GRAPHIC #1 **<END>** g01465187

WORK TOOLS

229-6978 TIP GP-GENERAL PURPOSE–K-100

S/N: MYG1-UP; PPN1-UP
AN ATTACHMENT

SMCS-6805 **i02390321**

NOTE	REF NO	GRAPHIC REF	PART NUMBER	QTY	PART NAME 1 2 3 4 5 6 (PRODUCT LEVEL)	SEE PAGE
	1	1	**220-9090**	1	RETAINER-G.E.T.	
	2	1	**220-9109**	1	TIP-GENERAL PURPOSE (K-100)	

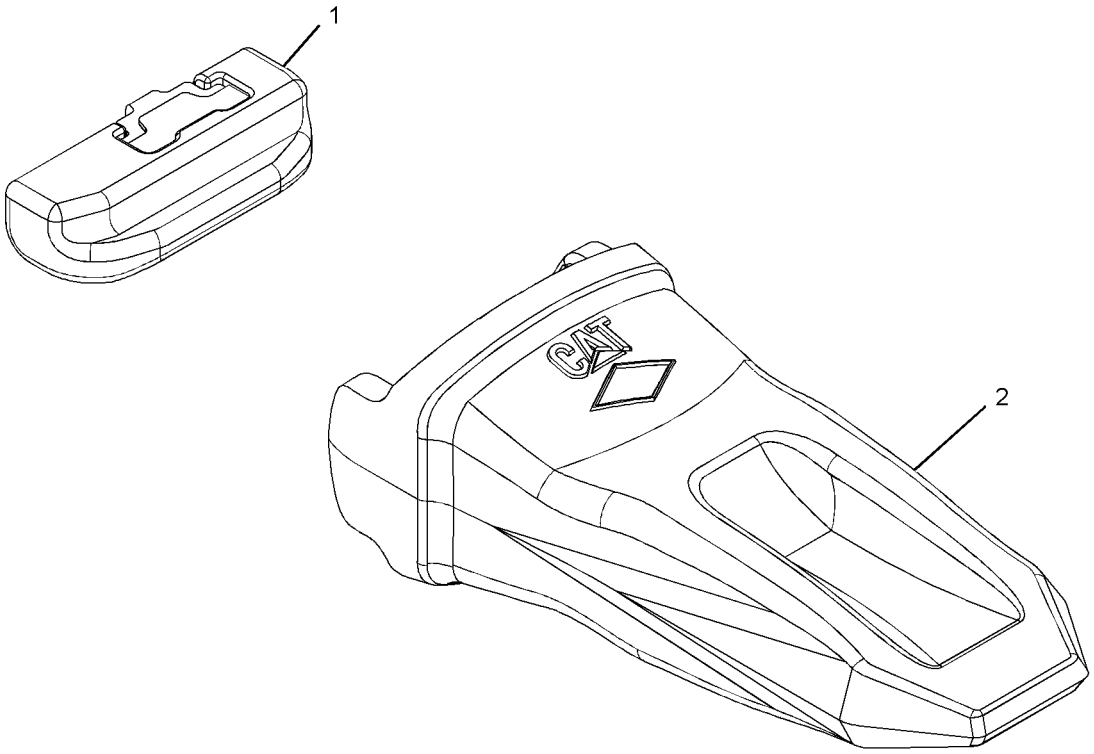

GRAPHIC #1 **<END>** g01143522

WORK TOOLS

309-1127 TIP GP-GENERAL PURPOSE–K-110

S/N: MYG1-UP; PPN1-UP
AN ATTACHMENT

SMCS-6805 **i02958461**

NOTE	REF NO	GRAPHIC REF	PART NUMBER	QTY	PART NAME 1 2 3 4 5 6 (PRODUCT LEVEL)	SEE PAGE
	1	1	**286-2110**	1	RETAINER-G.E.T. (K-110)	
	2	1	**286-2117**	1	TIP-GENERAL PURPOSE (K-110)	

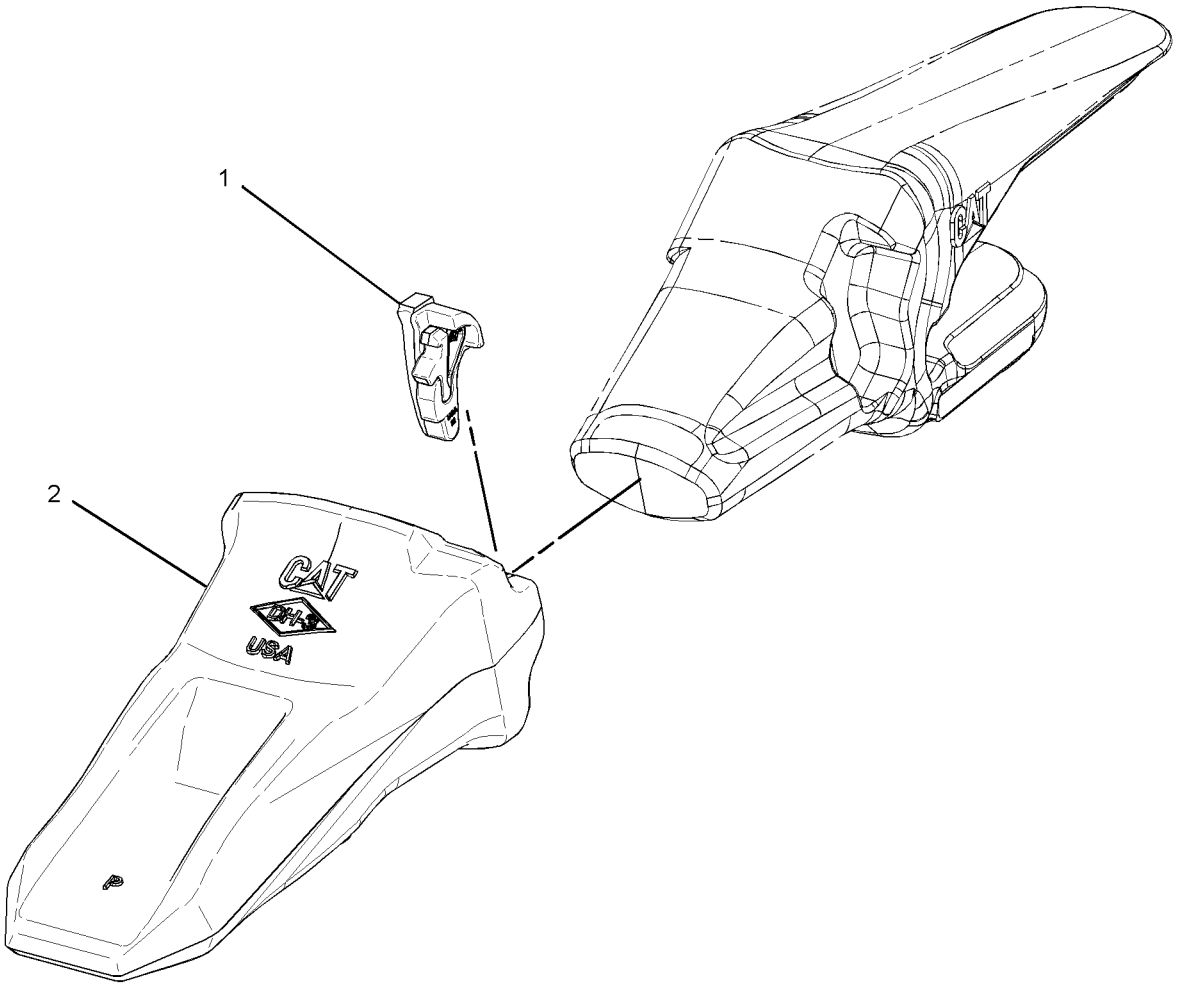

GRAPHIC #1 **<END>** g01519264

WORK TOOLS

309-1129 TIP GP-HEAVY ABRASION–K-110

S/N: MYG1-UP; PPN1-UP
AN ATTACHMENT

SMCS-6805 **i02958255**

NOTE	REF NO	GRAPHIC REF	PART NUMBER	QTY	PART NAME 1 2 3 4 5 6 (PRODUCT LEVEL)	SEE PAGE
	1	1	**286-2110**	1	RETAINER-G.E.T. (K-110)	
	2	1	**286-2119**	1	TIP-HEAVY ABRASION (K-110)	

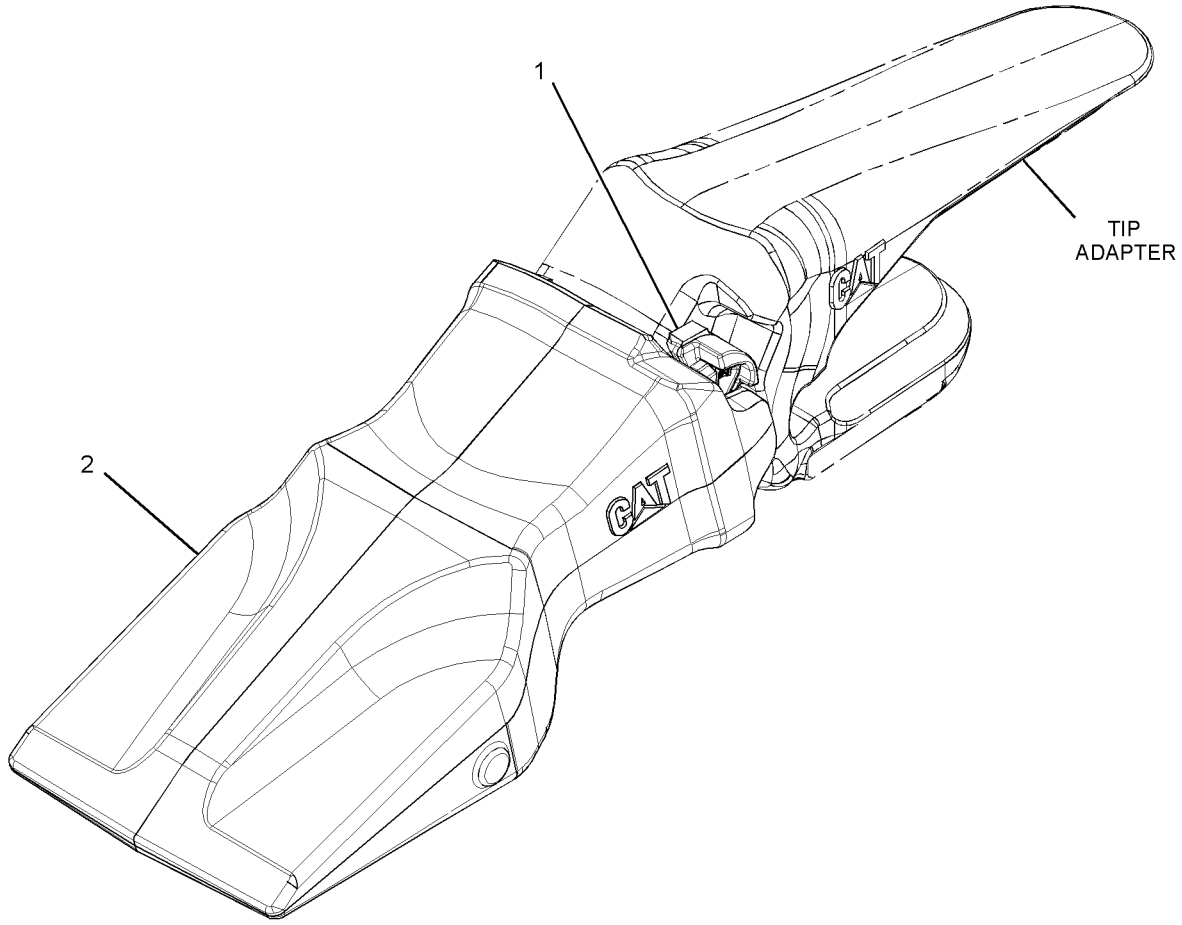

GRAPHIC #1 **<END>** g01521854

309-1128 TIP GP-HEAVY PENETRATION–K-110

S/N: MYG1-UP; PPN1-UP
AN ATTACHMENT

SMCS-6805 **i02958439**

NOTE	REF NO	GRAPHIC REF	PART NUMBER	QTY	PART NAME 1 2 3 4 5 6 (PRODUCT LEVEL)	SEE PAGE
	1	1	**286-2110**	1	RETAINER-G.E.T.	
	2	1	**286-2118**	1	TIP-HEAVY PENETRATION	

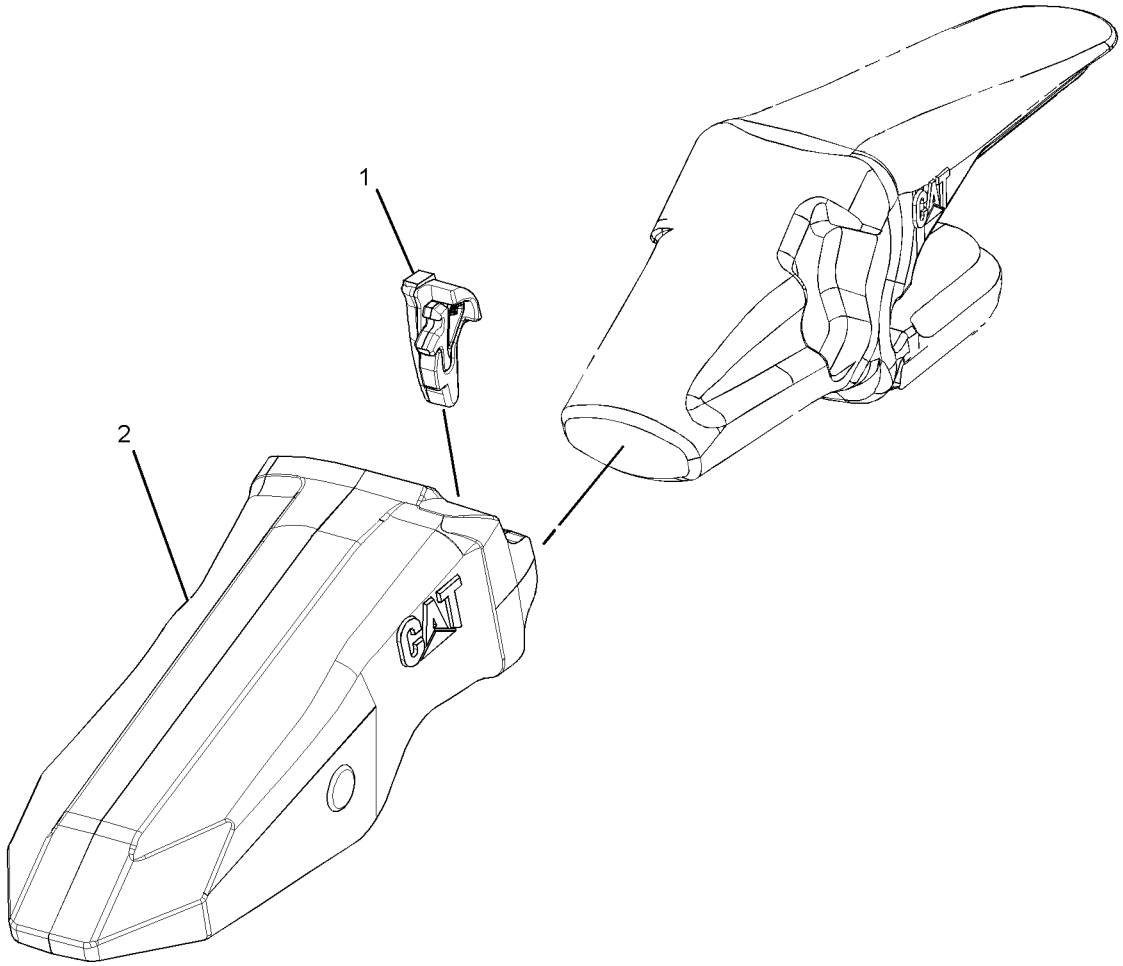

GRAPHIC #1 **<END>** g01475272

WORK TOOLS

229-6974 TIP GP-PENETRATION—K-100

S/N: MYG1-UP; PPN1-UP

AN ATTACHMENT

SMCS-6805 **i02390316**

NOTE	REF NO	GRAPHIC REF	PART NUMBER	QTY	PART NAME 1 2 3 4 5 6 (PRODUCT LEVEL)	SEE PAGE
	1	1	**220-9090**	1	RETAINER-G.E.T.	
	2	1	**220-9102**	1	TIP-PENETRATION (K-100)	

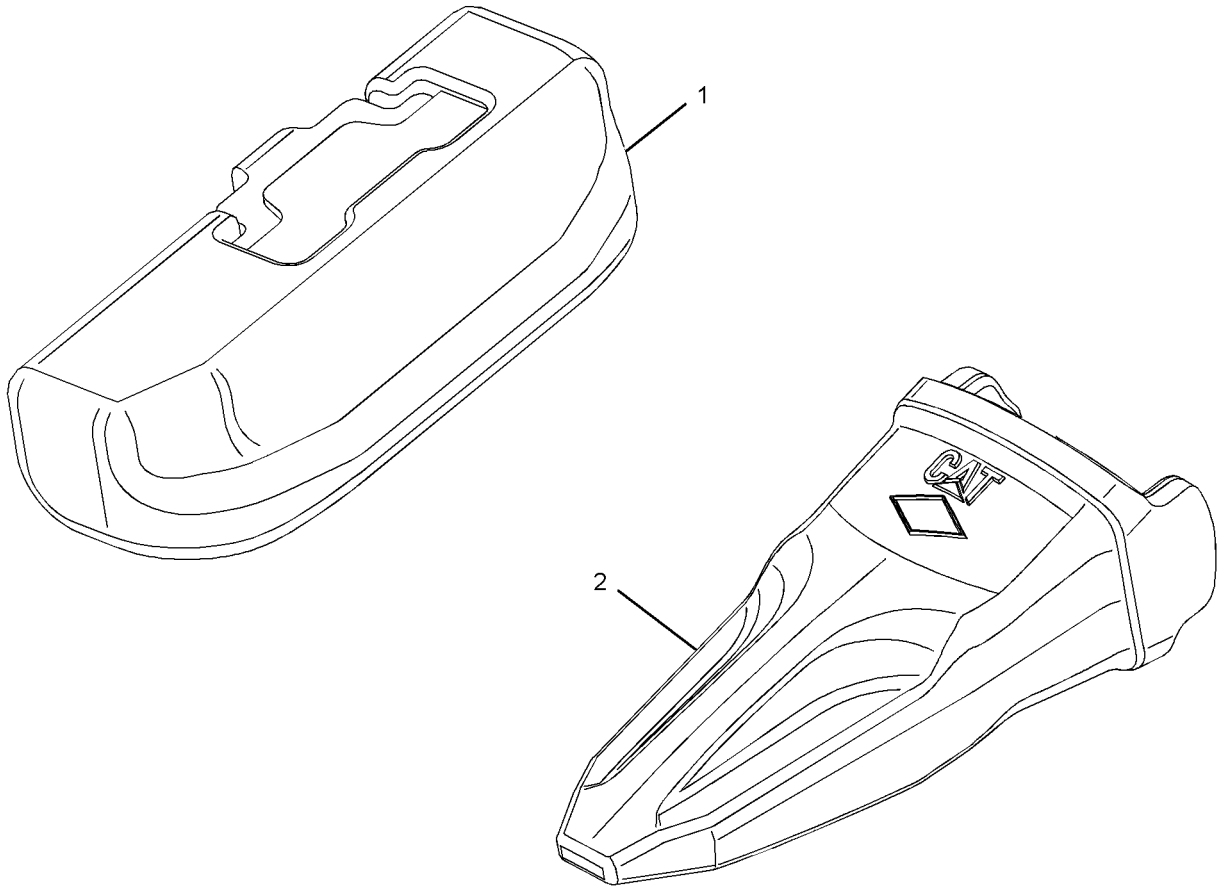

GRAPHIC #1 **<END>** g01144259

WORK TOOLS

309-1123 TIP GP-PENETRATION–K-110

S/N: MYG1-UP; PPN1-UP

AN ATTACHMENT

SMCS-6805 **i02958738**

NOTE	REF NO	GRAPHIC REF	PART NUMBER	QTY	PART NAME 1 2 3 4 5 6 (PRODUCT LEVEL)	SEE PAGE
	1	1	**286-2110**	1	RETAINER-G.E.T.	
	2	1	**286-2113**	1	TIP-PENETRATION	

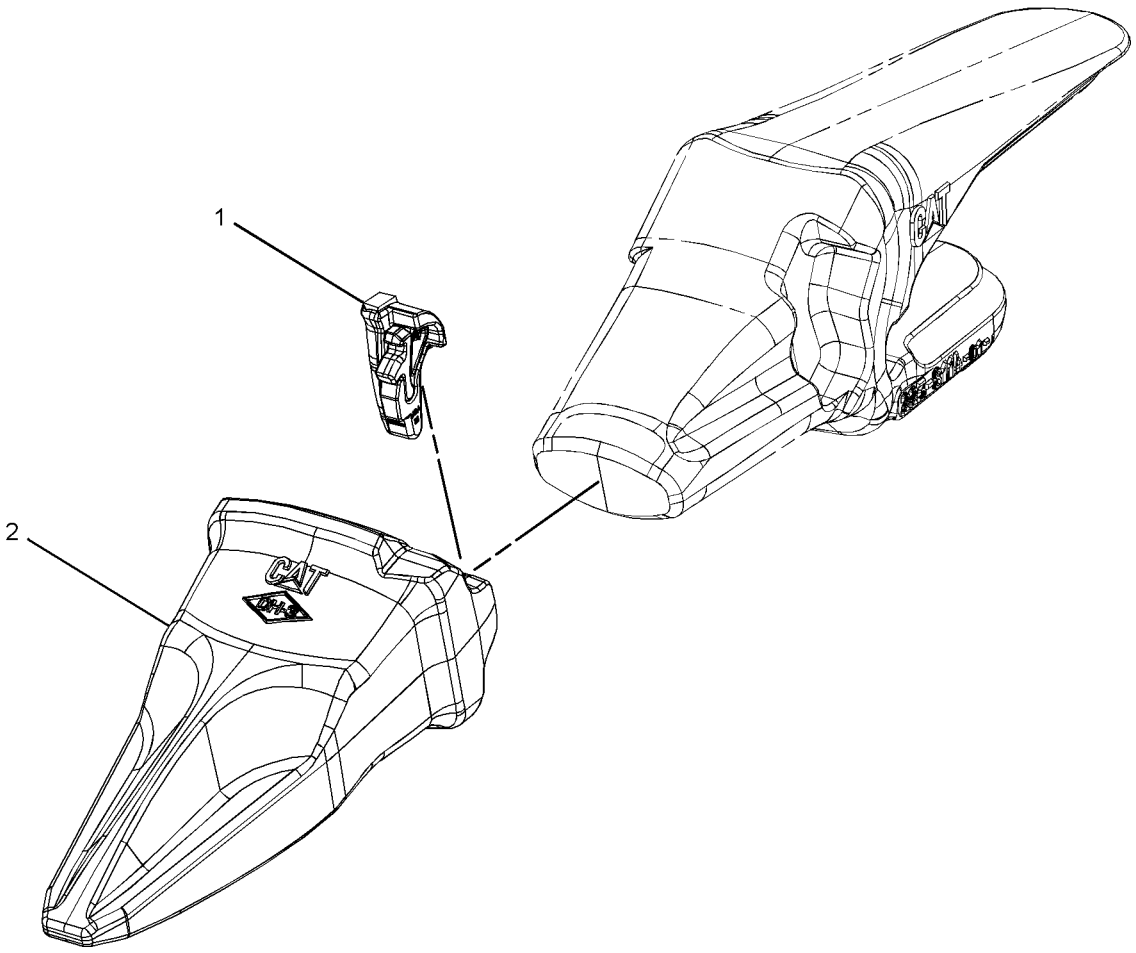

GRAPHIC #1 **<END>** g01465507

229-6975 TIP GP-PENETRATION PLUS–K-100

S/N: MYG1-UP; PPN1-UP

AN ATTACHMENT

SMCS-6805 **i02518280**

NOTE	REF NO	GRAPHIC REF	PART NUMBER	QTY	PART NAME 1 2 3 4 5 6 (PRODUCT LEVEL)	SEE PAGE
	1	1	**220-9090**	1	RETAINER-G.E.T.	
	2	1	**220-9103**	1	TIP-PENETRATION PLUS (K-100)	

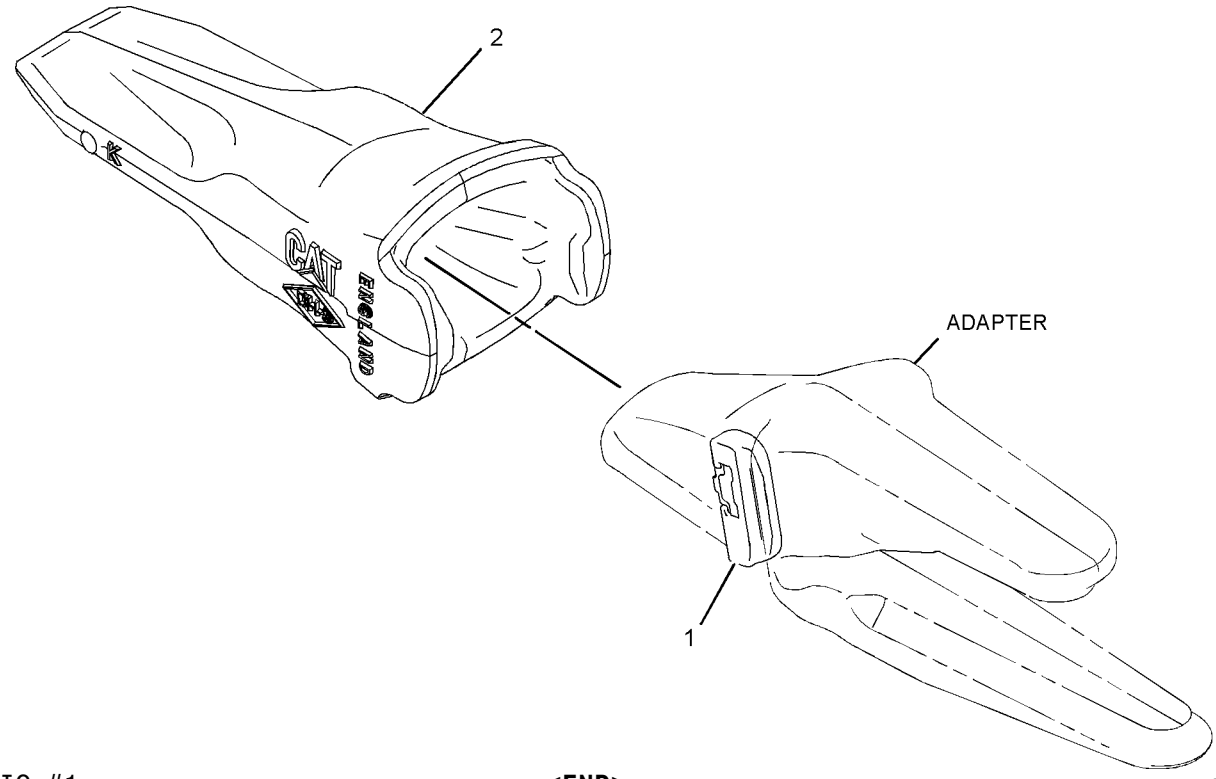

GRAPHIC #1 **<END>** g01074401

WORK TOOLS

309-1124 TIP GP-PENETRATION PLUS–K-110

S/N: MYG1-UP; PPN1-UP
AN ATTACHMENT

SMCS-6805 **i02958722**

NOTE	REF NO	GRAPHIC REF	PART NUMBER	QTY	PART NAME 1 2 3 4 5 6 (PRODUCT LEVEL)	SEE PAGE
	1	1	**286-2110**	1	RETAINER-G.E.T.	
	2	1	**286-2114**	1	TIP-PENETRATION PLUS	

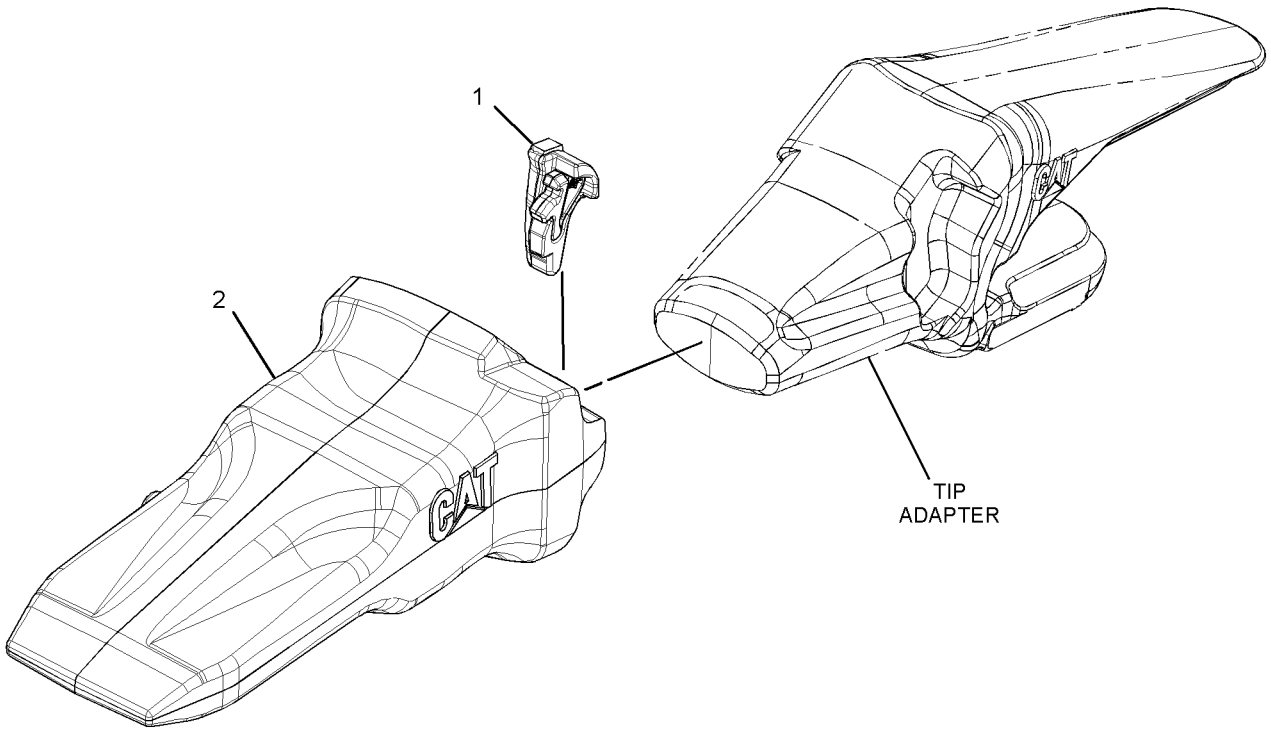

GRAPHIC #1 **<END>** g01478333

WORK TOOLS

309-1125 TIP GP-SPIKE–K-110

S/N: MYG1-UP; PPN1-UP

AN ATTACHMENT

SMCS-6805 **i02958699**

NOTE	REF NO	GRAPHIC REF	PART NUMBER	QTY	PART NAME 1 2 3 4 5 6 (PRODUCT LEVEL)	SEE PAGE
	1	1	**286-2110**	1	RETAINER-G.E.T.	
	2	1	**286-2115**	1	TIP-SPIKE	

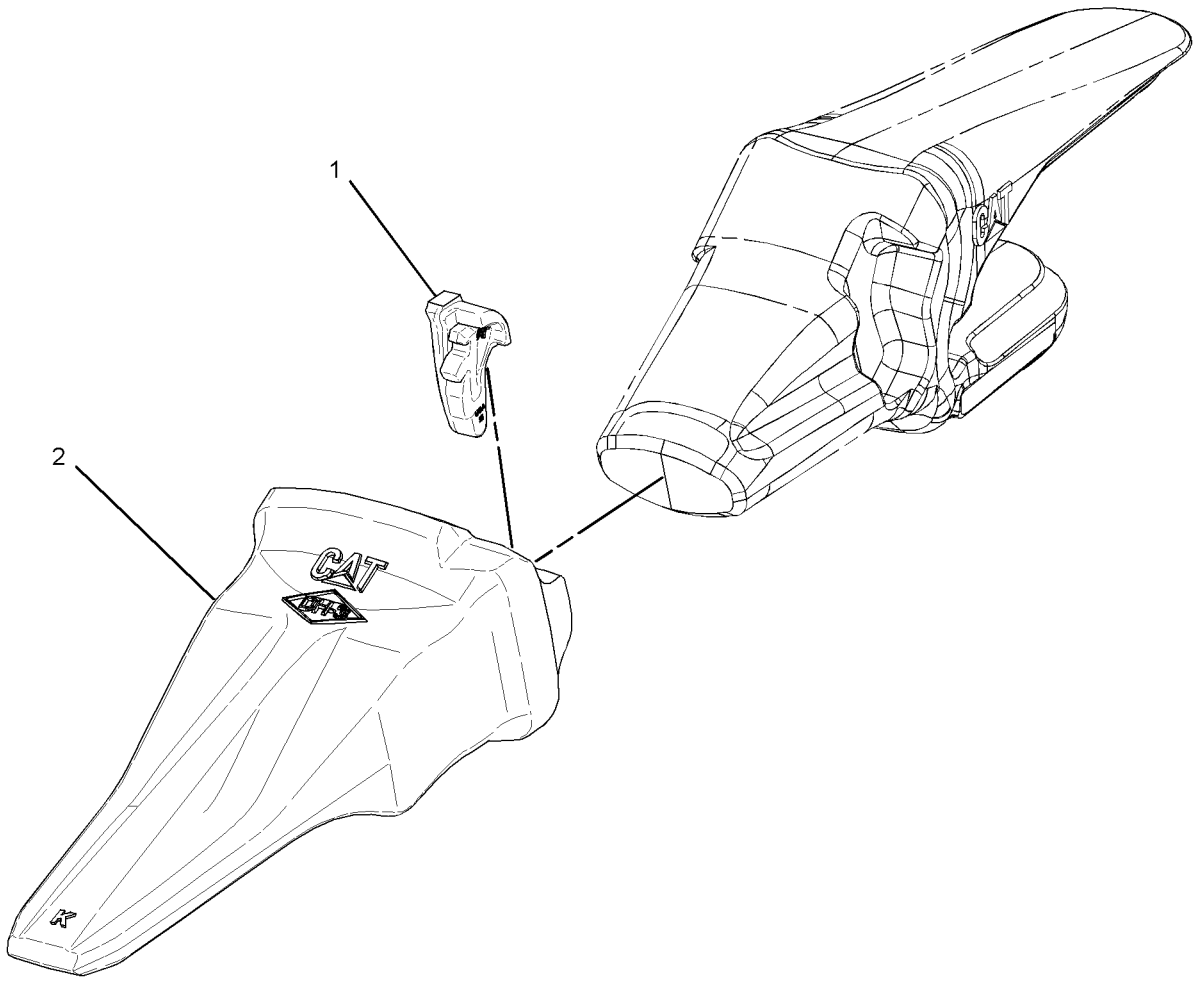

GRAPHIC #1 **<END>** g01519186

WORK TOOLS

309-1121 TIP GP-WIDE—K-110

S/N: MYG1-UP; PPN1-UP

AN ATTACHMENT

SMCS-6805 **i02958745**

NOTE	REF NO	GRAPHIC REF	PART NUMBER	QTY	PART NAME 1 2 3 4 5 6 (PRODUCT LEVEL)	SEE PAGE
	1	1	**286-2110**	1	RETAINER-G.E.T.	
	2	1	**286-2111**	1	TIP-WIDE	

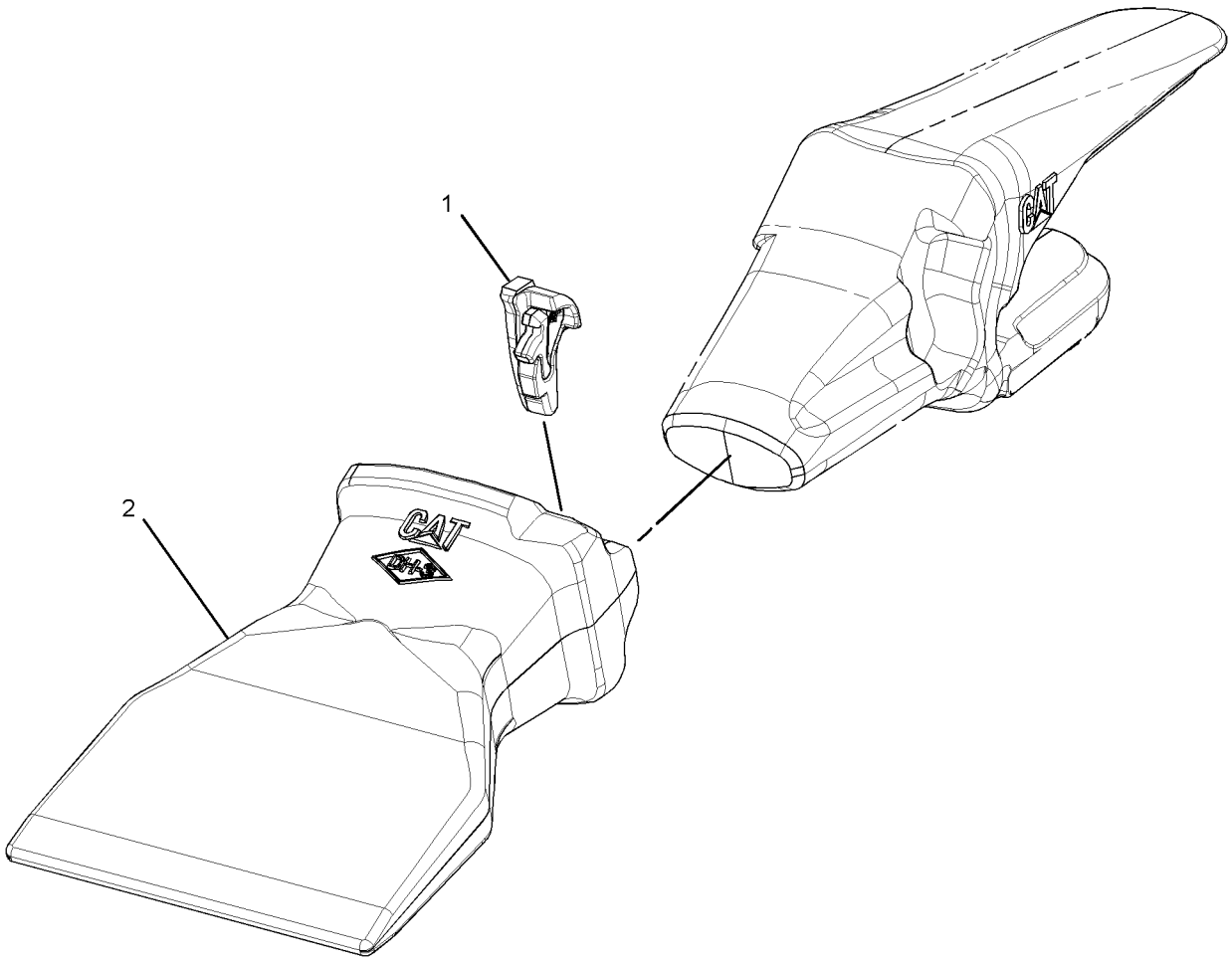

GRAPHIC #1 **<END>** g01474456

OPERATOR STATION

229-9080 AIR CONDITIONER & MOUNTING GP

S/N: MYG1-UP; PPN1-UP
PART OF 340-6526 AIR CONDITIONER AR
AN ATTACHMENT

SMCS-7320 **i03484963**

NOTE	REF NO	GRAPHIC REF	PART NUMBER	QTY	PART NAME 1 2 3 4 5 6 (PRODUCT LEVEL)	SEE PAGE
	1	1	**293-1136**	1	PANEL AS-CONTROL	
	2	1	**235-8873**	1	HARNESS AS-HEATER & AIR COND (CONTROL PANEL SWITCHES)	
	3	1	**235-8874**	1	SENSOR-TEMPERATURE (AMBIENT AIR)	
	4	1	**235-8875**	1	BRACKET	
	5	1	**235-9006**	1	HARNESS AS-HEATER & AIR COND	
M	7	1	**099-2374**	2	BOLT-SOCKET HEAD (M5X0.8X12-MM)	
	8	1	**111-4836**	3	CLIP	
CY	9	1	**316-8917**	1	AIR CONDITIONER GP	839
	10	1	**3S-2093**	2	STRAP-CABLE	
M	11	1	**5C-9553**	1	BOLT (M6X1X16-MM)	
	12	1	**7X-7729**	7	WASHER (11X25X3-MM THK)	
	13	1	**8T-0328**	2	WASHER-HARD (5.5X10X1-MM THK)	
	14	1	**8T-4121**	3	WASHER-HARD (11X21X2.5-MM THK)	
M	15	1	**8T-4136**	7	BOLT (M10X1.5X25-MM)	
M	16	1	**8T-4137**	3	BOLT (M10X1.5X20-MM)	
	17	1	**9X-8256**	1	WASHER (6.6X12X2-MM THK)	

C-CHANGE FROM PREVIOUS TYPE
M-METRIC PART
Y-SEPARATE ILLUSTRATION

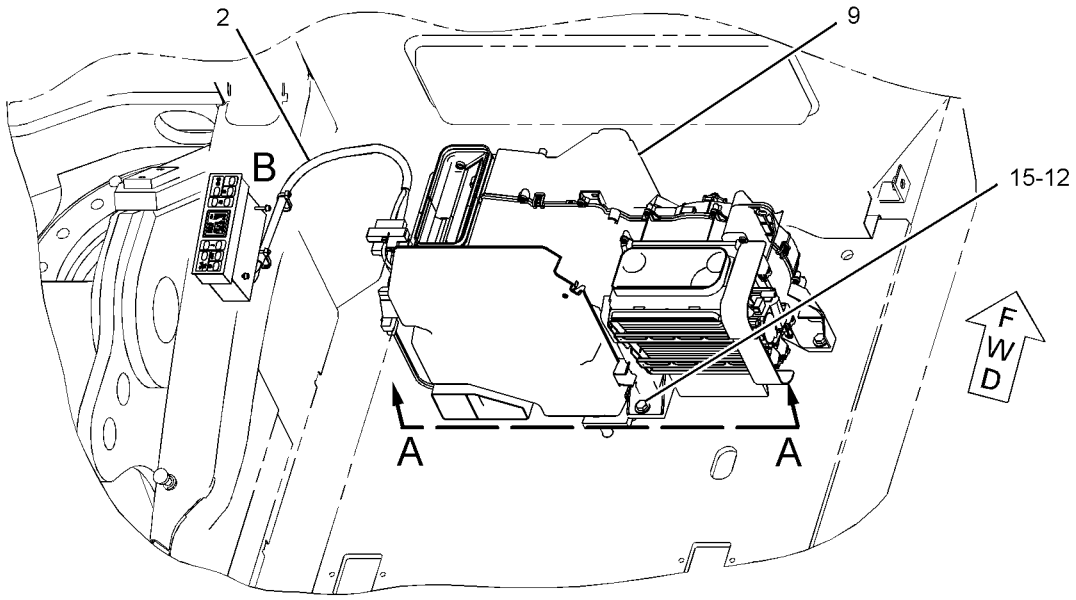

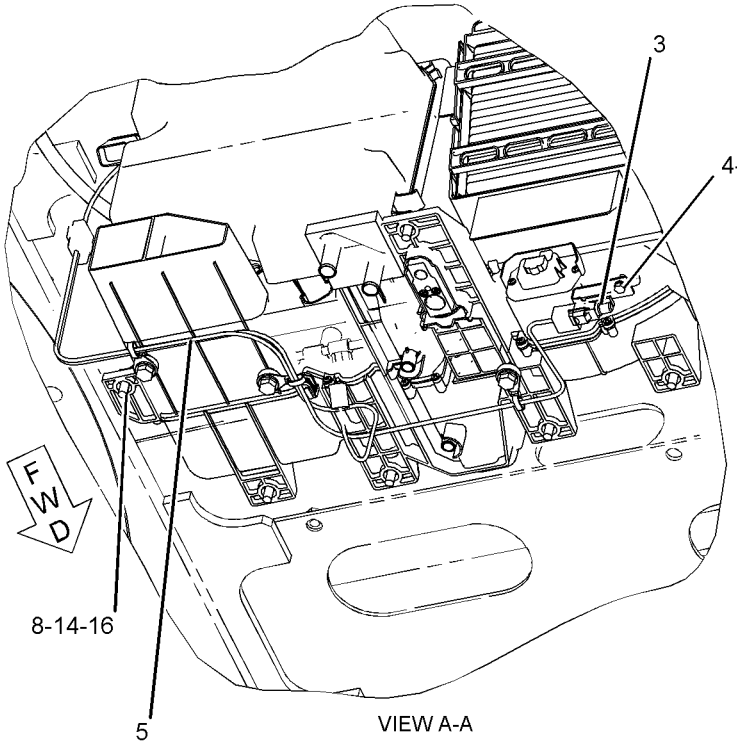

VIEW A-A

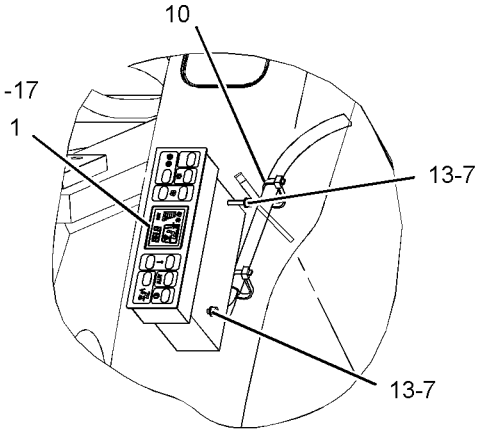

VIEW OF AREA B

GRAPHIC #1 **<END>** g01401004

OPERATOR STATION

340-6526 AIR CONDITIONER AR

S/N: MYG1-UP; PPN1-UP
PART OF 345-7497, 345-7498, 345-7499 OPTION AR-CONFIGURATION
AN ATTACHMENT

SMCS-7320 **i03661503**

NOTE	PART NUMBER	QTY	PART NAME 1 2 3 4 5 6 (PRODUCT LEVEL)	SEE PAGE
Y	*229-9080*	1	AIR CONDITIONER & MOUNTING GP	836
Y	*340-6524*	1	DUCT GP-CAB AIR	889

Y-SEPARATE ILLUSTRATION

<END>

OPERATOR STATION

316-8917 AIR CONDITIONER GP

S/N: MYG1-UP; PPN1-UP
PART OF 229-9080 AIR CONDITIONER & MOUNTING GP
AN ATTACHMENT

SMCS-7320 **i03484986**

NOTE	REF NO	GRAPHIC REF	PART NUMBER	QTY	PART NAME 1 2 3 4 5 6 (PRODUCT LEVEL)	SEE PAGE
	1	1	**185-8300**	35	SCREW-TAPPING	
	2	1	**185-8302**	3	SCREW AS-TAPPING	
Y	3	1	**245-7812**	1	HOUSING GP-AIR CONDITIONER (INLET AIR)	905
	4	1	**245-7817**	2	MOTOR AS	
	5	1	**245-7818**	3	CLIP	
	6	1	**245-7819**	2	CLIP	
	7	1	**245-7820**	1	COVER-FRONT	
	8	1	**245-7821**	1	HARNESS AS-HEATER & AIR COND	
	9	1	**245-7825**	1	INSULATOR	
	10	1	**245-7826**	1	INSULATOR	
	11	1	**245-7827**	1	INSULATOR	
	12	1	**245-7828**	1	INSULATOR	
	13	1	**245-7829**	1	PACKING	
	14	1	**245-7830**	1	CLIP	
	15	1	**245-7831**	1	SENSOR AS-TEMPERATURE (COOLANT)	
	16	1	**245-7832**	1	CONTROL AS	
	17	1	**245-7833**	1	CORE AS-HEATER	
	18	1	**245-7834**	1	DAMPER AS	
	19	1	**245-7835**	1	SENSOR AS-TEMPERATURE (AMBIENT AIR)	
Y	20	1	**245-7836**	1	COIL GP-EVAPORATOR	854
	21	1	**245-7838**	1	PACKING	
	22	1	**245-7839**	1	MOTOR AS (WITH FAN)	
	23	1	**245-7856**	3	SCREW AS-TAPPING	
	24	1	**293-1137**	1	FILTER GP-AIR (AIR CONDITIONER)	
		1	**245-7823**	1	FILTER ELEMENT-CAB AIR	
		1	**245-7824**	1	PACKING	
	25	1	**316-8846**	1	PLATE	
	26	1	**316-8847**	2	ROD	
	27	1	**316-8849**	1	ROD	
	28	1	**316-8918**	1	PLATE	
	29	1	**316-8920**	1	ROD	
	30	1	**316-8921**	1	ROD	

Y-SEPARATE ILLUSTRATION

316-8917 AIR CONDITIONER GP *(contd.)* i03484986

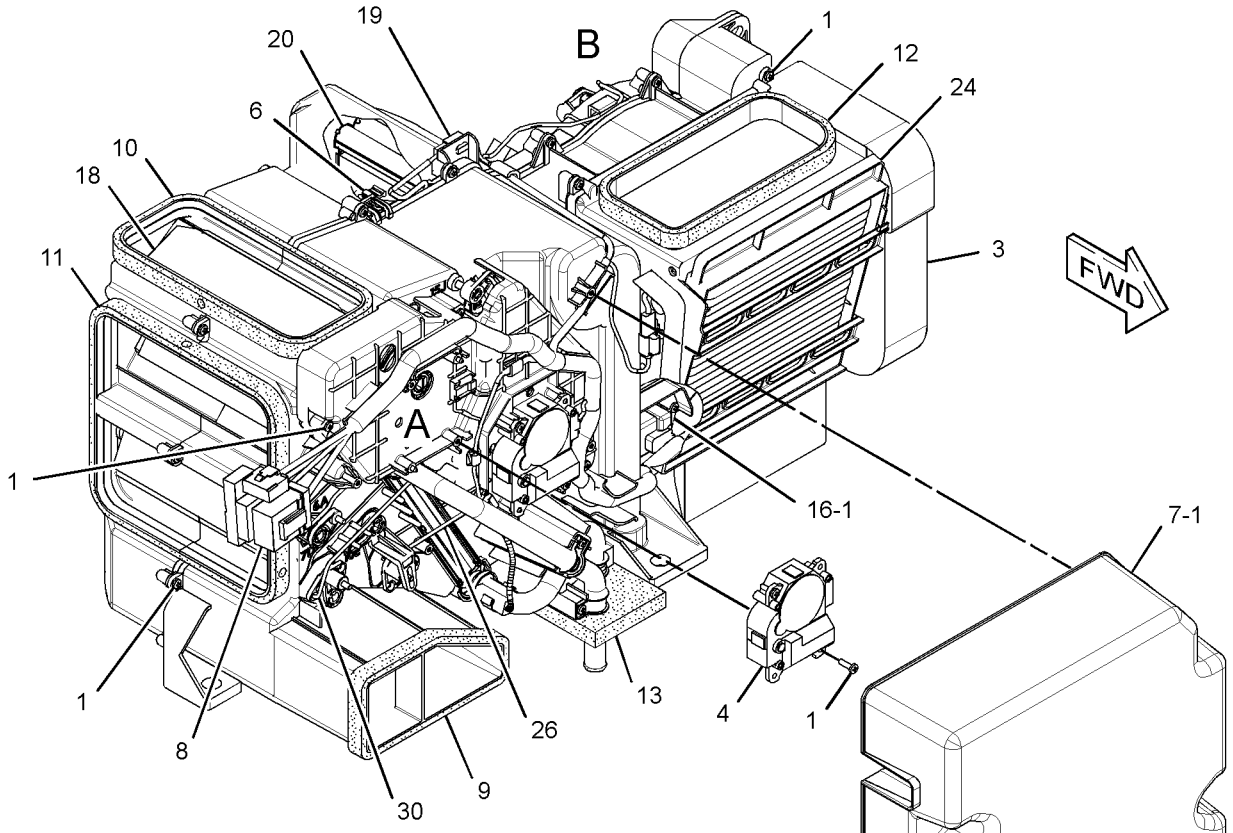

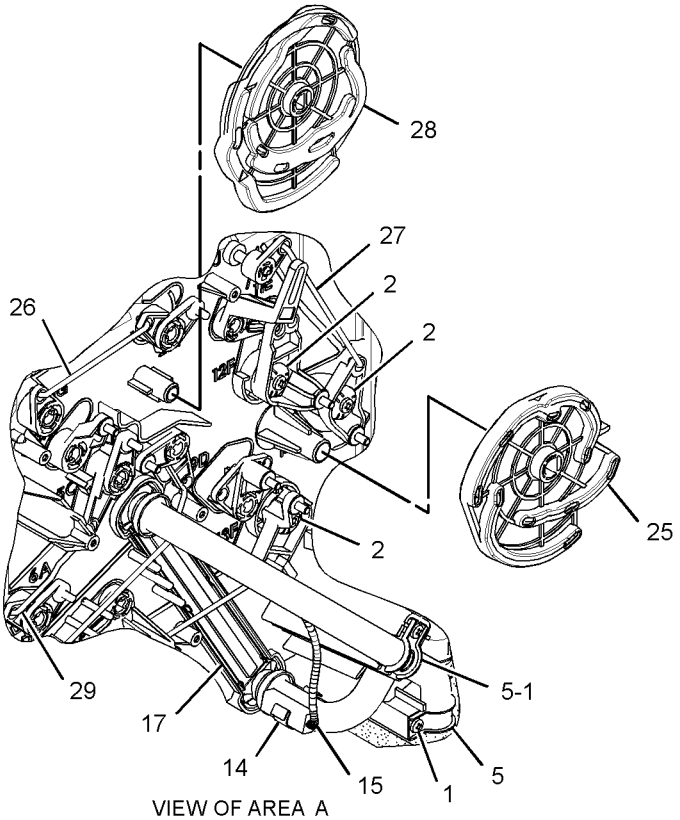

VIEW OF AREA A
(PARTS REMOVED)

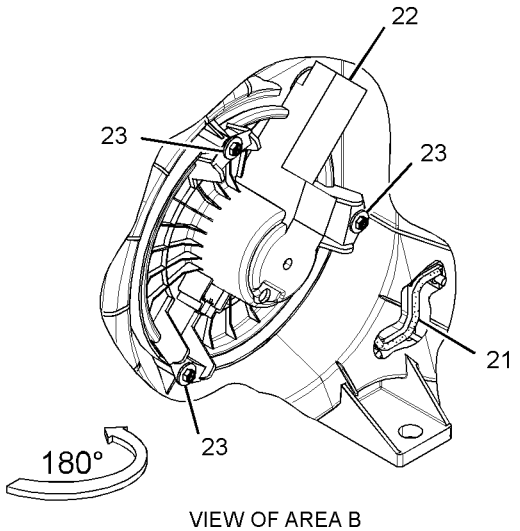

VIEW OF AREA B

GRAPHIC #1 **<END>** g01825495

OPERATOR STATION

259-7346 ARMREST GP–RH

S/N: MYG1-UP; PPN1-UP

PART OF 259-7348 CONSOLE GP-OPERATOR

SMCS-7307 **i02427006**

NOTE	REF NO	GRAPHIC REF	PART NUMBER	QTY	PART NAME 1 2 3 4 5 6 (PRODUCT LEVEL)	SEE PAGE
M	1	1	**171-7325**	3	SCREW-TAPPING (M5X0.8-THD)	
M	2	1	**185-8286**	2	SCREW-MACHINE (M4X0.7X8-MM)	
	3	1	**235-8951**	1	SUPPORT AS	
	4	1	**235-8996**	1	COVER	
	5	1	**235-8997**	1	KNOB	
	6	1	**279-3161**	1	CUSHION	

M-METRIC PART

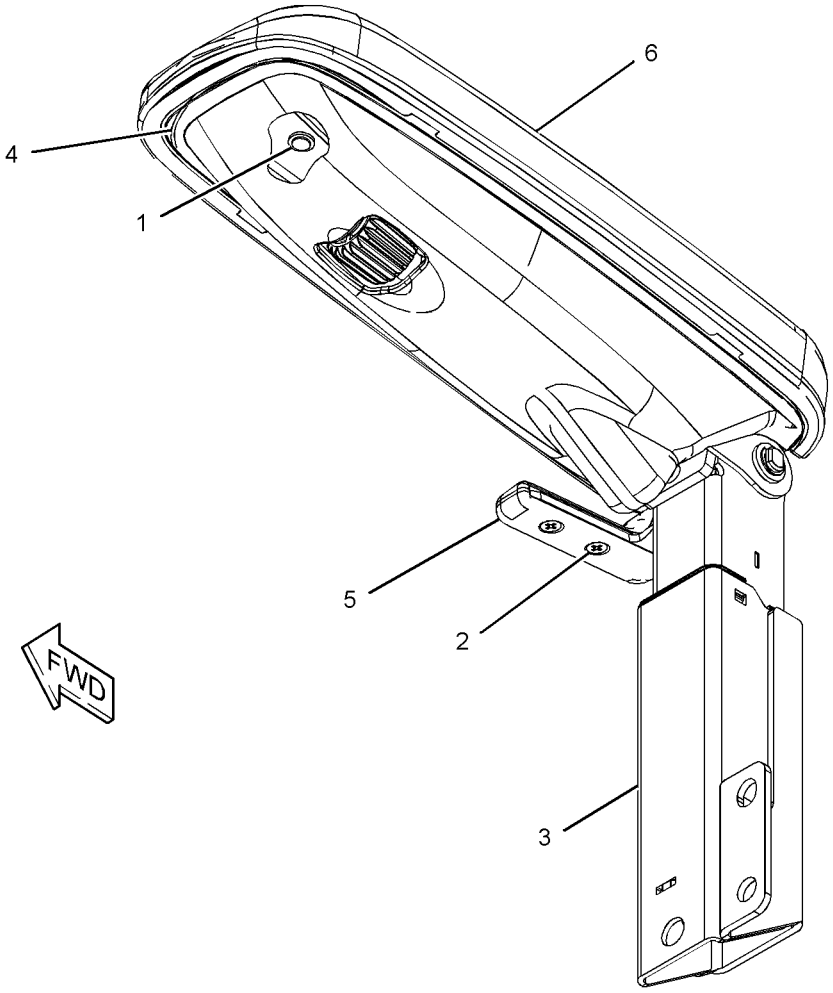

GRAPHIC #1 **<END>** g01217218

OPERATOR STATION

259-7347 ARMREST GP–LH

S/N: MYG1-UP; PPN1-UP

PART OF 259-7349 CONSOLE GP-OPERATOR

SMCS-7307 **i02427035**

NOTE	REF NO	GRAPHIC REF	PART NUMBER	QTY	PART NAME 1 2 3 4 5 6 (PRODUCT LEVEL)	SEE PAGE
M	1	1	**171-7325**	3	SCREW-TAPPING (M5X0.8-THD)	
M	2	1	**185-8286**	2	SCREW-MACHINE (M4X0.7X8-MM)	
	3	1	**235-8952**	1	SUPPORT AS	
	4	1	**235-8996**	1	COVER	
	5	1	**235-8998**	1	KNOB	
	6	1	**279-3161**	1	CUSHION	

M-METRIC PART

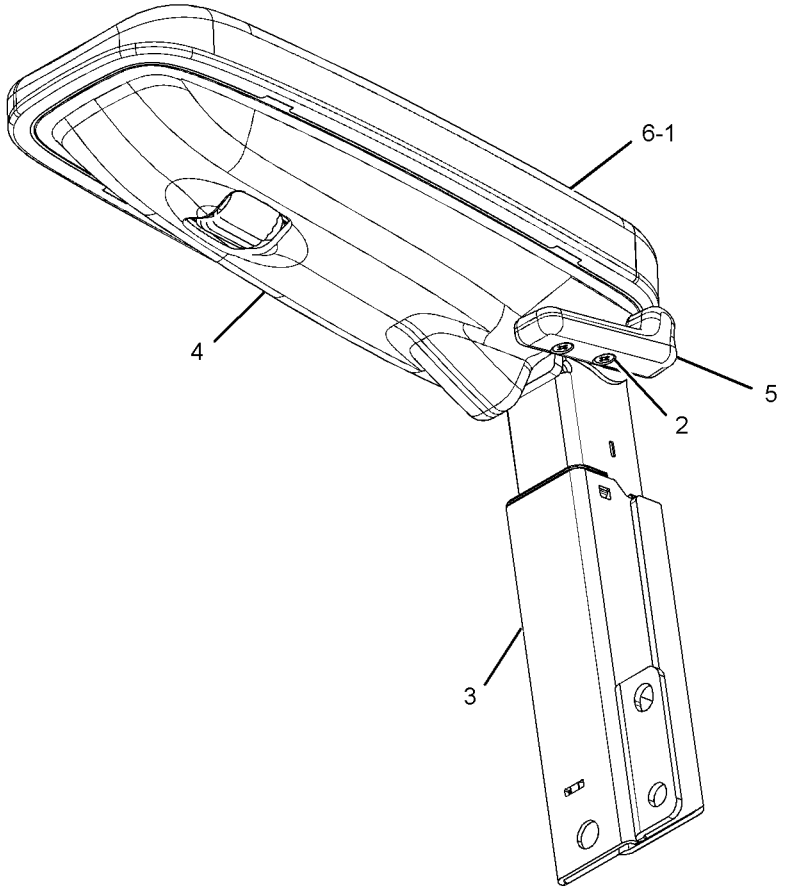

GRAPHIC #1 **<END>** g01210886

OPERATOR STATION

334-6541 CAB GP—EXTERIOR

S/N: MYG1-UP; PPN1-UP
PART OF 340-6601, 340-6607 CAB GP
AN ATTACHMENT

SMCS-7301, 7325 **i03711726**

NOTE	REF NO	GRAPHIC REF	PART NUMBER	QTY	PART NAME 1 2 3 4 5 6 (PRODUCT LEVEL)	SEE PAGE
	1	1	**156-6599**	1	STRIKER	
	2	1	**164-0515**	1	JOINT	
	3	1	**167-7042**	2	SEAL	
	4	1	**178-5570**	2	GROMMET	
M	5	1	**189-2864**	2	SCREW-FLAT HEAD (M8X1.25X30-MM)	
	6	1	**4B-4278**	3	WASHER (10.2X20.5X1.6-MM THK)	
	7	1	**205-6295**	1	LATCH AS	
	8	1	**280-8618**	1	HAMMER	
Y	9	1	**327-6550**	1	MIRROR GP-REAR VIEW	920
	10	1	**334-6542**	1	LEVER AS	
	11	1	**334-6546**	1	LEVER AS	
	12	1	**334-6549**	1	GUARD	
	13	1	**334-6550**	1	CABLE AS	
	14	1	**334-6551**	1	ROD	
Y	15	1	*334-6552*	1	LEVER GP-CAB DOOR	912
Y	16	1	*334-6557*	1	LEVER GP-CAB DOOR	913
	17	1	**334-6562**	1	BRACKET AS	
	18	1	**334-6564**	2	HOLDER	
	19	1	**334-6565**	1	BRACKET	
	20	1	**334-6566**	1	STOP	
	21	1	**334-6567**	1	COVER	
Y	22	1	**334-6568**	1	COVER GP-CAB	885
	23	1	**340-6586**	1	CLIP	
	24	1	**340-6587**	1	GROMMET	
Y	25	1	**346-7375**	1	MOUNTING GP-MIRROR	930
M	26	1	**096-2622**	2	SCREW-MACHINE (M4X0.7X8-MM)	
M	27	1	**099-0823**	3	SCREW-MACHINE (M6X1X6-MM)	
	28	1	**099-3607**	2	WASHER-HARD (10.2X30X3.2-MM THK)	
M	29	1	**127-0580**	2	SCREW-FLAT HEAD (M8X1.25X20-MM)	
M	30	1	**128-2135**	1	SCREW-TRUSS HEAD (M6X1X13-MM)	
	31	1	**176-1986**	1	LAMP AS-DOME	
		1	**201-4417**	1	LAMP (24-VOLT, 10-WATT)	
	32	1	**1R-5998**	4	LOCKWASHER	
M	33	1	**3E-8020**	6	SCREW-TRUSS HEAD (M6X1X25-MM)	
M	34	1	**095-0755**	2	SCREW-MACHINE (M4X0.7X12-MM)	
	35	1	**4I-1205**	2	BUMPER	
M	36	1	**8T-4137**	2	BOLT (M10X1.5X20-MM)	
	37	1	**4I-3144**	2	WASHER-HARD (10.2X22X3.2-MM THK)	
	38	1	**4I-4270**	1	HOLDER-GLASS	
	39	1	**5C-7793**	1	HOOK-COAT	
M	40	1	**8T-4133**	5	NUT (M10X1.5-THD)	
M	41	1	**8T-4779**	1	BOLT (M16X2X35-MM)	
M	42	1	**9X-2041**	2	SCREW-TRUSS HEAD (M10X1.5X20-MM)	
M	43	1	**9X-2042**	15	SCREW-TRUSS HEAD (M6X1X12-MM)	
	44	1	**9X-8257**	1	WASHER (17.5X30X3.5-MM THK)	

M-METRIC PART
Y-SEPARATE ILLUSTRATION

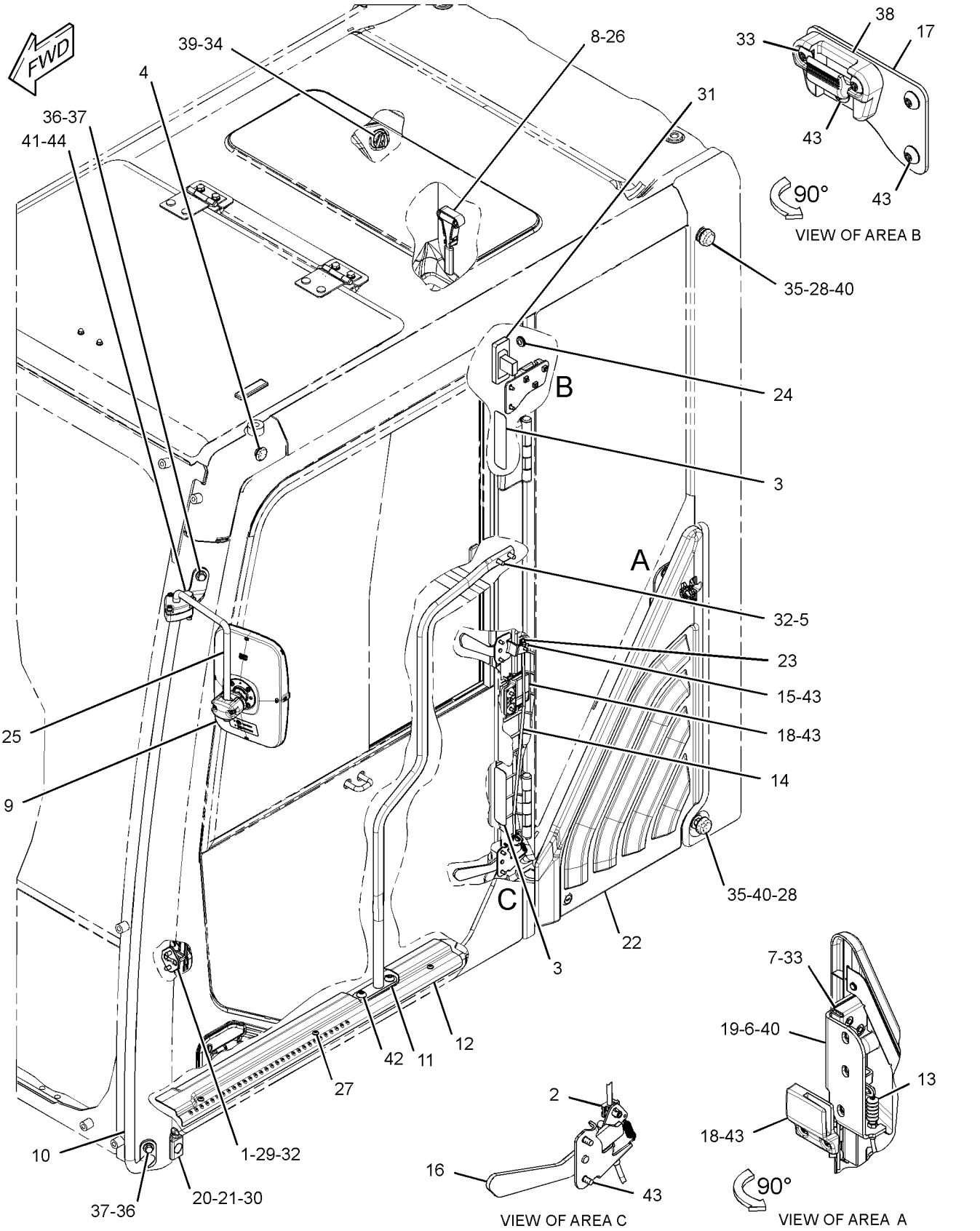

GRAPHIC #1 **<END>** g01961101

OPERATOR STATION

340-6600 CAB GP

S/N: MYG1-UP; PPN1-UP
PART OF 345-7497, 345-7499 OPTION AR-CONFIGURATION
AN ATTACHMENT

SMCS-7301, 7325 **i03662630**

NOTE	REF NO	GRAPHIC REF	PART NUMBER	QTY	PART NAME 1 2 3 4 5 6 (PRODUCT LEVEL)	SEE PAGE
M	1	1	**128-2135**	5	SCREW-TRUSS HEAD (M6X1X13-MM)	
	2	1	**164-8474**	2	LOUVER AS-VENT	
Y	3	1	**234-6501**	1	COVER GP-CAB (REAR)	884
	4	1	**235-9001**	1	SUPPORT	
Y	5	1	**340-6601**	1	CAB GP	847
M	6	1	**8T-4190**	4	BOLT (M16X2X25-MM)	
M	7	1	**8T-4192**	7	BOLT (M12X1.75X25-MM)	
	8	1	**8T-4223**	12	WASHER-HARD (13.5X25.5X3-MM THK)	
M	9	1	**8T-4648**	5	BOLT (M12X1.75X70-MM)	
	10	1	**8Y-6967**	2	LOUVER AS-VENT	
	11	1	**9X-8257**	4	WASHER (17.5X30X3.5-MM THK)	

M-METRIC PART
Y-SEPARATE ILLUSTRATION

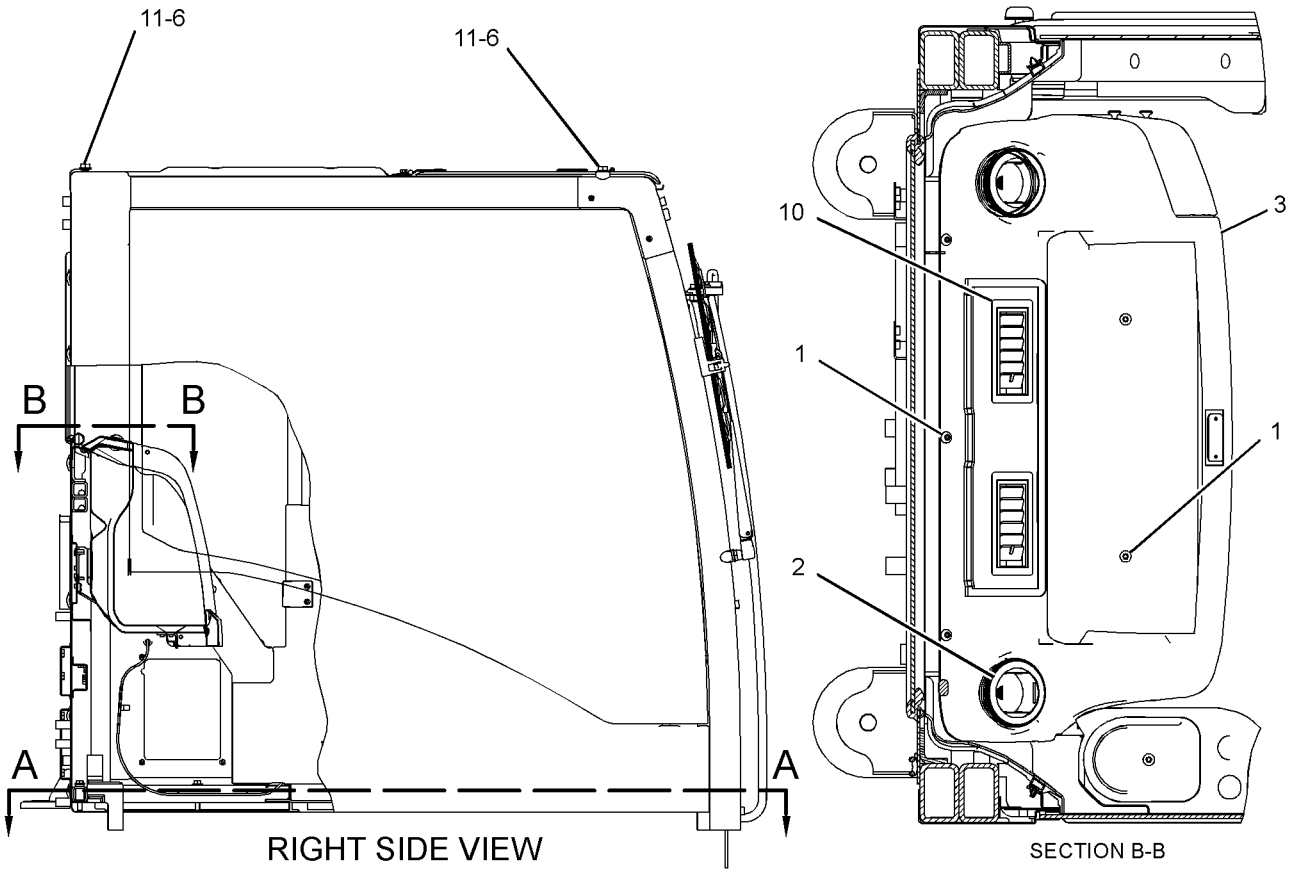

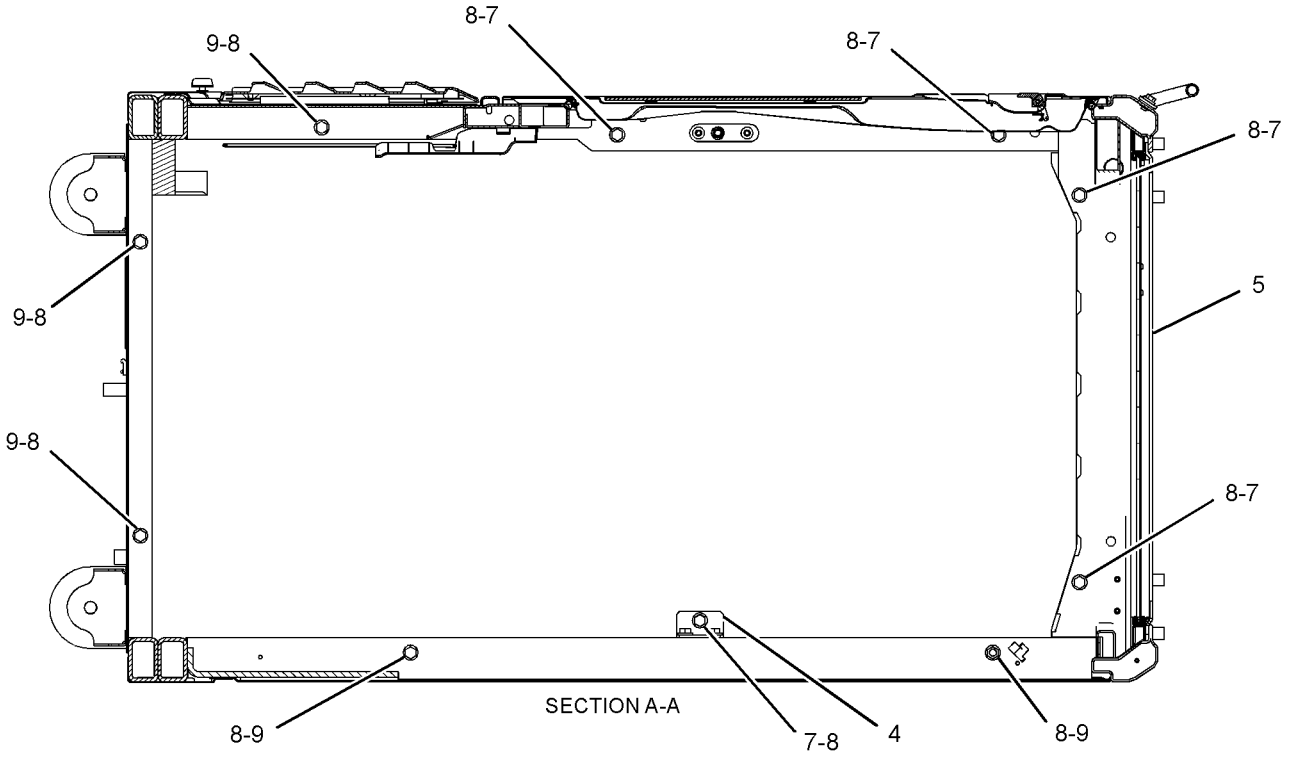

GRAPHIC #1 **<END>** g01981994

OPERATOR STATION

340-6601 CAB GP

S/N: MYG1-UP; PPN1-UP
PART OF 340-6600 CAB GP
AN ATTACHMENT

SMCS-7301, 7325 **i03662648**

NOTE	REF NO	GRAPHIC REF	PART NUMBER	QTY	PART NAME 1 2 3 4 5 6 (PRODUCT LEVEL)	SEE PAGE
	1	1	**316-8854**	1	GLASS	
Y	2	1	*327-6551*	1	WIPER GP-WINDOW	972
Y	3	1	*327-6625*	1	WINDOW GP-FRONT (CAB)	967
Y	4	1	**334-6387**	1	DOOR GP-CAB	887
Y	5	1	*334-6541*	1	CAB GP	843
Y	6	1	*340-6665*	1	HATCH GP-ROOF	902
	7	1	*340-6684*	1	CAB AS	
M	7A	1	**185-8182**	6	BOLT (M10X1.5X20-MM)	
	7B	1	**185-8187**	6	WASHER (10.2X22X3.2-MM THK)	
	7C	1	**151-6777**	2	HINGE	
Y	8	1	*340-6693*	1	TRIM GP-CAB	954
Y	9	1	*340-6695*	1	WINDOW GP-CAB	962

M-METRIC PART
Y-SEPARATE ILLUSTRATION

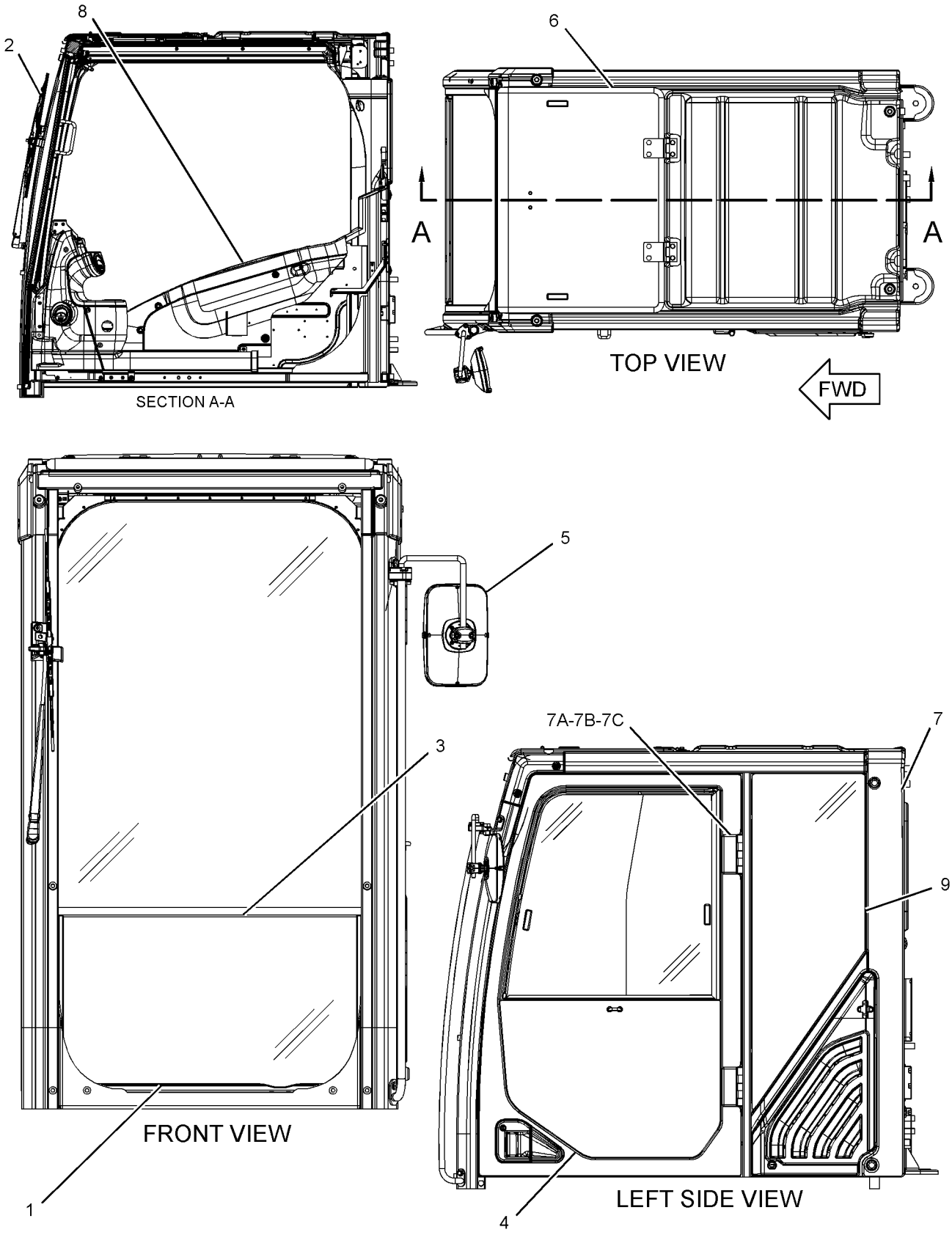

GRAPHIC #1 **<END>** g01982053

OPERATOR STATION

340-6606 CAB GP

S/N: MYG1-UP; PPN1-UP
PART OF 345-7498 OPTION AR-CONFIGURATION
AN ATTACHMENT

SMCS-7301, 7325 **i03664207**

NOTE	REF NO	GRAPHIC REF	PART NUMBER	QTY	PART NAME 1 2 3 4 5 6 (PRODUCT LEVEL)	SEE PAGE
M	1	1	**128-2135**	5	SCREW-TRUSS HEAD (M6X1X13-MM)	
	2	1	**164-8474**	2	LOUVER AS-VENT	
Y	3	1	**234-6501**	1	COVER GP-CAB (REAR)	884
	4	1	**235-9001**	1	SUPPORT	
Y	5	1	**340-6607**	1	CAB GP	851
M	6	1	**8T-4190**	4	BOLT (M16X2X25-MM)	
M	7	1	**8T-4192**	7	BOLT (M12X1.75X25-MM)	
	8	1	**8T-4223**	12	WASHER-HARD (13.5X25.5X3-MM THK)	
M	9	1	**8T-4648**	5	BOLT (M12X1.75X70-MM)	
	10	1	**8Y-6967**	2	LOUVER AS-VENT	
	11	1	**9X-8257**	4	WASHER (17.5X30X3.5-MM THK)	

M-METRIC PART
Y-SEPARATE ILLUSTRATION

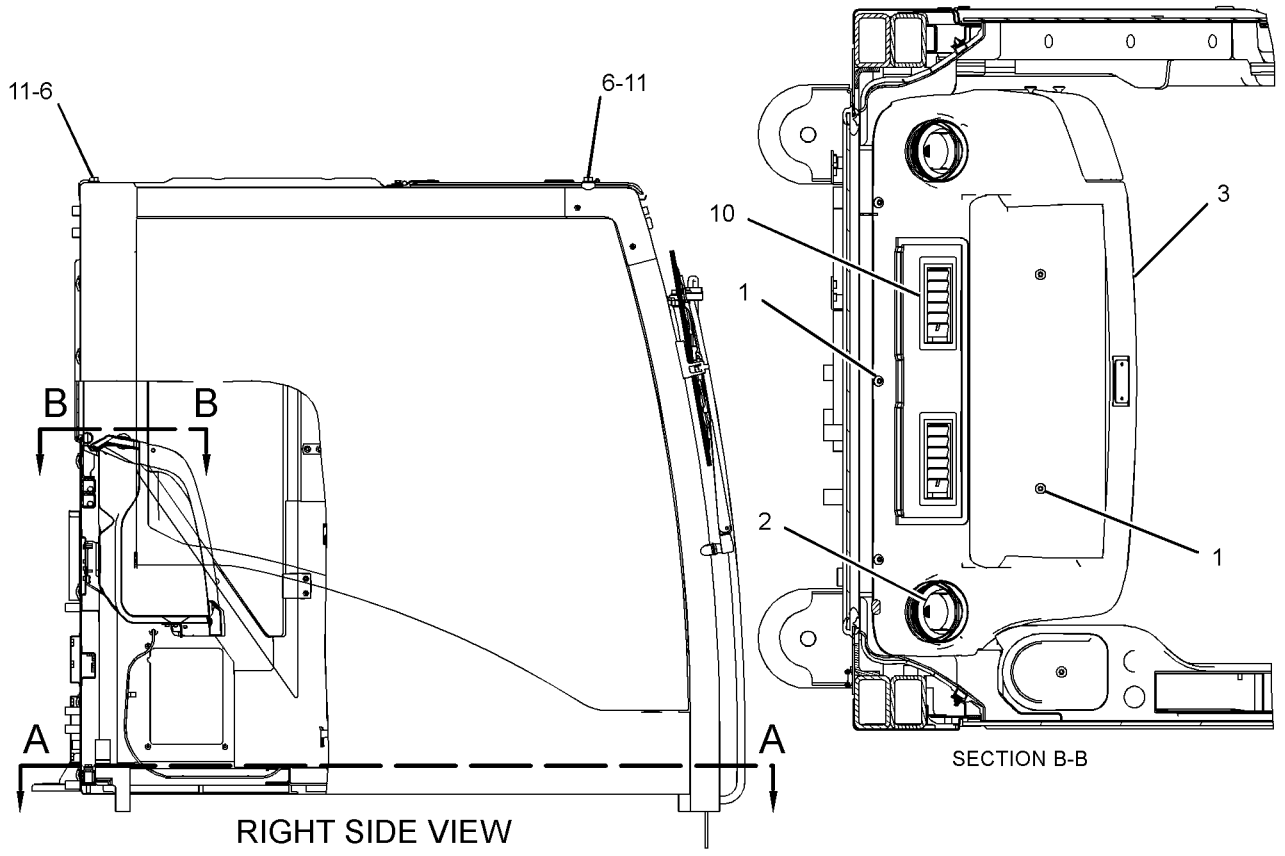

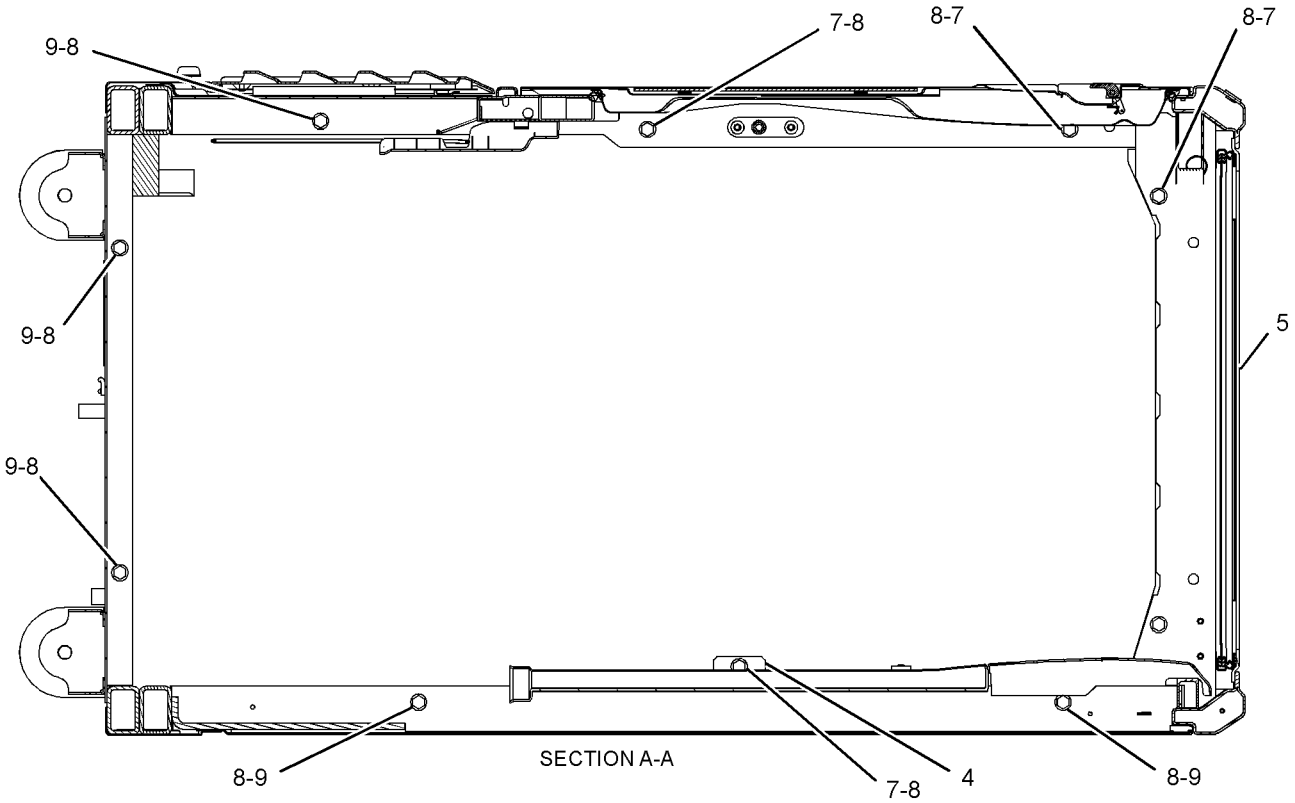

GRAPHIC #1 **<END>** g01974865

OPERATOR STATION

340-6607 CAB GP

S/N: MYG1-UP; PPN1-UP
PART OF 340-6606 CAB GP
AN ATTACHMENT

SMCS-7301, 7325 **i03715162**

NOTE	REF NO	GRAPHIC REF	PART NUMBER	QTY	PART NAME 1 2 3 4 5 6 (PRODUCT LEVEL)	SEE PAGE
Y	1	1	*327-6551*	1	WIPER GP-WINDOW	972
Y	2	1	**334-6387**	1	DOOR GP-CAB	887
Y	3	1	*334-6541*	1	CAB GP	843
Y	4	1	*340-6664*	1	WINDOW GP-CAB (FRONT WINDOW, 1-PIECE)	961
Y	5	1	*340-6665*	1	HATCH GP-ROOF	902
	6	1	**340-6687**	1	CAB AS	
M	6A	1	**185-8182**	6	BOLT (M10X1.5X20-MM)	
	6B	1	**185-8187**	6	WASHER (10.2X22X3.2-MM THK)	
M	6C	1	**9X-2041**	6	SCREW-TRUSS HEAD (M10X1.5X20-MM)	
	6D	1	**151-6777**	2	HINGE	
Y	7	1	*340-6693*	1	TRIM GP-CAB	954
Y	8	1	*342-3712*	1	WINDOW GP-CAB (SIDE, REAR)	964

M-METRIC PART
Y-SEPARATE ILLUSTRATION

340-6607 CAB GP *(contd.)* **i03715162**

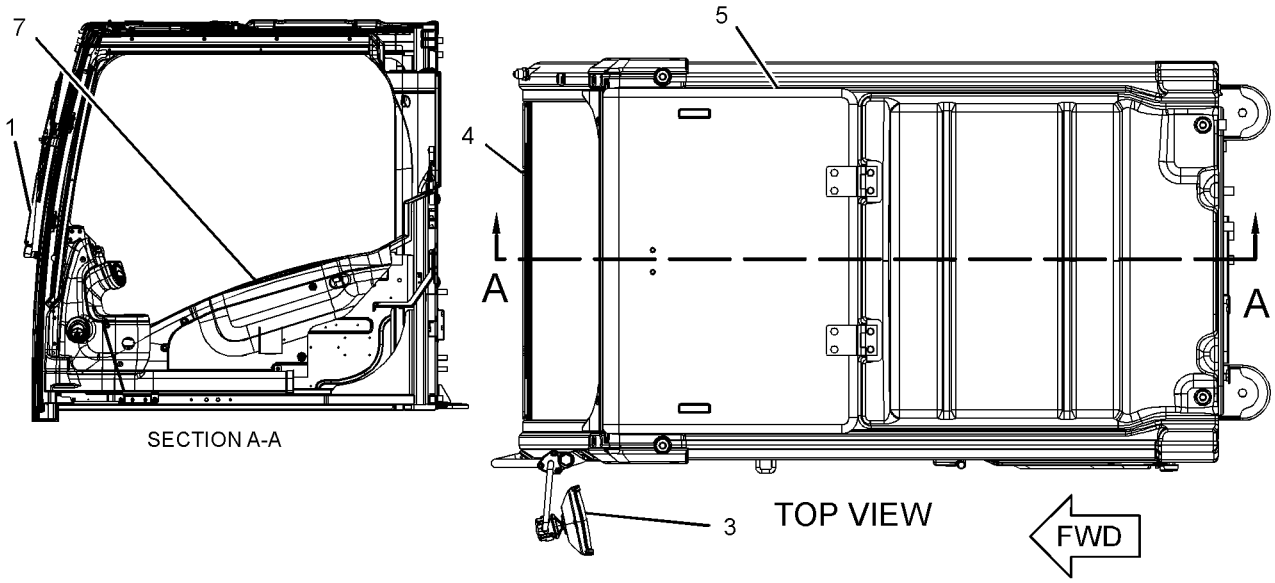

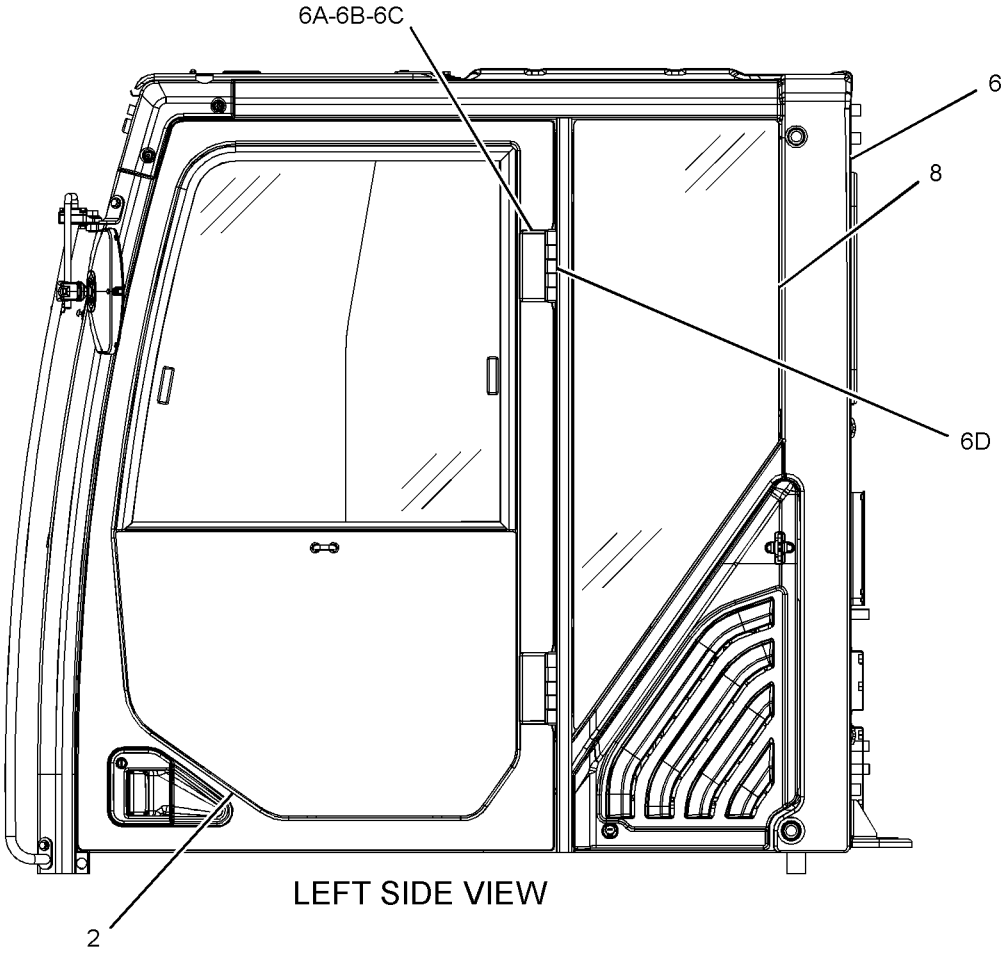

GRAPHIC #1 **<END>** g01975117

OPERATOR STATION

340-3835 CAMERA & MIRROR AR

S/N: MYG1-UP; PPN1-UP
PART OF 345-7583 OPTION AR-CONFIGURATION
AN ATTACHMENT

SMCS-7319, 7348 **i03674941**

NOTE	PART NUMBER	QTY	PART NAME 1 2 3 4 5 6 (PRODUCT LEVEL)	SEE PAGE
Y	*340-3773*	1	CAMERA AR	168
Y	*330-1354*	1	MIRROR GP	917

Y-SEPARATE ILLUSTRATION

<END>

OPERATOR STATION

245-7836 COIL GP-EVAPORATOR

S/N: MYG1-UP; PPN1-UP
PART OF 316-8917 AIR CONDITIONER GP
AN ATTACHMENT

SMCS-7343 **i02218172**

NOTE	REF NO	GRAPHIC REF	PART NUMBER	QTY	PART NAME 1 2 3 4 5 6 (PRODUCT LEVEL)	SEE PAGE
	1	1	**245-7837**	1	VALVE AS-EXPANSION	
	2	1	**245-7905**	1	INSULATOR	
M	3	1	**8T-0266**	2	BOLT-SOCKET HEAD (M5X0.8X40-MM)	
	4	1	**121-7136**	1	SEAL-O-RING	
	5	1	**121-7138**	1	SEAL-O-RING	

M-METRIC PART

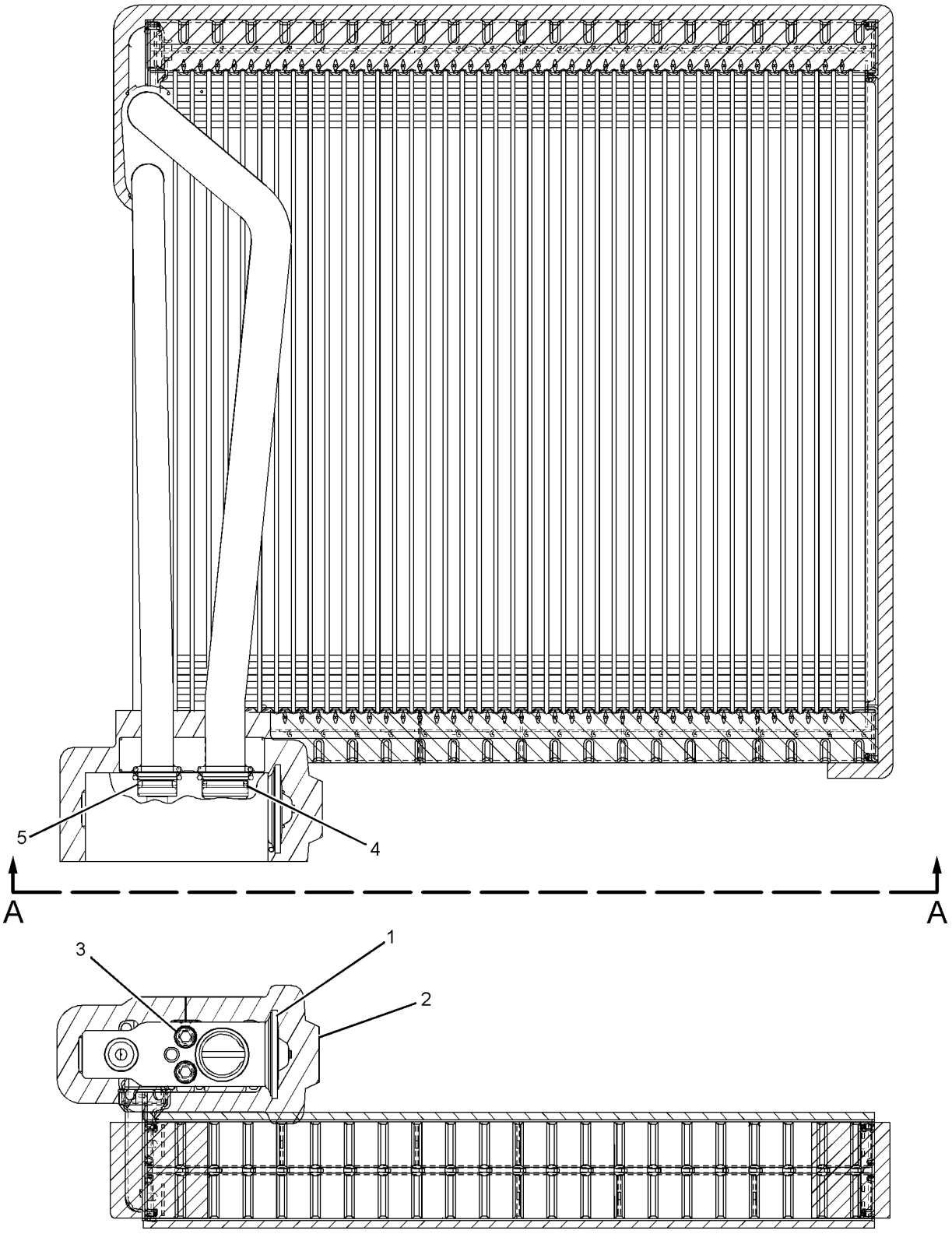

VIEW A-A

GRAPHIC #1 **<END>** g01134658

OPERATOR STATION

276-3814 COMPRESSOR GP-REFRIGERANT

S/N: THX14533-UP; THY5575-UP
PART OF 224-9843 ENGINE AR

SMCS-1802 **i03172948**

NOTE	REF NO	GRAPHIC REF	PART NUMBER	QTY	PART NAME 1 2 3 4 5 6 (PRODUCT LEVEL)	SEE PAGE
M	1	1	**258-9892**	2	BOLT (M8X1.25X80-MM)	
C	2	1	**305-0325**	1	COMPRESSOR & MTG GP-REFRIG	
	3	1	**132-5789**	2	CLIP	
M	4	1	**8T-3647**	2	BOLT (M8X1.25X80-MM)	
	5	1	**8T-4224**	4	WASHER-HARD (8.8X16X2-MM THK)	

C-CHANGE FROM PREVIOUS TYPE
M-METRIC PART

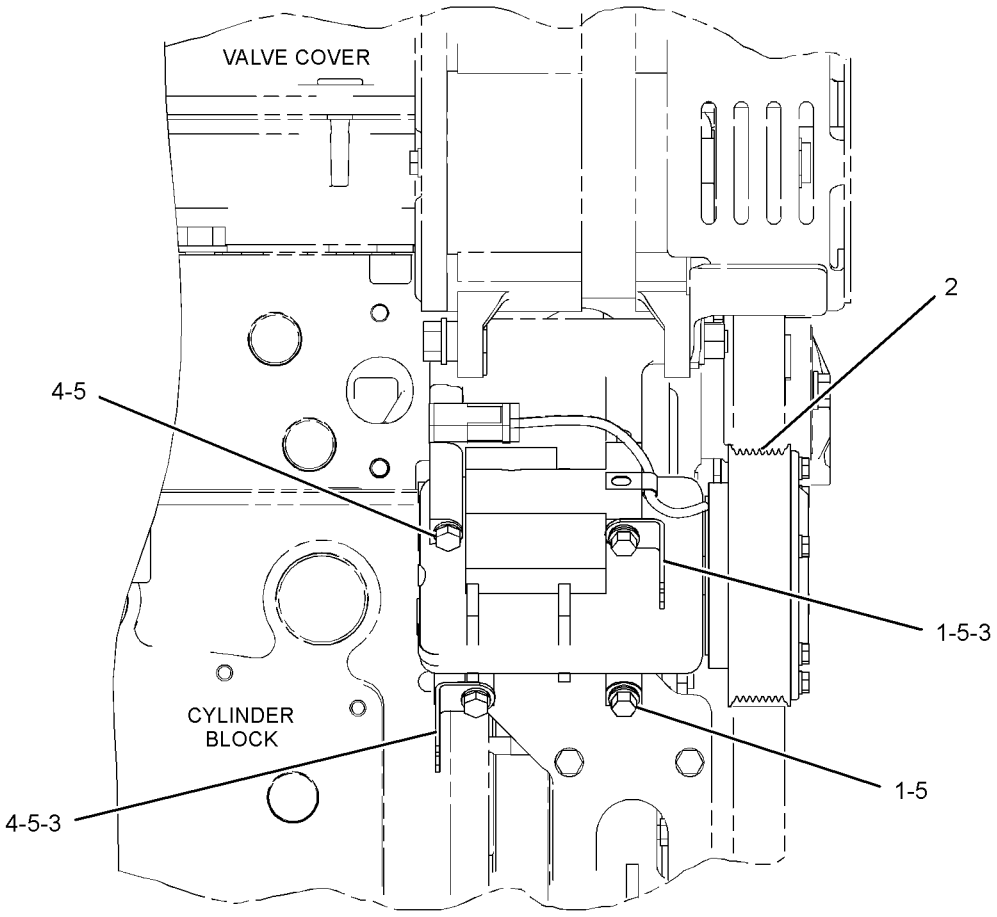

RIGHT SIDE VIEW

GRAPHIC #1 **<END>** g01217731

OPERATOR STATION

245-7940 CONDENSER & MTG GP-REFRIGERANT

S/N: MYG1-UP; PPN1-UP

PART OF 279-7825 INSTALLATION AR-ENGINE

SMCS-1805 **i03652144**

NOTE	REF NO	GRAPHIC REF	PART NUMBER	QTY	PART NAME 1 2 3 4 5 6 (PRODUCT LEVEL)	SEE PAGE
	1	1	**245-7942**	1	BRACKET AS	
	2	1	**245-7943**	1	BRACKET AS	
CY	3	1	**334-6569**	1	CONDENSER GP-REFRIGERANT	858
	4	1	**8T-4121**	8	WASHER-HARD (11X21X2.5-MM THK)	
M	5	1	**8T-4137**	8	BOLT (M10X1.5X20-MM)	

C-CHANGE FROM PREVIOUS TYPE
M-METRIC PART
Y-SEPARATE ILLUSTRATION

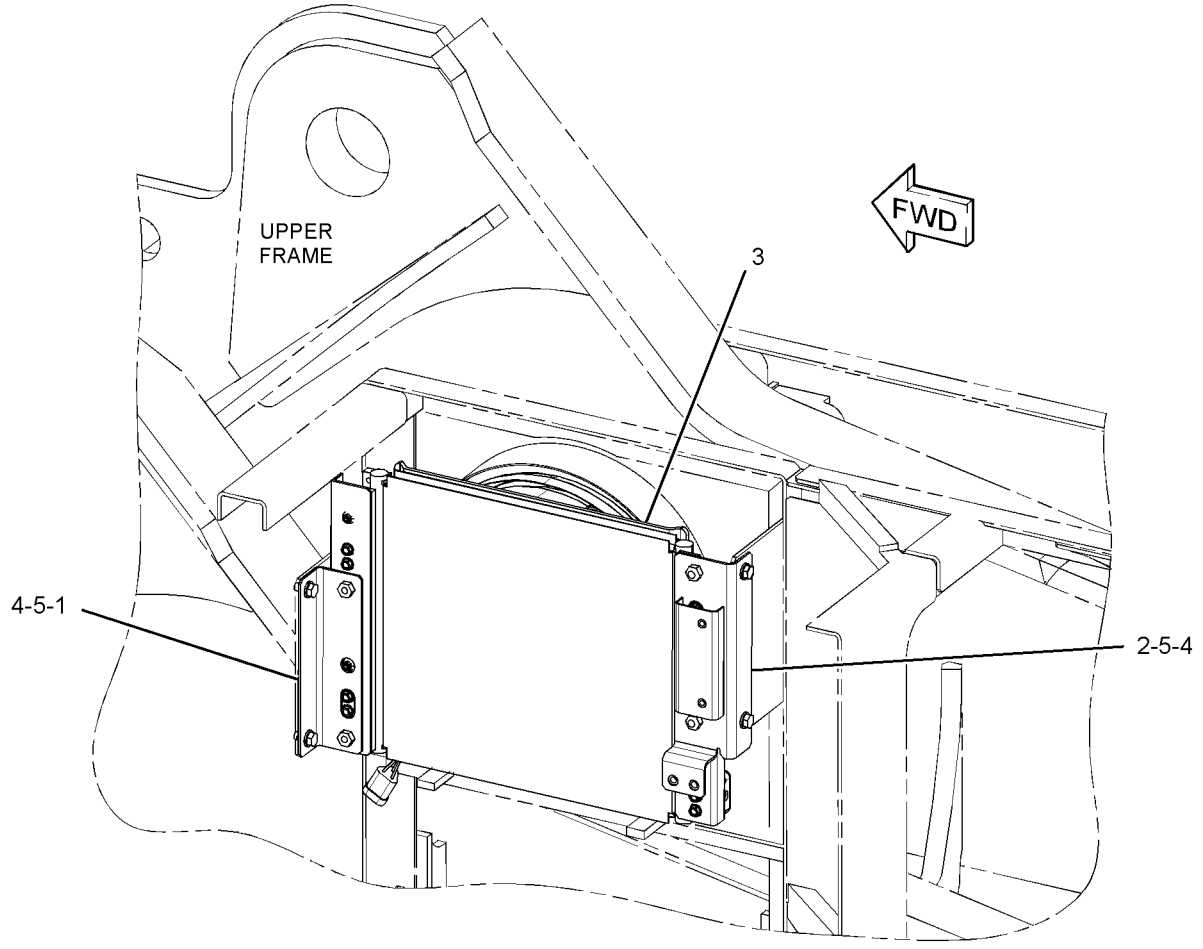

GRAPHIC #1 **<END>** g01911156

OPERATOR STATION

334-6569 CONDENSER GP-REFRIGERANT

S/N: MYG1-UP; PPN1-UP

PART OF 245-7940 CONDENSER & MTG GP-REFRIGERANT

SMCS-1805 **i03652148**

NOTE	REF NO	GRAPHIC REF	PART NUMBER	QTY	PART NAME 1 2 3 4 5 6 (PRODUCT LEVEL)	SEE PAGE
M	1	1	**164-0500**	4	NUT-FLANGE (M8X1.25-THD)	
M	2	1	**227-6846**	8	BOLT AS	
	3	1	**245-7868**	4	BUSHING AS	
	4	1	**245-7869**	2	PACKING-RUBBER	
	5	1	**245-7870**	1	STRAP-CABLE	
M	6	1	**245-7871**	4	NUT-FLANGE (M6X1-THD)	
M	7	1	**245-7876**	3	BOLT AS	
	8	1	**245-7906**	2	PACKING-RUBBER	
	9	1	**245-7911**	1	CONDENSER AS	
	10	1	**273-5316**	1	HARNESS AS-MOTOR (CONDENSER FAN)	
		1	**102-8803**	1	KIT-RECEPTACLE (3-PIN)	
					(INCLUDES RECEPTACLE AS & WEDGE)	
		1	**9W-0852**	3	PIN-CONNECTOR (14-GA)	
M	11	1	**273-5337**	1	BOLT AS	
Y	12	1	**336-1156**	1	FAN & MOTOR GP (CONDENSER)	81

M-METRIC PART
Y-SEPARATE ILLUSTRATION

334-6569 CONDENSER GP-REFRIGERANT *(contd.)* i03652148

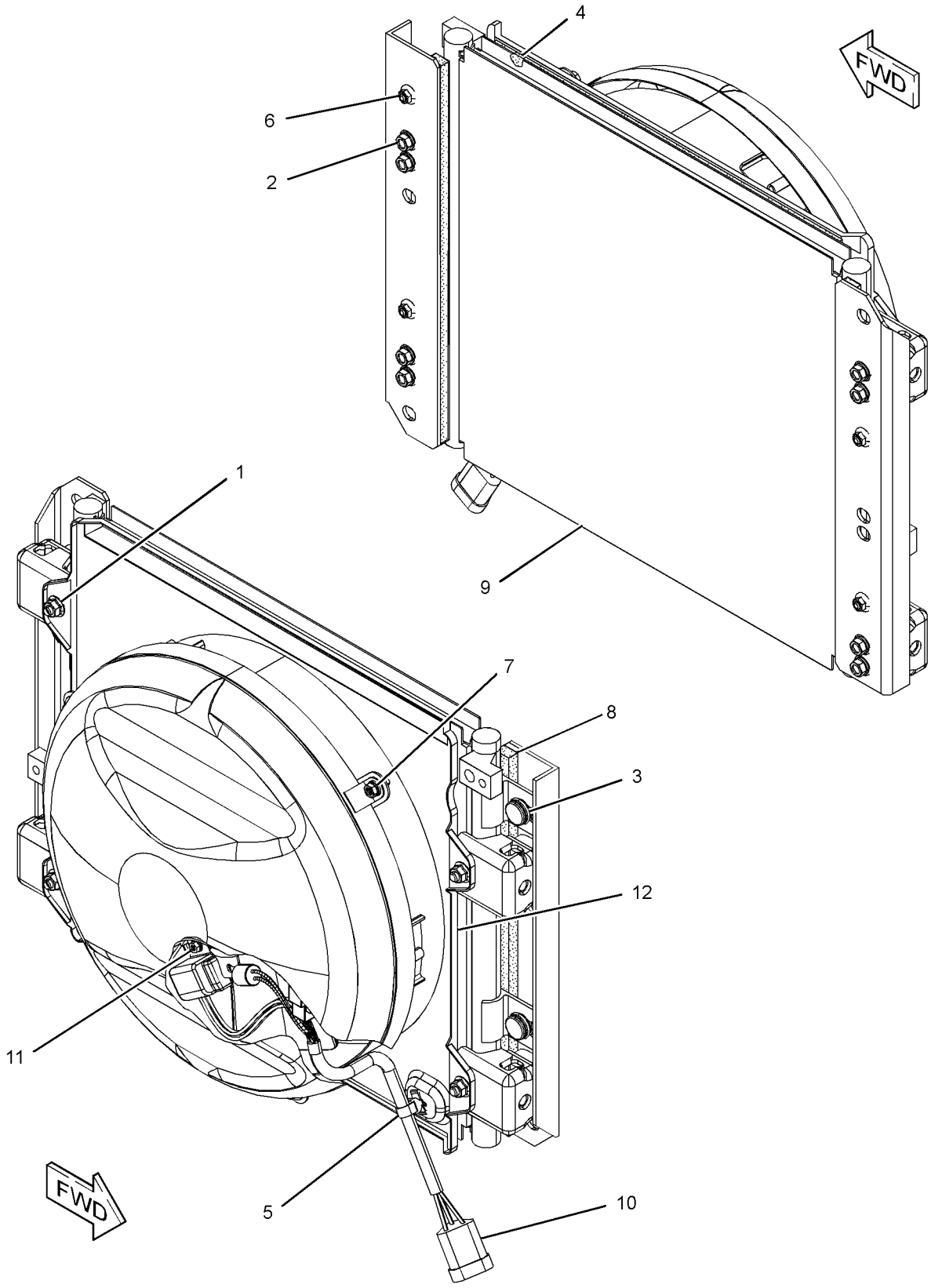

GRAPHIC #1 **<END>** g01752718

OPERATOR STATION

245-7922 CONSOLE GP-OPERATOR

S/N: MYG1-UP; PPN1-UP

PART OF 340-6485 OPERATOR AR

SMCS-5258 **i03641451**

NOTE	REF NO	GRAPHIC REF	PART NUMBER	QTY	PART NAME 1 2 3 4 5 6 (PRODUCT LEVEL)	SEE PAGE
	1	1	**176-1916**	2	GROMMET	
	2	1	**178-5422**	2	GROMMET	
	3	1	**178-5423**	2	GROMMET	
	4	1	**185-8161**	2	INSULATOR	
	5	1	**235-8893**	2	SUPPORT	
	6	1	**235-8894**	2	SUPPORT	
Y	7	1	*259-7349*	1	CONSOLE GP-OPERATOR (LH)	864
Y	8	1	*259-7348*	1	CONSOLE GP-OPERATOR (RH)	862
	9	1	**8T-4121**	4	WASHER-HARD (11X21X2.5-MM THK)	
M	10	1	**8T-4195**	4	BOLT (M10X1.5X30-MM)	
M	11	1	**9X-2046**	8	SCREW-TRUSS HEAD (M6X1X35-MM)	
M	12	1	**9X-2045**	12	SCREW-TRUSS HEAD (M6X1X20-MM)	
	13	1	**7K-1181**	4	STRAP-CABLE	
	14	1	**122-9617**	2	GUARD	

M-METRIC PART
Y-SEPARATE ILLUSTRATION

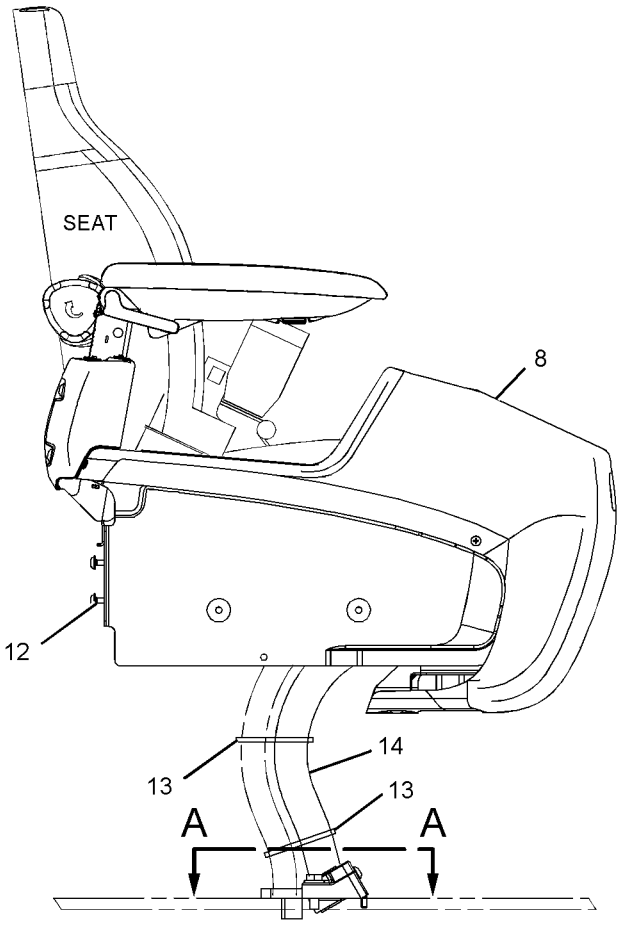

RIGHT SIDE VIEW

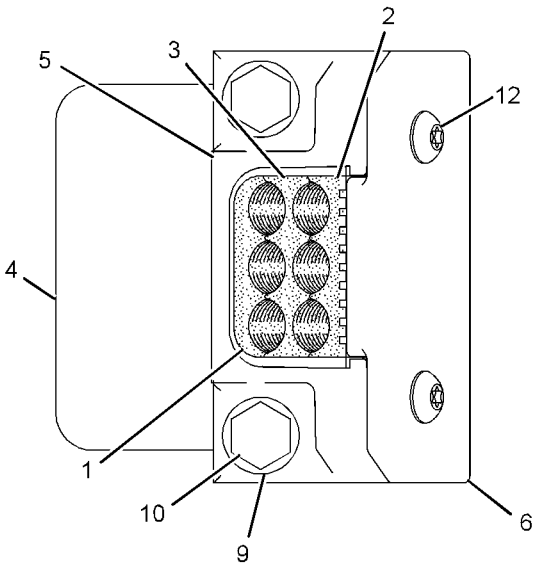

SECTION A-A

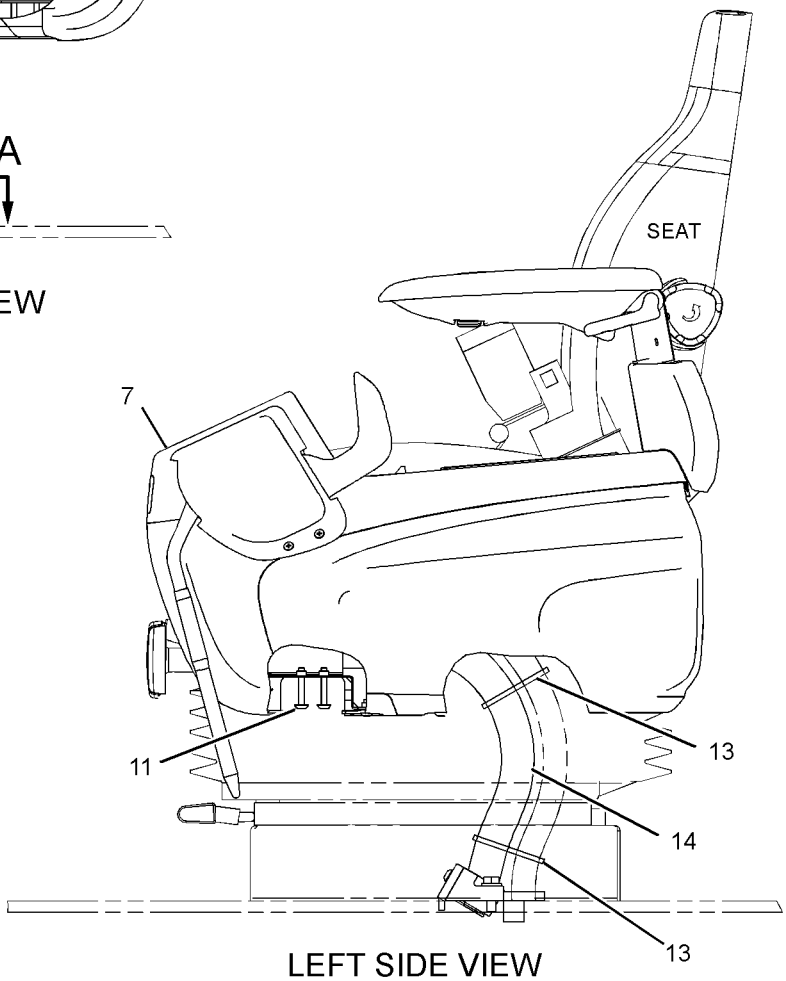

LEFT SIDE VIEW

GRAPHIC #1 **<END>** g01955102

OPERATOR STATION

259-7348 CONSOLE GP-OPERATOR—RH

S/N: MYG1-UP; PPN1-UP

PART OF 245-7922 CONSOLE GP-OPERATOR

SMCS-5258 **i02426987**

NOTE	REF NO	GRAPHIC REF	PART NUMBER	QTY	PART NAME 1 2 3 4 5 6 (PRODUCT LEVEL)	SEE PAGE
M	1	1	**128-2135**	4	SCREW-TRUSS HEAD (M6X1X13-MM)	
	2	1	**185-8284**	1	COVER	
	3	1	**234-6579**	2	NUT-SPEED	
	4	1	**234-6580**	2	CAP	
	5	1	**234-6602**	1	COVER	
	6	1	**234-6604**	1	COVER	
	7	1	**234-6608**	1	COVER	
	8	1	**234-6609**	1	COVER	
	9	1	**234-6610**	1	COVER	
	10	1	**235-8914**	4	NUT-SPEED	
	11	1	**235-8966**	2	BASE-MOUNTING	
	12	1	**245-7790**	2	SCREW-TAPPING	
	13	1	**245-7926**	1	SUPPORT AS	
	14	1	**245-7948**	4	SCREW-TAPPING	
Y	15	1	**259-7346**	1	ARMREST GP (RH)	841
M	16	1	**9X-2041**	3	SCREW-TRUSS HEAD (M10X1.5X20-MM)	

M-METRIC PART
Y-SEPARATE ILLUSTRATION

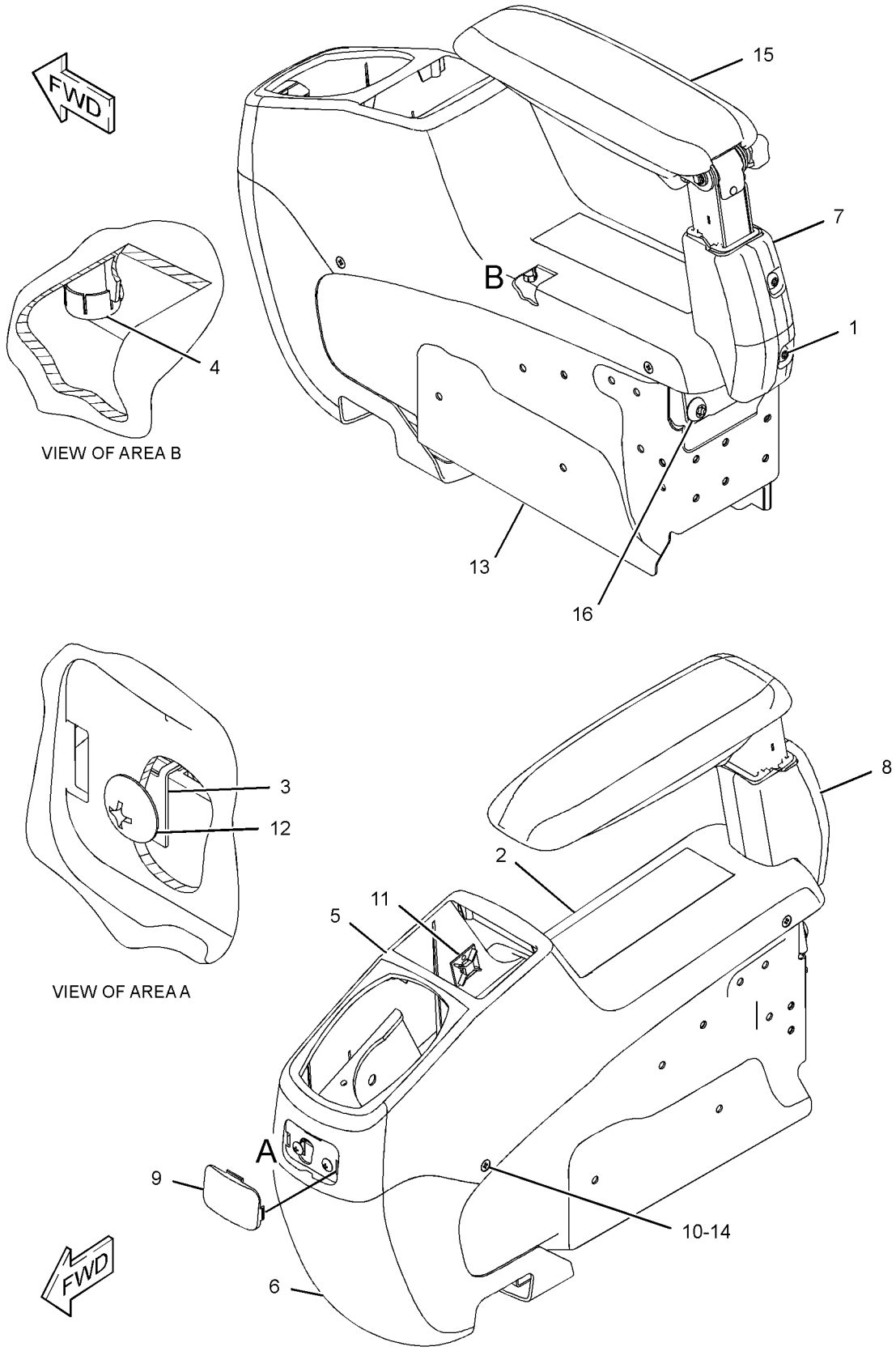

GRAPHIC #1 **<END>** g01217107

OPERATOR STATION

259-7349 CONSOLE GP-OPERATOR—LH

S/N: MYG1-UP; PPN1-UP

PART OF 245-7922 CONSOLE GP-OPERATOR

SMCS-5258 **i02426998**

NOTE	REF NO	GRAPHIC REF	PART NUMBER	QTY	PART NAME 1 2 3 4 5 6 (PRODUCT LEVEL)	SEE PAGE
M	1	1	**128-2135**	5	SCREW-TRUSS HEAD (M6X1X13-MM)	
M	2	1	**171-7325**	3	SCREW-TAPPING (M5X0.8-THD)	
	3	1	**234-6579**	6	NUT-SPEED	
	4	1	**234-6580**	4	CAP	
	5	1	**234-6603**	1	COVER	
	6	1	**234-6605**	1	COVER	
	7	1	**234-6608**	1	COVER	
	8	1	**234-6609**	1	COVER	
	9	1	**234-6610**	1	COVER	
	10	1	**234-6611**	1	CASE	
	11	1	**234-6612**	1	COVER	
Y	12	1	**234-6613**	1	SWITCH GP-POSITION (HYDRAULIC LOCKOUT)	236
	13	1	**234-6614**	1	COVER	
	14	1	**235-8914**	4	NUT-SPEED	
	15	1	**235-8965**	1	GUARD	
	16	1	**245-7790**	3	SCREW-TAPPING	
	17	1	**245-7925**	1	SUPPORT AS	
	18	1	**245-7948**	7	SCREW-TAPPING	
	19	1	**259-7202**	1	ASHTRAY	
Y	20	1	**259-7347**	1	ARMREST GP (LH)	842
M	21	1	**9X-2041**	3	SCREW-TRUSS HEAD (M10X1.5X20-MM)	
M	22	1	**9X-2042**	2	SCREW-TRUSS HEAD (M6X1X12-MM)	

M-METRIC PART
Y-SEPARATE ILLUSTRATION

259-7349 **CONSOLE GP-OPERATOR** *(contd.)* **i02426998**

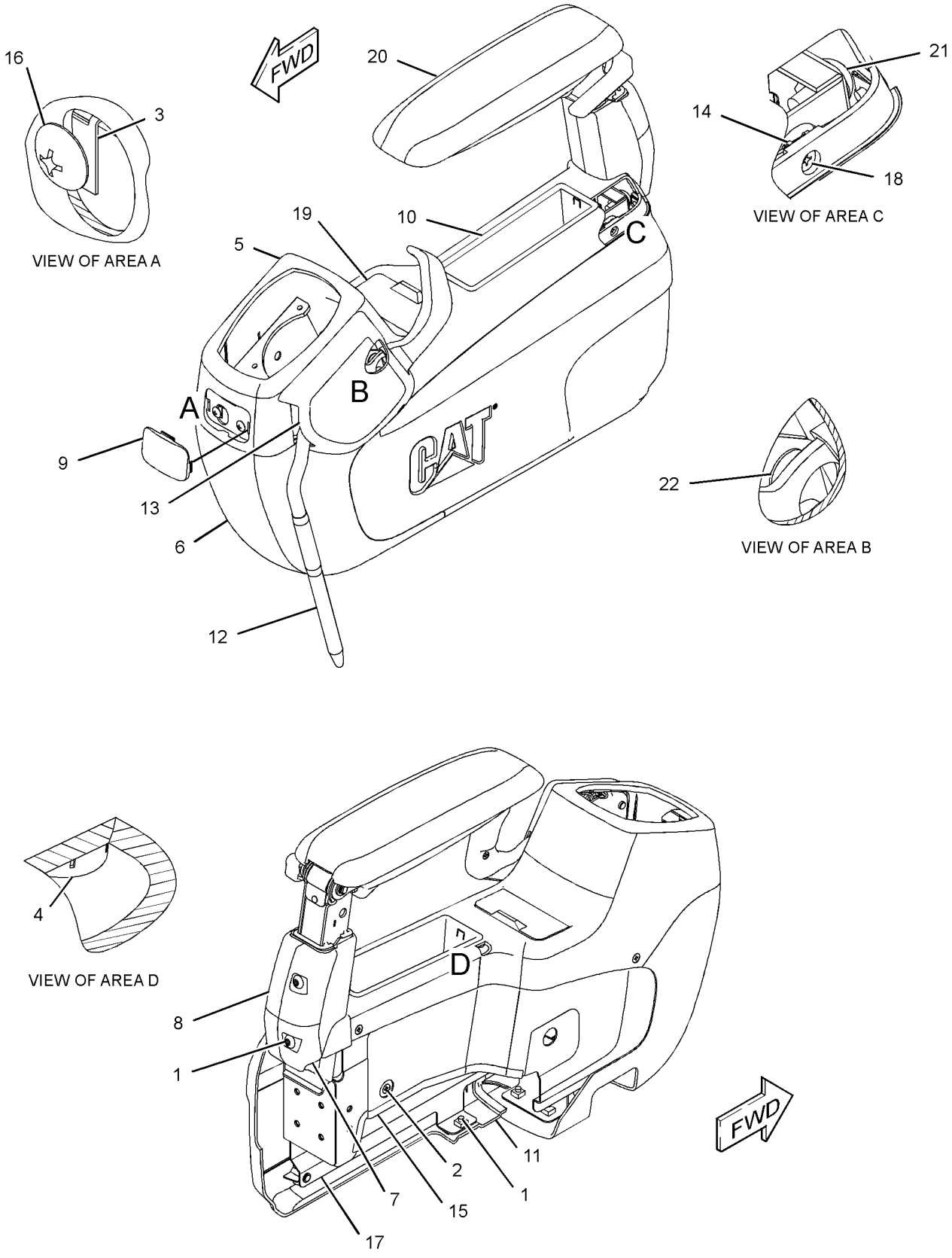

GRAPHIC #1 **<END>** g01217096

OPERATOR STATION

270-5687 CONTROL & MTG GP-JOYSTICK–

JOYSTICK, 2-BN, SLIDE, TRIG SW

S/N: MYG1-UP; PPN1-UP

PART OF 340-9468 OPTION AR-CONTROL

AN ATTACHMENT

SMCS-5063, 5705 **i02409784**

NOTE	PART NUMBER	QTY	PART NAME 1 2 3 4 5 6 (PRODUCT LEVEL)	SEE PAGE
Y	*270-5689*	1	CONTROL & MTG GP-JOYSTICK (2-BUTTON, SLIDE, TRIGGER SW)	867
Y	*247-7410*	1	FILM GP (OPERATOR CONTROLS, NOTICE)	977
Y	*259-5295*	1	FASTENER GP-WIRING HARNESS (JOYSTICK)	180
Y-SEPARATE ILLUSTRATION				

<END>

270-5688 CONTROL & MTG GP-JOYSTICK–

JOYSTICK, 3-BUTTON, TRIGGER SW

S/N: MYG1-UP; PPN1-UP

PART OF 340-9469 OPTION AR-CONTROL

AN ATTACHMENT

SMCS-5063, 5705 **i02518269**

NOTE	PART NUMBER	QTY	PART NAME 1 2 3 4 5 6 (PRODUCT LEVEL)	SEE PAGE
Y	*270-5690*	1	CONTROL & MTG GP-JOYSTICK (3-BUTTON, TRIGGER SWITCH)	868
Y	*259-5295*	1	FASTENER GP-WIRING HARNESS (JOYSTICK)	180
Y	*247-7411*	1	FILM GP (OPERATOR CONTROLS, NOTICE)	978
Y-SEPARATE ILLUSTRATION				

<END>

270-5689 CONTROL & MTG GP-JOYSTICK–

2-BUTTON, SLIDE, TRIGGER SW

S/N: MYG1-UP; PPN1-UP

PART OF 270-5687 CONTROL & MTG GP-JOYSTICK

AN ATTACHMENT

SMCS-5063, 5705 **i03267403**

NOTE	REF NO	GRAPHIC REF	PART NUMBER	QTY	PART NAME 1 2 3 4 5 6 (PRODUCT LEVEL)	SEE PAGE
CY	1	1	**297-0539**	1	CONTROL GP-PILOT OPERATED HYD (LH)	881
CY	2	1	**297-0538**	1	CONTROL GP-PILOT OPERATED HYD (RH)	880
M	3	1	**6V-7357**	6	BOLT (M6X1X25-MM)	
	4	1	**9X-8256**	6	WASHER (6.6X12X2-MM THK)	

C-CHANGE FROM PREVIOUS TYPE
M-METRIC PART
Y-SEPARATE ILLUSTRATION

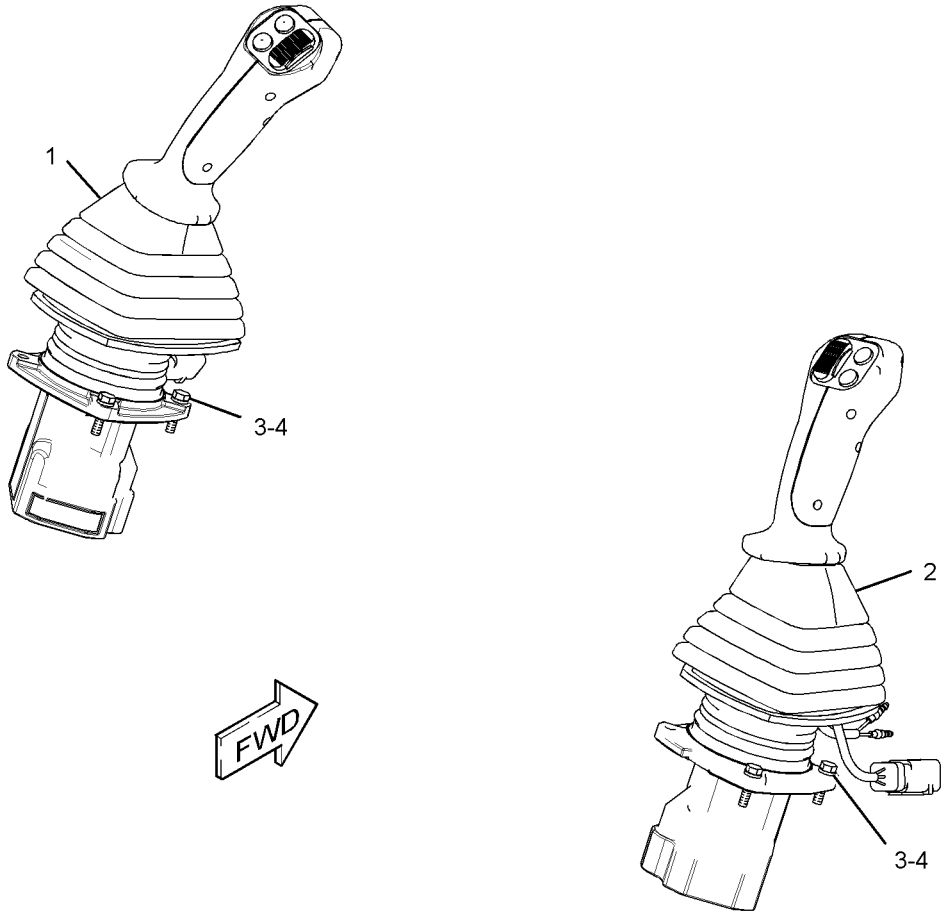

GRAPHIC #1 **<END>** g01619846

270-5690 CONTROL & MTG GP-JOYSTICK–
3-BUTTON, TRIGGER SWITCH
S/N: MYG1-UP; PPN1-UP
PART OF 270-5688 CONTROL & MTG GP-JOYSTICK
AN ATTACHMENT

SMCS-5063, 5705 **i03395501**

NOTE	REF NO	GRAPHIC REF	PART NUMBER	QTY	PART NAME 1 2 3 4 5 6 (PRODUCT LEVEL)	SEE PAGE
CY	1	1	**297-0540**	1	CONTROL GP-PILOT OPERATED HYD (RH)	882
CY	2	1	**297-0541**	1	CONTROL GP-PILOT OPERATED HYD (LH)	883
M	3	1	**6V-7357**	6	BOLT (M6X1X25-MM)	
	4	1	**9X-8256**	6	WASHER (6.6X12X2-MM THK)	

C-CHANGE FROM PREVIOUS TYPE
M-METRIC PART
Y-SEPARATE ILLUSTRATION

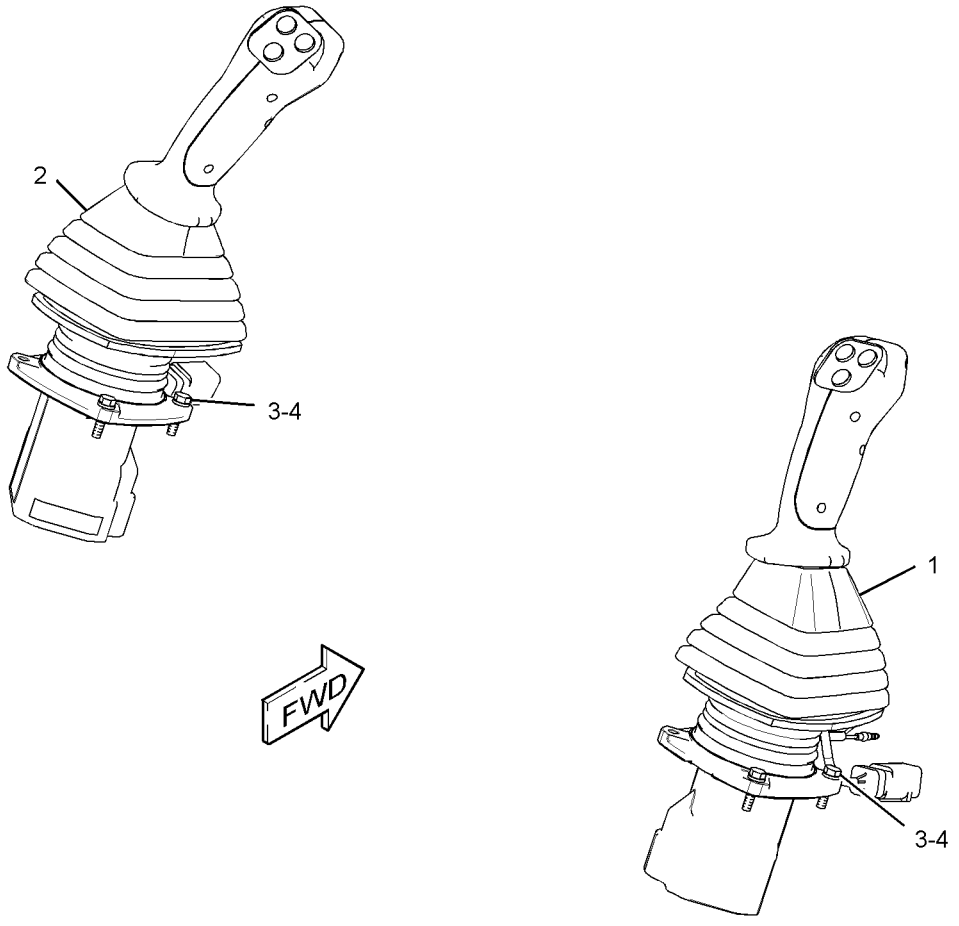

GRAPHIC #1 **<END>** g01620003

OPERATOR STATION

338-6943 CONTROL & MTG GP-PEDAL–LH

S/N: MYG1-UP; PPN1-UP
PART OF 335-0497 PEDAL AR-AUXILIARY
AN ATTACHMENT

SMCS-5462 **i03659059**

NOTE	REF NO	GRAPHIC REF	PART NUMBER	QTY	PART NAME 1 2 3 4 5 6 (PRODUCT LEVEL)	SEE PAGE
	1	1	**5I-7090**	1	CHAIN AS	
	2	1	**121-1865**	1	PEDAL-RUBBER (LH)	
	3	1	**128-2173**	1	PIN	
	4	1	**153-8723**	1	PEDAL AS	
Y	5	1	**309-5808**	1	CONTROL GP-PEDAL (ELECTRIC)	877
	6	1	**338-6948**	1	SUPPORT AS	
M	7	1	**095-0735**	2	SCREW-MACHINE (M5X0.8X8-MM)	
M	8	1	**7X-2536**	2	BOLT (M8X1.25X14-MM)	
	9	1	**8T-0114**	1	PIN-SPRING	
	10	1	**8T-4121**	3	WASHER-HARD (11X21X2.5-MM THK)	
M	11	1	**8T-4136**	2	BOLT (M10X1.5X25-MM)	
M	12	1	**8T-4191**	1	BOLT (M10X1.5X16-MM)	
	13	1	**8T-4224**	2	WASHER-HARD (8.8X16X2-MM THK)	

M-METRIC PART
Y-SEPARATE ILLUSTRATION

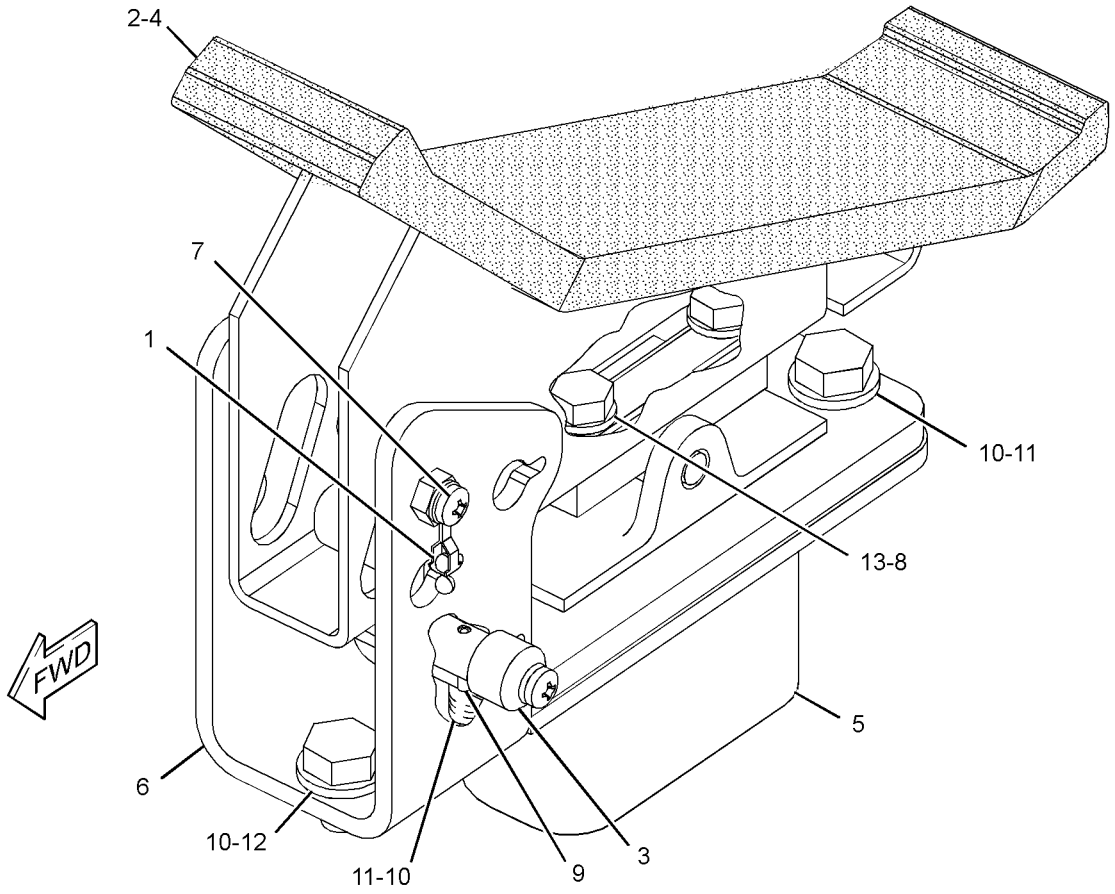

GRAPHIC #1 **<END>** g01983813

OPERATOR STATION

270-6107 CONTROL GP-FOOT—LEFT ON/OFF SWITCH

S/N: MYG1-UP; PPN1-UP
PART OF 270-6106 CONTROL AR-AUXILIARY
AN ATTACHMENT

SMCS-1435 **i02500411**

NOTE	REF NO	GRAPHIC REF	PART NUMBER	QTY	PART NAME 1 2 3 4 5 6 (PRODUCT LEVEL)	SEE PAGE
	1	1	**093-2069**	1	GROMMET	
	2	1	**2Q-4703**	1	SWITCH AS-FOOT (WORK TOOL)	
		1	**205-1340**	1	HARNESS AS-OPERATOR CONTROLS	
		1	**155-2270**	1	KIT-CONNECTING PLUG (2-PIN)	
					(INCLUDES PLUG AS, WEDGE & INTERFACE SEAL)	
	3	1	**285-1332**	1	SUPPORT AS	
	4	1	**285-1333**	1	SUPPORT AS	
	5	1	**285-1337**	1	PLATE-STOP	
	6	1	**6V-7646**	1	WASHER-HARD (7.2X25X2-MM THK)	
M	7	1	**8C-8580**	2	BOLT-SOCKET HEAD (M5X0.8X16-MM)	
M	8	1	**8T-0269**	2	BOLT-SOCKET HEAD (M6X1X20-MM)	
	9	1	**8T-4121**	4	WASHER-HARD (11X21X2.5-MM THK)	
M	10	1	**8T-4137**	4	BOLT (M10X1.5X20-MM)	
	11	1	**9X-8256**	1	WASHER (6.6X12X2-MM THK)	

M-METRIC PART

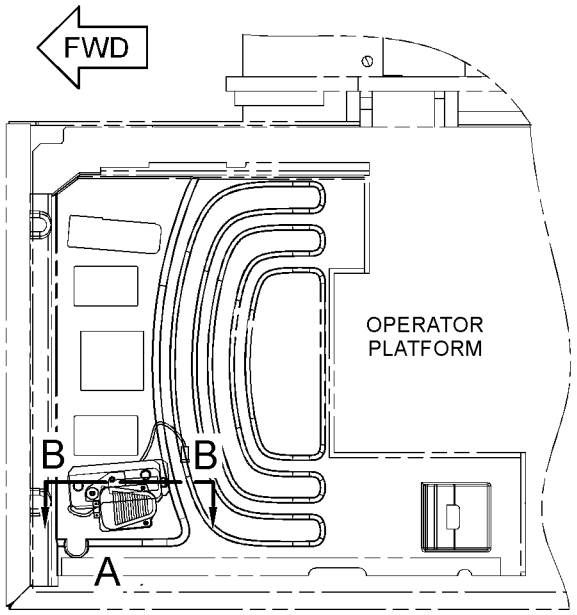

TOP VIEW

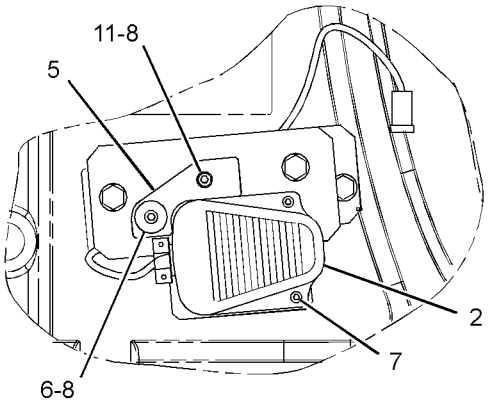

VIEW OF AREA A

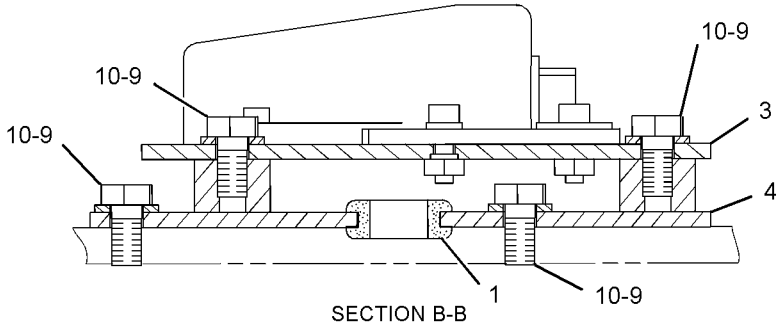

SECTION B-B

GRAPHIC #1 **<END>** g01252474

OPERATOR STATION

260-2109 CONTROL GP-HANDLE–JOYSTICK, RH

S/N: MYG1-UP; PPN1-UP
PART OF 297-0538 CONTROL GP-PILOT OPERATED HYD
AN ATTACHMENT

SMCS-5705 **i02981496**

NOTE	REF NO	GRAPHIC REF	PART NUMBER	QTY	PART NAME 1 2 3 4 5 6 (PRODUCT LEVEL)	SEE PAGE
M	1	1	**7Y-8463**	1	NUT (M14X2-THD)	
	2	1	**117-8683**	1	PIN-SPRING	
	3	1	**260-2111**	1	LEVER	
	4	1	**297-4589**	1	CONTROL GP-HANDLE (RH)	
		1	**247-2693**	1	RECEPTACLE AS-CONNECTOR (6-PIN)	
		1	**9X-3401**	6	PIN-CONNECTOR (16-GA TO 18-GA)	
					–OR–	
		1	**126-1767**	6	PIN-CONNECTOR (14-GA)	
	5	1	**305-0332**	1	BOOT	

M-METRIC PART

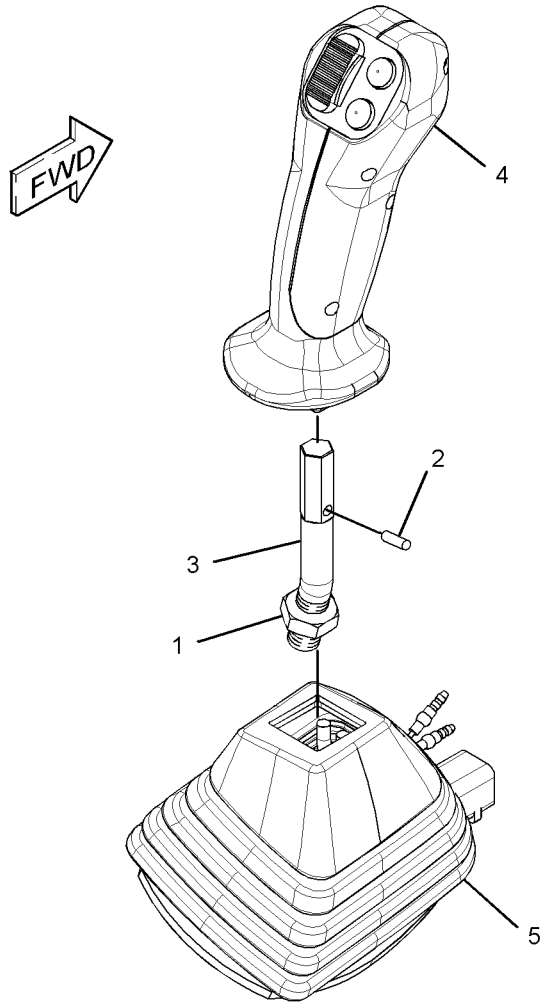

GRAPHIC #1

<END>

g01436256

OPERATOR STATION

260-2110 CONTROL GP-HANDLE–JOYSTICK, LH

S/N: MYG1-UP; PPN1-UP
PART OF 297-0539 CONTROL GP-PILOT OPERATED HYD
AN ATTACHMENT

SMCS-5705 **i02978363**

NOTE	REF NO	GRAPHIC REF	PART NUMBER	QTY	PART NAME 1 2 3 4 5 6 (PRODUCT LEVEL)	SEE PAGE
M	1	1	**7Y-8463**	1	NUT (M14X2-THD)	
	2	1	**117-8683**	1	PIN-SPRING	
	3	1	**260-2111**	1	LEVER	
CY	4	1	**297-4590**	1	CONTROL GP-HANDLE (LH)	875
	5	1	**305-0331**	1	BOOT	

C-CHANGE FROM PREVIOUS TYPE
M-METRIC PART
Y-SEPARATE ILLUSTRATION

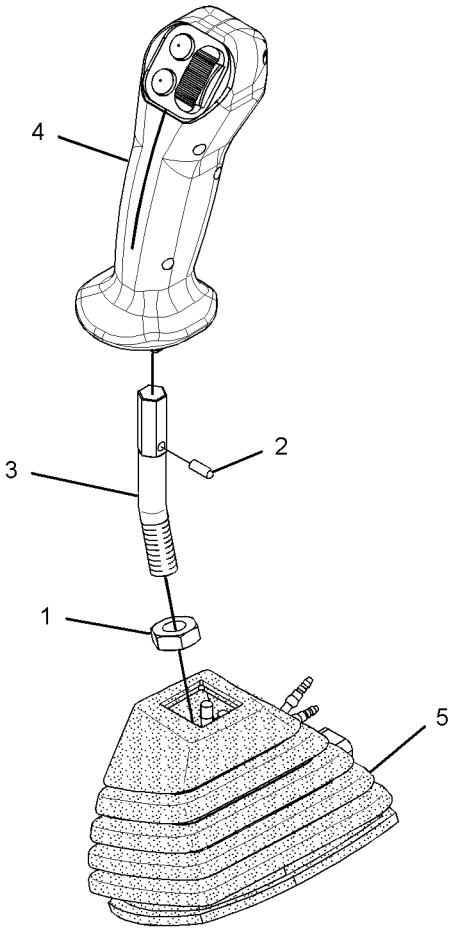

GRAPHIC #1 **<END>** g01428094

260-2127 CONTROL GP-HANDLE–JOYSTICK, RH

S/N: MYG1-UP; PPN1-UP
PART OF 297-0540 CONTROL GP-PILOT OPERATED HYD
AN ATTACHMENT

SMCS-5705 **i02981501**

NOTE	REF NO	GRAPHIC REF	PART NUMBER	QTY	PART NAME 1 2 3 4 5 6 (PRODUCT LEVEL)	SEE PAGE
M	1	1	**7Y-8463**	1	NUT (M14X2-THD)	
	2	1	**117-8683**	1	PIN-SPRING	
	3	1	**260-2111**	1	LEVER	
	4	1	**297-4595**	1	CONTROL GP-HANDLE (RH)	
		1	**8T-8737**	2	PLUG-SEAL	
		1	**9X-3401**	4	PIN-CONNECTOR (16-GA TO 18-GA)	
					–OR–	
		1	**126-1767**	4	PIN-CONNECTOR (14-GA)	
		1	**247-2693**	1	RECEPTACLE AS-CONNECTOR (6-PIN)	
	5	1	**305-0332**	1	BOOT	

M-METRIC PART

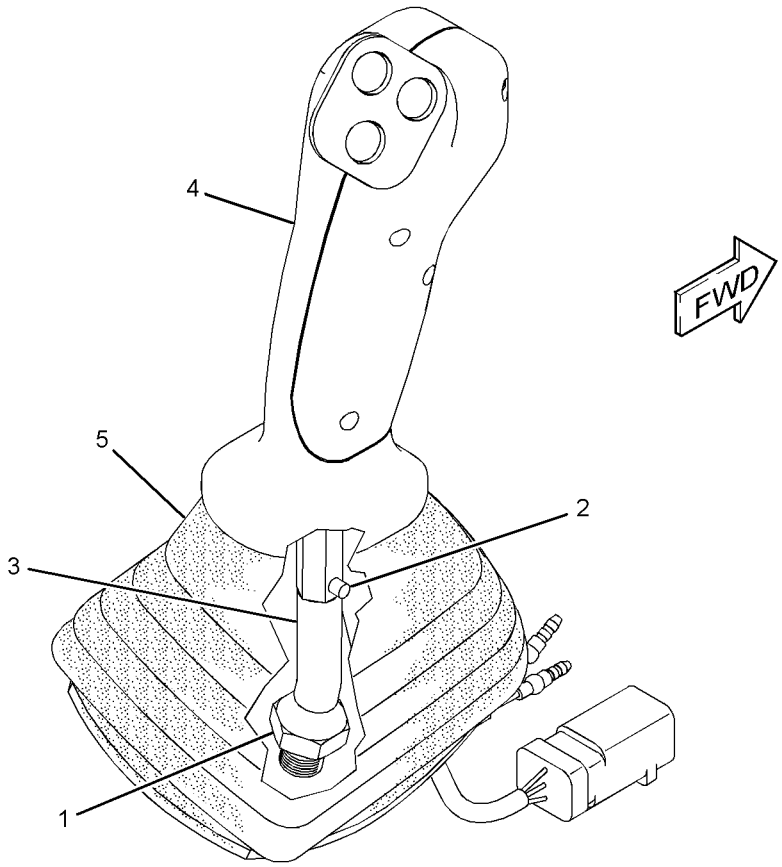

GRAPHIC #1 **<END>** g01430928

OPERATOR STATION

260-2128 CONTROL GP-HANDLE—JOYSTICK, LH

S/N: MYG1-UP; PPN1-UP
PART OF 297-0541 CONTROL GP-PILOT OPERATED HYD
AN ATTACHMENT

SMCS-5705 **i02981493**

NOTE	REF NO	GRAPHIC REF	PART NUMBER	QTY	PART NAME 1 2 3 4 5 6 (PRODUCT LEVEL)	SEE PAGE
M	1	1	**7Y-8463**	1	NUT (M14X2-THD)	
	2	1	**117-8683**	1	PIN-SPRING	
	3	1	**305-0331**	1	BOOT	
	4	1	**297-4595**	1	CONTROL GP-HANDLE (LH)	
		1	**8T-8737**	2	PLUG-SEAL	
		1	**9X-3401**	4	PIN-CONNECTOR (16-GA TO 18-GA)	
					—OR—	
		1	**126-1767**	4	PIN-CONNECTOR (14-GA)	
		1	**247-2693**	1	RECEPTACLE AS-CONNECTOR (6-PIN)	
	5	1	**260-2111**	1	LEVER	

M-METRIC PART

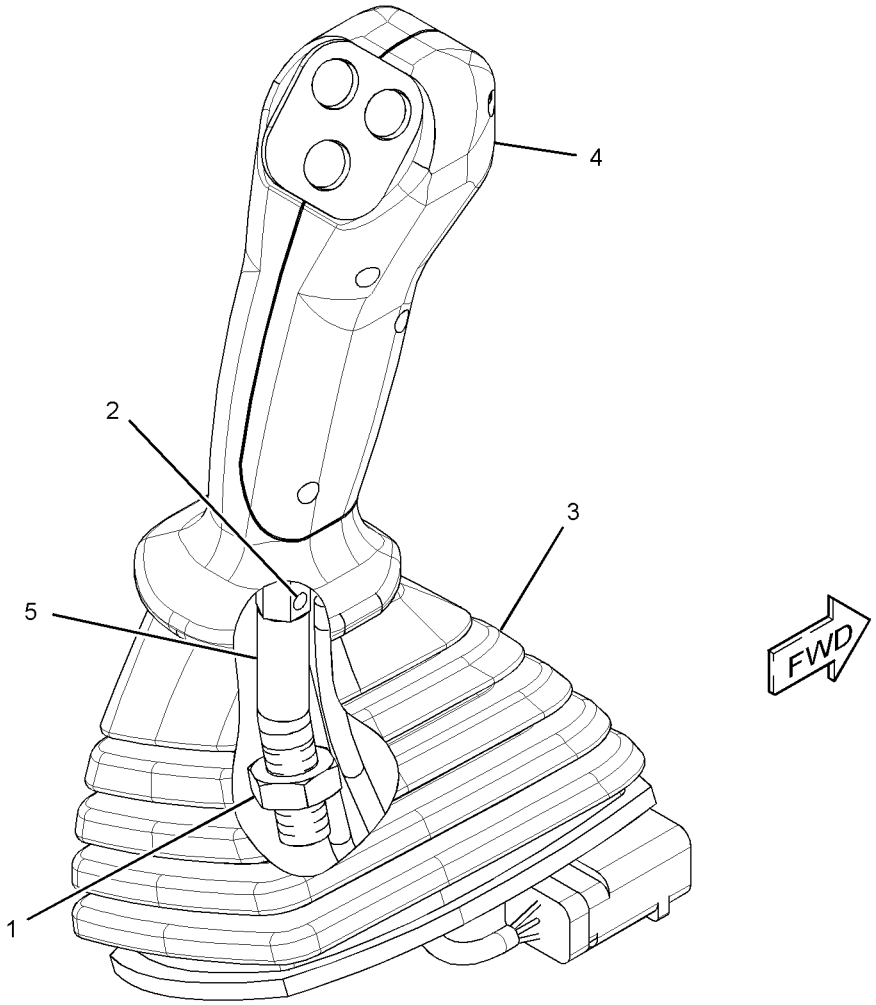

GRAPHIC #1 **<END>** g01436267

OPERATOR STATION

297-4590 CONTROL GP-HANDLE—LH

S/N: MYG1-UP; PPN1-UP
PART OF 260-2110 CONTROL GP-HANDLE
AN ATTACHMENT

SMCS-5705 **i02977011**

NOTE	REF NO	GRAPHIC REF	PART NUMBER	QTY	PART NAME 1 2 3 4 5 6 (PRODUCT LEVEL)	SEE PAGE
	1	1	**9X-3401**	6	PIN-CONNECTOR (16-GA TO 18-GA)	
					—OR—	
		1	**126-1767**	6	PIN-CONNECTOR (14-GA)	
	2	1	**247-2693**	1	RECEPTACLE AS-CONNECTOR (6-PIN)	

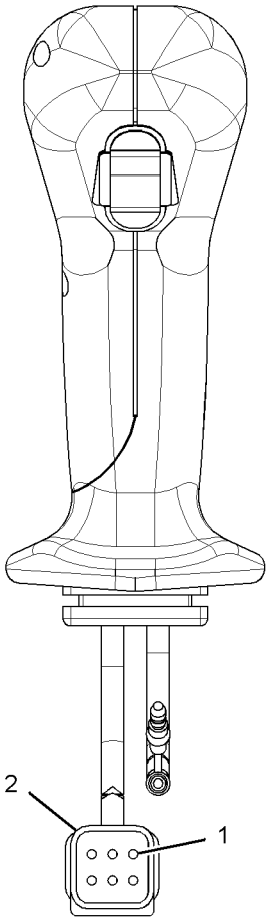

REAR VIEW

GRAPHIC #1

<END>

g01508125

OPERATOR STATION

316-8842 CONTROL GP-HYDRAULIC PEDAL

S/N: MYG1-UP; PPN1-UP
PART OF 342-3650 PEDAL AR-AUXILIARY
AN ATTACHMENT

SMCS-5059, 5063 **i03664960**

NOTE	REF NO	GRAPHIC REF	PART NUMBER	QTY	PART NAME 1 2 3 4 5 6 (PRODUCT LEVEL)	SEE PAGE
	1	1	**5I-7090**	1	CHAIN AS	
	2	1	**128-2173**	1	PIN	
	3	1	**135-2274**	1	PEDAL-RUBBER	
Y	4	1	**206-3336**	1	VALVE GP-PILOT	667
	5	1	**327-6453**	1	PEDAL AS	
	6	1	**327-6457**	1	SUPPORT AS	
M	7	1	**095-0735**	2	SCREW-MACHINE (M5X0.8X8-MM)	
M	8	1	**7X-2536**	2	BOLT (M8X1.25X14-MM)	
	9	1	**8T-0114**	1	PIN-SPRING	
	10	1	**8T-4121**	3	WASHER-HARD (11X21X2.5-MM THK)	
M	11	1	**8T-4136**	2	BOLT (M10X1.5X25-MM)	
M	12	1	**8T-4191**	1	BOLT (M10X1.5X16-MM)	
	13	1	**8T-4224**	2	WASHER-HARD (8.8X16X2-MM THK)	

M-METRIC PART
Y-SEPARATE ILLUSTRATION

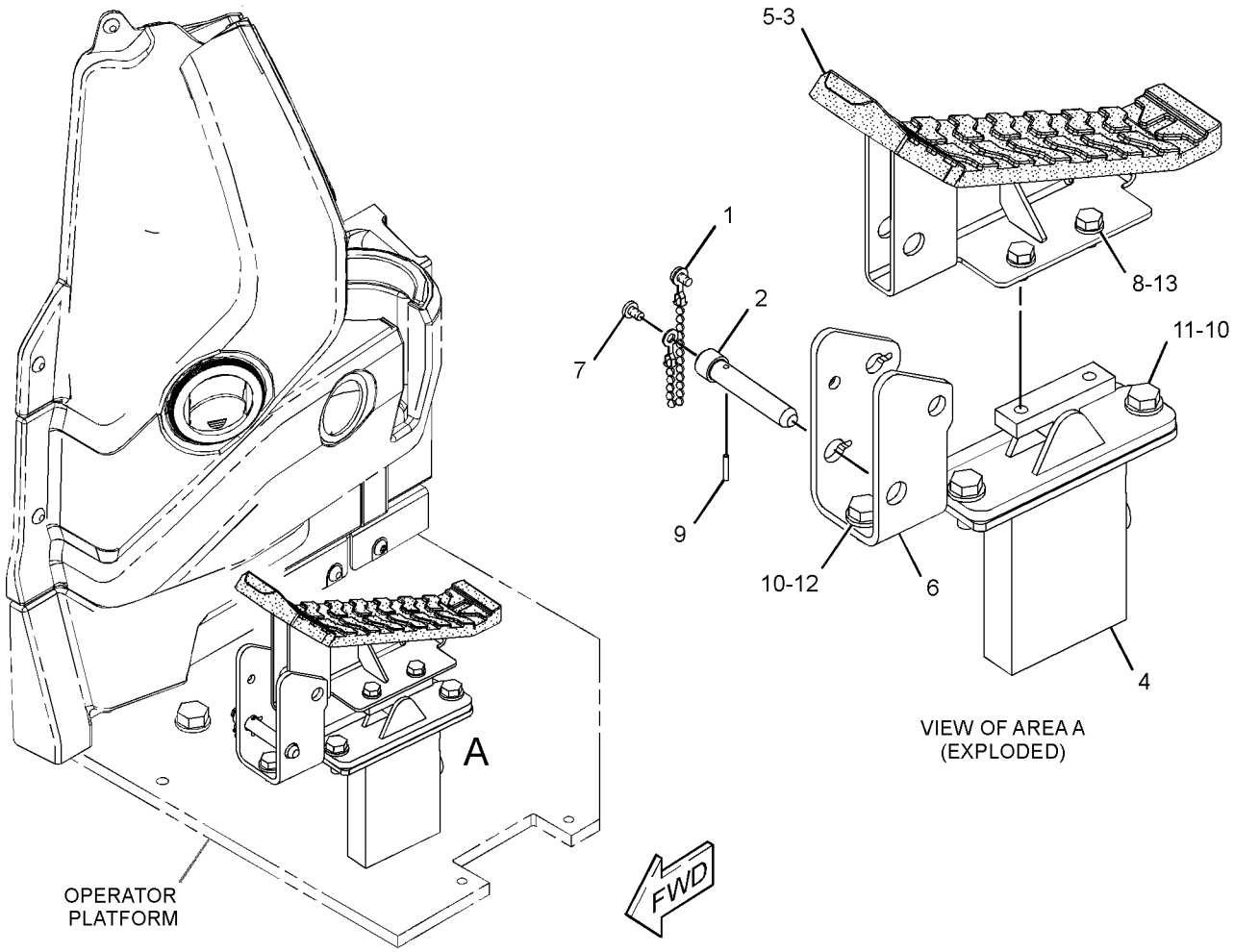

GRAPHIC #1 **<END>** g01954289

OPERATOR STATION

309-5808 CONTROL GP-PEDAL–ELECTRIC

S/N: MYG1-UP; PPN1-UP
PART OF 338-6943 CONTROL & MTG GP-PEDAL
AN ATTACHMENT

SMCS-1435, 5702 **i02981742**

NOTE	REF NO	GRAPHIC REF	PART NUMBER	QTY	PART NAME 1 2 3 4 5 6 (PRODUCT LEVEL)	SEE PAGE
	1	1	**8T-8737**	1	PLUG-SEAL	
	2	1	**9X-3401**	5	PIN-CONNECTOR (16-GA TO 18-GA)	
					–OR–	
		1	**126-1767**	5	PIN-CONNECTOR (14-GA)	
	3	1	**247-2693**	1	RECEPTACLE AS-CONNECTOR (6-PIN)	
	4	1	**247-5112**	1	BOOT	

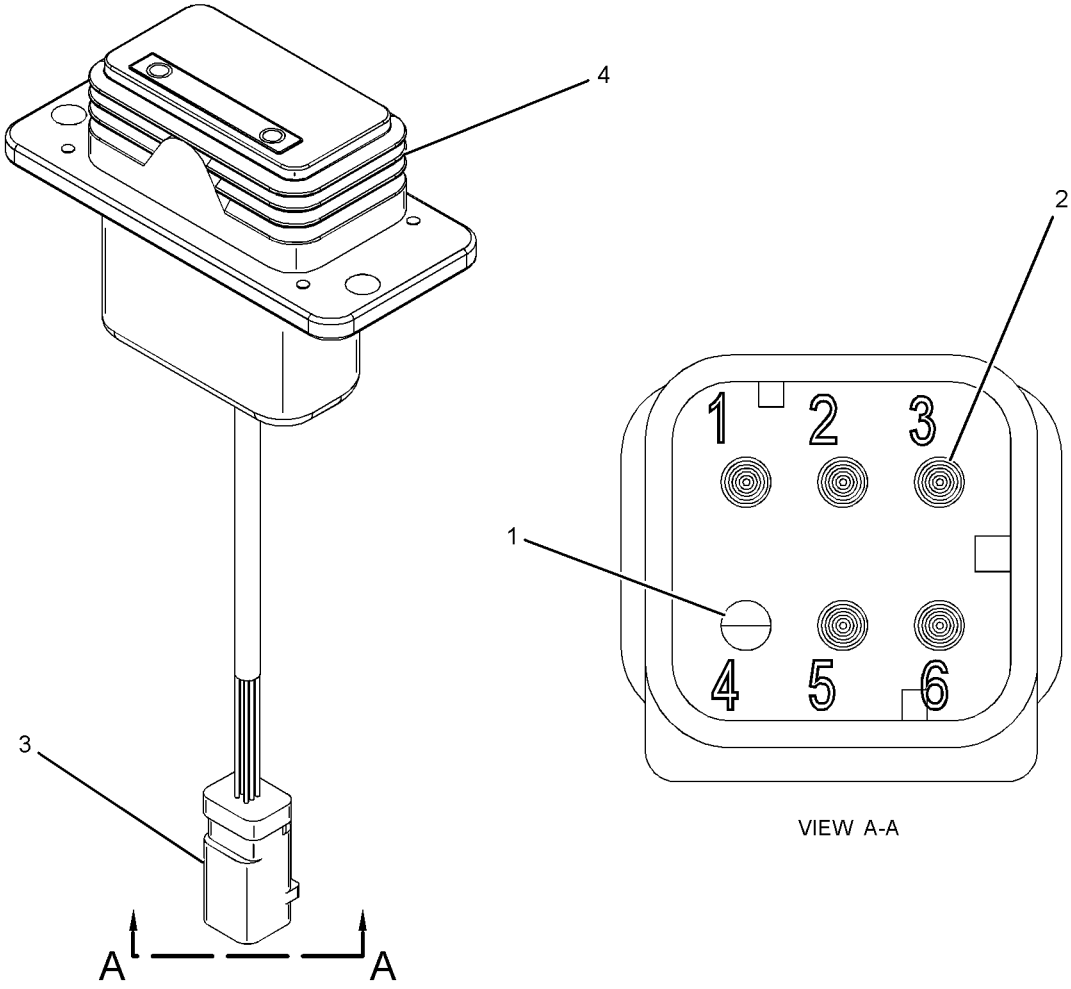

GRAPHIC #1 **<END>** g01219365

OPERATOR STATION

170-9497 CONTROL GP-PILOT OPERATED HYD–TRAVEL

S/N: MYG1-UP; PPN1-UP

PART OF 340-6485 OPERATOR AR

SMCS-5059 **i01893749**

NOTE	REF NO	GRAPHIC REF	PART NUMBER	QTY	PART NAME 1 2 3 4 5 6 (PRODUCT LEVEL)	SEE PAGE
	1	1	**096-6166**	2	WASHER-HARD (4.5X9X1-MM THK)	
M	2	1	**095-0728**	2	SCREW-MACHINE (M4X0.7X12-MM)	
	3	1	**8T-4121**	12	WASHER-HARD (11X21X2.5-MM THK)	
M	4	1	**8T-4136**	4	BOLT (M10X1.5X25-MM)	
M	5	1	**8T-4191**	8	BOLT (M10X1.5X16-MM)	
	6	1	**142-5546**	2	KNOB	
	7	1	**117-6356**	2	STEP AS	
	8	1	**122-9610**	2	STEP	
	9	1	**170-9499**	1	LEVER AS (LH)	
	10	1	**170-9498**	1	LEVER AS (RH)	
	11	1	**122-9608**	1	PEDAL-RUBBER (RH)	
	12	1	**117-6350**	1	PEDAL AS (RH)	
	13	1	**122-9609**	1	PEDAL-RUBBER (LH)	
	14	1	**117-6349**	1	PEDAL AS (LH)	

M-METRIC PART

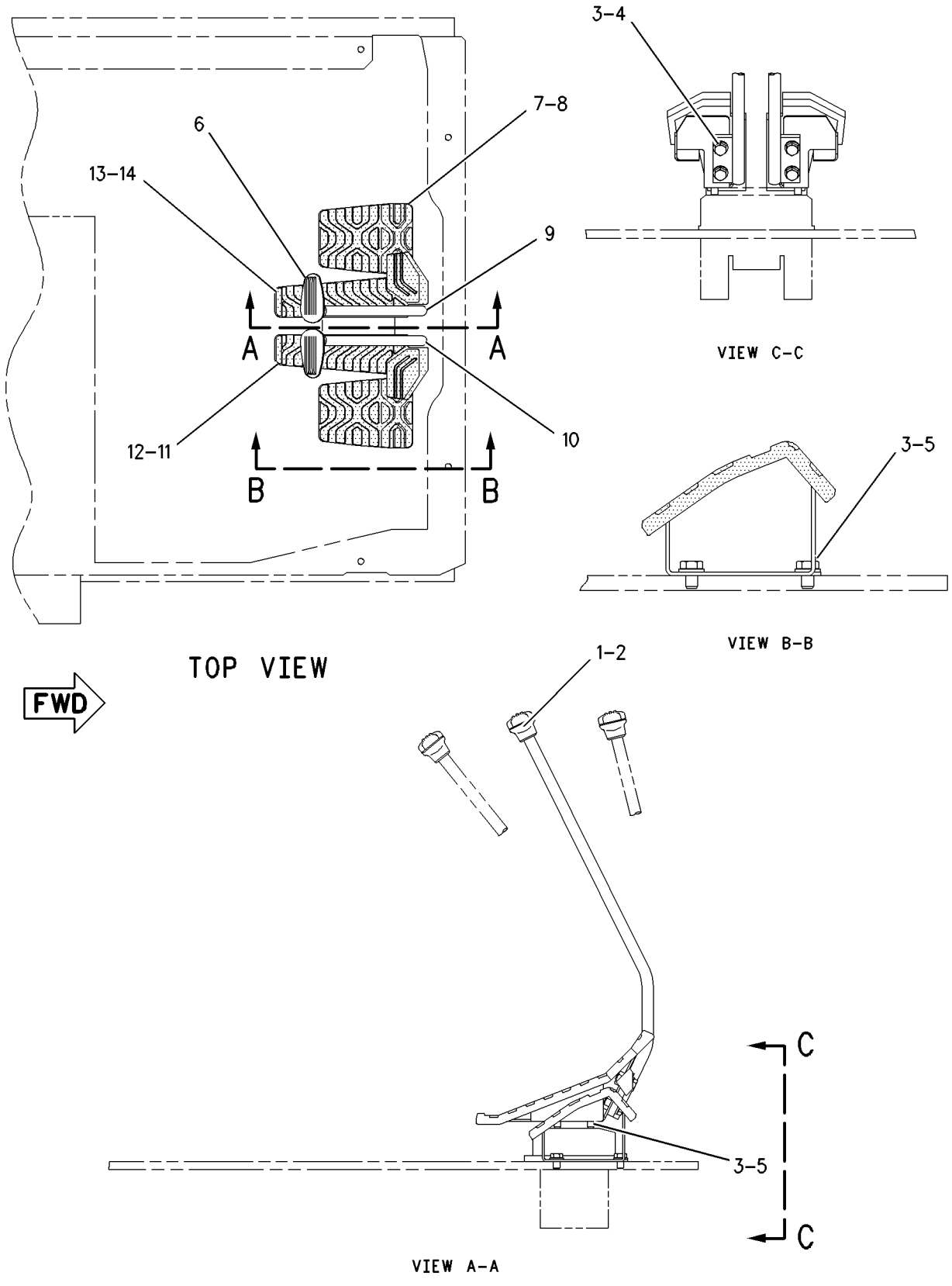

GRAPHIC #1 **<END>** g00985763

OPERATOR STATION

297-0538 CONTROL GP-PILOT OPERATED HYD–RH

S/N: MYG1-UP; PPN1-UP
PART OF 270-5689 CONTROL & MTG GP-JOYSTICK
AN ATTACHMENT

SMCS-5059 **i03278568**

NOTE	REF NO	GRAPHIC REF	PART NUMBER	QTY	PART NAME 1 2 3 4 5 6 (PRODUCT LEVEL)	SEE PAGE
	1	1	**6K-0806**	1	STRAP-CABLE	
Y	2	1	**260-2109**	1	CONTROL GP-HANDLE (JOYSTICK, RH)	871
Y	3	1	**297-0530**	1	VALVE GP-PILOT (JOYSTICK, RH)	668

Y-SEPARATE ILLUSTRATION

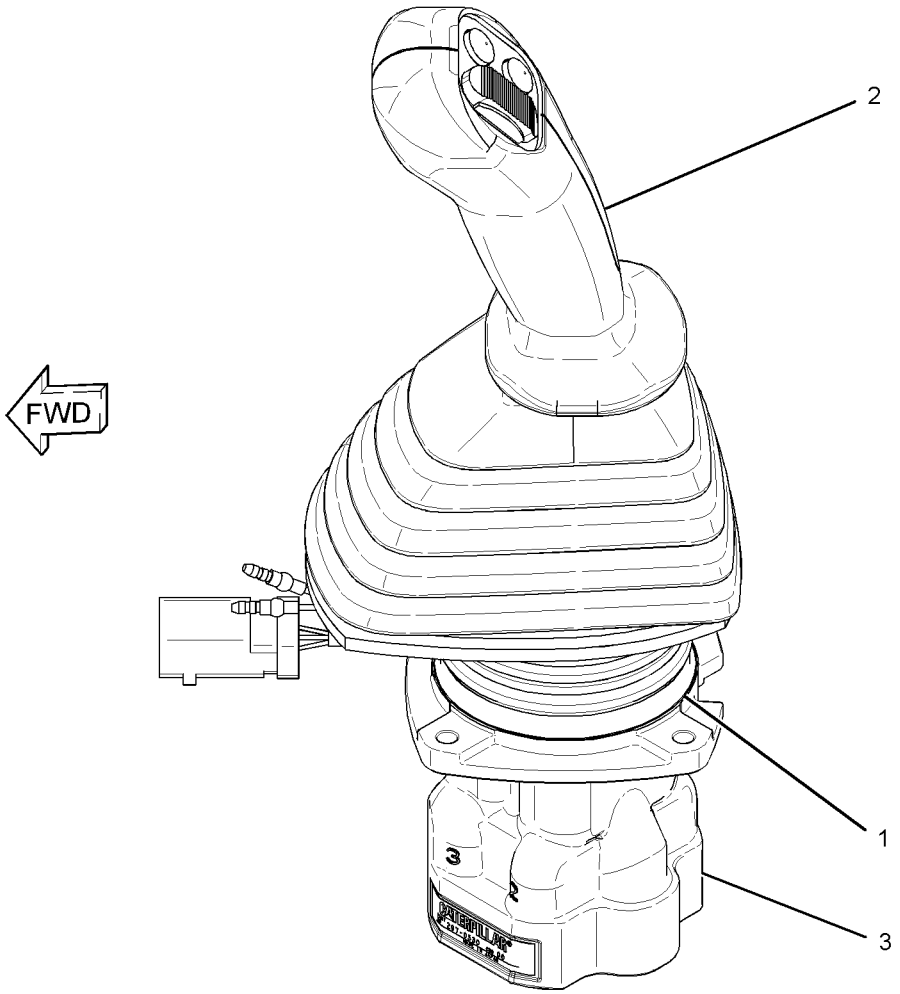

GRAPHIC #1 **<END>** g01620126

OPERATOR STATION

297-0539 CONTROL GP-PILOT OPERATED HYD—LH

S/N: MYG1-UP; PPN1-UP
PART OF 270-5689 CONTROL & MTG GP-JOYSTICK
AN ATTACHMENT

SMCS-5059 **i03278420**

NOTE	REF NO	GRAPHIC REF	PART NUMBER	QTY	PART NAME 1 2 3 4 5 6 (PRODUCT LEVEL)	SEE PAGE
	1	1	**6K-0806**	1	STRAP-CABLE	
Y	2	1	**260-2110**	1	CONTROL GP-HANDLE (JOYSTICK, LH)	872
Y	3	1	**297-0531**	1	VALVE GP-PILOT (JOYSTICK, LH)	670

Y-SEPARATE ILLUSTRATION

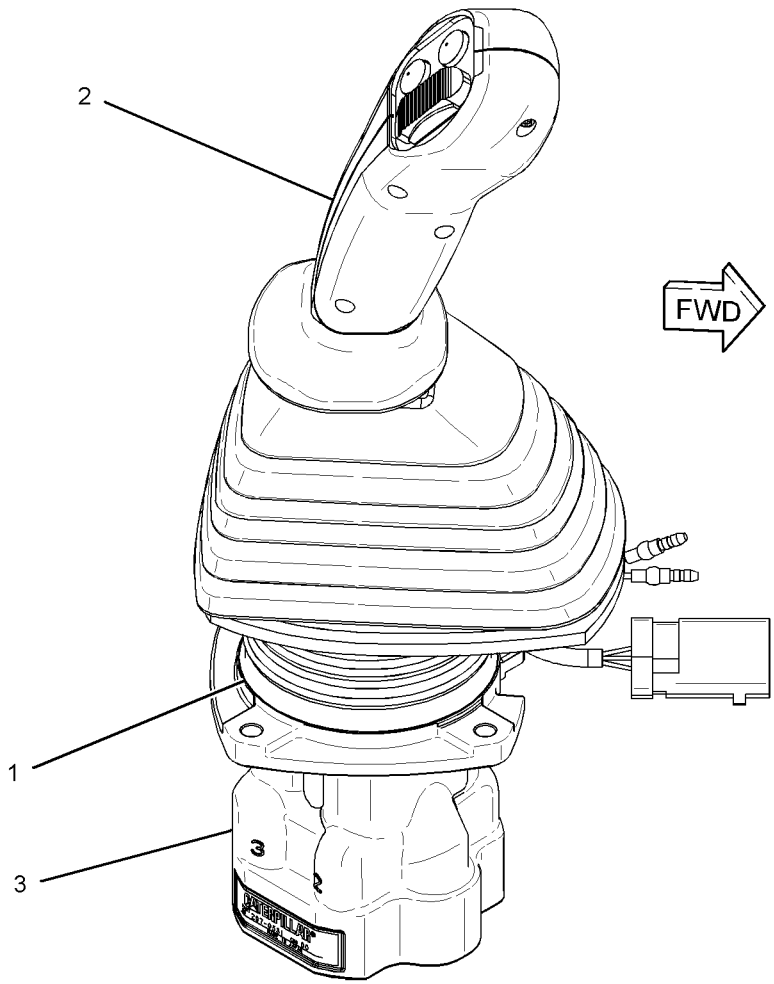

GRAPHIC #1 **<END>** g01620119

OPERATOR STATION

297-0540 CONTROL GP-PILOT OPERATED HYD–RH

S/N: MYG1-UP; PPN1-UP
PART OF 270-5690 CONTROL & MTG GP-JOYSTICK
AN ATTACHMENT

SMCS-5059 **i03395523**

NOTE	REF NO	GRAPHIC REF	PART NUMBER	QTY	PART NAME 1 2 3 4 5 6 (PRODUCT LEVEL)	SEE PAGE
	1	1	**6K-0806**	1	STRAP-CABLE	
Y	2	1	**260-2127**	1	CONTROL GP-HANDLE (JOYSTICK, RH)	873
Y	3	1	**297-0530**	1	VALVE GP-PILOT (JOYSTICK, RH)	668

Y-SEPARATE ILLUSTRATION

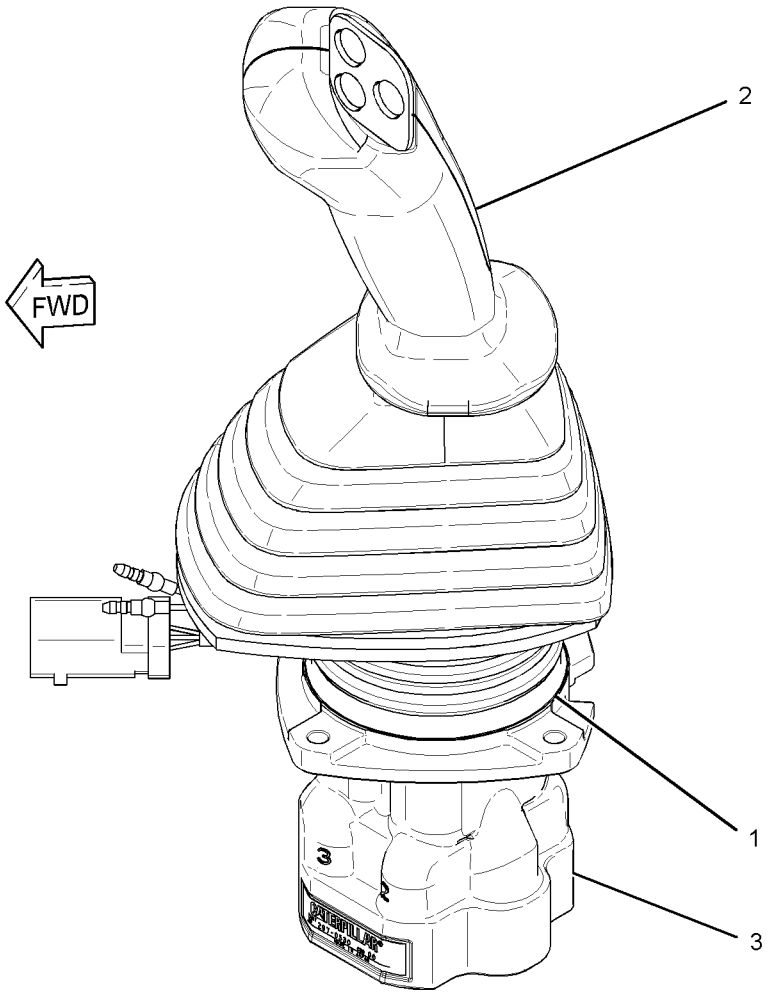

GRAPHIC #1 **<END>** g01620085

297-0541 CONTROL GP-PILOT OPERATED HYD–LH

S/N: MYG1-UP; PPN1-UP
PART OF 270-5690 CONTROL & MTG GP-JOYSTICK
AN ATTACHMENT

SMCS-5059 **i03395640**

NOTE	REF NO	GRAPHIC REF	PART NUMBER	QTY	PART NAME 1 2 3 4 5 6 (PRODUCT LEVEL)	SEE PAGE
	1	1	**6K-0806**	1	STRAP-CABLE	
Y	2	1	**260-2128**	1	CONTROL GP-HANDLE (JOYSTICK, LH)	874
Y	3	1	**297-0531**	1	VALVE GP-PILOT (JOYSTICK, LH)	670

Y-SEPARATE ILLUSTRATION

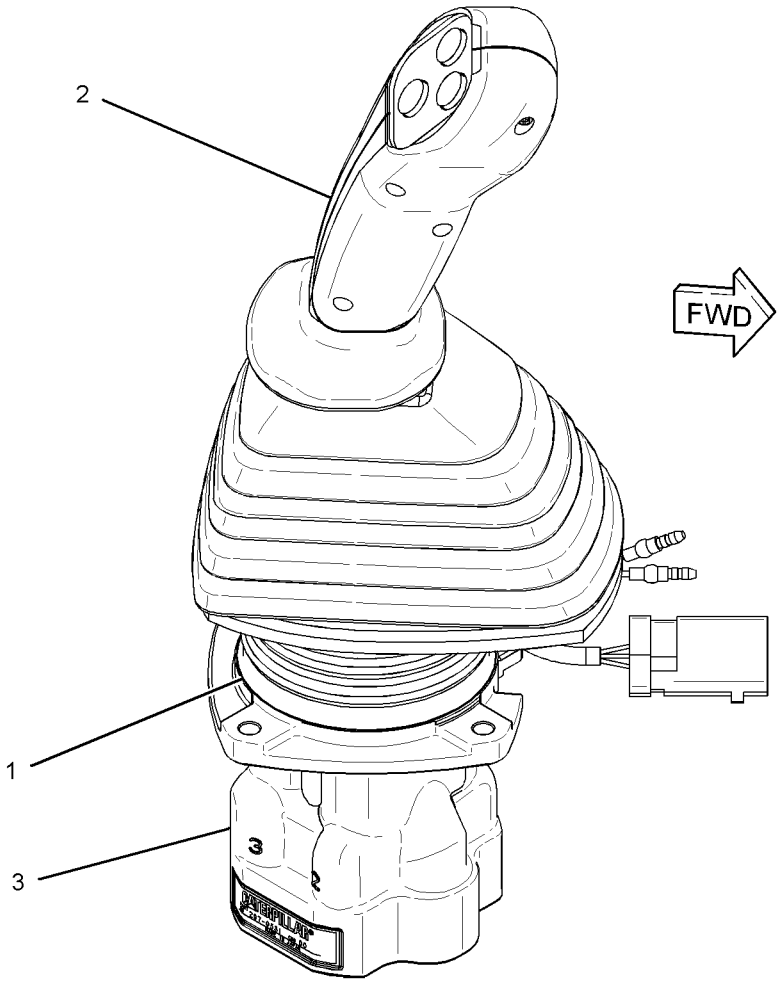

GRAPHIC #1 **<END>** g01620033

OPERATOR STATION

234-6501 COVER GP-CAB–REAR

S/N: MYG1-UP; PPN1-UP
PART OF 340-6600, 340-6606 CAB GP
AN ATTACHMENT

SMCS-7301, 7308 **i03711500**

NOTE	REF NO	GRAPHIC REF	PART NUMBER	QTY	PART NAME 1 2 3 4 5 6 (PRODUCT LEVEL)	SEE PAGE
	1	1	**234-6499**	1	COVER AS	
	2	1	**234-6502**	1	COVER-ACCESS (FUSE-REAR PANEL)	
	3	1	**234-6593**	2	FASTENER	
					(USE WITH COVER WITH A 9-MM DIAMETER UPPER MOUNTING HOLE)	
					–OR–	
			245-7929	2	CLIP	
					(USE WITH COVER WITH A 7.6-MM DIAMETER UPPER MOUNTING HOLE)	

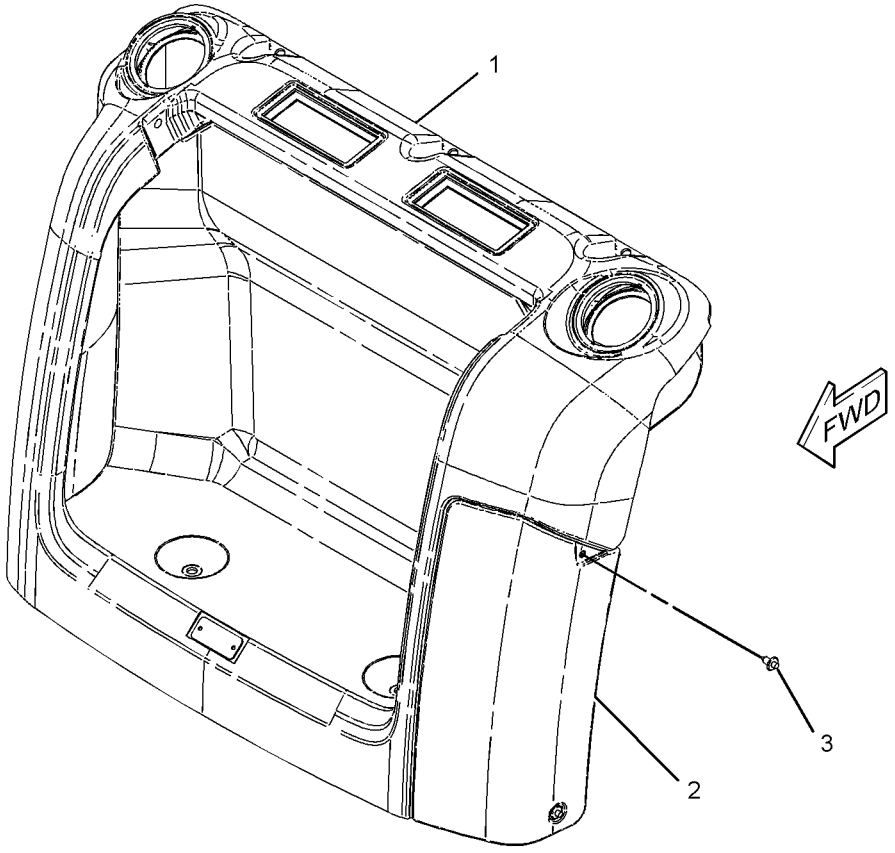

GRAPHIC #1 **<END>** g01998793

OPERATOR STATION

334-6568 COVER GP-CAB—EXTERIOR

S/N: MYG1-UP; PPN1-UP
PART OF 334-6541 CAB GP
AN ATTACHMENT

SMCS-7301, 7308 **i03664195**

NOTE	REF NO	GRAPHIC REF	PART NUMBER	QTY	PART NAME 1 2 3 4 5 6 (PRODUCT LEVEL)	SEE PAGE
M	1	1	**171-7325**	11	SCREW-TAPPING (M5X0.8-THD)	
J	2	1	**267-7064**	1	LOCK AS	
	3	1	**340-6582**	2	HINGE	
	4	1	**340-6583**	1	COVER	
	5	1	**340-6584**	1	SEAL	
	6	1	**340-6585**	2	SEAL-RUBBER	

J-REQUIRES CORPORATE KEY
M-METRIC PART

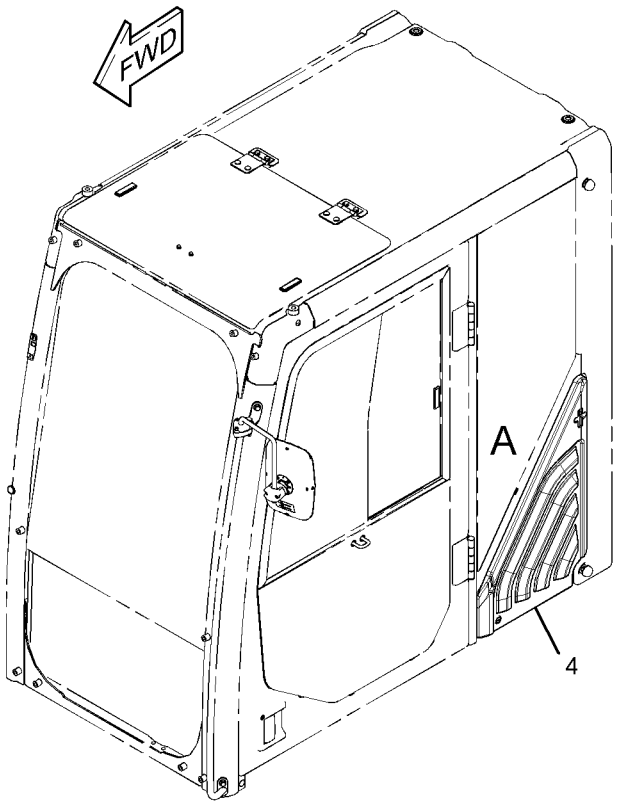

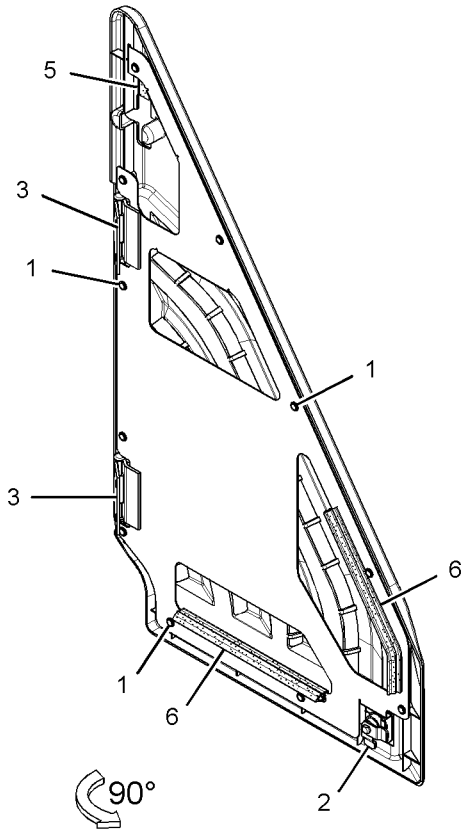

VIEW OF AREA A

GRAPHIC #1 **<END>** g01963875

OPERATOR STATION

234-6500 COVER GP-STORAGE—CAB, REAR

S/N: MYG1-UP; PPN1-UP

PART OF 345-7497, 345-7498, 345-7499 OPTION AR-CONFIGURATION

AN ATTACHMENT

SMCS-7268 **i02108928**

NOTE	REF NO	GRAPHIC REF	PART NUMBER	QTY	PART NAME 1 2 3 4 5 6 (PRODUCT LEVEL)	SEE PAGE
					(NO SERVICED PARTS)	

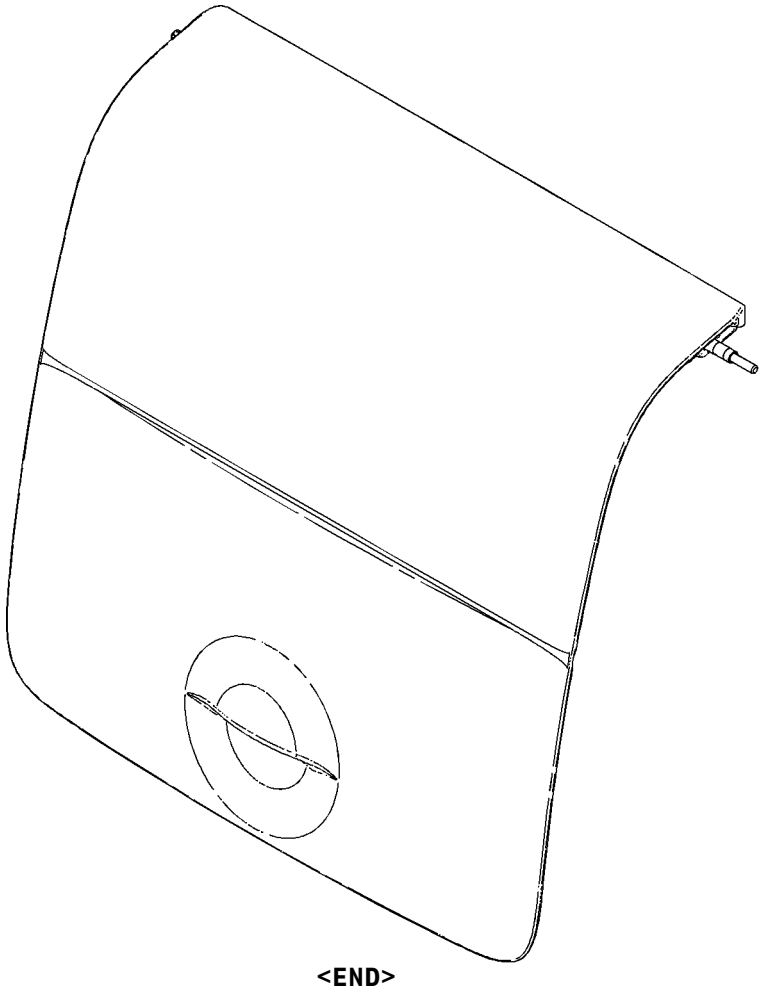

GRAPHIC #1 **<END>** g01092876

OPERATOR STATION

334-6387 DOOR GP-CAB

S/N: MYG1-UP; PPN1-UP
PART OF 340-6601, 340-6607 CAB GP
AN ATTACHMENT

SMCS-7308 **i03662846**

NOTE	REF NO	GRAPHIC REF	PART NUMBER	QTY	PART NAME 1 2 3 4 5 6 (PRODUCT LEVEL)	SEE PAGE
	1	1	**151-6703**	1	HANDLE-PULL	
	2	1	**151-6704**	2	CAP (HANDLE)	
	3	1	**161-3639**	1	HANDLE AS	
	4	1	**164-0515**	1	JOINT	
	5	1	**167-7039**	1	GROMMET	
	6	1	**178-5574**	2	SPACER	
M	7	1	**185-8180**	3	SCREW (M6X1X16-MM)	
	8	1	**8T-4224**	2	WASHER-HARD (8.8X16X2-MM THK)	
	9	1	**259-7354**	1	COVER	
Y	10	1	**334-6513**	1	WINDOW GP-DOOR	966
	11	1	**334-6526**	2	SPACER	
	12	1	**334-6527**	2	SPACER	
	13	1	**334-6528**	1	SEAL AS (DOOR)	
		1	**151-9497**	23	CLIP	
		1	**334-6530**	3	CLIP	
	14	1	**334-6531**	1	SEAL AS (DOOR)	
		1	**334-6530**	5	CLIP	
	15	1	**334-6533**	1	GLASS	
	16	1	**334-6534**	1	HOOK	
	17	1	**334-6535**	1	LATCH AS	
		1	**164-0514**	1	CLIP	
		1	**164-0519**	1	CLIP	
	18	1	**334-6536**	1	COVER	
	19	1	**334-6537**	1	HANDLE AS	
		1	**201-4391**	1	CLIP	
	20	1	**334-6538**	1	BUSHING-RUBBER	
M	21	1	**096-2622**	2	SCREW-MACHINE (M4X0.7X8-MM)	
M	22	1	**096-3884**	2	NUT-SPRING	
M	23	1	**101-8899**	2	SCREW AS (M6X1X16-MM)	
M	24	1	**101-8900**	2	SCREW AS (M6X1X20-MM)	
	25	1	**151-9461**	2	SPACER	
	26	1	**156-6644**	2	COVER	
	27	1	**178-5573**	4	SPACER	
	28	1	**189-2690**	1	HANDLE AS	
	29	1	**4I-4286**	1	KNOB (HANDLE)	
M	30	1	**9X-2042**	8	SCREW-TRUSS HEAD (M6X1X12-MM)	

M-METRIC PART
Y-SEPARATE ILLUSTRATION

334-6387 DOOR GP-CAB *(contd.)* i03662846

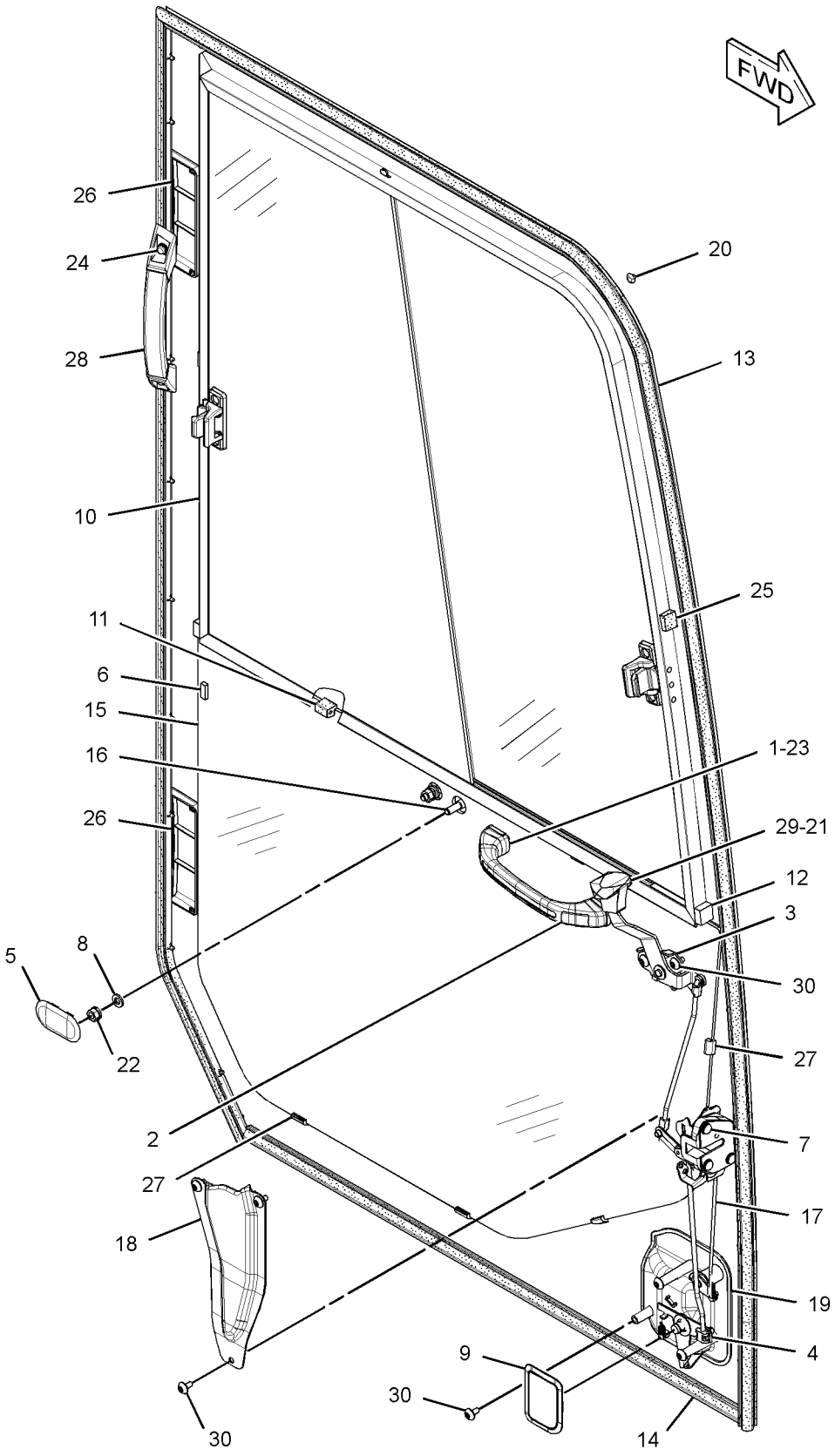

GRAPHIC #1 **<END>** g01961216

OPERATOR STATION

340-6524 DUCT GP-CAB AIR

S/N: MYG1-UP; PPN1-UP
PART OF 340-6526 AIR CONDITIONER AR
AN ATTACHMENT

SMCS-734D **i03661506**

NOTE	REF NO	GRAPHIC REF	PART NUMBER	QTY	PART NAME 1 2 3 4 5 6 (PRODUCT LEVEL)	SEE PAGE
M	1	1	**128-2135**	4	SCREW-TRUSS HEAD (M6X1X13-MM)	
	2	1	**235-8878**	1	DUCT AS (VENT, FRONT)	
		1	**245-7793**	1	INSULATOR	
	3	1	**235-8879**	1	DUCT AS (FLOOR)	
		1	**245-7873**	1	INSULATOR	
Y	4	1	**346-7437**	1	SUPPORT AS (FILTER)	950
	5	1	**327-6618**	1	FILTER ELEMENT-CAB AIR (AIR INTAKE)	
	6	1	**342-3456**	1	DUCT AS-VENT	
		1	**342-3458**	1	INSULATOR	
	7	1	**342-3459**	1	DUCT-AIR	
	8	1	**176-1996**	3	CLIP	

M-METRIC PART
Y-SEPARATE ILLUSTRATION

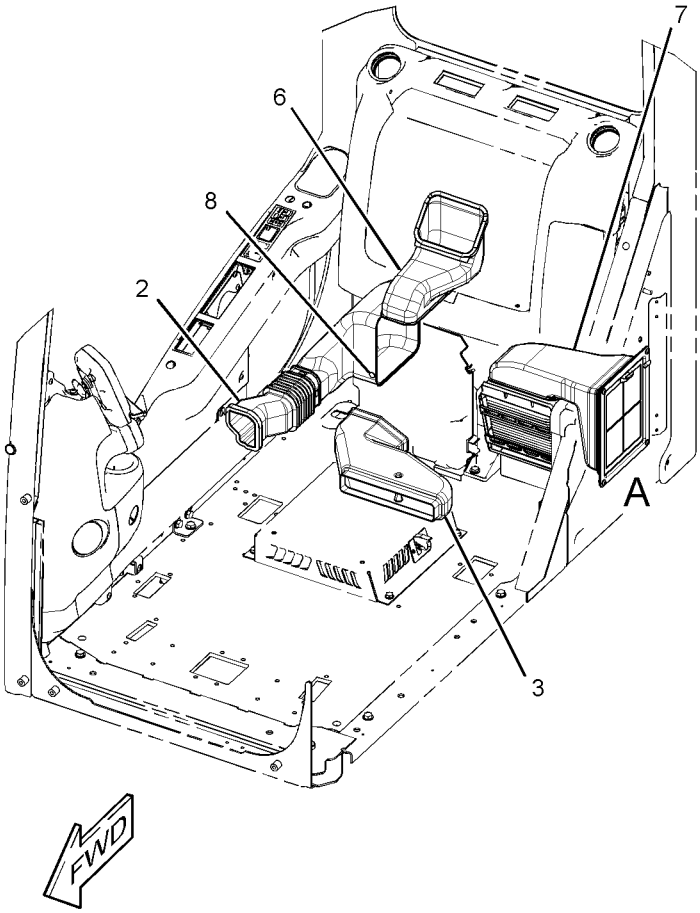

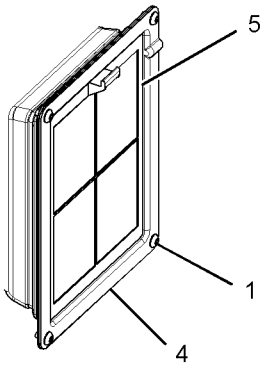

VIEW OF AREA A

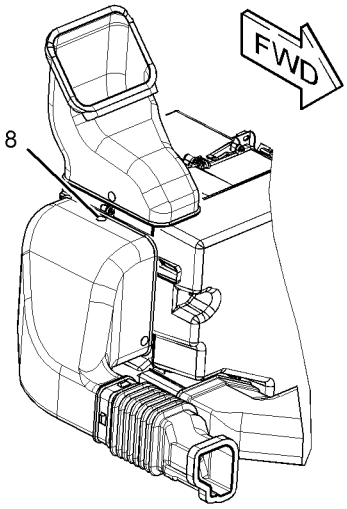

GRAPHIC #1 **<END>** g01952464

OPERATOR STATION

340-6488 FLOOR MAT

S/N: MYG1-UP; PPN1-UP
PART OF 345-7571, 348-8126, 352-2663 DISTRIBUTION AR
FIELD REPLACEMENT FOR 340-6489—PAGE 891, 340-6490—PAGE 892, 342-3536—PAGE 894
AN ATTACHMENT AND FIELD INSTALLATION

SMCS-726M **i03666184**

NOTE	REF NO	GRAPHIC REF	PART NUMBER	QTY	PART NAME 1 2 3 4 5 6 (PRODUCT LEVEL)	SEE PAGE
					(NO SERVICED PARTS)	

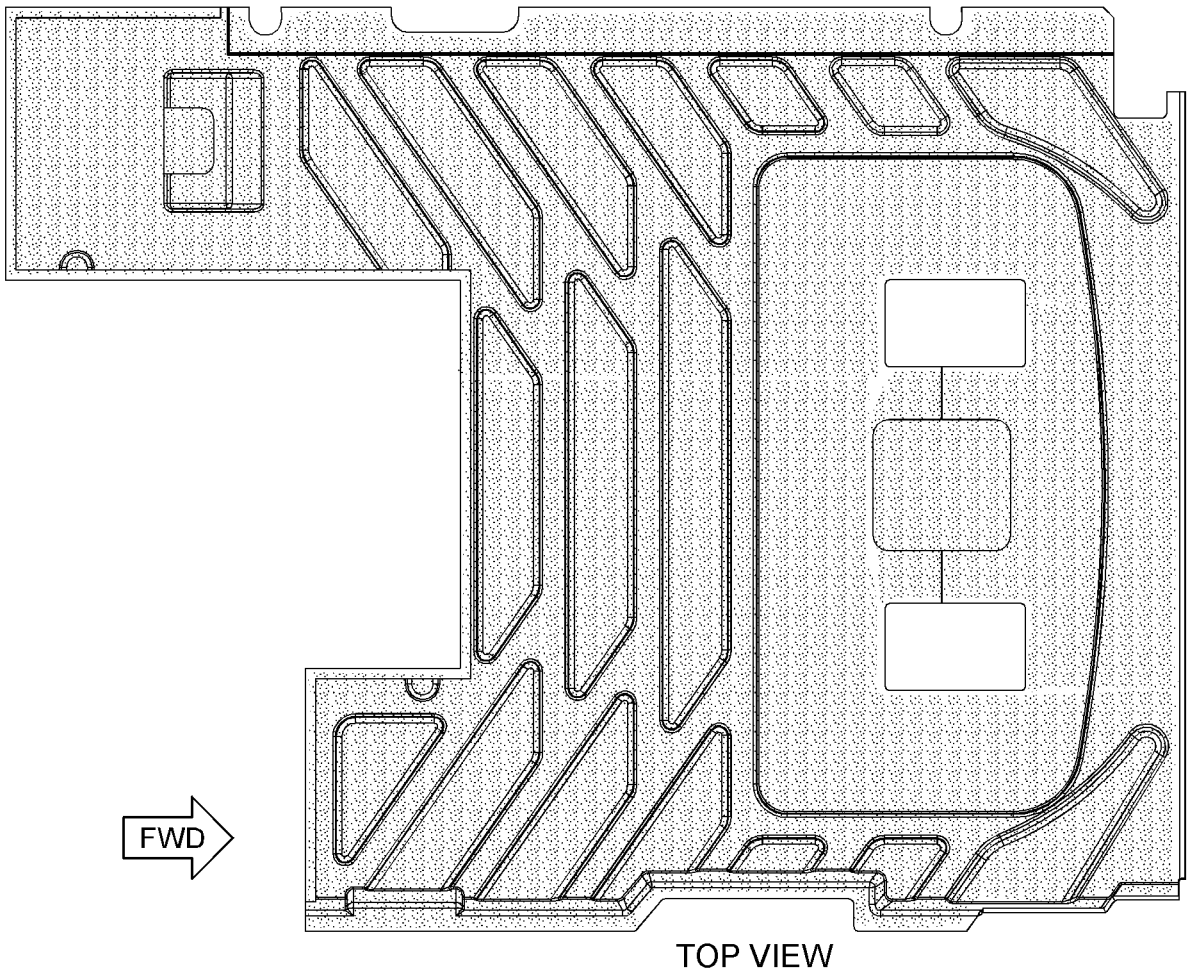

TOP VIEW

GRAPHIC #1 **<END>** g01961113

340-6489 FLOOR MAT–PEDAL, RH

S/N: MYG1-UP; PPN1-UP
PART OF 347-0286 PEDAL AR-AUXILIARY
FIELD REPLACEMENT ORDER 340-6488–PAGE 890
AN ATTACHMENT

SMCS-726M **i03665542**

NOTE	REF NO	GRAPHIC REF	PART NUMBER	QTY	PART NAME 1 2 3 4 5 6 (PRODUCT LEVEL)	SEE PAGE
					(NO SERVICED PARTS)	

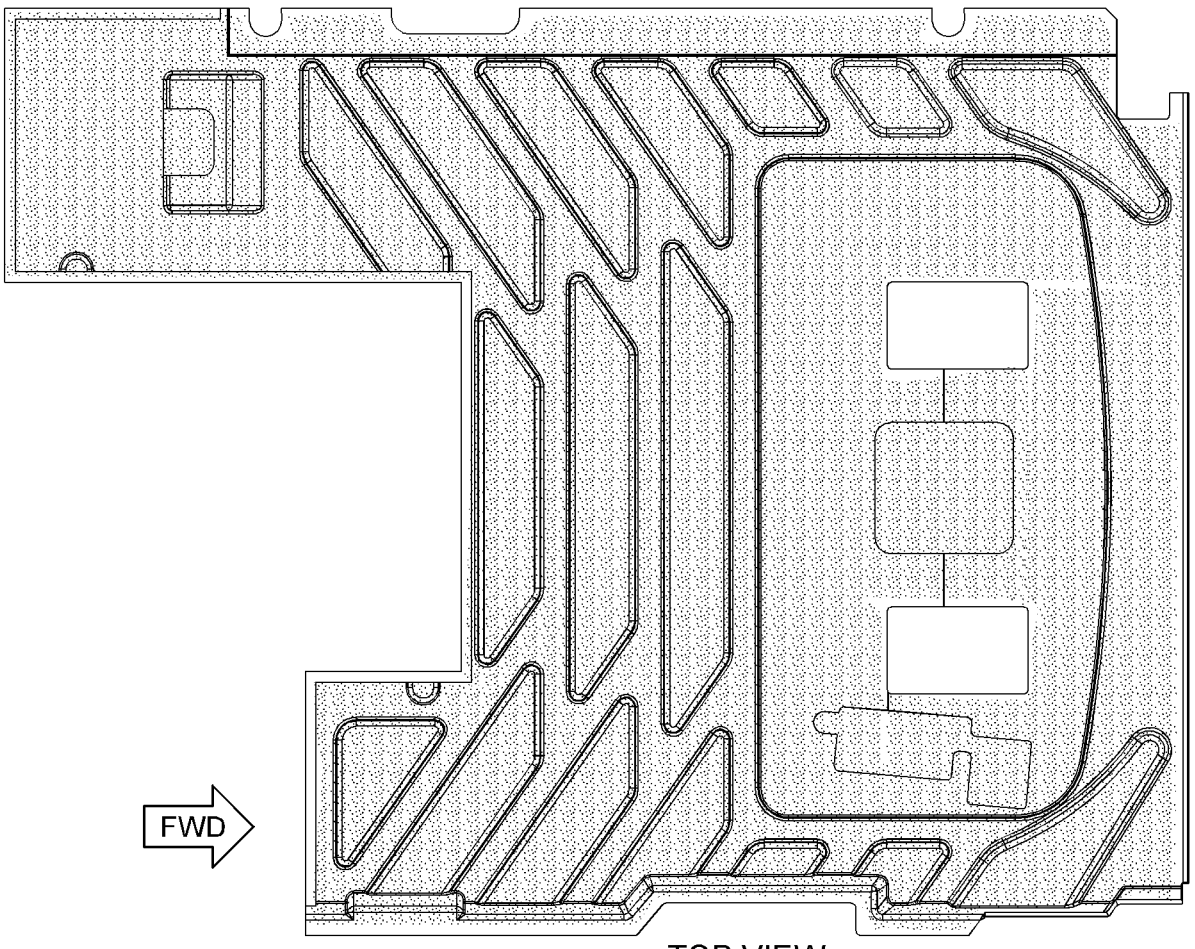

TOP VIEW

GRAPHIC #1 **<END>** g01961156

OPERATOR STATION

340-6490 FLOOR MAT

S/N: MYG1-UP; PPN1-UP
PART OF 347-0288 PEDAL AR-AUXILIARY
FIELD REPLACEMENT ORDER 340-6488—PAGE 890
AN ATTACHMENT

SMCS-726M **i03665541**

NOTE	REF NO	GRAPHIC REF	PART NUMBER	QTY	PART NAME 1 2 3 4 5 6 (PRODUCT LEVEL)	SEE PAGE
					(NO SERVICED PARTS)	

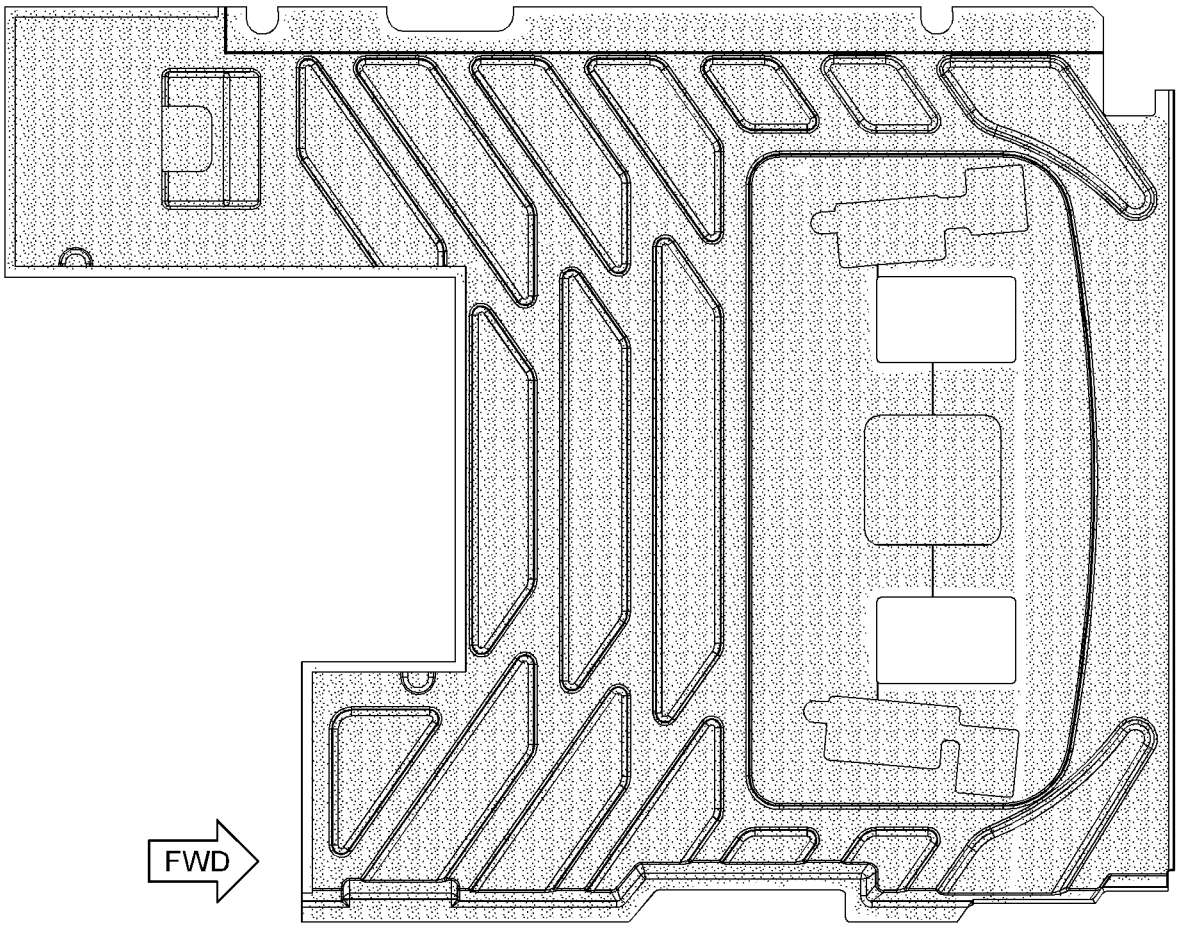

TOP VIEW

GRAPHIC #1 **<END>** g01960983

OPERATOR STATION

340-6493 FLOOR MAT

S/N: MYG1-UP; PPN1-UP
PART OF 347-0290 PEDAL AR-AUXILIARY
AN ATTACHMENT

SMCS-726M **i03666181**

NOTE	PART NUMBER	QTY	PART NAME 1 2 3 4 5 6 (PRODUCT LEVEL)	SEE PAGE
			(NO SERVICED PARTS)	

<END>

OPERATOR STATION

342-3536 FLOOR MAT—ACCUGRADE READY

S/N: MYG1-UP; PPN1-UP
PART OF 348-5467 PEDAL AR-AUXILIARY
FIELD REPLACEMENT ORDER 340-6488—PAGE 890
AN ATTACHMENT

SMCS-726M **i03665540**

NOTE	REF NO	GRAPHIC REF	PART NUMBER	QTY	PART NAME 1 2 3 4 5 6 (PRODUCT LEVEL)	SEE PAGE
					(NO SERVICED PARTS)	

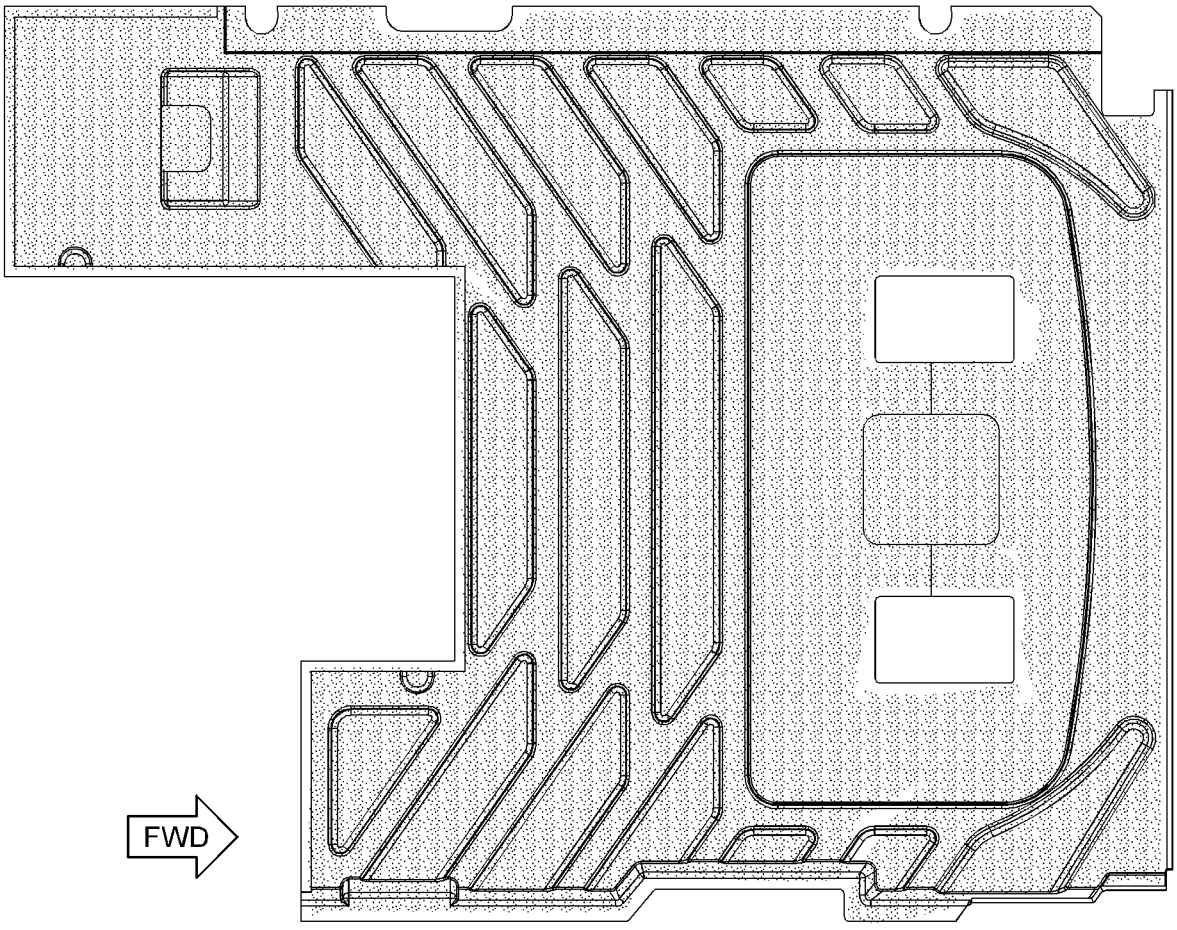

TOP VIEW

GRAPHIC #1 **<END>** g01960332

OPERATOR STATION

340-6486 GUARD AR-OVERHEAD—FALLING OBJECT

S/N: MYG1-UP; PPN1-UP
PART OF 347-0297 INSTALLATION AR-CAB
AN ATTACHMENT

SMCS-7159 **i03661480**

NOTE	PART NUMBER	QTY	PART NAME 1 2 3 4 5 6 (PRODUCT LEVEL)	SEE PAGE
Y	*336-1196*	1	GUARD GP-OVERHEAD	896
Y	*316-8831*	1	GUARD GP-WINDOW	897

Y-SEPARATE ILLUSTRATION

<END>

OPERATOR STATION

336-1196 GUARD GP-OVERHEAD

S/N: MYG1-UP; PPN1-UP
PART OF 340-6486 GUARD AR-OVERHEAD
AN ATTACHMENT

SMCS-7159 **i03661500**

NOTE	REF NO	GRAPHIC REF	PART NUMBER	QTY	PART NAME 1 2 3 4 5 6 (PRODUCT LEVEL)	SEE PAGE
	1	1	**219-0305**	1	FILM-WARNING (NO WELD, NO DRILL, READ OMM)	
M	2	1	**8T-4137**	2	BOLT (M10X1.5X20-MM)	
	3	1	**9X-8257**	4	WASHER (17.5X30X3.5-MM THK)	
	4	1	**336-1197**	1	GUARD AS	
	5	1	**349-5364**	1	BRACKET AS	
M	6	1	**7X-2475**	4	BOLT (M16X2X130-MM)	
	7	1	**8T-4121**	2	WASHER-HARD (11X21X2.5-MM THK)	

M-METRIC PART

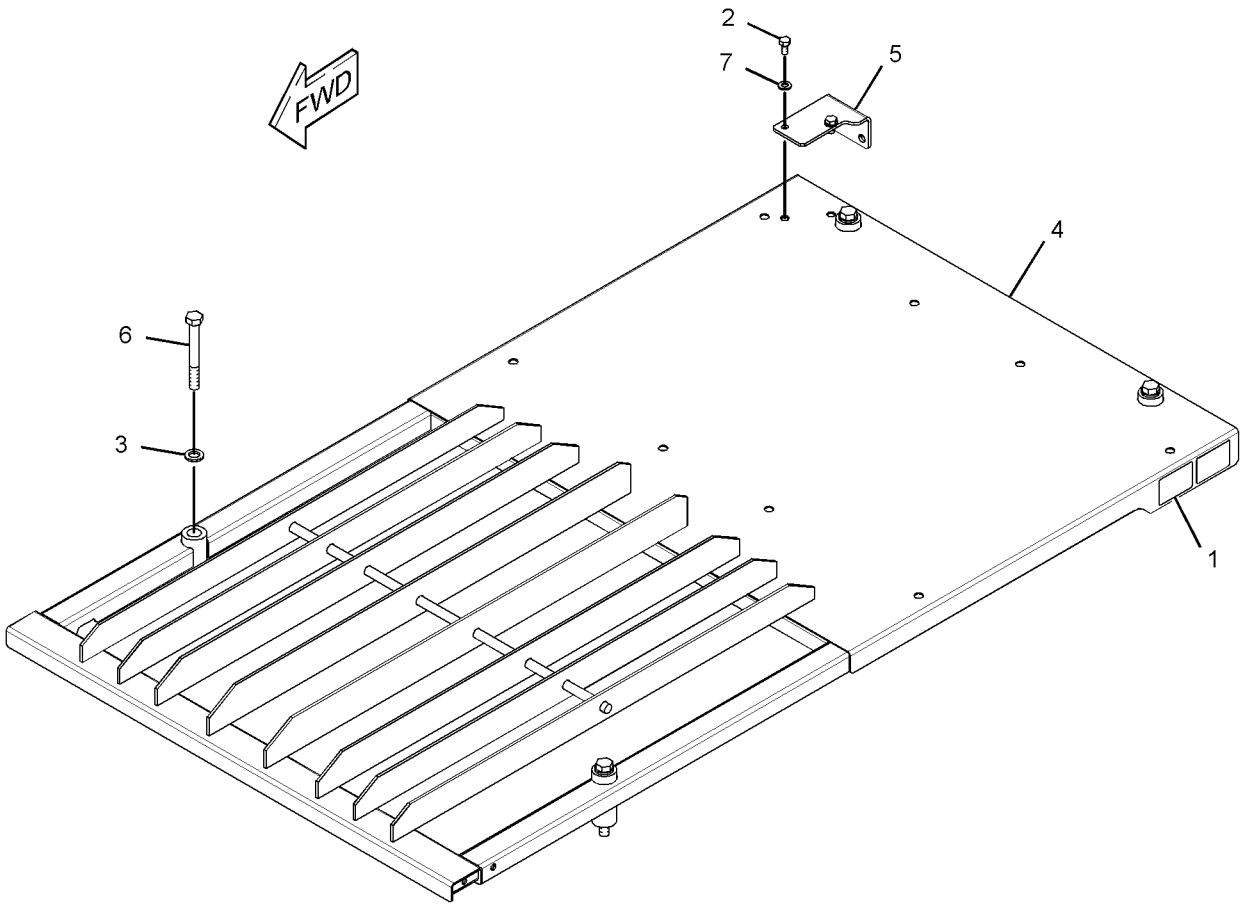

GRAPHIC #1 **<END>** g01971538

OPERATOR STATION

316-8831 GUARD GP-WINDOW

S/N: MYG1-UP; PPN1-UP
PART OF 340-6486 GUARD AR-OVERHEAD
AN ATTACHMENT

SMCS-7182, 7315 **i03661481**

NOTE	REF NO	GRAPHIC REF	PART NUMBER	QTY	PART NAME 1 2 3 4 5 6 (PRODUCT LEVEL)	SEE PAGE
	1	1	**5D-4822**	4	RING-RETAINING	
	2	1	**6I-5976**	4	SHIM (1-MM THK)	
	3	1	**7Y-8561**	2	BUMPER	
	4	1	**8Y-5745**	2	LATCH AS	
	5	1	**102-7688**	2	KNOB	
	7	1	**201-4534**	2	PIN	
	8	1	**336-1159**	1	SUPPORT AS	
	9	1	**336-1160**	1	SUPPORT AS	
	10	1	**336-1161**	1	GUARD AS	
	11	1	**336-1163**	2	BRACKET AS	
	12	1	**346-7367**	1	PEDAL AS	
	13	1	**346-7370**	1	PEDAL AS	
	14	1	**342-3715**	1	BRACKET AS	
	15	1	**342-3717**	1	BRACKET AS	
	16	1	**342-3723**	2	SPRING AS-GAS (WINDOW)	
M	17	1	**6V-7357**	8	BOLT (M6X1X25-MM)	
M	18	1	**7Y-0623**	2	LOCKNUT (M16X2-THD)	
	19	1	**8T-4121**	12	WASHER-HARD (11X21X2.5-MM THK)	
M	20	1	**8T-4133**	2	NUT (M10X1.5-THD)	
M	21	1	**8T-4136**	2	BOLT (M10X1.5X25-MM)	
M	22	1	**8T-4195**	8	BOLT (M10X1.5X30-MM)	
	23	1	**9X-6165**	2	WASHER (6.5X22X2.5-MM THK)	
	24	1	**9X-8256**	6	WASHER (6.6X12X2-MM THK)	
	25	1	**9X-8257**	2	WASHER (17.5X30X3.5-MM THK)	
	26	1	**219-0305**	1	FILM-WARNING (NO WELD, NO DRILL, READ OMM)	

M-METRIC PART

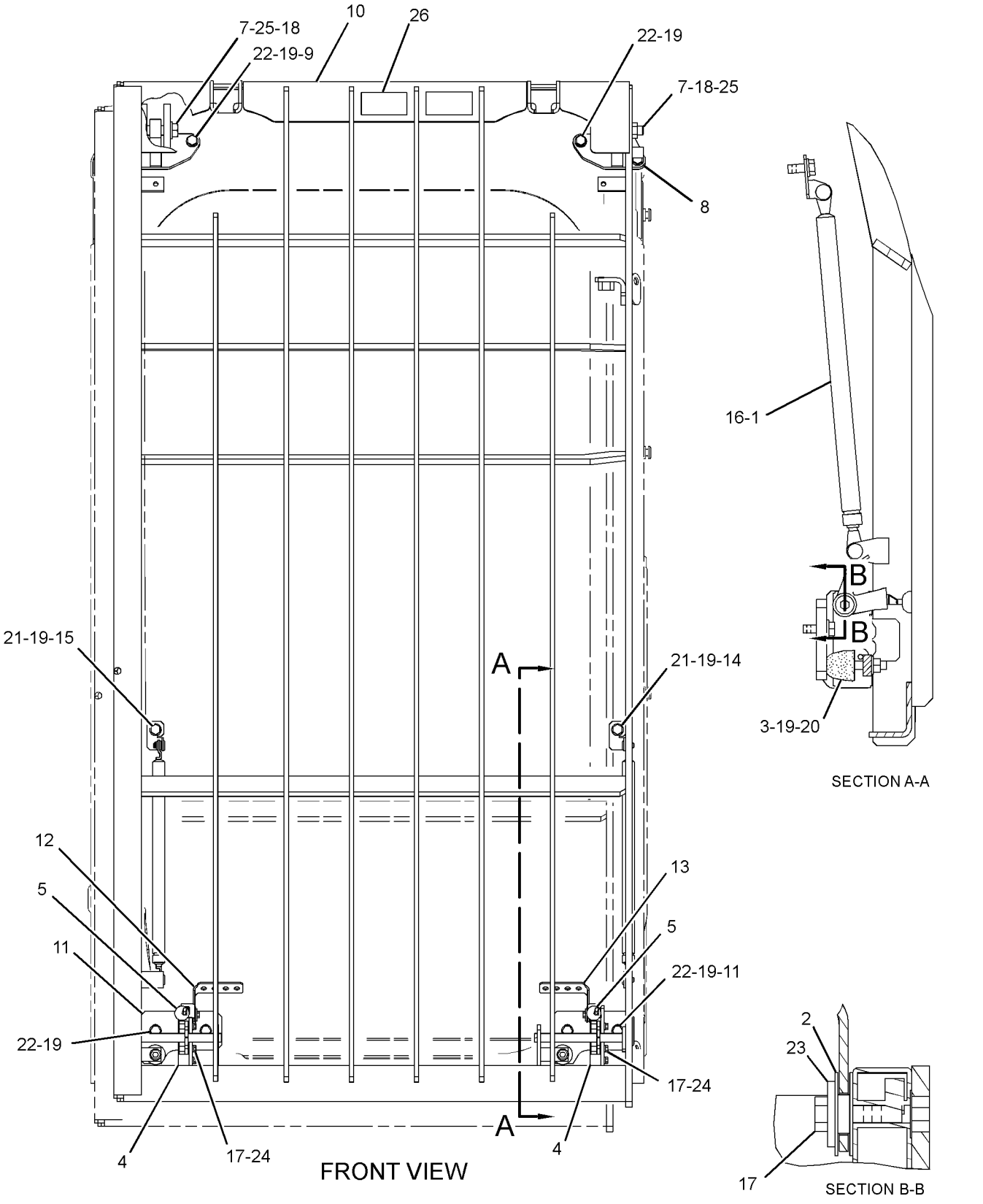

GRAPHIC #1 **<END>** g01982913

OPERATOR STATION

316-8837 GUARD GP-WINDOW

S/N: MYG1-UP; PPN1-UP
PART OF 347-0361 INSTALLATION AR-CAB
AN ATTACHMENT

SMCS-7182, 7315 **i03669004**

NOTE	REF NO	GRAPHIC REF	PART NUMBER	QTY	PART NAME 1 2 3 4 5 6 (PRODUCT LEVEL)	SEE PAGE
	1	1	**5D-4822**	4	RING-RETAINING	
	2	1	**6I-5976**	4	SHIM (1-MM THK)	
	3	1	**7Y-8561**	2	BUMPER	
	4	1	**8Y-5745**	2	LATCH AS	
	5	1	**102-7688**	2	KNOB	
	7	1	**201-4534**	2	PIN	
	8	1	**336-1159**	1	SUPPORT AS	
	9	1	**336-1160**	1	SUPPORT AS	
	10	1	**336-1163**	2	BRACKET AS	
	11	1	**340-6511**	1	GUARD AS	
	12	1	**342-3715**	1	BRACKET AS	
	13	1	**342-3717**	1	BRACKET AS	
	14	1	**342-3723**	2	SPRING AS-GAS	
	15	1	**346-7367**	1	PEDAL AS	
	16	1	**346-7370**	1	PEDAL AS	
M	17	1	**6V-7357**	8	BOLT (M6X1X25-MM)	
M	18	1	**7Y-0623**	2	LOCKNUT (M16X2-THD)	
	19	1	**8T-4121**	12	WASHER-HARD (11X21X2.5-MM THK)	
M	20	1	**8T-4133**	2	NUT (M10X1.5-THD)	
M	21	1	**8T-4136**	2	BOLT (M10X1.5X25-MM)	
M	22	1	**8T-4195**	8	BOLT (M10X1.5X30-MM)	
	23	1	**9X-6165**	2	WASHER (6.5X22X2.5-MM THK)	
	24	1	**9X-8256**	6	WASHER (6.6X12X2-MM THK)	
	25	1	**9X-8257**	2	WASHER (17.5X30X3.5-MM THK)	

M-METRIC PART

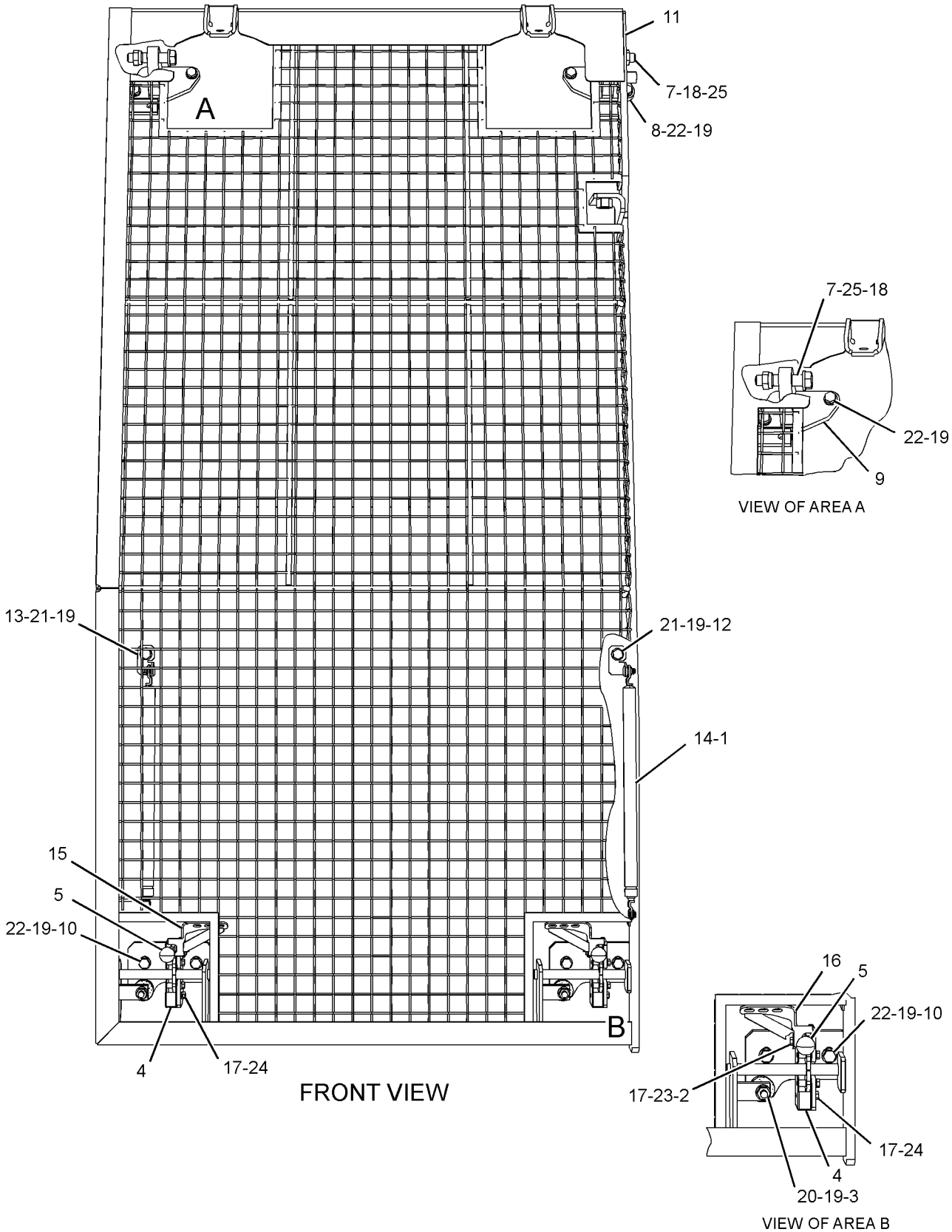

GRAPHIC #1 **<END>** g01960977

OPERATOR STATION

340-6589 HATCH GP-ROOF

S/N: MYG1-UP; PPN1-UP
PART OF 340-6665 HATCH GP-ROOF
AN ATTACHMENT

SMCS-7303 **i03664201**

NOTE	REF NO	GRAPHIC REF	PART NUMBER	QTY	PART NAME 1 2 3 4 5 6 (PRODUCT LEVEL)	SEE PAGE
	1	1	**085-6449**	2	PACKING	
	2	1	**161-3694**	1	CATCH	
	3	1	**189-2693**	1	BRACKET AS (RH)	
	4	1	**189-2694**	1	BRACKET AS (LH)	
	6	1	**340-6592**	2	HINGE AS	
M	7	1	**100-2881**	4	SCREW-TRUSS HEAD (M5X0.8X10-MM)	
	8	1	**171-7477**	2	NUT	
	9	1	**4I-1260**	2	PACKING	
	10	1	**4I-4361**	2	RETAINER	
M	11	1	**6I-5342**	4	NUT (M8X1.25-THD)	
M	12	1	**9X-2045**	2	SCREW-TRUSS HEAD (M6X1X20-MM)	

M-METRIC PART

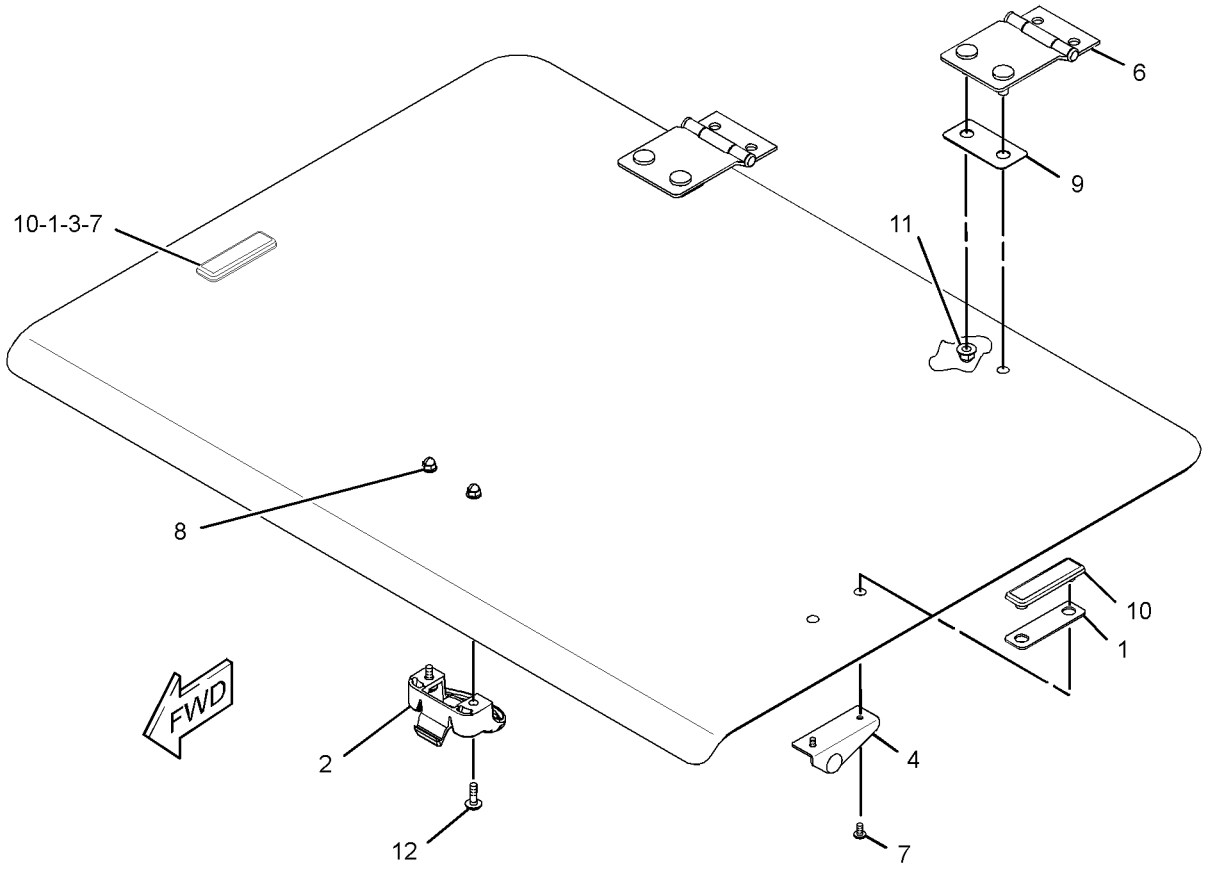

GRAPHIC #1 **<END>** g01957768

OPERATOR STATION

340-6665 HATCH GP-ROOF

S/N: MYG1-UP; PPN1-UP
PART OF 340-6601, 340-6607 CAB GP
AN ATTACHMENT

SMCS-7303 **i03664200**

NOTE	REF NO	GRAPHIC REF	PART NUMBER	QTY	PART NAME 1 2 3 4 5 6 (PRODUCT LEVEL)	SEE PAGE
	1	1	**099-3506**	2	SPRING AS-GAS	
M	2	1	**128-2135**	8	SCREW-TRUSS HEAD (M6X1X13-MM)	
	3	1	**235-8929**	2	HANDLE	
	4	1	**327-6477**	1	RAIL	
	5	1	**327-6478**	1	RAIL	
	6	1	**327-6479**	1	VISOR	
Y	7	1	**340-6589**	1	HATCH GP-ROOF	901
	8	1	**340-6593**	2	HOLDER AS	
	9	1	**340-6594**	1	SEAL	
	10	1	**340-6595**	1	STRIKER	
M	11	1	**105-2169**	4	BOLT AS	
	12	1	**5D-4822**	2	RING-RETAINING	
M	13	1	**9X-2042**	2	SCREW-TRUSS HEAD (M6X1X12-MM)	

M-METRIC PART
Y-SEPARATE ILLUSTRATION

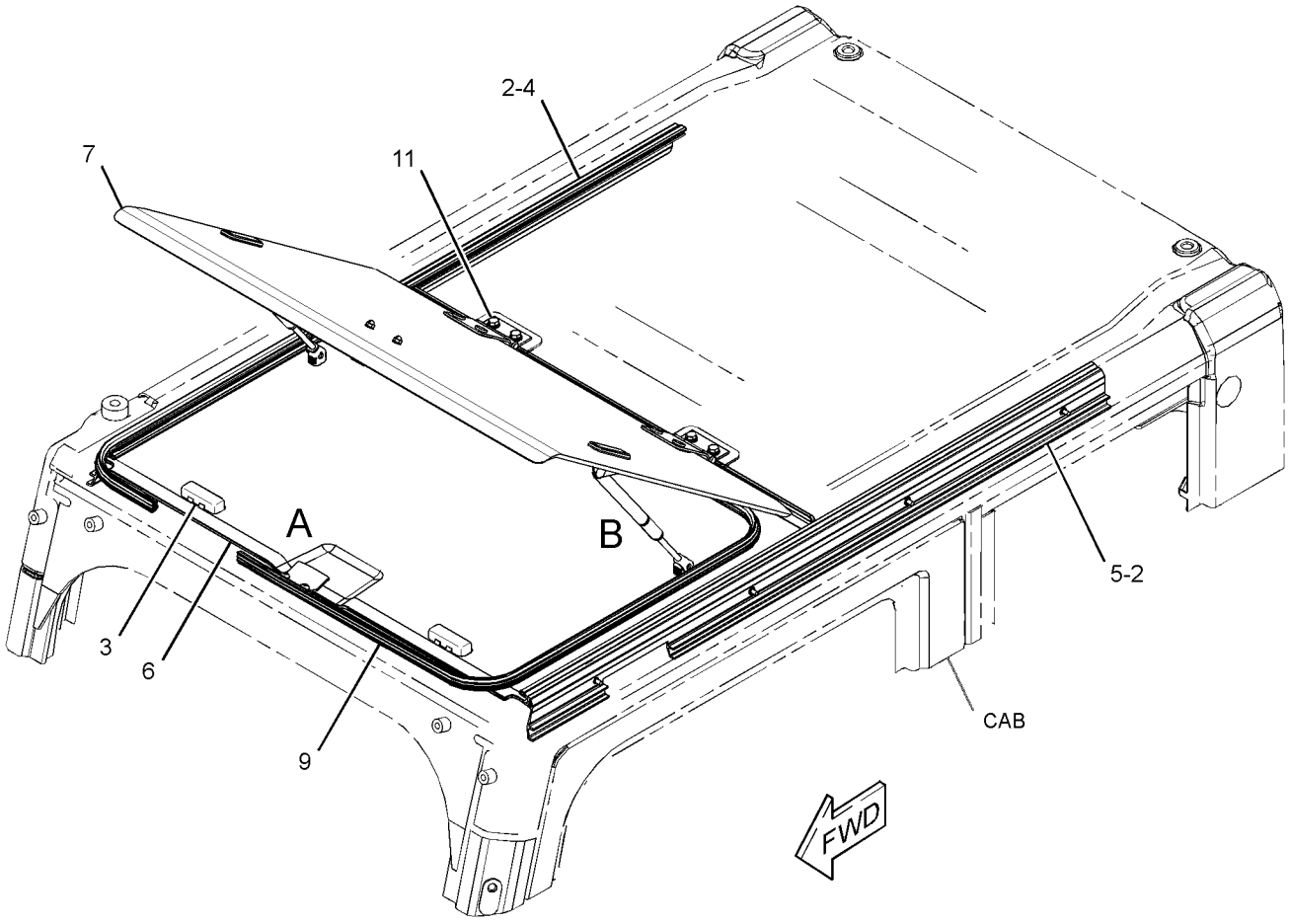

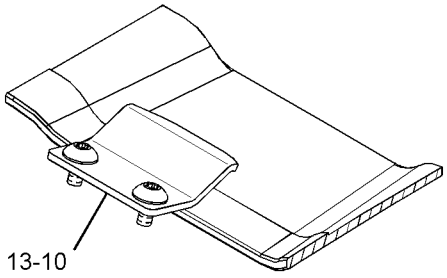

VIEW OF AREA A

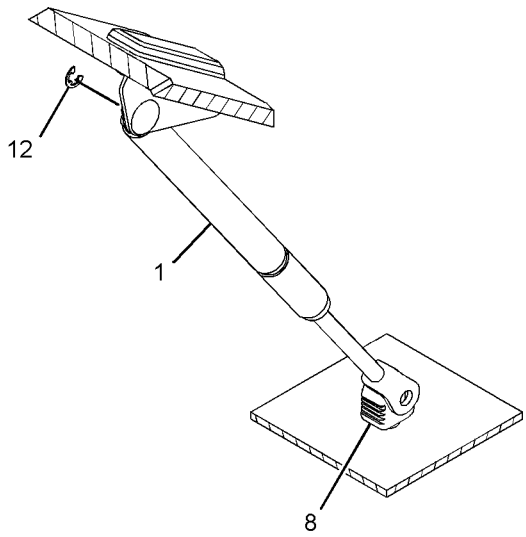

VIEW OF AREA B

GRAPHIC #1 **<END>** g01957896

OPERATOR STATION

277-9100 HORN GP-ELECTRIC

S/N: MYG1-UP; PPN1-UP

PART OF 343-1145, 343-1146 CHASSIS AR

SMCS-7402 **i03493762**

NOTE	REF NO	GRAPHIC REF	PART NUMBER	QTY	PART NAME 1 2 3 4 5 6 (PRODUCT LEVEL)	SEE PAGE
	1	1	**288-7976**	1	BRACKET AS	
	2	1	**277-6207**	1	HARNESS AS-WIRING (HORN)	
	3	1	**174-7875**	1	HORN AS (24-VOLT, HIGH TONE)	
	4	1	**8T-4121**	3	WASHER-HARD (11X21X2.5-MM THK)	
M	5	1	**8T-4137**	3	BOLT (M10X1.5X20-MM)	

M-METRIC PART

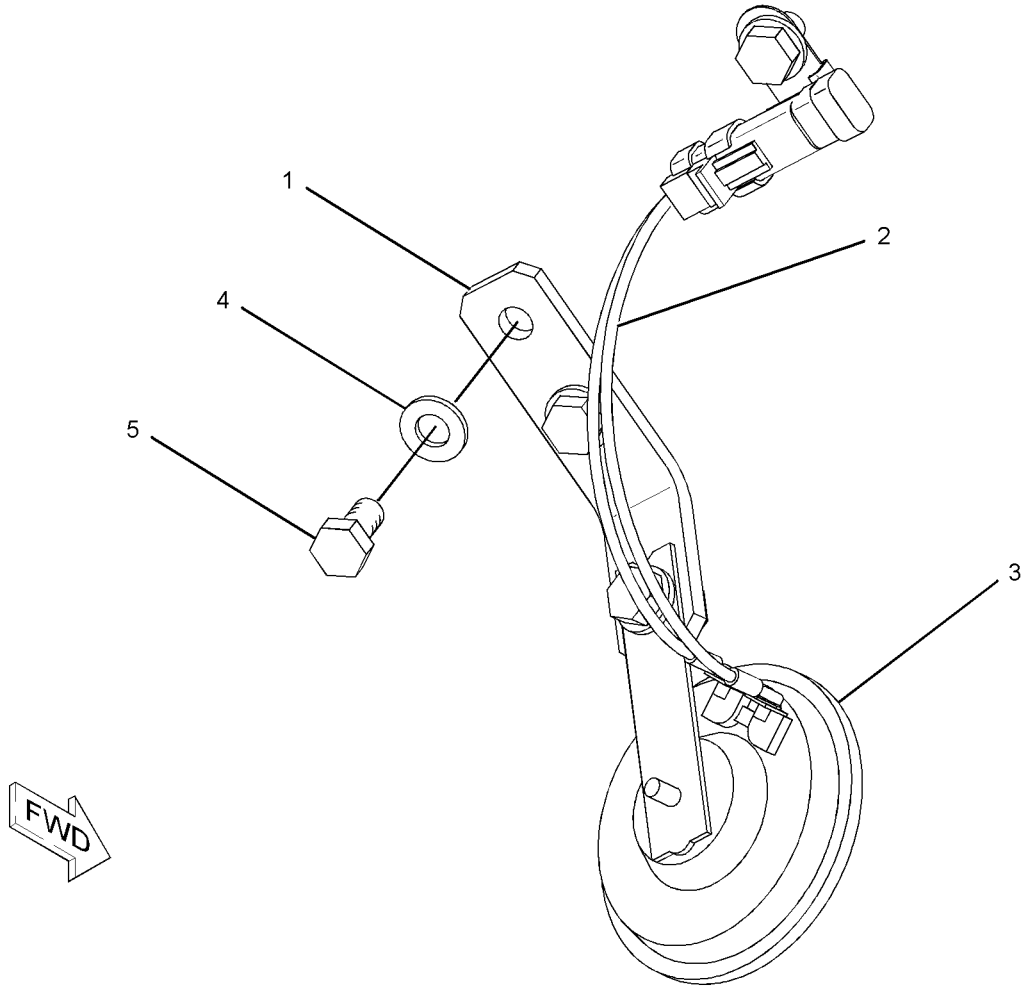

GRAPHIC #1 **<END>** g01192437

245-7812 HOUSING GP-AIR CONDITIONER–INLET AIR

S/N: MYG1-UP; PPN1-UP
PART OF 316-8917 AIR CONDITIONER GP
AN ATTACHMENT

SMCS-7320 **i02503827**

NOTE	REF NO	GRAPHIC REF	PART NUMBER	QTY	PART NAME 1 2 3 4 5 6 (PRODUCT LEVEL)	SEE PAGE
	1	1	**185-8300**	6	SCREW-TAPPING	
	2	1	**196-1666**	1	RELAY (COMPRESSOR CLUTCH)	
	2A	1	**196-1666**	1	RELAY (BLOWER)	
	2B	1	**196-1666**	1	RELAY (CONDENSER)	
	2C	1	**196-1666**	1	RELAY (CONDENSER, HIGH)	
	3	1	**245-7813**	1	MOTOR AS	
	4	1	**245-7814**	1	BRACKET	
	5	1	**245-7815**	1	SENSOR AS-TEMPERATURE (AIR)	
	6	1	**245-7816**	1	DAMPER AS	

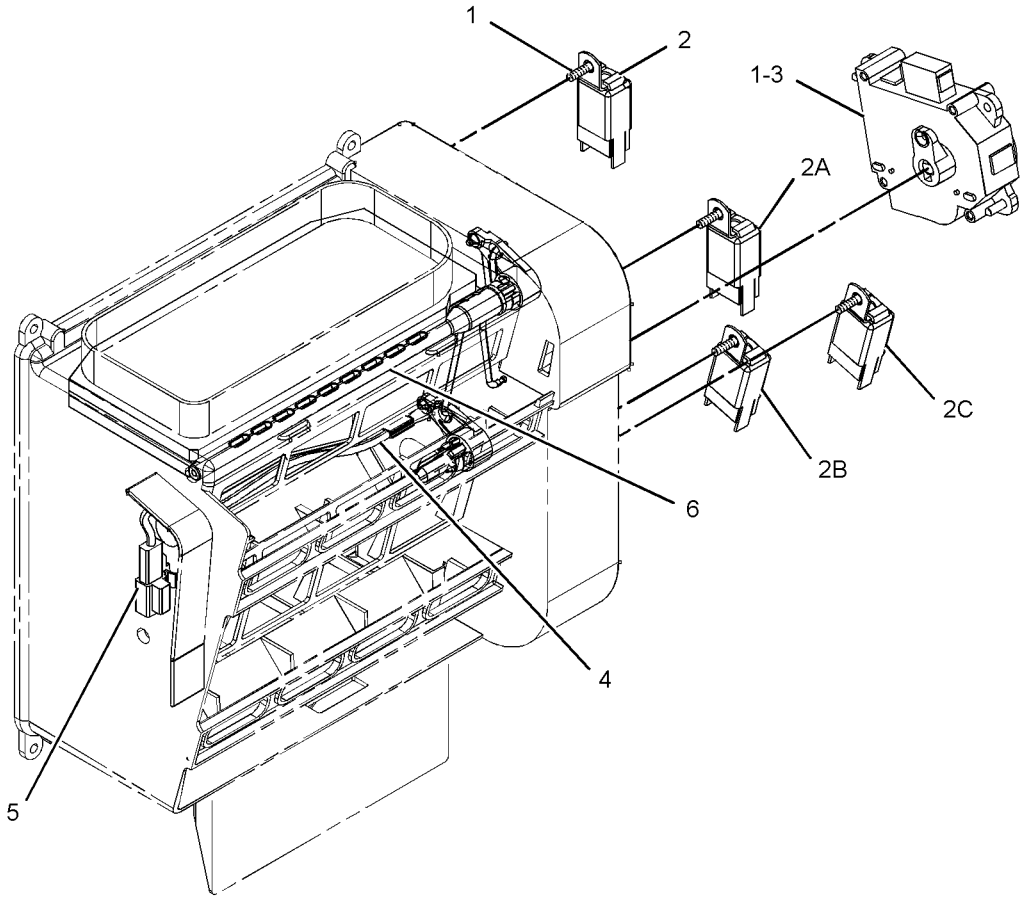

GRAPHIC #1 **<END>** g01253121

OPERATOR STATION

347-0295 INSTALLATION AR

S/N: MYG1-UP; PPN1-UP
PART OF 345-7571, 348-8126, 352-2663 DISTRIBUTION AR
CANNOT BE USED WITH FALLING OBJECT GUARD, MESH GUARD
AN ATTACHMENT

SMCS-7301 **i03669001**

NOTE	PART NUMBER	QTY	PART NAME 1 2 3 4 5 6 (PRODUCT LEVEL)	SEE PAGE
Y	*336-6071*	1	LIGHTING GP-FLOOD (CAB)	190
Y	*327-6552*	1	MIRROR GP-REAR VIEW	921
Y-SEPARATE ILLUSTRATION				

<END>

347-0297 INSTALLATION AR-CAB

S/N: MYG1-UP; PPN1-UP
CANNOT BE USED WITH 336-6071—PAGE 190, 347-0295—PAGE 906, MESH GUARD
AN ATTACHMENT

SMCS-7301 **i03669003**

NOTE	PART NUMBER	QTY	PART NAME 1 2 3 4 5 6 (PRODUCT LEVEL)	SEE PAGE
Y	*340-6486*	1	GUARD AR-OVERHEAD (FALLING OBJECT) (FALLING OBJECT)	895
Y	*336-6072*	1	LIGHTING GP-FLOOD (CAB GUARD) (CAB GUARD)	191
Y	*327-6553*	1	MIRROR GP-REAR VIEW	922
Y-SEPARATE ILLUSTRATION				

<END>

347-0361 INSTALLATION AR-CAB

S/N: MYG1-UP; PPN1-UP
CANNOT BE USED WITH 336-6071—PAGE 190, 347-0295—PAGE 906, FALLING OBJECTS GUARD
AN ATTACHMENT

SMCS-7301 **i03669002**

NOTE	PART NUMBER	QTY	PART NAME 1 2 3 4 5 6 (PRODUCT LEVEL)	SEE PAGE
Y	*316-8837*	1	GUARD GP-WINDOW	899
Y	*336-6072*	1	LIGHTING GP-FLOOD (CAB GUARD) (CAB GUARD)	191
Y	*327-6553*	1	MIRROR GP-REAR VIEW	922
Y-SEPARATE ILLUSTRATION				

<END>

OPERATOR STATION

336-6139 INSTALLATION GP-RADIO

S/N: MYG1-UP; PPN1-UP
PART OF 345-7571, 348-8126, 352-2663 DISTRIBUTION AR
CANNOT BE USED WITH 251-0538—PAGE 936
AN ATTACHMENT

SMCS-7338 **i03659114**

NOTE	REF NO	GRAPHIC REF	PART NUMBER	QTY	PART NAME 1 2 3 4 5 6 (PRODUCT LEVEL)	SEE PAGE
	1	1	**3S-2093**	9	STRAP-CABLE	
	2	1	**7K-1181**	9	STRAP-CABLE	
	3	1	**238-1463**	1	RECEPTACLE AS (8-PIN)	
		1	**8T-8737**	8	PLUG-SEAL	
		1	**243-4509**	1	RECEPTACLE AS-CONNECTOR (8-PIN)	
	4	1	**238-2216**	1	SWITCH AS-ROCKER (RADIO MUTE)	
		1	**167-3542**	1	CONNECTOR-RECEPTACLE	
		1	**167-3543**	5	TERMINAL (MALE)	
	5	1	**328-0139**	1	HARNESS AS-RADIO	
		1	**8T-8729**	2	PIN-CONNECTOR (16-GA TO 18-GA)	
		1	**8T-8730**	18	SOCKET-CONNECTOR (16-GA TO 18-GA)	
		1	**3S-2093**	13	STRAP-CABLE	
		1	**8T-8737**	10	PLUG-SEAL	
		1	**9W-0844**	2	SOCKET-CONNECTOR (14-GA)	
		1	**230-5010**	1	PLUG AS-CONNECTOR (6-PIN)	
		1	**264-7032**	1	SEAL-CONNECTOR	
		1	**231-2295**	2	PLUG AS-CONNECTOR (8-PIN)	
					(EACH INCLUDES)	
		1	**264-7033**	1	SEAL-CONNECTOR	
		1	**243-4505**	1	RECEPTACLE AS-CONNECTOR (2-PIN)	
		1	**243-4509**	1	RECEPTACLE AS-CONNECTOR (8-PIN)	
	6	1	**283-2783**	1	CONVERTER-POWER (24-VOLT TO 12-VOLT)	
M	7	1	**8T-4171**	4	BOLT (M6X1X12-MM)	
	8	1	**9X-8256**	4	WASHER (6.6X12X2-MM THK)	

M-METRIC PART

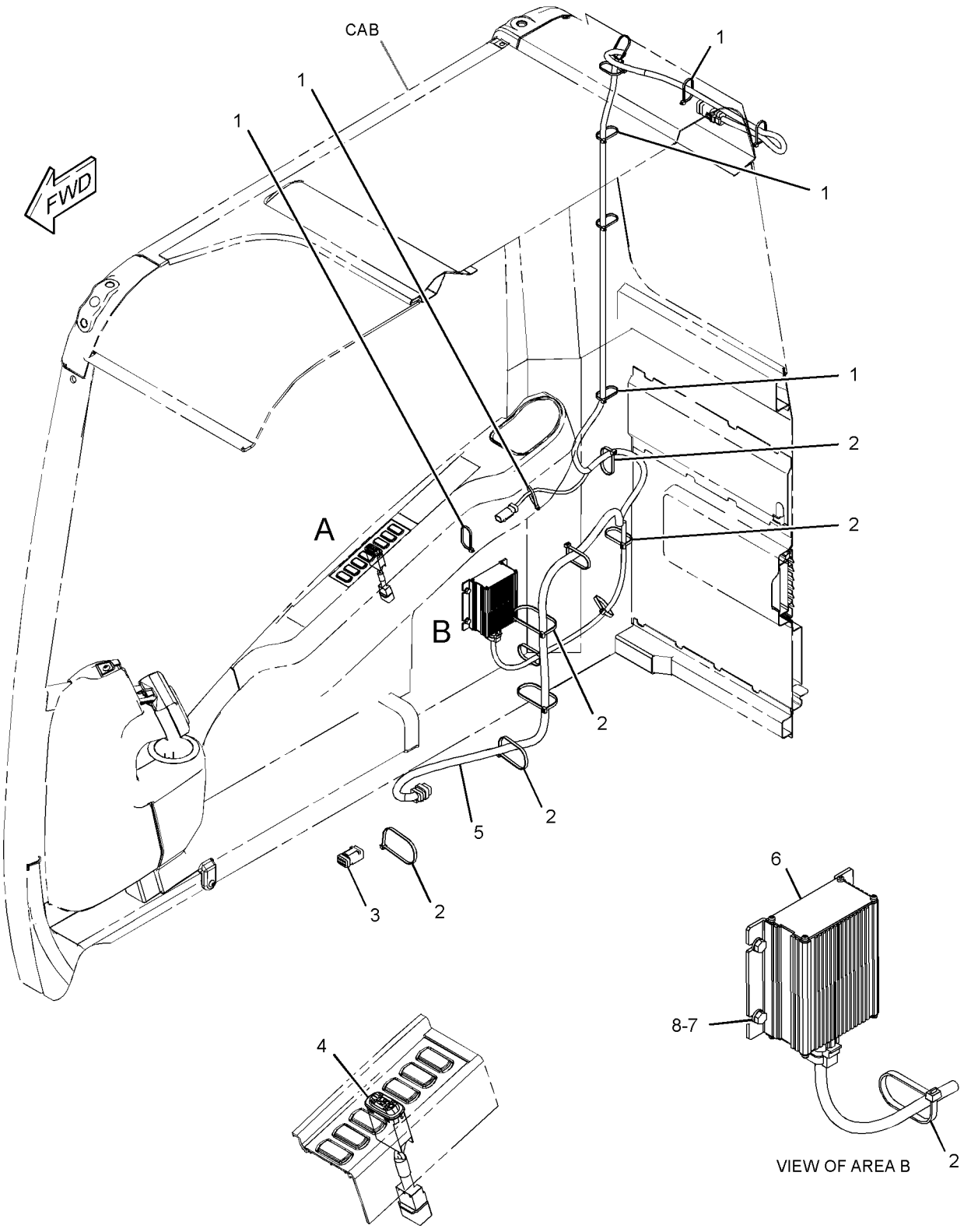

GRAPHIC #1 **<END>** g01955861

OPERATOR STATION

327-6645 KIT-SEAT SUSPENSION—MECHANICAL

S/N: MYG1-UP; PPN1-UP
PART OF 327-6520 SUSPENSION GP-SEAT
AN ATTACHMENT

SMCS-7312 **i03579304**

NOTE	REF NO	GRAPHIC REF	PART NUMBER	QTY	PART NAME 1 2 3 4 5 6 (PRODUCT LEVEL)	SEE PAGE
	1	1	**327-6646**	1	KIT-CYLINDER (DAMPENER)	
J	2	1	**327-6647**	1	KIT-COVER (SUSPENSION SEAT)	
					(INCLUDES COVER & CLIP KIT)	
	3	1	**333-4180**	6	SCREW-BUTTON HEAD (M8X1.25X20-MM)	
	4	1	**333-4181**	1	KIT-HANDLE (SEAT HEIGHT)	
M	5	1	**7Y-7394**	4	SCREW-BUTTON HEAD (M8X1.25X25-MM)	
					PARTS SHOWN IN GRAPHIC(S) WITHOUT A REFERENCE NUMBER ARE NOT SERVICED SEPARATELY	
					AVAILABLE REPAIR KIT(S):	
J			**245-7895**	1	KIT-CLIP (SUSPENSION SEAT)	
					(INCLUDES 28 CLIPS)	

J-KIT MARKED J SERVICES PART(S) MARKED J
M-METRIC PART

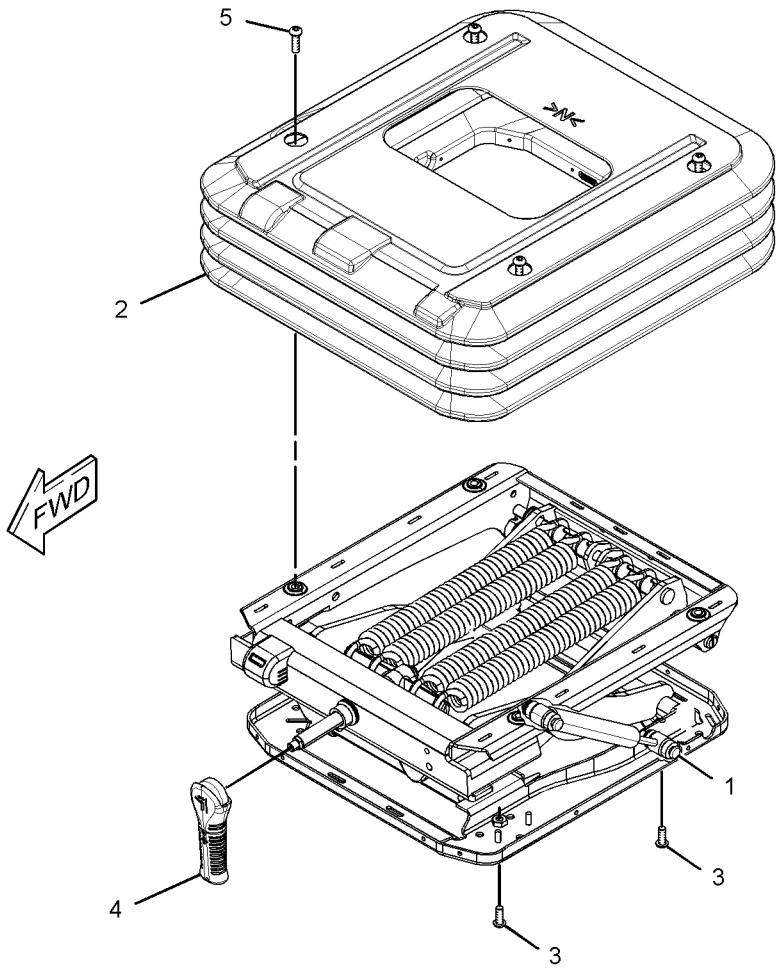

GRAPHIC #1 **<END>** g01689513

OPERATOR STATION

333-4157 KIT-SEAT SUSPENSION–AIR

S/N: MYG1-UP; PPN1-UP
PART OF 327-6521 SUSPENSION GP-SEAT
AN ATTACHMENT

SMCS-7312 **i03468501**

NOTE	REF NO	GRAPHIC REF	PART NUMBER	QTY	PART NAME 1 2 3 4 5 6 (PRODUCT LEVEL)	SEE PAGE
	1	1	**327-6646**	1	KIT-CYLINDER (DAMPENER) (DAMPENER)	
J	2	1	**333-4158**	1	KIT-COVER (AIR SEAT) (AIR SEAT)	
					(INCLUDES COVER & CLIP KIT)	
	3	1	**333-4159**	1	KIT-VALVE (AIR SEAT) (AIR SEAT)	
		1	**333-4178**	1	NUT	
	4	1	**333-4180**	6	SCREW-BUTTON HEAD (M8X1.25X20-MM)	
M	5	1	**7Y-7394**	4	SCREW-BUTTON HEAD (M8X1.25X25-MM)	
					PARTS SHOWN IN GRAPHIC(S) WITHOUT A REFERENCE NUMBER ARE NOT SERVICED SEPARATELY	
					AVAILABLE REPAIR KIT(S):	
J			**245-7895**	1	KIT-CLIP (SUSPENSION SEAT)	
					(INCLUDES 28 CLIPS)	

J-MARKED J SERVICES PART(S) MARKED J
M-METRIC PART

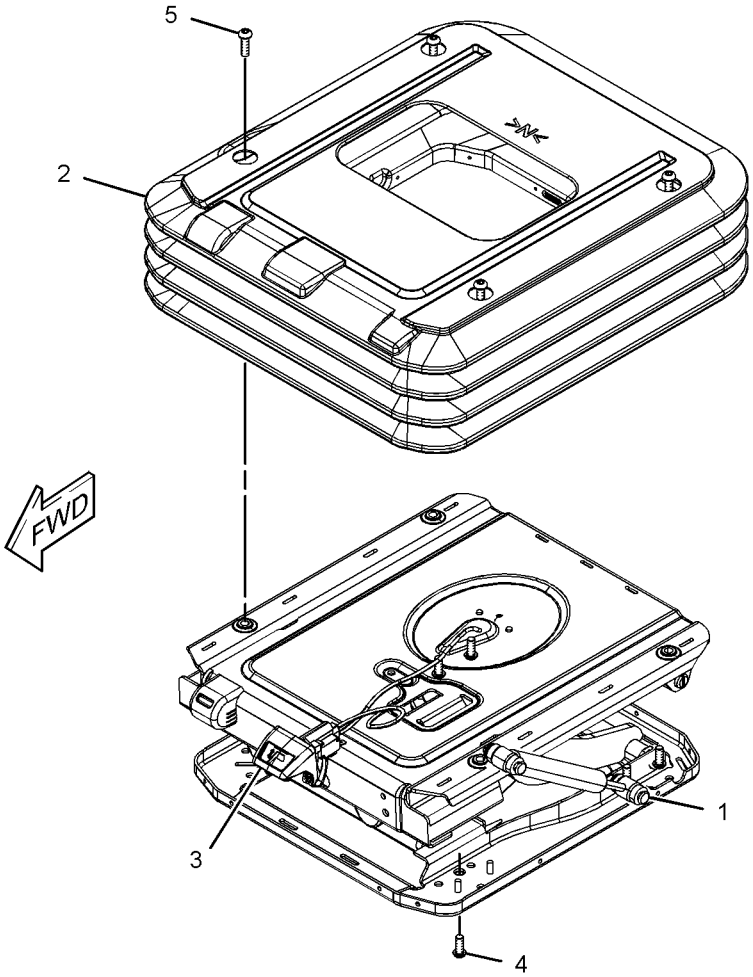

GRAPHIC #1 **<END>** g01689529

OPERATOR STATION

085-6444 LATCH GP-FRONT WINDOW

S/N: MYG1-UP; PPN1-UP
PART OF 334-6513 WINDOW GP-DOOR
AN ATTACHMENT

SMCS-7340 **i03668500**

NOTE	REF NO	GRAPHIC REF	PART NUMBER	QTY	PART NAME 1 2 3 4 5 6 (PRODUCT LEVEL)	SEE PAGE
	1	1	**085-6445**	1	LOCK	
	2	1	**085-6446**	1	LOCK	
	3	1	**085-6447**	1	RETAINER	
M	4	1	**085-6448**	2	SCREW-TAPPING	
	5	1	**085-6449**	1	PACKING	

M-METRIC PART

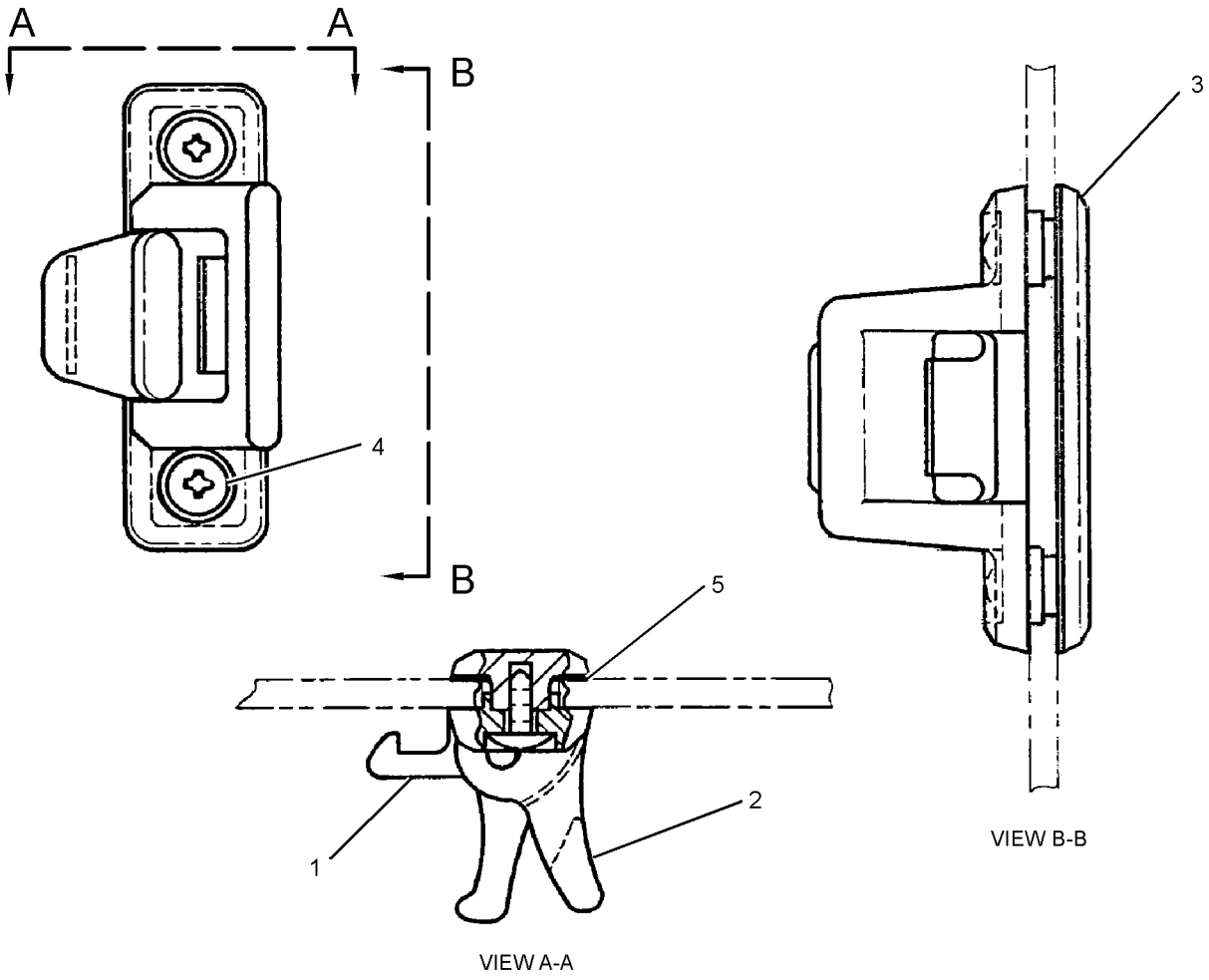

GRAPHIC #1 **<END>** g01164280

OPERATOR STATION

334-6552 LEVER GP-CAB DOOR

S/N: MYG1-UP; PPN1-UP
PART OF 334-6541 CAB GP
AN ATTACHMENT

SMCS-7308 **i03664187**

NOTE	REF NO	GRAPHIC REF	PART NUMBER	QTY	PART NAME 1 2 3 4 5 6 (PRODUCT LEVEL)	SEE PAGE
	1	1	**176-1941**	1	PIN	
	2	1	**185-8280**	1	WASHER-WAVE (10.5X15X0.3-MM THK)	
	3	1	**334-6553**	1	BRACKET	
	4	1	**334-6554**	1	LEVER AS	

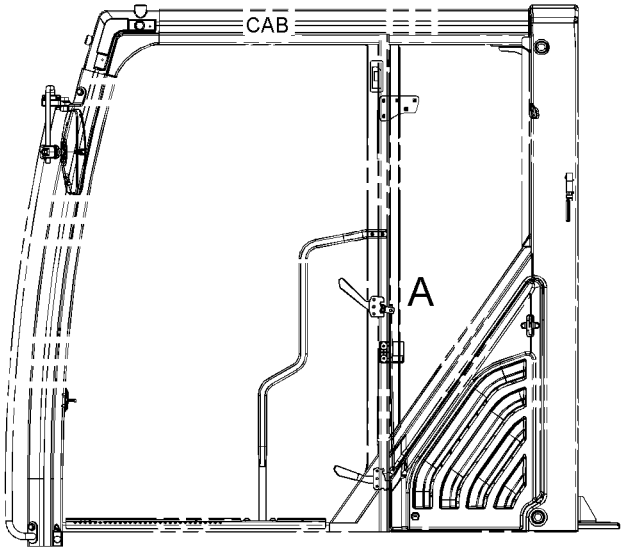

LEFT SIDE VIEW

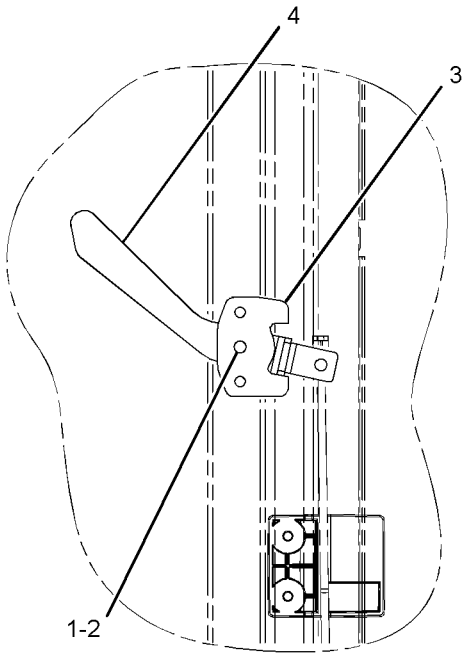

VIEW OF AREA A

GRAPHIC #1 **<END>** g01960673

OPERATOR STATION

334-6557 LEVER GP-CAB DOOR

S/N: MYG1-UP; PPN1-UP
PART OF 334-6541 CAB GP
AN ATTACHMENT

SMCS-7308 **i03664190**

NOTE	REF NO	GRAPHIC REF	PART NUMBER	QTY	PART NAME 1 2 3 4 5 6 (PRODUCT LEVEL)	SEE PAGE
	1	1	**176-1941**	1	PIN	
	2	1	**185-8280**	1	WASHER-WAVE (10.5X15X0.3-MM THK)	
	3	1	**185-8281**	1	SPRING	
	4	1	**334-6558**	1	BRACKET	
	5	1	**334-6559**	1	LEVER AS	

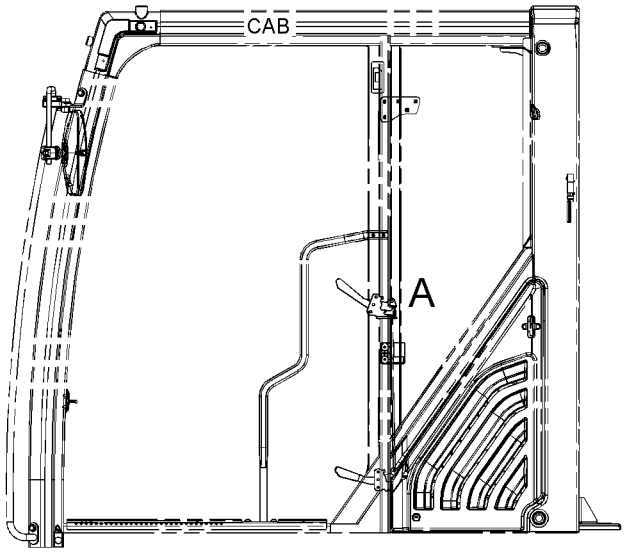

LEFT SIDE VIEW

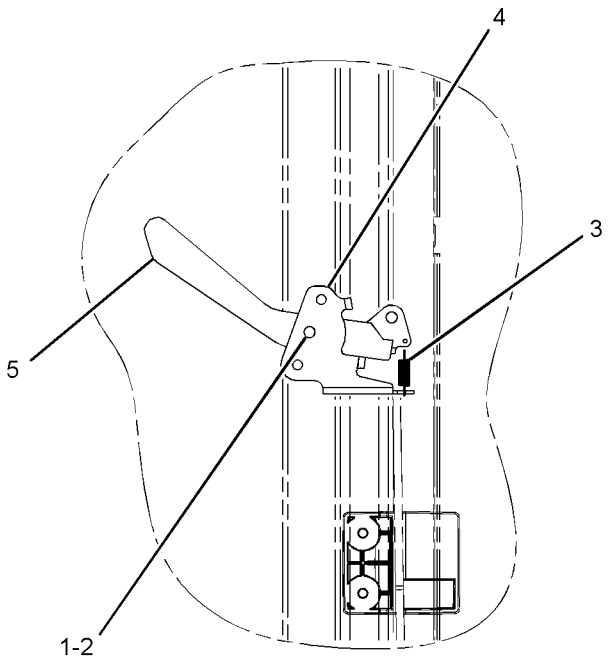

VIEW OF AREA A

GRAPHIC #1 **<END>** g01965076

OPERATOR STATION

235-9021 LINES GP-AIR CONDITIONER

S/N: MYG1-UP; PPN1-UP

PART OF 343-1145, 343-1146 CHASSIS AR

SMCS-1808 **i03390520**

NOTE	REF NO	GRAPHIC REF	PART NUMBER	QTY	PART NAME 1 2 3 4 5 6 (PRODUCT LEVEL)	SEE PAGE
	1	2	**3S-8536**	1	SPACER (0.406X0.656X0.38-IN THK)	
	2	2	**7I-2673**	2	STRAP-CABLE	
	4	2	**122-9657**	2	CLAMP	
	5	2	**176-1902**	1	RECEIVER-REFRIGERANT DRYER	
	6	2	**189-3434**	1	ELBOW	
	7	2	**235-8891**	1	PLATE	
CL	8	2	**235-9014**	4	CLAMP-SPRING	
					—OR—	
CL		2	**5D-1026**	4	CLAMP-BAND	
	9	2	**327-6548**	1	TUBE AS	
		2	**121-7137**	1	SEAL-O-RING	
	10	2	**240-5043**	1	HOSE AS	
		2	**121-7138**	2	SEAL-O-RING	
		2	**196-1665**	1	SWITCH AS-PRESSURE (REFRIGERANT)	
		2	**185-8293**	1	SEAL-O-RING	
	11	2	**240-5044**	1	HOSE AS	
		2	**121-7136**	2	SEAL-O-RING	
		2	**245-7851**	1	PLUG	
	12	2	**327-6549**	1	HOSE AS	
		2	**121-7137**	2	SEAL-O-RING	
		2	**245-7850**	1	PLUG	
	13	2	**245-7928**	1	HOSE AS	
		2	**121-7138**	2	SEAL-O-RING	
	14	1	**273-5428**	1	GUARD	
	15	1,2	**104-3173**	8	CLIP	
	16	2	**121-7098**	1	BRACKET AS	
M		2	**8T-4138**	2	BOLT (M6X1X20-MM)	
		2	**9X-8256**	2	WASHER (6.6X12X2-MM THK)	
	17	2	**130-0252**	2	HOSE-DRAIN	
	18	2	**1S-0994**	1	CLIP	
	19	2	**204-1673**	1	STRAP-CABLE	
	20	2	**3K-0360**	3	SEAL-O-RING	
	21	1	**4I-3503**	1	GROMMET	
	22	2	**6V-3265**	1	CLIP	
	23	2	**6V-7238**	2	VALVE-SHUTOFF (HEATER, LINES)	
M	24	2	**6V-7357**	4	BOLT (M6X1X25-MM)	
	25	1	**7Y-8165**	1	GROMMET	
	26	1	**7Y-8167**	1	GROMMET	
	27	2	**8M-2773**	5	CLIP	
	28	1,2	**8T-4121**	15	WASHER-HARD (11X21X2.5-MM THK)	
M	29	1,2	**8T-4137**	13	BOLT (M10X1.5X20-MM)	
M	30	2	**8T-4191**	1	BOLT (M10X1.5X16-MM)	
M	31	2	**8T-4195**	1	BOLT (M10X1.5X30-MM)	
M	32	2	**8T-4200**	2	BOLT (M8X1.25X16-MM)	
	33	2	**8T-4224**	2	WASHER-HARD (8.8X16X2-MM THK)	
M	34	2	**8T-4971**	2	BOLT (M6X1X30-MM)	
	35	2	**9X-8256**	7	WASHER (6.6X12X2-MM THK)	
CE	36	2	**5P-0767**		HOSE (400-CM)	
CE	36A	2	**5P-0767**		HOSE (360-CM)	
	37	2	**7K-1181**	1	STRAP-CABLE	
	38	2	**132-5789**	1	CLIP	
E	39	2	**225-5714**		GUARD (65-CM)	
E	40	1	**293-1135**		GUARD (15-CM)	
M	41	2	**7X-2533**	1	BOLT (M6X1X35-MM)	
					—OR—	
M		2	**8T-4971**	1	BOLT (M6X1X30-MM)	

235-9021 **LINES GP-AIR CONDITIONER** *(contd.)* **i03390520**

NOTE	REF NO	GRAPHIC REF	PART NUMBER	QTY	PART NAME 1 2 3 4 5 6 (PRODUCT LEVEL)	SEE PAGE
	42	2	**305-0441**	2	BAND-MARKER (HS)	
	43	2	**305-0442**	2	BAND-MARKER (HR)	

C-CHANGE FROM PREVIOUS TYPE
E-ORDER BY THE CENTIMETER
L-THESE PARTS ARE DIRECTLY INTERCHANGEABLE
M-METRIC PART

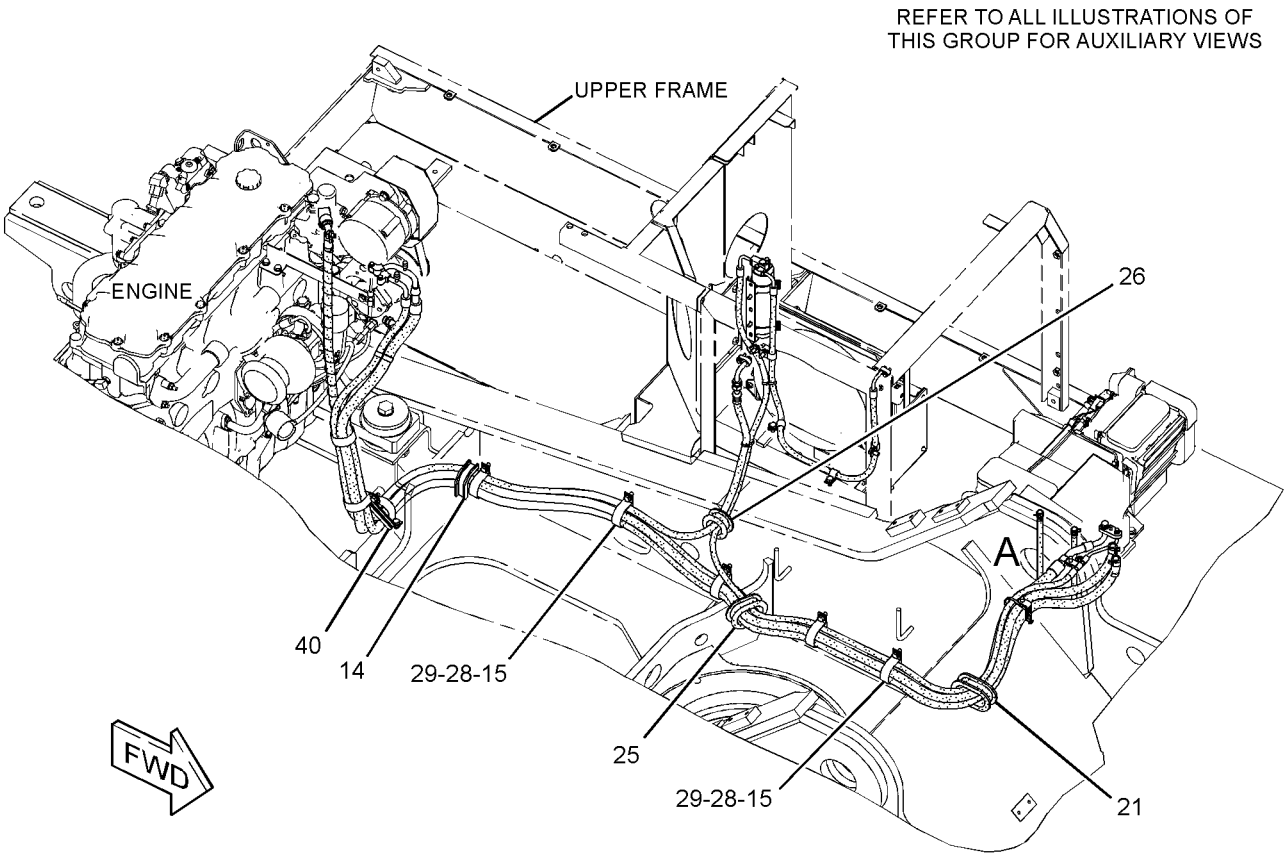

GRAPHIC #1 g01730373

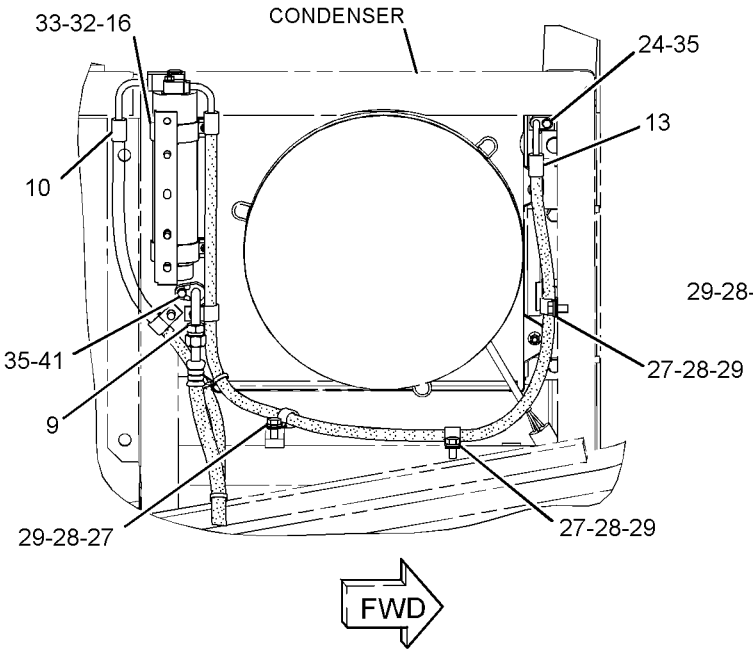

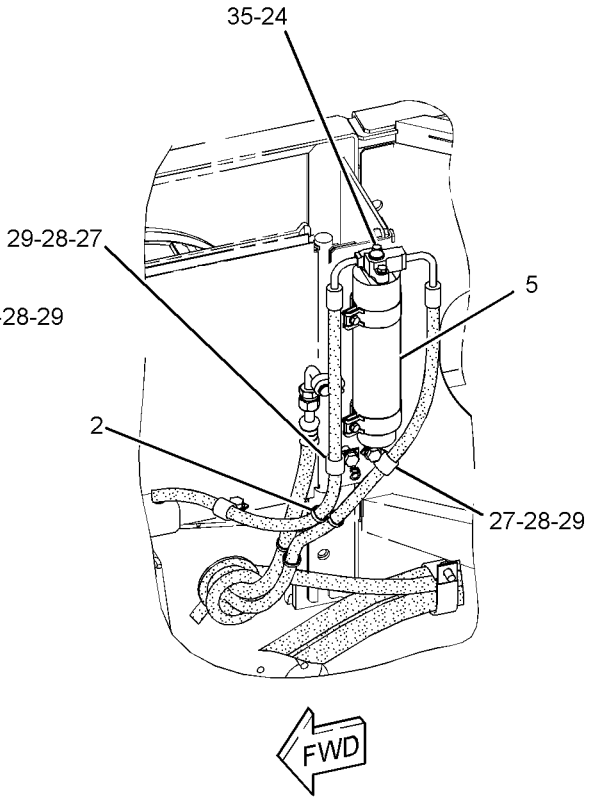

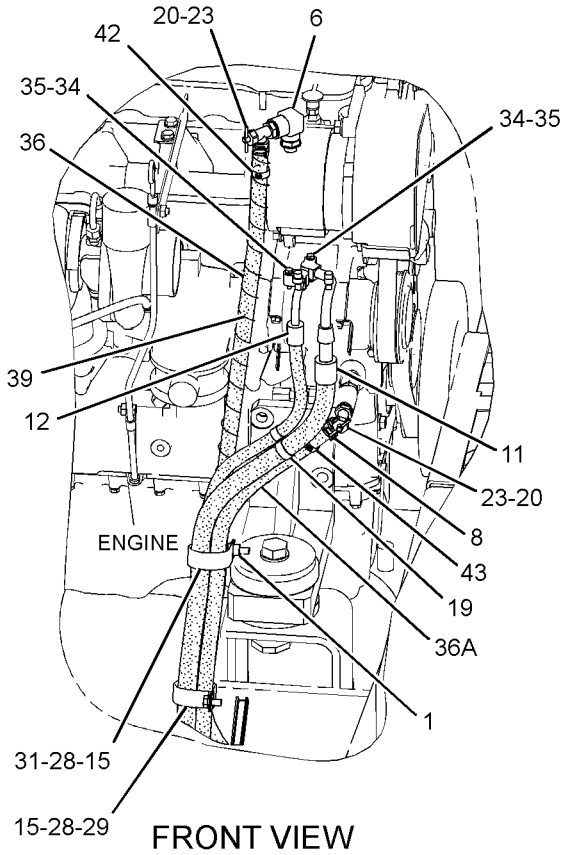

FRONT VIEW
(UPPER LEFT)

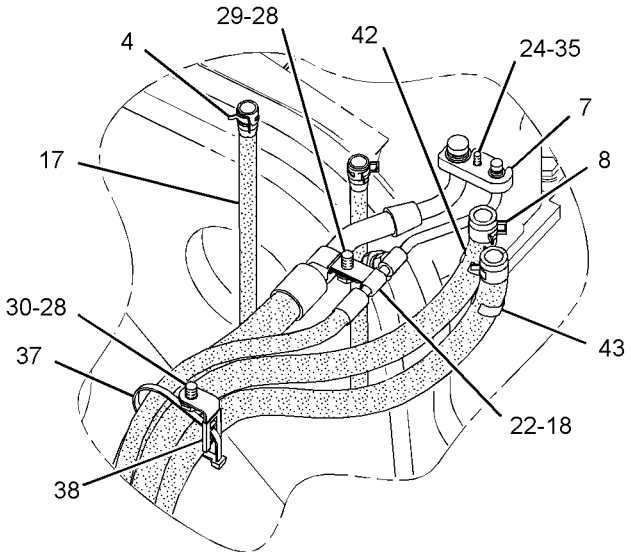

VIEW OF AREA A

GRAPHIC #2 **<END>** g01730374

OPERATOR STATION

7Y-0059 LITERATURE GP

S/N: MYG1-UP; PPN1-UP
PART OF 343-1145, 343-1146 CHASSIS AR

SMCS-7300 **i01853716**

NOTE	PART NUMBER	QTY	PART NAME 1 2 3 4 5 6 (PRODUCT LEVEL)	SEE PAGE
	099-3645	1	CABLE-LANYARD	
	5P-8500	2	KEY (LITERATURE GP)	
	5P-7958	2	SLEEVE-CABLE SPLICE	

<END>

330-1354 MIRROR GP

S/N: MYG1-UP; PPN1-UP
PART OF 340-3835 CAMERA & MIRROR AR
AN ATTACHMENT

SMCS-7319 **i03149022**

NOTE	PART NUMBER	QTY	PART NAME 1 2 3 4 5 6 (PRODUCT LEVEL)	SEE PAGE
Y	*330-1169*	1	FENDER & COVER GP	320
Y	*330-1162*	1	MIRROR GP-DOWN VIEW (FUEL TANK, RH)	918

Y-SEPARATE ILLUSTRATION

<END>

OPERATOR STATION

330-1162 MIRROR GP-DOWN VIEW—FUEL TANK, RH

S/N: MYG1-UP; PPN1-UP
PART OF 330-1354 MIRROR GP
AN ATTACHMENT

SMCS-7319 **i03139502**

NOTE	REF NO	GRAPHIC REF	PART NUMBER	QTY	PART NAME 1 2 3 4 5 6 (PRODUCT LEVEL)	SEE PAGE
M	1	1	**135-8575**	3	BOLT AS	
	2	1	**320-5525**	1	TUBE AS	
	3	1	**327-3062**	1	MIRROR GP-DOWN VIEW	
M		1	**8T-0269**	2	BOLT-SOCKET HEAD (M6X1X20-MM)	
		1	**9X-8256**	2	WASHER (6.6X12X2-MM THK)	
	4	1	**327-3063**	1	MIRROR GP-DOWN VIEW	
M		1	**8T-0269**	2	BOLT-SOCKET HEAD (M6X1X20-MM)	
		1	**9X-8256**	2	WASHER (6.6X12X2-MM THK)	

M-METRIC PART

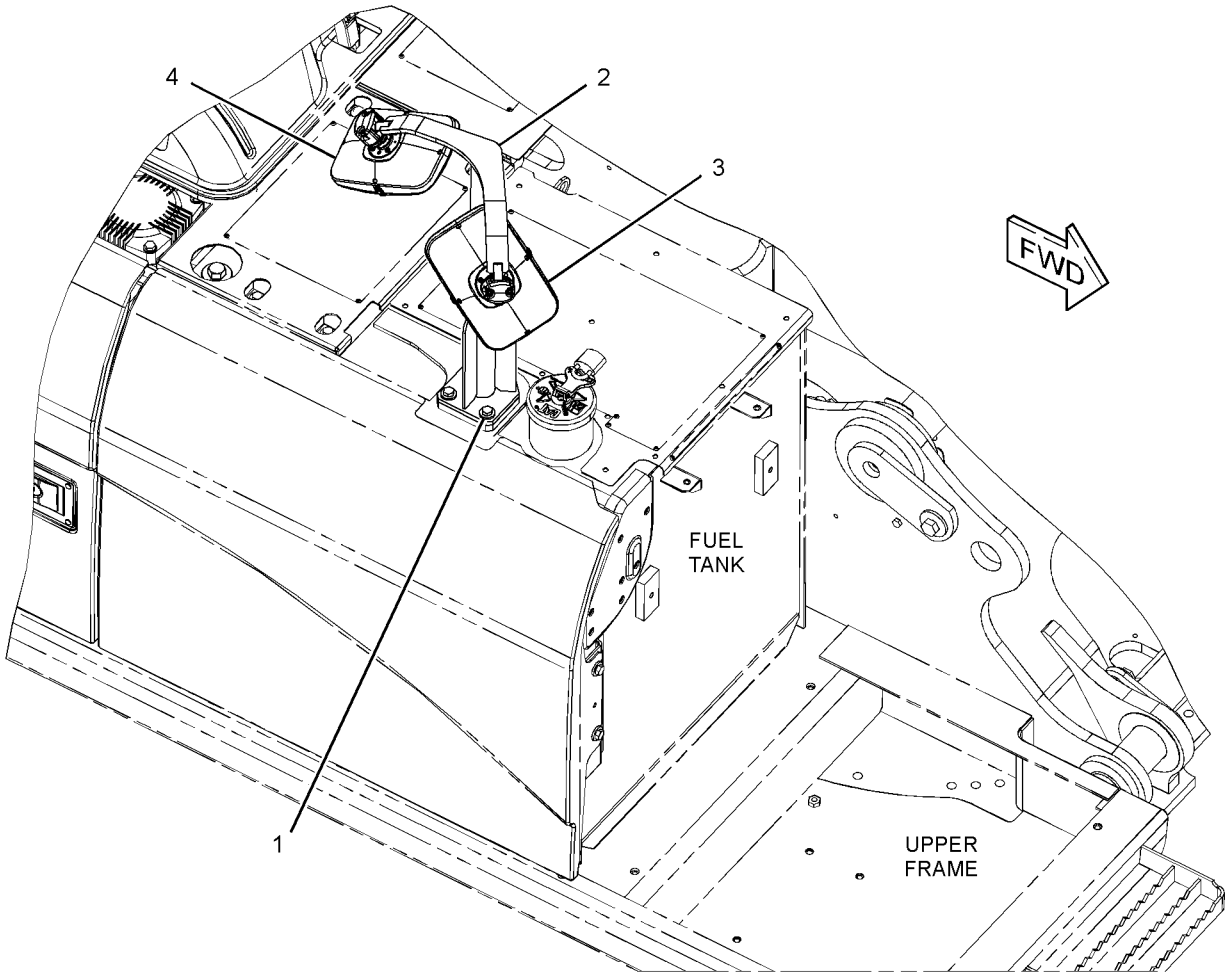

GRAPHIC #1 **<END>** g01619310

142-3836 MIRROR GP-REAR VIEW—FRONT, RH

S/N: MYG1-UP; PPN1-UP

PART OF 343-1145, 343-1146 CHASSIS AR

SMCS-7319 **i01985075**

NOTE	REF NO	GRAPHIC REF	PART NUMBER	QTY	PART NAME 1 2 3 4 5 6 (PRODUCT LEVEL)	SEE PAGE
	1	1	**8T-7971**	4	WASHER-HARD (13.5X25.5X5-MM THK)	
	2	1	**4I-8135**	1	MIRROR	
	3	1	**165-3065**	1	BRACKET-MIRROR	
	4	1	**177-6315**	4	PLUG	
M	5	1	**8T-4192**	4	BOLT (M12X1.75X25-MM)	

M-METRIC PART

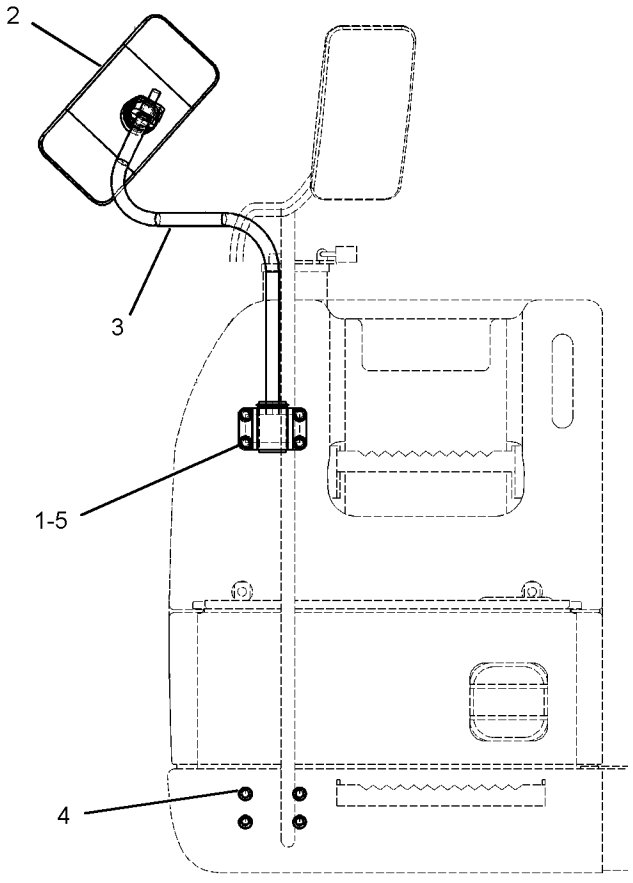

FRONT VIEW

GRAPHIC #1 **<END>** g01032974

OPERATOR STATION

327-6550 MIRROR GP-REAR VIEW

S/N: MYG1-UP; PPN1-UP
PART OF 334-6541 CAB GP, 327-6552, 327-6553 MIRROR GP-REAR VIEW
AN ATTACHMENT

SMCS-7319 **i03114210**

NOTE	REF NO	GRAPHIC REF	PART NUMBER	QTY	PART NAME 1 2 3 4 5 6 (PRODUCT LEVEL)	SEE PAGE
M	1	1	**8T-0269**	2	BOLT-SOCKET HEAD (M6X1X20-MM)	
	2	1	**9X-8256**	2	WASHER (6.6X12X2-MM THK)	

M-METRIC PART

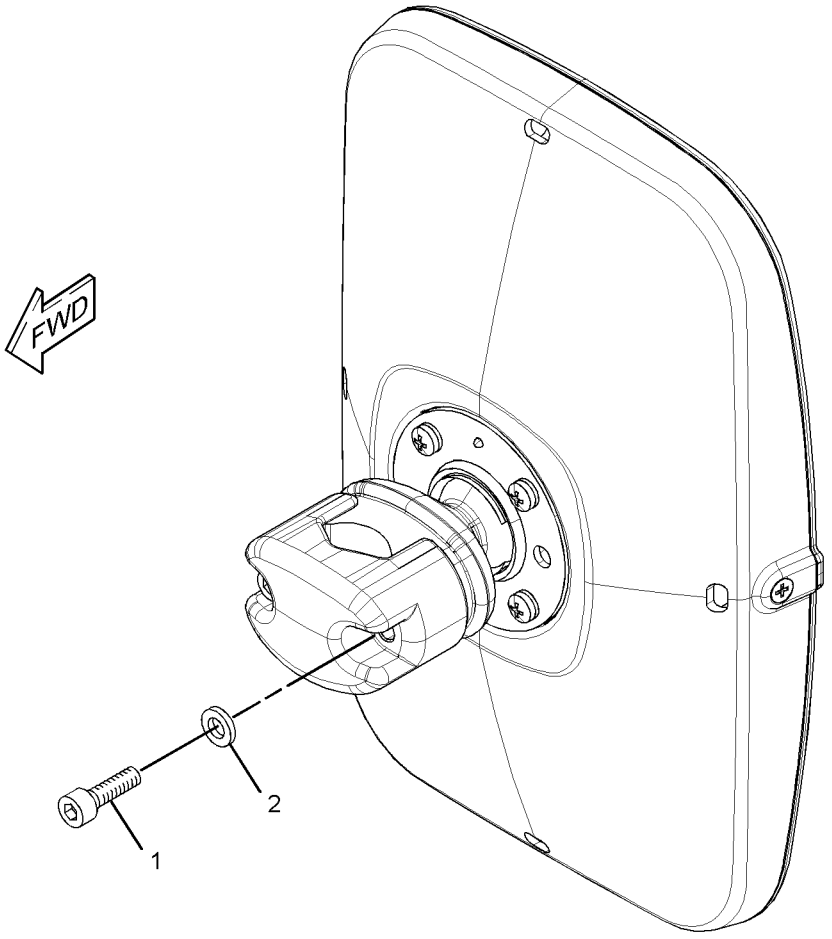

GRAPHIC #1 **<END>** g01615528

327-6552 MIRROR GP-REAR VIEW

S/N: MYG1-UP; PPN1-UP
PART OF 347-0295 INSTALLATION AR-CAB
CANNOT BE USED WITH 316-8831—PAGE 897, 316-8837—PAGE 899, FALLING OBJECT GUARDS
AN ATTACHMENT

SMCS-7319 **i03658619**

NOTE	REF NO	GRAPHIC REF	PART NUMBER	QTY	PART NAME 1 2 3 4 5 6 (PRODUCT LEVEL)	SEE PAGE
Y	1	1	**327-6550**	1	MIRROR GP-REAR VIEW	920
	2	1	**327-6576**	1	SUPPORT AS	
M	3	1	**8T-4175**	1	BOLT (M16X2X90-MM)	
	4	1	**9X-8257**	1	WASHER (17.5X30X3.5-MM THK)	

M-METRIC PART
Y-SEPARATE ILLUSTRATION

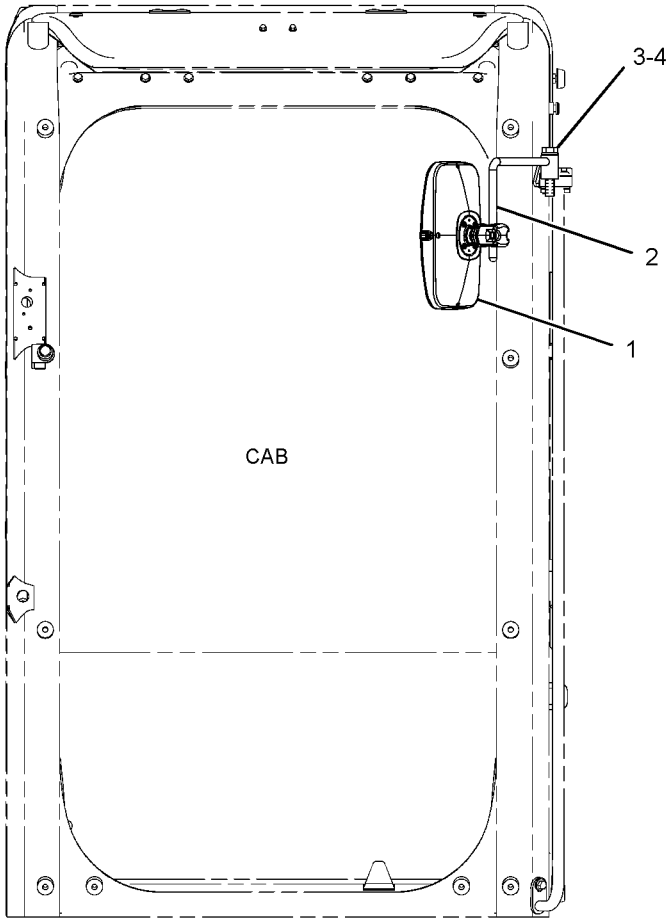

FRONT VIEW

GRAPHIC #1 **<END>** g01615557

OPERATOR STATION

327-6553 MIRROR GP-REAR VIEW

S/N: MYG1-UP; PPN1-UP
PART OF 347-0297, 347-0361 INSTALLATION AR-CAB
FOR USE WITH GUARD, 316-8831—PAGE 897, 316-8837—PAGE 899
AN ATTACHMENT

SMCS-7319 **i03658871**

NOTE	REF NO	GRAPHIC REF	PART NUMBER	QTY	PART NAME 1 2 3 4 5 6 (PRODUCT LEVEL)	SEE PAGE
	1	1	**316-8989**	1	SUPPORT AS	
Y	2	1	**327-6550**	1	MIRROR GP-REAR VIEW	920
M	3	1	**8T-4193**	1	BOLT (M16X2X50-MM)	
	4	1	**9X-8257**	1	WASHER (17.5X30X3.5-MM THK)	

M-METRIC PART
Y-SEPARATE ILLUSTRATION

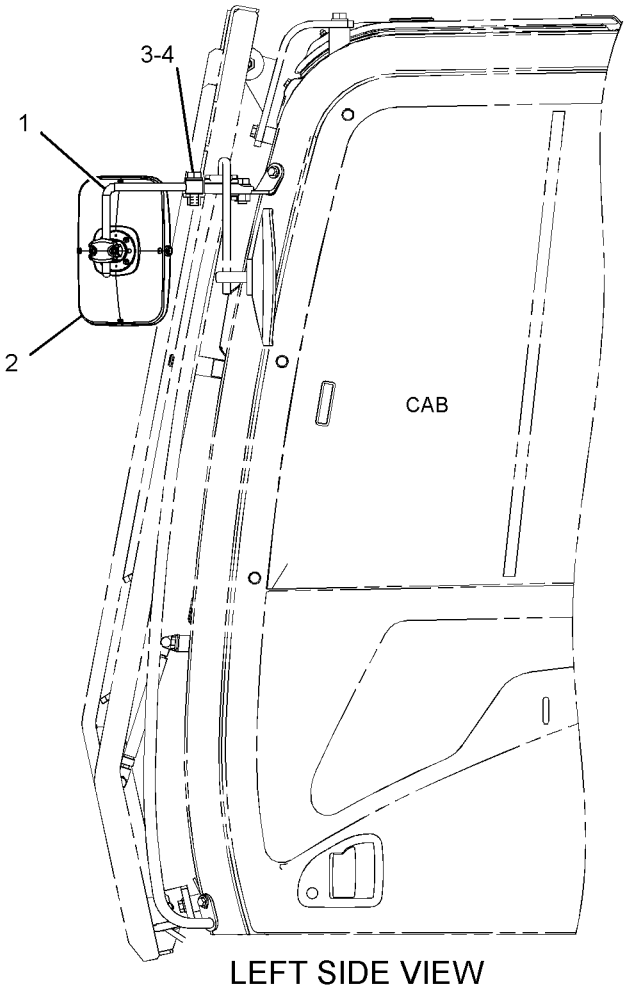

LEFT SIDE VIEW

GRAPHIC #1 **<END>** g01615542

OPERATOR STATION

221-8813 MONITOR & MTG GP-OPERATOR

S/N: MYG1-UP; PPN1-UP
PART OF 340-6485 OPERATOR AR

SMCS-7490 **i03623393**

NOTE	REF NO	GRAPHIC REF	PART NUMBER	QTY	PART NAME 1 2 3 4 5 6 (PRODUCT LEVEL)	SEE PAGE
CY	1	1	**327-7482**	1	MONITOR GP-OPERATOR	924
M	2	1	**9X-2046**	3	SCREW-TRUSS HEAD (M6X1X35-MM)	

C-CHANGE FROM PREVIOUS TYPE
M-METRIC PART
Y-SEPARATE ILLUSTRATION

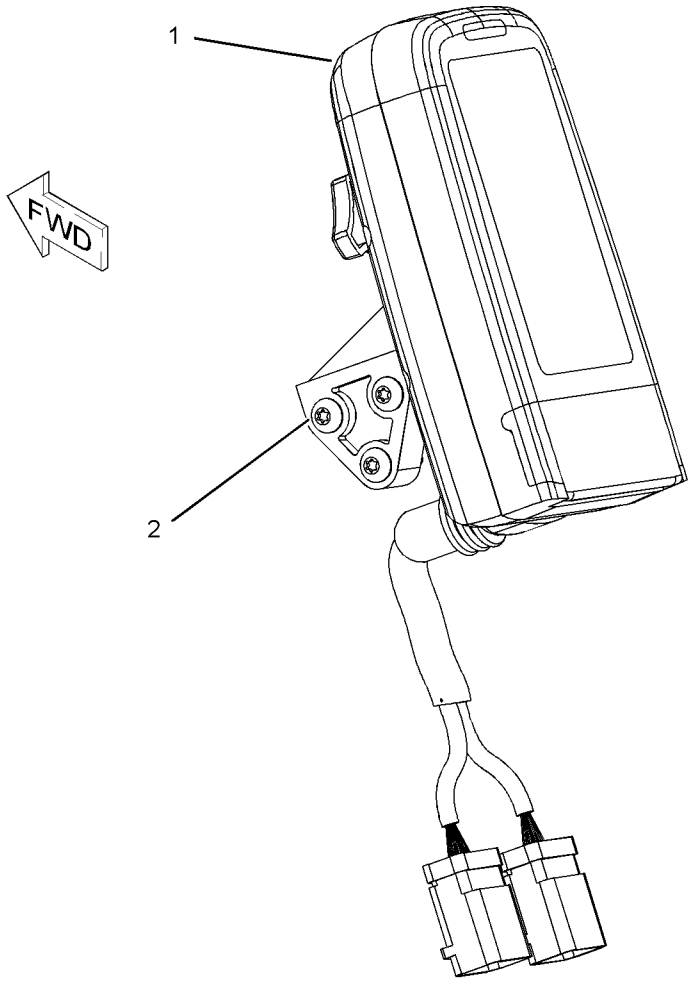

GRAPHIC #1 **<END>** g01072616

OPERATOR STATION

327-7482 MONITOR GP-OPERATOR

S/N: MYG1-UP; PPN1-UP

PART OF 221-8813 MONITOR & MTG GP-OPERATOR, 338-6921 SERVICE GP-MONITOR

SMCS-7490 **i03568432**

NOTE	REF NO	GRAPHIC REF	PART NUMBER	QTY	PART NAME 1 2 3 4 5 6 (PRODUCT LEVEL)	SEE PAGE
	1	1	**247-2694**	1	RECEPTACLE AS-CONNECTOR (12-PIN)	
	2	1	**247-2695**	1	RECEPTACLE AS-CONNECTOR (12-PIN)	
	3	1	**144-1636**	17	PIN-CONNECTOR (14-GA TO 18-GA)	
	4	1	**8T-8737**	7	PLUG-SEAL	
	5	1	**327-7594**	1	COVER AS-MONITOR	

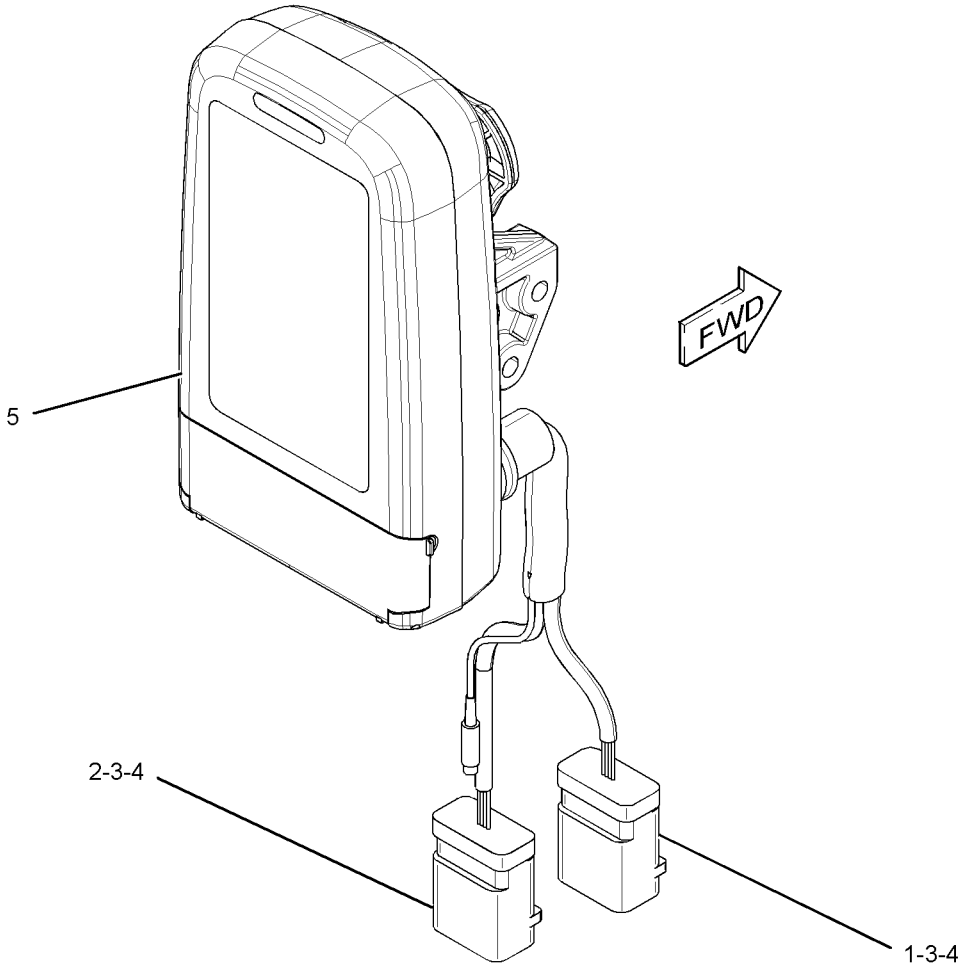

GRAPHIC #1 **<END>** g01733354

OPERATOR STATION

342-3546 MOTOR AS-WINDOW WIPER

S/N: MYG1-UP; PPN1-UP
PART OF 327-6551 WIPER GP-WINDOW
AN ATTACHMENT

SMCS-7305 **i03662654**

NOTE	REF NO	GRAPHIC REF	PART NUMBER	QTY	PART NAME 1 2 3 4 5 6 (PRODUCT LEVEL)	SEE PAGE
	1	1	**7Y-3472**	1	CAP	
	2	1	**124-3952**	1	PACKING	
	3	1	**124-3953**	1	WASHER (20.5X30X2-MM THK)	
M	4	1	**6V-8231**	1	NUT (M10X1.25-THD)	
M	5	1	**7Y-3470**	1	NUT (M20X1-THD)	

M-METRIC PART

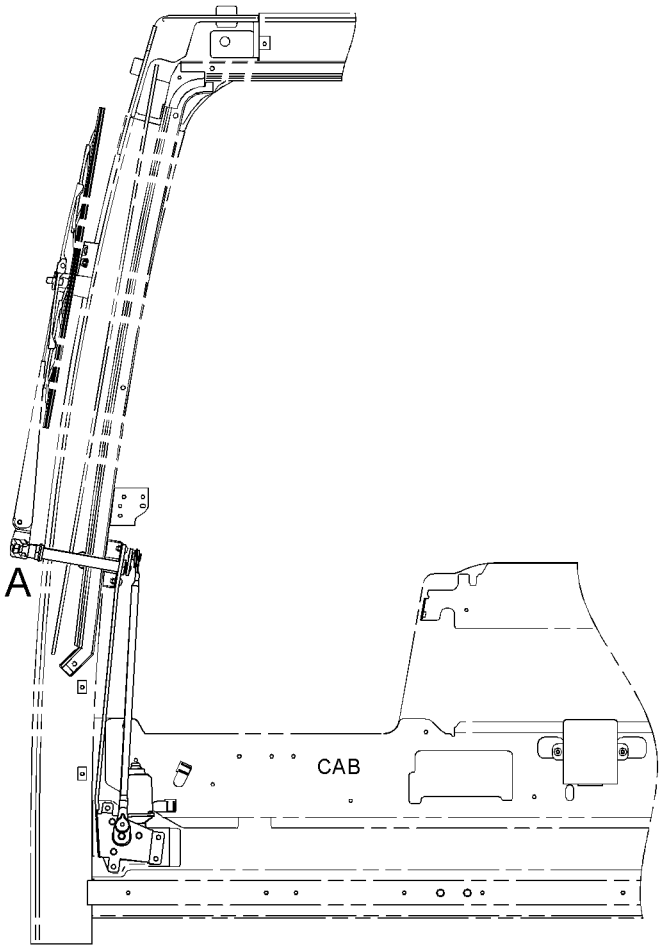

LEFT SIDE VIEW

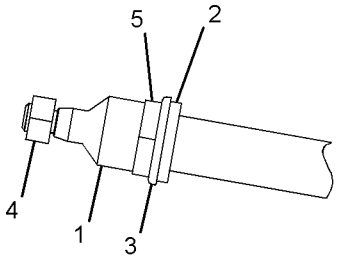

VIEW OF AREA A

GRAPHIC #1 **<END>** g01960694

OPERATOR STATION

338-6881 MOUNTING GP-ANTENNA—PRODUCT LINK

S/N: MYG1-UP; PPN1-UP

PART OF 340-3831 INSTALLATION AR-COMMUNICATION

AN ATTACHMENT

SMCS-7338, 7606 **i03665321**

NOTE	REF NO	GRAPHIC REF	PART NUMBER	QTY	PART NAME 1 2 3 4 5 6 (PRODUCT LEVEL)	SEE PAGE
	1	1	**3S-2093**	5	STRAP-CABLE	
	2	1	**7I-2673**	1	STRAP-CABLE	
	3	1	**284-8532**	1	ANTENNA AS	
		1	**301-0589**	1	ANTENNA (FLEXIBLE)	
	4	1	**349-5363**	1	BRACKET	
	5	1	**8T-4121**	2	WASHER-HARD (11X21X2.5-MM THK)	
M	6	1	**8T-4137**	2	BOLT (M10X1.5X20-MM)	

M-METRIC PART

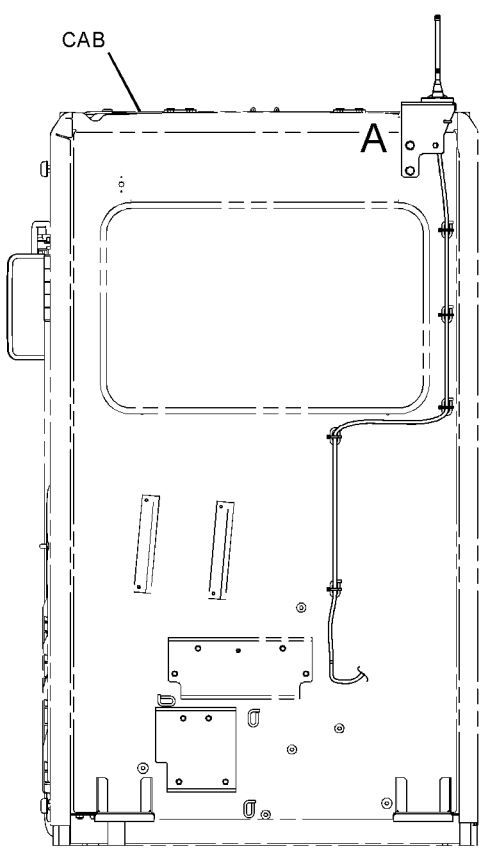

REAR VIEW

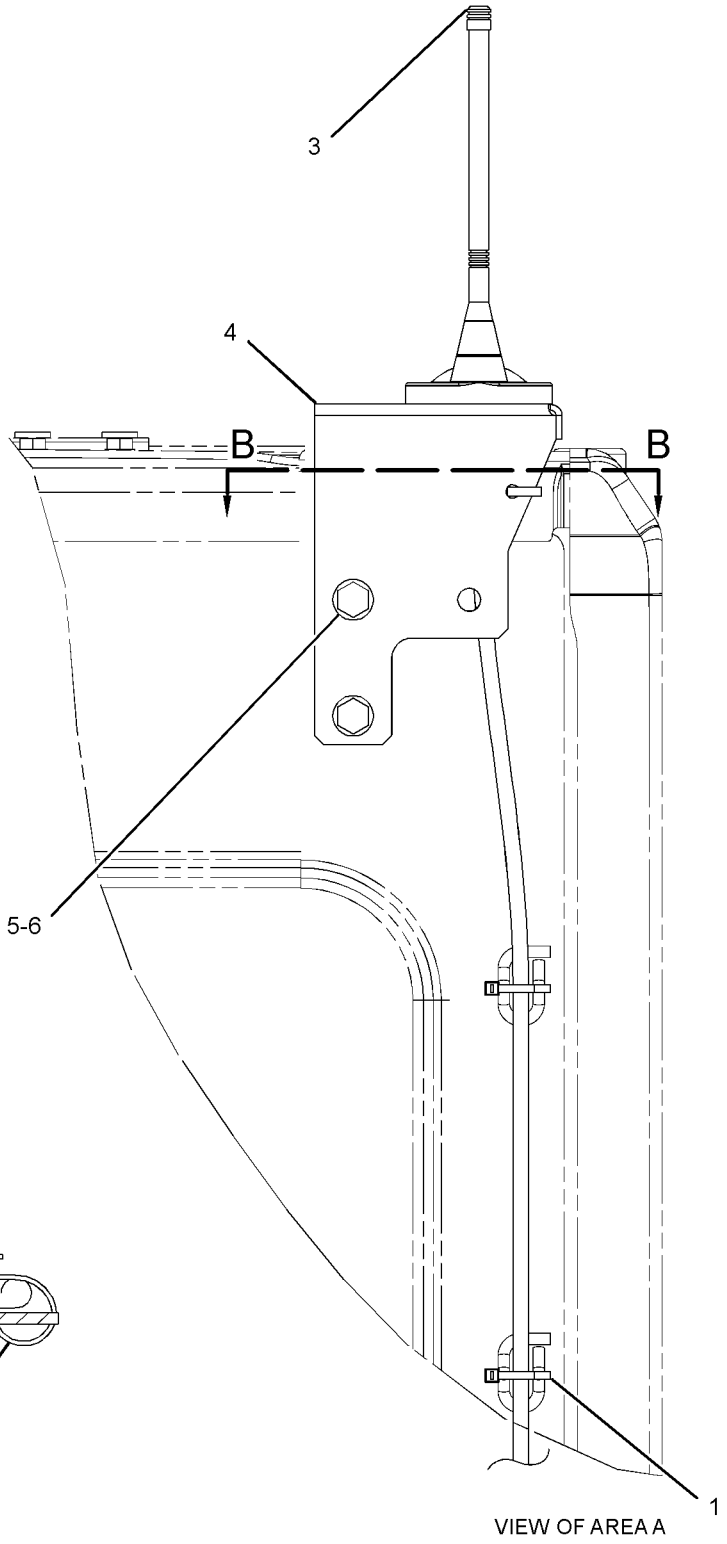

VIEW OF AREA A

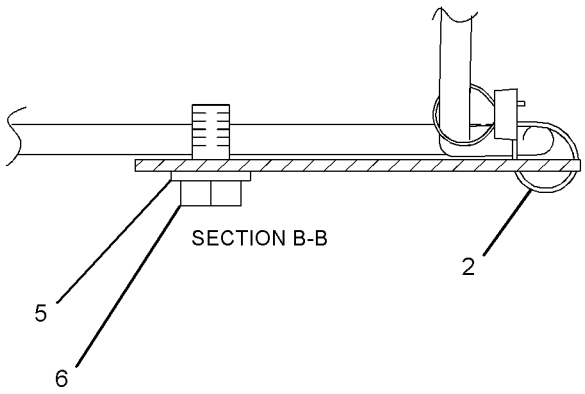

GRAPHIC #1 **<END>** g01968073

OPERATOR STATION

338-6937 MOUNTING GP-ANTENNA–ACCUGRADE

S/N: MYG1-UP; PPN1-UP
PART OF 346-4602, 346-4603 GRADE CONTROL AR
AN ATTACHMENT

SMCS-7338, 7606 **i03668022**

NOTE	REF NO	GRAPHIC REF	PART NUMBER	QTY	PART NAME 1 2 3 4 5 6 (PRODUCT LEVEL)	SEE PAGE
	1	1	**349-5370**	1	BRACKET AS	
	2	1	**349-5373**	1	BRACKET AS	
	3	1	**349-5375**	1	BRACKET AS	
	4	1	**8T-4121**	4	WASHER-HARD (11X21X2.5-MM THK)	
M	5	1	**8T-4137**	4	BOLT (M10X1.5X20-MM)	
M	6	1	**8T-4190**	2	BOLT (M16X2X25-MM)	
	7	1	**9X-8257**	2	WASHER (17.5X30X3.5-MM THK)	

M-METRIC PART

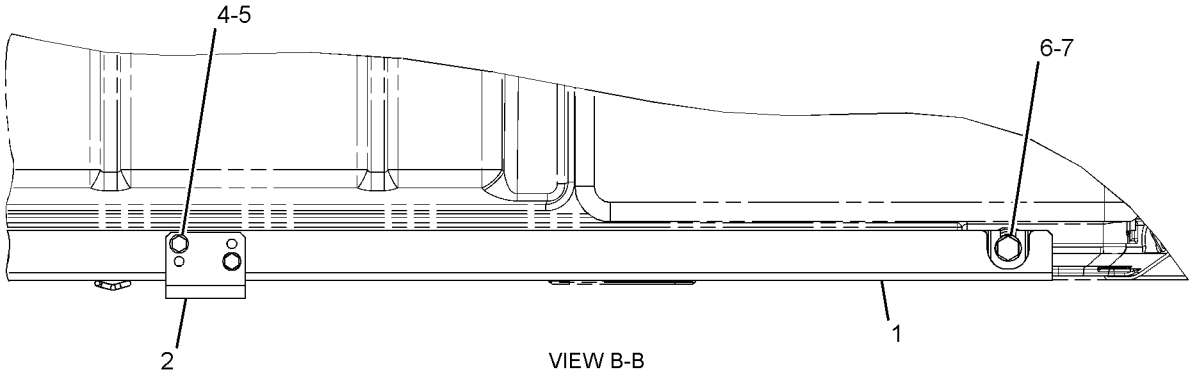

VIEW B-B

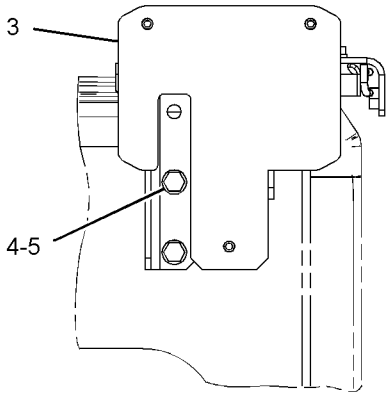

VIEW A-A

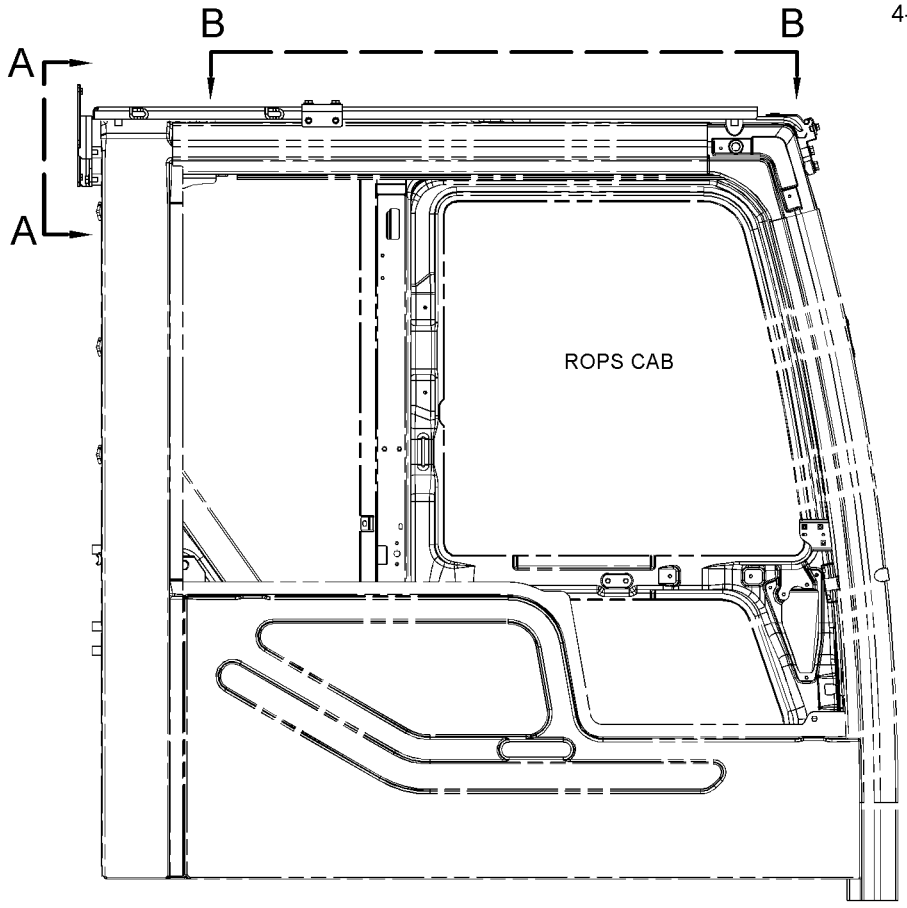

RIGHT SIDE VIEW

GRAPHIC #1 **<END>** g01971434

OPERATOR STATION

346-7375 MOUNTING GP-MIRROR

S/N: MYG1-UP; PPN1-UP
PART OF 334-6541 CAB GP
AN ATTACHMENT

SMCS-7319 **i03664196**

NOTE	REF NO	GRAPHIC REF	PART NUMBER	QTY	PART NAME 1 2 3 4 5 6 (PRODUCT LEVEL)	SEE PAGE
	1	1	**2U-2552**	5	LOCKWASHER	
M	2	1	**6V-5683**	3	BOLT (M6X1X16-MM)	
M	3	1	**9X-6153**	2	BOLT (M6X1X10-MM)	
					PARTS SHOWN IN GRAPHIC(S) WITHOUT A REFERENCE NUMBER ARE NOT SERVICED SEPARATELY	

M-METRIC PART

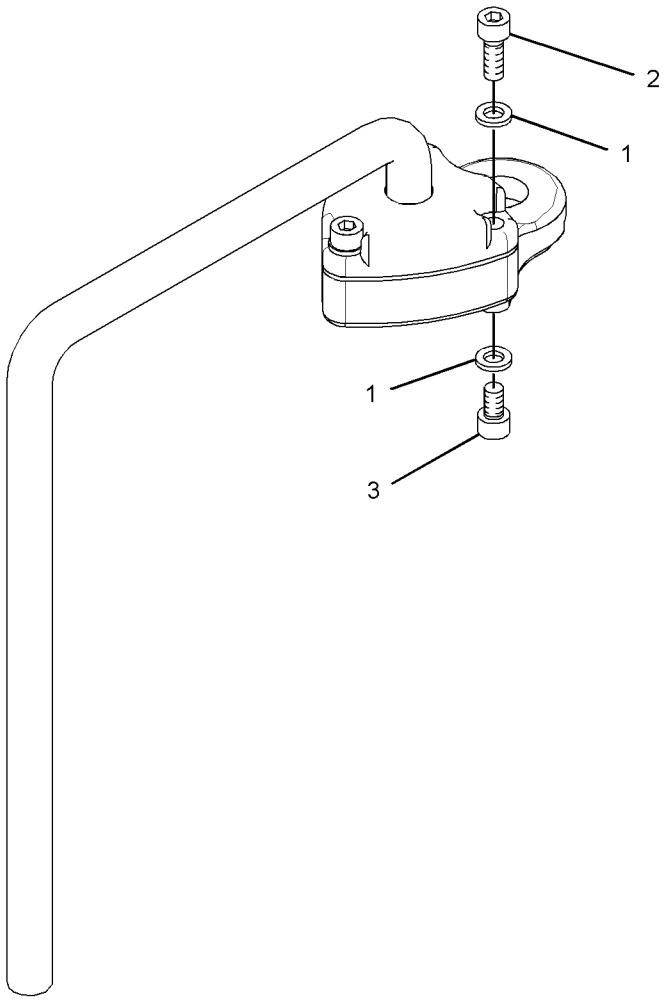

GRAPHIC #1 **<END>** g01962144

OPERATOR STATION

305-0446 MOUNTING GP-PLATFORM

S/N: MYG1-UP; PPN1-UP

PART OF 343-1145, 343-1146 CHASSIS AR

SMCS-7253 **i03639533**

NOTE	REF NO	GRAPHIC REF	PART NUMBER	QTY	PART NAME 1 2 3 4 5 6 (PRODUCT LEVEL)	SEE PAGE
	1	1	**316-8922**	4	MOUNT AS	
	2	1	**8T-4121**	16	WASHER-HARD (11X21X2.5-MM THK)	
M	3	1	**8T-4195**	16	BOLT (M10X1.5X30-MM)	

M-METRIC PART

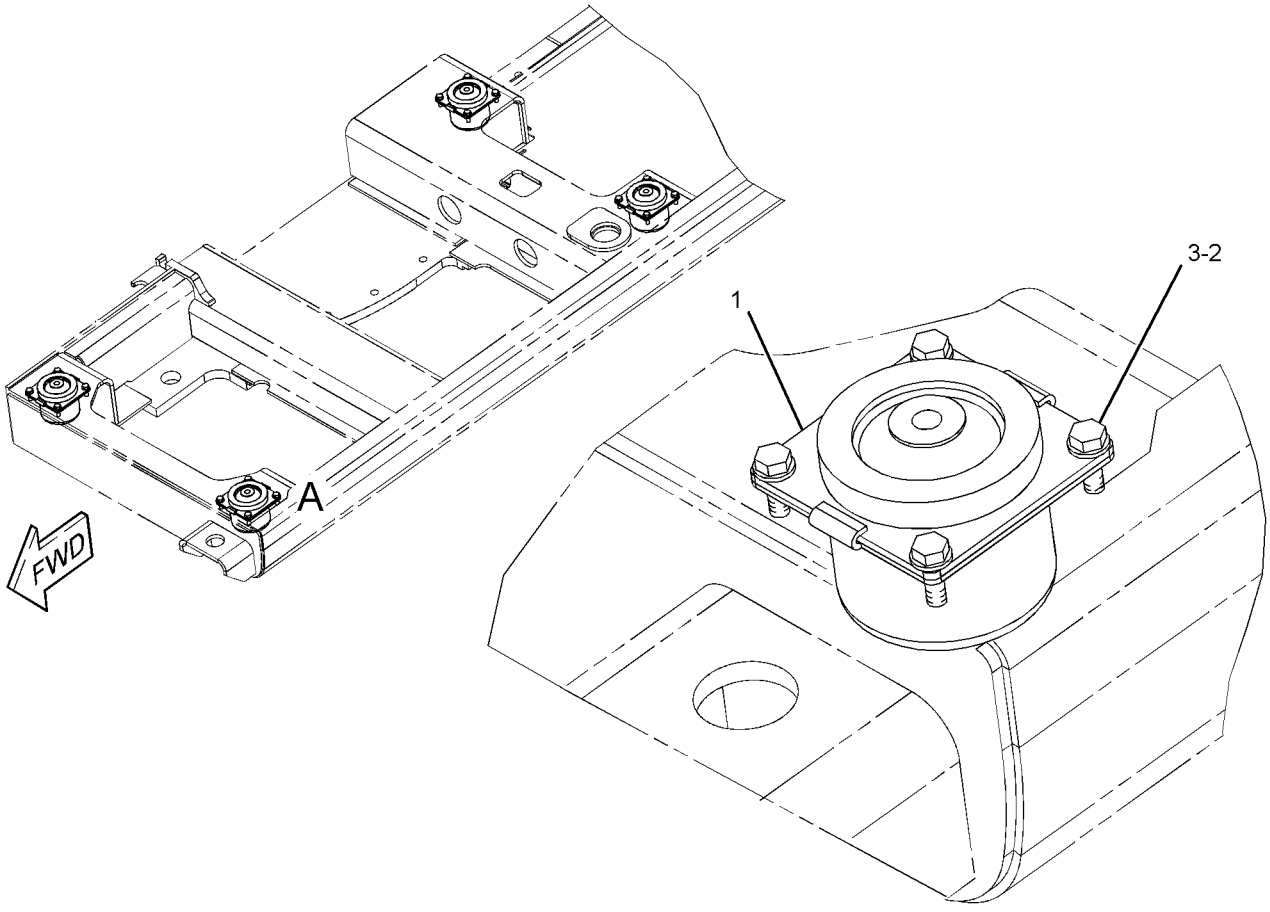

VIEW OF AREA A

GRAPHIC #1 **<END>** g01960010

OPERATOR STATION

316-8927 MOUNTING GP-ROPS

S/N: MYG1-UP; PPN1-UP

PART OF 343-1145, 343-1146 CHASSIS AR

SMCS-7266 **i03652463**

NOTE	REF NO	GRAPHIC REF	PART NUMBER	QTY	PART NAME 1 2 3 4 5 6 (PRODUCT LEVEL)	SEE PAGE
	1	1	**316-8931**	1	SLEEVE (FRONT)	
	2	1	**316-8932**	1	SPACER (18X87X22-MM THK) (FRONT)	
	3	1	**316-8933**	1	STOP (REAR)	
M	4	1	**7X-2576**	1	BOLT (M24X3X70-MM)	
	5	1	**8T-4167**	1	WASHER-HARD (26X44X4-MM THK)	
M	6	1	**8T-4173**	1	BOLT (M16X2X110-MM)	
	7	1	**9X-8257**	1	WASHER (17.5X30X3.5-MM THK)	

M-METRIC PART

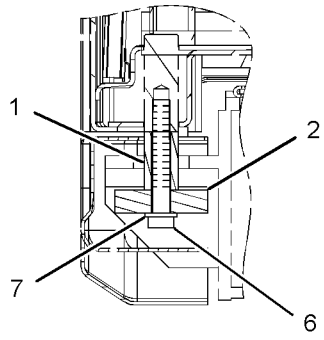

SECTION A-A

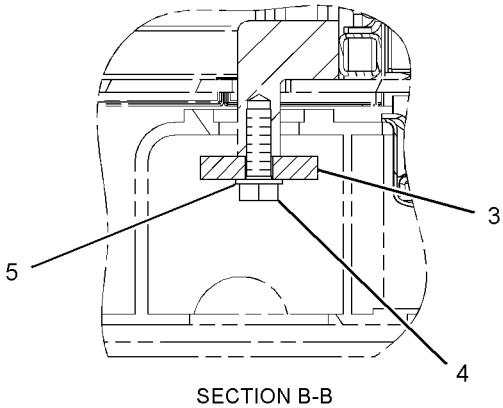

SECTION B-B

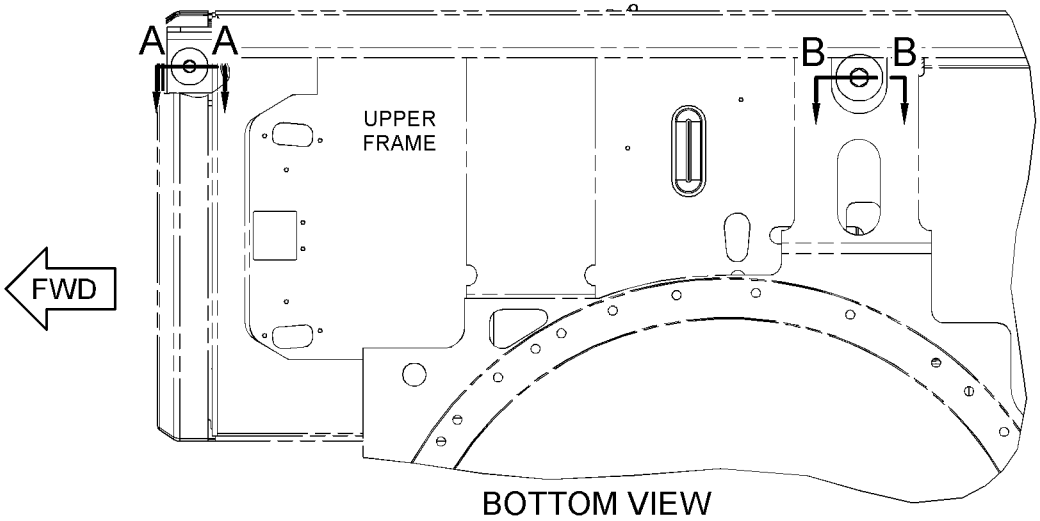

BOTTOM VIEW

GRAPHIC #1 **<END>** g01965394

OPERATOR STATION

340-6485 OPERATOR AR

S/N: MYG1-UP; PPN1-UP
PART OF 343-1145, 343-1146 CHASSIS AR

SMCS-7301 **i03652681**

NOTE	PART NUMBER	QTY	PART NAME 1 2 3 4 5 6 (PRODUCT LEVEL)	SEE PAGE
Y	*245-7922*	1	CONSOLE GP-OPERATOR	860
Y	*221-8872*	1	CONTROL & MTG GP-MACHINE	174
Y	*170-9497*	1	CONTROL GP-PILOT OPERATED HYD (TRAVEL)	878
Y	*221-8813*	1	MONITOR & MTG GP-OPERATOR	923
Y	*336-6179*	1	PANEL & MTG GP-CIRCUIT BREAKER	193
Y	*342-3460*	1	PLATFORM GP-OPERATOR	935
Y	*327-6523*	1	SUPPORT GP-SEAT	951
Y	*336-6174*	1	WIRING GP-CAB	257
Y	*251-0433*	1	WIRING GP-CONSOLE	273
Y	*336-5982*	1	WIRING GP-PLATFORM	286
Y-SEPARATE ILLUSTRATION				

<END>

335-0497 PEDAL AR-AUXILIARY—PEDAL, LH

S/N: MYG1-UP; PPN1-UP
PART OF 347-0288 PEDAL AR-AUXILIARY
AN ATTACHMENT

SMCS-5059 **i03659036**

NOTE	PART NUMBER	QTY	PART NAME 1 2 3 4 5 6 (PRODUCT LEVEL)	SEE PAGE
Y	*338-6943*	1	CONTROL & MTG GP-PEDAL (LH)	869
Y	*259-5293*	1	FASTENER GP-WIRING HARNESS (PEDAL CONTROL)	178
Y	*247-7418*	1	FILM GP (OPERATOR CONTROLS, NOTICE)	979
Y-SEPARATE ILLUSTRATION				

<END>

342-3650 PEDAL AR-AUXILIARY

S/N: MYG1-UP; PPN1-UP
PART OF 347-0286, 347-0288, 347-0290, 348-5467 PEDAL AR-AUXILIARY
AN ATTACHMENT

SMCS-5059 **i03675941**

NOTE	PART NUMBER	QTY	PART NAME 1 2 3 4 5 6 (PRODUCT LEVEL)	SEE PAGE
Y	*316-8842*	1	CONTROL GP-HYDRAULIC PEDAL	876
Y	*251-0526*	1	FASTENER GP-WIRING HARNESS (STRAIGHT TRAVEL)	176
Y	*255-1843*	1	LINES GP-PILOT (THIRD PEDAL, PILOT VALVE)	528
Y	*255-1844*	1	LINES GP-PILOT (CONTROL VALVE, TRAVEL VALVE)	530
	260-6948	1	FILM-INSTRUCTION (OPERATOR CONTROLS, READ OMM)	
			(INSIDE CAB ON LH WINDOW)	
Y-SEPARATE ILLUSTRATION				

<END>

OPERATOR STATION

347-0286 PEDAL AR-AUXILIARY—RH

S/N: MYG1-UP; PPN1-UP
AN ATTACHMENT

SMCS-5059 **i03676422**

NOTE	PART NUMBER	QTY	PART NAME 1 2 3 4 5 6 (PRODUCT LEVEL)	SEE PAGE
Y	*340-6489*	1	FLOOR MAT	891
Y	*342-3650*	1	PEDAL AR-AUXILIARY (THIRD)	933
Y-SEPARATE ILLUSTRATION				

<END>

347-0288 PEDAL AR-AUXILIARY—LH, RH

S/N: MYG1-UP; PPN1-UP
AN ATTACHMENT

SMCS-5059 **i03676461**

NOTE	PART NUMBER	QTY	PART NAME 1 2 3 4 5 6 (PRODUCT LEVEL)	SEE PAGE
Y	*340-6490*	1	FLOOR MAT	892
Y	*335-0497*	1	PEDAL AR-AUXILIARY (LH)	933
Y	*342-3650*	1	PEDAL AR-AUXILIARY (THIRD)	933
Y-SEPARATE ILLUSTRATION				

<END>

347-0290 PEDAL AR-AUXILIARY—PEDAL, RH, FOOT SWITCH, LH

S/N: MYG1-UP; PPN1-UP
AN ATTACHMENT

SMCS-5059 **i03676421**

NOTE	PART NUMBER	QTY	PART NAME 1 2 3 4 5 6 (PRODUCT LEVEL)	SEE PAGE
Y	*270-6106*	1	CONTROL AR-AUXILIARY (FOOT SWITCH, LH)	408
Y	**340-6493**	1	FLOOR MAT	893
Y	*342-3650*	1	PEDAL AR-AUXILIARY (THIRD)	933
Y-SEPARATE ILLUSTRATION				

<END>

348-5467 PEDAL AR-AUXILIARY—ACCUGRADE READY, RH

S/N: MYG1-UP; PPN1-UP
AN ATTACHMENT

SMCS-5059 **i03676483**

NOTE	PART NUMBER	QTY	PART NAME 1 2 3 4 5 6 (PRODUCT LEVEL)	SEE PAGE
Y	*342-3536*	1	FLOOR MAT	894
Y	*342-3650*	1	PEDAL AR-AUXILIARY (THIRD)	933
Y-SEPARATE ILLUSTRATION				

<END>

OPERATOR STATION

342-3460 PLATFORM GP-OPERATOR

S/N: MYG1-UP; PPN1-UP

PART OF 340-6485 OPERATOR AR

SMCS-7253 **i03652849**

NOTE	REF NO	GRAPHIC REF	PART NUMBER	QTY	PART NAME 1 2 3 4 5 6 (PRODUCT LEVEL)	SEE PAGE
	1	1	**135-8965**	1	GROMMET	
	2	1	**135-8966**	1	GROMMET	
	3	1	**162-0349**	2	COVER	
	4	1	**342-3461**	1	PLATFORM AS	
	5	1	**342-3718**	1	COVER	
M	6	1	**7X-2553**	2	BOLT (M16X2X40-MM)	
	7	1	**8T-4121**	2	WASHER-HARD (11X21X2.5-MM THK)	
M	8	1	**8T-4191**	2	BOLT (M10X1.5X16-MM)	
M	9	1	**8T-4193**	2	BOLT (M16X2X50-MM)	
	10	1	**9X-8257**	4	WASHER (17.5X30X3.5-MM THK)	

M-METRIC PART

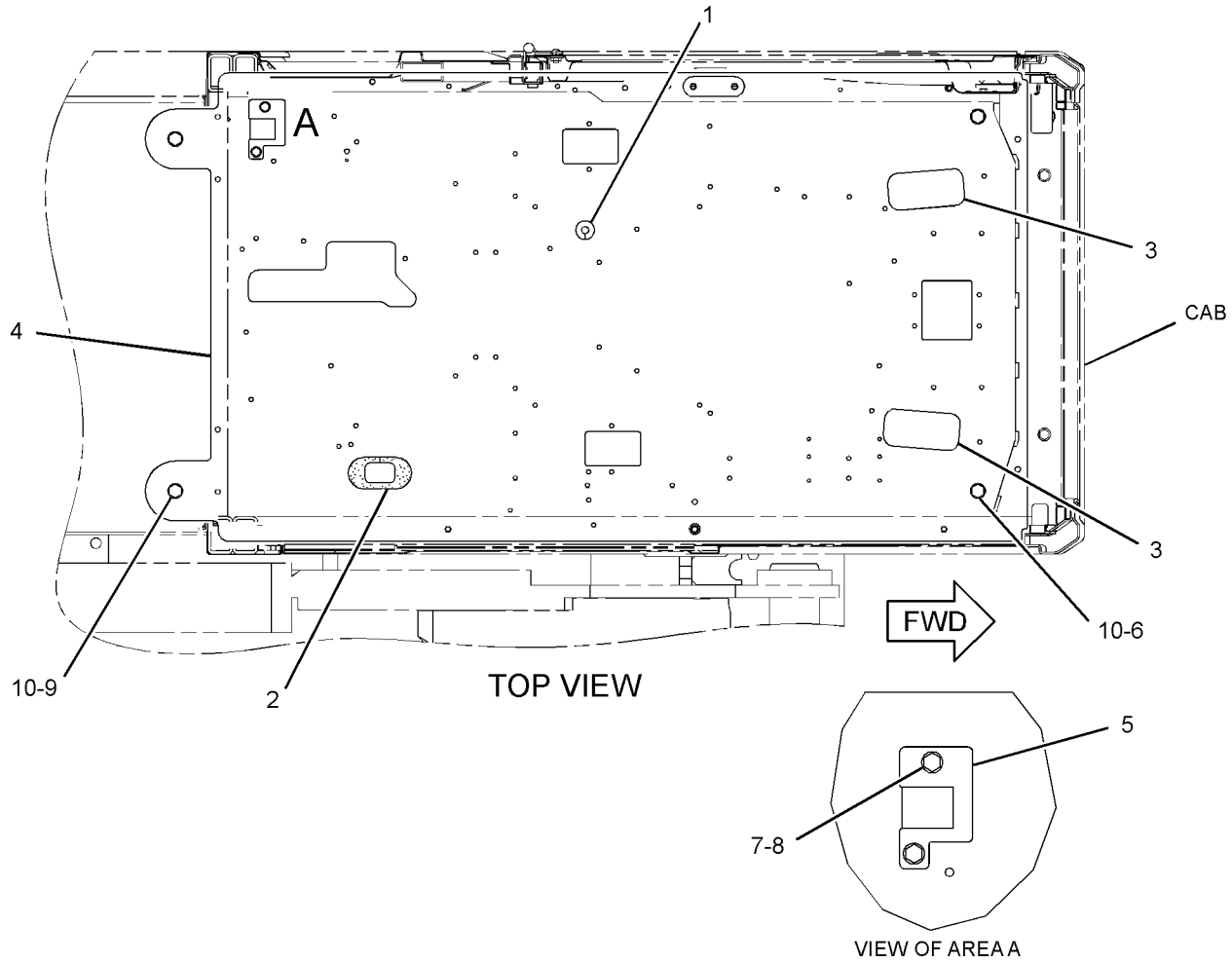

GRAPHIC #1 **<END>** g01956044

OPERATOR STATION

251-0538 RADIO GP

S/N: MYG1-UP; PPN1-UP
AN ATTACHMENT

SMCS-7338, 733C **i03024523**

NOTE	REF NO	GRAPHIC REF	PART NUMBER	QTY	PART NAME 1 2 3 4 5 6 (PRODUCT LEVEL)	SEE PAGE
	1	1	**3S-2093**	2	STRAP-CABLE	
	2	1	**7K-1181**	2	STRAP-CABLE	
	3	1	**106-2704**	2	SCREW AS (M5X0.8X10-MM)	
	4	1	**238-2260**	1	CABLE	
	5	1	**306-8802**	1	RADIO-AM/FM	
	6	1	**259-4914**	1	BRACKET AS	
	7	1	**119-5026**	2	SCREW-PAN HEAD (10-16X0.63-IN)	

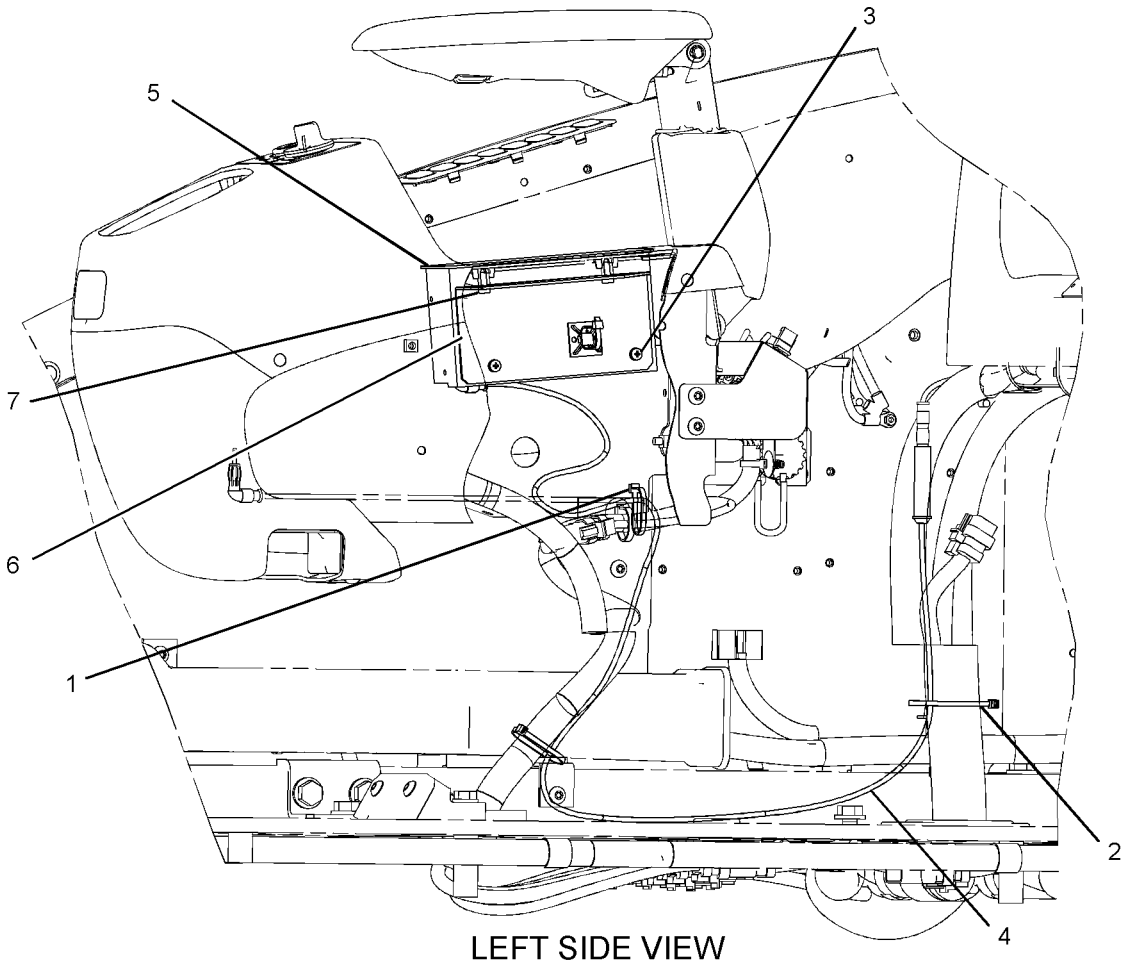

LEFT SIDE VIEW

GRAPHIC #1 **<END>** g01225602

OPERATOR STATION

263-9088 RADIO GP-COMMUNICATION—PRODUCT LINK 121SR

S/N: MYG1-UP; PPN1-UP
PART OF 338-6891 CONTROL & MTG GP-COMMUNICATION
AN ATTACHMENT

SMCS-733T **i03130503**

NOTE	PART NUMBER	QTY	PART NAME 1 2 3 4 5 6 (PRODUCT LEVEL)	SEE PAGE
	330-3408	1	SOFTWARE GP-COMMUNICATION (PRODUCT LINK 121SR)	

<END>

OPERATOR STATION

336-1150 SCREEN GP-SUN

S/N: MYG1-UP; PPN1-UP
PART OF 345-7497, 345-7498, 345-7499 OPTION AR-CONFIGURATION
AN ATTACHMENT

SMCS-7165 **i03659072**

NOTE	REF NO	GRAPHIC REF	PART NUMBER	QTY	PART NAME 1 2 3 4 5 6 (PRODUCT LEVEL)	SEE PAGE
	1	1	**259-7214**	3	HOOK-RETAINER	
	2	1	**259-7215**	3	HOOK-RETAINER	
	3	1	**336-1151**	1	SCREEN AS (SUN)	
M	4	1	**099-0822**	6	BOLT-SOCKET HEAD (M5X0.8X10-MM)	

M-METRIC PART

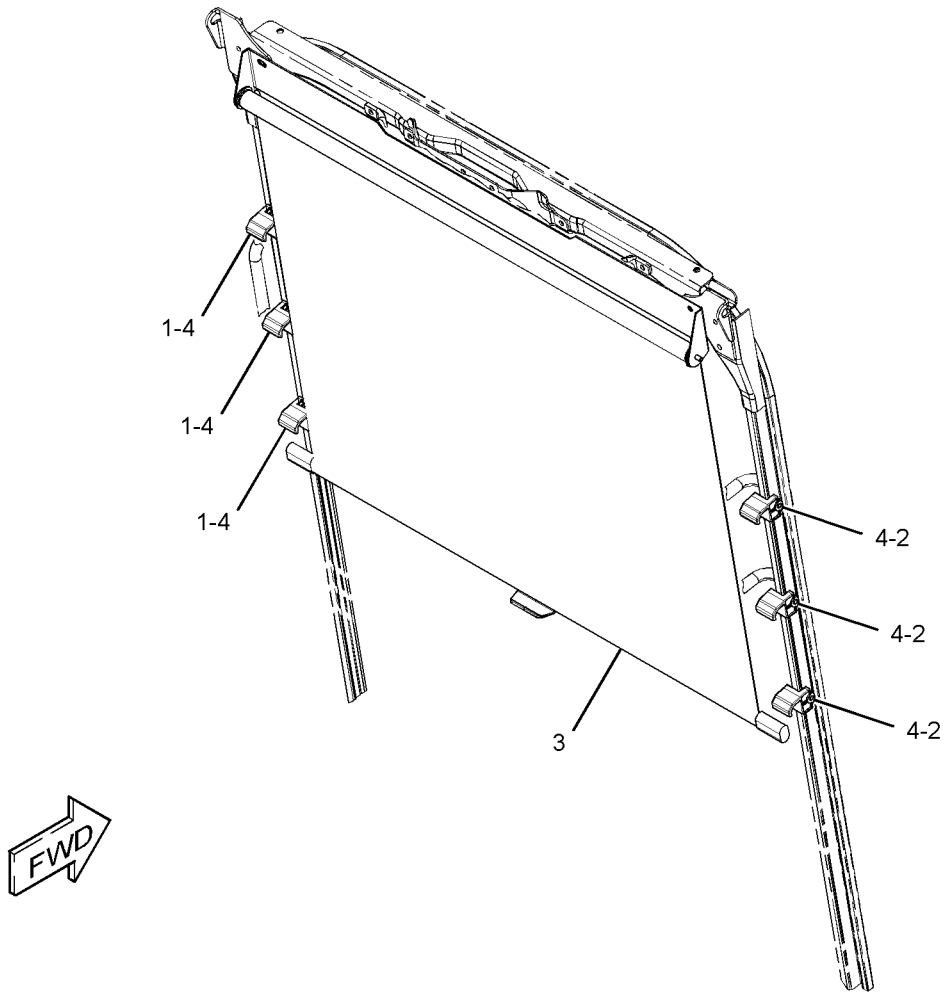

GRAPHIC #1 **<END>** g01950170

OPERATOR STATION

346-7412 SEAL GP-CAB

S/N: MYG1-UP; PPN1-UP
PART OF 343-1195, 343-1196 WIPER AR-WINDOW
AN ATTACHMENT

SMCS-7301 **i03666404**

NOTE	REF NO	GRAPHIC REF	PART NUMBER	QTY	PART NAME 1 2 3 4 5 6 (PRODUCT LEVEL)	SEE PAGE
	1	1	**346-7981**	1	PLUG	
	2	1	**346-7982**	1	SHEET	
	3	1	**346-7983**	1	INSULATOR	
M	4	1	**9X-2042**	2	SCREW-TRUSS HEAD (M6X1X12-MM)	

M-METRIC PART

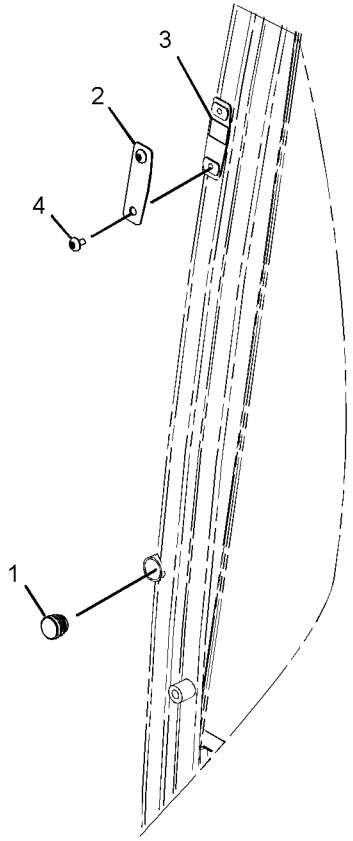

VIEW OF AREA A
(EXPLODED)

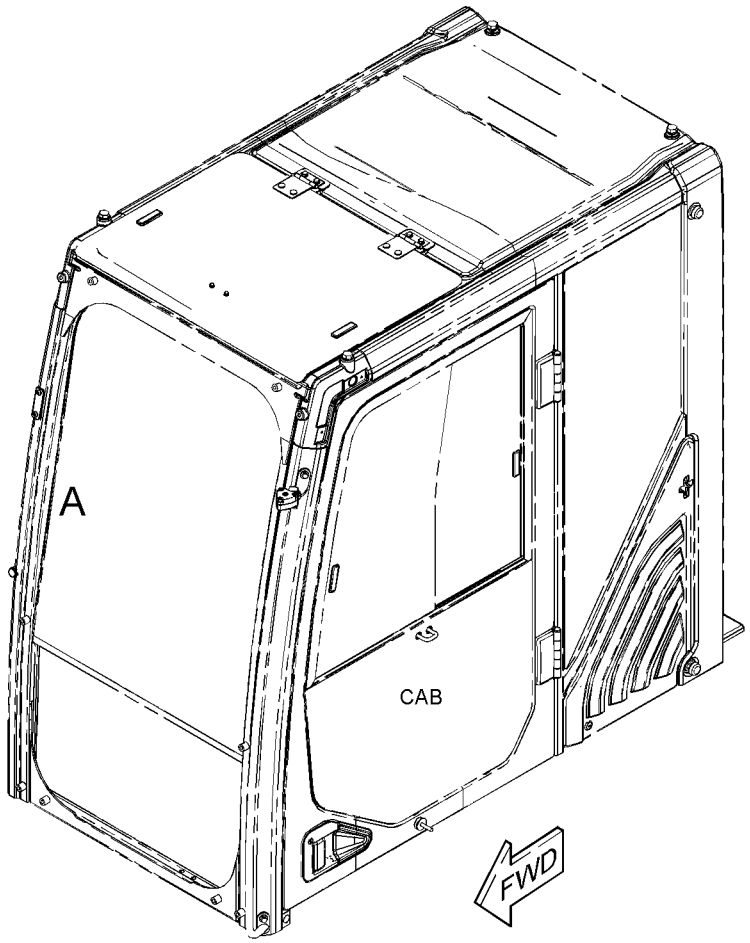

GRAPHIC #1

<END>

g01982176

OPERATOR STATION

327-6501 SEAT & MOUNTING GP—HIGH BACK, TILT

S/N: MYG1-UP; PPN1-UP
PART OF 345-7499 OPTION AR-CONFIGURATION
AN ATTACHMENT

SMCS-7312 **i03636621**

NOTE	REF NO	GRAPHIC REF	PART NUMBER	QTY	PART NAME 1 2 3 4 5 6 (PRODUCT LEVEL)	SEE PAGE
Y	1	1	*327-6507*	1	SEAT GP-SUSPENSION (HIGH BACK, TILT)	945
M	2	1	**6V-8202**	4	BOLT-SOCKET HEAD (M8X1.25X16-MM)	

M-METRIC PART
Y-SEPARATE ILLUSTRATION

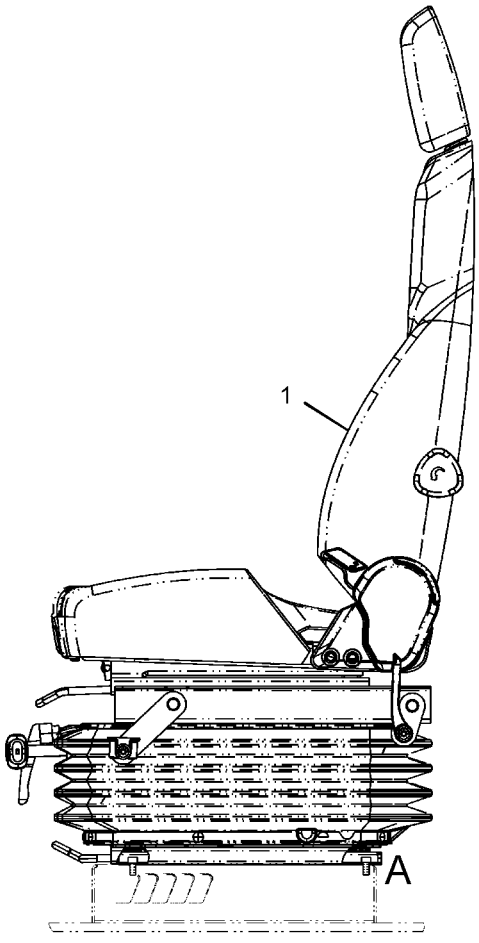

LEFT SIDE VIEW

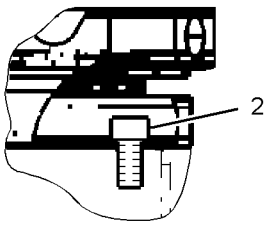

VIEW OF AREA A

GRAPHIC #1 **<END>** g01804737

OPERATOR STATION

327-6503 SEAT & MOUNTING GP—HIGH BACK, WITH HEATER

S/N: MYG1-UP; PPN1-UP

PART OF 345-7497, 345-7498 OPTION AR-CONFIGURATION

AN ATTACHMENT

SMCS-7312 **i03572349**

NOTE	REF NO	GRAPHIC REF	PART NUMBER	QTY	PART NAME 1 2 3 4 5 6 (PRODUCT LEVEL)	SEE PAGE
	1	1	**238-2211**	1	SWITCH AS-ROCKER (HEATED SEAT)	
		1	**167-3542**	1	CONNECTOR-RECEPTACLE	
		1	**167-3543**	4	TERMINAL (MALE)	
Y	2	1	*327-6509*	1	SEAT GP-SUSPENSION (HIGH BACK, WITH HEATER)	946
M	3	1	**6V-8202**	4	BOLT-SOCKET HEAD (M8X1.25X16-MM)	

M-METRIC PART
Y-SEPARATE ILLUSTRATION

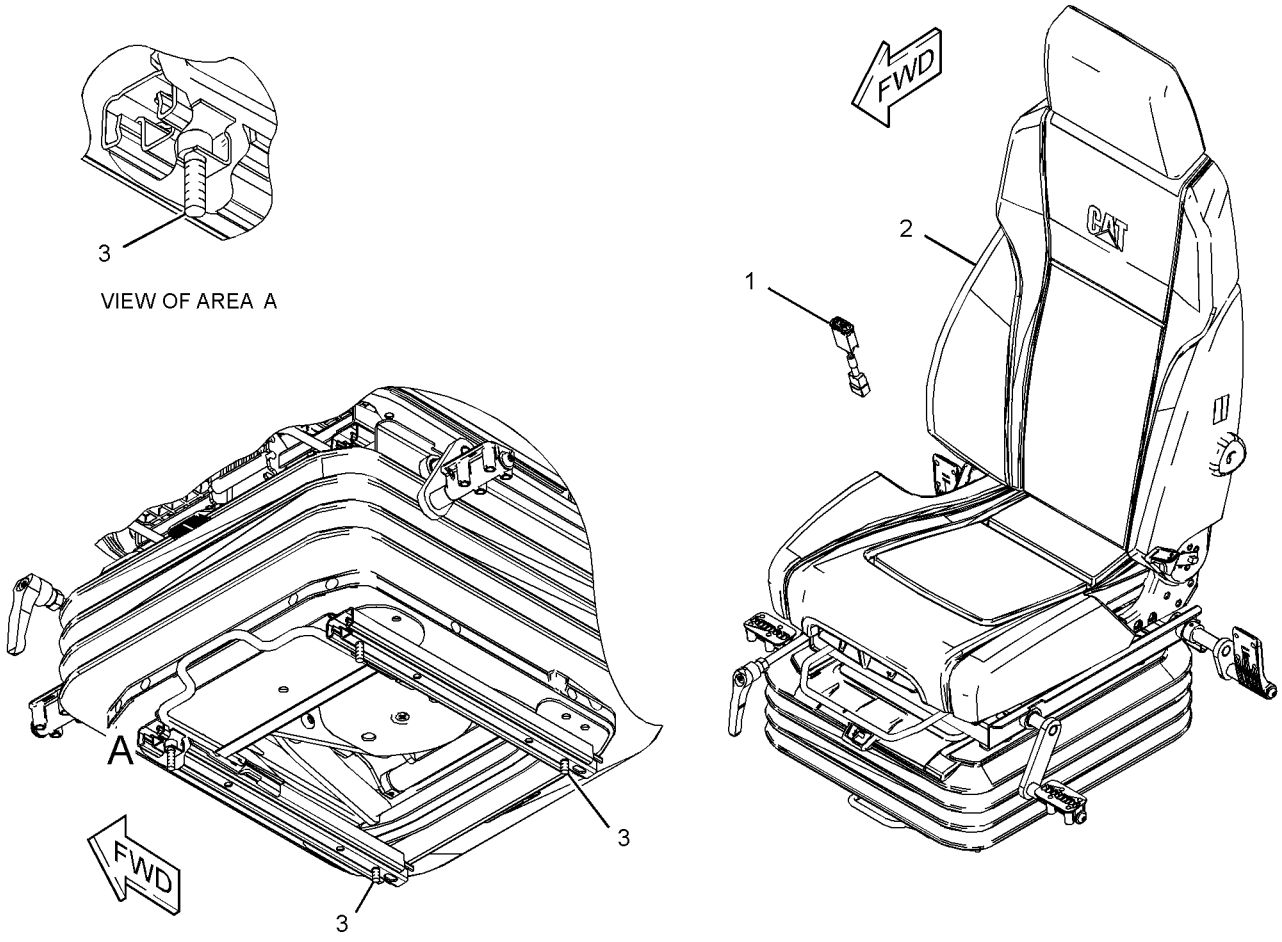

GRAPHIC #1 **<END>** g01901913

OPERATOR STATION

305-0467 SEAT BELT GP—RETRACTABLE, 43-MM

S/N: MYG1-UP; PPN1-UP

PART OF 345-7497, 345-7498, 345-7499 OPTION AR-CONFIGURATION

AN ATTACHMENT

SMCS-7327 **i03533580**

NOTE	REF NO	GRAPHIC REF	PART NUMBER	QTY	PART NAME 1 2 3 4 5 6 (PRODUCT LEVEL)	SEE PAGE
	1	1	**327-6541**	1	SEAT BELT GP (RETRACTABLE, 43-MM)	

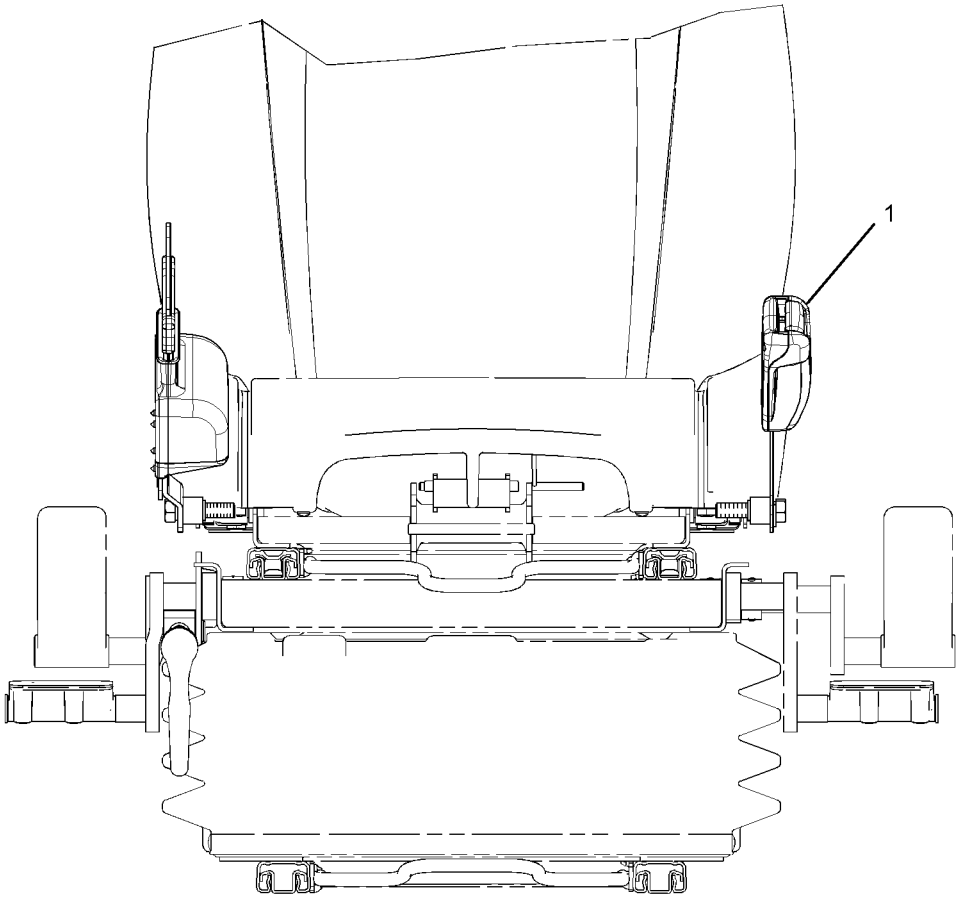

FRONT VIEW

GRAPHIC #1 **<END>** g01576478

OPERATOR STATION

327-6512 SEAT GP—HIGH BACK, TILT

S/N: MYG1-UP; PPN1-UP
PART OF 327-6507 SEAT GP-SUSPENSION
AN ATTACHMENT

SMCS-7312 **i03710782**

NOTE	REF NO	GRAPHIC REF	PART NUMBER	QTY	PART NAME 1 2 3 4 5 6 (PRODUCT LEVEL)	SEE PAGE
	1	1	**327-6515**	1	HEADREST AS-SEAT	
	2	1	**327-6642**	1	KIT-SEAT TILT	
		1	**333-4179**	2	BOLT-SHOULDER (M10X1.5X26.2-MM)	
		1	**333-4180**	4	SCREW-BUTTON HEAD (M8X1.25X20-MM)	
	3	1	**327-6643**	1	KIT-ADJUSTER (CUSHION POSITIONING)	
M		1	**9X-2616**	4	SCREW-SOCKET (M8X1.25X16-MM)	
		1	**316-8987**	2	BRACKET	
	4	1	**333-4160**	1	KIT-SEAT (HIGH BACK, MANUAL)	
	4A	1	**178-5659**	1	HANDLE (LUMBAR SUPPORT ADJUSTER)	
	4B	1	**327-6640**	1	KIT-HANDLE (RECLINER)	
		1	**333-4179**	2	BOLT-SHOULDER (M10X1.5X26.2-MM)	

M-METRIC PART

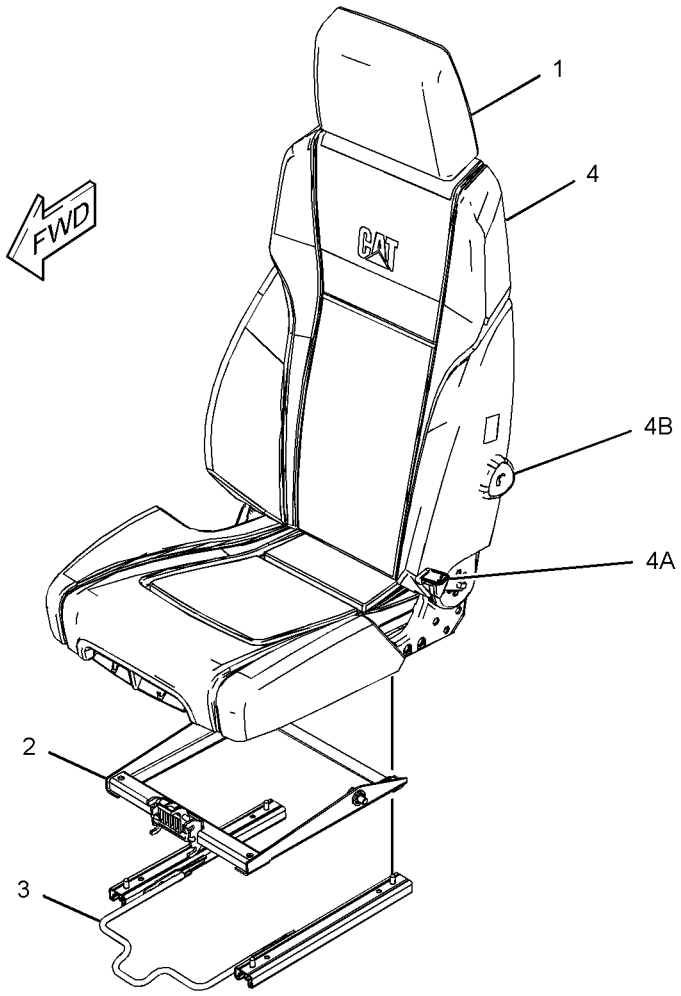

GRAPHIC #1

<END>

g01997973

OPERATOR STATION

327-6513 SEAT GP–HIGH BACK, WITH HEATER

S/N: MYG1-UP; PPN1-UP
PART OF 327-6509 SEAT GP-SUSPENSION
AN ATTACHMENT

SMCS-7312 **i03710850**

NOTE	REF NO	GRAPHIC REF	PART NUMBER	QTY	PART NAME 1 2 3 4 5 6 (PRODUCT LEVEL)	SEE PAGE
	1	1	**327-6515**	1	HEADREST AS-SEAT	
	2	1	**327-6642**	1	KIT-SEAT TILT	
		1	**333-4179**	2	BOLT-SHOULDER (M10X1.5X26.2-MM)	
		1	**333-4180**	4	SCREW-BUTTON HEAD (M8X1.25X20-MM)	
	3	1	**327-6643**	1	KIT-ADJUSTER (CUSHION POSITIONING)	
M		1	**9X-2616**	4	SCREW-SOCKET (M8X1.25X16-MM)	
		1	**316-8987**	2	BRACKET	
	4	1	**333-4160**	1	KIT-SEAT (HIGH BACK, MANUAL)	
	4A	1	**178-5659**	1	HANDLE (LUMBAR SUPPORT ADJUSTER)	
	4B	1	**327-6640**	1	KIT-HANDLE (RECLINER)	
		1	**333-4179**	2	BOLT-SHOULDER (M10X1.5X26.2-MM)	

M-METRIC PART

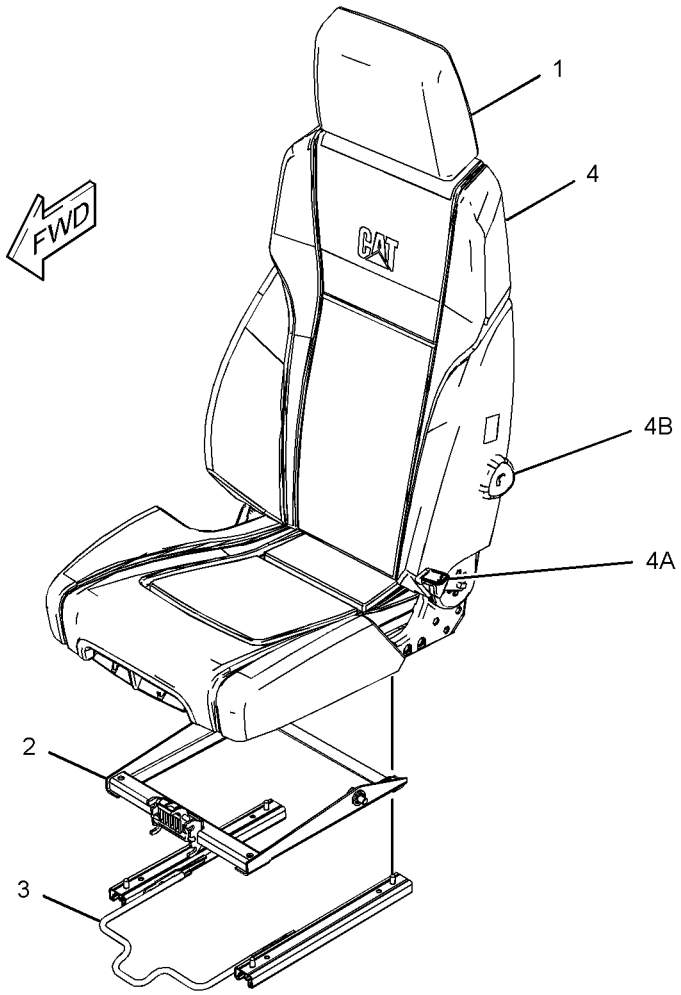

GRAPHIC #1 **<END>** g01997973

OPERATOR STATION

327-6507 SEAT GP-SUSPENSION—HIGH BACK, TILT

S/N: MYG1-UP; PPN1-UP
PART OF 327-6501 SEAT & MOUNTING GP
AN ATTACHMENT

SMCS-7324, 7336 **i03572478**

NOTE	REF NO	GRAPHIC REF	PART NUMBER	QTY	PART NAME 1 2 3 4 5 6 (PRODUCT LEVEL)	SEE PAGE
	1	1	**316-8987**	2	BRACKET	
Y	2	1	**327-6512**	1	SEAT GP (HIGH BACK, TILT)	943
Y	3	1	**327-6520**	1	SUSPENSION GP-SEAT (MECHANICAL)	952
M	4	1	**5A-3604**	4	BOLT-SOCKET HEAD (M8X1.25X25-MM)	

M-METRIC PART
Y-SEPARATE ILLUSTRATION

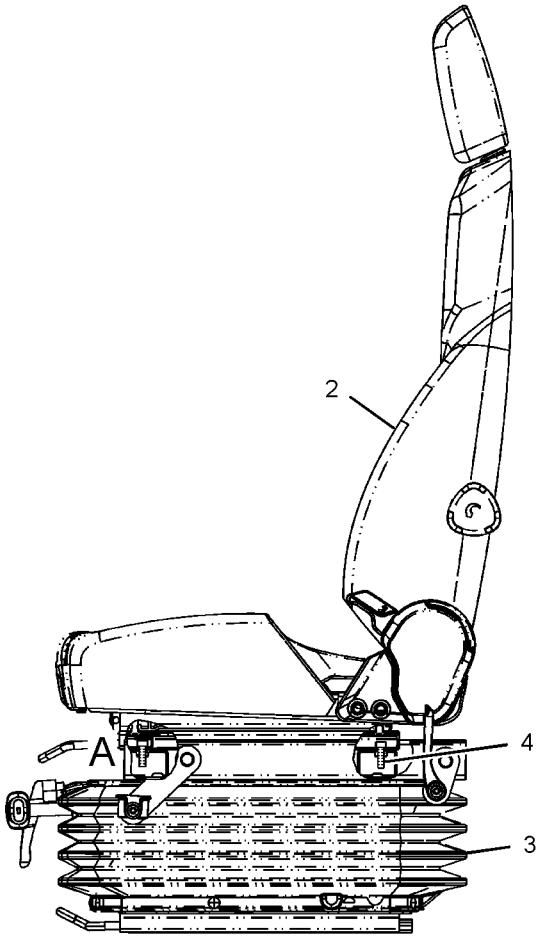

LEFT SIDE VIEW

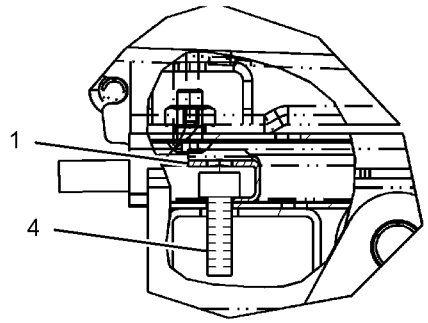

VIEW OF AREA A

GRAPHIC #1 **<END>** g01794435

327-6509 SEAT GP-SUSPENSION—HIGH BACK, WITH HEATER

S/N: MYG1-UP; PPN1-UP
PART OF 327-6503 SEAT & MOUNTING GP
AN ATTACHMENT

SMCS-7324, 7336 **i03608343**

NOTE	REF NO	GRAPHIC REF	PART NUMBER	QTY	PART NAME 1 2 3 4 5 6 (PRODUCT LEVEL)	SEE PAGE
	1	1	**7I-2673**	1	STRAP-CABLE	
	2	1	**316-8987**	2	BRACKET	
Y	3	1	**327-6513**	1	SEAT GP (HIGH BACK, WITH HEATER)	944
Y	4	1	**327-6521**	1	SUSPENSION GP-SEAT (AIR)	953
M	5	1	**5A-3604**	4	BOLT-SOCKET HEAD (M8X1.25X25-MM)	

M-METRIC PART
Y-SEPARATE ILLUSTRATION

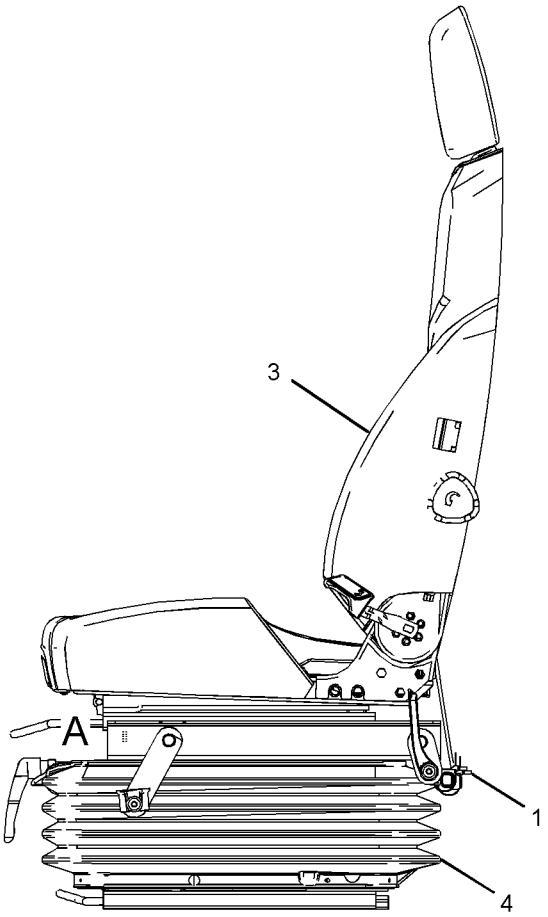

LEFT SIDE VIEW

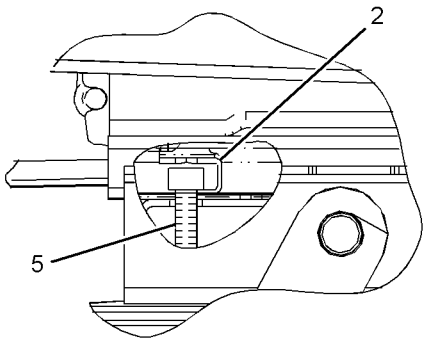

VIEW OF AREA A

GRAPHIC #1 **<END>** g01810781

OPERATOR STATION

338-6921 SERVICE GP-MONITOR

S/N: MYG1-UP; PPN1-UP

PART OF 221-8861 ELECTRONICS GP-MONITOR

SMCS-7610 **i03649763**

NOTE	REF NO	GRAPHIC REF	PART NUMBER	QTY	PART NAME 1 2 3 4 5 6 (PRODUCT LEVEL)	SEE PAGE
Y	1	1	**327-7482**	1	MONITOR GP-OPERATOR	924
	2	1	**338-6920**	1	SOFTWARE GP-MONITOR	

Y-SEPARATE ILLUSTRATION

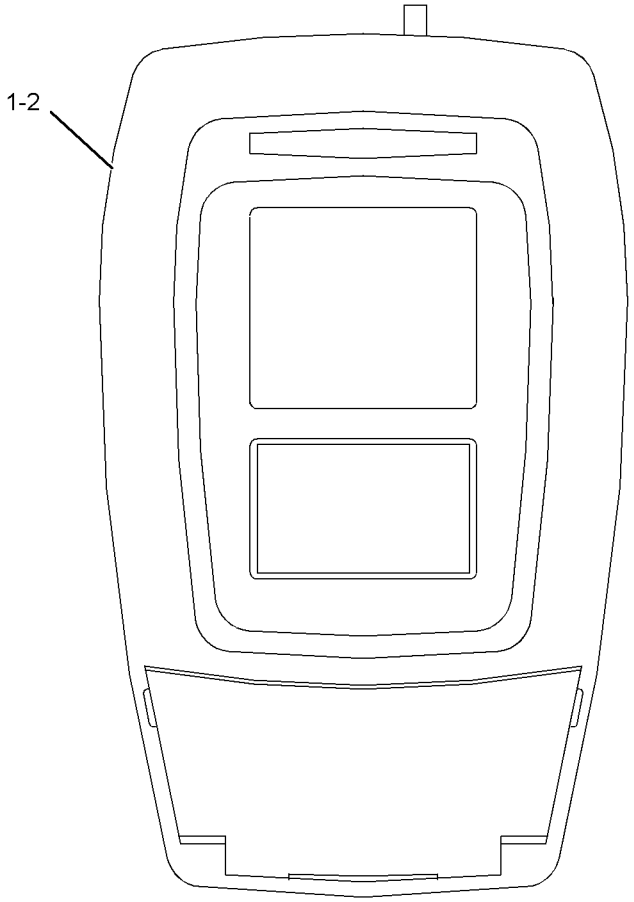

GRAPHIC #1 **<END>** g01892814

OPERATOR STATION

334-6492 STRIKER GP-LATCH

S/N: MYG1-UP; PPN1-UP
PART OF 327-6625 WINDOW GP-FRONT
AN ATTACHMENT

SMCS-7301 **i03662765**

NOTE	REF NO	GRAPHIC REF	PART NUMBER	QTY	PART NAME 1 2 3 4 5 6 (PRODUCT LEVEL)	SEE PAGE
	1	1	**7Y-8561**	1	BUMPER	
	2	1	**178-5576**	1	STOP	
M	3	1	**185-8197**	2	NUT (M10X1.5-THD)	
	4	1	**334-6493**	1	SHEET AS	
	5	1	**334-6495**	2	STRIKER	
	6	1	**4I-3144**	2	WASHER-HARD (10.2X22X3.2-MM THK)	
M	7	1	**5C-2890**	4	NUT (M6X1-THD)	
	8	1	**9X-8256**	4	WASHER (6.6X12X2-MM THK)	

M-METRIC PART

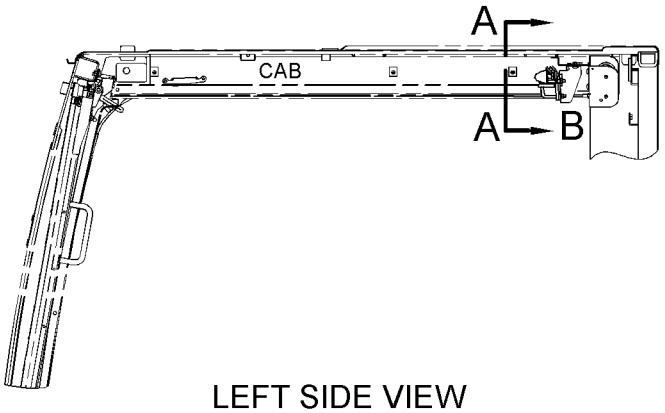

LEFT SIDE VIEW

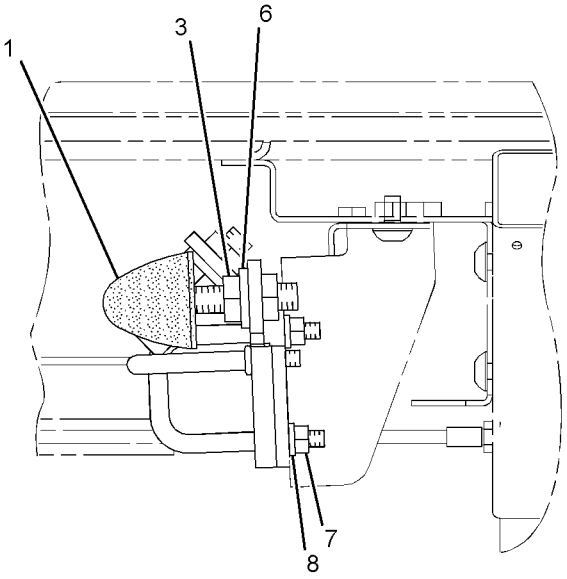

VIEW OF AREA B

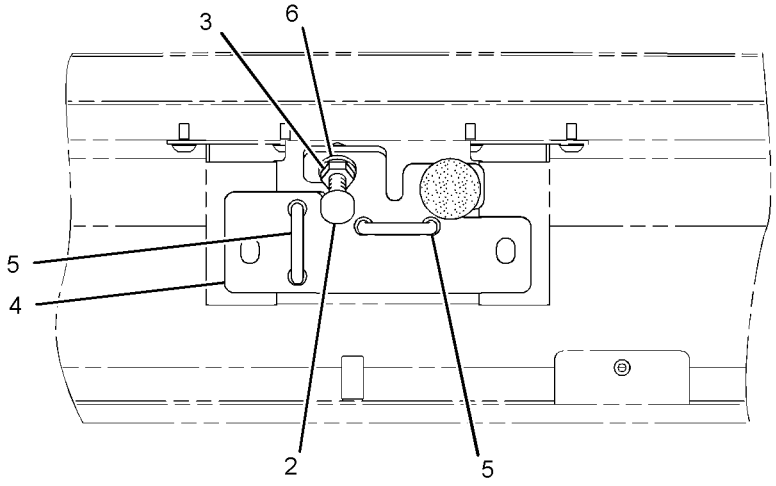

VIEW A-A

GRAPHIC #1 **<END>** g01958738

OPERATOR STATION

346-7437 SUPPORT AS–CAB AIR FILTER

S/N: MYG1-UP; PPN1-UP
PART OF 340-6524 DUCT GP-CAB AIR
AN ATTACHMENT

SMCS-7320 **i03661520**

NOTE	REF NO	GRAPHIC REF	PART NUMBER	QTY	PART NAME 1 2 3 4 5 6 (PRODUCT LEVEL)	SEE PAGE
	1	1	**346-7427**	2	INSULATION	
	2	1	**346-7428**	2	INSULATION	
	3	1	**346-7429**	1	INSULATION	

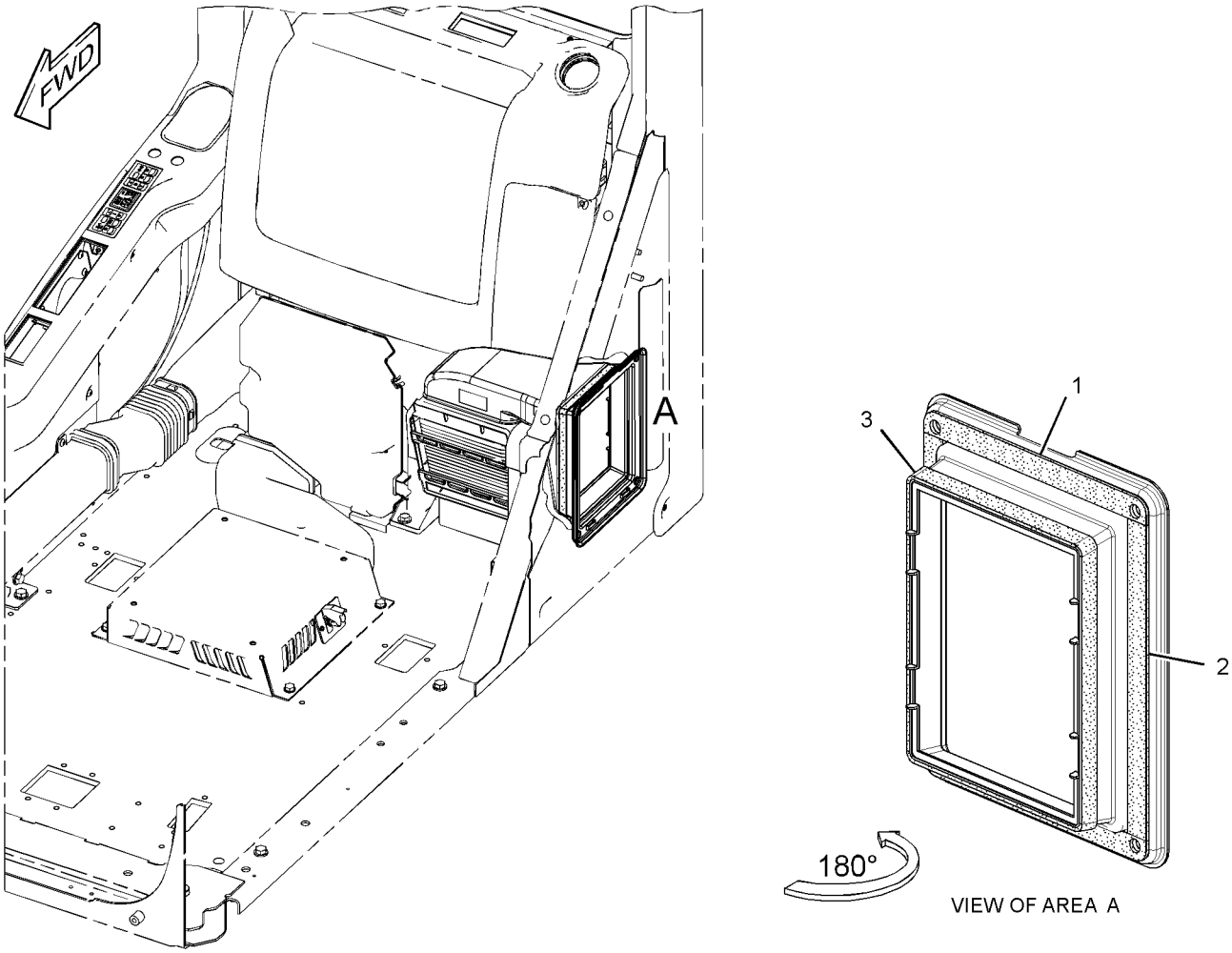

GRAPHIC #1 **<END>** g01964853

OPERATOR STATION

327-6523 SUPPORT GP-SEAT

S/N: MYG1-UP; PPN1-UP
PART OF 340-6485 OPERATOR AR

SMCS-7321 **i03641500**

NOTE	REF NO	GRAPHIC REF	PART NUMBER	QTY	PART NAME 1 2 3 4 5 6 (PRODUCT LEVEL)	SEE PAGE
	1	1	**327-6538**	1	SUPPORT AS-SEAT	
	2	1	**8T-4121**	4	WASHER-HARD (11X21X2.5-MM THK)	
M	3	1	**8T-4191**	4	BOLT (M10X1.5X16-MM)	

M-METRIC PART

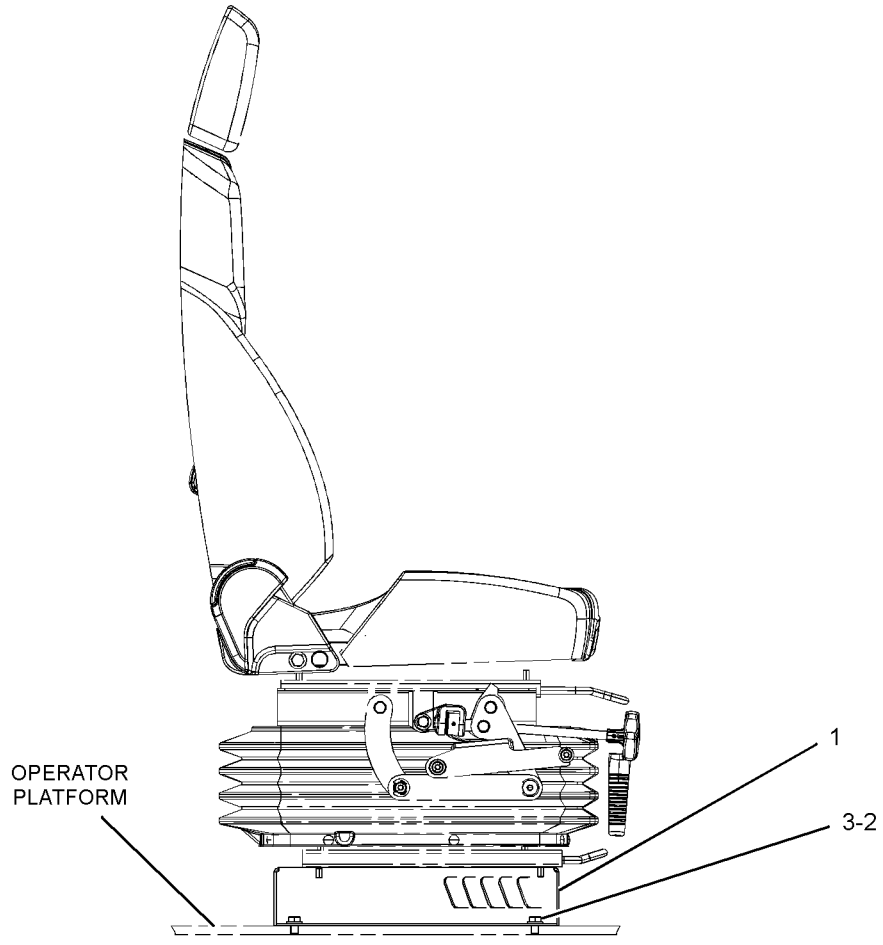

RIGHT SIDE VIEW

GRAPHIC #1 **<END>** g01528767

OPERATOR STATION

327-6520 SUSPENSION GP-SEAT—MECHANICAL

S/N: MYG1-UP; PPN1-UP
PART OF 327-6507 SEAT GP-SUSPENSION
AN ATTACHMENT

SMCS-7324 **i03572405**

NOTE	REF NO	GRAPHIC REF	PART NUMBER	QTY	PART NAME 1 2 3 4 5 6 (PRODUCT LEVEL)	SEE PAGE
	1	1	**327-6644**	1	KIT-BRACKET (CONSOLE RAISE, LOWER)	
M		1	**7Y-7394**	4	SCREW-BUTTON HEAD (M8X1.25X25-MM)	
Y	2	1	**327-6645**	1	KIT-SEAT SUSPENSION (MECHANICAL)	909
	3	1	**327-6648**	1	KIT-ADJUSTER (SEAT POSITION)	
		1	**333-4180**	6	SCREW-BUTTON HEAD (M8X1.25X20-MM)	

M-METRIC PART
Y-SEPARATE ILLUSTRATION

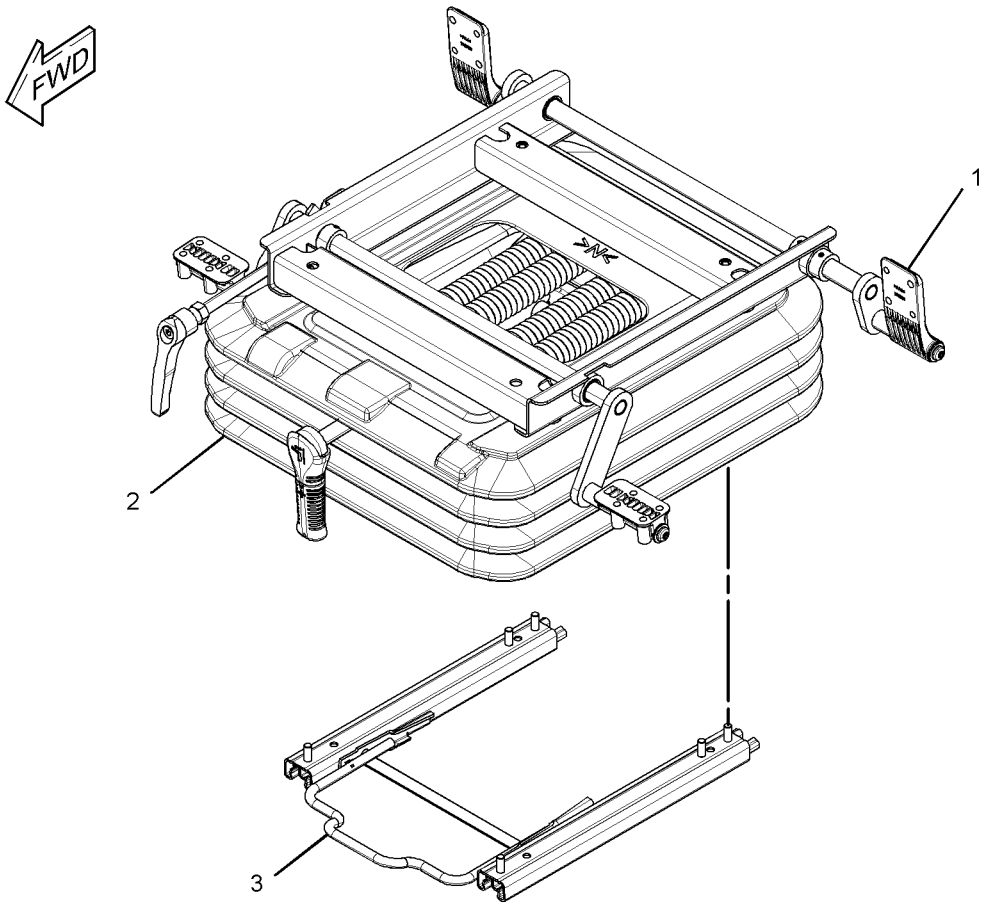

GRAPHIC #1 **<END>** g01637856

OPERATOR STATION

327-6521 SUSPENSION GP-SEAT–AIR

S/N: MYG1-UP; PPN1-UP
PART OF 327-6509 SEAT GP-SUSPENSION
AN ATTACHMENT

SMCS-7324 **i03572209**

NOTE	REF NO	GRAPHIC REF	PART NUMBER	QTY	PART NAME 1 2 3 4 5 6 (PRODUCT LEVEL)	SEE PAGE
	1	1	**7I-2673**	1	STRAP-CABLE	
	2	1	**327-6644**	1	KIT-BRACKET (CONSOLE RAISE, LOWER)	
M		1	**7Y-7394**	4	SCREW-BUTTON HEAD (M8X1.25X25-MM)	
	3	1	**327-6648**	1	KIT-ADJUSTER (SEAT POSITION)	
		1	**333-4180**	6	SCREW-BUTTON HEAD (M8X1.25X20-MM)	
Y	4	1	**333-4157**	1	KIT-SEAT SUSPENSION (AIR)	910

M-METRIC PART
Y-SEPARATE ILLUSTRATION

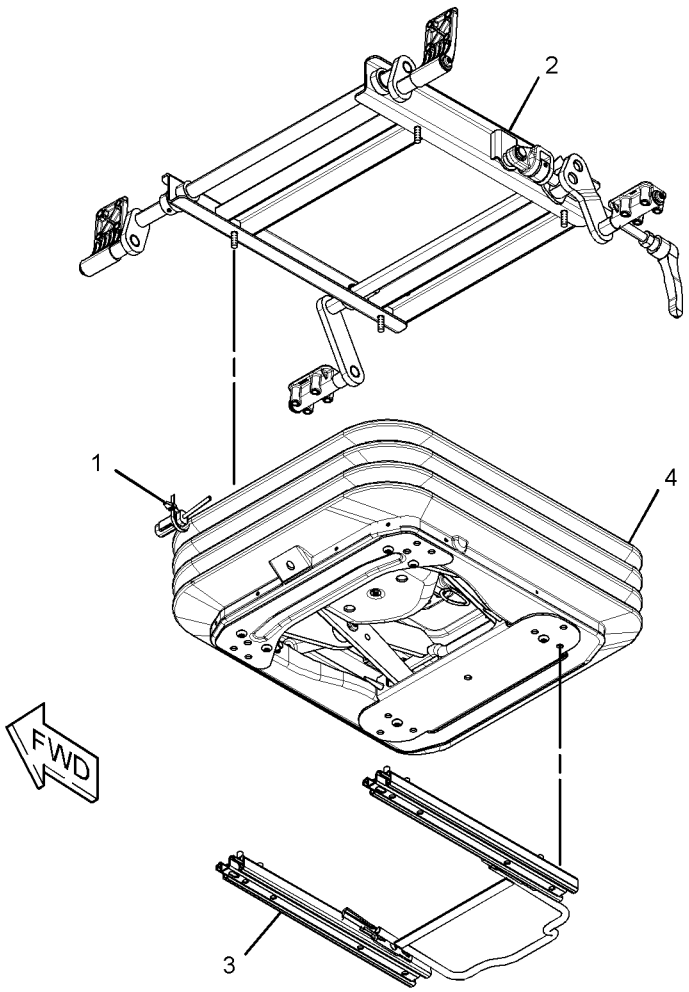

GRAPHIC #1 **<END>** g01906653

OPERATOR STATION

340-6693 TRIM GP-CAB—INTERIOR

S/N: MYG1-UP; PPN1-UP
PART OF 340-6601, 340-6607 CAB GP
AN ATTACHMENT

SMCS-7301, 7329 **i03664203**

NOTE	REF NO	GRAPHIC REF	PART NUMBER	QTY	PART NAME 1 2 3 4 5 6 (PRODUCT LEVEL)	SEE PAGE
Y	1	1	*340-6729*	1	TRIM GP-CAB (INTERIOR, REAR)	955
Y	2	1	*340-6731*	1	TRIM GP-CAB (INTERIOR, RH)	956

Y-SEPARATE ILLUSTRATION

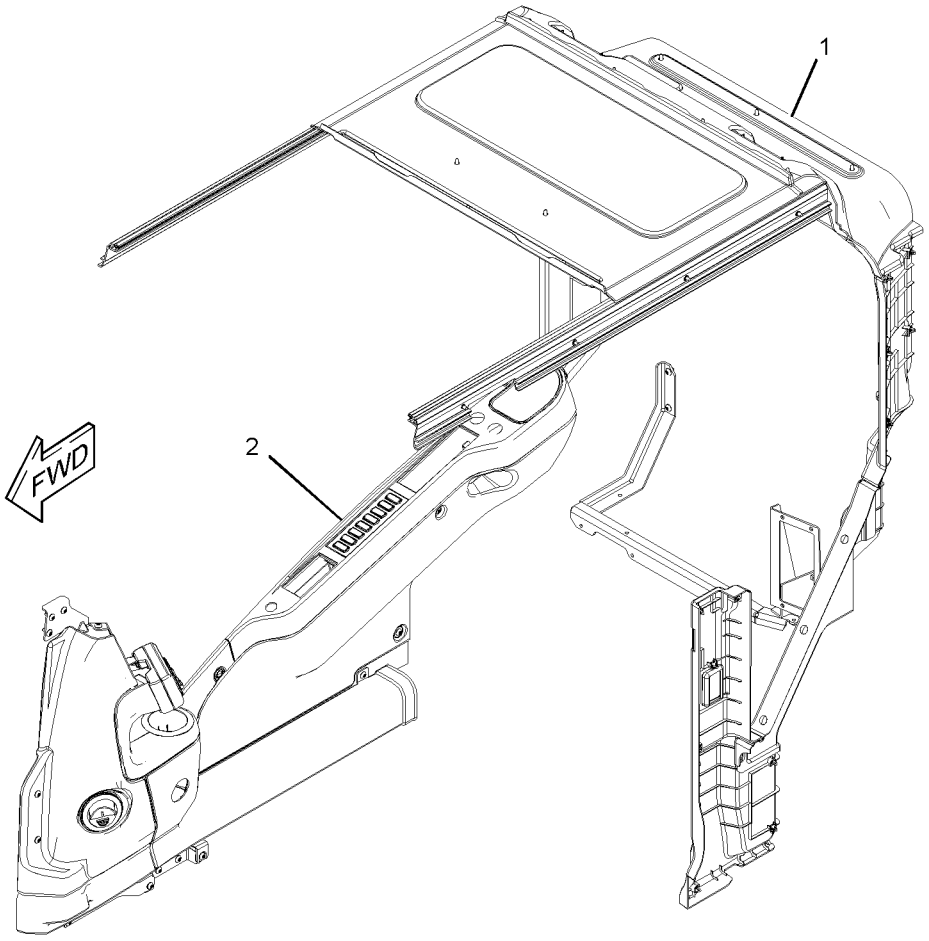

GRAPHIC #1 **<END>** g01957894

OPERATOR STATION

340-6729 TRIM GP-CAB

S/N: MYG1-UP; PPN1-UP
PART OF 340-6693 TRIM GP-CAB
AN ATTACHMENT

SMCS-7301, 7329 **i03664204**

NOTE	REF NO	GRAPHIC REF	PART NUMBER	QTY	PART NAME 1 2 3 4 5 6 (PRODUCT LEVEL)	SEE PAGE
M	1	1	**128-2135**	8	SCREW-TRUSS HEAD (M6X1X13-MM)	
M	2	1	**171-7325**	8	SCREW-TAPPING (M5X0.8-THD)	
	3	1	**185-8205**	17	CLIP	
	4	1	**234-6477**	1	BRACKET AS	
	5	1	**235-8914**	8	NUT-SPEED	
	6	1	**327-6476**	1	COVER	
	7	1	**327-6477**	1	RAIL	
	8	1	**327-6478**	1	RAIL	
	9	1	**327-6480**	1	COVER	
	10	1	**333-4353**	2	COVER	
	11	1	**340-6742**	1	COVER	
	12	1	**342-3745**	1	COVER AS	
		1	**170-9724**	5	CLIP	
	13	1	**342-3746**	1	COVER AS	
		1	**170-9724**	5	CLIP	
	14	1	**342-3747**	1	COVER AS	
		1	**170-9724**	7	CLIP	
M	15	1	**9X-2042**	4	SCREW-TRUSS HEAD (M6X1X12-MM)	

M-METRIC PART

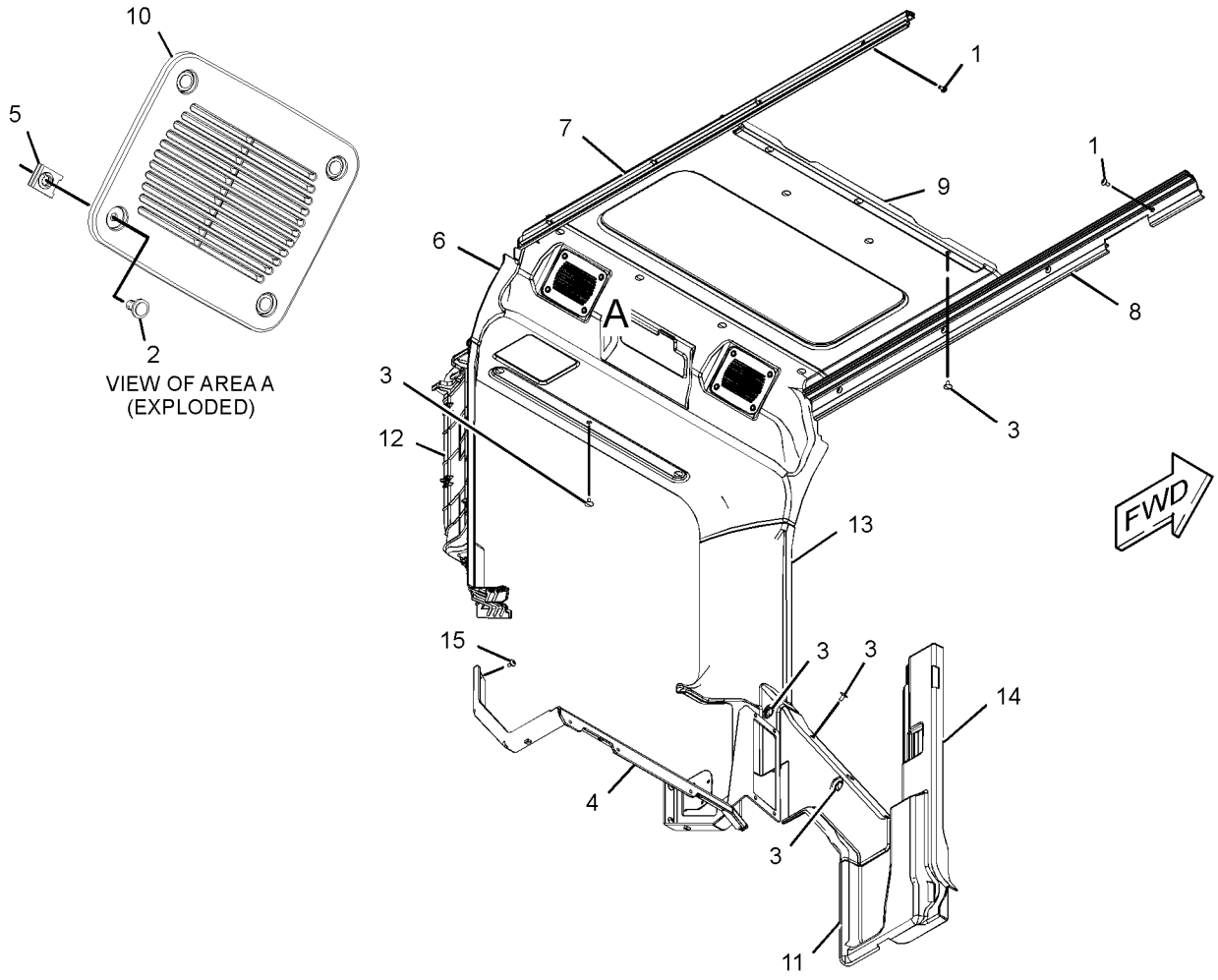

GRAPHIC #1 **<END>** g01958039

OPERATOR STATION

340-6731 TRIM GP-CAB—INTERIOR, RH

S/N: MYG1-UP; PPN1-UP
PART OF 340-6693 TRIM GP-CAB
AN ATTACHMENT

SMCS-7301, 7329 **i03664205**

NOTE	REF NO	GRAPHIC REF	PART NUMBER	QTY	PART NAME 1 2 3 4 5 6 (PRODUCT LEVEL)	SEE PAGE
	1	1	**8Y-6352**	1	LOUVER AS	
	2	1	**164-0646**	1	CUP	
	3	1	**164-0655**	1	PANEL-SWITCH (OPERATOR CONSOLE)	
	4	1	**164-8474**	2	LOUVER AS-VENT	
	5	1	**234-6469**	1	COVER	
	6	1	**234-6470**	1	COVER-MONITOR	
	7	1	**234-6471**	1	COVER-DUCT	
	8	1	**234-6473**	1	COVER-FRONT (UPPER, RH)	
	9	1	**234-6474**	1	COVER (UPPER, RH)	
	10	1	**234-6476**	1	DUCT	
	11	1	**234-6480**	1	BRACKET AS	
	12	1	**234-6483**	1	BRACKET AS	
	13	1	**234-6485**	1	BRACKET AS	
	14	1	**234-6490**	1	CUP	
	15	1	**234-6497**	1	COVER	
	16	1	**234-6498**	3	RIVET	
	17	1	**234-6579**	2	NUT-SPEED	
	18	1	**235-8923**	2	CAP	
	19	1	**245-7790**	2	SCREW-TAPPING	
	20	1	**305-0330**	1	COVER (LOWER, RH)	
	21	1	**305-0333**	1	BRACKET	
	22	1	**340-6732**	1	BRACKET AS	
	23	1	**340-6734**	1	BRACKET AS	
	24	1	*340-6736*	1	COVER GP-CAB	
		1	**259-7353**	4	CLIP	
		1	**340-6737**	1	COVER AS (CAB)	
	25	1	**340-6738**	1	COVER	
	26	1	**340-6739**	1	COVER	
	27	1	**340-6740**	1	BRACKET AS	
M	28	1	**128-2135**	10	SCREW-TRUSS HEAD (M6X1X13-MM)	
M	29	1	**128-2136**	2	SCREW-TRUSS HEAD (M6X1X16-MM)	
M	30	1	**9X-2042**	20	SCREW-TRUSS HEAD (M6X1X12-MM)	
M	31	1	**9X-2044**	4	SCREW-TRUSS HEAD (M6X1X16-MM)	

M-METRIC PART

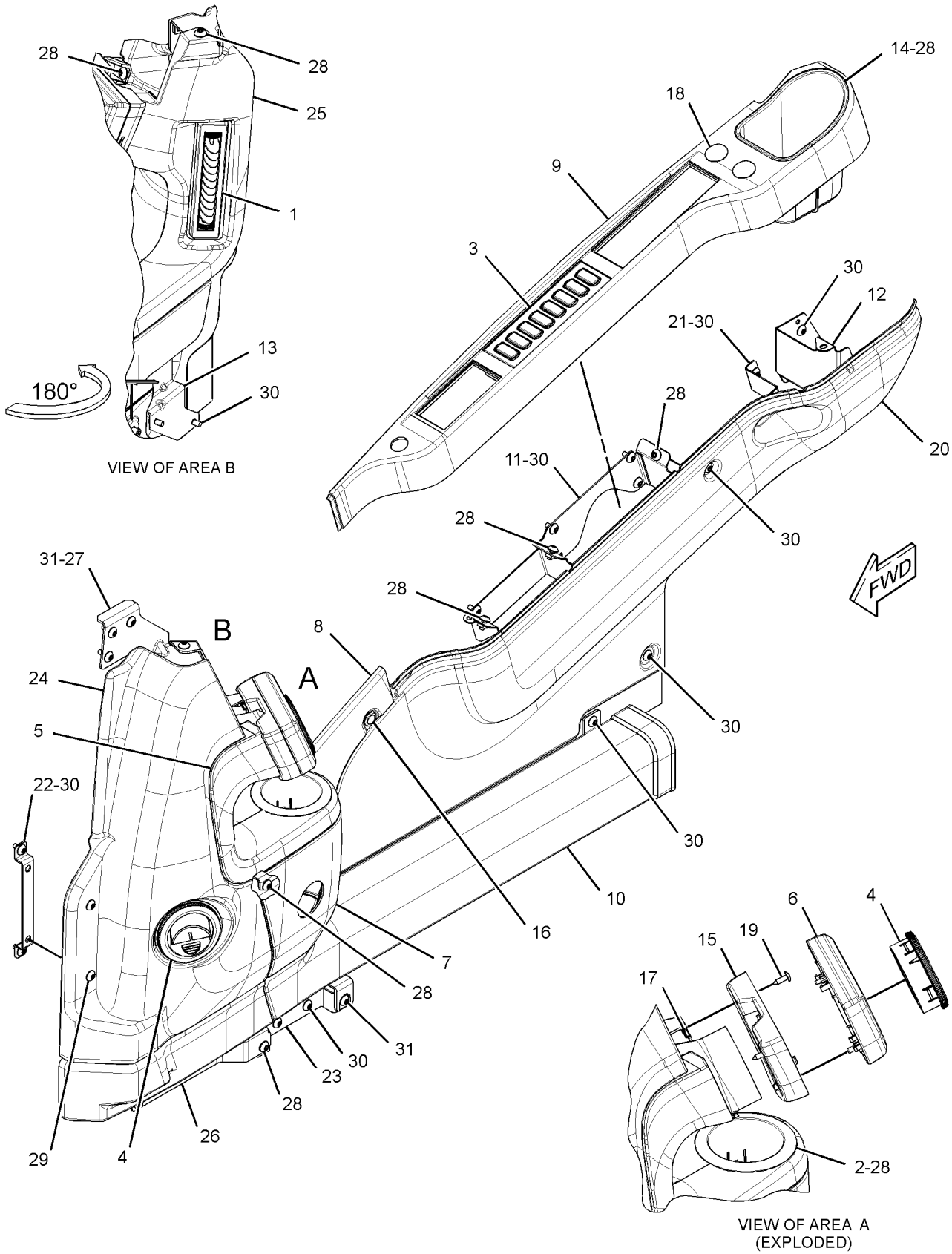

GRAPHIC #1 **<END>** g01958575

OPERATOR STATION

316-8838 VISOR GP-PROTECTION—RAIN

S/N: MYG1-UP; PPN1-UP
PART OF 345-7571, 352-2663 DISTRIBUTION AR
AN ATTACHMENT

SMCS-7340 **i03669005**

NOTE	REF NO	GRAPHIC REF	PART NUMBER	QTY	PART NAME 1 2 3 4 5 6 (PRODUCT LEVEL)	SEE PAGE
M	1	1	**4I-5049**	6	NUT-SPACER (M6X1-THD)	
	2	1	**327-6437**	1	VISOR	
	3	1	**327-6438**	1	BRACKET AS	
M	4	1	**6V-7357**	6	BOLT (M6X1X25-MM)	
	5	1	**8T-4121**	4	WASHER-HARD (11X21X2.5-MM THK)	
M	6	1	**8T-4191**	4	BOLT (M10X1.5X16-MM)	
	7	1	**9X-8256**	6	WASHER (6.6X12X2-MM THK)	
D	8	1	**5P-8309**	1	SEAL (1.4-M)	

D-ORDER BY THE METER
M-METRIC PART

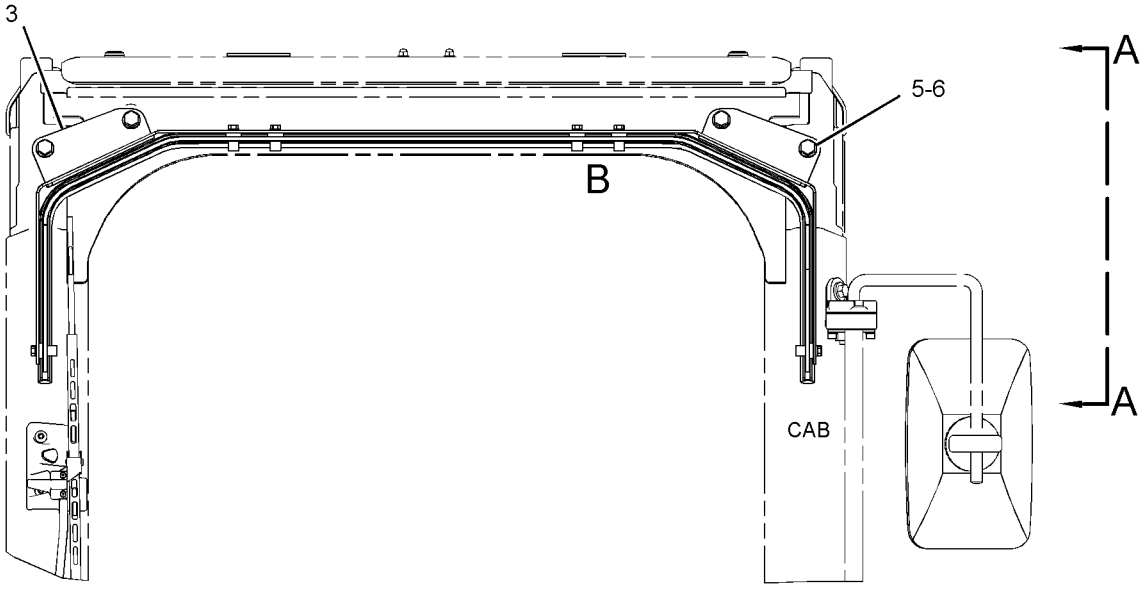

FRONT VIEW

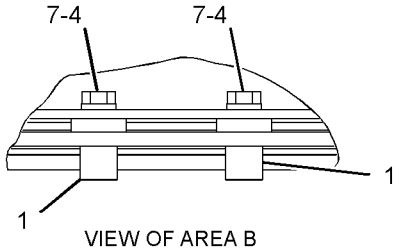

VIEW OF AREA B

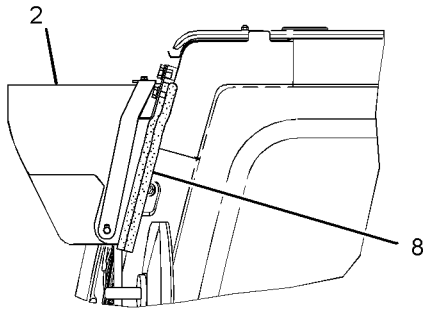

VIEW A-A

GRAPHIC #1 **<END>** g01950131

OPERATOR STATION

340-6504 WASHER GP-WINDOW—LOWER

S/N: MYG1-UP; PPN1-UP
PART OF 343-1195, 343-1196 WIPER AR-WINDOW
AN ATTACHMENT

SMCS-7306 **i03666381**

NOTE	REF NO	GRAPHIC REF	PART NUMBER	QTY	PART NAME 1 2 3 4 5 6 (PRODUCT LEVEL)	SEE PAGE
	1	1	**3S-2093**	4	STRAP-CABLE	
	2	1	**340-6760**	1	TANK AS-WINDOW WASHER	
	2A	1	**5C-8138**	1	GROMMET	
	2B	1	**7T-8890**	1	PUMP AS-WASHER	
	2C	1	**178-5431**	1	CAP AS (WINDOW WASHER)	
		1	**3W-6399**	1	PACKING	
	3	1	**342-3541**	1	BRACKET AS	
	4	1	**342-3544**	1	BRACKET AS	
M	5	1	**5C-9553**	2	BOLT (M6X1X16-MM)	
	6	1	**5P-9297**	7	CLIP	
	7	1	**6V-3265**	1	CLIP	
	8	1	**7Y-3474**	1	VALVE AS-CHECK (WINDOW WASHER)	
	9	1	**8T-4121**	12	WASHER-HARD (11X21X2.5-MM THK)	
M	10	1	**8T-4191**	12	BOLT (M10X1.5X16-MM)	
	11	1	**9K-0700**	1	GROMMET	
	12	1	**9X-8256**	2	WASHER (6.6X12X2-MM THK)	
E	13	1	**144-0195**		HOSE (270-CM)	

E-ORDER BY THE CENTIMETER
M-METRIC PART

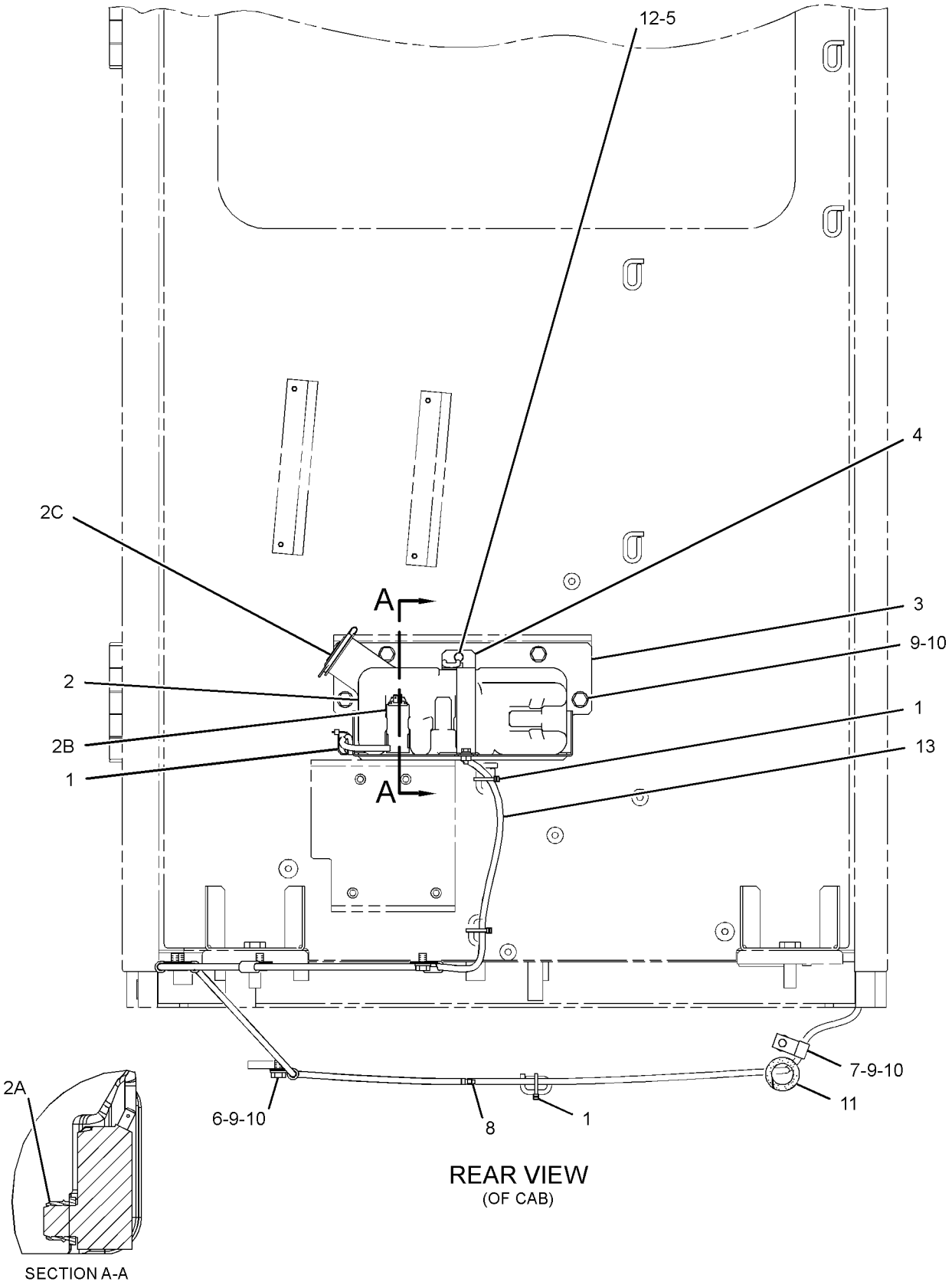

GRAPHIC #1 **<END>** g01986737

OPERATOR STATION

340-6664 WINDOW GP-CAB

S/N: MYG1-UP; PPN1-UP
PART OF 340-6607 CAB GP
AN ATTACHMENT

SMCS-7310 **i03664865**

NOTE	REF NO	GRAPHIC REF	PART NUMBER	QTY	PART NAME 1 2 3 4 5 6 (PRODUCT LEVEL)	SEE PAGE
	1	1	**342-3572**	2	SEAL	
	2	1	**342-3573**	1	GLASS	
	3	1	**342-3574**	1	SEAL	
	4	1	**342-3575**	4	BRACKET	
	5	1	**342-3576**	1	BRACKET AS	
M	6	1	**9X-2042**	10	SCREW-TRUSS HEAD (M6X1X12-MM)	

M-METRIC PART

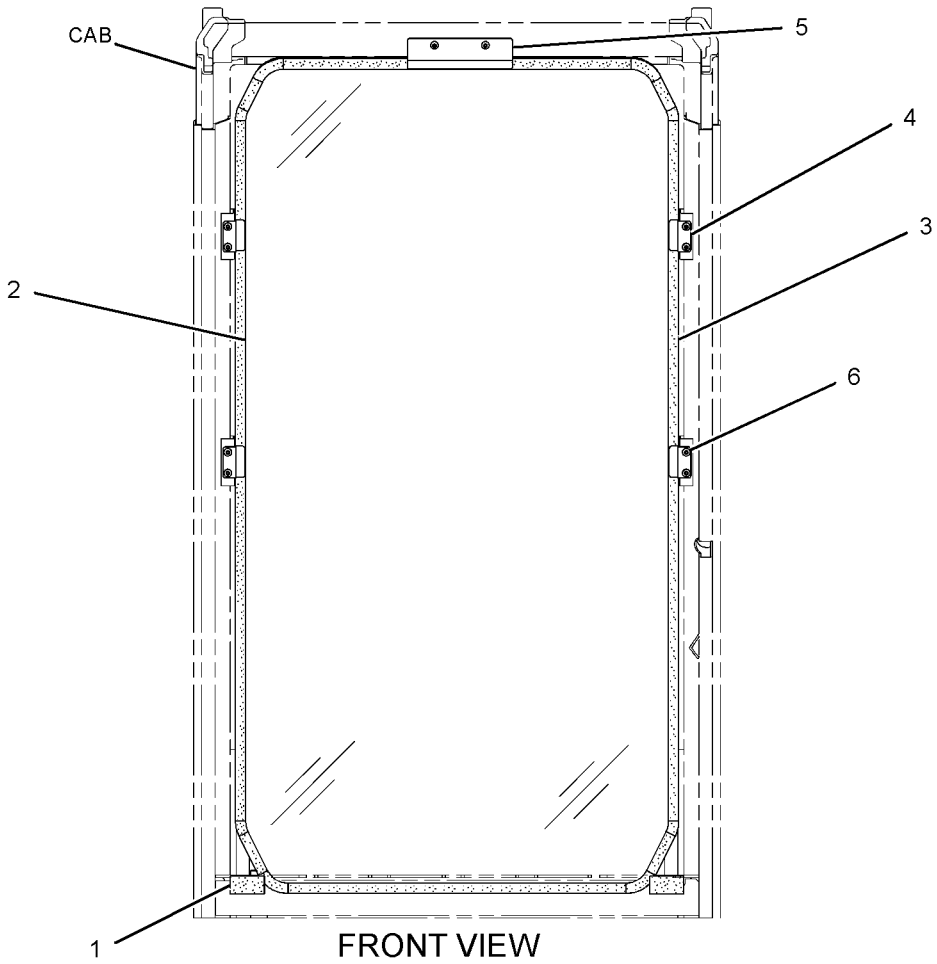

GRAPHIC #1 **<END>** g01978293

OPERATOR STATION

340-6695 WINDOW GP-CAB—SIDE, REAR

S/N: MYG1-UP; PPN1-UP
PART OF 340-6601 CAB GP
AN ATTACHMENT

SMCS-7310 **i03708300**

NOTE	REF NO	GRAPHIC REF	PART NUMBER	QTY	PART NAME 1 2 3 4 5 6 (PRODUCT LEVEL)	SEE PAGE
	1	1	**139-7119**	2	PLUG	
	2	1	**156-6631**	2	STOP	
	3	1	**178-5572**	6	SPACER	
	4	1	**340-6624**	1	GLASS	
	5	1	**340-6625**	1	GLASS	
	6	1	**340-6626**	1	GLASS	
	7	1	**340-6627**	1	SEAL	
	8	1	**340-6727**	1	SEAL	
	9	1	**346-8030**	2	SEAL	
	10	1	**099-3629**	1	RING-KEY	
	11	1	**178-5574**	7	SPACER	
	12	1	**316-8854**	1	GLASS	

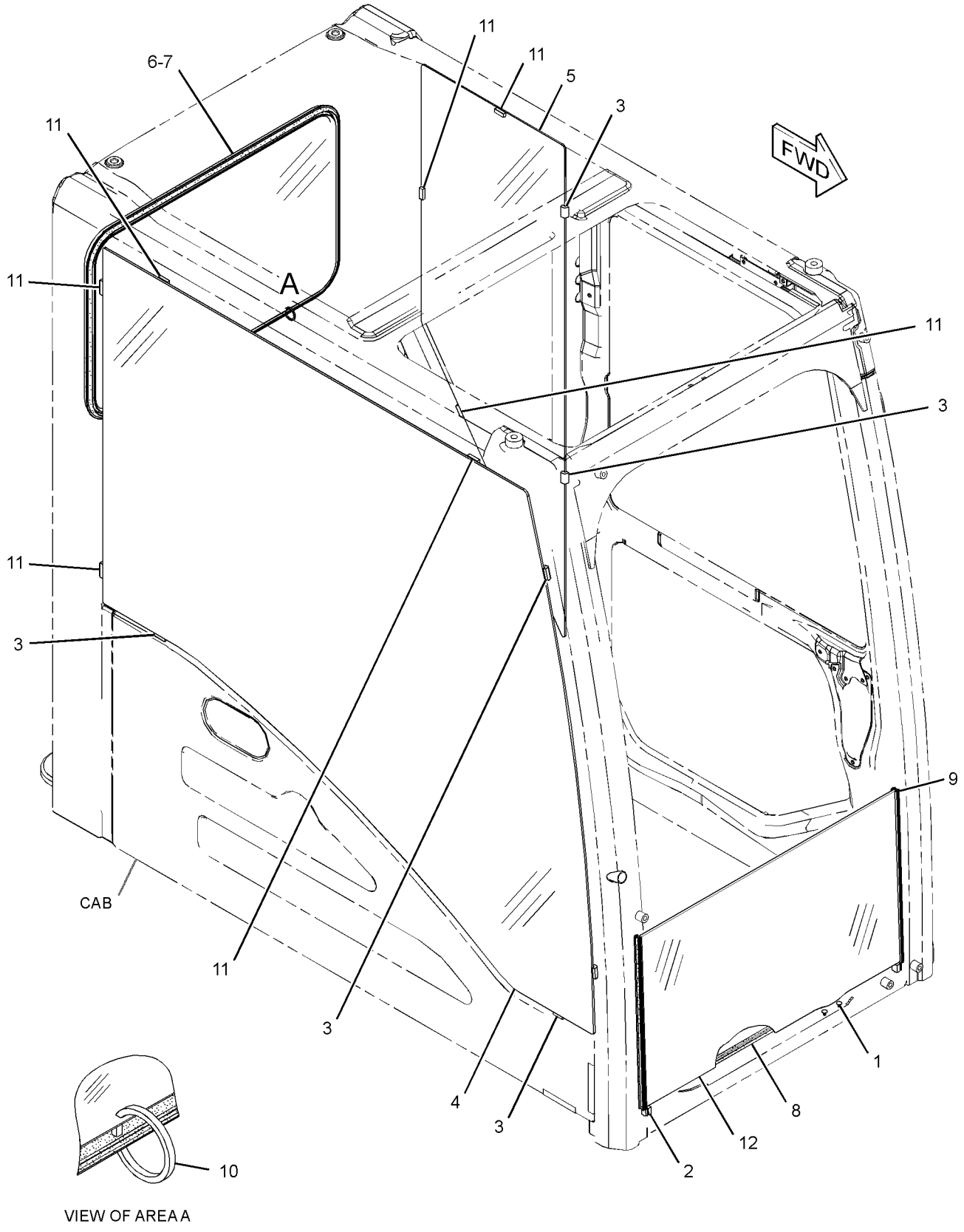

VIEW OF AREA A

GRAPHIC #1 **<END>** g02001937

OPERATOR STATION

342-3712 WINDOW GP-CAB—SIDE, REAR

S/N: MYG1-UP; PPN1-UP
PART OF 340-6607 CAB GP
AN ATTACHMENT

SMCS-7310 **i03664882**

NOTE	REF NO	GRAPHIC REF	PART NUMBER	QTY	PART NAME 1 2 3 4 5 6 (PRODUCT LEVEL)	SEE PAGE
	1	2	**178-5572**	6	SPACER	
	2	1	**340-6624**	1	GLASS	
	3	1	**340-6625**	1	GLASS	
	4	1	**340-6626**	1	GLASS	
	5	1	**340-6627**	1	SEAL	
	6	2	**099-3629**	1	RING-KEY	
	7	2	**178-5574**	7	SPACER	

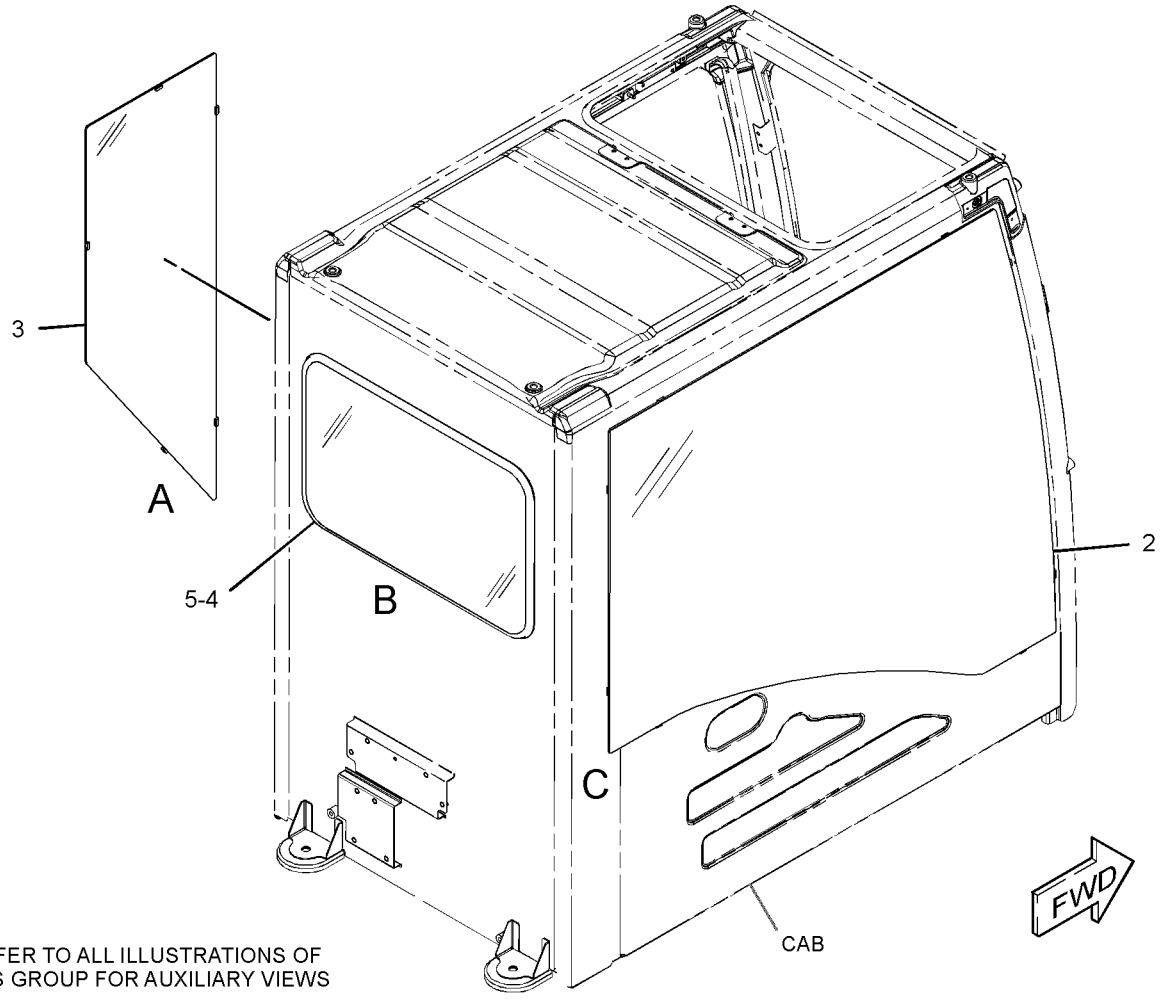

REFER TO ALL ILLUSTRATIONS OF
THIS GROUP FOR AUXILIARY VIEWS

GRAPHIC #1 g01992174

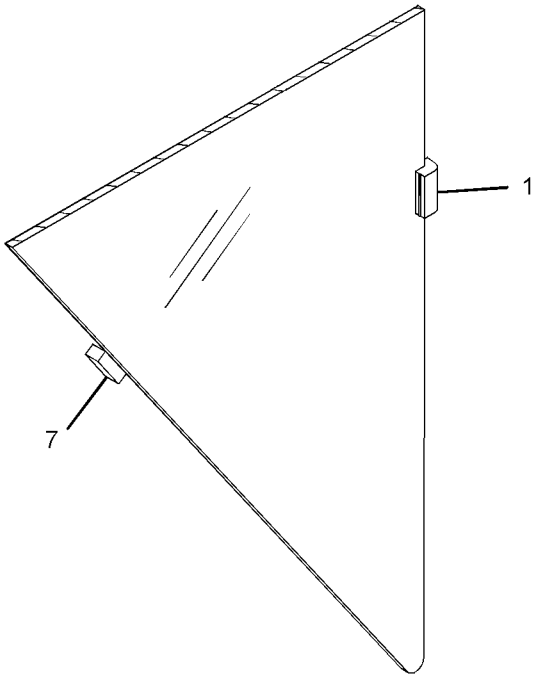

VIEW OF AREA A

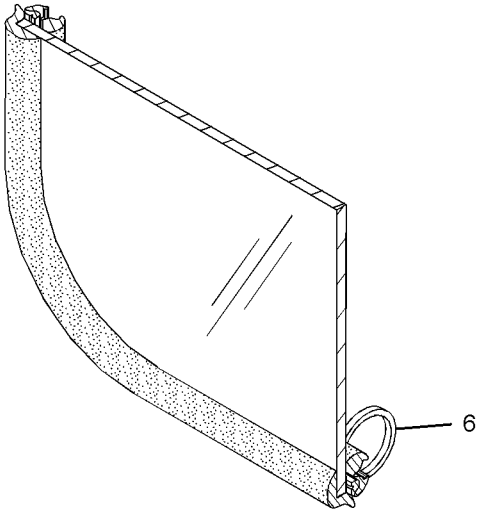

VIEW OF AREA B

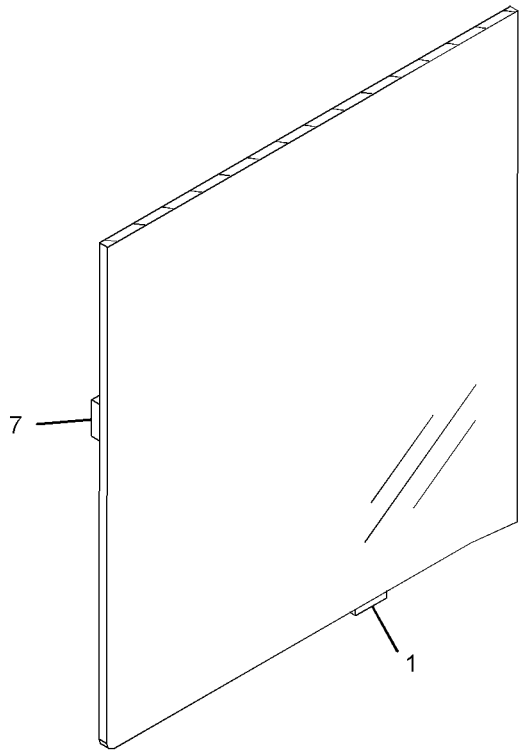

VIEW OF AREA C

GRAPHIC #2 **<END>** g01992175

OPERATOR STATION

334-6513 WINDOW GP-DOOR

S/N: MYG1-UP; PPN1-UP
PART OF 334-6387 DOOR GP-CAB
AN ATTACHMENT

SMCS-7308, 7310 **i03662884**

NOTE	REF NO	GRAPHIC REF	PART NUMBER	QTY	PART NAME 1 2 3 4 5 6 (PRODUCT LEVEL)	SEE PAGE
	1	1	**164-0517**	1	RUBBER	
	2	1	**334-6514**	1	FRAME AS-WINDOW	
		1	**4I-4298**	1	STOPPER	
		1	**4I-4300**	1	CATCH	
		1	**099-0139**	3	RIVET	
	3	1	**334-6519**	1	SEAL	
	4	1	**334-6520**	1	SEAL	
	5	1	**334-6521**	1	SEAL	
	6	1	**334-6522**	1	SPACER-RUBBER (WINDOW)	
	7	1	**334-6523**	1	SPACER-RUBBER (WINDOW)	
	8	1	**334-6524**	1	GLASS	
	9	1	**334-6525**	1	GLASS	
Y	10	1	**085-6444**	2	LATCH GP-FRONT WINDOW	911

Y-SEPARATE ILLUSTRATION

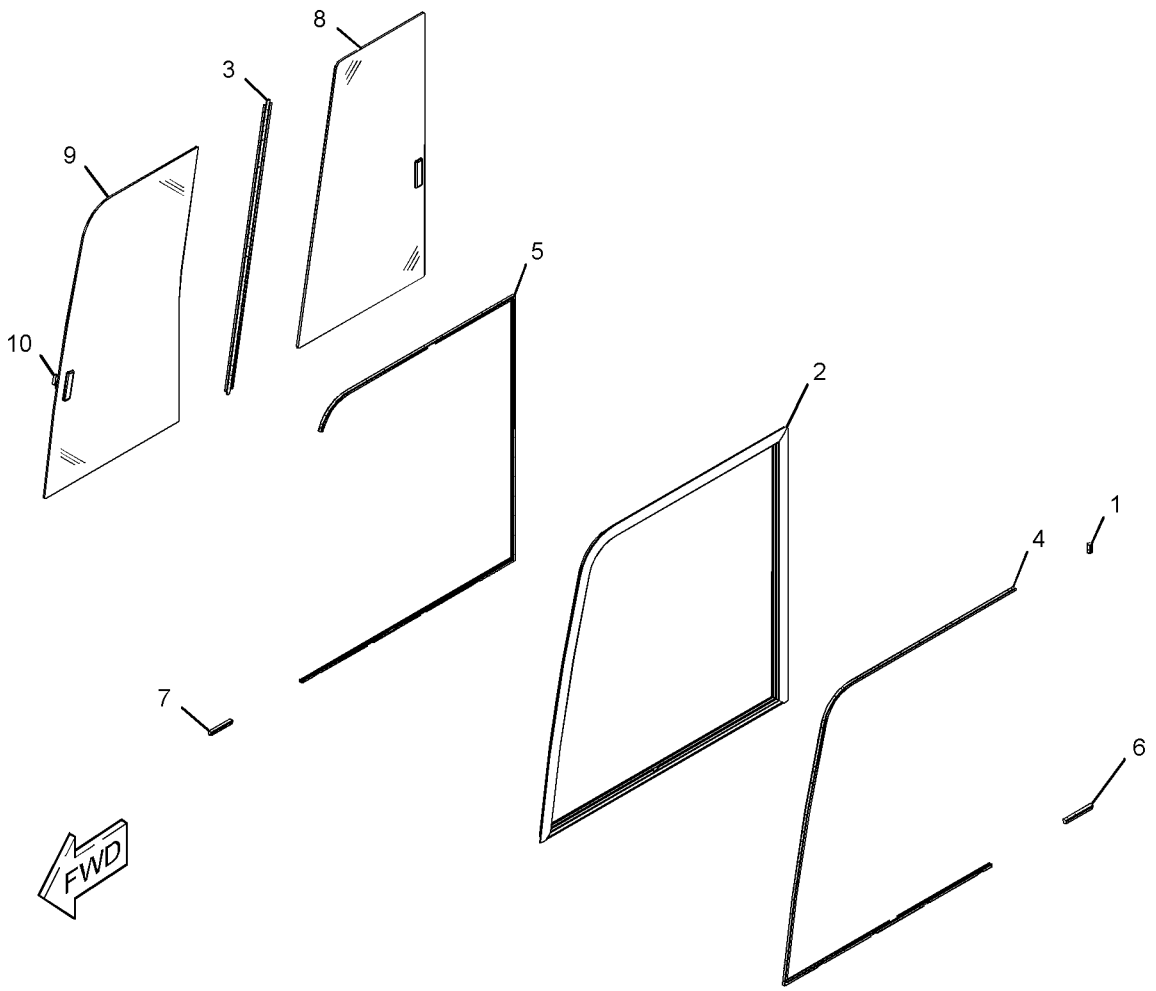

GRAPHIC #1 **<END>** g01960434

OPERATOR STATION

327-6625 WINDOW GP-FRONT

S/N: MYG1-UP; PPN1-UP
PART OF 340-6601 CAB GP
AN ATTACHMENT

SMCS-7340 **i03662668**

NOTE	REF NO	GRAPHIC REF	PART NUMBER	QTY	PART NAME 1 2 3 4 5 6 (PRODUCT LEVEL)	SEE PAGE
	1	1	**151-9557**	2	STOP-RUBBER	
M	2	1	**6V-5210**	2	SCREW-MACHINE (M4X0.7X10-MM)	
Y	3	1	**334-6388**	1	WINDOW GP-FRONT	969
Y	4	1	*334-6492*	1	STRIKER GP-LATCH (WINDOW)	948
	5	1	**334-6497**	1	SHEET AS	
	6	1	**334-6499**	1	BRACKET AS	
	7	1	**334-6501**	1	STRIKER AS	
	8	1	**334-6504**	1	SHIM	
	9	1	**334-6505**	1	BRACKET AS	
	10	1	**334-6507**	1	SEAL AS (WINDOW)	
	11	1	**334-6508**	1	CABLE AS	
	12	1	**334-6509**	1	GUIDE AS	
M	13	1	**099-2374**	1	BOLT-SOCKET HEAD (M5X0.8X12-MM)	
	14	1	**117-6306**	1	SWITCH (WINDOW POSITION)	
M	15	1	**9X-2041**	2	SCREW-TRUSS HEAD (M10X1.5X20-MM)	
M	16	1	**9X-2042**	12	SCREW-TRUSS HEAD (M6X1X12-MM)	

M-METRIC PART
Y-SEPARATE ILLUSTRATION

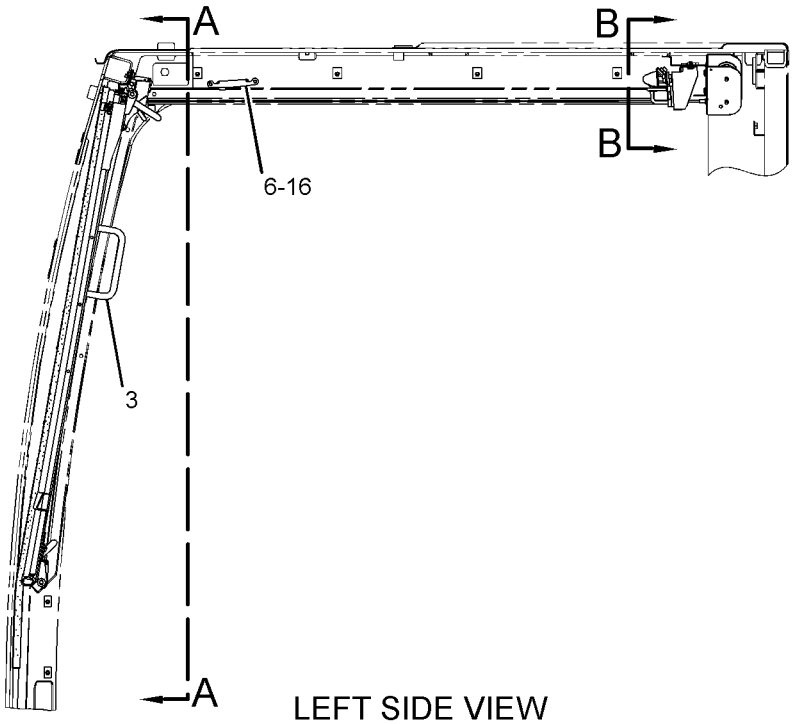

LEFT SIDE VIEW

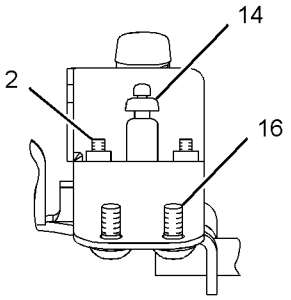

VIEW D-D

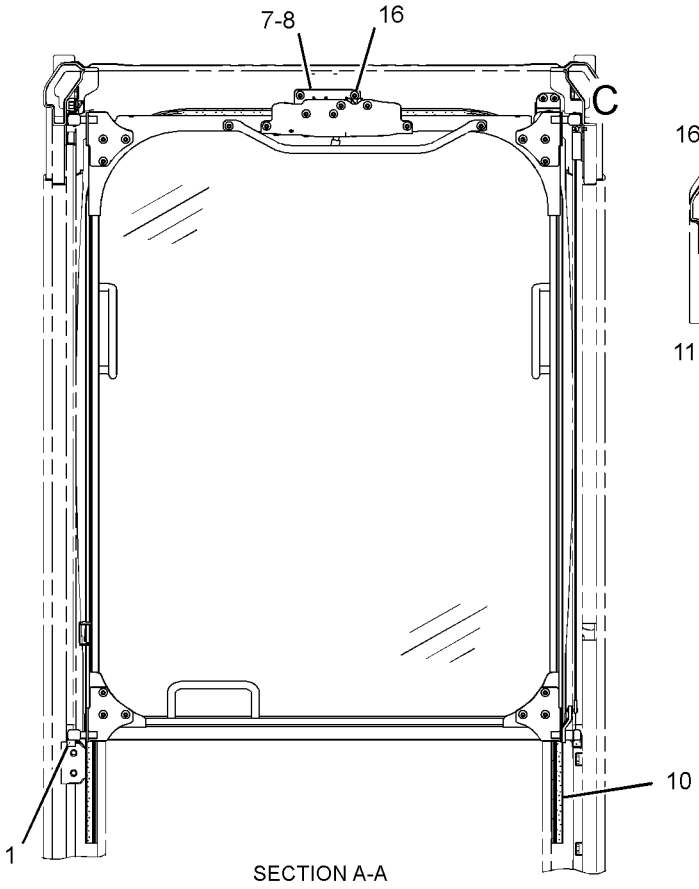

SECTION A-A

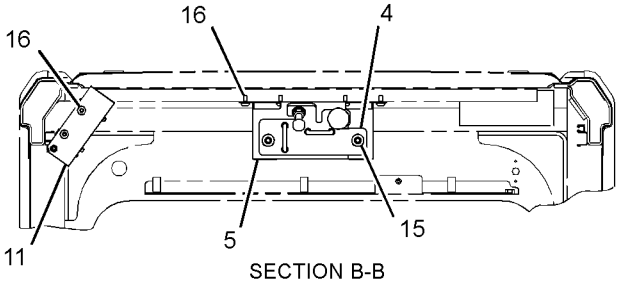

SECTION B-B

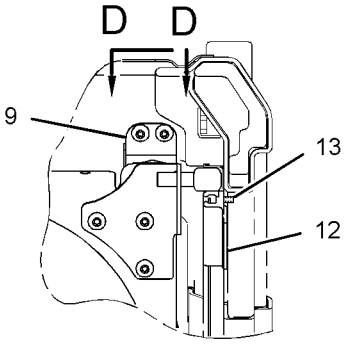

VIEW OF AREA C

GRAPHIC #1 **<END>** g01960896

OPERATOR STATION

334-6388 WINDOW GP-FRONT

S/N: MYG1-UP; PPN1-UP
PART OF 327-6625 WINDOW GP-FRONT
AN ATTACHMENT

SMCS-7340 **i03662740**

NOTE	REF NO	GRAPHIC REF	PART NUMBER	QTY	PART NAME 1 2 3 4 5 6 (PRODUCT LEVEL)	SEE PAGE
	1	1	**151-6813**	1	BRACKET AS	
	2	1	**161-3698**	1	SEAL	
	3	1	**185-8221**	2	STOP	
	4	1	**334-6389**	1	FRAME AS-WINDOW	
	4A	1	**156-6470**	1	HANDLE	
	4B	1	**334-6469**	1	SEAL	
	4C	1	**334-6478**	2	HANDLE	
	5	1	**334-6479**	1	BRACKET AS	
	6	1	**334-6481**	2	BRACKET AS	
	7	1	**334-6482**	3	ROLLER	
	8	1	**334-6483**	1	GLASS	
	9	1	**334-6484**	1	SEAL	
	10	1	*334-6485*	1	LOCK AS-WINDOW	
M		1	**9X-2042**	7	SCREW-TRUSS HEAD (M6X1X12-MM)	
		1	**334-6486**	1	COVER AS	
		1	**334-6488**	1	LOCK AS	
		1	**334-6489**	1	LEVER AS	
	11	1	**334-6490**	1	HANDLE	
	12	1	**334-6491**	2	SEAL	
	13	1	**151-9576**	1	ROLLER	
M	14	1	**9X-2042**	16	SCREW-TRUSS HEAD (M6X1X12-MM)	
M	15	1	**9X-2044**	2	SCREW-TRUSS HEAD (M6X1X16-MM)	

M-METRIC PART

334-6388 WINDOW GP-FRONT *(contd.)* i03662740

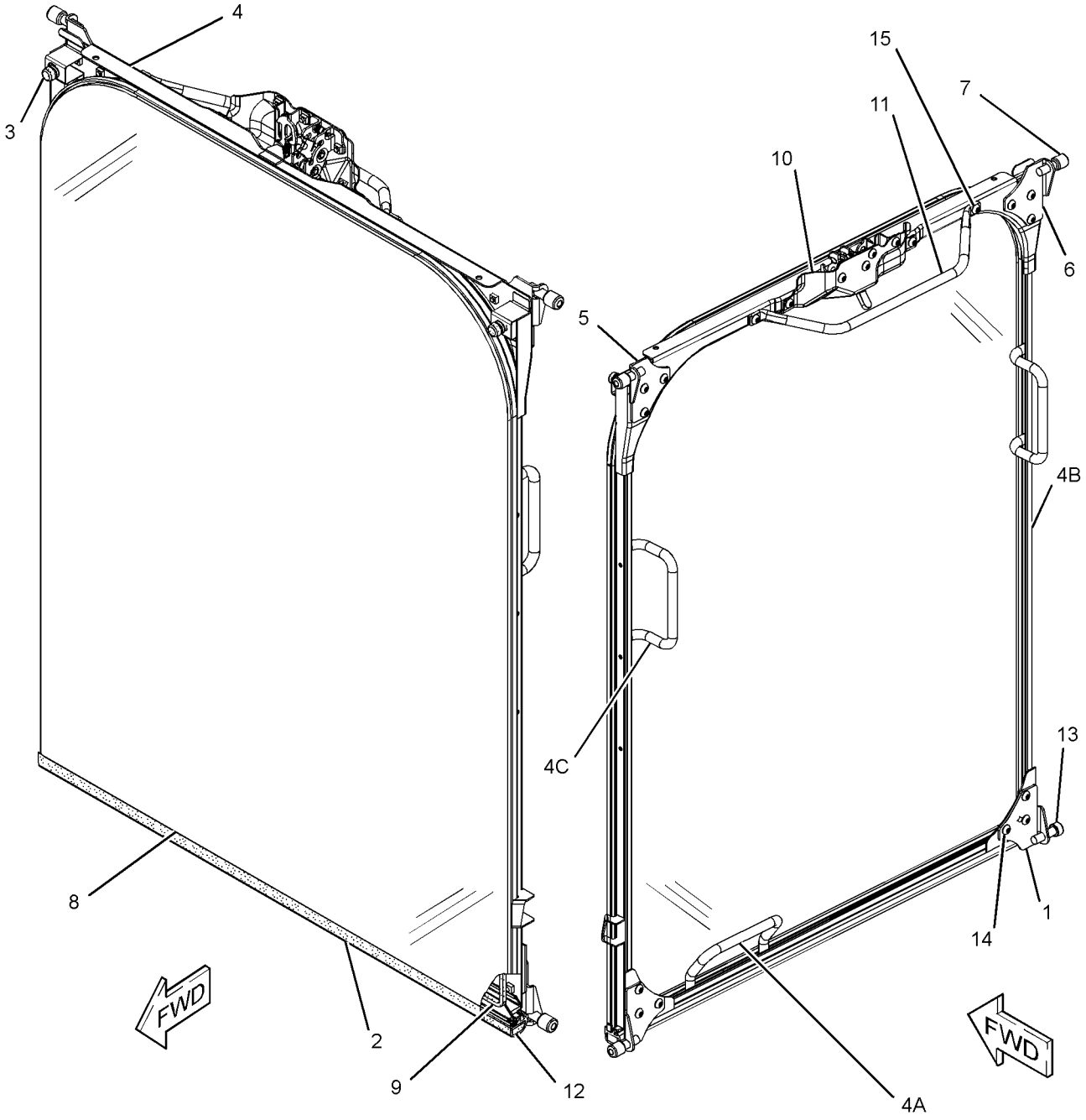

GRAPHIC #1 **<END>** g01965654

343-1195 WIPER AR-WINDOW—FRONT WINDOW, 70/30-SPLIT

S/N: MYG1-UP; PPN1-UP
PART OF 345-7497, 345-7499 OPTION AR-CONFIGURATION
FOR USE WITH 340-6600—PAGE 845. CANNOT BE USED WITH 340-6606—PAGE 849
AN ATTACHMENT

SMCS-7305 **i03666269**

NOTE	PART NUMBER	QTY	PART NAME 1 2 3 4 5 6 (PRODUCT LEVEL)	SEE PAGE
Y	*342-3664*	1	BUMPER GP-FRONT	304
Y	*346-7412*	1	SEAL GP-CAB	939
Y	*340-6504*	1	WASHER GP-WINDOW (LOWER)	959
Y	*327-6622*	1	WIPER GP-WINDOW (70/30-SPLIT)	973
Y	*342-3108*	1	WIRING GP-WINDOW WIPER	293

Y-SEPARATE ILLUSTRATION

<END>

343-1196 WIPER AR-WINDOW—FRONT WINDOW, 1-PIECE

S/N: MYG1-UP; PPN1-UP
PART OF 345-7498 OPTION AR-CONFIGURATION
FOR USE WITH 340-6606—PAGE 849. CANNOT BE USED WITH 340-6600—PAGE 845
AN ATTACHMENT

SMCS-7305 **i03666424**

NOTE	PART NUMBER	QTY	PART NAME 1 2 3 4 5 6 (PRODUCT LEVEL)	SEE PAGE
Y	*342-3664*	1	BUMPER GP-FRONT	304
Y	*346-7412*	1	SEAL GP-CAB	939
Y	*340-6504*	1	WASHER GP-WINDOW (LOWER)	959
Y	*342-3719*	1	WIPER GP-WINDOW (1-PIECE)	975
Y	*342-3108*	1	WIRING GP-WINDOW WIPER	293

Y-SEPARATE ILLUSTRATION

<END>

OPERATOR STATION

327-6551 WIPER GP-WINDOW

S/N: MYG1-UP; PPN1-UP
PART OF 340-6601, 340-6607 CAB GP
AN ATTACHMENT

SMCS-7305 **i03662650**

NOTE	REF NO	GRAPHIC REF	PART NUMBER	QTY	PART NAME 1 2 3 4 5 6 (PRODUCT LEVEL)	SEE PAGE
Y	1	1	**342-3546**	1	MOTOR AS-WINDOW WIPER	925
	2	1	**342-3547**	1	NOZZLE AS	
	3	1	**342-3548**	1	HOLDER	
	4	1	**155-7042**	1	RELAY AS (UPPER) (WIPER)	
	5	1	**161-3668**	1	ARM AS-WIPER	
		1	**161-3669**	1	GUIDE	
		1	**161-3670**	1	BLADE AS-WIPER (600-MM)	
		1	**161-3671**	1	ARM AS	
		1	**185-8290**	1	SCREW AS (M3.5X0.6X9-MM)	
M	6	1	**9X-2042**	6	SCREW-TRUSS HEAD (M6X1X12-MM)	
M	7	1	**9X-2044**	4	SCREW-TRUSS HEAD (M6X1X16-MM)	

M-METRIC PART
Y-SEPARATE ILLUSTRATION

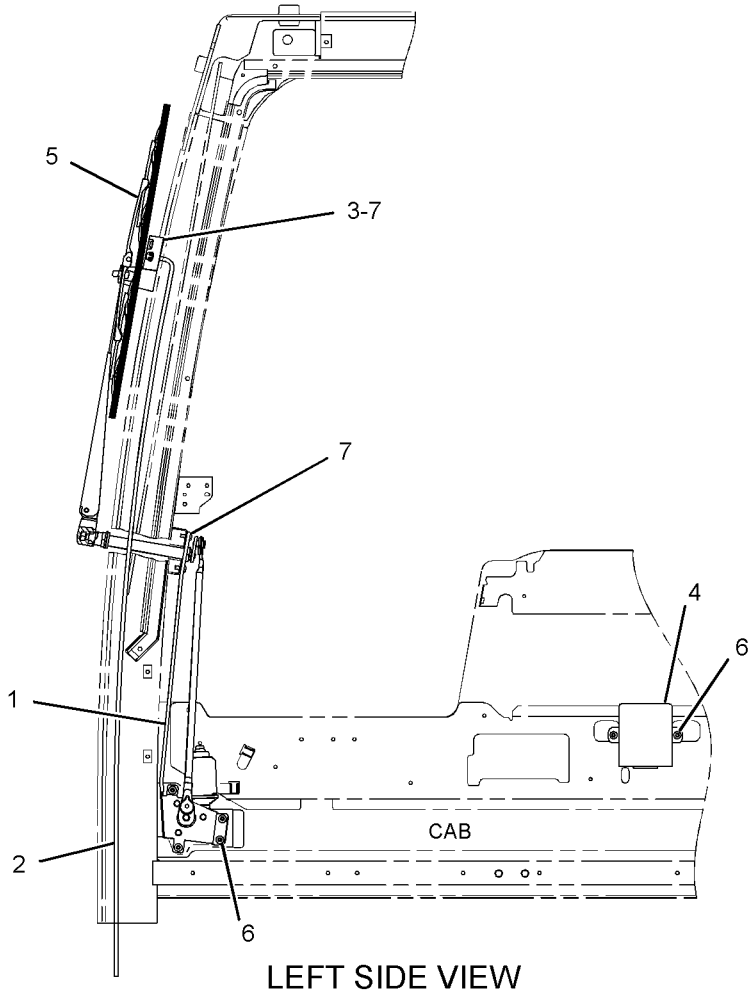

LEFT SIDE VIEW

GRAPHIC #1 **<END>** g01960862

OPERATOR STATION

327-6622 WIPER GP-WINDOW—70/30-SPLIT

S/N: MYG1-UP; PPN1-UP
PART OF 343-1195 WIPER AR-WINDOW
AN ATTACHMENT

SMCS-7305 **i03666380**

NOTE	REF NO	GRAPHIC REF	PART NUMBER	QTY	PART NAME 1 2 3 4 5 6 (PRODUCT LEVEL)	SEE PAGE
	1	1	**3S-2093**	2	STRAP-CABLE	
	2	1	**8T-5400**	1	CONNECTOR AS	
	3	1	**340-6643**	1	CONTROL GP-WASHER & WIPER	
	4	1	**346-7441**	1	MOTOR AS-WINDOW WIPER	
	5	1	**346-7442**	1	LINKAGE AS	
	6	1	**346-7443**	1	ARM AS-WIPER (FRONT WINDOW)	
	7	1	**346-7444**	1	BLADE-WIPER (FRONT WINDOW, 70/30-SPLIT)	
	8	1	**346-7888**	1	PLATE AS	
	9	1	**346-7890**	1	PLATE	
	10	1	**5I-8307**	1	GROMMET	
	11	1	**8T-4121**	4	WASHER-HARD (11X21X2.5-MM THK)	
M	12	1	**8T-4136**	4	BOLT (M10X1.5X25-MM)	
M	13	1	**9X-2042**	2	SCREW-TRUSS HEAD (M6X1X12-MM)	
E	14	1	**144-0195**		HOSE (103-CM)	

E-ORDER BY THE CENTIMETER
M-METRIC PART

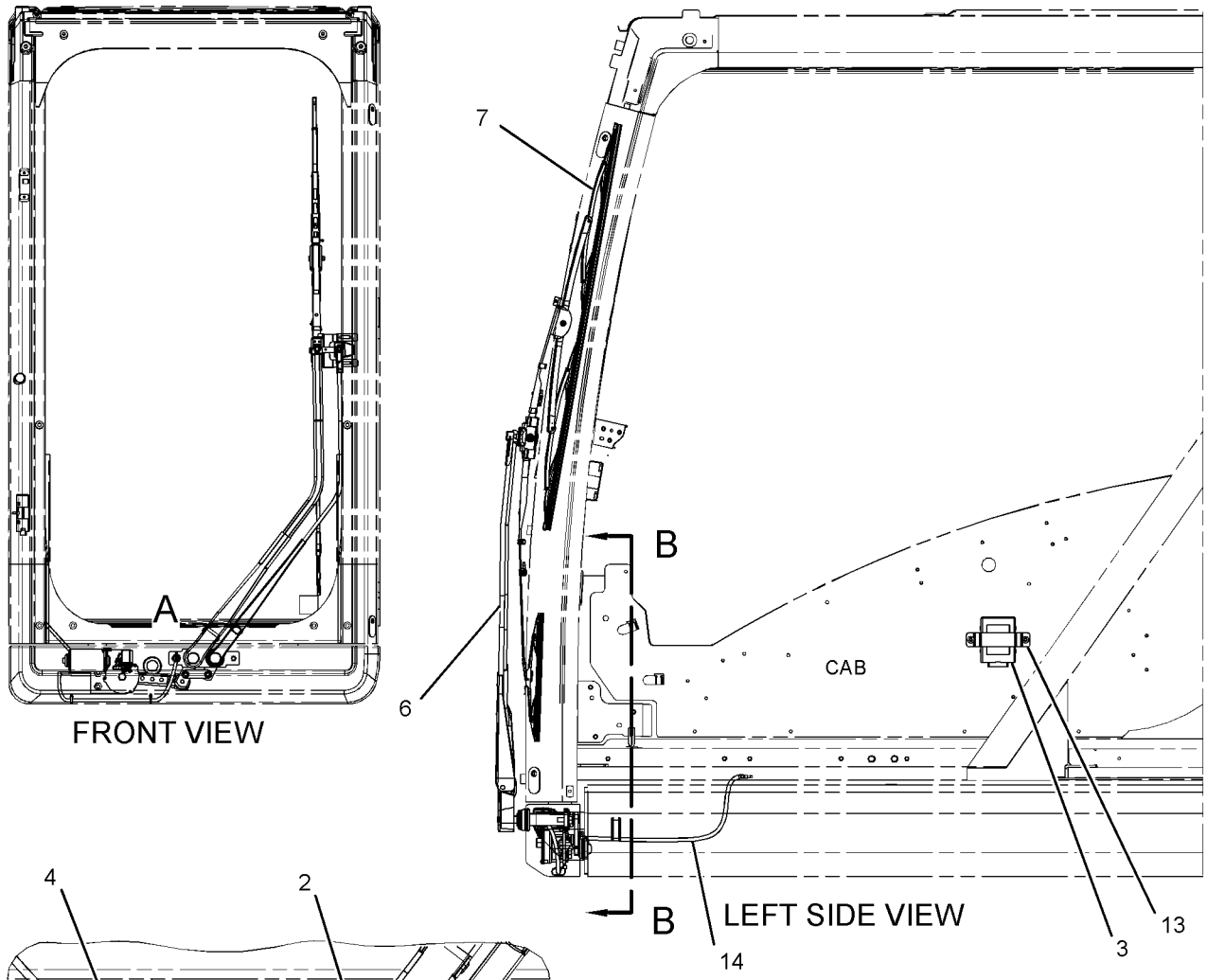

GRAPHIC #1 **<END>** g01976873

OPERATOR STATION

342-3719 WIPER GP-WINDOW—1-PIECE

S/N: MYG1-UP; PPN1-UP
PART OF 343-1196 WIPER AR-WINDOW
AN ATTACHMENT

SMCS-7305 **i03666447**

NOTE	REF NO	GRAPHIC REF	PART NUMBER	QTY	PART NAME 1 2 3 4 5 6 (PRODUCT LEVEL)	SEE PAGE
	1	1	**3S-2093**	2	STRAP-CABLE	
	2	1	**8T-5400**	1	CONNECTOR AS	
	3	1	**340-6643**	1	CONTROL GP-WASHER & WIPER	
	4	1	**346-7441**	1	MOTOR AS-WINDOW WIPER	
	5	1	**346-7442**	1	LINKAGE AS	
	6	1	**346-7443**	1	ARM AS-WIPER (FRONT WINDOW)	
	7	1	**346-7445**	1	BLADE AS-WIPER (1358-MM) (FRONT WINDOW)	
	8	1	**346-7888**	1	PLATE AS	
	9	1	**346-7890**	1	PLATE	
	10	1	**5I-8307**	1	GROMMET	
	11	1	**8T-4121**	4	WASHER-HARD (11X21X2.5-MM THK)	
M	12	1	**8T-4136**	4	BOLT (M10X1.5X25-MM)	
M	13	1	**9X-2042**	2	SCREW-TRUSS HEAD (M6X1X12-MM)	
E	14	1	**144-0195**		HOSE (103-CM)	

E-ORDER BY THE CENTIMETER
M-METRIC PART

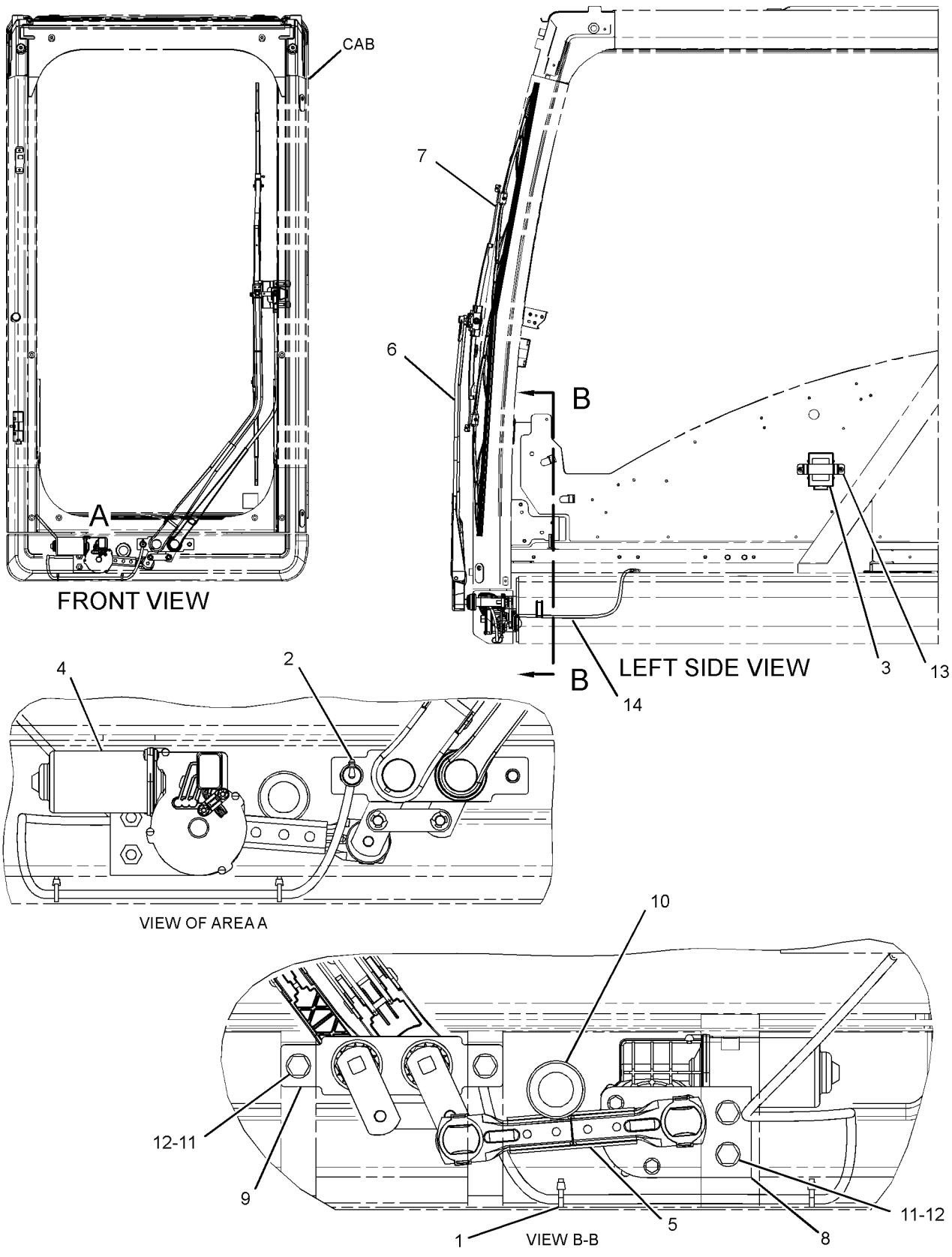

GRAPHIC #1 **<END>** g01975596

SERVICE EQUIPMENT AND SUPPLIES

247-7410 FILM GP–OPERATOR CONTROLS, NOTICE

S/N: MYG1-UP; PPN1-UP

PART OF 270-5687 CONTROL & MTG GP-JOYSTICK

AN ATTACHMENT

SMCS-7405, 7557 **i03173981**

NOTE	REF NO	GRAPHIC REF	PART NUMBER	QTY	PART NAME 1 2 3 4 5 6 (PRODUCT LEVEL)	SEE PAGE
	1	1	**250-8054**	1	FILM-NOTICE (HAMMER, READ OMM)	
	2	1	**260-6941**	1	FILM-INFORMATION (OPERATOR CONTROLS, READ OMM)	

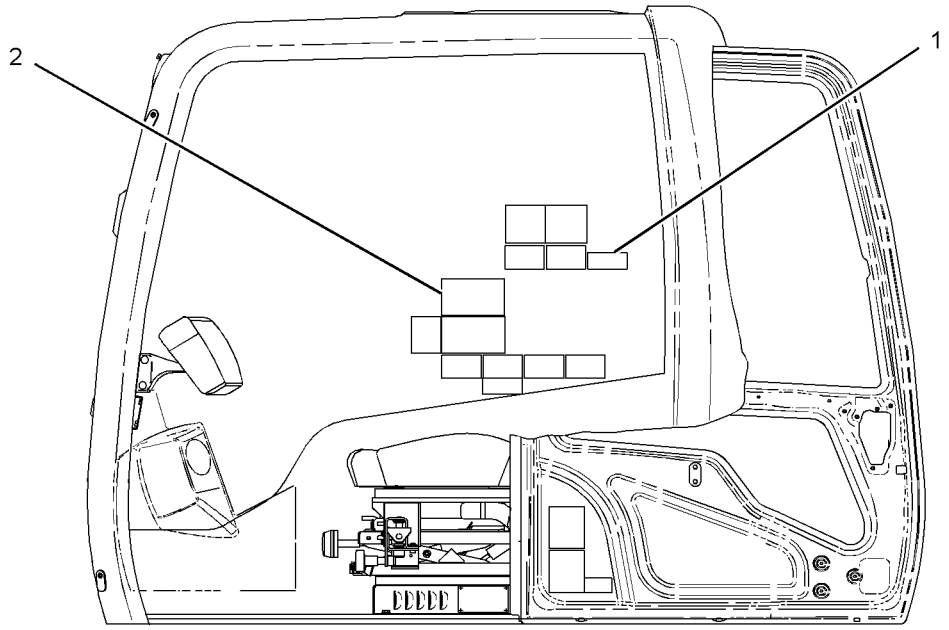

LEFT SIDE VIEW

GRAPHIC #1 **<END>** g01213282

SERVICE EQUIPMENT AND SUPPLIES

247-7411 FILM GP–OPERATOR CONTROLS, NOTICE

S/N: MYG1-UP; PPN1-UP
PART OF 270-5688 CONTROL & MTG GP-JOYSTICK
AN ATTACHMENT

SMCS-7405, 7557 **i02433606**

NOTE	REF NO	GRAPHIC REF	PART NUMBER	QTY	PART NAME 1 2 3 4 5 6 (PRODUCT LEVEL)	SEE PAGE
	1	1	**260-6942**	1	FILM-INFORMATION (OPERATOR CONTROLS, READ OMM)	
	2	1	**250-8054**	1	FILM-NOTICE (HAMMER, READ OMM)	

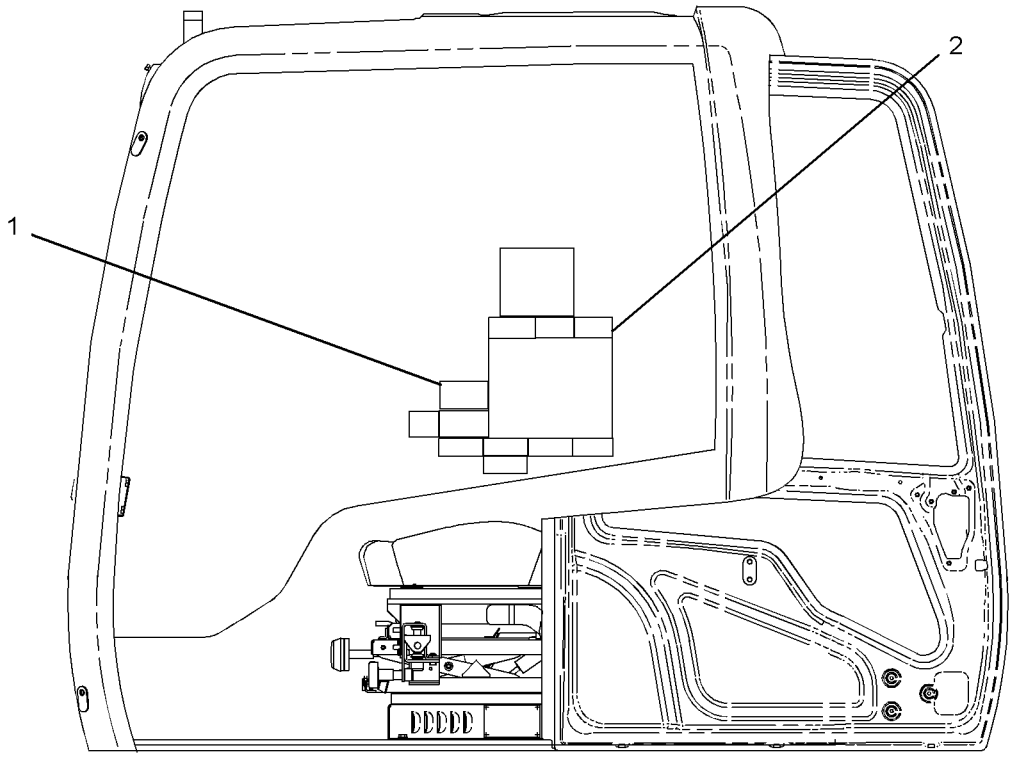

LEFT SIDE VIEW

GRAPHIC #1 **<END>** g01212938

SERVICE EQUIPMENT AND SUPPLIES

247-7418 FILM GP–OPERATOR CONTROLS, NOTICE

S/N: MYG1-UP; PPN1-UP
PART OF 335-0497 PEDAL AR-AUXILIARY
AN ATTACHMENT

SMCS-7405, 7557 **i02305378**

NOTE	REF NO	GRAPHIC REF	PART NUMBER	QTY	PART NAME 1 2 3 4 5 6 (PRODUCT LEVEL)	SEE PAGE
	1	1	**250-8054**	1	FILM-NOTICE (HAMMER, READ OMM)	
	2	1	**260-6948**	1	FILM-INSTRUCTION (OPERATOR CONTROLS, READ OMM)	

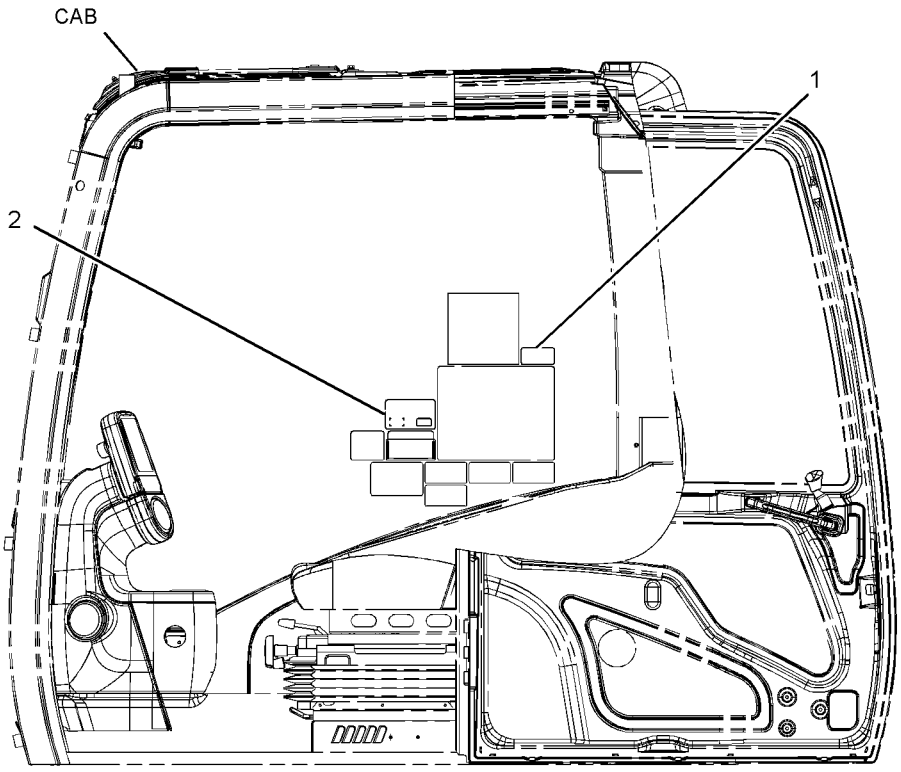

LEFT SIDE VIEW

GRAPHIC #1 **<END>** g01203264

SERVICE EQUIPMENT AND SUPPLIES

247-7465 FILM GP—HAMMER CONTROL, FOOT SWITCH

S/N: MYG1-UP; PPN1-UP
PART OF 270-6106 CONTROL AR-AUXILIARY
AN ATTACHMENT

SMCS-7405, 7557 **i02305418**

NOTE	REF NO	GRAPHIC REF	PART NUMBER	QTY	PART NAME 1 2 3 4 5 6 (PRODUCT LEVEL)	SEE PAGE
	1	1	**176-2815**	1	FILM-INSTRUCTION (HAMMER CONTROL)	
	2	1	**250-8054**	1	FILM-NOTICE (HAMMER, READ OMM)	

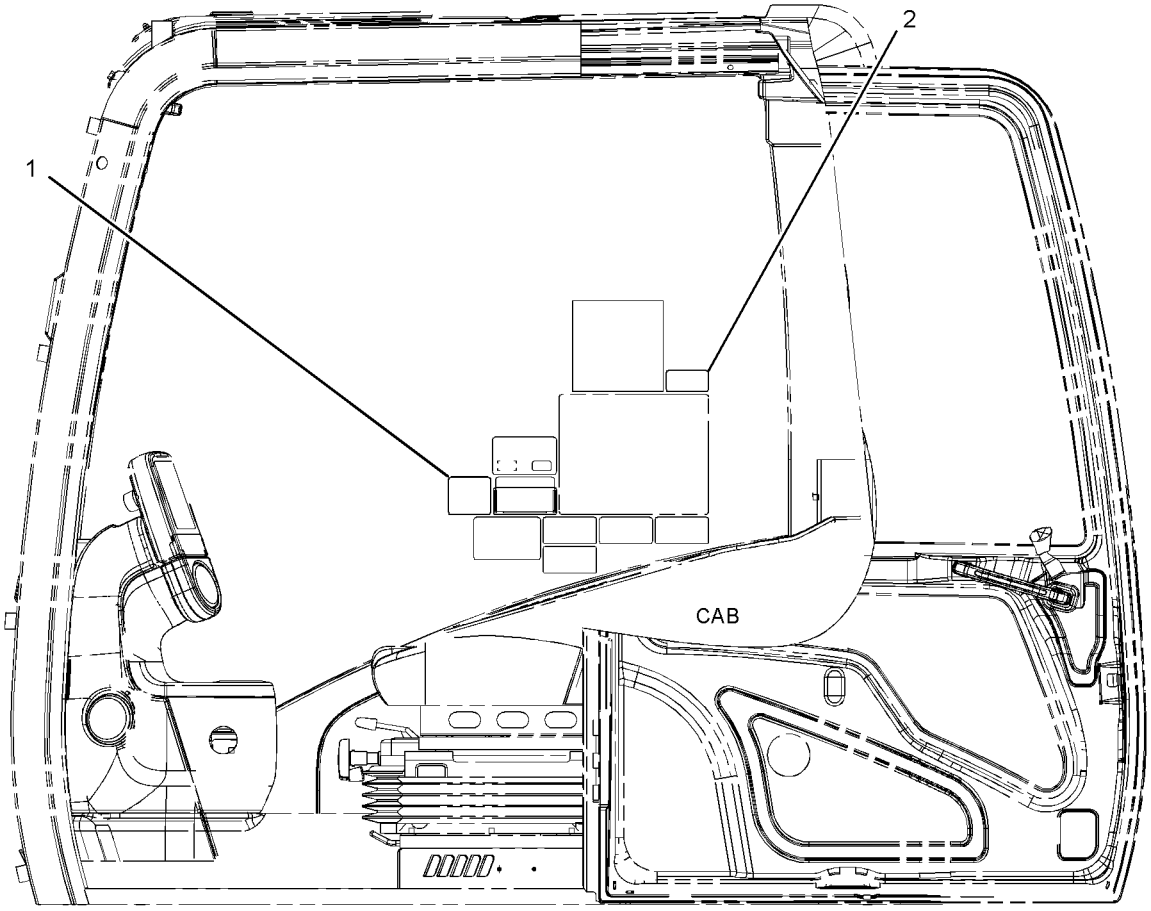

LEFT SIDE VIEW

GRAPHIC #1 **<END>** g01157047

SERVICE EQUIPMENT AND SUPPLIES

268-6816 FILM GP—QUICK COUPLER

S/N: MYG1-UP; PPN1-UP
PART OF 344-4124 CONTROL AR-COUPLER
AN ATTACHMENT

SMCS-7405, 7557 **i02390035**

NOTE	REF NO	GRAPHIC REF	PART NUMBER	QTY	PART NAME 1 2 3 4 5 6 (PRODUCT LEVEL)	SEE PAGE
	1	1	**268-6817**	1	FILM-IDENTIFICATION (QUICK COUPLER)	

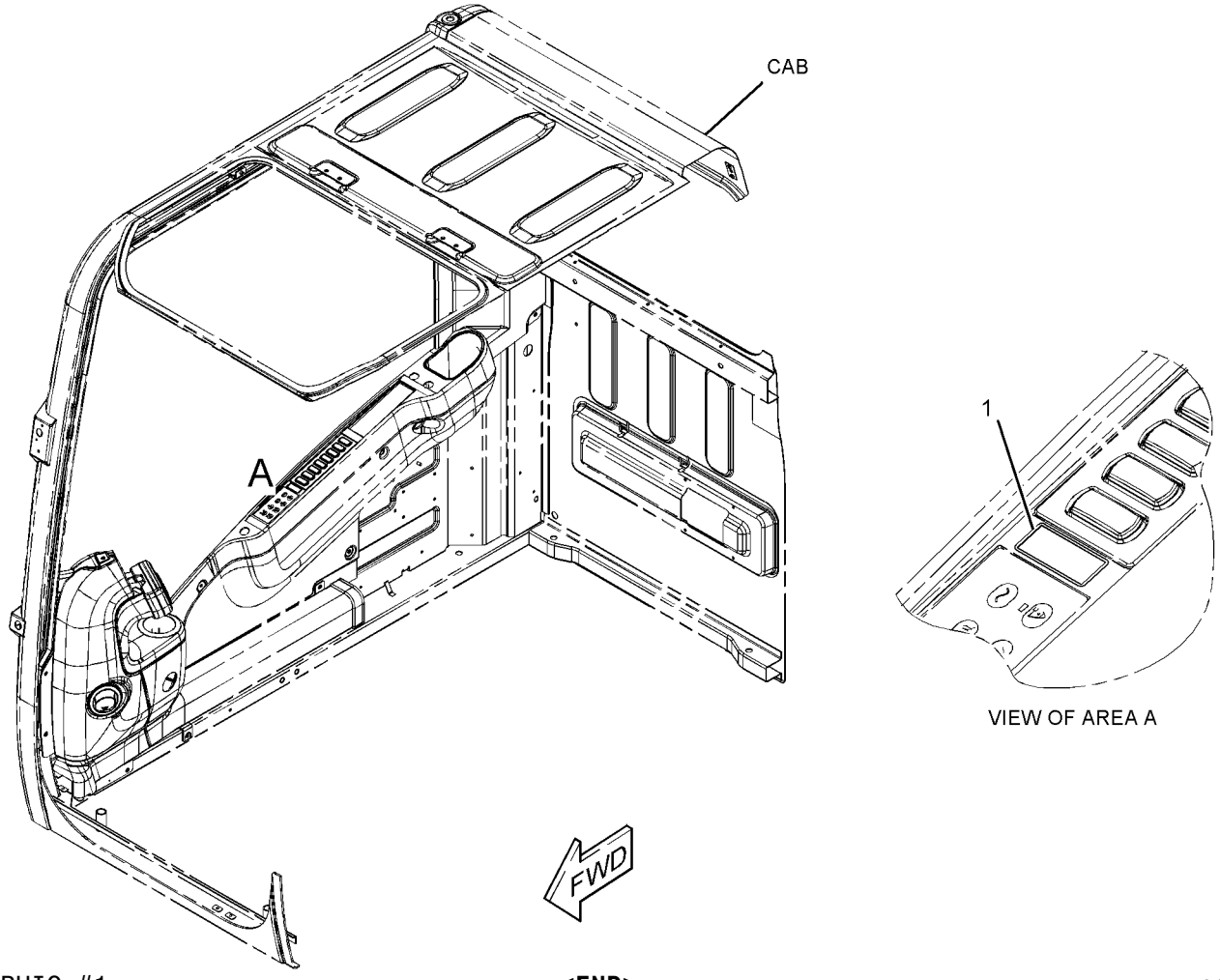

GRAPHIC #1 **<END>** g01199575

SERVICE EQUIPMENT AND SUPPLIES

298-4258 FILM GP–FUEL TRANSFER PUMP

S/N: MYG1-UP; PPN1-UP
PART OF 229-1784 PUMP AR-FUEL TRANSFER
AN ATTACHMENT

SMCS-7405, 7557 **i02885333**

NOTE	REF NO	GRAPHIC REF	PART NUMBER	QTY	PART NAME 1 2 3 4 5 6 (PRODUCT LEVEL)	SEE PAGE
	1	1	**309-3872**	1	FILM-WARNING (EXPLOSION HAZARD, READ OMM)	

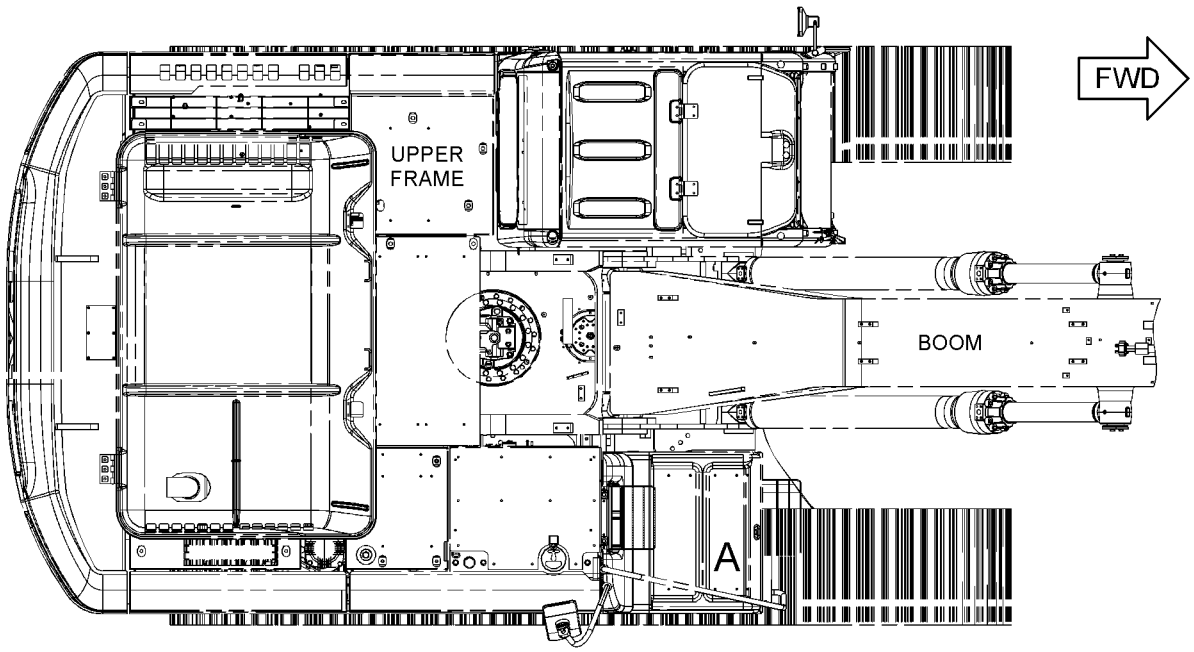

TOP VIEW

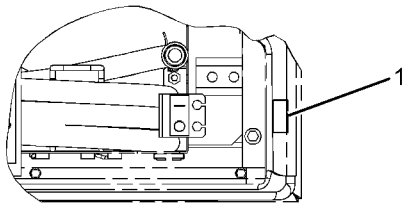

VIEW OF AREA A

GRAPHIC #1 **<END>** g01428719

SERVICE EQUIPMENT AND SUPPLIES

298-4341 FILM GP–SMARTBOOM

S/N: MYG1-UP; PPN1-UP
PART OF 346-4449 CONTROL AR-BOOM
AN ATTACHMENT

SMCS-7405, 7557 **i03173940**

NOTE	REF NO	GRAPHIC REF	PART NUMBER	QTY	PART NAME 1 2 3 4 5 6 (PRODUCT LEVEL)	SEE PAGE
	1	1	**236-0563**	1	FILM-IDENTIFICATION (SMARTBOOM)	
	2	1	**260-6944**	1	FILM-WARNING (BOOM FLOAT)	
	3	1	**322-4582**	1	FILM-WARNING (TIPPING HAZARD, READ OMM)	

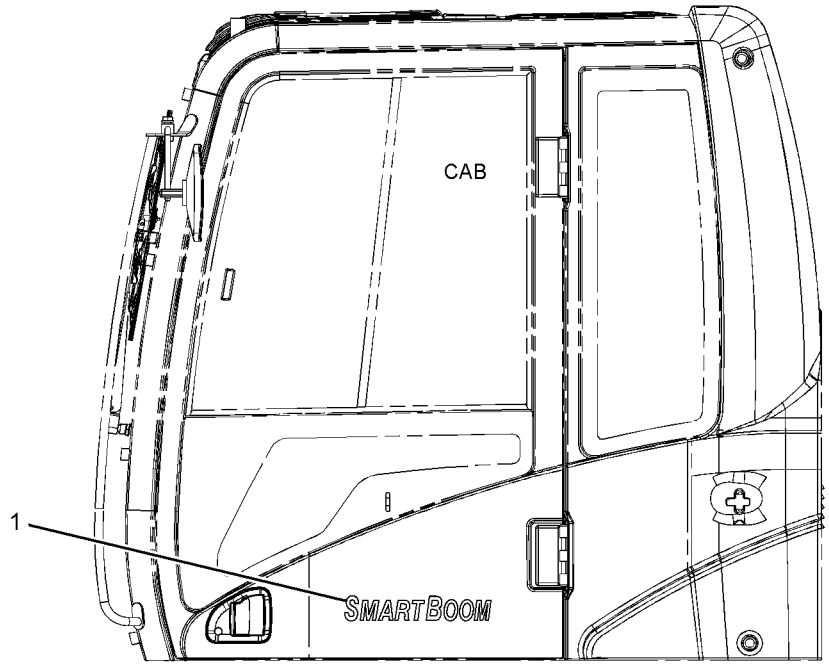

LEFT SIDE VIEW

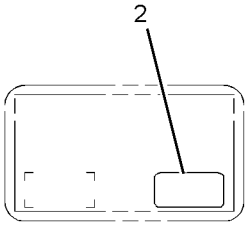

VIEW OF AREA A

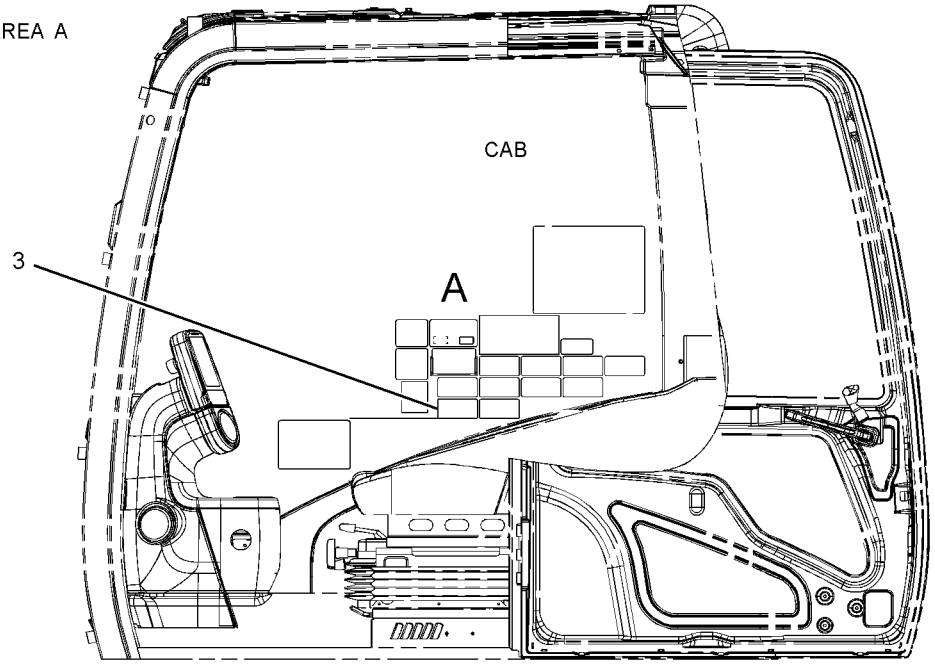

LEFT SIDE VIEW
(DOOR OPEN)

GRAPHIC #1 **<END>** g01621999

SERVICE EQUIPMENT AND SUPPLIES

303-2787 FILM GP–WORK AREA VISUAL SYSTEM, REAR

S/N: MYG1-UP; PPN1-UP
PART OF 340-3773 CAMERA AR
AN ATTACHMENT

SMCS-7405, 7557 **i03023311**

NOTE	REF NO	GRAPHIC REF	PART NUMBER	QTY	PART NAME 1 2 3 4 5 6 (PRODUCT LEVEL)	SEE PAGE
	1	1	**319-9152**	1	FILM-INSTRUCTION (BATTERY LIFE, CAMERA)	

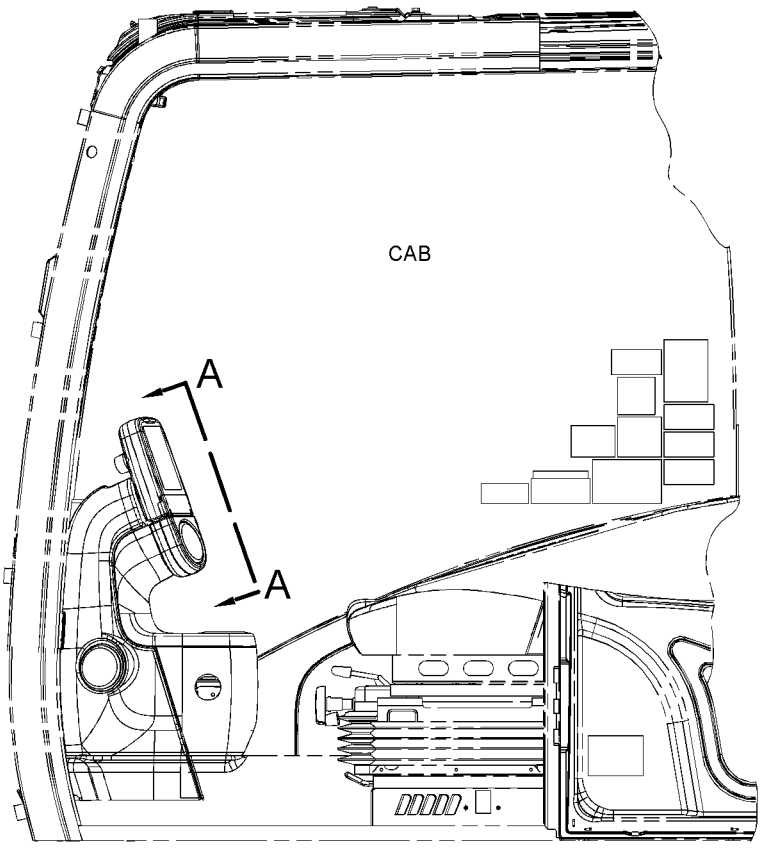

LEFT SIDE VIEW

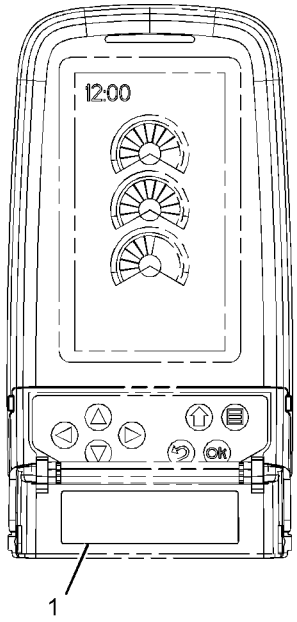

VIEW A-A

GRAPHIC #1 **<END>** g01520371

SERVICE EQUIPMENT AND SUPPLIES

240-3768 PLATE & FILM GP—BIODEGRADABLE OIL

S/N: MYG1-UP; PPN1-UP
PART OF 340-9484 OPTION AR-HYDRAULIC
AN ATTACHMENT

SMCS-7405, 7557 **i03501042**

NOTE	REF NO	GRAPHIC REF	PART NUMBER	QTY	PART NAME 1 2 3 4 5 6 (PRODUCT LEVEL)	SEE PAGE
	1	1	**169-3530**	1	FILM-IDENTIFICATION (BIODEGRADABLE HYDRAULIC OIL)	

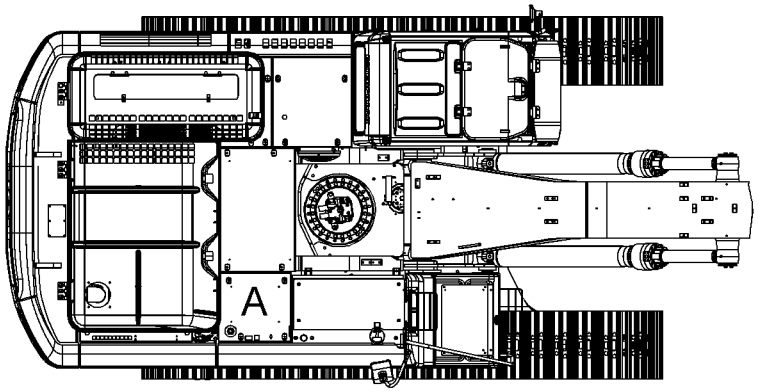

TOP VIEW

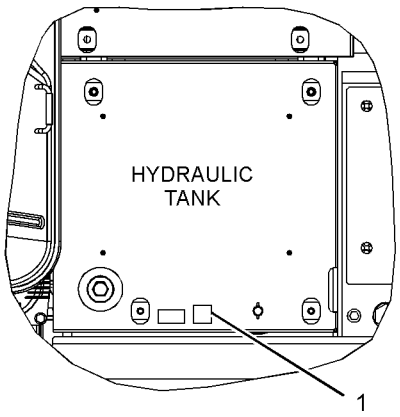

VIEW OF AREA A

GRAPHIC #1 **<END>** g01836956

SERVICE EQUIPMENT AND SUPPLIES

340-3825 PLATE & FILM GP

S/N: PPN1-UP

PART OF 343-1145 CHASSIS AR

SMCS-7405, 7557 **i03690920**

NOTE	REF NO	GRAPHIC REF	PART NUMBER	QTY	PART NAME 1 2 3 4 5 6 (PRODUCT LEVEL)	SEE PAGE
	1	1	**1P-2807**	4	FILM-INFORMATION (LIFT EYE LOCATION)	
	2	1	**4I-8472**	1	FILM-INSTRUCTION (OPERATOR CONTROLS)	
	3	1	**7X-7644**	4	FILM-INFORMATION (TIE-DOWN)	
	4	1	**8T-6842**	1	FILM-INSTRUCTION (PULL RING, ALTERNATE EXIT)	
	5	1	**134-7258**	1	FILM-INFORMATION (EXTENDED LIFE COOLANT,READ OMM)	
	6	1	**146-6747**	1	FILM-INFORMATION (24-VOLT)	
	7	1	**167-7270**	1	FILM-INSTRUCTION (NO STEP)	
	8	1	**187-0661**	1	FILM-INSTRUCTION (ALTERNATE EXIT)	
	9	1	**190-5386**	2	FILM-STRIPE (ROUND RED REFLECTIVE)	
	10	1	**214-7915**	1	FILM-INSTRUCTION (ENGINE SHUTOFF)	
	11	1	**219-0302**	1	FILM-WARNING (NO WELD, NO DRILL, READ OMM)	
	12	1	**221-8045**	1	FILM-WARNING (SEAT BELT, INTERNATIONAL)	
	13	1	**223-9818**	1	FILM-INSTRUCTION (WINDOW CLEANING, READ OMM)	
	14	1	**224-0554**	1	FILM-WARNING (UNIVERSAL, READ OMM, INTL)	
	15	1	**224-8946**	1	FILM-WARNING (NO ETHER SPRAY/AIR INTK, INTL)	
	16	1	**225-0312**	1	FILM-WARNING (JUMP START, READ OMM)	
	17	1	**225-4257**	2	FILM-WARNING (HOT FLUID UNDER PRESS, INTL)	
	18	1	**228-2781**	2	FILM-WARNING (MACHINE SWING, CRUSHING, INTL)	
	19	1	**228-7316**	4	FILM-WARNING (HOT SURFACE, HANDS CLEAR, INTL)	
	20	1	**228-9254**	1	FILM-WARNING (ELEC HAZARD, READ OMM, INTL)	
	21	1	**229-0887**	1	FILM-INFORMATION (AIR CLEANER)	
	22	1	**239-6986**	1	PLATE-IDENTIFICATION (MACHINE)	
	23	1	**242-1510**	1	FILM-INSTRUCTION (HYDRAULIC OIL CHECK)	
	24	1	**242-1588**	1	FILM-WARNING (FRONT WINDOW, READ OMM, INTL)	
	25	1	**242-6092**	1	FILM-WARNING (ACCUMULATOR PRESSURE)	
	26	1	**245-5457**	1	FILM-INSTRUCTION (BACKUP CONTROL)	
	27	1	**247-7436**	1	FILM-IDENTIFICATION (CAT)	
	28	1	**247-7437**	1	FILM-IDENTIFICATION (BATTERY CIRCUIT BREAKER)	
	29	1	**247-7438**	2	FILM-IDENTIFICATION (ELECTRICAL CIRCUIT BREAKER)	
	30	1	**247-7441**	1	FILM-IDENTIFICATION (FUSE PANEL)	
	31	1	**253-0861**	2	FILM-INFORMATION (CAT POWER, ACERT TECHNOLOGY)	
	32	1	**257-4502**	1	FILM-IDENTIFICATION (CATERPILLAR)	
	33	1	**266-5431**	1	FILM-WARNING (CRUSH HAZARD, READ OMM, INTL)	
	34	1	**290-1727**	1	FILM-IDENTIFICATION (CAT BOOM, RH)	
	35	1	**290-1728**	1	FILM-IDENTIFICATION (CAT BOOM, LH)	
	36	1	**290-1729**	2	FILM-IDENTIFICATION (CAT UPPER STRUCTURE)	
E	37	1	**290-1906**		FILM-STRIPE (RED) (45-CM EACH)	
	38	1	**303-2668**	1	PLATE-INSTRUCTION (AIR CONDITIONER, READ OMM)	
	39	1	**310-6252**	1	FILM-INSTRUCTION (BACKUP CONTROL, READ OMM)	
	40	1	**329-6508**	2	FILM-IDENTIFICATION (336D L)	
	41	1	**334-4603**	1	FILM-INFORMATION (HYDO ADVANCED 10)	
AF			**4W-1413**		PLATE-SERIAL NUMBER (ENGINE)	
					(ON LH SIDE OF CYLINDER BLOCK, TOWARDS THE TOP & REAR)	

A-NOT PART OF THIS GROUP
E-ORDER BY THE CENTIMETER
F-NOT SHOWN

NO GRAPHIC AVAILABLE AT TIME OF PUBLICATION

GRAPHIC #1 **<END>** g01269539

SERVICE EQUIPMENT AND SUPPLIES

343-1147 PLATE & FILM GP

S/N: MYG1-UP

PART OF 343-1146 CHASSIS AR

SMCS-7405, 7557 **i03690100**

NOTE	REF NO	GRAPHIC REF	PART NUMBER	QTY	PART NAME 1 2 3 4 5 6 (PRODUCT LEVEL)	SEE PAGE
	1	1	**1P-2807**	4	FILM-INFORMATION (LIFT EYE LOCATION)	
	2	1	**4I-8472**	1	FILM-INSTRUCTION (OPERATOR CONTROLS)	
	3	1	**7X-7644**	4	FILM-INFORMATION (TIE-DOWN)	
	4	1	**8T-6842**	1	FILM-INSTRUCTION (PULL RING, ALTERNATE EXIT)	
	5	1	**134-7258**	1	FILM-INFORMATION (EXTENDED LIFE COOLANT,READ OMM)	
	6	1	**146-6747**	1	FILM-INFORMATION (24-VOLT)	
	7	1	**167-7270**	1	FILM-INSTRUCTION (NO STEP)	
	8	1	**187-0661**	1	FILM-INSTRUCTION (ALTERNATE EXIT)	
	9	1	**190-5386**	2	FILM-STRIPE (ROUND RED REFLECTIVE)	
	10	1	**214-7915**	1	FILM-INSTRUCTION (ENGINE SHUTOFF)	
	11	1	**219-0302**	1	FILM-WARNING (NO WELD, NO DRILL, READ OMM)	
	12	1	**221-8045**	1	FILM-WARNING (SEAT BELT, INTERNATIONAL)	
	13	1	**223-9818**	1	FILM-INSTRUCTION (WINDOW CLEANING, READ OMM)	
	14	1	**224-0554**	1	FILM-WARNING (UNIVERSAL, READ OMM, INTL)	
	15	1	**224-8946**	1	FILM-WARNING (NO ETHER SPRAY/AIR INTK, INTL)	
	16	1	**225-0312**	1	FILM-WARNING (JUMP START, READ OMM)	
	17	1	**225-4257**	2	FILM-WARNING (HOT FLUID UNDER PRESS, INTL)	
	18	1	**228-2781**	2	FILM-WARNING (MACHINE SWING, CRUSHING, INTL)	
	19	1	**228-7316**	4	FILM-WARNING (HOT SURFACE, HANDS CLEAR, INTL)	
	20	1	**228-9254**	1	FILM-WARNING (ELEC HAZARD, READ OMM, INTL)	
	21	1	**229-0887**	1	FILM-INFORMATION (AIR CLEANER)	
	22	1	**239-6986**	1	PLATE-IDENTIFICATION (MACHINE)	
	23	1	**242-1510**	1	FILM-INSTRUCTION (HYDRAULIC OIL CHECK)	
	24	1	**242-1588**	1	FILM-WARNING (FRONT WINDOW, READ OMM, INTL)	
	25	1	**242-6092**	1	FILM-WARNING (ACCUMULATOR PRESSURE)	
	26	1	**245-5457**	1	FILM-INSTRUCTION (BACKUP CONTROL)	
	27	1	**247-7436**	1	FILM-IDENTIFICATION (CAT)	
	28	1	**247-7437**	1	FILM-IDENTIFICATION (BATTERY CIRCUIT BREAKER)	
	29	1	**247-7438**	2	FILM-IDENTIFICATION (ELECTRICAL CIRCUIT BREAKER)	
	30	1	**247-7441**	1	FILM-IDENTIFICATION (FUSE PANEL)	
	31	1	**253-0861**	2	FILM-INFORMATION (CAT POWER, ACERT TECHNOLOGY)	
	32	1	**257-4502**	1	FILM-IDENTIFICATION (CATERPILLAR)	
	33	1	**266-5431**	1	FILM-WARNING (CRUSH HAZARD, READ OMM, INTL)	
	34	1	**290-1727**	1	FILM-IDENTIFICATION (CAT BOOM, RH)	
	35	1	**290-1728**	1	FILM-IDENTIFICATION (CAT BOOM, LH)	
	36	1	**290-1729**	2	FILM-IDENTIFICATION (CAT UPPER STRUCTURE)	
E	37	1	**290-1906**		FILM-STRIPE (RED) (45-CM EACH)	
	38	1	**303-2668**	1	PLATE-INSTRUCTION (AIR CONDITIONER, READ OMM)	
	39	1	**310-6252**	1	FILM-INSTRUCTION (BACKUP CONTROL, READ OMM)	
	40	1	**329-6509**	2	FILM-IDENTIFICATION (336D LN)	
	41	1	**334-4603**	1	FILM-INFORMATION (HYDO ADVANCED 10)	
AF			**4W-1413**		PLATE-SERIAL NUMBER (ENGINE)	
					(ON LH SIDE OF CYLINDER BLOCK, TOWARDS THE TOP & REAR)	

A-NOT PART OF THIS GROUP
E-ORDER BY THE CENTIMETER
F-NOT SHOWN

NO GRAPHIC AVAILABLE AT TIME OF PUBLICATION

GRAPHIC #1 **<END>** g01269539

PART NUMBER INDEX

Part	Page
0	
0L-1026	23
	25
0S-0519	27
	28
0S-1589	18
0S-1597	230
1	
1B-3581	225
1B-8705	16
	22
1F-7960	135
1H-1023	230
1H-2629	230
1H-3244	150
	194
1H-3338	234
1H-7339	379
1J-9671	507
1K-8850	341
	342
1M-3097	386
1M-6119	152
	153
	162
1M-6120	152
	153
	162
1M-9968	231
1M-9971	230
1N-8062	135
1P-0451	111
1P-2807	987
	989
1P-3702	499
	504
	509
	573
	629
	630
	636
	651
	664
	686
1P-3703	455
	458
	483
	484
	485
	489
	499
	504
	509
	512
	567
	573
	577
	578
	579
	580
	585
	587
1P-3704	460
	464
	466
	469
	470
	471
	478
	480
	485
	488
	504
	509
	567
	573
	578
	580
	662
1P-3705	460
	464
	478
	480
	573
	582
	584
1P-3706	584
1P-4578	499
	504
	560
	563
	565
1P-5411	89
1P-5412	89
1P-5767	460
	464
	466
	469
	470
	471
	478
	480
	509
	565
	567
	578
	580
1R-0762	116
	119
1R-1808	69
1R-5998	843
1R-9953	101
	102
1R-9958	333
1S-0812	238
	239
1S-0994	914
1S-2342	286
1S-7251	152
	154
	162
	229
1S-7252	154
	162
	229
1S-7446	230
1T-0808	230
1T-0936	599
1U-8846	53
	54
	103
	224
	296
	326
	432
	434
	585
	587
1W-2715	36
	38
1W-8407	27
	28
2	
2A-3746	35
	40
2A-4429	36
	38
2B-7561	326
	434
2C-9259	747
	748
	749
	750
	751
	752
	753
	754
	755
	756
	757
	758
	759
	760
	761
	762
	763
	764
	765
	766
	767
	768
	769
	770
	771
	772
	773
	774
	775
	776
	777
	778
	779
	780
	781
	782
	783
	784
	785
	786
	787
	788
	789
	790
	791
	792
	793
	794
	795
	796
	797
	798
	799
	800
	801
	802
	803
	804
2D-0388	329
2D-1290	116
	120
2D-6392	230
2D-6642	599
	659
	665
	693
2F-6678	231
2G-8767	152
2H-3429	230
2H-3922	233
2J-3507	822
2J-8163	230
2K-4821	150
2L-0273	284
2L-6679	230
2L-8049	153
2L-8050	153
	286
2L-8052	286
2L-8057	153
2L-8058	153
2L-8060	286
2L-8065	258
	291
2L-8067	258
	291
2L-8069	153
	266
	286
2L-8074	274
	286
2L-8075	154
	196
	258
	291
2L-8077	269
	291
2L-8079	154
	248
	282
	289
	291
2M-4453	93
2M-9780	69

► **PRIMARY REFERENCE**

PART NUMBER INDEX

Part	Page
	119
	120
	225
	436
	507
	519
	558
	570
	585
	587
	599
	638
	647
2P-1279	495
	497
2P-3628	295
2P-4304	69
2Q-4703	870
2R-1236	599
2R-6806	114
2S-1647	266
2S-2596	643
	659
	662
2S-4078	131
	141
	143
	499
	504
	563
	565
	567
2S-5926	369
2U-2552	930
2W-1145	429
2W-7381	41
2W-8147	22
2Y-5829	64
	65
3	
3B-0551	141
	143
3B-0623	23
	25
3B-4501	184
	185
3B-4618	334
3B-8489	323
	325
	326
	415
	416
	417
	418
	725
	726
	730
	732
	734
	738
	739
	741
	743
	744
3D-2824	62
	485
	499
	503
	504
	512
	515
	558
	560
	567
	570
	571
	582
	585
	587
	599
	605
	627
	687
	688
	689
	690
	692
	711
3D-5102	225
3D-6209	330
3D-9143	301
3E-2310	532
	537
	541
3E-2338	295
3E-3368	205
3E-4297	442
3E-4352	103
	201
	202
3E-5169	286
3E-6910	593
3E-7389	239
3E-7771	231
3E-8004	467
	472
3E-8005	17
3E-8017	107
	111
3E-8020	843
3E-8025	447
3E-8320	194
3E-9412	133
3F-1547	593
3F-9556	150
	235
3G-8054	552
3G-8057	552
3H-0442	659
	665
3J-1907	112
	114
	116
	141
	143
	146
	203
	407
	436
	485
	495
	497
	507
	512
	514
	515
	516
	522
	523
	526
	528
	532
	533
	535
	537
	540
	541
	544
	546
	548
	550
	551
	552
	556
	558
	565
	573
	582
	585
	587
	590
	597
	624
	634
	638
	655
	657
	659
	662
	665
	666
	693
	694
	695
	717
3J-5390	63
3J-7354	69
	485
	624
	659
	662
	672
3K-0360	36
	58
	86
	87
	94
	114
	116
	119
	405
	411
	432
	436
	467
	472
	486
	512
	519
	522
	532
	535
	546
	551
	552
	565
	567
	570
	573
	590
	591
	594
	599
	613
	627
	643
	655
	657
	914
3K-0835	238
	239
3K-8460	53
3L-2875	225
3L-3380	230
3L-8187	251
3N-3763	231
3P-0647	217
3P-9847	538
	541
3R-8797	230
3R-8801	231
3R-9965	266
3S-2093	152
	153
	165
	171
	176
	180
	196
	198
	200
	236
	244
	246
	248
	251
	253
	255
	257
	263
	265
	266
	269
	271
	274
	277
	279

► **PRIMARY REFERENCE**

PART NUMBER INDEX

Part	Page	Part	Page	Part	Page	Part	Page
	282	4I-0232	333		580		550
	284	4I-0378	141	4I-6121	550	4I-9524	522
	285		143	4I-6130	580		526
	286	4I-0379	116	4I-6365	668		537
	289		119		670		540
	291	4I-0716	548	4I-6397	638		548
	293	4I-0800	532		647		550
	836	4I-0806	540	4I-6604	746	4I-9525	485
	907	4I-0812	585	4I-6605	746		514
	926	4I-0821	550	4I-6626	745		522
	936	4I-0836	550		746		530
	959	4I-1025	514	4I-6897	741		537
	973	4I-1205	843		743		540
	975	4I-1260	901	4I-7714	690		548
3S-6050	162	4I-1536	▶400	4I-7889	269		550
3S-8536	914		403		528	4I-9526	486
3S-9643	86	4I-1539	400		560		522
	88	4I-1671	537		563		530
3T-3418	230	4I-1688	537	4I-7924	310		544
3T-3422	230		540		334		546
3T-3423	230	4I-1694	532		344		548
	231	4I-1704	514		345		550
3T-3424	230		528		347	4I-9527	514
	231	4I-1739	550		349		522
3T-3434	230	4I-2187	301		351		532
3T-4688	153	4I-2599	333		353		537
3T-4709	230	4I-3038	236		354		540
3T-4710	230	4I-3144	843		356		546
3T-7528	442		948		357		548
3T-9494	230	4I-3503	914		359		550
	231	4I-3510	690		360	4I-9528	522
3T-9524	231		692		361		548
3T-9525	230	4I-3511	548	4I-8019	333		550
3V-4791	265	4I-3569	638	4I-8135	919	4J-0519	664
3W-6399	959	4I-4039	745	4I-8267	401	4J-0520	454
3Y-9267	672	4I-4043	745	4I-8472	987		457
		4I-4070	▶745		989		647
			761	4I-8799	548	4J-0522	499
4			762	4I-8965	655		504
			763		657		560
4B-2049	231		764	4I-9521	486		563
4B-3665	44		765		514		565
4B-4158	369	4I-4270	843		522	4J-0524	567
	599	4I-4286	887		530	4J-0525	93
4B-4276	194	4I-4298	966		537	4J-0527	519
4B-4278	843	4I-4300	966		540		560
4B-9044	225	4I-4361	901		548		563
4B-9783	694	4I-4978	719		550		567
	695		721	4I-9522	486		627
4B-9880	697		723		514	4J-5267	509
4C-9612	58	4I-5005	719		522		519
4D-1836	287		721		526		565
4D-3704	18		723		530		634
4D-7388	78	4I-5049	958		537	4J-5268	509
4D-7733	116	4I-5394	627		540		573
	120	4I-5409	1		548	4J-5309	638
4F-5695	23		2		550	4J-5477	492
	25		▶187	4I-9523	514		493
4G-4972	27	4I-5490	627		522		495
	28	4I-5849	597		526		497
4H-6112	432	4I-5862	400		535		514
4I-0117	333	4I-5900	550		537		515
4I-0118	333	4I-5906	550		540		532
4I-0191	305	4I-6030	548		544		556
	306	4I-6046	578		548		582

▶ **PRIMARY REFERENCE**

PART NUMBER INDEX

Part	Page
4J-7385	681
	682
4J-7386	681
	682
4J-7533	442
	590
	632
	638
	655
	657
	659
	662
	665
	708
4J-8998	629
	630
	636
	651
	686
4K-1388	681
	682
4K-2039	704
4K-4284	599
4K-8501	341
4K-8864	154
	162
	552
4L-2729	231
4L-7124	194
4M-0189	82
4M-1827	230
4M-1828	230
4M-1831	230
4M-1853	230
4M-1854	230
4M-1896	231
4N-0205	152
4N-1059	229
4N-1114	18
4N-2514	50
4N-9170	326
4N-9624	116
4P-4369	107
4P-5820	▶216
	218
4P-7428	154
	266
4P-7581	190
	191
	244
	259
	266
	277
	279
	289
	523
4P-8134	277
	279
4R-9999	66
4S-9191	86
	88
4T-0987	659
4T-3148	638
4T-5074	638
4W-1413	987
	989
4W-2026	19

5

Part	Page
5A-3604	945
	946
5B-0651	732
5C-2889	184
	185
5C-2890	135
	224
	234
	253
	259
	263
	679
	948
5C-7261	20
	87
	154
	162
	447
	675
	676
	679
	815
	817
5C-7793	843
5C-7883	154
5C-8138	959
5C-9553	165
	194
	301
	334
	533
	627
	836
	959
5D-1026	434
	914
5D-4822	897
	899
	902
5F-9144	112
5H-5672	621
5H-8848	386
5I-3088	578
5I-3299	738
	739
	744
5I-4111	681
	682
5I-4376	514
5I-4387	514
5I-4390	570
5I-4393	474
	476
5I-4396	537
	544
	550
5I-6881	654
5I-7090	869
	876

Part	Page
5I-8270	152
	162
5I-8307	973
	975
5I-8416	▶401
	403
5I-8511	655
	657
5I-8670	438
5I-8708	550
5I-8748	154
	560
	563
5I-8754	429
5I-8790	447
5I-8791	447
5I-8799	447
5I-8800	447
5I-8802	447
5I-8808	447
5I-8809	447
5I-8810	447
5I-8811	447
5I-8812	447
5I-8813	447
5I-8815	447
5I-8820	447
5J-2383	597
5J-5314	230
5K-0430	225
5K-8451	544
	546
5K-9090	452
	455
	458
	483
	484
	485
	499
	503
	504
	509
	512
	563
	565
	567
	573
	574
5K-9243	326
	725
	726
5L-3233	101
	102
	106
5L-4758	407
	704
5M-3034	230
5M-4454	432
5M-9624	662
5N-4185	17
5P-0372	333
5P-0597	71
5P-0743	75
5P-0747	229
5P-0761	152
	162
5P-0767	434
	914
5P-1075	225
	301
	318
	560
	563
5P-1076	82
	100
	108
	331
	334
	377
	378
	512
5P-1318	507
5P-1442	117
	120
5P-2321	251
	258
5P-2424	149
5P-2568	717
5P-2766	274
5P-3108	681
	682
5P-3264	133
5P-3454	153
	284
5P-4115	194
	334
5P-4116	148
	154
	301
5P-4325	71
5P-4536	110
5P-4924	141
	143
5P-5148	570
5P-5952	341
	342
5P-5998	236
5P-6271	258
5P-6298	230
5P-6312	225
5P-6313	225
5P-6314	225
5P-7462	552
5P-7463	552
5P-7464	570
5P-7465	570
5P-7468	560
	563
	567
5P-7469	560
	563
	567
5P-7470	499
	504
	560
	563
5P-7471	499
	504
	560
	563

▶ **PRIMARY REFERENCE**

PART NUMBER INDEX

Part	Page	Part	Page	Part	Page	Part	Page
5P-7530	74	6D-3479	541	6K-0806	880	6V-2317	20
	76	6D-4246	519		881	6V-2369	194
5P-7701	53	6D-5257	266		882		257
	69	6D-9157	627		883	6V-2606	120
5P-7814	53	6E-1435	541	6K-8178	155	6V-2722	162
5P-7958	917	6E-2163	643		162		164
5P-7970	71	6E-2271	633	6L-3616	725	6V-3265	72
	277		643		726		188
	279		645	6M-5062	605		189
5P-8068	627	6E-2274	636		704		914
5P-8077	478		638	6N-3279	230		959
	480		647	6N-3826	230	6V-3382	599
5P-8182	499		651	6P-2215	353	6V-3538	27
	504	6E-2313	634	6P-2216	310		28
	560	6E-2745	604		334	6V-3551	611
	563		607		344	6V-3822	114
5P-8196	69	6E-2746	▶604		345	6V-3908	69
5P-8245	19		606		347	6V-3918	17
	47	6E-3653	638		349		54
	53	6E-4793	▶605		351		58
	55		606		353		94
	67	6E-4815	605		354	6V-3922	638
	72	6E-4816	▶606		356		647
5P-8247	50		647		357	6V-3940	16
	150		651		359		17
5P-8309	333	6E-5102	42		360		60
	334	6E-5169	638		361		61
	341	6E-5431	634	6S-6649	341		74
	342	6E-5434	634	6T-0363	230		76
	344	6E-5438	634	6T-0371	230		201
	345	6E-5439	634	6T-0372	230		202
	347	6E-5643	638	6T-3631	242	6V-3965	436
	352	6E-5731	636		251		507
	357		638	6T-3632	242		515
	360		647		251		538
	958		651	6T-3633	242		541
5P-8347	173	6E-6528	679		251		544
5P-8439	155	6F-0253	238	6T-9442	238		558
5P-8444	567		239	6V-0400	509		624
5P-8500	139	6F-4855	446		577	6V-4249	46
	241	6F-7045	233		578	6V-4298	440
	333	6G-2256	152		579	6V-4369	277
	917	6G-2263	152		580	6V-4589	116
5P-9120	379	6H-4746	225		585		133
5P-9297	114	6I-0723	627		587		237
	959	6I-0724	627	6V-0405	495	6V-5048	201
5Q-4212	474	6I-5342	901		497		202
	476	6I-5976	897	6V-0545	563		207
	490		899	6V-0683	552		208
	492	6I-6033	333	6V-0852	436		211
	493	6I-6371	822		507		212
5S-7349	150	6I-6795	690		515	6V-5049	62
5V-3854	341		692		538		137
	342	6I-6798	419		541		138
		6I-6904	654		544		201
		6I-6905	654		558		204
		6I-6907	654		624		206
		6I-8454	394	6V-0974	552		215
6B-5072	86		398	6V-1322	230	6V-5050	133
	88	6J-2680	500	6V-1572	567	6V-5192	599
6C-3679	345		504	6V-1573	567	6V-5204	592
6C-6760	467		567	6V-1819	79		615
	472		570	6V-1874	560		815
6C-9140	326		624	6V-1875	567		817
6D-1641	544	6J-6855	662	6V-1889	515	6V-5210	184

6

▶ **PRIMARY REFERENCE**

PART NUMBER INDEX

Part	Page
	185
	967
6V-5217	54
	71
	277
	279
6V-5218	42
	69
	76
6V-5219	53
6V-5326	659
	662
6V-5393	638
6V-5556	638
	684
6V-5590	44
6V-5597	636
	639
	647
	651
6V-5645	194
6V-5683	930
6V-5696	19
6V-5782	507
6V-5839	42
	71
	72
	79
	107
	114
	133
	277
	279
	284
6V-5842	42
6V-5843	51
6V-6317	71
	72
	277
	279
	284
6V-6609	87
	88
	220
	223
6V-6707	560
	563
	627
6V-7238	58
	432
	914
6V-7357	116
	120
	867
	868
	897
	899
	914
	958
6V-7604	31
	33
6V-7646	870
6V-7658	442
6V-7981	133
6V-8076	436
6V-8077	544
6V-8133	295
6V-8149	19
6V-8185	194
6V-8186	235
6V-8187	194
6V-8188	149
	231
6V-8189	150
6V-8197	53
6V-8200	615
6V-8201	592
6V-8202	940
	941
6V-8213	447
6V-8214	149
6V-8218	690
	692
6V-8225	149
6V-8231	925
6V-8237	295
6V-8336	47
6V-8362	241
6V-8374	251
6V-8378	235
6V-8397	114
	116
	119
	120
	141
	143
	474
	476
	485
	492
	493
	495
	497
	512
	514
	515
	516
	522
	523
	526
	528
	532
	533
	535
	537
	540
	541
	544
	546
	548
	550
	551
	552
	556
	558
	570
	582
	585
	587
	592
	657
	695
	696
6V-8398	436
	462
	467
	472
	474
	476
	490
	492
	493
	507
	515
	519
	522
	535
	550
	551
	552
	558
	565
	567
	570
	582
	698
	699
6V-8399	667
	701
6V-8400	499
	504
	672
6V-8554	495
	497
6V-8625	436
	535
	551
	567
6V-8626	519
6V-8627	514
	582
6V-8629	585
	587
6V-8633	582
6V-8634	116
	119
6V-8635	69
	499
	503
	509
	573
6V-8636	76
	114
	133
	485
	512
	514
	516
	522
	526
	528
	535
	537
	540
	544
	546
6V-8637	560
	585
	587
6V-8638	436
6V-8639	519
	551
	570
6V-8641	514
6V-8642	519
6V-8675	55
6V-8713	485
6V-8714	503
6V-8715	119
6V-8716	503
	560
6V-8721	558
	570
6V-8722	512
6V-8723	76
6V-8724	114
	485
	514
	522
	526
	528
	532
	535
	537
	540
	544
	548
	551
	556
	558
6V-8730	117
	120
6V-8754	654
6V-8774	532
	552
6V-8775	436
	570
6V-8781	515
	526
	546
	548
	552
6V-8782	436
6V-8784	504
6V-8785	573
6V-8934	532
6V-8935	492
	493
	495
	497
	515
6V-8936	492
	493
	515
6V-8943	512
	515
6V-8978	690

PART NUMBER INDEX

Part	Page	Part	Page	Part	Page	Part	Page
	692	6V-9850	119		591		291
6V-8979	495		512		634		293
	497		540		639		436
6V-8994	474		551	7I-2673	95		474
	476	6V-9852	515		152		476
6V-9001	512		519		177		485
	514	6V-9853	573		188		495
	522	6V-9854	573		189		497
	528	6V-9876	532		244		514
	551		570		248		519
	556	6W-6005	152		257		522
6V-9002	522		162		914		526
	551	6Y-2589	382		926		530
	570		383		946		532
6V-9004	499	6Y-2590	382		953		535
	504		383	7I-7131	622		537
	570	6Y-2748	383	7I-7403	700		540
6V-9005	512	6Y-2751	382		702		544
6V-9007	485		383	7I-7611	432		546
	499	6Y-2792	387	7I-7619	432		548
	503		388	7I-7684	432		550
	558	6Y-5323	384	7I-8084	447		570
	570		385		615		573
6V-9008	563		▶386		697		585
	567	6Y-5685	299		701		587
	573	6Y-8023	379		703		860
6V-9009	499	6Y-8028	379	7I-8152	615		907
	504	6Y-8029	379	7I-8154	615		914
6V-9168	474	6Y-8075	386	7I-8166	615		936
	476	6Y-8076	386	7I-8171	615	7L-2894	230
6V-9182	560	6Y-8077	386	7I-8172	615	7M-0324	230
6V-9200	485	6Y-9855	386	7J-9108	462	7M-0325	231
6V-9491	196	6Y-9856	386		485	7M-0326	230
	198	6Y-9858	386		486	7M-0327	230
	259	6Y-9859	386		512	7M-7410	591
6V-9512	565				515	7M-8485	295
6V-9746	485				519		499
	499	**7**			565		503
	503				567		504
	504	7B-7501	87	7J-9933	684		509
	512	7C-1445	20	7K-1181	117		512
	515		53		120		560
	558	7C-1493	69		131		563
	560	7E-5714	224		152		567
	570	7E-6455	108		171		573
	571	7F-0560	164		190		574
	573	7F-3488	230		191		584
	574	7F-3525	230		244		632
	585	7F-8268	21		246		639
	587	7H-3171	379		248		647
	711		386		250		662
6V-9829	546	7I-0717	307		251		708
6V-9836	532		308		253	7M-8651	230
	535	7I-0894	333		255	7N-0140	225
	537	7I-0966	684		257	7N-0296	225
	540	7I-0986	700		263	7N-0719	194
	546		702		265		▶233
	551	7I-1248	636		266	7N-2059	225
6V-9837	515		638		269	7N-5274	162
6V-9839	512		647		271	7N-5683	27
6V-9843	515		651		274		28
	541	7I-1418	333		282	7N-9801	243
6V-9846	515	7I-2272	277		285	7T-1099	266
	585		279		286	7T-3974	230
	587		590		289	7T-6799	241

▶ **PRIMARY REFERENCE**

PART NUMBER INDEX

Part	Page
7T-8890	959
7T-9123	231
7W-3447	114
7X-0339	149
7X-0513	732
7X-0515	82
7X-0562	231
7X-0579	120
7X-0618	89
7X-0818	556
7X-2454	384
	385
7X-2475	629
	630
	896
7X-2501	127
7X-2533	182
	914
7X-2536	869
	876
7X-2539	120
7X-2543	467
	472
7X-2546	567
7X-2548	155
7X-2549	304
	541
7X-2550	303
	490
	507
7X-2553	56
	82
	584
	935
7X-2554	56
7X-2555	462
	582
7X-2557	584
7X-2563	95
	380
	745
	746
7X-2567	56
7X-2572	321
7X-2573	719
	721
	723
7X-2575	299
	815
	817
7X-2576	434
	932
7X-2577	384
	385
7X-2619	291
7X-2621	155
	176
	178
	179
	287
	639
7X-2908	60
	61
7X-3164	467
	472
7X-3373	230
7X-4803	417
	418
7X-7644	987
	989
7X-7700	141
	143
7X-7729	78
	82
	89
	104
	108
	836
7Y-0059	1
	2
	▶917
7Y-0357	822
7Y-0358	822
7Y-0366	▶822
7Y-0595	295
7Y-0623	897
	899
7Y-0639	295
7Y-0642	295
7Y-0643	295
7Y-0644	295
7Y-0645	295
7Y-0656	295
7Y-0659	295
7Y-0661	295
7Y-0662	295
7Y-0663	295
7Y-0667	295
7Y-0673	295
7Y-0676	295
7Y-0731	295
7Y-1056	295
7Y-1057	295
7Y-1094	295
7Y-1095	326
7Y-1113	321
7Y-1647	326
7Y-1648	326
7Y-1650	326
7Y-1838	100
7Y-1976	89
	95
7Y-2292	307
	308
7Y-2397	732
7Y-2853	333
7Y-2854	334
7Y-2916	335
7Y-3470	925
7Y-3472	925
7Y-3474	959
7Y-3729	503
7Y-3730	509
7Y-3731	455
	499
	503
7Y-3732	462
	488
	489
7Y-3950	251
	257
7Y-3951	196
	257
7Y-3952	196
	257
7Y-3953	251
7Y-3954	257
7Y-3955	257
7Y-3958	257
7Y-3962	153
	190
	191
	196
	253
	255
	257
7Y-3963	153
	190
	191
	196
	255
	258
	271
	274
7Y-4199	550
7Y-4294	597
7Y-4387	514
	537
	540
	548
7Y-4390	514
7Y-4399	548
7Y-4660	419
	421
7Y-4669	419
	421
7Y-4672	419
	421
7Y-4673	419
	421
7Y-4695	419
	421
7Y-4817	622
7Y-4941	423
7Y-4944	423
7Y-4945	426
7Y-4956	426
7Y-5215	419
	421
7Y-5219	599
	639
7Y-5221	597
7Y-5226	659
	665
7Y-5235	295
7Y-5239	423
	426
7Y-5247	519
	567
7Y-5272	407
7Y-5458	240
7Y-5464	240
7Y-5499	194
7Y-5505	257
7Y-7394	909
	910
	952
	953
7Y-7955	550
7Y-8099	647
7Y-8165	116
	119
	152
	914
7Y-8167	914
7Y-8436	685
7Y-8437	685
7Y-8463	871
	872
	873
	874
7Y-8561	897
	899
	948
7Y-8876	341
	342
	8
8B-6561	155
8C-0564	516
8C-3089	230
8C-3206	454
	457
8C-3445	69
8C-3446	69
	624
8C-3451	624
8C-4984	45
8C-5607	182
8C-5608	170
	182
8C-5748	103
8C-5917	153
	162
8C-5918	152
	162
8C-6354	258
8C-6358	164
8C-6561	127
8C-6711	135
8C-6868	116
	119
8C-6869	141
	143
8C-6965	672
8C-8400	560
	571
8C-8451	170
8C-8580	870
8C-8988	116
	119
	533
8C-8989	570
8C-8992	331
	377
	378
	466
	469

▶ **PRIMARY REFERENCE**

PART NUMBER INDEX

Part	Page	Part	Page	Part	Page	Part	Page
	471		772		146		108
8C-9660	230		773		194		117
8F-0212	634		774		231		120
8F-1434	231		775		259		149
	235		776		277		155
8F-6575	67		777		279		167
8F-7219	112		778		291		176
8F-8882	387		779		344		178
	388		780		345		179
8H-5303	233		781		347		188
8H-5306	233		782		440		189
8H-5352	429		783		836		190
8J-2559	599		784	8T-0337	259		191
8J-6815	659		785		287		193
	662		786	8T-0338	815		204
8K-5440	225		787		817		225
8L-2779	76		788	8T-0341	594		244
8L-2786	53		789	8T-0343	615		246
	62		790	8T-0376	89		248
	76		791	8T-0404	567		265
	117		792	8T-0643	42		266
	120		793	8T-0644	86		269
	219		794		88		276
	222		795		93		281
8L-8413	152		796	8T-0646	67		285
	153		797		611		287
	154		798	8T-1158	672		289
	162		799	8T-1159	386		326
	266		800	8T-1482	56		335
8M-0505	87		801	8T-1683	116		341
8M-2770	155		802		119		342
8M-2772	725		803	8T-1686	565		436
	726		804	8T-1687	552		462
8M-2773	117	8S-2332	229	8T-1715	87		466
	914	8T-0075	514		116		467
8M-5860	31		526		119		469
	33		537	8T-1779	528		470
8N-0869	152		540		552		471
8N-1546	286		544		585		472
8N-1547	153		546		587		483
8P-9770	747	8T-0078	504	8T-1889	155		484
	748	8T-0100	20	8T-1890	155		485
	749		49	8T-1905	116		488
	750		103		515		489
	751	8T-0114	869		528		495
	752		876		537		497
	753	8T-0164	556		541		500
	754	8T-0198	499	8T-2393	599		504
	755		503	8T-2883	515		509
	756	8T-0266	854	8T-2920	570		512
	757	8T-0267	627	8T-2922	703		515
	758	8T-0269	447	8T-3008	632		519
	759		870		708		523
	760		918	8T-3518	164		526
	761		920	8T-3519	164		538
	762	8T-0288	701	8T-3647	856		541
	763		703	8T-3666	41		544
	764		705	8T-4001	730		546
	765		706		734		552
	766		707	8T-4121	78		556
	767		715		82		558
	768	8T-0292	74		95		560
	769	8T-0293	72		98		563
	770	8T-0328	141		100		565
	771		143		104		567

► **PRIMARY REFERENCE**

PART NUMBER INDEX

Part	Page
	582
	584
	585
	587
	610
	622
	624
	627
	636
	639
	647
	651
	725
	726
	836
	857
	860
	869
	870
	876
	878
	896
	897
	899
	904
	914
	926
	928
	931
	935
	951
	958
	959
	973
	975
8T-4123	95
	321
	719
	721
	723
	730
	734
	738
	739
	741
	743
	744
	745
	746
8T-4127	259
8T-4131	615
	730
	734
8T-4132	82
8T-4133	78
	100
	117
	120
	155
	162
	188
	189
	191
	301
	341
	342
	462
	621
	672
	725
	726
	843
	897
	899
8T-4136	78
	95
	104
	108
	117
	120
	149
	155
	191
	225
	269
	276
	281
	289
	326
	444
	467
	472
	500
	504
	515
	519
	523
	526
	538
	541
	544
	552
	556
	558
	560
	563
	565
	585
	587
	622
	624
	655
	657
	836
	869
	876
	878
	897
	899
	973
	975
8T-4137	82
	89
	98
	108
	117
	120
	155
	167
	190
	193
	204
	225
	244
	248
	277
	279
	281
	287
	326
	495
	497
	515
	519
	523
	541
	544
	552
	627
	836
	843
	857
	870
	896
	904
	914
	926
	928
8T-4138	171
	335
	914
8T-4139	82
	89
	225
	460
	462
	464
	467
	472
	474
	476
	478
	480
	483
	484
	485
	488
	489
	490
	500
	504
	512
	515
	533
	546
	560
	563
	565
	567
	570
	574
	659
8T-4140	139
	478
	480
	626
	664
	732
8T-4141	814
	815
	817
	819
8T-4167	56
	295
	321
	326
	374
	376
	384
	385
	434
	719
	721
	723
	730
	732
	734
	932
8T-4171	194
	276
	335
	907
8T-4172	155
	552
8T-4173	932
8T-4174	460
	464
8T-4175	474
	476
	921
8T-4176	89
	485
	500
	504
8T-4177	538
	541
8T-4178	512
	528
8T-4179	171
	225
	244
	307
	308
8T-4182	155
	512
8T-4183	95
	131
	432
	436
	460
	464
	466
	469
	471
	478
	480
	624
	814
	815
	817

► **PRIMARY REFERENCE**

PART NUMBER INDEX

Part	Page
	819
8T-4184	82
	108
	307
	308
	460
	462
	464
	490
	577
	578
	579
	580
	585
	587
8T-4185	100
	108
	462
	467
	472
	485
	519
	541
8T-4186	78
	436
	504
	567
	582
	610
8T-4189	148
	225
	335
	533
	558
8T-4190	188
	189
	190
	306
	845
	849
	928
8T-4191	155
	190
	191
	244
	246
	265
	266
	269
	369
	725
	726
	869
	876
	878
	914
	935
	951
	958
	959
8T-4192	89
	95
	100
	225
	332
	552
	560
	574
	845
	849
	919
8T-4193	582
	664
	922
	935
8T-4194	82
	440
	460
	462
	464
	466
	469
	470
	471
	478
	480
	509
	565
	567
8T-4195	78
	95
	117
	155
	318
	335
	538
	541
	552
	560
	563
	565
	624
	634
	636
	639
	647
	651
	860
	897
	899
	914
	931
8T-4196	78
	82
	108
	117
	120
	155
	483
	484
	485
	488
	489
	500
	560
	563
	565
	582
	584
8T-4198	285
	523
	546
8T-4199	155
	291
	326
8T-4200	301
	552
	914
8T-4205	127
	150
	194
	230
	277
	279
8T-4223	82
	89
	95
	108
	131
	149
	155
	171
	184
	185
	225
	244
	267
	301
	303
	304
	307
	308
	332
	335
	412
	432
	436
	440
	460
	462
	464
	466
	467
	469
	470
	471
	472
	474
	476
	478
	480
	483
	484
	485
	488
	489
	490
	492
	493
	500
	504
	507
	509
	512
	515
8T-4224	20
	48
	117
	120
	127
	150
	225
	291
	301
	335
	436
	507
	533
	538
	541
	552
	556
	558
	624
	634
	856
	869
	876
	887
	914
8T-4226	155
	162
8T-4240	295
8T-4241	615
8T-4244	82
	108
	184
	185
	432
	436
	462
	474

► **PRIMARY REFERENCE**

PART NUMBER INDEX

Part	Page
	476
	490
8T-4648	267
	335
	462
	485
	512
	584
	845
	849
8T-4779	82
	719
	721
	723
	843
8T-4780	321
	719
	721
	723
	738
	739
	741
	743
	744
8T-4908	117
	120
	436
	624
8T-4910	483
	484
	485
	488
	489
8T-4944	429
8T-4956	82
	89
	108
	432
	478
	480
	490
	492
	493
	500
	504
	519
	538
	541
	567
	570
	574
	609
	627
8T-4970	190
	194
	526
8T-4971	914
8T-4986	106
8T-4987	100
	106
8T-5001	474
	476
	577
	579
8T-5005	155
	269
	560
	563
	574
8T-5041	89
	578
	580
8T-5092	500
	504
8T-5379	374
	376
	730
	732
	734
8T-5400	973
	975
8T-5412	504
8T-5436	546
8T-5451	277
	279
8T-5460	730
	734
8T-5878	434
8T-6383	432
8T-6404	592
8T-6430	381
8T-6466	155
8T-6684	504
8T-6685	466
	469
	470
	471
	639
8T-6693	344
	345
	347
	440
8T-6703	95
8T-6759	591
	622
	634
	639
	659
	662
	672
	713
	715
8T-6761	92
	627
8T-6764	38
8T-6842	987
	989
8T-6868	574
	582
8T-6869	120
8T-6870	538
	541
	544
	634
8T-6876	436
8T-7044	107
8T-7338	56
	363
	565
8T-7811	717
8T-7910	495
	497
8T-7927	69
8T-7971	467
	472
	624
	919
8T-8442	447
	613
8T-8729	152
	153
	237
	248
	257
	269
	282
	286
	289
	291
	907
8T-8730	153
	239
	248
	251
	253
	257
	263
	269
	271
	274
	286
	289
	291
	907
8T-8731	269
8T-8732	269
8T-8737	58
	153
	196
	200
	218
	240
	253
	258
	263
	266
	269
	271
	274
	279
	282
	286
	291
	873
	874
	877
	907
	924
8T-8748	238
	239
8T-8827	153
8T-8887	495
	497
8T-8920	412
8T-8987	565
8T-9080	389
	429
	616
8T-9403	509
	512
8T-9597	429
	594
	613
8T-9655	119
	173
8T-9756	152
	162
8T-9757	154
8U-8009	411
8Y-5745	897
	899
8Y-6352	956
8Y-6967	845
	849
8Y-9603	229
9B-7233	241
9D-1829	117
	120
9D-3769	95
9F-2167	478
	480
	512
9F-2247	36
9F-4446	17
9F-5599	230
9F-5644	233
9F-7283	565
9G-0002	152
	162
9G-0003	154
9G-0004	153
	162
9G-0005	152
	162
9G-4101	230
	231
9G-4336	153
9G-4343	153
	194
	257
9G-7641	196
	198
	▶241
9G-8451	194
9G-8909	154
9H-3757	230
9J-0705	605
9K-0700	959
9L-6770	150
9M-1974	17
	42
	45
	53
	54
	58
	69

9

▶ **PRIMARY REFERENCE**

PART NUMBER INDEX

Part	Page	Part	Page	Part	Page	Part	Page
	71		717	9X-2021	50		274
	74	9S-8005	36	9X-2041	843		286
	76		38		851	9X-3463	184
	87		58		862		185
	94		62		864		186
	103		94		967		191
	173		117	9X-2042	251	9X-3495	269
	277		120		259		291
	279		590		274	9X-3601	419
9M-2307	360		591		843		421
	361		594		864	9X-3602	423
9M-3786	565		599		887	9X-3603	423
9M-5590	667		613		902	9X-3604	423
9M-5732	360		655		939	9X-3607	426
	361		657		955	9X-4184	239
9M-7609	230	9S-8006	119		956	9X-4597	415
9M-7958	131	9S-8008	600		961		417
9M-8406	117	9S-9334	53		967		732
	120	9T-1614	659		969	9X-4598	741
	540		662		972		743
9N-0869	49	9T-4506	604		973	9X-6032	296
	173		607		975		613
9N-1941	108	9U-8693	432	9X-2044	259	9X-6153	930
9S-2544	230	9V-3659	341		956	9X-6165	170
9S-4167	116		342		969		182
9S-4180	442	9W-0335	257		972		897
	638	9W-0625	238	9X-2045	860		899
	665	9W-0742	155		901	9X-6419	594
9S-4181	69		▶164	9X-2046	860	9X-6582	492
	499	9W-0844	153		923		493
	504		251	9X-2099	20		514
	509		258	9X-2205	141	9X-6654	565
	567		263		143	9X-7680	613
	584		266	9X-2332	279	9X-7712	69
9S-4182	69		269	9X-2480	174	9X-7737	145
9S-4183	62		271	9X-2616	943		237
9S-4185	53		274		944	9X-8081	251
	86		282	9X-3401	58	9X-8256	117
	87		286		154		120
	88		289		240		155
	486		293		248		165
	546		907		253		171
	570	9W-0852	153		258		174
	573		263		266		190
9S-4191	62		269		269		194
	522		271		274		224
	546		274		279		253
	551		282		286		259
	556		286		522		263
	565		289		528		276
	634		858		533		291
	657	9W-1951	258		627		301
	666	9W-2146	387		871		335
9S-6130	141		388		873		526
	143	9X-0196	153		874		533
	567	9X-0261	201		875		627
9S-8001	590		202		877		836
9S-8002	29	9X-0262	201	9X-3402	153		867
	679		202		196		868
9S-8004	112	9X-1386	216		248		870
	117	9X-1813	148		253		897
	133		205		258		899
	515		209		266		907
	590		234		269		914
	655		237		271		918

▶ **PRIMARY REFERENCE**

PART NUMBER INDEX

Part	Page
	920
	948
	958
	959
9X-8257	56
	188
	189
	190
	363
	432
	460
	462
	464
	474
	476
	478
	480
	565
	582
	584
	592
	603
	664
	719
	721
	723
	814
	819
	843
	845
	849
	896
	897
	899
	921
	922
	928
	932
	935
9X-8267	135
	149
9X-8268	23
	25
	45
9X-8600	141
	143
9X-8979	594
9X-9896	170
9Y-0810	22
9Y-6089	18
9Y-8389	116
	119
	127

0

Part	Page
003-7764	116
	119
005-4362	114
012-0380	234
030-1706	154
030-7950	133
030-8188	114
030-8194	129
033-5853	29
	69
	679
033-6034	74
033-6043	679
033-8248	725
	726
036-1865	89
036-9821	230
045-4065	231
061-9455	20
	53
081-6344	307
	308
085-6444	▶911
	966
085-6445	911
085-6446	911
085-6447	911
085-6448	911
085-6449	901
	911
085-7356	532
	537
	540
	558
085-7538	711
085-9310	139
	626
087-3908	333
087-3909	333
087-4402	522
	526
	528
087-4411	540
	550
087-4441	550
087-4454	401
	▶402
087-4456	▶403
	405
087-4531	550
087-4534	550
087-4575	402
087-4576	402
087-4577	402
087-4587	152
087-4683	236
087-4710	672
087-4786	599
087-4932	509
087-4935	509
087-4944	565
087-5166	655
	657
087-5306	540
087-5548	423
	732
087-5550	423
087-5551	423
087-5661	577
	579
087-5708	672
087-5760	550
087-5762	528
087-5765	528
	550
087-5766	526
	528
087-5771	532
087-5772	526
	550
087-5773	550
087-5774	550
087-6583	532
	537
	540
087-6584	530
087-6643	577
091-9035	152
093-0074	719
	721
	723
093-0090	321
093-0349	719
	721
	723
	730
	734
	738
	739
	741
	743
	744
093-0363	738
	739
	744
093-0364	321
093-0366	719
	721
	723
	738
	739
	741
	743
	744
093-1290	582
093-1291	462
093-1294	582
093-1345	730
	732
	734
093-1347	732
093-1349	730
	734
093-1730	432
093-1731	295
093-2069	870
093-7521	445
094-0577	295
094-0578	295
094-0579	295
094-0580	295
094-0584	295
094-0876	668
	670
094-1528	432
095-0673	672
095-0705	814
	819
095-0723	259
095-0728	878
095-0735	869
	876
095-0736	141
	143
095-0755	843
095-0826	627
095-0843	301
095-0882	615
095-0891	295
095-0929	616
095-0930	426
095-0944	615
095-0948	815
	817
095-0965	615
095-0966	615
095-1260	672
095-1386	116
	119
095-1388	75
095-1393	815
	817
095-1519	446
	700
	702
095-1522	654
095-1572	599
095-1575	638
	667
	672
	708
095-1576	713
	715
095-1578	667
	687
	688
	689
	697
	700
	702
095-1579	667
	690
	692
095-1580	675
	676
095-1582	654
	675
	676
095-1584	667
	674
	690
095-1585	599
	632
095-1586	550
	668
	670
	685
	698
	699
	704
	709
	713

▶ **PRIMARY REFERENCE**

PART NUMBER INDEX

Part	Page
	715
095-1587	690
	692
095-1590	636
	638
	647
	651
	674
	675
	676
	685
	690
	692
095-1594	655
	657
	659
095-1596	599
	674
095-1600	597
095-1601	632
	685
	708
095-1602	632
	708
095-1603	638
095-1608	627
095-1625	622
095-1633	419
	421
095-1635	423
095-1657	632
	708
095-1681	442
095-1698	684
	713
	715
095-1700	599
	632
	708
095-1716	622
095-1726	426
095-1735	627
095-1750	550
	698
	699
095-1751	550
	698
	699
	701
095-1777	558
095-1778	638
095-1785	685
	713
	715
095-1786	690
	692
095-1787	636
	638
	647
	651
	685
095-1789	655
	657
	659
095-2927	369
095-6639	621
095-7380	599
095-7424	44
095-7944	382
096-0008	593
096-0061	204
096-1441	432
096-1533	597
096-1545	717
096-1628	668
	670
096-2323	447
096-2591	291
096-2622	843
	887
096-3216	295
096-3780	301
096-3884	887
096-3978	599
096-4035	89
	95
096-4129	344
	345
	347
096-4755	434
096-4883	519
	567
096-4884	334
096-5919	599
096-5962	259
096-6166	196
	198
	259
	287
	878
096-6467	321
098-5747	814
	819
099-0139	966
099-0365	654
099-0822	700
	702
	938
099-0823	843
099-2374	447
	836
	967
099-3095	611
099-3506	902
099-3607	843
099-3629	962
	964
099-3645	917
099-3649	48
	551
099-5194	432
099-6137	668
	670
	672
099-6141	672
099-6144	672
099-6145	672
099-6418	316
	317
099-7030	599
099-7857	329
099-8111	412
	597
099-8232	499
	503
	1
100-2881	901
100-3320	277
	279
100-3866	603
101-2846	259
101-3128	173
101-7396	519
101-7397	509
101-7398	512
101-7401	499
	503
101-7402	519
	567
101-7403	509
101-7404	499
	503
	509
	512
	565
101-8899	887
101-8900	887
101-9848	344
	345
	347
	357
	361
	362
	364
	367
102-1157	550
102-3596	10
	▶50
102-5828	69
102-5829	69
102-7688	897
	899
102-7886	285
102-7964	258
	274
	286
102-7965	251
	258
	274
	286
	293
102-8016	257
102-8802	58
	141
	143
	147
	148
	153
	196
	216
	234
	235
	237
	243
	244
	277
	279
	286
	289
	522
	528
	532
	573
	627
102-8803	152
	153
	236
	242
	244
	257
	266
	277
	858
102-8804	153
	203
	286
102-8806	153
	200
	274
103-1384	514
	551
103-2529	153
103-5246	719
	721
	723
103-8177	638
103-8252	687
	688
	689
103-8253	687
	688
	689
103-8254	687
	688
	689
103-8255	687
	688
	689
103-8345	426
104-3173	914
104-6871	266
104-7293	633
	643
	645
104-7294	643
	645
104-7296	643
	645
104-8771	546
104-8783	540
104-8838	550
104-8903	550
104-8950	550
104-8976	532
105-1797	277
	279
105-2169	902

▶ **PRIMARY REFERENCE**

PART NUMBER INDEX

Part	Page	Part	Page	Part	Page	Part	Page
105-3477	499	109-9437	56	113-6738	532		872
	503	110-5496	550	113-6853	▶577		873
	509	110-5525	597		736		874
	573		615		737	118-0911	87
105-3479	503		703	113-6859	▶578	118-1727	10
105-3483	509	110-7149	432		736		▶19
105-3484	551	110-7183	323	113-8490	257	118-4044	655
105-3485	503	110-7231	295	113-8491	250		657
	509	110-8769	153		257	118-4057	599
105-3487	301	111-0985	532	113-8493	257	118-4086	668
	334	111-2416	277	114-0489	711		670
105-3489	567		279	114-0623	698	118-4087	668
105-5175	251	111-4799	236		699		670
105-6324	374	111-4816	258		704	118-7302	382
106-0210	240		293	114-0760	419	118-7303	382
106-2704	936	111-4836	152		421	119-2378	489
106-6248	606		188	114-0762	423	119-2379	489
	▶607		189	114-1322	432	119-3662	153
106-8715	560		244	114-1398	432		258
	571		248	114-1399	432		266
106-9586	69		281	114-1541	295		286
107-2724	573		286	114-6285	334		291
107-6370	681		836	114-6289	344	119-5026	196
	682	111-4837	152		345		198
107-6371	681		188	115-3699	379		936
	682		189	115-4072	51	119-5162	627
107-6479	667		269	115-4219	51	119-5259	711
	697		281	115-8634	570	119-5260	711
107-6540	690	111-4838	152	115-8645	548	119-5262	711
107-6541	690		286	115-8694	413	119-5388	672
	711	111-4839	152		▶488	119-5389	672
107-6579	426		286	115-8739	512	119-5391	672
107-6631	523	111-6752	514	115-8856	483	119-5398	690
	528		546		484	119-5708	108
107-6933	426	111-9916	▶698		485		114
107-7017	711		701	115-8961	488	120-4394	613
107-7018	711		706	116-0118	152	120-5114	131
107-7694	16		707		176	120-9027	236
107-8618	152	111-9959	647		178	120-9127	87
108-1781	428	111-9977	711		179	121-0140	390
	612	111-9985	711		188		399
108-1782	573	111-9986	711		189	121-0987	276
	582	111-9998	675		248	121-1022	258
108-3819	499		676		269	121-1038	123
	503	112-0083	528		286		153
108-4282	503		▶693	116-0126	153		291
108-6503	599	112-0085	693		291	121-1039	123
108-7118	585	112-0090	711	116-0128	123		153
	587	112-2482	▶821		153		286
108-7191	565	112-2489	821		291		291
108-7203	548	112-3930	326	116-0255	153	121-1168	196
108-7369	532	112-3931	326		258		258
108-7387	514	112-4550	152		286		286
	532	113-2003	565		291	121-1173	196
108-7516	528	113-2824	369	116-3715	107		251
	532	113-2825	369	116-4556	10		258
108-7550	483	113-2963	719		▶47		286
	484		721	117-5372	371		293
	485		723		373	121-1459	685
	512		738	117-5435	321	121-1491	590
109-0881	379		739	117-6306	967		591
109-1294	615		744	117-6349	878		634
109-1296	615	113-6069	51	117-6350	878		638
109-1641	611	113-6479	458	117-6356	878		▶699
109-3207	113		509	117-8683	871		705

▶ **PRIMARY REFERENCE**

PART NUMBER INDEX

Part	Page
121-1865	869
121-6303	526
	▶700
121-6304	700
	702
121-7098	914
121-7136	854
	914
121-7137	914
121-7138	854
	914
122-3979	333
122-3980	333
122-4101	316
122-4120	333
122-7797	659
	662
122-9608	878
122-9609	878
122-9610	878
122-9617	860
122-9657	914
123-2003	440
123-2112	423
123-2139	597
123-2431	556
	695
123-2485	638
123-2511	694
123-2516	711
123-2549	▶694
	696
123-2552	694
	695
123-2809	512
123-4750	514
124-0887	483
124-0891	484
124-0903	582
	584
124-0909	584
124-0911	488
124-1008	546
124-1035	514
124-1067	565
124-1106	478
	480
124-1107	478
	480
124-1108	478
	480
124-1109	478
	480
124-1253	565
124-1541	599
124-1561	599
124-3548	257
124-3952	925
124-3953	925
125-1302	194
	▶234
125-4766	286
125-4840	258
	293
125-4841	258
125-6535	231
125-6536	231
125-6537	231
125-7874	153
	244
	248
	251
	253
	258
	266
	269
	271
	279
	286
	289
125-7875	153
	188
	189
	238
	239
	244
	248
	251
	255
	258
	266
	269
	271
	274
	279
	286
	291
126-1757	20
126-1767	58
	240
	274
	279
	286
	522
	528
	533
	871
	873
	874
	875
	877
126-1768	153
	196
	258
	271
	274
	286
126-1774	269
126-1865	672
126-1866	672
126-1913	560
	563
126-5011	277
	279
126-5066	392
	397
126-6514	709
126-6515	709
126-6516	709
127-0580	843
127-3872	432
127-5483	153
127-5484	286
127-5728	10
	▶18
128-2135	843
	845
	849
	862
	864
	889
	902
	955
	956
128-2136	956
128-2173	869
	876
128-4411	141
	143
128-8886	152
128-8950	258
128-9170	432
128-9265	419
	421
128-9266	423
129-3399	307
	308
129-5096	149
129-5874	478
	480
129-7784	621
129-7925	44
129-7970	447
129-7971	447
129-7973	447
129-7974	447
129-8034	440
130-0252	914
130-1433	152
130-3280	100
130-4410	726
131-0353	103
131-5818	672
131-5915	668
	670
131-8826	101
	102
131-8829	102
131-8847	108
131-9453	519
131-9547	512
131-9548	512
131-9750	560
	563
132-0999	821
132-1829	▶147
	257
132-5789	154
	191
	244
	246
	265
	269
133-2427	321
133-5813	522
	532
	535
133-6788	715
134-2540	266
134-3284	188
	189
134-3296	258
	286
134-3297	154
	258
	286
134-3344	152
134-6852	116
	119
134-6918	541
134-7258	987
	989
134-7489	679
134-8887	5
	▶331
134-8888	331
134-8891	331
134-8951	746
134-8952	745
134-9137	725
135-2274	876
135-3980	490
	493
135-8572	131
	139
	333
135-8573	131
	318
	332
	333
135-8574	333
135-8575	116
	119
	333
	918
135-8576	329
135-8577	300
	333
135-8578	332
	333
135-8579	141
	143
135-8965	935
135-8966	935
135-9819	19
136-0155	811
136-0207	152
	537
	540
136-0822	20
136-2422	▶379
	381
136-2802	432
136-2803	432
136-3842	611

▶ **PRIMARY REFERENCE**

PART NUMBER INDEX

Part	Page
136-3847	379
136-4182	82
136-4183	51
136-4303	58
136-7227	129
137-1602	110
137-3623	442
137-3624	442
137-3625	442
137-3626	407
	442
137-3628	407
	442
137-3631	407
137-3708	599
137-3746	44
137-3749	44
137-3780	613
137-6606	282
137-6645	219
138-5709	478
	480
139-0246	391
139-6873	116
	▶145
139-7119	962
139-8736	56
139-8737	56
139-8794	102
139-8873	56
140-0674	678
140-0677	678
140-3048	374
141-1313	499
141-2759	257
141-3538	725
	726
141-7251	558
142-1339	101
	102
142-1404	101
	102
142-3836	1
	2
	▶919
142-5546	878
142-7764	455
142-7765	452
143-2849	444
143-4254	550
143-4294	476
143-9392	173
144-0195	959
	973
	975
144-0367	95
	104
	519
	567
144-1636	924
145-2237	515
145-2264	69
145-5106	403
	▶404
146-4936	345
146-6747	987
	989
147-3957	719
	721
	723
147-4131	672
147-4161	▶681
	686
147-4163	647
	▶682
147-4184	655
147-5088	94
147-7170	82
148-2903	113
148-3386	741
	743
148-3533	387
	388
148-4600	432
148-4601	432
148-4602	432
148-4603	432
148-4604	432
148-4605	432
148-4607	432
148-4608	432
148-4609	432
148-4611	432
148-4685	325
148-4703	326
148-4704	326
148-5018	154
148-8311	116
	119
148-8315	519
148-8317	503
148-8318	116
	119
148-8319	119
148-8321	515
148-8325	514
148-8327	560
	585
	587
148-8328	582
148-8330	499
	503
148-8335	499
	503
	509
	573
148-8336	114
	485
	512
	514
	516
	522
	526
	528
	535
	537
	540
	544
	546
	551
	556
	585
	587
148-8338	514
	526
	537
	540
	544
	546
148-8339	503
	560
148-8340	519
	551
	570
148-8341	485
148-8345	436
148-8346	565
148-8347	485
	499
	503
	558
	570
148-8352	573
148-8353	512
	514
	522
	528
	551
	556
148-8354	522
	551
	570
148-8355	512
148-8356	499
	504
148-8357	563
	567
	573
148-8360	560
148-8361	485
148-8362	504
148-8363	532
	570
148-8364	436
	535
	551
	567
148-8365	436
148-8367	119
	512
	540
	551
148-8368	514
	582
148-8371	116
	119
	533
148-8372	558
	570
148-8378	114
	485
	514
	522
	526
	528
148-8382	567
148-8383	116
	119
148-8384	495
	497
148-8388	585
	587
148-8390	519
148-8391	565
148-8392	573
148-8393	514
	519
148-8395	36
	58
	655
	657
148-8407	522
	546
	551
	556
	565
	634
	657
148-8408	62
148-8411	86
	87
	486
	546
	570
	573
148-8413	532
148-8414	512
	515
148-8415	492
	493
	515
148-8419	492
	493
	495
	497
148-8421	515
148-8428	436
148-8431	573
148-8433	532
	535
	537
	540
	546
	551
148-8434	515
	540
148-8435	515
	526
	546
	548

▶ **PRIMARY REFERENCE**

PART NUMBER INDEX

Part	Page
	551
148-8436	436
	570
148-8439	532
	552
148-8444	515
148-8449	512
149-1738	485
149-5050	251
	253
	263
	291
149-5051	251
	253
	263
	291
149-5069	251
	253
	258
	263
	291
149-5070	251
	253
	258
	263
	291
149-5071	258
149-5240	113
149-5452	474
	476
150-3033	556
150-3036	116
	515
	528
	537
	541
150-3073	565
150-4027	532
	537
	541
150-4033	515
	585
	587
150-4044	528
	552
	585
	587
150-4048	512
150-8896	805
	806
	807
	809
	811
151-2939	22
151-6703	887
151-6704	887
151-6777	847
	851
151-6813	969
151-9461	887
151-9497	887
151-9557	967
151-9576	969
153-1036	41
153-2521	▶184
	188
	189
153-2523	▶185
	187
153-2540	196
153-2541	196
153-2602	258
153-2620	154
	286
153-2630	154
153-2631	258
153-4906	133
	615
	703
153-5223	672
153-5239	686
153-5276	633
	643
	645
153-5286	647
153-5288	638
	647
153-5289	638
	647
153-5290	638
	647
153-5291	638
	647
153-5292	638
	647
153-5293	638
	647
153-5298	638
153-5299	638
153-5306	638
153-5309	638
153-5311	638
153-6237	499
	504
	570
153-6241	570
153-7036	135
153-8723	869
154-0690	726
154-9025	86
	88
154-9355	436
155-2255	269
155-2260	154
	205
	209
	244
	248
	258
	266
	271
	277
	282
155-2265	274
	277
	279
155-2270	58
	154
	196
	203
	218
	244
	246
	248
	258
	277
	279
	282
	285
	286
	289
	291
	870
155-2271	154
	286
155-2276	209
155-4038	444
155-4039	444
155-4041	444
155-7042	972
155-9117	620
155-9122	594
155-9125	613
155-9127	613
155-9131	613
155-9134	613
155-9137	620
155-9139	406
155-9141	406
155-9142	406
155-9143	406
156-6175	259
156-6470	969
156-6599	843
156-6631	962
156-6644	887
157-0670	86
	88
157-0935	662
157-9338	490
158-8150	638
158-8159	636
	638
	647
	651
158-8186	678
158-8206	638
158-8207	638
158-8987	▶438
	624
158-9085	▶713
	714
159-4700	404
159-7667	102
159-7782	622
159-7784	440
159-8036	805
	806
	807
	809
	811
159-8049	154
159-8050	154
	162
159-9322	154
160-6631	388
160-7689	154
160-7690	269
160-8194	60
	61
160-8197	60
	61
160-8199	60
	61
161-1703	206
161-1704	208
161-1705	207
161-3128	257
161-3398	107
161-3406	13
	14
	▶27
	▶28
161-3411	107
161-3424	60
161-3639	887
161-3668	972
161-3669	972
161-3670	972
161-3671	972
161-3694	901
161-3698	969
161-3732	81
161-3734	81
161-6963	110
162-0177	515
	655
162-0349	935
163-0424	50
163-2437	68
163-2445	67
163-2447	64
163-2459	67
163-2478	36
	38
163-3493	745
163-3729	321
163-6637	154
163-6659	258
163-6699	258
163-6711	274
163-6758	257
163-6759	154
	286
163-6790	258
163-6795	190
	253
	257
	259
	271
	274
163-6803	251
	258
164-0499	81
164-0500	858
164-0514	887
164-0515	843
	887
164-0517	966

▶ **PRIMARY REFERENCE**

PART NUMBER INDEX

Part	Page
164-0519	887
164-0646	956
164-0655	956
164-4180	499
	504
	509
	567
	584
164-5547	532
164-5567	507
	515
	537
	541
	544
	558
	624
164-5574	504
164-5590	624
164-5597	116
	119
164-5603	87
164-5606	504
164-5608	552
164-5616	567
164-5619	119
164-5628	523
	528
164-5629	528
	532
164-5669	67
164-6148	13
	14
	▶22
164-6872	570
164-6874	532
	537
	540
	558
164-6979	551
	▶695
164-6980	514
	▶696
164-6981	▶405
	550
164-8474	845
	849
	956
164-8977	550
164-8983	550
164-9640	515
165-2976	315
	316
	317
165-3065	919
165-3165	452
165-3169	455
165-3173	458
165-3256	627
165-3260	570
165-4444	10
	▶107
165-4465	10
	▶76
165-4557	10
	▶41
165-4931	544
165-5970	▶242
	282
165-9154	116
	▶127
165-9290	419
	421
165-9291	423
165-9431	668
	670
165-9435	668
	670
165-9436	668
	670
165-9438	668
	670
165-9442	668
	670
165-9443	668
	670
165-9444	668
	670
165-9460	668
	670
165-9463	672
165-9464	697
165-9513	659
	665
165-9514	659
	665
165-9552	672
165-9553	672
165-9554	672
166-1487	738
	739
	741
	743
	744
166-1488	321
	730
	734
166-1489	719
	721
	723
166-1490	719
	721
	723
166-1494	416
	741
	743
166-1495	730
	734
166-1496	416
	730
	734
	738
	739
	744
166-1497	415
166-1498	719
	721
	723
	738
	739
	741
	743
	744
166-1579	725
	726
166-1776	20
166-1781	20
166-1785	55
166-3648	60
	61
167-0024	29
	30
167-3441	▶186
	190
167-3487	251
	258
167-3542	251
	253
	257
	907
	941
167-3543	253
	257
	907
	941
167-3593	257
167-3630	258
167-3631	258
167-3855	599
167-3857	599
167-3858	599
167-3859	599
167-3862	599
167-3863	599
167-3865	599
167-3866	599
167-3867	599
167-3868	599
167-3872	599
167-7039	887
167-7042	843
167-7270	987
	989
167-8121	41
167-8987	266
168-0765	684
168-1969	507
168-6727	298
	▶299
168-7211	60
168-9523	458
168-9759	522
	546
168-9760	451
168-9762	457
169-0737	814
	819
169-0738	814
	819
169-0739	814
	815
	817
	819
169-0740	814
	815
	817
	819
169-0741	814
169-0745	814
	819
169-0751	806
	809
	▶814
169-0753	▶425
	814
	819
169-0756	814
	819
169-2519	814
	819
169-3105	10
	▶62
169-3530	986
169-3923	425
	819
169-6064	412
170-1612	599
170-1616	599
170-1626	599
170-1627	599
170-3015	312
170-3016	333
170-6888	257
170-6890	258
170-6891	258
	263
170-6929	152
	162
170-6993	184
	185
170-8553	560
	563
170-9324	196
170-9360	301
170-9417	184
	185
170-9418	184
	185
170-9497	▶878
	933
170-9498	878
170-9499	878
170-9724	955
170-9864	419
	421
170-9865	423
170-9964	429
170-9985	597
170-9986	597
170-9996	597
171-0023	711
171-0034	690
	692
171-0035	692
171-0036	692
171-0037	690
	692
171-0087	668
	670
171-0123	675
	676

▶ **PRIMARY REFERENCE**

PART NUMBER INDEX

Part	Page	Part	Page	Part	Page	Part	Page
171-0124	675	173-3518	440	177-2619	407	179-9806	442
	676	173-3529	442	177-2653	499	180-2435	10
171-0126	675	173-3536	713		▶683		▶229
	676		715	177-5739	312	180-3861	184
171-0127	675	173-4063	599	177-5879	332		185
	676	173-4066	599	177-5880	332	180-6769	599
171-0128	675	173-4816	567	177-6315	919	180-6770	599
	676	173-7916	460	177-6395	316	180-9340	205
171-0150	636		464	177-6972	10	183-1035	191
	651		466		▶149	183-2823	127
171-0188	538		469	177-7707	266	183-2874	385
	541		471	177-8506	467		▶388
	▶701	173-9957	805	177-8572	493	183-2875	388
171-0198	701		806	177-9778	116	183-2883	388
171-2210	194		807	178-2334	203	183-3399	76
171-3370	95		809	178-2335	203		133
171-5349	216		▶812	178-2345	▶203	183-3404	76
171-7325	841		813		204	183-3406	62
	842	173-9971	805	178-2513	284	183-3407	133
	864		806	178-3899	10	183-4494	42
	885		807		▶66	184-3835	597
	955		812	178-5422	860	184-5394	95
171-7477	901	174-0503	266	178-5423	860	184-8580	345
171-8612	805	174-3016	154	178-5431	959		347
	▶815		258	178-5570	843	184-8722	307
171-8613	807	174-5160	815	178-5572	962		308
	▶817		817		964	184-8862	317
171-8617	815	174-5415	100	178-5573	887	184-9336	522
171-8618	817	174-6946	815	178-5574	887	184-9508	503
171-8622	815		817		962	184-9593	550
	817	174-7791	184		964	184-9595	550
171-8625	815		185	178-5576	948	185-0230	423
	817	174-7875	904	178-5659	943	185-0231	423
171-8629	815	174-9570	▶112		944	185-0232	423
	817		116	178-6473	56	185-0303	594
171-8630	815		130	178-6474	56	185-0383	522
	817	175-0454	23	179-1292	386	185-0407	701
171-8639	815		25	179-1486	384	185-0423	675
	817	175-4430	695		▶387		676
171-8659	815	175-7436	599	179-1488	387	185-0462	522
	817	175-7887	599	179-1497	387		▶697
171-8669	815	176-1902	914		388	185-0463	697
	817	176-1916	860	179-1498	387	185-0472	532
171-8671	815	176-1941	912	179-1499	387		▶702
	817		913		388	185-0473	702
171-8675	815	176-1986	843	179-3037	389	185-0488	573
	817	176-1996	889	179-3038	389	185-2638	150
171-9413	432	176-2815	980	179-3040	389	185-2639	150
171-9892	101	176-4463	550	179-3044	369	185-2642	150
172-0907	548	176-4469	550	179-3046	369	185-2644	150
172-4432	634	176-4708	548	179-3047	369	185-2645	150
172-6062	277		550	179-3048	369	185-2647	150
	279	176-4746	548	179-3426	382	185-2648	150
172-6064	279	176-4755	550		383	185-2650	150
172-6065	279	176-4770	570	179-3428	382	185-2651	150
173-3503	▶407	176-4853	370		383	185-2653	150
	440		▶384	179-5235	474	185-2654	150
173-3505	407	176-5913	67		476	185-2655	150
173-3506	407	176-5914	67		490	185-2658	150
173-3507	440	176-9299	154	179-5254	474	185-5294	149
173-3510	440		258		476		▶150
173-3513	442	177-1044	94	179-7456	528	185-8161	860
173-3515	442	177-1052	94	179-7616	532	185-8180	887
173-3516	442	177-1056	94		587	185-8182	847
173-3517	442	177-2553	442	179-8128	135		851

▶ **PRIMARY REFERENCE**

PART NUMBER INDEX

Part	Page
185-8187	847
	851
185-8197	948
185-8205	955
185-8221	969
185-8280	912
	913
185-8281	913
185-8284	862
185-8286	236
	841
	842
185-8290	972
185-8293	914
185-8300	839
	905
185-8302	839
185-9208	196
	198
186-0359	114
186-3735	131
	141
	143
	147
	148
	198
	203
	216
	234
	235
	236
	238
	242
	243
	271
	274
	573
186-3736	203
186-5175	599
186-5649	730
	734
187-0472	10
	▶58
187-0474	10
	▶69
187-0661	987
	989
187-1315	35
	40
187-5853	499
187-6720	503
187-7067	436
187-9833	462
187-9981	467
	472
188-2128	218
188-3066	382
188-3826	13
	14
	▶80
188-4140	▶440
	624
188-4142	440
	▶442
188-4143	442
188-4162	597
188-4163	597
188-4164	597
188-4165	597
188-4166	597
188-4167	597
188-4170	597
188-4171	597
188-4172	597
188-4173	597
188-4176	597
188-4216	419
	421
188-4217	419
	421
188-4218	419
	421
188-6121	119
	▶129
189-2449	42
189-2690	887
189-2693	901
189-2694	901
189-2864	843
189-3189	599
189-3434	914
189-3860	3
	▶374
189-3861	374
189-3862	374
189-3922	730
	734
189-9377	58
190-0643	42
190-3562	29
	30
190-5386	987
	989
190-6114	58
190-6115	36
	38
190-6117	36
	38
190-7050	329
190-7062	330
190-7745	567
190-7750	668
	670
190-7819	667
190-7865	657
190-8970	130
190-8977	129
	▶130
191-1782	119
191-1783	119
191-2511	432
191-2513	432
191-2514	432
191-2521	295
191-2524	432
191-2526	295
191-2576	4
	▶298
191-2577	298
	▶434
191-2645	295
191-3063	10
	▶55
191-4457	86
	88
191-5602	426
191-5603	426
191-5604	426
191-5605	426
191-5606	294
	▶593
191-5619	421
191-5643	426
191-5644	426
191-5645	426
191-5646	426
191-5647	426
191-5648	426
191-5705	426
191-7581	613
191-7582	594
	613
191-7583	594
	613
191-7584	406
191-7823	277
	279
192-4697	107
192-6901	▶579
	736
192-6908	413
	▶483
192-6909	413
	▶484
192-8302	370
	▶376
192-8303	376
192-8320	718
	▶725
192-8321	719
	721
	723
192-8358	374
193-0158	114
193-2162	133
193-2839	108
193-2844	108
193-6648	460
193-6650	460
193-6662	462
	474
	476
193-7901	599
193-9389	307
	308
193-9994	503
194-0101	509
194-0115	509
194-0174	▶451
	509
194-0176	451
	▶452
194-0177	▶453
	509
194-0178	453
	▶454
194-0179	453
	▶455
194-0180	▶456
	509
194-0181	456
	▶457
194-0182	456
	▶458
194-0242	567
194-0243	567
194-0280	509
194-0354	573
194-3526	72
194-4741	662
194-5226	209
194-5227	209
194-6725	▶205
	211
194-9473	594
	613
194-9479	619
	620
194-9480	619
	620
194-9481	619
	620
195-0452	74
195-5320	725
195-8098	13
	14
	▶79
196-0477	480
196-0478	478
	480
196-0480	480
196-0481	478
	480
196-0482	478
	480
196-0711	603
196-1665	914
196-1666	905
196-1829	10
	▶71
196-1831	71
196-3784	672
196-4987	599
196-6838	137
197-0196	590
	591
197-0199	590
	591
197-0252	711
197-0273	590
	591
197-2100	460
197-2101	460
197-2384	467
	472
197-2471	594
197-2472	594
197-2474	594
197-4385	154
	287

▶ **PRIMARY REFERENCE**

PART NUMBER INDEX

Part	Page
	291
197-8391	116
	119
	▶219
197-8393	201
	▶206
197-8394	201
	▶207
197-8419	76
197-9367	60
	61
197-9392	60
197-9581	94
197-9642	42
199-1286	509
199-1918	504
199-2002	532
199-2004	532
199-2012	573
199-4523	326
199-4524	326
199-4538	298
199-4540	432
199-4559	▶323
	324
199-4582	295
199-4583	295
199-7891	150
199-8436	150
2	
200-3292	615
200-3311	44
200-3372	431
	▶592
200-4495	51
201-0827	382
201-0828	382
	383
201-2771	321
	719
	721
	723
	730
	732
	734
201-2816	718
	▶726
201-2836	730
	734
201-3003	741
	743
201-3145	662
201-3146	662
201-4391	887
201-4417	843
201-4534	897
	899
201-9119	▶382
	390
	391
	392
	393
	394
201-9236	532
	▶654
201-9263	638
201-9299	442
201-9379	535
202-3301	10
	▶17
202-3762	532
202-6603	10
	▶74
202-6752	582
202-6758	460
	464
202-6857	464
202-6858	464
202-6859	464
202-7001	467
	472
202-7002	467
	472
202-7021	462
202-7056	467
202-7674	10
	▶93
202-9002	573
203-0199	149
203-0860	3
	▶390
203-0862	▶391
	395
203-2059	141
	143
203-2076	662
203-3237	36
203-3238	36
203-4927	312
203-5057	344
	345
	347
203-5805	23
	25
203-6090	23
	25
203-7775	107
204-0909	95
204-0920	95
204-1611	152
	244
	248
	285
	289
204-1673	152
	162
	914
204-2676	597
204-2677	597
204-2678	596
	▶684
204-2755	▶685
	717
204-2756	717
204-2762	442
204-2763	407
204-2799	613
204-2819	593
	▶717
204-7368	611
204-7369	611
204-8210	478
204-8212	478
204-8358	483
204-8359	483
204-8360	484
204-8361	484
204-8428	503
204-9538	▶23
	29
204-9539	27
	▶29
205-0826	198
205-1306	114
	▶137
205-1320	51
205-1321	13
	14
	▶51
205-1340	870
205-4013	10
	▶92
205-6295	843
205-8257	198
205-9114	295
206-3164	664
	▶686
206-3336	▶667
	876
206-3354	550
206-3719	66
206-5162	182
206-9290	447
	615
	703
206-9291	447
	616
206-9294	447
206-9295	447
206-9296	447
206-9297	447
206-9298	429
206-9299	447
206-9300	447
206-9301	447
207-5542	493
207-5549	493
207-6228	485
207-6229	485
207-6231	507
207-6282	579
207-6395	480
207-6398	480
207-6403	627
207-6404	627
207-6418	550
207-6443	499
207-6683	512
207-8235	609
	▶611
208-4289	315
	316
208-7474	72
208-9277	284
208-9282	74
209-1434	92
209-3464	811
	▶819
209-3466	819
209-5011	611
209-5582	▶235
	284
209-5920	717
209-5940	679
209-5941	679
209-5942	679
209-5982	▶406
	613
209-6000	621
209-6003	679
209-6004	679
209-6005	679
209-7290	69
209-7291	69
209-7293	80
209-9234	129
210-1747	201
	▶208
211-2134	36
	38
211-3285	10
	▶20
211-4185	662
211-6807	279
211-7730	129
212-2829	725
	726
212-2830	725
	726
212-2841	321
212-5148	499
212-5185	333
212-5419	474
212-5443	512
212-5580	478
212-5583	478
212-7002	23
	25
212-8917	31
	33
212-8926	▶67
	68
213-0677	58
	627
213-0772	257
	291
213-1971	▶383
	396
	397
	398
	399
213-2410	17
213-2411	17
213-3190	60
	61
213-3745	514
213-4363	13

▶ **PRIMARY REFERENCE**

PART NUMBER INDEX

Part	Page
	14
	▶45
213-5213	74
213-9100	148
213-9242	679
213-9243	679
213-9244	679
213-9246	679
213-9247	679
213-9248	613
213-9250	613
213-9320	▶64
	67
214-7566	214
214-7567	210
	213
214-7568	36
	38
	76
	133
	202
214-7915	987
	989
214-8310	333
215-3249	277
	279
215-4909	438
	▶674
215-5037	551
	▶589
216-2941	94
216-2942	94
216-4027	2
	▶392
216-4970	194
216-5586	23
	25
216-6513	582
216-6515	582
216-6578	460
	464
216-6579	460
	464
216-6580	460
	464
217-0609	36
	38
217-5199	88
217-5200	86
	88
218-0404	182
218-0859	10
	▶46
218-1002	503
218-1059	530
	548
218-1125	573
218-1126	573
218-1128	509
218-1130	573
218-1172	573
218-1173	573
218-1174	573
218-1175	573
219-0302	987
	989
219-0305	896
	897
219-1322	425
	819
219-4452	93
	▶94
219-6314	182
220-0453	102
220-1718	71
220-1952	28
	▶30
220-8678	112
220-9090	824
	826
	830
	832
220-9101	824
220-9102	830
220-9103	832
220-9104	747
	748
	749
	750
	751
	752
	753
	766
	767
	768
	769
	770
	771
	772
	773
	774
	775
	776
	777
	778
	784
220-9105	747
	748
	749
	750
	751
	752
	753
	766
	767
	768
	769
	770
	771
	772
	773
	774
	775
	776
	777
	778
	784
220-9106	747
	748
	749
	750
	751
	752
	753
	766
	767
	768
	769
	770
	771
	772
	773
	774
	775
	776
	777
	778
	784
220-9109	826
221-0144	79
221-3494	76
	133
221-5138	662
221-6809	103
221-7155	662
221-8045	987
	989
221-8813	▶923
	933
221-8859	576
221-8861	4
	▶175
221-8872	▶174
	933
221-8874	174
221-8912	558
221-9806	58
222-0085	692
222-0298	662
222-3347	662
222-3901	94
222-4737	638
	665
223-3040	1
	2
	▶300
223-3041	300
	▶301
223-6748	573
223-6768	548
223-6876	488
223-6915	478
	480
223-7098	485
223-7100	485
223-7103	485
223-7105	485
223-9818	987
	989
224-0554	987
	989
224-1377	284
224-3247	16
224-4536	▶209
	210
224-8946	987
	989
224-9843	▶10
	12
225-0312	987
	989
225-4257	987
	989
225-4516	616
225-4517	429
225-4518	616
	▶703
225-4548	622
225-4549	622
225-4558	703
	▶704
225-4625	423
225-4787	659
225-4789	659
225-4790	659
225-4791	659
225-4792	659
225-4793	659
225-4796	659
225-4797	659
225-4803	659
225-4804	632
	655
	657
	659
	662
	708
225-4815	668
	670
225-4818	655
	657
	659
	662
225-4820	659
	662
225-4821	659
	662
225-4830	659
225-4831	659
225-4832	659
225-4833	659
225-5714	914
227-0428	567
227-0590	627
227-0620	▶446
	627
227-0674	587
227-1200	31
	33
227-4002	277
227-4531	21
227-5904	133
227-6074	325
227-6089	▶324
	326
227-6090	324
	▶325
227-6105	326
227-6106	326
227-6145	▶326

▶ **PRIMARY REFERENCE**

PART NUMBER INDEX

Part	Page
	370
227-6190	295
227-6191	295
227-6192	295
227-6215	432
227-6846	858
227-7575	257
227-7581	▶182
228-2781	987
	989
228-3621	46
228-4766	55
228-5615	730
	734
228-5617	421
	738
	739
	744
228-5619	741
	743
228-5897	135
228-7094	69
228-7096	36
	38
228-7316	987
	989
228-9254	987
	989
229-0887	987
	989
229-0999	116
	119
229-1784	2
	3
	▶124
229-1785	124
	▶131
229-1857	131
229-1859	▶123
	131
229-1860	131
229-1861	131
229-1898	4
	▶370
229-2665	10
	▶13
229-3568	10
	▶53
229-3569	53
229-6973	▶824
229-6974	▶830
229-6975	▶832
229-6978	▶826
229-9080	▶836
	838
230-1340	171
230-1341	171
230-2866	104
230-2896	15
	▶95
230-2898	15
	▶104
230-2899	15
	▶82
230-2930	95
230-2931	95
230-2933	104
230-2939	104
230-2940	104
230-2946	82
230-2953	82
230-2956	82
230-2960	82
230-4009	154
	258
	266
	274
	287
230-4011	154
	239
	258
	271
	274
	279
	287
	291
230-4013	154
	253
	258
	279
230-5008	251
	253
	263
	274
	293
230-5010	154
	196
	269
	271
	274
	287
	907
231-1771	▶148
231-1836	▶271
	273
231-1978	10
	▶201
231-2295	154
	266
	274
	907
231-3039	10
	▶114
231-3043	114
231-4707	594
231-6843	426
231-6844	426
232-0114	754
	755
	756
	757
	758
	759
	760
	761
	762
	763
	764
	765
	779
	780
	781
	782
	783
	785
	786
	787
	788
	789
	790
	791
	792
	793
	794
	795
	796
	797
	798
	799
	800
	801
	802
	803
232-0115	754
	755
	756
	757
	758
	759
	760
	761
	762
	763
	764
	765
	779
	780
	781
	782
	783
	785
	786
	787
	788
	789
	790
	791
	792
	793
	794
	795
	796
	797
	798
	799
	800
	801
	802
	803
232-0116	754
	755
	756
	757
	758
	759
	760
	761
	762
	763
	764
	765
	779
	780
	781
	782
	783
	785
	786
	787
	788
	789
	790
	791
	792
	793
	794
	795
	796
	797
	798
	799
	800
	801
	802
	803
232-0343	137
	▶138
232-4102	551
	▶675
232-4113	632
	708
232-4114	632
	708
233-0423	10
	▶49
233-0891	173
233-1124	1
	2
	▶204
233-2530	594
	▶619
233-2535	619
233-4880	620
233-4885	619
233-5125	619
234-0203	74
234-1037	194
234-1038	194
234-1097	257
234-1122	286
234-1156	196
	198
234-1158	196
234-4440	585
	587
	▶622
234-4492	512
234-4539	615
234-4620	408
	▶428

▶ **PRIMARY REFERENCE**

PART NUMBER INDEX

Part	Page	Part	Page	Part	Page	Part	Page
	608		▶21		▶48		718
234-4638	82	235-8200	10	236-8335	370	238-1585	188
	▶594		▶200		▶371	238-1586	▶189
234-5012	202	235-8202	277	236-8336	370		718
	▶220	235-8873	836		▶373	238-1587	189
234-5013	202	235-8874	836	236-8338	373	238-1594	▶238
	▶221	235-8875	836	236-8339	373		291
234-6469	956	235-8878	889	236-8415	728	238-1595	238
234-6470	956	235-8879	889		▶730	238-1596	▶239
234-6471	956	235-8891	914	236-8561	719		291
234-6473	956	235-8893	860		721	238-1597	239
234-6474	956	235-8894	860		723	238-2171	281
234-6476	956	235-8914	862		738	238-2211	941
234-6477	955		864		739	238-2212	257
234-6480	956		955		741	238-2214	253
234-6483	956	235-8923	956		743	238-2216	907
234-6485	956	235-8929	902		744	238-2260	936
234-6490	956	235-8951	841	236-9435	301	238-2279	194
234-6497	956	235-8952	842	236-9437	301	238-2280	194
234-6498	956	235-8965	864	236-9438	301	238-2318	257
234-6499	884	235-8966	862	236-9440	301	238-2319	258
234-6500	4	235-8996	841	236-9568	312	238-2363	258
	5		842	237-0227	279		274
	▶886	235-8997	841	237-1962	229		287
234-6501	845	235-8998	842		▶230	238-2366	196
	849	235-9001	845	237-3191	7		258
	▶884		849		8		287
234-6502	884	235-9006	836		▶460	238-2390	257
234-6579	862	235-9014	914		729	238-2391	257
	864	235-9021	1	237-3192	7	238-2501	152
	956		2		8		162
234-6580	862		▶914		▶462	238-2528	152
	864	235-9651	125		729		162
234-6593	884	236-0563	983	237-3194	410	238-3215	10
234-6602	862	236-2839	512		▶490		▶224
234-6603	864	236-2843	522	237-3195	9	238-3216	224
234-6604	862	236-2844	522		▶464	238-5080	38
234-6605	864	236-2848	522	237-3199	▶582		221
234-6608	862	236-3170	627		631	238-8591	393
	864	236-3257	446	237-3200	▶474		396
234-6609	862	236-3258	446		631	239-1134	225
	864	236-3259	446	237-3202	▶476		▶243
234-6610	862	236-3670	301		631	239-1611	▶624
	864	236-3671	301	237-5176	86		626
234-6611	864	236-3702	318		88	239-1618	459
234-6612	864	236-3703	318	237-8752	1		▶585
234-6613	▶236	236-4545	225		2	239-1619	459
	864	236-6220	201		▶116		▶587
234-6614	864		▶210	237-8759	1	239-1626	▶478
234-6615	236	236-6221	201		2		718
235-5507	110		202		▶305	239-1627	413
235-7626	732		▶217	237-8783	1		▶489
235-7627	732	236-6226	10		2	239-1632	409
235-7628	732		▶277		▶139		▶485
235-7636	732	236-6339	519	237-8877	329	239-1872	478
235-7639	732	236-6419	636	237-9312	116		480
235-7642	732		638		119	239-1876	414
235-7679	738		647	238-1463	907		▶584
	739		651	238-1568	1	239-1877	584
	744	236-6421	638		2	239-1878	584
235-7764	▶363		647		▶281	239-1892	585
	395	236-6919	429	238-1570	124	239-1986	489
235-7765	363		609		▶291	239-2396	116
235-7770	421		612	238-1579	291		119
235-8174	10	236-7315	10	238-1584	▶188		▶211

▶ **PRIMARY REFERENCE**

PART NUMBER INDEX

Part	Page	Part	Page	Part	Page	Part	Page
239-2402	135	241-2365	307	242-1598	72	244-6715	573
239-3482	411		308	242-1599	72	244-7980	315
239-4320	370	241-2366	307	242-1934	10	244-8045	307
	▶380		308		▶103		308
239-4321	380	241-2367	307	242-3360	110	244-8046	307
	▶381		308	242-3864	69		308
239-4322	381	241-2368	307	242-6092	987	244-8400	▶633
	▶389		308		989		636
239-4323	389	241-3661	411	242-6787	421		651
239-4324	389	241-4194	225	242-6833	419	245-2184	462
239-4326	389	241-7129	730	242-6840	419	245-2187	462
239-4330	389		734	242-6912	615	245-2190	462
239-4352	5	241-7150	730	242-6913	615	245-2193	462
	▶385	241-7231	738	242-6914	615	245-2196	462
239-6406	15		739	242-6915	615	245-2199	462
	▶106		744	242-6916	615	245-2223	490
239-6407	15	241-7280	730	242-6918	615	245-2294	490
	▶98		734	242-6919	615	245-3109	276
239-6408	15	241-7333	370	242-6920	615	245-3259	54
	▶75		▶377	242-9982	10	245-3260	13
239-6409	15	241-7334	377		▶218		14
	▶78	241-7335	5	243-4505	131		▶54
239-6411	99		▶378		154	245-4630	217
	▶100	241-7336	378		188	245-5079	522
239-6474	15	241-7337	378		189	245-5080	409
	▶56	241-7340	419		238		▶576
239-6475	56	241-7341	419		259	245-5110	485
239-6494	108	241-7342	426		263	245-5113	485
239-6500	78	241-7604	42		271	245-5116	485
239-6677	▶225	241-7605	10		274	245-5120	485
	228		▶42		286	245-5122	485
239-6692	▶411	241-8382	36		287	245-5457	987
239-6986	987	241-8383	36		291		989
	989		38		907	245-7339	66
239-7352	271	241-8384	36	243-4506	154	245-7790	862
	274		38		248		864
	287	241-8385	36		259		956
239-7356	259		38	243-4507	248	245-7793	889
	266	241-8386	36		253	245-7812	839
239-8697	589		38		282		▶905
	▶590	241-8387	36		287	245-7813	905
239-8998	589		38		289	245-7814	905
	▶591	241-8388	31	243-4508	154	245-7815	905
239-9097	551		33		240	245-7816	905
239-9098	551	241-8390	36		269	245-7817	839
239-9117	551		38		271	245-7818	839
239-9118	551	241-9265	108		285	245-7819	839
240-0041	17	242-0328	65		287	245-7820	839
240-2978	312	242-0329	▶65	243-4509	154	245-7821	839
240-3768	6		67		244	245-7823	839
	▶986	242-0447	13		246	245-7824	839
240-3887	4		14		287	245-7825	839
	▶370		▶68		907	245-7826	839
240-5043	914	242-0672	13	243-4510	154	245-7827	839
240-5044	914		▶35		244	245-7828	839
241-0985	▶393	242-0673	16		266	245-7829	839
241-1900	330	242-0674	13		274	245-7830	839
241-1902	330		14		287	245-7831	839
241-1904	329		▶16	243-5362	266	245-7832	839
241-2139	315	242-1510	987	243-6716	22	245-7833	839
241-2163	333		989	244-0988	87	245-7834	839
241-2320	333	242-1586	10	244-0989	10	245-7835	839
241-2323	333		▶72		▶87	245-7836	839
241-2324	333	242-1588	987	244-4500	49		▶854
241-2325	312		989	244-5891	68	245-7837	854

▶ **PRIMARY REFERENCE**

PART NUMBER INDEX

Part	Page	Part	Page	Part	Page	Part	Page
245-7838	839		▶979		▶444		723
245-7839	839	247-7436	987	250-1440	467	251-2552	730
245-7850	914		989		472		734
245-7851	914	247-7437	987	250-2446	638	251-2557	730
245-7856	839		989	250-2447	638		734
245-7868	858	247-7438	987	250-6430	▶746	251-2558	730
245-7869	858		989		747		734
245-7870	858	247-7441	987		748	251-2651	728
245-7871	858		989		749		▶732
245-7873	889	247-7465	408		750	251-2652	732
245-7876	858		▶980		751	251-4162	169
245-7877	81	247-7500	5		752	252-7803	38
245-7895	909		▶631		753	252-8439	35
	910	247-7587	634		754		▶36
245-7903	81	247-8712	615		755	253-0861	987
245-7905	854	247-8713	616		756		989
245-7906	858	247-8715	615		757	253-1346	369
245-7911	858	247-8717	616		758	253-2111	194
245-7922	▶860	247-8718	615		759	253-2695	266
	933	247-8719	615		760	253-4522	10
245-7925	864	247-8720	616	250-6457	746		▶173
245-7926	862	247-8725	615	250-6965	444	253-6434	460
245-7928	914	247-8726	616	250-7700	▶110		464
245-7929	884	247-8729	615		111	253-6441	460
245-7940	15	247-8732	447	250-8054	977		464
	▶857	247-8733	447		978	253-6444	490
245-7942	857	247-8734	447		979	253-6454	471
245-7943	857	247-8735	447		980	253-6455	472
245-7948	862	247-8736	447	250-9679	748	253-6458	462
	864	247-8737	447		768	253-6489	466
245-9170	95	247-8738	447		769	253-6495	410
245-9171	82	247-8786	615	250-9681	749		▶492
245-9174	95	247-8787	615		770	253-6548	492
245-9206	95	247-8841	615		771	253-6551	492
245-9287	95	247-8904	423	250-9682	750	253-6554	492
245-9288	95	247-8928	447		772	253-6562	471
245-9289	95	247-8929	447		773	253-6566	472
245-9292	82	247-8985	615	251-0153	152	253-6599	8
245-9293	82	248-2169	213	251-0299	286		▶466
245-9294	82	248-5513	86	251-0303	194	253-6600	8
245-9359	89	248-5576	110	251-0304	194		▶467
245-9360	89	248-7177	369	251-0433	▶273	253-6601	410
246-2641	139	248-8835	10		933		▶493
	333		▶86	251-0435	273	253-6603	9
246-3150	22	248-9337	305		▶274		▶469
246-6036	76		306	251-0483	276	253-6607	9
246-9353	200	248-9825	459	251-0485	4		▶470
246-9867	615		▶522		5	253-6611	7
247-2693	271	248-9838	459		▶276		▶471
	274		▶567	251-0526	▶176		729
	287	248-9840	459		933	253-6635	490
	871		▶519	251-0538	▶936	253-6682	470
	873	248-9845	▶570	251-0542	2	254-3025	730
	874		626		3		734
	875	249-1306	615		▶196	254-3080	514
	877	249-1307	616	251-0544	182		▶634
247-2694	924	249-6657	615		▶198	254-3941	36
247-2695	924	249-6658	447	251-0580	271	254-3942	36
247-5112	877	249-6659	447	251-0602	274	254-3946	31
247-7133	88	249-6660	447	251-0623	▶244		33
247-7410	866	249-6661	447		409	254-3947	31
	▶977	249-6670	429	251-0637	257		33
247-7411	866		616	251-2542	321	255-1659	459
	▶978	249-9230	76	251-2547	719		▶526
247-7418	933	250-0728	436		721	255-1665	522

▶ PRIMARY REFERENCE

PART NUMBER INDEX

Part	Page
255-1666	522
255-1745	509
255-1749	509
255-1826	507
	540
255-1843	▶528
	933
255-1844	▶530
	933
255-1853	409
	▶532
255-1854	▶535
	631
255-1892	499
	503
255-1894	499
	503
255-1900	546
255-1923	408
	▶499
255-1924	409
	▶503
255-1926	408
	▶507
255-1933	584
255-1936	499
255-1939	565
255-1941	565
255-1947	565
255-1971	567
255-1979	567
255-1981	567
255-1986	567
255-1989	567
255-2021	519
255-2024	563
255-2025	519
255-2028	519
255-2078	409
	▶573
255-2272	295
255-2900	108
255-2929	100
255-2966	106
255-2991	225
255-5285	173
255-5594	638
	678
255-5661	636
	638
	647
	▶687
255-5662	655
	657
	659
	▶688
255-5680	509
	▶655
255-5683	509
	▶657
255-5747	662
	▶689
255-5774	6
	▶408
255-5822	6
255-5823	6
	▶608
255-5868	2
	3
	▶631
255-8674	68
256-1644	1
	2
	▶332
256-1797	361
256-1799	361
256-1802	333
	▶349
256-1805	349
256-1806	349
256-1810	360
256-1811	360
256-1814	360
256-1824	357
256-1826	333
	▶350
256-1828	350
256-1829	350
256-1830	333
	▶364
256-1841	364
256-1853	333
	▶351
256-1858	351
256-1859	351
256-1860	351
256-1861	351
256-1863	351
256-1864	351
256-1865	351
256-1866	351
256-1886	333
256-1890	333
	▶352
256-1892	352
256-1893	352
256-1894	333
256-1907	333
256-1911	333
256-1912	333
	▶353
256-1913	353
256-1915	353
256-1916	353
256-1917	353
256-1918	353
256-1919	333
	▶354
256-1922	354
256-1923	354
256-1924	354
256-1939	329
256-6453	220
	221
257-4502	987
	989
258-0883	116
	119
	▶237
258-6749	514
	▶705
258-7531	149
258-8337	13
	14
	▶111
258-8745	13
	14
	▶133
258-9892	856
259-0680	631
	▶714
259-0682	408
	608
	▶609
259-0815	612
	▶613
259-0824	519
259-0831	616
259-0832	615
259-0907	613
	▶679
259-0908	613
259-0918	621
259-0922	▶621
	627
259-2993	76
259-2994	76
259-3509	330
259-3513	329
259-3543	318
259-3546	359
259-3547	359
259-3548	359
259-3549	333
259-3552	▶310
	333
259-3557	310
259-3559	333
259-3563	333
259-3591	333
	▶355
259-3593	355
259-3595	364
259-3609	367
	368
259-3610	367
259-3629	333
259-3631	333
259-3633	333
259-3634	333
259-3637	355
259-3662	343
259-3669	333
259-3696	344
	345
	347
259-3697	344
	345
	347
259-3698	345
259-3699	344
	345
	347
259-3700	344
	345
259-3701	344
	345
	347
259-3815	334
259-3865	307
	308
259-3915	119
259-3918	▶119
	128
259-3953	333
259-4877	274
259-4884	251
259-4887	269
259-4914	936
259-4940	269
259-4963	▶246
	408
259-4964	▶285
	408
259-5071	244
259-5075	244
259-5125	285
259-5126	162
259-5127	152
259-5128	152
259-5130	153
259-5132	153
259-5206	153
259-5237	▶177
	459
259-5293	▶178
	933
259-5294	▶179
	408
259-5295	▶180
	866
259-5501	619
259-5503	619
259-5829	36
	38
259-7202	864
259-7214	938
259-7215	938
259-7220	251
259-7346	▶841
	862
259-7347	▶842
	864
259-7348	860
	▶862
259-7349	860
	▶864
259-7353	956
259-7354	887
259-7378	629
	▶636
259-7410	4
	▶459
259-7411	4
	▶459
259-7416	▶631
259-7429	540
	▶706

▶ **PRIMARY REFERENCE**

PART NUMBER INDEX

Part	Page	Part	Page	Part	Page	Part	Page
259-7430	537	260-7870	459		368	264-2578	▶790
	544		▶512	262-2561	317	264-2579	▶796
	▶707	260-7871	▶480	262-2562	317	264-2580	▶797
259-7692	582		718	262-2563	317	264-2581	▶798
	▶659	260-7895	519	262-2564	317	264-2582	▶799
259-7788	659	260-7904	603	262-2566	315	264-2649	766
259-7848	690	260-7912	454	262-2567	315		796
259-7849	690	260-7956	560	262-2568	334	264-2650	767
259-7850	690	260-7959	499	262-2569	334		797
259-7851	690		503	262-2571	313	264-2651	768
259-7852	690	260-8027	503		314		792
260-2042	170	260-8030	499	262-2572	313	264-2652	769
260-2109	▶871		503		314		793
	880	260-8045	503	262-2573	313	264-2653	770
260-2110	▶872	260-8098	499		314		794
	881	260-8145	556	262-2574	313	264-2654	771
260-2111	871	260-8148	540	262-2575	313		795
	872	260-8193	499	262-2578	311	264-2655	772
	873		503	262-2582	344		785
	874	260-8197	509		347	264-2656	773
260-2127	▶873	260-8254	▶580	262-2583	344		786
	882		736		347	264-2657	784
260-2128	▶874	260-8278	485	262-2590	344		787
	883	260-8281	573		347		798
260-2180	558	260-9452	3	262-2592	334	264-2658	774
260-2191	558		▶394	262-2595	1		788
260-2552	423	261-1544	22		2		799
260-3003	653	262-0284	135		▶318	264-2659	775
260-4856	36	262-1421	170	262-2596	318		789
	38		▶175	262-2598	116	264-2660	776
260-5716	135	262-2137	356	262-2604	119		790
260-6692	146	262-2138	356	262-3147	7	264-2661	777
260-6941	977	262-2139	356		▶472	264-2662	778
260-6942	978	262-2140	356		729	264-2663	747
260-6944	983	262-2141	356	262-3169	466		766
260-6948	933	262-2145	334	262-3225	469		767
	979	262-2157	315	262-3347	469	264-2664	751
260-7524	64	262-2176	341	262-6074	133		774
	65		342	263-1962	485		784
260-7840	560	262-2179	344		▶662	264-2665	752
	563		345	263-2915	45		775
260-7841	560		347	263-7825	21		776
	563	262-2209	332	263-9088	171	264-2666	753
260-7842	560	262-2360	329		▶937		777
	563	262-2435	341	263-9574	153		778
260-7845	560		342		162	264-2667	758
	563		356	264-2556	▶766		785
260-7855	408	262-2440	351	264-2557	▶767		786
	▶537	262-2543	334	264-2558	▶768	264-2668	759
260-7857	409		▶356	264-2559	▶769		787
	▶540	262-2545	356	264-2560	▶770		788
260-7861	408	262-2546	356	264-2561	▶771	264-2669	760
	▶544	262-2550	334	264-2562	▶772		762
260-7862	408		▶357	264-2563	▶773		763
	▶560	262-2552	357	264-2564	▶784		780
260-7863	6	262-2553	334	264-2565	▶774		782
	▶546		▶359	264-2567	▶775		783
260-7864	▶563	262-2554	359	264-2568	▶776		789
	608	262-2555	334	264-2570	▶777		790
260-7866	459		▶365	264-2571	▶778		791
	▶548	262-2556	365	264-2572	▶785	264-2670	754
260-7867	459		366	264-2573	▶786		796
	▶550	262-2557	365	264-2574	▶787		797
260-7869	459		366	264-2575	▶788	264-2691	747
	▶509	262-2559	367	264-2576	▶789		766

▶ **PRIMARY REFERENCE**

PART NUMBER INDEX

Part	Page	Part	Page	Part	Page	Part	Page
	767		757	264-8030	▶781		794
264-2692	748		758	264-8031	▶782		795
	768		759	264-8032	▶783	266-8403	764
	769		760	264-8033	▶802		800
264-2693	749		785	264-8034	▶803		802
	761		786	264-8266	615	266-8404	765
	770		787	264-8495	▶395		801
	771		788	264-9961	638		803
	779		789	265-1400	13	266-8423	761
	781		790		▶60		762
264-2694	750		792	265-1401	60		779
	772		793		61		780
	773		794	265-3505	334		781
264-2695	751		795	265-3506	334		782
	774	264-2705	754	265-3534	89	266-8424	763
	784		755	265-3535	89		783
264-2696	752		796	265-3536	89		791
	762		797	265-3537	89	266-8425	764
	775		798	265-3539	89		765
	776		799	265-3540	89		800
	780		804	265-3542	89		801
	782	264-4297	219	265-3543	89		802
264-2697	753		222	265-3544	89		803
	777		223	265-3552	82	266-8429	779
	778	264-5423	755	265-3553	▶89		800
264-2698	758		798		95	266-8430	780
	785		799	265-3561	104		791
	786	264-5732	279	265-3571	334	266-8431	801
264-2699	759	264-6156	68	265-3595	95	266-8432	781
	787	264-7029	154	266-0953	503		802
	788		239	266-0954	503	266-8433	782
264-2700	760		258	266-0982	532		783
	763		271	266-1029	563	266-8434	803
	783		274	266-1161	459	266-8650	202
	789		279		▶603		▶212
	790		287	266-1162	603	266-8816	764
	791	264-7030	154	266-1278	499		800
264-2701	754		253		503		802
	796		258	266-1279	499	266-8817	765
	797		279		503		801
264-2702	755	264-7031	253	266-1303	499		803
	798		263		503	267-0120	371
	799		274	266-2724	131		373
264-2703	747		293	266-5431	987	267-1123	▶436
	748	264-7032	154		989		439
	749		269	266-6189	100	267-1402	202
	750		271	266-6190	100		▶213
	751		274		▶101	267-3361	▶125
	752		287	266-6217	106		126
	753		907	266-6240	108	267-3362	13
	766	264-7033	154	266-6311	4		14
	767		266		▶12		▶126
	768		274	266-6312	12	267-6809	295
	769		907		▶108	267-6810	295
	770	264-7034	154	266-7833	613	267-6811	295
	771		258		▶620	267-6812	295
	772		259	266-7834	613	267-6813	295
	773		266	266-7835	613	267-6814	295
	774		274	266-7836	620	267-6815	295
	775		287	266-7837	620	267-6816	295
	776	264-8025	▶779	266-7838	620	267-6817	295
	777	264-8026	▶780	266-8402	757	267-7064	885
	778	264-8027	▶791		761	267-7671	251
	784	264-8028	▶800		779	267-7672	251
264-2704	756	264-8029	▶801		781	267-7676	251

▶ **PRIMARY REFERENCE**

PART NUMBER INDEX

Part	Page
267-7813	269
267-7867	244
267-7976	196
267-7977	198
268-0507	310
268-0508	310
268-3490	21
268-6816	409
	▶981
268-6817	981
268-7112	462
268-7208	582
268-7209	582
268-7211	582
268-7213	582
268-8643	265
268-9931	▶792
268-9932	▶793
268-9936	▶794
268-9937	▶795
268-9956	756
	792
	793
268-9957	757
	794
	795
268-9958	756
	792
	793
269-3410	10
	▶284
269-8788	76
269-9562	409
	▶514
269-9714	558
269-9754	544
269-9757	459
	▶626
269-9758	626
269-9759	626
269-9760	626
269-9761	512
269-9864	514
269-9919	526
269-9932	565
269-9944	535
269-9952	514
269-9955	514
270-0012	507
270-0013	507
270-0014	507
270-0015	507
270-1282	▶747
270-1283	▶748
270-1284	▶749
270-1285	▶750
270-1286	▶751
270-1292	▶752
270-1295	▶753
270-1303	▶754
270-1304	▶755
270-1307	▶756
270-1309	▶757
270-1310	▶758
270-1312	▶759
270-1313	▶760
270-1319	747
	754
270-1320	748
	756
270-1321	749
	757
270-1322	750
	758
270-1323	751
	755
	759
270-1324	752
	760
270-1325	753
270-5455	171
270-5687	6
	▶866
270-5688	6
	▶866
270-5689	866
	▶867
270-5690	866
	▶868
270-5692	485
	▶665
270-5693	665
270-5949	672
270-5950	672
270-6106	▶408
	934
270-6107	408
	▶870
270-9617	329
270-9619	329
270-9622	329
270-9626	307
	308
270-9627	307
	308
270-9642	357
270-9643	357
270-9644	357
270-9645	334
	▶360
270-9647	361
270-9649	362
270-9783	361
270-9787	365
	366
270-9788	365
	366
270-9789	365
	366
270-9790	317
271-2418	21
271-4374	436
271-6376	593
	▶599
271-6377	599
271-6432	594
271-7442	36
	38
272-0290	600
272-4650	412
272-4669	▶412
	610
272-5000	266
272-9580	▶805
272-9581	807
272-9583	▶806
	808
272-9585	▶807
272-9625	13
	14
273-2838	21
273-5307	81
273-5316	858
273-5337	858
273-5428	914
273-7095	6
	▶439
273-7668	317
273-7836	334
273-7852	334
273-7854	334
273-7856	334
273-7859	334
273-7864	334
273-7867	334
273-7902	311
273-7903	▶311
	334
273-7904	311
273-7918	341
	342
273-7919	341
	342
273-7920	341
	342
273-7921	341
	342
273-7933	334
273-7934	334
273-7943	360
273-7944	360
273-7946	334
273-7964	301
274-4512	599
274-4513	599
274-6719	214
274-7162	▶808
274-7163	▶495
	808
274-7395	201
	▶222
274-7396	201
	▶223
275-0713	▶804
275-1361	436
	570
275-1362	624
275-1384	499
	503
275-1388	503
275-1392	503
275-1418	573
275-1422	573
275-1425	573
275-1439	499
	503
275-1440	503
275-1442	537
	540
275-1443	537
	540
275-1444	537
	540
275-1475	573
275-1495	409
	▶556
275-1540	503
275-1624	551
275-1663	514
275-1675	567
275-1680	560
	563
275-1693	537
	540
275-1722	563
275-1731	570
275-1739	519
	558
275-1740	519
	558
275-1741	519
275-1818	537
	540
275-3255	804
275-3257	804
275-3259	804
275-5982	821
275-6321	810
	▶811
275-6631	69
275-6841	266
275-6842	266
275-6865	281
275-6936	244
275-6937	246
275-6993	291
275-7635	▶809
	810
275-7738	▶497
	810
275-7742	▶810
275-7752	▶810
276-1600	▶761
276-1602	▶762
276-1604	▶763
276-1606	▶764
276-1608	▶765
276-1610	761
	764
276-1611	762
	763
276-1612	765
276-3814	10
	▶856
276-6793	212
276-9067	202
	▶214
277-0954	466
	469
	470

▶ **PRIMARY REFERENCE**

PART NUMBER INDEX

Part	Page	Part	Page	Part	Page	Part	Page
	471	283-1226	284	289-5283	538		9
	▶666	283-2783	907		540		▶718
277-6207	904	283-3074	274	289-5286	538	290-1820	6
277-6304	495	284-8532	926		540		7
	497	285-1332	870	289-5289	538		▶736
277-9100	1	285-1333	870		540	290-1821	7
	2	285-1337	870	289-5347	567		8
	▶904	285-1345	459	289-5355	519		▶736
277-9864	495		629	289-5565	624	290-1823	8
	497		630		▶627		9
277-9865	495		▶664	289-5657	523		▶736
	497	285-1347	▶638	289-6754	334	290-1824	9
278-3581	301		664		▶344		▶736
278-3818	318	285-1348	638	289-6755	344	290-1825	6
	320		▶643	289-6758	334		7
278-3820	314	285-1357	▶645	289-6761	334		8
278-3932	▶306		647	289-6762	334		▶728
	729	285-1362	▶647	289-6765	334	290-1826	8
278-4016	334		664	289-6766	334		9
278-4018	334	285-1375	630	289-6893	▶316		▶728
278-6523	570		▶651		334	290-1829	729
279-0344	295	285-1399	550	289-6894	316		▶737
279-3161	841	285-1465	550	289-6896	317	290-1830	▶728
	842	285-1531	507	289-6897	▶317		729
279-7609	266		▶653		334	290-1843	6
279-7820	15	285-1777	653	289-7917	615		7
	▶63	285-2520	512	289-8010	▶413		8
279-7825	4	285-2591	535		728		▶718
	▶15	285-2592	535	289-8011	413	290-1906	987
279-7887	225	285-4073	66		▶416		989
279-7888	225	285-4106	21	289-8018	▶413	290-6884	45
280-2747	500	286-2110	823		718	290-9236	718
	504		825	289-8019	▶413		▶719
280-6794	86		827		718	290-9237	719
	88		828	289-8020	413	290-9248	718
280-8618	843		829		▶415		▶721
281-3510	104		831	289-8027	419	290-9249	721
281-3512	104		833	289-8029	▶414	290-9263	736
281-3515	104		834		718		▶738
281-3546	95		835	289-8030	414	290-9264	738
281-3548	82	286-2111	835		▶418	290-9275	736
282-1771	22	286-2112	825	289-8031	418		▶739
282-1772	22	286-2113	831		▶426	290-9276	739
282-2478	60	286-2114	833	289-8032	426	290-9287	736
	61	286-2115	834	289-8037	426		▶741
282-2479	60	286-2116	823	289-8039	▶413	290-9288	741
	61	286-2117	827		728	290-9318	736
282-2743	408	286-2118	829	289-8040	413		▶743
	409	286-2119	828		▶417	290-9319	743
	▶629	286-4271	165	289-8172	615	291-7780	153
282-4566	728		▶169	289-8173	615	291-8635	408
	▶734	286-6528	565	289-8174	615		▶630
282-4567	734	286-6556	537	289-8175	615	292-7223	567
282-5717	474		540	289-8179	447	293-0653	662
	476	286-6824	585	289-8180	447	293-0730	113
282-5718	474		587	289-8194	▶445	293-1135	914
282-5722	476	287-0169	412		624	293-1136	836
282-7050	558	287-0215	56	289-8195	445	293-1137	839
282-7092	552	287-0216	56	290-1727	987	293-6867	181
282-7106	519	287-2352	634		989		▶339
	570	288-7324	279	290-1728	987	293-6873	339
282-7373	519	288-7641	462		989		▶345
282-7566	538	288-7643	490	290-1729	987	293-6881	340
	540	288-7646	490		989		▶347
282-7569	551	288-7976	904	290-1818	8	293-6895	339

▶ **PRIMARY REFERENCE**

PART NUMBER INDEX

Part	Page
	340
293-6931	339
	340
293-6934	340
	▶366
293-6935	339
	366
293-6960	339
	340
293-6985	181
	▶340
293-9367	80
294-1507	737
	▶744
294-1508	744
294-3794	462
294-3795	462
294-3798	462
294-3799	462
294-8620	138
295-1803	137
295-9439	▶44
	82
295-9441	428
	▶429
295-9540	619
295-9552	594
295-9553	594
295-9554	594
295-9555	594
295-9574	447
295-9575	448
295-9577	447
295-9578	447
295-9579	447
295-9580	447
295-9583	447
295-9584	447
295-9656	615
295-9657	616
295-9658	615
295-9659	615
295-9660	▶447
	616
295-9674	610
	▶612
295-9695	615
296-6217	▶294
	298
296-6218	294
	▶295
296-6219	296
296-6980	519
296-7072	585
	587
296-7079	565
296-7348	480
296-7350	480
296-7351	480
296-7352	478
296-7354	478
296-7355	478
296-8060	215
297-0370	503
	573
	▶632
297-0371	573
	▶708
297-0483	678
297-0494	6
	▶409
297-0530	▶668
	880
	882
297-0531	▶670
	881
	883
297-0538	867
	▶880
297-0539	867
	▶881
297-0540	868
	▶882
297-0541	868
	▶883
297-4429	4
	▶175
297-4589	871
297-4590	872
	▶875
297-4595	873
	874
297-6828	225
297-7710	225
297-7711	225
297-7713	225
297-7920	69
297-9151	▶369
	380
297-9156	369
298-2942	316
	317
298-2974	315
298-3111	334
298-3112	334
298-3147	116
	119
	▶146
298-3225	▶315
	334
298-3257	146
298-3258	146
298-4258	124
	▶982
298-4341	409
	▶983
301-0091	152
	153
	154
301-0589	926
301-7292	257
302-3208	551
302-9466	666
303-2668	987
	989
303-2787	168
	▶985
303-3357	202
	▶215
303-9626	329
303-9627	330
303-9933	141
	143
303-9937	141
	143
303-9959	334
304-5260	68
305-0325	856
305-0330	956
305-0331	872
	874
305-0332	871
	873
305-0333	956
305-0441	915
305-0442	915
305-0446	1
	2
	▶931
305-0467	4
	5
	▶942
305-4672	108
305-4903	78
305-5362	279
306-3998	230
306-8349	181
	▶250
306-8350	250
306-8526	153
306-8590	255
306-8802	936
306-8803	153
306-8887	811
	▶813
307-0047	171
307-2673	38
307-5106	459
	▶558
307-5122	459
	▶565
307-5123	565
307-5129	565
307-5130	565
307-6480	69
307-6481	69
307-7860	347
307-7862	345
307-8428	279
308-8784	321
308-8785	321
308-8786	321
309-0175	114
309-1114	804
309-1117	804
309-1118	804
309-1121	▶835
309-1122	▶825
309-1123	▶831
309-1124	▶833
309-1125	▶834
309-1126	▶823
309-1127	▶827
309-1128	▶829
309-1129	▶828
309-3872	982
309-5769	522
	528
	532
309-5808	869
	▶877
309-5842	▶170
	181
309-9941	653
310-0210	550
	▶676
310-0393	638
	▶690
310-0394	683
	▶692
310-0414	522
	▶672
310-0419	672
310-0420	672
310-0421	672
310-0422	672
310-6252	987
	989
310-7255	31
	33
310-7257	31
	33
310-9486	459
	▶610
310-9725	108
310-9771	108
311-7229	▶31
	38
311-8150	390
	391
	392
	393
	394
	396
	397
	398
	399
311-9526	415
	▶419
311-9527	419
311-9548	615
312-2645	131
313-4620	135
313-7833	▶165
	167
313-8154	116
313-8155	116
	119
313-8232	119
314-3615	▶718
	729
314-8113	544
315-4412	▶709
	715
315-4451	416
	▶421

3

▶ PRIMARY REFERENCE

PART NUMBER INDEX

Part	Page	Part	Page	Part	Page	Part	Page
315-4452	421	319-9152	985		▶940	328-0028	253
315-4473	417	319-9702	509	327-6503	4	328-0139	907
	▶423	319-9771	560		5	328-2574	▶113
315-4475	423	320-5392	165		▶941		125
315-7670	371	320-5396	167	327-6507	940	329-6508	987
315-7671	371	320-5525	918		▶945	329-6509	989
316-3915	490	321-1463	383	327-6509	941	330-1162	917
316-3918	490	321-8635	38		▶946		▶918
316-8831	895	321-8638	36	327-6512	▶943	330-1169	▶320
	▶897		38		945		917
316-8837	▶899	322-4582	983	327-6513	▶944	330-1170	320
	906	322-8716	512		946	330-1278	305
316-8838	2		▶715	327-6515	943		▶307
	3	322-8733	612		944	330-1279	307
	▶958		▶615	327-6520	945	330-1284	306
316-8842	▶876	322-8734	615		▶952		▶308
	933	323-7558	503	327-6521	946	330-1285	308
316-8846	839		▶710		▶953	330-1354	853
316-8847	839	323-7559	710	327-6523	933		▶917
316-8849	839		▶711		▶951	330-1408	334
316-8854	847	323-7770	672	327-6538	951		▶367
	962	323-7772	711	327-6541	942	330-1411	367
316-8917	836	323-7897	638	327-6548	914	330-1412	334
	▶839	323-7898	638	327-6549	914		▶341
316-8918	839		▶678	327-6550	843	330-1417	339
316-8920	839	323-9140	279		▶920		340
316-8921	839	324-1093	718		921		▶342
316-8922	931		▶723		922	330-1423	▶312
316-8927	1	324-1094	723	327-6551	847		334
	2	324-4149	98		851	330-1442	334
	▶932		▶102		▶972	330-1444	343
316-8931	932	324-4150	102	327-6552	906		▶368
316-8932	932	324-4169	106		▶921	330-1447	368
316-8933	932	324-5761	131	327-6553	906	330-2316	551
316-8987	943	324-7380	60		▶922	330-3408	937
	944		61	327-6576	921	330-3409	175
	945	325-3915	▶25	327-6618	889	330-3410	175
	946		30	327-6622	971	330-6018	10
316-8989	922	325-9029	507		▶973		▶279
317-4881	480	325-9220	519	327-6625	847	330-6034	10
317-4882	478	326-1644	112		▶967		▶202
317-7210	33	326-3898	89	327-6640	943	331-7388	▶396
317-7211	33	326-4405	558		944	331-8905	79
317-7212	33	327-3062	918	327-6642	943	331-8906	79
317-7213	33	327-3063	918		944	332-3619	▶33
318-2082	231	327-3329	▶167	327-6643	943		36
318-2558	390		168		944	333-2958	298
	391	327-3333	139	327-6644	952		▶431
	394		▶140		953	333-2959	431
	398	327-3334	140	327-6645	▶909		▶432
	399		▶141		952	333-4157	▶910
318-2559	392	327-3335	140	327-6646	909		953
	393		▶143		910	333-4158	910
	396	327-6437	958	327-6647	909	333-4159	910
	397	327-6438	958	327-6648	952	333-4160	943
318-6357	135	327-6453	876		953		944
318-8811	436	327-6457	876	327-7482	923	333-4178	910
319-0677	133	327-6476	955		▶924	333-4179	943
	▶135	327-6477	902		947		944
319-1335	291		955	327-7533	175	333-4180	909
319-4420	196	327-6478	902	327-7534	175		910
	198		955	327-7594	924		943
	▶240	327-6479	902	327-9998	255		944
319-6237	36	327-6480	955	328-0021	196		952
	38	327-6501	5		198		953

▶ **PRIMARY REFERENCE**

PART NUMBER INDEX

Part	Page
333-4181	909
333-4353	955
333-4533	570
333-5075	116
	119
333-5089	116
333-5091	116
	119
333-5092	116
	119
333-5093	116
	119
333-5094	119
333-7057	565
333-7059	558
333-7060	546
334-4603	987
	989
334-6387	847
	851
	▶887
334-6388	967
	▶969
334-6389	969
334-6469	969
334-6478	969
334-6479	969
334-6481	969
334-6482	969
334-6483	969
334-6484	969
334-6485	969
334-6486	969
334-6488	969
334-6489	969
334-6490	969
334-6491	969
334-6492	▶948
	967
334-6493	948
334-6495	948
334-6497	967
334-6499	967
334-6501	967
334-6504	967
334-6505	967
334-6507	967
334-6508	967
334-6509	967
334-6513	887
	▶966
334-6514	966
334-6519	966
334-6520	966
334-6521	966
334-6522	966
334-6523	966
334-6524	966
334-6525	966
334-6526	887
334-6527	887
334-6528	887
334-6530	887
334-6531	887
334-6533	887
334-6534	887
334-6535	887
334-6536	887
334-6537	887
334-6538	887
334-6541	▶843
	847
	851
334-6542	843
334-6546	843
334-6549	843
334-6550	843
334-6551	843
334-6552	843
	▶912
334-6553	912
334-6554	912
334-6557	843
	▶913
334-6558	913
334-6559	913
334-6562	843
334-6564	843
334-6565	843
334-6566	843
334-6567	843
334-6568	843
	▶885
334-6569	857
	▶858
334-6572	81
334-9973	592
	▶596
334-9979	596
	▶597
334-9982	597
335-0136	667
335-0138	667
335-0497	▶933
	934
336-1150	4
	5
	▶938
336-1151	938
336-1156	▶81
	858
336-1159	897
	899
336-1160	897
	899
336-1161	897
336-1163	897
	899
336-1196	895
	▶896
336-1197	896
336-4501	362
336-4508	362
336-4509	334
	▶361
336-4510	361
336-4511	361
336-4512	361
336-4513	334
336-4514	334
	▶362
336-5966	286
336-5982	▶286
	933
336-6071	▶190
	906
336-6072	▶191
	906
336-6095	190
336-6096	191
336-6103	190
336-6105	190
336-6137	▶251
	409
336-6139	2
	3
	▶907
336-6149	128
	▶282
336-6156	▶253
	409
336-6159	168
	▶255
336-6170	1
	2
	▶152
336-6174	▶257
	933
336-6179	▶193
	933
336-6180	193
	▶194
336-6194	▶289
	409
336-6206	▶248
	409
336-6212	▶162
	228
336-6220	128
	▶263
336-6242	181
	▶269
336-6305	153
336-6307	153
336-6309	153
336-6356	251
337-1139	329
337-1140	329
337-1157	509
337-1161	509
337-1165	509
337-1205	548
337-1277	624
337-1525	1
	2
	▶321
337-1526	321
338-6881	181
	▶926
338-6891	▶171
	181
338-6920	175
	947
338-6921	175
	▶947
338-6937	181
	▶928
338-6943	▶869
	933
338-6948	869
340-3773	▶168
	853
340-3825	1
	▶987
340-3831	5
	▶181
340-3835	5
	▶853
340-3837	3
	▶128
340-3839	3
	▶228
340-6485	1
	2
	▶933
340-6486	▶895
	906
340-6488	2
	3
	▶890
340-6489	▶891
	934
340-6490	▶892
	934
340-6493	▶893
	934
340-6504	▶959
	971
340-6511	899
340-6524	838
	▶889
340-6526	4
	5
	▶838
340-6582	885
340-6583	885
340-6584	885
340-6585	885
340-6586	843
340-6587	843
340-6589	▶901
	902
340-6592	901
340-6593	902
340-6594	902
340-6595	902
340-6600	4
	5
	▶845
340-6601	845
	▶847
340-6606	5
	▶849
340-6607	849
	▶851
340-6624	962
	964
340-6625	962
	964
340-6626	962

▶ **PRIMARY REFERENCE**

PART NUMBER INDEX

Part	Page
	964
340-6627	962
	964
340-6643	973
	975
340-6664	851
	▶961
340-6665	847
	851
	▶902
340-6684	847
340-6687	851
340-6693	847
	851
	▶954
340-6695	847
	▶962
340-6727	962
340-6729	954
	▶955
340-6731	954
	▶956
340-6732	956
340-6734	956
340-6736	956
340-6737	956
340-6738	956
340-6739	956
340-6740	956
340-6742	955
340-6760	959
340-9468	2
	3
	▶6
340-9469	▶6
340-9472	▶6
340-9473	▶7
340-9474	3
	▶7
340-9475	▶7
340-9476	▶8
340-9477	2
	3
	▶8
340-9478	▶8
340-9479	▶9
340-9480	▶9
340-9481	▶9
340-9484	▶6
341-0087	88
341-1842	141
	143
341-5135	732
341-5272	732
342-0817	334
342-0819	334
342-0820	330
342-0822	330
342-1068	1
	2
	▶333
342-1069	1
	2
	▶329
342-1070	99
	▶343
342-1071	5
	▶330
342-1110	301
342-2826	194
342-2827	194
342-2856	257
342-2859	253
342-2981	194
342-2982	194
342-3015	168
	▶265
342-3063	153
342-3064	154
342-3065	154
342-3067	257
342-3108	▶293
	971
342-3109	293
342-3126	263
342-3144	289
342-3145	248
342-3146	282
342-3149	181
	▶266
342-3235	266
342-3456	889
342-3458	889
342-3459	889
342-3460	933
	▶935
342-3461	935
342-3536	▶894
	934
342-3541	959
342-3544	959
342-3546	▶925
	972
342-3547	972
342-3548	972
342-3572	961
342-3573	961
342-3574	961
342-3575	961
342-3576	961
342-3588	1
	2
	▶303
342-3589	303
342-3601	259
342-3650	▶933
	934
342-3664	▶304
	971
342-3712	851
	▶964
342-3715	897
	899
342-3717	897
	899
342-3718	935
342-3719	971
	▶975
342-3723	897
	899
342-3745	955
342-3746	955
342-3747	955
343-1142	▶4
343-1143	▶4
343-1145	▶1
	4
343-1146	▶2
	4
343-1147	2
	▶989
343-1195	4
	5
	▶971
343-1196	5
	▶971
343-5527	112
344-2149	▶38
	40
344-4124	▶409
	410
345-3787	▶729
345-7497	2
	3
	▶4
345-7498	3
	▶5
345-7499	▶5
345-7571	▶2
345-7579	3
	▶410
345-7582	▶410
345-7583	2
	3
	▶5
345-8414	14
	▶40
346-2703	▶313
	334
346-2713	▶314
	343
346-4449	5
	▶409
346-4594	2
	3
	▶99
346-4602	▶181
346-4603	▶181
	729
346-7367	897
	899
346-7370	897
	899
346-7375	843
	▶930
346-7412	▶939
	971
346-7427	950
346-7428	950
346-7429	950
346-7437	889
	▶950
346-7441	973
	975
346-7442	973
	975
346-7443	973
	975
346-7444	973
346-7445	975
346-7446	304
346-7888	973
	975
346-7890	973
	975
346-7981	939
346-7982	939
346-7983	939
346-8030	962
347-0286	▶934
347-0288	▶934
347-0290	▶934
347-0295	2
	3
	▶906
347-0297	▶906
347-0361	▶906
347-2343	▶397
347-2345	▶398
347-2346	▶399
347-2380	61
347-2381	61
347-2382	61
347-7908	14
	▶61
348-2747	10
	▶14
348-4301	10
	▶88
348-5467	▶934
348-8126	▶3
349-5363	926
349-5364	896
349-5370	928
349-5373	928
349-5375	928
350-8037	162
352-2663	▶3

▶ **PRIMARY REFERENCE**

MEMORANDA



© 2009 CATERPILLAR
ALL RIGHTS
RESERVED

CAT, CATERPILLAR, THEIR RESPECTIVE LOGOS, “CATERPILLAR YELLOW” AND THE POWER EDGE TRADE DRESS, AS WELL AS CORPORATE AND PRODUCT IDENTITY USED HEREIN, ARE TRADEMARKS OF CATERPILLAR AND MAY NOT BE USED WITHOUT PERMISSION.

PRINTED IN
U.S.A.