SEBP5387-04
November 2009

RUTHZIL TRATOR COMERCIAL DE PEÇAS LTDA 11 97083-6812 ROLANDO

Parts Manual

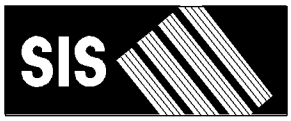

See "General Information" for New Parts Manual Features.

336D L Excavators

D3P1-Up (Machine)
M4T1-Up (Machine)
THX1-Up (Engine)

Powered By C9 Engine

Product and Dealer Information

Note: For product identification plate locations, see the section “Product Identification Information” in the Operation and Maintenance Manual.

Delivery Date: _____

Product Information

Model: _____

Product Identification Number: _____

Engine Serial Number: _____

Transmission Serial Number: _____

Generator Serial Number: _____

Attachment Serial Numbers: _____

Attachment Information: _____

Customer Equipment Number: _____

Dealer Equipment Number: _____

Dealer Information

Name: _____ Branch: _____

Address: _____

_____

_____

	Dealer Contact	Phone Number	Hours
Sales:	_____	_____	_____
Parts:	_____	_____	_____
Service:	_____	_____	_____

MEMORANDA

TABLE OF CONTENTS

Name	Page
GENERAL INFORMATION	A5
REPAIR ALTERNATIVES	A8
SUPPLEMENTAL COOLANT ADDITIVES	A9
MAINTENANCE PARTS	A10
INDEX	A13
MACHINE ARRANGEMENT	1
CHASSIS AR	1
COLD WEATHER AR	1
CONVERSION AR-MACHINE	2
DISTRIBUTION AR	2
GENERAL AR	3
OPTION AR-CAB	4
OPTION AR-CONFIGURATION	5
OPTION AR-CONTROL	5
OPTION AR-COUPLER	6
OPTION AR-GUARD	8
OPTION AR-HYDRAULIC	8
OPTION AR-INSTALLATION	9
OPTION AR-LINKAGE	9
OPTION AR-PUMP	15
OPTION AR-UNDERCARRIAGE	15
ENGINE ARRANGEMENT	16
ENGINE AR	16
ENGINE AR-COMPLETE	18
ENGINE AR-CORE	21
INSTALLATION AR-ENGINE	25
BASIC ENGINE	26
BELT GP-SERPENTINE	26
CAMSHAFT GP	27
COVER GP-CYLINDER BLOCK	28
COVER GP-FLYWHEEL HOUSING	29
COVER GP-FRONT HOUSING	30
COVER GP-VALVE MECHANISM	32
CRANKSHAFT GP	33
CYLINDER BLOCK AS	34
CYLINDER BLOCK GP	36
CYLINDER HEAD AS	38
CYLINDER HEAD GP	42
DAMPER & PULLEY GP	50
DRIVE GP-ACCESSORY	51
DRIVE GP-FAN	55
FASTENER GP-CYLINDER HEAD	56
FASTENER GP-DAMPER & PULLEY	59
FASTENER GP-FRONT HOUSING	60
FASTENER GP-VALVE COVER	61
FASTENER GP-VALVE COVER BASE	62
FLYWHEEL GP	63
GEAR GP-FRONT	64
HOUSING GP-FLYWHEEL	65
HOUSING GP-FRONT	66
LIFTING GP-ENGINE	67
MOUNTING GP-ENGINE	68
PAN GP-OIL	70
PISTON & ROD GP	72
PLUG GP-ENGINE	74
ROCKER ARM GP	76
SEAL GP-CRANKSHAFT	78
VALVE MECHANISM GP	79
LUBRICATION SYSTEM	81
FILTER GP-ENGINE OIL	81
FUMES DISPOSAL GP	85
GAUGE GP-OIL LEVEL (DIPSTICK)	86
LINES GP-ENGINE OIL	88
LINES GP-ENGINE OIL DRAIN	89
LINES GP-TURBOCHARGER OIL	90
MOUNTING GP-ENGINE OIL FILTER	93
PUMP GP-ENGINE OIL	95
COOLING SYSTEM	97
COOLER GP-ENGINE OIL	97
FAN & MOTOR GP	98
FAN GP-SUCTION	99
HOUSING & REGULATOR GP	103
LINES GP-TURBOCHARGER WATER	104
LINES GP-WATER	105
MODULE GP-COOLING	106
PLUG GP-WATER LINES	109
PUMP GP-WATER	110
RADIATOR & HYD OIL COOLER GP	112
AIR INLET AND EXHAUST SYSTEM	115
AIR CLEANER & MOUNTING GP	115
AIR CLEANER AR	116
AIR CLEANER GP	117
ELBOW GP-AIR INLET	120
LINES GP-AIR	121
MANIFOLD GP-EXHAUST	124
MUFFLER GP	125
TURBOCHARGER GP	127
FUEL SYSTEM	129
FILTER GP-WATER SEP & FUEL	129
INJECTOR GP-FUEL	130
LINES GP-FUEL	132
PUMP & MOTOR GP-REFUELING	148
PUMP AR-FUEL TRANSFER	149
PUMP GP-FUEL INJECTION	150
PUMP GP-FUEL PRIMING	153
PUMP GP-FUEL PRM & PRIM FILTER	155
PUMP GP-FUEL PRM & WATER SEP	156
PUMP GP-REFUELING	157
PUMP GP-UNIT INJECTOR HYD	159

TABLE OF CONTENTS

Name	Page
REGULATOR GP-FUEL PRESSURE	163
TANK & MTG GP-FUEL	165
TANK GP-FUEL	166
VALVE GP-FUEL BYPASS	171
VALVE GP-FUEL SHUTOFF	172
ELECTRICAL AND STARTING SYSTEM	173
ALARM GP	173
ALARM GP-TRAVEL	174
ALTERNATOR GP-CHARGING	175
BATTERY & WIRING GP	178
BLOCK GP-JUNCTION	188
CAMERA & MOUNTING GP	189
CAMERA AR	192
CAMERA GP	193
CONTROL & MTG GP-COMMUNICATION	194
CONTROL & MTG GP-ENGINE ELEK	198
CONTROL & MTG GP-MACHINE	199
ELECTRONICS GP-COMMUNICATION	200
ELECTRONICS GP-MACHINE	200
ELECTRONICS GP-MONITOR	200
FASTENER GP-WIRING HARNESS	201
GRADE CONTROL AR-SATELLITE	206
HEATER GP-JACKET WATER	207
INSTALLATION AR-COMMUNICATION	208
INSTALLATION GP-SECURITY	209
LAMP GP-FLOOD	211
LIGHTING GP-CHASSIS	214
LIGHTING GP-FLOOD	215
MOUNTING GP-GRADE CONTROL	220
PANEL & MTG GP-CIRCUIT BREAKER	221
PANEL GP-CIRCUIT BREAKER	222
PANEL GP-SWITCH	224
PLUG GP-CONNECTOR	230
RECEIVER GP-SATELLITE	231
SENSOR AR-GRADE	231
SENSOR GP-ENGINE	232
SENSOR GP-LIQUID LEVEL	234
SENSOR GP-PRESSURE	236
SENSOR GP-SPEED	247
SENSOR GP-TEMPERATURE	250
STARTING AID GP	255
STARTING AID GP-ETHER	256
STARTING AR-COLD WEATHER	259
STARTING MOTOR GP-ELECTRIC	260
SWITCH GP-DISCONNECT	264
SWITCH GP-MAGNETIC	265
SWITCH GP-POSITION	267
SWITCH GP-PRESSURE	268
SWITCH GP-PUSH BUTTON	269
SWITCH GP-ROTARY	271
SWITCH GP-START	273
SWITCH GP-TOGGLE	274
SWITCH GP-WIPER	277
VALVE GP-ETHER STARTING	278
WIRING GP-AUX START RECEPTACLE	279
WIRING GP-AUXILIARY CONTROL	281
WIRING GP-BOOM FLOAT	292
WIRING GP-CAB	294
WIRING GP-CAMERA	310
WIRING GP-CHASSIS	311
WIRING GP-COMMUNICATION	314
WIRING GP-CONSOLE	316
WIRING GP-CONVERTER	320
WIRING GP-ELECTRONIC CONTROL	322
WIRING GP-FAN	326
WIRING GP-FINE SWING	327
WIRING GP-FUEL SYSTEM	328
WIRING GP-GRADE CONTROL	329
WIRING GP-HEATER	330
WIRING GP-MEDIUM PRESSURE	331
WIRING GP-PLATFORM	332
WIRING GP-QUICK COUPLER	334
WIRING GP-REFUELING PUMP	337
POWER TRAIN	339
FINAL DRIVE GP	339
DRIVE GP-FINAL	340
POWER TRAIN AR	343
SPROCKET GP	344
FRAME AND BODY	345
BOX & MTG GP-STORAGE	345
BOX GP-STORAGE	346
BUMPER GP	348
COUNTERWEIGHT & MOUNTING GP	349
COUNTERWEIGHT GP	352
COVER AS-SOUND SUPPRESSION	357
COVER GP-ACCESS	360
DOOR AS-ACCESS	361
DOOR GP-ACCESS	362
FENDER & COVER GP	364
FRAME GP-UPPER	366
GEAR & BEARING GP-SWING	368
GUARD AR-BOTTOM	374
GUARD GP-BOTTOM	375
GUARD GP-SWIVEL	377
HANDRAIL GP	378
HOOD & GUARD GP	379
HOOD GP	387
HOOD GP-ENGINE	391
SHEET AS-SOUND SUPPRESSION	395
STEP GP	407
STORAGE GP-VANDALISM GUARD	408
SUPPORT AS-ENCLOSURE	409

TABLE OF CONTENTS

Name	Page
UNDERCARRIAGE	413
ADJUSTMENT GP-HYDRAULIC TRACK	413
FRAME AR-UNDERCARRIAGE	414
FRAME AS-UNDERCARRIAGE	415
GUARD GP-TRACK GUIDE	416
GUARD GP-TRAVEL MOTOR	419
IDLER GP-FRONT	421
LINK AS-TRACK	424
ROLLER AR-TRACK & CARRIER	426
ROLLER GP-TRACK CARRIER	427
ROLLER GP-TRACK-SINGLE FLANGE	428
SPRING GP-RECOIL	429
TRACK AR	430
TRACK GP	431
HYDRAULIC SYSTEM	444
ACCUMULATOR GP-HYDRAULIC	444
ACTUATOR GP	450
BASE GP-OIL FILTER	451
CONTROL AR-AUXILIARY	452
CONTROL AR-BOOM	455
CONTROL AR-COUPLER	456
CONTROL AR-FAN	456
COUPLING GP-PUMP	457
CYLINDER & LINES GP-BOOM	458
CYLINDER & LINES GP-BUCKET	458
CYLINDER & LINES GP-STICK	459
CYLINDER & SEAL GP-BOOM	460
CYLINDER & SEAL GP-BUCKET	461
CYLINDER & SEAL GP-STICK	463
CYLINDER GP-BOOM	464
CYLINDER GP-BUCKET	466
CYLINDER GP-COUPLER	470
CYLINDER GP-STICK	471
DRIVE GP-AUXILIARY PUMP	473
DRIVE GP-SWING	476
FASTENER GP-SWING & FINAL DR	482
FILTER & VALVE GP-PILOT	484
FILTER GP-OIL	485
GAUGE GP-SIGHT	490
GUARD AR-CYLINDER	491
GUARD GP-CYLINDER	492
HEAD GP-PUMP	493
HOSE GP-HYDRAULIC	497
HYDRAULIC AR	505
LINES GP-AUXILIARY HYDRAULIC	506
LINES GP-BOOM	527
LINES GP-BOOM CYLINDER	532
LINES GP-BUCKET CYLINDER	537
LINES GP-COUPLER	540
LINES GP-FRONT	552
LINES GP-HYDRAULIC OIL COOLER	596
LINES GP-MOTOR	599
LINES GP-PILOT	602
LINES GP-PUMP	663
LINES GP-RETURN	670
LINES GP-SENSOR	679
LINES GP-STICK	680
LINES GP-STICK CYLINDER	685
LINES GP-TRAVEL MOTOR	686
MANIFOLD GP-CONTROL	688
MOTOR & MTG GP-HYDRAULIC FAN	691
MOTOR & MTG GP-SWING	692
MOTOR & MTG GP-TRAVEL	694
MOTOR GP-PISTON	695
MOTOR GP-SWING	698
MOTOR GP-TRAVEL	704
MOUNTING GP-MAIN CONTROL VALVE	707
PLUG GP-CONTROL VALVE	708
PUMP & LINES GP-COOLING	713
PUMP & MTG GP-AUXILIARY	714
PUMP & MTG GP-MAIN HYDRAULIC	715
PUMP GP-GEAR	716
PUMP GP-MAIN HYDRAULIC	717
PUMP GP-PISTON	718
ROTATING GP-MOTOR	724
ROTATING GP-PUMP	725
SCREEN GP-HYDRAULIC	726
SWIVEL GP	727
TANK & FILTER GP-HYDRAULIC	729
TANK & MTG GP-HYDRAULIC	733
TANK GP-HYDRAULIC	734
VALVE & MTG GP-CONTROL	736
VALVE AR-ALT PATTERN CONTROL	739
VALVE AR-SWING	739
VALVE GP-CHECK	740
VALVE GP-CONTROL	742
VALVE GP-FLOW CONTROL	765
VALVE GP-FLOW CONTROL & RELIEF	766
VALVE GP-LOAD CONTROL	768
VALVE GP-MAIN CONTROL	774
VALVE GP-MANUAL	776
VALVE GP-PILOT	778
VALVE GP-PILOT RELIEF	797
VALVE GP-PRESSURE REDUCING	799
VALVE GP-PRIORITY	801
VALVE GP-PUMP CONTROL	802
VALVE GP-RELIEF	804
VALVE GP-SHUTTLE	820
VALVE GP-SOLENOID	824
VALVE GP-SOLENOID & MANIFOLD	838
VALVE GP-SOLENOID & RELIEF	839
VALVE GP-SWING CUSHION	844
VALVE GP-TRAVEL COUNTERBALANCE	848
IMPLEMENTS	849
BOOM AR-1 PIECE LONG	849

TABLE OF CONTENTS

Name	Page
BOOM AR-1 PIECE SHORT	850
BOOM GP	851
LINES GP-GREASE	859
LINKAGE AR-BUCKET	862
LINKAGE GP-BUCKET	863
STICK AR	870
STICK AR-HOE	870
STICK GP-HOE	873
WORK TOOLS	887
ADJUSTER GP-BUCKET	887
BUCKET & ADJUSTER GP	889
BUCKET AS-GENERAL PURPOSE	896
BUCKET AS-HEAVY DUTY	897
BUCKET AS-HEAVY DUTY ROCK	900
BUCKET GP-ROCK	901
BUSHING GP-SLEEVE	903
COUPLER AR-QUICK	904
COUPLER GP-QUICK	905
HOOK GP-LIFTING	906
LOCK GP-QUICK COUPLER	907
PROTECTOR GP-SIDE BAR	908
SIDECUTTER GP	912
TIP GP-GENERAL PURPOSE	915
TIP GP-HEAVY ABRASION	917
TIP GP-PENETRATION	918
TIP GP-PENETRATION PLUS	920
OPERATOR STATION	922
ADJUSTER GP-SEAT	922
AIR CONDITIONER & MOUNTING GP	923
AIR CONDITIONER AR	927
AIR CONDITIONER GP	928
ANTENNA & MOUNTING GP	933
ARMREST GP	934
CAB AR	936
CAB GP	937
COIL GP-EVAPORATOR	947
COMPRESSOR GP-REFRIGERANT	949
CONDENSER & MTG GP-REFRIGERANT	950
CONDENSER GP-REFRIGERANT	953
CONSOLE GP-OPERATOR	956
CONTROL & MTG GP-JOYSTICK	963
CONTROL & MTG GP-PEDAL	968
CONTROL GP-FOOT	969
CONTROL GP-HANDLE	971
CONTROL GP-HYDRAULIC PEDAL	977
CONTROL GP-JOYSTICK	980
CONTROL GP-PEDAL	986
CONTROL GP-PILOT OPERATED HYD	987
COVER GP-CAB	990
COVER GP-STORAGE	991
DISPLAY GP-MONITOR	992
DOOR GP-CAB	993
DUCT GP-CAB AIR	995
FLOOR MAT	996
FLOOR MAT GP	999
GUARD AR-OVERHEAD	1000
GUARD AR-VANDALISM	1000
GUARD GP-FRONT WINDOW	1001
GUARD GP-OVERHEAD	1003
GUARD GP-VANDALISM	1005
GUARD GP-WINDOW	1006
HATCH GP-ROOF	1010
HORN GP-ELECTRIC	1012
HOUSING GP-AIR CONDITIONER	1014
INSTALLATION GP-RADIO	1015
KIT-SEAT SUSPENSION	1017
LINES GP-AIR CONDITIONER	1019
LITERATURE GP	1022
MIRROR GP-REAR VIEW	1023
MONITOR & MTG GP-OPERATOR	1027
MONITOR GP-OPERATOR	1029
MOUNTING GP-ANTENNA	1031
MOUNTING GP-MONITOR	1033
MOUNTING GP-PLATFORM	1034
MOUNTING GP-RADIO	1036
OPERATOR AR	1037
PEDAL AR-AUXILIARY	1037
PLATFORM GP-OPERATOR	1038
RADIO GP	1039
RADIO GP-COMMUNICATION	1040
SCREEN GP-SUN	1041
SEAT & MOUNTING GP	1042
SEAT BELT GP	1045
SEAT GP	1046
SEAT GP-SUSPENSION	1050
SERVICE GP-MONITOR	1053
SUPPORT GP-SEAT	1054
SUSPENSION GP-SEAT	1055
VISOR GP-CAB	1059
VISOR GP-PROTECTION	1060
WASHER GP-WINDOW	1061
WINDOW GP-CAB	1064
WINDOW GP-DOOR	1071
WIPER & WASHER GP-WINDOW	1073
WIPER AR-WINDOW	1075
WIPER GP-WINDOW	1076
SERVICE EQUIPMENT AND SUPPLIES	1078
FILM GP	1078
FILM GP-U.S.	1095
PLATE & FILM GP	1096
PART NUMBER INDEX	B1

GENERAL INFORMATION

1. MACHINE IDENTIFICATION

Caterpillar machines are identified by Product Identification Numbers (PIN). Some components included in a machine may be identified by Serial Numbers (S/N). Typical components that will be serialized include engines, transmissions, bulldozers, and rippers. The machine and engine are further identified by arrangement numbers and in some cases modification numbers. These numbers are shown on the product identification plate(s) and on the master plate in the operator's compartment.

Caterpillar dealers need all of these numbers to determine accurate parts identification.

SIS *New Feature*

Effective First Quarter 2001 the Caterpillar Product Identification Number (PIN) changed from 8 to 17 characters. In an effort to provide uniform equipment identification, Caterpillar and other construction equipment manufacturers are moving to comply with the latest version of the product identification numbering standard. Non-road machine PINs are defined by ISO 10261. The new PIN format will apply to all Caterpillar machines and generator sets. The PIN plates and frame marking will display the 17 character PIN. The new format will look like the following:

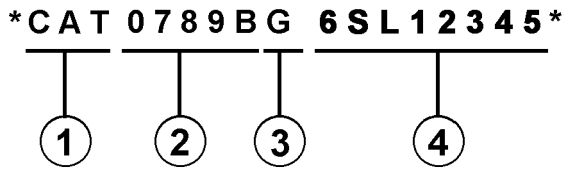

Where:

1. Caterpillar's World Manufacturing Code (characters 1-3)

2. Machine Descriptor (characters 4-8)

3. Check Character (character 9)

4. Machine Indicator Section (MIS) or Product Sequence Number (characters 10-17). These were previously referred to as the Serial Number.

Machines and generator sets produced before First Quarter 2001 will maintain their 8 character PIN format.

Components such as engines, transmissions, axles, etc. and work tools will continue to use an 8 character Serial Number (S/N).

2. ORDERING PARTS

⚠ WARNING

When replacement parts are required for this product Caterpillar recommends using Caterpillar replacement parts or parts with equivalent specifications including, but not limited to, physical dimensions, type, strength and material.

Failure to heed this warning can lead to premature failures, product damage, personal injury or death.

Quality Caterpillar replacement parts are available from Caterpillar dealers throughout the world. Their parts inventories are up to date and include all parts normally required to protect your investment in Caterpillar machines. Dealers may offer repair kits or remanufactured parts to allow selection of the most effective repair alternative for a particular situation. When ordering parts, your order should specify the quantity, part number, part name, and the serial number/product identification number of the machine for which the parts are needed.

3. PARTS MANUAL ORGANIZATION

Product information in this manual is presented as "information elements" that represent all of the components for the specific model. Engine Arrangement and Seat Group are examples of information elements. The information elements are organized alphabetically by part name and secondarily by part number within each major section of the manual.

4. TABLE OF CONTENTS

A table of contents (TOC) is found at the beginning of the manual. The TOC lists each section of the manual with a complete list of all information elements organized as they appear in the manual. Page numbers are provided for quick reference to detailed parts identification illustrations and serviceable consist lists.

5. MAINTENANCE PARTS INDEX

The Maintenance Parts Index, located near the beginning of the manual, references most frequently used maintenance part numbers, providing description, quantity, usage and page number. This information is organized alphabetically by part description.

6. INDEX

The index located near the front of the manual is an alphabetical listing of all information elements included in the manual. Page numbers are provided for quick reference to detailed parts identification illustrations and serviceable consist lists.

7. PART NUMBER INDEX

A numerical index listing all part numbers and the corresponding page number(s) appears at the back of the manual.

8. CAPTIONS

Captions located at the beginning of each information element identify the part number and part name along with additional descriptive information. PIN and S/N information found in each caption should be used to select correct information for a specific machine. Field replacement options, identification of optional attachment components, and where used ("part of") information is also provided.

The first line of a caption is shown in larger type font to indicate the beginning of an information element. Captions for additional pages that may be required to illustrate an information element will be shown in standard type font and will include the term *(contd.)* .

9. NON-SERVICED PARTS

In some instances it is necessary to display non-serviced parts that are a link to a lower level serviceable consist lists. These non-serviced part numbers are shown in *italic* type indicating that they are not available.

10. PARTS LIST REFERENCE NUMBERS

Numbers shown in the Ref No column correspond to numbers used in the associated graphic(s). An alphabetic suffix may be added to a reference number to identify lower level consist items. Numbers shown in the Graphic Ref column refer to the graphic number identifier displayed in the lower left corner of each illustration. The Graphic Ref number may be used in combination with the item Ref No to determine the correct part number. There may be intentional omission of a Ref No in a consist list as information is updated to reflect the latest serviceable part numbers.

11. INDENTED PART NAMES

When a part name is indented in a parts list, it is part of (included in) the group or assembly under which it is indented.

12. ILLUSTRATION REFERENCE LETTERS

When necessary, illustrations contain reference letters (A, B, C etc.) that are intended to track lines and harnesses from one point to another. They are also used to show where to reconnect illustrations that have been separated.

13. ABBREVIATIONS AND SYMBOLS

O.D. – Outside Diameter
I.D. – Inside Diameter
A – Not Part Of This Group
B – Use As Required
C – Change From Previous Type
D – Order By The Meter
E – Order By The Centimeter
F – Not Shown
G – Order By The Inch
I – Refer To Hydraulic Information System
M – Metric Part
R – Remfg Part May Be Available
Y – Separate Illustration
Z – Not Serviced Separately

SIS *New Feature*

14. DESCRIPTION OF TYPE CHANGES

Type - A type is defined as any configuration change that requires an additional Information Element for an Arrangement, Group, or Assembly. If serial number breaks for types are not available, a type # (Type 1, Type 2, etc.) will be displayed in the caption. These "type" changes are identified with a "C" note (change from previous type) in the Parts List. Only the "types" that apply to this Parts Manual will be included. Additional types may exist causing "C" notes to appear on an Information Element when no other types are shown.

15.<END>

This symbol indicates the end of an information element.

NOTE:

Continuing improvement and advancement of product design may cause changes to your machine which may not be included in this publication. Whenever a question arises regarding your Caterpillar product or this publication, please consult your Caterpillar dealer for the latest available information.

GENERAL INFORMATION

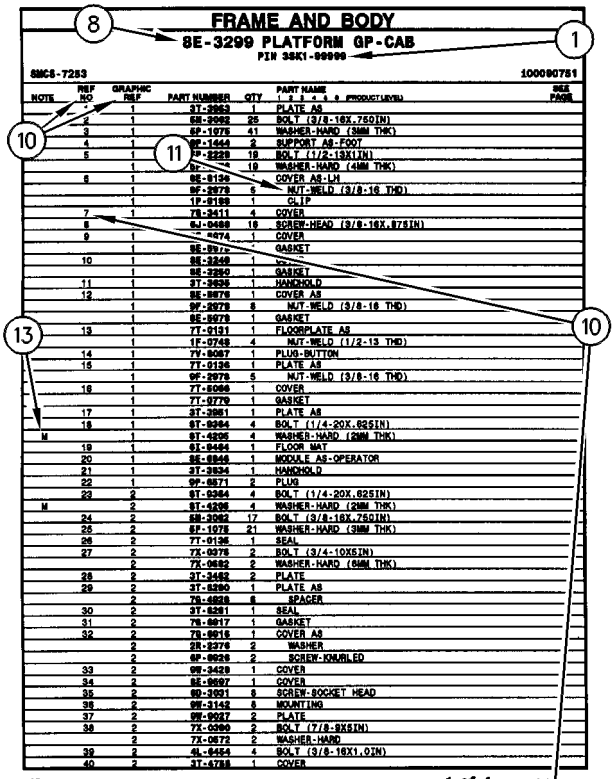

FRAME AND BODY

8E-3299 PLATFORM GP-CAB

PIN 3SK1-99999

SMCS-7253 100090751

NOTE	REF NO	GRAPHIC REF	PART NUMBER	QTY	PART NAME (1 2 3 4 5 6 PRODUCT LEVEL)	SEE PAGE
	*	1	3T-3953	1	PLATE AS	
	2	1	6E-2992	25	BOLT (3/8-16X.750IN)	
	3	1	6F-1976	41	WASHER-HARD (38MM THK)	
	4	1	9F-1444	2	SUPPORT AS-FOOT	
	5	1	7P-2229	18	BOLT (1/2-13X1IN)	
		1	6F-	18	WASHER-HARD (41MM THK)	
	6	1	6E-6136		COVER AS-LH	
		1	9F-2978	6	NUT-WELD (3/8-16 THD)	
		1	1P-0188	1	CLIP	
	7	1	7S-3411	4	COVER	
	8	1	9J-0488	18	SCREW-HEAD (3/8-16X.875IN)	
	9	1	-4474	1	COVER	
		1	6E-897		GASKET	
	10	1	6E-3249	1		
		1	6E-3250	1	GASKET	
	11	1	3T-3638	1	HANDHOLD	
	12	1	6E-8978	1	COVER AS	
		1	9F-2978	8	NUT-WELD (3/8-16 THD)	
		1	6E-8979	1	GASKET	
	13	1	7T-0131	1	FLOORPLATE AS	
		1	1F-0748	4	NUT-WELD (1/2-13 THD)	
	14	1	7V-8067	1	PLUG-BUTTON	
	15	1	7T-0136	1	PLATE AS	
		1	9F-2978	5	NUT-WELD (3/8-16 THD)	
	16	1	7T-8066	1	COVER	
		1	7T-8779	1	GASKET	
	17	1	3T-3861	1	PLATE AS	
	18	1	6T-8364	4	BOLT (1/4-20X.625IN)	
M		1	9T-4295	4	WASHER-HARD (28MM THK)	
	19	1	6L-8494	1	FLOOR MAT	
	20	1	8E-8846	1	MODULE AS-OPERATOR	
	21	1	3T-3834	1	HANDHOLD	
	22	1	9P-8871	2	PLUG	
	23	2	6T-8364	4	BOLT (1/4-20X.625IN)	
M		2	9T-4295	4	WASHER-HARD (28MM THK)	
	24	2	6E-3062	17	BOLT (3/8-16X.750IN)	
	26	2	6F-1976	21	WASHER-HARD (38MM THK)	
	26	2	7T-0135	1	SEAL	
	27	2	7X-0975	2	BOLT (3/4-10X5IN)	
		2	7X-0682	2	WASHER-HARD (64MM THK)	
	28	2	3T-3462	2	PLATE	
	29	2	3T-8290	1	PLATE AS	
		2	7S-4828	8	SPACER	
	30	2	3T-8281	1	SEAL	
	31	2	7S-8817	1	GASKET	
	32	2	7S-8816	1	COVER AS	
		2	2R-3276	2	WASHER	
		2	6P-8926	2	SCREW-KNURLED	
	33	2	9W-3429	1	COVER	
	34	2	8E-8897	1	COVER	
	35	2	6D-3931	8	SCREW-SOCKET HEAD	
	36	2	9W-3142	8	MOUNTING	
	37	2	9W-9027	2	PLATE	
	38	2	7X-0990	2	BOLT (7/8-9X5IN)	
		2	7X-0672	2	WASHER-HARD	
	39	2	4L-6454	4	BOLT (3/8-16X1.0IN)	
	40	2	3T-4788	1	COVER	

12 FRAME AND BODY 1 of 4 SELP4570-01

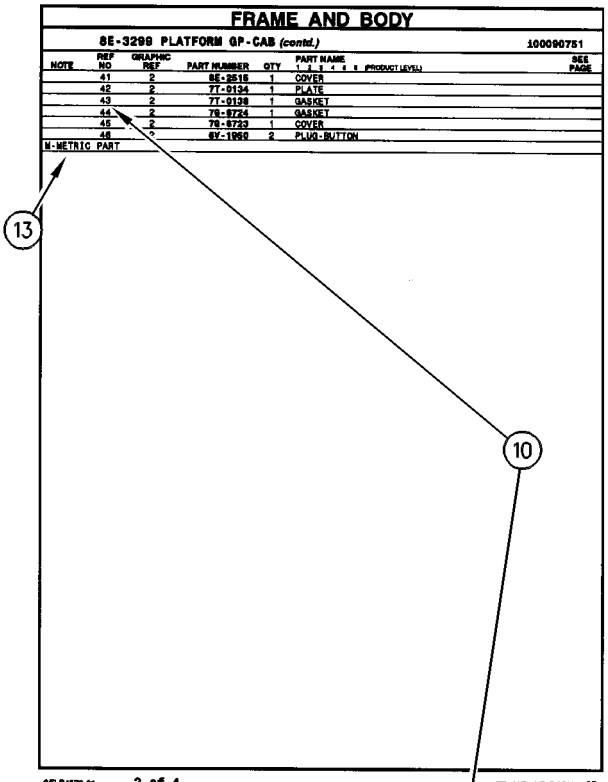

FRAME AND BODY

8E-3299 PLATFORM GP-CAB (contd.) 100090751

NOTE	REF NO	GRAPHIC REF	PART NUMBER	QTY	PART NAME (1 2 3 4 5 6 PRODUCT LEVEL)	SEE PAGE
	41	2	6E-2516	1	COVER	
	42	2	7T-0134	1	PLATE	
	43	2	7T-0138	1	GASKET	
	44	2	7S-8724	1	GASKET	
	45	2	7S-8723	1	COVER	
	46	2	6V-1950	2	PLUG-BUTTON	

M-METRIC PART

SELP4570-01 2 of 4 FRAME AND BODY 13

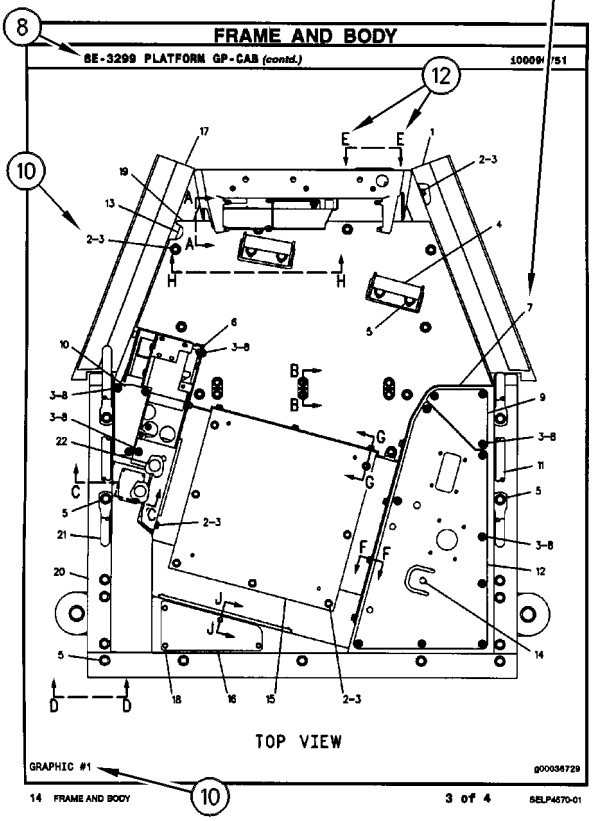

FRAME AND BODY

8E-3299 PLATFORM GP-CAB (contd.) 100090751

TOP VIEW

GRAPHIC #1 g00036729

14 FRAME AND BODY 3 of 4 SELP4570-01

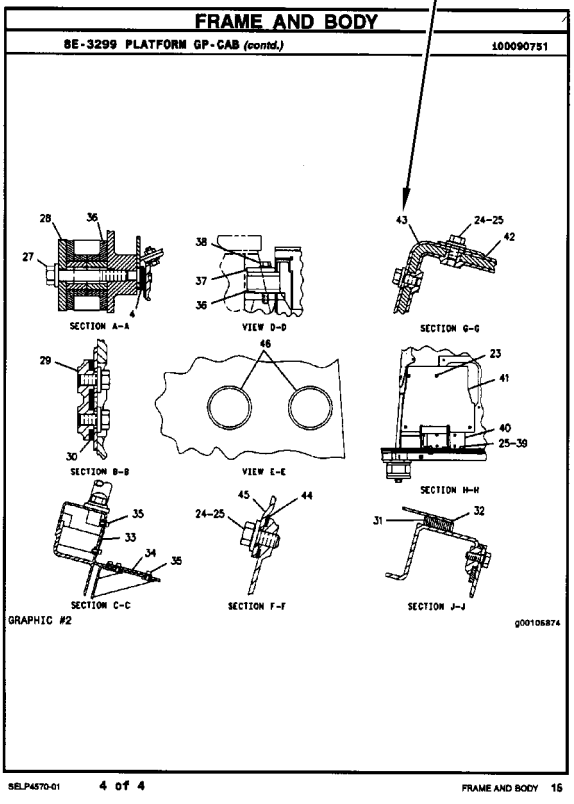

FRAME AND BODY

8E-3299 PLATFORM GP-CAB (contd.) 100090751

SECTION A-A

VIEW D-D

SECTION G-G

SECTION B-B

VIEW E-E

SECTION H-H

SECTION C-C

SECTION F-F

SECTION J-J

GRAPHIC #2 g00105874

SELP4570-01 4 of 4 FRAME AND BODY 16

REPAIR ALTERNATIVES

REMANUFACTURED COMPONENTS

As an option when making repairs consider Caterpillar Remanufactured Components. Components that are available through the Caterpillar Remanufactured Program are identified three ways in the parts book:

- with the letter R in the note field of the parts list
- with an R* at the beginning of the first line of the caption
- with an *R at the end of the first line of the caption

Typical components included in the Remanufacturing Program include:

ALTERNATORS
CONNECTING RODS
CRANKSHAFTS - UNDERSIZE
CRANKSHAFTS - UPGRADE TO NEW
CYLINDER HEADS
ELECTRONIC CONTROL MODULES (ECM)
ELECTRONIC SENSORS
FUEL INJECTORS
FUEL NOZZLES
FUEL PUMPS
GOVERNORS
OIL PUMPS
PISTONS
SHORT BLOCKS
STARTERS
TURBOCHARGERS - COMPLETE
TURBOCHARGER CARTRIDGES
WATER PUMPS

Caterpillar Remanufactured engines for many engine arrangements are also available.

SUPPLEMENTAL COOLANT ADDITIVES

CUSTOMER BENEFITS:

Protects against cavitation, foam, erosion, corrosion, and scale buildup in cooling systems.

- Provides measured coolant conditioner.

DESCRIPTION:

Additives deplete from the coolant with normal operation. For this reason, Supplemental Coolant Additives (SCA) must be added to all heavy duty coolants at regular intervals. In addition, when not using a fully formulated, pre-charged antifreeze, like Caterpillar's DEAC, an initial charge of SCA must be added to the cooling system. The amount of SCA added to the system is dependent on the capacity of the system.

The SCA for initial fill is provided as a liquid. SCA's for maintenance intervals are available in liquid form and as a spin-on element. (No Spin-on available for 3600 Family of Engines)

NOTE:

The amount of SCA added at initial fill is not the same as the amount added at maintenance intervals.

The coolant additive elements can be used with any ethylene or propylene glycol type antifreeze which meets ASTM D4985 or ASTM D5345 Specifications.

NOTE:

For use with standard heavy duty coolant only, not for use with Extended Life Coolant.

PARTS NEEDED:

Cooling System Capacity		Liquid SCA at Initial Fill	Liquid SCA at Maintenance*	Spin-on SCA Maintenance Element*
Liters	Gallons			
22-30	(6-8)	3P-2044 (1)	6V-3542 (1)	111-2370 (1)
30-38	(8-10)	3P-2044 (1) 6V-3542 (1)	111-2372 (1)	111-2369 (1)
38-49	(10-13)	3P-2044 (1) 8T-1589 (1)	111-2372 (1)	111-2369 (1)
49-64	(13-17)	3P-2044 (2)	8T-1589 (1)	9N-3368 (1)
64-83	(17-22)	3P-2044 (2) 8T-1589 (1)	111-2372 (1) 6V-3542 (1)	111-2371 (1)
83-114	(22-30)	3P-2044 (3) 8T-1589 (1)	3P-2044 (1)	9N-3718 (1)
114-163	(30-43)	3P-2044 (5)	3P-2044 (1) 6V-3542 (1)	111-2371 (2)
163-242	(43-64)	3P-2044 (8)	3P-2044 (2)	9N-3718 (2)

** Normal maintenance period is 250 hrs. See your Operation and Maintenance Manual for complete coolant maintenance instructions.*

( ) Indicates quantity required.

MAINTENANCE PARTS

DESCRIPTION	PART NUMBER	QTY	WHERE USED	PAGE
AIR INLET AND EXHAUST SYSTEM				
FILTER ELEMENT AS-AIR (PRIMARY)	142-1339	1	AIR CLEANER GP	118
		1	AIR CLEANER GP	119
FILTER ELEMENT AS-AIR (PRIMARY, ULTRA HIGH EFFICIENCY)	220-0453	1	AIR CLEANER GP	118
		1	AIR CLEANER GP	119
FILTER ELEMENT AS-AIR (SECONDARY)	142-1404	1	AIR CLEANER GP	118
		1	AIR CLEANER GP	119
BASIC ENGINE				
BELT-SERPENTINE	183-4494	1	BELT GP-SERPENTINE	26
		1	DRIVE GP-ACCESSORY	51
BREATHER AS (CRANKCASE)	240-0041	1	COVER GP-CYLINDER BLOCK	28
CAP AS-ENGINE OIL FILLER	227-4531	1	COVER GP-VALVE MECHANISM	32
SEAL-VALVE COVER	285-4106		COVER GP-VALVE MECHANISM	32
SEAL-VALVE COVER (VALVE MECHANISM BASE)	268-3490	1	COVER GP-VALVE MECHANISM	32
COOLING SYSTEM				
CAP AS (COOLANT FILL)	204-0920	1	RADIATOR & HYD OIL COOLER GP	112
CAP AS (COOLANT OVERFLOW)	171-3370	1	RADIATOR & HYD OIL COOLER GP	112
CAP AS-RADIATOR	036-1865	1	MODULE GP-COOLING	106
GASKET (WATER REGULATOR HOUSING)	191-4457	1	HOUSING & REGULATOR GP	103
		1	LINES GP-WATER	105
HOSE-RADIATOR	230-2930	1	RADIATOR & HYD OIL COOLER GP	112
	230-2931	1	RADIATOR & HYD OIL COOLER GP	112
REGULATOR-TEMPERATURE (92-DEG C) (COOLANT)	248-5513	1	HOUSING & REGULATOR GP	103
REGULATOR-WATER TEMPERATURE (98-DEG C) (COOLANT)	247-7133	1	LINES GP-WATER	105

MAINTENANCE PARTS

DESCRIPTION	PART NUMBER	QTY	WHERE USED	PAGE
ELECTRICAL AND STARTING SYSTEM				
BATTERY (12-VOLT, MAINTENANCE FREE)	263-9574	2	BATTERY & WIRING GP	178
		2	BATTERY & WIRING GP	180
CAP AS-FILLER (BATTERY)	123-1373	6	BATTERY & WIRING GP	178
		6	BATTERY & WIRING GP	180
CIRCUIT BREAKER AS (120-AMPERE) (HEATER)	216-4970	1	PANEL GP-CIRCUIT BREAKER	222
CIRCUIT BREAKER AS (80-AMPERE) (ALTERNATOR)	171-2210	1	PANEL GP-CIRCUIT BREAKER	222
CIRCUIT BREAKER AS (80-AMPERE) (MAIN)	171-2210	1	PANEL GP-CIRCUIT BREAKER	222
FUSE (10-AMPERE)	113-8490	22	WIRING GP-CAB	294
FUSE (15-AMPERE)	113-8491	5	WIRING GP-CAB	294
		1	WIRING GP-CAB	306
FUSE (25-AMPERE)	113-8493	3	WIRING GP-CAB	294
FUSE (30-AMPERE)	124-3548	2	WIRING GP-CAB	294
FUSE (5-AMPERE)	141-2759	8	WIRING GP-CAB	294
KEY (BATTERY DISCONNECT)	8H-5306	1	SWITCH GP-DISCONNECT	264
KEY AS-ELECTRONIC (SECURITY)	206-5162	2	INSTALLATION GP-SECURITY	209
	206-5165	1	INSTALLATION GP-SECURITY	209
LAMP AS (24-VOLT, 3-WATT)	170-9324	1	PANEL GP-SWITCH	224
		1	PANEL GP-SWITCH	226
LAMP-HALOGEN (24-VOLT, 70-WATT)	9X-3463	1	LAMP GP-FLOOD	211
		1	LAMP GP-FLOOD	212
		1	LAMP GP-FLOOD	213
		1	LIGHTING GP-FLOOD	215
		1	LIGHTING GP-FLOOD	217
FUEL SYSTEM				
CAP AS-FILLER (FUEL TANK)	7X-7700	1	TANK GP-FUEL	167
		1	TANK GP-FUEL	169
FILTER AS-WATER SEP & FUEL (PRIMARY)	326-1644	1	FILTER GP-WATER SEP & FUEL	129
FILTER-FUEL (ADVANCED EFFICIENCY)	1R-0762	1	LINES GP-FUEL	134
		1	LINES GP-FUEL	137
		1	LINES GP-FUEL	141
		1	LINES GP-FUEL	145
GASKET	9Y-8389	1	LINES GP-FUEL	134
		1	LINES GP-FUEL	145
GASKET (FUEL PRIMING PUMP)	9Y-8389	1	LINES GP-FUEL	137
		1	LINES GP-FUEL	141
		1	PUMP GP-FUEL PRIMING	153
STRAINER AS-FUEL	229-1860	1	PUMP GP-REFUELING	157
STRAINER AS-FUEL (FLOAT GAUGE)	303-9933	1	TANK GP-FUEL	167
		1	TANK GP-FUEL	169

MAINTENANCE PARTS

DESCRIPTION	PART NUMBER	QTY	WHERE USED	PAGE
HYDRAULIC SYSTEM				
BREATHER (HYDRAULIC TANK)	227-0590	1	TANK GP-HYDRAULIC	734
BREATHER (SWING DRIVE)	4H-6112	1	DRIVE GP-SWING	477
		1	DRIVE GP-SWING	480
FILTER ELEMENT AS-OIL (ULTRA HIGH EFFICIENCY) (HYDRAULIC RETURN)	179-9806	1	FILTER GP-OIL	487
FILTER-OIL (ADVANCED EFFICIENCY) (HYDRAULIC, CASE DRAIN)	093-7521	1	FILTER GP-OIL	489
FILTER-OIL (ADVANCED EFFICIENCY) (HYDRAULIC, PILOT)	5I-8670	1	FILTER & VALVE GP-PILOT	484
PLUG-O-RING	9S-4181	1	LINES GP-FRONT	564
PLUG-OIL DRAIN (OIL PAN) (HYDRAULIC TANK)	6I-0723	1	TANK GP-HYDRAULIC	734
SCREEN AS (HYDRAULIC TANK)	131-9750	1	LINES GP-PUMP	663
		1	LINES GP-PUMP	666
	209-6000	1	SCREEN GP-HYDRAULIC	726
LUBRICATION SYSTEM				
FILTER-ENGINE OIL (ADVANCED EFFICIENCY)	1R-1808	1	FILTER GP-ENGINE OIL	81
		1	FILTER GP-ENGINE OIL	83
MACHINE ARRANGEMENT				
SEAT BELT GP (RETRACTABLE, 76-MM)	305-0466	1	OPTION AR-CAB	4
		1	OPTION AR-CAB	5
OPERATOR STATION				
BLADE AS-WIPER (275-MM) (LOWER)	4I-5021	1	WIPER & WASHER GP-WINDOW	1073
BLADE AS-WIPER (600-MM) (UPPER)	161-3670	1	WIPER GP-WINDOW	1076
CAP AS (WINDOW WASHER)	178-5431	1	WASHER GP-WINDOW	1061
FILTER ELEMENT AS-CAB AIR	305-0329	1	DUCT GP-CAB AIR	995
FILTER ELEMENT-CAB AIR	245-7823	1	AIR CONDITIONER GP	928
		1	AIR CONDITIONER GP	931
	293-1184	1	CAB GP	946
FILTER GP-AIR (AIR CONDITIONER)	293-1137	1	AIR CONDITIONER GP	931
LAMP (24-VOLT, 10-WATT)	201-4417	1	CAB GP	942
LAMP-HALOGEN (24-VOLT, 70-WATT)	9X-3463	1	GUARD GP-WINDOW	1006
		1	GUARD GP-WINDOW	1008
RECEIVER-REFRIGERANT DRYER	176-1902	1	LINES GP-AIR CONDITIONER	1019
SEAT BELT GP (RETRACTABLE, 3-IN)	235-9020	1	SEAT GP	1047
SEAT BELT GP (RETRACTABLE, 76-MM)	305-0466	1	CAB AR	936
	327-6540	1	SEAT BELT GP	1045

INDEX

Name	Page
A	
ACCUMULATOR GP-HYDRAULIC–CHARGED	444 445 446 447 448 449
ACTUATOR GP–HYDRAULIC FAN PUMP	450
ADJUSTER GP-BUCKET–DB-FAMILY	888
ADJUSTER GP-BUCKET–G/U/V/TB-FAMILY	887
ADJUSTER GP-SEAT (UPPER SLIDE)	1055
ADJUSTER GP-SEAT–LOWER SLIDE	922
ADJUSTMENT GP-HYDRAULIC TRACK	413
AIR CLEANER & MOUNTING GP	115
AIR CLEANER AR–PRECLEANER	116
AIR CLEANER GP	118 119
AIR CLEANER GP–WITH PRECLEANER	117
AIR CONDITIONER & MOUNTING GP	923 925
AIR CONDITIONER AR	927
AIR CONDITIONER GP	928 931
ALARM GP	173
ALARM GP-TRAVEL	174
ALTERNATOR GP-CHARGING	175 176
ANTENNA & MOUNTING GP–PRODUCT LINK	933
ARMREST GP–LH	935
ARMREST GP–RH	934
ATOMIZER GP-ETHER	256
B	
BASE GP-OIL FILTER–HYDRAULIC	451
BASE GP-VALVE COVER	32
BATTERY & WIRING GP	180
BATTERY & WIRING GP–COLD WEATHER	178
BATTERY (12-VOLT, MAINTENANCE FREE)	178 180
BELT GP-SERPENTINE	26
BELT-SERPENTINE	26 51
BLADE AS-WIPER (275-MM) (LOWER)	1073
BLADE AS-WIPER (600-MM) (UPPER)	1076
BLOCK GP-JUNCTION (BATTERY)	188
BLOCK GP-JUNCTION–BATTERY	188
BOOM AR-1 PIECE LONG	849
BOOM AR-1 PIECE LONG–ACCUGRADE	850
BOOM AR-1 PIECE SHORT	850
BOOM GP	851 853 855
BOOM GP–ACCUGRADE	857
BOX & MTG GP-STORAGE	345
BOX GP-STORAGE	346
BRACKET GP-MOUNTING (SUSPENSION SEAT)	1055
BREATHER (HYDRAULIC TANK)	734
BREATHER (SWING DRIVE)	477 480
BREATHER AS (CRANKCASE)	28
BUCKET & ADJUSTER GP–GENERAL PURPOSE, DB-FAMILY	889 890 891
BUCKET & ADJUSTER GP–HEAVY-DUTY POWER, TB-FAMILY	892 893 894
BUCKET & ADJUSTER GP–HEAVY-DUTY ROCK, TB-FAMILY	895
BUCKET AS-GENERAL PURPOSE–DB-FAMILY	896
BUCKET AS-HEAVY DUTY ROCK–TB-FAMILY	900
BUCKET AS-HEAVY DUTY–TB-FAMILY	897 898 899
BUCKET GP-ROCK–QUICK COUPLER	901 902
BUMPER GP	348
BUSHING GP-SLEEVE	903
C	
CAB AR	936
CAB GP	937 939 946
CAB GP–EXTERIOR	942
CAB GP–INTERIOR	940
CAMERA & MOUNTING GP–WORK AREA VISUAL SYSTEM, REAR	189 191
CAMERA AR–WORK AREA VISUAL SYSTEM, REAR	192
CAMERA GP	193
CAMSHAFT GP	27
CAP AS (COOLANT FILL)	112
CAP AS (COOLANT OVERFLOW)	112
CAP AS (WINDOW WASHER)	1061
CAP AS-ENGINE OIL FILLER	32
CAP AS-FILLER (BATTERY)	178 180
CAP AS-FILLER (FUEL TANK)	167 169

INDEX

Name	Page
CAP AS-RADIATOR	106
CHASSIS AR	1
CIRCUIT BREAKER AS (120-AMPERE) (HEATER)	222
CIRCUIT BREAKER AS (80-AMPERE) (ALTERNATOR)	222
CIRCUIT BREAKER AS (80-AMPERE) (MAIN)	222
COIL GP-EVAPORATOR	947
COLD WEATHER AR	1
COMPRESSOR GP-REFRIGERANT	949
CONDENSER & MTG GP-REFRIGERANT	950 952
CONDENSER GP-REFRIGERANT	953 954
CONSOLE GP-OPERATOR	956
CONSOLE GP-OPERATOR–LH	960 962
CONSOLE GP-OPERATOR–RH	958 962
CONTROL & MTG GP-COMMUNICATION–PRODUCT LINK 121SR	195
CONTROL & MTG GP-COMMUNICATION–PRODUCT LINK 300	194
CONTROL & MTG GP-ENGINE ELEK	198
CONTROL & MTG GP-JOYSTICK	964 966 967
CONTROL & MTG GP-JOYSTICK–2-BUTTON, SLIDE, TRIGGER SW	965
CONTROL & MTG GP-JOYSTICK–JOYSTICK, 2-BN, SLIDE, TRIG SW	964
CONTROL & MTG GP-JOYSTICK–WITH SLIDE CONTROL	963
CONTROL & MTG GP-MACHINE	199
CONTROL & MTG GP-PEDAL–LH	968
CONTROL AR-AUXILIARY–MEDIUM PRESSURE	453
CONTROL AR-AUXILIARY–SYSTEM 11, COMBINED FN, MED PR	452
CONTROL AR-AUXILIARY–SYSTEM 13, COMBINED FUNCTION	455
CONTROL AR-AUXILIARY–SYSTEM 14, COMBINED FUNCTION	453 454
CONTROL AR-AUXILIARY–SYSTEM 16, 1-WAY, 2-PUMP	452
CONTROL AR-AUXILIARY–SYSTEM 17, COMBINED FN, MED PR	454
CONTROL AR-AUXILIARY–SYSTEM 18, COMBINED FUNCTION	455
CONTROL AR-AUXILIARY–SYSTEM 3, 1-WAY, 2-PUMP	454
CONTROL AR-BOOM–BOOM FLOAT, OVERLOAD WARNING	455
CONTROL AR-COUPLER	456
CONTROL AR-FAN–REVERSING	456
CONTROL GP-FOOT–WORK TOOL	969
CONTROL GP-HANDLE–JOYSTICK, LH	971 974
CONTROL GP-HANDLE–JOYSTICK, RH	972 973
CONTROL GP-HANDLE–LH	976
CONTROL GP-HANDLE–RH	975
CONTROL GP-HYDRAULIC PEDAL	977 978
CONTROL GP-JOYSTICK–LH	981 983 985
CONTROL GP-JOYSTICK–RH	980 982 984
CONTROL GP-PEDAL–ELECTRIC	986
CONTROL GP-PILOT OPERATED HYD–LH	989
CONTROL GP-PILOT OPERATED HYD–RH	988
CONTROL GP-PILOT OPERATED HYD–TRAVEL	987
CONTROL GP-UNPROGRAMMED	199
CONTROL GP-UNPROGRAMMED (ENGINE)	198
CONVERSION AR-MACHINE–ACCUGRADE READY	2
CONVERTER-POWER (24-VOLT TO 12-VOLT)	1015
COOLER GP-ENGINE OIL	97
CORE AS-HEATER	928 931
CORE AS-OIL COOLER (ENGINE)	97
CORE AS-OIL COOLER (HYDRAULIC)	106
CORE AS-RADIATOR	106
COUNTERWEIGHT & MOUNTING GP	349 350 351
COUNTERWEIGHT GP	352 354 355
COUPLER AR-QUICK–WITH HOOK	904
COUPLER GP-QUICK–WITH HOOK	905
COUPLING GP-PUMP	457
COVER AS-SOUND SUPPRESSION	357 359
COVER AS-SOUND SUPPRESSION–PRECLEANER	358
COVER GP-ACCESS–FUEL, HYDRAULIC TANKS	360
COVER GP-CAB–REAR	990
COVER GP-CYLINDER BLOCK	28
COVER GP-FLYWHEEL HOUSING	29
COVER GP-FRONT HOUSING	30 31
COVER GP-STORAGE	991
COVER GP-VALVE MECHANISM	32

INDEX

Name	Page
CRANKSHAFT GP	33
CYLINDER & LINES GP-BOOM–LH	458
CYLINDER & LINES GP-BOOM–RH	458
CYLINDER & LINES GP-BUCKET	458
CYLINDER & LINES GP-STICK	459
CYLINDER & SEAL GP-BOOM	460
CYLINDER & SEAL GP-BUCKET	461
	462
CYLINDER & SEAL GP-STICK	463
CYLINDER BLOCK AS	34
CYLINDER BLOCK GP	36
	37
CYLINDER GP-BOOM	464
CYLINDER GP-BUCKET	466
	468
CYLINDER GP-COUPLER	907
CYLINDER GP-COUPLER–LOCK	470
CYLINDER GP-STICK	471
CYLINDER HEAD AS	38
	40
CYLINDER HEAD GP	42
	43
	45
	47
	49

D

DAMPER & PULLEY GP	50
DISPLAY GP-MONITOR (CD700)	992
DISPLAY GP-MONITOR–CD700	992
DISTRIBUTION AR	2
	3
DOOR AS-ACCESS–AIR CLEANER, BATTERY	361
DOOR GP-ACCESS–PUMP COMPARTMENT	363
DOOR GP-ACCESS–RADIATOR	362
DOOR GP-CAB	993
DRIVE GP-ACCESSORY	53
DRIVE GP-ACCESSORY–ACCESSORY DRIVE	51
DRIVE GP-AUXILIARY PUMP–ACCESSORY DRIVE	473
	474
DRIVE GP-FAN	55
DRIVE GP-FINAL–WITHOUT MOTOR	340
DRIVE GP-SWING–WITH MOTOR	476
	479
DRIVE GP-SWING–WITHOUT MOTOR	477
	480
DUCT GP-CAB AIR	995

E

ELBOW GP-AIR INLET	120
ELECTRONICS GP-COMMUNICATION–PRODUCT LINK 300	200
ELECTRONICS GP-ENGINE RATINGS	23
ELECTRONICS GP-MACHINE–HIGH POWER	200
ELECTRONICS GP-MONITOR	200
ENGINE AR	16
	17
ENGINE AR-COMPLETE	18
	19
ENGINE AR-CORE	21
	22
	23
	24

F

FAN & MOTOR GP	98
FAN GP-SUCTION	99
FASTENER GP-CYLINDER HEAD	56
	57
	58
FASTENER GP-DAMPER & PULLEY	59
FASTENER GP-FRONT HOUSING	60
FASTENER GP-SWING & FINAL DR	482
FASTENER GP-VALVE COVER	61
FASTENER GP-VALVE COVER BASE	62
FASTENER GP-WIRING HARNESS–FOOT SWITCH	204
FASTENER GP-WIRING HARNESS–HEAVY LIFT	202
FASTENER GP-WIRING HARNESS–JOYSTICK	205
FASTENER GP-WIRING HARNESS–PEDAL CONTROL	203
FASTENER GP-WIRING HARNESS–STRAIGHT TRAVEL	201
FENDER & COVER GP	364
FILM GP	1083
FILM GP–ALT PATTERN CONTROL, WARNING	1085
FILM GP–CONTROL PATTERN, QUICK CHANGE	1086
FILM GP–FAN, FLYING DEBRIS	1089
FILM GP–FUEL TRANSFER PUMP	1091
FILM GP–HAMMER CONTROL, FOOT SWITCH	1084
FILM GP–MASS EXCAVATOR	1078
FILM GP–OPERATOR CONTROLS, NOTICE	1079
	1081
	1082
FILM GP–QUICK COUPLER	1088
	1090
FILM GP–SMARTBOOM	1092
FILM GP–WORK AREA VISUAL SYSTEM, REAR	1094

INDEX

Name	Page
FILM GP-U.S.	1095
FILM-CERTIFICATION (OPS GUARD, READ OMM, ENGLISH)	1001
FILM-IDENTIFICATION (BIODEGRADABLE HYDRAULIC OIL)	1096
FILM-IDENTIFICATION (FUEL)	328
FILM-IDENTIFICATION (SMARTBOOM)	1092
FILM-INFORMATION (HYDO ADVANCED 10)	1099
FILM-INFORMATION (PRODUCT LINK, READ OMM)	195
FILM-INFORMATION (SECURITY SYSTEM)	209
FILM-INFORMATION (TIE-DOWN)	1099
FILM-INSTRUCTION (COUPLER OPERATION)	1090
FILM-INSTRUCTION (ENGINE SHUTOFF)	1099
FILM-INSTRUCTION (HYDRAULIC OIL RETURN FILTER)	487
FILM-INSTRUCTION (MACHINE SECURITY, CONSOLE)	228
FILM-INSTRUCTION (MACHINE SECURITY, READ OMM)	209
FILM-INSTRUCTION (OPERATOR CONTROLS)	1099
FILM-INSTRUCTION (OPERATOR CONTROLS, READ OMM)	1037, 1082
FILM-INSTRUCTION (REFUELING PUMP)	157
FILM-INSTRUCTION (TOP, AIR CLEANER COVER)	118, 119
FILM-INSTRUCTION (WINDOW CLEANING, READ OMM)	1099
FILM-NOTICE (LIFT EYE LOCATION)	905
FILM-WARNING (CRUSH HAZARD, READ OMM, INTL)	1090
FILM-WARNING (CRUSH HAZARD, READ OMM, U.S.)	1090
FILM-WARNING (FLYING DEBRIS, STAY BACK, ANSI)	1089
FILM-WARNING (FLYING DEBRIS, STAY BACK, U.S.)	1089
FILM-WARNING (FRONT GUARD, READ OMM)	1008
FILM-WARNING (HIGH PRESSURE CYLINDER)	448
FILM-WARNING (HOT FLUID UNDER PRESSURE, U.S.)	1097
FILM-WARNING (NO WELD, NO DRILL, READ OMM)	1001
FILM-WARNING (PRODUCT LINK RADIO, INTL)	195
FILM-WARNING (PRODUCT LINK RADIO, U.S.)	195
FILM-WARNING (READ OMM)	905
FILM-WARNING (SEAT BELT, U.S.)	1097
FILM-WARNING (TIPPING HAZARD, READ OMM)	1092
FILM-WARNING (TOP GUARD, READ OMM)	1008
FILTER & VALVE GP-PILOT–HYDRAULIC OIL	484
FILTER AS-WATER SEP & FUEL (PRIMARY)	129
FILTER ELEMENT AS-AIR (PRIMARY)	118, 119
FILTER ELEMENT AS-AIR (PRIMARY, ULTRA HIGH EFFICIENCY)	118, 119
FILTER ELEMENT AS-AIR (SECONDARY)	118, 119
FILTER ELEMENT AS-CAB AIR	995
FILTER ELEMENT AS-OIL (ULTRA HIGH EFFICIENCY) (HYDRAULIC RETURN)	487
FILTER ELEMENT-CAB AIR	928, 931, 946
FILTER GP-AIR (AIR CONDITIONER)	928, 931
FILTER GP-ENGINE OIL	81, 83
FILTER GP-OIL–HYDRAULIC RETURN	485, 487
FILTER GP-OIL–HYDRAULIC, CASE DRAIN	489
FILTER GP-WATER SEP & FUEL	129
FILTER-ENGINE OIL (ADVANCED EFFICIENCY)	81, 83
FILTER-FUEL (ADVANCED EFFICIENCY)	134, 137, 141, 145
FILTER-OIL (ADVANCED EFFICIENCY) (HYDRAULIC, CASE DRAIN)	489
FILTER-OIL (ADVANCED EFFICIENCY) (HYDRAULIC, PILOT)	484
FINAL DRIVE GP	340
FINAL DRIVE GP–WITH MOTOR	339
FLOOR MAT	5, 8, 9, 996, 997, 998, 999
FLOOR MAT GP	999
FLYWHEEL GP	63
FRAME AR-UNDERCARRIAGE	414
FRAME AS-UNDERCARRIAGE	415
FRAME GP-UPPER	366
FUMES DISPOSAL GP	85
FUSE (10-AMPERE)	294
FUSE (15-AMPERE)	294

INDEX

Name	Page
	306
FUSE (25-AMPERE)	294
FUSE (30-AMPERE)	294
FUSE (5-AMPERE)	294

G

GASKET	134
	145
GASKET (FUEL PRIMING PUMP)	137
	141
	153
GASKET (WATER REGULATOR HOUSING)	103
	105
GAUGE GP-OIL LEVEL (DIPSTICK)	86
GAUGE GP-SIGHT–HYDRAULIC OIL LEVEL	490
GAUGE-OIL LEVEL (SWING DRIVE)	477
	480
GEAR & BEARING GP-SWING	368
	369
	370
	371
GEAR GP-FRONT	64
GENERAL AR	3
	4
GRADE CONTROL AR-SATELLITE–ACCUGRADE	206
GUARD AR-BOTTOM–HEAVY-DUTY	374
GUARD AR-CYLINDER	491
GUARD AR-OVERHEAD	1000
GUARD AR-VANDALISM	1000
GUARD GP-BOTTOM	375
GUARD GP-BOTTOM–HEAVY-DUTY	376
GUARD GP-CYLINDER–BUCKET	492
GUARD GP-FRONT WINDOW	1001
GUARD GP-OVERHEAD	1003
GUARD GP-SWIVEL	377
GUARD GP-TRACK GUIDE	416
	417
	418
GUARD GP-TRAVEL MOTOR	419
	420
GUARD GP-VANDALISM–CAB	1005
GUARD GP-WINDOW	1006
	1008

H

HANDLE GP-JOYSTICK (RH)	973
HANDRAIL GP	378
HARNESS AS-AUXILIARY (WORK AREA VISUAL SYSTEM, REAR)	307
HARNESS AS-CAB	284
	294
	306
HARNESS AS-CAB (PRIMING PUMP)	302
HARNESS AS-CHASSIS	181
HARNESS AS-CHASSIS (HORN)	1013
HARNESS AS-CONSOLE	228
HARNESS AS-CONSOLE (LH)	316
HARNESS AS-CONSOLE (RH)	224
	226
	318
HARNESS AS-CONTROL	281
	286
	288
	290
	326
	331
HARNESS AS-CONTROL (BODY TILT SENSOR, GPS RECEIVER)	311
HARNESS AS-CONTROL (DISPLAY, GPS RADIO)	311
HARNESS AS-CONTROL (PRODUCT LINK)	314
HARNESS AS-CONTROL (PRODUCT LINK, ANTENNA)	314
HARNESS AS-CONTROL (RELIEF ONE)	290
HARNESS AS-ENGINE	324
HARNESS AS-ENGINE (ELECTRONIC CONTROL MODULE)	322
HARNESS AS-ENGINE (UNIT INJECTOR)	322
	324
HARNESS AS-HEATER & AIR COND	923
	925
	928
	931
HARNESS AS-HEATER & AIR COND (CONTROL PANEL SWITCHES)	923
	925
HARNESS AS-LIGHTING	218
	219
HARNESS AS-LIGHTING (CAB FLOODLIGHT)	215
HARNESS AS-LIGHTING (CAB FLOODLIGHTS, FRONT)	217
HARNESS AS-MONITOR (HIGH MOUNT)	1033
HARNESS AS-MONITOR (LOW MOUNT)	1033
HARNESS AS-MOTOR (CONDENSER FAN)	953
	954
HARNESS AS-OPERATOR CONTROLS	969
HARNESS AS-PLATFORM	332
HARNESS AS-PUMP (FUEL PRIMING)	328
HARNESS AS-PUMP (REFUELING)	337
HARNESS AS-QUICK COUPLER	304
	334
HARNESS AS-RADIO	1015
HARNESS AS-SENSOR	308
HARNESS AS-SENSOR (OVERLOAD WARNING DEVICE)	292

INDEX

Name	Page
HARNESS AS-SOLENOID (1-WAY/2-WAY FLOW)	298
HARNESS AS-SOLENOID (FINE SWING)	327
HARNESS AS-SOLENOID (QUICK COUPLER DISENGAGE)	336
HARNESS AS-SOLENOID (RELIEF TWO)	290
HARNESS AS-SWITCH (REFUELING PUMP, START)	269
HARNESS AS-SWITCH (REFUELING PUMP, STOP)	270
HARNESS AS-SWITCH (SECONDARY SHUTDOWN)	332
HARNESS AS-WIRING	337
HARNESS AS-WIRING (CAB)	304
HARNESS AS-WIRING (LIGHT BAR)	1033
HARNESS AS-WIRING (QUICK COUPLER SWITCH)	275
HARNESS AS-WIRING (SERVICE CONNECTOR)	314
HARNESS AS-WIRING (WORK AREA VISUAL SYSTEM, REAR)	307
HATCH GP-ROOF	1010
	1011
HEAD GP-MOTOR	699
	702
HEAD GP-PUMP	493
HEATER GP-JACKET WATER	207
HOOD & GUARD GP	379
HOOD GP–ACCUGRADE READY	389
HOOD GP–PRECLEANER	387
	388
HOOD GP–RADIATOR	390
HOOD GP-ENGINE	392
	393
HOOD GP-ENGINE–RADIATOR	391
HOOK GP-LIFTING	906
HORN GP-ELECTRIC	1012
	1013
HOSE GP-HYDRAULIC–CONTROL VALVE, BOOM	502
HOSE GP-HYDRAULIC–CONTROL VALVE, STICK	497
HOSE GP-HYDRAULIC–FRONT	498
	499
	500
	501
	503
	504
HOSE-RADIATOR	112
HOUSING & REGULATOR GP–TEMPERATURE REGULATOR	103
HOUSING GP-AIR CONDITIONER–INLET AIR	1014
HOUSING GP-FLYWHEEL	65
HOUSING GP-FRONT	66
HYDRAULIC AR	505

I

IDLER GP-FRONT	421
	422
	423
INDICATOR AS (HYDRAULIC RETURN FILTER)	485
INDICATOR AS-AIR FILTER CHANGE (AIR RESTRICTION)	123
INJECTOR GP-FUEL	130
	131
INSTALLATION AR-COMMUNICATION–PRODUCT LINK 321SR	208
INSTALLATION AR-ENGINE	25
INSTALLATION GP-RADIO	1015
INSTALLATION GP-SECURITY	209

K

KEY (BATTERY DISCONNECT)	264
KEY AS-ELECTRONIC (SECURITY)	209
KIT-RECEPTACLE (2-PIN)	322
KIT-SEAL (GEAR PUMP)	716
KIT-SEAT SUSPENSION–AIR	1018
KIT-SEAT SUSPENSION–MECHANICAL	1017

L

LAMP (24-VOLT, 10-WATT)	942
LAMP AS (24-VOLT, 3-WATT)	224
	226
LAMP GP-FLOOD (24-VOLT)	217
	1006
LAMP GP-FLOOD (24-VOLT) (CANOPY)	1008
LAMP GP-FLOOD–24-VOLT	211
	212
	213
LAMP-HALOGEN (24-VOLT, 70-WATT)	211
	212
	213
	215
	217
	1006
	1008
LIFTING GP-ENGINE	67
LIGHTING GP-CHASSIS	214
LIGHTING GP-FLOOD–2-LAMP, CAB GUARD	217
LIGHTING GP-FLOOD–BOOM	218
LIGHTING GP-FLOOD–CAB	215
LIGHTING GP-FLOOD–MASS BOOM	219
LINES GP-AIR–AFTERCOOLER TO TURBOCHARGER	121
LINES GP-AIR–AIR CLEANER TO TURBOCHARGER	123
LINES GP-AIR CONDITIONER	1019

INDEX

Name	Page
LINES GP-AUXILIARY HYDRAULIC– BOOM, HIGH PRESSURE	506
LINES GP-AUXILIARY HYDRAULIC– BOOM, MEDIUM PRESSURE	508
LINES GP-AUXILIARY HYDRAULIC– HIGH FLOW, STICK	517
LINES GP-AUXILIARY HYDRAULIC– MASS BOOM, HIGH PRESSURE	510
LINES GP-AUXILIARY HYDRAULIC– MASS BOOM, MEDIUM PRESSURE	512
LINES GP-AUXILIARY HYDRAULIC– STICK, HIGH PRESSURE	514
	518
	521
	524
LINES GP-AUXILIARY HYDRAULIC– STICK, MEDIUM PRESSURE	515
	519
	522
	525
LINES GP-BOOM	527
	529
LINES GP-BOOM CYLINDER– BOOM LOWERING CONTROL	534
LINES GP-BOOM CYLINDER–LH	532
LINES GP-BOOM CYLINDER–RH	533
LINES GP-BUCKET CYLINDER	537
	538
	539
LINES GP-COUPLER	547
LINES GP-COUPLER–MASS BOOM	542
LINES GP-COUPLER–QUICK, HOOK	550
LINES GP-COUPLER–REACH BOOM	540
LINES GP-COUPLER–STICK	544
	545
	546
	549
LINES GP-ENGINE OIL	88
LINES GP-ENGINE OIL DRAIN	89
LINES GP-FRONT–BOOM CYLINDER	579
LINES GP-FRONT– COMBINED FUNCTION, PEDAL	552
LINES GP-FRONT– IMPL, SWING, TRAVEL, WORK TOOL	576
LINES GP-FRONT– MEDIUM PRESSURE CIRCUIT	574
LINES GP-FRONT–QUICK COUPLER	581
	594
LINES GP-FRONT– SYSTEM 11, COMBINED FN, MED PR	572
LINES GP-FRONT– SYSTEM 13, COMBINED FUNCTION	590
LINES GP-FRONT– SYSTEM 14, COMBINED FUNCTION	560
LINES GP-FRONT– SYSTEM 16, 1-WAY, 2-PUMP	564
LINES GP-FRONT– SYSTEM 17, COMBINED FUNCTION	568
LINES GP-FRONT– SYSTEM 18, COMBINED FUNCTION	587
LINES GP-FRONT– SYSTEM 3, 1-WAY, 2-PUMP	556
LINES GP-FUEL	132
	134
	137
	141
	145
LINES GP-GREASE–LONG BOOM	859
LINES GP-GREASE–SHORT BOOM	860
LINES GP-HYDRAULIC OIL COOLER	596
LINES GP-MOTOR–REVERSING FAN	599
LINES GP-PILOT– 1-PUMP/2-PUMP, 1-WAY FLOW	644
LINES GP-PILOT–4-WAY PATTERN	629
LINES GP-PILOT– ALT PATTERN CONTROL, 2-WAY	632
LINES GP-PILOT–BOOM FLOAT	635
LINES GP-PILOT–CAB	655
LINES GP-PILOT–CONTROL VALVE	610
	613
LINES GP-PILOT– CONTROL VALVE, TRAVEL VALVE	627
LINES GP-PILOT–HEAVY LIFT	619
	621
LINES GP-PILOT–JOYSTICK, PEDALS	602
	606
LINES GP-PILOT–MAIN HYDRAULIC	657
LINES GP-PILOT–MEDIUM PRESSURE	651
LINES GP-PILOT–ROTATOR	653
LINES GP-PILOT– SYSTEM 11, COMBINED FN, MED PR	638
LINES GP-PILOT–SYSTEM 11, COMBINED FN, MEDIUM PRESSURE	623
LINES GP-PILOT–SYSTEM 14, SYSTEM 17	647
LINES GP-PILOT– THIRD PEDAL, PILOT VALVE	625
LINES GP-PILOT–WORK TOOL, 4-FUNCTION, FLOW CONTROL	659
LINES GP-PUMP–AUXILIARY	663
LINES GP-PUMP–HYDRAULIC OIL COOLER	666
LINES GP-PUMP–MAIN HYDRAULIC	668
LINES GP-RETURN–FILTERS	673
LINES GP-RETURN– LOAD CONTROL, BOOM CYLINDER	676
LINES GP-RETURN–REAR	670
LINES GP-SENSOR– OVERLOAD WARNING DEVICE	679
LINES GP-STICK–BUCKET CYLINDER	680
	681

INDEX

Name	Page
	682
	683
	684
LINES GP-STICK CYLINDER	685
LINES GP-TRAVEL MOTOR– LONG UNDERCARRIAGE	686
LINES GP-TURBOCHARGER OIL	90
	92
LINES GP-TURBOCHARGER WATER	104
LINES GP-WATER	105
LINK AS-TRACK	424
LINK AS-TRACK–GREASE LUBRICATED	425
LINKAGE AR-BUCKET– DB-FAMILY, WITH LIFTING EYE	862
LINKAGE AR-BUCKET– TB1-FAMILY, WITH LIFTING EYE	862
LINKAGE GP-BUCKET	869
LINKAGE GP-BUCKET– DB-FAMILY, ACCUGRADE READY	867
LINKAGE GP-BUCKET– DB-FAMILY, WITH LIFTING EYE	863
LINKAGE GP-BUCKET– TB-FAMILY, WITH LIFTING EYE	865
LITERATURE GP	1022
LOCK GP-QUICK COUPLER–HYDRAULIC	907

M

MANIFOLD GP-CONTROL– PILOT OIL SUPPLY	688
	689
	690
MANIFOLD GP-EXHAUST	124
MIRROR GP-REAR VIEW	1024
	1025
	1026
MIRROR GP-REAR VIEW–FRONT, RH	1023
MODULE GP-COOLING	106
MODULE GP-INTERFACE (KEY)	209
MONITOR & MTG GP-OPERATOR	1027
	1028
MONITOR GP-OPERATOR	1027
	1029
	1030
	1053
MOTOR & MTG GP-HYDRAULIC FAN– REVERSING	691
MOTOR & MTG GP-SWING	692
	693
MOTOR & MTG GP-TRAVEL	694
MOTOR AS (WIPER)	1076
MOTOR GP-PISTON–HYDRAULIC FAN	695
	697
MOTOR GP-SWING	698
	699
	701
	702
MOTOR GP-TRAVEL	704
MOUNTING GP-ANTENNA–ACCUGRADE	1031
MOUNTING GP-ENGINE	68
MOUNTING GP-ENGINE OIL FILTER	93
MOUNTING GP-GRADE CONTROL	220
MOUNTING GP-MAIN CONTROL VALVE	707
MOUNTING GP-MONITOR	1033
MOUNTING GP-PLATFORM	1034
MOUNTING GP-RADIO	1036
MUFFLER GP	125

O

OPERATOR AR	1037
OPTION AR-CAB	4
	5
OPTION AR-CONFIGURATION	5
OPTION AR-CONTROL	5
	6
OPTION AR-COUPLER	6
	7
OPTION AR-GUARD	8
OPTION AR-HYDRAULIC	8
	9
OPTION AR-INSTALLATION	9
OPTION AR-LINKAGE	9
	10
	11
	12
	13
	14
OPTION AR-PUMP	15
OPTION AR-UNDERCARRIAGE	15

P

PADLOCK GP	165
	379
PAN GP-OIL–ENGINE	70
PANEL & MTG GP-CIRCUIT BREAKER	221
PANEL GP-CIRCUIT BREAKER	222
PANEL GP-SWITCH–ENGINE SPEED, START	224
	226
	228
PEDAL AR-AUXILIARY–LH	1037
PEDAL AR-AUXILIARY– THIRD PEDAL, STRAIGHT TRAVEL	1037
PISTON & ROD GP	72
	73
PLATE & FILM GP	1099
PLATE & FILM GP–BIODEGRADABLE OIL	1096
PLATE & FILM GP–U.S.	1097
PLATE-CAUTION (OIL FILL)	704

INDEX

Name	Page
PLATE-IDENTIFICATION (CAT)	889
	890
	896
	897
	898
	899
	900
	901
	902
PLATE-INSTRUCTION (BATTERY)	222
PLATE-SERIAL NUMBER	905
PLATE-WARNING (HIGH PRESSURE CYLINDER)	413
PLATE-WARNING (STRUCTURE MODIFICATION)	1003
PLATFORM GP-OPERATOR	1038
PLUG GP-CONNECTOR– ENGINE HARNESS, PROTECTIVE COVER	230
PLUG GP-CONTROL VALVE	708
	709
	710
	711
PLUG GP-CONTROL VALVE–AUXILIARY	712
PLUG GP-ENGINE	74
	75
PLUG GP-WATER LINES	109
PLUG-O-RING	564
PLUG-OIL DRAIN (OIL PAN) (HYDRAULIC TANK)	734
PLUG-PIPE	109
POWER TRAIN AR	343
PROTECTOR GP-SIDE BAR	908
	909
	910
	911
PUMP & LINES GP-COOLING–AUXILIARY	713
PUMP & MOTOR GP-REFUELING	148
PUMP & MTG GP-AUXILIARY	714
PUMP & MTG GP-MAIN HYDRAULIC	715
PUMP AR-FUEL TRANSFER	149
PUMP GP-ENGINE OIL	95
	96
PUMP GP-FUEL INJECTION	150
	151
	152
PUMP GP-FUEL PRIMING	153
	154
PUMP GP-FUEL PRM & PRIM FILTER– WITH WATER SEPARATOR	155
PUMP GP-FUEL PRM & WATER SEP	156
PUMP GP-GEAR	716
	720
PUMP GP-GEROTOR	96
PUMP GP-MAIN HYDRAULIC	717
PUMP GP-PISTON	718
PUMP GP-PISTON– WITH PILOT GEAR PUMP	720
PUMP GP-REFUELING	157
PUMP GP-UNIT INJECTOR HYD	159
	161
PUMP GP-WATER	110
	111

R

RADIATOR & HYD OIL COOLER GP	112
RADIO GP–AM, FM	1039
RADIO GP-COMMUNICATION– PRODUCT LINK 121SR	1040
RECEIVER GP-SATELLITE– DUAL GNSS, MS990	231
RECEIVER-REFRIGERANT DRYER	1019
REGULATOR AS-VOLTAGE (24-VOLT) (ALTERNATOR)	176
REGULATOR GP-FUEL PRESSURE	163
	164
REGULATOR-PRESSURE (FUEL)	155
REGULATOR-TEMPERATURE (92-DEG C) (COOLANT)	103
REGULATOR-WATER TEMPERATURE (98-DEG C) (COOLANT)	105
RELAY (24-VOLT) (1-WAY/2-WAY SOLENOID)	298
RELAY (24-VOLT) (BOOM FLOAT DISABLE)	308
RELAY (24-VOLT) (BOOM FLOODLIGHT)	294
RELAY (24-VOLT) (CAB FLOODLIGHT)	294
RELAY (24-VOLT) (CHASSIS LIGHT)	294
RELAY (24-VOLT) (ETHER)	294
RELAY (24-VOLT) (HORN)	294
RELAY (24-VOLT) (NEUTRAL START)	294
RELAY (24-VOLT) (PRIMING PUMP)	302
RELAY (24-VOLT) (QUICK COUPLER LOCK ON)	304
RELAY (24-VOLT) (QUICK COUPLER LOCK PRIORITY)	304
RELAY (24-VOLT) (QUICK COUPLER LOCK)	304
RELAY (24-VOLT) (REFUELING PUMP, START)	337
RELAY (24-VOLT) (REFUELING PUMP, STOP)	337
RELAY (24-VOLT) (SMARTBOOM, DOWN)	308
RELAY (24-VOLT) (SMARTBOOM, UP/DOWN)	308
RELAY (24-VOLT) (TRAVEL ALARM)	294
RELAY (BLOWER)	1014
RELAY (COMPRESSOR CLUTCH)	1014
RELAY (CONDENSER)	1014
RELAY (CONDENSER, HIGH)	1014
RELAY AS (UPPER) (WIPER)	1076
ROCKER ARM GP–EXHAUST	76
ROCKER ARM GP–INLET	77
ROLLER AR-TRACK & CARRIER	426
ROLLER GP-TRACK CARRIER	427

INDEX

Name	Page
ROLLER GP-TRACK-SINGLE FLANGE	428
ROTATING GP-MOTOR–HYDRAULIC FAN	724
ROTATING GP-PUMP	725

S

SCREEN AS (HYDRAULIC TANK)	663, 666, 726
SCREEN GP-HYDRAULIC–TANK	726
SCREEN GP-SUN	1041
SEAL GP-CRANKSHAFT	78
SEAL-CRANKSHAFT	78
SEAL-VALVE COVER	32
SEAL-VALVE COVER (VALVE MECHANISM BASE)	32
SEAT & MOUNTING GP–HIGH BACK, TILT	1042, 1043
SEAT & MOUNTING GP–HIGH BACK, WITH HEATER	1044
SEAT BELT GP (RETRACTABLE, 3-IN)	1047
SEAT BELT GP (RETRACTABLE, 76-MM)	4, 5, 936, 1045
SEAT BELT GP–RETRACTABLE, 76-MM	1045
SEAT GP (HIGH BACK, TILT)	1051
SEAT GP (HIGH BACK, WITH HEATER)	1052
SEAT GP–HIGH BACK, TILT	1046, 1047, 1048
SEAT GP–HIGH BACK, WITH HEATER	1049
SEAT GP-SUSPENSION–HIGH BACK, TILT	1050, 1051
SEAT GP-SUSPENSION–HIGH BACK, WITH HEATER	1052
SENDER AS-TEMPERATURE (HYDRAULIC OIL)	734
SENSOR AR-GRADE	231
SENSOR AS-LIQUID LEVEL (WATER SEPARATOR)	234
SENSOR AS-PRESSURE	238
SENSOR AS-PRESSURE (BOOM LOWERING CONTROL)	679
SENSOR AS-PRESSURE (MAIN HYDRAULIC PUMP)	657
SENSOR AS-PRESSURE (NEGATIVE FLOW CONTROL)	590
SENSOR AS-PRESSURE (WORK TOOL)	560
SENSOR AS-TEMPERATURE	251, 252
SENSOR AS-TEMPERATURE (AIR)	1014
SENSOR AS-TEMPERATURE (AMBIENT AIR TEMP)	928
SENSOR AS-TEMPERATURE (AMBIENT AIR)	931
SENSOR AS-TEMPERATURE (COOLANT)	928, 931
SENSOR GP-ENGINE	18, 19, 232, 233
SENSOR GP-FUEL LEVEL	167, 169
SENSOR GP-LIQUID LEVEL	234
SENSOR GP-LIQUID LEVEL (WATER IN FUEL)	1, 235
SENSOR GP-LIQUID LEVEL–WATER IN FUEL	235
SENSOR GP-PRESSURE	236, 237, 238, 239, 240, 241, 242, 243, 244, 245, 246
SENSOR GP-PRESSURE (ATMOSPHERIC AIR)	232
SENSOR GP-PRESSURE (ATMOSPHERIC)	233
SENSOR GP-PRESSURE (ENGINE OIL)	232, 233
SENSOR GP-PRESSURE (FUEL)	134, 137, 141, 145
SENSOR GP-PRESSURE (INJECTION ACTUATION)	232, 233
SENSOR GP-PRESSURE (OUTLET AIR)	233
SENSOR GP-PRESSURE (TURBOCHARGER OUTLET)	232
SENSOR GP-SPEED	18, 19, 247, 248
SENSOR GP-SPEED (ENGINE TIMING)	232, 233
SENSOR GP-SPEED–CRANKSHAFT	249
SENSOR GP-TEMPERATURE	145, 250, 251, 252, 253, 254
SENSOR GP-TEMPERATURE (AIR)	250

INDEX

Name	Page
SENSOR GP-TEMPERATURE (AMBIENT AIR)	180
SENSOR GP-TEMPERATURE (COOLANT)	233
SENSOR GP-TEMPERATURE (FUEL)	134
	137
	141
SENSOR GP-TEMPERATURE (INTAKE AIR TEMPERATURE)	233
SENSOR-ANGLE (AS21)	231
SENSOR-ANGLE (AS300)	231
SENSOR-PRESSURE	245
SENSOR-TEMPERATURE (AMBIENT AIR)	923
	925
SERVICE GP-COMMUNICATION (PRODUCT LINK 300)	200
SERVICE GP-MONITOR	1053
SHEET AS-SOUND SUPPRESSION	395
	396
	397
	398
	399
	400
	401
	402
	403
	404
	405
	406
SIDECUTTER GP	912
	913
	914
SOFTWARE GP-COMMUNICATION (PRODUCT LINK 121SR)	1040
SOFTWARE GP-COMMUNICATION (PRODUCT LINK 300)	200
SOFTWARE GP-MACHINE	200
SOFTWARE GP-MONITOR	200
	1053
SOLENOID AS-STARTING MOTOR (24-VOLT)	262
SPRING AS-GAS	1001
	1008
SPRING GP-RECOIL	429
SPROCKET GP	344
STARTING AID GP–AIR INLET HEATER	255
STARTING AID GP-ETHER	256
STARTING AR-COLD WEATHER	259
STARTING MOTOR GP-ELECTRIC	260
	261
STEP GP	407
STICK AR–AUX HYD, QUICK COUPLER	870
STICK AR-HOE	871
STICK AR-HOE–AUX HYD, QUICK COUPLER	870
STICK AR-HOE–COUPLER	871
STICK AR-HOE–MASS	871
STICK AR-HOE–REACH	871
STICK AR-HOE– REACH, ACCUGRADE READY	872
STICK GP-HOE–ACCUGRADE	886
STICK GP-HOE–ACCUGRADE READY	885
STICK GP-HOE–AUXILIARY, COUPLER	873
	875
	877
	878
STICK GP-HOE–MASS	881
	883
STICK GP-HOE–REACH	879
STORAGE GP-VANDALISM GUARD	408
STRAINER AS-FUEL	157
STRAINER AS-FUEL (FLOAT GAUGE)	167
	169
SUN VISOR	1059
SUPPORT AS-ENCLOSURE	409
	410
SUPPORT AS-ENCLOSURE–AIR CLEANER	411
	412
SUPPORT GP-SEAT	1054
SUSPENSION GP-SEAT	1056
SUSPENSION GP-SEAT (AIR)	1052
SUSPENSION GP-SEAT (MECHANICAL)	1051
SUSPENSION GP-SEAT–AIR	1058
SUSPENSION GP-SEAT–MECHANICAL	1055
	1057
SWITCH (WINDOW LOWER LIMIT)	1064
SWITCH AS-FOOT	969
SWITCH AS-LIMIT (HYDRAULIC LOCKOUT)	267
SWITCH AS-LIQUID LEVEL (ENGINE OIL)	70
SWITCH AS-LIQUID LEVEL (FUEL TANK SHUTOFF)	157
SWITCH AS-LIQUID LEVEL (HYDRAULIC OIL)	734
SWITCH AS-MAGNETIC (24-VOLT) (MAIN RELAY)	294
SWITCH AS-MAGNETIC (24-VOLT) (REFUELING POWER RELAY)	337
SWITCH AS-PRESSURE (ACTION INPUT, MEDIUM PRESSURE)	623
SWITCH AS-PRESSURE (AUXILIARY, COMBINED FUNCTION)	623
SWITCH AS-PRESSURE (BOOM CYLINDER, ROD END)	676
SWITCH AS-PRESSURE (BOOM FLOAT)	635
SWITCH AS-PRESSURE (IMPLEMENT, SWING)	602
	606
SWITCH AS-PRESSURE (PILOT, BOOM UP)	639
SWITCH AS-PRESSURE (REFRIGERANT)	1019
SWITCH AS-PRESSURE (THIRD PEDAL, STRAIGHT TRAVEL)	625
SWITCH AS-PRESSURE (TRAVEL, LH)	602
	606

INDEX

Name	Page
SWITCH AS-PRESSURE (TRAVEL, RH)	602, 606
SWITCH AS-PUSH BUTTON (HORN)	971
SWITCH AS-PUSH BUTTON (MANUAL LOW IDLE)	972
SWITCH AS-ROCKER (BOOM FLOAT)	308
SWITCH AS-ROCKER (FINE SWING)	294
SWITCH AS-ROCKER (HEATED SEAT)	1044
SWITCH AS-ROCKER (LOWER WASHER)	277
SWITCH AS-ROCKER (OVERLOAD WARNING)	308
SWITCH AS-ROCKER (RADIO MUTE)	1015
SWITCH AS-ROCKER (WIPER, LOWER)	277
SWITCH AS-ROLLER (WIPER, LOWER)	1073
SWITCH AS-TOGGLE (AUTO/MANUAL ENG SPEED CONTROL)	318
SWITCH AS-TOGGLE (MANUAL ENGINE SPEED CONTROL)	318
SWITCH AS-TOGGLE (QUICK COUPLER)	275, 304
SWITCH AS-TOGGLE (SECONDARY SHUTDOWN)	332
SWITCH GP-DISCONNECT (BATTERY)	222
SWITCH GP-DISCONNECT–BATTERY	264
SWITCH GP-MAGNETIC	265, 266
SWITCH GP-PEDAL (WORK TOOL)	969
SWITCH GP-POSITION–HYDRAULIC LOCKOUT	267
SWITCH GP-PRESSURE (FUEL FILTER)	134, 137
SWITCH GP-PRESSURE (FUEL)	141, 145
SWITCH GP-PRESSURE–FUEL FILTER	268
SWITCH GP-PUSH BUTTON (REFUELING PUMP, STOP)	270
SWITCH GP-PUSH BUTTON–REFUELING PUMP, START	269
SWITCH GP-PUSH BUTTON–REFUELING PUMP, STOP	270
SWITCH GP-PUSHBUTTON (REFUELING PUMP, START)	269
SWITCH GP-ROTARY	271
SWITCH GP-ROTARY–THROTTLE POSITION	272
SWITCH GP-START–ENGINE, KEY	273
SWITCH GP-TOGGLE	274, 275
SWITCH GP-TOGGLE (QUICK COUPLER)	304
SWITCH GP-TOGGLE–QUICK COUPLER LOCK	276
SWITCH GP-WIPER–LOWER	277
SWIVEL GP	727

T

Name	Page
TANK & FILTER GP-HYDRAULIC	729, 731
TANK & MTG GP-FUEL	165
TANK & MTG GP-HYDRAULIC	733
TANK GP-FUEL	166, 167, 169
TANK GP-HYDRAULIC	734
TIP GP-GENERAL PURPOSE–K-100	915
TIP GP-GENERAL PURPOSE–K-110	916
TIP GP-HEAVY ABRASION–K-110	917
TIP GP-PENETRATION–K-100	918
TIP GP-PENETRATION–K-110	919
TIP GP-PENETRATION PLUS–K-100	920
TIP GP-PENETRATION PLUS–K-110	921
TRACK AR	430
TRACK GP–2-REQUIRED	431, 434, 435, 436, 437, 438, 440, 441, 442, 443
TRACK GP–2-REQUIRED, HEAVY-DUTY	432, 433
TRACK GP–HEAVY-DUTY	439
TURBOCHARGER GP	127, 128

V

Name	Page
VALVE & MTG GP-CONTROL–AUXILIARY	736, 737
VALVE & MTG GP-CONTROL–SYSTEM 16, 1-WAY, 2-PUMP	738
VALVE AR-ALT PATTERN CONTROL–2-WAY	739
VALVE AR-ALT PATTERN CONTROL–4-WAY	739
VALVE AR-SWING–WITHOUT FINE SWING	739
VALVE AS (FUEL SHUTOFF)	167, 169
VALVE GP-CHECK	740
VALVE GP-CHECK (OIL COOLER BYPASS)	670
VALVE GP-CONTROL	829
VALVE GP-CONTROL–AUXILIARY	748, 757
VALVE GP-CONTROL–LH	750
VALVE GP-CONTROL–MEDIUM FLOW	744
VALVE GP-CONTROL–MEDIUM PRESSURE	759
VALVE GP-CONTROL–QUICK COUPLER	746
VALVE GP-CONTROL–REVERSE FLOW FAN	742

INDEX

Name	Page
VALVE GP-CONTROL–RH	760
VALVE GP-CONTROL– WITHOUT COVERS, HOUSINGS	743
	755
	764
VALVE GP-COUNTERBALANCE (TRAVEL)	848
VALVE GP-ETHER STARTING	278
VALVE GP-FLOW CONTROL	772
VALVE GP-FLOW CONTROL & RELIEF	766
VALVE GP-FLOW CONTROL– BOOM FLOAT, PILOT OIL	765
VALVE GP-FUEL BYPASS	171
VALVE GP-FUEL SHUTOFF	172
VALVE GP-LOAD CONTROL– BOOM DRIFT RED, LINE RELIEF	770
VALVE GP-LOAD CONTROL– BOOM LOWER, DRIFT RED, RELIEF	772
VALVE GP-LOAD CONTROL– STICK DRIFT RED, LINE RELIEF	768
VALVE GP-MAIN CONTROL–HEAVY LIFT	774
VALVE GP-MANUAL (AUXILIARY, SHUTOFF)	521
	524
VALVE GP-MANUAL–AUXILIARY, SHUTOFF	777
VALVE GP-MANUAL–BOOM LOWER	776
VALVE GP-PILOT	782
	795
	977
VALVE GP-PILOT (THIRD PEDAL, STRAIGHT TRAVEL)	978
VALVE GP-PILOT– ALT PATTERN CONTROL, 2-WAY	787
VALVE GP-PILOT– CONTROL PATTERN CHANGE	778
VALVE GP-PILOT–JOYSTICK	779
	789
VALVE GP-PILOT–JOYSTICK, LH	784
	793
VALVE GP-PILOT–JOYSTICK, RH	783
	791
VALVE GP-PILOT RELIEF	797
	798
VALVE GP-PILOT RELIEF (HYDRAULIC FILTER)	484
VALVE GP-PILOT–TRAVEL	785
VALVE GP-PRESSURE REDUCING (QUICK COUPLER)	746
VALVE GP-PRESSURE REDUCING– BOOM, SWING PRIORITY	799
VALVE GP-PRIORITY–SWING	801
VALVE GP-PUMP CONTROL– HYDRAULIC FAN	802
VALVE GP-RELIEF	698
	805
	806
	808
	809
	810
	819
	844
VALVE GP-RELIEF (160-BAR (2321-PSI))	759
VALVE GP-RELIEF (80-BAR (1161-PSI))	759
VALVE GP-RELIEF (CROSSOVER)	848
VALVE GP-RELIEF (LINE)	742
	772
VALVE GP-RELIEF–LINE	814
	815
	816
VALVE GP-RELIEF–MAIN, HEAVY LIFT	812
	817
VALVE GP-RELIEF– NEGATIVE FLOW CONTROL	804
	811
VALVE GP-RELIEF–WITH BLOCK	807
VALVE GP-SHUTTLE	820
	821
	822
	823
	828
VALVE GP-SOLENOID	619
	824
	825
	826
	827
	828
	829
	830
	831
	832
	833
	834
	835
	836
	837
VALVE GP-SOLENOID & MANIFOLD	838
VALVE GP-SOLENOID & RELIEF	839
	840
	841
	843
VALVE GP-SOLENOID & RELIEF (1-WAY/2-WAY FLOW)	587
	590
VALVE GP-SOLENOID & RELIEF (WITH BLOCK)	560
	568
VALVE GP-SOLENOID (1-PUMP/2-PUMP, 1-WAY FLOW)	835
VALVE GP-SOLENOID (AUXILIARY, COMBINED FUNCTION) (1-PUMP/2-PUMP, 1-WAY/2-WAY FLW)	639
VALVE GP-SOLENOID (BOOM FLOAT UP)	676

INDEX

Name	Page
VALVE GP-SOLENOID (BOOM FLOAT)	635
VALVE GP-SOLENOID (HEAVY LIFT)	621
VALVE GP-SOLENOID (HYDRAULIC LOCKOUT)	689, 690
VALVE GP-SOLENOID (NEG FLOW CONT, PROPN RED VALVE)	639, 645, 648, 659
VALVE GP-SOLENOID (PRESSURE REDUCING)	651
VALVE GP-SOLENOID (PRESSURE REDUCING) (1-PUMP/2-PUMP, 1-WAY FLOW)	644
VALVE GP-SOLENOID (PUMP CONTROL)	721
VALVE GP-SOLENOID (QUICK COUPLER PIN)	833
VALVE GP-SOLENOID (QUICK COUPLER)	746
VALVE GP-SOLENOID (REVERSING FAN)	599, 832
VALVE GP-SOLENOID (STRAIGHT TRAVEL)	750
VALVE GP-SOLENOID (SWING BRAKE RELEASE)	689, 690
VALVE GP-SOLENOID (TRAVEL SPEED)	689, 690
VALVE GP-SOLENOID (WORK TOOL, 4-FUNCTION)	647, 659, 834
VALVE GP-SWING CUSHION	844, 845
VALVE GP-SWING CUSHION (FINE SWING)	579
VALVE GP-SWING CUSHION–FINE SWING	846
VALVE GP-TRAVEL COUNTERBALANCE	848
VALVE GP-UNLOADING	750
VALVE MECHANISM GP	79, 80
VALVE-SHUTOFF (HEATER, LINES)	1019
VISOR GP-CAB–SUN	1059
VISOR GP-PROTECTION–RAIN	1060
WIRING GP-AUX START RECEPTACLE–JUMP START	279
WIRING GP-AUXILIARY CONTROL	281, 284, 288
WIRING GP-AUXILIARY CONTROL–SYSTEM 16, 1-WAY, 2-PUMP	286
WIRING GP-AUXILIARY CONTROL–WORK TOOL, 4-FUNCTION, FLOW CONTROL	290
WIRING GP-BOOM FLOAT	292
WIRING GP-CAB	294, 298
WIRING GP-CAB–ACCUGRADE READY	306
WIRING GP-CAB–BOOM FLOAT	308
WIRING GP-CAB–COUPLER	304
WIRING GP-CAB–PRIMING PUMP	302
WIRING GP-CAB–REAR VISION CAMERA	307
WIRING GP-CAMERA–WORK AREA VISUAL SYSTEM	310
WIRING GP-CHASSIS–ACCUGRADE READY	311
WIRING GP-COMMUNICATION–PRODUCT LINK 321SR	314
WIRING GP-CONSOLE	317
WIRING GP-CONSOLE–LH	316
WIRING GP-CONSOLE–RH	318
WIRING GP-CONVERTER–12-VOLT, 7-AMPERE	320, 321
WIRING GP-ELECTRONIC CONTROL	322, 324
WIRING GP-FAN–REVERSING	326
WIRING GP-FINE SWING	327
WIRING GP-FUEL SYSTEM–PRIMING PUMP	328
WIRING GP-GRADE CONTROL	329
WIRING GP-HEATER–AIR INLET MANIFOLD	330
WIRING GP-MEDIUM PRESSURE	331
WIRING GP-PLATFORM	332
WIRING GP-QUICK COUPLER	334, 336
WIRING GP-REFUELING PUMP–REFUELING	337

W

WASHER GP-WINDOW	1061
WASHER GP-WINDOW–LOWER	1062
WATER SEP & FUEL PRM PUMP GP	156
WINDOW GP-CAB–FRONT, LOWER	1067, 1068
WINDOW GP-CAB–FRONT, UPPER	1064
WINDOW GP-CAB–SIDE, REAR	1070
WINDOW GP-DOOR	1071
WIPER & WASHER GP-WINDOW–LOWER	1073
WIPER AR-WINDOW–LOWER	1075
WIPER GP-WINDOW–FRONT, UPPER	1076

MACHINE ARRANGEMENT

314-3709 CHASSIS AR

S/N: D3P1-UP; M4T1-UP

PART OF 314-3698, 314-3699 GENERAL AR

SMCS-7000 **i03129246**

NOTE	PART NUMBER	QTY	PART NAME 1 2 3 4 5 6 (PRODUCT LEVEL)	SEE PAGE
Y	*306-8527*	1	BATTERY & WIRING GP	180
Y	*223-3040*	1	BOX & MTG GP-STORAGE	345
Y	*237-8759*	1	COUNTERWEIGHT & MOUNTING GP	349
Y	*262-2595*	1	FENDER & COVER GP	364
Y	*251-2755*	1	FRAME GP-UPPER	366
Y	*237-8753*	1	GUARD GP-BOTTOM	375
Y	*256-1644*	1	HANDRAIL GP	378
Y	*237-8768*	1	HOOD & GUARD GP	379
Y	*267-8071*	1	HORN GP-ELECTRIC	1012
Y	*4I-5409*	1	LIGHTING GP-CHASSIS (FRONT, RH)	214
Y	*235-9021*	1	LINES GP-AIR CONDITIONER	1019
Y	*237-8752*	1	LINES GP-FUEL	134
Y	*7Y-0059*	1	LITERATURE GP	1022
Y	*142-3836*	1	MIRROR GP-REAR VIEW (FRONT, RH)	1023
Y	*245-7811*	1	MOUNTING GP-PLATFORM	1034
Y	*229-9072*	1	OPERATOR AR	1037
Y	*314-3716*	1	PLATE & FILM GP	1099
Y	*233-1124*	1	SENSOR GP-LIQUID LEVEL (WATER IN FUEL)	235
Y	*237-8783*	1	TANK & MTG GP-FUEL	165
Y	*238-1568*	1	WIRING GP-FINE SWING	327

Y-SEPARATE ILLUSTRATION

<END>

267-8840 COLD WEATHER AR

S/N: D3P1-UP; M4T1-UP

PART OF 337-5230, 337-5231 DISTRIBUTION AR

AN ATTACHMENT

SMCS-7000 **i03161460**

NOTE	PART NUMBER	QTY	PART NAME 1 2 3 4 5 6 (PRODUCT LEVEL)	SEE PAGE
Y	*237-7621*	1	HEATER GP-JACKET WATER	207
Y	*314-3587*	1	STARTING AR-COLD WEATHER	259
Y	*251-0621*	1	WIRING GP-AUX START RECEPTACLE (JUMP START)	279

Y-SEPARATE ILLUSTRATION

<END>

MACHINE ARRANGEMENT

290-1780 CONVERSION AR-MACHINE–ACCUGRADE READY

S/N: D3P1-UP; M4T1-UP
PART OF 337-4154 OPTION AR-LINKAGE
AN ATTACHMENT

SMCS-7000 **i02819347**

NOTE	PART NUMBER	QTY	PART NAME 1 2 3 4 5 6 (PRODUCT LEVEL)	SEE PAGE
Y	*273-5358*	1	FLOOR MAT GP (ACCUGRADE)	999
Y	*293-6867*	1	HOOD GP (ACCUGRADE READY)	389
Y	*270-5603*	1	MOUNTING GP-ANTENNA (ACCUGRADE)	1031
Y	*306-8349*	1	WIRING GP-CAB (ACCUGRADE READY)	306
Y	*275-7194*	1	WIRING GP-CHASSIS (ACCUGRADE READY)	311

Y-SEPARATE ILLUSTRATION

<END>

337-5230 DISTRIBUTION AR

S/N: M4T1-UP
AN ATTACHMENT

SMCS-7000 **i03743659**

NOTE	PART NUMBER	QTY	PART NAME 1 2 3 4 5 6 (PRODUCT LEVEL)	SEE PAGE
Y	*267-8840*	1	COLD WEATHER AR	1
Y	*337-4122*	1	OPTION AR-CAB	4
Y	*337-4108*	1	OPTION AR-HYDRAULIC	8
Y	*337-4107*	1	OPTION AR-INSTALLATION	9
Y	*337-4118*	1	OPTION AR-LINKAGE	10
Y	*241-0985*	2	TRACK GP	435

Y-SEPARATE ILLUSTRATION

<END>

337-5231 DISTRIBUTION AR

S/N: M4T1-UP
AN ATTACHMENT

SMCS-7000 **i03732351**

NOTE	PART NUMBER	QTY	PART NAME 1 2 3 4 5 6 (PRODUCT LEVEL)	SEE PAGE
Y	*267-8840*	1	COLD WEATHER AR	1
Y	*269-1167*	1	GUARD AR-BOTTOM (HEAVY-DUTY)	374
Y	*215-6662*	1	GUARD GP-WINDOW	1006
Y	*337-4125*	1	OPTION AR-CAB	5
Y	*337-4109*	1	OPTION AR-HYDRAULIC	8
Y	*337-4107*	1	OPTION AR-INSTALLATION	9
Y	*337-4119*	1	OPTION AR-LINKAGE	10
Y	*337-4134*	1	OPTION AR-PUMP	15
Y	*337-4121*	1	OPTION AR-UNDERCARRIAGE	15

Y-SEPARATE ILLUSTRATION

<END>

MACHINE ARRANGEMENT

345-2289 DISTRIBUTION AR

S/N: M4T1-UP

AN ATTACHMENT

SMCS-7000 **i03747051**

NOTE	PART NUMBER	QTY	PART NAME 1 2 3 4 5 6 (PRODUCT LEVEL)	SEE PAGE
Y	*275-3719*	1	AIR CLEANER AR (PRECLEANER)	116
Y	*345-2288*	1	CAB AR	936
Y	*270-5688*	1	CONTROL & MTG GP-JOYSTICK (3-BUTTON, TRIGGER SWITCH)	964
Y	*231-1768*	1	INSTALLATION GP-RADIO	1015
Y	*345-2281*	1	OPTION AR-CONFIGURATION	5
Y	*340-9478*	1	OPTION AR-LINKAGE	12
Y	*347-2343*	2	TRACK GP	440
Y-SEPARATE ILLUSTRATION				

<END>

345-2290 DISTRIBUTION AR

S/N: M4T1-UP

AN ATTACHMENT

SMCS-7000 **i03730681**

NOTE	PART NUMBER	QTY	PART NAME 1 2 3 4 5 6 (PRODUCT LEVEL)	SEE PAGE
Y	*275-3719*	1	AIR CLEANER AR (PRECLEANER)	116
Y	*345-2288*	1	CAB AR	936
Y	*231-1768*	1	INSTALLATION GP-RADIO	1015
Y	*345-2281*	1	OPTION AR-CONFIGURATION	5
Y	*340-9469*	1	OPTION AR-CONTROL	6
Y	*345-2282*	1	OPTION AR-LINKAGE	13
Y	*216-4027*	2	TRACK GP	434
Y-SEPARATE ILLUSTRATION				

<END>

314-3698 GENERAL AR

S/N: D3P1-UP

SMCS-7000 **i03134106**

NOTE	PART NUMBER	QTY	PART NAME 1 2 3 4 5 6 (PRODUCT LEVEL)	SEE PAGE
Y	*314-3709*	1	CHASSIS AR	1
Y	*274-7465*	1	CONSOLE GP-OPERATOR (LH)	962
Y	*274-7466*	1	CONSOLE GP-OPERATOR (RH)	962
Y	*297-4426*	1	ELECTRONICS GP-MACHINE (HIGH POWER)	200
Y	*221-8861*	1	ELECTRONICS GP-MONITOR	200
Y	**262-1359**	1	ENGINE AR	16
Y	*229-1898*	1	FRAME AR-UNDERCARRIAGE	414
Y	*259-7766*	1	HYDRAULIC AR	505
Y	*279-7825*	1	INSTALLATION AR-ENGINE	25
Y	*191-2576*	1	POWER TRAIN AR	343
	185-8284	1	COVER	
Y-SEPARATE ILLUSTRATION				

<END>

MACHINE ARRANGEMENT

314-3699 GENERAL AR

S/N: M4T1-UP

SMCS-7000 **i03134120**

NOTE	PART NUMBER	QTY	PART NAME 1 2 3 4 5 6 (PRODUCT LEVEL)	SEE PAGE
Y	*314-3709*	1	CHASSIS AR	1
Y	*274-7465*	1	CONSOLE GP-OPERATOR (LH)	962
Y	*274-7466*	1	CONSOLE GP-OPERATOR (RH)	962
Y	*297-4426*	1	ELECTRONICS GP-MACHINE (HIGH POWER)	200
Y	*221-8861*	1	ELECTRONICS GP-MONITOR	200
Y	**266-6263**	1	ENGINE AR	17
Y	*229-1898*	1	FRAME AR-UNDERCARRIAGE	414
Y	*259-7766*	1	HYDRAULIC AR	505
Y	*279-7825*	1	INSTALLATION AR-ENGINE	25
Y	*191-2576*	1	POWER TRAIN AR	343
	185-8284	1	COVER	

Y-SEPARATE ILLUSTRATION

<END>

337-4122 OPTION AR-CAB

S/N: D3P1-UP; M4T1-UP
PART OF 337-5230 DISTRIBUTION AR
AN ATTACHMENT

SMCS-7000 **i03733300**

NOTE	PART NUMBER	QTY	PART NAME 1 2 3 4 5 6 (PRODUCT LEVEL)	SEE PAGE
Y	*229-9079*	1	AIR CONDITIONER AR	927
Y	*229-9098*	1	CAB GP	937
Y	**234-6500**	1	COVER GP-STORAGE (CAB, REAR)	991
Y	*251-0538*	1	RADIO GP (AM, FM)	1039
Y	*327-6501*	1	SEAT & MOUNTING GP (HIGH BACK, TILT)	1043
Y	*305-0466*	1	SEAT BELT GP (RETRACTABLE, 76-MM)	1045
Y	*229-9070*	1	WASHER GP-WINDOW	1061
Y	*251-0482*	1	WIRING GP-CONVERTER (12-VOLT, 7-AMPERE)	320

Y-SEPARATE ILLUSTRATION

<END>

MACHINE ARRANGEMENT

337-4125 OPTION AR-CAB

S/N: D3P1-UP; M4T1-UP
PART OF 337-5231 DISTRIBUTION AR
AN ATTACHMENT

SMCS-7000 **i03733580**

NOTE	PART NUMBER	QTY	PART NAME 1 2 3 4 5 6 (PRODUCT LEVEL)	SEE PAGE
Y	*229-9079*	1	AIR CONDITIONER AR	927
Y	*229-9098*	1	CAB GP	937
Y	**234-6500**	1	COVER GP-STORAGE (CAB, REAR)	991
Y	*251-0538*	1	RADIO GP (AM, FM)	1039
Y	*245-7881*	1	SCREEN GP-SUN	1041
Y	*327-6503*	1	SEAT & MOUNTING GP (HIGH BACK, WITH HEATER)	1044
Y	*305-0466*	1	SEAT BELT GP (RETRACTABLE, 76-MM)	1045
Y	*229-9086*	1	WIPER AR-WINDOW (LOWER)	1075
Y	*251-0485*	1	WIRING GP-CONVERTER (12-VOLT, 7-AMPERE)	321

Y-SEPARATE ILLUSTRATION

<END>

345-2281 OPTION AR-CONFIGURATION

S/N: M4T1-UP
PART OF 345-2289, 345-2290 DISTRIBUTION AR
AN ATTACHMENT

SMCS-7000 **i03727103**

NOTE	PART NUMBER	QTY	PART NAME 1 2 3 4 5 6 (PRODUCT LEVEL)	SEE PAGE
Y	*237-8754*	1	GUARD GP-BOTTOM (HEAVY-DUTY)	376
Y	*134-8887*	1	GUARD GP-SWIVEL	377
Y	*241-7335*	1	GUARD GP-TRAVEL MOTOR (HEAVY-DUTY)	420
Y	*163-6772*	1	LIGHTING GP-FLOOD (CAB)	215
Y	*247-7500*	1	VALVE AR-SWING (WITHOUT FINE SWING)	739

Y-SEPARATE ILLUSTRATION

<END>

337-4126 OPTION AR-CONTROL

S/N: D3P1-UP; M4T1-UP
AN ATTACHMENT

SMCS-7000 **i03733220**

NOTE	PART NUMBER	QTY	PART NAME 1 2 3 4 5 6 (PRODUCT LEVEL)	SEE PAGE
Y	*310-0078*	1	CONTROL & MTG GP-JOYSTICK	967
Y	*240-5073*	1	FLOOR MAT	997
Y	*259-7176*	1	PEDAL AR-AUXILIARY (THIRD PEDAL, STRAIGHT TRAVEL)	1037
Y	*259-7422*	1	VALVE AR-ALT PATTERN CONTROL (2-WAY)	739

Y-SEPARATE ILLUSTRATION

<END>

MACHINE ARRANGEMENT

340-9468 OPTION AR-CONTROL

S/N: M4T1-UP
AN ATTACHMENT

SMCS-7000 **i03732073**

NOTE	PART NUMBER	QTY	PART NAME 1 2 3 4 5 6 (PRODUCT LEVEL)	SEE PAGE
Y	*270-5687*	1	CONTROL & MTG GP-JOYSTICK (JOYSTICK, 2-BN, SLIDE, TRIG SW)	964
Y	*255-5822*	1	CONTROL AR-AUXILIARY (MEDIUM PRESSURE)	453
Y	*336-3339*	1	CONTROL AR-AUXILIARY (SYSTEM 18, COMBINED FUNCTION)	455
Y	*260-7863*	1	LINES GP-PILOT (ROTATOR)	653
Y-SEPARATE ILLUSTRATION				

<END>

340-9469 OPTION AR-CONTROL

S/N: M4T1-UP
PART OF 345-2290 DISTRIBUTION AR
AN ATTACHMENT

SMCS-7000 **i03727081**

NOTE	PART NUMBER	QTY	PART NAME 1 2 3 4 5 6 (PRODUCT LEVEL)	SEE PAGE
Y	*270-5688*	1	CONTROL & MTG GP-JOYSTICK (3-BUTTON, TRIGGER SWITCH)	964
Y	*255-5774*	1	CONTROL AR-AUXILIARY (SYSTEM 16, 1-WAY, 2-PUMP)	452
Y	*260-7863*	1	LINES GP-PILOT (ROTATOR)	653
Y	*255-5823*	1	PUMP & LINES GP-COOLING (AUXILIARY)	713
Y-SEPARATE ILLUSTRATION				

<END>

337-4113 OPTION AR-COUPLER

S/N: D3P1-UP; M4T1-UP
AN ATTACHMENT

SMCS-7000 **i03744110**

NOTE	PART NUMBER	QTY	PART NAME 1 2 3 4 5 6 (PRODUCT LEVEL)	SEE PAGE
Y	*268-6821*	1	CONTROL AR-COUPLER (UNIVERSAL QUICK COUPLER)	456
Y	*275-7752*	1	COUPLER AR-QUICK (WITH HOOK)	904
Y	*237-3198*	1	LINES GP-COUPLER (MASS BOOM)	542
Y	*253-6609*	1	LINES GP-COUPLER (STICK)	549
Y-SEPARATE ILLUSTRATION				

<END>

MACHINE ARRANGEMENT

337-4114 OPTION AR-COUPLER

S/N: D3P1-UP; M4T1-UP

AN ATTACHMENT

SMCS-7000 **i03744149**

NOTE	PART NUMBER	QTY	PART NAME 1 2 3 4 5 6 (PRODUCT LEVEL)	SEE PAGE
Y	*268-6821*	1	CONTROL AR-COUPLER (UNIVERSAL QUICK COUPLER)	456
Y	*275-7752*	1	COUPLER AR-QUICK (WITH HOOK)	904
Y	*253-6501*	1	LINES GP-COUPLER (STICK)	545
Y	*237-3198*	1	LINES GP-COUPLER (MASS BOOM)	542

Y-SEPARATE ILLUSTRATION

<END>

340-9471 OPTION AR-COUPLER

S/N: M4T1-UP

AN ATTACHMENT

SMCS-7000 **i03732340**

NOTE	PART NUMBER	QTY	PART NAME 1 2 3 4 5 6 (PRODUCT LEVEL)	SEE PAGE
Y	*268-6821*	1	CONTROL AR-COUPLER	456
Y	*237-3194*	1	LINES GP-COUPLER (REACH BOOM)	540
Y	*253-6601*	1	LINES GP-COUPLER (STICK)	547

Y-SEPARATE ILLUSTRATION

<END>

347-8786 OPTION AR-COUPLER

S/N: D3P1-UP

AN ATTACHMENT

SMCS-7000 **i03680221**

NOTE	PART NUMBER	QTY	PART NAME 1 2 3 4 5 6 (PRODUCT LEVEL)	SEE PAGE
Y	*344-4212*	1	CONTROL AR-COUPLER	456
Y	*237-3194*	1	LINES GP-COUPLER (REACH BOOM)	540
Y	*253-6596*	1	LINES GP-COUPLER (STICK)	546

Y-SEPARATE ILLUSTRATION

<END>

347-8787 OPTION AR-COUPLER

S/N: D3P1-UP

AN ATTACHMENT

SMCS-7000 **i03679481**

NOTE	PART NUMBER	QTY	PART NAME 1 2 3 4 5 6 (PRODUCT LEVEL)	SEE PAGE
Y	*344-4212*	1	CONTROL AR-COUPLER	456
Y	*237-3194*	1	LINES GP-COUPLER (REACH BOOM)	540
Y	*253-6495*	1	LINES GP-COUPLER (STICK)	544

Y-SEPARATE ILLUSTRATION

<END>

MACHINE ARRANGEMENT

337-4138 OPTION AR-GUARD

S/N: D3P1-UP; M4T1-UP
AN ATTACHMENT

SMCS-7000 **i03733120**

NOTE	PART NUMBER	QTY	PART NAME 1 2 3 4 5 6 (PRODUCT LEVEL)	SEE PAGE
Y	*267-0118*	1	BUMPER GP (SIDE)	348
Y	*269-1167*	1	GUARD AR-BOTTOM	374
Y-SEPARATE ILLUSTRATION				

<END>

337-9027 OPTION AR-GUARD

S/N: D3P1-UP
AN ATTACHMENT

SMCS-7000 **i03680042**

NOTE	PART NUMBER	QTY	PART NAME 1 2 3 4 5 6 (PRODUCT LEVEL)	SEE PAGE
Y	*267-0118*	1	BUMPER GP (SIDE)	348
Y	*269-1167*	1	GUARD AR-BOTTOM	374
Y	*240-3740*	1	GUARD AR-VANDALISM	1000
Y-SEPARATE ILLUSTRATION				

<END>

337-4108 OPTION AR-HYDRAULIC

S/N: D3P1-UP; M4T1-UP
PART OF 337-5230 DISTRIBUTION AR
AN ATTACHMENT

SMCS-7000 **i03485621**

NOTE	PART NUMBER	QTY	PART NAME 1 2 3 4 5 6 (PRODUCT LEVEL)	SEE PAGE
Y	*310-0078*	1	CONTROL & MTG GP-JOYSTICK	967
Y	**240-5071**	1	FLOOR MAT	996
Y-SEPARATE ILLUSTRATION				

<END>

337-4109 OPTION AR-HYDRAULIC

S/N: D3P1-UP; M4T1-UP
PART OF 337-5231 DISTRIBUTION AR
AN ATTACHMENT

SMCS-7000 **i03732523**

NOTE	PART NUMBER	QTY	PART NAME 1 2 3 4 5 6 (PRODUCT LEVEL)	SEE PAGE
Y	*310-0078*	1	CONTROL & MTG GP-JOYSTICK	967
Y	*272-9663*	1	CONTROL AR-AUXILIARY (SYSTEM 3, 1-WAY, 2-PUMP)	454
	240-5071	1	FLOOR MAT	
Y-SEPARATE ILLUSTRATION				

<END>

MACHINE ARRANGEMENT

337-4112 OPTION AR-HYDRAULIC

S/N: D3P1-UP; M4T1-UP
AN ATTACHMENT

SMCS-7000 **i03744076**

NOTE	PART NUMBER	QTY	PART NAME 1 2 3 4 5 6 (PRODUCT LEVEL)	SEE PAGE
Y	*310-0078*	1	CONTROL & MTG GP-JOYSTICK	967
Y	*272-9663*	1	CONTROL AR-AUXILIARY (SYSTEM 3, 1-WAY, 2-PUMP)	454
Y	*240-5073*	1	FLOOR MAT	997
Y	*259-7176*	1	PEDAL AR-AUXILIARY (THIRD PEDAL, STRAIGHT TRAVEL)	1037
Y	*259-7422*	1	VALVE AR-ALT PATTERN CONTROL (2-WAY)	739

Y-SEPARATE ILLUSTRATION

<END>

337-4152 OPTION AR-HYDRAULIC

S/N: D3P1-UP; M4T1-UP
AN ATTACHMENT

SMCS-7000 **i03732711**

NOTE	PART NUMBER	QTY	PART NAME 1 2 3 4 5 6 (PRODUCT LEVEL)	SEE PAGE
Y	*310-0078*	1	CONTROL & MTG GP-JOYSTICK	967
Y	*255-5770*	1	CONTROL AR-AUXILIARY (SYSTEM 11, COMBINED FN, MED PR)	452
Y	*245-7794*	1	FLOOR MAT	998

Y-SEPARATE ILLUSTRATION

<END>

337-4107 OPTION AR-INSTALLATION

S/N: D3P1-UP; M4T1-UP
PART OF 337-5230, 337-5231 DISTRIBUTION AR
AN ATTACHMENT

SMCS-7000 **i03732440**

NOTE	PART NUMBER	QTY	PART NAME 1 2 3 4 5 6 (PRODUCT LEVEL)	SEE PAGE
Y	*231-1771*	1	ALARM GP-TRAVEL (BACKUP)	174
Y	*314-3533*	1	INSTALLATION AR-COMMUNICATION (PRODUCT LINK 321SR)	208

Y-SEPARATE ILLUSTRATION

<END>

337-4116 OPTION AR-LINKAGE

S/N: D3P1-UP; M4T1-UP
AN ATTACHMENT

SMCS-7000 **i03744163**

NOTE	PART NUMBER	QTY	PART NAME 1 2 3 4 5 6 (PRODUCT LEVEL)	SEE PAGE
Y	*302-7339*	1	BOOM AR-1 PIECE LONG (HEAVY-DUTY, REACH)	849
Y	*290-1825*	1	LINKAGE AR-BUCKET (DB-FAMILY, WITH LIFTING EYE)	862
Y	*290-1820*	1	STICK AR-HOE (DB-FAMILY)	870

Y-SEPARATE ILLUSTRATION

<END>

MACHINE ARRANGEMENT

337-4117 OPTION AR-LINKAGE

S/N: D3P1-UP; M4T1-UP
AN ATTACHMENT

SMCS-7000 **i03744173**

NOTE	PART NUMBER	QTY	PART NAME 1 2 3 4 5 6 (PRODUCT LEVEL)	SEE PAGE
Y	*290-1818*	1	BOOM AR-1 PIECE SHORT	850
Y	*240-3776*	1	FILM GP (MASS EXCAVATOR)	1078
Y	*290-1826*	1	LINKAGE AR-BUCKET (TB1-FAMILY, WITH LIFTING EYE)	862
Y	*270-0090*	1	STICK AR (MASS, REINFORCED)	870
Y-SEPARATE ILLUSTRATION				

<END>

337-4118 OPTION AR-LINKAGE

S/N: D3P1-UP; M4T1-UP
PART OF 337-5230 DISTRIBUTION AR
AN ATTACHMENT

SMCS-7000 **i03744053**

NOTE	PART NUMBER	QTY	PART NAME 1 2 3 4 5 6 (PRODUCT LEVEL)	SEE PAGE
Y	*290-1818*	1	BOOM AR-1 PIECE SHORT	850
Y	*240-3776*	1	FILM GP (MASS EXCAVATOR)	1078
Y	*290-1826*	1	LINKAGE AR-BUCKET (TB1-FAMILY, WITH LIFTING EYE)	862
Y	*272-2896*	1	STICK AR (MASS, REINFORCED) (AUX HYD, QUICK COUPLER)	870
Y-SEPARATE ILLUSTRATION				

<END>

337-4119 OPTION AR-LINKAGE

S/N: D3P1-UP; M4T1-UP
PART OF 337-5231 DISTRIBUTION AR
AN ATTACHMENT

SMCS-7000 **i03744000**

NOTE	PART NUMBER	QTY	PART NAME 1 2 3 4 5 6 (PRODUCT LEVEL)	SEE PAGE
Y	*290-1818*	1	BOOM AR-1 PIECE SHORT	850
Y	*240-3776*	1	FILM GP (MASS EXCAVATOR)	1078
Y	*237-3195*	1	LINES GP-AUXILIARY HYDRAULIC (MASS BOOM, HIGH PRESSURE)	510
Y	*253-6607*	1	LINES GP-AUXILIARY HYDRAULIC (STICK, HIGH PRESSURE)	521
Y	*290-1826*	1	LINKAGE AR-BUCKET (TB1-FAMILY, WITH LIFTING EYE)	862
Y	*270-0090*	1	STICK AR (MASS, REINFORCED) (AUX HYD, QUICK COUPLER)	870
Y-SEPARATE ILLUSTRATION				

<END>

MACHINE ARRANGEMENT

337-4120 OPTION AR-LINKAGE

S/N: D3P1-UP; M4T1-UP

AN ATTACHMENT

SMCS-7000 **i03744186**

NOTE	PART NUMBER	QTY	PART NAME 1 2 3 4 5 6 (PRODUCT LEVEL)	SEE PAGE
Y	*290-1818*	1	BOOM AR-1 PIECE SHORT	850
Y	*240-3776*	1	FILM GP (MASS EXCAVATOR)	1078
Y	*237-3195*	1	LINES GP-AUXILIARY HYDRAULIC (MASS BOOM, HIGH PRESSURE)	510
Y	*253-6603*	1	LINES GP-AUXILIARY HYDRAULIC (STICK, HIGH PRESSURE)	518
Y	*290-1826*	1	LINKAGE AR-BUCKET (TB1-FAMILY, WITH LIFTING EYE)	862
Y	*272-2896*	1	STICK AR (MASS, REINFORCED)	870
Y-SEPARATE ILLUSTRATION				

<END>

337-4153 OPTION AR-LINKAGE

S/N: D3P1-UP; M4T1-UP

AN ATTACHMENT

SMCS-7000 **i03732702**

NOTE	PART NUMBER	QTY	PART NAME 1 2 3 4 5 6 (PRODUCT LEVEL)	SEE PAGE
Y	*302-7339*	1	BOOM AR-1 PIECE LONG (HEAVY-DUTY, REACH)	849
Y	*290-1825*	1	LINKAGE AR-BUCKET (DB-FAMILY, WITH LIFTING EYE)	862
Y	*290-1819*	1	STICK AR-HOE (REACH)	870
Y-SEPARATE ILLUSTRATION				

<END>

337-4154 OPTION AR-LINKAGE

S/N: D3P1-UP; M4T1-UP

AN ATTACHMENT

SMCS-7000 **i03732620**

NOTE	PART NUMBER	QTY	PART NAME 1 2 3 4 5 6 (PRODUCT LEVEL)	SEE PAGE
Y	*314-3615*	1	BOOM AR-1 PIECE LONG (ACCUGRADE READY)	850
Y	*290-1780*	1	CONVERSION AR-MACHINE (ACCUGRADE READY)	2
Y	*278-3932*	1	COUNTERWEIGHT & MOUNTING GP	350
Y	*290-1830*	1	LINKAGE AR-BUCKET (DB-FAMILY, WITH LIFTING EYE)	862
Y	*290-1829*	1	STICK AR-HOE (REACH, ACCUGRADE READY)	872
Y-SEPARATE ILLUSTRATION				

<END>

MACHINE ARRANGEMENT

340-9478 OPTION AR-LINKAGE

S/N: M4T1-UP
PART OF 345-2289 DISTRIBUTION AR
AN ATTACHMENT

SMCS-7000 **i03728920**

NOTE	PART NUMBER	QTY	PART NAME 1 2 3 4 5 6 (PRODUCT LEVEL)	SEE PAGE
Y	*290-1818*	1	BOOM AR-1 PIECE SHORT	850
Y	*290-1826*	1	LINKAGE AR-BUCKET (TB1-FAMILY, WITH LIFTING EYE)	862
Y	*290-1823*	1	STICK AR-HOE (COUPLER)	871
Y-SEPARATE ILLUSTRATION				

<END>

340-9479 OPTION AR-LINKAGE

S/N: M4T1-UP
AN ATTACHMENT

SMCS-7000 **i03731970**

NOTE	PART NUMBER	QTY	PART NAME 1 2 3 4 5 6 (PRODUCT LEVEL)	SEE PAGE
Y	*290-1818*	1	BOOM AR-1 PIECE SHORT	850
Y	*237-3195*	1	LINES GP-AUXILIARY HYDRAULIC (MASS BOOM, HIGH PRESSURE)	510
Y	*253-6603*	1	LINES GP-AUXILIARY HYDRAULIC (STICK, HIGH PRESSURE)	518
Y	*290-1826*	1	LINKAGE AR-BUCKET (TB1-FAMILY, WITH LIFTING EYE)	862
Y	*290-1823*	1	STICK AR-HOE (COUPLER)	871
Y-SEPARATE ILLUSTRATION				

<END>

340-9480 OPTION AR-LINKAGE

S/N: M4T1-UP
AN ATTACHMENT

SMCS-7000 **i03731920**

NOTE	PART NUMBER	QTY	PART NAME 1 2 3 4 5 6 (PRODUCT LEVEL)	SEE PAGE
Y	*290-1818*	1	BOOM AR-1 PIECE SHORT	850
Y	*290-1826*	1	LINKAGE AR-BUCKET (TB1-FAMILY, WITH LIFTING EYE)	862
Y	*290-1824*	1	STICK AR-HOE (MASS)	871
Y-SEPARATE ILLUSTRATION				

<END>

MACHINE ARRANGEMENT

340-9481 OPTION AR-LINKAGE

S/N: M4T1-UP
AN ATTACHMENT

SMCS-7000 **i03731723**

NOTE	PART NUMBER	QTY	PART NAME 1 2 3 4 5 6 (PRODUCT LEVEL)	SEE PAGE
Y	*290-1818*	1	BOOM AR-1 PIECE SHORT	850
Y	*237-3195*	1	LINES GP-AUXILIARY HYDRAULIC (MASS BOOM, HIGH PRESSURE)	510
Y	*253-6607*	1	LINES GP-AUXILIARY HYDRAULIC (STICK, HIGH PRESSURE)	521
Y	*290-1826*	1	LINKAGE AR-BUCKET (TB1-FAMILY, WITH LIFTING EYE)	862
Y	*290-1824*	1	STICK AR-HOE (MASS)	871
Y-SEPARATE ILLUSTRATION				

<END>

345-2282 OPTION AR-LINKAGE

S/N: M4T1-UP
PART OF 345-2290 DISTRIBUTION AR
AN ATTACHMENT

SMCS-7000 **i03727101**

NOTE	PART NUMBER	QTY	PART NAME 1 2 3 4 5 6 (PRODUCT LEVEL)	SEE PAGE
Y	*302-7339*	1	BOOM AR-1 PIECE LONG (HEAVY-DUTY, REACH)	849
Y	*237-3191*	1	LINES GP-AUXILIARY HYDRAULIC (BOOM, HIGH PRESSURE)	506
Y	*253-6611*	1	LINES GP-AUXILIARY HYDRAULIC (STICK, HIGH PRESSURE)	524
Y	*290-1825*	1	LINKAGE AR-BUCKET (DB-FAMILY, WITH LIFTING EYE)	862
Y	*290-1820*	1	STICK AR-HOE (DB-FAMILY)	870
Y-SEPARATE ILLUSTRATION				

<END>

345-2283 OPTION AR-LINKAGE

S/N: M4T1-UP
AN ATTACHMENT

SMCS-7000 **i03730922**

NOTE	PART NUMBER	QTY	PART NAME 1 2 3 4 5 6 (PRODUCT LEVEL)	SEE PAGE
Y	*302-7339*	1	BOOM AR-1 PIECE LONG (HEAVY-DUTY, REACH)	849
Y	*237-3191*	1	LINES GP-AUXILIARY HYDRAULIC (BOOM, HIGH PRESSURE)	506
Y	*237-3192*	1	LINES GP-AUXILIARY HYDRAULIC (BOOM, MEDIUM PRESSURE)	508
Y	*253-6611*	1	LINES GP-AUXILIARY HYDRAULIC (STICK, HIGH PRESSURE)	524
Y	*262-3147*	1	LINES GP-AUXILIARY HYDRAULIC (STICK, MEDIUM PRESSURE)	525
Y	*290-1825*	1	LINKAGE AR-BUCKET (DB-FAMILY, WITH LIFTING EYE)	862
Y	*290-1820*	1	STICK AR-HOE (DB-FAMILY)	870
Y-SEPARATE ILLUSTRATION				

<END>

MACHINE ARRANGEMENT

345-2284 OPTION AR-LINKAGE

S/N: M4T1-UP

AN ATTACHMENT

SMCS-7000 **i03730921**

NOTE	PART NUMBER	QTY	PART NAME 1 2 3 4 5 6 (PRODUCT LEVEL)	SEE PAGE
Y	*302-7339*	1	BOOM AR-1 PIECE LONG (HEAVY-DUTY, REACH)	849
Y	*290-1825*	1	LINKAGE AR-BUCKET (DB-FAMILY, WITH LIFTING EYE)	862
Y	*290-1821*	1	STICK AR-HOE (REACH)	871

Y-SEPARATE ILLUSTRATION

<END>

345-2285 OPTION AR-LINKAGE

S/N: M4T1-UP

AN ATTACHMENT

SMCS-7000 **i03729925**

NOTE	PART NUMBER	QTY	PART NAME 1 2 3 4 5 6 (PRODUCT LEVEL)	SEE PAGE
Y	*302-7339*	1	BOOM AR-1 PIECE LONG (HEAVY-DUTY, REACH)	849
Y	*237-3191*	1	LINES GP-AUXILIARY HYDRAULIC (BOOM, HIGH PRESSURE)	506
Y	*253-6599*	1	LINES GP-AUXILIARY HYDRAULIC (HIGH FLOW, STICK)	517
Y	*290-1825*	1	LINKAGE AR-BUCKET (DB-FAMILY, WITH LIFTING EYE)	862
Y	*290-1821*	1	STICK AR-HOE (REACH)	871

Y-SEPARATE ILLUSTRATION

<END>

345-2286 OPTION AR-LINKAGE

S/N: M4T1-UP

AN ATTACHMENT

SMCS-7000 **i03729885**

NOTE	PART NUMBER	QTY	PART NAME 1 2 3 4 5 6 (PRODUCT LEVEL)	SEE PAGE
Y	*302-7339*	1	BOOM AR-1 PIECE LONG (HEAVY-DUTY, REACH)	849
Y	*237-3191*	1	LINES GP-AUXILIARY HYDRAULIC (BOOM, HIGH PRESSURE)	506
Y	*253-6594*	1	LINES GP-AUXILIARY HYDRAULIC (STICK, HIGH PRESSURE)	514
Y	*290-1825*	1	LINKAGE AR-BUCKET (DB-FAMILY, WITH LIFTING EYE)	862
Y	*290-1819*	1	STICK AR-HOE (REACH)	870

Y-SEPARATE ILLUSTRATION

<END>

MACHINE ARRANGEMENT

337-4134 OPTION AR-PUMP

S/N: D3P1-UP; M4T1-UP
PART OF 337-5231 DISTRIBUTION AR
AN ATTACHMENT

SMCS-7000 **i03733162**

NOTE	PART NUMBER	QTY	PART NAME 1 2 3 4 5 6 (PRODUCT LEVEL)	SEE PAGE
Y	*240-3769*	1	AIR CLEANER AR (PRECLEANER)	116
Y	*247-7501*	1	PUMP GP-FUEL PRIMING	154
Y-SEPARATE ILLUSTRATION				

<END>

337-4121 OPTION AR-UNDERCARRIAGE

S/N: D3P1-UP; M4T1-UP
PART OF 337-5231 DISTRIBUTION AR
AN ATTACHMENT

SMCS-7000 **i03733661**

NOTE	PART NUMBER	QTY	PART NAME 1 2 3 4 5 6 (PRODUCT LEVEL)	SEE PAGE
Y	*189-3860*	1	GUARD GP-TRACK GUIDE (FULL LENGTH)	416
Y	*260-9452*	2	TRACK GP	437
Y-SEPARATE ILLUSTRATION				

<END>

ENGINE ARRANGEMENT

262-1359 ENGINE AR

S/N: D3P1-UP

PART OF 314-3698 GENERAL AR

SMCS-1000 **i03600580**

NOTE	PART NUMBER	QTY	PART NAME 1 2 3 4 5 6 (PRODUCT LEVEL)	SEE PAGE
Y	*177-6972*	1	ALTERNATOR GP-CHARGING	175
Y	*281-9154*	1	BELT GP-SERPENTINE	26
Y	*276-3814*	1	COMPRESSOR GP-REFRIGERANT	949
Y	**240-1861**	1	ENGINE AR-COMPLETE	18
Y	*222-8300*	1	MUFFLER GP	125
Y	*180-2435*	1	STARTING MOTOR GP-ELECTRIC	260

Y-SEPARATE ILLUSTRATION

ENGINE ARRANGEMENT

266-6263 ENGINE AR

S/N: M4T1-UP

PART OF 314-3699 GENERAL AR

SMCS-1000 **i03602340**

NOTE	PART NUMBER	QTY	PART NAME 1 2 3 4 5 6 (PRODUCT LEVEL)	SEE PAGE
Y	**177-6972**	1	ALTERNATOR GP-CHARGING	175
Y	**281-9154**	1	BELT GP-SERPENTINE	26
Y	**276-3814**	1	COMPRESSOR GP-REFRIGERANT	949
Y	**301-3082**	1	ENGINE AR-COMPLETE	19
Y	**222-8300**	1	MUFFLER GP	125
Y	**180-2435**	1	STARTING MOTOR GP-ELECTRIC	260

Y-SEPARATE ILLUSTRATION

ENGINE ARRANGEMENT

240-1861 ENGINE AR-COMPLETE

S/N: THX1000-UP
227-BRAKE KW (285-BHP) AT 1800 RPM
PART OF 262-1359 ENGINE AR

SMCS-1000 **i03688583**

NOTE	PART NUMBER	QTY	PART NAME 1 2 3 4 5 6 (PRODUCT LEVEL)	SEE PAGE
Y	*253-4522*	1	CONTROL & MTG GP-ENGINE ELEK	198
Y	*202-3301*	1	COVER GP-CYLINDER BLOCK (CRANKCASE BREATHER)	28
Y	*127-5728*	1	COVER GP-FLYWHEEL HOUSING	29
Y	*118-1727*	1	COVER GP-FRONT HOUSING (ACCESSORY DRIVE)	30
Y	*211-3285*	1	COVER GP-FRONT HOUSING	31
Y	*235-8174*	1	COVER GP-VALVE MECHANISM	32
Y	*165-4557*	1	DAMPER & PULLEY GP	50
Y	*277-8279*	1	DRIVE GP-ACCESSORY	53
Y	*242-1934*	1	ELBOW GP-AIR INLET	120
Y	*229-2665*	1	ENGINE AR-CORE	21
			S/N: THX1000-22637	
Y	*348-2747*	1	ENGINE AR-CORE	24
			S/N: THX22638-UP	
Y	*218-0859*	1	FASTENER GP-DAMPER & PULLEY	59
Y	*116-4556*	1	FASTENER GP-FRONT HOUSING	60
Y	*236-7315*	1	FASTENER GP-VALVE COVER	61
Y	*233-0423*	1	FASTENER GP-VALVE COVER BASE	62
Y	*187-0474*	1	FILTER GP-ENGINE OIL	81
Y	*102-3596*	1	FLYWHEEL GP	63
Y	*196-1829*	1	FUMES DISPOSAL GP	85
Y	*242-1586*	1	GAUGE GP-OIL LEVEL (DIPSTICK)	86
Y	*238-3215*	1	STARTING AID GP	255
Y	*229-3568*	1	HOUSING GP-FLYWHEEL	65
Y	*191-3063*	1	LIFTING GP-ENGINE	67
Y	*202-6603*	1	LINES GP-ENGINE OIL	88
Y	*231-3039*	1	LINES GP-FUEL	132
Y	*165-4465*	1	LINES GP-TURBOCHARGER OIL	90
Y	*244-0989*	1	LINES GP-TURBOCHARGER WATER	104
Y	*248-8835*	1	HOUSING & REGULATOR GP	103
			S/N: THX1000-22637	
Y	*348-4301*	1	LINES GP-WATER	105
			S/N: THX22638-UP	
Y	*165-4444*	1	MANIFOLD GP-EXHAUST	124
Y	*187-0472*	1	PAN GP-OIL	70
Y	*235-8200*	1	PLUG GP-CONNECTOR (ENGINE HARNESS, PROT COVER)	230
Y	*169-3105*	1	PLUG GP-ENGINE	74
Y	*205-4013*	1	PLUG GP-WATER LINES	109
Y	*202-7674*	1	PUMP GP-WATER	110
Y	*178-3899*	1	SEAL GP-CRANKSHAFT	78
Y	*231-1978*	1	SENSOR GP-ENGINE	232
			S/N: THX1000-22179	
Y	*330-6034*	1	SENSOR GP-ENGINE	233
			S/N: THX22180-UP	
Y	*242-9982*	1	SENSOR GP-SPEED	249
Y	*236-6226*	1	WIRING GP-ELECTRONIC CONTROL (ENGINE)	322
			S/N: THX1000-22179	
Y	*330-6018*	1	WIRING GP-ELECTRONIC CONTROL	324
			S/N: THX22180-UP	
Y	*269-3410*	1	WIRING GP-HEATER	330
			PLEASE USE THE GASKET KIT LINK IN SIS OR CONTACT YOUR LOCAL DEALER FOR THE LATEST GASKET KIT INFORMATION	

Y-SEPARATE ILLUSTRATION

ENGINE ARRANGEMENT

301-3082 ENGINE AR-COMPLETE

S/N: THX1-UP
213 BRAKE KW (286 BHP) AT 1800 RPM
PART OF 266-6263 ENGINE AR

SMCS-1000 **i03663351**

NOTE	PART NUMBER	QTY	PART NAME 1 2 3 4 5 6 (PRODUCT LEVEL)	SEE PAGE
Y	*253-4522*	1	CONTROL & MTG GP-ENGINE ELEK	198
Y	*202-3301*	1	COVER GP-CYLINDER BLOCK (CRANKCASE BREATHER)	28
Y	*127-5728*	1	COVER GP-FLYWHEEL HOUSING	29
Y	*118-1727*	1	COVER GP-FRONT HOUSING (ACCESSORY DRIVE)	30
Y	*211-3285*	1	COVER GP-FRONT HOUSING	31
Y	*235-8174*	1	COVER GP-VALVE MECHANISM	32
Y	*165-4557*	1	DAMPER & PULLEY GP	50
Y	*242-1934*	1	ELBOW GP-AIR INLET	120
Y	*270-4216*	1	ENGINE AR-CORE	22
			S/N: THX1-22638	
Y	*348-2746*	1	ENGINE AR-CORE	23
			S/N: THX22639-UP	
Y	*218-0859*	1	FASTENER GP-DAMPER & PULLEY	59
Y	*116-4556*	1	FASTENER GP-FRONT HOUSING	60
Y	*236-7315*	1	FASTENER GP-VALVE COVER	61
Y	*233-0423*	1	FASTENER GP-VALVE COVER BASE	62
Y	*187-0474*	1	FILTER GP-ENGINE OIL	81
Y	*102-3596*	1	FLYWHEEL GP	63
Y	*196-1829*	1	FUMES DISPOSAL GP	85
Y	*242-1586*	1	GAUGE GP-OIL LEVEL (DIPSTICK) (ENGINE)	86
Y	*229-3568*	1	HOUSING GP-FLYWHEEL	65
Y	*191-3063*	1	LIFTING GP-ENGINE	67
Y	*202-6603*	1	LINES GP-ENGINE OIL	88
Y	*231-3039*	1	LINES GP-FUEL	132
Y	*165-4465*	1	LINES GP-TURBOCHARGER OIL	90
Y	*244-0989*	1	LINES GP-TURBOCHARGER WATER	104
Y	*248-8835*	1	HOUSING & REGULATOR GP	103
			S/N: THX1-22638	
Y	*348-4301*	1	LINES GP-WATER	105
			S/N: THX22639-UP	
Y	*165-4444*	1	MANIFOLD GP-EXHAUST	124
Y	*187-0472*	1	PAN GP-OIL	70
Y	*235-8200*	1	PLUG GP-CONNECTOR (ENGINE HARNESS, PROT COVER)	230
Y	*169-3105*	1	PLUG GP-ENGINE	74
Y	*205-4013*	1	PLUG GP-WATER LINES	109
Y	*241-7605*	1	DRIVE GP-ACCESSORY	51
			—OR—	
Y	*277-8279*	1	DRIVE GP-ACCESSORY	53
Y	*202-7674*	1	PUMP GP-WATER	110
Y	*178-3899*	1	SEAL GP-CRANKSHAFT	78
Y	*231-1978*	1	SENSOR GP-ENGINE	232
			S/N: THX1-22179	
Y	*330-6034*	1	SENSOR GP-ENGINE	233
			S/N: THX22180-UP	
Y	*242-9982*	1	SENSOR GP-SPEED	249
Y	*238-3215*	1	STARTING AID GP	255
Y	*236-6226*	1	WIRING GP-ELECTRONIC CONTROL (ENGINE)	322
			S/N: THX1-22179	
Y	*330-6018*	1	WIRING GP-ELECTRONIC CONTROL	324
			S/N: THX22180-UP	
Y	*269-3410*	1	WIRING GP-HEATER	330
			PLEASE USE THE GASKET KIT LINK IN SIS OR CONTACT YOUR LOCAL DEALER FOR THE LATEST GASKET KIT INFORMATION	

ENGINE ARRANGEMENT

301-3082 ENGINE AR-COMPLETE *(contd.)* **i03663351**

Y-SEPARATE ILLUSTRATION

ENGINE ARRANGEMENT

229-2665 ENGINE AR-CORE

S/N: THX1000-22637

PART OF 240-1861 ENGINE AR-COMPLETE

SMCS-1000 **i02503744**

NOTE	PART NUMBER	QTY	PART NAME 1 2 3 4 5 6 (PRODUCT LEVEL)	SEE PAGE
Y	*242-0674*	1	CAMSHAFT GP	27
Y	*188-3826*	1	COOLER GP-ENGINE OIL	97
Y	*164-6148*	1	CRANKSHAFT GP	33
Y	*161-3406*	1	CYLINDER BLOCK GP	36
Y	*242-0672*	1	CYLINDER HEAD GP	42
Y	*213-4363*	1	FASTENER GP-CYLINDER HEAD	57
Y	*205-1321*	1	GEAR GP-FRONT	64
Y	*245-3260*	1	HOUSING GP-FRONT	66
Y	*265-1400*	6	PISTON & ROD GP	72
Y	*195-8098*	1	PUMP GP-ENGINE OIL	95
Y	*267-3362*	1	PUMP GP-FUEL INJECTION	152
Y	*258-8745*	1	PUMP GP-UNIT INJECTOR HYD	159
Y	*258-8337*	1	TURBOCHARGER GP	128
Y	*242-0447*	1	VALVE MECHANISM GP	80
	272-9625	1	ELECTRONICS GP-ENGINE RATINGS	

Y-SEPARATE ILLUSTRATION

ENGINE ARRANGEMENT

270-4216 ENGINE AR-CORE

S/N: THX1-22638

PART OF 301-3082 ENGINE AR-COMPLETE

SMCS-1000 **i02636004**

NOTE	PART NUMBER	QTY	PART NAME 1 2 3 4 5 6 (PRODUCT LEVEL)	SEE PAGE
Y	*242-0674*	1	CAMSHAFT GP	27
Y	*188-3826*	1	COOLER GP-ENGINE OIL	97
Y	*164-6148*	1	CRANKSHAFT GP	33
Y	*161-3406*	1	CYLINDER BLOCK GP	36
Y	*242-0672*	1	CYLINDER HEAD GP	42
Y	*213-4363*	1	FASTENER GP-CYLINDER HEAD	57
Y	*205-1321*	1	GEAR GP-FRONT	64
Y	*245-3260*	1	HOUSING GP-FRONT	66
Y	*265-1400*	6	PISTON & ROD GP	72
Y	*195-8098*	1	PUMP GP-ENGINE OIL	95
Y	*267-3362*	1	PUMP GP-FUEL INJECTION	152
Y	*258-8745*	1	PUMP GP-UNIT INJECTOR HYD	159
Y	*258-8337*	1	TURBOCHARGER GP	128
Y	*242-0447*	1	VALVE MECHANISM GP	80
	223-9020	1	ELECTRONICS GP-ENGINE RATINGS	

Y-SEPARATE ILLUSTRATION

ENGINE ARRANGEMENT

348-2746 ENGINE AR-CORE

S/N: THX22639-UP
213 BRAKE KW (286 GHP) AT 1800 RPM
PART OF 301-3082 ENGINE AR-COMPLETE

SMCS-1000 **i03714520**

NOTE	PART NUMBER	QTY	PART NAME 1 2 3 4 5 6 (PRODUCT LEVEL)	SEE PAGE
Y	*242-0674*	1	CAMSHAFT GP	27
Y	*188-3826*	1	COOLER GP-ENGINE OIL	97
Y	*164-6148*	1	CRANKSHAFT GP	33
Y	*161-3406*	1	CYLINDER BLOCK GP	36
Y	*345-8414*	1	CYLINDER HEAD GP	49
Y	*213-4363*	1	FASTENER GP-CYLINDER HEAD	57
Y	*205-1321*	1	GEAR GP-FRONT	64
Y	*245-3260*	1	HOUSING GP-FRONT	66
Y	*347-7908*	6	PISTON & ROD GP	73
Y	*195-8098*	1	PUMP GP-ENGINE OIL	95
Y	*267-3362*	1	PUMP GP-FUEL INJECTION	152
Y	*258-8745*	1	PUMP GP-UNIT INJECTOR HYD	159
Y	*258-8337*	1	TURBOCHARGER GP	128
Y	*242-0447*	1	VALVE MECHANISM GP	80
	223-9020	1	ELECTRONICS GP-ENGINE RATINGS	

Y-SEPARATE ILLUSTRATION

ENGINE ARRANGEMENT

348-2747 ENGINE AR-CORE

S/N: THX22638-UP

PART OF 240-1861 ENGINE AR-COMPLETE

SMCS-1000 **i03688582**

NOTE	PART NUMBER	QTY	PART NAME 1 2 3 4 5 6 (PRODUCT LEVEL)	SEE PAGE
Y	*242-0674*	1	CAMSHAFT GP	27
Y	*188-3826*	1	COOLER GP-ENGINE OIL	97
Y	*164-6148*	1	CRANKSHAFT GP	33
Y	*161-3406*	1	CYLINDER BLOCK GP	36
Y	*345-8414*	1	CYLINDER HEAD GP	49
Y	*213-4363*	1	FASTENER GP-CYLINDER HEAD	57
Y	*205-1321*	1	GEAR GP-FRONT	64
Y	*245-3260*	1	HOUSING GP-FRONT	66
Y	*347-7908*	6	PISTON & ROD GP	73
Y	*195-8098*	1	PUMP GP-ENGINE OIL	95
Y	*267-3362*	1	PUMP GP-FUEL INJECTION	152
Y	*258-8745*	1	PUMP GP-UNIT INJECTOR HYD	159
Y	*258-8337*	1	TURBOCHARGER GP	128
Y	*242-0447*	1	VALVE MECHANISM GP	80
	272-9625	1	ELECTRONICS GP-ENGINE RATINGS	

Y-SEPARATE ILLUSTRATION

ENGINE ARRANGEMENT

279-7825 INSTALLATION AR-ENGINE

S/N: D3P1-UP; M4T1-UP

PART OF 314-3698, 314-3699 GENERAL AR

SMCS-1000 **i03600682**

NOTE	PART NUMBER	QTY	PART NAME 1 2 3 4 5 6 (PRODUCT LEVEL)	SEE PAGE
Y	*239-6407*	1	AIR CLEANER & MOUNTING GP	115
Y	*245-7940*	1	CONDENSER & MTG GP-REFRIGERANT	950
Y	*230-2899*	1	FAN GP-SUCTION	99
Y	*239-6406*	1	LINES GP-AIR (AIR CLEANER TO TURBOCHARGER)	123
Y	*230-2898*	1	LINES GP-AIR (AFTERCOOLER TO TURBOCHARGER)	121
Y	*239-6408*	1	LINES GP-ENGINE OIL DRAIN	89
Y	*239-6474*	1	MOUNTING GP-ENGINE	68
Y	*239-6409*	1	MOUNTING GP-ENGINE OIL FILTER	93
Y	*279-7820*	1	PLUG GP-ENGINE	75
Y	*230-2896*	1	RADIATOR & HYD OIL COOLER GP	112

Y-SEPARATE ILLUSTRATION

BASIC ENGINE

281-9154 BELT GP-SERPENTINE

S/N: D3P1-UP; M4T1-UP

PART OF 262-1359, 266-6263 ENGINE AR

SMCS-1397 **i02756622**

NOTE	REF NO	GRAPHIC REF	PART NUMBER	QTY	PART NAME 1 2 3 4 5 6 (PRODUCT LEVEL)	SEE PAGE
	1	1	**183-4494**	1	BELT-SERPENTINE	

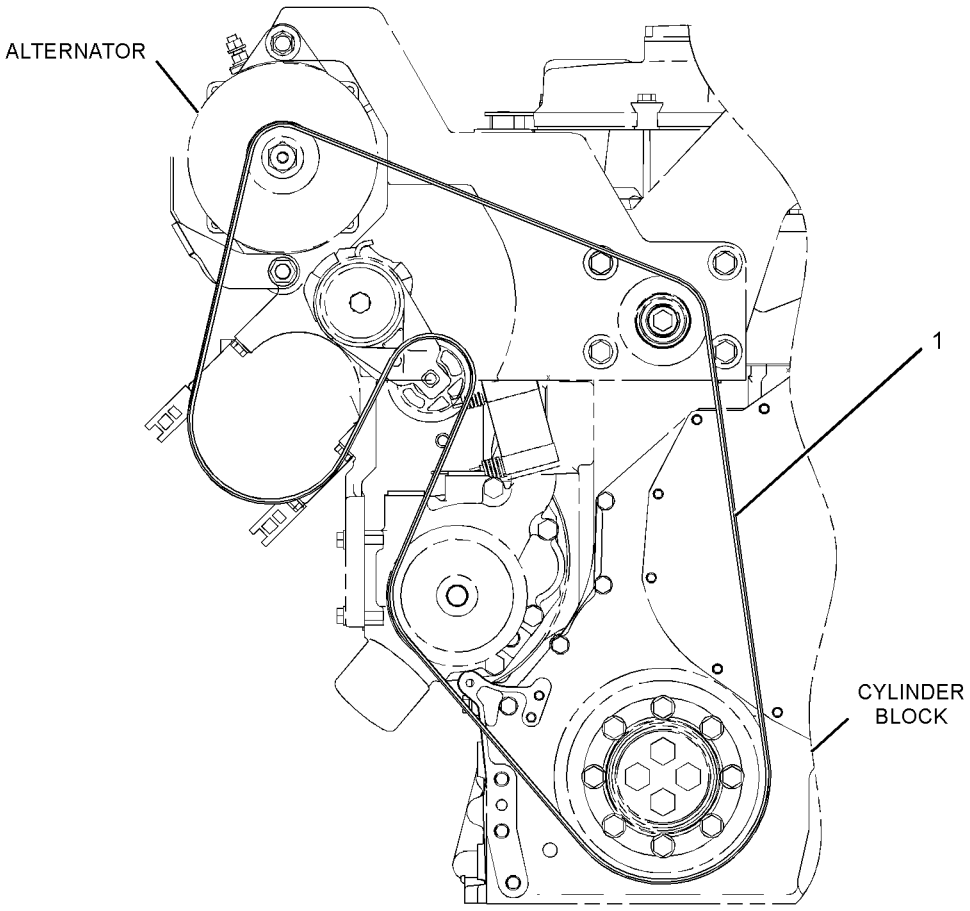

FRONT VIEW
(ENGINE)

GRAPHIC #1 **<END>** g01236782

242-0674 CAMSHAFT GP

S/N: THX1-UP

PART OF 229-2665, 270-4216, 348-2746, 348-2747 ENGINE AR-CORE

SMCS-1210 **i02433943**

NOTE	REF NO	GRAPHIC REF	PART NUMBER	QTY	PART NAME 1 2 3 4 5 6 (PRODUCT LEVEL)	SEE PAGE
	1	1	**107-7694**	1	PLATE-THRUST	
R	2	1	**242-0673**	1	CAMSHAFT AS	
	2A	1	**1B-8705**	1	KEY-WOODRUFF	
	2B	1	**224-3247**	1	GEAR (100-TEETH)	
M	3		**6V-3940**	2	BOLT (M8X1.25X25-MM)	

M-METRIC PART
R-REMFG PART MAY BE AVAILABLE

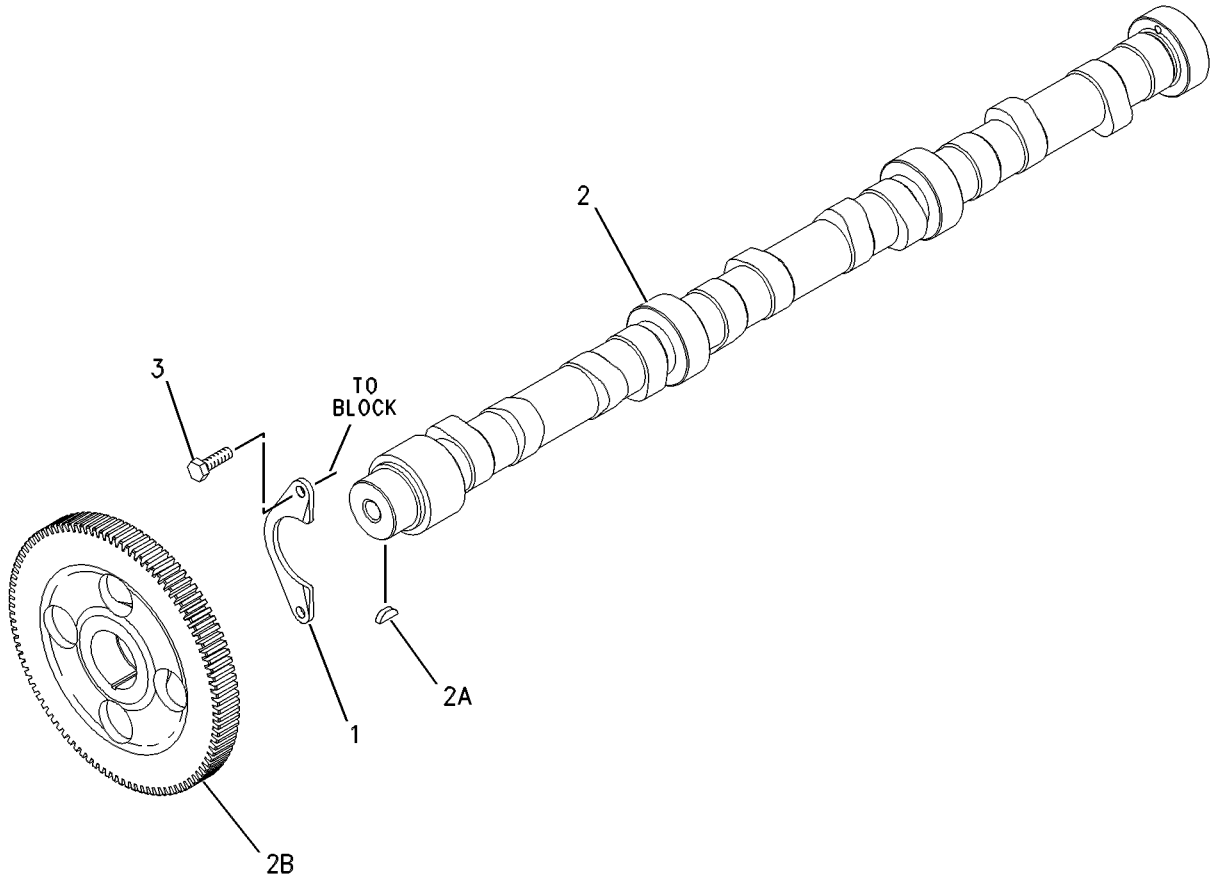

GRAPHIC #1 **<END>** g00626400

202-3301 COVER GP-CYLINDER BLOCK

S/N: THX1-UP

PART OF 240-1861, 301-3082 ENGINE AR-COMPLETE

SMCS-1201 **i02535211**

NOTE	REF NO	GRAPHIC REF	PART NUMBER	QTY	PART NAME 1 2 3 4 5 6 (PRODUCT LEVEL)	SEE PAGE
	1	1	**213-2411**	1	COVER	
	2	1	**213-2410**	1	GASKET	
	3	1	**240-0041**	1	BREATHER AS (CRANKCASE)	
M	4	1	**3E-8005**	1	BOLT (M8X1.25X160-MM)	
M	5	1	**6V-3918**	2	BOLT (M8X1.25X50-MM)	
M	6	1	**6V-3940**	9	BOLT (M8X1.25X25-MM)	
	7	1	**9F-4446**	1	SEAL-O-RING (CRANKCASE BREATHER)	
	8	1	**9M-1974**	11	WASHER-HARD (8.8X16X2-MM THK)	
	9	1	**5N-4185**	1	WASHER-SPECIAL	

M-METRIC PART

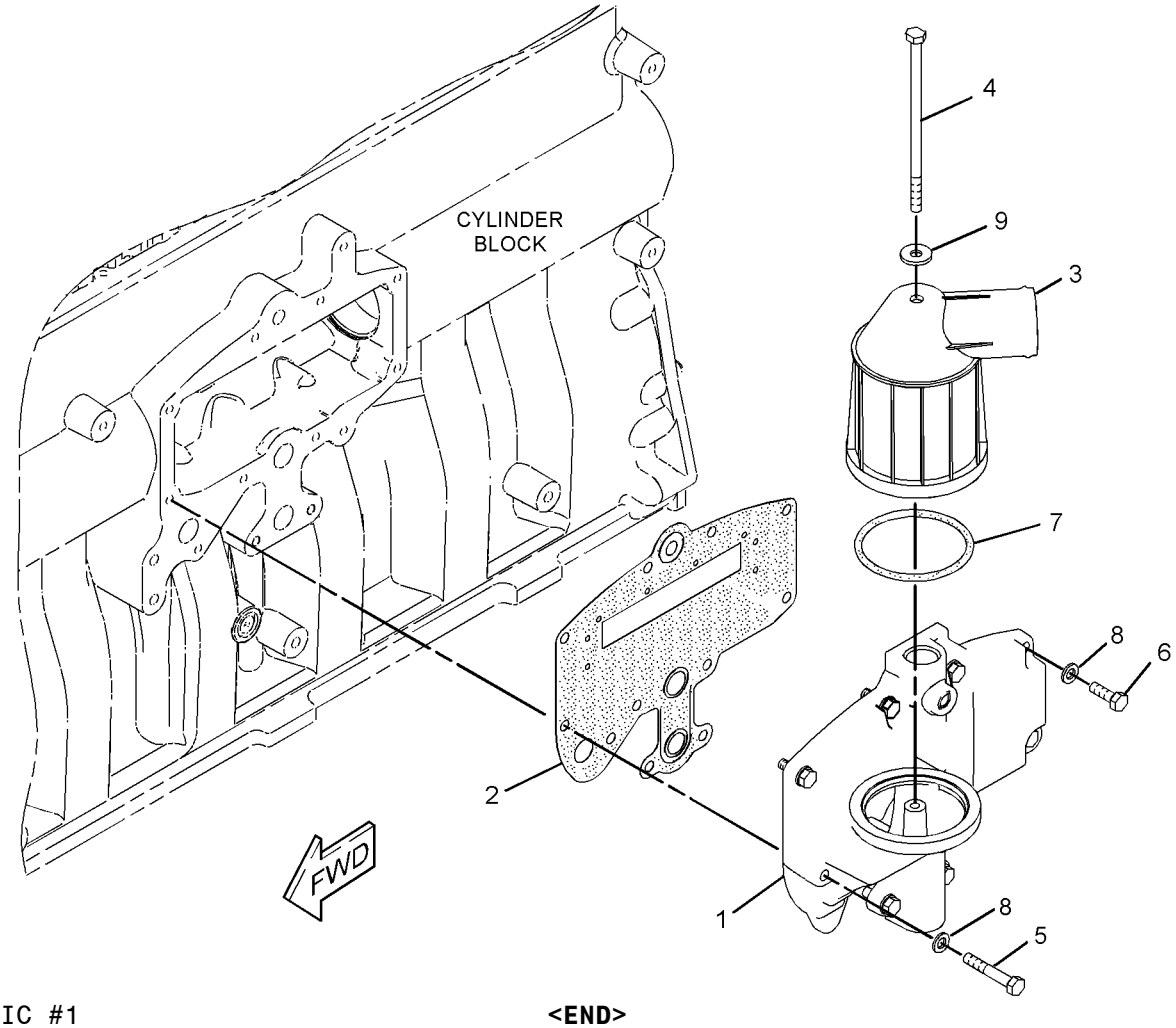

GRAPHIC #1 **<END>** g01216863

127-5728 COVER GP-FLYWHEEL HOUSING

S/N: THX1-UP

PART OF 240-1861, 301-3082 ENGINE AR-COMPLETE

SMCS-1157 **i01671192**

NOTE	REF NO	GRAPHIC REF	PART NUMBER	QTY	PART NAME 1 2 3 4 5 6 (PRODUCT LEVEL)	SEE PAGE
	1	1	**9Y-6089**	1	GASKET	
	2	1	**0S-1589**	3	BOLT (5/8-11X1.75-IN)	
	3	1	**4D-3704**	3	WASHER-HARD (17X30X5-MM THK)	
	4	1	**4N-1114**	1	COVER	

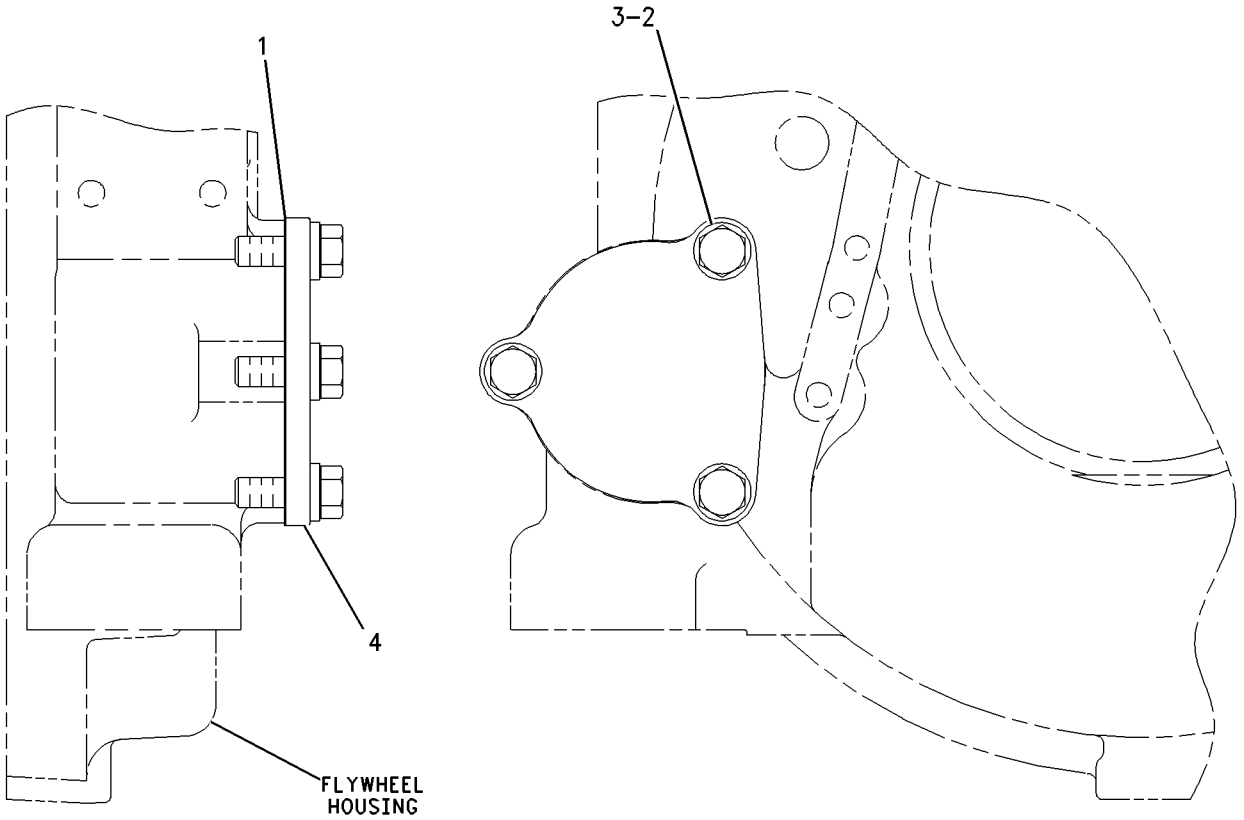

RIGHT SIDE VIEW FRONT VIEW

GRAPHIC #1 **<END>** g00783561

BASIC ENGINE

118-1727 COVER GP-FRONT HOUSING

S/N: THX1-UP

PART OF 240-1861, 301-3082 ENGINE AR-COMPLETE

SMCS-1150 **i01671188**

NOTE	REF NO	GRAPHIC REF	PART NUMBER	QTY	PART NAME 1 2 3 4 5 6 (PRODUCT LEVEL)	SEE PAGE
	1	1	**5P-8245**	4	WASHER-HARD (13.5X25.5X3-MM THK)	
M	2	1	**6V-5696**	2	BOLT (M12X1.75X80-MM)	
	3	1	**4W-2026**	1	COVER	
	4	1	**135-9819**	1	SEAL-INTEGRAL	
M	5	1	**6V-8149**	2	NUT (M12X1.75-THD)	

M-METRIC PART

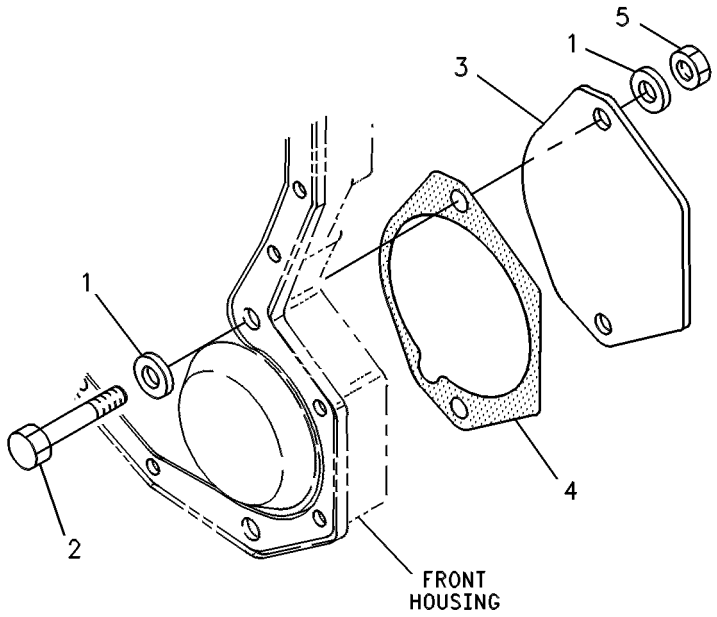

GRAPHIC #1 **<END>** g00245495

211-3285 COVER GP-FRONT HOUSING

S/N: THX1-UP

PART OF 240-1861, 301-3082 ENGINE AR-COMPLETE

SMCS-1150 **i01674489**

NOTE	REF NO	GRAPHIC REF	PART NUMBER	QTY	PART NAME 1 2 3 4 5 6 (PRODUCT LEVEL)	SEE PAGE
M	1	1	**9X-2099**	2	STUD (M8X1.25X52.75-MM)	
	2	1	**7C-1445**	1	COVER	
	3	1	**166-1776**	1	COVER AS-FRONT	
	3A	1	**126-1757**	2	WASHER (10.85X19.3X1.27-MM THK)	
	3B	1	**136-0822**	2	STUD	
	4	1	**166-1781**	1	GASKET	
	5	1	**061-9455**	1	SEAL-O-RING	
M	6	1	**5C-7261**	2	NUT (M8X1.25-THD)	
M	7	1	**6V-2317**	10	BOLT (M8X1.25X30-MM)	
M	8	1	**8T-0100**	2	BOLT (M8X1.25X60-MM)	
	9	1	**8T-4224**	2	WASHER-HARD (8.8X16X2-MM THK)	

M-METRIC PART

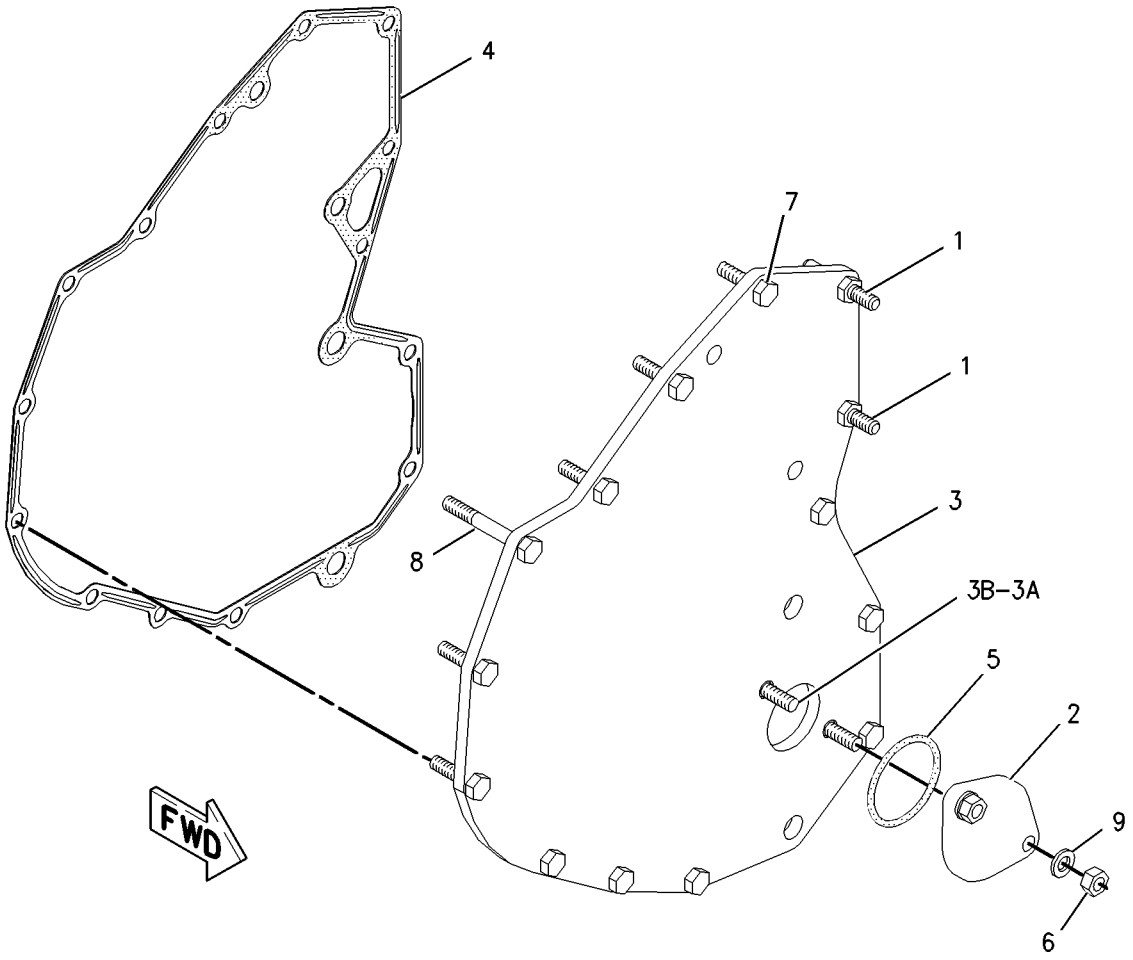

GRAPHIC #1 **<END>** g00827837

235-8174 COVER GP-VALVE MECHANISM

S/N: THX1-UP

PART OF 240-1861, 301-3082 ENGINE AR-COMPLETE

SMCS-1107 **i02672328**

NOTE	REF NO	GRAPHIC REF	PART NUMBER	QTY	PART NAME 1 2 3 4 5 6 (PRODUCT LEVEL)	SEE PAGE
	1	1	**227-4531**	1	CAP AS-ENGINE OIL FILLER	
	1A	1	**7F-8268**	1	SEAL-O-RING	
C	2	1	**273-2838**	11	SLEEVE-SPACER	
C	3	1	**263-7825**	1	COVER GP-VALVE MECHANISM	
	3A	1	**285-4106**		SEAL-VALVE COVER	
	4	1	**271-2418**	1	BASE GP-VALVE COVER	
	4A	1	**268-3490**	1	SEAL-VALVE COVER (VALVE MECHANISM BASE)	

C-CHANGE FROM PREVIOUS TYPE

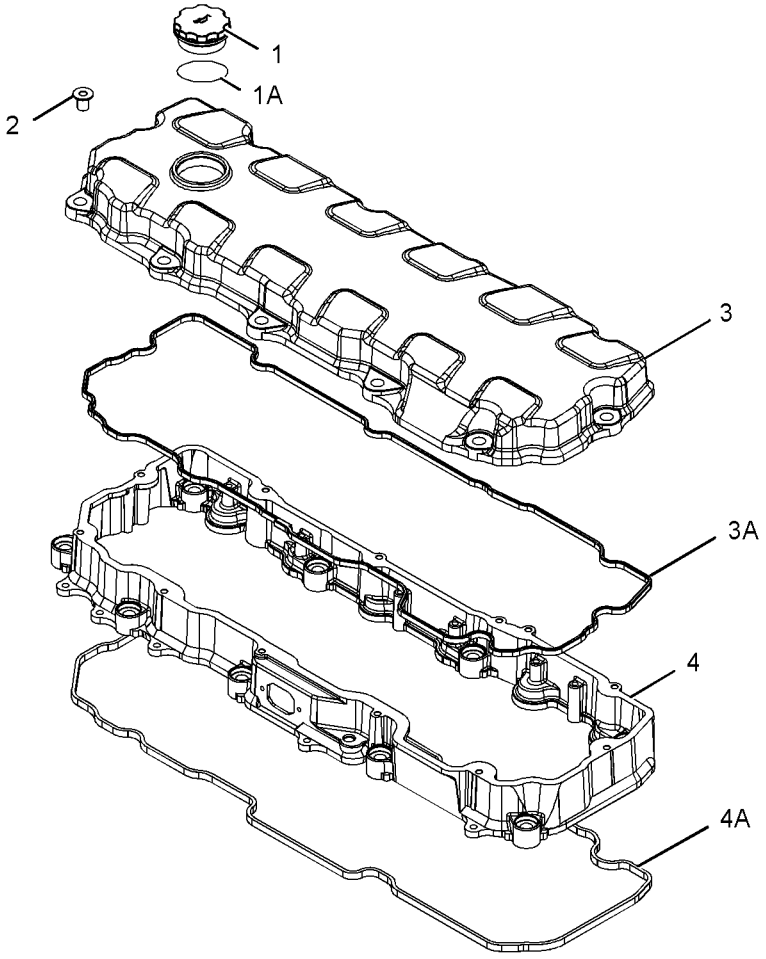

GRAPHIC #1 **<END>** g01277347

BASIC ENGINE

164-6148 CRANKSHAFT GP

S/N: THX1-UP

PART OF 229-2665, 270-4216, 348-2746, 348-2747 ENGINE AR-CORE

SMCS-1202 **i03592365**

NOTE	REF NO	GRAPHIC REF	PART NUMBER	QTY	PART NAME 1 2 3 4 5 6 (PRODUCT LEVEL)	SEE PAGE
J	1	1	**151-2939**	7	BEARING-MAIN (STANDARD)	
AB			**282-1771**	7	BEARING-MAIN (0.25-MM US)	
AB			**282-1772**	7	BEARING-MAIN (0.51-MM US)	
R	2	1	**261-1544**	1	CRANKSHAFT AS	
	2A	1	**1B-8705**	1	KEY-WOODRUFF	
	2B	1	**2W-8147**	1	GEAR (50-TEETH)	
	2C	1	**9Y-0810**	1	SLEEVE-WEAR	
J	3	1	**246-3150**	2	PLATE-THRUST	
					AVAILABLE REPAIR KIT(S):	
AJ			**243-6716**		BEARING GP-MAIN (STANDARD)	
					(INCLUDES A COMPLETE SET OF MAIN BEARINGS AND THRUST PLATES)	

A-NOT PART OF THIS GROUP
B-USE AS REQUIRED
J-KIT MARKED J INCLUDES PARTS MARKED J
R-REMFG PART MAY BE AVAILABLE

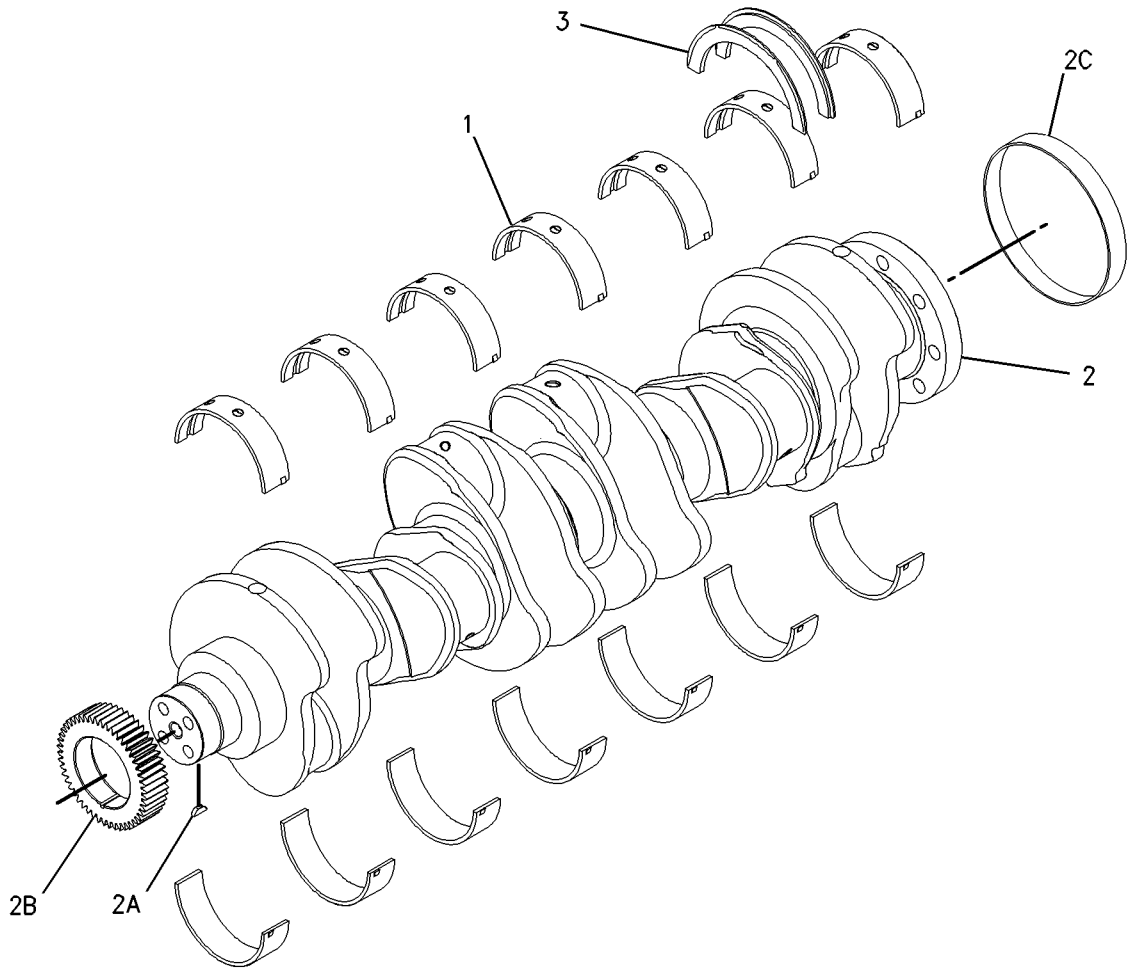

GRAPHIC #1 **<END>** g00789955

BASIC ENGINE

325-3915 CYLINDER BLOCK AS

S/N: THX1-UP

PART OF 220-1952 CYLINDER BLOCK GP

SMCS-1201 **i03235781**

NOTE	REF NO	GRAPHIC REF	PART NUMBER	QTY	PART NAME 1 2 3 4 5 6 (PRODUCT LEVEL)	SEE PAGE
	1	1	**0L-1026**	2	PLUG-CUP	
	2	1	**3B-0623**	2	PLUG-CUP	
	3	1	**4F-5695**	4	PLUG-CUP	
M	4	1	**175-0454**	14	BOLT (M16X2X160-MM)	
	5	1	**203-5805**	2	BEARING-SLEEVE	
	6	1	**203-6090**	1	BEARING-SLEEVE	
	7	1	**212-7002**	7	CAP-BEARING	
	8	1	**216-5586**	1	BEARING-SLEEVE (CAMSHAFT)	
	10	1	**9X-8268**	14	WASHER (17.5X30X3.5-MM THK)	

M-METRIC PART

325-3915 CYLINDER BLOCK AS *(contd.)* **i03235781**

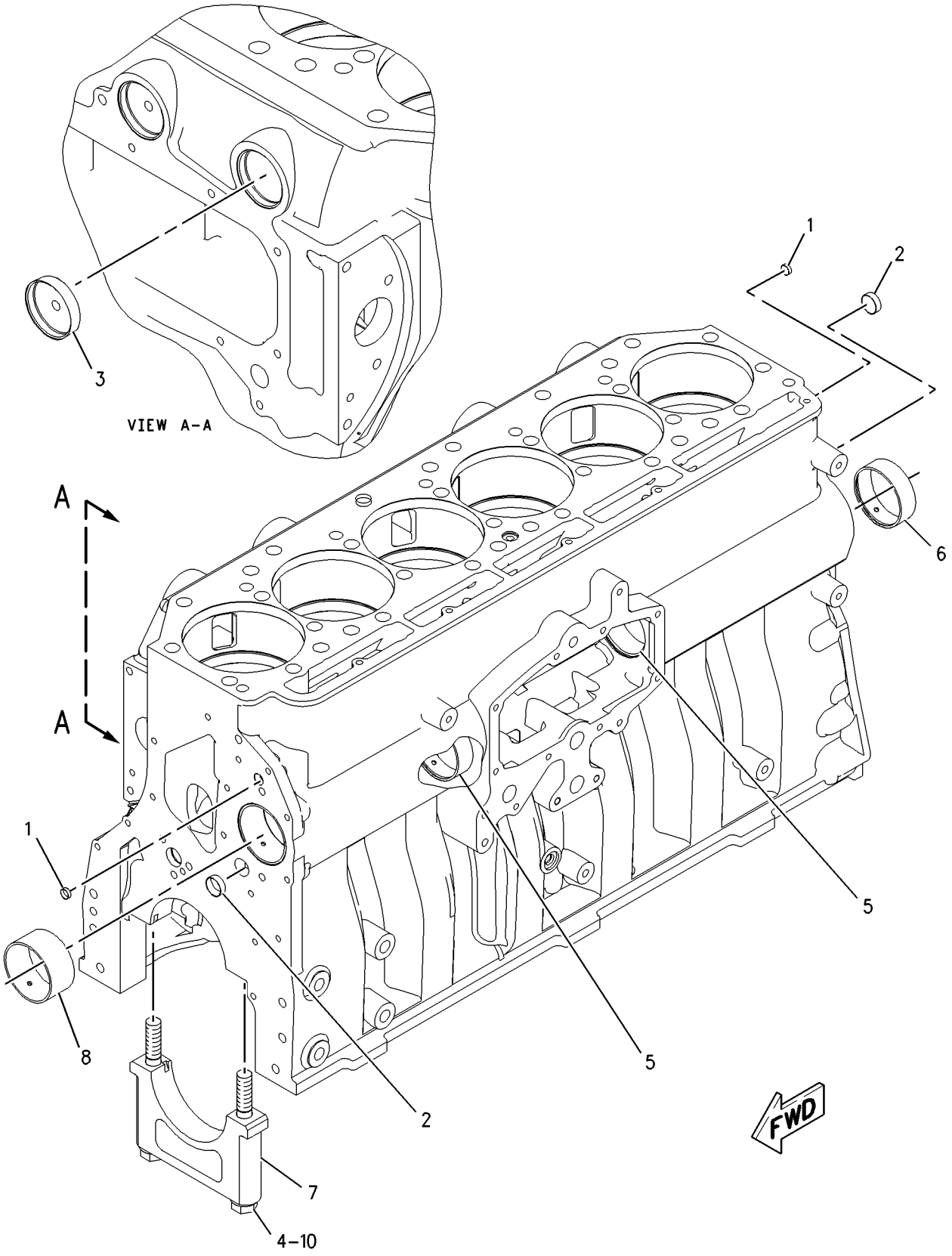

GRAPHIC #1 **<END>** g00920253

BASIC ENGINE

161-3406 CYLINDER BLOCK GP

S/N: THX1-UP

PART OF 229-2665, 270-4216, 348-2746, 348-2747 ENGINE AR-CORE

SMCS-1201 **i01833065**

NOTE	REF NO	GRAPHIC REF	PART NUMBER	QTY	PART NAME 1 2 3 4 5 6 (PRODUCT LEVEL)	SEE PAGE
	1	1	**0S-0519**	1	PLUG-CUP	
	2	1	**1W-8407**	2	SLEEVE	
	3	1	**4G-4972**	1	SEAL-O-RING	
CY	4	1	*220-1952*	1	CYLINDER BLOCK GP	37
	5	1	**6V-3538**	2	DOWEL	
	6	1	**7N-5683**	2	DOWEL	

C-CHANGE FROM PREVIOUS TYPE
Y-SEPARATE ILLUSTRATION

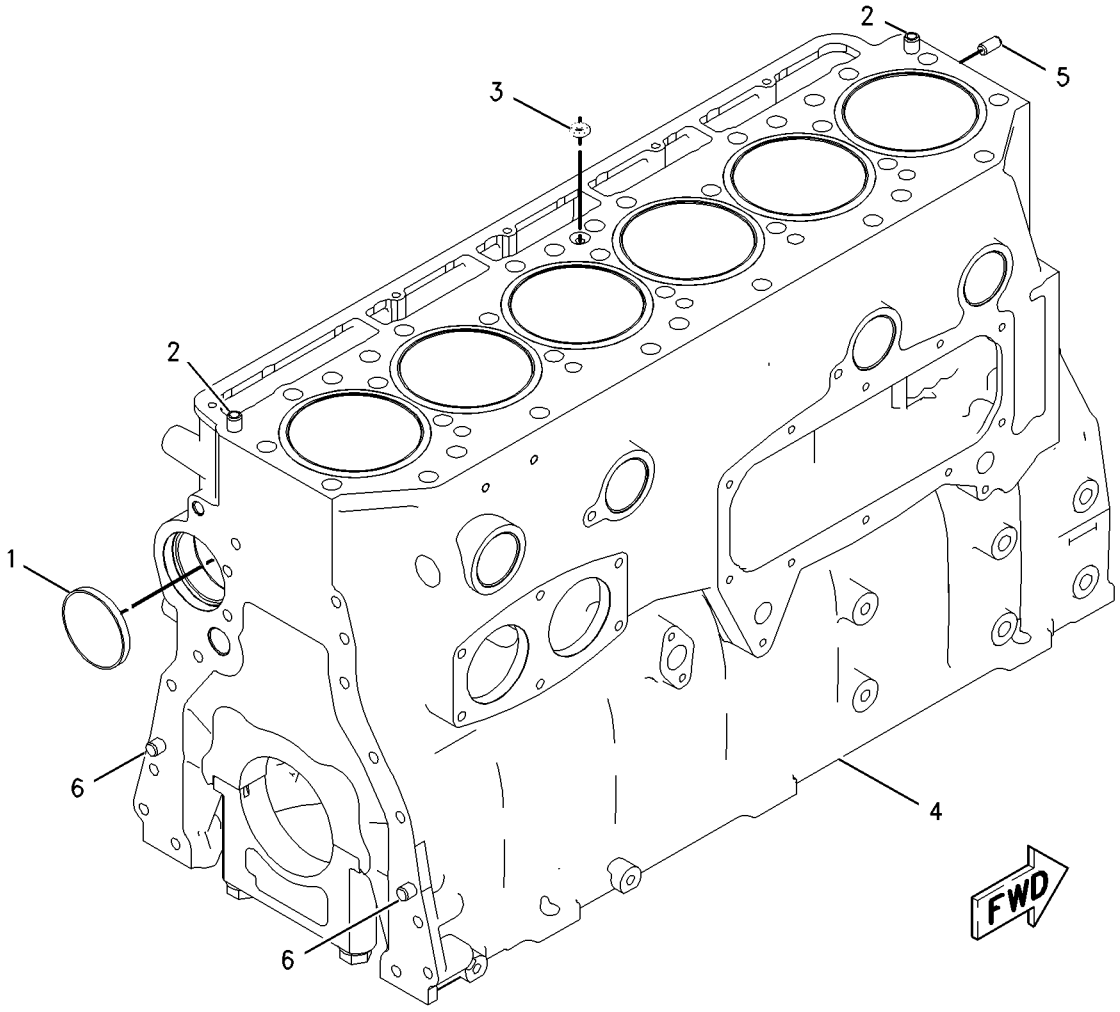

GRAPHIC #1 **<END>** g00838255

220-1952 CYLINDER BLOCK GP

S/N: THX1-UP

PART OF 161-3406 CYLINDER BLOCK GP

SMCS-1201 **i03235603**

NOTE	REF NO	GRAPHIC REF	PART NUMBER	QTY	PART NAME 1 2 3 4 5 6 (PRODUCT LEVEL)	SEE PAGE
	1	1	**167-0024**	6	SEAL-LINER	
	2	1	**190-3562**	6	LINER-CYLINDER	
Y	3	1	**325-3915**	1	CYLINDER BLOCK AS	34

Y-SEPARATE ILLUSTRATION

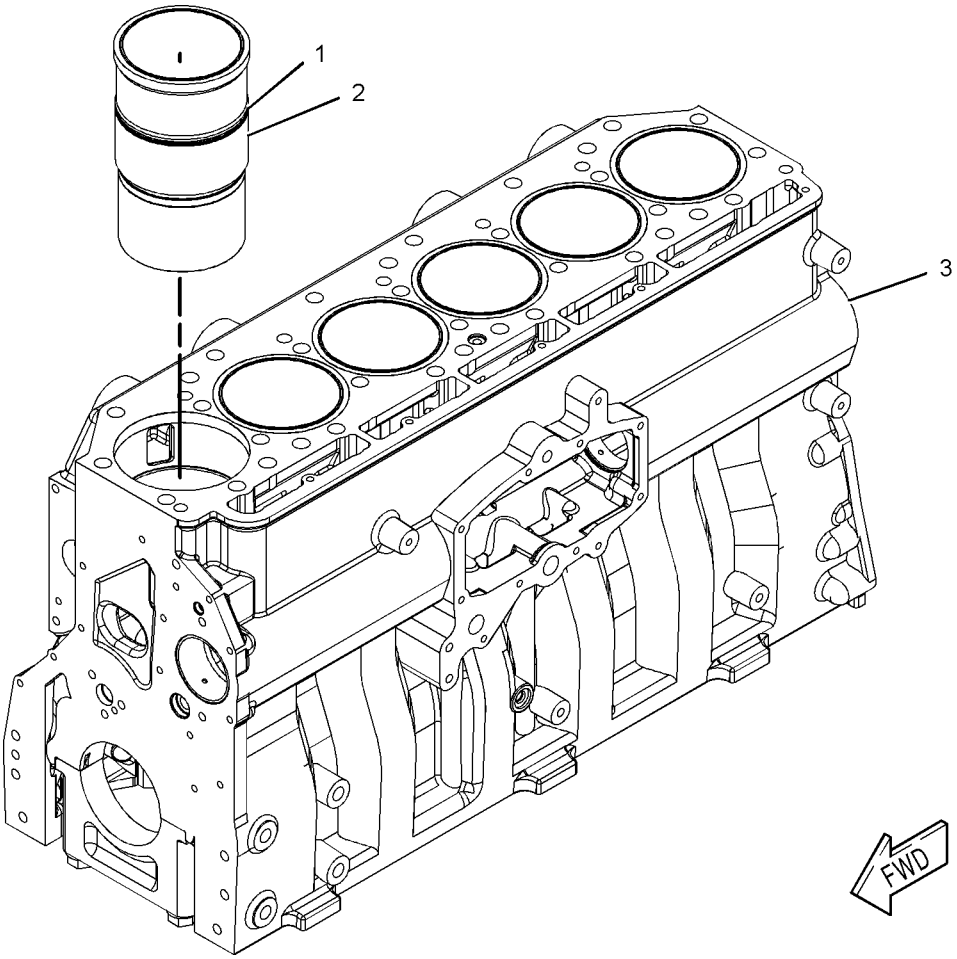

GRAPHIC #1 **<END>** g01032547

BASIC ENGINE

311-7229 CYLINDER HEAD AS

S/N: THX1-UP

PART OF 252-8439, 344-2149 CYLINDER HEAD GP

SMCS-1100 **i03770655**

NOTE	REF NO	GRAPHIC REF	PART NUMBER	QTY	PART NAME 1 2 3 4 5 6 (PRODUCT LEVEL)	SEE PAGE
	1	1	**6V-7604**	6	PLUG-CUP	
	2	1	**8M-5860**	18	PLUG-CUP	
	3	1	**212-8917**	12	INSERT-VALVE SEAT (EXHAUST) (STANDARD)	
AB		1	**254-3947**		INSERT-VALVE SEAT (0.508-MM OS OD, EXHAUST)	
	4	1	**227-1200**	6	SLEEVE-INJECTOR	
	5	1	**241-8388**	12	INSERT-VALVE SEAT (INLET) (STANDARD)	
AB		1	**254-3946**		INSERT-VALVE SEAT (0.508-MM OS OD, INLET)	
	6	1	**310-7255**	6	SEAL-O-RING	
	7	1	**310-7257**	6	SEAL-O-RING	

A-NOT PART OF THIS GROUP
B-USE AS REQUIRED

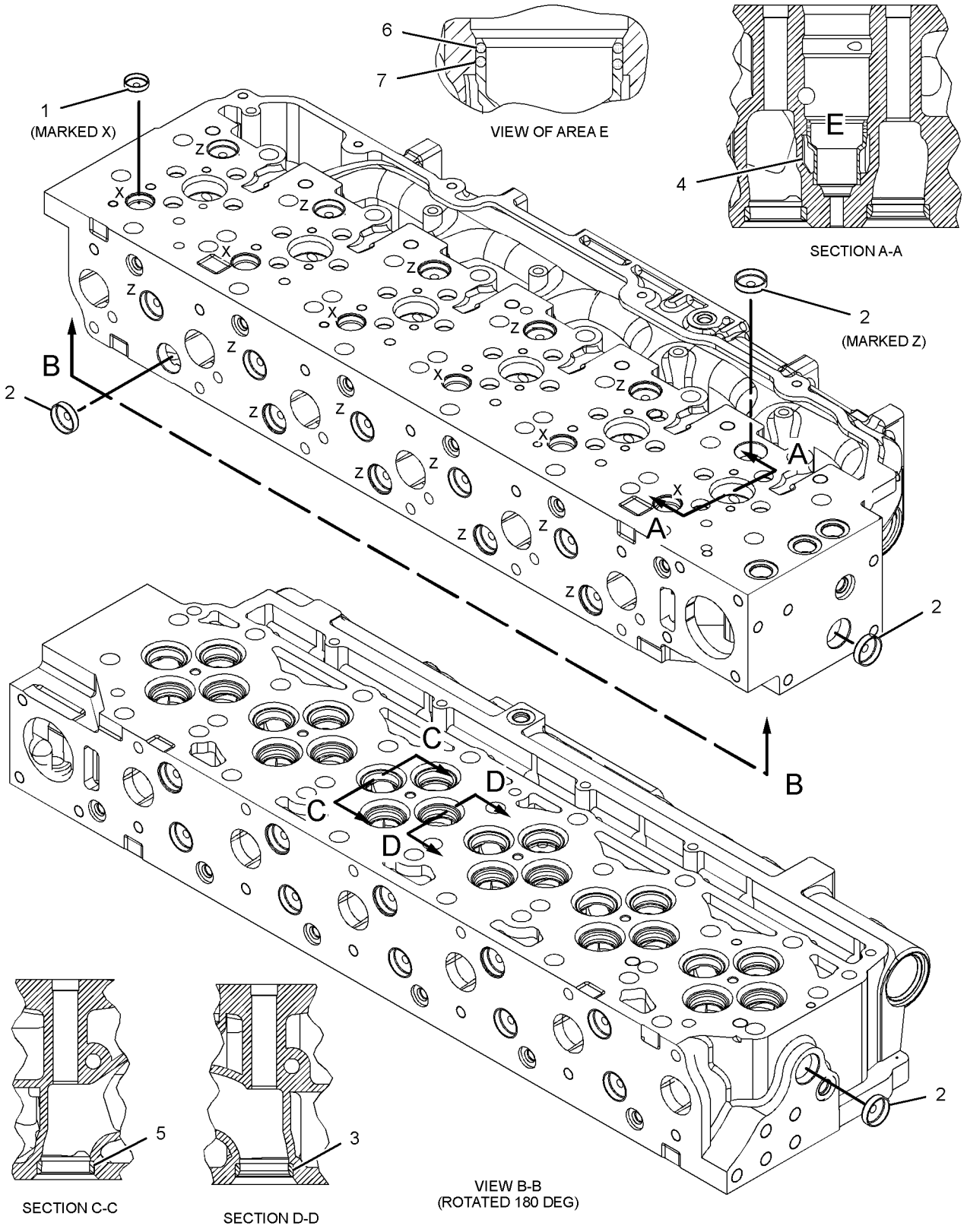

GRAPHIC #1 **<END>** g01414571

332-3619 CYLINDER HEAD AS

S/N: THX1-UP

PART OF 252-8439 CYLINDER HEAD GP

SMCS-1100 **i03246481**

NOTE	REF NO	GRAPHIC REF	PART NUMBER	QTY	PART NAME 1 2 3 4 5 6 (PRODUCT LEVEL)	SEE PAGE
	1	1	**6V-7604**	6	PLUG-CUP	
	2	1	**8M-5860**	18	PLUG-CUP	
	3	1	**212-8917**	12	INSERT-VALVE SEAT (EXHAUST) (STANDARD)	
AB		1	**317-7210**		INSERT-VALVE SEAT (0.127-MM OS OD, EXHAUST)	
AB		1	**317-7211**		INSERT-VALVE SEAT (0.254-MM OS OD, EXHAUST)	
AB		1	**254-3947**		INSERT-VALVE SEAT (0.508-MM OS OD, EXHAUST)	
	4	1	**227-1200**	6	SLEEVE-INJECTOR	
	5	1	**241-8388**	12	INSERT-VALVE SEAT (INLET) (STANDARD)	
AB		1	**317-7212**		INSERT-VALVE SEAT (0.127-MM OS OD, INLET)	
AB		1	**317-7213**		INSERT-VALVE SEAT (0.254-MM OS OD, INLET)	
AB		1	**254-3946**		INSERT-VALVE SEAT (0.508-MM OS OD, INLET)	
	6	1	**310-7255**	6	SEAL-O-RING	
	7	1	**310-7257**	6	SEAL-O-RING	

A-NOT PART OF THIS GROUP
B-USE AS REQUIRED

332-3619 **CYLINDER HEAD AS** *(contd.)* **i03246481**

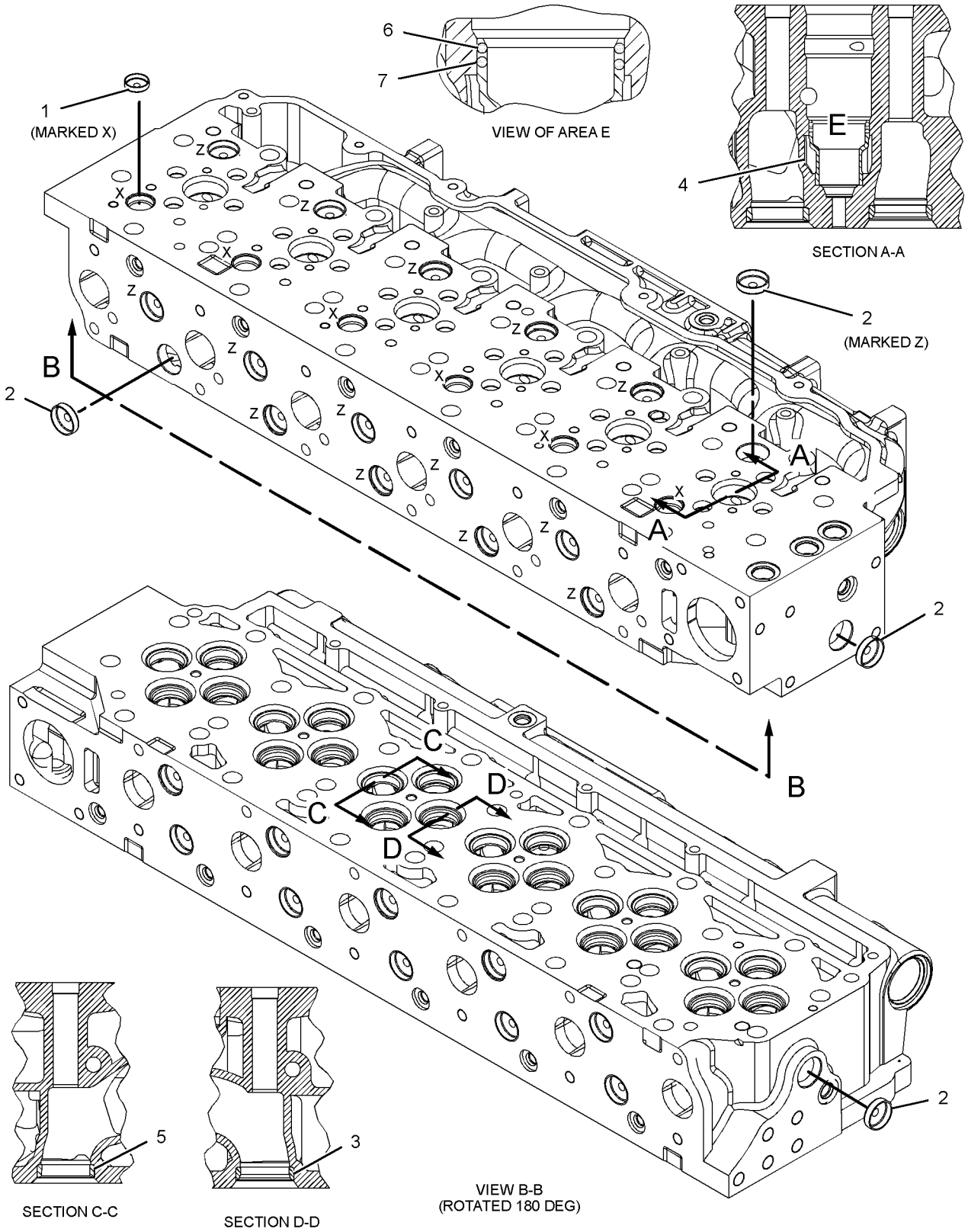

GRAPHIC #1 **<END>** g01414571

BASIC ENGINE

242-0672 CYLINDER HEAD GP

S/N: THX1-UP

PART OF 229-2665, 270-4216 ENGINE AR-CORE

SMCS-1100 **i02721753**

NOTE	REF NO	GRAPHIC REF	PART NUMBER	QTY	PART NAME 1 2 3 4 5 6 (PRODUCT LEVEL)	SEE PAGE
	1	1	**2A-3746**	1	PLUG-CUP	
	2	1	**187-1315**	1	GASKET AS	
Y	3	1	**252-8439**	1	CYLINDER HEAD GP	43

Y-SEPARATE ILLUSTRATION

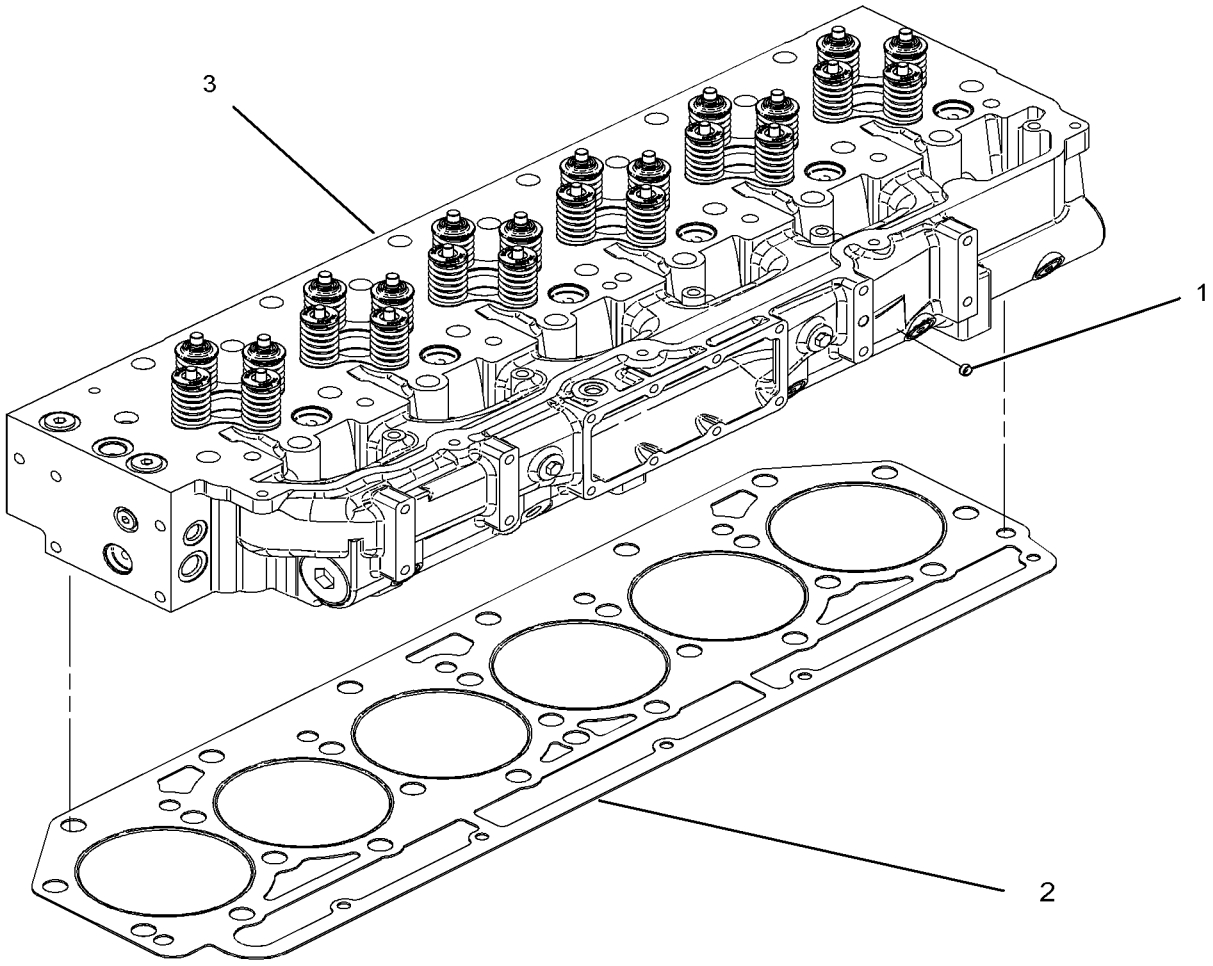

GRAPHIC #1 **<END>** g01305570

252-8439 CYLINDER HEAD GP*R

S/N: THX1-UP

PART OF 242-0672 CYLINDER HEAD GP

TYPE 1

SMCS-1100 **i03770650**

NOTE	REF NO	GRAPHIC REF	PART NUMBER	QTY	PART NAME 1 2 3 4 5 6 (PRODUCT LEVEL)	SEE PAGE
	1	1	**1W-2715**	24	LOCK-RETAINER	
	2	1	**2A-4429**	24	LOCK-RETAINER	
	3	1	**260-4856**	12	GUIDE-VALVE (STANDARD, EXHAUST)	
AB		1	**203-3237**	12	GUIDE-VALVE (0.13-MM OS OD, EXHAUST)	
AB		1	**203-3238**	12	GUIDE-VALVE (0.5-MM OS OD, EXHAUST)	
	4	1	**163-2478**	12	SEAL-VALVE STEM	
	5	1	*321-8638*	6	PLUG AS (MARKED Y)	
					(EACH INCLUDES)	
		1	**214-7568**	1	SEAL-O-RING	
	6	1	*319-6237*	2	PLUG AS (HEX HEAD)	
					(EACH INCLUDES)	
		1	**271-7442**	1	PLUG	
	6A	1	**228-7096**	1	SEAL-O-RING	
	8	1	**190-6115**	12	SPRING-VALVE (INNER)	
	9	1	**190-6117**	12	SPRING-VALVE (OUTER)	
	10	1	**211-2134**	12	RETAINER (VALVE SPRING)	
	11	1	**217-0609**	6	SEAT-VALVE SPRING	
	12	1	**241-8382**	12	VALVE-INLET	
	13	1	**241-8383**	12	VALVE-EXHAUST	
	14	1	**241-8384**	12	RETAINER (VALVE SPRING)	
	15	1	**241-8385**	12	SPRING-VALVE (OUTER)	
	16	1	**241-8386**	12	SPRING-VALVE (INNER)	
	17	1	**241-8387**	6	SEAT	
	18	1	**259-5829**	12	GUIDE-VALVE (STANDARD, INTAKE)	
AB		1	**254-3941**		GUIDE-VALVE (0.13-MM OS OD)	
AB		1	**254-3942**		GUIDE-VALVE (0.5-MM OS OD)	
	19	1	**241-8390**	12	SEAL-VALVE STEM	
Y	20	1	*311-7229*	1	CYLINDER HEAD AS	38
	21	1	*148-8395*	2	PLUG AS	
					(EACH INCLUDES)	
		1	**3K-0360**	1	SEAL-O-RING	
		1	**9S-8005**	1	PLUG-O-RING (HEX HEAD)	
	22	1	**8T-6764**	2	PLUG-PIPE (1/8-27-THD)	

A-NOT PART OF THIS GROUP
B-USE AS REQUIRED
Y-SEPARATE ILLUSTRATION

252-8439 CYLINDER HEAD GP *(contd.)* i03770650

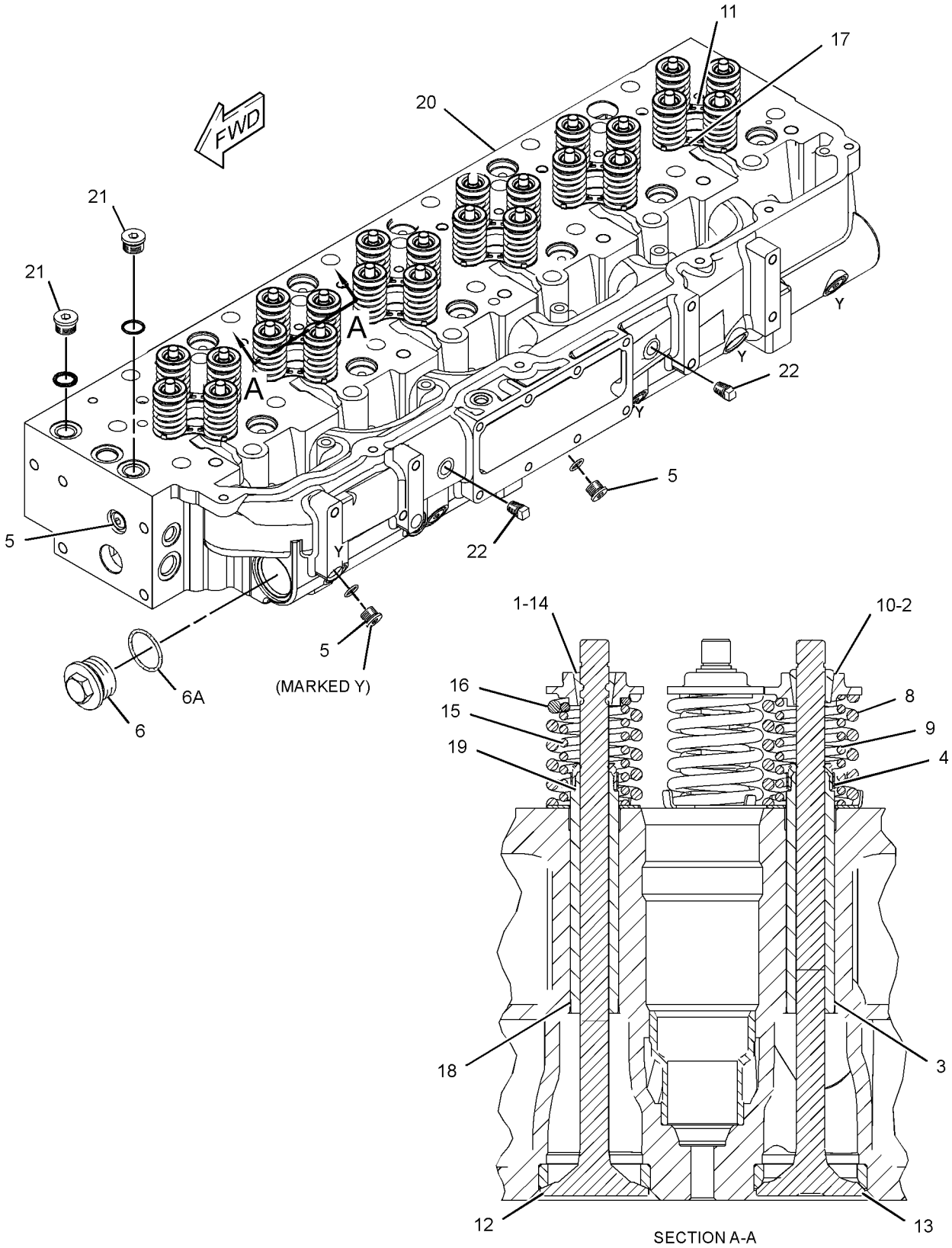

GRAPHIC #1 **<END>** g01988815

252-8439 CYLINDER HEAD GP*R

S/N: THX1-UP

PART OF 242-0672 CYLINDER HEAD GP

TYPE 2

SMCS-1100 **i03770653**

NOTE	REF NO	GRAPHIC REF	PART NUMBER	QTY	PART NAME 1 2 3 4 5 6 (PRODUCT LEVEL)	SEE PAGE
	1	1	**1W-2715**	24	LOCK-RETAINER	
	2	1	**2A-4429**	24	LOCK-RETAINER	
	3	1	**260-4856**	12	GUIDE-VALVE (STANDARD, EXHAUST)	
AB		1	**203-3237**	12	GUIDE-VALVE (0.13-MM OS OD, EXHAUST)	
AB		1	**203-3238**	12	GUIDE-VALVE (0.5-MM OS OD, EXHAUST)	
	4	1	**163-2478**	12	SEAL-VALVE STEM	
	5	1	*321-8638*	6	PLUG AS (MARKED Y)	
					(EACH INCLUDES)	
		1	**214-7568**	1	SEAL-O-RING	
	6	1	*319-6237*	2	PLUG AS (HEX HEAD)	
					(EACH INCLUDES)	
		1	**271-7442**	1	PLUG	
	6A	1	**228-7096**	1	SEAL-O-RING	
	8	1	**190-6115**	12	SPRING-VALVE (INNER)	
	9	1	**190-6117**	12	SPRING-VALVE (OUTER)	
	10	1	**211-2134**	12	RETAINER (VALVE SPRING)	
	11	1	**217-0609**	6	SEAT-VALVE SPRING	
	12	1	**241-8382**	12	VALVE-INLET	
	13	1	**241-8383**	12	VALVE-EXHAUST	
	14	1	**241-8384**	12	RETAINER (VALVE SPRING)	
	15	1	**241-8385**	12	SPRING-VALVE (OUTER)	
	16	1	**241-8386**	12	SPRING-VALVE (INNER)	
	17	1	**241-8387**	6	SEAT	
	18	1	**259-5829**	12	GUIDE-VALVE (STANDARD, INTAKE)	
AB		1	**254-3941**		GUIDE-VALVE (0.13-MM OS OD)	
AB		1	**254-3942**		GUIDE-VALVE (0.5-MM OS OD)	
	19	1	**241-8390**	12	SEAL-VALVE STEM	
CY	20	1	*332-3619*	1	CYLINDER HEAD AS	40
	21	1	*148-8395*	2	PLUG AS	
					(EACH INCLUDES)	
		1	**3K-0360**	1	SEAL-O-RING	
		1	**9S-8005**	1	PLUG-O-RING (HEX HEAD)	
	22	1	**9F-2247**	2	PLUG-PIPE	

A-NOT PART OF THIS GROUP
B-USE AS REQUIRED
C-CHANGE FROM PREVIOUS TYPE
Y-SEPARATE ILLUSTRATION

252-8439 CYLINDER HEAD GP *(contd.)* i03770653

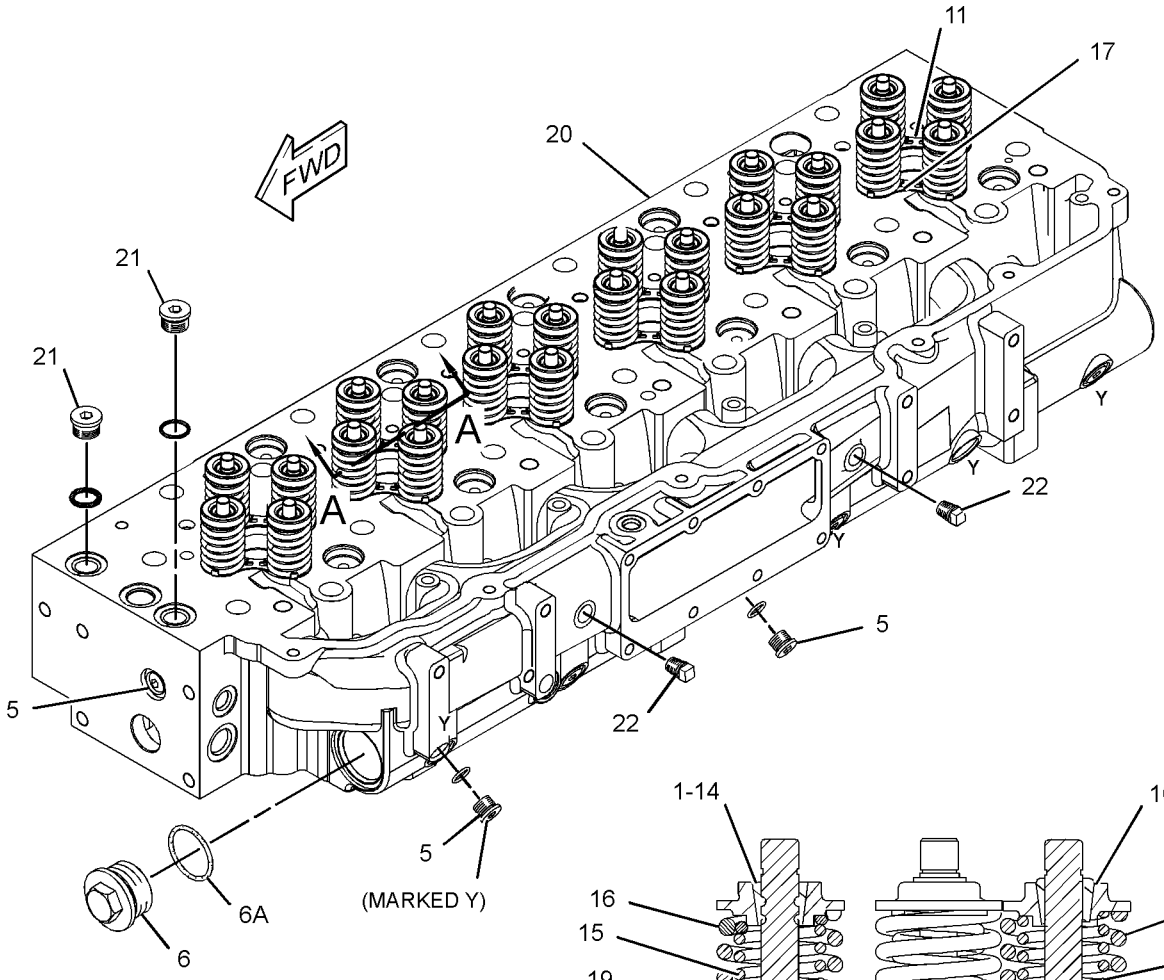

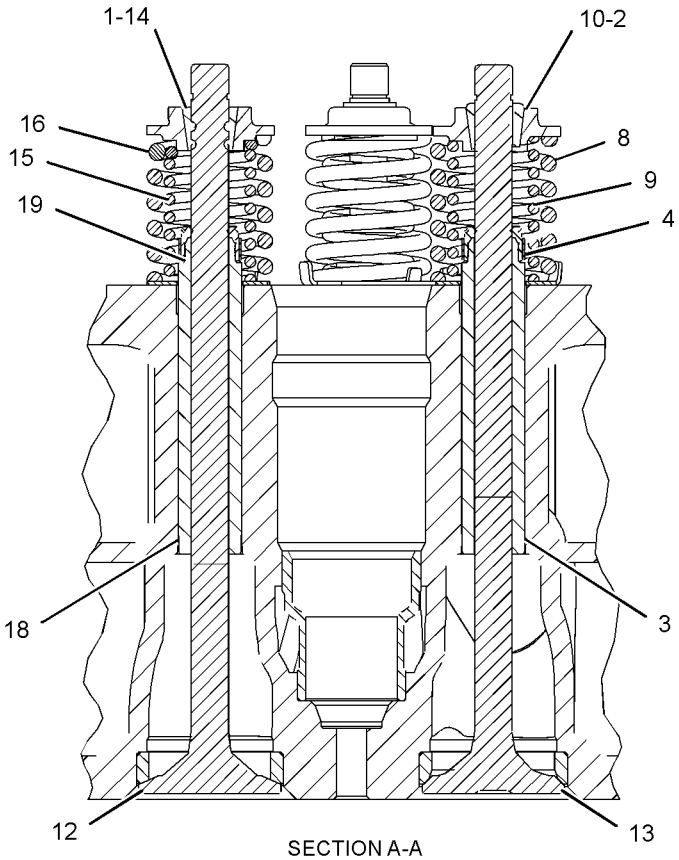

GRAPHIC #1 **<END>** g01988815

344-2149 CYLINDER HEAD GP

S/N: THX22638-UP

PART OF 345-8414 CYLINDER HEAD GP

SMCS-1100 **i03688757**

NOTE	REF NO	GRAPHIC REF	PART NUMBER	QTY	PART NAME 1 2 3 4 5 6 (PRODUCT LEVEL)	SEE PAGE
	1	1	**1W-2715**	24	LOCK-RETAINER (INLET)	
	2	1	**2A-4429**	24	LOCK-RETAINER (EXHAUST)	
	3	1	**163-2478**	12	SEAL-VALVE STEM (EXHAUST)	
	4	1	**190-6115**	12	SPRING-VALVE (INNER)	
	5	1	**190-6117**	12	SPRING-VALVE (OUTER)	
	6	1	**211-2134**	12	RETAINER (VALVE SPRING)	
	7	1	**217-0609**	6	SEAT-VALVE SPRING	
	8	1	**241-8383**	12	VALVE-EXHAUST	
	9	1	**241-8384**	12	RETAINER (VALVE SPRING)	
	10	1	**241-8385**	12	SPRING-VALVE (OUTER)	
	11	1	**241-8386**	12	SPRING-VALVE (INNER)	
	12	1	**241-8387**	6	SEAT	
	13	1	**241-8390**	12	SEAL-VALVE STEM	
	14	1	**252-7803**	12	VALVE-INLET	
	15	1	**259-5829**	12	GUIDE-VALVE (STANDARD, INTAKE)	
	16	1	**260-4856**	12	GUIDE-VALVE (STANDARD, EXHAUST)	
Y	17	1	*311-7229*	1	CYLINDER HEAD AS	38
	18	1	*319-6237*	2	PLUG AS	
					(EACH INCLUDES)	
		1	**228-7096**	1	SEAL-O-RING	
		1	**271-7442**	1	PLUG	
	19	1	*321-8638*	6	PLUG AS	
					(EACH INCLUDES)	
		1	**214-7568**	1	SEAL-O-RING	
		1	**321-8635**	1	PLUG	
	20	1	*307-2673*	2	PLUG AS	
					(EACH INCLUDES)	
		1	**9S-8005**	1	PLUG-O-RING	
		1	**238-5080**	1	SEAL-O-RING	
	21	1	**8T-6764**	2	PLUG-PIPE (CYLINDER HEAD)	

Y-SEPARATE ILLUSTRATION

344-2149 **CYLINDER HEAD GP** *(contd.)* **i03688757**

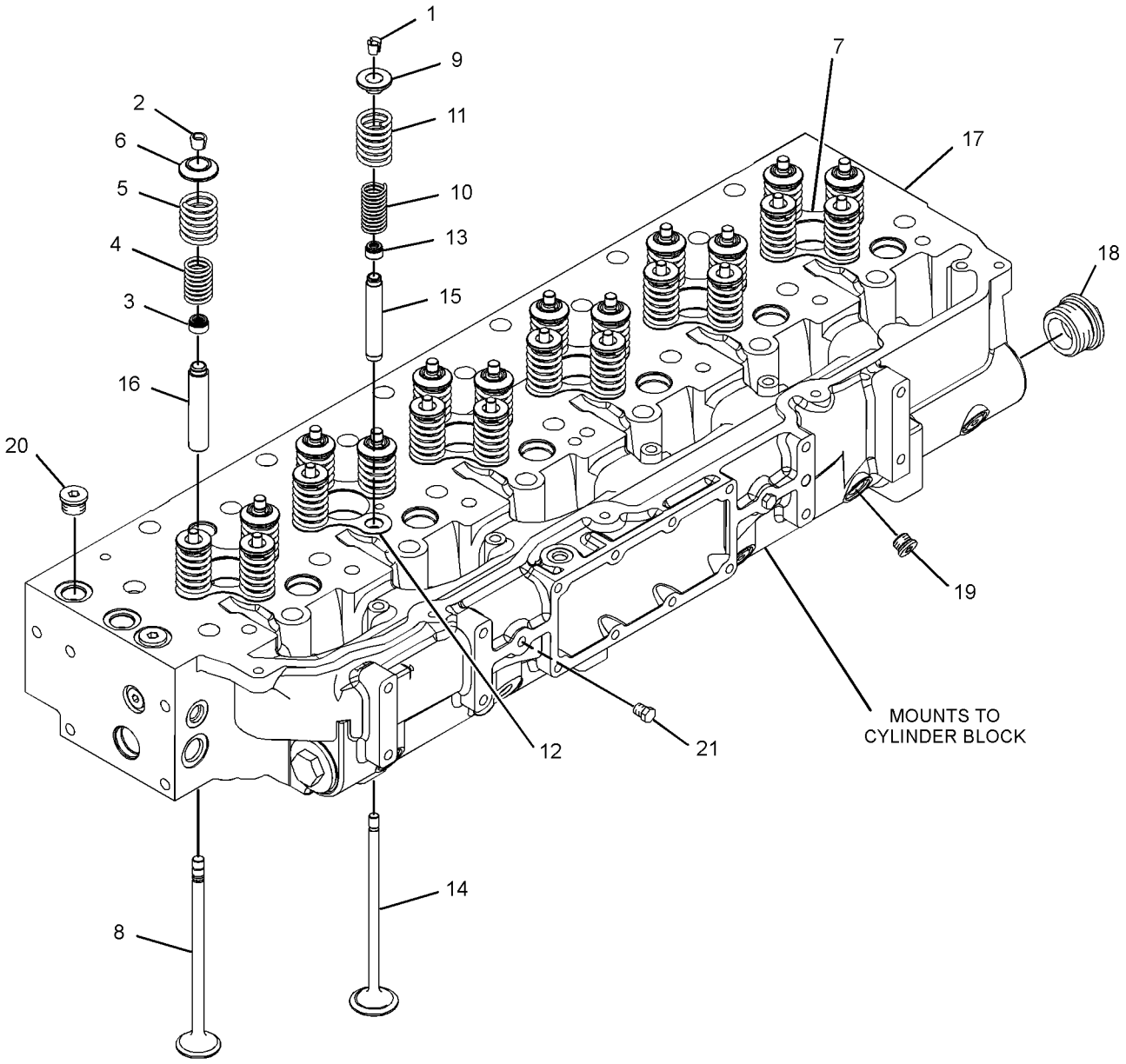

GRAPHIC #1 **<END>** g01979881

345-8414 CYLINDER HEAD GP

S/N: THX22638-UP

PART OF 348-2746, 348-2747 ENGINE AR-CORE

SMCS-1100 **i03688610**

NOTE	REF NO	GRAPHIC REF	PART NUMBER	QTY	PART NAME 1 2 3 4 5 6 (PRODUCT LEVEL)	SEE PAGE
	1	1	**2A-3746**	1	PLUG-CUP	
	2	1	**187-1315**	1	GASKET AS	
Y	3	1	**344-2149**	1	CYLINDER HEAD GP	47

Y-SEPARATE ILLUSTRATION

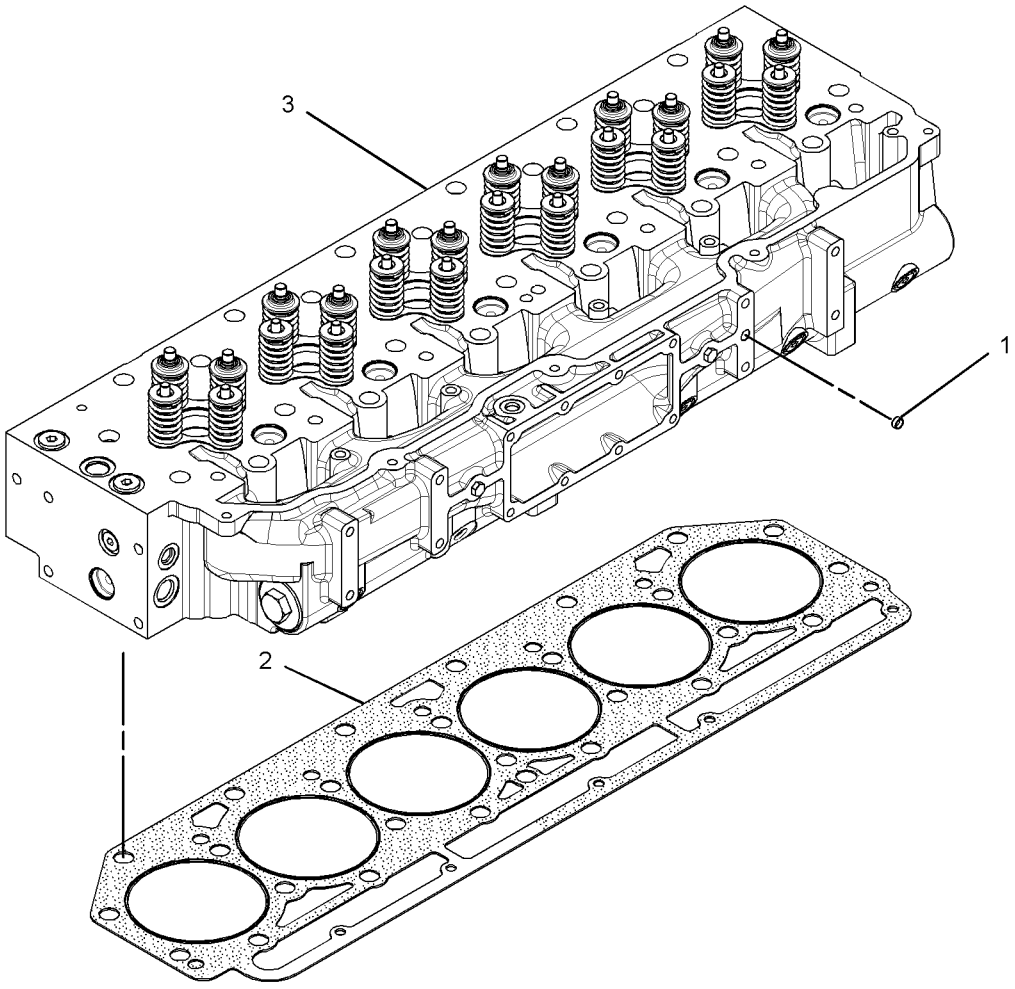

GRAPHIC #1 **<END>** g01979813

BASIC ENGINE

165-4557 DAMPER & PULLEY GP

S/N: THX1-UP

PART OF 240-1861, 301-3082 ENGINE AR-COMPLETE

SMCS-1205 **i01743128**

NOTE	REF NO	GRAPHIC REF	PART NUMBER	QTY	PART NAME 1 2 3 4 5 6 (PRODUCT LEVEL)	SEE PAGE
	1	1	**2W-7381**	1	PLATE-CLAMP	
	2	1	**167-8121**	1	DAMPER AS	
	3	1	**153-1036**	1	PULLEY-CRANKSHAFT (8 GROOVE)	
M	4	1	**8T-3666**	4	BOLT (M14X2X60-MM)	

M-METRIC PART

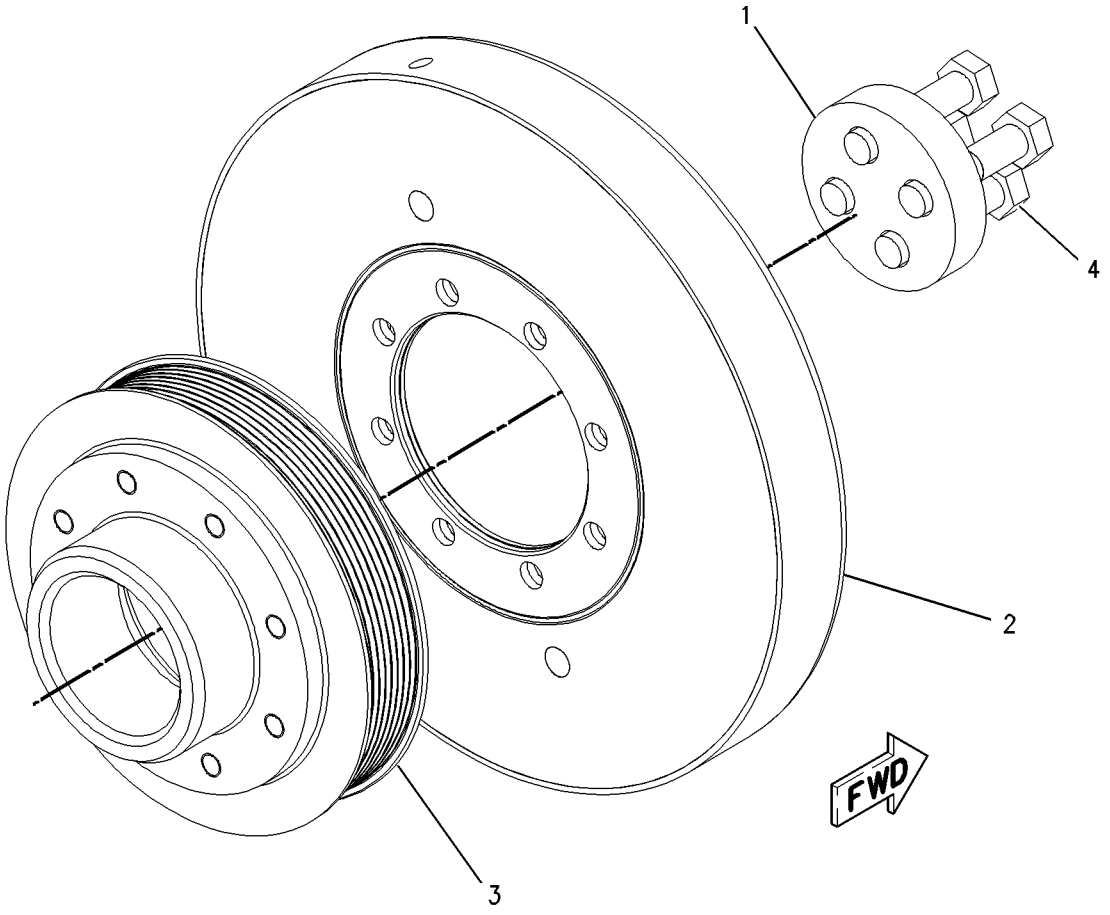

GRAPHIC #1 **<END>** g00836513

241-7605 DRIVE GP-ACCESSORY—ACCESSORY DRIVE

S/N: THX1-UP

PART OF 301-3082 ENGINE AR-COMPLETE

SMCS-1207 **i03600722**

NOTE	REF NO	GRAPHIC REF	PART NUMBER	QTY	PART NAME 1 2 3 4 5 6 (PRODUCT LEVEL)	SEE PAGE
	1	1	**189-2449**	1	SUPPORT	
	2	1	**190-0643**	1	BELT TENSIONER	
	3	1	**197-9642**	1	PULLEY AS-IDLER (8-GROOVE)	
	4	1	**241-7604**	1	BRACKET	
	5	1	**183-4494**	1	BELT-SERPENTINE	
	6	1	**6E-5102**	1	PLATE	
M	7	1	**6V-5218**	4	BOLT (M8X1.25X35-MM)	
	8	1	**6V-5839**	7	WASHER (11X21X2.5-MM THK)	
M	9	1	**6V-5842**	6	BOLT (M10X1.5X40-MM)	
M	10	1	**8T-0643**	1	BOLT (M10X1.5X80-MM)	
	11	1	**9M-1974**	4	WASHER-HARD (8.8X16X2-MM THK)	

M-METRIC PART

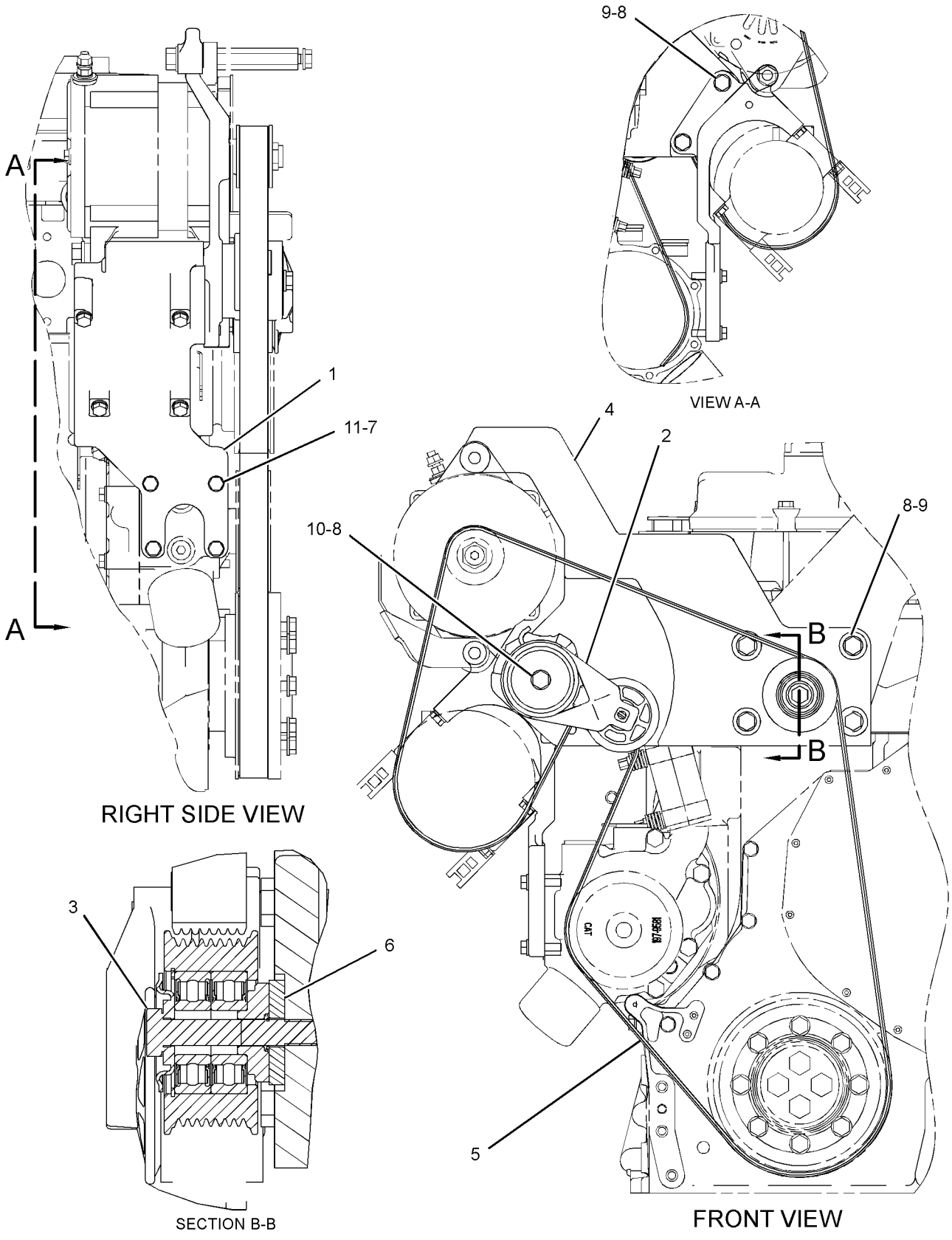

GRAPHIC #1 **<END>** g01186148

277-8279 DRIVE GP-ACCESSORY

S/N: THX1-UP

PART OF 240-1861, 301-3082 ENGINE AR-COMPLETE

SMCS-1207 **i02772288**

NOTE	REF NO	GRAPHIC REF	PART NUMBER	QTY	PART NAME 1 2 3 4 5 6 (PRODUCT LEVEL)	SEE PAGE
	1	1	**189-2449**	1	SUPPORT (COMPRESSOR)	
	2	1	**190-0643**	1	BELT TENSIONER	
	3	1	**197-9642**	1	PULLEY AS-IDLER (8-GROOVE)	
	4	1	**241-7604**	1	BRACKET	
	5	1	**6E-5102**	1	PLATE	
M	6	1	**6V-5218**	4	BOLT (M8X1.25X35-MM)	
	7	1	**6V-5839**	7	WASHER (11X21X2.5-MM THK)	
M	8	1	**6V-5842**	6	BOLT (M10X1.5X40-MM)	
M	9	1	**8T-0643**	1	BOLT (M10X1.5X80-MM)	
	10	1	**9M-1974**	4	WASHER-HARD (8.8X16X2-MM THK)	

M-METRIC PART

277-8279 **DRIVE GP-ACCESSORY** *(contd.)* **i02772288**

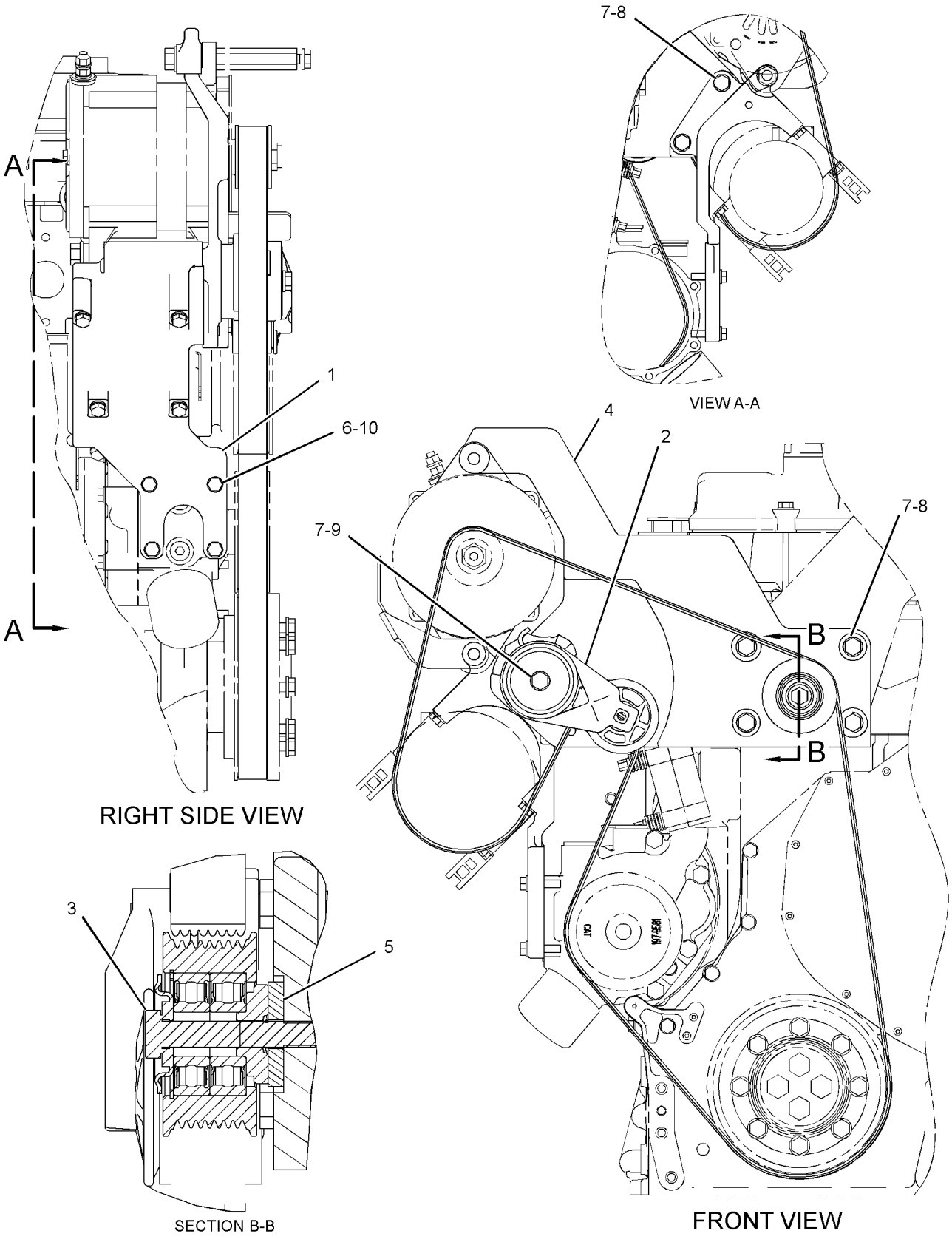

GRAPHIC #1 **<END>** g01217113

295-9439 DRIVE GP-FAN

S/N: D3P1-UP; M4T1-UP

PART OF 230-2899 FAN GP-SUCTION

SMCS-1359 **i03297835**

NOTE	REF NO	GRAPHIC REF	PART NUMBER	QTY	PART NAME 1 2 3 4 5 6 (PRODUCT LEVEL)	SEE PAGE
	1	1	**137-3746**	1	SHAFT	
	2	1	**129-7925**	1	SEAL-LIP TYPE	
	3	1	**200-3311**	1	HOUSING	
	4	1	**4B-3665**	2	BALL BEARING	
	5	1	**137-3749**	2	SPACER (45X53X10-MM THK)	
	6	1	**6V-5590**	1	RING-RETAINING	
	7	1	**095-7424**	1	RING-RETAINING	

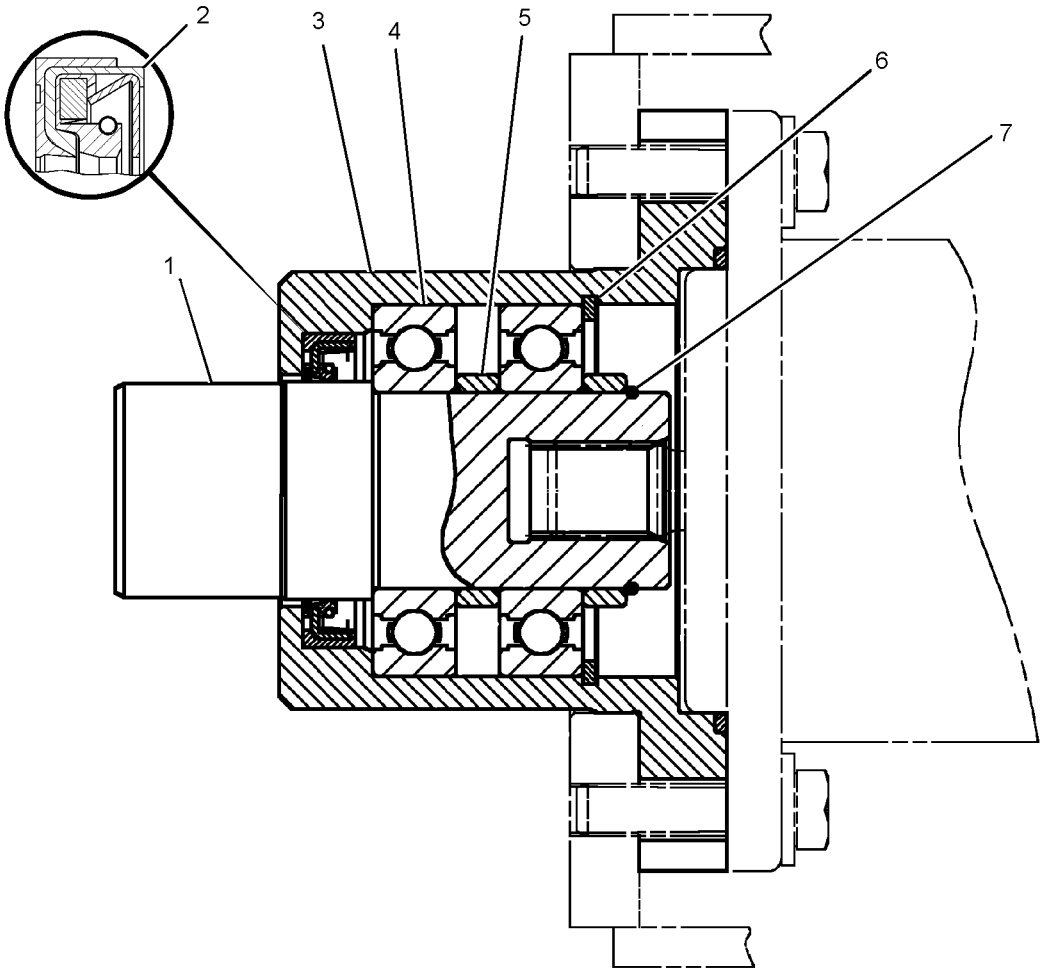

GRAPHIC #1 **<END>** g01538953

BASIC ENGINE

167-0171 FASTENER GP-CYLINDER HEAD

S/N: THX1-16676

PART OF 213-4363 FASTENER GP-CYLINDER HEAD

SMCS-1100 **i01682539**

NOTE	REF NO	GRAPHIC REF	PART NUMBER	QTY	PART NAME 1 2 3 4 5 6 (PRODUCT LEVEL)	SEE PAGE
M	1	1	**183-5163**	1	BOLT	
	2	1	**9X-8268**	1	WASHER (17.5X30X3.5MM THK)	

M-METRIC PART

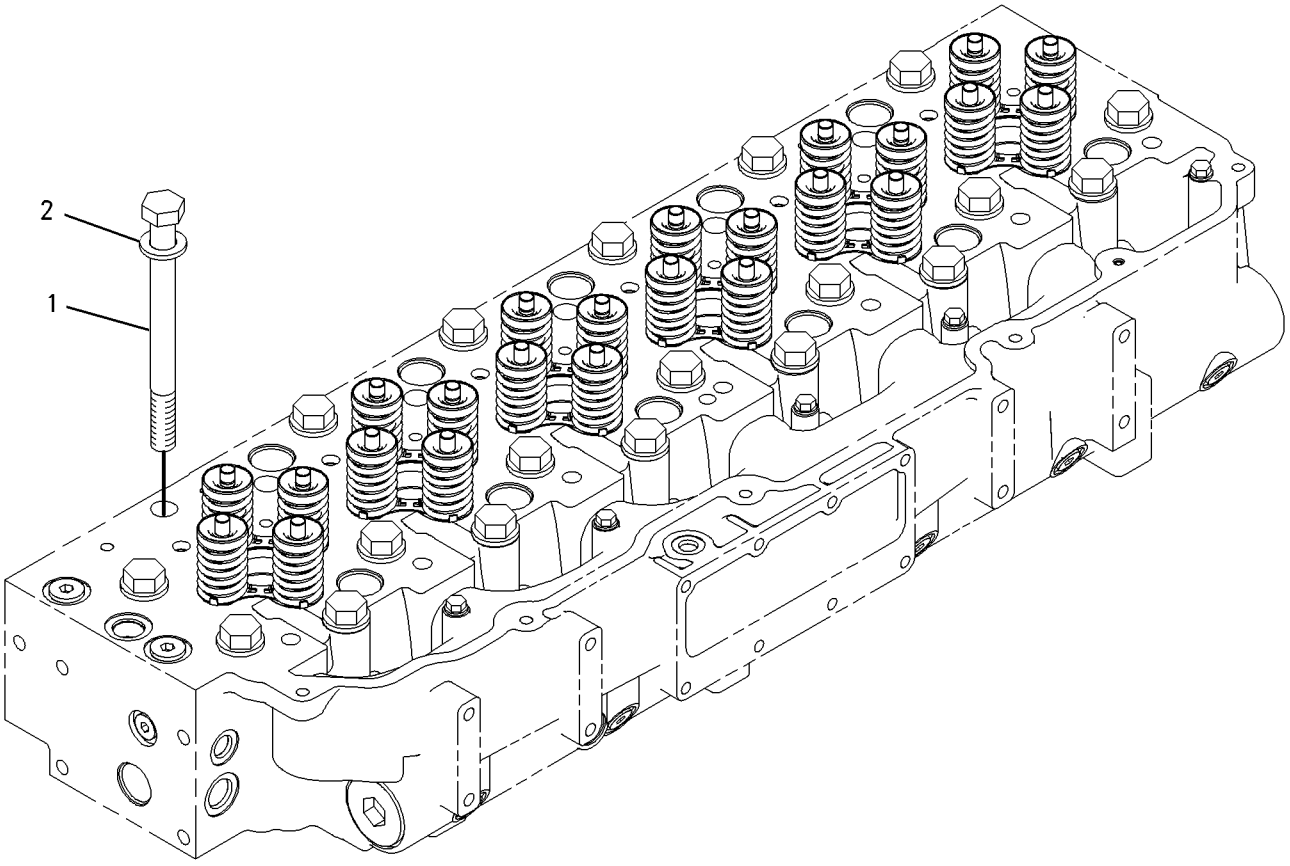

GRAPHIC #1 **<END>** g00792849

213-4363 FASTENER GP-CYLINDER HEAD

S/N: THX1-16676

PART OF 229-2665, 270-4216 ENGINE AR-CORE

SMCS-1100 **i02433678**

NOTE	REF NO	GRAPHIC REF	PART NUMBER	QTY	PART NAME 1 2 3 4 5 6 (PRODUCT LEVEL)	SEE PAGE
Y	1	1	*167-0171*	26	FASTENER GP-CYLINDER HEAD	56
M	2	1	**8C-4984**	5	BOLT (M8X1.25X150-MM)	
	3	1	**9M-1974**	5	WASHER-HARD (8.8X16X2-MM THK)	

M-METRIC PART
Y-SEPARATE ILLUSTRATION

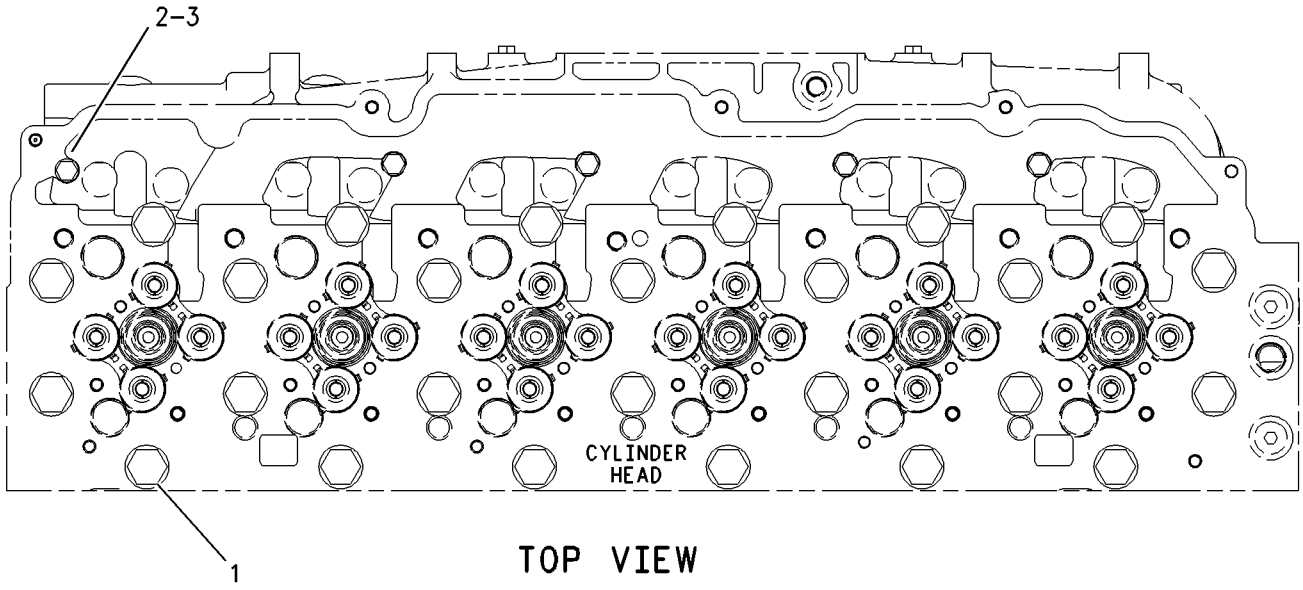

TOP VIEW

GRAPHIC #1 **<END>** g00919169

213-4363 FASTENER GP-CYLINDER HEAD

S/N: THX16677-UP

PART OF 229-2665, 270-4216, 348-2746, 348-2747 ENGINE AR-CORE

SMCS-1100 **i02747975**

NOTE	REF NO	GRAPHIC REF	PART NUMBER	QTY	PART NAME 1 2 3 4 5 6 (PRODUCT LEVEL)	SEE PAGE
C	1	1	*290-6884*	26	FASTENER GP-CYLINDER HEAD	
		1	**9X-8268**	26	WASHER (17.5X30X3.5-MM THK)	
M		1	**263-2915**	26	BOLT-12 POINT HEAD (M16X2X180-MM)	
M	2	1	**8C-4984**	5	BOLT (M8X1.25X150-MM)	
	3	1	**9M-1974**	5	WASHER-HARD (8.8X16X2-MM THK)	

C-CHANGE FROM PREVIOUS TYPE
M-METRIC PART

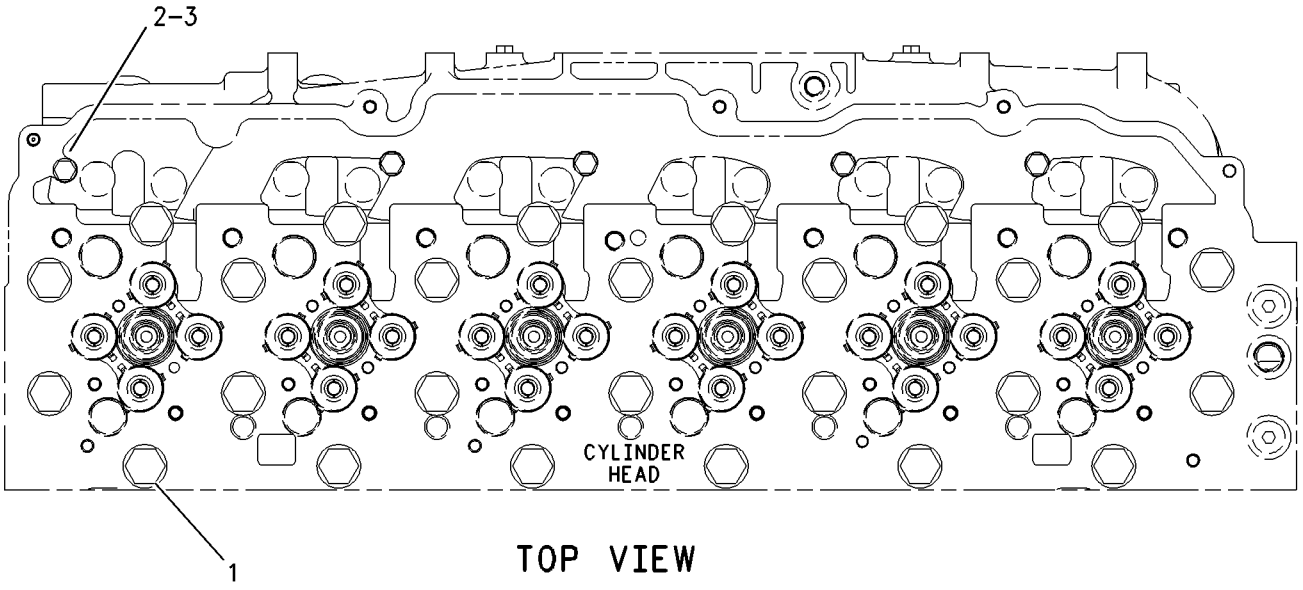

TOP VIEW

GRAPHIC #1 **<END>** g00919169

218-0859 FASTENER GP-DAMPER & PULLEY

S/N: THX1-UP

PART OF 240-1861, 301-3082 ENGINE AR-COMPLETE

SMCS-1205, 7553 **i02214637**

NOTE	REF NO	GRAPHIC REF	PART NUMBER	QTY	PART NAME 1 2 3 4 5 6 (PRODUCT LEVEL)	SEE PAGE
	1	1	**228-3621**	1	SPACER (101.5X167X8-MM THK)	
M	2	1	**6V-4249**	8	BOLT (M10X1.5X50-MM)	

M-METRIC PART

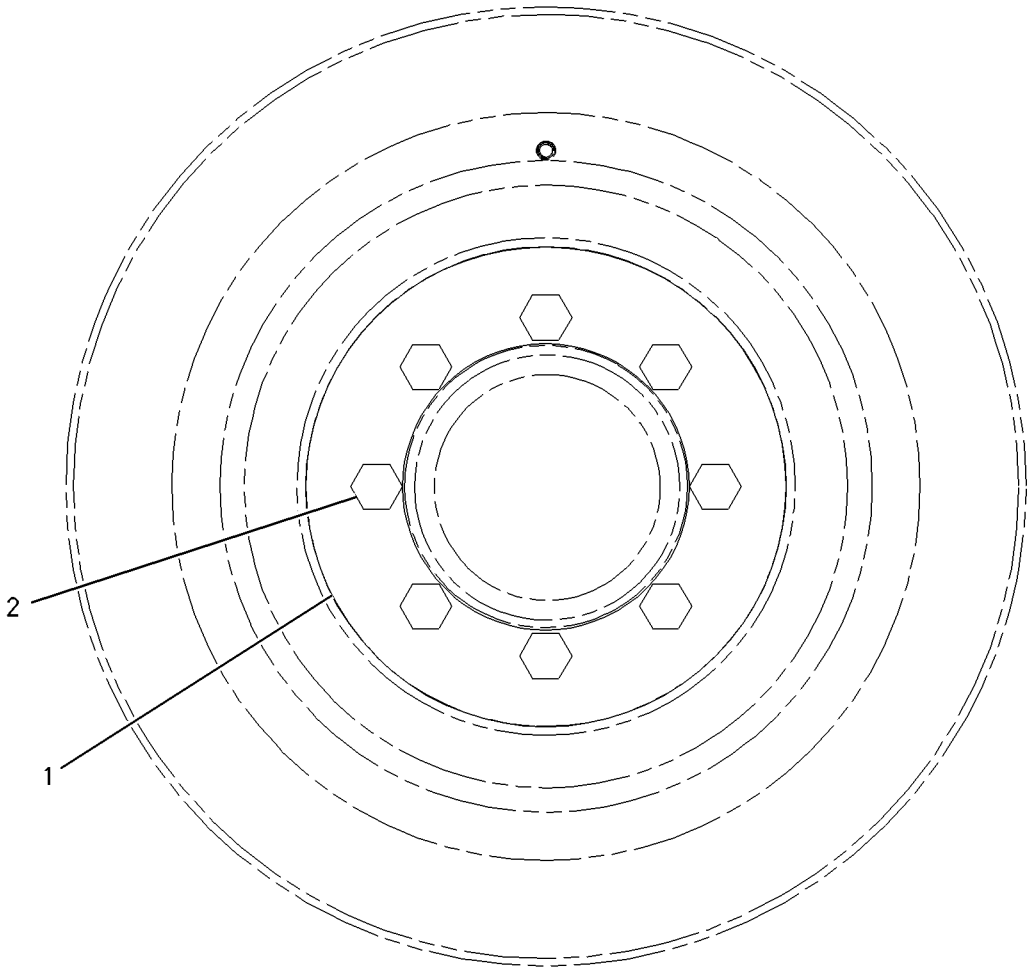

FRONT VIEW

GRAPHIC #1 **<END>** g00919524

116-4556 FASTENER GP-FRONT HOUSING

S/N: THX1-UP

PART OF 240-1861, 301-3082 ENGINE AR-COMPLETE

SMCS-1162 **i01487429**

NOTE	REF NO	GRAPHIC REF	PART NUMBER	QTY	PART NAME 1 2 3 4 5 6 (PRODUCT LEVEL)	SEE PAGE
M	1	1	**6V-8336**	6	BOLT (M12X1.75X70-MM)	
		1	**5P-8245**	6	WASHER-HARD (13.5X25.5X3-MM THK)	

M-METRIC PART

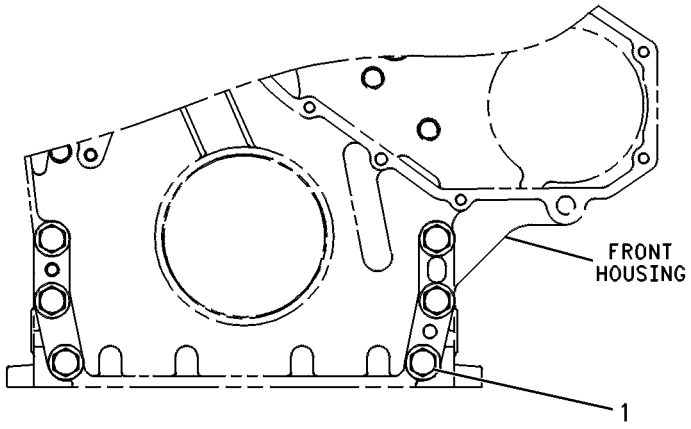

FRONT VIEW

GRAPHIC #1 **<END>** g00244671

236-7315 FASTENER GP-VALVE COVER

S/N: THX1-UP

PART OF 240-1861, 301-3082 ENGINE AR-COMPLETE

SMCS-1107 **i02431566**

NOTE	REF NO	GRAPHIC REF	PART NUMBER	QTY	PART NAME 1 2 3 4 5 6 (PRODUCT LEVEL)	SEE PAGE
M	1	1	**099-3649**	11	BOLT (M8X1.25X40-MM)	
	2	1	**8T-4224**	11	WASHER-HARD (8.8X16X2-MM THK)	

M-METRIC PART

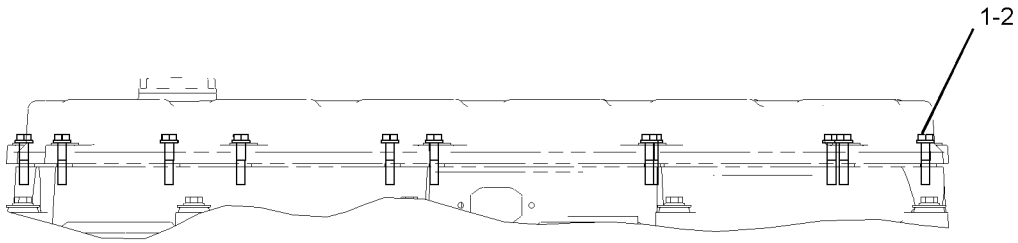

GRAPHIC #1 **<END>** g01013698

233-0423 FASTENER GP-VALVE COVER BASE

S/N: THX1-UP

PART OF 240-1861, 301-3082 ENGINE AR-COMPLETE

SMCS-1120 **i02637720**

NOTE	REF NO	GRAPHIC REF	PART NUMBER	QTY	PART NAME 1 2 3 4 5 6 (PRODUCT LEVEL)	SEE PAGE
	1	1	**244-4500**	9	SPRING	
M	2	1	**8T-0100**	9	BOLT (M8X1.25X60-MM)	
	3	1	**9N-0869**	9	WASHER-HARD (8.8X25.5X2-MM THK)	

M-METRIC PART

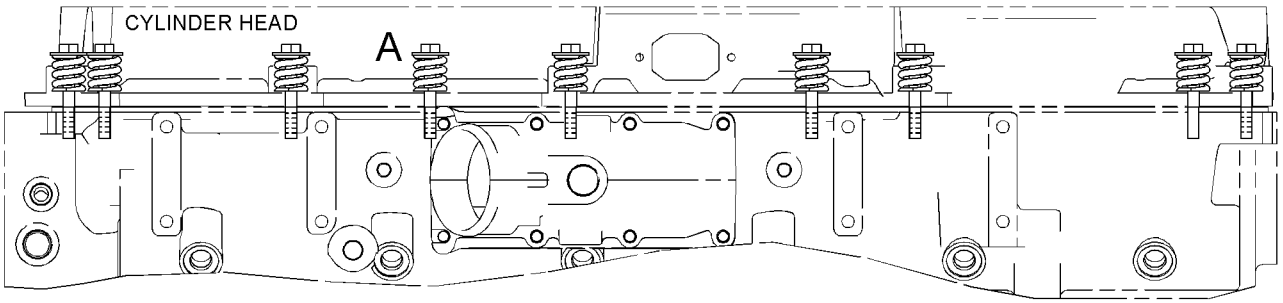

LEFT SIDE VIEW

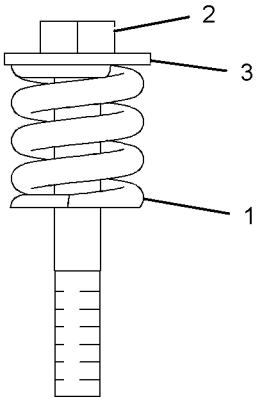

VIEW OF AREA A

GRAPHIC #1 **<END>** g01207018

102-3596 FLYWHEEL GP

S/N: THX1-UP

PART OF 240-1861, 301-3082 ENGINE AR-COMPLETE

SMCS-1156 **i02503973**

NOTE	REF NO	GRAPHIC REF	PART NUMBER	QTY	PART NAME 1 2 3 4 5 6 (PRODUCT LEVEL)	SEE PAGE
R	1	1	**163-0424**	1	FLYWHEEL AS	
	1A	1	**4N-2514**	1	GEAR (113-TEETH)	
M	2	1	**9X-2021**	8	BOLT-LOCKING (M16X2X45-MM)	
	3	1	**5P-8247**	8	WASHER-HARD (17X32X3.5-MM THK)	

M-METRIC PART
R-REMFG PART MAY BE AVAILABLE

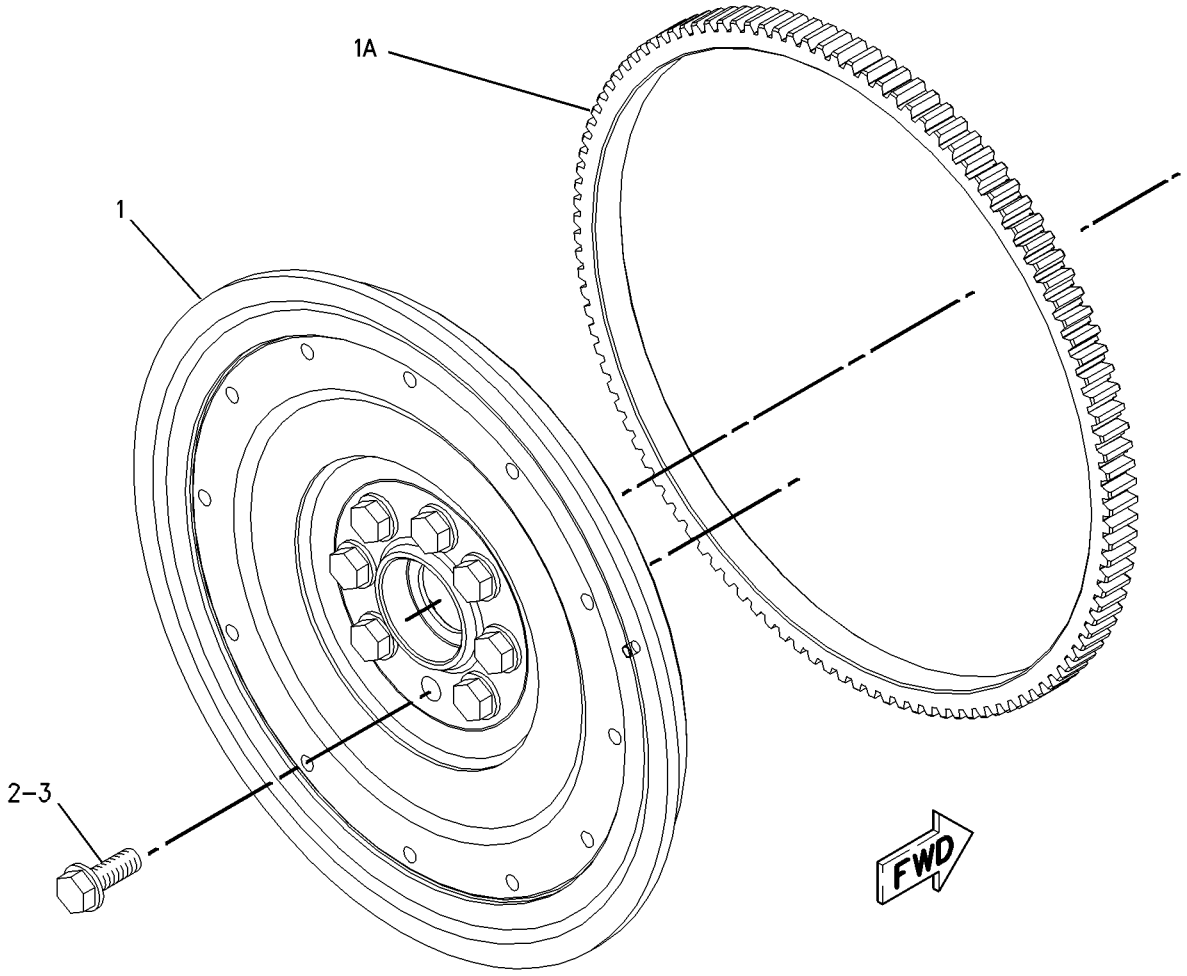

GRAPHIC #1 **<END>** g00779246

BASIC ENGINE

205-1321 GEAR GP-FRONT

S/N: THX1-UP

PART OF 229-2665, 270-4216, 348-2746, 348-2747 ENGINE AR-CORE

SMCS-1151, 1162, 1206 **i01696307**

NOTE	REF NO	GRAPHIC REF	PART NUMBER	QTY	PART NAME 1 2 3 4 5 6 (PRODUCT LEVEL)	SEE PAGE
	1	1	**113-6069**	1	PLATE-THRUST	
	2	1	**115-4219**	1	PLATE-RETAINING	
	3	1	**200-4495**	1	SHAFT-IDLER	
	4	1	**205-1320**	1	GEAR AS-IDLER (50 TEETH)	
	4A	1	**115-4072**	1	BEARING	
M	5	1	**136-4183**	1	BOLT-12 POINT HEAD (M10X1.5X30MM)	
M	6	1	**6V-5843**	2	BOLT (M10X1.50X45MM)	

M-METRIC PART

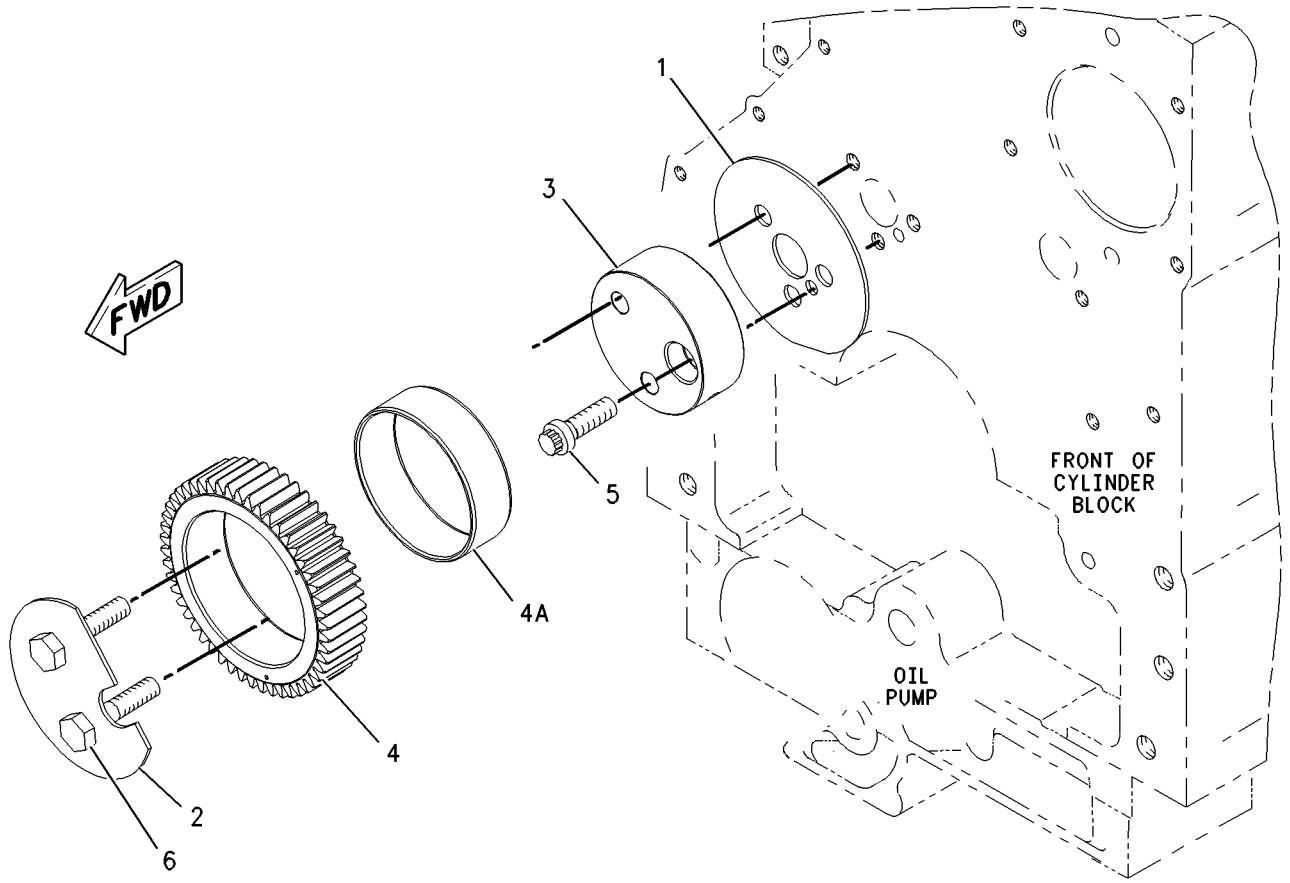

GRAPHIC #1 **<END>** g00873940

BASIC ENGINE

229-3568 HOUSING GP-FLYWHEEL

S/N: THX1-UP

PART OF 240-1861, 301-3082 ENGINE AR-COMPLETE

SMCS-1157 **i03171283**

NOTE	REF NO	GRAPHIC REF	PART NUMBER	QTY	PART NAME 1 2 3 4 5 6 (PRODUCT LEVEL)	SEE PAGE
	1	1	**7C-1445**	2	COVER	
	2	1	**229-3569**	1	HOUSING-FLYWHEEL	
	3	1	**061-9455**	1	SEAL-O-RING	
	4	1	**3K-8460**	1	PLUG	
	5	1	**5P-7701**	1	SEAL-O-RING	
	6	1	**5P-7814**	1	SEAL-O-RING	
	7	1	**5P-8245**	14	WASHER-HARD (13.5X25.5X3-MM THK)	
M	8	1	**6V-5219**	2	BOLT (M8X1.25X40-MM)	
M	9	1	**6V-8197**	14	BOLT (M12X1.75X40-MM)	
	10	1	**8L-2786**	2	SEAL-O-RING	
	11	1	**9M-1974**	2	WASHER-HARD (8.8X16X2-MM THK)	
	12	1	**9S-4185**	2	PLUG-O-RING (FLYWHEEL HOUSING DRAIN)	
	13	1	**9S-9334**	1	PLUG-O-RING	
BF			**1U-8846**		SEALANT-GASKET	

B-USE AS REQUIRED
F-NOT SHOWN
M-METRIC PART

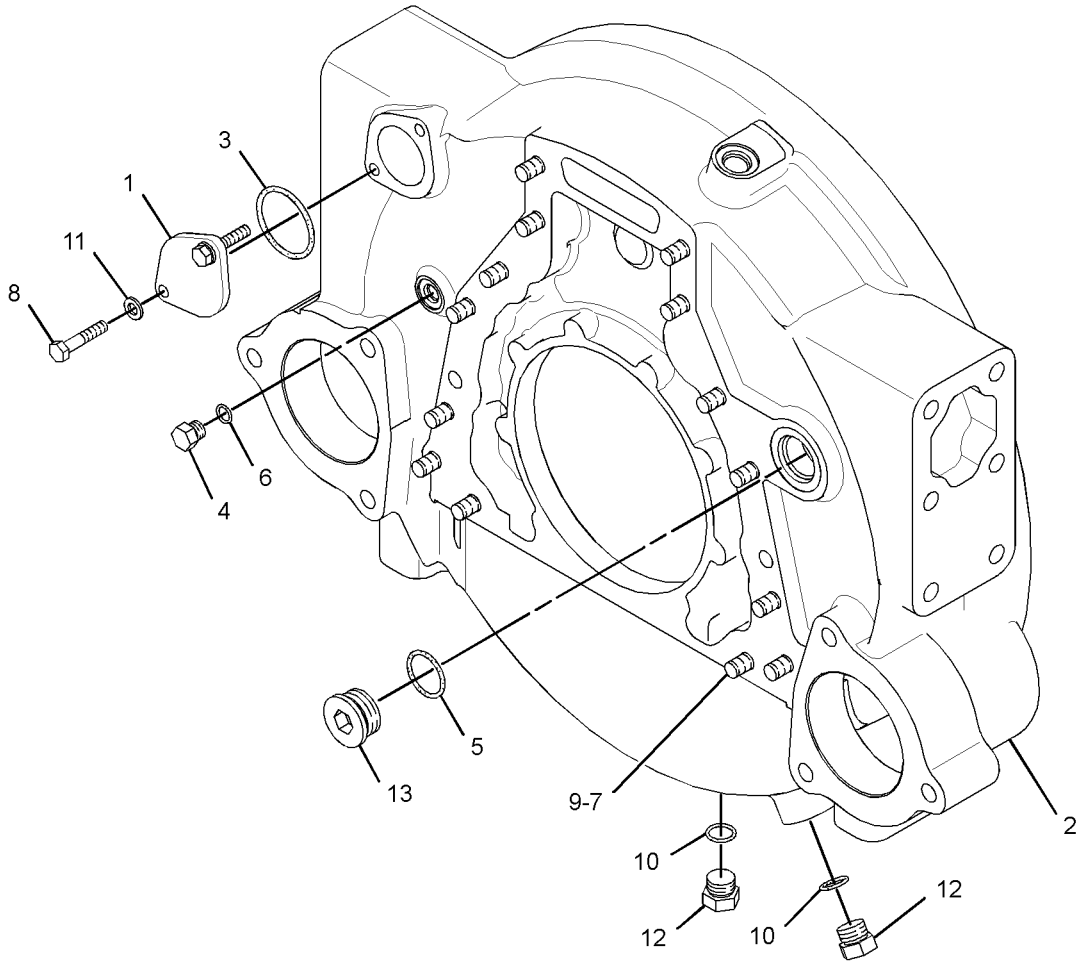

GRAPHIC #1 **<END>** g01623341

BASIC ENGINE

245-3260 HOUSING GP-FRONT

S/N: THX1-UP

PART OF 229-2665, 270-4216, 348-2746, 348-2747 ENGINE AR-CORE

SMCS-1151, 1162, 1206 **i02504053**

NOTE	REF NO	GRAPHIC REF	PART NUMBER	QTY	PART NAME 1 2 3 4 5 6 (PRODUCT LEVEL)	SEE PAGE
	1	1	**245-3259**	1	HOUSING-FRONT	
M	2	1	**6V-3918**	4	BOLT (M8X1.25X50-MM)	
M	3	1	**6V-5217**	8	BOLT (M8X1.25X20-MM)	
	4	1	**9M-1974**	12	WASHER-HARD (8.8X16X2-MM THK)	
B	5	1	**1U-8846**		SEALANT-GASKET	

B-USE AS REQUIRED
M-METRIC PART

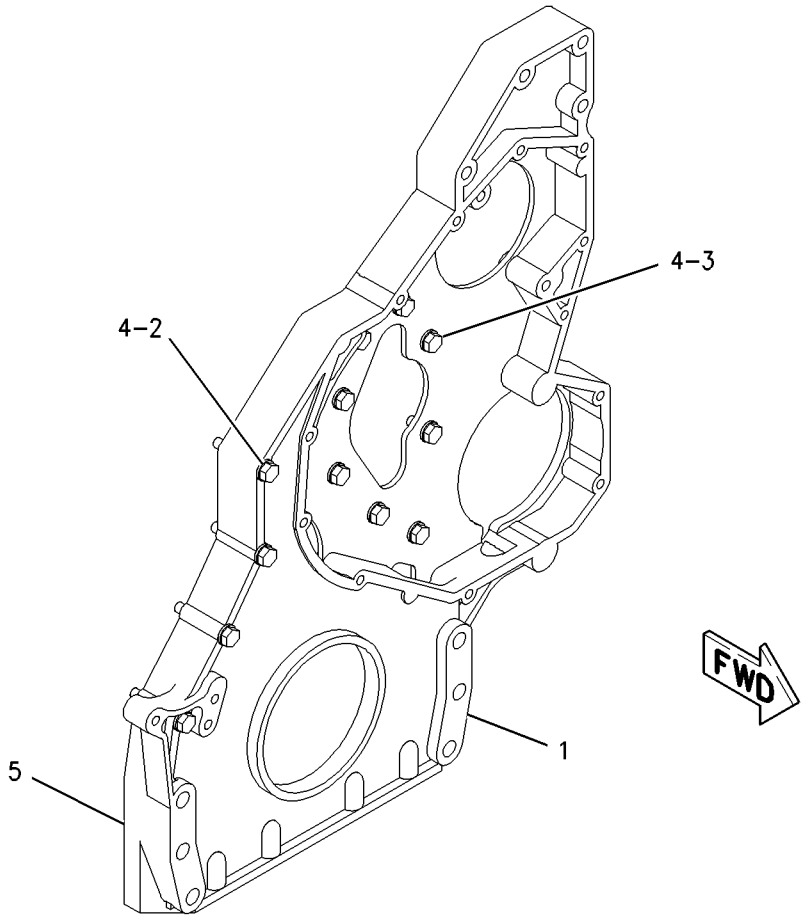

GRAPHIC #1 **<END>** g00713985

191-3063 LIFTING GP-ENGINE

S/N: THX1-UP

PART OF 240-1861, 301-3082 ENGINE AR-COMPLETE

SMCS-1122 **i02052452**

NOTE	REF NO	GRAPHIC REF	PART NUMBER	QTY	PART NAME 1 2 3 4 5 6 (PRODUCT LEVEL)	SEE PAGE
	1	1	**228-4766**	1	PLATE-LIFTING	
	2	1	**166-1785**	1	PLATE-LIFTING	
	3	1	**5P-8245**	3	WASHER-HARD (13.5X25.5X3-MM THK)	
M	4	1	**6V-8675**	3	BOLT (M12X1.75X35-MM)	

M-METRIC PART

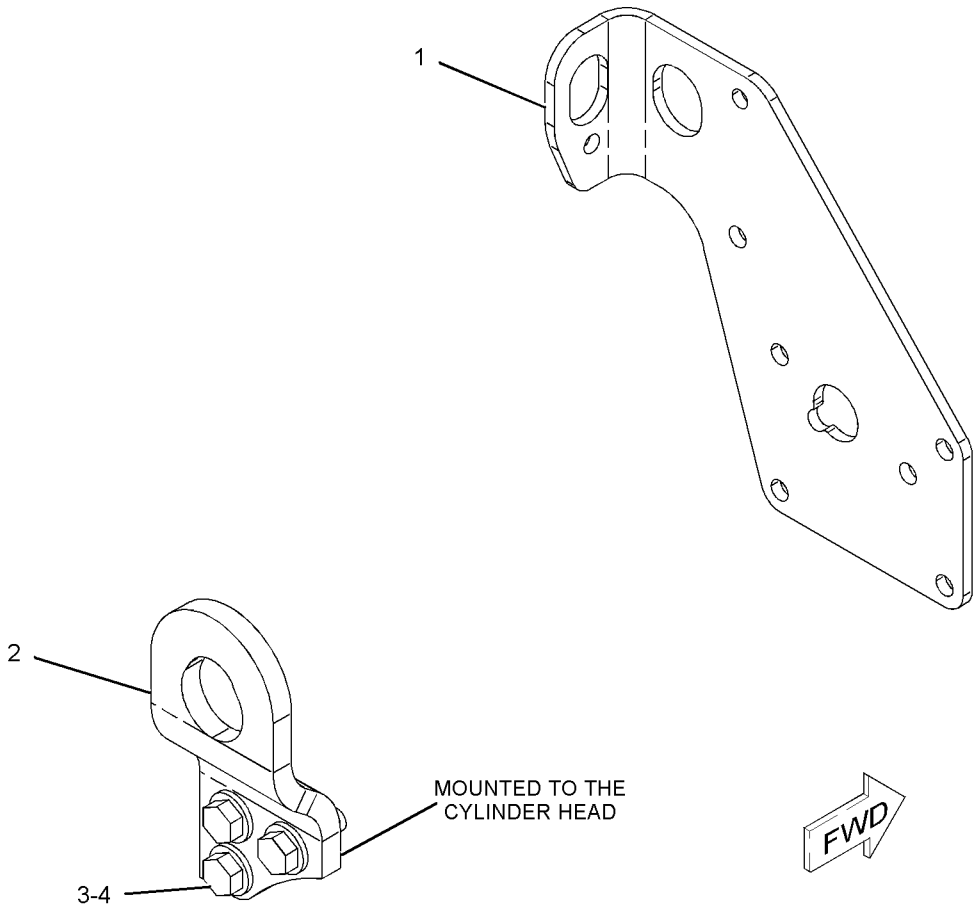

GRAPHIC #1 **<END>** g01057483

BASIC ENGINE

239-6474 MOUNTING GP-ENGINE

S/N: D3P1-UP; M4T1-UP

PART OF 279-7825 INSTALLATION AR-ENGINE

SMCS-1152 **i02746995**

NOTE	REF NO	GRAPHIC REF	PART NUMBER	QTY	PART NAME 1 2 3 4 5 6 (PRODUCT LEVEL)	SEE PAGE
	1	1	**109-9437**	4	WASHER (24.5X135X12-MM THK)	
	2	1	**139-8736**	2	MOUNT-FLEXIBLE	
	3	1	**139-8737**	2	MOUNT-FLEXIBLE	
M	4	1	**139-8873**	4	SUPPORT AS	
	5	1	**178-6473**	2	MOUNT-FLEXIBLE	
	6	1	**178-6474**	2	MOUNT-FLEXIBLE	
	7	1	**9X-8257**	16	WASHER (17.5X30X3.5-MM THK)	
	8	1	**239-6475**	2	BRACKET (FRONT, RH)	
	9	1	**287-0215**	1	BRACKET AS (REAR, RH)	
	10	1	**287-0216**	1	BRACKET AS (REAR, LH)	
M	11	1	**7X-2553**	4	BOLT (M16X2X40-MM)	
M	12	1	**7X-2554**	4	BOLT (M16X2X70-MM)	
M	13	1	**7X-2567**	4	BOLT (M24X3X160-MM)	
	14	1	**8T-1482**	4	WASHER-HARD (26X50X8-MM THK)	
	15	1	**8T-4167**	4	WASHER-HARD (26X44X4-MM THK)	
M	16	1	**8T-7338**	8	BOLT (M16X2X45-MM)	

M-METRIC PART

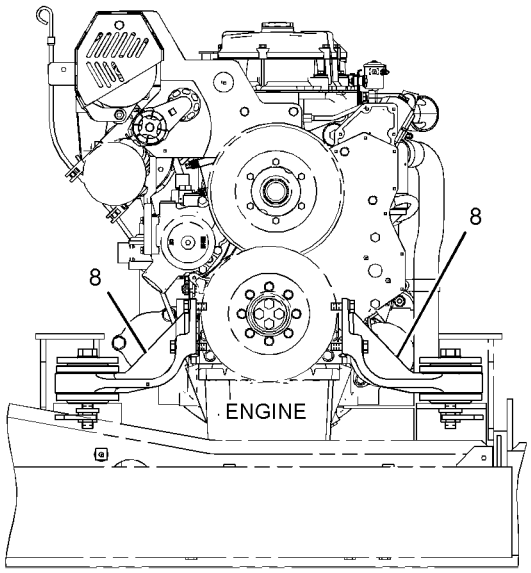

FRONT VIEW OF ENGINE

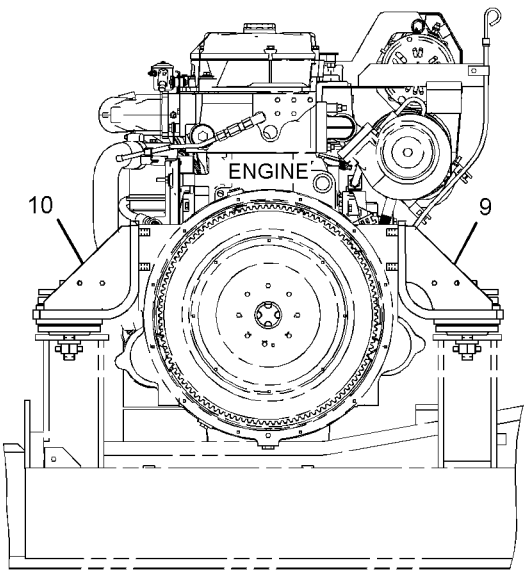

REAR VIEW OF ENGINE

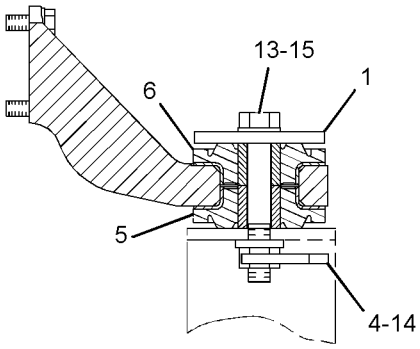

SECTION A-A

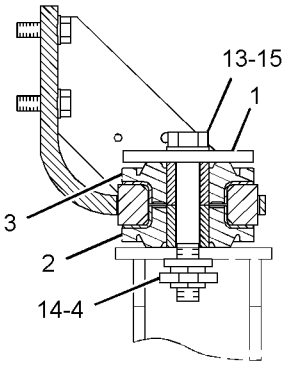

SECTION B-B

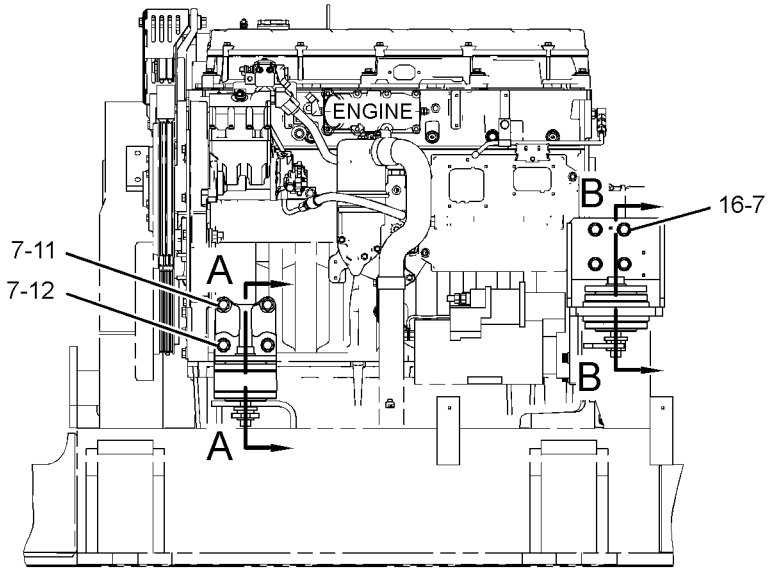

LEFT SIDE VIEW OF ENGINE

GRAPHIC #1

<END>

g01377974

187-0472 PAN GP-OIL—ENGINE

S/N: THX1-UP

PART OF 240-1861, 301-3082 ENGINE AR-COMPLETE

SMCS-1302 **i03171302**

NOTE	REF NO	GRAPHIC REF	PART NUMBER	QTY	PART NAME 1 2 3 4 5 6 (PRODUCT LEVEL)	SEE PAGE
	1	1	*148-8395*	1	PLUG AS	
		1	**3K-0360**	1	SEAL-O-RING	
		1	**9S-8005**	1	PLUG-O-RING	
	2	1	**6V-7238**	1	VALVE-SHUTOFF (ENGINE OIL PAN DRAIN)	
	3	1	**213-0677**	1	SWITCH AS-LIQUID LEVEL (ENGINE OIL)	
		1	**9X-3401**	2	PIN-CONNECTOR (16-GA TO 18-GA)	
					—OR—	
		1	**126-1767**	2	PIN-CONNECTOR (14-GA)	
	3A	1	**102-8802**	1	KIT-RECEPTACLE (2-PIN)	
					(INCLUDES RECEPTACLE AS & WEDGE)	
	4	1	**136-4303**	1	PLUG AS-CONNECTOR (2-PIN)	
		1	**8T-8737**	2	PLUG-SEAL	
		1	**155-2270**	1	KIT-CONNECTING PLUG (2-PIN)	
					(INCLUDES PLUG AS, WEDGE & INTERFACE SEAL)	
	5	1	**189-9377**	1	SEAL-O-RING	
	6	1	**190-6114**	1	GASKET-OIL PAN (ENGINE)	
	7	1	**221-9806**	1	PAN-OIL	
	8	1	**3K-0360**	1	SEAL-O-RING	
M	9	1	**6V-3918**	32	BOLT (M8X1.25X50-MM)	
	10	1	**9M-1974**	32	WASHER-HARD (8.8X16X2-MM THK)	
B	11	1	**4C-9612**		SEALANT-SILICONE	

B-USE AS REQUIRED
M-METRIC PART

187-0472 **PAN GP-OIL** *(contd.)* **i03171302**

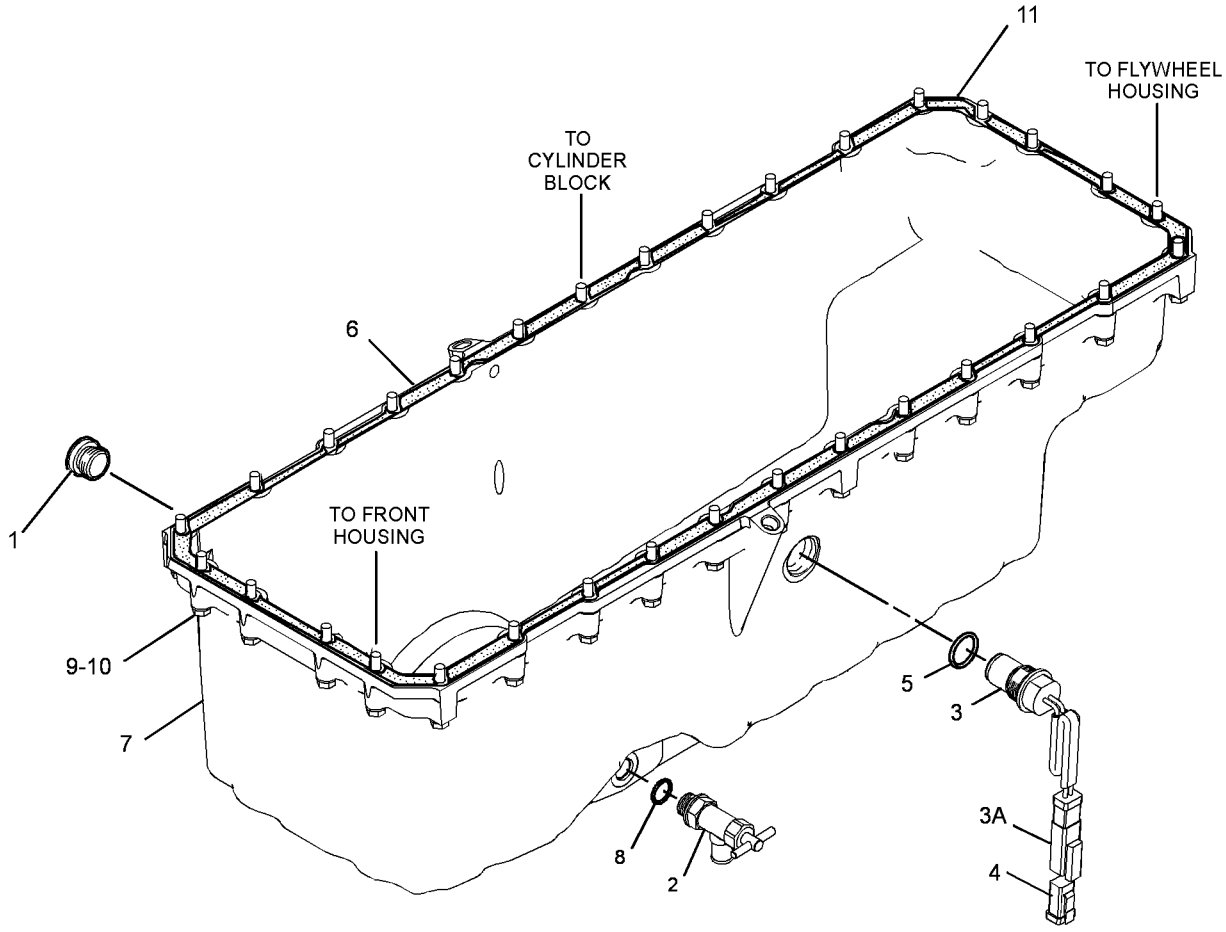

GRAPHIC #1 **<END>** g01430144

265-1400 PISTON & ROD GP

S/N: THX1-UP
16.1:1 COMPRESSION RATIO
PART OF 229-2665, 270-4216 ENGINE AR-CORE

SMCS-1225 **i03770654**

NOTE	REF NO	GRAPHIC REF	PART NUMBER	QTY	PART NAME 1 2 3 4 5 6 (PRODUCT LEVEL)	SEE PAGE
	1	1	**213-3190**	1	BEARING (STANDARD)	
AB		1	**282-2478**		BEARING-CONNECTING ROD (0.25-MM US)	
AB		1	**282-2479**		BEARING-CONNECTING ROD (0.51-MM US)	
R	2	1	**160-8199**	1	ROD AS	
	2A	1	**160-8194**	1	BEARING (CONNECTING ROD)	
M	2B	1	**160-8197**	2	BOLT	
	3	1	**166-3648**	1	PIN-PISTON	
	4	1	**168-7211**	1	RING-PISTON (OIL CONTROL)	
R	5	1	**265-1401**	1	CROWN AS-PISTON	
	6	1	**161-3424**	1	RING-PISTON (INTERMEDIATE)	
	7	1	**197-9367**	1	TUBE AS (PISTON COOLING JET)	
	8	1	**197-9392**	1	RING-PISTON (TOP)	
	9	1	**324-7380**	1	SKIRT-PISTON	
M	10	1	**6V-3940**	1	BOLT (M8X1.25X25-MM)	
	11	1	**7X-2908**	2	RING-RETAINING	

A-NOT PART OF THIS GROUP
B-USE AS REQUIRED
M-METRIC PART
R-REMFG PART MAY BE AVAILABLE

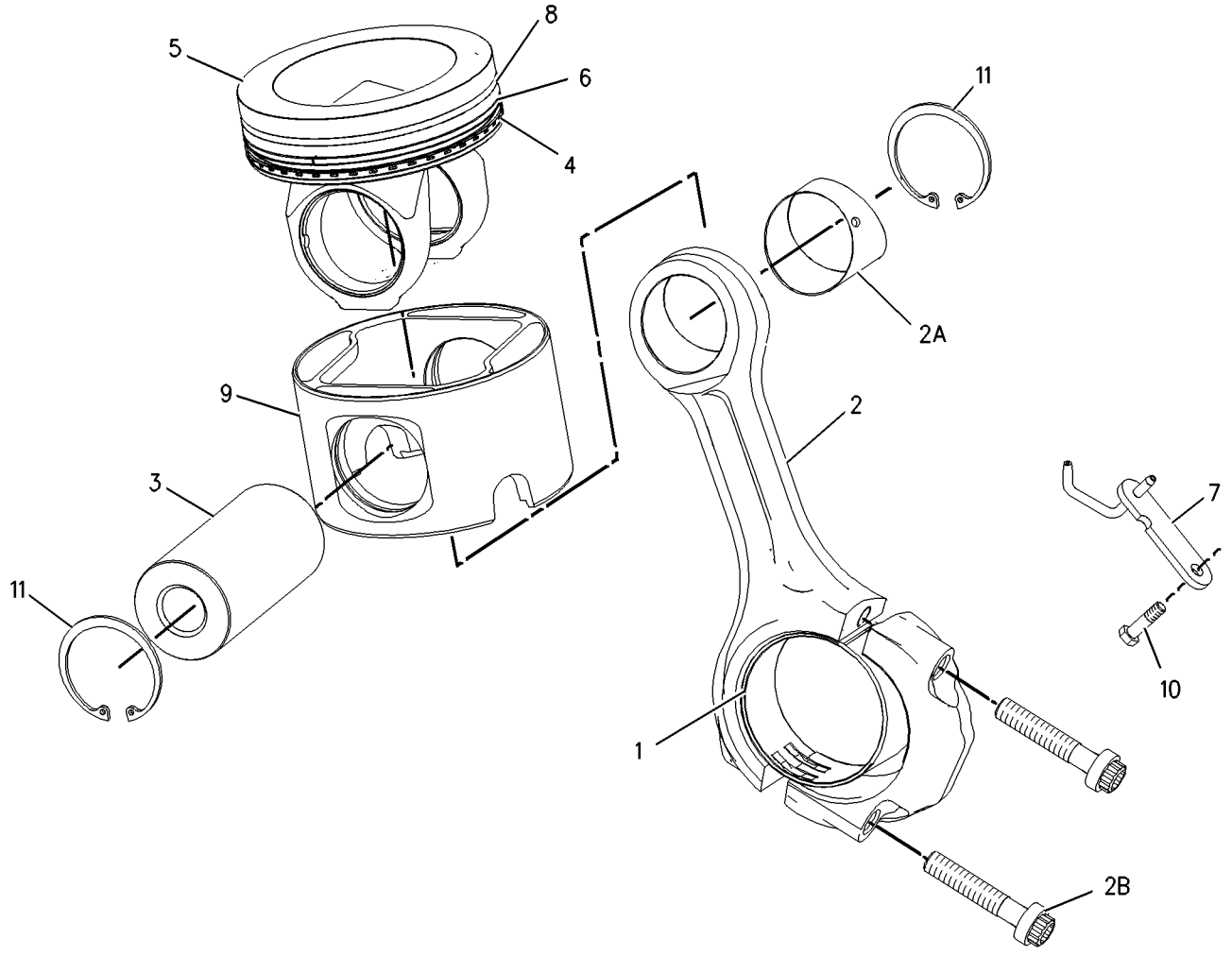

GRAPHIC #1 **<END>** g00922644

BASIC ENGINE

347-7908 PISTON & ROD GP

S/N: THX22638-UP

PART OF 348-2746, 348-2747 ENGINE AR-CORE

SMCS-1225 **i03770656**

NOTE	REF NO	GRAPHIC REF	PART NUMBER	QTY	PART NAME 1 2 3 4 5 6 (PRODUCT LEVEL)	SEE PAGE
	1	1	**213-3190**	1	BEARING (STANDARD)	
AB		1	**282-2478**		BEARING-CONNECTING ROD (0.25-MM US)	
AB		1	**282-2479**		BEARING-CONNECTING ROD (0.51-MM US)	
R	2	1	**160-8199**	1	ROD AS	
	2A	1	**160-8194**	1	BEARING	
M	2B	1	**160-8197**	2	BOLT	
	3	1	**166-3648**	1	PIN-PISTON	
	4	1	**347-2382**	1	RING-PISTON (OIL CONTROL)	
R	5	1	**265-1401**	1	CROWN AS-PISTON	
	6	1	**347-2381**	1	RING-PISTON (INTERMEDIATE)	
	7	1	**197-9367**	1	TUBE AS (PISTON COOLING JET)	
	8	1	**347-2380**	1	RING-PISTON-TOP	
	9	1	**324-7380**	1	SKIRT-PISTON	
M	10	1	**6V-3940**	1	BOLT (M8X1.25X25-MM)	
	11	1	**7X-2908**	2	RING-RETAINING	

A-NOT PART OF THIS GROUP
B-USE AS REQUIRED
M-METRIC PART
R-REMFG PART MAY BE AVAILABLE

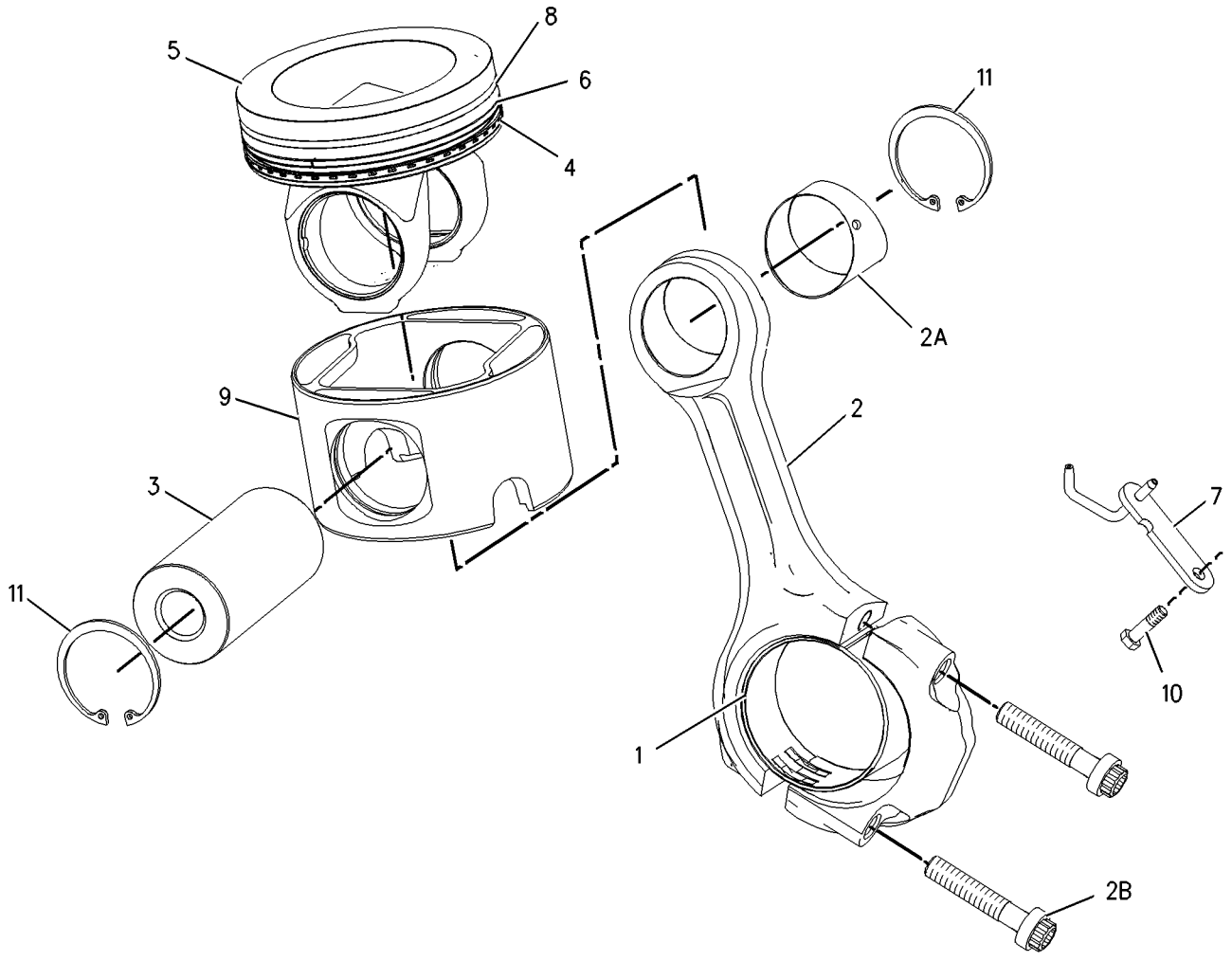

GRAPHIC #1 **<END>** g00922644

BASIC ENGINE

169-3105 PLUG GP-ENGINE

S/N: THX1-UP

PART OF 240-1861, 301-3082 ENGINE AR-COMPLETE

SMCS-1000 **i02795404**

NOTE	REF NO	GRAPHIC REF	PART NUMBER	QTY	PART NAME 1 2 3 4 5 6 (PRODUCT LEVEL)	SEE PAGE
	1	1	*183-3406*	2	PLUG AS	
					(EACH INCLUDES)	
		1	**9S-4191**	1	PLUG-O-RING	
	1A	1	**6V-5049**	1	SEAL-O-RING	
	2	1	*148-8408*	1	PLUG AS	
		1	**9S-4183**	1	PLUG-O-RING	
	2A	1	**3D-2824**	1	SEAL-O-RING	
	3	1	**8L-2786**	2	SEAL-O-RING	
	4	1	**9S-8005**	2	PLUG-O-RING	

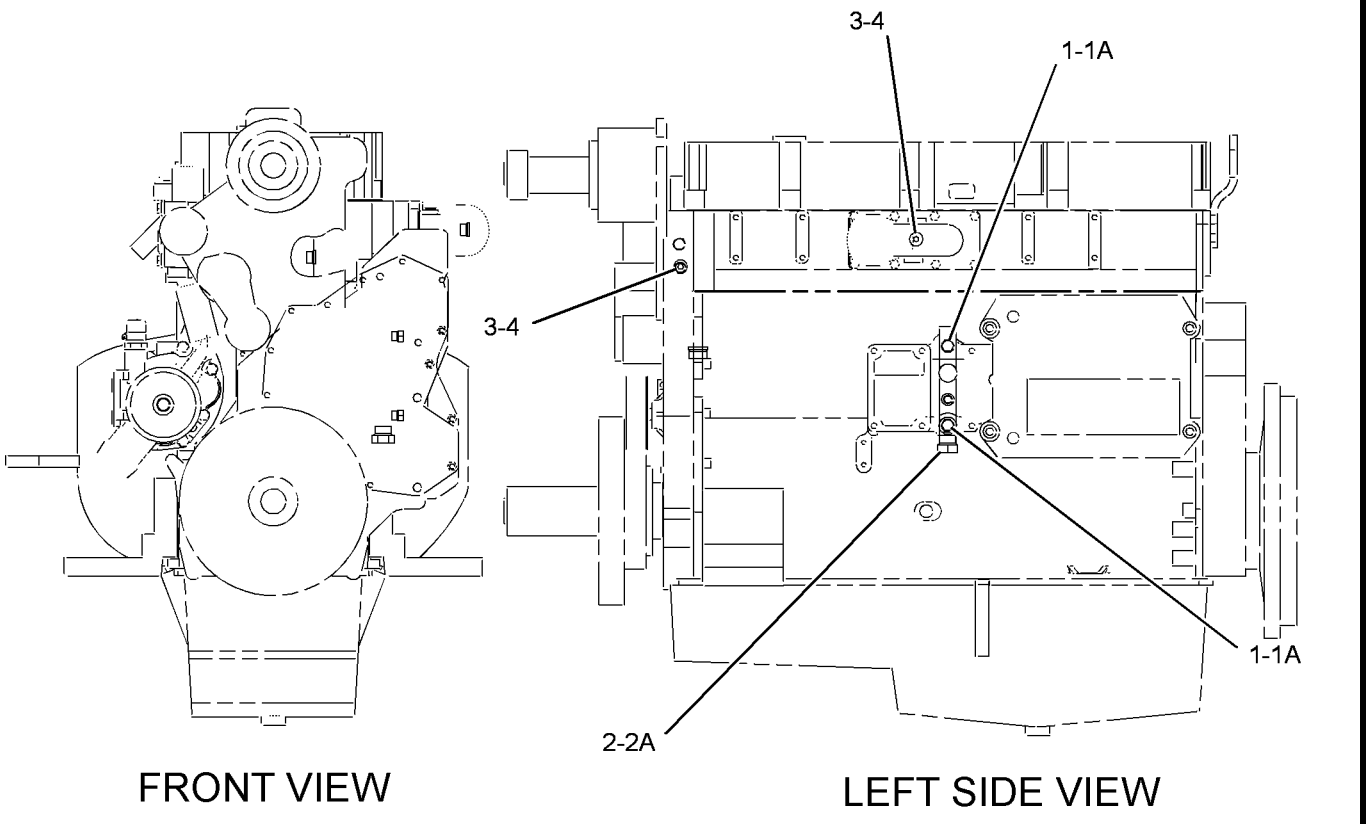

GRAPHIC #1 **<END>** g01395933

BASIC ENGINE

279-7820 PLUG GP-ENGINE

S/N: D3P1-UP; M4T1-UP

PART OF 279-7825 INSTALLATION AR-ENGINE

SMCS-1000 **i02756547**

NOTE	REF NO	GRAPHIC REF	PART NUMBER	QTY	PART NAME 1 2 3 4 5 6 (PRODUCT LEVEL)	SEE PAGE
	1	1	**3J-5390**	1	PLUG	

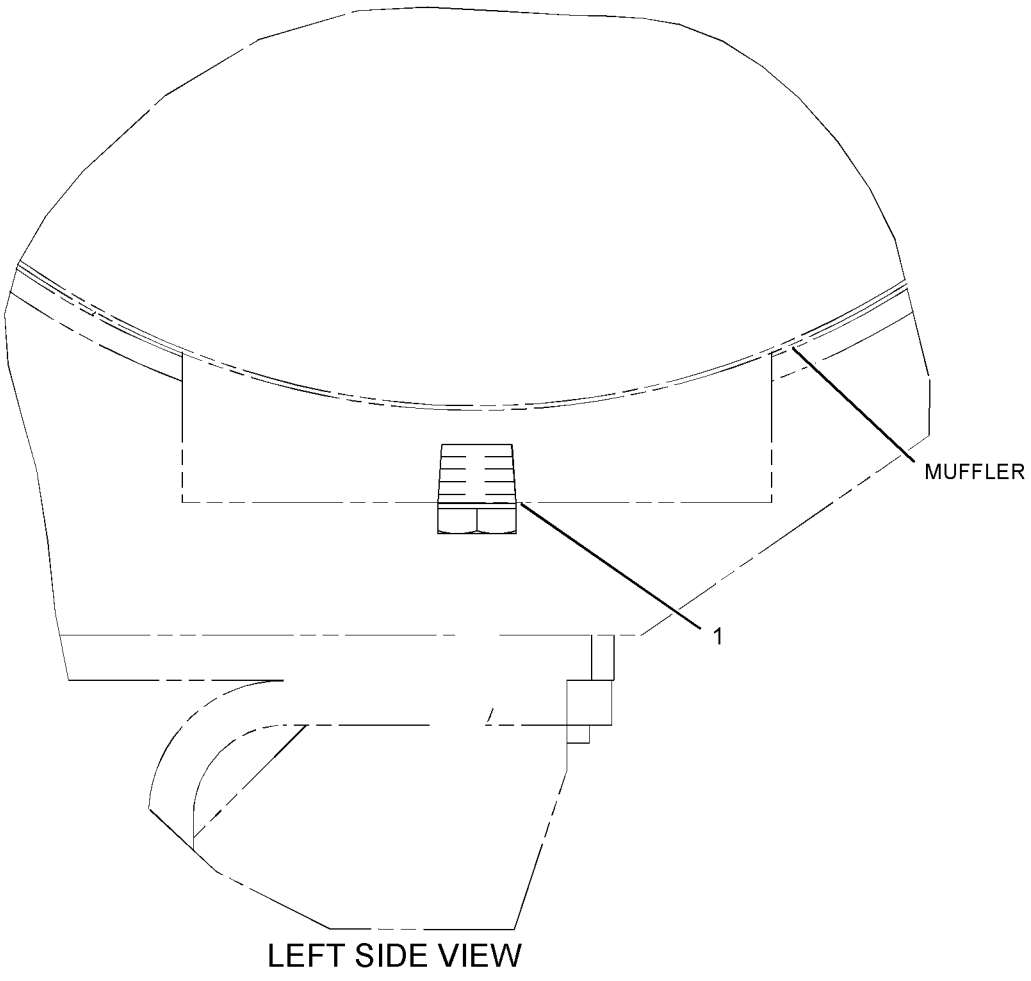

LEFT SIDE VIEW

GRAPHIC #1

<END>

g01239111

213-9320 ROCKER ARM GP–EXHAUST

S/N: THX1-UP

PART OF 212-8926 VALVE MECHANISM GP

SMCS-1123 **i02585214**

NOTE	REF NO	GRAPHIC REF	PART NUMBER	QTY	PART NAME 1 2 3 4 5 6 (PRODUCT LEVEL)	SEE PAGE
R	1	1	**163-2447**	1	ROCKER ARM AS	
M	2	1	**260-7524**	1	SCREW-VALVE ADJUSTMENT (M10X1.5-THD)	
M	3	1	**2Y-5829**	1	NUT (M10X1.5-THD)	

M-METRIC PART
R-REMFG PART MAY BE AVAILABLE

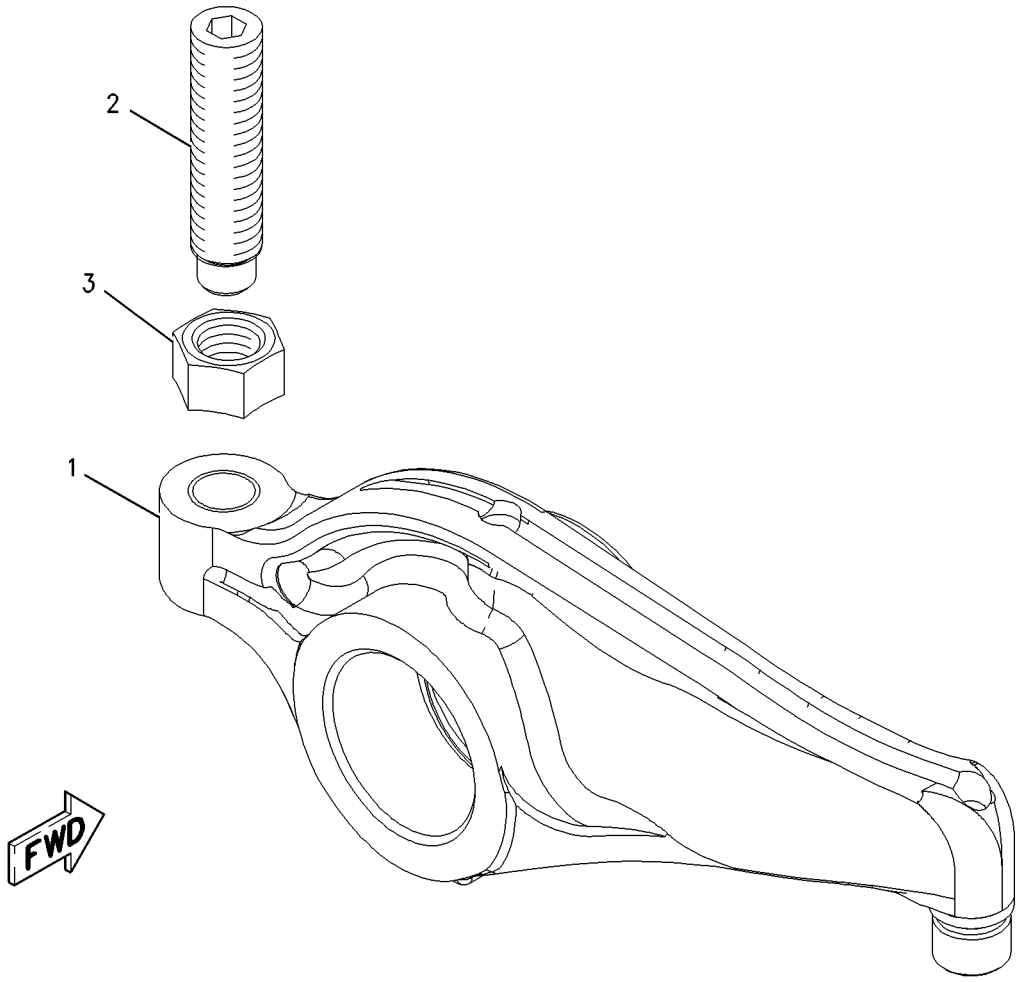

GRAPHIC #1 **<END>** g00979393

242-0329 ROCKER ARM GP–INLET

S/N: THX1-UP

PART OF 212-8926 VALVE MECHANISM GP

SMCS-1123 **i02585530**

NOTE	REF NO	GRAPHIC REF	PART NUMBER	QTY	PART NAME 1 2 3 4 5 6 (PRODUCT LEVEL)	SEE PAGE
M	1	1	**260-7524**	1	SCREW-VALVE ADJUSTMENT (M10X1.5-THD)	
R	2	1	**242-0328**	1	ROCKER ARM AS	
M	3	1	**2Y-5829**	1	NUT (M10X1.5-THD)	

M-METRIC PART
R-REMFG PART MAY BE AVAILABLE

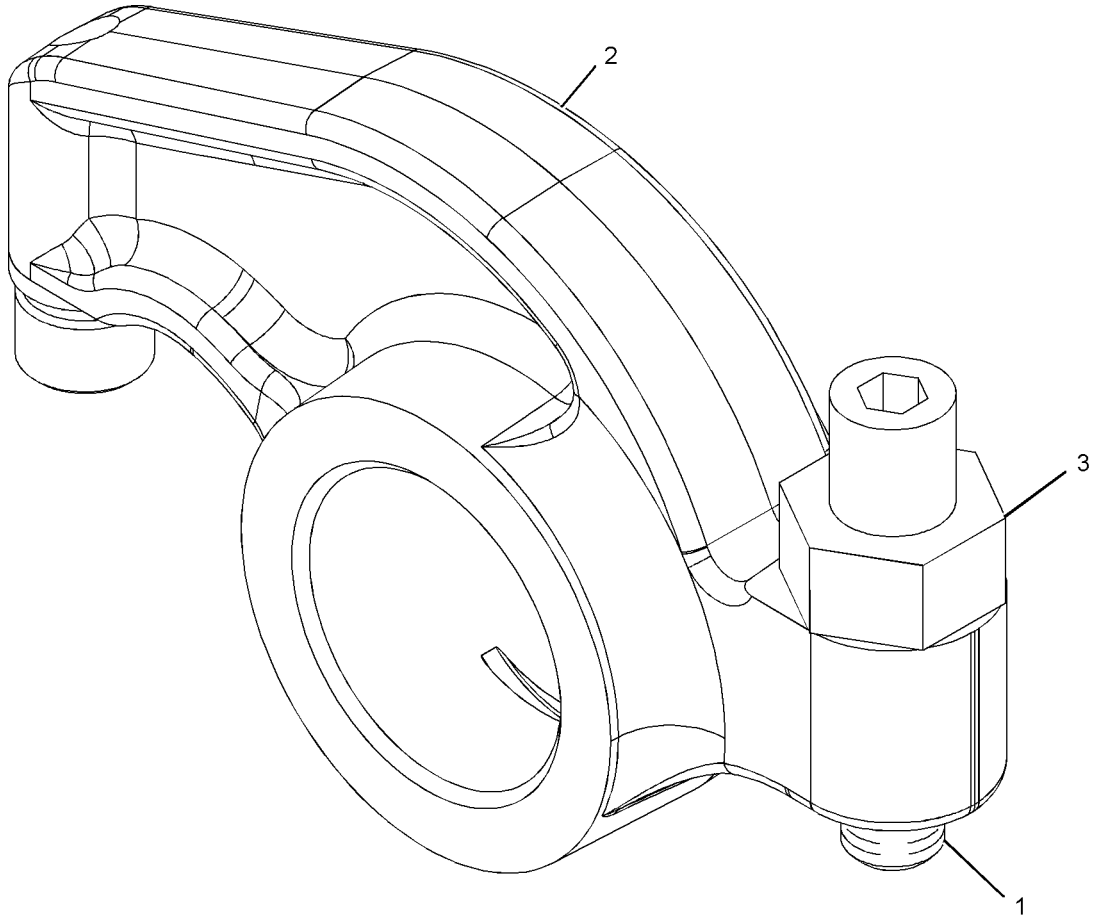

GRAPHIC #1 **<END>** g01056688

BASIC ENGINE

178-3899 SEAL GP-CRANKSHAFT

S/N: THX1-UP

PART OF 240-1861, 301-3082 ENGINE AR-COMPLETE

SMCS-1160, 1161 **i02893380**

NOTE	REF NO	GRAPHIC REF	PART NUMBER	QTY	PART NAME 1 2 3 4 5 6 (PRODUCT LEVEL)	SEE PAGE
	1	1	**4R-9999**	1	EXCLUDER-CRANKSHAFT SEAL	
M	2	1	**206-3719**	9	BOLT AS	
	3	1	**245-7339**	1	SEAL-CRANKSHAFT	
	4	1	**285-4073**	1	SEAL GP-CRANKSHAFT	

M-METRIC PART

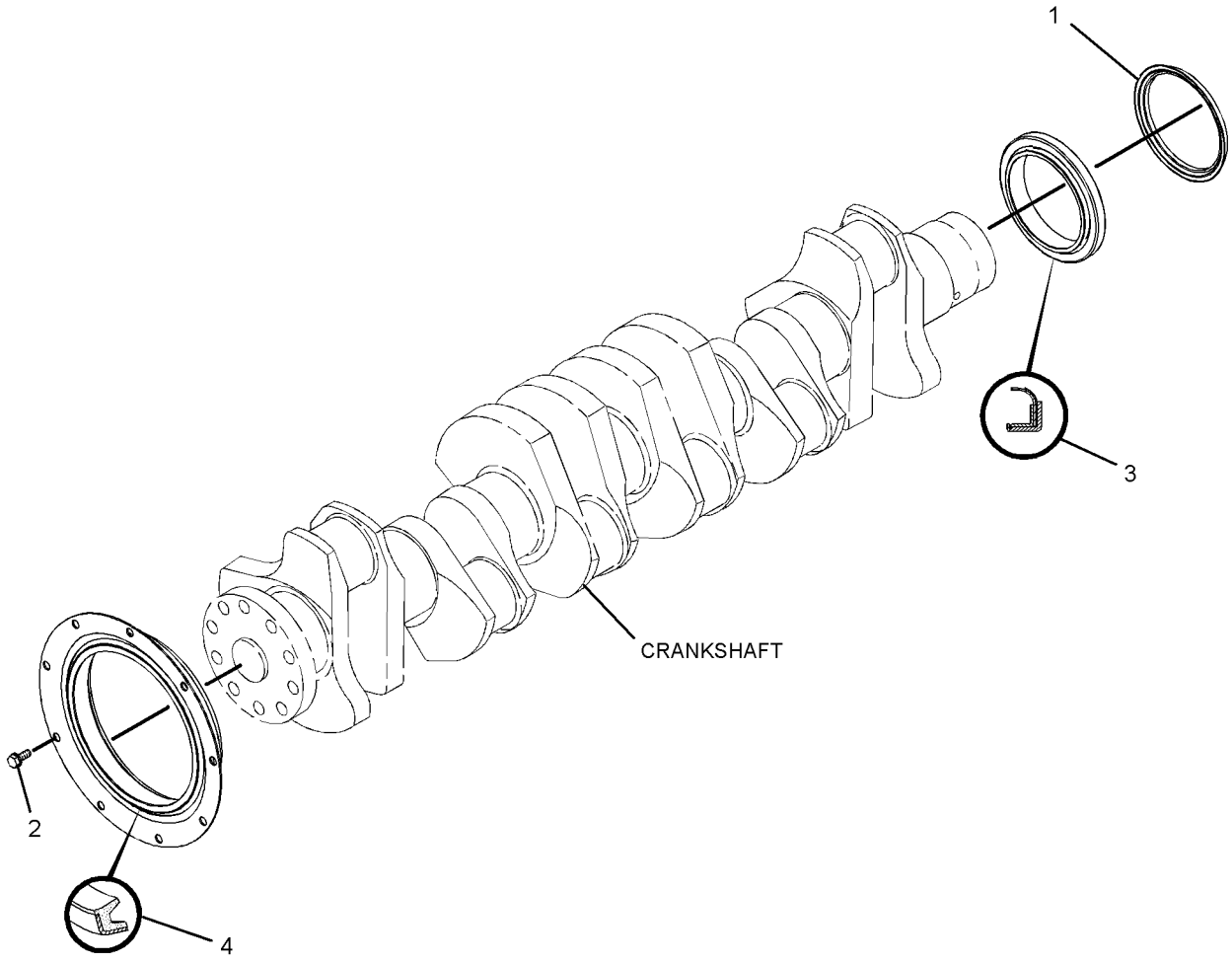

GRAPHIC #1 **<END>** g01439993

212-8926 VALVE MECHANISM GP

S/N: THX1-UP

PART OF 242-0447 VALVE MECHANISM GP

SMCS-1209 **i02433895**

NOTE	REF NO	GRAPHIC REF	PART NUMBER	QTY	PART NAME 1 2 3 4 5 6 (PRODUCT LEVEL)	SEE PAGE
	1	1	**163-2445**	1	SHAFT AS-ROCKER ARM	
		1	**8F-6575**	2	PLUG-CUP	
	2	1	**163-2459**	6	SPRING	
	3	1	**164-5669**	2	STAND (END)	
	4	1	**176-5913**	4	STAND (MIDDLE)	
	5	1	**176-5914**	1	STAND (OIL)	
Y	6	1	*213-9320*	6	ROCKER ARM GP (EXHAUST)	76
Y	7	1	*242-0329*	6	ROCKER ARM GP (INLET)	77
	8	1	**5P-8245**	7	WASHER-HARD (13.5X25.5X3-MM THK)	
M	9	1	**8T-0646**	7	BOLT (M12X1.75X110-MM)	

M-METRIC PART
Y-SEPARATE ILLUSTRATION

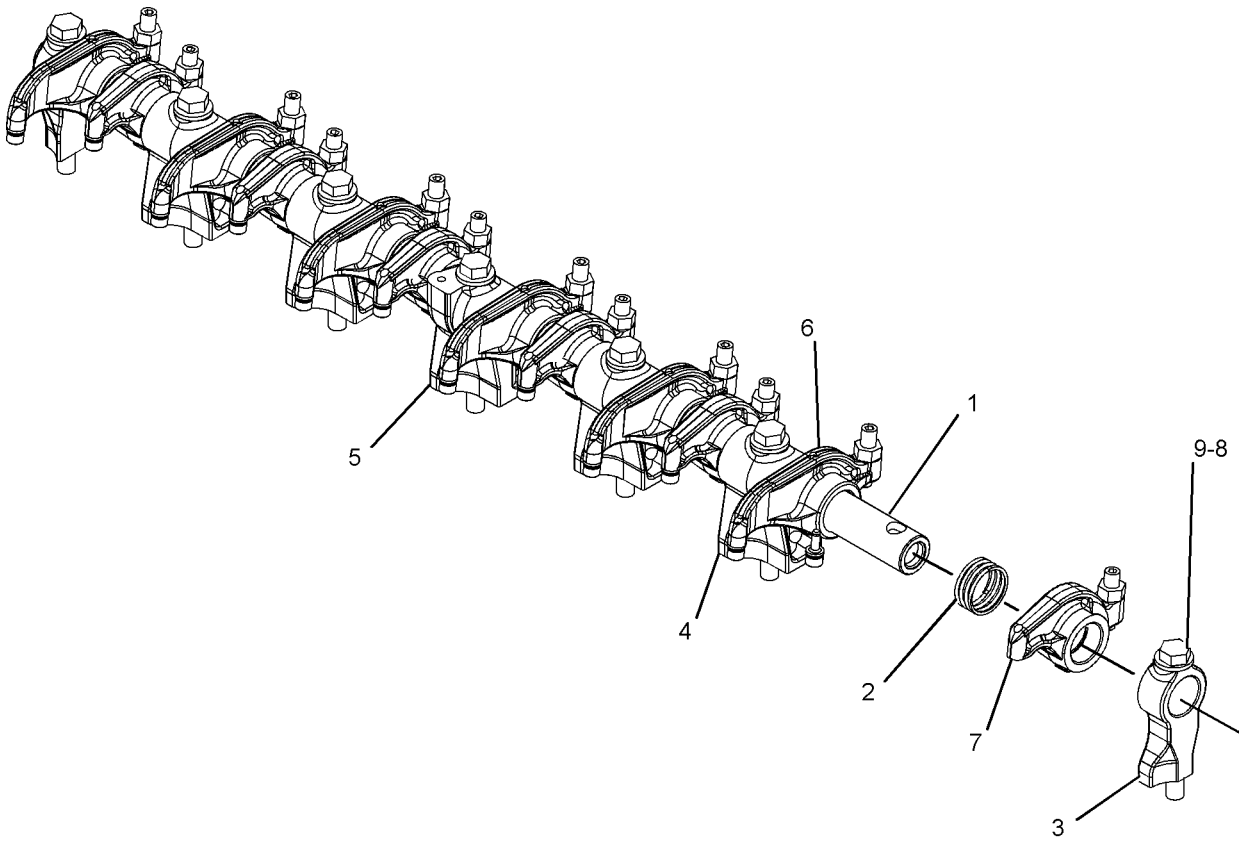

GRAPHIC #1 **<END>** g01069313

242-0447 VALVE MECHANISM GP

S/N: THX1-UP

PART OF 229-2665, 270-4216, 348-2746, 348-2747 ENGINE AR-CORE

SMCS-1209 **i02748257**

NOTE	REF NO	GRAPHIC REF	PART NUMBER	QTY	PART NAME 1 2 3 4 5 6 (PRODUCT LEVEL)	SEE PAGE
	1	1	**304-5260**	12	SPRING-GUIDE	
	2	1	**264-6156**	12	ROD-VALVE PUSH	
	3	1	**163-2437**	12	LIFTER AS-VALVE	
Y	4	1	*212-8926*	1	VALVE MECHANISM GP	79
	5	1	**244-5891**	6	BRIDGE-VALVE	
	6	1	**255-8674**	6	BRIDGE-VALVE	

Y-SEPARATE ILLUSTRATION

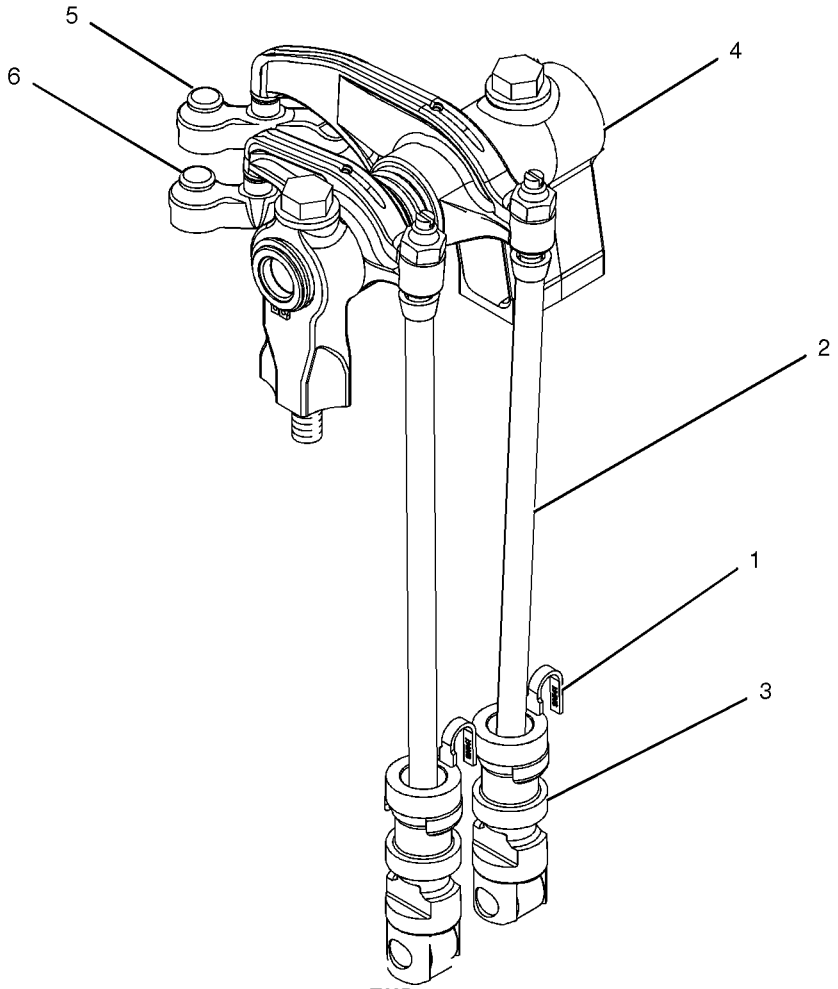

GRAPHIC #1

<END>

g01043825

187-0474 FILTER GP-ENGINE OIL

S/N: THX1-9314

PART OF 301-3082 ENGINE AR-COMPLETE

SMCS-1308 **i03465082**

NOTE	REF NO	GRAPHIC REF	PART NUMBER	QTY	PART NAME 1 2 3 4 5 6 (PRODUCT LEVEL)	SEE PAGE
	1	1	**1R-1808**	1	FILTER-ENGINE OIL (ADVANCED EFFICIENCY)	
	2	1	**7C-1493**	2	VALVE AS-BYPASS (ENGINE OIL FILTER BASE)	
	3	1	**8C-3445**	1	CAP-DUST	
	4	1	**242-3864**	2	SPRING	
	5	1	**102-5828**	1	COVER	
	6	1	**102-5829**	1	ADAPTER	
	7	1	**144-6650**	1	ELBOW	
	8	1	**275-6631**	1	BASE AS-OIL FILTER (ENGINE)	
	8A	1	**2P-4304**	1	STUD-HOLLOW	
	9	1	**209-7291**	1	BASE AS-OIL FILTER (ENGINE)	
	9A	1	**2P-4304**	1	STUD-HOLLOW	
	10	1	**209-7290**	1	GASKET	
	11	1	**030-7935**	1	CONNECTOR	
	12	1	**033-5853**	1	SEAL-O-RING	
	13	1	**106-9586**	2	SEAL-O-RING	
I	14	1	**203-1022**	1	HOSE AS	
I	15	1	**203-1023**	1	HOSE AS	
	16	1	**2M-9780**	2	SEAL-O-RING	
	17	1	**3J-7354**	1	SEAL-O-RING	
	18	1	**5P-7701**	4	SEAL-O-RING	
M	19	1	**5P-8196**	2	PLUG	
	20	1	**6V-3908**	2	SEAL-O-RING	
M	21	1	**6V-5218**	12	BOLT (M8X1.25X35-MM)	
	22	1	**6V-8635**	2	CONNECTOR	
	23	1	**8C-3446**	1	VALVE-FLUID SAMPLING (ENGINE OIL)	
	24	1	**9M-1974**	12	WASHER-HARD (8.8X16X2-MM THK)	
	25	1	**9S-4181**	1	PLUG-O-RING	
	26	1	**9S-4182**	1	PLUG-O-RING	
	27	1	**9X-7712**	1	SEAL-O-RING	

I-REFER TO HYDRAULIC INFORMATION SYSTEM
M-METRIC PART

187-0474 **FILTER GP-ENGINE OIL** *(contd.)* **i03465082**

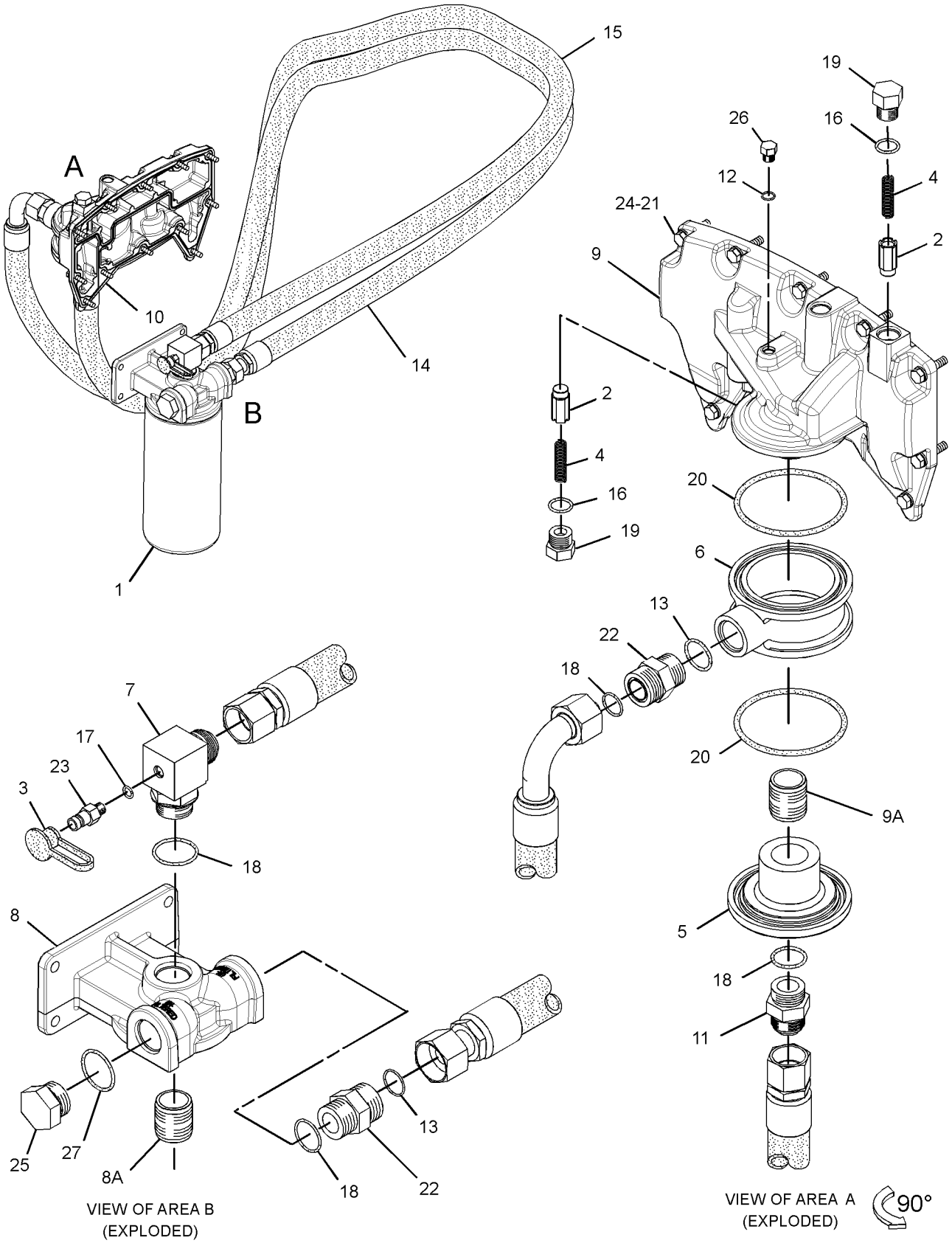

GRAPHIC #1 **<END>** g01413131

187-0474 FILTER GP-ENGINE OIL

S/N: THX9315-UP

PART OF 240-1861, 301-3082 ENGINE AR-COMPLETE

SMCS-1308 **i03743523**

NOTE	REF NO	GRAPHIC REF	PART NUMBER	QTY	PART NAME 1 2 3 4 5 6 (PRODUCT LEVEL)	SEE PAGE
	1	1	**1R-1808**	1	FILTER-ENGINE OIL (ADVANCED EFFICIENCY)	
	2	1	**7C-1493**	2	VALVE AS-BYPASS (ENGINE OIL FILTER BASE)	
	3	1	**8C-3445**	1	CAP-DUST	
	4	1	**242-3864**	2	SPRING	
	5	1	**102-5828**	1	COVER	
	6	1	**102-5829**	1	ADAPTER	
C	7	1	**297-7920**	1	TEE	
	8	1	**275-6631**	1	BASE AS-OIL FILTER (ENGINE)	
	8A	1	**2P-4304**	1	STUD-HOLLOW	
	9	1	**209-7291**	1	BASE AS-OIL FILTER (ENGINE)	
	9A	1	**2P-4304**	1	STUD-HOLLOW	
	10	1	**209-7290**	1	GASKET	
C	11	1	**8T-7927**	1	CONNECTOR	
	12	1	**033-5853**	1	SEAL-O-RING	
	13	1	**106-9586**	2	SEAL-O-RING	
CI	14	1	**307-6480**	1	HOSE AS	
CI	15	1	**307-6481**	1	HOSE AS	
	16	1	**2M-9780**	2	SEAL-O-RING	
	17	1	**3J-7354**	1	SEAL-O-RING	
	18	1	**5P-7701**	4	SEAL-O-RING	
M	19	1	**5P-8196**	2	PLUG	
	20	1	**6V-3908**	2	SEAL-O-RING	
M	21	1	**6V-5218**	11	BOLT (M8X1.25X35-MM)	
	22	1	**6V-8635**	2	CONNECTOR	
	23	1	**8C-3446**	1	VALVE-FLUID SAMPLING (ENGINE OIL)	
	24	1	**9M-1974**	12	WASHER-HARD (8.8X16X2-MM THK)	
	25	1	**9S-4181**	1	PLUG-O-RING	
	26	1	**9S-4182**	1	PLUG-O-RING	
	27	1	**9X-7712**	1	SEAL-O-RING	
C	28	1	**228-7094**	2	SEAL-O-RING	
M	29	1	**145-2264**	1	STUD (M8X1.25X35-MM)	

C-CHANGE FROM PREVIOUS TYPE
I-REFER TO HYDRAULIC INFORMATION SYSTEM
M-METRIC PART

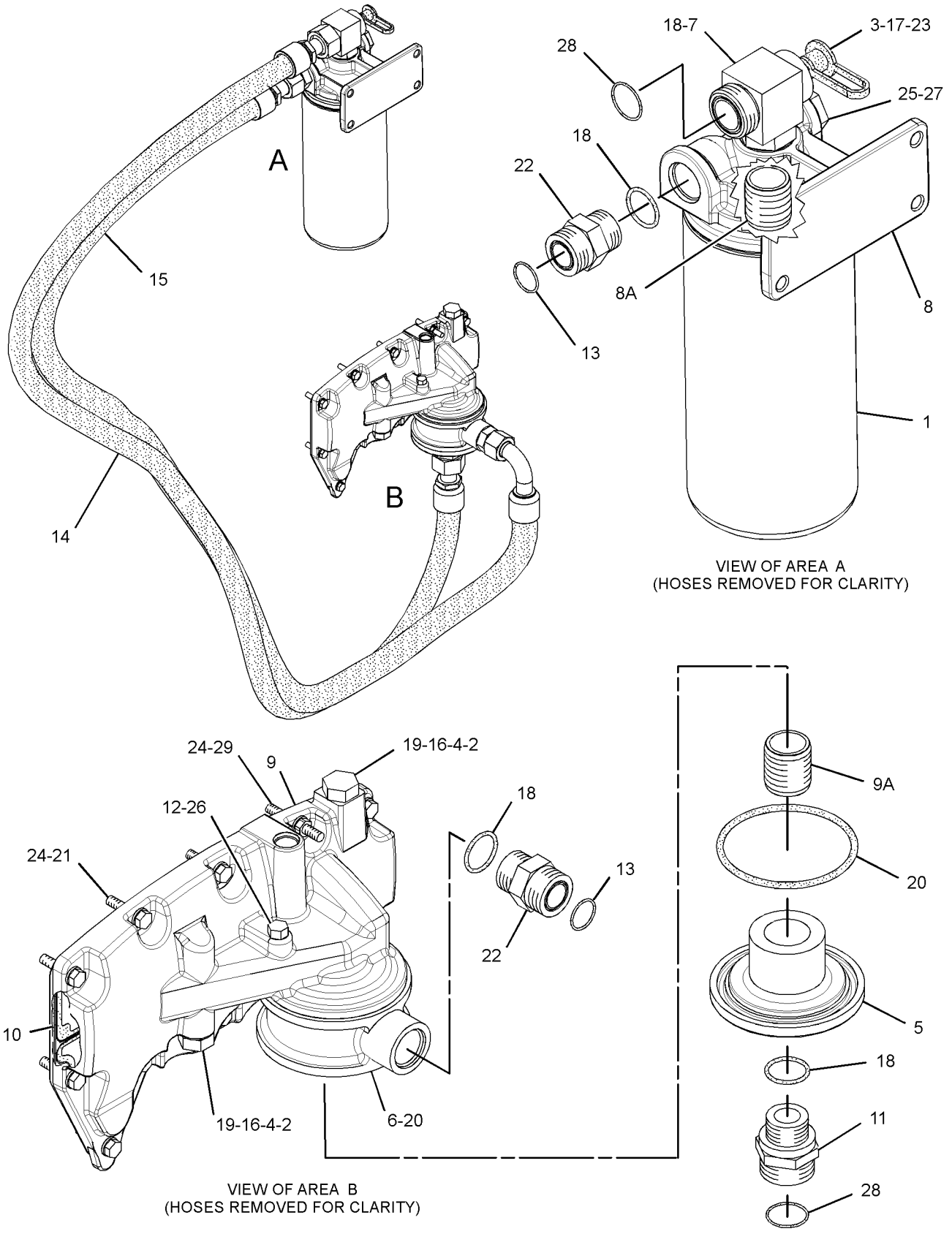

GRAPHIC #1 **<END>** g02022900

196-1829 FUMES DISPOSAL GP

S/N: THX1-UP

PART OF 240-1861, 301-3082 ENGINE AR-COMPLETE

SMCS-1317 **i02034219**

NOTE	REF NO	GRAPHIC REF	PART NUMBER	QTY	PART NAME 1 2 3 4 5 6 (PRODUCT LEVEL)	SEE PAGE
	1	1	**5P-0597**	1	CLAMP-HOSE	
	2	1	**196-1831**	1	HOSE-DISPOSAL (FUMES)	
	3	1	**220-1718**	1	BRACKET	
	4	1	**5P-4325**	1	CLIP	
M	5	1	**5P-7970**	1	NUT (M8X1.25-THD)	
M	6	1	**6V-5217**	1	BOLT (M8X1.25X20-MM)	
	7	1	**6V-5839**	1	WASHER (11X21X2.5-MM THK)	
M	8	1	**6V-6317**	1	BOLT (M10X1.5X20-MM)	
	9	1	**9M-1974**	2	WASHER-HARD (8.8X16X2-MM THK)	

M-METRIC PART

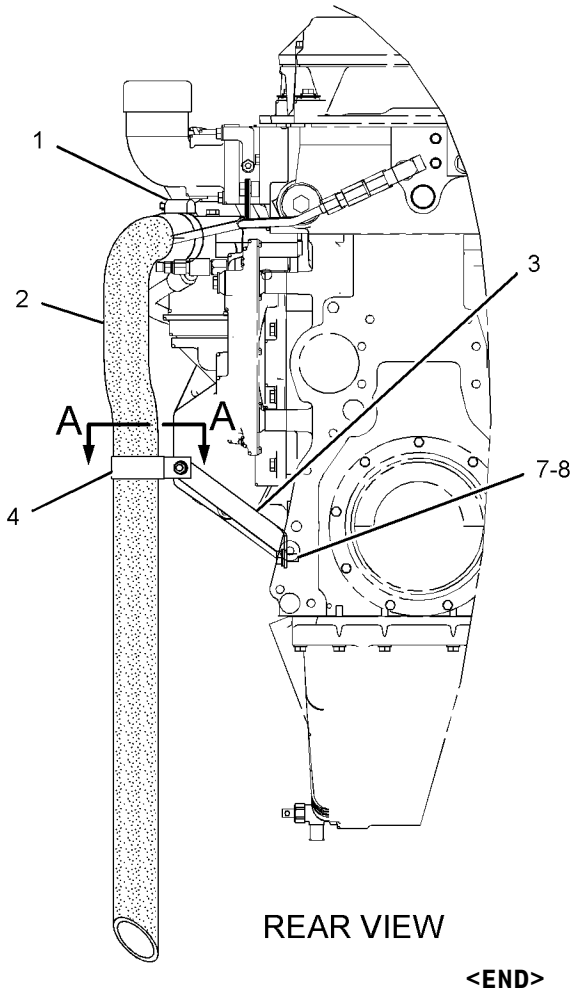

REAR VIEW

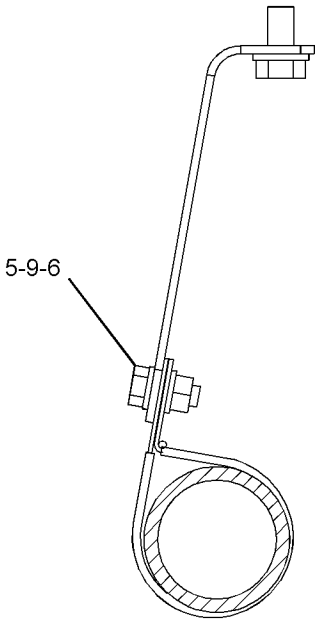

SECTION A-A

GRAPHIC #1 **<END>** g01058524

242-1586 GAUGE GP-OIL LEVEL (DIPSTICK)

S/N: THX1-UP

PART OF 240-1861, 301-3082 ENGINE AR-COMPLETE

SMCS-1326 **i02503996**

NOTE	REF NO	GRAPHIC REF	PART NUMBER	QTY	PART NAME 1 2 3 4 5 6 (PRODUCT LEVEL)	SEE PAGE
	1	1	**242-1598**	1	BRACKET AS	
	2	1	**242-1599**	1	TUBE AS	
	3	1	**262-9965**	1	GAUGE-OIL LEVEL (DIPSTICK) (ENGINE)	
	4	1	**263-1193**	1	BRACKET AS	
	5	1	**5P-8245**	1	WASHER-HARD (13.5X25.5X3-MM THK)	
	6	1	**6V-3265**	2	CLIP	
	7	1	**6V-5839**	4	WASHER (11X21X2.5-MM THK)	
M	8	1	**6V-6317**	4	BOLT (M10X1.5X20-MM)	
M	9	1	**8T-0293**	1	BOLT (M12X1.75X20-MM)	

M-METRIC PART

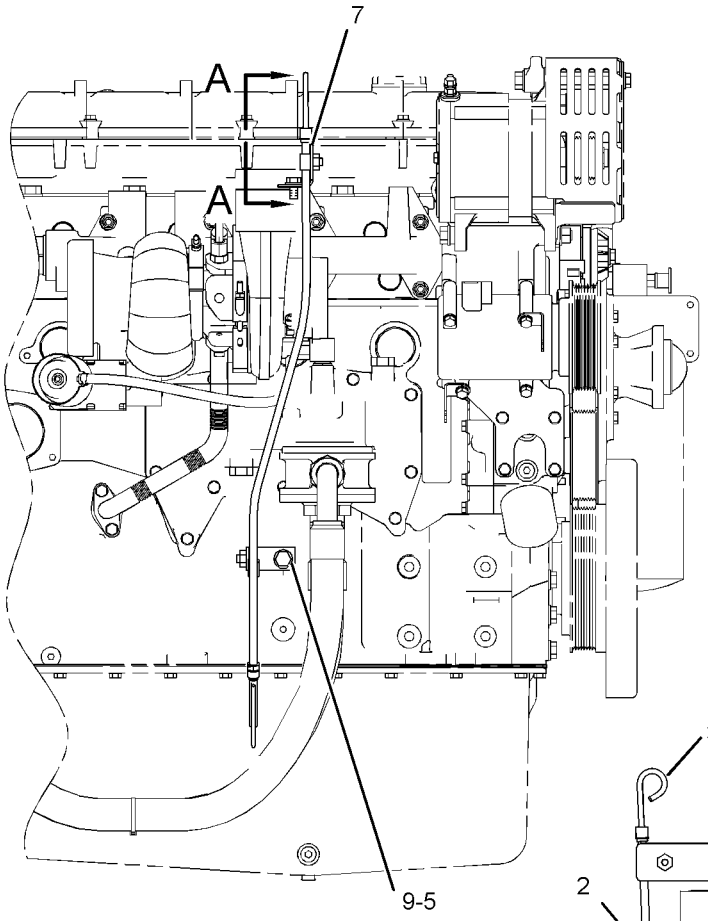

RIGHT SIDE VIEW

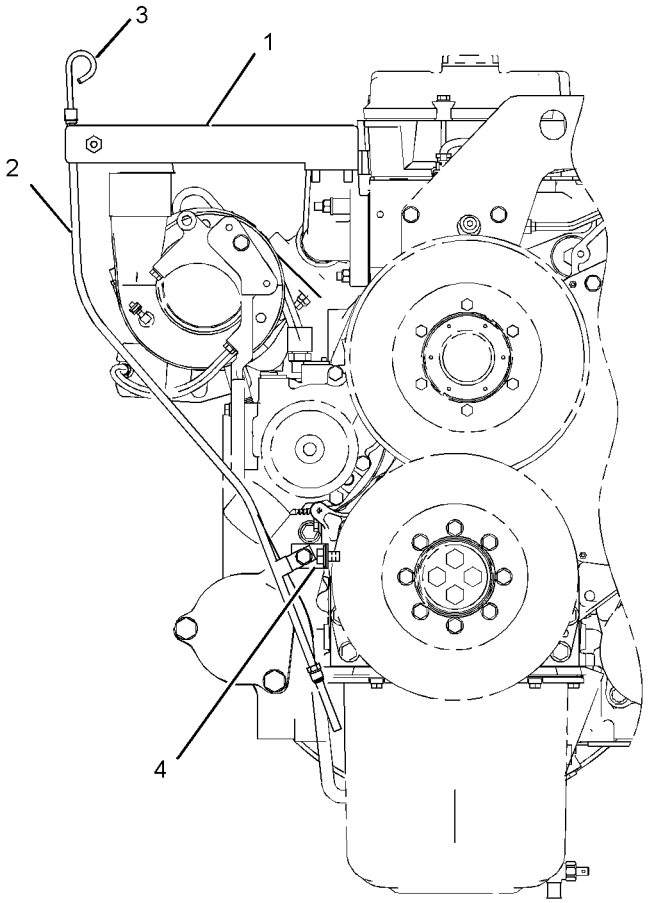

FRONT VIEW

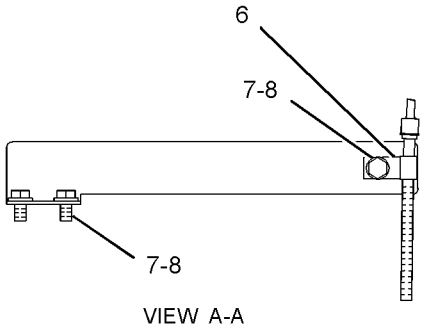

VIEW A-A

GRAPHIC #1 **<END>** g01188541

LUBRICATION SYSTEM

202-6603 LINES GP-ENGINE OIL

S/N: THX1-UP

PART OF 240-1861, 301-3082 ENGINE AR-COMPLETE

SMCS-1307 **i01964568**

NOTE	REF NO	GRAPHIC REF	PART NUMBER	QTY	PART NAME 1 2 3 4 5 6 (PRODUCT LEVEL)	SEE PAGE
	1	1	**195-0452**	1	GASKET	
	2	1	**234-0203**	1	ELBOW-OUTLET	
	3	1	**213-5213**	1	TUBE AS	
	4	1	**033-6034**	1	SEAL-O-RING	
M	5	1	**208-9282**	1	BOLT (M8X1.25X25-MM)	
	6	1	**5P-7530**	1	SEAL-O-RING	
M	7	1	**6V-3940**	2	BOLT (M8X1.25X25-MM)	
M	8	1	**8T-0292**	1	BOLT (M8X1.25X90-MM)	
	9	1	**9M-1974**	3	WASHER-HARD (8.8X16X2-MM THK)	

M-METRIC PART

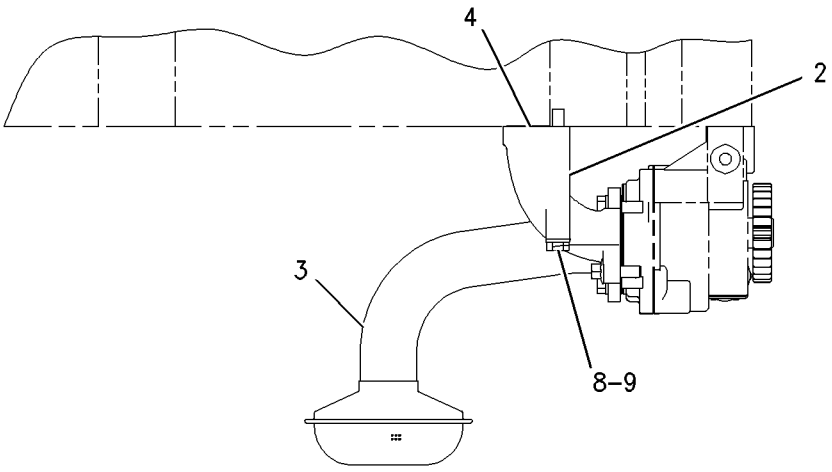

LEFT SIDE VIEW

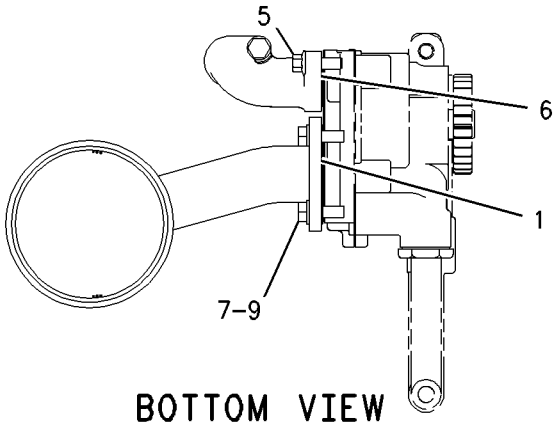

BOTTOM VIEW

GRAPHIC #1 **<END>** g00992152

239-6408 LINES GP-ENGINE OIL DRAIN

S/N: D3P1-UP; M4T1-UP

PART OF 279-7825 INSTALLATION AR-ENGINE

SMCS-1307 **i02495102**

NOTE	REF NO	GRAPHIC REF	PART NUMBER	QTY	PART NAME 1 2 3 4 5 6 (PRODUCT LEVEL)	SEE PAGE
	1	1	**095-1388**	1	CLAMP-HOSE	
E	2	1	**5P-0743**		HOSE (27-CM)	

E-ORDER BY THE CENTIMETER

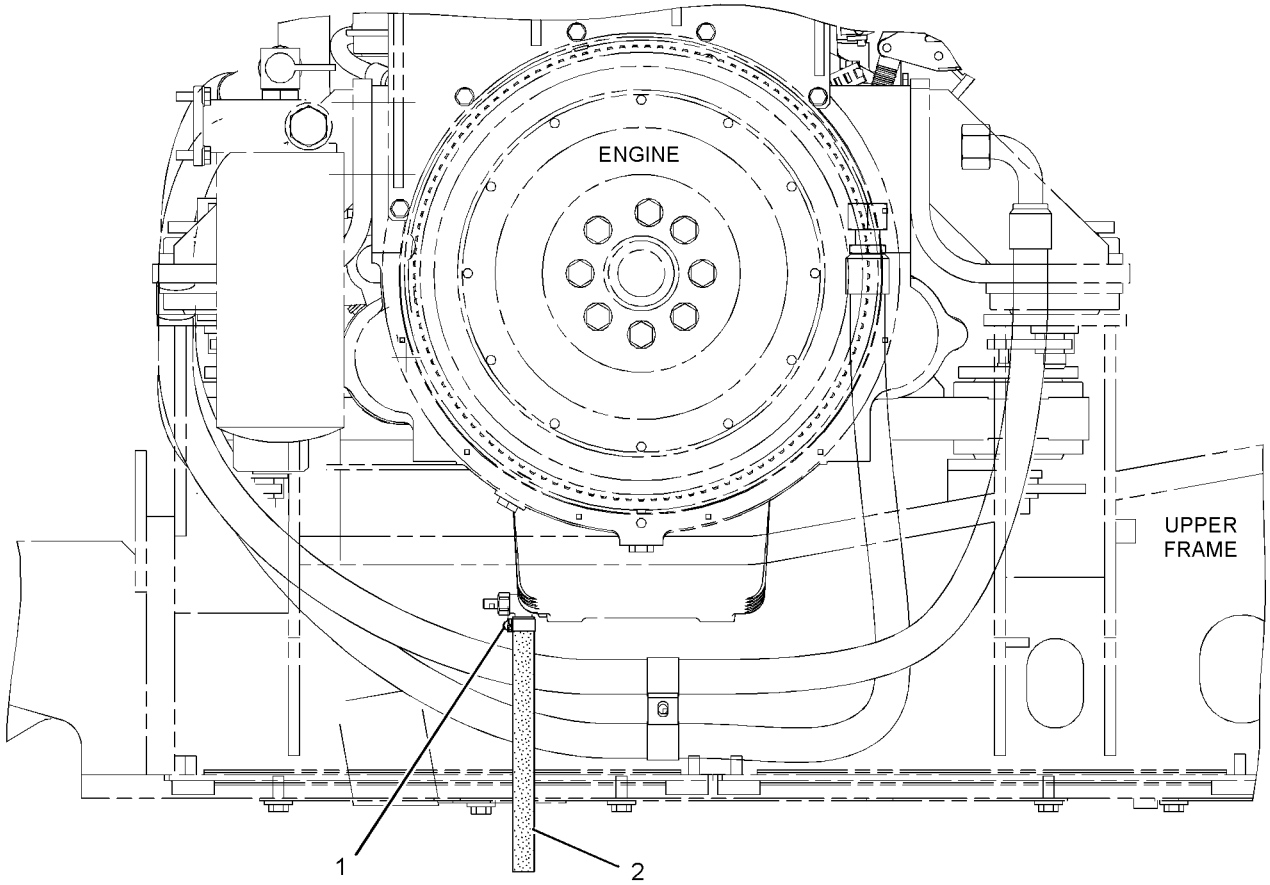

RIGHT SIDE VIEW

GRAPHIC #1

<END>

g01197323

LUBRICATION SYSTEM

165-4465 LINES GP-TURBOCHARGER OIL

S/N: THX1-320

PART OF 301-3082 ENGINE AR-COMPLETE

SMCS-1052 **i02177428**

NOTE	REF NO	GRAPHIC REF	PART NUMBER	QTY	PART NAME 1 2 3 4 5 6 (PRODUCT LEVEL)	SEE PAGE
	1	1	**249-9230**	1	HOSE AS (TURBOCHARGER OIL SUPPLY)	
	2	1	**167-0166**	1	TUBE AS (TURBOCHARGER) (FLEX)	
	3	1	**183-3398**	1	CONNECTOR AS	
		1	**6V-8636**	1	CONNECTOR	
	3A	1	**6V-5049**	1	SEAL-O-RING	
	3B	1	**8L-2779**	1	SEAL-O-RING	
	4	1	**183-3404**	1	ELBOW AS	
	4A	1	**8L-2779**	1	SEAL-O-RING	
	4B	1	**8L-2786**	1	SEAL-O-RING	
	5	1	**3P-1156**	2	SEAL-O-RING	
M	6	1	**6V-3940**	4	BOLT (M8X1.25X25-MM)	
	7	1	**9M-1974**	4	WASHER-HARD (8.8X16X2-MM THK)	

M-METRIC PART

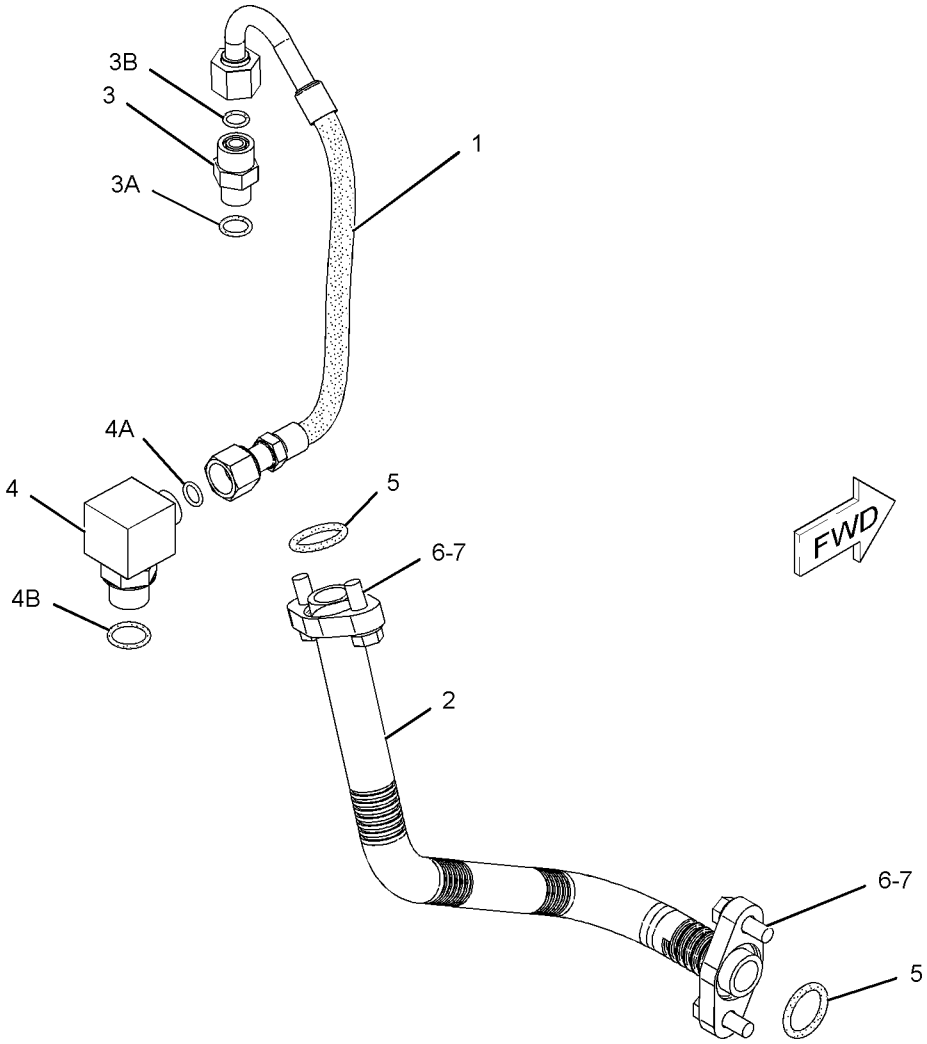

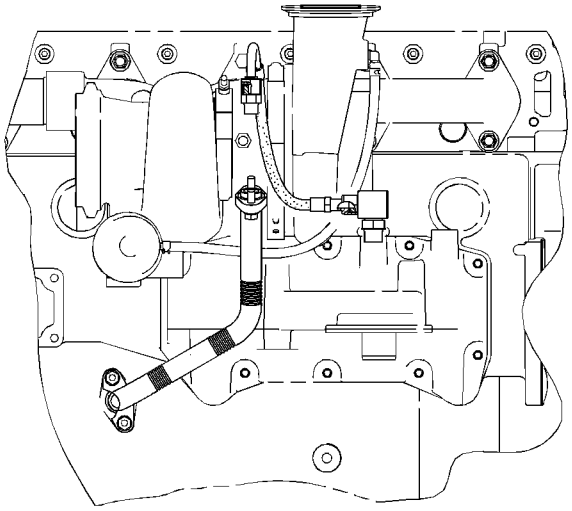

LEFT SIDE VIEW

GRAPHIC #1

<END>

g01067149

LUBRICATION SYSTEM

165-4465 LINES GP-TURBOCHARGER OIL

S/N: THX321-UP

PART OF 240-1861, 301-3082 ENGINE AR-COMPLETE

SMCS-1052 **i02772944**

NOTE	REF NO	GRAPHIC REF	PART NUMBER	QTY	PART NAME 1 2 3 4 5 6 (PRODUCT LEVEL)	SEE PAGE
C	1	1	*183-3399*	1	CONNECTOR AS	
		1	**6V-8636**	1	CONNECTOR	
	1A	1	**214-7568**	1	SEAL-O-RING	
	1B	1	**221-3494**	1	SEAL-O-RING	
	2	1	**183-3404**	1	ELBOW AS	
	2A	1	**8L-2779**	1	SEAL-O-RING	
	2B	1	**8L-2786**	1	SEAL-O-RING	
C	3	1	**197-8419**	1	GASKET	
C	4	1	**246-6036**	1	HOSE	
	5	1	**249-9230**	1	HOSE AS	
C	6	1	**259-2993**	1	TUBE AS-DRAIN	
C	7	1	**259-2994**	1	TUBE AS-DRAIN	
C	8	1	**269-8788**	2	CLAMP-BAND	
	9	1	**5P-7530**	1	SEAL-O-RING	
CM	10	1	**6V-3940**	2	BOLT (M8X1.25X25-MM)	
CM	11	1	**6V-5218**	2	BOLT (M8X1.25X35-MM)	
	12	1	**9M-1974**	4	WASHER-HARD (8.8X16X2-MM THK)	

C-CHANGE FROM PREVIOUS TYPE
M-METRIC PART

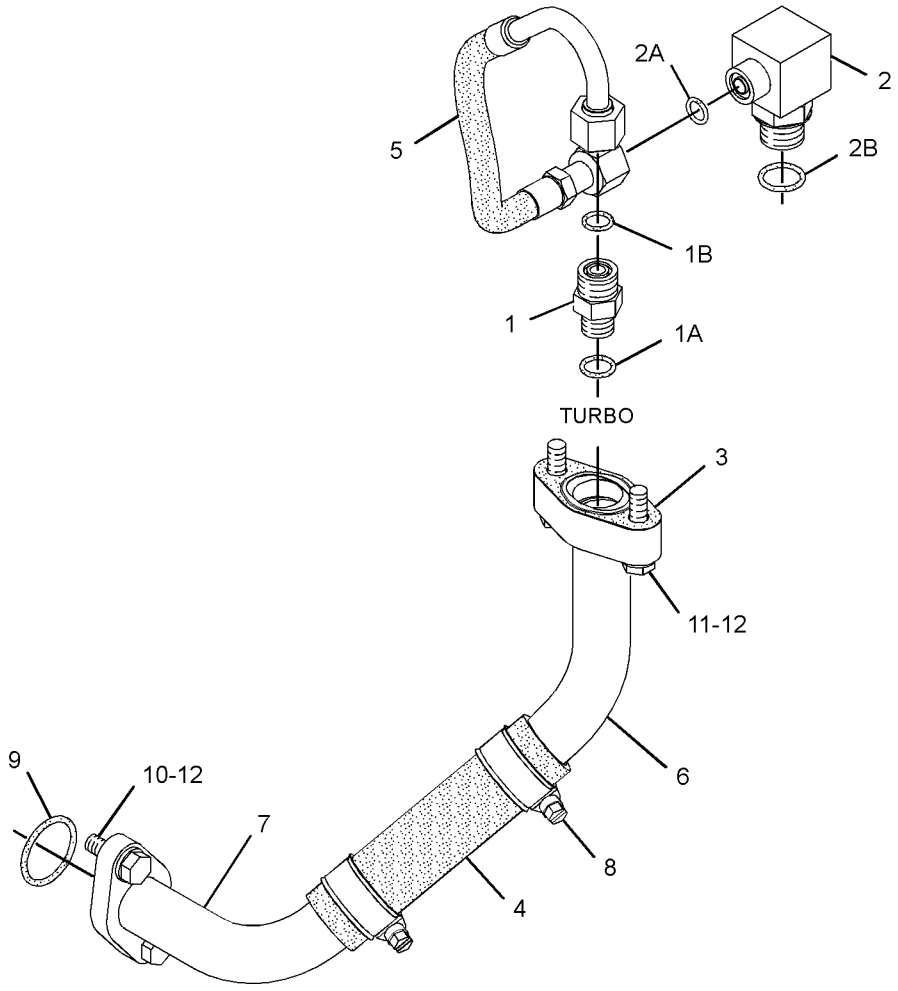

GRAPHIC #1 **<END>** g01387023

239-6409 MOUNTING GP-ENGINE OIL FILTER

S/N: D3P1-UP; M4T1-UP

PART OF 279-7825 INSTALLATION AR-ENGINE

SMCS-1308 **i02816122**

NOTE	REF NO	GRAPHIC REF	PART NUMBER	QTY	PART NAME 1 2 3 4 5 6 (PRODUCT LEVEL)	SEE PAGE
	1	1	**239-6500**	1	PLATE	
	2	1	**305-4903**	1	SUPPORT AS	
	3	1	**4D-7388**	6	CLIP	
	4	1	**7X-7729**	2	WASHER (11X25X3-MM THK)	
	5	1	**8T-4121**	10	WASHER-HARD (11X21X2.5-MM THK)	
M	6	1	**8T-4133**	1	NUT (M10X1.5-THD)	
M	7	1	**8T-4136**	3	BOLT (M10X1.5X25-MM)	
M	8	1	**8T-4186**	2	BOLT (M10X1.5X40-MM)	
M	9	1	**8T-4195**	5	BOLT (M10X1.5X30-MM)	
M	10	1	**8T-4196**	1	BOLT (M10X1.5X35-MM)	

M-METRIC PART

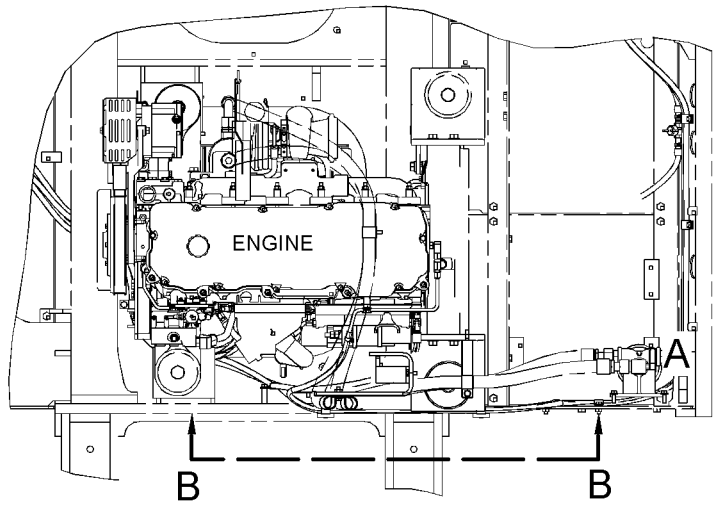

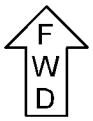

TOP VIEW

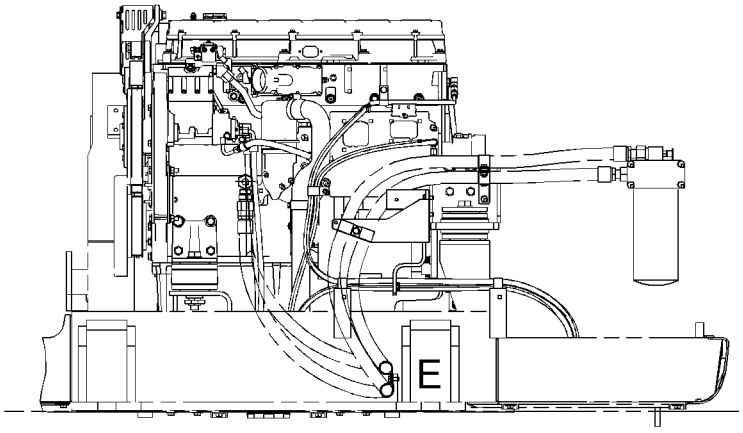

REAR VIEW

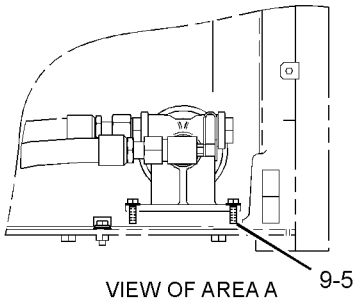

VIEW OF AREA A

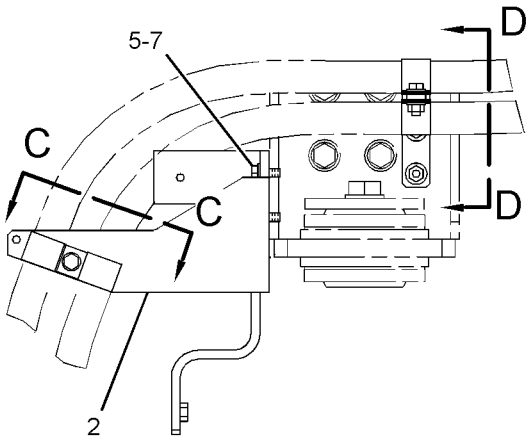

SECTION B-B

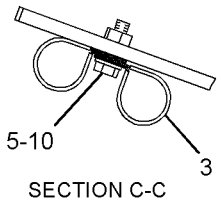

SECTION C-C

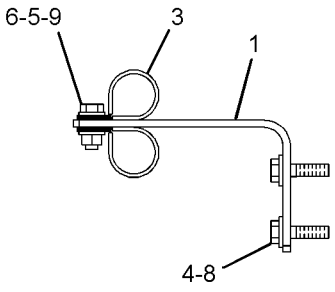

SECTION D-D

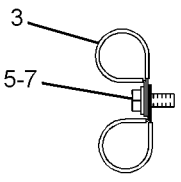

VIEW OF AREA E

GRAPHIC #1 **<END>** g01416217

195-8098 PUMP GP-ENGINE OIL

S/N: THX1-UP

PART OF 229-2665, 270-4216 ENGINE AR-CORE

TYPE 1

SMCS-1304, 1315 **i01836187**

NOTE	REF NO	GRAPHIC REF	PART NUMBER	QTY	PART NAME 1 2 3 4 5 6 (PRODUCT LEVEL)	SEE PAGE
	1	1	**211-0546**	1	PUMP GP-ENGINE OIL	
		1	**210-5522**	1	PUMP AS-ENGINE OIL	
	1A	1	**221-0144**	1	GEAR AS (60 TEETH)	
M	2	1	**6V-1819**	2	BOLT (M10X1.50X100MM)	
	3	1	**6V-5839**	2	WASHER (11X21X2.5MM THK)	

M-METRIC PART

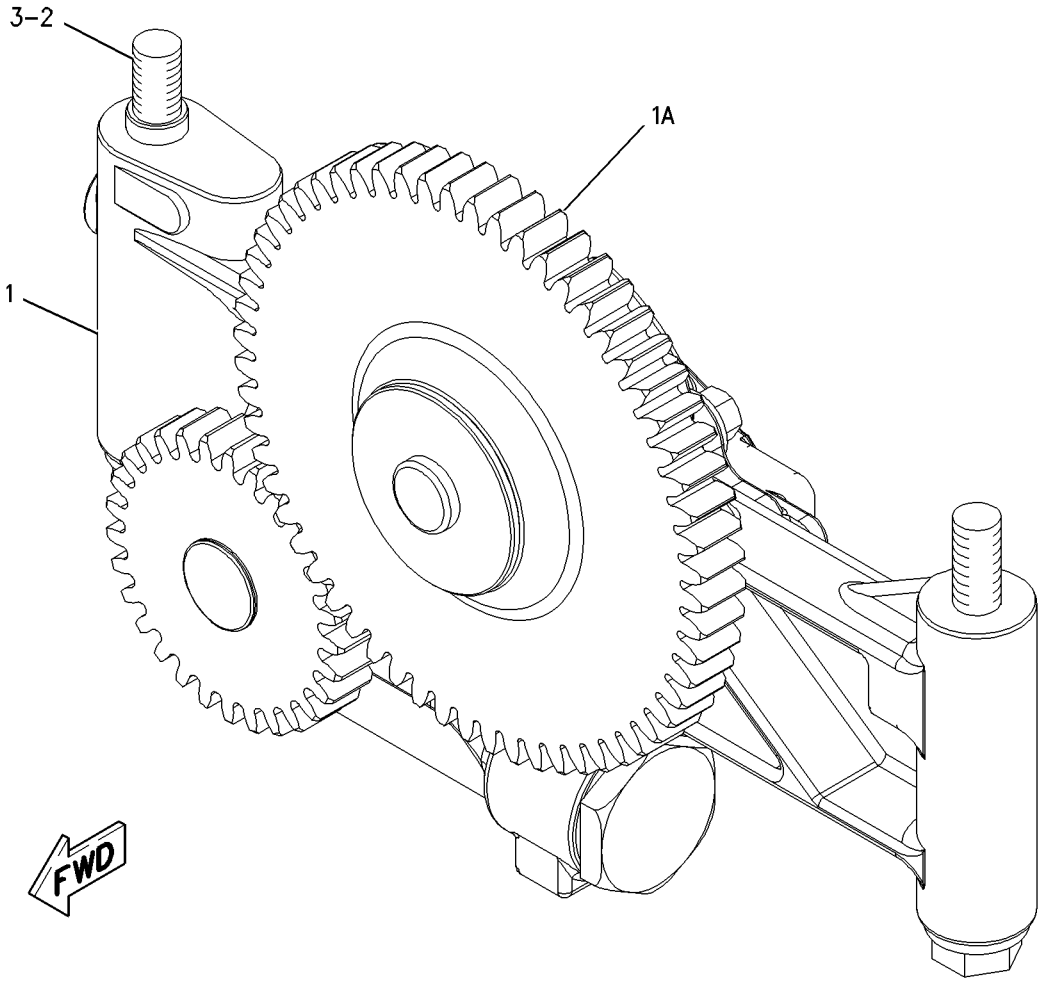

GRAPHIC #1 **<END>** g00909910

LUBRICATION SYSTEM

195-8098 PUMP GP-ENGINE OIL

S/N: THX1-UP

PART OF 229-2665, 270-4216, 348-2746, 348-2747 ENGINE AR-CORE

TYPE 2

SMCS-1304, 1315 **i03574923**

NOTE	REF NO	GRAPHIC REF	PART NUMBER	QTY	PART NAME 1 2 3 4 5 6 (PRODUCT LEVEL)	SEE PAGE
C	1	1	*331-8906*	1	PUMP GP-GEROTOR	
	1A	1	**221-0144**	1	GEAR AS (60-TEETH)	
		1	**331-8905**	1	PUMP AS-ENGINE OIL	
M	2	1	**6V-1819**	2	BOLT (M10X1.5X100-MM)	
	3	1	**6V-5839**	2	WASHER (11X21X2.5-MM THK)	

C-CHANGE FROM PREVIOUS TYPE
M-METRIC PART

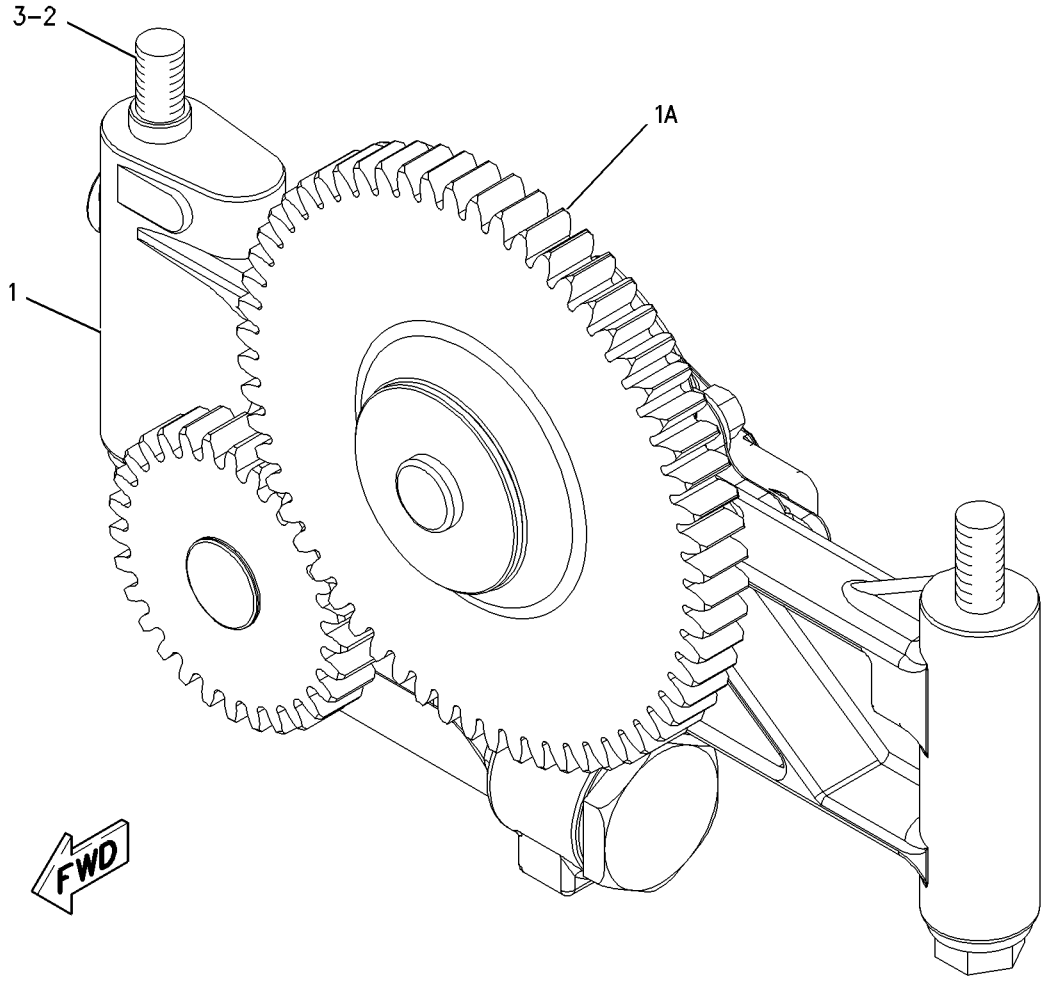

GRAPHIC #1 **<END>** g00909910

188-3826 COOLER GP-ENGINE OIL

S/N: THX1-UP

PART OF 229-2665, 270-4216, 348-2746, 348-2747 ENGINE AR-CORE

SMCS-1378 **i02946218**

NOTE	REF NO	GRAPHIC REF	PART NUMBER	QTY	PART NAME 1 2 3 4 5 6 (PRODUCT LEVEL)	SEE PAGE
	1	1	**209-7293**	1	GASKET	
	2	1	**293-9367**	1	CORE AS-OIL COOLER (ENGINE)	

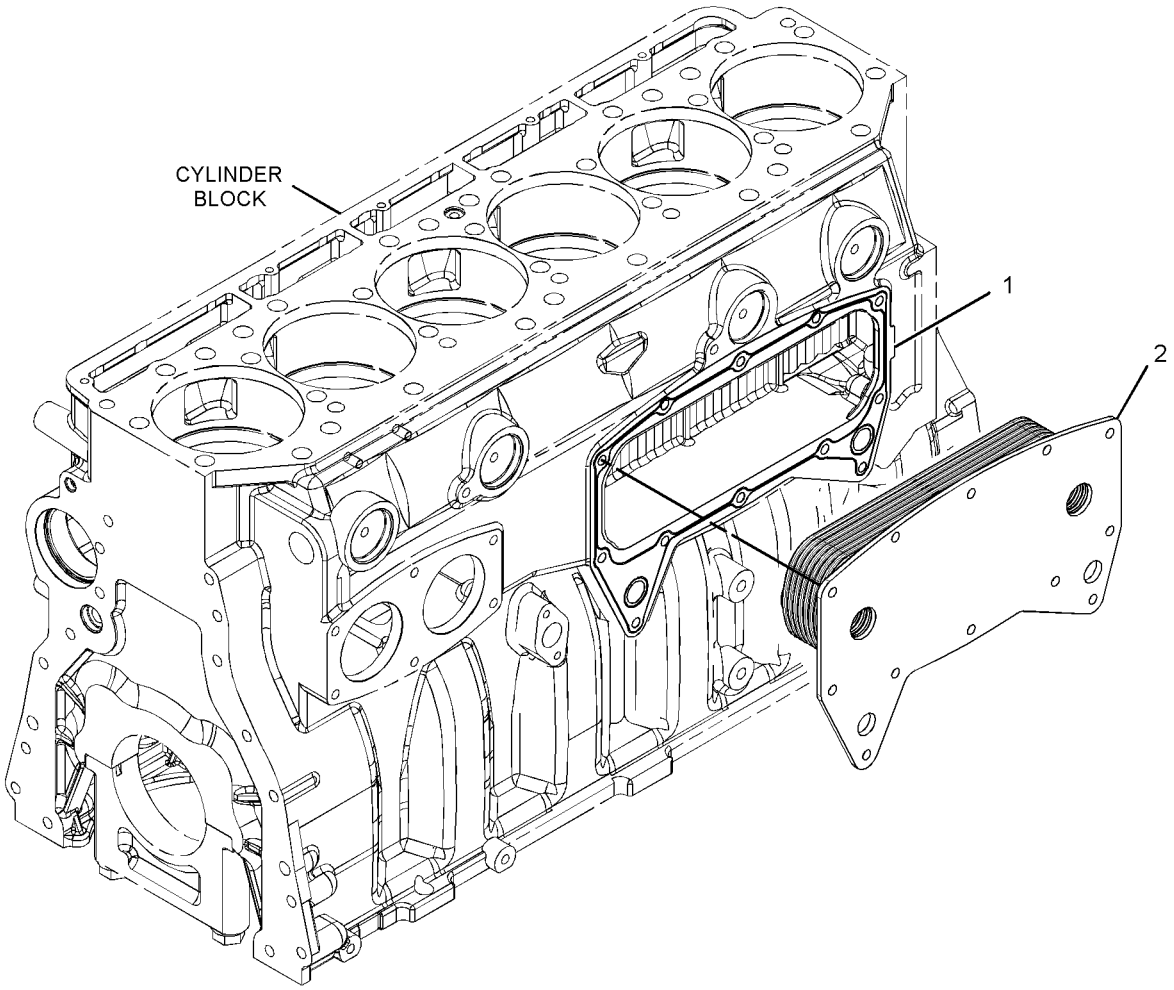

GRAPHIC #1 **<END>** g01419332

COOLING SYSTEM

336-1156 FAN & MOTOR GP

S/N: D3P1-UP; M4T271-UP

PART OF 334-6569 CONDENSER GP-REFRIGERANT

SMCS-1356, 1360, 1386, 5057 **i03753237**

NOTE	REF NO	GRAPHIC REF	PART NUMBER	QTY	PART NAME 1 2 3 4 5 6 (PRODUCT LEVEL)	SEE PAGE
	1	1	**161-3732**	1	MOTOR AS	
	2	1	**161-3734**	1	RESISTOR AS	
M	3	1	**164-0499**	1	NUT-FLANGE (M5X0.8-THD)	
M	4	1	**245-7877**	6	SCREW AS (M4X0.7X11-MM)	
M	5	1	**245-7903**	1	BOLT AS	
	6	1	**273-5307**	1	FAN AS-CONDENSER (4-BLADE)	
	7	1	**334-6572**	1	COVER	

M-METRIC PART

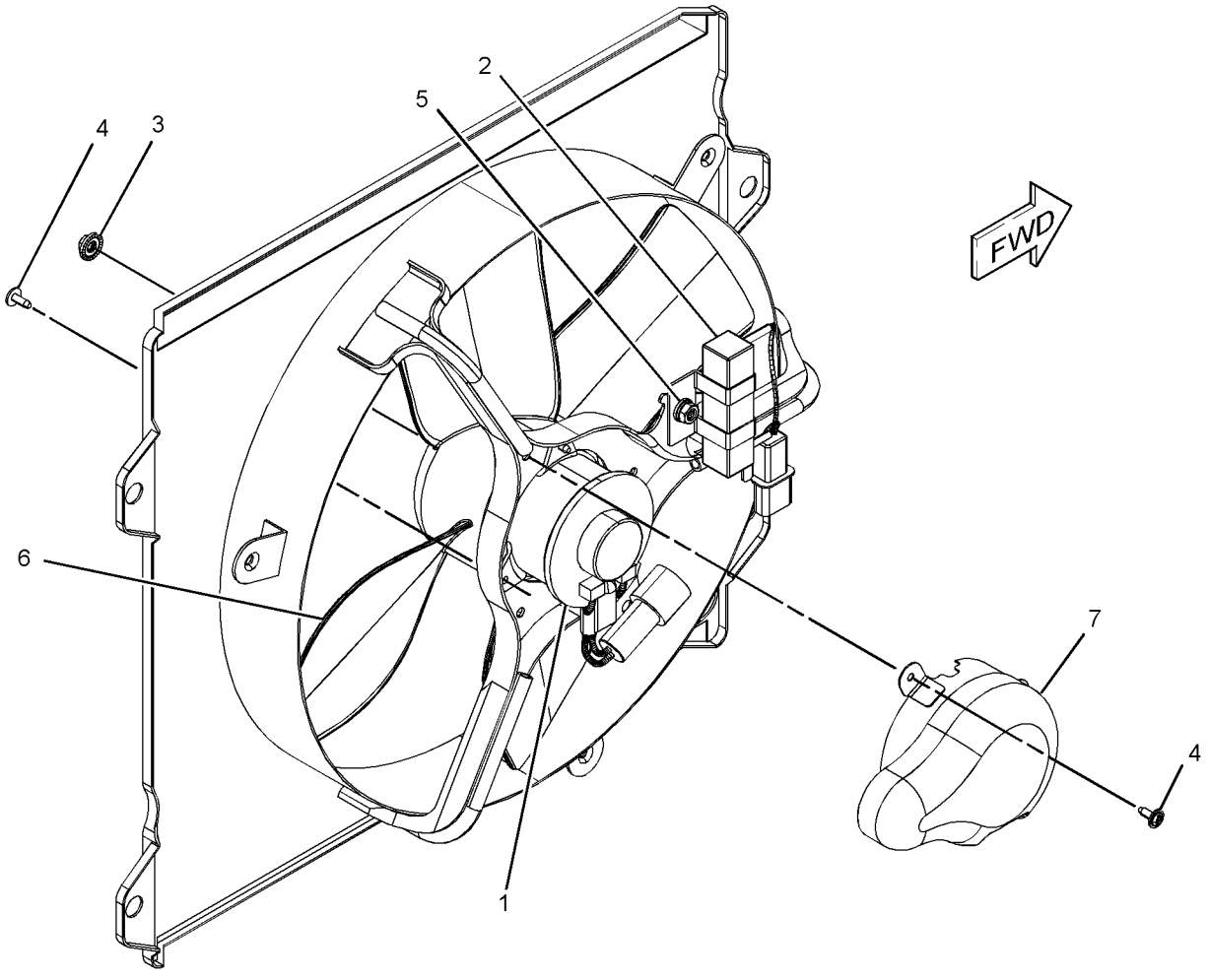

GRAPHIC #1 **<END>** g01750394

COOLING SYSTEM

230-2899 FAN GP-SUCTION

S/N: D3P1-UP; M4T1-UP

PART OF 279-7825 INSTALLATION AR-ENGINE

SMCS-1356 **i03600726**

NOTE	REF NO	GRAPHIC REF	PART NUMBER	QTY	PART NAME 1 2 3 4 5 6 (PRODUCT LEVEL)	SEE PAGE
CY	1	3	*295-9439*	1	DRIVE GP-FAN	55
M	2	3	**8T-4956**	8	BOLT (M12X1.75X35-MM)	
	3	3	**147-7170**	1	ADAPTER	
	4	1	**230-2946**	1	SUPPORT AS-FAN (LH)	
	5	1	**230-2953**	2	BRACE	
	6	1	**230-2956**	1	SUPPORT AS-FAN (RH)	
	7	3	**230-2960**	1	SUPPORT AS-FAN (RH, VERTICAL)	
YR	8	1	**234-4638**	1	MOTOR GP-PISTON (HYDRAULIC FAN)	695
	9	2	**245-9171**	1	SEAL	
	10	3	**245-9292**	1	SUPPORT AS-FAN (LH, VERTICAL)	
	11	1	**245-9293**	1	SPIDER AS (8-BLADE)	
	12	1	**245-9294**	2	GUARD AS-FAN	
	13	1	**281-3548**	1	SUPPORT AS-FAN (REAR)	
	14	2	**265-3552**	2	BRACE	
M	15	3	**136-4182**	2	BOLT (M16X2X100-MM)	
	16	3	**4M-0189**	1	SEAL-O-RING	
	17	3	**5P-1076**	18	WASHER-HARD (13.5X30X4-MM THK)	
	18	1,3	**7X-0515**	10	WASHER-HARD (17X35X5-MM THK)	
M	19	1,3	**7X-2553**	4	BOLT (M16X2X40-MM)	
	20	2	**7X-7729**	12	WASHER (11X25X3-MM THK)	
	21	3	**8T-4121**	8	WASHER-HARD (11X21X2.5-MM THK)	
M	22	3	**8T-4132**	2	NUT (M16X2-THD)	
M	23	2	**8T-4137**	12	BOLT (M10X1.5X20-MM)	
M	24	3	**8T-4139**	7	BOLT (M12X1.75X30-MM)	
M	25	3	**8T-4184**	4	BOLT (M12X1.75X45-MM)	
M	26	3	**8T-4194**	2	BOLT (M12X1.75X50-MM)	
M	27	3	**8T-4196**	8	BOLT (M10X1.5X35-MM)	
	28	3	**8T-4223**	9	WASHER-HARD (13.5X25.5X3-MM THK)	
M	29	3	**8T-4244**	6	NUT (M12X1.75-THD)	
M	30	1	**8T-4779**	6	BOLT (M16X2X35-MM)	

C-CHANGE FROM PREVIOUS TYPE
M-METRIC PART
R-REMFG PART MAY BE AVAILABLE
Y-SEPARATE ILLUSTRATION

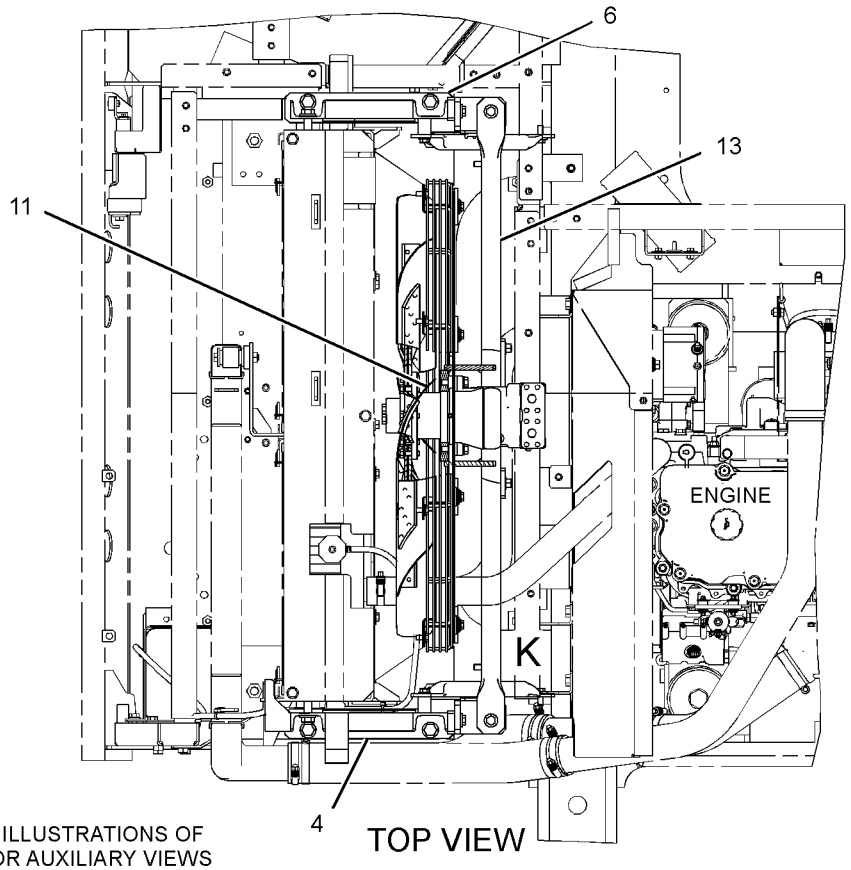

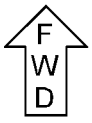

REFER TO ALL ILLUSTRATIONS OF THIS GROUP FOR AUXILIARY VIEWS

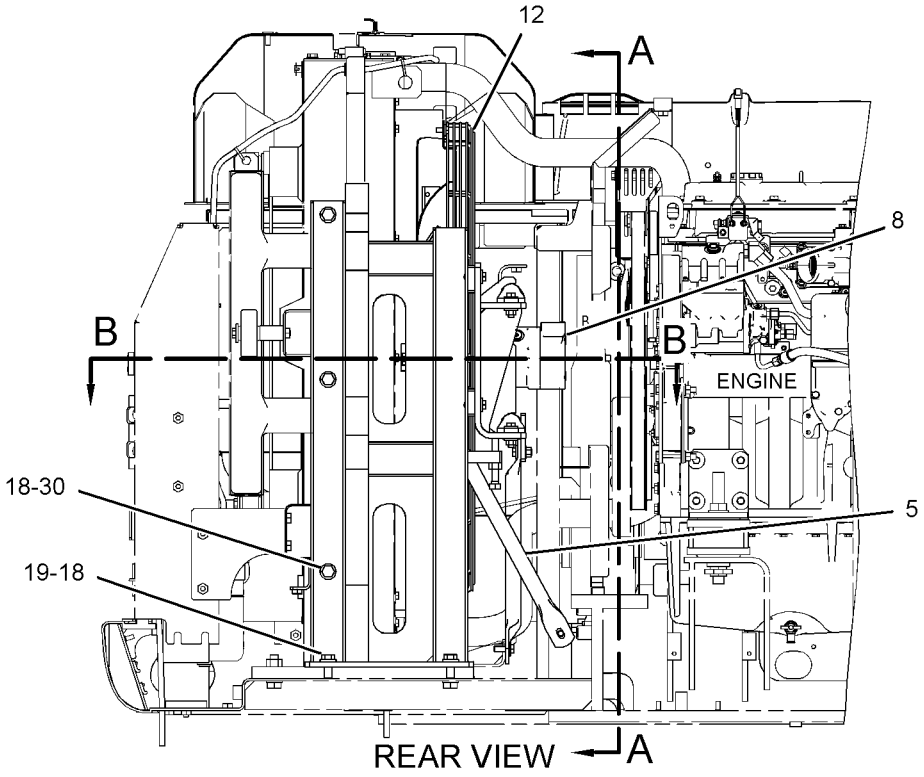

GRAPHIC #1

g01414961

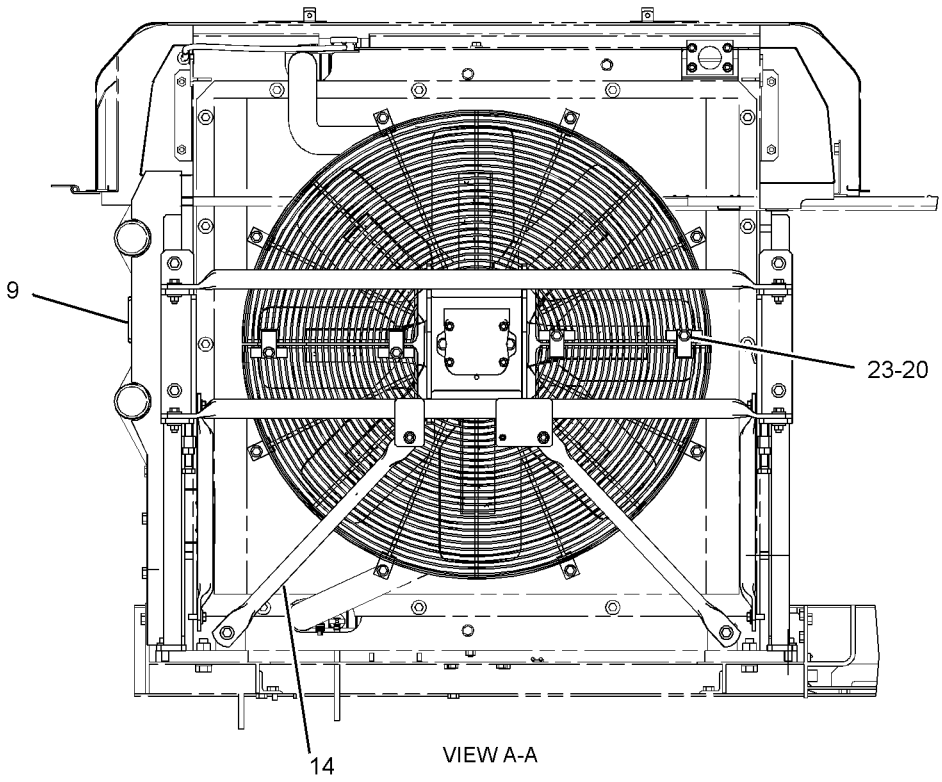

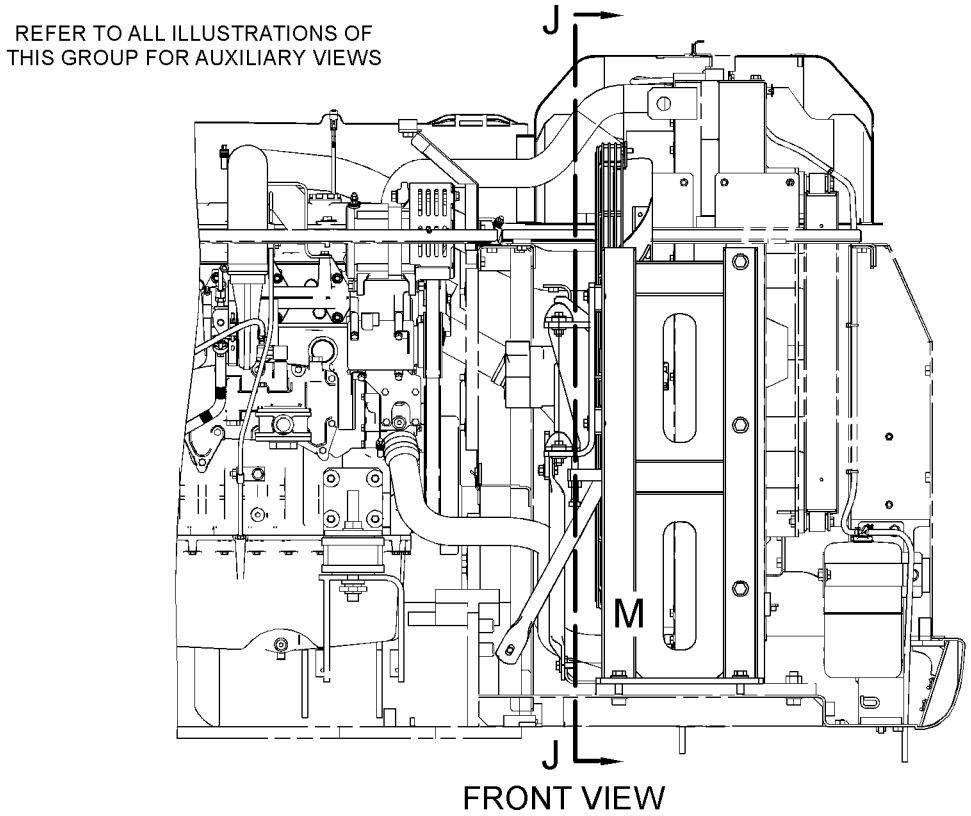

GRAPHIC #2 g01200694

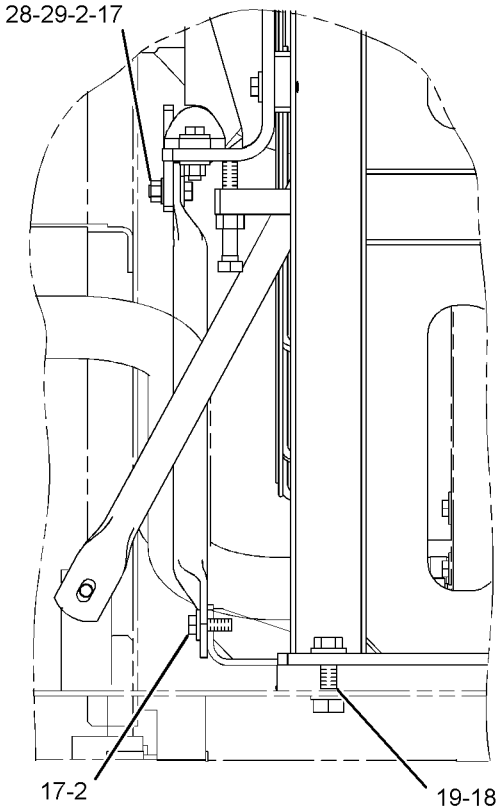

VIEW OF AREA M

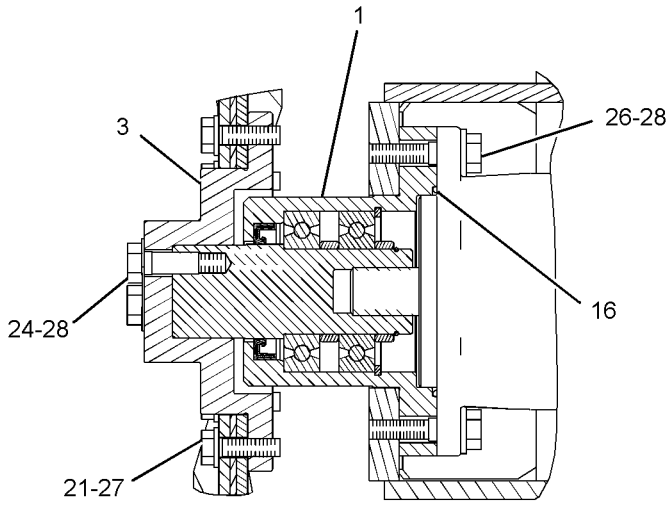

SECTION B-B

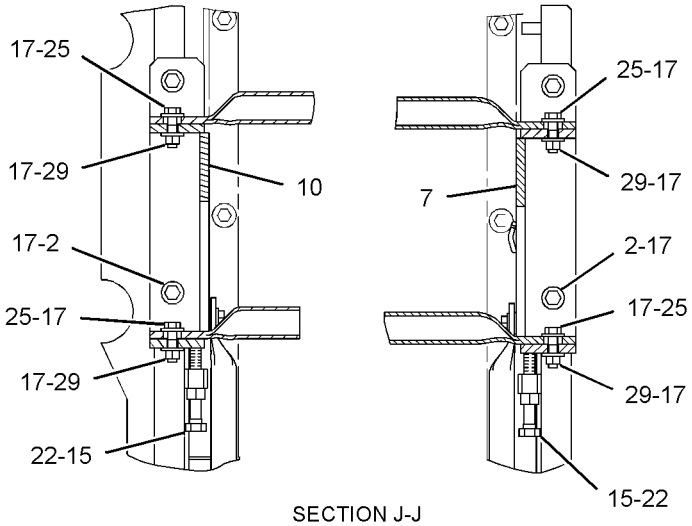

SECTION J-J

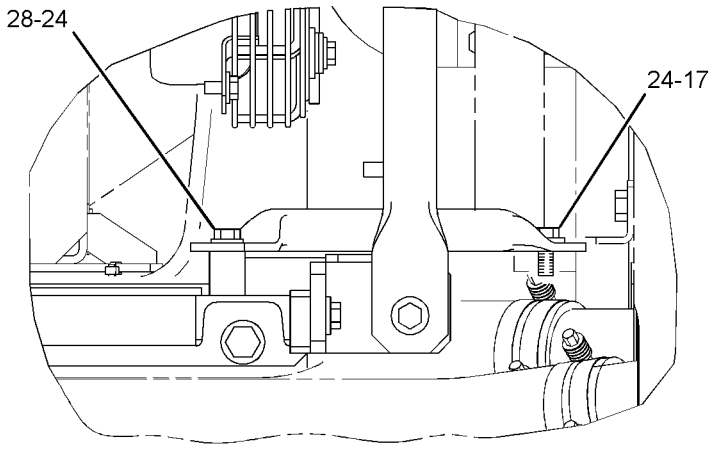

VIEW OF AREA K

GRAPHIC #3 **<END>** g01414963

248-8835 HOUSING & REGULATOR GP–TEMPERATURE REGULATOR

S/N: THX1-UP

PART OF 240-1861, 301-3082 ENGINE AR-COMPLETE

SMCS-1355, 1393 **i03734906**

NOTE	REF NO	GRAPHIC REF	PART NUMBER	QTY	PART NAME 1 2 3 4 5 6 (PRODUCT LEVEL)	SEE PAGE
	1	1	**248-5513**	1	REGULATOR-TEMPERATURE (92-DEG C) (COOLANT)	
	2	1	**157-0670**	1	CAP-DUST	
	3	1	**280-6794**	1	HOSE	
	4	1	**217-5200**	1	HOUSING AS	
	4A	1	**3S-9643**	1	SEAL-LIP TYPE (WATER TEMPERATURE REGULATOR)	
	5	1	**191-4457**	1	GASKET (WATER REGULATOR HOUSING)	
	6	1	**237-5176**	2	CLAMP-BAND	
	7	1	*341-0087*	1	PLUG AS	
		1	**9S-4185**	1	PLUG-O-RING	
	7A	1	**6V-6609**	1	SEAL-O-RING	
	8	1	**154-9025**	1	VALVE-FLUID SAMPLING (COOLANT)	
	9	1	**4S-9191**	4	WASHER (12X22.5X5-MM THK)	
	10	1	**6B-5072**	1	BUSHING-REDUCING	
M	11	1	**8T-0644**	4	BOLT (M10X1.5X90-MM)	

M-METRIC PART

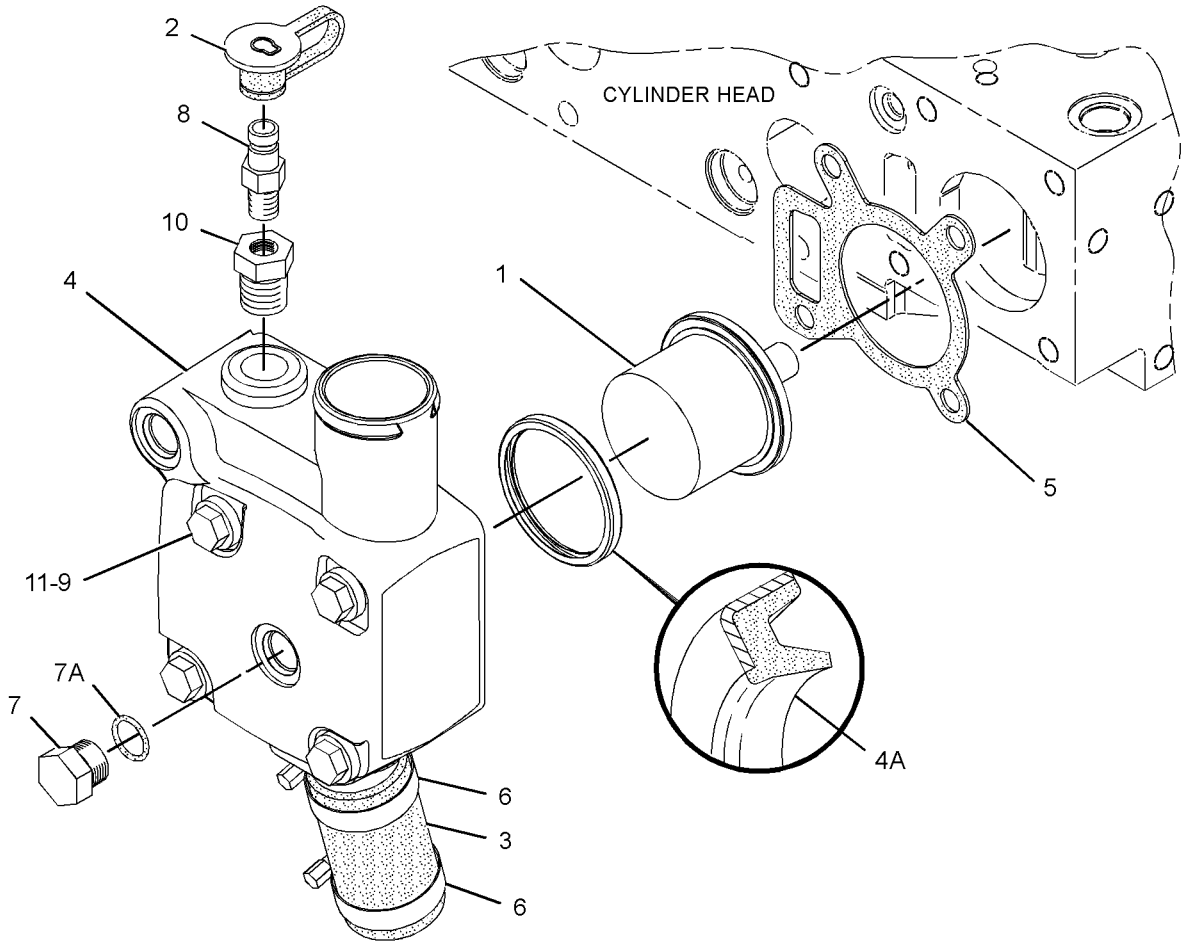

GRAPHIC #1 **<END>** g01256579

244-0989 LINES GP-TURBOCHARGER WATER

S/N: THX1-UP

PART OF 240-1861, 301-3082 ENGINE AR-COMPLETE

SMCS-1052 **i03434560**

NOTE	REF NO	GRAPHIC REF	PART NUMBER	QTY	PART NAME 1 2 3 4 5 6 (PRODUCT LEVEL)	SEE PAGE
	1	1	**118-0911**	1	TEE-O-RING PORT	
	2	1	**120-9127**	1	TEE	
	3	1	**3K-0360**	3	SEAL-O-RING	
M	4	1	**5C-7261**	1	NUT (M8X1.25-THD)	
	5	1	**7B-7501**	1	CLIP	
	6	1	**6V-6609**	2	SEAL-O-RING	
	7	1	**8M-0505**	2	CONNECTOR	
	8	1	**8T-1715**	1	ADAPTER	
	9	1	*148-8411*	2	PLUG AS	
					(EACH INCLUDES)	
		1	**3K-0360**	1	SEAL-O-RING	
		1	**9S-4185**	1	PLUG-O-RING	
	10	1	**164-5603**	1	CONNECTOR AS	
		1	**3K-0360**	1	SEAL-O-RING	
		1	**8M-0505**	1	CONNECTOR	
	11	1	**9M-1974**	1	WASHER-HARD (8.8X16X2-MM THK)	
	12	1	**244-0988**	2	HOSE AS	

M-METRIC PART

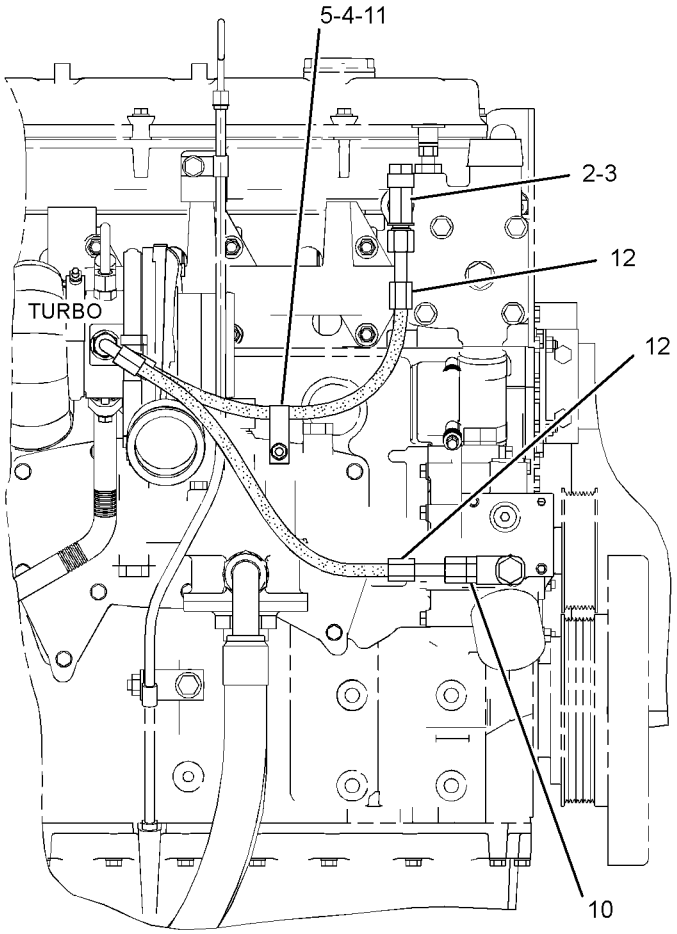

RIGHT SIDE VIEW OF ENGINE

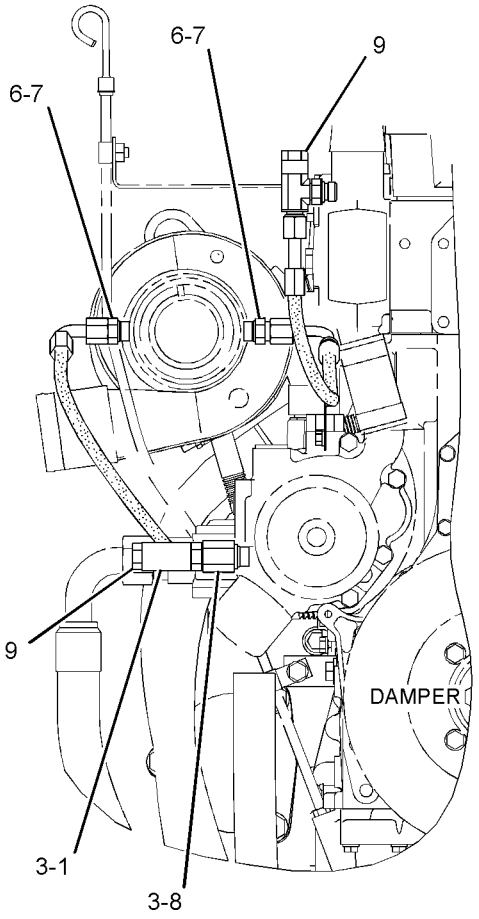

FRONT VIEW OF ENGINE

GRAPHIC #1 **<END>** g01716933

COOLING SYSTEM

348-4301 LINES GP-WATER

S/N: THX22638-UP

PART OF 240-1861, 301-3082 ENGINE AR-COMPLETE

SMCS-1355, 1380 **i03663203**

NOTE	REF NO	GRAPHIC REF	PART NUMBER	QTY	PART NAME 1 2 3 4 5 6 (PRODUCT LEVEL)	SEE PAGE
	1	1	**280-6794**	1	HOSE	
	2	1	**157-0670**	1	CAP-DUST	
	3	1	**191-4457**	1	GASKET (WATER REGULATOR HOUSING)	
	4	1	**217-5200**	1	HOUSING AS	
		1	**3S-9643**	1	SEAL-LIP TYPE	
		1	**217-5199**	1	HOUSING	
	5	1	**237-5176**	2	CLAMP-BAND	
	6	1	**247-7133**	1	REGULATOR-WATER TEMPERATURE (98-DEG C) (COOLANT)	
	7	1	*341-0087*	1	PLUG AS	
		1	**6V-6609**	1	SEAL-O-RING	
		1	**9S-4185**	1	PLUG-O-RING	
	8	1	**154-9025**	1	VALVE-FLUID SAMPLING (ENGINE COOLANT)	
	9	1	**4S-9191**	4	WASHER (12X22.5X5-MM THK)	
	10	1	**6B-5072**	1	BUSHING-REDUCING	
M	11	1	**8T-0644**	4	BOLT (M10X1.5X90-MM)	

M-METRIC PART

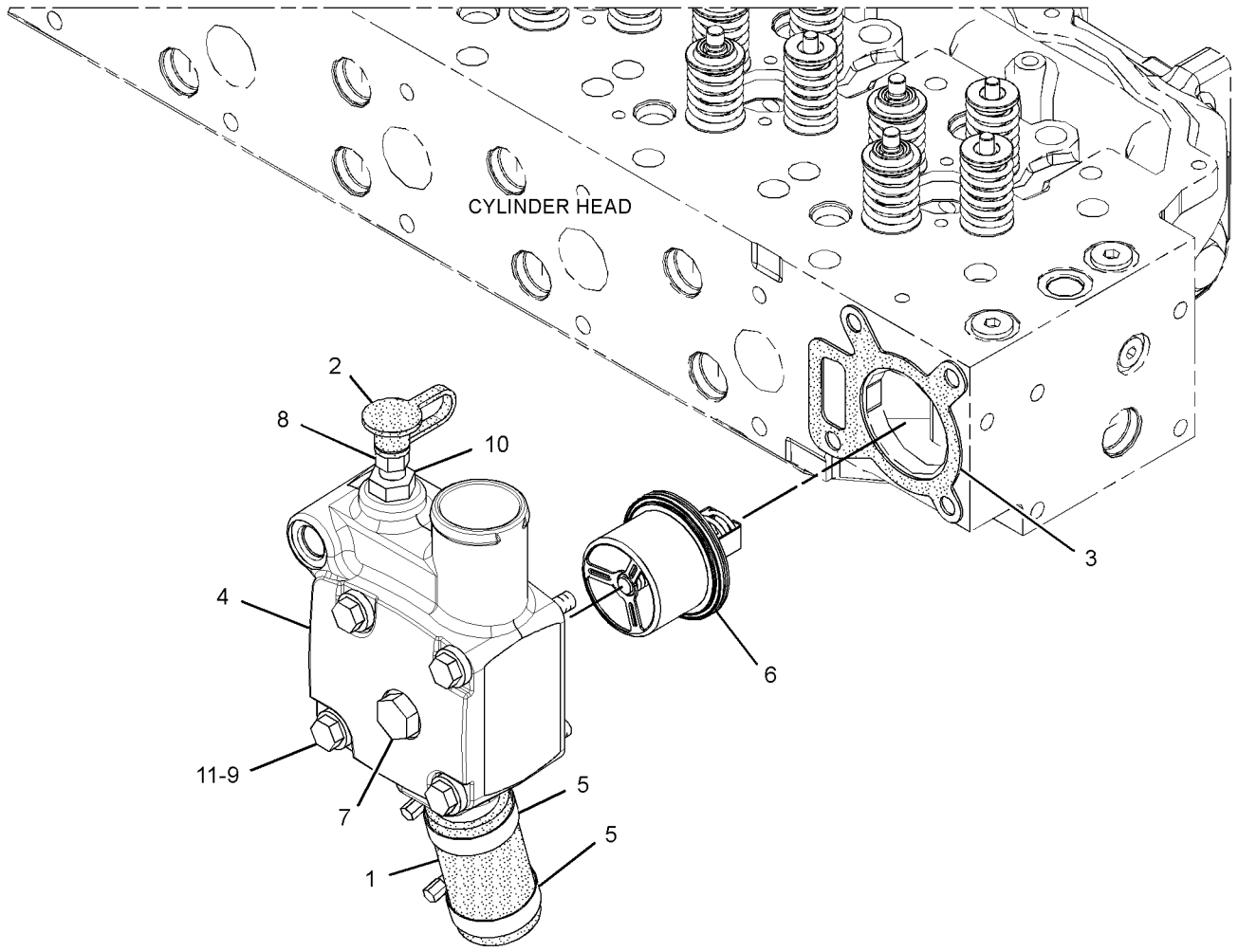

GRAPHIC #1 **<END>** g01966691

COOLING SYSTEM

265-3553 MODULE GP-COOLING

S/N: D3P1-UP; M4T1-UP

PART OF 230-2896 RADIATOR & HYD OIL COOLER GP

SMCS-1064, 1350, 1374, 1375, 1378, 137T, 1712, 1811, 4346 **i03600732**

NOTE	REF NO	GRAPHIC REF	PART NUMBER	QTY	PART NAME 1 2 3 4 5 6 (PRODUCT LEVEL)	SEE PAGE
	1	2	**1P-5411**	3	SLEEVE	
	2	2	**1P-5412**	6	BUSHING-TERMINAL	
	3	1	**8T-0376**	1	VALVE (DRAIN)	
	4	1	**036-1865**	1	CAP AS-RADIATOR	
	5	1	**096-4035**	3	CLIP	
	6	2	**245-9359**	1	CORE AS-RADIATOR	
	7	2	**245-9360**	1	CORE AS-OIL COOLER (HYDRAULIC)	
	8	2	**326-3898**	1	AFTERCOOLER AS	
	9	1	**265-3534**	1	FRAME AS	
	10	1	**265-3535**	1	BRACKET AS	
	11	2	**265-3536**	1	BRACKET AS	
	12	1	**265-3537**	1	PLATE AS	
	13	1	**265-3539**	4	ISOLATOR	
	14	1	**265-3540**	2	SEAL	
	15	2	**265-3542**	1	SEAL	
	16	2	**265-3543**	1	SEAL	
	17	2	**265-3544**	1	SHROUD AS-RADIATOR	
	18	2	**7X-0618**	5	WASHER-HARD (13.5X40X5-MM THK)	
	19	1	**7X-7729**	16	WASHER (11X25X3-MM THK)	
M	20	1	**8T-4137**	16	BOLT (M10X1.5X20-MM)	
M	21	1,2	**8T-4139**	5	BOLT (M12X1.75X30-MM)	
M	22	2	**8T-4176**	2	BOLT (M12X1.75X90-MM)	
M	23	1,2	**8T-4192**	7	BOLT (M12X1.75X25-MM)	
	24	1,2	**8T-4223**	14	WASHER-HARD (13.5X25.5X3-MM THK)	
M	25	2	**8T-4956**	2	BOLT (M12X1.75X35-MM)	
M	26	2	**8T-5041**	1	BOLT (M12X1.75X120-MM)	
E	27	1	**7Y-1976**		HOSE-WATER (176-CM)	
E	27A	1	**7Y-1976**		HOSE-WATER (21-CM)	

E-ORDER BY THE CENTIMETER
M-METRIC PART

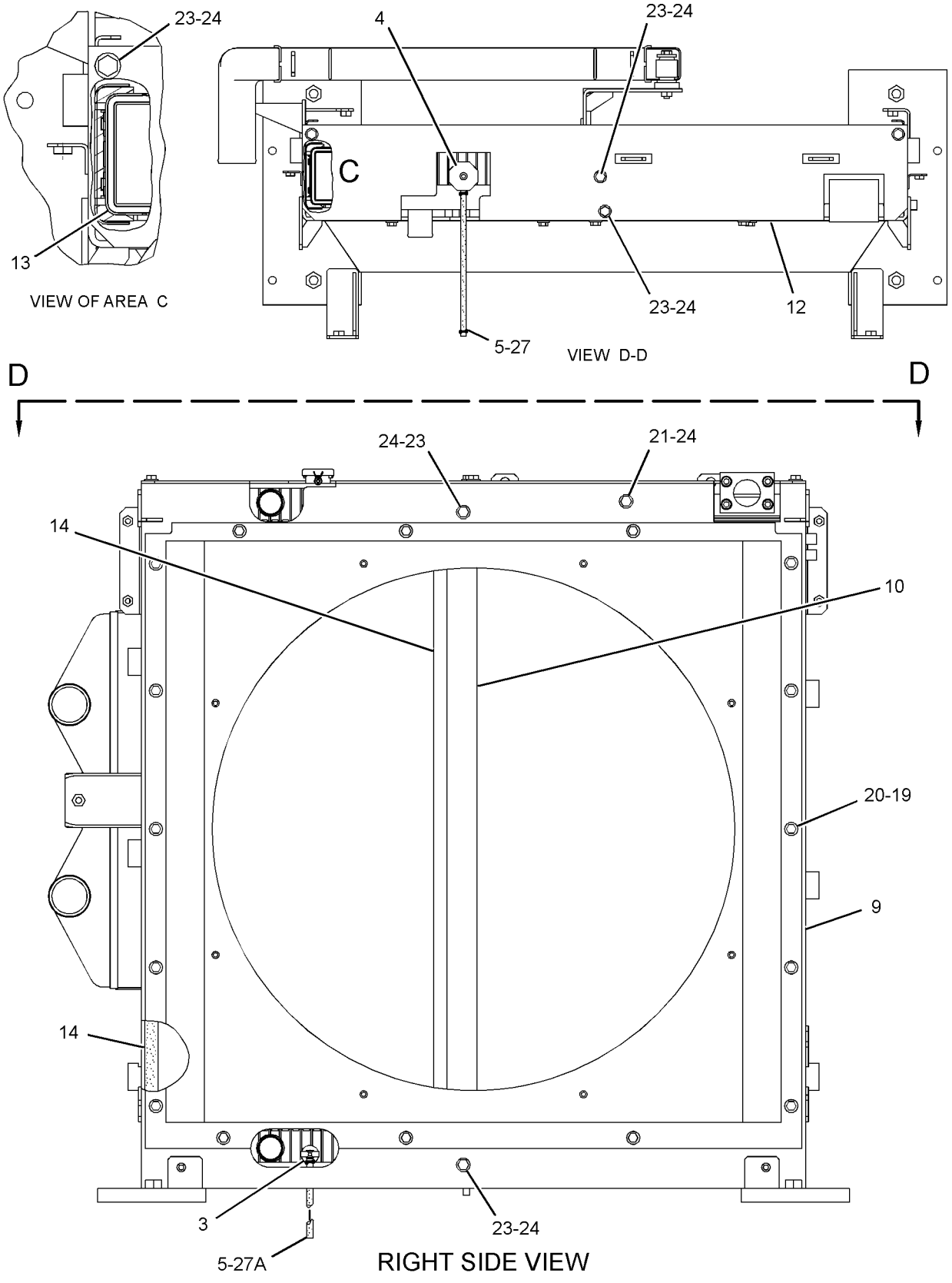

GRAPHIC #1 g01243551

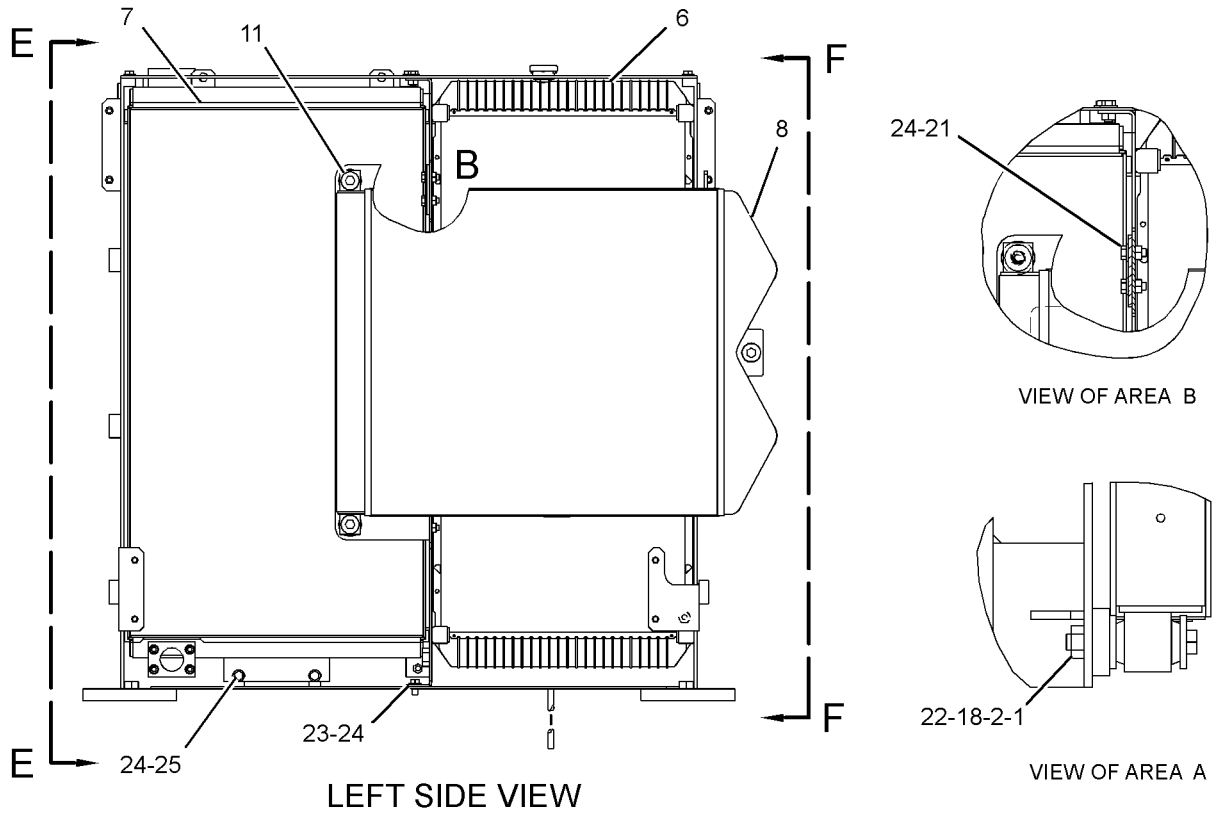

LEFT SIDE VIEW

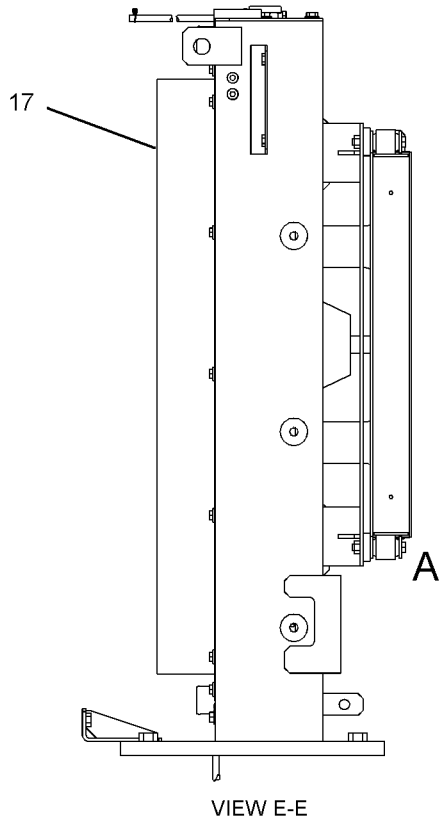

VIEW E-E

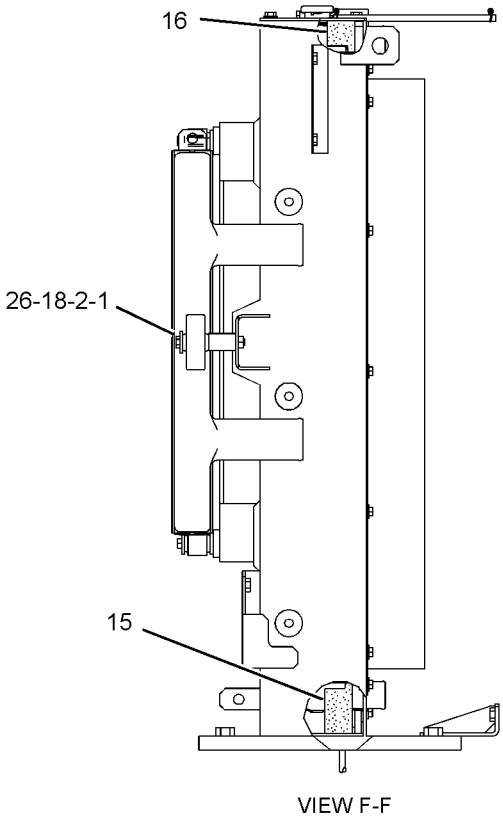

VIEW F-F

GRAPHIC #2 **<END>** g01243550

205-4013 PLUG GP-WATER LINES

S/N: THX1-UP

PART OF 240-1861, 301-3082 ENGINE AR-COMPLETE

SMCS-1393 **i01677922**

NOTE	REF NO	GRAPHIC REF	PART NUMBER	QTY	PART NAME 1 2 3 4 5 6 (PRODUCT LEVEL)	SEE PAGE
	1	1	**7L-7556**	2	PLUG-CUP (67.03MM DIA)	
					—OR—	
		1	**209-1434**	2	PLUG-CUP (73.38MM DIA)	
	2	1	**8T-6761**	1	PLUG-PIPE	

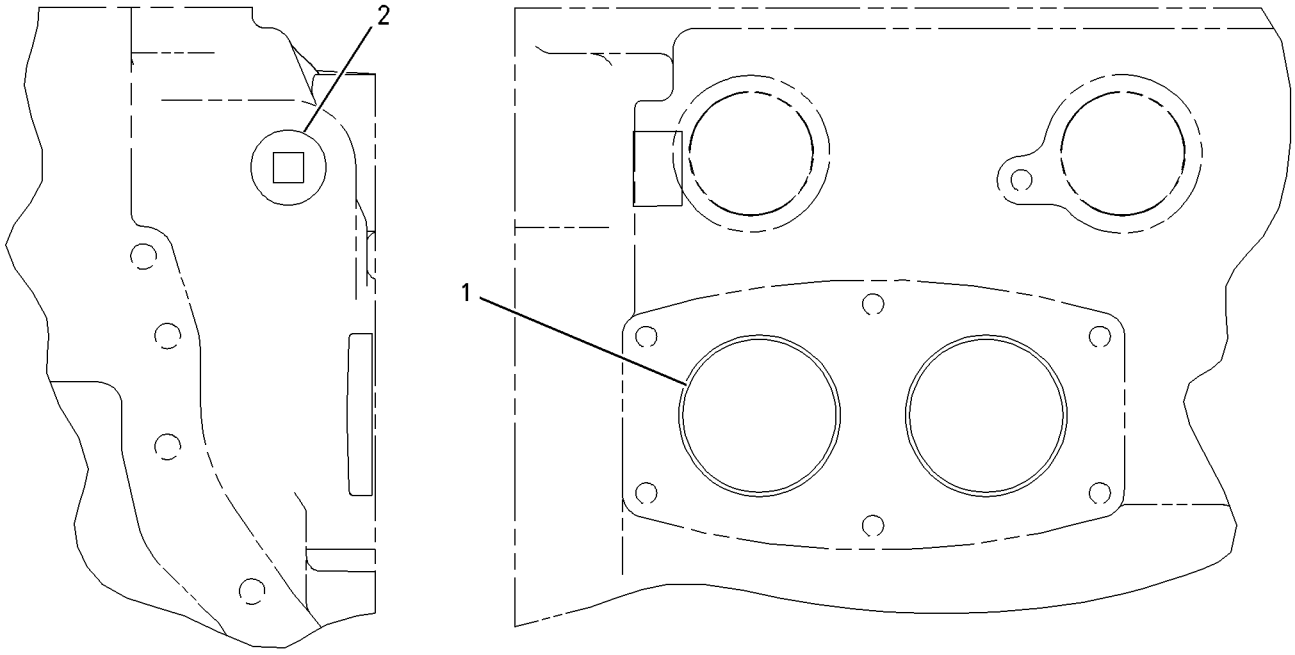

REAR VIEW RIGHT SIDE VIEW

GRAPHIC #1 **<END>** g00790624

COOLING SYSTEM

202-7674 PUMP GP-WATER

S/N: THX1-UP

PART OF 240-1861, 301-3082 ENGINE AR-COMPLETE

SMCS-1361 **i02034905**

NOTE	REF NO	GRAPHIC REF	PART NUMBER	QTY	PART NAME 1 2 3 4 5 6 (PRODUCT LEVEL)	SEE PAGE
CY	1	1	**219-4452**	1	PUMP GP-WATER	111
	2	1	**2M-4453**	1	SEAL-O-RING	
	3	1	**4J-0525**	1	SEAL-O-RING	
M	5	1	**8T-0644**	4	BOLT (M10X1.5X90-MM)	

C-CHANGE FROM PREVIOUS TYPE
M-METRIC PART
Y-SEPARATE ILLUSTRATION

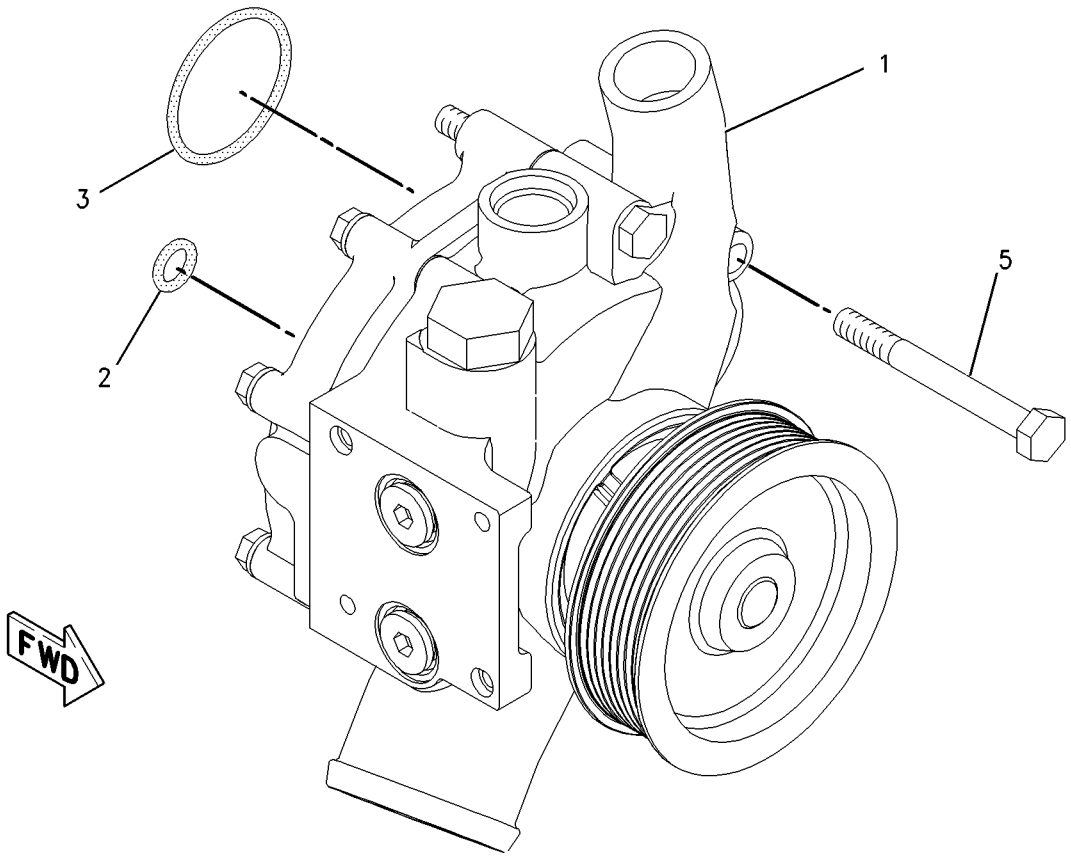

GRAPHIC #1 **<END>** g00787346

COOLING SYSTEM

219-4452 PUMP GP-WATER*R

S/N: THX1-UP

PART OF 202-7674 PUMP GP-WATER

SMCS-1361 **i01906203**

NOTE	REF NO	GRAPHIC REF	PART NUMBER	QTY	PART NAME 1 2 3 4 5 6 (PRODUCT LEVEL)	SEE PAGE
	1	1	**177-1044**	1	COVER	
M	2	1	**6V-3918**	4	BOLT (M8X1.25X50-MM)	
	2A	1	**9M-1974**	4	WASHER-HARD (8.8X16X2-MM THK)	
	3	1	**216-2942**	1	PUMP AS-WATER	
		1	**216-2941**	1	HOUSING-PUMP	
	3A	1	**177-1052**	1	SHAFT AS	
	3B	1	**177-1056**	1	IMPELLER-PUMP	
	3C	1	**197-9581**	1	PULLEY (8-GROOVE)	
	3D	1	**147-5088**	1	SEAL AS-WATER PUMP	
	4	1	**222-3901**	1	GASKET	
	5	1	**3K-0360**	2	SEAL-O-RING	
	6	1	**9S-8005**	2	PLUG-O-RING	

M-METRIC PART

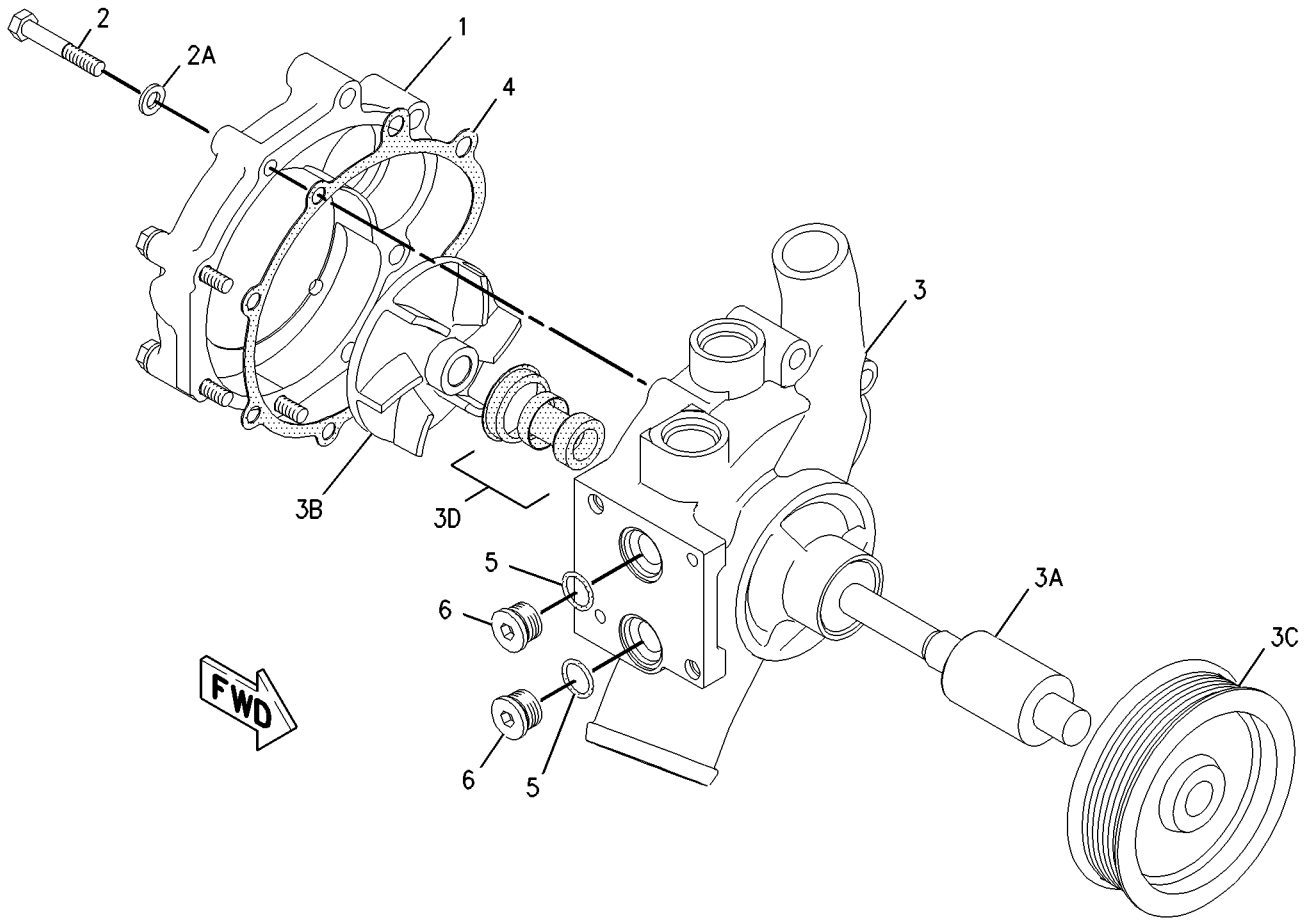

GRAPHIC #1 **<END>** g00941188

COOLING SYSTEM

230-2896 RADIATOR & HYD OIL COOLER GP

S/N: D3P1-UP; M4T1-UP

PART OF 279-7825 INSTALLATION AR-ENGINE

SMCS-1351 **i02808509**

NOTE	REF NO	GRAPHIC REF	PART NUMBER	QTY	PART NAME 1 2 3 4 5 6 (PRODUCT LEVEL)	SEE PAGE
	1	1	**7I-2673**	4	STRAP-CABLE	
	2	1	**8T-6703**	3	CLAMP-HOSE	
	3	1	**096-4035**	1	CLIP	
	4	1	**144-0367**	1	CLAMP-HOSE	
	5	2	**204-0909**	1	BAND	
	6	1	**230-2930**	1	HOSE-RADIATOR	
	7	1	**230-2931**	1	HOSE-RADIATOR	
	8	1	**245-9170**	1	SEAL	
	9	1	**245-9174**	1	SEAL	
	10	2	**245-9206**	1	TANK AS-EXPANSION (INCLUDES COOLANT LEVEL SWITCH)	
		2	**171-3370**	1	CAP AS (COOLANT OVERFLOW)	
		2	**204-0920**	1	CAP AS (COOLANT FILL)	
	11	1	**245-9287**	1	SEAL	
	12	1	**245-9288**	1	SEAL	
	13	1	**245-9289**	1	SEAL	
Y	14	1	**265-3553**	1	MODULE GP-COOLING	106
	15	2	**265-3595**	1	SUPPORT AS	
C	16	2	**281-3546**	1	PLATE AS	
C	17	2	**184-5394**	1	CLIP	
M	18	1	**7X-2563**	4	BOLT (M20X2.5X60-MM)	
C	19	2	**8T-4121**	3	WASHER-HARD (11X21X2.5-MM THK)	
	20	1	**8T-4123**	4	WASHER (22X35X3.5-MM THK)	
CM	21	2	**8T-4136**	1	BOLT (M10X1.5X25-MM)	
M	22	2	**8T-4183**	2	BOLT (M12X1.75X40-MM)	
M	23	2	**8T-4192**	3	BOLT (M12X1.75X25-MM)	
CM	24	2	**8T-4195**	2	BOLT (M10X1.5X30-MM)	
	25	2	**8T-4223**	5	WASHER-HARD (13.5X25.5X3-MM THK)	
	26	2	**9D-3769**	1	GROMMET	
E	27	1	**7Y-1976**		HOSE-WATER (56-CM)	

C-CHANGE FROM PREVIOUS TYPE
E-ORDER BY THE CENTIMETER
M-METRIC PART
Y-SEPARATE ILLUSTRATION

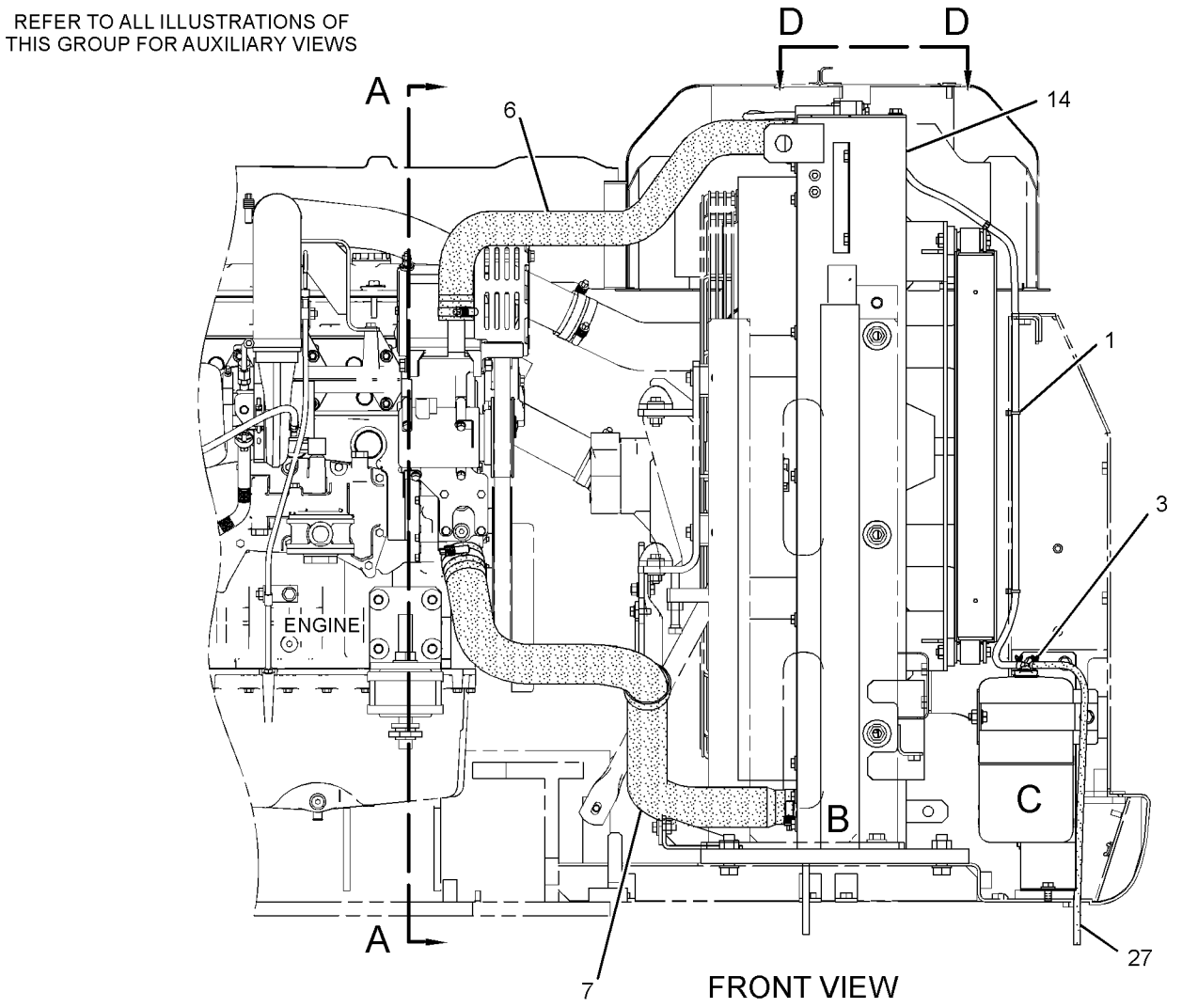

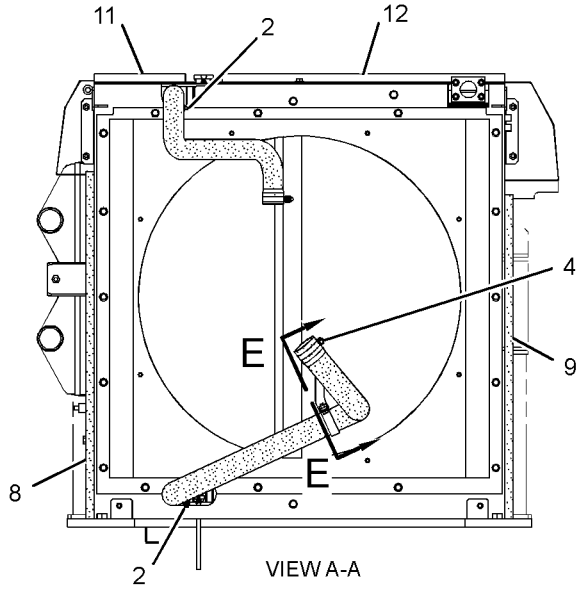

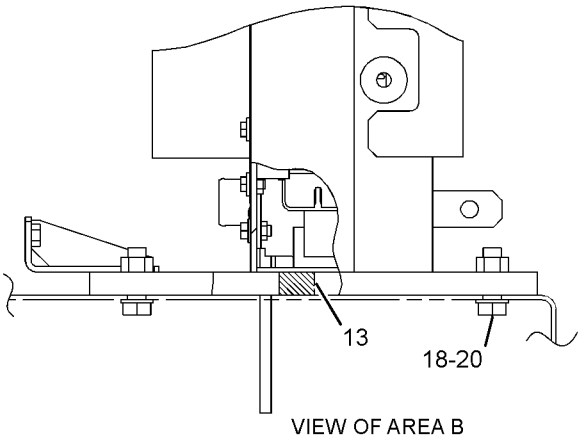

GRAPHIC #1 g01302435

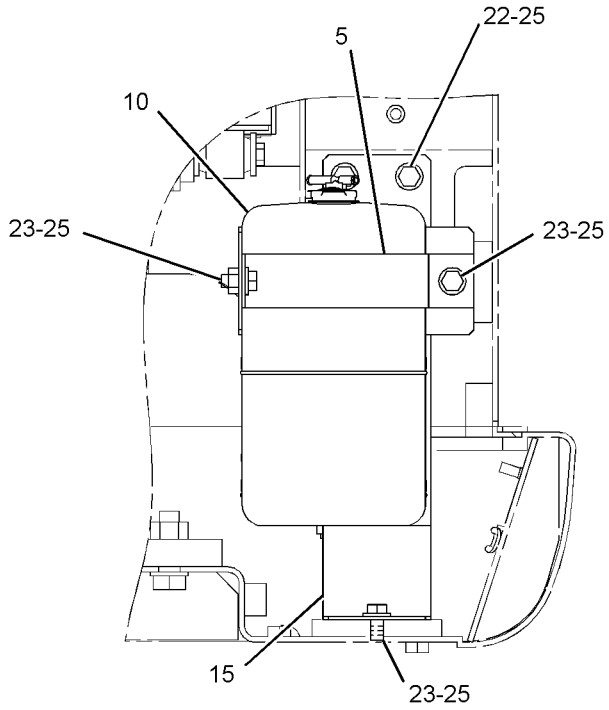

VIEW OF AREA C

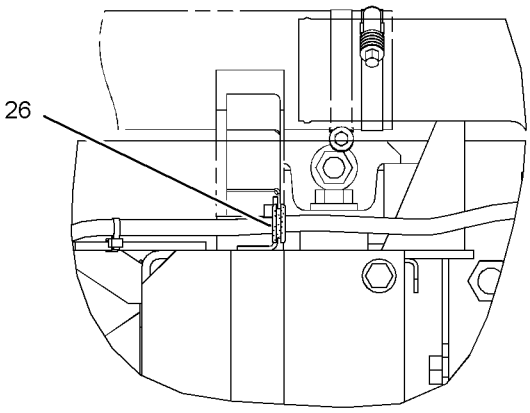

VIEW D-D

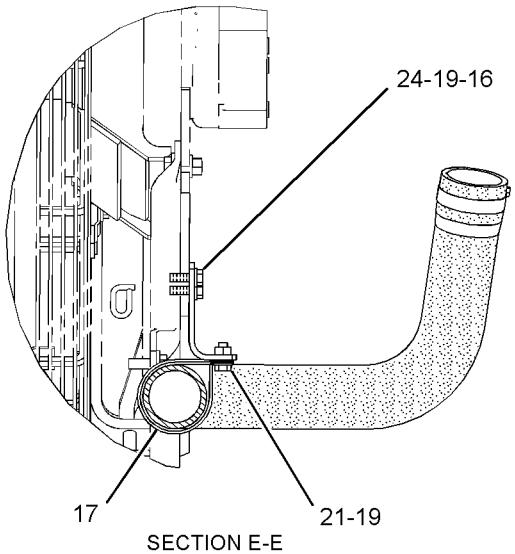

SECTION E-E

GRAPHIC #2 **<END>** g01302436

AIR INLET AND EXHAUST SYSTEM

239-6407 AIR CLEANER & MOUNTING GP

S/N: D3P1-UP; M4T1-UP

PART OF 279-7825 INSTALLATION AR-ENGINE

SMCS-1051, 1054, 7452 **i02619529**

NOTE	REF NO	GRAPHIC REF	PART NUMBER	QTY	PART NAME 1 2 3 4 5 6 (PRODUCT LEVEL)	SEE PAGE
Y	1	1	**255-2914**	1	AIR CLEANER GP	118
	2	1	**8T-4121**	4	WASHER-HARD (11X21X2.5-MM THK)	
M	3	1	**8T-4137**	4	BOLT (M10X1.5X20-MM)	

M-METRIC PART
Y-SEPARATE ILLUSTRATION

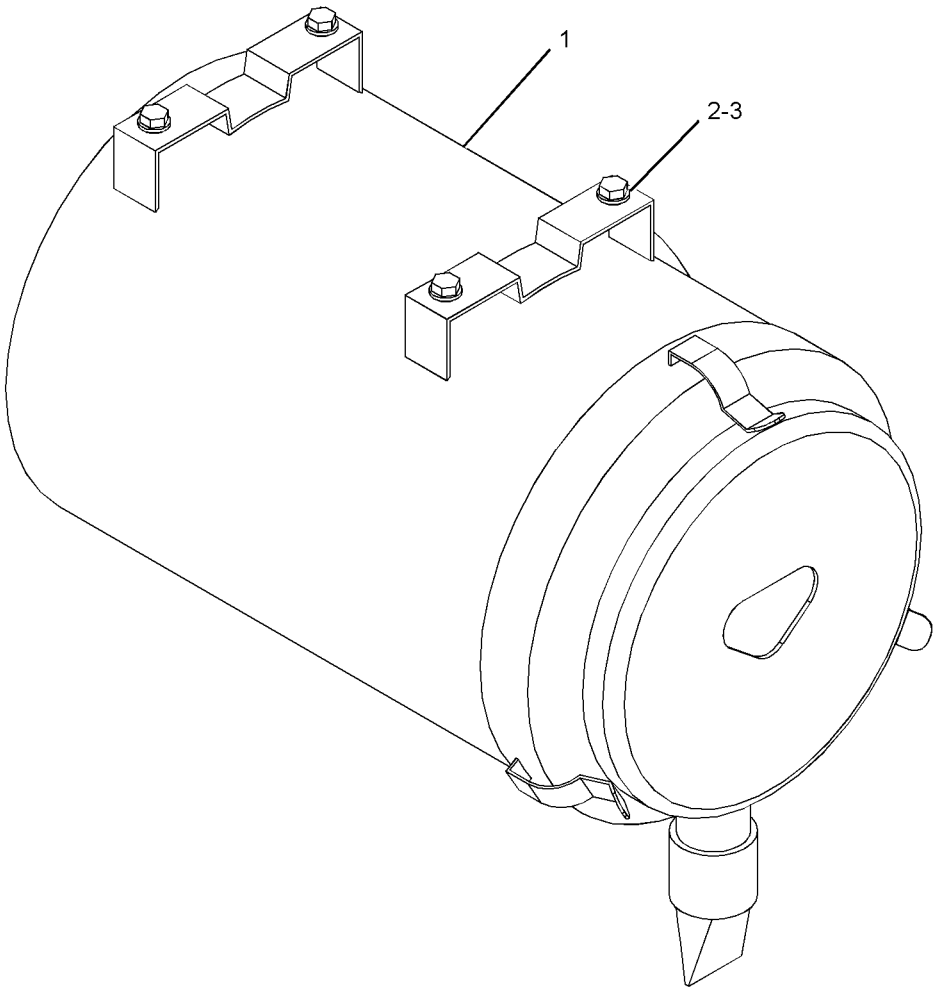

GRAPHIC #1 **<END>** g01199520

AIR INLET AND EXHAUST SYSTEM

240-3769 AIR CLEANER AR—PRECLEANER

S/N: D3P1-UP; M4T1-UP
PART OF 337-4134 OPTION AR-PUMP
AN ATTACHMENT

SMCS-1051 **i03171399**

NOTE	PART NUMBER	QTY	PART NAME 1 2 3 4 5 6 (PRODUCT LEVEL)	SEE PAGE
Y	*239-6411*	1	AIR CLEANER GP (WITH PRECLEANER)	117
Y	*237-8802*	1	HOOD GP (PRECLEANER)	387
Y-SEPARATE ILLUSTRATION				

<END>

275-3719 AIR CLEANER AR—PRECLEANER

S/N: M4T1-UP
PART OF 345-2289, 345-2290 DISTRIBUTION AR
AN ATTACHMENT

SMCS-1051 **i03727120**

NOTE	PART NUMBER	QTY	PART NAME 1 2 3 4 5 6 (PRODUCT LEVEL)	SEE PAGE
Y	*239-6411*	1	AIR CLEANER GP (WITH PRECLEANER)	117
Y	*278-3905*	1	HOOD GP (PRECLEANER)	388
Y-SEPARATE ILLUSTRATION				

<END>

AIR INLET AND EXHAUST SYSTEM

239-6411 AIR CLEANER GP—WITH PRECLEANER

S/N: D3P1-UP; M4T1-UP
PART OF 240-3769, 275-3719 AIR CLEANER AR
AN ATTACHMENT

SMCS-1051, 1054 **i02502373**

NOTE	REF NO	GRAPHIC REF	PART NUMBER	QTY	PART NAME 1 2 3 4 5 6 (PRODUCT LEVEL)	SEE PAGE
	1	1	**8T-4987**	1	CLAMP-HOSE	
	2	1	**130-3280**	1	PRECLEANER AS	
		1	**174-5415**	1	CLAMP	
	3	1	**255-2929**	1	TUBE AS	
	4	1	**266-6189**	1	HOSE	
Y	5	1	**266-6190**	1	AIR CLEANER GP	119
	6	1	**5P-1076**	4	WASHER-HARD (13.5X30X4-MM THK)	
	7	1	**7Y-1838**	1	CLAMP	
M	8	1	**8T-4133**	1	NUT (M10X1.5-THD)	
M	9	1	**8T-4185**	5	BOLT (M10X1.5X50-MM)	
M	10	1	**8T-4192**	4	BOLT (M12X1.75X25-MM)	

M-METRIC PART
Y-SEPARATE ILLUSTRATION

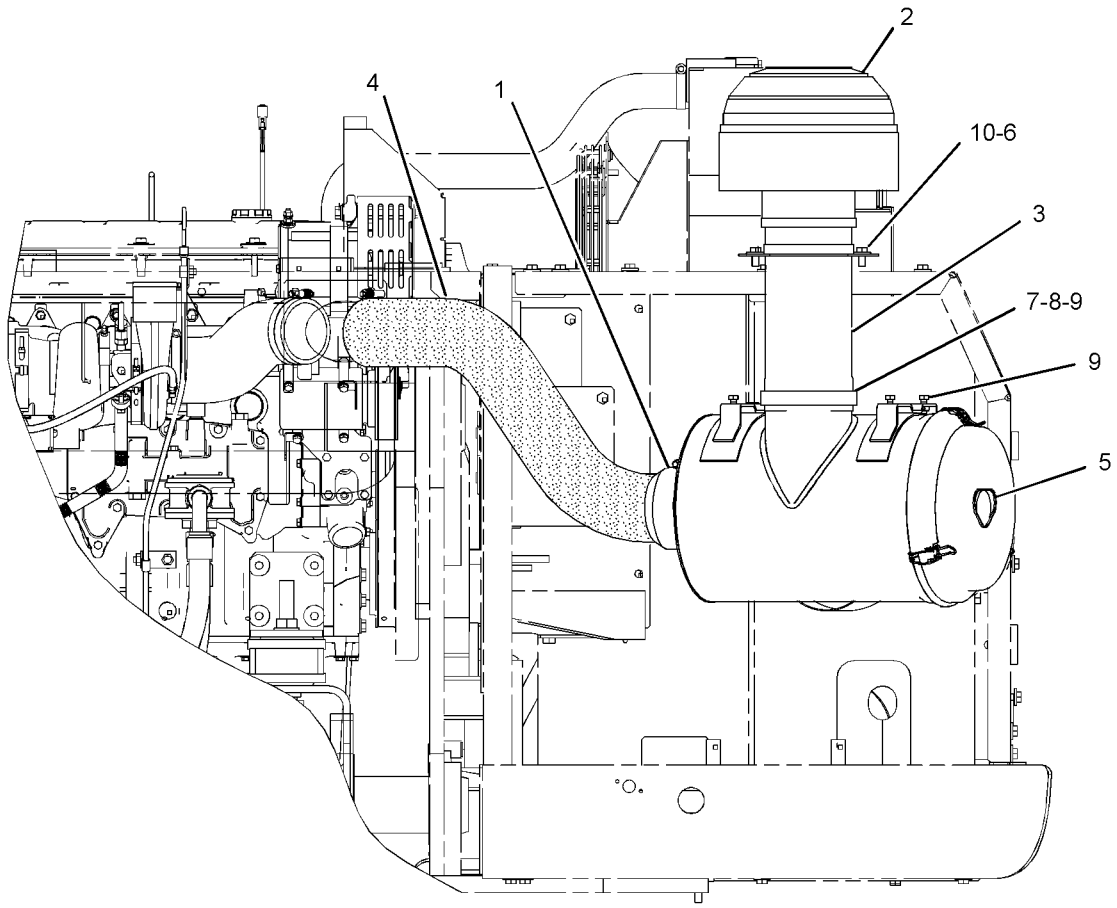

FRONT VIEW

GRAPHIC #1 **<END>** g01223611

AIR INLET AND EXHAUST SYSTEM

255-2914 AIR CLEANER GP

S/N: D3P1-UP; M4T1-UP

PART OF 239-6407 AIR CLEANER & MOUNTING GP

SMCS-1051, 1054 **i03107144**

NOTE	REF NO	GRAPHIC REF	PART NUMBER	QTY	PART NAME 1 2 3 4 5 6 (PRODUCT LEVEL)	SEE PAGE
	1	1	**131-8826**	1	FILM-INSTRUCTION (TOP, AIR CLEANER COVER)	
	2	1	**131-8829**	1	VALVE-DUST (AIR CLEANER)	
	3	1	**142-1404**	1	FILTER ELEMENT AS-AIR (SECONDARY)	
	4	1	**142-1339**	1	FILTER ELEMENT AS-AIR (PRIMARY)	
					—OR—	
		1	**220-0453**	1	FILTER ELEMENT AS-AIR (PRIMARY, ULTRA HIGH EFFICIENCY)	
	5	1	**159-7667**	1	SEAL-O-RING	
	6	1	**131-8828**	1	COVER AS	
	6A	1	**139-8794**	3	LATCH	
	7	1	**5L-3233**	1	FITTING	
	8	1	**1R-9953**	1	CAP	

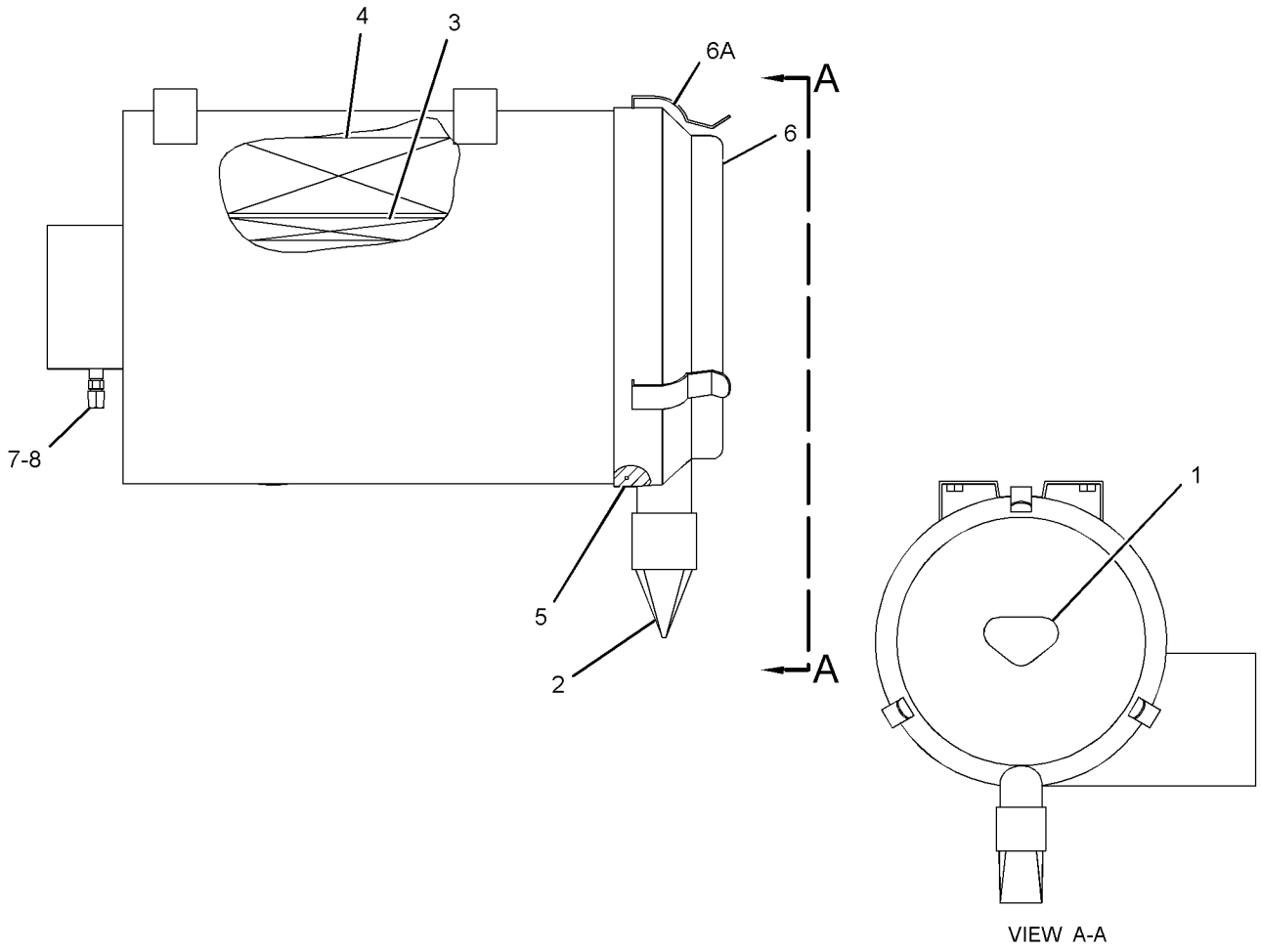

GRAPHIC #1 **<END>** g01590069

AIR INLET AND EXHAUST SYSTEM

266-6190 AIR CLEANER GP

S/N: D3P1-UP; M4T1-UP
PART OF 239-6411 AIR CLEANER GP
AN ATTACHMENT

SMCS-1051, 1054 **i03171400**

NOTE	REF NO	GRAPHIC REF	PART NUMBER	QTY	PART NAME 1 2 3 4 5 6 (PRODUCT LEVEL)	SEE PAGE
	1	1	**142-1404**	1	FILTER ELEMENT AS-AIR (SECONDARY)	
	2	1	**142-1339**	1	FILTER ELEMENT AS-AIR (PRIMARY)	
					–OR–	
		1	**220-0453**	1	FILTER ELEMENT AS-AIR (PRIMARY, ULTRA HIGH EFFICIENCY)	
	3	1	**171-9892**	1	COVER AS	
	4	1	**1R-9953**	1	CAP	
	5	1	**5L-3233**	1	FITTING	
	6	1	**131-8826**	1	FILM-INSTRUCTION (TOP, AIR CLEANER COVER)	

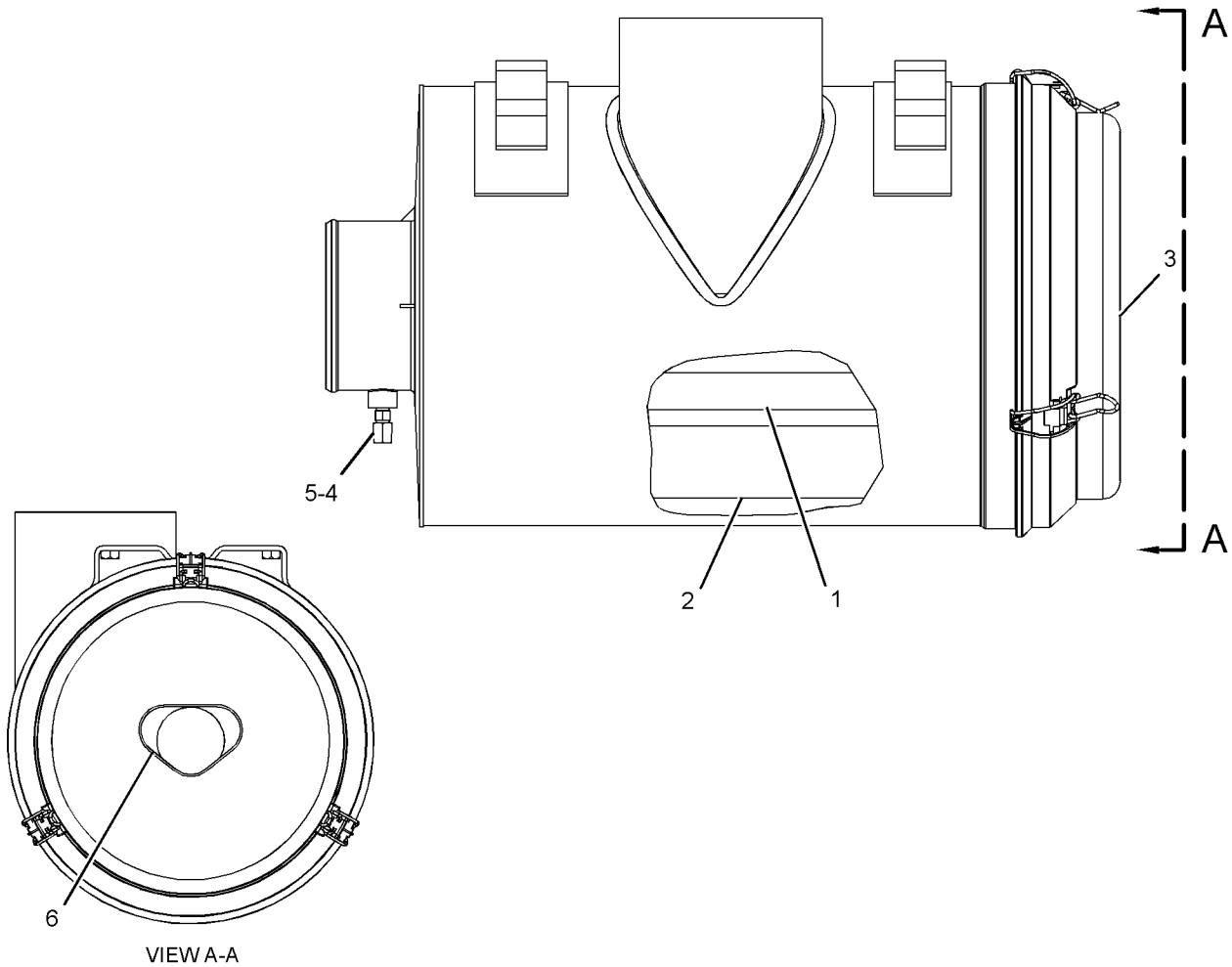

VIEW A-A

GRAPHIC #1 **<END>** g01199497

AIR INLET AND EXHAUST SYSTEM

242-1934 ELBOW GP-AIR INLET

S/N: THX1-UP

PART OF 240-1861, 301-3082 ENGINE AR-COMPLETE

SMCS-1058 **i03176081**

NOTE	REF NO	GRAPHIC REF	PART NUMBER	QTY	PART NAME 1 2 3 4 5 6 (PRODUCT LEVEL)	SEE PAGE
M	1	1	**131-0353**	2	STUD (M8X1.25X82.75-MM)	
	2	1	**221-6809**	1	ELBOW	
	3	1	**3E-4352**	2	WASHER-HARD (8.8X20.5X2.5-MM THK)	
M	4	1	**8C-5748**	5	BOLT (M8X1.25X55-MM)	
M	5	1	**8T-0100**	1	BOLT (M8X1.25X60-MM)	
	6	1	**9M-1974**	6	WASHER-HARD (8.8X16X2-MM THK)	
B	7	1	**1U-8846**		SEALANT-GASKET	

B-USE AS REQUIRED
M-METRIC PART

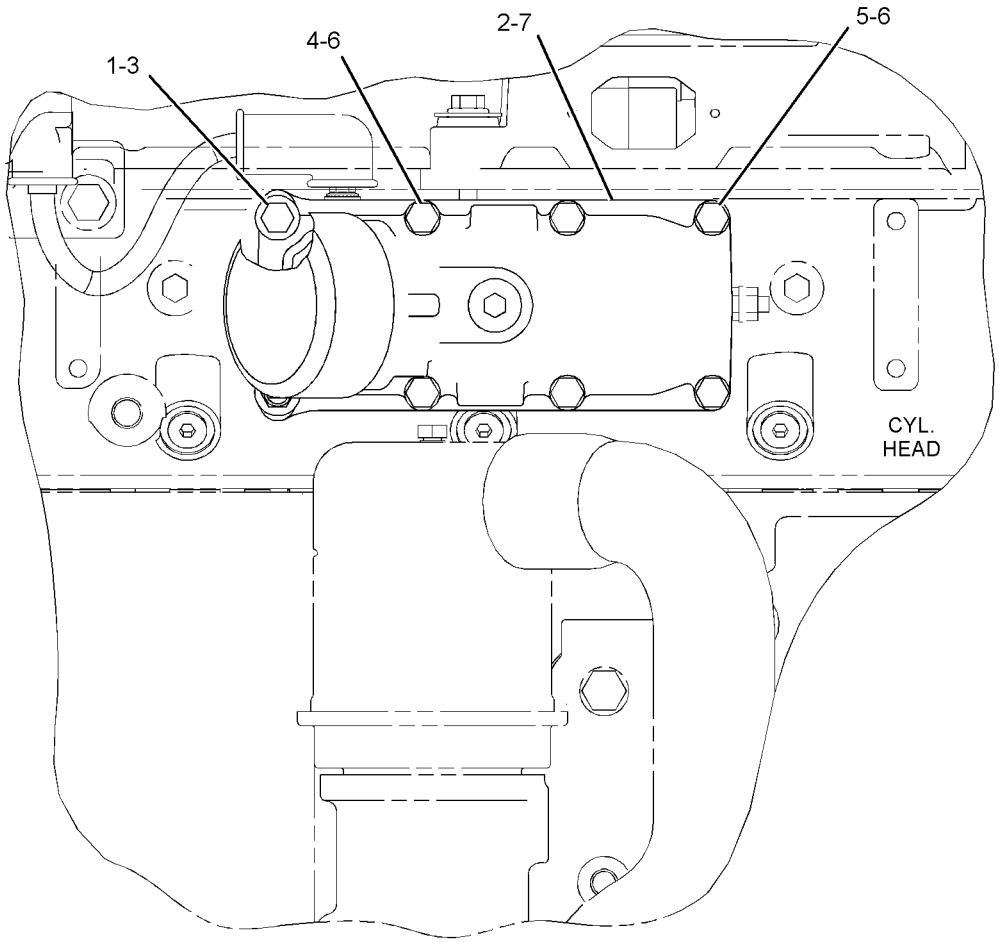

LEFT SIDE VIEW

GRAPHIC #1 **<END>** g01624587

AIR INLET AND EXHAUST SYSTEM

230-2898 LINES GP-AIR—AFTERCOOLER TO TURBOCHARGER

S/N: D3P1-UP; M4T1-UP

PART OF 279-7825 INSTALLATION AR-ENGINE

SMCS-1071 **i03252524**

NOTE	REF NO	GRAPHIC REF	PART NUMBER	QTY	PART NAME 1 2 3 4 5 6 (PRODUCT LEVEL)	SEE PAGE
	1	1	**144-0367**	12	CLAMP-HOSE	
	2	1	**230-2933**	1	HOSE	
C	3	1	**230-2866**	1	HOSE	
C	4	1	**281-3510**	1	TUBE AS	
	5	1	**230-2939**	1	BRACKET	
	6	1	**230-2940**	1	HOSE	
C	7	1	**281-3515**	1	HOSE	
C	8	1	**281-3512**	1	TUBE AS	
	9	1	**265-3561**	1	SEAL	
	10	1	**8T-4121**	1	WASHER-HARD (11X21X2.5-MM THK)	
M	11	1	**8T-4136**	7	BOLT (M10X1.5X25-MM)	
	12	1	**7X-7729**	6	WASHER (11X25X3-MM THK)	

C-CHANGE FROM PREVIOUS TYPE
M-METRIC PART

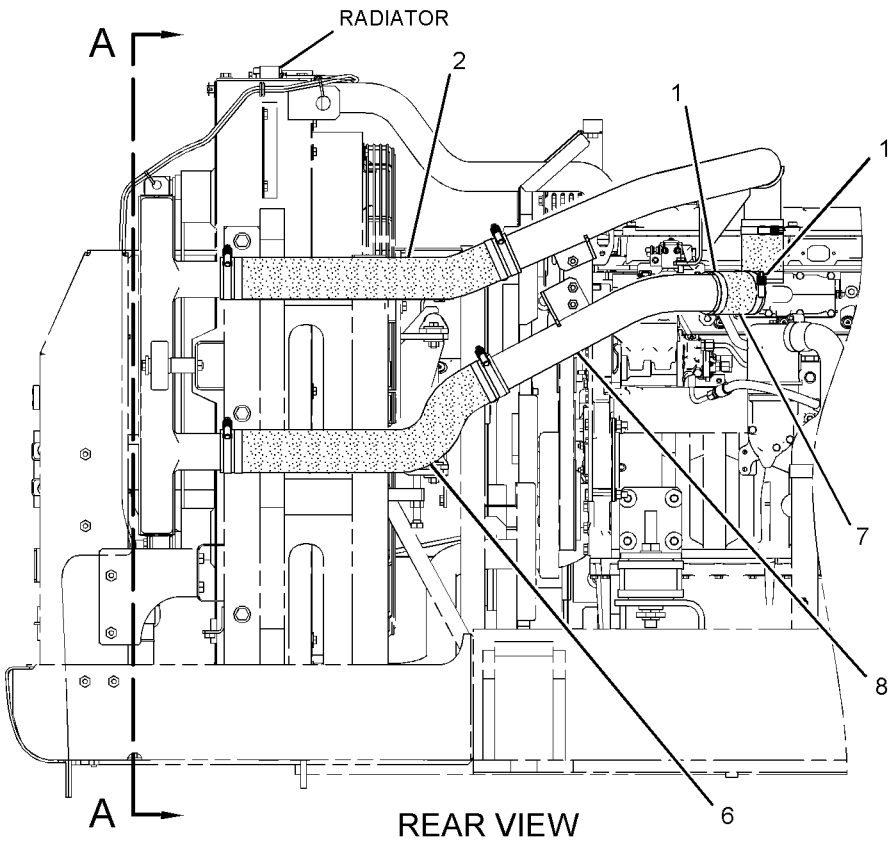

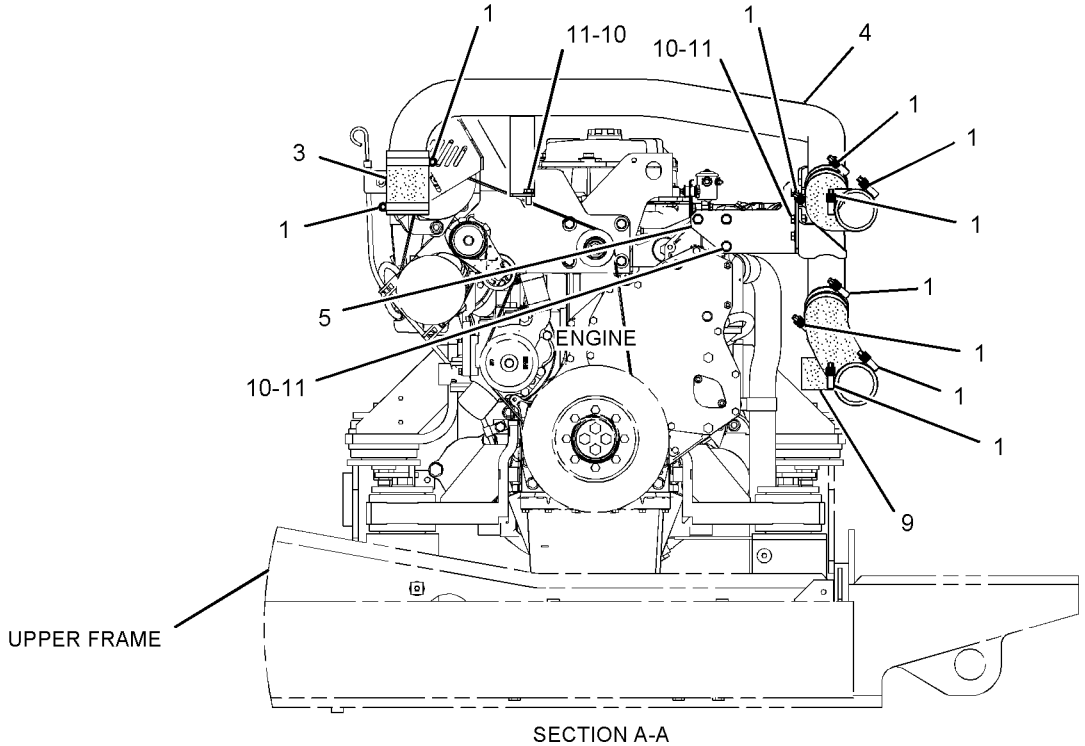

SECTION A-A

GRAPHIC #1 **<END>** g01335144

239-6406 LINES GP-AIR—AIR CLEANER TO TURBOCHARGER

S/N: D3P1-UP; M4T1-UP

PART OF 279-7825 INSTALLATION AR-ENGINE

SMCS-1071 **i03722583**

NOTE	REF NO	GRAPHIC REF	PART NUMBER	QTY	PART NAME 1 2 3 4 5 6 (PRODUCT LEVEL)	SEE PAGE
	1	1	**5L-3233**	1	FITTING	
	2	1	**8T-4986**	3	CLAMP-HOSE	
	3	1	**8T-4987**	1	CLAMP-HOSE	
	4	1	**255-2966**	1	INDICATOR AS-AIR FILTER CHANGE (AIR RESTRICTION)	
	5	1	**324-4169**	1	HOSE	
	6	1	**266-6217**	1	HOSE	

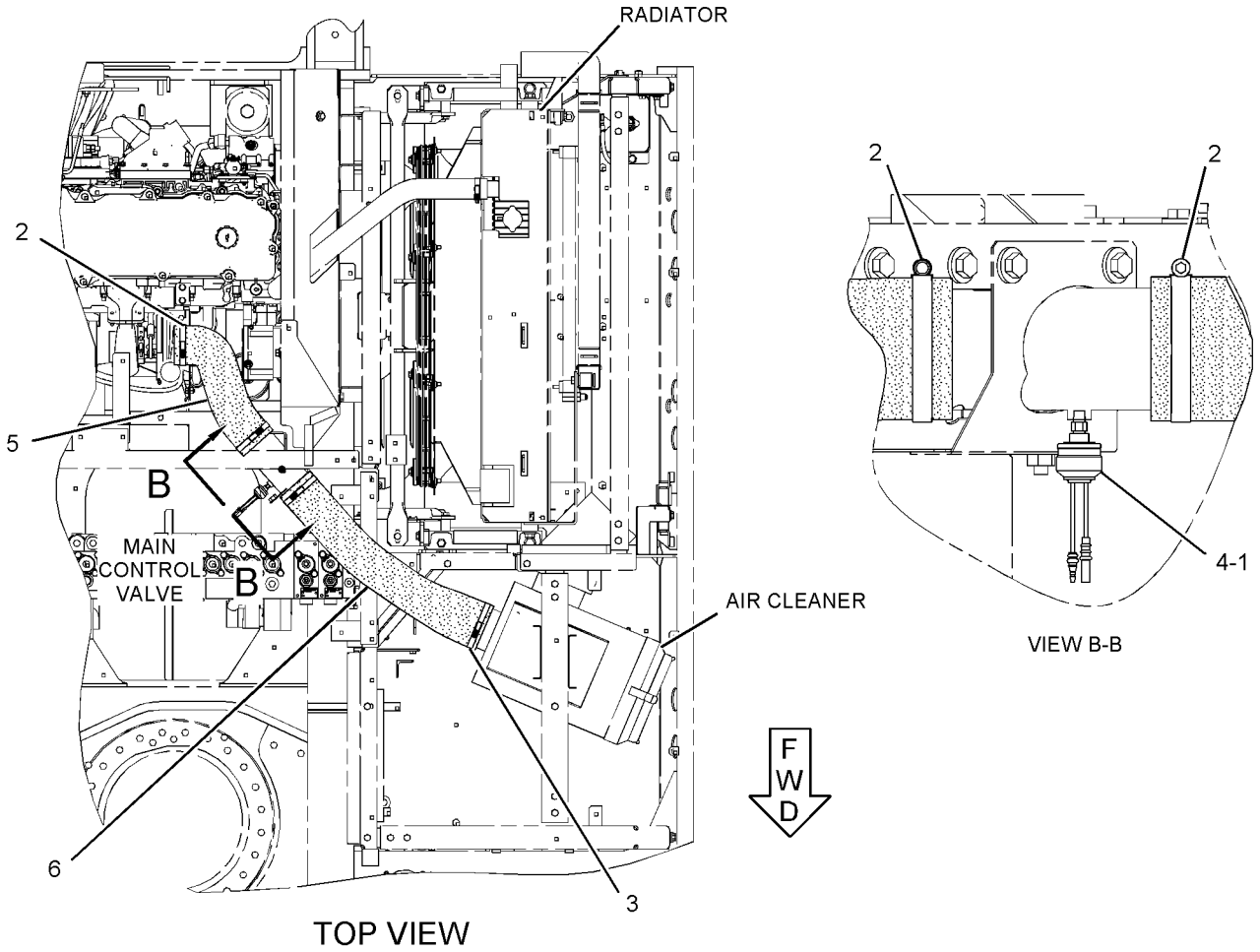

GRAPHIC #1 **<END>** g01199380

AIR INLET AND EXHAUST SYSTEM

165-4444 MANIFOLD GP-EXHAUST

S/N: THX1-UP
45 DEGREE DRY EXHAUST MANIFOLD WITH REAR TURBOCHARGER EXHAUST
PART OF 240-1861, 301-3082 ENGINE AR-COMPLETE
FOR USE WITH 165-4465—PAGE 90

SMCS-1059 **i02153917**

NOTE	REF NO	GRAPHIC REF	PART NUMBER	QTY	PART NAME 1 2 3 4 5 6 (PRODUCT LEVEL)	SEE PAGE
M	1	1	**3E-8017**	12	LOCKNUT (M10X1.5-MM THD)	
	2	1	**161-3398**	1	MANIFOLD-EXHAUST (REAR)	
	3	1	**192-4697**	1	MANIFOLD-EXHAUST (CENTER)	
	4	1	**161-3411**	6	GASKET	
	5	1	**203-7775**	1	MANIFOLD-EXHAUST (FRONT)	
M	6	1	**116-3715**	12	STUD-TAPERLOCK (M10X1.5X85-MM)	
	7	1	**4P-4369**	6	SPACER (12X19X23.5-MM THK)	
	8	1	**6V-5839**	12	WASHER (11X21X2.5-MM THK)	
M	9	1	**8T-7044**	4	STUD-TAPERLOCK (M10X1.5X40-MM)	

M-METRIC PART

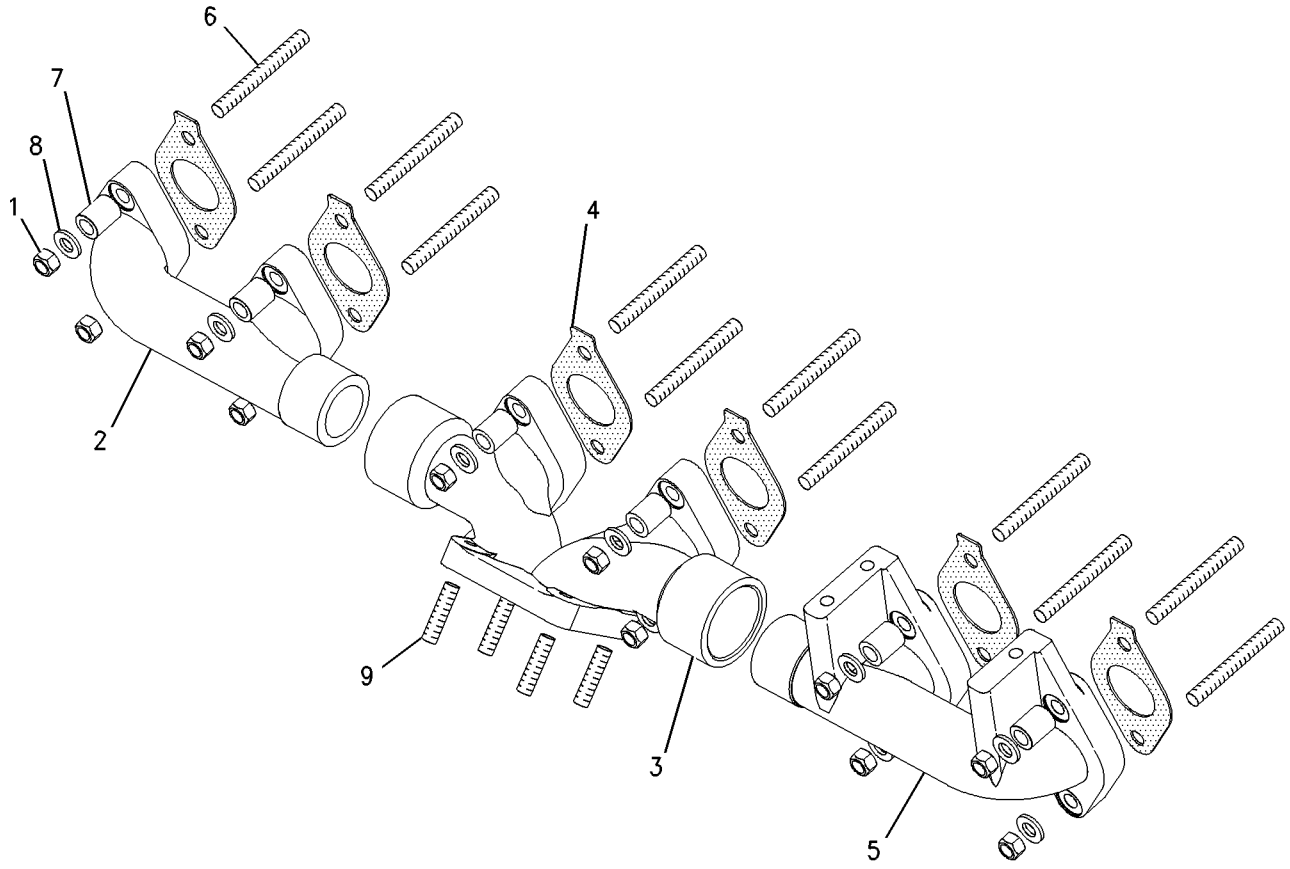

GRAPHIC #1 **<END>** g00713513

AIR INLET AND EXHAUST SYSTEM

222-8300 MUFFLER GP

S/N: D3P1-UP; M4T1-UP

PART OF 262-1359, 266-6263 ENGINE AR

SMCS-1062 **i03009510**

NOTE	REF NO	GRAPHIC REF	PART NUMBER	QTY	PART NAME 1 2 3 4 5 6 (PRODUCT LEVEL)	SEE PAGE
	1	1	**119-5708**	1	CLIP	
	2	1	**193-2839**	1	PIPE AS	
	3	1	**193-2844**	1	PLATE	
	4	1	**310-9725**	1	PLATE	
	5	1	**205-6642**	1	MUFFLER AS	
	6	1	**239-6494**	1	SUPPORT AS	
	7	1	**310-9771**	1	BRACKET AS	
	8	1	**131-8847**	2	U-BOLT	
	9	1	**241-9265**	1	CLAMP-MUFFLER	
M	11	1	**8T-4137**	1	BOLT (M10X1.5X20-MM)	
	12	1	**5P-1076**	3	WASHER-HARD (13.5X30X4-MM THK)	
	13	1	**7X-7729**	5	WASHER (11X25X3-MM THK)	
	15	1	**8T-4121**	5	WASHER-HARD (11X21X2.5-MM THK)	
M	16	1	**8T-4136**	2	BOLT (M10X1.5X25-MM)	
M	17	1	**8T-4184**	3	BOLT (M12X1.75X45-MM)	
M	18	1	**8T-4185**	5	BOLT (M10X1.5X50-MM)	
M	19	1	**8T-4196**	2	BOLT (M10X1.5X35-MM)	
	20	1	**8T-4223**	3	WASHER-HARD (13.5X25.5X3-MM THK)	
M	21	1	**8T-4244**	8	NUT (M12X1.75-THD)	
M	22	1	**8T-4956**	3	BOLT (M12X1.75X35-MM)	
	23	1	**9N-1941**	1	CLAMP-V-BAND	
	24	1	**255-2900**	1	PIPE AS-EXHAUST	
	25	1	**7E-6455**	1	CLAMP	

M-METRIC PART

222-8300 **MUFFLER GP** *(contd.)* **i03009510**

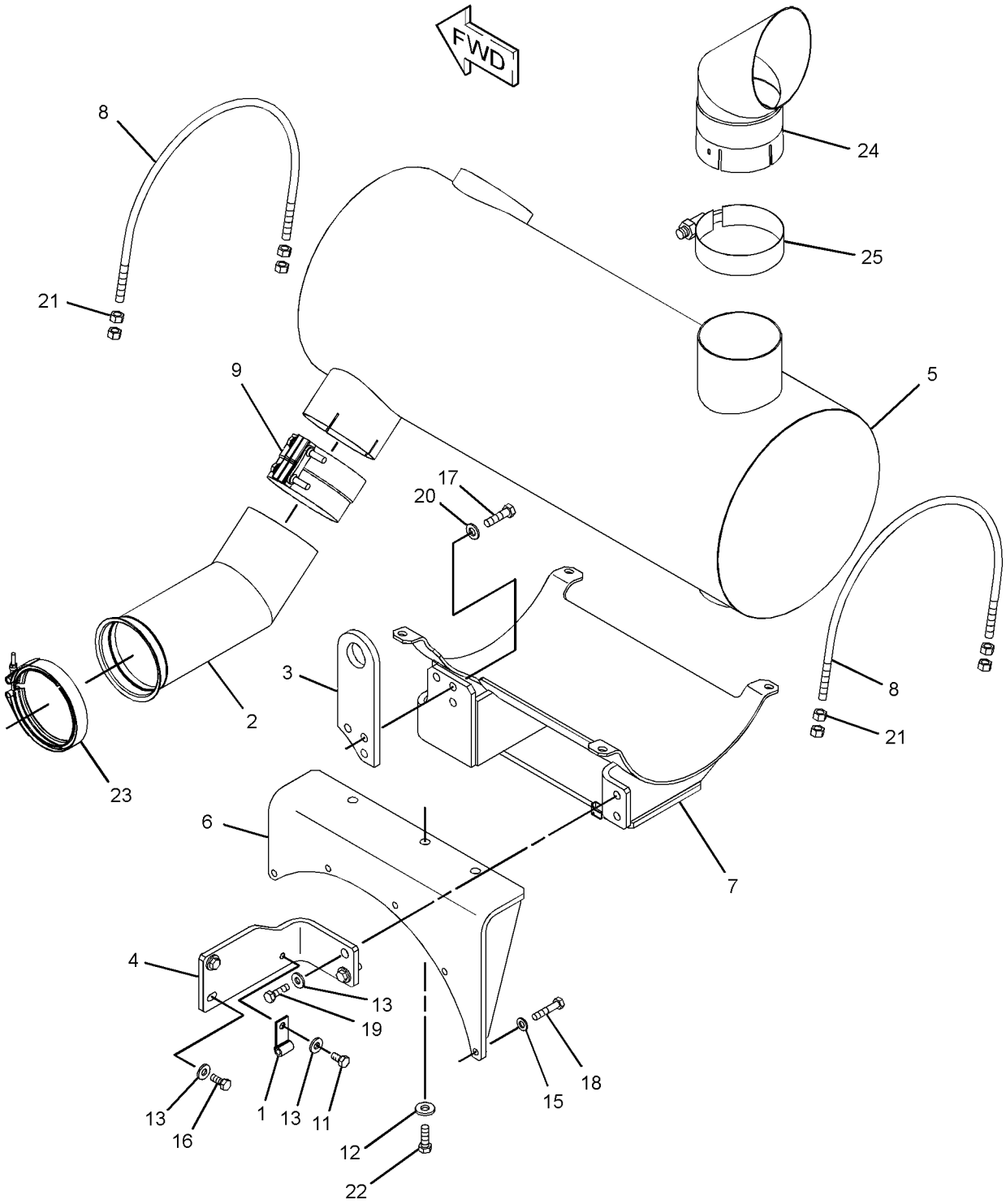

GRAPHIC #1 **<END>** g01518557

AIR INLET AND EXHAUST SYSTEM

250-7700 TURBOCHARGER GP

S/N: THX1-UP

PART OF 258-8337 TURBOCHARGER GP

SMCS-1052, 1053 **i02713175**

NOTE	REF NO	GRAPHIC REF	PART NUMBER	QTY	PART NAME 1 2 3 4 5 6 (PRODUCT LEVEL)	SEE PAGE
	1	1	**248-5576**	1	CLAMP AS-V-BAND	
	2	1	**5P-4536**	1	ELBOW	
	3	1	**137-1602**	1	CLAMP AS (TURBINE)	
	4	1	**161-6963**	2	CLAMP	
	6	1	**235-5507**	1	CARTRIDGE GP-TURBOCHARGER	
E	7	1	**242-3360**		HOSE (23-CM)	

E-ORDER BY THE CENTIMETER

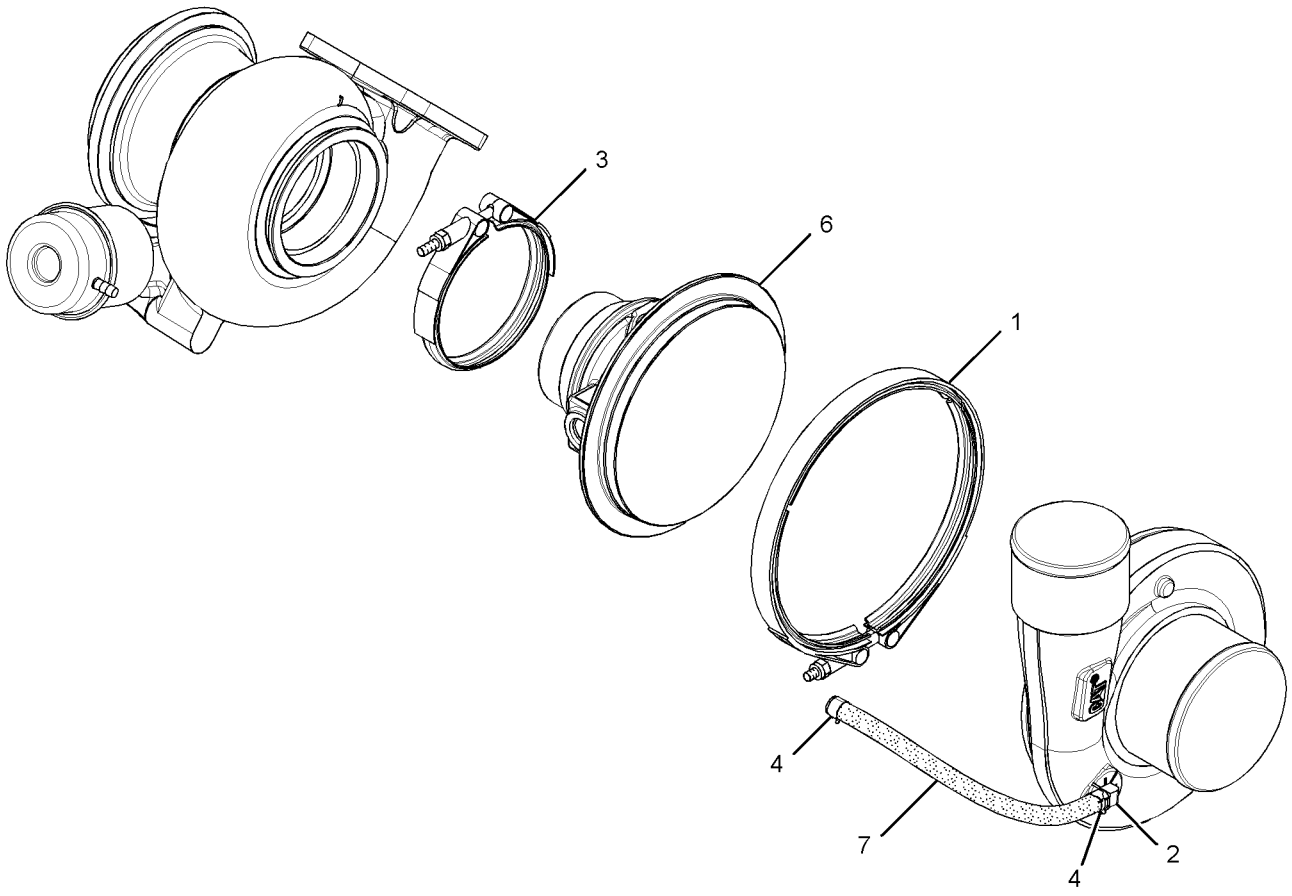

GRAPHIC #1 **<END>** g01375897

AIR INLET AND EXHAUST SYSTEM

258-8337 TURBOCHARGER GP

S/N: THX1-UP

PART OF 229-2665, 270-4216, 348-2746, 348-2747 ENGINE AR-CORE

SMCS-1052, 1053 **i02504042**

NOTE	REF NO	GRAPHIC REF	PART NUMBER	QTY	PART NAME 1 2 3 4 5 6 (PRODUCT LEVEL)	SEE PAGE
	1	1	**1P-0451**	1	GASKET	
M	2	1	**3E-8017**	4	LOCKNUT (M10X1.5-MM-THD)	
Y	3	1	**250-7700**	1	TURBOCHARGER GP	127

M-METRIC PART
Y-SEPARATE ILLUSTRATION

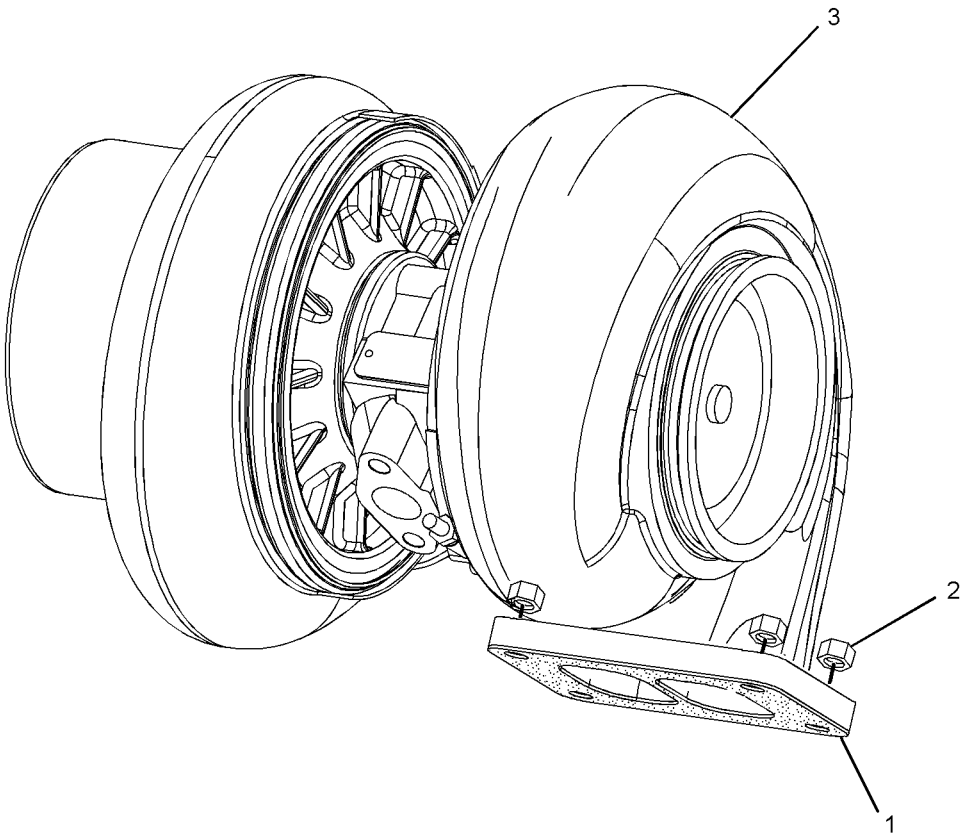

GRAPHIC #1 **<END>** g01187210

FUEL SYSTEM

174-9570 FILTER GP-WATER SEP & FUEL

S/N: D3P1-UP; M4T1-UP
PART OF 237-8752 LINES GP-FUEL, 190-8977 PUMP GP-FUEL PRM & WATER SEP
ALSO AN ATTACHMENT

SMCS-1261, 1263 **i03671369**

NOTE	REF NO	GRAPHIC REF	PART NUMBER	QTY	PART NAME 1 2 3 4 5 6 (PRODUCT LEVEL)	SEE PAGE
	1	1	**326-1644**	1	FILTER AS-WATER SEP & FUEL (PRIMARY)	
	1A	1	**220-8678**	1	SEAL-RING (FUEL, WATER SEPARATOR)	
	2	1	**343-5527**	1	BOWL AS (FUEL, WATER SEPARATOR)	
		1	**3J-1907**	1	SEAL-O-RING	
		1	**5F-9144**	1	SEAL-O-RING	
		1	**8F-7219**	1	SEAL-O-RING	
		1	**9S-8004**	1	PLUG	

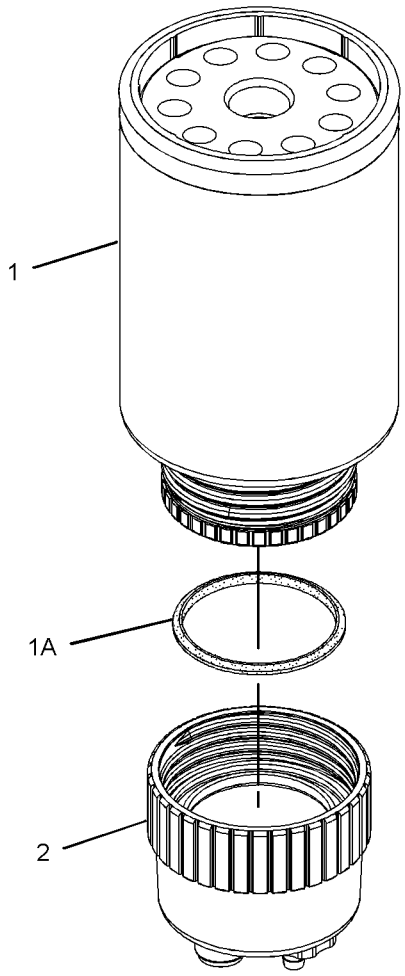

GRAPHIC #1 **<END>** g01179858

293-4072 INJECTOR GP-FUEL

S/N: THX1-17738

PART OF 267-3361 PUMP GP-FUEL INJECTION

SMCS-1251, 1254, 1290, 1713 **i02572072**

NOTE	REF NO	GRAPHIC REF	PART NUMBER	QTY	PART NAME 1 2 3 4 5 6 (PRODUCT LEVEL)	SEE PAGE
	1	1	**149-5240**	1	RING-BACKUP	
	2	1	**293-0730**	1	RING-BACKUP	
	3	1	**109-3207**	1	SEAL-O-RING	
	4	1	**148-2903**	2	SEAL-O-RING	

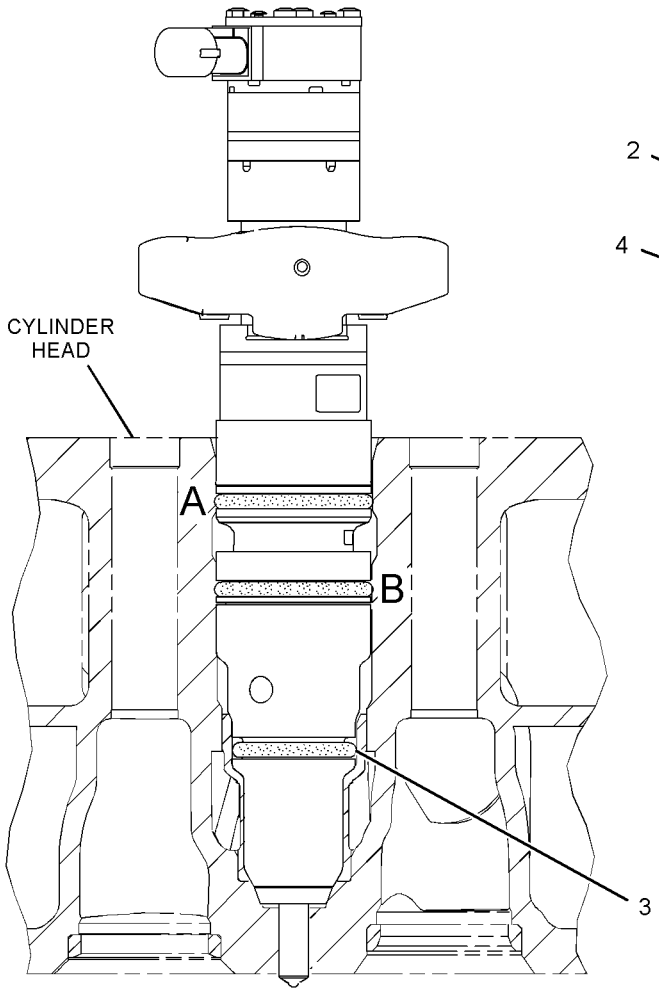

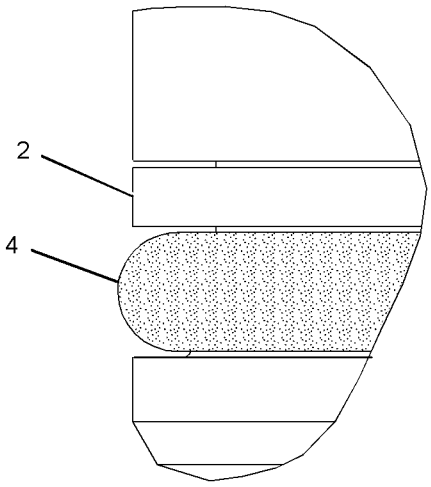

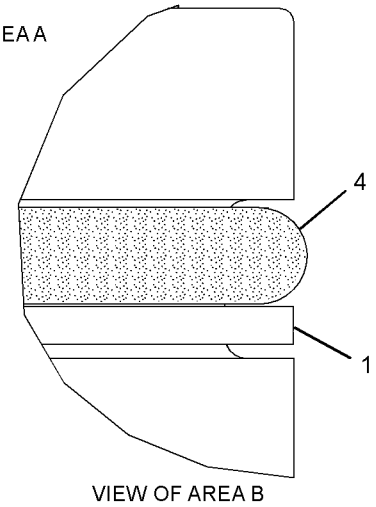

GRAPHIC #1 **<END>** g01290525

328-2574 INJECTOR GP-FUEL*R

S/N: THX17739-UP

PART OF 267-3361 PUMP GP-FUEL INJECTION

SMCS-1251, 1254, 1290, 1713 **i03173640**

NOTE	REF NO	GRAPHIC REF	PART NUMBER	QTY	PART NAME 1 2 3 4 5 6 (PRODUCT LEVEL)	SEE PAGE
	1	1	**149-5240**	1	RING-BACKUP	
	2	1	**293-0730**	1	RING-BACKUP	
	3	1	**109-3207**	1	SEAL-O-RING	
	4	1	**148-2903**	2	SEAL-O-RING (FUEL SYSTEM)	

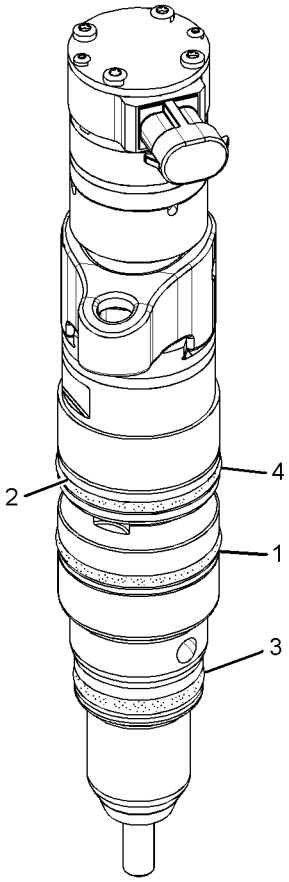

GRAPHIC #1 **<END>** g01624285

FUEL SYSTEM

231-3039 LINES GP-FUEL

S/N: THX1-UP

PART OF 240-1861, 301-3082 ENGINE AR-COMPLETE

SMCS-1274 **i03341107**

NOTE	REF NO	GRAPHIC REF	PART NUMBER	QTY	PART NAME 1 2 3 4 5 6 (PRODUCT LEVEL)	SEE PAGE
	1	1	**7W-3447**	1	SPACER (10.2X19.05X10.2-MM THK)	
	2	1	**309-0175**	1	TUBE AS	
I	3	1	**193-0158**	1	HOSE AS	
	4	1	**231-3043**	1	TUBE AS	
Y	6	1	*205-1306*	1	REGULATOR GP-FUEL PRESSURE	163
	7	1	**005-4362**	1	ELBOW	
	8	1	**030-8188**	1	CONNECTOR	
	9	1	*148-8336*	1	CONNECTOR AS	
		1	**3J-1907**	1	SEAL-O-RING	
		1	**6V-8397**	1	SEAL-O-RING	
		1	**6V-8636**	1	CONNECTOR	
	10	1	*148-8378*	1	ELBOW AS	
		1	**3J-1907**	1	SEAL-O-RING	
		1	**6V-8397**	1	SEAL-O-RING	
		1	**6V-8724**	1	ELBOW	
	11	1	**186-0359**	1	CLIP	
	12	1	**2R-6806**	2	CONNECTOR-O-RING	
	13	1	**3J-1907**	2	SEAL-O-RING	
	14	1	**3K-0360**	2	SEAL-O-RING	
	15	1	**5P-9297**	1	CLIP	
	16	1	**119-5708**	1	CLIP	
	17	1	**6V-5839**	1	WASHER (11X21X2.5-MM THK)	
M	18	1	**6V-3822**	1	BOLT (M10X1.5X35-MM)	

I-REFER TO HYDRAULIC INFORMATION SYSTEM
M-METRIC PART
Y-SEPARATE ILLUSTRATION

231-3039 **LINES GP-FUEL** *(contd.)* **i03341107**

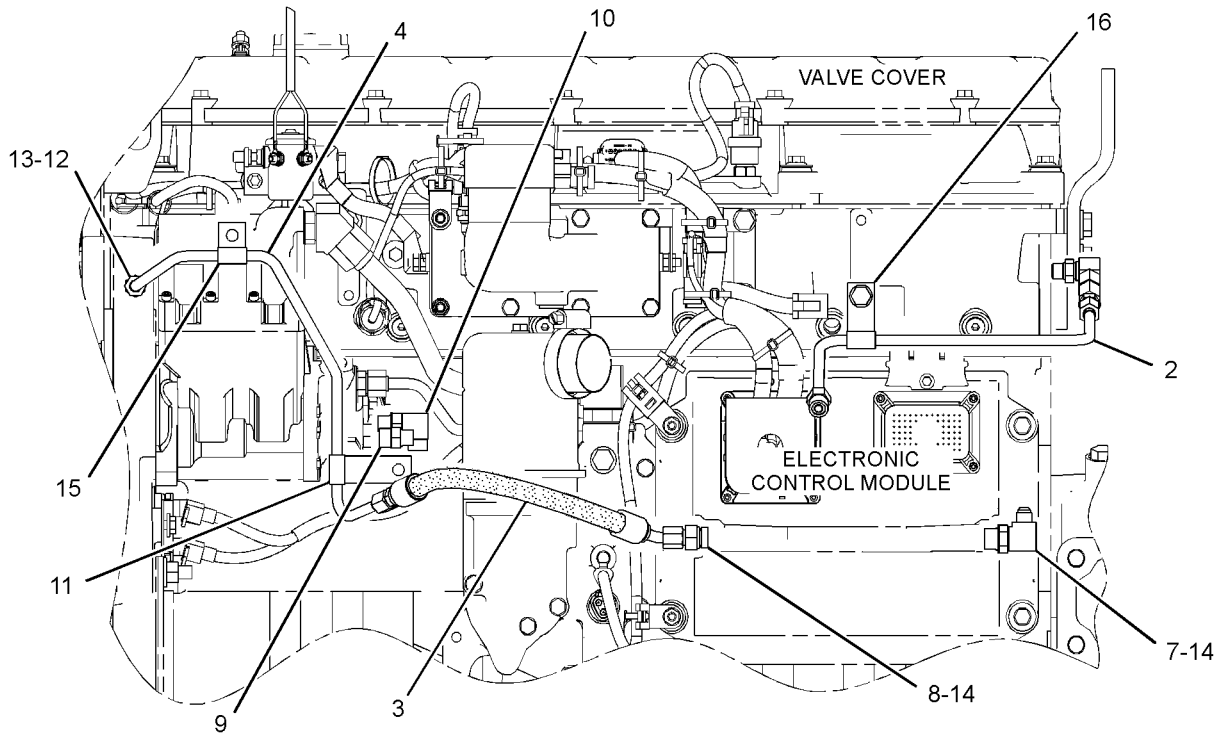

LEFT SIDE VIEW OF ENGINE

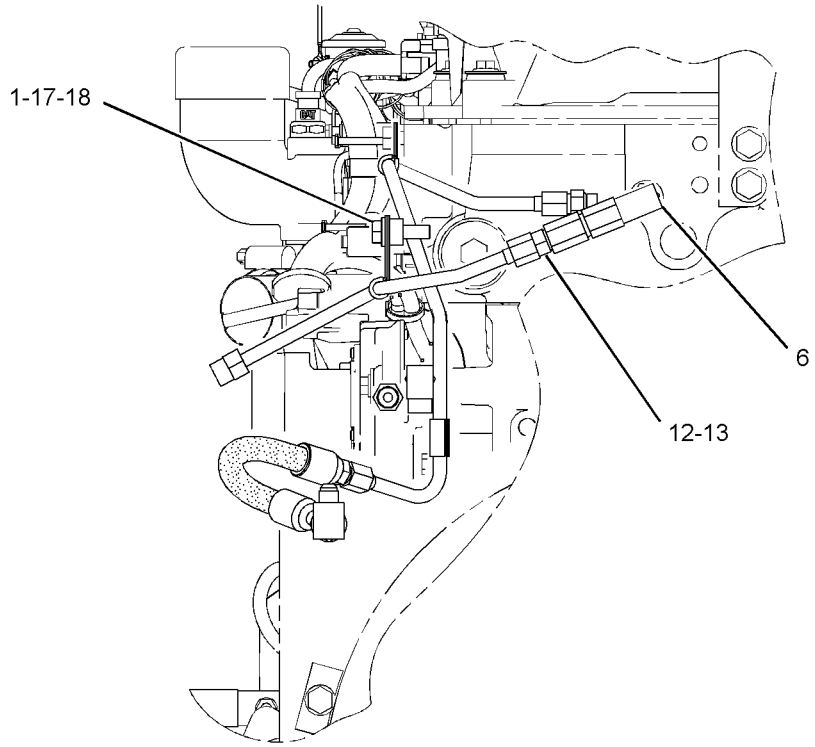

REAR VIEW OF ENGINE

GRAPHIC #1 **<END>** g01721633

FUEL SYSTEM

237-8752 LINES GP-FUEL

S/N: D3P1-UP; M4T1-UP

PART OF 314-3709 CHASSIS AR

SMCS-1274 **i03601025**

NOTE	REF NO	GRAPHIC REF	PART NUMBER	QTY	PART NAME 1 2 3 4 5 6 (PRODUCT LEVEL)	SEE PAGE
	1	2	**4I-0379**	1	VALVE-MANUAL (DRAIN, FUEL TANK)	
	2	2	**4N-9624**	1	ADAPTER-PRIMING PUMP	
	3	1	**7Y-8165**	1	GROMMET	
	4	2	**9Y-8389**	1	GASKET	
	5	2	**003-7764**	2	END-HOSE	
C	6	1,2	**095-1386**	4	CLAMP-HOSE	
	7	2	**134-6852**	1	CONNECTOR	
M	8	2	**135-8575**	4	BOLT AS	
Y	9	2	**139-6873**	1	VALVE GP-FUEL BYPASS (FILTER)	171
C	10	2	*164-5597*	1	CONNECTOR AS	
		2	**6V-8397**	1	SEAL-O-RING	
		2	**8C-6868**	1	CONNECTOR	
Y	11	2	*174-9570*	1	FILTER GP-WATER SEP & FUEL	129
	12	2	**177-9778**	1	BASE AS	
		2	**9S-4167**	1	STUD-HOLLOW (1-14X1.47-IN)	
Y	13	2	*197-8391*	1	SENSOR GP-TEMPERATURE (FUEL)	250
C	14	2	*150-3036*	1	ELBOW AS	
		2	**6V-8397**	1	SEAL-O-RING	
		2	**8T-1905**	1	ELBOW	
		2	**3J-1907**	1	SEAL-O-RING	
	15	2	**229-0999**	1	HOSE	
	16	2	**237-9312**	1	BASE AS-FUEL FILTER	
		2	**9S-4167**	1	STUD-HOLLOW (1-14X1.47-IN)	
Y	17	2	*239-2396*	1	SENSOR GP-PRESSURE (FUEL)	242
Y	18	2	**258-0883**	1	SWITCH GP-PRESSURE (FUEL FILTER)	268
	19	2	**262-2598**	1	SUPPORT AS	
C	20	1	*148-8371*	1	ELBOW AS	
		1	**6V-8397**	1	SEAL-O-RING	
		1	**8C-8988**	1	ELBOW	
Y	21	2	**298-3147**	1	VALVE GP-FUEL SHUTOFF	172
CI	22	1	**313-8153**	1	HOSE AS	
CI	23	1	**313-8154**	1	HOSE AS	
CI	24	1	**313-8155**	1	HOSE AS	
CI	25	1	**313-8156**	1	HOSE AS	
CI	26	1	**313-8157**	1	HOSE AS	
C	27	1	**313-8170**	1	HOSE AS	
	28	2	*148-8311*	1	ADAPTER AS	
		2	**3K-0360**	1	SEAL-O-RING	
		2	**8T-1715**	1	ADAPTER	
	29	2	*148-8318*	1	CONNECTOR AS	
		2	**3K-0360**	1	SEAL-O-RING	
		2	**6V-8397**	1	SEAL-O-RING	
		2	**6V-8634**	1	CONNECTOR	
	30	2	*148-8383*	1	ELBOW AS	
		2	**3K-0360**	1	SEAL-O-RING	
		2	**6V-8397**	1	SEAL-O-RING	
		2	**8T-1683**	1	ELBOW	
Y	31	1	*165-9154*	1	PUMP GP-FUEL PRIMING	153
	32	2	**1R-0762**	1	FILTER-FUEL (ADVANCED EFFICIENCY)	
	33	1	**2D-1290**	3	GROMMET	
	34	2	**3J-1907**	5	SEAL-O-RING	
C	35	1,2	**4D-7733**	14	CLIP	
C	36	1	**6V-1889**	1	CLIP	
	37	2	**6V-4589**	1	SEAL-O-RING	
M	38	2	**6V-7357**	1	BOLT (M6X1X25-MM)	
C	39	1,2	**6V-8397**	3	SEAL-O-RING	

237-8752 **LINES GP-FUEL** *(contd.)* **i03601025**

NOTE	REF NO	GRAPHIC REF	PART NUMBER	QTY	PART NAME 1 2 3 4 5 6 (PRODUCT LEVEL)	SEE PAGE
C	40	2	**6V-8730**	1	UNION (FACE SEAL)	
	41	2	**8L-2786**	3	SEAL-O-RING	
C	42	1,2	**8M-2773**	2	CLIP	
	43	1,2	**8T-4121**	28	WASHER-HARD (11X21X2.5-MM THK)	
M	44	1	**8T-4133**	1	NUT (M10X1.5-THD)	
CM	45	1,2	**8T-4136**	8	BOLT (M10X1.5X25-MM)	
CM	46	1,2	**8T-4137**	13	BOLT (M10X1.5X20-MM)	
M	47	2	**8T-4195**	4	BOLT (M10X1.5X30-MM)	
M	48	2	**8T-4196**	2	BOLT (M10X1.5X35-MM)	
	49	2	**8T-4224**	1	WASHER-HARD (8.8X16X2-MM THK)	
M	50	2	**8T-4908**	1	BOLT (M8X1.25X25-MM)	
C	51	1	**9D-1829**	2	CLIP	
C	52	1,2	**9M-8406**	6	CLIP	
	53	2	**9S-8004**	5	PLUG	
	54	2	**9S-8005**	2	PLUG-O-RING	
	55	2	**9X-8256**	1	WASHER (6.6X12X2-MM THK)	
CE	56	2	**5P-1442**		HOSE (205-CM)	
CE	56A	2	**5P-1442**		HOSE (39-CM)	
	57	1	**7K-1181**	2	STRAP-CABLE	

C-CHANGE FROM PREVIOUS TYPE
E-ORDER BY THE CENTIMETER
I-REFER TO HYDRAULIC INFORMATION SYSTEM
M-METRIC PART
Y-SEPARATE ILLUSTRATION

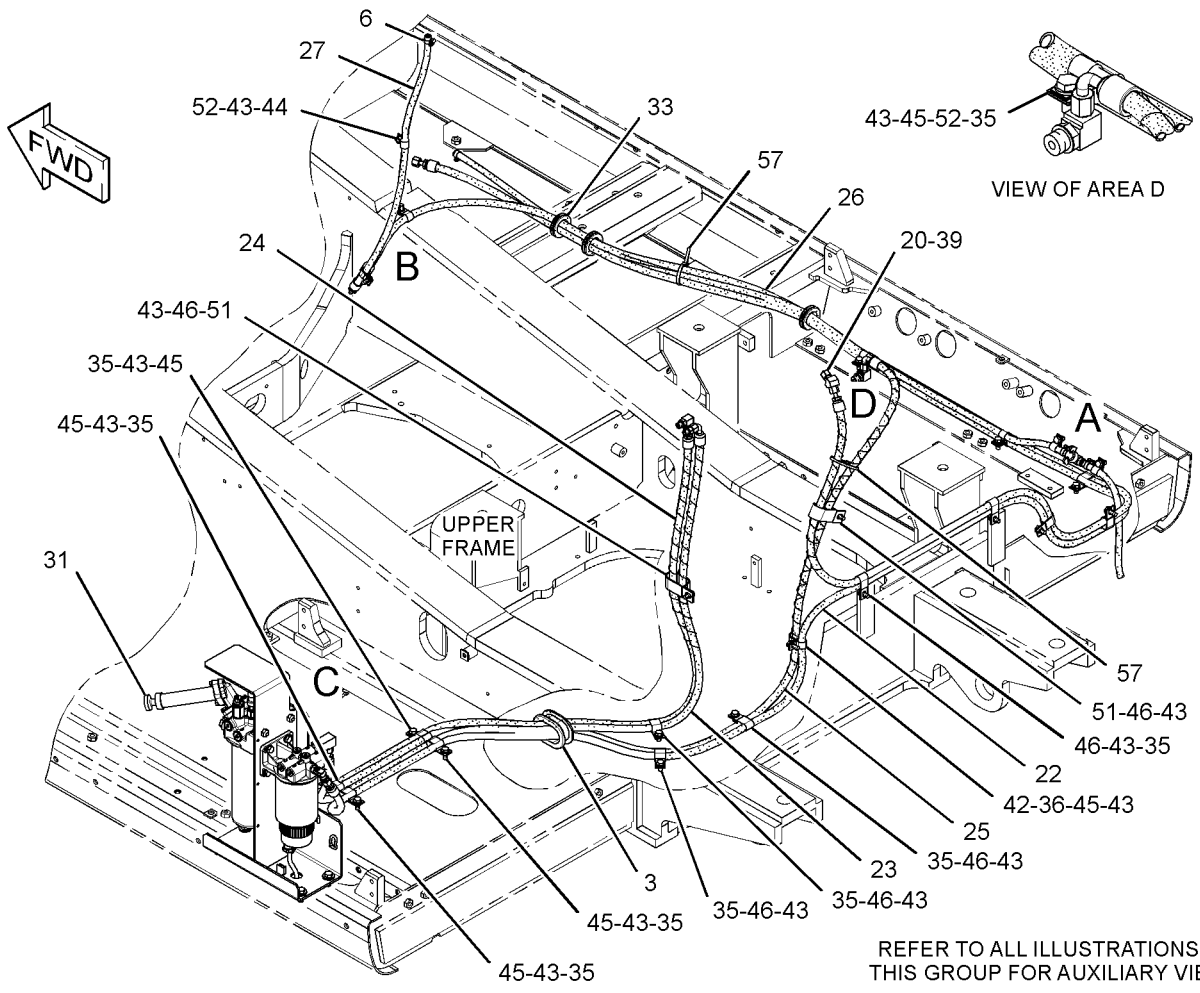

REFER TO ALL ILLUSTRATIONS OF THIS GROUP FOR AUXILIARY VIEWS

GRAPHIC #1 g01476612

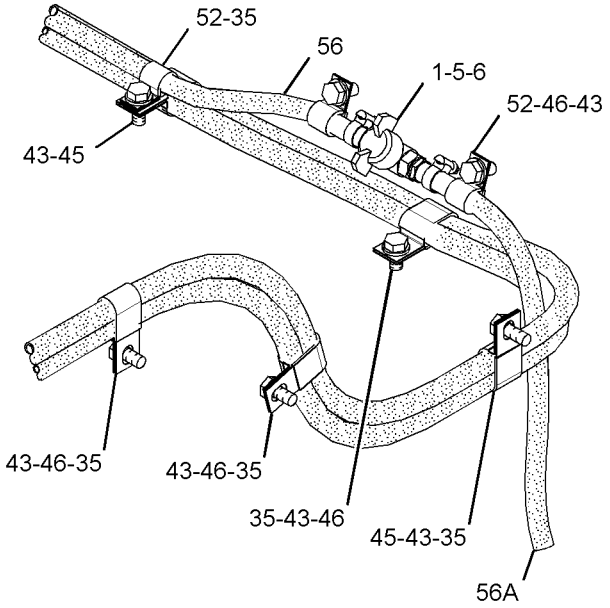

VIEW OF AREA A

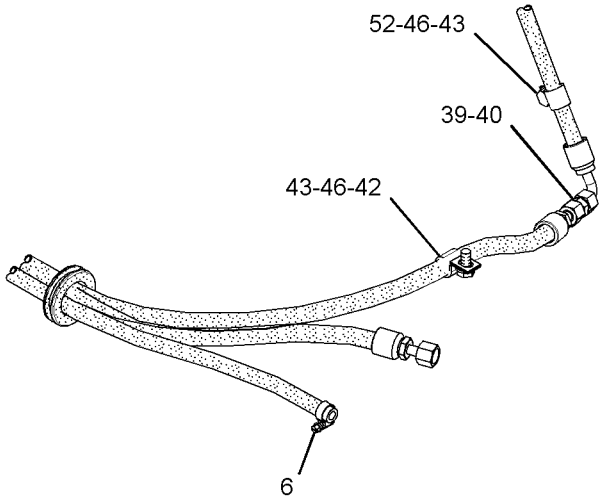

VIEW OF AREA B



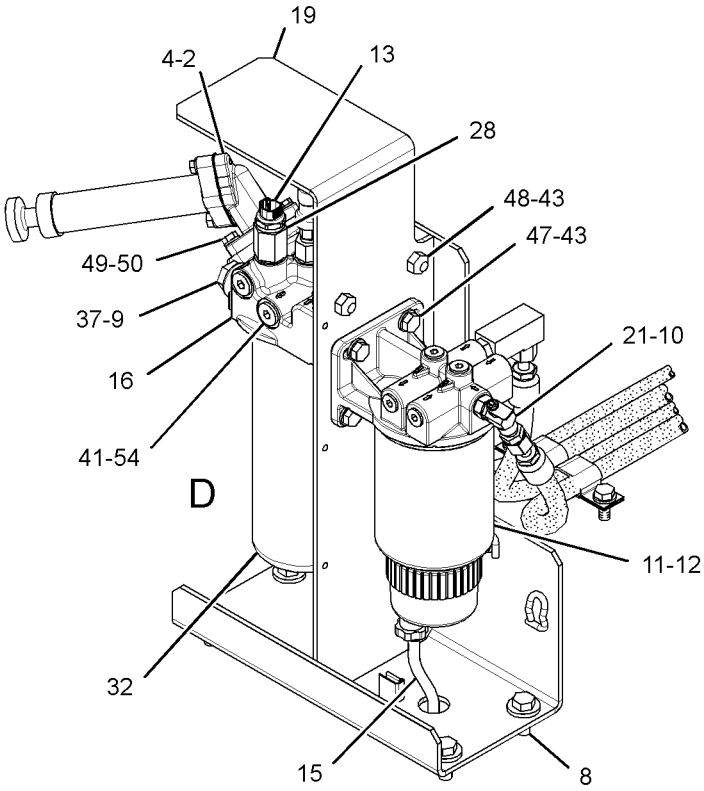

VIEW OF AREA C

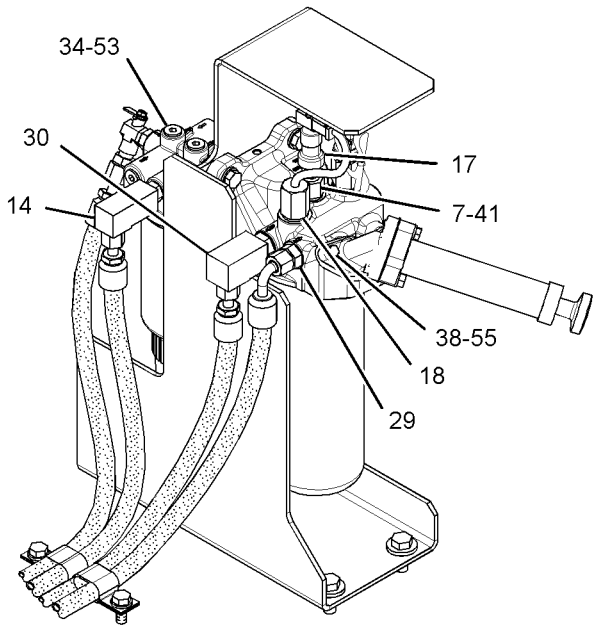

VIEW OF AREA D

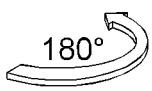

GRAPHIC #2 **<END>** g01476613

FUEL SYSTEM

259-3918 LINES GP-FUEL

S/N: D3P1-UP; M4T1-UP
PART OF 247-7501 PUMP GP-FUEL PRIMING
AN ATTACHMENT
TYPE 1

SMCS-1274 **i03379034**

NOTE	REF NO	GRAPHIC REF	PART NUMBER	QTY	PART NAME 1 2 3 4 5 6 (PRODUCT LEVEL)	SEE PAGE
	1	1	**4I-0379**	1	VALVE-MANUAL (DRAIN, FUEL TANK)	
	2	2	**7Y-8165**	1	GROMMET	
	3	2	**8T-9655**	6	MOUNT-ISOLATION	
	4	2	**9Y-8389**	1	GASKET (FUEL PRIMING PUMP)	
	5	1	**003-7764**	2	END-HOSE	
C	6	1	**095-1386**	4	CLAMP-HOSE	
	7	2	**134-6852**	1	CONNECTOR	
M	8	2	**135-8575**	4	BOLT AS	
C	9	2	*164-5597*	1	CONNECTOR AS	
		2	**6V-8397**	1	SEAL-O-RING	
		2	**8C-6868**	1	CONNECTOR	
	10	2	*164-5619*	1	PLUG AS	
		2	**2M-9780**	1	SEAL-O-RING	
		2	**9S-8006**	1	PLUG-O-RING	
Y	11	2	*188-6121*	1	PUMP GP-FUEL PRM & PRIM FILTER (WITH WATER SEPARATOR)	155
	12	2	**191-1782**	1	SPACER (8.5X12.7X38.2-MM THK)	
	13	2	**191-1783**	2	SPACER (8.5X12.7X87.3-MM THK)	
Y	14	2	*197-8391*	1	SENSOR GP-TEMPERATURE (FUEL)	250
	15	2	**229-0999**	1	HOSE	
	16	2	**237-9312**	1	BASE AS-FUEL FILTER	
Y	17	2	*239-2396*	1	SENSOR GP-PRESSURE (FUEL)	242
Y	18	2	**258-0883**	1	SWITCH GP-PRESSURE (FUEL FILTER)	268
	19	2	**259-3915**	1	COVER	
	20	2	**262-2604**	1	SUPPORT AS	
C	21	1	*148-8371*	1	ELBOW AS	
		1	**8C-8988**	1	ELBOW	
		1	**6V-8397**	1	SEAL-O-RING	
Y	22	2	**298-3147**	1	VALVE GP-FUEL SHUTOFF	172
CI	23	2	**313-8155**	1	HOSE AS	
CI	24	1,2	**313-8156**	1	HOSE AS	
CI	25	1	**313-8157**	1	HOSE AS	
C	26	1	**313-8170**	1	HOSE AS	
CI	27	2	**313-8232**	1	HOSE AS	
CI	28	2	**313-8238**	1	HOSE AS	
	29	2	*148-8311*	1	ADAPTER AS	
		2	**3K-0360**	1	SEAL-O-RING	
		2	**8T-1715**	1	ADAPTER	
	30	2	*148-8318*	1	CONNECTOR AS	
		2	**3K-0360**	1	SEAL-O-RING	
		2	**6V-8397**	1	SEAL-O-RING	
		2	**6V-8634**	1	CONNECTOR	
	31	2	*148-8319*	1	CONNECTOR AS	
		2	**2M-9780**	1	SEAL-O-RING	
		2	**6V-8397**	1	SEAL-O-RING	
		2	**6V-8715**	1	CONNECTOR	
	32	2	*148-8367*	1	ELBOW AS	
		2	**6V-8397**	1	SEAL-O-RING	
		2	**6V-9850**	1	ELBOW	
	33	2	*148-8383*	1	ELBOW AS	
		2	**3K-0360**	1	SEAL-O-RING	
		2	**6V-8397**	1	SEAL-O-RING	
		2	**8T-1683**	1	ELBOW	
	34	2	**1R-0762**	1	FILTER-FUEL (ADVANCED EFFICIENCY)	

259-3918 **LINES GP-FUEL** *(contd.)* **i03379034**

NOTE	REF NO	GRAPHIC REF	PART NUMBER	QTY	PART NAME 1 2 3 4 5 6 (PRODUCT LEVEL)	SEE PAGE
	35	1	**2D-1290**	3	GROMMET	
	36	2	**2M-9780**	1	SEAL-O-RING	
C	37	1,2	**4D-7733**	14	CLIP	
C	38	2	**6V-1889**	1	CLIP	
	39	2	**6V-2606**	1	ADAPTER	
M	40	2	**6V-7357**	1	BOLT (M6X1X25-MM)	
C	41	1	**6V-8397**	3	SEAL-O-RING	
C	42	1	**6V-8730**	1	UNION (FACE SEAL)	
M	43	2	**7X-2539**	2	BOLT (M8X1.25X110-MM)	
	44	2	**8L-2786**	3	SEAL-O-RING	
C	45	1,2	**8M-2773**	2	CLIP	
	46	1,2	**8T-4121**	24	WASHER-HARD (11X21X2.5-MM THK)	
M	47	1	**8T-4133**	1	NUT (M10X1.5-THD)	
CM	48	1,2	**8T-4136**	8	BOLT (M10X1.5X25-MM)	
CM	49	1,2	**8T-4137**	13	BOLT (M10X1.5X20-MM)	
M	50	2	**8T-4196**	2	BOLT (M10X1.5X35-MM)	
	51	2	**8T-4224**	1	WASHER-HARD (8.8X16X2-MM THK)	
M	52	2	**8T-4908**	1	BOLT (M8X1.25X25-MM)	
M	53	2	**8T-6869**	1	BOLT (M8X1.25X60-MM)	
C	54	1,2	**9D-1829**	2	CLIP	
C	55	1	**9M-8406**	6	CLIP	
	56	2	**7X-0579**	3	WASHER-HARD (8.8X25.5X2-MM THK)	
	57	2	**9S-8005**	2	PLUG-O-RING	
	58	2	**9X-8256**	1	WASHER (6.6X12X2-MM THK)	
E	59	1	**5P-1442**		HOSE (205-CM)	
E	59A	1	**5P-1442**		HOSE (39-CM)	
	60	1	**7K-1181**	2	STRAP-CABLE	

C-CHANGE FROM PREVIOUS TYPE
E-ORDER BY THE CENTIMETER
I-REFER TO HYDRAULIC INFORMATION SYSTEM
M-METRIC PART
Y-SEPARATE ILLUSTRATION

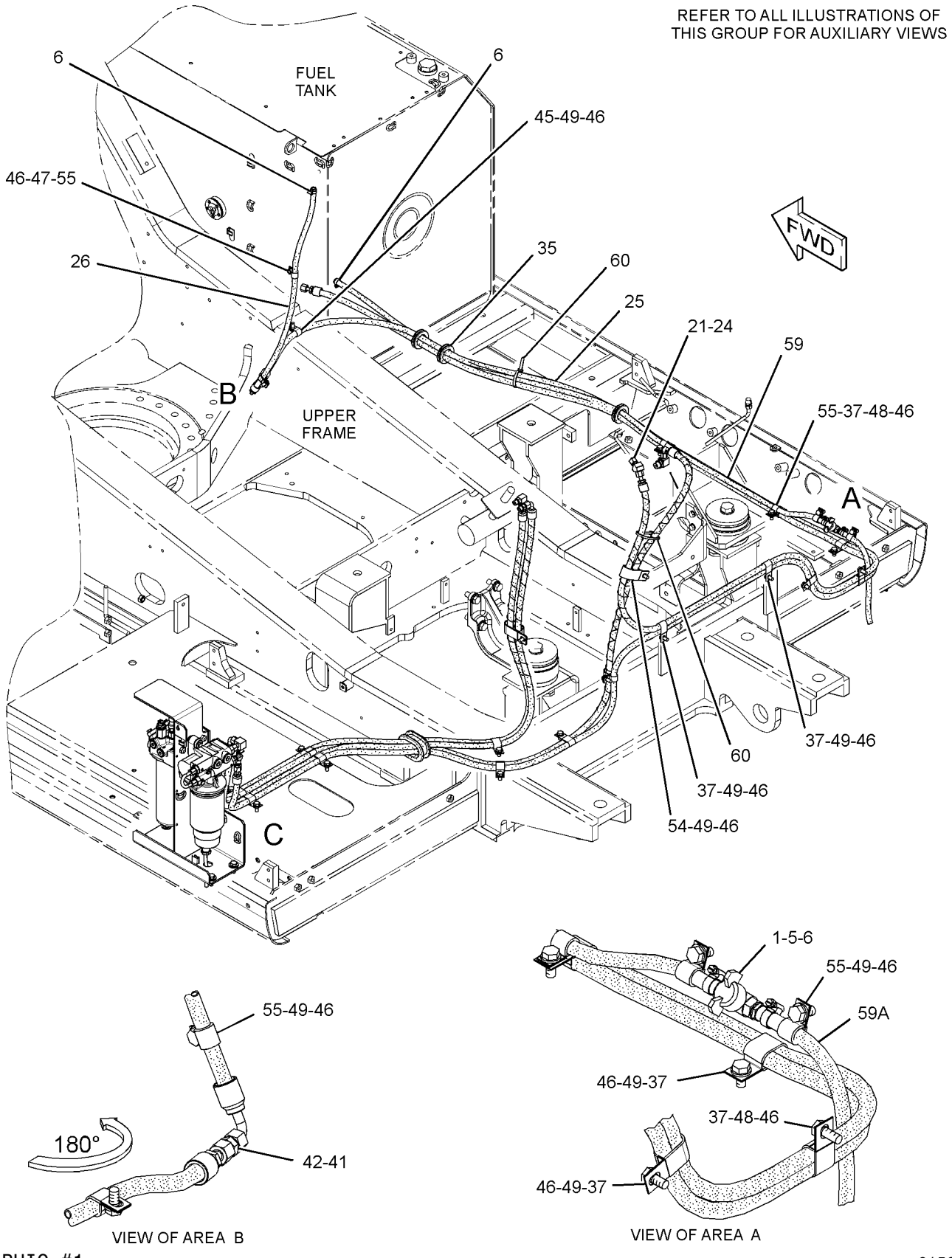

GRAPHIC #1

g01561303

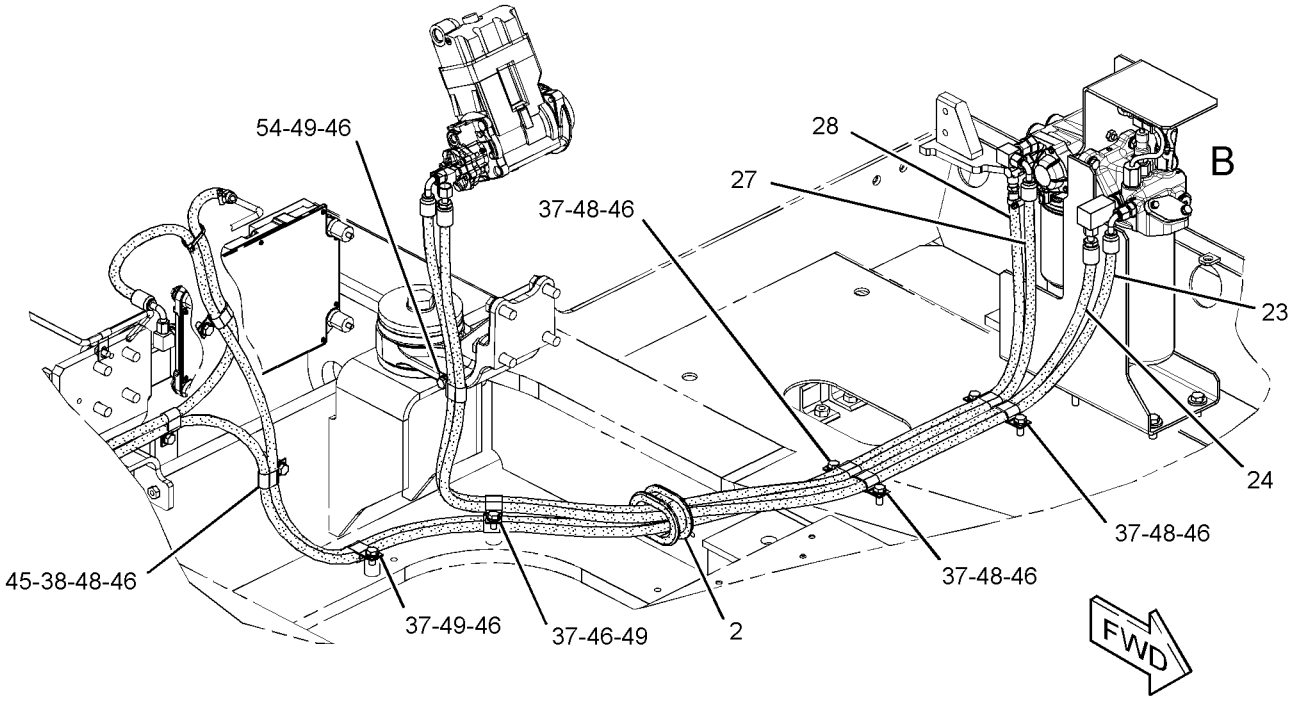

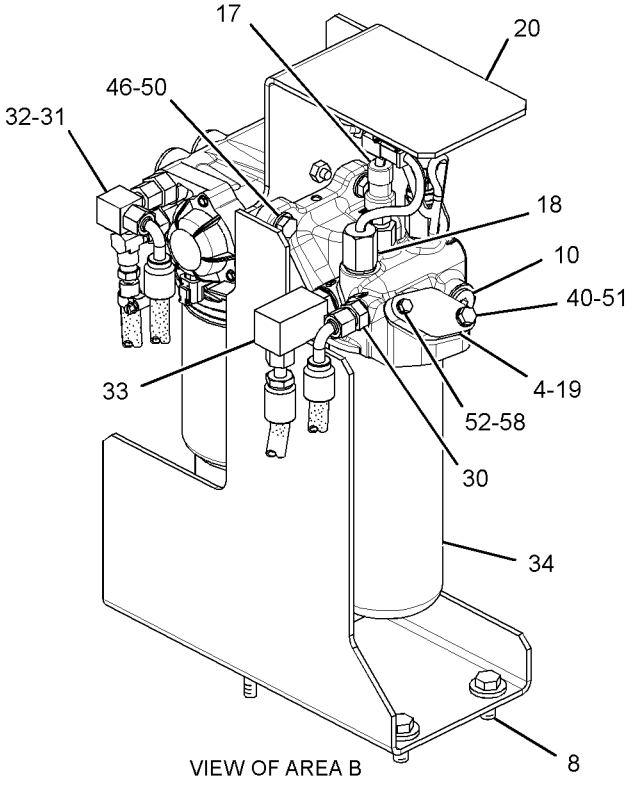

VIEW OF AREA B

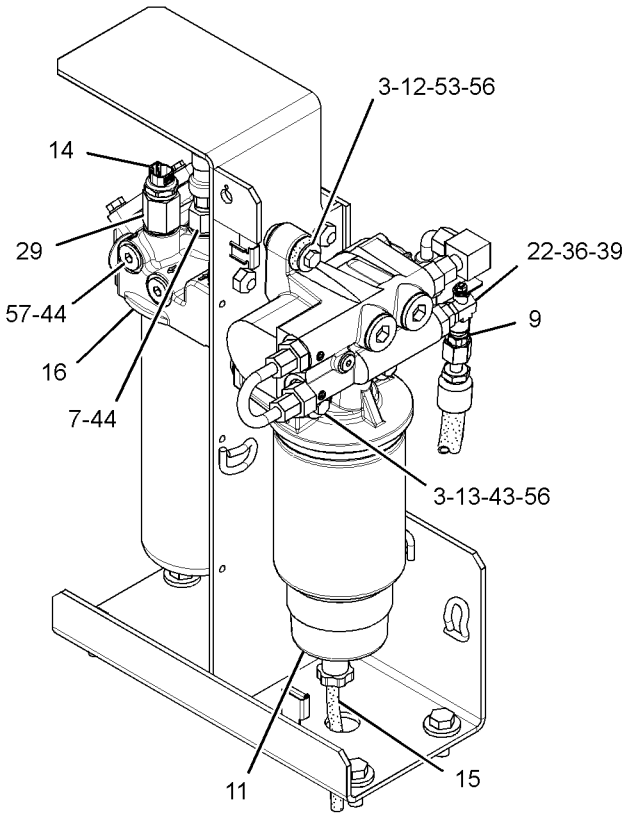

VIEW OF AREA C

GRAPHIC #2 **<END>** g01561304

FUEL SYSTEM

259-3918 LINES GP-FUEL

S/N: D3P1-UP; M4T1-UP
PART OF 247-7501 PUMP GP-FUEL PRIMING
AN ATTACHMENT
TYPE 2

SMCS-1274 **i03491241**

NOTE	REF NO	GRAPHIC REF	PART NUMBER	QTY	PART NAME 1 2 3 4 5 6 (PRODUCT LEVEL)	SEE PAGE
	1	1	**4I-0379**	1	VALVE-MANUAL (DRAIN, FUEL TANK)	
	2	2	**7Y-8165**	1	GROMMET	
	3	2	**8T-9655**	6	MOUNT-ISOLATION	
	4	2	**9Y-8389**	1	GASKET (FUEL PRIMING PUMP)	
	5	1	**003-7764**	2	END-HOSE	
	6	1	**095-1386**	4	CLAMP-HOSE	
	7	2	**134-6852**	1	CONNECTOR	
M	8	2	**135-8575**	4	BOLT AS	
	9	2	*164-5597*	1	CONNECTOR AS	
		2	**6V-8397**	1	SEAL-O-RING	
		2	**8C-6868**	1	CONNECTOR	
	10	2	*164-5619*	1	PLUG AS	
		2	**2M-9780**	1	SEAL-O-RING	
		2	**9S-8006**	1	PLUG-O-RING	
Y	11	2	*188-6121*	1	PUMP GP-FUEL PRM & PRIM FILTER (WITH WATER SEPARATOR)	155
	12	2	**191-1782**	1	SPACER (8.5X12.7X38.2-MM THK)	
	13	2	**191-1783**	2	SPACER (8.5X12.7X87.3-MM THK)	
Y	14	2	*197-8391*	1	SENSOR GP-TEMPERATURE (FUEL)	250
	15	2	**229-0999**	1	HOSE	
	16	2	**237-9312**	1	BASE AS-FUEL FILTER	
Y	17	2	*239-2396*	1	SENSOR GP-PRESSURE (FUEL)	242
Y	18	2	**258-0883**	1	SWITCH GP-PRESSURE (FUEL)	268
	19	2	**259-3915**	1	COVER	
	20	2	**262-2604**	1	SUPPORT AS	
	21	1	*148-8371*	1	ELBOW AS	
		1	**8C-8988**	1	ELBOW	
		1	**6V-8397**	1	SEAL-O-RING	
Y	22	2	**298-3147**	1	VALVE GP-FUEL SHUTOFF	172
I	23	2	**313-8155**	1	HOSE AS	
CI	24	1,2	**333-5091**	1	HOSE AS	
CI	25	2	**333-5092**	1	HOSE AS	
C	26	1	**333-5093**	1	HOSE AS	
CI	27	2	**313-8232**	1	HOSE AS	
CI	28	2	**333-5094**	1	HOSE AS	
	29	2	*148-8311*	1	ADAPTER AS	
		2	**3K-0360**	1	SEAL-O-RING	
		2	**8T-1715**	1	ADAPTER	
	30	2	*148-8318*	1	CONNECTOR AS	
		2	**3K-0360**	1	SEAL-O-RING	
		2	**6V-8397**	1	SEAL-O-RING	
		2	**6V-8634**	1	CONNECTOR	
	31	2	*148-8319*	1	CONNECTOR AS	
		2	**2M-9780**	1	SEAL-O-RING	
		2	**6V-8397**	1	SEAL-O-RING	
		2	**6V-8715**	1	CONNECTOR	
C	32	2	*148-8367*	1	ELBOW AS	
		2	**6V-8397**	1	SEAL-O-RING	
		2	**6V-9850**	1	ELBOW	
	33	2	*148-8383*	1	ELBOW AS	
		2	**3K-0360**	1	SEAL-O-RING	
		2	**6V-8397**	1	SEAL-O-RING	
		2	**8T-1683**	1	ELBOW	
	34	2	**1R-0762**	1	FILTER-FUEL (ADVANCED EFFICIENCY)	

259-3918 **LINES GP-FUEL** *(contd.)* **i03491241**

NOTE	REF NO	GRAPHIC REF	PART NUMBER	QTY	PART NAME 1 2 3 4 5 6 (PRODUCT LEVEL)	SEE PAGE
	35	1	**2D-1290**	3	GROMMET	
	36	2	**2M-9780**	1	SEAL-O-RING	
C	37	1,2	**4D-7733**	15	CLIP	
	39	2	**6V-2606**	1	ADAPTER	
M	40	2	**6V-7357**	1	BOLT (M6X1X25-MM)	
	41	1	**6V-8397**	3	SEAL-O-RING	
	42	1	**6V-8730**	1	UNION (FACE SEAL)	
M	43	2	**7X-2539**	2	BOLT (M8X1.25X110-MM)	
	44	2	**8L-2786**	3	SEAL-O-RING	
C	45	1,2	**333-5075**	1	BRACKET AS	
C	46	1,2	**8T-4121**	25	WASHER-HARD (11X21X2.5-MM THK)	
M	47	1	**8T-4133**	1	NUT (M10X1.5-THD)	
CM	48	1,2	**8T-4136**	6	BOLT (M10X1.5X25-MM)	
CM	49	1,2	**8T-4137**	16	BOLT (M10X1.5X20-MM)	
M	50	2	**8T-4196**	2	BOLT (M10X1.5X35-MM)	
	51	2	**8T-4224**	1	WASHER-HARD (8.8X16X2-MM THK)	
M	52	2	**8T-4908**	1	BOLT (M8X1.25X25-MM)	
M	53	2	**8T-6869**	1	BOLT (M8X1.25X60-MM)	
	54	1,2	**9D-1829**	2	CLIP	
C	55	1	**9M-8406**	7	CLIP	
	56	2	**7X-0579**	3	WASHER-HARD (8.8X25.5X2-MM THK)	
	57	2	**9S-8005**	2	PLUG-O-RING	
	58	2	**9X-8256**	1	WASHER (6.6X12X2-MM THK)	
CE	59	1	**5P-1442**		HOSE (210-CM)	
E	59A	1	**5P-1442**		HOSE (39-CM)	
	60	1	**7K-1181**	2	STRAP-CABLE	

C-CHANGE FROM PREVIOUS TYPE
E-ORDER BY THE CENTIMETER
I-REFER TO HYDRAULIC INFORMATION SYSTEM
M-METRIC PART
Y-SEPARATE ILLUSTRATION

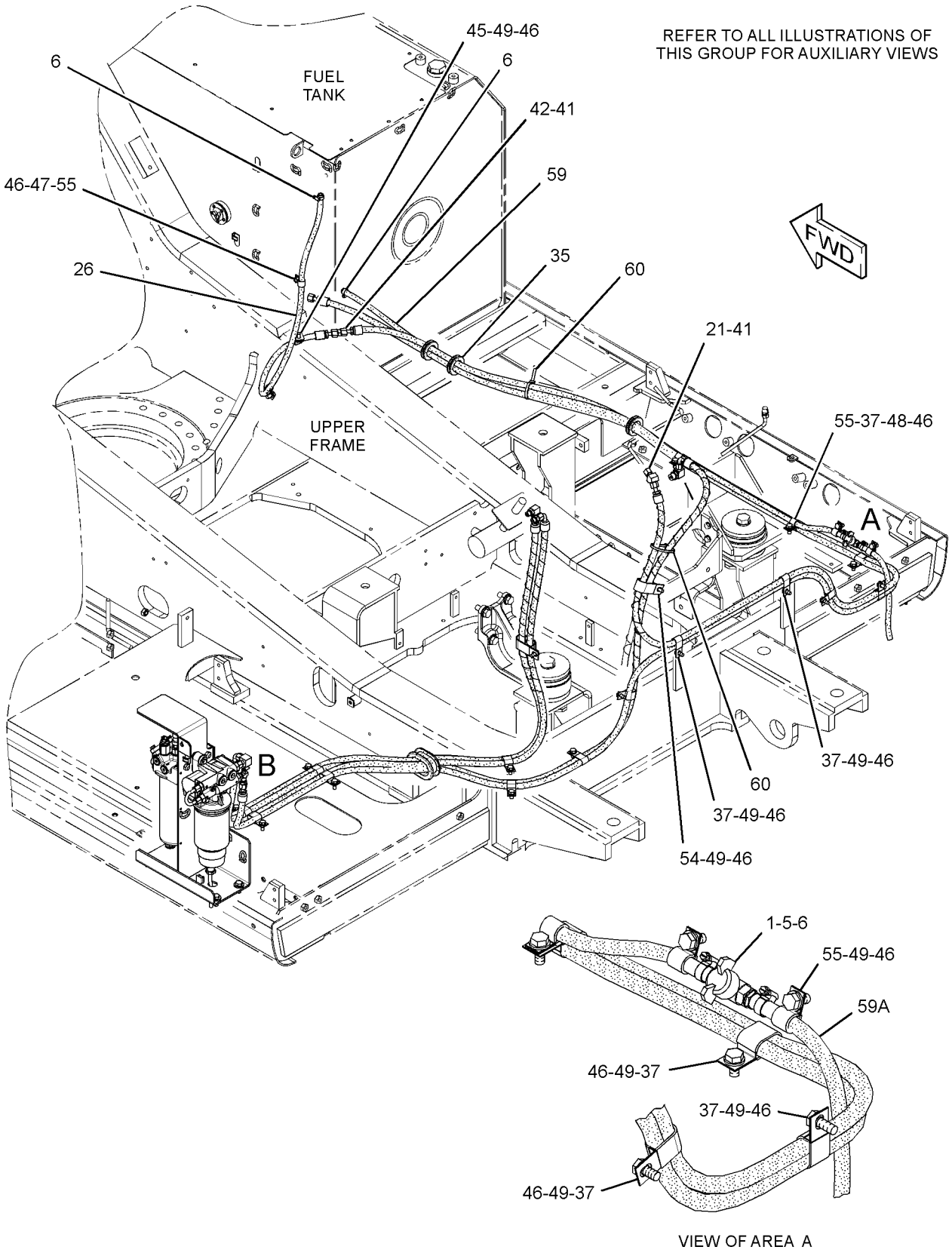

GRAPHIC #1 g01845795

259-3918 **LINES GP-FUEL** *(contd.)* **i03491241**

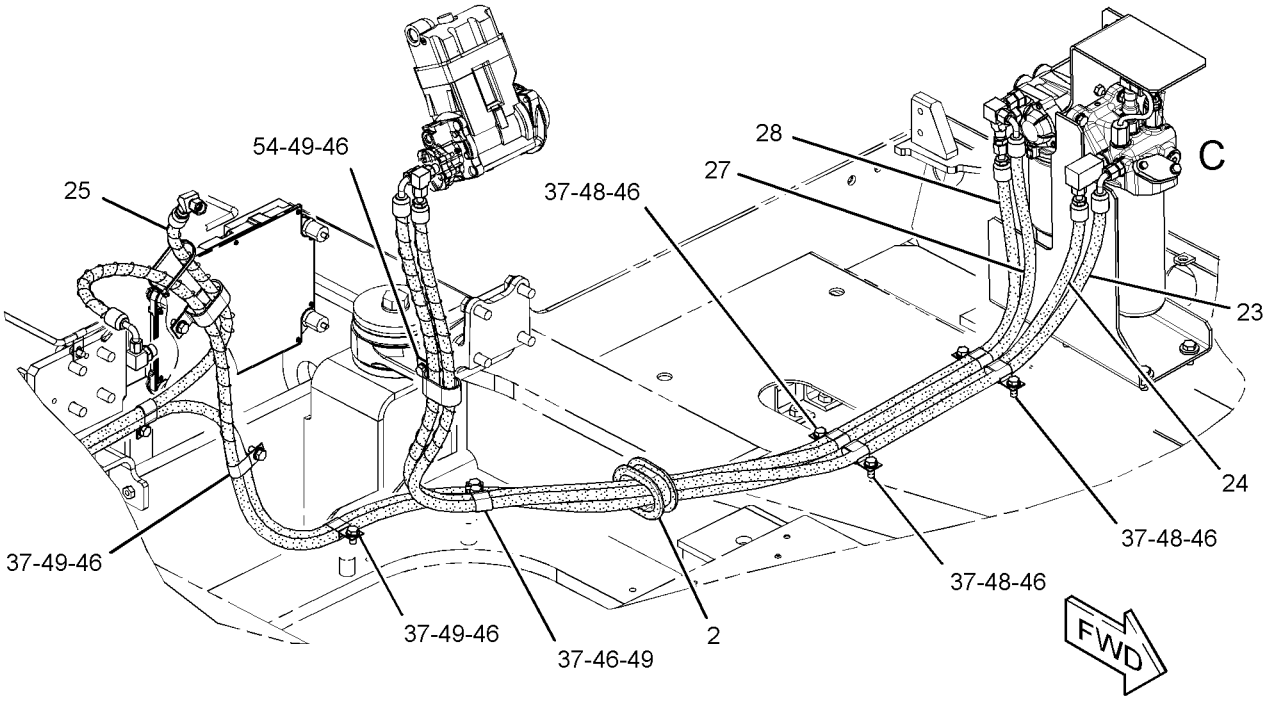

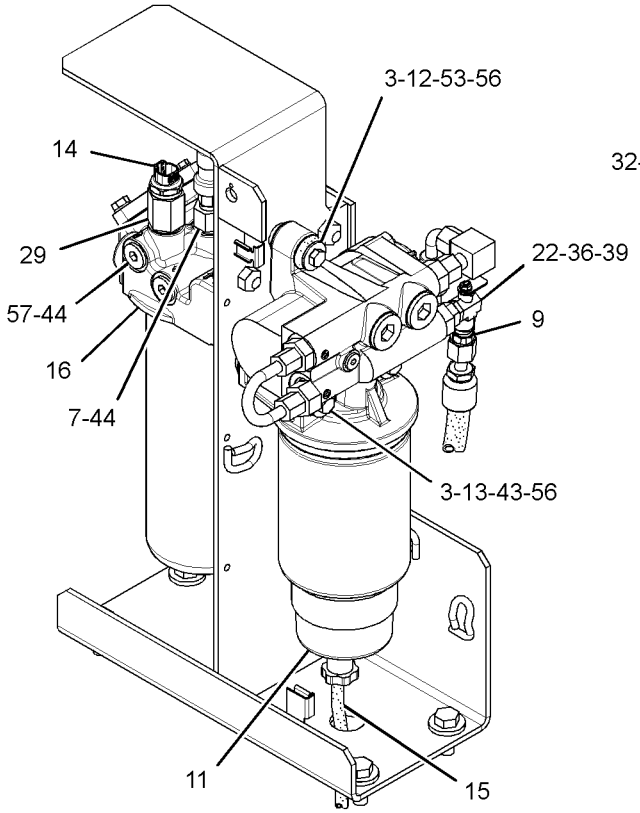

VIEW OF AREA B

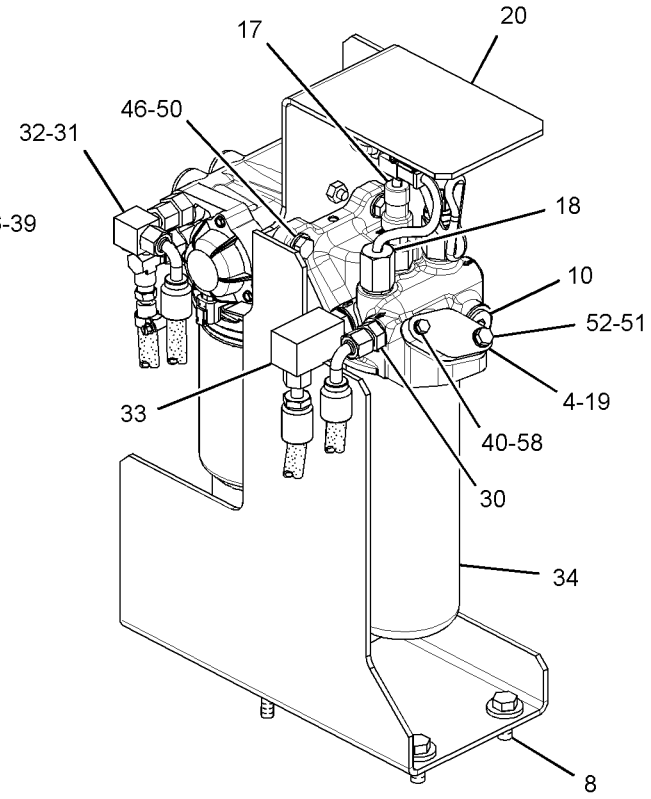

VIEW OF AREA C

GRAPHIC #2 **<END>** g01845796

343-2392 LINES GP-FUEL

S/N: D3P1-UP; M4T1-UP
PART OF 247-7501 PUMP GP-FUEL PRIMING
AN ATTACHMENT

SMCS-1274 **i03691036**

NOTE	REF NO	GRAPHIC REF	PART NUMBER	QTY	PART NAME 1 2 3 4 5 6 (PRODUCT LEVEL)	SEE PAGE
	1	2	**4I-0379**	1	VALVE-MANUAL (DRAIN, FUEL TANK)	
	2	2	**5P-7175**	1	FITTING-STRAIGHT	
	3	1	**7Y-8165**	1	GROMMET	
	4	2	**8T-9655**	6	MOUNT-ISOLATION	
	5	2	**9Y-8389**	1	GASKET	
	6	2	**003-7764**	2	END-HOSE	
	7	1,2	**095-1386**	6	CLAMP-HOSE	
	8	2	**134-6852**	1	CONNECTOR	
M	9	2	**135-8575**	4	BOLT AS	
	10	2	*164-5619*	1	PLUG AS	
		2	**2M-9780**	1	SEAL-O-RING	
		2	**9S-8006**	1	PLUG-O-RING	
Y	11	2	*188-6121*	1	PUMP GP-FUEL PRM & PRIM FILTER (WITH WATER SEPARATOR)	155
	12	2	**191-1782**	1	SPACER (8.5X12.7X38.2-MM THK)	
	13	2	**191-1783**	2	SPACER (8.5X12.7X87.3-MM THK)	
Y	14	2	*197-8391*	1	SENSOR GP-TEMPERATURE	250
	15	2	**229-0999**	1	HOSE	
	16	2	**237-9312**	1	BASE AS-FUEL FILTER	
		2	**9S-4167**	1	STUD-HOLLOW (1-14X1.47-IN)	
Y	17	2	*239-2396*	1	SENSOR GP-PRESSURE (FUEL)	242
Y	18	2	**258-0883**	1	SWITCH GP-PRESSURE (FUEL)	268
	19	2	**259-3915**	1	COVER	
	20	2	**262-2604**	1	SUPPORT AS	
Y	21	2	**298-3147**	1	VALVE GP-FUEL SHUTOFF	172
	22	1	**343-2385**	3	CLIP	
	23	1,2	**343-2386**	17	CLIP	
	24	2	**343-2395**	1	HOSE AS	
	25	2	**343-2396**	1	HOSE AS	
	26	2	**343-2397**	1	HOSE AS	
	27	2	**343-2398**	1	HOSE	
	28	2	**343-2399**	1	HOSE AS	
	29	2	*148-8311*	1	ADAPTER AS	
		2	**3K-0360**	1	SEAL-O-RING	
		2	**8T-1715**	1	ADAPTER	
	30	2	*148-8318*	1	CONNECTOR AS	
		2	**3K-0360**	1	SEAL-O-RING	
		2	**6V-8397**	1	SEAL-O-RING	
		2	**6V-8634**	1	CONNECTOR	
	31	2	*148-8319*	1	CONNECTOR AS	
		2	**2M-9780**	1	SEAL-O-RING	
		2	**6V-8397**	1	SEAL-O-RING	
		2	**6V-8715**	1	CONNECTOR	
	32	2	*148-8367*	1	ELBOW AS	
		2	**6V-8397**	1	SEAL-O-RING	
		2	**6V-9850**	1	ELBOW	
	33	1	*148-8371*	1	ELBOW AS	
		1	**6V-8397**	1	SEAL-O-RING	
		1	**8C-8988**	1	ELBOW	
	34	2	*148-8383*	1	ELBOW AS	
		2	**3K-0360**	1	SEAL-O-RING	
		2	**6V-8397**	1	SEAL-O-RING	
		2	**8T-1683**	1	ELBOW	
	35	2	**1R-0762**	1	FILTER-FUEL (ADVANCED EFFICIENCY)	
	36	1	**2D-1290**	3	GROMMET	

343-2392 **LINES GP-FUEL** *(contd.)* **i03691036**

NOTE	REF NO	GRAPHIC REF	PART NUMBER	QTY	PART NAME 1 2 3 4 5 6 (PRODUCT LEVEL)	SEE PAGE
	37	2	**2M-9780**	1	SEAL-O-RING	
	38	2	**6V-2606**	1	ADAPTER	
M	39	2	**6V-7357**	1	BOLT (M6X1X25-MM)	
	40	1	**6V-8397**	1	SEAL-O-RING	
	41	2	**7X-0579**	3	WASHER-HARD (8.8X25.5X2-MM THK)	
M	42	2	**7X-2539**	2	BOLT (M8X1.25X110-MM)	
	43	2	**8L-2786**	3	SEAL-O-RING	
	44	1,2	**8T-4121**	24	WASHER-HARD (11X21X2.5-MM THK)	
M	45	1	**8T-4133**	1	NUT (M10X1.5-THD)	
M	46	1,2	**8T-4136**	6	BOLT (M10X1.5X25-MM)	
M	47	1,2	**8T-4137**	15	BOLT (M10X1.5X20-MM)	
M	48	2	**8T-4196**	2	BOLT (M10X1.5X35-MM)	
	49	2	**8T-4224**	1	WASHER-HARD (8.8X16X2-MM THK)	
M	50	2	**8T-4908**	1	BOLT (M8X1.25X25-MM)	
M	51	2	**8T-6869**	1	BOLT (M8X1.25X60-MM)	
	52	2	**9M-8406**	4	CLIP	
	53	2	**9S-8005**	2	PLUG-O-RING	
	54	2	**9X-8256**	1	WASHER (6.6X12X2-MM THK)	
E	55	1	**5P-1442**		HOSE (210-CM)	
E	55A	2	**5P-1442**		HOSE (39-CM)	
	56	1	**7K-1181**	2	STRAP-CABLE	

E-ORDER BY THE CENTIMETER
M-METRIC PART
Y-SEPARATE ILLUSTRATION

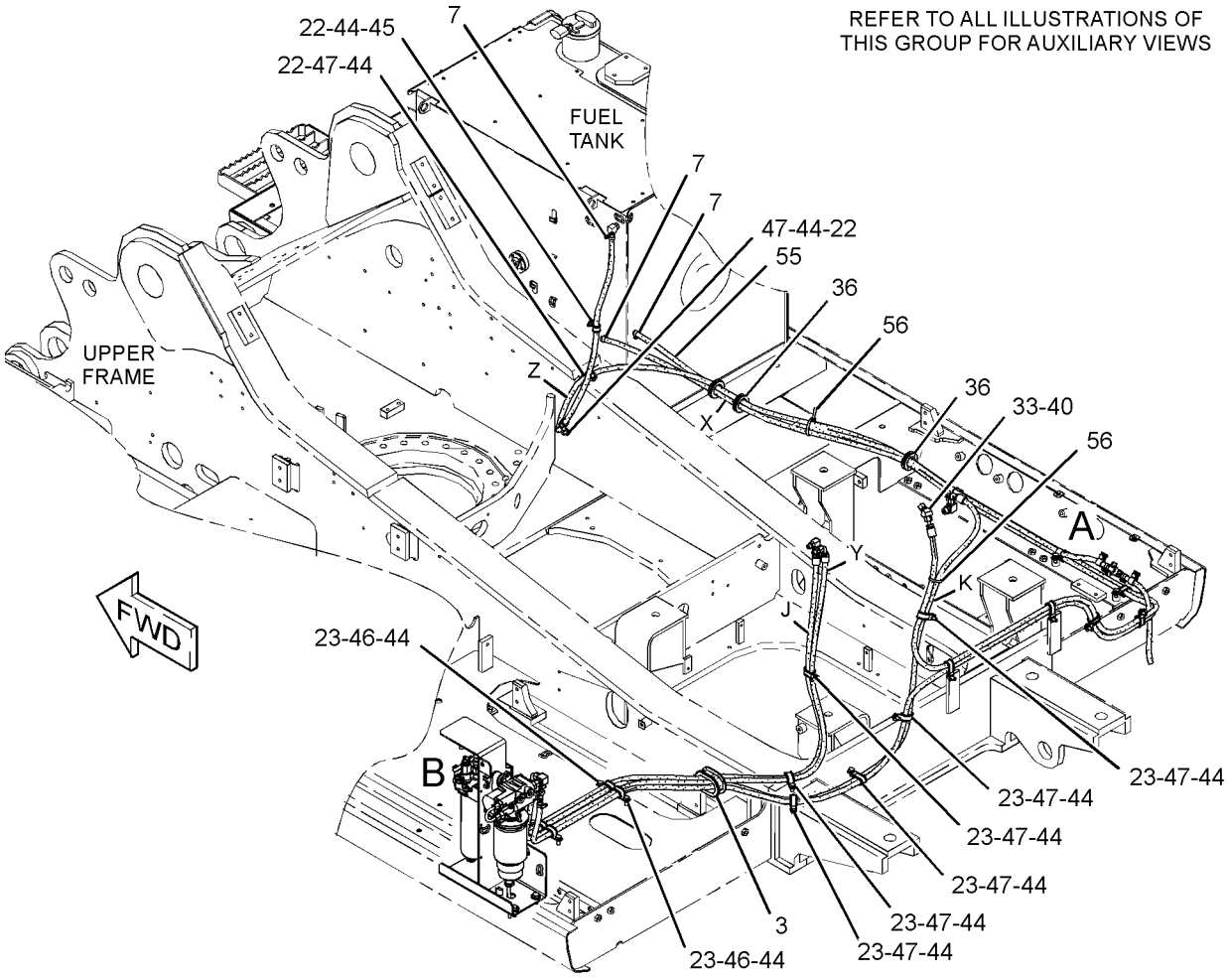

GRAPHIC #1 g01996264

343-2392 **LINES GP-FUEL** *(contd.)* **i03691036**

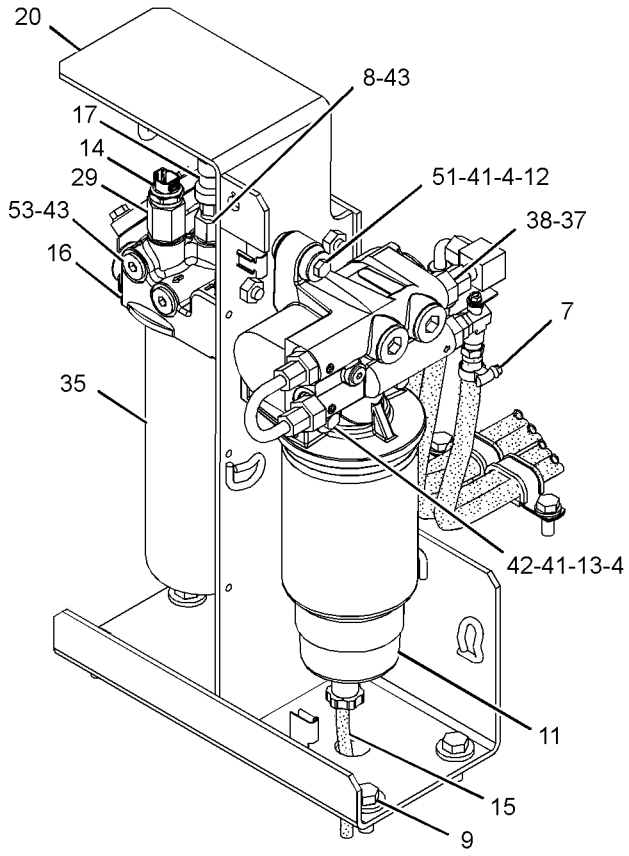

VIEW OF AREA B

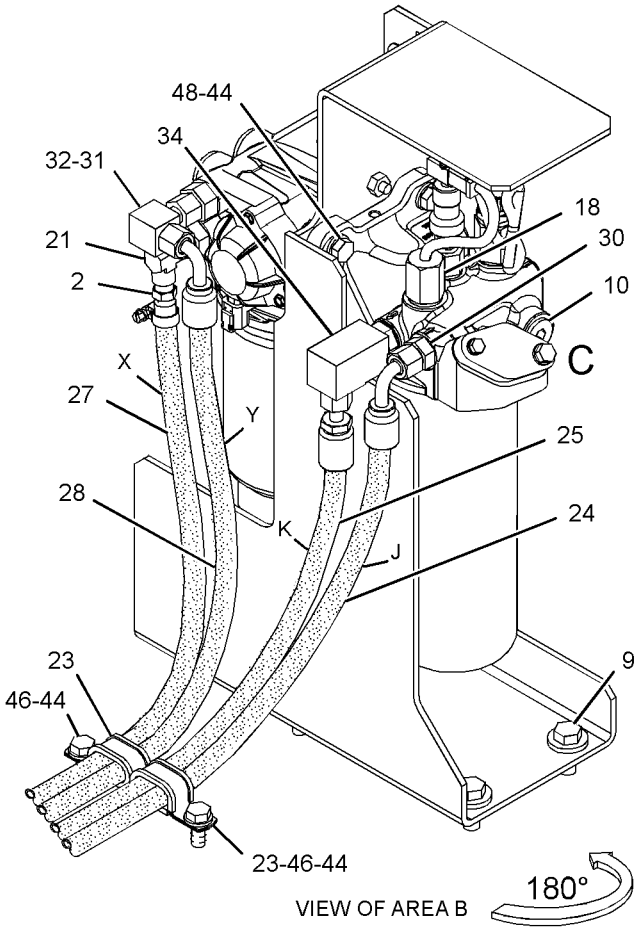

VIEW OF AREA B

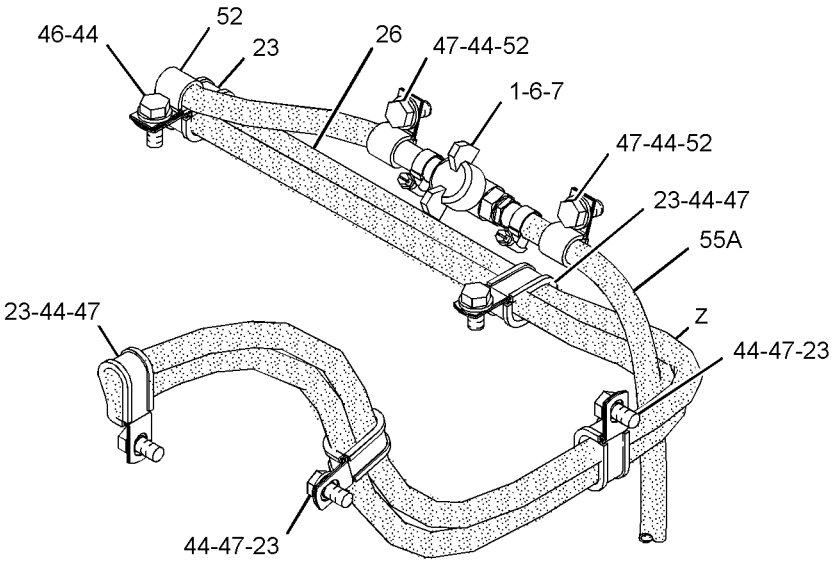

VIEW OF AREA A

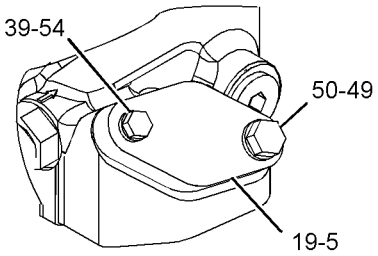

VIEW OF AREA C

GRAPHIC #2 **<END>** g01996265

229-1859 PUMP & MOTOR GP-REFUELING

S/N: D3P1-UP; M4T1-UP
PART OF 229-1785 PUMP GP-REFUELING
AN ATTACHMENT

SMCS-1295 **i02499702**

NOTE	REF NO	GRAPHIC REF	PART NUMBER	QTY	PART NAME 1 2 3 4 5 6 (PRODUCT LEVEL)	SEE PAGE
	1	1	**121-1038**	1	HOUSING-RECEPTACLE	
	2	1	**116-0128**	1	SEAL	
	3	1	**121-1039**	2	TERMINAL (MALE)	

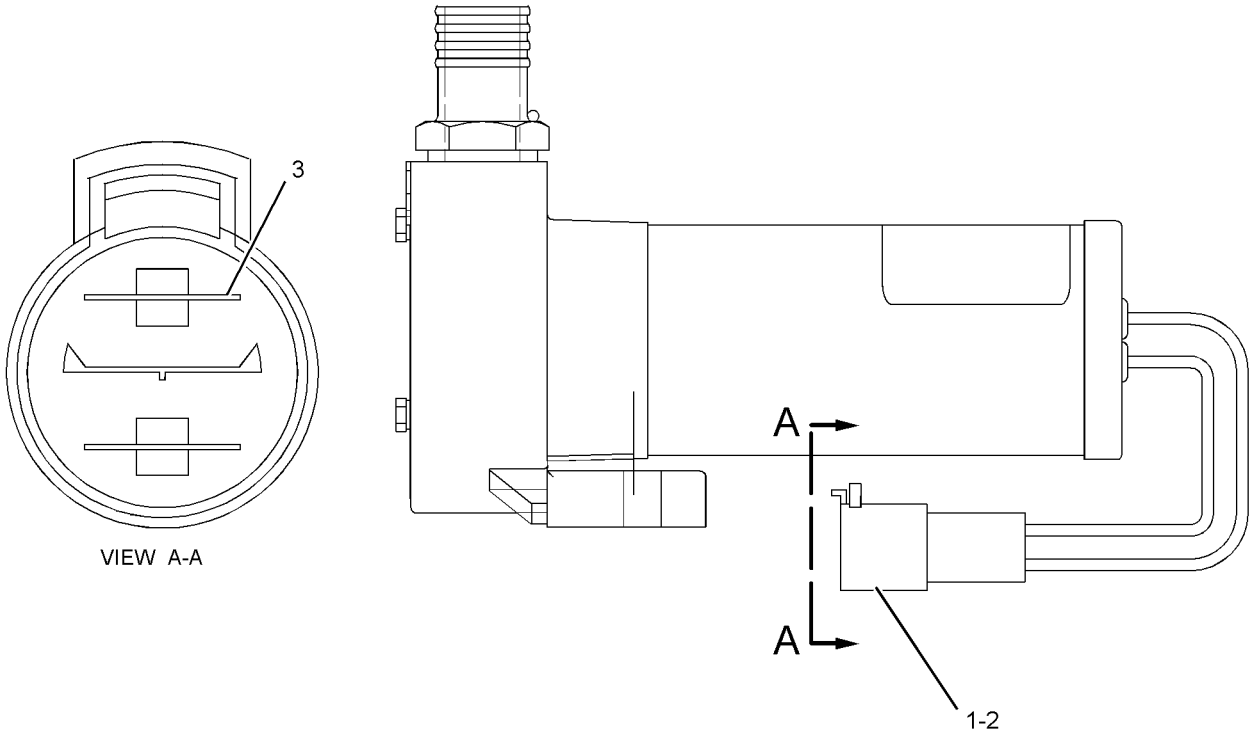

GRAPHIC #1 **<END>** g01104176

229-1784 PUMP AR-FUEL TRANSFER

S/N: D3P1-UP; M4T1-UP
AN ATTACHMENT

SMCS-1256 **i02855200**

NOTE	PART NUMBER	QTY	PART NAME 1 2 3 4 5 6 (PRODUCT LEVEL)	SEE PAGE
Y	*298-4258*	1	FILM GP (FUEL TRANSFER PUMP)	1091
Y	*229-1785*	1	PUMP GP-REFUELING	157
Y	*238-1570*	1	WIRING GP-REFUELING PUMP	337

Y-SEPARATE ILLUSTRATION

<END>

267-3361 PUMP GP-FUEL INJECTION

S/N: THX1-17738

PART OF 267-3362 PUMP GP-FUEL INJECTION

SMCS-1251, 1290 **i02571525**

NOTE	REF NO	GRAPHIC REF	PART NUMBER	QTY	PART NAME 1 2 3 4 5 6 (PRODUCT LEVEL)	SEE PAGE
	1	1	**235-9651**	2	BOLT-SOCKET HEAD (M8X1.25X65-MM)	
CY	2	1	**293-4072**	1	INJECTOR GP-FUEL	130

C-CHANGE FROM PREVIOUS TYPE
Y-SEPARATE ILLUSTRATION

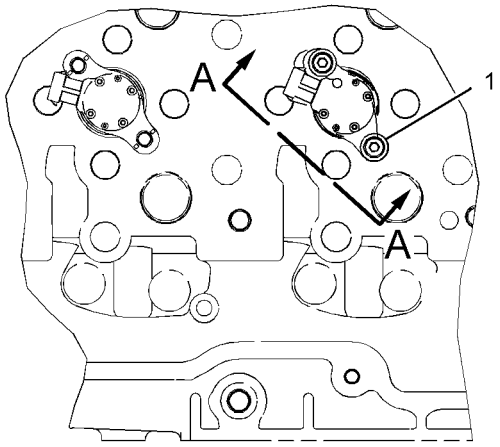

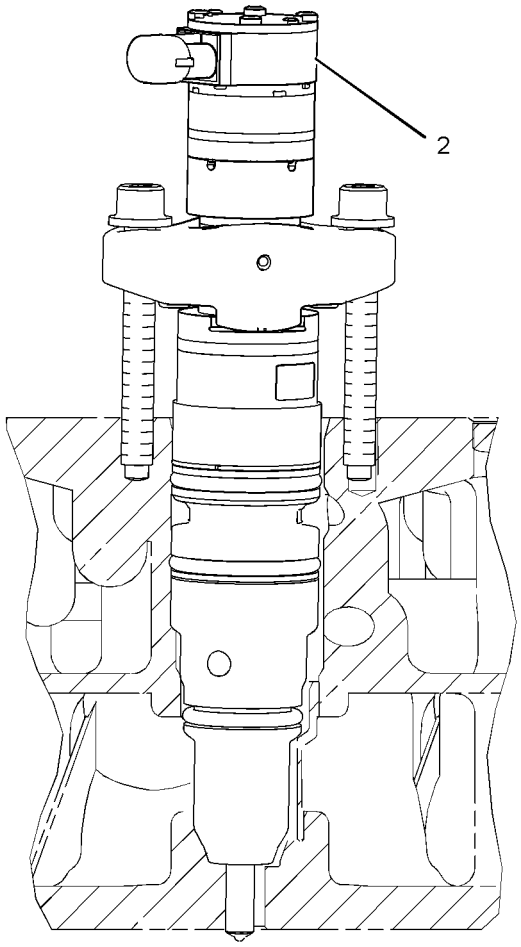

VIEW A-A
ROTATED 48° CCW

GRAPHIC #1 **<END>** g01147295

267-3361 PUMP GP-FUEL INJECTION

S/N: THX17739-UP

PART OF 267-3362 PUMP GP-FUEL INJECTION

SMCS-1251, 1290 **i03173440**

NOTE	REF NO	GRAPHIC REF	PART NUMBER	QTY	PART NAME 1 2 3 4 5 6 (PRODUCT LEVEL)	SEE PAGE
	1	1	**235-9651**	2	BOLT-SOCKET HEAD (M8X1.25X65-MM)	
CYR	2	1	**328-2574**	1	INJECTOR GP-FUEL	131

C-CHANGE FROM PREVIOUS TYPE
R-REMFG PART MAY BE AVAILABLE
Y-SEPARATE ILLUSTRATION

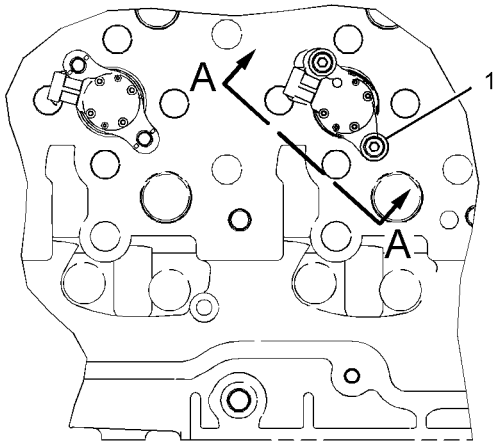

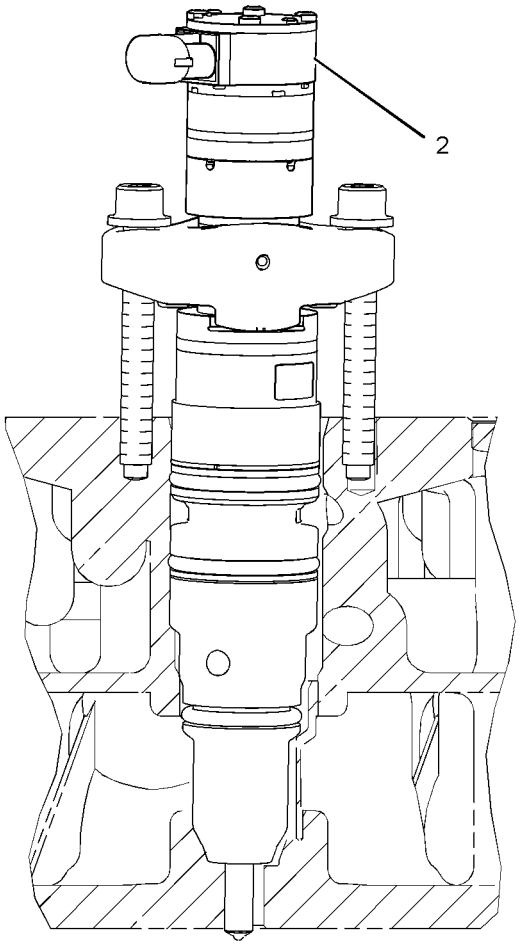

VIEW A-A
ROTATED 48° CCW

GRAPHIC #1 **<END>** g01147295

267-3362 PUMP GP-FUEL INJECTION

S/N: THX1-UP

PART OF 229-2665, 270-4216, 348-2746, 348-2747 ENGINE AR-CORE

SMCS-1251, 1290 **i02504055**

NOTE	REF NO	GRAPHIC REF	PART NUMBER	QTY	PART NAME 1 2 3 4 5 6 (PRODUCT LEVEL)	SEE PAGE
Y	1	1	*267-3361*	6	PUMP GP-FUEL INJECTION	150

Y-SEPARATE ILLUSTRATION

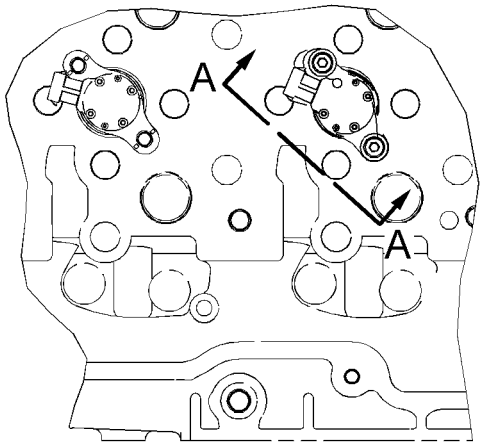

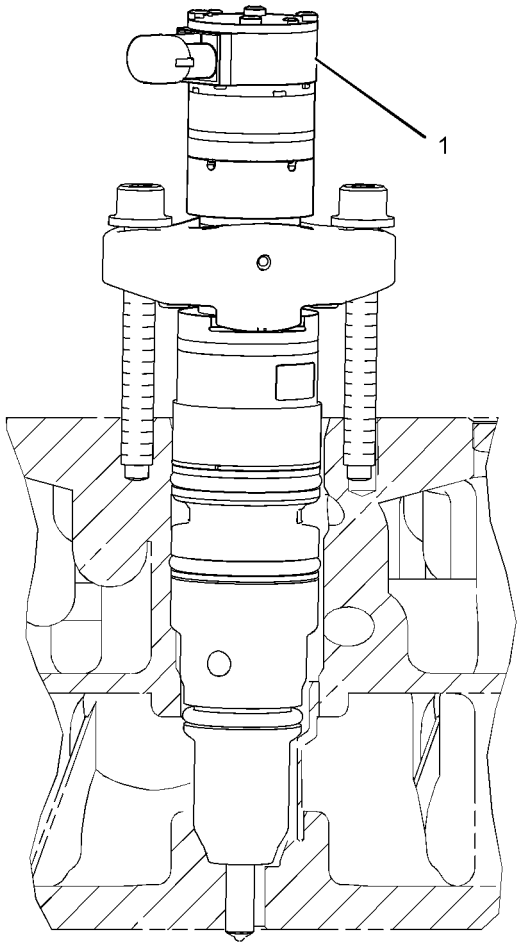

VIEW A-A
ROTATED 48° CCW

GRAPHIC #1 **<END>** g01147347

165-9154 PUMP GP-FUEL PRIMING

S/N: D3P1-UP; M4T1-UP

PART OF 237-8752 LINES GP-FUEL

SMCS-1258 **i02103107**

NOTE	REF NO	GRAPHIC REF	PART NUMBER	QTY	PART NAME 1 2 3 4 5 6 (PRODUCT LEVEL)	SEE PAGE
	1	1	**9Y-8389**	1	GASKET (FUEL PRIMING PUMP)	
	2	1	**183-2823**	1	PUMP AS-FUEL PRIMING	
	3	1	**8C-6561**	1	BOLT (5/16-18X1.375-IN)	
	4	1	**8T-4205**	1	WASHER-HARD (7.2X14.5X2-MM THK)	
	5	1	**7X-2501**	1	BOLT (1/4-20X1.25-IN)	
	6	1	**8T-4224**	1	WASHER-HARD (8.8X16X2-MM THK)	

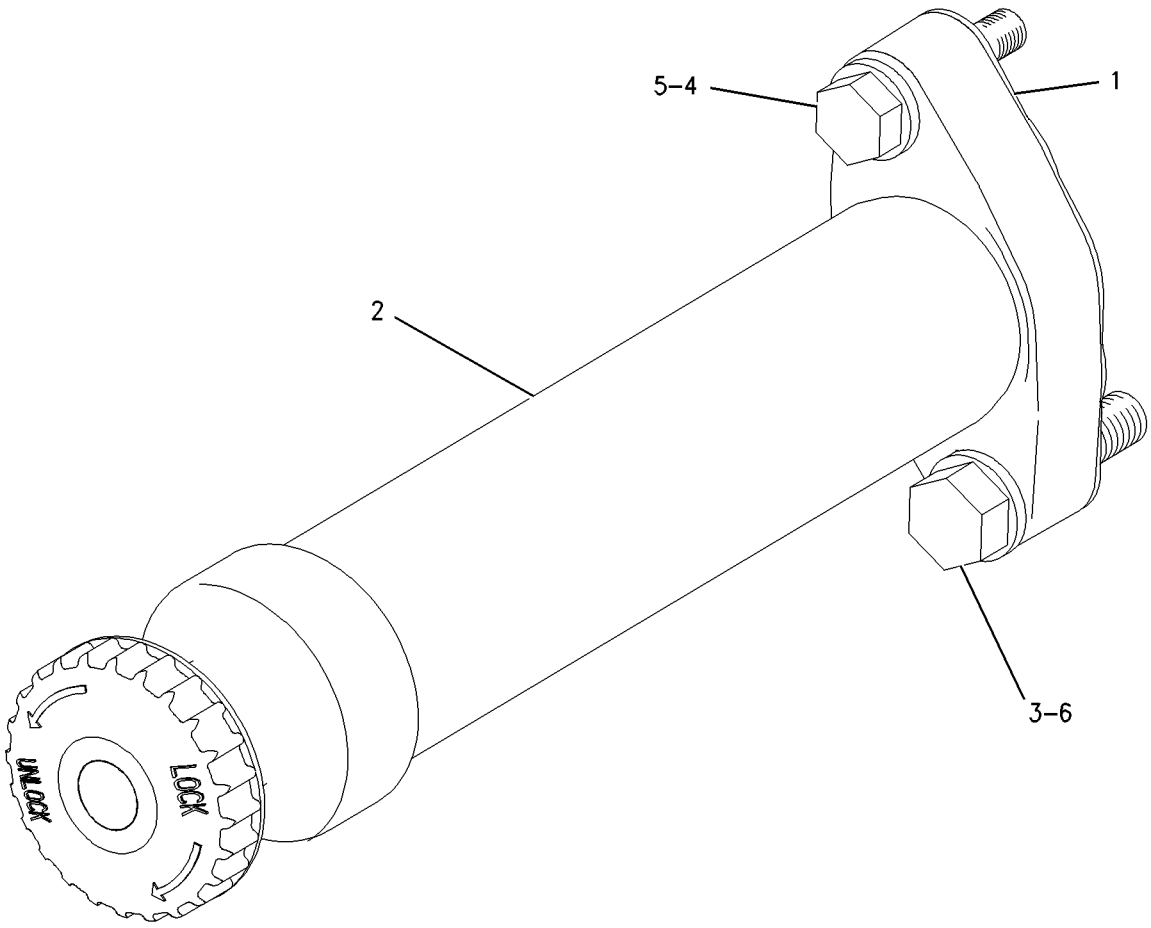

GRAPHIC #1 **<END>** g00655069

FUEL SYSTEM

247-7501 PUMP GP-FUEL PRIMING

S/N: D3P1-UP; M4T1-UP
PART OF 337-4134 OPTION AR-PUMP
AN ATTACHMENT

SMCS-1258 **i03691032**

NOTE	PART NUMBER	QTY	PART NAME 1 2 3 4 5 6 (PRODUCT LEVEL)	SEE PAGE
Y	*259-3918*	1	LINES GP-FUEL (PRIMING PUMP)	137
			—OR—	
Y	*343-2392*	1	LINES GP-FUEL (PRIMING PUMP)	145
Y	*259-5118*	1	WIRING GP-CAB (PRIMING PUMP)	302
Y	*259-5062*	1	WIRING GP-FUEL SYSTEM (PRIMING PUMP)	328

Y-SEPARATE ILLUSTRATION

<END>

188-6121 PUMP GP-FUEL PRM & PRIM FILTER–

WITH WATER SEPARATOR

S/N: D3P1-UP; M4T1-UP

PART OF 259-3918, 343-2392 LINES GP-FUEL

AN ATTACHMENT

SMCS-1258 **i01891413**

NOTE	REF NO	GRAPHIC REF	PART NUMBER	QTY	PART NAME 1 2 3 4 5 6 (PRODUCT LEVEL)	SEE PAGE
Y	1	1	**190-8977**	1	PUMP GP-FUEL PRM & WATER SEP	156
	2	1	**209-9234**	1	REGULATOR-PRESSURE (FUEL)	
	3	1	**211-7730**	1	TUBE AS	
	4	1	**030-8194**	1	CONNECTOR	
	5	1	**136-7227**	2	SEAL-O-RING	

Y-SEPARATE ILLUSTRATION

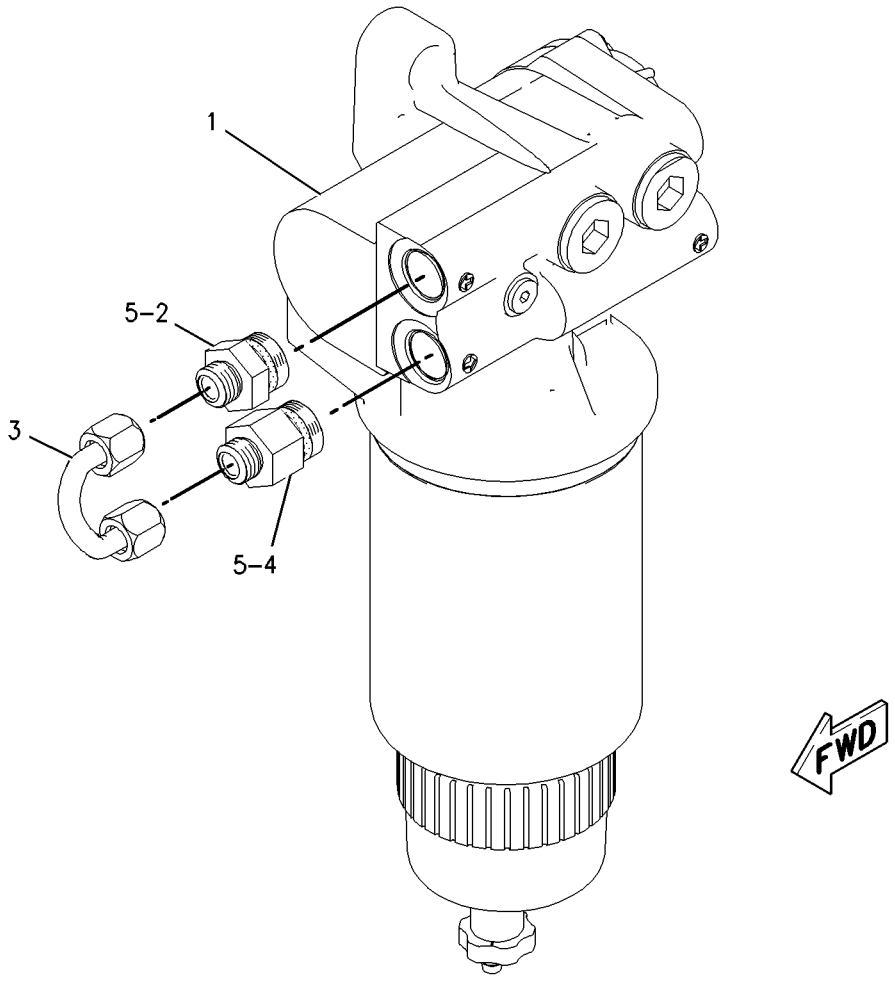

GRAPHIC #1 **<END>** g00850001

190-8977 PUMP GP-FUEL PRM & WATER SEP

S/N: D3P1-UP; M4T1-UP
PART OF 188-6121 PUMP GP-FUEL PRM & PRIM FILTER
AN ATTACHMENT

SMCS-1258, 1261, 1263 **i01934929**

NOTE	REF NO	GRAPHIC REF	PART NUMBER	QTY	PART NAME 1 2 3 4 5 6 (PRODUCT LEVEL)	SEE PAGE
Y	1	1	*174-9570*	1	FILTER GP-WATER SEP & FUEL (PRIMARY)	129
	2	1	**190-8970**	1	PUMP AS-FUEL PRIMING	

Y-SEPARATE ILLUSTRATION

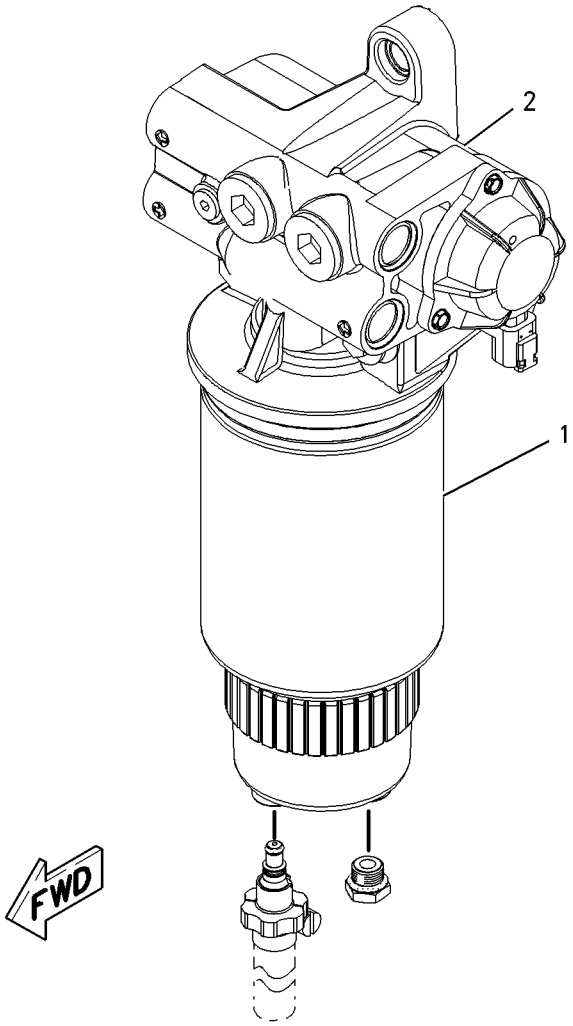

GRAPHIC #1 **<END>** g00904493

229-1785 PUMP GP-REFUELING

S/N: D3P1-UP; M4T1-UP
PART OF 229-1784 PUMP AR-FUEL TRANSFER
AN ATTACHMENT

SMCS-1295 **i03161310**

NOTE	REF NO	GRAPHIC REF	PART NUMBER	QTY	PART NAME 1 2 3 4 5 6 (PRODUCT LEVEL)	SEE PAGE
C	1	1	**312-2645**	1	SWITCH AS-LIQUID LEVEL (FUEL TANK SHUTOFF)	
		1	**2S-4078**	1	SEAL-O-RING	
		1	**186-3735**	2	PIN-CONNECTOR (16-GA TO 18-GA)	
		1	**243-4505**	1	RECEPTACLE AS-CONNECTOR (2-PIN)	
	2	1	**7K-1181**	1	STRAP-CABLE	
	3	1	**9M-7958**	4	CLAMP-HOSE	
	4	1	**120-5114**	1	FILM-INSTRUCTION (REFUELING PUMP)	
C	5	1	**324-5761**	1	COVER AS	
M	6	1	**135-8572**	2	BOLT AS	
M	7	1	**135-8573**	4	BOLT AS	
Y	8	1	**229-1859**	1	PUMP & MOTOR GP-REFUELING	148
	9	1	**229-1860**	1	STRAINER AS-FUEL	
	10	1	**229-1861**	1	CONNECTOR-HOSE	
	11	1	**240-3920**	1	SUPPORT AS	
M	12	1	**8T-4194**	2	BOLT (M12X1.75X50-MM)	
	13	1	**8T-4223**	4	WASHER-HARD (13.5X25.5X3-MM THK)	
M	14	1	**8T-4244**	2	NUT (M12X1.75-THD)	
E	15	1	**229-1857**		HOSE (430-CM)	
E	15A	1	**229-1857**		HOSE (38-CM)	

C-CHANGE FROM PREVIOUS TYPE
E-ORDER BY THE CENTIMETER
M-METRIC PART
Y-SEPARATE ILLUSTRATION

229-1785 **PUMP GP-REFUELING** *(contd.)* **i03161310**

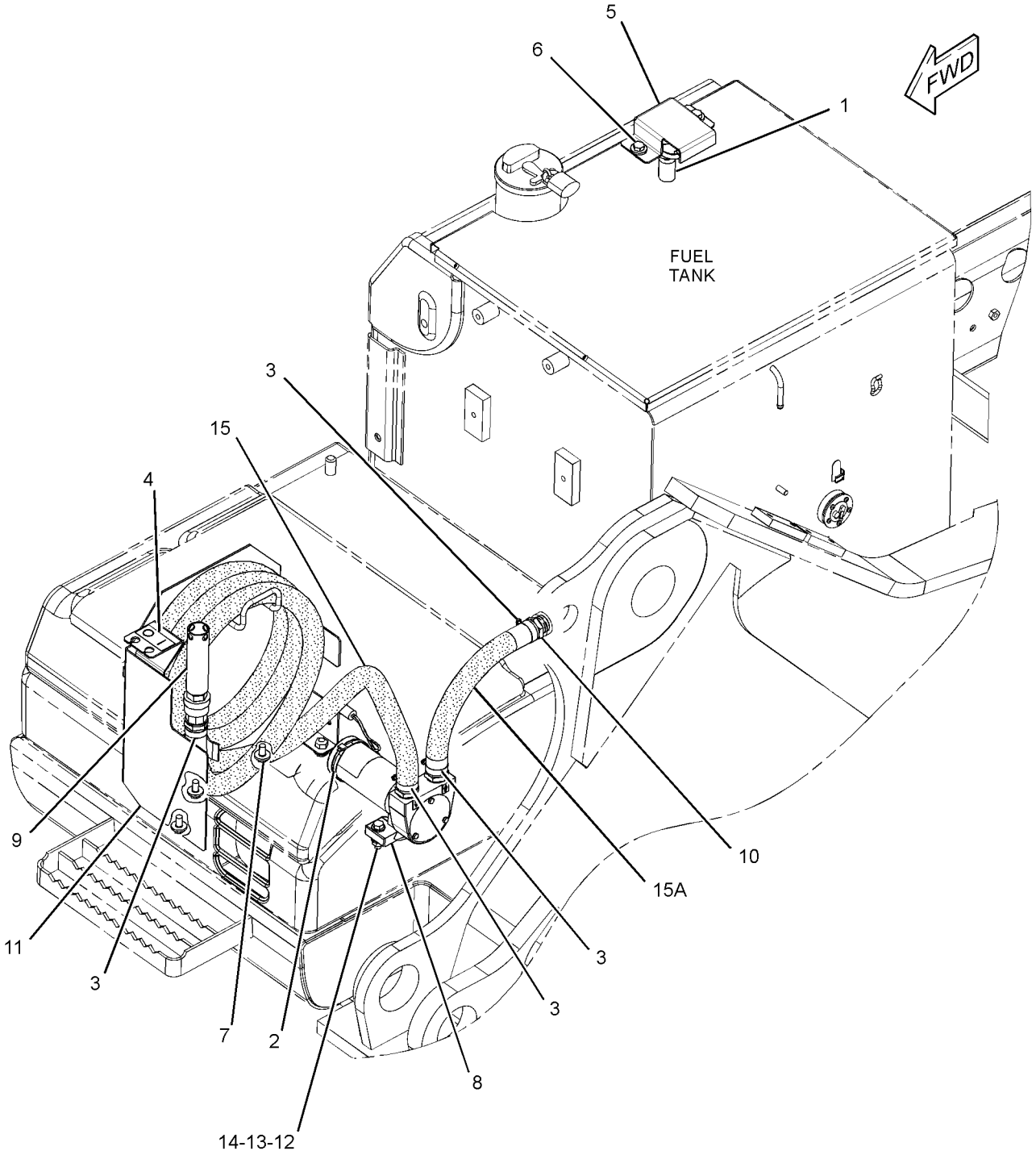

GRAPHIC #1 **<END>** g01582453

258-8745 PUMP GP-UNIT INJECTOR HYD

S/N: THX1-UP

PART OF 229-2665, 270-4216, 348-2746, 348-2747 ENGINE AR-CORE

SMCS-1714 **i03028830**

NOTE	REF NO	GRAPHIC REF	PART NUMBER	QTY	PART NAME 1 2 3 4 5 6 (PRODUCT LEVEL)	SEE PAGE
	1	1	**262-6074**	1	TUBE AS	
	2	1	*183-3399*	2	CONNECTOR AS	
					(EACH INCLUDES)	
		1	**6V-8636**	1	CONNECTOR	
		1	**214-7568**	1	SEAL-O-RING	
		1	**221-3494**	1	SEAL-O-RING	
	3	1	**193-2162**	1	TUBE AS	
	4	1	**227-5904**	1	SEAL-O-RING	
CYR	5	1	**319-0677**	1	PUMP GP-UNIT INJECTOR HYD	161
	6	1	**030-7950**	1	ELBOW	
	7	1	*183-3407*	1	PLUG AS	
		1	**9S-8004**	1	PLUG	
		1	**153-4906**	1	SEAL-O-RING	
	8	1	**3E-9412**	1	DOWEL	
	9	1	**5P-3264**	1	ELBOW	
	10	1	**6V-4589**	1	SEAL-O-RING	
	11	1	**6V-5050**	1	SEAL-O-RING	
	12	1	**6V-5839**	2	WASHER (11X21X2.5-MM THK)	
M	13	1	**6V-7981**	2	BOLT (M10X1.5X70-MM)	

C-CHANGE FROM PREVIOUS TYPE
M-METRIC PART
R-REMFG PART MAY BE AVAILABLE
Y-SEPARATE ILLUSTRATION

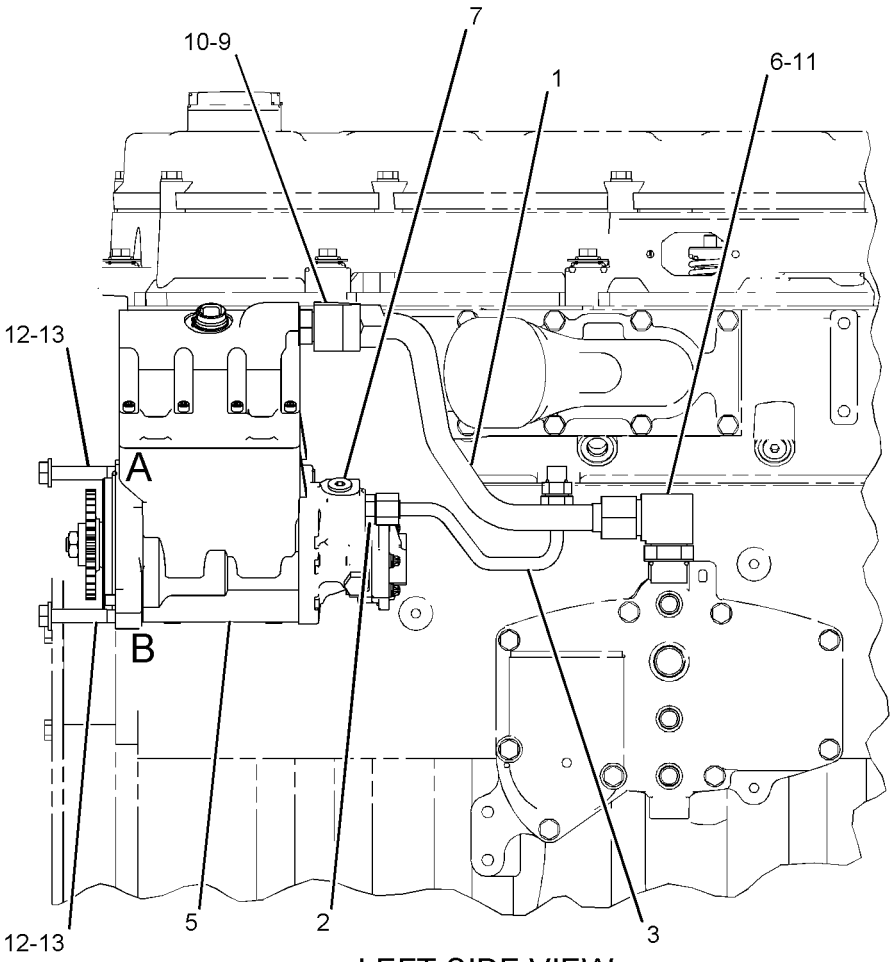

LEFT SIDE VIEW

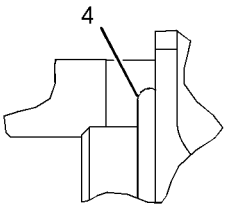

VIEW OF AREA A

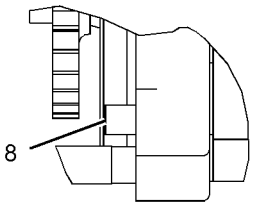

VIEW OF AREA B

GRAPHIC #1 **<END>** g01146833

319-0677 PUMP GP-UNIT INJECTOR HYD*R

S/N: THX1-UP

PART OF 258-8745 PUMP GP-UNIT INJECTOR HYD

SMCS-1714 **i03293379**

NOTE	REF NO	GRAPHIC REF	PART NUMBER	QTY	PART NAME 1 2 3 4 5 6 (PRODUCT LEVEL)	SEE PAGE
	1	1	**313-4620**	3	SCREW-PAN HEAD	
	2	1	**318-6357**	1	PUMP GP-FUEL TRANSFER	
	3	1	**179-8128**	1	SEAL-O-RING (FUEL SYSTEM)	
	4	1	**262-0284**	1	RING-RETAINING	
M	5	1	**228-5897**	4	BOLT-TORX (M8X1.25X136.7-MM)	
	6	1	**239-2402**	3	SEAL-O-RING	
	7	1	**1F-7960**	1	WASHER (13.5X32X6-MM THK)	
	8	1	**1N-8062**	1	BEARING AS-NEEDLE	
M	9	1	**5C-2890**	1	NUT (M6X1-THD)	
	10	1	**8C-6711**	1	NUT-RETAINER (1/2-20-THD)	
	11	1	**9X-8267**	1	WASHER (6.6X12X2-MM THK)	
	12	1	**153-7036**	1	SPOOL	
	13	1	**260-5716**	1	SPOOL	

M-METRIC PART

319-0677 PUMP GP-UNIT INJECTOR HYD *(contd.)* i03293379

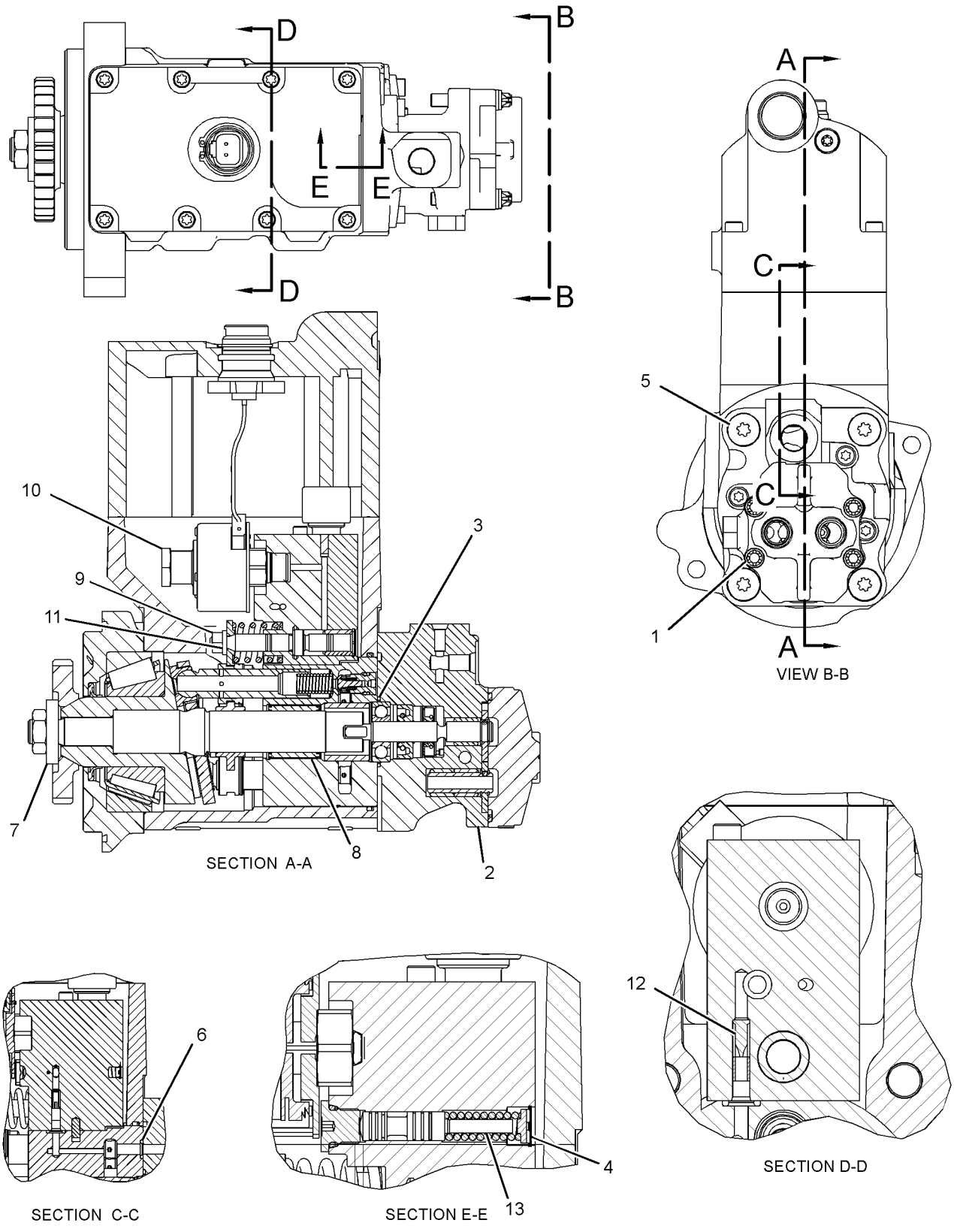

GRAPHIC #1 **<END>** g01689934

205-1306 REGULATOR GP-FUEL PRESSURE

S/N: THX1-UP

PART OF 231-3039 LINES GP-FUEL

SMCS-1715 **i02684188**

NOTE	REF NO	GRAPHIC REF	PART NUMBER	QTY	PART NAME 1 2 3 4 5 6 (PRODUCT LEVEL)	SEE PAGE
	1	1	*295-1803*	1	ELBOW AS	
	1A	1	**6V-5049**	1	SEAL-O-RING	
		1	**196-6838**		ELBOW	
Y	2	1	*232-0343*	1	REGULATOR GP-FUEL PRESSURE	164

Y-SEPARATE ILLUSTRATION

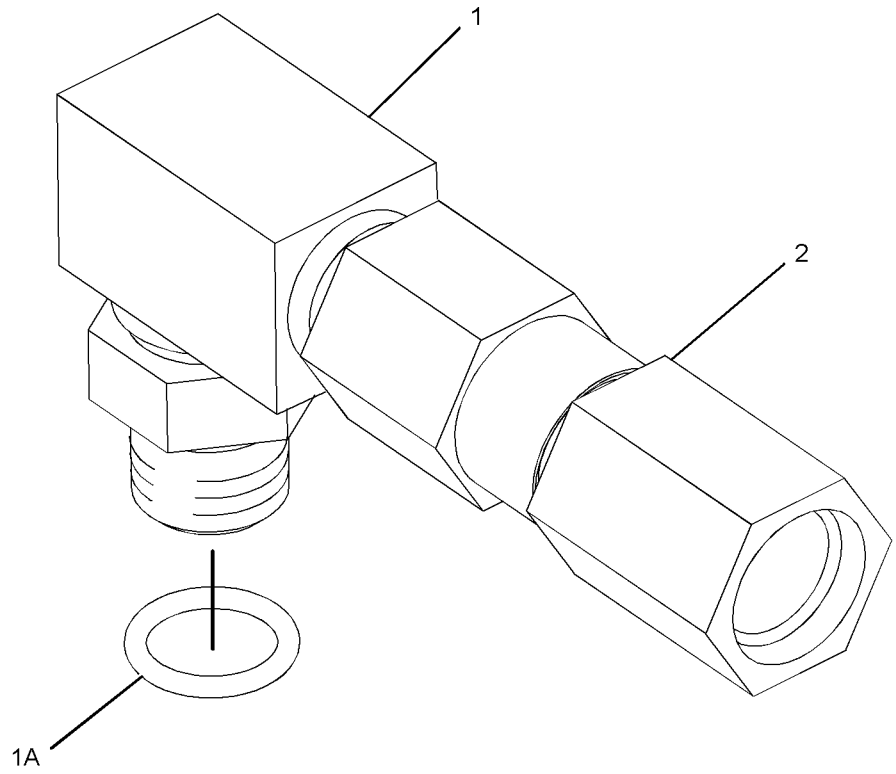

GRAPHIC #1 **<END>** g01349154

232-0343 REGULATOR GP-FUEL PRESSURE

S/N: THX1-UP

PART OF 205-1306 REGULATOR GP-FUEL PRESSURE

SMCS-1715 **i02676270**

NOTE	REF NO	GRAPHIC REF	PART NUMBER	QTY	PART NAME 1 2 3 4 5 6 (PRODUCT LEVEL)	SEE PAGE
	1	1	**6V-5049**	1	SEAL-O-RING	
	2	1	**294-8620**	1	REGULATOR AS (FUEL PRESSURE)	

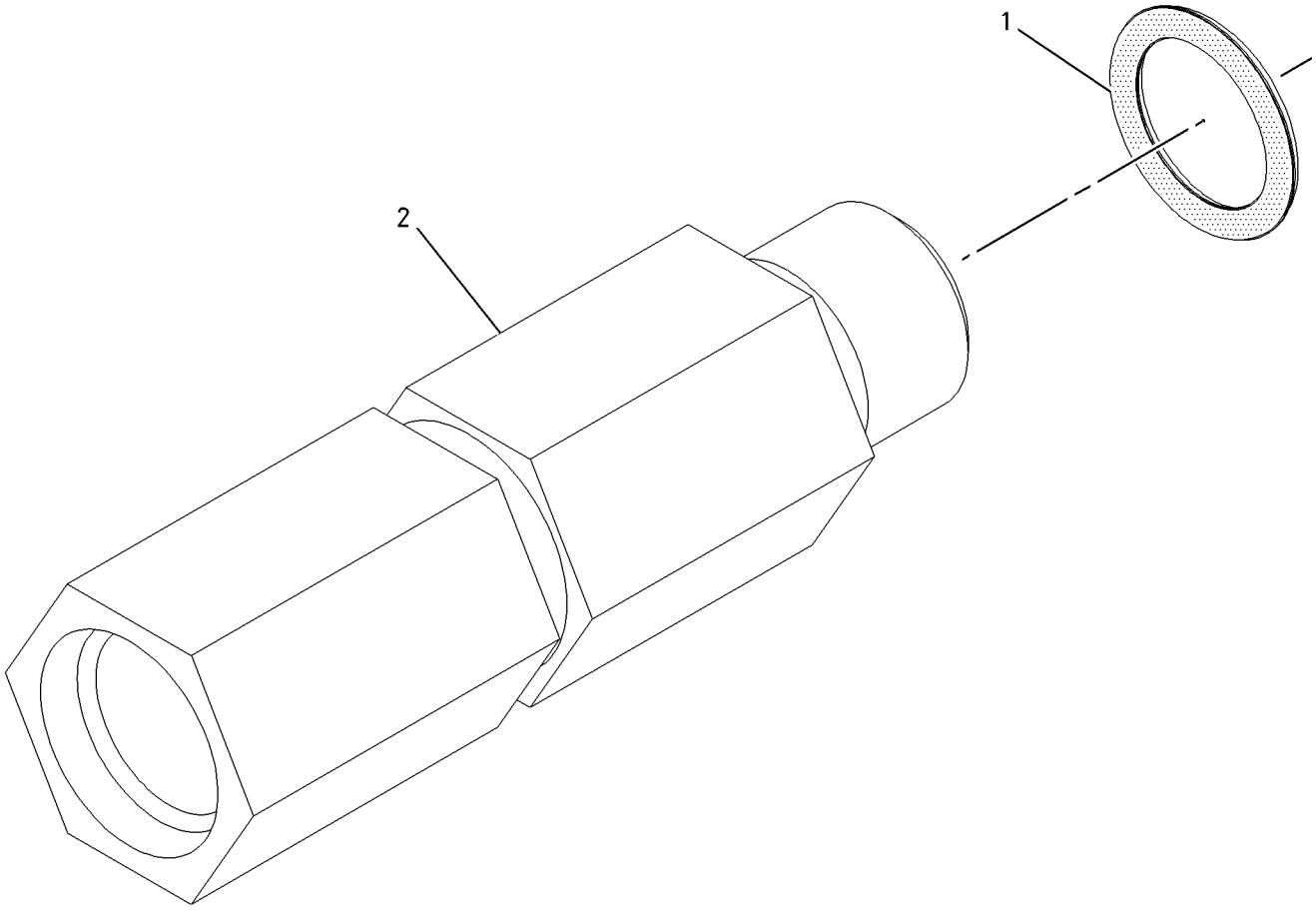

GRAPHIC #1 **<END>** g01004480

FUEL SYSTEM

237-8783 TANK & MTG GP-FUEL

S/N: D3P1-UP; M4T1-UP
PART OF 314-3709 CHASSIS AR

SMCS-1273 **i02495783**

NOTE	REF NO	GRAPHIC REF	PART NUMBER	QTY	PART NAME 1 2 3 4 5 6 (PRODUCT LEVEL)	SEE PAGE
	1	1	**246-2641**	1	PADLOCK GP	
		1	**5P-8500**	1	KEY	
M	2	1	**135-8572**	2	BOLT AS	
Y	3	1	**237-8784**	1	TANK GP-FUEL	166
	4	1	**085-9310**	4	SPACER (16.6X32X26-MM THK)	
M	5	1	**8T-4140**	4	BOLT (M16X2X60-MM)	

M-METRIC PART
Y-SEPARATE ILLUSTRATION

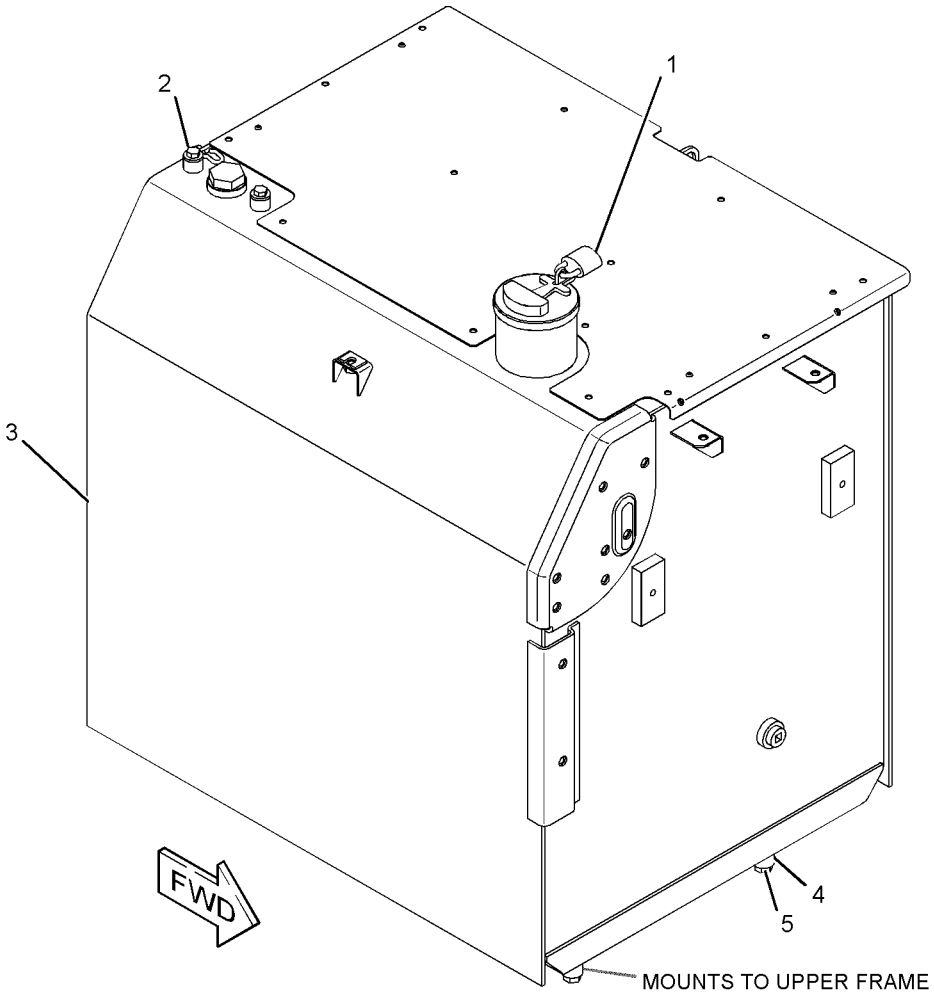

GRAPHIC #1 **<END>** g01197543

FUEL SYSTEM

237-8784 TANK GP-FUEL

S/N: D3P1-UP; M4T1-UP

PART OF 237-8783 TANK & MTG GP-FUEL

SMCS-1273 **i02495786**

NOTE	PART NUMBER	QTY	PART NAME 1 2 3 4 5 6 (PRODUCT LEVEL)	SEE PAGE
Y	*262-2222*	1	TANK GP-FUEL	167
			—OR—	
Y	*262-2223*	1	TANK GP-FUEL	169

Y-SEPARATE ILLUSTRATION

<END>

262-2222 TANK GP-FUEL

S/N: D3P1-UP; M4T1-UP
615-L (162-US GAL)
PART OF 237-8784 TANK GP-FUEL

SMCS-1273 **i03201424**

NOTE	REF NO	GRAPHIC REF	PART NUMBER	QTY	PART NAME 1 2 3 4 5 6 (PRODUCT LEVEL)	SEE PAGE
	1	1	**4I-0378**	1	GASKET-RUBBER	
	2	1	**5P-4924**	1	ELBOW	
L	3	1	**7X-7700**	1	CAP AS-FILLER (FUEL TANK)	
		1	**9X-8600**	1	SEAL-O-RING	
C	4	1	*203-2059*	1	CONNECTOR AS	
		1	**6V-8397**	1	SEAL-O-RING	
		1	**8C-6869**	1	CONNECTOR	
	5	1	**128-4411**	1	VALVE AS (FUEL SHUTOFF)	
	6	1	**163-6700**	1	SENSOR GP-FUEL LEVEL	
		1	**186-3735**	2	PIN-CONNECTOR (16-GA TO 18-GA)	
		1	**102-8802**	1	KIT-RECEPTACLE (2-PIN)	
					(INCLUDES RECEPTACLE AS & WEDGE)	
	7	1	**9S-6130**	1	PLUG	
J	8	1	**303-9933**	1	STRAINER AS-FUEL (FLOAT GAUGE)	
M	9	1	**095-0736**	5	SCREW-MACHINE (M5X0.8X10-MM)	
	10	1	**2S-4078**	1	SEAL-O-RING	
	11	1	**3B-0551**	1	PLUG-PIPE	
	12	1	**3J-1907**	1	SEAL-O-RING	
	13	1	**8T-0328**	5	WASHER-HARD (5.5X10X1-MM THK)	
					PARTS SHOWN IN GRAPHIC(S) WITHOUT A REFERENCE NUMBER ARE NOT SERVICED SEPARATELY	
					AVAILABLE REPAIR KIT(S):	
J			**303-9937**	1	KIT-GAUGE (FUEL STRAINER) (FUEL STRAINER)	
					(INCLUDES STOPPER & GAUGE)	
L			**9X-2205**	1	KIT-CAP FILTER (FUEL TANK)	
					(INCLUDES FILTER AS, 2 SCREWS, 4 GASKETS & VALVE)	

C-CHANGE FROM PREVIOUS TYPE
J-KIT MARKED J SERVICED PART(S) MARKED J
L-KIT MARKED L SERVICES PART(S) MARKED L
M-METRIC PART

262-2222 **TANK GP-FUEL** *(contd.)* **i03201424**

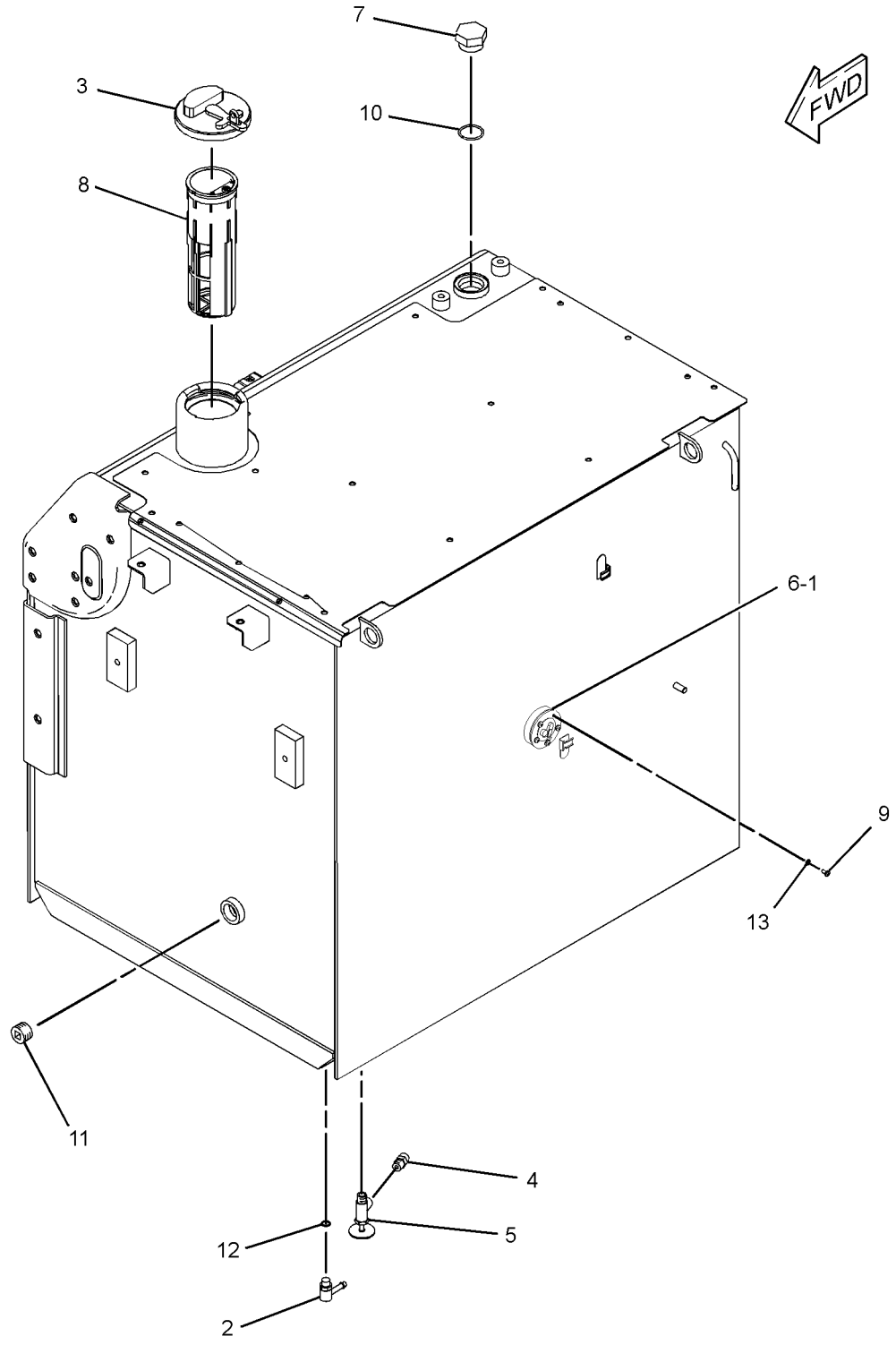

GRAPHIC #1 **<END>** g01618586

262-2223 TANK GP-FUEL

S/N: D3P1-UP; M4T1-UP
615-L(162-US GAL)
PART OF 237-8784 TANK GP-FUEL

SMCS-1273 **i03201481**

NOTE	REF NO	GRAPHIC REF	PART NUMBER	QTY	PART NAME 1 2 3 4 5 6 (PRODUCT LEVEL)	SEE PAGE
	1	1	**4I-0378**	1	GASKET-RUBBER	
	2	1	**5P-4924**	1	ELBOW	
L	3	1	**7X-7700**	1	CAP AS-FILLER (FUEL TANK)	
		1	**9X-8600**	1	SEAL-O-RING	
C	4	1	*203-2059*	1	CONNECTOR AS	
		1	**6V-8397**	1	SEAL-O-RING	
		1	**8C-6869**	1	CONNECTOR	
	5	1	**128-4411**	1	VALVE AS (FUEL SHUTOFF)	
	6	1	**163-6700**	1	SENSOR GP-FUEL LEVEL	
		1	**186-3735**	2	PIN-CONNECTOR (16-GA TO 18-GA)	
		1	**102-8802**	1	KIT-RECEPTACLE (2-PIN)	
					(INCLUDES RECEPTACLE AS & WEDGE)	
	7	1	**9S-6130**	1	PLUG	
J	8	1	**303-9933**	1	STRAINER AS-FUEL (FLOAT GAUGE)	
M	9	1	**095-0736**	5	SCREW-MACHINE (M5X0.8X10-MM)	
	10	1	**2S-4078**	1	SEAL-O-RING	
	11	1	**3B-0551**	1	PLUG-PIPE	
	12	1	**3J-1907**	1	SEAL-O-RING	
	13	1	**8T-0328**	5	WASHER-HARD (5.5X10X1-MM THK)	
					PARTS SHOWN IN GRAPHIC(S) WITHOUT A REFERENCE NUMBER ARE NOT SERVICED SEPARATELY	
					AVAILABLE REPAIR KIT(S):	
J			**303-9937**	1	KIT-GAUGE (FUEL STRAINER) (FUEL STRAINER)	
					(INCLUDES STOPPER & GAUGE)	
L			**9X-2205**	1	KIT-CAP FILTER (FUEL TANK)	
					(INCLUDES FILTER AS, 2 SCREWS, 4 GASKETS & VALVE)	

C-CHANGE FROM PREVIOUS TYPE
J-KIT MARKED J SERVICED PART(S) MARKED J
L-KIT MARKED L SERVICES PART(S) MARKED L
M-METRIC PART

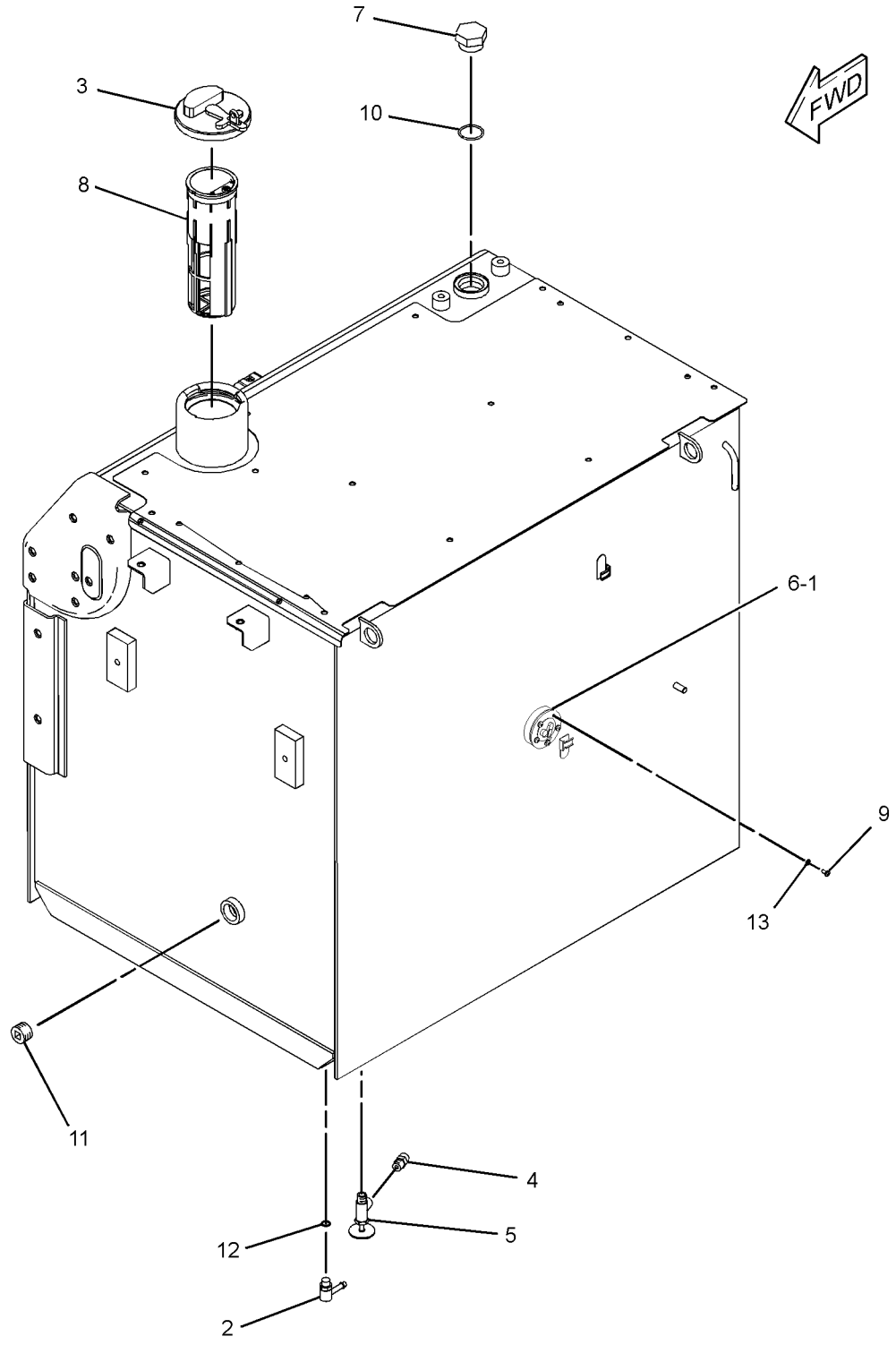

GRAPHIC #1 **<END>** g01618586

139-6873 VALVE GP-FUEL BYPASS

S/N: D3P1-UP; M4T1-UP

PART OF 237-8752 LINES GP-FUEL

SMCS-1250, 1261, 1715 **i01986136**

NOTE	REF NO	GRAPHIC REF	PART NUMBER	QTY	PART NAME 1 2 3 4 5 6 (PRODUCT LEVEL)	SEE PAGE
	1	1	**9X-7737**	1	SEAL-O-RING	

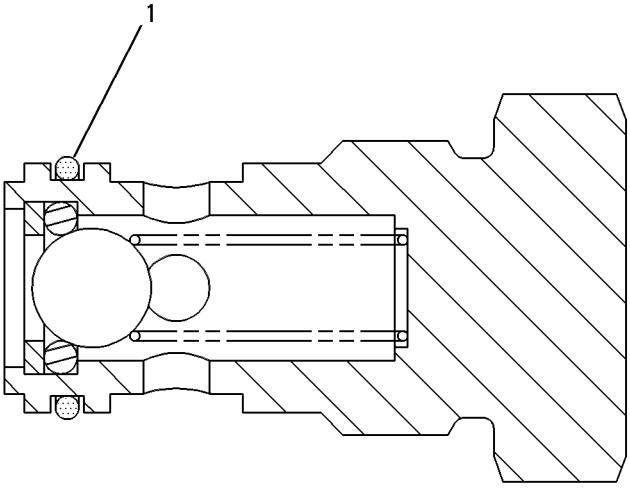

GRAPHIC #1 **<END>** g00266124

298-3147 VALVE GP-FUEL SHUTOFF

S/N: D3P1-UP; M4T1-UP
PART OF 237-8752, 259-3918, 343-2392 LINES GP-FUEL
ALSO AN ATTACHMENT

SMCS-1273 **i02775704**

NOTE	REF NO	GRAPHIC REF	PART NUMBER	QTY	PART NAME 1 2 3 4 5 6 (PRODUCT LEVEL)	SEE PAGE
	1	1	**298-3257**	1	STOP	
	2	1	**298-3258**	1	LEVER	
M	3	1	**260-6692**	1	NUT (M5X0.8-THD)	
	4	1	**3J-1907**	1	SEAL-O-RING	
	5	1	**8T-0328**	1	WASHER-HARD (5.5X10X1-MM THK)	
					PARTS SHOWN IN GRAPHIC(S) WITHOUT A REFERENCE NUMBER ARE NOT SERVICED SEPARATELY	

M-METRIC PART

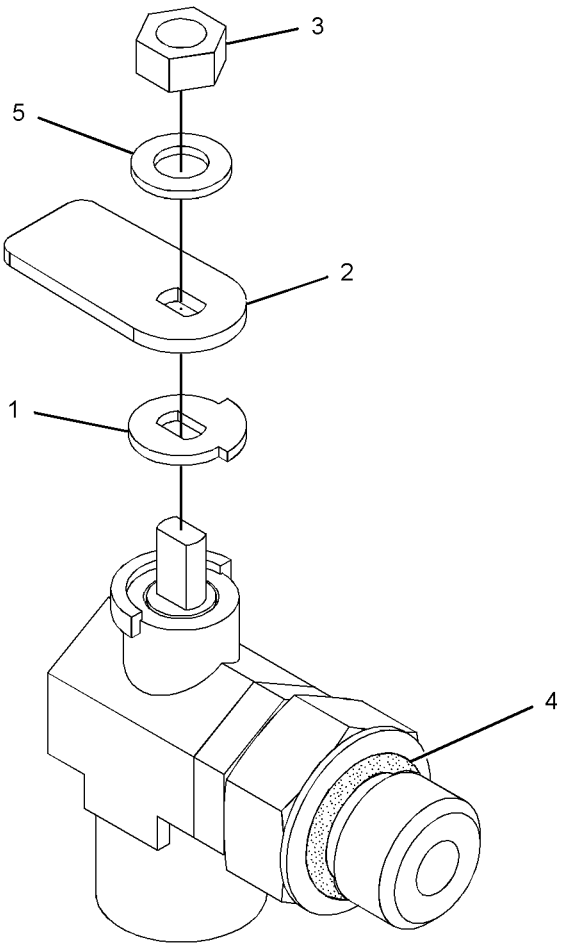

GRAPHIC #1 **<END>** g01377343

132-1829 ALARM GP

S/N: D3P1-UP; M4T1-UP
24-VOLT
PART OF 251-0432 WIRING GP-CAB
ALSO AN ATTACHMENT

SMCS-7400, 7402, 7407 **i03601165**

NOTE	REF NO	GRAPHIC REF	PART NUMBER	QTY	PART NAME 1 2 3 4 5 6 (PRODUCT LEVEL)	SEE PAGE
	1	1	**102-8802**	1	KIT-RECEPTACLE (2-PIN)	
					(INCLUDES RECEPTACLE AS & WEDGE)	
	2	1	**186-3735**	2	PIN-CONNECTOR (16-GA TO 18-GA)	

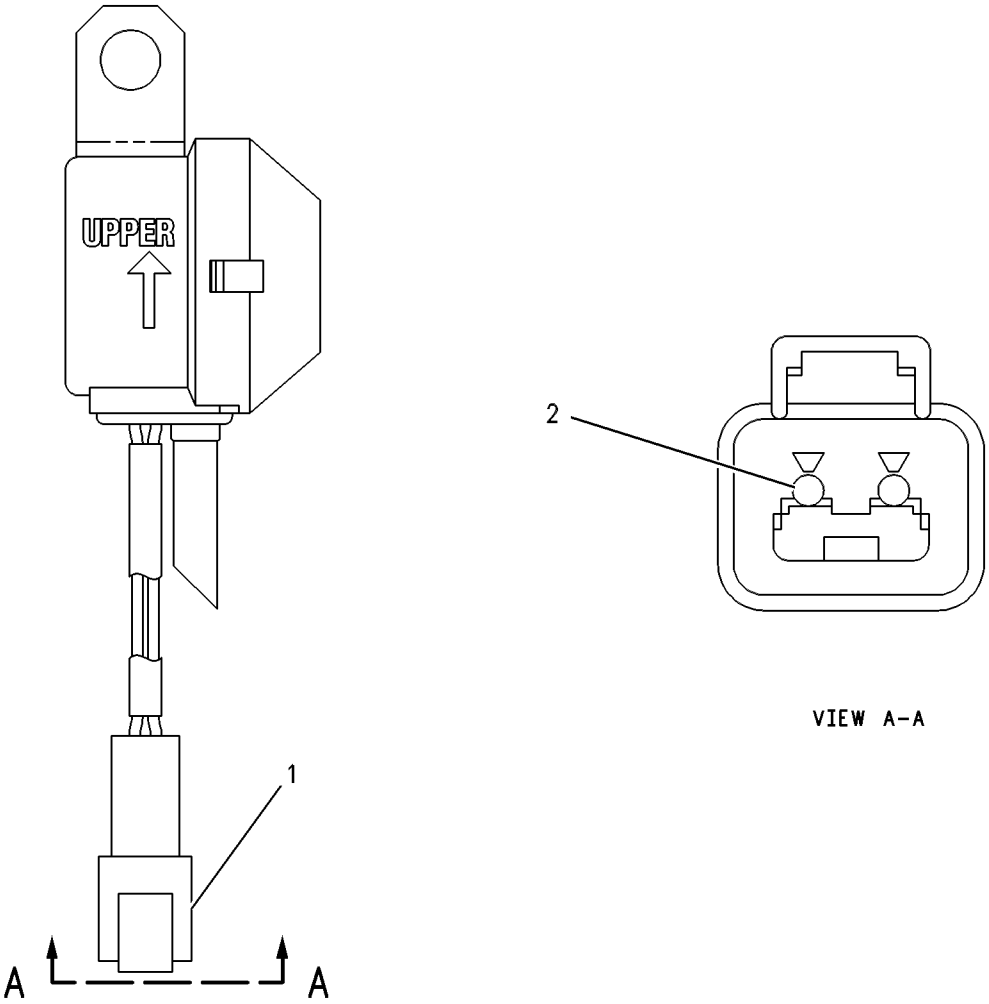

GRAPHIC #1 **<END>** g00272185

231-1771 ALARM GP-TRAVEL

S/N: D3P1-UP; M4T1-UP
PART OF 337-4107 OPTION AR-INSTALLATION
AN ATTACHMENT

SMCS-7429 **i03601166**

NOTE	REF NO	GRAPHIC REF	PART NUMBER	QTY	PART NAME 1 2 3 4 5 6 (PRODUCT LEVEL)	SEE PAGE
	1	1	**213-9100**	1	ALARM GP	
		1	**102-8802**	1	KIT-RECEPTACLE (2-PIN)	
					(INCLUDES RECEPTACLE AS & WEDGE)	
		1	**186-3735**	1	PIN-CONNECTOR (16-GA TO 18-GA)	
E		1	**9X-1813**		SLEEVE (29-CM)	
M	2	1	**8T-4189**	2	BOLT (M8X1.25X20-MM)	
	3	1	**5P-4116**	2	WASHER-HARD (8.8X20.5X2-MM THK)	

E-ORDER BY THE CENTIMETER
M-METRIC PART

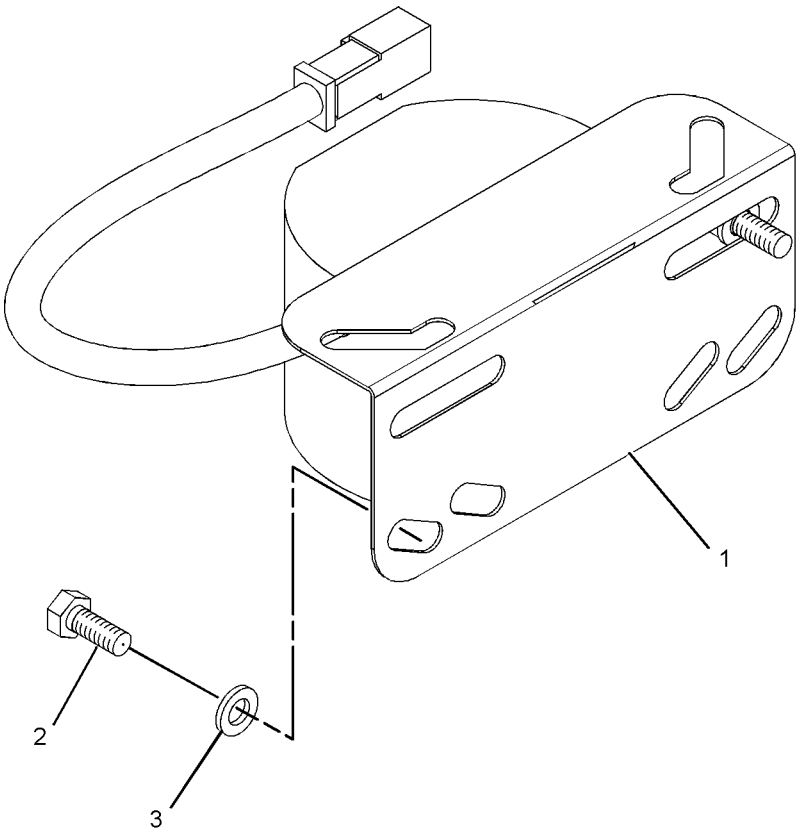

GRAPHIC #1 **<END>** g01071794

177-6972 ALTERNATOR GP-CHARGING

S/N: D3P1-UP; M4T1-UP
24 VOLT, 65 AMPERE
PART OF 262-1359, 266-6263 ENGINE AR

SMCS-1405 **i02246445**

NOTE	REF NO	GRAPHIC REF	PART NUMBER	QTY	PART NAME 1 2 3 4 5 6 (PRODUCT LEVEL)	SEE PAGE
	1	1	**129-5096**	1	PULLEY-ALTERNATOR	
YR	2	1	**185-5294**	1	ALTERNATOR GP-CHARGING (24-VOLT)	176
	3	1	**203-0199**	1	SPACER	
	4	1	**258-7531**	1	GUARD AS	
	5	1	**5P-2424**	1	BOLT (1/2-13X2.25-IN)	
	6	1	**6V-8188**	1	NUT (1/2-13-THD)	
	7	1	**7X-0339**	1	BOLT (1/2-13X6.25-IN)	
	8	1	**8T-4121**	1	WASHER-HARD (11X21X2.5-MM THK)	
M	9	1	**8T-4136**	1	BOLT (M10X1.5X25-MM)	
	10	1	**8T-4223**	3	WASHER-HARD (13.5X25.5X3-MM THK)	

M-METRIC PART
R-REMFG PART MAY BE AVAILABLE
Y-SEPARATE ILLUSTRATION

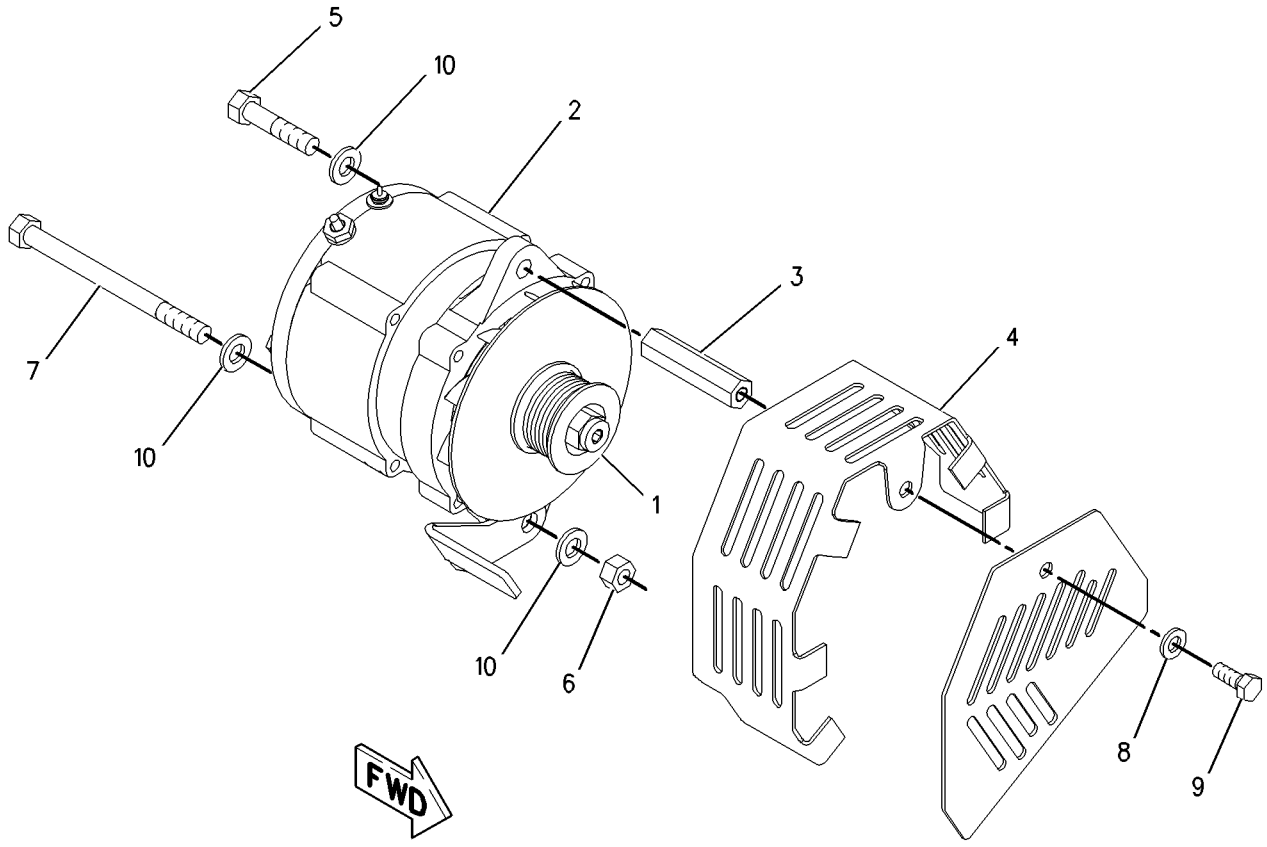

GRAPHIC #1 **<END>** g00775601

185-5294 ALTERNATOR GP-CHARGING*R

S/N: D3P1-UP; M4T1-UP
24-VOLT, 65-AMPERE
PART OF 177-6972 ALTERNATOR GP-CHARGING

SMCS-1405 **i02941646**

NOTE	REF NO	GRAPHIC REF	PART NUMBER	QTY	PART NAME 1 2 3 4 5 6 (PRODUCT LEVEL)	SEE PAGE
	1	1	**185-2653**	1	FRAME	
	2	1	**5S-7349**	1	BOLT (1/4-20X0.5-IN)	
	3	1	**185-2639**	1	FAN AS	
	4	1	**1H-3244**	1	LOCKWASHER	
	5	1	**185-2645**	1	FRAME	
	6	1	**2K-4821**	1	LOCKNUT (5/8-18-THD)	
	7	1	**5P-8247**	1	WASHER-HARD (17X32X3.5-MM THK)	
	8	1	**185-2651**	1	COVER	
	9	1	**8T-4205**	1	WASHER-HARD (7.2X14.5X2-MM THK)	
	10	1	**185-2647**	1	GROMMET	
	11	1	**9L-6770**	1	CAP-DUST	
	12	1	**185-2642**	1	STATOR AS	
	13	1	**185-2638**	2	COLLAR	
	14	1	**185-2654**	1	PLATE	
	15	1	**185-2650**	1	ROTOR AS	
	16	1	**185-2644**	1	COIL AS	
	17	1	**185-2648**	1	REGULATOR AS-VOLTAGE (24-VOLT) (ALTERNATOR)	
	18	1	**6V-8189**	1	NUT (5/16-18-THD)	
	19	1	**8T-4224**	1	WASHER-HARD (8.8X16X2-MM THK)	
	20	1	**3F-9556**	1	LOCKWASHER	
					AVAILABLE REPAIR KIT(S):	
			185-2655		KIT-BEARING (ALTERNATOR)	
					(INCLUDES 2 BEARINGS)	
			199-8436		KIT-TERMINAL (ALTERNATOR)	
					(INCLUDES HOLDER AS, PLATE, INSULATOR, PIN, BOLT, GROMMET, & NUT)	
			199-7891		KIT-TERMINAL (ALTERNATOR)	
					(INCLUDES INSULATORS, WASHERS, & NUT)	
			185-2658		KIT-HARDWARE (ALTERNATOR)	
					(INCLUDES BOLTS)	

185-5294 **ALTERNATOR GP-CHARGING** *(contd.)* **i02941646**

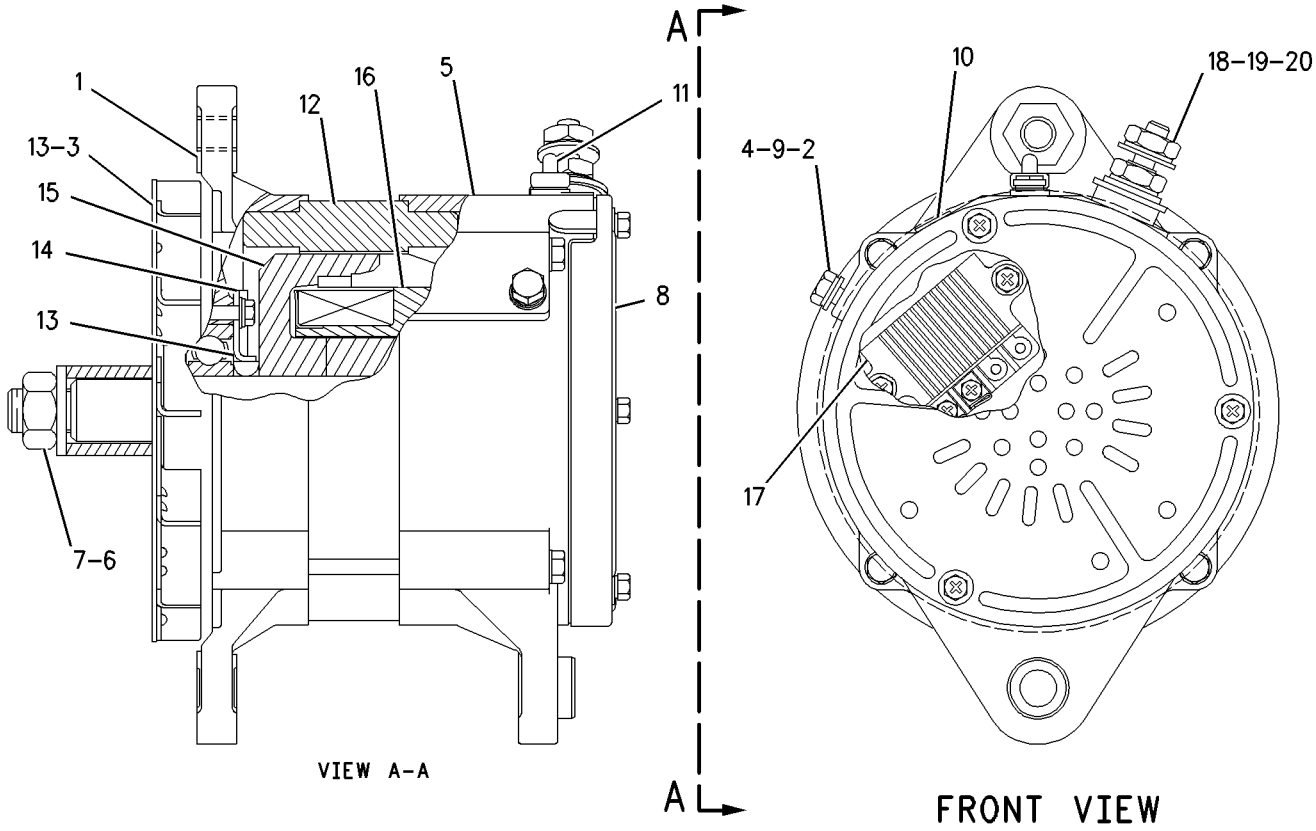

GRAPHIC #1 **<END>** g00806894

251-0620 BATTERY & WIRING GP—COLD WEATHER

S/N: D3P1-UP; M4T1-UP
PART OF 314-3587 STARTING AR-COLD WEATHER
AN ATTACHMENT

SMCS-1401, 1402, 1408 **i03601225**

NOTE	REF NO	GRAPHIC REF	PART NUMBER	QTY	PART NAME 1 2 3 4 5 6 (PRODUCT LEVEL)	SEE PAGE
	1	1	**263-9574**	2	BATTERY (12-VOLT, MAINTENANCE FREE)	
					(EACH INCLUDES)	
		1	**123-1373**	6	CAP AS-FILLER (BATTERY)	
	2	1	**5I-8270**	1	COVER-BATTERY	
	3	1	**6W-6005**	1	HOLD-DOWN-BATTERY	
	4	1	**170-6929**	1	CABLE AS	
E		1	**5P-0761**		CABLE (00-GA, RED) (31-CM)	
		1	**9G-0002**	1	COVER-TERMINAL (RED)	
		1	**8L-8413**	1	STRAP-CABLE	
		1	**9G-0005**	1	COVER-TERMINAL (BLACK)	
		1	**8L-8413**	1	STRAP-CABLE	
		1	**8C-5918**	1	TERMINAL AS (NEGATIVE) (RH)	
		1	**1M-6119**	1	BOLT (5/16-18X1.375-IN)	
		1	**1M-6120**	1	NUT (5/16-18-THD)	
		1	**8T-9756**	1	TERMINAL AS (POSITIVE) (LH)	
		1	**1M-6119**	1	BOLT (5/16-18X1.375-IN)	
		1	**1M-6120**	1	NUT (5/16-18-THD)	
	5	1	**291-7457**	1	CABLE AS	
BD		1	**6V-2722**		TUBE-HEAT SHRINK	
		1	**1S-7252**	1	TERMINAL-CABLE (00-GA, 3/8-IN SCREW)	
E		1	**5P-0747**		CABLE (00-GA, BLACK) (55-CM)	
		1	**7N-5274**	1	COVER-TERMINAL (BLACK)	
		1	**8L-8413**	1	STRAP-CABLE	
		1	**3S-6050**	1	TERMINAL AS-BATTERY (NEGATIVE)	
		1	**1M-6119**	1	BOLT (5/16-18X1.375-IN)	
		1	**1M-6120**	1	NUT (5/16-18-THD)	
	6	1	**238-2501**	1	KNOB	
	7	1	**238-2528**	1	ROD	
	8	1	**259-5126**	1	CABLE AS	
BD		1	**6V-2722**		TUBE-HEAT SHRINK	
		1	**1S-7251**	1	TERMINAL-CABLE (00-GA, 1/2-IN SCREW)	
E		1	**5P-0761**		CABLE (00-GA, RED) (356-CM)	
		1	**9G-0004**	1	COVER AS-TERMINAL (RED)	
		1	**8L-8413**	1	STRAP-CABLE	
		1	**8C-5917**	1	TERMINAL AS-BATTERY (POSITIVE)	
		1	**1M-6119**	1	BOLT (5/16-18X1.375-IN)	
		1	**1M-6120**	1	NUT (5/16-18-THD)	
	9	1	**4K-8864**	6	CLIP	
M	10	1	**5C-7261**	1	NUT (M8X1.25-THD)	
	11	1	**6K-8178**	1	CLIP	
M	12	1	**8T-4133**	1	NUT (M10X1.5-THD)	
	13	1	**8T-4226**	1	WASHER-PLATED (10.5X45X3-MM THK)	
	14	1	**204-1673**	2	STRAP-CABLE	

B-USE AS REQUIRED
D-ORDER BY THE METER
E-ORDER BY THE CENTIMETER
M-METRIC PART

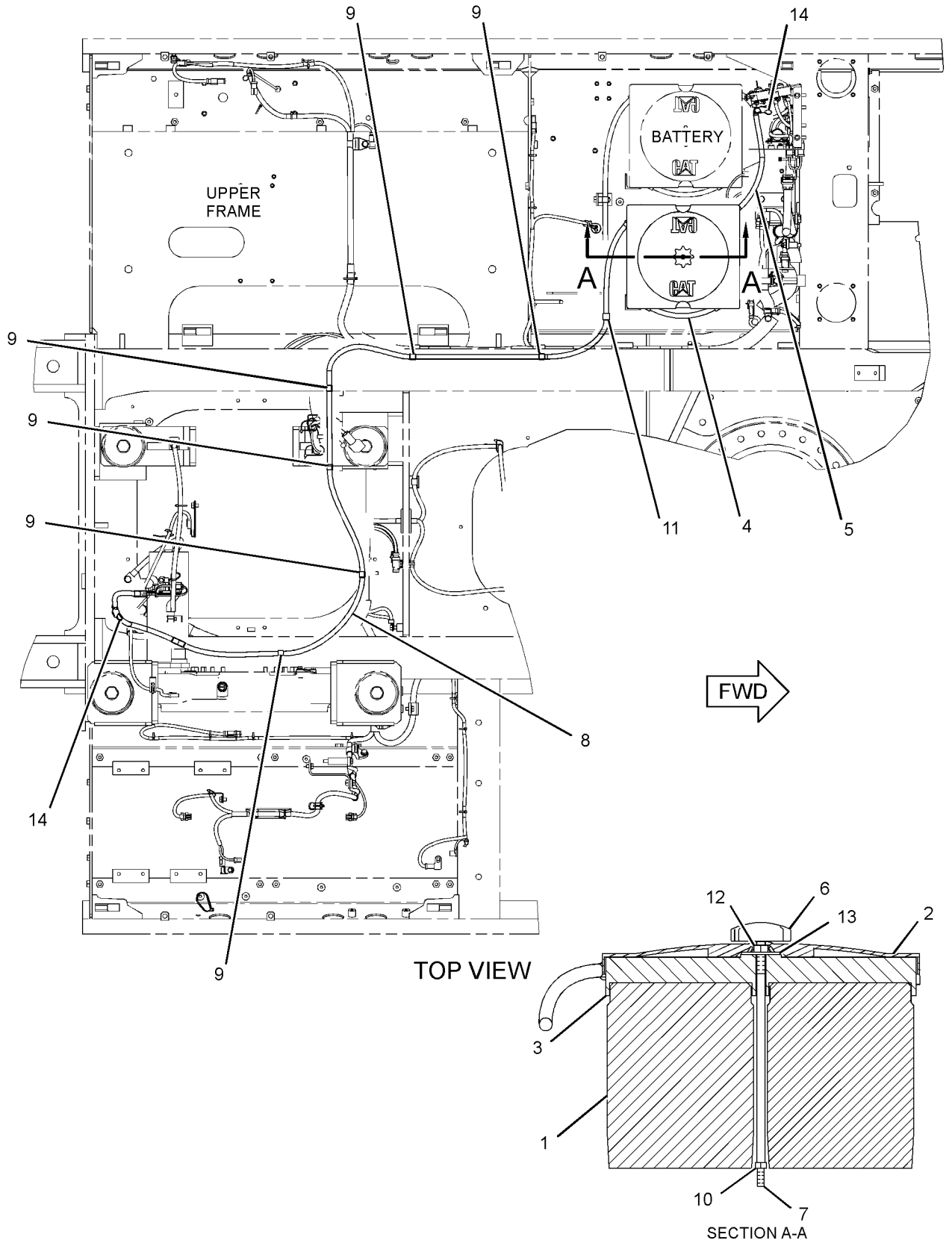

GRAPHIC #1 **<END>** g01736937

ELECTRICAL AND STARTING SYSTEM

306-8527 BATTERY & WIRING GP

S/N: D3P1-UP; M4T1-UP

PART OF 314-3709 CHASSIS AR

SMCS-1401, 1402, 1408 **i03601367**

NOTE	REF NO	GRAPHIC REF	PART NUMBER	QTY	PART NAME 1 2 3 4 5 6 (PRODUCT LEVEL)	SEE PAGE
	1	6	**2G-8767**	2	WASHER (10.5X60X3-MM THK)	
C	2	1,2,3, 4,5,6	**3S-2093**	43	STRAP-CABLE	
	3	1	**263-9574**	2	BATTERY (12-VOLT, MAINTENANCE FREE)	
					(EACH INCLUDES)	
		1	**123-1373**	6	CAP AS-FILLER (BATTERY)	
	4	2	**4N-0205**	2	SPACER (0.42X0.75X0.6-IN THK)	
	5	1	**5I-8270**	1	COVER-BATTERY	
	6	6	**6G-2256**	2	CLAMP	
	7	2,6	**6G-2263**	3	SPACER (10.5X19X28.5-MM THK)	
	8	1	**6W-6005**	1	HOLD-DOWN-BATTERY	
	9	3,6	**7I-2673**	5	STRAP-CABLE	
	10	2,3,4, 6	**7K-1181**	25	STRAP-CABLE	
	11	1	**7Y-5456**	2	GROMMET	
	12	5	**7Y-8165**	2	GROMMET	
	13	2	**087-4587**	1	GROMMET	
	14	6	**091-9035**	1	SPACER (11X25X20-MM THK)	
	15	1	**107-8618**	1	SENSOR GP-TEMPERATURE (AMBIENT AIR)	
		1	**102-8803**	1	KIT-RECEPTACLE (3-PIN)	
					(INCLUDES RECEPTACLE AS & WEDGE)	
		1	**186-3735**	3	PIN-CONNECTOR (16-GA TO 18-GA)	
E		1	**112-4550**		SLEEVE (31-CM)	
	16	1,2,5, 6	**111-4836**	9	CLIP	
	17	1,2,3, 5,6	**111-4837**	12	CLIP	
	18	2,4,6	**111-4838**	16	CLIP	
	19	2,4,6	**111-4839**	16	STRAP	
C	20	1,2,3, 5,6	**116-0118**	13	CLIP	
	21	4	**128-8886**	1	STRAP AS-GROUND	
	22	6	**130-1433**	1	SPACER (11X25X17-MM THK)	
	23	2	**132-1806**	1	STRAP AS-GROUND	
	24	6	**148-5018**	1	GROMMET	
	25	1	**170-6929**	1	CABLE AS	
E		1	**5P-0761**		CABLE (00-GA, RED) (31-CM)	
		1	**9G-0002**	1	COVER-TERMINAL (RED)	
		1	**8L-8413**	1	STRAP-CABLE	
		1	**9G-0005**	1	COVER-TERMINAL (BLACK)	
		1	**8L-8413**	1	STRAP-CABLE	
		1	**8C-5918**	1	TERMINAL AS (NEGATIVE)	
		1	**1M-6119**	1	BOLT (5/16-18X1.375-IN)	
		1	**1M-6120**	1	NUT (5/16-18-THD)	
		1	**8T-9756**	1	TERMINAL AS (POSITIVE)	
		1	**1M-6119**	1	BOLT (5/16-18X1.375-IN)	
		1	**1M-6120**	1	NUT (5/16-18-THD)	
	26	4	**204-1611**	1	STRAP-CABLE	
	27	2	**204-1614**	1	BRACKET AS	
	28	1	**231-1827**	1	CABLE AS	
		1	**1S-7252**	1	TERMINAL-CABLE (00-GA, 3/8-IN SCREW)	
E		1	**5P-0747**		CABLE (00-GA, BLACK) (23-CM)	
		1	**9G-0003**	1	COVER AS-TERMINAL (BLACK) (BATTERY)	
		1	**8L-8413**	1	STRAP-CABLE	
		1	**9G-8909**	1	COVER-TERMINAL (BLACK) (DISCONNECT SWITCH)	
		1	**8T-9757**	1	TERMINAL AS-BATTERY (NEGATIVE)	
		1	**1M-6119**	1	BOLT (5/16-18X1.375-IN)	

306-8527 **BATTERY & WIRING GP** *(contd.)* **i03601367**

NOTE	REF NO	GRAPHIC REF	PART NUMBER	QTY	PART NAME 1 2 3 4 5 6 (PRODUCT LEVEL)	SEE PAGE
		1	**1M-6120**	1	NUT (5/16-18-THD)	
	29	1	**238-2501**	1	KNOB	
	30	1	**238-2528**	1	ROD	
	31	1	**251-0153**	1	BRACKET AS	
	32	2	**251-0467**	1	BRACKET AS	
	33	2	**251-0625**	1	CABLE AS	
		2	**1S-7251**	1	TERMINAL-CABLE (00-GA, 1/2-IN SCREW)	
E		2	**5P-0761**		CABLE (00-GA, RED) (413-CM)	
		2	**8N-0869**	1	COVER-TERMINAL (RED) (STARTING MOTOR)	
		2	**9G-0004**	1	COVER AS-TERMINAL (RED) (BATTERY)	
		2	**8L-8413**	1	STRAP-CABLE	
		2	**8C-5917**	1	TERMINAL AS-BATTERY (POSITIVE)	
		2	**1M-6120**	1	NUT (5/16-18-THD)	
		2	**1M-6119**	1	BOLT (5/16-18X1.375-IN)	
	34	3	**259-5130**	1	BRACKET AS	
	35	3	**259-5132**	1	BRACKET AS	
	36	4	**291-7780**	1	BRACKET AS	
C	37	2	**306-8797**	1	HARNESS AS-CHASSIS	
	38	3,4	**132-5789**	8	CLIP	
	39	2	**4K-8864**	2	CLIP	
C	40	3	**4P-7428**	2	CLIP	
C	41	3	**5I-8748**	1	SPACER (11X18X5-MM THK)	
M	42	1	**5C-7261**	1	NUT (M8X1.25-THD)	
M	43	2	**5C-7883**	4	BOLT-SOCKET HEAD (M6X1X16-MM)	
C	44	3	**5P-4116**	2	WASHER-HARD (8.8X20.5X2-MM THK)	
	45	4	**5P-8439**	1	GROMMET	
	46	2,6	**6K-8178**	6	CLIP	
M	47	3	**7X-2548**	1	BOLT (M12X1.75X16-MM)	
CM	48	2,5,6	**7X-2621**	5	BOLT (M10X1.5X12-MM)	
C	49	3	**8B-6561**	1	SPACER (5.56X22.22X55.58-MM THK)	
	50	2	**8M-2770**	1	CLIP	
	51	1,2,3, 4,5,6	**8T-4121**	62	WASHER-HARD (11X21X2.5-MM THK)	
M	52	1	**8T-4133**	1	NUT (M10X1.5-THD)	
CM	53	1,2,3, 4	**8T-4136**	11	BOLT (M10X1.5X25-MM)	
M	54	1,2,3, 5,6	**8T-4137**	20	BOLT (M10X1.5X20-MM)	
M	55	3	**8T-4172**	1	BOLT (M10X1.5X80-MM)	
C	56	3	**306-8803**	1	BRACKET AS	
M	57	6	**8T-4182**	1	BOLT (M10X1.5X45-MM)	
M	58	2	**8T-4185**	1	BOLT (M10X1.5X50-MM)	
M	59	2	**8T-4186**	1	BOLT (M10X1.5X40-MM)	
M	60	2,3,4, 5,6	**8T-4191**	9	BOLT (M10X1.5X16-MM)	
M	61	1,2	**8T-4195**	4	BOLT (M10X1.5X30-MM)	
M	62	2,6	**8T-4196**	7	BOLT (M10X1.5X35-MM)	
M	63	3	**8T-4199**	1	BOLT (M8X1.25X12-MM)	
	64	3	**8T-4223**	1	WASHER-HARD (13.5X25.5X3-MM THK)	
	65	1	**8T-4226**	1	WASHER-PLATED (10.5X45X3-MM THK)	
M	66	6	**8T-5005**	1	BOLT (M10X1.5X70-MM)	
M	67	6	**8T-6466**	1	BOLT (M10X1.5X60-MM)	
	68	2	**9X-8256**	4	WASHER (6.6X12X2-MM THK)	
	69	4	**204-1673**	1	STRAP-CABLE	

C-CHANGE FROM PREVIOUS TYPE
E-ORDER BY THE CENTIMETER
M-METRIC PART

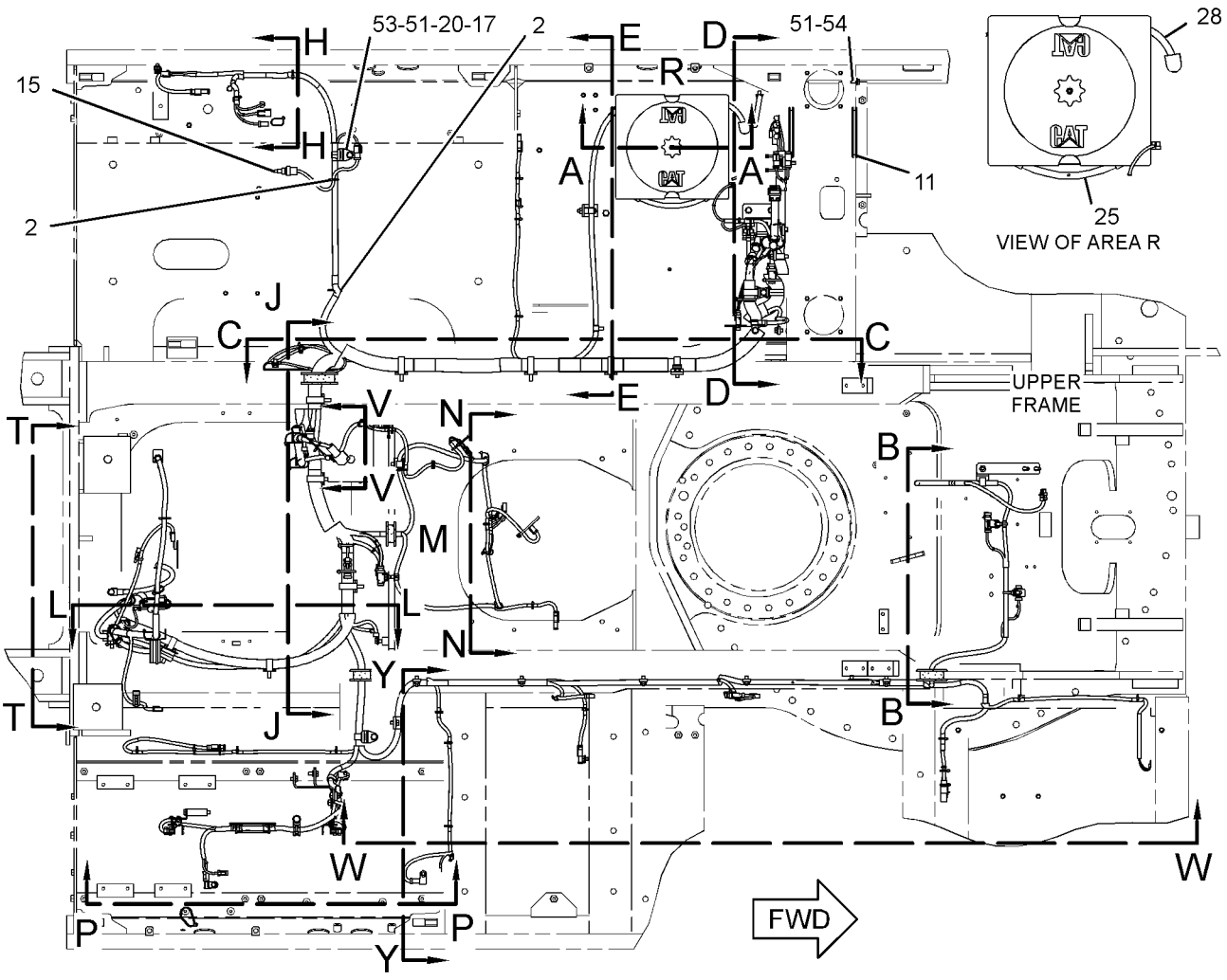

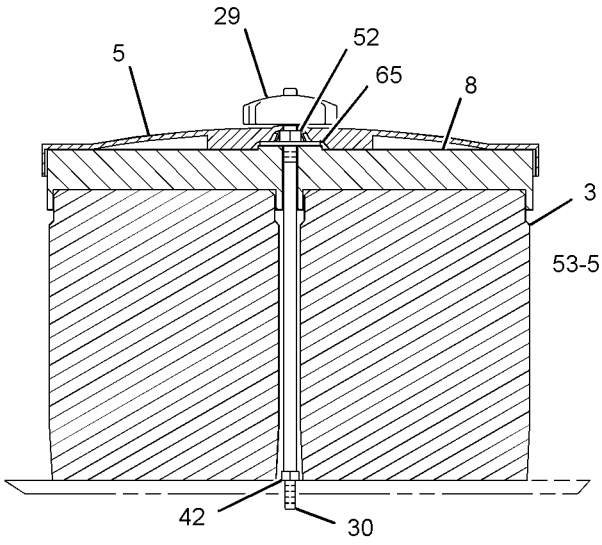

SECTION A-A

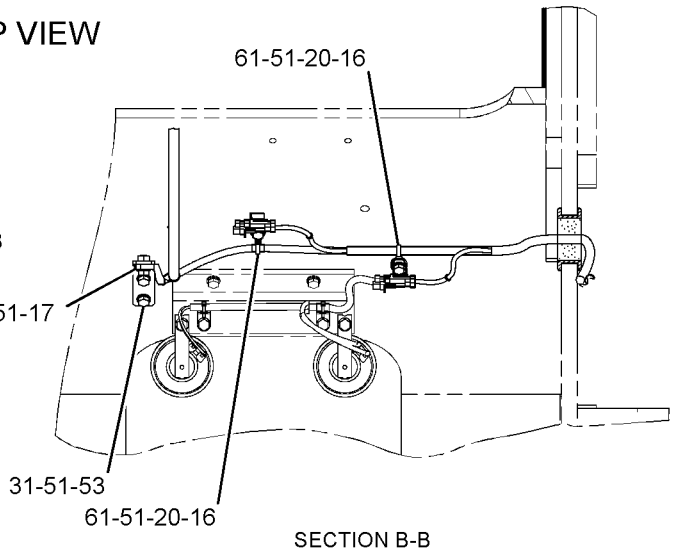

SECTION B-B

REFER TO ALL ILLUSTRATIONS OF THIS GROUP FOR AUXILIARY VIEWS

GRAPHIC #1

g01603953

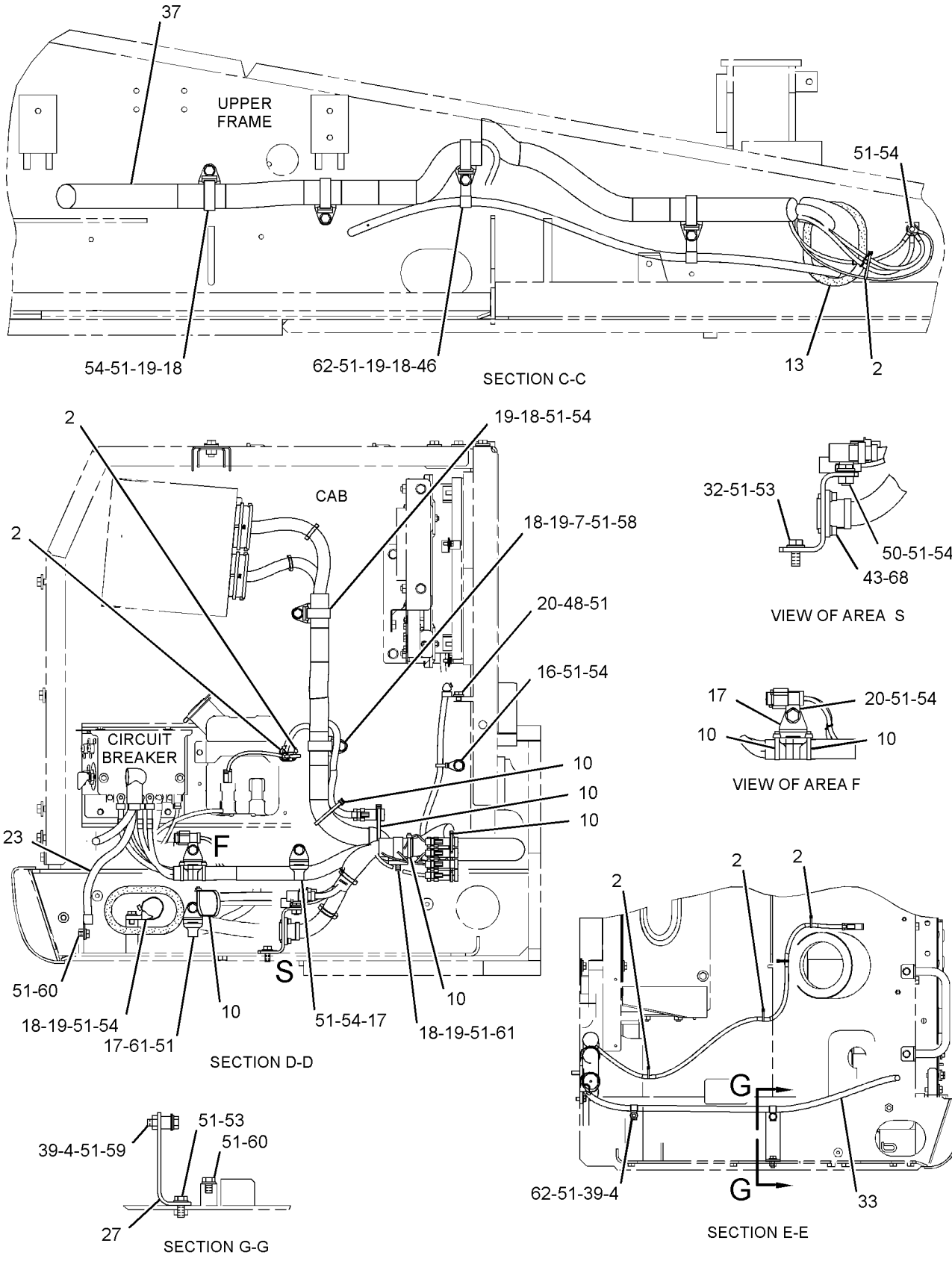

GRAPHIC #2

g01827454

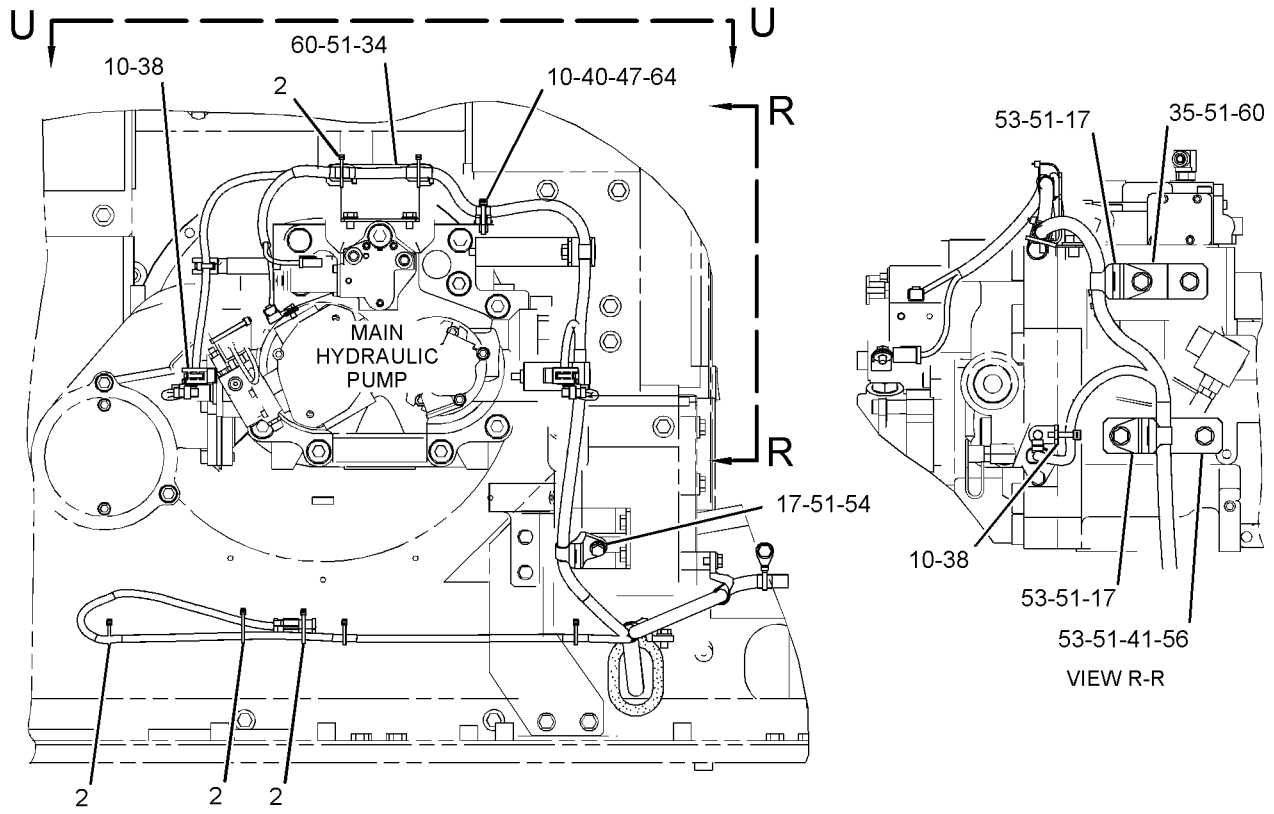

GRAPHIC #3 g01604496

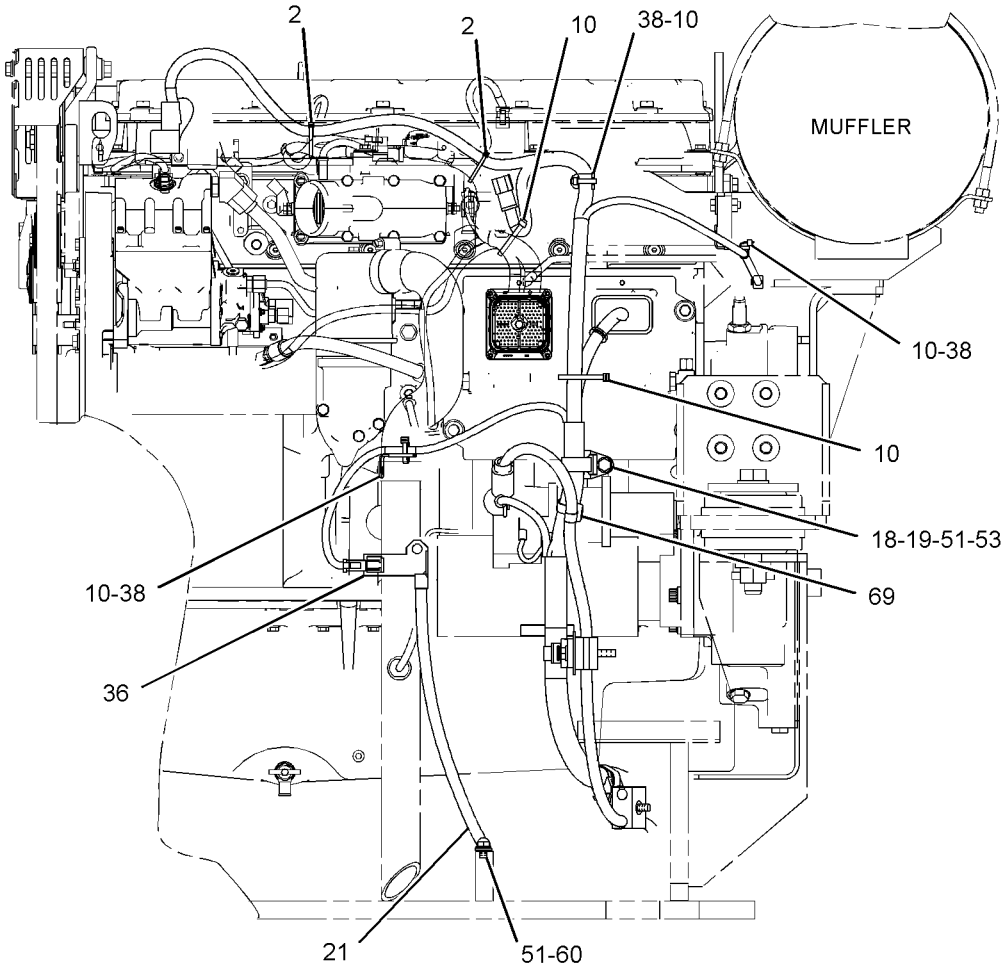

VIEW T-T

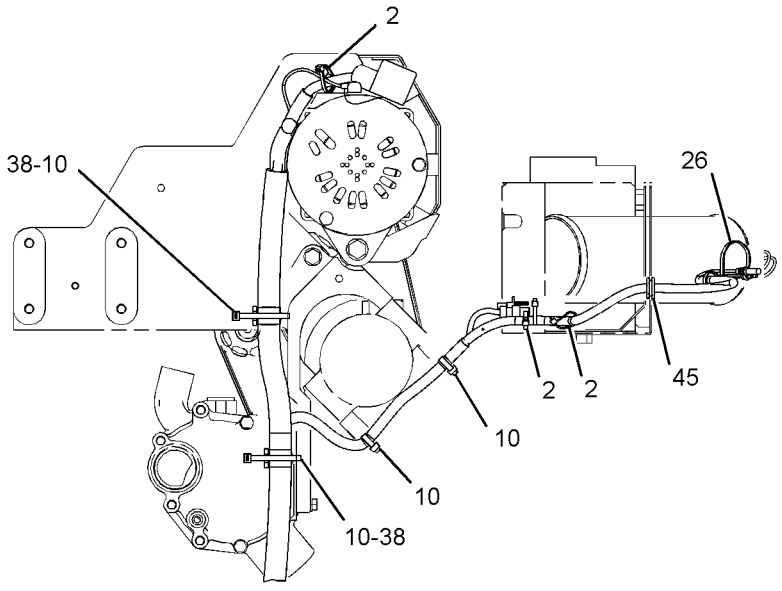

VIEW V-V

GRAPHIC #4 g01827455

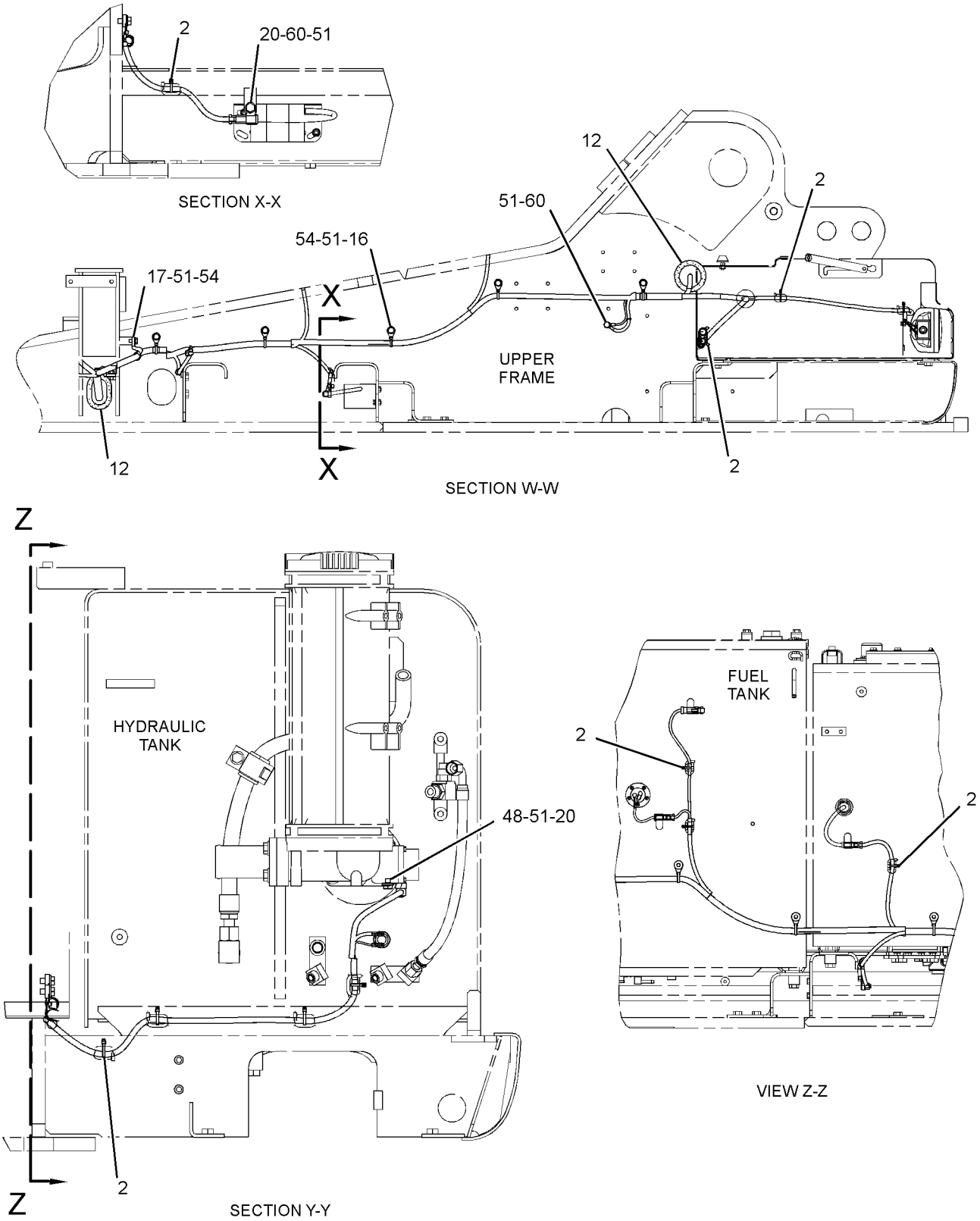

GRAPHIC #5

g01827456

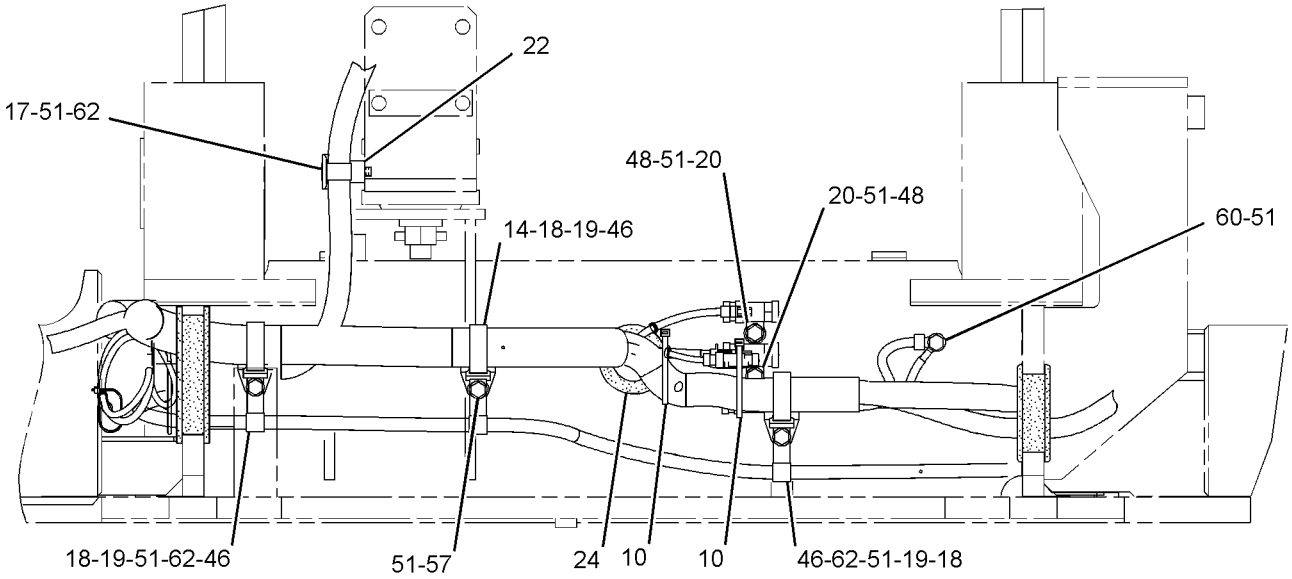

SECTION J-J

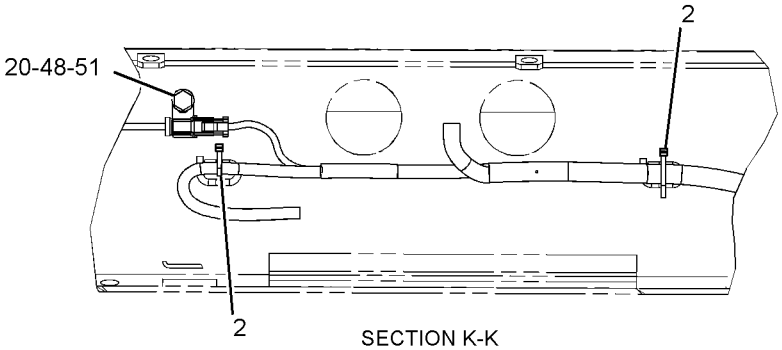

SECTION K-K

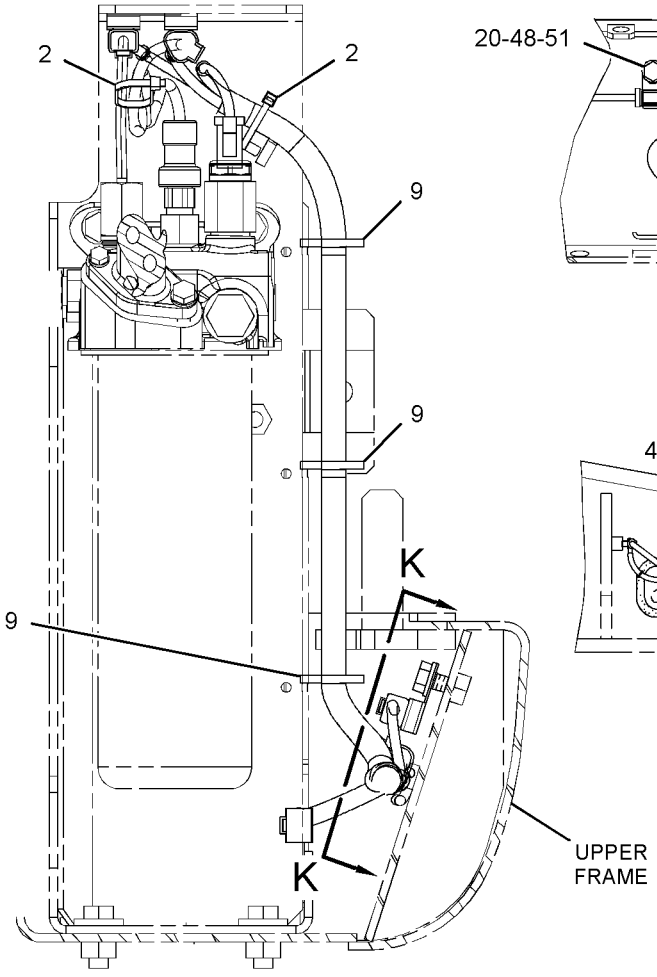

SECTION H-H

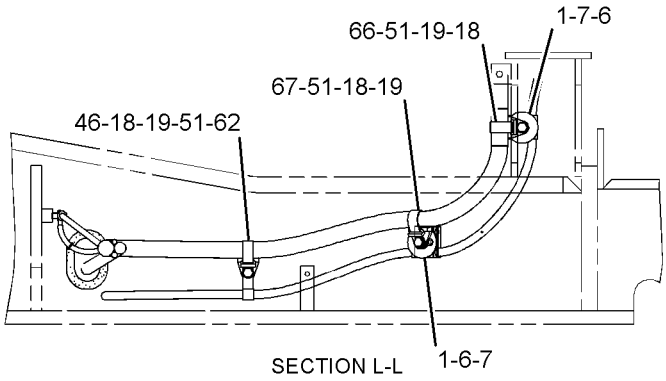

SECTION L-L

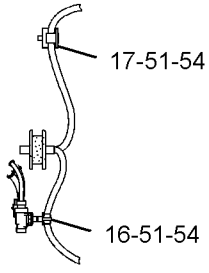

VIEW OF AREA M

GRAPHIC #6 **<END>** g01827457

9W-0742 BLOCK GP-JUNCTION–BATTERY

S/N: D3P1-UP; M4T1-UP
PART OF 251-0621 WIRING GP-AUX START RECEPTACLE
AN ATTACHMENT

SMCS-7426 **i02203621**

NOTE	REF NO	GRAPHIC REF	PART NUMBER	QTY	PART NAME 1 2 3 4 5 6 (PRODUCT LEVEL)	SEE PAGE
	1	1	**8C-6358**	1	BLOCK GP-JUNCTION (BATTERY)	
	2	1	**8T-3519**	3	BOLT-BRONZE (1/2-13X2-IN)	
	3	1	**8C-6921**	3	NUT-SPACER (1/2-13-THD)	
	4	1	**8T-3518**	6	NUT-FULL (1/2-13-THD)	
	5	1	**7F-0560**	6	WASHER (0.516X0.938X0.101-IN THK)	
BD	6	1	**6V-2722**		TUBE-HEAT SHRINK	

B-USE AS REQUIRED
D-ORDER BY THE METER

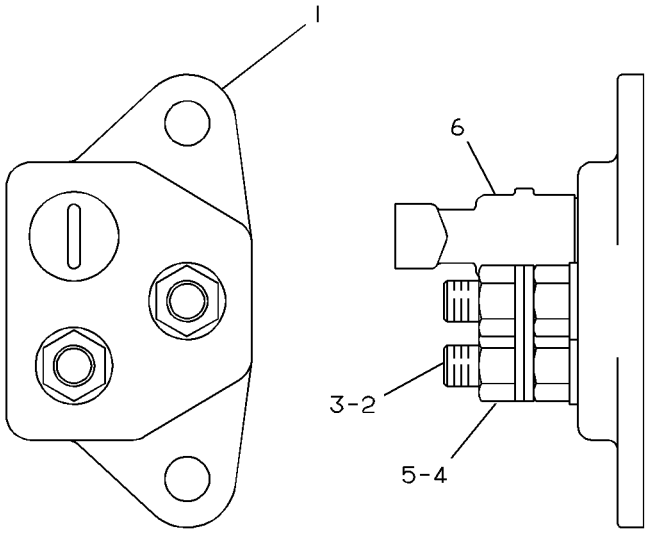

GRAPHIC #1 **<END>** g00082186

313-7833 CAMERA & MOUNTING GP–

WORK AREA VISUAL SYSTEM, REAR

S/N: M4T1-UP

PART OF 327-3329 CAMERA & MOUNTING GP

AN ATTACHMENT

SMCS-7348 **i03682664**

NOTE	REF NO	GRAPHIC REF	PART NUMBER	QTY	PART NAME 1 2 3 4 5 6 (PRODUCT LEVEL)	SEE PAGE
	1	1	**3S-2093**	1	STRAP-CABLE	
Y	2	1	**286-4271**	1	CAMERA GP (12-VOLT, 24-VOLT)	193
	3	1	**320-5392**	1	BRACKET AS	
M	4	1	**5C-9553**	2	BOLT (M6X1X16-MM)	
	5	1	**9X-8256**	2	WASHER (6.6X12X2-MM THK)	

M-METRIC PART
Y-SEPARATE ILLUSTRATION

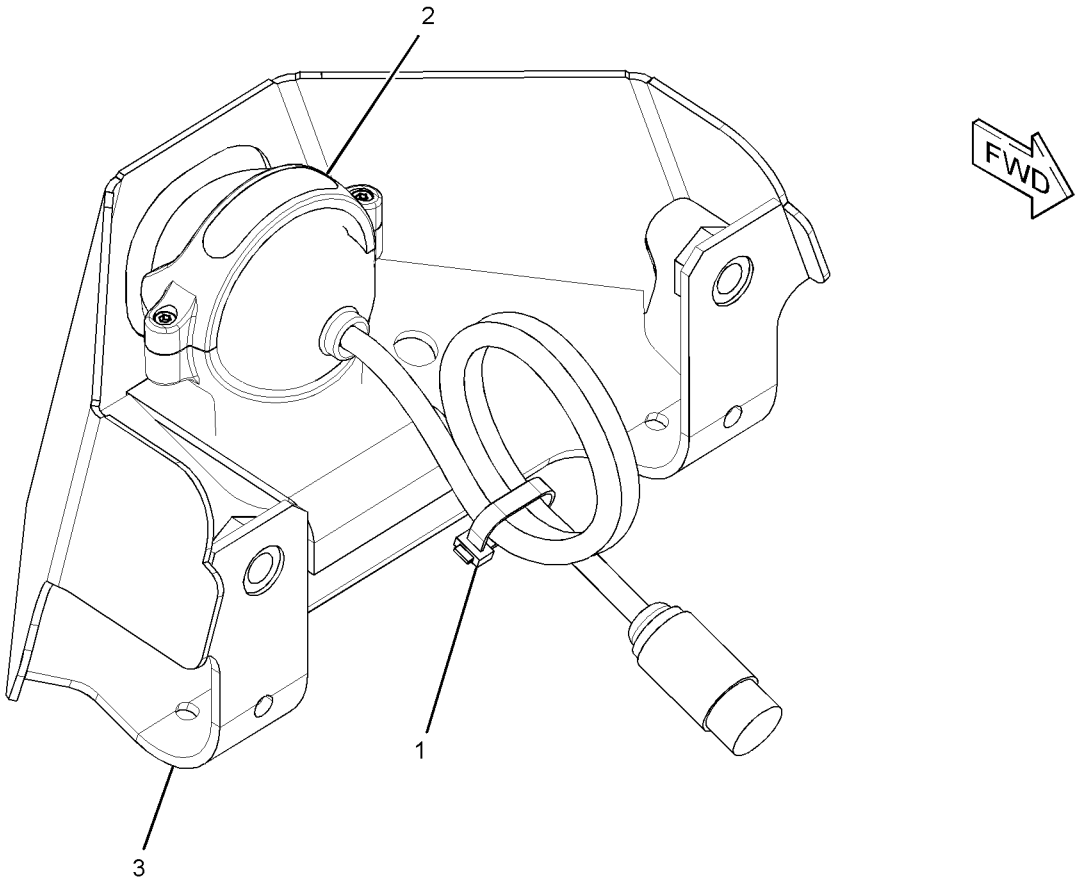

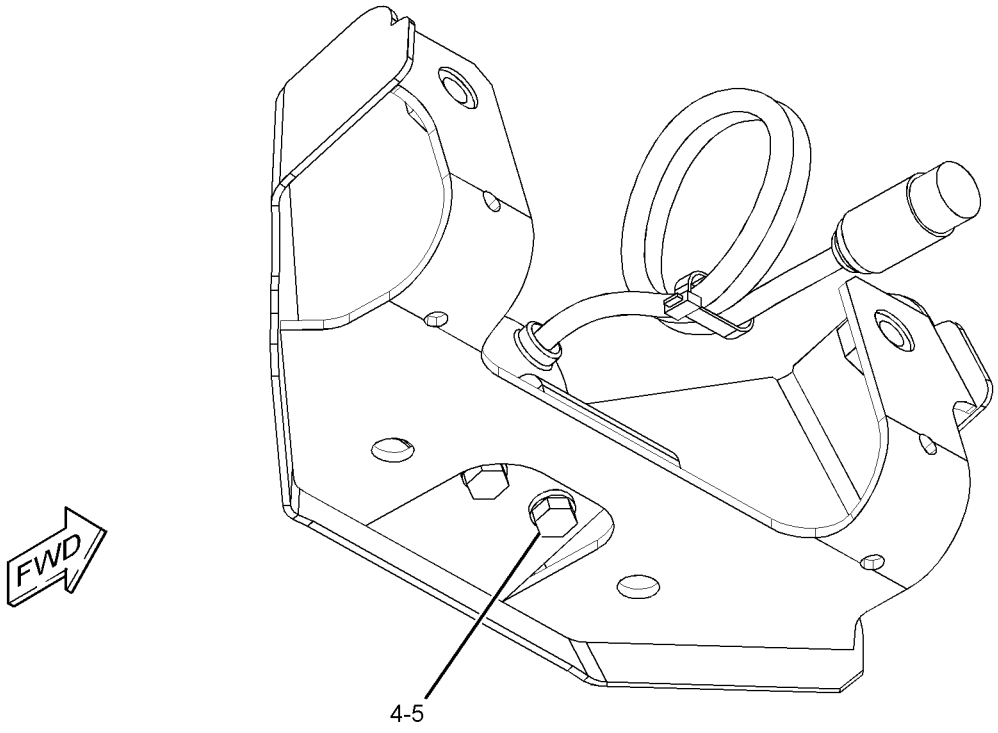

GRAPHIC #1 **<END>** g01515863

327-3329 CAMERA & MOUNTING GP–
WORK AREA VISUAL SYSTEM, REAR
S/N: M4T1-UP
PART OF 329-6574 CAMERA AR
AN ATTACHMENT

SMCS-7348 **i03682643**

NOTE	REF NO	GRAPHIC REF	PART NUMBER	QTY	PART NAME 1 2 3 4 5 6 (PRODUCT LEVEL)	SEE PAGE
Y	1	1	*313-7833*	1	CAMERA & MOUNTING GP (WORK AREA VISUAL SYSTEM, REAR)	189
	2	1	**320-5396**	1	COVER	
	3	1	**8T-4121**	4	WASHER-HARD (11X21X2.5-MM THK)	
M	4	1	**8T-4137**	4	BOLT (M10X1.5X20-MM)	

M-METRIC PART
Y-SEPARATE ILLUSTRATION

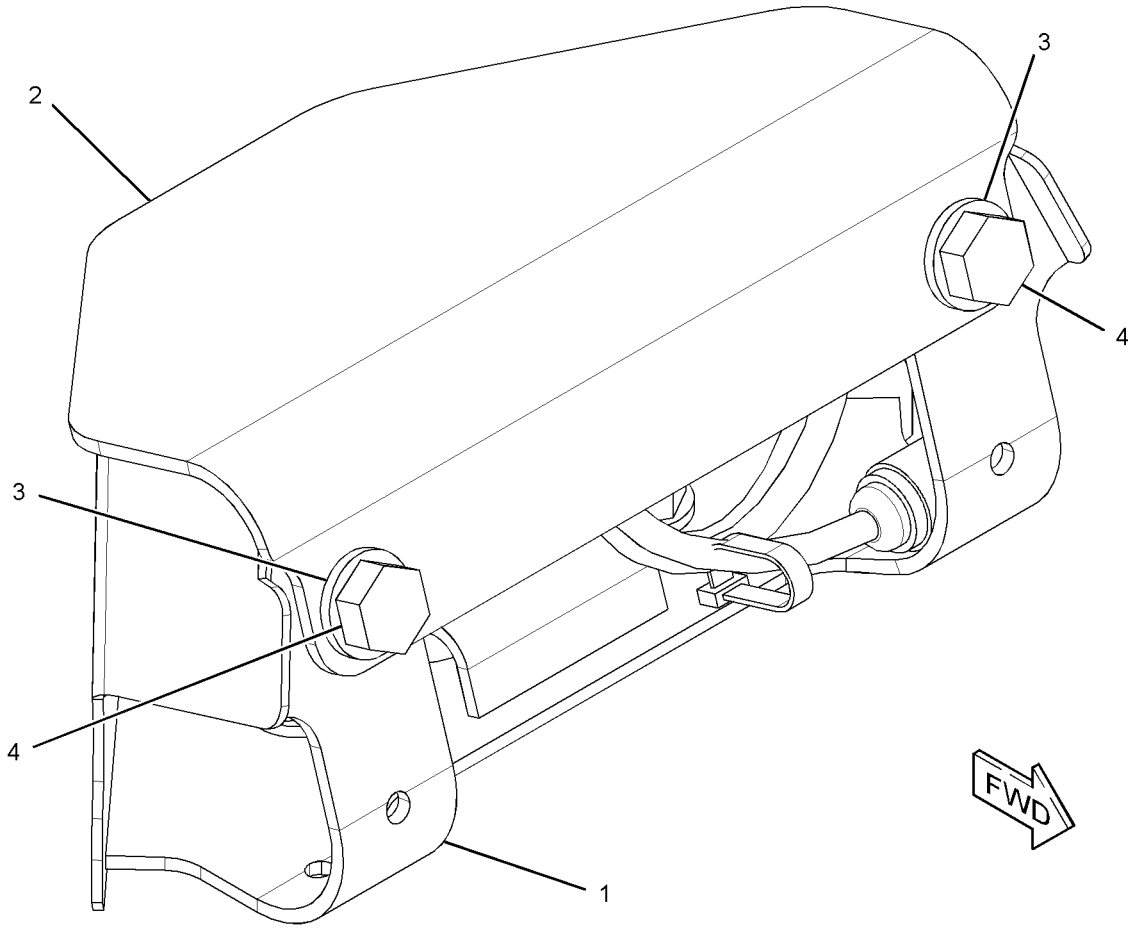

GRAPHIC #1 **<END>** g01609019

329-6574 CAMERA AR—WORK AREA VISUAL SYSTEM, REAR

S/N: M4T1-UP

AN ATTACHMENT

SMCS-7348 **i03682620**

NOTE	PART NUMBER	QTY	PART NAME 1 2 3 4 5 6 (PRODUCT LEVEL)	SEE PAGE
Y	*327-3329*	1	CAMERA & MOUNTING GP (WORK AREA VISUAL SYSTEM, REAR)	191
Y	*303-2787*	1	FILM GP (WORK AREA VISUAL SYSTEM, REAR)	1094
Y	*328-0048*	1	WIRING GP-CAB (REAR VISION CAMERA)	307
Y	*306-8721*	1	WIRING GP-CAMERA (WORK AREA VISUAL SYSTEM)	310

Y-SEPARATE ILLUSTRATION

<END>

286-4271 CAMERA GP

S/N: M4T1-UP
12/24-VOLT
PART OF 313-7833 CAMERA & MOUNTING GP
AN ATTACHMENT

SMCS-7348 **i03682726**

NOTE	REF NO	GRAPHIC REF	PART NUMBER	QTY	PART NAME 1 2 3 4 5 6 (PRODUCT LEVEL)	SEE PAGE
					AVAILABLE REPAIR KIT(S):	
			251-4162	1	KIT-BRACKET (CAMERA)	
					(KIT INCLUDES BRACKET, BOLTS, LOCKNUTS, SOCKET BOLTS, GASKET, & ALLEN KEY)	

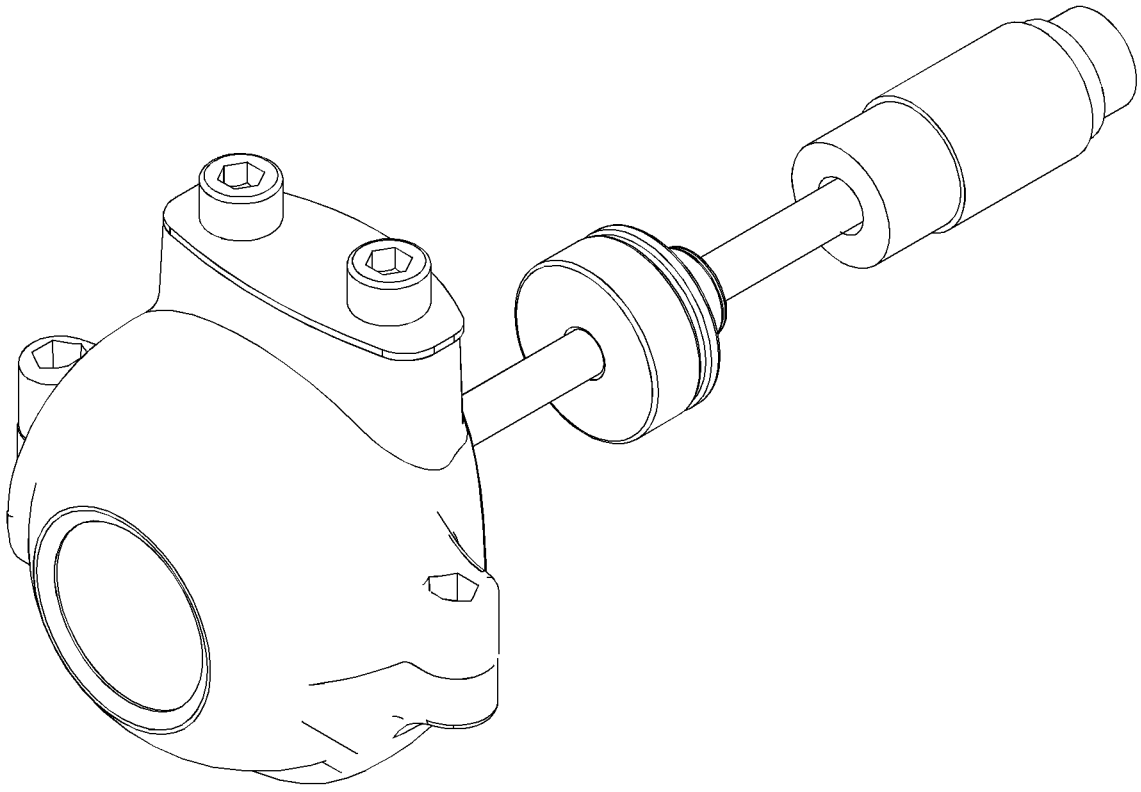

GRAPHIC #1 **<END>** g01356476

309-5842 CONTROL & MTG GP-COMMUNICATION–

PRODUCT LINK 300

S/N: D3P1-UP; M4T1-UP

PART OF 314-3533 INSTALLATION AR-COMMUNICATION

AN ATTACHMENT

SMCS-7606 **i03025066**

NOTE	REF NO	GRAPHIC REF	PART NUMBER	QTY	PART NAME 1 2 3 4 5 6 (PRODUCT LEVEL)	SEE PAGE
	1	1	**8C-5608**	4	SPACER (6.5X9.5X25.4-MM THK)	
	2	1	**9X-9896**	8	MOUNT (ISOLATION)	
	3	1	**260-2042**	1	BRACKET AS	
Y	4	1	*262-1421*	1	ELECTRONICS GP-COMMUNICATION (PRODUCT LINK 300)	200
M	5	1	**8C-8451**	4	BOLT (M6X1X40-MM)	
	6	1	**9X-6165**	4	WASHER (6.5X22X2.5-MM THK)	

M-METRIC PART
Y-SEPARATE ILLUSTRATION

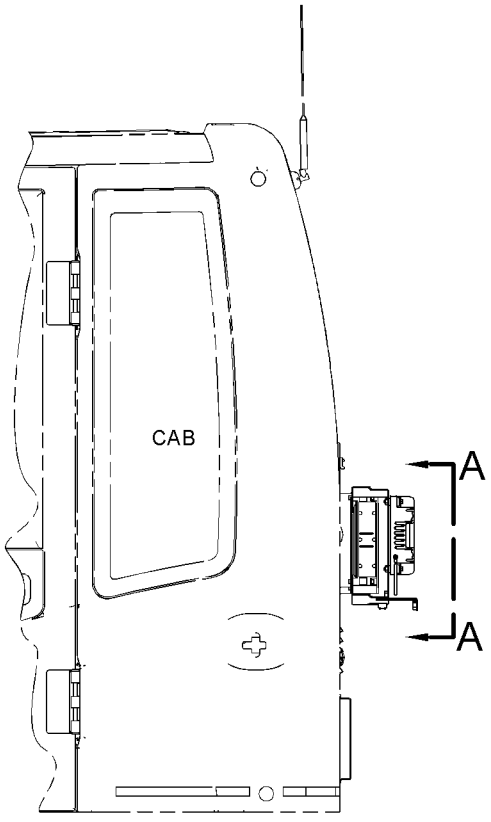

LEFT SIDE VIEW

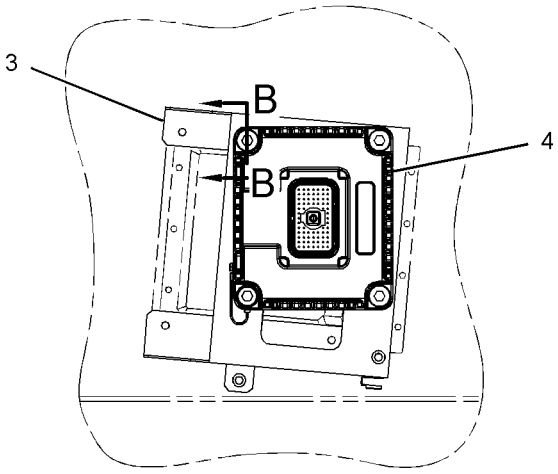

VIEW A-A

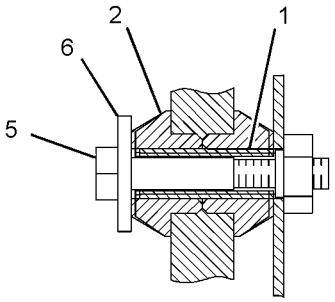

SECTION B-B

GRAPHIC #1 **<END>** g01447041

309-5887 CONTROL & MTG GP-COMMUNICATION–

PRODUCT LINK 121SR

S/N: D3P1-UP; M4T1-UP

PART OF 314-3533 INSTALLATION AR-COMMUNICATION

AN ATTACHMENT

SMCS-7606 **i03485543**

NOTE	REF NO	GRAPHIC REF	PART NUMBER	QTY	PART NAME 1 2 3 4 5 6 (PRODUCT LEVEL)	SEE PAGE
	1	1	**3S-2093**	6	STRAP-CABLE	
	2	2	**7K-1181**	4	STRAP-CABLE	
Y	3	1	**263-9088**	1	RADIO GP-COMMUNICATION (PRODUCT LINK 121SR)	1040
	4	1	**270-5455**	1	BRACKET AS	
	5	1	**111-4836**	1	CLIP	
	6	1	**8T-4121**	1	WASHER-HARD (11X21X2.5-MM THK)	
M	7	1	**8T-4137**	1	BOLT (M10X1.5X20-MM)	
M	8	1	**8T-4138**	4	BOLT (M6X1X20-MM)	
M	9	1	**8T-4179**	4	BOLT (M12X1.75X20-MM)	
	10	1	**8T-4223**	4	WASHER-HARD (13.5X25.5X3-MM THK)	
	11	1	**9X-8256**	4	WASHER (6.6X12X2-MM THK)	
	12	2	**230-1340**	1	FILM-WARNING (PRODUCT LINK RADIO, U.S.)	
					–OR–	
		2	**230-1341**	1	FILM-WARNING (PRODUCT LINK RADIO, INTL)	
	13	2	**307-0047**	1	FILM-INFORMATION (PRODUCT LINK, READ OMM)	

M-METRIC PART
Y-SEPARATE ILLUSTRATION

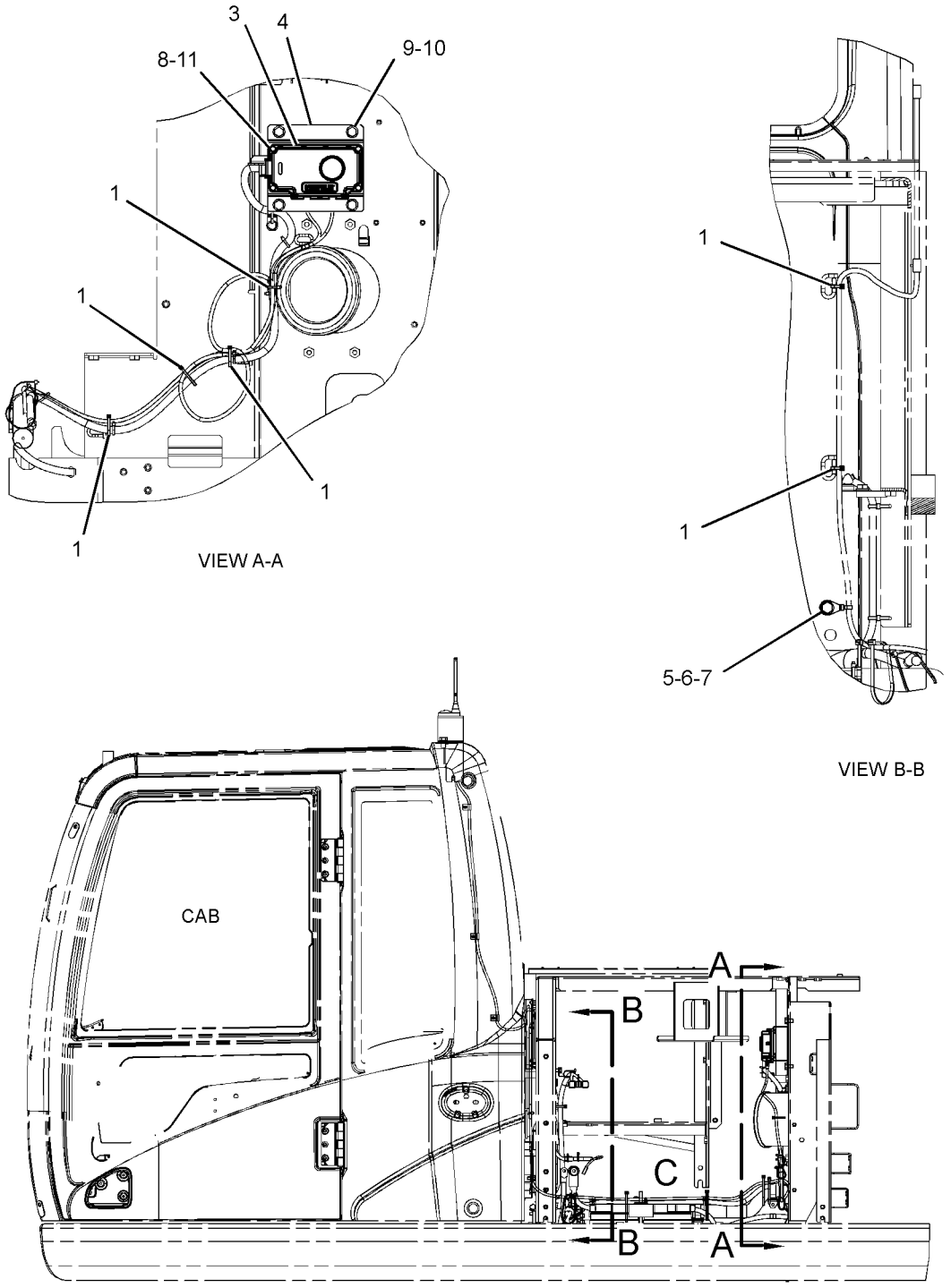

LEFT SIDE VIEW

REFER TO ALL ILLUSTRATIONS OF
THIS GROUP FOR AUXILIARY VIEWS.

GRAPHIC #1

g01508033

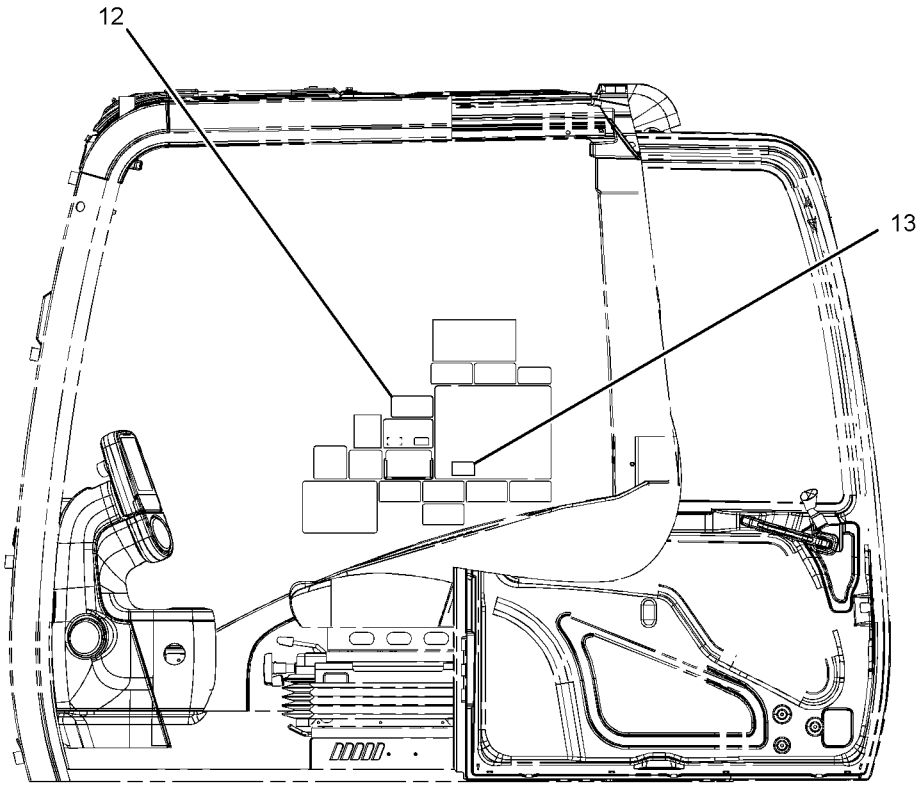

LEFT SIDE VIEW
(CAB)

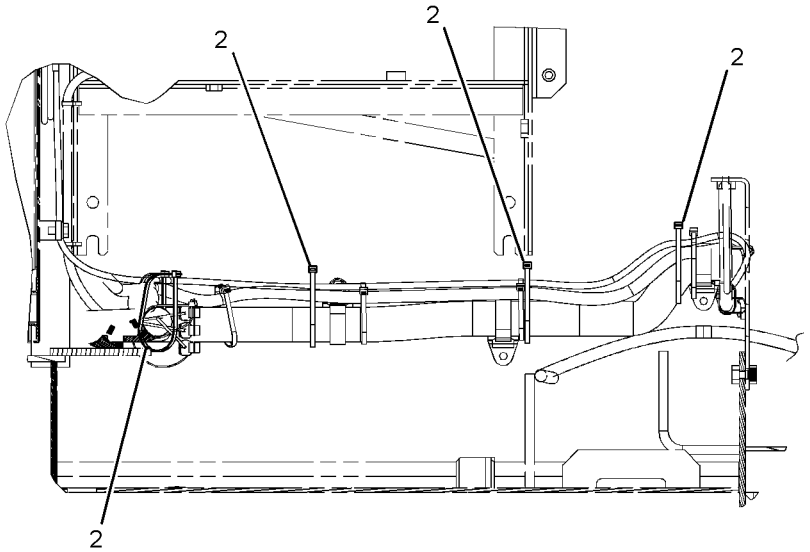

VIEW OF AREA C

GRAPHIC #2 **<END>** g01778673

253-4522 CONTROL & MTG GP-ENGINE ELEK

S/N: THX1-UP
FUEL COOLED
PART OF 240-1861, 301-3082 ENGINE AR-COMPLETE

SMCS-1901 **i03169487**

NOTE	REF NO	GRAPHIC REF	PART NUMBER	QTY	PART NAME 1 2 3 4 5 6 (PRODUCT LEVEL)	SEE PAGE
	1	1	**8T-9655**	8	MOUNT-ISOLATION	
	2	1	**101-3128**	4	SPACER-SPECIAL	
M	3	1	**143-9392**	2	STUD (M8X1.25-THD)	
R	5	1	**255-5285**	1	CONTROL GP-UNPROGRAMMED (ENGINE)	
	6	1	**233-0891**	1	BRACKET AS	
M	7	1	**5P-8347**	2	BOLT (M8X1.25X70-MM)	
	8	1	**9M-1974**	4	WASHER-HARD (8.8X16X2-MM THK)	
	9	1	**9N-0869**	4	WASHER-HARD (8.8X25.5X2-MM THK)	

M-METRIC PART
R-REMFG PART MAY BE AVAILABLE

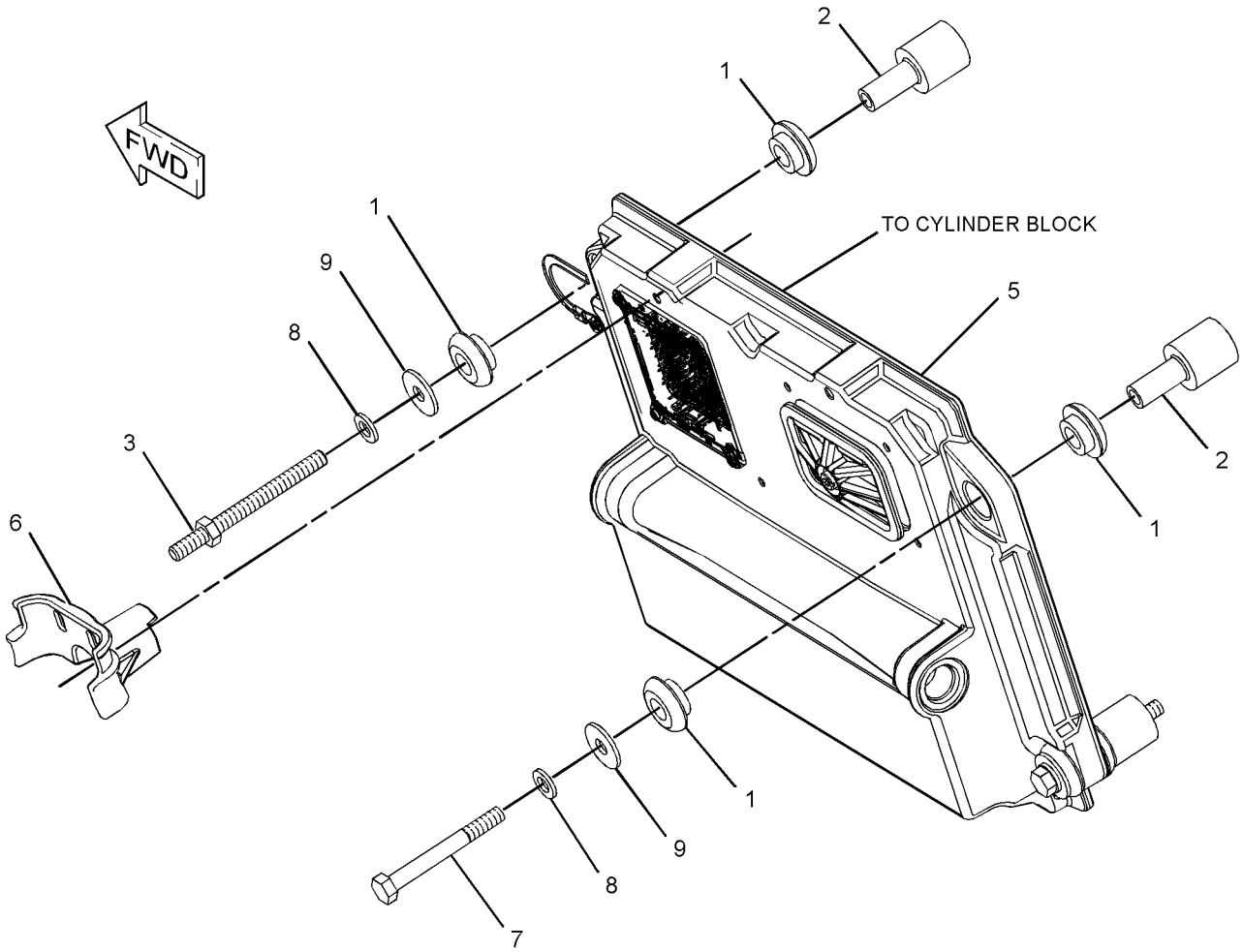

GRAPHIC #1 **<END>** g01178433

221-8872 CONTROL & MTG GP-MACHINE

S/N: D3P1-UP; M4T1-UP

PART OF 229-9072 OPERATOR AR

SMCS-1931, 7600 **i02489587**

NOTE	REF NO	GRAPHIC REF	PART NUMBER	QTY	PART NAME 1 2 3 4 5 6 (PRODUCT LEVEL)	SEE PAGE
	1	1	**221-8874**	1	CONTROL GP-UNPROGRAMMED	
M	2	1	**9X-2480**	4	BOLT (M6X1X45-MM)	
	3	1	**9X-8256**	4	WASHER (6.6X12X2-MM THK)	

M-METRIC PART

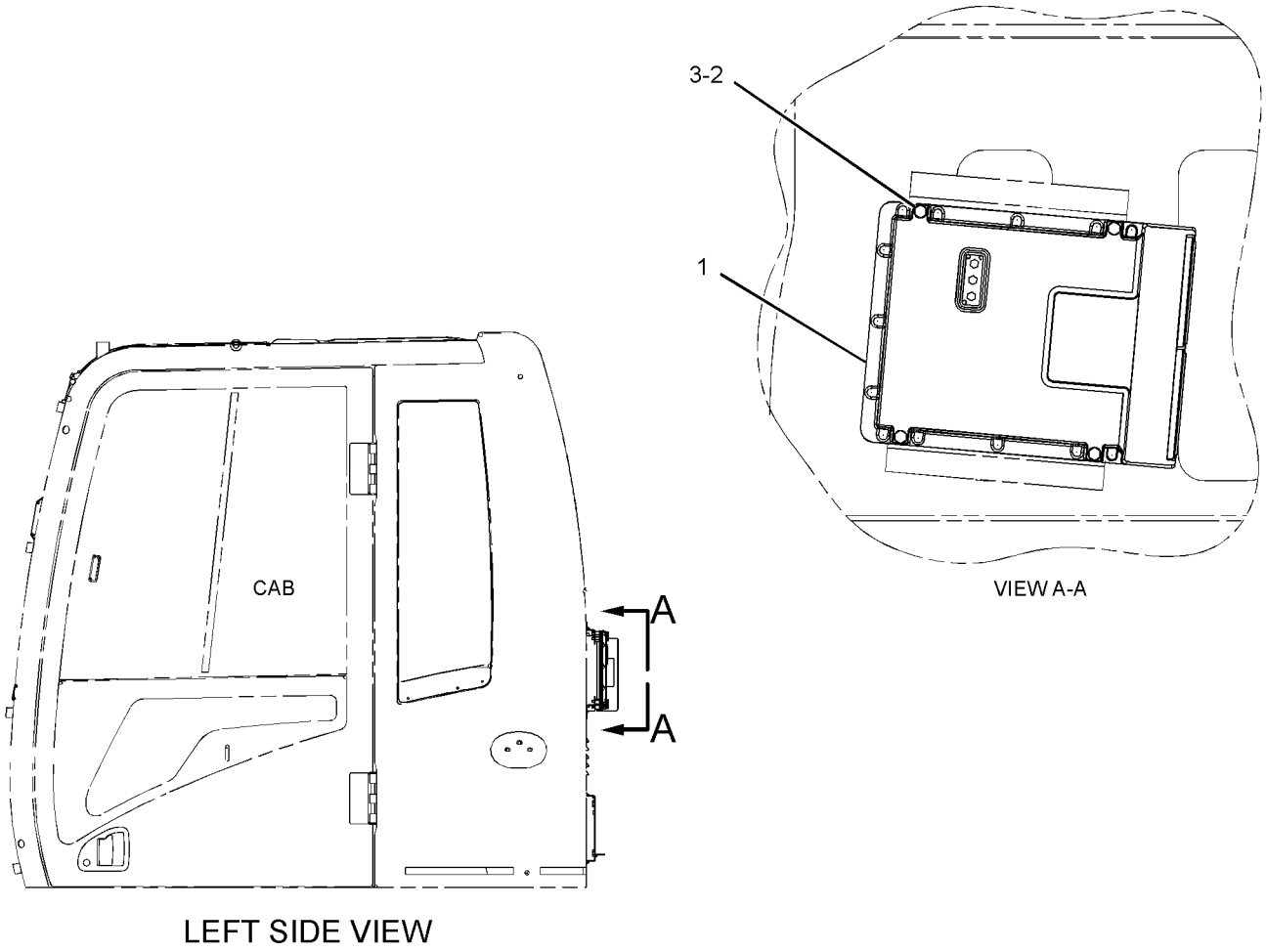

VIEW A-A

LEFT SIDE VIEW

GRAPHIC #1 **<END>** g01150750

262-1421 ELECTRONICS GP-COMMUNICATION–
PRODUCT LINK 300
S/N: D3P1-UP; M4T1-UP
PART OF 309-5842 CONTROL & MTG GP-COMMUNICATION
AN ATTACHMENT

SMCS-7606, 7610, 7620 **i03601391**

NOTE	PART NUMBER	QTY	PART NAME 1 2 3 4 5 6 (PRODUCT LEVEL)	SEE PAGE
	330-3409	1	SOFTWARE GP-COMMUNICATION (PRODUCT LINK 300)	
			-OR-	
	330-3410	1	SERVICE GP-COMMUNICATION (PRODUCT LINK 300)	
			(OPTIONAL SERVICE REPLACEMENT)(INCLUDES CONTROL GP & SOFTWARE)	
	7X-6315	1	STRAP AS-GROUND	
	126-7574	1	SCREW-PAN HEAD (8-32X9.52-MM)	
	134-4126	1	WASHER (4.52X8.28X0.76-MM THK)	

<END>

297-4426 ELECTRONICS GP-MACHINE–HIGH POWER
S/N: D3P1-UP; M4T1-UP
PART OF 314-3698, 314-3699 GENERAL AR

SMCS-7610, 7620 **i03678340**

NOTE	PART NUMBER	QTY	PART NAME 1 2 3 4 5 6 (PRODUCT LEVEL)	SEE PAGE
	327-7535	1	SOFTWARE GP-MACHINE	
			-OR-	
	327-7536	1	CONTROL GP-ELECTRONIC	
			(OPTIONAL SERVICE REPLACEMENT) (INCLUDES CONTROL GP & SOFTWARE)	

<END>

221-8861 ELECTRONICS GP-MONITOR
S/N: D3P1-UP; M4T1-UP
PART OF 314-3698, 314-3699 GENERAL AR

SMCS-7490, 7601, 7610, 7620 **i03704643**

NOTE	PART NUMBER	QTY	PART NAME 1 2 3 4 5 6 (PRODUCT LEVEL)	SEE PAGE
	349-5410	1	SOFTWARE GP-MONITOR	
			–OR–	
	349-5408	1	SERVICE GP-MONITOR	
			(OPTIONAL SERVICE REPLACEMENT)(INCLUDES MONITOR GP & SOFTWARE)	

<END>

251-0526 FASTENER GP-WIRING HARNESS–STRAIGHT TRAVEL

S/N: D3P1-UP; M4T1-UP
PART OF 259-7176 PEDAL AR-AUXILIARY
AN ATTACHMENT

SMCS-1408, 7553 **i03601465**

NOTE	REF NO	GRAPHIC REF	PART NUMBER	QTY	PART NAME 1 2 3 4 5 6 (PRODUCT LEVEL)	SEE PAGE
	1	1	**3S-2093**	1	STRAP-CABLE	
	2	1	**116-0118**	1	CLIP	
M	3	1	**7X-2621**	1	BOLT (M10X1.5X12-MM)	
	4	1	**8T-4121**	1	WASHER-HARD (11X21X2.5-MM THK)	

M-METRIC PART

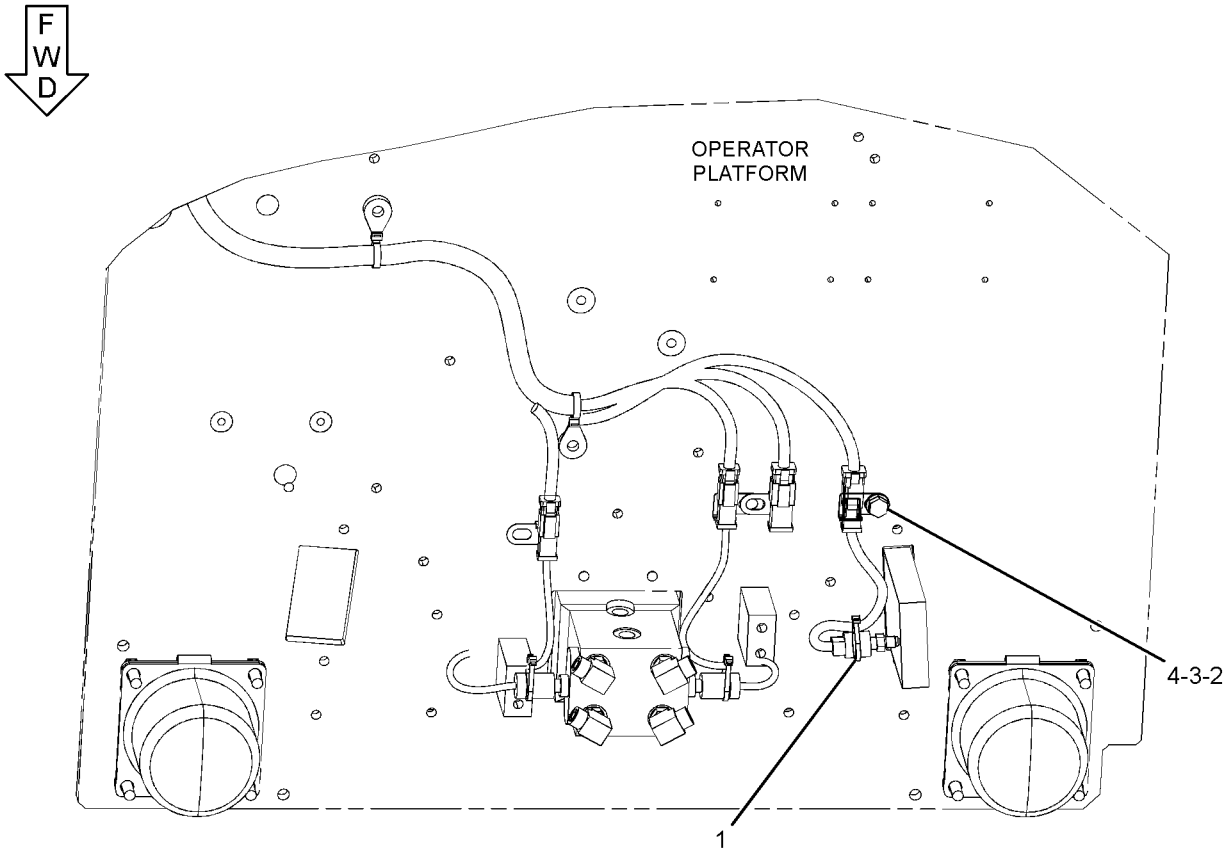

BOTTOM VIEW

GRAPHIC #1 **<END>** g01926299

259-5237 FASTENER GP-WIRING HARNESS–HEAVY LIFT

S/N: D3P1-UP; M4T1-UP

PART OF 259-7766 HYDRAULIC AR

SMCS-1408, 7553 **i02499398**

NOTE	REF NO	GRAPHIC REF	PART NUMBER	QTY	PART NAME 1 2 3 4 5 6 (PRODUCT LEVEL)	SEE PAGE
	1	1	**7I-2673**	1	STRAP - CABLE	

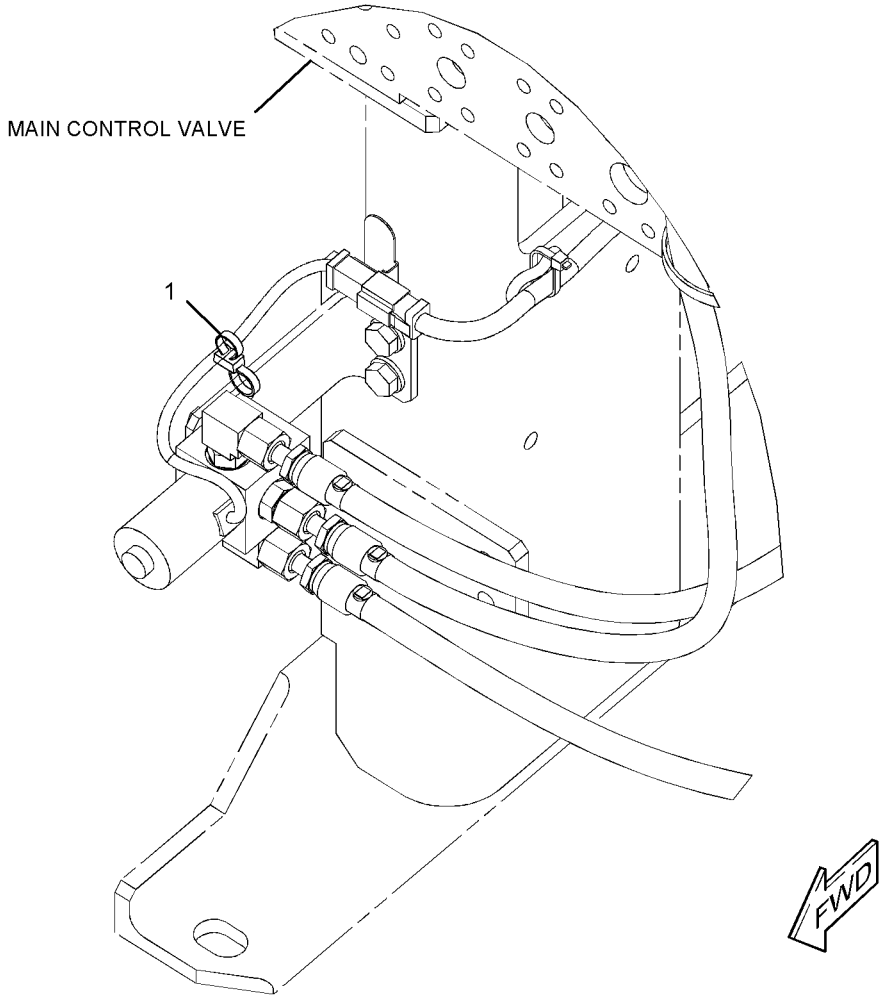

GRAPHIC #1 **<END>** g01200808

259-5293 FASTENER GP-WIRING HARNESS–PEDAL CONTROL

S/N: M4T1-UP

PART OF 255-5845 PEDAL AR-AUXILIARY

AN ATTACHMENT

SMCS-1408, 7553 **i02507734**

NOTE	REF NO	GRAPHIC REF	PART NUMBER	QTY	PART NAME 1 2 3 4 5 6 (PRODUCT LEVEL)	SEE PAGE
	1	1	**116-0118**	1	CLIP	
M	2	1	**7X-2621**	1	BOLT (M10X1.5X12-MM)	
	3	1	**8T-4121**	1	WASHER-HARD (11X21X2.5-MM THK)	

M-METRIC PART

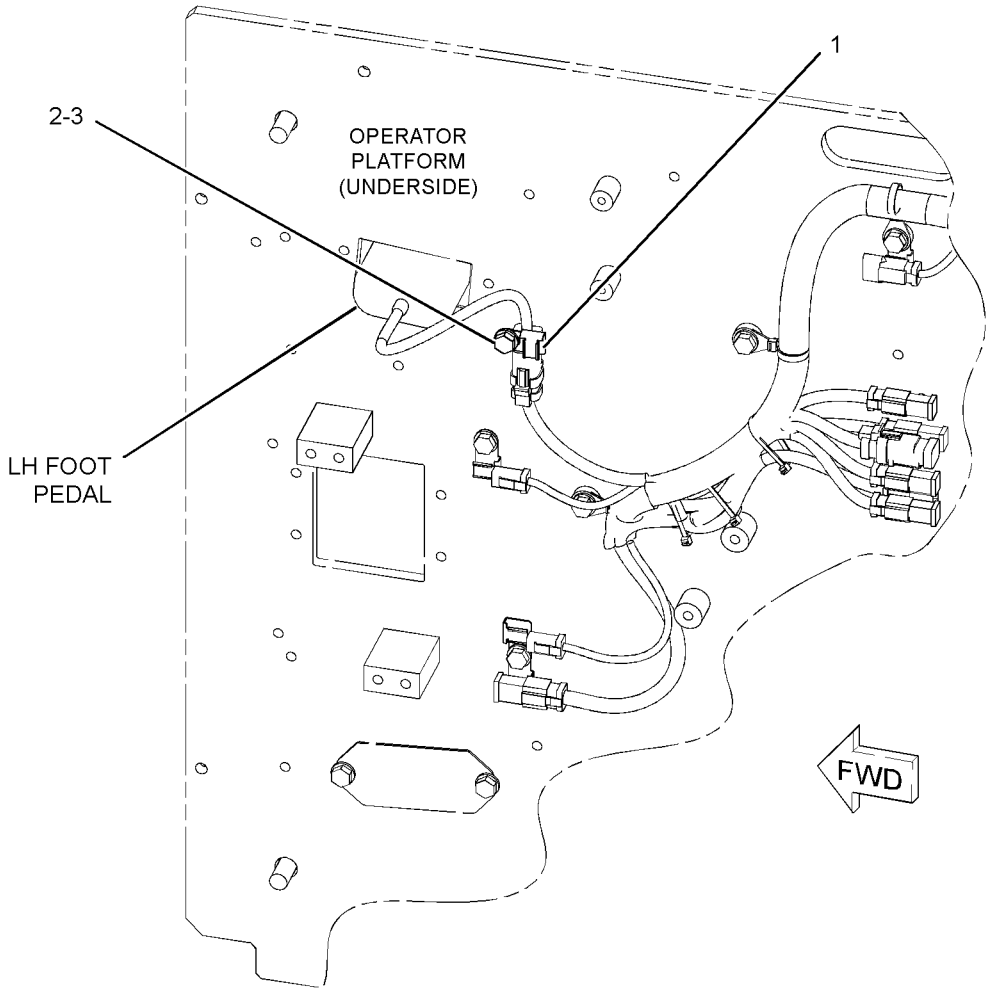

GRAPHIC #1 **<END>** g01264273

259-5294 FASTENER GP-WIRING HARNESS–FOOT SWITCH

S/N: D3P1-UP; M4T1-UP
PART OF 272-9663 CONTROL AR-AUXILIARY
AN ATTACHMENT

SMCS-1408, 7553 **i02510007**

NOTE	REF NO	GRAPHIC REF	PART NUMBER	QTY	PART NAME 1 2 3 4 5 6 (PRODUCT LEVEL)	SEE PAGE
	1	1	**116-0118**	1	CLIP	
M	2	1	**7X-2621**	1	BOLT (M10X1.5X12-MM)	
	3	1	**8T-4121**	1	WASHER-HARD (11X21X2.5-MM THK)	

M-METRIC PART

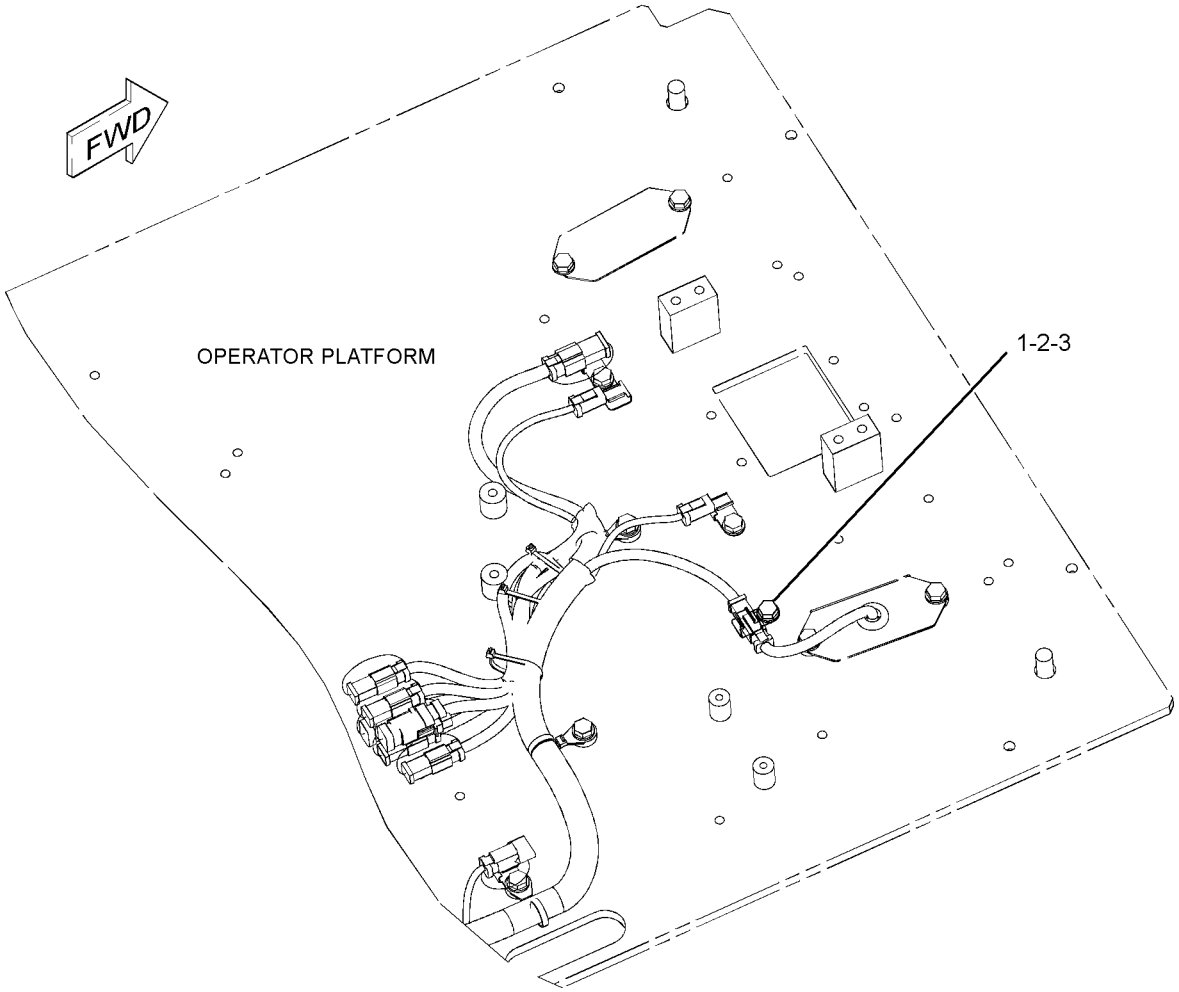

GRAPHIC #1 **<END>** g01156526

259-5295 FASTENER GP-WIRING HARNESS–JOYSTICK

S/N: D3P1-UP; M4T1-UP
PART OF 270-5687, 270-5688 CONTROL & MTG GP-JOYSTICK, 270-8795, 270-8796, 307-9975 CONTROL AR-AUXILIARY
AN ATTACHMENT

SMCS-1408, 7553 **i02509129**

NOTE	REF NO	GRAPHIC REF	PART NUMBER	QTY	PART NAME 1 2 3 4 5 6 (PRODUCT LEVEL)	SEE PAGE
	1	1	**3S-2093**	2	STRAP - CABLE	

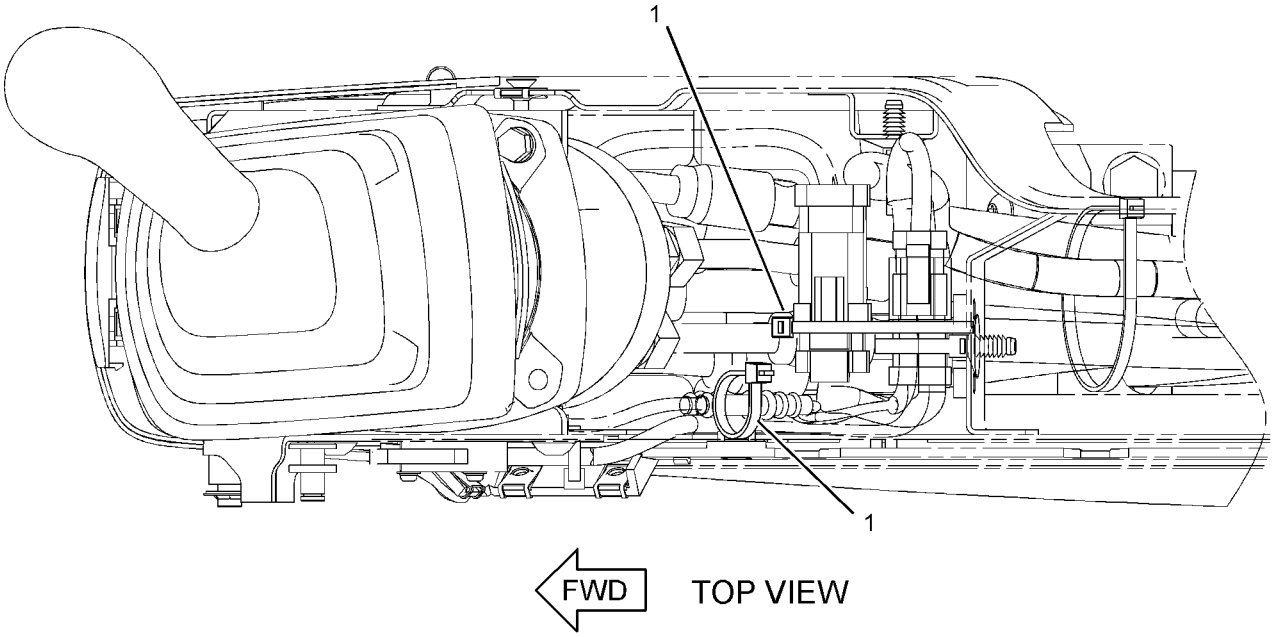

GRAPHIC #1 **<END>** g01160306

292-0276 GRADE CONTROL AR-SATELLITE–ACCUGRADE

S/N: D3P1-UP; M4T1-UP

FIELD INSTALLATION

SMCS-7220 **i03129240**

NOTE	PART NUMBER	QTY	PART NAME 1 2 3 4 5 6 (PRODUCT LEVEL)	SEE PAGE
Y	*286-0134*	1	DISPLAY GP-MONITOR (CD700)	992
Y	*297-5592*	1	MOUNTING GP-GRADE CONTROL	220
Y	*292-0304*	1	MOUNTING GP-MONITOR	1033
Y	*259-4746*	1	MOUNTING GP-RADIO	1036
Y	*292-0291*	1	RECEIVER GP-SATELLITE (DUAL GNSS, MS990)	231
Y	*297-5594*	1	SENSOR AR-GRADE (ANGLE SENSOR)	231
Y	*204-3461*	1	WIRING GP-GRADE CONTROL	329
	293-6883	2	MAST AS	

Y-SEPARATE ILLUSTRATION

<END>

237-7621 HEATER GP-JACKET WATER

S/N: D3P1-UP; M4T1-UP
PART OF 267-8840 COLD WEATHER AR
AN ATTACHMENT

SMCS-1383 **i03601516**

NOTE	REF NO	GRAPHIC REF	PART NUMBER	QTY	PART NAME 1 2 3 4 5 6 (PRODUCT LEVEL)	SEE PAGE
	1	1	**6N-1604**	1	CAP AS-DUST	
	2	1	**9G-6655**	1	ELEMENT AS-JACKET WATER HEATER (120-VOLT, 1500-WATT)	
	3	1	**9N-5253**	1	CORD AS-HEATER ELEMENT (120-VOLT, 15-AMPERE)	

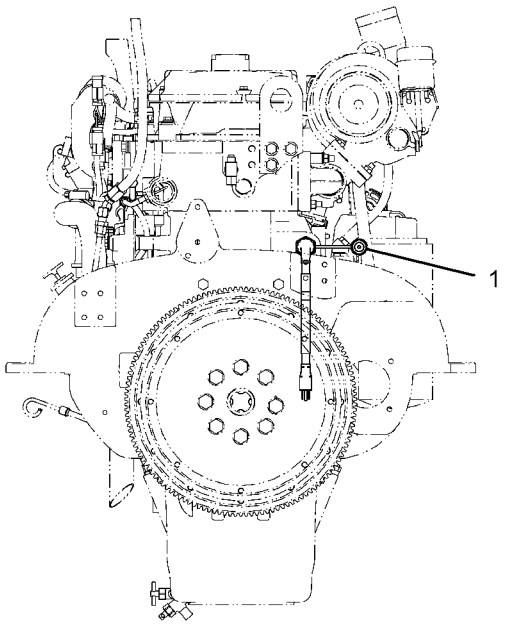

REAR VIEW OF ENGINE

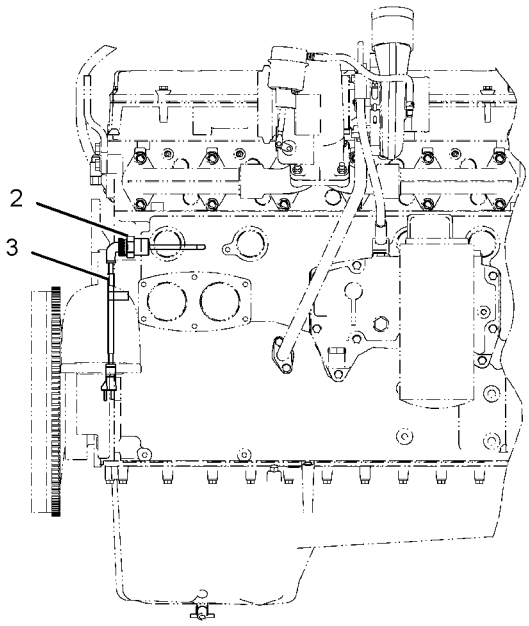

RIGHT SIDE VIEW OF ENGINE

GRAPHIC #1 **<END>** g01926400

314-3533 INSTALLATION AR-COMMUNICATION–

PRODUCT LINK 321SR

S/N: D3P1-UP; M4T1-UP

PART OF 337-4107 OPTION AR-INSTALLATION

AN ATTACHMENT

SMCS-7606 **i03171560**

NOTE	PART NUMBER	QTY	PART NAME 1 2 3 4 5 6 (PRODUCT LEVEL)	SEE PAGE
Y	*309-5789*	1	ANTENNA & MOUNTING GP (PRODUCT LINK)	933
Y	*309-5842*	1	CONTROL & MTG GP-COMMUNICATION (PRODUCT LINK 321SR)	194
Y	*309-5887*	1	CONTROL & MTG GP-COMMUNICATION (PRODUCT LINK 121SR)	195
Y	*267-7803*	1	WIRING GP-COMMUNICATION (PRODUCT LINK 321SR)	314

Y-SEPARATE ILLUSTRATION

<END>

227-7581 INSTALLATION GP-SECURITY

S/N: D3P1-UP; M4T1-UP
AN ATTACHMENT

SMCS-7631 **i02941015**

NOTE	REF NO	GRAPHIC REF	PART NUMBER	QTY	PART NAME 1 2 3 4 5 6 (PRODUCT LEVEL)	SEE PAGE
	1	1	**8C-5607**	4	MOUNT-ISOLATION	
	2	1	**8C-5608**	2	SPACER (6.5X9.5X25.4-MM THK)	
	3	1	**206-5162**	2	KEY AS-ELECTRONIC (SECURITY)	
					—OR—	
		1	**206-5165**	1	KEY AS-ELECTRONIC (SECURITY)	
	4	1	**218-0404**	1	MODULE GP-INTERFACE (KEY)	
		1	**6V-6715**	1	SCREW-PAN HEAD (4-20X0.25-IN)	
		1	**8C-3095**	1	SEAL-O-RING	
	5	1	**219-6314**	2	KEY RING (IDENTIFICATION)	
	6	1	**219-6607**	2	FILM-INFORMATION (SECURITY SYSTEM)	
	7	1	**225-5927**	1	FILM-INSTRUCTION (MACHINE SECURITY, READ OMM)	
Y	8	1	*251-0544*	1	PANEL GP-SWITCH (ENGINE SPEED, START)	228
M	9	1	**7X-2533**	2	BOLT (M6X1X35-MM)	
	10	1	**9X-6165**	2	WASHER (6.5X22X2.5-MM THK)	

M-METRIC PART
Y-SEPARATE ILLUSTRATION

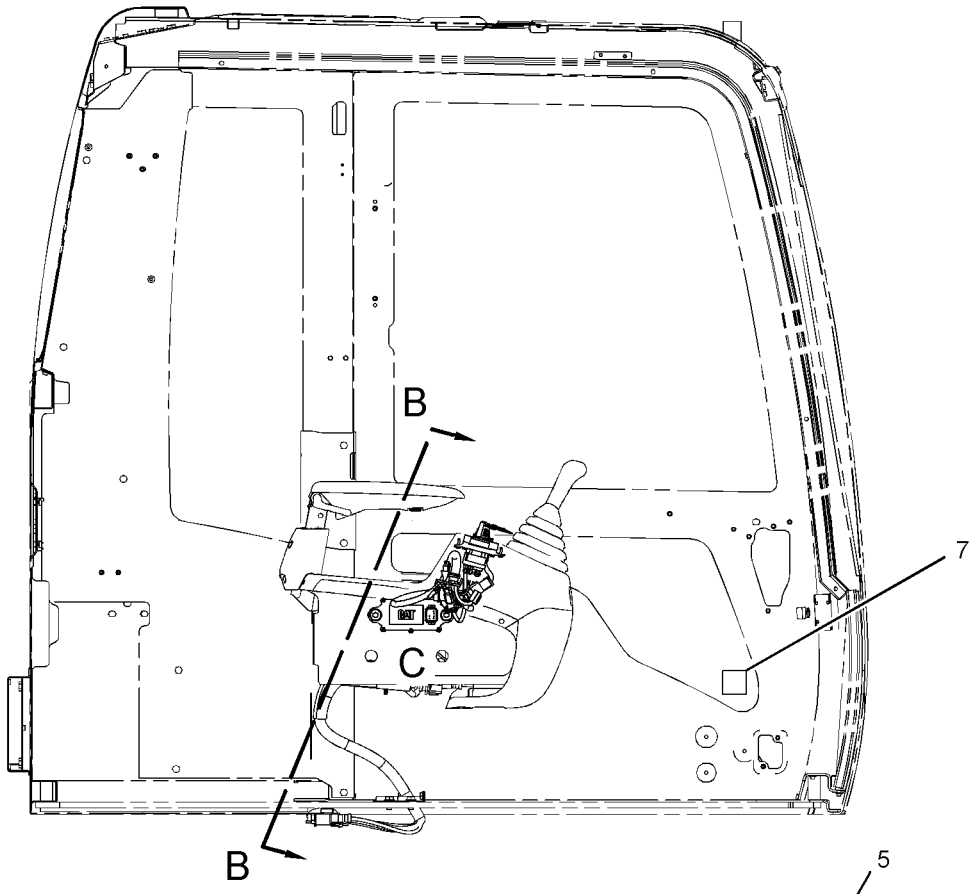

RIGHT SIDE VIEW

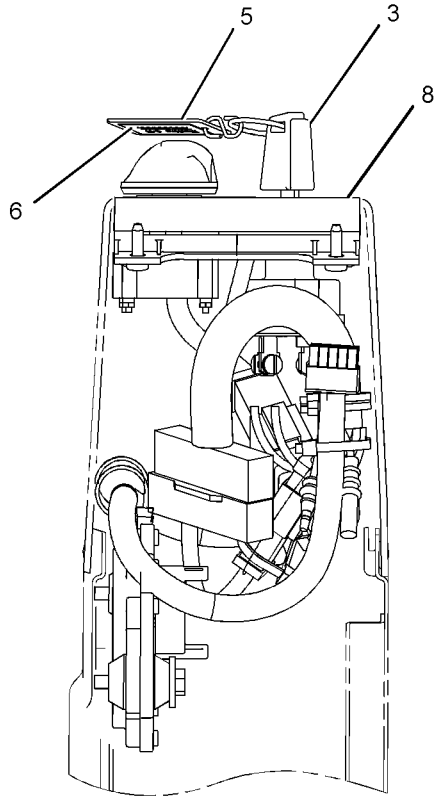

VIEW B-B

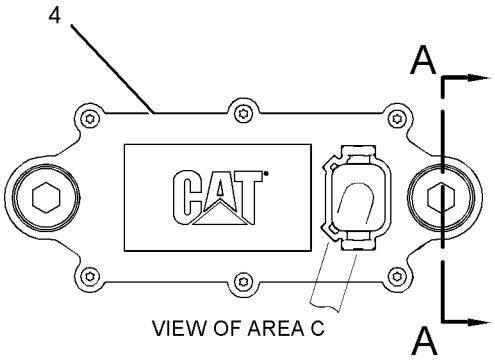

VIEW OF AREA C

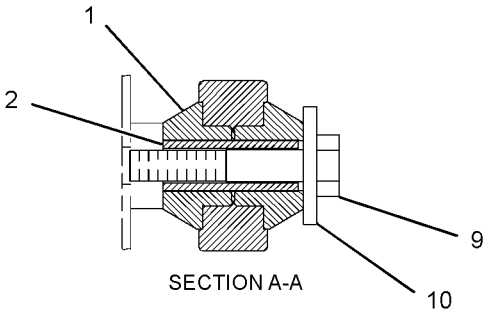

SECTION A-A

GRAPHIC #1 **<END>** g01500593

5I-8251 LAMP GP-FLOOD–24-VOLT

S/N: D3P1-UP; M4T1-UP

PART OF 4I-5409 LIGHTING GP-CHASSIS

SMCS-1434 **i03018325**

NOTE	REF NO	GRAPHIC REF	PART NUMBER	QTY	PART NAME 1 2 3 4 5 6 (PRODUCT LEVEL)	SEE PAGE
M	1	1	**9X-8488**	1	NUT-HEX THIN (M12X1.5-THD)	
	2	1	**8T-4223**	1	WASHER-HARD (13.5X25.5X3-MM THK)	
	3	1	**9X-3463**	1	LAMP-HALOGEN (24-VOLT, 70-WATT)	
M	4	1	**6V-5210**	2	SCREW-MACHINE (M4X0.7X10-MM)	
	5	1	**3B-4501**	2	LOCKWASHER (#8)	
	6	1	**106-0001**	1	LENS AS	
	7	1	**106-0002**	1	BAND	
	8	1	**106-0003**	1	RING-RUBBER	
	9	1	**106-0004**	1	RING-FITTING	
	10	1	**106-0005**	1	SEAT	
M	11	1	**7Y-5286**	1	BOLT-SQUARE NECK	
M	12	1	**7Y-5288**	2	SCREW-PAN HEAD (4X10-MM)	

M-METRIC PART

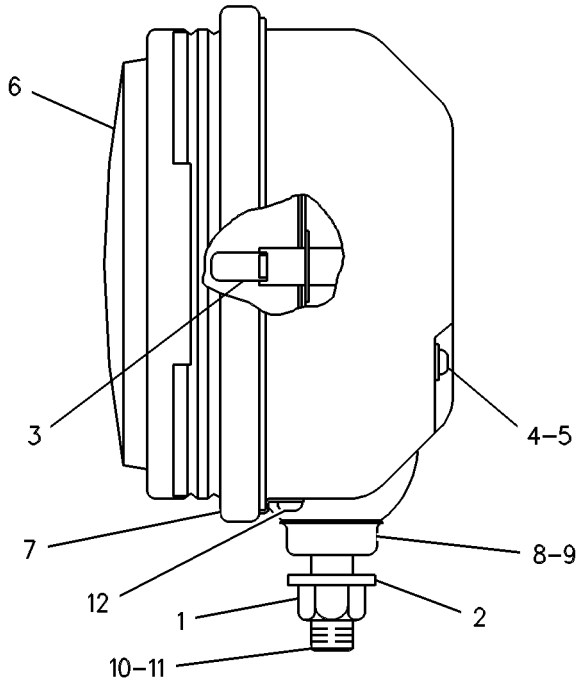

GRAPHIC #1 **<END>** g00252247

153-2521 LAMP GP-FLOOD–24-VOLT

S/N: D3P1-UP; M4T1-UP
PART OF 238-1584, 238-1586 LIGHTING GP-FLOOD
AN ATTACHMENT

SMCS-1434 **i03018476**

NOTE	REF NO	GRAPHIC REF	PART NUMBER	QTY	PART NAME 1 2 3 4 5 6 (PRODUCT LEVEL)	SEE PAGE
M	1	1	**6V-5210**	2	SCREW-MACHINE (M4X0.7X10-MM)	
	2	1	**3B-4501**	2	LOCKWASHER	
	3	1	**9X-3463**	1	LAMP-HALOGEN (24-VOLT, 70-WATT)	
	4	1	**8T-4223**	1	WASHER-HARD (13.5X25.5X3-MM THK)	
M	5	1	**8T-4244**	1	NUT (M12X1.75-THD)	
M	6	1	**174-7791**	1	SCREW-TAPPING	
	7	1	**5C-2889**	1	LOCKWASHER	
	8	1	**170-6993**	1	COVER	
M	9	1	**180-3861**	4	SCREW-TAPPING	
	10	1	**170-9417**	1	LENS AS	
	11	1	**170-9418**	1	BAND	

M-METRIC PART

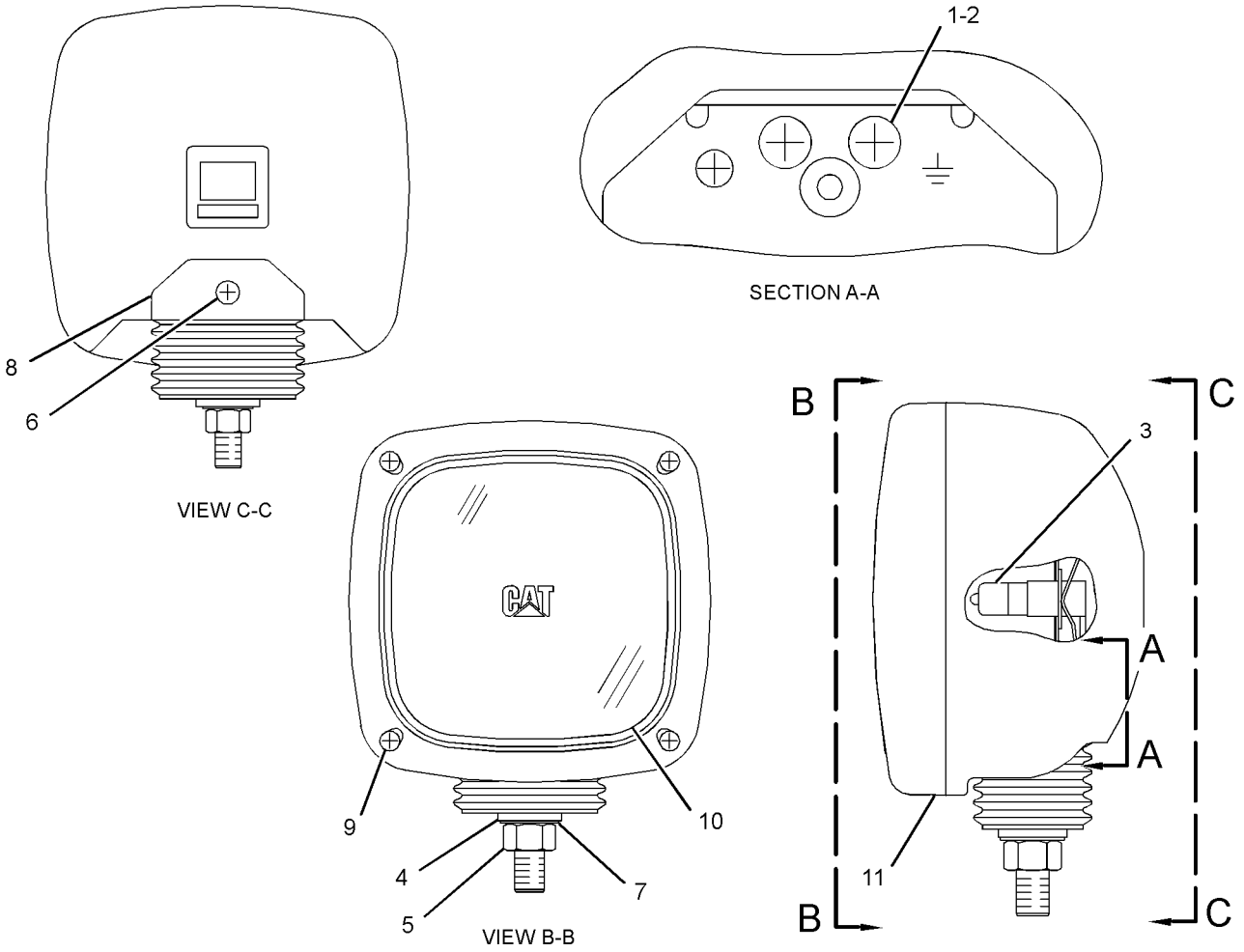

GRAPHIC #1 **<END>** g01528526

153-2523 LAMP GP-FLOOD–24-VOLT

S/N: D3P1-UP; M4T1-UP

PART OF 4I-5409 LIGHTING GP-CHASSIS

SMCS-1434 **i03018480**

NOTE	REF NO	GRAPHIC REF	PART NUMBER	QTY	PART NAME 1 2 3 4 5 6 (PRODUCT LEVEL)	SEE PAGE
M	1	1	**6V-5210**	2	SCREW-MACHINE (M4X0.7X10-MM)	
	2	1	**3B-4501**	2	LOCKWASHER	
	3	1	**9X-3463**	1	LAMP-HALOGEN (24-VOLT, 70-WATT)	
	4	1	**8T-4223**	1	WASHER-HARD (13.5X25.5X3-MM THK)	
M	5	1	**8T-4244**	1	NUT (M12X1.75-THD)	
M	6	1	**174-7791**	1	SCREW-TAPPING	
	7	1	**5C-2889**	1	LOCKWASHER	
	8	1	**170-6993**	1	COVER	
	9	1	**170-9417**	1	LENS AS	
M	10	1	**180-3861**	4	SCREW-TAPPING	
	11	1	**170-9418**	1	BAND	

M-METRIC PART

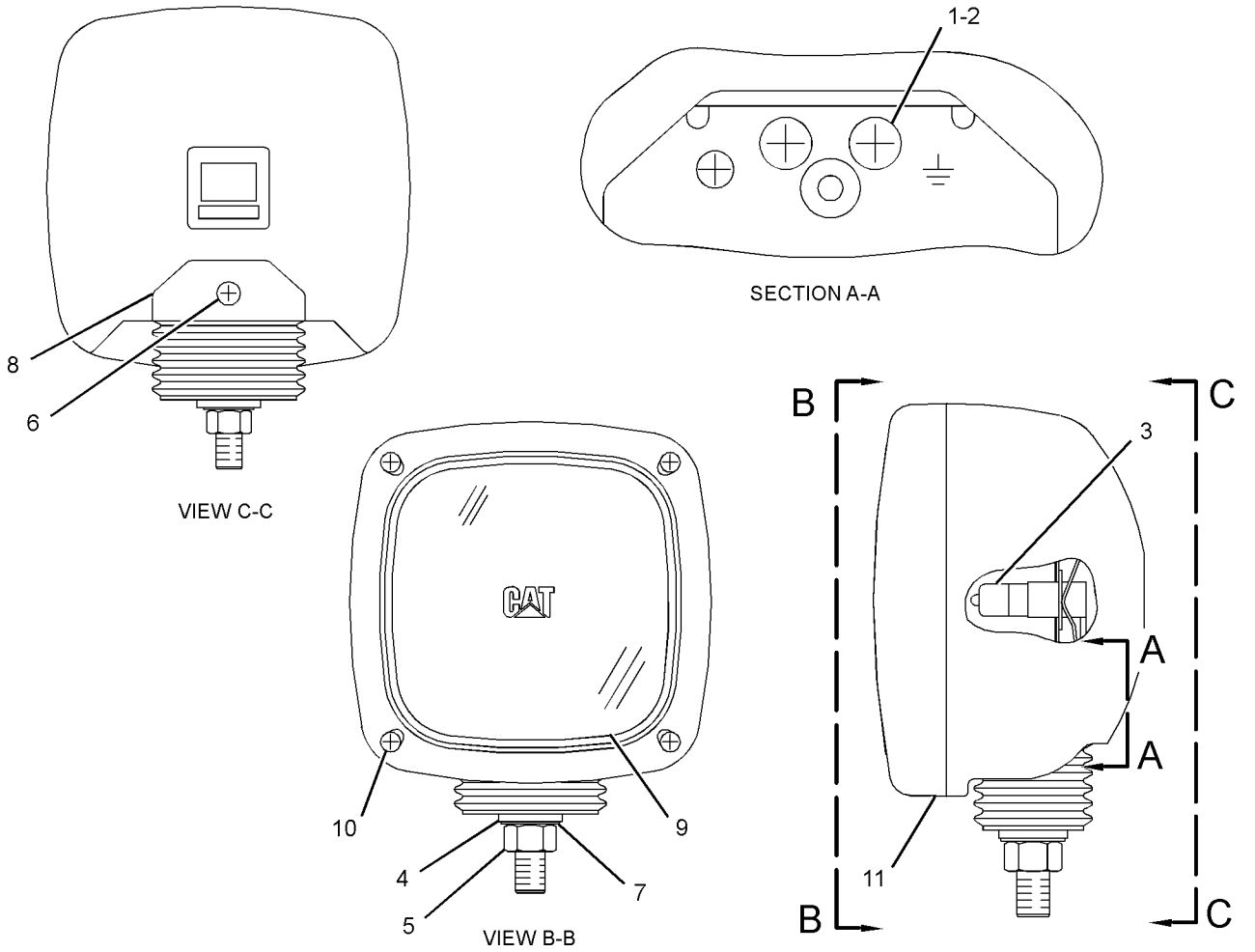

GRAPHIC #1 **<END>** g01528558

4I-5409 LIGHTING GP-CHASSIS

S/N: D3P1-UP; M4T1-UP
PART OF 314-3709 CHASSIS AR

SMCS-1429 **i03601519**

NOTE	REF NO	GRAPHIC REF	PART NUMBER	QTY	PART NAME 1 2 3 4 5 6 (PRODUCT LEVEL)	SEE PAGE
Y	1	1	**5I-8251**	1	LAMP GP-FLOOD (24-VOLT)	211
					—OR—	
Y		1	**153-2523**	1	LAMP GP-FLOOD (24-VOLT)	213
Y-SEPARATE ILLUSTRATION						

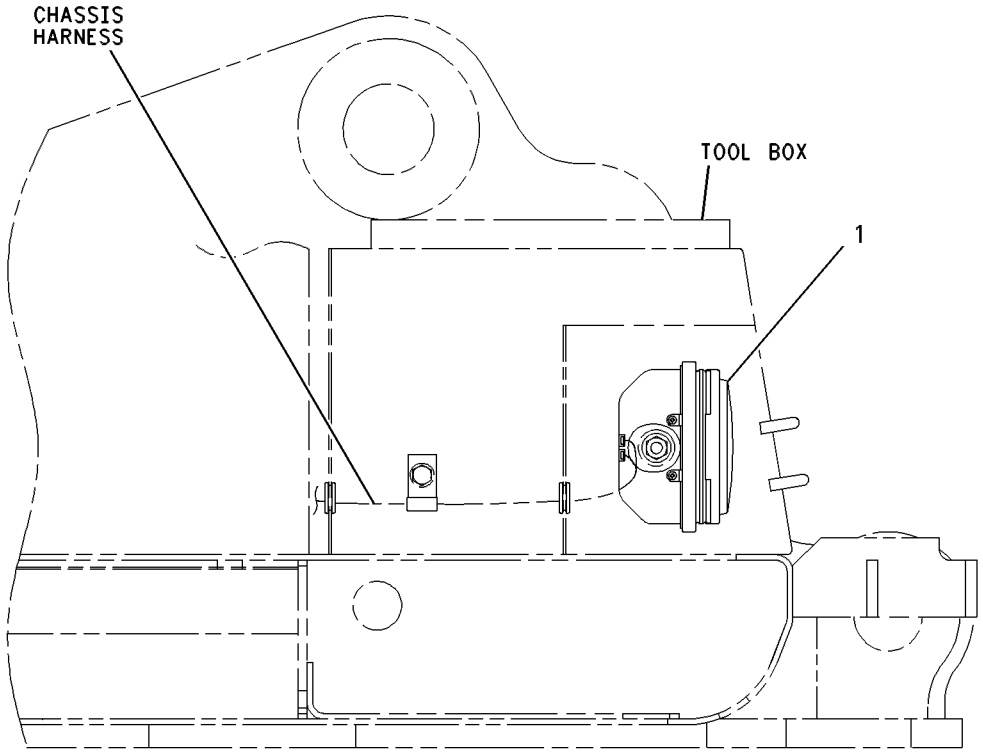

RIGHT SIDE VIEW

GRAPHIC #1 **<END>** g00547389

163-6772 LIGHTING GP-FLOOD–CAB

S/N: D3P1-UP; M4T1-UP
PART OF 345-2281 OPTION AR-CONFIGURATION
AN ATTACHMENT

SMCS-1434 **i02191879**

NOTE	REF NO	GRAPHIC REF	PART NUMBER	QTY	PART NAME 1 2 3 4 5 6 (PRODUCT LEVEL)	SEE PAGE
	1	1	**163-6814**	1	COVER (RH)	
	2	1	**163-6813**	1	COVER (LH)	
M	3	1	**8T-4970**	4	BOLT (M6X1X14-MM)	
	4	1	**9X-8256**	12	WASHER (6.6X12X2-MM THK)	
	5	1	**167-3441**	2	LAMP GP-FLOOD (24-VOLT)	
					(EACH INCLUDES)	
		1	**9X-3463**	1	LAMP-HALOGEN (24-VOLT, 70-WATT)	
	6	1	**167-3437**	1	BRACKET AS (LH)	
M	7	1	**8T-6411**	6	SCREW-MACHINE (M6X1X12-MM)	
	8	1	**167-3456**	2	HARNESS AS-LIGHTING (CAB FLOODLIGHT)	
	9	1	**167-3438**	1	BRACKET AS (RH)	
	10	1	**163-6795**	2	STRAP-CABLE	
B	11	1	**9X-8256**	4	WASHER (6.6X12X2-MM THK)	
M	12	1	**8T-6412**	2	SCREW-MACHINE (M6X1X20-MM)	

B-USE AS REQUIRED
M-METRIC PART

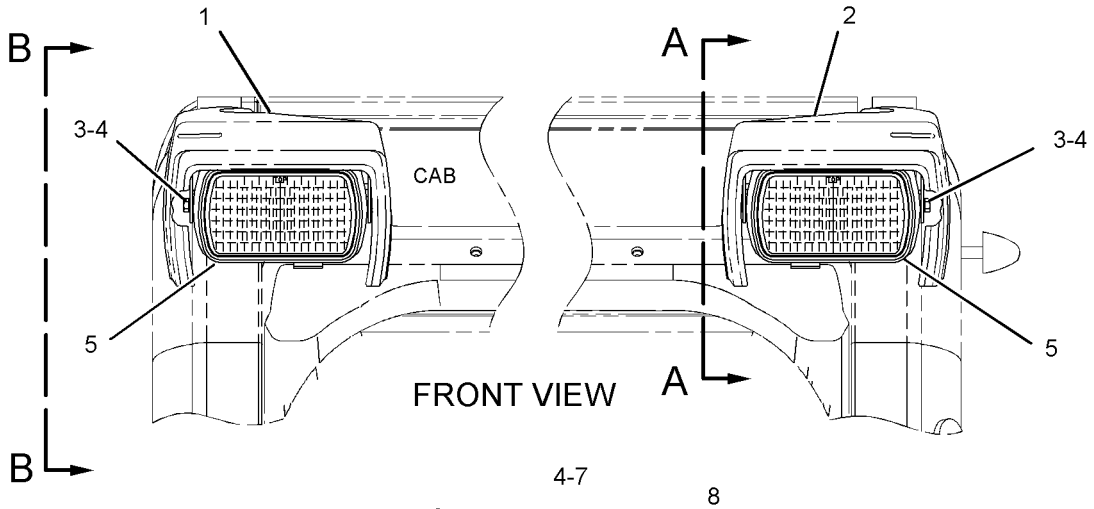

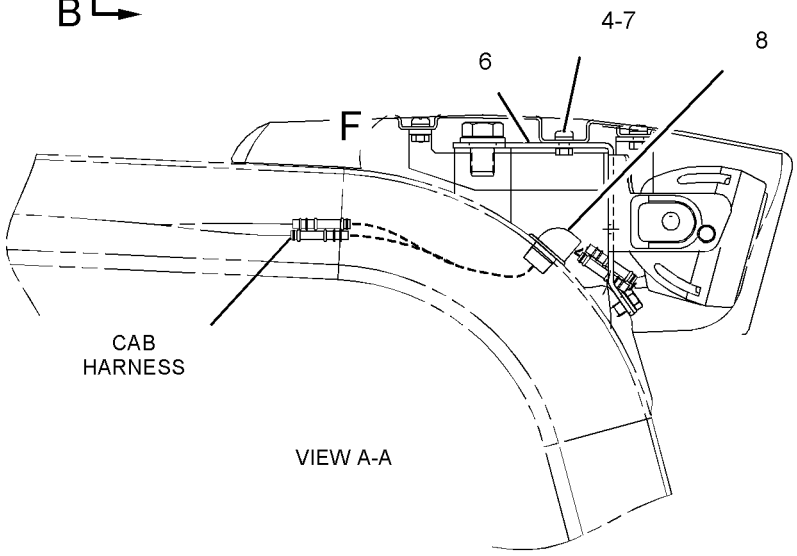

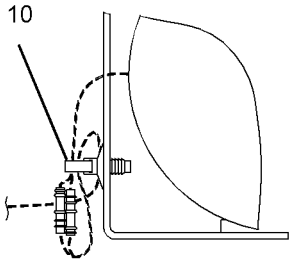

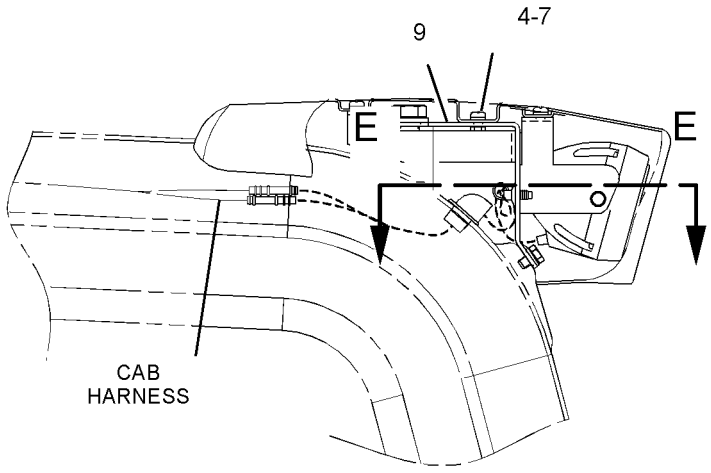

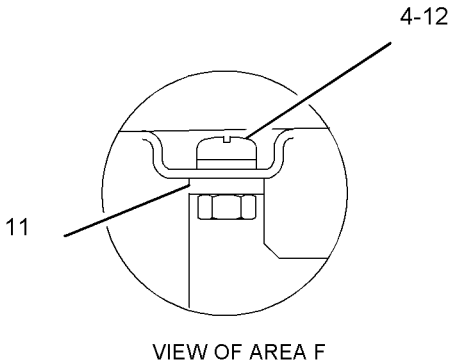

GRAPHIC #1 **<END>** g01116696

170-9294 LIGHTING GP-FLOOD–2-LAMP, CAB GUARD

S/N: M4T1-UP

AN ATTACHMENT

SMCS-1434 **i02570625**

NOTE	REF NO	GRAPHIC REF	PART NUMBER	QTY	PART NAME 1 2 3 4 5 6 (PRODUCT LEVEL)	SEE PAGE
	1	1	**183-1035**	2	LAMP GP-FLOOD (24-VOLT)	
					(EACH INCLUDES)	
		1	**9X-3463**	1	LAMP-HALOGEN (24-VOLT, 70-WATT)	
	2	1	**163-6795**	2	STRAP-CABLE	
M	3	1	**8T-4133**	2	NUT (M10X1.5-THD)	
	4	1	**8T-4121**	4	WASHER-HARD (11X21X2.5-MM THK)	
M	5	1	**8T-4137**	2	BOLT (M10X1.5X20-MM)	
	6	1	**170-9295**	2	HARNESS AS-LIGHTING (CAB FLOODLIGHTS, FRONT)	
					(EACH INCLUDES)	
		1	**7Y-3962**	2	TERMINAL-BULLET (MALE)	
		1	**7Y-3964**	2	TUBE (CONNECTOR TERMINAL)	
		1	**7Y-3963**	2	TERMINAL-BULLET (FEMALE)	
		1	**7Y-3965**	2	TUBE (RECEPTACLE TERMINAL)	

M-METRIC PART

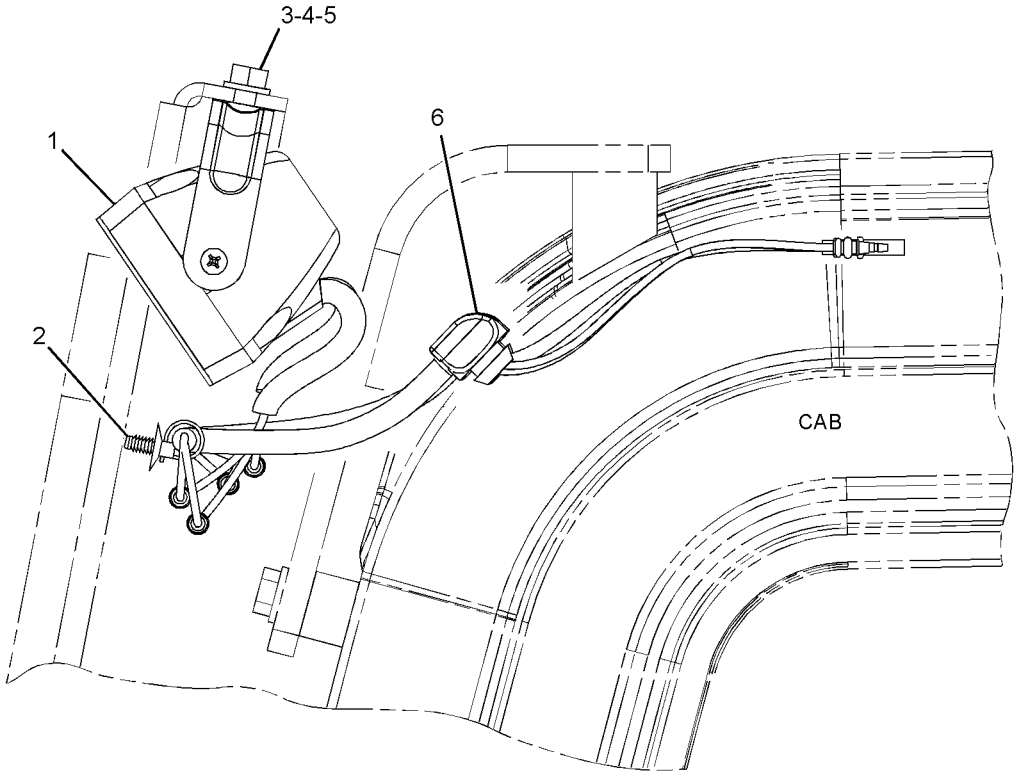

LEFT SIDE VIEW

GRAPHIC #1 **<END>** g01326919

ELECTRICAL AND STARTING SYSTEM

238-1584 LIGHTING GP-FLOOD–BOOM

S/N: D3P1-UP; M4T1-UP
PART OF 290-1817, 302-7339, 314-3615 BOOM AR-1 PIECE LONG
AN ATTACHMENT

SMCS-1434 **i03601527**

NOTE	REF NO	GRAPHIC REF	PART NUMBER	QTY	PART NAME 1 2 3 4 5 6 (PRODUCT LEVEL)	SEE PAGE
	1	1	**7I-2673**	2	STRAP-CABLE	
	2	1	**111-4836**	10	CLIP	
	3	1	**111-4837**	1	CLIP	
	4	1	**116-0118**	1	CLIP	
Y	5	1	**153-2521**	2	LAMP GP-FLOOD (24-VOLT)	212
	6	1	**238-1585**	1	HARNESS AS-LIGHTING	
E		1	**125-7875**		TUBE-HEAT SHRINK (7.44-MM DIA) (10-CM)	
		1	**243-4505**	1	RECEPTACLE AS-CONNECTOR (2-PIN)	
	7	1	**134-3284**	2	BRACKET	
	8	1	**6V-3265**	2	CLIP	
	9	1	**8T-4121**	10	WASHER-HARD (11X21X2.5-MM THK)	
M	10	1	**8T-4133**	10	NUT (M10X1.5-THD)	
M	11	1	**8T-4190**	2	BOLT (M16X2X25-MM)	
	12	1	**9X-8257**	2	WASHER (17.5X30X3.5-MM THK)	

E-ORDER BY THE CENTIMETER
M-METRIC PART
Y-SEPARATE ILLUSTRATION

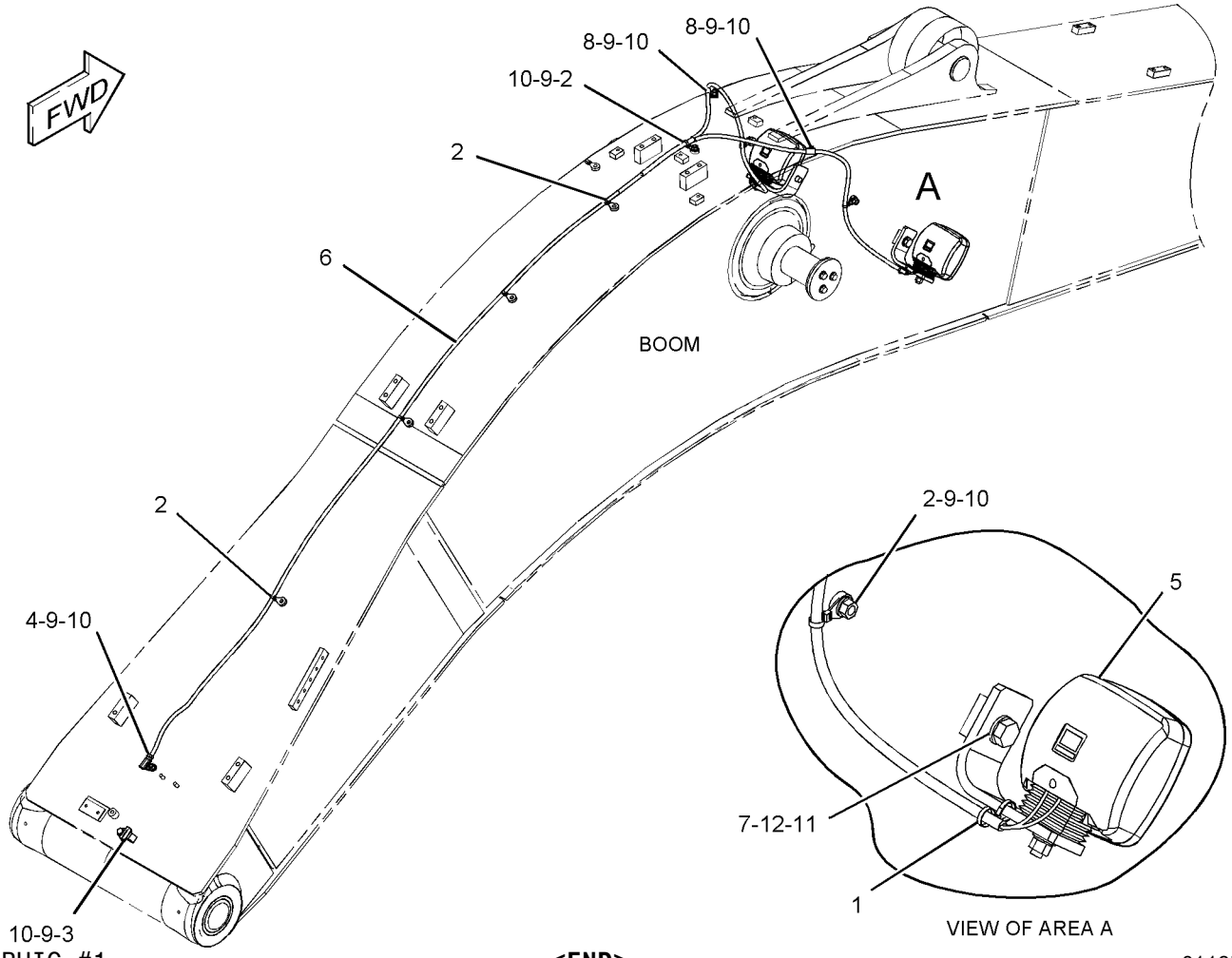

GRAPHIC #1

<END>

g01197782

238-1586 LIGHTING GP-FLOOD—MASS BOOM

S/N: D3P1-UP; M4T1-UP
PART OF 290-1818 BOOM AR-1 PIECE SHORT
AN ATTACHMENT

SMCS-1434 **i03202021**

NOTE	REF NO	GRAPHIC REF	PART NUMBER	QTY	PART NAME 1 2 3 4 5 6 (PRODUCT LEVEL)	SEE PAGE
	1	1	**7I-2673**	2	STRAP-CABLE	
	2	1	**111-4836**	11	CLIP	
	3	1	**111-4837**	1	CLIP	
	4	1	**116-0118**	1	CLIP	
Y	5	1	**153-2521**	2	LAMP GP-FLOOD (24-VOLT)	212
	6	1	**238-1587**	1	HARNESS AS-LIGHTING	
		1	**243-4505**	1	RECEPTACLE AS-CONNECTOR (2-PIN)	
E		1	**125-7875**		TUBE-HEAT SHRINK (7.44-MM DIA) (10-CM)	
	7	1	**134-3284**	2	BRACKET	
	8	1	**6V-3265**	2	CLIP	
	9	1	**8T-4121**	12	WASHER-HARD (11X21X2.5-MM THK)	
M	10	1	**8T-4133**	12	NUT (M10X1.5-THD)	
M	11	1	**8T-4190**	2	BOLT (M16X2X25-MM)	
	12	1	**9X-8257**	2	WASHER (17.5X30X3.5-MM THK)	

E-ORDER BY THE CENTIMETER
M-METRIC PART
Y-SEPARATE ILLUSTRATION

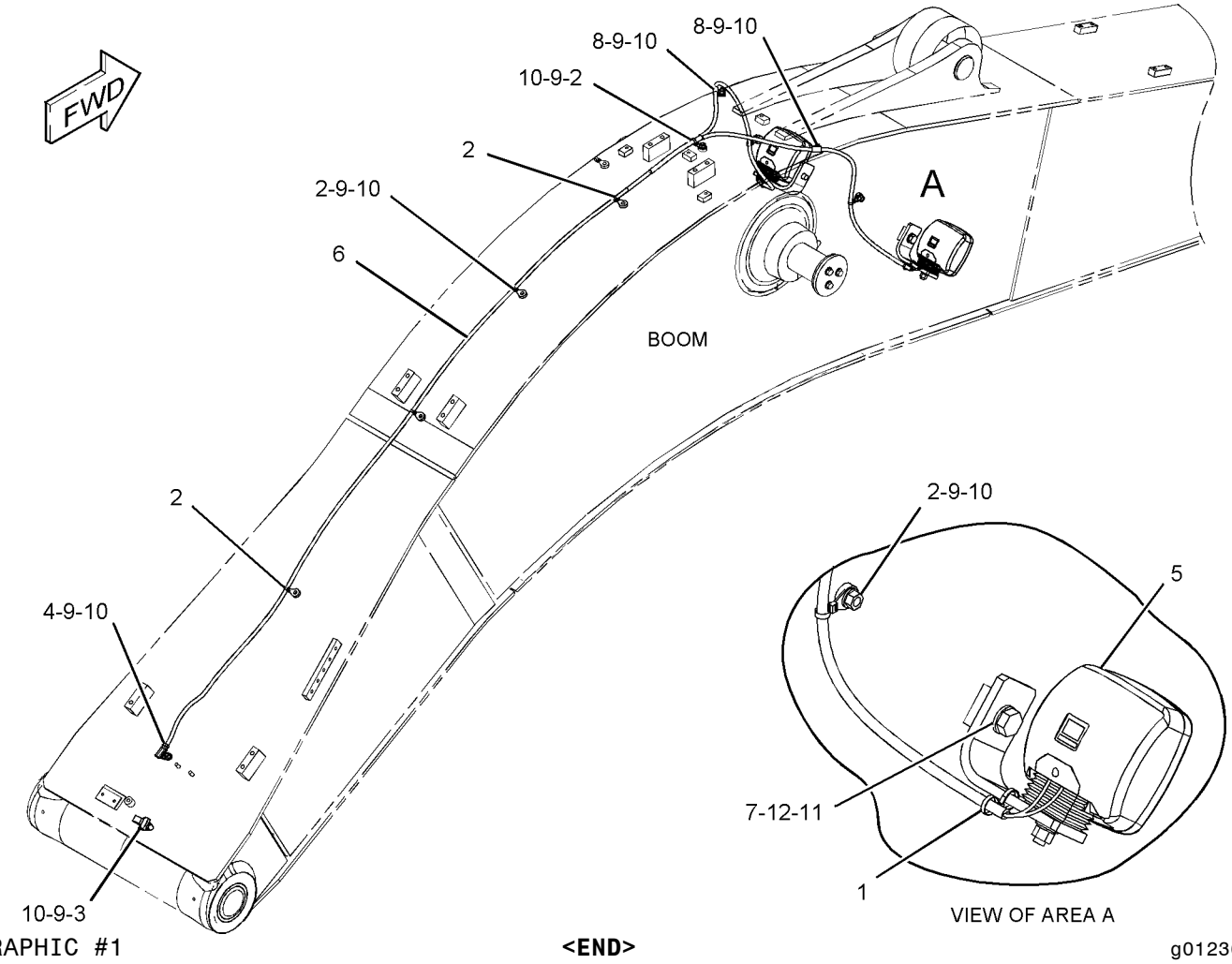

GRAPHIC #1 **<END>** g01236777

ELECTRICAL AND STARTING SYSTEM

297-5592 MOUNTING GP-GRADE CONTROL

S/N: D3P1-UP; M4T1-UP

PART OF 292-0276 GRADE CONTROL AR-SATELLITE

SMCS-7220 **i03129243**

NOTE	PART NUMBER	QTY	PART NAME 1 2 3 4 5 6 (PRODUCT LEVEL)	SEE PAGE
M	**5C-9553**	19	BOLT (M6X1X16-MM)	
M	**6V-8212**	3	BOLT (M10X1.5X16-MM)	
M	**8T-4137**	21	BOLT (M10X1.5X20-MM)	
M	**8T-4140**	8	BOLT (M16X2X60-MM)	
M	**8T-4200**	4	BOLT (M8X1.25X16-MM)	
M	**8T-7852**	3	BOLT (M4X0.7X10-MM)	
	265-8145	4	BRACKET-HOUSING	
	292-0305	2	CABLE AS (MAST)	
			(EACH INCLUDES)	
	8T-8737	5	PLUG-SEAL	
	9X-3402	7	SOCKET-CONNECTOR (16-GA TO 18-GA)	
	230-4009	1	PLUG AS-CONNECTOR (12-PIN)	
	264-7034	1	SEAL-CONNECTOR	
	116-0118	3	CLIP	
	132-5789	5	CLIP	
	8J-1256	3	CLIP	
	265-8146	4	COVER	
	263-6699	2	FLANGE-CONNECTOR	
	7Y-8169	1	GROMMET	
M	**179-4324**	16	LOCKNUT (M5X0.8-THD)	
	3L-8187	8	LOCKWASHER	
M	**3E-8048**	8	SCREW-MACHINE (M3X0.5X6-MM)	
	093-0332	2	SHIM (1-MM THK)	
	093-0334	6	SHIM (0.4-MM THK)	
	085-9310	8	SPACER (16.6X32X26-MM THK)	
	7K-1181	22	STRAP-CABLE	
	3S-2093	10	STRAP-CABLE	
	9X-8256	19	WASHER (6.6X12X2-MM THK)	
	8T-0328	16	WASHER-HARD (5.5X10X1-MM THK)	
	8T-4121	6	WASHER-HARD (11X21X2.5-MM THK)	
	8T-4224	4	WASHER-HARD (8.8X16X2-MM THK)	
	8T-7934	19	WASHER-HARD (11X21X5-MM THK)	
	161-6987	3	WASHER-HARD (5.2X16X1.5-MM THK)	

M-METRIC PART

<END>

238-1432 PANEL & MTG GP-CIRCUIT BREAKER

S/N: D3P1-UP; M4T1-UP
PART OF 229-9072 OPERATOR AR

SMCS-1417, 1420 **i02489673**

NOTE	REF NO	GRAPHIC REF	PART NUMBER	QTY	PART NAME 1 2 3 4 5 6 (PRODUCT LEVEL)	SEE PAGE
Y	1	1	*231-1756*	1	PANEL GP-CIRCUIT BREAKER	222
	2	1	**8T-4121**	4	WASHER-HARD (11X21X2.5-MM THK)	
M	3	1	**8T-4137**	4	BOLT (M10X1.5X20-MM)	

M-METRIC PART
Y-SEPARATE ILLUSTRATION

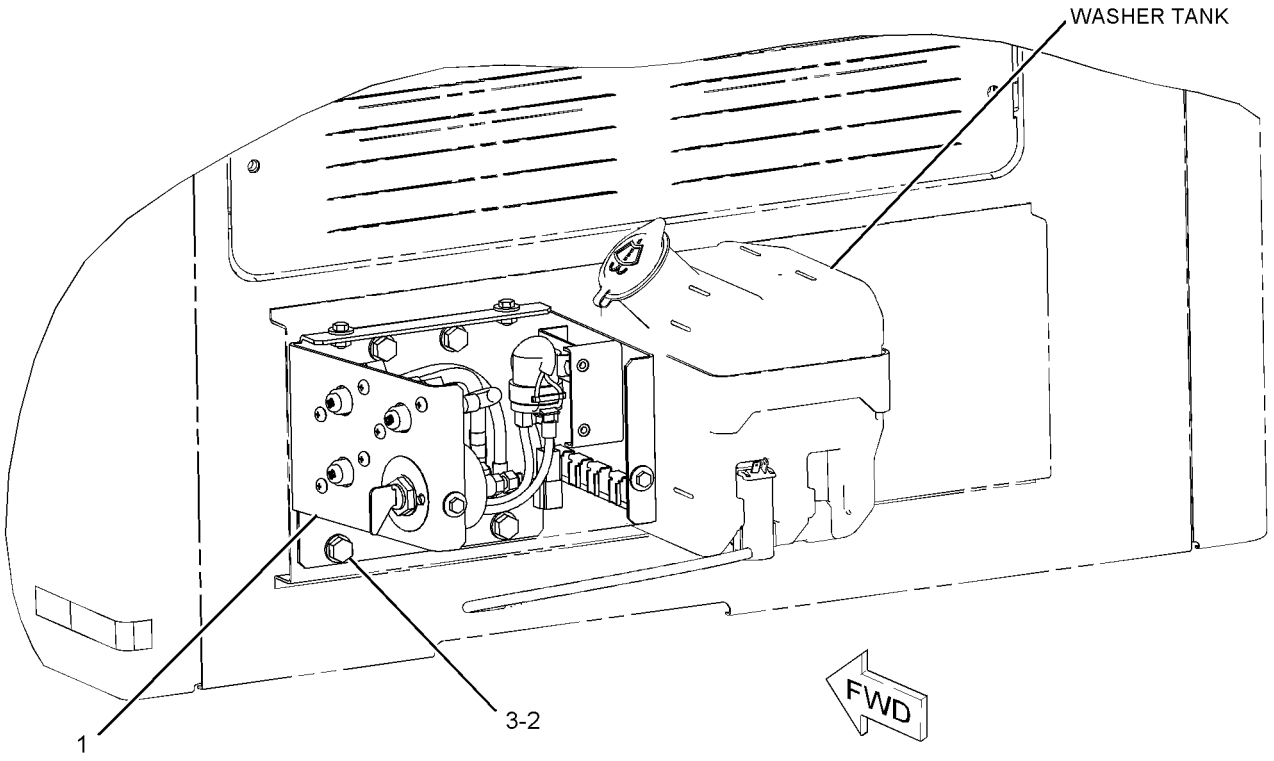

GRAPHIC #1 **<END>** g01150497

ELECTRICAL AND STARTING SYSTEM

231-1756 PANEL GP-CIRCUIT BREAKER

S/N: D3P1-UP; M4T1-UP

PART OF 238-1432 PANEL & MTG GP-CIRCUIT BREAKER

SMCS-1417 **i02668608**

NOTE	REF NO	GRAPHIC REF	PART NUMBER	QTY	PART NAME 1 2 3 4 5 6 (PRODUCT LEVEL)	SEE PAGE
	1	1	**3E-8320**	1	PLATE-INSTRUCTION (BATTERY)	
Y	2	1	**7N-0719**	1	SWITCH GP-DISCONNECT (BATTERY)	264
	3	1	**121-1023**	1	BLOCK-TERMINAL	
Y	4	1	**125-1302**	1	SWITCH GP-MAGNETIC (24-VOLT) (START RELAY)	265
	5	1	**216-4970**	1	CIRCUIT BREAKER AS (120-AMPERE) (HEATER)	
		1	**6V-8187**	2	NUT (1/4-28-THD)	
		1	**8T-4205**	2	WASHER-HARD (7.2X14.5X2-MM THK)	
		1	**253-2111**	2	LOCKWASHER	
	6	1	**291-7547**	1	BRACKET AS	
	7	1	**234-1035**	1	CABLE AS	
	8	1	**234-1037**	1	WIRE AS	
	9	1	**234-1038**	1	WIRE AS	
	10	1	**238-1506**	1	COVER	
	11	1	**238-2279**	1	BAR-BUS	
	12	1	**238-2280**	1	WIRE AS	
	13	1	**251-0303**	1	CABLE AS	
	14	1	**251-0304**	1	CABLE AS	
	15	1	**171-2210**	1	CIRCUIT BREAKER AS (80-AMPERE) (MAIN)	
	15A	1	**171-2210**	1	CIRCUIT BREAKER AS (80-AMPERE) (ALTERNATOR)	
					(EACH CIRCUIT BREAKER AS INCLUDES)	
		1	**6V-8187**	2	NUT (1/4-28-THD)	
		1	**8T-4205**	2	WASHER-HARD (7.2X14.5X2-MM THK)	
		1	**253-2111**	2	LOCKWASHER	
M	16	1	**5C-9553**	5	BOLT (M6X1X16-MM)	
	17	1	**5P-4115**	4	WASHER-HARD (7.2X19X2-MM THK)	
	18	1	**6V-5645**	6	SCREW-MACHINE (10-32X0.87-IN)	
	19	1	**8T-0328**	6	WASHER-HARD (5.5X10X1-MM THK)	
M	20	1	**8T-4171**	4	BOLT (M6X1X12-MM)	
M	21	1	**8T-4970**	4	BOLT (M6X1X14-MM)	
	22	1	**9X-8256**	11	WASHER (6.6X12X2-MM THK)	

M-METRIC PART
Y-SEPARATE ILLUSTRATION

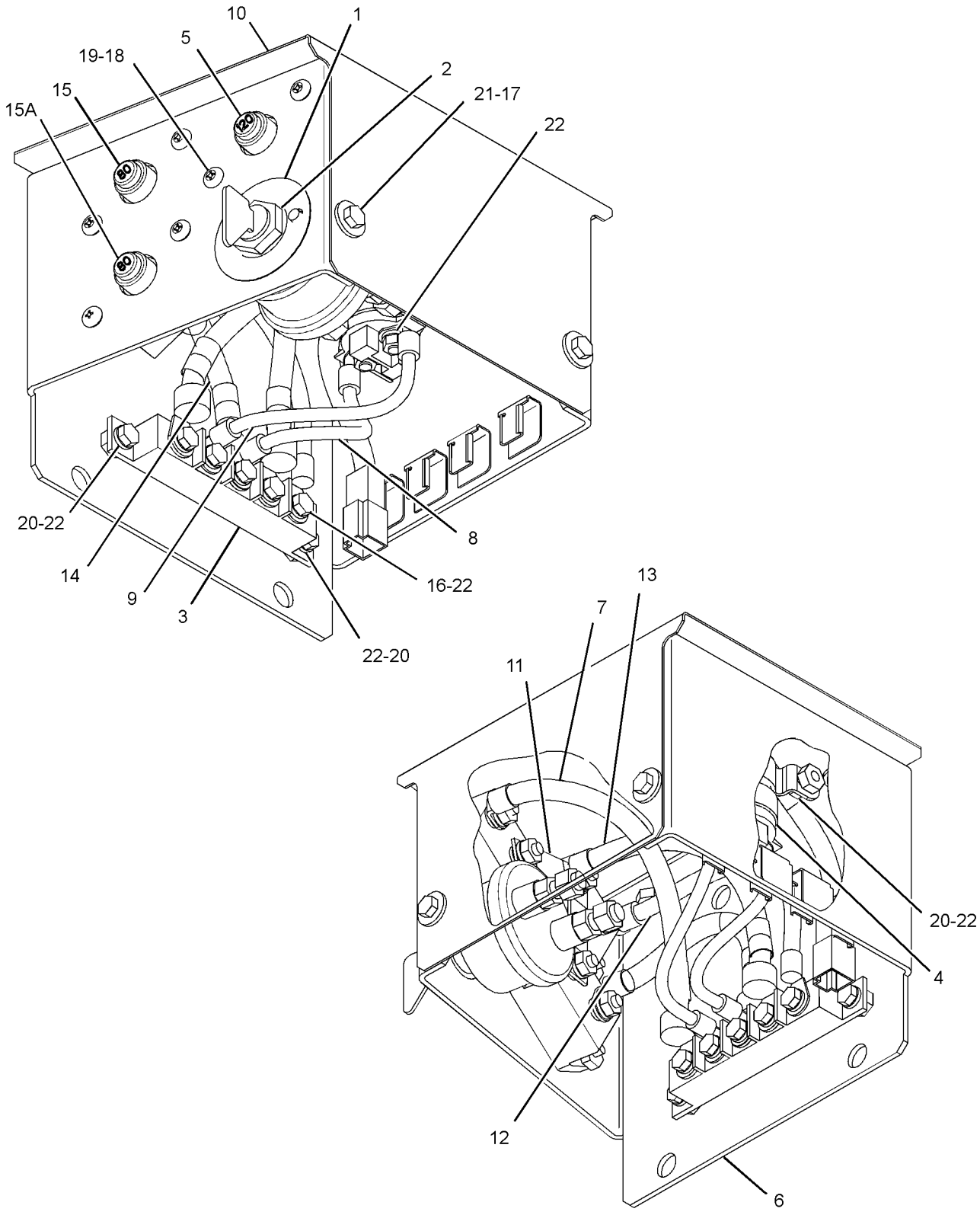

GRAPHIC #1 **<END>** g01326247

251-0542 PANEL GP-SWITCH—ENGINE SPEED, START

S/N: D3P1-100; M4T1-206

PART OF 274-7466 CONSOLE GP-OPERATOR

SMCS-1408, 1429, 7332, 7451 **i02500474**

NOTE	REF NO	GRAPHIC REF	PART NUMBER	QTY	PART NAME 1 2 3 4 5 6 (PRODUCT LEVEL)	SEE PAGE
	1	1	**3S-2093**	4	STRAP-CABLE	
Y	2	1	**9G-7641**	1	SWITCH GP-START (ENGINE, KEY)	273
Y	3	1	**106-0107**	1	SWITCH GP-ROTARY (THROTTLE POSITION)	271
	4	1	**170-9324**	1	LAMP AS (24-VOLT, 3-WATT)	
	5	1	**185-9208**	1	KNOB AS (THROTTLE POSITION)	
	6	1	**234-1156**	1	COVER	
	7	1	**234-1158**	1	COVER	
	8	1	**267-7976**	1	PANEL	
	9	1	**251-0543**	1	HARNESS AS-CONSOLE (RH)	
		1	**102-8802**	1	KIT-RECEPTACLE (2-PIN)	
					(INCLUDES RECEPTACLE AS & WEDGE)	
		1	**155-2270**	1	KIT-CONNECTING PLUG (2-PIN)	
		1	**155-2274**	1	KIT-CONNECTING PLUG (6-PIN)	
					(EACH CONNECTING PLUG KIT INCLUDES PLUG AS, WEDGE & INTERFACE SEAL)	
	10	1	**096-6166**	4	WASHER-HARD (4.5X9X1-MM THK)	
	11	1	**119-5026**	4	SCREW-PAN HEAD (10-16X0.63-IN)	
M	12	1	**6V-9491**	4	SCREW-MACHINE (M4X0.7X20-MM)	

M-METRIC PART
Y-SEPARATE ILLUSTRATION

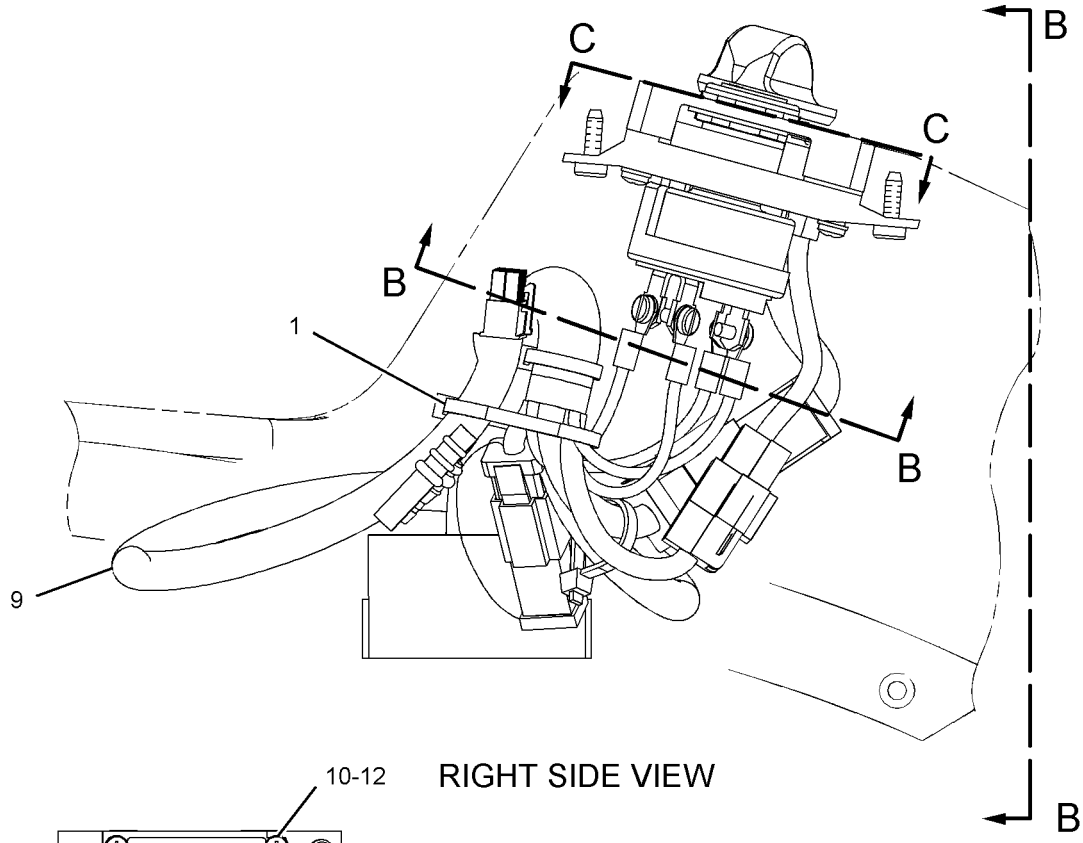

RIGHT SIDE VIEW

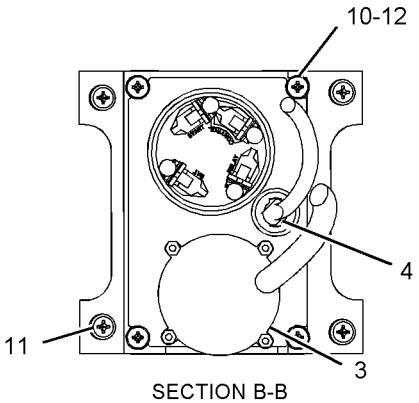

SECTION B-B

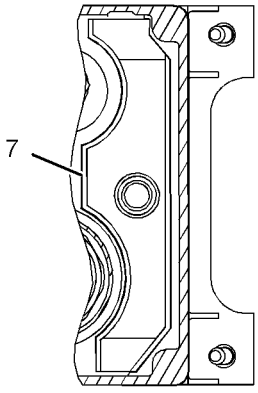

VIEW C-C

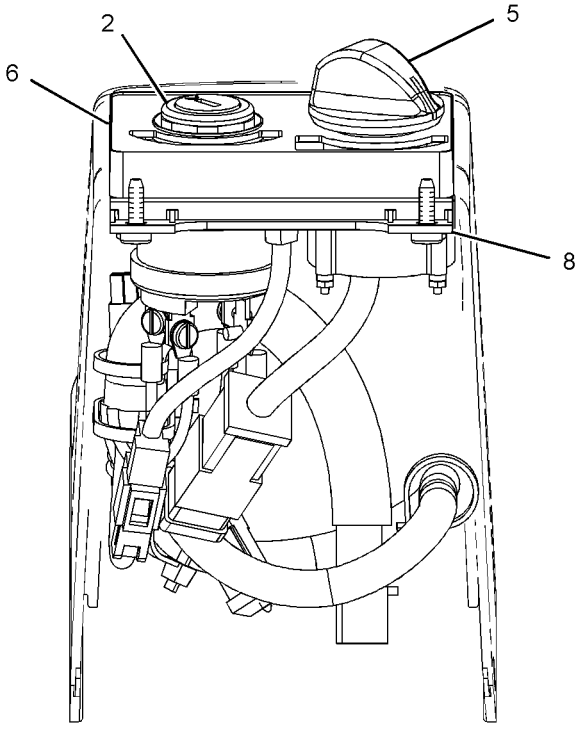

VIEW B-B

GRAPHIC #1 **<END>** g01112022

251-0542 PANEL GP-SWITCH—ENGINE SPEED, START

S/N: D3P101-UP; M4T207-UP

PART OF 274-7466 CONSOLE GP-OPERATOR

SMCS-1408, 1429, 7332, 7451 **i03434801**

NOTE	REF NO	GRAPHIC REF	PART NUMBER	QTY	PART NAME 1 2 3 4 5 6 (PRODUCT LEVEL)	SEE PAGE
	1	1	**3S-2093**	4	STRAP-CABLE	
Y	2	1	**9G-7641**	1	SWITCH GP-START (ENGINE, KEY)	273
CY	3	1	**319-4420**	1	SWITCH GP-ROTARY (THROTTLE POSITION)	272
	4	1	**170-9324**	1	LAMP AS (24-VOLT, 3-WATT)	
	5	1	**185-9208**	1	KNOB AS (THROTTLE POSITION)	
	6	1	**234-1156**	1	COVER	
	7	1	**234-1158**	1	COVER	
	8	1	**267-7976**	1	PANEL	
C	9	1	**328-0021**	1	HARNESS AS-CONSOLE (RH)	
	10	1	**096-6166**	4	WASHER-HARD (4.5X9X1-MM THK)	
	11	1	**119-5026**	4	SCREW-PAN HEAD (10-16X0.63-IN)	
M	12	1	**6V-9491**	4	SCREW-MACHINE (M4X0.7X20-MM)	

C-CHANGE FROM PREVIOUS TYPE
M-METRIC PART
Y-SEPARATE ILLUSTRATION

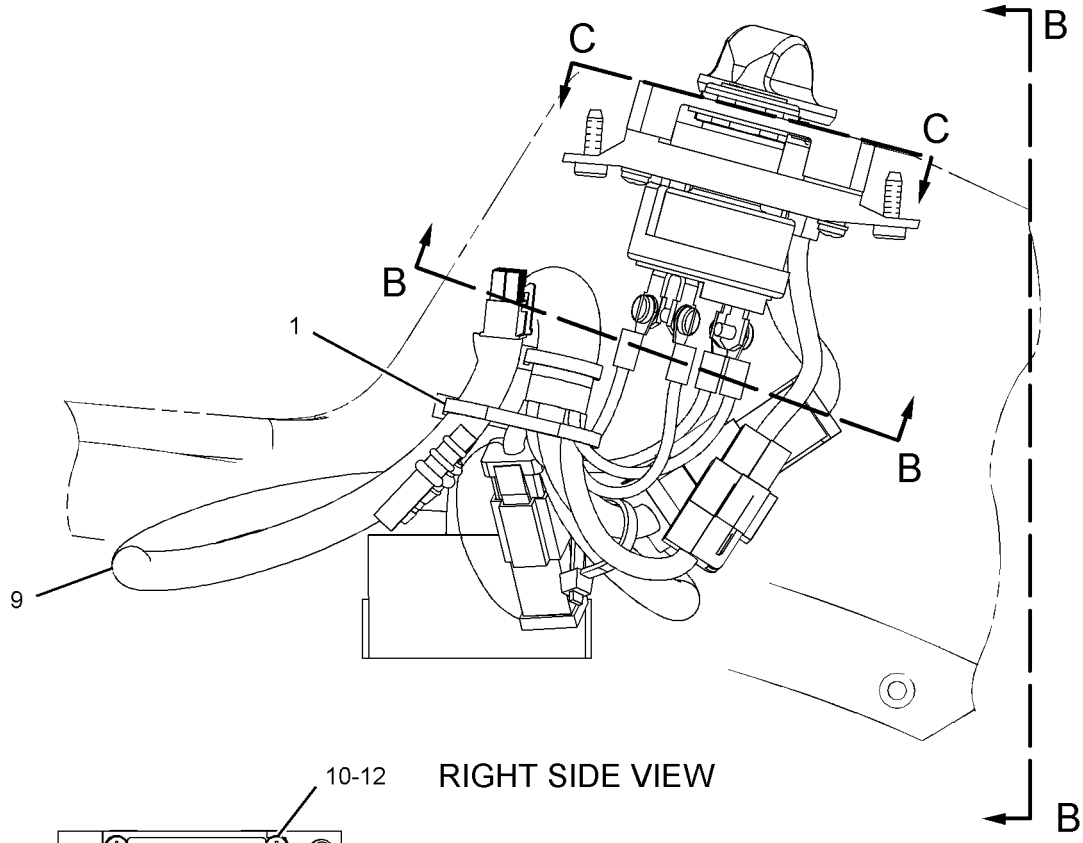

RIGHT SIDE VIEW

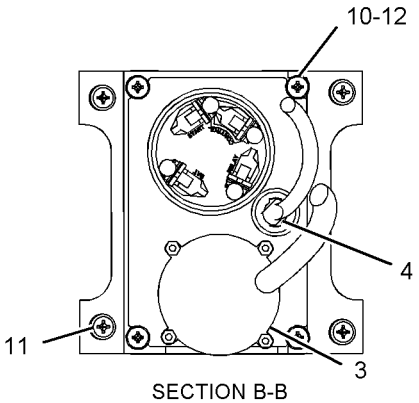

SECTION B-B

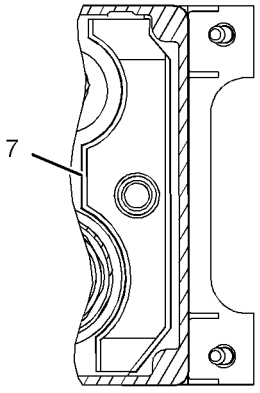

VIEW C-C

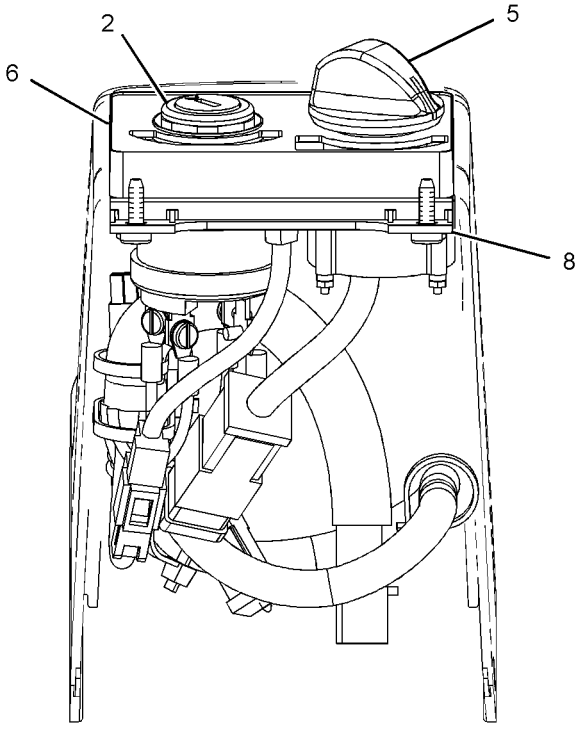

VIEW B-B

GRAPHIC #1 **<END>** g01112022

251-0544 PANEL GP-SWITCH—ENGINE SPEED, START

S/N: D3P1-UP; M4T1-UP
PART OF 227-7581 INSTALLATION GP-SECURITY
AN ATTACHMENT

SMCS-1408, 1429, 7332, 7451 **i03750387**

NOTE	REF NO	GRAPHIC REF	PART NUMBER	QTY	PART NAME 1 2 3 4 5 6 (PRODUCT LEVEL)	SEE PAGE
	1	1	**3S-2093**	5	STRAP-CABLE	
Y	2	1	**9G-7641**	1	SWITCH GP-START (ENGINE, KEY)	273
CY	3	1	**319-4420**	1	SWITCH GP-ROTARY (THROTTLE POSITION)	272
	4	1	**185-9208**	1	KNOB AS	
	5	1	**205-0826**	1	FILM-INSTRUCTION (MACHINE SECURITY, CONSOLE)	
	6	1	**206-5208**	1	COIL AS (EXCITER)	
	7	1	**234-1156**	1	COVER	
	8	1	**267-7977**	1	PANEL	
C	9	1	**328-0021**	1	HARNESS AS-CONSOLE	
		1	**102-8802**	1	KIT-RECEPTACLE (2-PIN)	
					(INCLUDES RECEPTACLE AS & WEDGE)	
		1	**3S-2093**	3	STRAP-CABLE	
		1	**7Y-3951**	2	TERMINAL-BLADE (14-GA)	
		1	**7Y-3952**	1	CONNECTOR-PLUG (2-PIN)	
		1	**7Y-3962**	1	TERMINAL-BULLET (MALE)	
		1	**7Y-3963**	1	TERMINAL-BULLET (FEMALE)	
		1	**8T-8737**	3	PLUG-SEAL	
		1	**121-1168**	1	CONNECTOR-RECEPTACLE	
		1	**121-1173**	14	TERMINAL (MALE)	
		1	**9X-3402**	7	SOCKET-CONNECTOR (16-GA TO 18-GA)	
		1	**2L-8075**	4	TERMINAL-RING (14-GA TO 16-GA, NO. 8 SCREW)	
		1	**153-2540**	10	TERMINAL	
		1	**153-2541**	1	CONNECTOR-PLUG	
		1	**155-2270**	1	KIT-CONNECTING PLUG (2-PIN)	
					(INCLUDES PLUG AS, WEDGE & INTERFACE SEAL)	
		1	**230-5010**	1	PLUG AS-CONNECTOR (6-PIN)	
		1	**264-7032**	1	SEAL-CONNECTOR	
		1	**238-2366**	7	TERMINAL (MALE)	
	10	1	**096-6166**	4	WASHER-HARD (4.5X9X1-MM THK)	
	11	1	**119-5026**	4	SCREW-PAN HEAD (10-16X0.63-IN)	
M	12	1	**6V-9491**	4	SCREW-MACHINE (M4X0.7X20-MM)	

C-CHANGE FROM PREVIOUS TYPE
M-METRIC PART
Y-SEPARATE ILLUSTRATION

251-0544 **PANEL GP-SWITCH** *(contd.)* **i03750387**

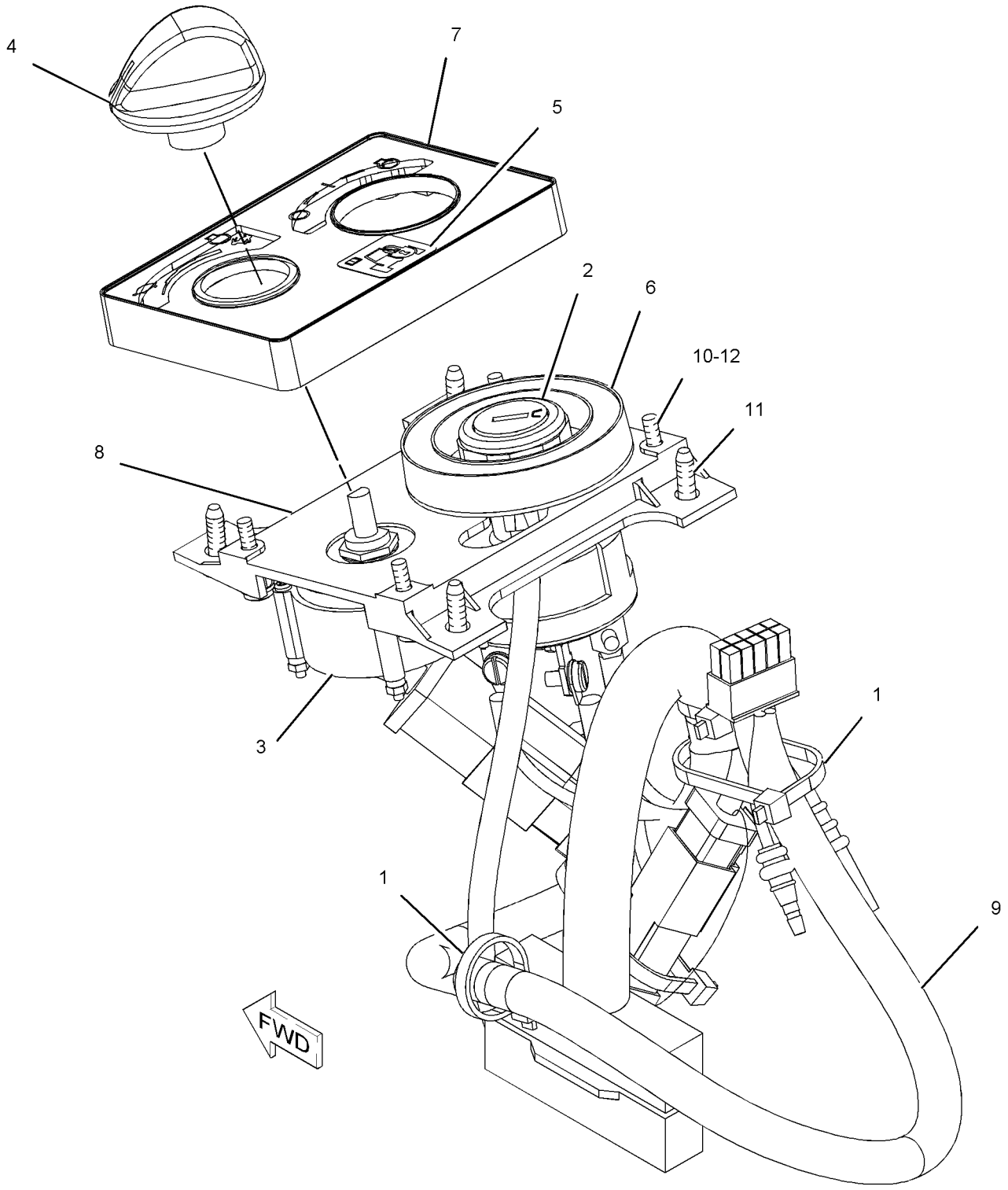

GRAPHIC #1 **<END>** g01123869

235-8200 PLUG GP-CONNECTOR–
ENGINE HARNESS, PROTECTIVE COVER
S/N: THX1-UP

PART OF 240-1861, 301-3082 ENGINE AR-COMPLETE

SMCS-1403, 1408 **i02951921**

NOTE	REF NO	GRAPHIC REF	PART NUMBER	QTY	PART NAME 1 2 3 4 5 6 (PRODUCT LEVEL)	SEE PAGE
	1	1	**246-9353**	1	PLUG AS	
	1A	1	**8T-8737**	8	PLUG-SEAL	
	1B	1	**102-8806**	1	KIT-RECEPTACLE (8-PIN)	
					(INCLUDES RECEPTACLE AS & WEDGE)	
	2	1	**3S-2093**	1	STRAP-CABLE	

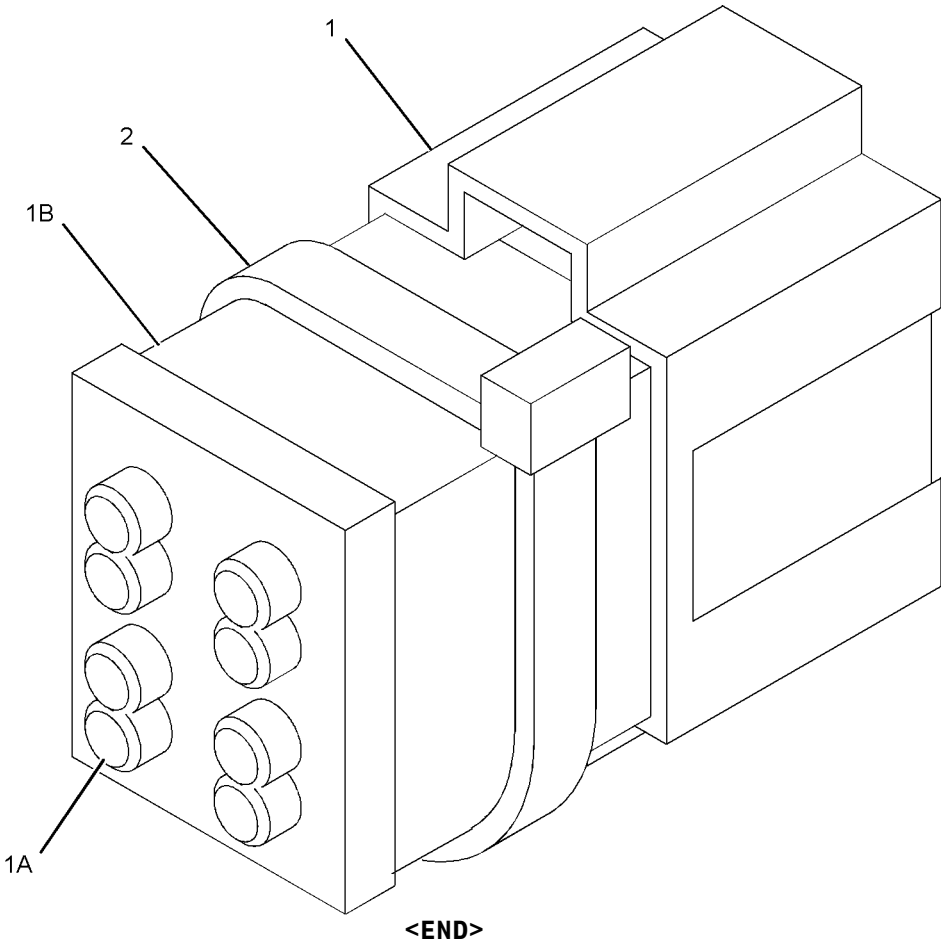

GRAPHIC #1 **<END>** g01105455

292-0291 RECEIVER GP-SATELLITE—DUAL GNSS, MS990

S/N: D3P1-UP; M4T1-UP

PART OF 292-0276 GRADE CONTROL AR-SATELLITE

SMCS-7010 **i02909035**

NOTE	PART NUMBER	QTY	PART NAME 1 2 3 4 5 6 (PRODUCT LEVEL)	SEE PAGE
	252-9628	2	MOUNTING GP-RECEIVER (TARGET)	
			(EACH INCLUDES)	
	8R-1803	5	WASHER (10.5X18X1-MM THK)	
M	**8T-9388**	4	BOLT (M10X1.5X25-MM)	
	113-0693	5	LOCKWASHER	
	289-8449	1	HANDLE AS	
R	**291-1913**	2	RECEIVER AS-SATELLITE (GNSS, MS990)	
	255-0939	1	CASE-PLASTIC (RECEIVER)	
	286-3017	2	HANDLE (RECEIVER)	

M-METRIC PART
R-REMFG PART MAY BE AVAILABLE

<END>

297-5594 SENSOR AR-GRADE

S/N: D3P1-UP; M4T1-UP

PART OF 292-0276 GRADE CONTROL AR-SATELLITE

SMCS-5953, 7220 **i03129244**

NOTE	PART NUMBER	QTY	PART NAME 1 2 3 4 5 6 (PRODUCT LEVEL)	SEE PAGE
	265-9492	1	JUNCTION BOX	
	226-9169	1	MODULE AS-POWER SUPPLY	
	244-1720	3	MONITOR AS (LIGHT BAR)	
	265-8047	1	SENSOR-ANGLE (AS21)	
	265-8059	3	SENSOR-ANGLE (AS300)	

<END>

231-1978 SENSOR GP-ENGINE

S/N: THX1-22179

PART OF 240-1861, 301-3082 ENGINE AR-COMPLETE

SMCS-1000, 1906, 1907, 1924, 7422 **i02835981**

NOTE	REF NO	GRAPHIC REF	PART NUMBER	QTY	PART NAME 1 2 3 4 5 6 (PRODUCT LEVEL)	SEE PAGE
	1	1	**9X-0262**	1	ADAPTER	
Y	2	1	*274-7395*	1	SENSOR GP-TEMPERATURE (AIR INLET MANIFOLD)	253
Y	3	1	*274-7396*	1	SENSOR GP-TEMPERATURE (WATER, COOLANT)	254
Y	4	1	*197-8393*	1	SENSOR GP-PRESSURE (ATMOSPHERIC AIR)	237
Y	5	1	*197-8394*	1	SENSOR GP-PRESSURE (ENGINE OIL)	238
Y	6	1	*210-1747*	1	SENSOR GP-PRESSURE (TURBOCHARGER OUTLET)	239
Y	7	1	*236-6220*	1	SENSOR GP-PRESSURE (INJECTION ACTUATION)	241
Y	8	1	*236-6221*	1	SENSOR GP-SPEED (ENGINE TIMING)	248
	9	1	**3E-4352**	1	WASHER-HARD (8.8X20.5X2.5-MM THK)	
M	10	1	**6V-3940**	1	BOLT (M8X1.25X25-MM)	
	11	1	**6V-5048**	1	SEAL-O-RING	
	12	1	**6V-5049**	1	SEAL-O-RING	
	13	1	**9X-0261**	1	ADAPTER	

M-METRIC PART
Y-SEPARATE ILLUSTRATION

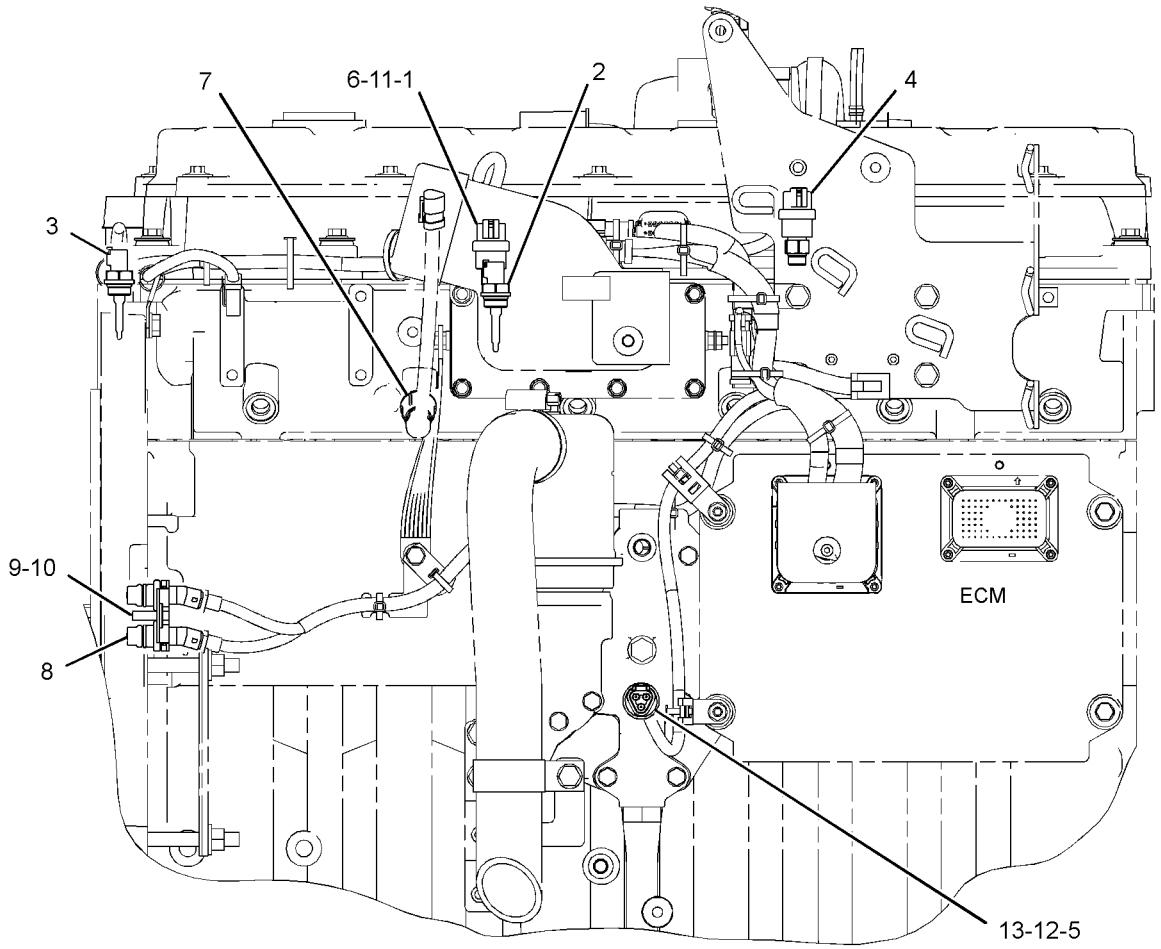

LEFT SIDE VIEW

GRAPHIC #1 **<END>** g01199708

330-6034 SENSOR GP-ENGINE

S/N: THX22180-UP

PART OF 240-1861, 301-3082 ENGINE AR-COMPLETE

SMCS-1000, 1906, 1907, 1924, 7422 **i03558745**

NOTE	REF NO	GRAPHIC REF	PART NUMBER	QTY	PART NAME 1 2 3 4 5 6 (PRODUCT LEVEL)	SEE PAGE
Y	1	1	*234-5012*	1	SENSOR GP-TEMPERATURE (COOLANT)	251
Y	2	1	*234-5013*	1	SENSOR GP-TEMPERATURE (INTAKE AIR TEMPERATURE)	252
Y	3	1	*236-6221*	1	SENSOR GP-SPEED (ENGINE TIMING)	248
Y	4	1	*266-8650*	1	SENSOR GP-PRESSURE (OUTLET AIR)	243
Y	5	1	*267-1402*	1	SENSOR GP-PRESSURE (INJECTION ACTUATION)	244
Y	6	1	*276-9067*	1	SENSOR GP-PRESSURE (ENGINE OIL)	245
Y	7	1	*303-3357*	1	SENSOR GP-PRESSURE (ATMOSPHERIC)	246
	8	1	**214-7568**	1	SEAL-O-RING	
	9	1	**3E-4352**	1	WASHER-HARD (8.8X20.5X2.5-MM THK)	
M	10	1	**6V-3940**	1	BOLT (M8X1.25X25-MM)	
	11	1	**6V-5048**	1	SEAL-O-RING	
	12	1	**9X-0261**	1	ADAPTER	
	13	1	**9X-0262**	1	ADAPTER	

M-METRIC PART
Y-SEPARATE ILLUSTRATION

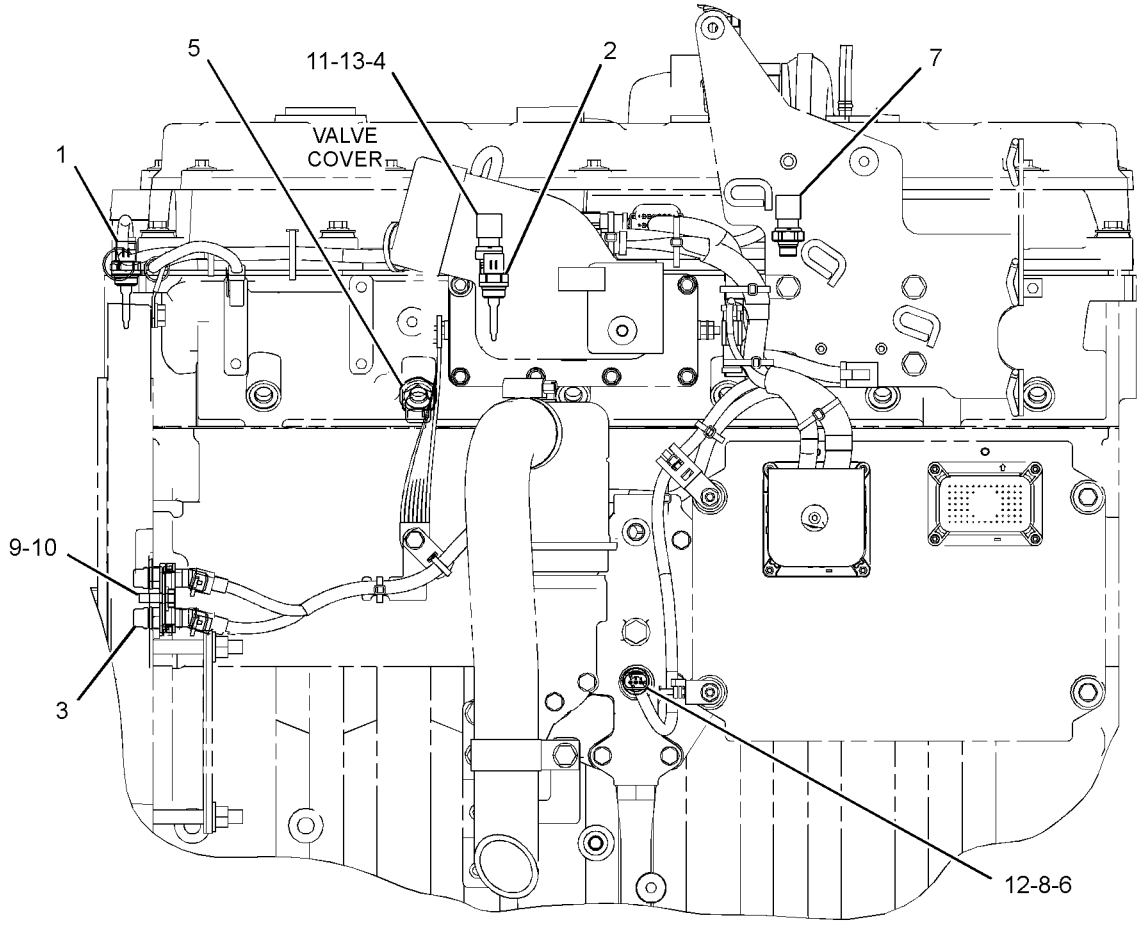

LEFT SIDE VIEW OF ENGINE

GRAPHIC #1 **<END>** g01913363

178-2345 SENSOR GP-LIQUID LEVEL

S/N: D3P1-UP; M4T1-UP

PART OF 233-1124 SENSOR GP-LIQUID LEVEL

SMCS-7422 **i03423327**

NOTE	REF NO	GRAPHIC REF	PART NUMBER	QTY	PART NAME 1 2 3 4 5 6 (PRODUCT LEVEL)	SEE PAGE
	1	1	**178-2334**	1	PROBE AS-LIQUID LEVEL (WATER SEPARATOR)	
	1A	1	**3J-1907**	1	SEAL-O-RING	
	2	1	**178-2335**	1	SENSOR AS-LIQUID LEVEL (WATER SEPARATOR)	
		1	**102-8804**	1	KIT-RECEPTACLE (4-PIN)	
					(INCLUDES RECEPTACLE AS & WEDGE)	
		1	**155-2270**	1	KIT-CONNECTING PLUG (2-PIN)	
					(INCLUDES PLUG AS, WEDGE, & INTERFACE SEAL)	
		1	**186-3735**	4	PIN-CONNECTOR (16-GA TO 18-GA)	
		1	**186-3736**	2	SOCKET-CONNECTOR (16-GA TO 18-GA)	

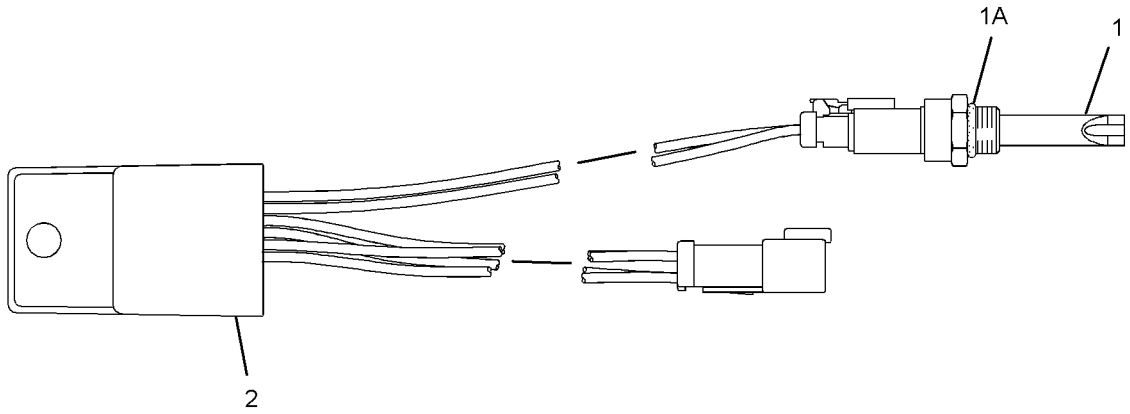

GRAPHIC #1 **<END>** g01285011

233-1124 SENSOR GP-LIQUID LEVEL—WATER IN FUEL

S/N: D3P1-UP; M4T1-UP
PART OF 314-3709 CHASSIS AR

SMCS-7422 **i02490245**

NOTE	REF NO	GRAPHIC REF	PART NUMBER	QTY	PART NAME 1 2 3 4 5 6 (PRODUCT LEVEL)	SEE PAGE
	1	1	**096-0061**	2	STRAP-CABLE	
Y	2	1	**178-2345**	1	SENSOR GP-LIQUID LEVEL (WATER IN FUEL)	234
	3	1	**6V-5049**	1	SEAL-O-RING	
	4	1	**8T-4121**	1	WASHER-HARD (11X21X2.5-MM THK)	
M	5	1	**8T-4137**	1	BOLT (M10X1.5X20-MM)	

M-METRIC PART
Y-SEPARATE ILLUSTRATION

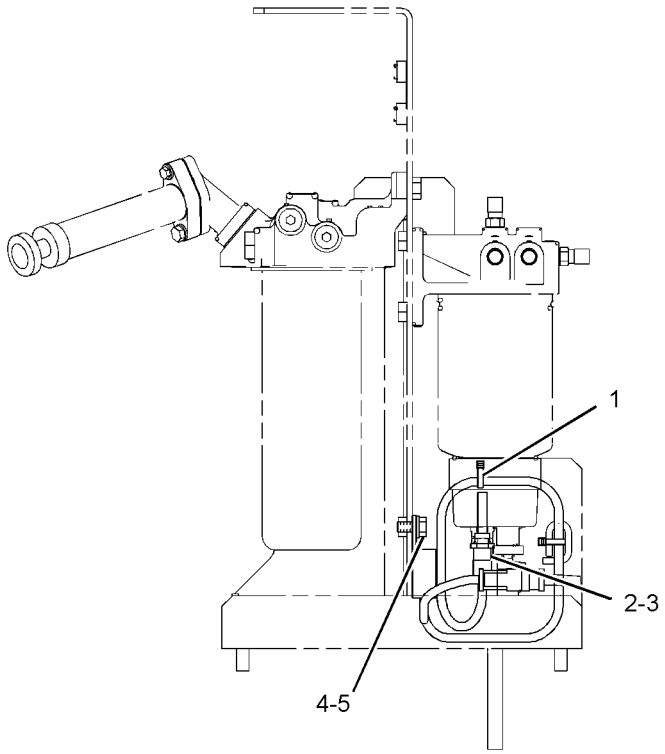

LEFT SIDE VIEW

GRAPHIC #1 **<END>** g01150641

194-6725 SENSOR GP-PRESSURE

S/N: D3P1-UP; M4T1-UP
PART OF 239-2396 SENSOR GP-PRESSURE
ALSO AN ATTACHMENT

SMCS-1439, 1916, 1917, 1923, 1924 **i03435081**

NOTE	REF NO	GRAPHIC REF	PART NUMBER	QTY	PART NAME 1 2 3 4 5 6 (PRODUCT LEVEL)	SEE PAGE
E	1	1	**9X-1813**		SLEEVE (34-CM)	
	2	1	**155-2260**	1	KIT-CONNECTING PLUG (3-PIN)	
					(INCLUDES PLUG AS, INTERFACE SEAL & WEDGE)	
	3	1	**180-9340**	3	SOCKET-CONNECTOR (14-GA TO 18-GA)	

E-ORDER BY THE CENTIMETER

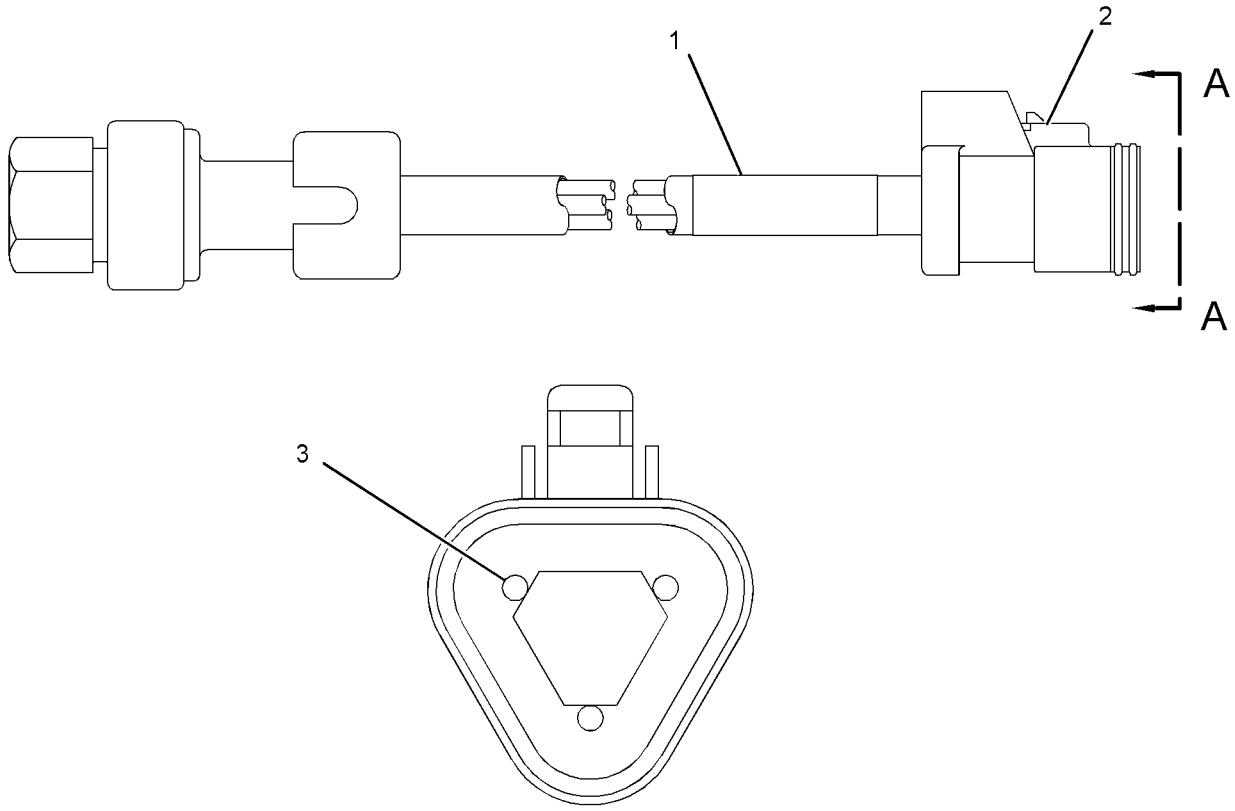

VIEW A-A

GRAPHIC #1 **<END>** g01662003

197-8393 SENSOR GP-PRESSURE

S/N: THX1-UP

PART OF 231-1978 SENSOR GP-ENGINE

SMCS-1439, 1916, 1917, 1923, 1924 **i03499761**

NOTE	REF NO	GRAPHIC REF	PART NUMBER	QTY	PART NAME 1 2 3 4 5 6 (PRODUCT LEVEL)	SEE PAGE
	1	1	**161-1703**	1	SENSOR GP-PRESSURE	
	2	1	**6V-5049**	1	SEAL-O-RING	

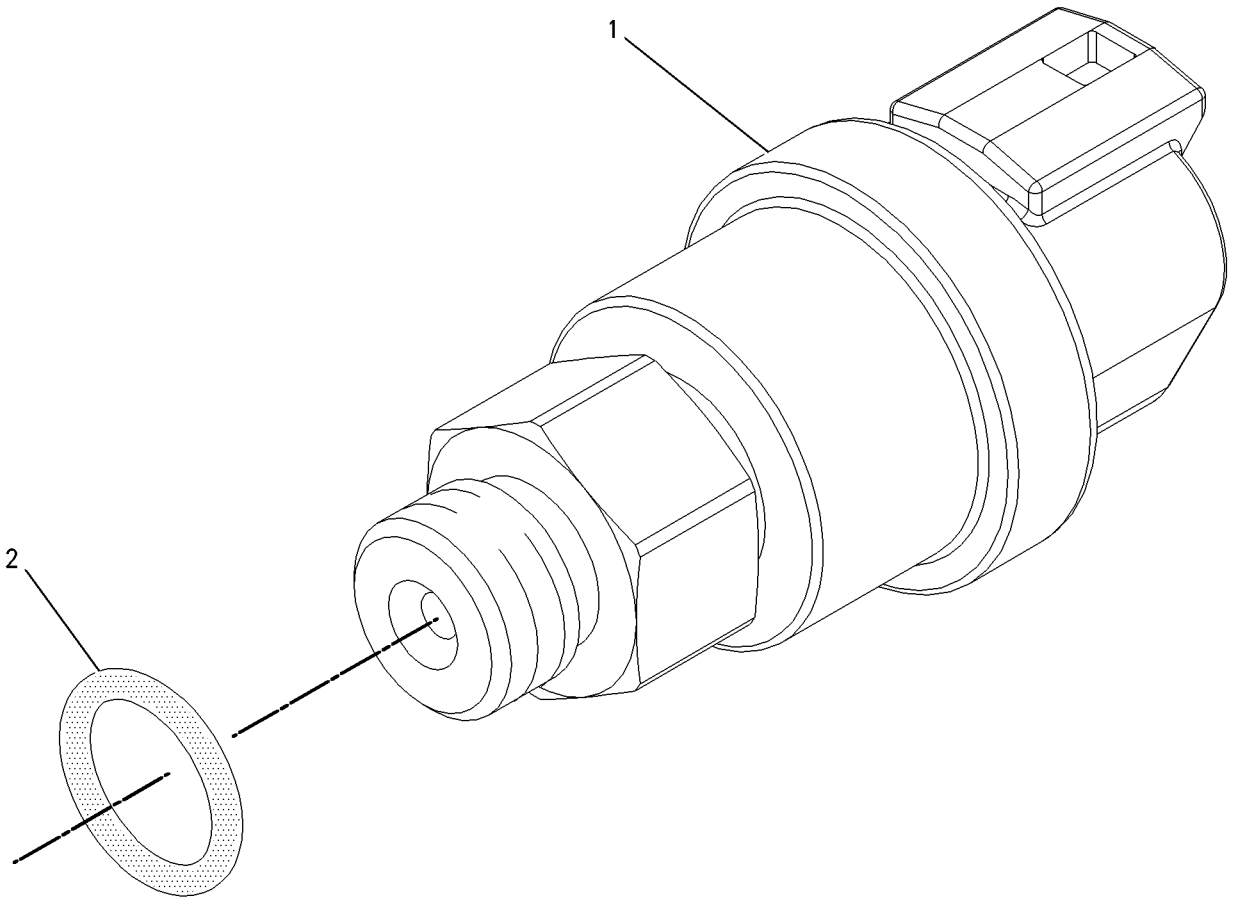

GRAPHIC #1 **<END>** g00855973

197-8394 SENSOR GP-PRESSURE

S/N: THX1-UP

PART OF 231-1978 SENSOR GP-ENGINE

SMCS-1439, 1916, 1917, 1923, 1924 **i03499862**

NOTE	REF NO	GRAPHIC REF	PART NUMBER	QTY	PART NAME 1 2 3 4 5 6 (PRODUCT LEVEL)	SEE PAGE
	1	1	**161-1705**	1	SENSOR AS-PRESSURE	
	2	1	**6V-5048**	1	SEAL-O-RING	

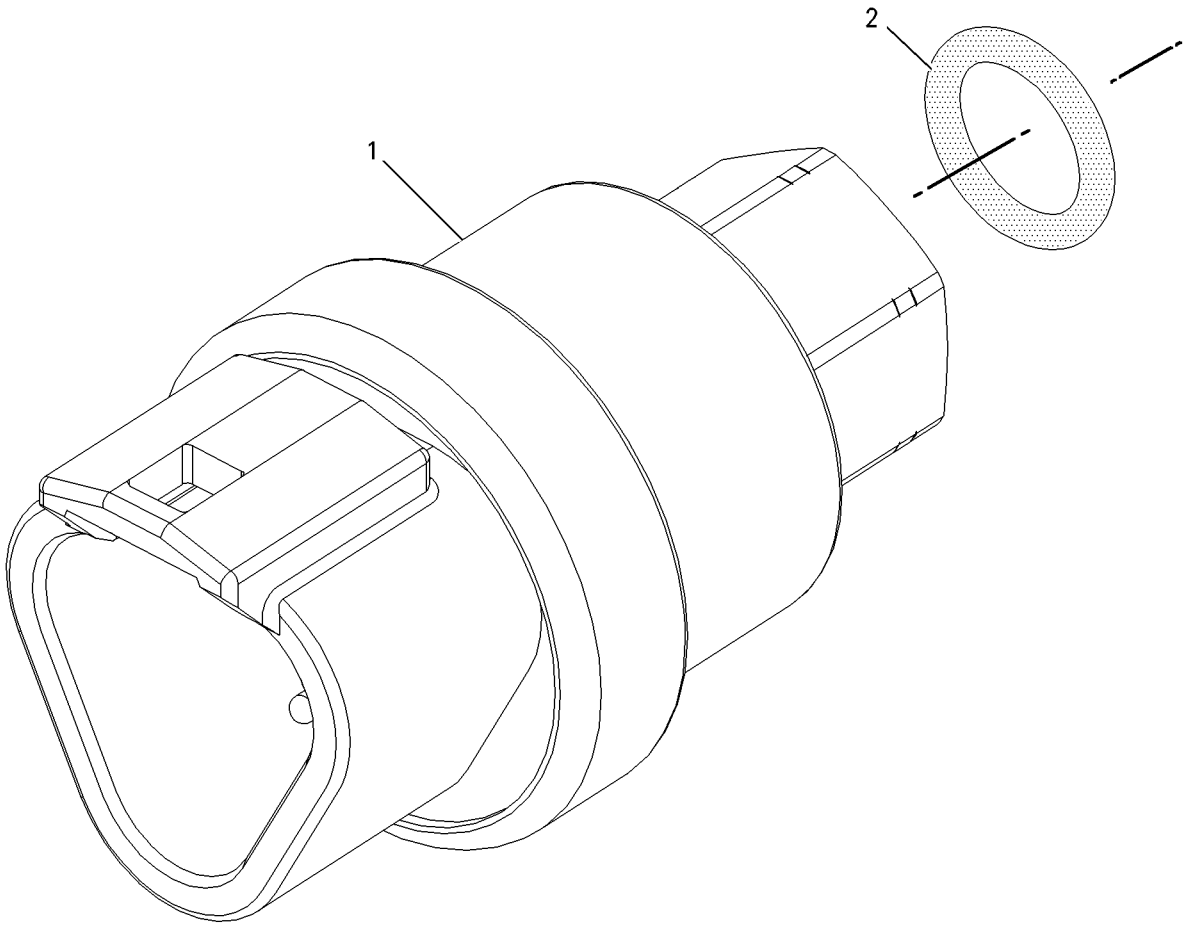

GRAPHIC #1 **<END>** g00856107

210-1747 SENSOR GP-PRESSURE

S/N: THX1-UP

PART OF 231-1978 SENSOR GP-ENGINE

SMCS-1439, 1916, 1917, 1923, 1924 **i03499901**

NOTE	REF NO	GRAPHIC REF	PART NUMBER	QTY	PART NAME 1 2 3 4 5 6 (PRODUCT LEVEL)	SEE PAGE
	1	1	**161-1704**	1	SENSOR GP-PRESSURE	
	2	1	**6V-5048**	1	SEAL-O-RING	

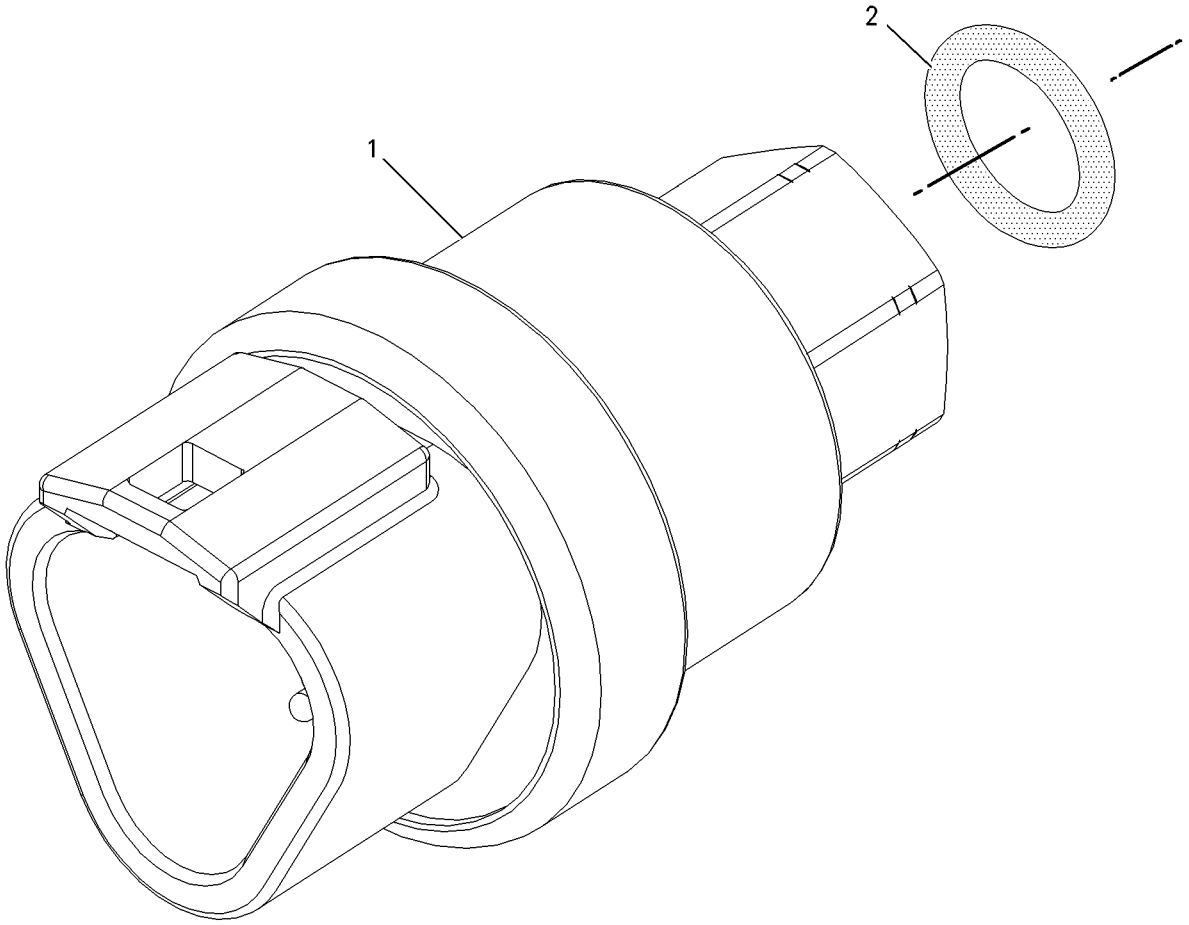

GRAPHIC #1 **<END>** g00856107

224-4536 SENSOR GP-PRESSURE

S/N: THX1-UP

PART OF 236-6220 SENSOR GP-PRESSURE

SMCS-1439, 1916, 1917, 1923, 1924 **i03172043**

NOTE	REF NO	GRAPHIC REF	PART NUMBER	QTY	PART NAME 1 2 3 4 5 6 (PRODUCT LEVEL)	SEE PAGE
BE	1	1	**9X-1813**		SLEEVE	
	2	1	**155-2260**	1	KIT-CONNECTING PLUG (3-PIN)	
					(INCLUDES PLUG AS, WEDGE, & INTERFACE SEAL)	
	3	1	**194-5226**	1	WIRE AS	
					—OR—	
		1	**194-5227**	1	WIRE AS (14-GA)	
	4	1	**155-2276**	1	WEDGE-PLUG LOCK (3-PIN)	

B-USE AS REQUIRED
E-ORDER BY THE CENTIMETER

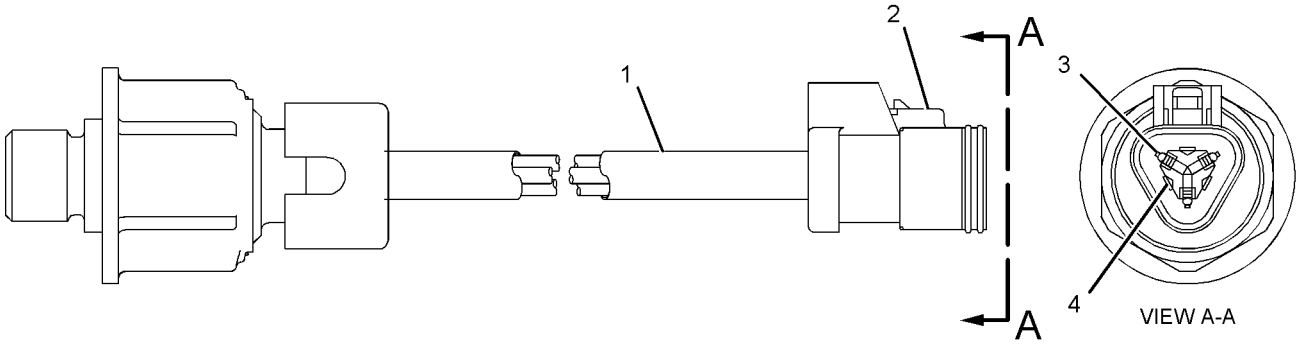

GRAPHIC #1 **<END>** g01040301

236-6220 SENSOR GP-PRESSURE

S/N: THX1-UP

PART OF 231-1978 SENSOR GP-ENGINE

SMCS-1439, 1916, 1917, 1923, 1924 **i03500600**

NOTE	REF NO	GRAPHIC REF	PART NUMBER	QTY	PART NAME 1 2 3 4 5 6 (PRODUCT LEVEL)	SEE PAGE
	1	1	**214-7567**	1	SEAL-O-RING	
Y	2	1	**224-4536**	1	SENSOR GP-PRESSURE	240

Y-SEPARATE ILLUSTRATION

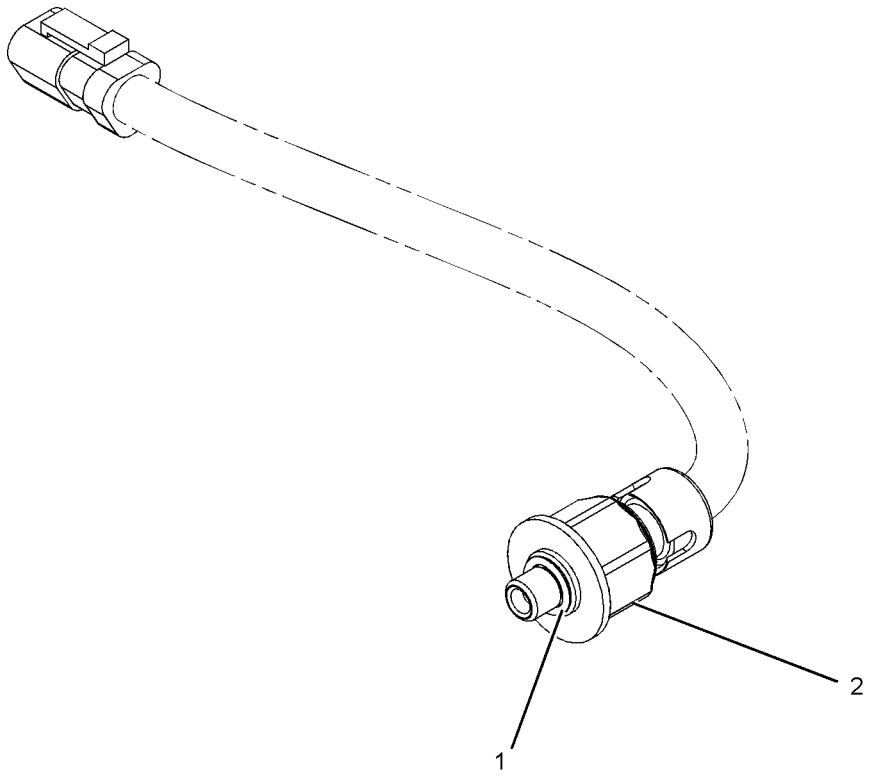

GRAPHIC #1 **<END>** g01054528

239-2396 SENSOR GP-PRESSURE

S/N: D3P1-UP; M4T1-UP

PART OF 237-8752, 259-3918, 343-2392 LINES GP-FUEL

ALSO AN ATTACHMENT

SMCS-1439, 1916, 1917, 1923, 1924 **i03435120**

NOTE	REF NO	GRAPHIC REF	PART NUMBER	QTY	PART NAME 1 2 3 4 5 6 (PRODUCT LEVEL)	SEE PAGE
Y	1	1	**194-6725**	1	SENSOR GP-PRESSURE	236
	2	1	**6V-5048**	1	SEAL-O-RING	

Y-SEPARATE ILLUSTRATION

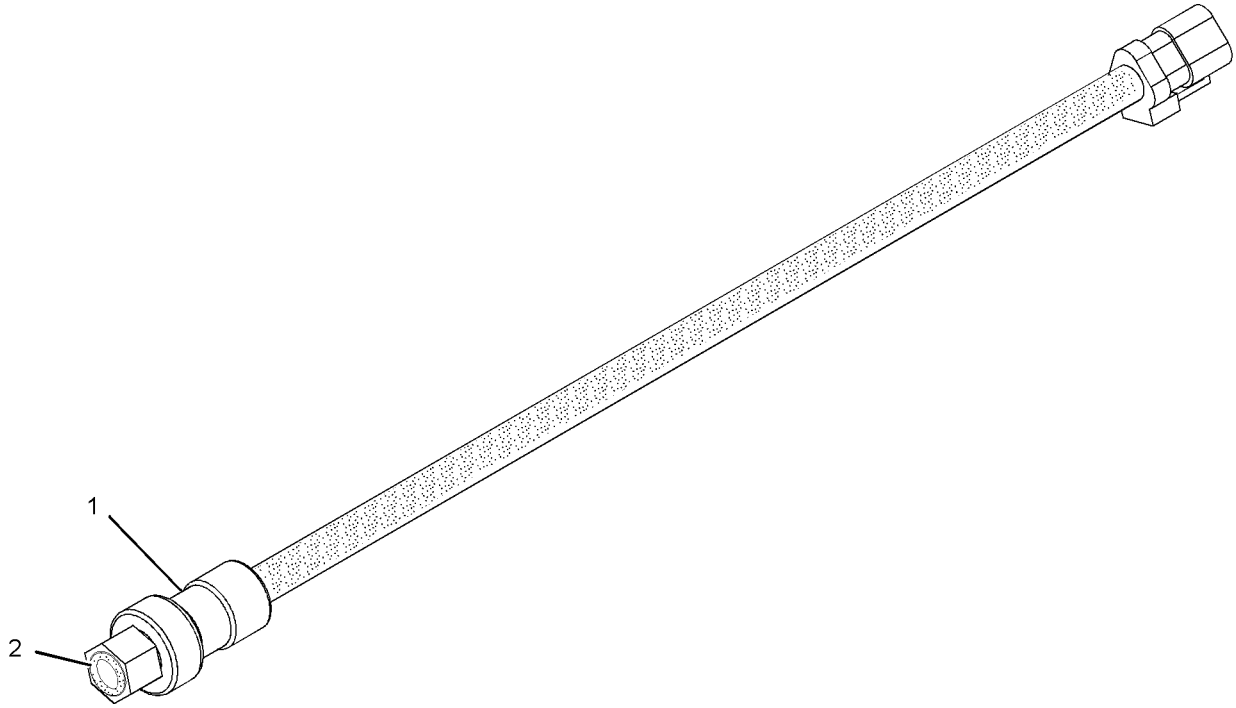

GRAPHIC #1 **<END>** g01019323

266-8650 SENSOR GP-PRESSURE

S/N: THX22180-UP
AMPSEAL CONNECTOR
PART OF 330-6034 SENSOR GP-ENGINE

SMCS-1439, 1916, 1917, 1923, 1924 **i03565215**

NOTE	REF NO	GRAPHIC REF	PART NUMBER	QTY	PART NAME 1 2 3 4 5 6 (PRODUCT LEVEL)	SEE PAGE
	1	1	**276-6793**	1	SENSOR GP-PRESSURE	
	2	1	**6V-5048**	1	SEAL-O-RING	

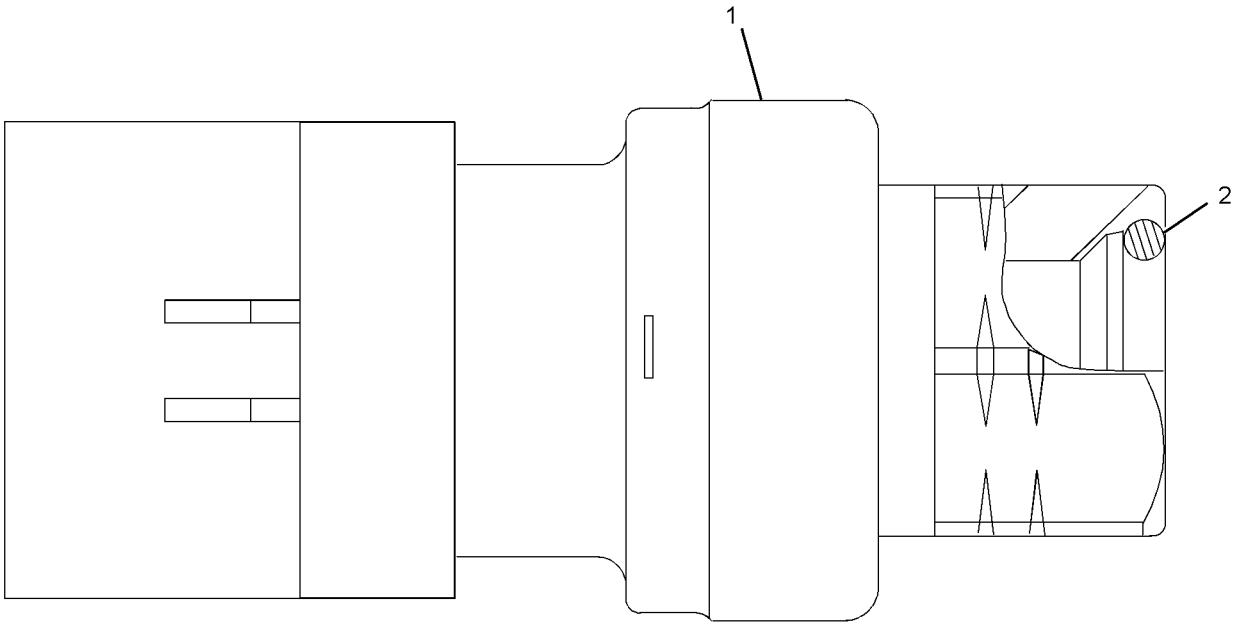

GRAPHIC #1 **<END>** g01164254

267-1402 SENSOR GP-PRESSURE

S/N: THX22180-UP
AMPSEAL CONNECTOR
PART OF 330-6034 SENSOR GP-ENGINE

SMCS-1439, 1916, 1917, 1923, 1924 **i03565217**

NOTE	REF NO	GRAPHIC REF	PART NUMBER	QTY	PART NAME 1 2 3 4 5 6 (PRODUCT LEVEL)	SEE PAGE
	1	1	**214-7567**	1	SEAL-O-RING	
	2	1	**248-2169**	1	SENSOR GP-PRESSURE	

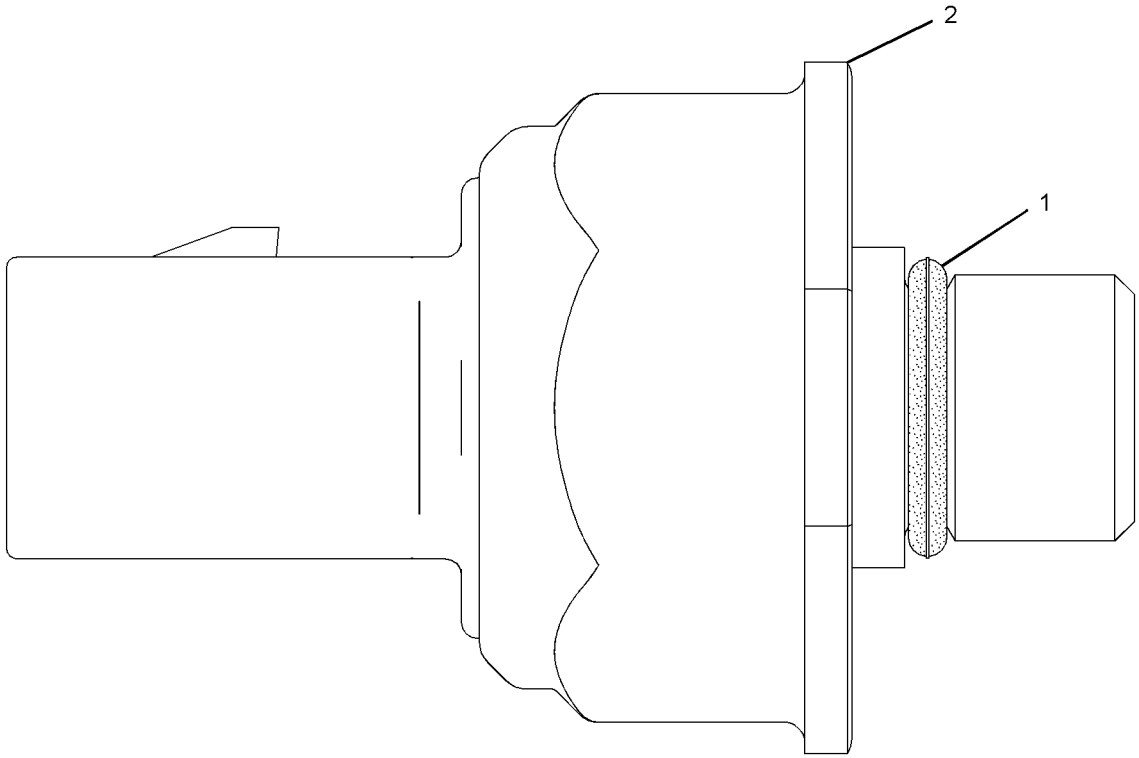

GRAPHIC #1 **<END>** g01164283

276-9067 SENSOR GP-PRESSURE

S/N: THX22180-UP
AMPSEAL CONNECTOR
PART OF 330-6034 SENSOR GP-ENGINE

SMCS-1439, 1916, 1917, 1923, 1924 **i03703689**

NOTE	REF NO	GRAPHIC REF	PART NUMBER	QTY	PART NAME 1 2 3 4 5 6 (PRODUCT LEVEL)	SEE PAGE
	1	1	**274-6719**	1	SENSOR-PRESSURE	
	2	1	**214-7566**	1	SEAL-O-RING	

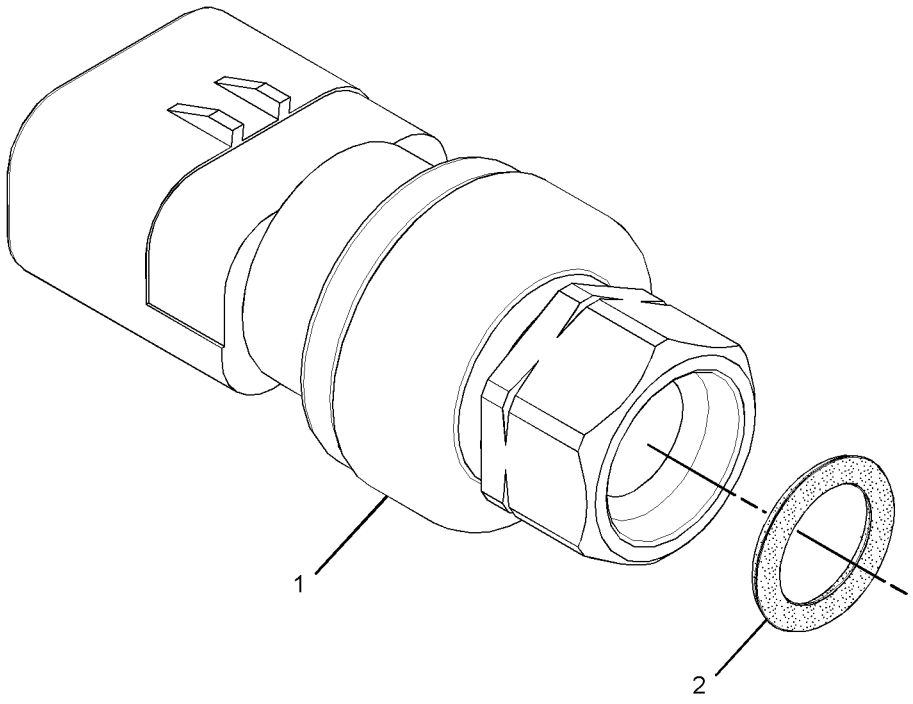

GRAPHIC #1 **<END>** g01994176

303-3357 SENSOR GP-PRESSURE

S/N: THX22180-UP

PART OF 330-6034 SENSOR GP-ENGINE

SMCS-1439, 1916, 1917, 1923, 1924 **i03565210**

NOTE	REF NO	GRAPHIC REF	PART NUMBER	QTY	PART NAME 1 2 3 4 5 6 (PRODUCT LEVEL)	SEE PAGE
	1	1	**296-8060**	1	SENSOR GP-PRESSURE	
	2	1	**6V-5049**	1	SEAL-O-RING	

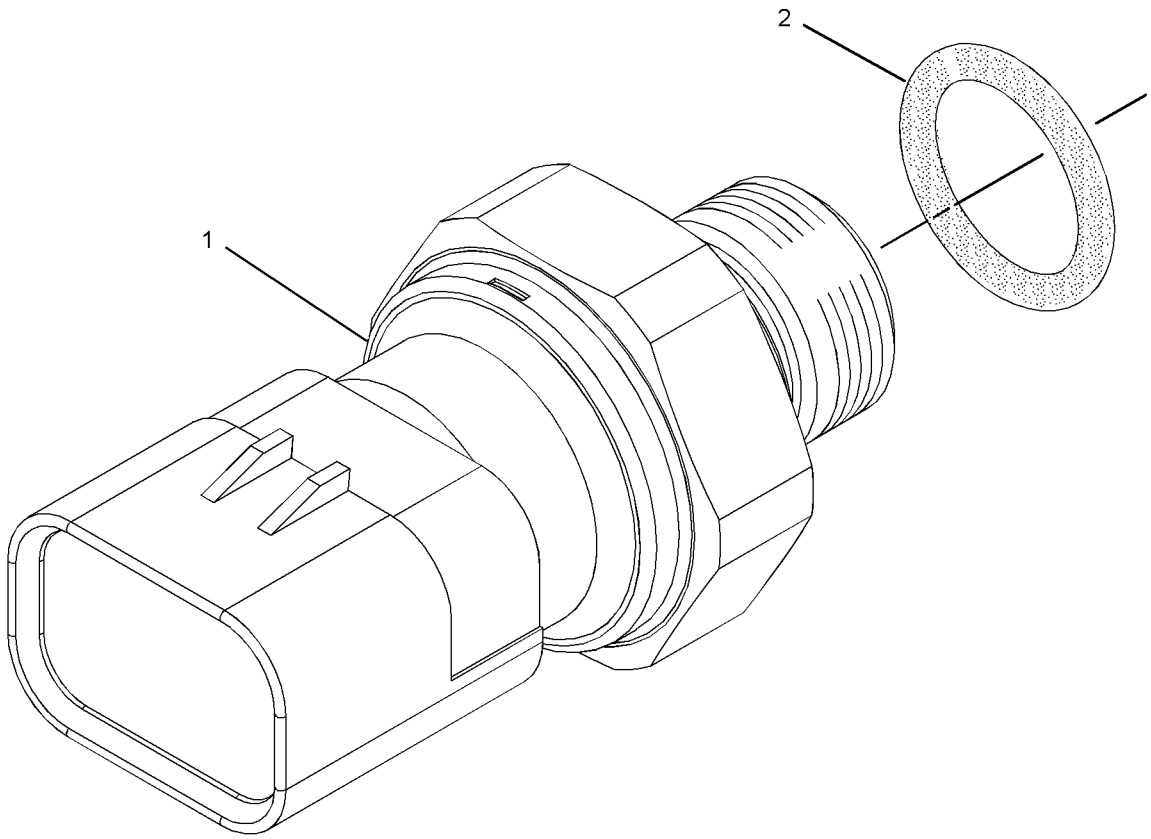

GRAPHIC #1 **<END>** g01331369

4P-5820 SENSOR GP-SPEED

S/N: THX1-UP

PART OF 242-9982 SENSOR GP-SPEED

SMCS-1907, 1912, 4803, 7493 **i02487695**

NOTE	REF NO	GRAPHIC REF	PART NUMBER	QTY	PART NAME 1 2 3 4 5 6 (PRODUCT LEVEL)	SEE PAGE
	1	1	**171-5349**	1	STRAP-MARKER	
	2	1	**102-8802**	2	KIT-RECEPTACLE (2-PIN)	
					(INCLUDES RECEPTACLE AS AND WEDGE)	
	3	1	**186-3735**	2	PIN-CONNECTOR (16-GA TO 18-GA)	
E	4	1	**9X-1386**		SLEEVE (14-CM)	

E-ORDER BY THE CENTIMETER

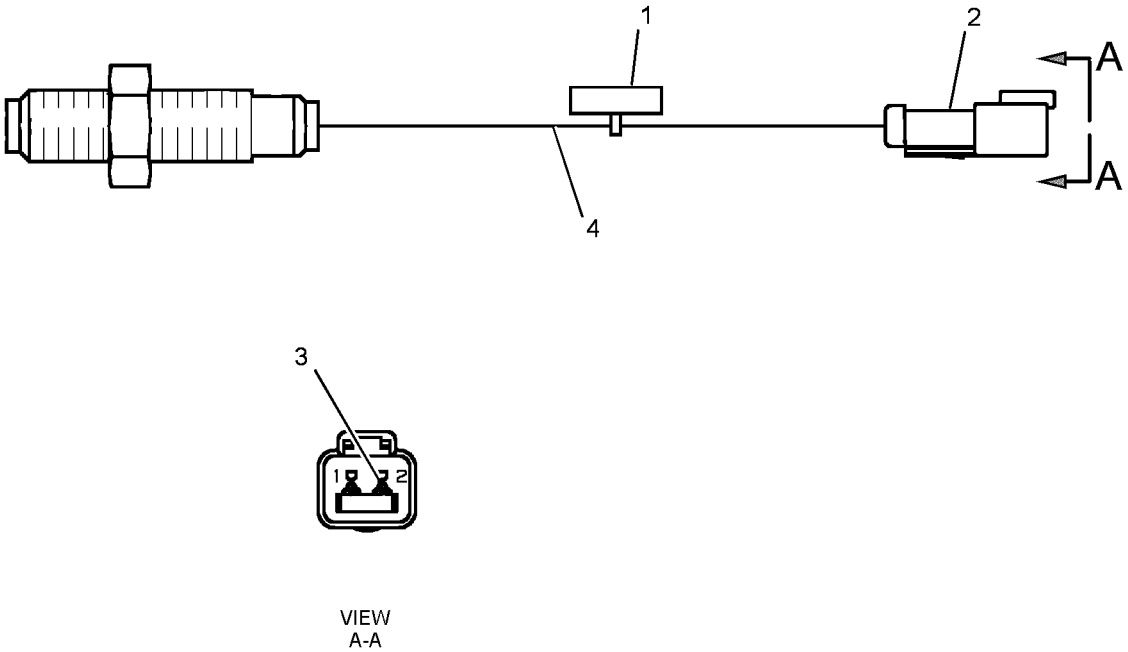

GRAPHIC #1 **<END>** g01242242

236-6221 SENSOR GP-SPEED

S/N: THX1-UP

PART OF 231-1978, 330-6034 SENSOR GP-ENGINE

SMCS-1907, 1912, 4803, 7493 **i03594258**

NOTE	REF NO	GRAPHIC REF	PART NUMBER	QTY	PART NAME 1 2 3 4 5 6 (PRODUCT LEVEL)	SEE PAGE
	1	1	**3P-0647**	2	SEAL-O-RING	
	2	1	**245-4630**	1	SENSOR GP-SPEED	

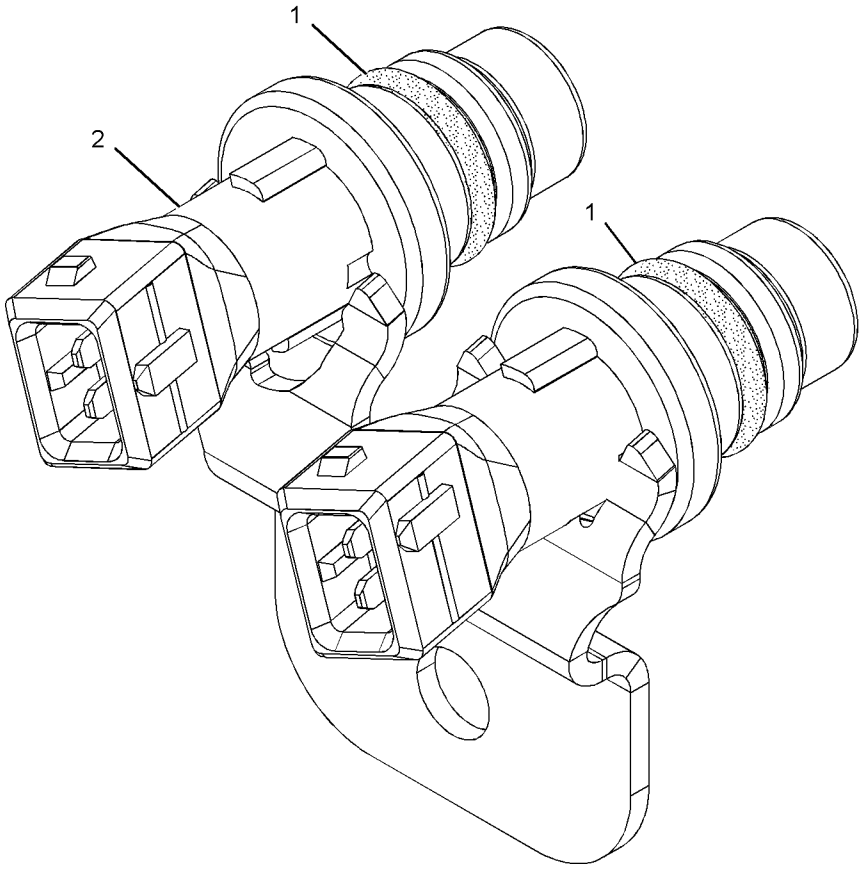

GRAPHIC #1 **<END>** g01013894

242-9982 SENSOR GP-SPEED–CRANKSHAFT

S/N: THX1-UP

PART OF 240-1861, 301-3082 ENGINE AR-COMPLETE

SMCS-1907, 1912, 4803, 7493 **i02504054**

NOTE	REF NO	GRAPHIC REF	PART NUMBER	QTY	PART NAME 1 2 3 4 5 6 (PRODUCT LEVEL)	SEE PAGE
Y	1	1	**4P-5820**	1	SENSOR GP-SPEED (CRANKSHAFT)	247
	2	1	**188-2128**	1	PLUG AS	
		1	**8T-8737**	2	PLUG-SEAL	
		1	**155-2270**	1	KIT-CONNECTING PLUG (2-PIN)	
					(INCLUDES PLUG AS AND WEDGE)	

Y-SEPARATE ILLUSTRATION

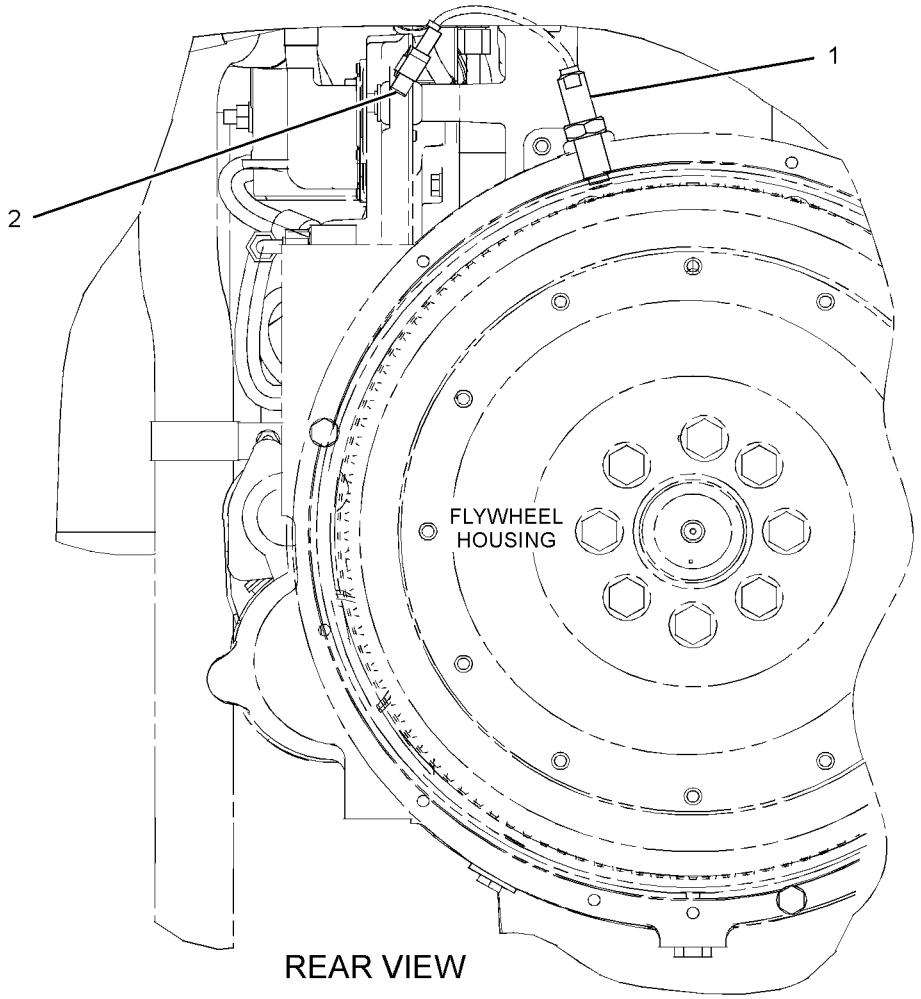

GRAPHIC #1 **<END>** g01186058

197-8391 SENSOR GP-TEMPERATURE

S/N: D3P1-UP; M4T1-UP
PART OF 237-8752, 259-3918, 343-2392 LINES GP-FUEL
ALSO AN ATTACHMENT

SMCS-1906, 1921, 1922, 1928, 1929, 3290, 7344 **i03087540**

NOTE	REF NO	GRAPHIC REF	PART NUMBER	QTY	PART NAME 1 2 3 4 5 6 (PRODUCT LEVEL)	SEE PAGE
C	1	1	**264-4297**	1	SENSOR GP-TEMPERATURE (AIR)	
		1	**137-6645**		PAD	
	2	1	**8L-2786**	1	SEAL-O-RING	

C-CHANGE FROM PREVIOUS TYPE

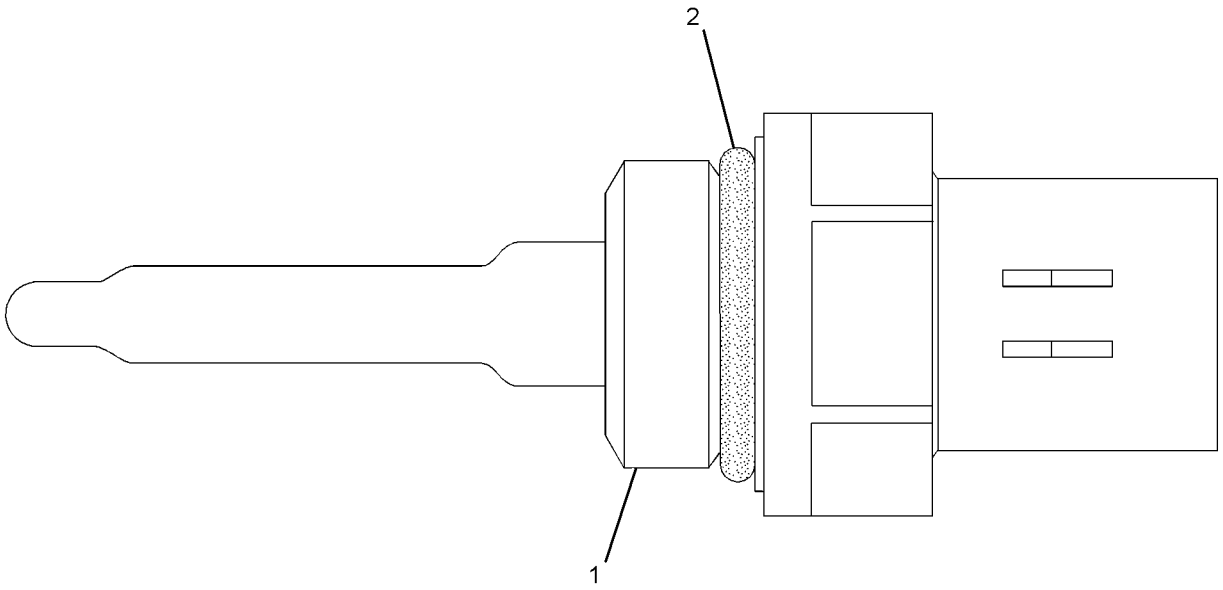

GRAPHIC #1 **<END>** g01164268

234-5012 SENSOR GP-TEMPERATURE

S/N: THX22180-UP
AMPSEAL CONNECTOR
PART OF 330-6034 SENSOR GP-ENGINE

SMCS-1906, 1921, 1922, 1928, 1929, 3290, 7344 **i03565212**

NOTE	REF NO	GRAPHIC REF	PART NUMBER	QTY	PART NAME 1 2 3 4 5 6 (PRODUCT LEVEL)	SEE PAGE
	1	1	**256-6453**	1	SENSOR AS-TEMPERATURE	
	2	1	**6V-6609**	1	SEAL-O-RING	

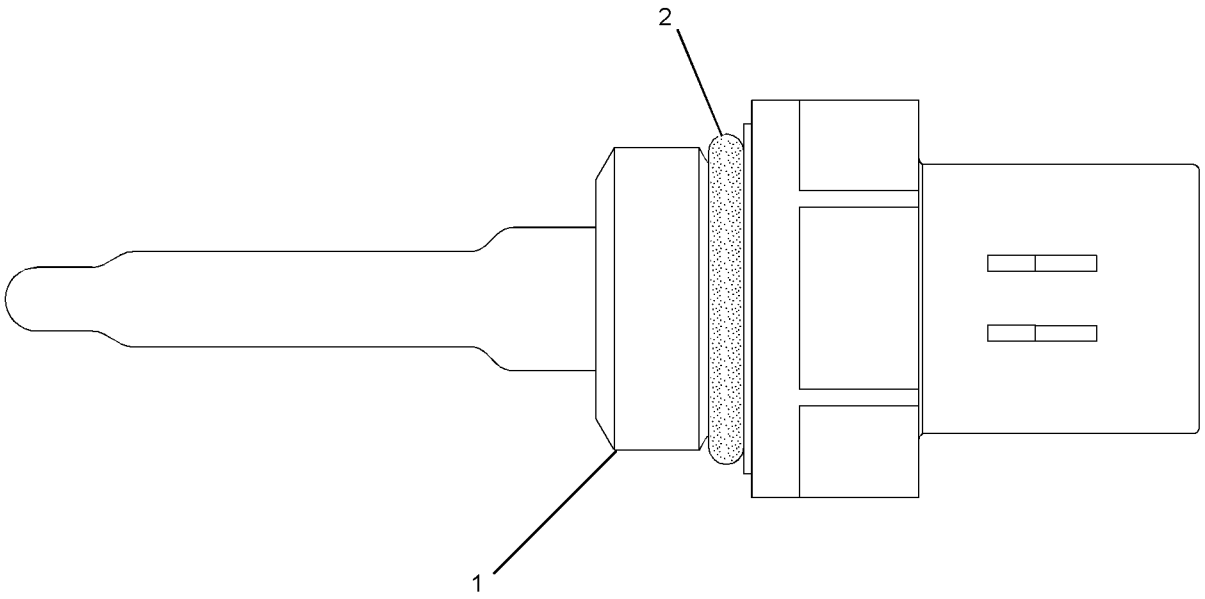

GRAPHIC #1 **<END>** g01164284

234-5013 SENSOR GP-TEMPERATURE

S/N: THX22180-UP
AMPSEAL CONNECTOR
PART OF 330-6034 SENSOR GP-ENGINE

SMCS-1906, 1921, 1922, 1928, 1929, 3290, 7344 **i03645027**

NOTE	REF NO	GRAPHIC REF	PART NUMBER	QTY	PART NAME 1 2 3 4 5 6 (PRODUCT LEVEL)	SEE PAGE
	1	1	**256-6453**	1	SENSOR AS-TEMPERATURE	
	2	1	**238-5080**	1	SEAL-O-RING	

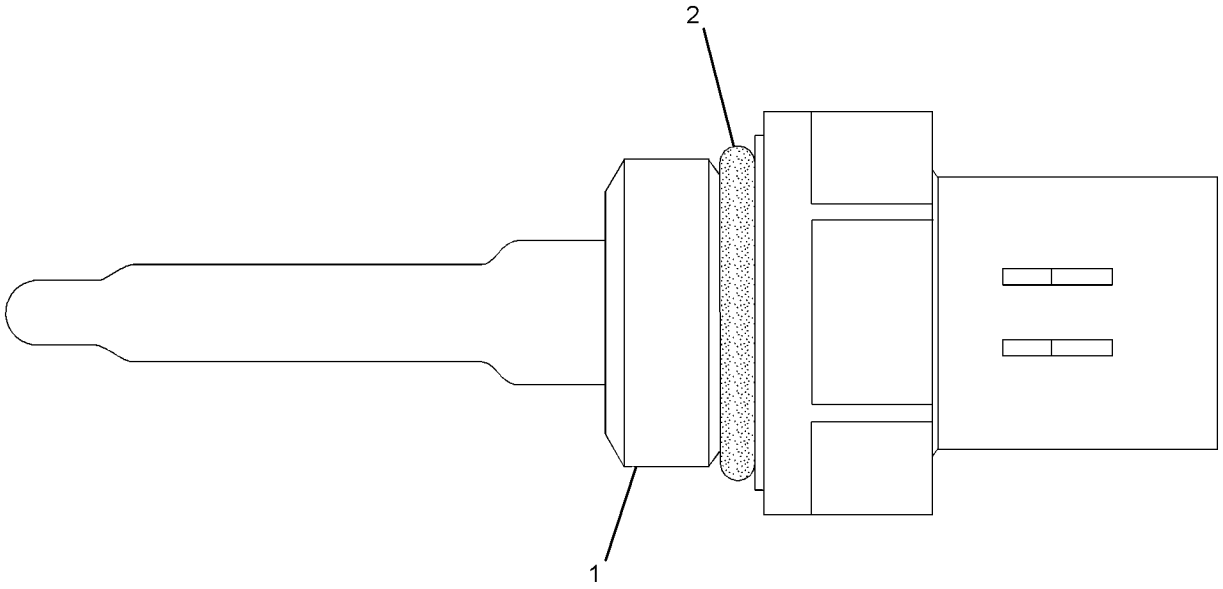

GRAPHIC #1 **<END>** g01164268

274-7395 SENSOR GP-TEMPERATURE

S/N: THX1-UP

PART OF 231-1978 SENSOR GP-ENGINE

SMCS-1906, 1921, 1922, 1928, 1929, 3290, 7344 **i03435385**

NOTE	REF NO	GRAPHIC REF	PART NUMBER	QTY	PART NAME 1 2 3 4 5 6 (PRODUCT LEVEL)	SEE PAGE
	1	1	**264-4297**	1	SENSOR GP-TEMPERATURE	
		1	**137-6645**	1	PAD	
	2	1	**8L-2786**	1	SEAL-O-RING	

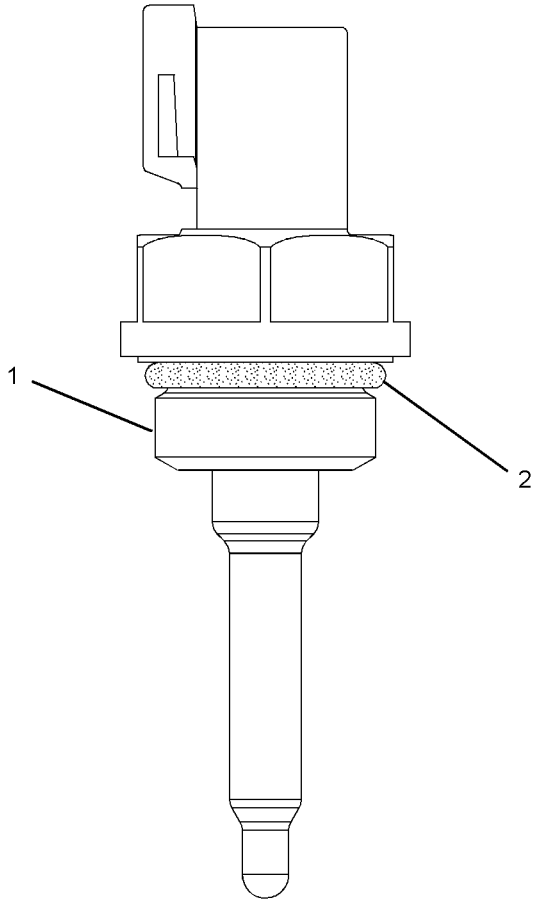

GRAPHIC #1 **<END>** g01353734

274-7396 SENSOR GP-TEMPERATURE

S/N: THX1-UP

PART OF 231-1978 SENSOR GP-ENGINE

SMCS-1906, 1921, 1922, 1928, 1929, 3290, 7344 **i03435390**

NOTE	REF NO	GRAPHIC REF	PART NUMBER	QTY	PART NAME 1 2 3 4 5 6 (PRODUCT LEVEL)	SEE PAGE
	1	1	**264-4297**	1	SENSOR GP-TEMPERATURE	
		1	**137-6645**	1	PAD	
	2	1	**6V-6609**	1	SEAL-O-RING	

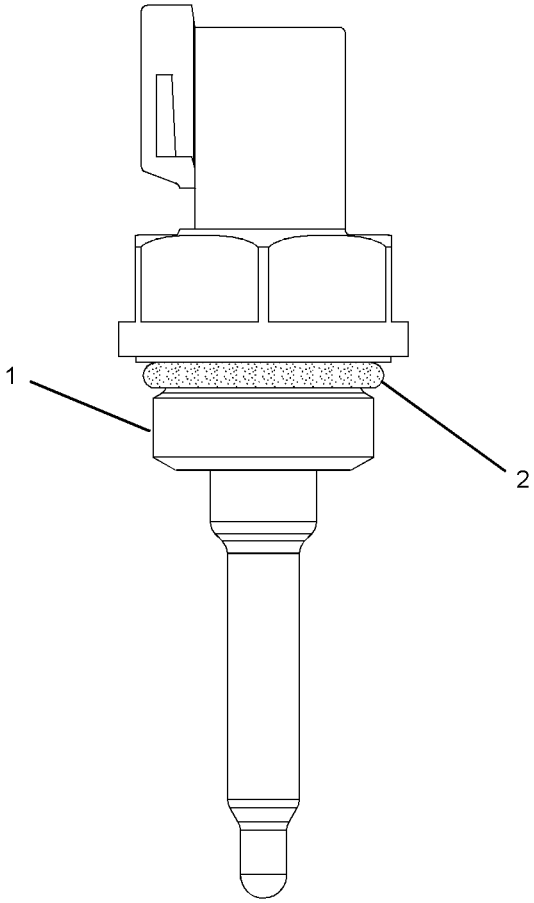

GRAPHIC #1 **<END>** g01353734

238-3215 STARTING AID GP–AIR INLET HEATER

S/N: THX1-UP
24-VOLT, 2000-WATT
PART OF 240-1861, 301-3082 ENGINE AR-COMPLETE

SMCS-1090 **i02504009**

NOTE	REF NO	GRAPHIC REF	PART NUMBER	QTY	PART NAME 1 2 3 4 5 6 (PRODUCT LEVEL)	SEE PAGE
	1	1	**7E-5714**	1	STRAP-GROUNDING	
	2	1	**238-3216**	1	HEATER AS (STARTING AID)	
M	3	1	**5C-2890**	2	NUT (M6X1-THD)	
	4	1	**9X-8256**	2	WASHER (6.6X12X2-MM THK)	
BF			**1U-8846**		SEALANT-GASKET	

B-USE AS REQUIRED
F-NOT SHOWN
M-METRIC PART

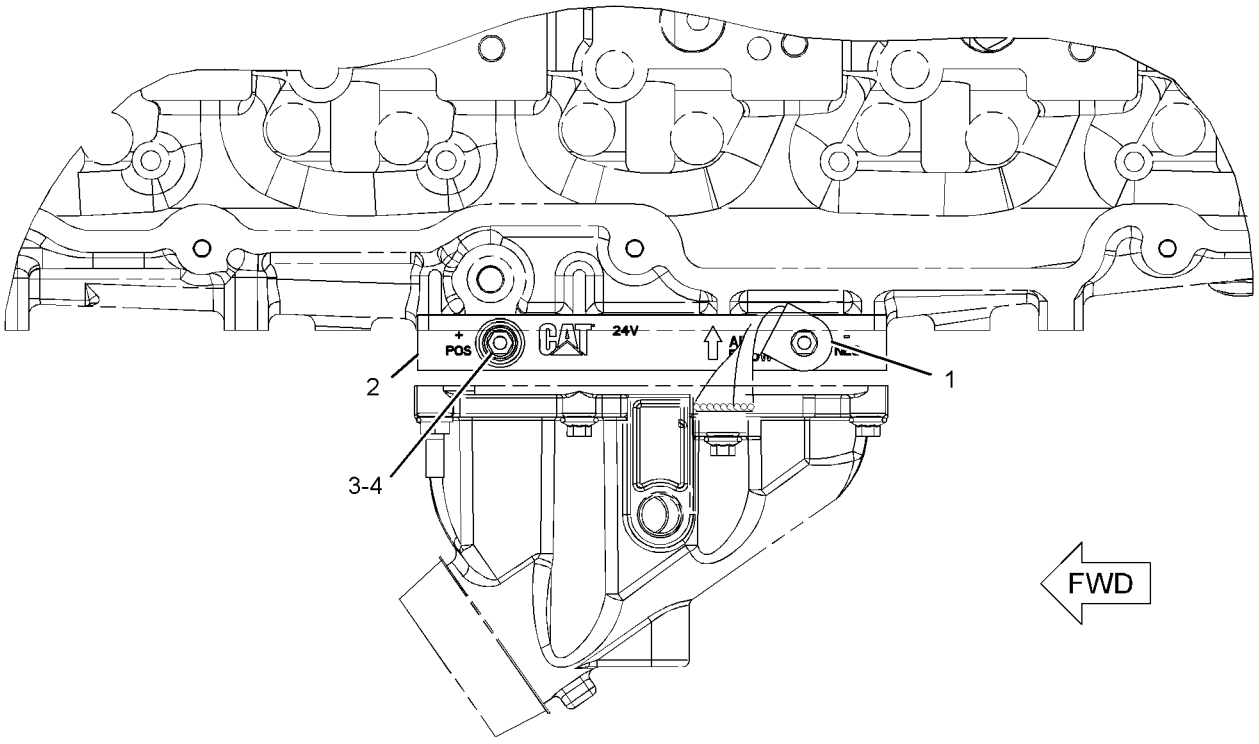

TOP VIEW

GRAPHIC #1 **<END>** g01200323

ELECTRICAL AND STARTING SYSTEM

239-6677 STARTING AID GP-ETHER

S/N: D3P1-UP; M4T1-UP
PART OF 314-3587 STARTING AR-COLD WEATHER
AN ATTACHMENT

SMCS-1456 **i03143700**

NOTE	REF NO	GRAPHIC REF	PART NUMBER	QTY	PART NAME 1 2 3 4 5 6 (PRODUCT LEVEL)	SEE PAGE
	1	1	**5P-6312**	2	UNION	
	2	1,2	**5P-6313**	5	NUT (5/16-24-THD)	
	3	1,2	**5P-6314**	5	SLEEVE	
	4	2	**6H-4746**	1	ADAPTER	
		2	**4B-9044**	1	PLUG-TRANSFER PUMP	
	5	1	**7N-0140**	1	TUBE AS-COIL	
	6	2	**7N-2059**	1	CLAMP AS	
Y	7	2	**239-1134**	1	VALVE GP-ETHER STARTING (24-VOLT)	278
	8	2	**241-4194**	1	FITTING AS (CONTROL)	
		2	**236-4545**	1	NUT-SLEEVE (5/16-24-THD)	
	9	1	**255-2991**	1	PLATE AS	
	10	2	**279-7887**	1	TUBE	
	11	1	**279-7888**	1	TUBE	
	12	2	**297-6828**	1	ATOMIZER GP-ETHER	
		2	**236-4545**	1	NUT-SLEEVE (5/16-24-THD)	
C	13	1	**297-7710**	1	TUBE	
C	14	1	**297-7711**	1	TUBE	
C	15	2	**297-7713**	1	PLATE AS	
C	16	1,2	**1B-3581**	4	CLIP	
	17	2	**2M-9780**	1	SEAL-O-RING	
C	18	1,2	**3D-5102**	10	GROMMET	
C	19	1	**3L-2875**	1	CLIP	
	20	1	**5K-0430**	2	CLIP	
C	21	1	**5P-1075**	1	WASHER-HARD (10.2X22.5X3-MM THK)	
	22	1	**8K-5440**	3	CLIP	
C	23	1,2	**8T-4121**	3	WASHER-HARD (11X21X2.5-MM THK)	
CM	24	1,2	**8T-4136**	3	BOLT (M10X1.5X25-MM)	
CM	25	1	**8T-4137**	1	BOLT (M10X1.5X20-MM)	
CM	26	2	**8T-4139**	1	BOLT (M12X1.75X30-MM)	
CM	27	1	**8T-4179**	1	BOLT (M12X1.75X20-MM)	
M	28	2	**8T-4189**	4	BOLT (M8X1.25X20-MM)	
CM	29	1,2	**8T-4192**	7	BOLT (M12X1.75X25-MM)	
C	30	1,2	**8T-4223**	9	WASHER-HARD (13.5X25.5X3-MM THK)	
	31	2	**8T-4224**	4	WASHER-HARD (8.8X16X2-MM THK)	
A		1	**7N-0296**	1	CYLINDER AS-ETHER	
					(MUST BE PROCURED LOCALLY FROM YOUR CATERPILLAR DEALER)	

A-NOT PART OF THIS GROUP
C-CHANGE FROM PREVIOUS TYPE
M-METRIC PART
Y-SEPARATE ILLUSTRATION

REFER TO ALL ILLUSTRATIONS OF
THIS GROUP FOR AUXILIARY VIEWS

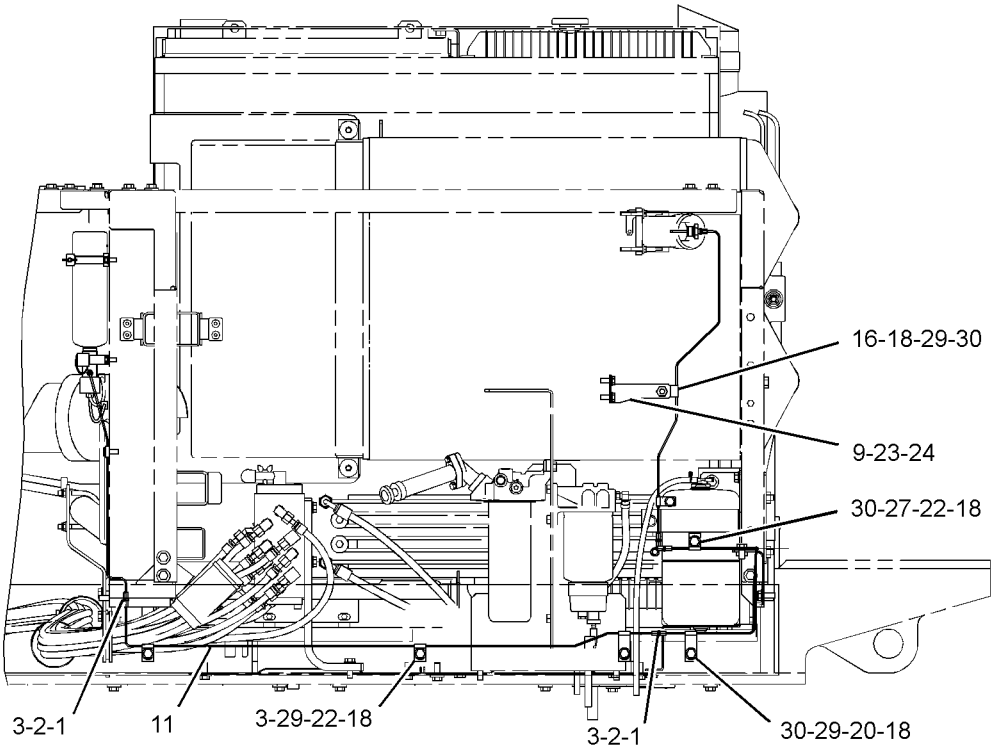

LEFT SIDE VIEW

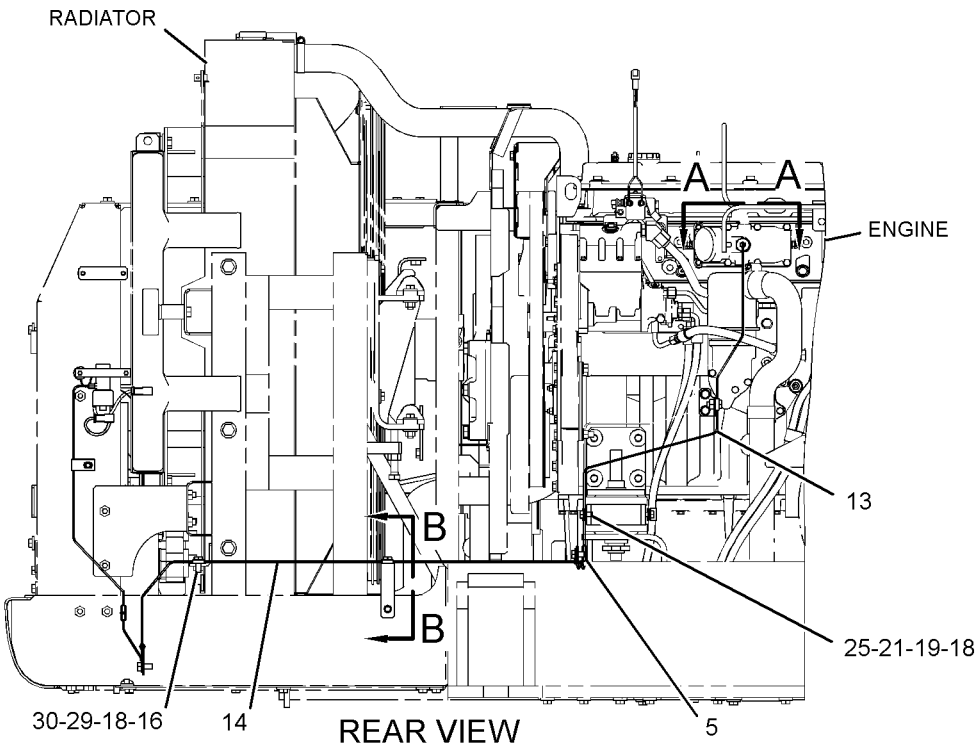

REAR VIEW

GRAPHIC #1

g01384032

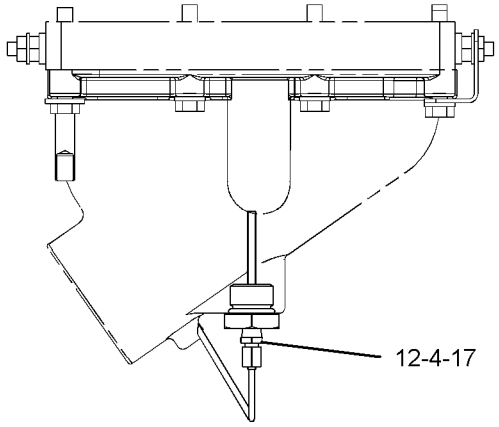

VIEW A-A

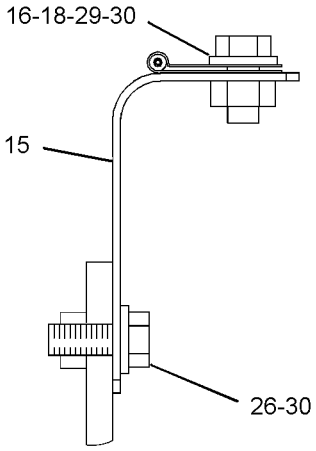

SECTION B-B

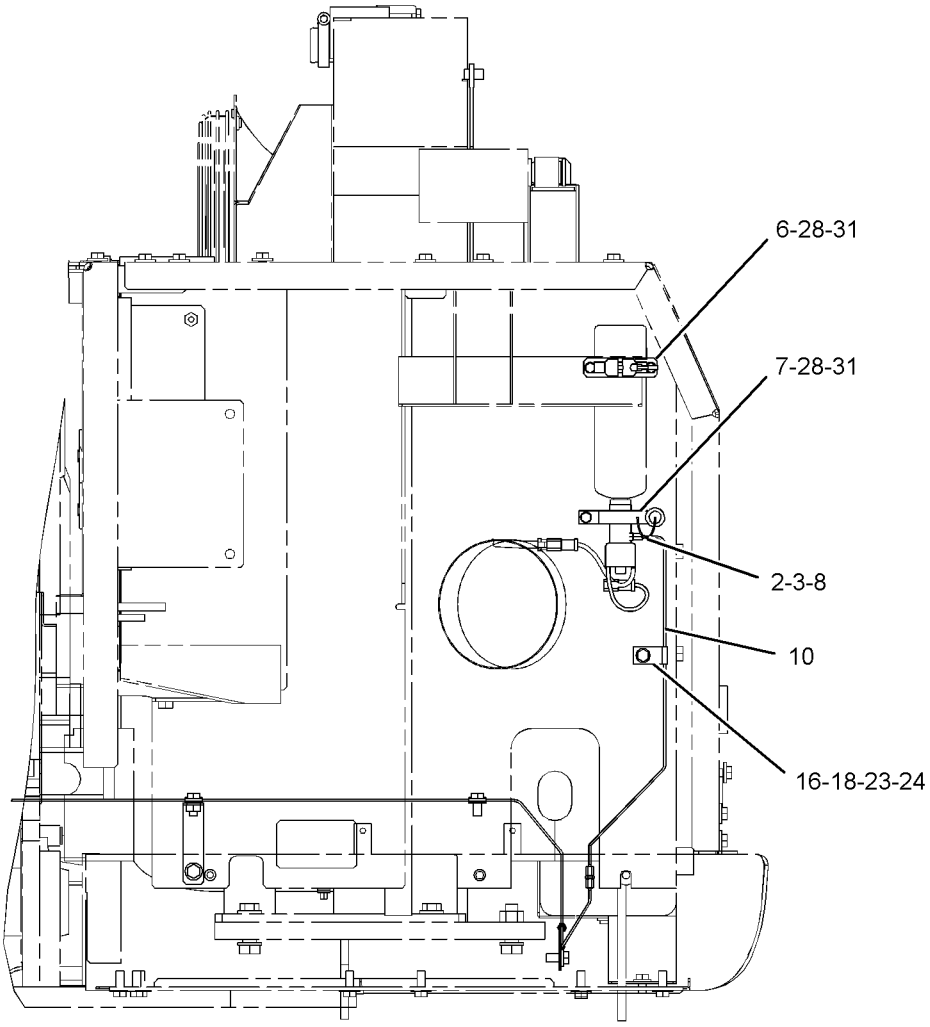

FRONT VIEW

GRAPHIC #2 **<END>** g01384034

314-3587 STARTING AR-COLD WEATHER

S/N: D3P1-UP; M4T1-UP
PART OF 267-8840 COLD WEATHER AR
AN ATTACHMENT

SMCS-1450 **i03161480**

NOTE	PART NUMBER	QTY	PART NAME 1 2 3 4 5 6 (PRODUCT LEVEL)	SEE PAGE
Y	*251-0620*	1	BATTERY & WIRING GP	178
Y	*239-6677*	1	STARTING AID GP-ETHER	256

Y-SEPARATE ILLUSTRATION

<END>

180-2435 STARTING MOTOR GP-ELECTRIC

S/N: D3P1-UP; M4T1-UP
24 VOLT
PART OF 262-1359, 266-6263 ENGINE AR

SMCS-1453 **i02061346**

NOTE	REF NO	GRAPHIC REF	PART NUMBER	QTY	PART NAME 1 2 3 4 5 6 (PRODUCT LEVEL)	SEE PAGE
	1	1	**8S-2332**	3	BOLT-12 POINT HEAD (5/8-11X1.75-IN)	
YR	2	1	**237-1962**	1	STARTING MOTOR GP-ELECTRIC (24-VOLT)	261
	3	1	**4N-1059**	1	GASKET	
	4	1	**8Y-9603**	1	CABLE AS-STARTING MOTOR	
		1	**1S-7251**	1	TERMINAL-CABLE (00-GA, 1/2-IN BOLT)	
		1	**1S-7252**	1	TERMINAL-CABLE (00-GA, 3/8-IN BOLT)	
E		1	**5P-0747**		CABLE (00-GA, BLACK) (28-CM)	

E-ORDER BY THE CENTIMETER
R-REMFG PART MAY BE AVAILABLE
Y-SEPARATE ILLUSTRATION

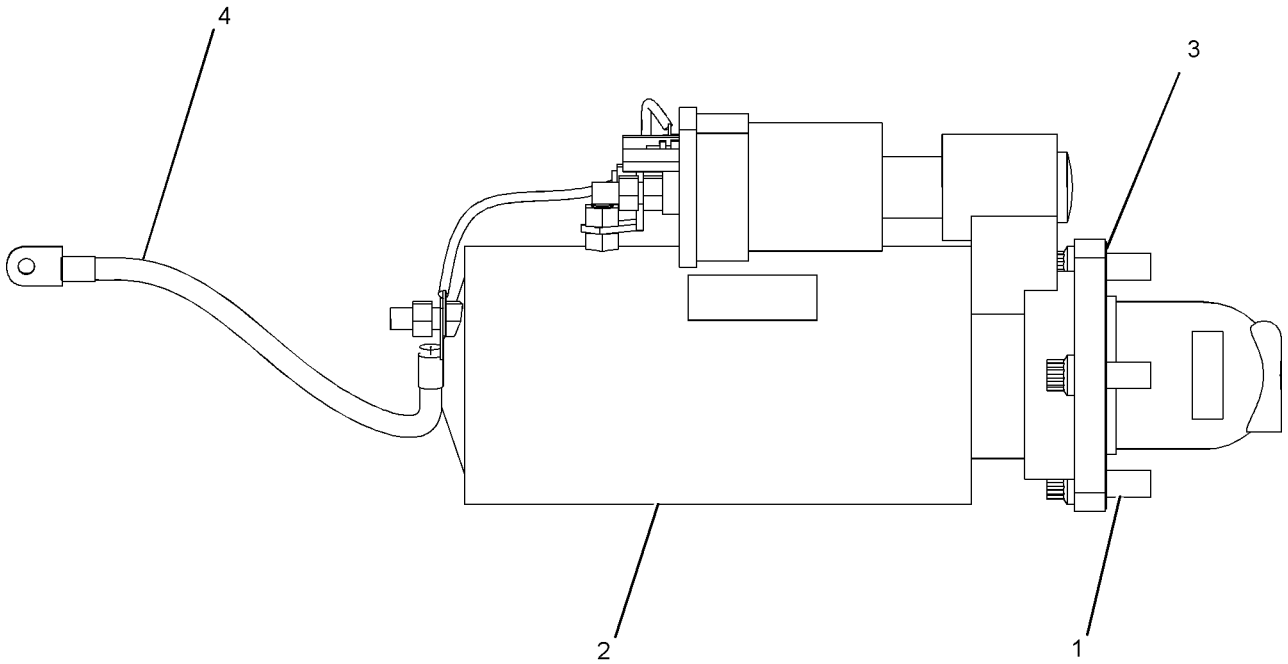

GRAPHIC #1 **<END>** g01061029

ELECTRICAL AND STARTING SYSTEM

237-1962 STARTING MOTOR GP-ELECTRIC*R

S/N: D3P1-UP; M4T1-UP
24-VOLT
PART OF 180-2435 STARTING MOTOR GP-ELECTRIC

SMCS-1453 **i03630207**

NOTE	REF NO	GRAPHIC REF	PART NUMBER	QTY	PART NAME 1 2 3 4 5 6 (PRODUCT LEVEL)	SEE PAGE
	1	1	**7M-0326**	1	CONNECTOR	
	2	1	**9H-3757**	2	WASHER (0.516X1X0.094-IN THK)	
	3	1	**1S-7446**	3	SCREW-MACHINE (8-32X0.437-IN)	
	4	1	**8C-9660**	3	WASHER (4.6X7.9X0.8-MM THK)	
	5	1	**9S-2544**	9	SCREW-HEX HEAD (8-32X11.13-MM)	
	6	1	**7M-0327**	1	WASHER-THRUST (17.4X25.4X1.6-MM THK)	
	7	1	**3T-3418**	1	FRAME AS-END	
		1	**3T-3423**	1	CUP	
		1	**3T-3424**	1	PLUG-FELT	
		1	**9G-4101**	1	BUSHING-END	
	8	1	**3T-9525**	1	PLATE AS-BRUSH	
	8A	1	**6T-0371**	1	INSULATOR	
	8B	1	**5P-6298**	12	SCREW-MACHINE (10-32X0.5-IN)	
		1	**9F-5599**	12	LOCKWASHER	
	8C	1	**7F-3525**	6	WASHER-BUSHING (0.207X0.39X0.09-IN THK)	
	8D	1	**6T-0372**	1	PLATE	
	8E	1	**3T-4709**	3	PLATE	
	8F	1	**2L-6679**	3	PLATE-INSULATOR	
	8G	1	**3T-4710**	3	PLATE	
	8H	1	**6T-0363**	6	HOLDER AS-BRUSH (STARTING MOTOR)	
					(EACH INCLUDES)	
	8J	1	**3T-9494**	1	SPRING	
	9	1	**1T-0808**	2	WASHER (0.516X0.812X0.09-IN THK)	
	10	1	**3T-3422**	1	WIRE AS (STARTING MOTOR)	
	11	1	**2J-8163**	2	SEAL-O-RING	
	12	1	**7X-3373**	1	BOLT (5/16-18X0.88-IN)	
	13	1	**3T-3434**	6	PLUG	
	14	1	**5J-5314**	5	BOLT (5/16-18X1.5-IN)	
	15	1	**3L-3380**	1	BUSHING-TERMINAL	
	16	1	**036-9821**	1	WASHER	
	17	1	**4M-1828**	1	RETAINER-SPRING	
	18	1	**306-3998**	1	BOOT-RUBBER	
	19	1	**9M-7609**	1	SPRING (SHIFT LEVER)	
	20	1	**4M-1827**	1	RETAINER-SPRING	
	21	1	**8C-3089**	1	SEAL-O-RING	
	22	1	**4M-1853**	1	LEVER AS-SHIFT	
	23	1	**5M-3034**	1	LOCKNUT (5/16-24-THD)	
	24	1	**7L-2894**	4	GASKET	
	25	1	**4M-1831**	4	PLUG-LEVER HOUSING	
	26	1	**4M-1854**	1	SHAFT-LEVER	
	27	1	**1H-1023**	1	SEAL-O-RING	
	28	1	**2D-6392**	1	SEAL-O-RING	
	29	1	**7T-3974**	1	HOUSING AS-DRIVE	
	30	1	**6N-3826**	1	DRIVE AS-MOTOR	
	31	1	**2H-3429**	2	RING-RETAINING	
	32	1	**6V-1322**	4	BOLT (1/4-20X0.375-IN)	
	33	1	**8T-4205**	4	WASHER-HARD (7.2X14.5X2-MM THK)	
	34	1	**6N-3279**	1	INSULATOR	
	35	1	**0S-1597**	13	BOLT (1/4-28X1-IN)	
	36	1	**1M-9971**	1	SPACER (0.835X1.72X0.188-IN THK)	
	37	1	**1H-2629**	3	STRIP-INSULATION	
	38	1	**7M-0324**	1	COIL AS-FIELD	
	39	1	**3R-8797**	12	SCREW & WASHER AS (3/8-24X0.72-IN)	
	40	1	**7F-3488**	6	SHOE-POLE	
	41	1	**7M-8651**	1	ARMATURE AS	

237-1962 STARTING MOTOR GP-ELECTRIC *(contd.)* i03630207

NOTE	REF NO	GRAPHIC REF	PART NUMBER	QTY	PART NAME 1 2 3 4 5 6 (PRODUCT LEVEL)	SEE PAGE
	42	1	**7M-0325**	1	INSULATOR	
	43	1	**3T-9524**	6	BRUSH AS	
	44	1	**3N-3763**	1	KIT-TERMINAL (STARTING MOTOR)	
					(INCLUDES BUSHINGS & WASHERS)	
	45	1	**125-6537**	1	INSULATOR	
	46	1	**3R-8801**	1	CLAMP	
	47	1	**8F-1434**	2	LOCKWASHER	
	48	1	**6V-8188**	6	NUT (1/2-13-THD)	
	49	1	**7X-0562**	6	WASHER-HARD (13.5X19X0.8-MM THK)	
	50	1	**4B-2049**	6	NUT (10-32-THD)	
	51	1	**8T-0328**	10	WASHER-HARD (5.5X10X1-MM THK)	
	52	1	**3T-9494**	6	SPRING (STARTING MOTOR)	
	53	1	**3E-7771**	1	HOUSING AS (STARTING MOTOR)	
	54	1	**9G-4101**	1	BUSHING-END	
	55	1	**3T-3424**	3	PLUG-FELT	
	56	1	**3T-3423**	3	CUP	
	57	1	**1M-9968**	1	BUSHING	
	58	1	**2F-6678**	1	SEAL-LIP TYPE	
	59	1	**4L-2729**	1	WASHER (0.844X1.9X0.188-IN THK)	
	60	1	**4M-1896**	1	BUSHING-TERMINAL	
	61	1	**045-4065**	4	SCREW-MACHINE (10-32X0.75-IN)	
	62	1	**125-6535**	1	COVER-STARTING MOTOR	
	63	1	**7T-9123**	1	GASKET-PLATE	
	64	1	**318-2082**	1	SOLENOID AS-STARTING MOTOR (24-VOLT)	
	65	1	**125-6536**	1	TERMINAL AS	

237-1962 STARTING MOTOR GP-ELECTRIC *(contd.)* i03630207

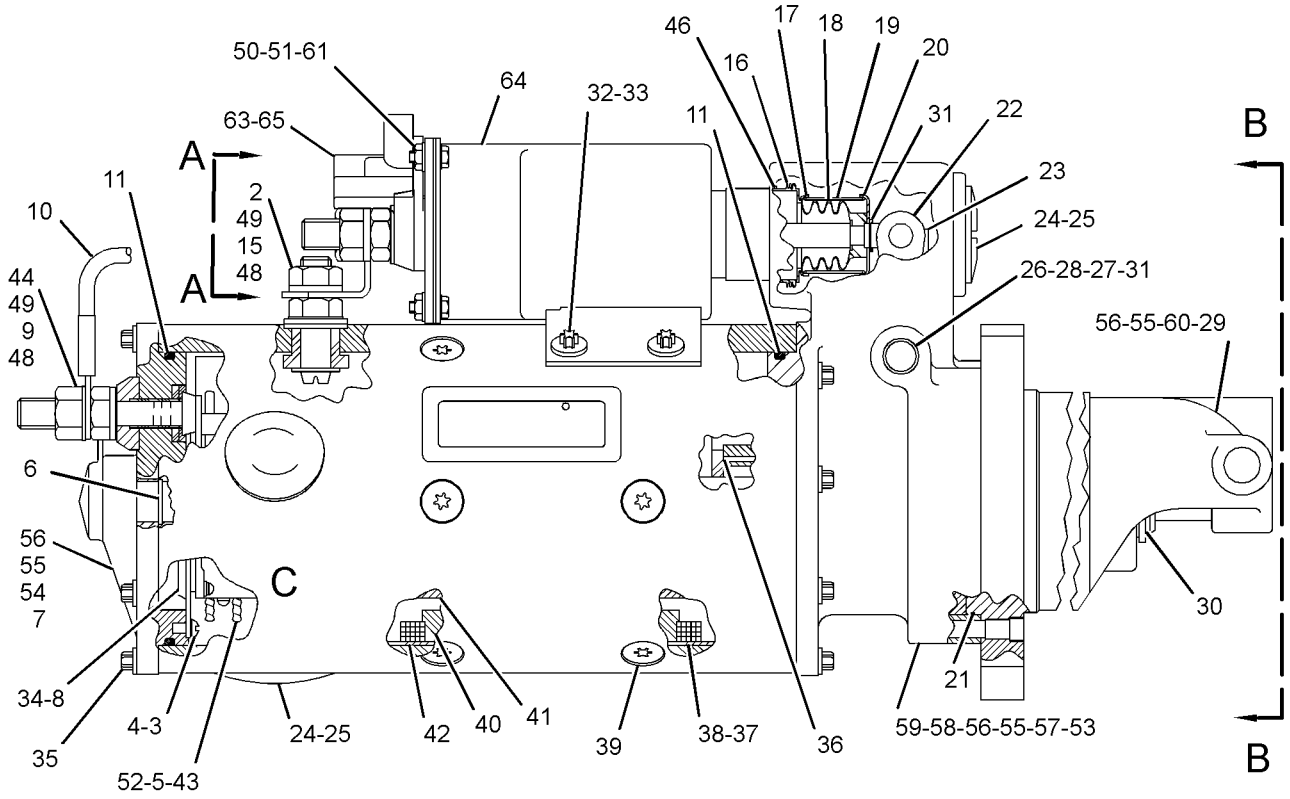

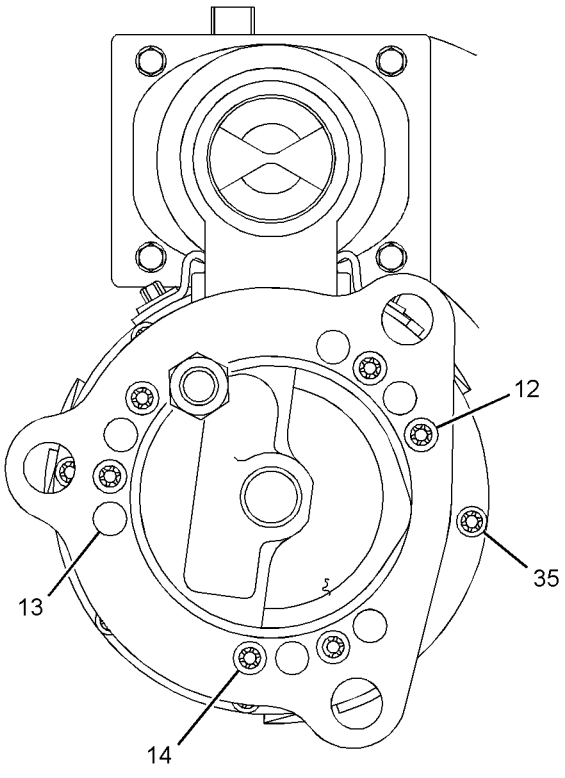

VIEW B-B

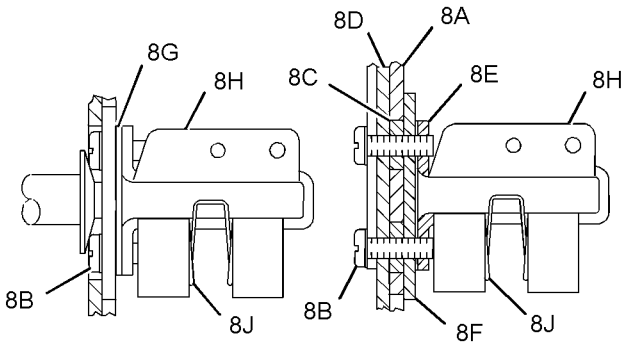

VIEW OF AREA C

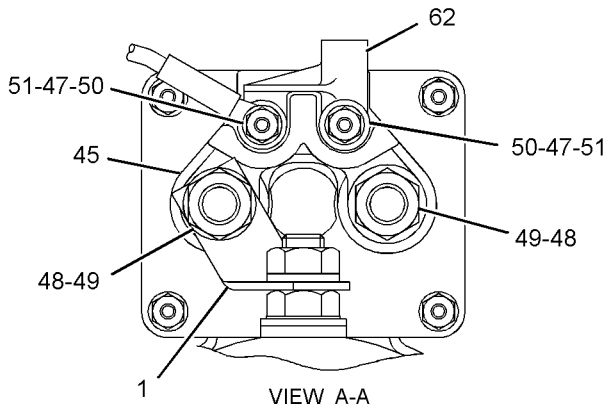

VIEW A-A

GRAPHIC #1 **<END>** g01453239

7N-0719 SWITCH GP-DISCONNECT–BATTERY

S/N: D3P1-UP; M4T1-UP

PART OF 231-1756 PANEL GP-CIRCUIT BREAKER

SMCS-1411 **i01087971**

NOTE	REF NO	GRAPHIC REF	PART NUMBER	QTY	PART NAME 1 2 3 4 5 6 (PRODUCT LEVEL)	SEE PAGE
	1	1	**8H-5306**	1	KEY (BATTERY DISCONNECT)	
	2	1	**8H-5303**	1	NUT (3/4-16-THD)	
	3	1	**2H-3922**	1	LOCKWASHER	
	4	1	**7F-7259**	4	LOCKWASHER	
	5	1	**6F-7045**	4	NUT-FULL (3/8-24-THD)	

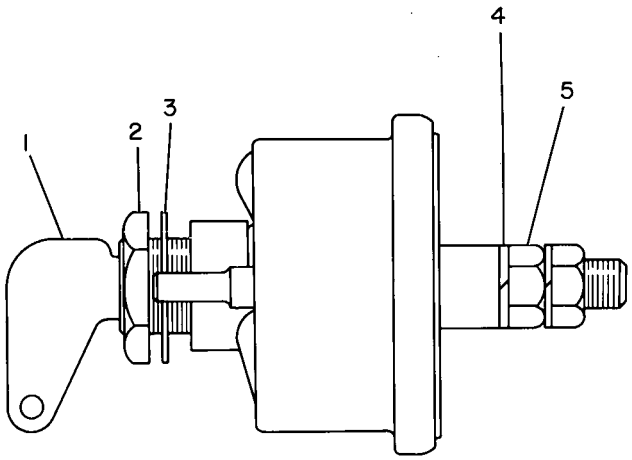

GRAPHIC #1 **<END>** g00136161

125-1302 SWITCH GP-MAGNETIC

S/N: D3P1-UP; M4T1-UP
24-VOLT
PART OF 231-1756 PANEL GP-CIRCUIT BREAKER

SMCS-7499 **i03546076**

NOTE	REF NO	GRAPHIC REF	PART NUMBER	QTY	PART NAME 1 2 3 4 5 6 (PRODUCT LEVEL)	SEE PAGE
	1	1	**102-8802**	1	KIT-RECEPTACLE (2-PIN)	
					(INCLUDES RECEPTACLE AS & WEDGE)	
	2	1	**186-3735**	2	PIN-CONNECTOR (16-GA TO 18-GA)	
	3	1	**1H-3338**	2	LOCKWASHER (EXTERNAL TOOTH)	
	4	1	**012-0380**	2	LOCKWASHER (SPLIT)	
M	5	1	**5C-2890**	2	NUT (M6X1-THD)	
BE	6	1	**9X-1813**		SLEEVE	

B-USE AS REQUIRED
E-ORDER BY THE CENTIMETER
M-METRIC PART

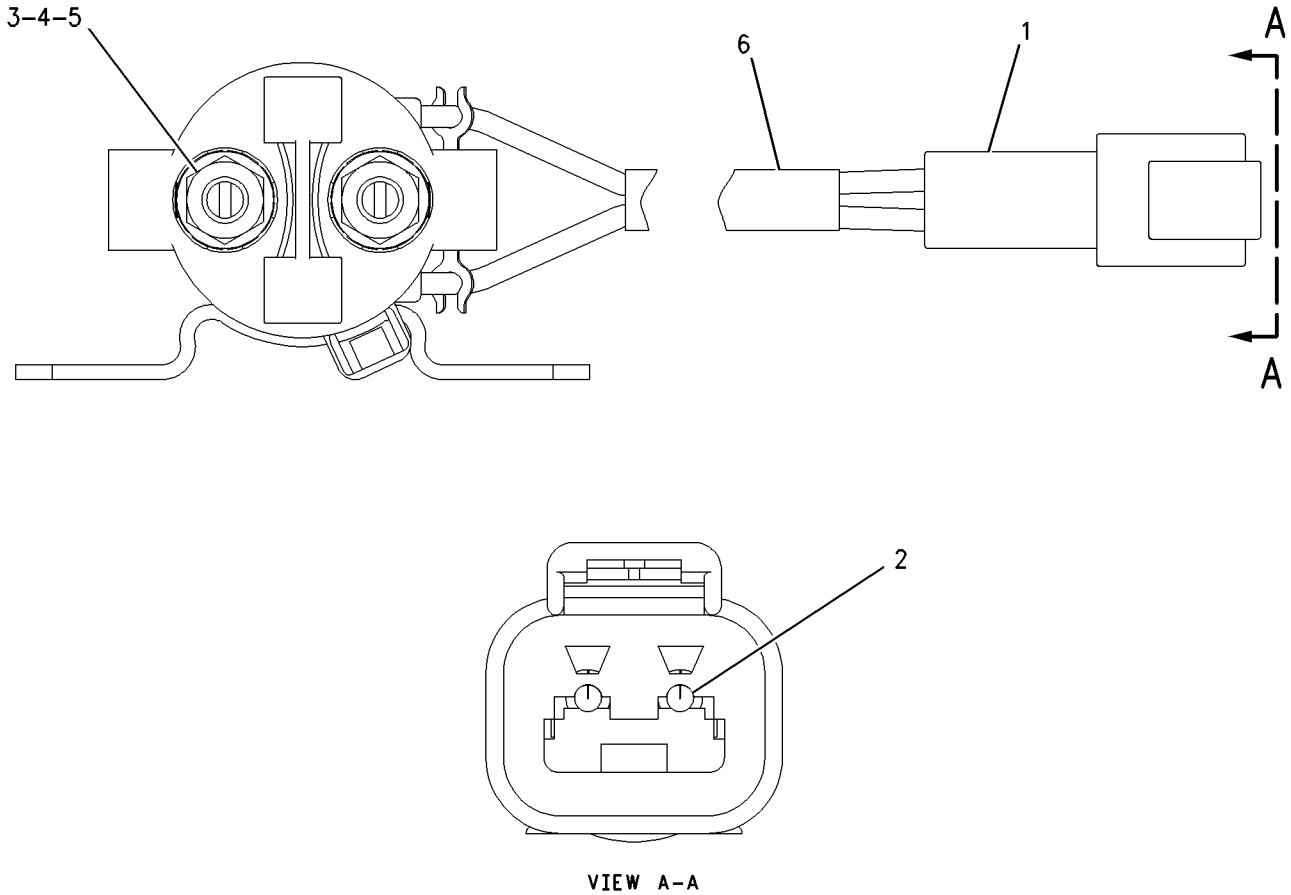

VIEW A-A

GRAPHIC #1 **<END>** g00987986

209-5582 SWITCH GP-MAGNETIC

S/N: THX1-UP

PART OF 269-3410 WIRING GP-HEATER

SMCS-7499 **i03753269**

NOTE	REF NO	GRAPHIC REF	PART NUMBER	QTY	PART NAME 1 2 3 4 5 6 (PRODUCT LEVEL)	SEE PAGE
	1	1	**102-8802**	1	KIT-RECEPTACLE (2-PIN)	
					(INCLUDES RECEPTACLE AS & WEDGE)	
	2	1	**8T-8729**	2	PIN-CONNECTOR (16-GA TO 18-GA)	
	3	1	**3F-9556**	2	LOCKWASHER	
	4	1	**6V-8186**	2	NUT-FULL (5/16-24-THD)	
	5	1	**6V-8378**	2	NUT (10-32-THD)	
	6	1	**8F-1434**	2	LOCKWASHER	

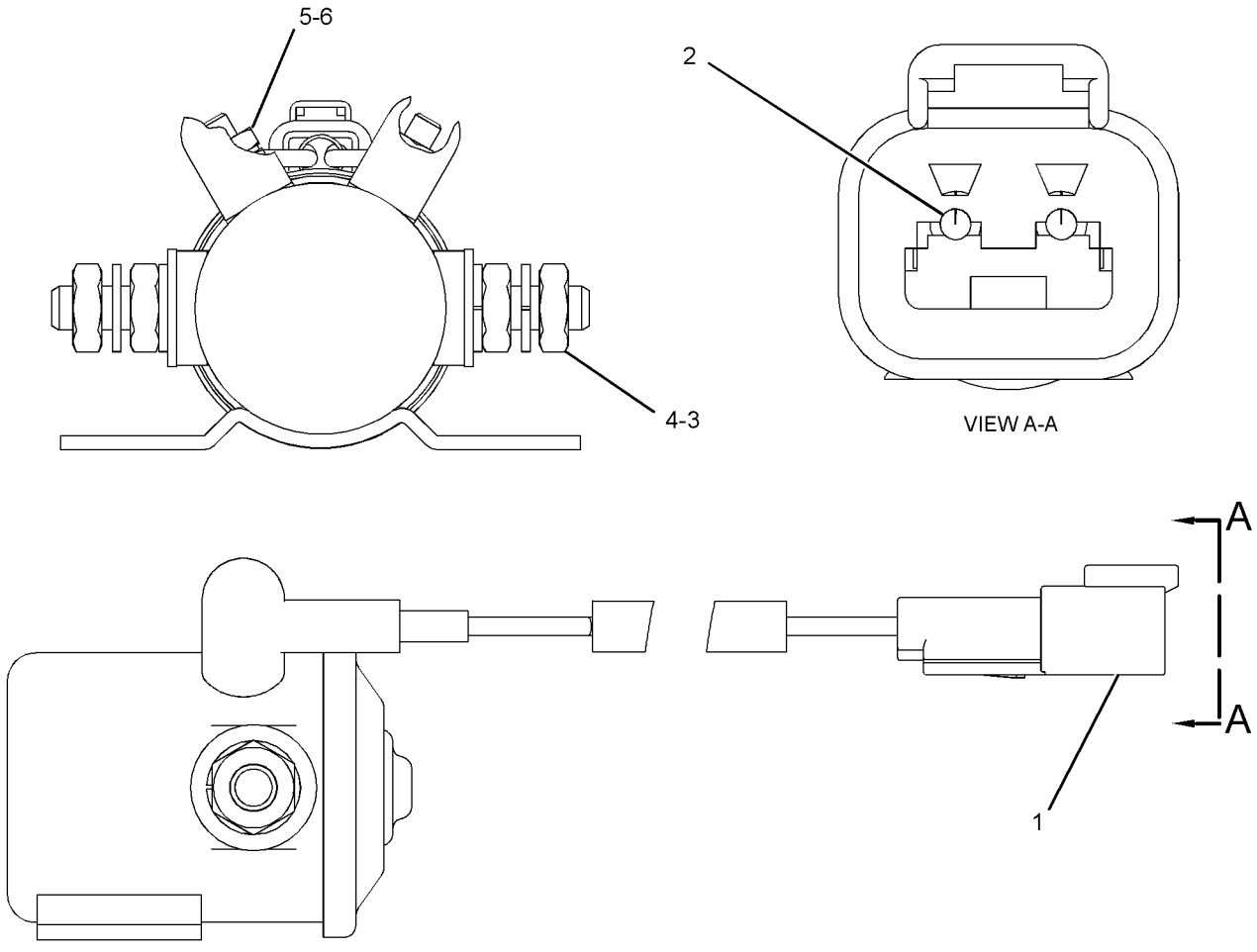

GRAPHIC #1 **<END>** g01279452

234-6613 SWITCH GP-POSITION–HYDRAULIC LOCKOUT

S/N: D3P1-UP; M4T1-UP

PART OF 259-7349 CONSOLE GP-OPERATOR

SMCS-1408, 1435 **i02489984**

NOTE	REF NO	GRAPHIC REF	PART NUMBER	QTY	PART NAME 1 2 3 4 5 6 (PRODUCT LEVEL)	SEE PAGE
	1	1	**3S-2093**	1	STRAP-CABLE	
	2	1	**4I-3038**	2	WASHER (3.3X8X0.5-MM THK)	
	3	1	**111-4799**	1	SWITCH AS-LIMIT (HYDRAULIC LOCKOUT)	
		1	**102-8803**	1	KIT-RECEPTACLE (3-PIN)	
					(INCLUDES RECEPTACLE AS & WEDGE)	
		1	**186-3735**		PIN-CONNECTOR (16-GA TO 18-GA)	
D		1	**5P-5998**		TUBE (.25-M)	
M	4	1	**185-8286**	2	SCREW-MACHINE (M4X0.7X8-MM)	
	5	1	**234-6615**	1	KNOB	
	6	1	**087-4683**	2	LOCKWASHER	
M	7	1	**120-9027**	2	SCREW-PAN HEAD (M3X0.5X16-MM)	

D-ORDER BY THE METER
M-METRIC PART

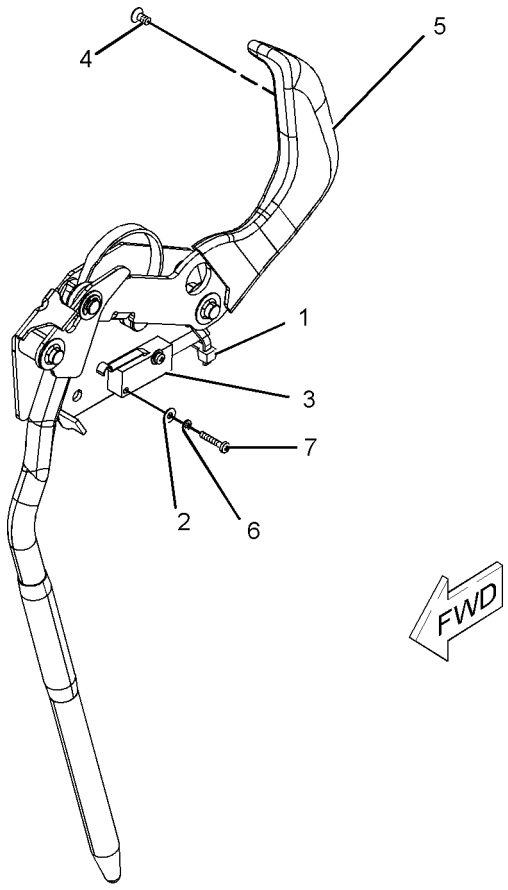

GRAPHIC #1 **<END>** g01096293

258-0883 SWITCH GP-PRESSURE–FUEL FILTER

S/N: D3P1-UP; M4T1-UP
PART OF 237-8752, 259-3918, 343-2392 LINES GP-FUEL
ALSO AN ATTACHMENT

SMCS-1435 **i03525581**

NOTE	REF NO	GRAPHIC REF	PART NUMBER	QTY	PART NAME 1 2 3 4 5 6 (PRODUCT LEVEL)	SEE PAGE
	1	1	**102-8802**	1	KIT-RECEPTACLE (2-PIN)	
					(INCLUDES RECEPTACLE AS & WEDGE)	
	2	1	**9X-7737**	1	SEAL-O-RING	
	3	1	**186-3735**	2	PIN-CONNECTOR (16-GA TO 18-GA)	
E	4	1	**9X-1813**		SLEEVE (14-CM)	
	5	1	**6V-4589**	1	SEAL-O-RING	

E-ORDER BY THE CENTIMETER

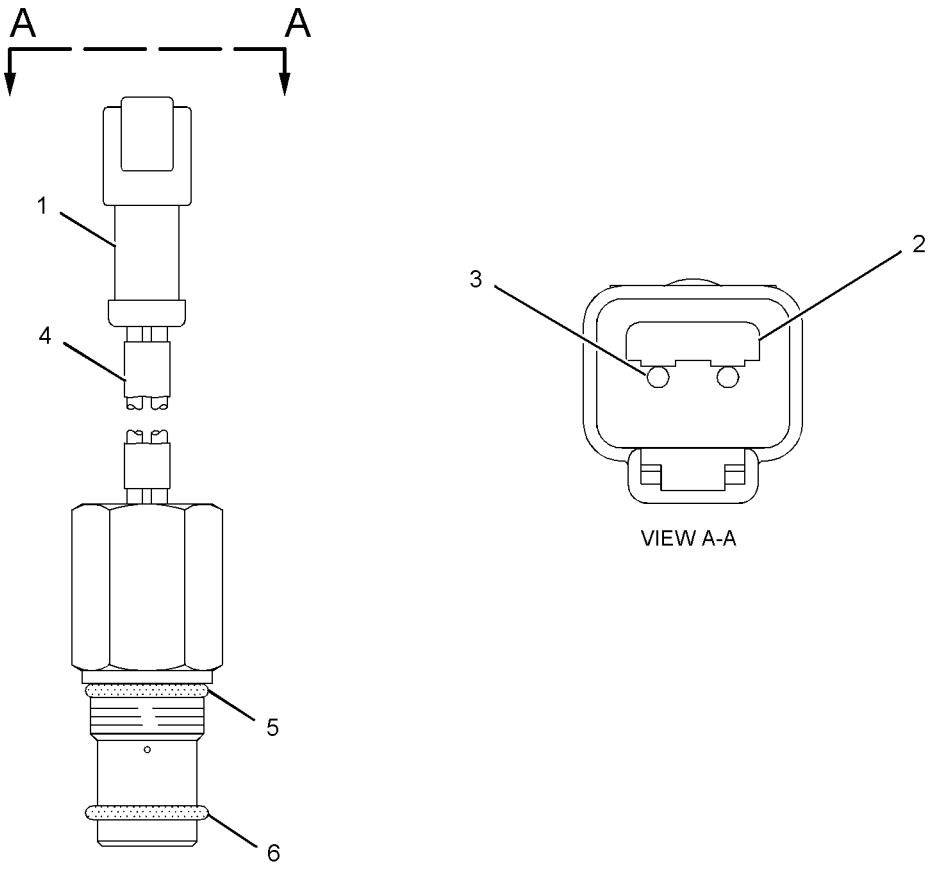

GRAPHIC #1 **<END>** g01072091

238-1594 SWITCH GP-PUSH BUTTON–REFUELING PUMP, START

S/N: D3P1-UP; M4T1-UP

PART OF 238-1570 WIRING GP-REFUELING PUMP

AN ATTACHMENT

SMCS-1435, 7332 **i03601625**

NOTE	REF NO	GRAPHIC REF	PART NUMBER	QTY	PART NAME 1 2 3 4 5 6 (PRODUCT LEVEL)	SEE PAGE
	1	1	**6T-9442**	1	SWITCH GP-PUSHBUTTON (REFUELING PUMP, START)	
		1	**1S-0812**	2	SCREW-TAPPING	
		1	**3K-0835**	1	NUT (5/8-24-THD)	
		1	**6F-0253**	1	LOCKWASHER	
		1	**8T-8748**	1	ADAPTER-MOUNT	
	2	1	**238-1595**	1	HARNESS AS-SWITCH (REFUELING PUMP, START)	
E	3	1	**125-7875**		TUBE-HEAT SHRINK (7.44-MM DIA) (6-CM)	

E-ORDER BY THE CENTIMETER

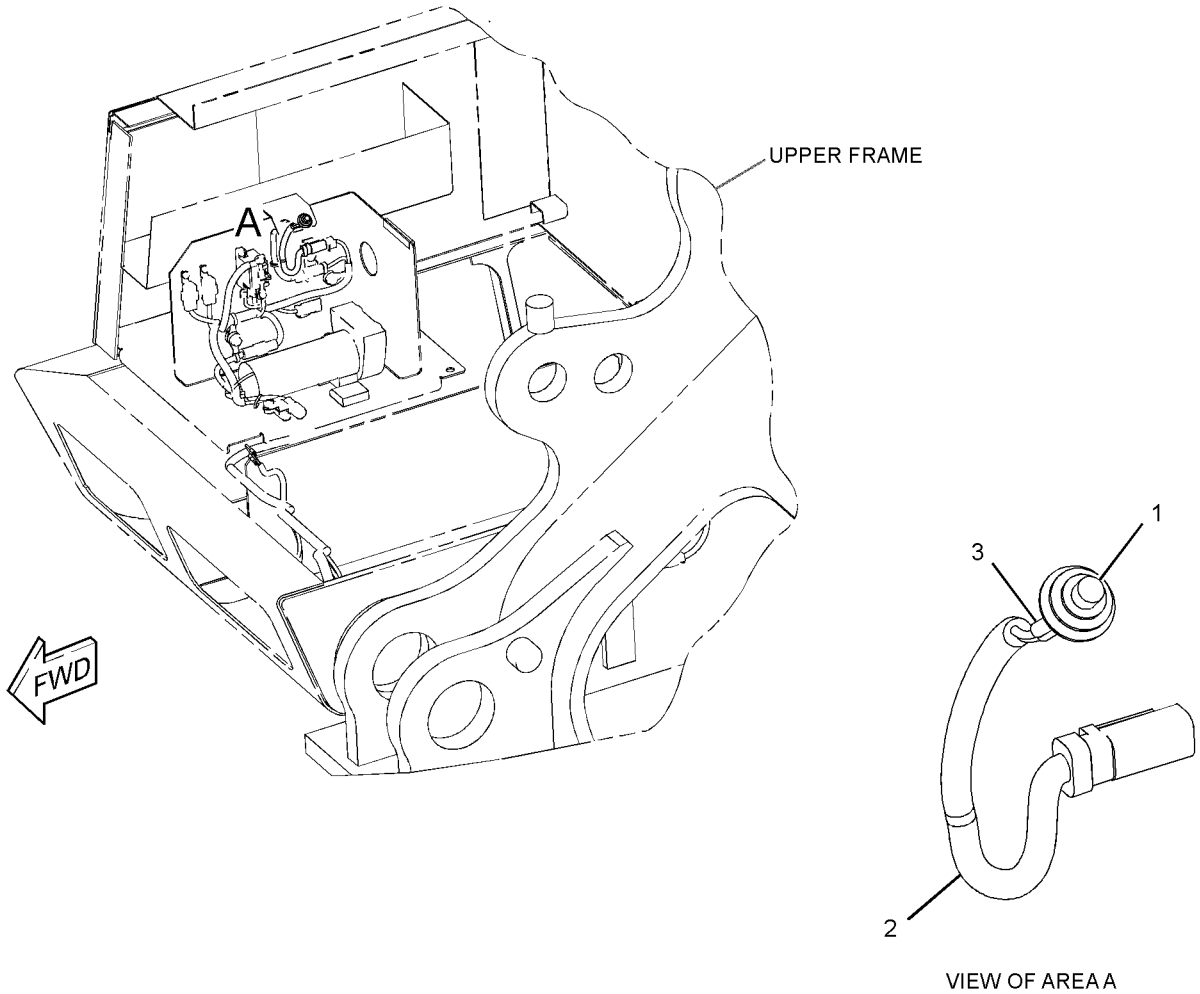

GRAPHIC #1 **<END>** g01560235

238-1596 SWITCH GP-PUSH BUTTON–REFUELING PUMP, STOP

S/N: D3P1-UP; M4T1-UP
PART OF 238-1570 WIRING GP-REFUELING PUMP
AN ATTACHMENT

SMCS-1435, 7332 **i03601626**

NOTE	REF NO	GRAPHIC REF	PART NUMBER	QTY	PART NAME 1 2 3 4 5 6 (PRODUCT LEVEL)	SEE PAGE
	1	1	*9X-4184*	1	SWITCH GP-PUSH BUTTON (REFUELING PUMP, STOP)	
		1	**1S-0812**	2	SCREW-TAPPING	
		1	**3K-0835**	1	NUT (5/8-24-THD)	
		1	**6F-0253**	1	LOCKWASHER	
		1	**8T-8748**	1	ADAPTER-MOUNT	
	2	1	**238-1597**	1	HARNESS AS-SWITCH (REFUELING PUMP, STOP)	
E	3	1	**125-7875**		TUBE-HEAT SHRINK (7.44-MM DIA) (6-CM)	

E-ORDER BY THE CENTIMETER

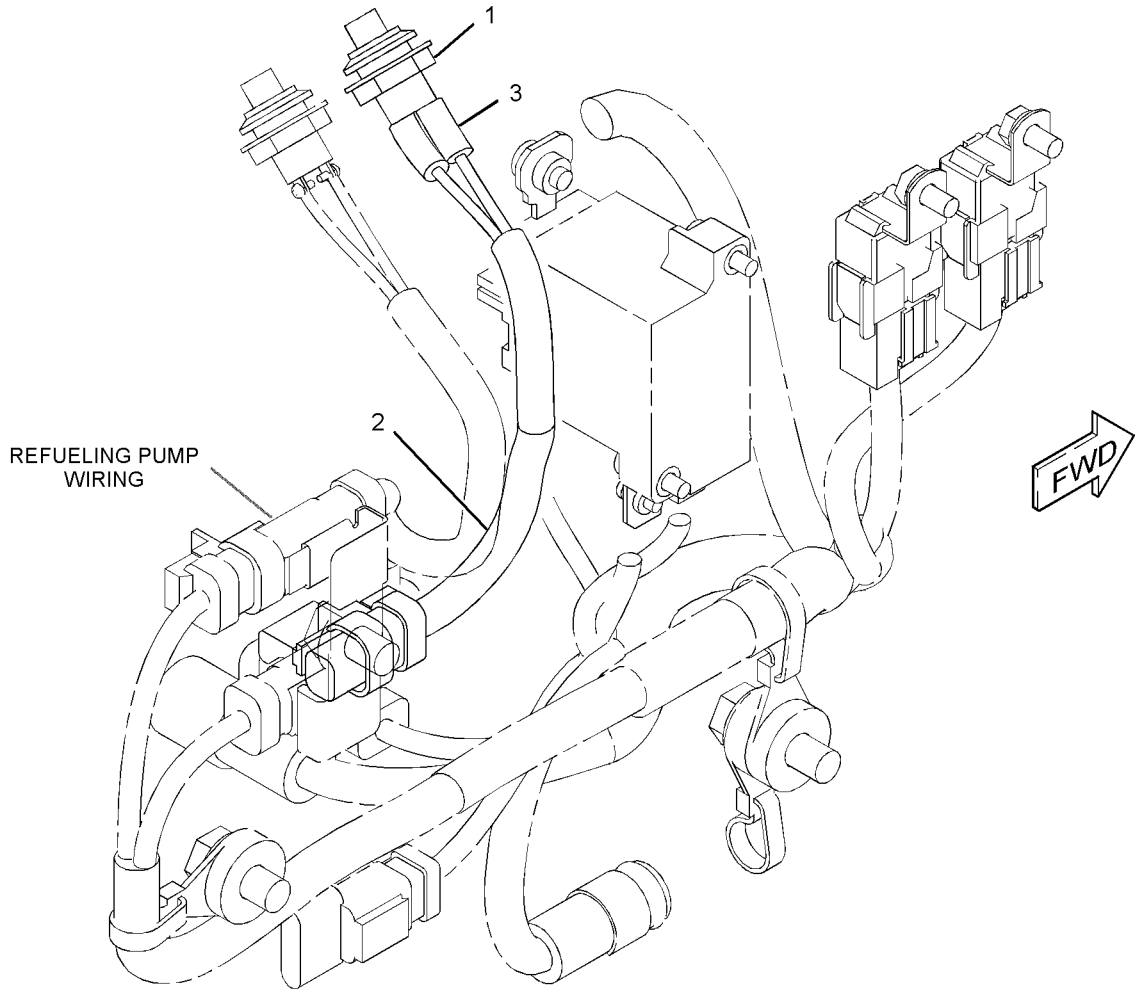

GRAPHIC #1 **<END>** g01560319

106-0107 SWITCH GP-ROTARY

S/N: D3P1-100; M4T1-206

PART OF 251-0542 PANEL GP-SWITCH

SMCS-7332 **i02305918**

NOTE	REF NO	GRAPHIC REF	PART NUMBER	QTY	PART NAME 1 2 3 4 5 6 (PRODUCT LEVEL)	SEE PAGE
	1	1	**102-8805**	1	KIT-RECEPTACLE (6-PIN)	
					(INCLUDES RECEPTACLE AS & WEDGE)	
	2	1	**3E-3383**	1	WEDGE-RECEPTACLE LOCK (6-PIN)	
	3	1	**8T-8737**	1	PLUG-SEAL	
	4	1	**144-1636**	5	PIN-CONNECTOR (14-GA TO 18-GA)	
M	5	1	**7Y-5458**	1	NUT (M12X1-THD)	
	6	1	**7Y-5464**	1	WASHER (12.2X15.4X0.5-MM THK)	
	7	1	**106-0210**	1	SEAL	

M-METRIC PART

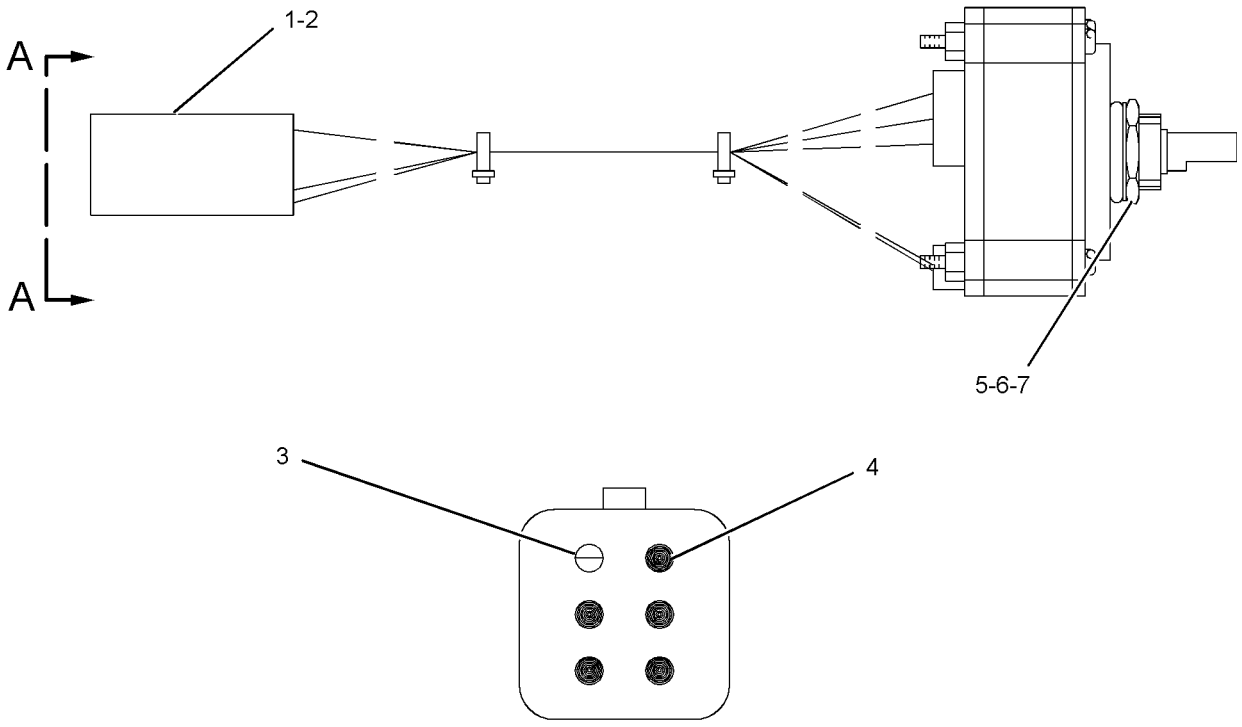

VIEW A-A

GRAPHIC #1 **<END>** g01098706

319-4420 SWITCH GP-ROTARY–THROTTLE POSITION

S/N: D3P101-UP; M4T207-UP
PART OF 251-0542, 251-0544 PANEL GP-SWITCH
ALSO AN ATTACHMENT

SMCS-7332 **i03434983**

NOTE	REF NO	GRAPHIC REF	PART NUMBER	QTY	PART NAME 1 2 3 4 5 6 (PRODUCT LEVEL)	SEE PAGE
	1	1	**243-4508**	1	RECEPTACLE AS-CONNECTOR (6-PIN)	
	2	1	**9X-3401**	5	PIN-CONNECTOR (16-GA TO 18-GA)	
					–OR–	
		1	**126-1767**	5	PIN-CONNECTOR (14-GA)	
	3	1	**8T-8737**	1	PLUG-SEAL	
M	4	1	**7Y-5458**	1	NUT (M12X1-THD)	
	5	1	**7Y-5464**	1	WASHER (12.2X15.4X0.5-MM THK)	
	6	1	**106-0210**	1	SEAL	

M-METRIC PART

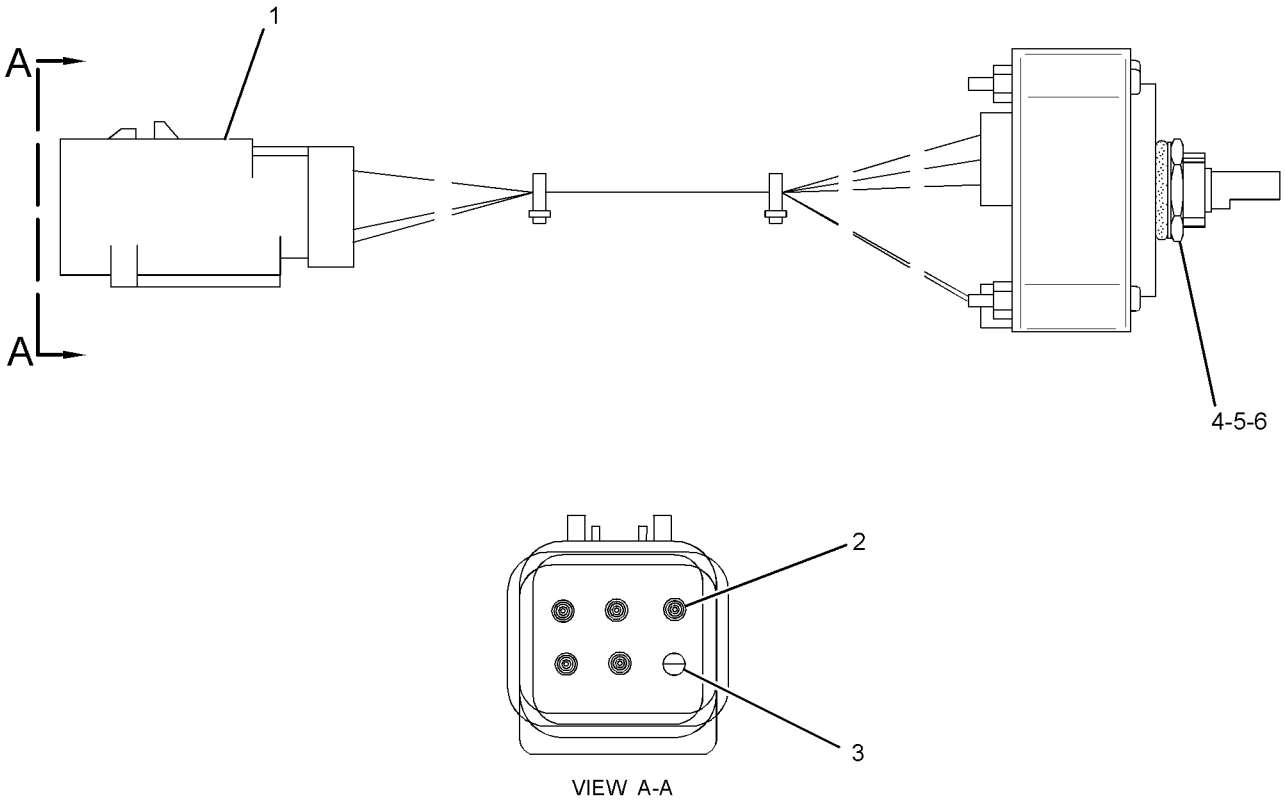

GRAPHIC #1 **<END>** g01588034

9G-7641 SWITCH GP-START–ENGINE, KEY

S/N: D3P1-UP; M4T1-UP
PART OF 251-0542, 251-0544 PANEL GP-SWITCH
ALSO AN ATTACHMENT

SMCS-1416 **i03439600**

NOTE	REF NO	GRAPHIC REF	PART NUMBER	QTY	PART NAME 1 2 3 4 5 6 (PRODUCT LEVEL)	SEE PAGE
J	1	1	*6V-3324*	1	LOCK AS-CYLINDER	
	2	1	**6V-8362**	4	SCREW-MACHINE (8-32X0.31-IN)	
	3	1	**9B-7233**	4	LOCKWASHER	
	4	1	**7T-6799**	1	NUT-MOUNTING (1-32-THD)	
J-REQUIRES CORPORATE KEY						

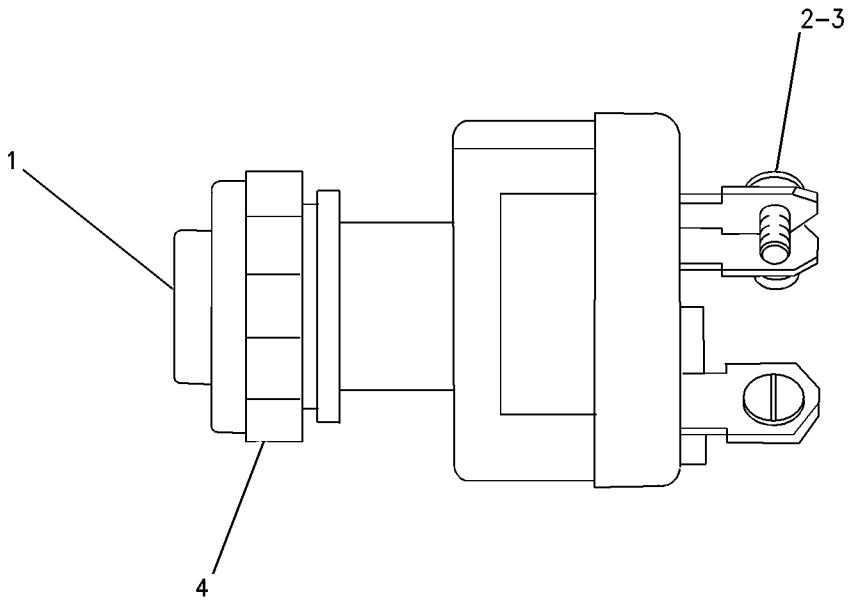

GRAPHIC #1 **<END>** g00706809

165-5970 SWITCH GP-TOGGLE

S/N: D3P1-UP; M4T1-UP
PART OF 259-5062 WIRING GP-FUEL SYSTEM
AN ATTACHMENT

SMCS-7332 **i02299813**

NOTE	REF NO	GRAPHIC REF	PART NUMBER	QTY	PART NAME 1 2 3 4 5 6 (PRODUCT LEVEL)	SEE PAGE
	1	1	**6T-3631**	2	NUT-HEX (15/32-32-THD)	
	2	1	**6T-3632**	1	LOCKWASHER	
	3	1	**6T-3633**	1	RING-LOCKING	
	4	1	**102-8803**	1	KIT-RECEPTACLE (3-PIN)	
					(INCLUDES RECEPTACLE AS & WEDGE)	
	5	1	**3E-3371**	1	WEDGE-RECEPTACLE LOCK (3-PIN)	
	6	1	**186-3735**	3	PIN-CONNECTOR (16-GA TO 18-GA)	

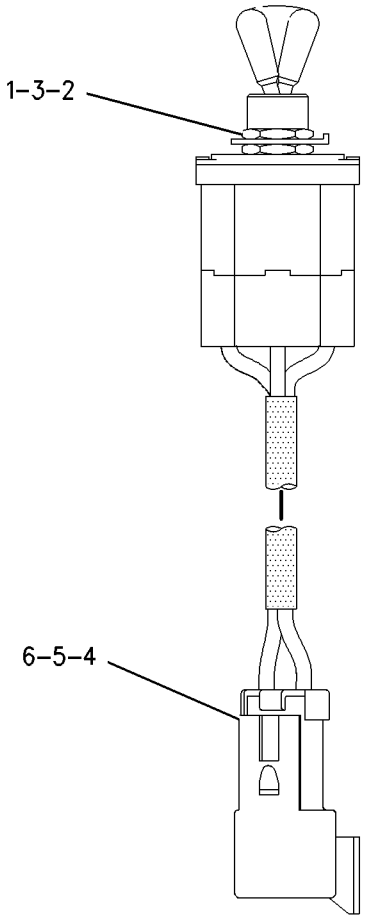

GRAPHIC #1 **<END>** g00749466

238-2478 SWITCH GP-TOGGLE

S/N: D3P1-UP

PART OF 238-2485 SWITCH GP-TOGGLE

AN ATTACHMENT

SMCS-7332 **i02515923**

NOTE	REF NO	GRAPHIC REF	PART NUMBER	QTY	PART NAME 1 2 3 4 5 6 (PRODUCT LEVEL)	SEE PAGE
	1	1	**7N-2353**	1	SWITCH AS-TOGGLE (QUICK COUPLER)	
	2	1	**238-2479**	1	HARNESS AS-WIRING (QUICK COUPLER SWITCH)	
		1	**7Y-3950**	2	TERMINAL-BLADE (14-GA TO 20-GA)	
		1	**7Y-3953**	1	CONNECTOR-RECEPTACLE	
		1	**3S-2093**	1	STRAP-CABLE	

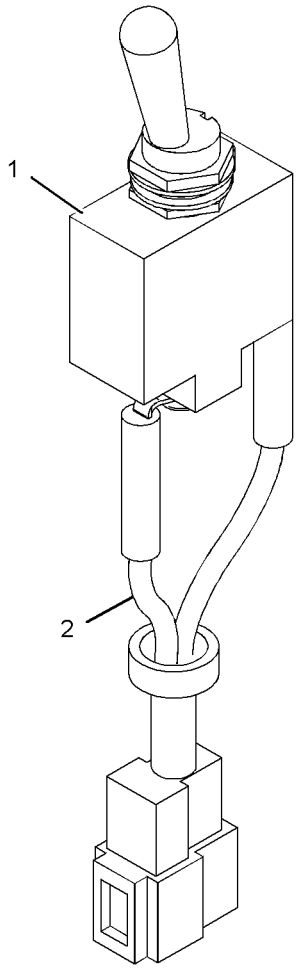

GRAPHIC #1

<END>

g01125914

238-2485 SWITCH GP-TOGGLE–QUICK COUPLER LOCK

S/N: D3P1-UP
PART OF 344-4212 CONTROL AR-COUPLER
AN ATTACHMENT

SMCS-7332 **i02508822**

NOTE	REF NO	GRAPHIC REF	PART NUMBER	QTY	PART NAME 1 2 3 4 5 6 (PRODUCT LEVEL)	SEE PAGE
Y	1	1	*238-2478*	1	SWITCH GP-TOGGLE (QUICK COUPLER)	275
	2	1	**259-4884**	1	BRACKET AS	
	3	1	**259-7180**	1	COVER	
M	4	1	**9X-2042**	3	SCREW-TRUSS HEAD (M6X1X12-MM)	

M-METRIC PART
Y-SEPARATE ILLUSTRATION

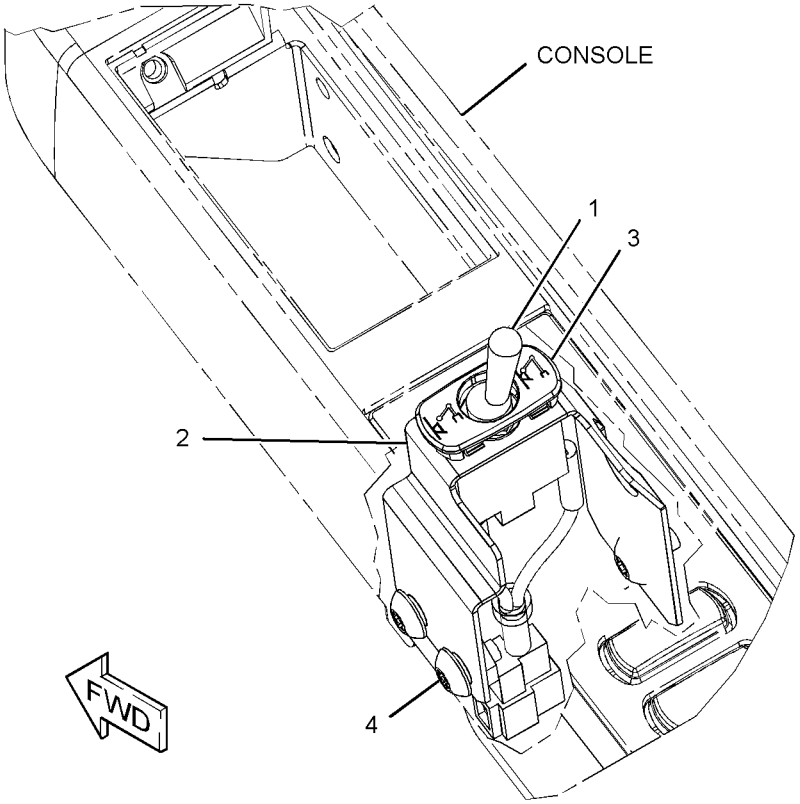

GRAPHIC #1 **<END>** g01259753

238-2208 SWITCH GP-WIPER–LOWER

S/N: D3P1-UP; M4T1-UP
PART OF 229-9086 WIPER AR-WINDOW
AN ATTACHMENT

SMCS-7305 **i03171740**

NOTE	REF NO	GRAPHIC REF	PART NUMBER	QTY	PART NAME 1 2 3 4 5 6 (PRODUCT LEVEL)	SEE PAGE
	1	1	**238-2209**	1	SWITCH AS-ROCKER (WIPER, LOWER)	
		1	**167-3542**	1	CONNECTOR-RECEPTACLE	
		1	**167-3543**	5	TERMINAL (MALE)	
	2	1	**238-2210**	1	SWITCH AS-ROCKER (LOWER WASHER)	
		1	**167-3542**	1	CONNECTOR-RECEPTACLE	
		1	**167-3543**	4	TERMINAL (MALE)	

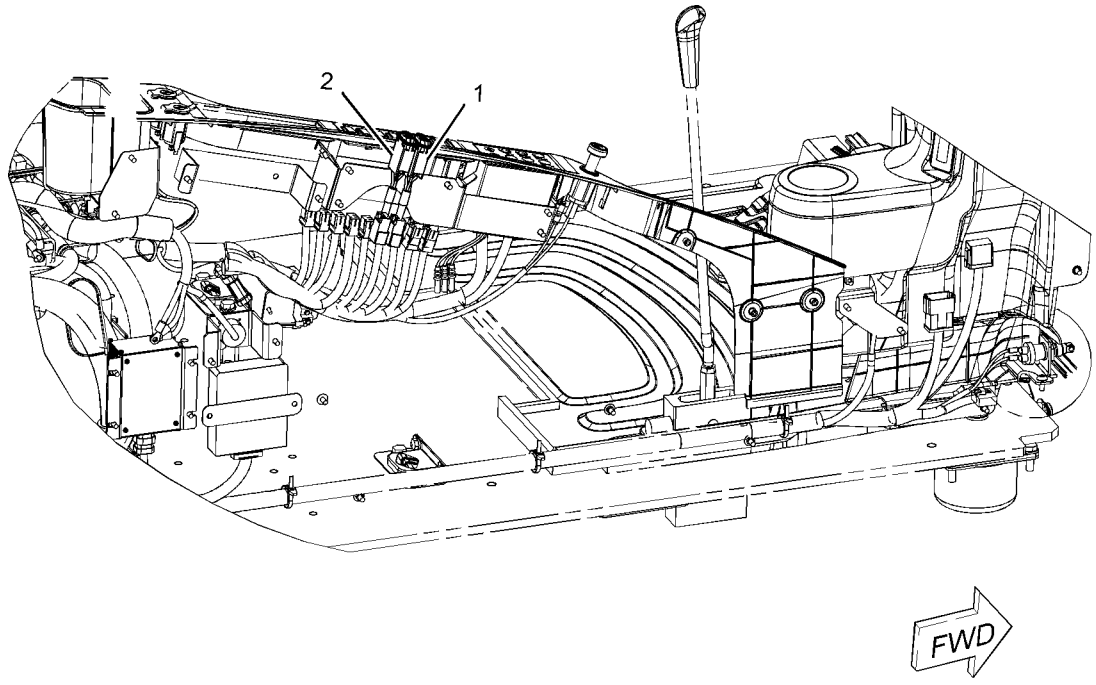

GRAPHIC #1 **<END>** g01098895

239-1134 VALVE GP-ETHER STARTING

S/N: D3P1-UP; M4T1-UP
24-VOLT
PART OF 239-6677 STARTING AID GP-ETHER
AN ATTACHMENT

SMCS-1456 **i03435882**

NOTE	REF NO	GRAPHIC REF	PART NUMBER	QTY	PART NAME 1 2 3 4 5 6 (PRODUCT LEVEL)	SEE PAGE
	1	1	**7N-9801**	1	GASKET	
	2	1	**102-8802**	1	KIT-RECEPTACLE (2-PIN)	
					(INCLUDES RECEPTACLE AS & WEDGE)	
	3	1	**186-3735**	2	PIN-CONNECTOR (16-GA TO 18-GA)	

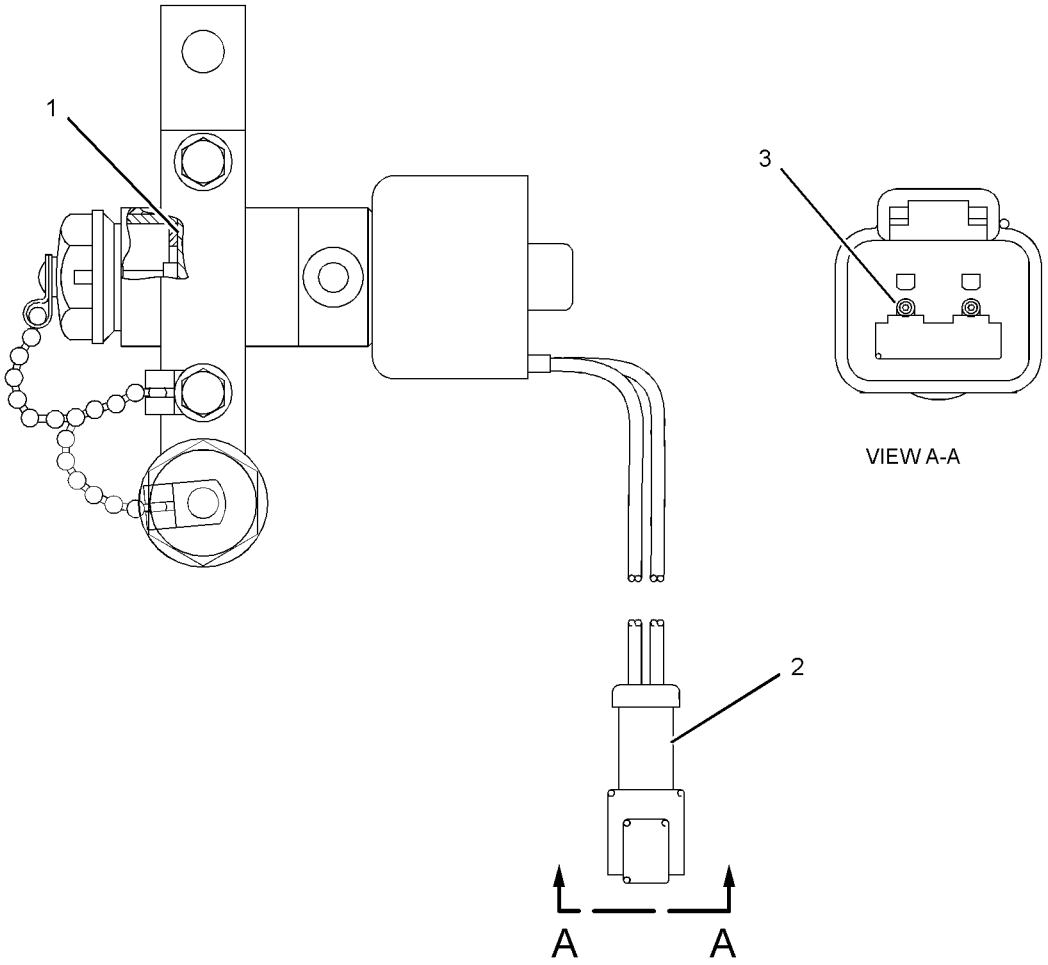

GRAPHIC #1 **<END>** g01375620

251-0621 WIRING GP-AUX START RECEPTACLE–JUMP START

S/N: D3P1-UP; M4T1-UP
PART OF 267-8840 COLD WEATHER AR
AN ATTACHMENT

SMCS-1408, 1463 **i03601967**

NOTE	REF NO	GRAPHIC REF	PART NUMBER	QTY	PART NAME 1 2 3 4 5 6 (PRODUCT LEVEL)	SEE PAGE
	1	1	**2G-1830**	1	RECEPTACLE AS (AUXILIARY START) (AUXILIARY START)	
E		1	**5P-0747**		CABLE (00-GA, BLACK) (49-CM)	
E		1	**5P-0761**		CABLE (00-GA, RED) (56-CM)	
D		1	**6V-2722**		TUBE-HEAT SHRINK (0.1-M)	
		1	**1S-7251**	2	TERMINAL-CABLE (00-GA, 1/2-IN SCREW)	
	2	1	**301-0091**	1	COVER-TERMINAL (RED)	
	3	1	**8S-2634**	1	COVER AS	
Y	4	1	*9W-0742*	1	BLOCK GP-JUNCTION (BATTERY)	188
	5	1	**231-1806**	1	BRACKET	
	6	1	**259-5127**	1	CABLE AS	
		1	**301-0091**	1	COVER-TERMINAL (RED)	
		1	**1S-7251**	2	TERMINAL-CABLE (00-GA, 1/2-IN SCREW)	
E		1	**5P-0761**		CABLE (00-GA, RED) (365-CM)	
		1	**8N-0869**	1	COVER-TERMINAL (RED)	
	7	1	**259-5128**	1	CABLE AS	
		1	**1S-7251**	1	TERMINAL-CABLE (00-GA, 1/2-IN SCREW)	
E		1	**5P-0761**		CABLE (00-GA, RED) (44-CM)	
		1	**301-0091**	1	COVER-TERMINAL (RED)	
		1	**9G-0004**	1	COVER AS-TERMINAL (RED)	
		1	**8C-5917**	1	TERMINAL AS-BATTERY (POSITIVE)	
		1	**1M-6119**	1	BOLT (5/16-18X1.375-IN)	
		1	**1M-6120**	1	NUT (5/16-18-THD)	
	8	1	**259-5206**	1	BRACKET AS	
M		1	**8T-3490**	2	NUT-WELD (M10X1.5-THD)	
M	9	1	**5C-9553**	4	BOLT (M6X1X16-MM)	
	10	1	**5P-4115**	4	WASHER-HARD (7.2X19X2-MM THK)	
	11	1	**8T-4121**	6	WASHER-HARD (11X21X2.5-MM THK)	
M	12	1	**8T-4136**	6	BOLT (M10X1.5X25-MM)	

D-ORDER BY THE METER
E-ORDER BY THE CENTIMETER
M-METRIC PART
Y-SEPARATE ILLUSTRATION

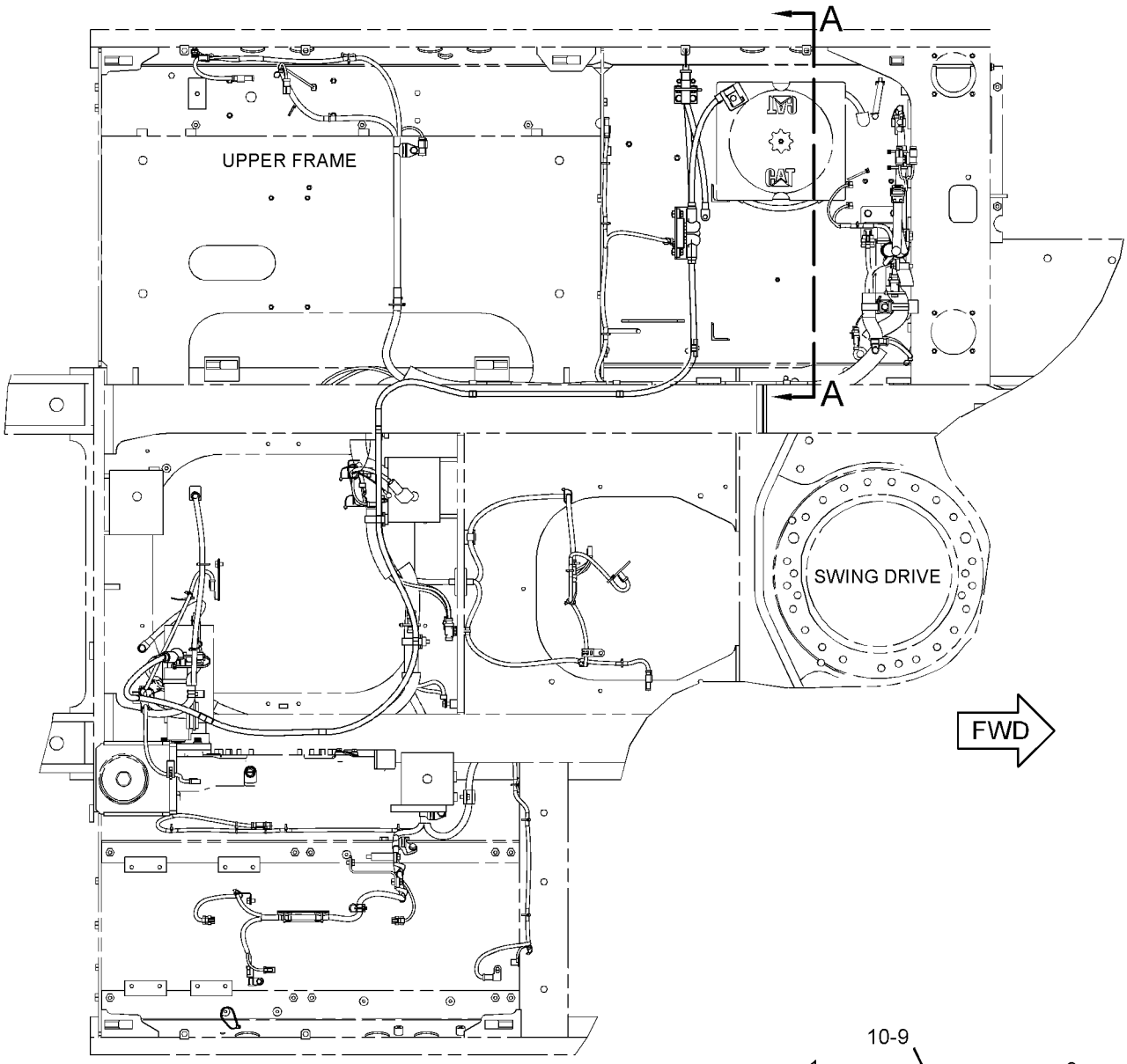

TOP VIEW

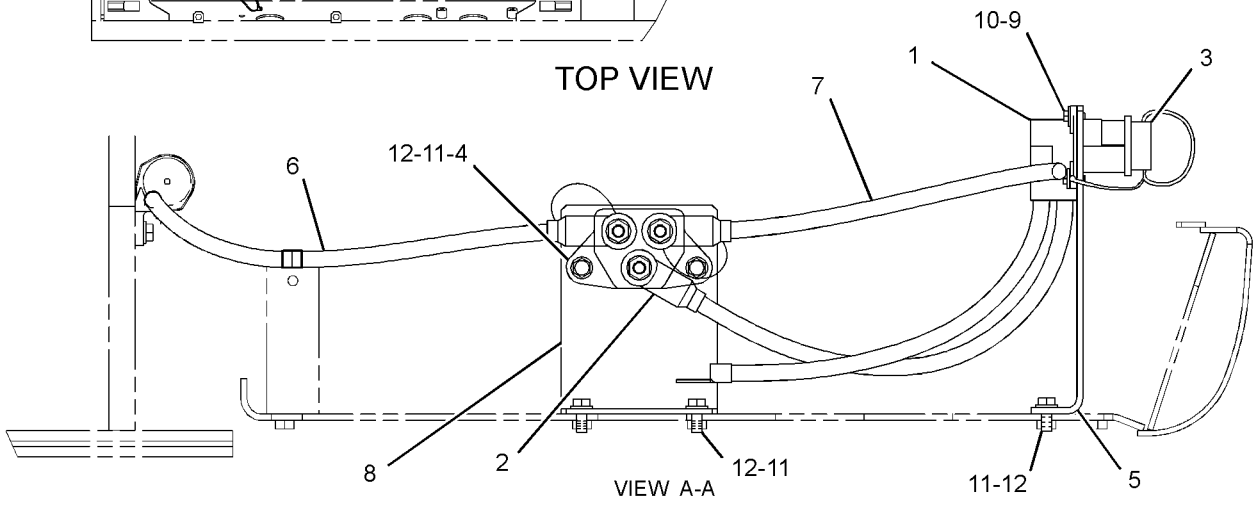

VIEW A-A

GRAPHIC #1 **<END>** g01442477

251-0623 WIRING GP-AUXILIARY CONTROL

S/N: D3P1-UP; M4T1-UP

PART OF 270-8795, 270-8796, 297-0494 CONTROL AR-AUXILIARY AN ATTACHMENT

SMCS-1408 **i03602041**

NOTE	REF NO	GRAPHIC REF	PART NUMBER	QTY	PART NAME 1 2 3 4 5 6 (PRODUCT LEVEL)	SEE PAGE
	1	1,2	**3S-2093**	20	STRAP-CABLE	
H	2	1,2	**7I-2673**	2	STRAP-CABLE	
	3	1	**7K-1181**	7	STRAP-CABLE	
	4	1,2	**204-1611**	5	STRAP-CABLE	
	5	1,2	**259-5071**	2	BRACKET AS	
	6	2	**259-5075**	1	BRACKET AS	
	7	1	**267-7867**	1	BRACKET AS	
	8	1	**275-6936**	1	HARNESS AS-CONTROL	
		1	**102-8803**	1	KIT-RECEPTACLE (3-PIN)	
		1	**102-8802**	8	KIT-RECEPTACLE (2-PIN)	
					(EACH RECEPTACLE KIT INCLUDES RECEPTACLE AS & WEDGE)	
		1	**155-2270**	9	KIT-CONNECTING PLUG (2-PIN)	
		1	**155-2260**	1	KIT-CONNECTING PLUG (3-PIN)	
					(EACH PLUG KIT INCLUDES PLUG AS, WEDGE & INTERFACE SEAL)	
		1	**243-4509**	1	RECEPTACLE AS-CONNECTOR (8-PIN)	
		1	**243-4510**	1	RECEPTACLE AS-CONNECTOR (12-PIN)	
		1	**3S-2093**	4	STRAP-CABLE	
	9	1	**111-4836**	2	CLIP	
	10	1	**132-5789**	2	CLIP	
	11	1	**4P-7581**	1	CLIP	
	12	1,2	**8T-4121**	9	WASHER-HARD (11X21X2.5-MM THK)	
M	13	1	**8T-4137**	3	BOLT (M10X1.5X20-MM)	
M	14	1,2	**8T-4179**	4	BOLT (M12X1.75X20-MM)	
M	15	1,2	**8T-4191**	6	BOLT (M10X1.5X16-MM)	
	16	1,2	**8T-4223**	4	WASHER-HARD (13.5X25.5X3-MM THK)	

H-USE WITH FOOT PEDAL
M-METRIC PART

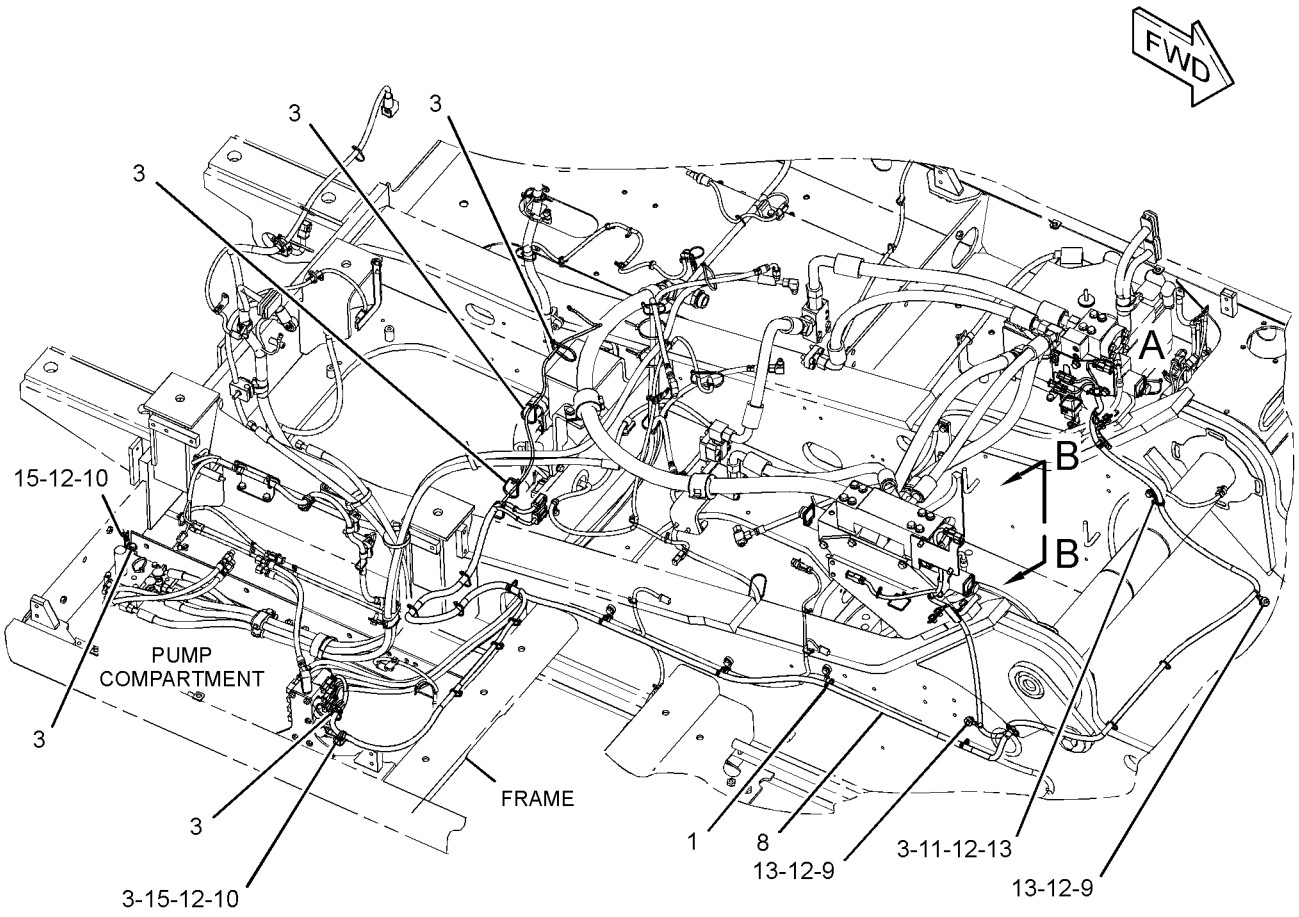

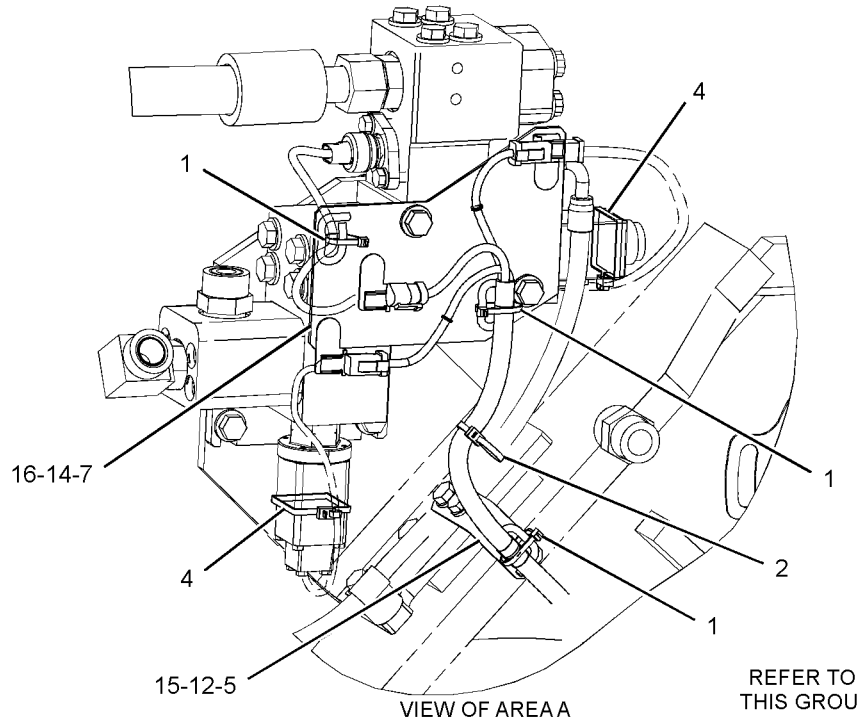

REFER TO ALL ILLUSTRATIONS OF
THIS GROUP FOR AUXILIARY VIEWS

GRAPHIC #1

g01927273

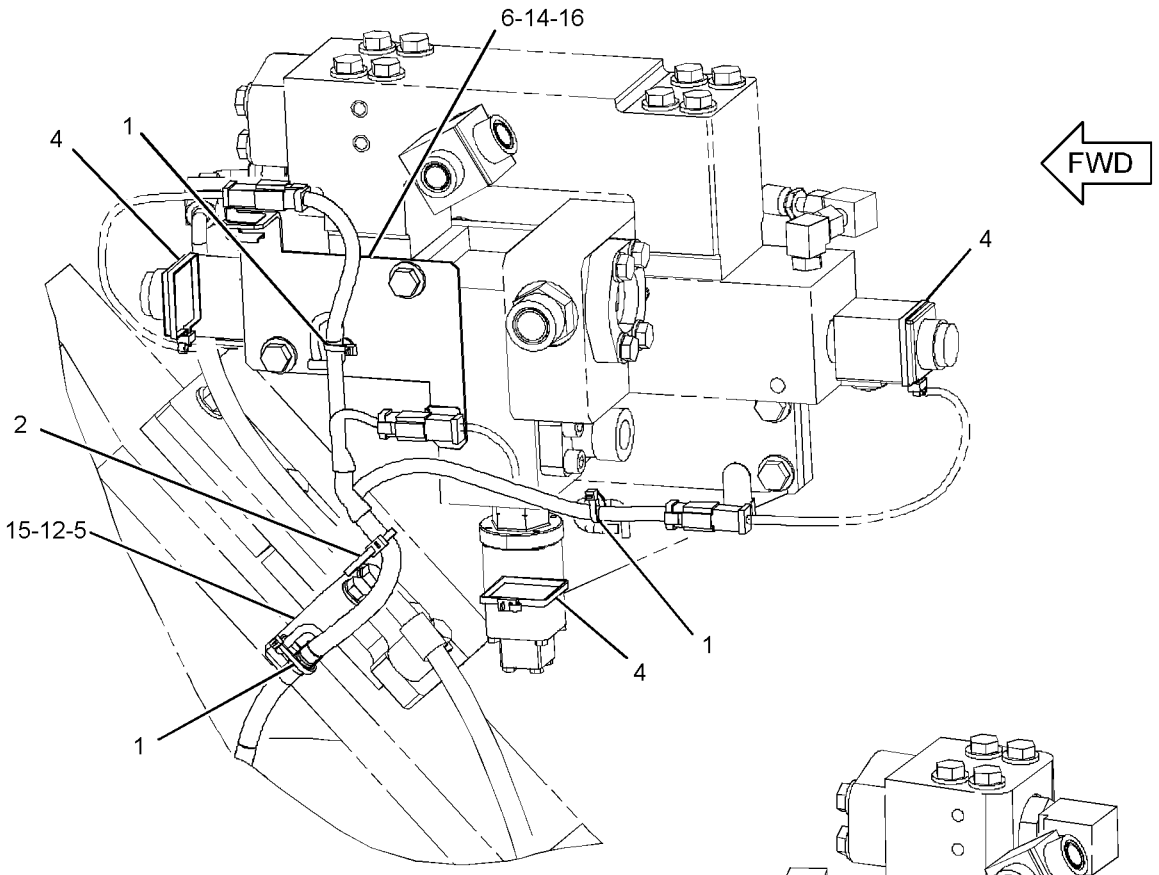

VIEW B-B
(SYSTEM 14)

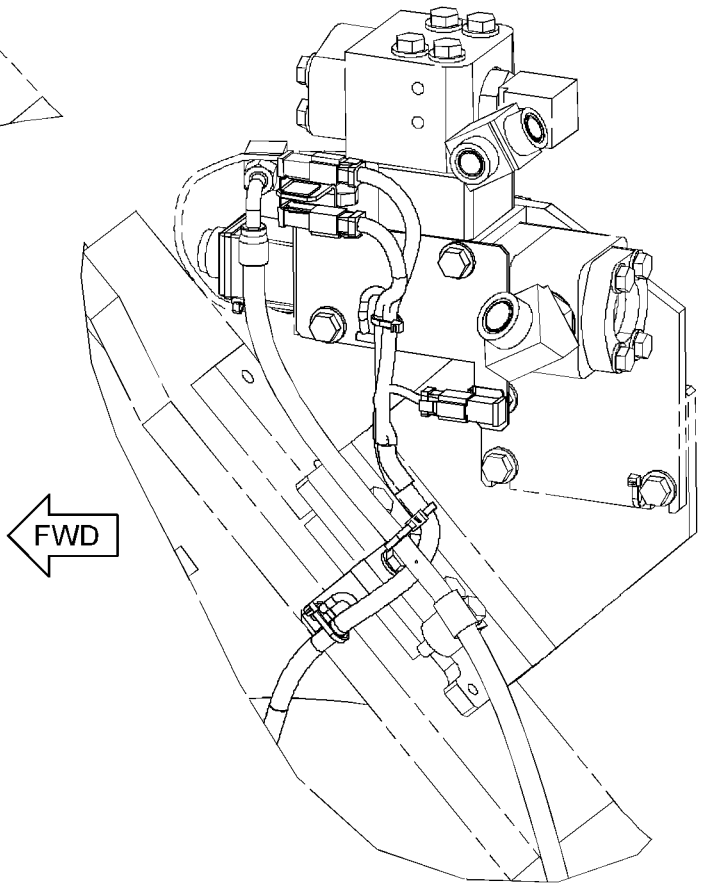

VIEW B-B
(SYSTEM 17)

GRAPHIC #2 **<END>** g01944354

ELECTRICAL AND STARTING SYSTEM

259-4962 WIRING GP-AUXILIARY CONTROL

S/N: D3P1-UP; M4T1-UP
PART OF 255-5770 CONTROL AR-AUXILIARY
AN ATTACHMENT

SMCS-1408 **i03706648**

NOTE	REF NO	GRAPHIC REF	PART NUMBER	QTY	PART NAME 1 2 3 4 5 6 (PRODUCT LEVEL)	SEE PAGE
	1	1	**3S-2093**	26	STRAP-CABLE	
	2	1	**7I-2673**	2	STRAP-CABLE	
	3	1	**7K-1181**	13	STRAP-CABLE	
	4	1	**204-1611**	3	STRAP-CABLE	
	5	1	**259-5071**	2	BRACKET AS	
	6	1	**283-3000**	1	BRACKET AS	
	7	1	**259-5075**	1	BRACKET AS	
	8	1	**275-6935**	1	HARNESS AS-CAB	
		1	**8T-8729**	2	PIN-CONNECTOR (16-GA TO 18-GA)	
		1	**8T-8730**	14	SOCKET-CONNECTOR (16-GA TO 18-GA)	
		1	**8T-8737**	9	PLUG-SEAL	
		1	**9W-0852**	1	PIN-CONNECTOR (14-GA)	
		1	**9W-0844**	1	SOCKET-CONNECTOR (14-GA)	
BE		1	**125-7874**		TUBE-HEAT SHRINK (5.72-MM DIA)	
		1	**9X-3402**	2	SOCKET-CONNECTOR (16-GA TO 18-GA)	
		1	**2L-8069**	1	TERMINAL-RING (2-GA TO 10-GA, 3/8-IN SCREW)	
		1	**2L-8079**	1	TERMINAL-RING (14-GA TO 16-GA, 3/8-IN SCREW)	
		1	**9X-3401**	1	PIN-CONNECTOR (16-GA TO 18-GA)	
		1	**155-2270**	6	KIT-CONNECTING PLUG (2-PIN)	
					(EACH KIT INCLUDES PLUG AS, WEDGE & INTERFACE SEAL)	
		1	**230-5010**	1	PLUG AS-CONNECTOR (6-PIN)	
		1	**264-7032**	1	SEAL-CONNECTOR	
		1	**243-4510**	1	RECEPTACLE AS-CONNECTOR (12-PIN)	
	9	1	**111-4836**	2	CLIP	
	10	1	**132-5789**	2	CLIP	
	11	1	**4P-7581**	1	CLIP	
	12	1	**8T-4121**	9	WASHER-HARD (11X21X2.5-MM THK)	
M	13	1	**8T-4137**	3	BOLT (M10X1.5X20-MM)	
M	14	1	**8T-4179**	4	BOLT (M12X1.75X20-MM)	
M	15	1	**8T-4191**	6	BOLT (M10X1.5X16-MM)	
	16	1	**8T-4223**	4	WASHER-HARD (13.5X25.5X3-MM THK)	

B-USE AS REQUIRED
E-ORDER BY THE CENTIMETER
M-METRIC PART

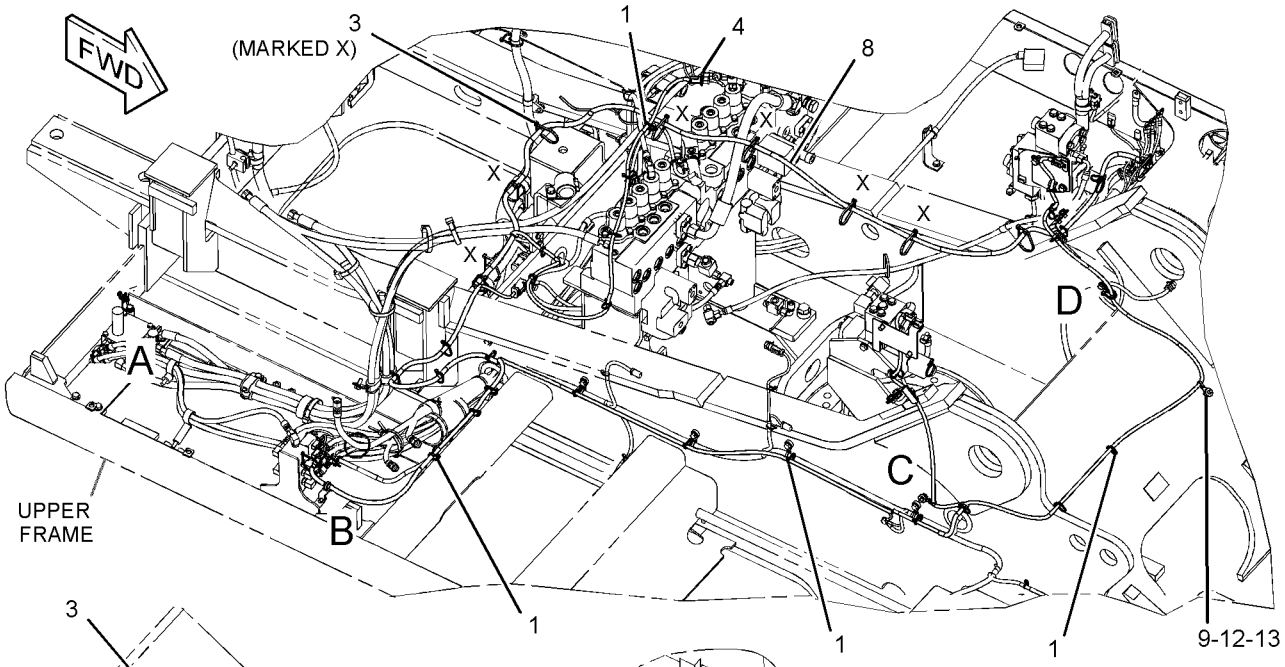

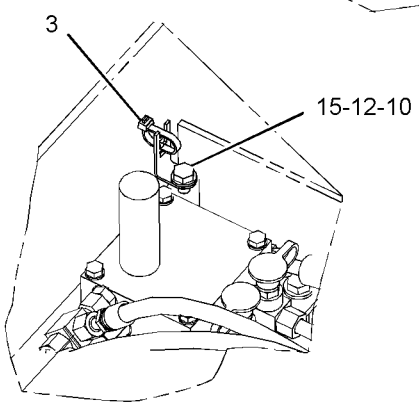

VIEW OF AREA A

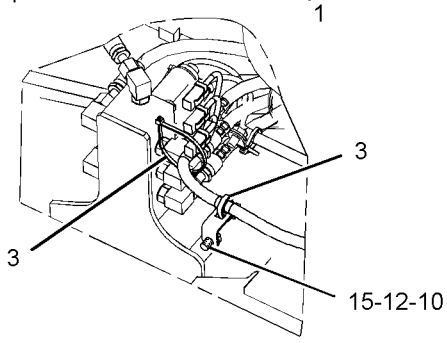

VIEW OF AREA B

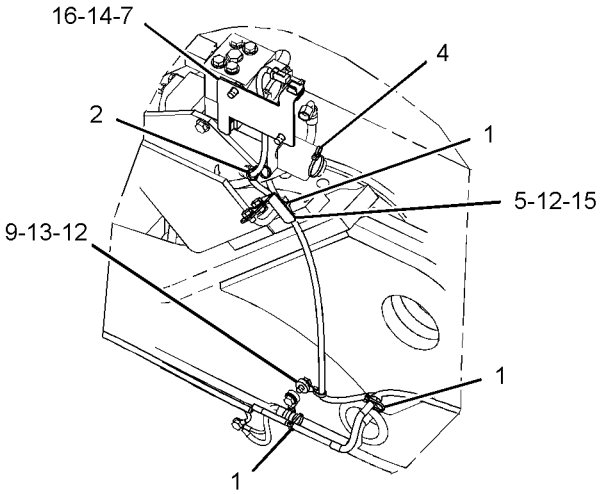

VIEW OF AREA C

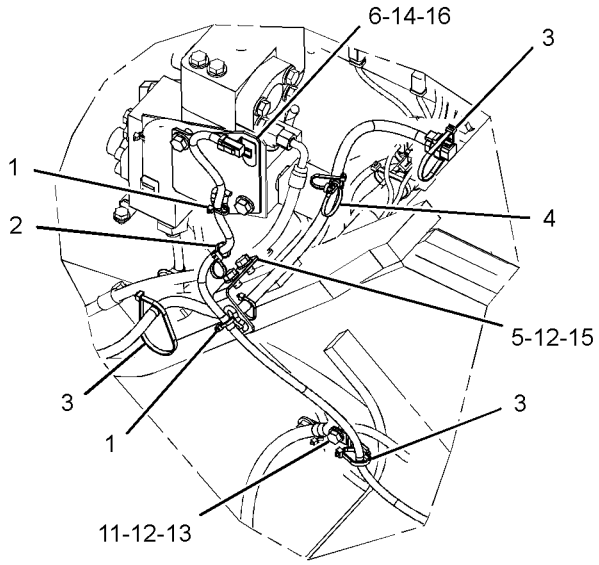

VIEW OF AREA D

GRAPHIC #1 **<END>** g01501113

259-4963 WIRING GP-AUXILIARY CONTROL–

SYSTEM 16, 1-WAY, 2-PUMP

S/N: M4T1-UP

PART OF 255-5774 CONTROL AR-AUXILIARY

AN ATTACHMENT

SMCS-1408 **i03727261**

NOTE	REF NO	GRAPHIC REF	PART NUMBER	QTY	PART NAME 1 2 3 4 5 6 (PRODUCT LEVEL)	SEE PAGE
	1	1	**3S-2093**	5	STRAP-CABLE	
	2	1	**7K-1181**	6	STRAP-CABLE	
	3	1	**275-6937**	1	HARNESS AS-CONTROL	
		1	**8T-8729**	3	PIN-CONNECTOR (16-GA TO 18-GA)	
		1	**8T-8730**	4	SOCKET-CONNECTOR (16-GA TO 18-GA)	
		1	**3S-2093**	2	STRAP-CABLE	
		1	**8T-8737**	5	PLUG-SEAL	
BE		1	**125-7874**		TUBE-HEAT SHRINK (5.72-MM DIA)	
		1	**155-2270**	2	KIT-CONNECTING PLUG (2-PIN)	
					(EACH INCLUDES PLUG AS, WEDGE & INTERFACE SEAL)	
		1	**243-4509**	1	RECEPTACLE AS-CONNECTOR (8-PIN)	
	4	1	**132-5789**	2	CLIP	
	5	1	**8T-4121**	2	WASHER-HARD (11X21X2.5-MM THK)	
M	6	1	**8T-4191**	2	BOLT (M10X1.5X16-MM)	

B-USE AS REQUIRED
E-ORDER BY THE CENTIMETER
M-METRIC PART

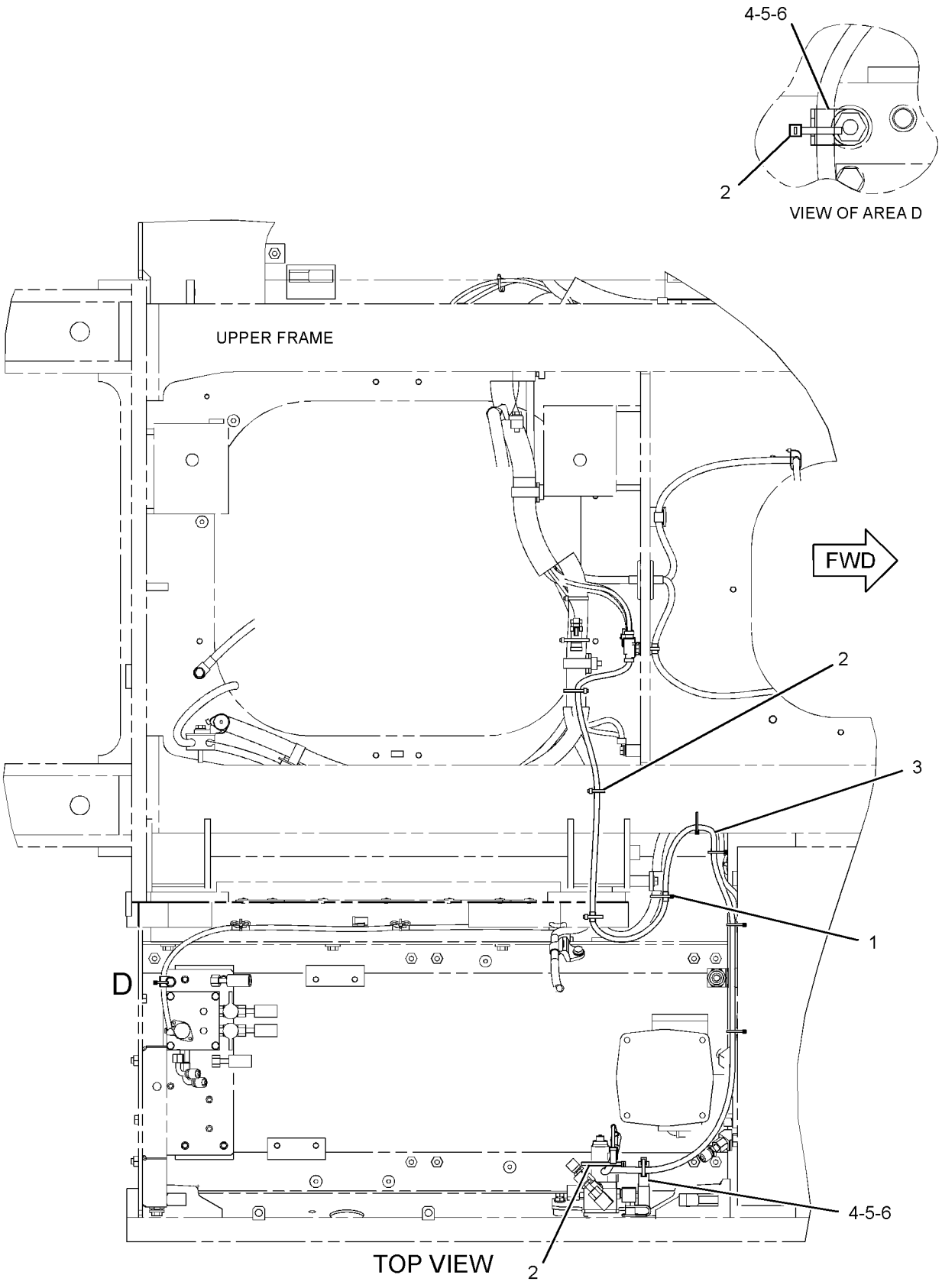

GRAPHIC #1

<END>

g01243211

ELECTRICAL AND STARTING SYSTEM

259-5340 WIRING GP-AUXILIARY CONTROL

S/N: D3P1-UP; M4T1-UP
PART OF 272-9663 CONTROL AR-AUXILIARY
AN ATTACHMENT

SMCS-1408 **i02508270**

NOTE	REF NO	GRAPHIC REF	PART NUMBER	QTY	PART NAME 1 2 3 4 5 6 (PRODUCT LEVEL)	SEE PAGE
	1	1	**3S-2093**	14	STRAP-CABLE	
	2	1	**7K-1181**	11	STRAP-CABLE	
	3	1	**111-4836**	1	CLIP	
	4	1	**132-5789**	1	CLIP	
	5	1	**275-6936**	1	HARNESS AS-CONTROL	
		1	**102-8802**	8	KIT-RECEPTACLE (2-PIN)	
		1	**102-8803**	1	KIT-RECEPTACLE (3-PIN)	
					(EACH RECEPTACLE KIT INCLUDES RECEPTACLE AS & WEDGE)	
		1	**3S-2093**	4	STRAP-CABLE	
		1	**155-2260**	1	KIT-CONNECTING PLUG (3-PIN)	
		1	**155-2270**	9	KIT-CONNECTING PLUG (2-PIN)	
					(EACH PLUG KIT INCLUDES PLUG AS, WEDGE & INTERFACE SEAL)	
		1	**243-4509**	1	RECEPTACLE AS-CONNECTOR (8-PIN)	
		1	**243-4510**	1	RECEPTACLE AS-CONNECTOR (12-PIN)	
E		1	**125-7874**		TUBE-HEAT SHRINK (5.72-MM DIA) (10-CM)	
E		1	**125-7875**		TUBE-HEAT SHRINK (7.44-MM DIA) (5-CM)	
	6	1	**8T-4121**	2	WASHER-HARD (11X21X2.5-MM THK)	
M	7	1	**8T-4137**	1	BOLT (M10X1.5X20-MM)	
M	8	1	**8T-4191**	1	BOLT (M10X1.5X16-MM)	
J	9	1	**7K-1181**	1	STRAP-CABLE	
J	10	1	**132-5789**	1	CLIP	
J	11	1	**8T-4121**	1	WASHER-HARD (11X21X2.5-MM THK)	
JM	12	1	**8T-4191**	1	BOLT (M10X1.5X16-MM)	

E-ORDER BY THE CENTIMETER
J-USE FOR AUXILIARY CONFIGURATION FOR 2-PUMP, 1-WAY FLOW
M-METRIC PART

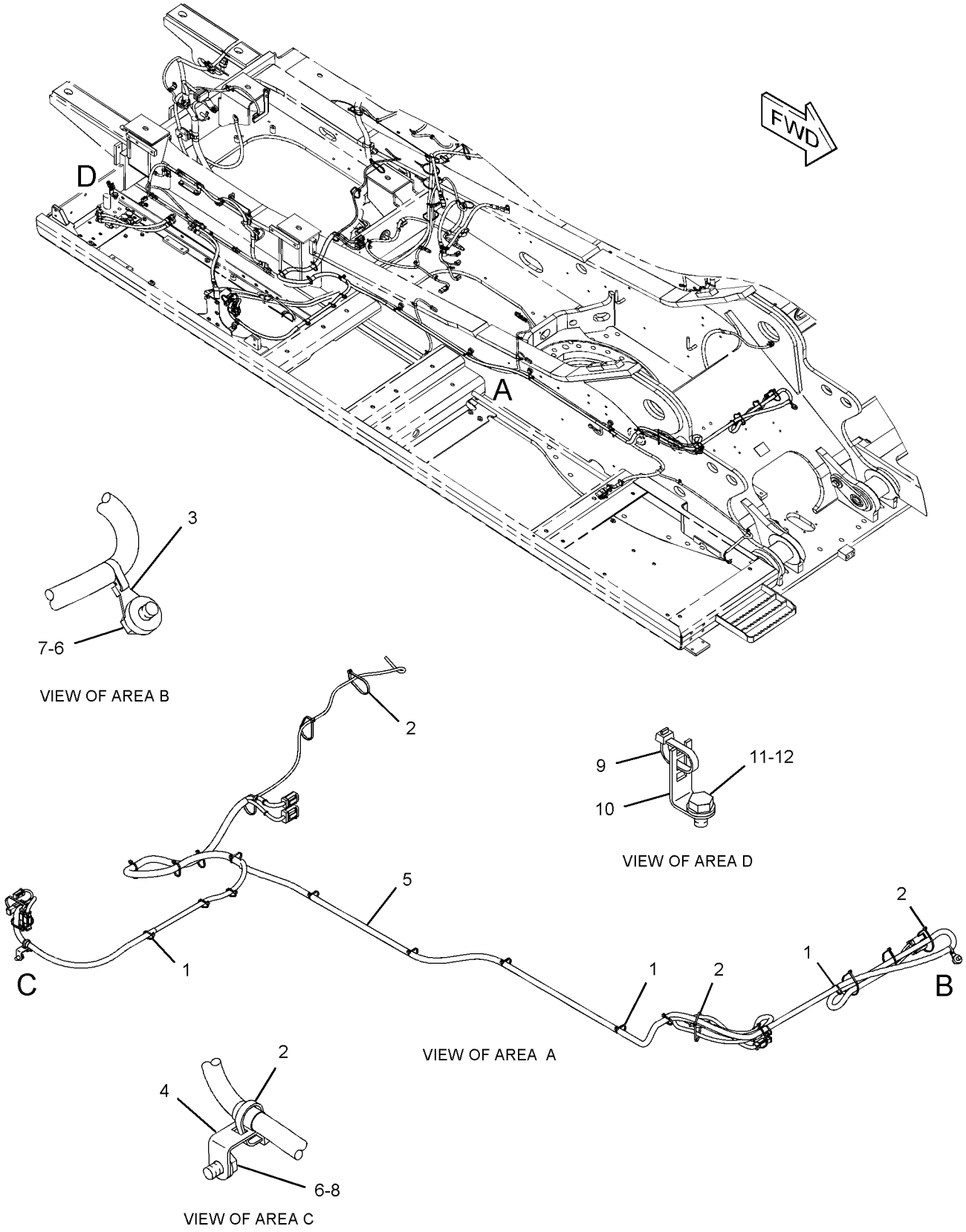

GRAPHIC #1 **<END>** g01239663

328-0370 WIRING GP-AUXILIARY CONTROL–

WORK TOOL, 4-FUNCTION, FLOW CONTROL

S/N: D3P1-UP; M4T1-UP

PART OF 307-9975, 336-3339 CONTROL AR-AUXILIARY

AN ATTACHMENT

SMCS-1408 **i03732293**

NOTE	REF NO	GRAPHIC REF	PART NUMBER	QTY	PART NAME 1 2 3 4 5 6 (PRODUCT LEVEL)	SEE PAGE
	1	1	**3S-2093**	19	STRAP-CABLE	
	2	1	**7K-1181**	12	STRAP-CABLE	
	3	1	**111-4836**	2	CLIP	
	4	1	**259-5071**	2	BRACKET AS	
	5	1	**275-6936**	1	HARNESS AS-CONTROL	
		1	**102-8802**	8	KIT-RECEPTACLE (2-PIN)	
		1	**102-8803**	1	KIT-RECEPTACLE (3-PIN)	
					(EACH RECEPTACLE KIT INCLUDES RECEPTACLE AS & WEDGE)	
		1	**8T-8729**	11	PIN-CONNECTOR (16-GA TO 18-GA)	
		1	**8T-8730**	18	SOCKET-CONNECTOR (16-GA TO 18-GA)	
		1	**3S-2093**	4	STRAP-CABLE	
		1	**8T-8737**	25	PLUG-SEAL	
BE		1	**125-7874**		TUBE-HEAT SHRINK (5.72-MM DIA)	
BE		1	**125-7875**		TUBE-HEAT SHRINK (7.44-MM DIA)	
		1	**9X-3402**	3	SOCKET-CONNECTOR (16-GA TO 18-GA)	
		1	**2L-8079**	1	TERMINAL-RING (14-GA TO 16-GA, 3/8-IN SCREW)	
		1	**9X-3401**	3	PIN-CONNECTOR (16-GA TO 18-GA)	
		1	**155-2270**	9	KIT-CONNECTING PLUG (2-PIN)	
		1	**155-2260**	1	KIT-CONNECTING PLUG (3-PIN)	
					(EACH PLUG KIT INCLUDES PLUG AS, WEDGE & INTERFACE SEAL)	
		1	**243-4509**	1	RECEPTACLE AS-CONNECTOR (8-PIN)	
		1	**243-4510**	1	RECEPTACLE AS-CONNECTOR (12-PIN)	
	6	1	**328-0371**	1	HARNESS AS-CONTROL (RELIEF ONE)	
		1	**102-8802**	1	KIT-RECEPTACLE (2-PIN)	
		1	**102-8803**	2	KIT-RECEPTACLE (3-PIN)	
					(EACH RECEPTACLE KIT INCLUDES RECEPTACLE AS & WEDGE)	
		1	**3E-3371**	1	WEDGE-RECEPTACLE LOCK (3-PIN)	
		1	**8T-8729**	2	PIN-CONNECTOR (16-GA TO 18-GA)	
		1	**8T-8730**	2	SOCKET-CONNECTOR (16-GA TO 18-GA)	
		1	**8T-8737**	3	PLUG-SEAL	
		1	**9X-3402**	3	SOCKET-CONNECTOR (16-GA TO 18-GA)	
		1	**9X-3401**	3	PIN-CONNECTOR (16-GA TO 18-GA)	
		1	**155-2260**	1	KIT-CONNECTING PLUG (3-PIN)	
					(INCLUDES PLUG AS, WEDGE & INTERFACE SEAL)	
		1	**230-4011**	1	PLUG AS-CONNECTOR (2-PIN)	
		1	**264-7029**	1	SEAL-CONNECTOR	
	7	1	**328-0372**	1	HARNESS AS-SOLENOID (RELIEF TWO)	
		1	**102-8802**	1	KIT-RECEPTACLE (2-PIN)	
		1	**8T-8729**	2	PIN-CONNECTOR (16-GA TO 18-GA)	
		1	**8T-8730**	2	SOCKET-CONNECTOR (16-GA TO 18-GA)	
		1	**230-4011**	1	PLUG AS-CONNECTOR (2-PIN)	
		1	**264-7029**	1	SEAL-CONNECTOR	
	8	1	**328-0373**	1	SHEET AS	
	9	1	**132-5789**	2	CLIP	
	10	1	**4P-7581**	1	CLIP	
	11	1	**8T-4121**	9	WASHER-HARD (11X21X2.5-MM THK)	
M	12	1	**8T-4137**	3	BOLT (M10X1.5X20-MM)	
M	13	1	**8T-4179**	2	BOLT (M12X1.75X20-MM)	
M	14	1	**8T-4191**	6	BOLT (M10X1.5X16-MM)	
	15	1	**8T-4223**	2	WASHER-HARD (13.5X25.5X3-MM THK)	

328-0370 **WIRING GP-AUXILIARY CONTROL** *(contd.)* **i03732293**

B-USE AS REQUIRED
E-ORDER BY THE CENTIMETER
M-METRIC PART

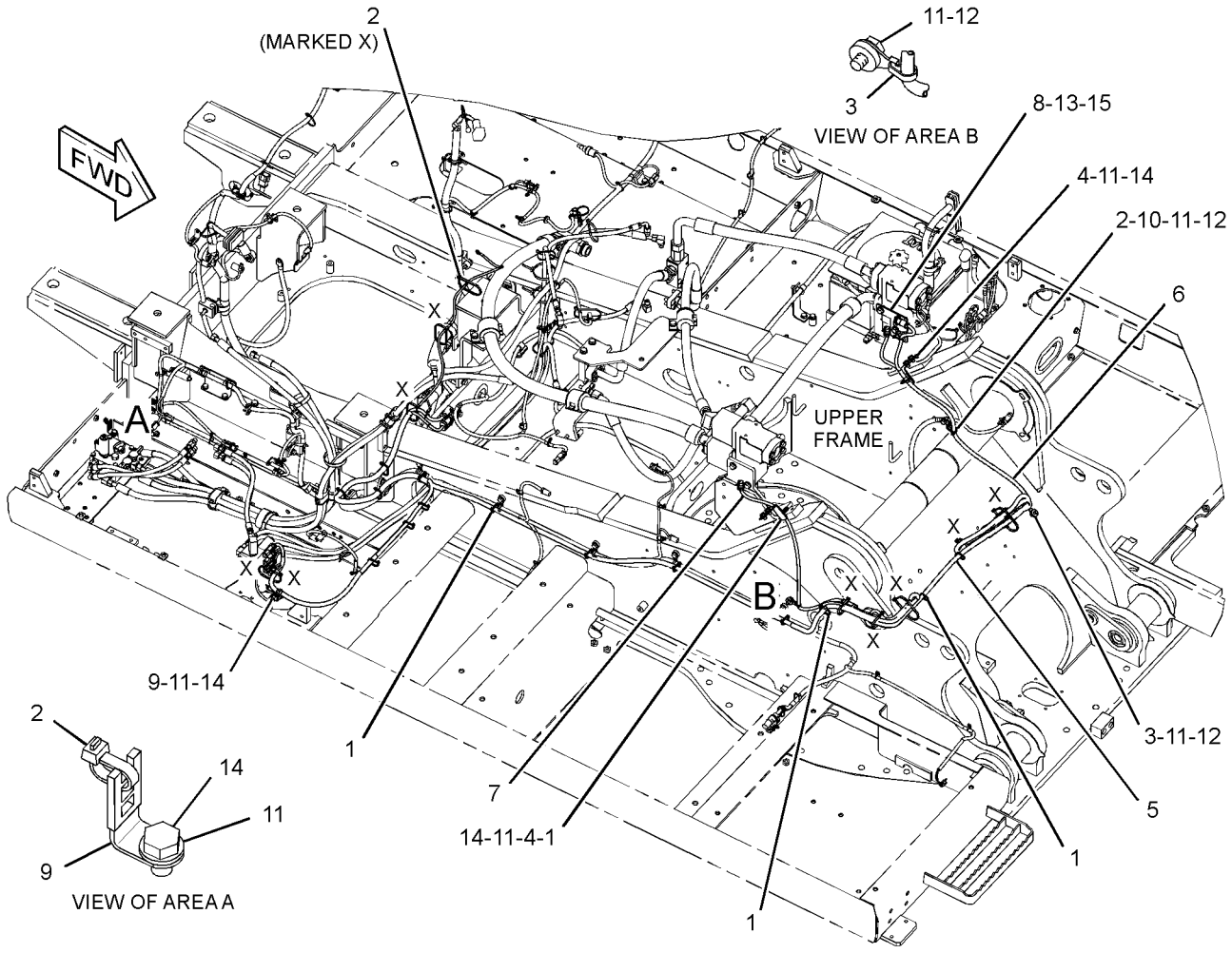

GRAPHIC #1 **<END>** g01811515

251-0619 WIRING GP-BOOM FLOAT

S/N: M4T1-UP
PART OF 329-6564 CONTROL AR-BOOM
AN ATTACHMENT

SMCS-1408 **i03744361**

NOTE	REF NO	GRAPHIC REF	PART NUMBER	QTY	PART NAME 1 2 3 4 5 6 (PRODUCT LEVEL)	SEE PAGE
	1	1	**3S-2093**	21	STRAP-CABLE	
	2	1	**7I-2673**	9	STRAP-CABLE	
	3	1	**7K-1181**	20	STRAP-CABLE	
	4	1	**111-4836**	1	CLIP	
	5	1	**116-0118**	1	CLIP	
	6	1	**204-1611**	1	STRAP-CABLE	
	7	1	**267-7915**	1	HARNESS AS-SENSOR (OVERLOAD WARNING DEVICE)	
		1	**8T-8729**	4	PIN-CONNECTOR (16-GA TO 18-GA)	
		1	**8T-8730**	10	SOCKET-CONNECTOR (16-GA TO 18-GA)	
		1	**3S-2093**	1	STRAP-CABLE	
BE		1	**125-7874**		TUBE-HEAT SHRINK (5.72-MM DIA)	
BE		1	**125-7875**		TUBE-HEAT SHRINK (7.44-MM DIA)	
		1	**9X-3402**	3	SOCKET-CONNECTOR (16-GA TO 18-GA)	
		1	**2L-8079**	1	TERMINAL-RING (14-GA TO 16-GA, 3/8-IN SCREW)	
		1	**9X-3401**	3	PIN-CONNECTOR (16-GA TO 18-GA)	
		1	**155-2270**	5	KIT-CONNECTING PLUG (2-PIN)	
		1	**155-2260**	1	KIT-CONNECTING PLUG (3-PIN)	
					(EACH PLUG KIT INCLUDES PLUG AS, WEDGE & INTERFACE SEAL)	
		1	**243-4506**	1	RECEPTACLE AS-CONNECTOR (3-PIN)	
		1	**243-4507**	1	RECEPTACLE AS-CONNECTOR (4-PIN)	
	8	1	**8T-4121**	1	WASHER-HARD (11X21X2.5-MM THK)	
M	9	1	**8T-4137**	1	BOLT (M10X1.5X20-MM)	

B-USE AS REQUIRED
E-ORDER BY THE CENTIMETER
M-METRIC PART

251-0619 **WIRING GP-BOOM FLOAT** *(contd.)* **i03744361**

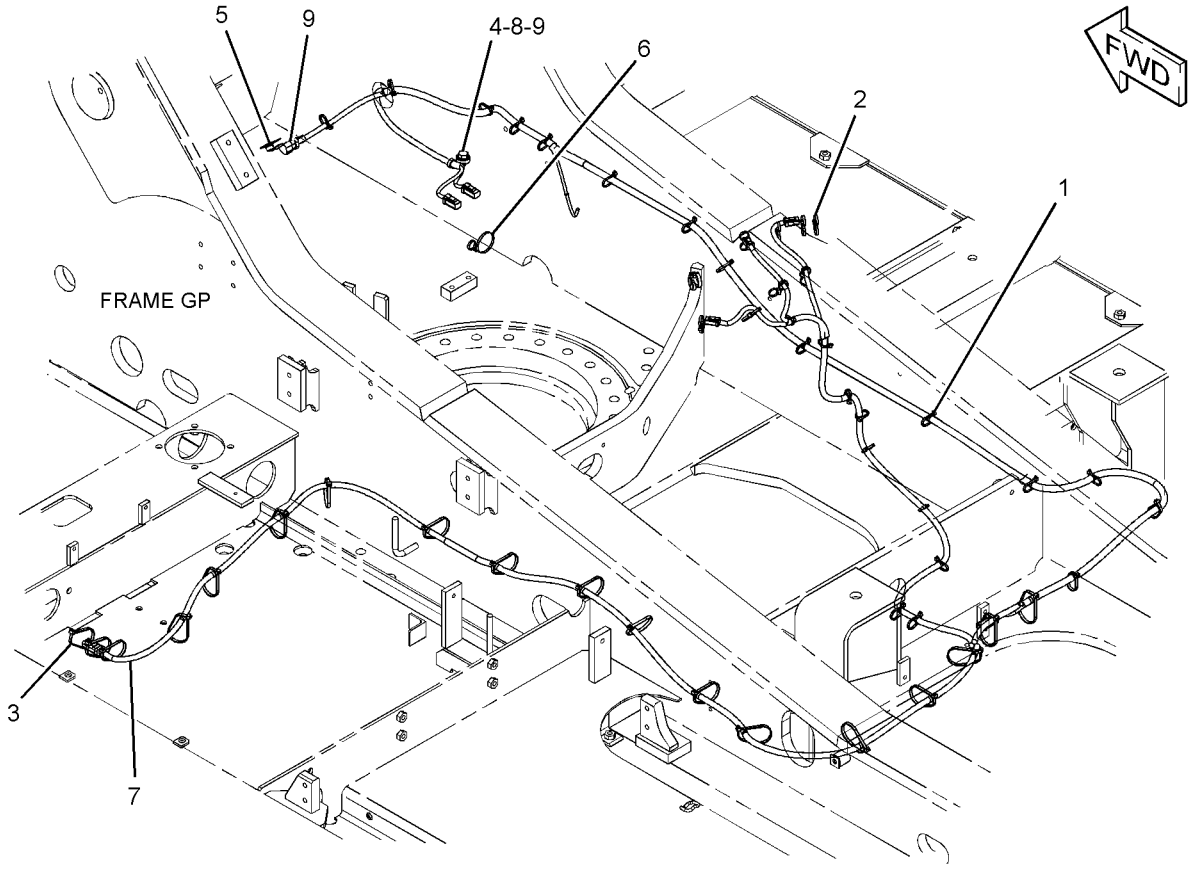

GRAPHIC #1 **<END>** g01241557

ELECTRICAL AND STARTING SYSTEM

251-0432 WIRING GP-CAB

S/N: D3P1-UP; M4T1-UP
PART OF 274-7468 CAB GP, 229-9072 OPERATOR AR
ALSO AN ATTACHMENT

SMCS-1408, 7301 **i03002032**

NOTE	REF NO	GRAPHIC REF	PART NUMBER	QTY	PART NAME 1 2 3 4 5 6 (PRODUCT LEVEL)	SEE PAGE
	1	1,2	**3S-2093**	9	STRAP-CABLE	
	2	1,2	**7Y-5505**	2	SPEAKER AS	
					(EACH INCLUDES)	
		1,2	**7Y-3951**	2	TERMINAL-BLADE (14-GA)	
		1,2	**7Y-3954**	1	CONNECTOR-PLUG (3-PIN)	
	3	1	**9W-0335**	1	LIGHTER AS-CIGAR (24-VOLT)	
					—OR—	
		1	**238-2318**	1	LIGHTER AS-CIGAR (24-VOLT)	
M	4	1,2	**099-7127**	8	SCREW-MACHINE (M4X0.7X12-MM)	
	5	1	**102-8016**	1	RESISTOR AS	
	6	2	**113-8490**	22	FUSE (10-AMPERE)	
	7	2	**113-8491**	5	FUSE (15-AMPERE)	
	8	2	**113-8493**	3	FUSE (25-AMPERE)	
	9	1,2	**116-0210**	4	BRACKET AS	
	10	2	**124-3548**	2	FUSE (30-AMPERE)	
Y	11	1	**132-1829**	1	ALARM GP (24-VOLT)	173
	12	2	**141-2759**	8	FUSE (5-AMPERE)	
	13	2	**161-3128**	1	RELAY (24-VOLT) (BOOM FLOODLIGHT)	
	13A	2	**161-3128**	1	RELAY (24-VOLT) (CHASSIS LIGHT)	
	13B	2	**161-3128**	1	RELAY (24-VOLT) (CAB FLOODLIGHT)	
	13C	2	**161-3128**	1	RELAY (24-VOLT) (HORN)	
	13D	2	**161-3128**	1	RELAY (24-VOLT) (NEUTRAL START)	
	13E	2	**161-3128**	1	RELAY (24-VOLT) (TRAVEL ALARM)	
	13F	2	**161-3128**	1	RELAY (24-VOLT) (ETHER)	
	14	1	**268-1964**	1	KIT-SERVICE METER	
					(INCLUDES SERVICE METER & FILM)	
	15	2	**163-6758**	1	WIRE AS	
	16	1	**167-3593**	1	STRAP	
	17	2	**170-6888**	1	PULLER-FUSE	
	18	2	**213-0772**	1	SWITCH AS-MAGNETIC (24-VOLT) (MAIN RELAY)	
	19	1	**227-7575**	1	PANEL-CONTROL (SWITCH)	
	20	1	**234-1097**	1	BRACKET	
	21	1	**238-2212**	1	SWITCH AS-ROCKER (FINE SWING)	
		1	**167-3542**	1	CONNECTOR-RECEPTACLE	
		1	**167-3543**	5	TERMINAL (MALE)	
	23	2	**238-2390**	1	CABLE AS	
D		2	**6V-2369**		CABLE (4-GA, BLACK) (0.3-M)	
		2	**9G-4343**	2	TERMINAL-RING (4-GA, 1/4-IN SCREW)	
	24	2	**238-2391**	1	CABLE AS	
D		2	**6V-2369**		CABLE (4-GA, BLACK) (0.3-M)	
		2	**9G-4343**	2	TERMINAL-RING (4-GA, 1/4-IN SCREW)	
	25	1	**245-7760**	8	INSULATION	
	26	1	**251-0637**	1	INSULATION	
	27	1	**259-4883**	1	ANTENNA AS	
	28	1	**267-7591**	1	HARNESS AS-CAB	
M	29	1	**095-0723**	3	SCREW (M3X0.5X10-MM)	
	30	1	**096-5962**	3	WASHER-HARD (3.4X7X0.8-MM THK)	
	31	1	**096-6166**	2	WASHER-HARD (4.5X9X1-MM THK)	
	32	1,2	**132-5789**	7	CLIP	
	33	1	**163-6795**	15	STRAP-CABLE	
	34	2	**4P-7581**	1	CLIP	
M	35	1	**5C-2890**	3	NUT (M6X1-THD)	
M	36	1,2	**6V-5210**	8	SCREW-MACHINE (M4X0.7X10-MM)	
M	37	1	**6V-9672**	2	SCREW-MACHINE (M4X0.7X16-MM)	
	38	2	**8T-0328**	3	WASHER-HARD (5.5X10X1-MM THK)	

251-0432 **WIRING GP-CAB** ***(contd.)*** **i03002032**

NOTE	REF NO	GRAPHIC REF	PART NUMBER	QTY	PART NAME 1 2 3 4 5 6 (PRODUCT LEVEL)	SEE PAGE
M	39	2	**8T-4127**	2	SCREW-MACHINE (M5X0.8X20-MM)	
M	40	2	**8T-6693**	1	SCREW-MACHINE (M5X0.8X16-MM)	
M	41	1,2	**9X-2042**	11	SCREW-TRUSS HEAD (M6X1X12-MM)	
M	42	1,2	**9X-2044**	5	SCREW-TRUSS HEAD (M6X1X16-MM)	
	43	1	**9X-8256**	3	WASHER (6.6X12X2-MM THK)	
E	44	1	**101-2846**		GUARD (9.5-CM)	
E	44A	1	**101-2846**		GUARD (9-CM EACH)	

D-ORDER BY THE METER
E-ORDER BY THE CENTIMETER
M-METRIC PART
Y-SEPARATE ILLUSTRATION

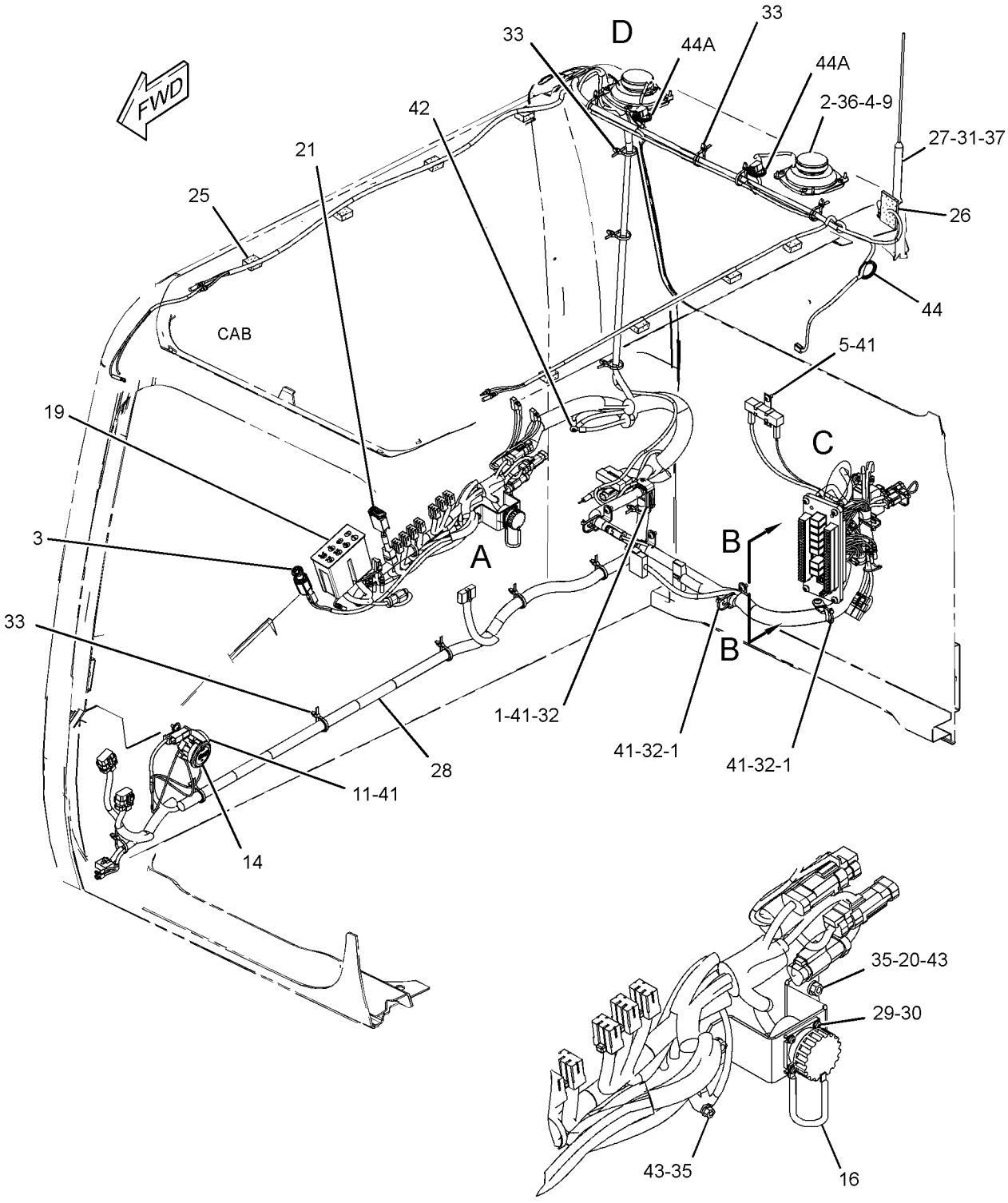

REFER TO ALL ILLUSTRATIONS OF THIS GROUP FOR AUXILIARY VIEWS

VIEW OF AREA A

GRAPHIC #1

g01505996

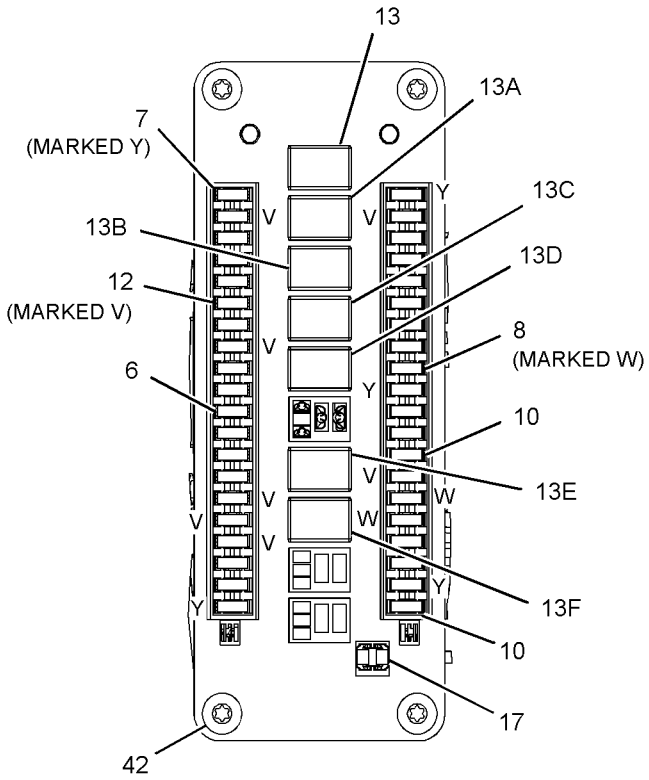

VIEW B-B

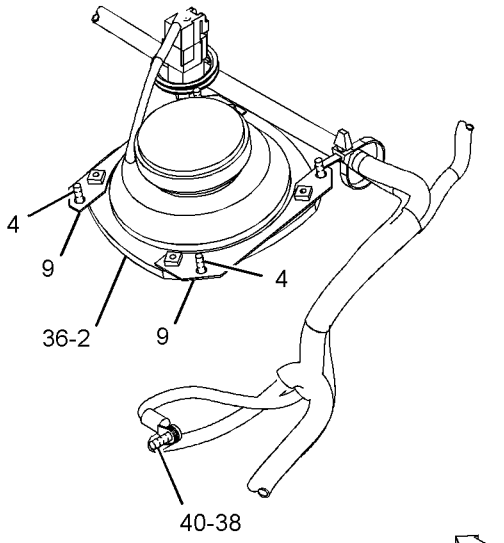

VIEW OF AREA D

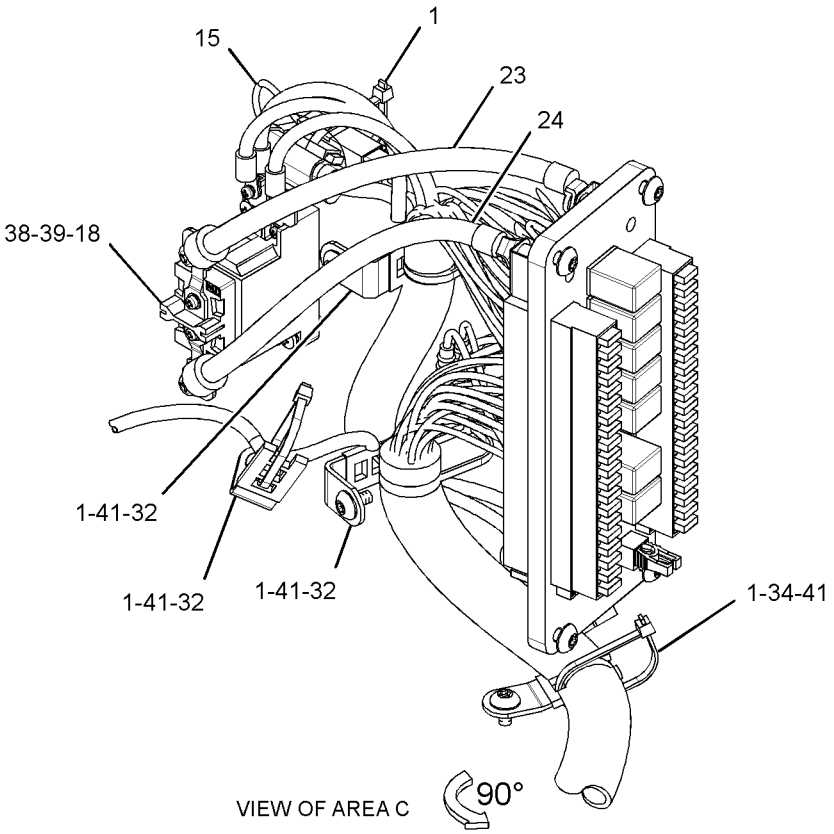

VIEW OF AREA C

GRAPHIC #2 **<END>** g01505997

ELECTRICAL AND STARTING SYSTEM

251-0529 WIRING GP-CAB

S/N: D3P1-UP; M4T1-UP
PART OF 255-5770 CONTROL AR-AUXILIARY
AN ATTACHMENT

SMCS-1408, 7301 **i02786472**

NOTE	REF NO	GRAPHIC REF	PART NUMBER	QTY	PART NAME 1 2 3 4 5 6 (PRODUCT LEVEL)	SEE PAGE
	1	1,3	**3S-2093**	4	STRAP-CABLE	
	2	1,2	**7K-1181**	8	STRAP-CABLE	
	3	3	**116-0118**	2	CLIP	
	4	1	**149-5050**	1	RELAY (24-VOLT) (1-WAY/2-WAY SOLENOID)	
	5	1	**251-0598**	1	HARNESS AS-SOLENOID (1-WAY/2-WAY FLOW)	
		1	**3S-2093**	6	STRAP-CABLE	
		1	**8T-8737**	1	PLUG-SEAL	
		1	**243-4508**	1	RECEPTACLE AS-CONNECTOR (6-PIN)	
M	6	1	**5C-2890**	1	NUT (M6X1-THD)	
M	7	3	**7X-2621**	2	BOLT (M10X1.5X12-MM)	
	8	3	**8T-4121**	2	WASHER-HARD (11X21X2.5-MM THK)	
	9	1	**9X-8256**	1	WASHER (6.6X12X2-MM THK)	

M-METRIC PART

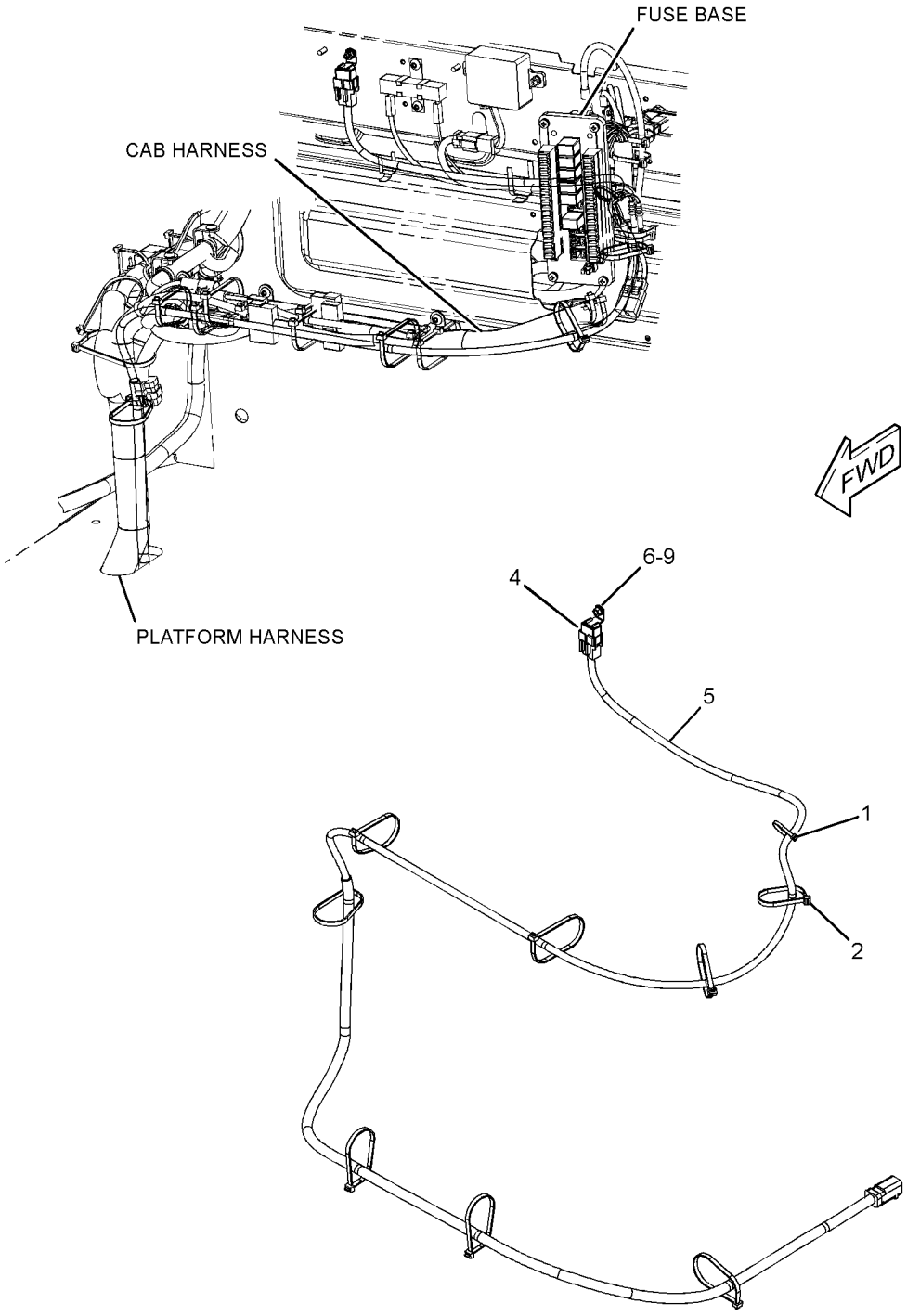

REFER TO ALL ILLUSTRATIONS OF
THIS GROUP FOR AUXILIARY VIEWS

GRAPHIC #1 g01233498

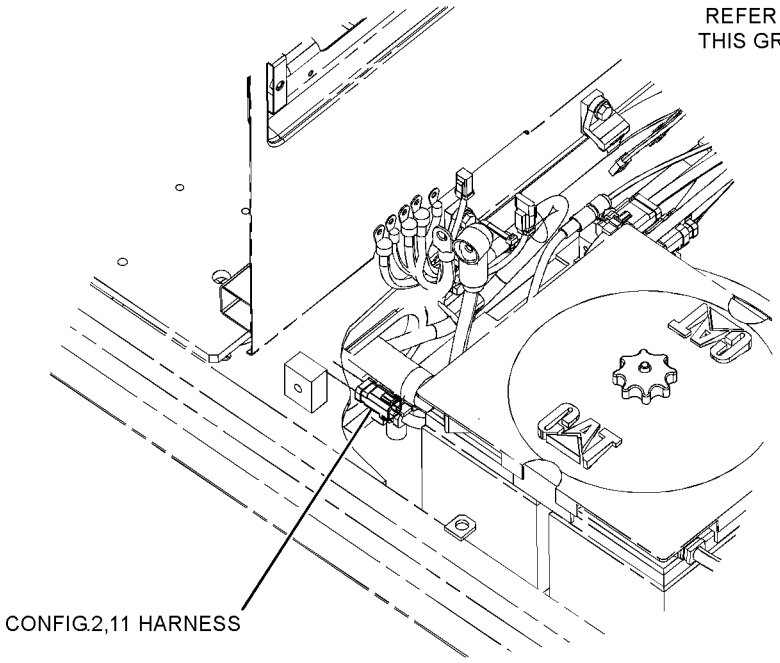

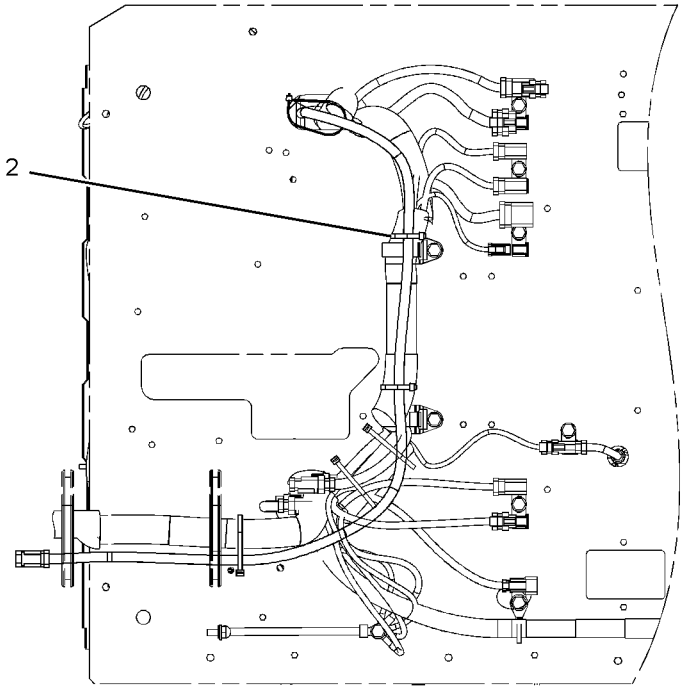

BOTTOM VIEW
(FOR CONFIG. 2,11)

GRAPHIC #2 g01233501

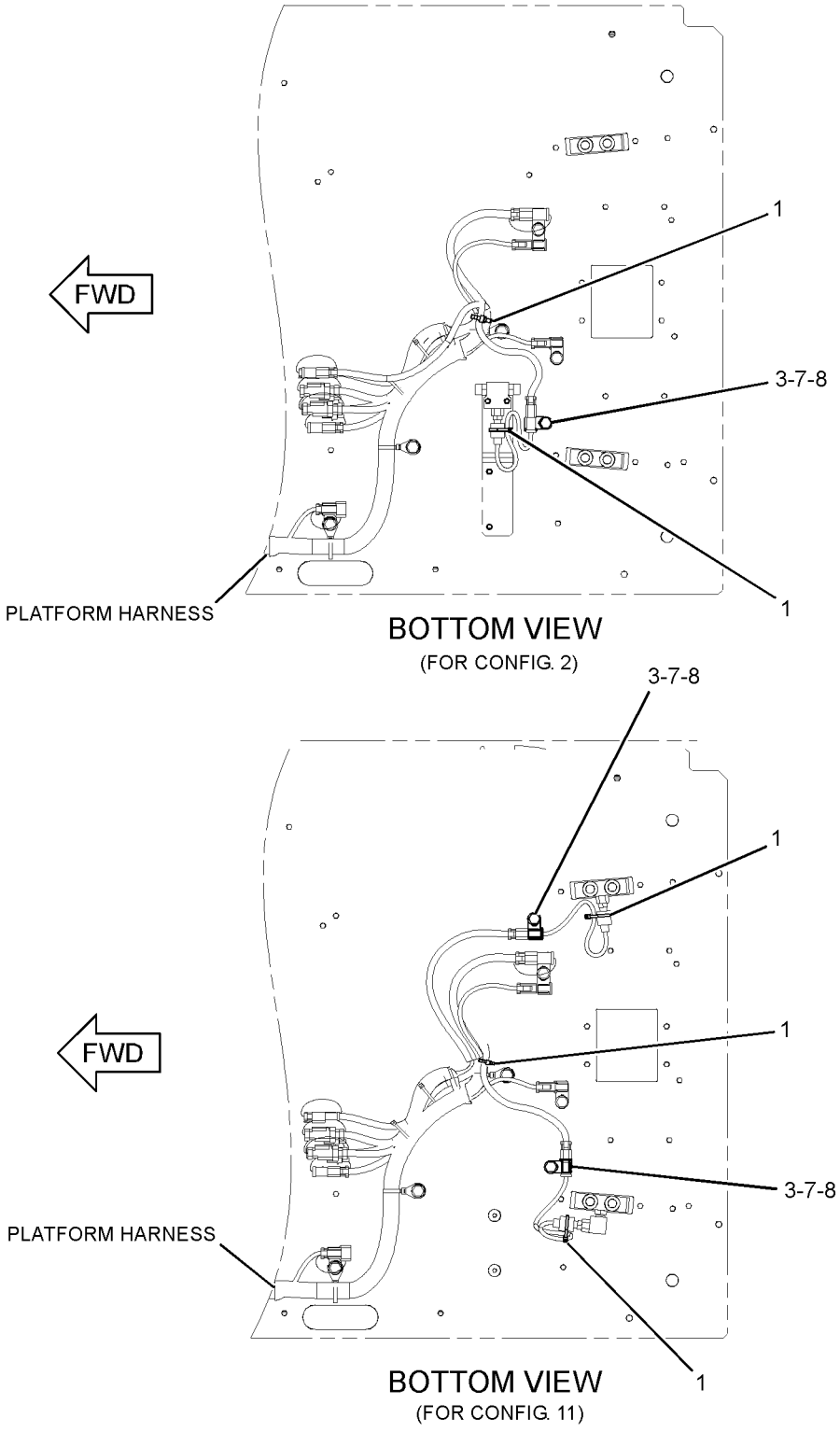

GRAPHIC #3 **<END>** g01233503

259-5118 WIRING GP-CAB—PRIMING PUMP

S/N: D3P1-UP; M4T1-UP
PART OF 247-7501 PUMP GP-FUEL PRIMING
AN ATTACHMENT

SMCS-1408, 7301 **i02506658**

NOTE	REF NO	GRAPHIC REF	PART NUMBER	QTY	PART NAME 1 2 3 4 5 6 (PRODUCT LEVEL)	SEE PAGE
	1	1	**3S-2093**	5	STRAP-CABLE	
	2	1	**7K-1181**	9	STRAP-CABLE	
	3	1	**149-5050**	1	RELAY (24-VOLT) (PRIMING PUMP)	
	4	1	**259-5119**	1	HARNESS AS-CAB (PRIMING PUMP)	
		1	**3S-2093**	2	STRAP-CABLE	
		1	**230-5008**	1	PLUG AS-CONNECTOR (4-PIN)	
		1	**243-4505**	1	RECEPTACLE AS-CONNECTOR (2-PIN)	
M	5	1	**5C-2890**	1	NUT (M6X1-THD)	
	6	1	**9X-8256**	1	WASHER (6.6X12X2-MM THK)	

M-METRIC PART

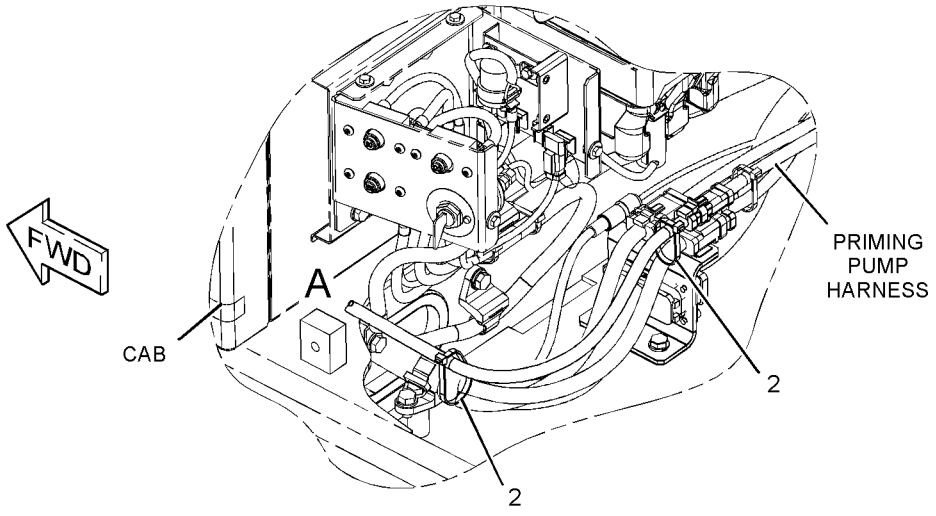

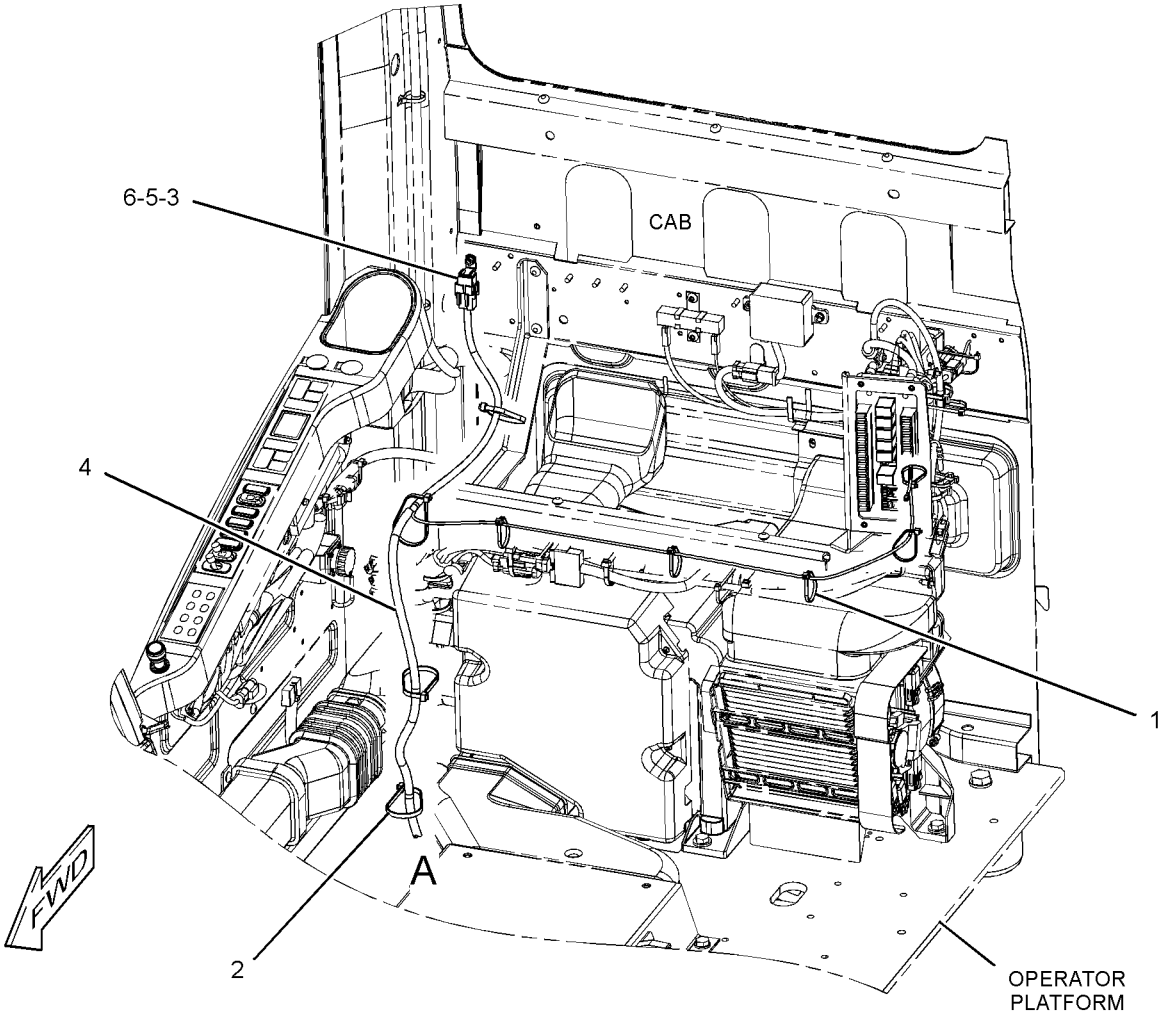

GRAPHIC #1 **<END>** g01155307

ELECTRICAL AND STARTING SYSTEM

267-7642 WIRING GP-CAB–COUPLER

S/N: D3P1-UP; M4T1-UP
PART OF 268-6821 CONTROL AR-COUPLER
AN ATTACHMENT

SMCS-1408, 7301 **i02663229**

NOTE	REF NO	GRAPHIC REF	PART NUMBER	QTY	PART NAME 1 2 3 4 5 6 (PRODUCT LEVEL)	SEE PAGE
	1	1	**7K-1181**	13	STRAP-CABLE	
	2	1	**149-5050**	1	RELAY (24-VOLT) (QUICK COUPLER LOCK PRIORITY)	
	2A	1	**149-5050**	1	RELAY (24-VOLT) (QUICK COUPLER LOCK ON)	
	2B	1	**149-5050**	1	RELAY (24-VOLT) (QUICK COUPLER LOCK)	
	2C	1	**149-5050**	1	RELAY (24-VOLT) (QUICK COUPLER LOCK)	
	3	1	**259-4884**	1	BRACKET AS	
	4	1	**259-7220**	1	COVER	
	5	1	**267-7644**	1	HARNESS AS-QUICK COUPLER	
		1	**102-7965**	3	TERMINAL (FEMALE)	
E		1	**125-7874**		TUBE-HEAT SHRINK (5.72-MM DIA) (10-CM)	
E		1	**125-7875**		TUBE-HEAT SHRINK (7.44-MM DIA) (15-CM)	
		1	**149-5070**	9	TERMINAL-BLADE (16-GA TO 20-GA)	
		1	**163-6803**	1	CONNECTOR-PLUG	
		1	**230-5008**	1	PLUG AS-CONNECTOR (4-PIN)	
		1	**7Y-3950**	2	TERMINAL-BLADE (14-GA TO 20-GA)	
		1	**7Y-3953**	1	CONNECTOR-RECEPTACLE	
		1	**149-5069**	7	TERMINAL-BLADE (14-GA TO 20-GA)	
		1	**3S-2093**	15	STRAP-CABLE	
		1	**230-5008**	1	PLUG AS-CONNECTOR (4-PIN)	
	6	1	*267-7671*	1	SWITCH GP-TOGGLE (QUICK COUPLER)	
		1	**105-5175**	1	SWITCH AS-TOGGLE (QUICK COUPLER)	
		1	**3L-8187**	6	LOCKWASHER	
		1	**6T-3631**	2	NUT-HEX (15/32-32-THD)	
		1	**6T-3632**	1	LOCKWASHER	
		1	**6T-3633**	1	RING-LOCKING	
		1	**6V-8374**	6	SCREW-MACHINE (6-32X0.25-IN)	
		1	**267-7672**	1	HARNESS AS-WIRING (CAB)	
		1	**3S-2093**	1	STRAP-CABLE	
		1	**121-1173**	3	TERMINAL (MALE)	
		1	**167-3542**	1	CONNECTOR-RECEPTACLE	
	7	1	**267-7676**	1	BRACKET AS	
M	8	1	**9X-2042**	7	SCREW-TRUSS HEAD (M6X1X12-MM)	

E-ORDER BY THE CENTIMETER
M-METRIC PART

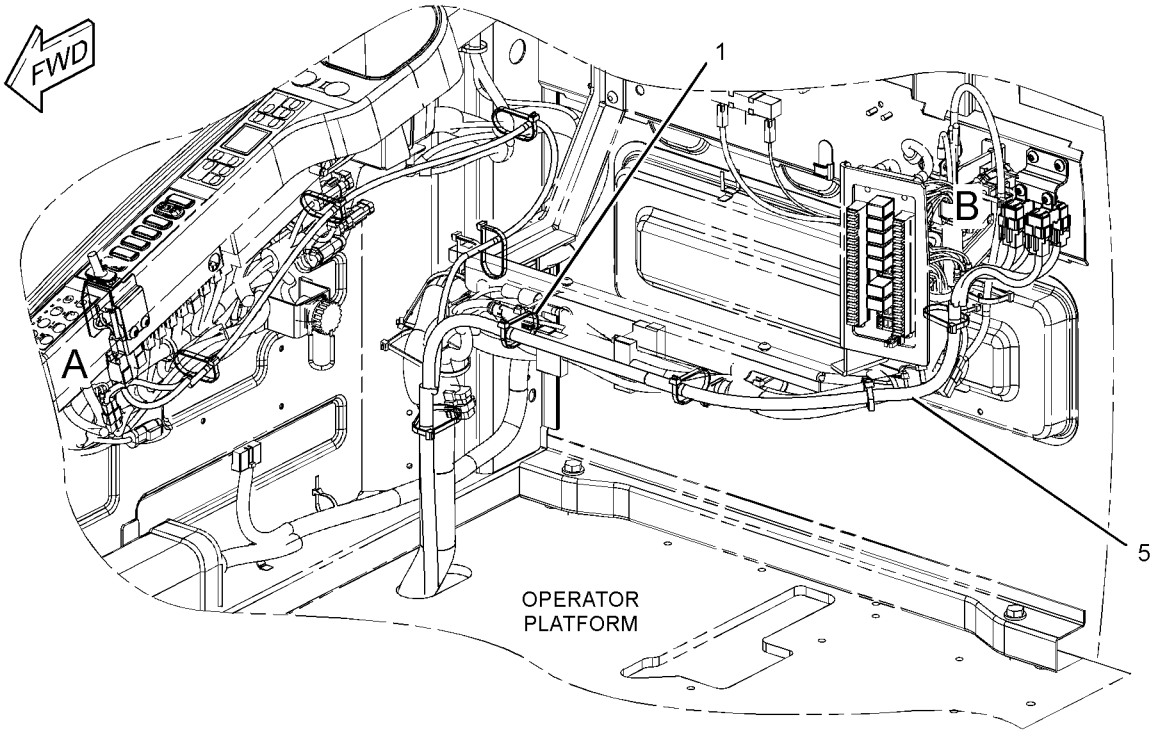

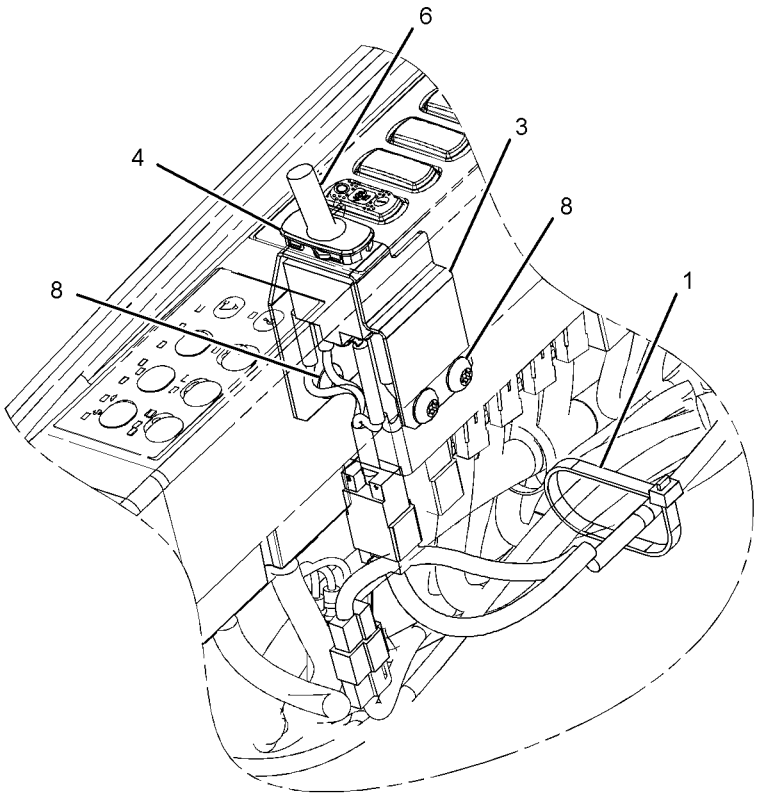

VIEW OF AREA A

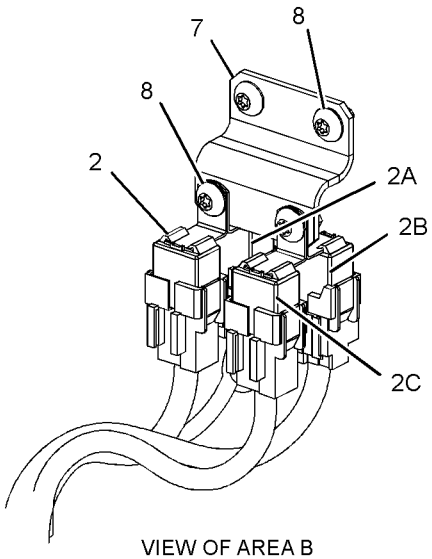

VIEW OF AREA B

GRAPHIC #1 **<END>** g01235651

306-8349 WIRING GP-CAB–ACCUGRADE READY

S/N: D3P1-UP; M4T1-UP
PART OF 290-1780 CONVERSION AR-MACHINE
AN ATTACHMENT

SMCS-1408, 7301 **i02825093**

NOTE	REF NO	GRAPHIC REF	PART NUMBER	QTY	PART NAME 1 2 3 4 5 6 (PRODUCT LEVEL)	SEE PAGE
	1	1	**7K-1181**	7	STRAP-CABLE	
	2	1	**113-8491**	1	FUSE (15-AMPERE)	
	3	1	**306-8350**	1	HARNESS AS-CAB	

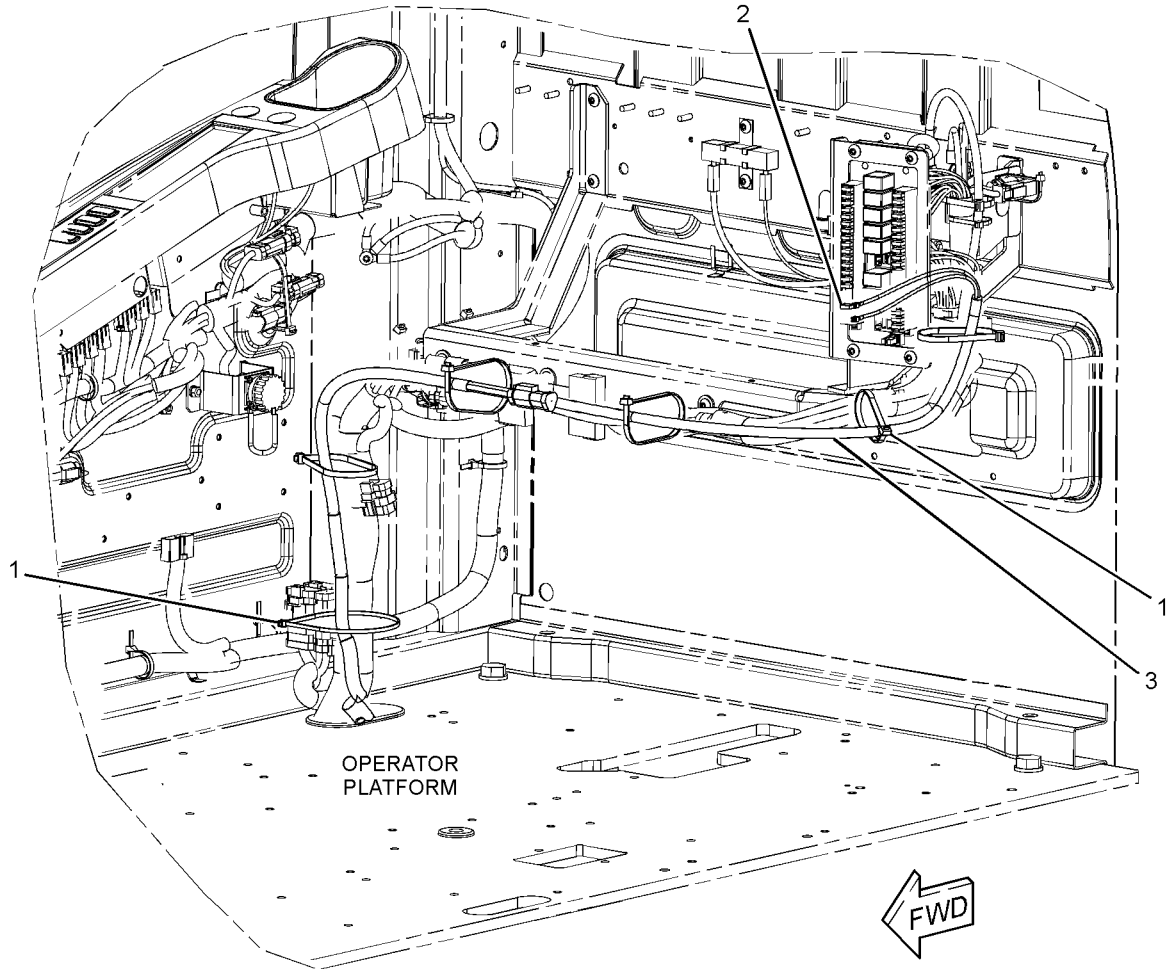

GRAPHIC #1 **<END>** g01422585

328-0048 WIRING GP-CAB–REAR VISION CAMERA

S/N: M4T1-UP
PART OF 329-6574 CAMERA AR
AN ATTACHMENT

SMCS-1408, 7301 **i03682641**

NOTE	REF NO	GRAPHIC REF	PART NUMBER	QTY	PART NAME 1 2 3 4 5 6 (PRODUCT LEVEL)	SEE PAGE
	1	1	**3S-2093**	13	STRAP-CABLE	
	2	1	**7K-1181**	16	STRAP-CABLE	
	3	1	**306-8590**	1	HARNESS AS-WIRING (WORK AREA VISUAL SYSTEM, REAR)	
	4	1	**327-9998**	1	HARNESS AS-AUXILIARY (WORK AREA VISUAL SYSTEM, REAR)	
		1	**3S-2093**	1	STRAP-CABLE	
		1	**7Y-3962**	1	TERMINAL-BULLET (MALE) (MALE)	
		1	**7Y-3963**	2	TERMINAL-BULLET (FEMALE) (FEMALE)	
BE		1	**125-7875**		TUBE-HEAT SHRINK (7.44-MM DIA)	

B-USE AS REQUIRED
E-ORDER BY THE CENTIMETER

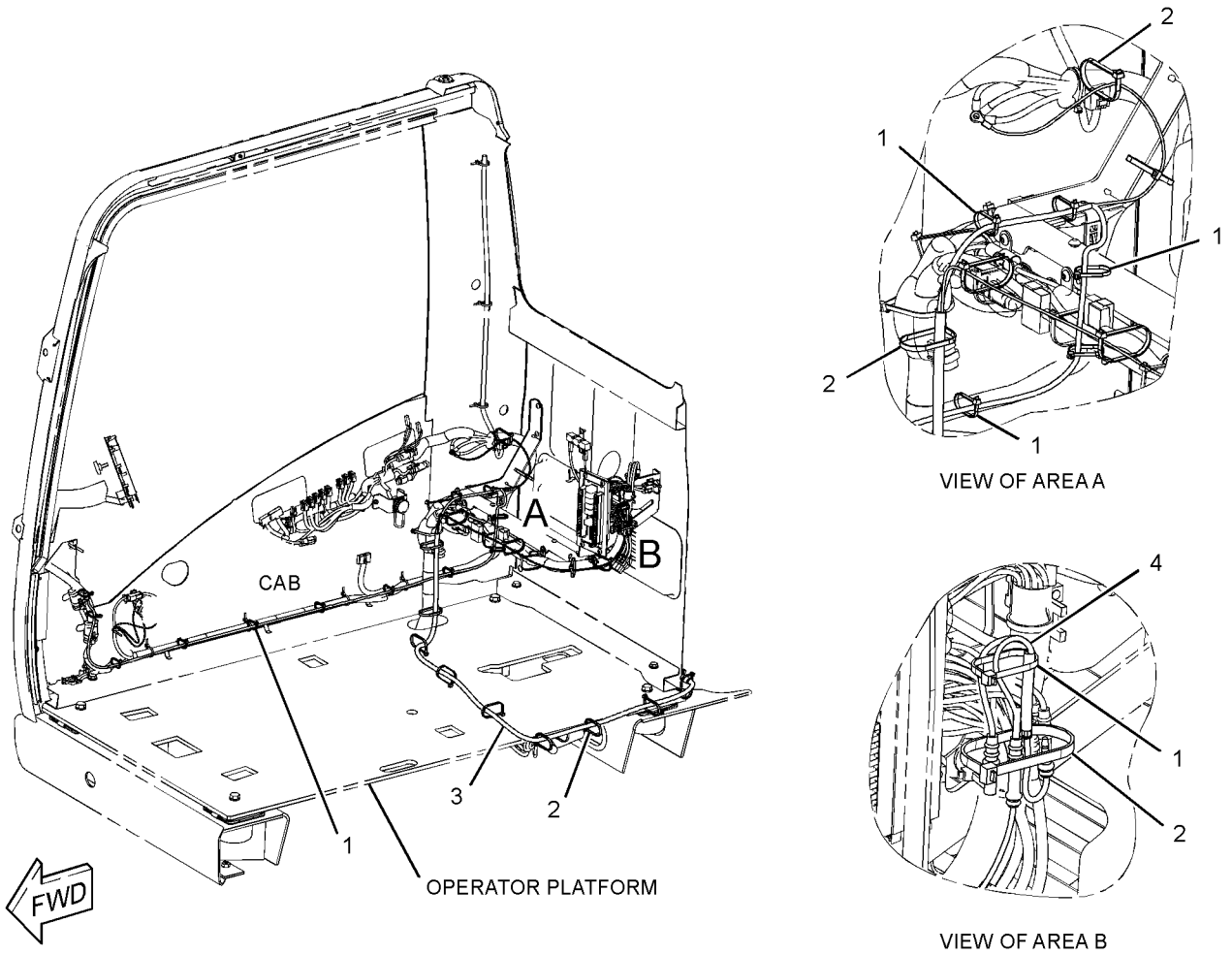

GRAPHIC #1 **<END>** g01609106

328-0093 WIRING GP-CAB–BOOM FLOAT

S/N: M4T1-UP
PART OF 329-6564 CONTROL AR-BOOM
AN ATTACHMENT

SMCS-1408, 7301 **i03744453**

NOTE	REF NO	GRAPHIC REF	PART NUMBER	QTY	PART NAME 1 2 3 4 5 6 (PRODUCT LEVEL)	SEE PAGE
	1	1	**7K-1181**	14	STRAP-CABLE	
	2	1	**149-5050**	1	RELAY (24-VOLT) (BOOM FLOAT DISABLE)	
	2A	1	**149-5050**	1	RELAY (24-VOLT) (SMARTBOOM, DOWN)	
	2B	1	**149-5050**	1	RELAY (24-VOLT) (SMARTBOOM, UP/DOWN)	
	3	1	**238-2214**	1	SWITCH AS-ROCKER (BOOM FLOAT)	
		1	**167-3542**	1	CONNECTOR-RECEPTACLE	
		1	**167-3543**	5	TERMINAL (MALE)	
	4	1	**251-0614**	1	HARNESS AS-SENSOR	
		1	**8T-8730**	7	SOCKET-CONNECTOR (16-GA TO 18-GA)	
		1	**3S-2093**	27	STRAP-CABLE	
		1	**7Y-3962**	1	TERMINAL-BULLET (MALE)	
		1	**8T-8737**	1	PLUG-SEAL	
BE		1	**125-7874**		TUBE-HEAT SHRINK (5.72-MM DIA)	
		1	**9X-3402**	3	SOCKET-CONNECTOR (16-GA TO 18-GA)	
		1	**9X-3401**	4	PIN-CONNECTOR (16-GA TO 18-GA)	
		1	**149-5051**	3	CONNECTOR-RECEPTACLE	
		1	**149-5069**	5	TERMINAL-BLADE (14-GA TO 20-GA)	
		1	**149-5070**	8	TERMINAL-BLADE (16-GA TO 20-GA)	
		1	**230-4013**	1	PLUG AS-CONNECTOR (3-PIN)	
		1	**264-7030**	1	SEAL-CONNECTOR	
		1	**230-5008**	2	PLUG AS-CONNECTOR (4-PIN)	
					(EACH INCLUDES)	
		1	**264-7031**	1	SEAL-CONNECTOR	
		1	**243-4507**		RECEPTACLE AS-CONNECTOR (4-PIN)	
	5	1	**328-0028**	1	SWITCH AS-ROCKER (OVERLOAD WARNING)	
		1	**167-3542**	1	CONNECTOR-RECEPTACLE	
		1	**167-3543**	4	TERMINAL (MALE)	
M	6	1	**5C-2890**	3	NUT (M6X1-THD)	
	7	1	**9X-8256**	3	WASHER (6.6X12X2-MM THK)	

B-USE AS REQUIRED
E-ORDER BY THE CENTIMETER
M-METRIC PART

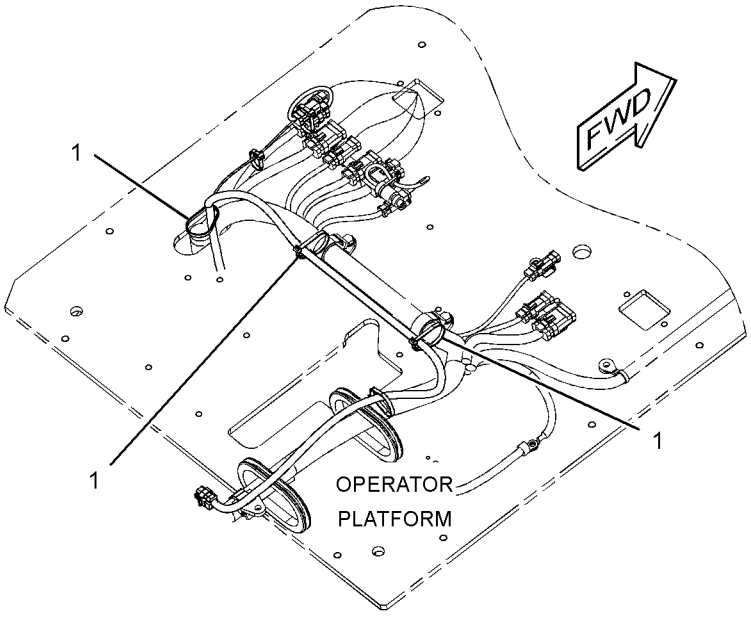

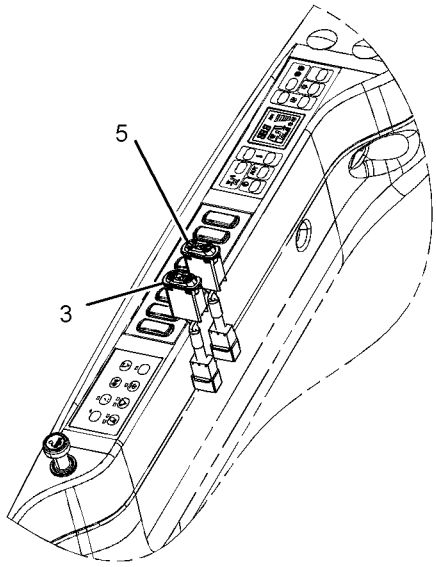

VIEW OF AREA A
(CAB SIDE PANEL)

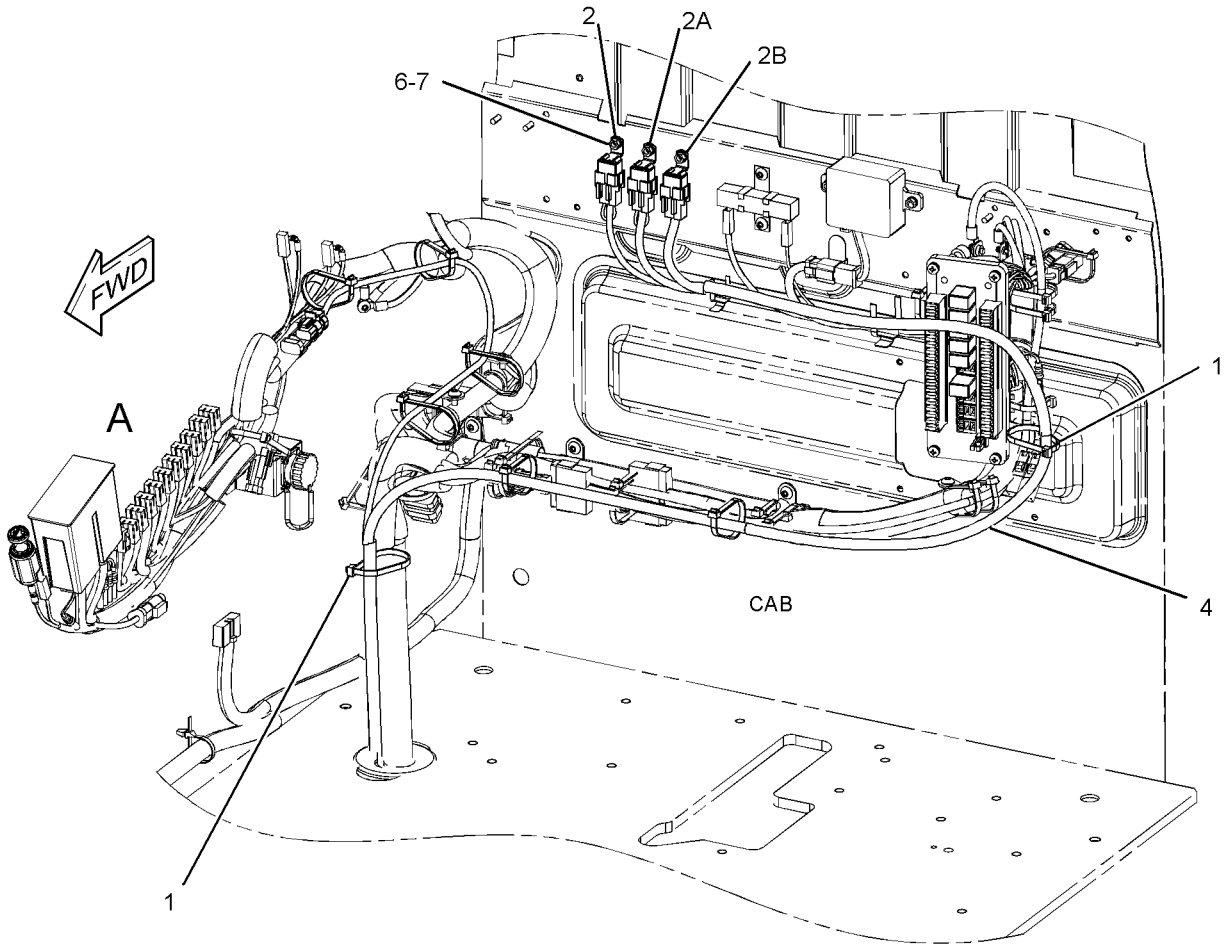

GRAPHIC #1 **<END>** g01618610

306-8721 WIRING GP-CAMERA–WORK AREA VISUAL SYSTEM

S/N: M4T1-UP
PART OF 329-6574 CAMERA AR
AN ATTACHMENT

SMCS-1408, 7348 **i03682762**

NOTE	REF NO	GRAPHIC REF	PART NUMBER	QTY	PART NAME 1 2 3 4 5 6 (PRODUCT LEVEL)	SEE PAGE
	1	1	**3S-2093**	14	STRAP-CABLE	
	2	1	**7K-1181**	10	STRAP-CABLE	
	3	1	**268-8643**	1	CABLE AS	
	4	1	**132-5789**	3	CLIP	
	5	1	**3V-4791**	1	GROMMET	
	6	1	**8T-4121**	3	WASHER-HARD (11X21X2.5-MM THK)	
M	7	1	**8T-4191**	3	BOLT (M10X1.5X16-MM)	

M-METRIC PART

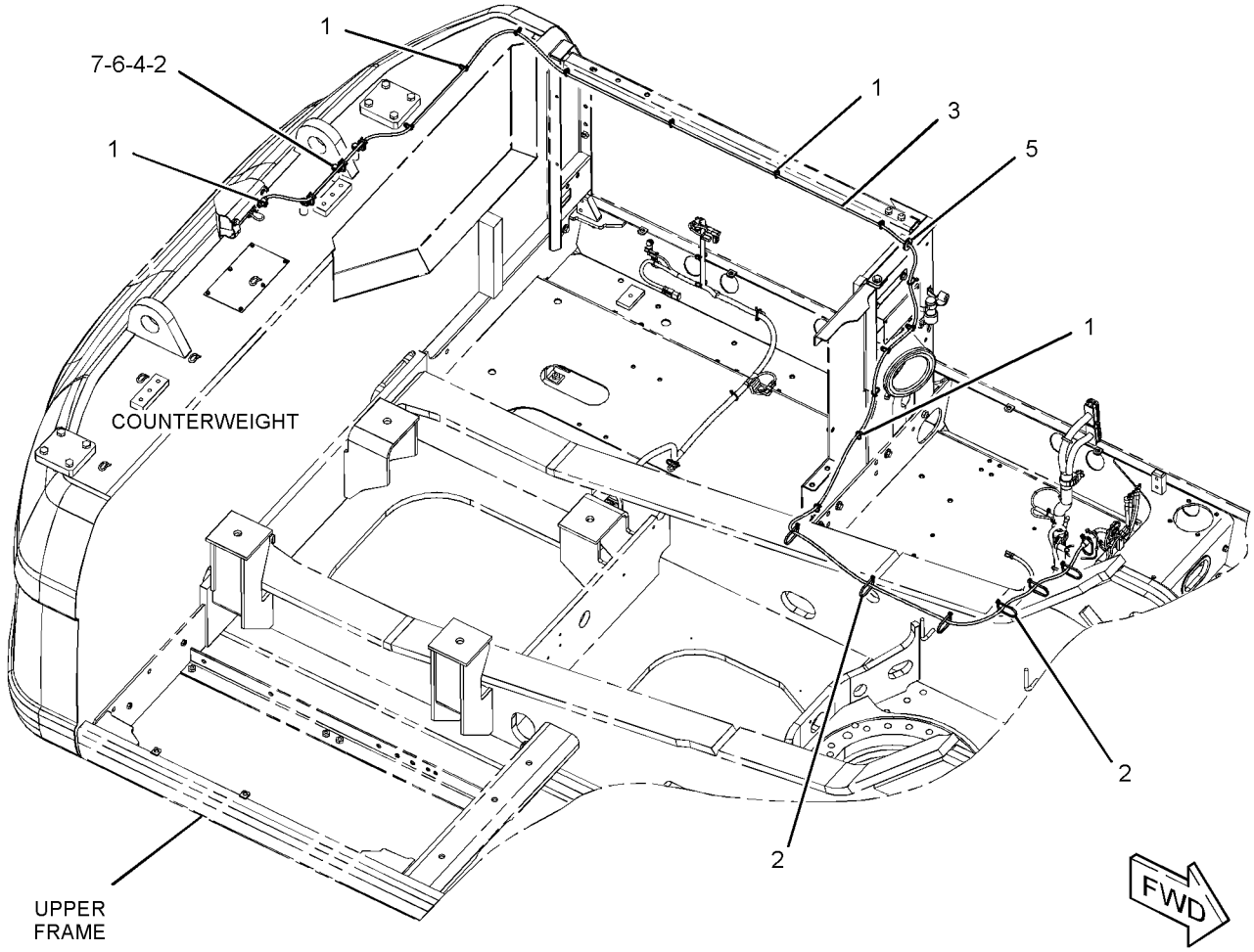

GRAPHIC #1 **<END>** g01620146

275-7194 WIRING GP-CHASSIS–ACCUGRADE READY

S/N: D3P1-UP; M4T1-UP
PART OF 290-1780 CONVERSION AR-MACHINE
AN ATTACHMENT

SMCS-1408 **i02819831**

NOTE	REF NO	GRAPHIC REF	PART NUMBER	QTY	PART NAME 1 2 3 4 5 6 (PRODUCT LEVEL)	SEE PAGE
	1	1,2	**7K-1181**	44	STRAP-CABLE	
	2	1	**177-7707**	2	BOSS	
	3	2	**275-6841**	1	HARNESS AS-CONTROL (BODY TILT SENSOR, GPS RECEIVER)	
E		2	**125-7874**		TUBE-HEAT SHRINK (5.72-MM DIA) (20-CM)	
		2	**230-4009**	1	PLUG AS-CONNECTOR (12-PIN)	
		2	**239-7356**	1	PLUG AS-CONNECTOR (12-PIN)	
		2	**243-4510**	1	RECEPTACLE AS-CONNECTOR (12-PIN)	
	4	2	**275-6842**	1	HARNESS AS-CONTROL (DISPLAY, GPS RADIO)	
		2	**167-8987**	1	PLUG AS-CONNECTOR (8-PIN)	
		2	**243-4510**	1	RECEPTACLE AS-CONNECTOR (12-PIN)	
		2	**263-6699**	1	FLANGE-CONNECTOR	
	5	1	**279-7609**	1	BRACKET AS	
	6	1	**306-8361**	1	HARNESS AS-CONTROL (ACCUGRADE READY)	
		1	**102-8803**	1	KIT-RECEPTACLE (3-PIN)	
					(INCLUDES RECEPTACLE AS & WEDGE)	
		1	**3R-9965**	1	PLUG AS-CONNECTOR (8-PIN)	
		1	**3S-2093**	1	STRAP-CABLE	
		1	**6D-5257**	1	PLUG AS-CONNECTOR (8-PIN)	
		1	**8L-8413**	3	STRAP-CABLE	
		1	**104-6871**	1	CAP-DUST	
E		1	**119-3662**		TUBE-HEAT SHRINK (10.85-MM DIA) (7-CM)	
E		1	**125-7874**		TUBE-HEAT SHRINK (5.72-MM DIA) (40-CM)	
E		1	**125-7875**		TUBE-HEAT SHRINK (7.44-MM DIA) (50-CM)	
		1	**134-2540**	1	RESISTOR AS-CONNECTION (3-PIN)	
		1	**155-2260**	2	KIT-CONNECTING PLUG (3-PIN)	
					(INCLUDES PLUG AS, WEDGE & INTERFACE SEAL)	
		1	**230-4009**	3	PLUG AS-CONNECTOR (12-PIN)	
		1	**231-2295**	1	PLUG AS-CONNECTOR (8-PIN)	
		1	**243-4510**	1	RECEPTACLE AS-CONNECTOR (12-PIN)	
		1	**243-5362**	1	CAP-DUST	
		1	**253-2695**	1	PLUG AS-CONNECTOR	
		1	**272-5000**	1	RECEPTACLE AS-CONNECTOR (12-PIN)	
	7	2	**132-5789**	1	CLIP	
	8	2	**2S-1647**	2	GROMMET	
	9	1	**4P-7428**	1	CLIP	
	10	2	**4P-7581**	1	CLIP	
	11	2	**8T-4121**	2	WASHER-HARD (11X21X2.5-MM THK)	
M	12	2	**8T-4191**	2	BOLT (M10X1.5X16-MM)	
	13	1	**8T-4223**	2	WASHER-HARD (13.5X25.5X3-MM THK)	
M	14	1	**8T-4648**	2	BOLT (M12X1.75X70-MM)	

E-ORDER BY THE CENTIMETER
M-METRIC PART

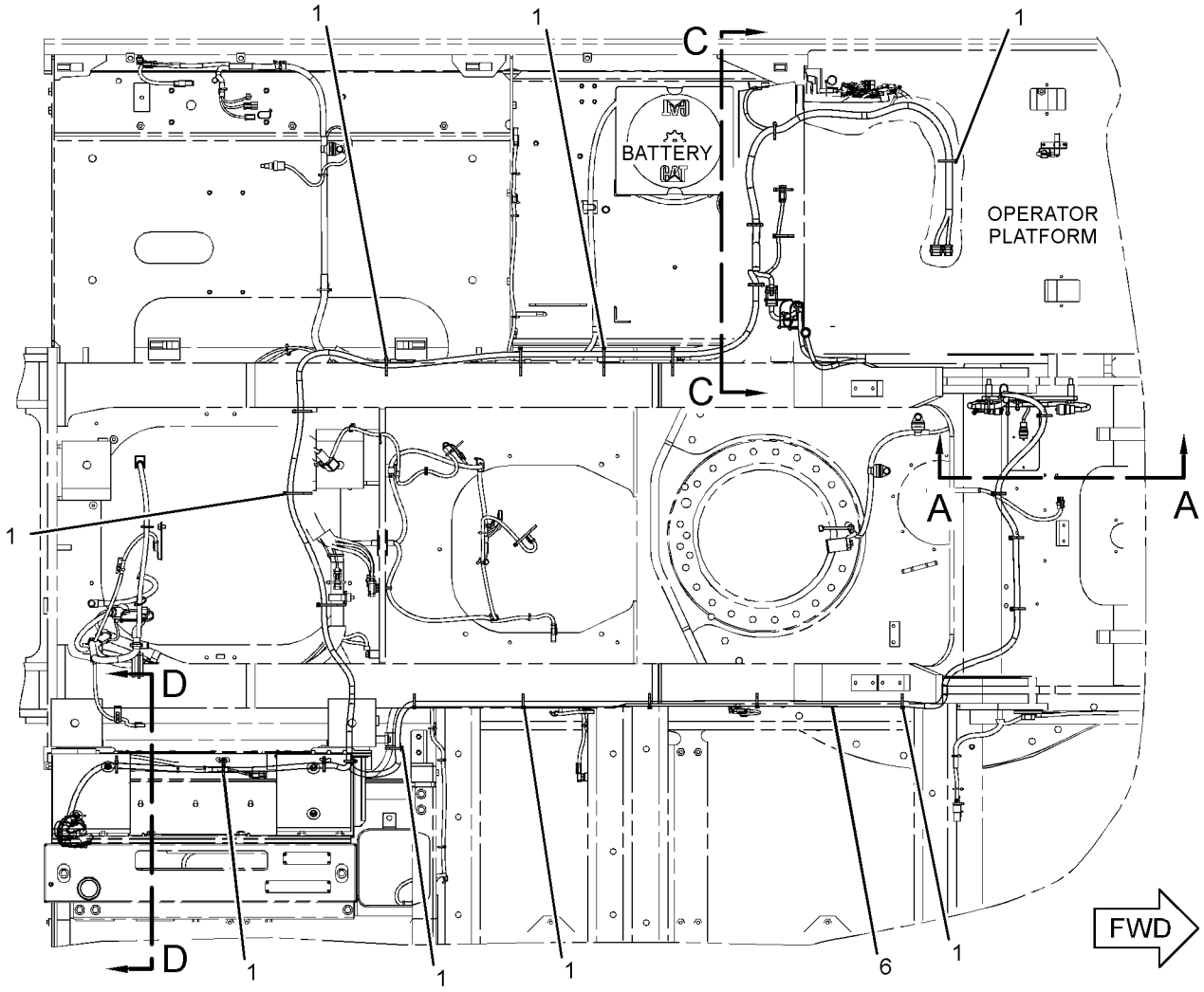

TOP VIEW

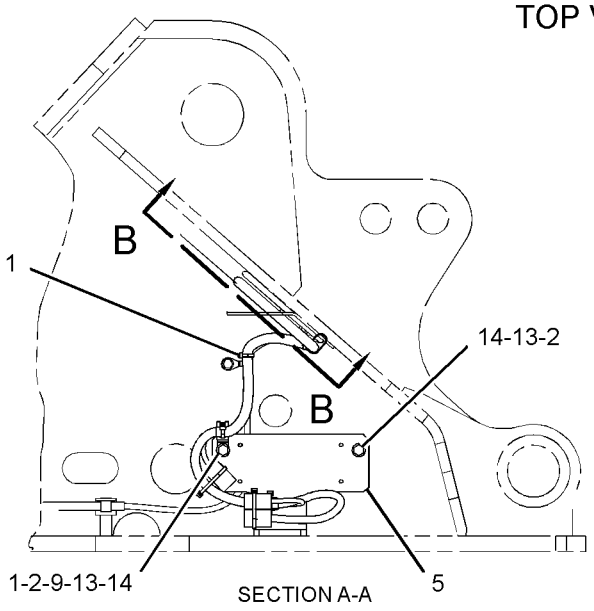

SECTION A-A

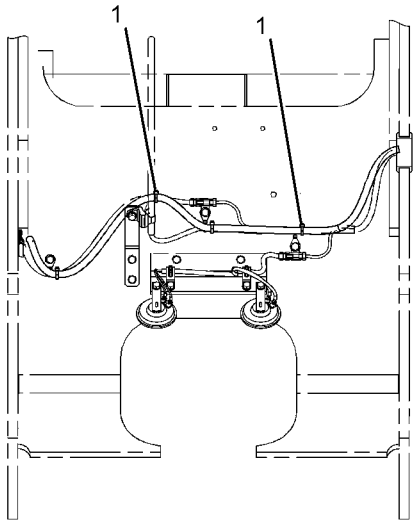

SECTION B-B

GRAPHIC #1

g01404380

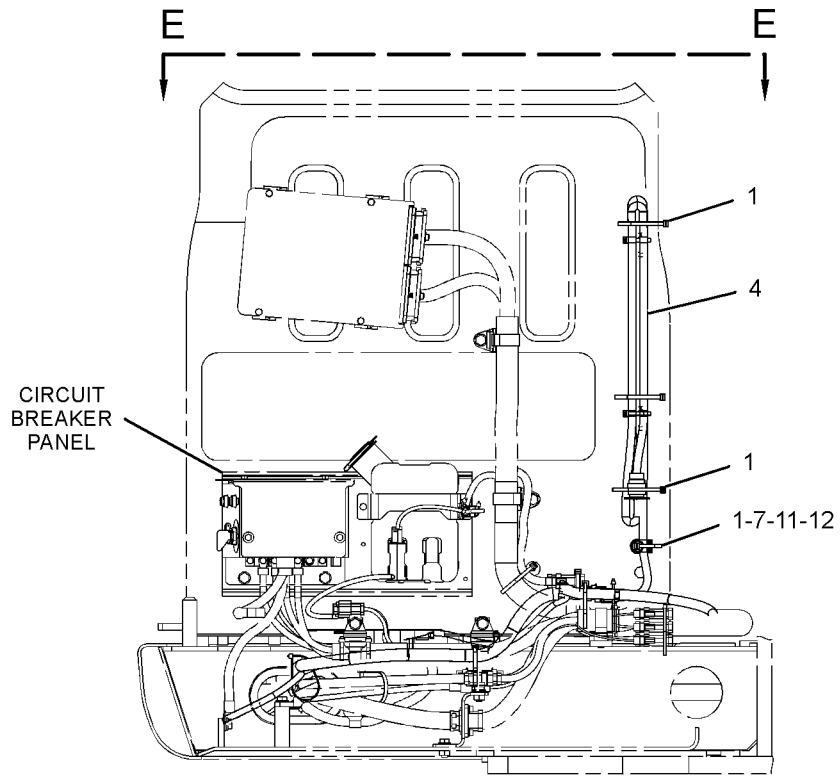

SECTION C-C

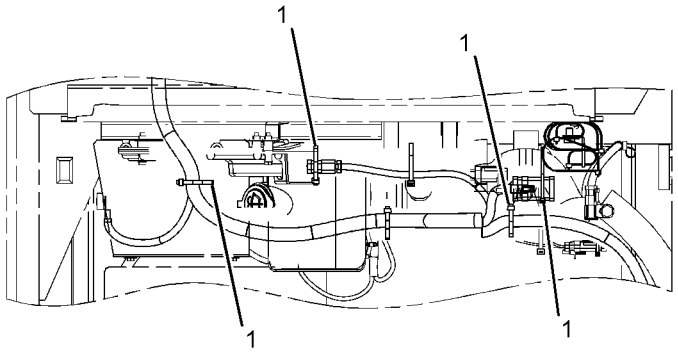

VIEW E-E

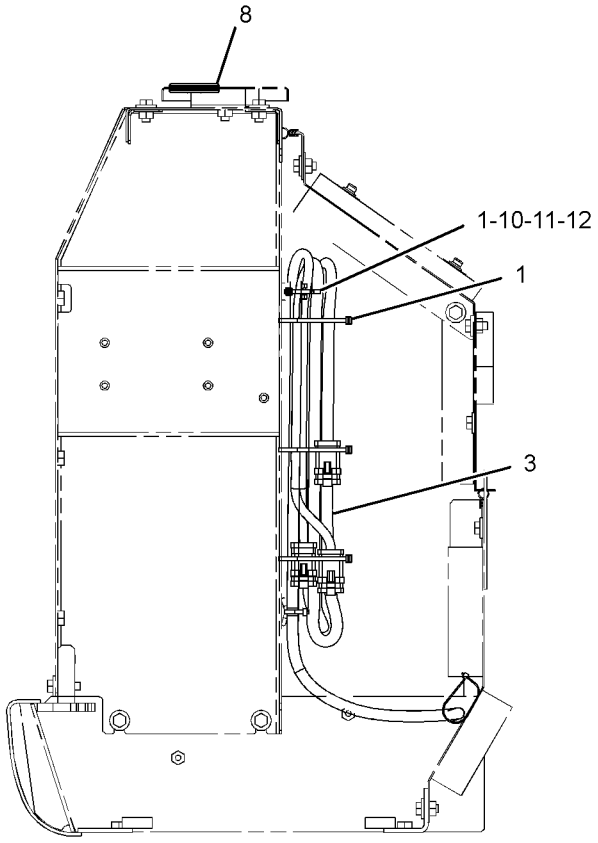

SECTION D-D

GRAPHIC #2 **<END>** g01404381

267-7803 WIRING GP-COMMUNICATION—PRODUCT LINK 321SR

S/N: D3P1-UP; M4T1-UP

PART OF 314-3533 INSTALLATION AR-COMMUNICATION

AN ATTACHMENT

SMCS-1408 **i03013411**

NOTE	REF NO	GRAPHIC REF	PART NUMBER	QTY	PART NAME 1 2 3 4 5 6 (PRODUCT LEVEL)	SEE PAGE
	1	1	**3S-2093**	7	STRAP-CABLE	
	2	1	**4I-7889**	1	SPACER (11X25X45-MM THK)	
	3	1	**7K-1181**	8	STRAP-CABLE	
	4	1	**9X-3495**	1	CLIP AS	
		1	**8C-3334**	2	RIVET-TUBULAR	
	6	1	**116-0118**	3	CLIP	
	7	1	**259-4887**	1	HARNESS AS-CONTROL (PRODUCT LINK)	
E		1	**125-7874**		TUBE-HEAT SHRINK (5.72-MM DIA) (15-CM)	
E		1	**125-7875**		TUBE-HEAT SHRINK (7.44-MM DIA) (5-CM)	
		1	**3S-2093**	2	STRAP-CABLE	
		1	**126-1774**	1	COVER-CONNECTOR	
		1	**160-7690**	1	PLUG AS-CONNECTOR (70-PIN)	
		1	**159-9322**	1	SEAL-O-RING	
		1	**230-5010**	2	PLUG AS-CONNECTOR (6-PIN)	
		1	**243-4508**	2	RECEPTACLE AS-CONNECTOR (6-PIN)	
	8	1	**259-4940**	1	HARNESS AS-WIRING (SERVICE CONNECTOR)	
		1	**243-4508**	1	RECEPTACLE AS-CONNECTOR (6-PIN)	
	9	1	**267-7813**	1	HARNESS AS-CONTROL (PRODUCT LINK, ANTENNA)	
		1	**155-2255**	1	KIT-CONNECTING PLUG (12-PIN)	
					(INCLUDES PLUG AS, WEDGE & INTERFACE SEAL)	
		1	**230-5010**	1	PLUG AS-CONNECTOR (6-PIN)	
		1	**243-4508**	1	RECEPTACLE AS-CONNECTOR (6-PIN)	
	10	1	**111-4837**	1	CLIP	
	11	1	**132-5789**	2	CLIP	
	12	1	**8T-4121**	3	WASHER-HARD (11X21X2.5-MM THK)	
M	13	1	**8T-4136**	1	BOLT (M10X1.5X25-MM)	
M	14	1	**8T-4185**	1	BOLT (M10X1.5X50-MM)	
		1	**091-9035**	1	SPACER (11X25X20-MM THK)	
					—OR—	
M		1	**8T-4136**	1	BOLT (M10X1.5X25-MM)	
M	15	1	**8T-4191**	2	BOLT (M10X1.5X16-MM)	
M	16	1	**8T-5005**	1	BOLT (M10X1.5X70-MM)	

E-ORDER BY THE CENTIMETER
M-METRIC PART

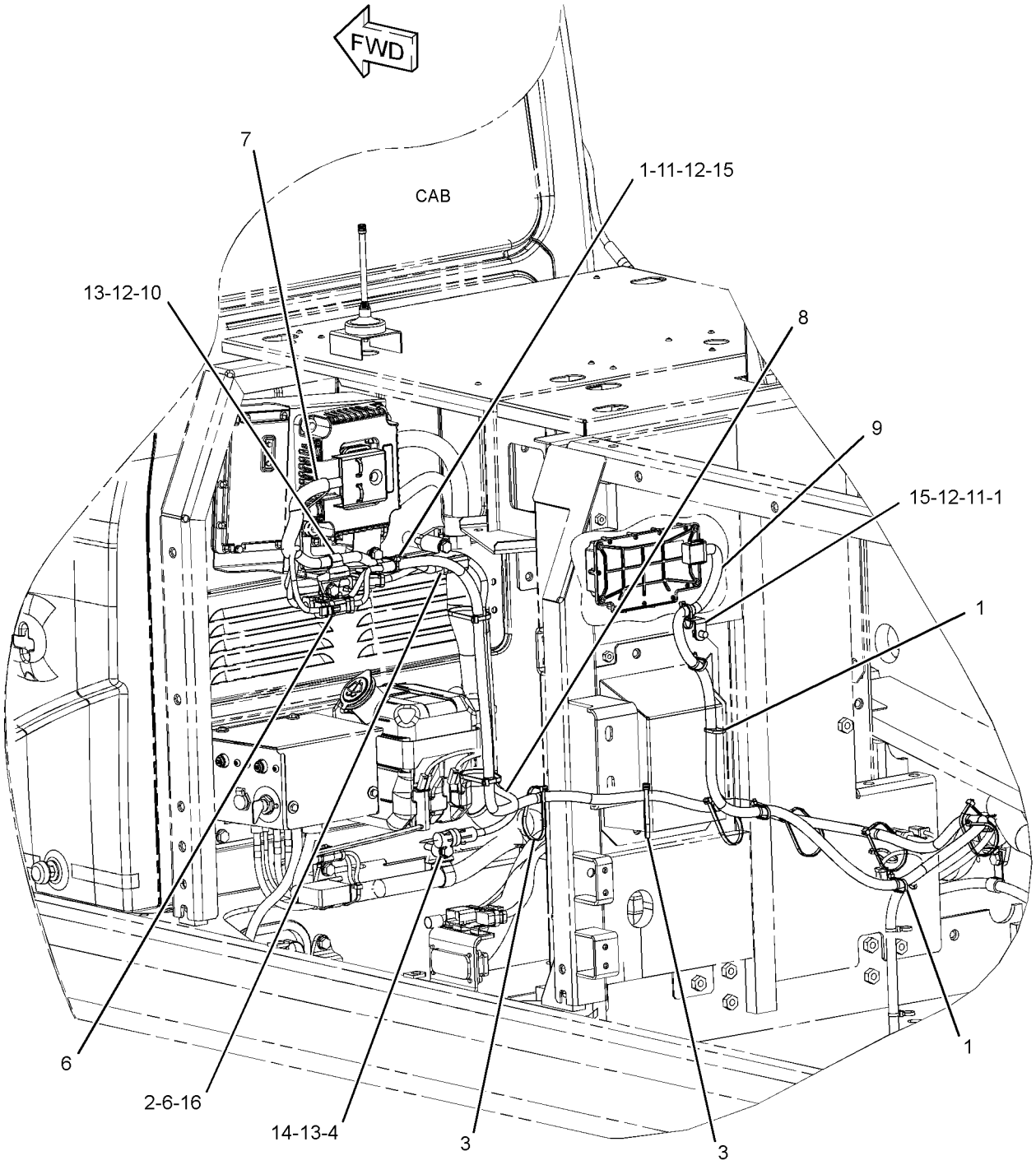

GRAPHIC #1 **<END>** g01528685

231-1836 WIRING GP-CONSOLE–LH

S/N: D3P1-UP; M4T1-UP

PART OF 274-7465 CONSOLE GP-OPERATOR, 251-0433 WIRING GP-CONSOLE

SMCS-1408 **i02490120**

NOTE	REF NO	GRAPHIC REF	PART NUMBER	QTY	PART NAME 1 2 3 4 5 6 (PRODUCT LEVEL)	SEE PAGE
	1	1	**3S-2093**	2	STRAP-CABLE	
	2	1	**7K-1181**	1	STRAP-CABLE	
	3	1	**163-6795**	2	STRAP-CABLE	
	4	1	**251-0580**	1	HARNESS AS-CONSOLE (LH)	
		1	**3S-2093**	9	STRAP-CABLE	
		1	**155-2260**	1	KIT-CONNECTING PLUG (3-PIN)	
					(INCLUDES PLUG AS, WEDGE & INTERFACE SEAL)	
		1	**230-4011**	1	PLUG AS-CONNECTOR (2-PIN)	
		1	**230-5010**	1	PLUG AS-CONNECTOR (6-PIN)	
		1	**239-7352**	1	PLUG AS-CONNECTOR (6-PIN)	
		1	**243-4505**	1	RECEPTACLE AS-CONNECTOR (2-PIN)	
		1	**243-4508**	1	RECEPTACLE AS-CONNECTOR (6-PIN)	
		1	**247-2693**	1	RECEPTACLE AS-CONNECTOR (6-PIN)	

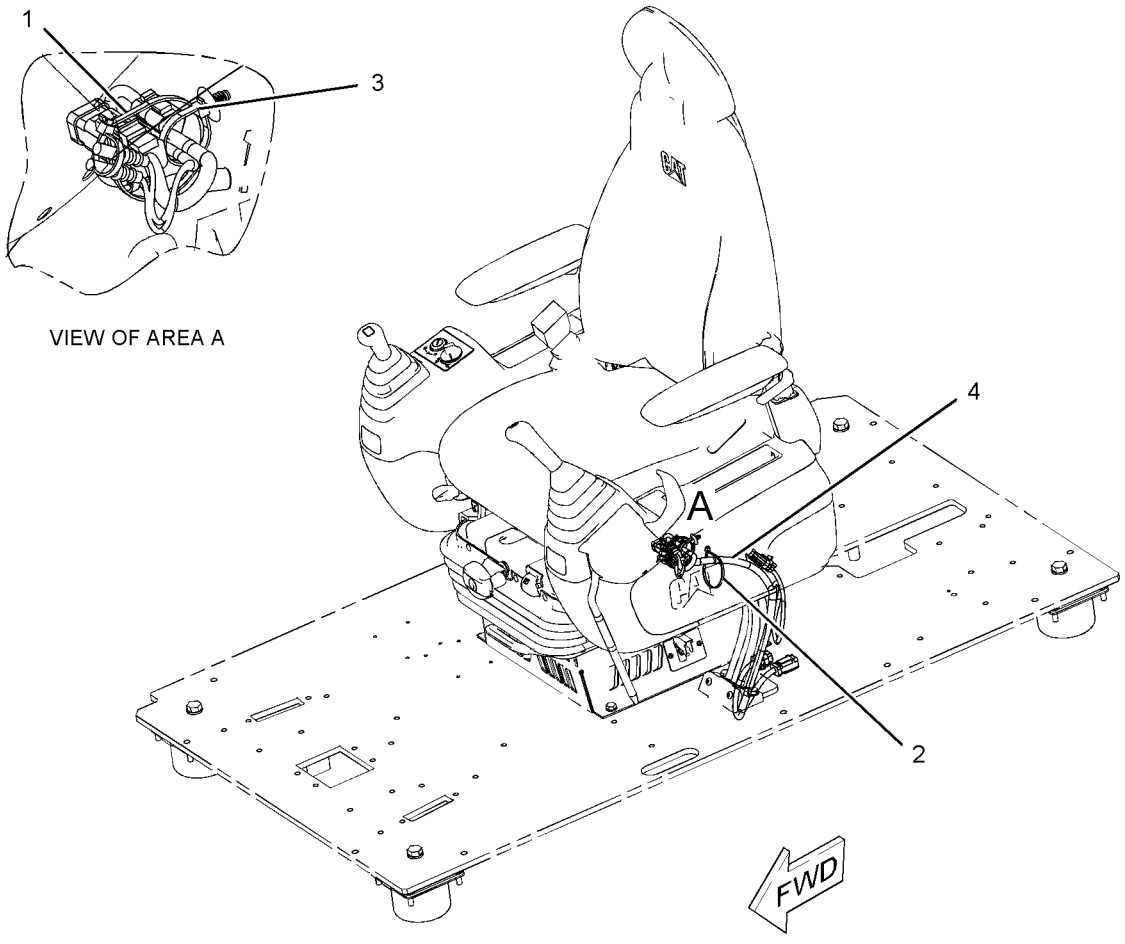

GRAPHIC #1 **<END>** g01150799

251-0433 WIRING GP-CONSOLE

S/N: D3P1-UP; M4T1-UP

PART OF 229-9072 OPERATOR AR

SMCS-1408 **i02490116**

NOTE	PART NUMBER	QTY	PART NAME 1 2 3 4 5 6 (PRODUCT LEVEL)	SEE PAGE
Y	*231-1836*	1	WIRING GP-CONSOLE (LH)	316
Y	*251-0435*	1	WIRING GP-CONSOLE (RH)	318

Y-SEPARATE ILLUSTRATION

<END>

251-0435 WIRING GP-CONSOLE–RH

S/N: D3P1-UP; M4T1-UP

PART OF 274-7466 CONSOLE GP-OPERATOR, 251-0433 WIRING GP-CONSOLE

SMCS-1408 **i02634692**

NOTE	REF NO	GRAPHIC REF	PART NUMBER	QTY	PART NAME 1 2 3 4 5 6 (PRODUCT LEVEL)	SEE PAGE
	1	1	**3S-2093**	3	STRAP-CABLE	
	2	1	**7K-1181**	1	STRAP-CABLE	
	3	1	**283-3074**	1	SWITCH AS-TOGGLE (AUTO/MANUAL ENG SPEED CONTROL)	
	4	1	**163-6711**	1	SWITCH AS-TOGGLE (MANUAL ENGINE SPEED CONTROL)	
	5	1	**163-6795**	3	STRAP-CABLE	
	6	1	**251-0602**	1	BRACKET	
	7	1	**259-4877**	1	HARNESS AS-CONSOLE (RH)	
		1	**3S-2093**	10	STRAP-CABLE	
		1	**8T-8737**	20	PLUG-SEAL	
		1	**102-8806**	1	KIT-RECEPTACLE (8-PIN)	
					(INCLUDES RECEPTACLE AS & WEDGE)	
		1	**155-2265**	1	KIT-CONNECTING PLUG (8-PIN)	
					(INCLUDES PLUG AS, WEDGE & INTERFACE SEAL)	
		1	**230-4009**	1	PLUG AS-CONNECTOR (12-PIN)	
		1	**230-4011**	1	PLUG AS-CONNECTOR (2-PIN)	
		1	**230-5008**	1	PLUG AS-CONNECTOR (4-PIN)	
		1	**230-5010**	1	PLUG AS-CONNECTOR (6-PIN)	
		1	**231-2295**	1	PLUG AS-CONNECTOR (8-PIN)	
		1	**239-7352**	1	PLUG AS-CONNECTOR (6-PIN)	
		1	**243-4505**	1	RECEPTACLE AS-CONNECTOR (2-PIN)	
		1	**243-4510**	1	RECEPTACLE AS-CONNECTOR (12-PIN)	
		1	**247-2693**	1	RECEPTACLE AS-CONNECTOR (6-PIN)	
M	8	1	**9X-2042**	3	SCREW-TRUSS HEAD (M6X1X12-MM)	

M-METRIC PART

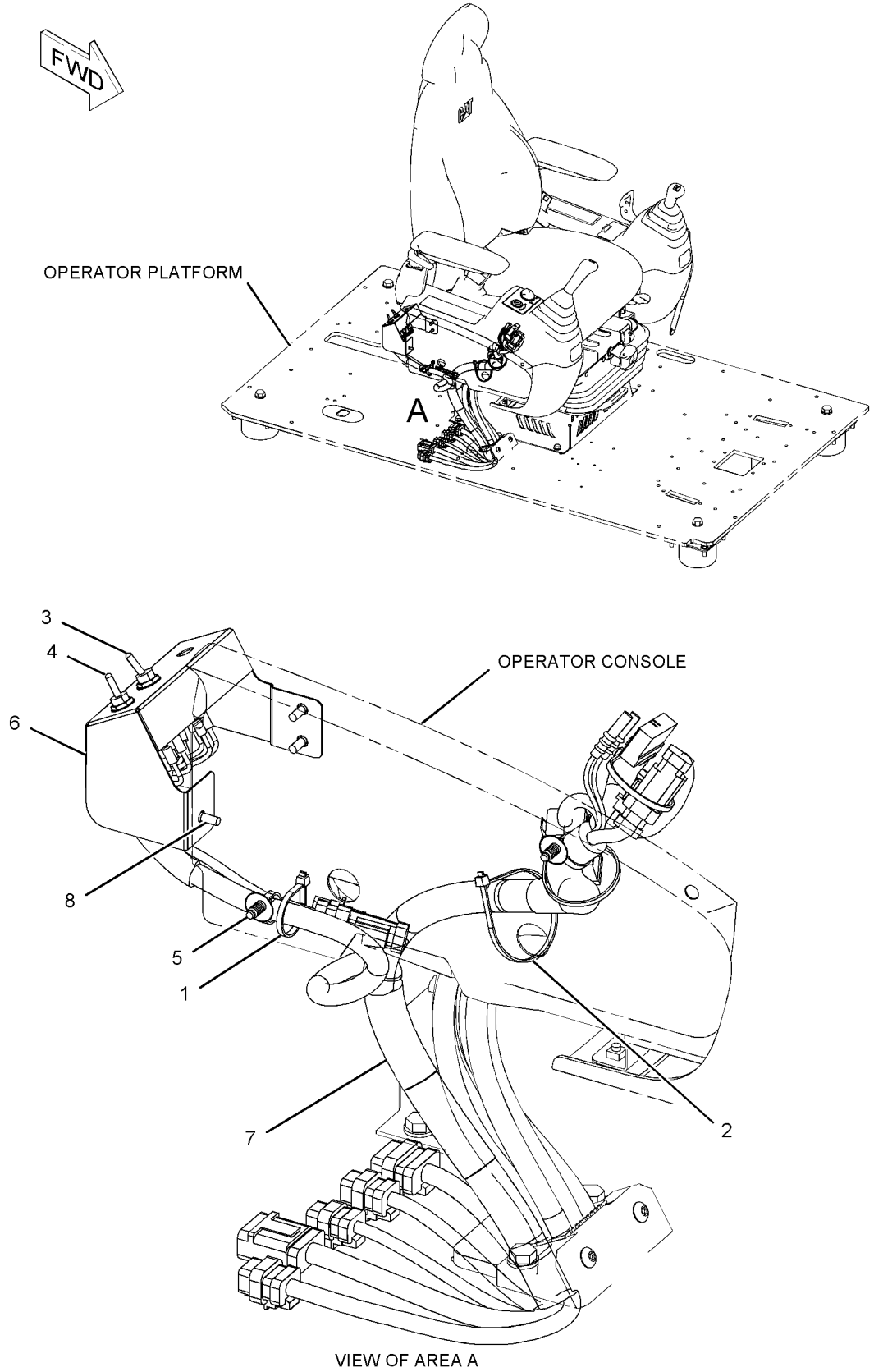

GRAPHIC #1 **<END>** g01231684

251-0482 WIRING GP-CONVERTER–12-VOLT, 7-AMPERE

S/N: D3P1-UP; M4T1-UP
PART OF 337-4122 OPTION AR-CAB
CANNOT BE USED WITH 251-0485–PAGE 321
AN ATTACHMENT

SMCS-1421 **i02662325**

NOTE	REF NO	GRAPHIC REF	PART NUMBER	QTY	PART NAME 1 2 3 4 5 6 (PRODUCT LEVEL)	SEE PAGE
	1	1	**7K-1181**	2	STRAP-CABLE	
	2	1	**121-0987**	1	SOCKET (12-VOLT, 7-AMPERE)	
	3	1	**283-2783**	1	CONVERTER-POWER (24-VOLT TO 12-VOLT)	
	4	1	**251-0483**	1	BRACKET	
	5	1	**8T-4121**	2	WASHER-HARD (11X21X2.5-MM THK)	
M	6	1	**8T-4136**	2	BOLT (M10X1.5X25-MM)	
M	7	1	**8T-4171**	4	BOLT (M6X1X12-MM)	
	8	1	**9X-8256**	4	WASHER (6.6X12X2-MM THK)	

M-METRIC PART

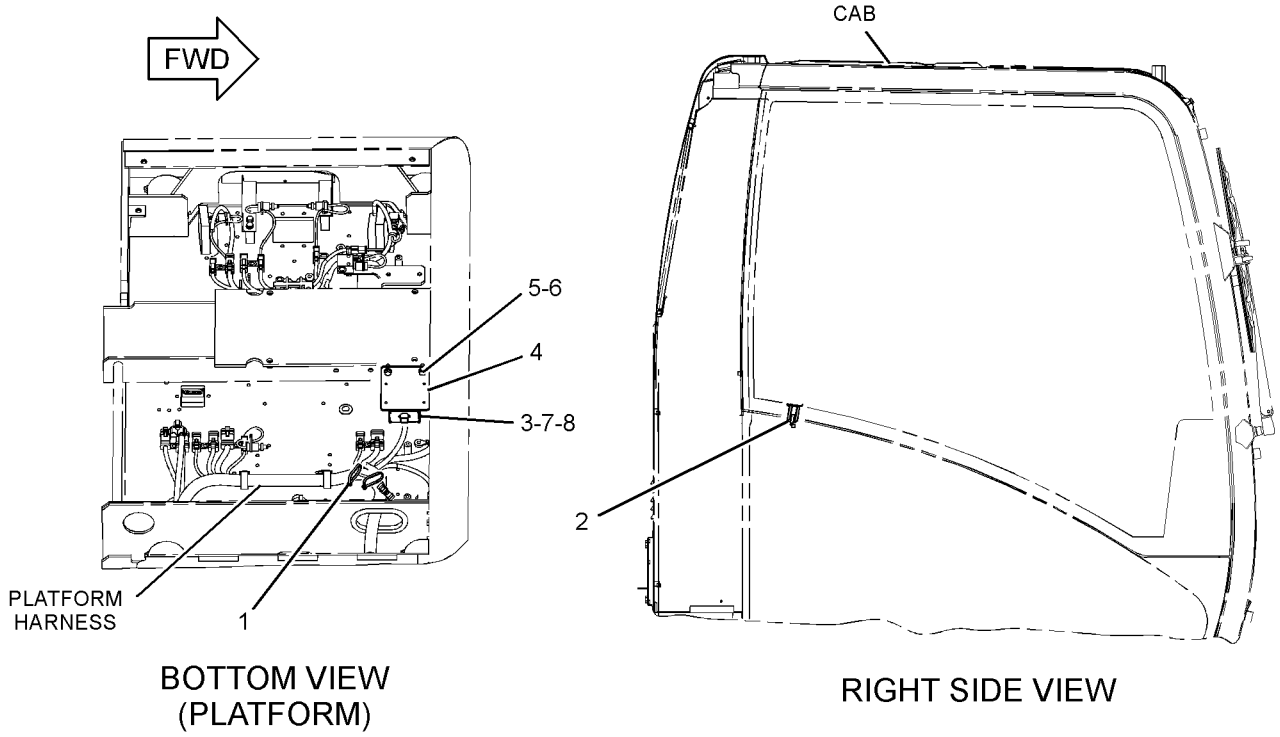

GRAPHIC #1 **<END>** g01155726

251-0485 WIRING GP-CONVERTER–12-VOLT, 7-AMPERE

S/N: D3P1-UP; M4T1-UP
PART OF 345-2287, 345-2288 CAB AR, 337-4125 OPTION AR-CAB
CANNOT BE USED WITH 251-0482–PAGE 320
AN ATTACHMENT

SMCS-1421 **i02662326**

NOTE	REF NO	GRAPHIC REF	PART NUMBER	QTY	PART NAME 1 2 3 4 5 6 (PRODUCT LEVEL)	SEE PAGE
	1	1	**121-0987**	2	SOCKET (12-VOLT, 7-AMPERE)	
	2	1	**283-2783**	2	CONVERTER-POWER (24-VOLT TO 12-VOLT)	
	3	1	**251-0483**	2	BRACKET	
	4	1	**8T-4121**	4	WASHER-HARD (11X21X2.5-MM THK)	
M	5	1	**8T-4136**	4	BOLT (M10X1.5X25-MM)	
M	6	1	**8T-4171**	8	BOLT (M6X1X12-MM)	
	7	1	**9X-8256**	8	WASHER (6.6X12X2-MM THK)	

M-METRIC PART

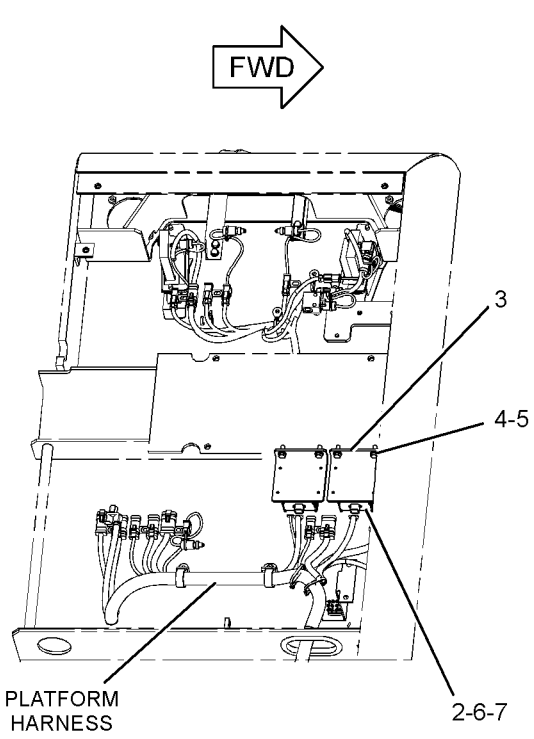

BOTTOM VIEW
(PLATFORM)

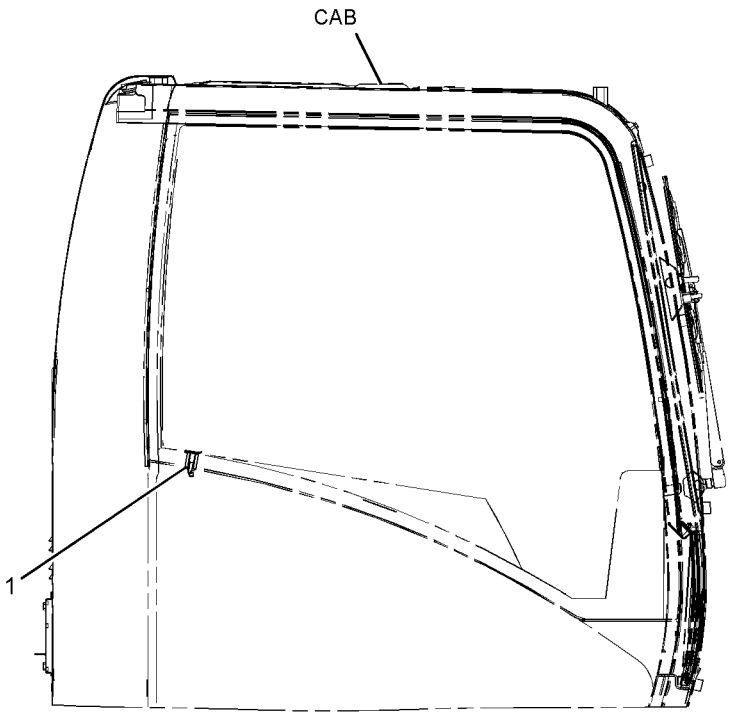

RIGHT SIDE VIEW

GRAPHIC #1 **<END>** g01155779

236-6226 WIRING GP-ELECTRONIC CONTROL

S/N: THX1-22179

PART OF 240-1861, 301-3082 ENGINE AR-COMPLETE

SMCS-1408 **i03172046**

NOTE	REF NO	GRAPHIC REF	PART NUMBER	QTY	PART NAME 1 2 3 4 5 6 (PRODUCT LEVEL)	SEE PAGE
	1	1	**3S-2093**	19	STRAP-CABLE	
	3	1	**215-3249**	1	HARNESS AS-ENGINE (UNIT INJECTOR)	
		1	**3S-2093**	5	STRAP-CABLE	
		1	**105-1797**	5	MOUNT	
		1	**191-7823**	1	RECEPTACLE AS	
	4	1	**235-8202**	1	HARNESS AS-ENGINE (ELECTRONIC CONTROL MODULE)	
		1	**102-8802**	1	KIT-RECEPTACLE (2-PIN)	
		1	**102-8803**	1	KIT-RECEPTACLE (3-PIN)	
					(EACH RECEPTACLE KIT INCLUDES RECEPTACLE AS & WEDGE)	
		1	**100-3320**	1	PLUG AS-CONNECTOR (2-PIN)	
		1	**126-5011**	1	SEAL-CONNECTOR	
		1	**111-2416**	1	PLUG AS-CONNECTOR (2-PIN)	
		1	**126-5011**	1	SEAL-CONNECTOR	
		1	**155-2265**	1	KIT-CONNECTING PLUG (8-PIN)	
		1	**155-2260**	1	KIT-CONNECTING PLUG (3-PIN)	
		1	**155-2270**	5	KIT-CONNECTING PLUG (2-PIN)	
					(EACH PLUG KIT INCLUDES PLUG AS, WEDGE, & INTERFACE SEAL)	
		1	**172-6062**	1	PLUG AS-CONNECTOR (18-PIN)	
		1	**227-4002**	1	PLUG AS-CONNECTOR (108-PIN)	
C	5	1	**4P-7581**	5	CLIP	
	6	1	**4P-8134**	2	CLIP	
M	7	1	**5P-7970**	3	NUT (M8X1.25-THD)	
	8	1	**6V-4369**	1	CLIP	
M	9	1	**6V-5217**	1	BOLT (M8X1.25X20-MM)	
	10	1	**6V-5839**	3	WASHER (11X21X2.5-MM THK)	
M	11	1	**6V-6317**	2	BOLT (M10X1.5X20-MM)	
M	12	1	**7I-2272**	2	BOLT (M5X0.8X12-MM)	
	13	1	**8T-0328**	2	WASHER-HARD (5.5X10X1-MM THK)	
M	14	1	**8T-4137**	1	BOLT (M10X1.5X20-MM)	
	15	1	**8T-4205**	1	WASHER-HARD (7.2X14.5X2-MM THK)	
M	16	1	**8T-5451**	1	BOLT (M6X1X12-MM)	
	17	1	**9M-1974**	3	WASHER-HARD (8.8X16X2-MM THK)	

C-CHANGE FROM PREVIOUS TYPE
M-METRIC PART

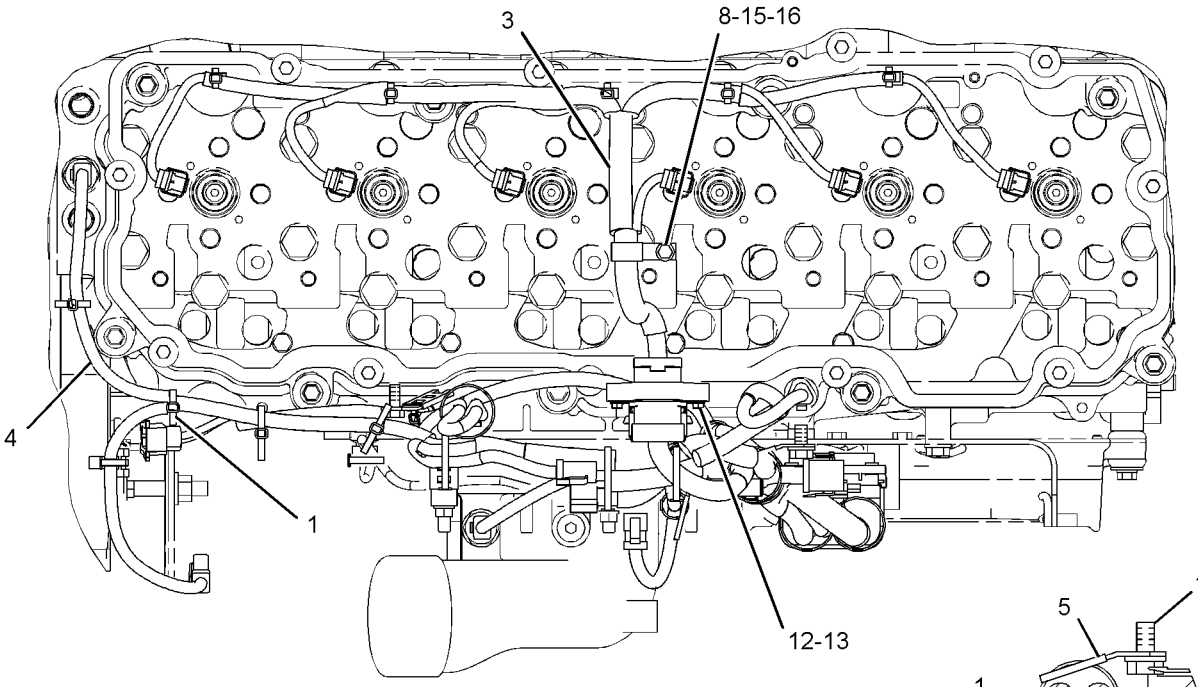

TOP VIEW OF ENGINE

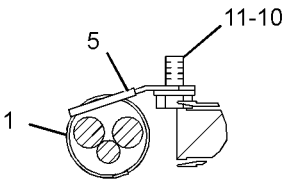

SECTION A-A

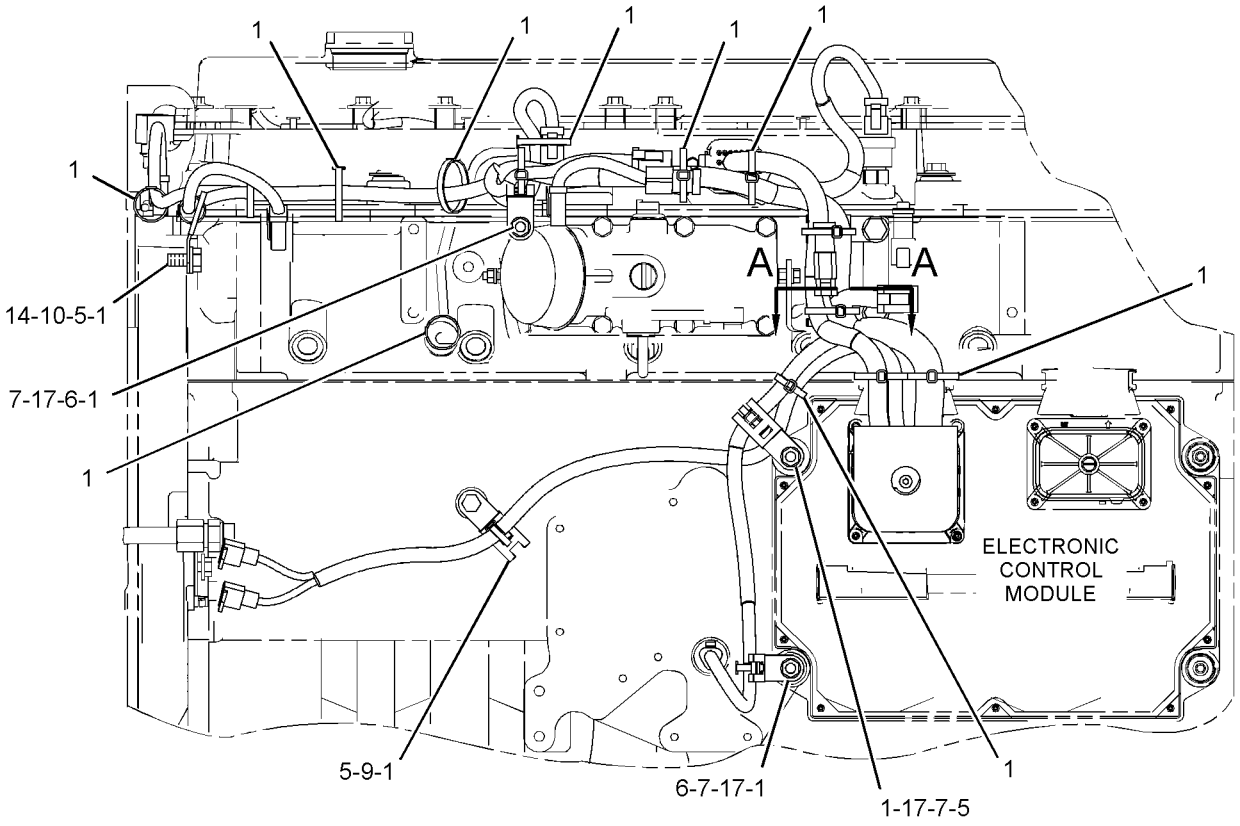

LEFT SIDE VIEW OF ENGINE

GRAPHIC #1 **<END>** g01336539

ELECTRICAL AND STARTING SYSTEM

330-6018 WIRING GP-ELECTRONIC CONTROL

S/N: THX22180-UP

PART OF 240-1861, 301-3082 ENGINE AR-COMPLETE

SMCS-1408 **i03614902**

NOTE	REF NO	GRAPHIC REF	PART NUMBER	QTY	PART NAME 1 2 3 4 5 6 (PRODUCT LEVEL)	SEE PAGE
	1	1	**3S-2093**	18	STRAP-CABLE	
	2	1	**215-3249**	1	HARNESS AS-ENGINE (UNIT INJECTOR)	
		1	**3S-2093**	5	STRAP-CABLE	
		1	**105-1797**	5	MOUNT	
		1	**9X-3401**	12	PIN-CONNECTOR (16-GA TO 18-GA)	
					—OR—	
		1	**126-1767**	12	PIN-CONNECTOR (14-GA)	
		1	**172-6064**	1	WEDGE-RECEPTACLE LOCK	
		1	**191-7823**	1	RECEPTACLE AS	
		1	**307-8428**	1	GASKET	
	3	1	**323-9140**	1	HARNESS AS-ENGINE	
		1	**102-8802**	1	KIT-RECEPTACLE (2-PIN)	
					(EACH RECEPTACLE KIT INCLUDES RECEPTACLE AS & WEDGE)	
		1	**8T-8737**	95	PLUG-SEAL	
		1	**100-3320**	1	PLUG AS-CONNECTOR (2-PIN)	
		1	**126-5011**	1	SEAL-CONNECTOR	
		1	**305-5362**	4	TERMINAL AS (18-GA)	
		1	**111-2416**	1	PLUG AS-CONNECTOR (2-PIN)	
		1	**126-5011**	1	SEAL-CONNECTOR	
E		1	**125-7874**		TUBE-HEAT SHRINK (5.72-MM DIA) (25-CM)	
E		1	**125-7875**		TUBE-HEAT SHRINK (7.44-MM DIA) (15-CM)	
		1	**155-2270**	3	KIT-CONNECTING PLUG (2-PIN)	
		1	**155-2265**	1	KIT-CONNECTING PLUG (8-PIN)	
					(EACH PLUG KIT INCLUDES PLUG AS & WEDGE)	
		1	**172-6062**	1	PLUG AS-CONNECTOR (18-PIN)	
		1	**172-6065**	1	WEDGE-PLUG LOCK	
		1	**211-6807**	1	COVER (CONNECTOR)	
		1	**230-4011**	2	PLUG AS-CONNECTOR (2-PIN)	
					(EACH INCLUDES)	
		1	**264-7029**	1	SEAL-CONNECTOR	
		1	**230-4013**	1	PLUG AS-CONNECTOR (3-PIN)	
		1	**264-7030**	1	SEAL-CONNECTOR	
		1	**237-0227**	3	PLUG AS-CONNECTOR (3-PIN)	
					(EACH INCLUDES)	
		1	**264-7030**	1	SEAL-CONNECTOR	
		1	**264-5732**	1	PLUG AS-CONNECTOR (120-PIN)	
		1	**288-7324**	1	SEAL-CONNECTOR	
	4	1	**4P-7581**	5	CLIP	
	5	1	**4P-8134**	2	CLIP	
M	6	1	**5P-7970**	3	NUT (M8X1.25-THD)	
M	7	1	**6V-5217**	1	BOLT (M8X1.25X20-MM)	
	8	1	**6V-5839**	3	WASHER (11X21X2.5-MM THK)	
M	9	1	**6V-6317**	2	BOLT (M10X1.5X20-MM)	
M	10	1	**7I-2272**	2	BOLT (M5X0.8X12-MM)	
	11	1	**8T-0328**	2	WASHER-HARD (5.5X10X1-MM THK)	
M	12	1	**8T-4137**	1	BOLT (M10X1.5X20-MM)	
	13	1	**8T-4205**	1	WASHER-HARD (7.2X14.5X2-MM THK)	
M	14	1	**8T-5451**	1	BOLT (M6X1X12-MM)	
	15	1	**9M-1974**	3	WASHER-HARD (8.8X16X2-MM THK)	
	16	1	**9X-2332**	1	CLIP	

E-ORDER BY THE CENTIMETER
M-METRIC PART

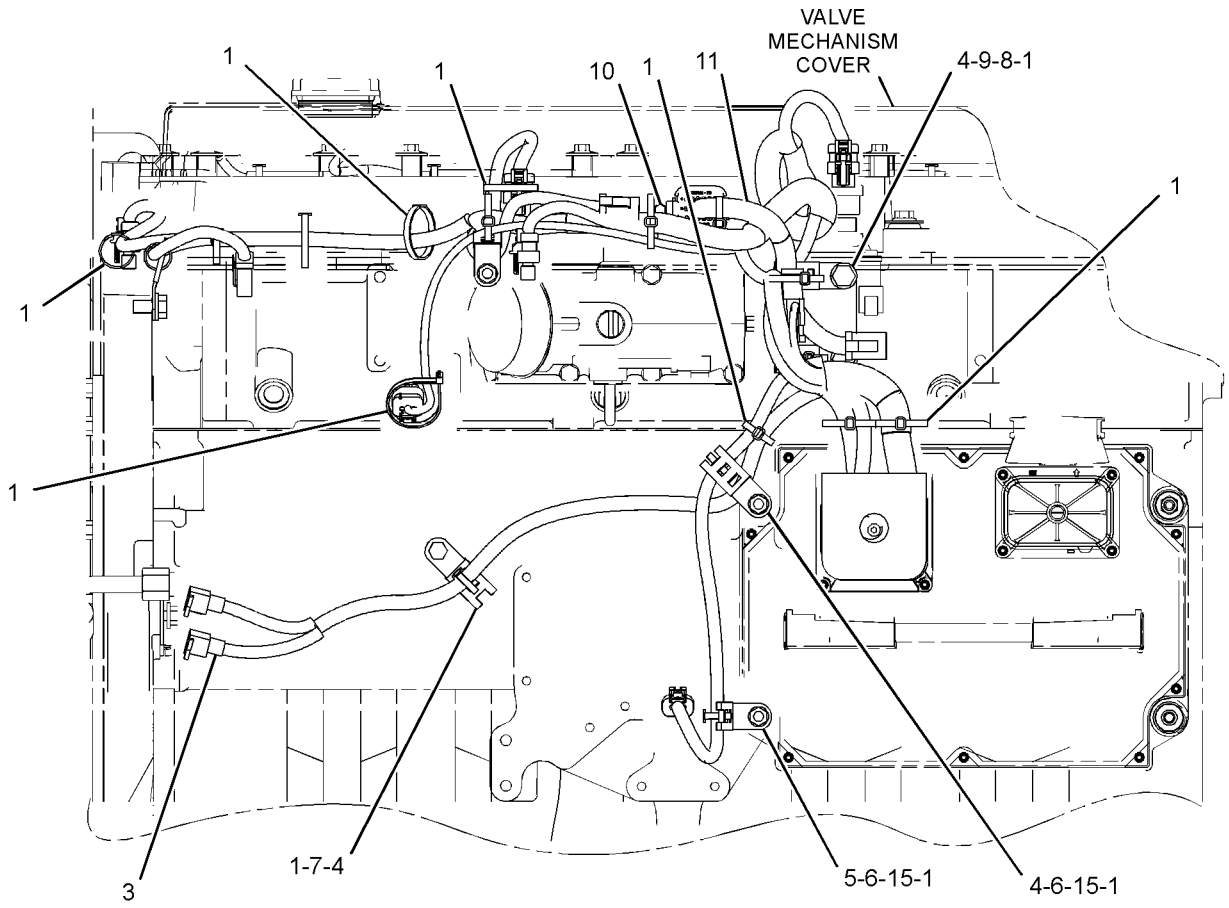

LEFT SIDE VIEW OF ENGINE

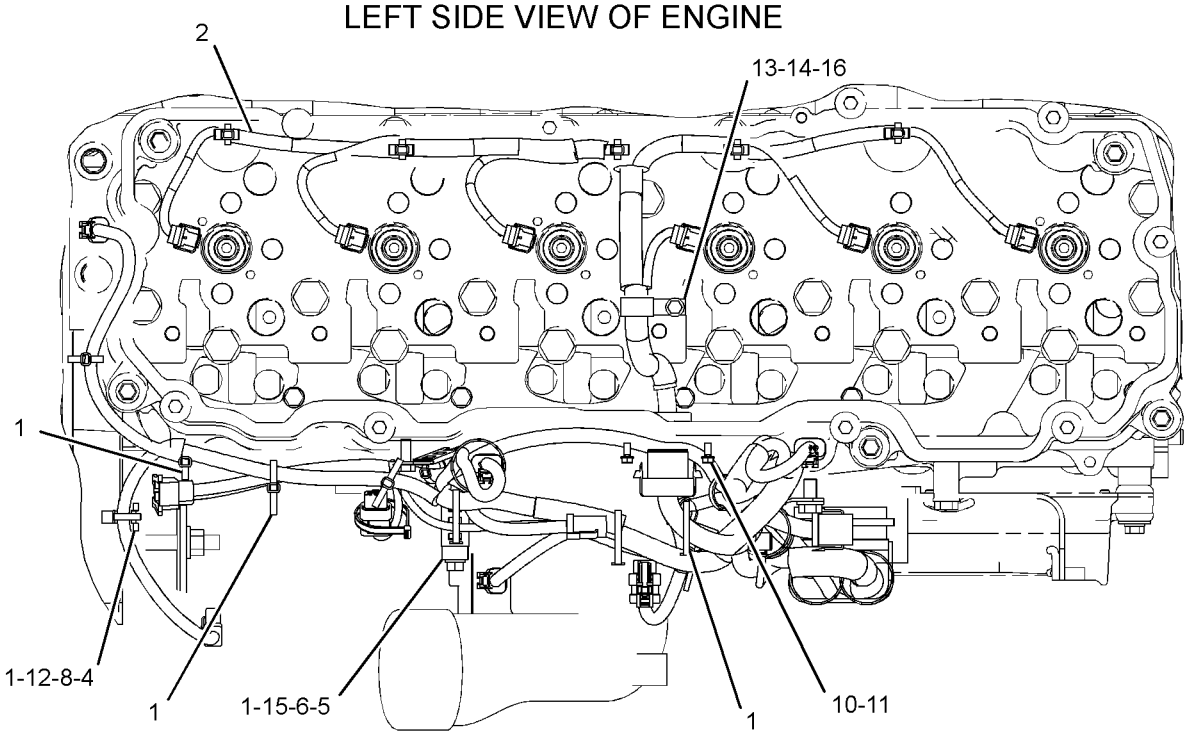

TOP VIEW OF ENGINE

GRAPHIC #1 **<END>** g01941313

238-1580 WIRING GP-FAN–REVERSING

S/N: D3P1-UP; M4T1-UP
PART OF 264-8479 CONTROL AR-FAN
AN ATTACHMENT

SMCS-1408 **i03744718**

NOTE	REF NO	GRAPHIC REF	PART NUMBER	QTY	PART NAME 1 2 3 4 5 6 (PRODUCT LEVEL)	SEE PAGE
	1	1	**3S-2093**	5	STRAP-CABLE	
	2	1	**7K-1181**	12	STRAP-CABLE	
	3	1	**238-1601**	1	HARNESS AS-CONTROL	
		1	**8T-8729**	1	PIN-CONNECTOR (16-GA TO 18-GA)	
		1	**8T-8730**	2	SOCKET-CONNECTOR (16-GA TO 18-GA)	
		1	**8T-8737**	1	PLUG-SEAL	
		1	**2L-8079**	1	TERMINAL-RING (14-GA TO 16-GA, 3/8-IN SCREW)	
		1	**155-2270**	1	KIT-CONNECTING PLUG (2-PIN)	
					(INCLUDES PLUG AS, WEDGE & INTERFACE SEAL)	
		1	**243-4505**	1	RECEPTACLE AS-CONNECTOR (2-PIN)	

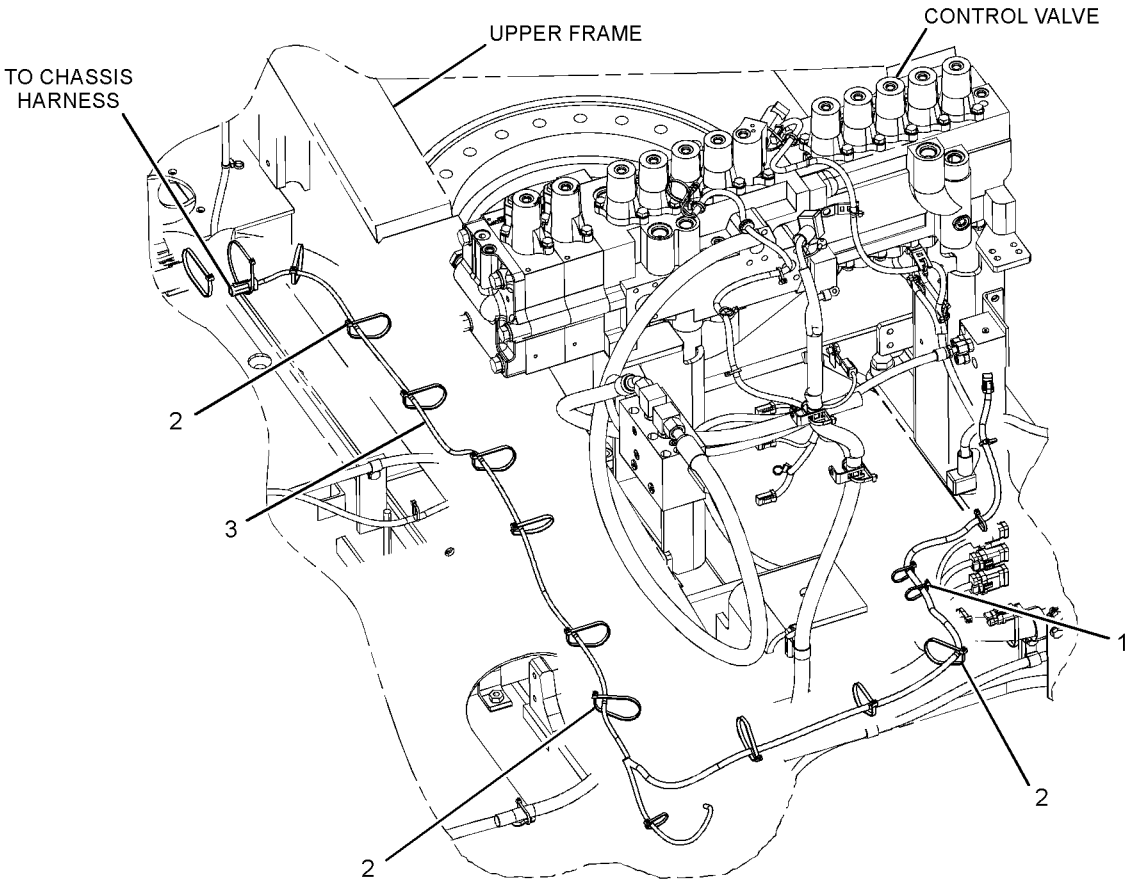

REAR VIEW
(UPPER LEFT)

GRAPHIC #1 **<END>** g01237890

238-1568 WIRING GP-FINE SWING

S/N: D3P1-UP; M4T1-UP
PART OF 314-3709 CHASSIS AR

SMCS-1408 **i02989641**

NOTE	REF NO	GRAPHIC REF	PART NUMBER	QTY	PART NAME 1 2 3 4 5 6 (PRODUCT LEVEL)	SEE PAGE
	1	1	**111-4836**	4	CLIP	
	2	1	**111-4837**	3	CLIP	
	3	1	**275-6865**	1	HARNESS AS-SOLENOID (FINE SWING)	
	4	1	**238-2171**	1	BRACKET AS	
	5	1	**8T-4121**	7	WASHER-HARD (11X21X2.5-MM THK)	
M	6	1	**8T-4136**	1	BOLT (M10X1.5X25-MM)	
M	7	1	**8T-4137**	6	BOLT (M10X1.5X20-MM)	

M-METRIC PART

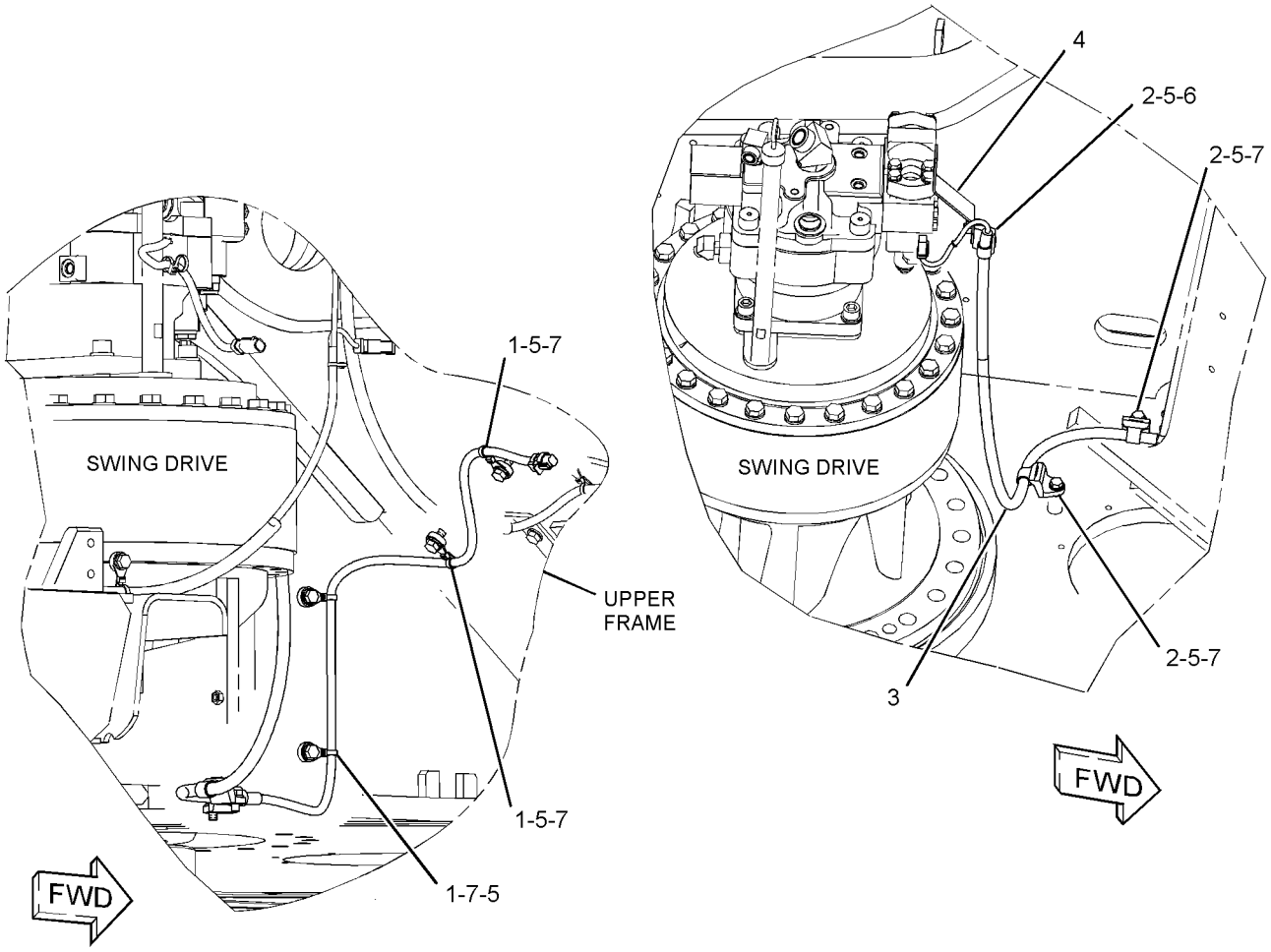

GRAPHIC #1 **<END>** g01520390

259-5062 WIRING GP-FUEL SYSTEM–PRIMING PUMP

S/N: D3P1-UP; M4T1-UP
PART OF 247-7501 PUMP GP-FUEL PRIMING
AN ATTACHMENT

SMCS-1408 **i03602227**

NOTE	REF NO	GRAPHIC REF	PART NUMBER	QTY	PART NAME 1 2 3 4 5 6 (PRODUCT LEVEL)	SEE PAGE
	1	1	**3S-2093**	10	STRAP-CABLE	
	2	1	**7K-1181**	16	STRAP-CABLE	
	3	1	**137-6606**	1	FILM-IDENTIFICATION (FUEL)	
Y	4	1	**165-5970**	1	SWITCH GP-TOGGLE (FUEL PRIMING PUMP)	274
	5	1	**275-6938**	1	HARNESS AS-PUMP (FUEL PRIMING)	
		1	**155-2260**	1	KIT-CONNECTING PLUG (3-PIN)	
		1	**155-2270**	1	KIT-CONNECTING PLUG (2-PIN)	
					(EACH PLUG KIT INCLUDES PLUG AS,WEDGE & INTERFACE SEAL)	
		1	**243-4507**	1	RECEPTACLE AS-CONNECTOR (4-PIN)	

Y-SEPARATE ILLUSTRATION

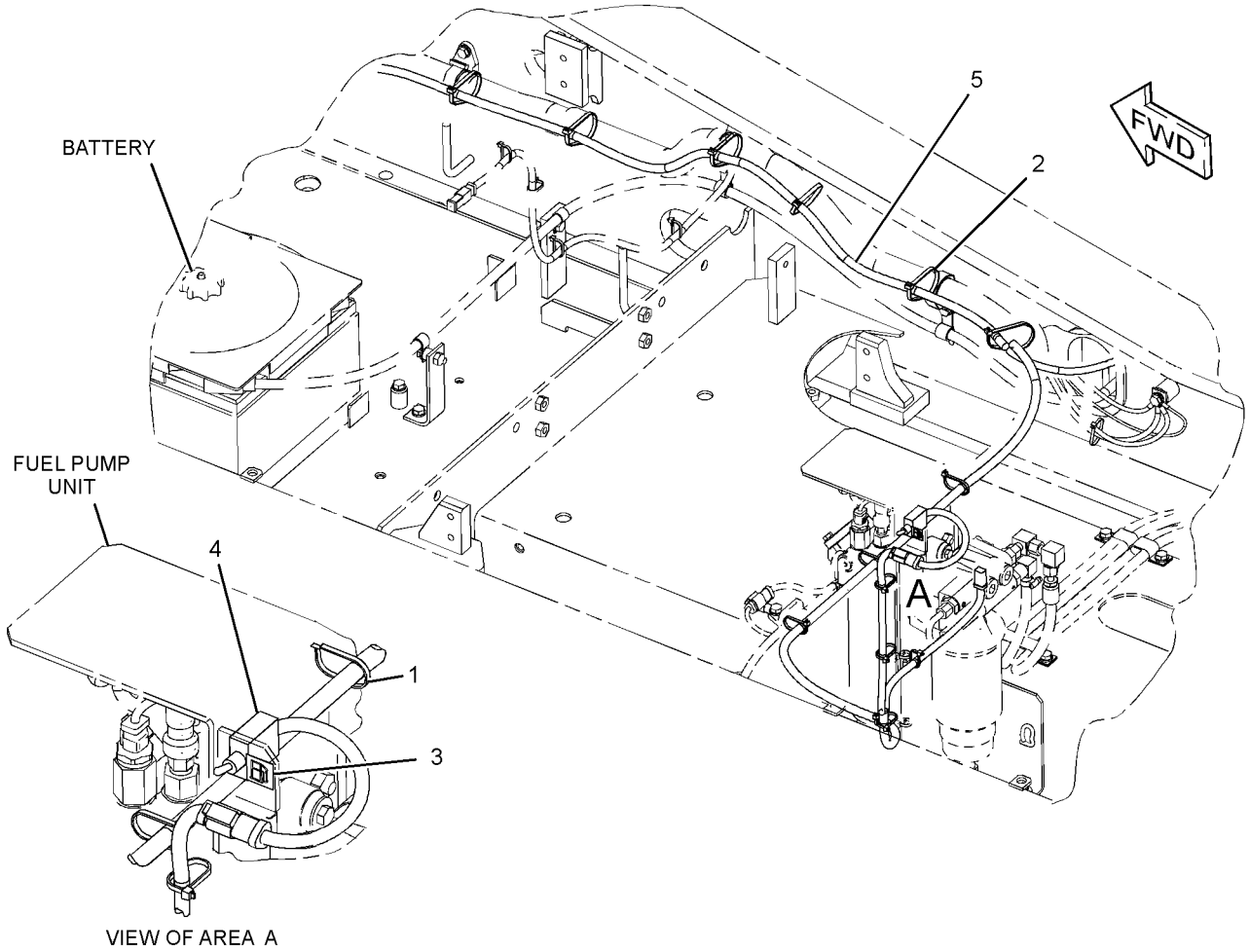

GRAPHIC #1 **<END>** g01238569

204-3461 WIRING GP-GRADE CONTROL

S/N: D3P1-UP; M4T1-UP

PART OF 292-0276 GRADE CONTROL AR-SATELLITE

SMCS-1408, 7220 **i03129241**

NOTE	PART NUMBER	QTY	PART NAME 1 2 3 4 5 6 (PRODUCT LEVEL)	SEE PAGE
M	**9X-2480**	4	BOLT (M6X1X45-MM)	
	177-3941	1	CABLE AS (BUCKET)	
	177-3942	1	CABLE AS (STICK)	
	177-3943	1	CABLE AS (BOOM)	
	286-2484	4	CLAMP	
	6D-4244	2	CLIP	
	111-4836	8	CLIP	
	132-5789	1	CLIP (LADDER)	
M	**8T-4133**	10	NUT (M10X1.5-THD)	
	107-4749	2	PLATE	
	3S-2093	6	STRAP-CABLE	
	7K-1181	16	STRAP-CABLE	
	9X-8256	4	WASHER (6.6X12X2-MM THK)	
	8T-4121	10	WASHER-HARD (11X21X2.5-MM THK)	

M-METRIC PART

<END>

269-3410 WIRING GP-HEATER–AIR INLET MANIFOLD

S/N: THX1-UP

PART OF 240-1861, 301-3082 ENGINE AR-COMPLETE

SMCS-7304 **i03347965**

NOTE	REF NO	GRAPHIC REF	PART NUMBER	QTY	PART NAME 1 2 3 4 5 6 (PRODUCT LEVEL)	SEE PAGE
	1	1	**3S-2093**	1	STRAP-CABLE	
Y	2	1	**209-5582**	1	SWITCH GP-MAGNETIC (24-VOLT) (AIR INLET HEATER RELAY)	266
	3	1	**224-1377**	1	WIRE AS	
		1	**2L-0273**	2	FITTING (RUBBER)	
		1	**5P-3454**	1	TERMINAL-RING (4-GA, 5/16-IN SCREW)	
		1	**178-2513**	1	RING-TERMINAL	
	4	1	**283-1226**	1	BRACKET AS	
	5	1	**208-9277**	2	BOLT-FLANGE HEAD (M8X1X25-MM)	
	6	1	**6V-5839**	2	WASHER (11X21X2.5-MM THK)	
M	7	1	**6V-6317**	2	BOLT (M10X1.5X20-MM)	

M-METRIC PART
Y-SEPARATE ILLUSTRATION

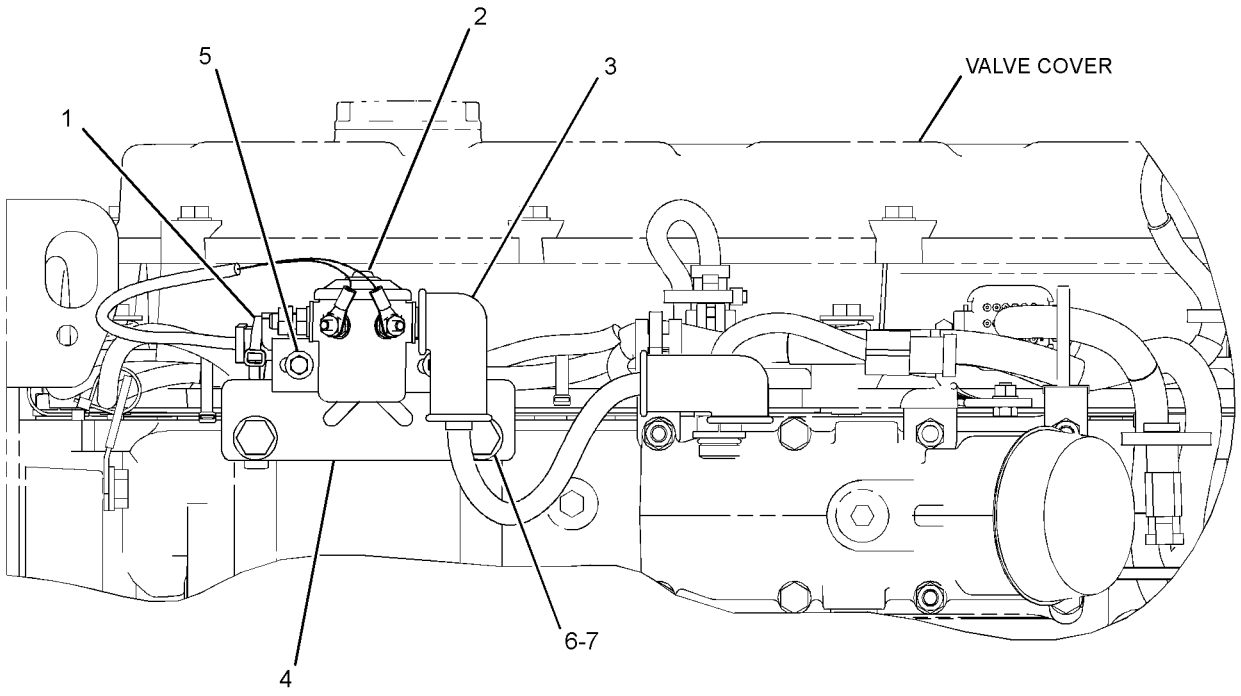

LEFT SIDE VIEW OF ENGINE

GRAPHIC #1 **<END>** g01724439

259-4964 WIRING GP-MEDIUM PRESSURE

S/N: D3P1-UP; M4T1-UP

PART OF 255-5822, 270-8795 CONTROL AR-AUXILIARY AN ATTACHMENT

SMCS-1408 **i02567651**

NOTE	REF NO	GRAPHIC REF	PART NUMBER	QTY	PART NAME 1 2 3 4 5 6 (PRODUCT LEVEL)	SEE PAGE
	1	1	**3S-2093**	6	STRAP-CABLE	
	2	1	**7K-1181**	3	STRAP-CABLE	
	3	1	**102-7886**	1	SLEEVE	
	4	1	**204-1611**	1	STRAP-CABLE	
	5	1	**259-5125**	1	HARNESS AS-CONTROL	
		1	**155-2270**	1	KIT-CONNECTING PLUG (2-PIN)	
					(INCLUDES PLUG AS, WEDGE, AND INTERFACE SEAL)	
		1	**243-4508**	1	RECEPTACLE AS-CONNECTOR (6-PIN)	
	6	1	**132-5789**	1	CLIP	
	7	1	**8T-4121**	1	WASHER-HARD (11X21X2.5-MM THK)	
M	8	1	**8T-4198**	1	BOLT (M10X1.5X100-MM)	

M-METRIC PART

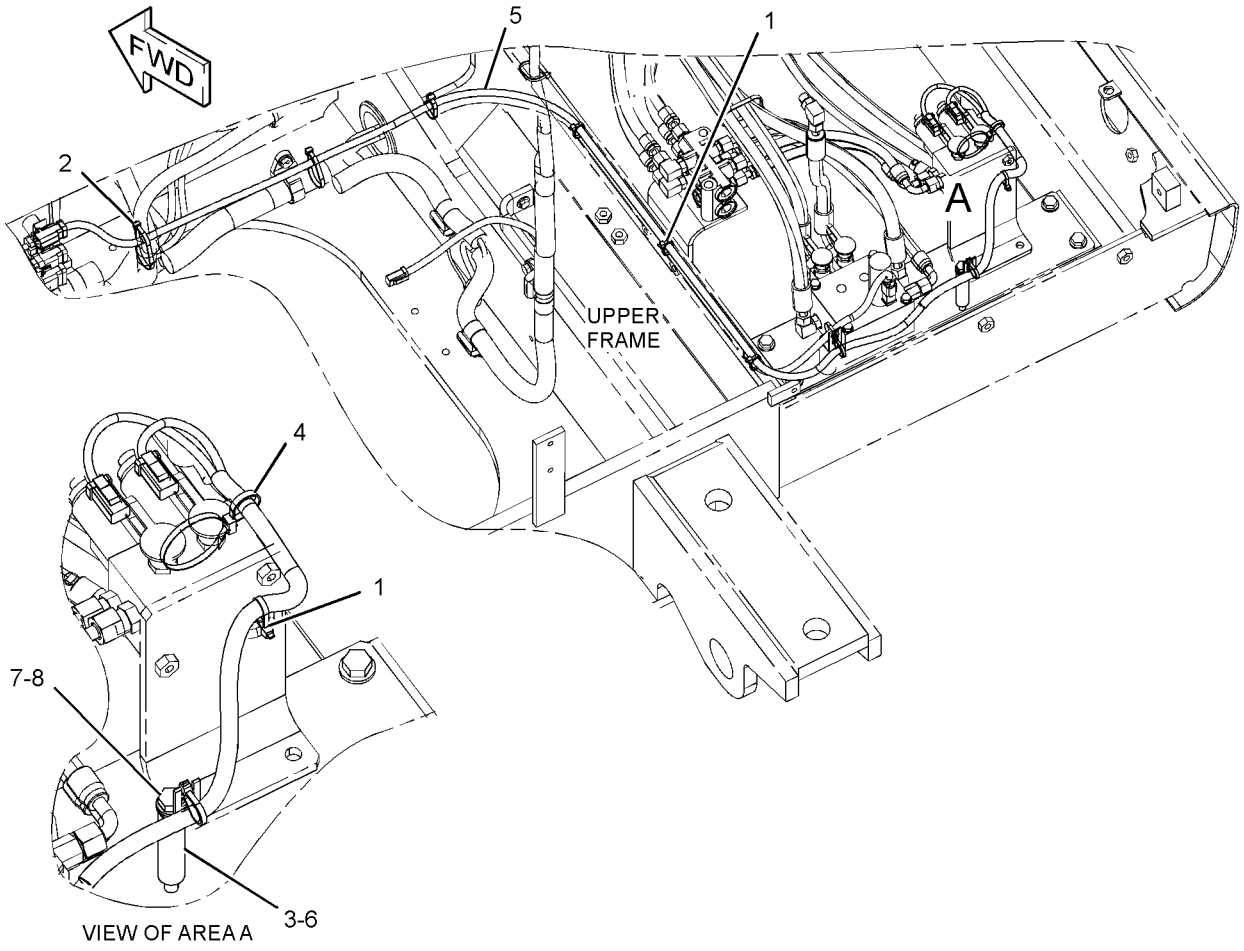

GRAPHIC #1 **<END>** g01154974

ELECTRICAL AND STARTING SYSTEM

251-0430 WIRING GP-PLATFORM

S/N: D3P1-UP; M4T1-UP

PART OF 229-9072 OPERATOR AR

SMCS-1408 **i02490073**

NOTE	REF NO	GRAPHIC REF	PART NUMBER	QTY	PART NAME 1 2 3 4 5 6 (PRODUCT LEVEL)	SEE PAGE
	1	1	**3S-2093**	6	STRAP-CABLE	
	2	1	**7G-1060**	1	STRAP AS-GROUND	
	3	1	**7K-1181**	18	STRAP-CABLE	
	4	1	**111-4836**	4	CLIP	
	5	1	**111-4838**	2	CLIP	
	6	1	**111-4839**	2	STRAP	
	7	1	**116-0118**	14	CLIP	
	8	1	**234-1122**	1	COVER	
	9	1	**251-0299**	1	HARNESS AS-SWITCH (SECONDARY SHUTDOWN)	
		1	**243-4505**	1	RECEPTACLE AS-CONNECTOR (2-PIN)	
	10	1	**267-7592**	1	HARNESS AS-PLATFORM	
		1	**102-8802**	5	KIT-RECEPTACLE (2-PIN)	
		1	**102-8804**	1	KIT-RECEPTACLE (4-PIN)	
					(EACH RECEPTACLE KIT INCLUDES RECEPTACLE AS & WEDGE)	
		1	**3S-2093**	23	STRAP-CABLE	
		1	**155-2270**	12	KIT-CONNECTING PLUG (2-PIN)	
		1	**155-2271**	1	KIT-CONNECTING PLUG (4-PIN)	
					(EACH PLUG KIT INCLUDES PLUG AS,WEDGE & INTERFACE SEAL)	
		1	**197-4385**	3	DIODE	
		1	**243-4505**	2	RECEPTACLE AS-CONNECTOR (2-PIN)	
		1	**243-4507**	1	RECEPTACLE AS-CONNECTOR (4-PIN)	
		1	**243-4508**	4	RECEPTACLE AS-CONNECTOR (6-PIN)	
		1	**243-4509**	1	RECEPTACLE AS-CONNECTOR (8-PIN)	
		1	**243-4510**	2	RECEPTACLE AS-CONNECTOR (12-PIN)	
		1	**247-2693**	1	RECEPTACLE AS-CONNECTOR (6-PIN)	
		1	**239-7352**	2	PLUG AS-CONNECTOR (6-PIN)	
		1	**153-2620**	1	PLUG AS-CONNECTOR (54-PIN, BLACK)	
		1	**155-2272**	1	PLUG AS-CONNECTOR (4-PIN)	
		1	**230-4009**	3	PLUG AS-CONNECTOR (12-PIN)	
		1	**230-4011**	4	PLUG AS-CONNECTOR (2-PIN)	
		1	**230-5010**	3	PLUG AS-CONNECTOR (6-PIN)	
		1	**239-7352**	1	PLUG AS-CONNECTOR (6-PIN)	
M	11	1	**095-0728**	2	SCREW-MACHINE (M4X0.7X12-MM)	
	12	1	**096-6166**	2	WASHER-HARD (4.5X9X1-MM THK)	
	13	1	**3E-5169**	1	GUARD-SWITCH	
	14	1	**4D-1836**	1	SWITCH AS-TOGGLE (SECONDARY SHUTDOWN)	
M	15	1	**7X-2621**	7	BOLT (M10X1.5X12-MM)	
	16	1	**8T-4121**	14	WASHER-HARD (11X21X2.5-MM THK)	
M	17	1	**8T-4137**	7	BOLT (M10X1.5X20-MM)	

M-METRIC PART

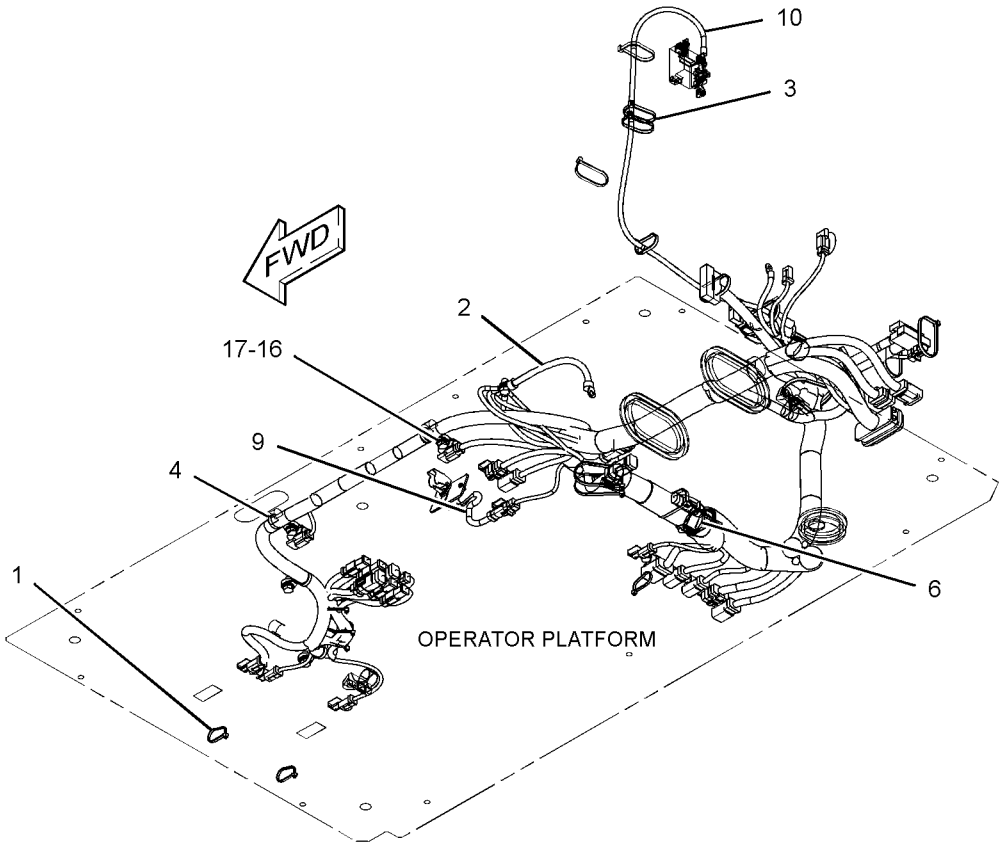

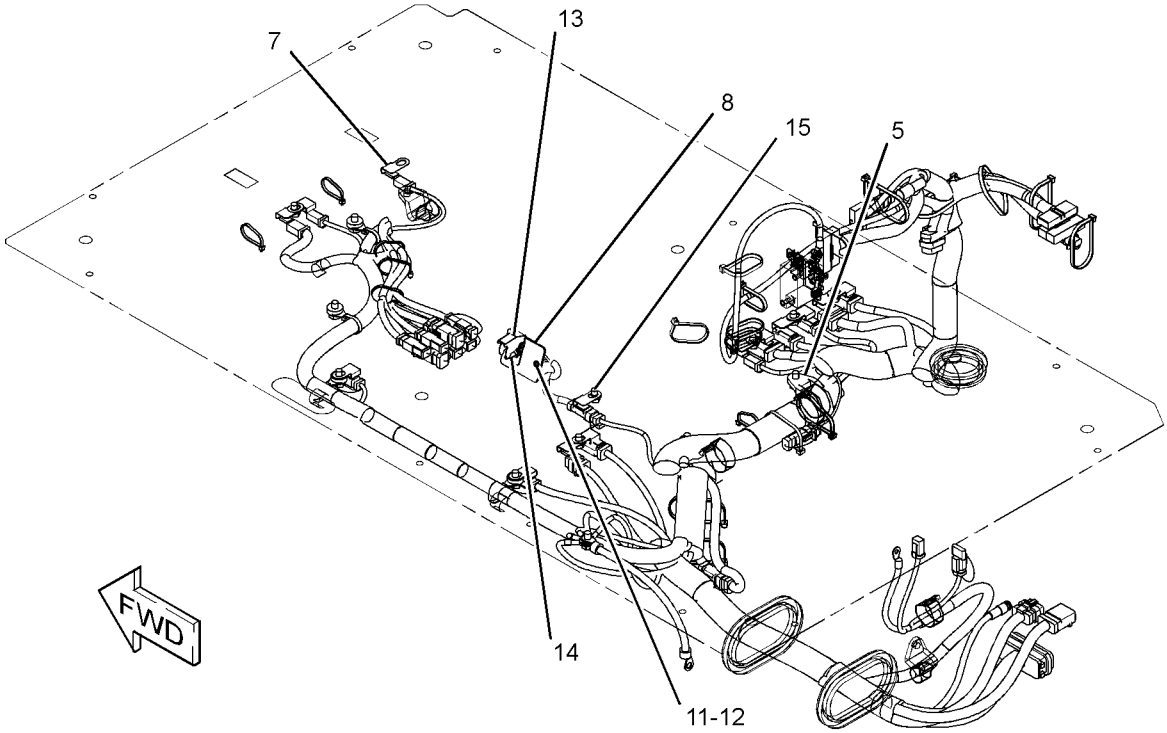

GRAPHIC #1 **<END>** g01152308

267-7748 WIRING GP-QUICK COUPLER

S/N: D3P1-UP; M4T1-UP
PART OF 268-6821 CONTROL AR-COUPLER
AN ATTACHMENT

SMCS-1408, 6129 **i02663242**

NOTE	REF NO	GRAPHIC REF	PART NUMBER	QTY	PART NAME 1 2 3 4 5 6 (PRODUCT LEVEL)	SEE PAGE
	1	1	**3S-2093**	21	STRAP-CABLE	
	2	1	**7K-1181**	22	STRAP-CABLE	
	3	1	**204-1611**	2	STRAP-CABLE	
	4	1	**267-7830**	1	HARNESS AS-QUICK COUPLER	
E		1	**125-7874**		TUBE-HEAT SHRINK (5.72-MM DIA) (10-CM)	
		1	**102-8802**	1	KIT-RECEPTACLE (2-PIN)	
					(INCLUDES RECEPTACLE AS & WEDGE)	
		1	**155-2270**	3	KIT-CONNECTING PLUG (2-PIN)	
					(EACH INCLUDES PLUG AS, WEDGE & INTERFACE SEAL)	
		1	**243-4507**	1	RECEPTACLE AS-CONNECTOR (4-PIN)	
	5	1	**4P-7581**	1	CLIP	
	6	1	**8T-4121**	1	WASHER-HARD (11X21X2.5-MM THK)	
M	7	1	**8T-4136**	1	BOLT (M10X1.5X25-MM)	

E-ORDER BY THE CENTIMETER
M-METRIC PART

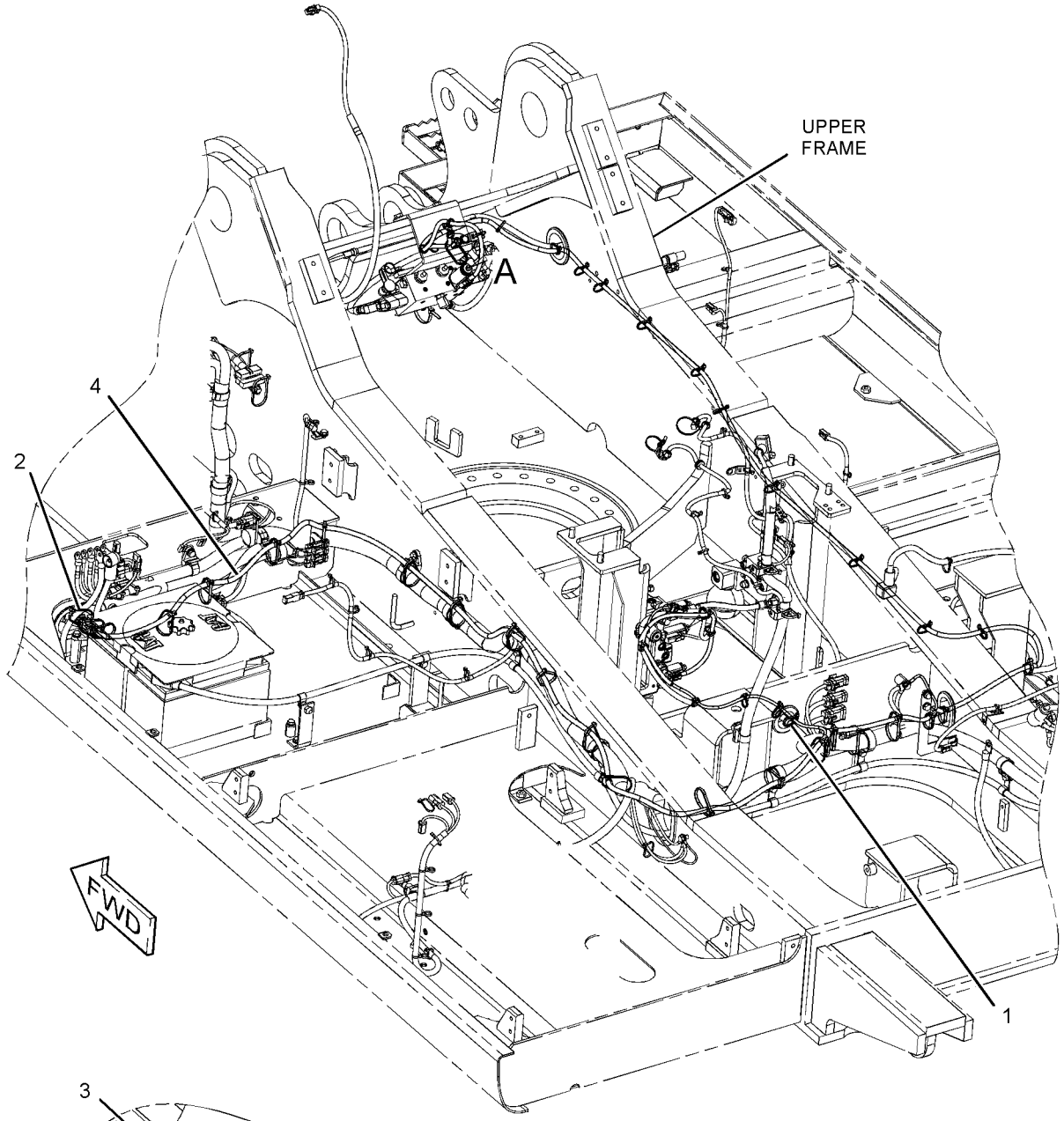

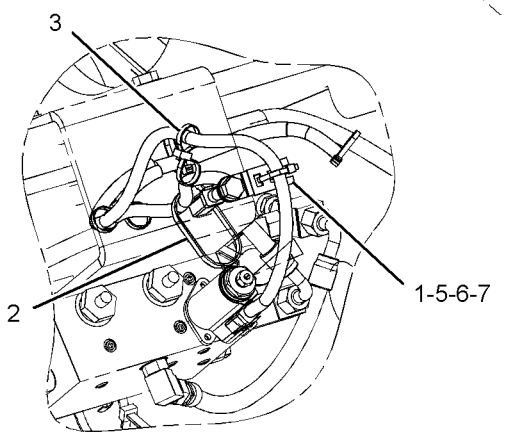

VIEW OF AREA A

GRAPHIC #1 **<END>** g01203697

342-3026 WIRING GP-QUICK COUPLER

S/N: D3P1-UP
PART OF 344-4212 CONTROL AR-COUPLER
AN ATTACHMENT

SMCS-1408, 6129 **i03679520**

NOTE	REF NO	GRAPHIC REF	PART NUMBER	QTY	PART NAME 1 2 3 4 5 6 (PRODUCT LEVEL)	SEE PAGE
	1	1	**3S-2093**	13	STRAP-CABLE	
	2	1	**7K-1181**	16	STRAP-CABLE	
	3	1	**342-3027**	1	HARNESS AS-SOLENOID (QUICK COUPLER DISENGAGE)	
		1	**8T-8730**	1	SOCKET-CONNECTOR (16-GA TO 18-GA)	
		1	**8T-8737**	1	PLUG-SEAL	
		1	**9W-0852**	1	PIN-CONNECTOR (14-GA)	
		1	**9W-0844**	1	SOCKET-CONNECTOR (14-GA)	
		1	**2L-8079**	1	TERMINAL-RING (14-GA TO 16-GA, 3/8-IN SCREW)	
		1	**230-4011**	1	PLUG AS-CONNECTOR (2-PIN)	
		1	**264-7029**	1	SEAL-CONNECTOR	
		1	**243-4505**	1	RECEPTACLE AS-CONNECTOR (2-PIN)	

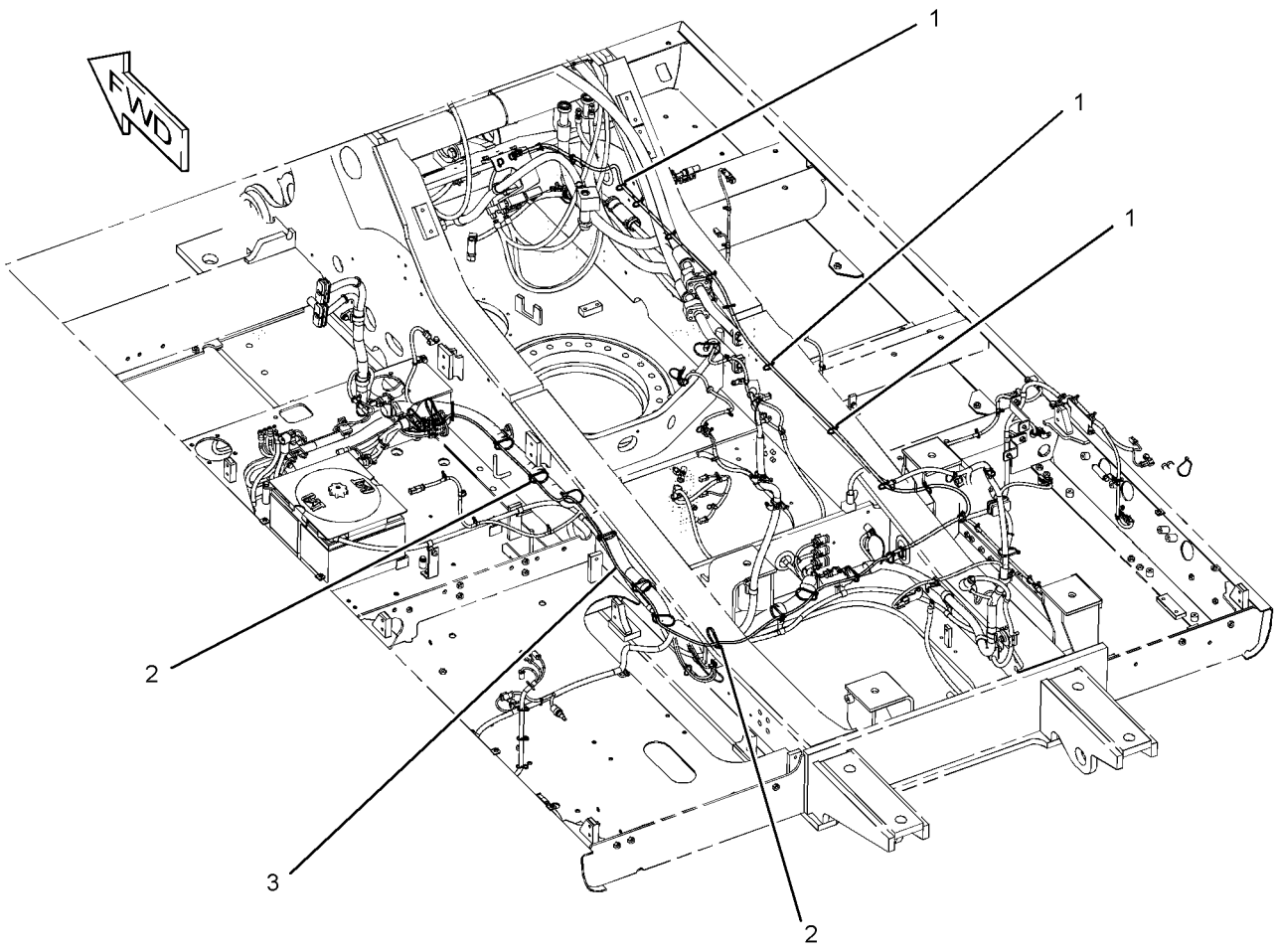

GRAPHIC #1 **<END>** g02016353

238-1570 WIRING GP-REFUELING PUMP–REFUELING

S/N: D3P1-UP; M4T1-UP
PART OF 229-1784 PUMP AR-FUEL TRANSFER
AN ATTACHMENT

SMCS-1408 **i03602222**

NOTE	REF NO	GRAPHIC REF	PART NUMBER	QTY	PART NAME 1 2 3 4 5 6 (PRODUCT LEVEL)	SEE PAGE
	1	1	**3S-2093**	16	STRAP-CABLE	
	2	1	**9X-3495**	1	CLIP AS	
	3	1	**149-5050**	1	RELAY (24-VOLT) (REFUELING PUMP, STOP)	
	3A	1	**149-5050**	1	RELAY (24-VOLT) (REFUELING PUMP, START)	
	4	1	**213-0772**	1	SWITCH AS-MAGNETIC (24-VOLT) (REFUELING POWER RELAY)	
	5	1	**238-1579**	1	HARNESS AS-PUMP (REFUELING)	
C	6	1	**319-1335**	1	HARNESS AS-WIRING	
Y	7	1	**238-1594**	1	SWITCH GP-PUSH BUTTON (REFUELING PUMP, START)	269
Y	8	1	**238-1596**	1	SWITCH GP-PUSH BUTTON (REFUELING PUMP, STOP)	270
M	9	1	**096-2591**	2	SCREW-MACHINE (M5X0.8X35-MM)	
M	10	1	**7X-2619**	2	BOLT (M6X1X10-MM)	
C	11	1	**8T-0328**	2	WASHER-HARD (5.5X10X1-MM THK)	
M	12	1	**8T-4199**	1	BOLT (M8X1.25X12-MM)	
	13	1	**8T-4224**	1	WASHER-HARD (8.8X16X2-MM THK)	
	14	1	**9X-8256**	2	WASHER (6.6X12X2-MM THK)	
	15	1	**275-6993**	1	COVER	
C	16	1	**7K-1181**	11	STRAP-CABLE	

C-CHANGE FROM PREVIOUS TYPE
M-METRIC PART
Y-SEPARATE ILLUSTRATION

238-1570 **WIRING GP-REFUELING PUMP** *(contd.)* **i03602222**

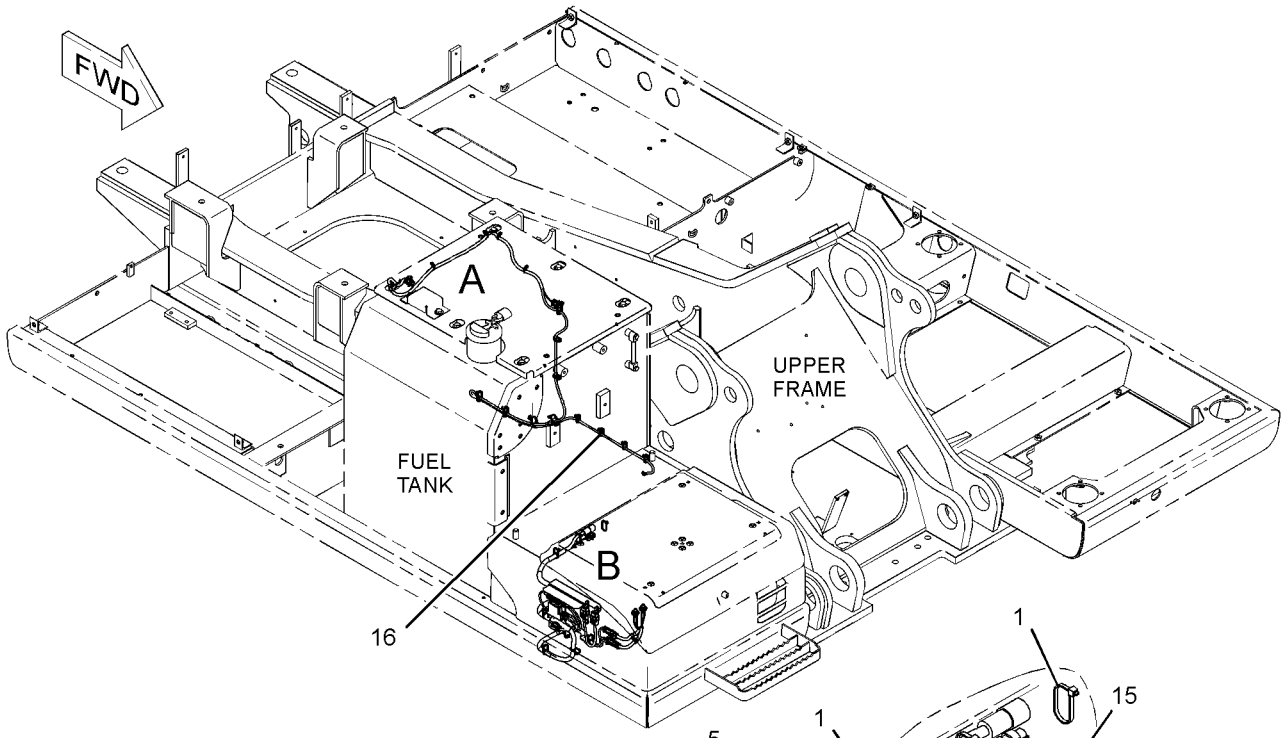

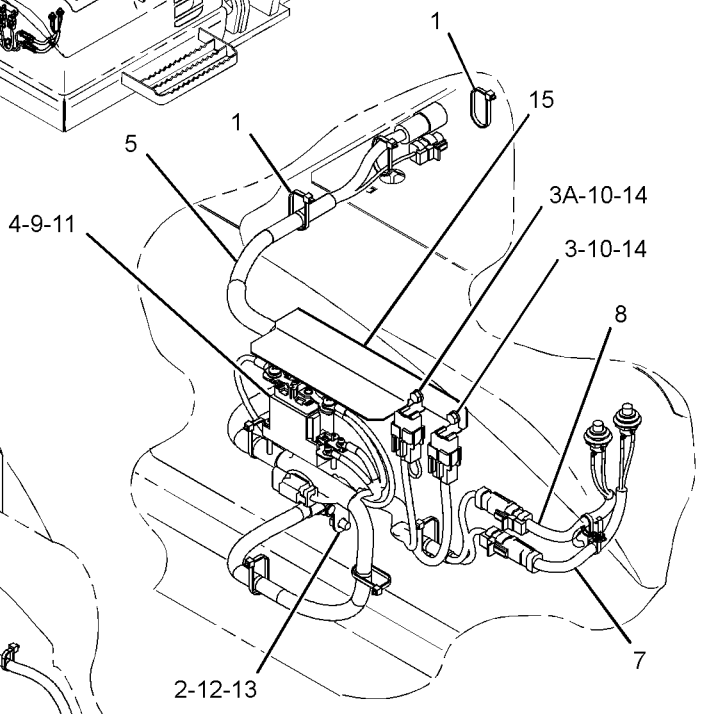

VIEW OF AREA B

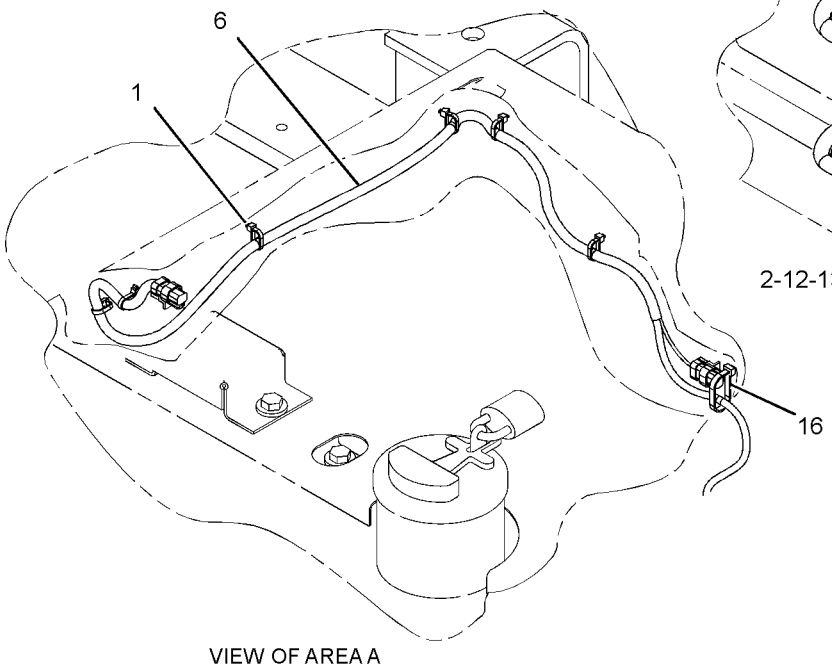

VIEW OF AREA A

GRAPHIC #1 **<END>** g01620056

296-6217 FINAL DRIVE GP–WITH MOTOR

S/N: D3P1-UP; M4T1-UP

PART OF 191-2576 POWER TRAIN AR

SMCS-4050 **i02833048**

NOTE	REF NO	GRAPHIC REF	PART NUMBER	QTY	PART NAME 1 2 3 4 5 6 (PRODUCT LEVEL)	SEE PAGE
Y	1	1	*191-5606*	1	MOTOR & MTG GP-TRAVEL	694
Y	2	1	**296-6218**	1	FINAL DRIVE GP (WITHOUT MOTOR)	340

Y-SEPARATE ILLUSTRATION

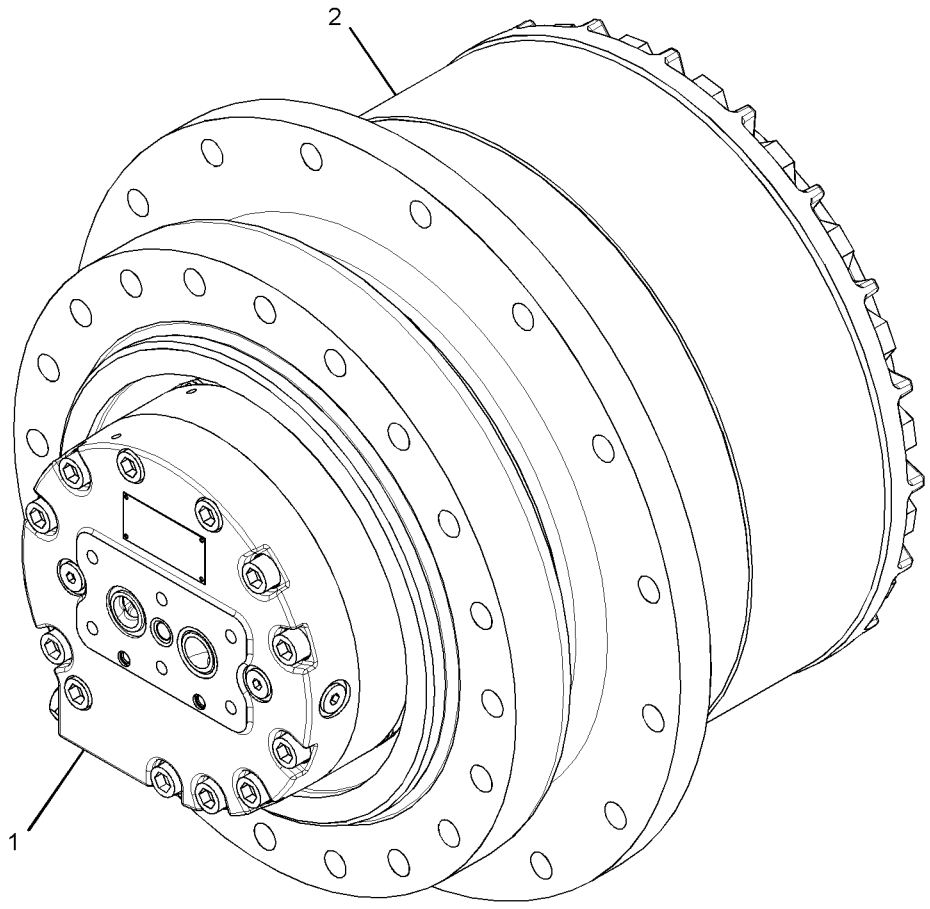

GRAPHIC #1 **<END>** g01479772

POWER TRAIN

296-6218 DRIVE GP-FINAL—WITHOUT MOTOR

S/N: D3P1-UP; M4T1-UP

PART OF 296-6217 DRIVE GP-FINAL

SMCS-4050 **i02833148**

NOTE	REF NO	GRAPHIC REF	PART NUMBER	QTY	PART NAME 1 2 3 4 5 6 (PRODUCT LEVEL)	SEE PAGE
	1	1	**3E-2338**	2	PLUG-PIPE	
	2	1	**7Y-0639**	1	GEAR-SUN (21-TEETH)	
	3	1	**7Y-0642**	1	GEAR-RING (63-TEETH)	
	4	1	**7Y-0643**	1	CARRIER	
	5	1	**7Y-0645**	1	CARRIER	
	6	1	**7Y-0659**	3	GEAR-PLANETARY (22-TEETH)	
	7	1	**7Y-0661**	3	SHAFT-PLANETARY	
	8	1	**7Y-0662**	4	SHAFT-PLANETARY	
	9	1	**7Y-0663**	4	GEAR-PLANETARY (20-TEETH)	
	10	1	**7Y-0667**	1	RING-RETAINING	
	11	1	**7Y-0673**	1	GEAR-RING (73-TEETH)	
	12	1	**7Y-0676**	3	GEAR-PLANETARY (24-TEETH)	
	13	1	**7Y-0731**	1	CARRIER AS	
	13A	1	**7Y-0656**	3	SHAFT-PLANETARY	
BJ	14	1	**7Y-1056**	1	SHIM (0.8-MM THK)	
BJ		1	**7Y-1057**	1	SHIM (1-MM THK)	
BJ		1	**267-6809**	1	SHIM (0.75-MM THK)	
BJ		1	**267-6810**	1	SHIM (0.85-MM THK)	
BJ		1	**267-6811**	1	SHIM (0.9-MM THK)	
BJ		1	**267-6812**	1	SHIM (0.95-MM THK)	
BJ		1	**267-6813**	1	SHIM (1.2-MM THK)	
BJ		1	**267-6814**	1	SHIM (1.4-MM THK)	
BJ		1	**267-6815**	1	SHIM (1.8-MM THK)	
BJ		1	**267-6816**	1	SHIM (2-MM THK)	
BJ		1	**267-6817**	1	SHIM (2.3-MM THK)	
M	16	1	**7Y-1094**	14	WASHER (66X102X1-MM THK)	
M	17	1	**7Y-5235**	20	BOLT (M24X3X190-MM)	
	18	1	**094-0577**	1	PLATE (7-MM THK)	
	19	1	**094-0578**	1	PLATE (8-MM THK)	
	20	1	**094-0579**	1	PLATE (9-MM THK)	
	21	1	**094-0580**	1	PLATE (10-MM THK)	
	22	1	**110-7231**	1	GEAR-SUN (18-TEETH)	
J	23	1	**114-1541**	6	PIN-DOWEL	
	24	1	**191-2521**	1	GEAR-SUN (23-TEETH)	
	25	1	**191-2526**	1	COVER	
	26	1	**199-4582**	3	BEARING AS	
	27	1	**199-4583**	11	BEARING AS	
J	28	1	**227-6190**	1	HOUSING-MOTOR	
J	29	1	**227-6191**	1	HOUSING	
J	30	1	**227-6192**	1	GEAR-COUPLING (66-TEETH)	
CJ	31	1	**255-2272**	1	SEAL GP-DUO-CONE	
		1	**205-9114**	2	RING-TORIC	
J	41	1	**279-0344**	2	BEARING AS-TAPERED ROLLER	
	42	1	**093-1731**	1	RING-RETAINING	
	43	1	**094-0584**	6	WASHER (40.3X72X1-MM THK)	
	44	1	**095-0891**	7	PIN-SPRING	
M	45	1	**096-3216**	2	SETSCREW-SOCKET (M12X1.75X12-MM)	
	46	1	**191-2645**	1	COUPLING	
	47	1	**2P-3628**	1	SEAL-O-RING	
JM	48	1	**6V-8133**	10	BOLT (M24X3X80-MM)	
J	49	1	**6V-8237**	10	WASHER (26X44X4-MM THK)	
	50	1	**7M-8485**	2	SEAL-O-RING	
	51	1	**7Y-0595**	2	SPACER (58X79.6X6-MM THK)	
	52	1	**7Y-0644**	1	SPACER (163X190X8-MM THK)	
	53	1	**8T-4167**	20	WASHER-HARD (26X44X4-MM THK)	
	54	1	**8T-4240**	3	RING-RETAINING	

296-6218 DRIVE GP-FINAL *(contd.)* i02833148

NOTE	REF NO	GRAPHIC REF	PART NUMBER	QTY	PART NAME 1 2 3 4 5 6 (PRODUCT LEVEL)	SEE PAGE
M	55	1	**9X-6032**	12	BOLT-SOCKET HEAD (M10X1.5X30-MM)	
B	56	1	**1U-8846**		SEALANT-GASKET	
					AVAILABLE REPAIR KIT(S):	
J			**296-6219**	1	KIT-HOUSING (FINAL DRIVE)	

B-USE AS REQUIRED
C-CHANGE FROM PREVIOUS TYPE
J-KIT MARKED J SERVICES PART(S) MARKED J
M-METRIC PART

296-6218 DRIVE GP-FINAL *(contd.)* i02833148

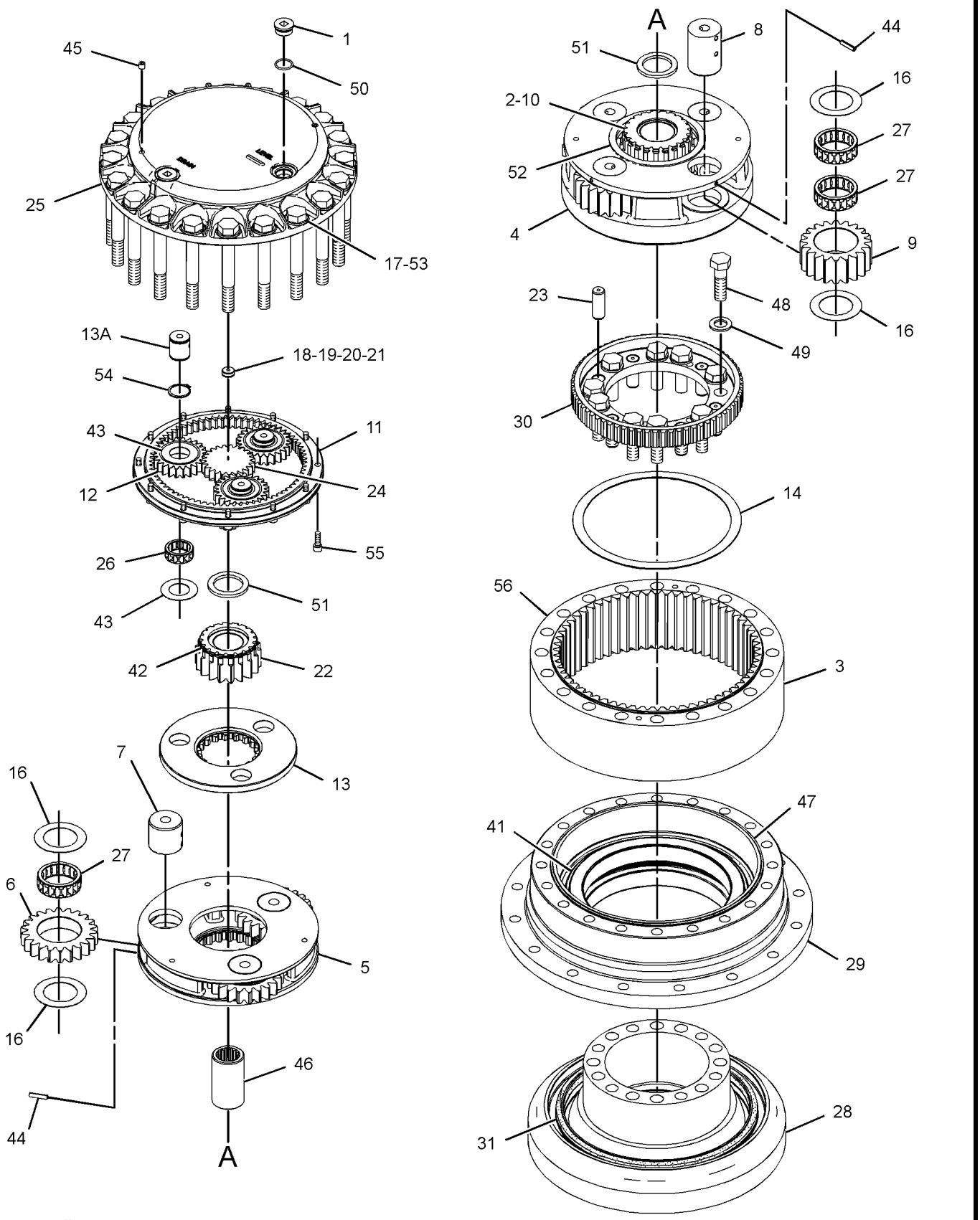

GRAPHIC #1 **<END>** g01378433

191-2576 POWER TRAIN AR

S/N: D3P1-UP; M4T1-UP

PART OF 314-3698, 314-3699 GENERAL AR

SMCS-3000, 4000 **i03767707**

NOTE	PART NUMBER	QTY	PART NAME 1 2 3 4 5 6 (PRODUCT LEVEL)	SEE PAGE
Y	*199-4538*	1	DRIVE GP-SWING (WITH MOTOR)	476
			S/N: M4T1-282	
Y	*333-2958*	1	DRIVE GP-SWING (WITH MOTOR)	479
			S/N: D3P1-UP; M4T283-UP	
Y	*191-2577*	1	FASTENER GP-SWING & FINAL DR	482
Y	*227-6195*	2	DRIVE GP-FINAL (WITH MOTOR)	
Y	**296-6217**	2	DRIVE GP-FINAL (WITH MOTOR)	339
Y	*168-6727*	2	SPROCKET GP	344

Y-SEPARATE ILLUSTRATION

<END>

168-6727 SPROCKET GP

S/N: D3P1-UP; M4T1-UP

PART OF 191-2576 POWER TRAIN AR

SMCS-4164 **i01685314**

NOTE	REF NO	GRAPHIC REF	PART NUMBER	QTY	PART NAME 1 2 3 4 5 6 (PRODUCT LEVEL)	SEE PAGE
	1	1	**6Y-5685**	1	SPROCKET-TRACK	
M	2	1	**7X-2575**	16	BOLT (M24X3X60MM)	

M-METRIC PART

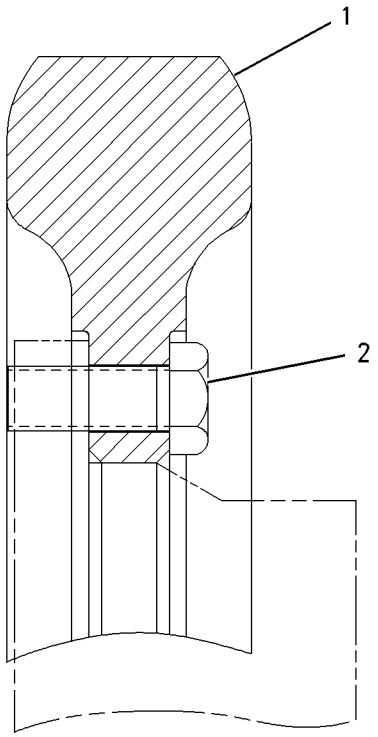

GRAPHIC #1 **<END>** g00801559

FRAME AND BODY

223-3040 BOX & MTG GP-STORAGE

S/N: D3P1-UP; M4T1-UP

PART OF 314-3709 CHASSIS AR

SMCS-7268 **i02489070**

NOTE	REF NO	GRAPHIC REF	PART NUMBER	QTY	PART NAME 1 2 3 4 5 6 (PRODUCT LEVEL)	SEE PAGE
Y	1	1	**223-3041**	1	BOX GP-STORAGE	346
M	2	1	**135-8577**	4	BOLT AS	

M-METRIC PART
Y-SEPARATE ILLUSTRATION

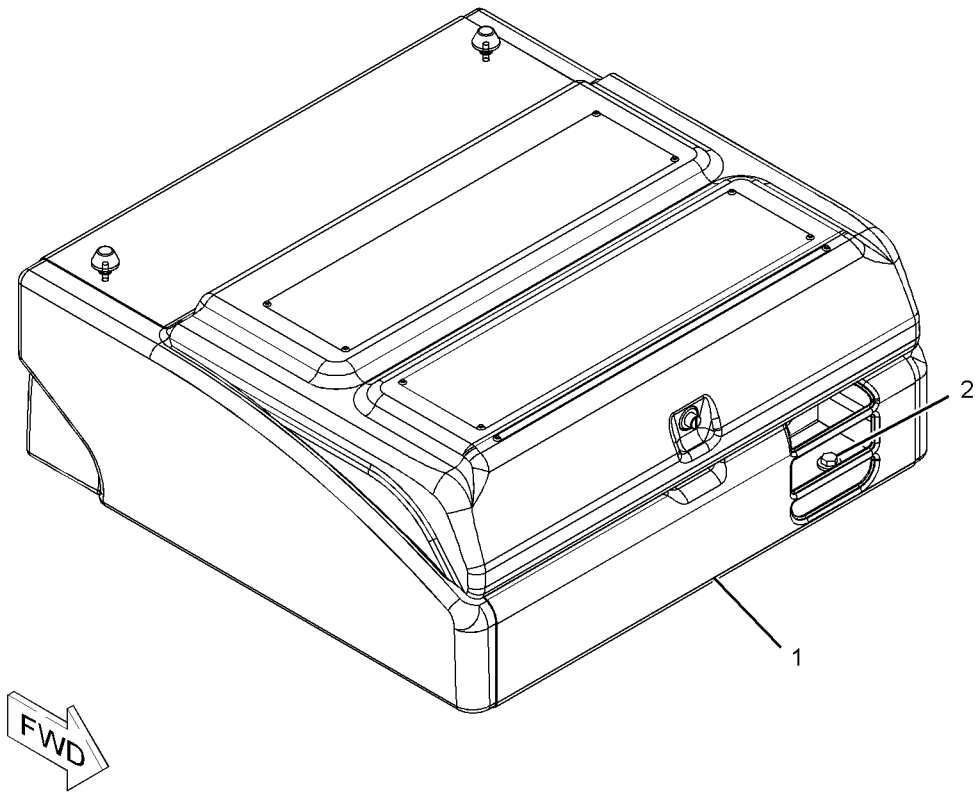

GRAPHIC #1 **<END>** g01150412

FRAME AND BODY

223-3041 BOX GP-STORAGE

S/N: D3P1-UP; M4T1-UP

PART OF 223-3040 BOX & MTG GP-STORAGE

SMCS-7268 **i03644983**

NOTE	REF NO	GRAPHIC REF	PART NUMBER	QTY	PART NAME 1 2 3 4 5 6 (PRODUCT LEVEL)	SEE PAGE
	1	1	**4I-2187**	1	SUPPORT AS	
J	2	1	**342-1110**	1	LOCK AS	
	3	1	**236-3670**	1	STRIKER AS	
	4	1	**236-3671**	1	SEAL	
	5	1	**236-9435**	1	BOX AS	
	6	1	**236-9437**	1	COVER AS	
	6A	1	**3D-9143**	2	HINGE-BUTT	
	7	1	**236-9438**	1	PLUNGER AS	
	8	1	**236-9440**	1	SHEET	
	9	1	**273-7964**	2	MOUNT	
	10	1	**095-0843**	1	PIN-COTTER	
	11	1	**096-3780**	1	PIN-CLEVIS	
M	12	1	**105-3487**	4	BOLT-SOCKET HEAD (M6X1X20-MM)	
	13	1	**170-9360**	1	GROMMET	
M	15	1	**5C-9553**	3	BOLT (M6X1X16-MM)	
	16	1	**5P-1075**	4	WASHER-HARD (10.2X22.5X3-MM THK)	
	17	1	**5P-4116**	1	WASHER-HARD (8.8X20.5X2-MM THK)	
M	18	1	**8T-4133**	4	NUT (M10X1.5-THD)	
M	19	1	**8T-4200**	2	BOLT (M8X1.25X16-MM)	
	20	1	**8T-4224**	2	WASHER-HARD (8.8X16X2-MM THK)	
	21	1	**9X-8256**	7	WASHER (6.6X12X2-MM THK)	
	22	1	**278-3581**	4	CUSHION	
B	23	1	**8T-4223**	2	WASHER-HARD (13.5X25.5X3-MM THK)	

B-USE AS REQUIRED
J-REQUIRES CORPORATE KEY
M-METRIC PART

223-3041 BOX GP-STORAGE *(contd.)* **i03644983**

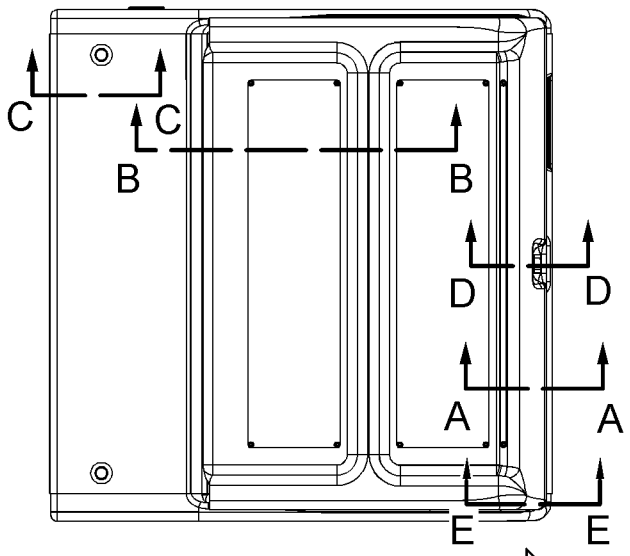

TOP VIEW

FWD

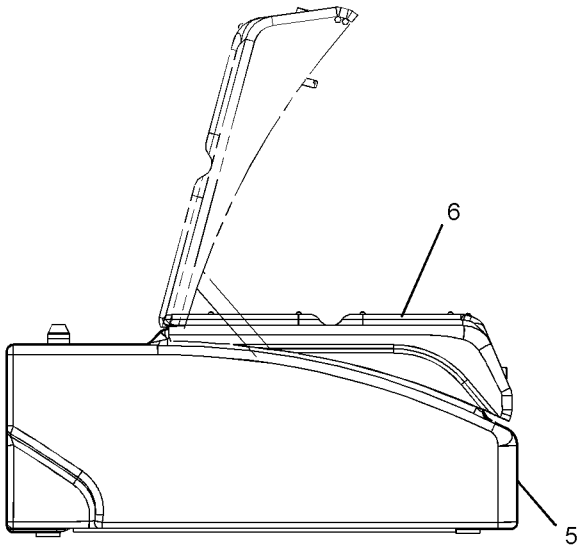

RIGHT SIDE VIEW

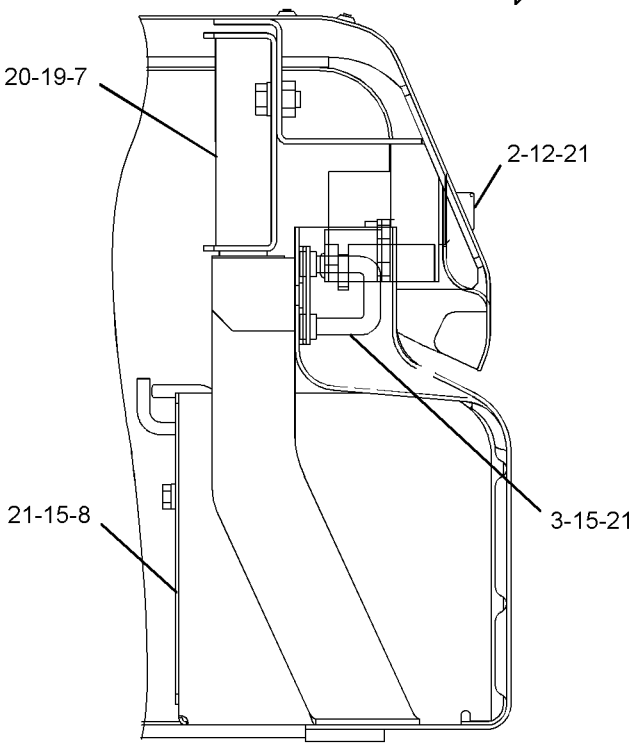

SECTION A-A

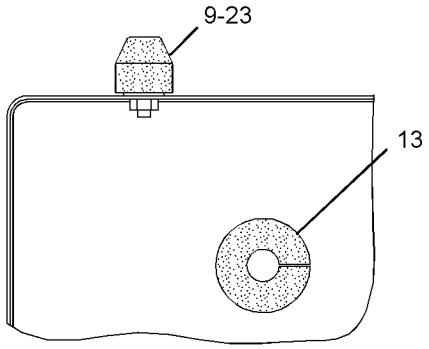

SECTION C-C

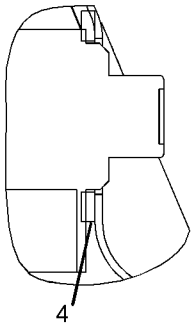

SECTION D-D

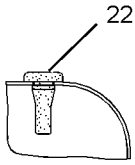

SECTION E-E

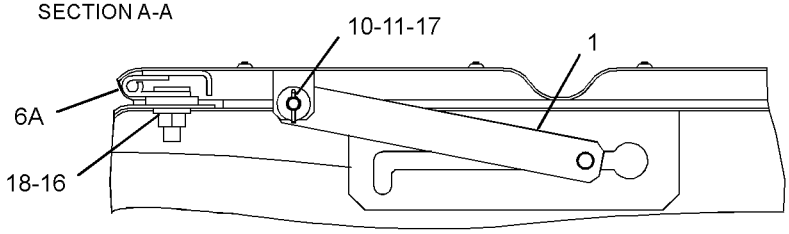

SECTION B-B

GRAPHIC #1

<END>

g01238343

267-0118 BUMPER GP

S/N: D3P1-UP; M4T1-UP
PART OF 337-4138, 337-9027 OPTION AR-GUARD
AN ATTACHMENT

SMCS-7156 **i03626117**

NOTE	REF NO	GRAPHIC REF	PART NUMBER	QTY	PART NAME 1 2 3 4 5 6 (PRODUCT LEVEL)	SEE PAGE
	1	1	**180-7521**	1	BUMPER AS	
	2	1	**180-7525**	2	BUMPER AS	
	3	1	**180-7529**	2	BUMPER AS	
	4	1	**180-7537**	1	BUMPER AS	
	5	1	**186-5611**	1	BUMPER AS	
	6	1	**186-5614**	1	BUMPER AS	
C	7	1	**273-6729**	1	FRAME AS-UPPER	
	7A	1	**163-3729**	1	STEP AS	
	7B	1	**7Y-1113**	1	BOSS	
	8	1	**8T-4223**	18	WASHER-HARD (13.5X25.5X3-MM THK)	
M	9	1	**8T-4244**	18	NUT (M12X1.75-THD)	

C-CHANGE FROM PREVIOUS TYPE
M-METRIC PART

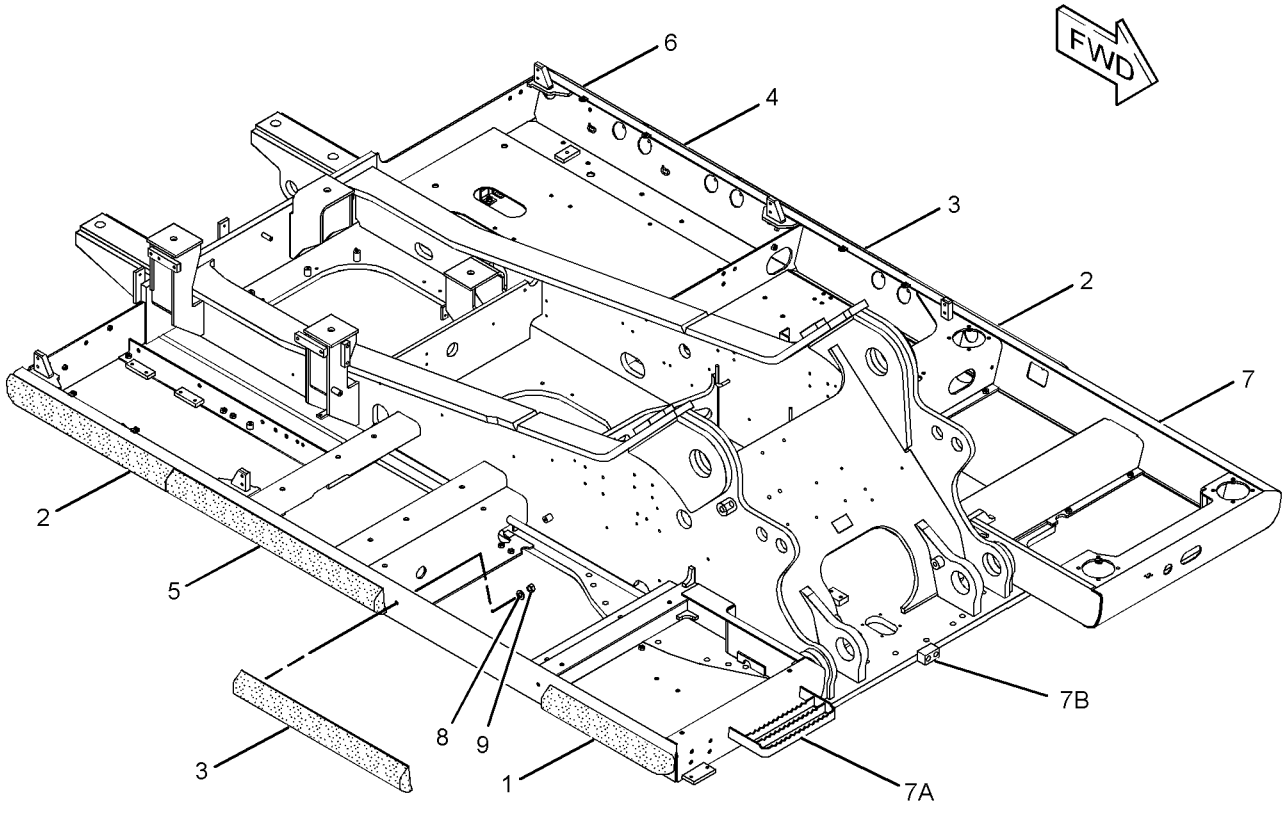

GRAPHIC #1 **<END>** g01945020

237-8759 COUNTERWEIGHT & MOUNTING GP

S/N: D3P1-UP; M4T1-UP

PART OF 314-3709 CHASSIS AR

SMCS-7056 **i03172842**

NOTE	REF NO	GRAPHIC REF	PART NUMBER	QTY	PART NAME 1 2 3 4 5 6 (PRODUCT LEVEL)	SEE PAGE
CY	1	1	*330-1278*	1	COUNTERWEIGHT GP	354
	2	1	**248-9337**	4	SPACER (39X75X20-MM THK)	
M	3	1	**4I-0191**	4	BOLT (M36X4X181-MM)	

C-CHANGE FROM PREVIOUS TYPE
M-METRIC PART
Y-SEPARATE ILLUSTRATION

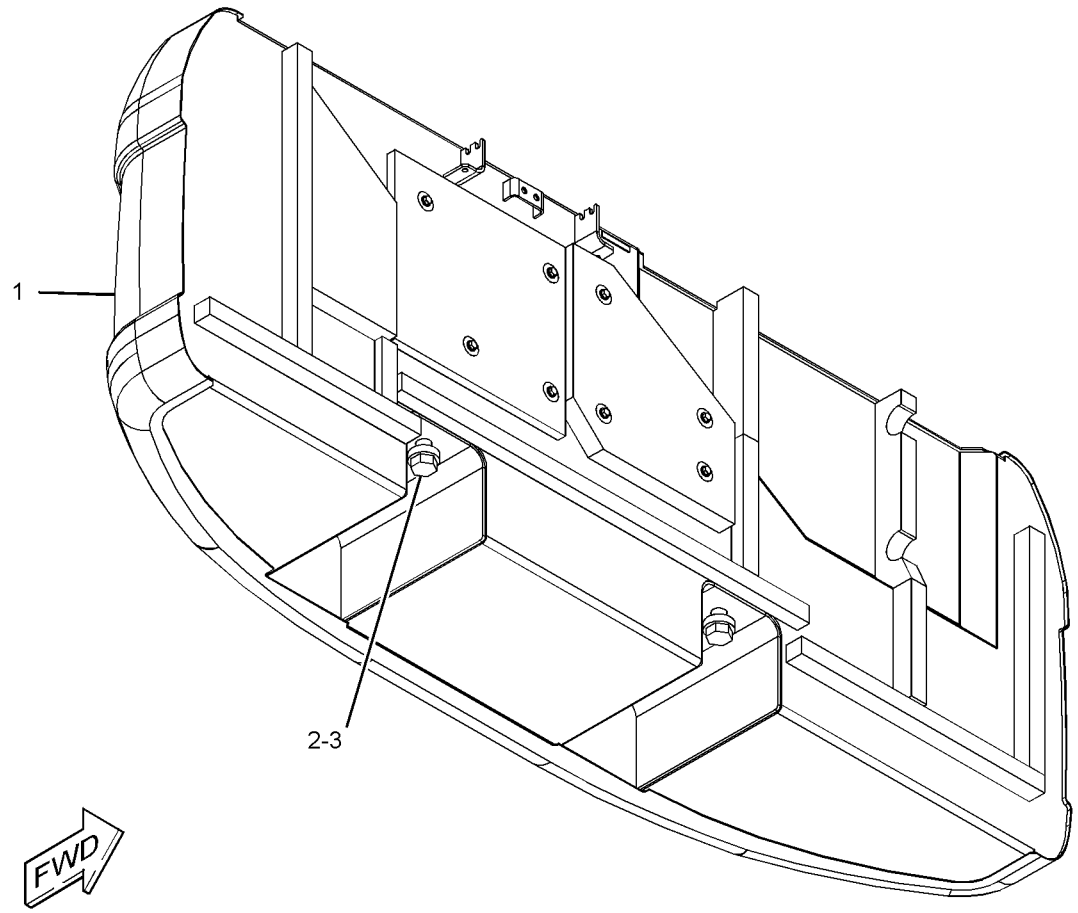

GRAPHIC #1 **<END>** g01198186

FRAME AND BODY

278-3932 COUNTERWEIGHT & MOUNTING GP

S/N: D3P1-UP; M4T1-UP
AN ATTACHMENT
TYPE 1

SMCS-7056 **i03166400**

NOTE	REF NO	GRAPHIC REF	PART NUMBER	QTY	PART NAME 1 2 3 4 5 6 (PRODUCT LEVEL)	SEE PAGE
	1	1	**248-9337**	4	SPACER (39X75X20-MM THK)	
Y	2	1	*278-3933*	1	COUNTERWEIGHT GP	352
M	3	1	**4I-0191**	4	BOLT (M36X4X181-MM)	
M	4	1	**8T-4190**	8	BOLT (M16X2X25-MM)	

M-METRIC PART
Y-SEPARATE ILLUSTRATION

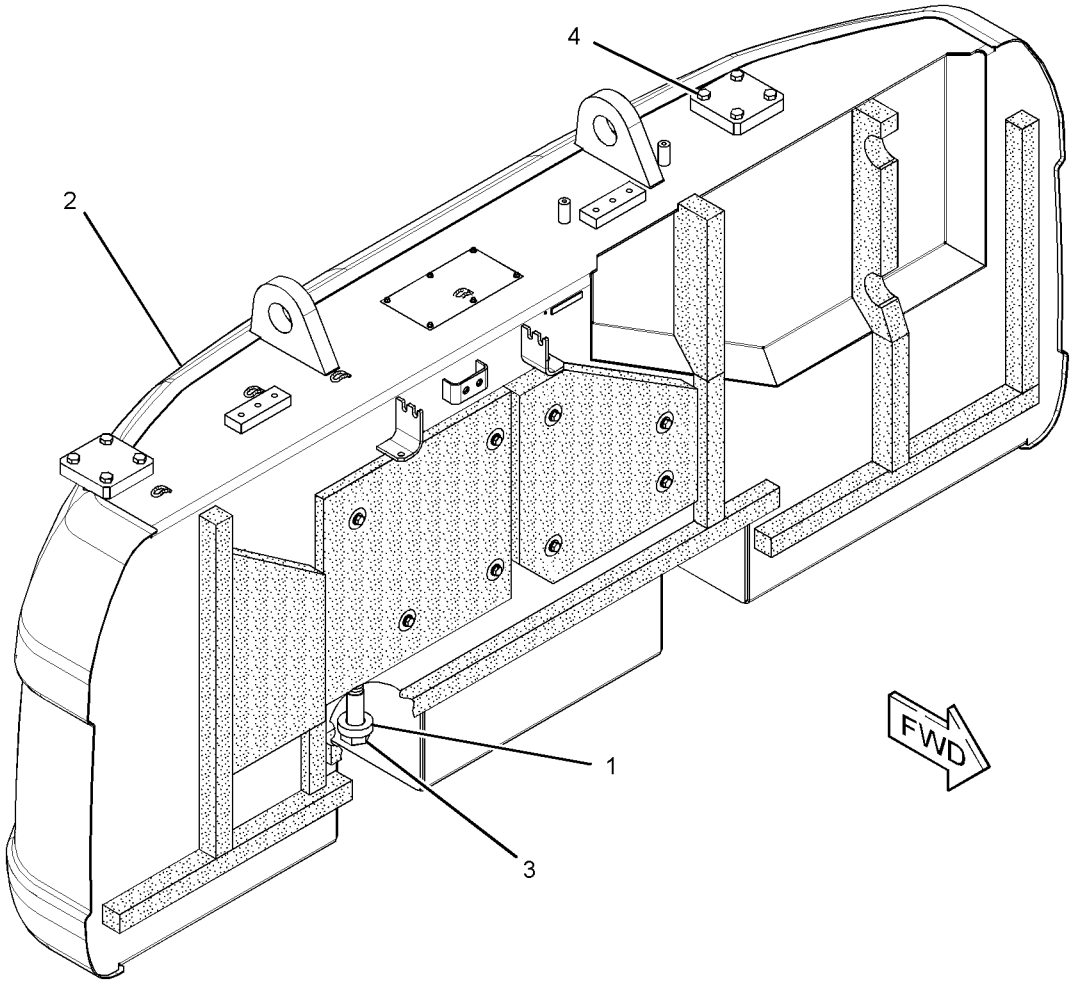

GRAPHIC #1 **<END>** g01557374

278-3932 COUNTERWEIGHT & MOUNTING GP

S/N: D3P1-UP; M4T1-UP
PART OF 337-4154 OPTION AR-LINKAGE
AN ATTACHMENT
TYPE 2

SMCS-7056 **i03308594**

NOTE	REF NO	GRAPHIC REF	PART NUMBER	QTY	PART NAME 1 2 3 4 5 6 (PRODUCT LEVEL)	SEE PAGE
	1	1	**248-9337**	4	SPACER (39X75X20-MM THK)	
CY	2	1	*330-1284*	1	COUNTERWEIGHT GP	355
M	3	1	**4I-0191**	4	BOLT (M36X4X181-MM)	
M	4	1	**8T-4190**	8	BOLT (M16X2X25-MM)	

C-CHANGE FROM PREVIOUS TYPE
M-METRIC PART
Y-SEPARATE ILLUSTRATION

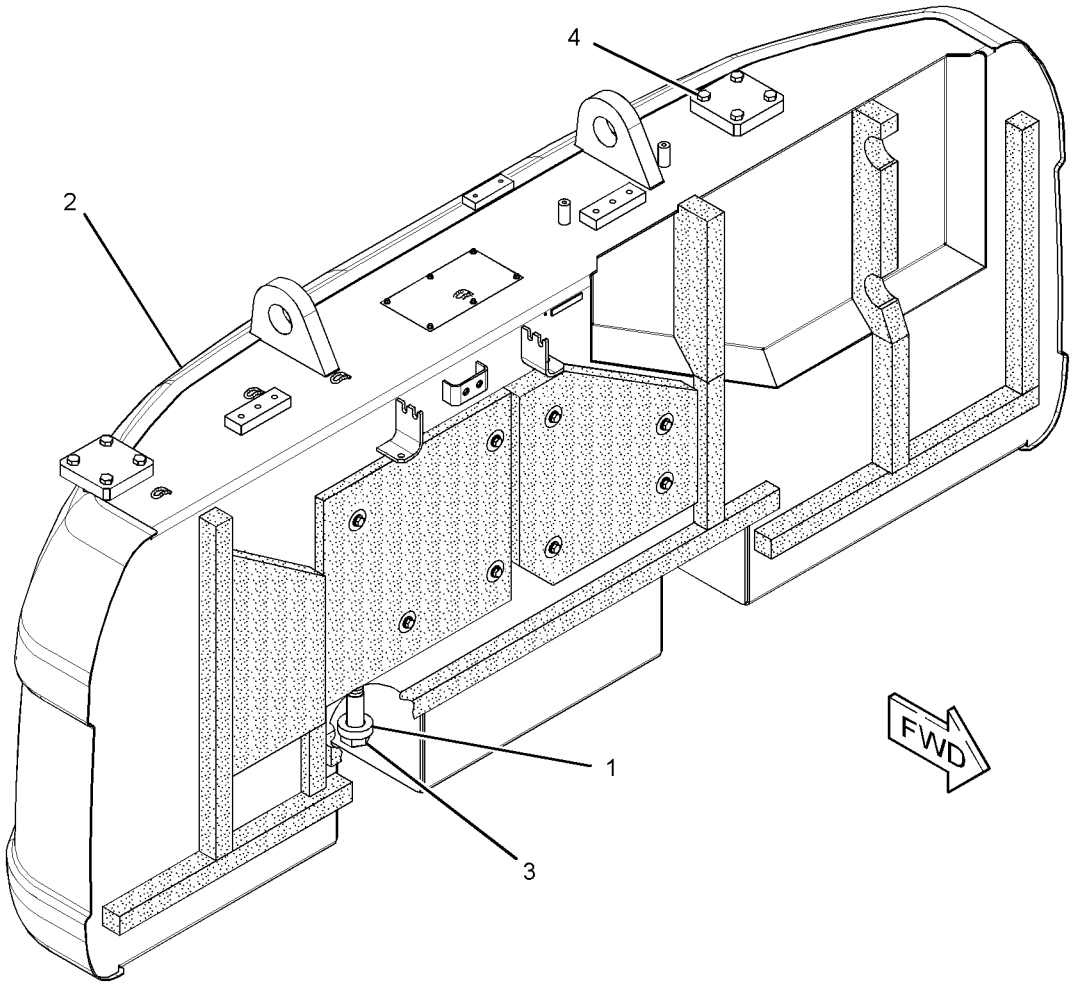

GRAPHIC #1 **<END>** g01620172

278-3933 COUNTERWEIGHT GP

S/N: D3P1-UP; M4T1-UP
6252-KG (13783-LB)
PART OF 278-3932 COUNTERWEIGHT & MOUNTING GP
AN ATTACHMENT

SMCS-7056 **i03168780**

NOTE	REF NO	GRAPHIC REF	PART NUMBER	QTY	PART NAME 1 2 3 4 5 6 (PRODUCT LEVEL)	SEE PAGE
	1	1	**7I-0717**	1	LINER	
	2	1	**081-6344**	4	SPACER (13.3X21.3X25-MM THK)	
	3	1	**129-3399**	1	LINER	
	4	1	**184-8722**	1	LINER	
	5	1	**193-9389**	1	LINER	
	6	1	**241-2365**	1	LINER	
	7	1	**241-2366**	1	LINER	
	8	1	**241-2367**	1	LINER	
	9	1	**241-2368**	1	LINER	
	10	1	**244-8045**	1	LINER	
	11	1	**244-8046**	1	LINER	
	12	1	**259-3865**	1	LINER	
	13	1	**270-9626**	1	INSULATION	
	14	1	**270-9627**	1	INSULATION	
	15	1	**278-4048**	1	COUNTERWEIGHT AS	
	16	1	**7Y-2292**	8	WASHER (13X50X2-MM THK)	
M	17	1	**8T-4179**	4	BOLT (M12X1.75X20-MM)	
M	18	1	**8T-4184**	4	BOLT (M12X1.75X45-MM)	
	19	1	**8T-4223**	8	WASHER-HARD (13.5X25.5X3-MM THK)	

M-METRIC PART

278-3933 **COUNTERWEIGHT GP** *(contd.)* **i03168780**

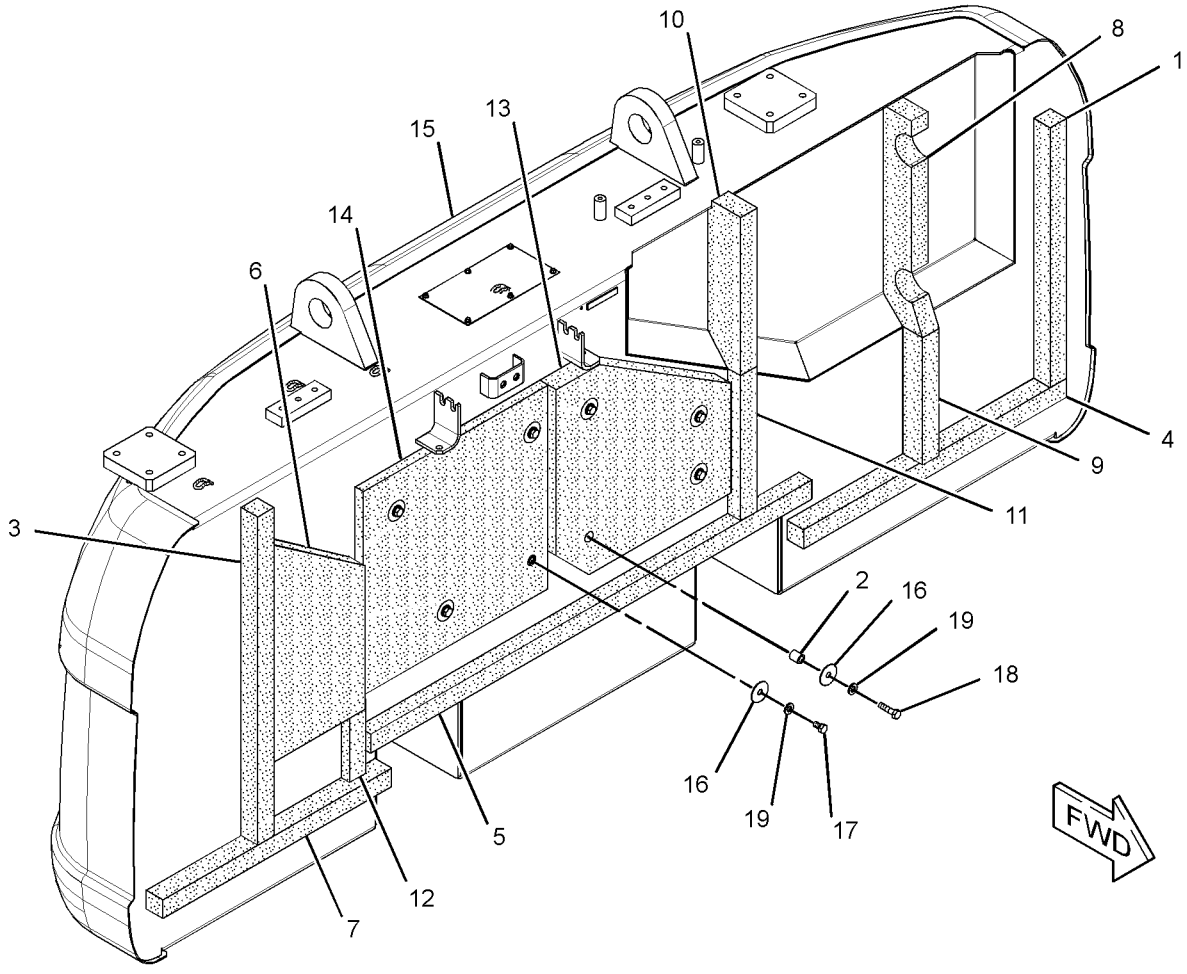

GRAPHIC #1 **<END>** g01558433

330-1278 COUNTERWEIGHT GP

S/N: D3P1-UP; M4T1-UP
6252-KG (13783-LB)
PART OF 237-8759 COUNTERWEIGHT & MOUNTING GP

SMCS-7056 **i03288898**

NOTE	REF NO	GRAPHIC REF	PART NUMBER	QTY	PART NAME 1 2 3 4 5 6 (PRODUCT LEVEL)	SEE PAGE
	1	1	**7I-0717**	1	LINER	
	2	1	**081-6344**	4	SPACER (13.3X21.3X25-MM THK)	
	3	1	**129-3399**	1	LINER	
	4	1	**184-8722**	1	LINER	
	5	1	**193-9389**	1	LINER	
	6	1	**241-2365**	1	LINER	
	7	1	**241-2366**	1	LINER	
	8	1	**241-2367**	1	LINER	
	9	1	**241-2368**	1	LINER	
	10	1	**244-8045**	1	LINER	
	11	1	**244-8046**	1	LINER	
	12	1	**259-3865**	1	LINER	
	13	1	**270-9626**	1	INSULATION	
	14	1	**270-9627**	1	INSULATION	
	15	1	**330-1279**	1	COUNTERWEIGHT AS	
	16	1	**7Y-2292**	8	WASHER (13X50X2-MM THK)	
M	17	1	**8T-4179**	4	BOLT (M12X1.75X20-MM)	
M	18	1	**8T-4184**	4	BOLT (M12X1.75X45-MM)	
	19	1	**8T-4223**	8	WASHER-HARD (13.5X25.5X3-MM THK)	

M-METRIC PART

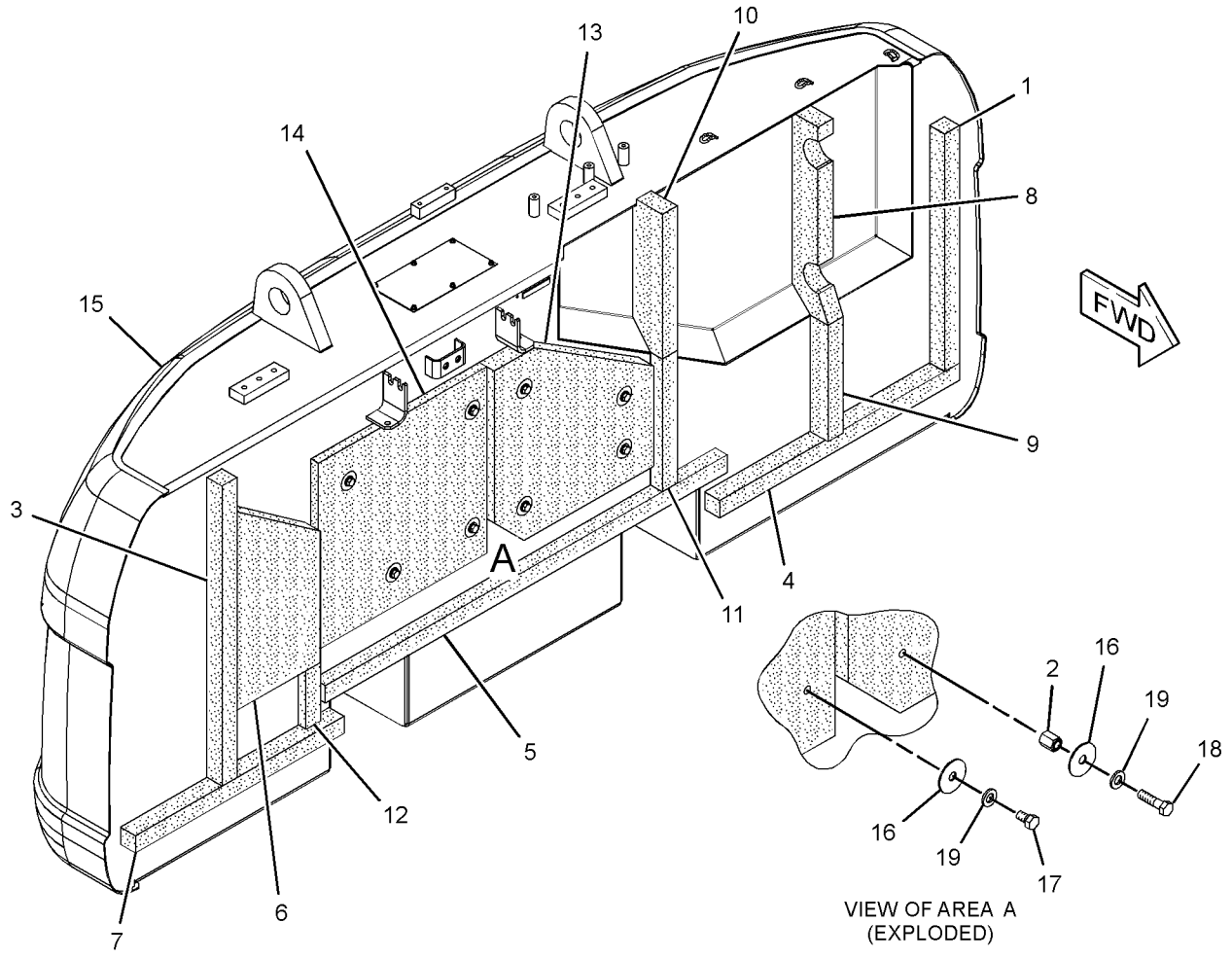

GRAPHIC #1 **<END>** g01675119

330-1284 COUNTERWEIGHT GP

S/N: D3P1-UP; M4T1-UP
6252-KG (13,783-LB)
PART OF 278-3932 COUNTERWEIGHT & MOUNTING GP
AN ATTACHMENT

SMCS-7056 **i03308641**

NOTE	REF NO	GRAPHIC REF	PART NUMBER	QTY	PART NAME 1 2 3 4 5 6 (PRODUCT LEVEL)	SEE PAGE
	1	1	**7I-0717**	1	LINER	
	2	1	**081-6344**	4	SPACER (13.3X21.3X25-MM THK)	
	3	1	**129-3399**	1	LINER	
	4	1	**184-8722**	1	LINER	
	5	1	**193-9389**	1	LINER	
	6	1	**241-2365**	1	LINER	
	7	1	**241-2366**	1	LINER	
	8	1	**241-2367**	1	LINER	
	9	1	**241-2368**	1	LINER	
	10	1	**244-8045**	1	LINER	
	11	1	**244-8046**	1	LINER	
	12	1	**259-3865**	1	LINER	
	13	1	**270-9626**	1	INSULATION	
	14	1	**270-9627**	1	INSULATION	
	15	1	**330-1285**	1	COUNTERWEIGHT GP	
	16	1	**7Y-2292**	8	WASHER (13X50X2-MM THK)	
M	17	1	**8T-4179**	4	BOLT (M12X1.75X20-MM)	
M	18	1	**8T-4184**	4	BOLT (M12X1.75X45-MM)	
	19	1	**8T-4223**	8	WASHER-HARD (13.5X25.5X3-MM THK)	

M-METRIC PART

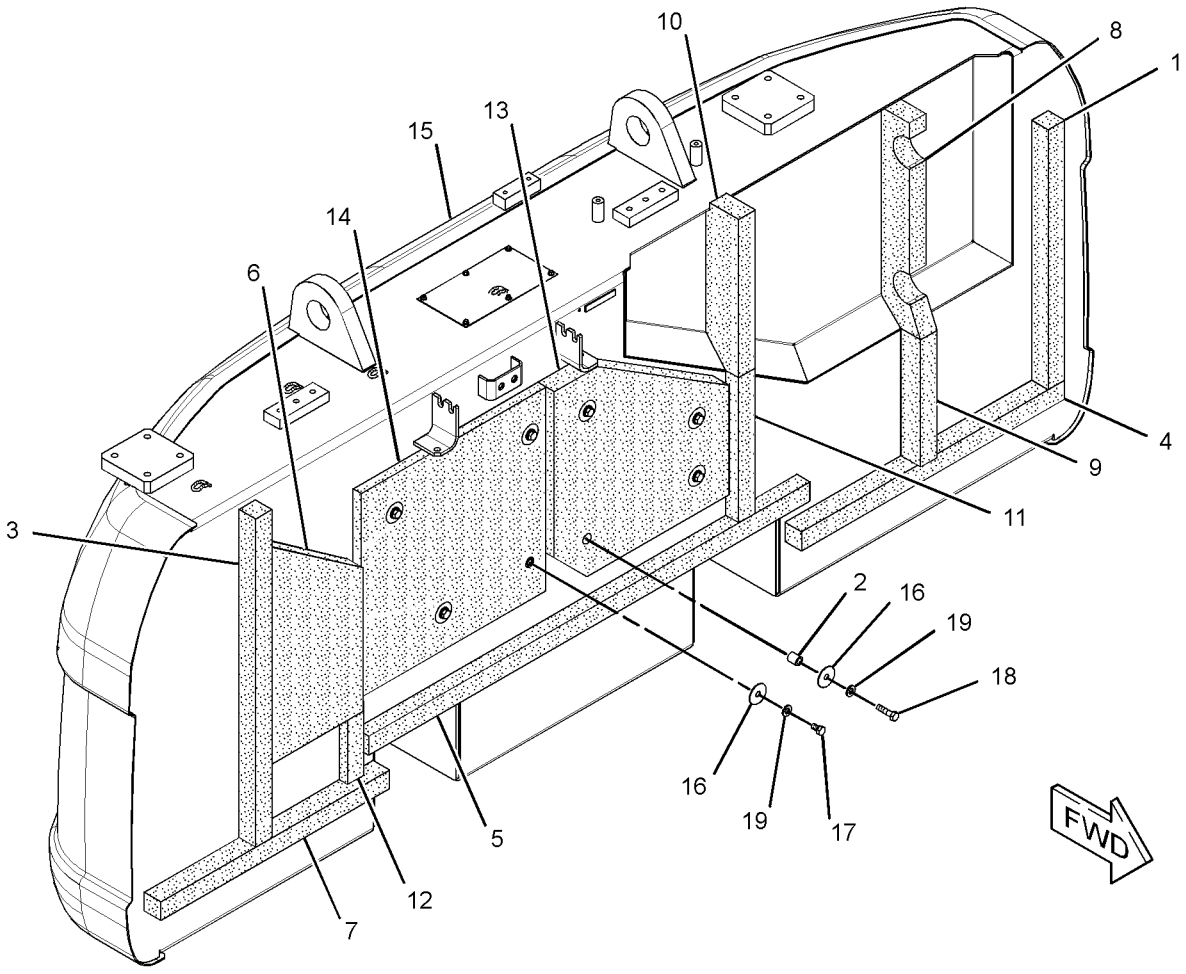

GRAPHIC #1 **<END>** g01620164

259-3552 COVER AS-SOUND SUPPRESSION

S/N: D3P1-UP; M4T1-UP

PART OF 237-8768 HOOD & GUARD GP

SMCS-7253, 7263, 7276, 795C **i02490652**

NOTE	REF NO	GRAPHIC REF	PART NUMBER	QTY	PART NAME 1 2 3 4 5 6 (PRODUCT LEVEL)	SEE PAGE
	1	1	**4I-7924**	4	WASHER (4.5X40X1.2-MM THK)	
	2	1	**6P-2216**	4	CAP	
Z	3	1		1	COVER AS	
	4	1	**259-3557**	1	LINER	
	5	1	**268-0507**	1	INSULATION	
	6	1	**268-0508**	1	INSULATION	

Z-NOT SERVICED SEPARATELY

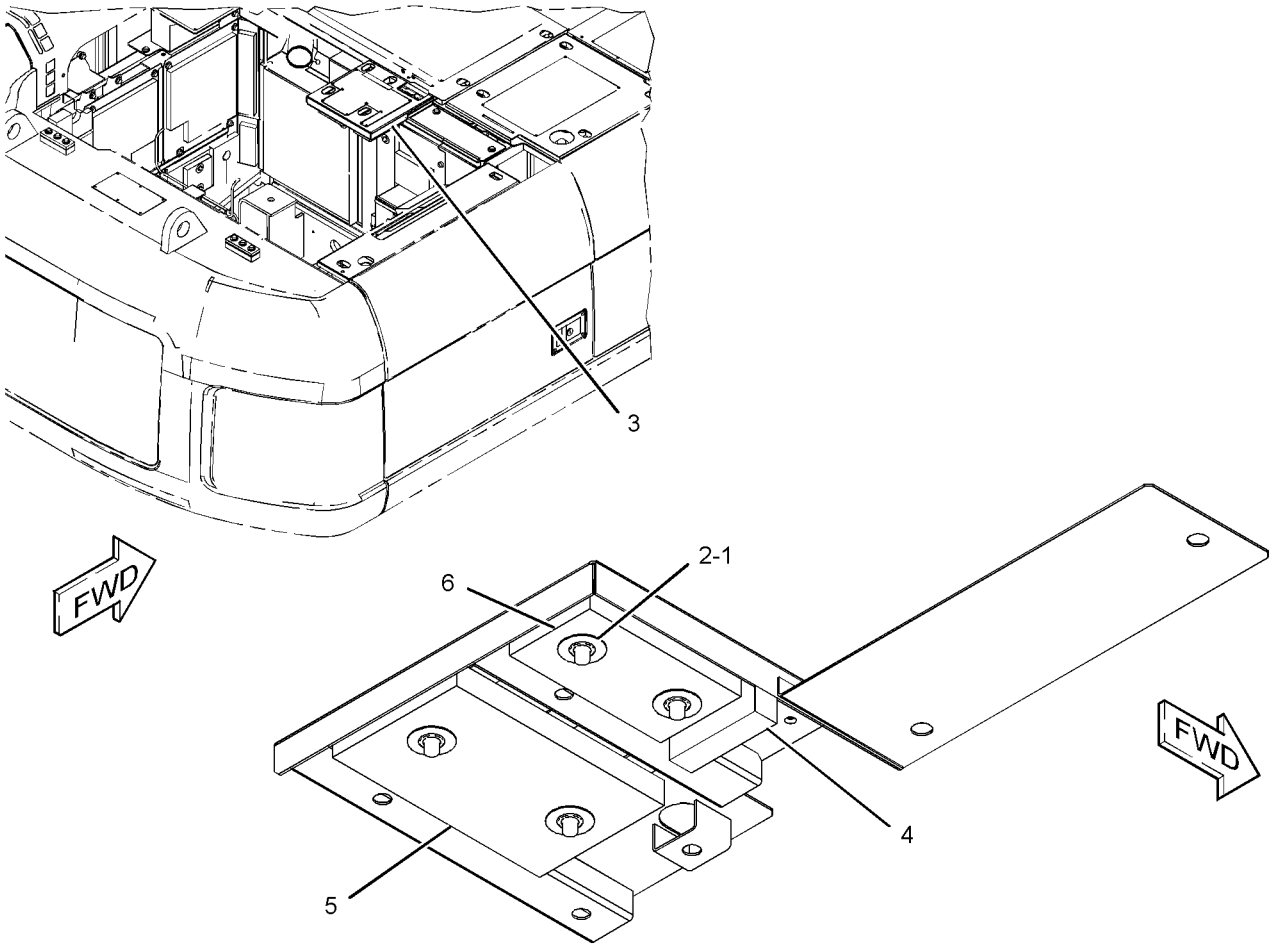

GRAPHIC #1 **<END>** g01238319

259-3667 COVER AS-SOUND SUPPRESSION–PRECLEANER

S/N: D3P1-UP; M4T1-UP
PART OF 237-8802 HOOD GP
AN ATTACHMENT

SMCS-7253, 7263, 7276, 795C **i03626159**

NOTE	REF NO	GRAPHIC REF	PART NUMBER	QTY	PART NAME 1 2 3 4 5 6 (PRODUCT LEVEL)	SEE PAGE
	1	1	**262-2571**	1	INSULATION	
	2	1	**262-2572**	1	INSULATION	
	3	1	**262-2573**	1	INSULATION	
Z	4	1		1	COVER AS-ACCESS	
	5	1	**278-3820**	1	INSULATION	

Z-NOT SERVICED SEPARATELY

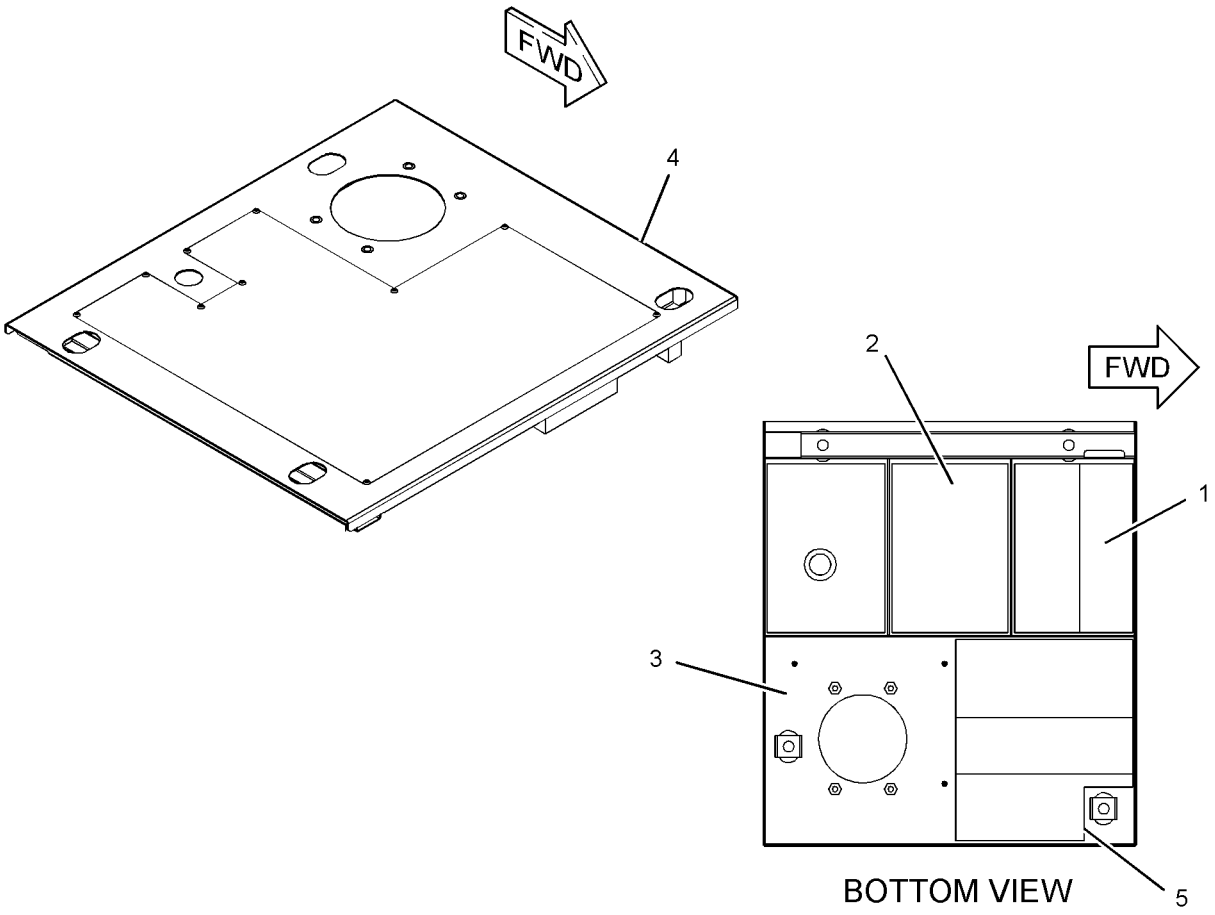

GRAPHIC #1 **<END>** g01239733

273-7873 COVER AS-SOUND SUPPRESSION

S/N: D3P1-UP; M4T1-UP

PART OF 237-8768 HOOD & GUARD GP

SMCS-7253, 7263, 7276, 795C **i02490655**

NOTE	REF NO	GRAPHIC REF	PART NUMBER	QTY	PART NAME 1 2 3 4 5 6 (PRODUCT LEVEL)	SEE PAGE
	1	1	**262-2192**	2	LINER	
Z	2	1		1	COVER AS	
	3	1	**273-7902**	3	LINER	

Z-NOT SERVICED SEPARATELY

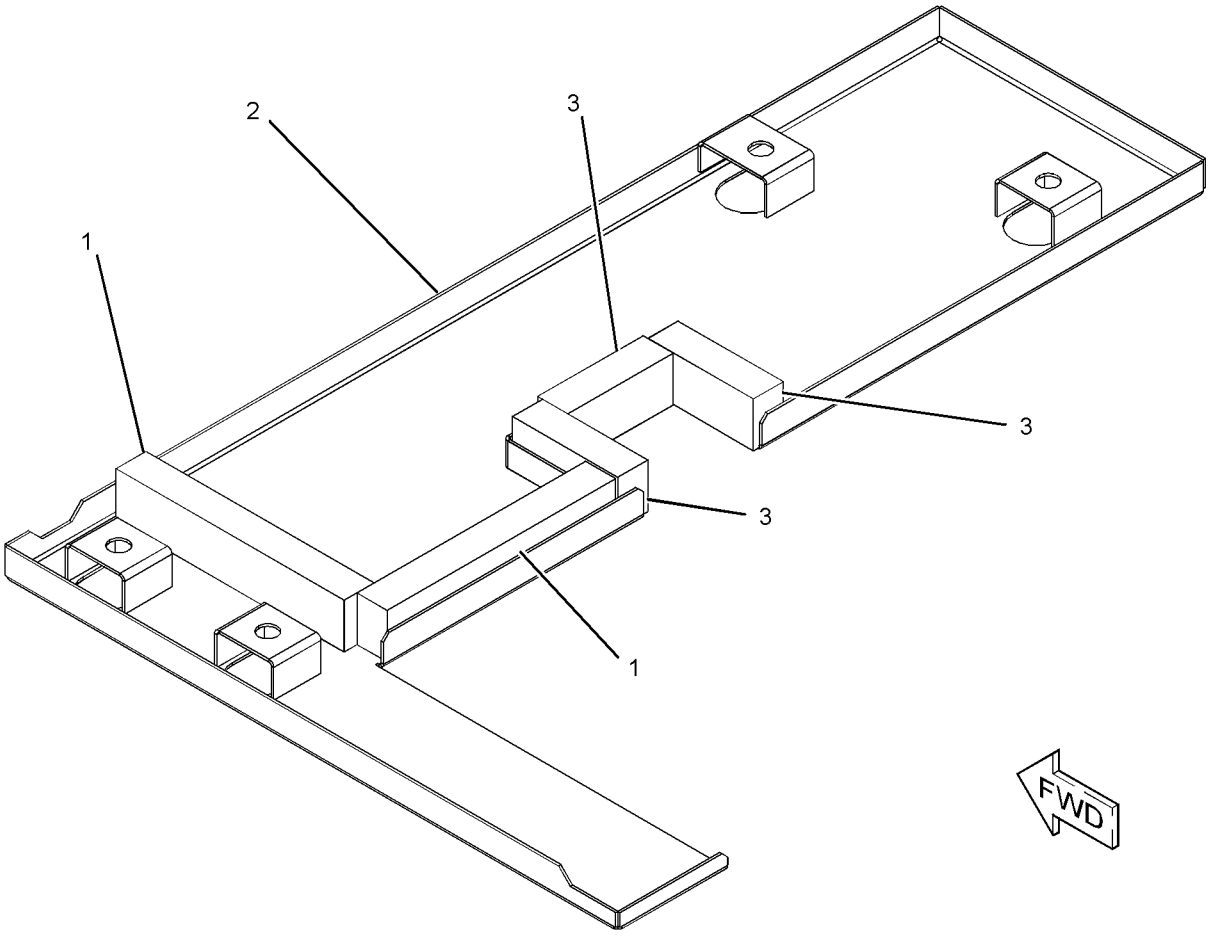

GRAPHIC #1 **<END>** g01236625

298-2975 COVER GP-ACCESS—FUEL, HYDRAULIC TANKS

S/N: D3P1-UP; M4T1-UP

PART OF 237-8768 HOOD & GUARD GP

SMCS-726A **i02831510**

NOTE	REF NO	GRAPHIC REF	PART NUMBER	QTY	PART NAME 1 2 3 4 5 6 (PRODUCT LEVEL)	SEE PAGE
	1	1	**170-3015**	1	BUMPER	
	2	1	**177-5739**	1	LINER	
	3	1	**203-4927**	1	LINER	
	4	1	**236-9568**	1	LINER	
	5	1	**241-2325**	1	LINER	

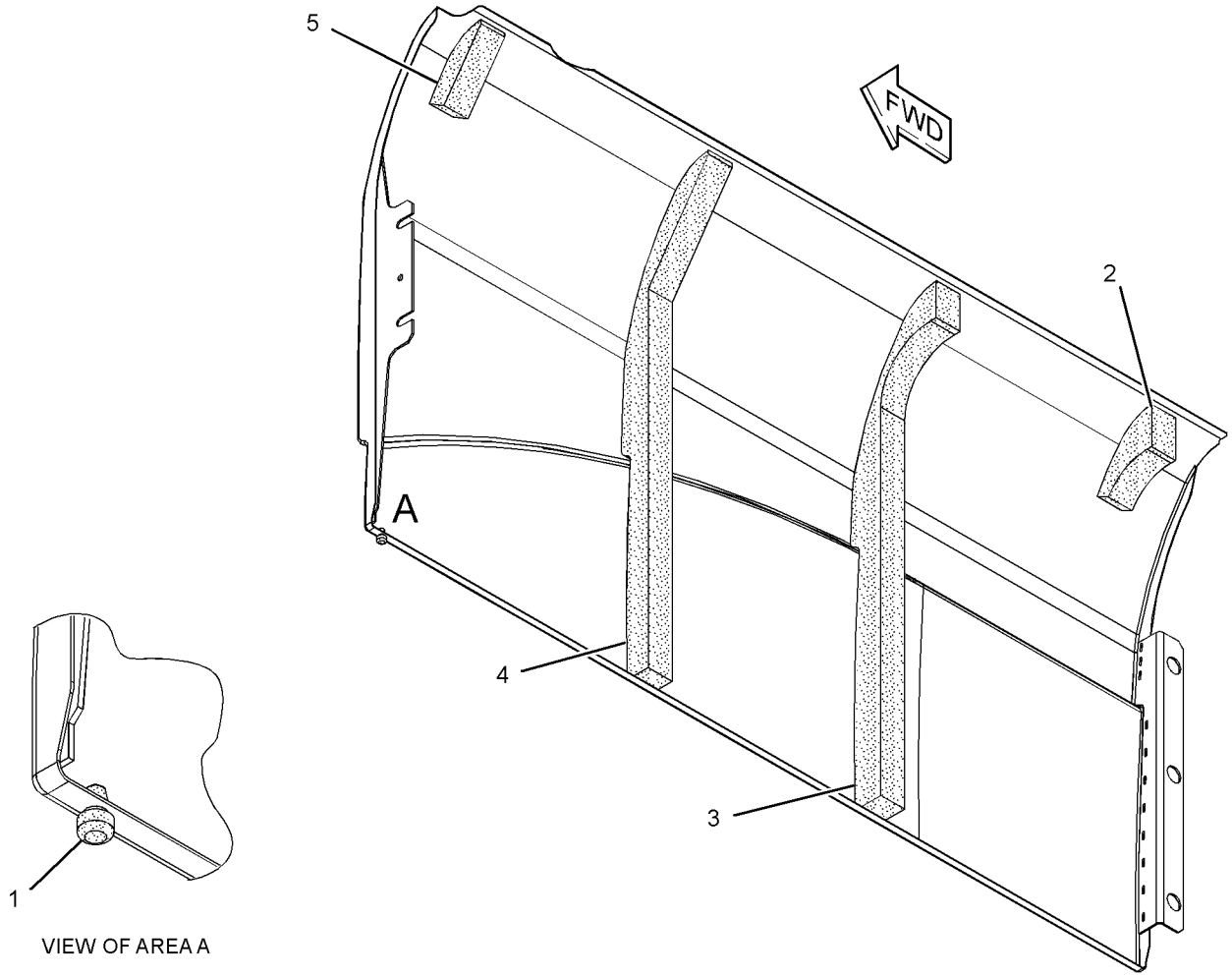

VIEW OF AREA A

GRAPHIC #1 **<END>** g01372999

298-3191 DOOR AS-ACCESS—AIR CLEANER, BATTERY

S/N: D3P1-UP; M4T1-UP

PART OF 237-8768 HOOD & GUARD GP

SMCS-7273 **i03016437**

NOTE	REF NO	GRAPHIC REF	PART NUMBER	QTY	PART NAME 1 2 3 4 5 6 (PRODUCT LEVEL)	SEE PAGE
	1	1	**241-2139**	1	INSULATION	
	2	1	**244-7980**	1	INSULATION	
	3	1	**262-2157**	1	LINER	
	4	1	*298-2974*	1	DOOR AS-ACCESS	
	4A	1	**165-2976**	2	HINGE	
	5	1	**208-4289**	1	CUSHION	

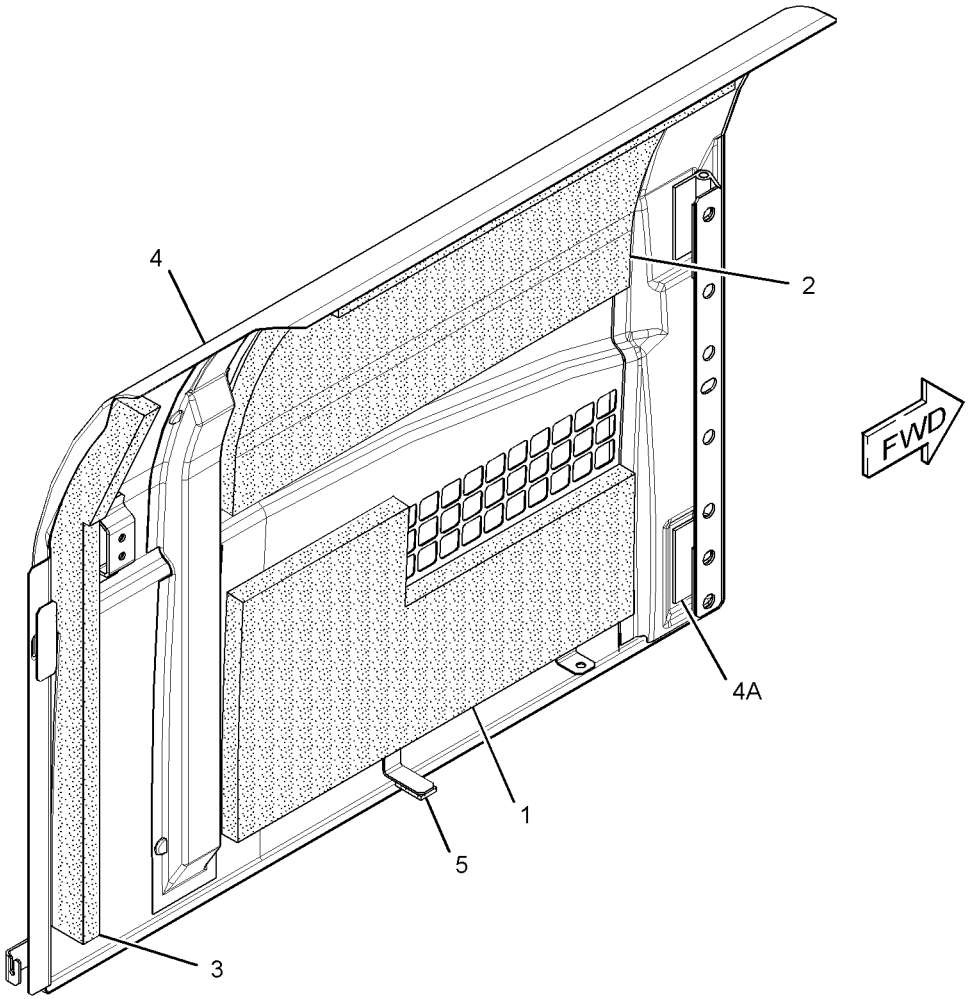

GRAPHIC #1 **<END>** g01520128

289-6893 DOOR GP-ACCESS–RADIATOR

S/N: D3P1-UP; M4T1-UP

PART OF 237-8768 HOOD & GUARD GP

SMCS-7273 **i02756124**

NOTE	REF NO	GRAPHIC REF	PART NUMBER	QTY	PART NAME 1 2 3 4 5 6 (PRODUCT LEVEL)	SEE PAGE
M	1	1	**099-6418**	4	NUT (M6X1-THD)	
	2	1	**122-4101**	1	RUBBER	
	3	1	**177-6395**	1	LINER	
	4	1	**208-4289**	1	CUSHION	
	5	1	*289-6894*	1	DOOR AS-ACCESS	
	5A	1	**165-2976**	2	HINGE	
J	6	1	**298-2942**	1	LOCK AS	

J-REQUIRES CORPORATE KEY
M-METRIC PART

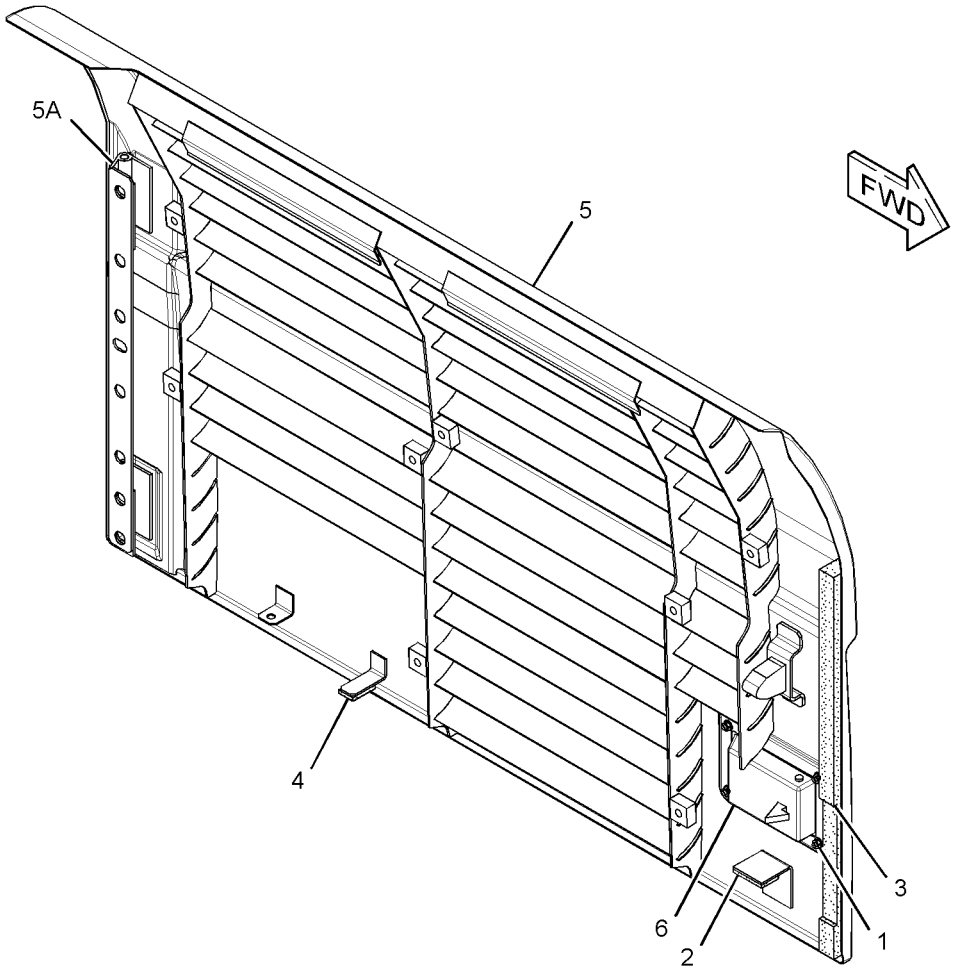

GRAPHIC #1 **<END>** g01390030

289-6895 DOOR GP-ACCESS—PUMP COMPARTMENT

S/N: D3P1-UP; M4T1-UP

PART OF 237-8768 HOOD & GUARD GP

SMCS-7273 **i02989634**

NOTE	REF NO	GRAPHIC REF	PART NUMBER	QTY	PART NAME 1 2 3 4 5 6 (PRODUCT LEVEL)	SEE PAGE
M	1	1	**099-6418**	4	NUT (M6X1-THD)	
	2	1	**193-9438**	1	INSULATION	
	3	1	**244-7979**	1	INSULATION	
J	4	1	**298-2942**	1	LOCK AS	
	5	1	**273-7668**	1	LINER	
	6	1	*289-6896*	1	DOOR AS-ACCESS	
	6A	1	**165-2976**	2	HINGE	
	7	1	**184-8862**	1	COVER	

J-REQUIRES CORPORATE KEY
M-METRIC PART

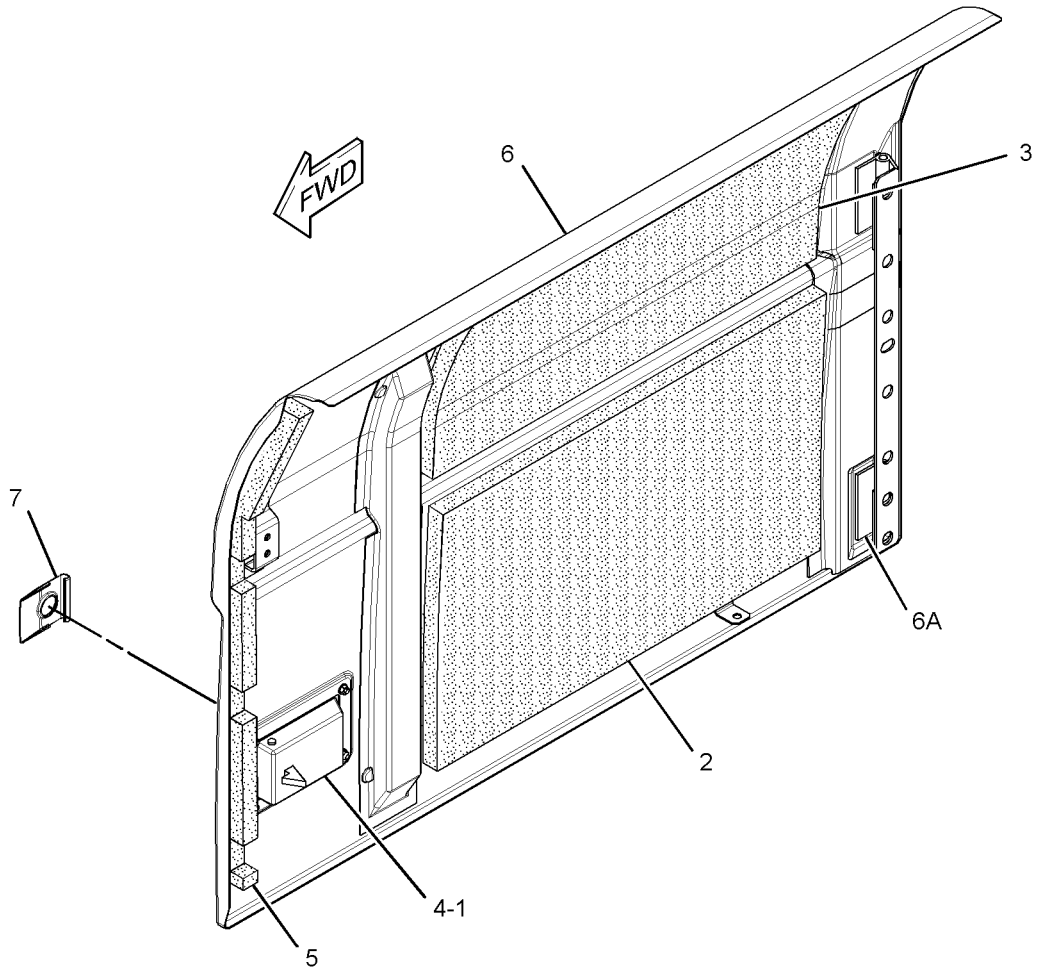

GRAPHIC #1 **<END>** g01407526

FRAME AND BODY

262-2595 FENDER & COVER GP

S/N: D3P1-UP; M4T1-UP

PART OF 314-3709 CHASSIS AR

SMCS-7252 **i02496572**

NOTE	REF NO	GRAPHIC REF	PART NUMBER	QTY	PART NAME 1 2 3 4 5 6 (PRODUCT LEVEL)	SEE PAGE
M	1	1	**135-8573**	2	BOLT AS	
	2	1	**236-3702**	2	SPACER (15X35X11-MM THK)	
	3	1	**236-3703**	2	WASHER (25X35X4-MM THK)	
	4	1	**259-3543**	1	STEP AS	
	5	1	**262-2596**	1	COVER AS-FENDER	
		1	**278-3818**	1	LINER	
	6	1	**5P-1075**	2	WASHER-HARD (10.2X22.5X3-MM THK)	
M	7	1	**8T-4195**	2	BOLT (M10X1.5X30-MM)	

M-METRIC PART

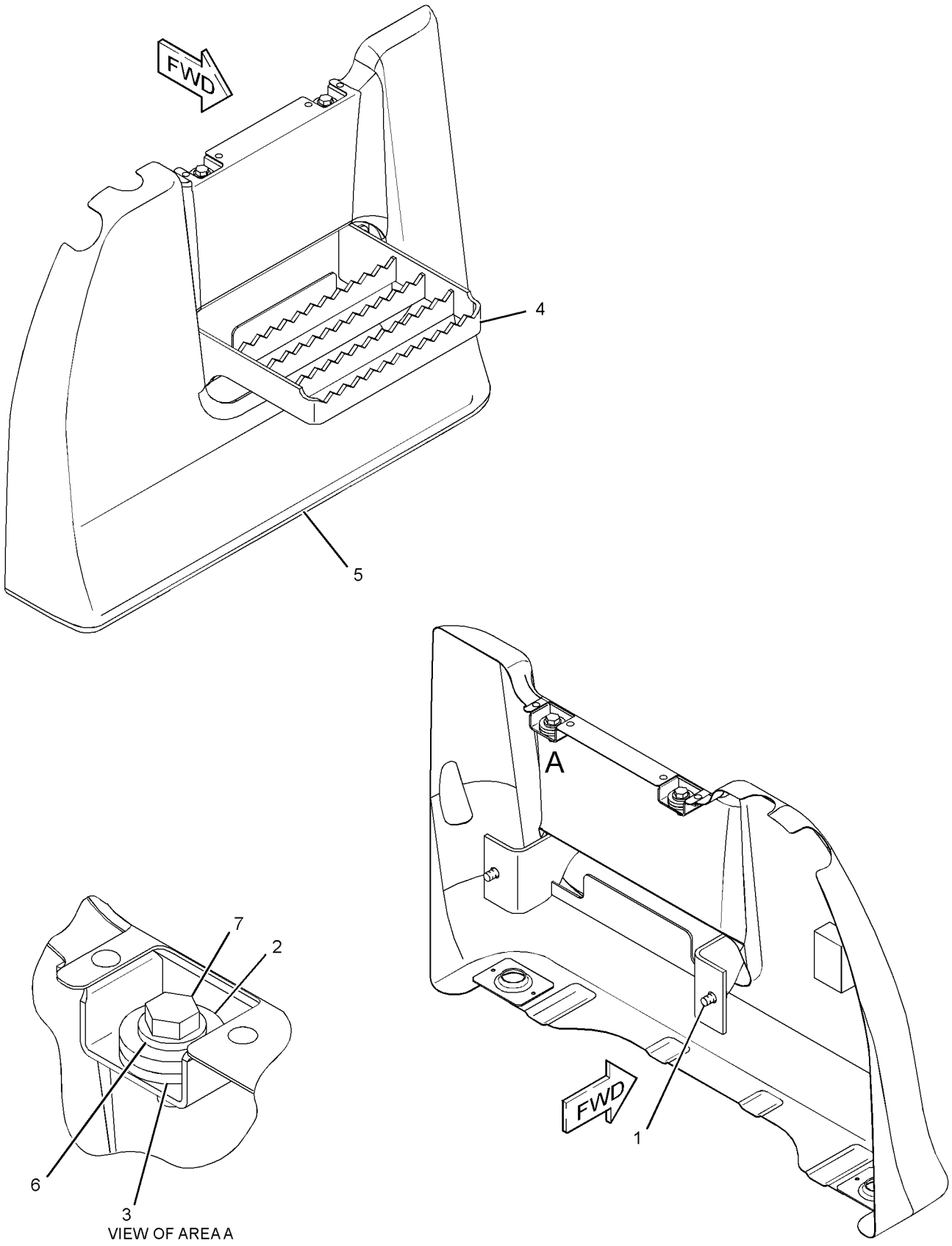

GRAPHIC #1 **<END>** g01199510

FRAME AND BODY

251-2755 FRAME GP-UPPER

S/N: D3P1-UP; M4T1-UP
PART OF 314-3709 CHASSIS AR

SMCS-7051 **i02989640**

NOTE	REF NO	GRAPHIC REF	PART NUMBER	QTY	PART NAME 1 2 3 4 5 6 (PRODUCT LEVEL)	SEE PAGE
B	1	1	**308-8785**	2	SHIM (1-MM THK)	
B	2	1	**093-0090**	4	SHIM (1-MM THK)	
B	3	1	**133-2427**	2	SHIM (0.5-MM THK)	
	4	1	**201-2771**	1	WASHER (26X90X8-MM THK)	
	5	1	**212-2841**	2	SHIM (2-MM THK)	
	6	1	**245-7900**	1	CAP	
	7	1	**245-7901**	1	CAP	
	8	1	**251-2542**	1	PIN AS	
	9	1	**251-2756**	1	FRAME AS-UPPER	
	9A	1	**163-3729**	1	STEP AS	
	9B	1	**7Y-1113**	1	BOSS	
B	10	1	**308-8786**	1	SHIM (2-MM THK)	
	11	1	**093-0364**	2	SPACER (103X140X12-MM THK)	
	12	1	**096-6467**	2	WASHER (22X60X8-MM THK)	
	13	1	**117-5435**	2	PIN AS	
B	14	1	**308-8784**	1	SHIM (0.5-MM THK)	
	15	1	**166-1488**	4	SHIM (2-MM THK)	
M	16	1	**7X-2572**	1	BOLT (M24X3X35-MM)	
	17	1	**8T-4123**	2	WASHER (22X35X3.5-MM THK)	
	18	1	**8T-4167**	1	WASHER-HARD (26X44X4-MM THK)	
M	19	1	**8T-4780**	2	BOLT (M20X2.5X30-MM)	

B-USE AS REQUIRED
M-METRIC PART

251-2755 **FRAME GP-UPPER** *(contd.)* **i02989640**

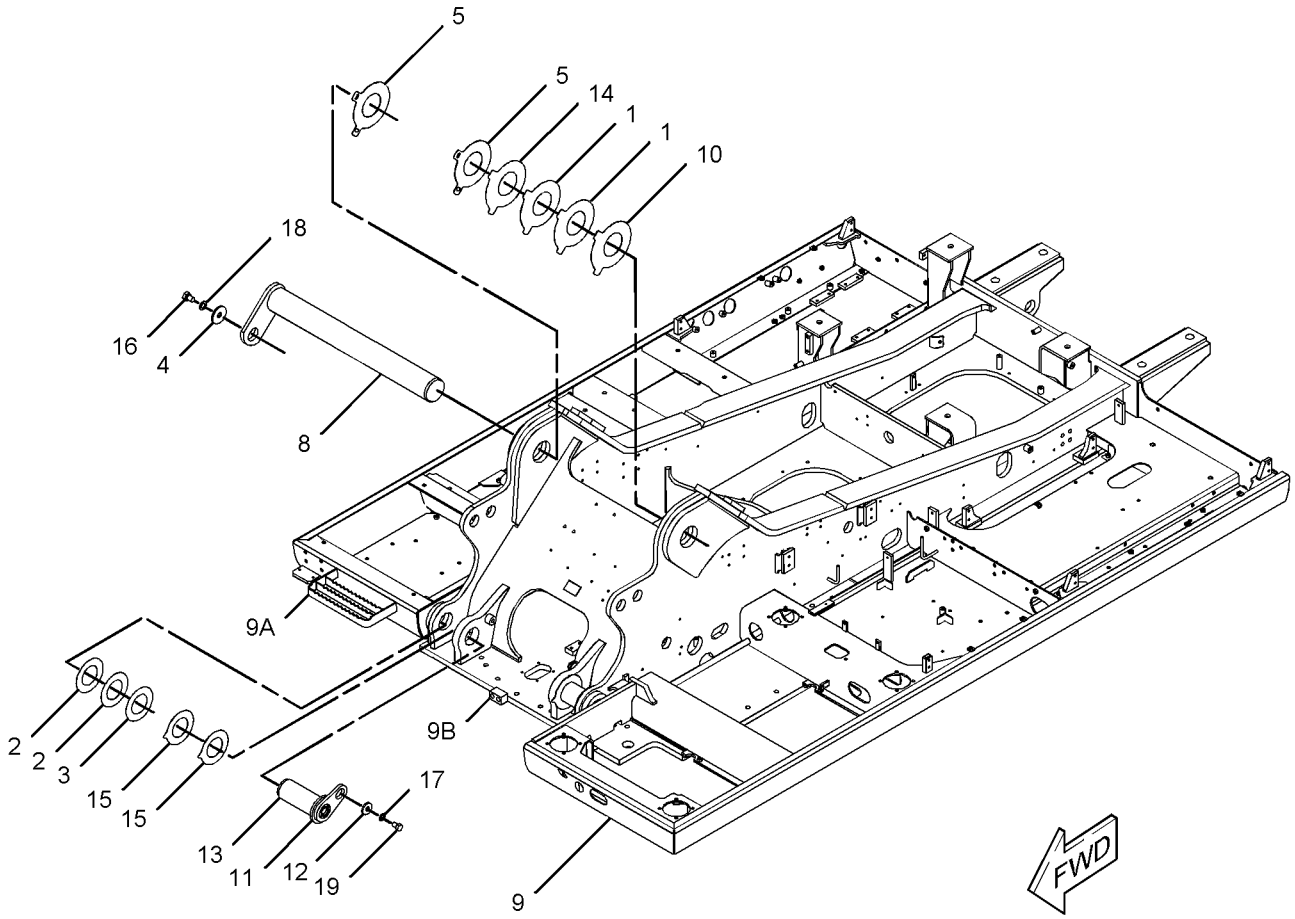

GRAPHIC #1 **<END>** g01609893

199-4559 GEAR & BEARING GP-SWING

S/N: D3P1-UP; M4T1-UP

PART OF 227-6089 GEAR & BEARING GP-SWING

SMCS-7063 **i03626236**

NOTE	REF NO	GRAPHIC REF	PART NUMBER	QTY	PART NAME 1 2 3 4 5 6 (PRODUCT LEVEL)	SEE PAGE
E	1	1	**110-7183**		SEAL (476-CM)	
E	1A	1	**110-7183**		SEAL (477-CM)	
	2	1	**3B-8489**	1	FITTING-GREASE	

E-ORDER BY THE CENTIMETER

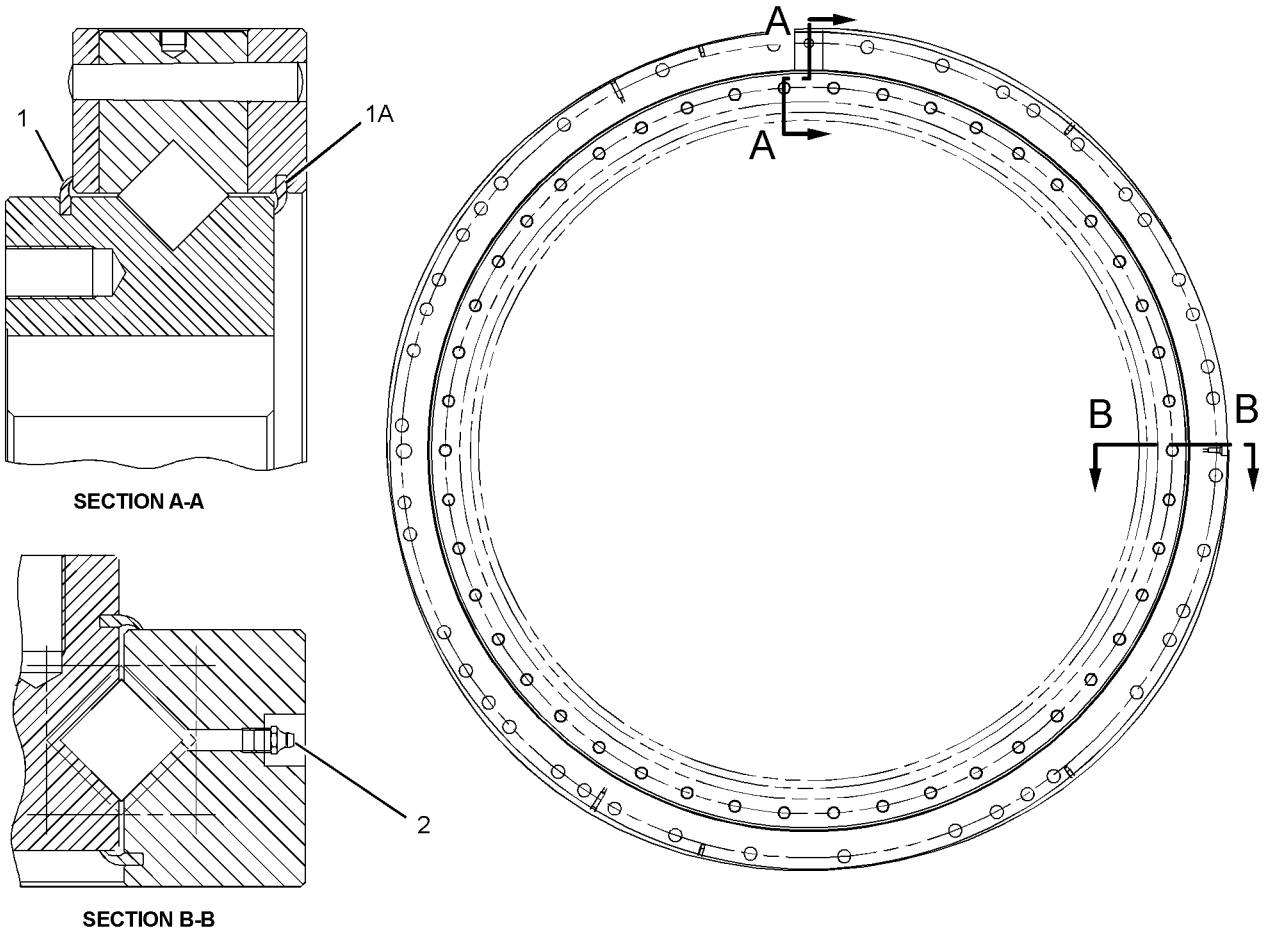

GRAPHIC #1 **<END>** g01945109

227-6089 GEAR & BEARING GP-SWING

S/N: D3P1-UP; M4T1-UP

PART OF 227-6145 GEAR & BEARING GP-SWING

SMCS-7063 **i02284009**

NOTE	PART NUMBER	QTY	PART NAME 1 2 3 4 5 6 (PRODUCT LEVEL)	SEE PAGE
Y	*199-4559*	1	GEAR & BEARING GP-SWING (114-BEARING)	368
			—OR—	
Y	*227-6090*	1	GEAR & BEARING GP-SWING (92-BEARING)	370

Y-SEPARATE ILLUSTRATION

<END>

227-6090 GEAR & BEARING GP-SWING

S/N: D3P1-UP; M4T1-UP

PART OF 227-6089 GEAR & BEARING GP-SWING

SMCS-7063 **i03626243**

NOTE	REF NO	GRAPHIC REF	PART NUMBER	QTY	PART NAME 1 2 3 4 5 6 (PRODUCT LEVEL)	SEE PAGE
Z	1	1		92	ROLLER	
Z	2	1		32	SEPARATOR	
Z	3	1		60	SEPARATOR	
Z	4	1		1	RACE-BEARING	
	5	1	**227-6074**	1	SEAL-DUST	
Z	6	1		1	RACE AS-OUTER	
	7	1	**3B-8489**	1	FITTING-GREASE	
E	8	1	**148-4685**		SEAL (465-CM)	

E-ORDER BY THE CENTIMETER
Z-NOT SERVICED SEPARATELY

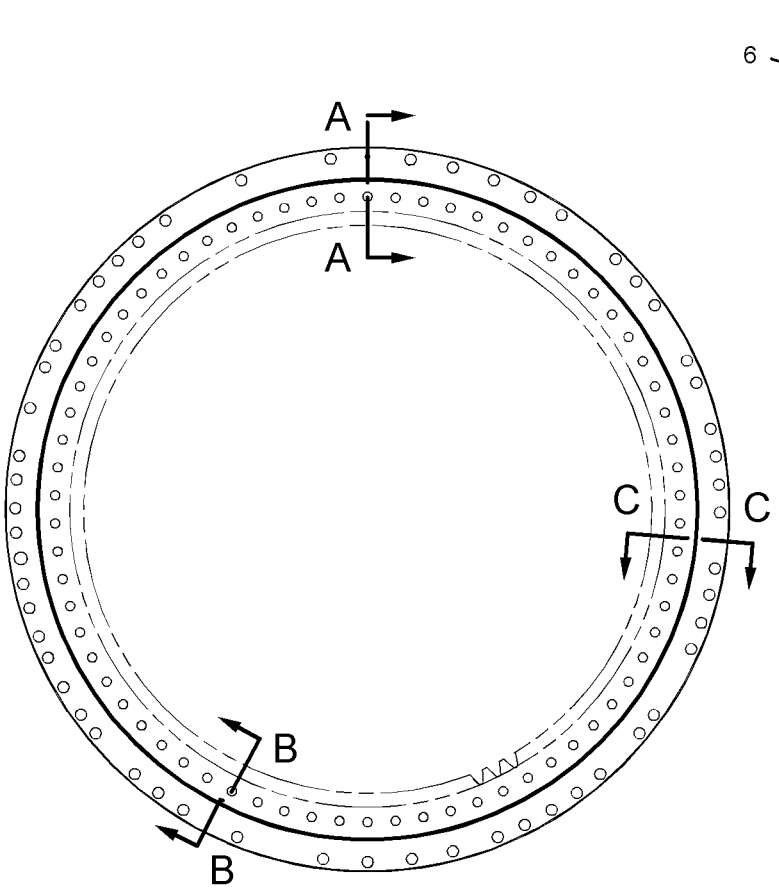

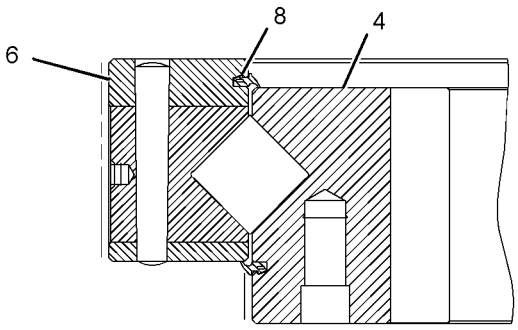

SECTION A-A

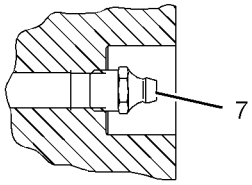

SECTION C-C

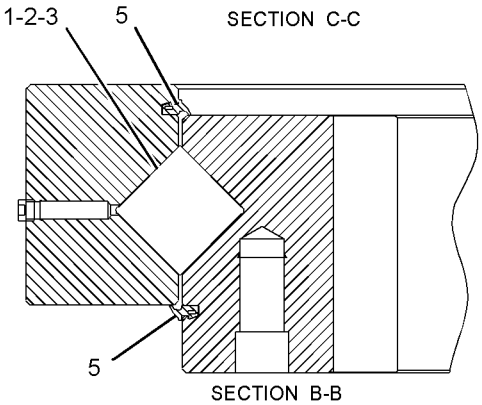

SECTION B-B

GRAPHIC #1 **<END>** g01945202

227-6145 GEAR & BEARING GP-SWING

S/N: D3P1-UP; M4T1-UP

PART OF 229-1898 FRAME AR-UNDERCARRIAGE

SMCS-7063 **i02488299**

NOTE	REF NO	GRAPHIC REF	PART NUMBER	QTY	PART NAME 1 2 3 4 5 6 (PRODUCT LEVEL)	SEE PAGE
	1	2	**2B-7561**	2	CORK	
	2	1,2	**5K-9243**	4	ELBOW-FLARED	
	3	2	**7Y-1507**	46	SPACER (24.5X44X43-MM THK)	
	4	1	**7Y-1647**	1	GASKET	
	5	2	**7Y-1650**	1	CLAMP-HOSE	
	6	2	**199-4523**	1	TUBE AS (RH)	
	7	1	**199-4524**	1	TUBE AS (LH)	
Y	8	2	**227-6089**	1	GEAR & BEARING GP-SWING	369
	9	2	**227-6105**	1	BOOT	
	10	2	**227-6106**	1	RETAINER	
M	11	2	**8T-0670**	42	BOLT (M24X3X140-MM)	
M	12	2	**6V-8132**	46	BOLT (M24X3X120-MM)	
	13	1	**148-4703**	1	COVER	
	14	1	**148-4704**	1	GASKET	
	15	1	**3B-8489**	2	FITTING-GREASE	
	16	2	**4N-9170**	4	CLIP	
	17	2	**7Y-1095**	1	DOWEL	
	18	1	**7Y-1648**	1	STRIP	
	19	1,2	**8T-4121**	14	WASHER-HARD (11X21X2.5-MM THK)	
M	20	1,2	**8T-4136**	12	BOLT (M10X1.5X25-MM)	
	21	2	**093-0020**	42	SPACER (25X44X6-MM THK)	
M	22	2	**8T-4199**	4	BOLT (M8X1.25X12-MM)	
B	23	2	**1U-8846**		SEALANT-GASKET	
M	24	1	**8T-4137**	2	BOLT (M10X1.5X20-MM)	

B-USE AS REQUIRED
M-METRIC PART
Y-SEPARATE ILLUSTRATION

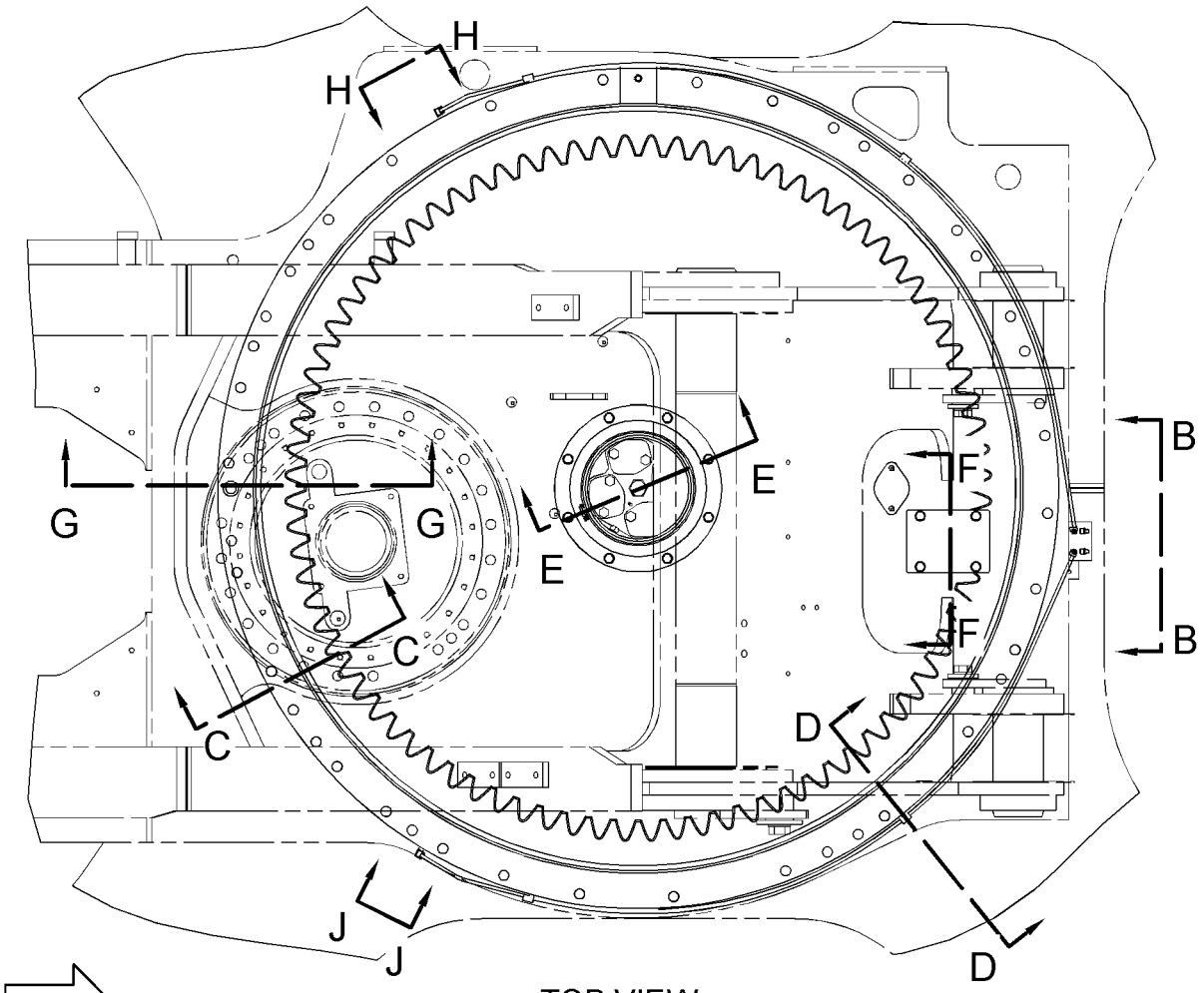

FWD

TOP VIEW

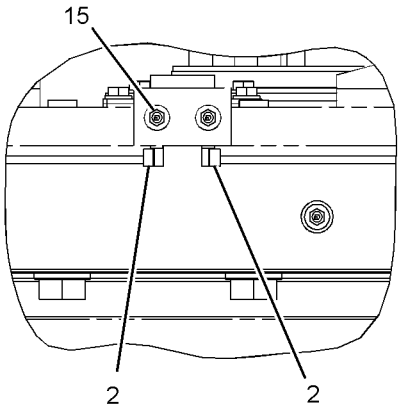

VIEW B-B

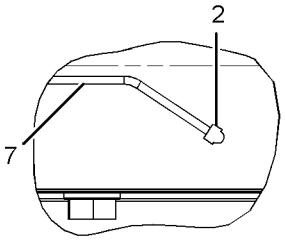

VIEW H-H

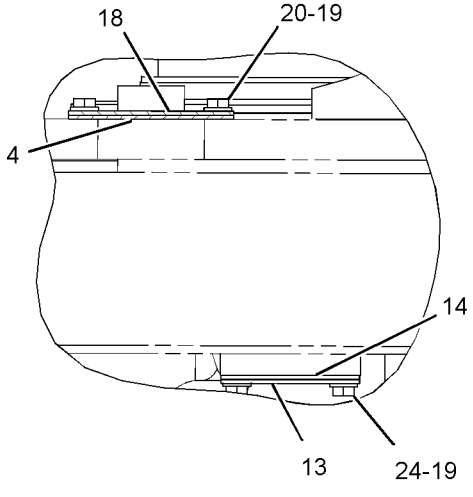

SECTION F-F

REFER TO ALL ILLUSTRATIONS OF
THIS GROUP FOR AUXILIARY VIEWS

GRAPHIC #1

g01237347

227-6145 **GEAR & BEARING GP-SWING** *(contd.)* **i02488299**

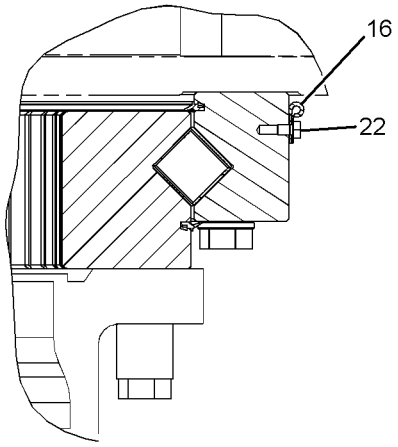

SECTION D-D

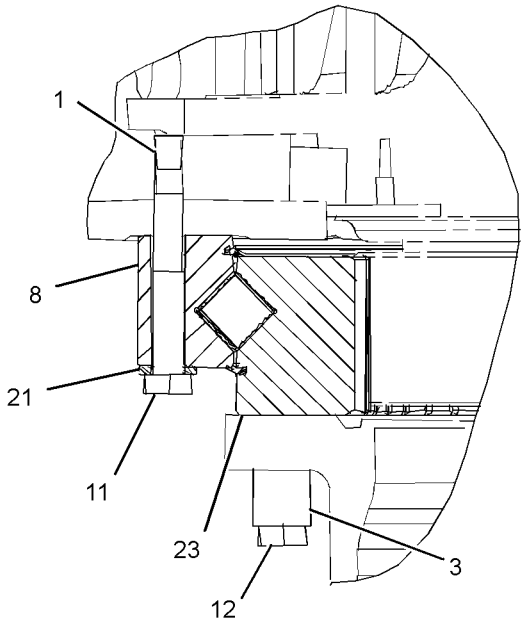

SECTION C-C

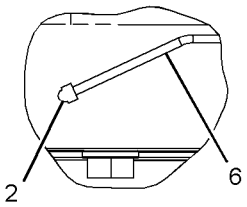

VIEW J-J

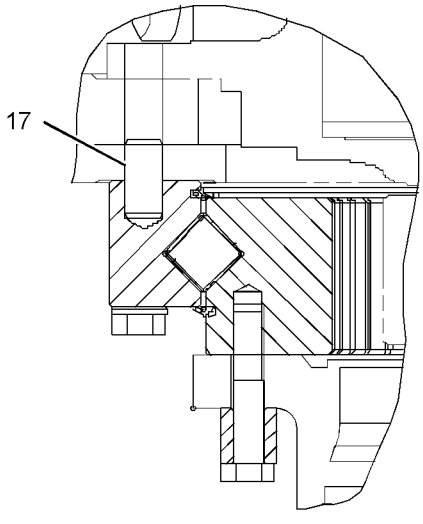

SECTION G-G

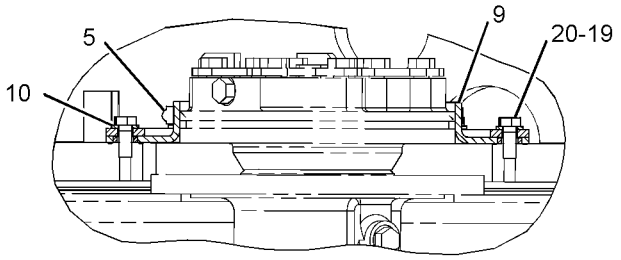

SECTION E-E

GRAPHIC #2 **<END>** g01237348

269-1167 GUARD AR-BOTTOM—HEAVY-DUTY

S/N: D3P1-UP; M4T1-UP

PART OF 337-5231 DISTRIBUTION AR, 337-4138, 337-9027 OPTION AR-GUARD AN ATTACHMENT

SMCS-7153 **i02503050**

NOTE	PART NUMBER	QTY	PART NAME 1 2 3 4 5 6 (PRODUCT LEVEL)	SEE PAGE
Y	*237-8754*	1	GUARD GP-BOTTOM (HEAVY-DUTY)	376
Y	*134-8887*	1	GUARD GP-SWIVEL	377
Y	*241-7335*	1	GUARD GP-TRAVEL MOTOR	420

Y-SEPARATE ILLUSTRATION

<END>

FRAME AND BODY

237-8753 GUARD GP-BOTTOM

S/N: D3P1-UP; M4T1-UP

PART OF 314-3709 CHASSIS AR

SMCS-7153 **i03067520**

NOTE	REF NO	GRAPHIC REF	PART NUMBER	QTY	PART NAME 1 2 3 4 5 6 (PRODUCT LEVEL)	SEE PAGE
M	1	1	**135-8576**	48	BOLT AS-LOCKING (M12X1.75X30-MM)	
	2	1	**203-4930**	1	SHEET AS	
	3	1	**237-8868**	1	SHEET	
	4	1	**237-8869**	1	SHEET	
	5	1	**237-8877**	1	SHEET	
	6	1	**241-1904**	1	SHEET	
	7	1	**241-2195**	1	SHEET AS	
	8	1	**248-8984**	2	PLATE AS	
C	9	1	**303-9626**	1	SHEET	
	10	1	**256-1939**	1	SHEET	

C-CHANGE FROM PREVIOUS TYPE
M-METRIC PART

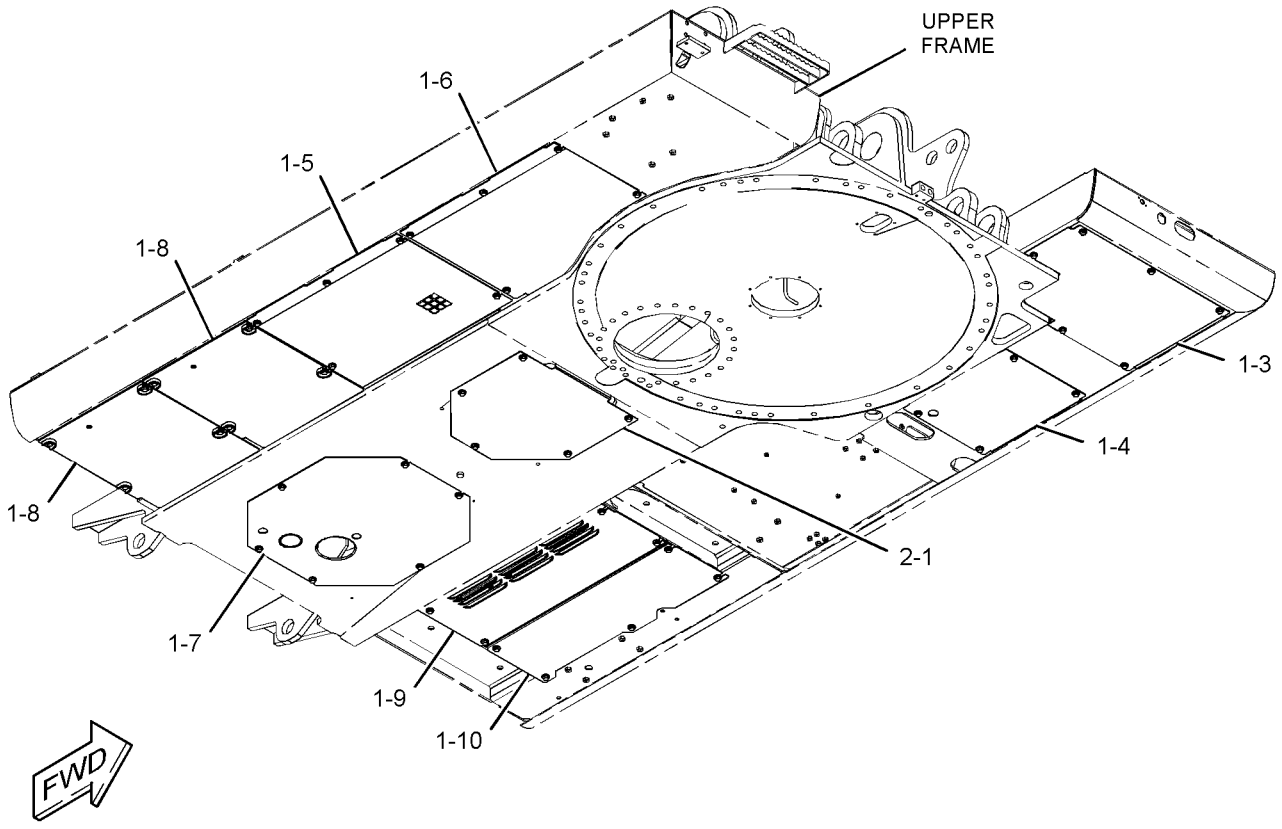

GRAPHIC #1 **<END>** g01232577

237-8754 GUARD GP-BOTTOM—HEAVY-DUTY

S/N: D3P1-UP; M4T1-UP

PART OF 269-1167 GUARD AR-BOTTOM, 345-2281 OPTION AR-CONFIGURATION

AN ATTACHMENT

SMCS-7153 **i03626343**

NOTE	REF NO	GRAPHIC REF	PART NUMBER	QTY	PART NAME 1 2 3 4 5 6 (PRODUCT LEVEL)	SEE PAGE
M	1	1	**135-8576**	4	BOLT AS-LOCKING (M12X1.75X30-MM)	
	2	1	**190-7062**	1	PLATE AS	
	3	1	**214-8110**	1	PLATE AS	
	3A	1	**099-7857**	1	HINGE	
	4	1	**237-8875**	1	PLATE AS	
	5	1	**237-8880**	1	PLATE AS	
	6	1	**237-8882**	1	PLATE AS	
	7	1	**241-1900**	1	PLATE AS	
	8	1	**241-1902**	1	PLATE AS	
C	9	1	**303-9627**	1	PLATE AS	
	10	1	**259-3509**	1	PLATE AS	

C-CHANGE FROM PREVIOUS TYPE
M-METRIC PART

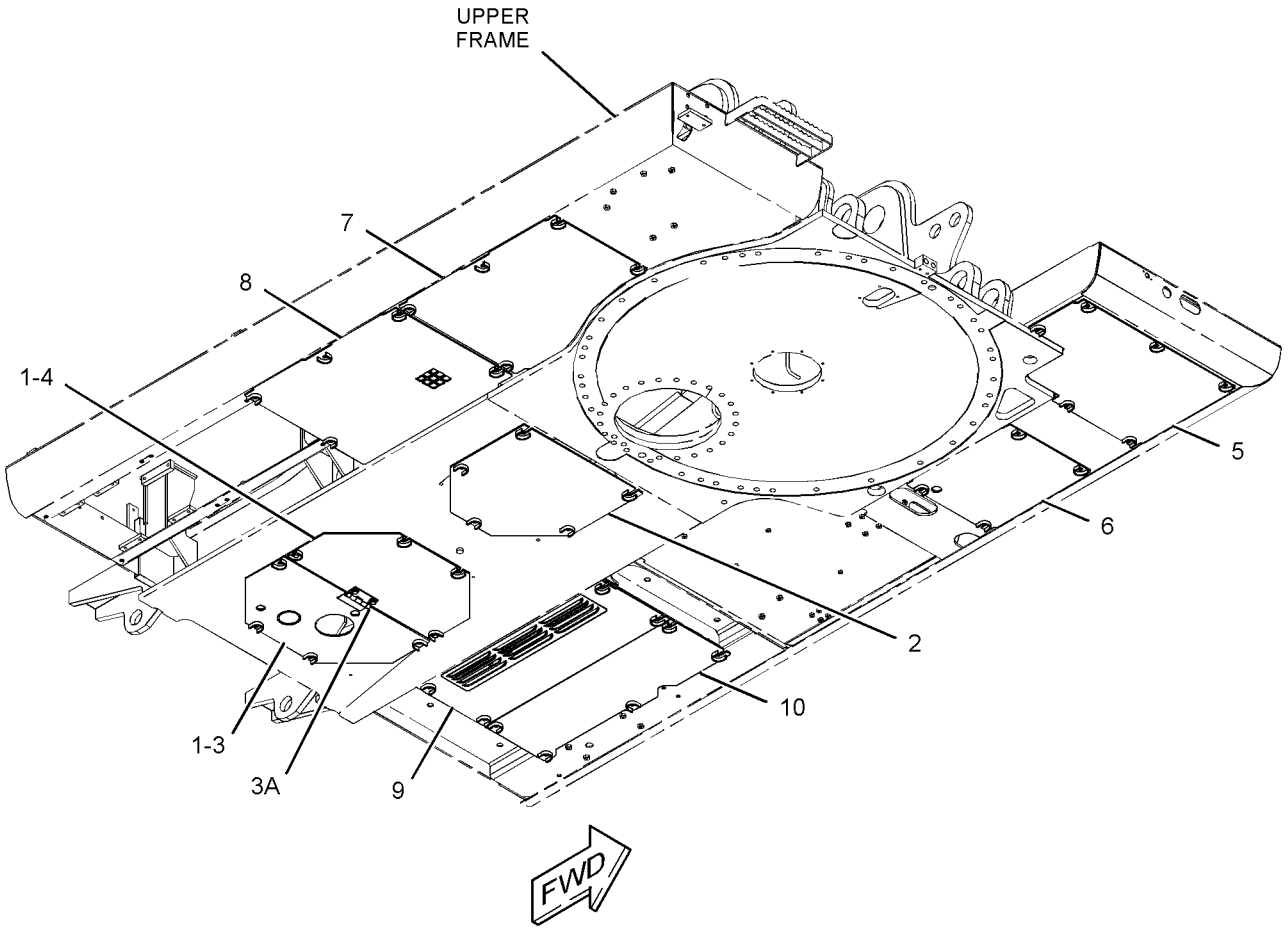

GRAPHIC #1 **<END>** g01945199

134-8887 GUARD GP-SWIVEL

S/N: D3P1-UP; M4T1-UP
PART OF 269-1167 GUARD AR-BOTTOM, 345-2281 OPTION AR-CONFIGURATION
AN ATTACHMENT

SMCS-7183 **i01681233**

NOTE	REF NO	GRAPHIC REF	PART NUMBER	QTY	PART NAME 1 2 3 4 5 6 (PRODUCT LEVEL)	SEE PAGE
	1	1	**134-8888**	1	PLATE AS	
	2	1	**134-8891**	1	PLATE AS	
M	3	1	**8C-8992**	6	BOLT-LOCKING (M12X1.75X30MM)	
	4	1	**5P-1076**	6	WASHER-HARD (13.5X30X4MM THK)	

M-METRIC PART

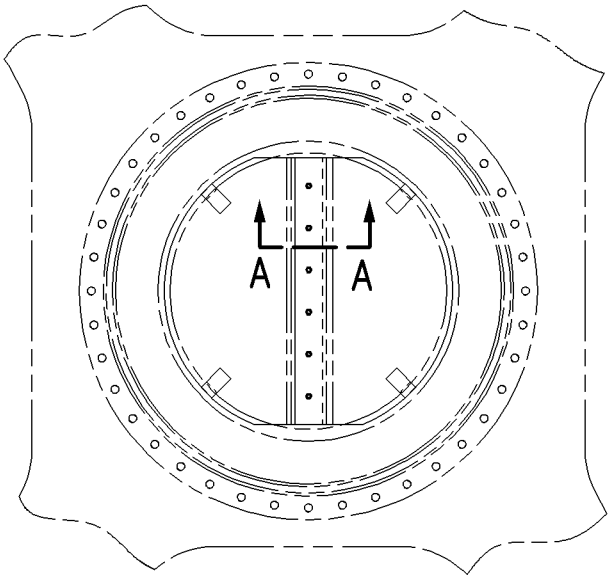

TOP VIEW FWD

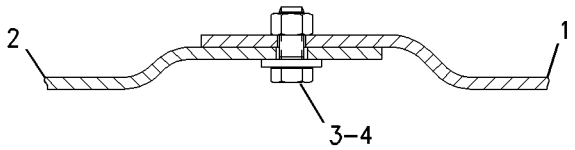

SECTION A–A

GRAPHIC #1 **<END>** g00790525

FRAME AND BODY

256-1644 HANDRAIL GP

S/N: D3P1-UP; M4T1-UP

PART OF 314-3709 CHASSIS AR

SMCS-7256 **i02496703**

NOTE	REF NO	GRAPHIC REF	PART NUMBER	QTY	PART NAME 1 2 3 4 5 6 (PRODUCT LEVEL)	SEE PAGE
M	1	1	**135-8573**	2	BOLT AS	
M	2	1	**135-8578**	3	BOLT AS	
	3	1	**177-5879**	2	CLAMP	
	4	1	**177-5880**	4	SLEEVE	
	5	1	**262-2209**	1	HANDRAIL AS	
M	6	1	**8T-4192**	2	BOLT (M12X1.75X25-MM)	
	7	1	**8T-4223**	2	WASHER-HARD (13.5X25.5X3-MM THK)	

M-METRIC PART

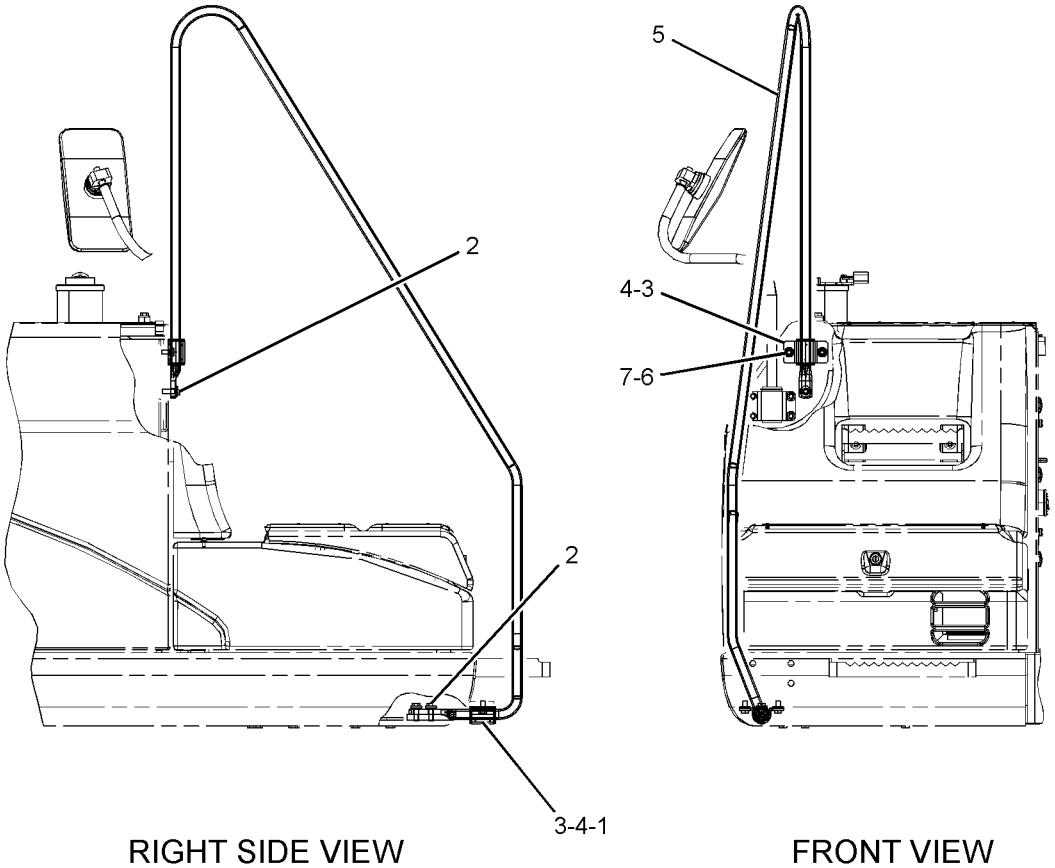

RIGHT SIDE VIEW FRONT VIEW

GRAPHIC #1 **<END>** g01226096

FRAME AND BODY

237-8768 HOOD & GUARD GP

S/N: D3P1-UP; M4T1-UP

PART OF 314-3709 CHASSIS AR

SMCS-7251, 7276 **i03172068**

NOTE	REF NO	GRAPHIC REF	PART NUMBER	QTY	PART NAME 1 2 3 4 5 6 (PRODUCT LEVEL)	SEE PAGE
	1	5	**1R-9958**	1	FASTENER	
	2	5	**4I-0117**	1	FASTENER	
	3	5	**4I-0118**	2	HOOK AS	
	4	2	**4I-0232**	2	STRIKER	
	5	2	**4I-2599**	1	SOCKET	
	6	5	**4I-8019**	2	SUPPORT	
	7	4	**246-2641**	1	PADLOCK GP	
		4	**5P-8500**	1	KEY	
	8	2	**6I-6033**	2	STOP	
	9	2	**7I-1418**	2	SUPPORT AS	
	10	5	**7Y-2853**	3	SPACER (13X38X5-MM THK)	
B	11	2	**087-3908**	2	SHIM (1-MM THK)	
B	12	2	**087-3909**	2	SHIM (2-MM THK)	
	13	2	**122-3979**	1	BAND	
	14	2	**122-3980**	1	ROD	
	15	4,5	**122-4120**	3	ROD	
M	16	1,2,3, 4	**135-8573**	114	BOLT AS	
M	17	3	**135-8574**	6	BOLT AS	
M	18	1,2,3, 4,5	**135-8575**	69	BOLT AS	
M	19	1	**135-8577**	8	BOLT AS	
M	20	1,3,4, 5	**135-8578**	20	BOLT AS	
B	21	1	**170-3016**	14	SPACER (19X32X2-MM THK)	
	22	2	**214-8310**	1	PLATE	
	23	1	**289-6796**	1	SUPPORT AS	
CY	24	1	**298-2975**	1	COVER GP-ACCESS (FUEL, HYDRAULIC TANKS)	360
Y	25	1	**289-6895**	1	DOOR GP-ACCESS (PUMP COMPARTMENT)	363
Y	26	1	**289-6893**	1	DOOR GP-ACCESS (RADIATOR)	362
	27	1	**241-2147**	1	COVER AS-HOOD	
	28	2	**241-2163**	1	SUPPORT AS	
	29	5	**241-2320**	1	PLATE AS	
	30	5	**241-2323**	1	SPRING	
	31	5	**241-2324**	1	SPRING	
	32	3	**289-6765**	1	SHEET AS	
		3	**289-6766**	1	LINER	
Y	33	3	**256-1794**	1	SHEET AS-SOUND SUPPRESSION	395
Y	34	3	**256-1802**	1	SHEET AS-SOUND SUPPRESSION	396
Y	35	3	**256-1807**	1	SHEET AS-SOUND SUPPRESSION	397
	36	3	**256-1815**	1	SHEET AS-SOUND SUPPRESSION	
		3	**256-1818**	1	LINER	
D		3	**101-9848**		SEAL (0.3-M)	
Y	37	3	**256-1820**	1	SHEET AS-SOUND SUPPRESSION	398
Y	38	3	**256-1826**	1	SHEET AS-SOUND SUPPRESSION	399
Y	39	1	**256-1830**	1	SUPPORT AS-ENCLOSURE	409
Y	40	2	**256-1853**	1	SHEET AS-SOUND SUPPRESSION	400
	41	3	**256-1886**	1	SUPPORT AS	
Y	42	2	**256-1890**	1	SHEET AS-SOUND SUPPRESSION	401
	43	3	**256-1894**	1	SHEET AS	
	44	1	**256-1897**	1	COVER AS	
		1	**259-3622**	2	INSULATION	
	45	3	**256-1907**	1	SHEET AS	
		3	**256-1911**	1	LINER	
D		3	**5P-8309**		SEAL (0.2-M)	
Y	46	2	**256-1912**	1	SHEET AS-SOUND SUPPRESSION	402

237-8768 **HOOD & GUARD GP** *(contd.)* **i03172068**

NOTE	REF NO	GRAPHIC REF	PART NUMBER	QTY	PART NAME 1 2 3 4 5 6 (PRODUCT LEVEL)	SEE PAGE
Y	47	2	**256-1919**	1	SHEET AS-SOUND SUPPRESSION	403
Y	48	2	**256-1925**	1	SHEET AS-SOUND SUPPRESSION	404
	49	1	**259-3549**	1	SUPPORT AS	
Y	50	1	**259-3552**	1	COVER AS-SOUND SUPPRESSION	357
	51	3	**259-3559**	1	SUPPORT AS	
	52	3	**259-3563**	1	SUPPORT AS	
	53	1	**259-3575**	1	COVER AS	
	54	3	**259-3589**	1	SHEET AS	
Y	55	3	**259-3591**	1	SHEET AS-SOUND SUPPRESSION	405
	56	3	**259-3615**	1	SUPPORT AS	
	57	3	**298-3111**	1	HANDLE AS	
	58	3	**259-3629**	1	SHEET AS	
		3	**259-3633**	1	LINER	
	59	4	**259-3631**	1	SHEET AS	
		4	**259-3633**	1	LINER	
	60	1	**259-3634**	1	SHEET AS	
		1	**259-3636**	1	LINER	
	61	2	**259-3669**	1	SHEET	
	62	1	**259-3953**	1	SUPPORT AS	
Y	63	3	**262-2134**	1	SHEET AS-SOUND SUPPRESSION	406
	64	3	**262-2145**	1	SHEET AS	
	65	2	**298-3112**	1	HANDHOLD	
	66	2	**262-2592**	1	SHEET AS	
	67	1	**265-3505**	1	SCREEN AS	
	68	1	**265-3506**	1	SCREEN AS	
	69	4	**265-3571**	1	SCREEN AS	
	70	4	**212-5185**	1	SUPPORT AS	
	71	1	**289-6758**	1	COVER AS	
		1	**289-6761**	1	INSULATION	
	72	3	**289-6762**	1	SUPPORT AS	
	73	3	**273-7836**	1	SHEET AS	
	74	1	**273-7852**	1	SUPPORT AS	
	75	1	**273-7854**	1	SUPPORT AS	
	76	1	**273-7856**	1	SUPPORT AS	
	77	1	**273-7859**	1	SUPPORT AS	
	78	2	**273-7864**	1	SUPPORT AS	
	79	1	**273-7867**	1	SUPPORT AS	
		1	**259-3815**	1	INSULATION	
Y	80	1	**273-7873**	1	COVER AS-SOUND SUPPRESSION	359
Y	81	1	**273-7905**	1	SUPPORT AS-ENCLOSURE	410
Y	82	4	**273-7911**	1	HOOD GP-ENGINE (RADIATOR)	391
CY	83	1	**298-3191**	1	DOOR AS-ACCESS (AIR CLEANER, BATTERY)	361
	84	1	**273-7933**	1	SHEET AS	
		1	**273-7934**	1	LINER	
Y	85	5	**289-6767**	1	HOOD GP-ENGINE	392
	86	3	**273-7946**	1	SUPPORT AS	
	87	4,5	**3B-4618**	3	PIN-COTTER	
M	88	2	**096-4884**	2	LOCKNUT (M12X1.75-THD)	
M	89	2	**105-3487**	4	BOLT-SOCKET HEAD (M6X1X20-MM)	
	90	5	**114-6285**	2	BAR	
M	91	2	**5C-9553**	2	BOLT (M6X1X16-MM)	
	92	2,4	**5P-1076**	5	WASHER-HARD (13.5X30X4-MM THK)	
	93	2,5	**5P-4115**	12	WASHER-HARD (7.2X19X2-MM THK)	
	94	4	**7J-5925**	1	PIN-COTTER	
	95	5	**7Y-2854**	3	SPACER (24X38X3-MM THK)	
	96	4	**7Y-2916**	1	PIN-CLEVIS	
	97	2,3,4, 5	**8T-4121**	7	WASHER-HARD (11X21X2.5-MM THK)	
M	98	2,3	**8T-4195**	4	BOLT (M10X1.5X30-MM)	
M	99	2	**8T-4138**	8	BOLT (M6X1X20-MM)	

237-8768 **HOOD & GUARD GP** *(contd.)* **i03172068**

NOTE	REF NO	GRAPHIC REF	PART NUMBER	QTY	PART NAME 1 2 3 4 5 6 (PRODUCT LEVEL)	SEE PAGE
M	100	5	**8T-4171**	4	BOLT (M6X1X12-MM)	
M	101	5	**8T-4189**	8	BOLT (M8X1.25X20-MM)	
	102	4	**8T-4223**	2	WASHER-HARD (13.5X25.5X3-MM THK)	
	103	5	**8T-4224**	8	WASHER-HARD (8.8X16X2-MM THK)	
M	104	2	**8T-4648**	2	BOLT (M12X1.75X70-MM)	
	105	2	**9X-8256**	6	WASHER (6.6X12X2-MM THK)	
	106	2	**278-4016**	1	SHEET AS	
E		2	**184-8580**		SEAL (70-CM)	
	107	2	**278-4018**	1	SHEET AS	
E		2	**184-8580**		SEAL (70-CM)	
M	108	3	**135-8572**	1	BOLT AS	

B-USE AS REQUIRED
C-CHANGE FROM PREVIOUS TYPE
D-ORDER BY THE METER
E-ORDER BY THE CENTIMETER
M-METRIC PART
Y-SEPARATE ILLUSTRATION

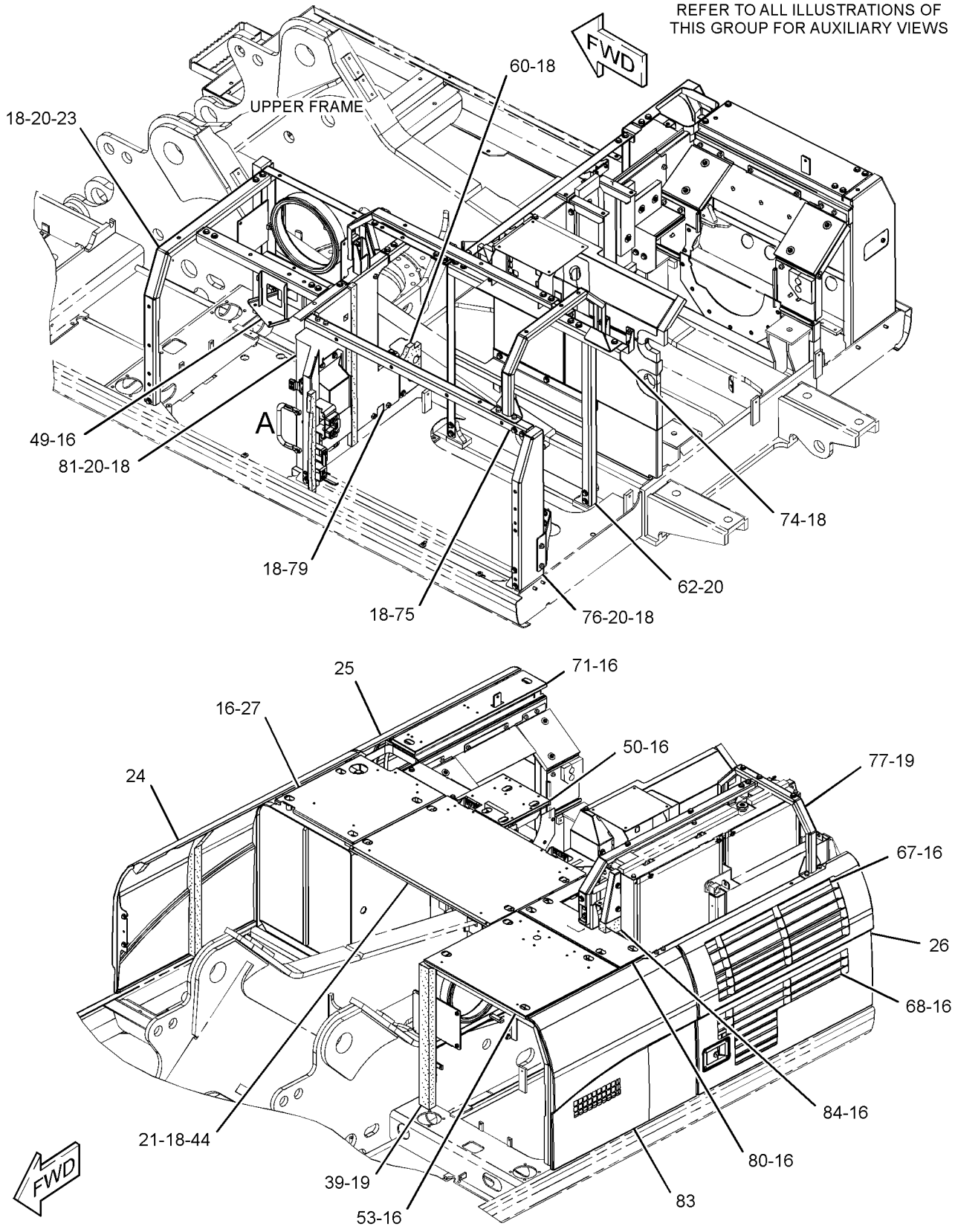

GRAPHIC #1

g01517965

237-8768 **HOOD & GUARD GP** *(contd.)* **i03172068**

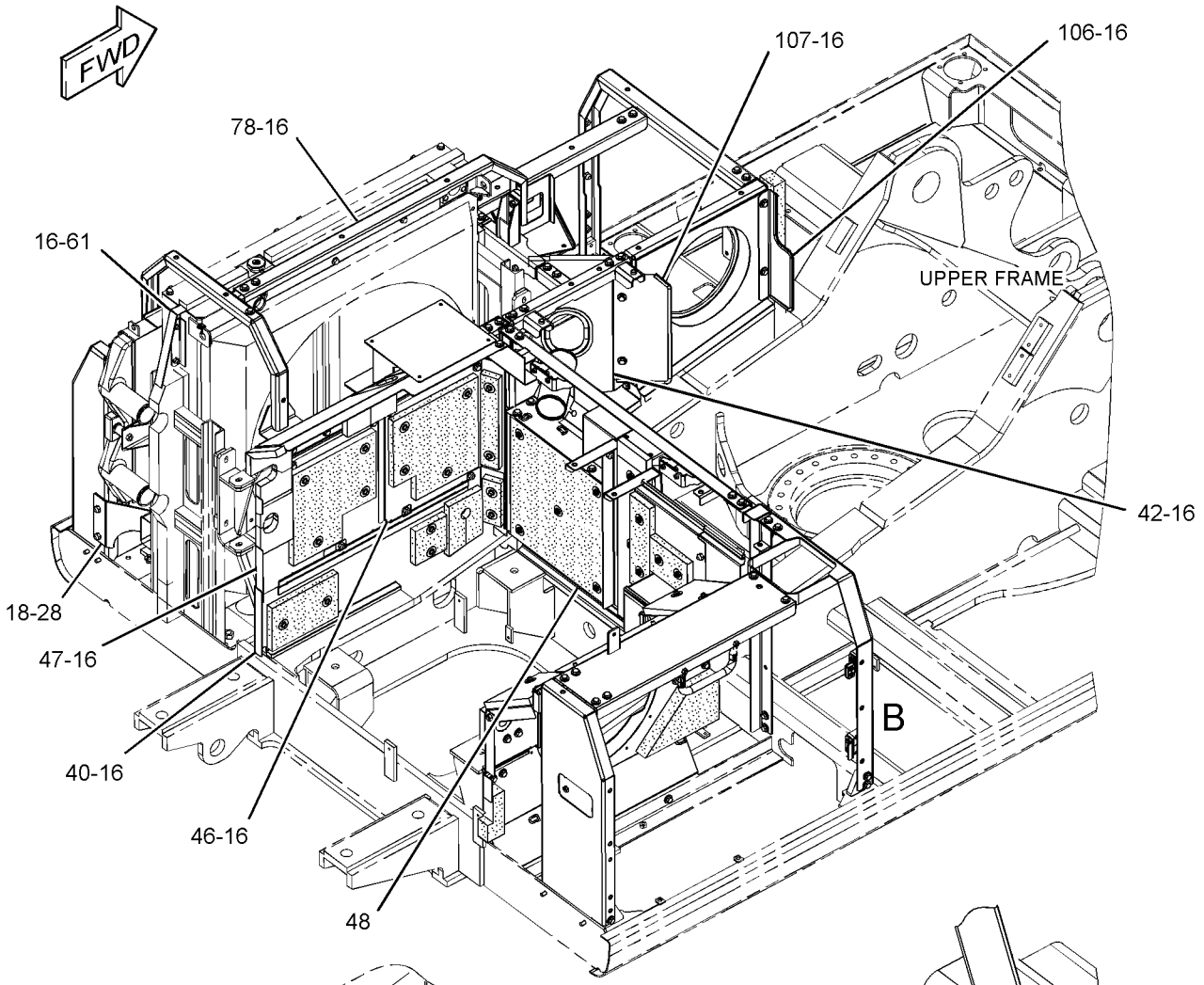

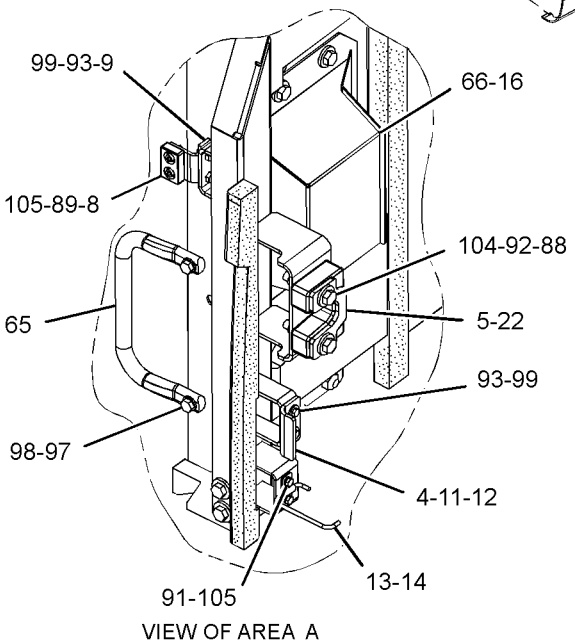

VIEW OF AREA A

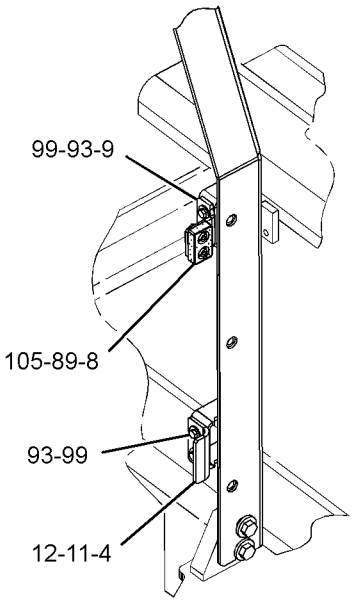

VIEW OF AREA B

GRAPHIC #2 g01518022

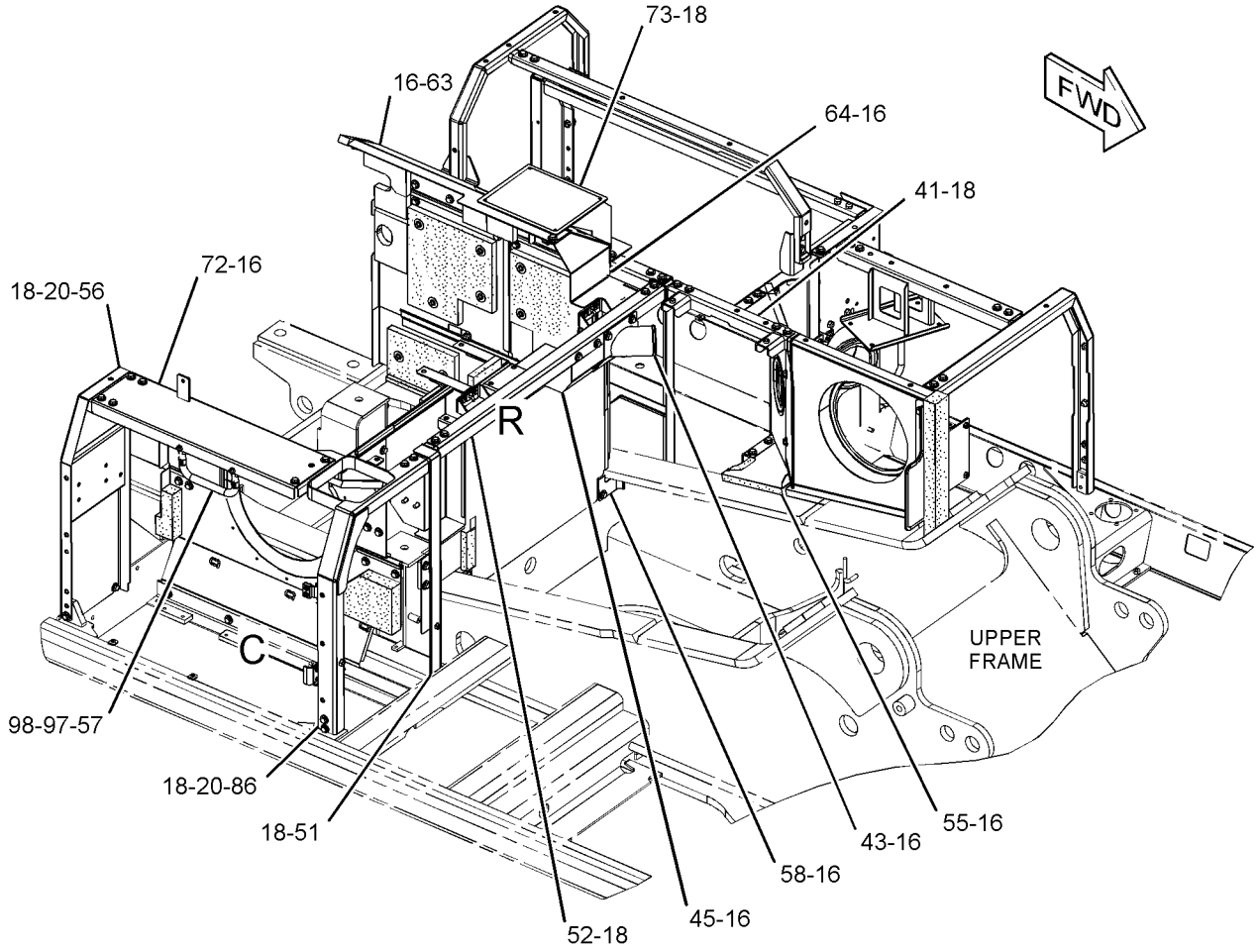

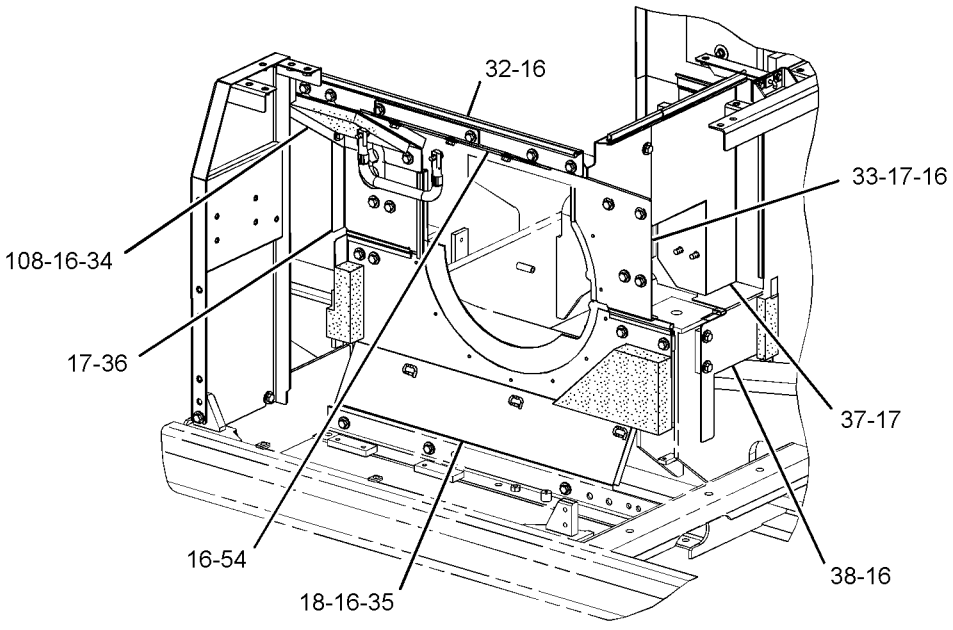

VIEW OF AREA C

GRAPHIC #3

g01518589

237-8768 **HOOD & GUARD GP** *(contd.)* **i03172068**

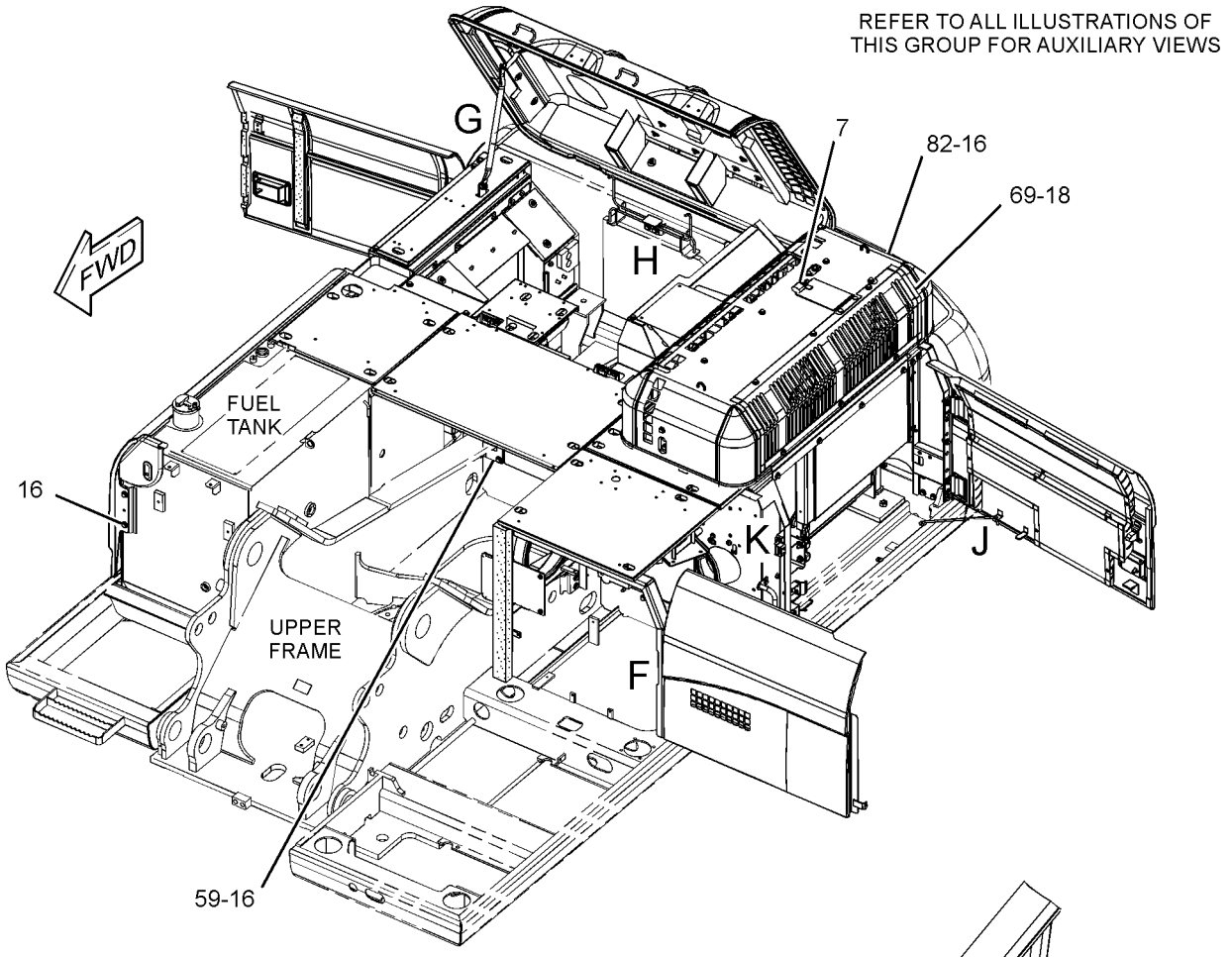

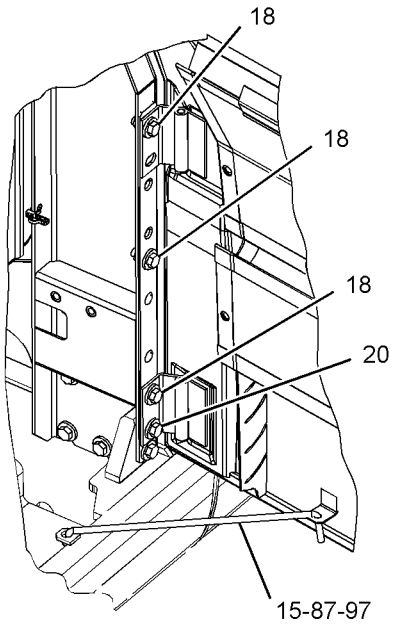

VIEW OF AREA J

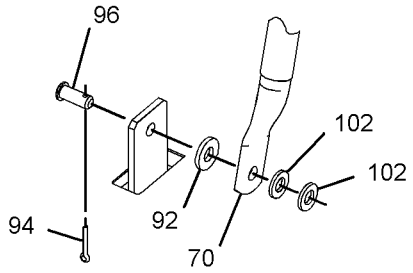

VIEW OF AREA G
(EXPLODED)

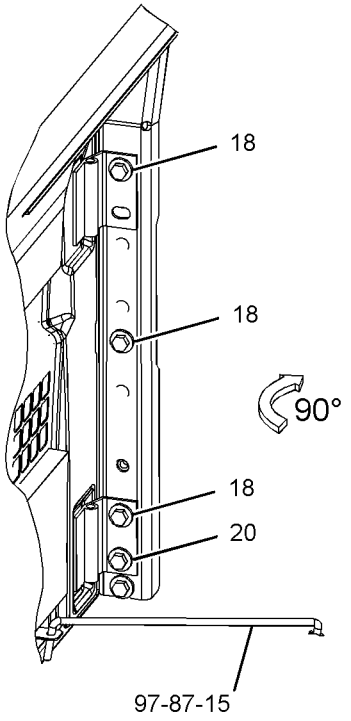

VIEW OF AREA F

GRAPHIC #4

g01518029

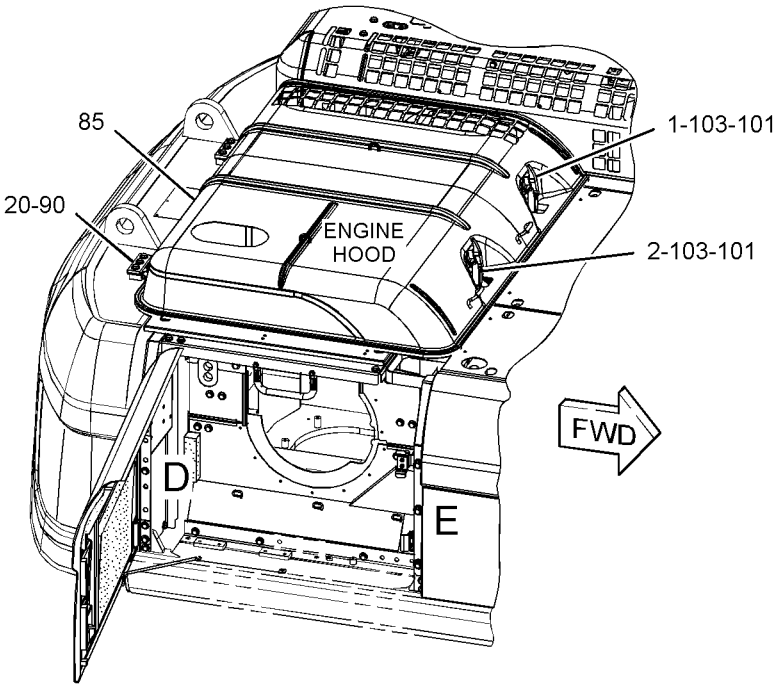

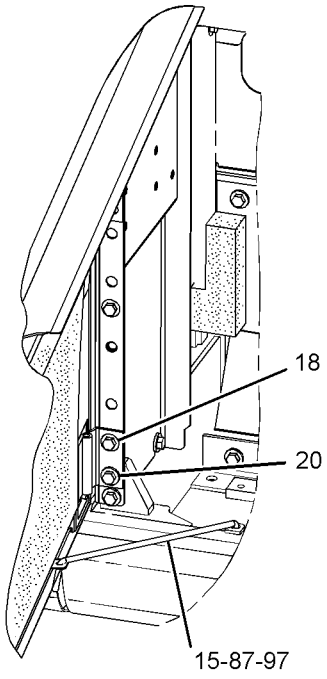

VIEW OF AREA D

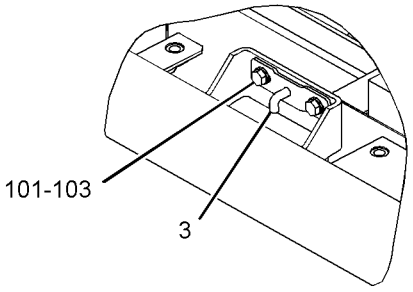

VIEW OF AREA R

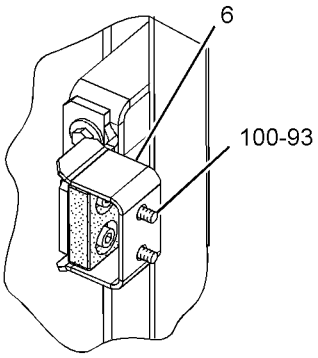

VIEW OF AREA K

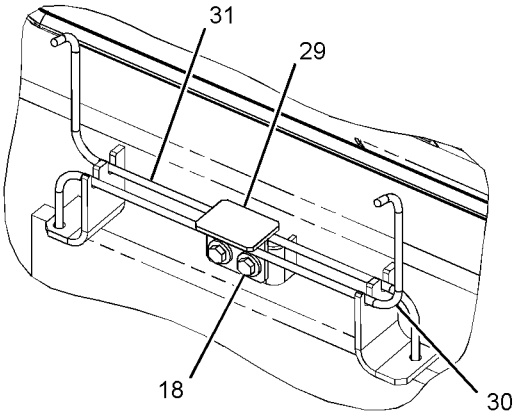

VIEW OF AREA H

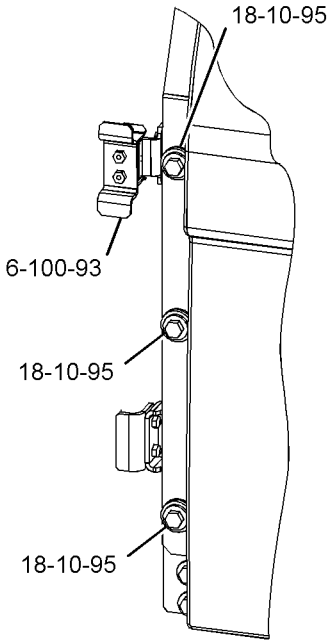

VIEW OF AREA E

GRAPHIC #5 **<END>** g01518540

237-8802 HOOD GP–PRECLEANER

S/N: D3P1-UP; M4T1-UP
PART OF 240-3769 AIR CLEANER AR
AN ATTACHMENT

SMCS-7251 **i03626392**

NOTE	REF NO	GRAPHIC REF	PART NUMBER	QTY	PART NAME 1 2 3 4 5 6 (PRODUCT LEVEL)	SEE PAGE
	1	1	**259-3662**	1	SUPPORT AS	
Y	2	1	**259-3667**	1	COVER AS-SOUND SUPPRESSION (PRECLEANER)	358
CY	3	1	**330-1444**	1	SUPPORT AS-ENCLOSURE (AIR CLEANER)	412

C-CHANGE FROM PREVIOUS TYPE
Y-SEPARATE ILLUSTRATION

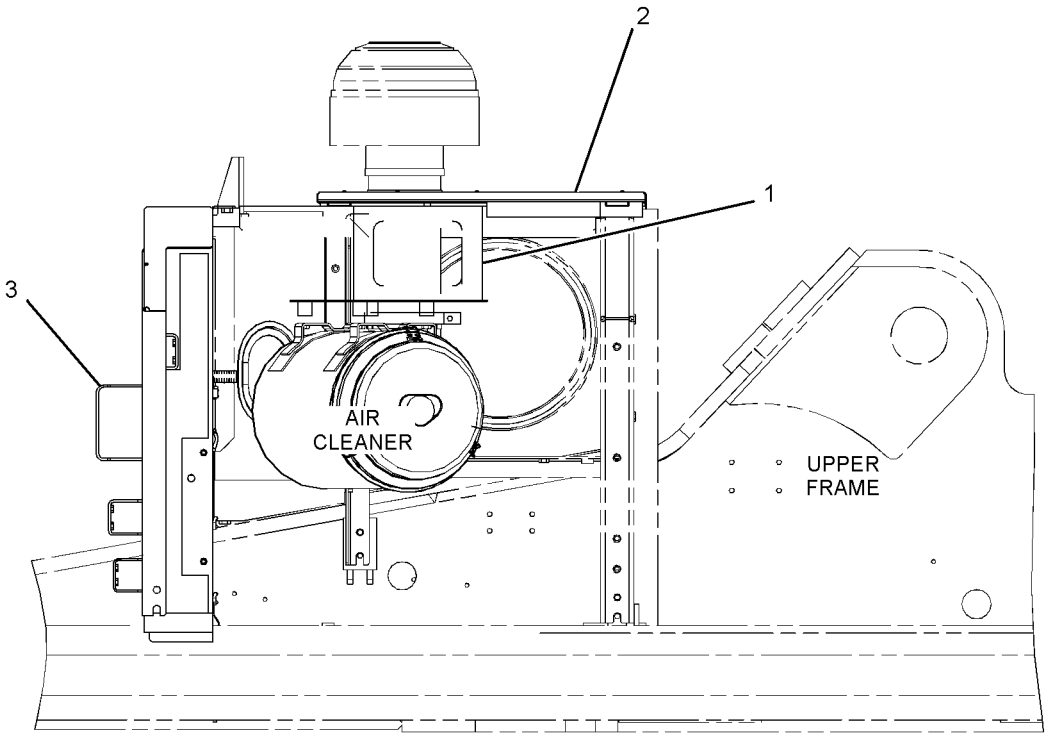

RIGHT SIDE VIEW

GRAPHIC #1 **<END>** g01203692

FRAME AND BODY

278-3905 HOOD GP–PRECLEANER

S/N: M4T1-UP
PART OF 275-3719 AIR CLEANER AR
AN ATTACHMENT

SMCS-7251 **i03728563**

NOTE	REF NO	GRAPHIC REF	PART NUMBER	QTY	PART NAME 1 2 3 4 5 6 (PRODUCT LEVEL)	SEE PAGE
	1	1	**259-3662**	1	SUPPORT AS	
Y	2	1	**273-7909**	1	SUPPORT AS-ENCLOSURE (AIR CLEANER)	411
	3	1	**278-3819**	1	COVER AS-ACCESS (PRECLEANER)	

Y-SEPARATE ILLUSTRATION

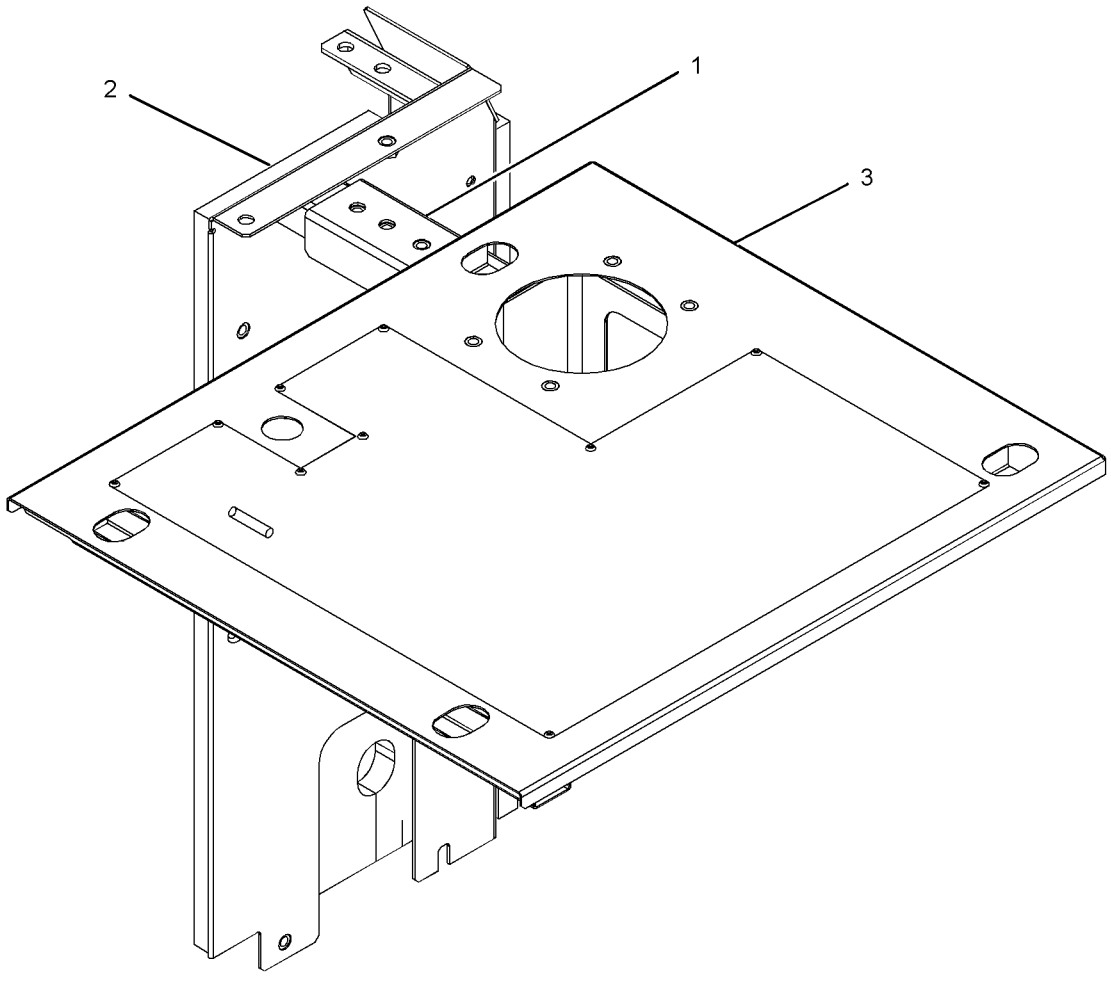

GRAPHIC #1 **<END>** g01236809

293-6867 HOOD GP–ACCUGRADE READY

S/N: D3P1-UP; M4T1-UP
PART OF 290-1780 CONVERSION AR-MACHINE
AN ATTACHMENT

SMCS-7251 **i03296089**

NOTE	REF NO	GRAPHIC REF	PART NUMBER	QTY	PART NAME 1 2 3 4 5 6 (PRODUCT LEVEL)	SEE PAGE
CY	1	1	**330-1417**	1	HOOD GP (RADIATOR)	390
Y	2	1	**293-6873**	1	HOOD GP-ENGINE	393
	3	1	**293-6895**	1	SUPPORT AS	
	4	1	**293-6931**	1	COVER AS	
		1	**293-6960**	1	INSULATION	
	5	1	**293-6935**	1	SUPPORT AS	

C-CHANGE FROM PREVIOUS TYPE
Y-SEPARATE ILLUSTRATION

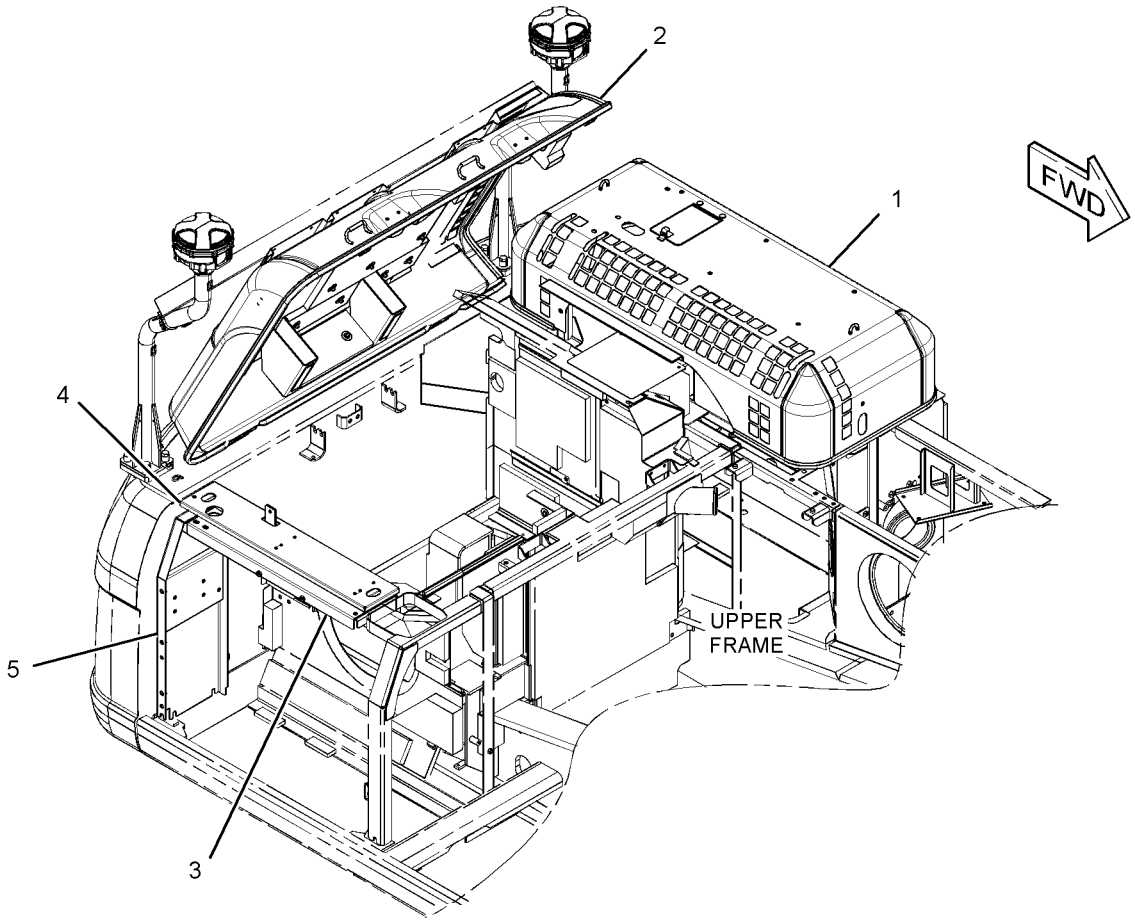

GRAPHIC #1 **<END>** g01369162

FRAME AND BODY

330-1417 HOOD GP–RADIATOR

S/N: D3P1-UP; M4T1-UP
PART OF 293-6867 HOOD GP
AN ATTACHMENT

SMCS-7251 **i03296095**

NOTE	REF NO	GRAPHIC REF	PART NUMBER	QTY	PART NAME 1 2 3 4 5 6 (PRODUCT LEVEL)	SEE PAGE
	1	1	**1K-8850**	1	SPRING	
	2	1	**5V-3854**	2	BUMPER	
	3	1	**7Y-8876**	1	DOOR AS	
	3A	1	**9V-3659**	1	HINGE	
	4	1	**262-2176**	1	LINER	
	5	1	**262-2435**	1	SHEET-RUBBER	
	6	1	**273-7918**	1	LINER	
	7	1	**273-7919**	1	LINER	
	8	1	**273-7920**	1	LINER	
	9	1	**273-7921**	1	LINER	
	11	1	**8T-4121**	2	WASHER-HARD (11X21X2.5-MM THK)	
M	12	1	**8T-4133**	2	NUT (M10X1.5-THD)	
D	13	1	**5P-5952**		SEAL (0.1-M)	
D	14	1	**5P-8309**		SEAL (1.2-M)	
D	14A	1	**5P-8309**		SEAL (0.9-M)	
D	14B	1	**5P-8309**		SEAL (0.04-M)	

D-ORDER BY THE METER
M-METRIC PART

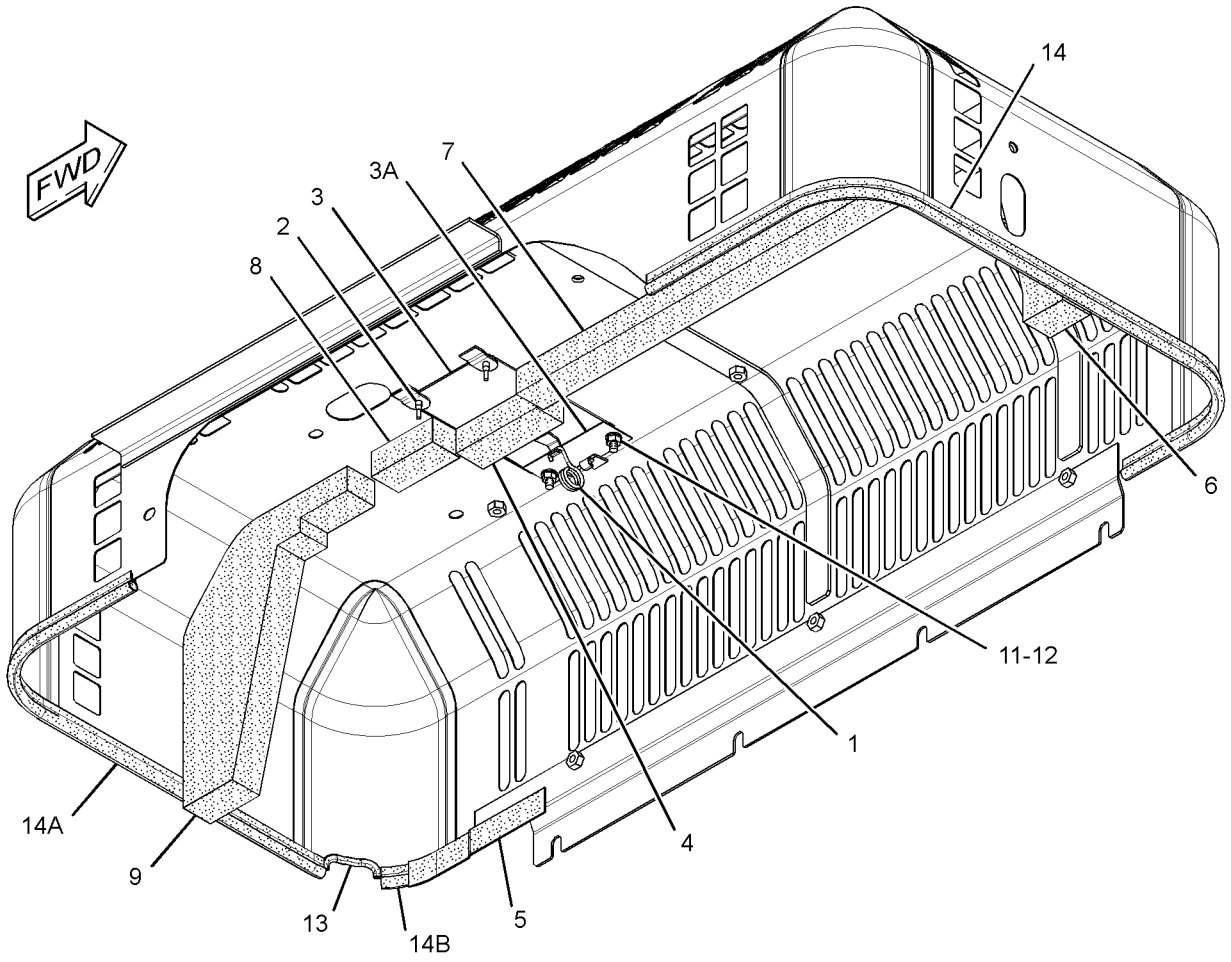

GRAPHIC #1 **<END>** g01615560

273-7911 HOOD GP-ENGINE–RADIATOR

S/N: D3P1-UP; M4T1-UP

PART OF 237-8768 HOOD & GUARD GP

SMCS-7251 **i03021075**

NOTE	REF NO	GRAPHIC REF	PART NUMBER	QTY	PART NAME 1 2 3 4 5 6 (PRODUCT LEVEL)	SEE PAGE
	1	1	**1K-8850**	1	SPRING	
	2	1	**5V-3854**	2	BUMPER	
	3	1	**7Y-8876**	1	DOOR AS	
	3A	1	**9V-3659**	1	HINGE	
	4	1	**262-2176**	1	LINER	
	5	1	**262-2435**	1	SHEET-RUBBER	
	7	1	**273-7918**	1	LINER	
	8	1	**273-7919**	1	LINER	
	9	1	**273-7920**	1	LINER	
	10	1	**273-7921**	1	LINER	
	11	1	**8T-4121**	2	WASHER-HARD (11X21X2.5-MM THK)	
M	12	1	**8T-4133**	2	NUT (M10X1.5-THD)	
D	13	1	**5P-8309**		SEAL (1-M)	
D	13A	1	**5P-8309**		SEAL (1.3-M)	

D-ORDER BY THE METER
M-METRIC PART

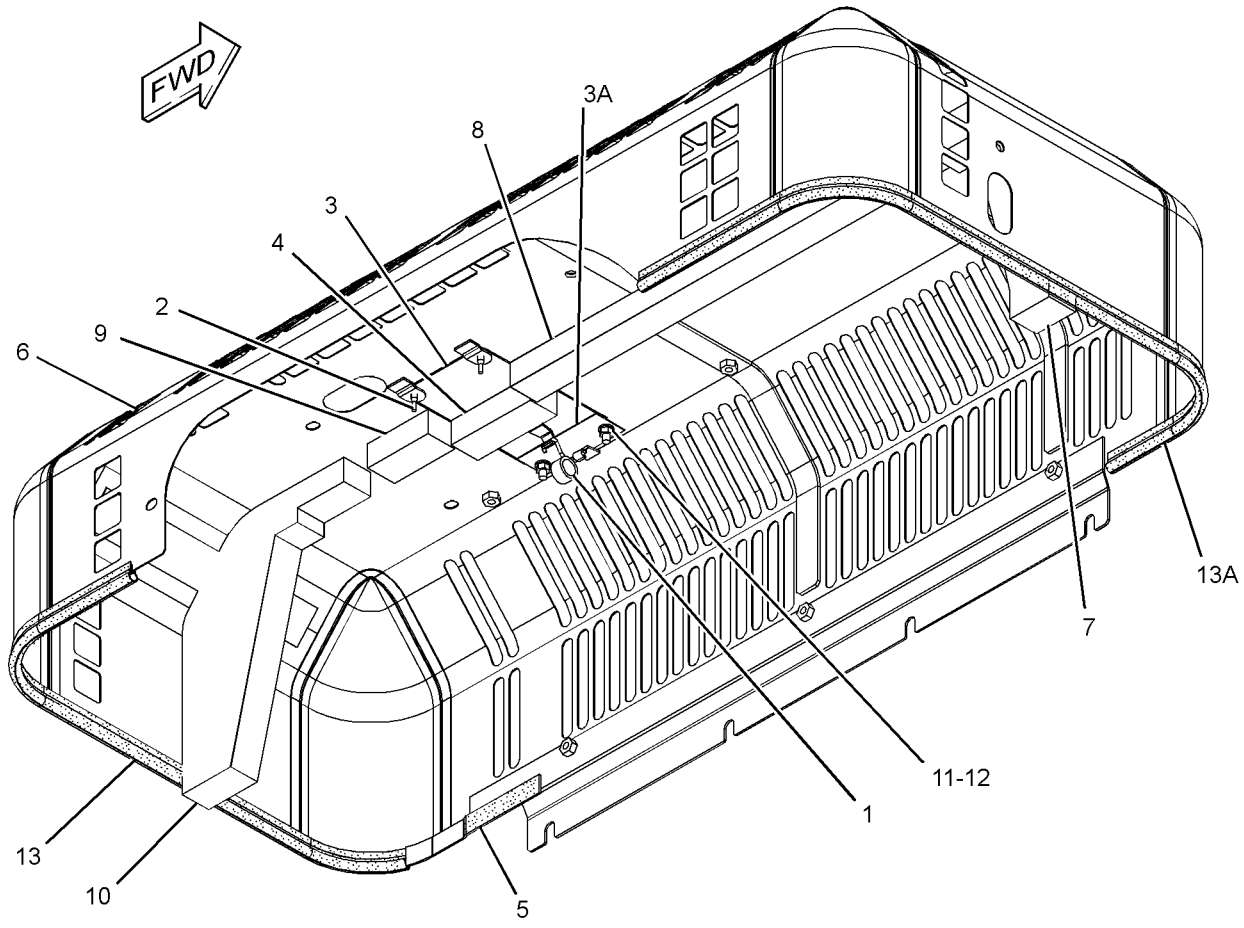

GRAPHIC #1 **<END>** g01250543

FRAME AND BODY

289-6767 HOOD GP-ENGINE

S/N: D3P1-UP; M4T1-UP

PART OF 237-8768 HOOD & GUARD GP

SMCS-7251 **i03626444**

NOTE	REF NO	GRAPHIC REF	PART NUMBER	QTY	PART NAME 1 2 3 4 5 6 (PRODUCT LEVEL)	SEE PAGE
	1	1	**4I-7924**	19	WASHER (4.5X40X1.2-MM THK)	
	2	1	**6P-2216**	19	CAP	
	3	1	**096-4129**	2	CUSHION	
	4	1	**203-5057**	1	LINER	
	5	1	**259-3696**	2	LINER	
	6	1	**259-3697**	1	LINER	
	7	1	**259-3698**	1	LINER	
	8	1	**259-3699**	1	LINER	
	9	1	**259-3700**	1	LINER	
	10	1	**259-3701**	1	LINER	
	11	1	**262-2179**	1	LINER	
	12	1	**289-6768**	1	HOOD AS-ENGINE	
	12A	1	**114-6289**	2	HINGE	
	13	1	**8T-0328**	4	WASHER-HARD (5.5X10X1-MM THK)	
M	14	1	**8T-6693**	4	SCREW-MACHINE (M5X0.8X16-MM)	
D	15	1	**5P-8309**	1	SEAL (1.6-M)	
D	16	1	**101-9848**	1	SEAL (4.7-M)	

D-ORDER BY THE METER
M-METRIC PART

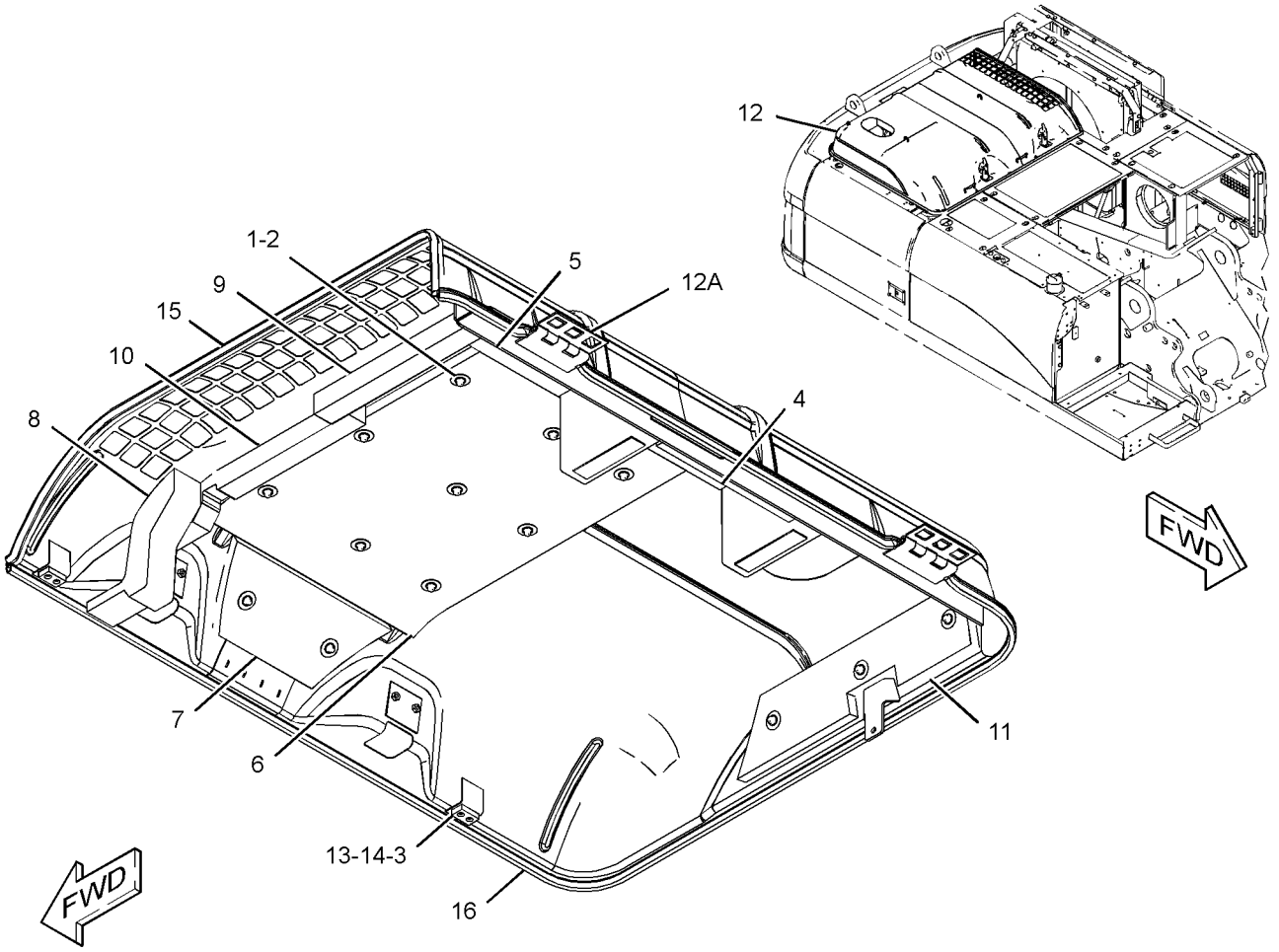

GRAPHIC #1 **<END>** g01250842

293-6873 HOOD GP-ENGINE

S/N: D3P1-UP; M4T1-UP
PART OF 293-6867 HOOD GP
AN ATTACHMENT

SMCS-7251 **i02819846**

NOTE	REF NO	GRAPHIC REF	PART NUMBER	QTY	PART NAME 1 2 3 4 5 6 (PRODUCT LEVEL)	SEE PAGE
	1	1	**4I-7924**	19	WASHER (4.5X40X1.2-MM THK)	
	2	1	**6P-2216**	19	CAP	
	3	1	**096-4129**	2	CUSHION	
	4	1	**203-5057**	1	LINER	
	5	1	**259-3696**	2	LINER	
	6	1	**259-3697**	1	LINER	
	7	1	**259-3698**	1	LINER	
	8	1	**259-3699**	1	LINER	
	9	1	**259-3700**	1	LINER	
	10	1	**259-3701**	1	LINER	
	11	1	**262-2179**	1	LINER	
	12	1	**307-7862**	1	HOOD AS-ENGINE	
	12A	1	**114-6289**	2	HINGE	
	12B	1	**146-4936**	2	HANDLE AS	
		1	**6C-3679**	80	RIVET-POP	
	13	1	**8T-0328**	4	WASHER-HARD (5.5X10X1-MM THK)	
M	14	1	**8T-6693**	4	SCREW-MACHINE (M5X0.8X16-MM)	
D	15	1	**5P-8309**		SEAL (1.6-M)	
D	16	1	**101-9848**		SEAL (4.7-M)	
E	17	1	**184-8580**		SEAL (35-CM)	
E	17A	1	**184-8580**		SEAL (41-CM)	

D-ORDER BY THE METER
E-ORDER BY THE CENTIMETER
M-METRIC PART

293-6873 HOOD GP-ENGINE *(contd.)* i02819846

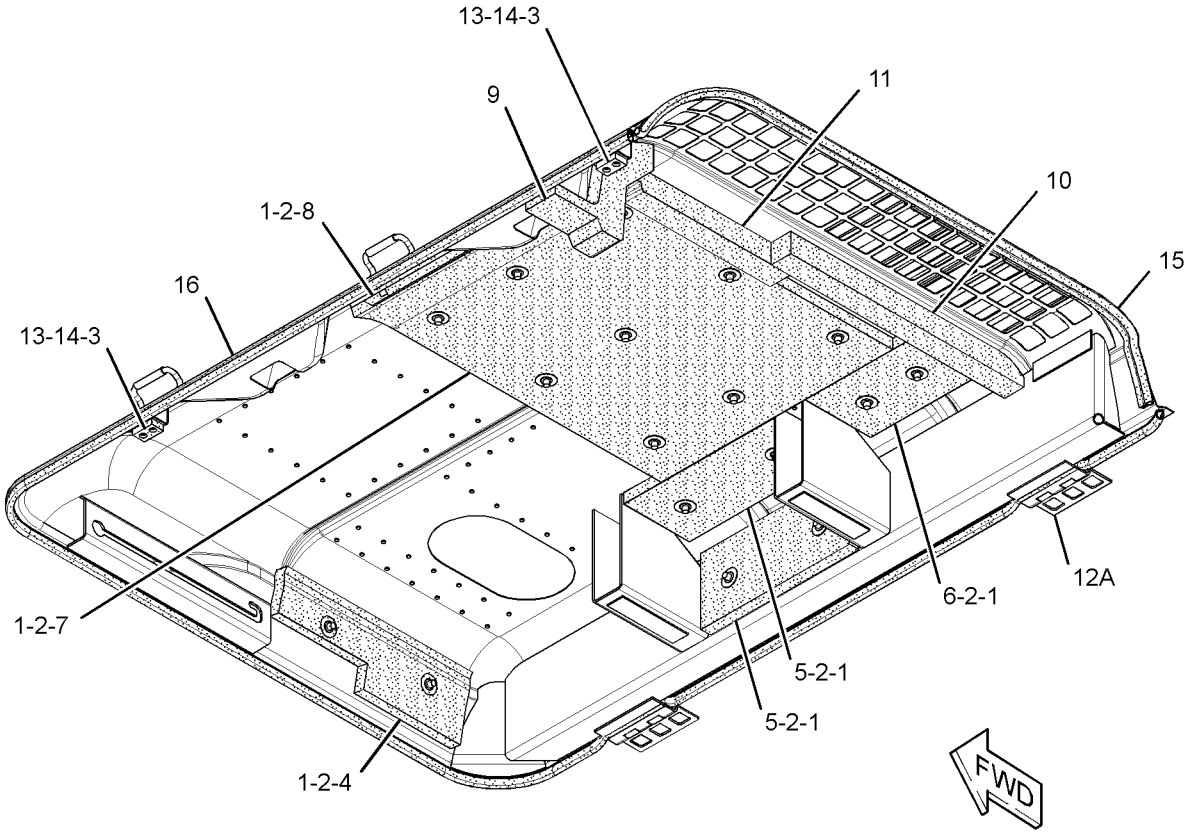

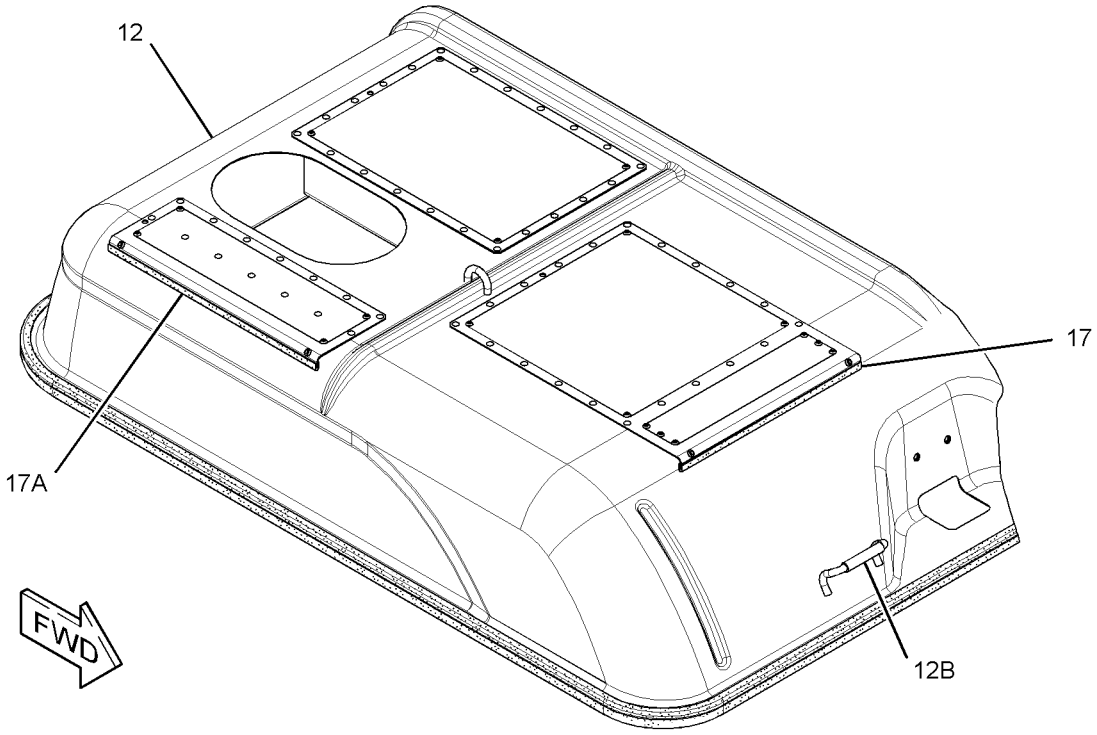

GRAPHIC #1 **<END>** g01619925

256-1794 SHEET AS-SOUND SUPPRESSION

S/N: D3P1-UP; M4T1-UP
PART OF 237-8768 HOOD & GUARD GP

SMCS-1801, 7076, 7251, 7267 **i02490606**

NOTE	REF NO	GRAPHIC REF	PART NUMBER	QTY	PART NAME 1 2 3 4 5 6 (PRODUCT LEVEL)	SEE PAGE
	1	1	**4I-7924**	2	WASHER (4.5X40X1.2-MM THK)	
	2	1	**6P-2216**	2	CAP	
	3	1	**9M-5732**	2	RIVET-POP	
Z	4	1		1	SHEET AS	
	5	1	**256-1797**	1	SHEET-RUBBER	
	6	1	**256-1799**	1	INSULATION	
	7	1	**270-9783**	1	INSULATION	
	8	1	**9M-2307**	2	WASHER (5.2X19X2-MM THK)	
D	9	1	**101-9848**		SEAL (0.2-M)	
D	9A	1	**101-9848**		SEAL (0.11-M)	

D-ORDER BY THE METER
Z-NOT SERVICED SEPARATELY

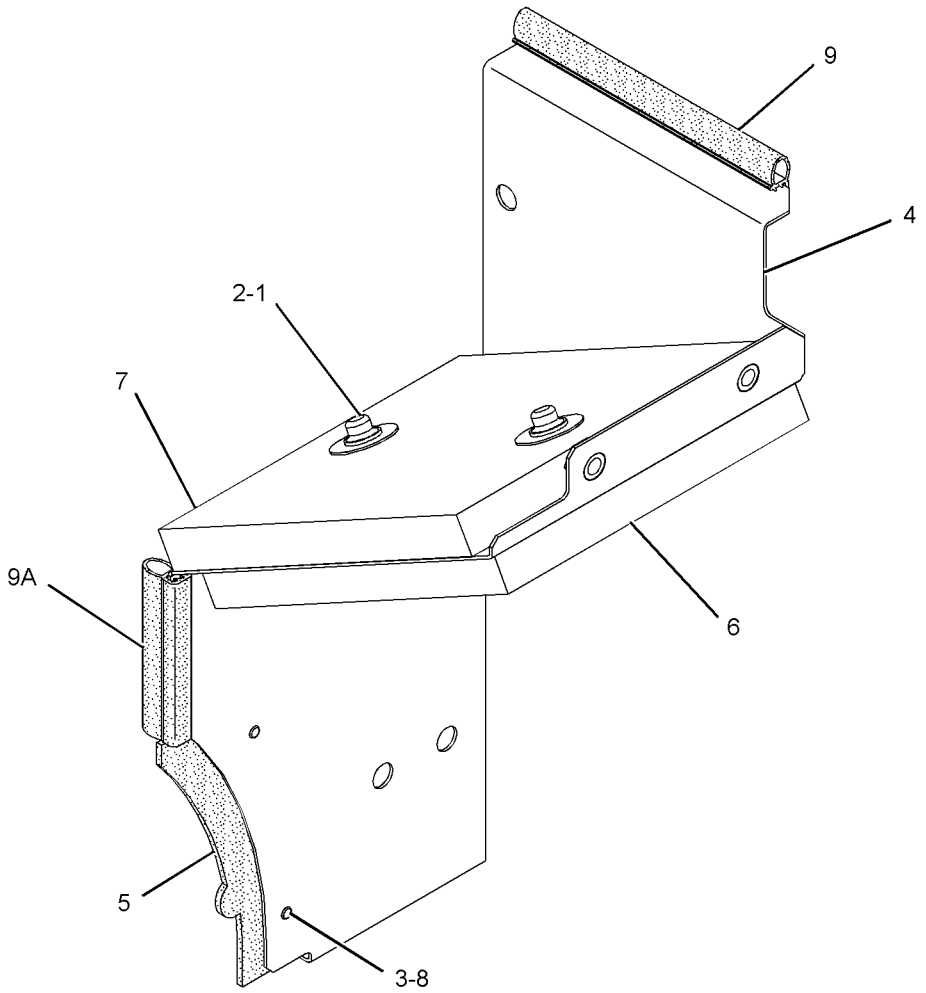

GRAPHIC #1 **<END>** g01236325

256-1802 SHEET AS-SOUND SUPPRESSION

S/N: D3P1-UP; M4T1-UP

PART OF 237-8768 HOOD & GUARD GP

SMCS-1801, 7076, 7251, 7267 **i02490607**

NOTE	REF NO	GRAPHIC REF	PART NUMBER	QTY	PART NAME 1 2 3 4 5 6 (PRODUCT LEVEL)	SEE PAGE
	1	1	**4I-7924**	2	WASHER (4.5X40X1.2-MM THK)	
	2	1	**6P-2216**	2	CAP	
Z	3	1		1	SHEET AS	
	4	1	**256-1805**	1	INSULATION	
	5	1	**256-1806**	1	INSULATION	

Z-NOT SERVICED SEPARATELY

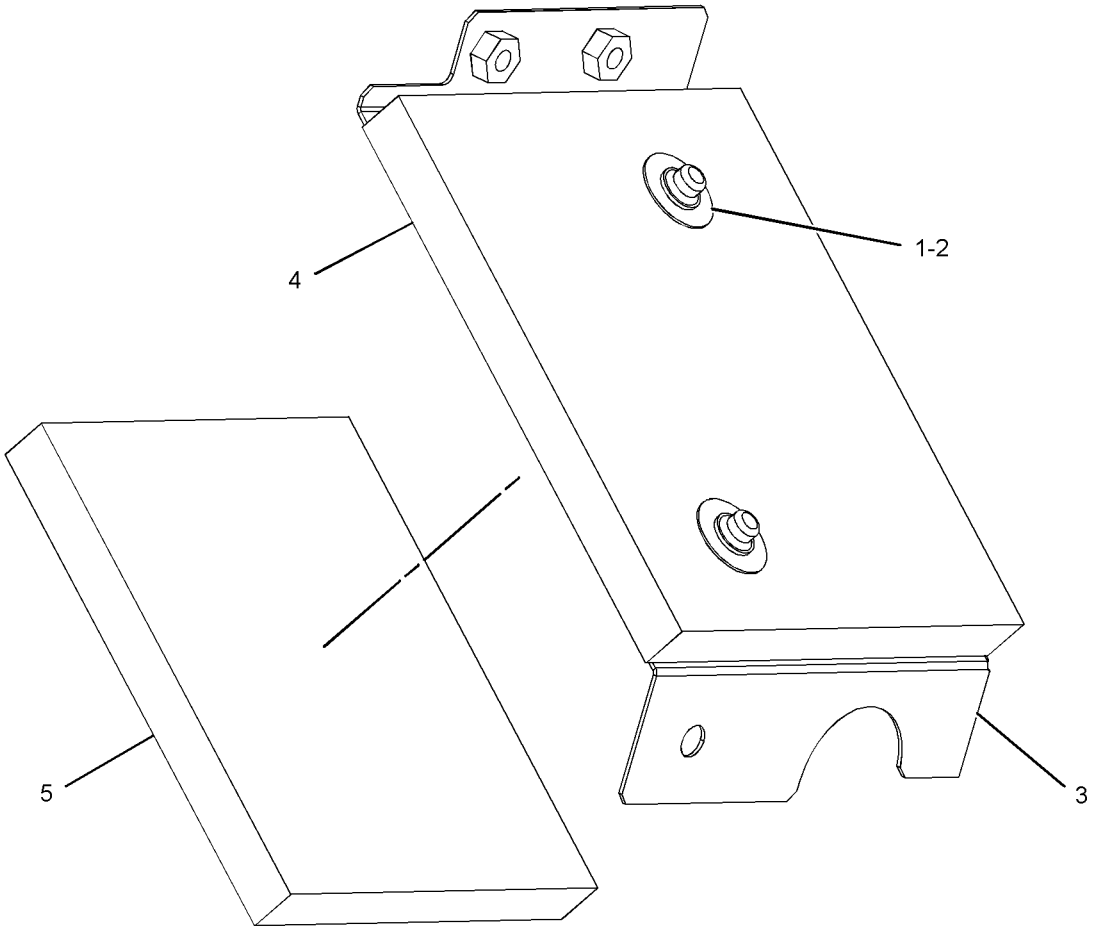

GRAPHIC #1 **<END>** g01236338

256-1807 SHEET AS-SOUND SUPPRESSION

S/N: D3P1-UP; M4T1-UP

PART OF 237-8768 HOOD & GUARD GP

SMCS-1801, 7076, 7251, 7267 **i02490619**

NOTE	REF NO	GRAPHIC REF	PART NUMBER	QTY	PART NAME 1 2 3 4 5 6 (PRODUCT LEVEL)	SEE PAGE
	1	1	**4I-7924**	3	WASHER (4.5X40X1.2-MM THK)	
	2	1	**6P-2216**	3	CAP	
	3	1	**9M-5732**	7	RIVET-POP	
Z	4	1		1	SHEET AS	
	5	1	**256-1810**	1	SHEET-RUBBER	
	6	1	**256-1811**	1	INSULATION	
	7	1	**256-1814**	1	INSULATION	
	8	1	**273-7943**	1	INSULATION	
	9	1	**9M-2307**	7	WASHER (5.2X19X2-MM THK)	
D	10	1	**5P-8309**		SEAL (0.2-M EACH)	

D-ORDER BY THE METER
Z-NOT SERVICED SEPARATELY

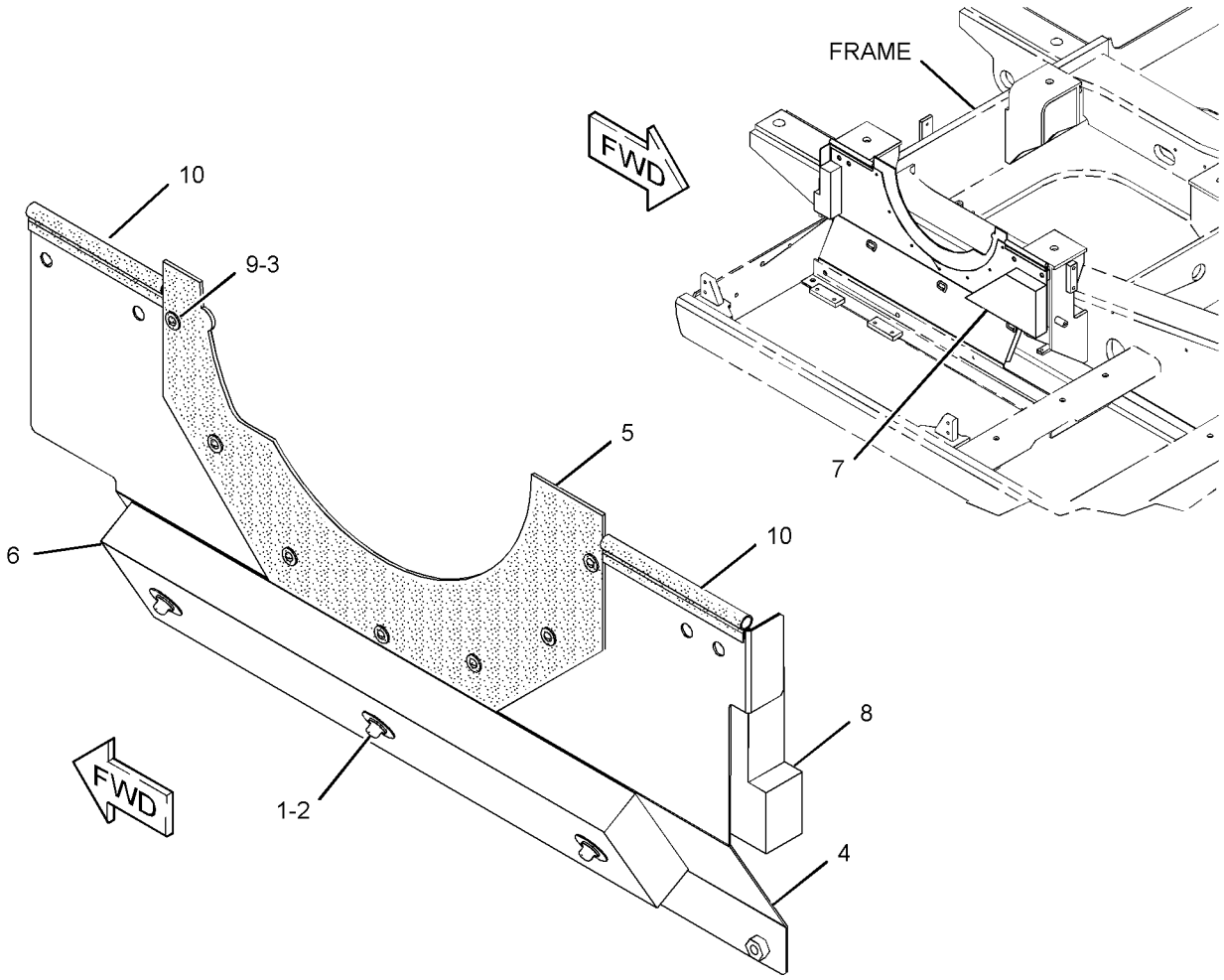

GRAPHIC #1 **<END>** g01241958

256-1820 SHEET AS-SOUND SUPPRESSION

S/N: D3P1-UP; M4T1-UP

PART OF 237-8768 HOOD & GUARD GP

SMCS-1801, 7076, 7251, 7267 **i02490620**

NOTE	REF NO	GRAPHIC REF	PART NUMBER	QTY	PART NAME 1 2 3 4 5 6 (PRODUCT LEVEL)	SEE PAGE
	1	1	**4I-7924**	4	WASHER (4.5X40X1.2-MM THK)	
	2	1	**6P-2216**	4	CAP	
Z	3	1		1	SHEET AS	
	4	1	**256-1824**	1	LINER	
	5	1	**256-1825**	1	LINER	
	6	1	**256-1905**	1	INSULATION	
	7	1	**256-1906**	1	INSULATION	
D	8	1	**5P-8309**		SEAL (0.6-M)	
D	9	1	**101-9848**		SEAL (0.33-M)	
D	9A	1	**101-9848**		SEAL (0.21-M)	

D-ORDER BY THE METER
Z-NOT SERVICED SEPARATELY

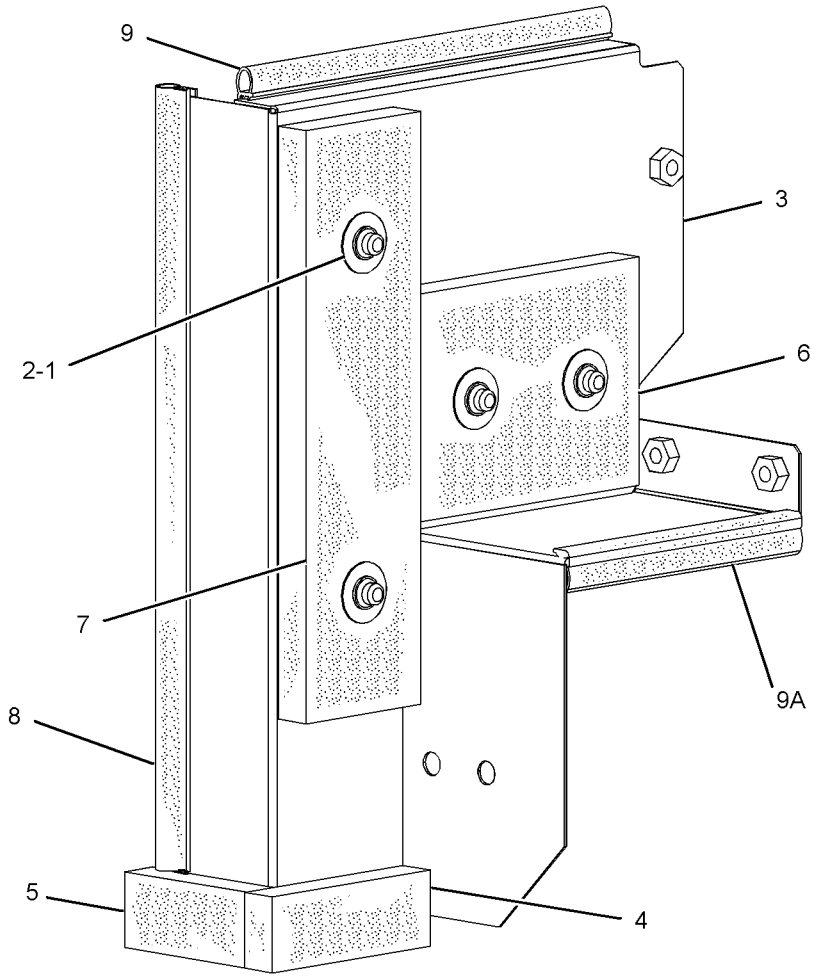

GRAPHIC #1 **<END>** g01236326

FRAME AND BODY

256-1826 SHEET AS-SOUND SUPPRESSION

S/N: D3P1-UP; M4T1-UP

PART OF 237-8768 HOOD & GUARD GP

SMCS-1801, 7076, 7251, 7267 **i02490621**

NOTE	REF NO	GRAPHIC REF	PART NUMBER	QTY	PART NAME 1 2 3 4 5 6 (PRODUCT LEVEL)	SEE PAGE
Z	1	1		1	SHEET	
	2	1	**256-1828**	1	LINER	
	3	1	**256-1829**	1	LINER	

Z-NOT SERVICED SEPARATELY

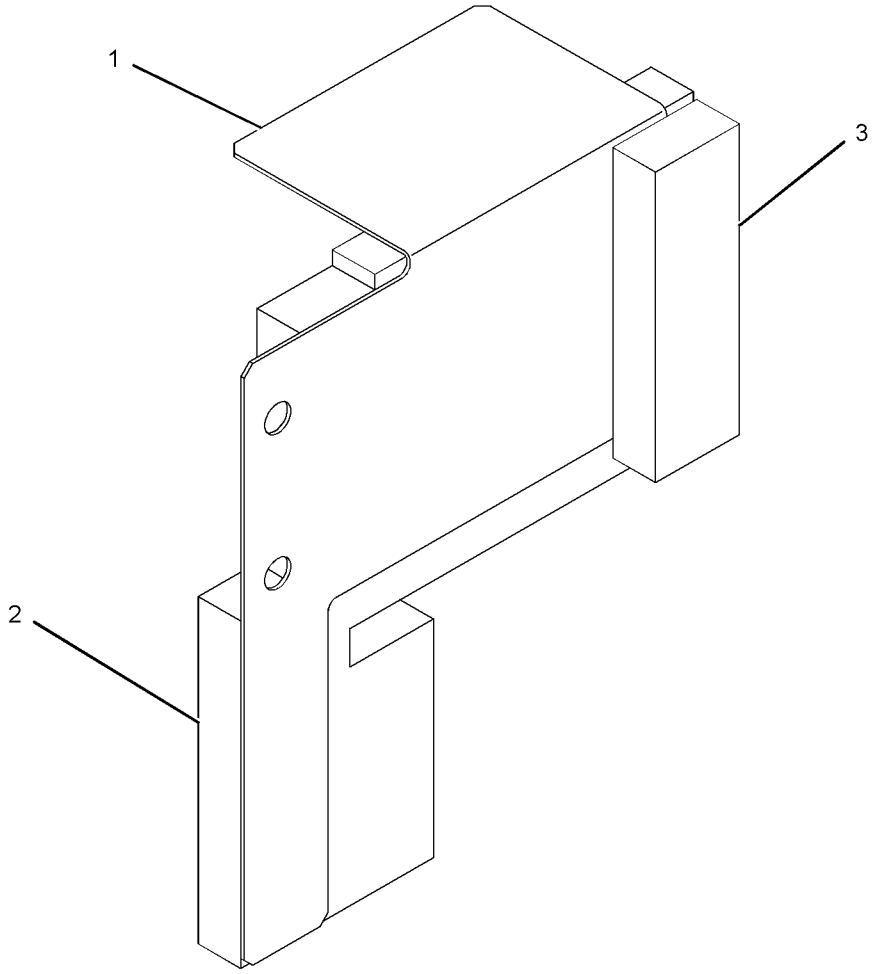

GRAPHIC #1 **<END>** g01236641

FRAME AND BODY

256-1853 SHEET AS-SOUND SUPPRESSION

S/N: D3P1-UP; M4T1-UP

PART OF 237-8768 HOOD & GUARD GP

SMCS-1801, 7076, 7251, 7267 **i02490634**

NOTE	REF NO	GRAPHIC REF	PART NUMBER	QTY	PART NAME 1 2 3 4 5 6 (PRODUCT LEVEL)	SEE PAGE
	1	1	**4I-7924**	6	WASHER (4.5X40X1.2-MM THK)	
	2	1	**6P-2216**	6	CAP	
Z	3	1		1	SHEET AS	
	4	1	**256-1858**	1	LINER	
	5	1	**256-1859**	1	INSULATION	
	6	1	**256-1860**	1	INSULATION	
	7	1	**256-1861**	1	LINER	
	8	1	**256-1863**	1	LINER	
	9	1	**256-1864**	1	LINER	
	10	1	**256-1865**	1	INSULATION	
	11	1	**256-1866**	3	SHEET-RUBBER	
	12	1	**262-2440**	1	LINER	

Z-NOT SERVICED SEPARATELY

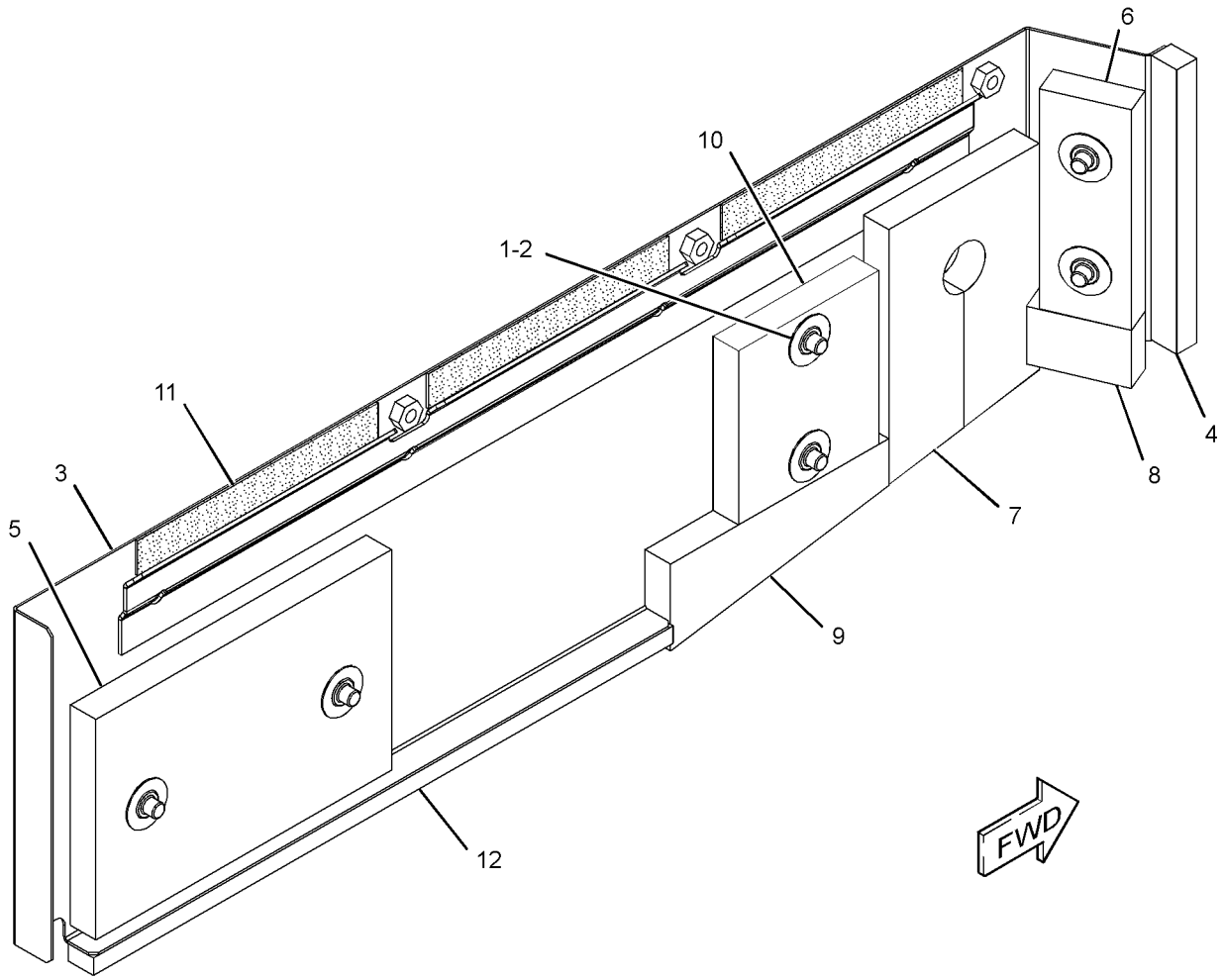

GRAPHIC #1 **<END>** g01198245

FRAME AND BODY

256-1890 SHEET AS-SOUND SUPPRESSION

S/N: D3P1-UP; M4T1-UP

PART OF 237-8768 HOOD & GUARD GP

SMCS-1801, 7076, 7251, 7267 **i02490635**

NOTE	REF NO	GRAPHIC REF	PART NUMBER	QTY	PART NAME 1 2 3 4 5 6 (PRODUCT LEVEL)	SEE PAGE
Z	1	1		1	SHEET	
	2	1	**256-1892**	1	LINER	
	3	1	**256-1893**	1	LINER	
D	4	1	**5P-8309**		SEAL (0.57-M)	

D-ORDER BY THE METER
Z-NOT SERVICED SEPARATELY

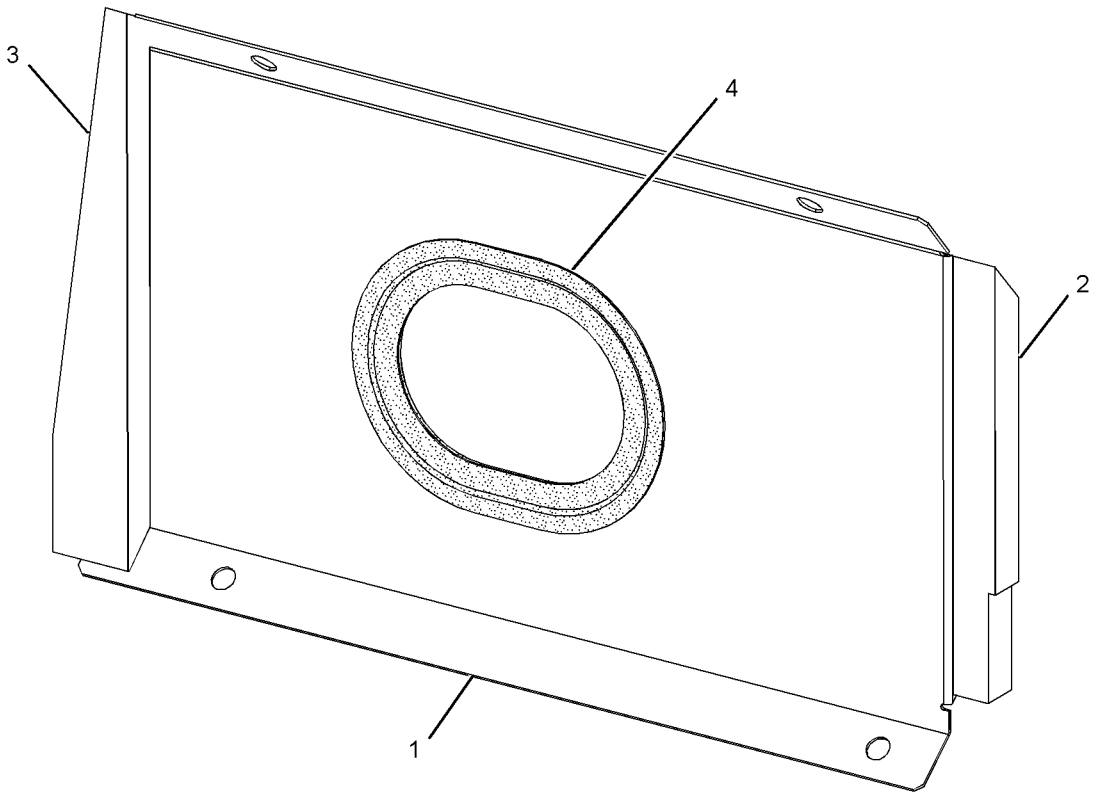

GRAPHIC #1 **<END>** g01236720

FRAME AND BODY

256-1912 SHEET AS-SOUND SUPPRESSION

S/N: D3P1-UP; M4T1-UP

PART OF 237-8768 HOOD & GUARD GP

SMCS-1801, 7076, 7251, 7267 **i02490646**

NOTE	REF NO	GRAPHIC REF	PART NUMBER	QTY	PART NAME 1 2 3 4 5 6 (PRODUCT LEVEL)	SEE PAGE
	1	1	**4I-7924**	6	WASHER (4.5X40X1.2-MM THK)	
	2	1	**6P-2216**	6	CAP	
Z	3	1		1	SHEET AS	
	4	1	**256-1915**	1	LINER	
	5	1	**256-1916**	1	INSULATION	
	6	1	**256-1917**	1	INSULATION	
	7	1	**256-1918**	1	LINER	

Z-NOT SERVICED SEPARATELY

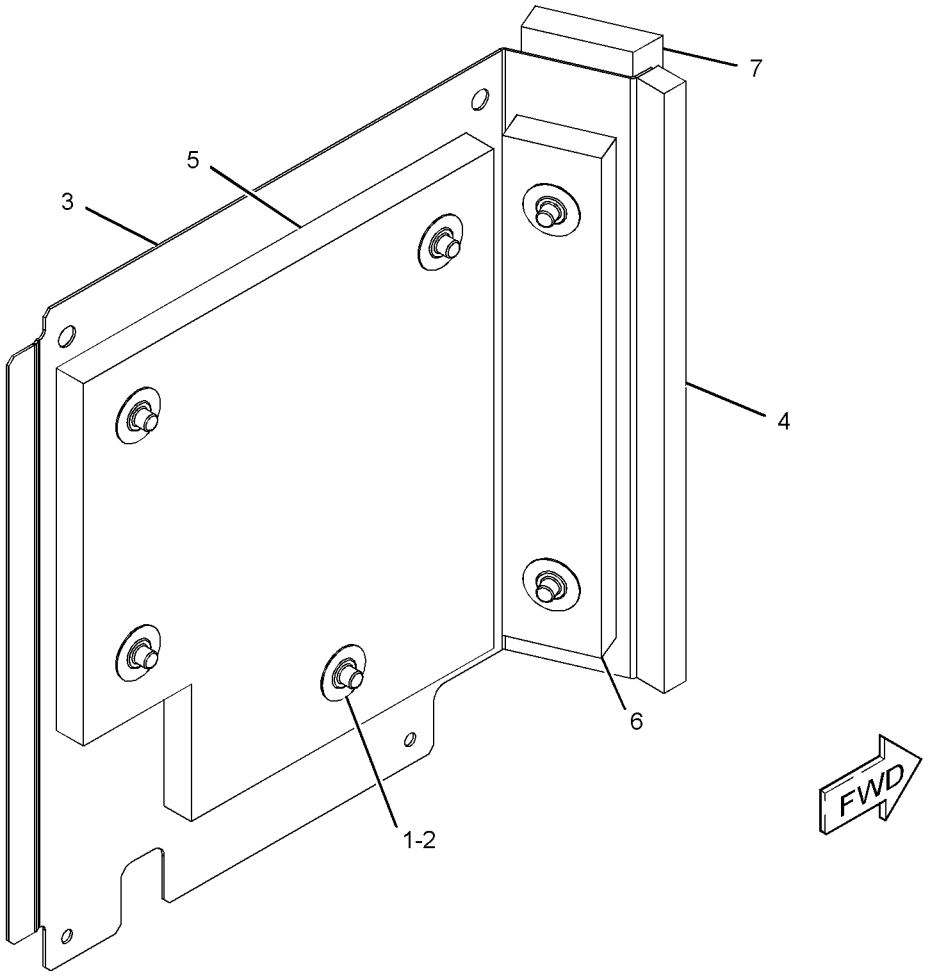

GRAPHIC #1 **<END>** g01198296

FRAME AND BODY

256-1919 SHEET AS-SOUND SUPPRESSION

S/N: D3P1-UP; M4T1-UP

PART OF 237-8768 HOOD & GUARD GP

SMCS-1801, 7076, 7251, 7267 **i02490648**

NOTE	REF NO	GRAPHIC REF	PART NUMBER	QTY	PART NAME 1 2 3 4 5 6 (PRODUCT LEVEL)	SEE PAGE
	1	1	**4I-7924**	4	WASHER (4.5X40X1.2-MM THK)	
	2	1	**6P-2216**	4	CAP	
Z	3	1		1	SHEET AS	
	4	1	**256-1922**	1	INSULATION	
	5	1	**256-1923**	1	LINER	
	6	1	**256-1924**	1	LINER	

Z-NOT SERVICED SEPARATELY

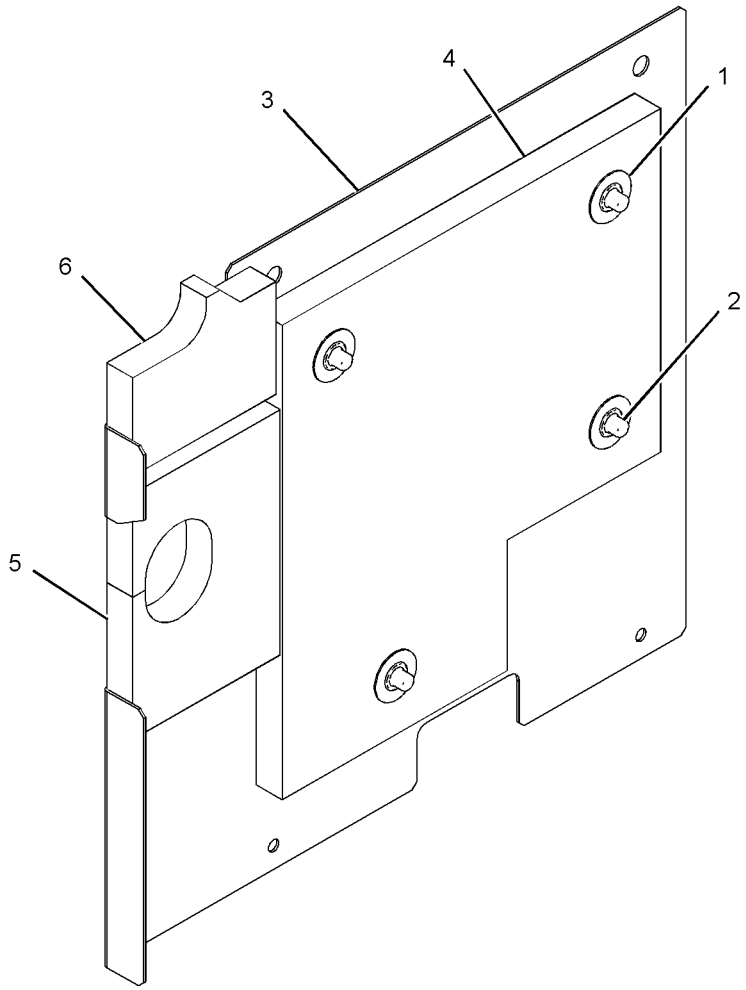

GRAPHIC #1 **<END>** g01199363

FRAME AND BODY

256-1925 SHEET AS-SOUND SUPPRESSION

S/N: D3P1-UP; M4T1-UP

PART OF 237-8768 HOOD & GUARD GP

SMCS-1801, 7076, 7251, 7267 **i02490650**

NOTE	REF NO	GRAPHIC REF	PART NUMBER	QTY	PART NAME 1 2 3 4 5 6 (PRODUCT LEVEL)	SEE PAGE
Z	1	1		1	SHEET AS	
	2	1	**4I-7924**	8	WASHER (4.5X40X1.2-MM THK)	
	3	1	**6P-2216**	8	CAP	
	4	1	**259-3546**	1	LINER	
	5	1	**259-3547**	1	INSULATION	
	6	1	**259-3548**	1	LINER	

Z-NOT SERVICED SEPARATELY

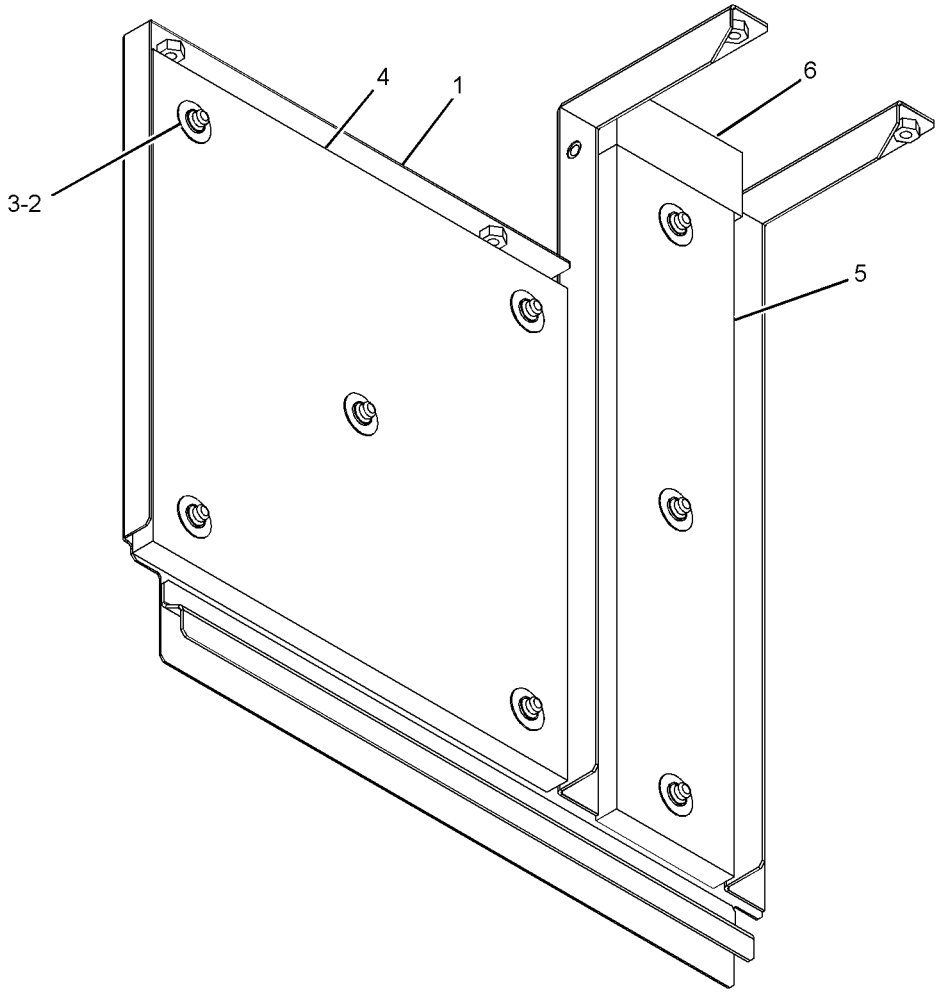

GRAPHIC #1 **<END>** g01236636

FRAME AND BODY

259-3591 SHEET AS-SOUND SUPPRESSION

S/N: D3P1-UP; M4T1-UP

PART OF 237-8768 HOOD & GUARD GP

SMCS-1801, 7076, 7251, 7267 **i02490653**

NOTE	REF NO	GRAPHIC REF	PART NUMBER	QTY	PART NAME 1 2 3 4 5 6 (PRODUCT LEVEL)	SEE PAGE
Z	1	1		1	SHEET	
	2	1	**259-3593**	1	LINER	
	3	1	**259-3637**	1	LINER	

Z-NOT SERVICED SEPARATELY

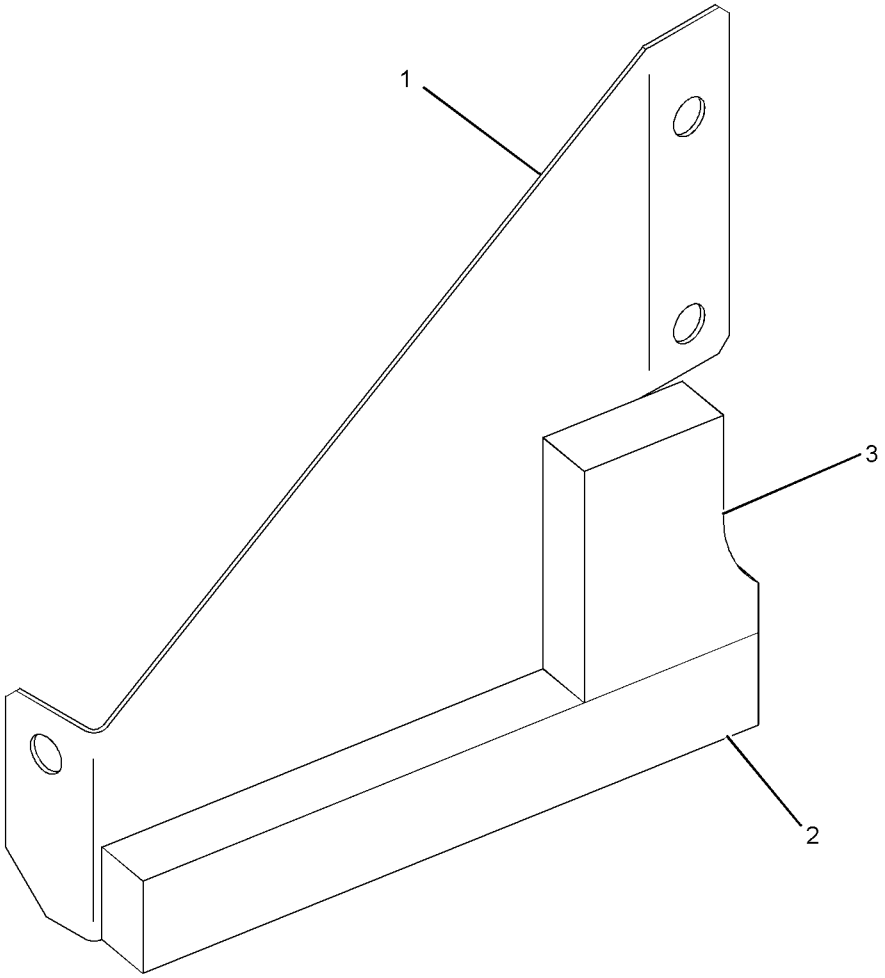

GRAPHIC #1 **<END>** g01236509

FRAME AND BODY

262-2134 SHEET AS-SOUND SUPPRESSION

S/N: D3P1-UP; M4T1-UP

PART OF 237-8768 HOOD & GUARD GP

SMCS-1801, 7076, 7251, 7267 **i02490654**

NOTE	REF NO	GRAPHIC REF	PART NUMBER	QTY	PART NAME 1 2 3 4 5 6 (PRODUCT LEVEL)	SEE PAGE
Z	1	1		1	SHEET AS	
	2	1	**262-2137**	1	LINER	
	3	1	**262-2138**	1	LINER	
	4	1	**262-2139**	1	LINER	
	5	1	**262-2140**	1	LINER	
	6	1	**262-2141**	1	LINER	
	7	1	**262-2435**	1	SHEET-RUBBER	

Z-NOT SERVICED SEPARATELY

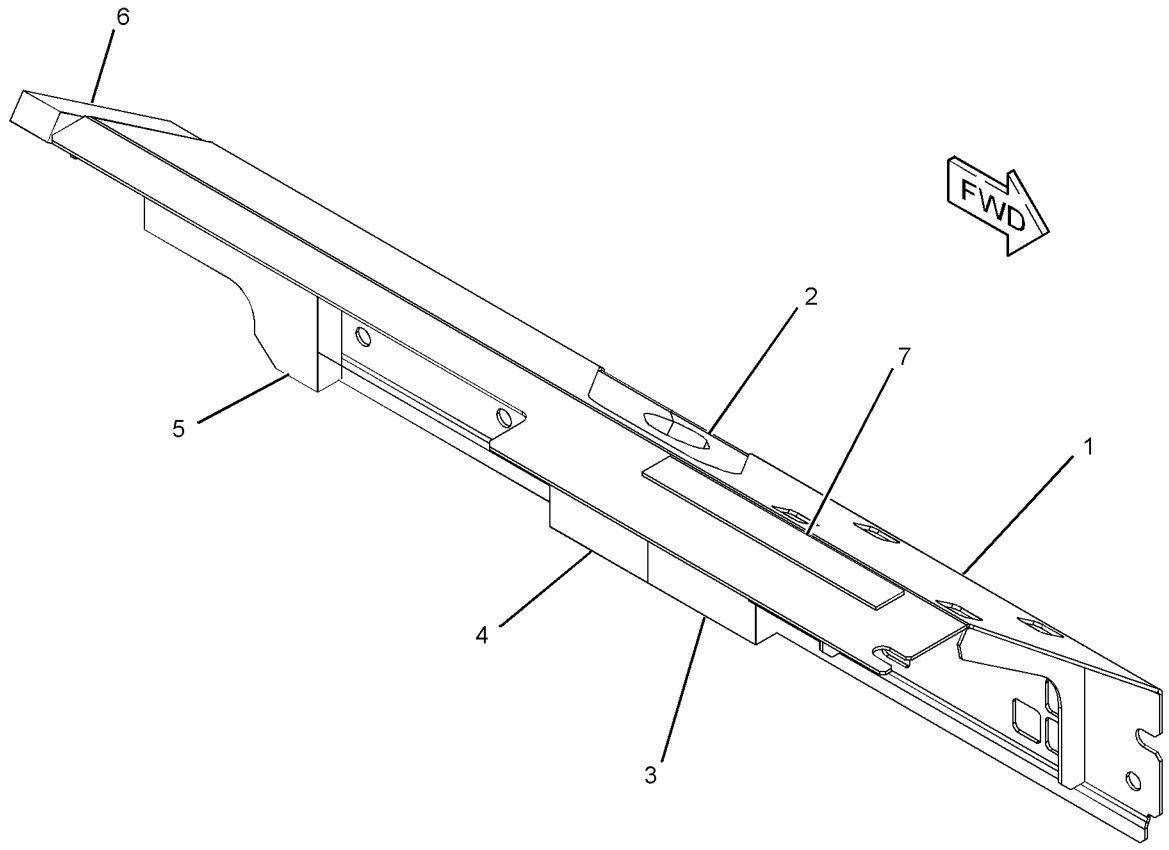

GRAPHIC #1 **<END>** g01236538

FRAME AND BODY

235-7764 STEP GP

S/N: D3P1-UP; M4T1-UP
PART OF 264-8494 TRACK AR, 264-8495 TRACK GP
AN ATTACHMENT

SMCS-7254 **i02503808**

NOTE	REF NO	GRAPHIC REF	PART NUMBER	QTY	PART NAME 1 2 3 4 5 6 (PRODUCT LEVEL)	SEE PAGE
	1	1	**235-7765**	2	STEP	
M	2	1	**8T-7338**	4	BOLT (M16X2X45-MM)	
	3	1	**9X-8257**	4	WASHER (17.5X30X3.5-MM THK)	

M-METRIC PART

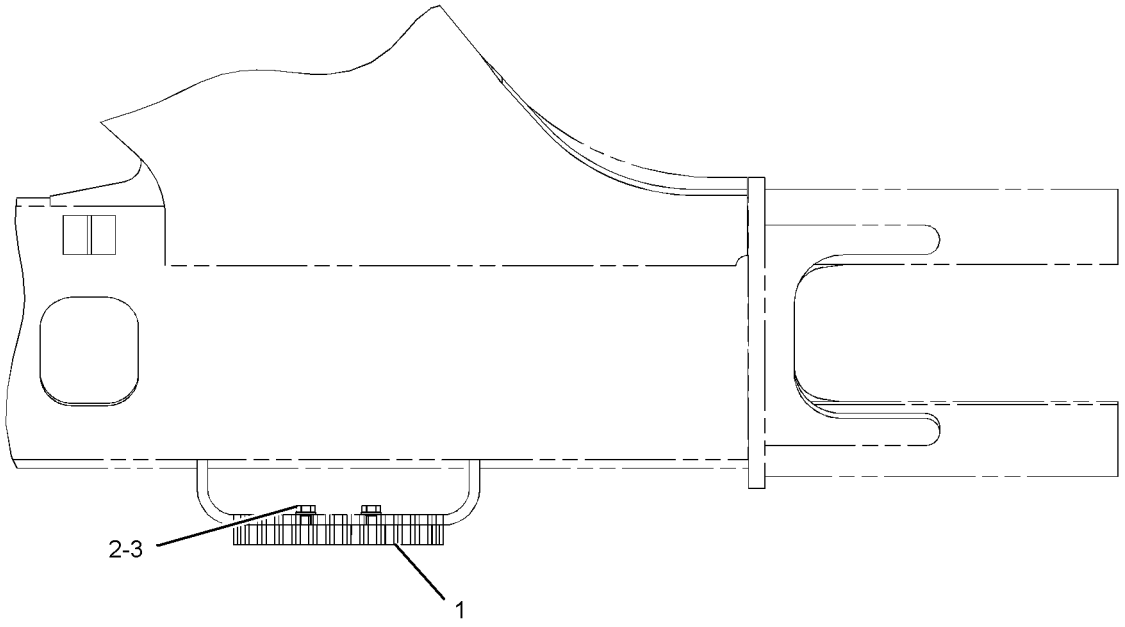

TOP VIEW

GRAPHIC #1 **<END>** g01150668

237-8801 STORAGE GP-VANDALISM GUARD

S/N: D3P1-UP
PART OF 240-3740 GUARD AR-VANDALISM
AN ATTACHMENT

SMCS-7315 **i03146988**

NOTE	REF NO	GRAPHIC REF	PART NUMBER	QTY	PART NAME 1 2 3 4 5 6 (PRODUCT LEVEL)	SEE PAGE
M	1	1	**135-8575**	2	BOLT AS	
	2	1	**241-1933**	1	BOLT AS-SPECIAL	
	3	1	**241-2311**	1	CABLE	
C	4	1	**307-8119**	1	SHEET AS	
E		1	**237-5586**		SEAL (55-CM)	
		1	**273-7963**	1	LINER	
	5	1	**5P-7958**	2	SLEEVE-CABLE SPLICE	

C-CHANGE FROM PREVIOUS TYPE
E-ORDER BY THE CENTIMETER
M-METRIC PART

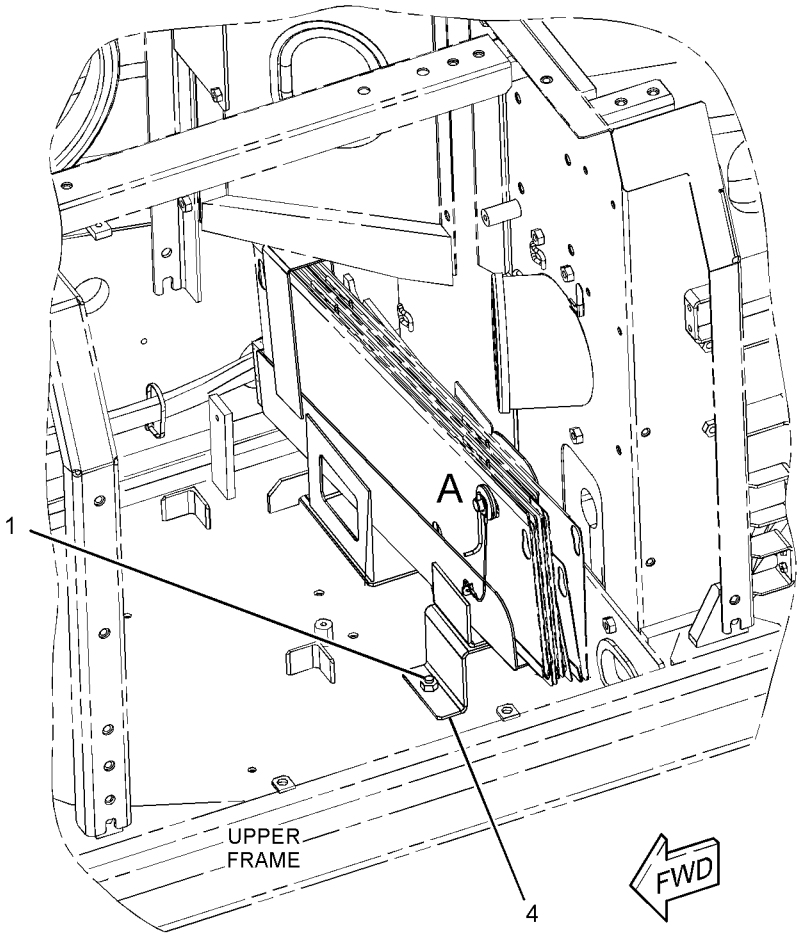

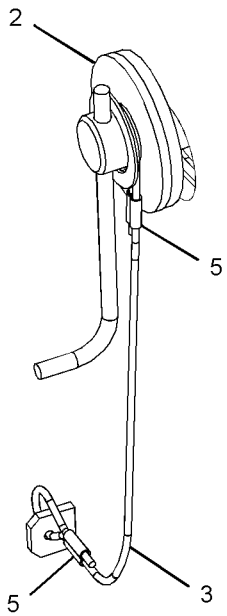

VIEW OF AREA A

GRAPHIC #1 **<END>** g01593206

256-1830 SUPPORT AS-ENCLOSURE

S/N: D3P1-UP; M4T1-UP

PART OF 237-8768 HOOD & GUARD GP

SMCS-0635, 1801, 7076, 7251, 7263, 7267, 7272, 7276 **i02490633**

NOTE	REF NO	GRAPHIC REF	PART NUMBER	QTY	PART NAME 1 2 3 4 5 6 (PRODUCT LEVEL)	SEE PAGE
Z	1	1		1	SUPPORT AS	
	2	1	**256-1841**	1	LINER	
	3	1	**259-3595**	1	INSULATION	
D	4	1	**101-9848**		SEAL (1.3-M)	

D-ORDER BY THE METER
Z-NOT SERVICED SEPARATELY

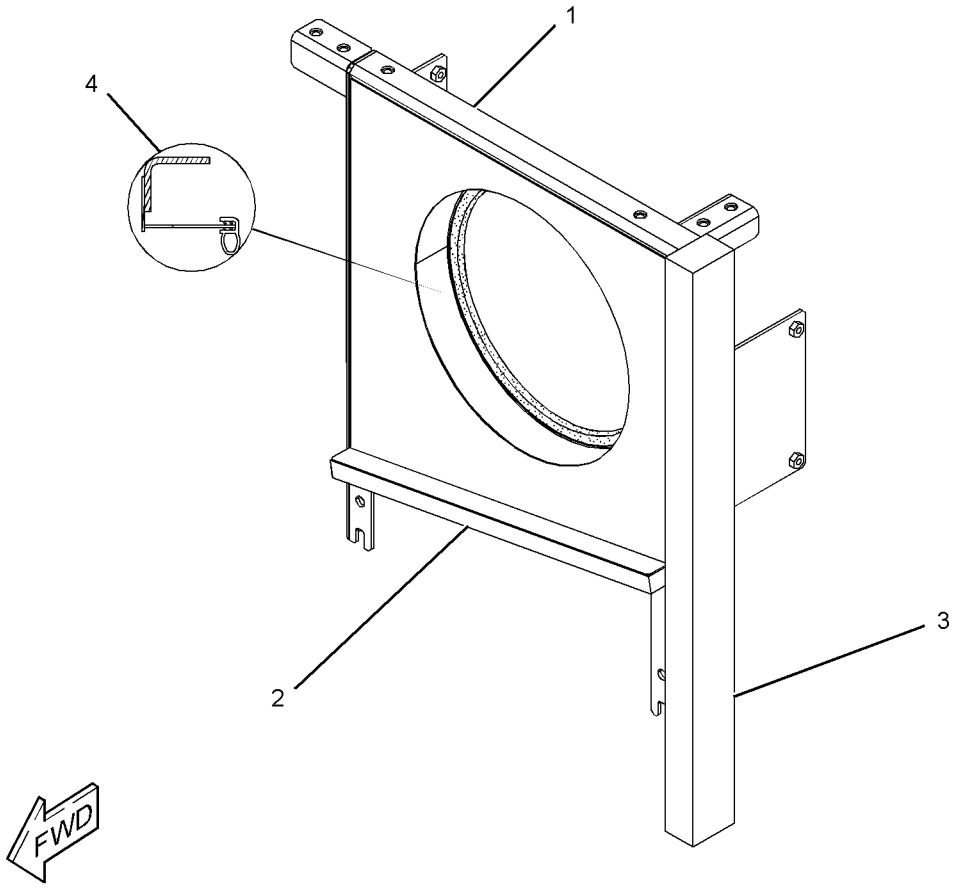

GRAPHIC #1 **<END>** g01236570

FRAME AND BODY

273-7905 SUPPORT AS-ENCLOSURE

S/N: D3P1-UP; M4T1-UP

PART OF 237-8768 HOOD & GUARD GP

SMCS-0635, 1801, 7076, 7251, 7263, 7267, 7272, 7276 **i03142926**

NOTE	REF NO	GRAPHIC REF	PART NUMBER	QTY	PART NAME 1 2 3 4 5 6 (PRODUCT LEVEL)	SEE PAGE
	1	1	**259-3609**	1	LINER	
	2	1	**259-3610**	1	LINER	
	3	1	**259-3611**	1	INSULATION	
D	4	1	**101-9848**		SEAL (0.54-M)	

D-ORDER BY THE METER

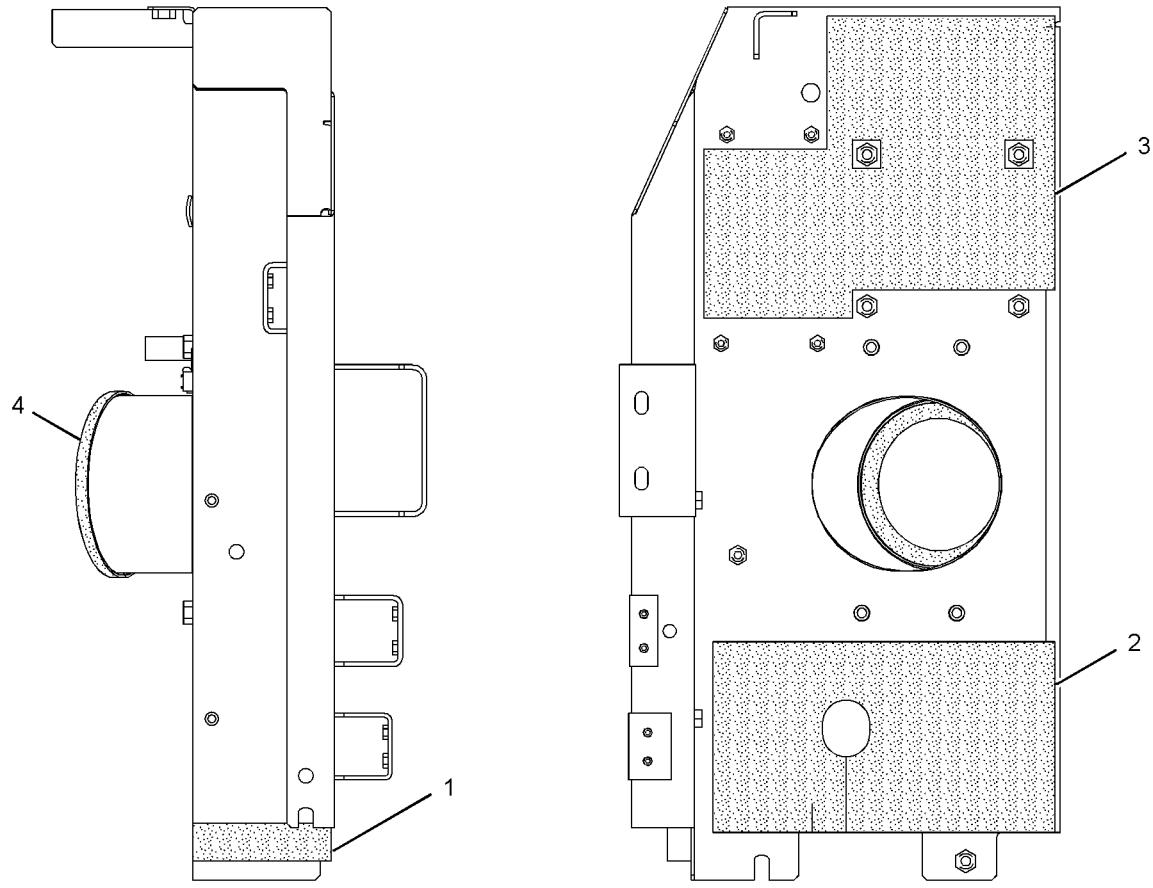

LEFT SIDE VIEW REAR VIEW

GRAPHIC #1 **<END>** g01609575

273-7909 SUPPORT AS-ENCLOSURE–AIR CLEANER

S/N: M4T1-UP
PART OF 278-3905 HOOD GP
AN ATTACHMENT

SMCS-0635, 1801, 7076, 7251, 7263, 7267, 7272, 7276 **i02502347**

NOTE	REF NO	GRAPHIC REF	PART NUMBER	QTY	PART NAME 1 2 3 4 5 6 (PRODUCT LEVEL)	SEE PAGE
	1	1	**259-3609**	1	LINER	
	2	1	**262-2559**	1	INSULATION	
	3	1	**268-0514**	1	INSULATION	
Z	4	1		1	SUPPORT AS	

Z-NOT SERVICED SEPARATELY

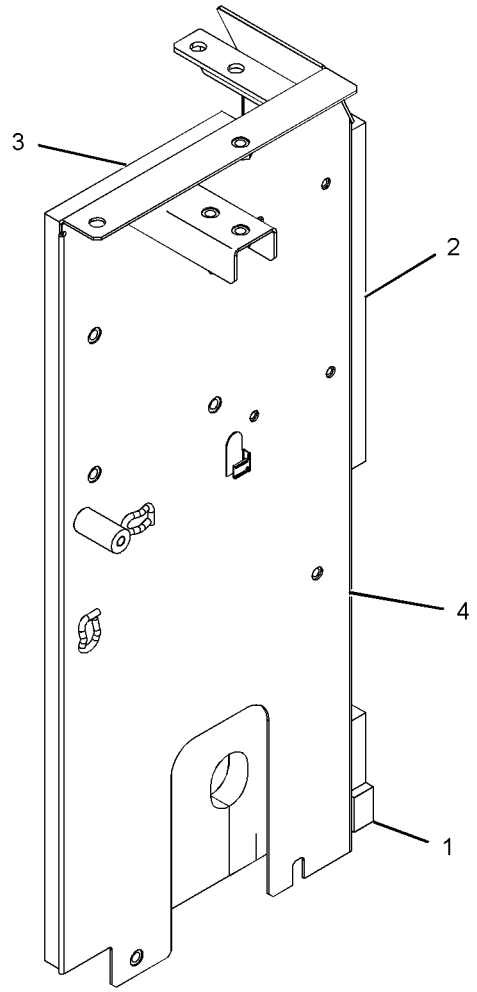

GRAPHIC #1

<END>

g01242041

330-1444 SUPPORT AS-ENCLOSURE–AIR CLEANER

S/N: D3P1-UP; M4T1-UP
PART OF 237-8802 HOOD GP
AN ATTACHMENT

SMCS-0635, 1801, 7076, 7251, 7263, 7267, 7272, 7276 **i03309670**

NOTE	REF NO	GRAPHIC REF	PART NUMBER	QTY	PART NAME 1 2 3 4 5 6 (PRODUCT LEVEL)	SEE PAGE
	1	1	**259-3609**	1	LINER	
	2	1	**262-2559**	1	INSULATION	
	3	1	**330-1447**	1	INSULATION	

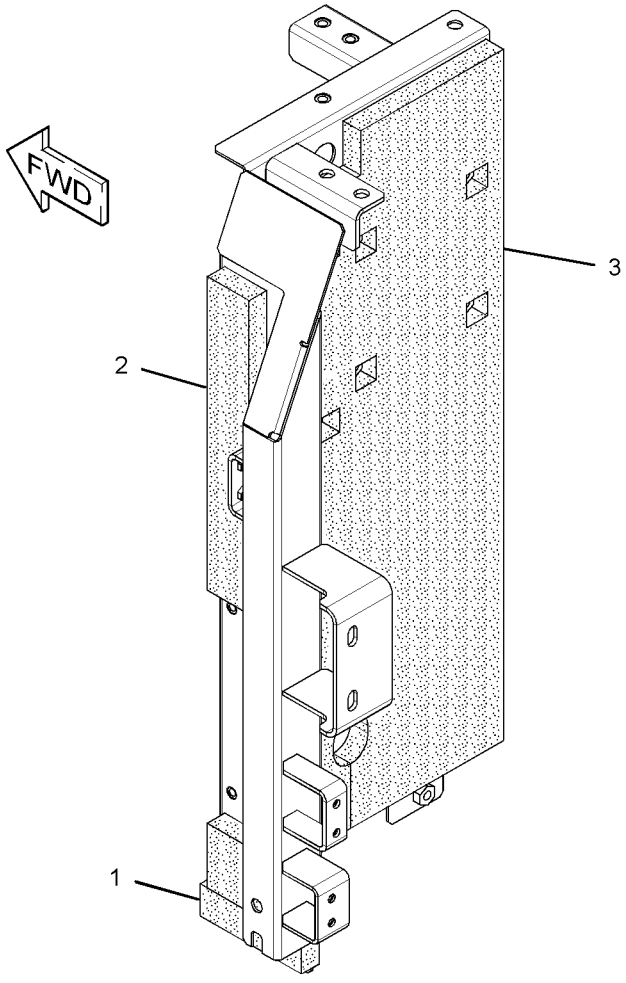

GRAPHIC #1 **<END>** g01618959

297-9151 ADJUSTMENT GP-HYDRAULIC TRACK

S/N: D3P1-UP; M4T1-UP

PART OF 239-4320 IDLER GP-FRONT

SMCS-4157 **i03626490**

NOTE	REF NO	GRAPHIC REF	PART NUMBER	QTY	PART NAME 1 2 3 4 5 6 (PRODUCT LEVEL)	SEE PAGE
	1	1	**2S-5926**	1	VALVE-RELIEF (TRACK TENSION CYLINDER)	
	2	1	**095-2927**	1	VALVE-FILL (TRACK TENSION CYLINDER)	
	3	1	**113-2824**	1	PLATE AS	
	3A	1	**4B-4158**	4	SCREW-DRIVE (4X0.25-IN)	
	3B	1	**253-1346**	1	PLATE-WARNING (HIGH PRESSURE CYLINDER)	
	4	1	**179-3044**	1	CYLINDER	
	5	1	**179-3046**	1	SEAL-LIP TYPE	
	6	1	**179-3047**	2	RING-BACKUP (BLACK)	
	7	1	**179-3048**	2	RING-BACKUP (BROWN)	
	8	1	**248-7177**	2	SEAL-O-RING	
	9	1	**297-9156**	1	PISTON	
M	10	1	**8T-4191**	2	BOLT (M10X1.5X16-MM)	

M-METRIC PART

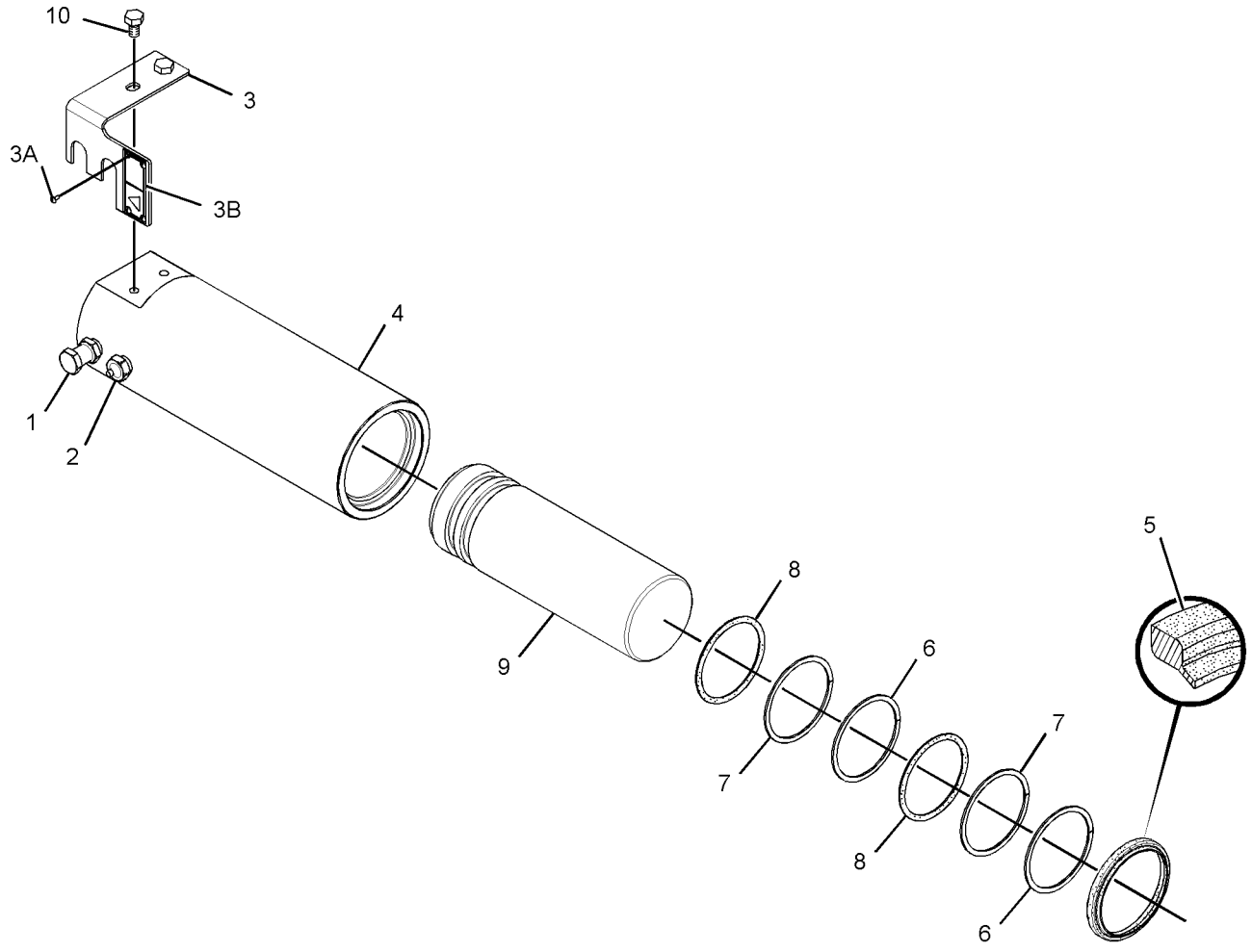

GRAPHIC #1 **<END>** g01945351

UNDERCARRIAGE

229-1898 FRAME AR-UNDERCARRIAGE

S/N: D3P1-UP; M4T1-UP

PART OF 314-3698, 314-3699 GENERAL AR

SMCS-4151 **i02993943**

NOTE	PART NUMBER	QTY	PART NAME 1 2 3 4 5 6 (PRODUCT LEVEL)	SEE PAGE
Y	**236-8335**	1	FRAME AS-UNDERCARRIAGE	415
Y	*227-6145*	1	GEAR & BEARING GP-SWING	371
Y	*192-8302*	1	GUARD GP-TRACK GUIDE	417
Y	*241-7333*	1	GUARD GP-TRAVEL MOTOR	419
Y	*239-4320*	1	IDLER GP-FRONT	422
Y	*176-4853*	1	ROLLER AR-TRACK & CARRIER	426

Y-SEPARATE ILLUSTRATION

<END>

236-8335 FRAME AS-UNDERCARRIAGE

S/N: D3P1-UP; M4T1-UP

PART OF 229-1898 FRAME AR-UNDERCARRIAGE

SMCS-4150, 7062 **i03586466**

NOTE	REF NO	GRAPHIC REF	PART NUMBER	QTY	PART NAME 1 2 3 4 5 6 (PRODUCT LEVEL)	SEE PAGE
	1	1	*236-8338*	1	FRAME AS-TRACK ROLLER (RH)	
	1A	1	**117-5372**	2	BRACKET	
	1B	1	**336-2583**	2	STEP	
	2	1	*236-8339*	1	FRAME AS-TRACK ROLLER (LH)	
	2A	1	**117-5372**	2	BRACKET	
	2B	1	**336-2583**	2	STEP	

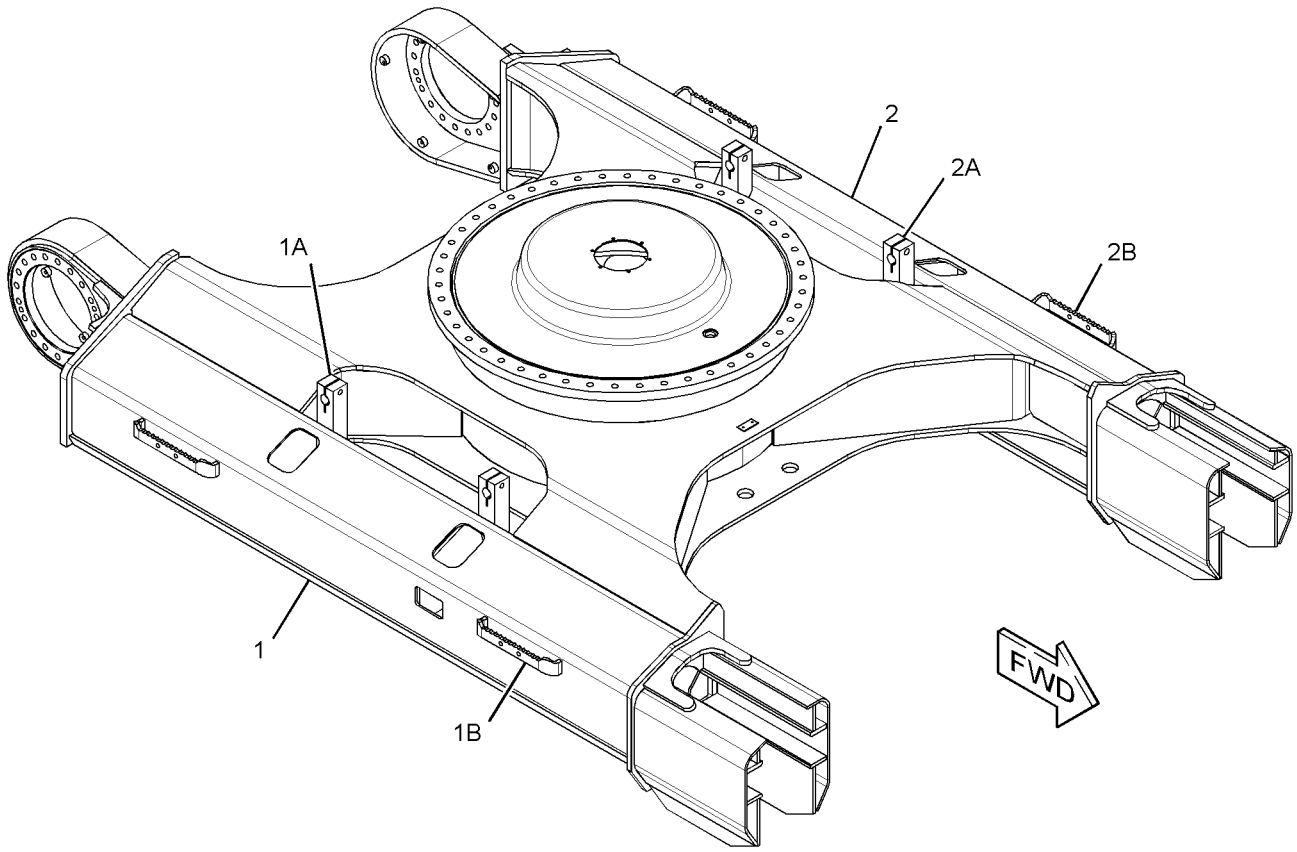

GRAPHIC #1 **<END>** g01879914

189-3860 GUARD GP-TRACK GUIDE

S/N: D3P1-UP; M4T1-UP
PART OF 337-4121 OPTION AR-UNDERCARRIAGE
AN ATTACHMENT

SMCS-4177 **i01669504**

NOTE	REF NO	GRAPHIC REF	PART NUMBER	QTY	PART NAME 1 2 3 4 5 6 (PRODUCT LEVEL)	SEE PAGE
	1	1	**105-6324**	16	SUPPORT AS	
	2	1	**189-3861**	4	GUARD AS-TRACK GUIDE	
	3	1	**189-3862**	4	GUARD AS-TRACK GUIDE	
	4	1	**192-8358**	16	PIPE	
M	5	1	**140-3048**	16	BOLT-HEX HEAD	
	6	1	**8T-4167**	64	WASHER-HARD (26X44X4MM THK)	
M	7	1	**8T-5379**	32	BOLT (M24X3.0X50MM)	

QUANTITIES SHOWN ARE THOSE REQUIRED FOR BOTH LH AND RH SIDES
M-METRIC PART

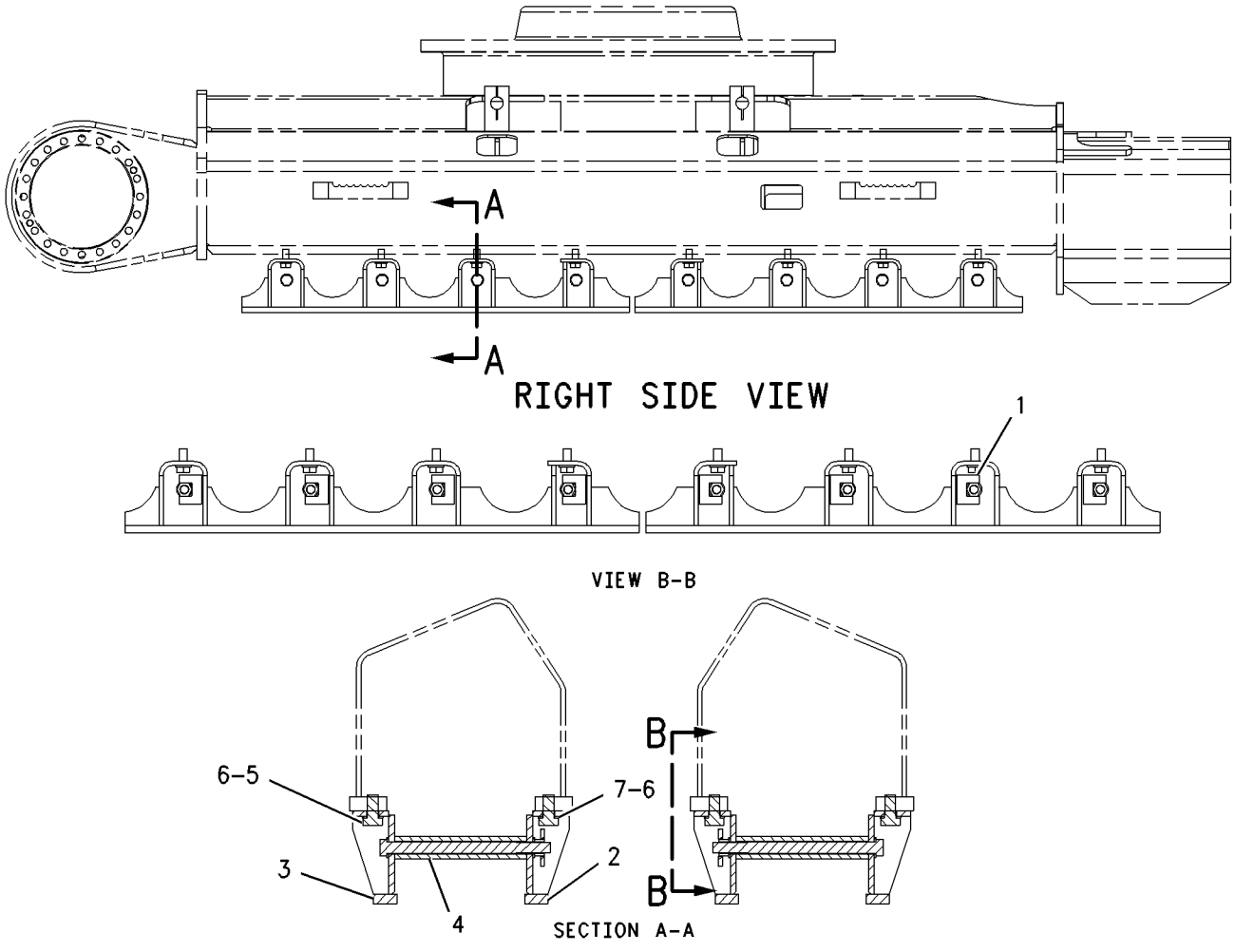

GRAPHIC #1 **<END>** g00826922

192-8302 GUARD GP-TRACK GUIDE

S/N: D3P1-UP; M4T1-UP

PART OF 229-1898 FRAME AR-UNDERCARRIAGE

SMCS-4177 **i01666873**

NOTE	REF NO	GRAPHIC REF	PART NUMBER	QTY	PART NAME 1 2 3 4 5 6 (PRODUCT LEVEL)	SEE PAGE
	1	1	**192-8303**	2	GUARD AS-TRACK GUIDE	
M	2	1	**8T-5379**	8	BOLT (M24X3.0X50MM)	
	3	1	**8T-4167**	8	WASHER-HARD (26X44X4MM THK)	

QUANTITIES SHOWN ARE THOSE REQUIRED FOR BOTH LH AND RH SIDES
M-METRIC PART

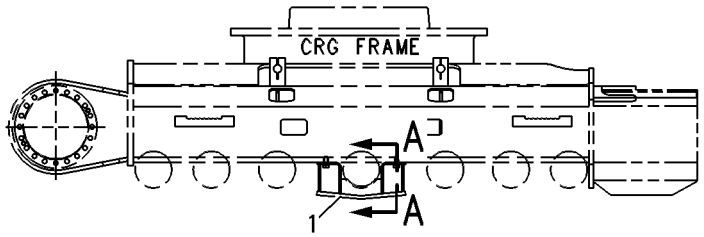

RIGHT SIDE VIEW

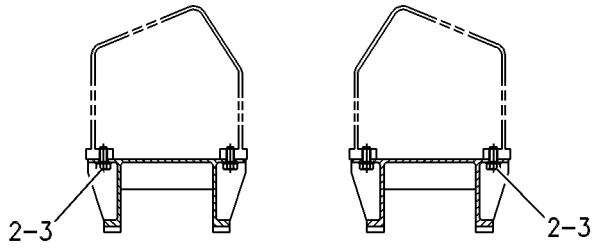

SECTION A-A

GRAPHIC #1 **<END>** g00261759

201-2774 GUARD GP-TRACK GUIDE

S/N: D3P1-UP; M4T1-UP
SPROCKET
AN ATTACHMENT

SMCS-4177 **i01677964**

NOTE	REF NO	GRAPHIC REF	PART NUMBER	QTY	PART NAME 1 2 3 4 5 6 (PRODUCT LEVEL)	SEE PAGE
	1	1	**105-6324**	8	SUPPORT AS	
	2	1	**189-3861**	2	GUARD AS-TRACK GUIDE	
	3	1	**189-3862**	2	GUARD AS-TRACK GUIDE	
	4	1	**192-8358**	8	PIPE	
M	5	1	**140-3048**	8	BOLT-HEX HEAD	
	6	1	**8T-4167**	32	WASHER-HARD (26X44X4MM THK)	
M	7	1	**8T-5379**	16	BOLT (M24X3.0X50MM)	

QUANTITIES SHOWN ARE THOSE REQUIRED FOR BOTH LH AND RH SIDES
M-METRIC PART

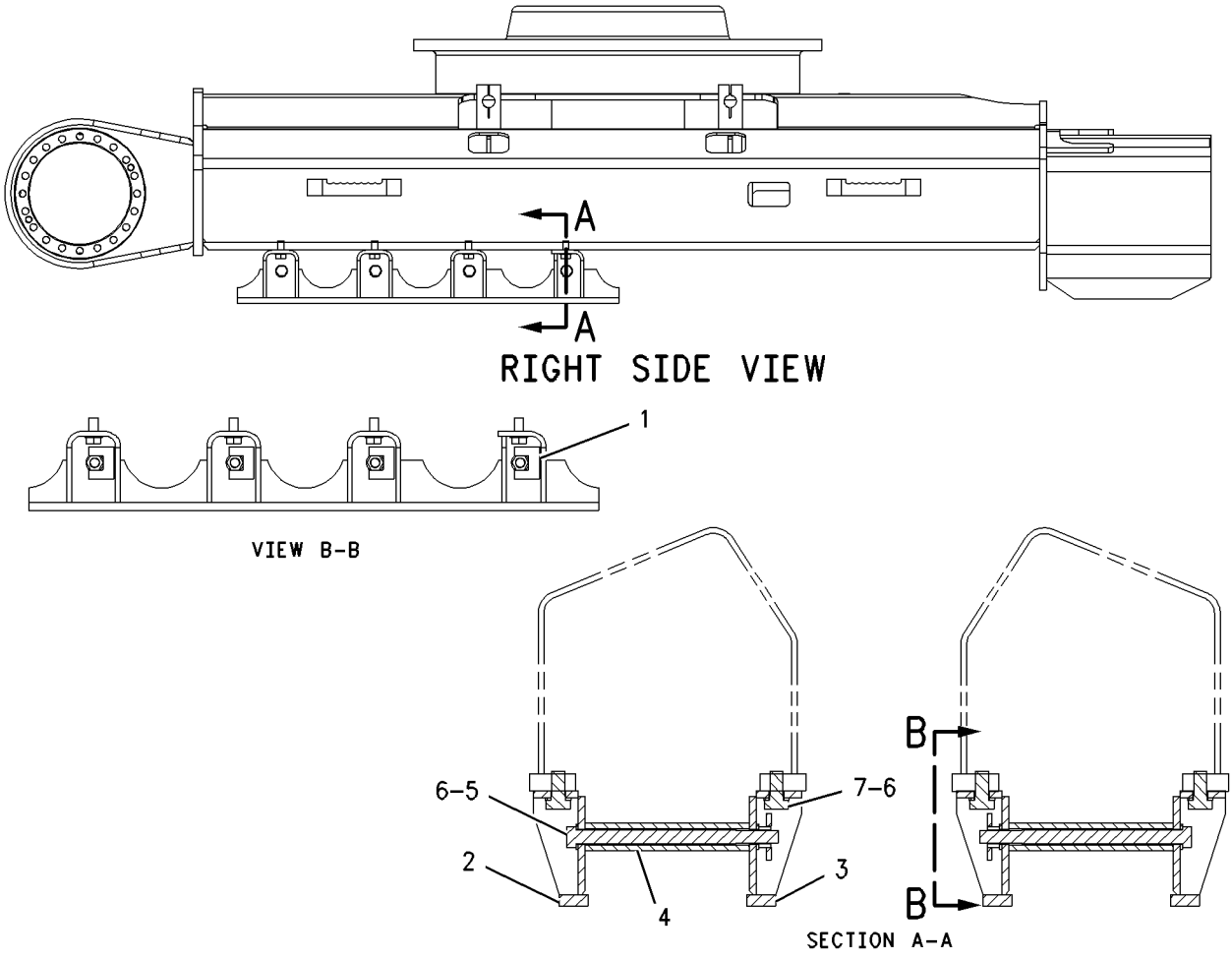

GRAPHIC #1 **<END>** g00826460

UNDERCARRIAGE

241-7333 GUARD GP-TRAVEL MOTOR

S/N: D3P1-UP; M4T1-UP

PART OF 229-1898 FRAME AR-UNDERCARRIAGE

SMCS-7163 **i02489025**

NOTE	REF NO	GRAPHIC REF	PART NUMBER	QTY	PART NAME 1 2 3 4 5 6 (PRODUCT LEVEL)	SEE PAGE
	1	1	**241-7334**	2	PLATE	
	2	1	**5P-1076**	10	WASHER-HARD (13.5X30X4-MM THK)	
M	3	1	**8C-8992**	10	BOLT-LOCKING (M12X1.75X30-MM)	

M-METRIC PART

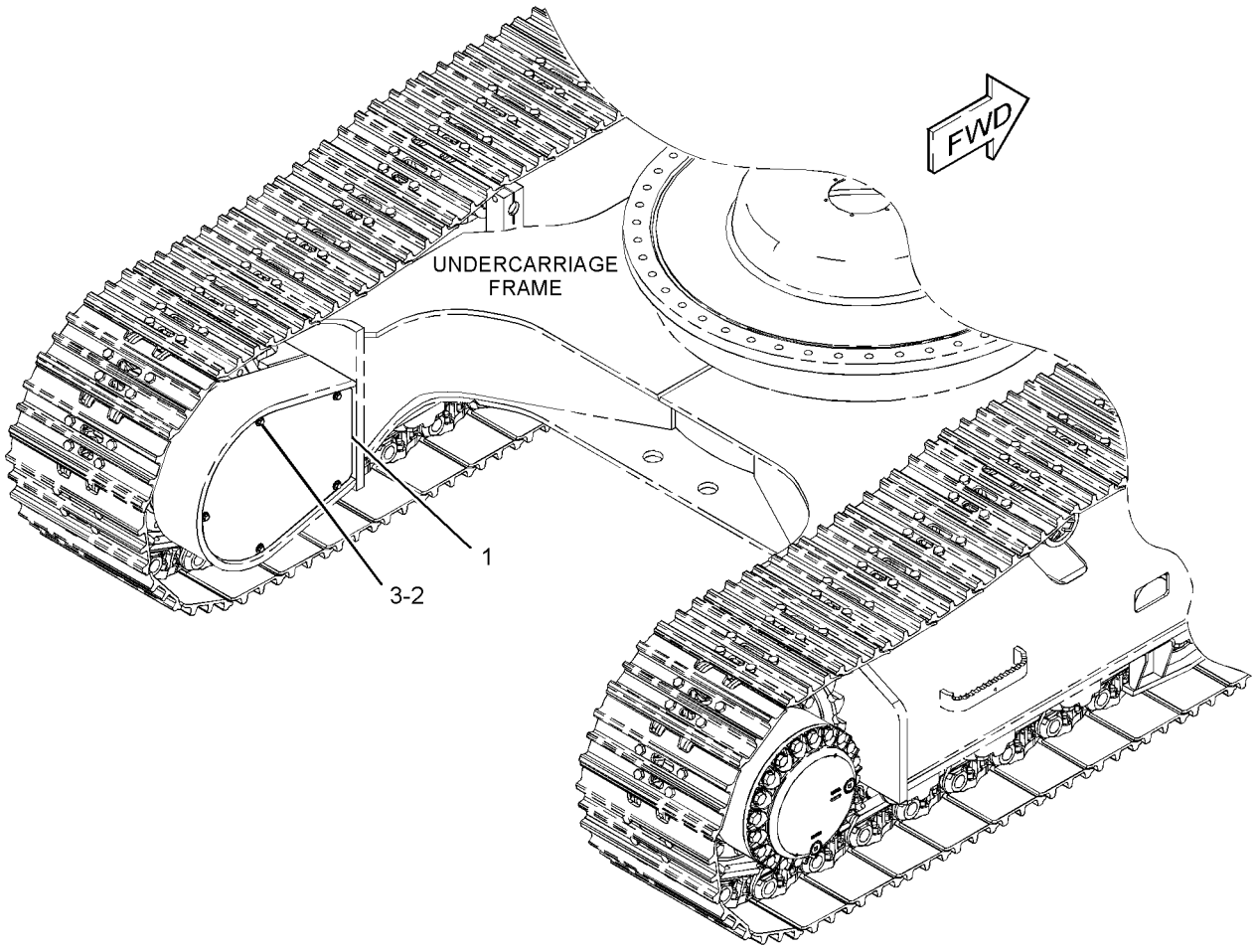

GRAPHIC #1 **<END>** g01199090

241-7335 GUARD GP-TRAVEL MOTOR

S/N: D3P1-UP; M4T1-UP
PART OF 269-1167 GUARD AR-BOTTOM, 345-2281 OPTION AR-CONFIGURATION
CANNOT BE USED WITH 269-1167—PAGE 374
AN ATTACHMENT

SMCS-7163 **i03626495**

NOTE	REF NO	GRAPHIC REF	PART NUMBER	QTY	PART NAME 1 2 3 4 5 6 (PRODUCT LEVEL)	SEE PAGE
	1	1	**241-7336**	1	COVER AS-ACCESS (LH)	
	2	1	**241-7337**	1	COVER AS-ACCESS (RH)	
	3	1	**5P-1076**	10	WASHER-HARD (13.5X30X4-MM THK)	
M	4	1	**8C-8992**	10	BOLT-LOCKING (M12X1.75X30-MM)	

M-METRIC PART

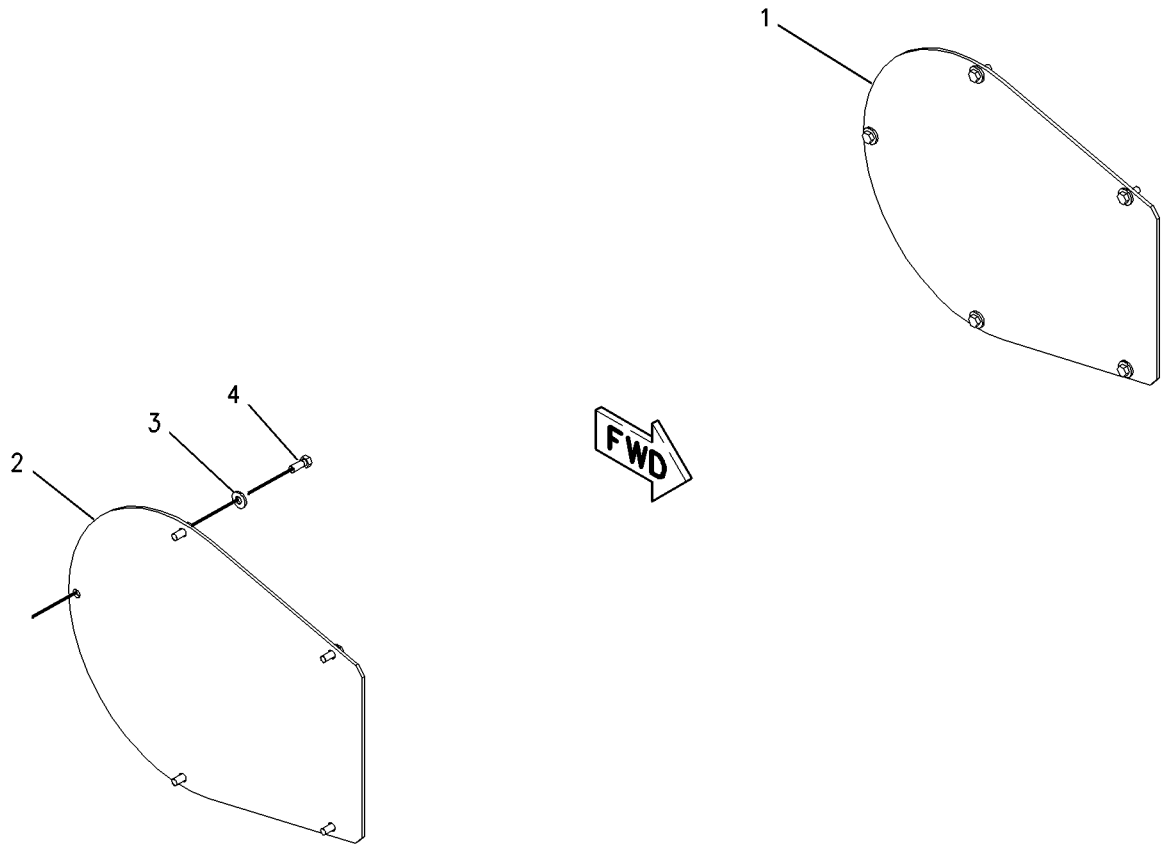

GRAPHIC #1 **<END>** g00850211

UNDERCARRIAGE

136-2422 IDLER GP-FRONT

S/N: D3P1-UP; M4T1-UP

PART OF 239-4321 IDLER GP-FRONT

SMCS-4159 **i01683295**

NOTE	REF NO	GRAPHIC REF	PART NUMBER	QTY	PART NAME 1 2 3 4 5 6 (PRODUCT LEVEL)	SEE PAGE
	1	1	**136-3847**	1	IDLER AS	
	1A	1	**6Y-8023**	2	BEARING-IDLER	
	2	1	**7H-3171**	1	PLUG-PIPE	
	3	1	**109-0881**	2	SEAL GP-DUO-CONE	
					(EACH INCLUDES)	
		1	**5P-9120**	2	RING-SEALING	
	4	1	**6Y-8029**	2	PIN-SPRING	
	5	1	**1H-7339**	2	SEAL-O-RING	
	6	1	**6Y-8028**	1	SHAFT-IDLER	
	7	1	**115-3699**	2	BEARING-FRONT	

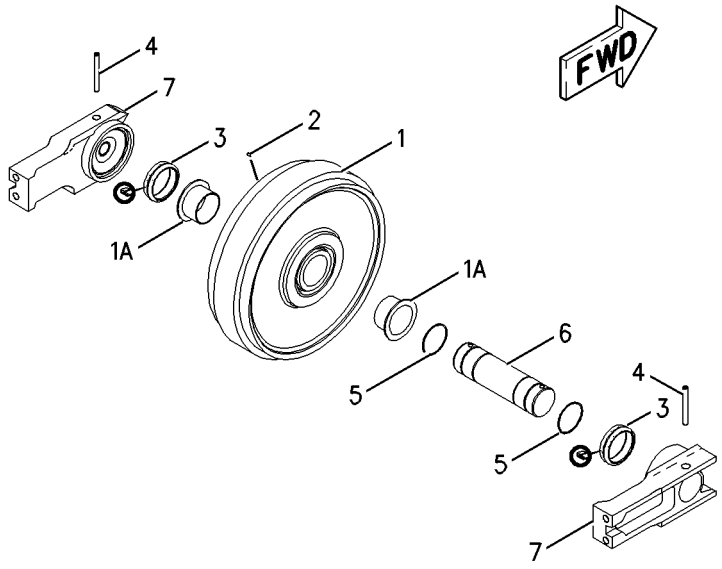

GRAPHIC #1 **<END>** g00836204

239-4320 IDLER GP-FRONT

S/N: D3P1-UP; M4T1-UP

PART OF 229-1898 FRAME AR-UNDERCARRIAGE

SMCS-4159 **i03022467**

NOTE	REF NO	GRAPHIC REF	PART NUMBER	QTY	PART NAME 1 2 3 4 5 6 (PRODUCT LEVEL)	SEE PAGE
CY	1	1	**297-9151**	2	ADJUSTMENT GP-HYDRAULIC TRACK	413
Y	2	1	*239-4321*	2	IDLER GP-FRONT	423
M	3	1	**7X-2563**	4	BOLT (M20X2.5X60-MM)	

C-CHANGE FROM PREVIOUS TYPE
M-METRIC PART
Y-SEPARATE ILLUSTRATION

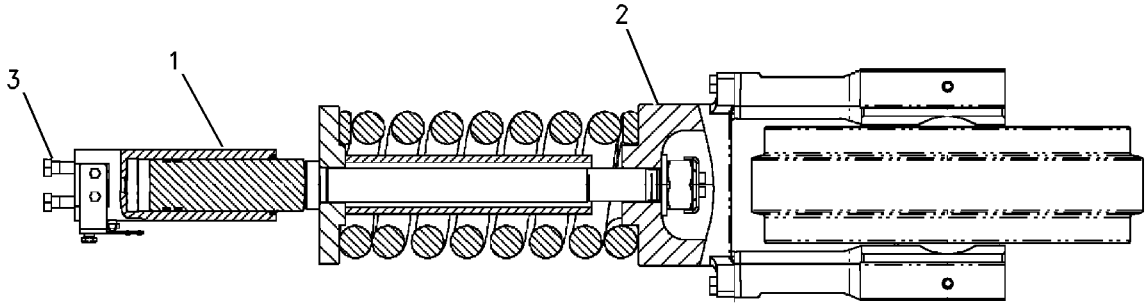

GRAPHIC #1 **<END>** g00837066

239-4321 IDLER GP-FRONT

S/N: D3P1-UP; M4T1-UP

PART OF 239-4320 IDLER GP-FRONT

SMCS-4159 **i02488364**

NOTE	REF NO	GRAPHIC REF	PART NUMBER	QTY	PART NAME 1 2 3 4 5 6 (PRODUCT LEVEL)	SEE PAGE
Y	1	1	**136-2422**	1	IDLER GP-FRONT	421
Y	2	1	*239-4322*	1	SPRING GP-RECOIL	429
M	3	1	**8T-6430**	4	BOLT (M20X2.5X50-MM)	

M-METRIC PART
Y-SEPARATE ILLUSTRATION

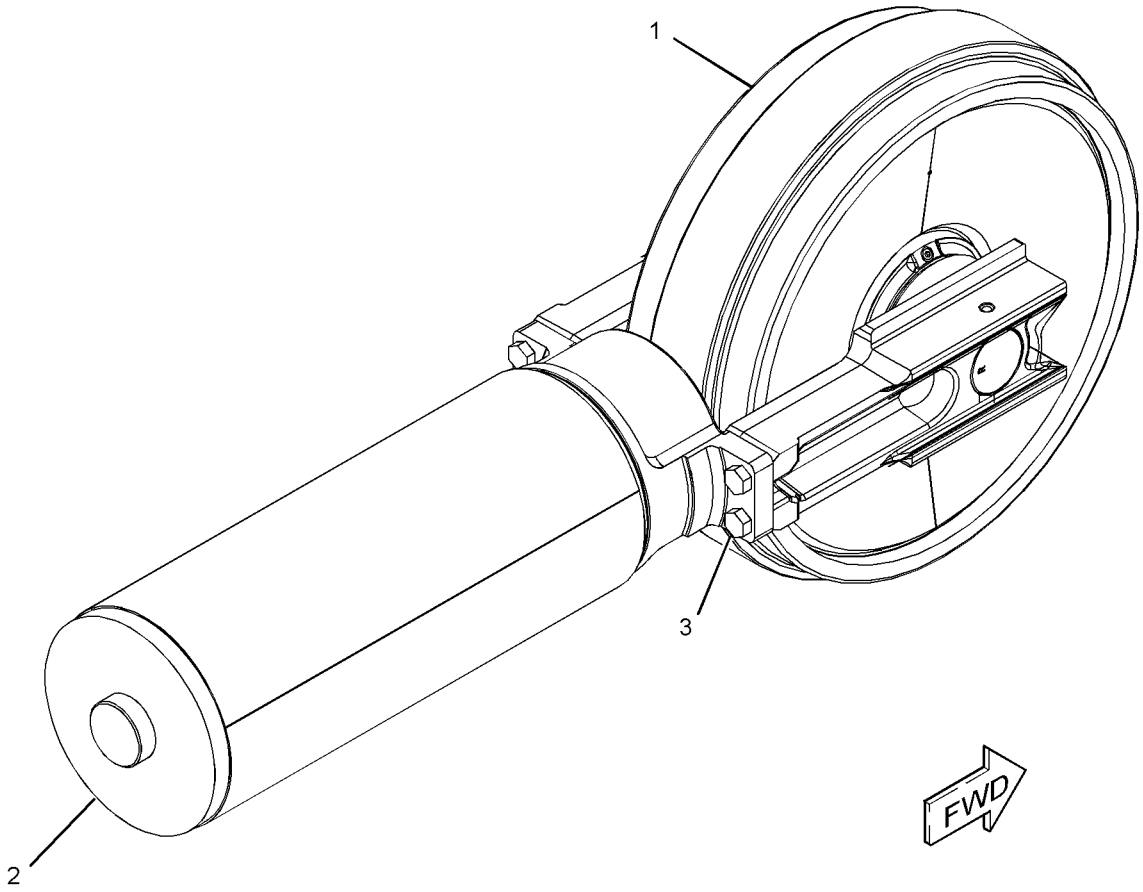

GRAPHIC #1 **<END>** g01196931

201-9119 LINK AS-TRACK

S/N: D3P1-UP; M4T1-UP
GREASE LUBRICATED TRACK
PART OF 203-0860, 203-0861, 203-0862, 216-4027, 241-0985, 260-9446, 260-9452, 260-9454 TRACK GP
AN ATTACHMENT

SMCS-4169, 4171 **i03021059**

NOTE	REF NO	GRAPHIC REF	PART NUMBER	QTY	PART NAME 1 2 3 4 5 6 (PRODUCT LEVEL)	SEE PAGE
	1	1	**6Y-2590**	48	LINK-TRACK (LH)	
	2	1	**095-7944**	1	PIN-COTTER	
	3	1	**118-7303**	1	LINK-TRACK MASTER (LH)	
	4	1	**201-0828**	1	BUSHING-TRACK MASTER	
	5	1	**118-7302**	1	LINK-TRACK MASTER (RH)	
	6	1	**188-3066**	1	PIN-TRACK MASTER	
	7	1	**179-3428**	2	SEAL-TRACK MASTER	
	8	1	**6Y-2589**	48	LINK-TRACK (RH)	
	9	1	**6Y-2751**	48	PIN-TRACK	
	10	1	**179-3426**	96	SEAL-TRACK	
	11	1	**321-1463**	48	BUSHING-TRACK	

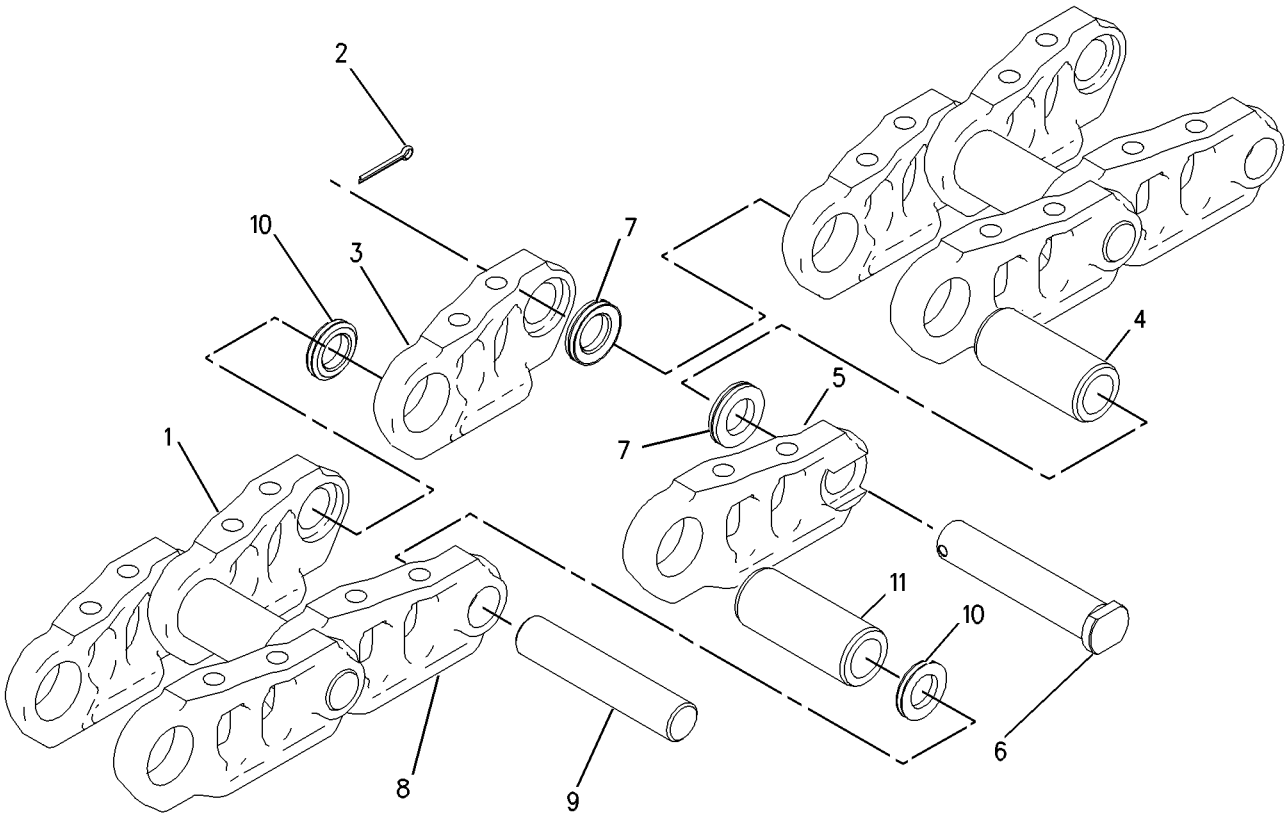

GRAPHIC #1 **<END>** g00826202

213-1971 LINK AS-TRACK—GREASE LUBRICATED

S/N: D3P1-UP; M4T1-UP
PART OF 347-2343, 347-2344, 347-2345, 347-2346 TRACK GP
AN ATTACHMENT

SMCS-4169, 4171 **i03747061**

NOTE	REF NO	GRAPHIC REF	PART NUMBER	QTY	PART NAME 1 2 3 4 5 6 (PRODUCT LEVEL)	SEE PAGE
	1	1	**201-0828**	1	BUSHING-TRACK MASTER	
	2	1	**321-1463**	48	BUSHING-TRACK	
	3	1	**6Y-2589**	49	LINK-TRACK (RH)	
	4	1	**6Y-2590**	49	LINK-TRACK (LH)	
	5	1	**6Y-2748**	1	PIN-TRACK MASTER	
	6	1	**6Y-2751**	48	PIN-TRACK	
	7	1	**179-3428**	2	SEAL-TRACK MASTER	
	8	1	**179-3426**	96	SEAL-TRACK	

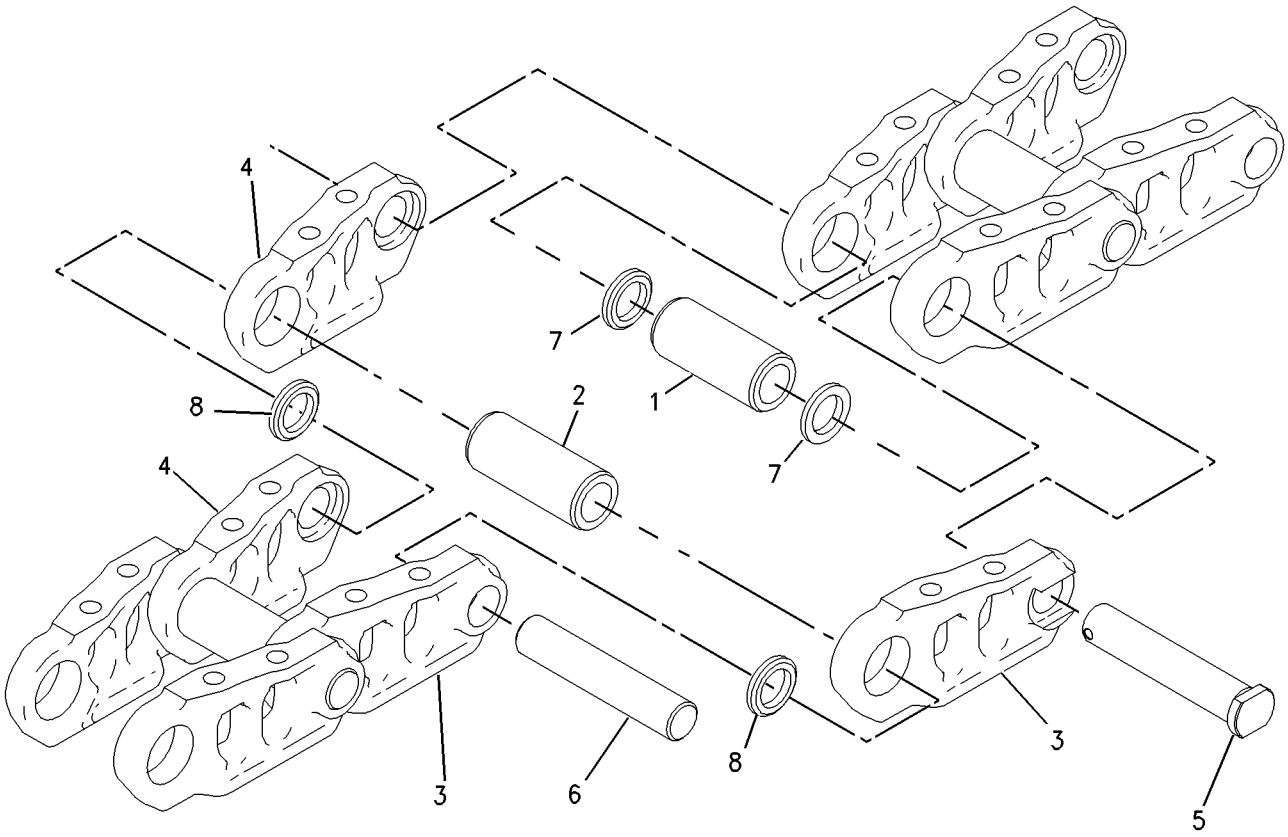

GRAPHIC #1 **<END>** g00936963

176-4853 ROLLER AR-TRACK & CARRIER

S/N: D3P1-UP; M4T1-UP

PART OF 229-1898 FRAME AR-UNDERCARRIAGE

SMCS-4154, 4180 **i02183298**

NOTE	REF NO	GRAPHIC REF	PART NUMBER	QTY	PART NAME 1 2 3 4 5 6 (PRODUCT LEVEL)	SEE PAGE
M	1	1	**7X-2577**	4	BOLT (M24X3X90-MM)	
Y	2	1	**6Y-5323**	4	ROLLER GP-TRACK CARRIER	427
Y	3	1	**183-2874**	18	ROLLER GP-TRACK-SINGLE FLANGE	428
M	4	1	**7X-2454**	72	BOLT (M24X3X110-MM)	
	5	1	**8T-4167**	72	WASHER-HARD (26X44X4-MM THK)	

QUANTITIES SHOWN ARE THOSE REQUIRED FOR BOTH LH AND RH SIDES
M-METRIC PART
Y-SEPARATE ILLUSTRATION

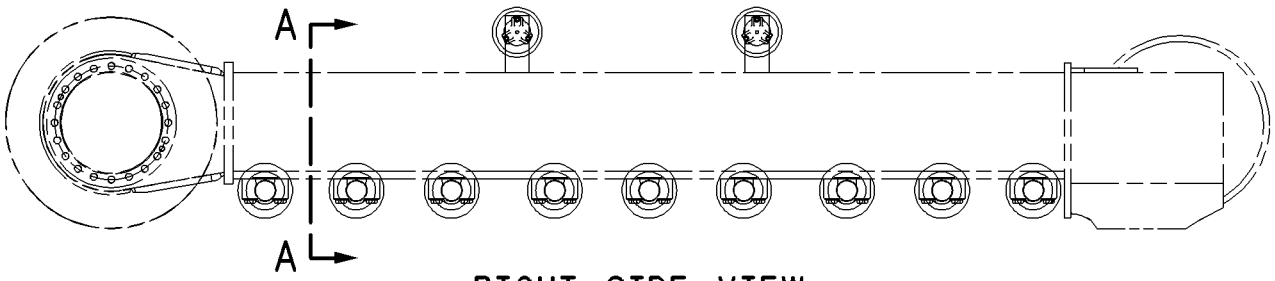

RIGHT SIDE VIEW

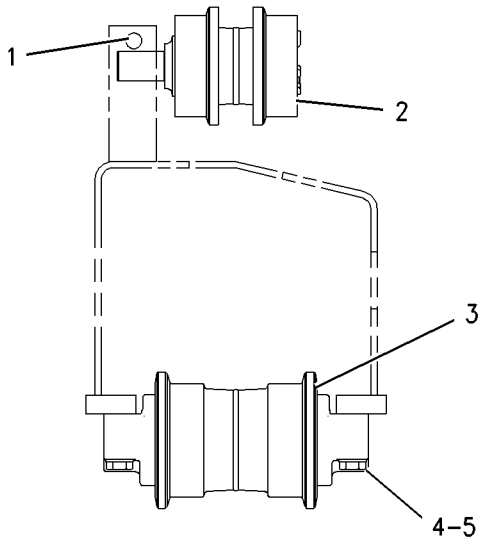

VIEW A-A

GRAPHIC #1 **<END>** g00791246

6Y-5323 ROLLER GP-TRACK CARRIER

S/N: D3P1-UP; M4T1-UP

PART OF 176-4853 ROLLER AR-TRACK & CARRIER

SMCS-4154 **i01666882**

NOTE	REF NO	GRAPHIC REF	PART NUMBER	QTY	PART NAME 1 2 3 4 5 6 (PRODUCT LEVEL)	SEE PAGE
	1	1	**6Y-9858**	1	SHAFT AS-TRACK ROLLER	
	2	1	**179-1292**	1	SEAL GP-DUO-CONE	
		1	**1M-3097**	2	RING-SEALING	
	3	1	**6Y-9859**	1	ROLLER & BEARING AS	
	3A	1	**6Y-9855**	1	BEARING-CARRIER ROLLER	
	3B	1	**6Y-9856**	1	BEARING-CARRIER ROLLER	
	4	1	**6Y-8075**	1	RETAINER	
	5	1	**6Y-8076**	1	WASHER-THRUST	
	6	1	**5H-8848**	1	SEAL-O-RING	
M	7	1	**8T-1159**	5	BOLT-SOCKET HEAD (M10X1.5X25MM)	
	8	1	**6Y-8077**	1	COVER-CARRIER ROLLER	
	9	1	**7H-3171**	1	PLUG-PIPE	

M-METRIC PART

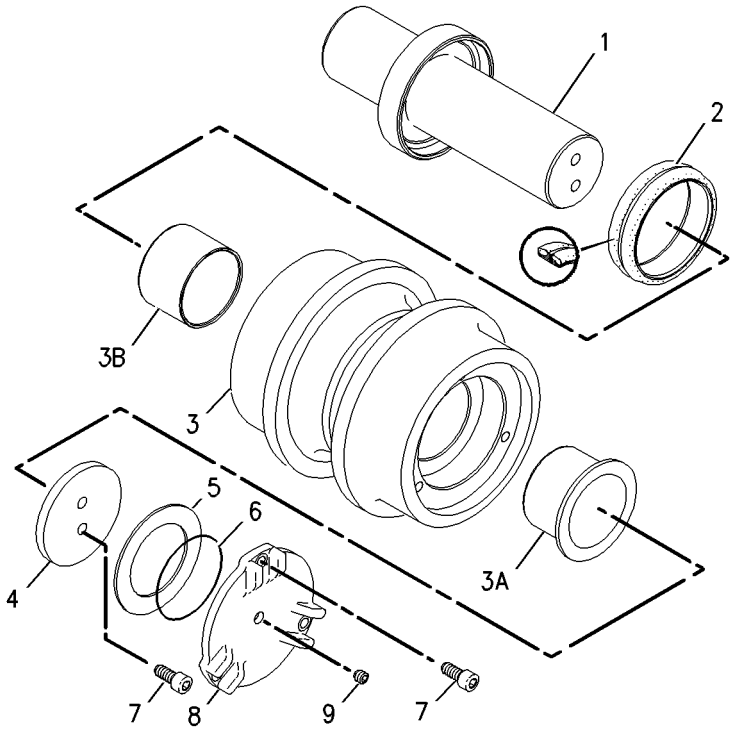

GRAPHIC #1 **<END>** g00850280

183-2874 ROLLER GP-TRACK-SINGLE FLANGE

S/N: D3P1-UP; M4T1-UP

PART OF 176-4853 ROLLER AR-TRACK & CARRIER

SMCS-4180 **i01682633**

NOTE	REF NO	GRAPHIC REF	PART NUMBER	QTY	PART NAME 1 2 3 4 5 6 (PRODUCT LEVEL)	SEE PAGE
	1	1	**183-2875**	1	ROLLER & BEARING AS	
	1A	1	**6Y-2792**	2	BEARING	
	2	1	**9W-2146**	1	PLUG	
	3	1	**148-3533**	2	SEAL GP-DUO-CONE	
					(EACH INCLUDES)	
		1	**160-6631**	2	RING-TORIC	
	4	1	**179-1497**	2	COLLAR-TRACK ROLLER	
	5	1	**179-1499**	2	DOWEL	
	6	1	**183-2883**	1	SHAFT-TRACK ROLLER	
	7	1	**8F-8882**	2	SEAL-O-RING	

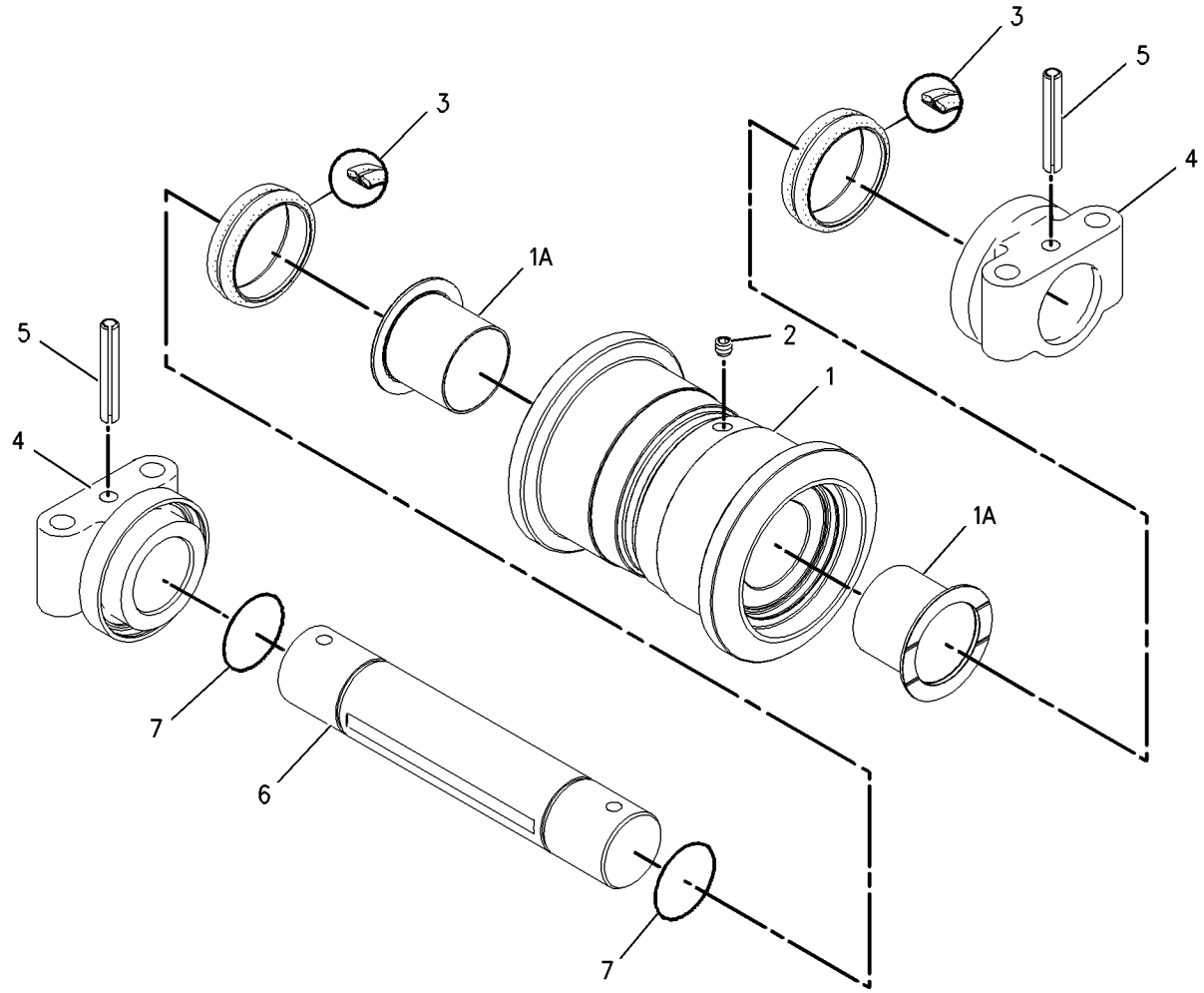

GRAPHIC #1 **<END>** g00686090

239-4322 SPRING GP-RECOIL

S/N: D3P1-UP; M4T1-UP

PART OF 239-4321 IDLER GP-FRONT

SMCS-4158 **i02488372**

NOTE	REF NO	GRAPHIC REF	PART NUMBER	QTY	PART NAME 1 2 3 4 5 6 (PRODUCT LEVEL)	SEE PAGE
	1	1	**179-3037**	1	WASHER (62X105X10-MM THK)	
	2	1	**179-3038**	1	NUT (M56X5.5-THD)	
	3	1	**179-3040**	1	STRIP	
	4	1	**239-4323**	1	SPRING	
	5	1	**239-4324**	1	ROD	
	6	1	**239-4326**	1	SUPPORT AS	
	7	1	**239-4330**	1	SUPPORT	
M	8	1	**8T-9080**	2	BOLT-SOCKET HEAD (M12X1.75X20-MM)	

M-METRIC PART

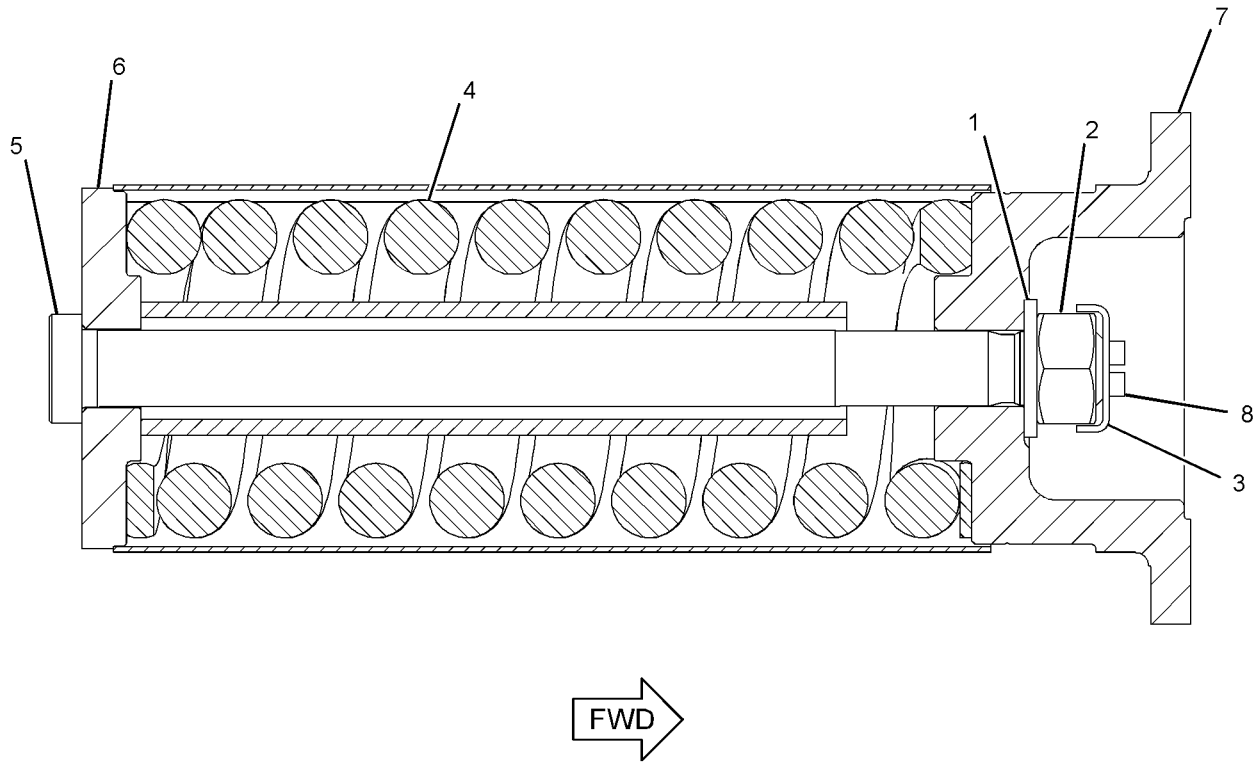

GRAPHIC #1 **<END>** g01196933

UNDERCARRIAGE

264-8494 TRACK AR

S/N: D3P1-UP; M4T1-UP
850-MM (33.5-IN) TRIPLE GROUSER SHOE
AN ATTACHMENT

SMCS-4170 **i02503810**

NOTE	PART NUMBER	QTY	PART NAME 1 2 3 4 5 6 (PRODUCT LEVEL)	SEE PAGE
Y	*235-7764*	1	STEP GP	407
Y	*260-9446*	1	TRACK GP	436

Y-SEPARATE ILLUSTRATION

<END>

203-0860 TRACK GP–2-REQUIRED

S/N: D3P1-UP; M4T1-UP

600-MM (23.6-IN) TRIPLE GROUSER SHOE. GREASE LUBRICATED TRACK, HEAVY-DUTY AN ATTACHMENT

SMCS-4170 **i03008152**

NOTE	REF NO	GRAPHIC REF	PART NUMBER	QTY	PART NAME 1 2 3 4 5 6 (PRODUCT LEVEL)	SEE PAGE
Y	1	1	**201-9119**	1	LINK AS-TRACK	424
	2	1	**121-0140**	49	SHOE-TRACK	
M	3	1	**318-2558**	196	BOLT-TRACK (M22X1.5X73-MM)	
M	4	1	**311-8150**	196	NUT-TRACK (M22X1.5-THD)	

M-METRIC PART
Y-SEPARATE ILLUSTRATION

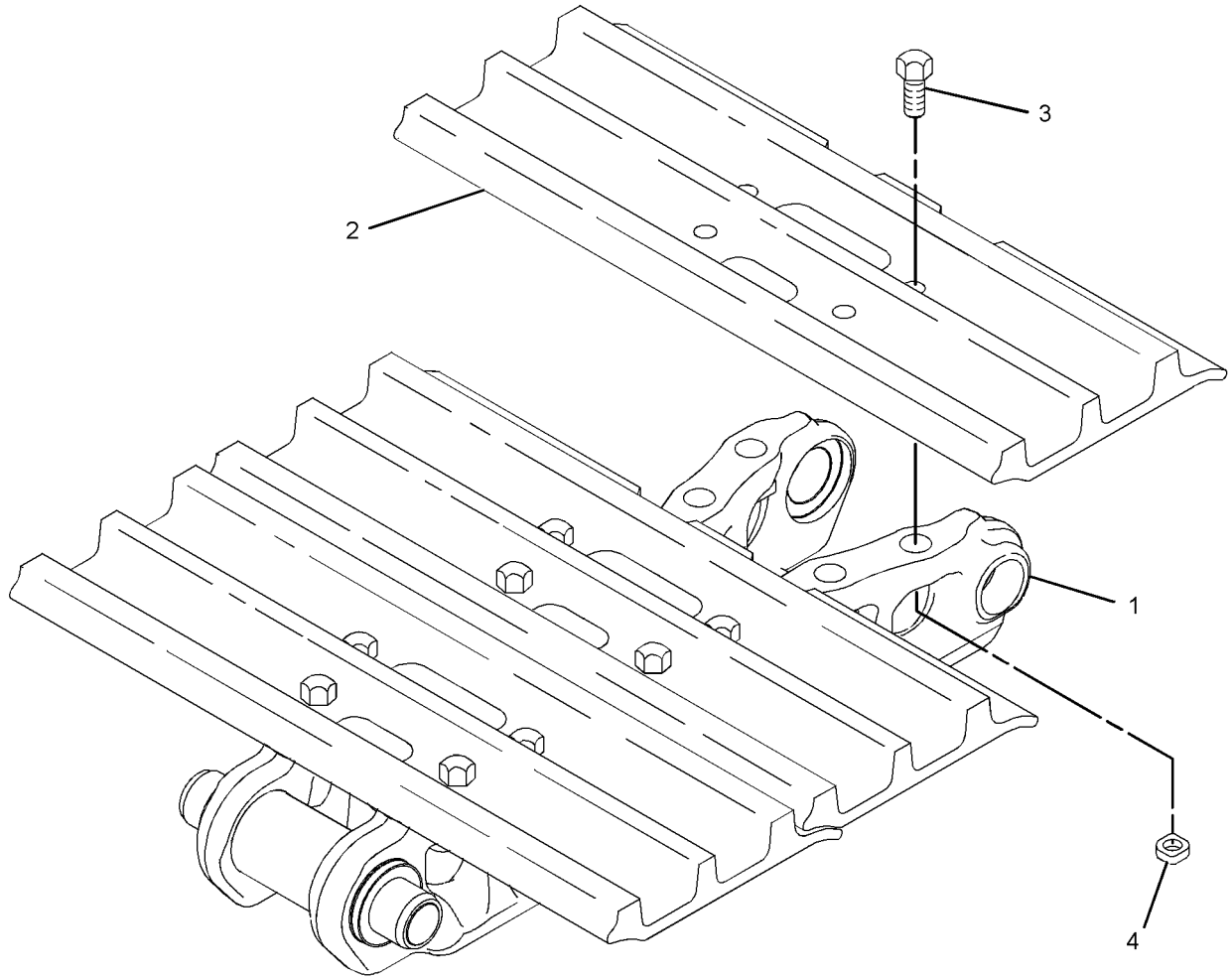

GRAPHIC #1 **<END>** g01201614

203-0861 TRACK GP–2-REQUIRED, HEAVY-DUTY

S/N: D3P1-UP; M4T1-UP
750-MM (29.5-IN) TRIPLE GROUSER SHOE. GREASE LUBRICATED TRACK
AN ATTACHMENT

SMCS-4170 **i02989431**

NOTE	REF NO	GRAPHIC REF	PART NUMBER	QTY	PART NAME 1 2 3 4 5 6 (PRODUCT LEVEL)	SEE PAGE
Y	1	1	**201-9119**	1	LINK AS-TRACK	424
	2	1	**121-0141**	49	SHOE-TRACK	
M	3	1	**318-2558**	196	BOLT-TRACK (M22X1.5X73-MM)	
M	4	1	**311-8150**	196	NUT-TRACK (M22X1.5-THD)	

M-METRIC PART
Y-SEPARATE ILLUSTRATION

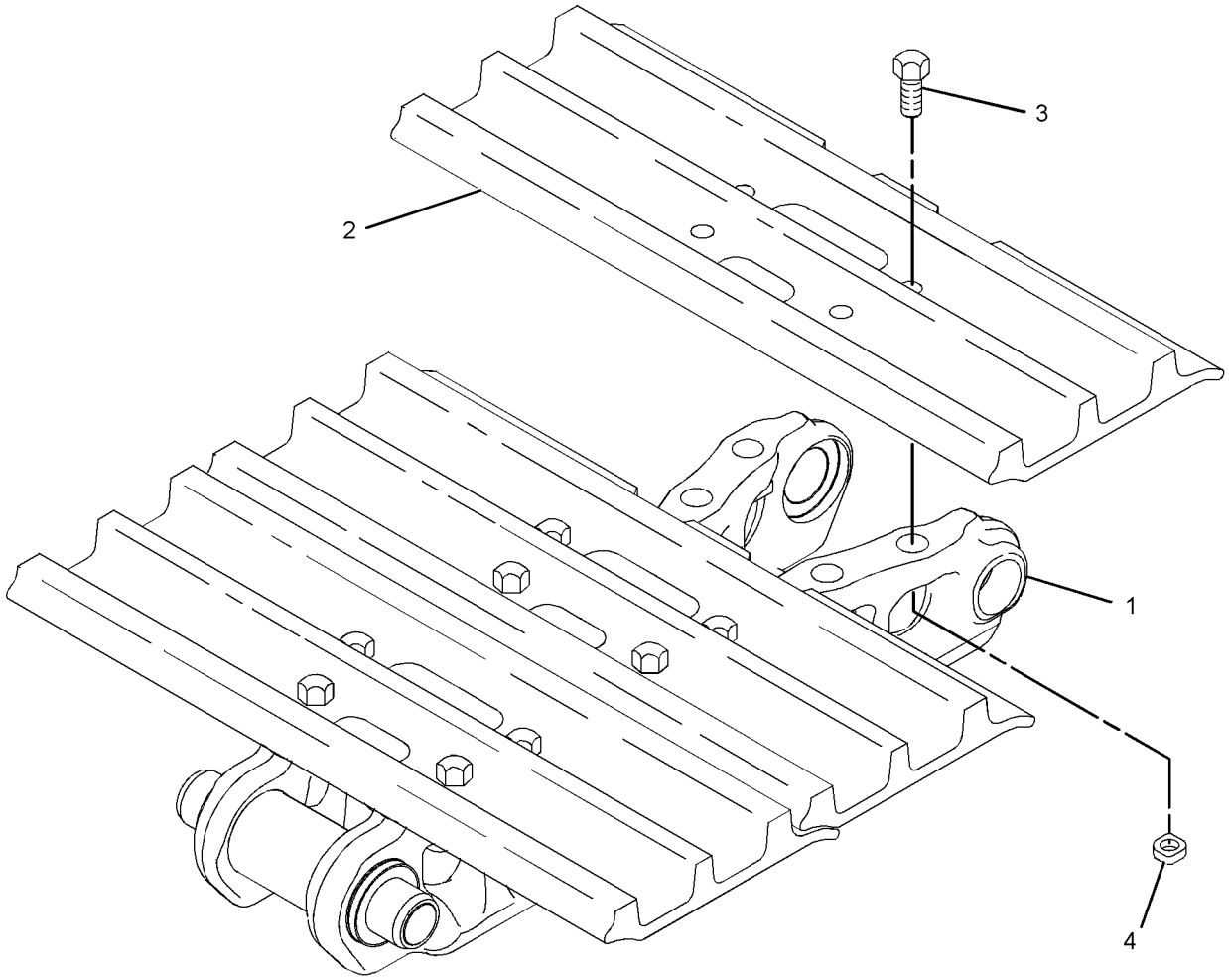

GRAPHIC #1 **<END>** g01201614

203-0862 TRACK GP–2-REQUIRED, HEAVY-DUTY

S/N: D3P1-UP; M4T1-UP
850-MM (33.5-IN) TRIPLE GROUSER SHOE. GREASE LUBRICATED TRACK
PART OF 264-8495 TRACK GP
AN ATTACHMENT

SMCS-4170 **i03626524**

NOTE	REF NO	GRAPHIC REF	PART NUMBER	QTY	PART NAME 1 2 3 4 5 6 (PRODUCT LEVEL)	SEE PAGE
Y	1	1	**201-9119**	1	LINK AS-TRACK	424
	2	1	**139-0246**	49	SHOE-TRACK	
M	3	1	**318-2558**	196	BOLT-TRACK (M22X1.5X73-MM)	
M	4	1	**311-8150**	196	NUT-TRACK (M22X1.5-THD)	

M-METRIC PART
Y-SEPARATE ILLUSTRATION

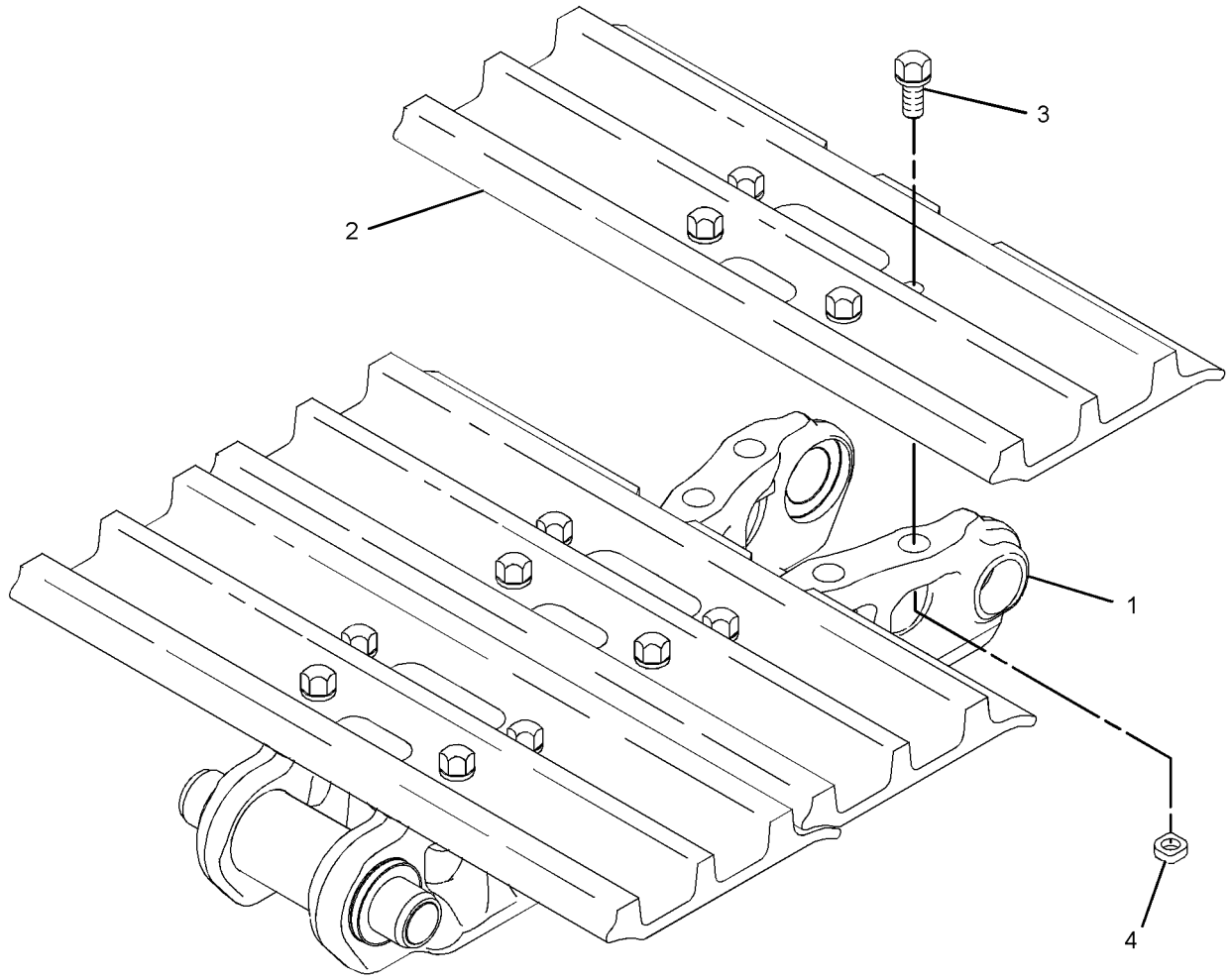

GRAPHIC #1 **<END>** g01525345

216-4027 TRACK GP–2-REQUIRED

S/N: D3P1-UP; M4T1-UP
600-MM (23.6-IN) TRIPLE GROUSER SHOE. GREASE LUBRICATED TRACK
PART OF 345-2290 DISTRIBUTION AR
AN ATTACHMENT

SMCS-4170 **i03630195**

NOTE	REF NO	GRAPHIC REF	PART NUMBER	QTY	PART NAME 1 2 3 4 5 6 (PRODUCT LEVEL)	SEE PAGE
Y	1	1	**201-9119**	1	LINK AS-TRACK	424
	2	1	**126-5066**	49	SHOE-TRACK	
M	3	1	**318-2559**	196	BOLT-TRACK (M22X1.5X67-MM)	
M	4	1	**311-8150**	196	NUT-TRACK (M22X1.5-THD)	

M-METRIC PART
Y-SEPARATE ILLUSTRATION

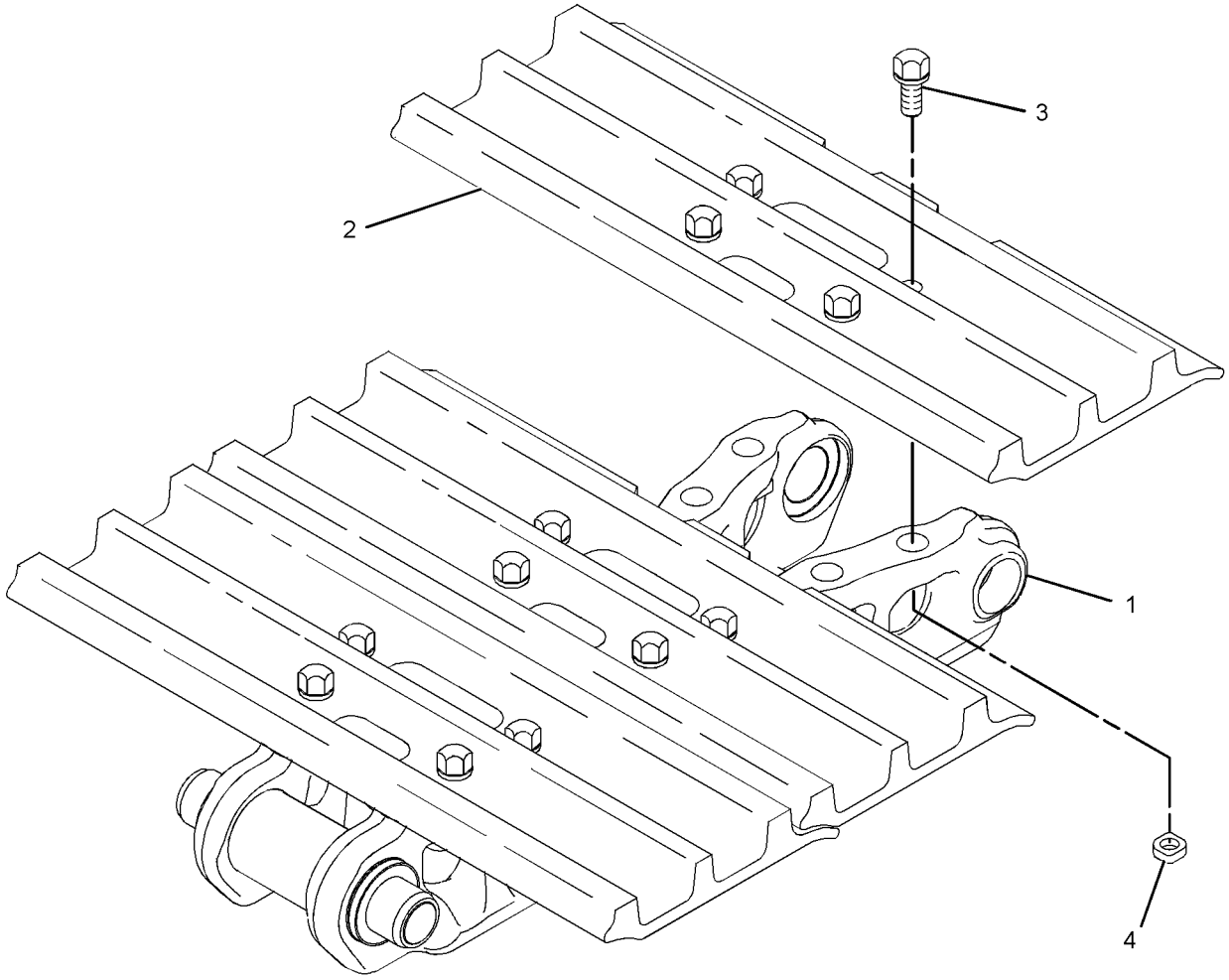

GRAPHIC #1 **<END>** g01525345

241-0985 TRACK GP–2-REQUIRED

S/N: D3P1-UP; M4T1-UP
700-MM (27.6-IN) TRIPLE GROUSER SHOE. GREASE LUBRICATED TRACK
PART OF 337-5230 DISTRIBUTION AR
AN ATTACHMENT

SMCS-4170 **i03013653**

NOTE	REF NO	GRAPHIC REF	PART NUMBER	QTY	PART NAME 1 2 3 4 5 6 (PRODUCT LEVEL)	SEE PAGE
Y	1	1	**201-9119**	1	LINK AS-TRACK	424
	2	1	**238-8591**	49	SHOE-TRACK	
M	3	1	**318-2559**	196	BOLT-TRACK (M22X1.5X67-MM)	
M	4	1	**311-8150**	196	NUT-TRACK (M22X1.5-THD)	

M-METRIC PART
Y-SEPARATE ILLUSTRATION

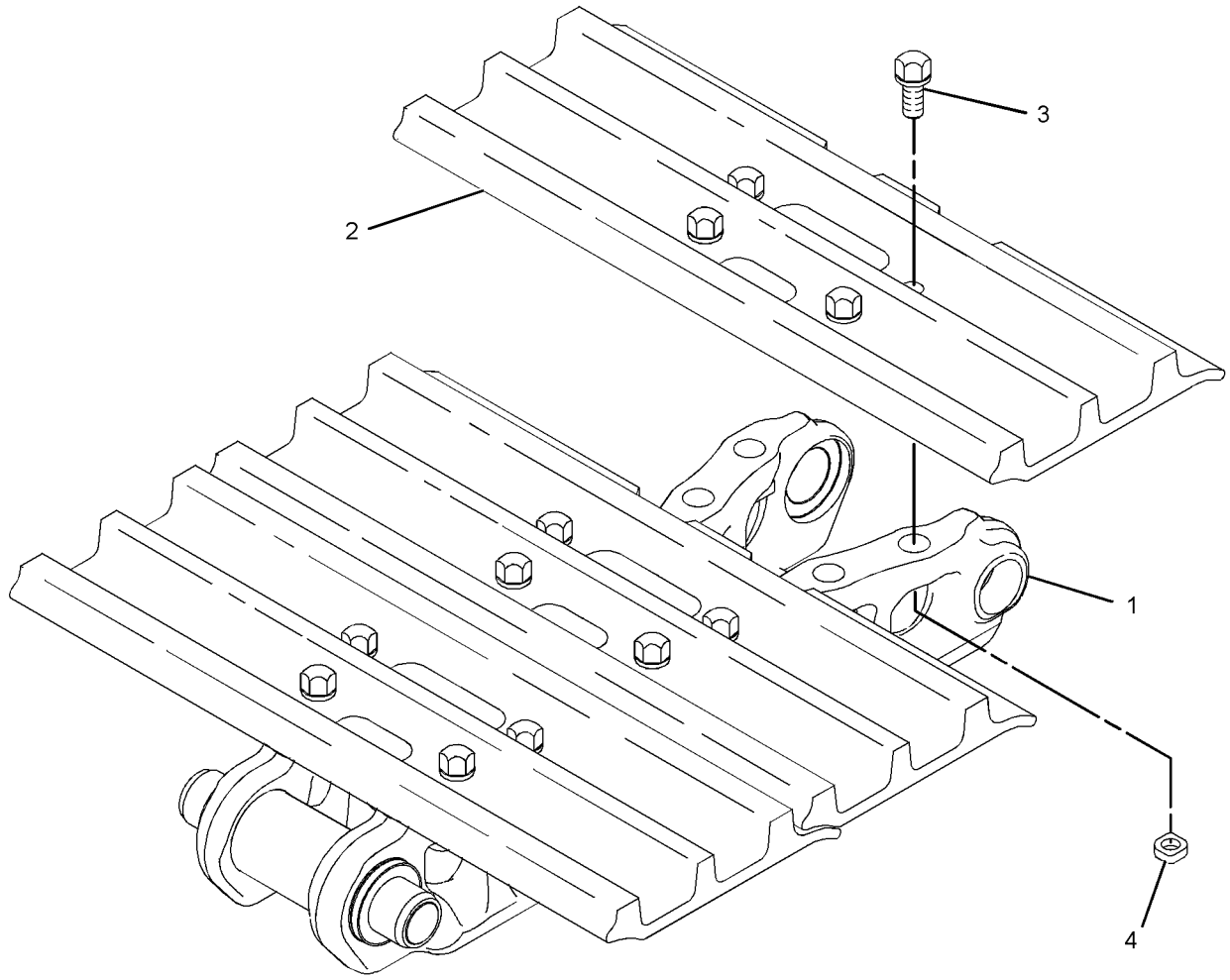

GRAPHIC #1 **<END>** g01525345

260-9446 TRACK GP–2-REQUIRED

S/N: D3P1-UP; M4T1-UP
850-MM (33.5-IN) TRIPLE GROUSER SHOE. GREASE LUBRICATED TRACK
PART OF 264-8494 TRACK AR
AN ATTACHMENT

SMCS-4170 **i03022074**

NOTE	REF NO	GRAPHIC REF	PART NUMBER	QTY	PART NAME 1 2 3 4 5 6 (PRODUCT LEVEL)	SEE PAGE
Y	1	1	**201-9119**	1	LINK AS-TRACK	424
	2	1	**6Y-8180**	49	SHOE-TRACK	
M	3	1	**318-2558**	196	BOLT-TRACK (M22X1.5X73-MM)	
M	4	1	**311-8150**	196	NUT-TRACK (M22X1.5-THD)	

M-METRIC PART
Y-SEPARATE ILLUSTRATION

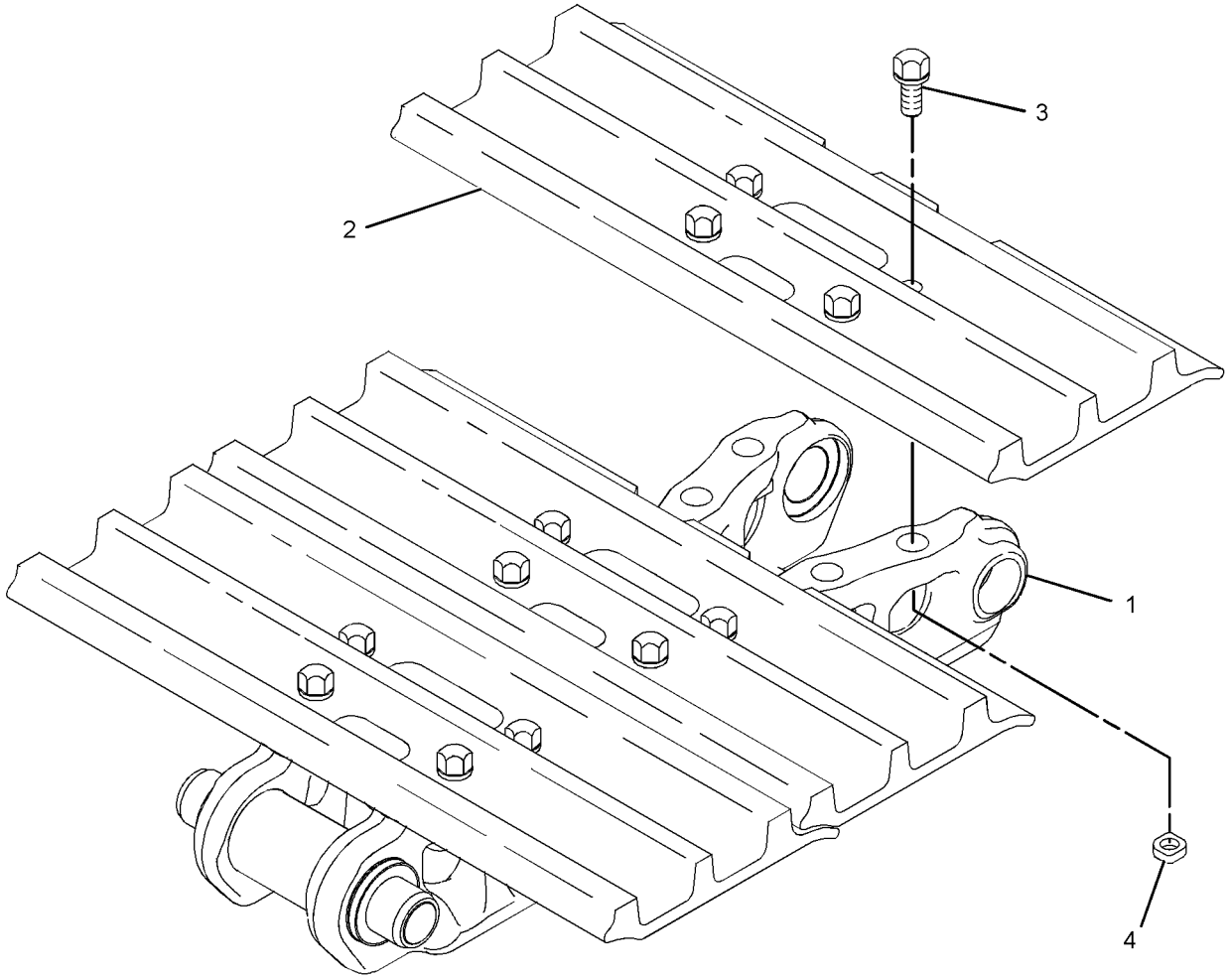

GRAPHIC #1 **<END>** g01525345

260-9452 TRACK GP–2-REQUIRED

S/N: D3P1-UP; M4T1-UP
600-MM (23.7-IN) DOUBLE GROUSER SHOE. GREASE LUBRICATED TRACK
PART OF 337-4121 OPTION AR-UNDERCARRIAGE
AN ATTACHMENT

SMCS-4170 **i03733700**

NOTE	REF NO	GRAPHIC REF	PART NUMBER	QTY	PART NAME 1 2 3 4 5 6 (PRODUCT LEVEL)	SEE PAGE
Y	1	1	**201-9119**	1	LINK AS-TRACK	424
	2	1	**6I-8454**	49	SHOE-TRACK	
M	3	1	**318-2558**	196	BOLT-TRACK (M22X1.5X73-MM)	
M	4	1	**311-8150**	196	NUT-TRACK (M22X1.5-THD)	

M-METRIC PART
Y-SEPARATE ILLUSTRATION

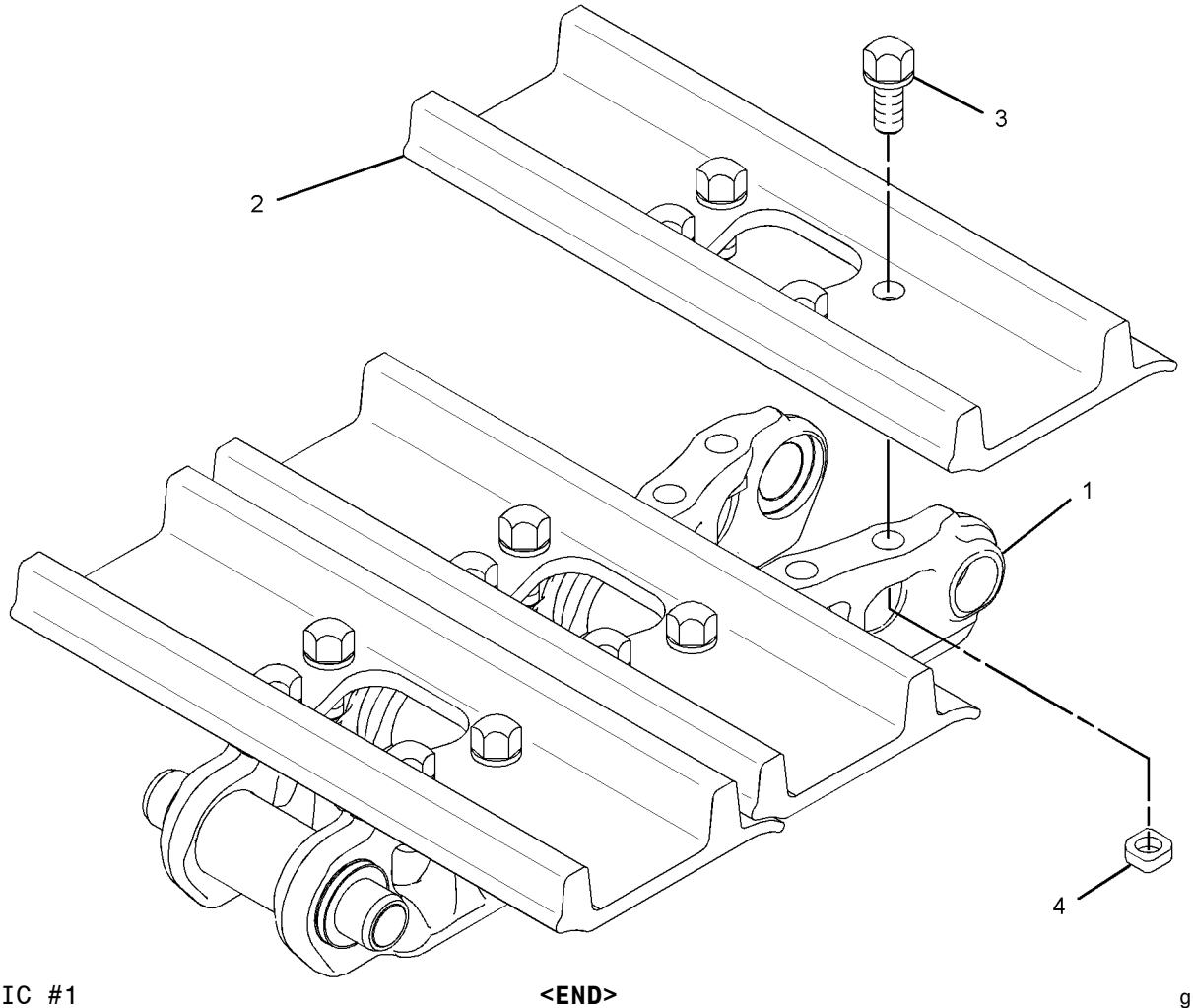

GRAPHIC #1 **<END>** g01528686

260-9454 TRACK GP–2-REQUIRED

S/N: D3P1-UP; M4T1-UP

800-MM (31.5-IN) TRIPLE GROUSER SHOE. GREASE LUBRICATED TRACK AN ATTACHMENT

SMCS-4170 **i03013632**

NOTE	REF NO	GRAPHIC REF	PART NUMBER	QTY	PART NAME 1 2 3 4 5 6 (PRODUCT LEVEL)	SEE PAGE
Y	1	1	**201-9119**	1	LINK AS-TRACK	424
	2	1	**238-8592**	49	SHOE-TRACK	
M	3	1	**318-2558**	196	BOLT-TRACK (M22X1.5X73-MM)	
M	4	1	**311-8150**	196	NUT-TRACK (M22X1.5-THD)	

M-METRIC PART
Y-SEPARATE ILLUSTRATION

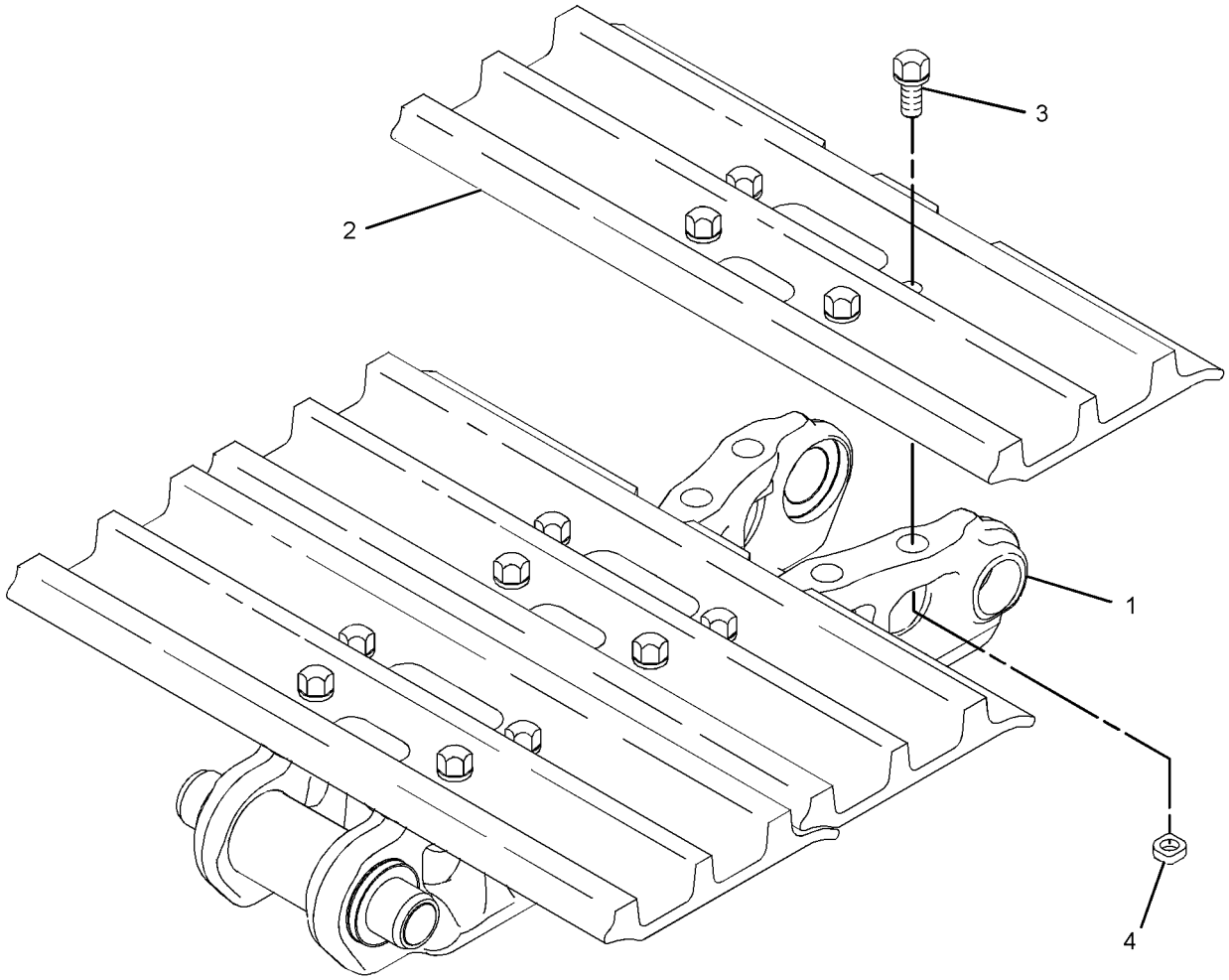

GRAPHIC #1 **<END>** g01525345

264-8495 TRACK GP—HEAVY-DUTY

S/N: D3P1-UP; M4T1-UP
850-MM (33.4-IN) TRIPLE GROUSER SHOE
AN ATTACHMENT

SMCS-4170 **i02503806**

NOTE	PART NUMBER	QTY	PART NAME 1 2 3 4 5 6 (PRODUCT LEVEL)	SEE PAGE
Y	*235-7764*	1	STEP GP	407
Y	**203-0862**	1	TRACK GP	433

Y-SEPARATE ILLUSTRATION

<END>

347-2343 TRACK GP–2-REQUIRED

S/N: D3P1-UP; M4T1-UP
600-MM (23.6-IN) TRIPLE GROUSER SHOE. GREASE LUBRICATED TRACK, TRAPEZOID
PART OF 345-2289 DISTRIBUTION AR
AN ATTACHMENT

SMCS-4170 **i03747054**

NOTE	REF NO	GRAPHIC REF	PART NUMBER	QTY	PART NAME 1 2 3 4 5 6 (PRODUCT LEVEL)	SEE PAGE
Y	1	1	**213-1971**	1	LINK AS-TRACK	425
	2	1	**126-5066**	49	SHOE-TRACK	
M	3	1	**318-2559**	196	BOLT-TRACK (M22X1.5X67-MM)	
M	4	1	**311-8150**	196	NUT-TRACK (M22X1.5-THD)	

M-METRIC PART
Y-SEPARATE ILLUSTRATION

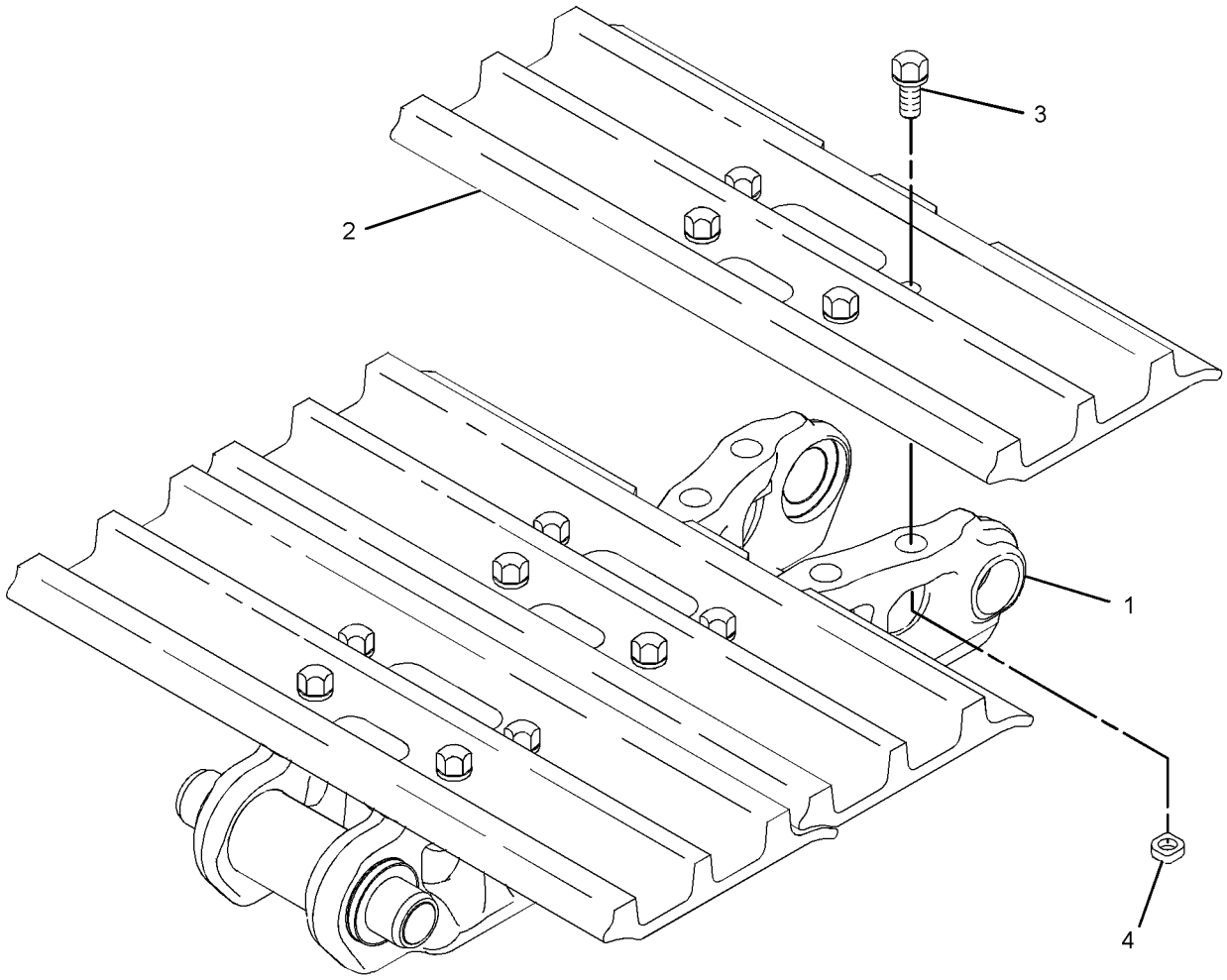

GRAPHIC #1 **<END>** g01525345

347-2344 TRACK GP–2-REQUIRED

S/N: D3P1-UP; M4T1-UP

800-MM (31.5-IN) TRIPLE GROUSER SHOE. GREASE LUBRICATED TRACK, TRAPEZOID AN ATTACHMENT

SMCS-4170 **i03748034**

NOTE	REF NO	GRAPHIC REF	PART NUMBER	QTY	PART NAME 1 2 3 4 5 6 (PRODUCT LEVEL)	SEE PAGE
Y	1	1	**213-1971**	1	LINK AS-TRACK	425
	2	1	**238-8592**	49	SHOE-TRACK	
M	3	1	**318-2558**	196	BOLT-TRACK (M22X1.5X73-MM)	
M	4	1	**311-8150**	196	NUT-TRACK (M22X1.5-THD)	

M-METRIC PART
Y-SEPARATE ILLUSTRATION

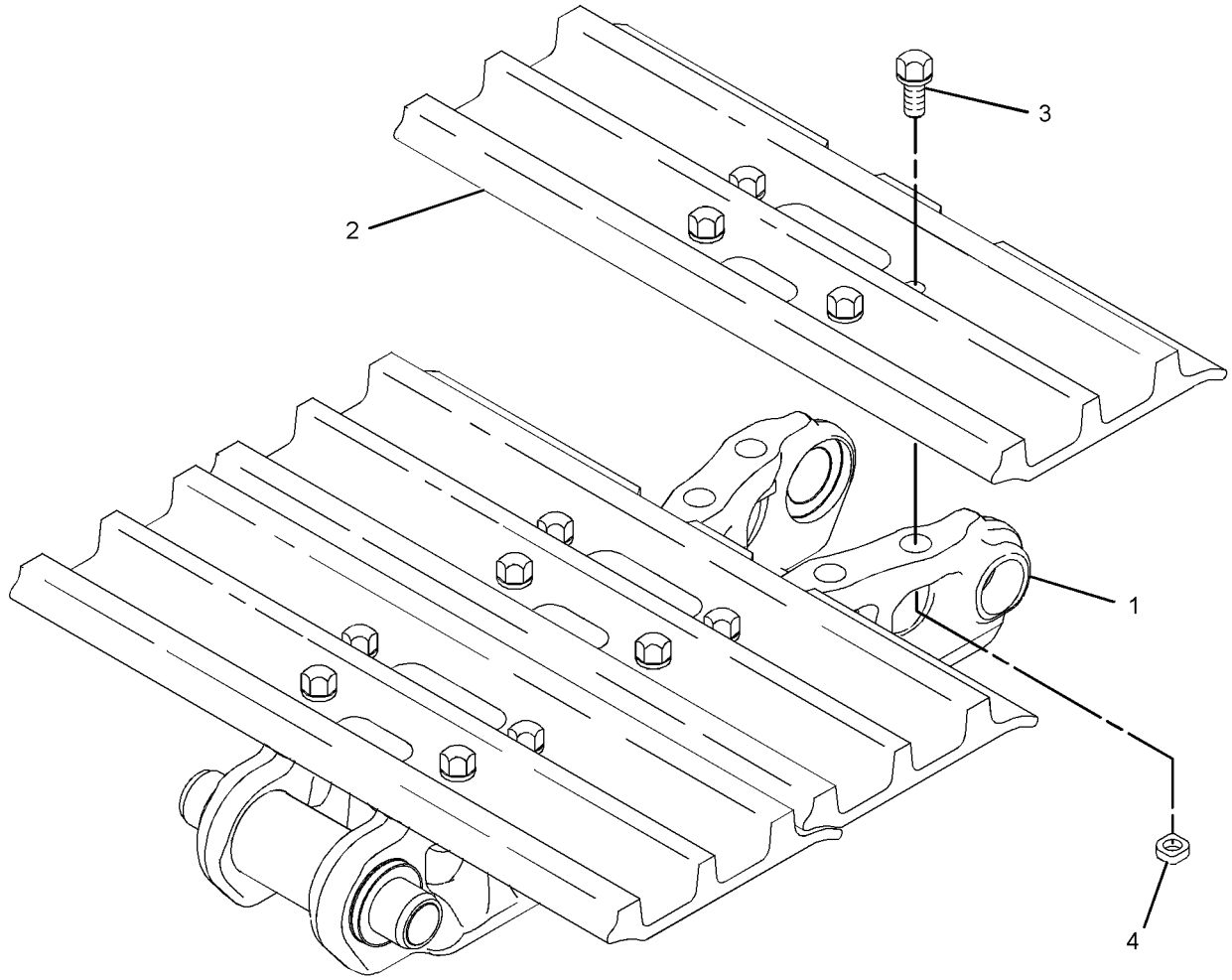

GRAPHIC #1 **<END>** g01525345

347-2345 TRACK GP–2-REQUIRED

S/N: D3P1-UP; M4T1-UP

600-MM (23.7-IN) TRIPLE GROUSER SHOE. GREASE LUBRICATED TRACK, HEAVY-DUTY AN ATTACHMENT

SMCS-4170 **i03748048**

NOTE	REF NO	GRAPHIC REF	PART NUMBER	QTY	PART NAME 1 2 3 4 5 6 (PRODUCT LEVEL)	SEE PAGE
Y	1	1	**213-1971**	1	LINK AS-TRACK	425
	2	1	**6I-8454**	49	SHOE-TRACK	
M	3	1	**318-2558**	196	BOLT-TRACK (M22X1.5X73-MM)	
M	4	1	**311-8150**	196	NUT-TRACK (M22X1.5-THD)	

M-METRIC PART
Y-SEPARATE ILLUSTRATION

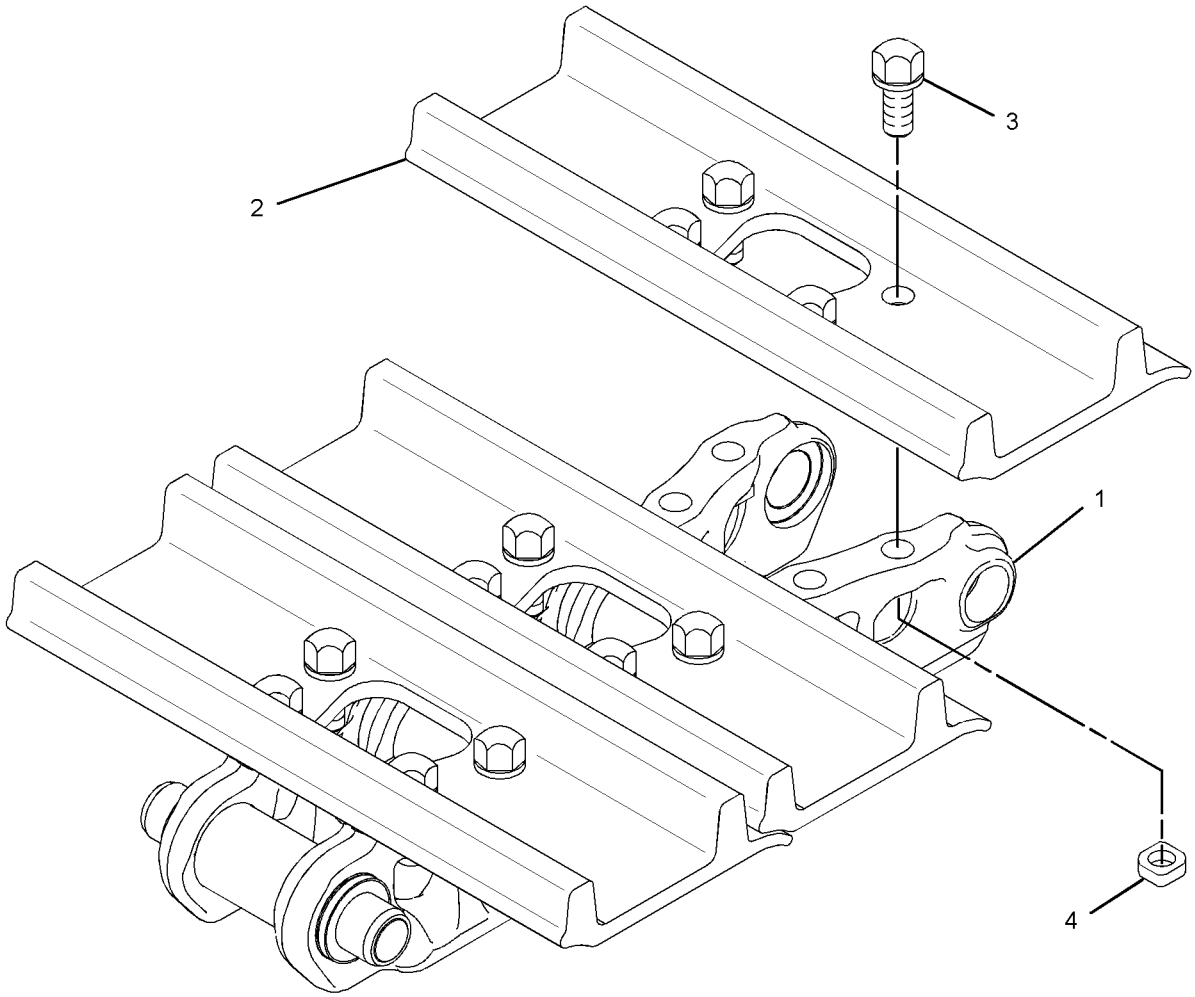

GRAPHIC #1 **<END>** g01528686

347-2346 TRACK GP–2-REQUIRED

S/N: D3P1-UP; M4T1-UP

600-MM (23.7-IN) TRIPLE GROUSER SHOE. GREASE LUBRICATED TRACK, HEAVY-DUTY, TRAPEZOID

AN ATTACHMENT

SMCS-4170 **i03748053**

NOTE	REF NO	GRAPHIC REF	PART NUMBER	QTY	PART NAME 1 2 3 4 5 6 (PRODUCT LEVEL)	SEE PAGE
Y	1	1	**213-1971**	1	LINK AS-TRACK	425
	2	1	**121-0140**	49	SHOE-TRACK	
M	3	1	**318-2558**	196	BOLT-TRACK (M22X1.5X73-MM)	
M	4	1	**311-8150**	196	NUT-TRACK (M22X1.5-THD)	

M-METRIC PART
Y-SEPARATE ILLUSTRATION

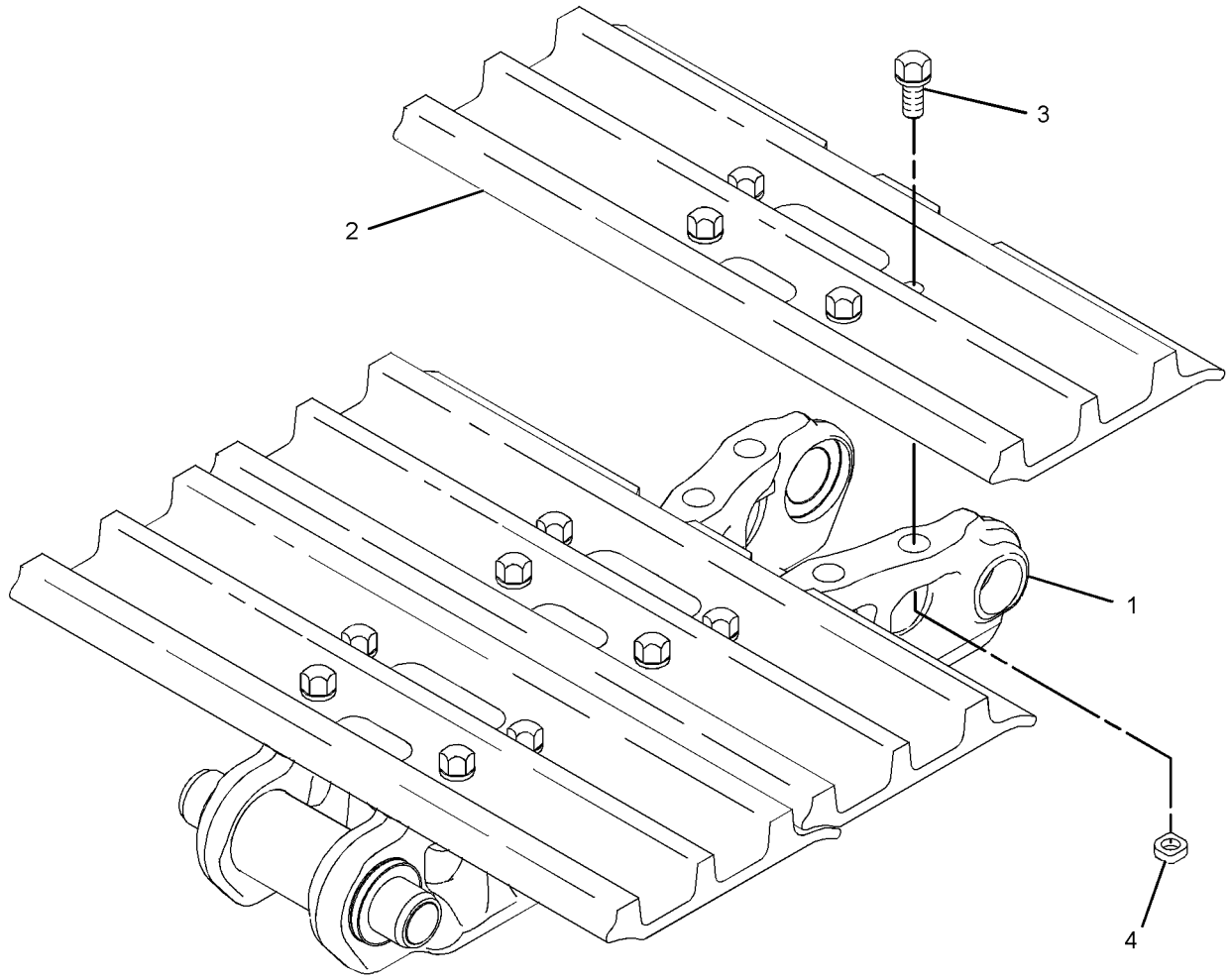

GRAPHIC #1 **<END>** g01525345

HYDRAULIC SYSTEM

4I-1536 ACCUMULATOR GP-HYDRAULIC—CHARGED

S/N: D3P1-UP; M4T1-UP

PART OF 087-4456 ACCUMULATOR GP-HYDRAULIC

SMCS-5077 **i00823582**

NOTE	REF NO	GRAPHIC REF	PART NUMBER	QTY	PART NAME 1 2 3 4 5 6 (PRODUCT LEVEL)	SEE PAGE
	1	1	**4I-5862**	1	CAP	
	2	1	**4I-1539**	1	CORE	

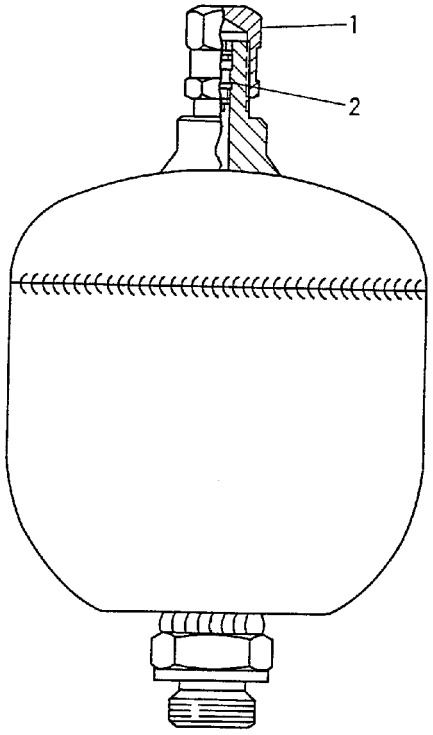

GRAPHIC #1 **<END>** g00222004

5I-8416 ACCUMULATOR GP-HYDRAULIC—CHARGED

S/N: D3P1-UP; M4T1-UP

PART OF 087-4456 ACCUMULATOR GP-HYDRAULIC

SMCS-5077 **i00823584**

NOTE	REF NO	GRAPHIC REF	PART NUMBER	QTY	PART NAME 1 2 3 4 5 6 (PRODUCT LEVEL)	SEE PAGE
	1	1	**4I-8267**	1	CAP	
Y	2	1	*087-4454*	1	ACCUMULATOR GP-HYDRAULIC (CHARGED)	446

Y-SEPARATE ILLUSTRATION

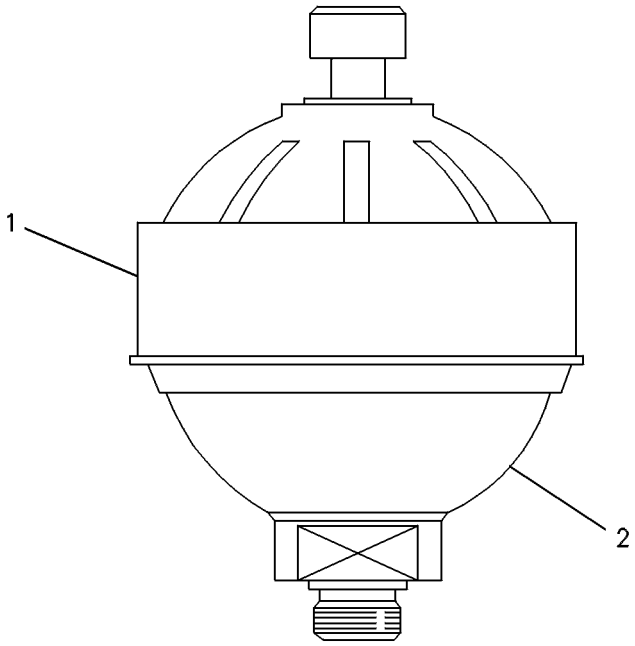

GRAPHIC #1 **<END>** g00237219

087-4454 ACCUMULATOR GP-HYDRAULIC—CHARGED

S/N: D3P1-UP; M4T1-UP

PART OF 5I-8416 ACCUMULATOR GP-HYDRAULIC

SMCS-5077 **i00827965**

NOTE	REF NO	GRAPHIC REF	PART NUMBER	QTY	PART NAME 1 2 3 4 5 6 (PRODUCT LEVEL)	SEE PAGE
	1	1	**087-4577**	1	SEAL	
	2	1	**087-4576**	1	CAP	
	3	1	**087-4575**	1	CORE	

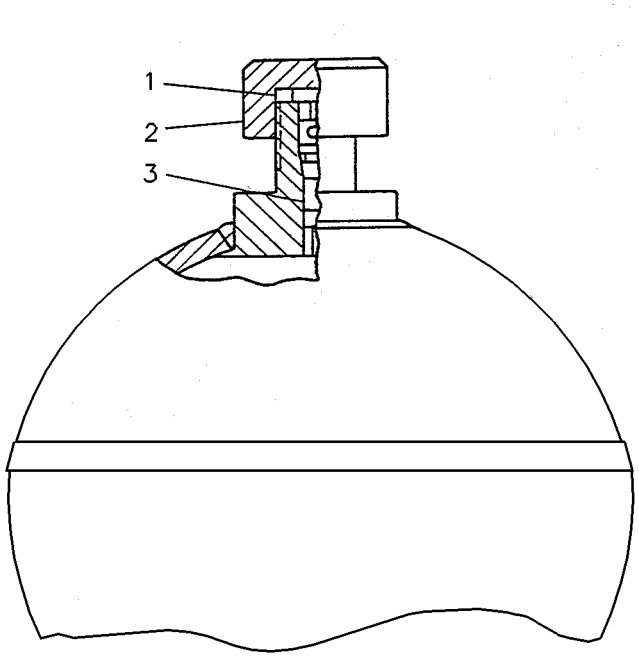

GRAPHIC #1 **<END>** g00221492

087-4456 ACCUMULATOR GP-HYDRAULIC—CHARGED

S/N: D3P1-UP; M4T1-UP

PART OF 164-6981 ACCUMULATOR GP-HYDRAULIC

SMCS-5077 **i02837812**

NOTE	PART NUMBER	QTY	PART NAME 1 2 3 4 5 6 (PRODUCT LEVEL)	SEE PAGE
Y	*4I-1536*	1	ACCUMULATOR GP-HYDRAULIC (CHARGED)	444
			-OR-	
Y	*5I-8416*	1	ACCUMULATOR GP-HYDRAULIC (CHARGED)	445
			-OR-	
Y	*145-5106*	1	ACCUMULATOR GP-HYDRAULIC (CHARGED)	448
Y-SEPARATE ILLUSTRATION				

<END>

HYDRAULIC SYSTEM

145-5106 ACCUMULATOR GP-HYDRAULIC—CHARGED

S/N: D3P1-UP; M4T1-UP

PART OF 087-4456 ACCUMULATOR GP-HYDRAULIC

SMCS-5077 **i02837951**

NOTE	REF NO	GRAPHIC REF	PART NUMBER	QTY	PART NAME 1 2 3 4 5 6 (PRODUCT LEVEL)	SEE PAGE
	1	1	**159-4700**	1	FILM-WARNING (HIGH PRESSURE CYLINDER)	

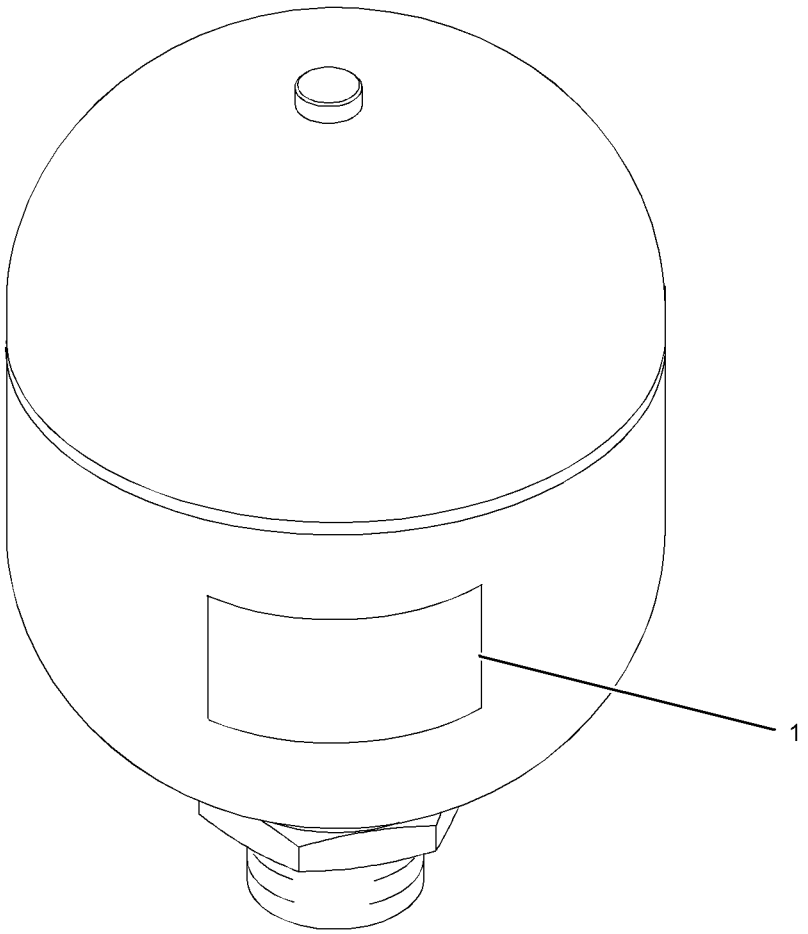

GRAPHIC #1 **<END>** g01288209

HYDRAULIC SYSTEM

164-6981 ACCUMULATOR GP-HYDRAULIC—CHARGED

S/N: D3P1-UP; M4T1-UP

PART OF 248-9843 LINES GP-PILOT

SMCS-5077 **i03440920**

NOTE	PART NUMBER	QTY	PART NAME 1 2 3 4 5 6 (PRODUCT LEVEL)	SEE PAGE
Y	**087-4456**	1	ACCUMULATOR GP-HYDRAULIC (CHARGED)	447
	3K-0360	1	SEAL-O-RING	

Y-SEPARATE ILLUSTRATION

<END>

209-5982 ACTUATOR GP–HYDRAULIC FAN PUMP

S/N: D3P1-UP; M4T1-UP
PART OF 259-0815 PUMP GP-PISTON

SMCS-5078 **i02500094**

NOTE	REF NO	GRAPHIC REF	PART NUMBER	QTY	PART NAME 1 2 3 4 5 6 (PRODUCT LEVEL)	SEE PAGE
	1	1	**155-9141**	1	PISTON	
	2	1	**155-9142**	1	GUIDE	
	3	1	**155-9143**	1	SPRING	
	4	1	**191-7584**	1	GUIDE	
	5	1	**155-9139**	1	PISTON	

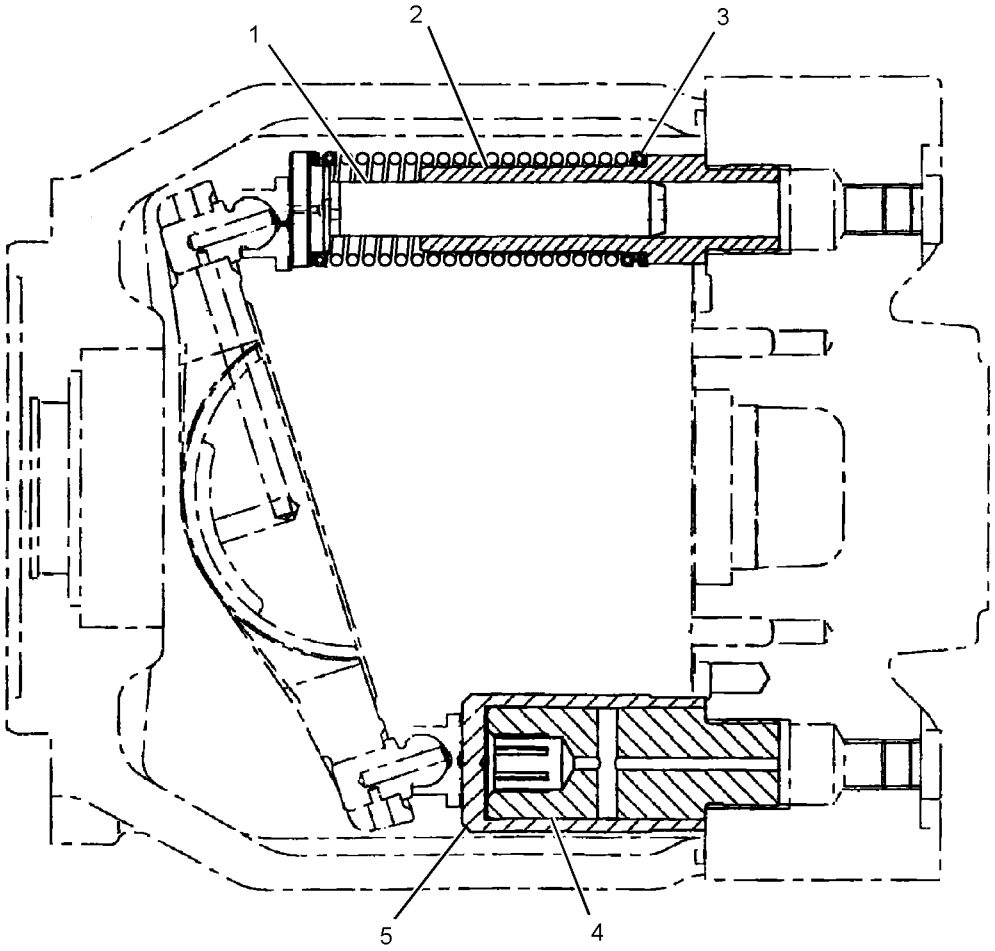

GRAPHIC #1 **<END>** g01201563

173-3503 BASE GP-OIL FILTER–HYDRAULIC

S/N: D3P1-UP; M4T1-UP

PART OF 188-4140 FILTER GP-OIL

SMCS-5068 **i02270914**

NOTE	REF NO	GRAPHIC REF	PART NUMBER	QTY	PART NAME 1 2 3 4 5 6 (PRODUCT LEVEL)	SEE PAGE
	1	1	**204-2763**	1	BLOCK	
	2	1	**5L-4758**	1	SEAL-O-RING	
	3	1	**177-2619**	2	PACKING	
	4	1	**173-3505**	1	PLATE-SLIDE	
	5	1	**137-3631**	1	PACKING	
M	6	1	**137-3626**	1	BOLT-SHOULDER (M6X1X28.75-MM)	
	7	1	**173-3506**	1	PLUG AS	
	8	1	**3J-1907**	1	SEAL-O-RING	
	9	1	**7Y-5272**	2	PIN-SPRING	
B	10	1	**137-3628**	1	SHIM (0.1-MM THK)	

B-USE AS REQUIRED
M-METRIC PART

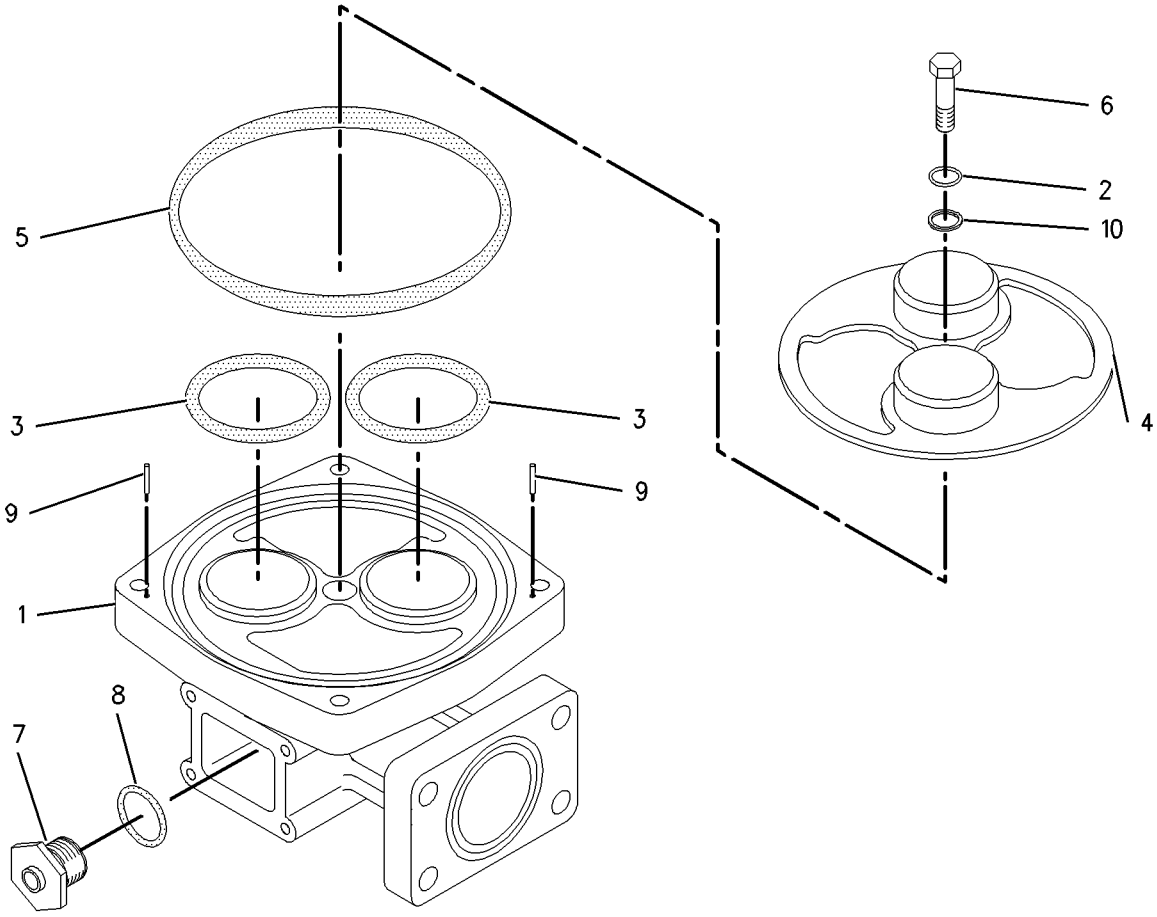

GRAPHIC #1 **<END>** g00731058

255-5770 CONTROL AR-AUXILIARY–SYSTEM 11, COMBINED FN, MED PR

S/N: D3P1-UP; M4T1-UP
PART OF 337-4152 OPTION AR-HYDRAULIC
AN ATTACHMENT

SMCS-5051 **i03706426**

NOTE	PART NUMBER	QTY	PART NAME 1 2 3 4 5 6 (PRODUCT LEVEL)	SEE PAGE
Y	*239-8695*	1	CONTROL GP-HYDRAULIC PEDAL	977
Y	*247-7423*	1	FILM GP (OPERATOR CONTROLS, NOTICE)	1083
Y	*255-1919*	1	LINES GP-FRONT (SYSTEM 2, COMBINED FUNCTION)	552
Y	*255-1925*	1	LINES GP-FRONT (SYSTEM 11, COMBINED FN, MED PR)	572
Y	*255-1663*	1	LINES GP-PILOT (PEDAL CONTROLS)	623
Y	*260-7854*	1	LINES GP-PILOT (SYSTEM 11, COMBINED FN, MED PR)	638
Y	*255-5716*	1	VALVE & MTG GP-CONTROL (AUXILIARY)	737
Y	*259-4962*	1	WIRING GP-AUXILIARY CONTROL	284
Y	*251-0529*	1	WIRING GP-CAB (1-WAY/2-WAY FLOW)	298

Y-SEPARATE ILLUSTRATION

<END>

255-5774 CONTROL AR-AUXILIARY–SYSTEM 16, 1-WAY, 2-PUMP

S/N: M4T1-UP
PART OF 340-9469 OPTION AR-CONTROL
AN ATTACHMENT

SMCS-5051 **i03727181**

NOTE	PART NUMBER	QTY	PART NAME 1 2 3 4 5 6 (PRODUCT LEVEL)	SEE PAGE
Y	*255-1923*	1	LINES GP-FRONT (SYSTEM 16, 1-WAY, 2-PUMP)	564
Y	*260-7855*	1	LINES GP-PILOT (1-PUMP/2-PUMP, 1-WAY FLOW)	644
Y	*285-1376*	1	VALVE & MTG GP-CONTROL (SYSTEM 16, 1-WAY, 2-PUMP)	738
Y	*259-4963*	1	WIRING GP-AUXILIARY CONTROL (SYSTEM 16, 1-WAY, 2-PUMP)	286

Y-SEPARATE ILLUSTRATION

<END>

255-5822 CONTROL AR-AUXILIARY—MEDIUM PRESSURE

S/N: M4T1-UP

PART OF 340-9468 OPTION AR-CONTROL

FOR USE WITH 255-5845—PAGE 1037, 270-5687—PAGE 964, 270-5688—PAGE 964, 260-7863—PAGE 653, 240-5073—PAGE 997, 245-7794—PAGE 998. CANNOT BE USED WITH 255-5823—PAGE 713

AN ATTACHMENT

SMCS-5051 **i03732100**

NOTE	PART NUMBER	QTY	PART NAME 1 2 3 4 5 6 (PRODUCT LEVEL)	SEE PAGE
Y	**234-4620**	1	DRIVE GP-AUXILIARY PUMP (ACCESSORY DRIVE)	473
Y	*255-1926*	1	LINES GP-FRONT (MEDIUM PRESSURE CIRCUIT)	574
Y	*260-7861*	1	LINES GP-PILOT (MEDIUM PRESSURE)	651
Y	*260-7862*	1	LINES GP-PUMP (AUXILIARY)	663
Y	*259-0682*	1	PUMP & MTG GP-AUXILIARY	714
Y	*259-4964*	1	WIRING GP-MEDIUM PRESSURE	331

Y-SEPARATE ILLUSTRATION

<END>

270-8795 CONTROL AR-AUXILIARY—SYSTEM 14, COMBINED FUNCTION

S/N: D3P1-UP; M4T1-UP

AN ATTACHMENT

SMCS-5051 **i03626580**

NOTE	PART NUMBER	QTY	PART NAME 1 2 3 4 5 6 (PRODUCT LEVEL)	SEE PAGE
Y	*200-6741*	1	CONTROL & MTG GP-JOYSTICK (WITH SLIDE CONTROL)	963
Y	**234-4620**	1	DRIVE GP-AUXILIARY PUMP (ACCESSORY DRIVE)	473
Y	*259-5295*	1	FASTENER GP-WIRING HARNESS (JOYSTICK)	205
Y	*247-7410*	1	FILM GP (OPERATOR CONTROLS, NOTICE)	1079
Y	*255-1922*	1	LINES GP-FRONT (SYSTEM 14, COMBINED FUNCTION)	560
Y	*255-1926*	1	LINES GP-FRONT (MEDIUM PRESSURE CIRCUIT)	574
Y	*260-7857*	1	LINES GP-PILOT (SYSTEM 14, SYSTEM 17)	647
Y	*260-7861*	1	LINES GP-PILOT (MEDIUM PRESSURE)	651
Y	*260-7863*	1	LINES GP-PILOT (ROTATOR)	653
Y	*260-7862*	1	LINES GP-PUMP (AUXILIARY)	663
Y	*259-0682*	1	PUMP & MTG GP-AUXILIARY	714
Y	*255-5713*	1	VALVE & MTG GP-CONTROL (AUXILIARY)	736
Y	*251-0623*	1	WIRING GP-AUXILIARY CONTROL (SYSTEM 14, COMBINED FUNCTION)	281
Y	*259-4964*	1	WIRING GP-MEDIUM PRESSURE	331

Y-SEPARATE ILLUSTRATION

<END>

270-8796 CONTROL AR-AUXILIARY–SYSTEM 14, COMBINED FUNCTION

S/N: D3P1-UP; M4T1-UP

AN ATTACHMENT

SMCS-5051 **i03626582**

NOTE	PART NUMBER	QTY	PART NAME 1 2 3 4 5 6 (PRODUCT LEVEL)	SEE PAGE
Y	*200-6741*	1	CONTROL & MTG GP-JOYSTICK (WITH SLIDE CONTROL)	963
Y	*259-5295*	1	FASTENER GP-WIRING HARNESS (JOYSTICK)	205
Y	*247-7410*	1	FILM GP (OPERATOR CONTROLS, NOTICE)	1079
Y	*255-1922*	1	LINES GP-FRONT (SYSTEM 14, COMBINED FUNCTION)	560
Y	*260-7857*	1	LINES GP-PILOT (SYSTEM 14, SYSTEM 17)	647
Y	*260-7863*	1	LINES GP-PILOT (ROTATOR)	653
Y	*255-5713*	1	VALVE & MTG GP-CONTROL (AUXILIARY)	736
Y	*251-0623*	1	WIRING GP-AUXILIARY CONTROL (SYSTEM 14, COMBINED FUNCTION)	281

Y-SEPARATE ILLUSTRATION

<END>

272-9663 CONTROL AR-AUXILIARY–SYSTEM 3, 1-WAY, 2-PUMP

S/N: D3P1-UP; M4T1-UP

PART OF 337-4109, 337-4112 OPTION AR-HYDRAULIC

AN ATTACHMENT

SMCS-5051 **i03626585**

NOTE	PART NUMBER	QTY	PART NAME 1 2 3 4 5 6 (PRODUCT LEVEL)	SEE PAGE
Y	*239-8696*	1	CONTROL GP-FOOT (WORK TOOL)	969
Y	*259-5294*	1	FASTENER GP-WIRING HARNESS (FOOT SWITCH)	204
Y	*247-7465*	1	FILM GP (HAMMER CONTROL, FOOT SWITCH)	1084
Y	*255-1920*	1	LINES GP-FRONT (SYSTEM 3, 1-WAY, 2-PUMP)	556
Y	*260-7855*	1	LINES GP-PILOT (1-PUMP/2-PUMP, 1-WAY FLOW)	644
Y	*260-7863*	1	LINES GP-PILOT (ROTATOR)	653
Y	*255-5713*	1	VALVE & MTG GP-CONTROL (AUXILIARY)	736
Y	*259-5340*	1	WIRING GP-AUXILIARY CONTROL	288

Y-SEPARATE ILLUSTRATION

<END>

297-0494 CONTROL AR-AUXILIARY–SYSTEM 17, COMBINED FN, MED PR

S/N: M4T1-UP

FOR USE WITH 255-5845–PAGE 1037, 270-5687–PAGE 964, 270-5688–PAGE 964, 260-7863–PAGE 653, 240-5071–PAGE 996, 240-5073–PAGE 997, 245-7794–PAGE 998, 255-5823–PAGE 713, 255-5822–PAGE 453

AN ATTACHMENT

SMCS-5051 **i03744527**

NOTE	PART NUMBER	QTY	PART NAME 1 2 3 4 5 6 (PRODUCT LEVEL)	SEE PAGE
Y	*255-1924*	1	LINES GP-FRONT (SYSTEM 17, COMBINED FUNCTION)	568
Y	*260-7857*	1	LINES GP-PILOT (SYSTEM 14, SYSTEM 17)	647
Y	*255-5713*	1	VALVE & MTG GP-CONTROL (AUXILIARY)	736
Y	*251-0623*	1	WIRING GP-AUXILIARY CONTROL (SYSTEM 14, COMBINED FUNCTION)	281

Y-SEPARATE ILLUSTRATION

<END>

307-9975 CONTROL AR-AUXILIARY–
SYSTEM 13, COMBINED FUNCTION
S/N: D3P1-UP
WITHOUT MEDIUM PRESSURE
AN ATTACHMENT

SMCS-5051 **i03747404**

NOTE	PART NUMBER	QTY	PART NAME 1 2 3 4 5 6 (PRODUCT LEVEL)	SEE PAGE
Y	*200-6741*	1	CONTROL & MTG GP-JOYSTICK (WITH SLIDE CONTROL)	963
Y	*259-5295*	1	FASTENER GP-WIRING HARNESS (JOYSTICK)	205
Y	*247-7410*	1	FILM GP (OPERATOR CONTROLS, NOTICE)	1079
Y	*330-2391*	1	LINES GP-FRONT (SYSTEM 13, COMBINED FUNCTION)	590
Y	*260-7863*	1	LINES GP-PILOT (ROTATOR)	653
Y	*330-2390*	1	LINES GP-PILOT	659
Y	*255-5713*	1	VALVE & MTG GP-CONTROL (AUXILIARY)	736
Y	*328-0370*	1	WIRING GP-AUXILIARY CONTROL	290
Y-SEPARATE ILLUSTRATION				

<END>

336-3339 CONTROL AR-AUXILIARY–
SYSTEM 18, COMBINED FUNCTION
S/N: M4T1-UP
PART OF 340-9468 OPTION AR-CONTROL
AN ATTACHMENT

SMCS-5051 **i03732167**

NOTE	PART NUMBER	QTY	PART NAME 1 2 3 4 5 6 (PRODUCT LEVEL)	SEE PAGE
Y	*330-2389*	1	LINES GP-FRONT (SYSTEM 18, COMBINED FUNCTION)	587
Y	*330-2390*	1	LINES GP-PILOT	659
Y	*255-5713*	1	VALVE & MTG GP-CONTROL (AUXILIARY)	736
Y	*328-0370*	1	WIRING GP-AUXILIARY CONTROL	290
Y-SEPARATE ILLUSTRATION				

<END>

329-6564 CONTROL AR-BOOM–BOOM FLOAT, OVERLOAD WARNING
S/N: M4T1-UP
AN ATTACHMENT

SMCS-5063, 6501 **i03744355**

NOTE	PART NUMBER	QTY	PART NAME 1 2 3 4 5 6 (PRODUCT LEVEL)	SEE PAGE
Y	*298-4341*	1	FILM GP (SMARTBOOM)	1092
Y	*239-1632*	1	LINES GP-BOOM CYLINDER	534
Y	*255-1853*	1	LINES GP-PILOT (BOOM FLOAT)	635
Y	*275-1495*	1	LINES GP-PILOT (CAB)	655
Y	*255-2078*	1	LINES GP-RETURN (LOAD CONTROL, BOOM CYLINDER)	676
Y	*245-5080*	1	LINES GP-SENSOR (OVERLOAD WARNING DEVICE)	679
Y	*251-0619*	1	WIRING GP-BOOM FLOAT	292
Y	*328-0093*	1	WIRING GP-CAB (BOOM FLOAT)	308
Y-SEPARATE ILLUSTRATION				

<END>

HYDRAULIC SYSTEM

268-6821 CONTROL AR-COUPLER

S/N: D3P1-UP; M4T1-UP
PART OF 337-4113, 337-4114, 340-9471 OPTION AR-COUPLER
AN ATTACHMENT

SMCS-6129 **i02663205**

NOTE	PART NUMBER	QTY	PART NAME 1 2 3 4 5 6 (PRODUCT LEVEL)	SEE PAGE
Y	*268-6816*	1	FILM GP (QUICK COUPLER)	1088
Y	*269-9562*	1	LINES GP-FRONT	581
Y	*267-7642*	1	WIRING GP-CAB (COUPLER)	304
Y	*267-7748*	1	WIRING GP-QUICK COUPLER	334

Y-SEPARATE ILLUSTRATION

<END>

344-4212 CONTROL AR-COUPLER

S/N: D3P1-UP
PART OF 347-8786, 347-8787 OPTION AR-COUPLER
AN ATTACHMENT

SMCS-6129 **i03679485**

NOTE	PART NUMBER	QTY	PART NAME 1 2 3 4 5 6 (PRODUCT LEVEL)	SEE PAGE
Y	*282-5705*	1	FILM GP (QUICK COUPLER)	1090
Y	*337-1244*	1	LINES GP-FRONT (QUICK COUPLER)	594
Y	*238-2485*	1	SWITCH GP-TOGGLE (QUICK COUPLER LOCK)	276
Y	*342-3026*	1	WIRING GP-QUICK COUPLER	336

Y-SEPARATE ILLUSTRATION

<END>

264-8479 CONTROL AR-FAN–REVERSING

S/N: D3P1-UP; M4T1-UP
AN ATTACHMENT

SMCS-1386, 138R **i03744697**

NOTE	PART NUMBER	QTY	PART NAME 1 2 3 4 5 6 (PRODUCT LEVEL)	SEE PAGE
Y	*275-3812*	1	FILM GP (FAN, FLYING DEBRIS)	1089
Y	*255-2079*	1	LINES GP-MOTOR (REVERSING FAN)	599
Y	*247-8834*	1	MOTOR & MTG GP-HYDRAULIC FAN (REVERSING)	691
Y	*238-1580*	1	WIRING GP-FAN (REVERSING)	326

Y-SEPARATE ILLUSTRATION

<END>

272-4669 COUPLING GP-PUMP

S/N: D3P1-UP; M4T1-UP

PART OF 310-9486 PUMP & MTG GP-MAIN HYDRAULIC

SMCS-5062 **i02662333**

NOTE	REF NO	GRAPHIC REF	PART NUMBER	QTY	PART NAME 1 2 3 4 5 6 (PRODUCT LEVEL)	SEE PAGE
	1	1	**287-0169**	1	COUPLING GP-FLEXIBLE	
	2	1	**272-4650**	1	PLATE	
	3	1	**099-8111**	4	PIN-SPRING	
M	4	1	**169-6064**	4	BOLT-SOCKET HEAD (M20X2.5X55-MM)	
	5	1	**8T-4223**	12	WASHER-HARD (13.5X25.5X3-MM THK)	
	6	1	**8T-8920**	12	BOLT (1/2-13X3.25-IN)	

M-METRIC PART

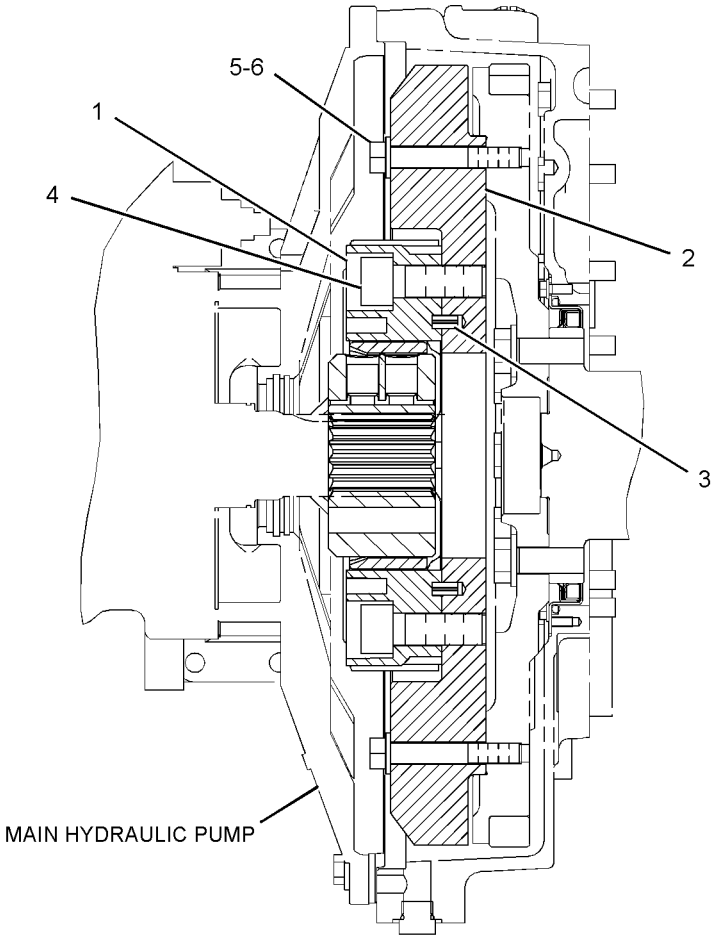

FRONT VIEW

GRAPHIC #1 **<END>** g01241227

289-8018 CYLINDER & LINES GP-BOOM–LH

S/N: D3P1-UP; M4T1-UP
PART OF 290-1817, 302-7339, 314-3615 BOOM AR-1 PIECE LONG, 290-1818 BOOM AR-1 PIECE SHORT AN ATTACHMENT

SMCS-5456, 7562 **i02766782**

NOTE	PART NUMBER	QTY	PART NAME 1 2 3 4 5 6 (PRODUCT LEVEL)	SEE PAGE
Y	*289-8020*	1	CYLINDER & SEAL GP-BOOM	460
Y	*192-6908*	1	LINES GP-BOOM CYLINDER (LH)	532
Y-SEPARATE ILLUSTRATION				

<END>

289-8019 CYLINDER & LINES GP-BOOM–RH

S/N: D3P1-UP; M4T1-UP
PART OF 290-1817, 302-7339, 314-3615 BOOM AR-1 PIECE LONG, 290-1818 BOOM AR-1 PIECE SHORT AN ATTACHMENT

SMCS-5456, 7562 **i02766995**

NOTE	PART NUMBER	QTY	PART NAME 1 2 3 4 5 6 (PRODUCT LEVEL)	SEE PAGE
Y	*289-8020*	1	CYLINDER & SEAL GP-BOOM	460
Y	*192-6909*	1	LINES GP-BOOM CYLINDER (RH)	533
Y-SEPARATE ILLUSTRATION				

<END>

289-8010 CYLINDER & LINES GP-BUCKET

S/N: D3P1-UP; M4T1-UP
PART OF 290-1825, 290-1830 LINKAGE AR-BUCKET AN ATTACHMENT

SMCS-5457 **i02830939**

NOTE	PART NUMBER	QTY	PART NAME 1 2 3 4 5 6 (PRODUCT LEVEL)	SEE PAGE
Y	**289-8011**	1	CYLINDER & SEAL GP-BUCKET	461
Y	*239-1627*	1	LINES GP-BUCKET CYLINDER	538
Y-SEPARATE ILLUSTRATION				

<END>

289-8039 CYLINDER & LINES GP-BUCKET

S/N: D3P1-UP; M4T1-UP
PART OF 290-1826 LINKAGE AR-BUCKET AN ATTACHMENT

SMCS-5457 **i02795002**

NOTE	PART NUMBER	QTY	PART NAME 1 2 3 4 5 6 (PRODUCT LEVEL)	SEE PAGE
Y	**289-8040**	1	CYLINDER & SEAL GP-BUCKET	462
Y	*115-8694*	1	LINES GP-BUCKET CYLINDER	537
Y-SEPARATE ILLUSTRATION				

<END>

289-8029 CYLINDER & LINES GP-STICK

S/N: D3P1-UP; M4T1-UP

PART OF 290-1817, 302-7339, 314-3615 BOOM AR-1 PIECE LONG, 290-1818 BOOM AR-1 PIECE SHORT

AN ATTACHMENT

SMCS-5458 **i02767009**

NOTE	PART NUMBER	QTY	PART NAME 1 2 3 4 5 6 (PRODUCT LEVEL)	SEE PAGE
Y	*289-8030*	1	CYLINDER & SEAL GP-STICK	463
Y	*239-1876*	1	LINES GP-STICK CYLINDER	685

Y-SEPARATE ILLUSTRATION

<END>

289-8020 CYLINDER & SEAL GP-BOOM

S/N: D3P1-UP; M4T1-UP
PART OF 289-8018, 289-8019 CYLINDER & LINES GP-BOOM
AN ATTACHMENT

SMCS-5456 **i02766957**

NOTE	REF NO	GRAPHIC REF	PART NUMBER	QTY	PART NAME 1 2 3 4 5 6 (PRODUCT LEVEL)	SEE PAGE
	1	1	**3B-8489**	1	FITTING-GREASE	
	2	1	**166-1497**	2	SEAL-LIP TYPE	
Y	3	1	**289-8021**	1	CYLINDER GP-BOOM	464
	4	1	**9X-4597**	2	SEAL-LIP TYPE	

Y-SEPARATE ILLUSTRATION

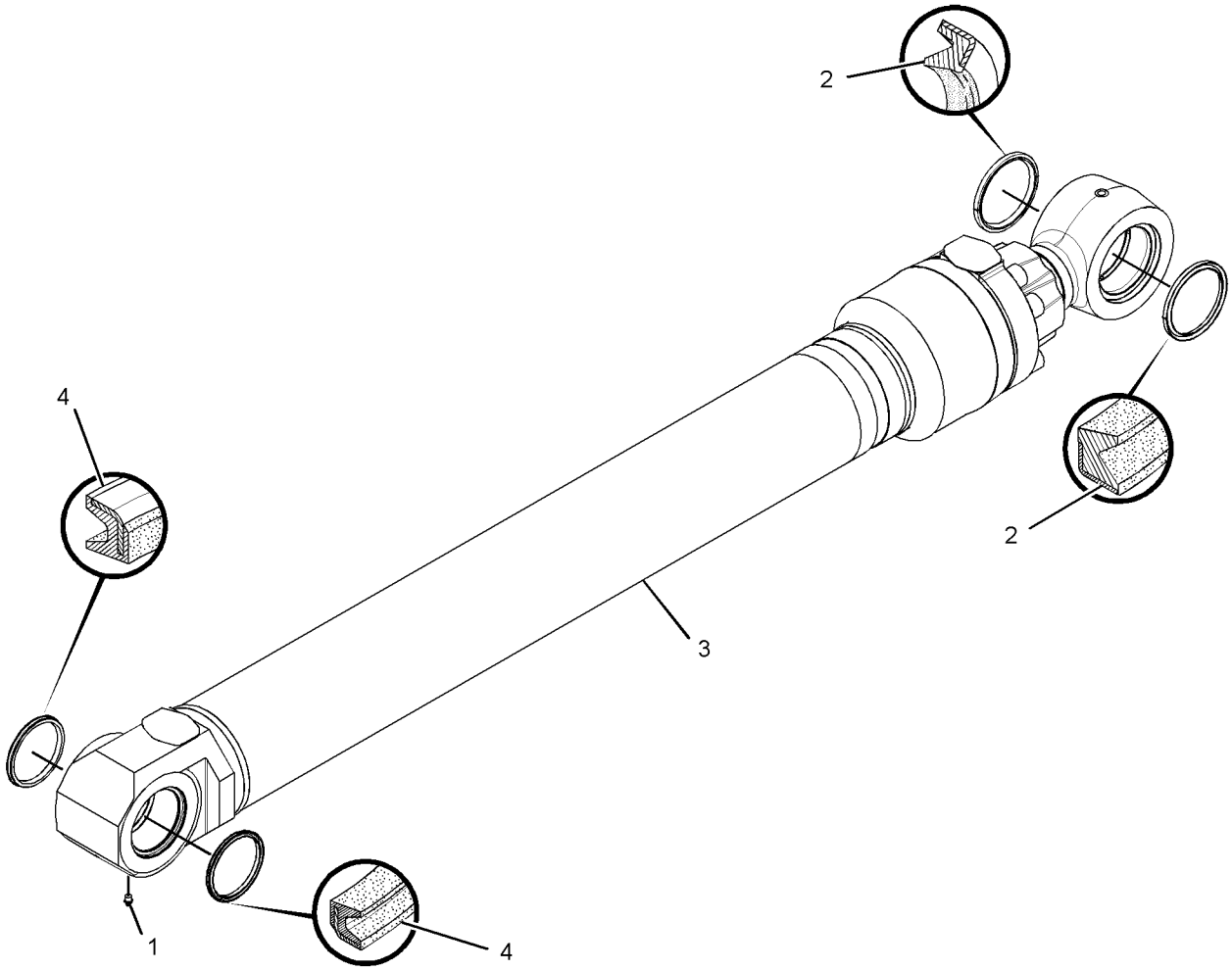

GRAPHIC #1 **<END>** g01361958

HYDRAULIC SYSTEM

289-8011 CYLINDER & SEAL GP-BUCKET

S/N: D3P1-UP; M4T1-UP
PART OF 289-8010 CYLINDER & LINES GP-BUCKET
AN ATTACHMENT

SMCS-5457 **i02832130**

NOTE	REF NO	GRAPHIC REF	PART NUMBER	QTY	PART NAME 1 2 3 4 5 6 (PRODUCT LEVEL)	SEE PAGE
	1	1	**3B-8489**	2	FITTING-GREASE	
	2	1	**166-1494**	2	SEAL-LIP TYPE	
	3	1	**166-1496**	2	SEAL-LIP TYPE	
Y	4	1	**289-8012**	1	CYLINDER GP-BUCKET	466

Y-SEPARATE ILLUSTRATION

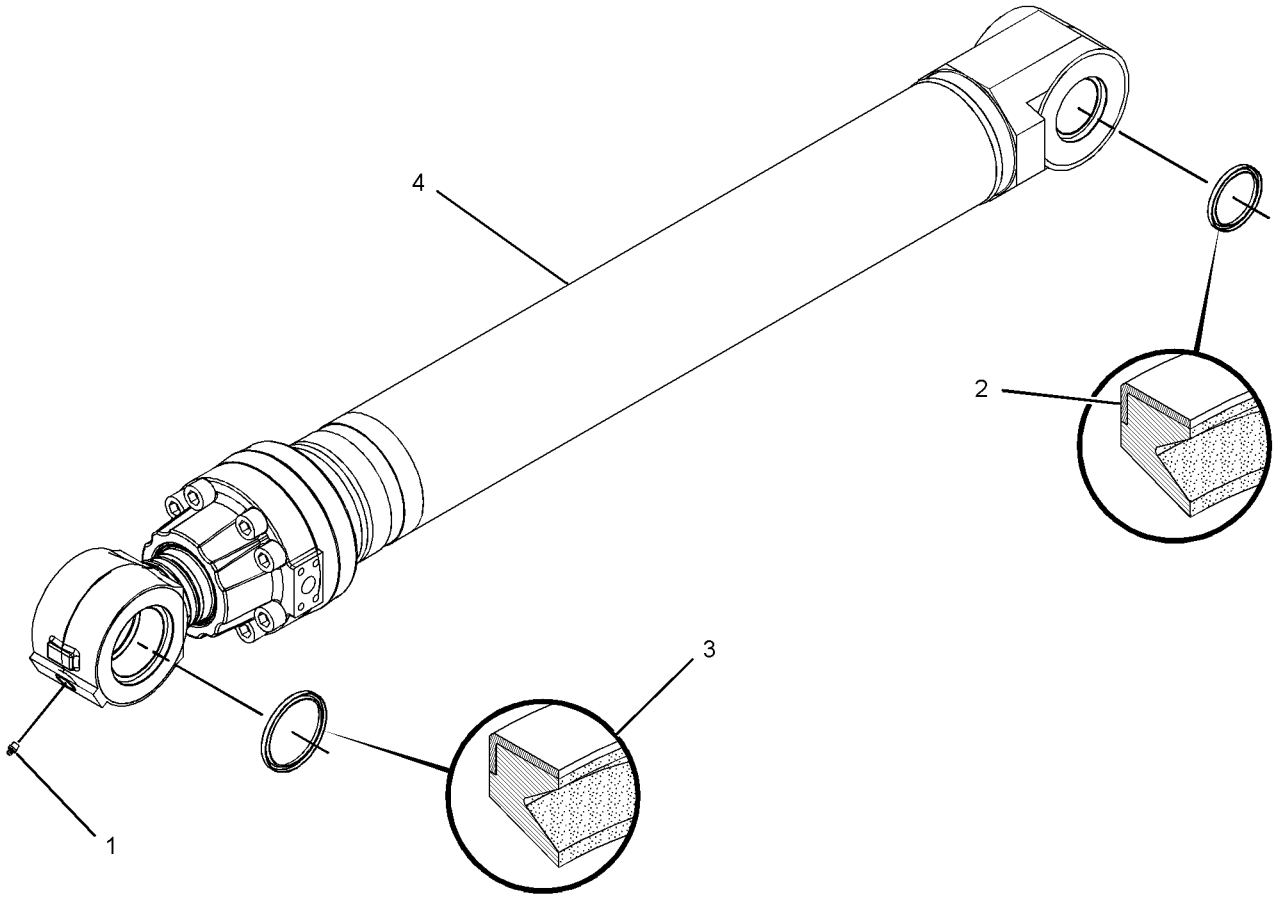

GRAPHIC #1 **<END>** g01456985

289-8040 CYLINDER & SEAL GP-BUCKET

S/N: D3P1-UP; M4T1-UP
PART OF 289-8039 CYLINDER & LINES GP-BUCKET
AN ATTACHMENT

SMCS-5457 **i02795019**

NOTE	REF NO	GRAPHIC REF	PART NUMBER	QTY	PART NAME 1 2 3 4 5 6 (PRODUCT LEVEL)	SEE PAGE
	1	1	**3B-8489**	2	FITTING-GREASE	
	2	1	**7X-4803**	2	SEAL-LIP TYPE	
Y	3	1	**289-8041**	1	CYLINDER GP-BUCKET	468
	4	1	**9X-4597**	2	SEAL-LIP TYPE	

Y-SEPARATE ILLUSTRATION

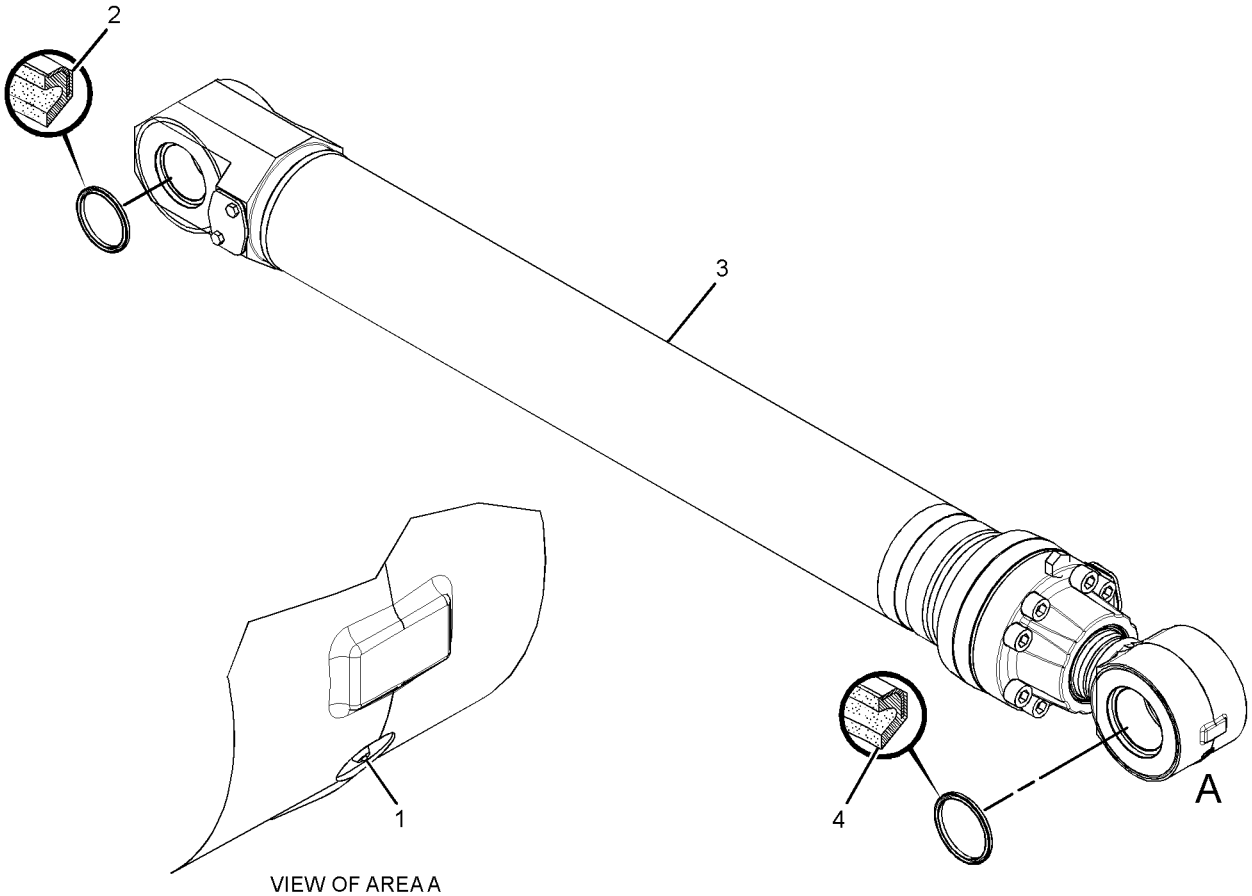

VIEW OF AREA A

GRAPHIC #1 **<END>** g01369509

289-8030 CYLINDER & SEAL GP-STICK

S/N: D3P1-UP; M4T1-UP
PART OF 289-8029 CYLINDER & LINES GP-STICK
AN ATTACHMENT

SMCS-5458 **i02767075**

NOTE	REF NO	GRAPHIC REF	PART NUMBER	QTY	PART NAME 1 2 3 4 5 6 (PRODUCT LEVEL)	SEE PAGE
	1	1	**7X-4803**	4	SEAL-LIP TYPE	
Y	2	1	**289-8031**	1	CYLINDER GP-STICK	471
	3	1	**3B-8489**	1	FITTING-GREASE	

Y-SEPARATE ILLUSTRATION

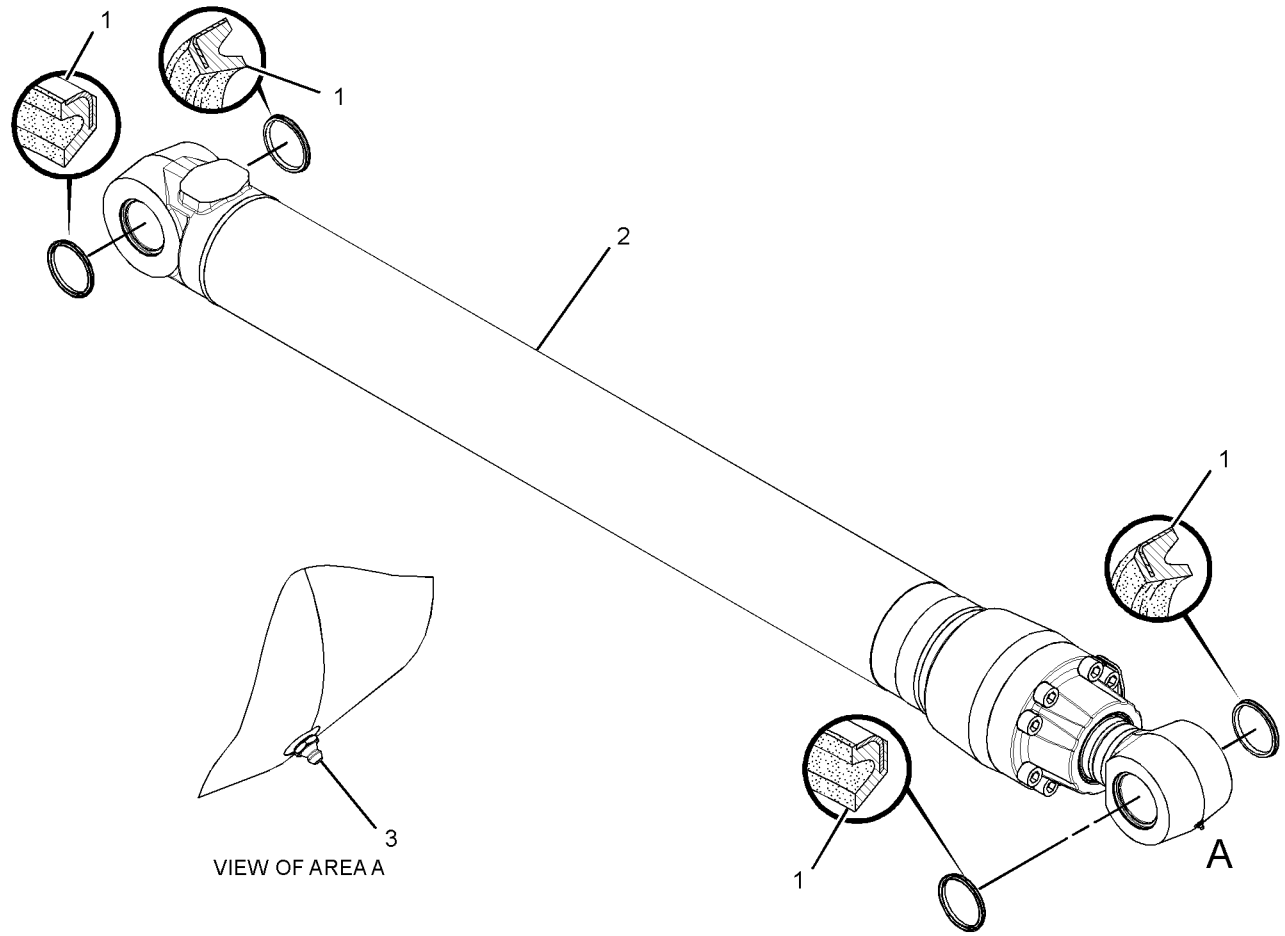

GRAPHIC #1 **<END>** g01361364

289-8021 CYLINDER GP-BOOM

S/N: D3P1-UP; M4T1-UP
150-MM (5.9-IN) BORE X 1440-MM (56.7-IN) STROKE
PART OF 289-8020 CYLINDER & SEAL GP-BOOM
AN ATTACHMENT

SMCS-5456 **i02766974**

NOTE	REF NO	GRAPHIC REF	PART NUMBER	QTY	PART NAME 1 2 3 4 5 6 (PRODUCT LEVEL)	SEE PAGE
	1	1	**6I-6798**	1	STOP	
	2	1	**7Y-4660**	1	HEAD	
J	3	1	**7Y-4669**	1	RING-BACKUP	
M	4	1	**7Y-4695**	1	LOCKNUT (M80X2-THD)	
J	5	1	**9X-3601**	1	SEAL AS	
J	6	1	**128-9265**	1	SEAL-BUFFER	
	7	1	**188-4216**	1	PISTON	
J	8	1	**188-4218**	1	RING	
J	9	1	**242-6833**	1	RING-SEAL	
	10	1	**289-8022**	1	CYLINDER AS-HYDRAULIC	
	10A	1	**241-7340**	1	BEARING-SLEEVE	
	11	1	**289-8027**	1	ROD AS	
	11A	1	**241-7341**	1	BEARING-SLEEVE	
	12	1	**7Y-4672**	1	RING-RETAINING	
J	13	1	**165-9290**	1	SEAL-LIP TYPE	
J	14	1	**170-9864**	1	SEAL-U-CUP	
J	15	1	**188-4217**	2	RING	
J	16	1	**095-1633**	1	SEAL-O-RING	
	17	1	**114-0760**	1	BEARING-SLEEVE	
J	18	1	**7Y-4673**	1	RING-BACKUP	
M	19	1	**7Y-5215**	8	BOLT-SOCKET HEAD (M24X3X90-MM)	
					AVAILABLE REPAIR KIT(S):	
J			**242-6840**	1	KIT-SEAL (BOOM CYLINDER)	

J-KIT MARKED J SERVICES PARTS MARKED J
M-METRIC PART

289-8021 CYLINDER GP-BOOM *(contd.)* **i02766974**

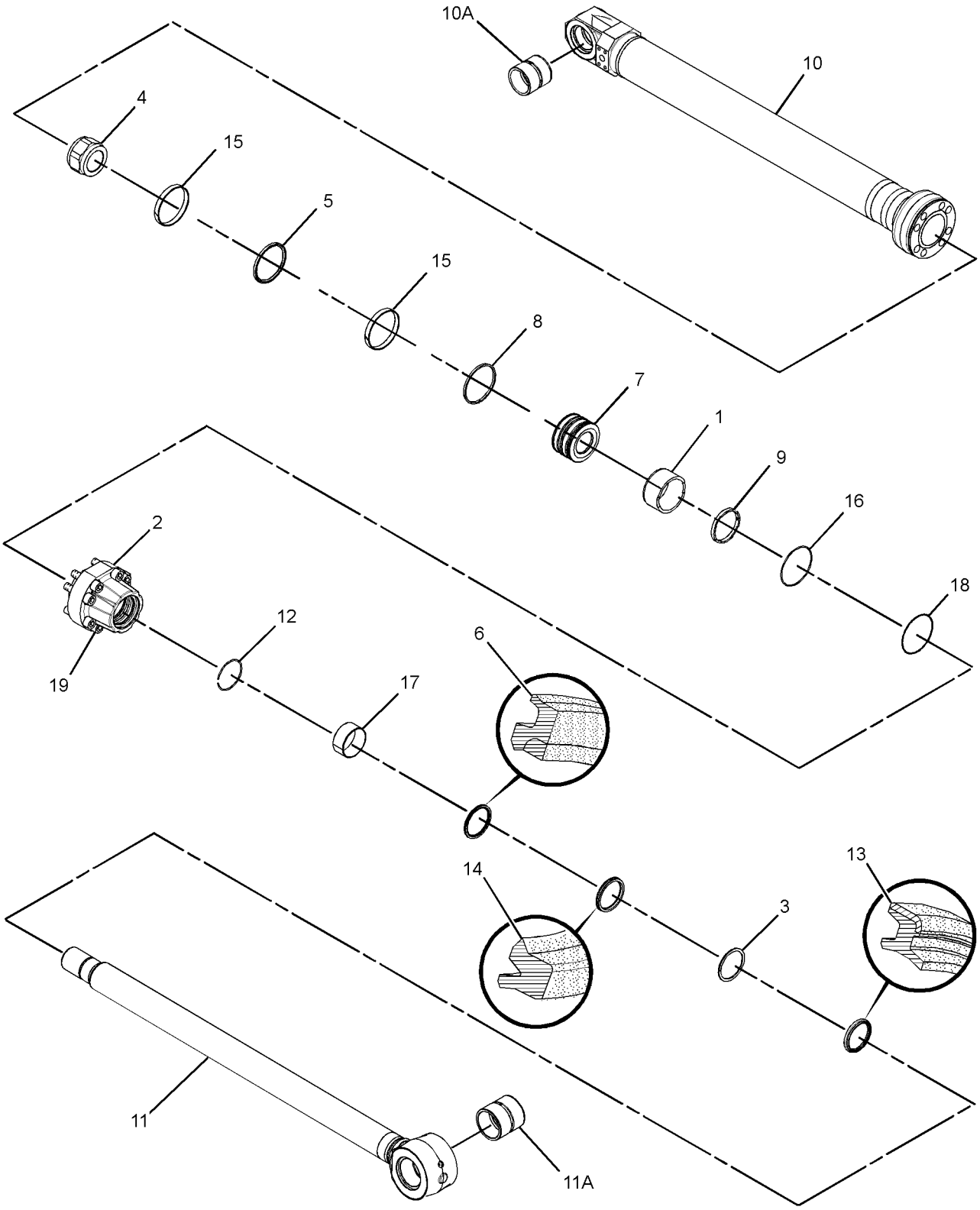

GRAPHIC #1 **<END>** g01405559

289-8012 CYLINDER GP-BUCKET

S/N: D3P1-UP; M4T1-UP
150-MM (5.9-IN) BORE X 1151-MM (45.3-IN) STROKE
PART OF 289-8011 CYLINDER & SEAL GP-BUCKET
AN ATTACHMENT

SMCS-5457 **i03202400**

NOTE	REF NO	GRAPHIC REF	PART NUMBER	QTY	PART NAME 1 2 3 4 5 6 (PRODUCT LEVEL)	SEE PAGE
	1	1	**7Y-4660**	1	HEAD	
J	2	1	**7Y-4669**	1	RING-BACKUP	
M	3	1	**7Y-4695**	1	LOCKNUT (M80X2-THD)	
J	4	1	**9X-3601**	1	SEAL AS	
J	5	1	**128-9265**	1	SEAL-BUFFER	
	6	1	**188-4216**	1	PISTON	
J	7	1	**188-4218**	1	RING	
	8	1	**242-6787**	1	ROD AS	
	8A	1	**228-5617**	1	BEARING-SLEEVE	
	9	1	**289-8013**	1	CYLINDER AS	
	9A	1	**235-7770**	1	BEARING-SLEEVE	
	10	1	**7Y-4672**	1	RING-RETAINING	
J	11	1	**165-9290**	1	SEAL-LIP TYPE	
J	12	1	**170-9864**	1	SEAL-U-CUP	
J	13	1	**188-4217**	2	RING	
J	14	1	**095-1633**	1	SEAL-O-RING	
	15	1	**114-0760**	1	BEARING-SLEEVE	
J	16	1	**7Y-4673**	1	RING-BACKUP	
M	17	1	**7Y-5215**	8	BOLT-SOCKET HEAD (M24X3X90-MM)	
					AVAILABLE REPAIR KIT(S):	
J			**191-5619**	1	KIT-SEAL (BUCKET CYLINDER)	

J-KIT MARKED J SERVICES PARTS MARKED J
M-METRIC PART

289-8012 CYLINDER GP-BUCKET *(contd.)* i03202400

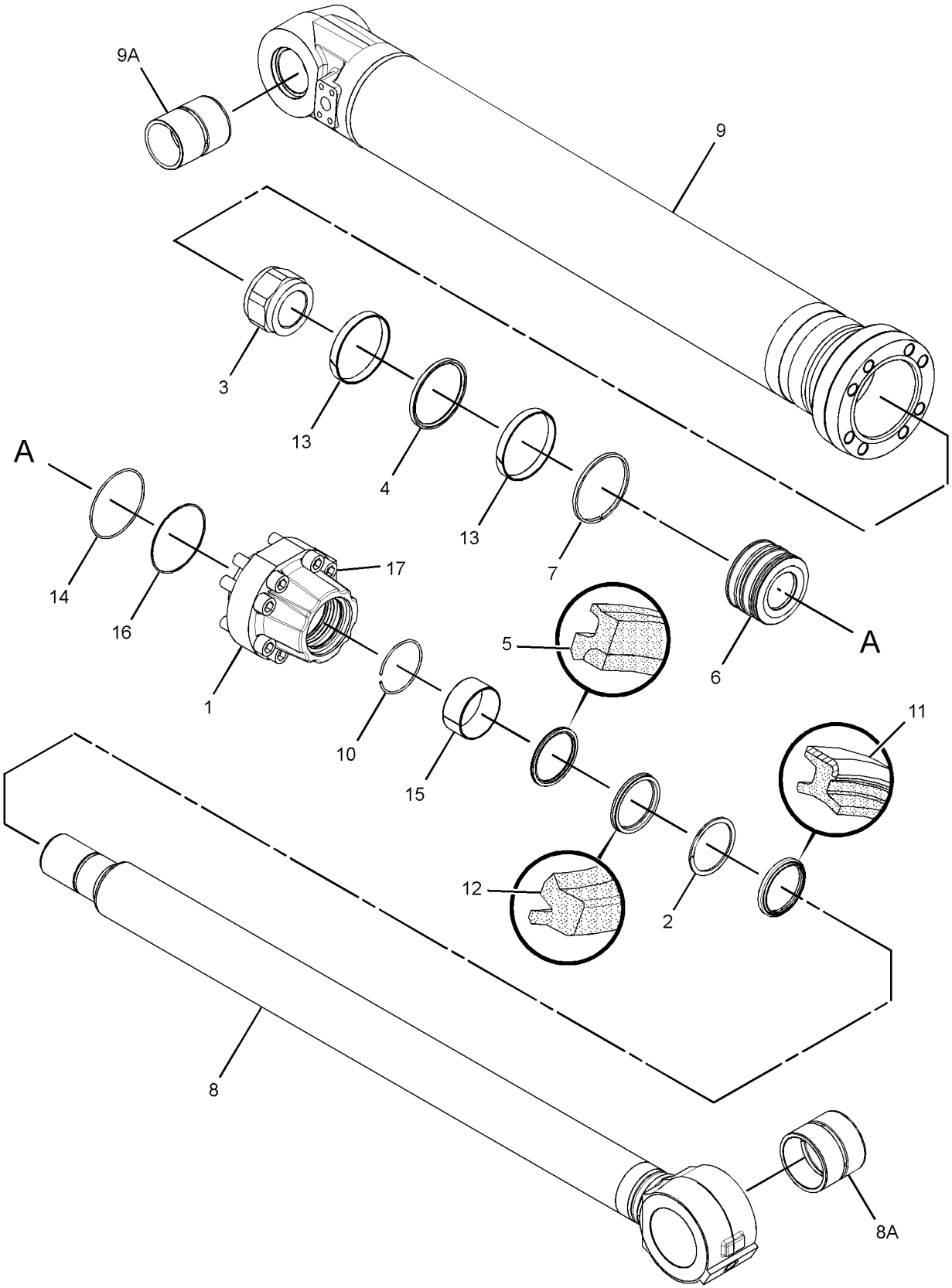

GRAPHIC #1 **<END>** g01386080

289-8041 CYLINDER GP-BUCKET

S/N: D3P1-UP; M4T1-UP
160-MM (6.2-IN) BORE X 1356-MM (53.4-IN) STROKE
PART OF 289-8040 CYLINDER & SEAL GP-BUCKET
AN ATTACHMENT

SMCS-5457 **i03172160**

NOTE	REF NO	GRAPHIC REF	PART NUMBER	QTY	PART NAME 1 2 3 4 5 6 (PRODUCT LEVEL)	SEE PAGE
J	1	1	**9X-3604**	1	SEAL AS	
J	2	1	**128-9266**	1	SEAL-BUFFER	
J	3	1	**165-9291**	1	SEAL-LIP TYPE	
J	4	1	**185-0231**	1	RING	
	5	1	**185-0232**	1	PISTON	
R	6	1	**247-8904**	1	ROD AS	
	6A	1	**087-5548**	1	BEARING-SLEEVE	
	7	1	**289-8042**	1	CYLINDER AS	
	7A	1	**260-2552**	1	BEARING-SLEEVE	
	8	1	**7Y-4944**	1	RING-RETAINING	
	9	1	**087-5551**	1	HEAD	
M	10	1	**123-2112**	1	LOCKNUT-SPECIAL (M90X2-THD)	
J	11	1	**185-0230**	2	RING	
J	12	1	**087-5550**	1	RING-BACKUP	
J	13	1	**095-1635**	1	SEAL-O-RING	
	14	1	**114-0762**	1	BEARING-SLEEVE	
J	15	1	**170-9865**	1	SEAL-U-CUP	
J	16	1	**7Y-4941**	1	RING-BACKUP	
M	17	1	**7Y-5239**	8	BOLT-SOCKET HEAD (M24X3X100-MM)	
					AVAILABLE REPAIR KIT(S):	
J			**225-4625**	1	KIT-SEAL (BUCKET CYLINDER)	

J-KIT MARKED J SERVICES PARTS MARKED J
M-METRIC PART
R-REMFG PART MAY BE AVAILABLE

289-8041 CYLINDER GP-BUCKET *(contd.)* **i03172160**

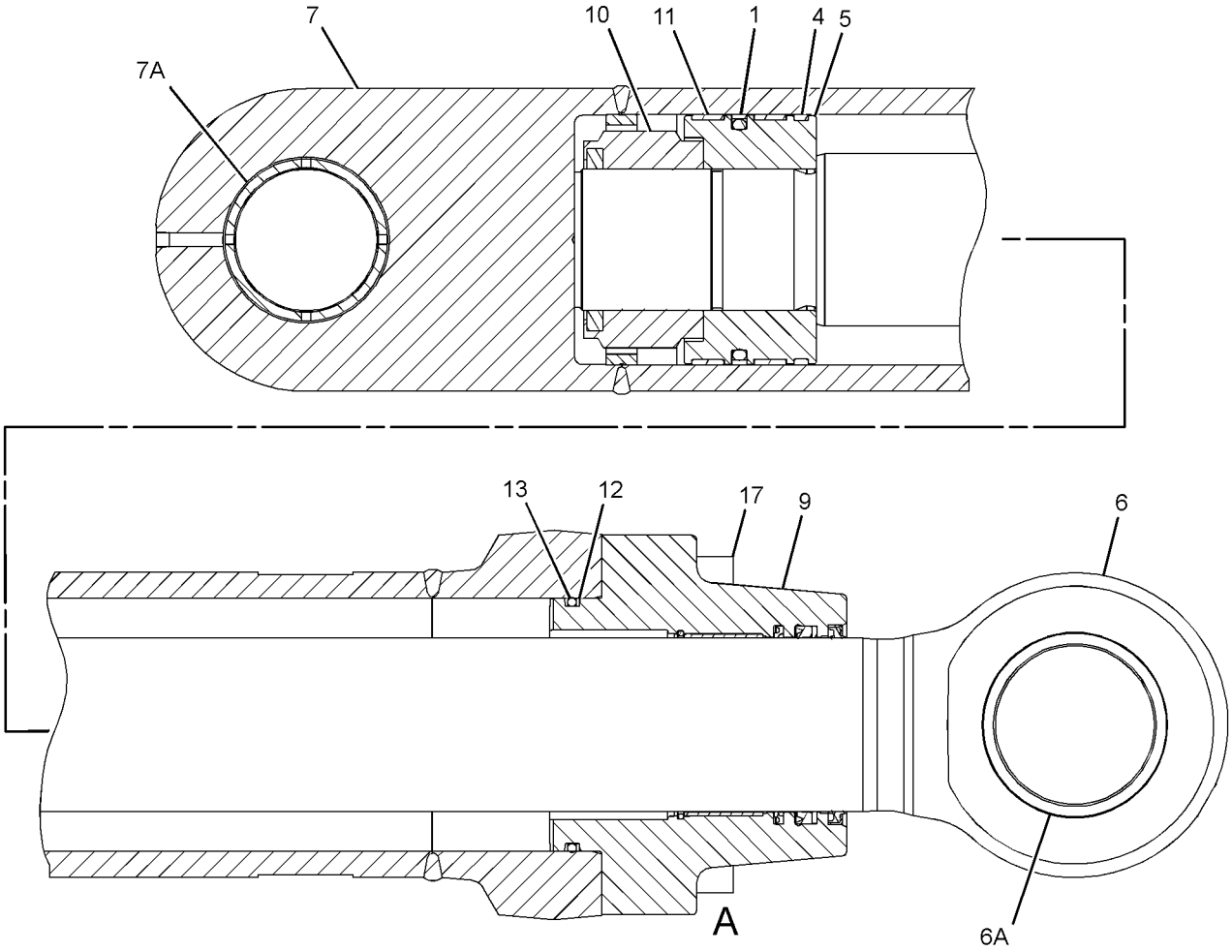

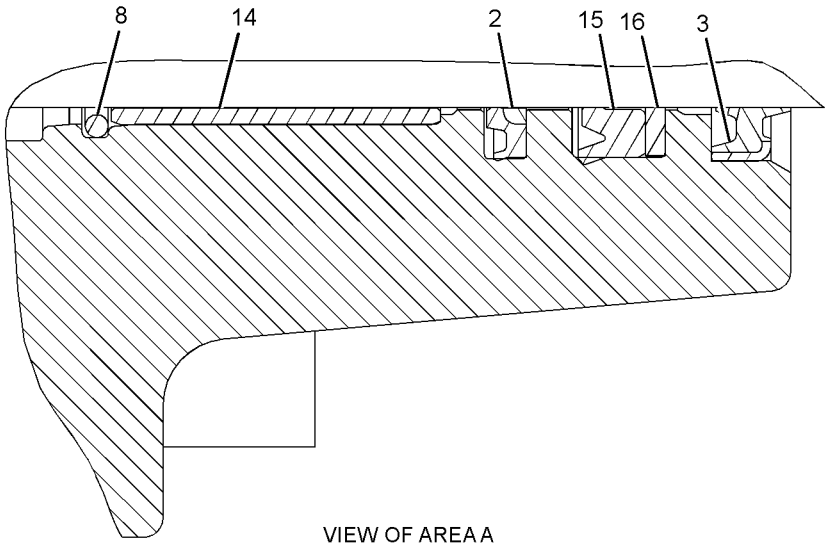

VIEW OF AREA A

GRAPHIC #1 **<END>** g01623658

169-0753 CYLINDER GP-COUPLER–LOCK

S/N: D3P1-UP; M4T1-UP
70-MM (2.8-IN) BORE X 130-MM (5.1-IN) STROKE
PART OF 209-3464 LOCK GP-QUICK COUPLER
AN ATTACHMENT

SMCS-5133 **i03626695**

NOTE	REF NO	GRAPHIC REF	PART NUMBER	QTY	PART NAME 1 2 3 4 5 6 (PRODUCT LEVEL)	SEE PAGE
	1	1	**169-3923**	1	KIT-VALVE (QUICK COUPLER)	
					AVAILABLE REPAIR KIT(S):	
			219-1322	1	KIT-SEAL (QUICK COUPLER LOCK CYLINDER)	

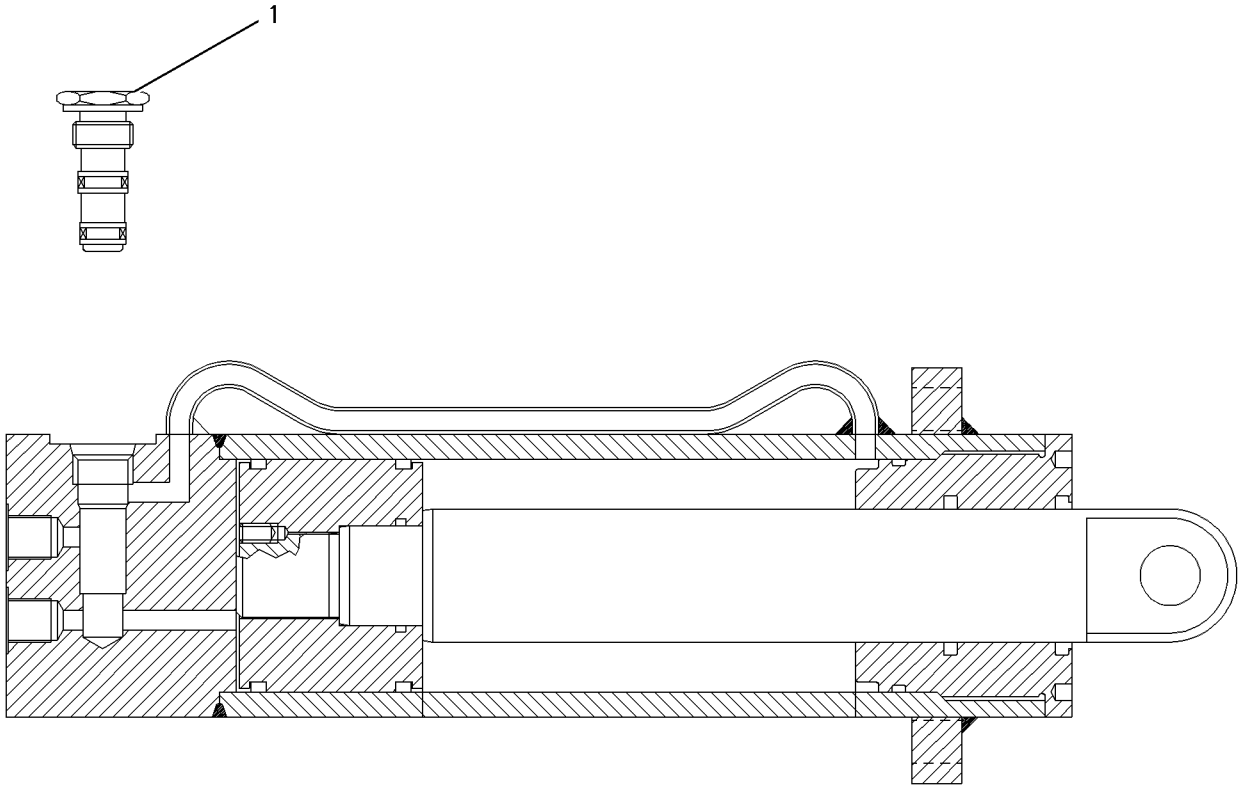

GRAPHIC #1 **<END>** g00562763

289-8031 CYLINDER GP-STICK

S/N: D3P1-UP; M4T1-UP
170-MM (6.7-IN) BORE X 1738-MM (68.4-IN) STROKE
PART OF 289-8030 CYLINDER & SEAL GP-STICK
AN ATTACHMENT

SMCS-5458 **i02767093**

NOTE	REF NO	GRAPHIC REF	PART NUMBER	QTY	PART NAME 1 2 3 4 5 6 (PRODUCT LEVEL)	SEE PAGE
M	1	1	**7Y-4956**	1	LOCKNUT (M90X2-THD)	
J	2	1	**9X-3607**	1	SEAL AS	
	3	1	**103-8345**	1	RING-RETAINING	
	4	1	**107-6579**	1	RING	
	5	1	**107-6933**	1	STOP	
	6	1	**191-5603**	1	PISTON	
J	7	1	**191-5605**	1	RING	
J	8	1	**231-6843**	1	RING-SEAL	
	9	1	**289-8032**	1	CYLINDER AS-HYDRAULIC	
	9A	1	**241-7342**	1	BEARING-SLEEVE	
R	10	1	**289-8037**	1	ROD AS	
	10A	1	**241-7342**	1	BEARING-SLEEVE	
	11	1	**191-5602**	1	HEAD	
J	12	1	**191-5604**	2	RING	
	13	1	**191-5643**	1	RING-RETAINING	
J	14	1	**191-5645**	1	SEAL-BUFFER	
J	15	1	**191-5647**	1	RING-BACKUP	
J	16	1	**191-5648**	1	SEAL-LIP TYPE	
	17	1	**191-5705**	1	STOP	
	18	1	**095-0930**	2	RING-RETAINING (EXTERNAL)	
J	19	1	**095-1726**	1	SEAL-O-RING	
	20	1	**191-5644**	1	BEARING-SLEEVE	
J	21	1	**191-5646**	1	SEAL-U-CUP	
J	22	1	**7Y-4945**	1	RING-BACKUP	
M	23	1	**7Y-5239**	8	BOLT-SOCKET HEAD (M24X3X100-MM)	
					AVAILABLE REPAIR KIT(S):	
J			**231-6844**	1	KIT-SEAL (STICK CYLINDER)	

J-KIT MARKED J SERVICES PARTS MARKED J
M-METRIC PART
R-REMFG PART MAY BE AVAILABLE

289-8031 **CYLINDER GP-STICK** *(contd.)* **i02767093**

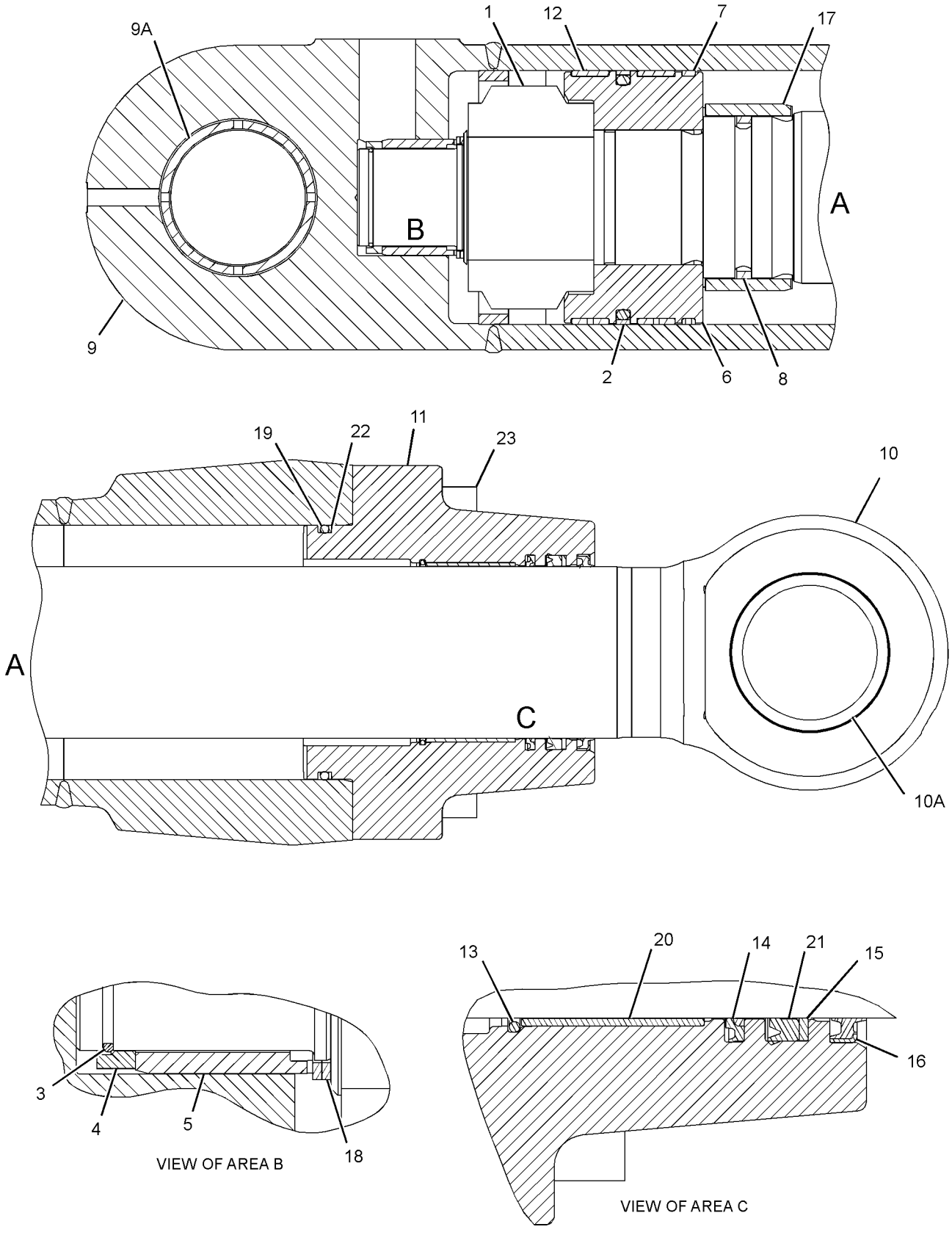

GRAPHIC #1 **<END>** g01363056

234-4620 DRIVE GP-AUXILIARY PUMP–ACCESSORY DRIVE

S/N: D3P1-UP; M4T1-UP
PART OF 255-5822, 270-8795 CONTROL AR-AUXILIARY, 255-5823 PUMP & LINES GP-COOLING
AN ATTACHMENT

SMCS-3108 **i03626716**

NOTE	REF NO	GRAPHIC REF	PART NUMBER	QTY	PART NAME 1 2 3 4 5 6 (PRODUCT LEVEL)	SEE PAGE
Y	1	1	**295-9441**	1	DRIVE GP-AUXILIARY PUMP (ACCESSORY DRIVE)	474
M	2	1	**108-1781**	8	BOLT-SOCKET HEAD (M12X1.75X35-MM)	

M-METRIC PART
Y-SEPARATE ILLUSTRATION

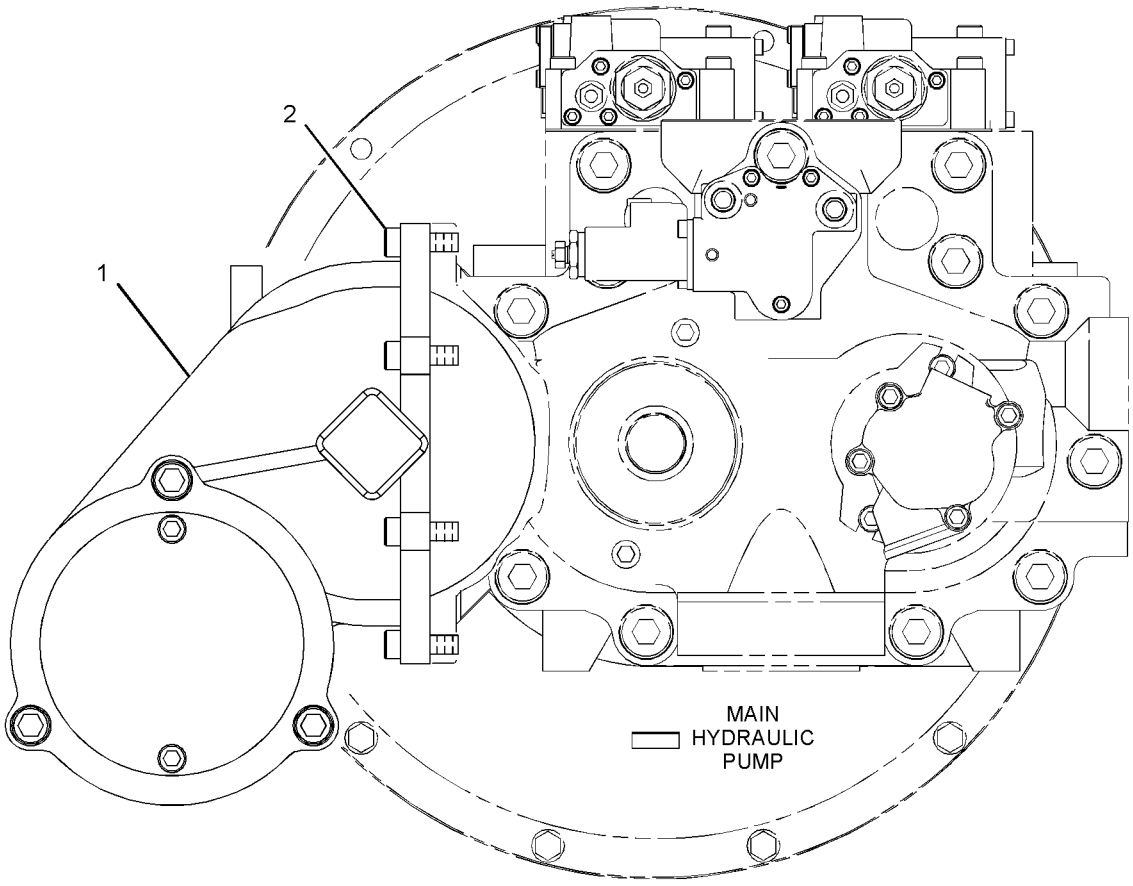

RIGHT SIDE VIEW

GRAPHIC #1 **<END>** g01415575

295-9441 DRIVE GP-AUXILIARY PUMP—ACCESSORY DRIVE

S/N: D3P1-UP; M4T1-UP
PART OF 234-4620 DRIVE GP-AUXILIARY PUMP
AN ATTACHMENT

SMCS-3108 **i02834142**

NOTE	REF NO	GRAPHIC REF	PART NUMBER	QTY	PART NAME 1 2 3 4 5 6 (PRODUCT LEVEL)	SEE PAGE
	1	1	**5I-8754**	3	SPACER-BEARING (35X45X3-MM THK)	
	2	1	**170-9964**	1	BEARING	
	3	1	**2W-1145**	1	RING-RETAINING	
	4	1	**206-9298**	1	SEAL-O-RING	
	5	1	**8T-9597**	1	RING-RETAINING	
	6	1	**236-6919**	1	SEAL-O-RING	
	7	1	**8H-5352**	2	BALL BEARING	
M	8	1	**8T-9080**	2	BOLT-SOCKET HEAD (M12X1.75X20-MM)	
	9	1	**249-6670**	1	SEAL-O-RING	
	10	1	**225-4517**	1	PLATE	
M	11	1	**8T-4944**	3	BOLT-SOCKET HEAD (M16X2X40-MM)	

M-METRIC PART

295-9441 **DRIVE GP-AUXILIARY PUMP** *(contd.)* **i02834142**

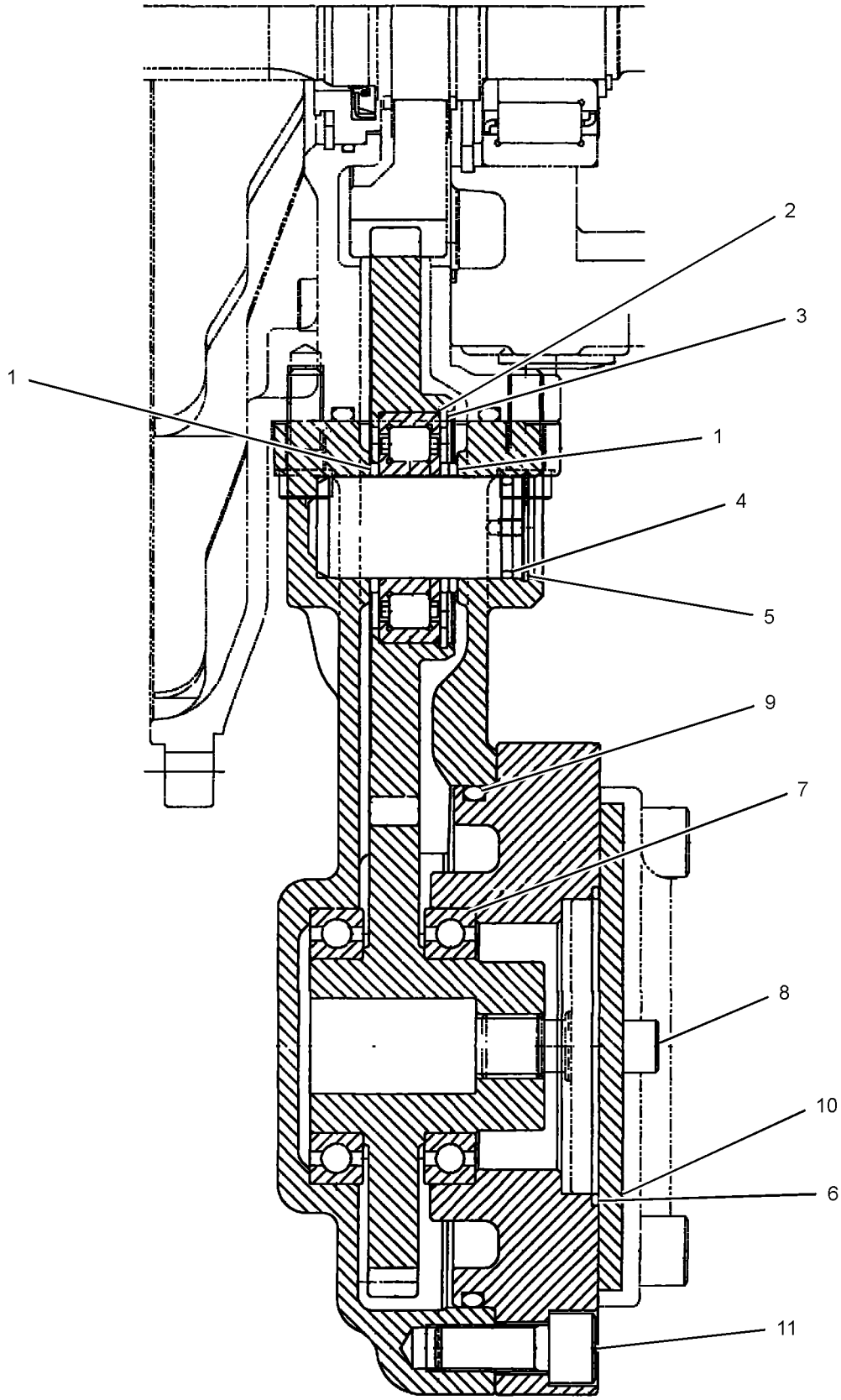

GRAPHIC #1 **<END>** g01348494

199-4538 DRIVE GP-SWING—WITH MOTOR

S/N: M4T1-282

PART OF 191-2576 POWER TRAIN AR

SMCS-5459 **i03408783**

NOTE	REF NO	GRAPHIC REF	PART NUMBER	QTY	PART NAME 1 2 3 4 5 6 (PRODUCT LEVEL)	SEE PAGE
Y	1	1	*200-3372*	1	MOTOR & MTG GP-SWING	692
Y	2	1	**199-4539**	1	DRIVE GP-SWING (WITHOUT MOTOR)	477

Y-SEPARATE ILLUSTRATION

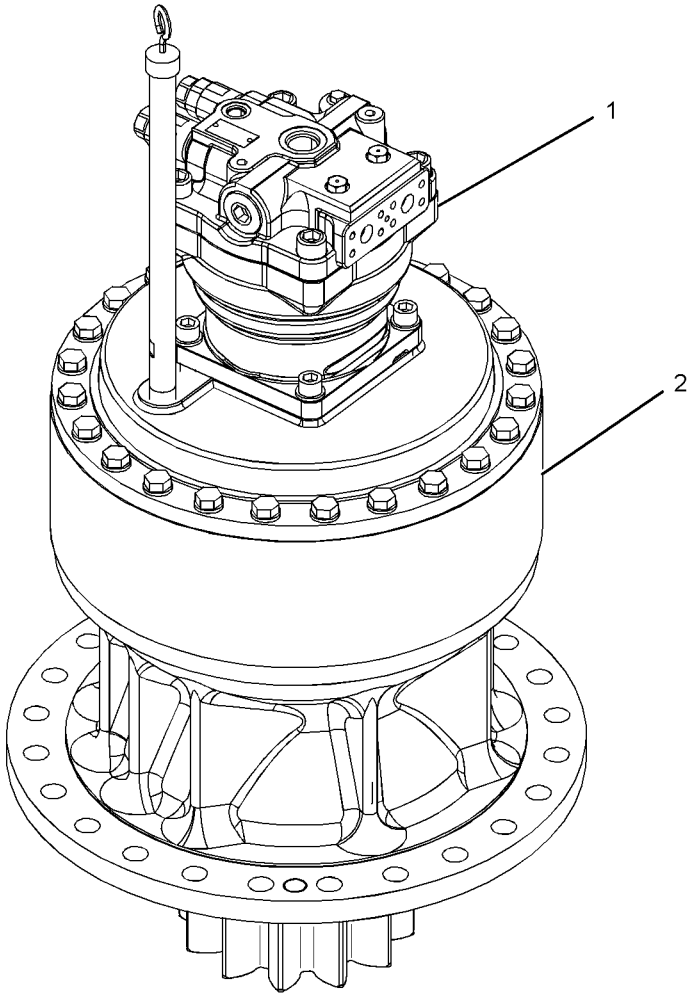

GRAPHIC #1

<END>

g01784873

HYDRAULIC SYSTEM

199-4539 DRIVE GP-SWING—WITHOUT MOTOR

S/N: M4T1-282

PART OF 199-4538 DRIVE GP-SWING

SMCS-5459 **i03626741**

NOTE	REF NO	GRAPHIC REF	PART NUMBER	QTY	PART NAME 1 2 3 4 5 6 (PRODUCT LEVEL)	SEE PAGE
	1	1	**148-4602**	4	GEAR-PLANETARY (24-TEETH)	
M	2	1	**094-1528**	8	WASHER (53X84X1-MM THK)	
	3	1	**148-4608**	4	SHAFT-PLANETARY	
	4	1	**114-1399**	1	PIPE-GAUGE	
	5	1	**148-4600**	1	GEAR-SUN (17-TEETH)	
M	6	1	**7I-7684**	2	SPACER (50X79.6X6-MM THK)	
	7	1	**114-1398**	1	GAUGE-OIL LEVEL (SWING DRIVE)	
	8	1	**199-4540**	1	COVER-HOUSING	
	9	1	**096-1441**	1	RING-RETAINING	
	10	1	**093-1730**	1	RING-RETAINING	
	11	1	**148-4601**	1	GEAR-SUN (17-TEETH)	
	12	1	**191-2511**	1	CARRIER-PLANETARY	
	13	1	**114-1322**	1	RING-RETAINING	
	14	1	**148-4607**	1	CARRIER-PLANETARY	
	15	1	**148-4604**	1	GEAR-RING (67-TEETH)	
B	16	1	**1U-8846**		SEALANT-GASKET	
	17	1	**171-9413**	1	SPACER (140.5X160X103.2-MM THK)	
	18	1	**110-7149**	1	RING-RETAINING	
	19	1	**9U-8693**	1	BEARING-ROLLER	
	20	1	**7I-7619**	1	BEARING-ROLLER	
	21	1	**128-9170**	2	SEAL-LIP TYPE	
	22	1	**148-4605**	1	SHAFT-PINION	
	23	1	**7I-7611**	1	CAGE	
M	24	1	**8T-4183**	10	BOLT (M12X1.75X40-MM)	
	25	1	**8T-4223**	10	WASHER-HARD (13.5X25.5X3-MM THK)	
	26	1	**5M-4454**	1	SEAL-O-RING	
	27	1	**191-2524**	1	HOUSING	
	28	1	**6V-7238**	1	VALVE-SHUTOFF	
	29	1	**3K-0360**	1	SEAL-O-RING	
	30	1	**148-4611**	8	WASHER (71.3X112X1-MM THK)	
	31	1	**191-2514**	8	BEARING AS	
	32	1	**148-4609**	4	SHAFT-PLANETARY	
	33	1	**148-4603**	4	GEAR-PLANETARY (24-TEETH)	
	34	1	**099-5194**	8	PIN-SPRING	
M	35	1	**8T-6383**	24	BOLT (M16X2X200-MM)	
	36	1	**9X-8257**	24	WASHER (17.5X30X3.5-MM THK)	
	37	1	**191-2513**	4	BEARING AS-ROLLER	
C	38	1	**227-6221**	1	BREATHER AS (SWING DRIVE)	
	38A	1	**227-6215**	1	BOSS (1/4-18-THD)	
	38B	1	**4H-6112**	1	BREATHER (SWING DRIVE)	
	38C	1	**267-6785**	1	PIPE	

B-USE AS REQUIRED
C-CHANGE FROM PREVIOUS TYPE
M-METRIC PART

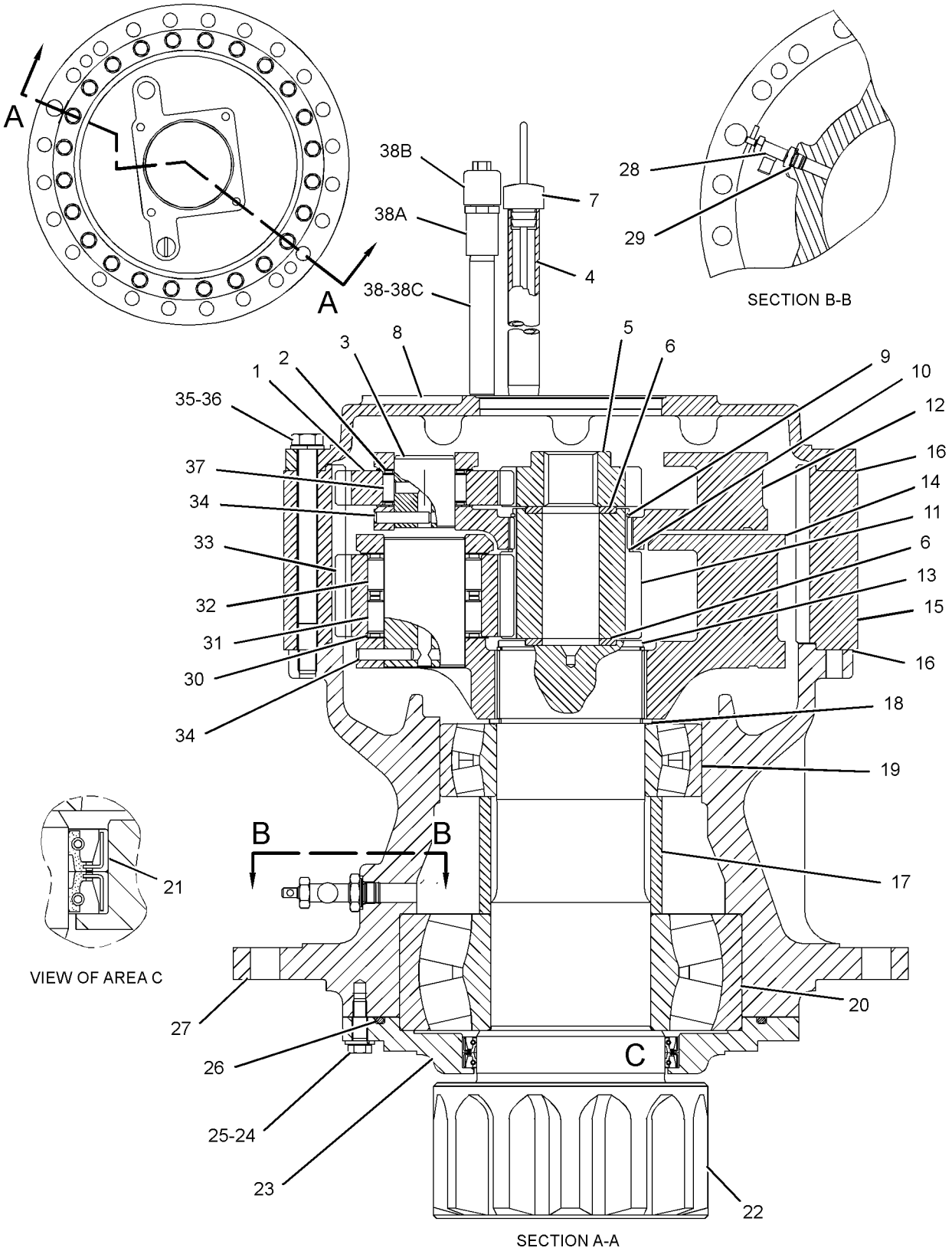

GRAPHIC #1 **<END>** g01324880

HYDRAULIC SYSTEM

333-2958 DRIVE GP-SWING–WITH MOTOR

S/N: D3P1-UP; M4T283-UP

PART OF 191-2576 POWER TRAIN AR

SMCS-5459 **i03767831**

NOTE	REF NO	GRAPHIC REF	PART NUMBER	QTY	PART NAME 1 2 3 4 5 6 (PRODUCT LEVEL)	SEE PAGE
Y	1	1	*200-3372*	1	MOTOR & MTG GP-SWING	692
Y	2	1	**333-2959**	1	DRIVE GP-SWING (WITHOUT MOTOR)	480

Y-SEPARATE ILLUSTRATION

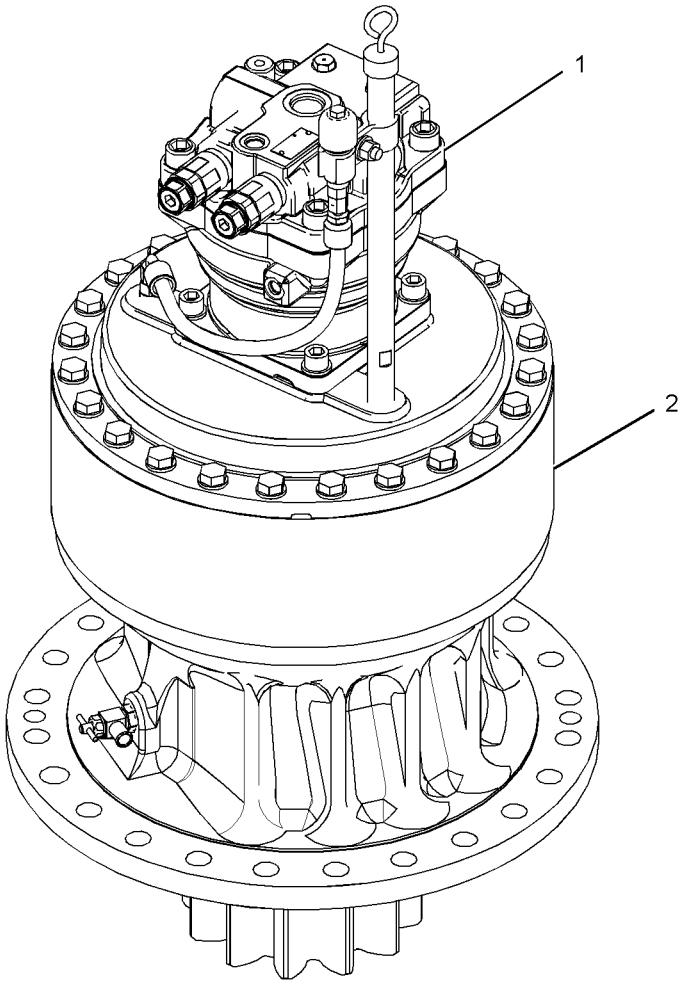

GRAPHIC #1 **<END>** g01948717

HYDRAULIC SYSTEM

333-2959 DRIVE GP-SWING—WITHOUT MOTOR

S/N: D3P1-UP; M4T283-UP

PART OF 333-2958 DRIVE GP-SWING

SMCS-5459 **i03767878**

NOTE	REF NO	GRAPHIC REF	PART NUMBER	QTY	PART NAME 1 2 3 4 5 6 (PRODUCT LEVEL)	SEE PAGE
	1	1	**4H-6112**	1	BREATHER (SWING DRIVE)	
	2	1	**6V-7238**	1	VALVE-SHUTOFF (SWING DRIVE)	
	3	1	**7I-7611**	1	CAGE	
	4	1	**7I-7619**	1	BEARING-ROLLER	
M	5	1	**7I-7684**	2	SPACER (50X79.6X6-MM THK)	
	6	1	**9U-8693**	1	BEARING-ROLLER	
	7	1	**093-1730**	1	RING-RETAINING	
M	8	1	**094-1528**	8	WASHER (53X84X1-MM THK)	
	9	1	**096-1441**	1	RING-RETAINING	
	10	1	**110-7149**	1	RING-RETAINING	
	11	1	**114-1322**	1	RING-RETAINING	
	12	1	**114-1398**	1	GAUGE-OIL LEVEL (SWING DRIVE)	
	13	1	**114-1399**	1	PIPE-GAUGE	
I	14	1	**127-3872**	1	HOSE AS	
	15	1	**136-2802**	2	CONNECTOR	
	16	1	**136-2803**	2	CLIP	
	17	1	**148-4600**	1	GEAR-SUN (17-TEETH)	
	18	1	**148-4601**	1	GEAR-SUN (17-TEETH)	
	19	1	**148-4602**	4	GEAR-PLANETARY (24-TEETH)	
	20	1	**148-4603**	4	GEAR-PLANETARY (24-TEETH)	
	21	1	**148-4604**	1	GEAR-RING (67-TEETH)	
	22	1	**148-4605**	1	SHAFT-PINION	
	23	1	**148-4607**	1	CARRIER-PLANETARY	
	24	1	**148-4608**	4	SHAFT-PLANETARY	
	25	1	**148-4609**	4	SHAFT-PLANETARY	
	26	1	**148-4611**	8	WASHER (71.3X112X1-MM THK)	
	27	1	**171-9413**	1	SPACER (140.5X160X103.2-MM THK)	
	28	1	**191-2511**	1	CARRIER-PLANETARY	
	29	1	**191-2513**	4	BEARING AS-ROLLER	
	30	1	**191-2514**	8	BEARING AS	
	31	1	**191-2524**	1	HOUSING	
	32	1	**199-4540**	1	COVER-HOUSING	
	33	1	**227-6215**	1	BOSS (1/4-18-THD)	
	34	1	**099-5194**	8	PIN-SPRING	
	35	1	**128-9170**	2	SEAL-LIP TYPE	
	36	1	**3K-0360**	1	SEAL-O-RING	
	37	1	**5M-4454**	1	SEAL-O-RING	
M	38	1	**8T-4183**	10	BOLT (M12X1.75X40-MM)	
	39	1	**8T-4223**	12	WASHER-HARD (13.5X25.5X3-MM THK)	
M	40	1	**8T-4244**	1	NUT (M12X1.75-THD)	
M	41	1	**8T-4956**	1	BOLT (M12X1.75X35-MM)	
M	42	1	**8T-6383**	24	BOLT (M16X2X200-MM)	
	43	1	**9X-8257**	24	WASHER (17.5X30X3.5-MM THK)	
B	44	1	**1U-8846**		SEALANT-GASKET	

B-USE AS REQUIRED
I-REFER TO HYDRAULIC INFORMATION SYSTEM
M-METRIC PART

333-2959 DRIVE GP-SWING *(contd.)* i03767878

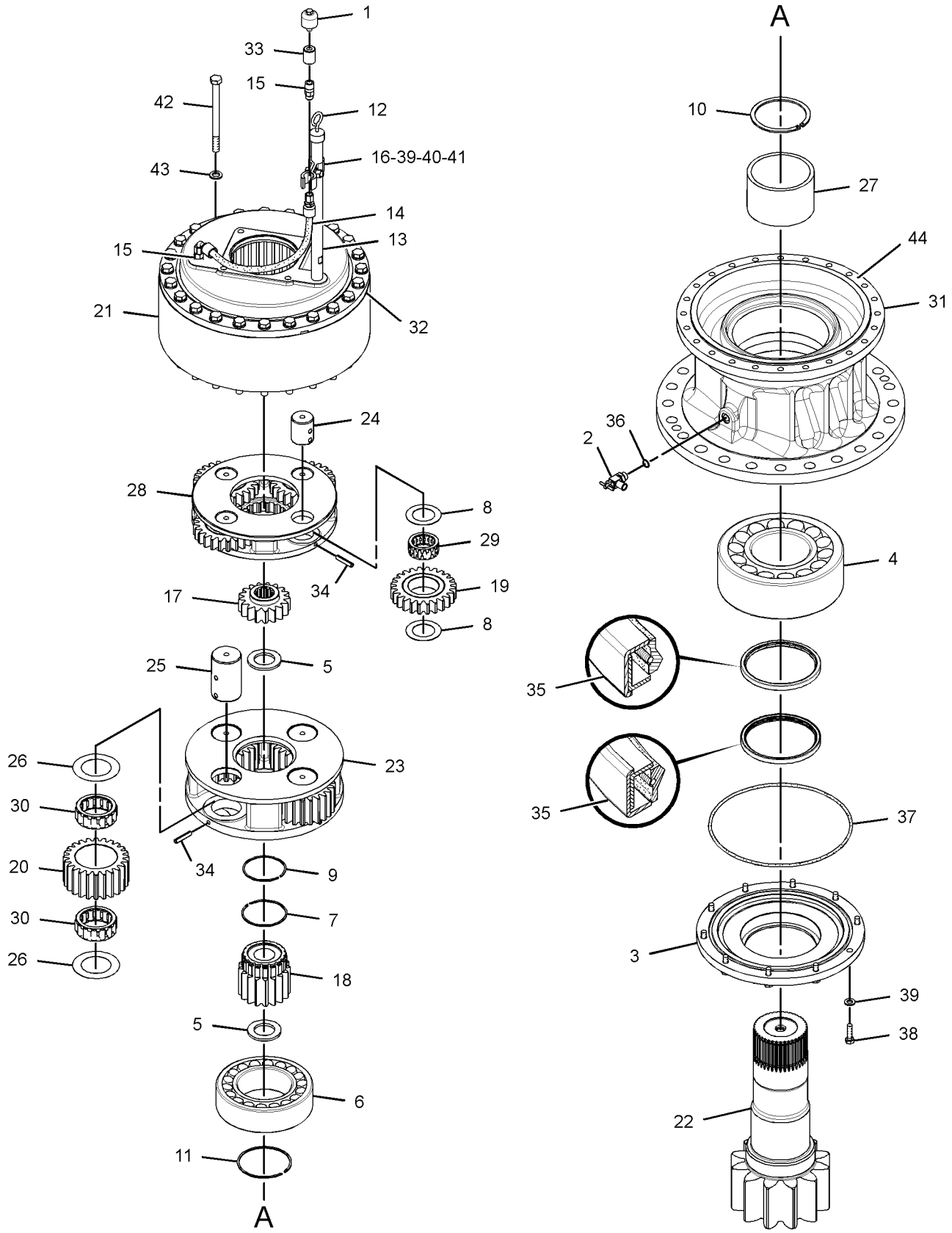

GRAPHIC #1 **<END>** g02032915

HYDRAULIC SYSTEM

191-2577 FASTENER GP-SWING & FINAL DR

S/N: D3P1-UP; M4T1-UP

PART OF 191-2576 POWER TRAIN AR

SMCS-4050, 5459 **i03113407**

NOTE	REF NO	GRAPHIC REF	PART NUMBER	QTY	PART NAME 1 2 3 4 5 6 (PRODUCT LEVEL)	SEE PAGE
M	1	1	**8T-5878**	40	BOLT (M24X3X80-MM)	
	2	1	**8T-4167**	63	WASHER-HARD (26X44X4-MM THK)	
M	3	1	**7X-2576**	23	BOLT (M24X3X70-MM)	
B	4	1	**1U-8846**		SEALANT-GASKET	
E	5	1	**5P-0767**		HOSE (90-CM)	
	6	1	**2B-7561**	2	CORK	
	7	1	**096-4755**	1	PIN	
	8	1	**5D-1026**	1	CLAMP-BAND	

B-USE AS REQUIRED
E-ORDER BY THE CENTIMETER
M-METRIC PART

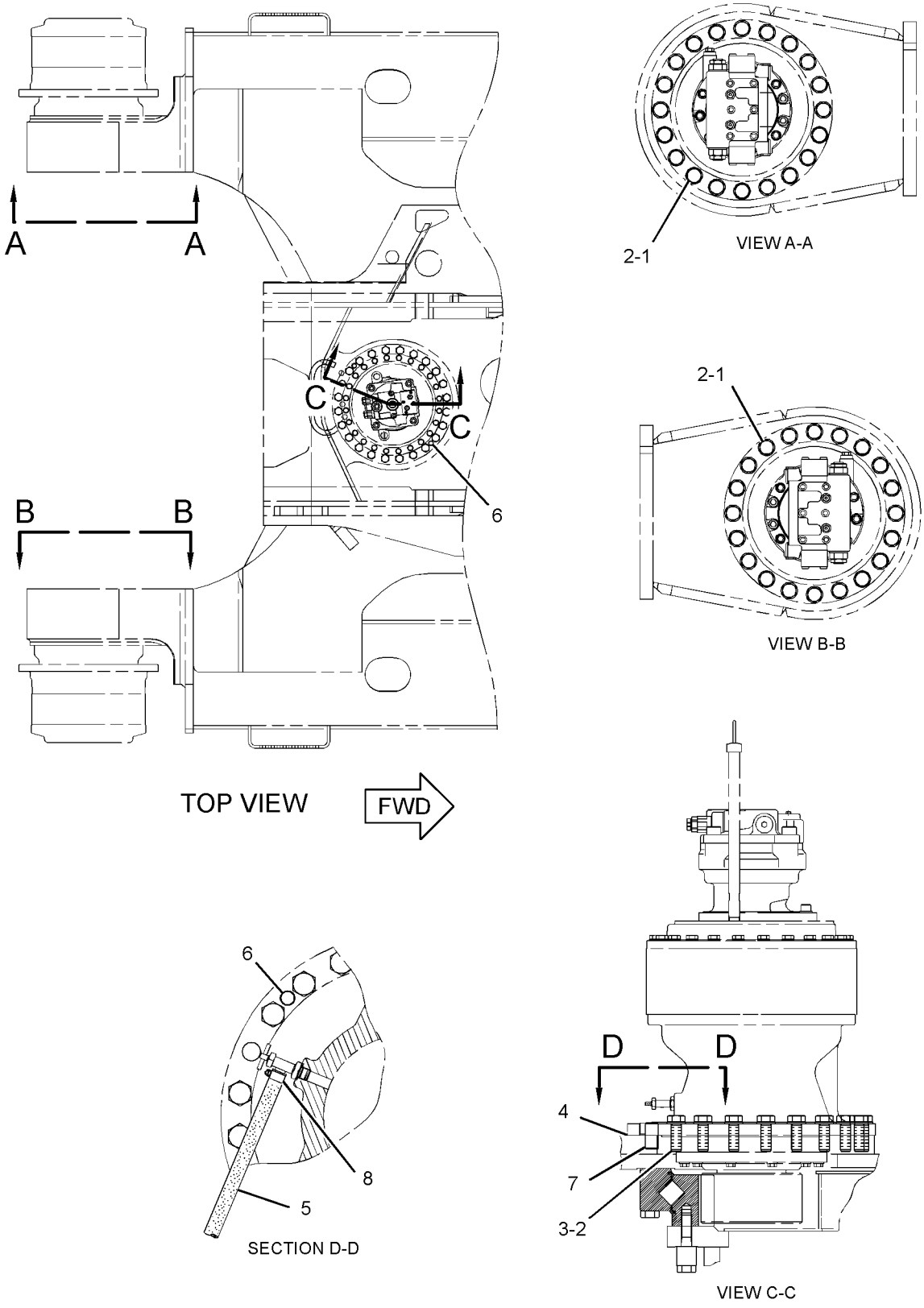

GRAPHIC #1 **<END>** g01592199

158-8987 FILTER & VALVE GP-PILOT—HYDRAULIC OIL

S/N: D3P1-UP; M4T1-UP

PART OF 239-1611 TANK & FILTER GP-HYDRAULIC

SMCS-5072, 5092 **i03629166**

NOTE	REF NO	GRAPHIC REF	PART NUMBER	QTY	PART NAME 1 2 3 4 5 6 (PRODUCT LEVEL)	SEE PAGE
	1	1	**5I-8670**	1	FILTER-OIL (ADVANCED EFFICIENCY) (HYDRAULIC, PILOT)	
	2	1	**215-4909**	1	VALVE GP-PILOT RELIEF (HYDRAULIC FILTER)	
	2A	1	**095-1584**	1	SEAL-O-RING	
	2B	1	**095-1590**	1	SEAL-O-RING	
	2C	1	**095-1596**	1	SEAL-O-RING	

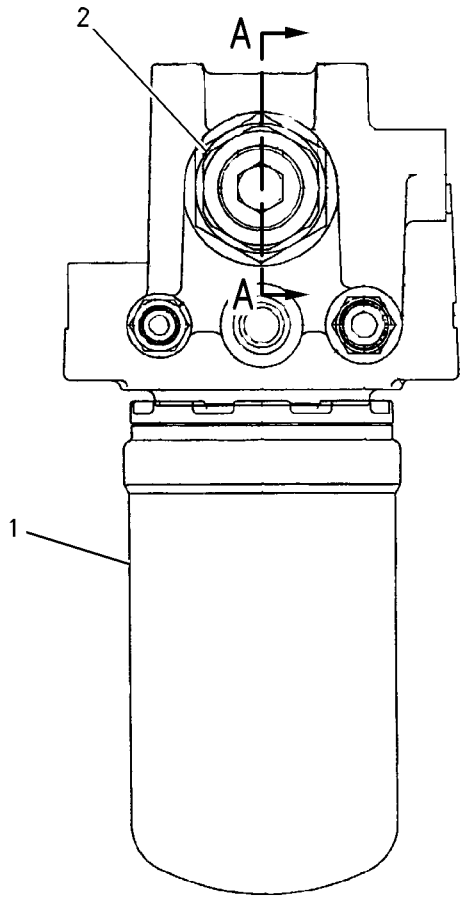

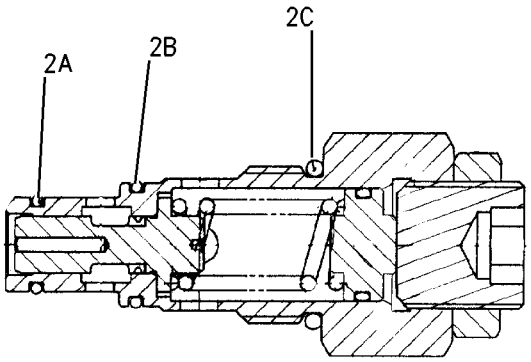

SECTION A–A

GRAPHIC #1 **<END>** g00842119

188-4140 FILTER GP-OIL–HYDRAULIC RETURN

S/N: D3P1-UP; M4T1-UP

PART OF 239-1611 TANK & FILTER GP-HYDRAULIC

SMCS-3004, 4295, 431F, 5068, 5091, 5092 **i02496815**

NOTE	REF NO	GRAPHIC REF	PART NUMBER	QTY	PART NAME 1 2 3 4 5 6 (PRODUCT LEVEL)	SEE PAGE
Y	1	1	**173-3503**	1	BASE GP-OIL FILTER (HYDRAULIC)	451
	2	1	**129-8034**	1	VALVE AS-BYPASS	
	3	1	**123-2003**	2	SEAL-O-RING	
	4	1	**173-3507**	1	HOUSING AS	
M	5	1	**8T-4194**	8	BOLT (M12X1.75X50-MM)	
	6	1	**8T-4223**	8	WASHER-HARD (13.5X25.5X3-MM THK)	
Y	7	1	**188-4142**	1	FILTER GP-OIL (HYDRAULIC RETURN)	487
	8	1	**173-3510**	1	COVER	
	9	1	**173-3518**	1	INDICATOR AS (HYDRAULIC RETURN FILTER)	
	10	1	**159-7784**	1	SEAL-O-RING	
M	11	1	**6V-4298**	4	BOLT (M5X0.8X16-MM)	
	12	1	**8T-0328**	4	WASHER-HARD (5.5X10X1-MM THK)	
M	13	1	**8T-6693**	4	SCREW-MACHINE (M5X0.8X16-MM)	

M-METRIC PART
Y-SEPARATE ILLUSTRATION

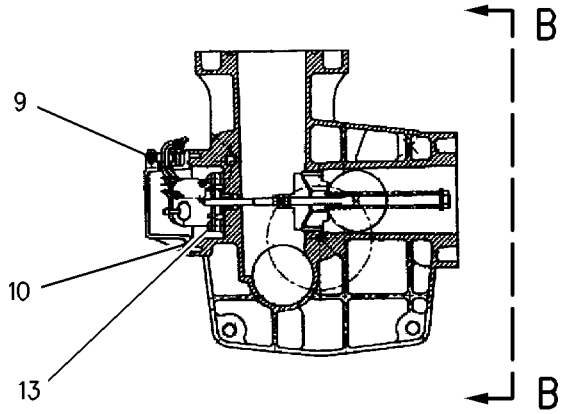

SECTION A-A

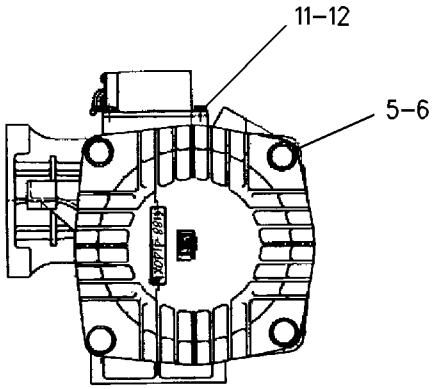

VIEW B-B

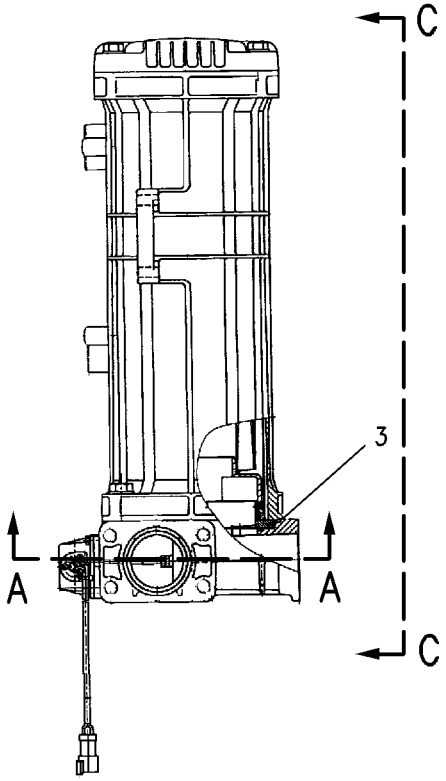

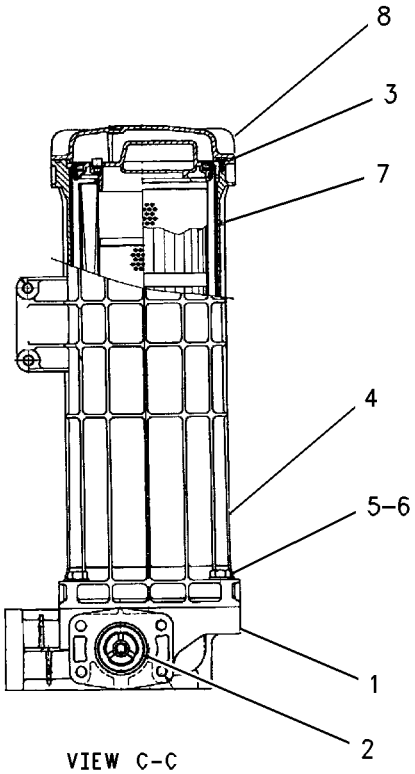

VIEW C-C

GRAPHIC #1 **<END>** g00792787

188-4142 FILTER GP-OIL—HYDRAULIC RETURN

S/N: D3P1-UP; M4T1-UP

PART OF 188-4140 FILTER GP-OIL

SMCS-3004, 4295, 431F, 5068, 5091, 5092 **i03626794**

NOTE	REF NO	GRAPHIC REF	PART NUMBER	QTY	PART NAME 1 2 3 4 5 6 (PRODUCT LEVEL)	SEE PAGE
	1	1	**204-2762**	1	PLATE	
JM	2	1	**173-3529**	6	BOLT (M6X1X15-MM)	
J	3	1	**3T-7528**	6	SEAL-O-RING	
	4	1	**173-3513**	1	BASE	
J	5	1	**3E-4297**	2	SEAL-O-RING	
M	6	1	**137-3626**	1	BOLT-SHOULDER (M6X1X28.75-MM)	
Z	7	1		1	SHELL AS	
	8	1	**179-9806**	1	FILTER ELEMENT AS-OIL (ULTRA HIGH EFFICIENCY) (HYDRAULIC RETURN)	
J	9	1	**137-3623**	4	SEAL-O-RING	
J	10	1	**6V-7658**	2	SEAL-O-RING	
J	11	1	**177-2553**	1	SEAL	
J	12	1	**095-1681**	1	SEAL-O-RING	
	13	1	**173-3515**	1	RING-RETAINING	
	14	1	**173-3516**	1	HANDLE	
J	15	1	**4J-7533**	1	SEAL-O-RING	
J	16	1	**9S-4180**	1	PLUG	
JM	17	1	**137-3624**	8	SCREW (M3X0.5X5-MM)	
J	18	1	**137-3625**	2	PAD	
	19	1	**173-3517**	1	PLATE	
BJ	20	1	**137-3628**	1	SHIM (0.1-MM THK)	
	21	1	**188-4143**	1	FILM-INSTRUCTION (HYDRAULIC OIL RETURN FILTER)	
					AVAILABLE REPAIR KIT(S):	
J			**201-9299**	1	KIT-SERVICE (HYDRAULIC RETURN FILTER)	

B-USE AS REQUIRED
J-KIT MARKED J SERVICES PARTS MARKED J
M-METRIC PART
Z-NOT SERVICED SEPARATELY

188-4142 FILTER GP-OIL *(contd.)* i03626794

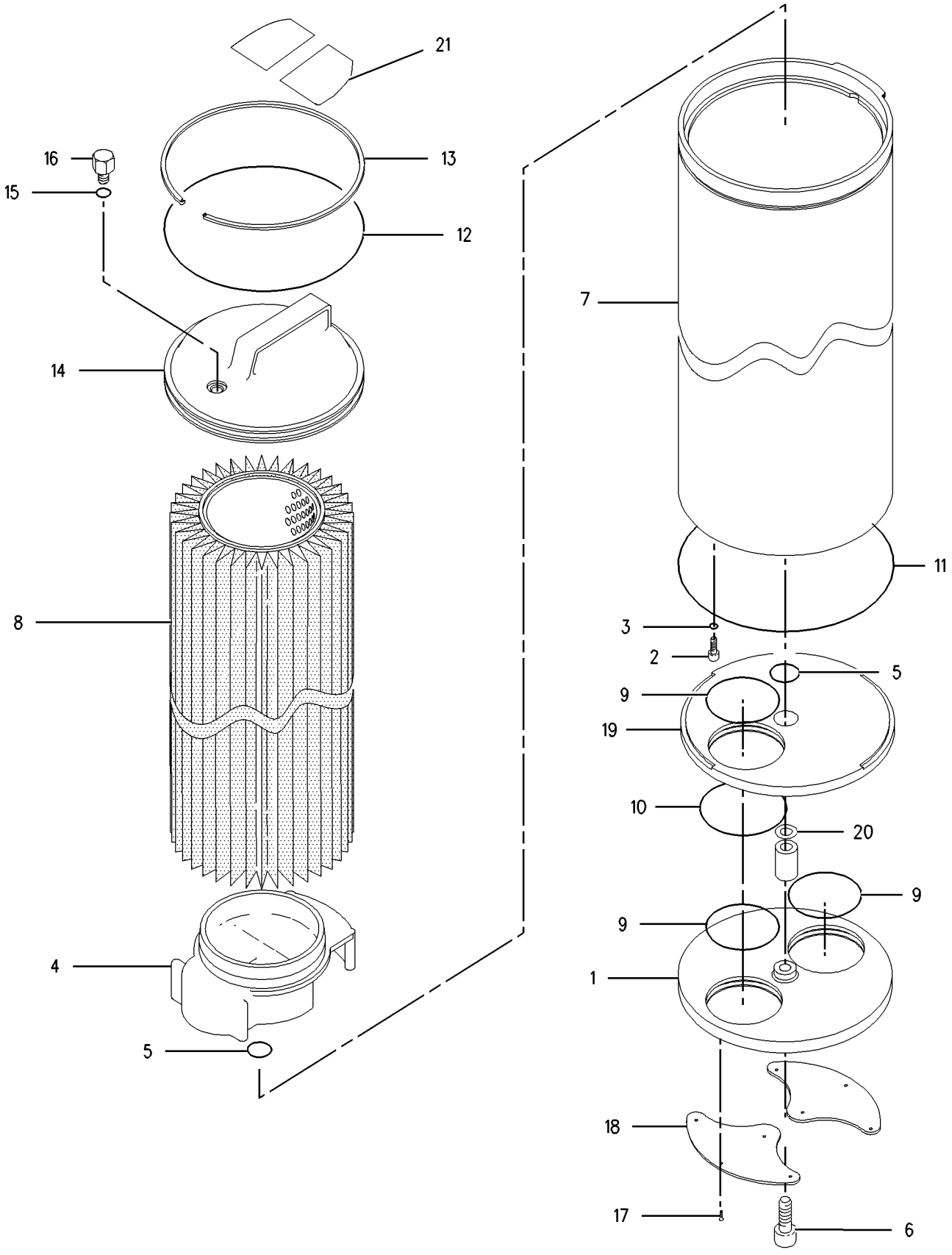

GRAPHIC #1 **<END>** g00923879

289-8194 FILTER GP-OIL—HYDRAULIC, CASE DRAIN

S/N: D3P1-UP; M4T1-UP

PART OF 239-1611 TANK & FILTER GP-HYDRAULIC

SMCS-3004, 4295, 431F, 5068, 5091, 5092 **i03626800**

NOTE	REF NO	GRAPHIC REF	PART NUMBER	QTY	PART NAME 1 2 3 4 5 6 (PRODUCT LEVEL)	SEE PAGE
	1	1	**093-7521**	1	FILTER-OIL (ADVANCED EFFICIENCY) (HYDRAULIC, CASE DRAIN)	
	2	1	**289-8195**	1	HEAD AS-FILTER	

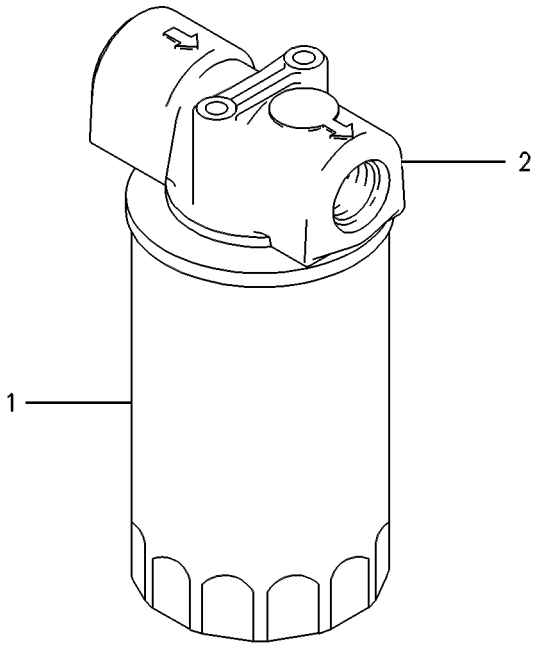

GRAPHIC #1 **<END>** g00258224

227-0620 GAUGE GP-SIGHT—HYDRAULIC OIL LEVEL

S/N: D3P1-UP; M4T1-UP

PART OF 289-5565 TANK GP-HYDRAULIC

SMCS-7479 **i02178125**

NOTE	REF NO	GRAPHIC REF	PART NUMBER	QTY	PART NAME 1 2 3 4 5 6 (PRODUCT LEVEL)	SEE PAGE
	1	1	**236-3258**	2	BLOCK	
M	2	1	**236-3259**	2	BOLT-SPECIAL	
	3	1	**236-3257**	1	PIPE	
	4	1	**095-1519**	4	SEAL-O-RING	
	5	1	**6F-4855**	4	SEAL-O-RING	

M-METRIC PART

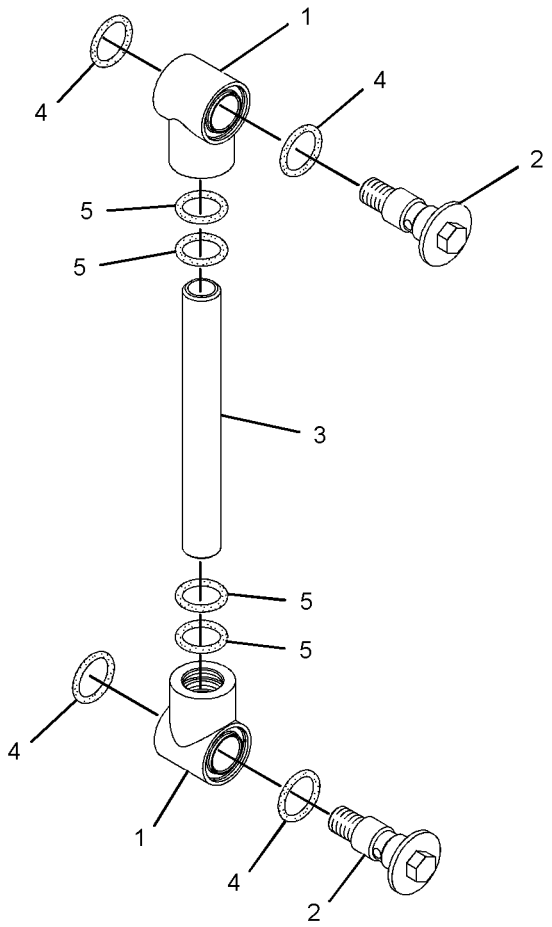

GRAPHIC #1 **<END>** g01091508

287-2919 GUARD AR-CYLINDER

S/N: D3P1-UP; M4T1-UP
AN ATTACHMENT

SMCS-7562 **i03680722**

NOTE	PART NUMBER	QTY	PART NAME 1 2 3 4 5 6 (PRODUCT LEVEL)	SEE PAGE
Y	*287-2917*	1	GUARD GP-CYLINDER (BUCKET)	492
Y	*295-1061*	1	LINES GP-BUCKET CYLINDER	539
Y	*287-2918*	1	LINKAGE GP-BUCKET	869

Y-SEPARATE ILLUSTRATION

<END>

287-2917 GUARD GP-CYLINDER–BUCKET

S/N: D3P1-UP; M4T1-UP
PART OF 287-2919 GUARD AR-CYLINDER
AN ATTACHMENT

SMCS-7164 **i03680724**

NOTE	REF NO	GRAPHIC REF	PART NUMBER	QTY	PART NAME 1 2 3 4 5 6 (PRODUCT LEVEL)	SEE PAGE
	1	1	**235-7636**	1	PIN AS	
	2	1	**235-7642**	1	PIN AS	
	3	1	**251-0686**	2	PAD	
	4	1	**251-0687**	4	BAR	
	5	1	**256-0991**	1	SUPPORT AS	
	6	1	**256-0994**	1	CHANNEL AS	
	7	1	**256-0997**	1	PLATE AS	
	8	1	**256-1001**	1	PLATE AS	
	9	1	**256-1004**	2	SUPPORT	
M	10	1	**7X-2550**	8	BOLT (M12X1.75X110-MM)	
M	11	1	**8T-4184**	4	BOLT (M12X1.75X45-MM)	
M	12	1	**8T-4193**	14	BOLT (M16X2X50-MM)	
	13	1	**8T-4223**	24	WASHER-HARD (13.5X25.5X3-MM THK)	
M	14	1	**8T-6868**	12	BOLT (M12X1.75X80-MM)	
	15	1	**9X-8257**	14	WASHER (17.5X30X3.5-MM THK)	

M-METRIC PART

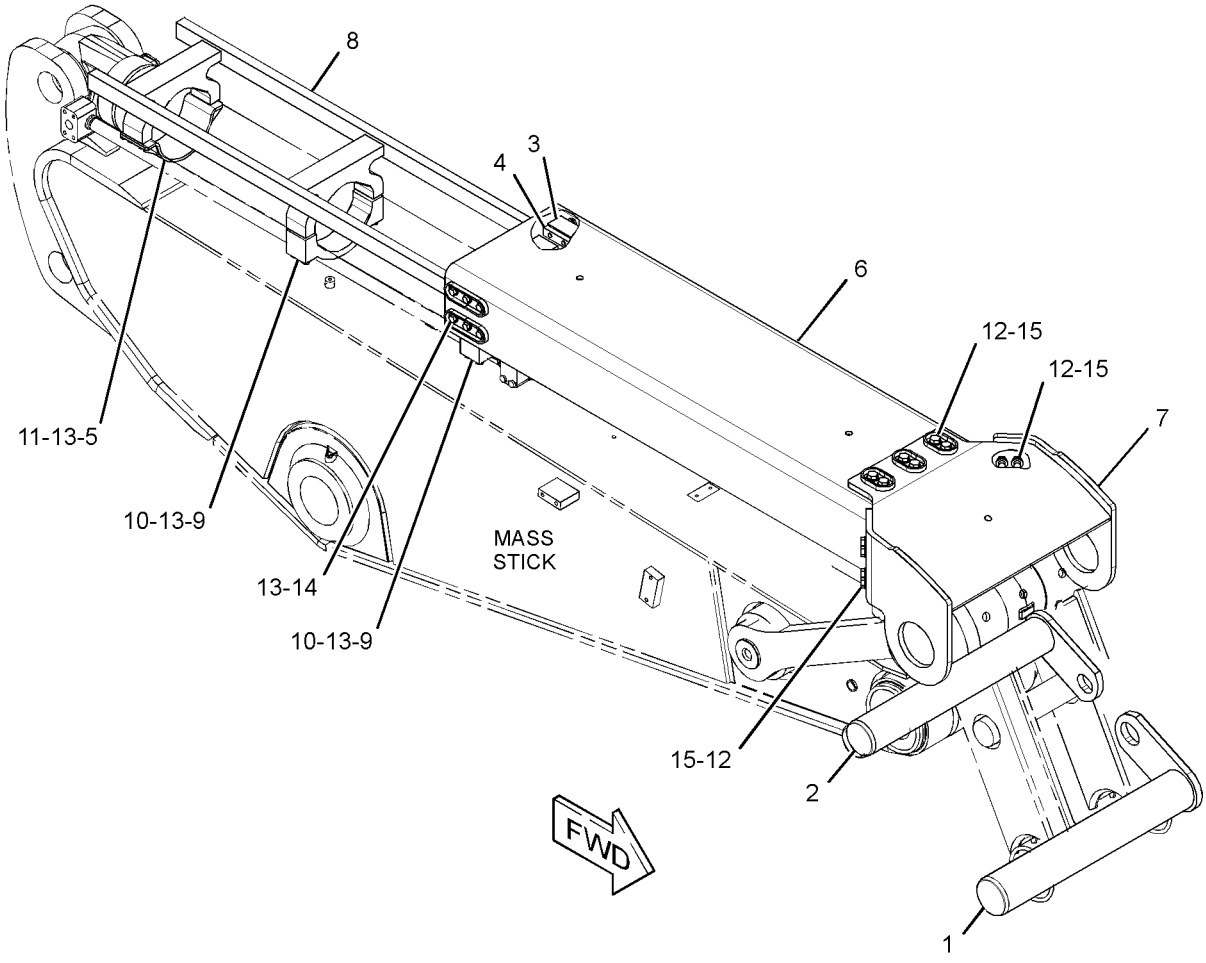

GRAPHIC #1 **<END>** g01397663

HYDRAULIC SYSTEM

295-9660 HEAD GP-PUMP

S/N: D3P1-UP; M4T1-UP

PART OF 322-8733 PUMP GP-PISTON

SMCS-3222, 5070, 5086 **i02884351**

NOTE	REF NO	GRAPHIC REF	PART NUMBER	QTY	PART NAME 1 2 3 4 5 6 (PRODUCT LEVEL)	SEE PAGE
	1	2	**289-8180**	1	SPRING-PILOT	
M	2	1,2	**8T-0269**	10	BOLT-SOCKET HEAD (M6X1X20-MM)	
M	3	2	**5I-8820**	1	SETSCREW (M8X20-MM)	
M	4	2	**5C-7261**	1	NUT (M8X1.25-THD)	
	5	2	**206-9295**	1	SEAL-O-RING	
	6	2	**289-8179**	1	RETAINER	
	7	2	**295-9577**	1	SEAT	
	8	2	**206-9300**	1	SEAL-O-RING	
	9	2	**295-9578**	1	PISTON	
	10	2	**206-9297**	1	SEAL-O-RING	
M	11	1	**3E-8025**	2	BOLT-SOCKET HEAD (M8X1.25X50-MM)	
	12	1	**5I-8815**	1	PIN	
	13	1	**249-6661**	2	SEAL-O-RING	
M	14	1	**099-2374**	4	BOLT-SOCKET HEAD (M5X0.8X12-MM)	
	15	1	**5I-8790**	1	PLUG	
	16	2	**096-2323**	1	RING-RETAINING (EXTERNAL)	
	17	2	**5I-8802**	1	COVER-PILOT	
	18	2	**5I-8811**	1	SPRING	
	19	2	**249-6659**	1	SEAL-O-RING	
	20	2	**5I-8809**	1	SEAT-SPRING	
	21	2	**5I-8810**	1	SPRING-RETURN	
	22	2	**5I-8813**	1	RING-RETAINING	
	23	2	**247-8737**	1	SLEEVE	
	24	2	**5I-8808**	1	SPOOL	
	25	2	**295-9583**	1	SEAT	
	26	2	**5I-8799**	1	COVER	
	27	2	**5I-8800**	1	LOCKNUT (M30X1.5-THD)	
	28	2	**295-9580**	1	SCREW	
	29	2	**247-8738**	1	SETSCREW (M8X19.5-MM)	
	30	2	**295-9579**	1	SETSCREW	
	31	2	**206-9294**	1	SEAL-O-RING	
	32	2	**206-9301**	1	SEAL-O-RING	
	33	2	**206-9299**	1	SEAL-O-RING	
	34	2	**247-8736**	1	SPRING	
	35	2	**129-7971**	1	SPRING	
	36	2	**295-9584**	1	ROD	
	37	2	**5I-8791**	1	PISTON-COMPENSATOR	
	38	2	**129-7970**	1	SLEEVE	
	39	2	**206-9296**	1	SEAL-O-RING	
	40	2	**129-7973**	1	SLEEVE	
	41	2	**129-7974**	1	PIN	
	42	1	**249-6660**	1	SEAL-O-RING	
M	43	1	**6V-8213**	2	BOLT-SOCKET HEAD (M8X1.25X70-MM)	
M	44	1	**8T-8442**	2	BOLT-SOCKET HEAD (M6X1X30-MM)	
	45	1	**206-9291**	1	SEAL-O-RING	
	46	1	**206-9290**	9	SEAL-O-RING	
	47	1	**7I-8084**	5	PLUG	
	48	1	**249-6658**	3	SEAL-O-RING	
	49	1	**5I-8812**	1	COVER-BLOCK	
	50	2	**247-8929**	1	BODY AS	
	51	1	**247-8732**	1	LEVER AS	
	52	1	**247-8733**	1	LEVER AS	
	53	1	**247-8734**	1	LEVER AS	
	54	1	**247-8735**	1	PIN AS	
	55	1	**247-8928**	1	COVER	
	56	2	**295-9574**	1	NUT	

295-9660 HEAD GP-PUMP *(contd.)* i02884351

NOTE	REF NO	GRAPHIC REF	PART NUMBER	QTY	PART NAME 1 2 3 4 5 6 (PRODUCT LEVEL)	SEE PAGE
	57	2	**295-9575**	1	SEAL-O-RING	
M-METRIC PART						

295-9660 HEAD GP-PUMP *(contd.)* **i02884351**

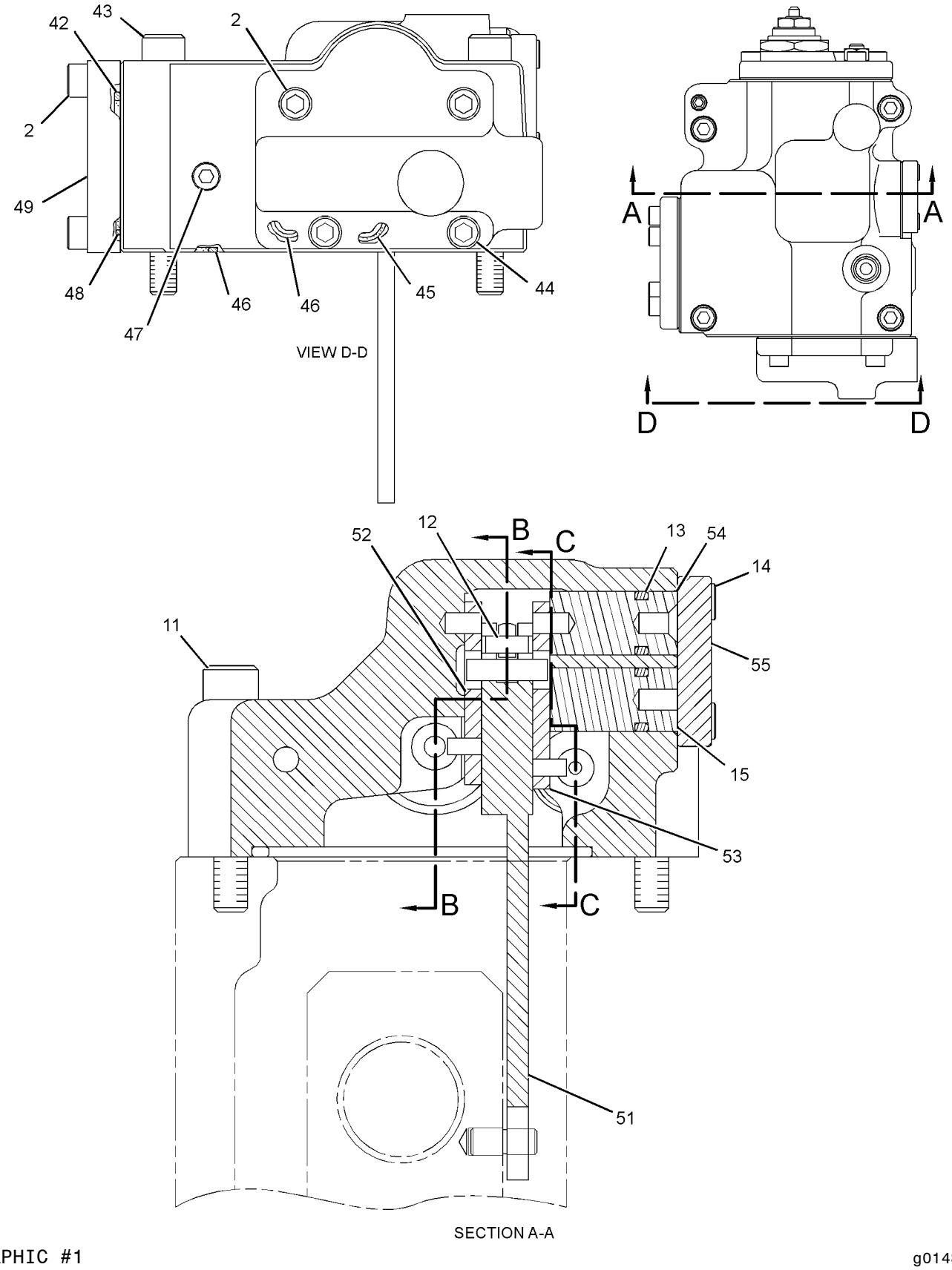

GRAPHIC #1

g01436032

295-9660 HEAD GP-PUMP *(contd.)* **i02884351**

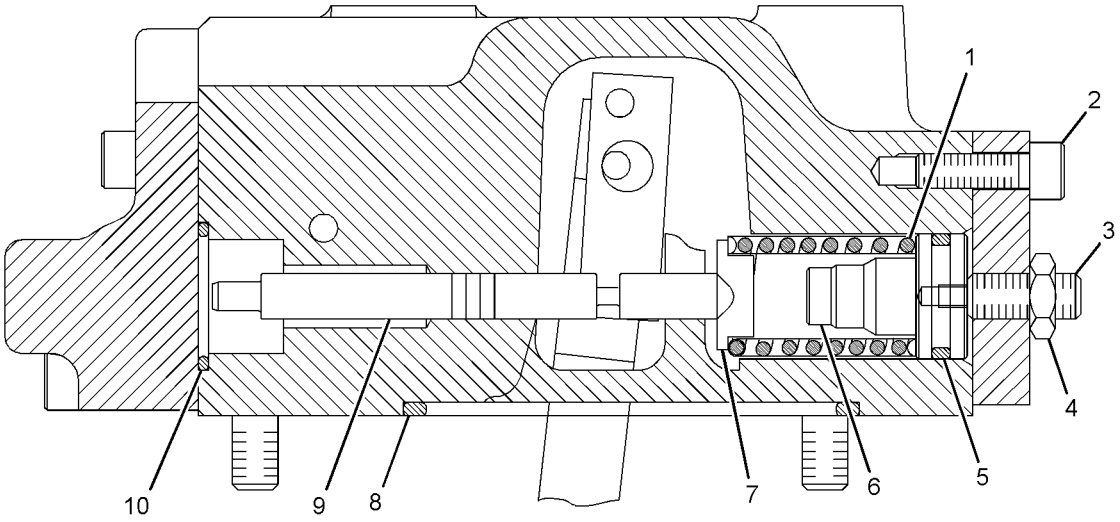

SECTION C-C

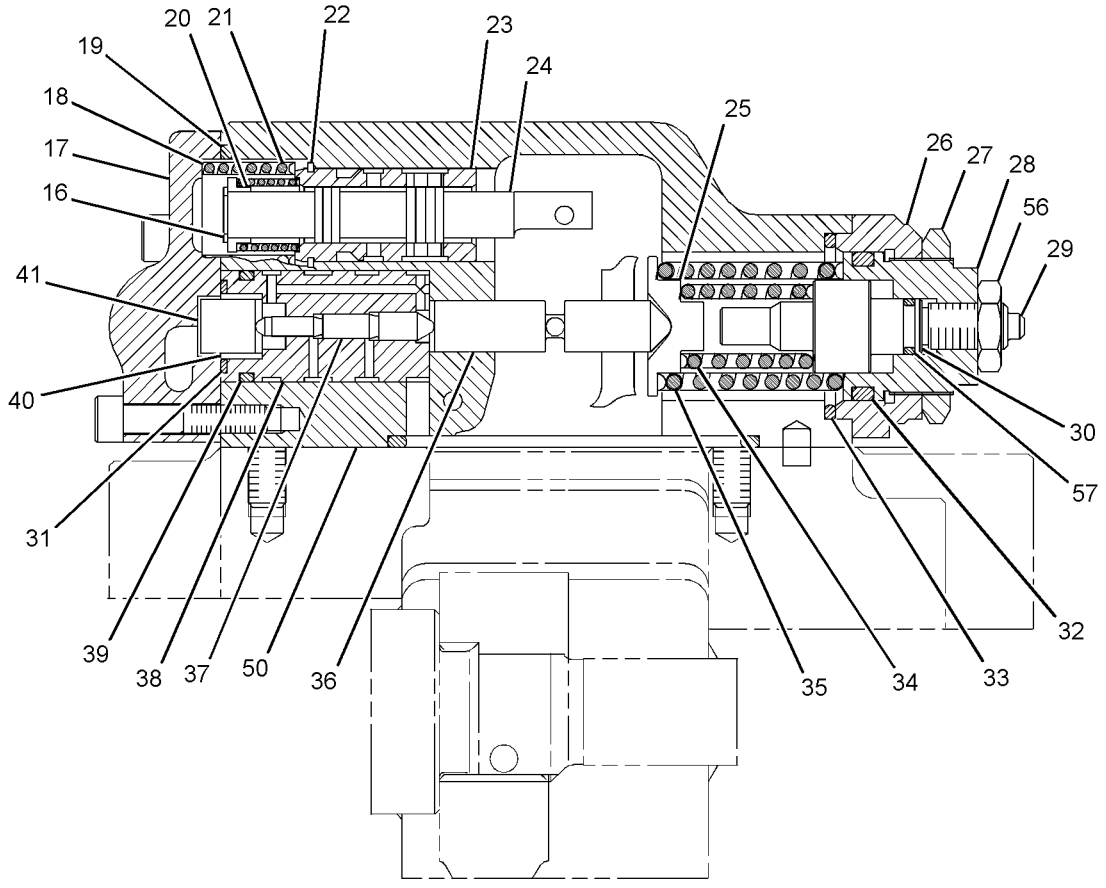

SECTION B-B

GRAPHIC #2 **<END>** g01434820

194-0174 HOSE GP-HYDRAULIC—CONTROL VALVE, STICK

S/N: D3P1-UP; M4T1-UP

PART OF 260-7869 LINES GP-FRONT

SMCS-5057 **i02378005**

NOTE	PART NUMBER	QTY	PART NAME 1 2 3 4 5 6 (PRODUCT LEVEL)	SEE PAGE
Y	*194-0176*	1	HOSE GP-HYDRAULIC	498
			-OR-	
	168-9760	1	HOSE GP-HYDRAULIC	

Y-SEPARATE ILLUSTRATION

<END>

HYDRAULIC SYSTEM

194-0176 HOSE GP-HYDRAULIC–FRONT

S/N: D3P1-UP; M4T1-UP

PART OF 194-0174 HOSE GP-HYDRAULIC

SMCS-5057 **i02378061**

NOTE	REF NO	GRAPHIC REF	PART NUMBER	QTY	PART NAME 1 2 3 4 5 6 (PRODUCT LEVEL)	SEE PAGE
	1	1	**142-7765**	1	TUBE AS	
	2	1	**5K-9090**	1	SEAL-O-RING	
I	3	1	**165-3165**	1	HOSE AS	

I-REFER TO HYDRAULIC INFORMATION SYSTEM

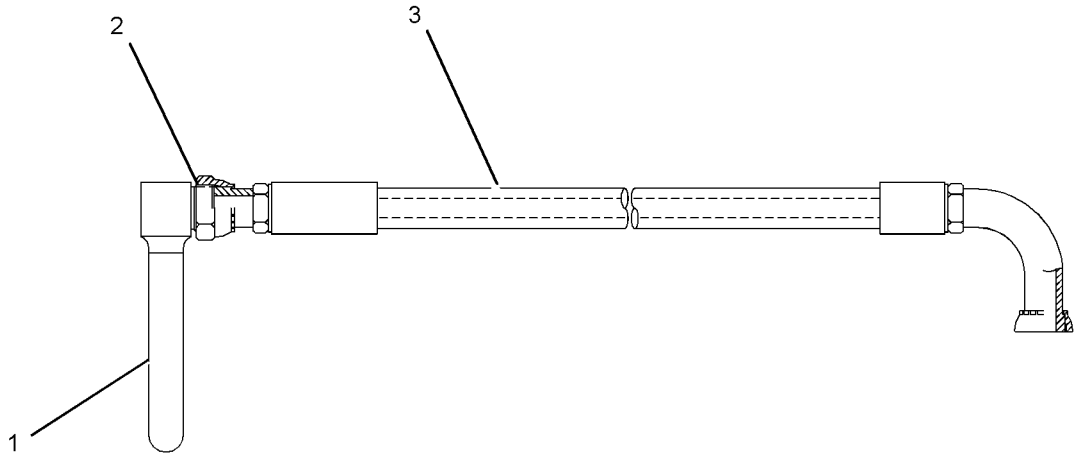

GRAPHIC #1 **<END>** g01041998

194-0177 HOSE GP-HYDRAULIC–FRONT

S/N: D3P1-UP; M4T1-UP

PART OF 260-7869 LINES GP-FRONT

SMCS-5057 **i02378168**

NOTE	PART NUMBER	QTY	PART NAME 1 2 3 4 5 6 (PRODUCT LEVEL)	SEE PAGE
Y	*194-0178*	1	HOSE GP-HYDRAULIC	500
			–OR–	
Y	*194-0179*	1	HOSE GP-HYDRAULIC	501

Y-SEPARATE ILLUSTRATION

<END>

HYDRAULIC SYSTEM

194-0178 HOSE GP-HYDRAULIC–FRONT

S/N: D3P1-UP; M4T1-UP

PART OF 194-0177 HOSE GP-HYDRAULIC

SMCS-5057 **i03715486**

NOTE	REF NO	GRAPHIC REF	PART NUMBER	QTY	PART NAME 1 2 3 4 5 6 (PRODUCT LEVEL)	SEE PAGE
	1	1	**260-7912**	1	HOSE AS	
	2	1	**8C-3206**	2	FLANGE-HALF	
	3	1	**4J-0520**	1	SEAL-O-RING	

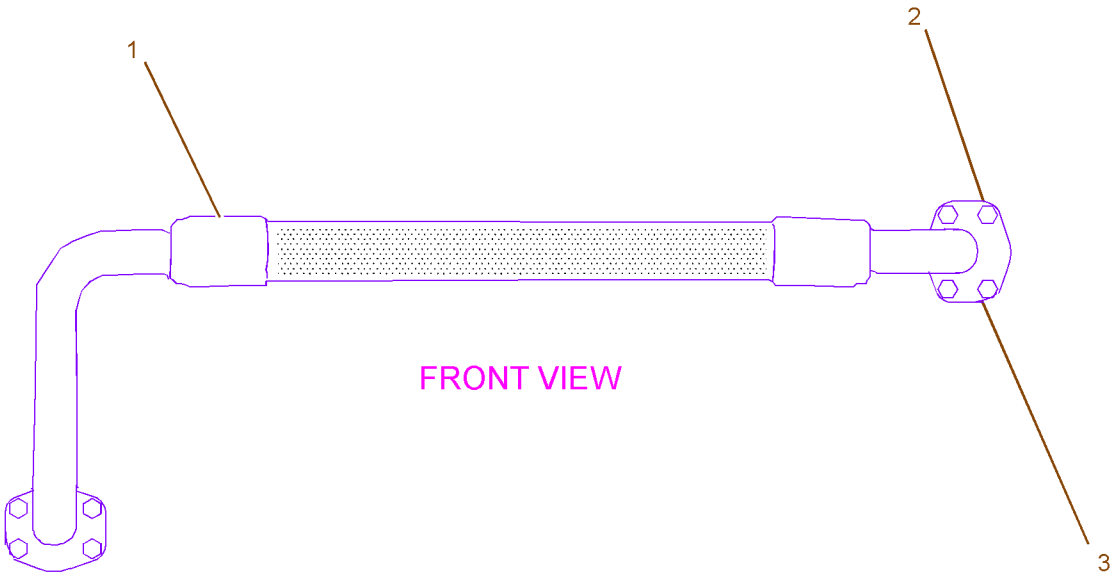

GRAPHIC #1 **<END>** g01042973

194-0179 HOSE GP-HYDRAULIC–FRONT

S/N: D3P1-UP; M4T1-UP

PART OF 194-0177 HOSE GP-HYDRAULIC

SMCS-5057 **i02378197**

NOTE	REF NO	GRAPHIC REF	PART NUMBER	QTY	PART NAME 1 2 3 4 5 6 (PRODUCT LEVEL)	SEE PAGE
I	1	1	**165-3169**	1	HOSE AS	
	2	1	**142-7764**	1	TUBE AS	
	3	1	**7Y-3731**	1	FLANGE	
	4	1	**1P-3703**	1	SEAL-RECTANGULAR	
	5	1	**5K-9090**	2	SEAL-O-RING	

I-REFER TO HYDRAULIC INFORMATION SYSTEM

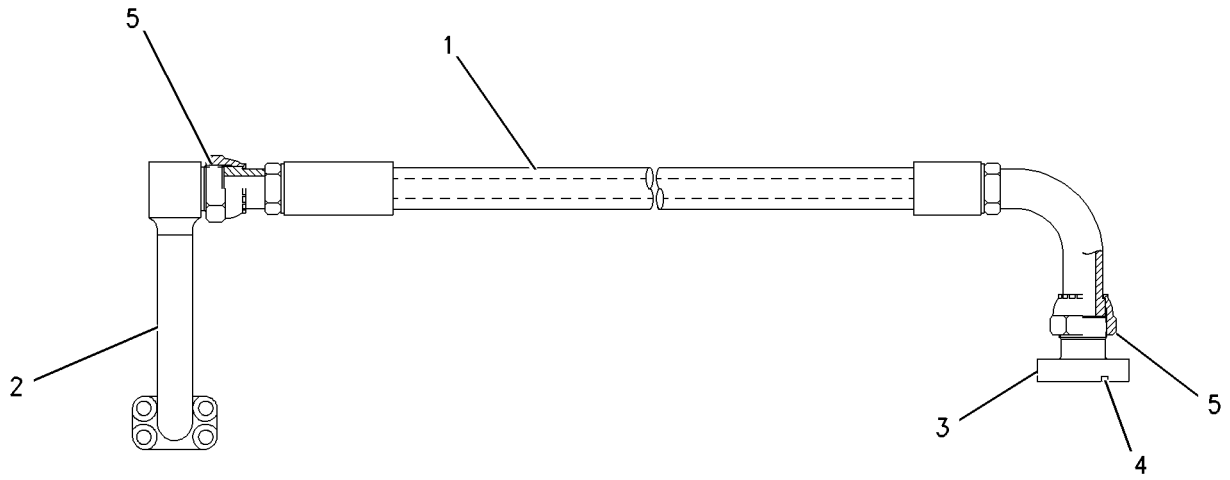

GRAPHIC #1 **<END>** g00834658

194-0180 HOSE GP-HYDRAULIC—CONTROL VALVE, BOOM

S/N: D3P1-UP; M4T1-UP

PART OF 260-7869 LINES GP-FRONT

SMCS-5057 **i02378085**

NOTE	PART NUMBER	QTY	PART NAME 1 2 3 4 5 6 (PRODUCT LEVEL)	SEE PAGE
Y	*194-0181*	1	HOSE GP-HYDRAULIC	503
			—OR—	
Y	*194-0182*	1	HOSE GP-HYDRAULIC	504

Y-SEPARATE ILLUSTRATION

<END>

194-0181 HOSE GP-HYDRAULIC–FRONT

S/N: D3P1-UP; M4T1-UP

PART OF 194-0180 HOSE GP-HYDRAULIC

SMCS-5057 **i02662568**

NOTE	REF NO	GRAPHIC REF	PART NUMBER	QTY	PART NAME 1 2 3 4 5 6 (PRODUCT LEVEL)	SEE PAGE
	1	1	**168-9762**	1	HOSE AS	
	2	1	**8C-3206**	2	FLANGE-HALF	
	3	1	**4J-0520**	1	SEAL-O-RING	



GRAPHIC #1 **<END>** g01049500

HYDRAULIC SYSTEM

194-0182 HOSE GP-HYDRAULIC–FRONT

S/N: D3P1-UP; M4T1-UP

PART OF 194-0180 HOSE GP-HYDRAULIC

SMCS-5057 **i02378159**

NOTE	REF NO	GRAPHIC REF	PART NUMBER	QTY	PART NAME 1 2 3 4 5 6 (PRODUCT LEVEL)	SEE PAGE
I	1	1	**165-3173**	1	HOSE AS	
	2	1	**168-9523**	1	TUBE AS	
	3	1	**113-6479**	1	FLANGE-SPECIAL	
	4	1	**5K-9090**	2	SEAL-O-RING	
	5	1	**1P-3703**	1	SEAL-RECTANGULAR	

I-REFER TO HYDRAULIC INFORMATION SYSTEM

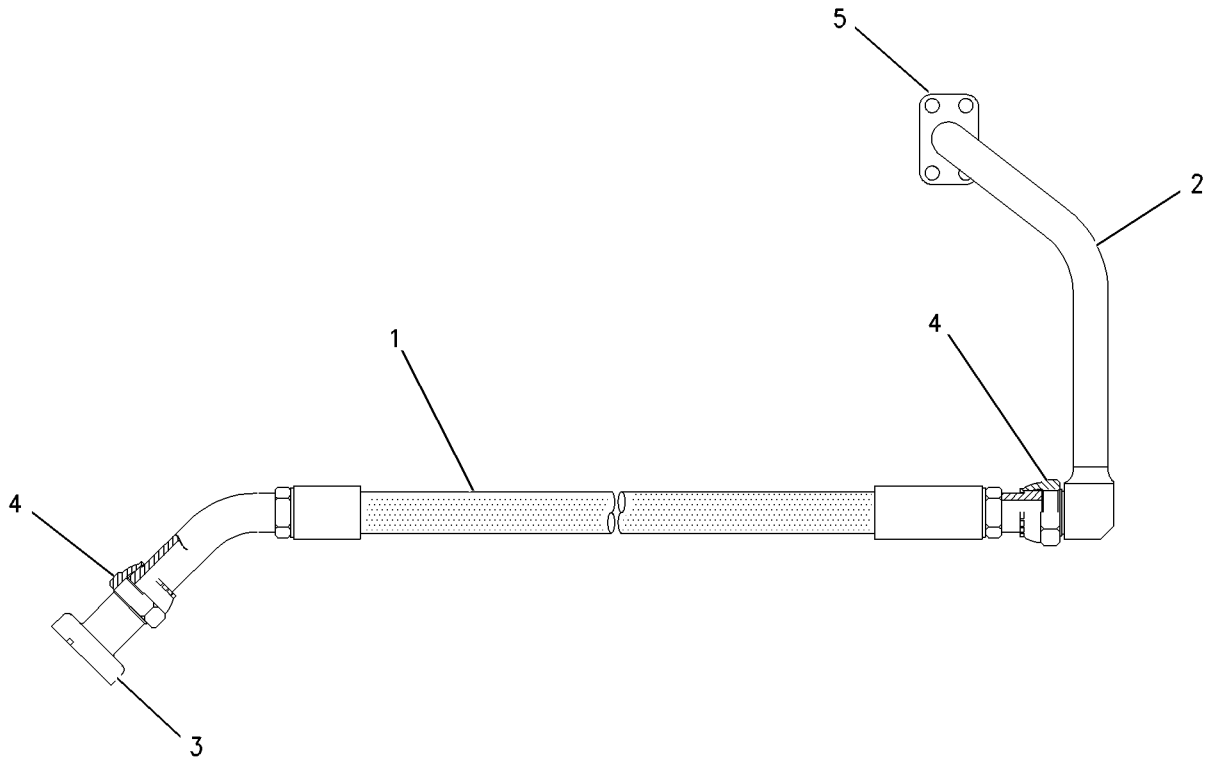

GRAPHIC #1 **<END>** g00834662

HYDRAULIC SYSTEM

259-7766 HYDRAULIC AR

S/N: D3P1-UP; M4T1-UP

PART OF 314-3698, 314-3699 GENERAL AR

SMCS-5050 **i03630006**

NOTE	PART NUMBER	QTY	PART NAME 1 2 3 4 5 6 (PRODUCT LEVEL)	SEE PAGE
Y	*259-5237*	1	FASTENER GP-WIRING HARNESS (HEAVY LIFT)	202
Y	*248-9838*	1	LINES GP-RETURN (REAR)	670
Y	*260-7869*	1	LINES GP-FRONT (IMPL, SWING, TRAVEL, WORK TOOL)	576
Y	*260-7870*	1	LINES GP-FRONT (BOOM CYLINDER)	579
Y	*248-9840*	1	LINES GP-HYDRAULIC OIL COOLER	596
Y	*248-9825*	1	LINES GP-PILOT (JOYSTICK, PEDALS)	602
Y	*248-9842*	1	LINES GP-PILOT (CONTROL VALVE)	610
Y	*248-9843*	1	LINES GP-PILOT (CONTROL VALVE)	613
Y	*307-5106*	1	LINES GP-PILOT (MAIN HYDRAULIC)	657
Y	*255-1659*	1	LINES GP-PILOT (HEAVY LIFT)	619
Y	*307-5122*	1	LINES GP-PUMP (MAIN HYDRAULIC)	668
Y	*239-1618*	1	LINES GP-TRAVEL MOTOR (LONG UNDERCARRIAGE)	686
Y	*260-7868*	1	MOUNTING GP-MAIN CONTROL VALVE	707
Y	*310-9486*	1	PUMP & MTG GP-MAIN HYDRAULIC	715
Y	*239-1610*	1	TANK & MTG GP-HYDRAULIC	733
Y	**285-1540**	1	VALVE GP-MAIN CONTROL (HEAVY LIFT)	774

Y-SEPARATE ILLUSTRATION

<END>

237-3191 LINES GP-AUXILIARY HYDRAULIC–BOOM, HIGH PRESSURE

S/N: D3P1-UP; M4T1-UP

PART OF 345-2282, 345-2283, 345-2285, 345-2286 OPTION AR-LINKAGE AN ATTACHMENT

SMCS-5057 **i02660460**

NOTE	REF NO	GRAPHIC REF	PART NUMBER	QTY	PART NAME 1 2 3 4 5 6 (PRODUCT LEVEL)	SEE PAGE
M	1	1	**8T-4139**	12	BOLT (M12X1.75X30-MM)	
M	2	1	**8T-4174**	8	BOLT (M16X2X120-MM)	
M	3	1	**8T-4183**	16	BOLT (M12X1.75X40-MM)	
M	4	1	**8T-4184**	4	BOLT (M12X1.75X45-MM)	
M	5	1	**8T-4194**	20	BOLT (M12X1.75X50-MM)	
	6	1	**173-7916**	16	CLAMP-HALF	
	7	1	**1P-5767**	8	FLANGE-HALF	
I	8	1	**202-6758**	2	HOSE AS	
	9	1	**216-6578**	2	PLATE	
	10	1	**253-6434**	2	PLATE	
	11	1	**253-6441**	4	PLATE	
	12	1	**1P-3704**	4	SEAL-RECTANGULAR	
	13	1	**1P-3705**	4	SEAL-RECTANGULAR	
	14	1	**193-6648**	1	TUBE AS	
	15	1	**193-6650**	1	TUBE AS	
	16	1	**197-2100**	1	TUBE AS	
	17	1	**197-2101**	1	TUBE AS	
	18	1	**216-6579**	1	TUBE AS	
	19	1	**216-6580**	1	TUBE AS	
	20	1	**9X-8257**	8	WASHER (17.5X30X3.5-MM THK)	
	21	1	**8T-4223**	36	WASHER-HARD (13.5X25.5X3-MM THK)	

I-REFER TO HYDRAULIC INFORMATION SYSTEM
M-METRIC PART

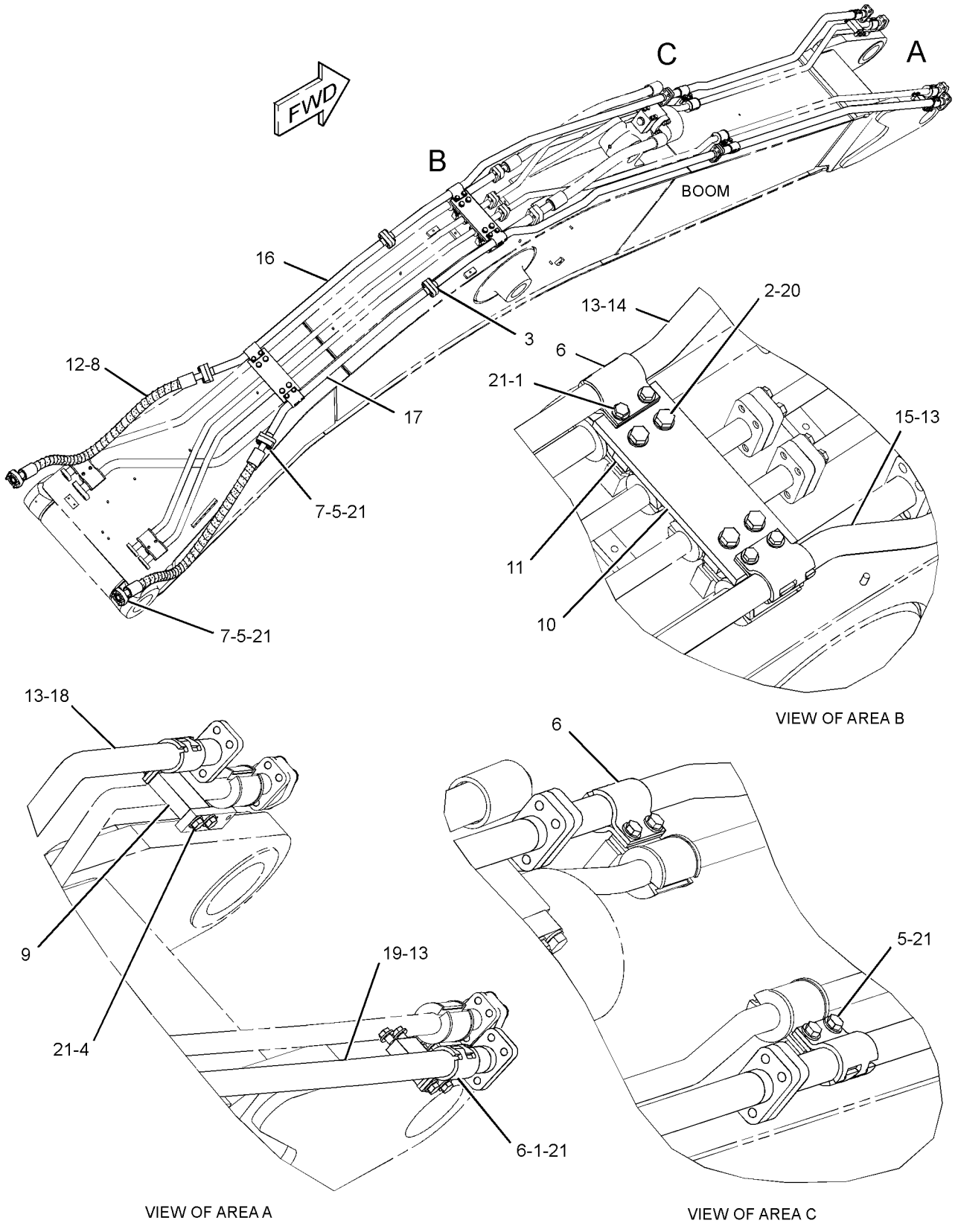

GRAPHIC #1 **<END>** g01340146

HYDRAULIC SYSTEM

237-3192 LINES GP-AUXILIARY HYDRAULIC–BOOM, MEDIUM PRESSURE

S/N: D3P1-UP; M4T1-UP

PART OF 345-2283 OPTION AR-LINKAGE

AN ATTACHMENT

SMCS-5057 **i03319340**

NOTE	REF NO	GRAPHIC REF	PART NUMBER	QTY	PART NAME 1 2 3 4 5 6 (PRODUCT LEVEL)	SEE PAGE
	1	1	**187-9833**	1	PLATE	
	2	1	**193-6662**	1	PLATE	
	3	1	**202-7021**	2	CLIP	
	4	1	**245-2184**	1	TUBE AS	
	5	1	**245-2187**	1	TUBE AS	
	6	1	**245-2190**	1	TUBE AS	
	7	1	**245-2193**	1	TUBE AS	
	8	1	**245-2196**	1	TUBE AS	
	9	1	**245-2199**	1	TUBE AS	
	10	1	**253-6458**	1	CLIP AS	
	11	1	**268-7112**	8	CLIP	
C	12	1	**294-3794**	2	CLIP AS	
C	13	1	**294-3795**	2	CLIP AS	
C	14	1	**294-3798**	1	PLATE	
C	15	1	**294-3799**	1	PLATE	
	16	1	**288-7641**	1	CLIP AS	
	17	1	**093-1291**	2	CLAMP	
	18	1	**6V-8398**	4	SEAL-O-RING	
	19	1	**7J-9108**	4	SEAL-O-RING	
M	20	1	**7X-2555**	2	BOLT (M16X2X80-MM)	
	21	1	**7Y-3732**	2	CLIP	
	22	1	**8T-4121**	2	WASHER-HARD (11X21X2.5-MM THK)	
M	23	1	**8T-4133**	2	NUT (M10X1.5-THD)	
M	24	1	**8T-4139**	12	BOLT (M12X1.75X30-MM)	
M	25	1	**8T-4184**	4	BOLT (M12X1.75X45-MM)	
M	26	1	**8T-4185**	2	BOLT (M10X1.5X50-MM)	
M	27	1	**8T-4194**	4	BOLT (M12X1.75X50-MM)	
	28	1	**8T-4223**	22	WASHER-HARD (13.5X25.5X3-MM THK)	
M	29	1	**8T-4244**	12	NUT (M12X1.75-THD)	
M	30	1	**8T-4648**	2	BOLT (M12X1.75X70-MM)	
	31	1	**9X-8257**	2	WASHER (17.5X30X3.5-MM THK)	

C-CHANGE FROM PREVIOUS TYPE
M-METRIC PART

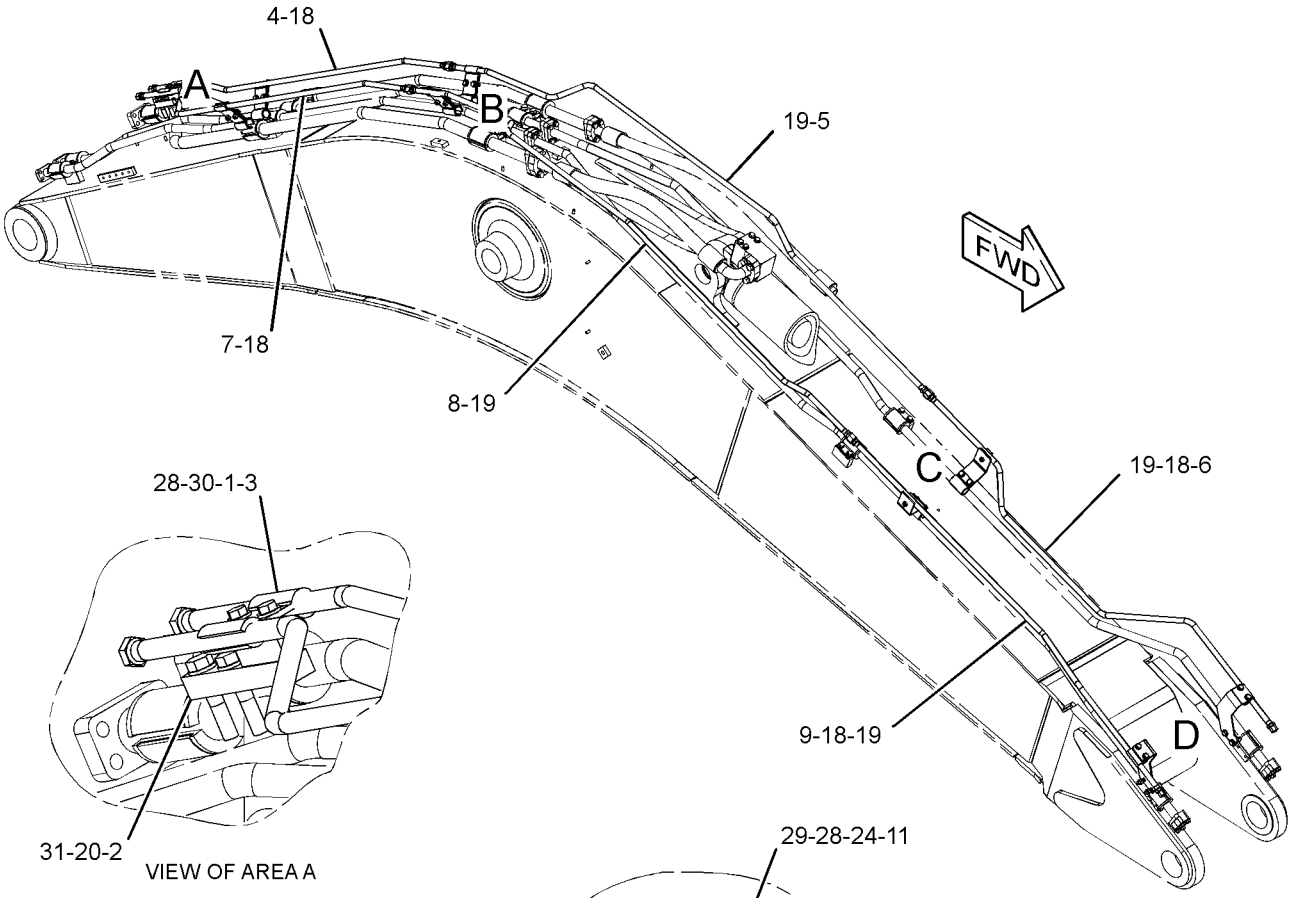

VIEW OF AREA A

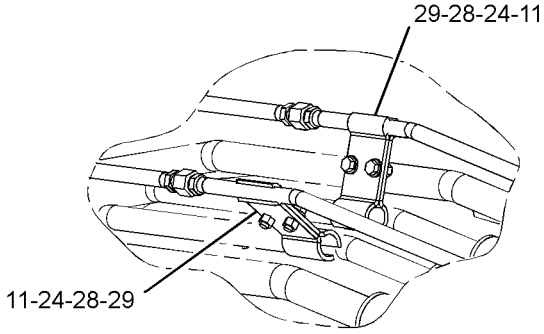

VIEW OF AREA B

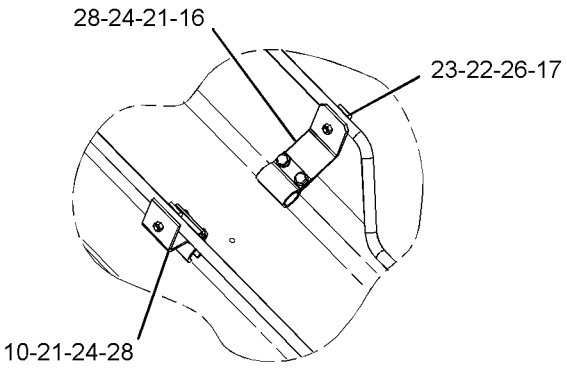

VIEW OF AREA C

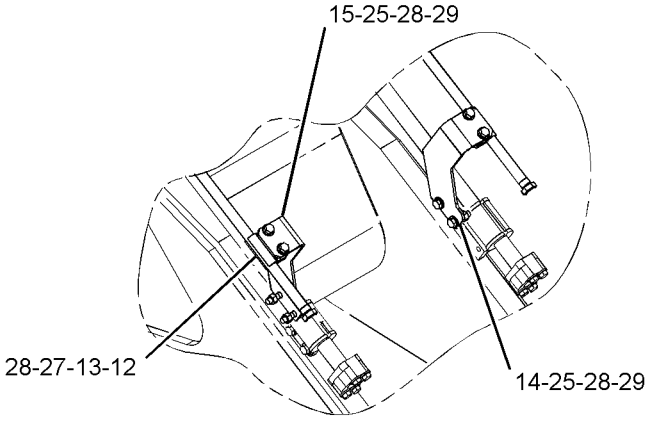

VIEW OF AREA D

GRAPHIC #1 **<END>** g01340079

HYDRAULIC SYSTEM

237-3195 LINES GP-AUXILIARY HYDRAULIC–

MASS BOOM, HIGH PRESSURE

S/N: D3P1-UP; M4T1-UP

PART OF 337-4119, 337-4120, 340-9479, 340-9481 OPTION AR-LINKAGE AN ATTACHMENT

SMCS-5057 **i02509696**

NOTE	REF NO	GRAPHIC REF	PART NUMBER	QTY	PART NAME 1 2 3 4 5 6 (PRODUCT LEVEL)	SEE PAGE
M	1	1	**8T-4139**	12	BOLT (M12X1.75X30-MM)	
M	2	1	**8T-4174**	8	BOLT (M16X2X120-MM)	
M	3	1	**8T-4183**	16	BOLT (M12X1.75X40-MM)	
M	4	1	**8T-4184**	4	BOLT (M12X1.75X45-MM)	
M	5	1	**8T-4194**	20	BOLT (M12X1.75X50-MM)	
	6	1	**173-7916**	16	CLAMP-HALF	
	7	1	**1P-5767**	8	FLANGE-HALF	
I	8	1	**202-6758**	2	HOSE AS	
	9	1	**216-6578**	2	PLATE	
	10	1	**253-6434**	2	PLATE	
	11	1	**253-6441**	4	PLATE	
	12	1	**1P-3704**	4	SEAL-RECTANGULAR	
	13	1	**1P-3705**	4	SEAL-RECTANGULAR	
	14	1	**202-6857**	2	TUBE AS	
	15	1	**202-6858**	1	TUBE AS	
	16	1	**202-6859**	1	TUBE AS	
	17	1	**216-6579**	1	TUBE AS	
	18	1	**216-6580**	1	TUBE AS	
	19	1	**9X-8257**	8	WASHER (17.5X30X3.5-MM THK)	
	20	1	**8T-4223**	36	WASHER-HARD (13.5X25.5X3-MM THK)	

I-REFER TO HYDRAULIC INFORMATION SYSTEM
M-METRIC PART

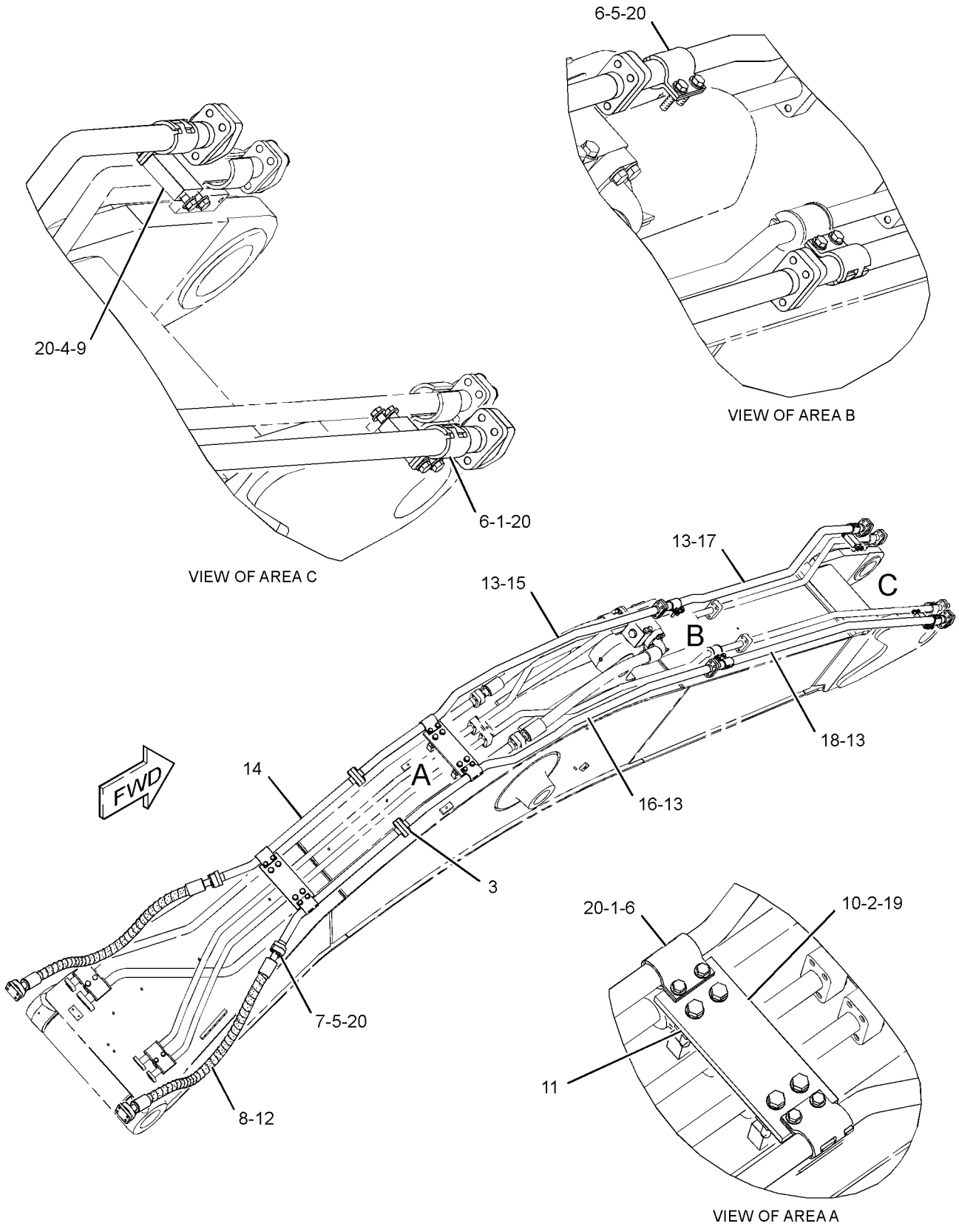

GRAPHIC #1 **<END>** g01236442

HYDRAULIC SYSTEM

237-3196 LINES GP-AUXILIARY HYDRAULIC–
MASS BOOM, MEDIUM PRESSURE
S/N: D3P1-UP; M4T1-UP
AN ATTACHMENT

SMCS-5057 **i03379474**

NOTE	REF NO	GRAPHIC REF	PART NUMBER	QTY	PART NAME 1 2 3 4 5 6 (PRODUCT LEVEL)	SEE PAGE
M	1	1	**7X-2555**	2	BOLT (M16X2X80-MM)	
M	2	1	**8T-4139**	12	BOLT (M12X1.75X30-MM)	
M	3	1	**8T-4184**	4	BOLT (M12X1.75X45-MM)	
CM	4	1	**8T-4185**	2	BOLT (M10X1.5X50-MM)	
CM	5	1	**8T-4194**	4	BOLT (M12X1.75X50-MM)	
M	6	1	**8T-4648**	2	BOLT (M12X1.75X70-MM)	
C	7	1	**093-1291**	2	CLAMP	
	8	1	**202-7021**	2	CLIP	
	9	1	**268-7112**	8	CLIP	
	10	1	**7Y-3732**	2	CLIP	
	11	1	**253-6458**	2	CLIP AS	
	12	1	**288-7412**	2	CLIP AS	
					–OR–	
		1	**294-3794**	2	CLIP AS	
	13	1	**288-7413**	2	CLIP AS	
					–OR–	
		1	**294-3795**	2	CLIP AS	
CM	14	1	**8T-4133**	2	NUT (M10X1.5-THD)	
M	15	1	**8T-4244**	12	NUT (M12X1.75-THD)	
	16	1	**187-9833**	1	PLATE	
	17	1	**193-6662**	1	PLATE	
	18	1	**288-7416**	1	PLATE	
					–OR–	
		1	**294-3798**	1	PLATE	
	19	1	**288-7417**	1	PLATE	
					–OR–	
		1	**294-3799**	1	PLATE	
	20	1	**6V-8398**	4	SEAL-O-RING	
	21	1	**7J-9108**	4	SEAL-O-RING	
	22	1	**262-3177**	1	TUBE AS	
	23	1	**262-3180**	1	TUBE AS	
	24	1	**262-3183**	1	TUBE AS	
	25	1	**262-3186**	1	TUBE AS	
	26	1	**262-3189**	1	TUBE AS	
	27	1	**262-3192**	1	TUBE AS	
	28	1	**9X-8257**	2	WASHER (17.5X30X3.5-MM THK)	
C	29	1	**8T-4121**	2	WASHER-HARD (11X21X2.5-MM THK)	
C	30	1	**8T-4223**	22	WASHER-HARD (13.5X25.5X3-MM THK)	

C-CHANGE FROM PREVIOUS TYPE
M-METRIC PART

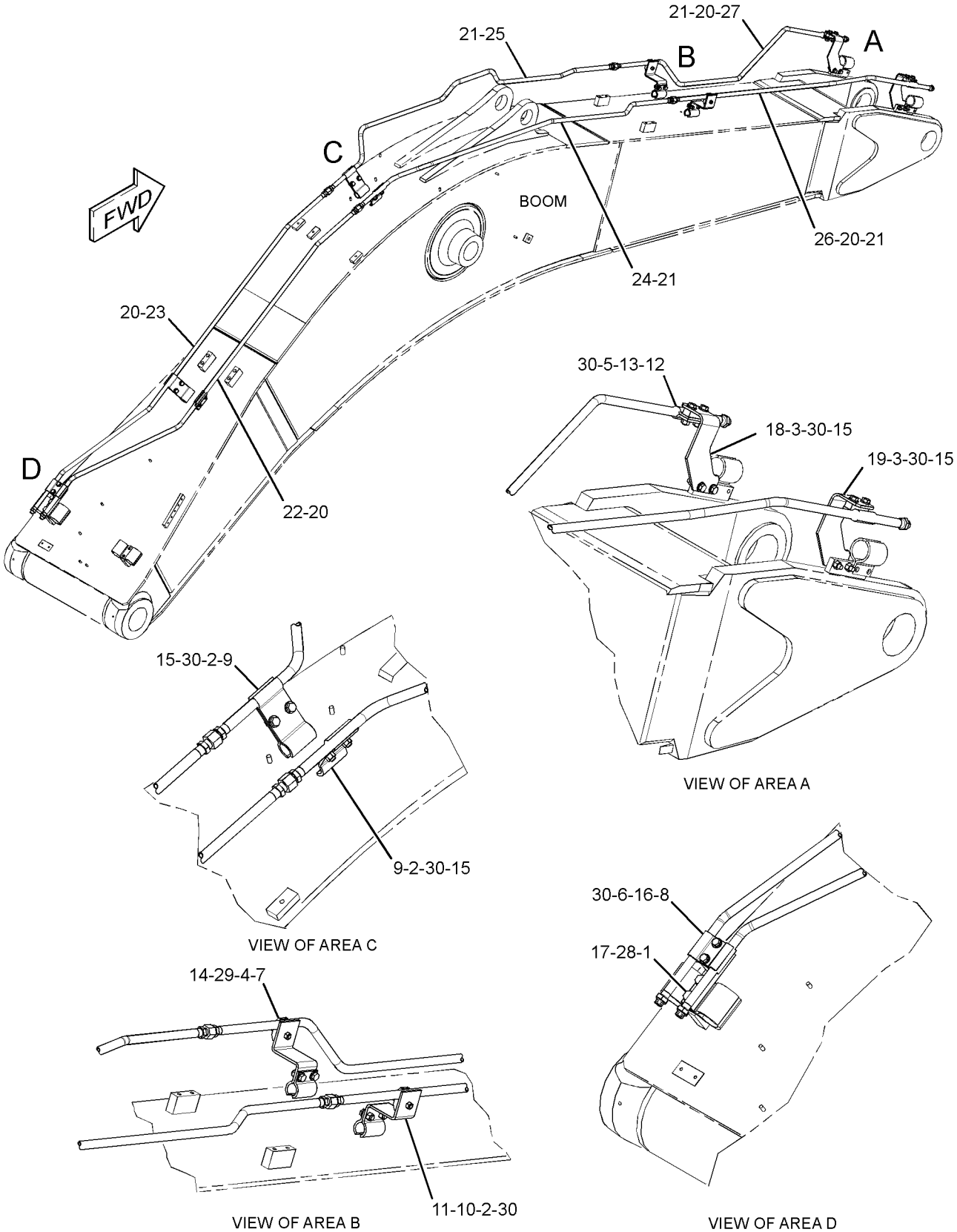

GRAPHIC #1 **<END>** g01342797

HYDRAULIC SYSTEM

253-6594 LINES GP-AUXILIARY HYDRAULIC–

STICK, HIGH PRESSURE
S/N: D3P1-UP; M4T1-UP
3.9-M (12.8-FT)
PART OF 345-2286 OPTION AR-LINKAGE
AN ATTACHMENT

SMCS-5057 **i02687130**

NOTE	REF NO	GRAPHIC REF	PART NUMBER	QTY	PART NAME 1 2 3 4 5 6 (PRODUCT LEVEL)	SEE PAGE
I	1	1	**7I-7420**	2	HOSE AS	
	2	1	**173-7916**	8	CLAMP-HALF	
CY	3	1	**277-0954**	2	VALVE GP-MANUAL (AUXILIARY, SHUTOFF) (AUXILIARY, SHUTOFF)	777
	4	1	**262-3233**	2	TUBE AS	
	5	1	**1P-3704**	6	SEAL-RECTANGULAR	
	6	1	**1P-5767**	8	FLANGE-HALF	
M	7	1	**8C-8992**	8	BOLT-LOCKING (M12X1.75X30-MM)	
	8	1	**8T-4121**	4	WASHER-HARD (11X21X2.5-MM THK)	
M	9	1	**8T-4183**	8	BOLT (M12X1.75X40-MM)	
M	10	1	**8T-4194**	16	BOLT (M12X1.75X50-MM)	
	11	1	**8T-4223**	24	WASHER-HARD (13.5X25.5X3-MM THK)	
M	12	1	**8T-6685**	4	BOLT (M10X1.5X110-MM)	

C-CHANGE FROM PREVIOUS TYPE
I-REFER TO HYDRAULIC INFORMATION SYSTEM
M-METRIC PART
Y-SEPARATE ILLUSTRATION

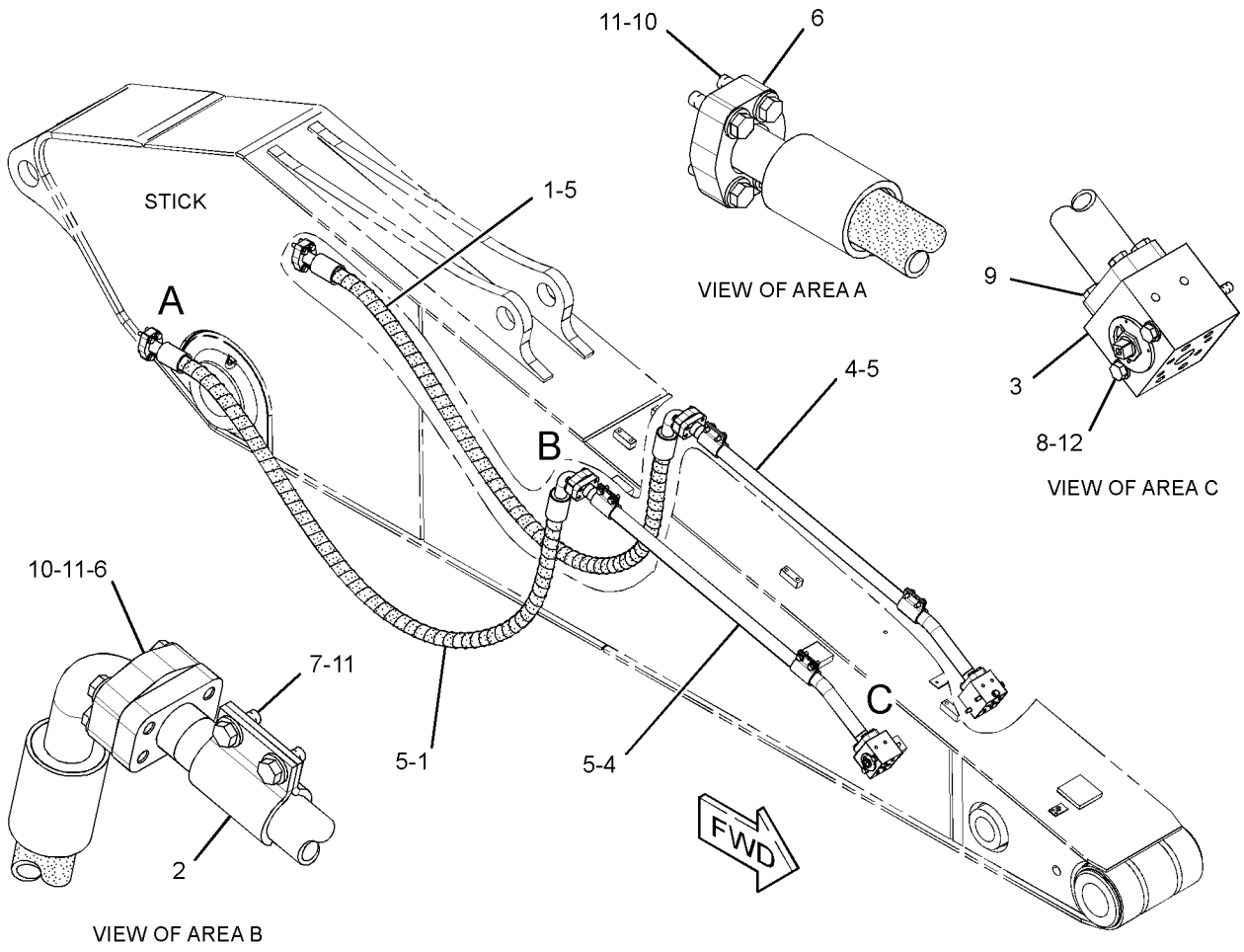

GRAPHIC #1 **<END>** g01351655

253-6595 LINES GP-AUXILIARY HYDRAULIC–STICK, MEDIUM PRESSURE

S/N: D3P1-UP; M4T1-UP
3.9-M (12.8-FT)
AN ATTACHMENT

SMCS-5057 **i02784794**

NOTE	REF NO	GRAPHIC REF	PART NUMBER	QTY	PART NAME 1 2 3 4 5 6 (PRODUCT LEVEL)	SEE PAGE
	1	1	**6C-6760**	2	MANIFOLD	
	2	1	**187-9981**	2	SUPPORT AS	
	3	1	**197-2384**	2	SUPPORT AS	
	4	1	**202-6981**	2	TUBE AS	
	5	1	**202-7001**	8	CLIP	
I	6	1	**245-2425**	2	HOSE AS	
	7	1	*250-1440*	2	ADAPTER AS	
					(EACH INCLUDES)	
		1	**3K-0360**	1	SEAL-O-RING	
		1	**7X-3164**	1	ADAPTER-SWIVEL	
	8	1	**202-7002**	2	PLATE	
	9	1	**6V-8398**	4	SEAL-O-RING	
	10	1	**8T-4121**	4	WASHER-HARD (11X21X2.5-MM THK)	
M	11	1	**8T-4136**	4	BOLT (M10X1.5X25-MM)	
M	12	1	**8T-4139**	16	BOLT (M12X1.75X30-MM)	
M	13	1	**8T-4185**	4	BOLT (M10X1.5X50-MM)	
	14	1	**8T-4223**	16	WASHER-HARD (13.5X25.5X3-MM THK)	
JM	15	1	**3E-8004**	8	BOLT (M12X1.75X45-MM)	
JM	16	1	**7X-2543**	4	BOLT (M10X1.5X120-MM)	
J	17	1	**8T-7971**	8	WASHER-HARD (13.5X25.5X5-MM THK)	

I-REFER TO HYDRAULIC INFORMATION SYSTEM
J-USE WITH HIGH PRESSURE LINES
M-METRIC PART

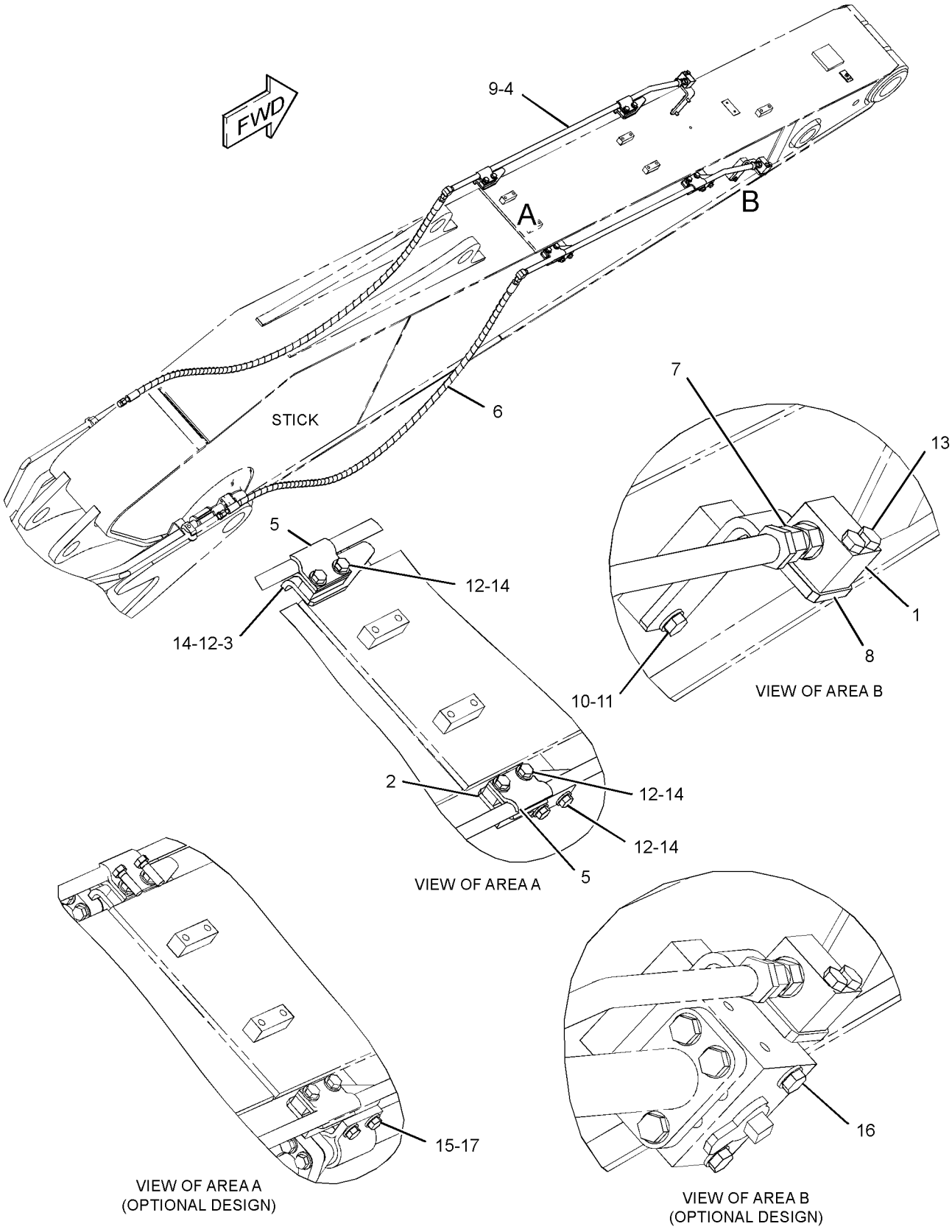

GRAPHIC #1 **<END>** g01333745

253-6599 LINES GP-AUXILIARY HYDRAULIC–HIGH FLOW, STICK

S/N: M4T1-UP
2.8-M (9.2-FT) STICK
PART OF 345-2285 OPTION AR-LINKAGE
AN ATTACHMENT

SMCS-5057 **i03729961**

NOTE	REF NO	GRAPHIC REF	PART NUMBER	QTY	PART NAME 1 2 3 4 5 6 (PRODUCT LEVEL)	SEE PAGE
M	1	1	**8T-4183**	8	BOLT (M12X1.75X40-MM)	
M	2	1	**8T-4194**	16	BOLT (M12X1.75X50-MM)	
M	3	1	**8T-6685**	4	BOLT (M10X1.5X110-MM)	
M	4	1	**8C-8992**	8	BOLT-LOCKING (M12X1.75X30-MM)	
	5	1	**173-7916**	8	CLAMP-HALF	
	6	1	**1P-5767**	8	FLANGE-HALF	
I	7	1	**253-6489**	2	HOSE AS	
	8	1	**1P-3704**	6	SEAL-RECTANGULAR	
	9	1	**262-3169**	2	TUBE AS	
Y	10	1	**277-0954**	2	VALVE GP-MANUAL (AUXILIARY, SHUTOFF)	777
	11	1	**8T-4121**	4	WASHER-HARD (11X21X2.5-MM THK)	
	12	1	**8T-4223**	24	WASHER-HARD (13.5X25.5X3-MM THK)	

I-REFER TO HYDRAULIC INFORMATION SYSTEM
M-METRIC PART
Y-SEPARATE ILLUSTRATION

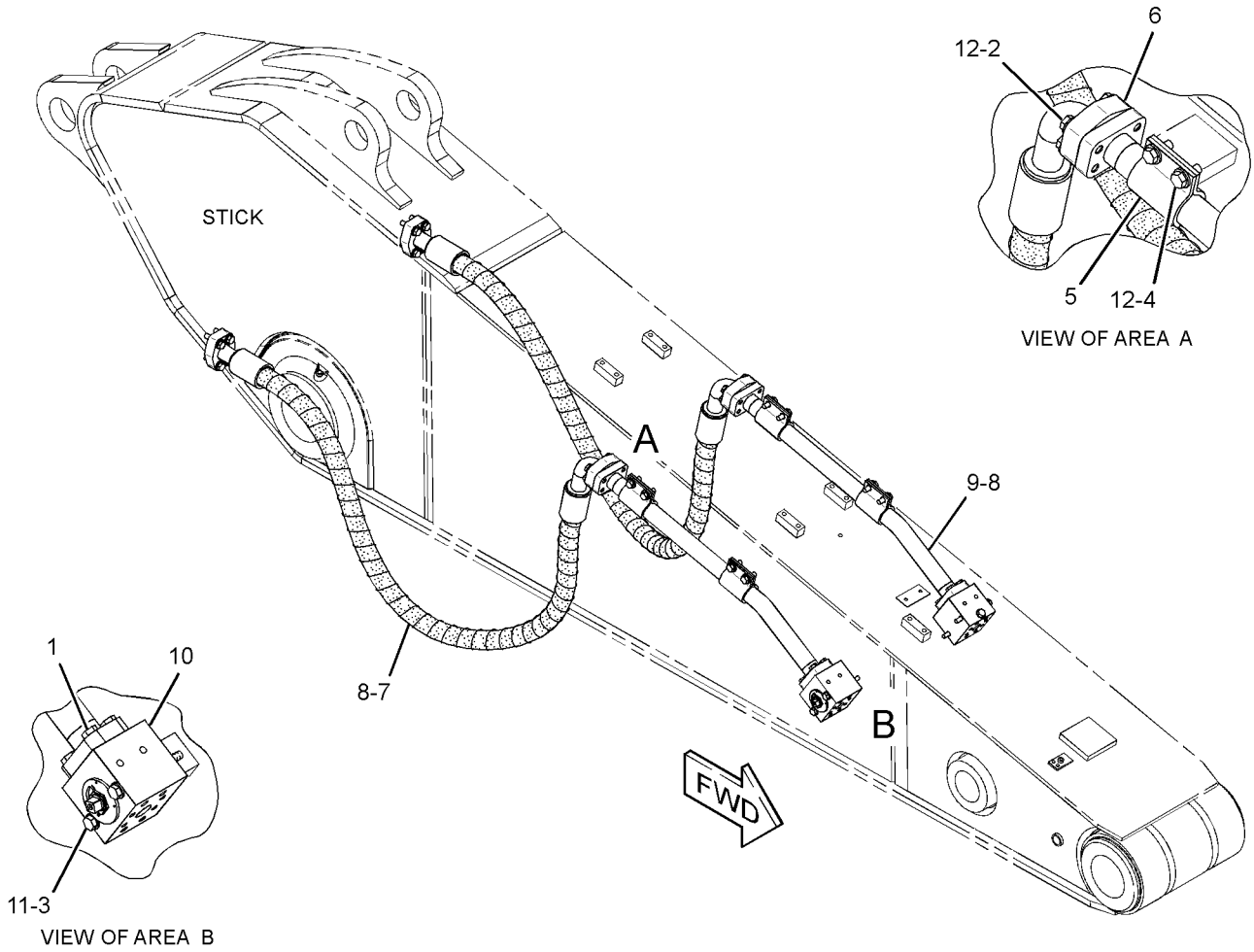

GRAPHIC #1 **<END>** g01395954

253-6603 LINES GP-AUXILIARY HYDRAULIC–STICK, HIGH PRESSURE

S/N: D3P1-UP; M4T1-UP
2.55-M (8.4-FT)
PART OF 337-4120, 340-9479 OPTION AR-LINKAGE AN ATTACHMENT

SMCS-5057 **i02820563**

NOTE	REF NO	GRAPHIC REF	PART NUMBER	QTY	PART NAME 1 2 3 4 5 6 (PRODUCT LEVEL)	SEE PAGE
	1	1	**173-7916**	8	CLAMP-HALF	
Y	2	1	**277-0954**	2	VALVE GP-MANUAL (AUXILIARY, SHUTOFF) (AUXILIARY, SHUTOFF)	777
I	3	1	**262-3225**	2	HOSE AS	
	4	1	**262-3347**	2	TUBE AS	
	5	1	**1P-3704**	6	SEAL-RECTANGULAR	
	6	1	**1P-5767**	8	FLANGE-HALF	
M	7	1	**8C-8992**	8	BOLT-LOCKING (M12X1.75X30-MM)	
	8	1	**8T-4121**	4	WASHER-HARD (11X21X2.5-MM THK)	
M	9	1	**8T-4183**	8	BOLT (M12X1.75X40-MM)	
M	10	1	**8T-4194**	16	BOLT (M12X1.75X50-MM)	
	11	1	**8T-4223**	24	WASHER-HARD (13.5X25.5X3-MM THK)	
M	12	1	**8T-6685**	4	BOLT (M10X1.5X110-MM)	

I-REFER TO HYDRAULIC INFORMATION SYSTEM
M-METRIC PART
Y-SEPARATE ILLUSTRATION

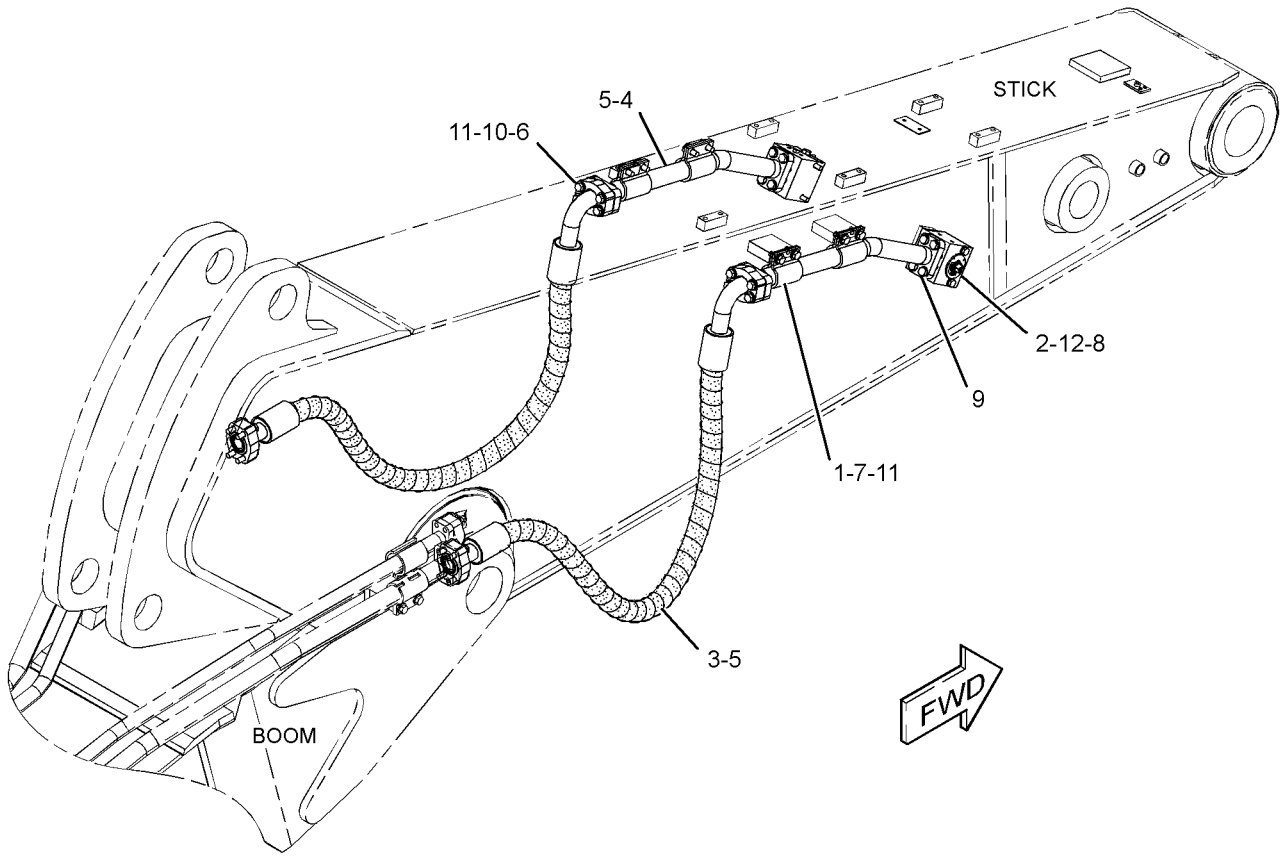

GRAPHIC #1 **<END>** g01395971

253-6604 LINES GP-AUXILIARY HYDRAULIC–STICK, MEDIUM PRESSURE

S/N: D3P1-UP; M4T1-UP
2.55-M (8.4-FT)
AN ATTACHMENT

SMCS-5057 **i03627082**

NOTE	REF NO	GRAPHIC REF	PART NUMBER	QTY	PART NAME 1 2 3 4 5 6 (PRODUCT LEVEL)	SEE PAGE
	1	1	**6C-6760**	2	MANIFOLD	
I	2	1	**177-8572**	2	HOSE AS	
	3	1	**187-9981**	1	SUPPORT AS	
	4	1	**197-2384**	1	SUPPORT AS	
	5	1	**202-7001**	4	CLIP	
	6	1	*250-1440*	2	ADAPTER AS	
					(EACH INCLUDES)	
		1	**3K-0360**	1	SEAL-O-RING	
		1	**7X-3164**	1	ADAPTER-SWIVEL	
	7	1	**262-3348**	2	TUBE AS	
	8	1	**202-7002**	2	PLATE	
	9	1	**6V-8398**	4	SEAL-O-RING	
	10	1	**8T-4121**	4	WASHER-HARD (11X21X2.5-MM THK)	
M	11	1	**8T-4136**	4	BOLT (M10X1.5X25-MM)	
M	12	1	**8T-4139**	8	BOLT (M12X1.75X30-MM)	
M	13	1	**8T-4185**	4	BOLT (M10X1.5X50-MM)	
	14	1	**8T-4223**	8	WASHER-HARD (13.5X25.5X3-MM THK)	
J	15	1	**197-2362**	2	PLATE	
JM	16	1	**3E-8004**	8	BOLT (M12X1.75X45-MM)	
JM	17	1	**7X-2543**	4	BOLT (M10X1.5X120-MM)	
J	18	1	**8T-7971**	8	WASHER-HARD (13.5X25.5X5-MM THK)	

I-REFER TO HYDRAULIC INFORMATION SYSTEM
J-WHEN USED WITH AUX-HYD HIGH PRESSURE LINES
M-METRIC PART

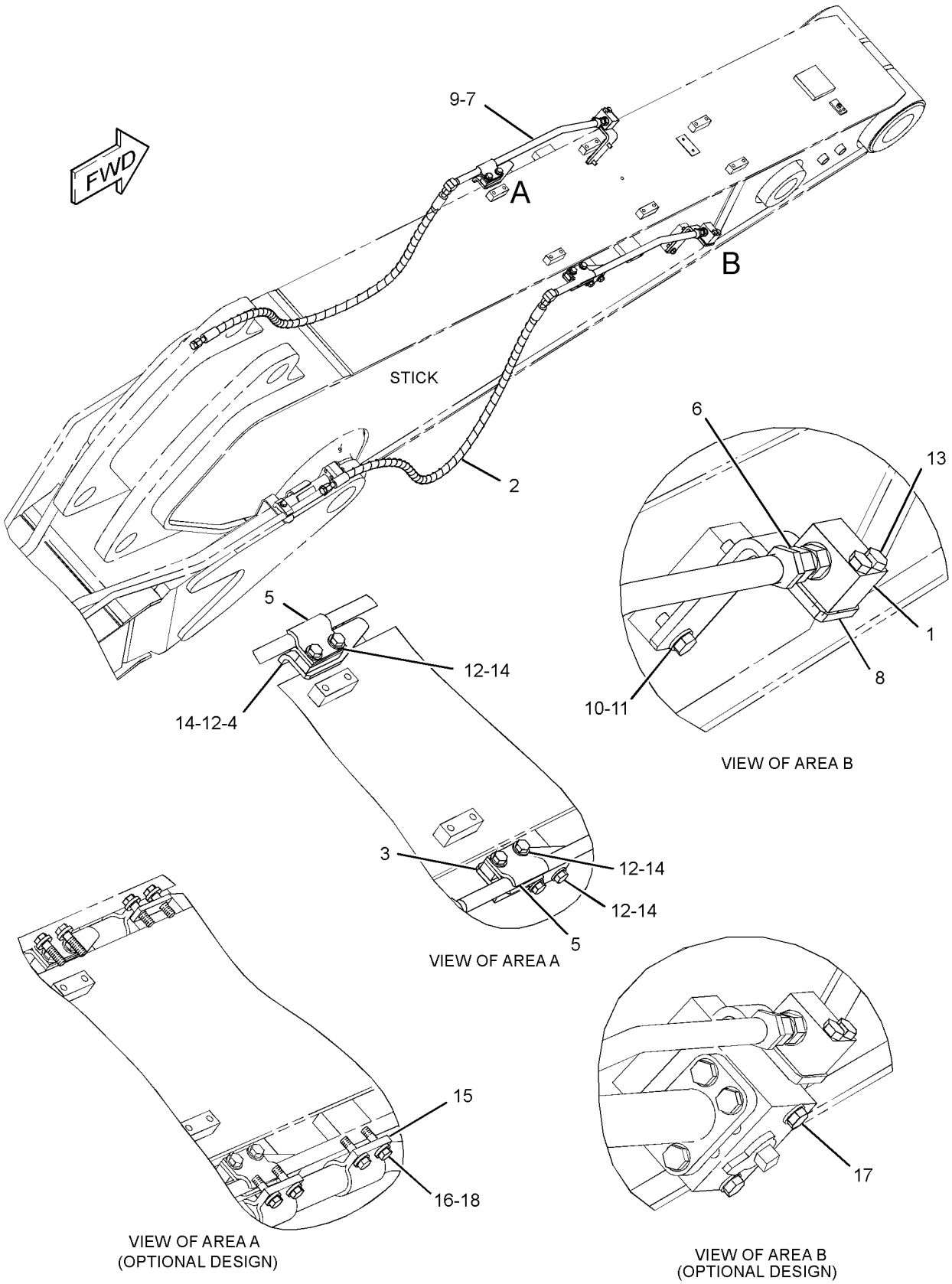

GRAPHIC #1 **<END>** g01423243

253-6607 LINES GP-AUXILIARY HYDRAULIC–

STICK, HIGH PRESSURE
S/N: D3P1-UP; M4T1-UP
2.15-M (7.1-FT)
PART OF 337-4119, 340-9481 OPTION AR-LINKAGE
AN ATTACHMENT

SMCS-5057 **i03627089**

NOTE	REF NO	GRAPHIC REF	PART NUMBER	QTY	PART NAME 1 2 3 4 5 6 (PRODUCT LEVEL)	SEE PAGE
CY	1	1	**277-0954**	2	VALVE GP-MANUAL (AUXILIARY, SHUTOFF)	777
I	2	1	**253-6682**	2	HOSE AS	
	3	1	**1P-3704**	4	SEAL-RECTANGULAR	
	4	1	**1P-5767**	8	FLANGE-HALF	
	5	1	**8T-4121**	4	WASHER-HARD (11X21X2.5-MM THK)	
M	6	1	**8T-4194**	16	BOLT (M12X1.75X50-MM)	
	7	1	**8T-4223**	16	WASHER-HARD (13.5X25.5X3-MM THK)	
M	8	1	**8T-6685**	4	BOLT (M10X1.5X110-MM)	

C-CHANGE FROM PREVIOUS TYPE
I-REFER TO HYDRAULIC INFORMATION SYSTEM
M-METRIC PART
Y-SEPARATE ILLUSTRATION

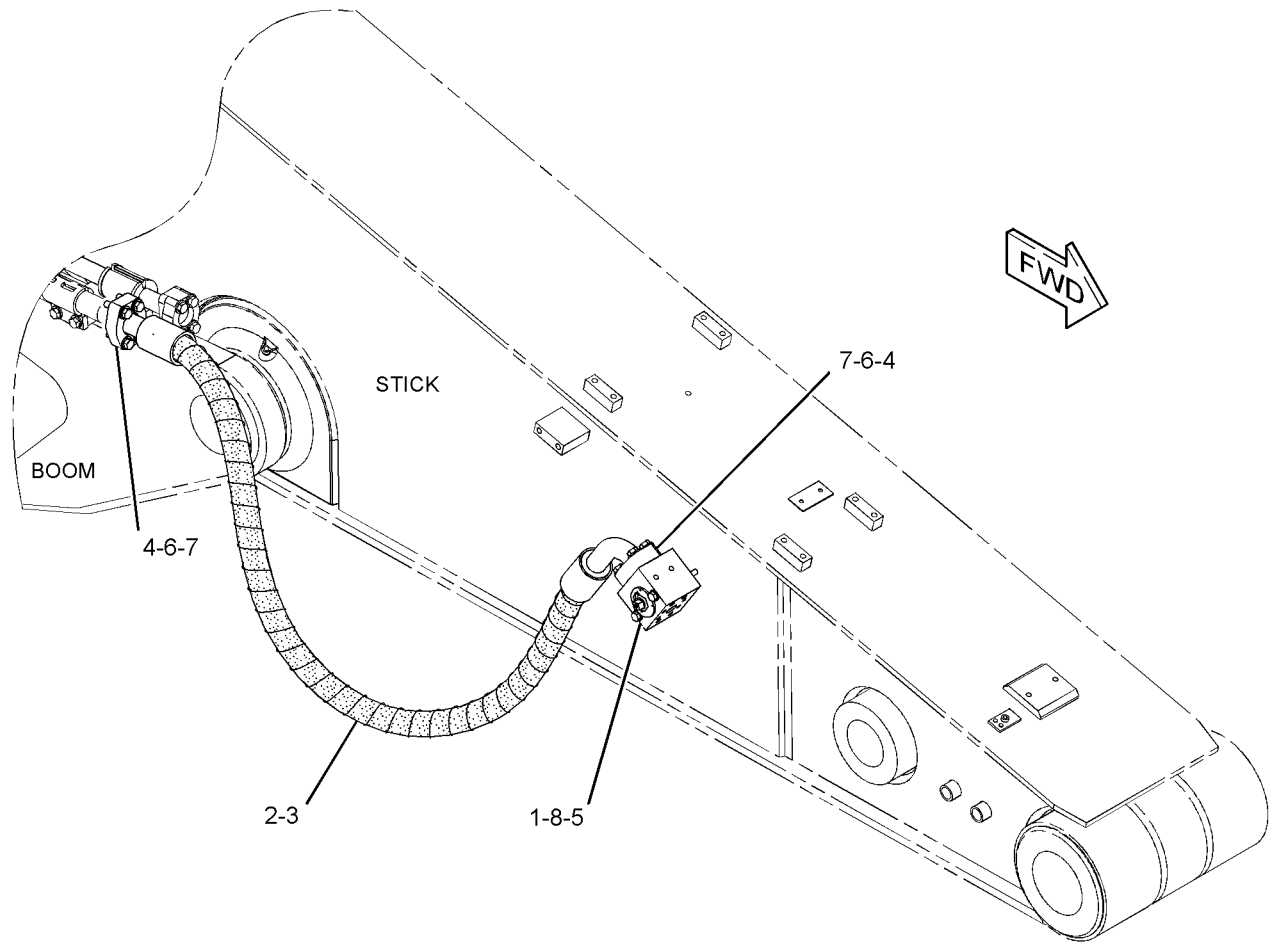

GRAPHIC #1 **<END>** g01239543

HYDRAULIC SYSTEM

253-6608 LINES GP-AUXILIARY HYDRAULIC–STICK, MEDIUM PRESSURE

S/N: D3P1-UP; M4T1-UP
2.15-M (7.1-FT)
AN ATTACHMENT

SMCS-5057 **i03627090**

NOTE	REF NO	GRAPHIC REF	PART NUMBER	QTY	PART NAME 1 2 3 4 5 6 (PRODUCT LEVEL)	SEE PAGE
	1	1	**6C-6760**	2	MANIFOLD	
	2	1	**188-0055**	2	TUBE AS	
	3	1	**188-0056**	2	SUPPORT AS	
	4	1	**202-7001**	4	CLIP	
	5	1	*250-1440*	2	ADAPTER AS	
					(EACH INCLUDES)	
		1	**3K-0360**	1	SEAL-O-RING	
		1	**7X-3164**	1	ADAPTER-SWIVEL	
I	6	1	**262-3390**	2	HOSE AS	
	7	1	**202-7002**	2	PLATE	
	8	1	**6V-8398**	4	SEAL-O-RING	
	9	1	**8T-4121**	4	WASHER-HARD (11X21X2.5-MM THK)	
M	10	1	**8T-4136**	4	BOLT (M10X1.5X25-MM)	
M	11	1	**8T-4139**	8	BOLT (M12X1.75X30-MM)	
M	12	1	**8T-4185**	4	BOLT (M10X1.5X50-MM)	
	13	1	**8T-4223**	8	WASHER-HARD (13.5X25.5X3-MM THK)	
JM	14	1	**7X-2543**	4	BOLT (M10X1.5X120-MM)	

I-REFER TO HYDRAULIC INFORMATION SYSTEM
J-WHEN USED AUX HYD HIGH PRESSURE LINES
M-METRIC PART

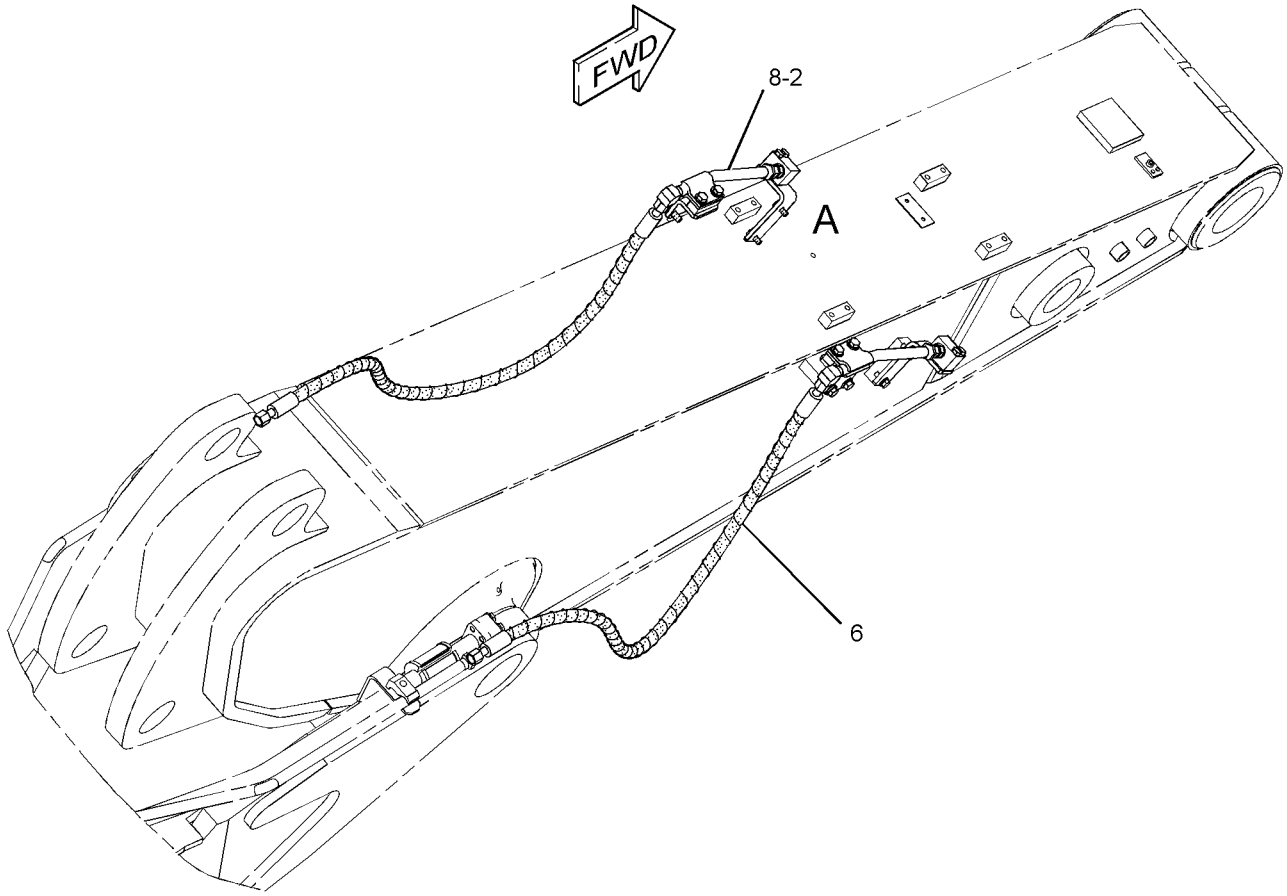

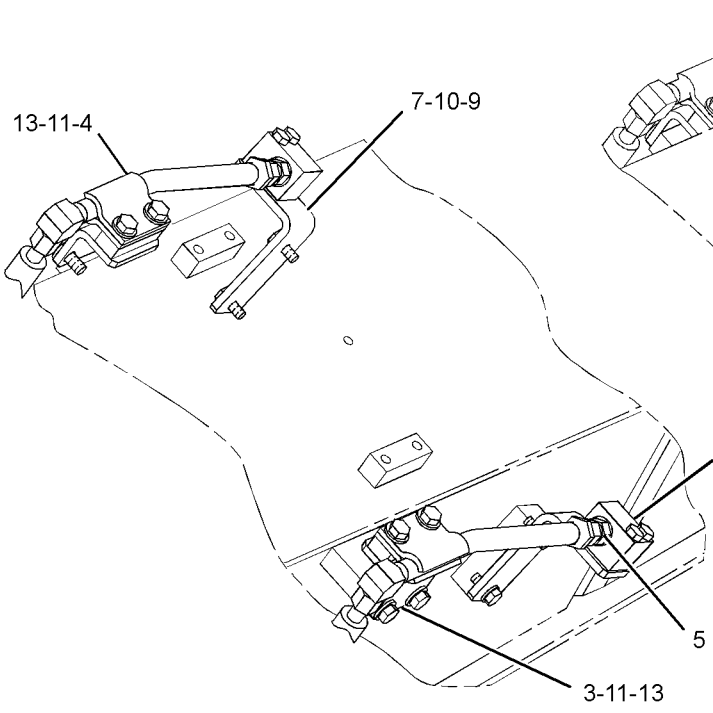

VIEW OF AREA A

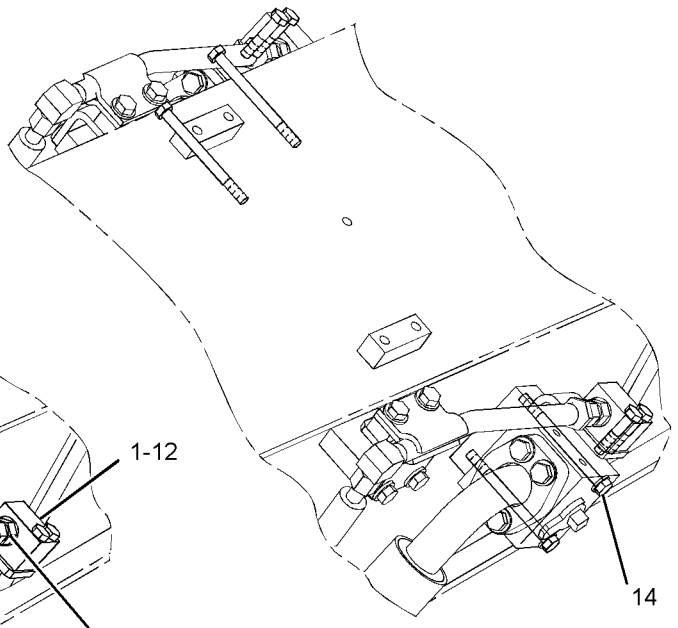

VIEW OF AREA A
(USED WITH HIGH FLOW LINES)

GRAPHIC #1 **<END>** g01237648

HYDRAULIC SYSTEM

253-6611 LINES GP-AUXILIARY HYDRAULIC–

STICK, HIGH PRESSURE
S/N: D3P1-UP; M4T1-UP
3.2-M (10.5-FT)
PART OF 345-2282, 345-2283 OPTION AR-LINKAGE
AN ATTACHMENT

SMCS-5057 **i03627095**

NOTE	REF NO	GRAPHIC REF	PART NUMBER	QTY	PART NAME 1 2 3 4 5 6 (PRODUCT LEVEL)	SEE PAGE
	1	1	**173-7916**	8	CLAMP-HALF	
CY	2	1	**277-0954**	2	VALVE GP-MANUAL (AUXILIARY, SHUTOFF)	777
	3	1	**253-6454**	2	TUBE AS	
I	4	1	**253-6562**	2	HOSE AS	
	5	1	**1P-3704**	6	SEAL-RECTANGULAR	
	6	1	**1P-5767**	8	FLANGE-HALF	
M	7	1	**8C-8992**	8	BOLT-LOCKING (M12X1.75X30-MM)	
	8	1	**8T-4121**	4	WASHER-HARD (11X21X2.5-MM THK)	
M	9	1	**8T-4183**	8	BOLT (M12X1.75X40-MM)	
M	10	1	**8T-4194**	16	BOLT (M12X1.75X50-MM)	
	11	1	**8T-4223**	24	WASHER-HARD (13.5X25.5X3-MM THK)	
M	12	1	**8T-6685**	4	BOLT (M10X1.5X110-MM)	

C-CHANGE FROM PREVIOUS TYPE
I-REFER TO HYDRAULIC INFORMATION SYSTEM
M-METRIC PART
Y-SEPARATE ILLUSTRATION

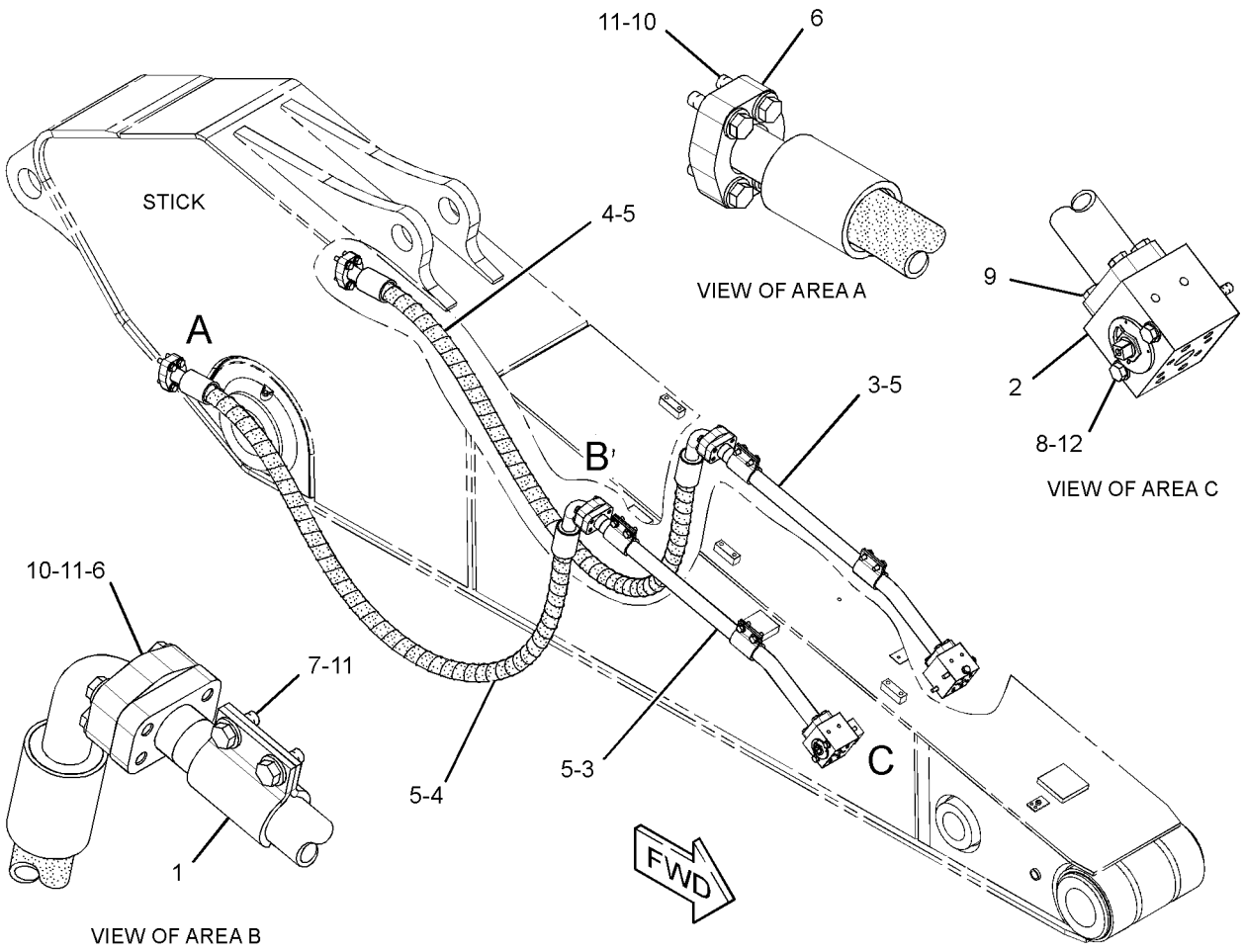

GRAPHIC #1 **<END>** g01351676

262-3147 LINES GP-AUXILIARY HYDRAULIC–STICK, MEDIUM PRESSURE

S/N: D3P1-UP; M4T1-UP
3.2-M (10.5-FT)
PART OF 345-2283 OPTION AR-LINKAGE
AN ATTACHMENT

SMCS-5057 **i02855030**

NOTE	REF NO	GRAPHIC REF	PART NUMBER	QTY	PART NAME 1 2 3 4 5 6 (PRODUCT LEVEL)	SEE PAGE
	1	1	**6C-6760**	2	MANIFOLD	
	2	1	**187-9981**	2	SUPPORT AS	
	3	1	**197-2384**	2	SUPPORT AS	
	4	1	**202-7001**	8	CLIP	
	5	1	*250-1440*	2	ADAPTER AS	
					(EACH INCLUDES)	
		1	**3K-0360**	1	SEAL-O-RING	
		1	**7X-3164**	1	ADAPTER-SWIVEL	
	6	1	**253-6455**	2	TUBE AS	
I	7	1	**253-6566**	2	HOSE AS	
	8	1	**202-7002**	2	PLATE	
	9	1	**6V-8398**	4	SEAL-O-RING	
	10	1	**8T-4121**	4	WASHER-HARD (11X21X2.5-MM THK)	
M	11	1	**8T-4136**	4	BOLT (M10X1.5X25-MM)	
M	12	1	**8T-4139**	16	BOLT (M12X1.75X30-MM)	
	13	1	**8T-4223**	16	WASHER-HARD (13.5X25.5X3-MM THK)	
M	14	1	**8T-4185**	4	BOLT (M10X1.5X50-MM)	
JM	15	1	**3E-8004**	8	BOLT (M12X1.75X45-MM)	
JM	16	1	**7X-2543**	4	BOLT (M10X1.5X120-MM)	
J	17	1	**8T-7971**	8	WASHER-HARD (13.5X25.5X5-MM THK)	

I-REFER TO HYDRAULIC INFORMATION SYSTEM
J-USE WITH HIGH PRESSURE AUXILIARY HYDRAULIC LINES
M-METRIC PART

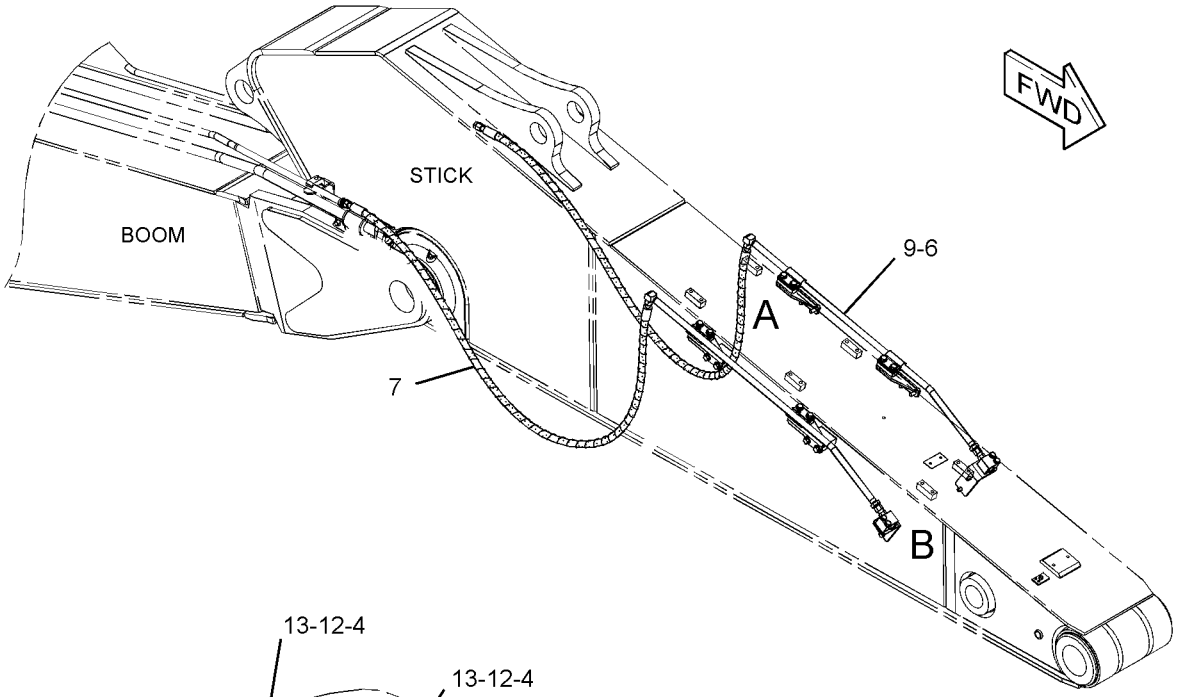

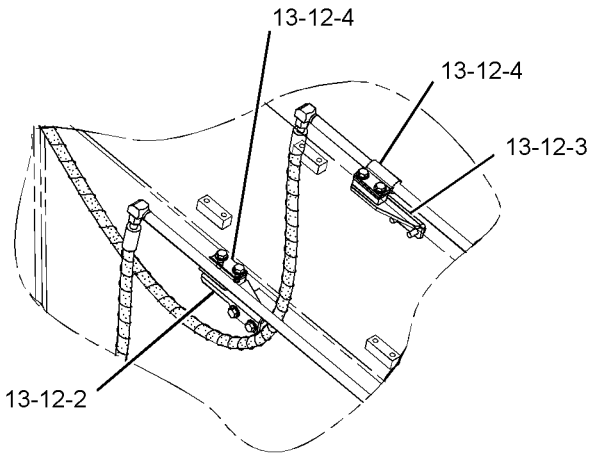

VIEW OF AREA A

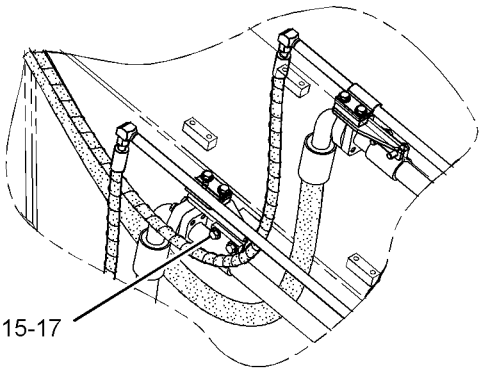

VIEW OF AREA A
(OPTIONAL DESIGN)

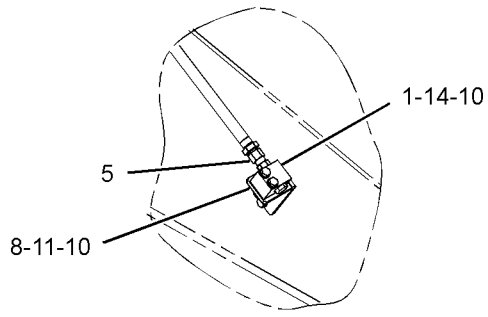

VIEW OF AREA B

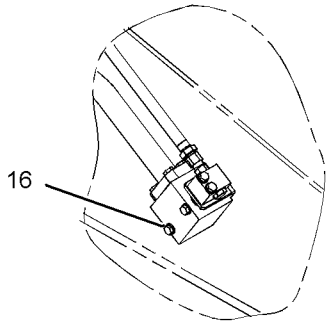

VIEW OF AREA B
(OPTIONAL DESIGN)

GRAPHIC #1 **<END>** g01356053

HYDRAULIC SYSTEM

239-1626 LINES GP-BOOM

S/N: D3P1-UP; M4T1-UP
PART OF 290-1818 BOOM AR-1 PIECE SHORT
AN ATTACHMENT

SMCS-5057 **i03627103**

NOTE	REF NO	GRAPHIC REF	PART NUMBER	QTY	PART NAME 1 2 3 4 5 6 (PRODUCT LEVEL)	SEE PAGE
	1	1	**124-1107**	3	GROMMET	
	2	1	**129-5874**	10	GROMMET	
	3	1	**138-5709**	3	GROMMET	
	4	1	**196-0482**	8	CLIP	
	5	1	**296-7352**	1	TUBE AS	
C	6	1	**317-4882**	1	TUBE AS	
	7	1	**296-7354**	1	TUBE AS	
	8	1	**296-7355**	1	TUBE AS	
J	9	1	**212-5580**	1	TUBE GP-HYDRAULIC (BOOM)	
L	9A	1	**204-8210**	1	TUBE AS	
L	9B	1	**196-0478**	1	TUBE AS	
L	9C	1	**1P-3704**	1	SEAL-RECTANGULAR	
LM	9D	1	**8T-4183**	4	BOLT (M12X1.75X40-MM)	
L		1	**8T-4223**	4	WASHER-HARD (13.5X25.5X3-MM THK)	
J	10	1	**212-5583**	1	TUBE GP-HYDRAULIC (BOOM)	
L	10A	1	**196-0481**	1	TUBE AS	
L	10B	1	**204-8212**	1	TUBE AS	
L	10C	1	**1P-3704**	1	SEAL-RECTANGULAR	
LM	10D	1	**8T-4183**	4	BOLT (M12X1.75X40-MM)	
L		1	**8T-4223**	4	WASHER-HARD (13.5X25.5X3-MM THK)	
I	11	1	**223-6915**	1	HOSE AS	
I	12	1	**239-1872**	1	HOSE AS	
	13	1	**124-1106**	2	CLIP	
	14	1	**124-1108**	8	CLIP	
	15	1	**124-1109**	2	CLIP	
	16	1	**1P-3704**	4	SEAL-RECTANGULAR	
	17	1	**1P-3705**	2	SEAL-RECTANGULAR	
	18	1	**1P-5767**	4	FLANGE-HALF	
	19	1	**5P-8077**	4	FLANGE-HALF	
M	20	1	**8T-4139**	4	BOLT (M12X1.75X30-MM)	
M	21	1	**8T-4140**	18	BOLT (M16X2X60-MM)	
M	22	1	**8T-4183**	8	BOLT (M12X1.75X40-MM)	
M	23	1	**8T-4194**	8	BOLT (M12X1.75X50-MM)	
	24	1	**8T-4223**	26	WASHER-HARD (13.5X25.5X3-MM THK)	
M	25	1	**8T-4956**	6	BOLT (M12X1.75X35-MM)	
	26	1	**9X-8257**	18	WASHER (17.5X30X3.5-MM THK)	
	27	1	**9F-2167**	4	SCREW-PURGE (3/8-24X1.164-IN)	

C-CHANGE FROM PREVIOUS TYPE
I-REFER TO HYDRAULIC INFORMATION SYSTEM
J-TUBE MAY BE 1-PIECE OR 2-PIECE DESIGN (2-PIECE SHOWN)
L-PARTS REQUIRED ONLY WITH 2-PIECE TUBE DESIGN
M-METRIC PART

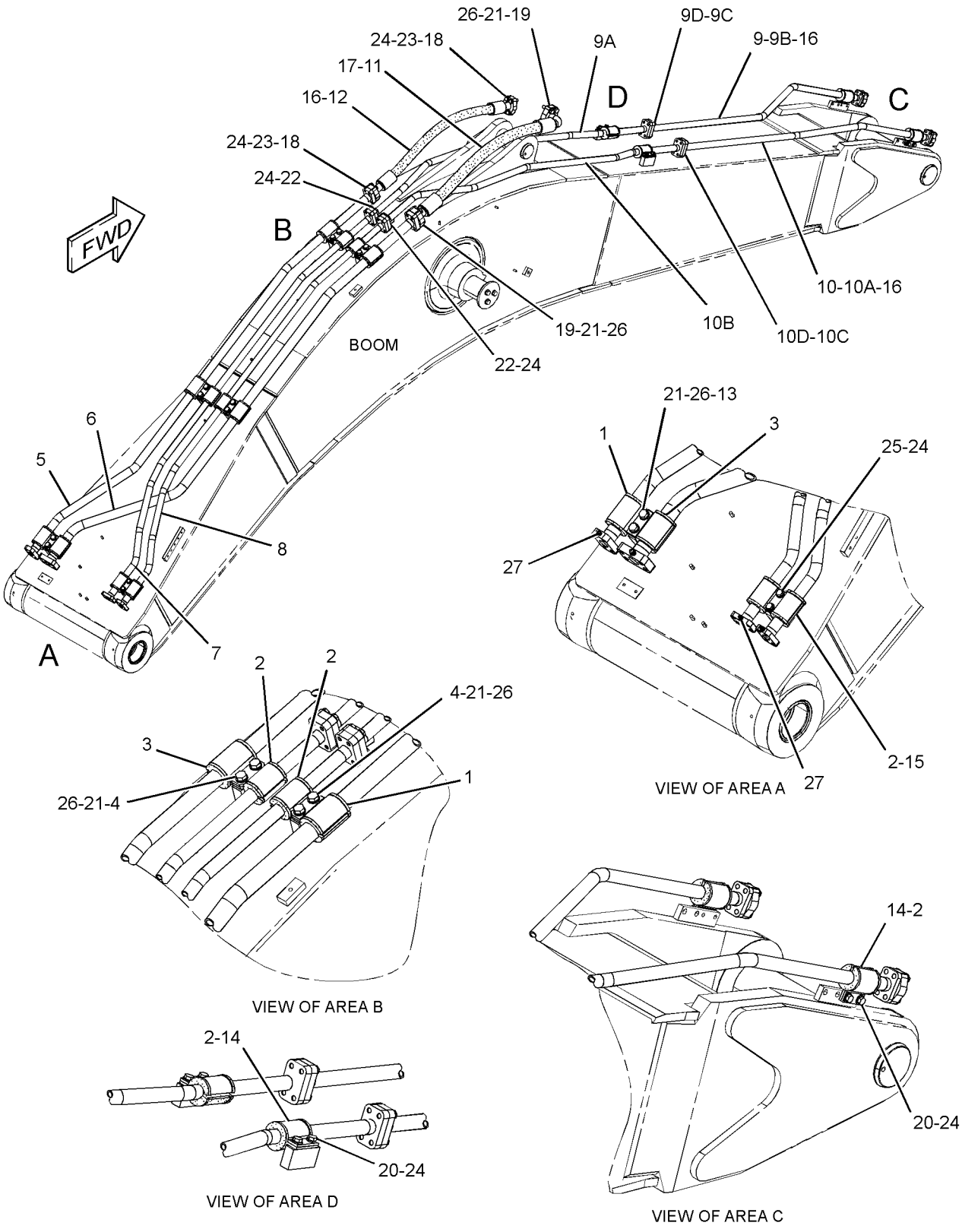

GRAPHIC #1 **<END>** g01945851

HYDRAULIC SYSTEM

260-7871 LINES GP-BOOM

S/N: D3P1-UP; M4T1-UP

PART OF 290-1817, 302-7339, 314-3615 BOOM AR-1 PIECE LONG

AN ATTACHMENT

SMCS-5057 **i02981466**

NOTE	REF NO	GRAPHIC REF	PART NUMBER	QTY	PART NAME 1 2 3 4 5 6 (PRODUCT LEVEL)	SEE PAGE
	1	2	**124-1107**	3	GROMMET	
	2	1,2	**129-5874**	10	GROMMET	
	3	2	**138-5709**	3	GROMMET	
C	4	1	**296-7348**	1	TUBE AS	
C	5	1	**317-4881**	1	TUBE AS	
C	6	1	**296-7350**	1	TUBE AS	
C	7	1	**296-7351**	1	TUBE AS	
	8	2	**196-0482**	8	CLIP	
J	9	1	**207-6395**	1	TUBE GP-HYDRAULIC (BOOM)	
L	9A	1	**196-0477**	1	TUBE AS	
L	9B	1	**196-0478**	1	TUBE AS	
L	9C	1	**1P-3704**	1	SEAL-RECTANGULAR	
LM	9D	1	**8T-4183**	4	BOLT (M12X1.75X40-MM)	
L		1	**8T-4223**	4	WASHER-HARD (13.5X25.5X3-MM THK)	
J	10	1	**207-6398**	1	TUBE GP-HYDRAULIC (BOOM)	
L	10A	1	**196-0481**	1	TUBE AS	
L	10B	1	**196-0480**	1	TUBE AS	
L	10C	1	**1P-3704**	1	SEAL-RECTANGULAR	
LM	10D	1	**8T-4183**	4	BOLT (M12X1.75X40-MM)	
L		1	**8T-4223**	4	WASHER-HARD (13.5X25.5X3-MM THK)	
I	11	1	**223-6915**	1	HOSE AS	
I	12	1	**239-1872**	1	HOSE AS	
	13	2	**124-1106**	2	CLIP	
	14	1,2	**124-1108**	8	CLIP	
	15	2	**124-1109**	2	CLIP	
	16	1	**1P-3704**	4	SEAL-RECTANGULAR	
	17	1	**1P-3705**	2	SEAL-RECTANGULAR	
	18	1	**1P-5767**	4	FLANGE-HALF	
	19	1	**5P-8077**	4	FLANGE-HALF	
M	20	1	**8T-4139**	4	BOLT (M12X1.75X30-MM)	
M	21	1,2	**8T-4140**	18	BOLT (M16X2X60-MM)	
M	22	1	**8T-4183**	8	BOLT (M12X1.75X40-MM)	
M	23	1	**8T-4194**	8	BOLT (M12X1.75X50-MM)	
	24	1,2	**8T-4223**	26	WASHER-HARD (13.5X25.5X3-MM THK)	
M	25	2	**8T-4956**	6	BOLT (M12X1.75X35-MM)	
	26	1,2	**9X-8257**	18	WASHER (17.5X30X3.5-MM THK)	
C	27	2	**9F-2167**	4	SCREW-PURGE (3/8-24X1.164-IN)	

C-CHANGE FROM PREVIOUS TYPE
I-REFER TO HYDRAULIC INFORMATION SYSTEM
J-TUBE MAY BE 1-PIECE OR 2-PIECE DESIGN (2-PIECE SHOWN)
L-PARTS REQUIRED ONLY WITH 2-PIECE TUBE DESIGN
M-METRIC PART

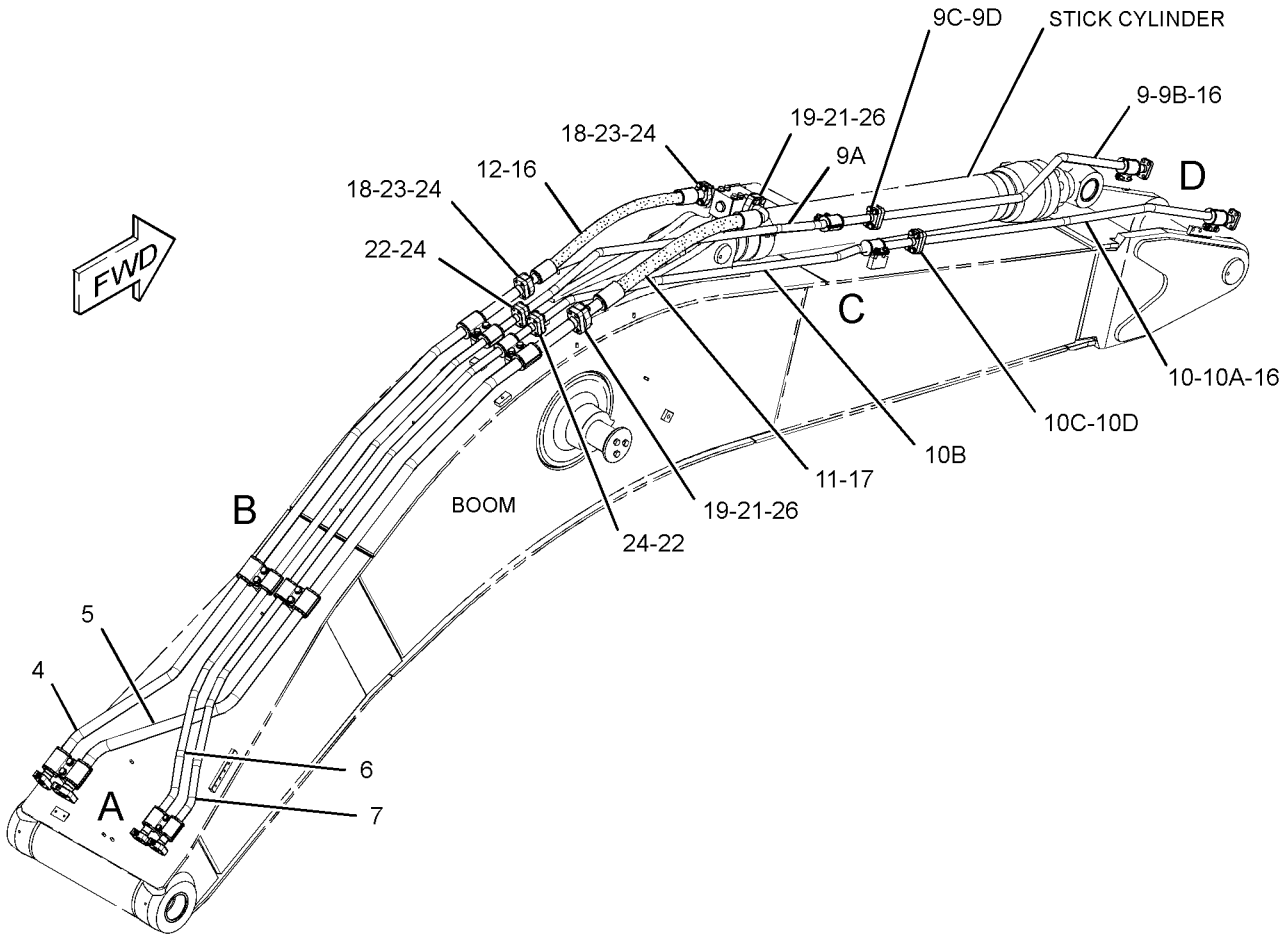

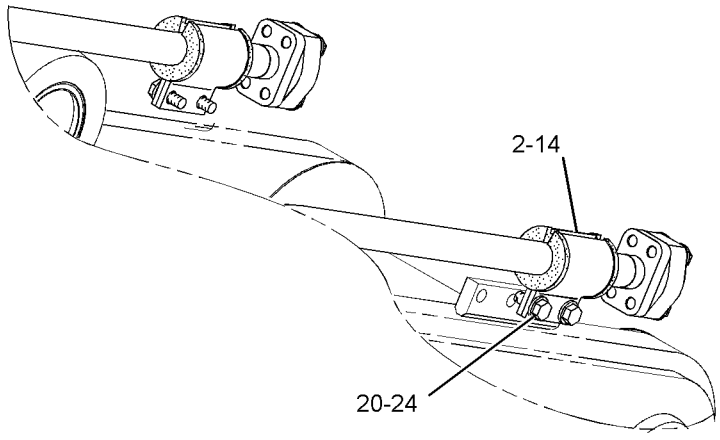

VIEW OF AREA D

REFER TO ALL ILLUSTRATIONS OF
THIS GROUP FOR AUXILIARY VIEWS

GRAPHIC #1 g01398531

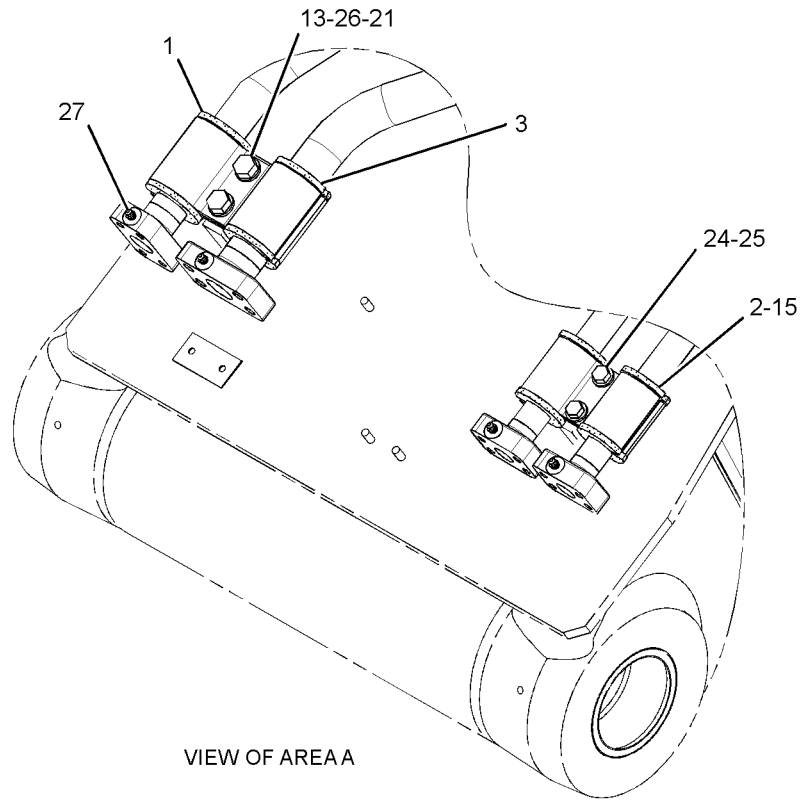

VIEW OF AREA A

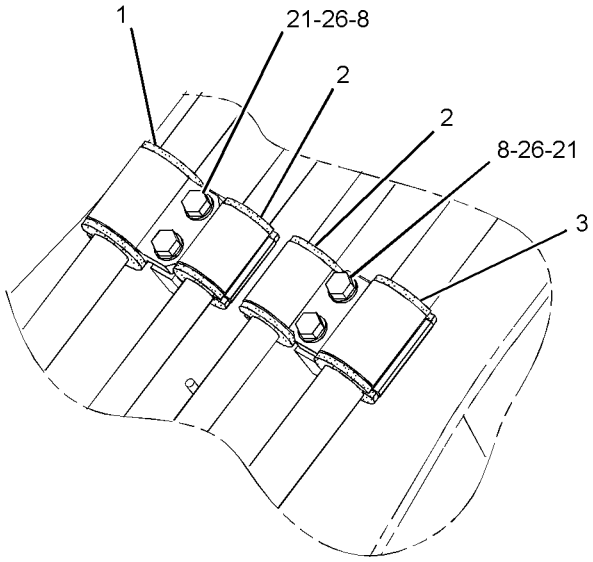

VIEW OF AREA B

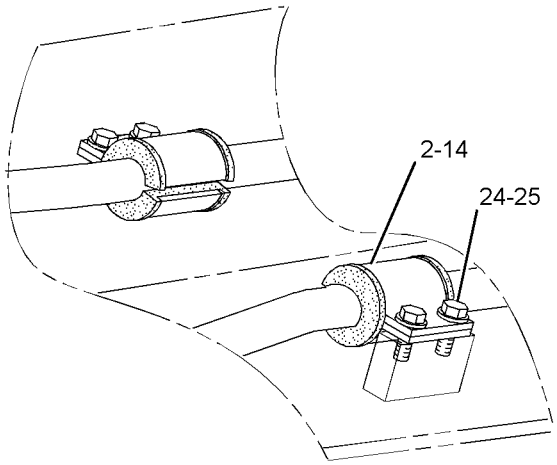

VIEW OF AREA C

GRAPHIC #2 **<END>** g01398532

HYDRAULIC SYSTEM

192-6908 LINES GP-BOOM CYLINDER–LH

S/N: D3P1-UP; M4T1-UP
PART OF 289-8018 CYLINDER & LINES GP-BOOM
AN ATTACHMENT

SMCS-5057, 5456 **i01683250**

NOTE	REF NO	GRAPHIC REF	PART NUMBER	QTY	PART NAME 1 2 3 4 5 6 (PRODUCT LEVEL)	SEE PAGE
	1	1	**1P-3703**	2	SEAL-RECTANGULAR	
M	2	1	**8T-4910**	8	BOLT (M12X1.75X60-MM)	
	3	1	**204-8358**	1	TUBE AS	
	4	1	**204-8359**	1	TUBE AS	
	5	1	**8T-4223**	2	WASHER-HARD (13.5X25.5X3-MM THK)	
M	6	1	**8T-4139**	2	BOLT (M12X1.75X30-MM)	
	7	1	**124-0887**	1	SUPPORT AS	
	8	1	**108-7550**	2	CLIP	
	9	1	**115-8856**	1	SUPPORT AS	
	10	1	**8T-4121**	4	WASHER-HARD (11X21X2.5-MM THK)	
M	11	1	**8T-4196**	4	BOLT (M10X1.5X35-MM)	
	12	1	**5K-9090**	2	SEAL-O-RING	

M-METRIC PART

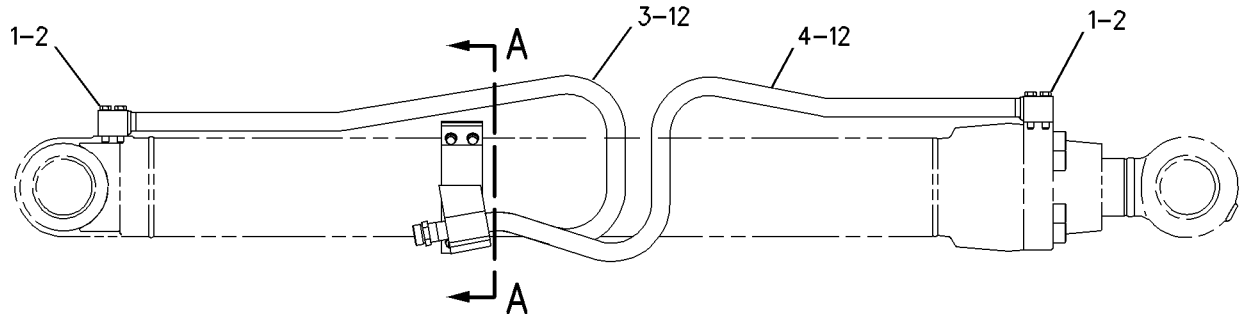

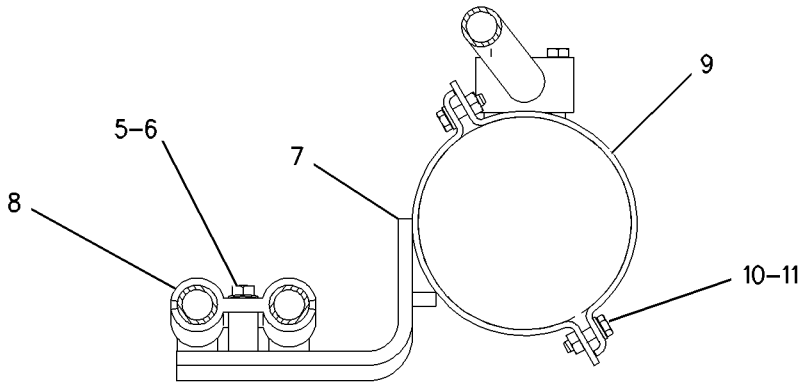

SECTION A–A

GRAPHIC #1 **<END>** g00800558

192-6909 LINES GP-BOOM CYLINDER–RH

S/N: D3P1-UP; M4T1-UP
PART OF 289-8019 CYLINDER & LINES GP-BOOM
AN ATTACHMENT

SMCS-5057, 5456 **i01683253**

NOTE	REF NO	GRAPHIC REF	PART NUMBER	QTY	PART NAME 1 2 3 4 5 6 (PRODUCT LEVEL)	SEE PAGE
	1	1	**1P-3703**	2	SEAL-RECTANGULAR	
M	2	1	**8T-4910**	8	BOLT (M12X1.75X60-MM)	
	3	1	**204-8360**	1	TUBE AS	
	4	1	**204-8361**	1	TUBE AS	
	5	1	**115-8856**	1	SUPPORT AS	
	6	1	**124-0891**	1	SUPPORT AS	
	7	1	**8T-4223**	2	WASHER-HARD (13.5X25.5X3-MM THK)	
M	8	1	**8T-4139**	2	BOLT (M12X1.75X30-MM)	
	9	1	**108-7550**	2	CLIP	
	10	1	**8T-4121**	4	WASHER-HARD (11X21X2.5-MM THK)	
M	11	1	**8T-4196**	4	BOLT (M10X1.5X35-MM)	
	12	1	**5K-9090**	2	SEAL-O-RING	

M-METRIC PART

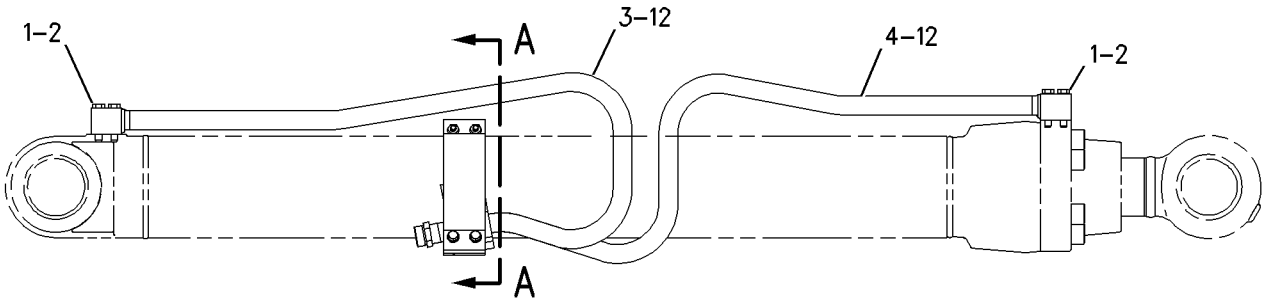

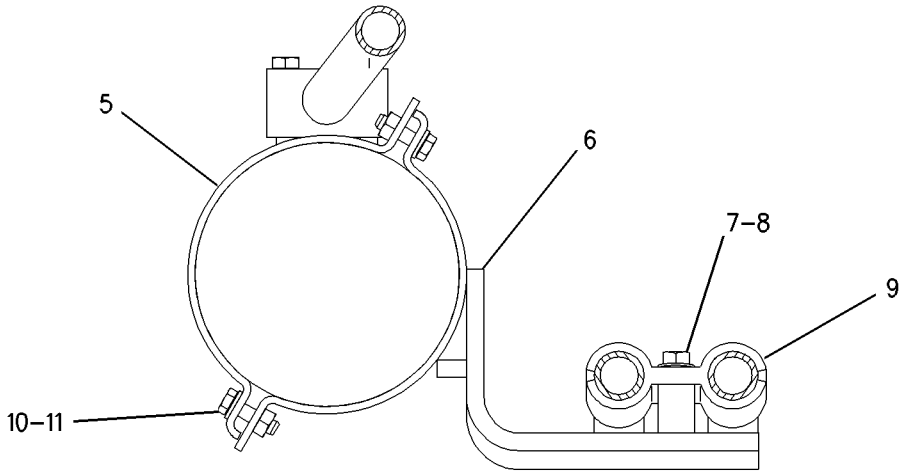

SECTION A-A

GRAPHIC #1 **<END>** g00800575

HYDRAULIC SYSTEM

239-1632 LINES GP-BOOM CYLINDER—BOOM LOWERING CONTROL

S/N: M4T1-UP

PART OF 329-6564 CONTROL AR-BOOM

AN ATTACHMENT

SMCS-5057, 5456 **i02756137**

NOTE	REF NO	GRAPHIC REF	PART NUMBER	QTY	PART NAME 1 2 3 4 5 6 (PRODUCT LEVEL)	SEE PAGE
	1	1	**7K-1181**	22	STRAP-CABLE	
	2	2	**108-7550**	4	CLIP	
	3	2	**115-8856**	2	SUPPORT AS	
	5	2	**149-1738**	4	CLIP	
	6	1	**207-6228**	1	TUBE AS	
	7	1	**207-6229**	1	TUBE AS	
	8	1	**223-7098**	1	TUBE AS	
	9	2	**223-7100**	1	SUPPORT AS	
	10	1	**223-7103**	1	TUBE AS	
	11	2	**223-7105**	1	SUPPORT AS	
I	12	1	**245-5110**	2	HOSE AS	
I	13	1	**245-5113**	2	HOSE AS	
I	14	1	**245-5116**	2	HOSE AS	
	15	1	**245-5120**	1	SUPPORT AS	
	16	1	**245-5122**	1	BLOCK	
Y	17	2	**270-5692**	1	VALVE GP-MANUAL (BOOM LOWER)	776
I	18	1	**260-8278**	2	HOSE AS	
Y	19	1	**263-1962**	2	VALVE GP-LOAD CONTROL (BOOM LOWERING, DRIFT REDUCTION)	772
	20	1	*148-8336*	8	CONNECTOR AS	
					(EACH INCLUDES)	
		1	**3J-1907**	1	SEAL-O-RING	
		1	**6V-8397**	1	SEAL-O-RING	
		1	**6V-8636**	1	CONNECTOR	
	21	1,2	*148-8341*	4	CONNECTOR AS	
					(EACH INCLUDES)	
		1,2	**3D-2824**	1	SEAL-O-RING	
		1,2	**6V-8713**	1	CONNECTOR	
		1,2	**7J-9108**	1	SEAL-O-RING	
	22	2	*148-8347*	1	ELBOW AS	
		2	**3D-2824**	1	SEAL-O-RING	
		2	**6V-9007**	1	ELBOW	
		2	**6V-9746**	1	SEAL-O-RING	
	23	2	*148-8361*	2	ELBOW AS	
					(EACH INCLUDES)	
		2	**3J-7354**	1	SEAL-O-RING	
		2	**6V-8397**	1	SEAL-O-RING	
		2	**6V-9200**	1	ELBOW	
	24	1,2	*148-8378*	4	ELBOW AS	
					(EACH INCLUDES)	
		1,2	**3J-1907**	1	SEAL-O-RING	
		1,2	**6V-8397**	1	SEAL-O-RING	
		1,2	**6V-8724**	1	ELBOW	
	25	1	**1P-3703**	2	SEAL-RECTANGULAR	
	26	1	**1P-3704**	2	SEAL-RECTANGULAR	
	27	1	**5K-9090**	2	SEAL-O-RING	
	28	1,2	**8T-4121**	10	WASHER-HARD (11X21X2.5-MM THK)	
M	29	2	**8T-4139**	8	BOLT (M12X1.75X30-MM)	
M	30	2	**8T-4176**	2	BOLT (M12X1.75X90-MM)	
M	31	1	**8T-4185**	2	BOLT (M10X1.5X50-MM)	
M	32	2	**8T-4196**	8	BOLT (M10X1.5X35-MM)	
	33	2	**8T-4223**	10	WASHER-HARD (13.5X25.5X3-MM THK)	
M	34	1	**8T-4648**	8	BOLT (M12X1.75X70-MM)	
M	35	1	**8T-4910**	8	BOLT (M12X1.75X60-MM)	
	36	2	*148-8411*	1	PLUG AS	

239-1632 **LINES GP-BOOM CYLINDER** *(contd.)* **i02756137**

NOTE	REF NO	GRAPHIC REF	PART NUMBER	QTY	PART NAME 1 2 3 4 5 6 (PRODUCT LEVEL)	SEE PAGE
		2	**3K-0360**	1	SEAL-O-RING	
		2	**9S-4185**	1	PLUG-O-RING	
	37	1	**7J-9108**	1	SEAL-O-RING	
C	38	1	**4I-9521**	2	BAND-MARKER (RED, L1)	
C	39	1	**4I-9522**	2	BAND-MARKER (YELLOW, L2)	
C	40	1	**4I-9525**	2	BAND-MARKER (ORANGE, R1)	
C	41	1	**4I-9526**	2	BAND-MARKER (WHITE, R2)	

C-CHANGE FROM PREVIOUS TYPE
I-REFER TO HYDRAULIC INFORMATION SYSTEM
M-METRIC PART
Y-SEPARATE ILLUSTRATION

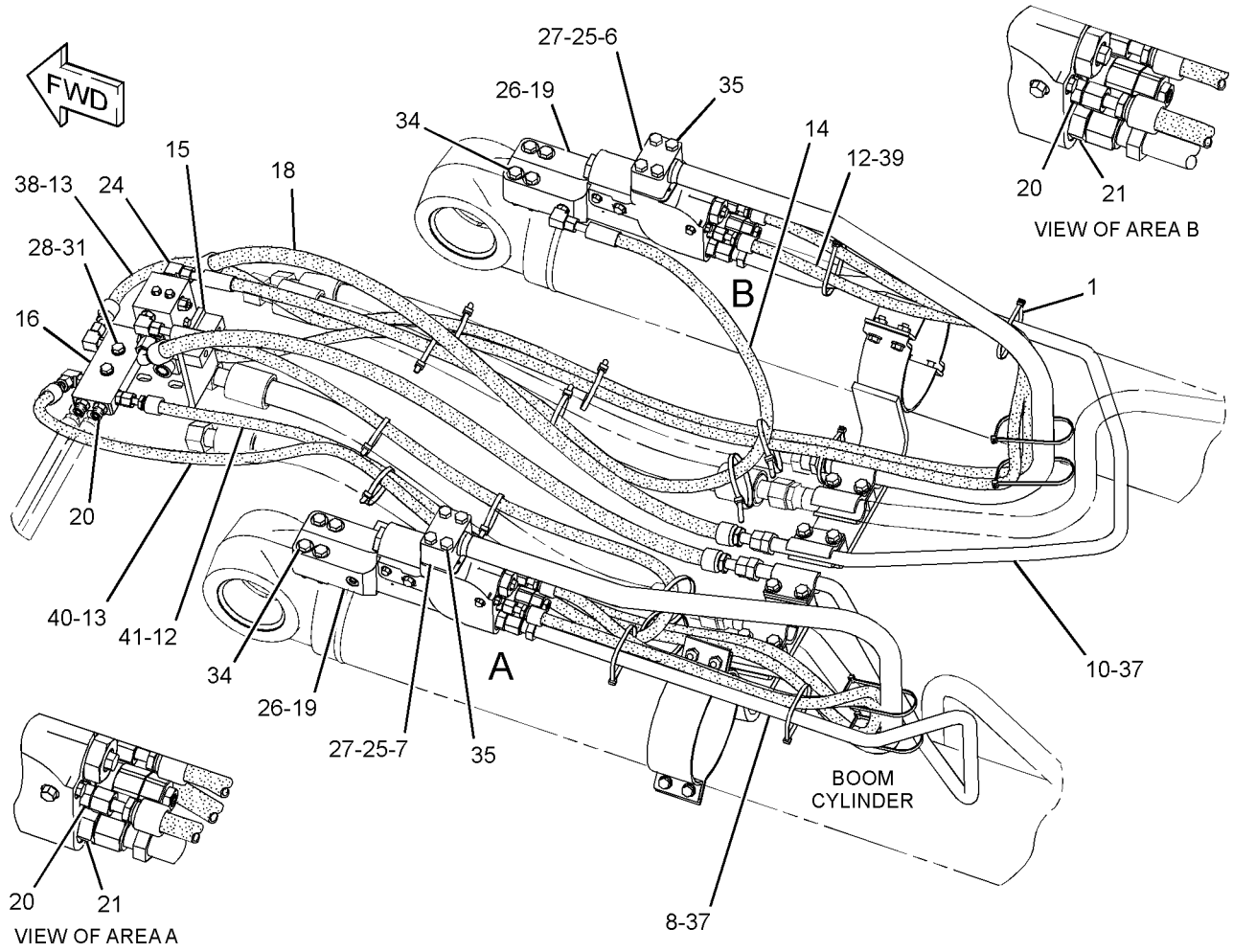

GRAPHIC #1 g01414657

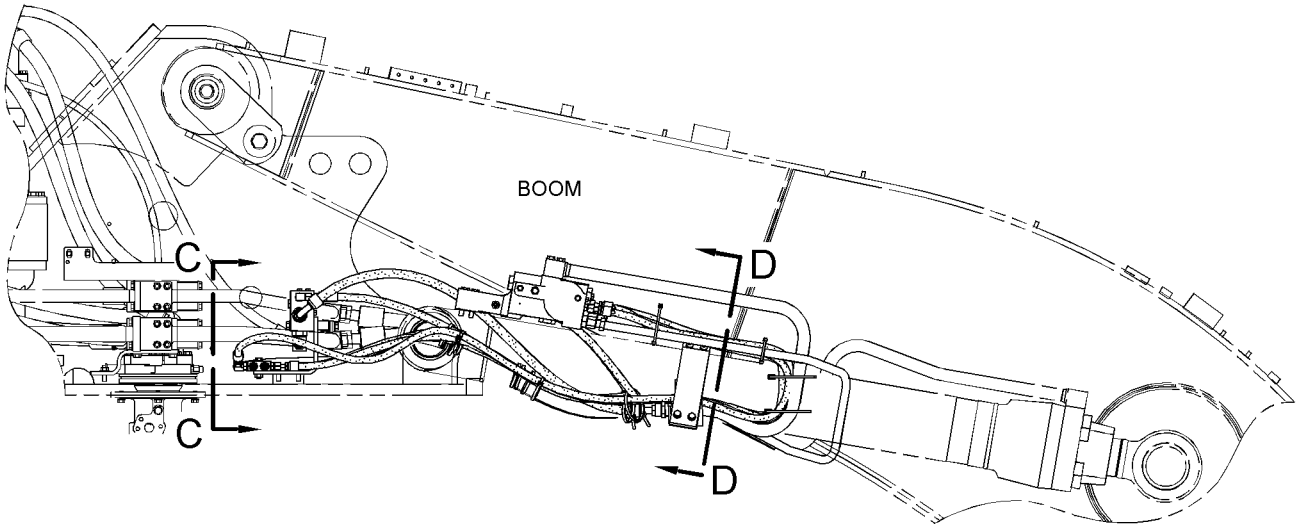

RIGHT SIDE VIEW

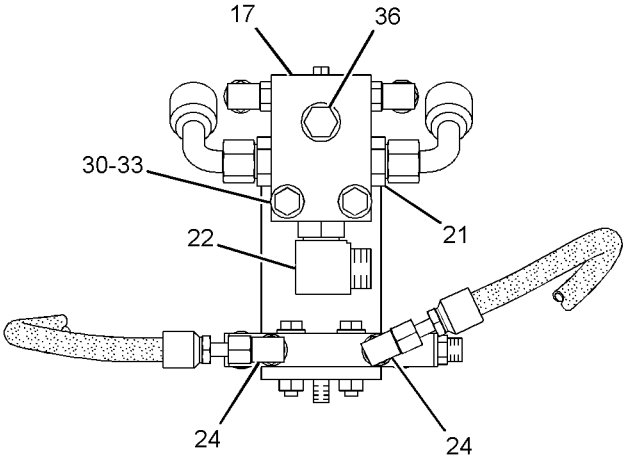

VIEW C-C

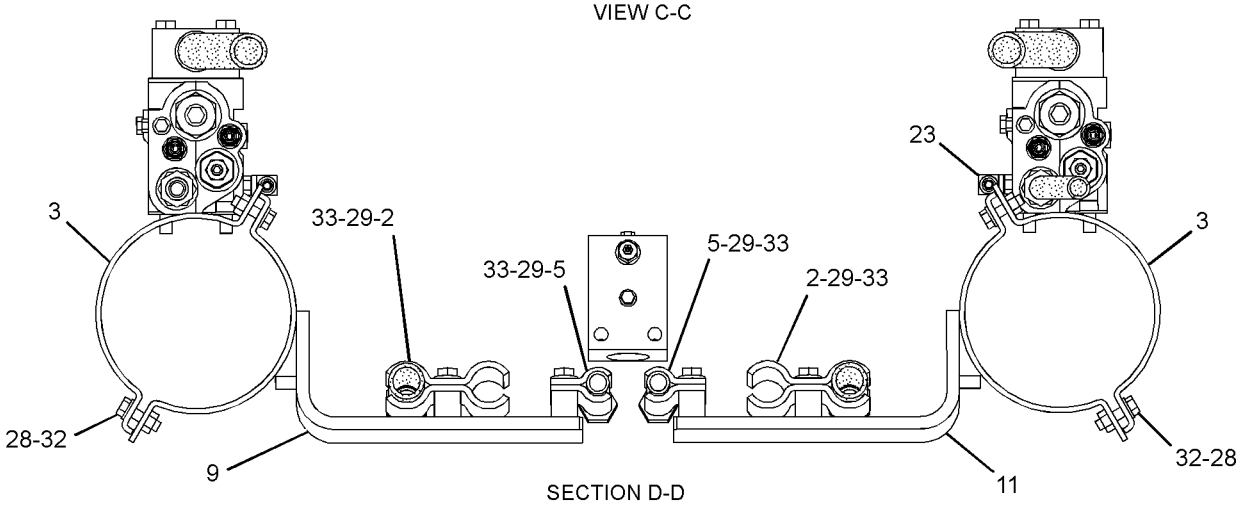

SECTION D-D

GRAPHIC #2 **<END>** g01414659

115-8694 LINES GP-BUCKET CYLINDER

S/N: D3P1-UP; M4T1-UP
PART OF 289-8039 CYLINDER & LINES GP-BUCKET
AN ATTACHMENT

SMCS-5457 **i01685295**

NOTE	REF NO	GRAPHIC REF	PART NUMBER	QTY	PART NAME 1 2 3 4 5 6 (PRODUCT LEVEL)	SEE PAGE
	1	1	**115-8961**	1	TUBE AS	
	2	1	**1P-3704**	1	SEAL-RECTANGULAR	
M	3	1	**8T-4910**	4	BOLT (M12X1.75X60-MM)	
M	4	1	**8T-4139**	4	BOLT (M12X1.75X30-MM)	
	5	1	**8T-4223**	4	WASHER-HARD (13.5X25.5X3-MM THK)	
	6	1	**7Y-3732**	4	CLIP	
	7	1	**124-0910**	2	SUPPORT AS	
	8	1	**8T-4121**	8	WASHER-HARD (11X21X2.5-MM THK)	
M	9	1	**8T-4196**	8	BOLT (M10X1.5X35-MM)	
	10	1	**124-0911**	2	SUPPORT AS	

M-METRIC PART

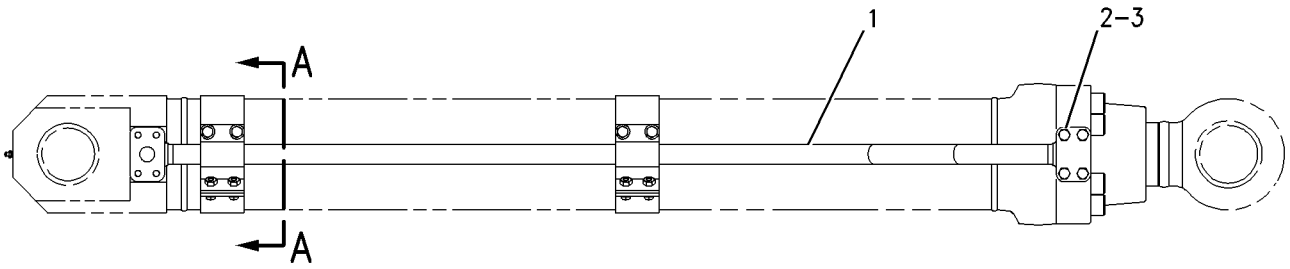

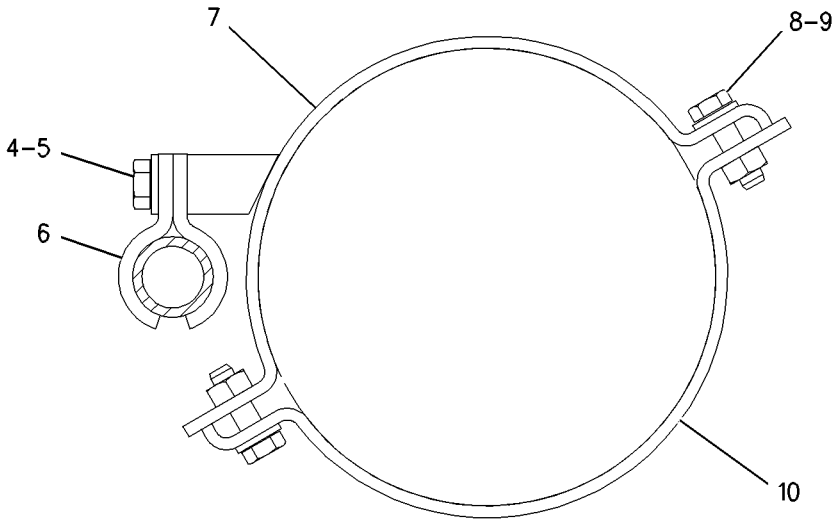

SECTION A-A

GRAPHIC #1 **<END>** g00673835

239-1627 LINES GP-BUCKET CYLINDER

S/N: D3P1-UP; M4T1-UP
PART OF 289-8010 CYLINDER & LINES GP-BUCKET
AN ATTACHMENT

SMCS-5457 **i02505072**

NOTE	REF NO	GRAPHIC REF	PART NUMBER	QTY	PART NAME 1 2 3 4 5 6 (PRODUCT LEVEL)	SEE PAGE
	1	1	**7Y-3732**	2	CLIP	
	2	1	**119-2378**	1	SUPPORT AS	
	3	1	**119-2379**	1	SUPPORT AS	
	4	1	**239-1986**	1	TUBE AS	
	5	1	**1P-3703**	1	SEAL-RECTANGULAR	
	6	1	**8T-4121**	4	WASHER-HARD (11X21X2.5-MM THK)	
M	7	1	**8T-4139**	2	BOLT (M12X1.75X30-MM)	
M	8	1	**8T-4196**	4	BOLT (M10X1.5X35-MM)	
	9	1	**8T-4223**	2	WASHER-HARD (13.5X25.5X3-MM THK)	
M	10	1	**8T-4910**	4	BOLT (M12X1.75X60-MM)	

M-METRIC PART

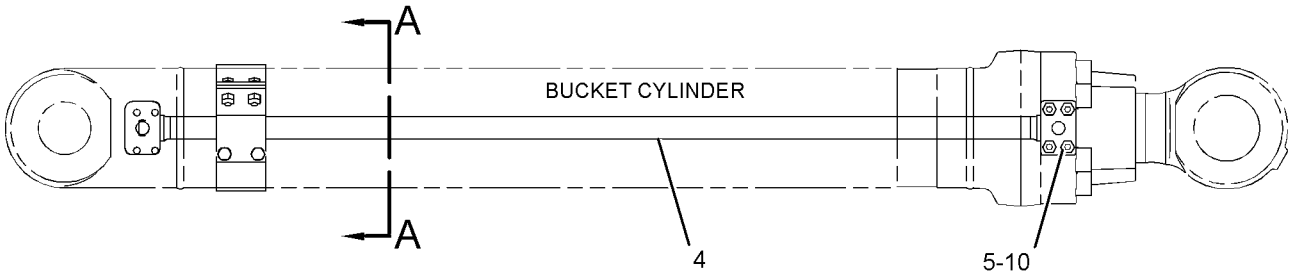

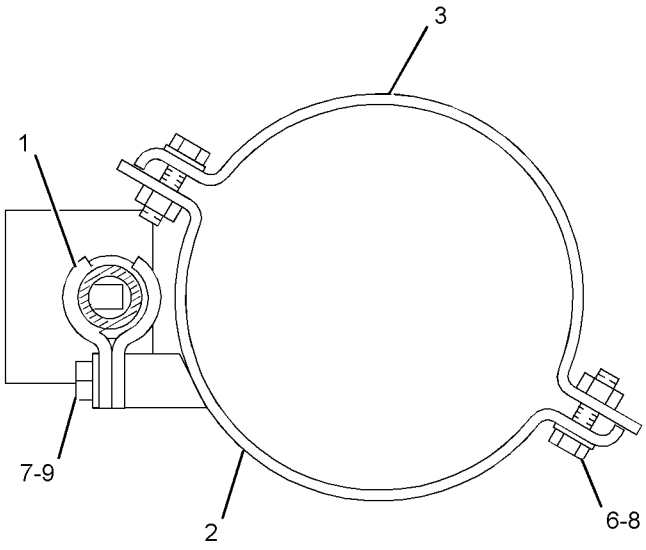

GRAPHIC #1 **<END>** g01154022

295-1061 LINES GP-BUCKET CYLINDER

S/N: D3P1-UP; M4T1-UP
PART OF 287-2919 GUARD AR-CYLINDER
FOR USE WITH TB-LINKAGE
AN ATTACHMENT

SMCS-5457 **i03680723**

NOTE	REF NO	GRAPHIC REF	PART NUMBER	QTY	PART NAME 1 2 3 4 5 6 (PRODUCT LEVEL)	SEE PAGE
	1	1	**124-0911**	1	SUPPORT AS	
	2	1	**223-6876**	1	SUPPORT AS	
	3	1	**263-2211**	1	BLOCK	
	4	1	**298-7781**	1	TUBE AS	
	5	1	**1P-3704**	2	SEAL-RECTANGULAR	
	6	1	**7Y-3732**	2	CLIP	
	7	1	**8T-4121**	4	WASHER-HARD (11X21X2.5-MM THK)	
M	8	1	**8T-4139**	2	BOLT (M12X1.75X30-MM)	
M	9	1	**8T-4196**	4	BOLT (M10X1.5X35-MM)	
	10	1	**8T-4223**	2	WASHER-HARD (13.5X25.5X3-MM THK)	
M	11	1	**8T-4910**	4	BOLT (M12X1.75X60-MM)	

M-METRIC PART

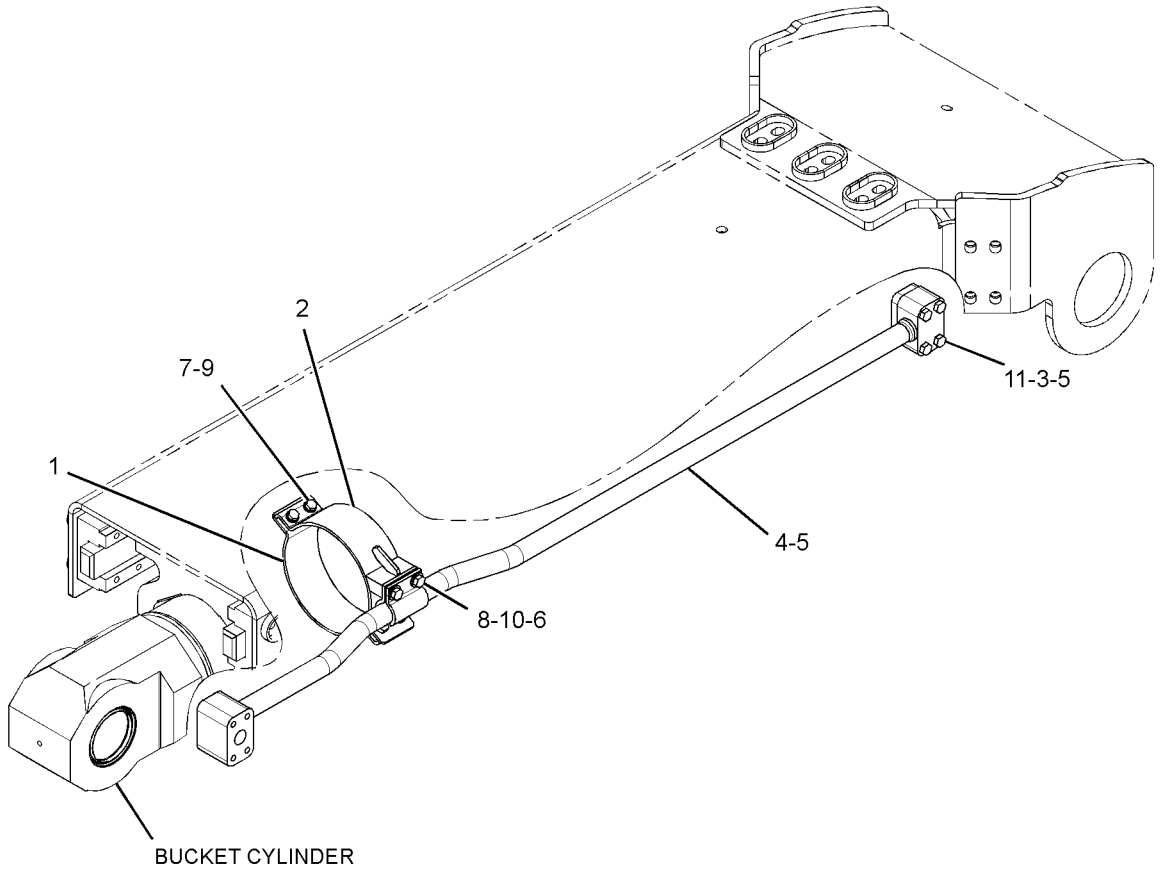

GRAPHIC #1 **<END>** g01397817

HYDRAULIC SYSTEM

237-3194 LINES GP-COUPLER—REACH BOOM

S/N: D3P1-UP; M4T1-UP

PART OF 340-9471, 347-8786, 347-8787 OPTION AR-COUPLER

AN ATTACHMENT

SMCS-5057, 5133 **i02990015**

NOTE	REF NO	GRAPHIC REF	PART NUMBER	QTY	PART NAME 1 2 3 4 5 6 (PRODUCT LEVEL)	SEE PAGE
M	1	1	**8T-4139**	14	BOLT (M12X1.75X30-MM)	
CM	2	1	**7X-2550**	2	BOLT (M12X1.75X110-MM)	
M	3	1	**8T-4184**	4	BOLT (M12X1.75X45-MM)	
M	4	1	**8T-4956**	4	BOLT (M12X1.75X35-MM)	
	5	1	**179-5235**	6	CLIP	
	6	1	**253-6444**	8	CLIP	
	7	1	**135-3980**	2	CLIP	
	8	1	**5Q-4212**	4	CLIP	
M	9	1	**8T-4244**	18	NUT (M12X1.75-THD)	
C	10	1	**157-9338**	1	PLATE	
	11	1	**6V-8398**	8	SEAL-O-RING	
	12	1	**253-6635**	2	SUPPORT AS	
C	13	1	**316-3915**	1	TUBE AS	
	14	1	**288-7643**	1	TUBE AS	
C	15	1	**316-3918**	1	TUBE AS	
	16	1	**245-2223**	1	TUBE AS	
	17	1	**288-7646**	1	TUBE AS	
	18	1	**245-2294**	1	TUBE AS	
	19	1	**8T-4223**	24	WASHER-HARD (13.5X25.5X3-MM THK)	

C-CHANGE FROM PREVIOUS TYPE
M-METRIC PART

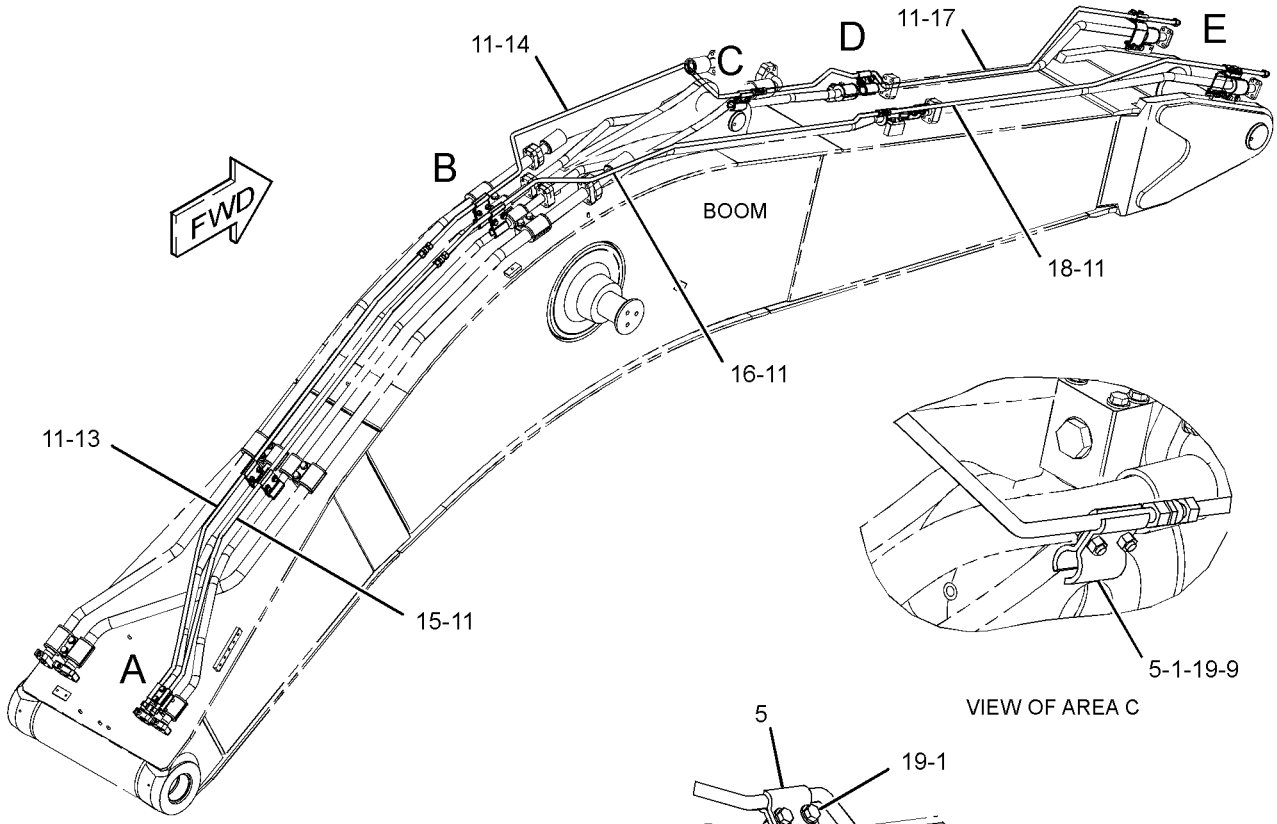

VIEW OF AREA C

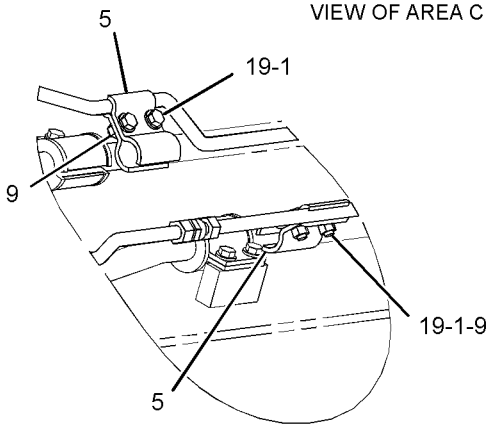

VIEW OF AREA D

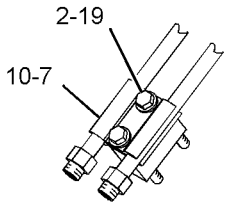

VIEW OF AREA A

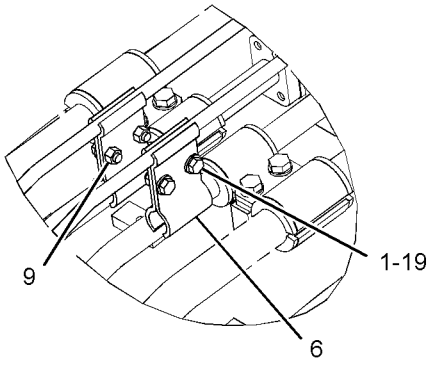

VIEW OF AREA B

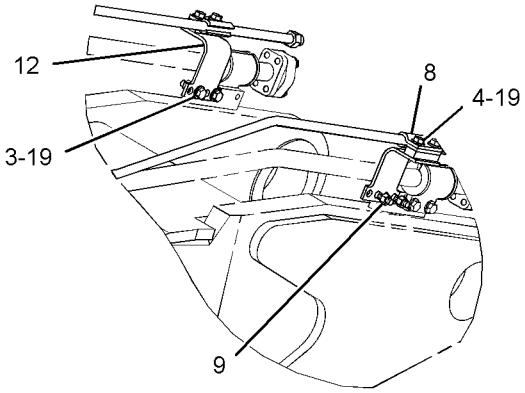

VIEW OF AREA E

GRAPHIC #1 **<END>** g01560554

HYDRAULIC SYSTEM

237-3198 LINES GP-COUPLER–MASS BOOM

S/N: D3P1-UP; M4T1-UP
PART OF 337-4113, 337-4114 OPTION AR-COUPLER
AN ATTACHMENT

SMCS-5057, 5133 **i03023906**

NOTE	REF NO	GRAPHIC REF	PART NUMBER	QTY	PART NAME 1 2 3 4 5 6 (PRODUCT LEVEL)	SEE PAGE
CM	1	1	**8T-5041**	2	BOLT (M12X1.75X120-MM)	
M	2	1	**8T-4139**	12	BOLT (M12X1.75X30-MM)	
M	3	1	**8T-4184**	4	BOLT (M12X1.75X45-MM)	
M	4	1	**8T-4956**	4	BOLT (M12X1.75X35-MM)	
	5	1	**179-5235**	4	CLIP	
	6	1	**253-6444**	8	CLIP	
	7	1	**135-3980**	2	CLIP	
	8	1	**5Q-4212**	4	CLIP	
M	9	1	**8T-4244**	16	NUT (M12X1.75-THD)	
C	10	1	**286-4106**	1	PLATE	
	11	1	**6V-8398**	8	SEAL-O-RING	
	12	1	**253-6635**	2	SUPPORT AS	
C	13	1	**318-5883**	1	TUBE AS	
C	14	1	**318-5884**	1	TUBE AS	
	15	1	**262-3213**	1	TUBE AS	
	16	1	**262-3216**	1	TUBE AS	
	17	1	**262-3219**	1	TUBE AS	
	18	1	**262-3222**	1	TUBE AS	
	19	1	**8T-4223**	22	WASHER-HARD (13.5X25.5X3-MM THK)	

C-CHANGE FROM PREVIOUS TYPE
M-METRIC PART

237-3198 **LINES GP-COUPLER** *(contd.)* **i03023906**

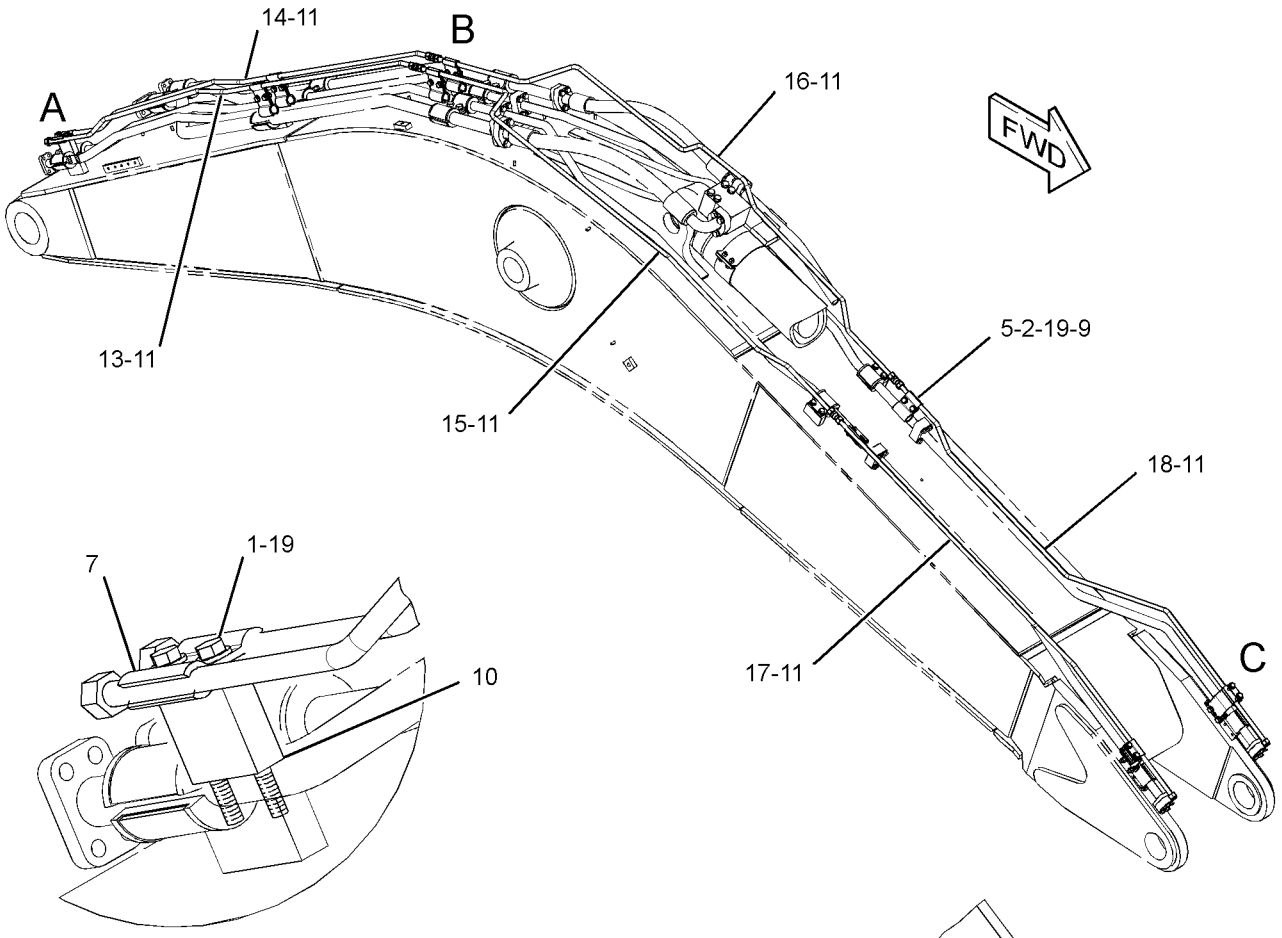

VIEW OF AREA A

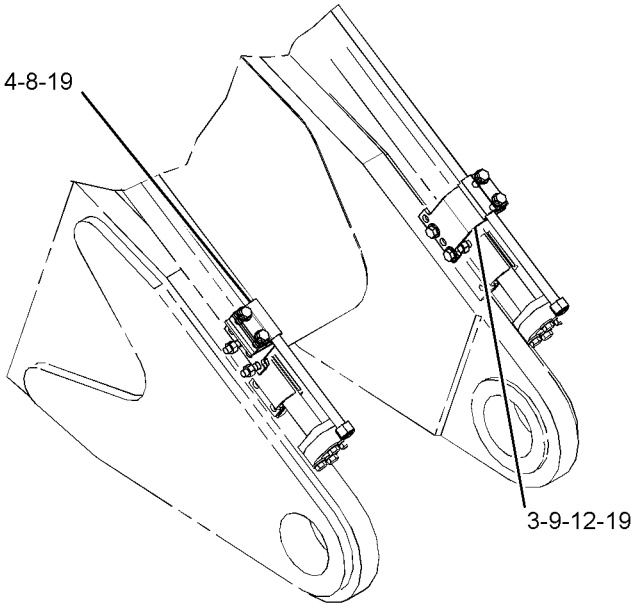

VIEW OF AREA C

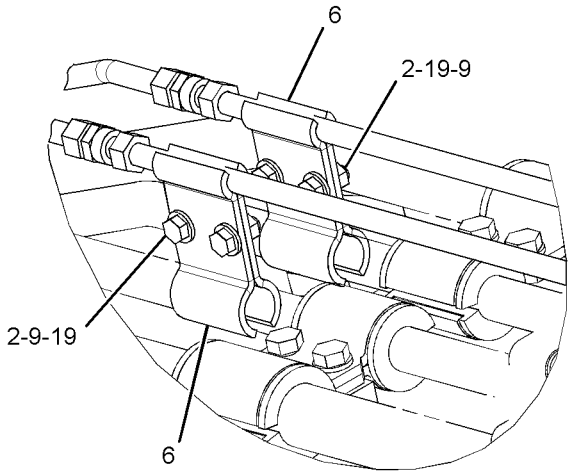

VIEW OF AREA B

GRAPHIC #1 **<END>** g01573363

HYDRAULIC SYSTEM

253-6495 LINES GP-COUPLER–STICK

S/N: D3P1-UP; M4T1-UP
3.2-M (10.5-FT) STICK
PART OF 347-8787 OPTION AR-COUPLER
AN ATTACHMENT

SMCS-5057, 5133 **i02509739**

NOTE	REF NO	GRAPHIC REF	PART NUMBER	QTY	PART NAME 1 2 3 4 5 6 (PRODUCT LEVEL)	SEE PAGE
	1	1	**9X-6582**	1	NUT (13/16-16-THD)	
	2	1	**253-6548**	1	TUBE AS	
	3	1	**253-6551**	1	TUBE AS	
I	4	1	**253-6554**	2	HOSE AS	
	5	1	*148-8415*	1	REDUCER AS	
		1	**6V-8397**	1	SEAL-O-RING	
		1	**6V-8936**	1	REDUCER	
	6	1	*148-8419*	1	REDUCER AS	
		1	**4J-5477**	1	SEAL-O-RING	
		1	**6V-8935**	1	REDUCER-O-RING	
	7	1	**5Q-4212**	12	CLIP	
	8	1	**6V-8398**	4	SEAL-O-RING	
	9	1	**8T-4223**	12	WASHER-HARD (13.5X25.5X3-MM THK)	
M	10	1	**8T-4956**	12	BOLT (M12X1.75X35-MM)	

I-REFER TO HYDRAULIC INFORMATION SYSTEM
M-METRIC PART

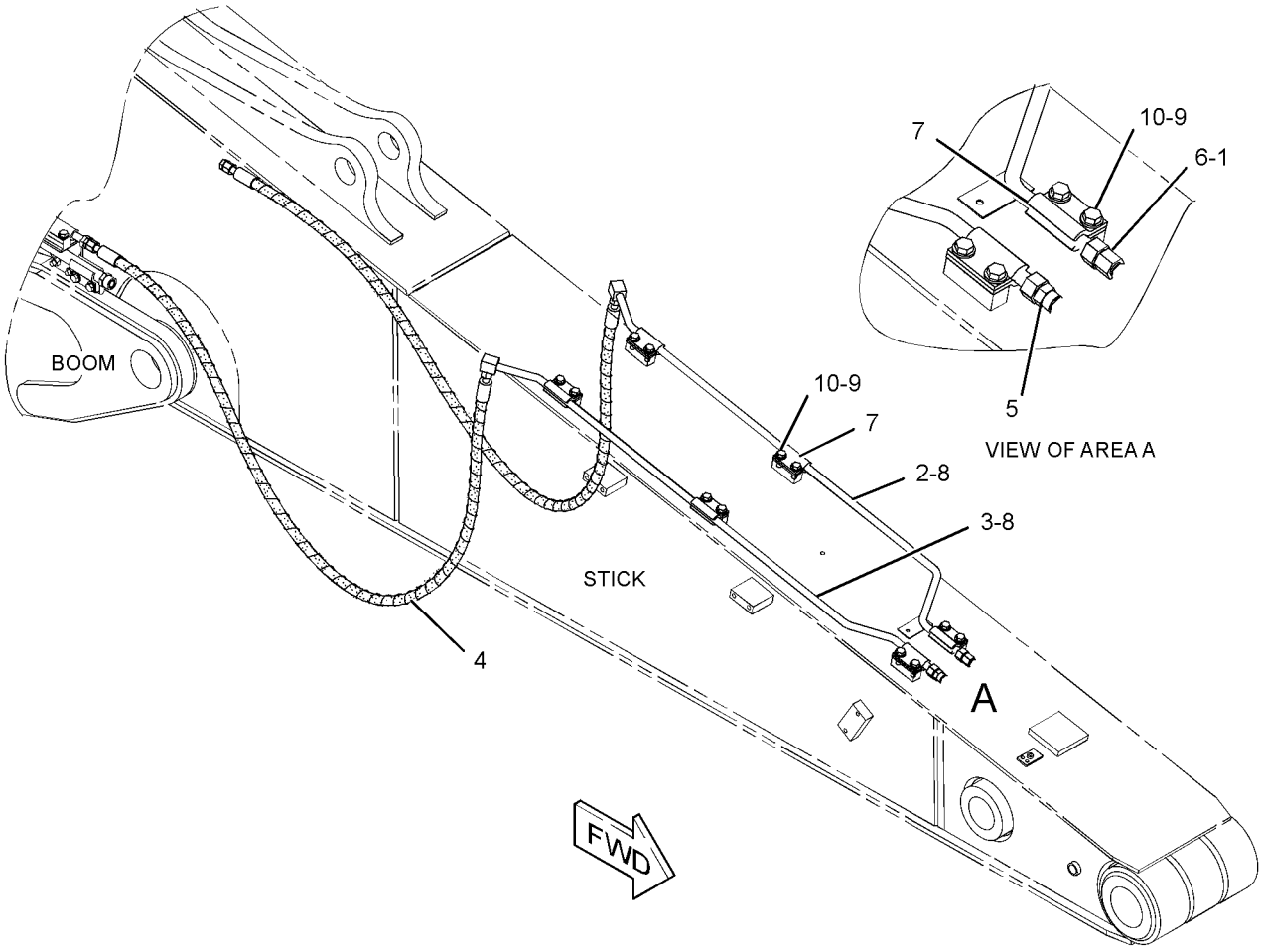

GRAPHIC #1 **<END>** g01156036

253-6501 LINES GP-COUPLER–STICK

S/N: D3P1-UP; M4T1-UP
2.55 TO 2.65-M (8.4 TO 8.7-FT) STICK
PART OF 337-4114 OPTION AR-COUPLER
AN ATTACHMENT

SMCS-5057, 5133 **i02509746**

NOTE	REF NO	GRAPHIC REF	PART NUMBER	QTY	PART NAME 1 2 3 4 5 6 (PRODUCT LEVEL)	SEE PAGE
	1	1	**9X-6582**	1	NUT (13/16-16-THD)	
I	2	1	**216-6485**	2	HOSE AS	
	3	1	**253-6688**	1	TUBE AS	
	4	1	**253-6691**	1	TUBE AS	
	5	1	*148-8415*	1	REDUCER AS	
		1	**6V-8397**	1	SEAL-O-RING	
		1	**6V-8936**	1	REDUCER	
	6	1	*148-8419*	1	REDUCER AS	
		1	**4J-5477**	1	SEAL-O-RING	
		1	**6V-8935**	1	REDUCER-O-RING	
	7	1	**5Q-4212**	12	CLIP	
	8	1	**6V-8398**	4	SEAL-O-RING	
	9	1	**8T-4223**	12	WASHER-HARD (13.5X25.5X3-MM THK)	
M	10	1	**8T-4956**	12	BOLT (M12X1.75X35-MM)	

I-REFER TO HYDRAULIC INFORMATION SYSTEM
M-METRIC PART

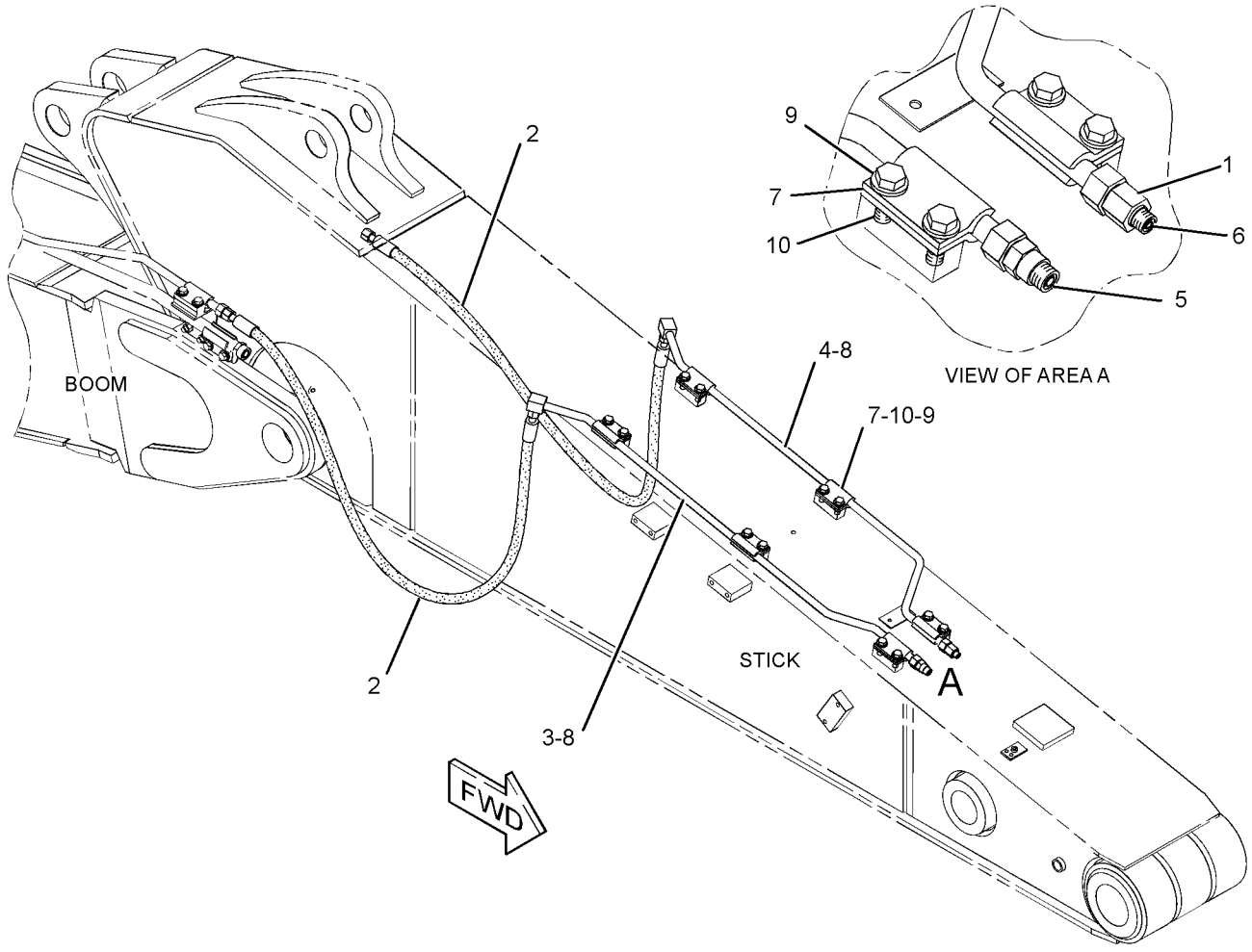

GRAPHIC #1 **<END>** g01191358

253-6596 LINES GP-COUPLER–STICK

S/N: D3P1-UP; M4T1-UP
3.9-M (12.8-FT) STICK
PART OF 347-8786 OPTION AR-COUPLER
AN ATTACHMENT

SMCS-5057, 5133 **i02517292**

NOTE	REF NO	GRAPHIC REF	PART NUMBER	QTY	PART NAME 1 2 3 4 5 6 (PRODUCT LEVEL)	SEE PAGE
	1	1	**9X-6582**	1	NUT (13/16-16-THD)	
	2	1	**230-0155**	1	TUBE AS	
	3	1	**230-0156**	1	TUBE AS	
I	4	1	**245-2425**	2	HOSE AS	
	5	1	**135-3980**	2	CLIP	
	6	1	*148-8415*	1	REDUCER AS	
		1	**6V-8397**	1	SEAL-O-RING	
		1	**6V-8936**	1	REDUCER	
	7	1	*148-8419*	1	REDUCER AS	
		1	**4J-5477**	1	SEAL-O-RING	
		1	**6V-8935**	1	REDUCER-O-RING	
	8	1	**5Q-4212**	8	CLIP	
	9	1	**6V-8398**	4	SEAL-O-RING	
	10	1	**8T-4223**	10	WASHER-HARD (13.5X25.5X3-MM THK)	
M	11	1	**8T-4956**	10	BOLT (M12X1.75X35-MM)	

I-REFER TO HYDRAULIC INFORMATION SYSTEM
M-METRIC PART

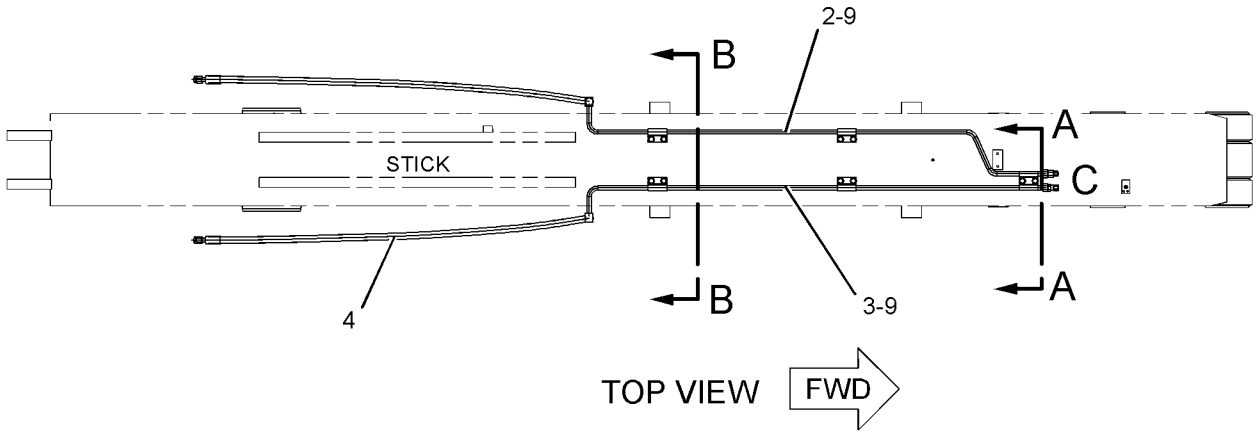

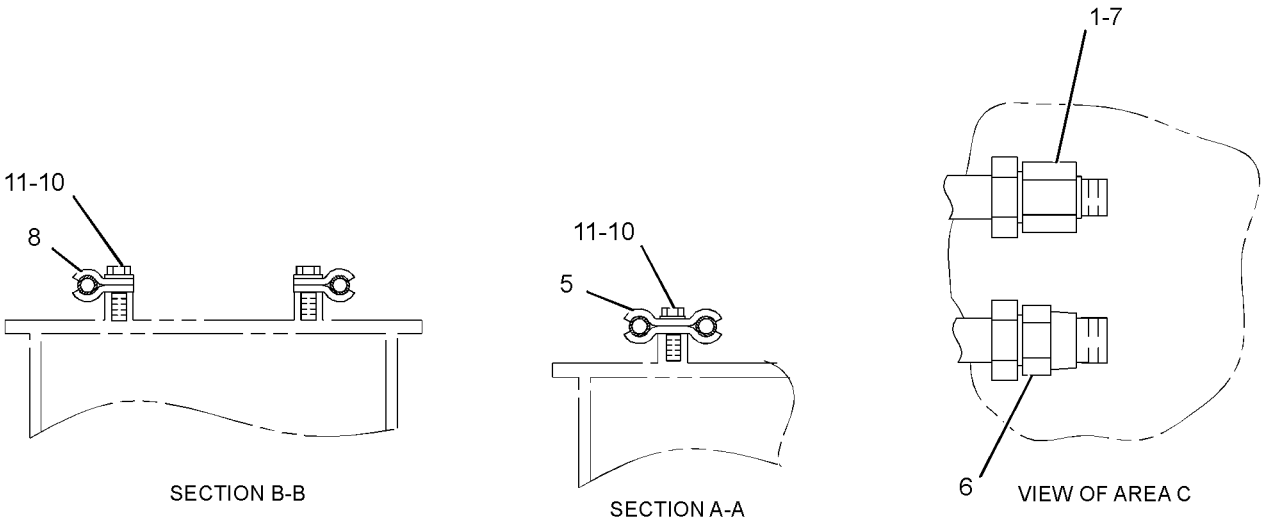

GRAPHIC #1 **<END>** g01238275

HYDRAULIC SYSTEM

253-6601 LINES GP-COUPLER

S/N: M4T1-UP
2.8-M (9.2-FT) STICK
PART OF 340-9471 OPTION AR-COUPLER
AN ATTACHMENT

SMCS-5057, 5133 **i03732348**

NOTE	REF NO	GRAPHIC REF	PART NUMBER	QTY	PART NAME 1 2 3 4 5 6 (PRODUCT LEVEL)	SEE PAGE
M	1	1	**8T-4956**	10	BOLT (M12X1.75X35-MM)	
	2	1	**135-3980**	2	CLIP	
	3	1	**5Q-4212**	8	CLIP	
I	4	1	**177-8572**	2	HOSE AS	
	5	1	**9X-6582**	1	NUT (13/16-16-THD)	
	6	1	*148-8415*	1	REDUCER AS	
		1	**6V-8397**	1	SEAL-O-RING	
		1	**6V-8936**	1	REDUCER	
	7	1	*148-8419*	1	REDUCER AS	
		1	**4J-5477**	1	SEAL-O-RING	
		1	**6V-8935**	1	REDUCER-O-RING	
	8	1	**6V-8398**	4	SEAL-O-RING	
	9	1	**207-5542**	1	TUBE AS	
	10	1	**207-5549**	1	TUBE AS	
	11	1	**8T-4223**	10	WASHER-HARD (13.5X25.5X3-MM THK)	

I-REFER TO HYDRAULIC INFORMATION SYSTEM
M-METRIC PART

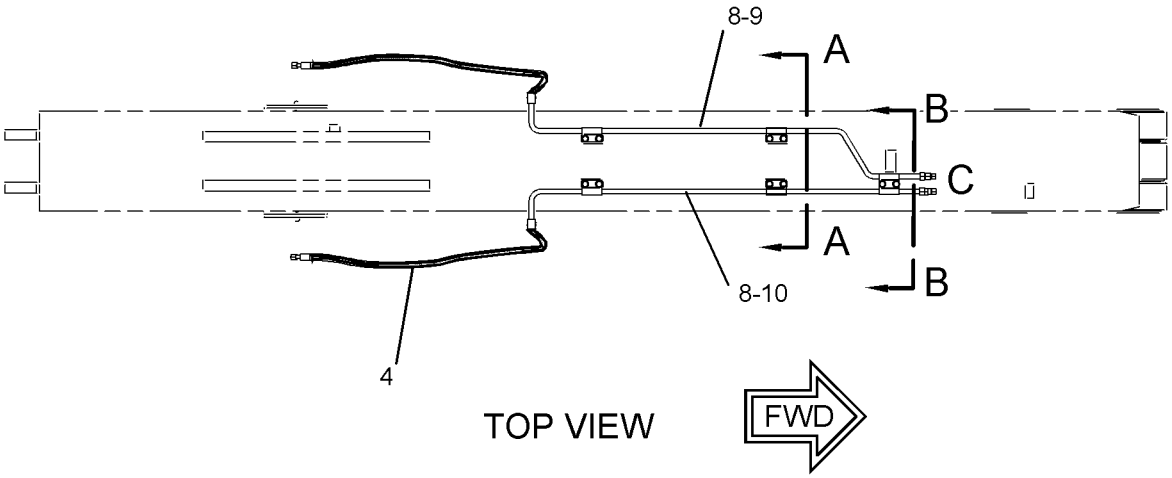

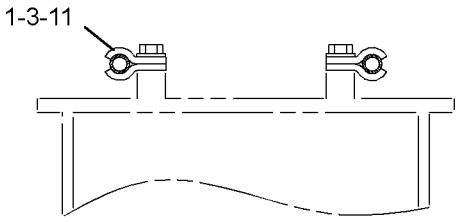

SECTION A-A

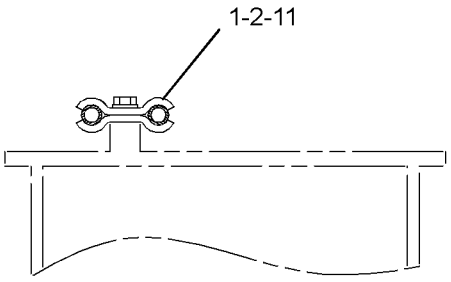

SECTION B-B

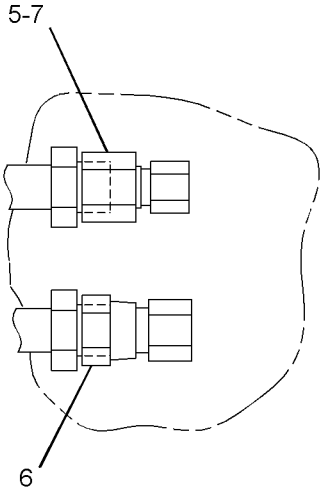

VIEW OF AREA C

GRAPHIC #1 **<END>** g01197433

253-6609 LINES GP-COUPLER–STICK

S/N: D3P1-UP; M4T1-UP
2.15-M (7.1-FT) STICK
PART OF 337-4113 OPTION AR-COUPLER
AN ATTACHMENT

SMCS-5057, 5133 **i02523895**

NOTE	REF NO	GRAPHIC REF	PART NUMBER	QTY	PART NAME 1 2 3 4 5 6 (PRODUCT LEVEL)	SEE PAGE
	1	1	**9X-6582**	1	NUT (13/16-16-THD)	
I	2	1	**177-8407**	2	HOSE AS	
	3	1	**262-3152**	1	TUBE AS	
	4	1	**262-3155**	1	TUBE AS	
	5	1	*148-8415*	1	REDUCER AS	
		1	**6V-8397**	1	SEAL-O-RING	
		1	**6V-8936**	1	REDUCER	
	6	1	*148-8419*	1	REDUCER AS	
		1	**4J-5477**	1	SEAL-O-RING	
		1	**6V-8935**	1	REDUCER-O-RING	
	7	1	**5Q-4212**	8	CLIP	
	8	1	**6V-8398**	4	SEAL-O-RING	
	9	1	**8T-4223**	8	WASHER-HARD (13.5X25.5X3-MM THK)	
M	10	1	**8T-4956**	8	BOLT (M12X1.75X35-MM)	

I-REFER TO HYDRAULIC INFORMATION SYSTEM
M-METRIC PART

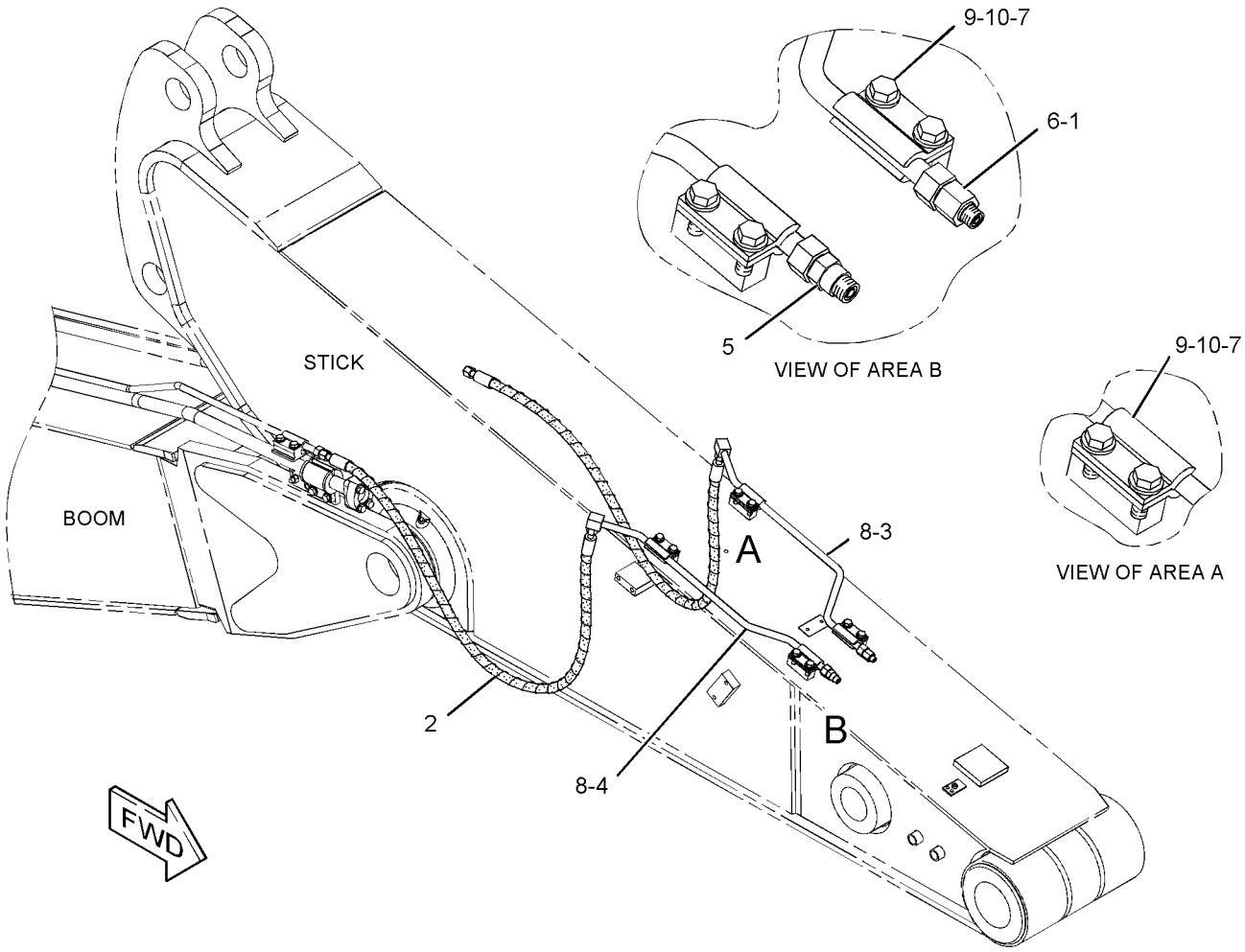

GRAPHIC #1 **<END>** g01262825

HYDRAULIC SYSTEM

275-7738 LINES GP-COUPLER—QUICK, HOOK

S/N: D3P1-UP; M4T1-UP
PART OF 275-7752 COUPLER AR-QUICK
AN ATTACHMENT

SMCS-5057, 5133 **i02663801**

NOTE	REF NO	GRAPHIC REF	PART NUMBER	QTY	PART NAME 1 2 3 4 5 6 (PRODUCT LEVEL)	SEE PAGE
	1	1	*148-8419*	1	REDUCER AS (ORFS)	
		1	**4J-5477**	1	SEAL-O-RING	
		1	**6V-8935**	1	REDUCER-O-RING	
	2	1	**6V-8554**	1	NUT (13/16-16-THD)	
	3	1	**7K-1181**	4	STRAP-CABLE	
	4	1	**6V-0405**	2	SEAL-BONDED	
	5	1	**8T-7910**	2	ADAPTER	
	6	1	**8T-8887**	2	CONNECTOR	
	7	1	**3J-1907**	2	SEAL-O-RING	
	8	1	**6V-8397**	2	SEAL-O-RING	
	9	1	*148-8384*	2	ELBOW AS	
					(EACH INCLUDES)	
		1	**4J-5477**	2	SEAL-O-RING	
		1	**6V-8979**	1	ELBOW	
	10	1	**2P-1279**	2	LOCKNUT (9/16-18-THD)	
M	11	1	**8T-4137**	2	BOLT (M10X1.5X20-MM)	
	12	1	**8T-4121**	2	WASHER-HARD (11X21X2.5-MM THK)	
	13	1	**277-6304**	1	BRACKET AS	
I	14	1	**277-9864**	2	HOSE AS	
I	15	1	**277-9865**	2	HOSE AS	

I-REFER TO HYDRAULIC INFORMATION SYSTEM
M-METRIC PART

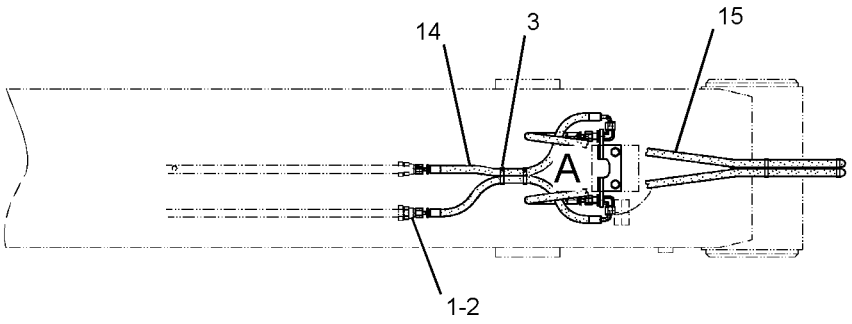

TOP VIEW

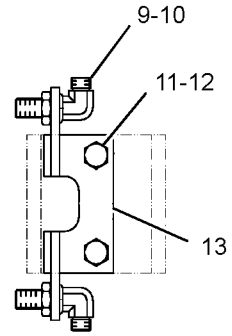

VIEW OF AREA A

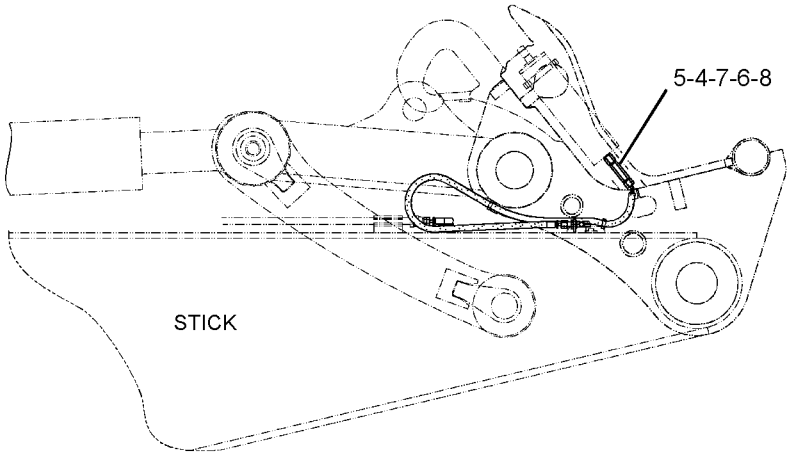

RIGHT SIDE VIEW

GRAPHIC #1 **<END>** g01260761

HYDRAULIC SYSTEM

255-1919 LINES GP-FRONT—COMBINED FUNCTION, PEDAL

S/N: D3P1-UP; M4T1-UP
PART OF 255-5770 CONTROL AR-AUXILIARY
AN ATTACHMENT

SMCS-5057 **i03705260**

NOTE	REF NO	GRAPHIC REF	PART NUMBER	QTY	PART NAME 1 2 3 4 5 6 (PRODUCT LEVEL)	SEE PAGE
	1	2	**7Y-3729**	1	FLANGE	
H	2	2	**7Y-3731**	1	FLANGE	
M	3	2	**105-3477**	6	BOLT-SOCKET HEAD (M10X1.5X45-MM)	
HI	4	1	**141-1313**	1	HOSE AS	
Y	5	2	**177-2653**	1	VALVE GP-RELIEF (WITH BLOCK) (1-WAY/2-WAY)	807
I	6	1	**184-9508**	1	HOSE AS	
H	7	2	**187-5854**	1	BLOCK	
H	8	2	**187-5855**	1	FLANGE	
	9	1	**199-1773**	1	ELBOW	
HI	10	1	**207-6443**	1	HOSE AS	
Y	11	2	**297-0370**	2	VALVE GP-CHECK (1-WAY/2-WAY, CHECK)	740
	12	2	**218-1139**	1	BLOCK	
H	13	1	**255-1892**	1	SUPPORT	
	14	1	**255-1894**	1	SUPPORT	
	15	2	**260-7959**	2	BRACKET	
	16	2	**260-8030**	1	SUPPORT	
	17	2	**260-8098**	1	SUPPORT	
	18	2	**266-0953**	1	BLOCK	
	19	2	**266-1278**	1	BLOCK	
	20	2	**266-1279**	2	FLANGE	
I	21	1	**266-1303**	1	HOSE AS	
I	22	1	**275-1384**	1	HOSE AS	
	23	2	**275-1439**	1	BLOCK	
	24	2	**275-1440**	1	BLOCK	
	25	2	**275-1540**	1	BLOCK	
I	26	1	**275-1541**	1	HOSE AS	
I	27	1	**275-1545**	1	HOSE AS	
	28	2	**099-8232**	1	SEAL-O-RING	
M	29	2	**101-7401**	8	BOLT-SOCKET HEAD (M10X1.5X20-MM)	
HM	30	2	**101-7402**	4	BOLT-SOCKET HEAD (M12X1.75X30-MM)	
HM	31	2	**101-7404**	8	BOLT-SOCKET HEAD (M10X1.5X30-MM)	
M	32	2	**108-4282**	4	BOLT-SOCKET HEAD (M10X1.5X100-MM)	
	33	2	*148-8330*	1	CONNECTOR AS	
		2	**5K-9090**	1	SEAL-O-RING	
		2	**7M-8485**	1	SEAL-O-RING	
		2	**8T-0198**	1	CONNECTOR	
H	34	1,2	*148-8335*	2	CONNECTOR AS	
					(EACH INCLUDES)	
		1,2	**5K-9090**	1	SEAL-O-RING	
		1,2	**6V-8635**	1	CONNECTOR	
		1,2	**7M-8485**	1	SEAL-O-RING	
	35	2	*148-8347*	1	ELBOW AS	
		2	**3D-2824**	1	SEAL-O-RING	
		2	**6V-9007**	1	ELBOW	
		2	**6V-9746**	1	SEAL-O-RING	
	36	1	*148-8411*	1	PLUG AS	
		1	**3K-0360**	1	SEAL-O-RING	
		1	**9S-4185**	1	PLUG-O-RING	
	37	2	*148-8442*	1	TEE AS	
		2	**6V-9746**	2	SEAL-O-RING	
		2	**7M-8485**	1	SEAL-O-RING	
		2	**8T-1685**	1	TEE	
	38	1	*153-6237*	1	ELBOW AS	
		1	**3D-2824**	1	SEAL-O-RING	
		1	**6V-9004**	1	ELBOW	

255-1919 **LINES GP-FRONT** *(contd.)* **i03705260**

NOTE	REF NO	GRAPHIC REF	PART NUMBER	QTY	PART NAME 1 2 3 4 5 6 (PRODUCT LEVEL)	SEE PAGE
		1	**6V-9746**	1	SEAL-O-RING	
	39	1	*164-5574*	1	TEE AS	
		1	**3D-2824**	1	SEAL-O-RING	
		1	**6V-8784**	1	TEE-FACE SEAL	
		1	**6V-9746**	2	SEAL-O-RING	
	40	2	*164-5606*	1	CONNECTOR AS	
		2	**3D-2824**	1	SEAL-O-RING	
		2	**6V-9746**	1	SEAL-O-RING	
		2	**8T-0078**	1	CONNECTOR	
	41	2	**1P-3702**	6	SEAL-RECTANGULAR	
H	42	2	**1P-3703**	5	SEAL-RECTANGULAR	
H	43	2	**1P-4578**	2	FLANGE-HALF	
M	44	2	**280-2747**	4	BOLT-SOCKET HEAD (M10X1.5X60-MM)	
	45	1	**2S-4078**	1	SEAL-O-RING	
H	46	1	**4J-0522**	1	SEAL-O-RING	
H	47	2	**5K-9090**	1	SEAL-O-RING	
H	48	1	**5P-7468**	2	CLIP (SLOT)	
H	49	1	**5P-7469**	2	CLIP (TAB)	
H	50	1	**6V-0545**	2	GROMMET	
	51	1	**6V-8400**	1	SEAL-O-RING	
	52	2	**6V-9746**	1	SEAL-O-RING	
H	53	1,2	**8T-4121**	6	WASHER-HARD (11X21X2.5-MM THK)	
HM	54	1	**8T-4136**	2	BOLT (M10X1.5X25-MM)	
M	55	2	**8T-4139**	10	BOLT (M12X1.75X30-MM)	
M	56	2	**8T-4176**	4	BOLT (M12X1.75X90-MM)	
HM	57	2	**8T-4178**	4	BOLT (M10X1.5X90-MM)	
H	58	1,2	**8T-4223**	30	WASHER-HARD (13.5X25.5X3-MM THK)	
HM	59	1,2	**8T-4956**	8	BOLT (M12X1.75X35-MM)	
M	60	2	**8T-5092**	8	BOLT (M12X1.75X150-MM)	

H-NOT REQUIRED WHEN USED WITH LINES GP-FRONT(HAMMER RETURN)
I-REFER TO HYDRAULIC INFORMATION SYSTEM
M-METRIC PART
Y-SEPARATE ILLUSTRATION

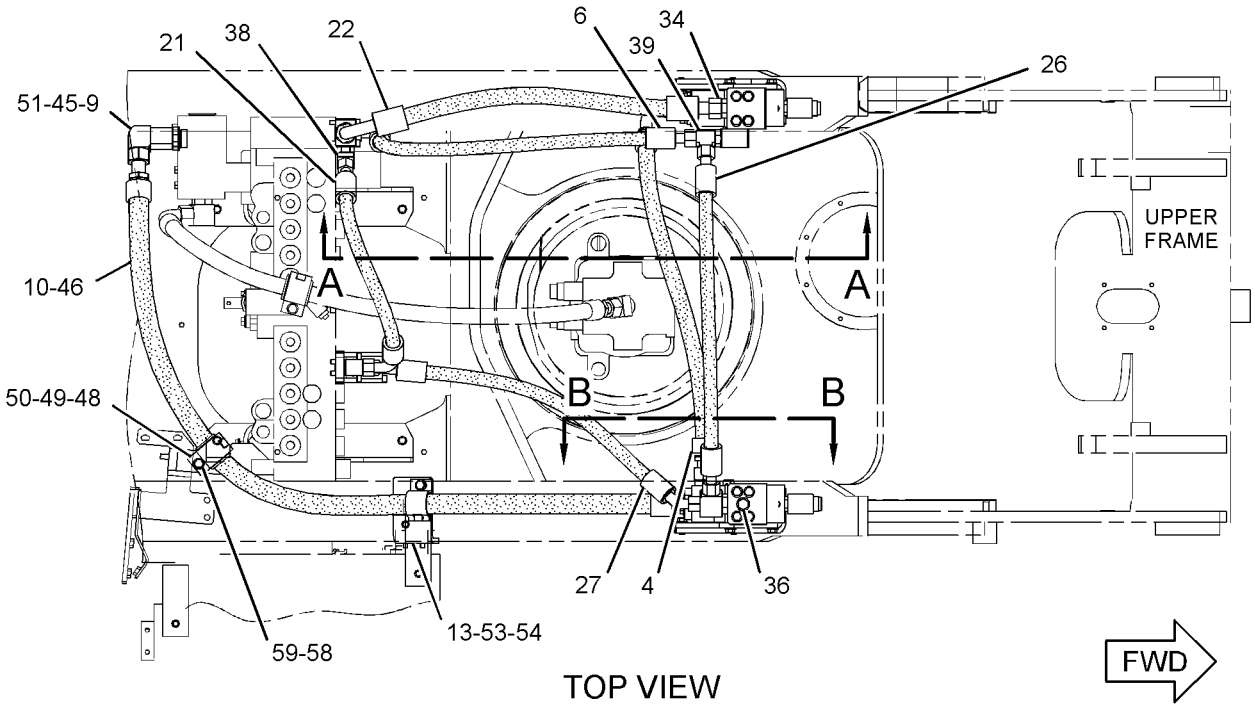

TOP VIEW

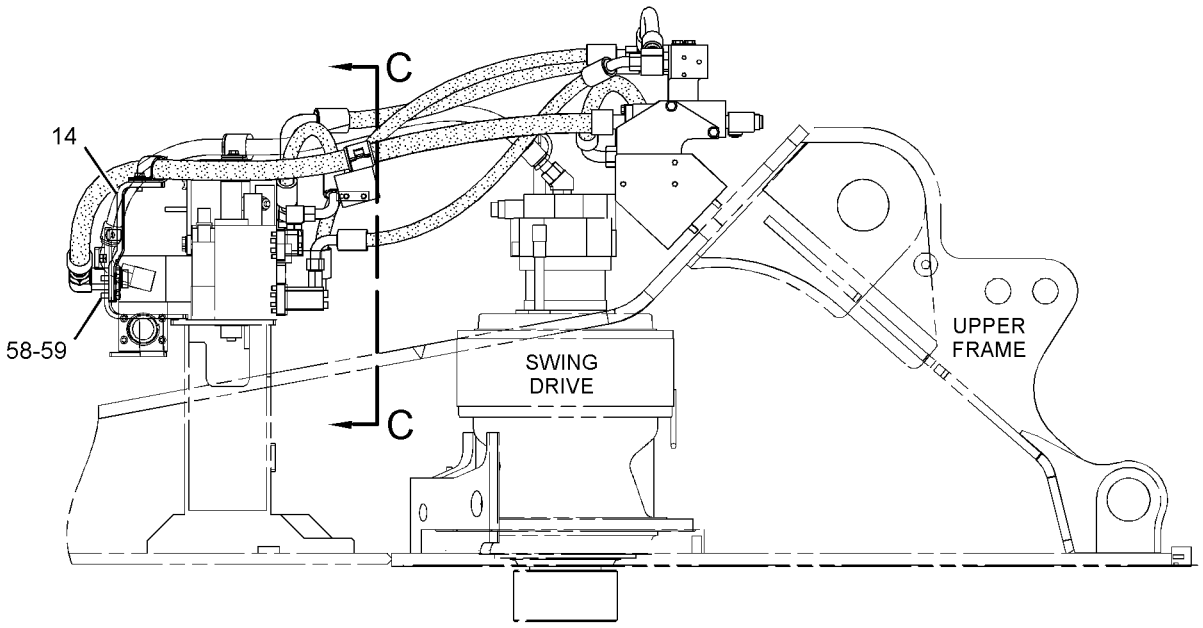

RIGHT SIDE VIEW

GRAPHIC #1

g01220735

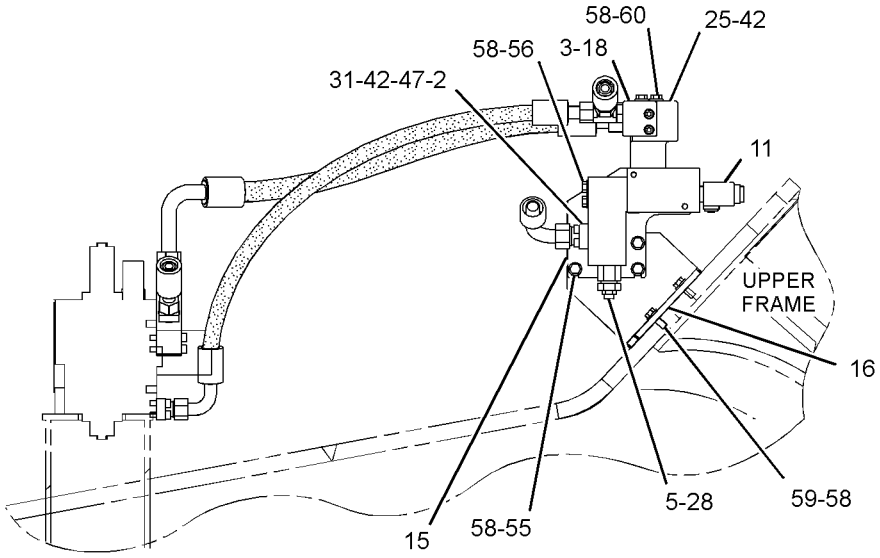

SECTION A-A

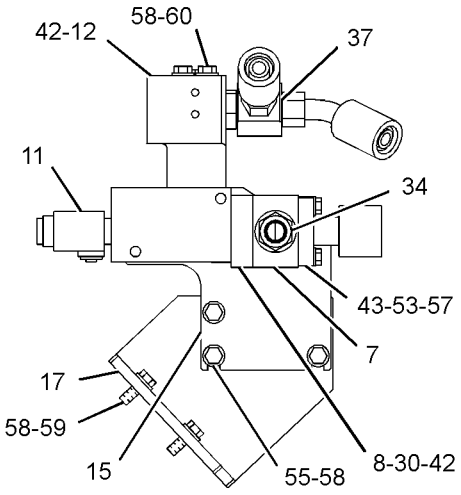

SECTION B-B

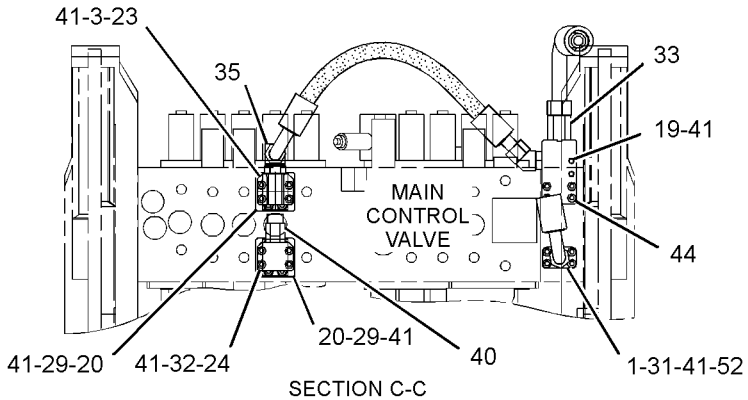

SECTION C-C

GRAPHIC #2 **<END>** g01220739

HYDRAULIC SYSTEM

255-1920 LINES GP-FRONT—SYSTEM 3, 1-WAY, 2-PUMP

S/N: D3P1-UP; M4T1-UP
PART OF 272-9663 CONTROL AR-AUXILIARY
AN ATTACHMENT

SMCS-5057 **i03627228**

NOTE	REF NO	GRAPHIC REF	PART NUMBER	QTY	PART NAME 1 2 3 4 5 6 (PRODUCT LEVEL)	SEE PAGE
J	1	2	**7Y-3731**	1	FLANGE	
M	2	2	**105-3477**	4	BOLT-SOCKET HEAD (M10X1.5X45-MM)	
JI	3	1	**141-1313**	1	HOSE AS	
Y	4	2	**177-2653**	1	VALVE GP-RELIEF (WITH BLOCK)	807
	5	2	**187-5853**	1	BLOCK	
	6	1	**199-1773**	1	ELBOW	
I	7	1	**207-6443**	1	HOSE AS	
	8	2	**212-5148**	1	BLOCK	
	9	2	**218-1139**	1	BLOCK	
J	10	1	**255-1892**	1	SUPPORT	
	11	1	**255-1894**	1	SUPPORT	
	12	2	**255-1936**	1	BLOCK	
	13	2	**260-7959**	2	BRACKET	
	14	2	**260-8030**	1	SUPPORT	
	15	2	**260-8098**	1	SUPPORT	
	16	2	**266-1278**	1	BLOCK	
	17	2	**266-1279**	1	FLANGE	
I	18	1	**266-1303**	1	HOSE AS	
I	19	1	**275-1384**	1	HOSE AS	
	20	2	**275-1439**	1	BLOCK	
	21	2	**099-8232**	1	SEAL-O-RING	
M	22	2	**101-7401**	4	BOLT-SOCKET HEAD (M10X1.5X20-MM)	
JM	23	2	**101-7404**	4	BOLT-SOCKET HEAD (M10X1.5X30-MM)	
	24	2	*148-8330*	1	CONNECTOR AS	
		2	**5K-9090**	1	SEAL-O-RING	
		2	**7M-8485**	1	SEAL-O-RING	
		2	**8T-0198**	1	CONNECTOR	
J	25	2	*148-8335*	2	CONNECTOR AS	
					(EACH INCLUDES)	
		2	**5K-9090**	1	SEAL-O-RING	
		2	**6V-8635**	1	CONNECTOR	
		2	**7M-8485**	1	SEAL-O-RING	
	26	2	*148-8347*	1	ELBOW AS	
		2	**3D-2824**	1	SEAL-O-RING	
		2	**6V-9007**	1	ELBOW	
		2	**6V-9746**	1	SEAL-O-RING	
	27	1	**148-8411**	1	PLUG AS	
		1	**3K-0360**	1	SEAL-O-RING	
		1	**9S-4185**	1	PLUG-O-RING	
	28	1	*153-6237*	1	ELBOW AS	
		1	**3D-2824**	1	SEAL-O-RING	
		1	**6V-9004**	1	ELBOW	
		1	**6V-9746**	1	SEAL-O-RING	
	29	2	*164-4180*	1	PLUG AS	
		2	**7M-8485**	1	SEAL-O-RING	
		2	**9S-4181**	1	PLUG-O-RING	
	30	2	**1P-3702**	3	SEAL-RECTANGULAR	
J	31	2	**1P-3703**	3	SEAL-RECTANGULAR	
	32	2	**1P-4578**	2	FLANGE-HALF	
	33	1	**2S-4078**	1	SEAL-O-RING	
J	34	1	**4J-0522**	1	SEAL-O-RING	
J	35	2	**5K-9090**	1	SEAL-O-RING	
J	36	1	**5P-7468**	2	CLIP (SLOT) (USE WITH 52-MM OD GROMMET)	
J		1	**5P-7469**	2	CLIP (TAB) (USE WITH 52-MM OD GROMMET)	

255-1920 **LINES GP-FRONT** *(contd.)* **i03627228**

NOTE	REF NO	GRAPHIC REF	PART NUMBER	QTY	PART NAME 1 2 3 4 5 6 (PRODUCT LEVEL)	SEE PAGE
J		1	**6V-0545**	2	GROMMET (52-MM OD)	
					—OR—	
J		1	**5P-7470**	2	CLIP (SLOT) (USE WITH 65-MM OD GROMMET)	
J		1	**5P-7471**	2	CLIP (TAB) (USE WITH 65-MM OD GROMMET)	
J		1	**5P-8182**	2	GROMMET (65-MM OD)	
	37	1	**6V-8400**	1	SEAL-O-RING	
J	38	1,2	**8T-4121**	6	WASHER-HARD (11X21X2.5-MM THK)	
JM	39	1	**8T-4136**	2	BOLT (M10X1.5X25-MM)	
M	40	1,2	**8T-4139**	10	BOLT (M12X1.75X30-MM)	
M	41	2	**8T-4176**	4	BOLT (M12X1.75X90-MM)	
M	42	2	**8T-4196**	4	BOLT (M10X1.5X35-MM)	
J	43	1,2	**8T-4223**	30	WASHER-HARD (13.5X25.5X3-MM THK)	
JM	44	1,2	**8T-4956**	8	BOLT (M12X1.75X35-MM)	
M	45	2	**8T-5092**	8	BOLT (M12X1.75X150-MM)	
M	46	2	**280-2747**	4	BOLT-SOCKET HEAD (M10X1.5X60-MM)	

I-REFER TO HYDRAULIC INFORMATION SYSTEM
J-NOT REQUIRED WHEN USED WITH LINES GP-FRONT(HAMMER RETURN)
M-METRIC PART
Y-SEPARATE ILLUSTRATION

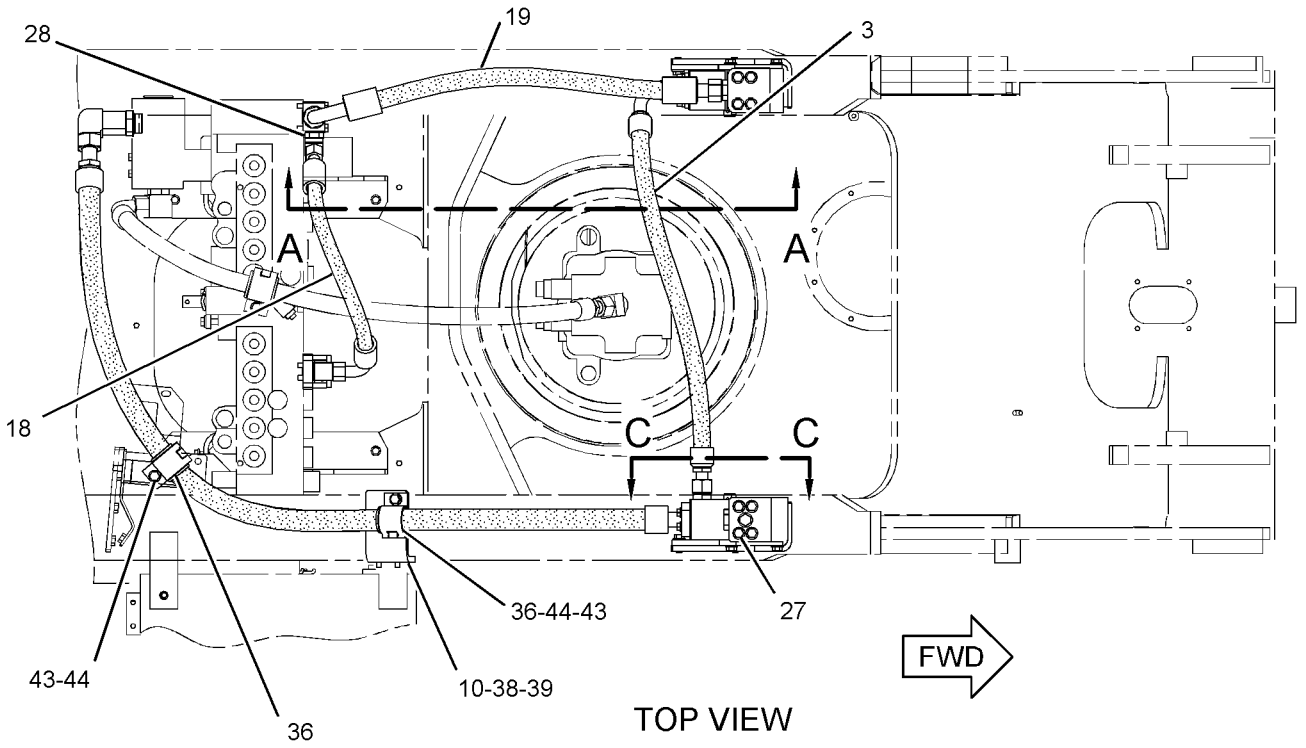

TOP VIEW

REFER TO ALL ILLUSTRATIONS OF
THIS GROUP FOR AUXILIARY VIEWS

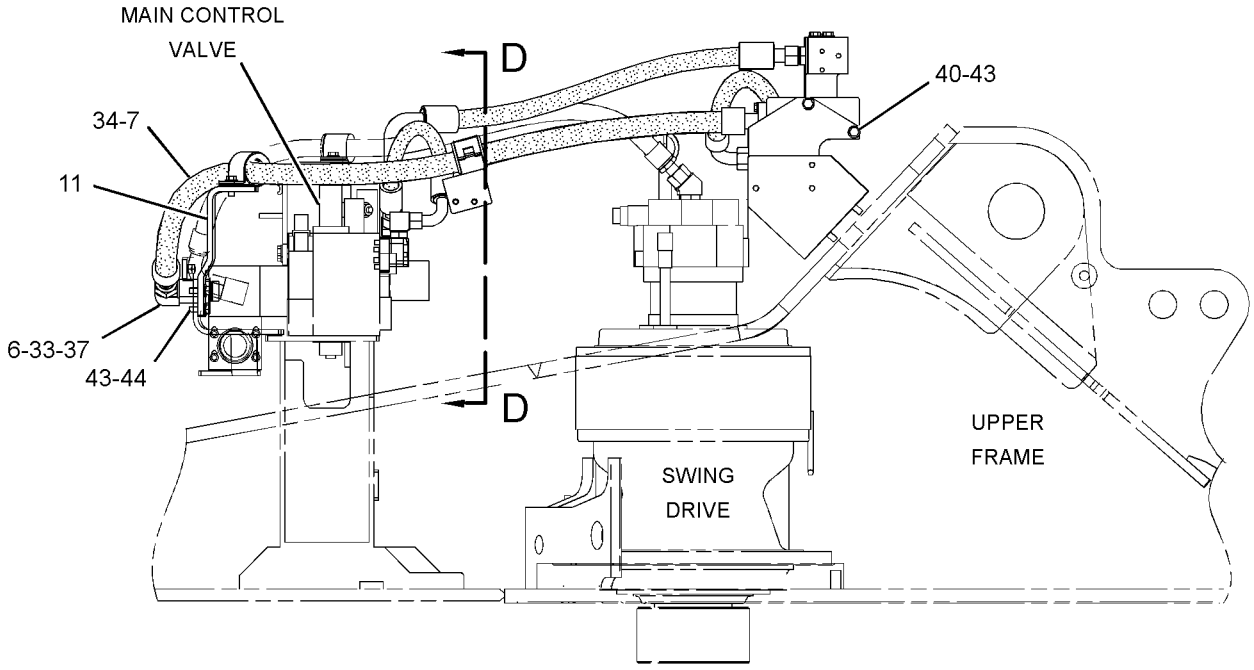

RIGHT SIDE VIEW

GRAPHIC #1

g01237734

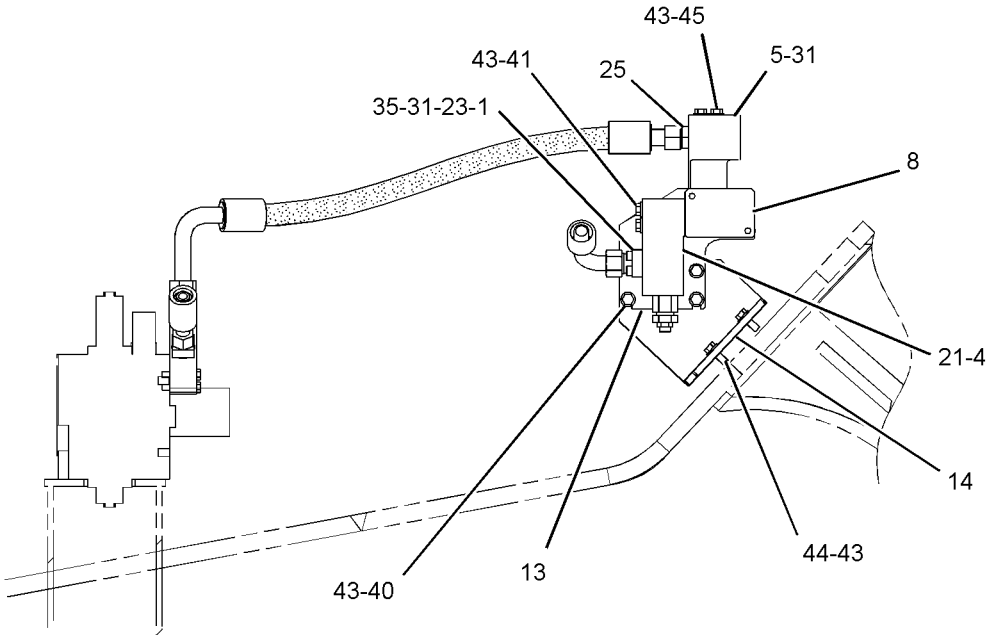

SECTION A-A

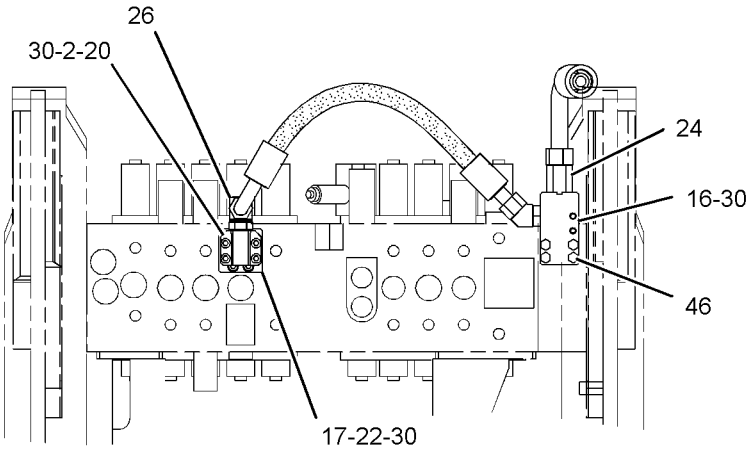

SECTION D-D

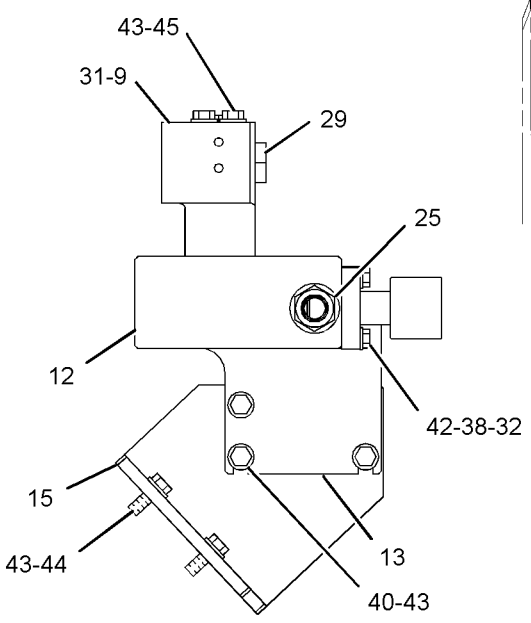

SECTION C-C

GRAPHIC #2 **<END>** g01237735

HYDRAULIC SYSTEM

255-1922 LINES GP-FRONT—SYSTEM 14, COMBINED FUNCTION

S/N: D3P1-UP; M4T1-UP
PART OF 270-8795, 270-8796 CONTROL AR-AUXILIARY
AN ATTACHMENT

SMCS-5057 **i03627276**

NOTE	REF NO	GRAPHIC REF	PART NUMBER	QTY	PART NAME 1 2 3 4 5 6 (PRODUCT LEVEL)	SEE PAGE
	1	1	**7Y-3731**	1	FLANGE	
M	2	2	**105-3477**	6	BOLT-SOCKET HEAD (M10X1.5X45-MM)	
M	3	2	**105-3479**	4	BOLT-SOCKET HEAD (M10X1.5X90-MM)	
I	4	2	**184-9508**	1	HOSE AS	
	5	1	**187-6720**	1	BLOCK	
I	6	2	**193-9994**	1	HOSE AS	
	7	2	**199-1773**	1	ELBOW	
I	8	2	**204-8428**	1	HOSE AS	
Y	9	1,2	**297-0370**	3	VALVE GP-CHECK	740
	10	2	**218-1002**	1	HOSE AS	
	11	2	**221-8859**	1	SENSOR AS-PRESSURE (WORK TOOL)	
		2	**3E-3371**	1	WEDGE-RECEPTACLE LOCK (3-PIN)	
		2	**9X-3401**	3	PIN-CONNECTOR (16-GA TO 18-GA)	
					—OR—	
		2	**126-1767**	3	PIN-CONNECTOR (14-GA)	
		2	**171-0596**	1	RECEPTACLE AS	
		2	**3K-0360**	1	SEAL-O-RING	
CY	12	1,2	**323-7558**	2	VALVE GP-SOLENOID & RELIEF (WITH BLOCK)	840
	13	2	**255-1892**	1	SUPPORT	
	14	2	**255-1894**	1	SUPPORT	
	15	2	**260-7959**	1	BRACKET	
	16	1	**260-8027**	1	SUPPORT AS	
	17	2	**260-8030**	1	SUPPORT	
	18	1	**260-8045**	1	BRACKET AS	
	19	2	**266-0953**	1	BLOCK	
	20	1	**266-0954**	1	BLOCK	
	21	2	**266-1278**	1	BLOCK	
	22	2	**266-1279**	2	FLANGE	
I	23	2	**266-1303**	1	HOSE AS	
I	24	2	**275-1384**	1	HOSE AS	
I	25	2	**275-1388**	1	HOSE AS	
I	26	2	**275-1392**	1	HOSE AS	
	27	2	**275-1396**	1	BLOCK	
	28	2	**275-1439**	1	BLOCK	
	29	2	**275-1440**	1	BLOCK	
	30	1,2	**099-8232**	2	SEAL-O-RING	
M	31	2	**101-7401**	8	BOLT-SOCKET HEAD (M10X1.5X20-MM)	
M	32	1,2	**101-7404**	8	BOLT-SOCKET HEAD (M10X1.5X30-MM)	
M	33	1	**105-3485**	4	BOLT-SOCKET HEAD (M12X1.75X60-MM)	
M	34	2	**108-4282**	4	BOLT-SOCKET HEAD (M10X1.5X100-MM)	
	35	2	*148-8317*	1	CONNECTOR AS	
		2	**3D-2824**	1	SEAL-O-RING	
		2	**5K-9090**	1	SEAL-O-RING	
		2	**6V-8714**	1	CONNECTOR	
	36	2	*148-8330*	1	CONNECTOR AS	
		2	**5K-9090**	1	SEAL-O-RING	
		2	**7M-8485**	1	SEAL-O-RING	
		2	**8T-0198**	1	CONNECTOR	
	37	1,2	*148-8335*	2	CONNECTOR AS	
					(EACH INCLUDES)	
		1,2	**5K-9090**	1	SEAL-O-RING	
		1,2	**6V-8635**	1	CONNECTOR	
		1,2	**7M-8485**	1	SEAL-O-RING	
	38	1	*148-8339*	1	CONNECTOR AS	
		1	**6V-8716**	1	CONNECTOR	

255-1922 **LINES GP-FRONT** *(contd.)* **i03627276**

NOTE	REF NO	GRAPHIC REF	PART NUMBER	QTY	PART NAME 1 2 3 4 5 6 (PRODUCT LEVEL)	SEE PAGE
		1	**6V-9746**	1	SEAL-O-RING	
		1	**7M-8485**	1	SEAL-O-RING	
	39	2	*148-8347*	1	ELBOW AS	
		2	**3D-2824**	1	SEAL-O-RING	
		2	**6V-9007**	1	ELBOW	
		2	**6V-9746**	1	SEAL-O-RING	
	40	2	*148-8362*	1	ELBOW AS	
		2	**3D-2824**	1	SEAL-O-RING	
		2	**5K-9090**	1	SEAL-O-RING	
		2	**8T-6684**	1	ELBOW	
	41	1,2	*153-6237*	2	ELBOW AS	
					(EACH INCLUDES)	
		1,2	**3D-2824**	1	SEAL-O-RING	
		1,2	**6V-9004**	1	ELBOW	
		1,2	**6V-9746**	1	SEAL-O-RING	
	42	1	*164-4180*	1	PLUG AS	
		1	**7M-8485**	1	SEAL-O-RING	
		1	**9S-4181**	1	PLUG-O-RING	
	43	2	*164-5574*	1	TEE AS	
		2	**3D-2824**	1	SEAL-O-RING	
		2	**6V-8784**	1	TEE-FACE SEAL	
		2	**6V-9746**	2	SEAL-O-RING	
	44	2	*164-5606*	1	CONNECTOR AS	
		2	**3D-2824**	1	SEAL-O-RING	
		2	**6V-9746**	1	SEAL-O-RING	
		2	**8T-0078**	1	CONNECTOR	
	45	2	**199-1918**	1	FLANGE	
	46	2	**1P-3702**	6	SEAL-RECTANGULAR	
	47	1,2	**1P-3703**	3	SEAL-RECTANGULAR	
	48	1	**1P-3704**	3	SEAL-RECTANGULAR	
	49	1	**1P-4578**	2	FLANGE-HALF	
M	50	2	**280-2747**	4	BOLT-SOCKET HEAD (M10X1.5X60-MM)	
	51	2	**2S-4078**	1	SEAL-O-RING	
	52	2	**4J-0522**	1	SEAL-O-RING	
	53	1	**5K-9090**	1	SEAL-O-RING	
	54	1	**5P-7468**	2	CLIP (SLOT) (USE WITH 52-MM OD GROMMET)	
		1	**5P-7469**	2	CLIP (TAB) (USE WITH 52-MM OD GROMMET)	
					—OR—	
		1	**6V-0545**	2	GROMMET (52-MM OD)	
		1	**5P-7470**	2	CLIP (SLOT) (USE WITH 65-MM OD GROMMET)	
		1	**5P-7471**	2	CLIP (TAB) (USE WITH 65-MM OD GROMMET)	
					—OR—	
		1	**5P-8182**	2	GROMMET (65-MM OD)	
	57	2	**7Y-3729**	1	FLANGE	
	58	1,2	**8T-4121**	6	WASHER-HARD (11X21X2.5-MM THK)	
M	59	2	**8T-4136**	2	BOLT (M10X1.5X25-MM)	
M	60	1,2	**8T-4139**	9	BOLT (M12X1.75X30-MM)	
M	61	1,2	**8T-4176**	8	BOLT (M12X1.75X90-MM)	
M	62	1	**8T-4186**	4	BOLT (M10X1.5X40-MM)	
	63	1,2	**8T-4223**	43	WASHER-HARD (13.5X25.5X3-MM THK)	
M	64	1,2	**8T-4956**	14	BOLT (M12X1.75X35-MM)	
M	65	1,2	**8T-5092**	8	BOLT (M12X1.75X150-MM)	
M	66	1	**8T-5412**	4	BOLT (M12X1.75X140-MM)	
	67	2	**6V-8400**	1	SEAL-O-RING	
	68	2	**6V-9746**	1	SEAL-O-RING	

C-CHANGE FROM PREVIOUS TYPE
I-REFER TO HYDRAULIC INFORMATION SYSTEM
M-METRIC PART
Y-SEPARATE ILLUSTRATION

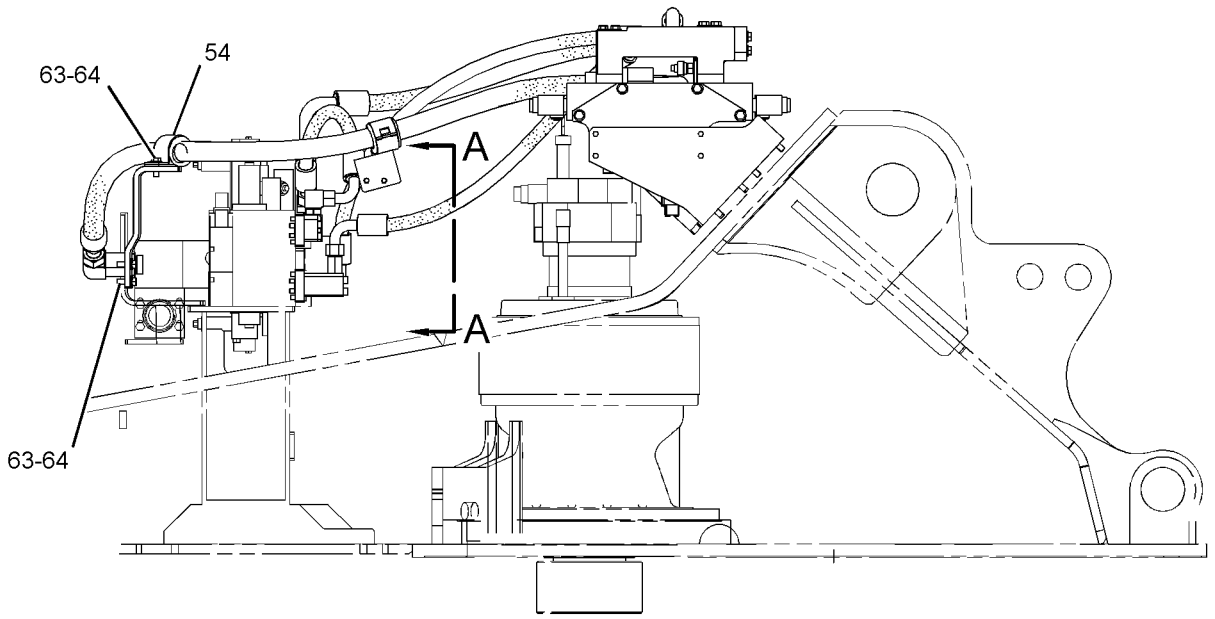

RIGHT SIDE VIEW

REFER TO ALL ILLUSTRATIONS OF
THIS GROUP FOR AUXILIARY VIEWS

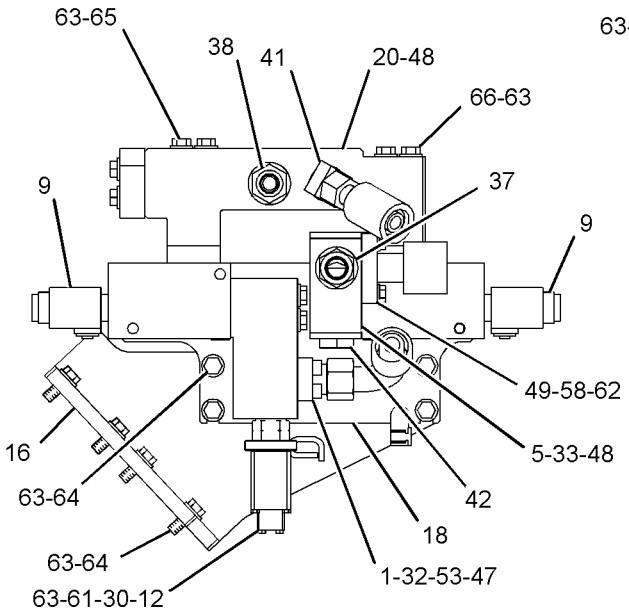

SECTION C-C

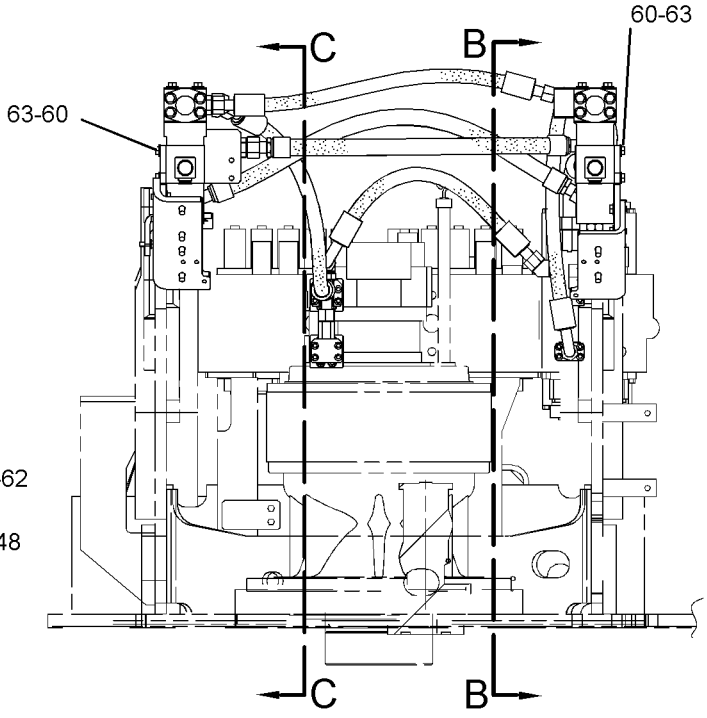

FRONT VIEW

GRAPHIC #1

g01946061

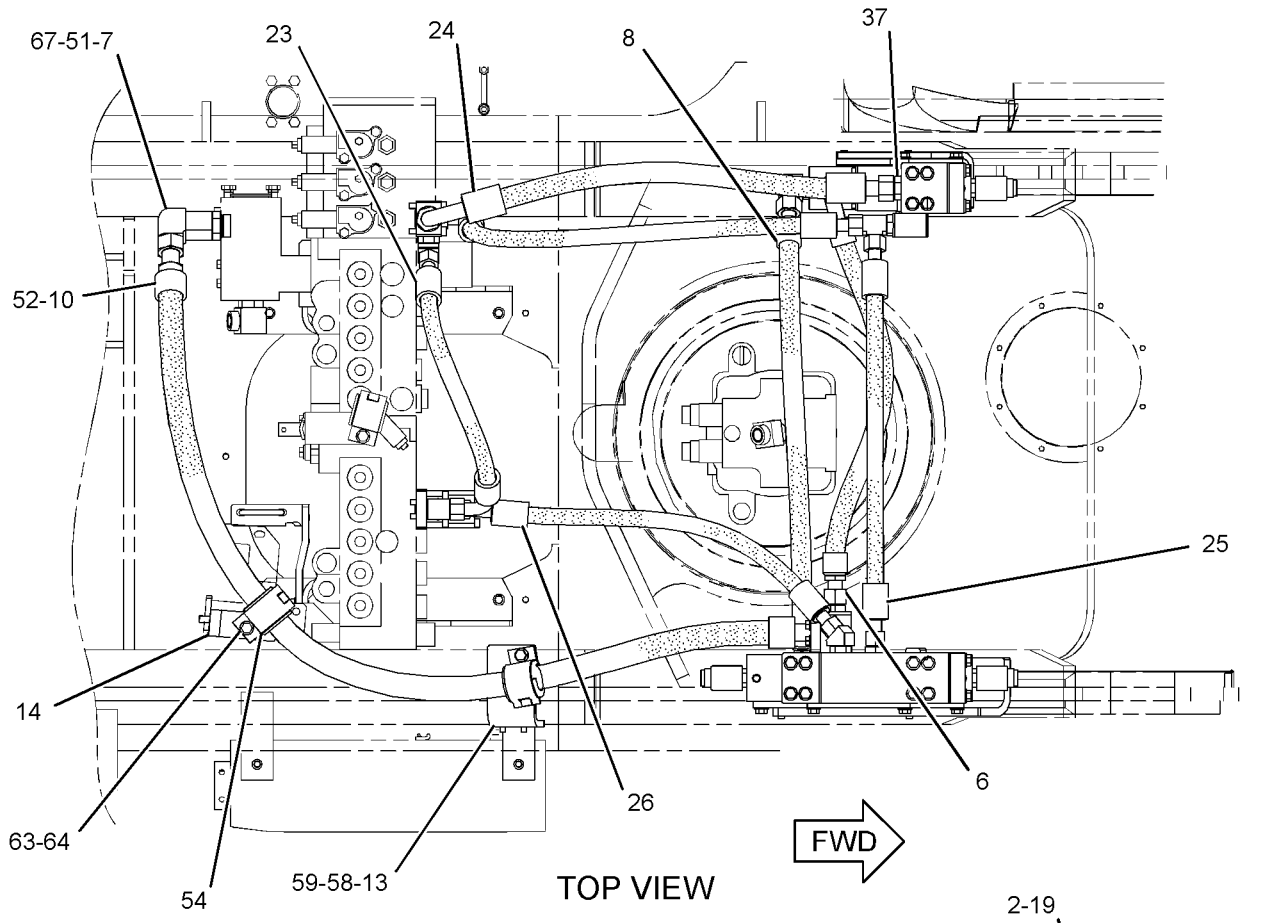

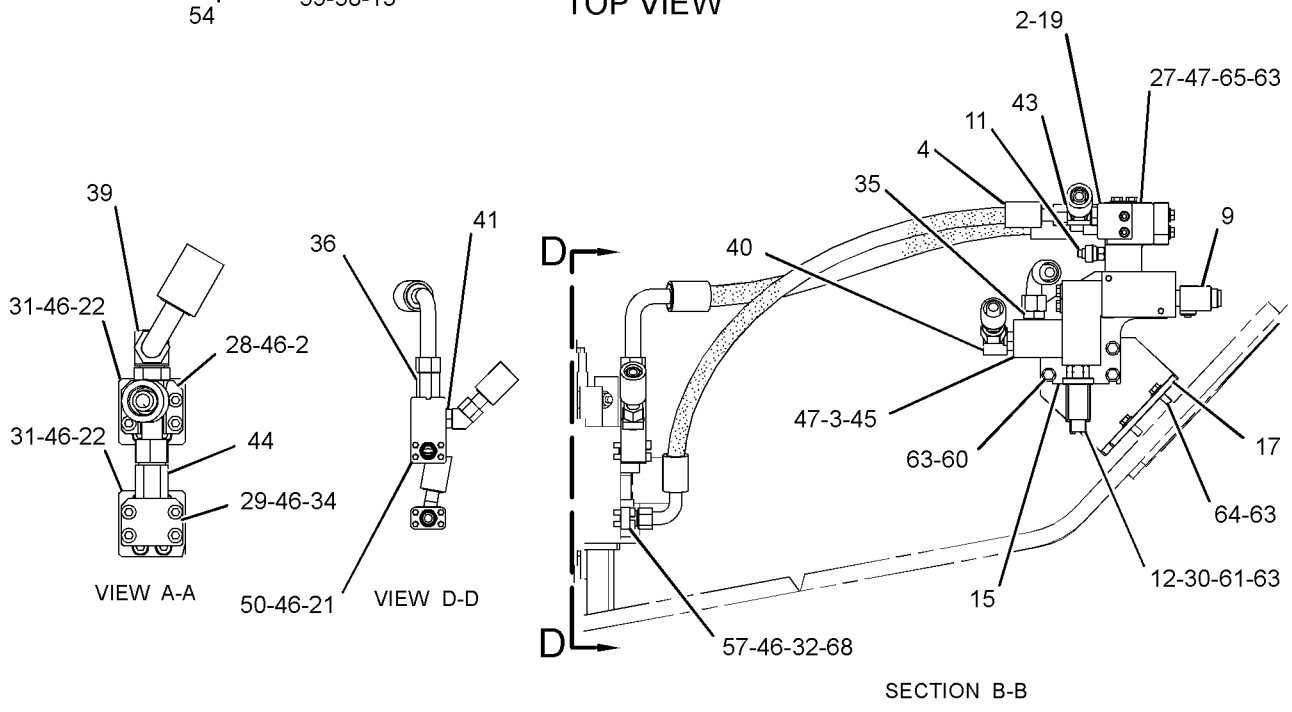

GRAPHIC #2 **<END>** g02026420

HYDRAULIC SYSTEM

255-1923 LINES GP-FRONT—SYSTEM 16, 1-WAY, 2-PUMP

S/N: M4T1-UP

PART OF 255-5774 CONTROL AR-AUXILIARY

AN ATTACHMENT

SMCS-5057 **i03727244**

NOTE	REF NO	GRAPHIC REF	PART NUMBER	QTY	PART NAME 1 2 3 4 5 6 (PRODUCT LEVEL)	SEE PAGE
	1	2	**7Y-3731**	1	FLANGE	
M	2	2	**105-3477**	4	BOLT-SOCKET HEAD (M10X1.5X45-MM)	
I	3	1	**141-1313**	1	HOSE AS	
Y	4	2	**177-2653**	1	VALVE GP-RELIEF (WITH BLOCK)	807
	5	2	**187-5853**	2	BLOCK	
I	6	2	**207-6443**	1	HOSE AS	
	7	2	**212-5148**	1	BLOCK	
	8	1	**255-1892**	1	SUPPORT	
	9	1	**255-1894**	1	SUPPORT	
	10	2	**255-1936**	1	BLOCK	
	11	2	**260-7959**	2	BRACKET	
	12	2	**260-8030**	1	SUPPORT	
	13	2	**260-8098**	1	SUPPORT	
	14	1	**260-8193**	1	TUBE AS	
	15	2	**266-1278**	1	BLOCK	
	16	2	**266-1279**	1	FLANGE	
I	17	1	**266-1303**	1	HOSE AS	
I	18	1	**275-1384**	1	HOSE AS	
	19	2	**275-1439**	1	BLOCK	
	20	2	**099-8232**	1	SEAL-O-RING	
M	21	2	**101-7401**	4	BOLT-SOCKET HEAD (M10X1.5X20-MM)	
M	22	2	**101-7404**	4	BOLT-SOCKET HEAD (M10X1.5X30-MM)	
M	23	1	**108-3819**	4	BOLT-SOCKET HEAD (M12X1.75X70-MM)	
	24	2	*148-8330*	1	CONNECTOR AS	
		2	**5K-9090**	1	SEAL-O-RING	
		2	**7M-8485**	1	SEAL-O-RING	
		2	**8T-0198**	1	CONNECTOR	
	25	2	*148-8335*	2	CONNECTOR AS	
					(EACH INCLUDES)	
		2	**5K-9090**	1	SEAL-O-RING	
		2	**6V-8635**	1	CONNECTOR	
		2	**7M-8485**	1	SEAL-O-RING	
	26	2	*148-8347*	1	ELBOW AS	
		2	**3D-2824**	1	SEAL-O-RING	
		2	**6V-9007**	1	ELBOW	
		2	**6V-9746**	1	SEAL-O-RING	
	27	2	*148-8356*	1	ELBOW AS	
		2	**2S-4078**	1	SEAL-O-RING	
		2	**6V-8400**	1	SEAL-O-RING	
		2	**6V-9009**	1	ELBOW	
	28	2	*153-6237*	1	ELBOW AS	
		2	**3D-2824**	1	SEAL-O-RING	
		2	**6V-9004**	1	ELBOW	
		2	**6V-9746**	1	SEAL-O-RING	
	29	2	*164-4180*	1	PLUG AS	
		2	**7M-8485**	1	SEAL-O-RING	
		2	**9S-4181**	1	PLUG-O-RING	
	30	2	**1P-3702**	3	SEAL-RECTANGULAR	
	31	2	**1P-3703**	3	SEAL-RECTANGULAR	
	32	2	**1P-4578**	2	FLANGE-HALF	
	33	2	**4J-0522**	1	SEAL-O-RING	
	34	2	**5K-9090**	1	SEAL-O-RING	
	35	1,2	**5P-7470**	2	CLIP (SLOT)	
	36	1,2	**5P-7471**	2	CLIP (TAB)	
	37	1,2	**5P-8182**	2	GROMMET	

255-1923 **LINES GP-FRONT** *(contd.)* **i03727244**

NOTE	REF NO	GRAPHIC REF	PART NUMBER	QTY	PART NAME 1 2 3 4 5 6 (PRODUCT LEVEL)	SEE PAGE
	38	1	**6J-2680**	1	SEAL-O-RING	
	39	1,2	**8T-4121**	6	WASHER-HARD (11X21X2.5-MM THK)	
M	40	1	**8T-4136**	2	BOLT (M10X1.5X25-MM)	
M	41	2	**8T-4139**	10	BOLT (M12X1.75X30-MM)	
M	42	2	**8T-4176**	4	BOLT (M12X1.75X90-MM)	
M	43	2	**8T-4196**	4	BOLT (M10X1.5X35-MM)	
	44	1,2	**8T-4223**	30	WASHER-HARD (13.5X25.5X3-MM THK)	
M	45	1,2	**8T-4956**	8	BOLT (M12X1.75X35-MM)	
M	46	2	**8T-5092**	8	BOLT (M12X1.75X150-MM)	
M	47	2	**280-2747**	4	BOLT-SOCKET HEAD (M10X1.5X60-MM)	

I-REFER TO HYDRAULIC INFORMATION SYSTEM
M-METRIC PART
Y-SEPARATE ILLUSTRATION

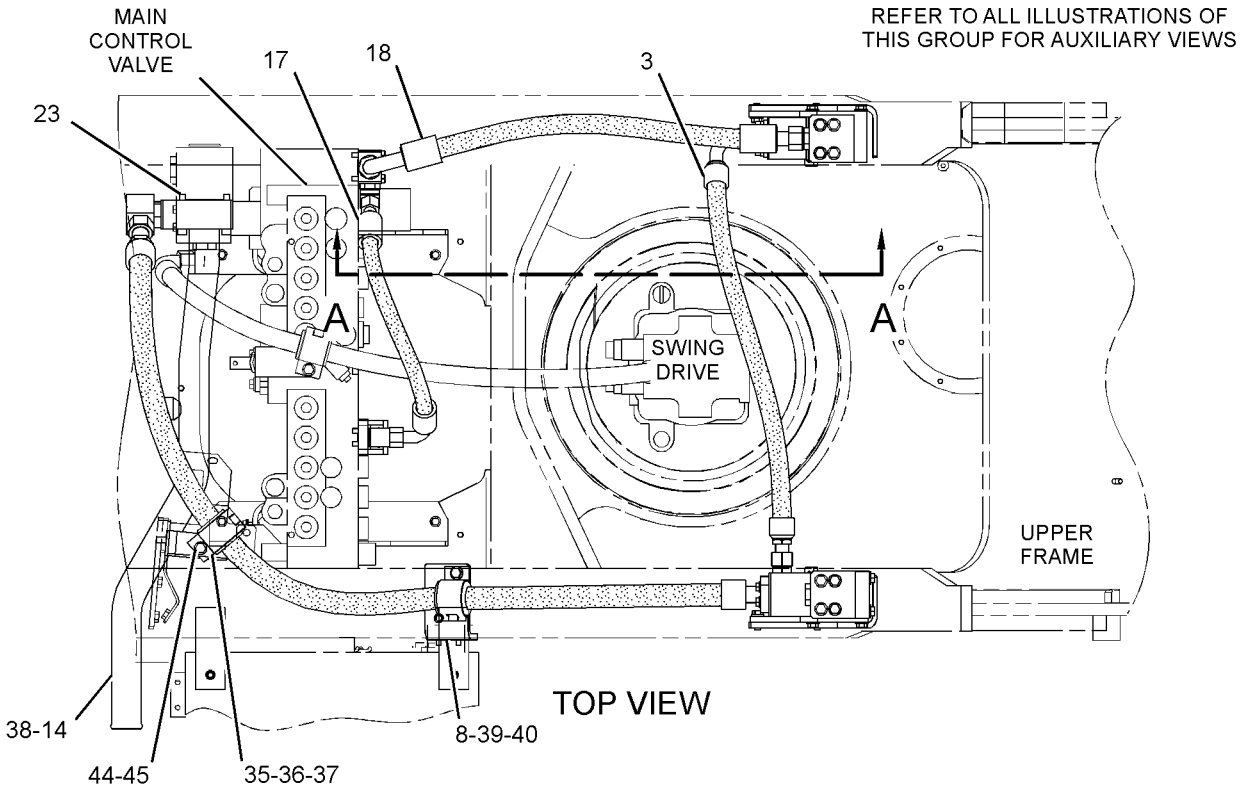

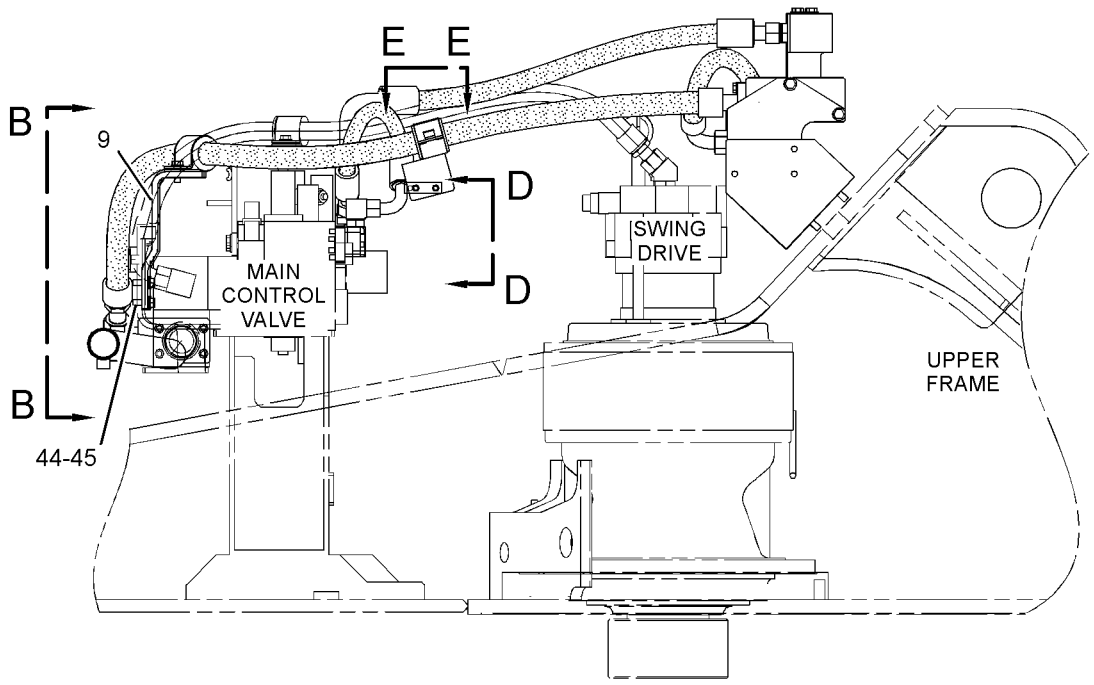

GRAPHIC #1 g01202887

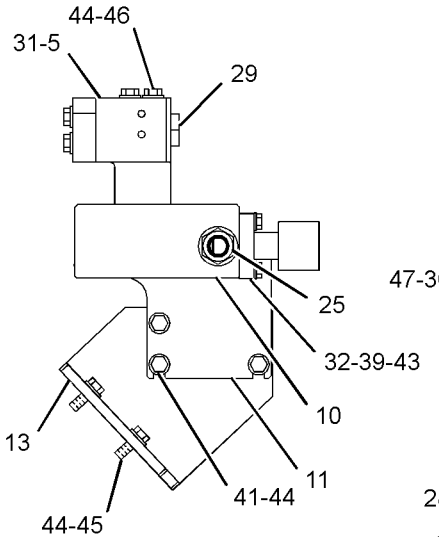

SECTION C-C

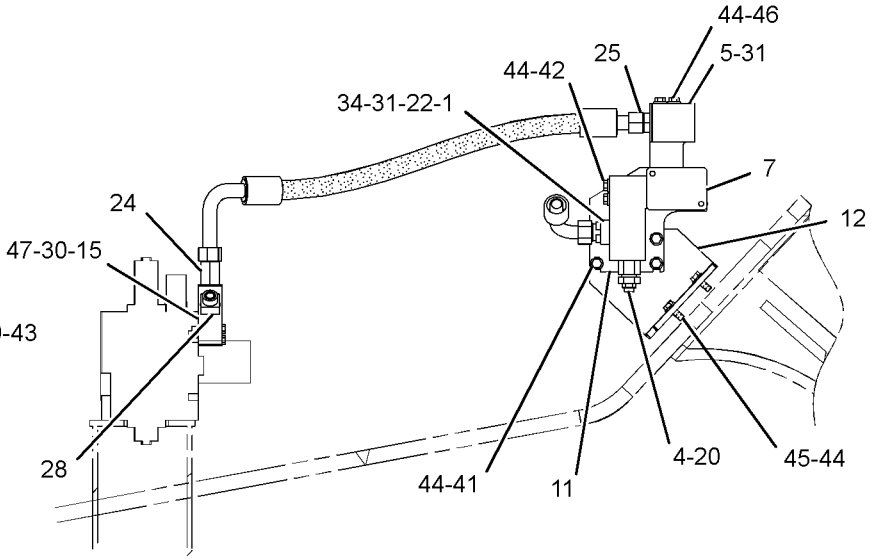

SECTION A-A

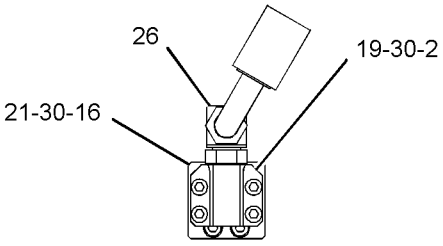

SECTION D-D

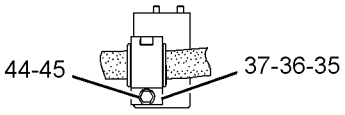

SECTION E-E

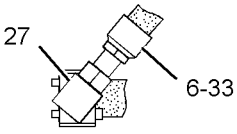

SECTION B-B

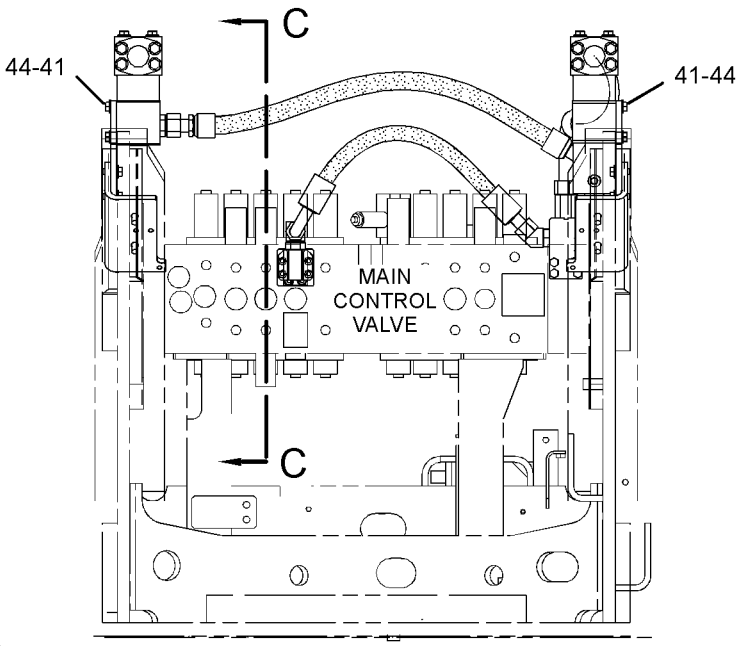

REAR VIEW

GRAPHIC #2 **<END>** g01202888

HYDRAULIC SYSTEM

255-1924 LINES GP-FRONT—SYSTEM 17, COMBINED FUNCTION

S/N: M4T1-UP

PART OF 297-0494 CONTROL AR-AUXILIARY

AN ATTACHMENT

SMCS-5057 **i03744538**

NOTE	REF NO	GRAPHIC REF	PART NUMBER	QTY	PART NAME 1 2 3 4 5 6 (PRODUCT LEVEL)	SEE PAGE
	1	1	**7Y-3729**	1	FLANGE	
	2	2	**7Y-3731**	1	FLANGE	
M	3	1,2	**105-3477**	6	BOLT-SOCKET HEAD (M10X1.5X45-MM)	
M	4	1	**105-3479**	4	BOLT-SOCKET HEAD (M10X1.5X90-MM)	
I	5	1	**184-9508**	1	HOSE AS	
	6	2	**187-6720**	1	BLOCK	
I	7	1	**193-9994**	1	HOSE AS	
I	8	1	**204-8428**	1	HOSE AS	
	9	1	**218-1002**	1	HOSE AS	
Y	10	1,2	**323-7558**	2	VALVE GP-SOLENOID & RELIEF (WITH BLOCK)	840
	11	1	**255-1892**	1	SUPPORT	
	12	1	**255-1894**	1	SUPPORT	
	13	1	**260-7959**	1	BRACKET	
	14	2	**260-8027**	1	SUPPORT AS	
	15	1	**260-8030**	1	SUPPORT	
	16	2	**260-8045**	1	BRACKET AS	
	17	1	**260-8193**	1	TUBE AS	
	18	1	**266-0953**	1	BLOCK	
	19	2	**266-0954**	1	BLOCK	
	20	2	**266-1278**	1	BLOCK	
	21	2	**266-1279**	2	FLANGE	
I	22	1	**266-1303**	1	HOSE AS	
I	23	1	**275-1384**	1	HOSE AS	
I	24	1	**275-1388**	1	HOSE AS	
I	25	1	**275-1392**	1	HOSE AS	
	26	2	**275-1439**	1	BLOCK	
	27	2	**275-1440**	1	BLOCK	
	28	1	**275-1540**	1	BLOCK	
Y	29	1,2	**297-0370**	3	VALVE GP-CHECK	740
	30	1,2	**099-8232**	2	SEAL-O-RING	
M	31	2	**101-7401**	8	BOLT-SOCKET HEAD (M10X1.5X20-MM)	
M	32	1,2	**101-7404**	8	BOLT-SOCKET HEAD (M10X1.5X30-MM)	
M	33	2	**105-3485**	4	BOLT-SOCKET HEAD (M12X1.75X60-MM)	
M	34	1	**108-3819**	4	BOLT-SOCKET HEAD (M12X1.75X70-MM)	
M	35	2	**108-4282**	4	BOLT-SOCKET HEAD (M10X1.5X100-MM)	
	36	1	*148-8317*	1	CONNECTOR AS	
		1	**3D-2824**	1	SEAL-O-RING	
		1	**5K-9090**	1	SEAL-O-RING	
		1	**6V-8714**	1	CONNECTOR	
	37	2	*148-8330*	1	CONNECTOR AS	
		2	**5K-9090**	1	SEAL-O-RING	
		2	**7M-8485**	1	SEAL-O-RING	
		2	**8T-0198**	1	CONNECTOR	
	38	1,2	*148-8335*	2	CONNECTOR AS	
					(EACH INCLUDES)	
		1,2	**5K-9090**	1	SEAL-O-RING	
		1,2	**6V-8635**	1	CONNECTOR	
		1,2	**7M-8485**	1	SEAL-O-RING	
	39	2	*148-8339*	1	CONNECTOR AS	
		2	**6V-8716**	1	CONNECTOR	
		2	**6V-9746**	1	SEAL-O-RING	
		2	**7M-8485**	1	SEAL-O-RING	
	40	2	*148-8347*	1	ELBOW AS	
		2	**3D-2824**	1	SEAL-O-RING	
		2	**6V-9007**	1	ELBOW	

255-1924 **LINES GP-FRONT** *(contd.)* **i03744538**

NOTE	REF NO	GRAPHIC REF	PART NUMBER	QTY	PART NAME 1 2 3 4 5 6 (PRODUCT LEVEL)	SEE PAGE
		2	**6V-9746**	1	SEAL-O-RING	
	41	1	*148-8356*	1	ELBOW AS	
		1	**2S-4078**	1	SEAL-O-RING	
		1	**6V-8400**	1	SEAL-O-RING	
		1	**6V-9009**	1	ELBOW	
	42	1	*148-8362*	1	ELBOW AS	
		1	**3D-2824**	1	SEAL-O-RING	
		1	**5K-9090**	1	SEAL-O-RING	
		1	**8T-6684**	1	ELBOW	
	43	2	*153-6237*	2	ELBOW AS	
					(EACH INCLUDES)	
		2	**3D-2824**	1	SEAL-O-RING	
		2	**6V-9004**	1	ELBOW	
		2	**6V-9746**	1	SEAL-O-RING	
	44	2	*164-4180*	1	PLUG AS	
		2	**7M-8485**	1	SEAL-O-RING	
		2	**9S-4181**	1	PLUG-O-RING	
	45	1	*164-5574*	1	TEE AS	
		1	**3D-2824**	1	SEAL-O-RING	
		1	**6V-8784**	1	TEE-FACE SEAL	
		1	**6V-9746**	2	SEAL-O-RING	
	46	2	*164-5606*	1	CONNECTOR AS	
		2	**3D-2824**	1	SEAL-O-RING	
		2	**6V-9746**	1	SEAL-O-RING	
		2	**8T-0078**	1	CONNECTOR	
	47	1	**199-1918**	1	FLANGE	
	48	1,2	**1P-3702**	6	SEAL-RECTANGULAR	
	49	1,2	**1P-3703**	3	SEAL-RECTANGULAR	
	50	2	**1P-3704**	3	SEAL-RECTANGULAR	
	51	2	**1P-4578**	2	FLANGE-HALF	
M	52	2	**280-2747**	4	BOLT-SOCKET HEAD (M10X1.5X60-MM)	
	53	1	**4J-0522**	1	SEAL-O-RING	
	54	2	**5K-9090**	1	SEAL-O-RING	
	55	1	**5P-7470**	2	CLIP (SLOT)	
	56	1	**5P-7471**	2	CLIP (TAB)	
	57	1	**5P-8182**	2	GROMMET	
	58	1	**6J-2680**	1	SEAL-O-RING	
	59	1	**6V-9746**	1	SEAL-O-RING	
	60	1,2	**8T-4121**	6	WASHER-HARD (11X21X2.5-MM THK)	
M	61	1	**8T-4136**	2	BOLT (M10X1.5X25-MM)	
M	62	1	**8T-4139**	9	BOLT (M12X1.75X30-MM)	
M	63	1,2	**8T-4176**	8	BOLT (M12X1.75X90-MM)	
M	64	2	**8T-4186**	4	BOLT (M10X1.5X40-MM)	
	65	1,2	**8T-4223**	43	WASHER-HARD (13.5X25.5X3-MM THK)	
M	66	1,2	**8T-4956**	14	BOLT (M12X1.75X35-MM)	
M	67	1,2	**8T-5092**	8	BOLT (M12X1.75X150-MM)	
M	68	2	**8T-5412**	4	BOLT (M12X1.75X140-MM)	

I-REFER TO HYDRAULIC INFORMATION SYSTEM
M-METRIC PART
Y-SEPARATE ILLUSTRATION

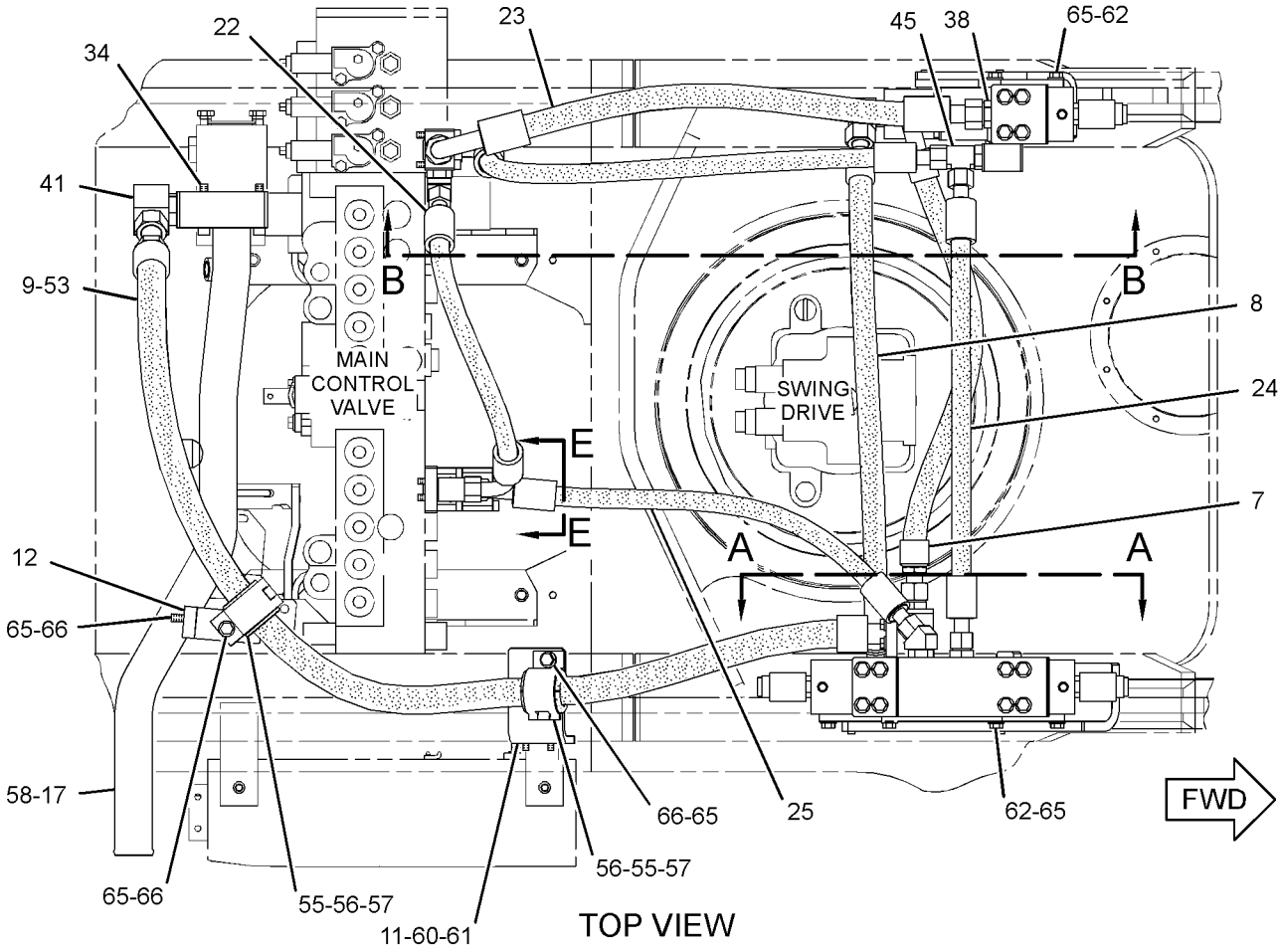

TOP VIEW

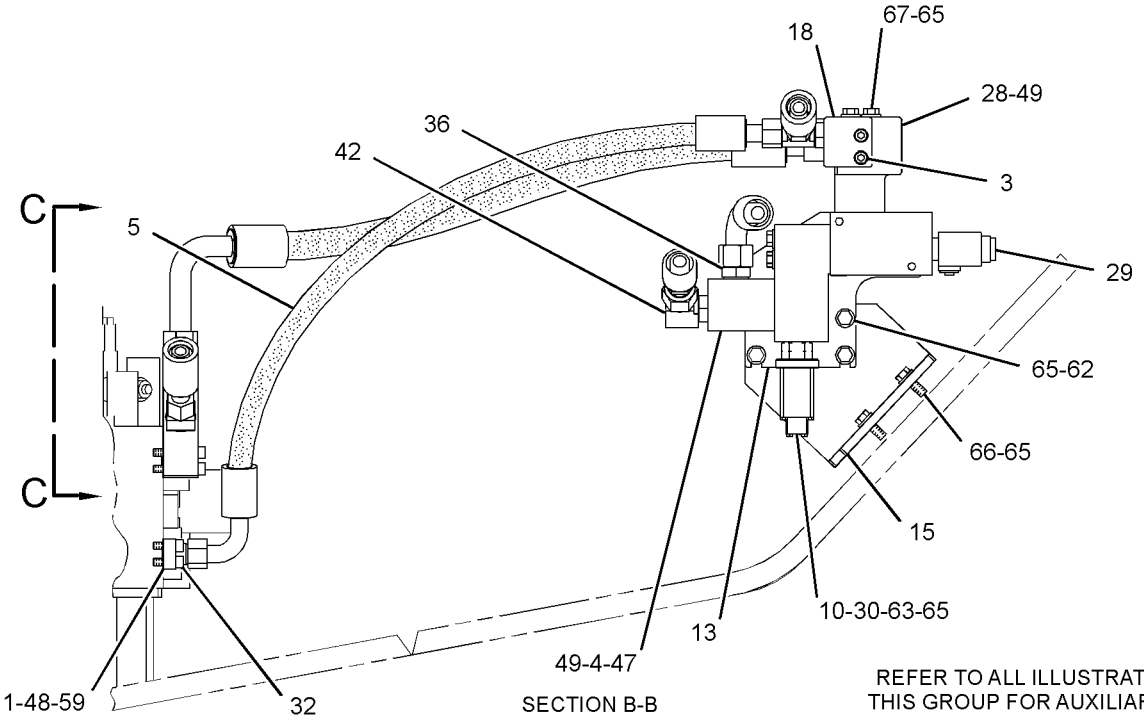

SECTION B-B

REFER TO ALL ILLUSTRATIONS OF THIS GROUP FOR AUXILIARY VIEWS

GRAPHIC #1

g01574093

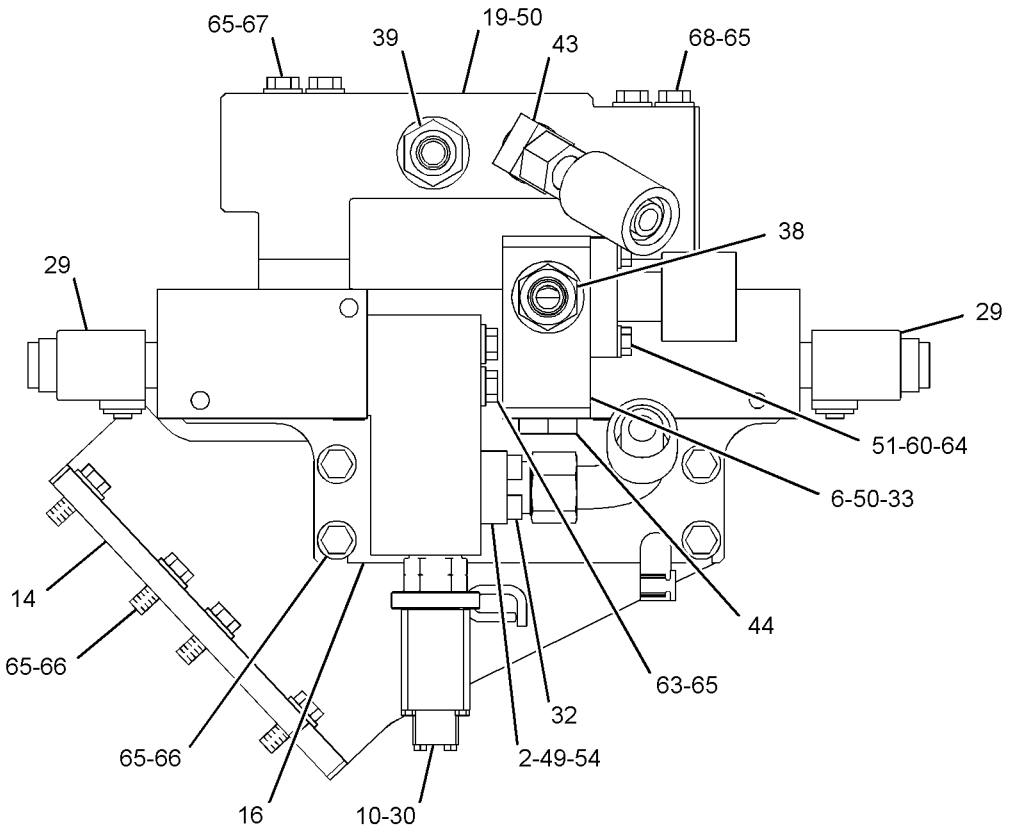

SECTION A-A

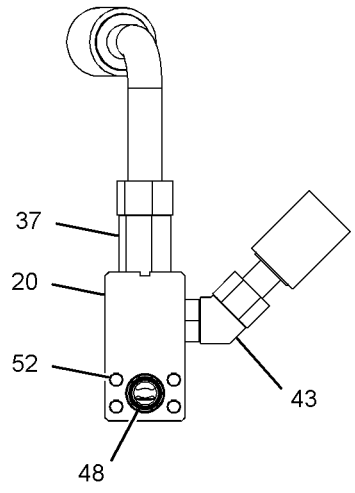

VIEW C-C

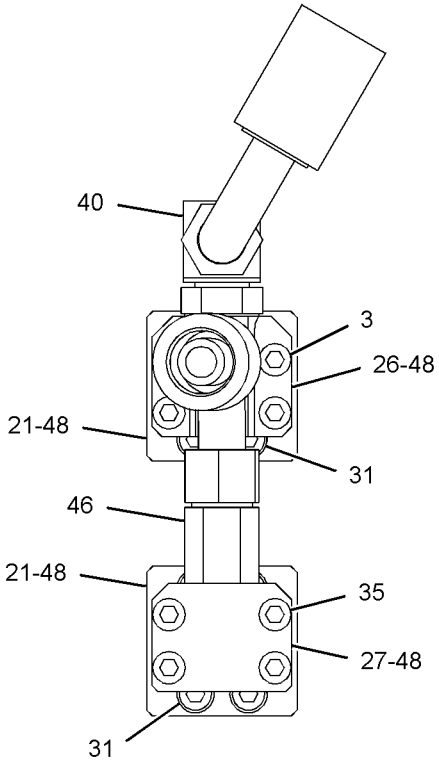

SECTION E-E

GRAPHIC #2 **<END>** g01574653

HYDRAULIC SYSTEM

255-1925 LINES GP-FRONT—SYSTEM 11, COMBINED FN, MED PR

S/N: D3P1-UP; M4T1-UP
PART OF 255-5770 CONTROL AR-AUXILIARY
AN ATTACHMENT

SMCS-5057 **i03706646**

NOTE	REF NO	GRAPHIC REF	PART NUMBER	QTY	PART NAME 1 2 3 4 5 6 (PRODUCT LEVEL)	SEE PAGE
	1	1	**187-7109**	1	TUBE AS	
I	2	1	**204-8505**	2	HOSE AS	
	3	1	**270-0020**	1	SUPPORT AS	
	4	1	**153-8867**	2	CLIP	
	5	1	**187-7108**	1	TUBE AS	
	6	1	**6V-8398**	2	SEAL-O-RING	
	7	1	**6V-9746**	2	SEAL-O-RING	
	8	1	**8T-4121**	2	WASHER-HARD (11X21X2.5-MM THK)	
M	9	1	**8T-4137**	2	BOLT (M10X1.5X20-MM)	
	10	1	**8T-4223**	2	WASHER-HARD (13.5X25.5X3-MM THK)	
M	11	1	**8T-4956**	2	BOLT (M12X1.75X35-MM)	

I-REFER TO HYDRAULIC INFORMATION SYSTEM
M-METRIC PART

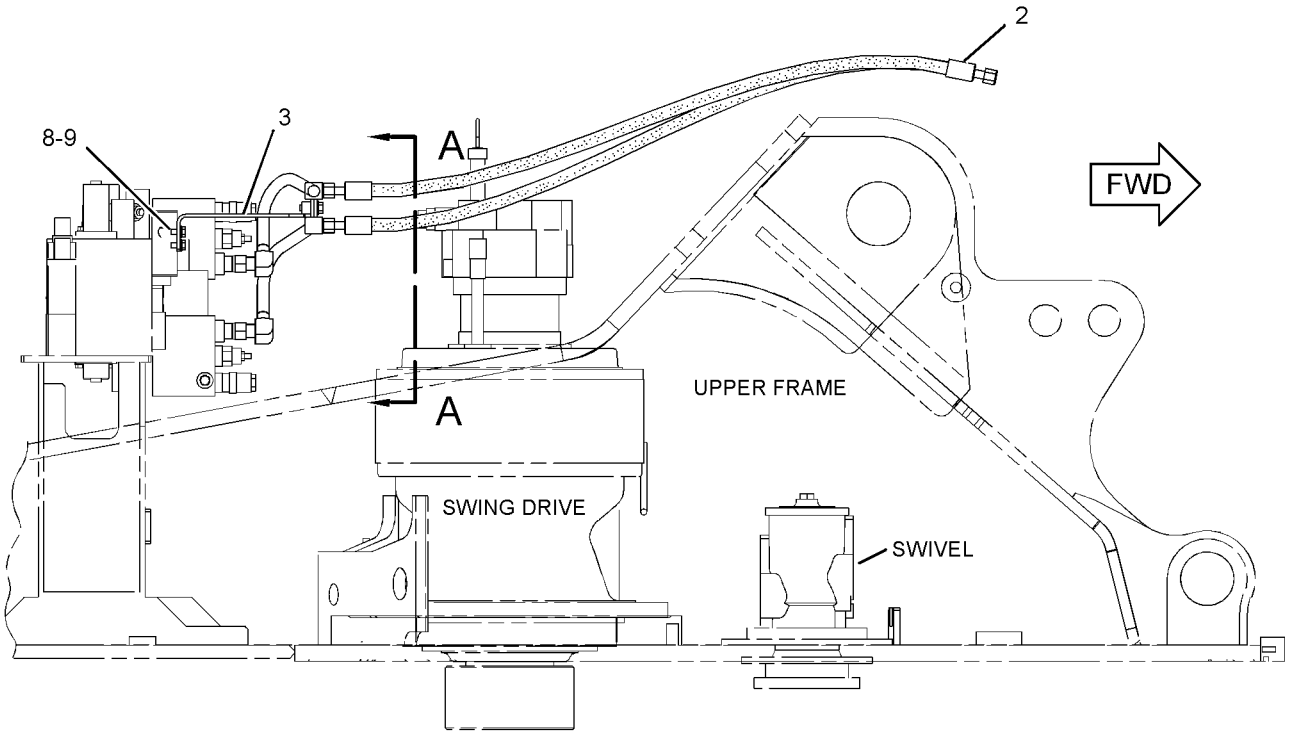

RIGHT SIDE VIEW

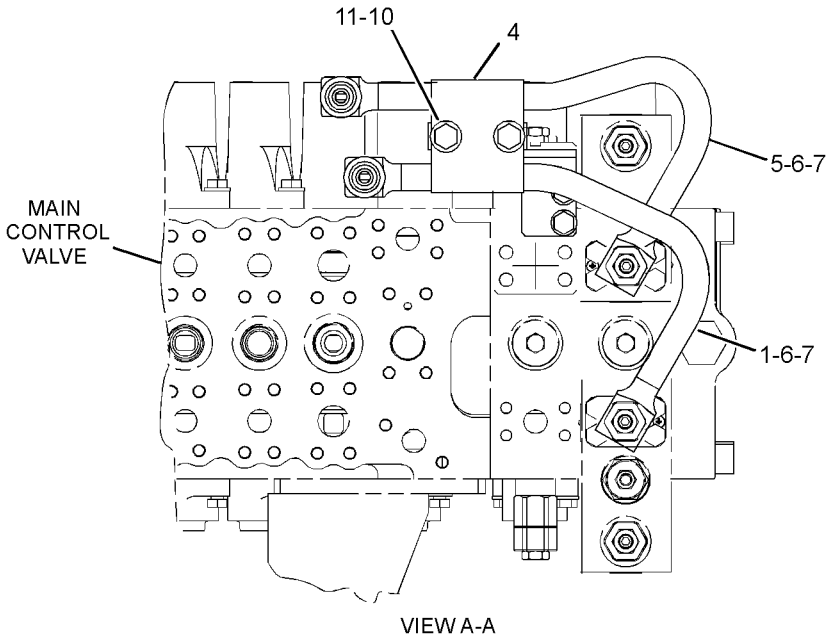

VIEW A-A

GRAPHIC #1 **<END>** g01237706

HYDRAULIC SYSTEM

255-1926 LINES GP-FRONT—MEDIUM PRESSURE CIRCUIT

S/N: D3P1-UP; M4T1-UP
PART OF 255-5822, 270-8795 CONTROL AR-AUXILIARY
AN ATTACHMENT

SMCS-5057 **i03110593**

NOTE	REF NO	GRAPHIC REF	PART NUMBER	QTY	PART NAME 1 2 3 4 5 6 (PRODUCT LEVEL)	SEE PAGE
	1	1	**6V-0852**	1	CAP-DUST	
I	2	1	**207-6231**	2	HOSE AS	
CY	3	1	**285-1531**	1	VALVE GP-CONTROL (MEDIUM PRESSURE)	759
	4	1	**255-1826**	2	SPACER (13.5X25X75.8-MM THK)	
	5	1	*270-0012*	1	ELBOW AS	
		1	**2M-9780**	1	SEAL-O-RING	
		1	**6V-8398**	1	SEAL-O-RING	
		1	**270-0013**	1	ELBOW	
	6	1	**325-9029**	1	SUPPORT AS	
	7	1	*270-0014*	1	ELBOW AS	
		1	**2M-9780**	1	SEAL-O-RING	
		1	**6V-8398**	1	SEAL-O-RING	
		1	**270-0015**	1	ELBOW	
	8	1	*164-5567*	1	COUPLER AS-QUICK DISCONNECT	
		1	**3J-1907**	1	SEAL-O-RING	
		1	**6V-3965**	1	FITTING (QUICK DISCONNECT)	
	9	1	*168-1969*	1	ADAPTER AS	
		1	**1J-9671**	1	SEAL-O-RING	
		1	**5P-1318**	1	ADAPTER	
	10	1	**6V-5782**	4	BOLT (5/16-18X1.125-IN)	
M	11	1	**7X-2550**	4	BOLT (M12X1.75X110-MM)	
	12	1	**8T-4223**	4	WASHER-HARD (13.5X25.5X3-MM THK)	
	13	1	**8T-4224**	4	WASHER-HARD (8.8X16X2-MM THK)	

C-CHANGE FROM PREVIOUS TYPE
I-REFER TO HYDRAULIC INFORMATION SYSTEM
M-METRIC PART
Y-SEPARATE ILLUSTRATION

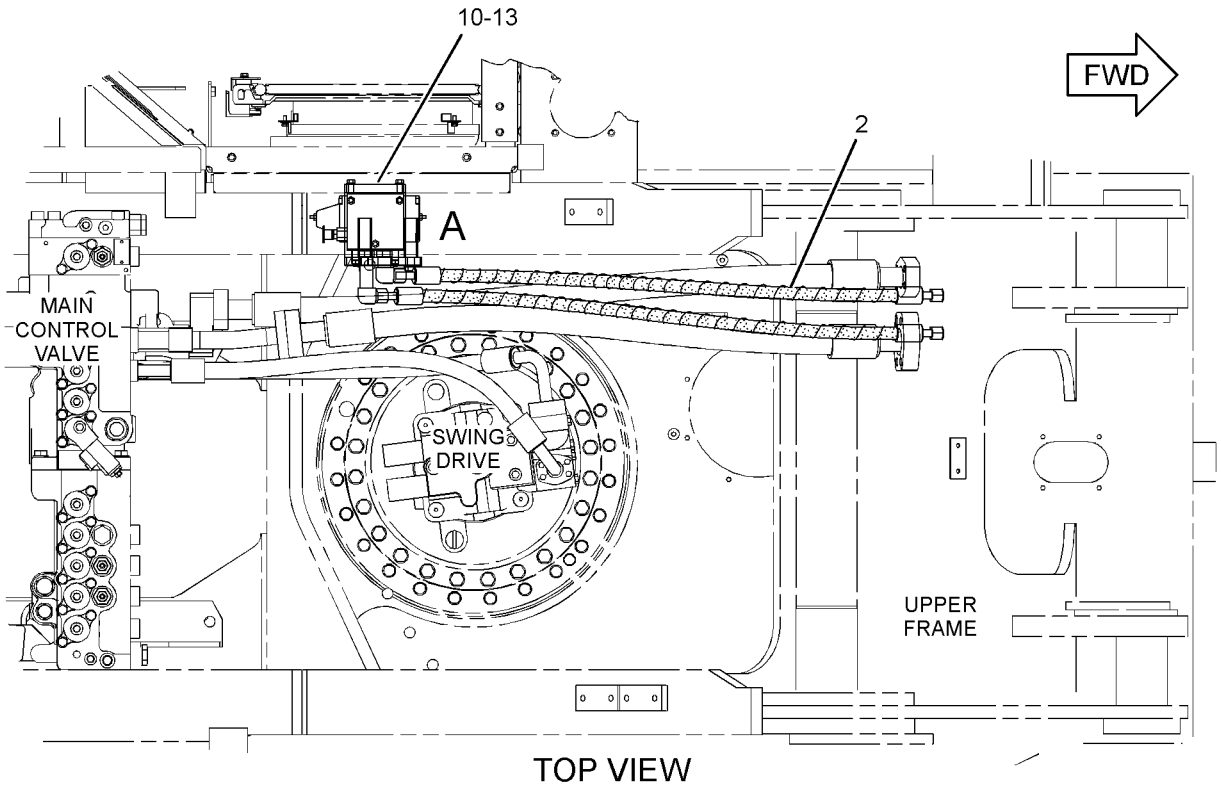

TOP VIEW

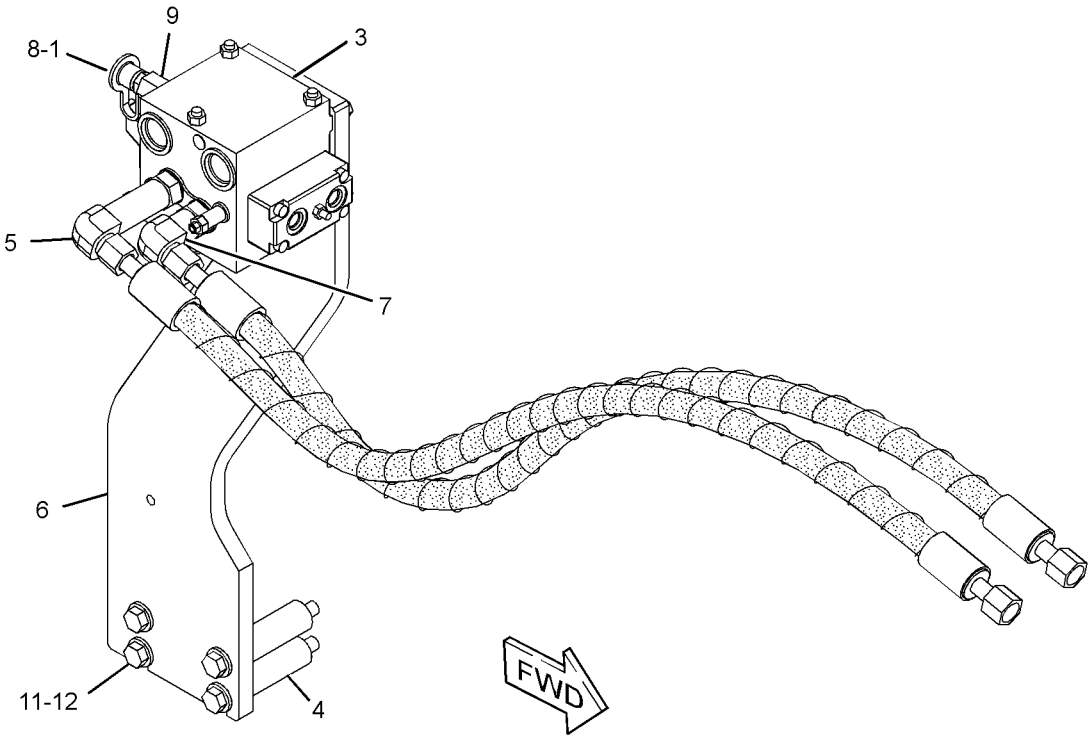

VIEW OF AREA A

GRAPHIC #1 **<END>** g01239265

HYDRAULIC SYSTEM

260-7869 LINES GP-FRONT—IMPL, SWING, TRAVEL, WORK TOOL

S/N: D3P1-UP; M4T1-UP

PART OF 259-7766 HYDRAULIC AR

SMCS-5057 **i03478314**

NOTE	REF NO	GRAPHIC REF	PART NUMBER	QTY	PART NAME 1 2 3 4 5 6 (PRODUCT LEVEL)	SEE PAGE
	1	2	**7Y-3730**	2	FLANGE-SPECIAL	
I	2	1	**087-4932**	1	HOSE AS	
I	3	1	**087-4935**	1	HOSE AS	
M	4	2	**101-7403**	2	BOLT-SOCKET HEAD (M10X1.5X80-MM)	
M	5	2	**105-3477**	8	BOLT-SOCKET HEAD (M10X1.5X45-MM)	
M	6	2	**105-3483**	2	BOLT-SOCKET HEAD (M10X1.5X70-MM)	
	7	2	**113-6479**	2	FLANGE-SPECIAL	
I	8	1	**337-1165**	1	HOSE AS	
I	9	1	**194-0101**	1	HOSE AS	
CI	10	1	**319-9702**	1	HOSE AS	
	11	2	**194-0115**	2	TUBE AS	
Y	12	1	**194-0174**	1	HOSE GP-HYDRAULIC (CONTROL VALVE, STICK)	497
Y	13	1	**194-0177**	1	HOSE GP-HYDRAULIC (CONTROL VALVE, STICK)	499
Y	14	1	**194-0180**	1	HOSE GP-HYDRAULIC (CONTROL VALVE, BOOM)	502
	15	2	**194-0280**	1	BLOCK	
	16	2	**218-1128**	1	TUBE AS	
I	17	1	**337-1161**	1	HOSE AS	
I	18	1	**255-1745**	1	HOSE AS	
I	19	1	**255-1749**	1	HOSE AS	
I	20	1	**337-1157**	1	HOSE AS	
Y	21	2	**255-5680**	1	VALVE GP-LOAD CONTROL (STICK DRIFT RED, LINE RELIEF)	768
Y	22	2	**255-5683**	1	VALVE GP-LOAD CONTROL (BOOM DRIFT RED, LINE RELIEF)	770
I	23	1	**260-8197**	1	HOSE AS	
M	24	1,2	**101-7397**	16	BOLT-SOCKET HEAD (M12X1.75X50-MM)	
M	25	2	**101-7404**	42	BOLT-SOCKET HEAD (M10X1.5X30-MM)	
	26	1	*148-8335*	1	CONNECTOR AS	
		1	**5K-9090**	1	SEAL-O-RING	
		1	**6V-8635**	1	CONNECTOR	
		1	**7M-8485**	1	SEAL-O-RING	
	27	2	*164-4180*	1	PLUG AS	
		2	**7M-8485**	1	SEAL-O-RING	
		2	**9S-4181**	1	PLUG-O-RING	
M	28	2	**199-1286**	6	BOLT-SOCKET HEAD (M10X1.5X150-MM)	
	29	1	**1P-3702**	4	SEAL-RECTANGULAR	
	30	1,2	**1P-3703**	11	SEAL-RECTANGULAR	
C	31	1,2	**1P-3704**	5	SEAL-RECTANGULAR	
C	33	1,2	**1P-5767**	8	FLANGE-HALF	
	34	1,2	**4J-5267**	10	SEAL-O-RING	
	35	2	**4J-5268**	1	SEAL-O-RING	
	36	2	**5K-9090**	4	SEAL-O-RING	
	38	1	**6V-0400**	8	FLANGE-HALF	
	39	2	**8T-4121**	8	WASHER-HARD (11X21X2.5-MM THK)	
CM	41	1	**8T-4194**	16	BOLT (M12X1.75X50-MM)	
C	42	1,2	**8T-4223**	36	WASHER-HARD (13.5X25.5X3-MM THK)	
M	43	2	**105-3485**	4	BOLT-SOCKET HEAD (M12X1.75X60-MM)	
	44	2	**8T-9403**	4	FLANGE-HALF	

C-CHANGE FROM PREVIOUS TYPE
I-REFER TO HYDRAULIC INFORMATION SYSTEM
M-METRIC PART
Y-SEPARATE ILLUSTRATION

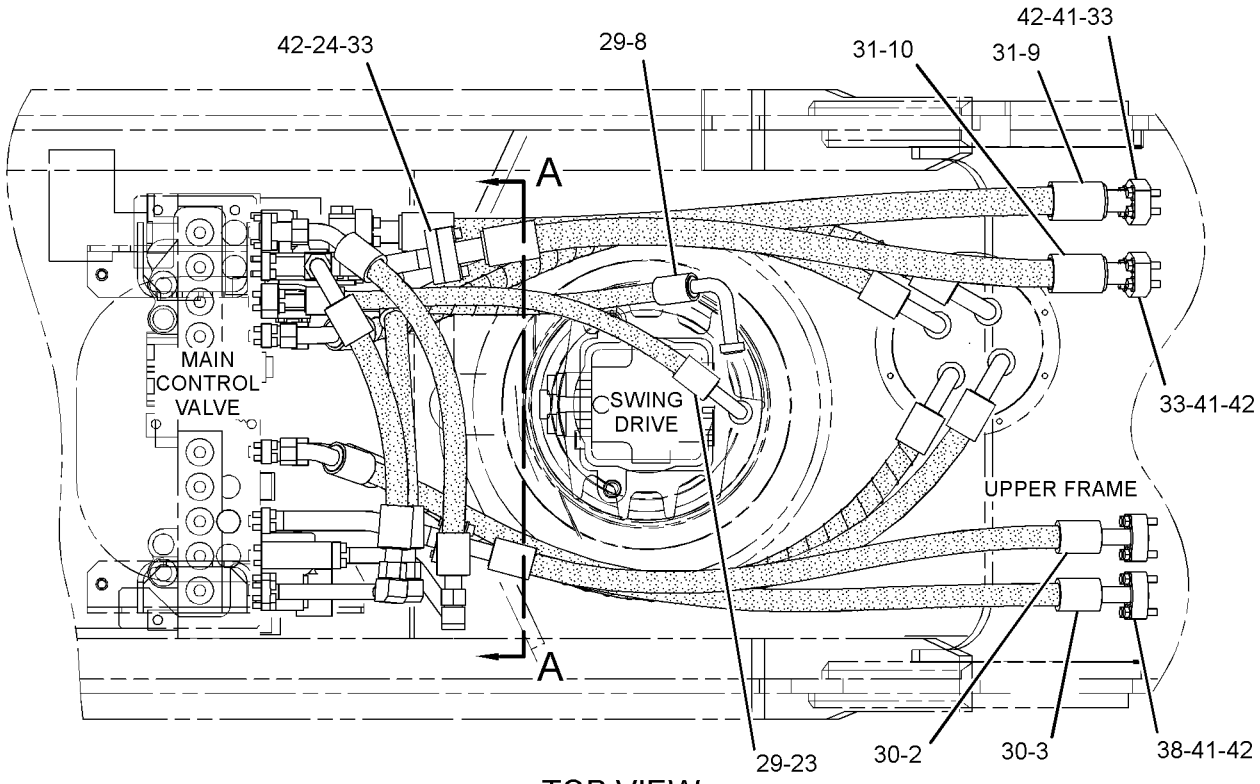

TOP VIEW

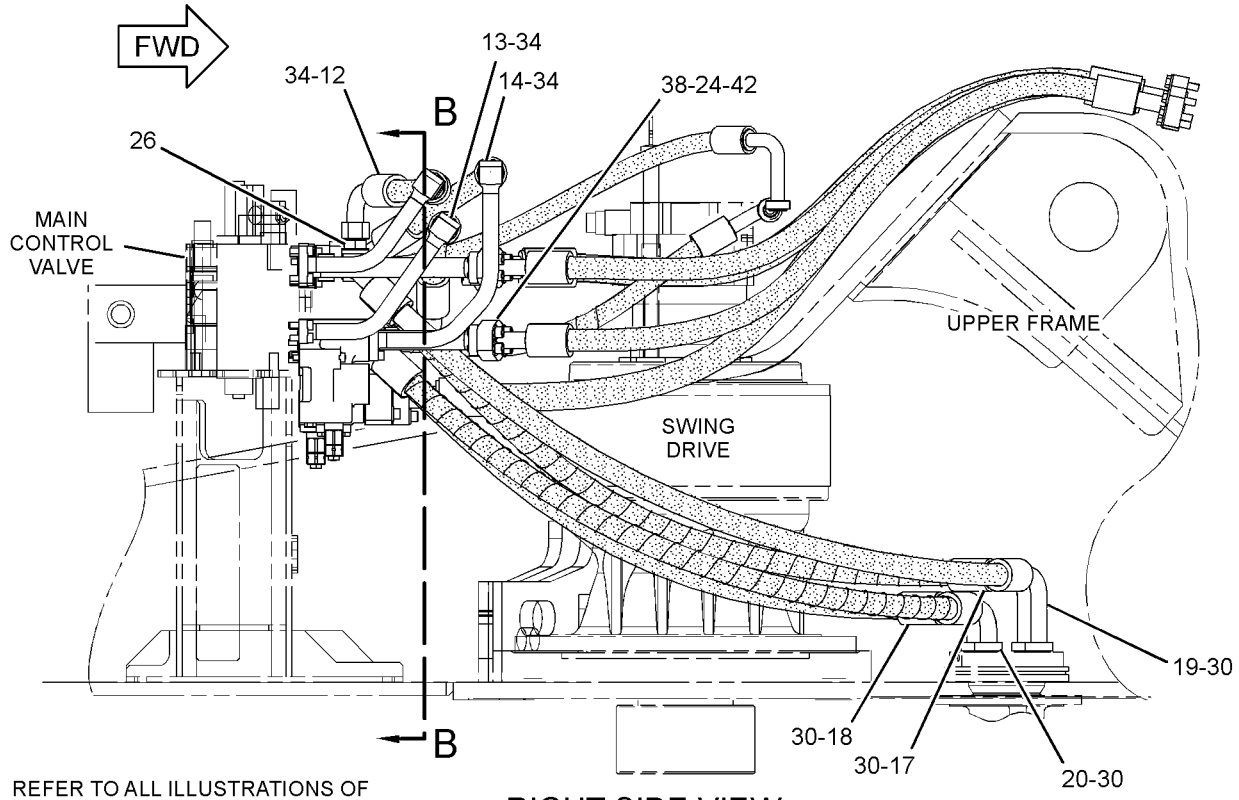

REFER TO ALL ILLUSTRATIONS OF THIS GROUP FOR AUXILIARY VIEWS

RIGHT SIDE VIEW

GRAPHIC #1

g01819993

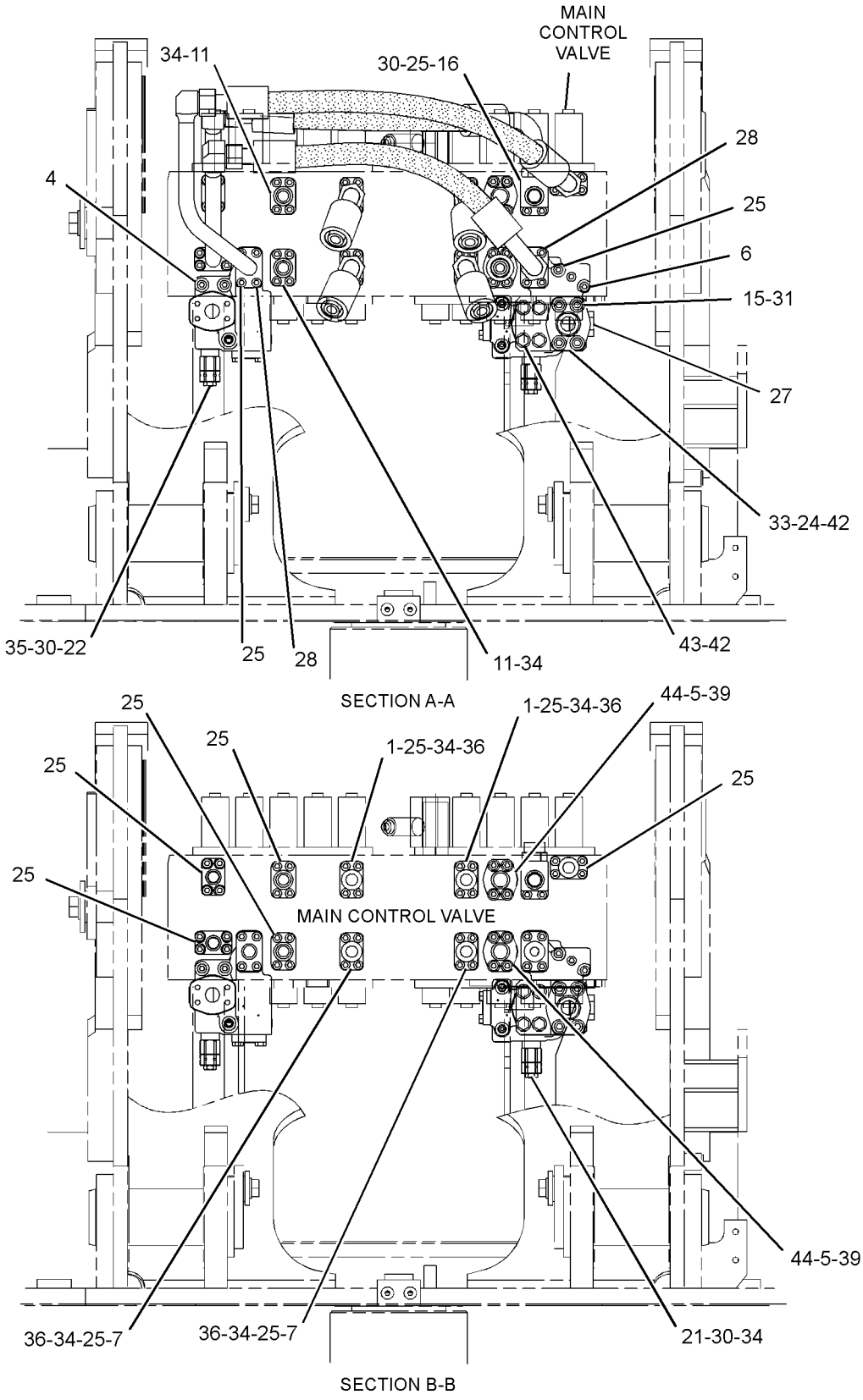

GRAPHIC #2 **<END>** g01199672

HYDRAULIC SYSTEM

260-7870 LINES GP-FRONT—BOOM CYLINDER

S/N: D3P1-UP; M4T1-UP

PART OF 259-7766 HYDRAULIC AR

SMCS-5057 **i03293353**

NOTE	REF NO	GRAPHIC REF	PART NUMBER	QTY	PART NAME 1 2 3 4 5 6 (PRODUCT LEVEL)	SEE PAGE
	1	1	**9F-2167**	1	SCREW-PURGE (3/8-24X1.164-IN)	
M	2	1	**101-7398**	4	BOLT-SOCKET HEAD (M10X1.5X40-MM)	
	3	1	**108-7550**	2	CLIP	
I	4	1	**115-8739**	4	HOSE AS	
	5	1	**131-9547**	1	CLIP	
	6	1	**131-9548**	1	SUPPORT AS	
CY	7	1	**322-8716**	1	VALVE GP-SWING CUSHION (FINE SWING)	846
	8	1	**207-6683**	1	TUBE AS	
	9	1	**212-5443**	1	TUBE AS	
	10	1	**234-4492**	1	SUPPORT	
I	11	1	**269-9761**	1	HOSE AS	
	12	1	*285-2520*	1	CONNECTOR AS	
		1	**3D-2824**	1	SEAL-O-RING	
		1	**6V-9746**	1	SEAL-O-RING	
		1	**236-2839**	1	TUBE AS	
M	13	1	**101-7404**	4	BOLT-SOCKET HEAD (M10X1.5X30-MM)	
	14	1	**123-2809**	1	SUPPORT AS	
	15	1	*148-8336*	1	CONNECTOR AS	
		1	**3J-1907**	1	SEAL-O-RING	
		1	**6V-8397**	1	SEAL-O-RING	
		1	**6V-8636**	1	CONNECTOR	
	16	1	*148-8353*	1	ELBOW AS	
		1	**3J-1907**	1	SEAL-O-RING	
		1	**6V-8397**	1	SEAL-O-RING	
		1	**6V-9001**	1	ELBOW	
	17	1	*148-8355*	1	ELBOW AS	
		1	**5K-9090**	1	SEAL-O-RING	
		1	**6V-9005**	1	ELBOW	
		1	**7M-8485**	1	SEAL-O-RING	
	18	1	*148-8367*	1	ELBOW AS	
		1	**6V-9850**	1	ELBOW	
		1	**6V-8397**	1	SEAL-O-RING	
	19	1	*148-8414*	1	REDUCER AS	
		1	**6V-8943**	1	REDUCER	
		1	**7J-9108**	1	SEAL-O-RING	
	20	1	*148-8449*	1	TEE AS-SWIVEL	
		1	**6V-9746**	2	SEAL-O-RING	
		1	**6V-9839**	1	TEE-SWIVEL	
	21	1	*150-4048*	1	ELBOW AS	
		1	**3K-0360**	1	SEAL-O-RING	
		1	**7J-9108**	1	SEAL-O-RING	
		1	**6V-8722**	1	ELBOW	
	22	1	**1P-3703**	2	SEAL-RECTANGULAR	
	23	1	**5K-9090**	4	SEAL-O-RING	
	24	1	**5P-1076**	2	WASHER-HARD (13.5X30X4-MM THK)	
	25	1	**8T-4121**	8	WASHER-HARD (11X21X2.5-MM THK)	
M	26	1	**8T-4139**	4	BOLT (M12X1.75X30-MM)	
M	27	1	**8T-4178**	6	BOLT (M10X1.5X90-MM)	
M	28	1	**8T-4182**	8	BOLT (M10X1.5X45-MM)	
	29	1	**8T-4223**	6	WASHER-HARD (13.5X25.5X3-MM THK)	
M	30	1	**8T-4648**	4	BOLT (M12X1.75X70-MM)	
	31	1	**8T-9403**	4	FLANGE-HALF	

C-CHANGE FROM PREVIOUS TYPE
I-REFER TO HYDRAULIC INFORMATION SYSTEM
M-METRIC PART
Y-SEPARATE ILLUSTRATION

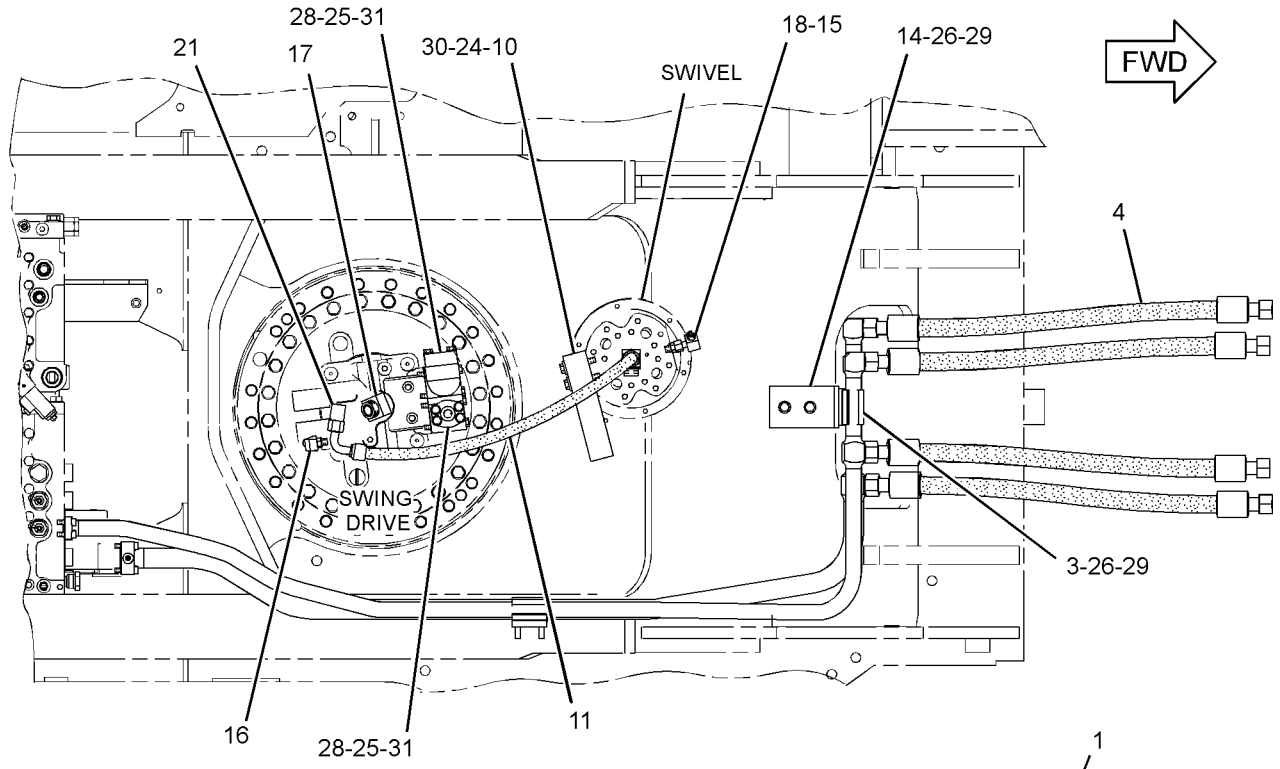

TOP VIEW

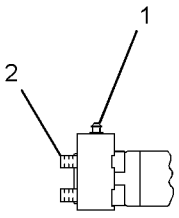

VIEW OF AREA A

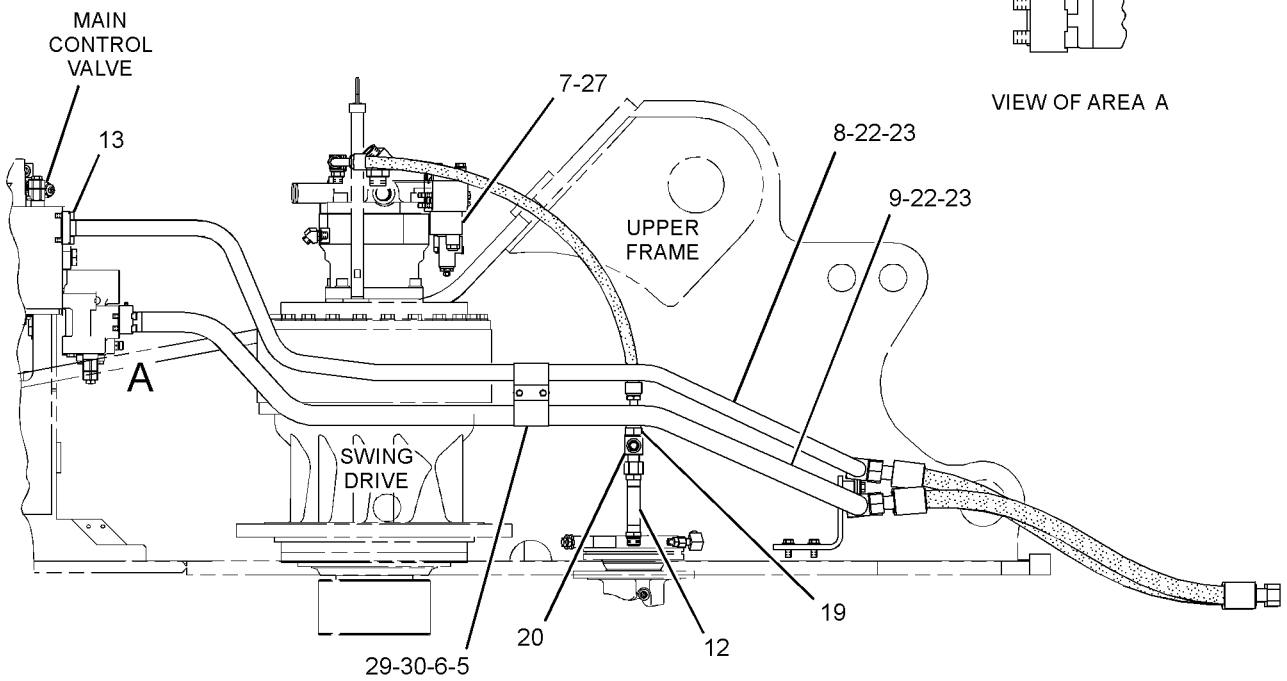

RIGHT SIDE VIEW

GRAPHIC #1 **<END>** g01600833

HYDRAULIC SYSTEM

269-9562 LINES GP-FRONT—QUICK COUPLER

S/N: D3P1-UP; M4T1-UP
PART OF 268-6821 CONTROL AR-COUPLER
AN ATTACHMENT

SMCS-5057 **i03319370**

NOTE	REF NO	GRAPHIC REF	PART NUMBER	QTY	PART NAME 1 2 3 4 5 6 (PRODUCT LEVEL)	SEE PAGE
I	1	3	**4I-1025**	1	HOSE AS	
I	2	3	**4I-1704**	1	HOSE AS	
	3	2	**4I-9521**	6	BAND-MARKER (RED, L1)	
	4	3	**4I-9522**	6	BAND-MARKER (YELLOW, L2)	
	5	2	**4I-9523**	2	BAND-MARKER (BLUE, L3)	
	6	2	**4I-9525**	2	BAND-MARKER (ORANGE, R1)	
	7	2	**4I-9527**	2	BAND-MARKER (GREEN, R3)	
	8	2	**5I-4376**	1	FITTING	
I	9	3	**5I-4387**	1	HOSE AS	
	10	1	**7K-1181**	11	STRAP-CABLE	
I	11	3	**7Y-4387**	1	HOSE AS	
I	12	2	**7Y-4390**	1	HOSE AS	
	13	1	**9X-6582**	2	NUT (13/16-16-THD)	
	14	1	**103-1384**	1	GUARD	
I	15	2	**108-7387**	1	HOSE AS	
I	16	2	**111-6752**	1	HOSE AS	
Y	17	2	**123-2549**	1	VALVE GP-SHUTTLE	822
	18	2	**124-1035**	1	FITTING-ORFS	
	19	3	**213-3745**	2	ELBOW	
Y	20	3	**254-3080**	1	VALVE GP-CONTROL (QUICK COUPLER)	746
Y	21	3	**258-6749**	1	VALVE GP-SOLENOID (QUICK COUPLER)	833
	22	3	**269-9864**	1	BRACKET AS	
I	23	1	**269-9952**	2	HOSE AS	
I	24	1	**269-9955**	1	HOSE AS	
I	25	2	**275-1663**	1	HOSE AS	
	26	2	**123-4750**	1	VALVE-CHECK (QUICK COUPLER SOLENOID)	
	27	3	*148-8325*	1	CONNECTOR AS	
		3	**3J-1907**	2	SEAL-O-RING	
		3	**4J-5477**	2	SEAL-O-RING	
		3	**6V-8641**	2	CONNECTOR	
	28	2	*148-8336*	4	CONNECTOR AS	
					(EACH INCLUDES)	
		2	**3J-1907**	1	SEAL-O-RING	
		2	**6V-8397**	1	SEAL-O-RING	
		2	**6V-8636**	1	CONNECTOR	
	29	2,3	*148-8338*	2	CONNECTOR AS	
					(EACH INCLUDES)	
		2,3	**3J-1907**	1	SEAL-O-RING	
		2,3	**6V-8397**	1	SEAL-O-RING	
		2,3	**8T-0075**	1	CONNECTOR	
	30	2	*148-8353*	1	ELBOW AS	
		2	**3J-1907**	1	SEAL-O-RING	
		2	**6V-8397**	1	SEAL-O-RING	
		2	**6V-9001**	1	ELBOW	
	31	3	*148-8368*	2	ELBOW AS	
					(EACH INCLUDES)	
		3	**3J-1907**	1	SEAL-O-RING	
		3	**4J-5477**	1	SEAL-O-RING	
		3	**6V-8627**	1	ELBOW	
	32	3	*148-8378*	4	ELBOW AS	
					(EACH INCLUDES)	
		3	**3J-1907**	1	SEAL-O-RING	
		3	**6V-8397**	1	SEAL-O-RING	
		3	**6V-8724**	1	ELBOW	
	33	2	*148-8393*	1	ELBOW AS	

269-9562 **LINES GP-FRONT** *(contd.)* **i03319370**

NOTE	REF NO	GRAPHIC REF	PART NUMBER	QTY	PART NAME 1 2 3 4 5 6 (PRODUCT LEVEL)	SEE PAGE
		2	**6V-9852**	1	ELBOW	
		2	**7J-9108**	1	SEAL-O-RING	
	34	1,2	*148-8414*	2	REDUCER AS	
					(EACH INCLUDES)	
		1,2	**6V-8943**	1	REDUCER	
		1,2	**7J-9108**	1	SEAL-O-RING	
	35	2	*148-8415*	1	REDUCER AS	
		2	**6V-8397**	1	SEAL-O-RING	
		2	**6V-8936**	1	REDUCER	
	36	1	*148-8419*	2	REDUCER AS	
					(EACH INCLUDES)	
		1	**4J-5477**	1	SEAL-O-RING	
		1	**6V-8935**	1	REDUCER-O-RING	
	37	1	*148-8421*	1	TEE AS	
		1	**3D-2824**	1	SEAL-O-RING	
		1	**6V-8397**	1	SEAL-O-RING	
		1	**6V-9746**	1	SEAL-O-RING	
		1	**8T-2883**	1	TEE	
	38	3	*148-8434*	1	TEE AS	
		3	**6V-8397**	2	SEAL-O-RING	
		3	**6V-9843**	1	TEE-SWIVEL	
	39	3	*148-8435*	2	TEE AS	
					(EACH INCLUDES)	
		3	**3J-1907**	1	SEAL-O-RING	
		3	**6V-8397**	2	SEAL-O-RING	
		3	**6V-8781**	1	TEE-FACE SEAL	
	40	2	*148-8444*	1	TEE AS-SWIVEL	
		2	**6V-8398**	2	SEAL-O-RING	
		2	**6V-9837**	1	TEE-SWIVEL	
	41	3	*150-3036*	1	ELBOW AS	
		3	**3J-1907**	1	SEAL-O-RING	
		3	**6V-8397**	1	SEAL-O-RING	
		3	**8T-1905**	1	ELBOW	
	42	2	*150-4033*	1	TEE AS	
		2	**6V-9746**	2	SEAL-O-RING	
		2	**6V-9846**	1	TEE-SWIVEL	
	43	3	*164-9640*	1	CONNECTOR AS	
		3	**3J-1907**	1	SEAL-O-RING	
		3	**4J-5477**	1	SEAL-O-RING	
		3	**145-2237**	1	CONNECTOR	
	44	2	*162-0177*	1	PLUG AS	
		2	**3J-1907**	1	SEAL-O-RING	
		2	**9S-8004**	1	PLUG	
	45	2,3	*164-5567*	3	COUPLER AS-QUICK DISCONNECT	
					(EACH INCLUDES)	
		2,3	**3J-1907**	1	SEAL-O-RING	
		2,3	**6V-3965**	1	FITTING (QUICK DISCONNECT)	
	46	2	**3J-1907**	1	SEAL-O-RING	
	48	2,3	**6V-0852**	3	CAP-DUST	
	49	3	**6V-1889**	1	CLIP	
	50	2	**6V-8397**	3	SEAL-O-RING	
	51	3	**8T-4121**	5	WASHER-HARD (11X21X2.5-MM THK)	
M	52	3	**8T-4136**	4	BOLT (M10X1.5X25-MM)	
M	53	3	**8T-4137**	1	BOLT (M10X1.5X20-MM)	
M	54	3	**8T-4139**	2	BOLT (M12X1.75X30-MM)	
	55	3	**8T-4223**	2	WASHER-HARD (13.5X25.5X3-MM THK)	
	56	3	*148-8321*	1	CONNECTOR AS	
		3	**3J-1907**	1	SEAL-O-RING	
		3	**6V-8397**	1	SEAL-O-RING	
		3	**8C-0564**	1	CONNECTOR	

I-REFER TO HYDRAULIC INFORMATION SYSTEM
M-METRIC PART
Y-SEPARATE ILLUSTRATION

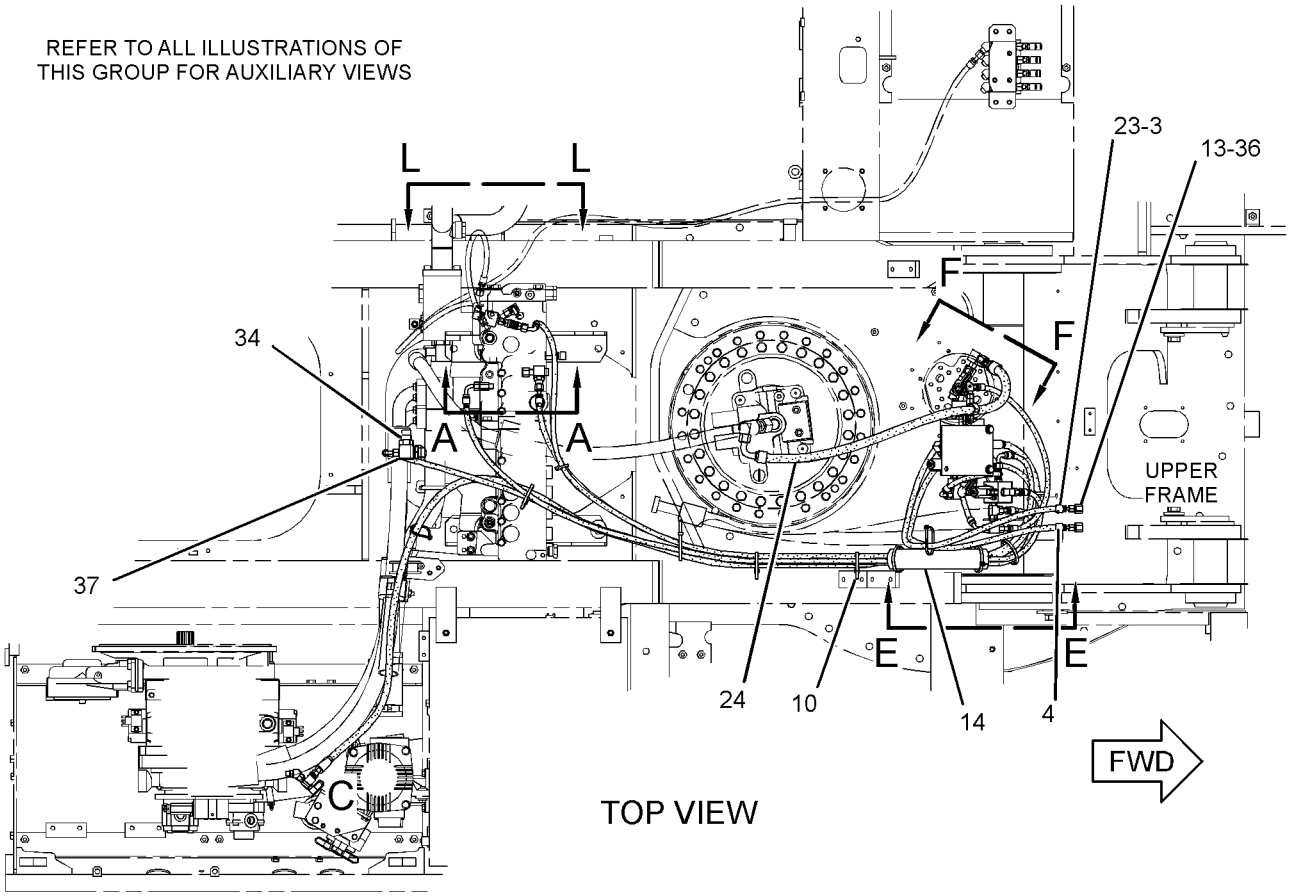

GRAPHIC #1

g01698635

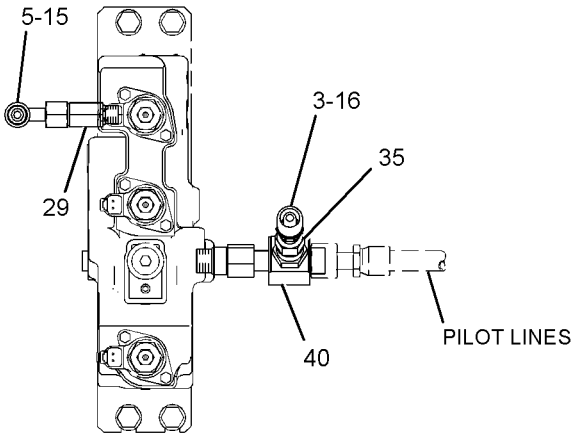

SECTION A-A

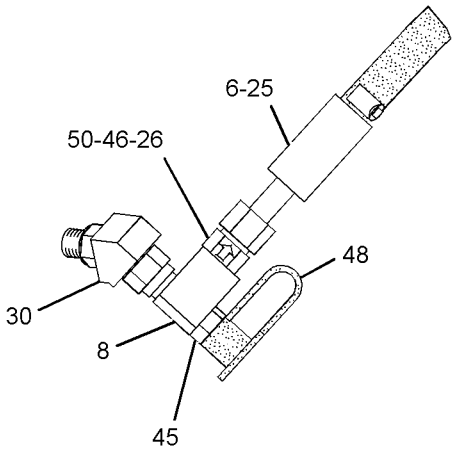

VIEW OF AREA C

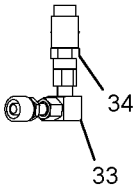

VIEW K-K

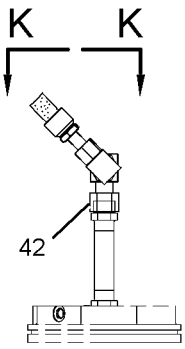

VIEW F-F

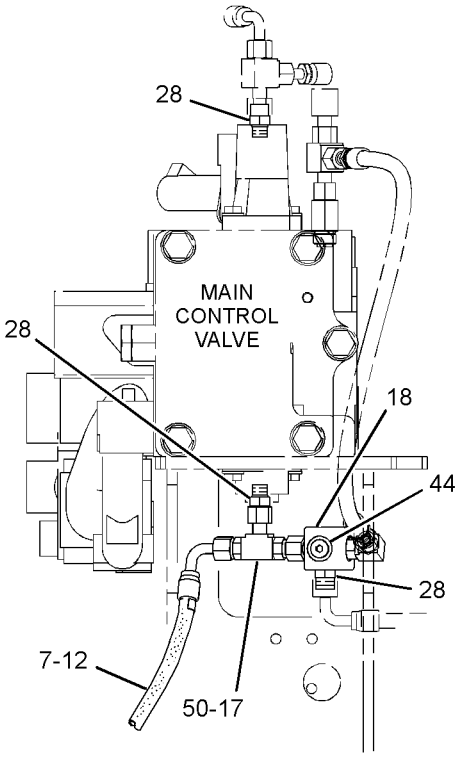

VIEW L-L

GRAPHIC #2

g01576036

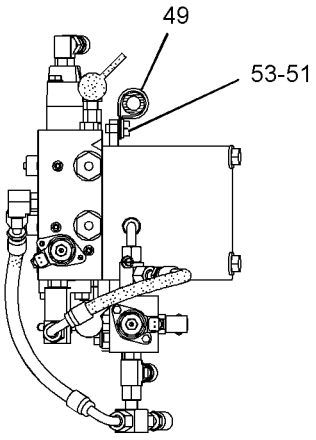

VIEW J-J

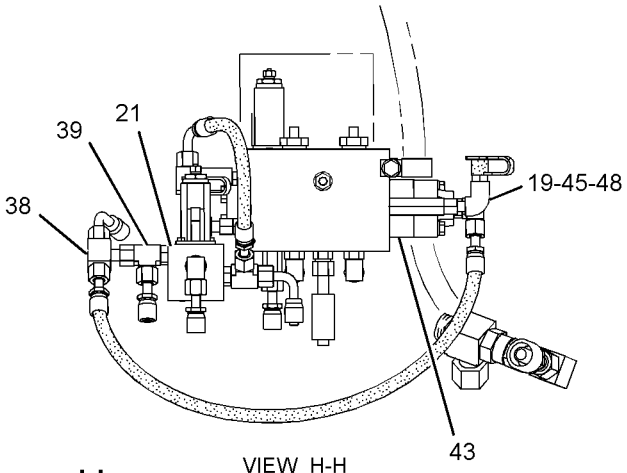

VIEW H-H

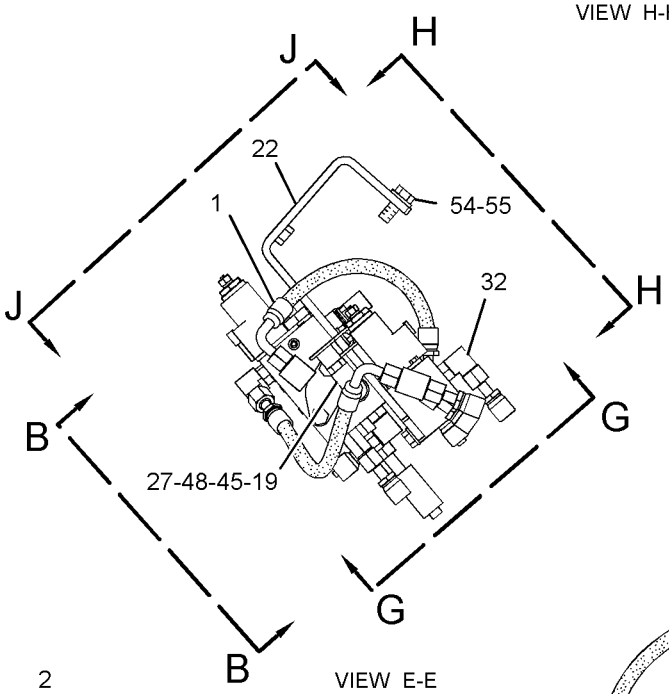

VIEW E-E

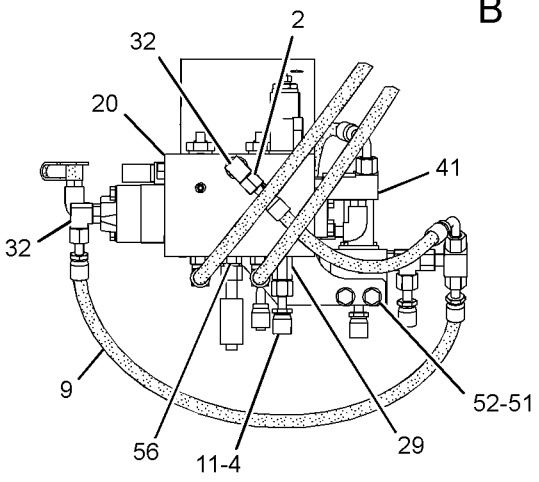

VIEW B-B

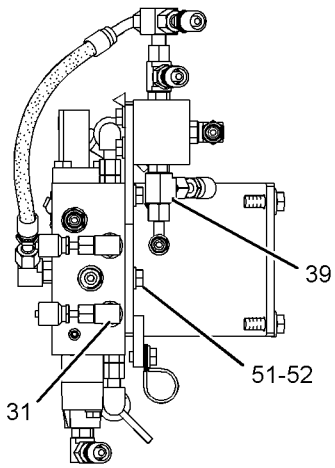

VIEW G-G

GRAPHIC #3 **<END>** g01564613

HYDRAULIC SYSTEM

330-2389 LINES GP-FRONT—SYSTEM 18, COMBINED FUNCTION

S/N: M4T1-UP

PART OF 336-3339 CONTROL AR-AUXILIARY

AN ATTACHMENT

SMCS-5057 **i03732324**

NOTE	REF NO	GRAPHIC REF	PART NUMBER	QTY	PART NAME 1 2 3 4 5 6 (PRODUCT LEVEL)	SEE PAGE
	1	2	**4I-1683**	1	FLANGE	
	2	2	**7Y-3729**	1	FLANGE	
	3	2	**113-6479**	1	FLANGE-SPECIAL	
	4	2	**255-1892**	1	SUPPORT	
	5	2	**255-1894**	1	SUPPORT	
	6	2	**260-8193**	1	TUBE AS	
	7	2	**266-1278**	1	BLOCK	
	8	2	**296-7024**	1	BLOCK	
Y	9	2	**297-0265**	2	VALVE GP-SOLENOID & RELIEF (1-WAY/2-WAY FLOW)	839
I	10	2	**330-2444**	1	HOSE AS	
I	11	2	**330-2445**	1	HOSE AS	
I	12	2	**330-2446**	1	HOSE AS	
I	13	2	**330-2447**	1	HOSE AS	
I	14	2	**330-2460**	1	HOSE AS	
I	15	2	**330-2463**	1	HOSE AS	
	16	2	**330-2466**	1	SUPPORT	
	17	2	**330-2467**	1	SUPPORT	
	18	2	**330-2468**	2	BRACKET	
	19	2	**330-2469**	1	FLANGE	
	20	2	**330-2470**	1	BLOCK	
	21	2	**330-2471**	1	SUPPORT AS	
M	22	2	**101-7401**	4	BOLT-SOCKET HEAD (M10X1.5X20-MM)	
M	23	2	**101-7404**	8	BOLT-SOCKET HEAD (M10X1.5X30-MM)	
M	24	2	**108-1782**	4	BOLT-SOCKET HEAD (M12X1.75X90-MM)	
M	25	2	**108-3819**	4	BOLT-SOCKET HEAD (M12X1.75X70-MM)	
M	26	2	**108-4282**	4	BOLT-SOCKET HEAD (M10X1.5X100-MM)	
	27	2	*148-8330*	1	CONNECTOR AS	
		2	**5K-9090**	1	SEAL-O-RING	
		2	**7M-8485**	1	SEAL-O-RING	
		2	**8T-0198**	1	CONNECTOR	
	28	2	*148-8356*	1	ELBOW AS	
		2	**2S-4078**	1	SEAL-O-RING	
		2	**6V-8400**	1	SEAL-O-RING	
		2	**6V-9009**	1	ELBOW	
	29	2	*148-8360*	1	ELBOW AS	
		2	**6V-9182**	1	ELBOW	
		2	**6V-9746**	1	SEAL-O-RING	
		2	**7M-8485**	1	SEAL-O-RING	
	30	2	*148-8411*	2	PLUG AS	
					(EACH INCLUDES)	
		2	**3K-0360**	1	SEAL-O-RING	
		2	**9S-4185**	1	PLUG-O-RING	
	31	2	*150-4049*	1	ELBOW AS	
		2	**6V-9746**	1	SEAL-O-RING	
		2	**7M-8485**	1	SEAL-O-RING	
		2	**8T-4149**	1	ELBOW	
	32	2	*153-6237*	1	ELBOW AS	
		2	**3D-2824**	1	SEAL-O-RING	
		2	**6V-9004**	1	ELBOW	
		2	**6V-9746**	1	SEAL-O-RING	
	33	2	**1P-3702**	3	SEAL-RECTANGULAR	
	34	2	**1P-3703**	2	SEAL-RECTANGULAR	
	35	2	**1P-3704**	2	SEAL-RECTANGULAR	
	36	2	**1P-4578**	6	FLANGE-HALF	
	37	2	**1P-5767**	2	FLANGE-HALF	

330-2389 **LINES GP-FRONT** *(contd.)* **i03732324**

NOTE	REF NO	GRAPHIC REF	PART NUMBER	QTY	PART NAME 1 2 3 4 5 6 (PRODUCT LEVEL)	SEE PAGE
M	38	2	**280-2747**	4	BOLT-SOCKET HEAD (M10X1.5X60-MM)	
	39	2	**4J-0522**	4	SEAL-O-RING	
	40	2	**4J-5267**	1	SEAL-O-RING	
	41	2	**5K-9090**	1	SEAL-O-RING	
	42	2	**5P-7468**	1	CLIP (SLOT)	
	43	2	**5P-7469**	1	CLIP (TAB)	
	44	2	**5P-7470**	2	CLIP (SLOT)	
	45	2	**5P-7471**	2	CLIP (TAB)	
	46	2	**5P-8182**	2	GROMMET	
	47	2	**6J-2680**	1	SEAL-O-RING	
	48	2	**6V-1874**	1	GROMMET	
	49	2	**6V-9746**	2	SEAL-O-RING	
	50	2	**8T-4121**	18	WASHER-HARD (11X21X2.5-MM THK)	
M	51	2	**8T-4136**	2	BOLT (M10X1.5X25-MM)	
M	52	2	**8T-4139**	10	BOLT (M12X1.75X30-MM)	
M	53	2	**8T-4182**	4	BOLT (M10X1.5X45-MM)	
M	54	2	**8T-4186**	12	BOLT (M10X1.5X40-MM)	
M	55	2	**8T-4194**	6	BOLT (M12X1.75X50-MM)	
	56	2	**8T-4223**	25	WASHER-HARD (13.5X25.5X3-MM THK)	
M	57	2	**8T-4956**	9	BOLT (M12X1.75X35-MM)	
	58	2	**8T-9403**	2	FLANGE-HALF	

I-REFER TO HYDRAULIC INFORMATION SYSTEM
M-METRIC PART
Y-SEPARATE ILLUSTRATION

REFER TO ALL ILLUSTRATIONS OF
THIS GROUP FOR AUXILIARY VIEWS

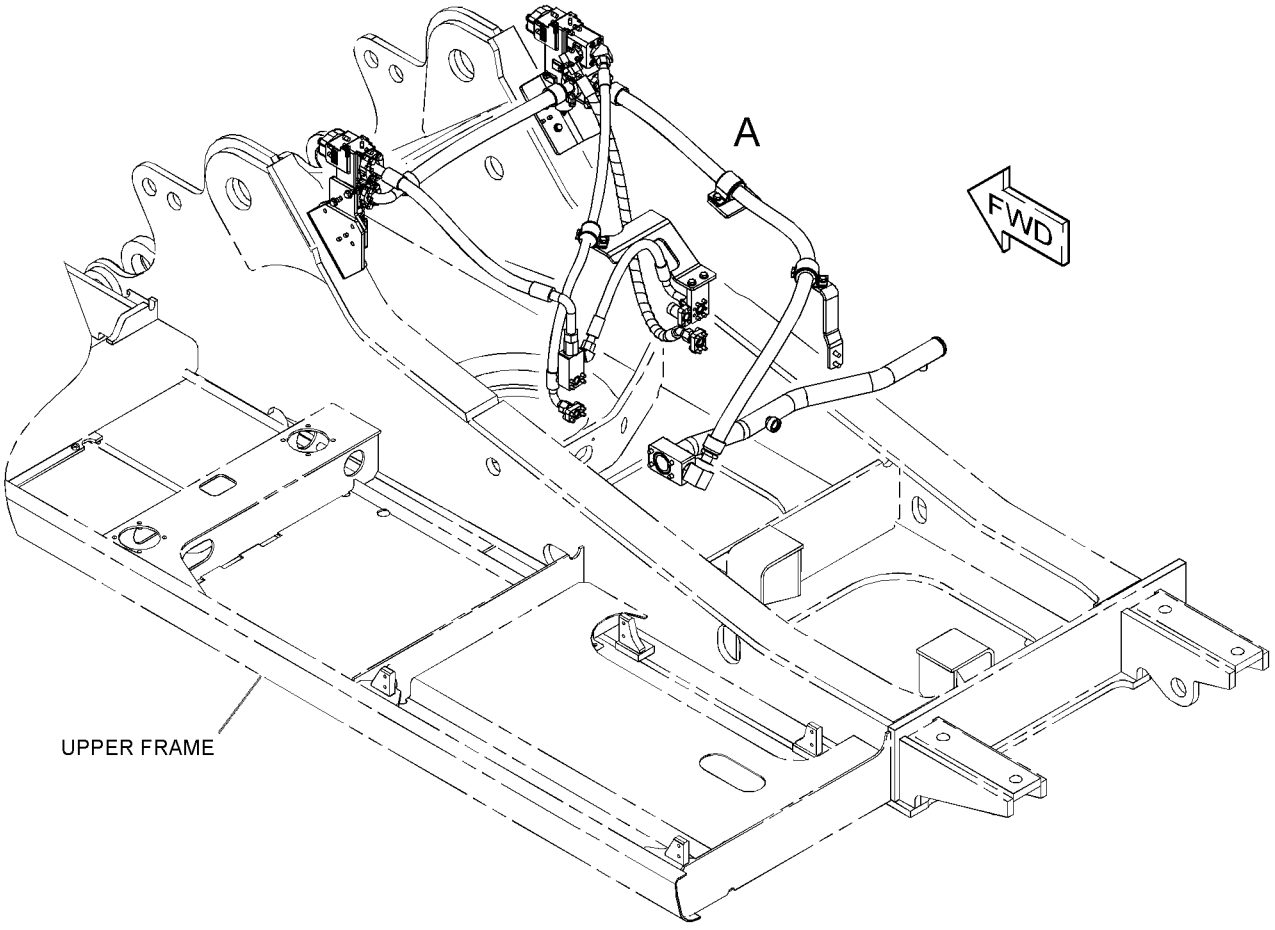

GRAPHIC #1 g02022196

330-2389 **LINES GP-FRONT** *(contd.)* **i03732324**

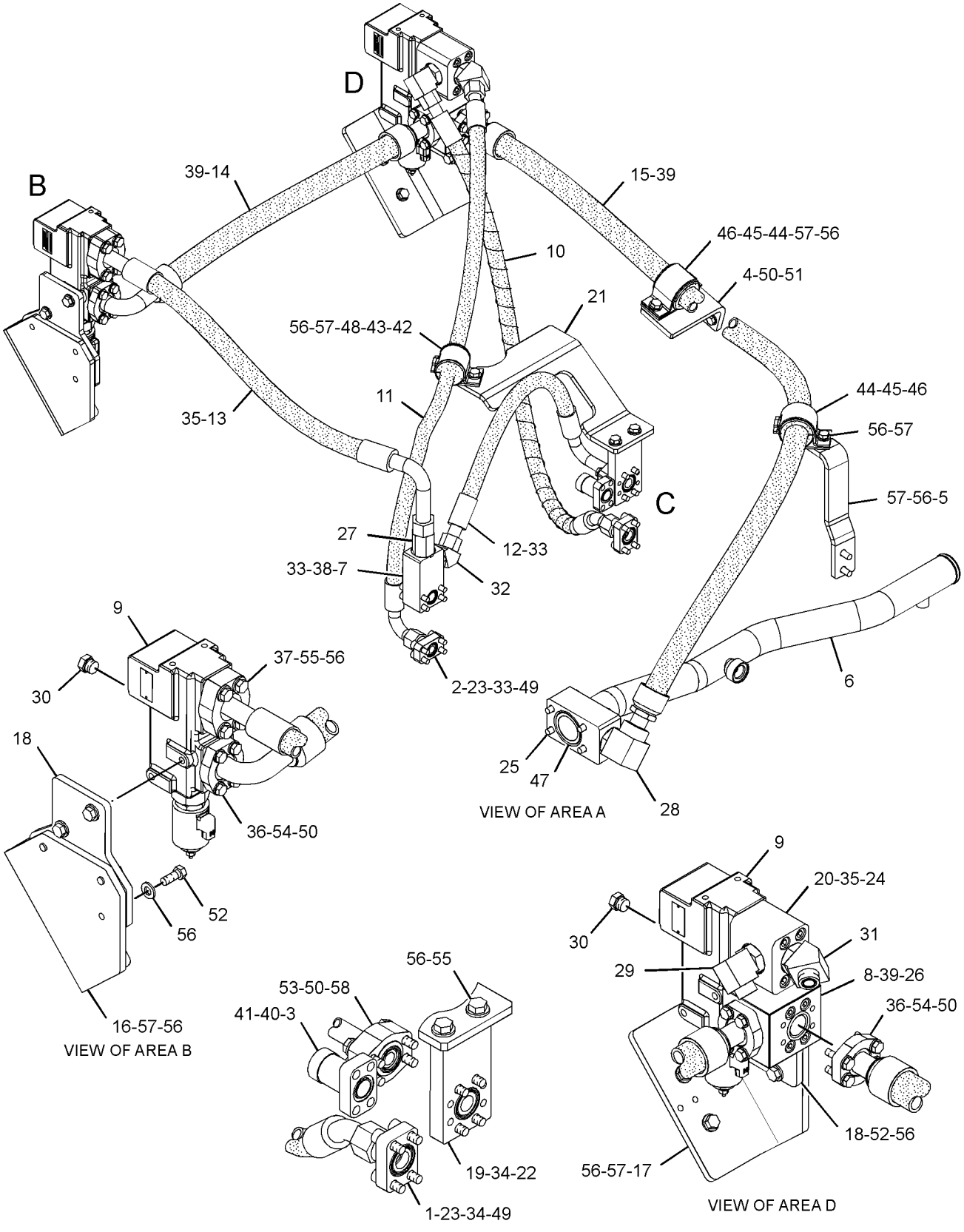

GRAPHIC #2 **<END>** g02022198

HYDRAULIC SYSTEM

330-2391 LINES GP-FRONT—SYSTEM 13, COMBINED FUNCTION

S/N: D3P1-UP
PART OF 307-9975 CONTROL AR-AUXILIARY
AN ATTACHMENT

SMCS-5057 **i03747954**

NOTE	REF NO	GRAPHIC REF	PART NUMBER	QTY	PART NAME 1 2 3 4 5 6 (PRODUCT LEVEL)	SEE PAGE
	1	2	**4I-1683**	1	FLANGE	
	2	2	**221-8859**	1	SENSOR AS-PRESSURE (NEGATIVE FLOW CONTROL)	
		2	**3E-3371**	1	WEDGE-RECEPTACLE LOCK (3-PIN)	
		2	**3K-0360**	1	SEAL-O-RING	
		2	**9X-3401**	3	PIN-CONNECTOR (16-GA TO 18-GA)	
					—OR—	
		2	**126-1767**	3	PIN-CONNECTOR (14-GA)	
		2	**171-0596**	1	RECEPTACLE AS	
	3	1	**255-1892**	1	SUPPORT	
	4	1	**255-1894**	1	SUPPORT	
	5	2	**266-1278**	1	BLOCK	
	6	2	*148-8360*	1	ELBOW AS	
		2	**6V-9746**	1	SEAL-O-RING	
		2	**6V-9182**	1	ELBOW	
		2	**7M-8485**	1	SEAL-O-RING	
	7	2	**296-7024**	1	BLOCK	
Y	8	2	**297-0265**	2	VALVE GP-SOLENOID & RELIEF (1-WAY/2-WAY FLOW)	839
I	9	1	**330-2444**	1	HOSE AS	
I	10	1	**330-2445**	1	HOSE AS	
I	11	1	**330-2446**	1	HOSE AS	
I	12	1	**330-2447**	1	HOSE AS	
	13	1	*330-2448*	1	ELBOW AS	
		1	**2S-4078**	1	SEAL-O-RING	
		1	**6V-8400**	1	SEAL-O-RING	
		1	**199-1773**	1	ELBOW	
I	14	1	**330-2460**	1	HOSE AS	
I	15	1	**330-2463**	1	HOSE AS	
	16	2	**330-2466**	1	SUPPORT	
	17	2	**330-2467**	1	SUPPORT	
	18	2	**330-2468**	2	BRACKET	
	19	2	**330-2469**	1	FLANGE	
	20	2	**330-2470**	1	BLOCK	
	21	1	**330-2471**	1	SUPPORT AS	
M	22	2	**101-7404**	8	BOLT-SOCKET HEAD (M10X1.5X30-MM)	
M	23	2	**101-7401**	4	BOLT-SOCKET HEAD (M10X1.5X20-MM)	
M	24	2	**108-1782**	4	BOLT-SOCKET HEAD (M12X1.75X90-MM)	
M	25	2	**108-4282**	4	BOLT-SOCKET HEAD (M10X1.5X100-MM)	
	26	2	*148-8330*	1	CONNECTOR AS	
		2	**5K-9090**	1	SEAL-O-RING	
		2	**7M-8485**	1	SEAL-O-RING	
		2	**8T-0198**	1	CONNECTOR	
	27	2	*148-8411*	1	PLUG AS	
		2	**3K-0360**	1	SEAL-O-RING	
		2	**9S-4185**	1	PLUG-O-RING	
	28	2	*150-4049*	1	ELBOW AS	
		2	**6V-9746**	1	SEAL-O-RING	
		2	**7M-8485**	1	SEAL-O-RING	
		2	**8T-4149**	1	ELBOW	
	29	2	*153-6237*	1	ELBOW AS	
		2	**3D-2824**	1	SEAL-O-RING	
		2	**6V-9004**	1	ELBOW	
		2	**6V-9746**	1	SEAL-O-RING	
	30	1,2	**1P-3702**	3	SEAL-RECTANGULAR	
	31	2	**1P-3703**	2	SEAL-RECTANGULAR	
	32	1,2	**1P-3704**	2	SEAL-RECTANGULAR	

330-2391 **LINES GP-FRONT** *(contd.)* **i03747954**

NOTE	REF NO	GRAPHIC REF	PART NUMBER	QTY	PART NAME 1 2 3 4 5 6 (PRODUCT LEVEL)	SEE PAGE
	33	2	**1P-4578**	6	FLANGE-HALF	
	34	2	**1P-5767**	2	FLANGE-HALF	
M	35	2	**280-2747**	4	BOLT-SOCKET HEAD (M10X1.5X60-MM)	
	36	1,2	**4J-0522**	4	SEAL-O-RING	
	37	1	**5P-7468**	1	CLIP (SLOT)	
	38	1	**5P-7469**	1	CLIP (TAB)	
	39	1	**5P-7470**	2	CLIP (SLOT)	
	40	1	**5P-7471**	2	CLIP (TAB)	
	41	1	**5P-8182**	2	GROMMET	
	42	1	**6V-1874**	1	GROMMET	
	43	2	**6V-9746**	2	SEAL-O-RING	
	44	2	**7Y-3729**	1	FLANGE	
	45	1,2	**8T-4121**	18	WASHER-HARD (11X21X2.5-MM THK)	
M	46	1	**8T-4136**	2	BOLT (M10X1.5X25-MM)	
M	47	2	**8T-4139**	10	BOLT (M12X1.75X30-MM)	
M	48	2	**8T-4182**	4	BOLT (M10X1.5X45-MM)	
M	49	2	**8T-4186**	12	BOLT (M10X1.5X40-MM)	
M	50	1,2	**8T-4194**	6	BOLT (M12X1.75X50-MM)	
	51	1,2	**8T-4223**	25	WASHER-HARD (13.5X25.5X3-MM THK)	
M	52	1,2	**8T-4956**	9	BOLT (M12X1.75X35-MM)	
	53	2	**8T-9403**	2	FLANGE-HALF	
	54	2	**113-6479**	1	FLANGE-SPECIAL	
	55	2	**5K-9090**	1	SEAL-O-RING	
	56	2	**4J-5267**	1	SEAL-O-RING	

I-REFER TO HYDRAULIC INFORMATION SYSTEM
M-METRIC PART
Y-SEPARATE ILLUSTRATION

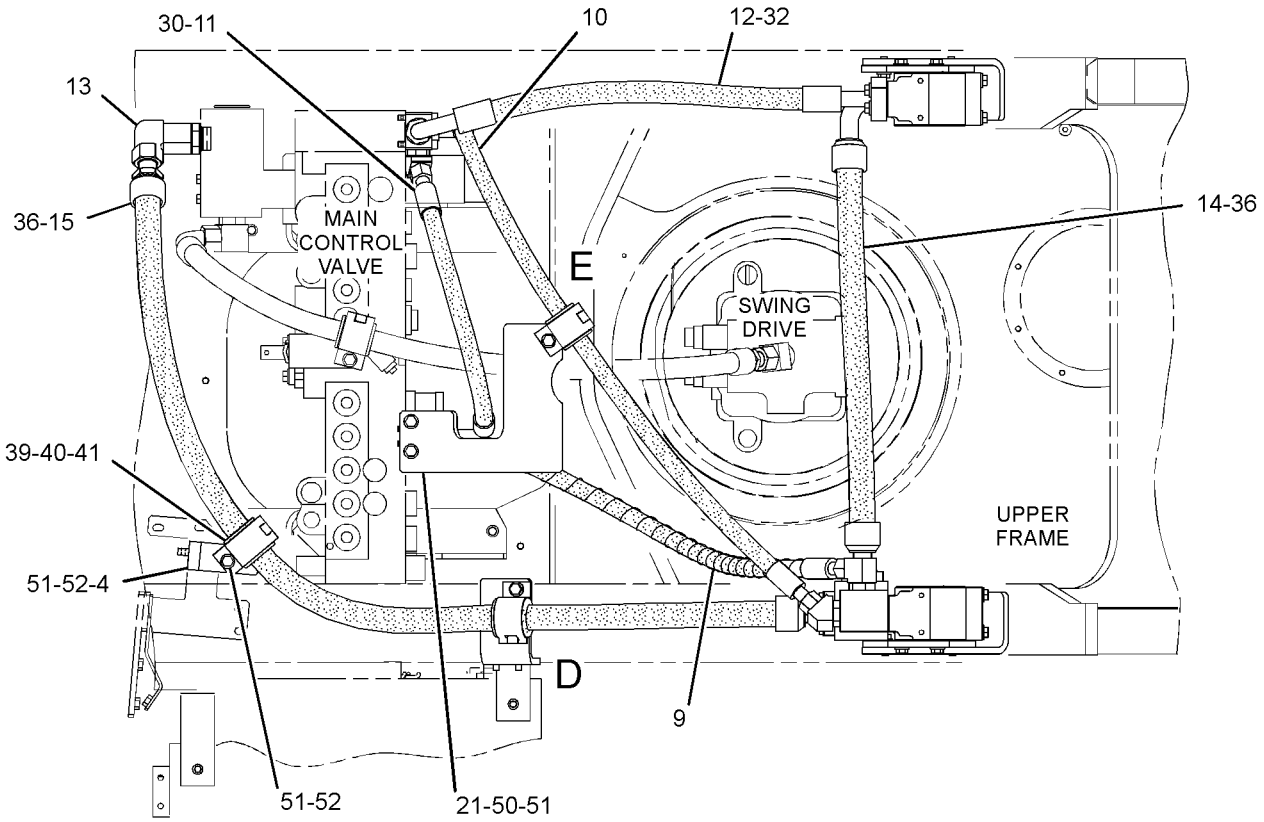

TOP VIEW FWD

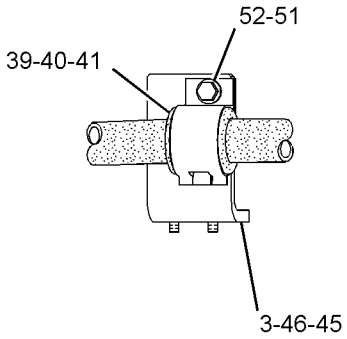

VIEW OF AREA D

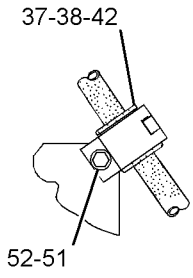

VIEW OF AREA E

GRAPHIC #1 g01943481

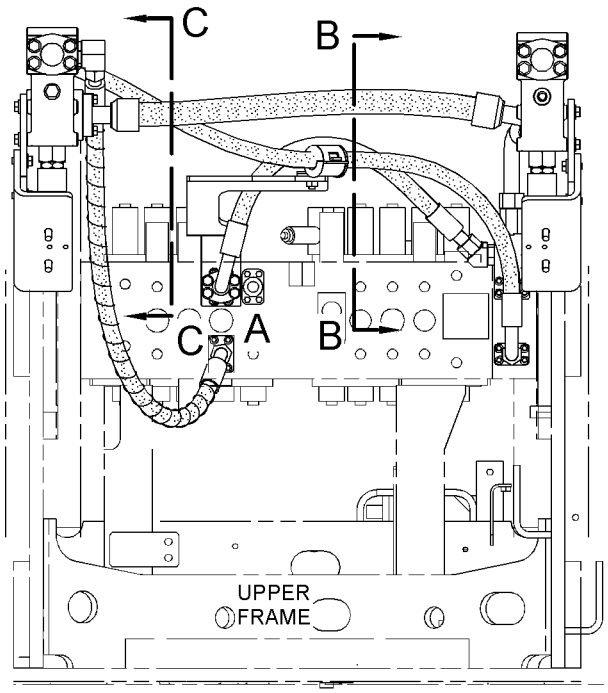

FRONT VIEW

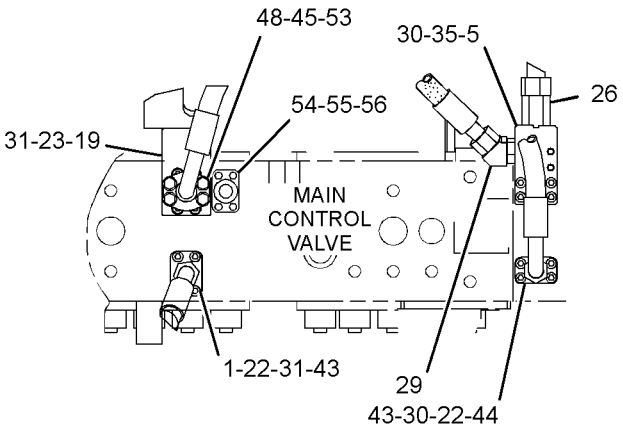

VIEW OF AREA A
(HOSES REMOVED FOR CLARITY)

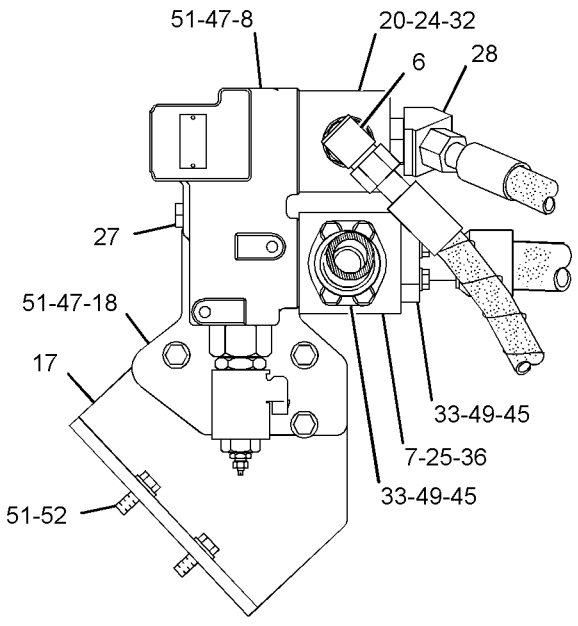

SECTION C-C

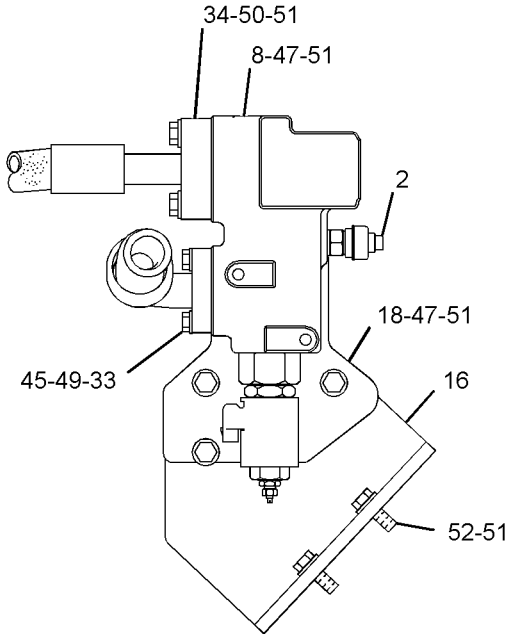

SECTION B-B

GRAPHIC #2 **<END>** g01937576

HYDRAULIC SYSTEM

337-1244 LINES GP-FRONT—QUICK COUPLER

S/N: D3P1-UP
PART OF 344-4212 CONTROL AR-COUPLER
AN ATTACHMENT

SMCS-5057 **i03679521**

NOTE	REF NO	GRAPHIC REF	PART NUMBER	QTY	PART NAME 1 2 3 4 5 6 (PRODUCT LEVEL)	SEE PAGE
	1	1	**4I-9521**	4	BAND-MARKER (RED, L1)	
	2	1	**4I-9522**	4	BAND-MARKER (YELLOW, L2)	
	3	1	**7K-1181**	13	STRAP-CABLE	
	4	1	**9X-6582**	2	NUT (13/16-16-THD)	
I	5	1	**109-7556**	1	HOSE AS	
	6	1	*148-8447*	1	TEE AS-SWIVEL	
		1	**7J-9108**	1	SEAL-O-RING	
		1	**7X-0872**	1	TEE-SWIVEL	
	7	1	**266-0982**	1	GUARD	
	8	1	*267-4048*	1	ELBOW AS	
		1	**3J-1907**	1	SEAL-O-RING	
		1	**4J-5477**	1	SEAL-O-RING	
		1	**267-4047**	1	ELBOW	
I	9	1	**269-9952**	2	HOSE AS	
I	10	1	**275-1487**	1	HOSE AS	
	11	1	**282-7092**	3	GROMMET	
Y	12	1	**328-2035**	1	VALVE GP-SOLENOID & MANIFOLD (QUICK COUPLER)	838
	13	1	**337-1220**	1	BLOCK	
	14	1	**337-1245**	1	BRACKET AS	
M	15	1	**105-3489**	4	BOLT-SOCKET HEAD (M12X1.75X80-MM)	
	16	1	*148-8353*	1	ELBOW AS	
		1	**3J-1907**	1	SEAL-O-RING	
		1	**6V-8397**	1	SEAL-O-RING	
		1	**6V-9001**	1	ELBOW	
	17	1	*148-8368*	1	ELBOW AS	
		1	**3J-1907**	1	SEAL-O-RING	
		1	**4J-5477**	1	SEAL-O-RING	
		1	**6V-8627**	1	ELBOW	
	18	1	*148-8378*	2	ELBOW AS	
					(EACH INCLUDES)	
		1	**3J-1907**	1	SEAL-O-RING	
		1	**6V-8397**	1	SEAL-O-RING	
		1	**6V-8724**	1	ELBOW	
	19	1	*148-8419*	2	REDUCER AS	
					(EACH INCLUDES)	
		1	**4J-5477**	1	SEAL-O-RING	
		1	**6V-8935**	1	REDUCER-O-RING	
	20	1	*150-3036*	1	ELBOW AS	
		1	**3J-1907**	1	SEAL-O-RING	
		1	**6V-8397**	1	SEAL-O-RING	
		1	**8T-1905**	1	ELBOW	
	21	1	**1P-3703**	1	SEAL-RECTANGULAR	
	22	1	**8T-4121**	2	WASHER-HARD (11X21X2.5-MM THK)	
M	23	1	**8T-4139**	2	BOLT (M12X1.75X30-MM)	
M	24	1	**8T-4182**	2	BOLT (M10X1.5X45-MM)	
	25	1	**8T-4223**	6	WASHER-HARD (13.5X25.5X3-MM THK)	
J	26	1	**6V-1889**	1	CLIP	
J	27	1	**8T-4121**	1	WASHER-HARD (11X21X2.5-MM THK)	
JM	28	1	**8T-4137**	1	BOLT (M10X1.5X20-MM)	

I-REFER TO HYDRAULIC INFORMATION SYSTEM
J-USED WITH LINES GP-RETURN (BLCV)
M-METRIC PART
Y-SEPARATE ILLUSTRATION

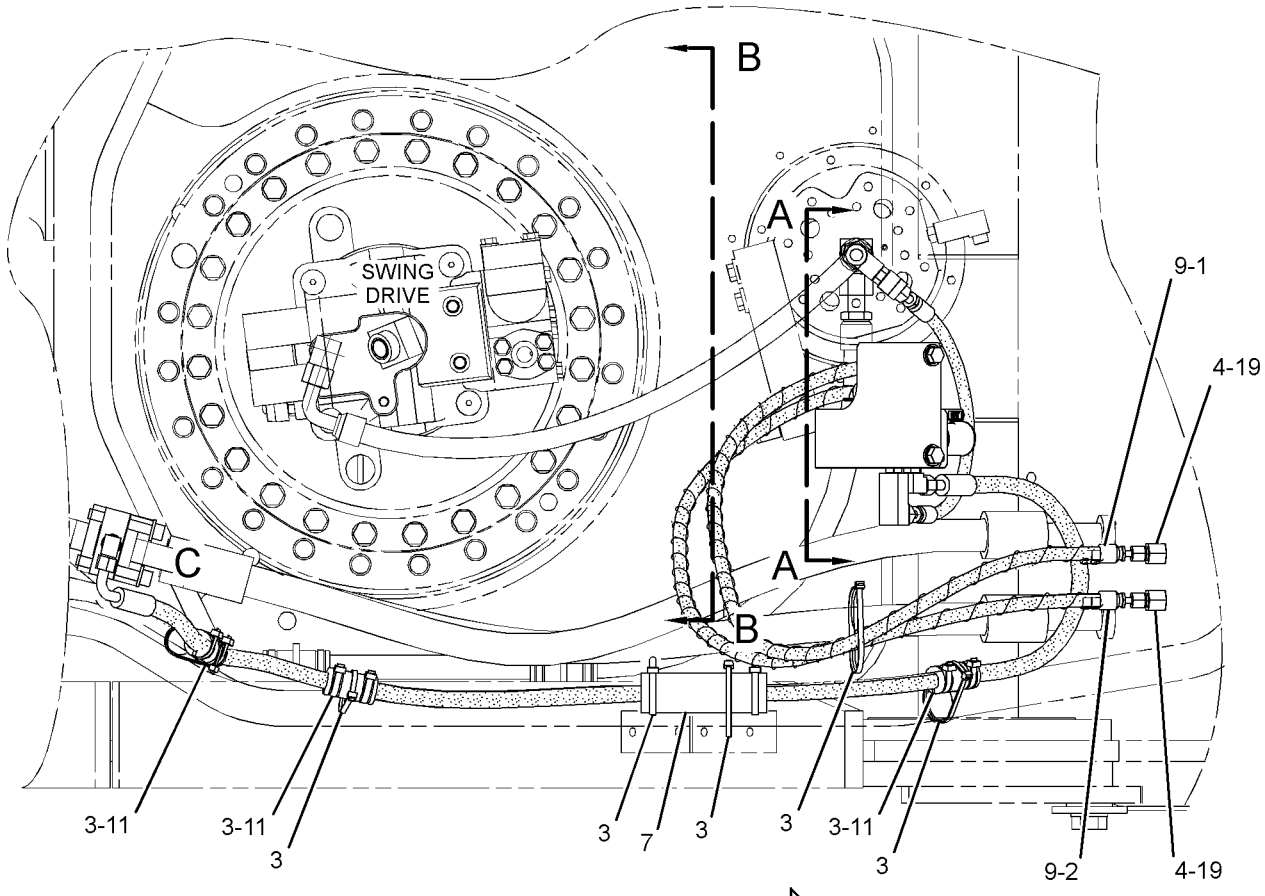

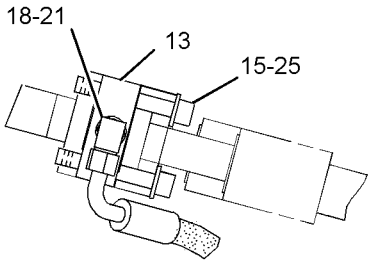

VIEW OF AREA C

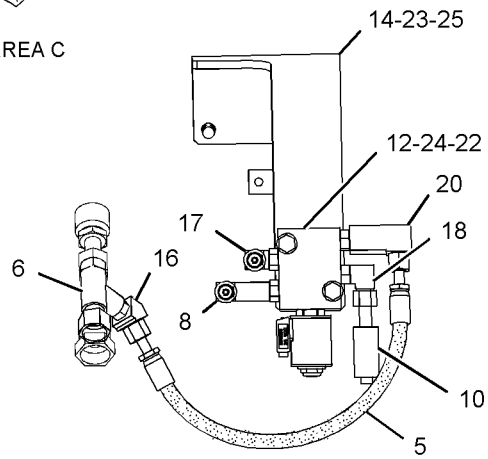

VIEW A-A

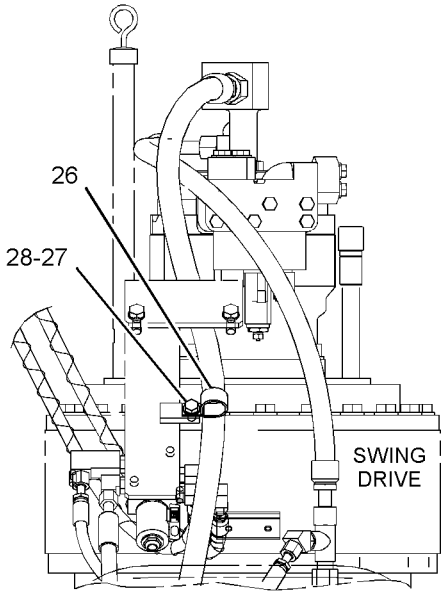

VIEW B-B
(OPTIONAL DESIGN)

GRAPHIC #1 **<END>** g02013533

HYDRAULIC SYSTEM

248-9840 LINES GP-HYDRAULIC OIL COOLER

S/N: D3P1-UP; M4T1-UP

PART OF 259-7766 HYDRAULIC AR

SMCS-1374 **i03108402**

NOTE	REF NO	GRAPHIC REF	PART NUMBER	QTY	PART NAME 1 2 3 4 5 6 (PRODUCT LEVEL)	SEE PAGE
CM	1	1	**8T-4185**	1	BOLT (M10X1.5X50-MM)	
M	2	2	**101-7396**	6	BOLT-SOCKET HEAD (M10X1.5X50-MM)	
I	3	1	**131-9453**	1	HOSE AS	
	4	1	**144-0367**	8	CLAMP-HOSE	
	5	1	**236-6339**	2	HOSE	
C	6	1	**296-6980**	1	SPACER (11X25X30-MM THK)	
	7	2	**282-7373**	2	SUPPORT	
	8	1	**289-5355**	1	TUBE AS	
	9	1	**255-2021**	1	TUBE AS	
I	10	2	**255-2025**	1	HOSE AS	
I	11	2	**255-2028**	1	HOSE AS	
	12	2	**259-0824**	1	BLOCK	
	13	2	**325-9220**	1	HOSE AS	
	14	1	**260-7895**	1	SUPPORT	
C	15	1,2	**275-1739**	3	CLIP (TAB)	
C	16	1,2	**275-1740**	3	CLIP (SLOT)	
C	17	1,2	**275-1741**	3	GROMMET	
	18	1	**282-7106**	3	GROMMET	
M	19	1,2	**096-4883**	6	LOCKNUT (M10X1.5-THD)	
M	20	1	**101-7402**	8	BOLT-SOCKET HEAD (M12X1.75X30-MM)	
	21	2	*148-8315*	1	CONNECTOR AS	
		2	**2M-9780**	1	SEAL-O-RING	
		2	**6V-8642**	1	CONNECTOR	
		2	**7J-9108**	1	SEAL-O-RING	
	22	2	*148-8340*	1	CONNECTOR AS	
		2	**3K-0360**	1	SEAL-O-RING	
		2	**6V-8398**	1	SEAL-O-RING	
		2	**6V-8639**	1	CONNECTOR	
	23	2	*148-8390*	1	ELBOW AS	
		2	**2M-9780**	1	SEAL-O-RING	
		2	**6V-8626**	1	ELBOW	
		2	**7J-9108**	1	SEAL-O-RING	
	24	1	*148-8393*	1	ELBOW AS	
		1	**6V-9852**	1	ELBOW	
		1	**7J-9108**	1	SEAL-O-RING	
	25	1	**4J-0527**	2	SEAL-O-RING	
	26	2	**4J-5267**	2	SEAL-O-RING	
CM	27	1	**8T-4137**	1	BOLT (M10X1.5X20-MM)	
M	28	2	**8T-4956**	4	BOLT (M12X1.75X35-MM)	
	29	2	**8T-4223**	4	WASHER-HARD (13.5X25.5X3-MM THK)	
	30	1,2	**6D-4246**	3	CLIP	
	31	1	**7K-1181**	6	STRAP-CABLE	
M	32	1,2	**7Y-5247**	3	U-BOLT	
C	33	1,2	**8T-4121**	14	WASHER-HARD (11X21X2.5-MM THK)	
M	34	1,2	**8T-4136**	5	BOLT (M10X1.5X25-MM)	

C-CHANGE FROM PREVIOUS TYPE
I-REFER TO HYDRAULIC INFORMATION SYSTEM
M-METRIC PART

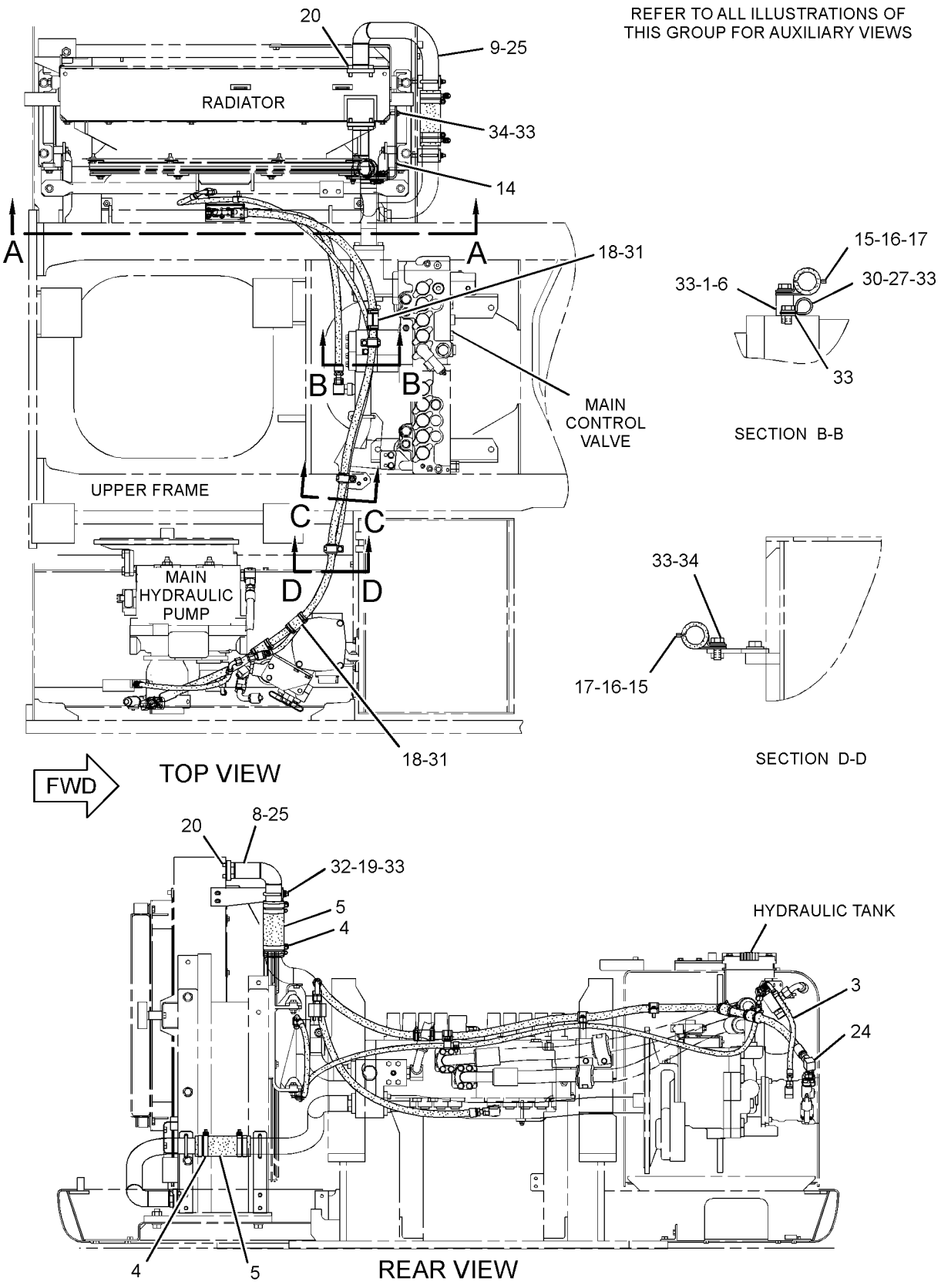

GRAPHIC #1

g01601873

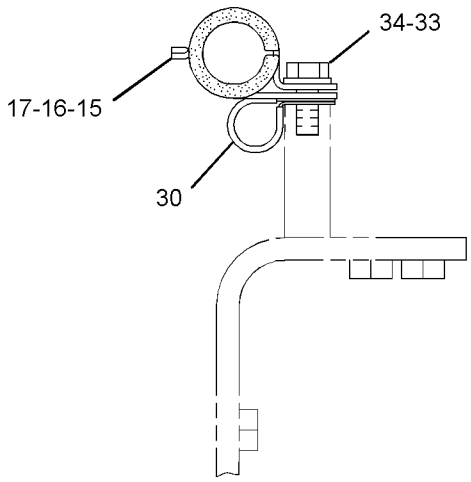

SECTION C-C

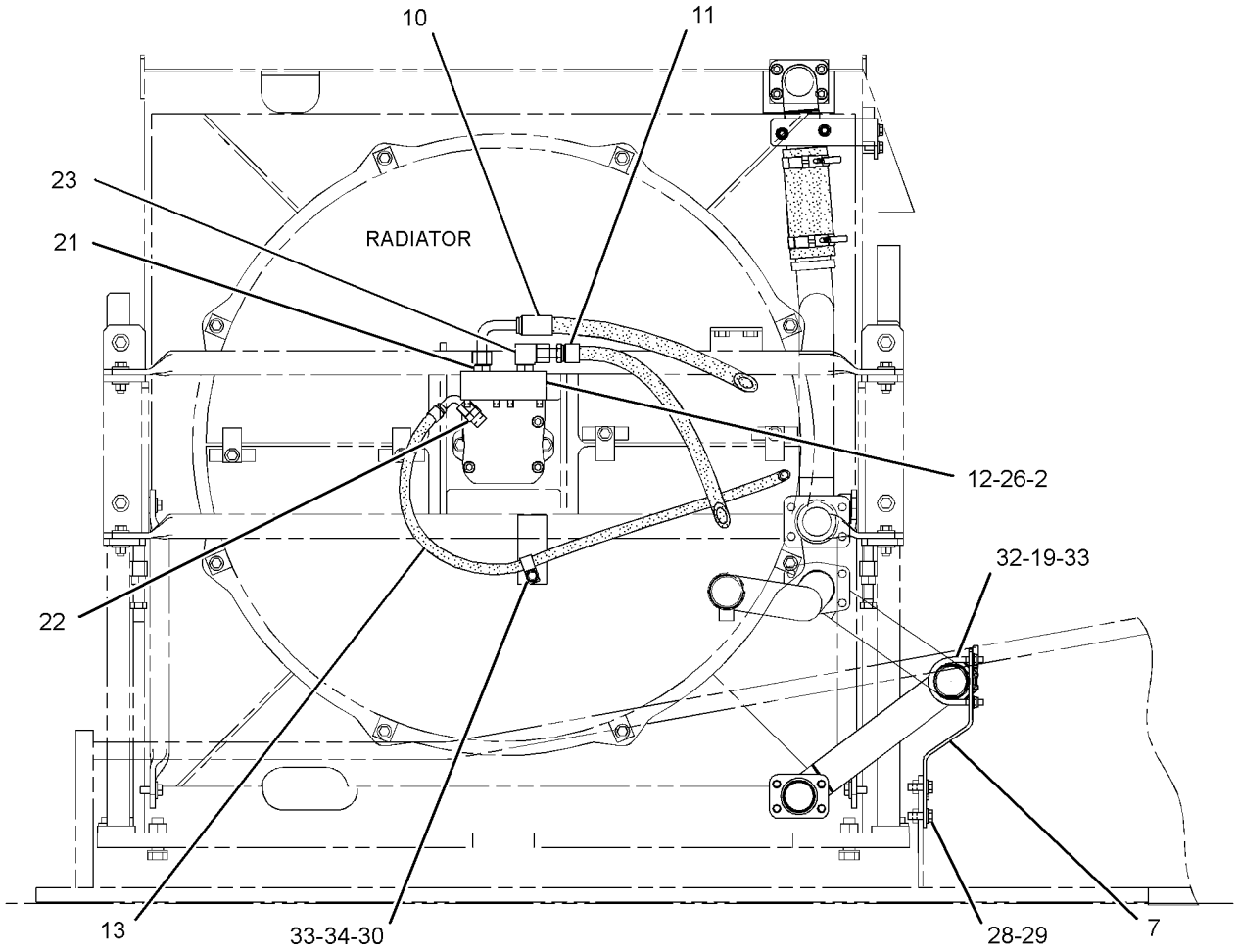

SECTION A-A

GRAPHIC #2 **<END>** g01378549

HYDRAULIC SYSTEM

255-2079 LINES GP-MOTOR—REVERSING FAN

S/N: D3P1-UP; M4T1-UP
PART OF 264-8479 CONTROL AR-FAN
AN ATTACHMENT

SMCS-5057, 5058 **i03745189**

NOTE	REF NO	GRAPHIC REF	PART NUMBER	QTY	PART NAME 1 2 3 4 5 6 (PRODUCT LEVEL)	SEE PAGE
I	1	2	**4I-1031**	1	HOSE AS	
I	2	2	**5I-4396**	1	HOSE AS	
I	3	1	**087-4438**	1	HOSE AS	
M	4	2	**101-7400**	6	BOLT-SOCKET HEAD (M10X1.5X110-MM)	
I	5	2	**115-3667**	1	HOSE AS	
	6	1	*164-6874*	1	FITTING AS-ELBOW	
		1	**3J-1907**	1	SEAL-O-RING	
		1	**085-7356**	1	FITTING	
	7	1	*197-8940*	2	CONNECTOR AS	
					(EACH INCLUDES)	
		1	**2M-9780**	1	SEAL-O-RING	
		1	**7J-9108**	1	SEAL-O-RING	
		1	**8T-1576**	1	CONNECTOR	
Y	8	2	**234-4624**	1	VALVE GP-CONTROL (REVERSE FLOW FAN)	742
Y	9	2	**242-6880**	1	VALVE GP-SOLENOID (REVERSING FAN)	832
I	10	2	**272-4194**	1	HOSE AS	
I	11	1	**272-4252**	1	HOSE AS	
	12	2	**272-4255**	1	SUPPORT AS	
M	13	2	**129-3181**	2	BOLT-SOCKET HEAD (M10X1.5X55-MM)	
	14	2	*148-8336*	3	CONNECTOR AS	
					(EACH INCLUDES)	
		2	**3J-1907**	1	SEAL-O-RING	
		2	**6V-8397**	1	SEAL-O-RING	
		2	**6V-8636**	1	CONNECTOR	
	15	2	*148-8340*	1	CONNECTOR AS	
		2	**3K-0360**	1	SEAL-O-RING	
		2	**6V-8398**	1	SEAL-O-RING	
		2	**6V-8639**	1	CONNECTOR	
	16	2	*148-8378*	1	ELBOW AS	
		2	**3J-1907**	1	SEAL-O-RING	
		2	**6V-8397**	1	SEAL-O-RING	
		2	**6V-8724**	1	ELBOW	
	17	1	*148-8433*	1	TEE AS	
		1	**6V-8397**	2	SEAL-O-RING	
		1	**6V-9836**	1	TEE-SWIVEL	
	18	1	*148-8435*	1	TEE AS	
		1	**3J-1907**	1	SEAL-O-RING	
		1	**6V-8397**	2	SEAL-O-RING	
		1	**6V-8781**	1	TEE-FACE SEAL	
	19	2	**4J-5267**	2	SEAL-O-RING	
	20	1	**7K-1181**	1	STRAP-CABLE	
	21	2	**8T-4121**	5	WASHER-HARD (11X21X2.5-MM THK)	
M	22	2	**8T-4137**	2	BOLT (M10X1.5X20-MM)	
	23	2	**239-6500**	1	PLATE	
	24	2	**5P-1076**	1	WASHER-HARD (13.5X30X4-MM THK)	
	25	2	**6D-4246**	1	CLIP	
	26	2	**275-1739**	1	CLIP (TAB)	
	27	2	**275-1740**	1	CLIP (SLOT)	
M	28	2	**8T-4133**	1	NUT (M10X1.5-THD)	
	29	2	**275-1741**	1	GROMMET	
M	30	2	**8T-4195**	2	BOLT (M10X1.5X30-MM)	

I-REFER TO HYDRAULIC INFORMATION SYSTEM
M-METRIC PART
Y-SEPARATE ILLUSTRATION

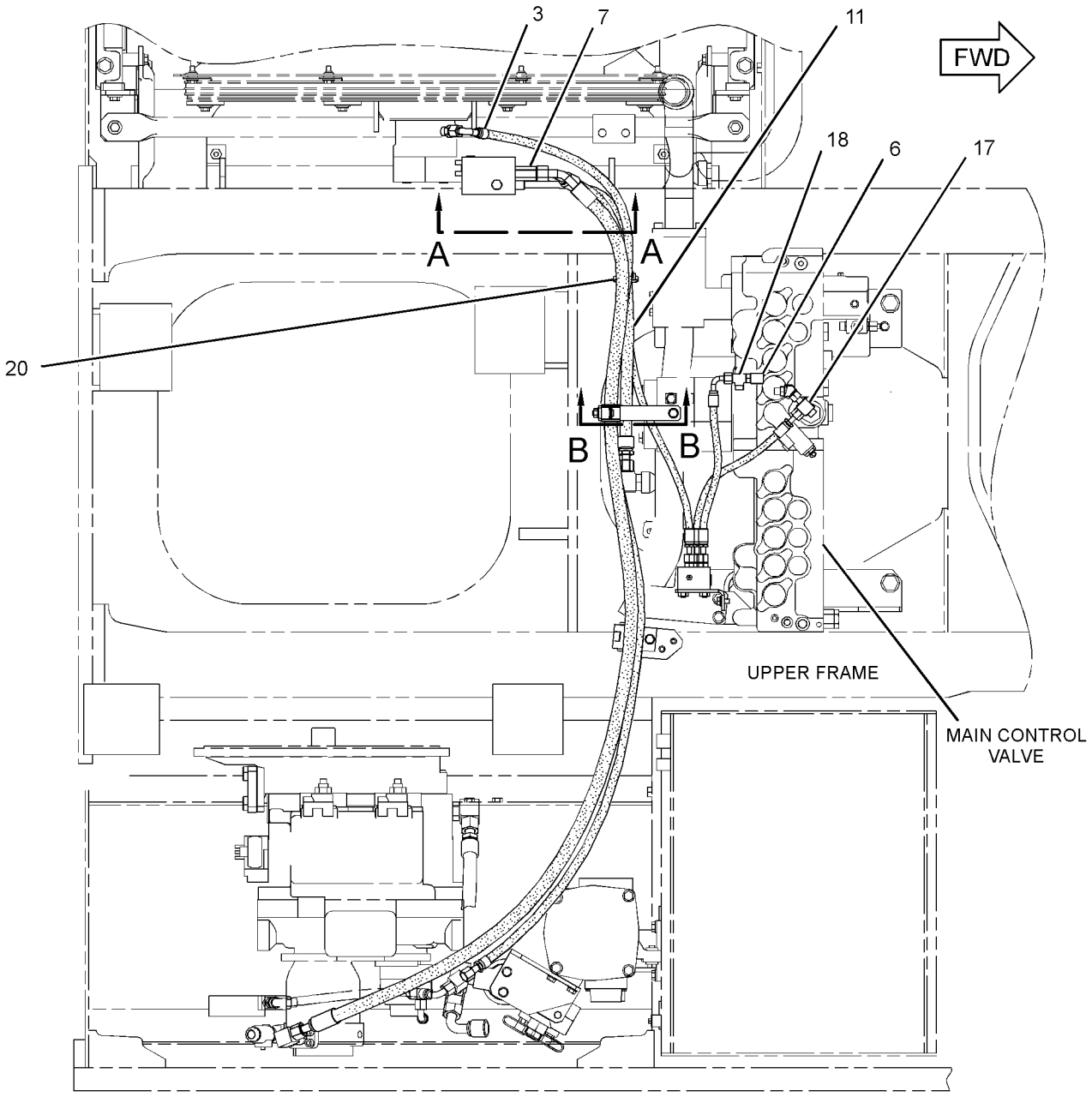

TOP VIEW

REFER TO ALL ILLUSTRATIONS OF THIS GROUP FOR AUXILIARY VIEWS

GRAPHIC #1

g01537976

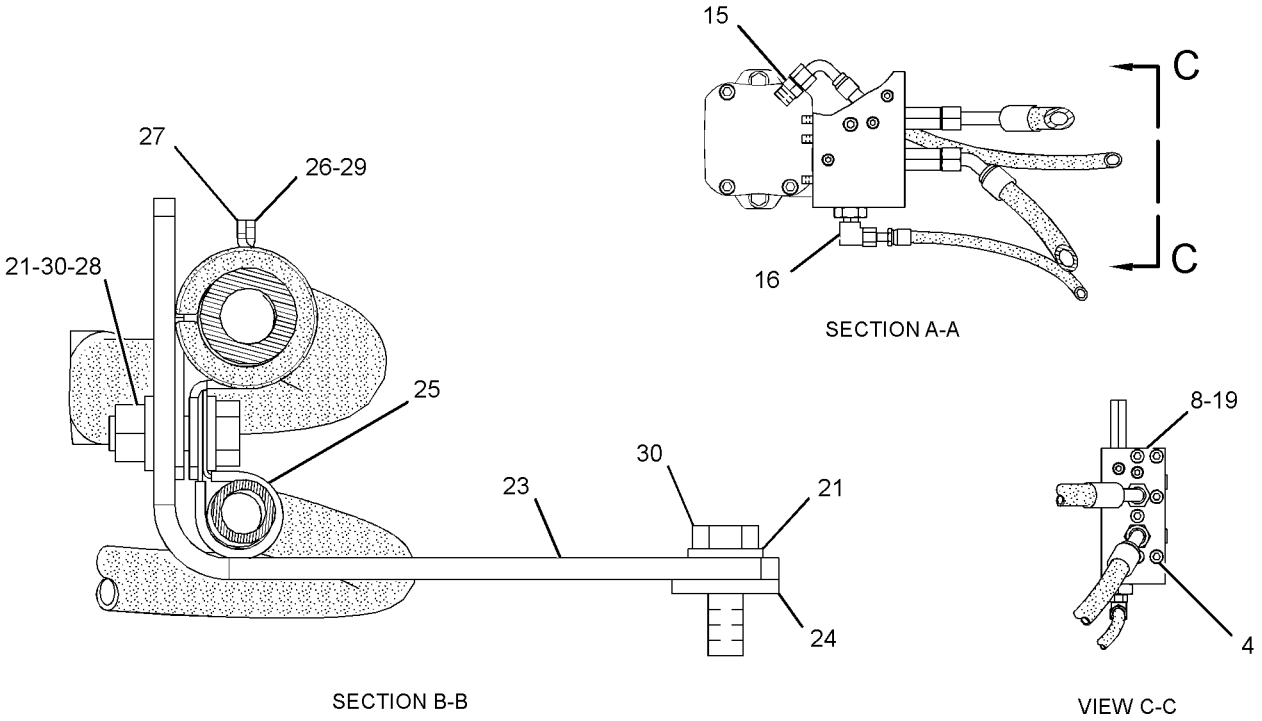

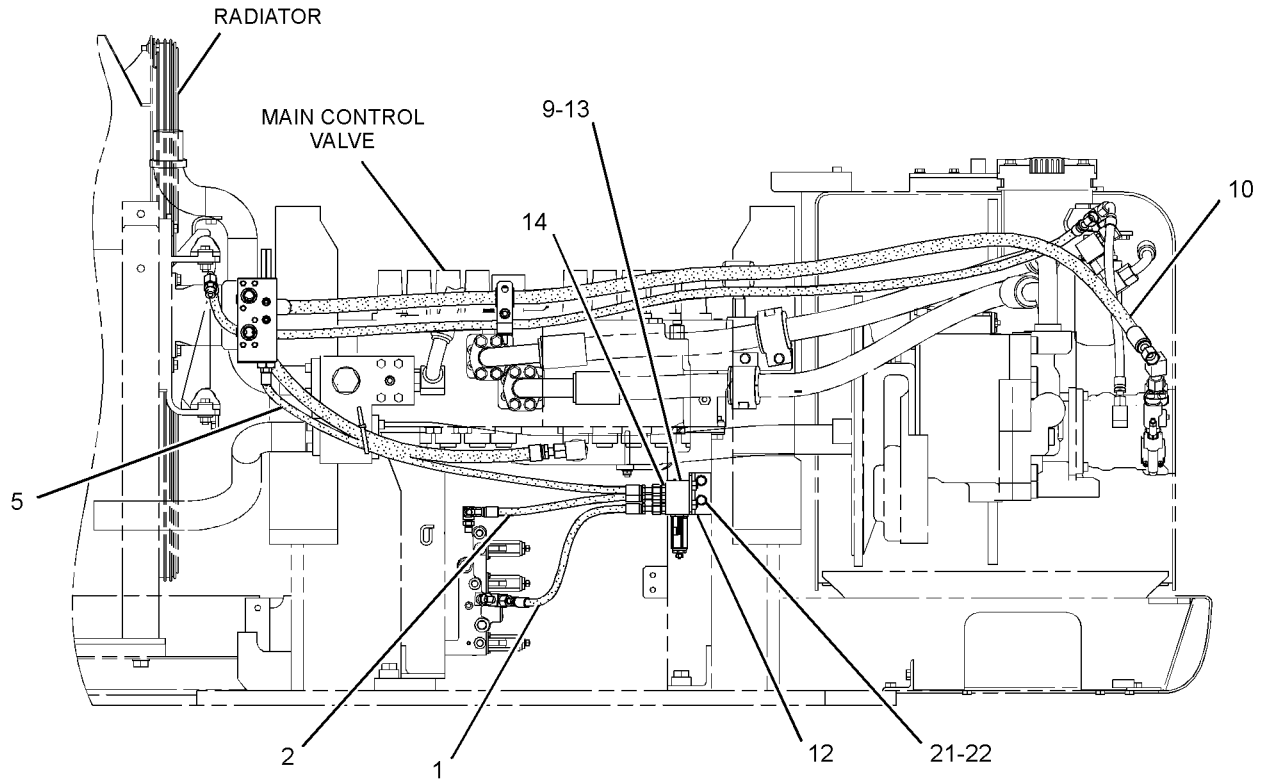

GRAPHIC #2 **<END>** g01537977

HYDRAULIC SYSTEM

248-9825 LINES GP-PILOT—JOYSTICK, PEDALS

S/N: M4T1-258

PART OF 259-7766 HYDRAULIC AR

SMCS-5057, 5059 **i02942262**

NOTE	REF NO	GRAPHIC REF	PART NUMBER	QTY	PART NAME 1 2 3 4 5 6 (PRODUCT LEVEL)	SEE PAGE
	1	2	**4I-9521**	2	BAND-MARKER (RED, L1)	
	2	2	**4I-9522**	2	BAND-MARKER (YELLOW, L2)	
	3	2	**4I-9523**	2	BAND-MARKER (BLUE, L3)	
	4	2	**4I-9524**	2	BAND-MARKER (BROWN, L4)	
	5	2	**4I-9525**	2	BAND-MARKER (ORANGE, R1)	
	6	2	**4I-9526**	2	BAND-MARKER (WHITE, R2)	
	7	2	**4I-9527**	2	BAND-MARKER (GREEN, R3)	
	8	2	**4I-9528**	2	BAND-MARKER (PURPLE, R4)	
	9	1,2	**7K-1181**	3	STRAP-CABLE	
I	10	1	**087-4402**	2	HOSE AS	
	11	2	**133-5813**	4	BAND-MARKER (GRAY, P)	
	12	2	**309-5769**	1	SWITCH AS-PRESSURE (IMPLEMENT, SWING)	
	12A	1	**309-5769**	1	SWITCH AS-PRESSURE (TRAVEL, LH)	
	12B	1	**309-5769**	1	SWITCH AS-PRESSURE (TRAVEL, RH)	
					(EACH SWITCH AS INCLUDES)	
		1	**102-8802**	1	KIT-RECEPTACLE (2-PIN)	
					(INCLUDES RECEPTACLE AS & WEDGE)	
		1	**9X-3401**	2	PIN-CONNECTOR (16-GA TO 18-GA)	
					—OR—	
		1	**126-1767**	2	PIN-CONNECTOR (14-GA)	
	13	2	**168-9759**	1	BLOCK	
	14	1,2	**184-9336**	4	SUPPORT	
	15	2	**185-0383**	1	BRACKET	
Y	16	2	**185-0462**	1	VALVE GP-SHUTTLE	823
	17	2	**236-2843**	4	HOSE AS	
	18	2	**236-2844**	3	HOSE AS	
	19	2	**236-2848**	1	HOSE AS	
	20	2	**245-5079**	1	HOSE AS	
	21	2	**255-1665**	1	HOSE AS	
	22	2	**255-1666**	1	HOSE AS	
Y	23	1	**270-5947**	1	VALVE GP-PILOT (TRAVEL)	785
	24	1,2	*148-8336*	23	CONNECTOR AS	
					(EACH INCLUDES)	
		1,2	**3J-1907**	1	SEAL-O-RING	
		1,2	**6V-8397**	1	SEAL-O-RING	
		1,2	**6V-8636**	1	CONNECTOR	
	25	2	*148-8353*	8	ELBOW AS	
					(EACH INCLUDES)	
		2	**3J-1907**	1	SEAL-O-RING	
		2	**6V-8397**	1	SEAL-O-RING	
		2	**6V-9001**	1	ELBOW	
	26	2	*148-8354*	2	ELBOW AS	
					(EACH INCLUDES)	
		2	**3K-0360**	1	SEAL-O-RING	
		2	**6V-8398**	1	SEAL-O-RING	
		2	**6V-9002**	1	ELBOW	
	27	1,2	*148-8378*	6	ELBOW AS	
					(EACH INCLUDES)	
		1,2	**3J-1907**	1	SEAL-O-RING	
		1,2	**6V-8397**	1	SEAL-O-RING	
		1,2	**6V-8724**	1	ELBOW	
	28	2	*148-8407*	4	PLUG AS	
					(EACH INCLUDES)	
		2	**3J-1907**	1	SEAL-O-RING	
		2	**9S-4191**	1	PLUG-O-RING	

248-9825 **LINES GP-PILOT** *(contd.)* **i02942262**

NOTE	REF NO	GRAPHIC REF	PART NUMBER	QTY	PART NAME 1 2 3 4 5 6 (PRODUCT LEVEL)	SEE PAGE
	29	1,2	*164-5628*	3	CONNECTOR AS	
					(EACH INCLUDES)	
		1,2	**3J-1907**	1	SEAL-O-RING	
		1,2	**6V-8397**	1	SEAL-O-RING	
		1,2	**107-6631**	1	CONNECTOR-FILTER	
	30	1,2	**8T-4121**	20	WASHER-HARD (11X21X2.5-MM THK)	
M	31	1	**8T-4136**	4	BOLT (M10X1.5X25-MM)	
M	32	1,2	**8T-4137**	15	BOLT (M10X1.5X20-MM)	
M	33	2	**8T-4198**	2	BOLT (M10X1.5X100-MM)	
	34	2	**289-5657**	1	HOSE AS	
	35	2	**4P-7581**	1	CLIP	

I-REFER TO HYDRAULIC INFORMATION SYSTEM
M-METRIC PART
Y-SEPARATE ILLUSTRATION

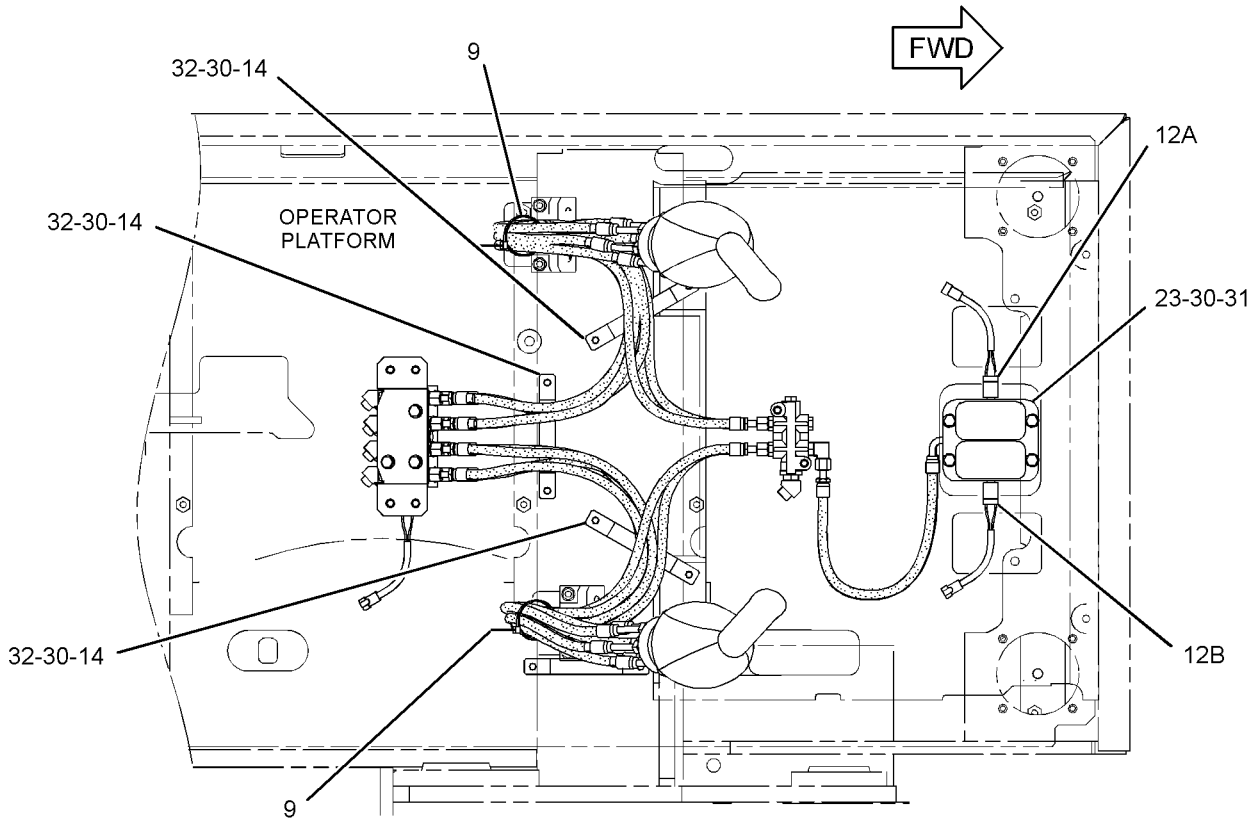

TOP VIEW

REFER TO ALL ILLUSTRATIONS OF
THIS GROUP FOR AUXILIARY VIEWS

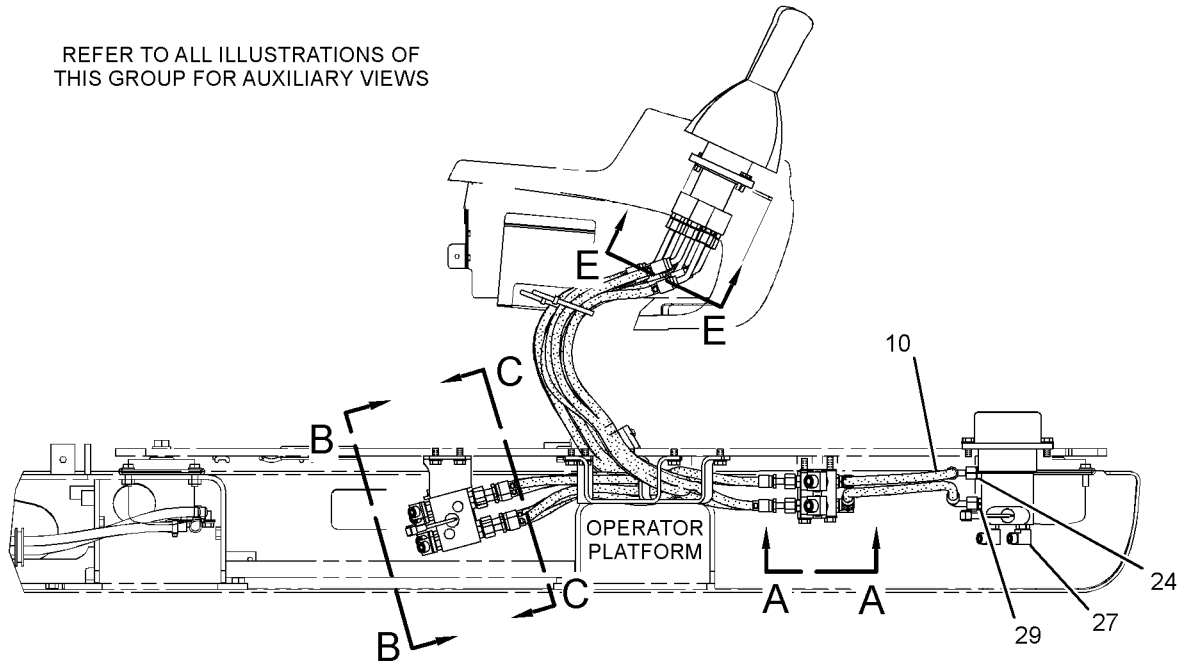

RIGHT SIDE VIEW

GRAPHIC #1

g01318427

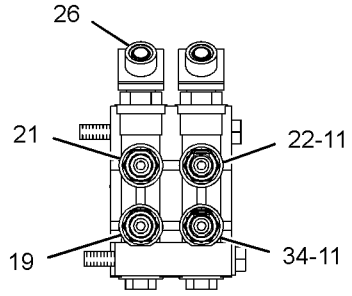

VIEW D-D

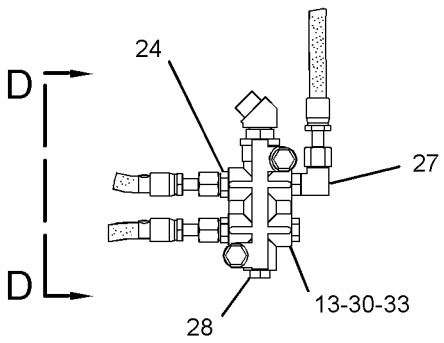

VIEW A-A

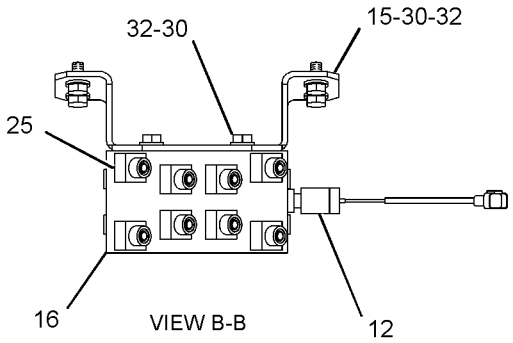

VIEW B-B

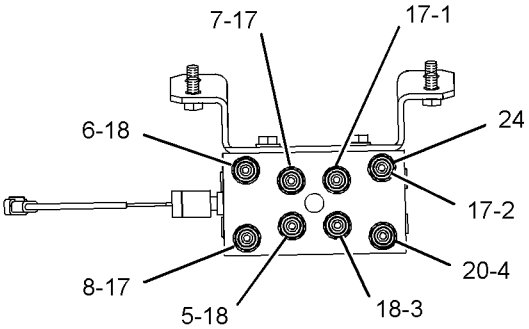

SECTION C-C

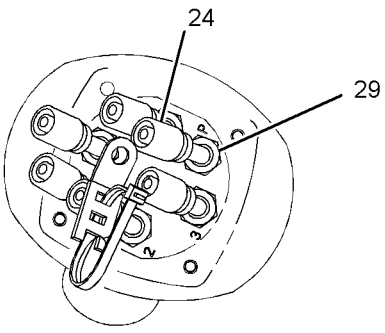

SECTION E-E

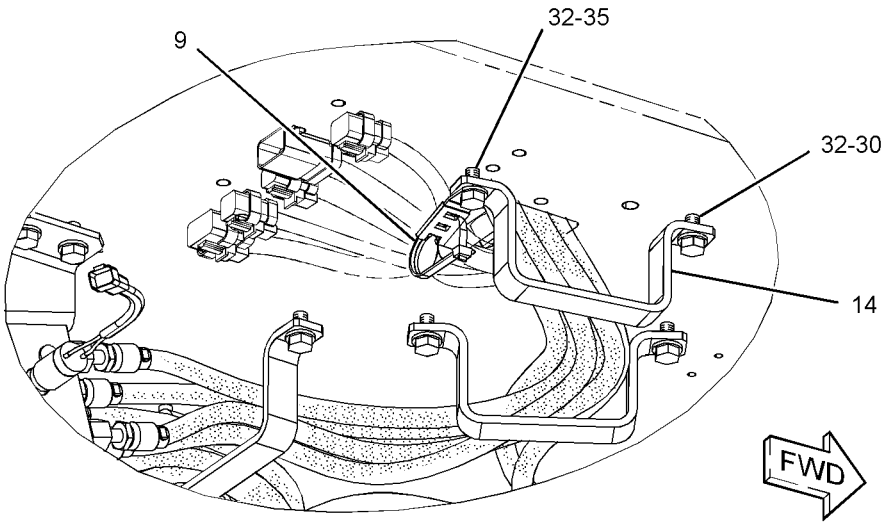

GRAPHIC #2 **<END>** g01318428

HYDRAULIC SYSTEM

248-9825 LINES GP-PILOT—JOYSTICK, PEDALS

S/N: D3P1-UP; M4T259-UP

PART OF 259-7766 HYDRAULIC AR

SMCS-5057, 5059 **i03751360**

NOTE	REF NO	GRAPHIC REF	PART NUMBER	QTY	PART NAME 1 2 3 4 5 6 (PRODUCT LEVEL)	SEE PAGE
	1	2	**4I-9521**	2	BAND-MARKER (RED, L1)	
	2	2	**4I-9522**	2	BAND-MARKER (YELLOW, L2)	
	3	2	**4I-9523**	2	BAND-MARKER (BLUE, L3)	
	4	2	**4I-9524**	2	BAND-MARKER (BROWN, L4)	
	5	2	**4I-9525**	2	BAND-MARKER (ORANGE, R1)	
	6	2	**4I-9526**	2	BAND-MARKER (WHITE, R2)	
	7	2	**4I-9527**	2	BAND-MARKER (GREEN, R3)	
	8	2	**4I-9528**	2	BAND-MARKER (PURPLE, R4)	
	9	1	**7K-1181**	3	STRAP-CABLE	
I	10	1	**087-4402**	2	HOSE AS	
	11	2	**133-5813**	4	BAND-MARKER (GRAY, P)	
	12	1	**309-5769**	1	SWITCH AS-PRESSURE (IMPLEMENT, SWING)	
	12A	1	**309-5769**	1	SWITCH AS-PRESSURE (TRAVEL, LH)	
	12B	2	**309-5769**	1	SWITCH AS-PRESSURE (TRAVEL, RH)	
					(EACH SWITCH AS INCLUDES)	
		1,2	**102-8802**	1	KIT-RECEPTACLE (2-PIN)	
					(INCLUDES RECEPTACLE AS & WEDGE)	
		1,2	**9X-3401**	2	PIN-CONNECTOR (16-GA TO 18-GA)	
					—OR—	
		1,2	**126-1767**	2	PIN-CONNECTOR (14-GA)	
	13	2	**168-9759**	1	BLOCK	
	14	1,2	**184-9336**	4	SUPPORT	
	15	2	**185-0383**	1	BRACKET	
Y	16	2	**185-0462**	1	VALVE GP-SHUTTLE	823
	17	2	**236-2843**	4	HOSE AS	
	18	2	**236-2844**	3	HOSE AS	
	19	2	**236-2848**	1	HOSE AS	
	20	2	**245-5079**	1	HOSE AS	
	21	2	**255-1665**	1	HOSE AS	
	22	2	**255-1666**	1	HOSE AS	
CY	23	1	**310-0414**	1	VALVE GP-PILOT (TRAVEL)	795
	24	1,2	*148-8336*	23	CONNECTOR AS	
					(EACH INCLUDES)	
		1,2	**3J-1907**	1	SEAL-O-RING	
		1,2	**6V-8397**	1	SEAL-O-RING	
		1,2	**6V-8636**	1	CONNECTOR	
	25	2	*148-8353*	8	ELBOW AS	
					(EACH INCLUDES)	
		2	**3J-1907**	1	SEAL-O-RING	
		2	**6V-8397**	1	SEAL-O-RING	
		2	**6V-9001**	1	ELBOW	
	26	2	*148-8354*	2	ELBOW AS	
					(EACH INCLUDES)	
		2	**3K-0360**	1	SEAL-O-RING	
		2	**6V-8398**	1	SEAL-O-RING	
		2	**6V-9002**	1	ELBOW	
	27	1,2	*148-8378*	6	ELBOW AS	
					(EACH INCLUDES)	
		1,2	**3J-1907**	1	SEAL-O-RING	
		1,2	**6V-8397**	1	SEAL-O-RING	
		1,2	**6V-8724**	1	ELBOW	
	28	2	*148-8407*	4	PLUG AS	
					(EACH INCLUDES)	
		2	**3J-1907**	1	SEAL-O-RING	
		2	**9S-4191**	1	PLUG-O-RING	

248-9825 **LINES GP-PILOT** ***(contd.)*** **i03751360**

NOTE	REF NO	GRAPHIC REF	PART NUMBER	QTY	PART NAME 1 2 3 4 5 6 (PRODUCT LEVEL)	SEE PAGE
	29	1,2	*164-5628*	3	CONNECTOR AS	
					(EACH INCLUDES)	
		1,2	**3J-1907**	1	SEAL-O-RING	
		1,2	**6V-8397**	1	SEAL-O-RING	
		1,2	**107-6631**	1	CONNECTOR-FILTER	
	30	1,2	**8T-4121**	20	WASHER-HARD (11X21X2.5-MM THK)	
M	31	1	**8T-4136**	4	BOLT (M10X1.5X25-MM)	
M	32	1,2	**8T-4137**	15	BOLT (M10X1.5X20-MM)	
M	33	2	**8T-4198**	2	BOLT (M10X1.5X100-MM)	
	34	2	**289-5657**	1	HOSE AS	
	35	2	**4P-7581**	1	CLIP	

C-CHANGE FROM PREVIOUS TYPE
I-REFER TO HYDRAULIC INFORMATION SYSTEM
M-METRIC PART
Y-SEPARATE ILLUSTRATION

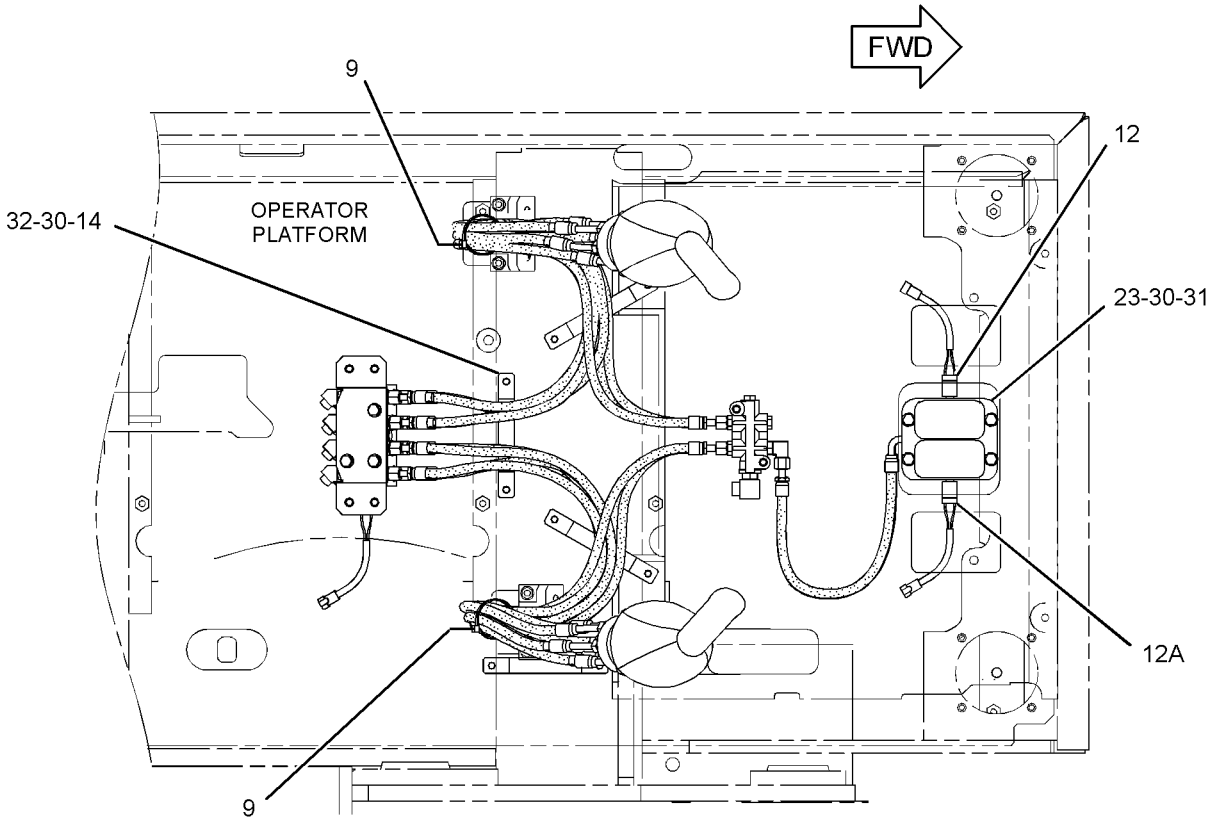

TOP VIEW

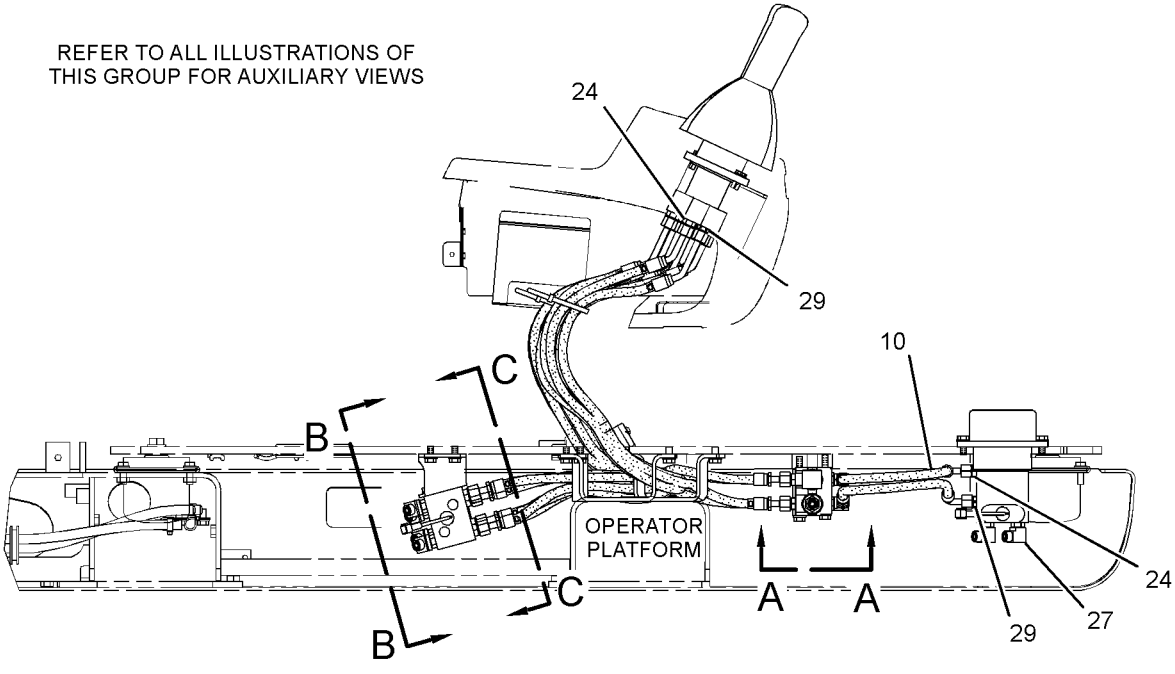

RIGHT SIDE VIEW

GRAPHIC #1

g01269086

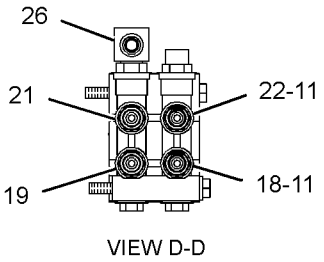

VIEW D-D

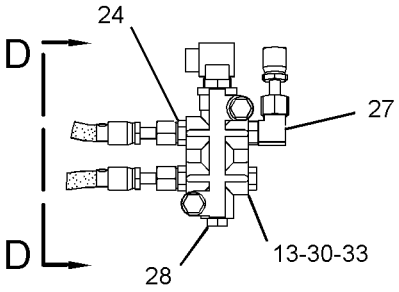

VIEW A-A

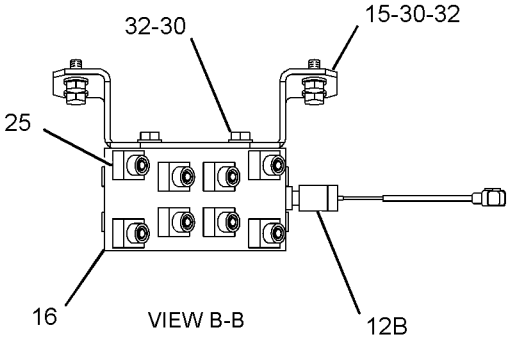

VIEW B-B

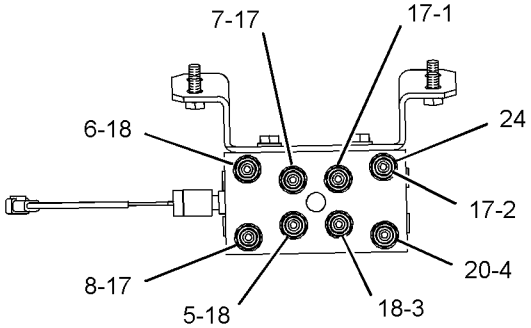

SECTION C-C

GRAPHIC #2 **<END>** g01269087

HYDRAULIC SYSTEM

248-9842 LINES GP-PILOT—CONTROL VALVE

S/N: D3P1-UP; M4T1-UP

PART OF 259-7766 HYDRAULIC AR

SMCS-5057, 5059 **i03627373**

NOTE	REF NO	GRAPHIC REF	PART NUMBER	QTY	PART NAME 1 2 3 4 5 6 (PRODUCT LEVEL)	SEE PAGE
I	1	2	**4I-0716**	1	HOSE AS	
I	2	1,2	**4I-3511**	2	HOSE AS	
I	3	1	**4I-6030**	1	HOSE AS	
I	4	2	**4I-8799**	3	HOSE AS	
	5	2	**4I-9521**	6	BAND-MARKER (RED, L1)	
	6	2	**4I-9522**	6	BAND-MARKER (YELLOW, L2)	
	7	2	**4I-9523**	2	BAND-MARKER (BLUE, L3)	
	8	1	**4I-9524**	2	BAND-MARKER (BROWN, L4)	
	9	2	**4I-9525**	6	BAND-MARKER (ORANGE, R1)	
	10	1,2	**4I-9526**	6	BAND-MARKER (WHITE, R2)	
	11	1	**4I-9527**	2	BAND-MARKER (GREEN, R3)	
	12	2	**4I-9528**	2	BAND-MARKER (PURPLE, R4)	
	13	1,2	**7K-1181**	14	STRAP-CABLE	
I	14	1	**7Y-4399**	1	HOSE AS	
I	15	2	**113-6741**	1	HOSE AS	
	16	1	**176-4708**	1	GROMMET	
I	17	2	**218-1059**	2	HOSE AS	
I	18	2	**223-6768**	1	HOSE AS	
	19	1,2	**115-8645**	3	GUARD	
	20	1,2	*148-8378*	6	ELBOW AS	
					(EACH INCLUDES)	
		1,2	**3J-1907**	1	SEAL-O-RING	
		1,2	**6V-8397**	1	SEAL-O-RING	
		1,2	**6V-8724**	1	ELBOW	
	21	1,2	*148-8435*	6	TEE AS	
					(EACH INCLUDES)	
		1,2	**3J-1907**	1	SEAL-O-RING	
		1,2	**6V-8397**	2	SEAL-O-RING	
		1,2	**6V-8781**	1	TEE-FACE SEAL	
	22	1	**176-4746**	1	GROMMET	
	23	1	**337-1205**	2	GROMMET	
J	24	1	**337-1205**	1	GROMMET	

I-REFER TO HYDRAULIC INFORMATION SYSTEM
J-USED ONLY ON D-ROPS SALES MODELS 336D & 336DL

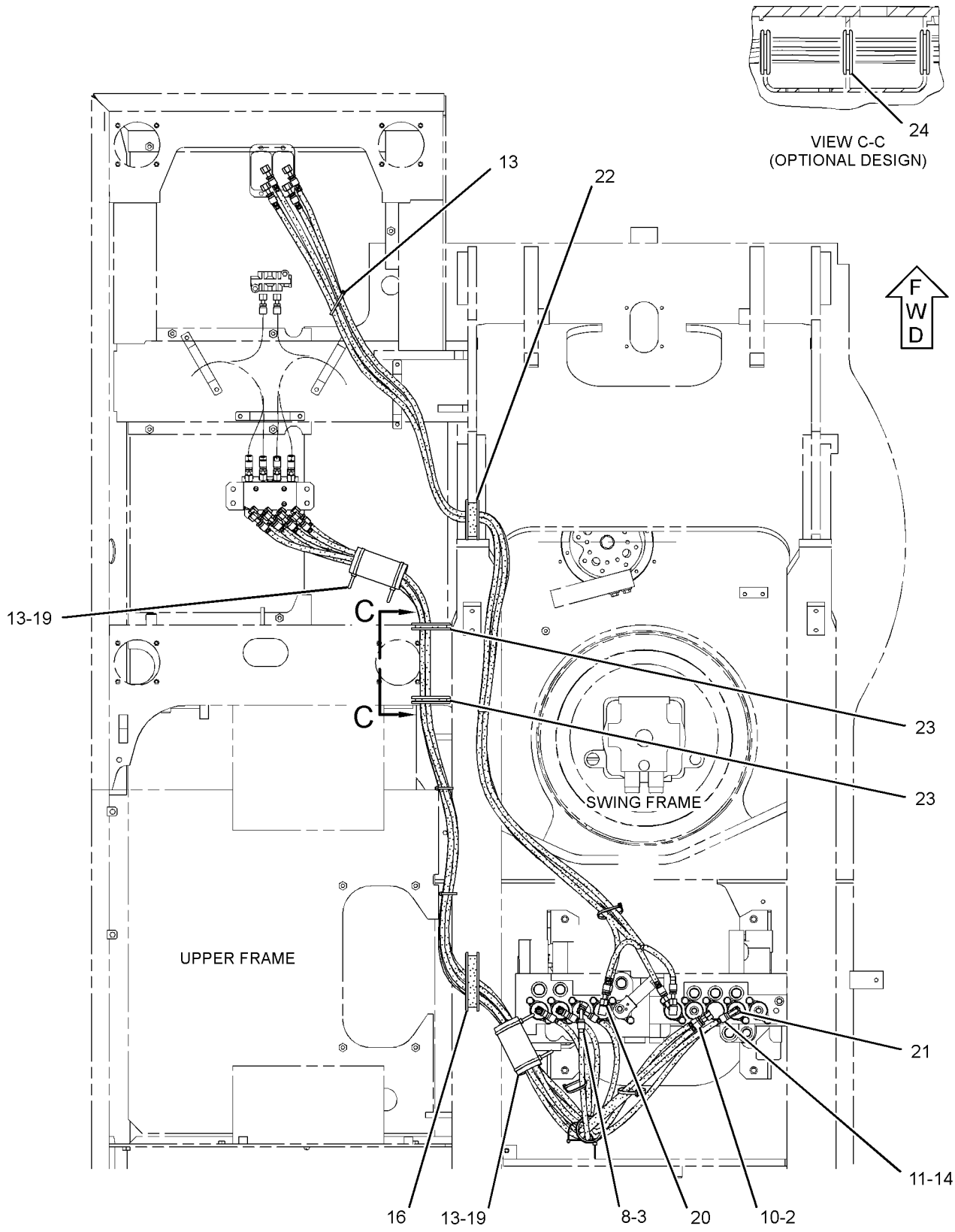

TOP VIEW

GRAPHIC #1

g02011038

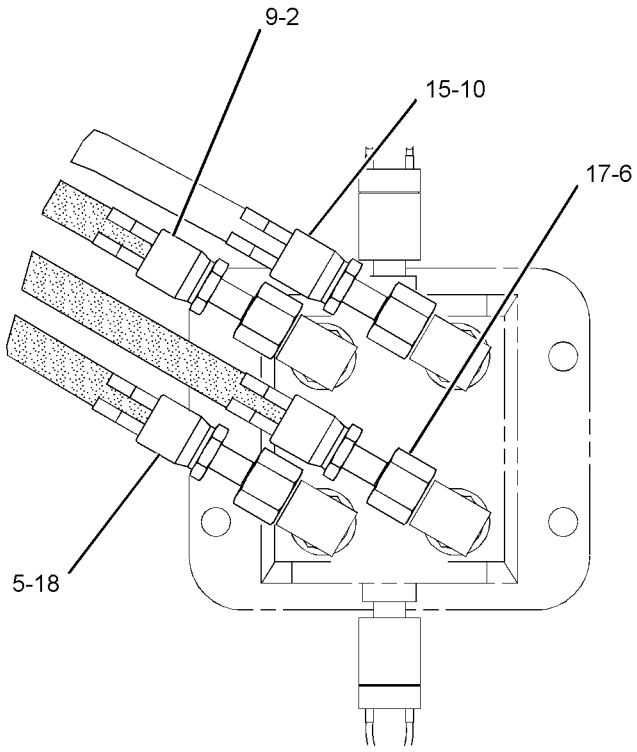

VIEW A-A

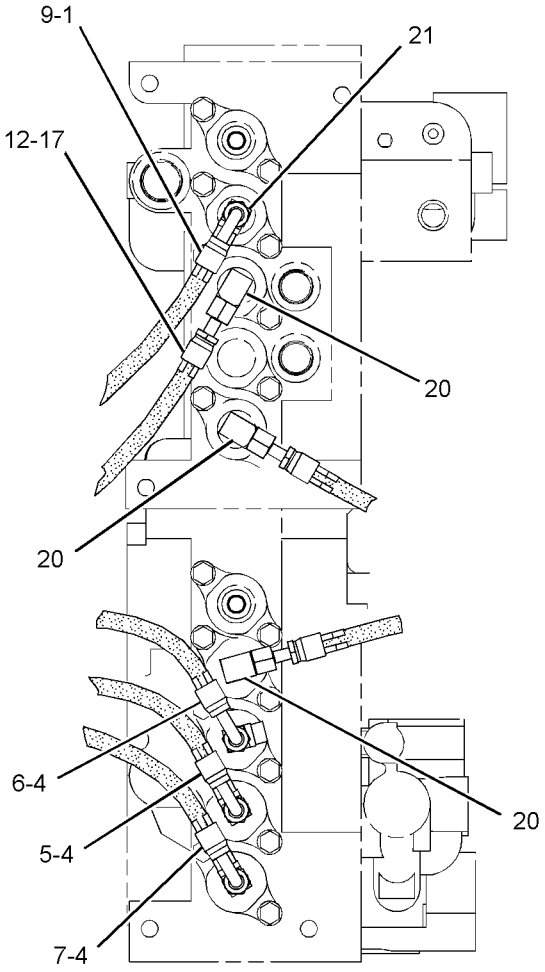

SECTION B-B

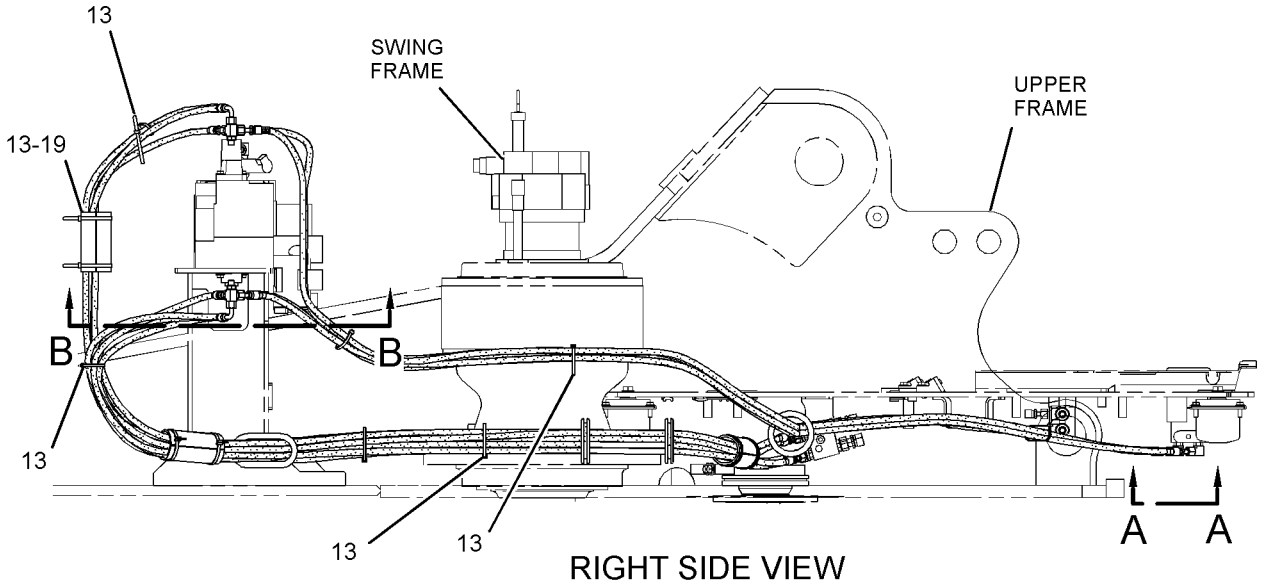

RIGHT SIDE VIEW

GRAPHIC #2 **<END>** g01237456

248-9843 LINES GP-PILOT–CONTROL VALVE

S/N: D3P1-UP; M4T1-UP

PART OF 259-7766 HYDRAULIC AR

SMCS-5057, 5059 **i03715410**

NOTE	REF NO	GRAPHIC REF	PART NUMBER	QTY	PART NAME 1 2 3 4 5 6 (PRODUCT LEVEL)	SEE PAGE
I	1	2	**4I-0836**	1	HOSE AS	
I	2	2	**4I-0839**	1	HOSE AS	
I	3	2	**4I-1739**	1	HOSE AS	
I	4	2	**4I-5900**	1	HOSE AS	
I	5	2	**4I-5906**	1	HOSE AS	
I	6	2	**4I-6121**	1	HOSE AS	
	7	2	**4I-9521**	2	BAND-MARKER (RED, L1)	
	8	1,2	**4I-9522**	6	BAND-MARKER (YELLOW, L2)	
	9	1,2	**4I-9523**	4	BAND-MARKER (BLUE, L3)	
	10	1,2	**4I-9524**	6	BAND-MARKER (BROWN, L4)	
	11	2	**4I-9525**	2	BAND-MARKER (ORANGE, R1)	
	12	2	**4I-9527**	4	BAND-MARKER (GREEN, R3)	
	13	2,3	**4I-9528**	4	BAND-MARKER (PURPLE, R4)	
I	14	3	**5I-4396**	1	HOSE AS	
I	15	2	**5I-8708**	1	HOSE AS	
	16	1,2	**7K-1181**	18	STRAP-CABLE	
I	17	1,2	**7Y-4199**	2	HOSE AS	
I	18	2	**087-4411**	1	HOSE AS	
I	19	2	**087-4531**	2	HOSE AS	
I	20	2	**087-4534**	1	HOSE AS	
I	21	2	**087-5760**	1	HOSE AS	
I	22	2	**087-5762**	1	HOSE AS	
I	23	2	**087-5772**	1	HOSE AS	
I	24	1	**087-5773**	1	HOSE AS	
I	25	2	**087-5774**	1	HOSE AS	
I	26	2	**102-1157**	1	HOSE AS	
I	27	3	**104-8838**	1	HOSE AS	
	28	2	**104-8903**	1	GUARD	
I	29	2	**110-5496**	1	HOSE AS	
I	30	2	**143-4254**	1	HOSE AS	
	31	3	*148-8364*	2	ELBOW AS	
					(EACH INCLUDES)	
		3	**3K-0360**	1	SEAL-O-RING	
		3	**6V-8398**	1	SEAL-O-RING	
		3	**6V-8625**	1	ELBOW	
	32	3	*148-8433*	3	TEE AS	
					(EACH INCLUDES)	
		3	**6V-8397**	2	SEAL-O-RING	
		3	**6V-9836**	1	TEE-SWIVEL	
	33	3	*148-8435*	4	TEE AS	
					(EACH INCLUDES)	
		3	**3J-1907**	1	SEAL-O-RING	
		3	**6V-8397**	2	SEAL-O-RING	
		3	**6V-8781**	1	TEE-FACE SEAL	
	34	3	*150-4044*	3	CONNECTOR AS	
					(EACH INCLUDES)	
		3	**3J-1907**	1	SEAL-O-RING	
		3	**6V-8397**	1	SEAL-O-RING	
		3	**8T-1779**	1	CONNECTOR	
Y	35	3	*164-6981*	1	ACCUMULATOR GP-HYDRAULIC (CHARGED)	449
I	36	2	**164-8977**	1	HOSE AS	
I	37	2	**164-8983**	1	HOSE AS	
	38	3	**176-4463**	1	PLATE	
	39	3	**176-4469**	1	BLOCK	
	40	2	**176-4708**	1	GROMMET	
I	41	2	**176-4755**	1	HOSE AS	

248-9843 **LINES GP-PILOT** *(contd.)* **i03715410**

NOTE	REF NO	GRAPHIC REF	PART NUMBER	QTY	PART NAME 1 2 3 4 5 6 (PRODUCT LEVEL)	SEE PAGE
I	42	3	**184-9593**	1	HOSE AS	
I	43	2	**184-9595**	1	HOSE AS	
I	44	1	**302-3208**	2	HOSE AS	
Y	45	3	**215-5037**	1	MANIFOLD GP-CONTROL (PILOT OIL SUPPLY)	688
CY	46	3	**310-0210**	1	VALVE GP-PRESSURE REDUCING (BOOM, SWING PRIORITY)	799
	47	3	*239-9097*	1	PLUG AS	
		3	**3J-1907**	1	SEAL-O-RING	
		3	**239-9117**	1	PLUG	
	48	3	*239-9098*	1	PLUG AS	
		3	**3J-1907**	1	SEAL-O-RING	
		3	**239-9118**	1	PLUG	
CY	49	3	**123-2430**	1	VALVE GP-SHUTTLE	821
I	50	2	**275-1624**	1	HOSE AS	
	51	1	**282-7092**	2	GROMMET	
I	52	2	**330-2316**	1	HOSE AS	
I	53	2	**282-7569**	1	HOSE AS	
	54	3	*285-1399*	1	CONNECTOR AS	
		3	**3J-1907**	1	SEAL-O-RING	
		3	**285-1465**	1	CONNECTOR	
		3	**6V-8397**	1	SEAL-O-RING	
M	55	3	**099-3649**	2	BOLT (M8X1.25X40-MM)	
	56	2	**103-1384**	1	GUARD	
M	57	3	**105-3484**	2	BOLT-SOCKET HEAD (M10X1.5X25-MM)	
C	58	3	*148-8336*	8	CONNECTOR AS	
					(EACH INCLUDES)	
		3	**3J-1907**	1	SEAL-O-RING	
		3	**6V-8397**	1	SEAL-O-RING	
		3	**6V-8636**	1	CONNECTOR	
	59	3	*148-8340*	3	CONNECTOR AS	
					(EACH INCLUDES)	
		3	**3K-0360**	1	SEAL-O-RING	
		3	**6V-8398**	1	SEAL-O-RING	
		3	**6V-8639**	1	CONNECTOR	
	60	3	*148-8353*	5	ELBOW AS	
					(EACH INCLUDES)	
		3	**3J-1907**	1	SEAL-O-RING	
		3	**6V-8397**	1	SEAL-O-RING	
		3	**6V-9001**	1	ELBOW	
	61	3	*148-8354*	1	ELBOW AS	
		3	**3K-0360**	1	SEAL-O-RING	
		3	**6V-8398**	1	SEAL-O-RING	
		3	**6V-9002**	1	ELBOW	
	62	3	*148-8367*	2	ELBOW AS	
					(EACH INCLUDES)	
		3	**6V-8397**	1	SEAL-O-RING	
		3	**6V-9850**	1	ELBOW	
	63	3	*148-8378*	8	ELBOW AS	
					(EACH INCLUDES)	
		3	**3J-1907**	1	SEAL-O-RING	
		3	**6V-8397**	1	SEAL-O-RING	
		3	**6V-8724**	1	ELBOW	
	64	3	*148-8407*	4	PLUG AS	
					(EACH INCLUDES)	
		3	**3J-1907**	1	SEAL-O-RING	
		3	**9S-4191**	1	PLUG-O-RING	
	65	3	*148-8439*	2	TEE AS	
					(EACH INCLUDES)	
		3	**3J-1907**	1	SEAL-O-RING	
		3	**6V-8397**	2	SEAL-O-RING	

248-9843 **LINES GP-PILOT** *(contd.)* **i03715410**

NOTE	REF NO	GRAPHIC REF	PART NUMBER	QTY	PART NAME 1 2 3 4 5 6 (PRODUCT LEVEL)	SEE PAGE
		3	**6V-8774**	1	TEE	
	66	3	*164-5608*	1	CONNECTOR AS	
		3	**3K-0360**	1	SEAL-O-RING	
		3	**6V-8398**	1	SEAL-O-RING	
		3	**8T-1687**	1	CONNECTOR	
	67	1	**3G-8054**	1	CLIP (TAB)	
	68	1	**3G-8057**	1	CLIP (SLOT)	
	69	1	**4K-8864**	1	CLIP	
	70	1	**5P-7462**	1	CLIP (SLOT)	
	71	1	**5P-7463**	1	CLIP (TAB)	
	72	1	**6V-0683**	1	GROMMET	
	73	1	**6V-0974**	1	GROMMET	
C	74	3	**6V-8397**	4	SEAL-O-RING	
	75	1,3	**8T-4121**	9	WASHER-HARD (11X21X2.5-MM THK)	
M	76	1	**8T-4136**	1	BOLT (M10X1.5X25-MM)	
M	77	3	**8T-4137**	4	BOLT (M10X1.5X20-MM)	
M	78	3	**8T-4172**	2	BOLT (M10X1.5X80-MM)	
M	79	3	**8T-4192**	3	BOLT (M12X1.75X25-MM)	
M	80	1	**8T-4195**	2	BOLT (M10X1.5X30-MM)	
	81	3	**8T-4223**	3	WASHER-HARD (13.5X25.5X3-MM THK)	
I	82	2	**330-2568**	1	HOSE AS	

C-CHANGE FROM PREVIOUS TYPE
I-REFER TO HYDRAULIC INFORMATION SYSTEM
M-METRIC PART
Y-SEPARATE ILLUSTRATION

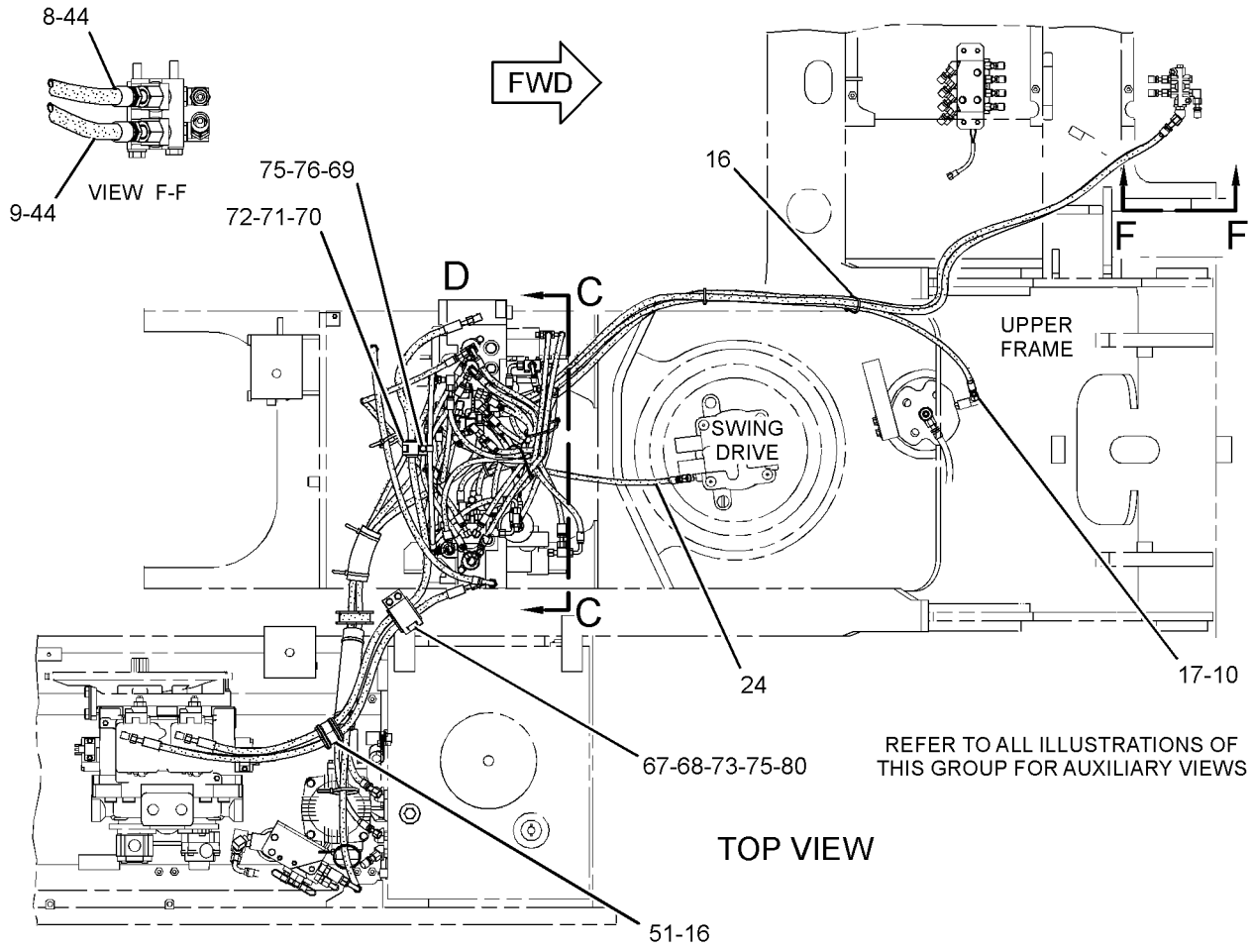

GRAPHIC #1 g02023515

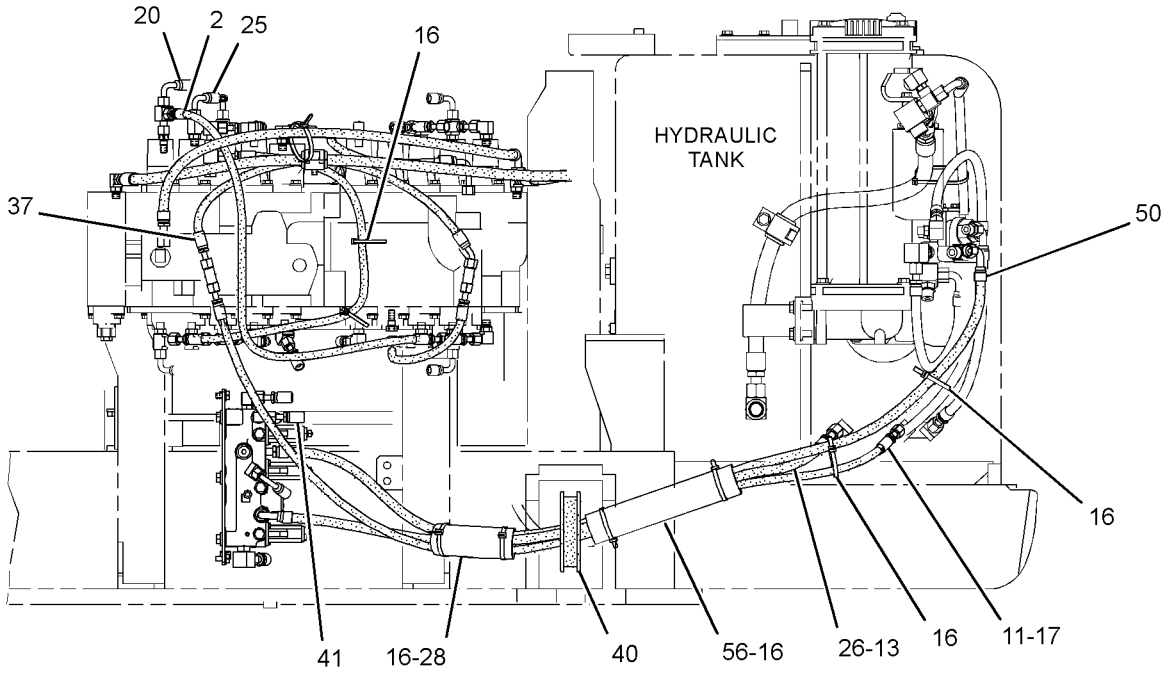

REAR VIEW

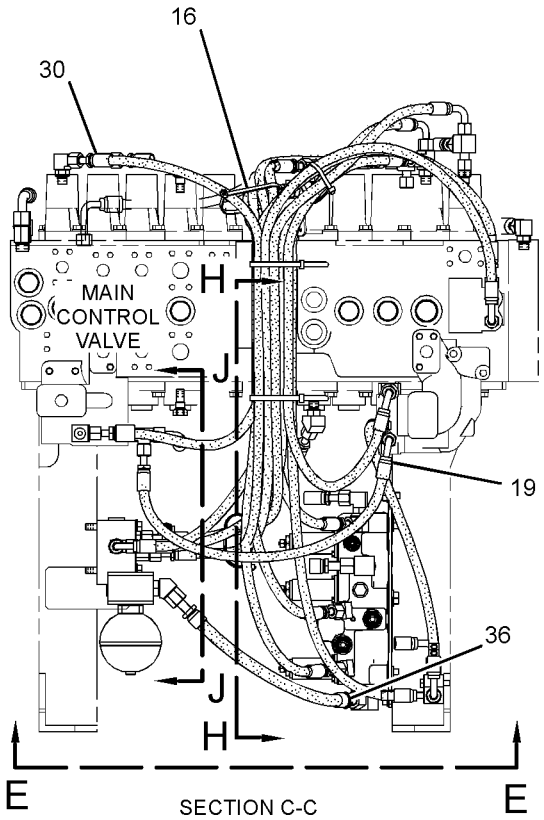

SECTION C-C

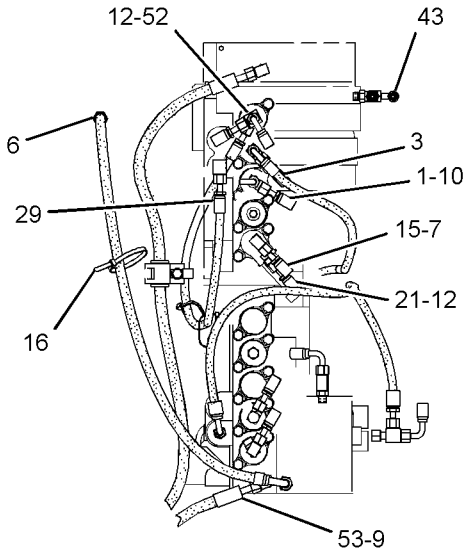

VIEW OF AREA D
(HOSES REMOVED FOR CLARITY)

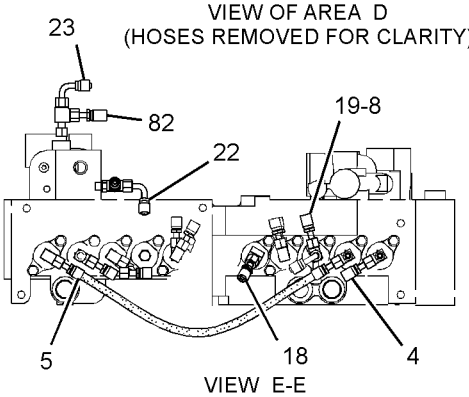

VIEW E-E

REFER TO ALL ILLUSTRATIONS OF THIS GROUP FOR AUXILIARY VIEWS

GRAPHIC #2

g02023514

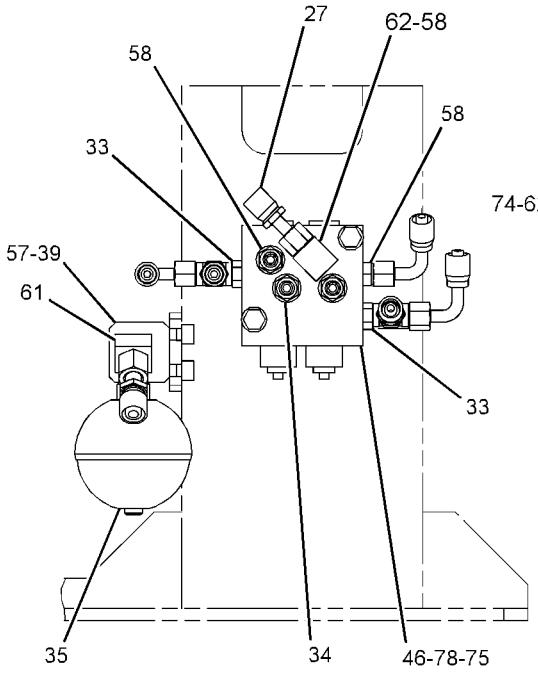

SECTION J-J

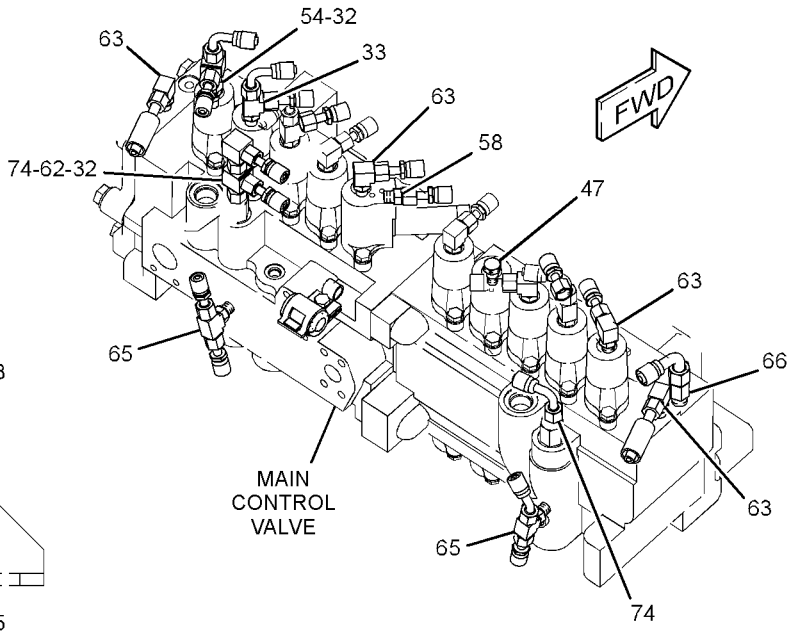

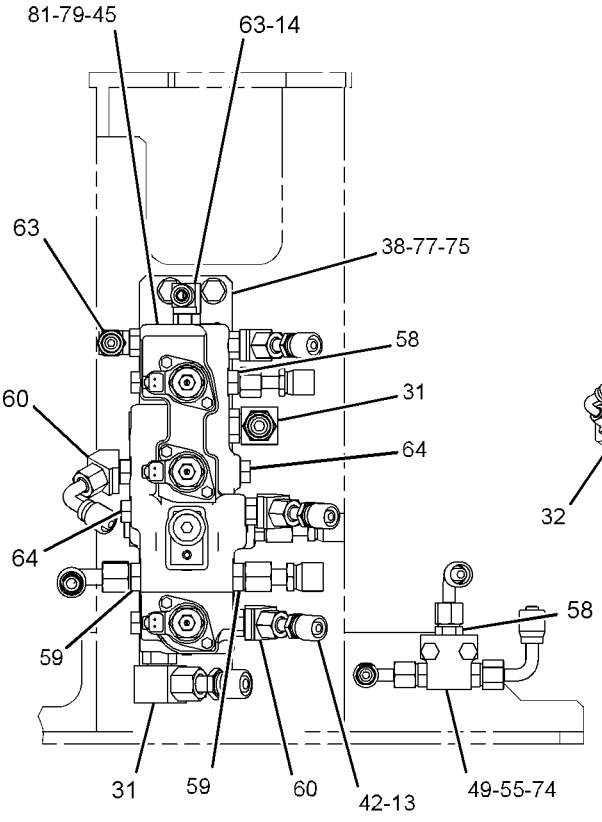

SECTION H-H

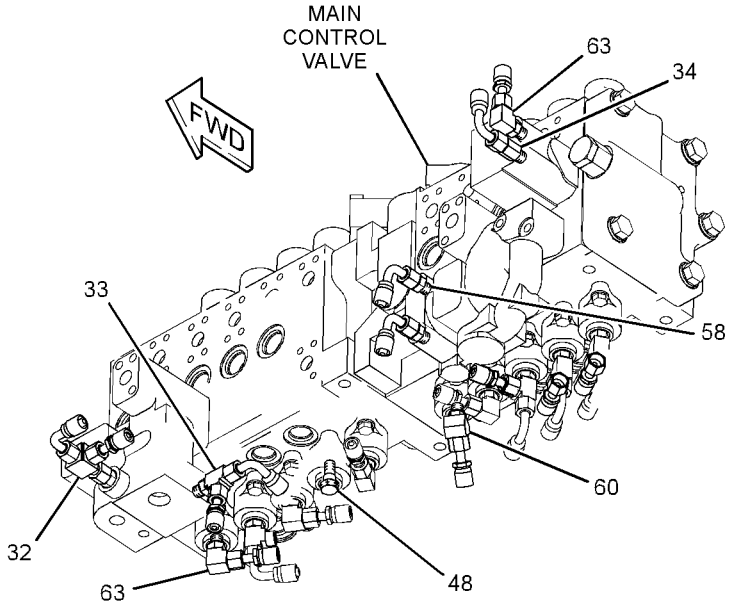

GRAPHIC #3 **<END>** g01507093

HYDRAULIC SYSTEM

255-1659 LINES GP-PILOT—HEAVY LIFT

S/N: M4T1-154

PART OF 259-7766 HYDRAULIC AR

SMCS-5057, 5059 **i02779908**

NOTE	REF NO	GRAPHIC REF	PART NUMBER	QTY	PART NAME 1 2 3 4 5 6 (PRODUCT LEVEL)	SEE PAGE
I	1	1	**087-4402**	1	HOSE AS	
I	2	1	**4I-6248**	1	HOSE AS	
	3	1	**4I-9522**	2	BAND-MARKER (YELLOW, L2)	
	4	1	**4I-9523**	2	BAND-MARKER (BLUE, L3)	
	5	1	**4I-9524**	2	BAND-MARKER (BROWN, L4)	
	6	1	**7K-1181**	2	STRAP-CABLE	
I	7	1	**087-5766**	1	HOSE AS	
Y	8	1	**121-6303**	1	VALVE GP-SOLENOID	826
	9	1	**269-9919**	1	PLATE	
	10	1	*148-8336*	2	CONNECTOR AS	
					(EACH INCLUDES)	
		1	**3J-1907**	1	SEAL-O-RING	
		1	**6V-8397**	1	SEAL-O-RING	
		1	**6V-8636**	1	CONNECTOR	
	11	1	*148-8338*	1	CONNECTOR AS	
		1	**3J-1907**	1	SEAL-O-RING	
		1	**6V-8397**	1	SEAL-O-RING	
		1	**8T-0075**	1	CONNECTOR	
	12	1	*148-8367*	1	ELBOW AS	
		1	**6V-8397**	1	SEAL-O-RING	
		1	**6V-9850**	1	ELBOW	
	13	1	*148-8378*	2	ELBOW AS	
					(EACH INCLUDES)	
		1	**3J-1907**	1	SEAL-O-RING	
		1	**6V-8397**	1	SEAL-O-RING	
		1	**6V-8724**	1	ELBOW	
	14	1	*148-8435*	1	TEE AS	
		1	**3J-1907**	1	SEAL-O-RING	
		1	**6V-8397**	2	SEAL-O-RING	
		1	**6V-8781**	1	TEE-FACE SEAL	
	15	1	**8T-4121**	2	WASHER-HARD (11X21X2.5-MM THK)	
M	16	1	**8T-4137**	2	BOLT (M10X1.5X20-MM)	
M	17	1	**8T-4970**	2	BOLT (M6X1X14-MM)	
	18	1	**9X-8256**	2	WASHER (6.6X12X2-MM THK)	

I-REFER TO HYDRAULIC INFORMATION SYSTEM
M-METRIC PART
Y-SEPARATE ILLUSTRATION

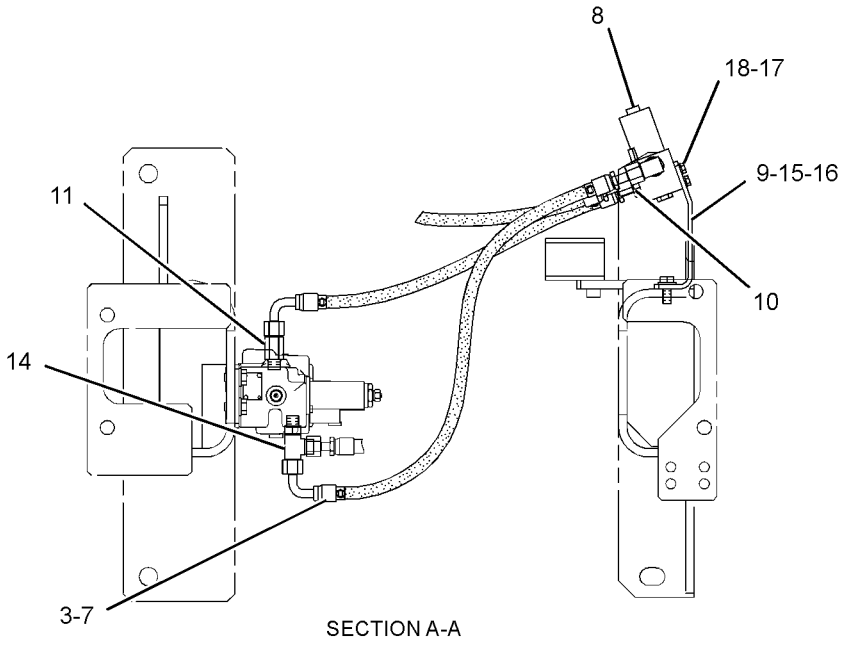

SECTION A-A

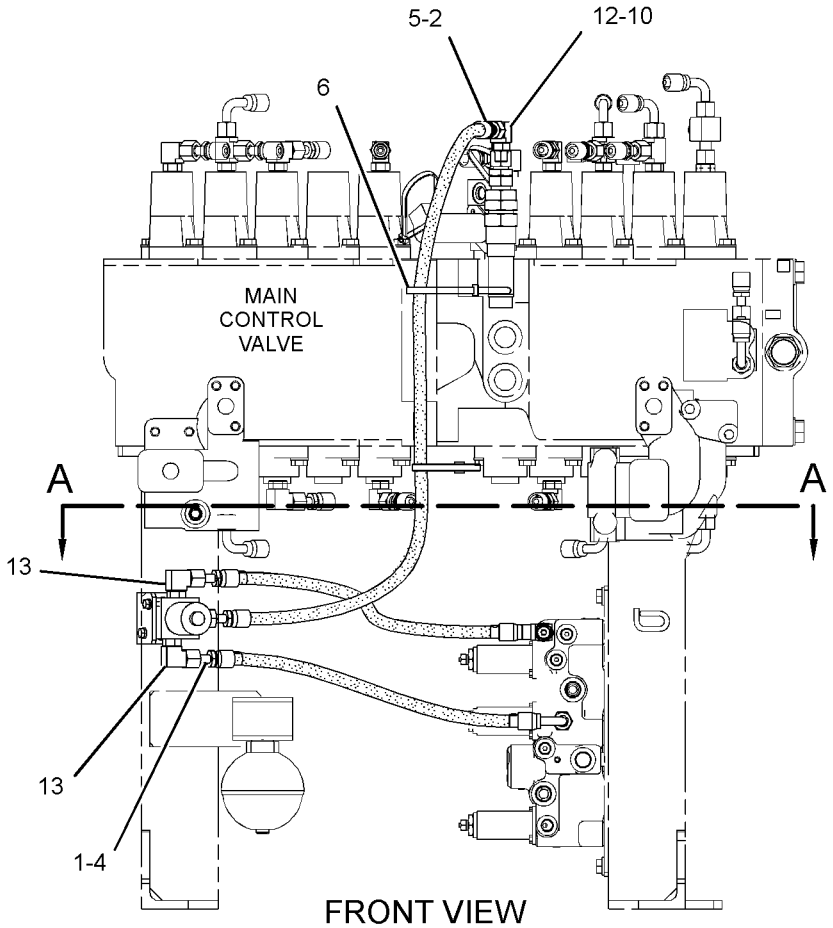

FRONT VIEW

GRAPHIC #1

<END>

g01226769

255-1659 LINES GP-PILOT—HEAVY LIFT

S/N: D3P1-UP; M4T155-UP

PART OF 259-7766 HYDRAULIC AR

SMCS-5057, 5059 **i03418361**

NOTE	REF NO	GRAPHIC REF	PART NUMBER	QTY	PART NAME 1 2 3 4 5 6 (PRODUCT LEVEL)	SEE PAGE
I	1	1	**087-4402**	1	HOSE AS	
CI	2	1	**087-5772**	1	HOSE AS	
	3	1	**4I-9522**	2	BAND-MARKER (YELLOW, L2)	
	4	1	**4I-9523**	2	BAND-MARKER (BLUE, L3)	
	5	1	**4I-9524**	2	BAND-MARKER (BROWN, L4)	
	6	1	**7K-1181**	2	STRAP-CABLE	
I	7	1	**087-5766**	1	HOSE AS	
Y	8	1	**121-6303**	1	VALVE GP-SOLENOID (HEAVY LIFT)	826
	9	1	**269-9919**	1	PLATE	
	10	1	*148-8336*	2	CONNECTOR AS	
					(EACH INCLUDES)	
		1	**3J-1907**	1	SEAL-O-RING	
		1	**6V-8397**	1	SEAL-O-RING	
		1	**6V-8636**	1	CONNECTOR	
	11	1	*148-8338*	1	CONNECTOR AS	
		1	**3J-1907**	1	SEAL-O-RING	
		1	**6V-8397**	1	SEAL-O-RING	
		1	**8T-0075**	1	CONNECTOR	
	13	1	*148-8378*	2	ELBOW AS	
					(EACH INCLUDES)	
		1	**3J-1907**	1	SEAL-O-RING	
		1	**6V-8397**	1	SEAL-O-RING	
		1	**6V-8724**	1	ELBOW	
	14	1	*148-8435*	1	TEE AS	
		1	**3J-1907**	1	SEAL-O-RING	
		1	**6V-8397**	2	SEAL-O-RING	
		1	**6V-8781**	1	TEE-FACE SEAL	
	15	1	**8T-4121**	2	WASHER-HARD (11X21X2.5-MM THK)	
M	16	1	**8T-4136**	2	BOLT (M10X1.5X25-MM)	
M	17	1	**8T-4970**	2	BOLT (M6X1X14-MM)	
	18	1	**9X-8256**	2	WASHER (6.6X12X2-MM THK)	

C-CHANGE FROM PREVIOUS TYPE
I-REFER TO HYDRAULIC INFORMATION SYSTEM
M-METRIC PART
Y-SEPARATE ILLUSTRATION

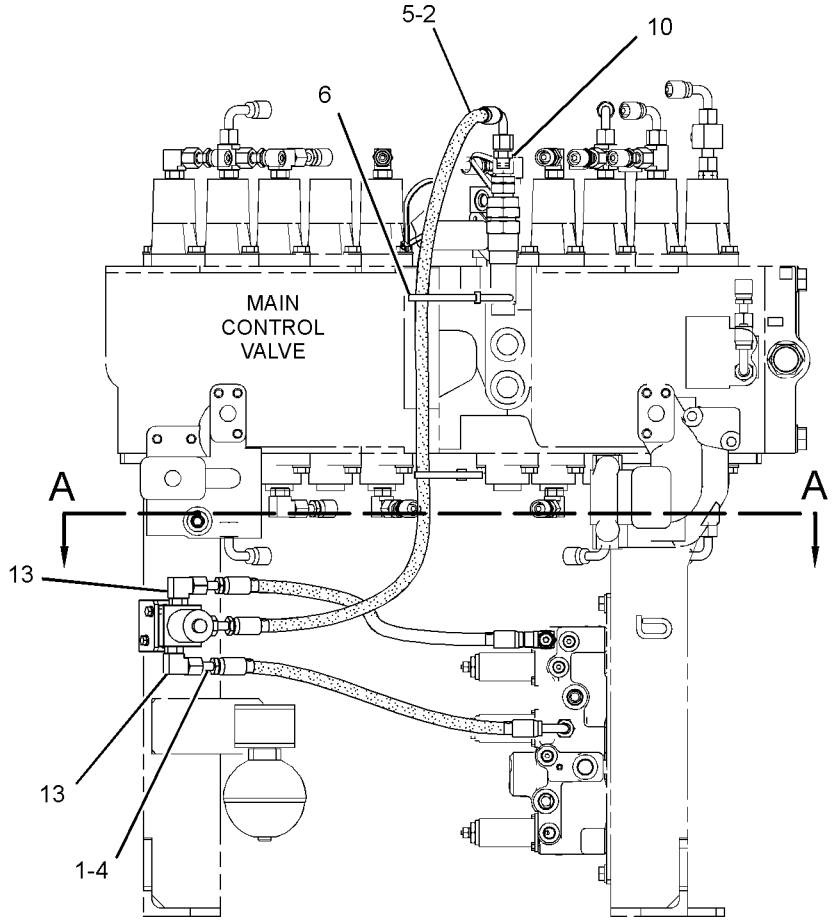

FRONT VIEW

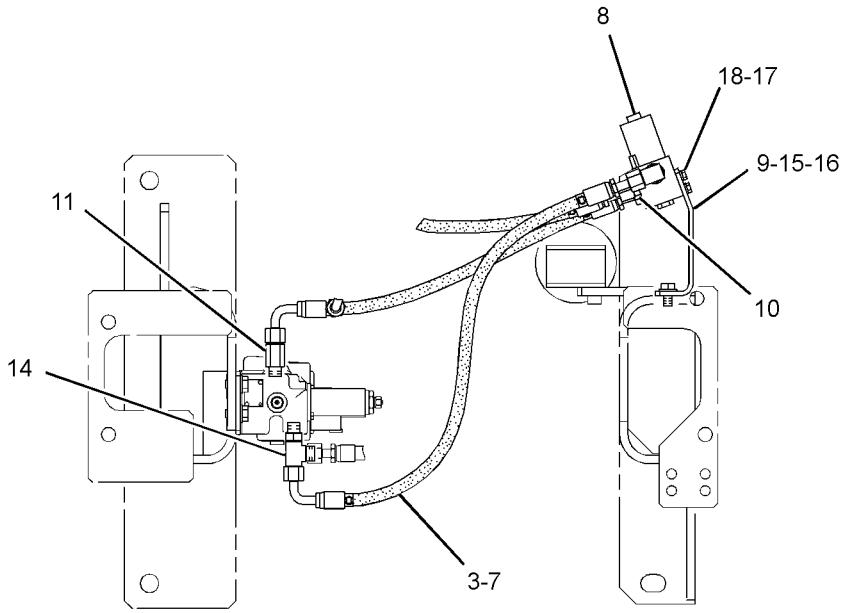

SECTION A-A

GRAPHIC #1 **<END>** g01511702

255-1663 LINES GP-PILOT–
SYSTEM 11, COMBINED FN, MEDIUM PRESSURE
S/N: D3P1-UP; M4T1-UP
PART OF 255-5770 CONTROL AR-AUXILIARY
AN ATTACHMENT

SMCS-5057, 5059 **i03008615**

NOTE	REF NO	GRAPHIC REF	PART NUMBER	QTY	PART NAME 1 2 3 4 5 6 (PRODUCT LEVEL)	SEE PAGE
I	1	1	**4I-1025**	1	HOSE AS	
I	2	1	**4I-1704**	1	HOSE AS	
I	3	1	**087-4402**	2	HOSE AS	
	4	1	*164-5629*	2	FITTING AS	
					(EACH INCLUDES)	
		1	**3J-1907**	1	SEAL-O-RING	
		1	**108-7516**	1	FITTING	
	5	1	*164-6874*	1	FITTING AS-ELBOW	
		1	**3J-1907**	1	SEAL-O-RING	
		1	**085-7356**	1	FITTING	
C	6	1	**309-5769**	1	SWITCH AS-PRESSURE (ACTION INPUT, MEDIUM PRESSURE)	
C	6A	1	**309-5769**	1	SWITCH AS-PRESSURE (AUXILIARY, COMBINED FUNCTION)	
					(EACH INCLUDES)	
		1	**102-8802**	1	KIT-RECEPTACLE (2-PIN)	
					(INCLUDES RECEPTACLE AS & WEDGE)	
		1	**9X-3401**	2	PIN-CONNECTOR (16-GA TO 18-GA)	
					–OR–	
		1	**126-1767**	2	PIN-CONNECTOR (14-GA)	
	7	1	*148-8336*	2	CONNECTOR AS	
					(EACH INCLUDES)	
		1	**3J-1907**	1	SEAL-O-RING	
		1	**6V-8397**	1	SEAL-O-RING	
		1	**6V-8636**	1	CONNECTOR	
	8	1	*148-8353*	2	ELBOW AS	
					(EACH INCLUDES)	
		1	**3J-1907**	1	SEAL-O-RING	
		1	**6V-8397**	1	SEAL-O-RING	
		1	**6V-9001**	1	ELBOW	
	9	1	*148-8378*	5	ELBOW AS	
					(EACH INCLUDES)	
		1	**3J-1907**	1	SEAL-O-RING	
		1	**6V-8397**	1	SEAL-O-RING	
		1	**6V-8724**	1	ELBOW	
	10	1	*150-3036*	1	ELBOW AS	
		1	**3J-1907**	1	SEAL-O-RING	
		1	**6V-8397**	1	SEAL-O-RING	
		1	**8T-1905**	1	ELBOW	
	11	1	*164-5628*	2	CONNECTOR AS	
					(EACH INCLUDES)	
		1	**3J-1907**	1	SEAL-O-RING	
		1	**6V-8397**	1	SEAL-O-RING	
		1	**107-6631**	1	CONNECTOR-FILTER	

C-CHANGE FROM PREVIOUS TYPE
I-REFER TO HYDRAULIC INFORMATION SYSTEM

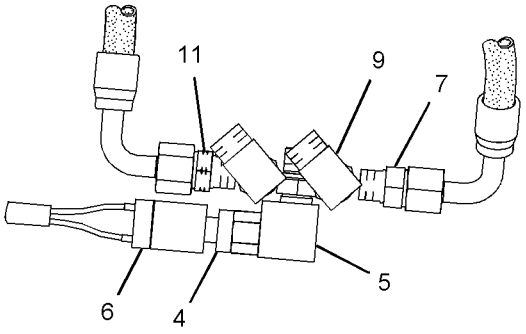

VIEW OF AREA C

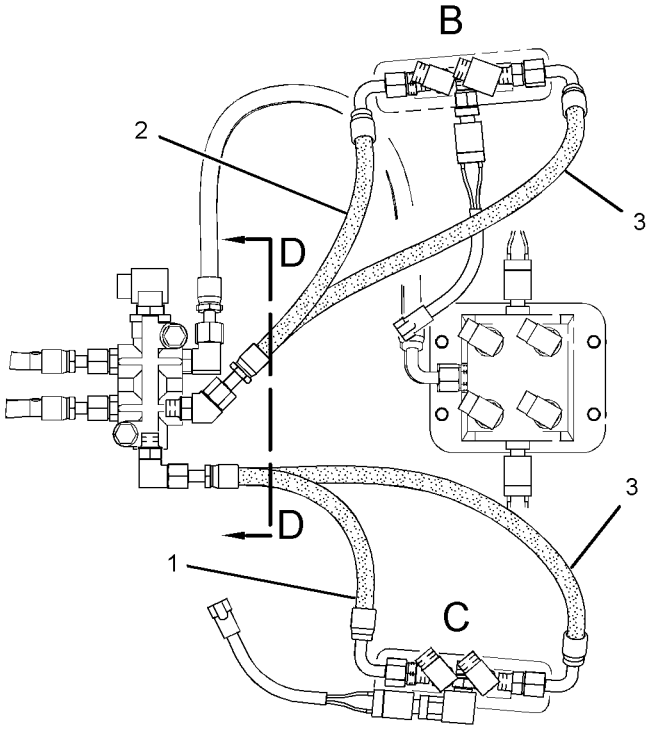

VIEW A-A

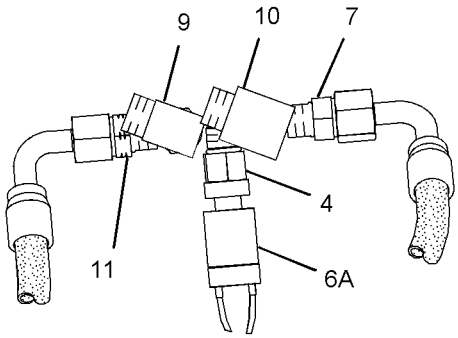

VIEW OF AREA B

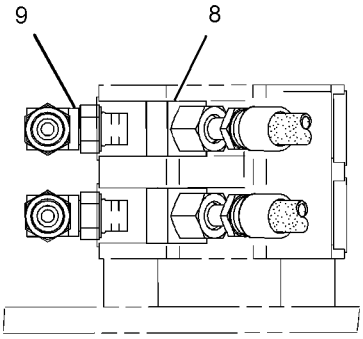

SECTION D-D

RIGHT SIDE VIEW

GRAPHIC #1 **<END>** g01439344

255-1843 LINES GP-PILOT—THIRD PEDAL, PILOT VALVE

S/N: D3P1-UP; M4T1-UP
PART OF 259-7176 PEDAL AR-AUXILIARY
AN ATTACHMENT

SMCS-5057, 5059 **i02981561**

NOTE	REF NO	GRAPHIC REF	PART NUMBER	QTY	PART NAME 1 2 3 4 5 6 (PRODUCT LEVEL)	SEE PAGE
I	1	1	**4I-1704**	1	HOSE AS	
I	2	1	**087-4402**	1	HOSE AS	
I	3	1	**087-5762**	1	HOSE AS	
I	4	1	**087-5765**	2	HOSE AS	
I	5	1	**087-5766**	1	HOSE AS	
	6	1	*164-5629*	1	FITTING AS	
		1	**3J-1907**	1	SEAL-O-RING	
		1	**108-7516**	1	FITTING	
I	7	1	**179-7456**	2	HOSE AS	
Y	8	1	**112-0083**	1	VALVE GP-SHUTTLE	820
	9	1	*148-8336*	3	CONNECTOR AS	
					(EACH INCLUDES)	
		1	**3J-1907**	1	SEAL-O-RING	
		1	**6V-8397**	1	SEAL-O-RING	
		1	**6V-8636**	1	CONNECTOR	
	10	1	*148-8353*	6	ELBOW AS	
					(EACH INCLUDES)	
		1	**3J-1907**	1	SEAL-O-RING	
		1	**6V-8397**	1	SEAL-O-RING	
		1	**6V-9001**	1	ELBOW	
	11	1	*148-8378*	4	ELBOW AS	
					(EACH INCLUDES)	
		1	**3J-1907**	1	SEAL-O-RING	
		1	**6V-8397**	1	SEAL-O-RING	
		1	**6V-8724**	1	ELBOW	
	12	1	*150-3036*	1	ELBOW AS	
		1	**3J-1907**	1	SEAL-O-RING	
		1	**6V-8397**	1	SEAL-O-RING	
		1	**8T-1905**	1	ELBOW	
	13	1	*150-4044*	1	CONNECTOR AS	
		1	**3J-1907**	1	SEAL-O-RING	
		1	**6V-8397**	1	SEAL-O-RING	
		1	**8T-1779**	1	CONNECTOR	
	14	1	*164-5628*	1	CONNECTOR AS	
		1	**3J-1907**	1	SEAL-O-RING	
		1	**6V-8397**	1	SEAL-O-RING	
		1	**107-6631**	1	CONNECTOR-FILTER	
	15	1	**309-5769**	1	SWITCH AS-PRESSURE (THIRD PEDAL, STRAIGHT TRAVEL)	
		1	**9X-3401**	2	PIN-CONNECTOR (16-GA TO 18-GA)	
					—OR—	
		1	**126-1767**		PIN-CONNECTOR (14-GA)	
		1	**102-8802**	1	KIT-RECEPTACLE (2-PIN)	
					(INCLUDES RECEPTACLE AS & WEDGE)	
CM	16	1	**8T-4178**	2	BOLT (M10X1.5X90-MM)	
C	17	1	**4I-7889**	2	SPACER (11X25X45-MM THK)	

C-CHANGE FROM PREVIOUS TYPE
I-REFER TO HYDRAULIC INFORMATION SYSTEM
M-METRIC PART
Y-SEPARATE ILLUSTRATION

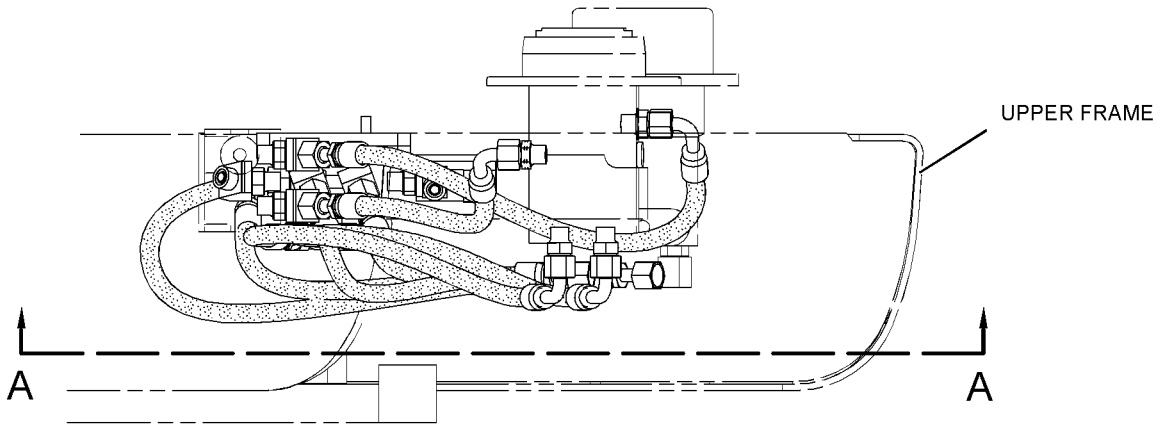

RIGHT SIDE VIEW

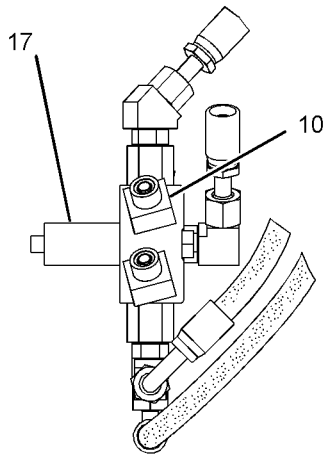

VIEW B-B

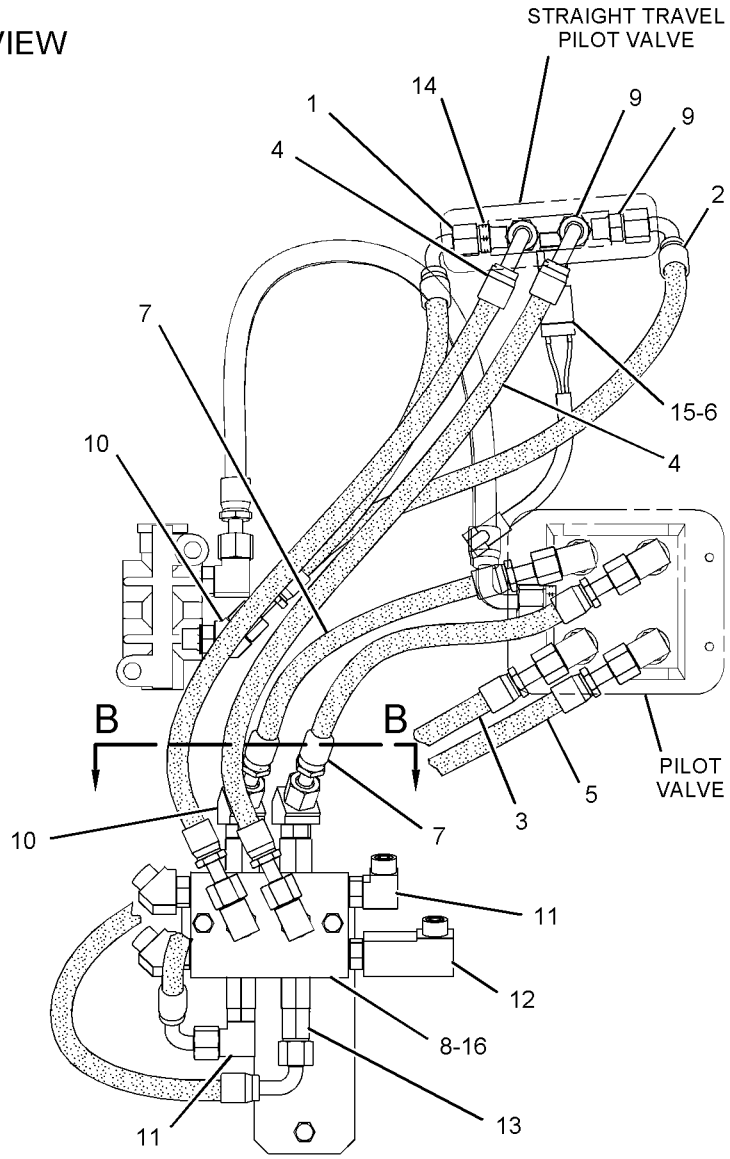

VIEW A-A

GRAPHIC #1 **<END>** g01398371

255-1844 LINES GP-PILOT—CONTROL VALVE, TRAVEL VALVE

S/N: D3P1-UP; M4T1-UP

PART OF 259-7176 PEDAL AR-AUXILIARY

AN ATTACHMENT

SMCS-5057, 5059 **i02518107**

NOTE	REF NO	GRAPHIC REF	PART NUMBER	QTY	PART NAME 1 2 3 4 5 6 (PRODUCT LEVEL)	SEE PAGE
	1	1	**4I-9521**	4	BAND-MARKER (RED, L1)	
	2	1	**4I-9522**	4	BAND-MARKER (YELLOW, L2)	
	3	1	**4I-9525**	4	BAND-MARKER (ORANGE, R1)	
	4	1	**4I-9526**	4	BAND-MARKER (WHITE, R2)	
	5	1	**7K-1181**	7	STRAP-CABLE	
I	6	1	**087-6584**	2	HOSE AS	
I	7	1	**218-1059**	2	HOSE AS	

I-REFER TO HYDRAULIC INFORMATION SYSTEM

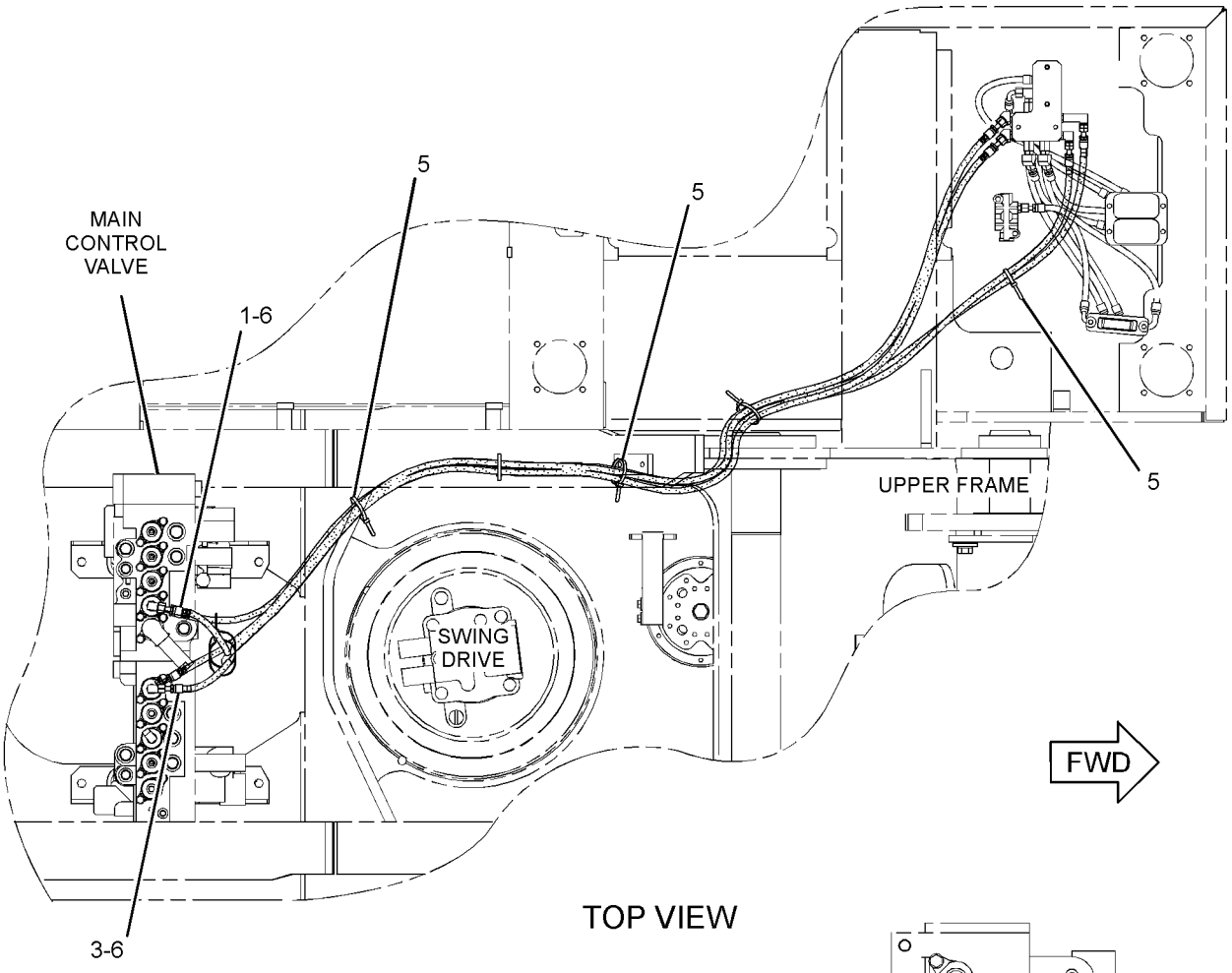

TOP VIEW

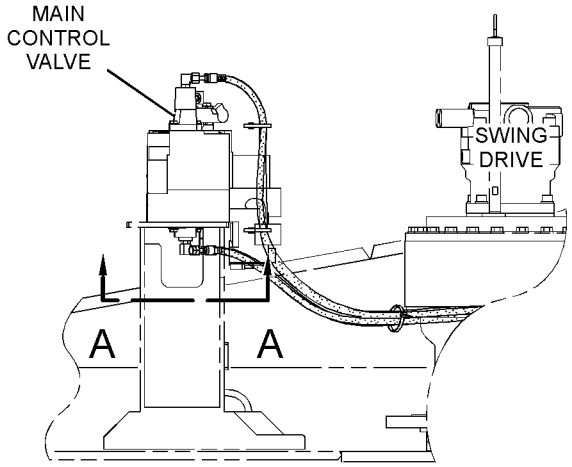

RIGHT SIDE VIEW

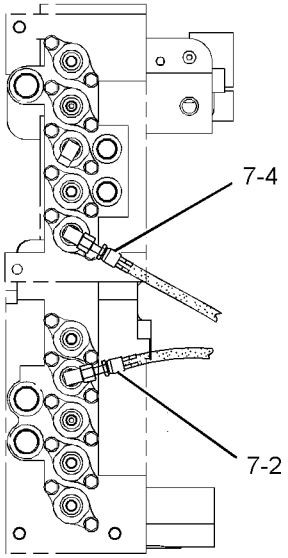

VIEW A-A

GRAPHIC #1 **<END>** g01203716

HYDRAULIC SYSTEM

255-1849 LINES GP-PILOT—4-WAY PATTERN

S/N: D3P1-UP; M4T1-UP
PART OF 259-7417 VALVE AR-ALT PATTERN CONTROL
AN ATTACHMENT

SMCS-5057, 5059 **i03627506**

NOTE	REF NO	GRAPHIC REF	PART NUMBER	QTY	PART NAME 1 2 3 4 5 6 (PRODUCT LEVEL)	SEE PAGE
I	1	2	**4I-6027**	1	HOSE AS	
I	2	2	**4I-8799**	1	HOSE AS	
	3	1,2	**4I-9521**	4	BAND-MARKER (RED, L1)	
	4	1,2	**4I-9522**	4	BAND-MARKER (YELLOW, L2)	
	5	1,2	**4I-9523**	4	BAND-MARKER (BLUE, L3)	
	6	1,2	**4I-9524**	4	BAND-MARKER (BROWN, L4)	
	7	1,2	**4I-9525**	4	BAND-MARKER (ORANGE, R1)	
	8	1,2	**4I-9526**	4	BAND-MARKER (WHITE, R2)	
	9	1,2	**4I-9527**	4	BAND-MARKER (GREEN, R3)	
	10	1,2	**4I-9528**	4	BAND-MARKER (PURPLE, R4)	
I	11	2	**5I-8853**	1	HOSE AS	
	12	1,2	**7K-1181**	18	STRAP-CABLE	
I	13	2	**7Y-4387**	1	HOSE AS	
Y	14	2	**085-6455**	1	VALVE GP-PILOT (CONTROL PATTERN CHANGE)	778
I	15	2	**087-5780**	1	HOSE AS	
I	16	1	**102-7685**	2	HOSE AS	
I	17	2	**108-7203**	1	HOSE AS	
I	18	1,2	**113-6738**	3	HOSE AS	
I	19	1	**172-0907**	1	HOSE AS	
	20	1	**124-1008**	1	GUARD	
I	21	2	**179-7616**	1	HOSE AS	
I	22	1	**218-1059**	3	HOSE AS	
	23	2	**255-1671**	1	GROMMET	
	24	2	**255-1850**	1	SUPPORT	
	25	1,2	**115-8645**	5	GUARD	
	26	2	*148-8353*	2	ELBOW AS	
					(EACH INCLUDES)	
		2	**3J-1907**	1	SEAL-O-RING	
		2	**6V-8397**	1	SEAL-O-RING	
		2	**6V-9001**	1	ELBOW	
	27	2	*148-8378*	9	ELBOW AS	
					(EACH INCLUDES)	
		2	**3J-1907**	1	SEAL-O-RING	
		2	**6V-8397**	1	SEAL-O-RING	
		2	**6V-8724**	1	ELBOW	
	28	2	*150-3036*	5	ELBOW AS	
					(EACH INCLUDES)	
		2	**3J-1907**	1	SEAL-O-RING	
		2	**6V-8397**	1	SEAL-O-RING	
		2	**8T-1905**	1	ELBOW	
	29	2	**8T-4223**	6	WASHER-HARD (13.5X25.5X3-MM THK)	
M	30	2	**8T-4956**	6	BOLT (M12X1.75X35-MM)	

I-REFER TO HYDRAULIC INFORMATION SYSTEM
M-METRIC PART
Y-SEPARATE ILLUSTRATION

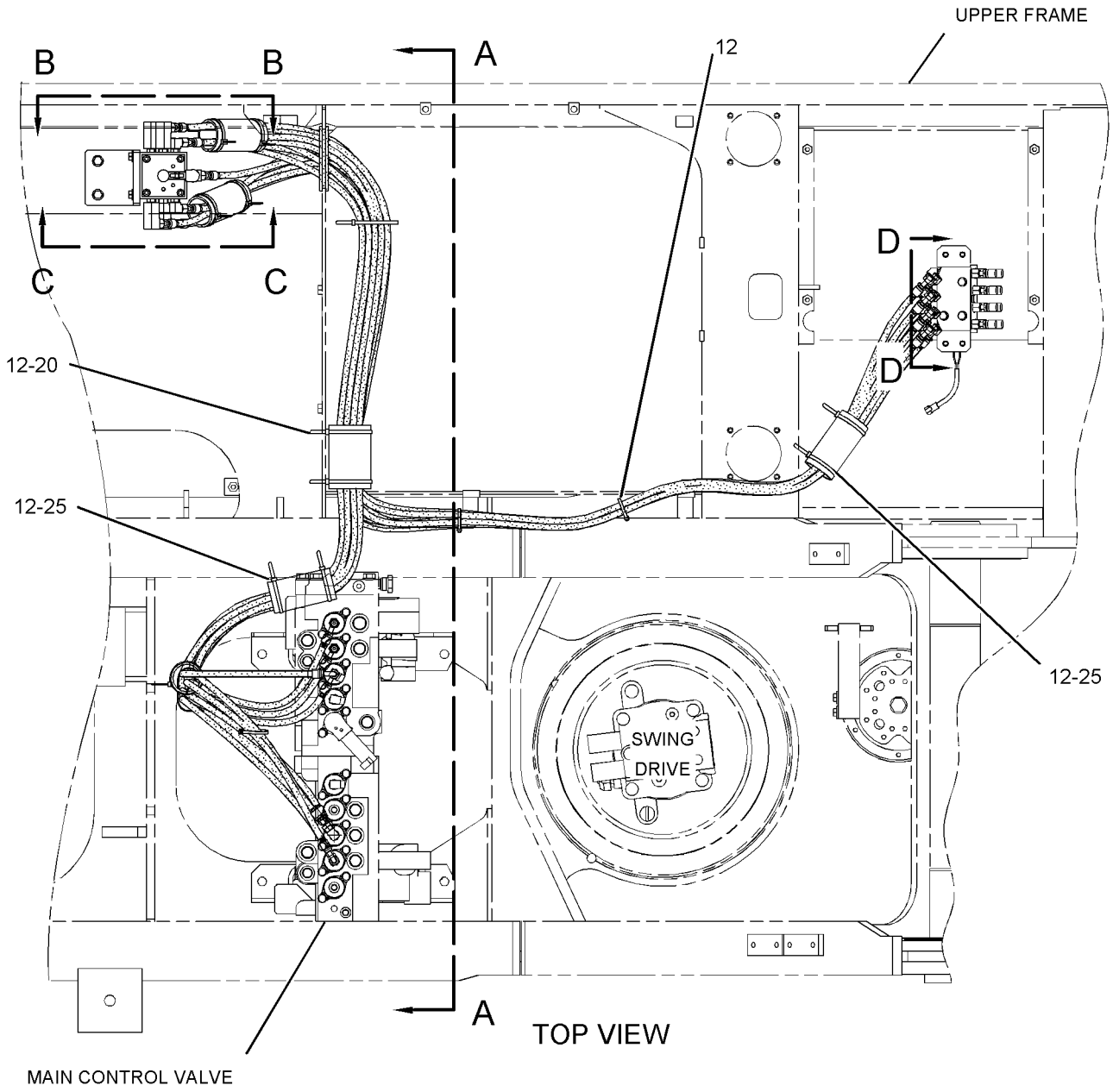

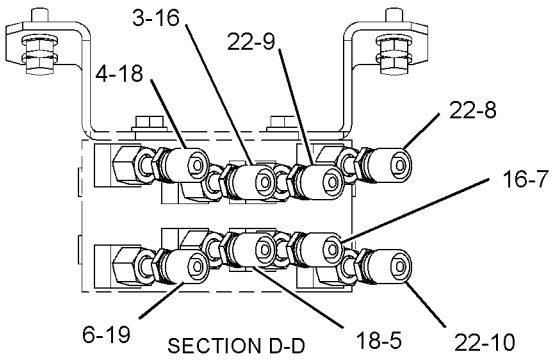

GRAPHIC #1

g01237654

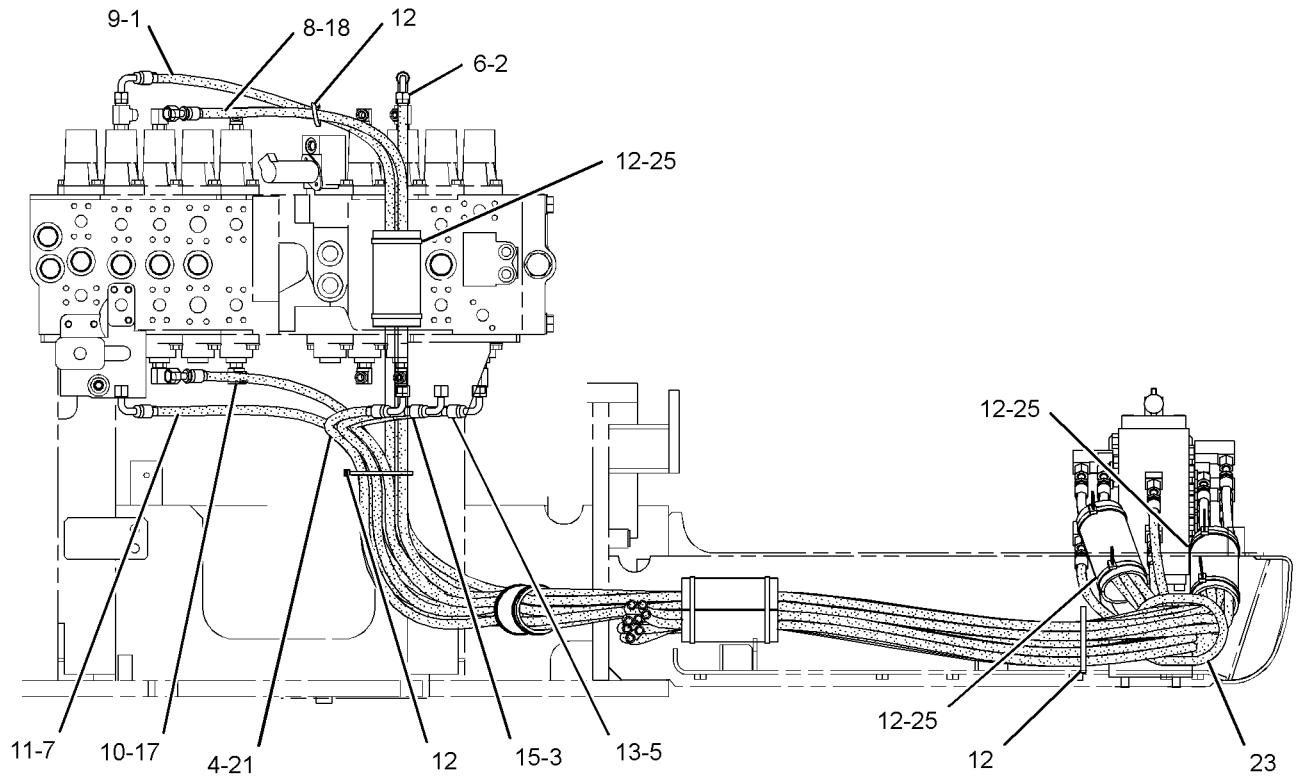

SECTION A-A

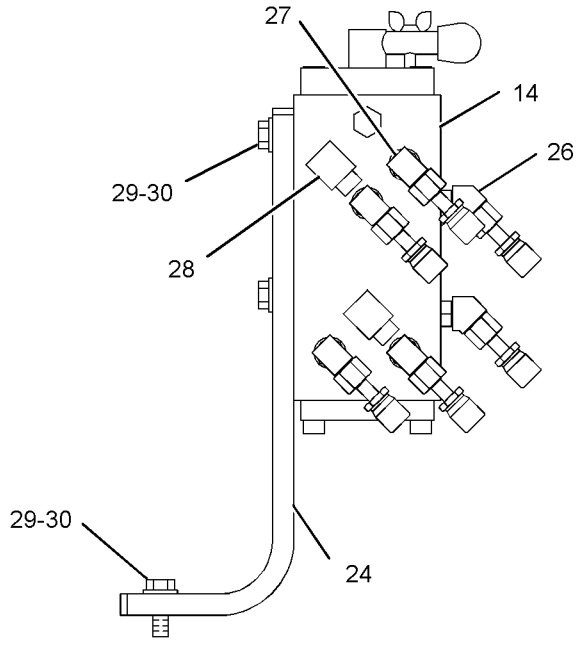

VIEW C-C

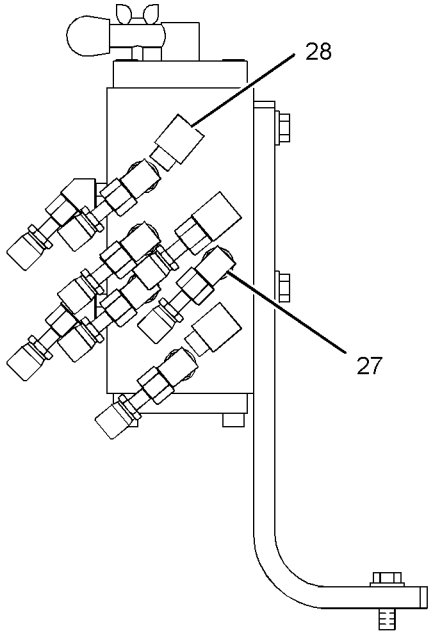

VIEW B-B

GRAPHIC #2 **<END>** g01237655

HYDRAULIC SYSTEM

255-1851 LINES GP-PILOT—ALT PATTERN CONTROL, 2-WAY

S/N: D3P1-UP; M4T1-UP
PART OF 259-7422 VALVE AR-ALT PATTERN CONTROL
AN ATTACHMENT

SMCS-5057, 5059 **i03120207**

NOTE	REF NO	GRAPHIC REF	PART NUMBER	QTY	PART NAME 1 2 3 4 5 6 (PRODUCT LEVEL)	SEE PAGE
I	1	1	**4I-6027**	1	HOSE AS	
	2	2	**4I-9521**	4	BAND-MARKER (RED, L1)	
	3	2	**4I-9523**	4	BAND-MARKER (BLUE, L3)	
	4	2	**4I-9525**	4	BAND-MARKER (ORANGE, R1)	
	5	1,2	**4I-9527**	4	BAND-MARKER (GREEN, R3)	
I	6	2	**305-7812**	1	HOSE AS	
C	7	1	**7K-1181**	20	STRAP-CABLE	
I	8	2	**087-4405**	1	HOSE AS	
I	9	2	**087-5780**	1	HOSE AS	
I	10	2	**102-7685**	2	HOSE AS	
I	11	2	**113-6738**	1	HOSE AS	
Y	12	2	**285-1765**	1	VALVE GP-PILOT (ALT PATTERN CONTROL, 2-WAY)	787
	13	1	**124-1008**	1	GUARD	
I	14	2	**218-1059**	1	HOSE AS	
	15	1	**255-1671**	1	GROMMET	
	16	2	**255-1850**	1	SUPPORT	
	17	1	**115-8645**	5	GUARD	
	18	2	*148-8378*	4	ELBOW AS	
					(EACH INCLUDES)	
		2	**3J-1907**	1	SEAL-O-RING	
		2	**6V-8397**	1	SEAL-O-RING	
		2	**6V-8724**	1	ELBOW	
	19	2	*150-3036*	4	ELBOW AS	
					(EACH INCLUDES)	
		2	**3J-1907**	1	SEAL-O-RING	
		2	**6V-8397**	1	SEAL-O-RING	
		2	**8T-1905**	1	ELBOW	
	20	2	**8T-4223**	6	WASHER-HARD (13.5X25.5X3-MM THK)	
M	21	2	**8T-4956**	6	BOLT (M12X1.75X35-MM)	
	22	2	**5P-4325**	1	CLIP	
C	23	2	**8T-4121**	1	WASHER-HARD (11X21X2.5-MM THK)	
CM	25	2	**8T-4185**	1	BOLT (M10X1.5X50-MM)	
C	26	2	**091-9035**	1	SPACER (11X25X20-MM THK)	

C-CHANGE FROM PREVIOUS TYPE
I-REFER TO HYDRAULIC INFORMATION SYSTEM
M-METRIC PART
Y-SEPARATE ILLUSTRATION

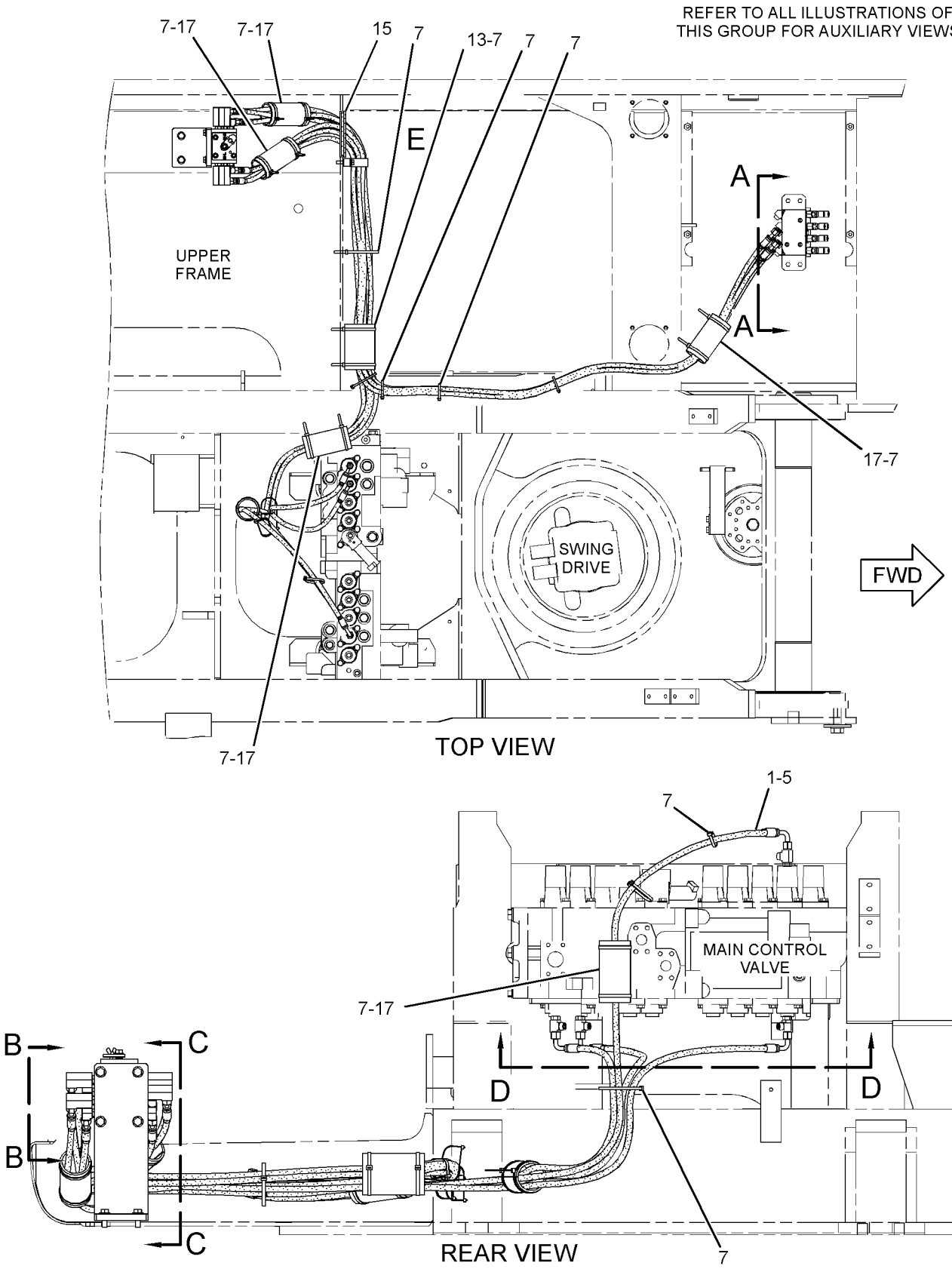

GRAPHIC #1

g01422332

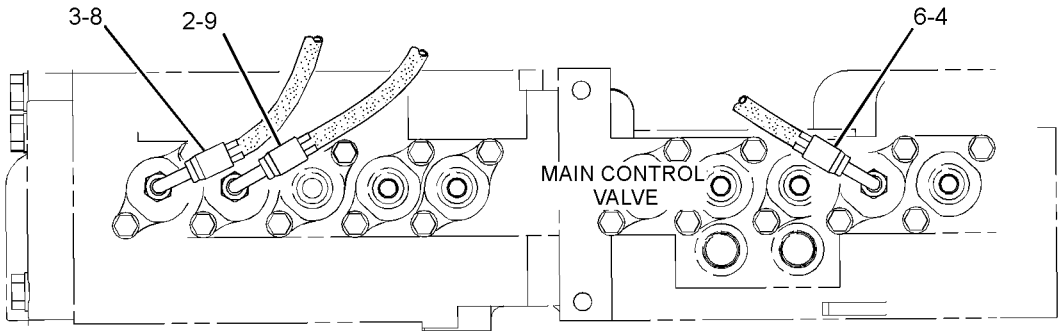

SECTION D-D

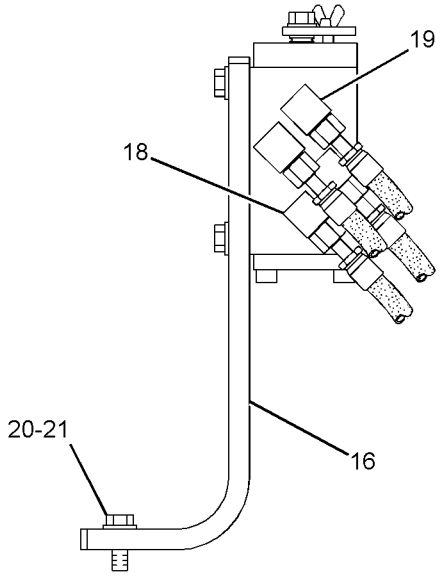

SECTION C-C

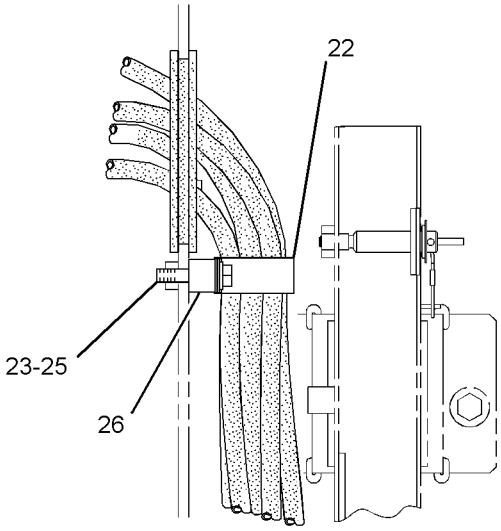

VIEW OF AREA E

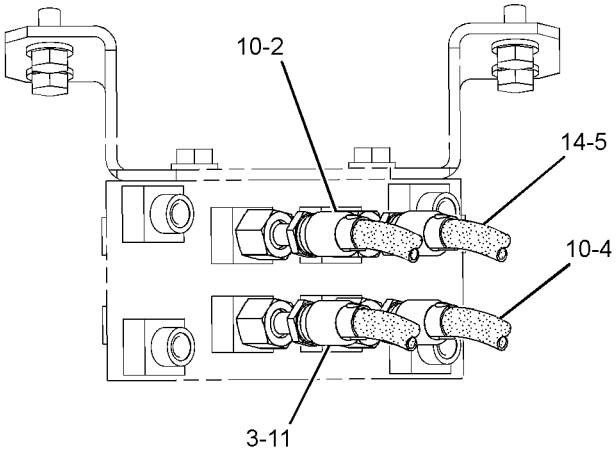

SECTION A-A

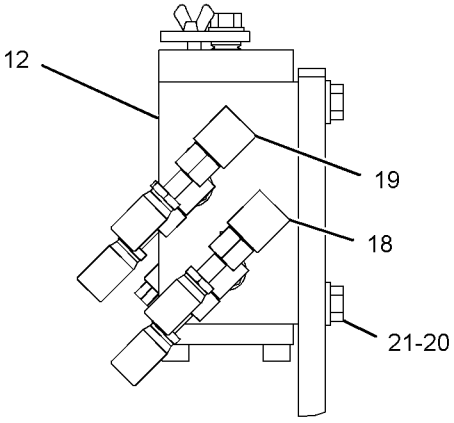

VIEW B-B

GRAPHIC #2 **<END>** g01422333

HYDRAULIC SYSTEM

255-1853 LINES GP-PILOT–BOOM FLOAT

S/N: M4T1-UP

PART OF 329-6564 CONTROL AR-BOOM

AN ATTACHMENT

SMCS-5057, 5059 **i03744401**

NOTE	REF NO	GRAPHIC REF	PART NUMBER	QTY	PART NAME 1 2 3 4 5 6 (PRODUCT LEVEL)	SEE PAGE
I	1	2	**4I-0800**	1	HOSE AS	
	2	2	**4I-9527**	2	BAND-MARKER (GREEN, R3)	
	3	2	**7K-1181**	9	STRAP-CABLE	
I	4	2	**087-5771**	1	HOSE AS	
I	5	2	**087-6583**	1	HOSE AS	
I	6	2	**104-8976**	1	HOSE AS	
I	7	2	**108-7369**	1	HOSE AS	
I	8	2	**108-7387**	1	HOSE AS	
I	9	2	**111-0985**	1	HOSE AS	
I	10	2	**113-6738**	1	HOSE AS	
	11	2	**133-5813**	2	BAND-MARKER (GRAY, P)	
	12	2	*164-5547*	1	CONNECTOR AS	
		2	**3J-1907**	1	SEAL-O-RING	
		2	**4I-1694**	1	CONNECTOR	
	13	2	*164-5629*	1	FITTING AS	
		2	**3J-1907**	1	SEAL-O-RING	
		2	**108-7516**	1	FITTING	
	14	2	*164-6874*	1	FITTING AS-ELBOW	
		2	**3J-1907**	1	SEAL-O-RING	
		2	**085-7356**	1	FITTING	
I	15	2	**179-7616**	1	HOSE AS	
Y	16	2	**185-0472**	1	VALVE GP-SOLENOID (BOOM FLOAT)	829
	17	2	**199-2002**	1	SUPPORT AS	
	18	2	**199-2004**	1	BRACKET	
Y	19	2	**201-9236**	1	VALVE GP-FLOW CONTROL (BOOM FLOAT, PILOT OIL)	765
I	20	2	**202-3762**	1	HOSE AS	
	21	2	**266-0982**	1	GUARD	
	22	2	*148-8363*	1	ELBOW AS	
		2	**3K-0360**	1	SEAL-O-RING	
		2	**6V-8397**	1	SEAL-O-RING	
		2	**6V-9876**	1	ELBOW	
	23	2	*148-8378*	3	ELBOW AS	
					(EACH INCLUDES)	
		2	**3J-1907**	1	SEAL-O-RING	
		2	**6V-8397**	1	SEAL-O-RING	
		2	**6V-8724**	1	ELBOW	
	24	2	*148-8413*	1	REDUCER AS	
		2	**4J-5477**	1	SEAL-O-RING	
		2	**6V-8934**	1	REDUCER AS	
	25	2	*148-8433*	2	TEE AS	
					(EACH INCLUDES)	
		2	**6V-8397**	2	SEAL-O-RING	
		2	**6V-9836**	1	TEE-SWIVEL	
	26	2	*148-8439*	2	TEE AS	
					(EACH INCLUDES)	
		2	**3J-1907**	1	SEAL-O-RING	
		2	**6V-8397**	2	SEAL-O-RING	
		2	**6V-8774**	1	TEE	
	27	2	*150-4027*	1	TEE AS	
		2	**3E-2310**	1	TEE	
		2	**3J-1907**	1	SEAL-O-RING	
		2	**6V-8397**	1	SEAL-O-RING	
	28	2	**309-5769**	1	SWITCH AS-PRESSURE (BOOM FLOAT)	
		2	**102-8802**	1	KIT-RECEPTACLE (2-PIN)	
					(INCLUDES RECEPTACLE AS & WEDGE)	

255-1853 **LINES GP-PILOT** *(contd.)* **i03744401**

NOTE	REF NO	GRAPHIC REF	PART NUMBER	QTY	PART NAME 1 2 3 4 5 6 (PRODUCT LEVEL)	SEE PAGE
		2	**9X-3401**	2	PIN-CONNECTOR (16-GA TO 18-GA)	
					—OR—	
		2	**126-1767**	2	PIN-CONNECTOR (14-GA)	
	29	2	**3J-1907**	1	SEAL-O-RING	
M	30	2	**5C-9553**	2	BOLT (M6X1X16-MM)	
	31	2	**6V-8397**	1	SEAL-O-RING	
M	32	2	**8T-4139**	2	BOLT (M12X1.75X30-MM)	
M	33	2	**8T-4189**	2	BOLT (M8X1.25X20-MM)	
	34	2	**8T-4223**	2	WASHER-HARD (13.5X25.5X3-MM THK)	
	35	2	**8T-4224**	2	WASHER-HARD (8.8X16X2-MM THK)	
	36	2	**9X-8256**	2	WASHER (6.6X12X2-MM THK)	
	37	2	*148-8371*	1	ELBOW AS	
		2	**6V-8397**	1	SEAL-O-RING	
		2	**8C-8988**	1	ELBOW	

I-REFER TO HYDRAULIC INFORMATION SYSTEM
M-METRIC PART
Y-SEPARATE ILLUSTRATION

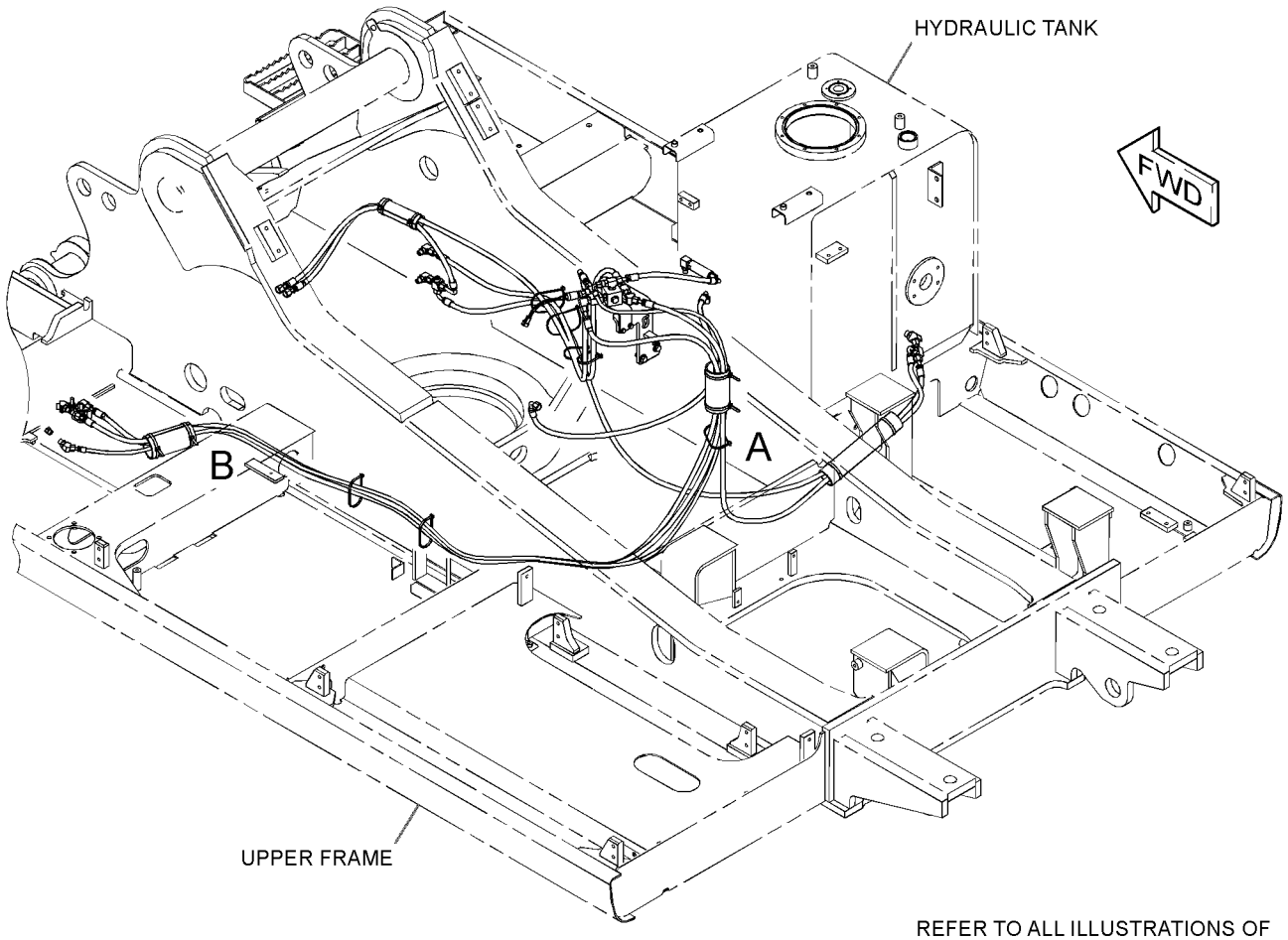

REFER TO ALL ILLUSTRATIONS OF THIS GROUP FOR AUXILIARY VIEWS

GRAPHIC #1

g01624401

255-1853 **LINES GP-PILOT** ***(contd.)*** **i03744401**

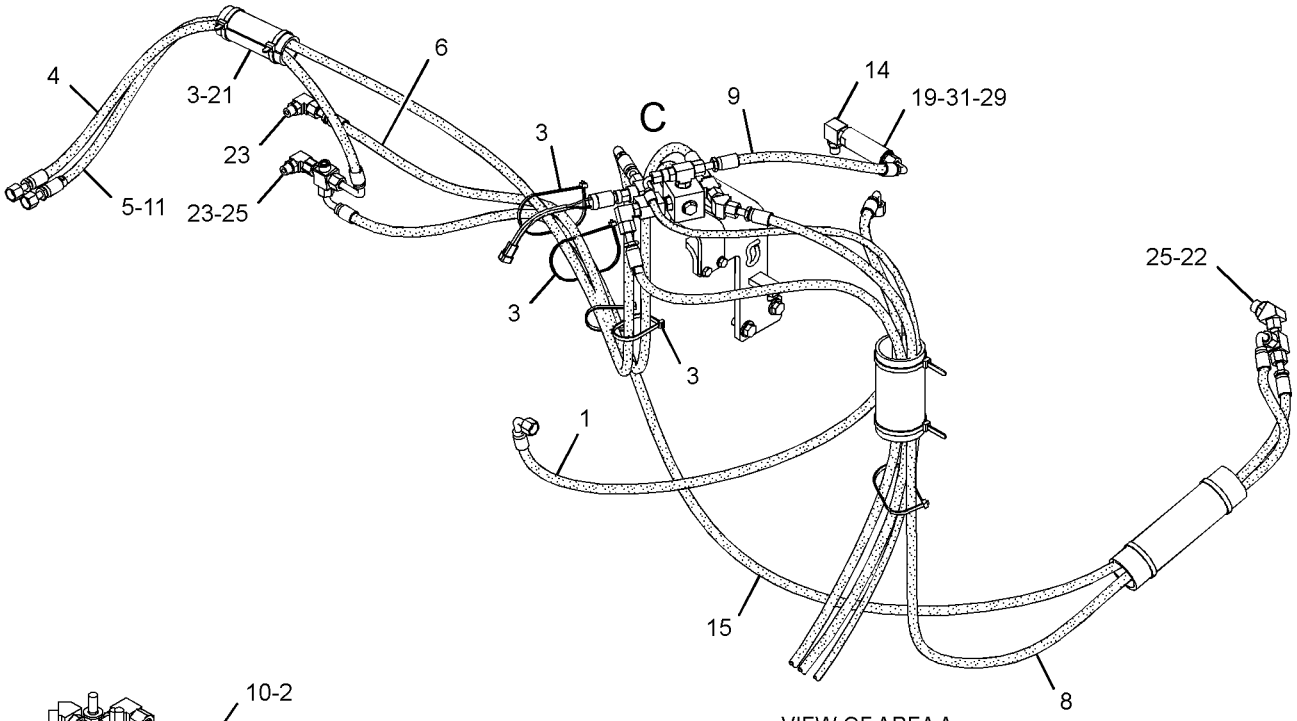

VIEW OF AREA A

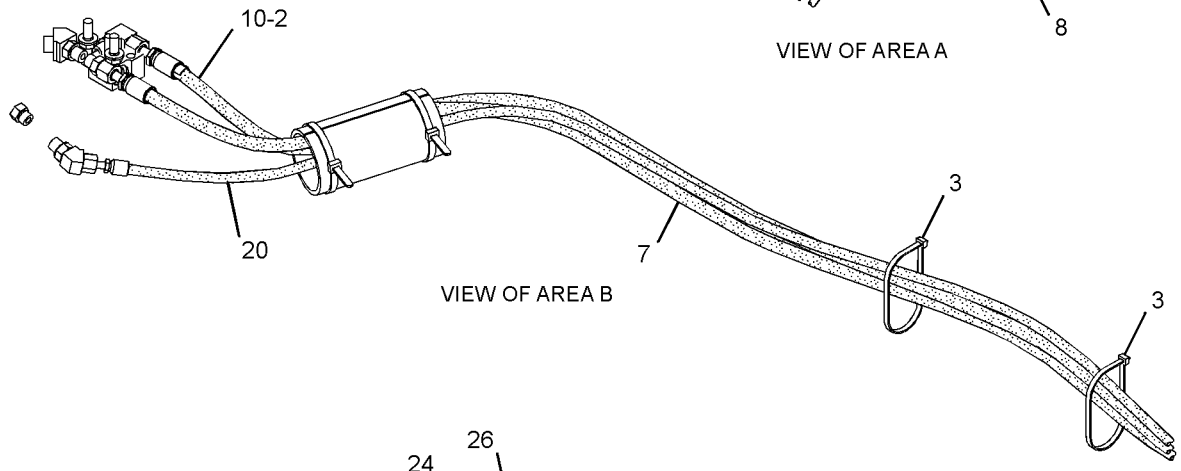

VIEW OF AREA B

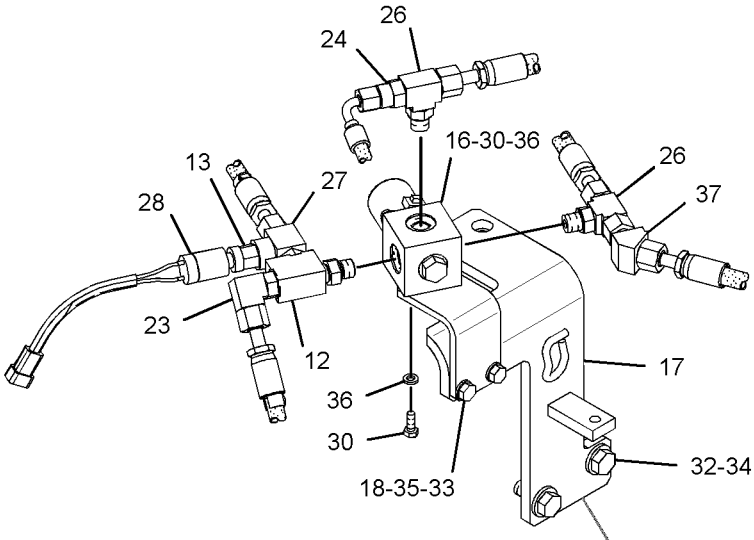

VIEW OF AREA C
(EXPLODED)

TO MAIN CONTROL VALVE

GRAPHIC #2 **<END>** g01624402

HYDRAULIC SYSTEM

260-7854 LINES GP-PILOT—SYSTEM 11, COMBINED FN, MED PR

S/N: D3P1-UP; M4T1-UP
PART OF 255-5770 CONTROL AR-AUXILIARY
AN ATTACHMENT

SMCS-5057, 5059 **i03706650**

NOTE	REF NO	GRAPHIC REF	PART NUMBER	QTY	PART NAME 1 2 3 4 5 6 (PRODUCT LEVEL)	SEE PAGE
I	1	1	**4I-0806**	1	HOSE AS	
	2	2	**4I-3941**	1	FITTING AS	
		2	**6V-8553**	1	NUT (11/16-16-THD)	
I	3	1	**087-5303**	1	HOSE AS	
I	4	1	**4I-6236**	1	HOSE AS	
	5	2	**4I-9521**	4	BAND-MARKER (RED, L1)	
	6	2	**4I-9522**	4	BAND-MARKER (YELLOW, L2)	
	7	1,3	**4I-9523**	8	BAND-MARKER (BLUE, L3)	
	8	1,2	**4I-9524**	8	BAND-MARKER (BROWN, L4)	
	9	2	**4I-9525**	4	BAND-MARKER (ORANGE, R1)	
	10	1,3	**4I-9527**	8	BAND-MARKER (GREEN, R3)	
	11	1	**4I-9528**	4	BAND-MARKER (PURPLE, R4)	
	12	1,2	**7K-1181**	19	STRAP-CABLE	
I	13	1	**4I-1739**	1	HOSE AS	
I	14	3	**179-7616**	1	HOSE AS	
I	15	1	**134-6921**	1	HOSE AS	
	16	2,3	**136-0207**	4	STRAP-CABLE	
I	17	1	**179-7782**	1	HOSE AS	
I	18	1	**7I-1097**	1	HOSE AS	
I	19	2	**199-1609**	2	HOSE AS	
	20	1	**255-1826**	2	SPACER (13.5X25X75.8-MM THK)	
	21	3	**255-1900**	1	SUPPORT AS	
	22	1	**260-8148**	1	PLATE	
	23	3	**286-6554**	1	SUPPORT AS	
	24	2,3	**275-1442**	4	CLIP (TAB)	
	25	2,3	**275-1443**	4	CLIP (SLOT)	
	26	2,3	**275-1444**	4	GROMMET	
	27	3	**296-7250**	1	SUPPORT AS	
	28	3	**275-1693**	1	SUPPORT AS	
I	29	2	**087-5306**	1	HOSE AS	
I	30	2	**087-6583**	1	HOSE AS	
	31	3	**091-9035**	1	SPACER (11X25X20-MM THK)	
I	32	2	**104-8783**	1	HOSE AS	
	33	1	**124-1008**	1	GUARD	
	34	2,3	*148-8336*	3	CONNECTOR AS	
					(EACH INCLUDES)	
		2,3	**3J-1907**	1	SEAL-O-RING	
		2,3	**6V-8397**	1	SEAL-O-RING	
		2,3	**6V-8636**	1	CONNECTOR	
	35	3	*148-8338*	2	CONNECTOR AS	
					(EACH INCLUDES)	
		3	**3J-1907**	1	SEAL-O-RING	
		3	**6V-8397**	1	SEAL-O-RING	
		3	**8T-0075**	1	CONNECTOR	
	36	2,3	*148-8342*	1	CONNECTOR AS	
		2,3	**3K-0360**	1	SEAL-O-RING	
		2,3	**6V-8632**	1	CONNECTOR	
		2,3	**7J-9108**	1	SEAL-O-RING	
	37	1,2,3	*148-8378*	16	ELBOW AS	
					(EACH INCLUDES)	
		1,2,3	**3J-1907**	1	SEAL-O-RING	
		1,2,3	**6V-8397**	1	SEAL-O-RING	
		1,2,3	**6V-8724**	1	ELBOW	
	38	2	*148-8393*	3	ELBOW AS	
					(EACH INCLUDES)	

260-7854 **LINES GP-PILOT** *(contd.)* **i03706650**

NOTE	REF NO	GRAPHIC REF	PART NUMBER	QTY	PART NAME 1 2 3 4 5 6 (PRODUCT LEVEL)	SEE PAGE
		2	**6V-9852**	1	ELBOW	
		2	**7J-9108**	1	SEAL-O-RING	
	39	3	*148-8407*	1	PLUG AS	
		3	**3J-1907**	1	SEAL-O-RING	
		3	**9S-4191**	1	PLUG-O-RING	
	40	2	*148-8411*	2	PLUG AS	
					(EACH INCLUDES)	
		2	**3K-0360**	1	SEAL-O-RING	
		2	**9S-4185**	1	PLUG-O-RING	
	41	3	*148-8433*	4	TEE AS	
					(EACH INCLUDES)	
		3	**6V-8397**	2	SEAL-O-RING	
		3	**6V-9836**	1	TEE-SWIVEL	
	42	2	*148-8435*	1	TEE AS	
		2	**3J-1907**	1	SEAL-O-RING	
		2	**6V-8397**	2	SEAL-O-RING	
		2	**6V-8781**	1	TEE-FACE SEAL	
	43	3	*150-4027*	2	TEE AS	
					(EACH INCLUDES)	
		3	**3E-2310**	1	TEE	
		3	**3J-1907**	1	SEAL-O-RING	
		3	**6V-8397**	1	SEAL-O-RING	
	44	2	*150-4048*	1	ELBOW AS	
		2	**3K-0360**	1	SEAL-O-RING	
		2	**6V-8722**	1	ELBOW	
		2	**7J-9108**	1	SEAL-O-RING	
	45	3	*164-5567*	2	COUPLER AS-QUICK DISCONNECT	
					(EACH INCLUDES)	
		3	**3J-1907**	1	SEAL-O-RING	
		3	**6V-3965**	1	FITTING (QUICK DISCONNECT)	
Y	46	3	**165-9549**	1	VALVE GP-SOLENOID (AUXILIARY, COMBINED FUNCTION) (1-PUMP/2-PUMP, 1-WAY/2-WAY FLW)	827
	47	2	**309-5769**	1	SWITCH AS-PRESSURE (PILOT, BOOM UP)	
		2	**102-8802**	1	KIT-RECEPTACLE (2-PIN)	
					(INCLUDES RECEPTACLE AS & WEDGE)	
		2	**9X-3401**	2	PIN-CONNECTOR (16-GA TO 18-GA)	
					—OR—	
		2	**126-1767**	2	PIN-CONNECTOR (14-GA)	
Y	48	3	**171-0188**	1	VALVE GP-SOLENOID (NEG FLOW CONT, PROPN RED VALVE)	828
I	49	3	**282-7566**	1	HOSE AS	
I	50	3	**289-5283**	1	HOSE AS	
I	51	1	**289-5286**	1	HOSE AS	
I	52	1	**289-5289**	1	HOSE AS	
	53	3	**3P-9847**	1	CLIP	
	54	1,3	**4S-4455**	2	CLIP	
	55	1	**6D-3479**	1	CLIP	
	56	1,2	**6E-1435**	2	SPACER (11X30X29-MM THK)	
	57	1,2	**6K-8178**	2	CLIP	
	58	3	**6V-0852**	2	CAP-DUST	
B	59	3	**6V-9829**	1	CAP AS	
M	60	1	**7X-2549**	2	BOLT (M12X1.75X100-MM)	
I	61	2	**7Y-4387**	1	HOSE AS	
	62	1	**333-7060**	1	SPACER (11X25X105-MM THK)	
	63	1,2,3	**8T-4121**	11	WASHER-HARD (11X21X2.5-MM THK)	
M	64	2,3	**8T-4136**	5	BOLT (M10X1.5X25-MM)	
M	65	1	**8T-4137**	1	BOLT (M10X1.5X20-MM)	
M	66	3	**8T-4177**	4	BOLT (M8X1.25X90-MM)	
M	67	1	**8T-5436**	1	BOLT (M10X1.5X130-MM)	

260-7854 **LINES GP-PILOT** *(contd.)* **i03706650**

NOTE	REF NO	GRAPHIC REF	PART NUMBER	QTY	PART NAME 1 2 3 4 5 6 (PRODUCT LEVEL)	SEE PAGE
M	68	3	**8T-4182**	1	BOLT (M10X1.5X45-MM)	
M	69	1,2	**8T-4185**	2	BOLT (M10X1.5X50-MM)	
M	70	3	**8T-4192**	6	BOLT (M12X1.75X25-MM)	
M	71	3	**8T-4195**	1	BOLT (M10X1.5X30-MM)	
	72	1,3	**8T-4223**	10	WASHER-HARD (13.5X25.5X3-MM THK)	
	73	3	**8T-4224**	4	WASHER-HARD (8.8X16X2-MM THK)	
M	74	3	**8T-4956**	2	BOLT (M12X1.75X35-MM)	
M	75	3	**8T-6870**	4	BOLT (M8X1.25X70-MM)	
I	76	2	**4I-0995**	1	HOSE AS	
	77	1	**4I-9526**	2	BAND-MARKER (WHITE, R2)	
	78	1,3	**133-5813**	2	BAND-MARKER (GRAY, P)	

B-USE AS REQUIRED
I-REFER TO HYDRAULIC INFORMATION SYSTEM
M-METRIC PART
Y-SEPARATE ILLUSTRATION

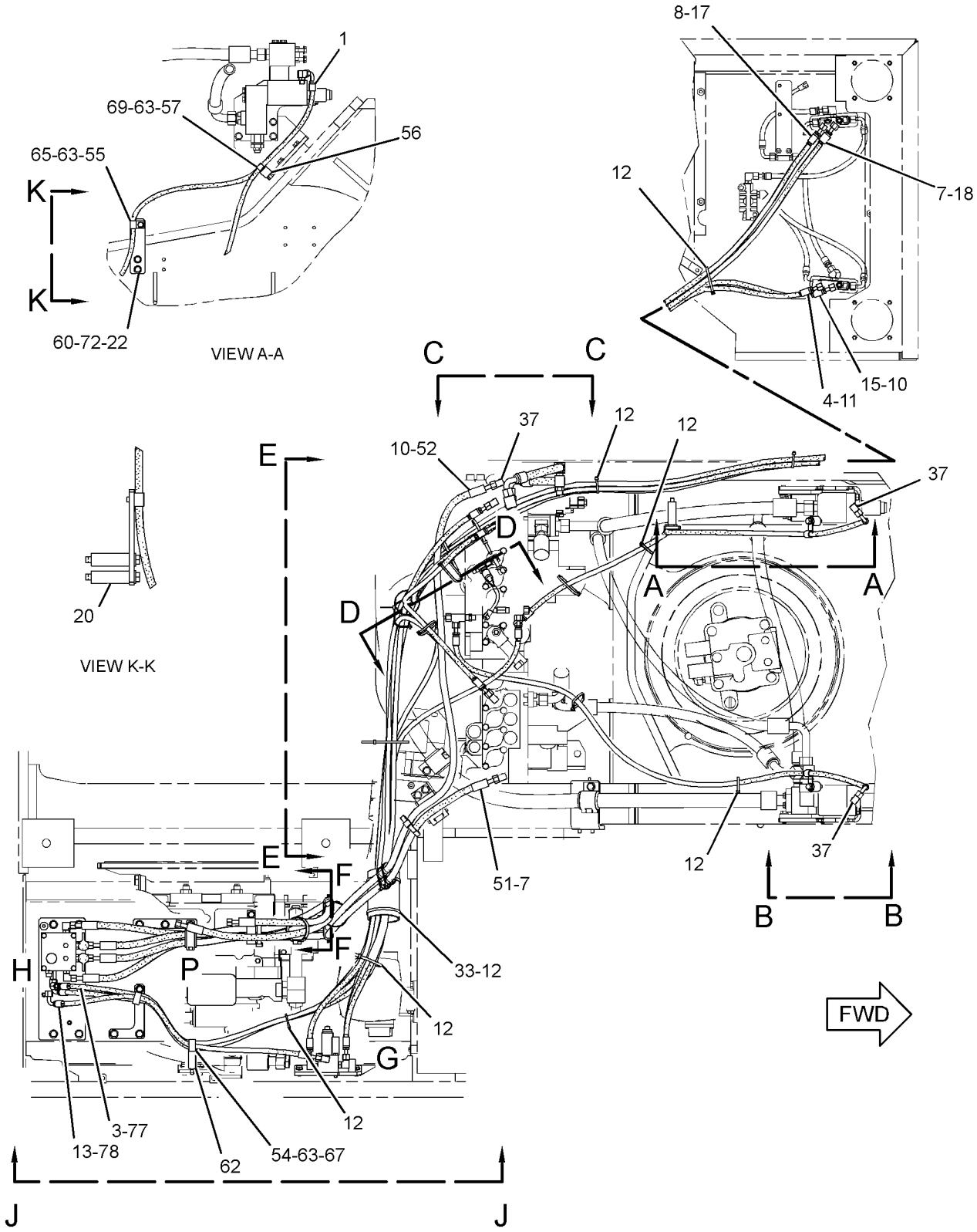

TOP VIEW

REFER TO ALL ILLUSTRATIONS OF THIS GROUP FOR AUXILIARY VIEWS.

GRAPHIC #1

g01628361

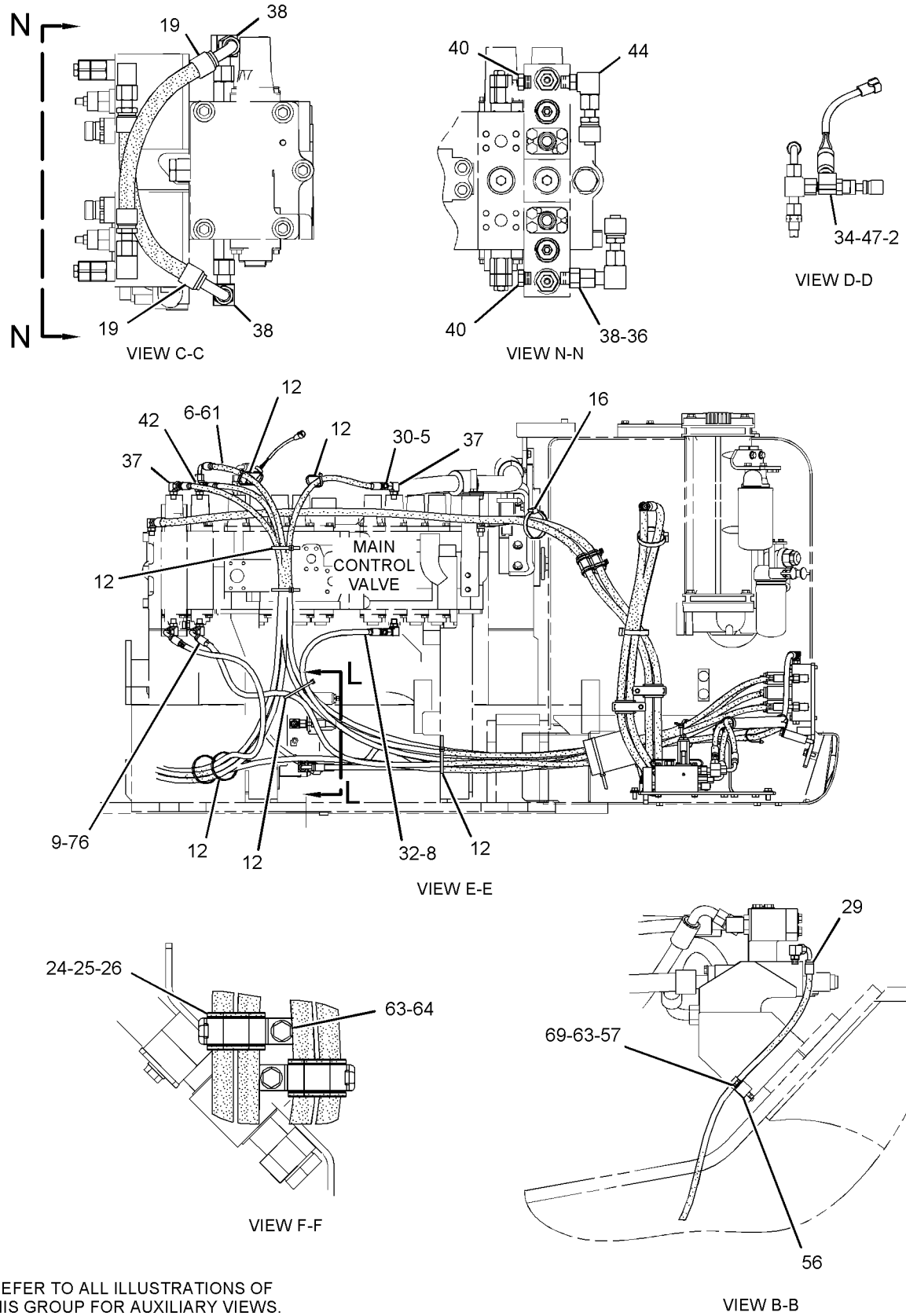

REFER TO ALL ILLUSTRATIONS OF
THIS GROUP FOR AUXILIARY VIEWS.

GRAPHIC #2

g01560410

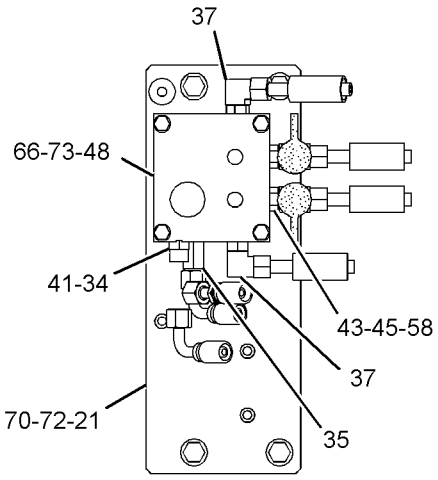

VIEW OF AREA H

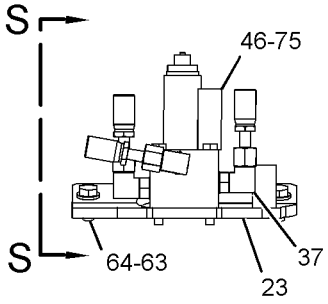

VIEW OF AREA G

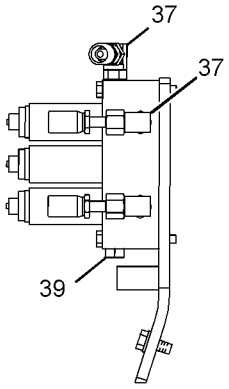

VIEW S-S

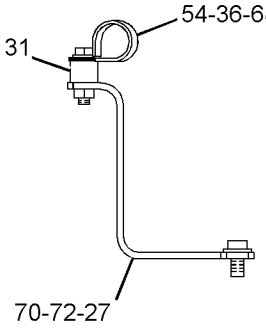

VIEW M-M

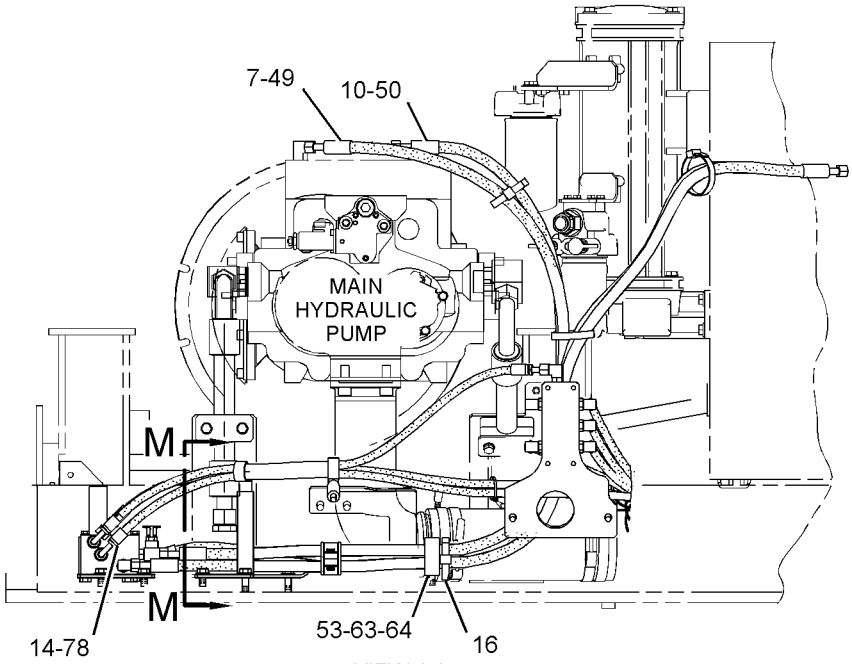

VIEW J-J

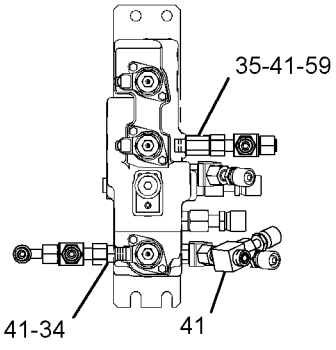

VIEW L-L

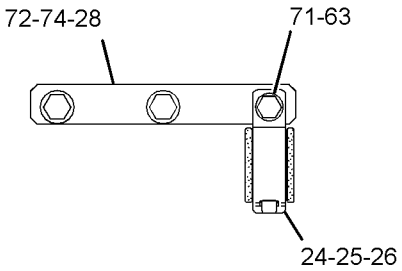

VIEW OF AREA P

GRAPHIC #3 **<END>** g01628369

HYDRAULIC SYSTEM

260-7855 LINES GP-PILOT—1-PUMP/2-PUMP, 1-WAY FLOW

S/N: D3P1-UP; M4T1-UP

PART OF 255-5774, 272-9663 CONTROL AR-AUXILIARY

AN ATTACHMENT

SMCS-5057, 5059 **i03033500**

NOTE	REF NO	GRAPHIC REF	PART NUMBER	QTY	PART NAME 1 2 3 4 5 6 (PRODUCT LEVEL)	SEE PAGE
I	1	1	**4I-1688**	2	HOSE AS	
	2	2	**4I-9521**	2	BAND-MARKER (RED, L1)	
	3	2	**4I-9522**	2	BAND-MARKER (YELLOW, L2)	
	4	1,2	**4I-9523**	4	BAND-MARKER (BLUE, L3)	
	5	2	**4I-9524**	2	BAND-MARKER (BROWN, L4)	
	6	2	**4I-9525**	2	BAND-MARKER (ORANGE, R1)	
	7	1,2	**4I-9527**	4	BAND-MARKER (GREEN, R3)	
I	8	2	**5I-4396**	1	HOSE AS	
	9	2	**7K-1181**	6	STRAP-CABLE	
I	10	2	**7Y-4387**	1	HOSE AS	
I	11	2	**087-6583**	1	HOSE AS	
	12	2	**136-0207**	4	STRAP-CABLE	
	13	2	*164-6874*	2	FITTING AS-ELBOW	
					(EACH INCLUDES)	
		2	**3J-1907**	1	SEAL-O-RING	
		2	**085-7356**		FITTING	
CI	14	2	**4I-1671**	1	HOSE AS	
Y	15	2	**259-7430**	1	VALVE GP-SOLENOID (PRESSURE REDUCING) (1-PUMP/2-PUMP, 1-WAY FLOW)	835
	16	2	**286-6556**	1	SUPPORT AS	
	17	2	**275-1442**	4	CLIP (TAB)	
	18	2	**275-1443**	4	CLIP (SLOT)	
	19	2	**275-1444**	4	GROMMET	
	21	2	**275-1693**	1	SUPPORT AS	
	22	2	**275-1818**	2	HOSE AS	
C	23	1,2	*148-8336*	4	CONNECTOR AS	
					(EACH INCLUDES)	
		1,2	**3J-1907**	1	SEAL-O-RING	
		1,2	**6V-8397**	1	SEAL-O-RING	
		1,2	**6V-8636**	1	CONNECTOR	
C	24	1	*148-8338*	2	CONNECTOR AS	
					(EACH INCLUDES)	
		1	**3J-1907**	1	SEAL-O-RING	
		1	**6V-8397**	1	SEAL-O-RING	
		1	**8T-0075**	1	CONNECTOR	
	25	1,2	*148-8378*	9	ELBOW AS	
					(EACH INCLUDES)	
		1,2	**3J-1907**	1	SEAL-O-RING	
		1,2	**6V-8397**	1	SEAL-O-RING	
		1,2	**6V-8724**	1	ELBOW	
	26	1	*148-8433*	1	TEE AS	
		1	**6V-8397**	2	SEAL-O-RING	
		1	**6V-9836**	1	TEE-SWIVEL	
	27	2	*150-3036*	1	ELBOW AS	
		2	**3J-1907**	1	SEAL-O-RING	
		2	**6V-8397**	1	SEAL-O-RING	
		2	**8T-1905**	1	ELBOW	
	28	2	*150-4027*	2	TEE AS	
					(EACH INCLUDES)	
		2	**3E-2310**	1	TEE	
		2	**3J-1907**	1	SEAL-O-RING	
		2	**6V-8397**	1	SEAL-O-RING	
	29	2	*164-5567*	4	COUPLER AS-QUICK DISCONNECT	
					(EACH INCLUDES)	
		2	**3J-1907**	1	SEAL-O-RING	

260-7855 **LINES GP-PILOT** *(contd.)* **i03033500**

NOTE	REF NO	GRAPHIC REF	PART NUMBER	QTY	PART NAME 1 2 3 4 5 6 (PRODUCT LEVEL)	SEE PAGE
		2	**6V-3965**	1	FITTING (QUICK DISCONNECT)	
Y	30	2	**171-0188**	1	VALVE GP-SOLENOID (NEG FLOW CONT, PROPN RED VALVE)	828
I	31	1	**282-7566**	1	HOSE AS	
I	32	1	**289-5283**	1	HOSE AS	
I	33	2	**289-5286**	1	HOSE AS	
I	34	2	**289-5289**	1	HOSE AS	
	35	2	**3P-9847**	1	CLIP	
	36	2	**6V-0852**	4	CAP-DUST	
	37	2	**8T-4121**	6	WASHER-HARD (11X21X2.5-MM THK)	
M	38	2	**8T-4136**	5	BOLT (M10X1.5X25-MM)	
M	39	2	**8T-4177**	4	BOLT (M8X1.25X90-MM)	
M	40	2	**8T-4195**	1	BOLT (M10X1.5X30-MM)	
	41	2	**8T-4223**	2	WASHER-HARD (13.5X25.5X3-MM THK)	
	42	2	**8T-4224**	4	WASHER-HARD (8.8X16X2-MM THK)	
M	43	2	**8T-4956**	2	BOLT (M12X1.75X35-MM)	
M	44	2	**8T-6870**	2	BOLT (M8X1.25X70-MM)	

C-CHANGE FROM PREVIOUS TYPE
I-REFER TO HYDRAULIC INFORMATION SYSTEM
M-METRIC PART
Y-SEPARATE ILLUSTRATION

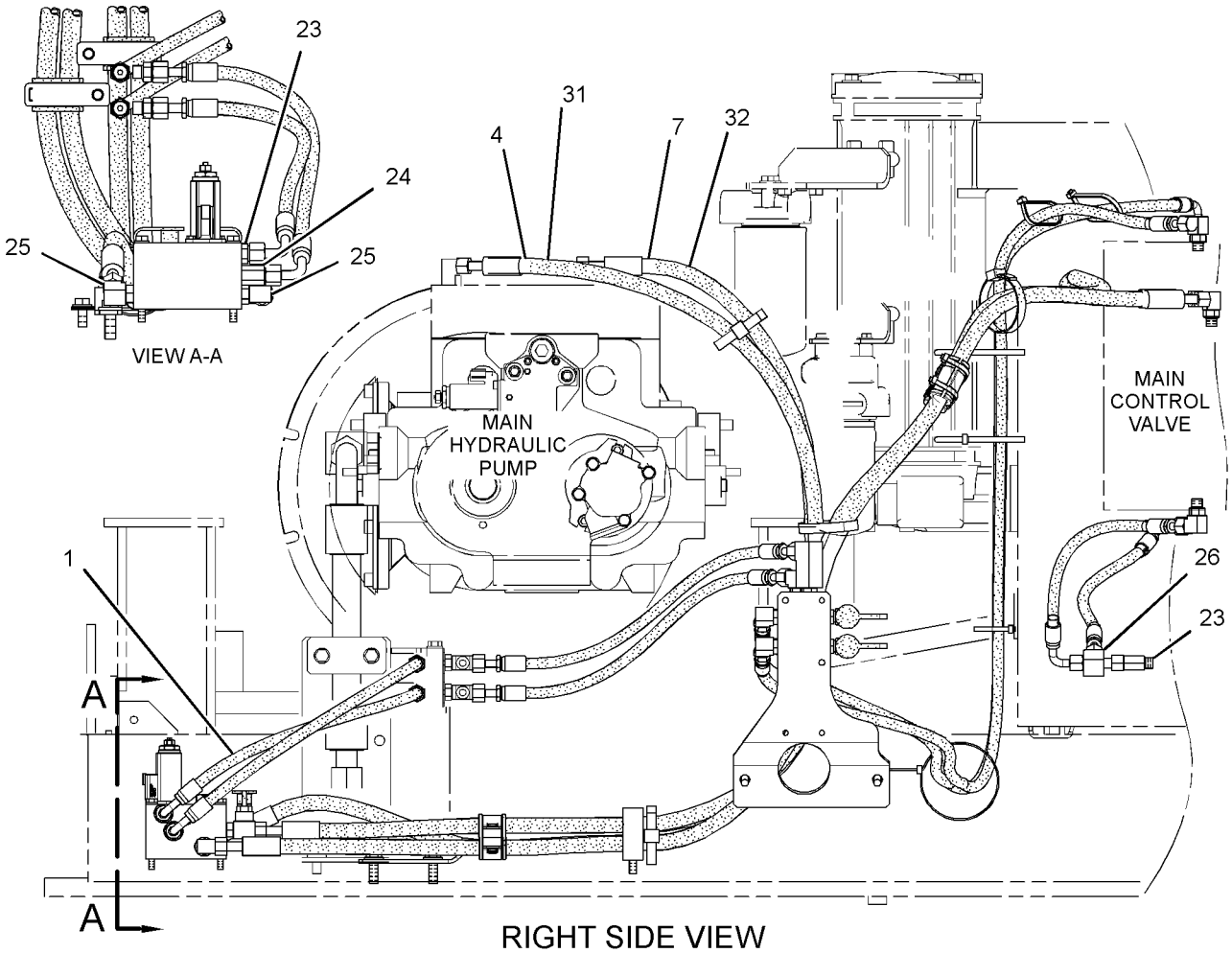

RIGHT SIDE VIEW

GRAPHIC #1

g01446956

260-7855 **LINES GP-PILOT** *(contd.)* **i03033500**

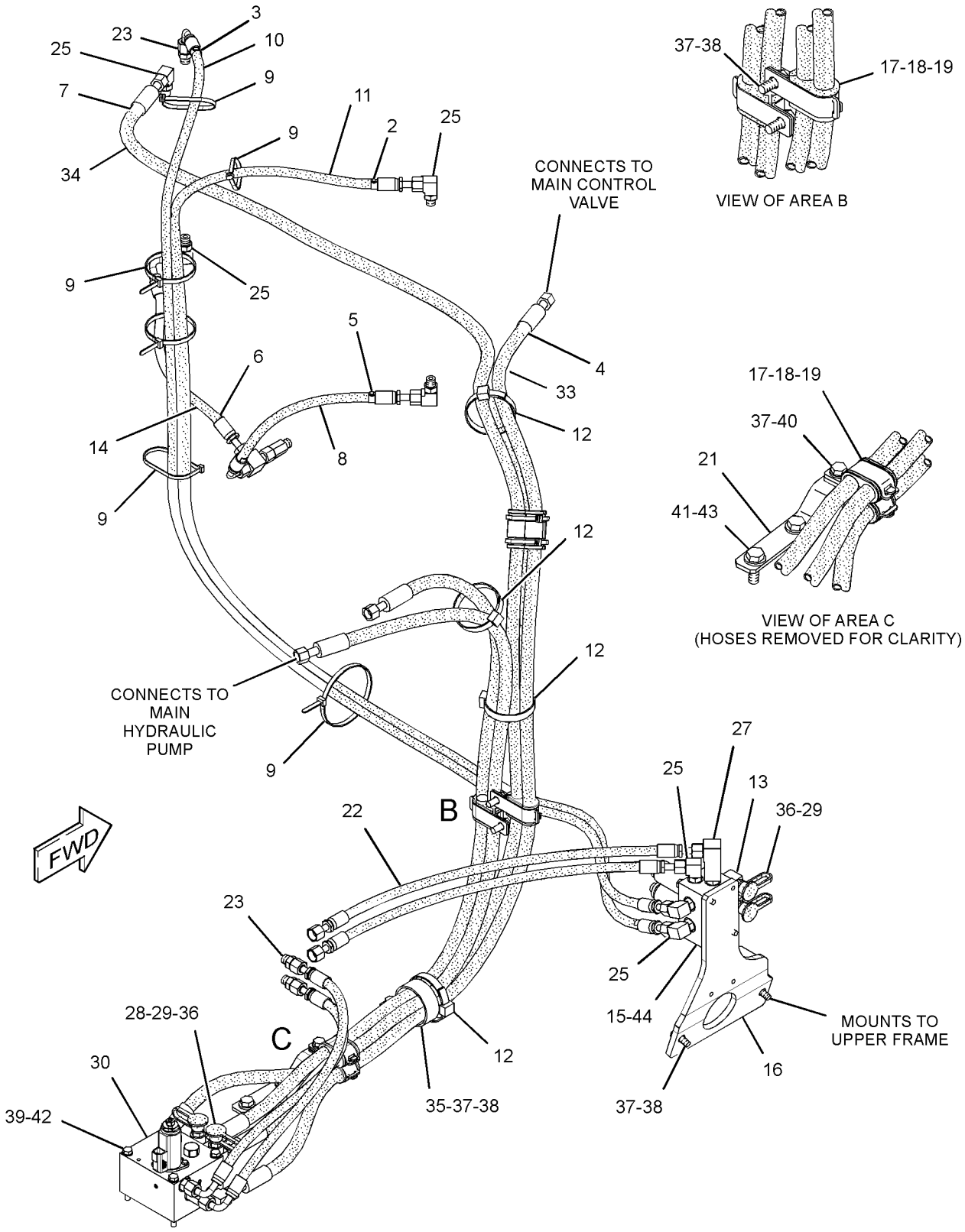

GRAPHIC #2 **<END>** g01446957

HYDRAULIC SYSTEM

260-7857 LINES GP-PILOT—SYSTEM 14, SYSTEM 17

S/N: D3P1-UP; M4T1-UP

PART OF 270-8795, 270-8796, 297-0494 CONTROL AR-AUXILIARY

AN ATTACHMENT

SMCS-5057, 5059 **i03105910**

NOTE	REF NO	GRAPHIC REF	PART NUMBER	QTY	PART NAME 1 2 3 4 5 6 (PRODUCT LEVEL)	SEE PAGE
I	1	1	**4I-0806**	1	HOSE AS	
I	2	2	**4I-1688**	2	HOSE AS	
	3	1	**4I-9521**	2	BAND-MARKER (RED, L1)	
	4	1	**4I-9522**	2	BAND-MARKER (YELLOW, L2)	
	5	1,2	**4I-9523**	4	BAND-MARKER (BLUE, L3)	
	6	1	**4I-9524**	2	BAND-MARKER (BROWN, L4)	
	7	1	**4I-9525**	2	BAND-MARKER (ORANGE, R1)	
	8	1,2	**4I-9527**	4	BAND-MARKER (GREEN, R3)	
	9	1	**7K-1181**	10	STRAP-CABLE	
I	10	1	**7Y-4387**	1	HOSE AS	
I	11	1	**087-5306**	1	HOSE AS	
I	12	1	**087-6583**	1	HOSE AS	
CI	13	1	**104-8783**	1	HOSE AS	
I	14	1	**087-4411**	1	HOSE AS	
	15	1,2	**136-0207**	4	STRAP-CABLE	
	16	1	*164-6874*	4	FITTING AS-ELBOW	
					(EACH INCLUDES)	
		1	**3J-1907**	1	SEAL-O-RING	
		1	**085-7356**	1	FITTING	
	17	1	**255-1826**	2	SPACER (13.5X25X75.8-MM THK)	
Y	18	2	**259-7429**	1	VALVE GP-SOLENOID (WORK TOOL, 4-FUNCTION)	834
	19	2	**260-8148**	1	PLATE	
	20	2	**286-6556**	1	SUPPORT AS	
	21	1,2	**275-1442**	4	CLIP (TAB)	
	22	1,2	**275-1443**	4	CLIP (SLOT)	
	23	1,2	**275-1444**	4	GROMMET (13.5X25X75.8-MM THK)	
	24	1,2	**9M-8406**	2	CLIP	
I	25	2	**282-7566**	1	HOSE AS	
I	26	2	**289-5283**	1	HOSE AS	
I	27	1	**289-5286**	1	HOSE AS	
I	28	1	**289-5289**	1	HOSE AS	
	29	2	**275-1693**	1	SUPPORT AS	
	30	1	**275-1818**	2	HOSE AS	
	31	1,2	*148-8336*	4	CONNECTOR AS	
					(EACH INCLUDES)	
		1,2	**3J-1907**	1	SEAL-O-RING	
		1,2	**6V-8397**	1	SEAL-O-RING	
		1,2	**6V-8636**	1	CONNECTOR	
	32	2	*148-8338*	1	CONNECTOR AS	
		2	**3J-1907**	1	SEAL-O-RING	
		2	**6V-8397**	1	SEAL-O-RING	
		2	**8T-0075**	1	CONNECTOR	
	33	1	*148-8367*	1	ELBOW AS	
		1	**6V-8397**	1	SEAL-O-RING	
		1	**6V-9850**	1	ELBOW	
	34	1,2	*148-8378*	14	ELBOW AS	
					(EACH INCLUDES)	
		1,2	**3J-1907**	1	SEAL-O-RING	
		1,2	**6V-8397**	1	SEAL-O-RING	
		1,2	**6V-8724**	1	ELBOW	
	35	2	*148-8433*	1	TEE AS	
		2	**6V-8397**	2	SEAL-O-RING	
		2	**6V-9836**	1	TEE-SWIVEL	
	36	1	*148-8434*	1	TEE AS	
		1	**6V-8397**	2	SEAL-O-RING	

260-7857 **LINES GP-PILOT** *(contd.)* **i03105910**

NOTE	REF NO	GRAPHIC REF	PART NUMBER	QTY	PART NAME 1 2 3 4 5 6 (PRODUCT LEVEL)	SEE PAGE
		1	**6V-9843**	1	TEE-SWIVEL	
	37	2	*150-3036*	1	ELBOW AS	
		2	**3J-1907**	1	SEAL-O-RING	
		2	**6V-8397**	1	SEAL-O-RING	
		2	**8T-1905**	1	ELBOW	
	38	2	*150-4027*	2	TEE AS	
					(EACH INCLUDES)	
		2	**3E-2310**	1	TEE	
		2	**3J-1907**	1	SEAL-O-RING	
		2	**6V-8397**	1	SEAL-O-RING	
	39	1,2	*164-5567*	6	COUPLER AS-QUICK DISCONNECT	
					(EACH INCLUDES)	
		1,2	**3J-1907**	1	SEAL-O-RING	
		1,2	**6V-3965**	1	FITTING (QUICK DISCONNECT)	
Y	40	2	**171-0188**	1	VALVE GP-SOLENOID (NEG FLOW CONT, PROPN RED VALVE)	828
	41	2	**3P-9847**	1	CLIP	
	42	1,2	**6D-3479**	3	CLIP	
	43	1,2	**6E-1435**	2	SPACER (11X30X29-MM THK)	
	44	1,2	**6V-0852**	6	CAP-DUST	
M	45	2	**7X-2549**	2	BOLT (M12X1.75X100-MM)	
	46	1,2	**8T-4121**	9	WASHER-HARD (11X21X2.5-MM THK)	
M	47	1,2	**8T-4136**	5	BOLT (M10X1.5X25-MM)	
M	48	2	**8T-4137**	1	BOLT (M10X1.5X20-MM)	
M	49	2	**8T-4177**	4	BOLT (M8X1.25X90-MM)	
M	50	1,2	**8T-4185**	2	BOLT (M10X1.5X50-MM)	
M	51	2	**8T-4195**	1	BOLT (M10X1.5X30-MM)	
	52	2	**8T-4223**	4	WASHER-HARD (13.5X25.5X3-MM THK)	
	53	2	**8T-4224**	4	WASHER-HARD (8.8X16X2-MM THK)	
M	54	2	**8T-4956**	2	BOLT (M12X1.75X35-MM)	
M	55	2	**8T-6870**	4	BOLT (M8X1.25X70-MM)	
CI	56	1	**134-6918**	1	HOSE AS	

C-CHANGE FROM PREVIOUS TYPE
I-REFER TO HYDRAULIC INFORMATION SYSTEM
M-METRIC PART
Y-SEPARATE ILLUSTRATION

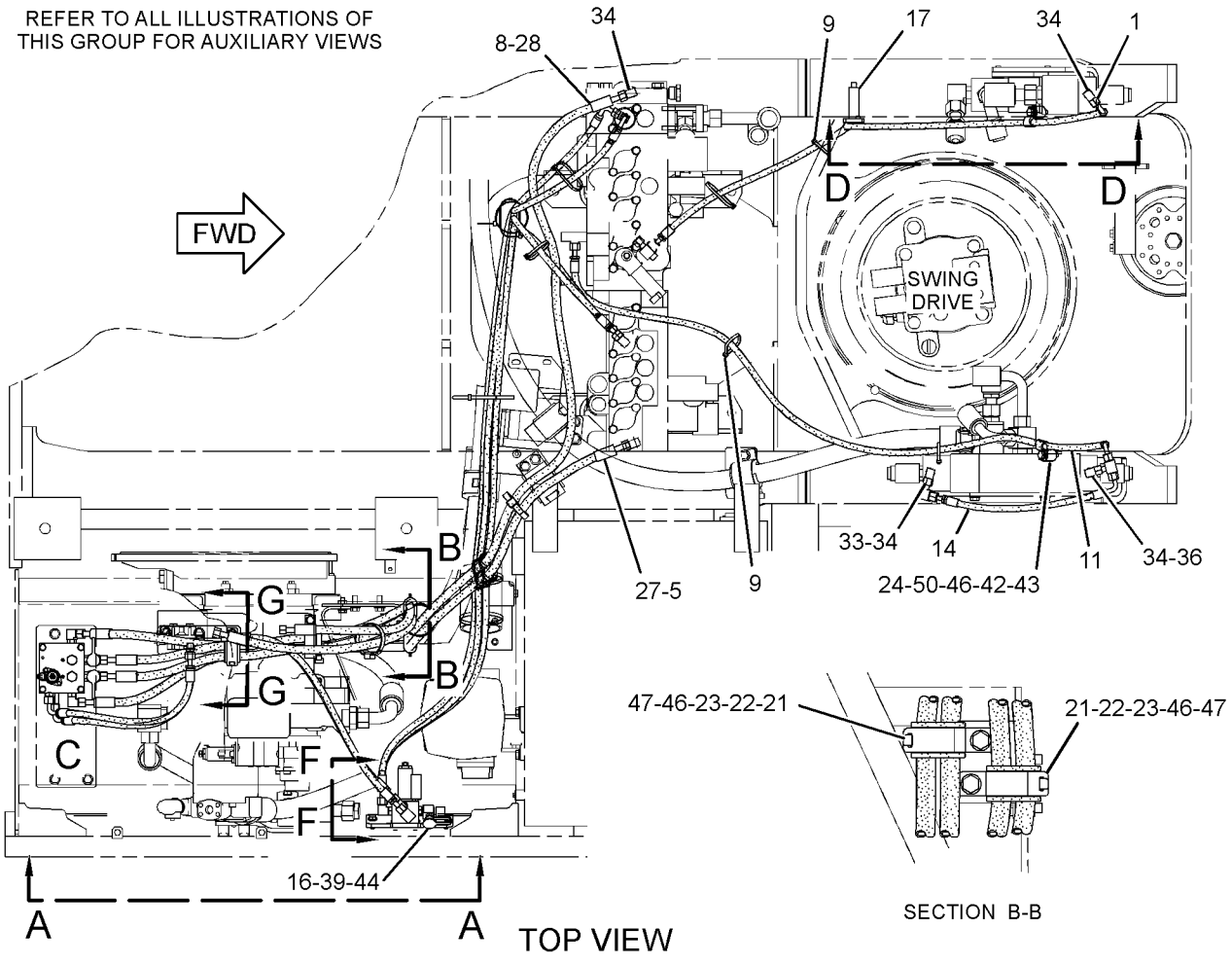

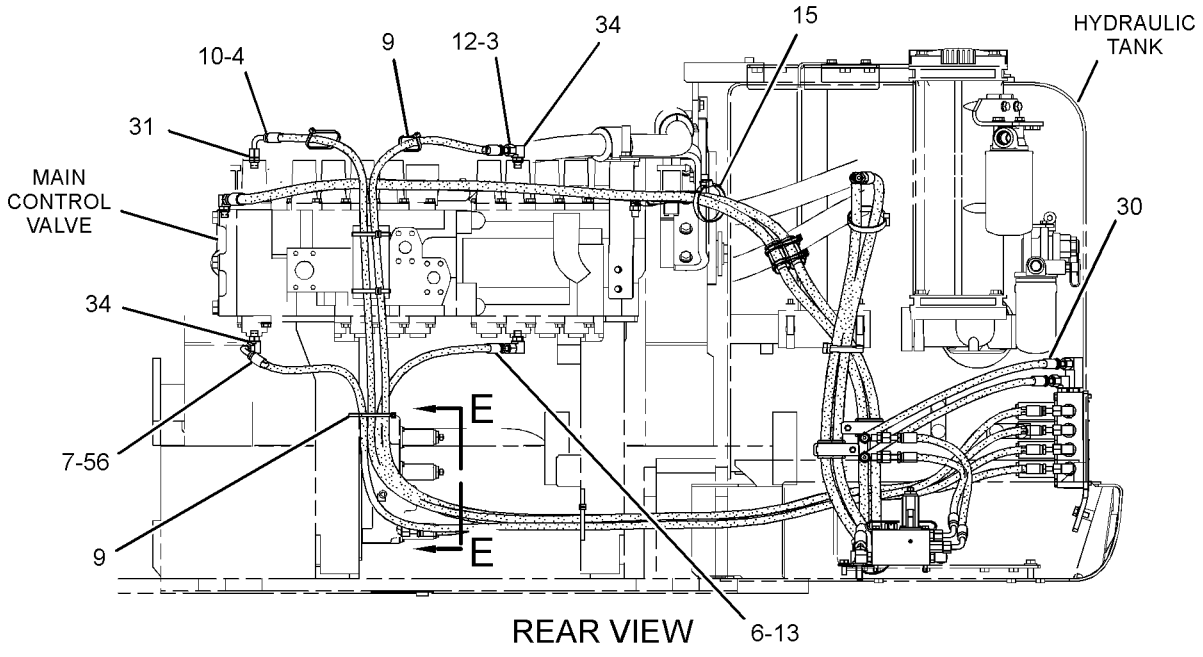

GRAPHIC #1 g01502241

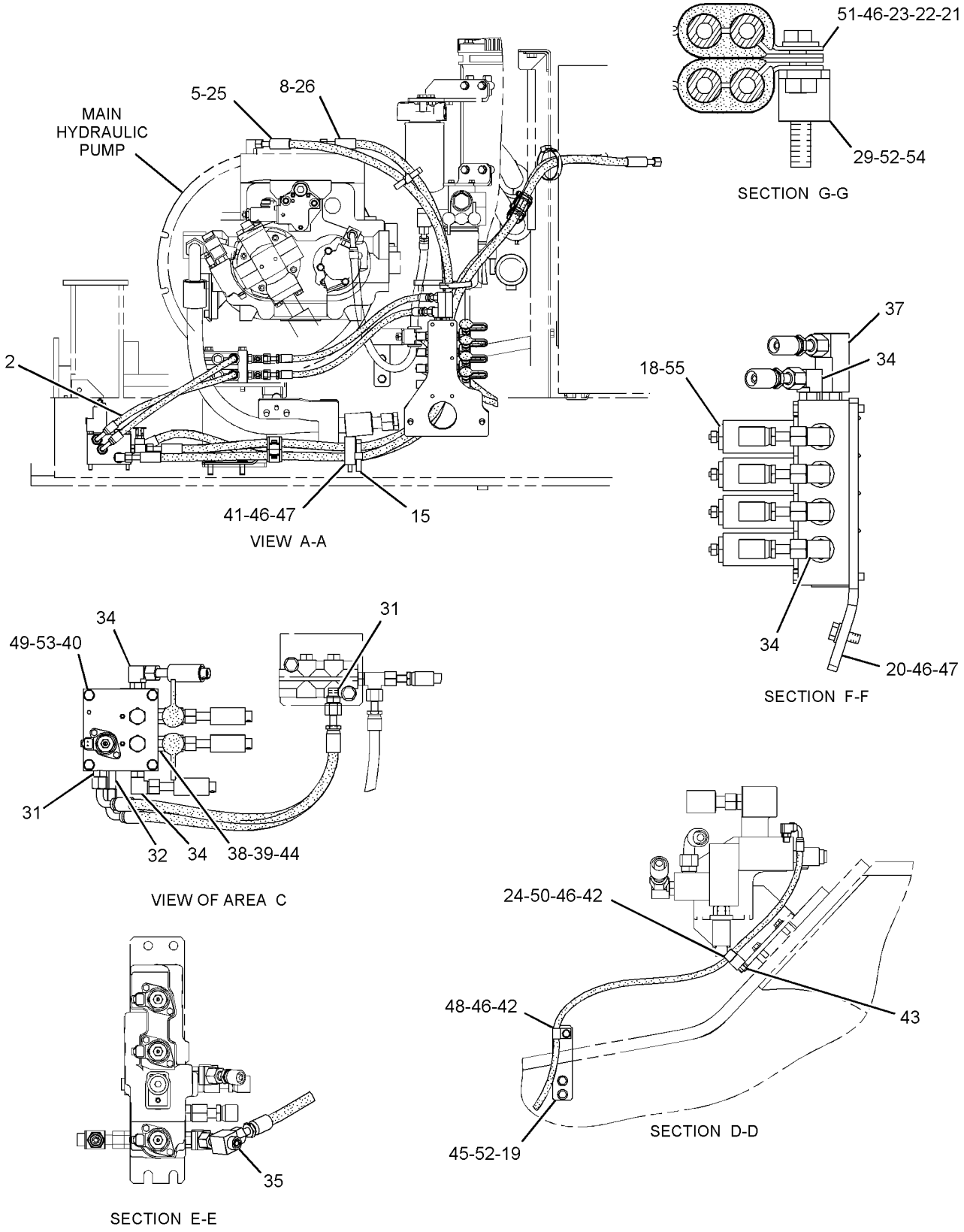

GRAPHIC #2 **<END>** g01502244

HYDRAULIC SYSTEM

260-7861 LINES GP-PILOT—MEDIUM PRESSURE

S/N: D3P1-UP; M4T1-UP
PART OF 255-5822, 270-8795 CONTROL AR-AUXILIARY
AN ATTACHMENT

SMCS-5057, 5059 **i03028342**

NOTE	REF NO	GRAPHIC REF	PART NUMBER	QTY	PART NAME 1 2 3 4 5 6 (PRODUCT LEVEL)	SEE PAGE
	1	1	**4I-9523**	2	BAND-MARKER (BLUE, L3)	
	2	1	**4I-9526**	2	BAND-MARKER (WHITE, R2)	
	3	1	**7K-1181**	4	STRAP-CABLE	
I	5	1	**269-9754**	2	HOSE AS	
	6	1	*165-4931*	2	ELBOW AS	
					(EACH INCLUDES)	
		1	**3J-1907**	1	SEAL-O-RING	
		1	**6V-8077**	1	ELBOW	
CI	7	1	**5I-4396**	2	HOSE AS	
C	8	1	**314-8113**	1	SUPPORT AS	
Y	9	1	**259-7430**	1	VALVE GP-SOLENOID (PRESSURE REDUCING)	835
C	10	1	*148-8336*	4	CONNECTOR AS	
					(EACH INCLUDES)	
		1	**3J-1907**	1	SEAL-O-RING	
		1	**6V-8397**	1	SEAL-O-RING	
		1	**6V-8636**	1	CONNECTOR	
	11	1	*148-8338*	1	CONNECTOR AS	
		1	**3J-1907**	1	SEAL-O-RING	
		1	**6V-8397**	1	SEAL-O-RING	
		1	**8T-0075**	1	CONNECTOR	
	12	1	*148-8378*	3	ELBOW AS	
					(EACH INCLUDES)	
		1	**3J-1907**	1	SEAL-O-RING	
		1	**6V-8397**	1	SEAL-O-RING	
		1	**6V-8724**	1	ELBOW	
	14	1	*164-5567*	2	COUPLER AS-QUICK DISCONNECT	
					(EACH INCLUDES)	
		1	**3J-1907**	1	SEAL-O-RING	
		1	**6V-3965**	1	FITTING (QUICK DISCONNECT)	
	15	1	**5K-8451**	1	CLIP	
	16	1	**6D-1641**	1	CLIP	
	17	1	**6V-0852**	2	CAP-DUST	
	18	1	**8T-4121**	3	WASHER-HARD (11X21X2.5-MM THK)	
M	19	1	**8T-4136**	2	BOLT (M10X1.5X25-MM)	
M	20	1	**8T-4137**	1	BOLT (M10X1.5X20-MM)	
M	21	1	**8T-6870**	2	BOLT (M8X1.25X70-MM)	

C-CHANGE FROM PREVIOUS TYPE
I-REFER TO HYDRAULIC INFORMATION SYSTEM
M-METRIC PART
Y-SEPARATE ILLUSTRATION

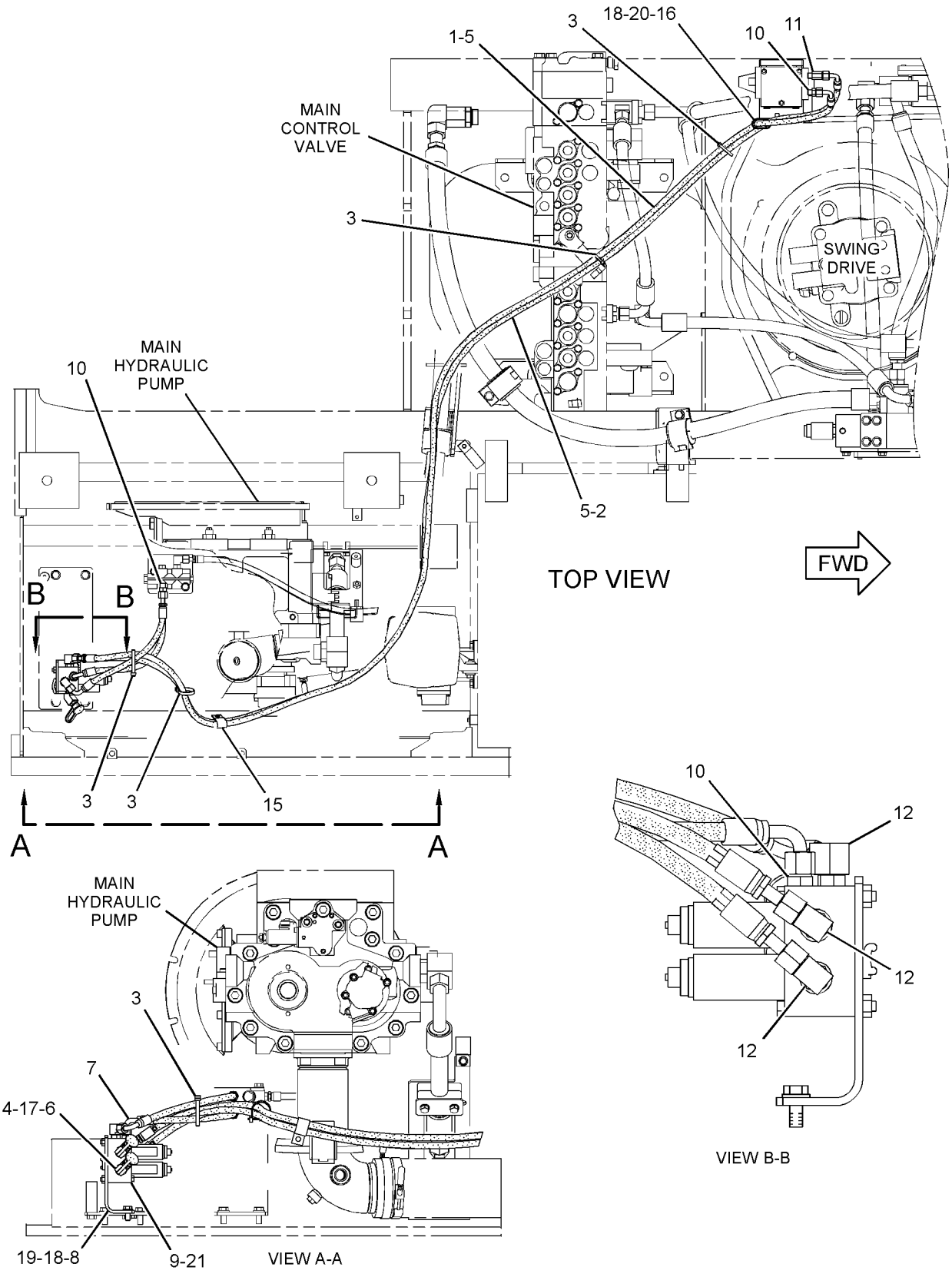

GRAPHIC #1 **<END>** g01558994

260-7863 LINES GP-PILOT–ROTATOR

S/N: D3P1-UP; M4T1-UP
PART OF 270-8795, 270-8796, 272-9663, 307-9975 CONTROL AR-AUXILIARY, 340-9468, 340-9469 OPTION AR-CONTROL AN ATTACHMENT

SMCS-5057, 5059 **i03536553**

NOTE	REF NO	GRAPHIC REF	PART NUMBER	QTY	PART NAME 1 2 3 4 5 6 (PRODUCT LEVEL)	SEE PAGE
	1	1	**7K-1181**	6	STRAP-CABLE	
I	2	1	**104-8771**	1	HOSE AS	
I	3	1	**111-6752**	1	HOSE AS	
	4	1	**168-9759**	1	BLOCK	
	5	1	**255-1900**	1	SUPPORT AS	
	6	1	**124-1008**	2	GUARD	
	7	1	*148-8336*	1	CONNECTOR AS	
		1	**3J-1907**	1	SEAL-O-RING	
		1	**6V-8397**	1	SEAL-O-RING	
		1	**6V-8636**	1	CONNECTOR	
	8	1	*148-8338*	1	CONNECTOR AS	
		1	**3J-1907**	1	SEAL-O-RING	
		1	**6V-8397**	1	SEAL-O-RING	
		1	**8T-0075**	1	CONNECTOR	
B	9	1	*148-8407*	8	PLUG AS	
					(EACH INCLUDES)	
		1	**3J-1907**	1	SEAL-O-RING	
		1	**9S-4191**	1	PLUG-O-RING	
	10	1	*148-8411*	2	PLUG AS	
					(EACH INCLUDES)	
		1	**3K-0360**	1	SEAL-O-RING	
		1	**9S-4185**	1	PLUG-O-RING	
	11	1	*148-8433*	2	TEE AS	
					(EACH INCLUDES)	
		1	**6V-8397**	2	SEAL-O-RING	
		1	**6V-9836**	1	TEE-SWIVEL	
	12	1	*148-8435*	2	TEE AS	
					(EACH INCLUDES)	
		1	**3J-1907**	1	SEAL-O-RING	
		1	**6V-8397**	2	SEAL-O-RING	
		1	**6V-8781**	1	TEE-FACE SEAL	
	13	1	**5K-8451**	1	CLIP	
B	14	1	**6V-9829**	4	CAP AS	
	15	1	**333-7060**	1	SPACER (11X25X105-MM THK)	
	16	1	**8T-4121**	3	WASHER-HARD (11X21X2.5-MM THK)	
M	17	1	**8T-4139**	4	BOLT (M12X1.75X30-MM)	
M	18	1	**8T-5436**	1	BOLT (M10X1.5X130-MM)	
M	19	1	**8T-4198**	2	BOLT (M10X1.5X100-MM)	
	20	1	**8T-4223**	4	WASHER-HARD (13.5X25.5X3-MM THK)	
	21	1	**4I-9526**	2	BAND-MARKER (WHITE, R2)	
	22	1	**4I-9527**	2	BAND-MARKER (GREEN, R3)	

B-USE AS REQUIRED
I-REFER TO HYDRAULIC INFORMATION SYSTEM
M-METRIC PART

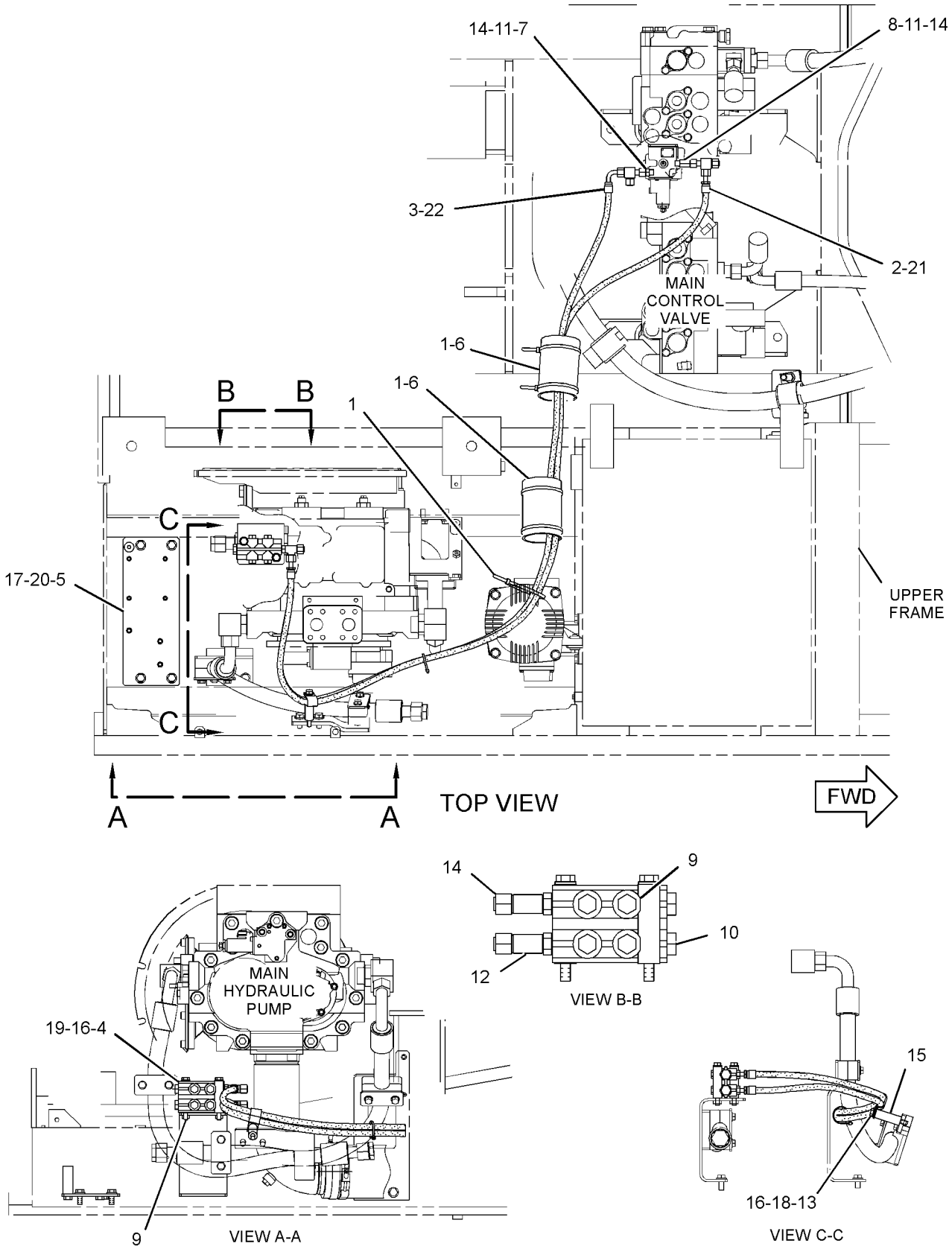

GRAPHIC #1 **<END>** g01342428

HYDRAULIC SYSTEM

275-1495 LINES GP-PILOT–CAB

S/N: M4T1-UP
PART OF 329-6564 CONTROL AR-BOOM
AN ATTACHMENT

SMCS-5057, 5059 **i03744436**

NOTE	REF NO	GRAPHIC REF	PART NUMBER	QTY	PART NAME 1 2 3 4 5 6 (PRODUCT LEVEL)	SEE PAGE
	1	1	**123-2431**	1	BODY-VALVE	
	2	1	**260-8145**	1	BRACKET AS	
	3	1	*148-8336*	1	CONNECTOR AS	
		1	**3J-1907**	1	SEAL-O-RING	
		1	**6V-8397**	1	SEAL-O-RING	
		1	**6V-8636**	1	CONNECTOR	
	4	1	*148-8353*	1	ELBOW AS	
		1	**3J-1907**	1	SEAL-O-RING	
		1	**6V-8397**	1	SEAL-O-RING	
		1	**6V-9001**	1	ELBOW	
	5	1	*148-8378*	1	ELBOW AS	
		1	**3J-1907**	1	SEAL-O-RING	
		1	**6V-8397**	1	SEAL-O-RING	
		1	**6V-8724**	1	ELBOW	
	6	1	*148-8407*	1	PLUG AS	
		1	**3J-1907**	1	SEAL-O-RING	
		1	**9S-4191**	1	PLUG-O-RING	
	7	1	*150-3033*	1	ELBOW AS	
		1	**3J-1907**	1	SEAL-O-RING	
		1	**4J-5477**	1	SEAL-O-RING	
		1	**8T-0164**	1	ELBOW	
M	8	1	**7X-0818**	2	BOLT (M8X1.25X45-MM)	
	9	1	**8T-4121**	2	WASHER-HARD (11X21X2.5-MM THK)	
M	10	1	**8T-4136**	2	BOLT (M10X1.5X25-MM)	
	11	1	**8T-4224**	2	WASHER-HARD (8.8X16X2-MM THK)	

M-METRIC PART

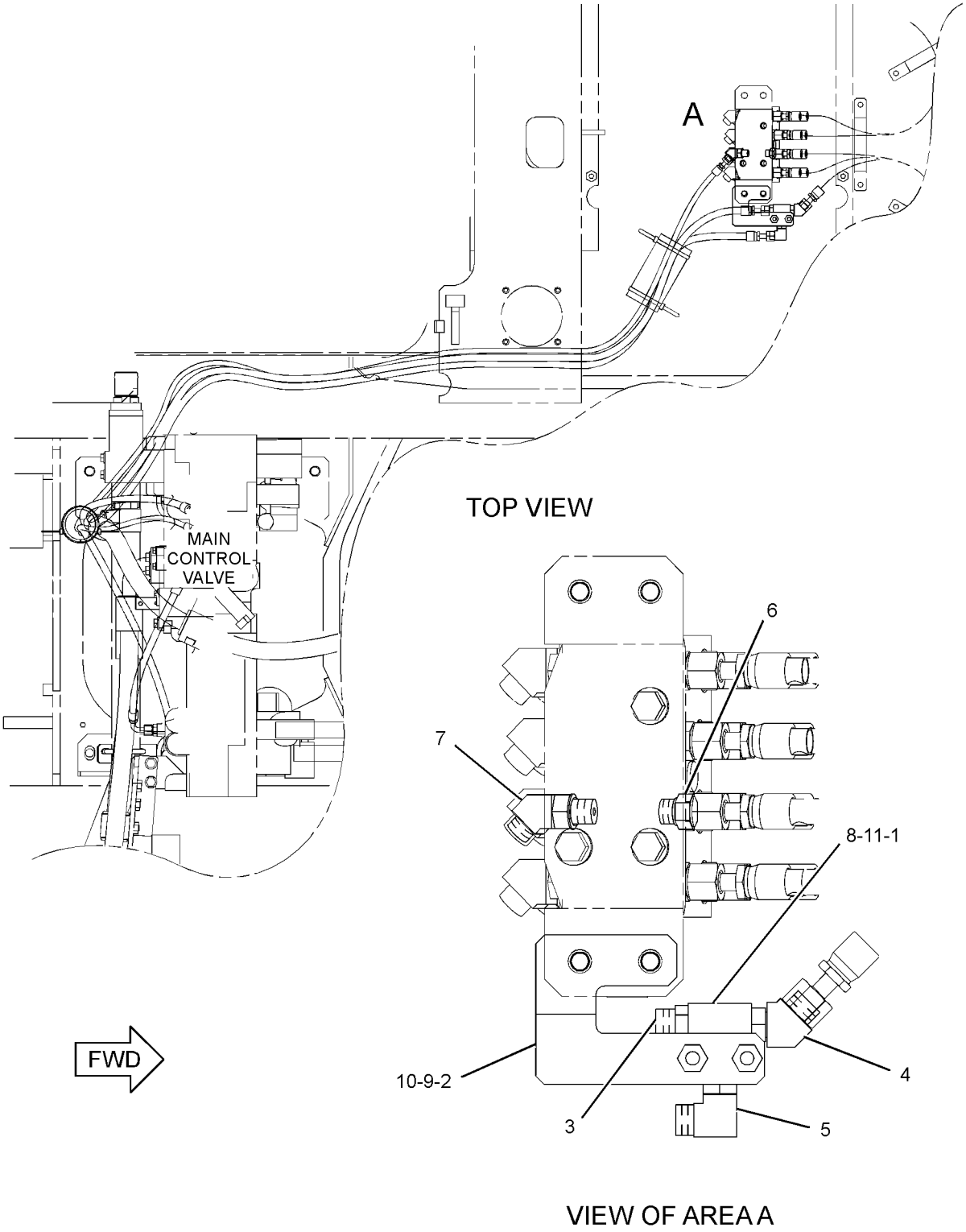

GRAPHIC #1 **<END>** g01206540

HYDRAULIC SYSTEM

307-5106 LINES GP-PILOT—MAIN HYDRAULIC

S/N: D3P1-UP; M4T1-UP

PART OF 259-7766 HYDRAULIC AR

SMCS-5057, 5059 **i03627515**

NOTE	REF NO	GRAPHIC REF	PART NUMBER	QTY	PART NAME 1 2 3 4 5 6 (PRODUCT LEVEL)	SEE PAGE
	1	1	**6V-0852**	4	CAP-DUST	
C	2	1	*148-8347*	1	ELBOW AS	
		1	**3D-2824**	1	SEAL-O-RING	
		1	**6V-9007**	1	ELBOW	
		1	**6V-9746**	1	SEAL-O-RING	
	3	1	*164-6874*	1	FITTING AS-ELBOW	
		1	**3J-1907**	1	SEAL-O-RING	
		1	**085-7356**	1	FITTING	
	4	1	**221-8912**	2	FLANGE	
	5	1	**260-2180**	2	SENSOR AS-PRESSURE (MAIN HYDRAULIC PUMP)	
					(EACH INCLUDES)	
		1	**095-1777**	1	RING-BACKUP	
		1	**260-2191**	1	SEAL-O-RING	
I	6	1	**269-9714**	1	HOSE AS	
	7	1	**282-7050**	1	HOSE AS	
	9	1	*148-8372*	1	ELBOW AS	
		1	**2M-9780**	1	SEAL-O-RING	
		1	**6V-8398**	1	SEAL-O-RING	
		1	**6V-8721**	1	ELBOW	
	10	1	*148-8378*	2	ELBOW AS	
					(EACH INCLUDES)	
		1	**3J-1907**	1	SEAL-O-RING	
		1	**6V-8397**	1	SEAL-O-RING	
		1	**6V-8724**	1	ELBOW	
C	11	1	*326-4405*	1	CONNECTOR AS	
		1	**3J-1907**	1	SEAL-O-RING	
		1	**6V-8398**	1	SEAL-O-RING	
		1	**141-7251**	1	CONNECTOR-FILTER	
	12	1	*164-5567*	4	COUPLER AS-QUICK DISCONNECT	
					(EACH INCLUDES)	
		1	**3J-1907**	1	SEAL-O-RING	
		1	**6V-3965**	1	FITTING (QUICK DISCONNECT)	
	14	1	**5P-7462**	1	CLIP (SLOT)	
	15	1	**5P-7463**	1	CLIP (TAB)	
	16	1	**6V-0683**	1	GROMMET	
	18	1	**8T-4121**	1	WASHER-HARD (11X21X2.5-MM THK)	
M	19	1	**8T-4189**	4	BOLT (M8X1.25X20-MM)	
M	20	1	**8T-4195**	1	BOLT (M10X1.5X30-MM)	
	21	1	**8T-4224**	4	WASHER-HARD (8.8X16X2-MM THK)	

C-CHANGE FROM PREVIOUS TYPE
I-REFER TO HYDRAULIC INFORMATION SYSTEM
M-METRIC PART

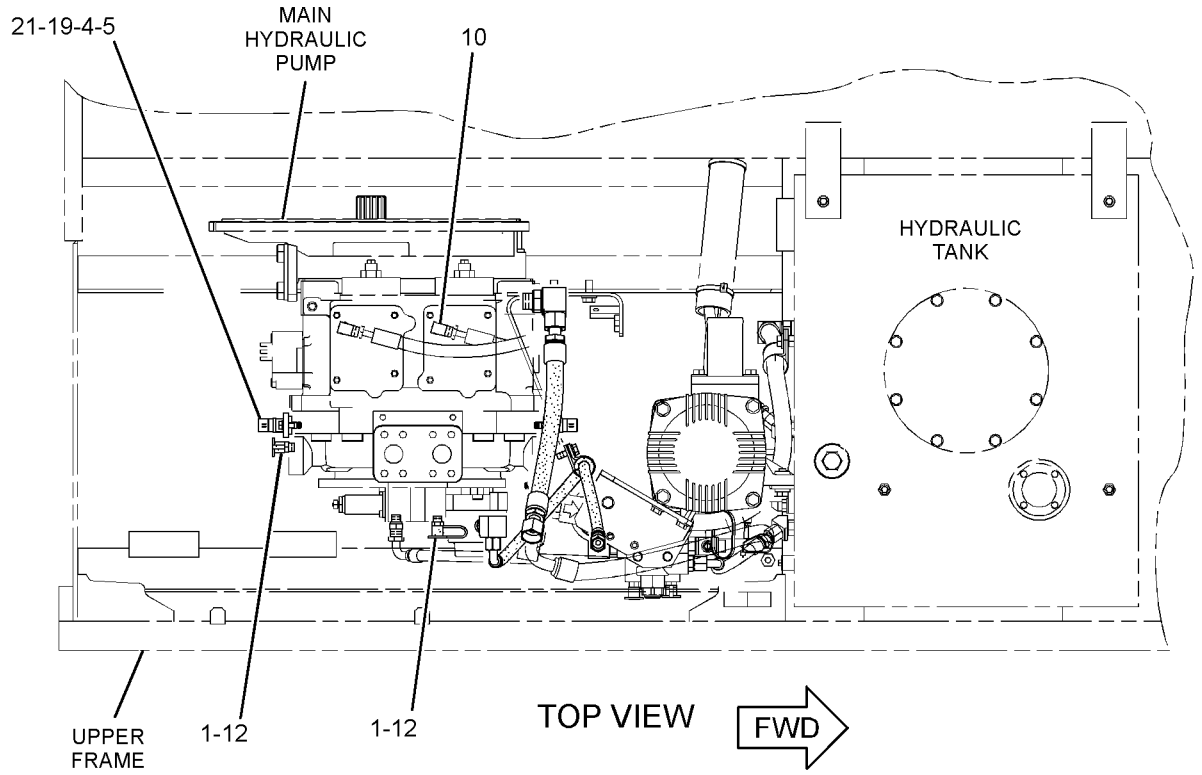

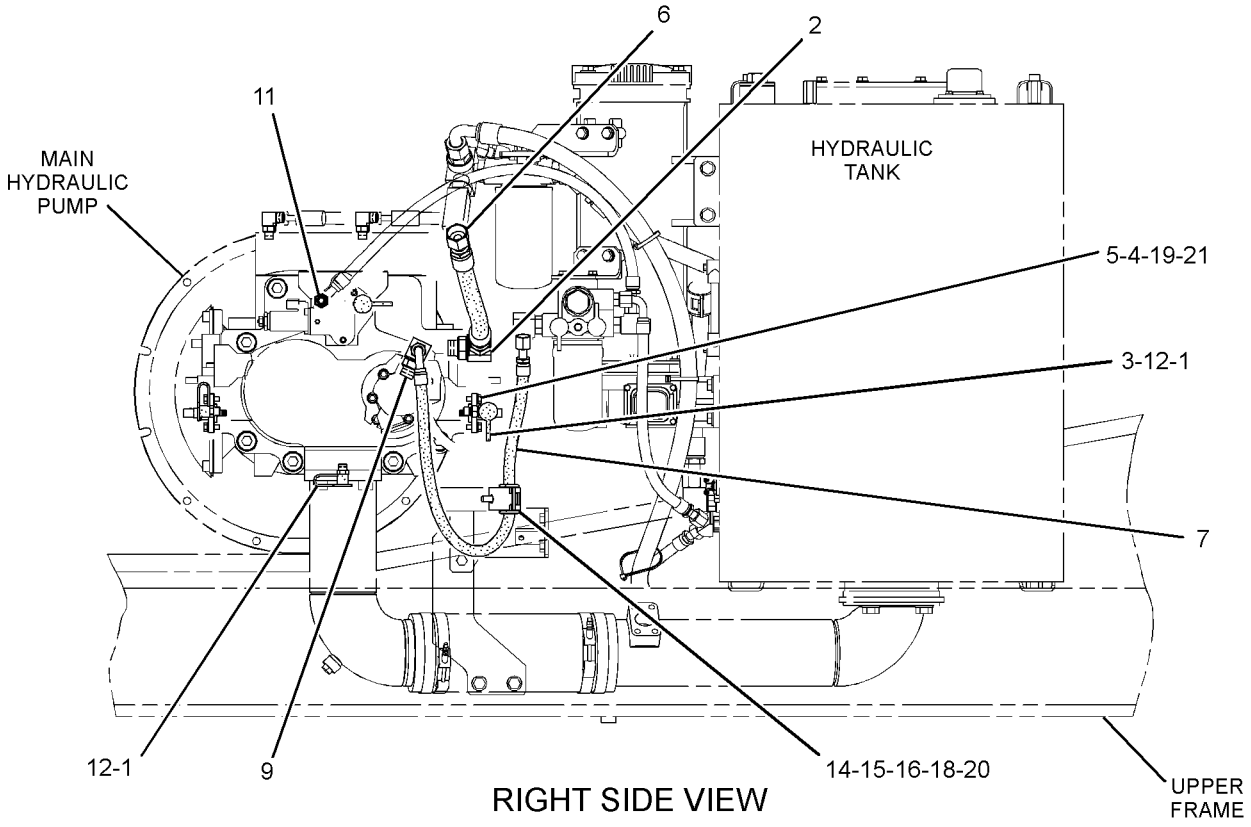

GRAPHIC #1 **<END>** g01514197

HYDRAULIC SYSTEM

330-2390 LINES GP-PILOT–
WORK TOOL, 4-FUNCTION, FLOW CONTROL
S/N: D3P1-UP; M4T1-UP
PART OF 307-9975, 336-3339 CONTROL AR-AUXILIARY
AN ATTACHMENT

SMCS-5057, 5059 **i03732331**

NOTE	REF NO	GRAPHIC REF	PART NUMBER	QTY	PART NAME 1 2 3 4 5 6 (PRODUCT LEVEL)	SEE PAGE
I	1	1	**4I-1688**	2	HOSE AS	
	2	2	**4I-9521**	2	BAND-MARKER (RED, L1)	
	3	2	**4I-9522**	2	BAND-MARKER (YELLOW, L2)	
	4	1	**4I-9523**	4	BAND-MARKER (BLUE, L3)	
	5	2	**4I-9524**	2	BAND-MARKER (BROWN, L4)	
	6	2	**4I-9525**	2	BAND-MARKER (ORANGE, R1)	
	7	1	**4I-9527**	4	BAND-MARKER (GREEN, R3)	
	8	2	**6V-0852**	6	CAP-DUST	
	9	2	**7K-1181**	6	STRAP-CABLE	
I	10	2	**7Y-4387**	1	HOSE AS	
I	11	2	**087-6583**	1	HOSE AS	
I	12	2	**104-8783**	1	HOSE AS	
I	13	2	**134-6918**	1	HOSE AS	
	14	1,2	**136-0207**	4	STRAP-CABLE	
	15	2	*164-6874*	4	FITTING AS-ELBOW	
					(EACH INCLUDES)	
		2	**3J-1907**	1	SEAL-O-RING	
		2	**085-7356**	1	FITTING	
Y	16	2	**171-0188**	1	VALVE GP-SOLENOID (NEG FLOW CONT, PROPN RED VALVE)	828
Y	17	2	**259-7429**	1	VALVE GP-SOLENOID (WORK TOOL, 4-FUNCTION)	834
	18	1	**275-1442**	4	CLIP (TAB)	
	19	1	**275-1443**	4	CLIP (SLOT)	
	20	1	**275-1444**	4	GROMMET	
	21	1	**275-1693**	1	SUPPORT AS	
	22	2	**275-1818**	2	HOSE AS	
I	23	1	**282-7566**	1	HOSE AS	
	24	2	**286-6556**	1	SUPPORT AS	
I	25	1	**289-5283**	1	HOSE AS	
I	26	1	**289-5286**	1	HOSE AS	
I	27	1	**289-5289**	1	HOSE AS	
	28	2	*148-8336*	4	CONNECTOR AS	
					(EACH INCLUDES)	
		2	**3J-1907**	1	SEAL-O-RING	
		2	**6V-8397**	1	SEAL-O-RING	
		2	**6V-8636**	1	CONNECTOR	
	29	2	*148-8338*	1	CONNECTOR AS	
		2	**3J-1907**	1	SEAL-O-RING	
		2	**6V-8397**	1	SEAL-O-RING	
		2	**8T-0075**	1	CONNECTOR	
	30	1,2	*148-8378*	11	ELBOW AS	
					(EACH INCLUDES)	
		1,2	**3J-1907**	1	SEAL-O-RING	
		1,2	**6V-8397**	1	SEAL-O-RING	
		1,2	**6V-8724**	1	ELBOW	
	31	2	*150-3036*	1	ELBOW AS	
		2	**3J-1907**	1	SEAL-O-RING	
		2	**6V-8397**	1	SEAL-O-RING	
		2	**8T-1905**	1	ELBOW	
	32	2	*150-4027*	2	TEE AS	
					(EACH INCLUDES)	
		2	**3E-2310**	1	TEE	
		2	**3J-1907**	1	SEAL-O-RING	
		2	**6V-8397**	1	SEAL-O-RING	

330-2390 **LINES GP-PILOT** *(contd.)* **i03732331**

NOTE	REF NO	GRAPHIC REF	PART NUMBER	QTY	PART NAME 1 2 3 4 5 6 (PRODUCT LEVEL)	SEE PAGE
	33	2	*164-5567*	6	COUPLER AS-QUICK DISCONNECT	
					(EACH INCLUDES)	
		2	**6V-3965**	1	FITTING (QUICK DISCONNECT)	
		2	**214-7568**	1	SEAL-O-RING	
	34	1	**3P-9847**	1	CLIP	
	35	1,2	**8T-4121**	6	WASHER-HARD (11X21X2.5-MM THK)	
M	36	1,2	**8T-4136**	5	BOLT (M10X1.5X25-MM)	
M	37	2	**8T-4177**	4	BOLT (M8X1.25X90-MM)	
M	38	1	**8T-4195**	1	BOLT (M10X1.5X30-MM)	
	39	1	**8T-4223**	2	WASHER-HARD (13.5X25.5X3-MM THK)	
	40	2	**8T-4224**	4	WASHER-HARD (8.8X16X2-MM THK)	
M	41	1	**8T-4956**	2	BOLT (M12X1.75X35-MM)	
M	42	2	**8T-6870**	4	BOLT (M8X1.25X70-MM)	

I-REFER TO HYDRAULIC INFORMATION SYSTEM
M-METRIC PART
Y-SEPARATE ILLUSTRATION

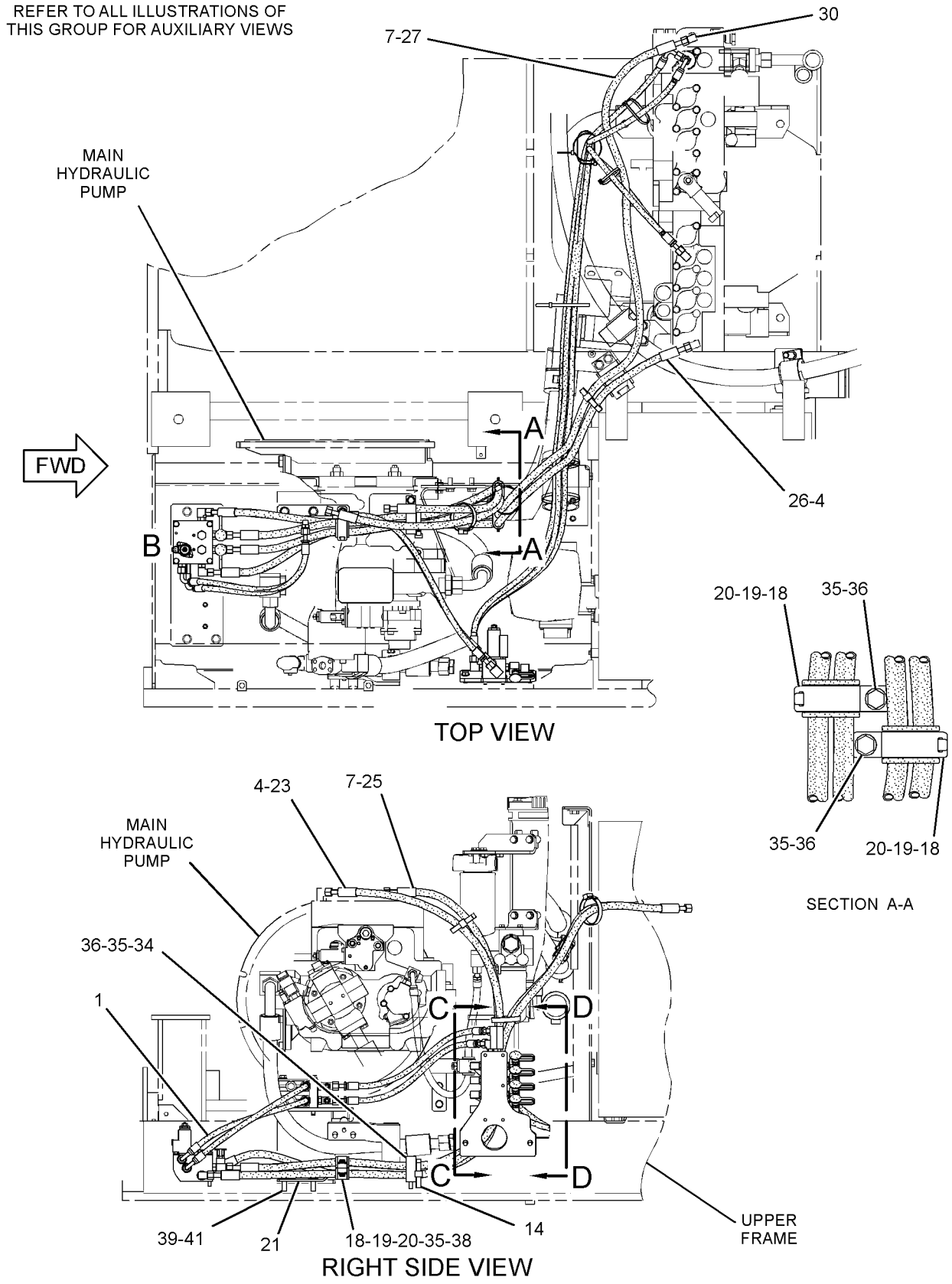

GRAPHIC #1

g01758815

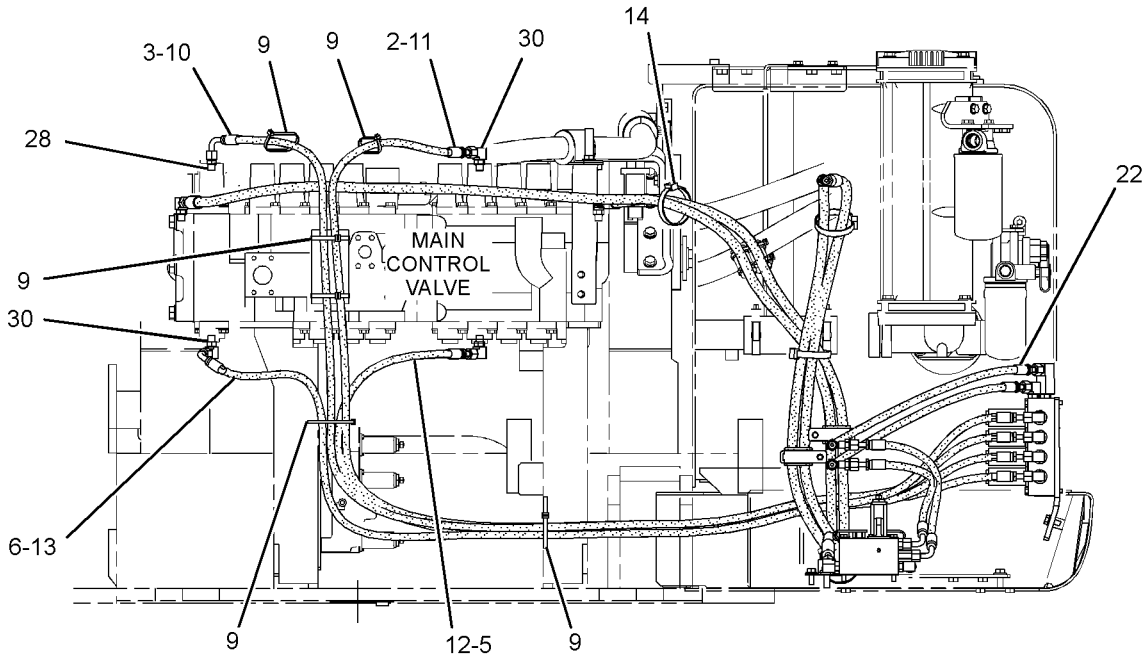

REAR VIEW

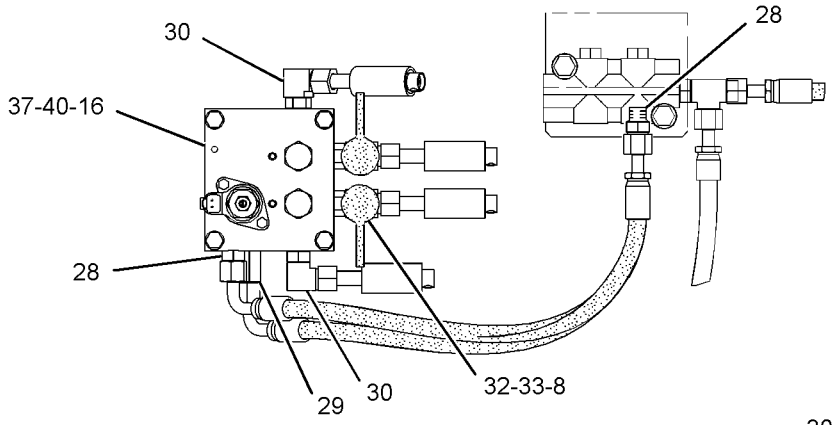

VIEW OF AREA B

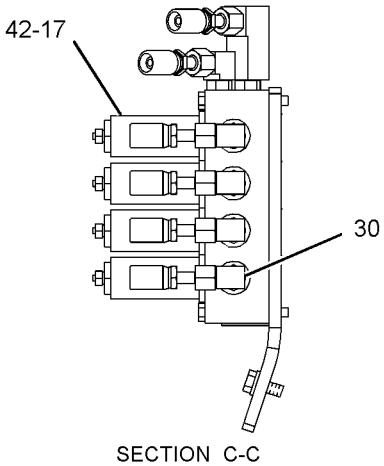

SECTION C-C

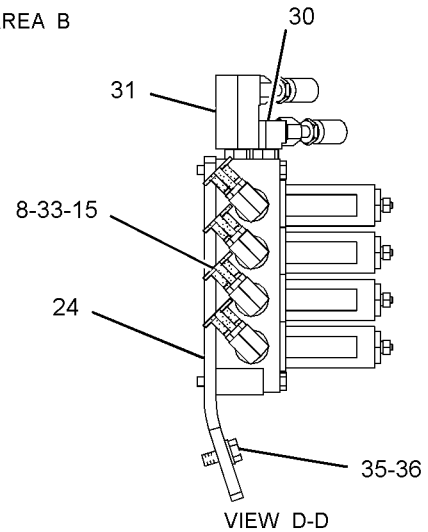

VIEW D-D

GRAPHIC #2 **<END>** g01758816

HYDRAULIC SYSTEM

260-7862 LINES GP-PUMP–AUXILIARY

S/N: D3P1-UP; M4T1-UP
PART OF 255-5822, 270-8795 CONTROL AR-AUXILIARY
AN ATTACHMENT

SMCS-5057 **i03013248**

NOTE	REF NO	GRAPHIC REF	PART NUMBER	QTY	PART NAME 1 2 3 4 5 6 (PRODUCT LEVEL)	SEE PAGE
	1	2	**4I-7889**	1	SPACER (11X25X45-MM THK)	
	2	2	**126-1913**	1	PLATE	
	3	2	**131-9750**	1	SCREEN AS (HYDRAULIC TANK)	
M	4	2	**170-8553**	4	BOLT-SOCKET HEAD (M12X1.75X40-MM)	
	5	2	**260-7840**	1	FLANGE	
	6	1	**260-7841**	1	GROMMET	
	7	1	**260-7842**	1	SUPPORT AS-PUMP	
I	8	2	**260-7845**	1	HOSE AS	
I	9	2	**319-9771**	1	HOSE AS	
I	10	1	**260-7956**	1	HOSE AS	
	11	1	*148-8327*	1	CONNECTOR AS	
		1	**3D-2824**	1	SEAL-O-RING	
		1	**6V-8637**	1	CONNECTOR	
		1	**6V-9746**	1	SEAL-O-RING	
	12	1	*148-8339*	1	CONNECTOR AS	
		1	**6V-8716**	1	CONNECTOR	
		1	**6V-9746**	1	SEAL-O-RING	
		1	**7M-8485**	1	SEAL-O-RING	
	13	2	*148-8360*	1	ELBOW AS	
		2	**6V-9182**	1	ELBOW	
		2	**6V-9746**	1	SEAL-O-RING	
		2	**7M-8485**	1	SEAL-O-RING	
	14	2	**1P-4578**	4	FLANGE-HALF	
	15	1	**275-1680**	1	FLANGE	
	16	2	**4J-0522**	3	SEAL-O-RING	
	17	2	**4J-0527**	1	SEAL-O-RING	
	18	1	**5I-8748**	1	SPACER (11X18X5-MM THK)	
	19	1	**5P-1075**	1	WASHER-HARD (10.2X22.5X3-MM THK)	
	20	1,2	**5P-7468**	3	CLIP (SLOT)	
	21	1,2	**5P-7469**	3	CLIP (TAB)	
	22	1	**5P-7470**	1	CLIP (SLOT)	
	23	1	**5P-7471**	1	CLIP (TAB)	
	24	1	**5P-8182**	1	GROMMET	
	25	1,2	**6V-1874**	3	GROMMET	
	26	2	**6V-6707**	1	SEAL-O-RING	
M	27	2	**8T-5005**	5	BOLT (M10X1.5X70-MM)	
	28	1	*106-8715*	1	ELBOW AS	
		1	**3D-2824**	1	SEAL-O-RING	
		1	**6V-9746**	1	SEAL-O-RING	
		1	**8C-8400**	1	ELBOW	
	29	1,2	**8T-4121**	16	WASHER-HARD (11X21X2.5-MM THK)	
M	30	1,2	**8T-4136**	7	BOLT (M10X1.5X25-MM)	
M	31	1	**8T-4139**	1	BOLT (M12X1.75X30-MM)	
M	32	1	**8T-4192**	1	BOLT (M12X1.75X25-MM)	
M	33	1	**8T-4195**	1	BOLT (M10X1.5X30-MM)	
M	34	2	**8T-4196**	4	BOLT (M10X1.5X35-MM)	
	35	1	**8T-4223**	2	WASHER-HARD (13.5X25.5X3-MM THK)	

I-REFER TO HYDRAULIC INFORMATION SYSTEM
M-METRIC PART

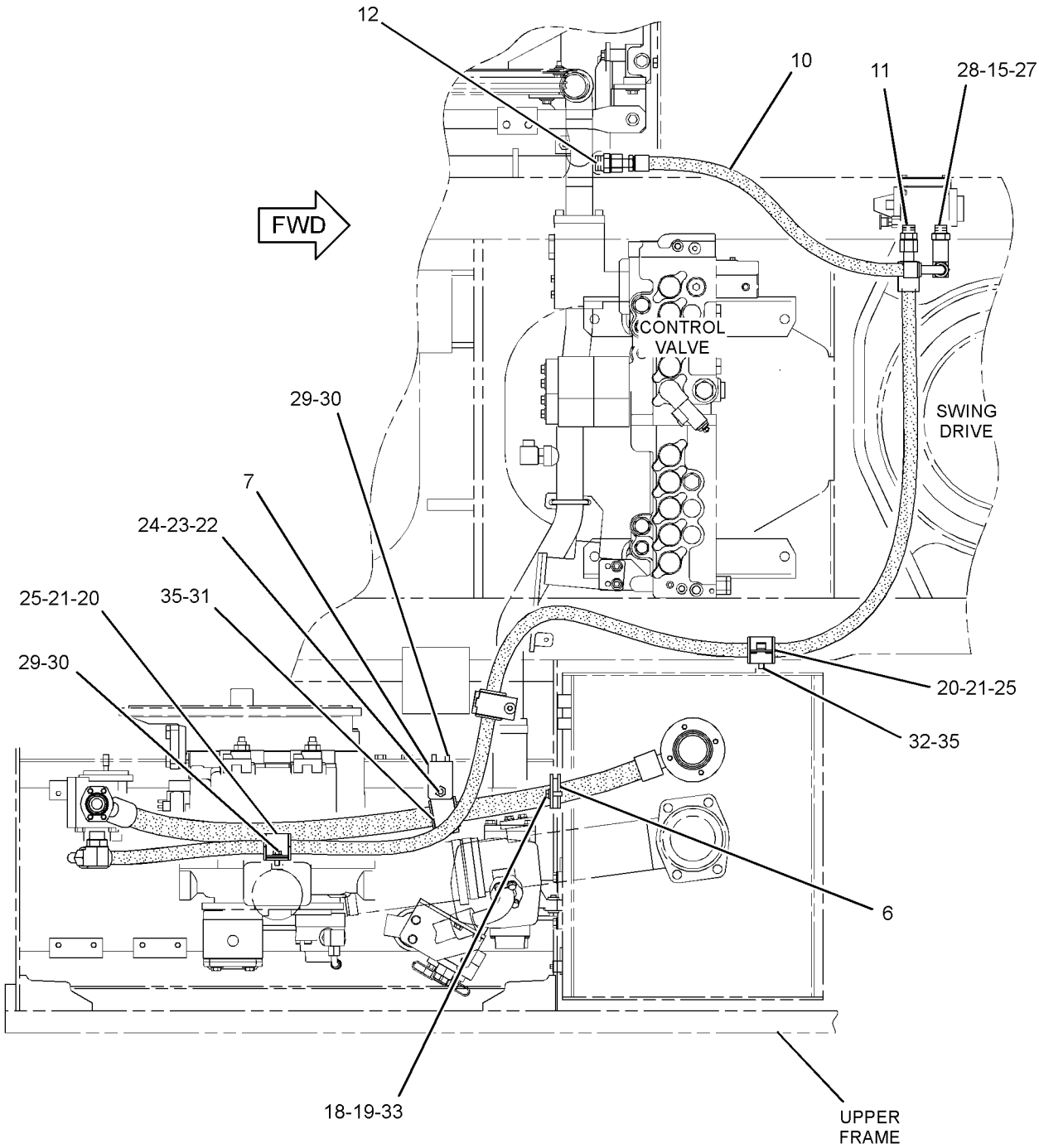

TOP VIEW

GRAPHIC #1

g01203387

260-7862 **LINES GP-PUMP** *(contd.)* **i03013248**

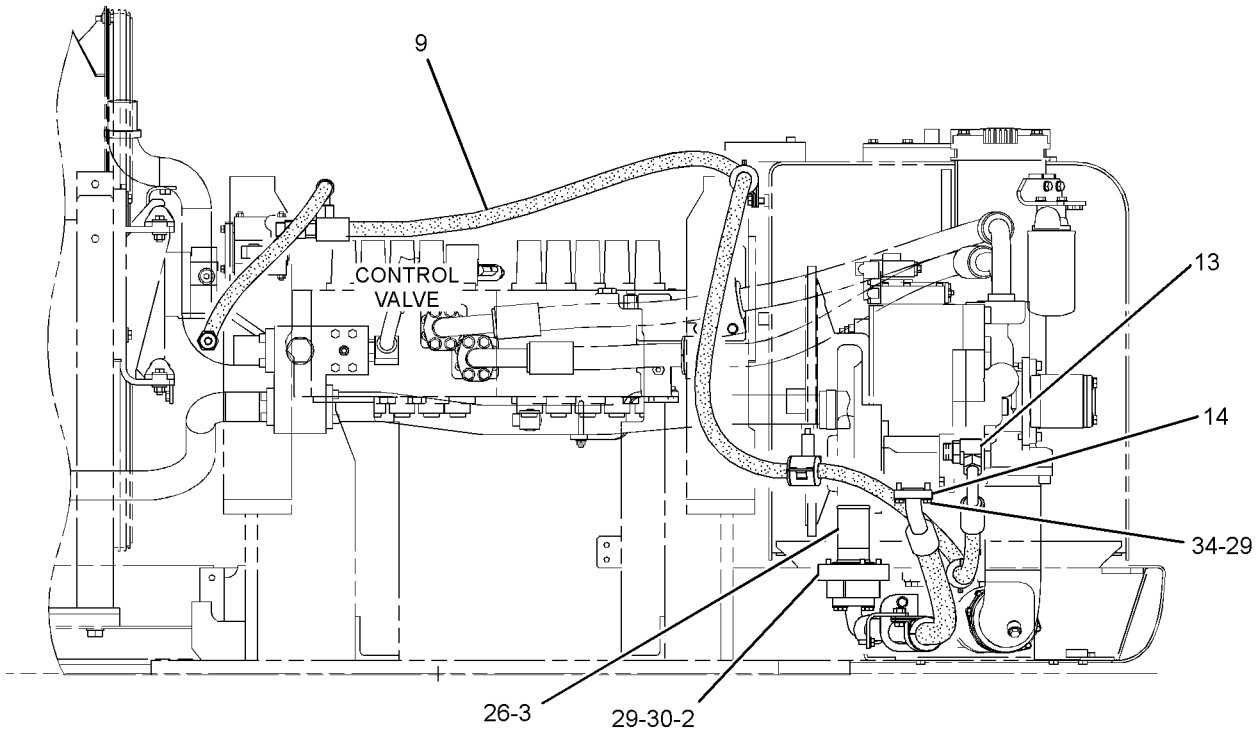

REAR VIEW

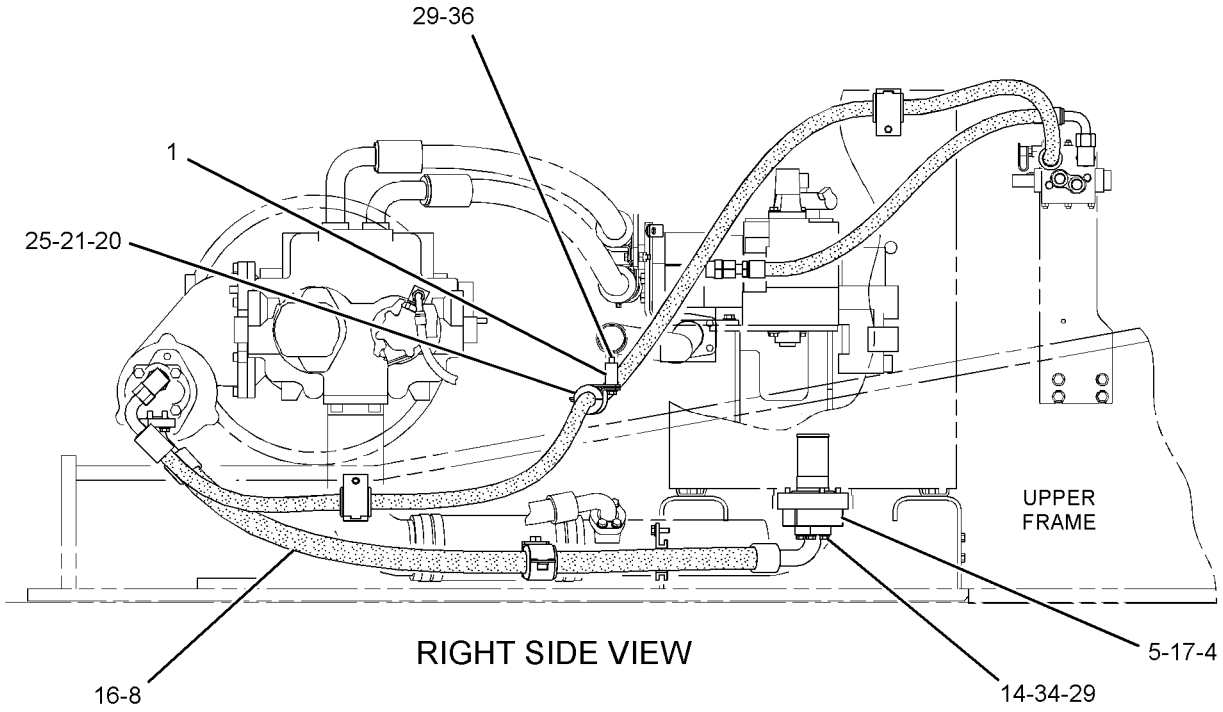

RIGHT SIDE VIEW

GRAPHIC #2 **<END>** g01203834

HYDRAULIC SYSTEM

260-7864 LINES GP-PUMP—HYDRAULIC OIL COOLER

S/N: M4T1-UP

PART OF 255-5823 PUMP & LINES GP-COOLING

AN ATTACHMENT

SMCS-5057 **i03727346**

NOTE	REF NO	GRAPHIC REF	PART NUMBER	QTY	PART NAME 1 2 3 4 5 6 (PRODUCT LEVEL)	SEE PAGE
	1	1	**4I-7889**	1	SPACER (11X25X45-MM THK)	
	2	1	**126-1913**	1	PLATE	
	3	1	**131-9750**	1	SCREEN AS (HYDRAULIC TANK)	
M	4	1	**170-8553**	4	BOLT-SOCKET HEAD (M12X1.75X40-MM)	
	5	1	*275-1722*	1	ELBOW GP	
		1	**2S-4078**	1	SEAL-O-RING	
		1	**5K-9090**	1	SEAL-O-RING	
		1	**255-2024**	1	ELBOW	
	6	1	**260-7840**	1	FLANGE	
	7	1	**260-7841**	1	GROMMET	
	8	1	**260-7842**	1	SUPPORT AS-PUMP	
I	9	1	**260-7845**	1	HOSE AS	
I	10	1	**266-1029**	1	HOSE AS	
	11	1	*148-8357*	1	ELBOW AS	
		1	**5K-9090**	1	SEAL-O-RING	
		1	**6V-9008**	1	ELBOW	
		1	**7M-8485**	1	SEAL-O-RING	
	12	1	**1P-4578**	4	FLANGE-HALF	
	13	1	**275-1680**	1	FLANGE	
	14	1	**4J-0522**	3	SEAL-O-RING	
	15	1	**4J-0527**	1	SEAL-O-RING	
	16	1	**5I-8748**	1	SPACER (11X18X5-MM THK)	
M	17	1	**8T-5005**	5	BOLT (M10X1.5X70-MM)	
	18	1	**5P-1075**	1	WASHER-HARD (10.2X22.5X3-MM THK)	
	19	1	**5P-7468**	2	CLIP (SLOT)	
	20	1	**5P-7469**	2	CLIP (TAB)	
	21	1	**5P-7470**	1	CLIP (SLOT)	
	22	1	**5P-7471**	1	CLIP (TAB)	
	23	1	**5P-8182**	1	GROMMET	
	24	1	**6V-0545**	2	GROMMET	
	25	1	**6V-6707**	1	SEAL-O-RING	
	26	1	**8T-4121**	16	WASHER-HARD (11X21X2.5-MM THK)	
M	27	1	**8T-4136**	7	BOLT (M10X1.5X25-MM)	
M	28	1	**8T-4139**	1	BOLT (M12X1.75X30-MM)	
M	29	1	**8T-4195**	1	BOLT (M10X1.5X30-MM)	
M	30	1	**8T-4196**	4	BOLT (M10X1.5X35-MM)	
	31	1	**8T-4223**	1	WASHER-HARD (13.5X25.5X3-MM THK)	

I-REFER TO HYDRAULIC INFORMATION SYSTEM
M-METRIC PART

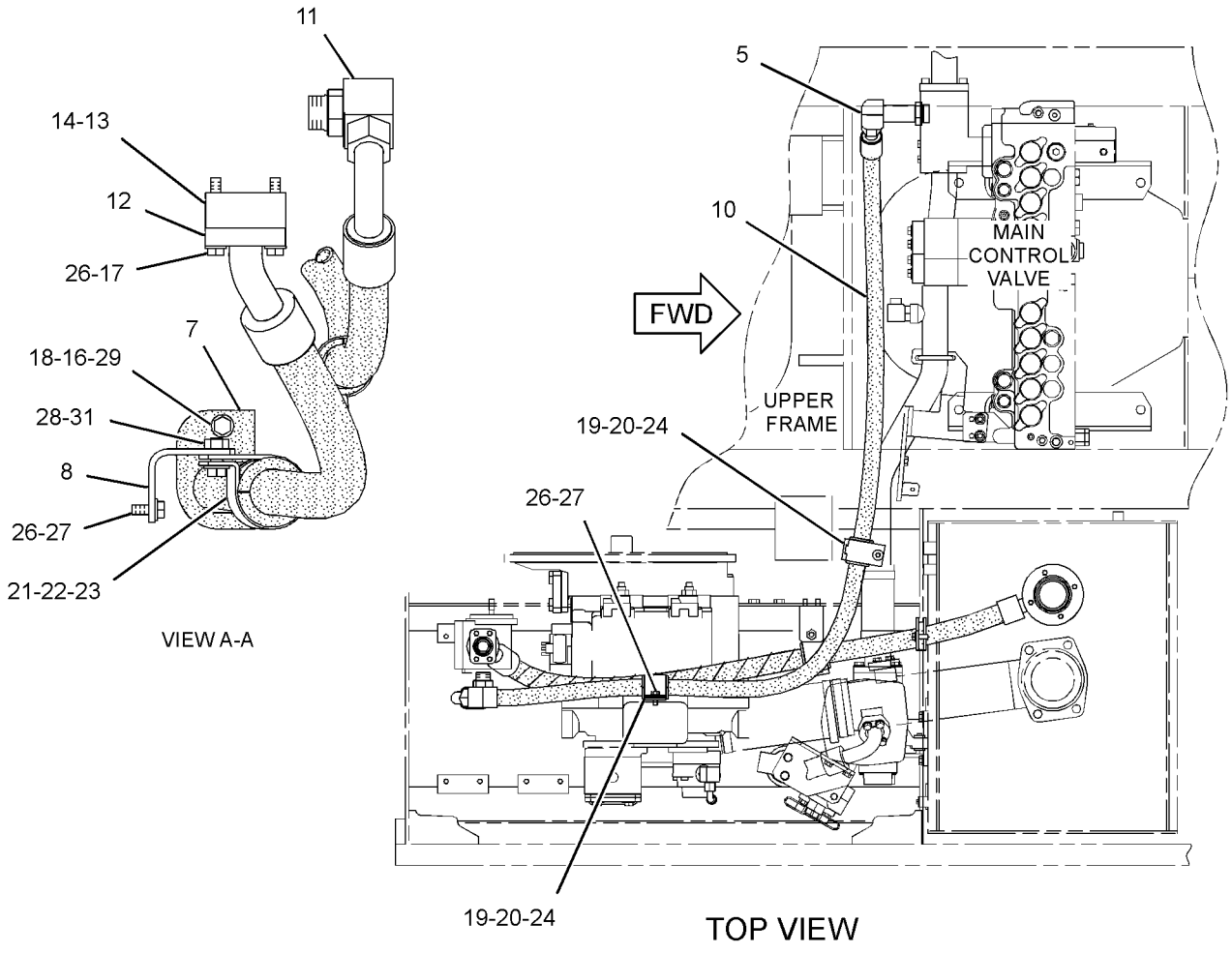

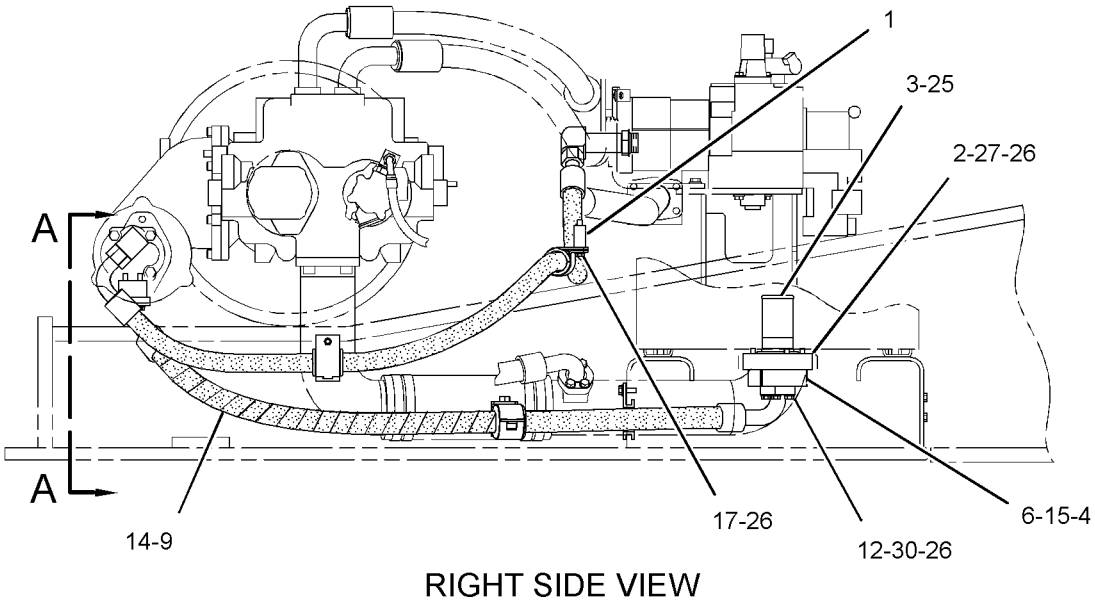

GRAPHIC #1 **<END>** g01240799

HYDRAULIC SYSTEM

307-5122 LINES GP-PUMP–MAIN HYDRAULIC

S/N: D3P1-UP; M4T1-UP

PART OF 259-7766 HYDRAULIC AR

SMCS-5057 **i03198524**

NOTE	REF NO	GRAPHIC REF	PART NUMBER	QTY	PART NAME 1 2 3 4 5 6 (PRODUCT LEVEL)	SEE PAGE
	1	1	**9X-6654**	4	CLAMP-HOSE	
	2	1	**087-4944**	1	HOSE	
	3	1	**108-7191**	1	FLANGE-SPECIAL	
M	4	1	**113-2003**	4	BOLT-SOCKET HEAD (M16X2X40-MM)	
	5	1	**124-1067**	2	PLATE	
	6	1	**124-1253**	4	GROMMET (RUBBER)	
	7	1	**255-1939**	1	TUBE AS	
	8	1	**255-1941**	1	TUBE AS	
I	9	1	**255-1947**	1	HOSE AS	
	10	1	**269-9932**	1	SUPPORT AS	
I	11	1	**286-6528**	2	HOSE AS	
	12	1	**296-7079**	1	SUPPORT AS	
	13	1	**296-7081**	1	SUPPORT AS	
	14	1	**307-5123**	1	SUPPORT AS	
M	15	1	**101-7404**	4	BOLT-SOCKET HEAD (M10X1.5X30-MM)	
	16	1	*307-5129*	1	CONNECTOR AS	
		1	**5K-9090**	1	SEAL-O-RING	
		1	**307-5130**	1	CONNECTOR	
		1	**2S-4078**	1	SEAL-O-RING	
	17	1	*148-8346*	1	ELBOW AS	
		1	**3K-0360**	1	SEAL-O-RING	
		1	**6V-8398**	1	SEAL-O-RING	
		1	**8T-1686**	1	ELBOW	
	18	1	*148-8391*	1	ELBOW AS	
		1	**2S-4078**	1	SEAL-O-RING	
		1	**5K-9090**	1	SEAL-O-RING	
		1	**8T-8987**	1	ELBOW	
	19	1	*148-8407*	1	PLUG AS	
		1	**3J-1907**	1	SEAL-O-RING	
		1	**9S-4191**	1	PLUG-O-RING	
	20	1	*150-3073*	2	PLUG AS	
					(EACH INCLUDES)	
		1	**5K-9090**	1	SEAL-O-RING	
		1	**6V-9512**	1	PLUG (1-7/16-12-THD)	
	21	1	**1P-4578**	4	FLANGE-HALF	
	22	1	**1P-5767**	4	FLANGE-HALF	
	23	1	**4J-0522**	2	SEAL-O-RING	
	24	1	**4J-5267**	1	SEAL-O-RING	
	25	1	**7J-9108**	1	SEAL-O-RING	
	26	1	**8T-4121**	14	WASHER-HARD (11X21X2.5-MM THK)	
M	27	1	**8T-4136**	4	BOLT (M10X1.5X25-MM)	
M	28	1	**8T-4139**	6	BOLT (M12X1.75X30-MM)	
M	29	1	**8T-4194**	8	BOLT (M12X1.75X50-MM)	
M	30	1	**8T-4195**	2	BOLT (M10X1.5X30-MM)	
M	31	1	**8T-4196**	8	BOLT (M10X1.5X35-MM)	
	32	1	**8T-4223**	14	WASHER-HARD (13.5X25.5X3-MM THK)	
M	33	1	**8T-7338**	4	BOLT (M16X2X45-MM)	
	34	1	**9F-7283**	1	SEAL-O-RING	
	35	1	**9M-3786**	1	SEAL-O-RING	
	36	1	**9X-8257**	4	WASHER (17.5X30X3.5-MM THK)	

I-REFER TO HYDRAULIC INFORMATION SYSTEM
M-METRIC PART

307-5122 **LINES GP-PUMP** *(contd.)* **i03198524**

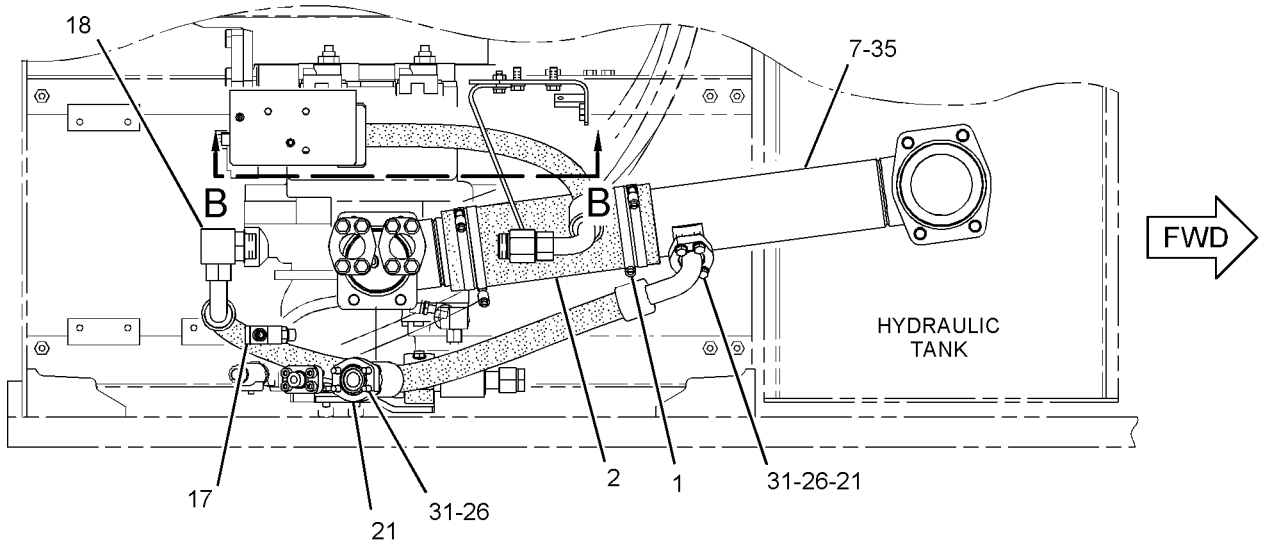

TOP VIEW

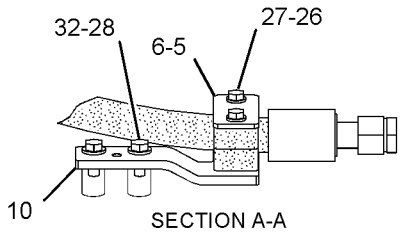

SECTION A-A

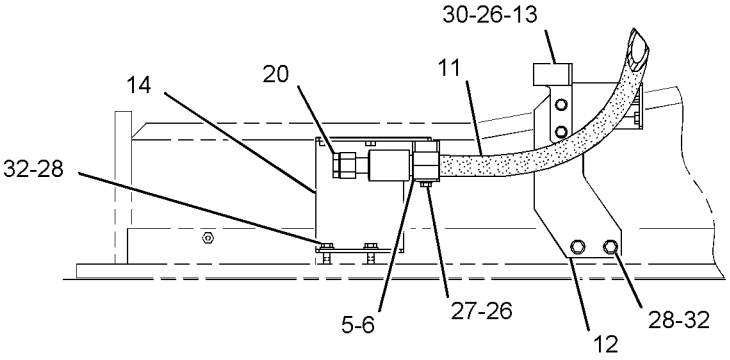

SECTION B-B

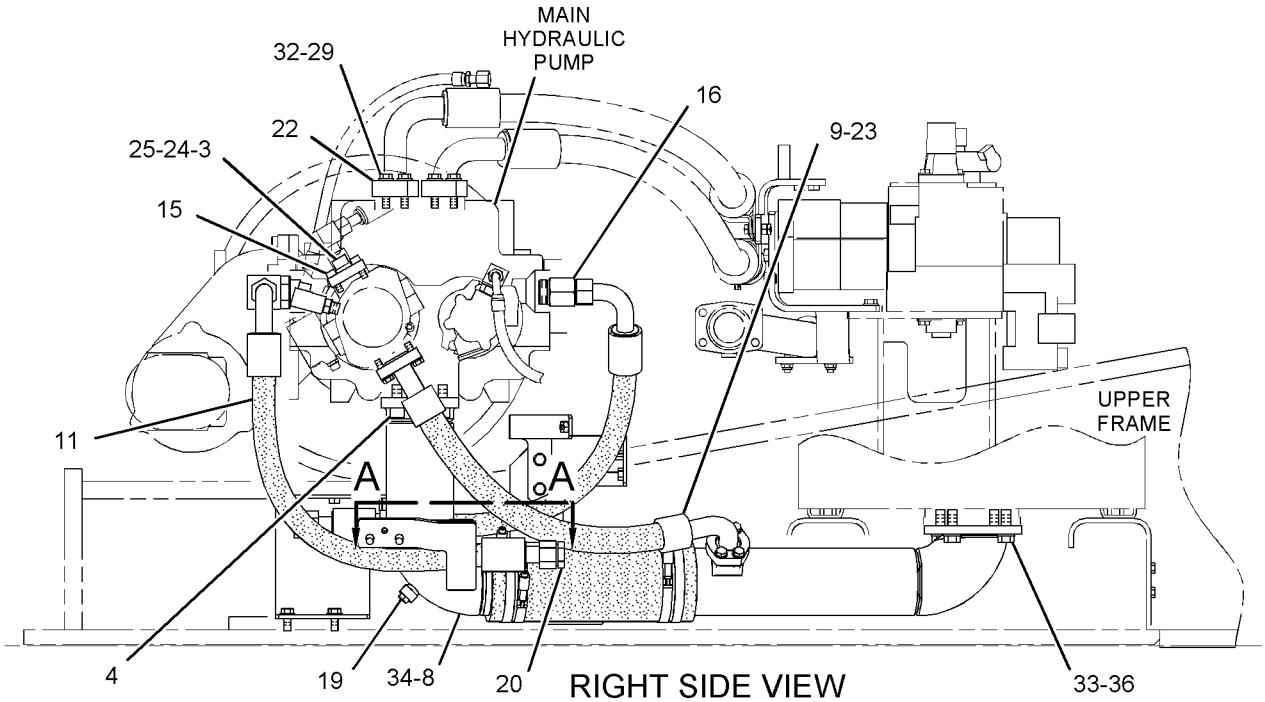

RIGHT SIDE VIEW

GRAPHIC #1

<END>

g01434794

HYDRAULIC SYSTEM

248-9838 LINES GP-RETURN–REAR

S/N: D3P1-UP; M4T1-UP

PART OF 259-7766 HYDRAULIC AR

SMCS-5057 **i03627528**

NOTE	REF NO	GRAPHIC REF	PART NUMBER	QTY	PART NAME 1 2 3 4 5 6 (PRODUCT LEVEL)	SEE PAGE
M	1	1	**8T-4956**	1	BOLT (M12X1.75X35-MM)	
	2	2	**173-4816**	1	SUPPORT AS	
	3	2	**190-7745**	1	VALVE GP-CHECK (OIL COOLER BYPASS)	
	4	2	**194-0242**	2	FLANGE	
	5	2	**194-0243**	1	FLANGE	
	6	2	**144-0367**	2	CLAMP-HOSE	
	7	2	**227-0428**	1	HOSE	
	8	2	**255-1971**	1	TUBE AS	
	9	2	**289-5347**	1	TUBE AS	
	10	2	**255-1979**	1	TUBE AS	
	11	1	**255-1981**	1	SUPPORT AS	
	12	2	**292-7223**	1	FLANGE	
I	13	2	**255-1986**	1	HOSE AS	
I	14	2	**255-1989**	1	HOSE AS	
I	15	1	**275-1675**	1	HOSE AS	
M	16	2	**096-4883**	2	LOCKNUT (M10X1.5-THD)	
M	17	2	**101-7402**	12	BOLT-SOCKET HEAD (M12X1.75X30-MM)	
	18	2	*148-8357*	1	ELBOW AS	
		2	**5K-9090**	1	SEAL-O-RING	
		2	**6V-9008**	1	ELBOW	
		2	**7M-8485**	1	SEAL-O-RING	
	19	1	*148-8364*	1	ELBOW AS	
		1	**3K-0360**	1	SEAL-O-RING	
		1	**6V-8398**	1	SEAL-O-RING	
		1	**6V-8625**	1	ELBOW	
	20	2	*148-8382*	1	ELBOW AS	
		2	**3D-2824**	1	SEAL-O-RING	
		2	**7J-9108**	1	SEAL-O-RING	
		2	**8T-0404**	1	ELBOW	
	21	1	*164-4180*	1	PLUG AS	
		1	**7M-8485**	1	SEAL-O-RING	
		1	**9S-4181**	1	PLUG-O-RING	
	22	2	*164-5616*	1	PLUG AS	
		2	**2S-4078**	1	SEAL-O-RING	
		2	**9S-6130**	1	PLUG	
	23	2	**1P-3703**	4	SEAL-RECTANGULAR	
	24	2	**1P-3704**	4	SEAL-RECTANGULAR	
	25	1	**1P-5767**	4	FLANGE-HALF	
	26	2	**4J-0524**	1	SEAL-O-RING	
	27	2	**4J-0527**	1	SEAL-O-RING	
	28	1	**5P-7468**	1	CLIP (SLOT)	
	29	1	**5P-7469**	1	CLIP (TAB)	
	30	1	**5P-8444**	1	GROMMET	
	31	2	**6J-2680**	2	SEAL-O-RING	
	32	2	**6V-1572**	2	CLIP (SLOT)	
	33	2	**6V-1573**	2	CLIP (TAB)	
	34	2	**6V-1875**	2	GROMMET	
M	35	2	**7X-2546**	4	BOLT (M10X1.5X180-MM)	
M	36	2	**7Y-5247**	1	U-BOLT	
M	37	2	**105-3489**	16	BOLT-SOCKET HEAD (M12X1.75X80-MM)	
	38	2	**8T-4121**	8	WASHER-HARD (11X21X2.5-MM THK)	
M	39	1,2	**8T-4139**	4	BOLT (M12X1.75X30-MM)	
M	40	2	**8T-4186**	2	BOLT (M10X1.5X40-MM)	
M	41	1	**8T-4194**	8	BOLT (M12X1.75X50-MM)	
	42	1,2	**8T-4223**	13	WASHER-HARD (13.5X25.5X3-MM THK)	

I-REFER TO HYDRAULIC INFORMATION SYSTEM
M-METRIC PART

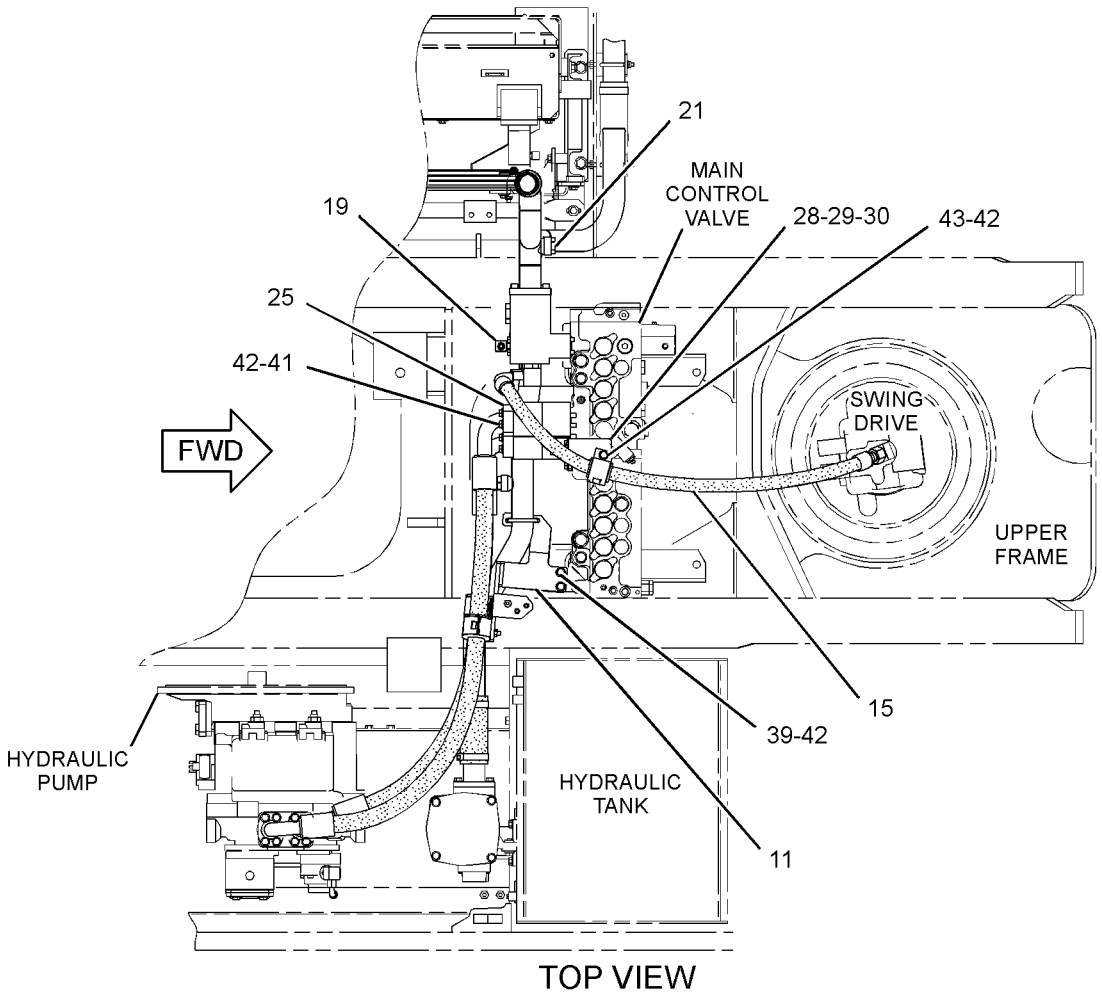

GRAPHIC #1 g01199869

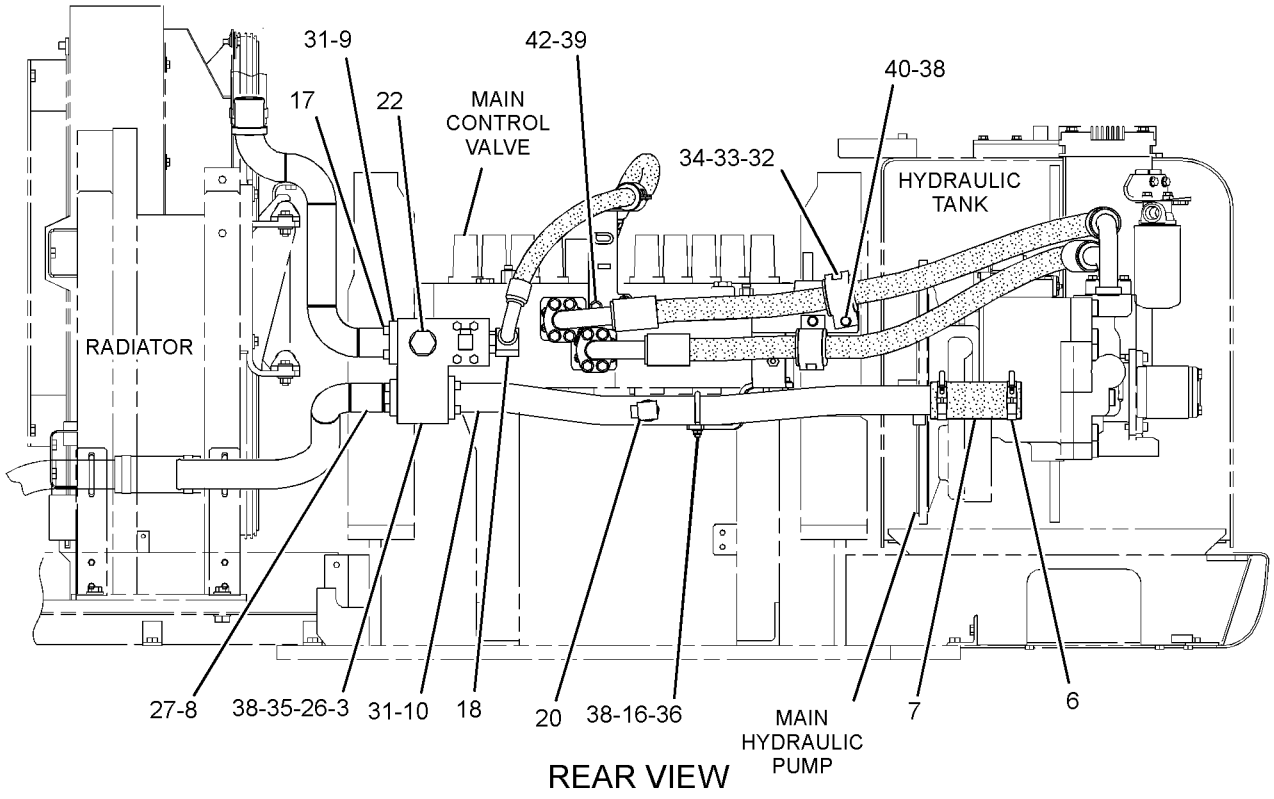

REAR VIEW

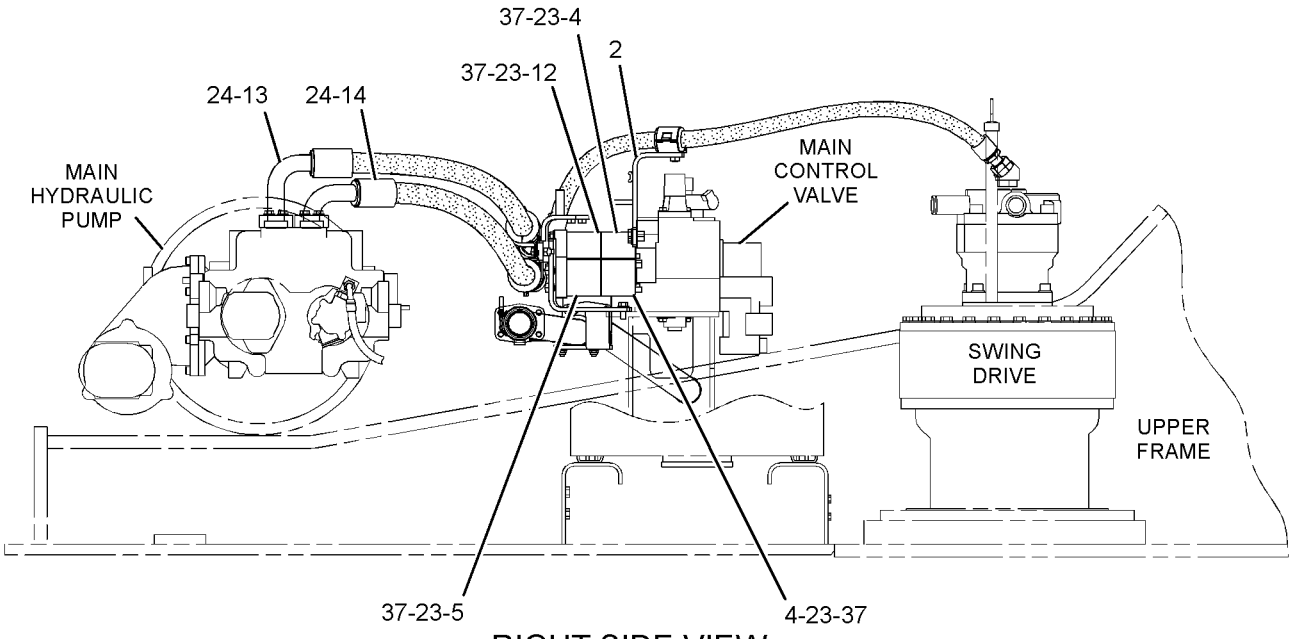

RIGHT SIDE VIEW

GRAPHIC #2

<END>

g01340858

HYDRAULIC SYSTEM

248-9845 LINES GP-RETURN–FILTERS

S/N: D3P1-UP; M4T1-UP

PART OF 239-1610 TANK & MTG GP-HYDRAULIC

SMCS-5057 **i03021488**

NOTE	REF NO	GRAPHIC REF	PART NUMBER	QTY	PART NAME 1 2 3 4 5 6 (PRODUCT LEVEL)	SEE PAGE
M	1	1	**8T-4956**	4	BOLT (M12X1.75X35-MM)	
I	2	1	**5I-4390**	1	HOSE AS	
	3	1	**5P-5148**	2	STRAP-TIE	
	4	1	**7K-1181**	10	STRAP-CABLE	
I	5	1	**275-1361**	1	HOSE AS	
I	6	1	**176-4770**	1	HOSE AS	
	7	1	**282-7106**	2	GROMMET	
I	8	1	**269-9775**	1	HOSE AS	
	9	1	*278-6523*	1	FITTING AS	
		1	**3D-2824**	1	SEAL-O-RING	
		1	**275-1731**	1	FITTING	
C	10	1	*148-8327*	1	CONNECTOR AS	
		1	**3D-2824**	1	SEAL-O-RING	
		1	**6V-8637**	1	CONNECTOR	
		1	**6V-9746**	1	SEAL-O-RING	
	11	1	*148-8340*	1	CONNECTOR AS	
		1	**3K-0360**	1	SEAL-O-RING	
		1	**6V-8398**	1	SEAL-O-RING	
		1	**6V-8639**	1	CONNECTOR	
	12	1	*148-8347*	1	ELBOW AS	
		1	**3D-2824**	1	SEAL-O-RING	
		1	**6V-9007**	1	ELBOW	
		1	**6V-9746**	1	SEAL-O-RING	
	13	1	*148-8354*	2	ELBOW AS	
					(EACH INCLUDES)	
		1	**3K-0360**	1	SEAL-O-RING	
		1	**6V-8398**	1	SEAL-O-RING	
		1	**6V-9002**	1	ELBOW	
	14	1	*148-8363*	1	ELBOW AS	
		1	**3K-0360**	1	SEAL-O-RING	
		1	**6V-8397**	1	SEAL-O-RING	
		1	**6V-9876**	1	ELBOW	
	15	1	*148-8372*	1	ELBOW AS	
		1	**2M-9780**	1	SEAL-O-RING	
		1	**6V-8398**	1	SEAL-O-RING	
		1	**6V-8721**	1	ELBOW	
	16	1	*148-8411*	1	PLUG AS	
		1	**3K-0360**	1	SEAL-O-RING	
		1	**9S-4185**	1	PLUG-O-RING	
	17	1	*148-8436*	1	TEE AS	
		1	**3K-0360**	1	SEAL-O-RING	
		1	**6V-8398**	2	SEAL-O-RING	
		1	**6V-8775**	1	TEE-FACE SEAL	
	18	1	*153-6237*	1	ELBOW AS	
		1	**3D-2824**	1	SEAL-O-RING	
		1	**6V-9004**	1	ELBOW	
		1	**6V-9746**	1	SEAL-O-RING	
	19	1	*153-6241*	1	ELBOW AS	
		1	**6V-8398**	1	SEAL-O-RING	
		1	**8C-8989**	1	ELBOW	
	20	1	*164-6872*	1	TEE AS	
		1	**2M-9780**	1	SEAL-O-RING	
		1	**6V-8398**	2	SEAL-O-RING	
		1	**115-8634**	1	TEE-O-RING	
	21	1	**165-3260**	1	PIPE AS	
	22	1	**5P-7464**	1	CLIP (SLOT)	

248-9845 **LINES GP-RETURN** *(contd.)* **i03021488**

NOTE	REF NO	GRAPHIC REF	PART NUMBER	QTY	PART NAME 1 2 3 4 5 6 (PRODUCT LEVEL)	SEE PAGE
	23	1	**5P-7465**	1	CLIP (TAB)	
	24	1	**6J-2680**	1	SEAL-O-RING	
	25	1	**8T-2920**	1	GROMMET	
M	26	1	**8T-4139**	1	BOLT (M12X1.75X30-MM)	
	27	1	**8T-4223**	5	WASHER-HARD (13.5X25.5X3-MM THK)	
C	28	1	*106-8715*	1	ELBOW AS	
		1	**3D-2824**	1	SEAL-O-RING	
		1	**6V-9746**	1	SEAL-O-RING	
		1	**8C-8400**	1	ELBOW	

C-CHANGE FROM PREVIOUS TYPE
I-REFER TO HYDRAULIC INFORMATION SYSTEM
M-METRIC PART

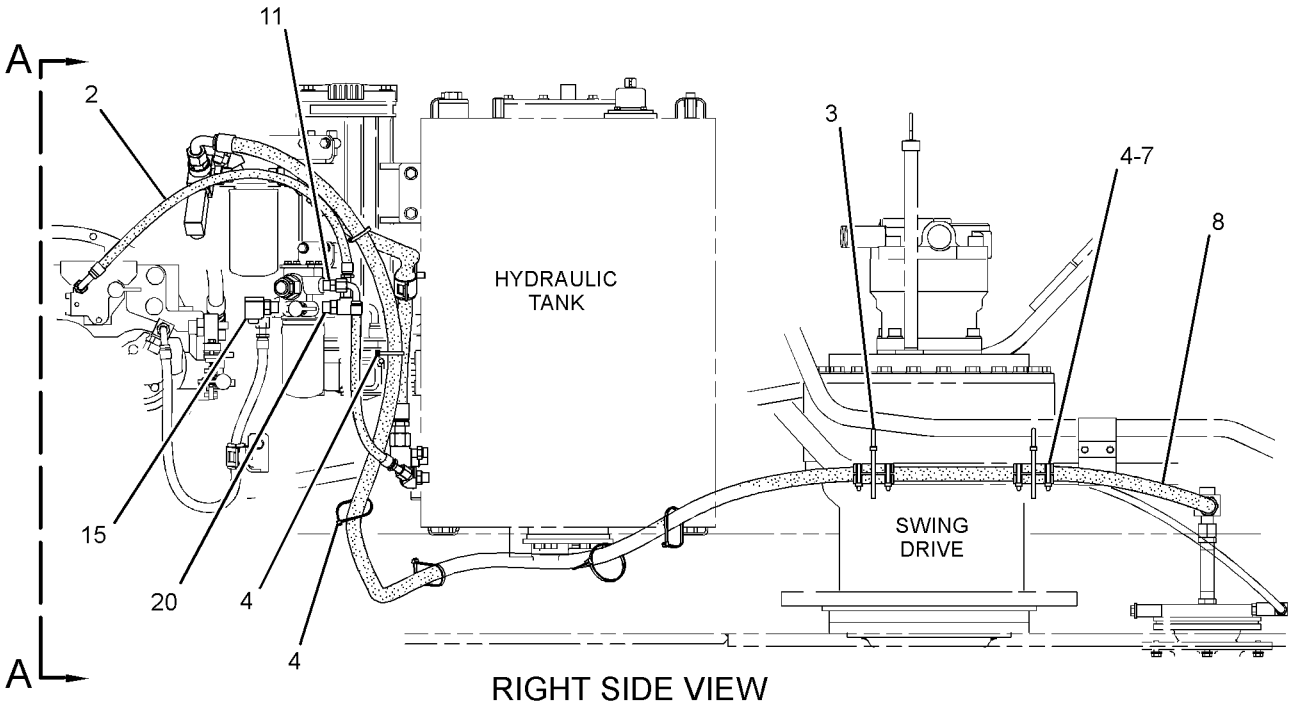

RIGHT SIDE VIEW

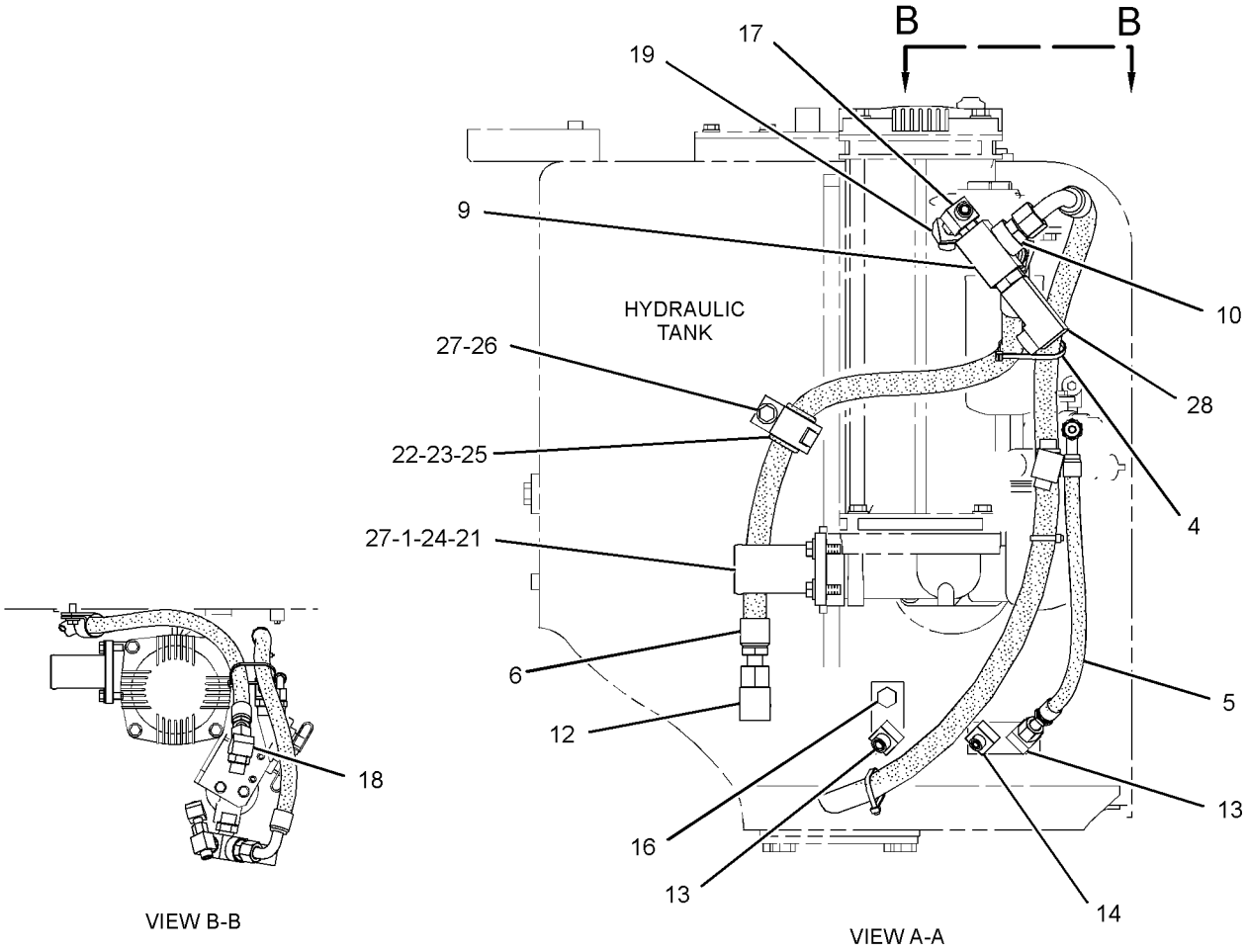

VIEW B-B

VIEW A-A

GRAPHIC #1 **<END>** g01434908

HYDRAULIC SYSTEM

255-2078 LINES GP-RETURN—LOAD CONTROL, BOOM CYLINDER

S/N: M4T1-UP

PART OF 329-6564 CONTROL AR-BOOM

AN ATTACHMENT

SMCS-5057 **i03744423**

NOTE	REF NO	GRAPHIC REF	PART NUMBER	QTY	PART NAME 1 2 3 4 5 6 (PRODUCT LEVEL)	SEE PAGE
	1	1	**7K-1181**	4	STRAP-CABLE	
M	2	1	**105-3477**	4	BOLT-SOCKET HEAD (M10X1.5X45-MM)	
I	3	1	**194-0354**	1	HOSE AS	
	4	1	**199-2012**	1	PLATE	
	5	1	**202-9002**	1	SWITCH AS-PRESSURE (BOOM CYLINDER, ROD END)	
		1	**102-8802**	1	KIT-RECEPTACLE (2-PIN)	
					(INCLUDES RECEPTACLE AS & WEDGE)	
		1	**186-3735**	1	PIN-CONNECTOR (16-GA TO 18-GA)	
Y	6	1	**297-0370**	1	VALVE GP-CHECK (BOOM FLOAT, LOAD CONTROL)	740
Y	7	1	**297-0371**	1	VALVE GP-SOLENOID (BOOM FLOAT UP)	836
	8	1	**218-1125**	1	BLOCK	
	9	1	**218-1126**	1	BLOCK	
	10	1	**218-1130**	1	BLOCK	
	11	1	**218-1172**	1	TUBE AS	
	12	1	**218-1173**	1	TUBE AS	
	13	1	**218-1174**	1	TUBE AS	
	14	1	**218-1175**	1	TUBE AS	
	15	1	**223-6748**	1	SUPPORT AS	
	16	1	**244-6715**	1	PLATE	
	17	1	**260-8281**	1	SUPPORT	
I	18	1	**275-1418**	1	HOSE AS	
I	19	1	**275-1422**	1	HOSE AS	
I	20	1	**275-1425**	1	HOSE AS	
I	21	1	**275-1475**	1	HOSE AS	
M	22	1	**107-2724**	4	BOLT-SOCKET HEAD (M12X1.75X100-MM)	
M	23	1	**108-1782**	4	BOLT-SOCKET HEAD (M12X1.75X90-MM)	
	24	1	*148-8335*	1	CONNECTOR AS	
		1	**5K-9090**	1	SEAL-O-RING	
		1	**6V-8635**	1	CONNECTOR	
		1	**7M-8485**	1	SEAL-O-RING	
	25	1	*148-8352*	1	ELBOW AS	
		1	**5K-9090**	1	SEAL-O-RING	
		1	**6V-9854**	1	ELBOW	
	26	1	*148-8357*	3	ELBOW AS	
					(EACH INCLUDES)	
		1	**5K-9090**	1	SEAL-O-RING	
		1	**6V-9008**	1	ELBOW	
		1	**7M-8485**	1	SEAL-O-RING	
	27	1	*148-8392*	1	ELBOW AS	
		1	**6V-9746**	1	SEAL-O-RING	
		1	**6V-9853**	1	ELBOW	
	28	1	*148-8411*	1	PLUG AS	
		1	**3K-0360**	1	SEAL-O-RING	
		1	**9S-4185**	1	PLUG-O-RING	
	29	1	*148-8431*	1	TEE AS	
		1	**5K-9090**	2	SEAL-O-RING	
		1	**6V-8785**	1	TEE	
		1	**7M-8485**	1	SEAL-O-RING	
	30	1	**185-0488**	1	BLOCK	
	31	1	**1P-3702**	2	SEAL-RECTANGULAR	
	32	1	**1P-3703**	4	SEAL-RECTANGULAR	
	33	1	**1P-3704**	5	SEAL-RECTANGULAR	
	34	1	**1P-3705**	1	SEAL-RECTANGULAR	
	35	1	**3J-1907**	1	SEAL-O-RING	
	36	1	**4J-5268**	1	SEAL-O-RING	

255-2078 **LINES GP-RETURN** ***(contd.)*** **i03744423**

NOTE	REF NO	GRAPHIC REF	PART NUMBER	QTY	PART NAME 1 2 3 4 5 6 (PRODUCT LEVEL)	SEE PAGE
	37	1	**5K-9090**	4	SEAL-O-RING	
	38	1	**6V-9746**	1	SEAL-O-RING	
	39	1	**7M-8485**	1	SEAL-O-RING	
M	40	1	**8T-4139**	8	BOLT (M12X1.75X30-MM)	
M	41	1	**8T-4192**	2	BOLT (M12X1.75X25-MM)	
	42	1	**8T-4223**	26	WASHER-HARD (13.5X25.5X3-MM THK)	
M	43	1	**8T-4956**	8	BOLT (M12X1.75X35-MM)	
M	44	1	**8T-5005**	4	BOLT (M10X1.5X70-MM)	
M	45	1	**8T-6868**	8	BOLT (M12X1.75X80-MM)	

I-REFER TO HYDRAULIC INFORMATION SYSTEM
M-METRIC PART
Y-SEPARATE ILLUSTRATION

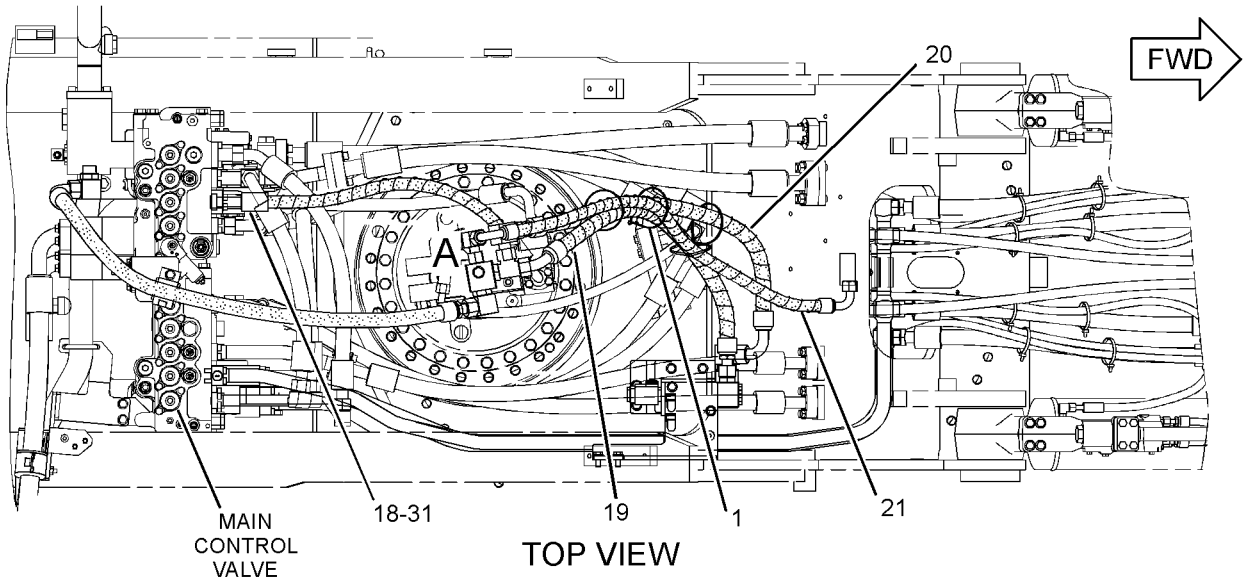

TOP VIEW

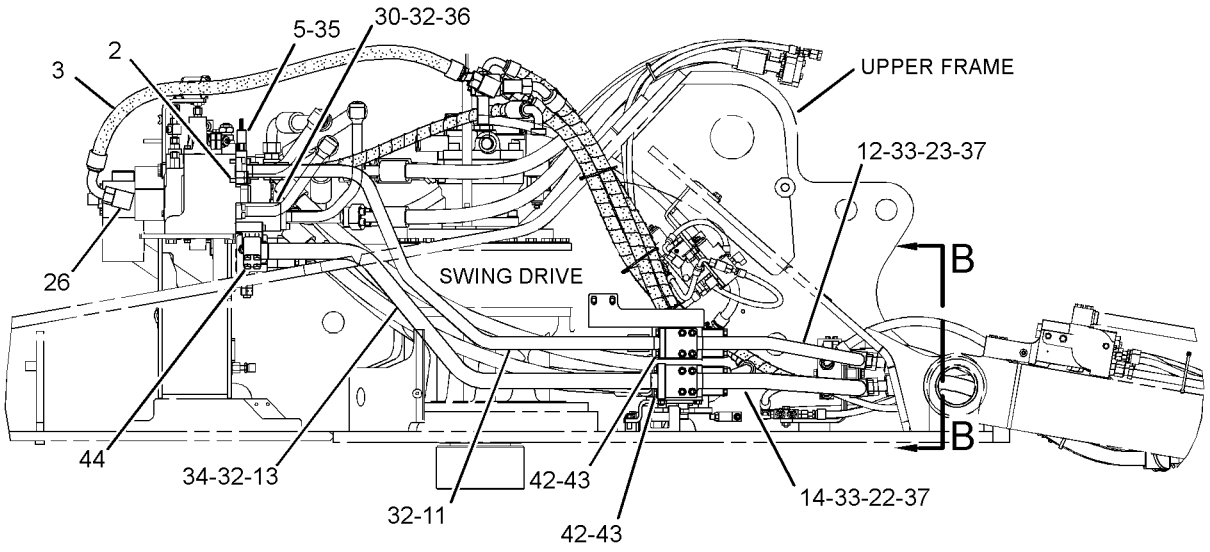

RIGHT SIDE VIEW

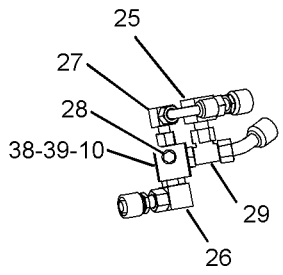

VIEW OF AREA A

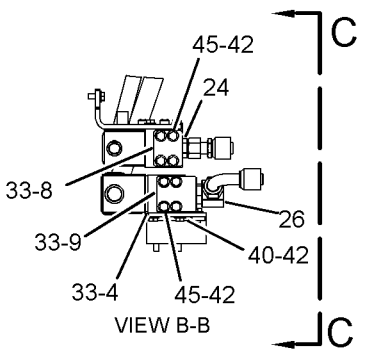

VIEW B-B

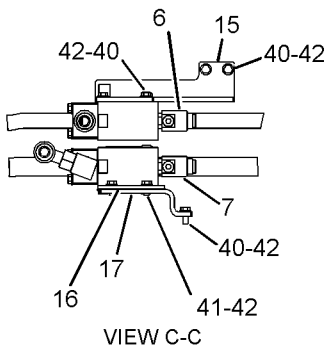

VIEW C-C

GRAPHIC #1 **<END>** g01236539

245-5080 LINES GP-SENSOR—OVERLOAD WARNING DEVICE

S/N: M4T1-UP
PART OF 329-6564 CONTROL AR-BOOM
AN ATTACHMENT

SMCS-1439, 5057 **i03744360**

NOTE	REF NO	GRAPHIC REF	PART NUMBER	QTY	PART NAME 1 2 3 4 5 6 (PRODUCT LEVEL)	SEE PAGE
	1	1	**221-8859**	1	SENSOR AS-PRESSURE (BOOM LOWERING CONTROL)	
		1	**3E-3371**	1	WEDGE-RECEPTACLE LOCK (3-PIN)	
		1	**3K-0360**	1	SEAL-O-RING	
		1	**9X-3401**	3	PIN-CONNECTOR (16-GA TO 18-GA)	
					—OR—	
		1	**126-1767**	3	PIN-CONNECTOR (14-GA)	
		1	**171-0596**	1	RECEPTACLE AS	

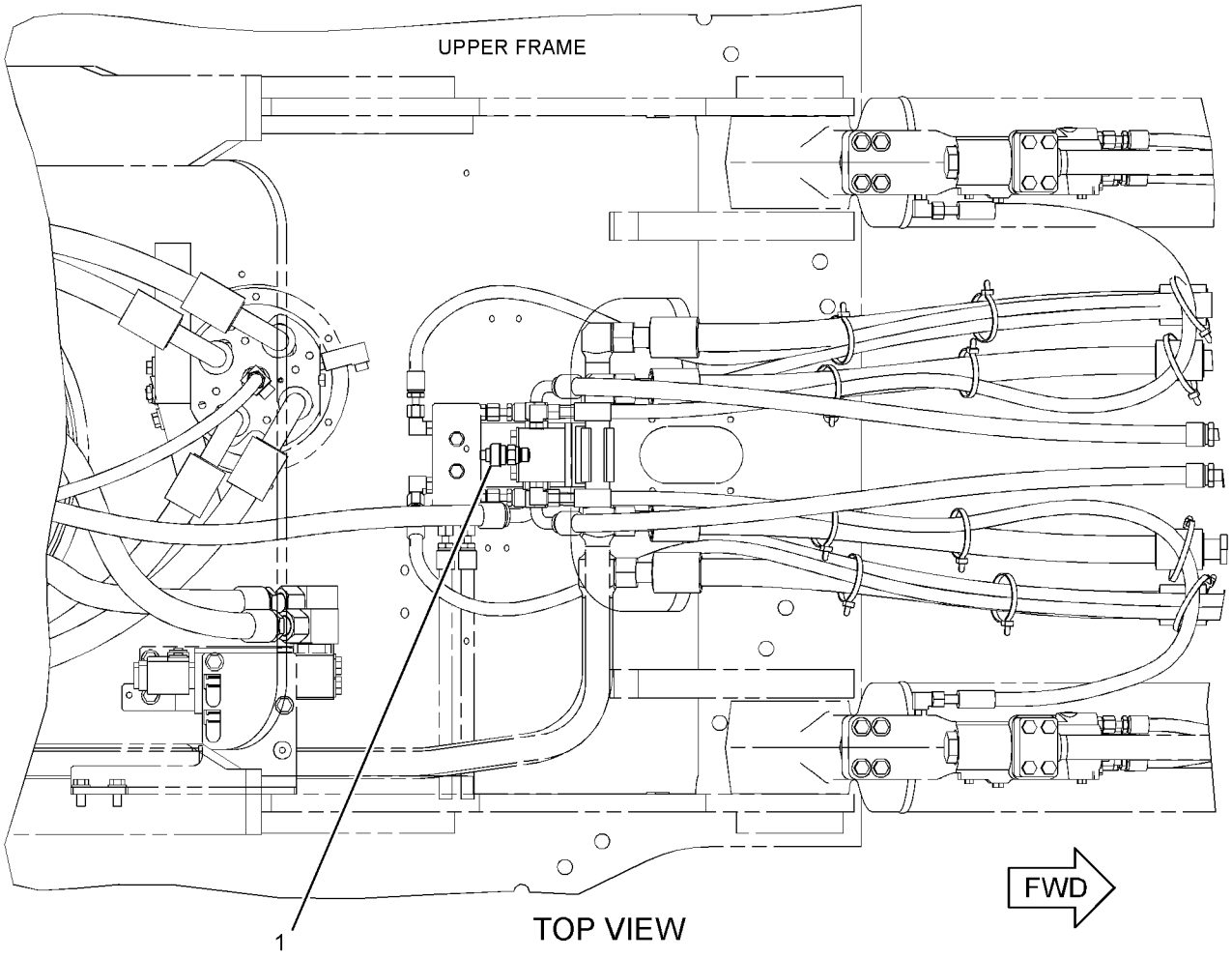

TOP VIEW

GRAPHIC #1 **<END>** g02023126

HYDRAULIC SYSTEM

113-6851 LINES GP-STICK–BUCKET CYLINDER

S/N: D3P1-UP; M4T1-UP
DB FAMILY
PART OF 290-1819, 290-1828 STICK AR-HOE
FOR USE WITH 3.9-M (12.8-FT) STICK
AN ATTACHMENT

SMCS-5057, 5458 **i03627532**

NOTE	REF NO	GRAPHIC REF	PART NUMBER	QTY	PART NAME 1 2 3 4 5 6 (PRODUCT LEVEL)	SEE PAGE
	1	1	**6V-0400**	8	FLANGE-HALF	
	2	1	**1P-3703**	5	SEAL-RECTANGULAR	
	3	1	**8T-4223**	16	WASHER-HARD (13.5X25.5X3-MM THK)	
M	4	1	**8T-4184**	12	BOLT (M12X1.75X45-MM)	
I	5	1	**4I-3695**	2	HOSE AS	
	6	1	**087-5661**	1	BLOCK	
M	7	1	**8T-5001**	4	BOLT (M12X1.75X130-MM)	

I-REFER TO HYDRAULIC INFORMATION SYSTEM
M-METRIC PART

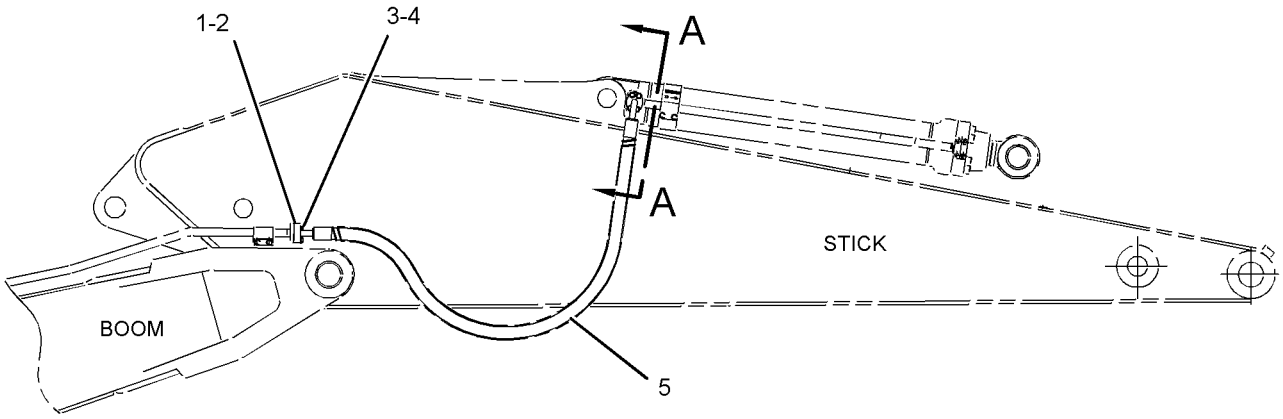

RIGHT SIDE VIEW

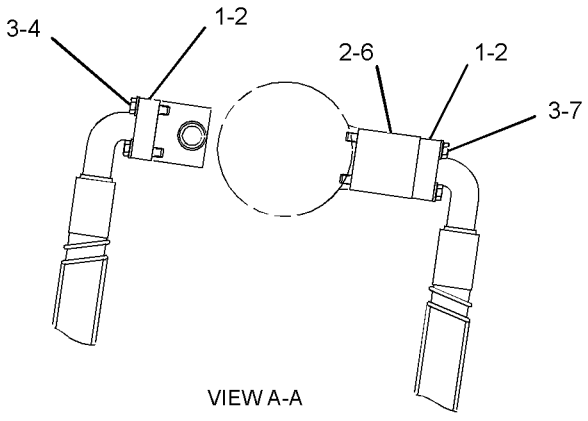

VIEW A-A

GRAPHIC #1 **<END>** g01946228

113-6853 LINES GP-STICK–BUCKET CYLINDER

S/N: D3P1-UP; M4T1-UP
DB-FAMILY
PART OF 290-1820, 290-1829 STICK AR-HOE
FOR USE WITH 3.2-M (10.5-FT) STICK
AN ATTACHMENT

SMCS-5057, 5458 **i01626869**

NOTE	REF NO	GRAPHIC REF	PART NUMBER	QTY	PART NAME 1 2 3 4 5 6 (PRODUCT LEVEL)	SEE PAGE
	1	1	**6V-0400**	8	FLANGE-HALF	
	2	1	**1P-3703**	5	SEAL-RECTANGULAR	
	3	1	**8T-4223**	16	WASHER-HARD (13.5X25.5X3-MM THK)	
M	4	1	**8T-4184**	12	BOLT (M12X1.75X45-MM)	
I	5	1	**087-6643**	2	HOSE AS	
	6	1	**087-5661**	1	BLOCK	
M	7	1	**8T-5001**	4	BOLT (M12X1.75X130-MM)	

I-REFER TO HYDRAULIC INFORMATION SYSTEM
M-METRIC PART

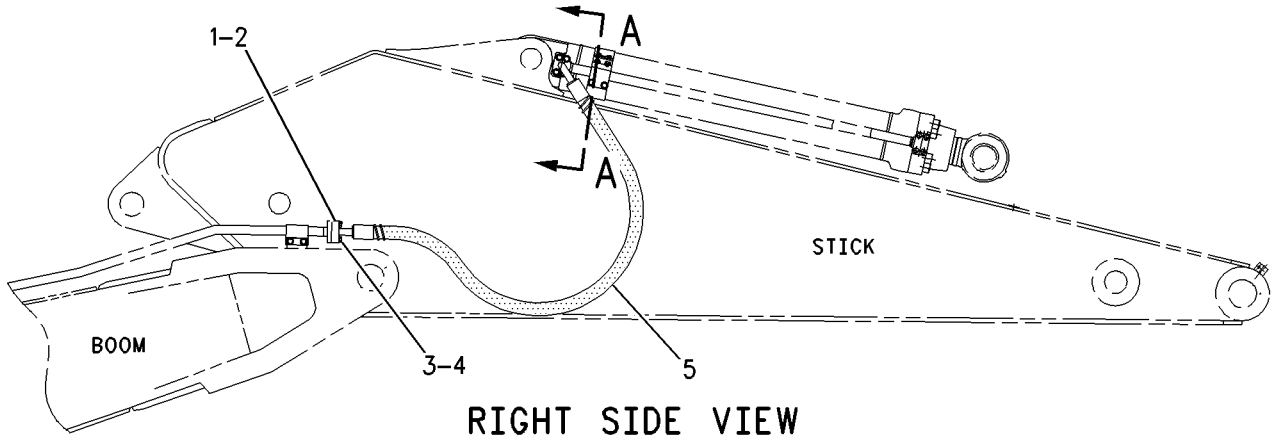

RIGHT SIDE VIEW

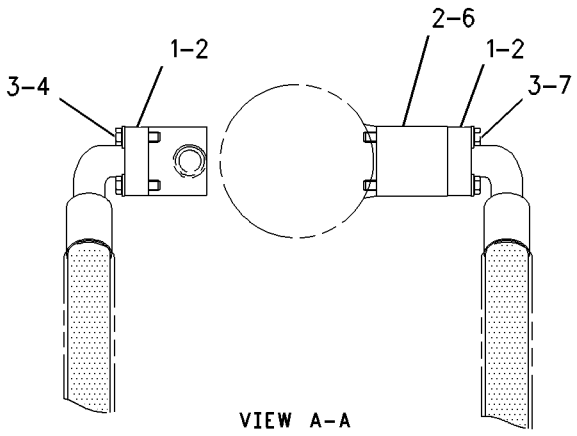

VIEW A-A

GRAPHIC #1 **<END>** g00869627

HYDRAULIC SYSTEM

113-6859 LINES GP-STICK–BUCKET CYLINDER

S/N: D3P1-UP; M4T1-UP
TB-FAMILY
PART OF 272-2896 STICK AR, 290-1823 STICK AR-HOE
FOR USE WITH 2.55-M (8.4-FT) STICK
AN ATTACHMENT

SMCS-5057, 5458 **i01653570**

NOTE	REF NO	GRAPHIC REF	PART NUMBER	QTY	PART NAME 1 2 3 4 5 6 (PRODUCT LEVEL)	SEE PAGE
I	1	1	**5I-3088**	2	HOSE AS	
	2	1	**1P-3703**	2	SEAL-RECTANGULAR	
	3	1	**6V-0400**	4	FLANGE-HALF	
	4	1	**8T-4223**	16	WASHER-HARD (13.5X25.5X3-MM THK)	
M	5	1	**8T-4184**	12	BOLT (M12X1.75X45-MM)	
	6	1	**1P-5767**	4	FLANGE-HALF	
	7	1	**1P-3704**	3	SEAL-RECTANGULAR	
	8	1	**4I-6046**	1	BLOCK	
M	9	1	**8T-5041**	4	BOLT (M12X1.75X120-MM)	

I-REFER TO HYDRAULIC INFORMATION SYSTEM
M-METRIC PART

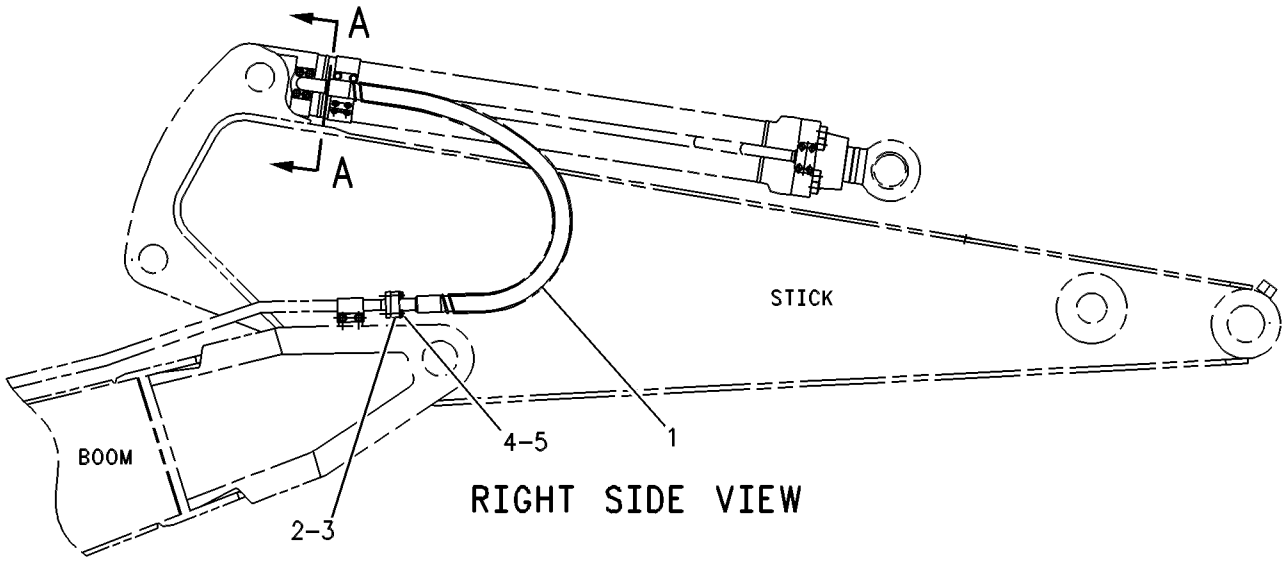

RIGHT SIDE VIEW

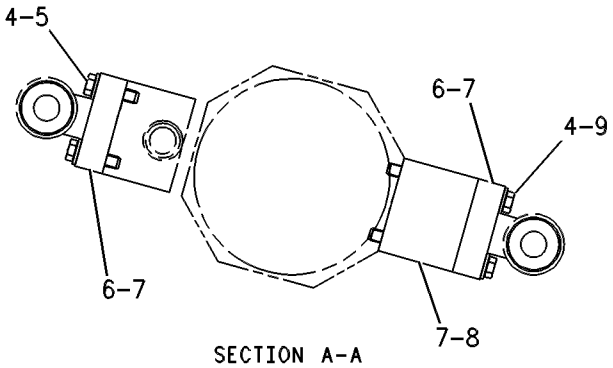

SECTION A-A

GRAPHIC #1 **<END>** g00261907

192-6901 LINES GP-STICK–BUCKET CYLINDER

S/N: M4T1-UP
PART OF 290-1821 STICK AR-HOE
AN ATTACHMENT

SMCS-5057, 5458 **i01683268**

NOTE	REF NO	GRAPHIC REF	PART NUMBER	QTY	PART NAME 1 2 3 4 5 6 (PRODUCT LEVEL)	SEE PAGE
	1	1	**6V-0400**	8	FLANGE-HALF	
	2	1	**1P-3703**	5	SEAL-RECTANGULAR	
	3	1	**8T-4223**	16	WASHER-HARD (13.5X25.5X3-MM THK)	
M	4	1	**8T-4184**	12	BOLT (M12X1.75X45-MM)	
I	5	1	**207-6282**	2	HOSE AS	
	6	1	**087-5661**	1	BLOCK	
M	7	1	**8T-5001**	4	BOLT (M12X1.75X130-MM)	

I-REFER TO HYDRAULIC INFORMATION SYSTEM
M-METRIC PART

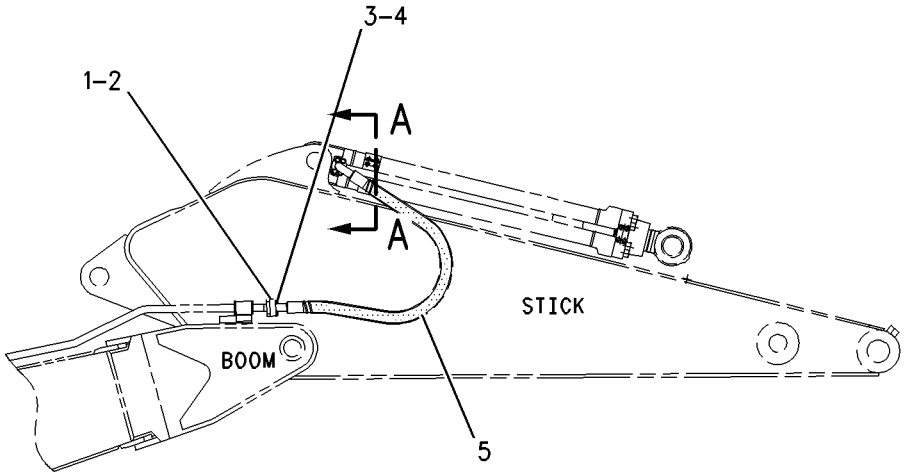

RIGHT SIDE VIEW

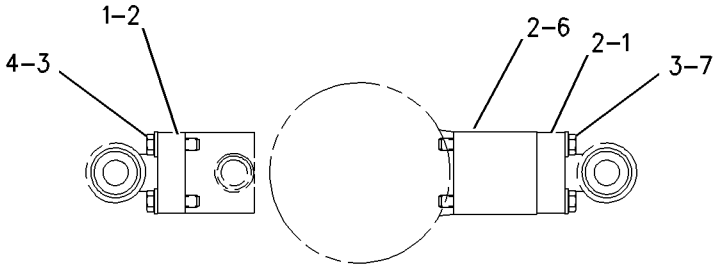

SECTION A–A

GRAPHIC #1 **<END>** g00838474

260-8254 LINES GP-STICK–BUCKET CYLINDER

S/N: D3P1-UP; M4T1-UP
TB-FAMILY
PART OF 270-0090 STICK AR, 290-1824 STICK AR-HOE
FOR USE WITH 2.15-M (7.1-FT) STICK
AN ATTACHMENT

SMCS-5057, 5458 **i02567599**

NOTE	REF NO	GRAPHIC REF	PART NUMBER	QTY	PART NAME 1 2 3 4 5 6 (PRODUCT LEVEL)	SEE PAGE
	1	1	**4I-6046**	1	BLOCK	
I	2	1	**4I-6130**	2	HOSE AS	
	3	1	**1P-3703**	2	SEAL-RECTANGULAR	
	4	1	**1P-3704**	3	SEAL-RECTANGULAR	
	5	1	**1P-5767**	4	FLANGE-HALF	
	6	1	**6V-0400**	4	FLANGE-HALF	
M	7	1	**8T-4184**	12	BOLT (M12X1.75X45-MM)	
	8	1	**8T-4223**	16	WASHER-HARD (13.5X25.5X3-MM THK)	
M	9	1	**8T-5041**	4	BOLT (M12X1.75X120-MM)	

I-REFER TO HYDRAULIC INFORMATION SYSTEM
M-METRIC PART

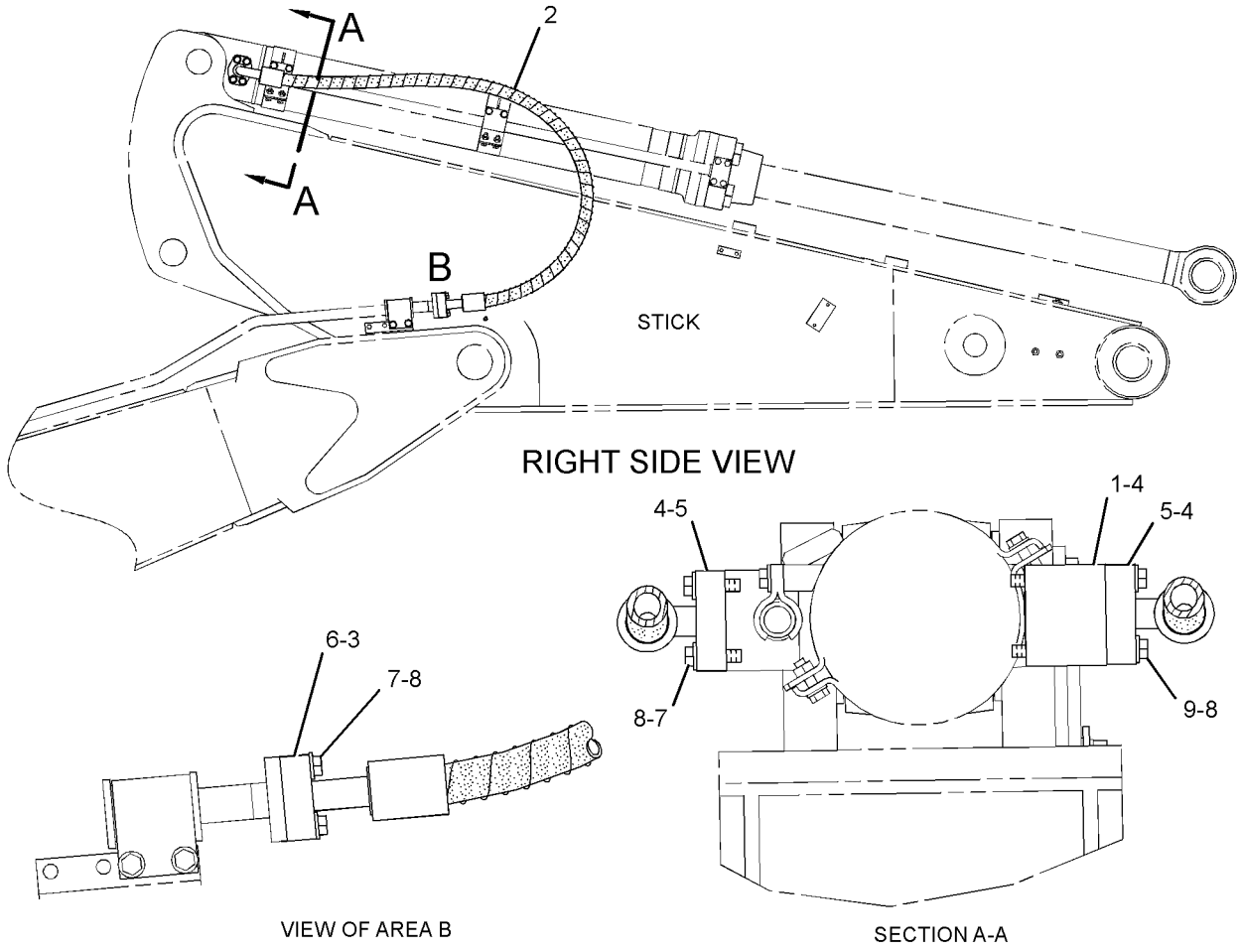

GRAPHIC #1 **<END>** g01303469

239-1876 LINES GP-STICK CYLINDER

S/N: D3P1-UP; M4T1-UP
PART OF 289-8029 CYLINDER & LINES GP-STICK
AN ATTACHMENT

SMCS-5458 **i02500014**

NOTE	REF NO	GRAPHIC REF	PART NUMBER	QTY	PART NAME 1 2 3 4 5 6 (PRODUCT LEVEL)	SEE PAGE
	1	1	**124-0903**	1	SUPPORT AS	
	2	1	**239-1877**	1	TUBE AS	
	3	1	**239-1878**	1	SUPPORT AS	
	4	1	**255-1933**	1	BLOCK	
	5	1	**124-0909**	2	CLIP	
	6	1	*164-4180*	1	PLUG AS	
		1	**7M-8485**	1	SEAL-O-RING	
		1	**9S-4181**	1	PLUG-O-RING	
	7	1	**1P-3705**	1	SEAL-RECTANGULAR	
	8	1	**1P-3706**	1	SEAL-RECTANGULAR	
M	9	1	**7X-2553**	2	BOLT (M16X2X40-MM)	
M	10	1	**7X-2557**	4	BOLT (M16X2X140-MM)	
	11	1	**8T-4121**	4	WASHER-HARD (11X21X2.5-MM THK)	
M	12	1	**8T-4196**	4	BOLT (M10X1.5X35-MM)	
M	13	1	**8T-4648**	4	BOLT (M12X1.75X70-MM)	
	14	1	**9X-8257**	6	WASHER (17.5X30X3.5-MM THK)	

M-METRIC PART

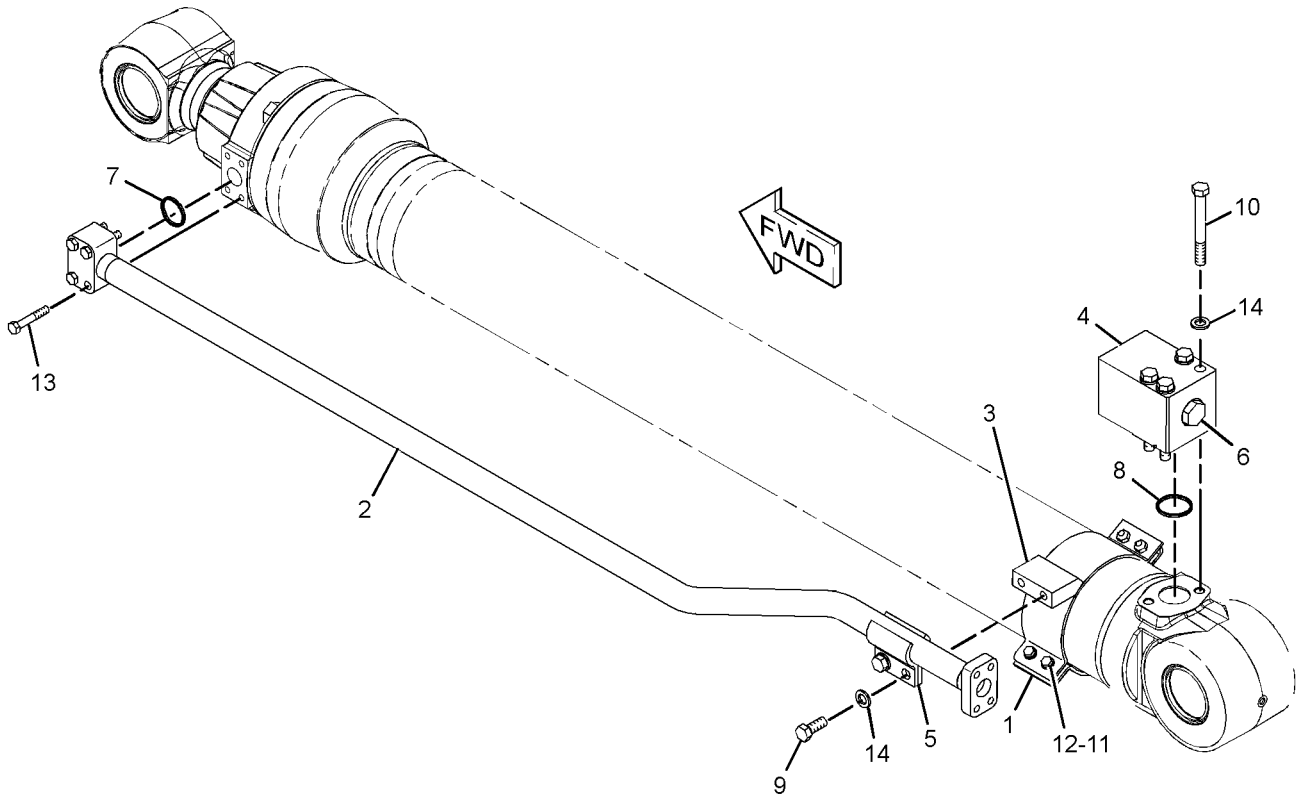

GRAPHIC #1 **<END>** g01197557

HYDRAULIC SYSTEM

239-1618 LINES GP-TRAVEL MOTOR—LONG UNDERCARRIAGE

S/N: D3P1-UP; M4T1-UP

PART OF 259-7766 HYDRAULIC AR

SMCS-5057, 5058 **i02818181**

NOTE	REF NO	GRAPHIC REF	PART NUMBER	QTY	PART NAME 1 2 3 4 5 6 (PRODUCT LEVEL)	SEE PAGE
I	1	1	**4I-0812**	2	HOSE AS	
	2	1	**7K-1181**	4	STRAP-CABLE	
	3	1	**108-7118**	2	GROMMET	
Y	4	1	**234-4440**	1	SWIVEL GP	727
I	5	1	**239-1892**	4	HOSE AS	
CI	6	1	**286-6824**	2	HOSE AS	
	7	1	**296-7072**	2	GROMMET	
	8	1	*148-8336*	2	CONNECTOR AS	
					(EACH INCLUDES)	
		1	**3J-1907**	1	SEAL-O-RING	
		1	**6V-8397**	1	SEAL-O-RING	
		1	**6V-8636**	1	CONNECTOR	
	9	1	*148-8388*	1	ELBOW AS	
		1	**2M-9780**	1	SEAL-O-RING	
		1	**6V-8629**	1	ELBOW	
		1	**6V-9746**	1	SEAL-O-RING	
B	10	1	**1U-8846**		SEALANT-GASKET	
	11	1	*150-4033*	1	TEE AS	
		1	**6V-9746**	2	SEAL-O-RING	
		1	**6V-9846**	1	TEE-SWIVEL	
	12	1	*150-4044*	2	CONNECTOR AS	
					(EACH INCLUDES)	
		1	**3J-1907**	1	SEAL-O-RING	
		1	**6V-8397**	1	SEAL-O-RING	
		1	**8T-1779**	1	CONNECTOR	
C	13	1	*148-8327*	2	CONNECTOR AS	
					(EACH INCLUDES)	
		1	**3D-2824**	1	SEAL-O-RING	
		1	**6V-8637**	1	CONNECTOR	
		1	**6V-9746**	1	SEAL-O-RING	
	14	1	**1P-3703**	8	SEAL-RECTANGULAR	
	15	1	**6V-0400**	24	FLANGE-HALF	
	16	1	**8T-4121**	6	WASHER-HARD (11X21X2.5-MM THK)	
M	17	1	**8T-4136**	6	BOLT (M10X1.5X25-MM)	
M	18	1	**8T-4184**	48	BOLT (M12X1.75X45-MM)	
	19	1	**8T-4223**	48	WASHER-HARD (13.5X25.5X3-MM THK)	

B-USE AS REQUIRED
C-CHANGE FROM PREVIOUS TYPE
I-REFER TO HYDRAULIC INFORMATION SYSTEM
M-METRIC PART
Y-SEPARATE ILLUSTRATION

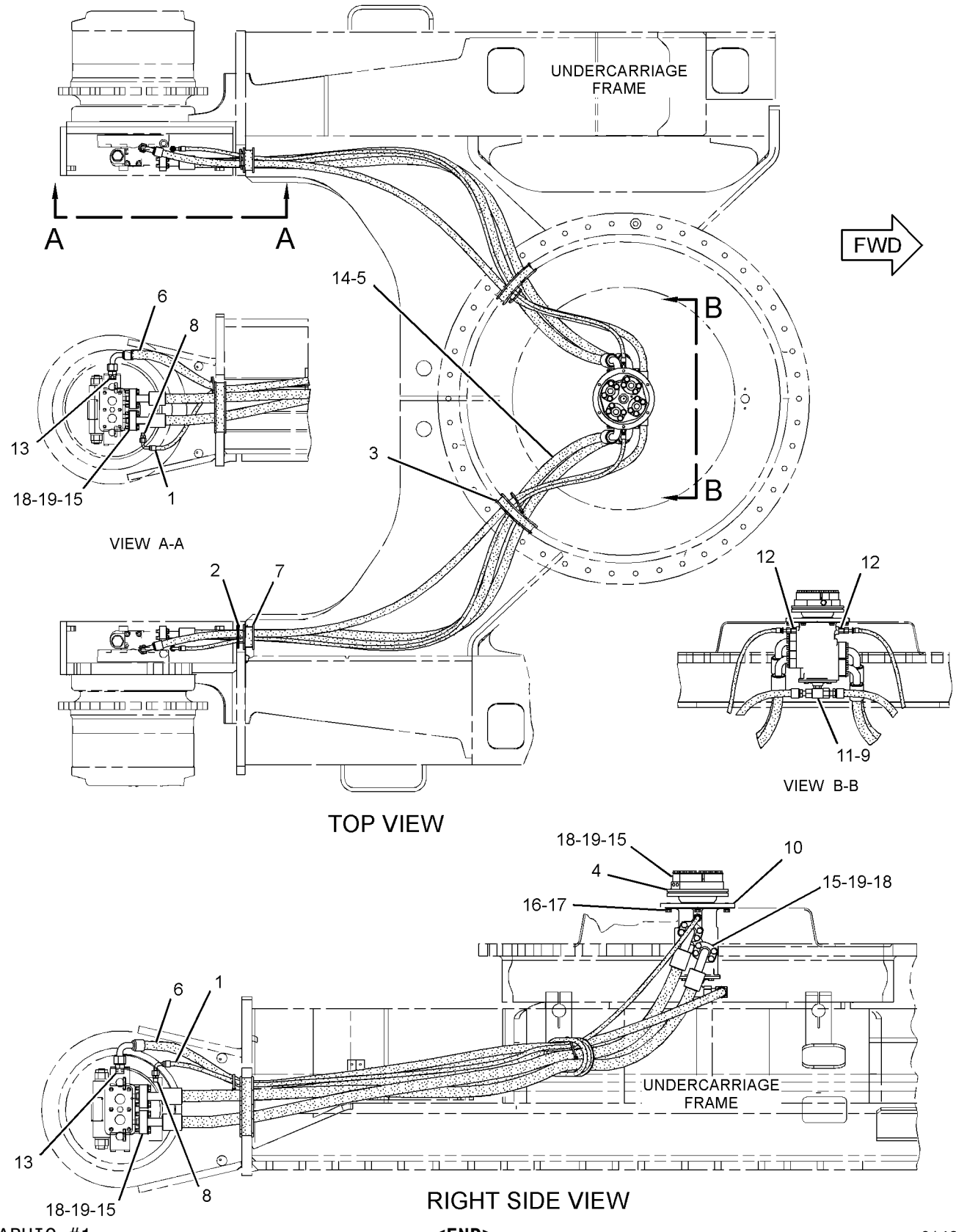

GRAPHIC #1

<END>

g01422923

215-5037 MANIFOLD GP-CONTROL—PILOT OIL SUPPLY

S/N: D3P1-UP; M4T1-UP

PART OF 248-9843 LINES GP-PILOT

SMCS-5264 **i02571595**

NOTE	PART NUMBER	QTY	PART NAME 1 2 3 4 5 6 (PRODUCT LEVEL)	SEE PAGE
Y	*239-8998*	1	MANIFOLD GP-CONTROL (PILOT OIL SUPPLY) (STEEL BODY)	690
			-OR-	
Y	*239-8697*	1	MANIFOLD GP-CONTROL (PILOT OIL SUPPLY) (ALUMINUM BODY)	689

Y-SEPARATE ILLUSTRATION

<END>

239-8697 MANIFOLD GP-CONTROL—PILOT OIL SUPPLY

S/N: D3P1-UP; M4T1-UP
ALUMINUM BODY
PART OF 215-5037 MANIFOLD GP-CONTROL

SMCS-5264 **i02571596**

NOTE	REF NO	GRAPHIC REF	PART NUMBER	QTY	PART NAME 1 2 3 4 5 6 (PRODUCT LEVEL)	SEE PAGE
Y	1	1	**121-1491**	1	VALVE GP-SOLENOID (SWING BRAKE RELEASE)	825
Y	2	1	**121-1491**	1	VALVE GP-SOLENOID (HYDRAULIC LOCKOUT)	825
Y	3	1	**121-1491**	1	VALVE GP-SOLENOID (TRAVEL SPEED)	825
	4	1	**197-0196**	1	VALVE-CHECK	
	5	1	**197-0199**	1	SPRING	
	6	1	**197-0273**	1	SPRING	
Z	7	1		1	MANIFOLD GP-CONTROL	
	8	1	**3J-1907**	1	SEAL-O-RING	
	9	1	**3K-0360**	4	SEAL-O-RING	
	10	1	**4J-7533**	6	SEAL-O-RING	
M	11	1	**7I-2272**	6	BOLT (M5X0.8X12-MM)	
	12	1	**9S-8001**	6	PLUG-O-RING	
	13	1	**9S-8004**	1	PLUG	
	14	1	**9S-8005**	4	PLUG-O-RING	

M-METRIC PART
Y-SEPARATE ILLUSTRATION
Z-NOT SERVICED SEPARATELY

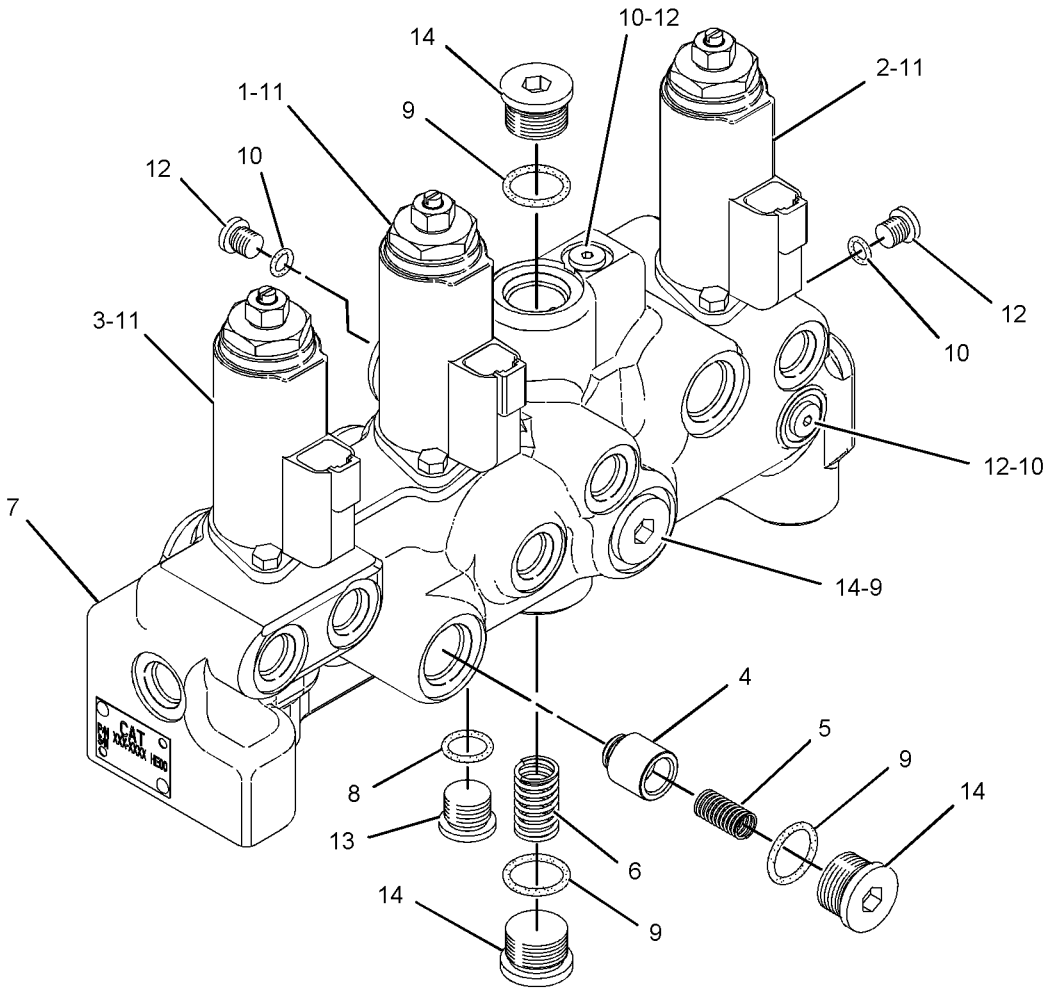

GRAPHIC #1 **<END>** g01084474

239-8998 MANIFOLD GP-CONTROL—PILOT OIL SUPPLY

S/N: D3P1-UP; M4T1-UP
STEEL BODY
PART OF 215-5037 MANIFOLD GP-CONTROL

SMCS-5264 **i02571597**

NOTE	REF NO	GRAPHIC REF	PART NUMBER	QTY	PART NAME 1 2 3 4 5 6 (PRODUCT LEVEL)	SEE PAGE
Y	1	1	**121-1491**	1	VALVE GP-SOLENOID (SWING BRAKE RELEASE)	825
Y	2	1	**121-1491**	1	VALVE GP-SOLENOID (HYDRAULIC LOCKOUT)	825
Y	3	1	**121-1491**	1	VALVE GP-SOLENOID (TRAVEL SPEED)	825
	4	1	**197-0196**	1	VALVE-CHECK	
Z	5	1		1	MANIFOLD GP-CONTROL	
	6	1	**197-0199**	1	SPRING	
	7	1	**197-0273**	1	SPRING	
	8	1	**3K-0360**	3	SEAL-O-RING	
M	9	1	**7I-2272**	6	BOLT (M5X0.8X12-MM)	
	10	1	**7M-7410**	2	PLUG-PIPE	
	11	1	**8T-6759**	6	PLUG-PIPE	
	12	1	**9S-8005**	3	PLUG-O-RING	

M-METRIC PART
Y-SEPARATE ILLUSTRATION
Z-NOT SERVICED SEPARATELY

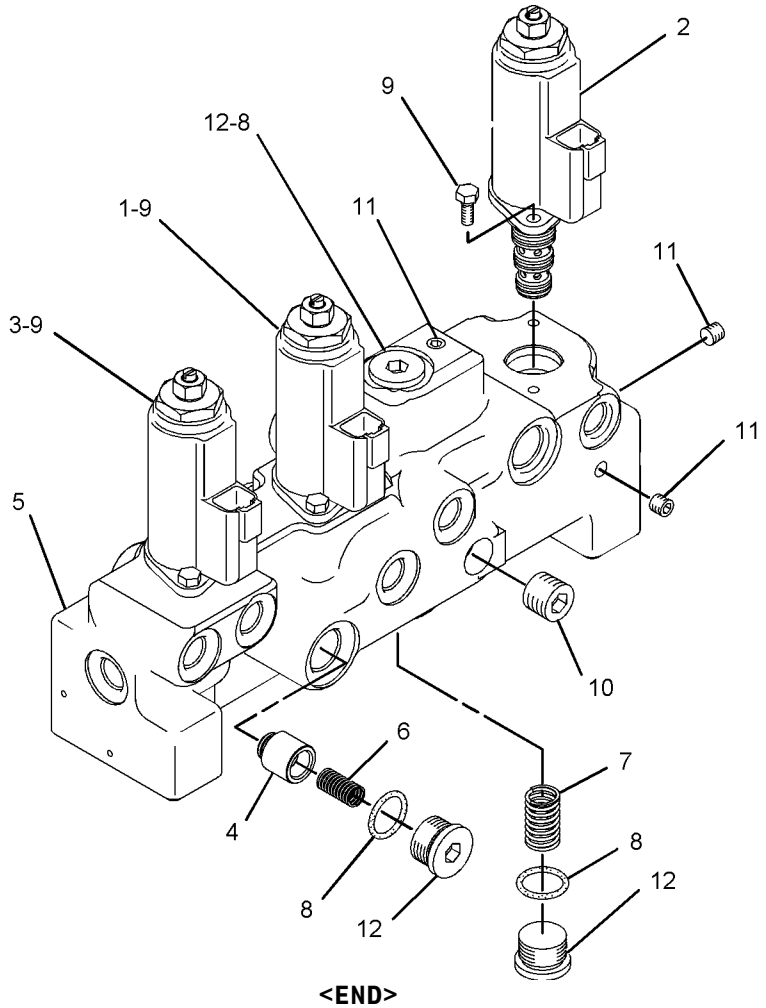

GRAPHIC #1 **<END>** g01083316

247-8834 MOTOR & MTG GP-HYDRAULIC FAN–REVERSING

S/N: D3P1-UP; M4T1-UP
PART OF 264-8479 CONTROL AR-FAN
AN ATTACHMENT

SMCS-1386 **i03744785**

NOTE	REF NO	GRAPHIC REF	PART NUMBER	QTY	PART NAME 1 2 3 4 5 6 (PRODUCT LEVEL)	SEE PAGE
CYR	1	1	**242-6776**	1	MOTOR GP-PISTON (HYDRAULIC FAN)	697

C-CHANGE FROM PREVIOUS TYPE
R-REMFG PART MAY BE AVAILABLE
Y-SEPARATE ILLUSTRATION

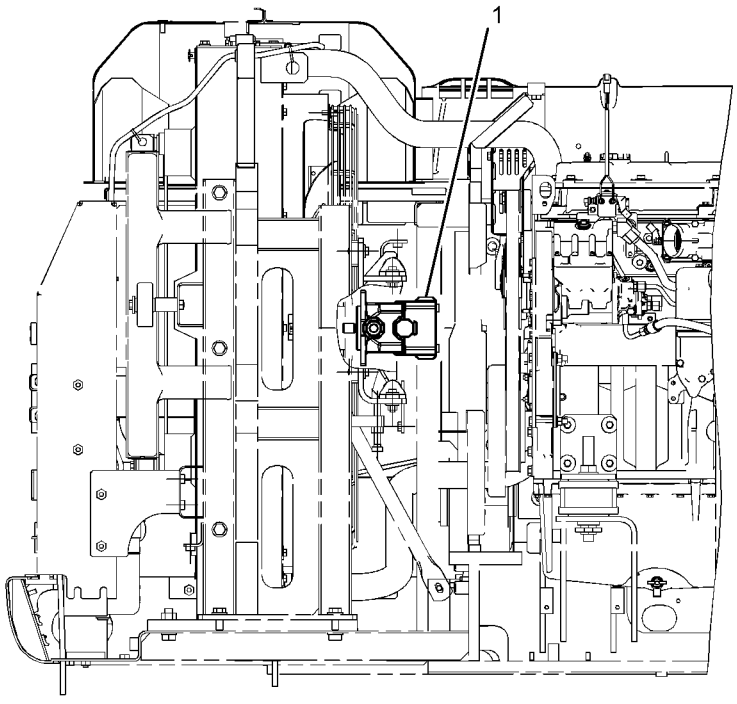

REAR VIEW

GRAPHIC #1 **<END>** g01243324

HYDRAULIC SYSTEM

200-3372 MOTOR & MTG GP-SWING

S/N: M4T1-262

PART OF 199-4538 DRIVE GP-SWING

SMCS-5058 **i01681329**

NOTE	REF NO	GRAPHIC REF	PART NUMBER	QTY	PART NAME 1 2 3 4 5 6 (PRODUCT LEVEL)	SEE PAGE
YR	1	1	**200-3373**	1	MOTOR GP-SWING	698
	2	1	**8T-6404**	1	SEAL-O-RING	
	3	1	**6V-5204**	1	RING-RETAINING	
	4	1	**9X-8257**	4	WASHER (17.5X30X3.5-MM THK)	
M	5	1	**6V-8201**	4	BOLT-SOCKET HEAD (M16X2X45-MM)	

M-METRIC PART
R-REMFG PART MAY BE AVAILABLE
Y-SEPARATE ILLUSTRATION

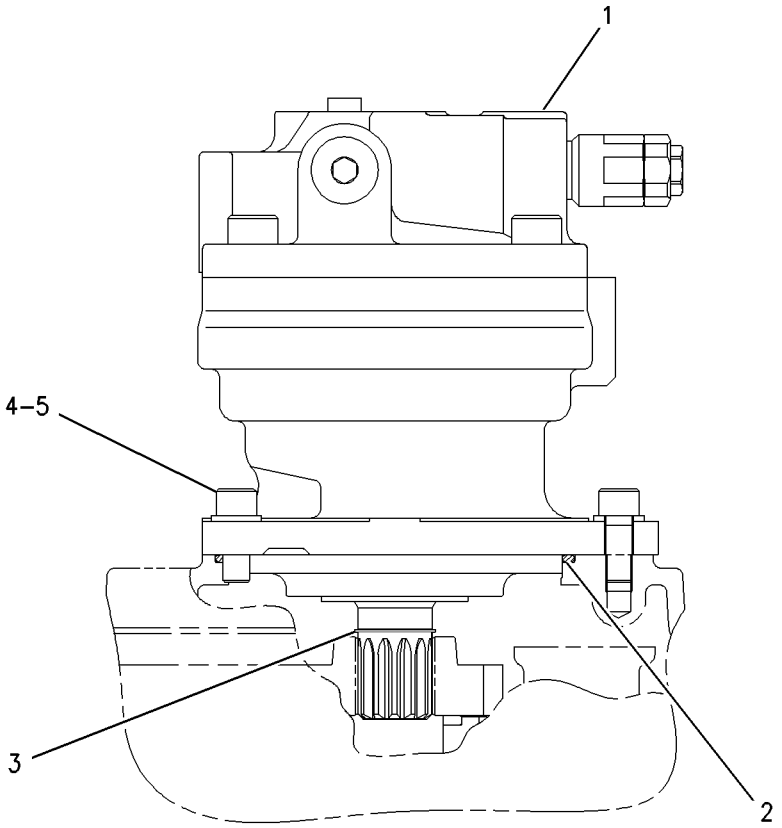

GRAPHIC #1 **<END>** g00835356

200-3372 MOTOR & MTG GP-SWING

S/N: D3P1-UP; M4T263-UP

PART OF 199-4538, 333-2958 DRIVE GP-SWING

SMCS-5058 **i03751323**

NOTE	REF NO	GRAPHIC REF	PART NUMBER	QTY	PART NAME 1 2 3 4 5 6 (PRODUCT LEVEL)	SEE PAGE
CY	1	1	**334-9973**	1	MOTOR GP-SWING	701
	2	1	**8T-6404**	1	SEAL-O-RING	
	3	1	**6V-5204**	1	RING-RETAINING	
	4	1	**9X-8257**	4	WASHER (17.5X30X3.5-MM THK)	
M	5	1	**6V-8201**	4	BOLT-SOCKET HEAD (M16X2X45-MM)	

C-CHANGE FROM PREVIOUS TYPE
M-METRIC PART
Y-SEPARATE ILLUSTRATION

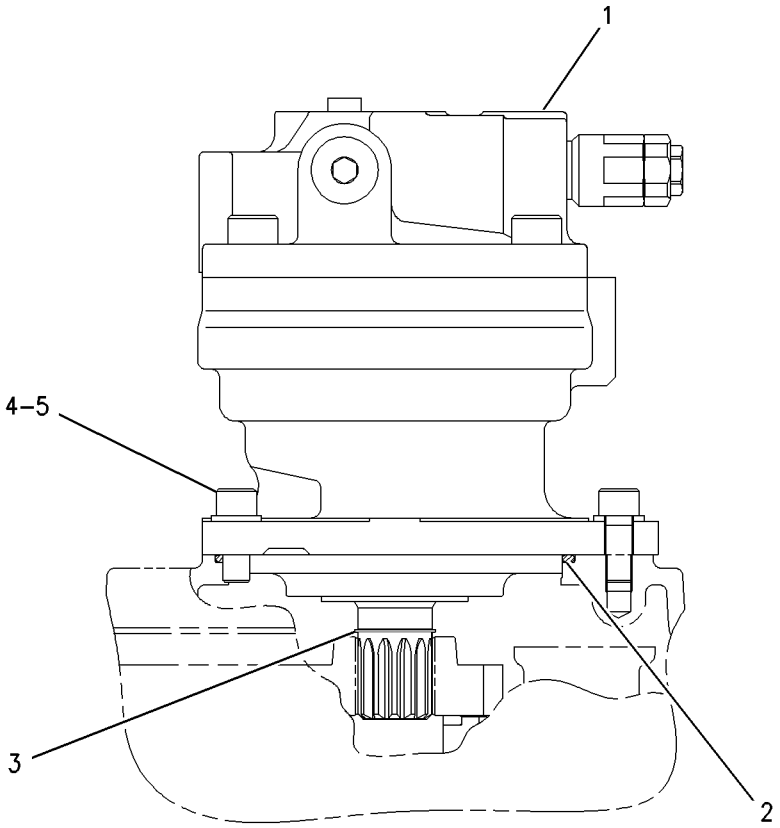

GRAPHIC #1 **<END>** g00835356

HYDRAULIC SYSTEM

191-5606 MOTOR & MTG GP-TRAVEL

S/N: D3P1-UP; M4T1-UP

PART OF 296-6217 DRIVE GP-FINAL

SMCS-4351 **i03483425**

NOTE	REF NO	GRAPHIC REF	PART NUMBER	QTY	PART NAME 1 2 3 4 5 6 (PRODUCT LEVEL)	SEE PAGE
CYR	1	1	**271-6376**	1	MOTOR GP-TRAVEL	704
Y	2	1	**204-2819**	1	VALVE GP-TRAVEL COUNTERBALANCE	848
M	3	1	**3E-6910**	6	BOLT-SOCKET HEAD (M12X1.75X70-MM)	
M	4	1	**096-0008**	4	BOLT-SOCKET HEAD (M16X2X140-MM)	
	5	1	**3F-1547**	1	SEAL-O-RING	

C-CHANGE FROM PREVIOUS TYPE
M-METRIC PART
R-REMFG PART MAY BE AVAILABLE
Y-SEPARATE ILLUSTRATION

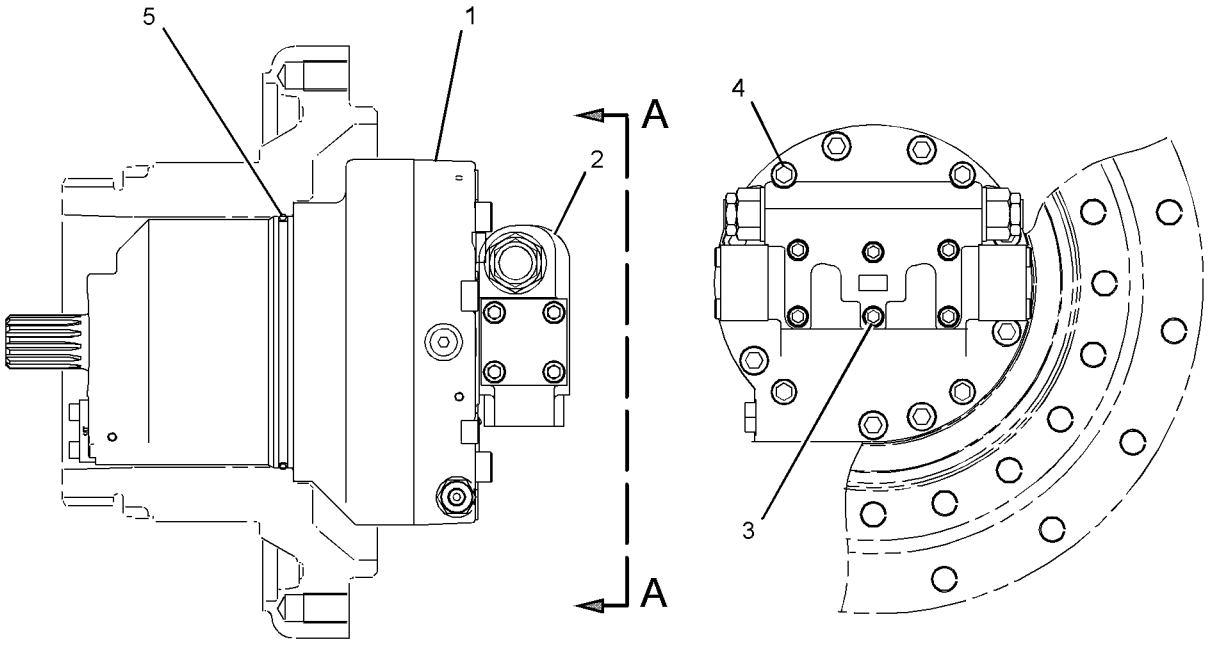

VIEW A-A

GRAPHIC #1 **<END>** g01823353

234-4638 MOTOR GP-PISTON—HYDRAULIC FAN*R

S/N: D3P1-UP; M4T1-UP

PART OF 230-2899 FAN GP-SUCTION

SMCS-5058 **i03630685**

NOTE	REF NO	GRAPHIC REF	PART NUMBER	QTY	PART NAME 1 2 3 4 5 6 (PRODUCT LEVEL)	SEE PAGE
	1	1	**8T-9597**	1	RING-RETAINING	
	2	1	**185-0303**	1	SEAL-OIL	
	3	1	**271-6432**	1	BEARING AS-TAPERED ROLLER	
	4	1	**155-9122**	1	SWASHPLATE	
	5	1	**295-9552**	1	HOUSING	
	6	1	**191-7582**	1	SHIM (2.5-MM THK)	
	7	1	**191-7583**	1	BEARING AS-ROLLER	
	8	1	**295-9553**	1	COVER	
M	9	1	**8T-0341**	4	BOLT-SOCKET HEAD (M10X1.5X60-MM)	
	10	1	**9X-8979**	1	DOWEL	
	11	1	**231-4707**	1	SEAL-O-RING	
Y	12	1	**233-2530**	1	ROTATING GP-MOTOR (HYDRAULIC FAN)	724
	13	1	**9S-8005**	1	PLUG-O-RING	
	14	1	**3K-0360**	1	SEAL-O-RING	
	15	1	**9X-6419**	2	DOWEL	
	16	1	**194-9473**	1	RING	
	17	1	**295-9554**	1	SHAFT-DRIVE	
	18	1	**197-2471**	1	PLUG AS	
		1	**197-2472**	1	SEAL	
	19	1	**295-9555**	1	SLEEVE	
	20	1	**197-2474**	1	VALVE AS	

M-METRIC PART
Y-SEPARATE ILLUSTRATION

234-4638 MOTOR GP-PISTON *(contd.)* **i03630685**

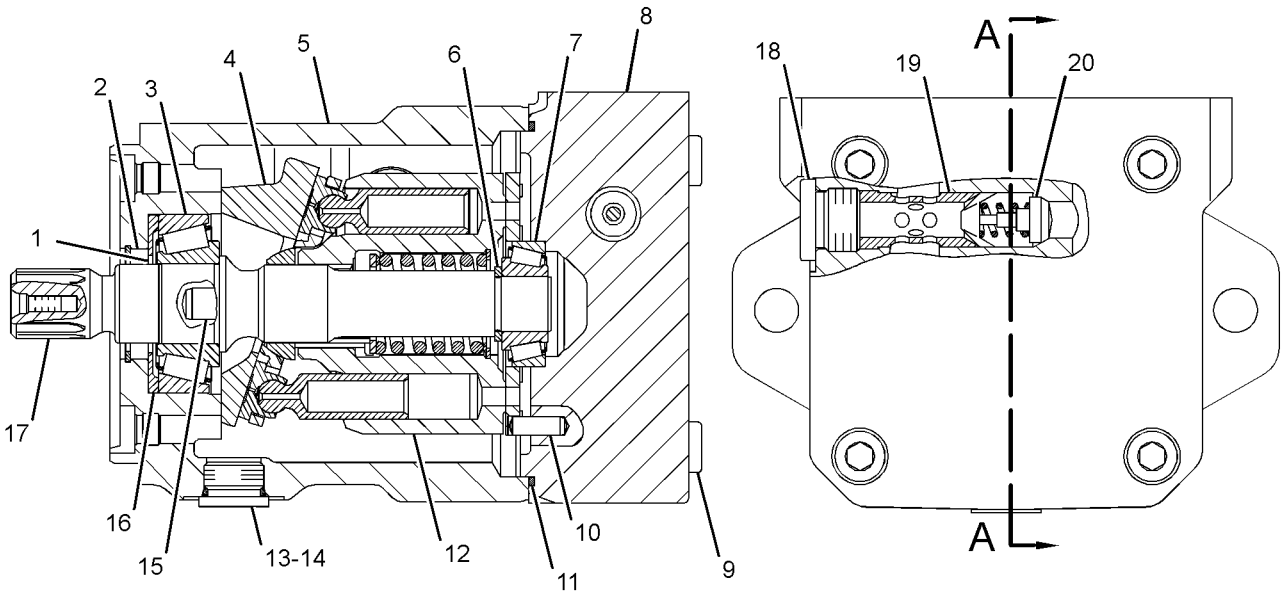

SECTION A-A

GRAPHIC #1 **<END>** g01366619

242-6776 MOTOR GP-PISTON–HYDRAULIC FAN*R

S/N: D3P1-UP; M4T1-UP
PART OF 247-8834 MOTOR & MTG GP-HYDRAULIC FAN
AN ATTACHMENT

SMCS-5058 **i03485241**

NOTE	REF NO	GRAPHIC REF	PART NUMBER	QTY	PART NAME 1 2 3 4 5 6 (PRODUCT LEVEL)	SEE PAGE
	1	1	**8T-9597**	1	RING-RETAINING	
	2	1	**185-0303**	1	SEAL-OIL	
	3	1	**271-6432**	1	BEARING AS-TAPERED ROLLER	
	4	1	**155-9122**	1	SWASHPLATE	
	5	1	**295-9552**	1	HOUSING	
	6	1	**191-7582**	1	SHIM (2.5-MM THK)	
	7	1	**191-7583**	1	BEARING AS-ROLLER	
	8	1	**295-9556**	1	COVER	
M	9	1	**8T-0341**	4	BOLT-SOCKET HEAD (M10X1.5X60-MM)	
	10	1	**9X-8979**	1	DOWEL	
	11	1	**231-4707**	1	SEAL-O-RING	
Y	12	1	**233-2530**	1	ROTATING GP-MOTOR (HYDRAULIC FAN)	724
	13	1	**9S-8005**	1	PLUG-O-RING	
	14	1	**3K-0360**	1	SEAL-O-RING	
	15	1	**9X-6419**	2	DOWEL	
	16	1	**194-9473**	1	RING	
	17	1	**295-9554**	1	SHAFT-DRIVE	

M-METRIC PART
Y-SEPARATE ILLUSTRATION

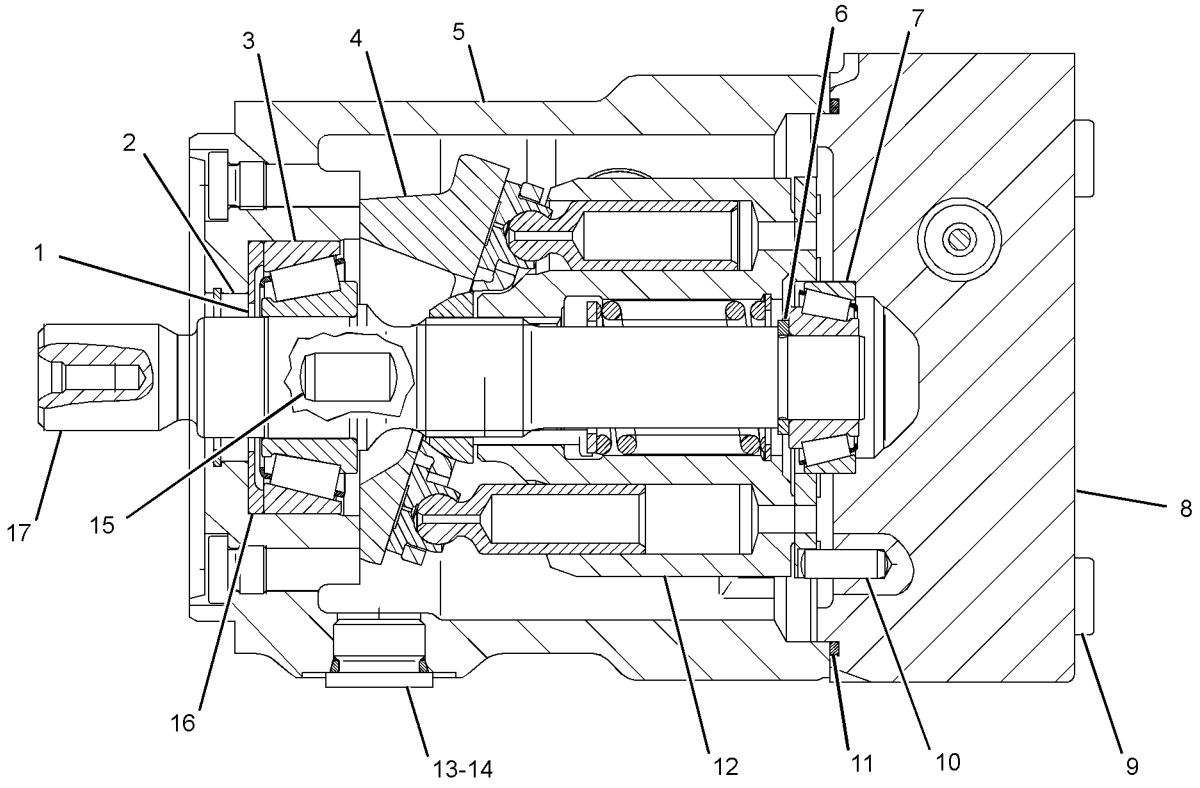

GRAPHIC #1 **<END>** g01372868

HYDRAULIC SYSTEM

200-3373 MOTOR GP-SWING*R

S/N: M4T1-262
PART OF 200-3372 MOTOR & MTG GP-SWING
FIELD REPLACEMENT ORDER 334-9973—PAGE 701

SMCS-5058 **i01683246**

NOTE	REF NO	GRAPHIC REF	PART NUMBER	QTY	PART NAME 1 2 3 4 5 6 (PRODUCT LEVEL)	SEE PAGE
Y	1	1	**204-2678**	2	VALVE GP-RELIEF	809
Y	2	1	**204-2679**	1	MOTOR GP-SWING	699

Y-SEPARATE ILLUSTRATION

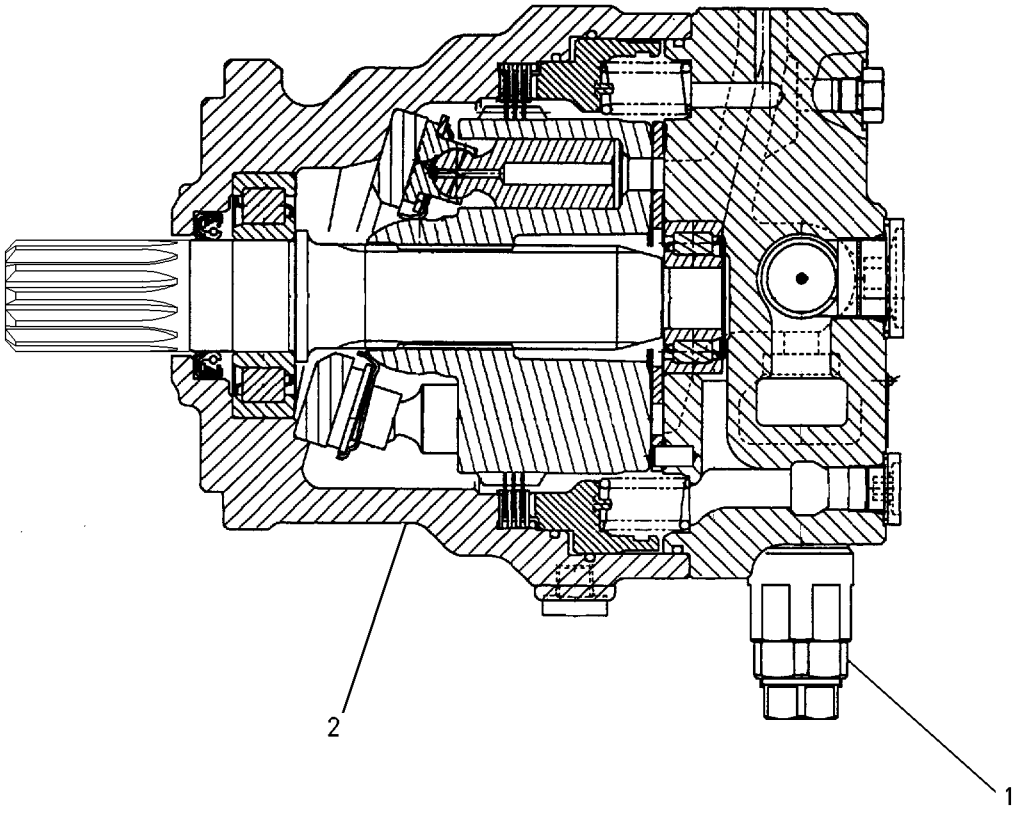

GRAPHIC #1 **<END>** g00835258

204-2679 MOTOR GP-SWING

S/N: M4T1-262

PART OF 200-3373 MOTOR GP-SWING

FIELD REPLACEMENT ORDER 334-9979—PAGE 702

SMCS-5058 **i03624200**

NOTE	REF NO	GRAPHIC REF	PART NUMBER	QTY	PART NAME 1 2 3 4 5 6 (PRODUCT LEVEL)	SEE PAGE
	1	1	**188-4163**	1	SHAFT	
J	2	1	**096-1533**	1	SEAL-LIP TYPE	
	3	1	**188-4170**	1	BEARING	
	4	1	**204-2676**	1	BODY	
	5	1	**188-4165**	1	PLATE	
	6	1	**188-4167**	1	PLATE	
	7	1	**295-9686**	1	PISTON AS	
	8	1	**188-4166**	1	PLATE	
	9	1	**188-4164**	1	BARREL	
	10	1	**188-4172**	3	PLATE-FRICTION	
	11	1	**188-4173**	4	PLATE-SEPARATOR	
	12	1	**184-3835**	1	PISTON	
J	13	1	**5J-2383**	1	SEAL-O-RING	
J	14	1	**7Y-4294**	1	SEAL-O-RING	
J	15	1	**4I-5849**	1	SEAL-O-RING	
	16	1	**123-2139**	20	SPRING	
	17	1	**188-4162**	1	HEAD GP-MOTOR	
	17A	1	**099-8111**	2	PIN-SPRING	
J	18	1	**3J-1907**	2	SEAL-O-RING	
	19	1	**110-5525**	2	PLUG	
	20	1	**204-2677**	1	PLATE-VALVE	
	21	1	**188-4171**	1	BEARING	
	22	1	**170-9996**	2	PLUG	
	23	1	**170-9985**	2	VALVE	
M	24	1	**7Y-5221**	4	BOLT-SOCKET HEAD (M20X2.5X45-MM)	
	25	1	**170-9986**	2	SPRING	
J	26	1	**095-1600**	2	SEAL-O-RING	
					AVAILABLE REPAIR KIT(S):	
J			**188-4176**		KIT-SEAL (SWING MOTOR)	

J-KIT MARKED J SERVICES PART(S) MARKED J
M-METRIC PART

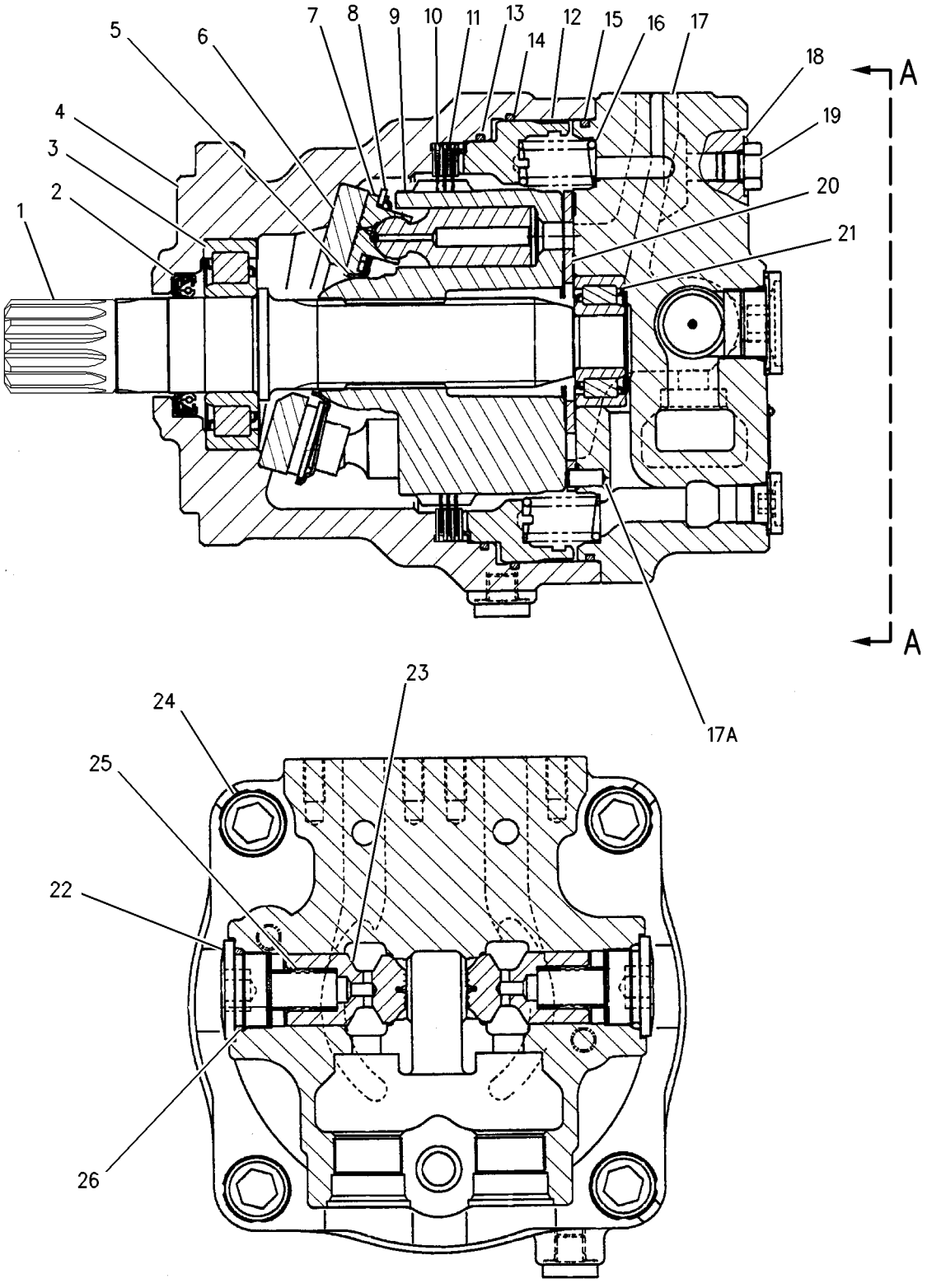

VIEW A-A

GRAPHIC #1 **<END>** g00868186

334-9973 MOTOR GP-SWING

S/N: D3P1-UP; M4T263-UP
PART OF 200-3372 MOTOR & MTG GP-SWING
FIELD REPLACEMENT FOR 200-3373—PAGE 698

SMCS-5058 **i03751332**

NOTE	REF NO	GRAPHIC REF	PART NUMBER	QTY	PART NAME 1 2 3 4 5 6 (PRODUCT LEVEL)	SEE PAGE
Y	1	1	**204-2678**	2	VALVE GP-RELIEF (SWING MOTOR)	809
Y	2	1	**334-9979**	1	MOTOR GP-SWING	702

Y-SEPARATE ILLUSTRATION

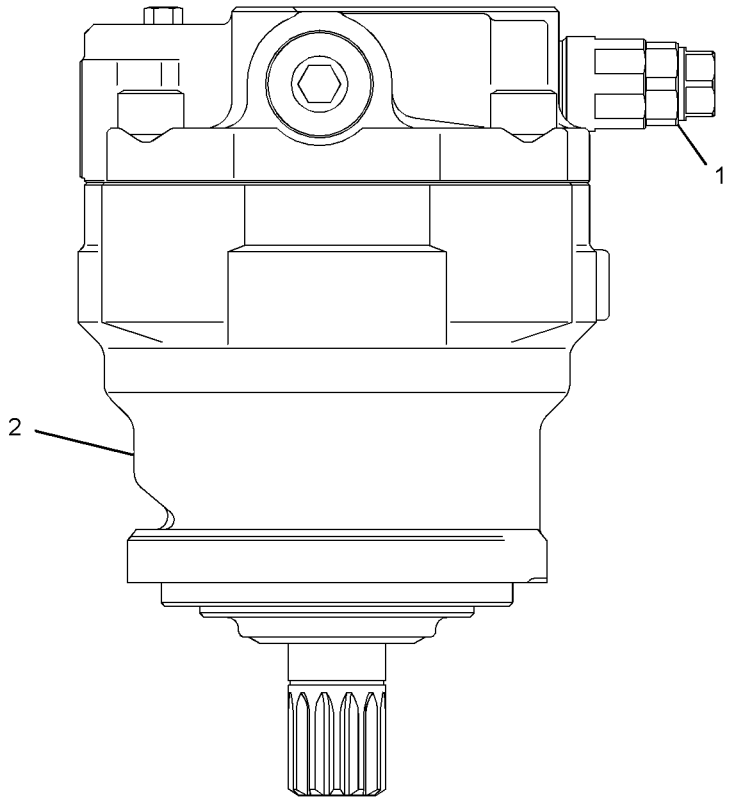

LEFT SIDE VIEW

GRAPHIC #1 **<END>** g01766694

HYDRAULIC SYSTEM

334-9979 MOTOR GP-SWING

S/N: D3P1-UP; M4T263-UP
PART OF 334-9973 MOTOR GP-SWING
FIELD REPLACEMENT FOR 204-2679—PAGE 699

SMCS-5058 **i03632603**

NOTE	REF NO	GRAPHIC REF	PART NUMBER	QTY	PART NAME 1 2 3 4 5 6 (PRODUCT LEVEL)	SEE PAGE
	1	1	**188-4163**	1	SHAFT	
J	2	1	**096-1533**	1	SEAL-LIP TYPE	
	3	1	**188-4170**	1	BEARING	
	4	1	**204-2676**	1	BODY	
	5	1	**188-4165**	1	PLATE	
	6	1	**188-4167**	1	PLATE	
	7	1	**334-9982**	1	PISTON AS	
	8	1	**188-4166**	1	PLATE	
	9	1	**188-4164**	1	BARREL	
	10	1	**188-4172**	3	PLATE-FRICTION	
	11	1	**188-4173**	4	PLATE-SEPARATOR	
	12	1	**184-3835**	1	PISTON	
J	13	1	**5J-2383**	1	SEAL-O-RING	
J	14	1	**7Y-4294**	1	SEAL-O-RING	
J	15	1	**4I-5849**	1	SEAL-O-RING	
	16	1	**123-2139**	20	SPRING	
	17	1	**188-4162**	1	HEAD GP-MOTOR	
		1	**099-8111**	2	PIN-SPRING	
J	18	1	**3J-1907**	2	SEAL-O-RING	
	19	1	**110-5525**	2	PLUG	
	20	1	**204-2677**	1	PLATE-VALVE	
	21	1	**188-4171**	1	BEARING	
	22	1	**170-9996**	2	PLUG	
	23	1	**170-9985**	2	VALVE	
M	24	1	**7Y-5221**	4	BOLT-SOCKET HEAD (M20X2.5X45-MM)	
	25	1	**170-9986**	2	SPRING	
J	26	1	**095-1600**	2	SEAL-O-RING	
					AVAILABLE REPAIR KIT(S):	
J			**188-4176**	1	KIT-SEAL (SWING MOTOR)	

J-KIT MARKED J INCLUDES PART(S) MARKED J
M-METRIC PART

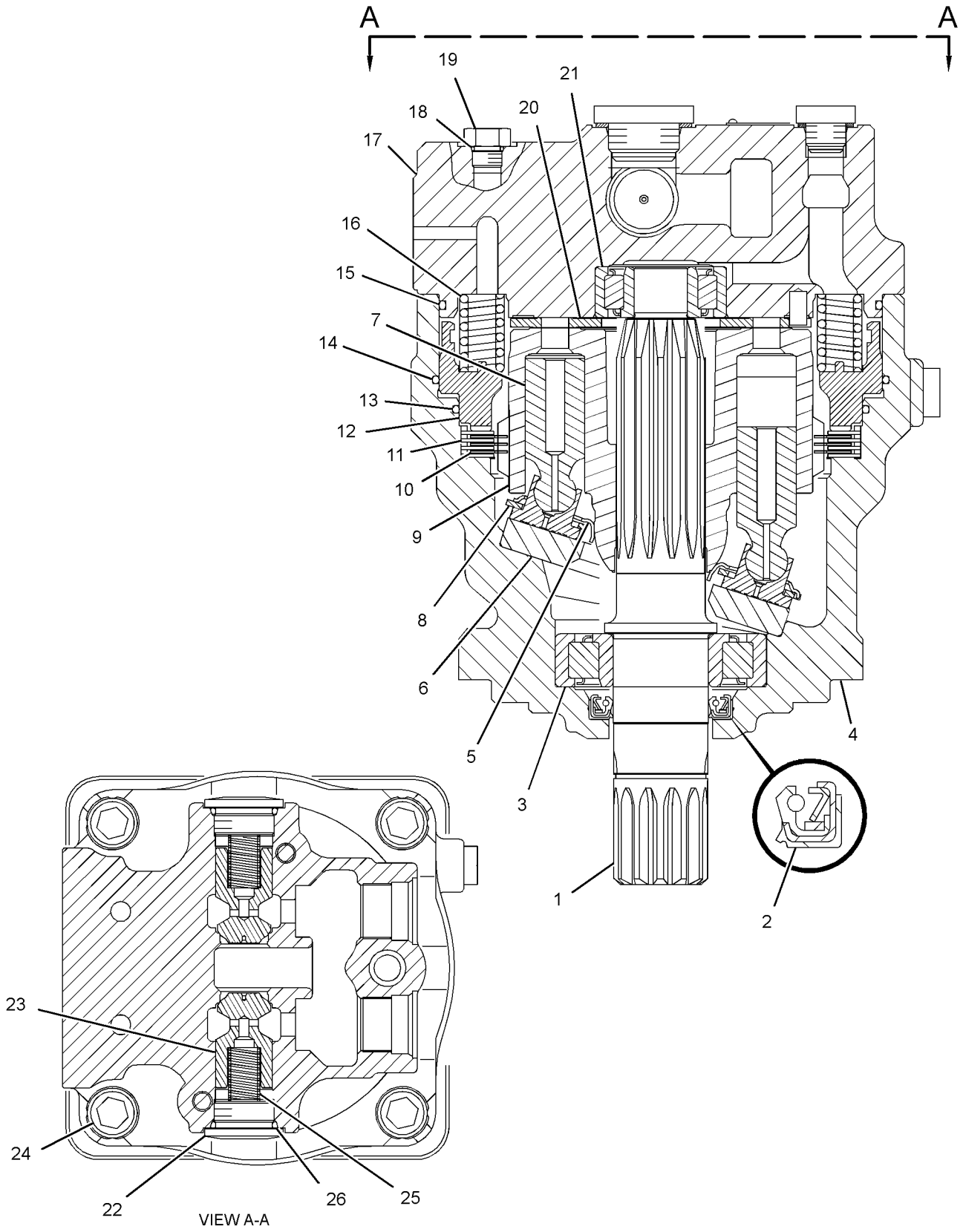

GRAPHIC #1 **<END>** g01768361

HYDRAULIC SYSTEM

271-6376 MOTOR GP-TRAVEL*R

S/N: D3P1-UP; M4T1-UP

PART OF 191-5606 MOTOR & MTG GP-TRAVEL

SMCS-4351, 5058 **i03483424**

NOTE	REF NO	GRAPHIC REF	PART NUMBER	QTY	PART NAME 1 2 3 4 5 6 (PRODUCT LEVEL)	SEE PAGE
	1	1	**1T-0936**	1	PLUG-PIPE	
	2	1	**4B-4158**	4	SCREW-DRIVE (NO 4X0.25-IN)	
J	3	2	**6V-3382**	1	SEAL-LIP TYPE	
	4	1	**8J-2559**	1	PLATE-CAUTION (OIL FILL)	
	5	1	**087-4786**	1	ADAPTER	
	6	2	**108-6503**	9	PISTON AS	
	7	2	**118-4057**	9	SPRING	
	8	2	**124-1541**	2	PIN	
	9	2	**124-1561**	20	SPRING-BRAKE	
	10	2	**137-3708**	1	RETAINER	
	11	2	**167-3855**	1	SHAFT	
	12	2	**167-3857**	1	KEY	
	13	2	**167-3858**	1	KEY	
	14	2	**167-3859**	1	PLATE-CAM	
	15	2	**167-3862**	1	PLATE-RETAINER	
	16	2	**167-3863**	1	BALL	
	17	2	**167-3865**	5	PLATE-SEPARATOR	
	18	2	**167-3866**	4	PLATE-FRICTION	
	19	2	**167-3867**	1	PLATE-PORT	
	20	2	**167-3868**	1	PISTON-BRAKE	
	21	1	**167-3872**	1	SPOOL	
J	22	2	**170-1612**	2	SEAL	
J	23	2	**170-1626**	1	RING-BACKUP	
J	24	2	**170-1627**	1	RING-BACKUP	
	25	2	**173-4063**	1	BARREL AS-MOTOR	
	26	2	**173-4066**	1	SPACER (63.05X79.8X7-MM THK)	
	27	2	**175-7436**	1	VALVE	
	28	2	**175-7887**	2	DOWEL	
	29	2	**180-6769**	1	BEARING AS	
	30	2	**180-6770**	1	BEARING AS	
	31	2	**186-5175**	1	PLUG	
	32	2	**189-3189**	1	RING-SEAL	
	33	2	**193-7901**	1	BODY AS	
	34	2	**196-4987**	1	PISTON-ACTUATOR	
	35	2	**271-6377**	1	HEAD AS	
	36	2	**274-4512**	1	SEAT	
	37	1	**274-4513**	2	RETAINER	
J	38	1	**095-1572**	2	SEAL-O-RING	
J	39	2	**095-1585**	1	SEAL-O-RING	
J	40	2	**095-1596**	1	SEAL-O-RING	
J	41	2	**095-1700**	2	SEAL-O-RING	
	42	2	**095-7380**	1	SPRING	
	44	1	**096-3978**	1	SPRING	
J	45	1	**096-5919**	2	RING-BACKUP	
J	46	2	**099-7030**	1	RING-BACKUP	
J	47	2	**170-1616**	1	SEAL	
	48	1	**2D-6642**	2	BALL	
J	49	1	**2M-9780**	1	SEAL-O-RING	
	50	2	**2R-1236**	1	RING-RETAINING (LOCK, INTERNAL)	
J	51	1	**3D-2824**	2	SEAL-O-RING	
J	53	1	**3K-0360**	2	SEAL-O-RING	
	54	2	**4K-4284**	1	RING-RETAINING	
M	55	2	**6V-5192**	4	BOLT-SOCKET HEAD (M8X1.25X30-MM)	
J	56	1,2	**7Y-5219**	2	SEAL-O-RING	
M	57	1	**8T-2393**	8	BOLT-SOCKET HEAD (M16X2X60-MM)	
	58	1	**9S-8005**	2	PLUG-O-RING	

271-6376 MOTOR GP-TRAVEL *(contd.)* i03483424

NOTE	REF NO	GRAPHIC REF	PART NUMBER	QTY	PART NAME 1 2 3 4 5 6 (PRODUCT LEVEL)	SEE PAGE
	59	1	**9S-8008**	2	PLUG-O-RING	
					AVAILABLE REPAIR KIT(S):	
J			**272-0290**	1	KIT-SEAL (TRAVEL MOTOR)	
					(ALSO INCLUDES O-RING SEALS)	

J-KIT MARKED J SERVICES PART(S) MARKED J
M-METRIC PART

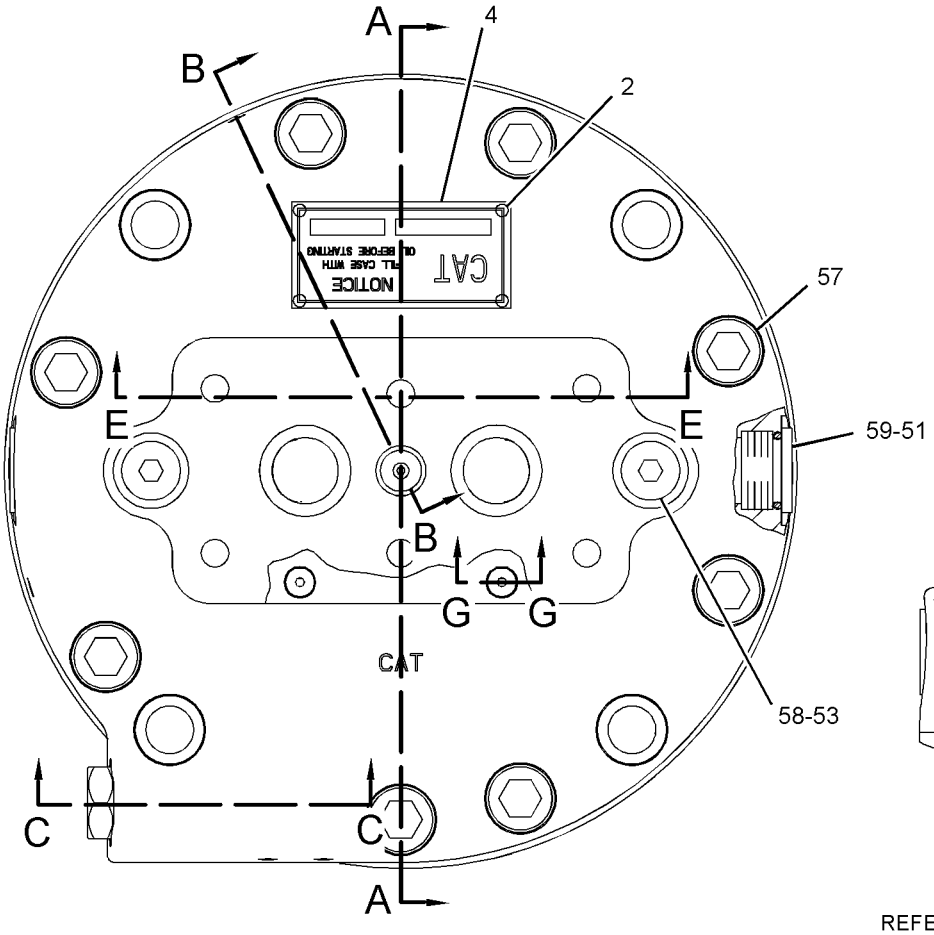

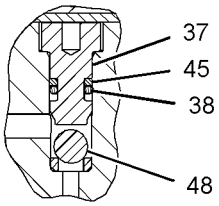

SECTION G-G

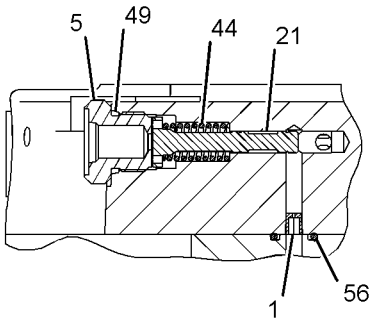

SECTION C-C

REFER TO ALL ILLUSTRATIONS OF
THIS GROUP FOR ALL AUXILIARY VIEWS

GRAPHIC #1

g01823795

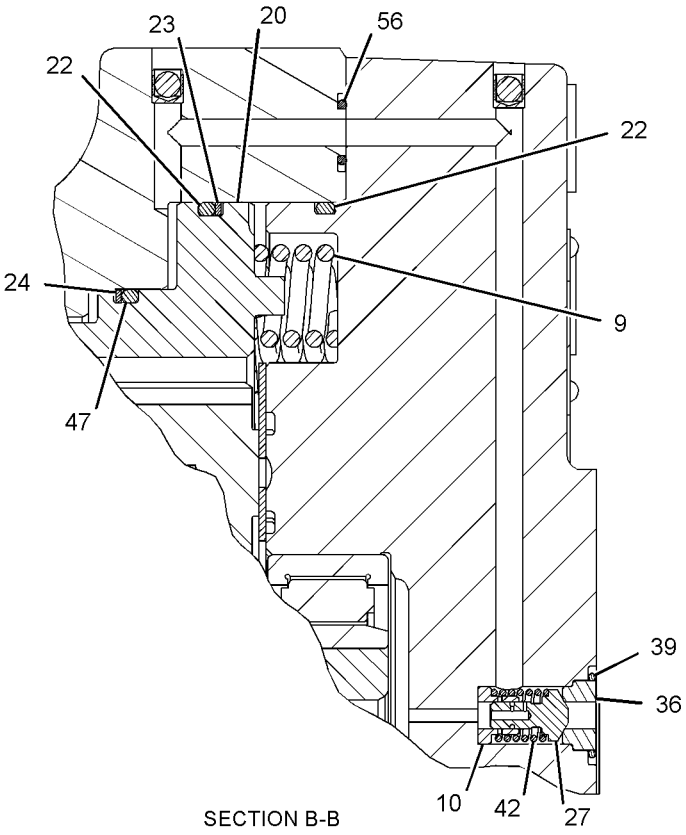

SECTION B-B

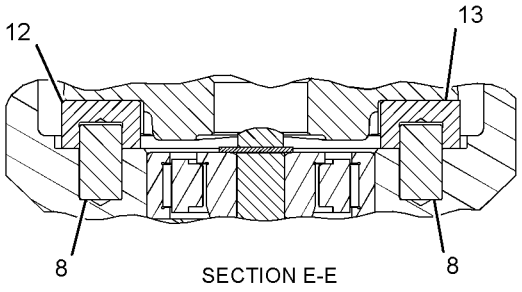

SECTION E-E

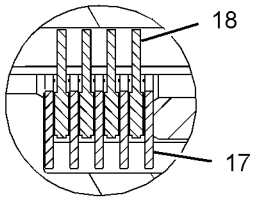

VIEW OF AREA D

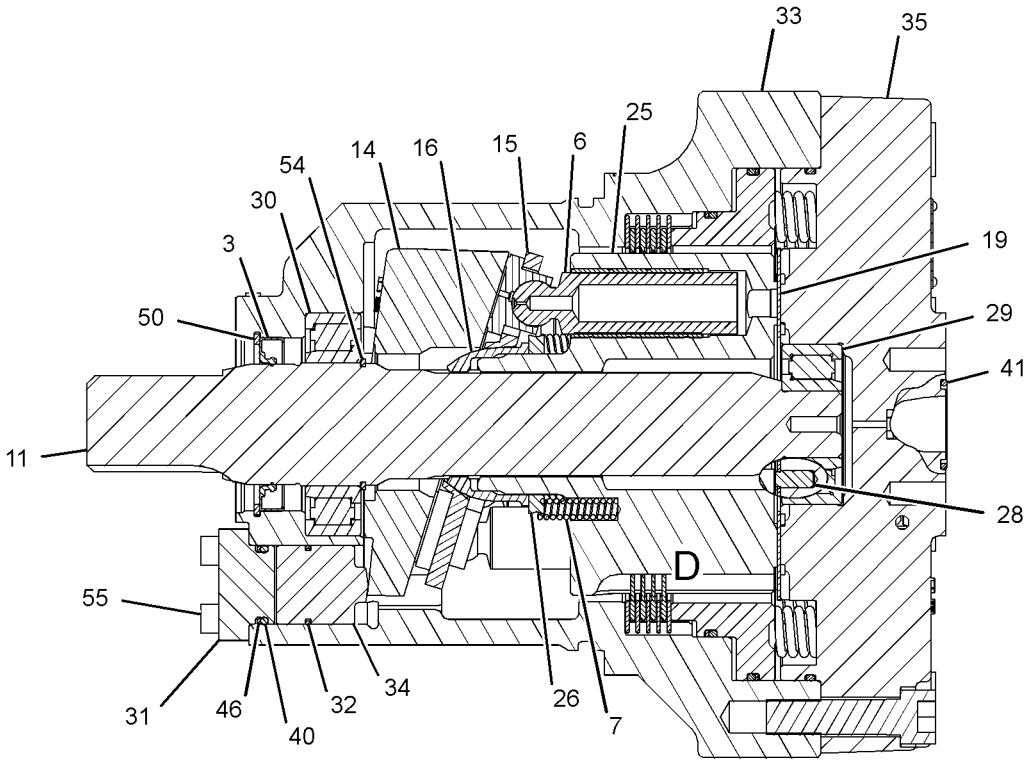

SECTION A-A

GRAPHIC #2 **<END>** g01823796

260-7868 MOUNTING GP-MAIN CONTROL VALVE

S/N: D3P1-UP; M4T1-UP
PART OF 259-7766 HYDRAULIC AR

SMCS-5051 **i02499414**

NOTE	REF NO	GRAPHIC REF	PART NUMBER	QTY	PART NAME 1 2 3 4 5 6 (PRODUCT LEVEL)	SEE PAGE
	1	1	**260-7904**	1	SUPPORT AS	
	2	1	**260-7906**	1	SUPPORT AS	
M	3	1	**100-3866**	8	BOLT-SELF-LOCKING (M16X2X40-MM)	
	4	1	**9X-8257**	4	WASHER (17.5X30X3.5-MM THK)	
	5	1	**196-0711**	4	WASHER (17X40X8-MM THK)	

M-METRIC PART

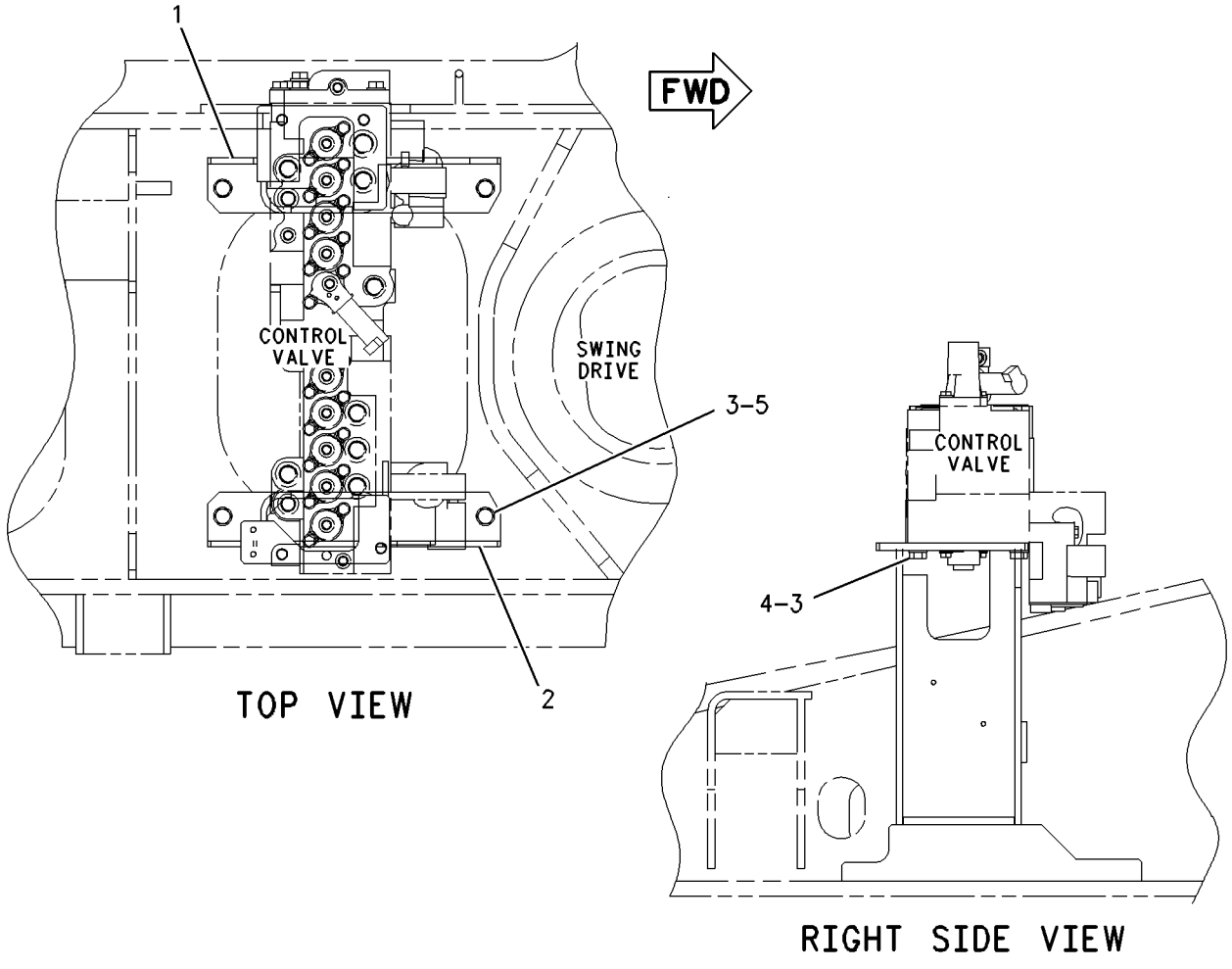

GRAPHIC #1 **<END>** g00676425

HYDRAULIC SYSTEM

6E-2746 PLUG GP-CONTROL VALVE

S/N: D3P1-UP; M4T1-UP
PART OF 6E-4816 PLUG GP-CONTROL VALVE
ALSO AN ATTACHMENT

SMCS-5051 **i00828073**

NOTE	REF NO	GRAPHIC REF	PART NUMBER	QTY	PART NAME 1 2 3 4 5 6 (PRODUCT LEVEL)	SEE PAGE
	1	1	**6E-2745**	1	SEAL-O-RING	
	2	1	**9T-4506**	1	PLUG	

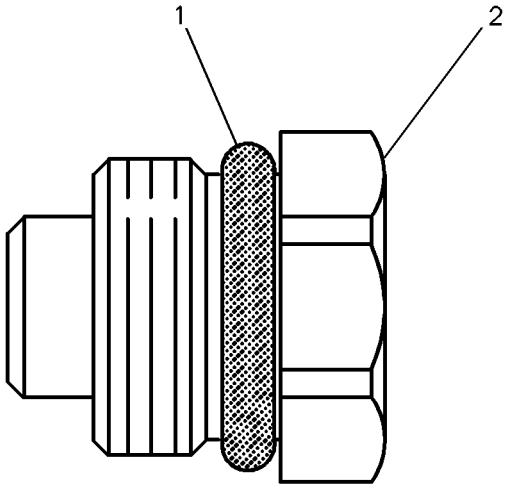

GRAPHIC #1 **<END>** g00228739

6E-4793 PLUG GP-CONTROL VALVE

S/N: D3P1-UP; M4T1-UP
PART OF 6E-4816 PLUG GP-CONTROL VALVE
ALSO AN ATTACHMENT

SMCS-5051 **i00831416**

NOTE	REF NO	GRAPHIC REF	PART NUMBER	QTY	PART NAME 1 2 3 4 5 6 (PRODUCT LEVEL)	SEE PAGE
	1	1	**6M-5062**	1	SEAL-O-RING	
	2	1	**3D-2824**	1	SEAL-O-RING	
	3	1	**9J-0705**	1	RING-BACKUP	
	4	1	**6E-4815**	1	PLUG	

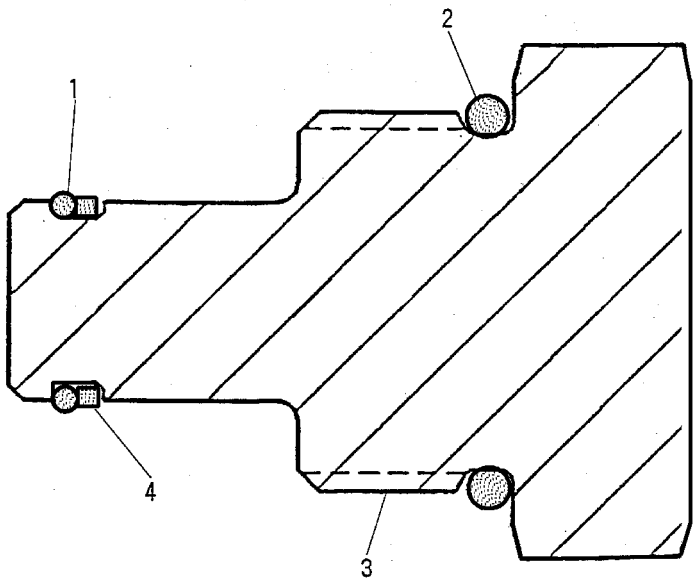

GRAPHIC #1 **<END>** g00228736

6E-4816 PLUG GP-CONTROL VALVE

S/N: D3P1-UP; M4T1-UP
PART OF 285-1375, 285-1537 VALVE GP-CONTROL
ALSO AN ATTACHMENT

SMCS-5051 **i00751498**

NOTE	PART NUMBER	QTY	PART NAME 1 2 3 4 5 6 (PRODUCT LEVEL)	SEE PAGE
Y	*6E-2746*	1	PLUG GP-CONTROL VALVE	708
Y	*6E-4793*	1	PLUG GP-CONTROL VALVE	709
Y	*106-6248*	1	PLUG GP-CONTROL VALVE	711

Y-SEPARATE ILLUSTRATION

<END>

106-6248 PLUG GP-CONTROL VALVE

S/N: D3P1-UP; M4T1-UP
PART OF 6E-4816 PLUG GP-CONTROL VALVE
ALSO AN ATTACHMENT

SMCS-5051 **i00828076**

NOTE	REF NO	GRAPHIC REF	PART NUMBER	QTY	PART NAME 1 2 3 4 5 6 (PRODUCT LEVEL)	SEE PAGE
	1	1	**6E-2745**	1	SEAL-O-RING	
	2	1	**9T-4506**	1	PLUG	

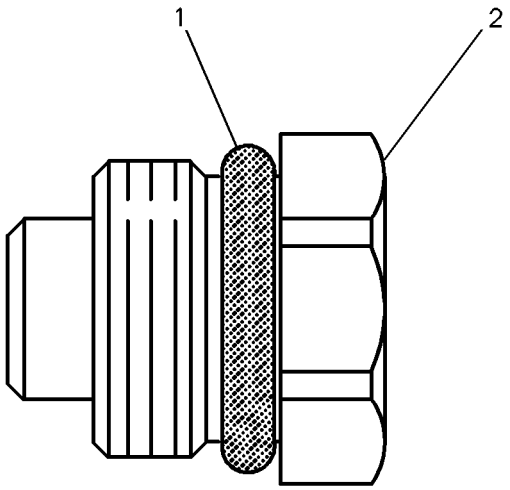

GRAPHIC #1 **<END>** g00228739

HYDRAULIC SYSTEM

165-9473 PLUG GP-CONTROL VALVE–AUXILIARY

S/N: D3P1-UP; M4T1-UP
PART OF 244-8419 VALVE GP-CONTROL
AN ATTACHMENT

SMCS-5051 **i02797132**

NOTE	REF NO	GRAPHIC REF	PART NUMBER	QTY	PART NAME 1 2 3 4 5 6 (PRODUCT LEVEL)	SEE PAGE
	1	1	**6M-5062**	1	SEAL-O-RING	
	2	1	**9J-0705**	1	RING-BACKUP	
	3	1	**3D-2824**	1	SEAL-O-RING	
	4	1	**165-9474**	1	PLUG	
	5	1	**7J-9108**	1	SEAL-O-RING	

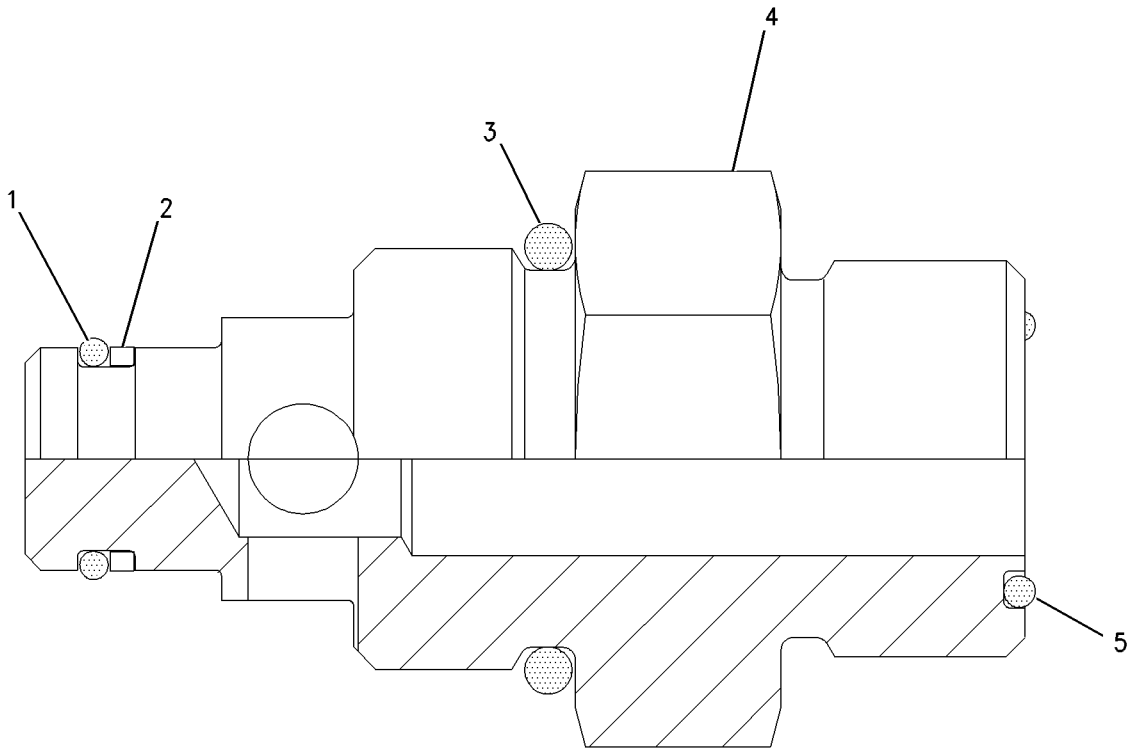

GRAPHIC #1 **<END>** g00693084

HYDRAULIC SYSTEM

255-5823 PUMP & LINES GP-COOLING—AUXILIARY

S/N: M4T1-UP

PART OF 340-9469 OPTION AR-CONTROL

FOR USE WITH 255-5774—PAGE 452, 297-0494—PAGE 454. CANNOT BE USED WITH 255-5822—PAGE 453

AN ATTACHMENT

SMCS-1374, 5057, 5073 **i03750920**

NOTE	PART NUMBER	QTY	PART NAME 1 2 3 4 5 6 (PRODUCT LEVEL)	SEE PAGE
Y	**234-4620**	1	DRIVE GP-AUXILIARY PUMP (ACCESSORY DRIVE)	473
Y	*260-7864*	1	LINES GP-PUMP (HYDRAULIC OIL COOLER)	666
Y	*259-0682*	1	PUMP & MTG GP-AUXILIARY	714

Y-SEPARATE ILLUSTRATION

<END>

259-0682 PUMP & MTG GP-AUXILIARY

S/N: D3P1-UP; M4T1-UP
PART OF 255-5822, 270-8795 CONTROL AR-AUXILIARY, 255-5823 PUMP & LINES GP-COOLING
AN ATTACHMENT

SMCS-5070, 5073 **i02567648**

NOTE	REF NO	GRAPHIC REF	PART NUMBER	QTY	PART NAME 1 2 3 4 5 6 (PRODUCT LEVEL)	SEE PAGE
Y	1	1	**207-8235**	1	PUMP GP-GEAR	716
	2	1	**236-6919**	1	SEAL-O-RING	
	3	1	**8T-4223**	2	WASHER-HARD (13.5X25.5X3-MM THK)	
M	4	1	**8T-4956**	2	BOLT (M12X1.75X35-MM)	

M-METRIC PART
Y-SEPARATE ILLUSTRATION

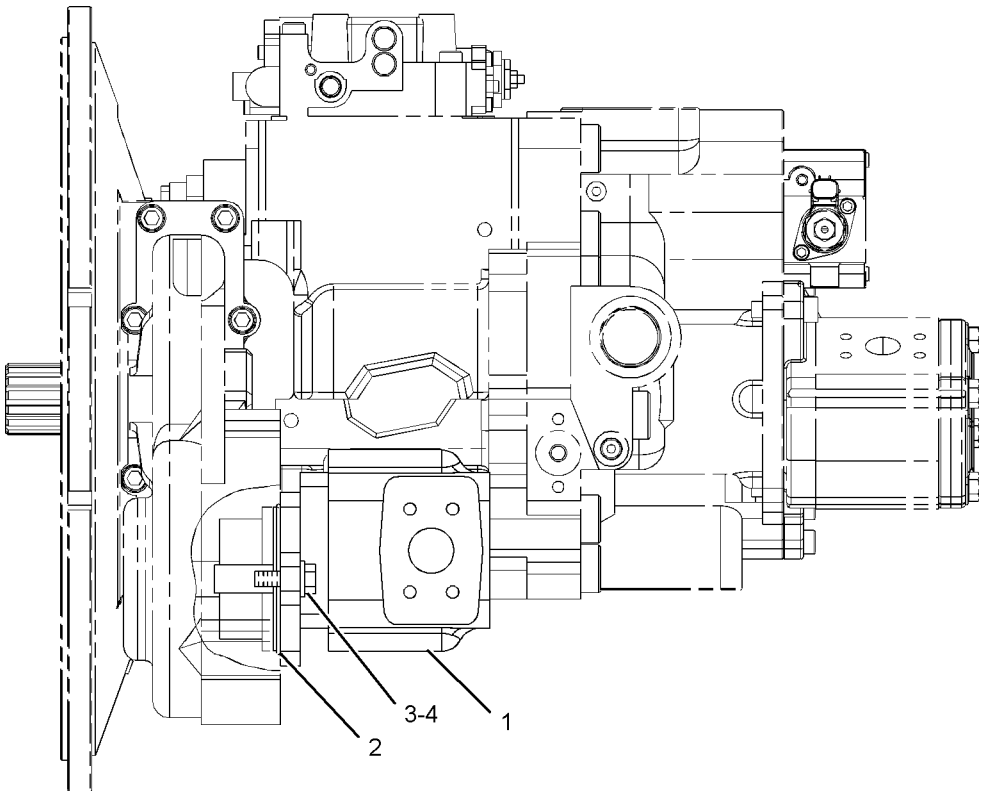

GRAPHIC #1 **<END>** g01098752

HYDRAULIC SYSTEM

310-9486 PUMP & MTG GP-MAIN HYDRAULIC

S/N: D3P1-UP; M4T1-UP

PART OF 259-7766 HYDRAULIC AR

SMCS-5070 **i03630703**

NOTE	REF NO	GRAPHIC REF	PART NUMBER	QTY	PART NAME 1 2 3 4 5 6 (PRODUCT LEVEL)	SEE PAGE
Y	1	1	*272-4669*	1	COUPLING GP-PUMP	457
Y	2	1	*295-9674*	1	PUMP GP-MAIN HYDRAULIC	717
	3	1	**8T-4121**	7	WASHER-HARD (11X21X2.5-MM THK)	
M	4	1	**8T-4186**	7	BOLT (M10X1.5X40-MM)	

M-METRIC PART
Y-SEPARATE ILLUSTRATION

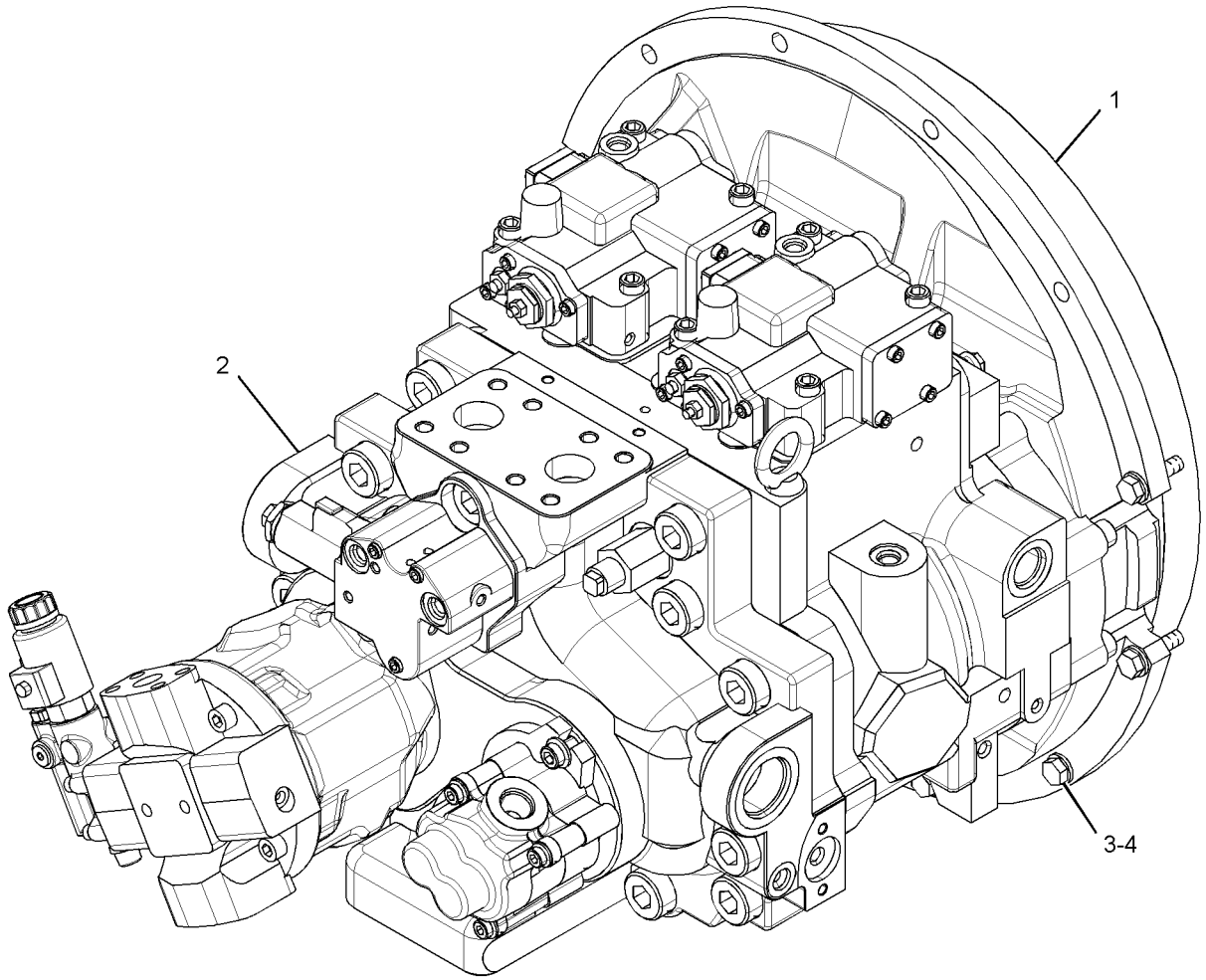

GRAPHIC #1 **<END>** g01430021

HYDRAULIC SYSTEM

207-8235 PUMP GP-GEAR

S/N: D3P1-UP; M4T1-UP
PART OF 259-0682 PUMP & MTG GP-AUXILIARY
AN ATTACHMENT

SMCS-5073 **i02567841**

NOTE	REF NO	GRAPHIC REF	PART NUMBER	QTY	PART NAME 1 2 3 4 5 6 (PRODUCT LEVEL)	SEE PAGE
J	1	1	**109-1641**	2	RING-SNAP	
J	2	1	**204-7368**	2	SEAL-LIP TYPE	
	3	1	**136-3842**	1	FLANGE	
J	4	1	**6V-3551**	2	SEAL-O-RING	
	5	1	**099-3095**	4	DOWEL	
	6	1	**209-5011**	1	COVER	
M	7	1	**8T-0646**	4	BOLT (M12X1.75X110-MM)	
Z	8	1		1	SHAFT AS	
Z	9	1		1	SHAFT AS	
Z	10	1		2	CARRIER	
JZ	11	1		2	SEAL	
JZ	12	1		2	RING-RETAINING	
Z	13	1		1	BODY	
					AVAILABLE REPAIR KIT(S):	
J			**204-7369**	1	KIT-SEAL (GEAR PUMP)	

J-KIT MARKED J SERVICES PARTS MARKED J
M-METRIC PART
Z-NOT SERVICED SEPARATELY

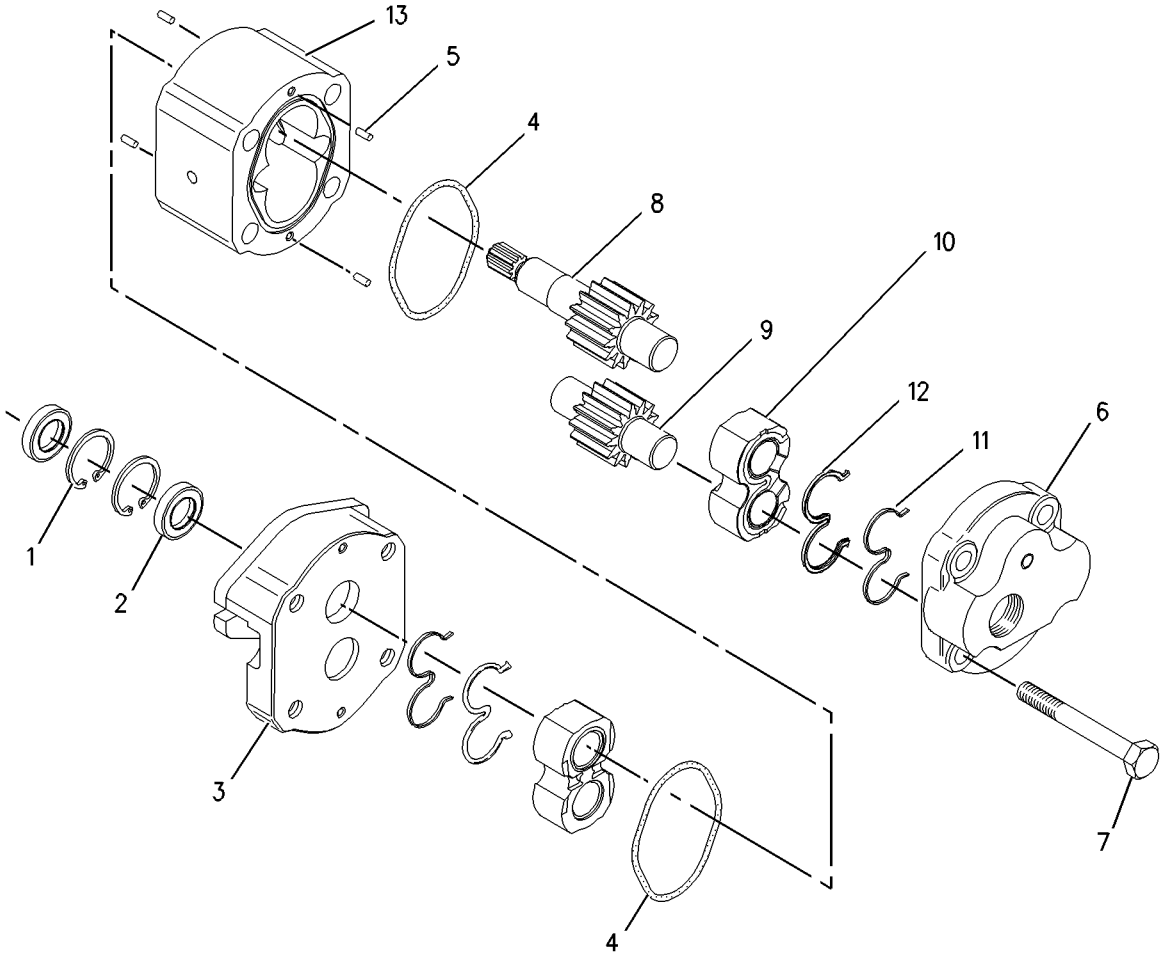

GRAPHIC #1 **<END>** g00937605

295-9674 PUMP GP-MAIN HYDRAULIC

S/N: D3P1-UP; M4T1-UP

PART OF 310-9486 PUMP & MTG GP-MAIN HYDRAULIC

SMCS-5070 **i03630934**

NOTE	REF NO	GRAPHIC REF	PART NUMBER	QTY	PART NAME 1 2 3 4 5 6 (PRODUCT LEVEL)	SEE PAGE
	1	1	**236-6919**	1	SEAL-O-RING	
YR	2	1	**259-0815**	1	PUMP GP-PISTON (HYDRAULIC FAN)	718
CYR	3	1	**322-8733**	1	PUMP GP-PISTON (WITH PILOT GEAR PUMP)	720
M	4	1	**108-1781**	2	BOLT-SOCKET HEAD (M12X1.75X35-MM)	

C-CHANGE FROM PREVIOUS TYPE
M-METRIC PART
R-REMFG PART MAY BE AVAILABLE
Y-SEPARATE ILLUSTRATION

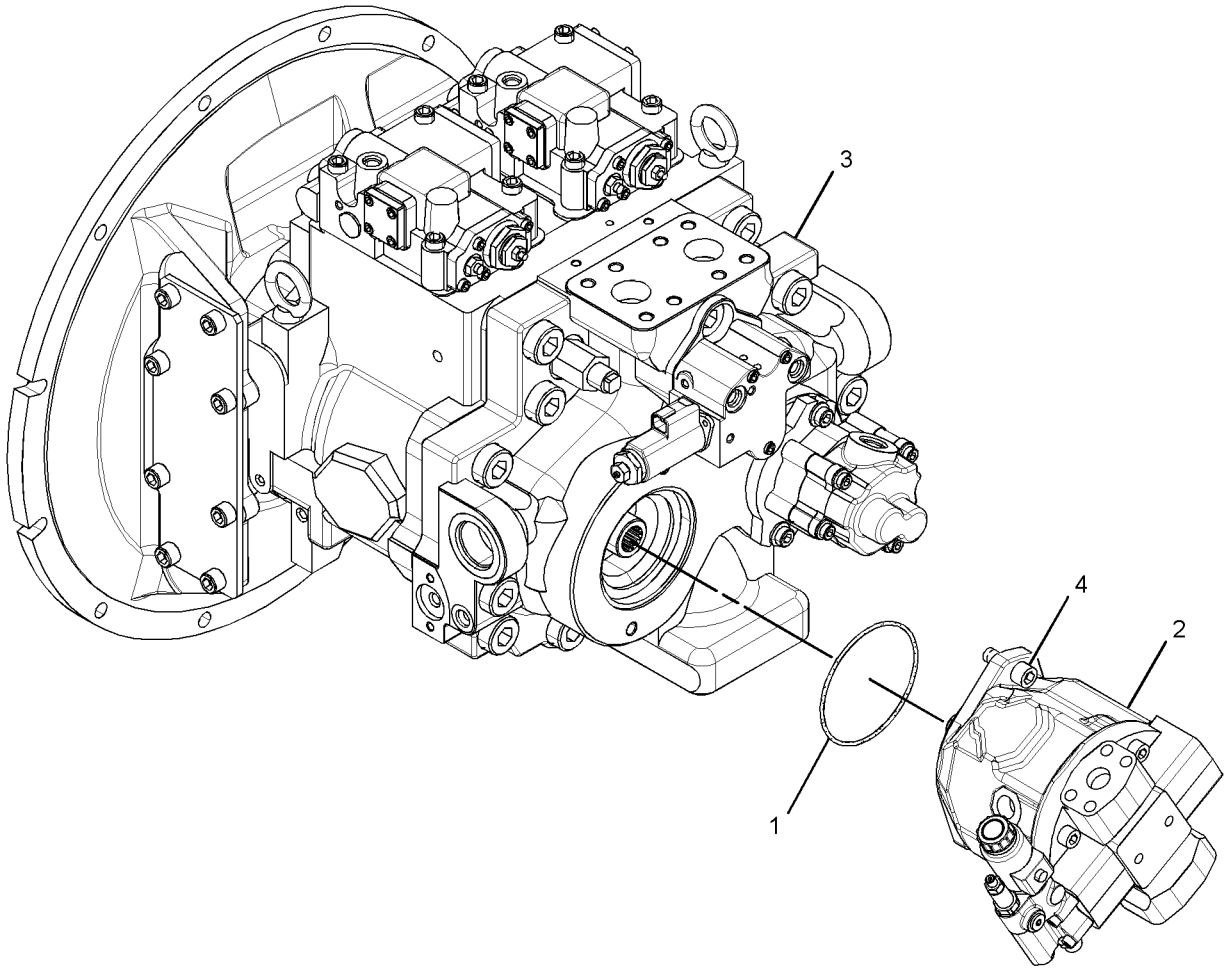

GRAPHIC #1 **<END>** g01431921

HYDRAULIC SYSTEM

259-0815 PUMP GP-PISTON*R

S/N: D3P1-UP; M4T1-UP

PART OF 295-9674 PUMP GP-MAIN HYDRAULIC

SMCS-5070 **i03630707**

NOTE	REF NO	GRAPHIC REF	PART NUMBER	QTY	PART NAME 1 2 3 4 5 6 (PRODUCT LEVEL)	SEE PAGE
	1	1	**191-7581**	1	SHAFT	
	2	1	**8T-9597**	1	RING-RETAINING	
	3	1	**194-9473**	1	RING	
	4	1	**155-9125**	1	BEARING AS-ROLLER	
	5	1	**213-9250**	4	SEAL-O-RING	
M	6	1	**9X-6032**	4	BOLT-SOCKET HEAD (M10X1.5X30-MM)	
	7	1	**191-7583**	1	BEARING AS-ROLLER	
	8	1	**213-9248**	1	SEAL-O-RING	
	9	1	**191-7582**	1	SHIM (2.5-MM THK)	
Y	10	1	**266-7833**	1	ROTATING GP-PUMP	725
	11	1	**9S-8005**	1	PLUG-O-RING	
	12	1	**3K-0360**	1	SEAL-O-RING	
	13	1	**155-9134**	2	PLATE	
	14	1	**155-9127**	1	SEAL	
	15	1	**155-9131**	1	SWASHPLATE	
Y	16	1	**209-5982**	1	ACTUATOR GP (HYDRAULIC FAN PUMP)	450
	17	1	**266-7835**	1	COVER	
	18	1	**120-4394**	1	PLUG-BREAK OFF	
	19	1	**137-3780**	2	PLUG	
	20	1	**259-0908**	2	SEAL	
	21	1	**204-2799**	1	DOWEL	
	22	1	**266-7834**	1	HOUSING	
	23	1	**9X-7680**	3	SEAL-O-RING	
M	24	1	**8T-8442**	4	BOLT-SOCKET HEAD (M6X1X30-MM)	
Y	25	1	**259-0907**	1	VALVE GP-PUMP CONTROL (HYDRAULIC FAN)	802

M-METRIC PART
Y-SEPARATE ILLUSTRATION

259-0815 PUMP GP-PISTON *(contd.)* **i03630707**

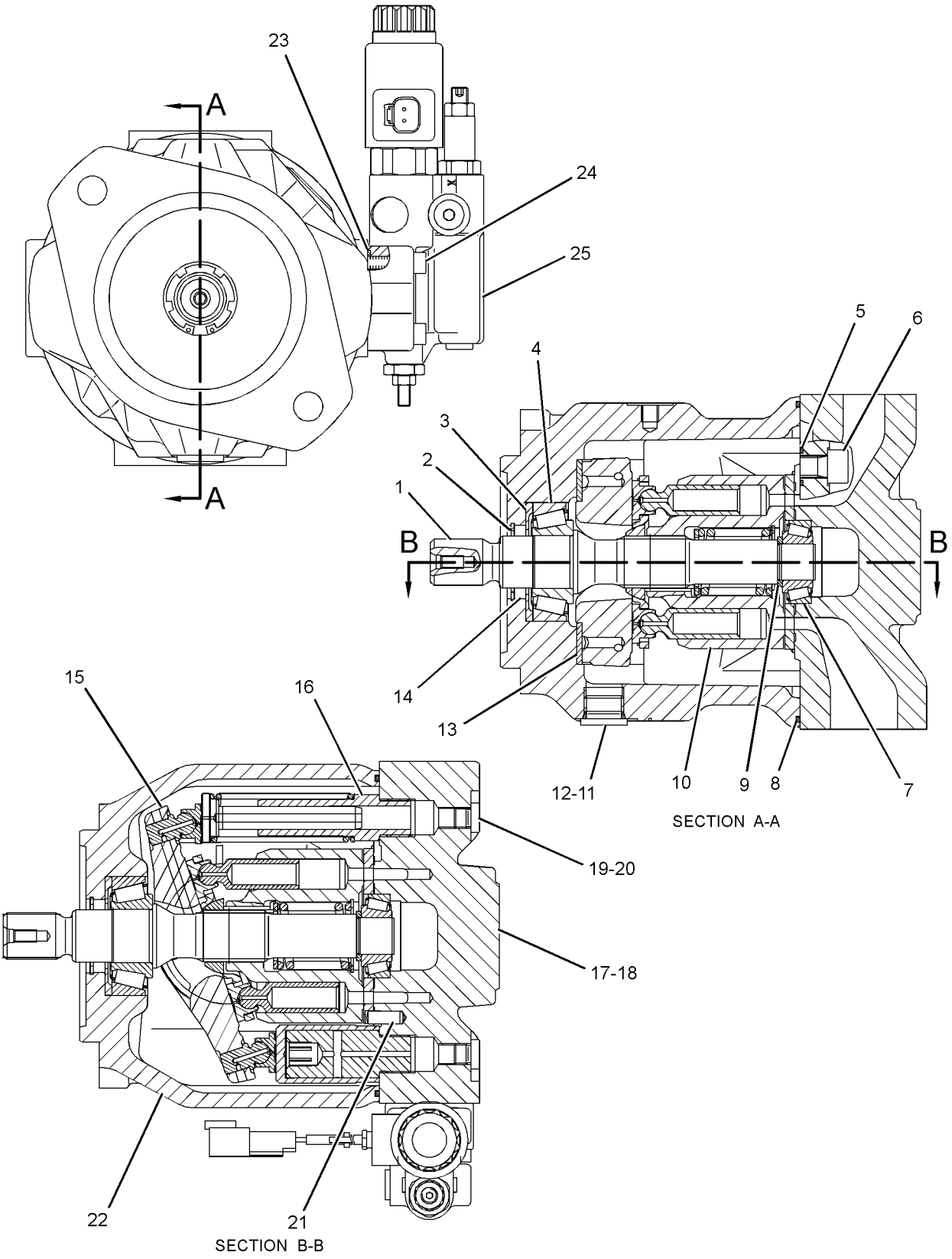

GRAPHIC #1 **<END>** g01201557

HYDRAULIC SYSTEM

322-8733 PUMP GP-PISTON—WITH PILOT GEAR PUMP*R

S/N: D3P1-UP; M4T1-UP

PART OF 295-9674 PUMP GP-MAIN HYDRAULIC

SMCS-5070 **i03266301**

NOTE	REF NO	GRAPHIC REF	PART NUMBER	QTY	PART NAME 1 2 3 4 5 6 (PRODUCT LEVEL)	SEE PAGE
	1	1	**289-7917**	1	PUMP GP-GEAR	
		1	**246-9867**	1	SEAL-O-RING	
M		1	**247-8841**	2	BOLT (M10X1.5X30-MM)	
M	2	3	**242-6920**	8	BOLT (M8X30-MM)	
	3	3	**247-8985**	4	DOWEL	
	4	3	**247-8729**	2	COVER	
M	5	3	**242-6919**	2	SETSCREW (M20X2.5X56-MM)	
M	6	3	**8T-4131**	2	NUT (M20X2.5-THD)	
M	7	3	**6V-8200**	8	BOLT-SOCKET HEAD (M12X1.75X35-MM)	
	8	3	**7I-8166**	2	STOPPER	
	9	3	**109-1296**	2	SEAL-O-RING	
	10	3	**7I-8172**	2	RING-BACKUP	
	11	3	**242-6914**	2	PISTON-SERVO	
	12	3	**247-8712**	2	PIN AS	
	13	3	**7I-8152**	18	SPRING-CYLINDER	
	14	3	**109-1294**	2	SEAL-O-RING	
	15	3	**7I-8171**	2	RING-BACKUP	
	16	3	**242-6915**	2	STOPPER	
	17	3	**095-0965**	11	PLUG	
	18	3	**095-0966**	2	PLUG	
M	19	3	**242-6918**	2	NUT (M20X2.5-THD)	
M	20	3	**200-3292**	2	SETSCREW (M20X2.5X90-MM)	
	21	3	**264-8266**	1	BOLT-SOCKET HEAD (M22X2.5X130-MM)	
	22	3	**234-4539**	2	DOWEL	
M	23	3	**249-1306**	10	BOLT-SOCKET HEAD (M22X2.5X60-MM)	
	24	2,3	**242-6916**	2	GASKET	
	25	2,3	**110-5525**	4	PLUG	
	26	2,3	**153-4906**	4	SEAL-O-RING	
	27	3	**295-9656**	2	PISTON AS	
	28	3	**7I-8154**	2	PLATE	
	29	3	**242-6912**	2	PLATE	
	30	3	**242-6913**	2	RETAINER-BALL	
	31	3	**289-8172**	2	SWASHPLATE AS	
	32	2,3	**7I-8084**	20	PLUG	
	33	3	**311-9548**	4	PLUG	
	34	3	**247-8725**	2	PLATE	
	35	3	**095-0882**	4	PIN-SPRING	
	36	3	**247-8786**	2	DOWEL	
	37	3	**206-9290**	9	SEAL-O-RING	
	38	2	**295-9695**	1	SEAL-LIP TYPE	
	39	2	**095-0944**	1	RING-RETAINING	
	40	2	**249-6657**	1	SEAL-O-RING	
	41	2	**289-8174**	1	GEAR-DRIVE	
	42	2	**289-8175**	1	GEAR-DRIVEN	
	43	2	**6V-5204**	1	RING-RETAINING	
	44	2	**247-8718**	1	SPACER (44.5X68X3-MM THK)	
	45	2	**289-8173**	1	FLANGE	
M	46	2	**8T-0343**	11	BOLT-SOCKET HEAD (M12X1.75X55-MM)	
	47	2	**8T-4241**	3	RING-RETAINING	
	48	2	**247-8787**	2	RING-RETAINING	
	49	2	**247-8719**	3	SPACER (50X64X3-MM THK)	
	50	2	**322-8734**	1	BODY	
	51	2	**295-9658**	1	BARREL AS	
	52	2	**259-0832**	1	SHAFT-DRIVEN	
	53	2	**247-8715**	2	BEARING-NEEDLE	
	54	2	**295-9659**	1	BLOCK-PORT	

322-8733 **PUMP GP-PISTON** *(contd.)* **i03266301**

NOTE	REF NO	GRAPHIC REF	PART NUMBER	QTY	PART NAME 1 2 3 4 5 6 (PRODUCT LEVEL)	SEE PAGE
	55	2	**295-9657**	1	BARREL AS	
M	56	2	**249-1307**	2	BOLT-SOCKET HEAD (M22X2.5X95-MM)	
	57	2	**247-8713**	2	BEARING-ROLLER	
M	58	2	**8T-9080**	8	BOLT-SOCKET HEAD (M12X1.75X20-MM)	
	59	2	**225-4516**	1	PLATE	
	60	2	**249-6670**	1	SEAL-O-RING	
	61	2	**247-8720**	2	SPACER (95X110X3.2-MM THK)	
	62	2	**247-8717**	2	SPACER (65X90X1-MM THK)	
	63	2	**095-0929**	2	RING-RETAINING	
	64	2	**247-8726**	1	COVER	
	65	2	**259-0831**	1	SHAFT-DRIVE	
	66	3	**206-9291**	2	SEAL-O-RING	
Y	67	1	**225-4518**	1	VALVE GP-SOLENOID (PUMP CONTROL)	830
Y	68	1	**295-9660**	2	HEAD GP-PUMP	493

M-METRIC PART
Y-SEPARATE ILLUSTRATION

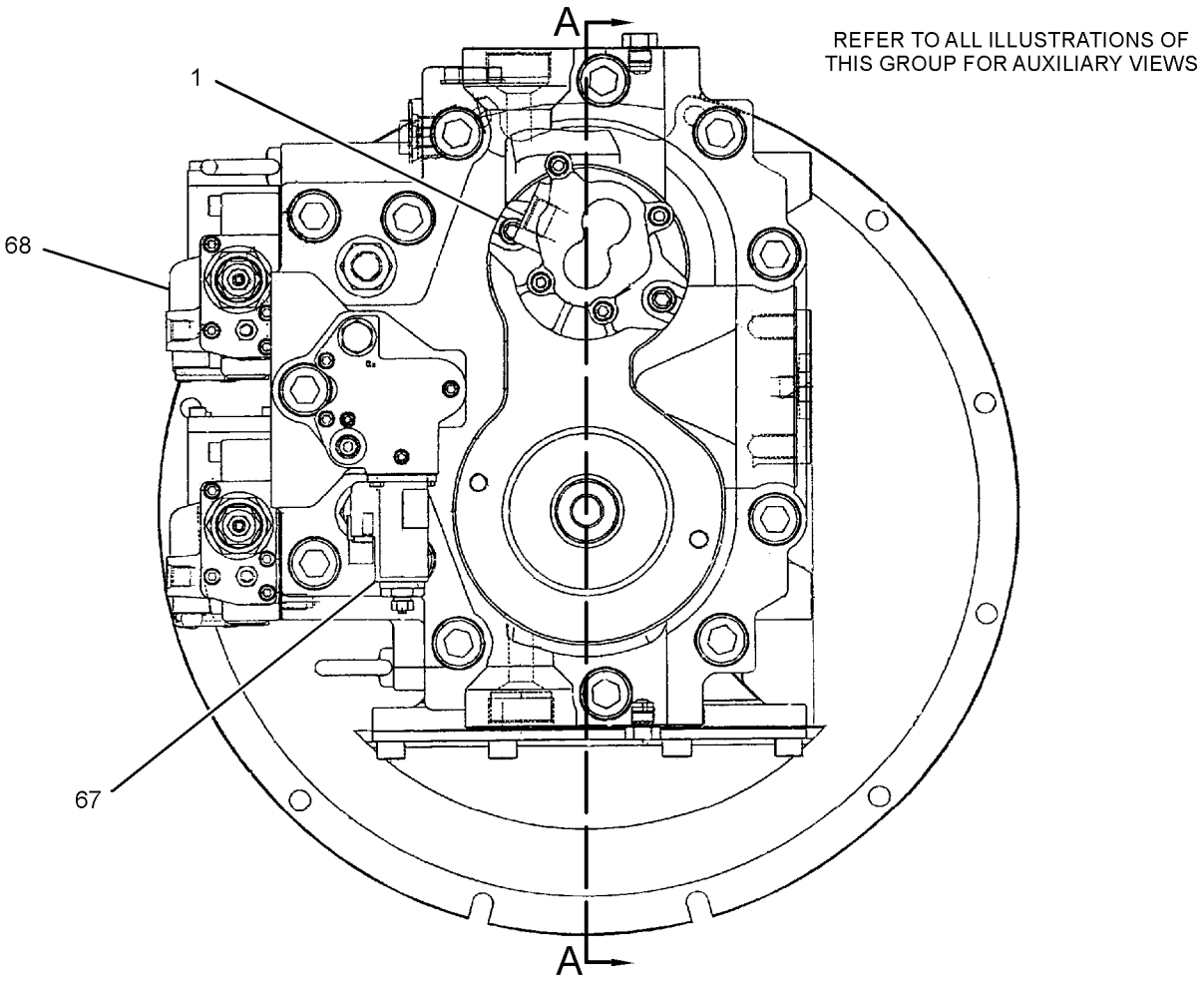

GRAPHIC #1 g01497233

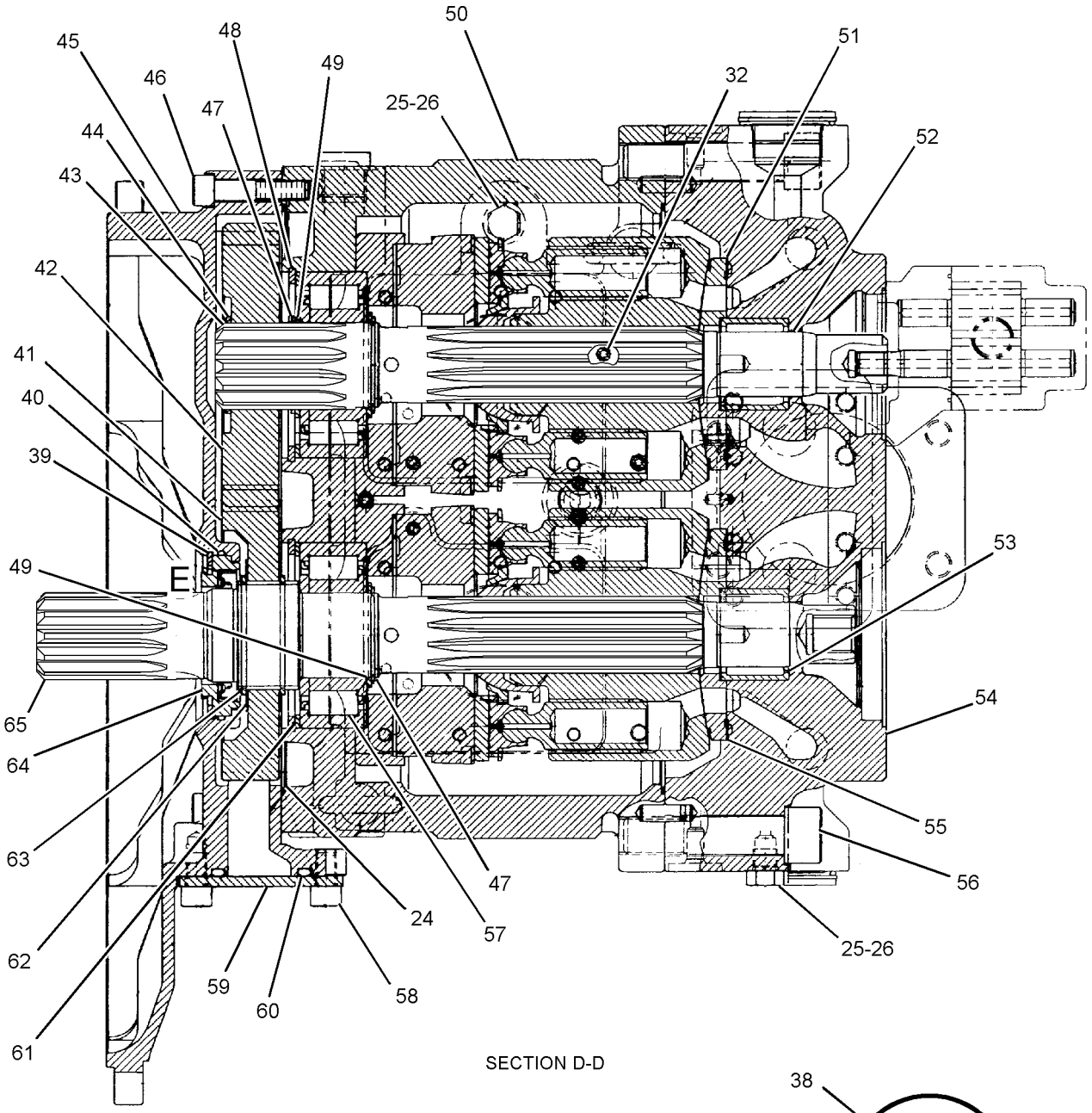

SECTION D-D

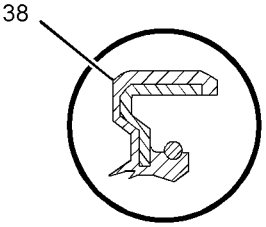

VIEW OF AREA E

GRAPHIC #2

g01497253

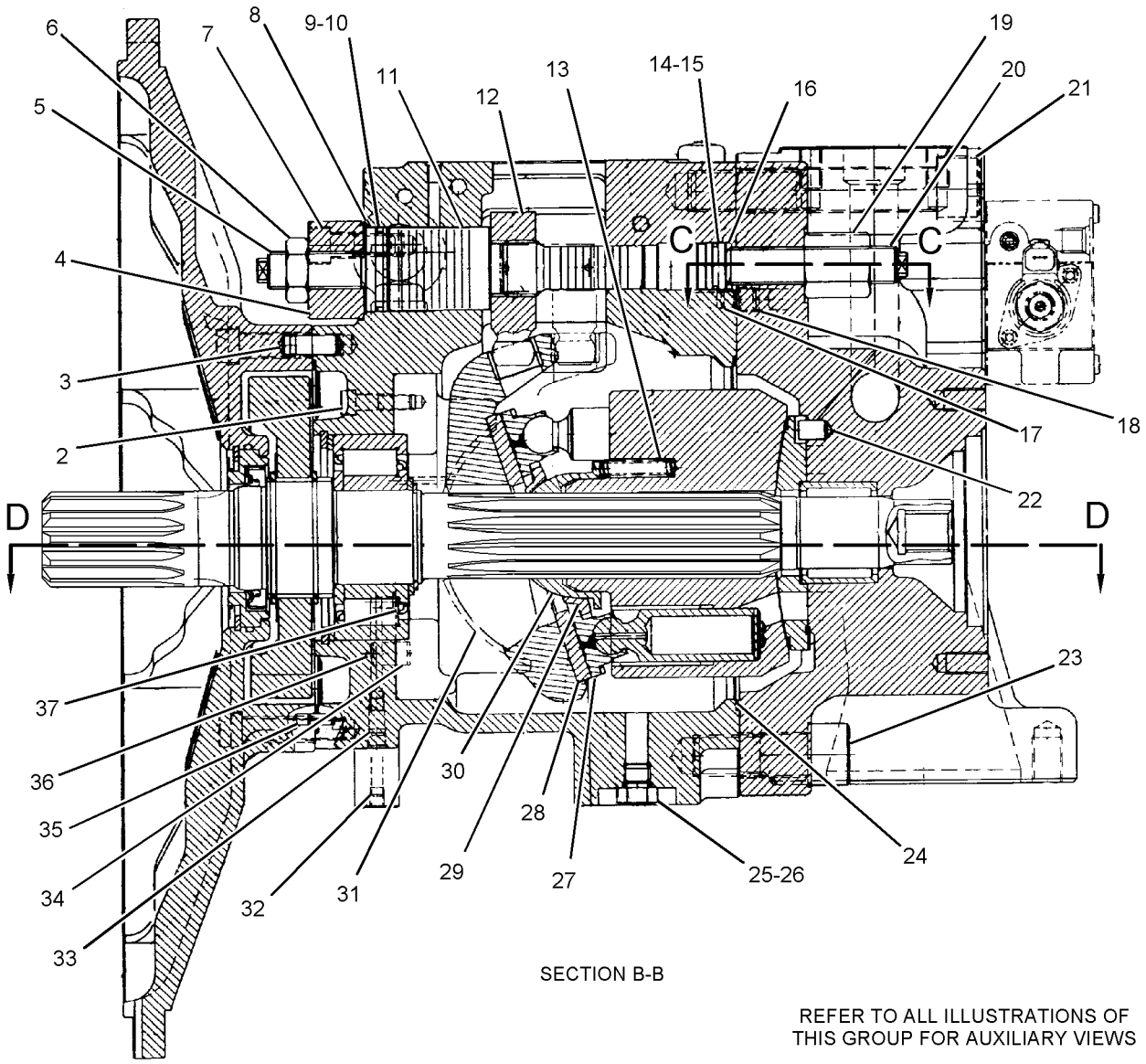

SECTION B-B

REFER TO ALL ILLUSTRATIONS OF THIS GROUP FOR AUXILIARY VIEWS

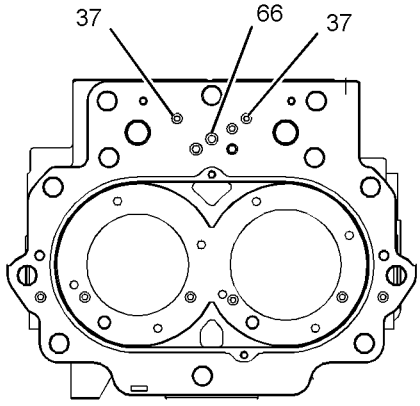

SECTION C-C

GRAPHIC #3 **<END>** g01502727

233-2530 ROTATING GP-MOTOR–HYDRAULIC FAN

S/N: D3P1-UP; M4T1-UP
PART OF 234-4638, 242-6776 MOTOR GP-PISTON
ALSO AN ATTACHMENT

SMCS-5058 **i02158105**

NOTE	REF NO	GRAPHIC REF	PART NUMBER	QTY	PART NAME 1 2 3 4 5 6 (PRODUCT LEVEL)	SEE PAGE
	1	1	**189-9380**	9	PISTON AS	
	2	1	**233-4885**	1	BARREL	
	3	1	**233-2535**	1	PLATE (VALVE)	
	4	1	**189-9382**	1	PLATE	
	5	1	**138-8175**	1	BEARING-TAPERED ROLLER	
	6	1	**168-7941**	1	SPRING	
	7	1	**168-7940**	3	PIN	
	8	1	**096-0015**	1	RING-RETAINING	
	9	1	**168-7942**	1	WASHER (36.5-MM ODX2.0-MM THK)	

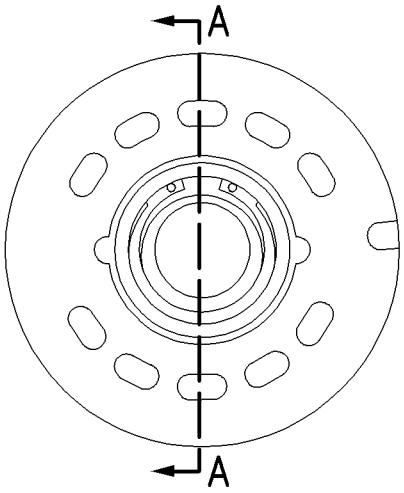

LEFT SIDE VIEW

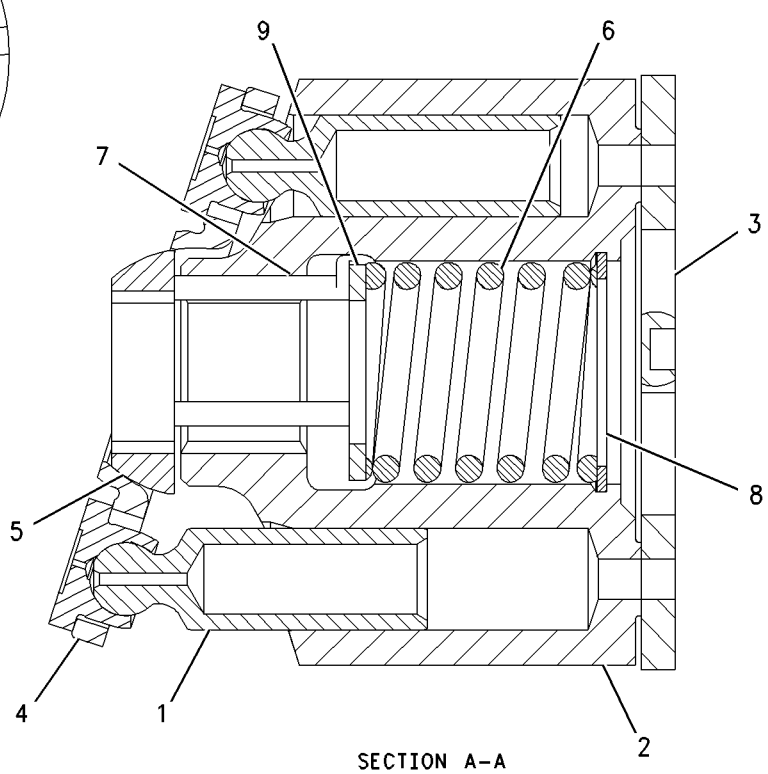

SECTION A-A

GRAPHIC #1 **<END>** g01001863

HYDRAULIC SYSTEM

266-7833 ROTATING GP-PUMP

S/N: D3P1-UP; M4T1-UP

PART OF 259-0815 PUMP GP-PISTON

SMCS-5070 **i02500083**

NOTE	REF NO	GRAPHIC REF	PART NUMBER	QTY	PART NAME 1 2 3 4 5 6 (PRODUCT LEVEL)	SEE PAGE
	1	1	**155-9137**	1	PLATE	
	2	1	**194-9480**	1	RING-RETAINING	
	3	1	**266-7836**	1	BARREL	
	4	1	**155-9117**	1	SPRING	
	5	1	**194-9481**	1	DISC-THRUST	
	6	1	**194-9479**	3	PIN	
	7	1	**233-4880**	9	PISTON AS	
	8	1	**266-7837**	1	PLATE	
	9	1	**266-7838**	1	GUIDE	

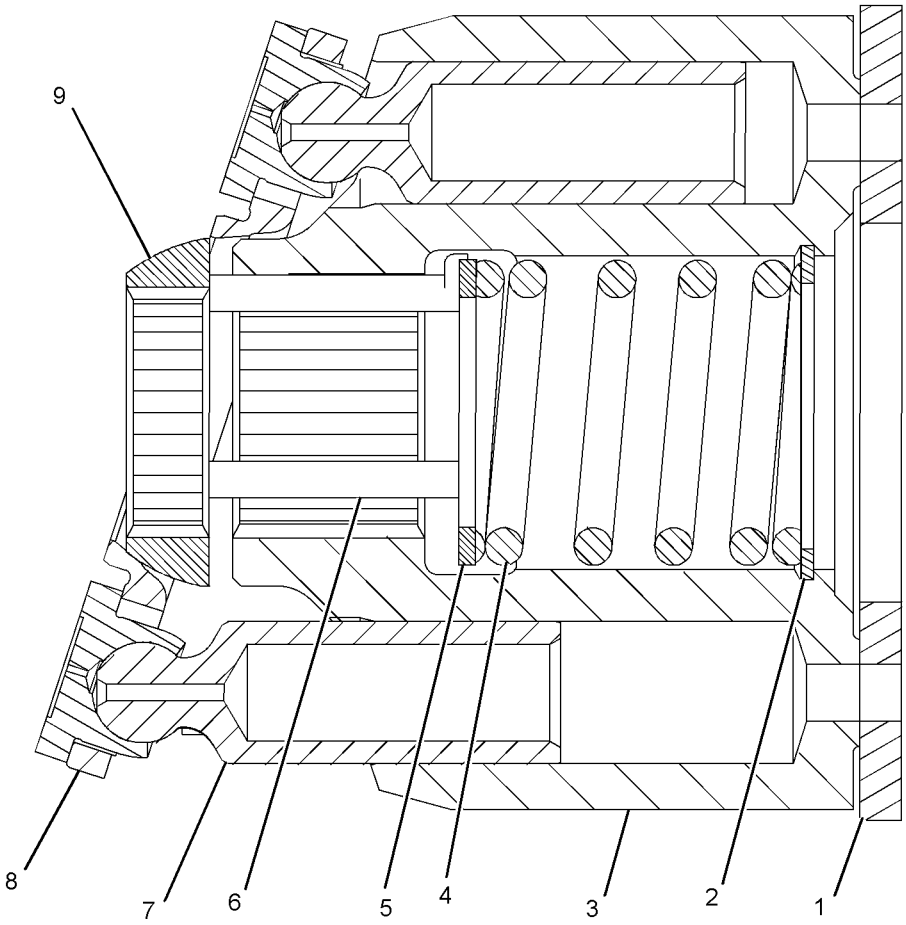

GRAPHIC #1 **<END>** g01201440

HYDRAULIC SYSTEM

259-0922 SCREEN GP-HYDRAULIC–TANK

S/N: D3P1-UP; M4T1-UP

PART OF 289-5565 TANK GP-HYDRAULIC

SMCS-5068 **i02346889**

NOTE	REF NO	GRAPHIC REF	PART NUMBER	QTY	PART NAME 1 2 3 4 5 6 (PRODUCT LEVEL)	SEE PAGE
	1	1	**259-0918**	1	GUIDE	
	2	1	**095-6639**	1	SPRING	
M	3	1	**8T-4133**	2	NUT (M10X1.5-THD)	
	4	1	**129-7784**	1	ROD	
	5	1	**209-6000**	1	SCREEN AS (HYDRAULIC TANK)	
	6	1	**5H-5672**	1	SEAL-O-RING	

M-METRIC PART

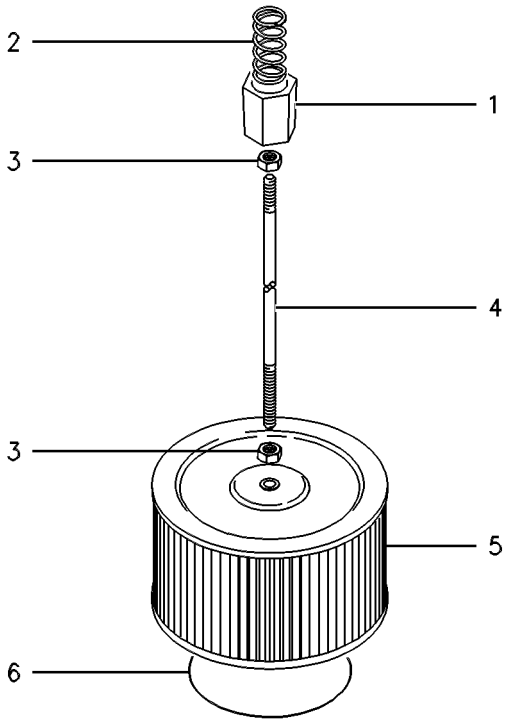

GRAPHIC #1 **<END>** g00267878

HYDRAULIC SYSTEM

234-4440 SWIVEL GP

S/N: D3P1-UP; M4T1-UP

PART OF 239-1618 LINES GP-TRAVEL MOTOR

SMCS-5060 **i02497047**

NOTE	REF NO	GRAPHIC REF	PART NUMBER	QTY	PART NAME 1 2 3 4 5 6 (PRODUCT LEVEL)	SEE PAGE
	1	1	**7I-7131**	1	RETAINER	
	2	1	**7Y-4817**	1	COVER	
	3	1	**159-7782**	5	SEAL	
	4	1	**225-4548**	1	HOUSING	
	5	1	**225-4549**	1	ROTOR	
	6	1	**095-1625**	3	SEAL-O-RING	
	7	1	**095-1716**	1	SEAL-O-RING	
	8	1	**8T-4121**	2	WASHER-HARD (11X21X2.5-MM THK)	
M	9	1	**8T-4136**	6	BOLT (M10X1.5X25-MM)	
	10	1	**8T-6759**	1	PLUG-PIPE	

M-METRIC PART

234-4440 SWIVEL GP *(contd.)* **i02497047**

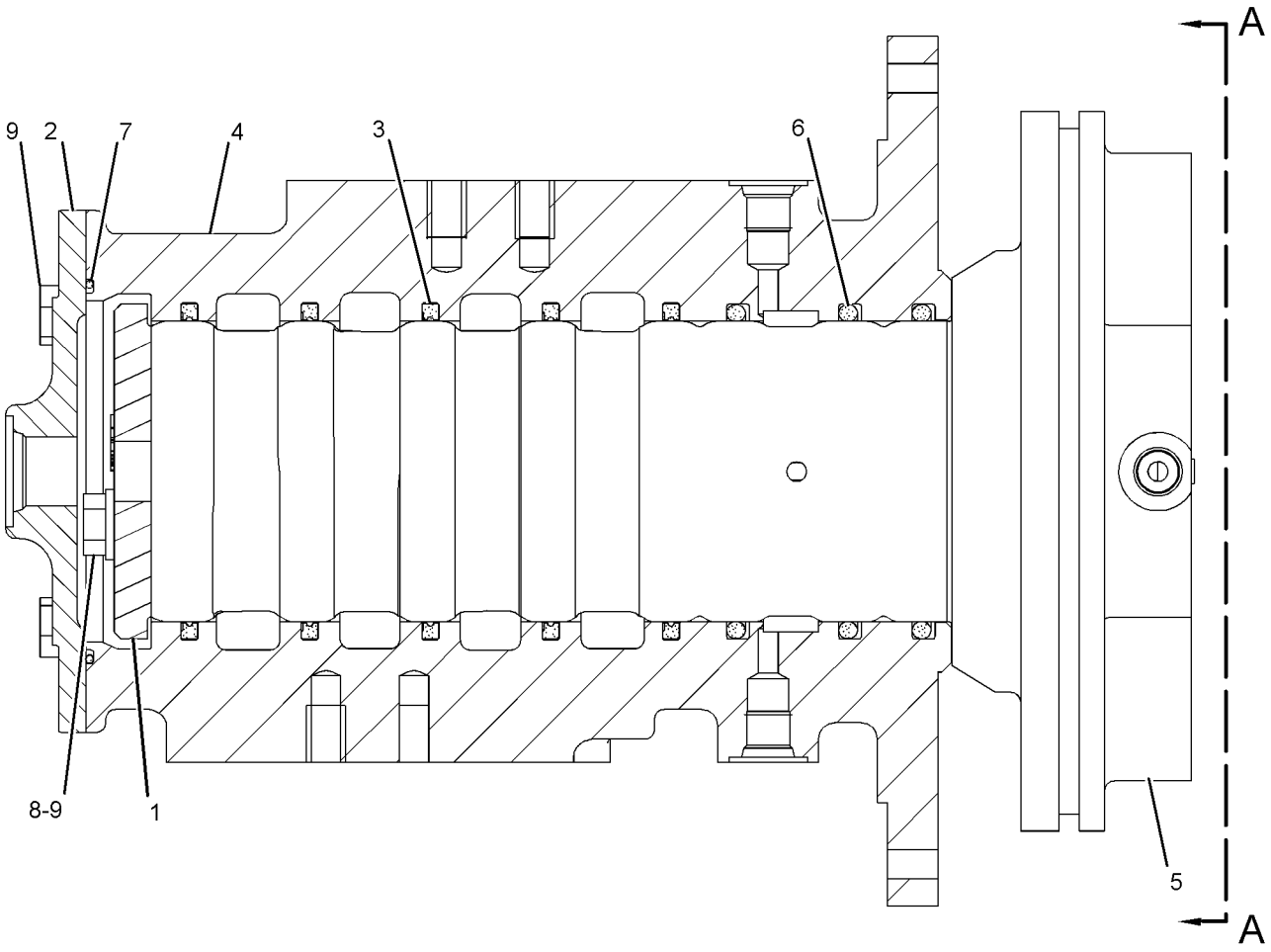

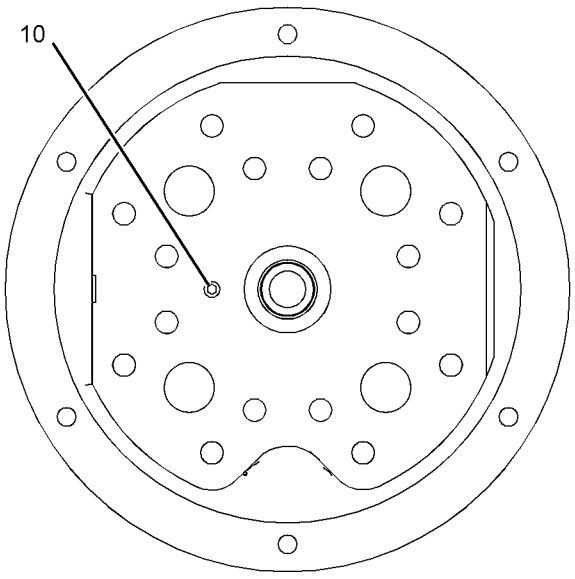

VIEW A-A

GRAPHIC #1 **<END>** g01153614

239-1611 TANK & FILTER GP-HYDRAULIC

S/N: M4T1-257

PART OF 239-1610 TANK & MTG GP-HYDRAULIC

SMCS-5056, 5068 **i03126159**

NOTE	REF NO	GRAPHIC REF	PART NUMBER	QTY	PART NAME 1 2 3 4 5 6 (PRODUCT LEVEL)	SEE PAGE
C	1	1	**292-7299**	1	SUPPORT AS	
	2	1	**282-7126**	1	SUPPORT AS	
Y	3	1	**289-5565**	1	TANK GP-HYDRAULIC	734
	4	1	**275-1362**	1	BRACKET	
CY	5	1	**289-8194**	1	FILTER GP-OIL (HYDRAULIC, CASE DRAIN)	489
Y	6	1	**158-8987**	1	FILTER & VALVE GP-PILOT (HYDRAULIC OIL)	484
	7	1	*164-5567*	1	COUPLER AS-QUICK DISCONNECT	
		1	**3J-1907**	1	SEAL-O-RING	
		1	**6V-3965**	1	FITTING (QUICK DISCONNECT)	
	8	1	*164-5590*	1	VALVE AS-FLUID SAMPLING (PILOT OIL)	
		1	**3J-7354**	1	SEAL-O-RING	
		1	**8C-3446**	1	VALVE-FLUID SAMPLING	
Y	9	1	*188-4140*	1	FILTER GP-OIL (HYDRAULIC RETURN)	485
	10	1	**8T-7971**	2	WASHER-HARD (13.5X25.5X5-MM THK)	
	11	1	**6J-2680**	1	SEAL-O-RING	
	12	1	**6V-0852**	1	CAP-DUST	
	13	1	**8C-3451**	1	CAP-DUST	
C	14	1	**8T-4121**	7	WASHER-HARD (11X21X2.5-MM THK)	
CM	15	1	**8T-4136**	3	BOLT (M10X1.5X25-MM)	
M	16	1	**8T-4183**	2	BOLT (M12X1.75X40-MM)	
M	17	1	**8T-4192**	2	BOLT (M12X1.75X25-MM)	
M	18	1	**8T-4195**	4	BOLT (M10X1.5X30-MM)	
	19	1	**8T-4223**	6	WASHER-HARD (13.5X25.5X3-MM THK)	
	20	1	**8T-4224**	4	WASHER-HARD (8.8X16X2-MM THK)	
M	21	1	**8T-4908**	4	BOLT (M8X1.25X25-MM)	
M	22	1	**8T-4956**	4	BOLT (M12X1.75X35-MM)	

C-CHANGE FROM PREVIOUS TYPE
M-METRIC PART
Y-SEPARATE ILLUSTRATION

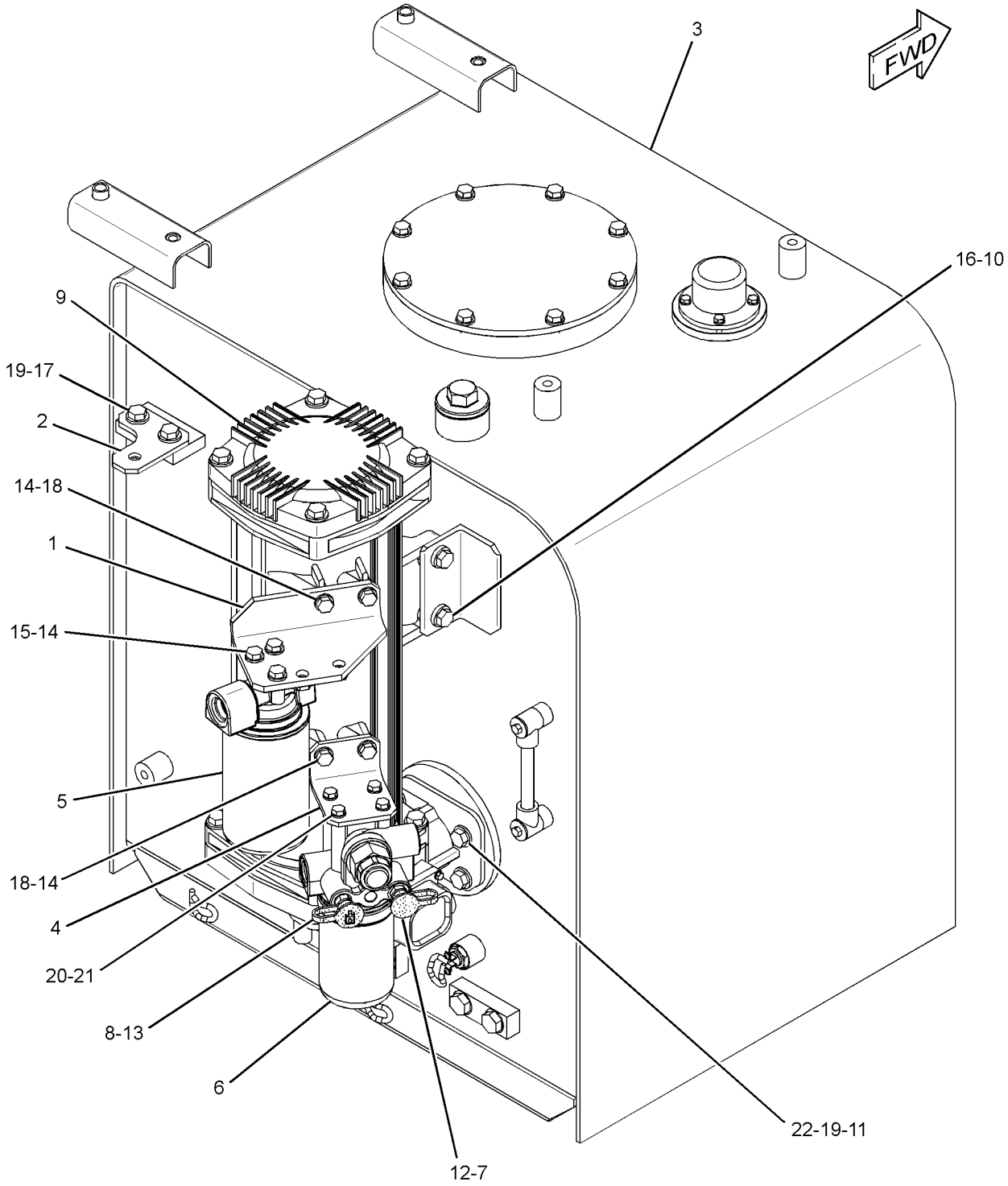

GRAPHIC #1 **<END>** g01363441

239-1611 TANK & FILTER GP-HYDRAULIC

S/N: D3P1-UP; M4T258-UP

PART OF 239-1610 TANK & MTG GP-HYDRAULIC

SMCS-5056, 5068 **i03753208**

NOTE	REF NO	GRAPHIC REF	PART NUMBER	QTY	PART NAME 1 2 3 4 5 6 (PRODUCT LEVEL)	SEE PAGE
	1	1	**292-7299**	1	SUPPORT AS	
Y	3	1	**289-5565**	1	TANK GP-HYDRAULIC	734
	4	1	**275-1362**	1	BRACKET	
Y	5	1	**289-8194**	1	FILTER GP-OIL (HYDRAULIC, CASE DRAIN)	489
Y	6	1	**158-8987**	1	FILTER & VALVE GP-PILOT (HYDRAULIC OIL)	484
	7	1	*164-5567*	1	COUPLER AS-QUICK DISCONNECT	
		1	**3J-1907**	1	SEAL-O-RING	
		1	**6V-3965**	1	FITTING (QUICK DISCONNECT)	
	8	1	*164-5590*	1	VALVE AS-FLUID SAMPLING (PILOT OIL)	
		1	**3J-7354**	1	SEAL-O-RING	
		1	**8C-3446**	1	VALVE-FLUID SAMPLING	
Y	9	1	*188-4140*	1	FILTER GP-OIL (HYDRAULIC RETURN)	485
	10	1	**8T-7971**	2	WASHER-HARD (13.5X25.5X5-MM THK)	
	11	1	**6J-2680**	1	SEAL-O-RING	
	12	1	**6V-0852**	1	CAP-DUST	
	13	1	**8C-3451**	1	CAP-DUST	
	14	1	**8T-4121**	7	WASHER-HARD (11X21X2.5-MM THK)	
M	15	1	**8T-4136**	3	BOLT (M10X1.5X25-MM)	
CM	16	1	**8T-4183**	6	BOLT (M12X1.75X40-MM)	
M	18	1	**8T-4195**	4	BOLT (M10X1.5X30-MM)	
C	19	1	**8T-4223**	4	WASHER-HARD (13.5X25.5X3-MM THK)	
	20	1	**8T-4224**	4	WASHER-HARD (8.8X16X2-MM THK)	
M	21	1	**8T-4908**	4	BOLT (M8X1.25X25-MM)	

C-CHANGE FROM PREVIOUS TYPE
M-METRIC PART
Y-SEPARATE ILLUSTRATION

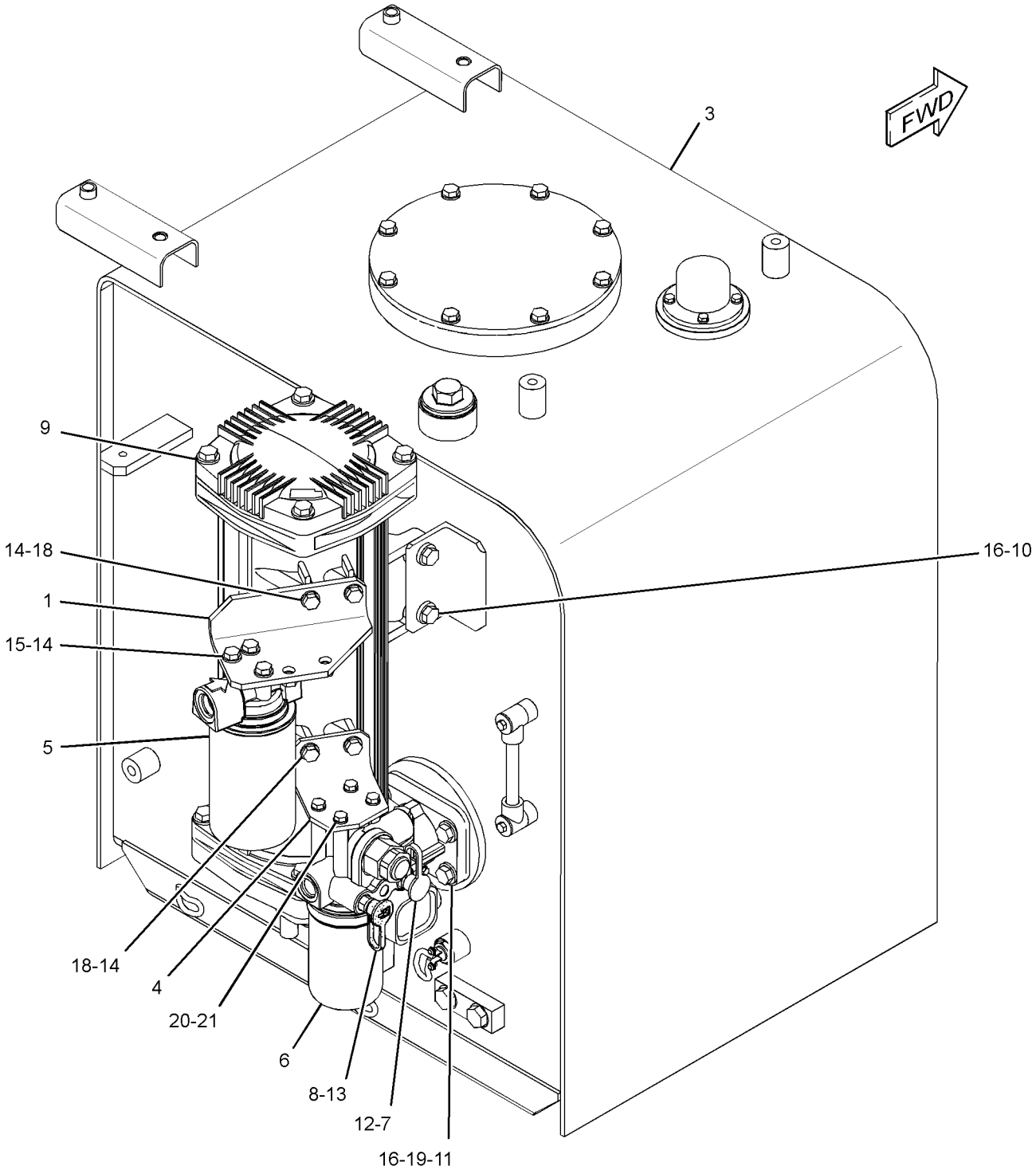

GRAPHIC #1 **<END>** g02028194

HYDRAULIC SYSTEM

239-1610 TANK & MTG GP-HYDRAULIC

S/N: D3P1-UP; M4T1-UP
PART OF 259-7766 HYDRAULIC AR

SMCS-5056 **i02496716**

NOTE	REF NO	GRAPHIC REF	PART NUMBER	QTY	PART NAME 1 2 3 4 5 6 (PRODUCT LEVEL)	SEE PAGE
Y	1	1	**239-1611**	1	TANK & FILTER GP-HYDRAULIC	729
Y	2	1	*248-9845*	1	LINES GP-RETURN	673
	3	1	**085-9310**	6	SPACER (16.6X32X26-MM THK)	
M	4	1	**8T-4140**	6	BOLT (M16X2X60-MM)	

M-METRIC PART
Y-SEPARATE ILLUSTRATION

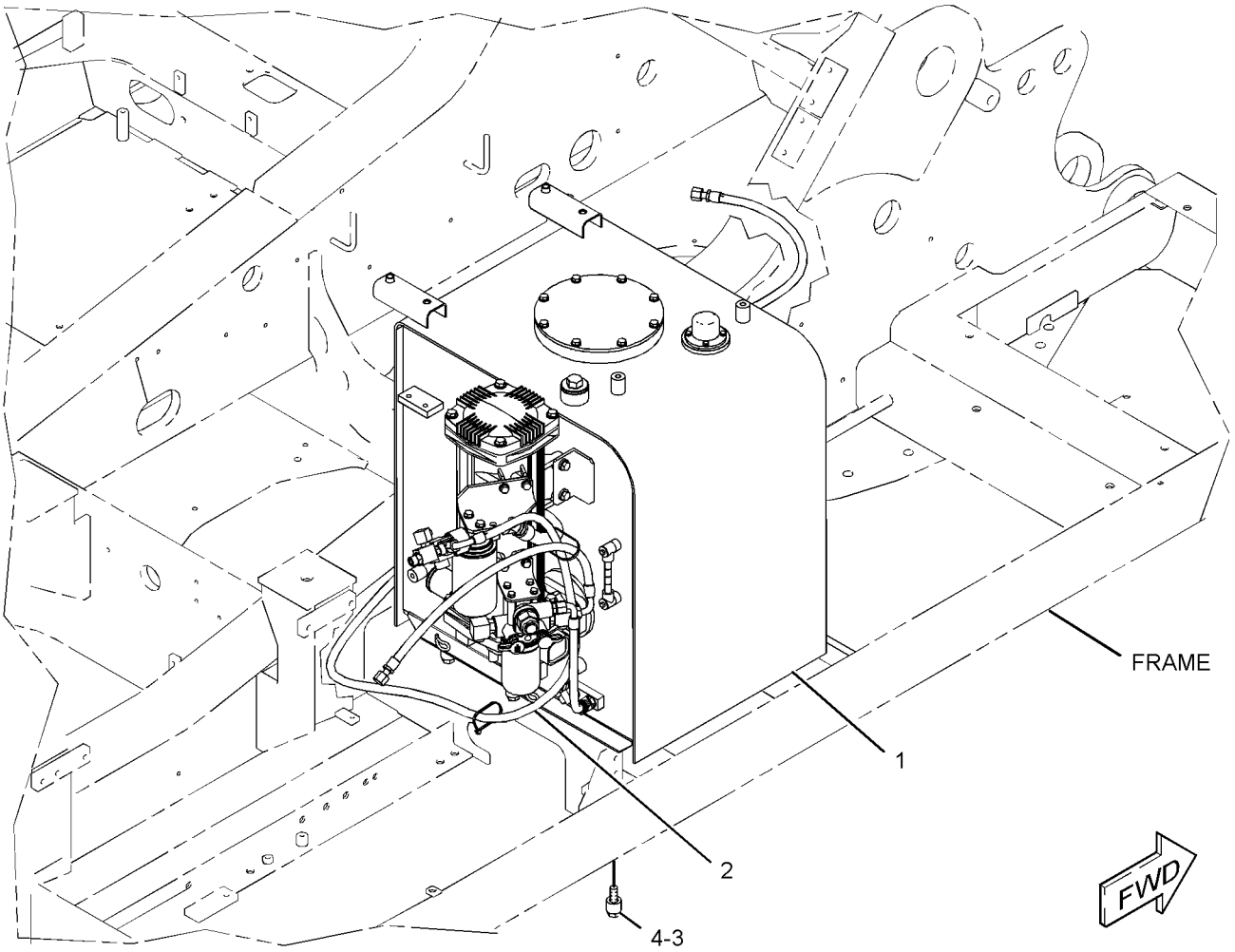

GRAPHIC #1 **<END>** g01232580

HYDRAULIC SYSTEM

289-5565 TANK GP-HYDRAULIC

S/N: D3P1-UP; M4T1-UP

PART OF 239-1611 TANK & FILTER GP-HYDRAULIC

SMCS-5056, 5068, 7479 **i03630938**

NOTE	REF NO	GRAPHIC REF	PART NUMBER	QTY	PART NAME 1 2 3 4 5 6 (PRODUCT LEVEL)	SEE PAGE
	1	1	**4I-5394**	1	SENDER AS-TEMPERATURE (HYDRAULIC OIL)	
M		1	**4I-5490**	2	SCREW-MACHINE (M4X0.7X6-MM)	
		1	**095-0826**	2	LOCKWASHER	
	2	1	**119-5162**	1	COVER	
	3	1	**213-0677**	1	SWITCH AS-LIQUID LEVEL (HYDRAULIC OIL)	
		1	**102-8802**	1	KIT-RECEPTACLE (2-PIN)	
					(INCLUDES RECEPTACLE AS & WEDGE)	
		1	**9X-3401**	2	PIN-CONNECTOR (16-GA TO 18-GA)	
	4	1	**227-0590**	1	BREATHER (HYDRAULIC TANK)	
Y	5	1	**227-0620**	1	GAUGE GP-SIGHT (HYDRAULIC OIL LEVEL)	490
	6	1	**236-3170**	1	COVER AS	
	7	1	**9X-8256**	4	WASHER (6.6X12X2-MM THK)	
Y	8	1	**259-0922**	1	SCREEN GP-HYDRAULIC (TANK)	726
	9	1	**207-6403**	1	PLUG	
	10	1	**207-6404**	1	WASHER (49.5X60.5X1.5-MM THK)	
	11	1	**095-1608**	1	SEAL-O-RING	
	12	1	**095-1735**	1	SEAL-O-RING	
	13	1	**165-3256**	1	PIPE AS	
	14	1	**3D-2824**	1	SEAL-O-RING	
	15	1	**3K-0360**	1	SEAL-O-RING	
	16	1	**4J-0527**	1	SEAL-O-RING	
M	17	1	**5C-9553**	4	BOLT (M6X1X16-MM)	
	18	1	**5P-8068**	1	SEAL-O-RING	
	19	1	**6D-9157**	1	SEAL-O-RING	
	20	1	**6I-0723**	1	PLUG-OIL DRAIN (OIL PAN) (HYDRAULIC TANK)	
	21	1	**6I-0724**	1	ADAPTER-PLUG	
	22	1	**6V-6707**	1	SEAL-O-RING	
M	23	1	**8T-0267**	2	BOLT-SOCKET HEAD (M6X1X12-MM)	
	24	1	**8T-4121**	12	WASHER-HARD (11X21X2.5-MM THK)	
M	25	1	**8T-4137**	12	BOLT (M10X1.5X20-MM)	
	26	1	**8T-4223**	2	WASHER-HARD (13.5X25.5X3-MM THK)	
M	27	1	**8T-4956**	2	BOLT (M12X1.75X35-MM)	
	28	1	**8T-6761**	1	PLUG-PIPE	

M-METRIC PART
Y-SEPARATE ILLUSTRATION

289-5565 TANK GP-HYDRAULIC *(contd.)* **i03630938**

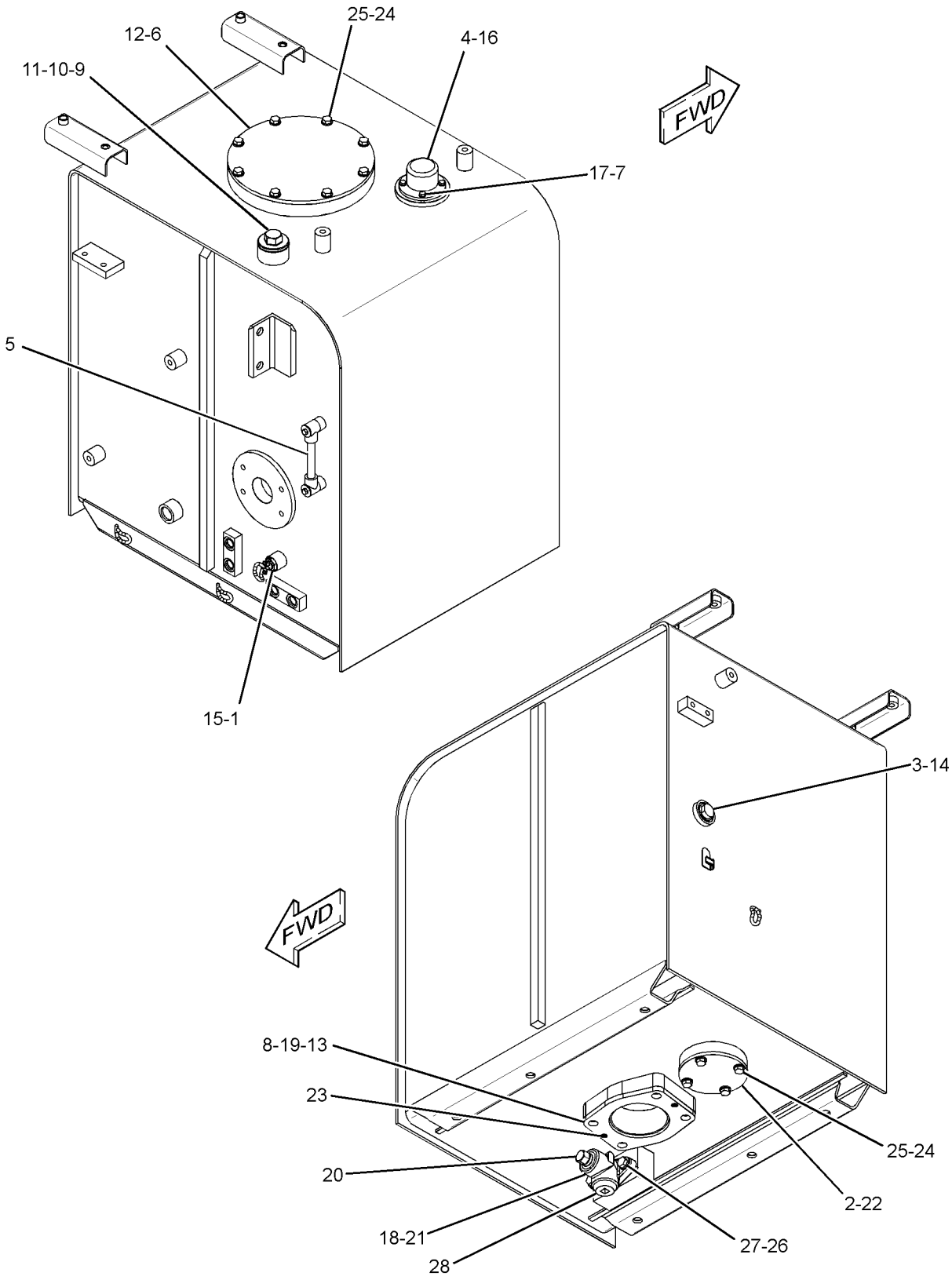

GRAPHIC #1 **<END>** g01341426

HYDRAULIC SYSTEM

255-5713 VALVE & MTG GP-CONTROL–AUXILIARY

S/N: D3P1-UP; M4T1-UP
PART OF 270-8795, 270-8796, 272-9663, 297-0494, 307-9975, 336-3339 CONTROL
AR-AUXILIARY
AN ATTACHMENT

SMCS-5051 **i02509663**

NOTE	REF NO	GRAPHIC REF	PART NUMBER	QTY	PART NAME 1 2 3 4 5 6 (PRODUCT LEVEL)	SEE PAGE
Y	1	1	**259-7378**	1	VALVE GP-CONTROL (AUXILIARY)	748
M	2	1	**7I-1026**	5	BOLT-SOCKET HEAD (M16X2X130-MM)	
	3	1	**4J-8998**	2	SEAL-O-RING	
	4	1	**1P-3702**	2	SEAL-RECTANGULAR	

M-METRIC PART
Y-SEPARATE ILLUSTRATION

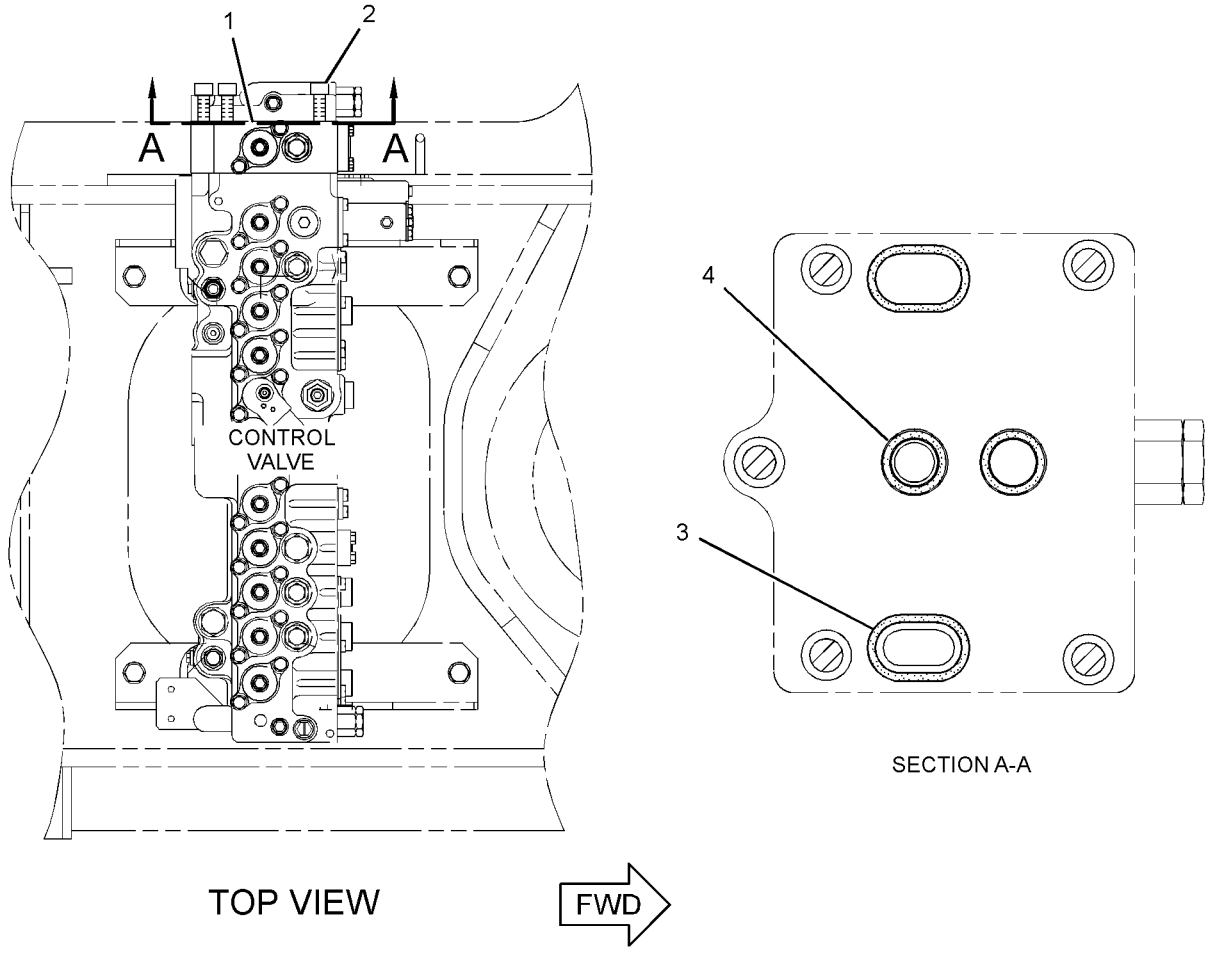

GRAPHIC #1 **<END>** g01214142

255-5716 VALVE & MTG GP-CONTROL–AUXILIARY

S/N: D3P1-UP; M4T1-UP
PART OF 255-5770 CONTROL AR-AUXILIARY
AN ATTACHMENT

SMCS-5051 **i02787696**

NOTE	REF NO	GRAPHIC REF	PART NUMBER	QTY	PART NAME 1 2 3 4 5 6 (PRODUCT LEVEL)	SEE PAGE
Y	1	1	**244-8419**	1	VALVE GP-CONTROL (MEDIUM FLOW)	744
Y	2	1	**259-7378**	1	VALVE GP-CONTROL (AUXILIARY)	748
M	3	1	**7Y-5243**	5	BOLT-SOCKET HEAD (M16X2X200-MM)	
	4	1	**1P-3702**	2	SEAL-RECTANGULAR	
	5	1	**4J-8998**	2	SEAL-O-RING	

M-METRIC PART
Y-SEPARATE ILLUSTRATION

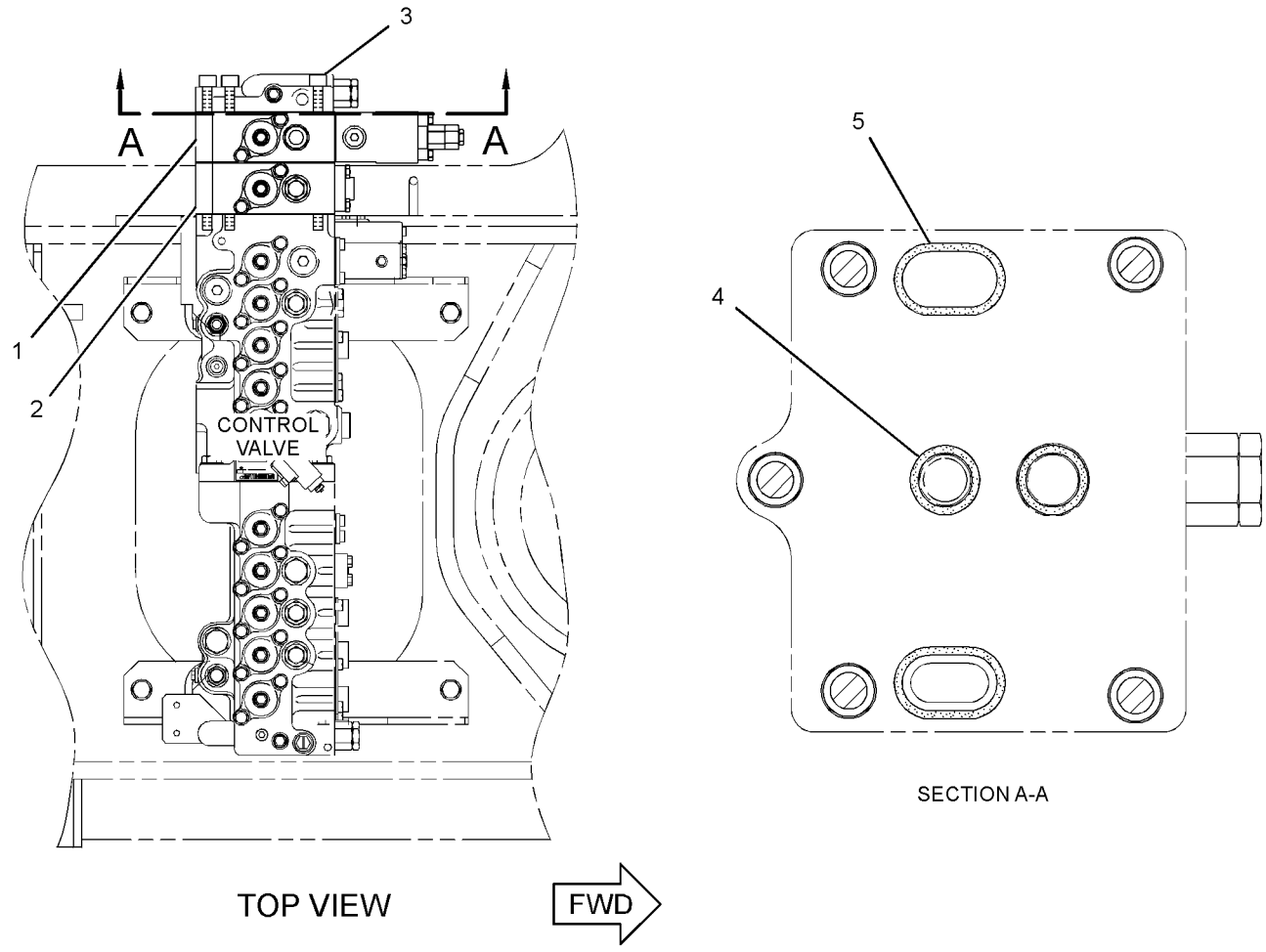

GRAPHIC #1 **<END>** g01232197

285-1376 VALVE & MTG GP-CONTROL–
SYSTEM 16, 1-WAY, 2-PUMP
S/N: M4T1-UP
PART OF 255-5774 CONTROL AR-AUXILIARY
AN ATTACHMENT

SMCS-5051 **i03727280**

NOTE	REF NO	GRAPHIC REF	PART NUMBER	QTY	PART NAME 1 2 3 4 5 6 (PRODUCT LEVEL)	SEE PAGE
	1	1	**4J-8998**	2	SEAL-O-RING	
M	2	1	**7I-1026**	5	BOLT-SOCKET HEAD (M16X2X130-MM)	
Y	3	1	**285-1375**	1	VALVE GP-CONTROL (2-PUMP, 1-WAY FLOW)	757
	4	1	**1P-3702**	2	SEAL-RECTANGULAR	

M-METRIC PART
Y-SEPARATE ILLUSTRATION

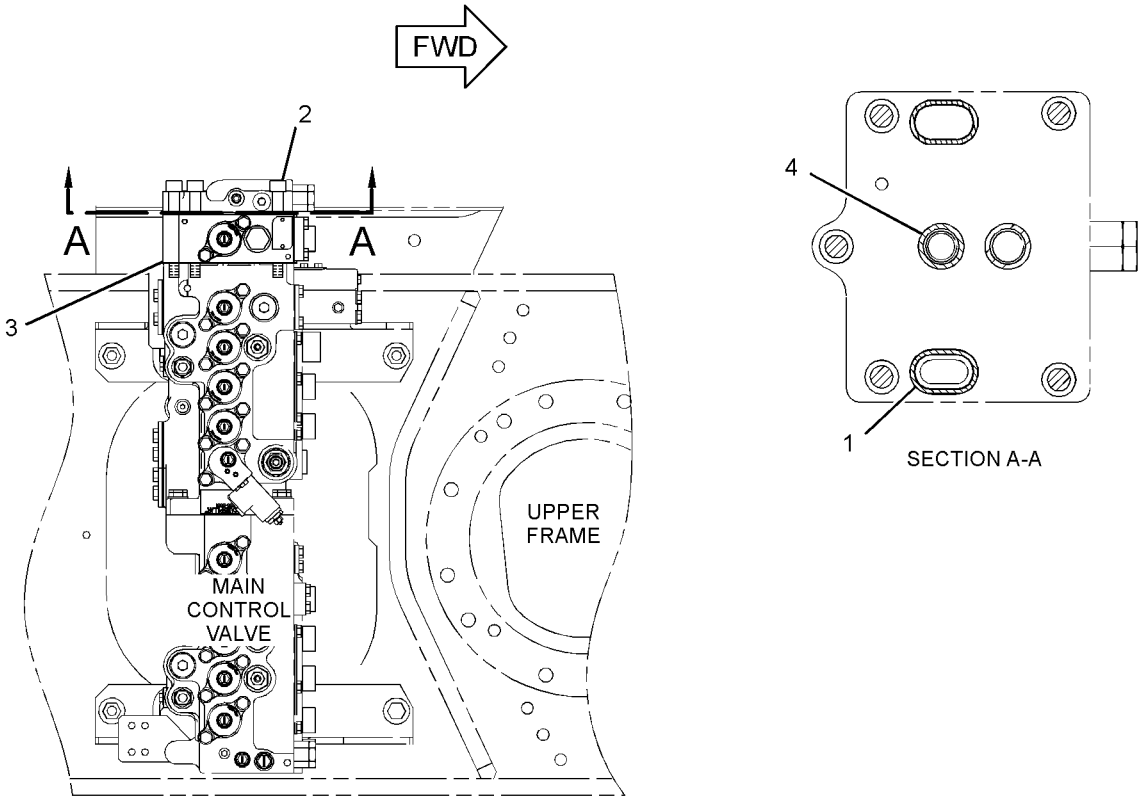

TOP VIEW

GRAPHIC #1 **<END>** g01264271

259-7417 VALVE AR-ALT PATTERN CONTROL—4-WAY

S/N: D3P1-UP; M4T1-UP
AN ATTACHMENT

SMCS-5065 **i02517833**

NOTE	PART NUMBER	QTY	PART NAME 1 2 3 4 5 6 (PRODUCT LEVEL)	SEE PAGE
Y	*247-7494*	1	FILM GP (CONTROL PATTERN, QUICK CHANGE)	1086
Y	*255-1849*	1	LINES GP-PILOT (4-WAY PATTERN)	629

Y-SEPARATE ILLUSTRATION

<END>

259-7422 VALVE AR-ALT PATTERN CONTROL—2-WAY

S/N: D3P1-UP; M4T1-UP
PART OF 337-4126 OPTION AR-CONTROL, 337-4112 OPTION AR-HYDRAULIC
AN ATTACHMENT

SMCS-5065 **i03172724**

NOTE	PART NUMBER	QTY	PART NAME 1 2 3 4 5 6 (PRODUCT LEVEL)	SEE PAGE
Y	*247-7490*	1	FILM GP (ALT PATTERN CONTROL, WARNING)	1085
Y	*255-1851*	1	LINES GP-PILOT (ALT PATTERN CONTROL, 2-WAY)	632

Y-SEPARATE ILLUSTRATION

<END>

247-7500 VALVE AR-SWING—WITHOUT FINE SWING

S/N: M4T1-UP
PART OF 345-2281 OPTION AR-CONFIGURATION
AN ATTACHMENT

SMCS-5480 **i03728300**

NOTE	PART NUMBER	QTY	PART NAME 1 2 3 4 5 6 (PRODUCT LEVEL)	SEE PAGE
Y	*259-0680*	1	VALVE GP-SWING CUSHION	845

Y-SEPARATE ILLUSTRATION

<END>

HYDRAULIC SYSTEM

297-0370 VALVE GP-CHECK

S/N: D3P1-UP; M4T1-UP
PART OF 255-1919, 255-1922, 255-1924 LINES GP-FRONT, 255-2078 LINES GP-RETURN
AN ATTACHMENT

SMCS-5067 **i02787572**

NOTE	REF NO	GRAPHIC REF	PART NUMBER	QTY	PART NAME 1 2 3 4 5 6 (PRODUCT LEVEL)	SEE PAGE
	1	1	**095-1585**	1	SEAL-O-RING	
	2	1	**225-4804**	3	PLUG	
	3	1	**4J-7533**	3	SEAL-O-RING	
	4	1	**095-1602**	1	SEAL-O-RING	
	5	1	**232-4113**	1	RING	
	6	1	**095-1601**	1	SEAL-O-RING	
	7	1	**8T-3008**	1	RING-BACKUP	
	8	1	**095-1700**	1	SEAL-O-RING	
	9	1	**7M-8485**	1	SEAL-O-RING	
	10	1	**095-1657**	1	SEAL-O-RING	
	11	1	**232-4114**	2	RING	

297-0370 VALVE GP-CHECK *(contd.)* **i02787572**

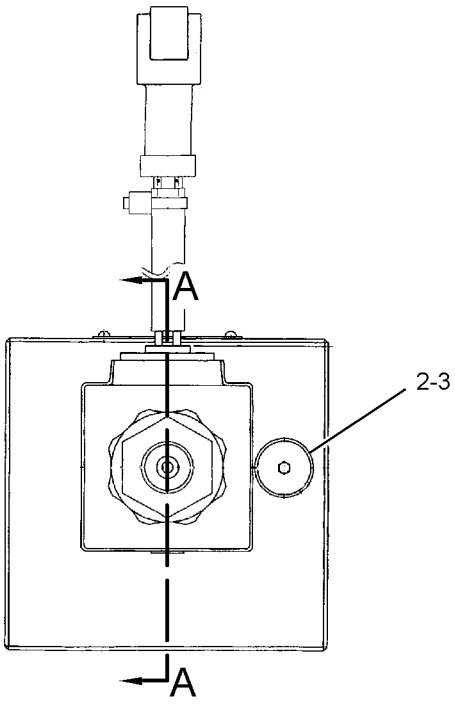

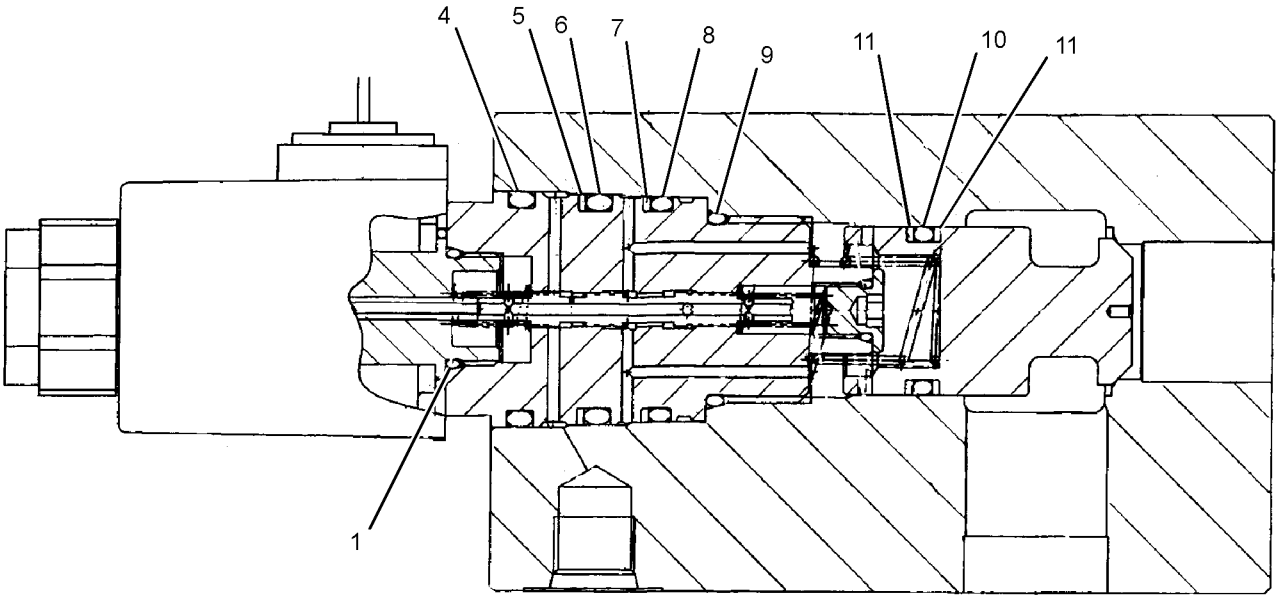

SECTION A-A

GRAPHIC #1 **<END>** g01382946

234-4624 VALVE GP-CONTROL–REVERSE FLOW FAN

S/N: D3P1-UP; M4T1-UP
PART OF 255-2079 LINES GP-MOTOR
AN ATTACHMENT

SMCS-5051 **i03745205**

NOTE	REF NO	GRAPHIC REF	PART NUMBER	QTY	PART NAME 1 2 3 4 5 6 (PRODUCT LEVEL)	SEE PAGE
	1	1	**7Y-5010**	2	PLUG	
	2	1	**283-5990**	1	BODY AS-VALVE	
	4	1	**242-6890**	1	SPRING	
	5	1	**242-6891**	1	PLUG	
J	6	1	**242-6892**	1	VALVE GP-RELIEF (LINE)	
	7	1	**107-7068**	11	PLUG-PIPE	
	8	1	**111-9959**	3	PLUG-PIPE	
	9	1	**096-1598**	1	SPRING	
	10	1	**3J-1907**	2	SEAL-O-RING	
	11	1	**3K-0360**	2	SEAL-O-RING	
	12	1	**4K-1388**	1	SEAL-O-RING	
	13	1	**7Y-5011**	1	VALVE	
	14	1	**9S-8004**	2	PLUG	
					AVAILABLE REPAIR KIT(S):	
J			**242-6925**	1	KIT-SEAL (LINE RELIEF VALVE)	
					(INCLUDES O-RING SEALS, BACK-UP RING & RETAINING RING)	

J-KIT MARKED J SERVICES PART(S) MARKED J

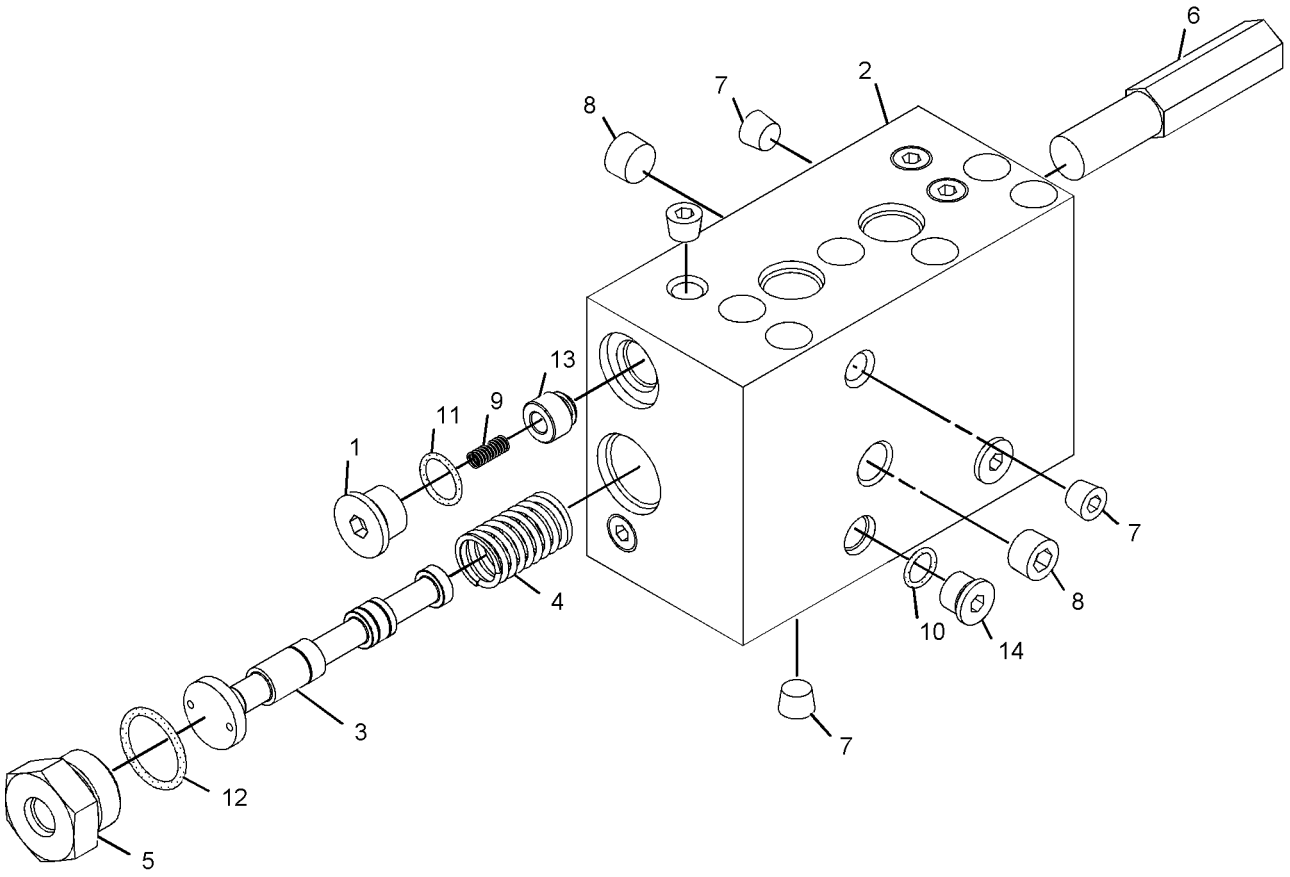

GRAPHIC #1 **<END>** g01093739

244-8400 VALVE GP-CONTROL—WITHOUT COVERS, HOUSINGS

S/N: D3P1-UP; M4T1-UP

PART OF 244-8419, 259-7378, 285-1375 VALVE GP-CONTROL

AN ATTACHMENT

SMCS-5051 **i02411027**

NOTE	REF NO	GRAPHIC REF	PART NUMBER	QTY	PART NAME 1 2 3 4 5 6 (PRODUCT LEVEL)	SEE PAGE
	1	1	**104-7293**	1	SPRING	
Z	2	1		1	STEM-AUXILIARY	
Z	3	1		1	BLOCK	
	4	1	**153-5276**	1	BOLT-SPECIAL	
	5	1	**6E-2271**	2	RETAINER	

Z-NOT SERVICED SEPARATELY

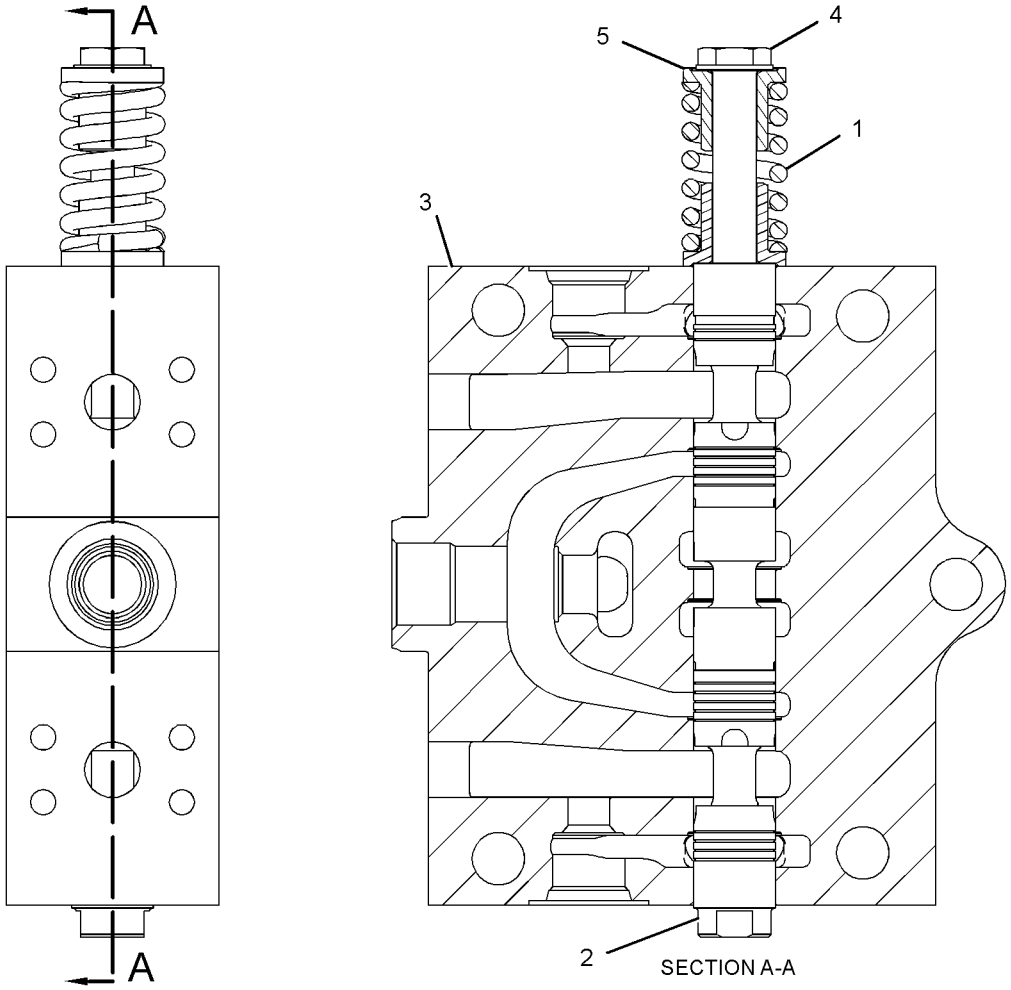

GRAPHIC #1 **<END>** g01218449

HYDRAULIC SYSTEM

244-8419 VALVE GP-CONTROL—MEDIUM FLOW

S/N: D3P1-UP; M4T1-UP
PART OF 255-5716 VALVE & MTG GP-CONTROL
AN ATTACHMENT

SMCS-5051 **i02794858**

NOTE	REF NO	GRAPHIC REF	PART NUMBER	QTY	PART NAME 1 2 3 4 5 6 (PRODUCT LEVEL)	SEE PAGE
M	1	1	**8T-4195**	4	BOLT (M10X1.5X30-MM)	
	2	1	**4J-8998**	2	SEAL-O-RING	
	3	1	**6E-5731**	1	VALVE (LOAD CHECK)	
	4	1	**7I-1248**	1	SPRING	
	5	1	**158-8159**	1	HOUSING	
Y	6	1	**165-9473**	2	PLUG GP-CONTROL VALVE (AUXILIARY)	712
Y	7	1	**185-0490**	2	VALVE GP-FLOW CONTROL & RELIEF (MEDIUM FLOW, ROTATOR MOTOR)	766
	8	1	**236-6419**	1	PLUG	
Y	9	1	*244-8400*	1	VALVE GP-CONTROL (WITHOUT COVERS, HOUSINGS)	743
	10	1	**8T-4121**	4	WASHER-HARD (11X21X2.5-MM THK)	
	11	1	**095-1590**	1	SEAL-O-RING	
	12	1	**095-1787**	1	RING-BACKUP	
	13	1	**1P-3702**	2	SEAL-RECTANGULAR	
	14	1	**4J-5267**	2	SEAL-O-RING	
	15	1	**6E-2274**	1	COVER	
	16	1	**6V-5597**	2	SEAL-O-RING	
M	17	1	**7X-2545**	8	BOLT (M10X1.5X150-MM)	

M-METRIC PART
Y-SEPARATE ILLUSTRATION

244-8419 VALVE GP-CONTROL *(contd.)* **i02794858**

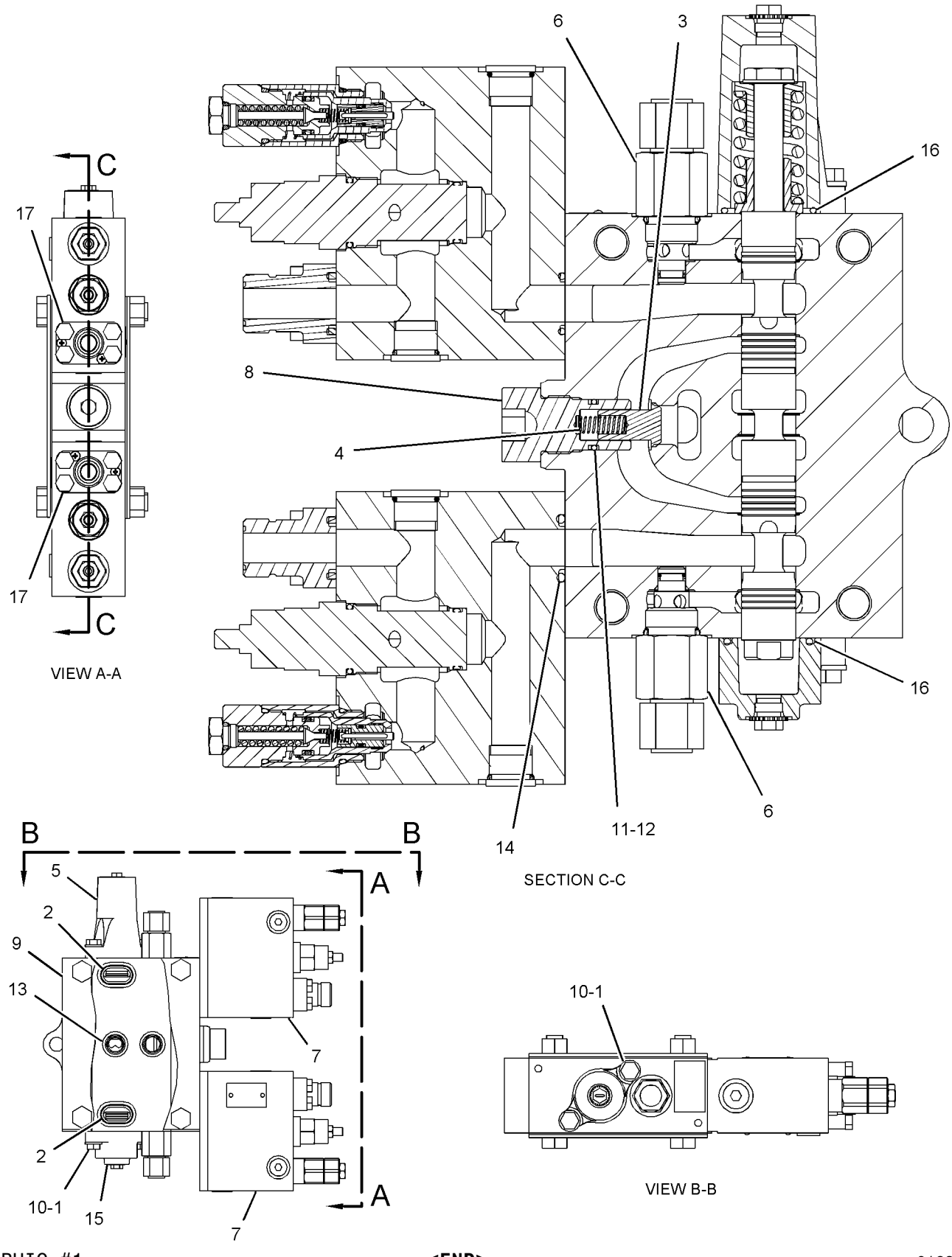

GRAPHIC #1 **<END>** g01232090

HYDRAULIC SYSTEM

254-3080 VALVE GP-CONTROL—QUICK COUPLER

S/N: D3P1-UP; M4T1-UP
PART OF 269-9562 LINES GP-FRONT
AN ATTACHMENT

SMCS-5051 **i03631010**

NOTE	REF NO	GRAPHIC REF	PART NUMBER	QTY	PART NAME 1 2 3 4 5 6 (PRODUCT LEVEL)	SEE PAGE
	1	1	**287-2352**	1	RETAINER-SPRING	
	2	1	**6E-5438**	1	SPRING	
	3	1	**6E-5439**	1	SPRING	
Y	4	1	**121-1491**	1	VALVE GP-SOLENOID (QUICK COUPLER)	825
J	5	1	**247-7587**	2	VALVE GP-PRESSURE REDUCING (QUICK COUPLER)	
Z	6	1		1	BODY-VALVE	
Z	7	1		1	STEM	
	8	1	*148-8407*	2	PLUG AS	
					(EACH INCLUDES)	
		1	**3J-1907**	1	SEAL-O-RING	
		1	**9S-4191**	1	PLUG-O-RING	
	9	1	**4J-5267**	1	SEAL-O-RING	
	10	1	**6E-2313**	1	COVER	
	11	1	**6E-5431**	5	SHIM (0.5-MM THK)	
	12	1	**6E-5434**	1	HOUSING-PILOT	
M	13	1	**7I-2272**	2	BOLT (M5X0.8X12-MM)	
	14	1	**8F-0212**	1	SEAL-O-RING	
M	15	1	**8T-4195**	2	BOLT (M10X1.5X30-MM)	
	16	1	**8T-4224**	2	WASHER-HARD (8.8X16X2-MM THK)	
	17	1	**8T-6759**	12	PLUG-PIPE	
M	18	1	**8T-6870**	2	BOLT (M8X1.25X70-MM)	
					AVAILABLE REPAIR KIT(S):	
J			**172-4432**	1	KIT-SEAL (QUICK COUPLER VALVE)	

J-KIT MARKED J SERVICES PART(S) MARKED J
M-METRIC PART
Y-SEPARATE ILLUSTRATION
Z-NOT SERVICED SEPARATELY

254-3080 VALVE GP-CONTROL *(contd.)* **i03631010**

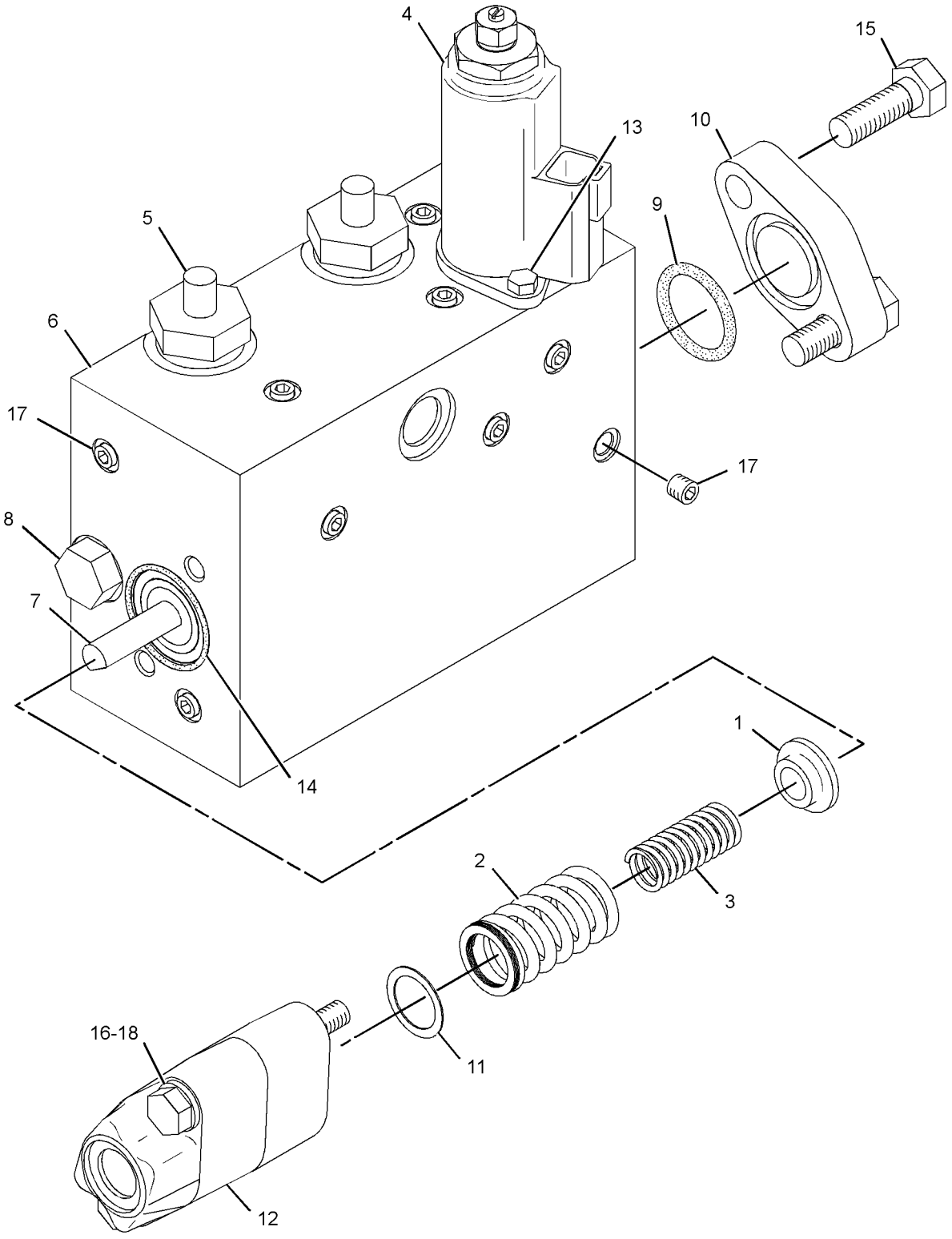

GRAPHIC #1 **<END>** g01245214

HYDRAULIC SYSTEM

259-7378 VALVE GP-CONTROL–AUXILIARY

S/N: D3P1-UP; M4T1-UP
PART OF 255-5713, 255-5716 VALVE & MTG GP-CONTROL
AN ATTACHMENT

SMCS-5051 **i03423330**

NOTE	REF NO	GRAPHIC REF	PART NUMBER	QTY	PART NAME 1 2 3 4 5 6 (PRODUCT LEVEL)	SEE PAGE
M	1	1	**8T-4195**	12	BOLT (M10X1.5X30-MM)	
	2	1	**4J-8998**	2	SEAL-O-RING	
	3	1	**6E-5731**	1	VALVE (LOAD CHECK)	
	4	1	**7I-1248**	1	SPRING	
	5	1	**171-0150**	2	COVER	
	6	1	**236-6419**	1	PLUG	
Y	7	1	*244-8400*	1	VALVE GP-CONTROL (WITHOUT COVERS, HOUSINGS)	743
Y	8	1	**255-5661**	2	VALVE GP-RELIEF (LINE)	814
	9	1	**8T-4121**	4	WASHER-HARD (11X21X2.5-MM THK)	
	10	1	**095-1590**	1	SEAL-O-RING	
	11	1	**095-1787**	1	RING-BACKUP	
	12	1	**158-8159**	1	HOUSING	
	13	1	**1P-3702**	4	SEAL-RECTANGULAR	
	14	1	**6E-2274**	1	COVER	
	15	1	**6V-5597**	2	SEAL-O-RING	

M-METRIC PART
Y-SEPARATE ILLUSTRATION

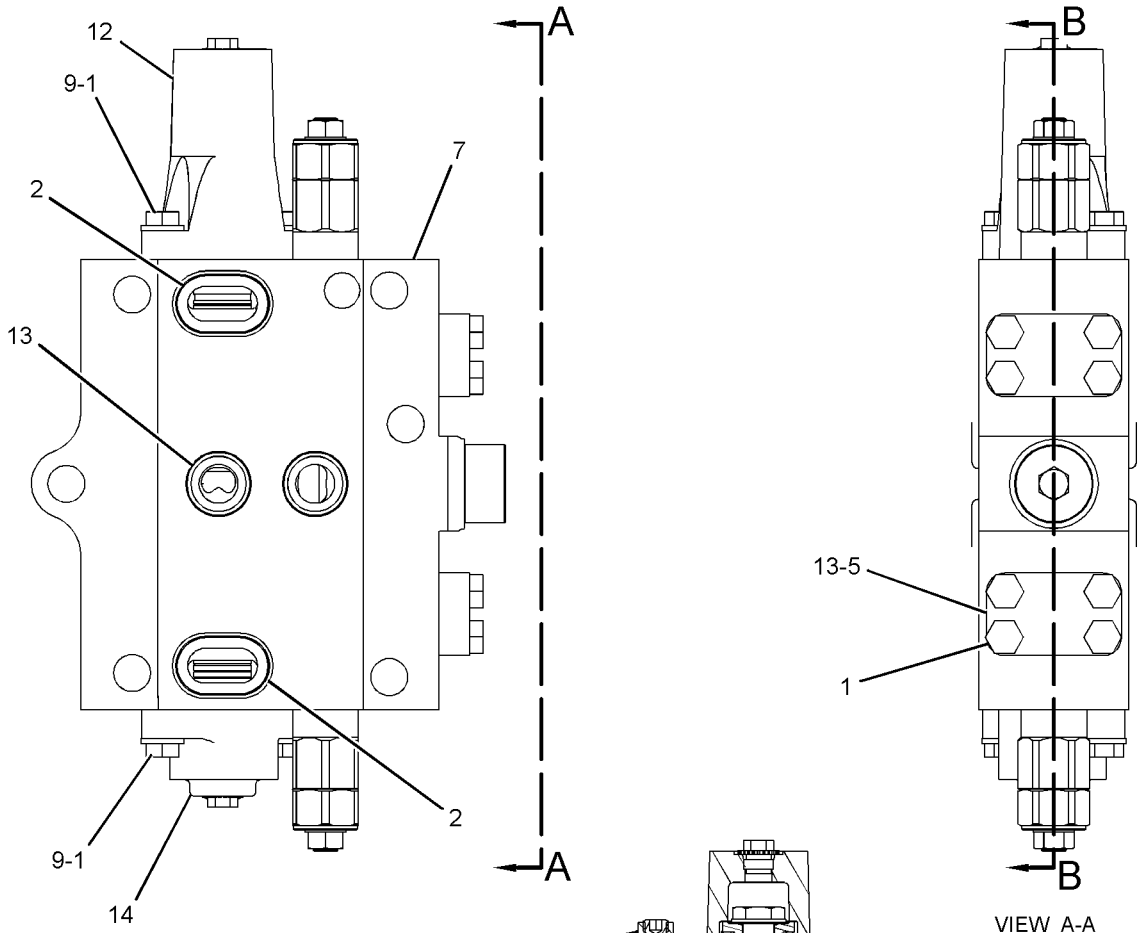

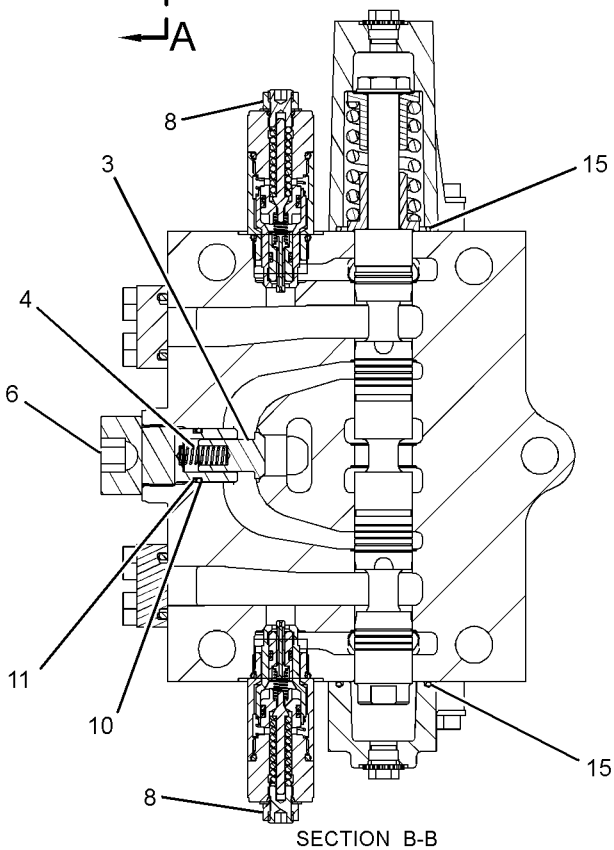

GRAPHIC #1 **<END>** g01219416

HYDRAULIC SYSTEM

259-7448 VALVE GP-CONTROL–LH

S/N: D3P1-UP; M4T1-UP

PART OF 285-1540 VALVE GP-MAIN CONTROL

SMCS-5051 **i02567845**

NOTE	REF NO	GRAPHIC REF	PART NUMBER	QTY	PART NAME 1 2 3 4 5 6 (PRODUCT LEVEL)	SEE PAGE
	1	2,3	**4T-3148**	3	SPRING	
	2	1	**6E-2274**	5	COVER	
	3	3	**6E-5169**	1	SPRING	
	4	2	**7I-1248**	1	SPRING	
Y	5	1	**121-1491**	1	VALVE GP-SOLENOID (STRAIGHT TRAVEL)	825
	6	3	**153-5288**	1	SPRING	
	7	3	**153-5289**	1	GUIDE	
	8	3	**153-5290**	2	PLUG	
	9	3	**153-5291**	1	CONNECTOR	
	10	3	**153-5292**	1	VALVE-CHECK	
	11	3	**153-5293**	1	SPRING	
Y	12	2	**153-5295**	1	VALVE GP-PRIORITY (SWING)	801
	13	2	**153-5298**	1	SLEEVE	
	14	2	**153-5299**	1	VALVE	
	15	2	**153-5306**	1	SPRING	
	16	3	**153-5309**	1	SLEEVE	
	17	3	**153-5311**	1	SPRING	
	18	3	**158-8150**	1	VALVE GP-UNLOADING	
	19	1	**158-8159**	4	HOUSING	
	20	1	**158-8206**	1	HOUSING	
	21	3	**158-8207**	1	STOPPER	
	22	2	**165-9595**	1	COVER	
	23	3	**201-9263**	2	PLUG	
	24	2	*222-4737*	3	PLUG AS	
					(EACH INCLUDES)	
		2	**4J-7533**	1	SEAL-O-RING	
		2	**9S-4180**	1	PLUG	
	25	2	**236-6419**	1	PLUG	
	26	3	**236-6421**	1	PLUG	
	27	2	**236-6422**	1	PLUG	
Y	28	1	*270-5661*	1	VALVE GP-CONTROL (WITHOUT COVERS, HOUSINGS)	755
Y	29	3	**239-8774**	1	VALVE GP-RELIEF (MAIN, HEAVY LIFT)	812
	30	2	**250-2446**	1	PLUG	
	31	3	**250-2447**	1	PLUG	
Y	32	2	**255-5661**	1	VALVE GP-RELIEF (LINE)	814
	33	3	**095-1575**	1	SEAL-O-RING	
	34	2,3	**095-1590**	3	SEAL-O-RING	
	35	3	**095-1603**	1	SEAL-O-RING	
	36	3	**095-1778**	1	RING-BACKUP	
	37	2,3	**095-1787**	3	RING-BACKUP	
	38	2	**103-8173**	1	SEAL-O-RING	
	39	3	**103-8177**	1	ADAPTER	
	40	3	**123-2485**	1	PLUG	
	41	3	**2M-9780**	1	SEAL-O-RING	
	42	3	**3J-1907**	1	SEAL-O-RING	
	43	1	**4I-3569**	1	RING-BACKUP	
	44	3	**4I-6397**	3	RING-BACKUP	
	45	2	**4J-5309**	1	SEAL-O-RING	
	46	2	**4T-5074**	1	RING-BACKUP	
	47	1	**6E-3653**	1	PLUG	
	48	2	**6E-5643**	3	VALVE (LOAD CHECK)	
	49	2	**6E-5731**	1	VALVE (LOAD CHECK)	
	50	3	**6V-3922**	3	SEAL-O-RING	
	51	3	**6V-5393**	1	SEAL-O-RING	
	52	2	**6V-5556**	1	SEAL-O-RING	
	53	2,3	**6V-5597**	9	SEAL-O-RING	

259-7448 VALVE GP-CONTROL *(contd.)* i02567845

NOTE	REF NO	GRAPHIC REF	PART NUMBER	QTY	PART NAME 1 2 3 4 5 6 (PRODUCT LEVEL)	SEE PAGE
M	54	1	**7I-2272**	2	BOLT (M5X0.8X12-MM)	
	55	3	**7M-8485**	2	SEAL-O-RING	
M	56	2	**7X-2621**	1	BOLT (M10X1.5X12-MM)	
	57	1	**7Y-5219**	1	SEAL-O-RING	
	58	1,2	**8T-4121**	24	WASHER-HARD (11X21X2.5-MM THK)	
M	59	1	**8T-4195**	20	BOLT (M10X1.5X30-MM)	
M	60	2	**8T-6685**	4	BOLT (M10X1.5X110-MM)	
	61	1	**8T-6759**	2	PLUG-PIPE	

M-METRIC PART
Y-SEPARATE ILLUSTRATION

REFER TO ALL ILLUSTRATIONS OF
THIS GROUP FOR AUXILIARY VIEWS

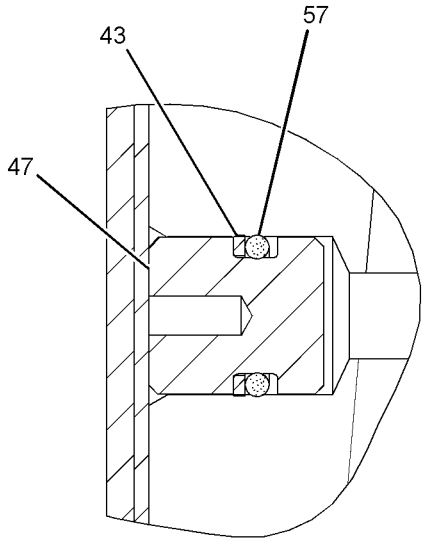

SECTION H-H

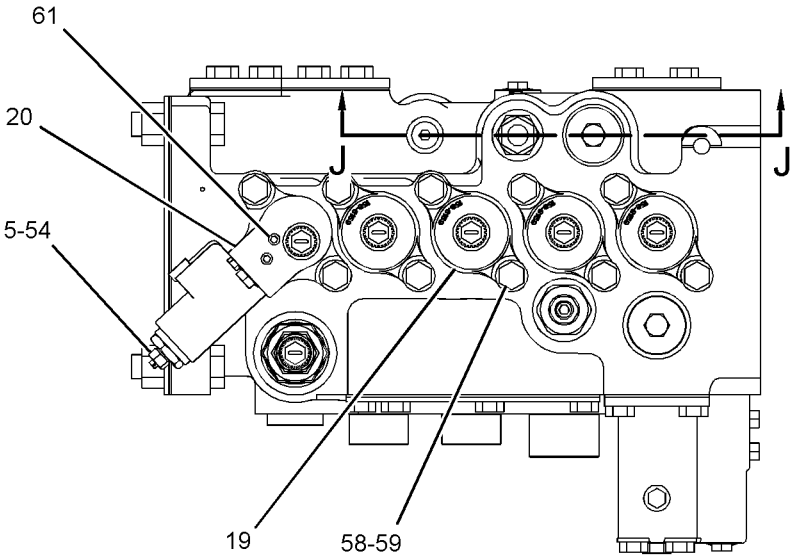

VIEW F-F

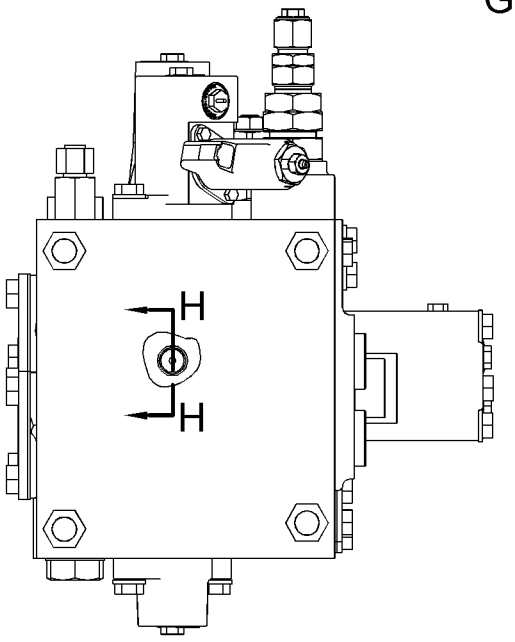

VIEW G-G

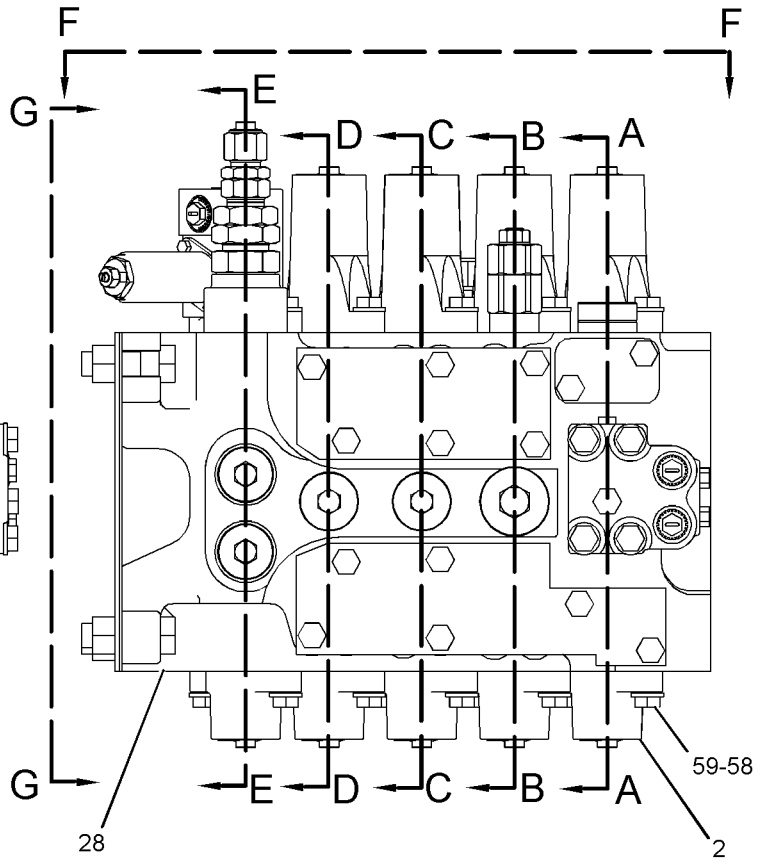

GRAPHIC #1

g01201307

259-7448 VALVE GP-CONTROL *(contd.)* **i02567845**

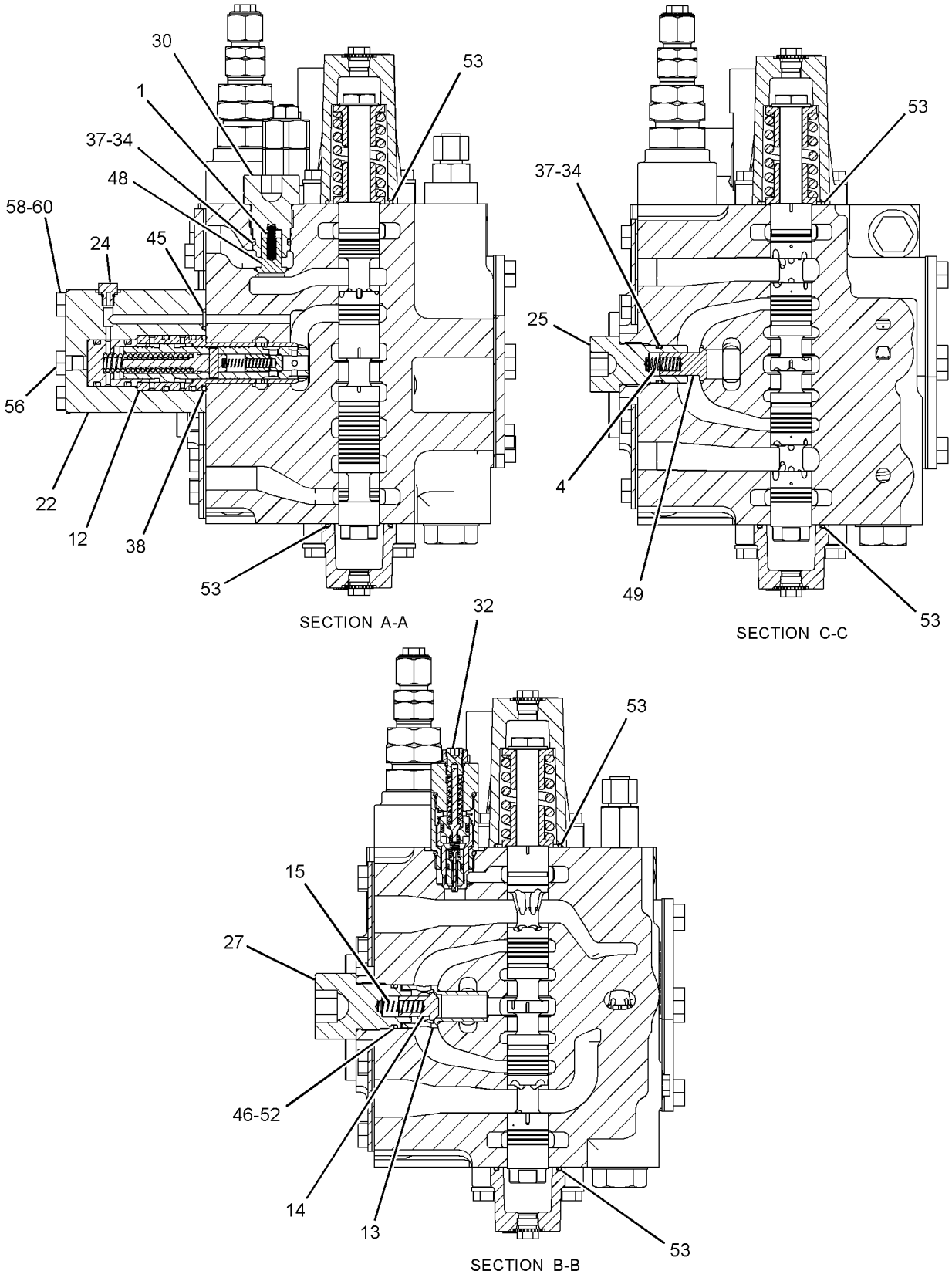

GRAPHIC #2 g01201308

259-7448 VALVE GP-CONTROL *(contd.)* i02567845

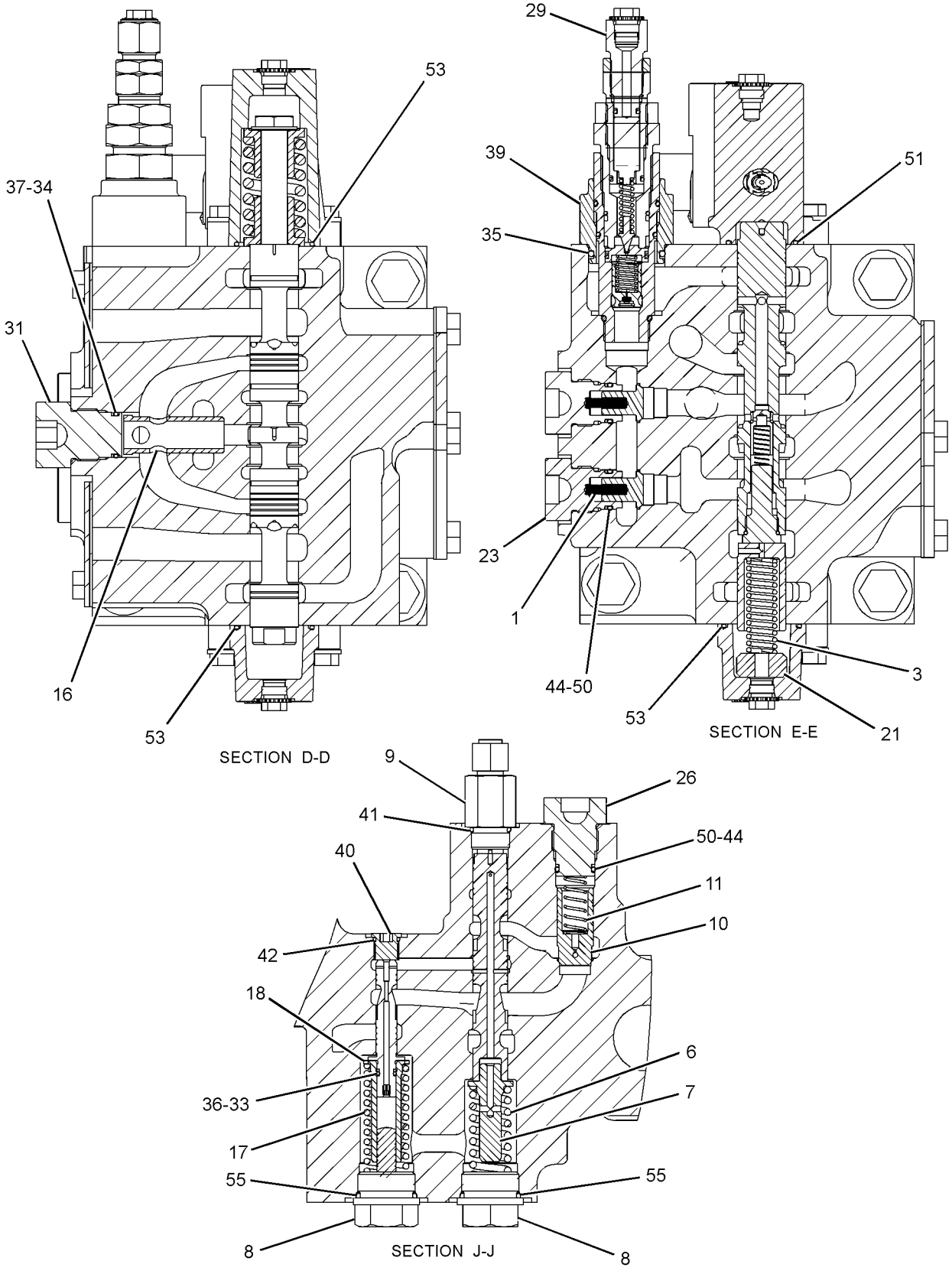

GRAPHIC #3 **<END>** g01201309

270-5661 VALVE GP-CONTROL—WITHOUT COVERS, HOUSINGS

S/N: D3P1-UP; M4T1-UP

PART OF 259-7448 VALVE GP-CONTROL

SMCS-5051 **i02499382**

NOTE	REF NO	GRAPHIC REF	PART NUMBER	QTY	PART NAME 1 2 3 4 5 6 (PRODUCT LEVEL)	SEE PAGE
	1	1	**2S-2596**	1	SPRING	
	2	1	**6E-2163**	1	VALVE-CHECK	
	3	1	**6E-2271**	8	RETAINER	
	4	1	**104-7293**	2	SPRING	
	5	1	**104-7294**	1	SPRING	
	6	1	**104-7296**	1	SPRING	
Z	7	1		1	PISTON	
Z	8	1		1	GUIDE	
Z	9	1		1	VALVE AS	
Z	10	1		1	STEM-TRAVEL	
Z	11	1		1	BODY-VALVE	
Z	12	1		1	STEM-TRAVEL	
Z	13	1		1	STEM (STICK)	
Z	14	1		1	STEM-REGENERATE	
Z	15	1		1	STEM-BOOM	
	16	1	**153-5276**	4	BOLT-SPECIAL	
Z	17	1		1	STEM-SWING	
	18	1	**3K-0360**	1	SEAL-O-RING	

Z-NOT SERVICED SEPARATELY

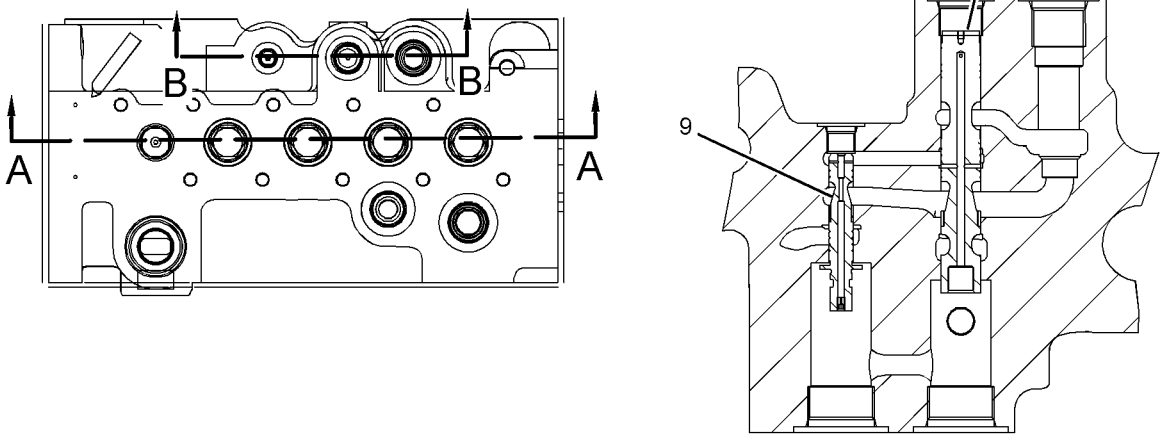

SECTION B-B

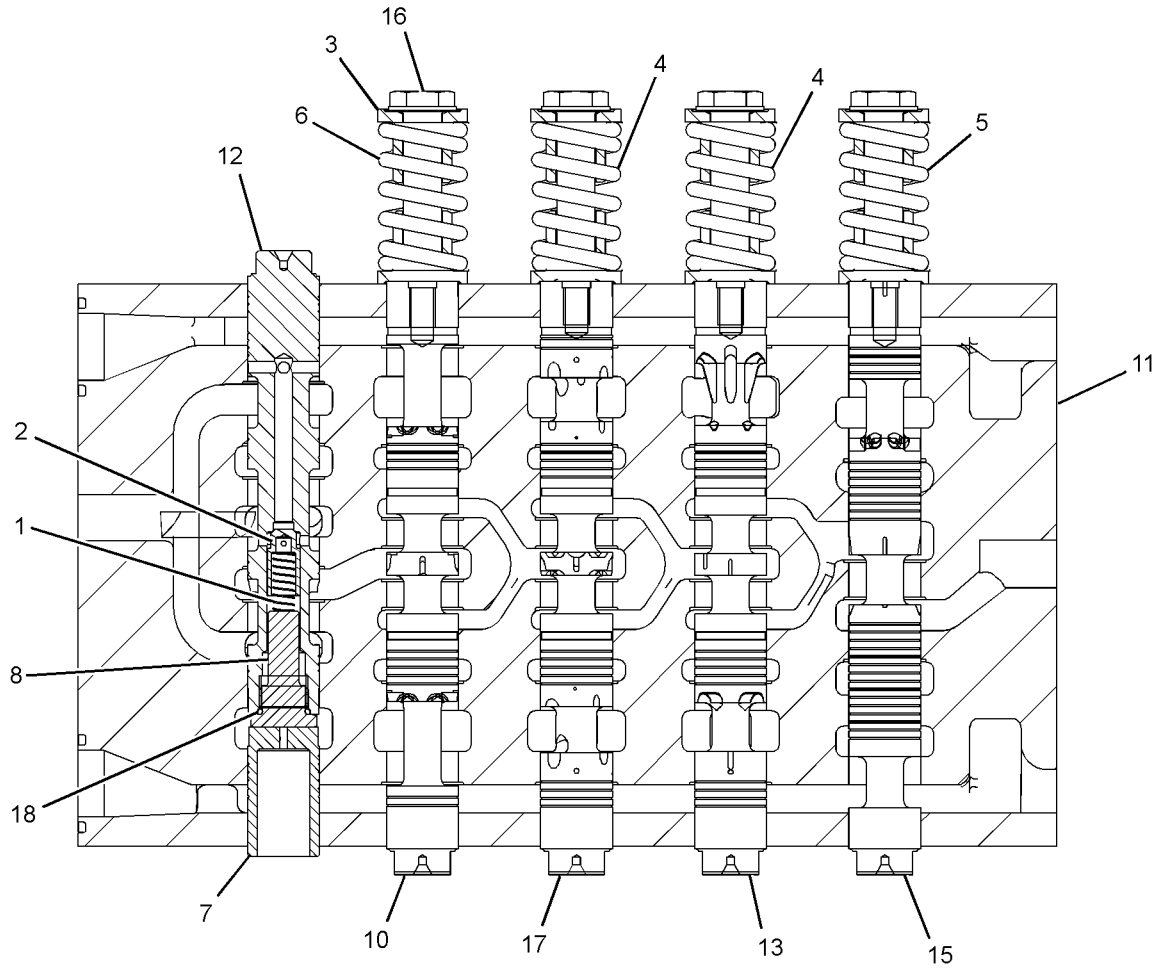

SECTION A-A

GRAPHIC #1 **<END>** g01240060

HYDRAULIC SYSTEM

285-1375 VALVE GP-CONTROL—AUXILIARY

S/N: M4T1-UP

PART OF 285-1376 VALVE & MTG GP-CONTROL

AN ATTACHMENT

SMCS-5051 **i03247531**

NOTE	REF NO	GRAPHIC REF	PART NUMBER	QTY	PART NAME 1 2 3 4 5 6 (PRODUCT LEVEL)	SEE PAGE
	1	1	**4J-8998**	2	SEAL-O-RING	
	2	1	**6E-2274**	1	COVER	
	3	1	**6E-5731**	1	VALVE (LOAD CHECK)	
	4	1	**7I-1248**	1	SPRING	
	5	1	**171-0150**	2	COVER	
	6	1	**236-6419**	1	PLUG	
Y	7	1	*244-8400*	1	VALVE GP-CONTROL (WITHOUT COVERS, HOUSINGS)	743
	8	1	**095-1590**	1	SEAL-O-RING	
	9	1	**095-1787**	1	RING-BACKUP	
	10	1	**158-8159**	1	HOUSING	
	11	1	**1P-3702**	4	SEAL-RECTANGULAR	
Y	12	1	**6E-4816**	2	PLUG GP-CONTROL VALVE	710
	13	1	**6V-5597**	2	SEAL-O-RING	
	14	1	**8T-4121**	4	WASHER-HARD (11X21X2.5-MM THK)	
M	15	1	**8T-4195**	12	BOLT (M10X1.5X30-MM)	

M-METRIC PART
Y-SEPARATE ILLUSTRATION

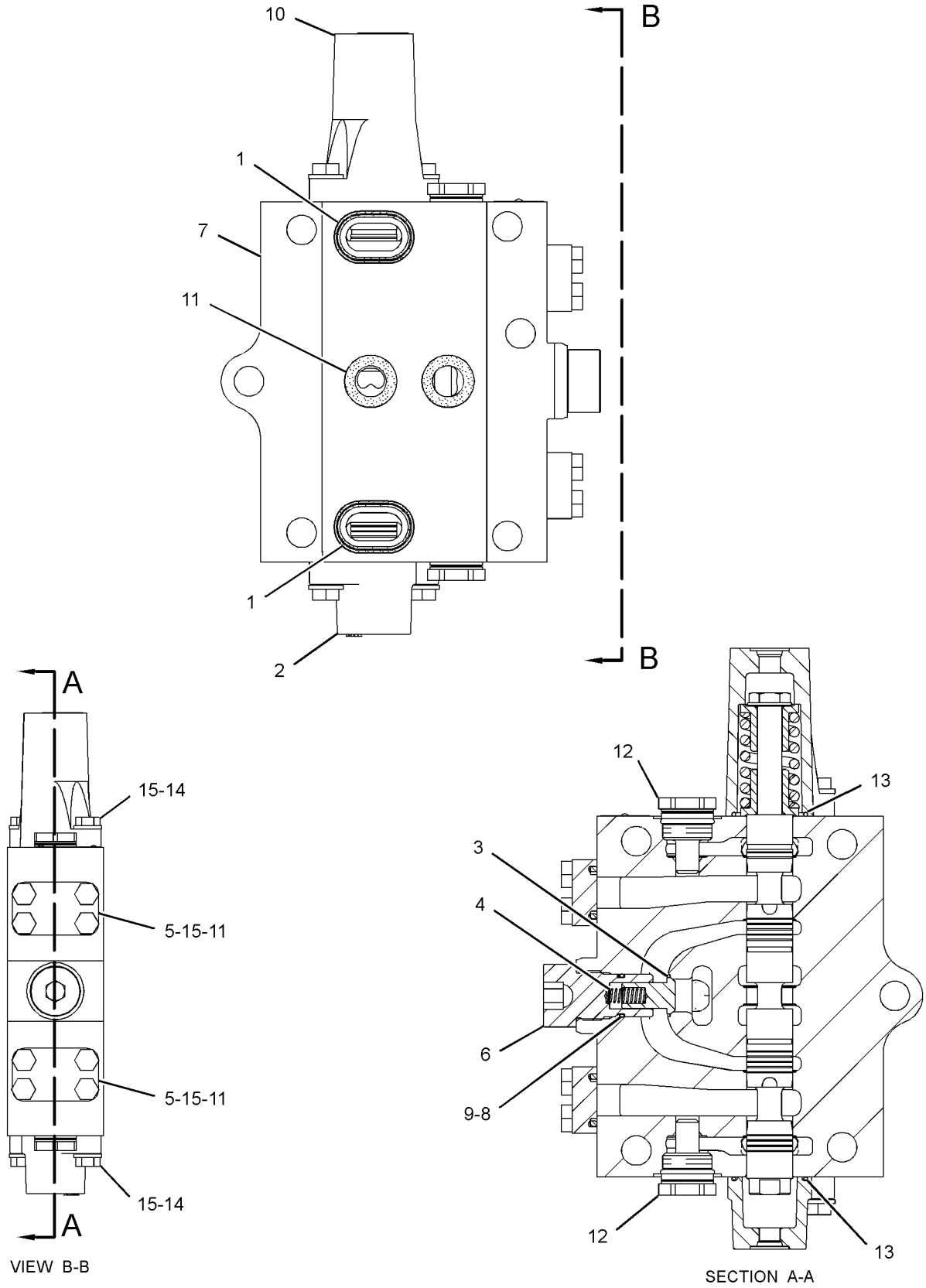

GRAPHIC #1 **<END>** g01687113

285-1531 VALVE GP-CONTROL–MEDIUM PRESSURE

S/N: D3P1-UP; M4T1-UP
PART OF 255-1926 LINES GP-FRONT
AN ATTACHMENT

SMCS-5051 **i02957882**

NOTE	REF NO	GRAPHIC REF	PART NUMBER	QTY	PART NAME 1 2 3 4 5 6 (PRODUCT LEVEL)	SEE PAGE
	1	1	**285-1777**	2	VALVE GP-RELIEF (230-BAR (3336-PSI))	
					–OR–	
A			**260-3003**	2	VALVE GP-RELIEF (160-BAR (2321-PSI))	
					(OPTIONAL SERVICE REPLACEMENT)	
					–OR–	
A			**309-9941**	2	VALVE GP-RELIEF (80-BAR (1161-PSI))	
					(OPTIONAL SERVICE REPLACEMENT)	

A-NOT PART OF THIS GROUP

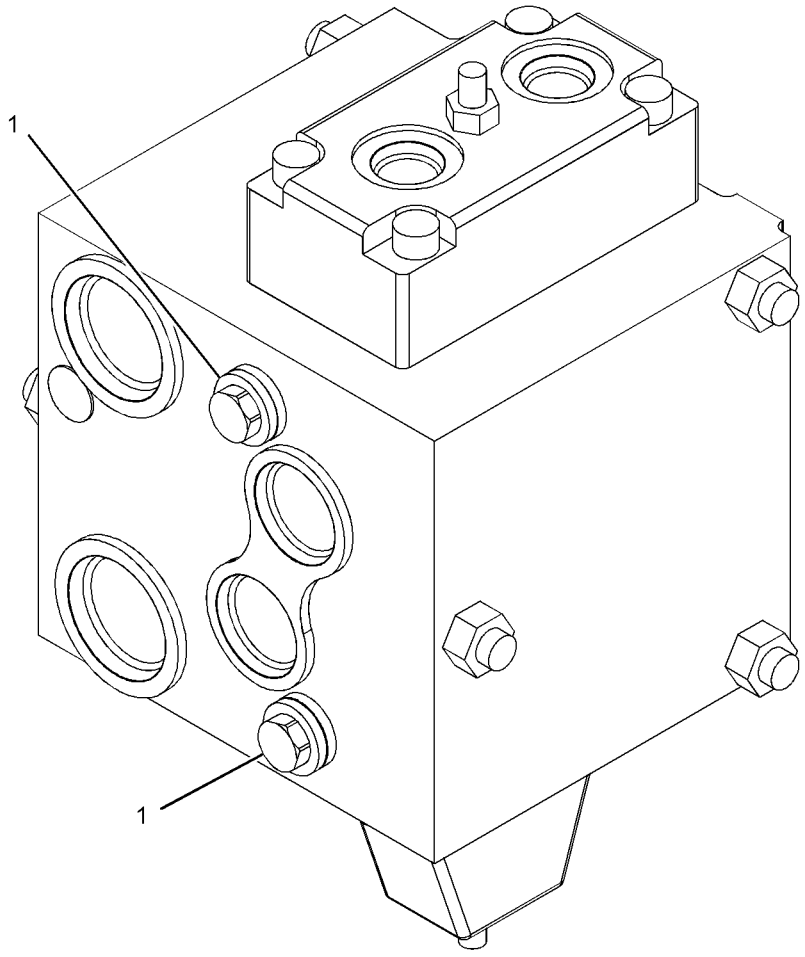

GRAPHIC #1 **<END>** g01384393

HYDRAULIC SYSTEM

285-1537 VALVE GP-CONTROL–RH

S/N: D3P1-UP; M4T1-UP

PART OF 285-1540 VALVE GP-MAIN CONTROL

SMCS-5051 **i02604410**

NOTE	REF NO	GRAPHIC REF	PART NUMBER	QTY	PART NAME 1 2 3 4 5 6 (PRODUCT LEVEL)	SEE PAGE
	1	1	**6E-2274**	5	COVER	
	2	2,3	**6E-5731**	4	VALVE (LOAD CHECK)	
	3	2,3	**7I-1248**	5	SPRING	
Y	4	3	**147-4163**	1	VALVE GP-RELIEF (NEGATIVE FLOW CONTROL)	805
	5	3	**153-5286**	1	VALVE (LOAD CHECK)	
	6	3	**153-5288**	1	SPRING	
	7	3	**153-5289**	1	GUIDE	
	8	3	**153-5290**	1	PLUG	
	9	3	**153-5291**	1	CONNECTOR	
	10	3	**153-5292**	1	VALVE-CHECK	
	11	3	**153-5293**	1	SPRING	
	12	1	**158-8159**	5	HOUSING	
	13	2,3	**236-6419**	5	PLUG	
	14	3	**236-6421**	1	PLUG	
Y	15	1	*285-1538*	1	VALVE GP-CONTROL (WITHOUT COVERS, HOUSINGS)	764
Y	16	2	**255-5661**	2	VALVE GP-RELIEF (LINE) (BUCKET)	814
Y	16A	3	**255-5661**	1	VALVE GP-RELIEF (LINE) (BOOM)	814
	17	2,3	**095-1590**	5	SEAL-O-RING	
	18	2,3	**095-1787**	5	RING-BACKUP	
	19	1	**111-9959**	1	PLUG-PIPE	
	20	3	**2M-9780**	1	SEAL-O-RING	
	21	3	**4I-6397**	1	RING-BACKUP	
	22	2	**4J-0520**	2	SEAL-O-RING	
Y	23	2	**6E-4816**	2	PLUG GP-CONTROL VALVE	710
	24	3	**6V-3922**	1	SEAL-O-RING	
	25	2,3	**6V-5597**	10	SEAL-O-RING	
	26	3	**7M-8485**	1	SEAL-O-RING	
	27	2	**7Y-8099**	2	COVER	
	28	1	**8T-4121**	20	WASHER-HARD (11X21X2.5-MM THK)	
M	29	1,2	**8T-4195**	28	BOLT (M10X1.5X30-MM)	

M-METRIC PART
Y-SEPARATE ILLUSTRATION

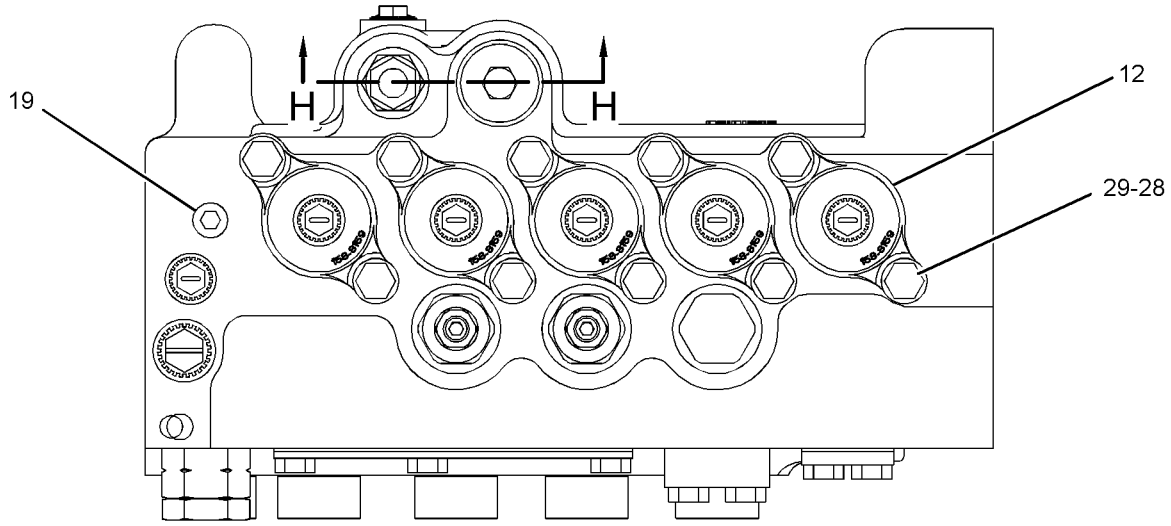

VIEW G-G

REFER TO ALL ILLUSTRATIONS OF THIS GROUP FOR AUXILIARY VIEWS

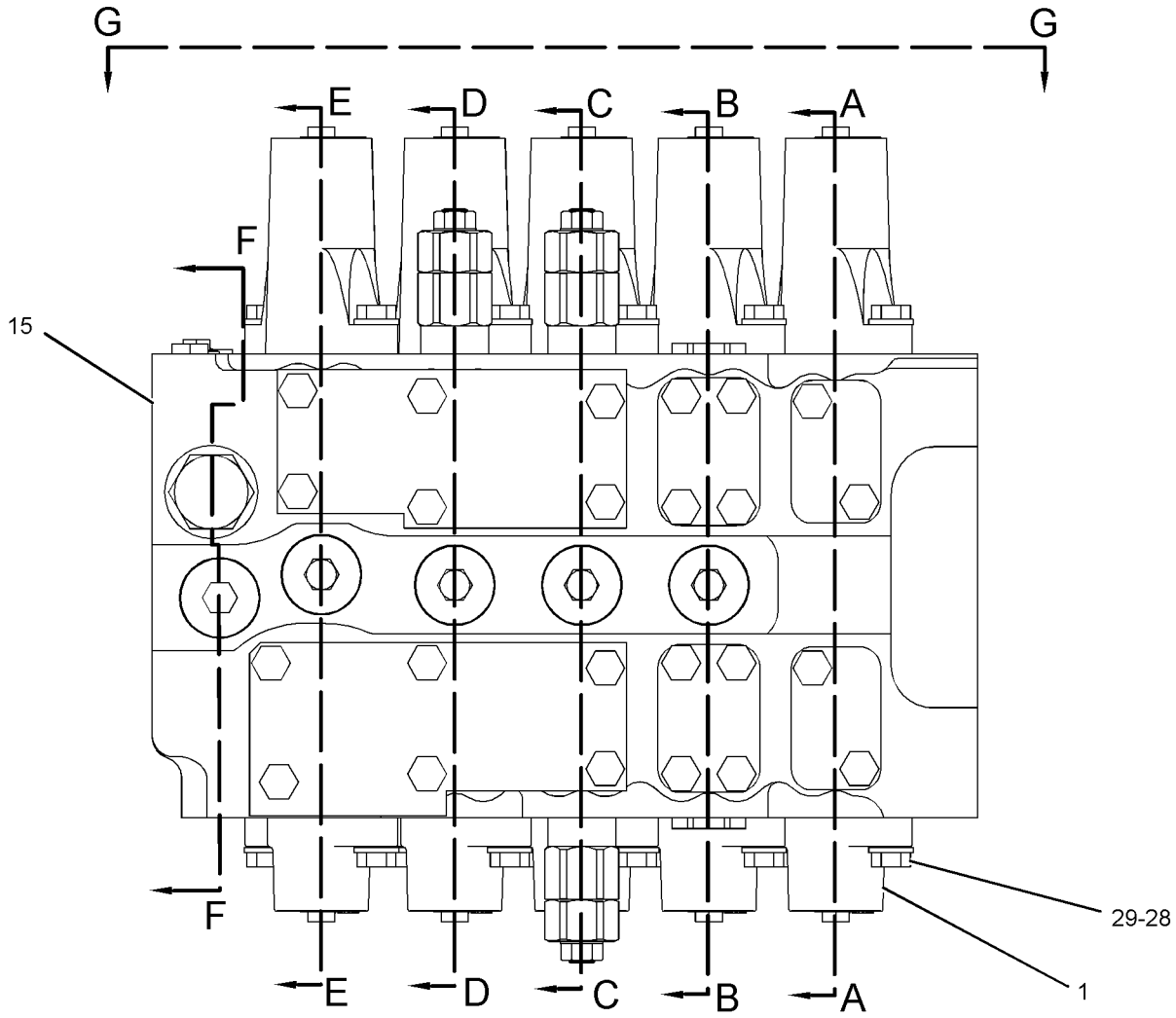

GRAPHIC #1

g01201247

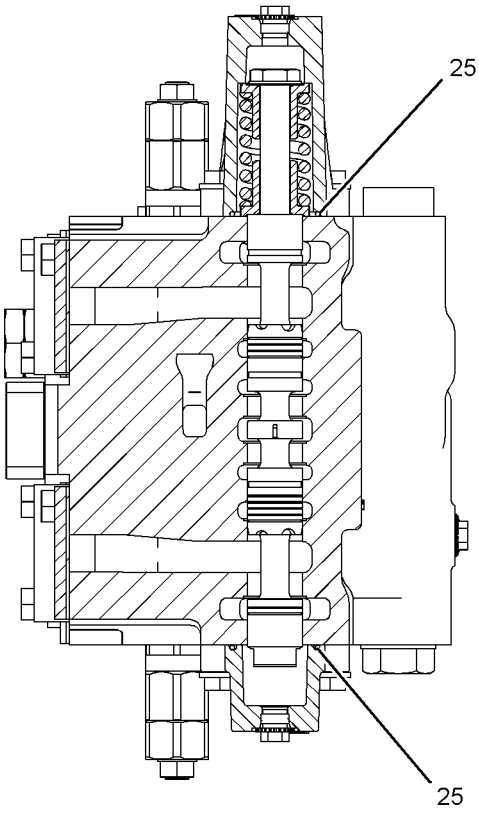

SECTION A-A

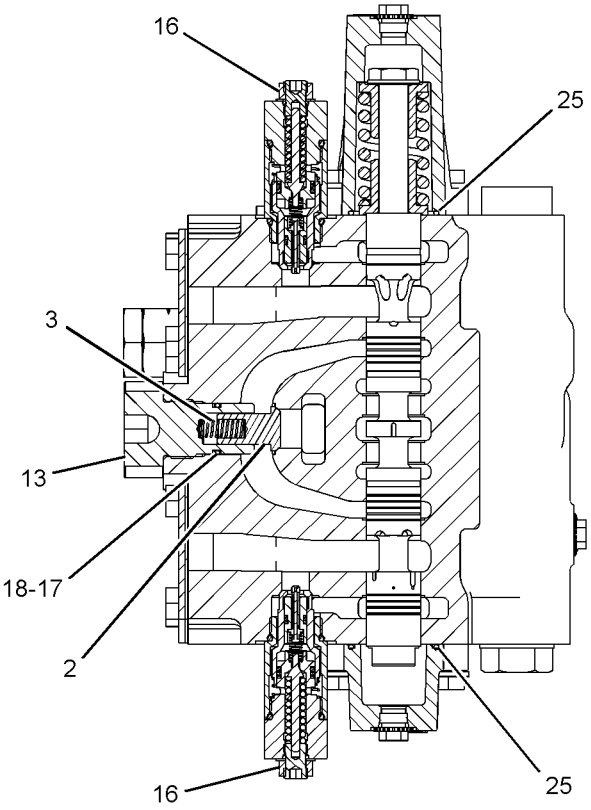

SECTION C-C

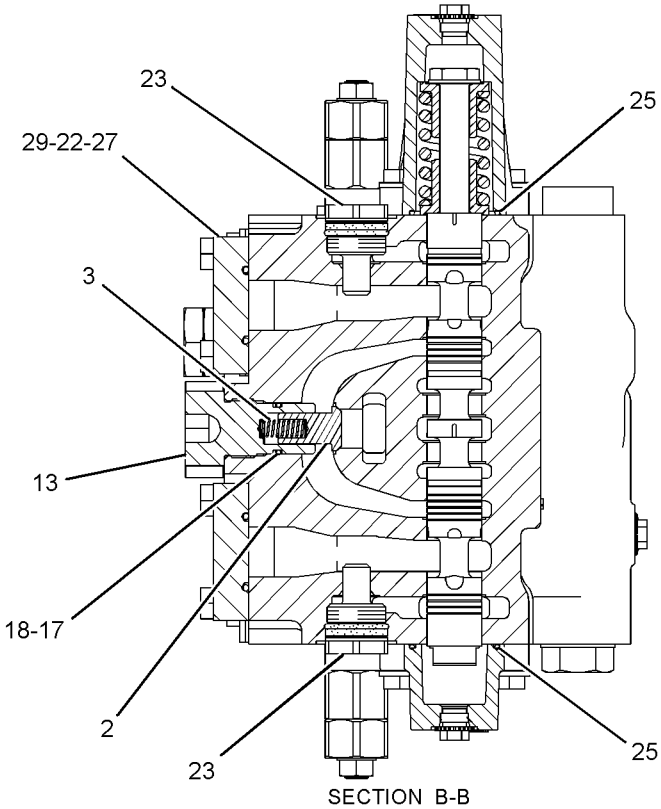

SECTION B-B

GRAPHIC #2

g01201248

285-1537 VALVE GP-CONTROL *(contd.)* **i02604410**

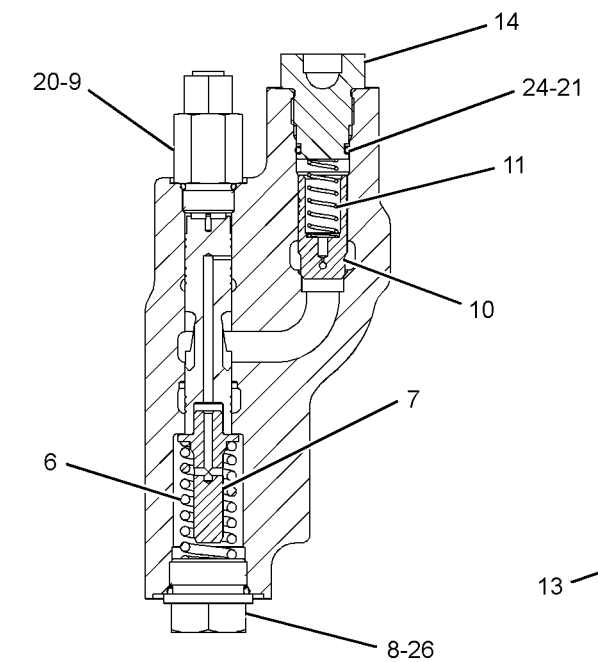

SECTION G-G

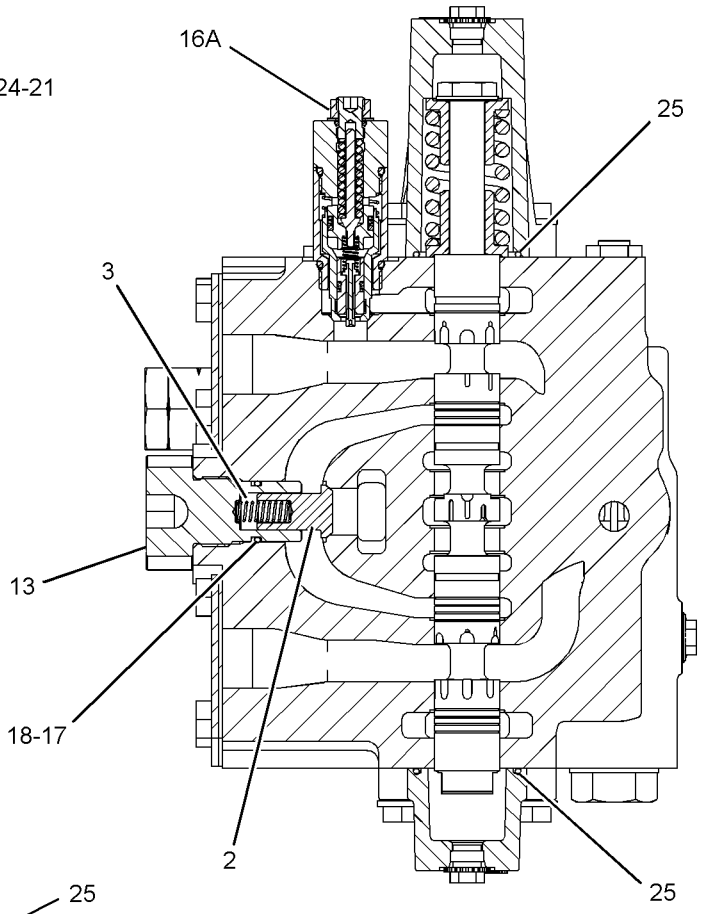

SECTION D-D

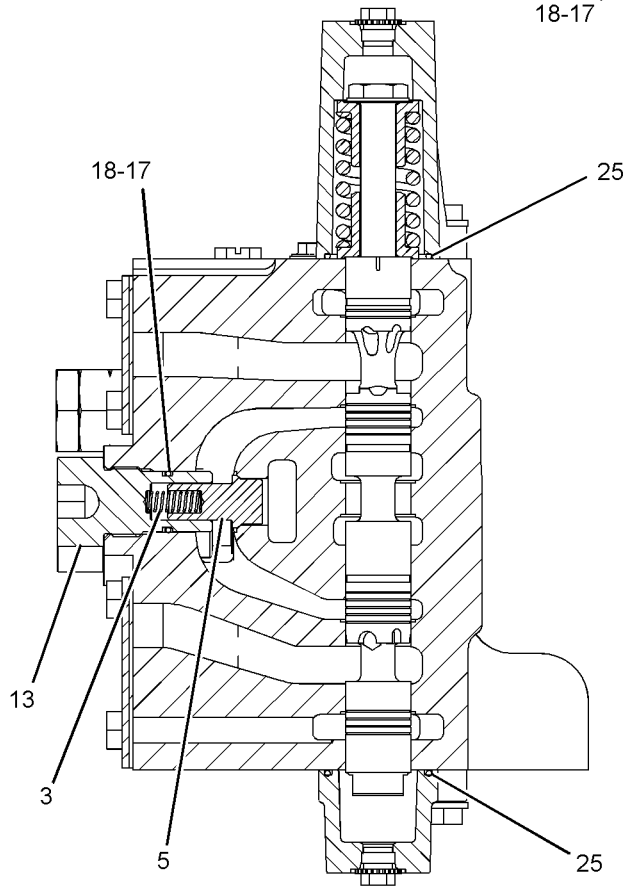

SECTION E-E

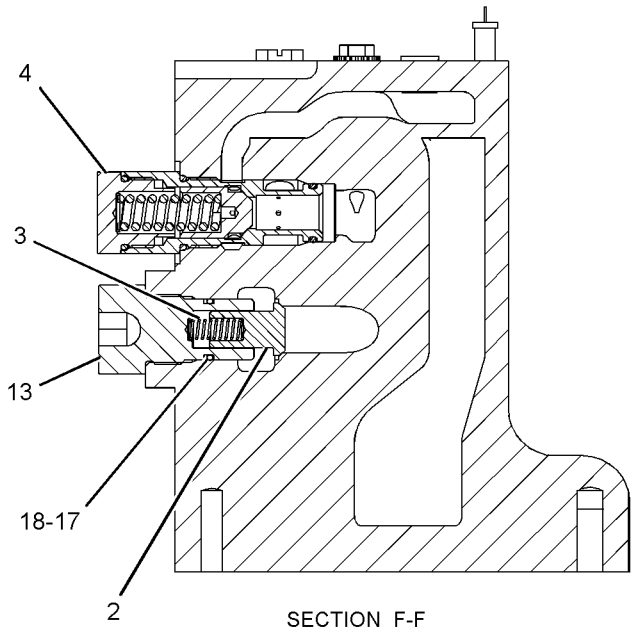

SECTION F-F

GRAPHIC #3 **<END>** g01251577

285-1538 VALVE GP-CONTROL—WITHOUT COVERS, HOUSINGS

S/N: D3P1-UP; M4T1-UP

PART OF 285-1537 VALVE GP-CONTROL

SMCS-5051 **i02604547**

NOTE	REF NO	GRAPHIC REF	PART NUMBER	QTY	PART NAME 1 2 3 4 5 6 (PRODUCT LEVEL)	SEE PAGE
	1	1	**6E-2271**	10	RETAINER	
	2	1	**104-7293**	3	SPRING	
	3	1	**104-7294**	1	SPRING	
	4	1	**104-7296**	1	SPRING	
Z	5	1		1	STEM-AUXILIARY	
Z	6	1		1	STEM-BOOM	
Z	7	1		1	STEM-TRAVEL	
Z	8	1		1	BODY-VALVE	
Z	9	1		1	STEM-BUCKET	
Z	10	1		1	STEM-STICK	
	11	1	**153-5276**	5	BOLT-SPECIAL	
Z	12	1		1	STEM	

Z-NOT SERVICED SEPARATELY

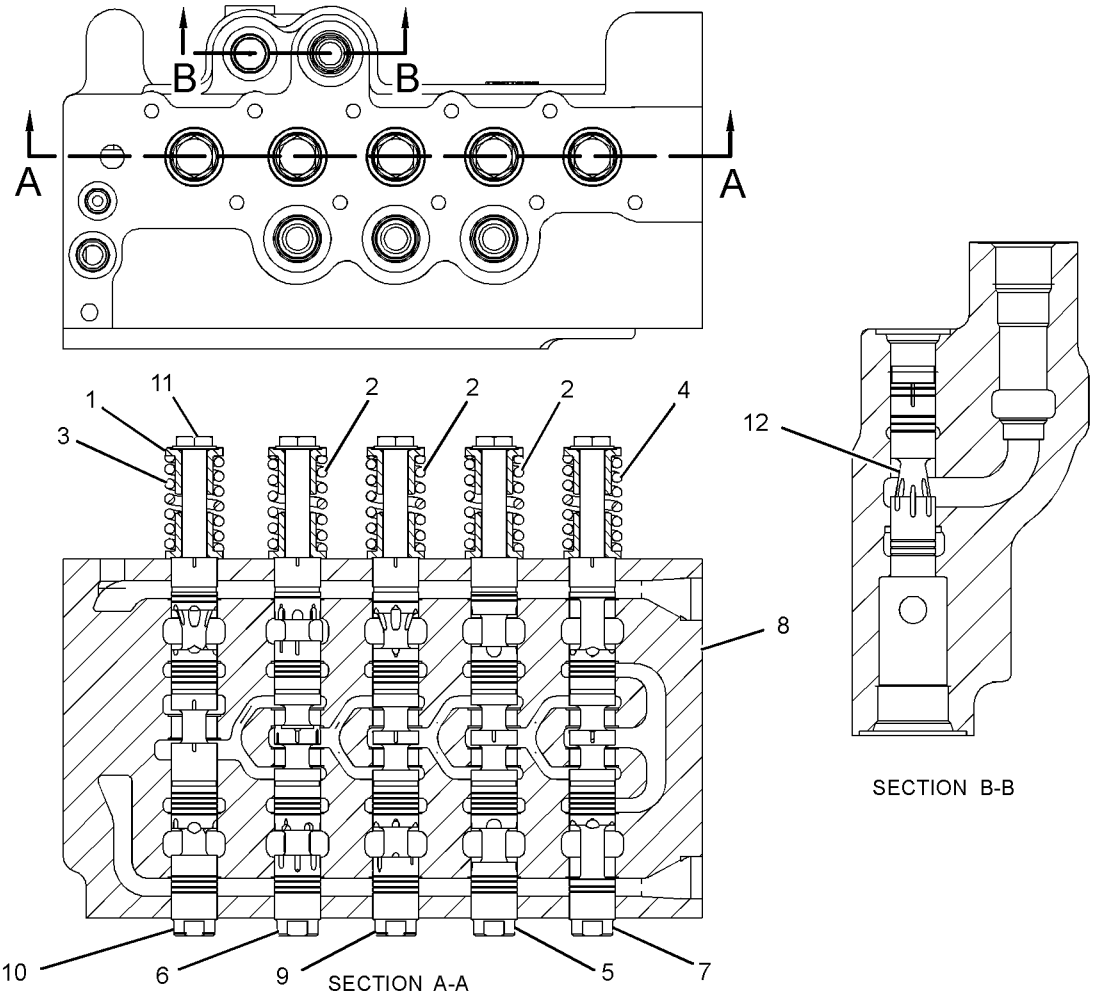

GRAPHIC #1 **<END>** g01277157

201-9236 VALVE GP-FLOW CONTROL–BOOM FLOAT, PILOT OIL

S/N: M4T1-UP
PART OF 255-1853 LINES GP-PILOT
AN ATTACHMENT

SMCS-5137 **i03744402**

NOTE	REF NO	GRAPHIC REF	PART NUMBER	QTY	PART NAME 1 2 3 4 5 6 (PRODUCT LEVEL)	SEE PAGE
	1	1	**6I-6904**	1	CONNECTOR	
	2	1	**095-1582**	1	SEAL-O-RING	
	3	1	**6I-6905**	1	BODY	
	4	1	**099-0365**	2	SPRING	
	5	1	**5I-6881**	1	PLUNGER AS	
	6	1	**6I-6907**	1	SLEEVE	
	7	1	**095-1522**	2	SEAL-O-RING	
	8	1	**6V-8754**	1	RING-RETAINING	

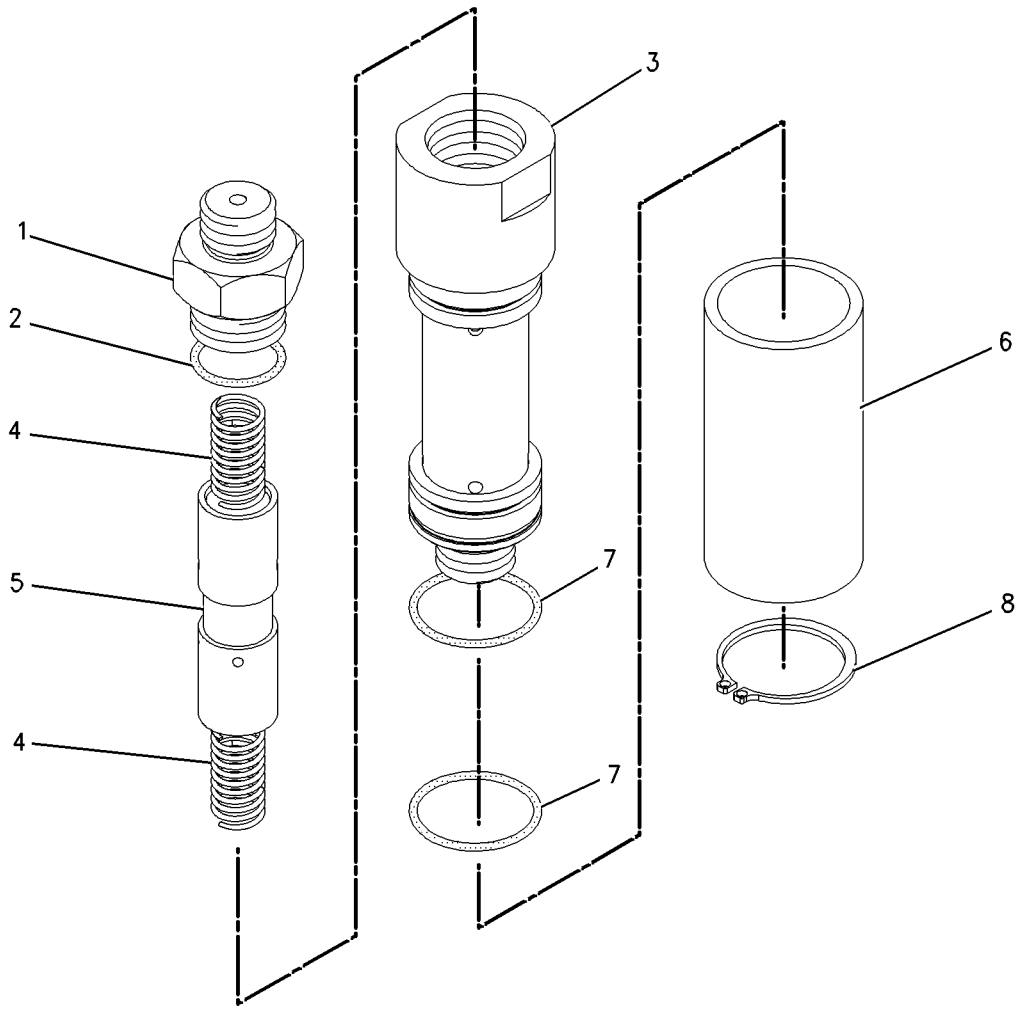

GRAPHIC #1 **<END>** g00807794

HYDRAULIC SYSTEM

185-0490 VALVE GP-FLOW CONTROL & RELIEF

S/N: D3P1-UP; M4T1-UP
PART OF 244-8419 VALVE GP-CONTROL
AN ATTACHMENT

SMCS-5117, 5137 **i02797210**

NOTE	REF NO	GRAPHIC REF	PART NUMBER	QTY	PART NAME 1 2 3 4 5 6 (PRODUCT LEVEL)	SEE PAGE
M	1	1	**096-3773**	2	SCREW-MACHINE (M4X0.7X25-MM)	
Y	2	1	**201-9352**	1	VALVE GP-RELIEF (LINE)	808
J	3	1	**165-9497**	1	VALVE GP-FLOW CONTROL (MEDIUM PRESSURE)	
	4	1	**9S-8006**	2	PLUG-O-RING	
	5	1	**2M-9780**	2	SEAL-O-RING	
	6	1	**123-2423**	1	FLANGE-TUBE	
	7	1	**1P-3702**	1	SEAL-RECTANGULAR	
					AVAILABLE REPAIR KIT(S):	
J			**185-0400**	1	KIT-SEAL (CONTROL VALVE)	

J-KIT MARKED J SERVICES PART(S) MARKED J
M-METRIC PART
Y-SEPARATE ILLUSTRATION

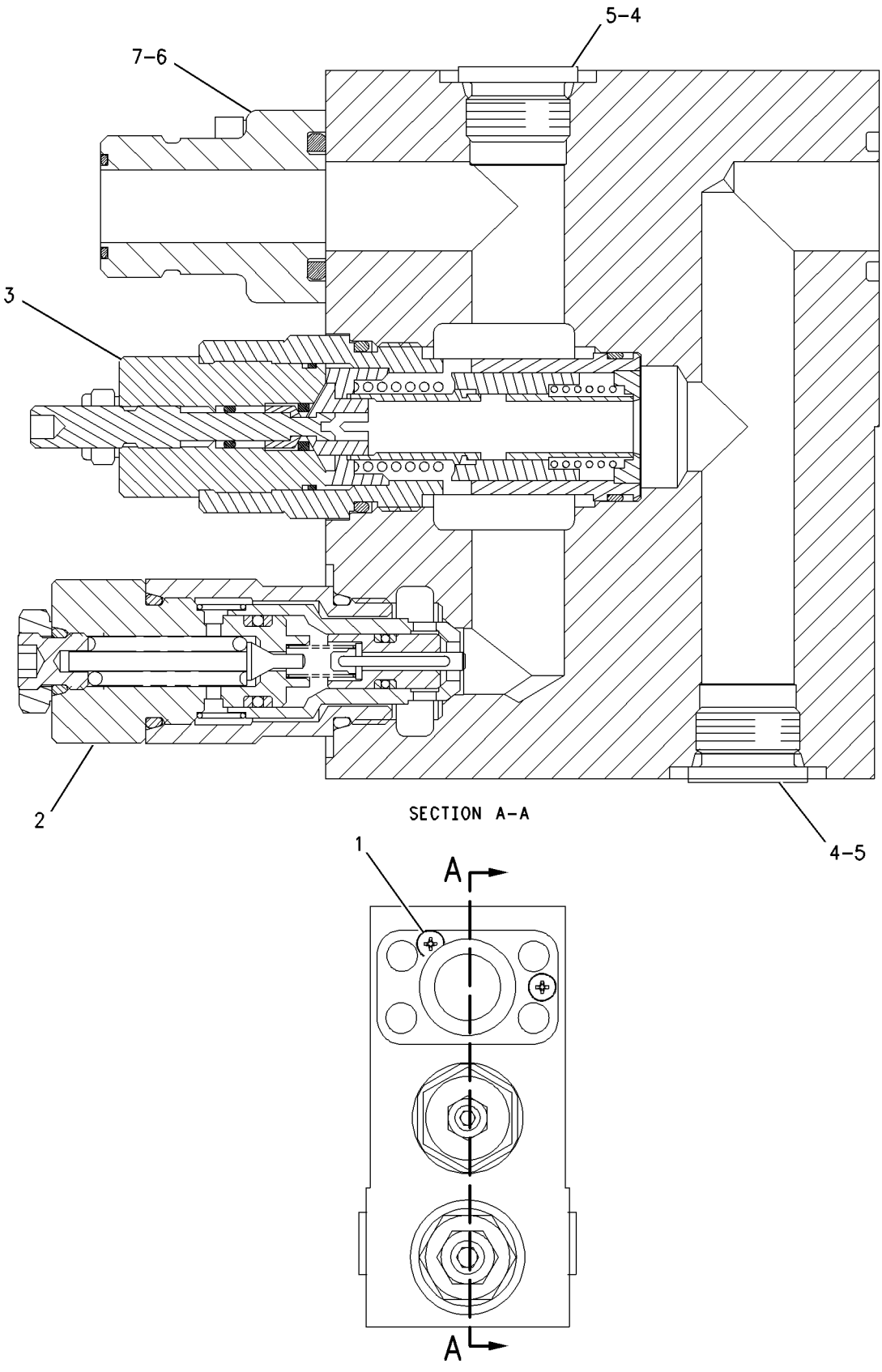

GRAPHIC #1 **<END>** g00885072

255-5680 VALVE GP-LOAD CONTROL–
STICK DRIFT RED, LINE RELIEF
S/N: D3P1-UP; M4T1-UP
PART OF 260-7869 LINES GP-FRONT

SMCS-5067, 5117, 5147, 5811 **i02502323**

NOTE	REF NO	GRAPHIC REF	PART NUMBER	QTY	PART NAME 1 2 3 4 5 6 (PRODUCT LEVEL)	SEE PAGE
	2	1	**4I-8965**	1	GUIDE	
	3	1	**5I-8511**	1	SPRING	
	4	1	**087-5166**	1	SPRING	
	5	1	**118-4044**	1	COVER	
	7	1	**147-4184**	1	PLUG	
	8	1	*225-4818*	2	PLUG AS	
					(EACH INCLUDES)	
		1	**4J-7533**	1	SEAL-O-RING	
		1	**225-4804**	1	PLUG	
Y	9	1	**255-5662**	1	VALVE GP-RELIEF (LINE)	815
Z	10	1		1	VALVE GP-CONTROL (DRIFT CONTROL)	
	11	1	**095-1594**	1	SEAL-O-RING	
	12	1	**095-1789**	1	RING	
	13	1	*148-8395*	1	PLUG AS	
		1	**3K-0360**	1	SEAL-O-RING	
		1	**9S-8005**	1	PLUG-O-RING	
	14	1	*162-0177*	1	PLUG AS	
		1	**3J-1907**	1	SEAL-O-RING	
		1	**9S-8004**	1	PLUG	
M	15	1	**8T-4136**	4	BOLT (M10X1.5X25-MM)	

M-METRIC PART
Y-SEPARATE ILLUSTRATION
Z-NOT SERVICED SEPARATELY

255-5680 **VALVE GP-LOAD CONTROL** *(contd.)* **i02502323**

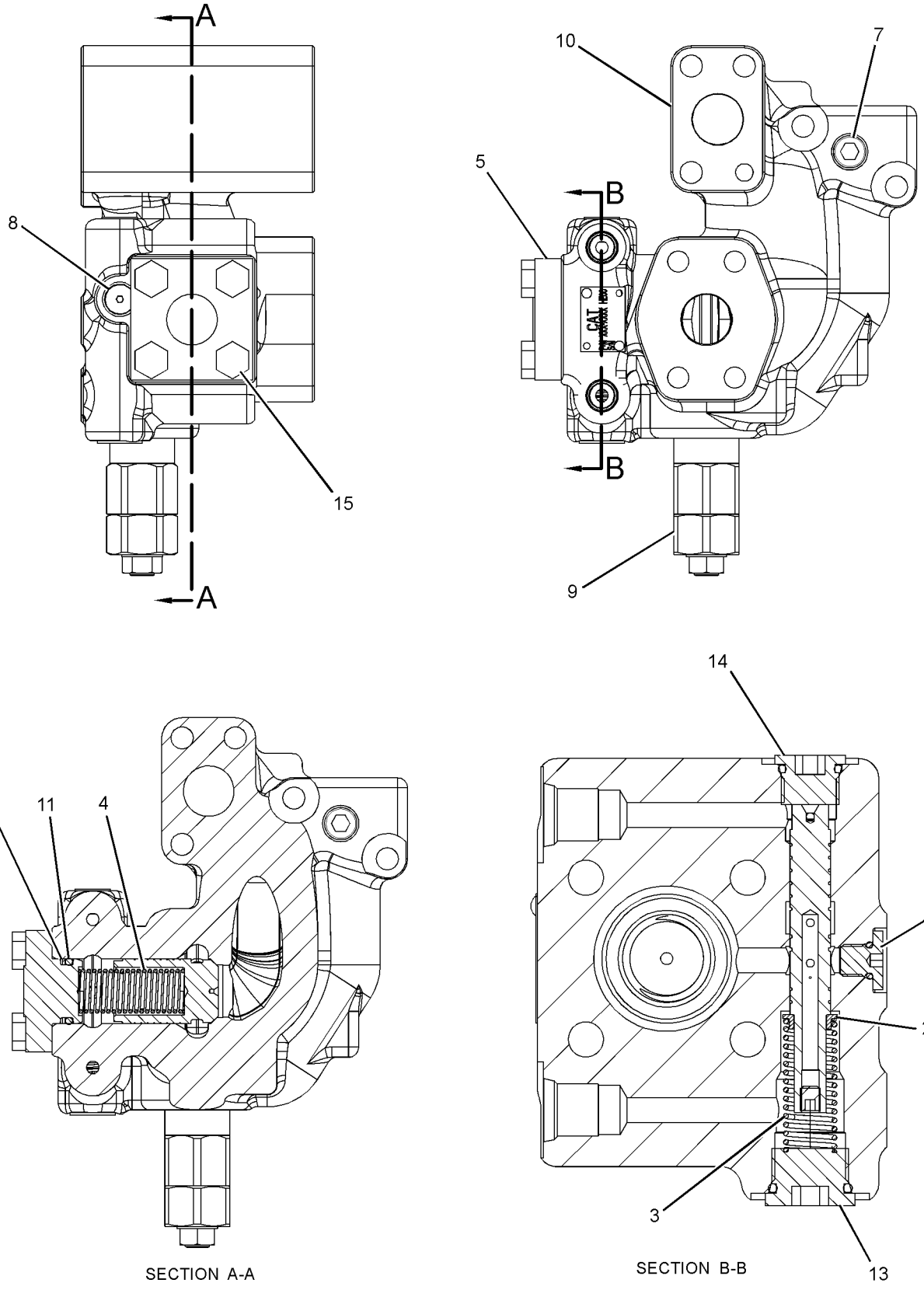

GRAPHIC #1 **<END>** g01174591

HYDRAULIC SYSTEM

255-5683 VALVE GP-LOAD CONTROL–
BOOM DRIFT RED, LINE RELIEF
S/N: D3P1-UP; M4T1-UP
PART OF 260-7869 LINES GP-FRONT

SMCS-5067, 5117, 5147, 5811 **i02499630**

NOTE	REF NO	GRAPHIC REF	PART NUMBER	QTY	PART NAME 1 2 3 4 5 6 (PRODUCT LEVEL)	SEE PAGE
	2	1	**4I-8965**	1	GUIDE	
	3	1	**5I-8511**	1	SPRING	
	4	1	**087-5166**	1	SPRING	
	5	1	**118-4044**	1	COVER	
	7	1	*225-4818*	2	PLUG AS	
					(EACH INCLUDES)	
		1	**225-4804**	1	PLUG	
	7A	1	**4J-7533**	1	SEAL-O-RING	
Y	8	1	**255-5662**	1	VALVE GP-RELIEF (LINE)	815
Z	9	1		1	VALVE GP-CONTROL (DRIFT REDUCTION)	
	10	1	**095-1594**	1	SEAL-O-RING	
	11	1	**095-1789**	1	RING	
	12	1	*148-8395*	1	PLUG AS	
		1	**9S-8005**	1	PLUG-O-RING	
	12A	1	**3K-0360**	1	SEAL-O-RING	
	13	1	*148-8407*	1	PLUG AS	
		1	**9S-4191**	1	PLUG-O-RING	
	13A	1	**3J-1907**	1	SEAL-O-RING	
	14	1	**190-7865**	1	CONNECTOR	
	15	1	**3J-1907**	1	SEAL-O-RING	
	16	1	**6V-8397**	1	SEAL-O-RING	
M	17	1	**8T-4136**	4	BOLT (M10X1.5X25-MM)	

M-METRIC PART
Y-SEPARATE ILLUSTRATION
Z-NOT SERVICED SEPARATELY

255-5683 **VALVE GP-LOAD CONTROL** *(contd.)* **i02499630**

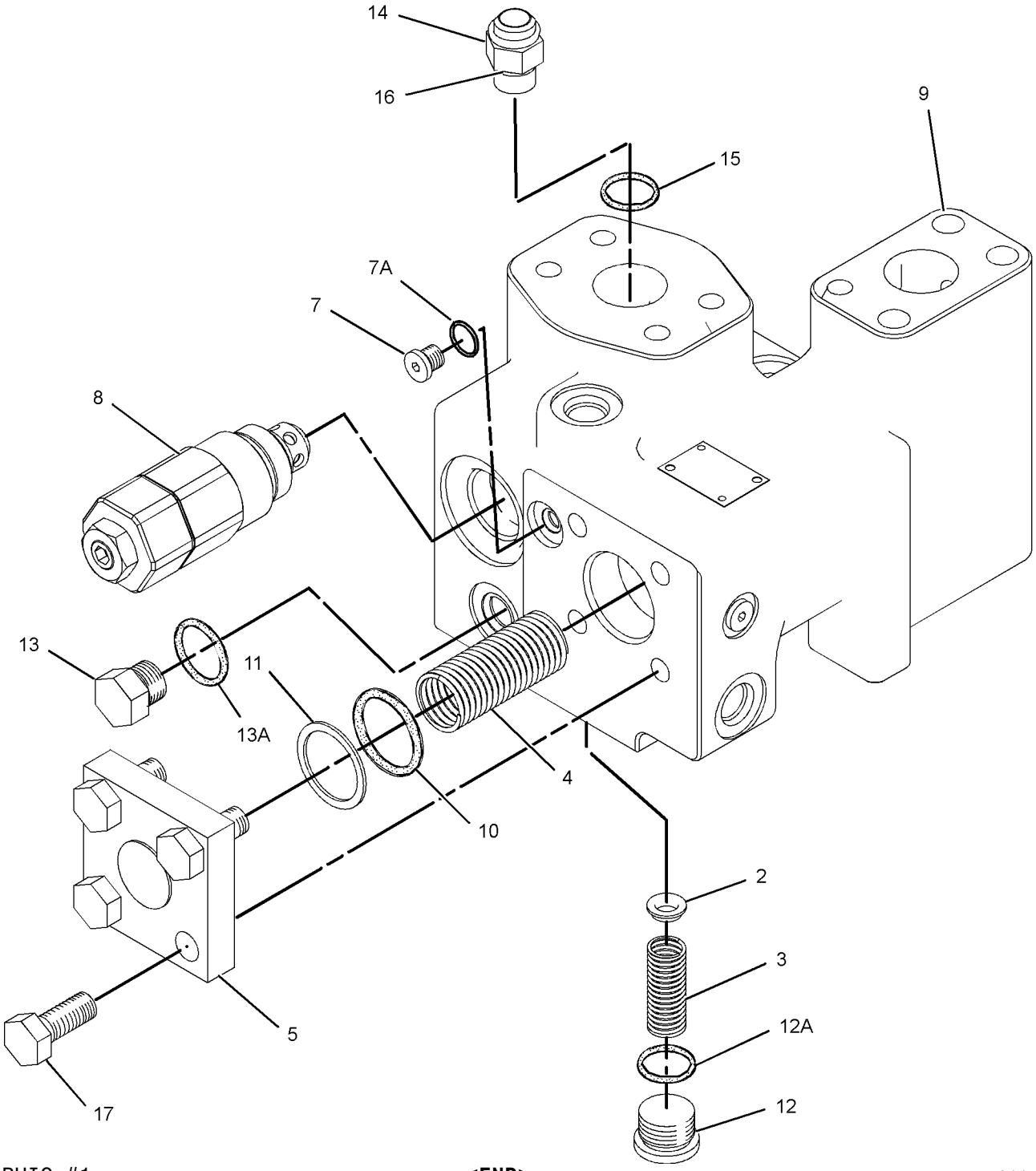

GRAPHIC #1 **<END>** g01152135

HYDRAULIC SYSTEM

263-1962 VALVE GP-LOAD CONTROL–
BOOM LOWER, DRIFT RED, RELIEF
S/N: M4T1-UP
PART OF 239-1632 LINES GP-BOOM CYLINDER
AN ATTACHMENT

SMCS-5067, 5117, 5147, 5811 **i03027391**

NOTE	REF NO	GRAPHIC REF	PART NUMBER	QTY	PART NAME 1 2 3 4 5 6 (PRODUCT LEVEL)	SEE PAGE
	1	1	**2S-2596**	1	SPRING	
	2	1	**9T-1614**	1	VALVE	
	3	1	**114-8229**	3	ORIFICE	
	4	1	**293-0653**	1	GUIDE AS	
	5	1	**157-0935**	3	SHIM (0.1-MM THK)	
	6	1	**194-4741**	1	PLUG AS	
	8	1	**201-3145**	1	PLUG	
	9	1	**201-3146**	1	PISTON	
	10	1	**203-2076**	1	SPRING	
	11	1	**8T-6759**	1	PLUG-PIPE	
	12	1	**211-4185**	1	POPPET	
Y	13	1	**255-5747**	1	VALVE GP-RELIEF (LINE)	816
	14	1	**221-5138**	1	RETAINER	
	15	1	**221-7155**	1	POPPET	
	16	1	**222-0298**	1	GUIDE	
	17	1	**222-3347**	1	VALVE GP-FLOW CONTROL	
	18	1	**122-7797**	1	RING	
	19	1	*225-4818*	4	PLUG AS	
					(EACH INCLUDES)	
		1	**4J-7533**	1	SEAL-O-RING	
		1	**225-4804**	1	PLUG	
	20	1	*225-4820*	4	PLUG AS	
					(EACH INCLUDES)	
		1	**3J-7354**	1	SEAL-O-RING	
		1	**225-4821**	1	PLUG	
	21	1	**1P-3704**	1	SEAL-RECTANGULAR	
	22	1	**3J-1907**	1	SEAL-O-RING	
B	23	1	**5M-9624**	9	SHIM (0.25-MM THK)	
B	24	1	**6J-6855**	9	SHIM (0.12-MM THK)	
	25	1	**6V-5326**	1	SEAL-O-RING	
	26	1	**7M-8485**	3	SEAL-O-RING	

B-USE AS REQUIRED
Y-SEPARATE ILLUSTRATION

263-1962 VALVE GP-LOAD CONTROL *(contd.)* **i03027391**

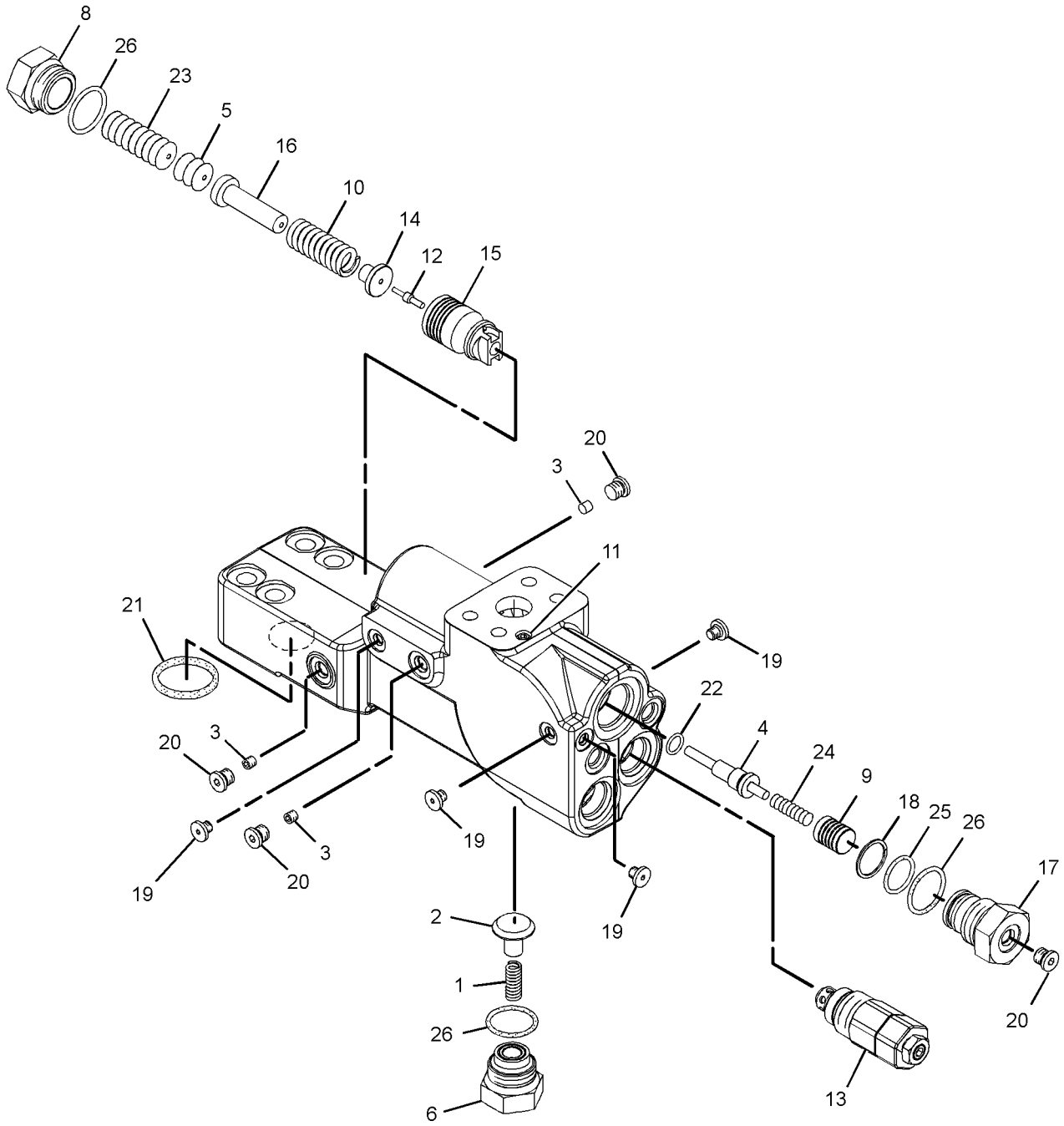

GRAPHIC #1 **<END>** g01532600

285-1540 VALVE GP-MAIN CONTROL—HEAVY LIFT

S/N: D3P1-UP; M4T1-UP

PART OF 259-7766 HYDRAULIC AR

SMCS-5051 **i03631020**

NOTE	REF NO	GRAPHIC REF	PART NUMBER	QTY	PART NAME 1 2 3 4 5 6 (PRODUCT LEVEL)	SEE PAGE
M	1	1	**8T-4193**	4	BOLT (M16X2X50-MM)	
Y	2	1	*206-3164*	1	VALVE GP-RELIEF (NEGATIVE FLOW CONTROL)	811
Y	3	1	**285-1537**	1	VALVE GP-CONTROL (RH)	760
Y	4	1	**259-7448**	1	VALVE GP-CONTROL (LH)	750
	5	1	**9X-8257**	9	WASHER (17.5X30X3.5-MM THK)	
	6	1	**1P-3702**	2	SEAL-RECTANGULAR	
	7	1	**4J-0519**	2	SEAL-O-RING	
M	8	1	**8T-4140**	5	BOLT (M16X2X60-MM)	

M-METRIC PART
Y-SEPARATE ILLUSTRATION

285-1540 VALVE GP-MAIN CONTROL *(contd.)* **i03631020**

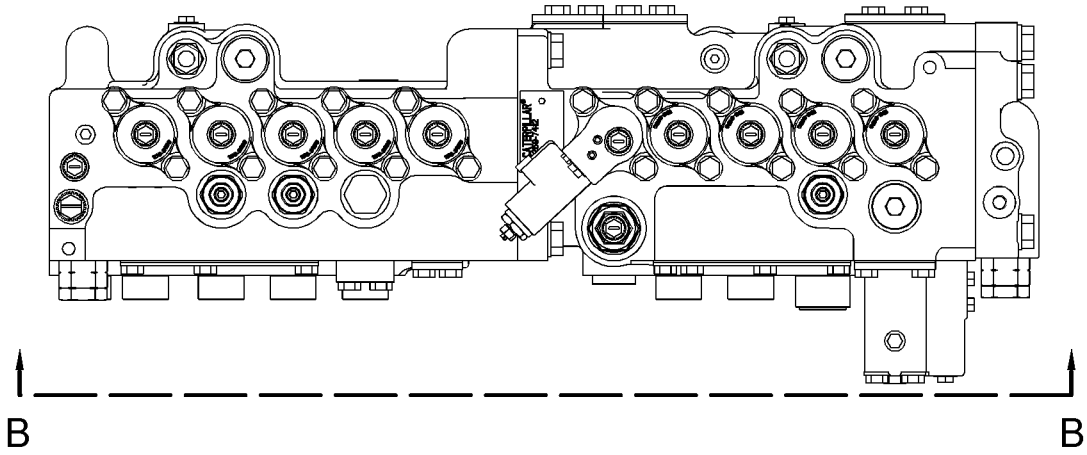

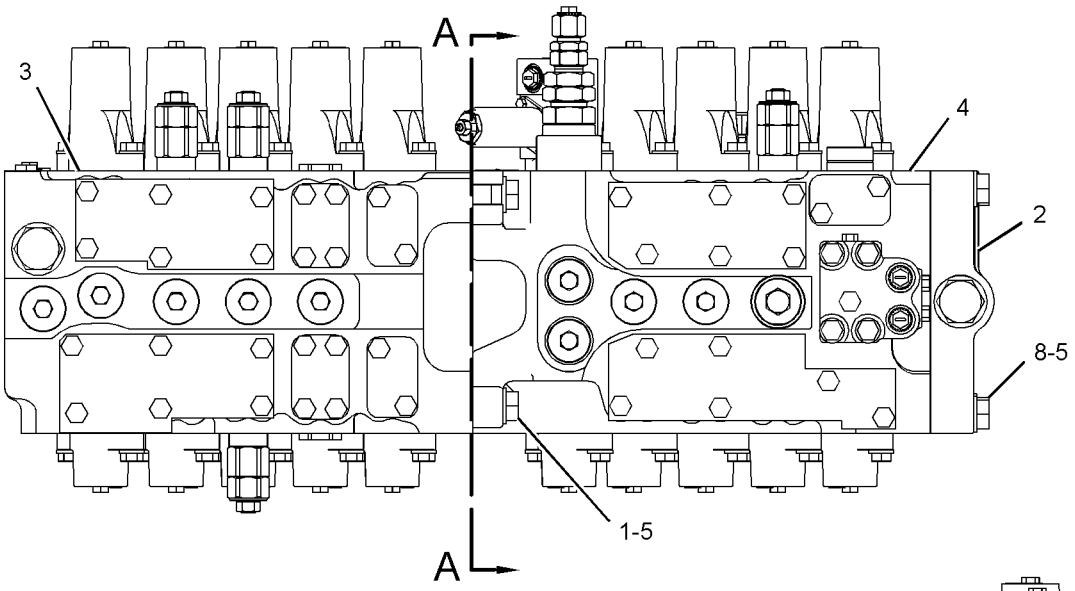

VIEW B-B

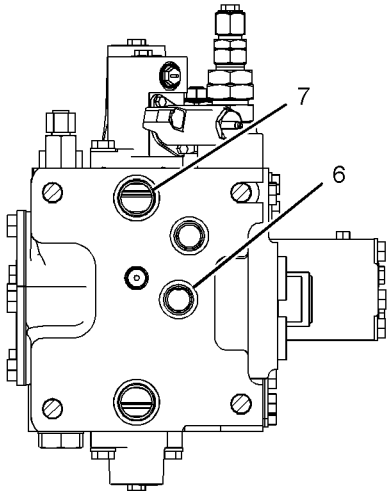

SECTION A-A

GRAPHIC #1 **<END>** g01208066

HYDRAULIC SYSTEM

270-5692 VALVE GP-MANUAL—BOOM LOWER

S/N: M4T1-UP
PART OF 239-1632 LINES GP-BOOM CYLINDER
AN ATTACHMENT

SMCS-1329, 5001, 5130 **i02518513**

NOTE	REF NO	GRAPHIC REF	PART NUMBER	QTY	PART NAME 1 2 3 4 5 6 (PRODUCT LEVEL)	SEE PAGE
	1	1	**165-9513**	1	SEAT	
	2	1	**165-9514**	1	PLUG	
	3	1	*222-4737*	3	PLUG AS	
					(EACH INCLUDES)	
		1	**4J-7533**	1	SEAL-O-RING	
		1	**9S-4180**	1	PLUG	
	4	1	**270-5693**	1	BLOCK	
	5	1	**2D-6642**	1	BALL	
	6	1	**3H-0442**	1	SEAL-O-RING	
	7	1	**3J-1907**	1	SEAL-O-RING	
M	8	1	**7Y-5226**	1	NUT (M5X0.8-THD)	

M-METRIC PART

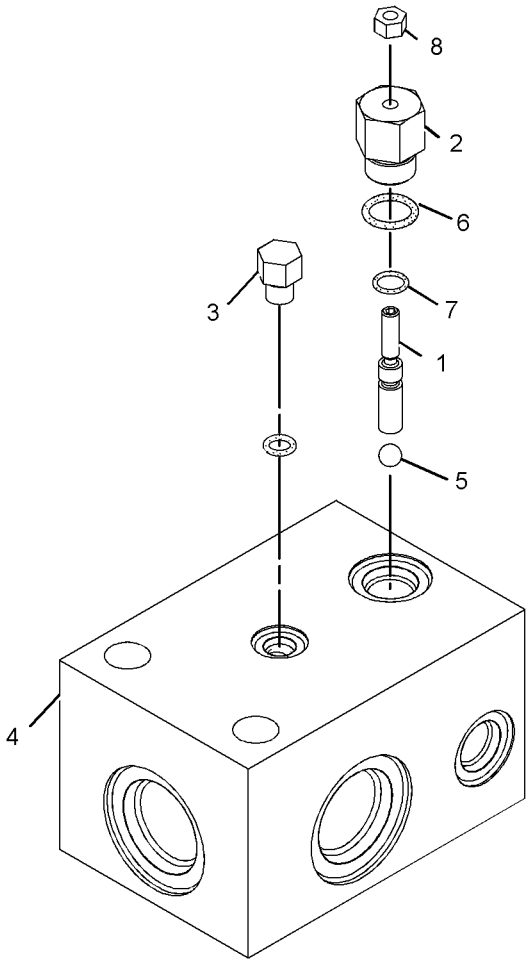

GRAPHIC #1

<END>

g01193347

277-0954 VALVE GP-MANUAL–AUXILIARY, SHUTOFF

S/N: D3P1-UP; M4T1-UP

PART OF 253-6594, 253-6599, 253-6603, 253-6607, 253-6611 LINES GP-AUXILIARY HYDRAULIC

AN ATTACHMENT

SMCS-1329, 5001, 5130 **i02827624**

NOTE	REF NO	GRAPHIC REF	PART NUMBER	QTY	PART NAME 1 2 3 4 5 6 (PRODUCT LEVEL)	SEE PAGE
	1	1	**302-9466**	1	HANDLE	
	2	1	**3J-1907**	1	SEAL-O-RING	
	3	1	**9S-4191**	1	PLUG-O-RING	

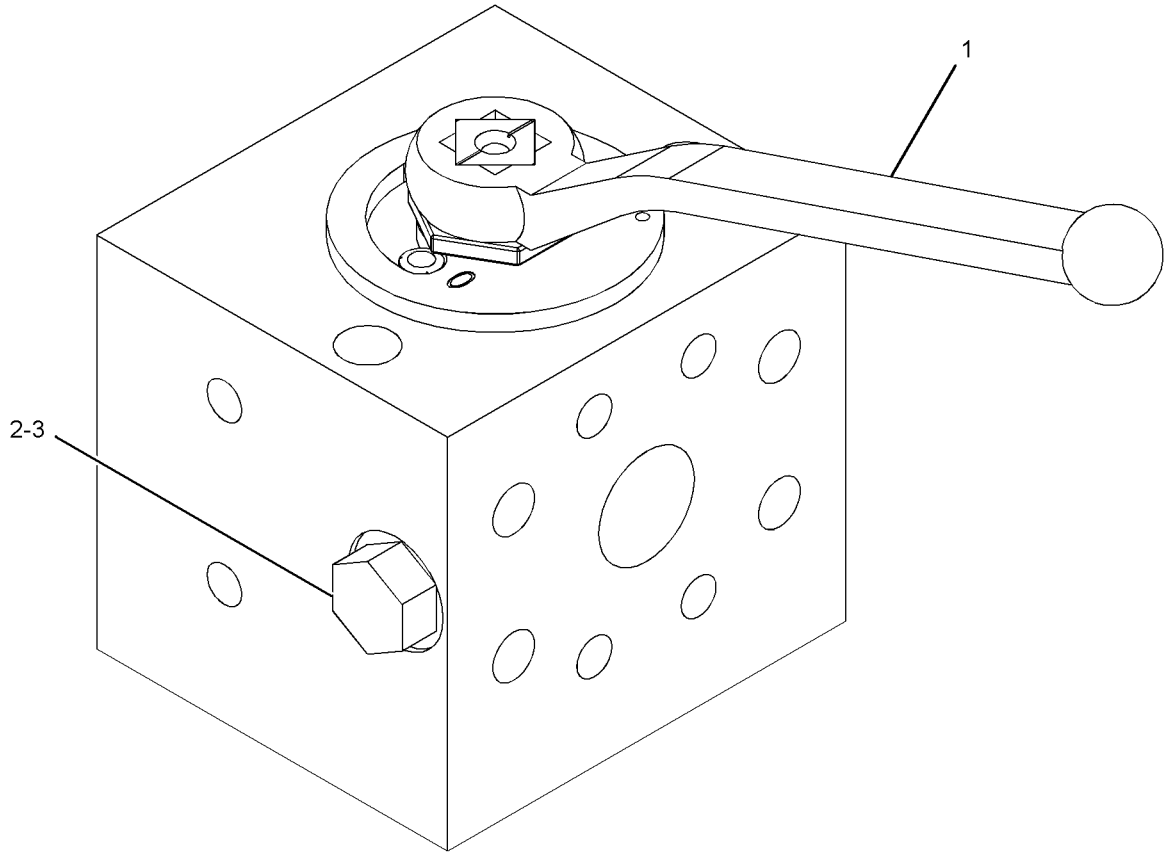

GRAPHIC #1 **<END>** g01236800

085-6455 VALVE GP-PILOT–CONTROL PATTERN CHANGE

S/N: D3P1-UP; M4T1-UP
PART OF 255-1849 LINES GP-PILOT
AN ATTACHMENT

SMCS-5059 **i03172740**

NOTE	REF NO	GRAPHIC REF	PART NUMBER	QTY	PART NAME 1 2 3 4 5 6 (PRODUCT LEVEL)	SEE PAGE
M	1	1	**8T-1159**	8	BOLT-SOCKET HEAD (M10X1.5X25-MM)	
	2	1	**085-7076**	1	COVER	
	3	1	**085-7079**	1	GRIP	
	4	1	**085-7080**	1	LEVER	
	5	1	**085-7084**	1	BOLT (M8X1.25X35-MM)	
	6	1	**095-1710**	2	SEAL-O-RING	
	7	1	**085-7075**	1	COVER	
	8	1	**095-1590**	1	SEAL-O-RING	
	9	1	**095-1787**	1	RING-BACKUP	
	10	1	**085-7083**	1	PIN-SPRING	
	11	1	**6I-6923**	1	SEAL	
	12	1	**085-7085**	1	BALL	
	13	1	**095-1582**	1	SEAL-O-RING	
	14	1	**085-7078**	1	SPRING	
	15	1	**085-7077**	1	PLUG	
	16	1	**085-7081**	4	NEEDLE	
	17	1	**085-7082**	14	PLUG	
	18	1	**197-0758**	2	SCREW	
	19	1	**169-1165**	1	PIN	

M-METRIC PART

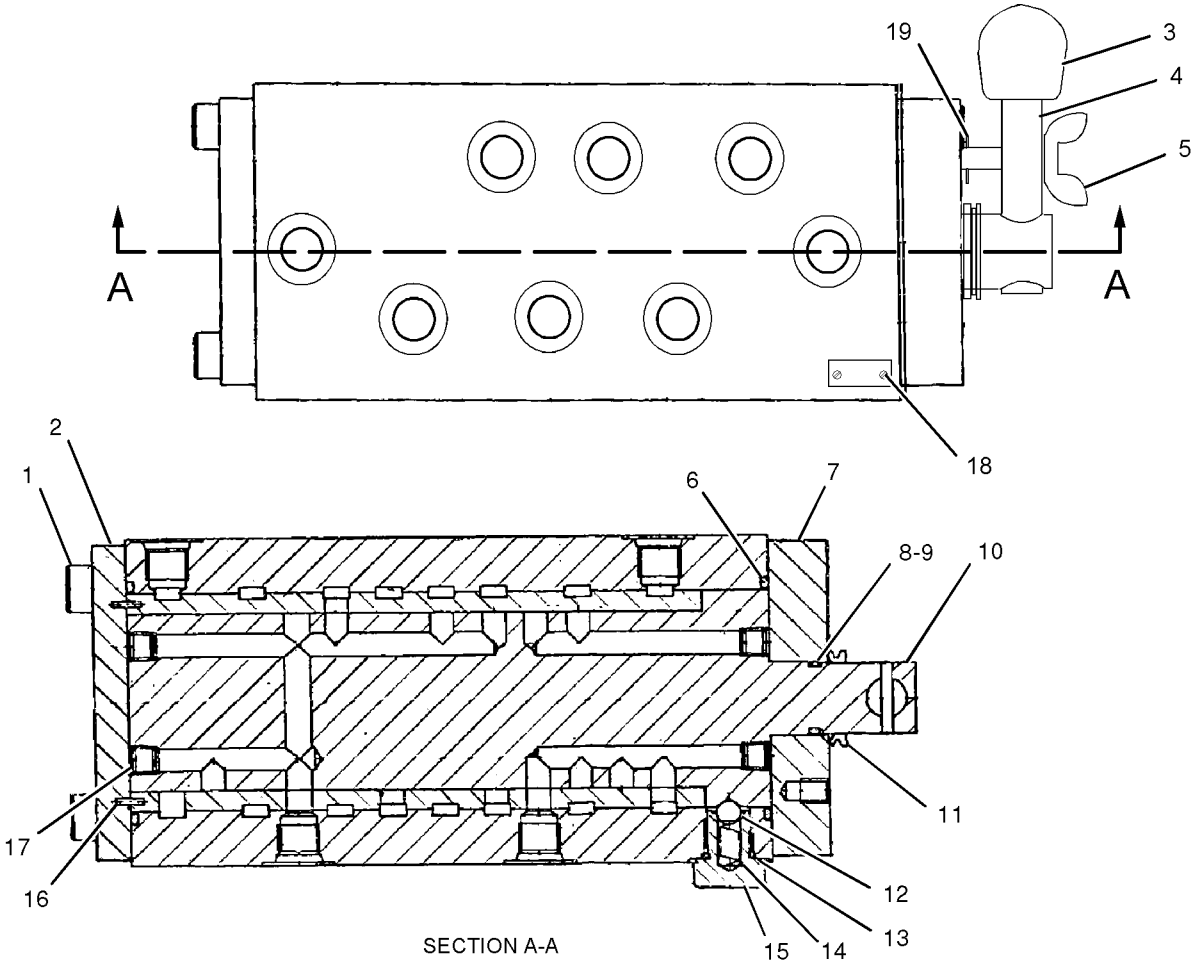

GRAPHIC #1 **<END>** g01027795

206-3305 VALVE GP-PILOT—JOYSTICK

S/N: D3P1-UP; M4T1-UP

PART OF 259-7762, 259-7763 CONTROL GP-JOYSTICK

AN ATTACHMENT

SMCS-5059 **i02181958**

NOTE	REF NO	GRAPHIC REF	PART NUMBER	QTY	PART NAME 1 2 3 4 5 6 (PRODUCT LEVEL)	SEE PAGE
	1	1	**165-9431**	1	PLATE	
	2	1	**4I-6365**	1	JOINT	
	3	1	**118-4087**	4	SPRING	
	4	1	**165-9444**	2	SEAT-SPRING	
					(USED WITH REF NO 7 OR 7A SPRINGS)	
					—OR—	
J		1	**244-8496**	2	SEAT-SPRING	
					(USED WITH REF NO 7B SPRINGS)	
					—OR—	
L		1	**244-8500**	2	SEAT-SPRING	
					(USED WITH REF NO 7C SPRINGS)	
	5	1	**096-1628**	4	PLUG	
	6	1	**165-9436**	2	SEAT	
	7	1	**165-9460**	2	SPRING (STANDARD)	
					—OR—	
	7A	1	**225-4815**	2	SPRING (OPTIONAL)	
					(REDUCES OPERATING FORCE FOR IMPROVED INCHING CONTROL)	
					—OR—	
J	7B	1	**244-8494**	2	SPRING (OPTIONAL)	
					(PROVIDES CONTROLLABILITY EQUAL TO A-SERIES MACHINES)	
					—OR—	
L	7C	1	**244-8498**	2	SPRING (OPTIONAL)	
					(PROVIDES CONTROLLABILITY COMPARABLE TO A AND B-SERIES MACHINES)	
	8	1	**165-9461**	4	SPRING (STANDARD)	
					—OR—	
		1	**190-7750**	4	SPRING (OPTIONAL)	
					(REDUCES OPERATING FORCE BY 30%)	
					—OR—	
		1	**190-7751**	4	SPRING (OPTIONAL)	
					(REDUCES OPERATING FORCE BY 20%)	
	9	1	**165-9439**	1	BUSHING	
	10	1	**165-9448**	1	SEAL-O-RING	
	11	1	**168-0794**	1	PLATE	
	12	1	**096-4498**	2	WASHER-SEAL	
M	13	1	**6V-8337**	2	BOLT-SOCKET HEAD (M8X1.25X35-MM)	
	14	1	**171-0087**	1	BELLOWS	
M	15	1	**131-5915**	1	NUT-SPECIAL	
	16	1	**7Y-0468**	1	PIN-SPRING	
	17	1	**094-0876**	4	SEAL	
B	18	1	**099-6137**	4	WASHER (6.1X9X0.2-MM THK)	
	19	1	**165-9442**	2	SPRING (STANDARD)	
					—OR—	
	19A	1	**225-4816**	2	SPRING (OPTIONAL)	
					(REDUCES OPERATING FORCE FOR IMPROVED INCHING CONTROL)	
					—OR—	
J	19B	1	**244-8495**	2	SPRING (OPTIONAL)	
					(PROVIDES CONTROLLABILITY EQUAL TO A-SERIES MACHINES)	
					—OR—	
L	19C	1	**244-8499**	2	SPRING (OPTIONAL)	
					(PROVIDES CONTROLLABILITY COMPARABLE TO A AND B-SERIES MACHINES)	

206-3305 VALVE GP-PILOT *(contd.)* i02181958

NOTE	REF NO	GRAPHIC REF	PART NUMBER	QTY	PART NAME 1 2 3 4 5 6 (PRODUCT LEVEL)	SEE PAGE
	20	1	**165-9435**	2	SEAT	
	21	1	**095-1586**	4	SEAL-O-RING	
	22	1	**165-9443**	2	SEAT-SPRING	
					(USED WITH REF NO 19 OR 19A SPRINGS)	
					—OR—	
J		1	**244-8497**	2	SEAT-SPRING	
					(USED WITH REF NO 19B SPRINGS)	
					—OR—	
L		1	**244-8501**	2	SEAT-SPRING	
					(USED WITH REF NO 19C SPRINGS)	
	23	1	**165-9438**	1	PLATE	
	24	1	**118-4086**	4	ROD	

B-USE AS REQUIRED
J-PARTS MARKED J MUST BE USED TOGETHER AS A SET
L-PARTS MARKED L MUST BE USED TOGETHER AS A SET
M-METRIC PART

206-3305 VALVE GP-PILOT *(contd.)* **i02181958**

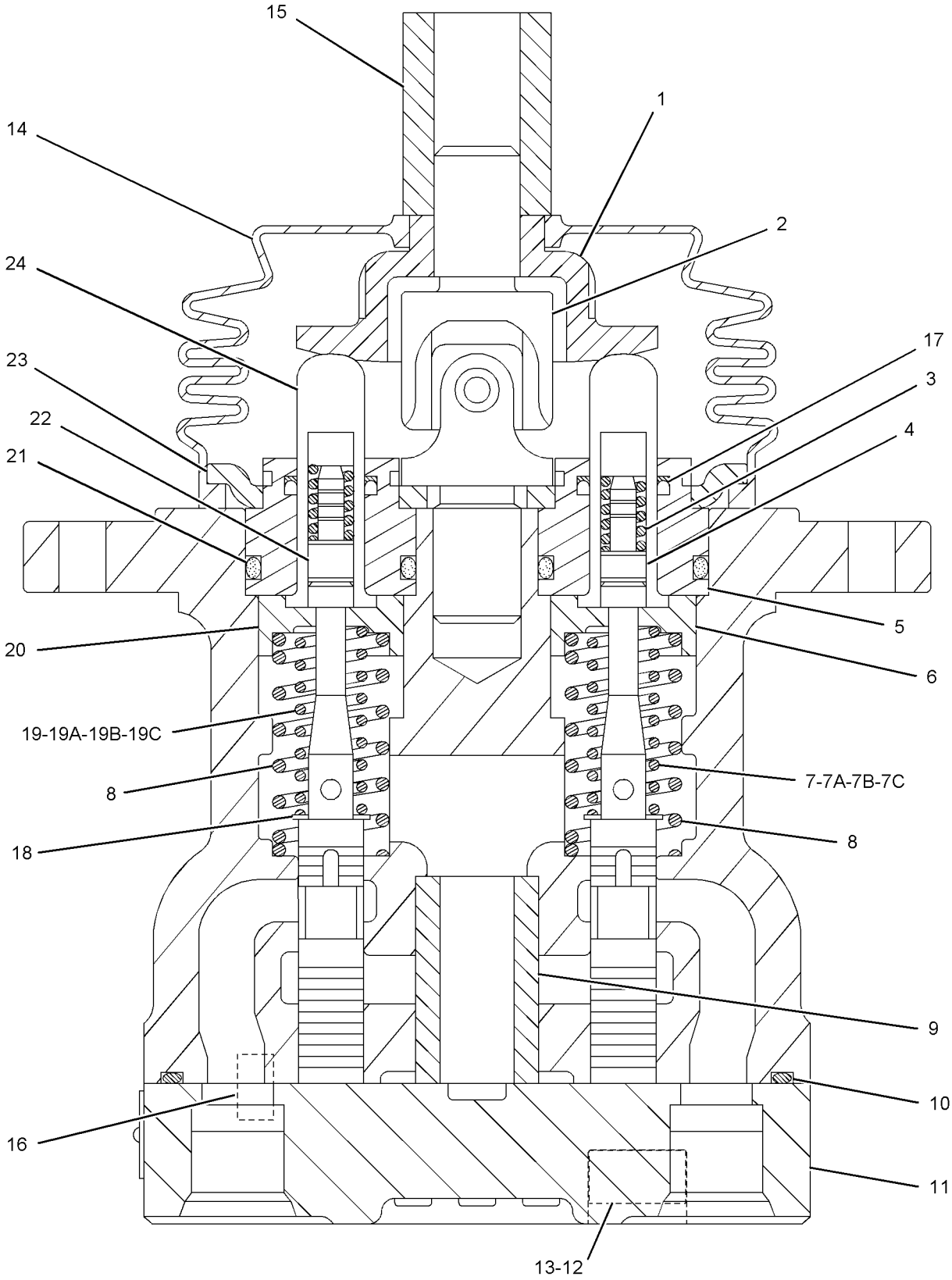

GRAPHIC #1 **<END>** g01102305

HYDRAULIC SYSTEM

206-3336 VALVE GP-PILOT

S/N: D3P1-UP; M4T1-UP
AN ATTACHMENT

SMCS-5059 **i03751422**

NOTE	REF NO	GRAPHIC REF	PART NUMBER	QTY	PART NAME 1 2 3 4 5 6 (PRODUCT LEVEL)	SEE PAGE
	1	1	**107-6479**	1	PLUG	
	2	1	**190-7819**	2	SPRING	
	3	1	**335-0136**	1	BELLOWS	
	4	1	**335-0138**	2	PACKING	
	5	1	**095-1575**	1	SEAL-O-RING	
	6	1	**095-1578**	2	SEAL-O-RING	
	7	1	**095-1579**	1	SEAL-O-RING	
	8	1	**095-1584**	1	SEAL-O-RING	
	9	1	**6V-8399**	2	SEAL-O-RING	
	10	1	**9M-5590**	1	BALL	

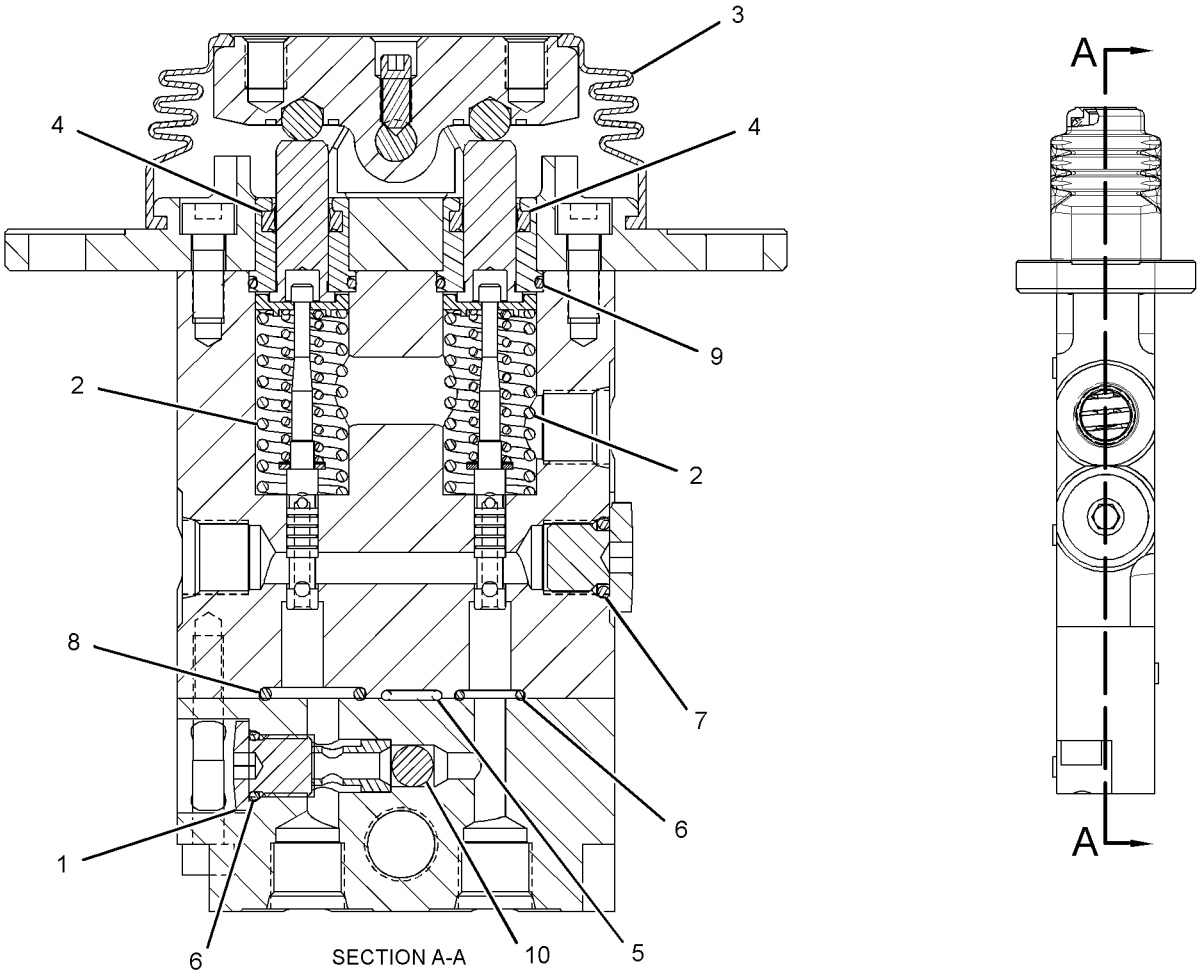

GRAPHIC #1 **<END>** g01952872

225-4813 VALVE GP-PILOT—JOYSTICK, RH

S/N: M4T1-UP
PART OF 259-7705 CONTROL GP-JOYSTICK
FIELD REPLACEMENT ORDER 297-0530—PAGE 791
AN ATTACHMENT

SMCS-5059 **i03713125**

NOTE	PART NUMBER	QTY	PART NAME 1 2 3 4 5 6 (PRODUCT LEVEL)	SEE PAGE
	171-0087	1	BELLOWS	
M	**6V-8337**	2	BOLT-SOCKET HEAD (M8X1.25X35-MM)	
	165-9439	1	BUSHING	
	4I-6365	1	JOINT	
M	**131-5915**	1	NUT-SPECIAL	
	7Y-0468	1	PIN-SPRING	
	165-9431	1	PLATE	
	168-0794	1	PLATE	
	165-9438	1	PLATE	
	096-1628	4	PLUG	
	118-4086	4	ROD	
	094-0876	4	SEAL	
	165-9448	1	SEAL-O-RING	
	095-1586	4	SEAL-O-RING	
	165-9436	2	SEAT	
	165-9435	2	SEAT	
	165-9444	2	SEAT-SPRING	
	165-9443	2	SEAT-SPRING	
	118-4087	4	SPRING	
	165-9460	1	SPRING	
	225-4815	1	SPRING	
B	**190-7750**	4	SPRING	
	165-9442	2	SPRING	
B	**099-6137**	4	WASHER (6.1X9X0.2-MM THK)	
	096-4498	2	WASHER-SEAL	

B-USE AS REQUIRED
M-METRIC PART

<END>

232-4100 VALVE GP-PILOT—JOYSTICK, LH

S/N: M4T1-UP
PART OF 259-7706 CONTROL GP-JOYSTICK
FIELD REPLACEMENT ORDER 297-0531—PAGE 793
AN ATTACHMENT

SMCS-5059 **i03712977**

NOTE	PART NUMBER	QTY	PART NAME 1 2 3 4 5 6 (PRODUCT LEVEL)	SEE PAGE
	171-0087	1	BELLOWS	
M	**6V-8337**	2	BOLT-SOCKET HEAD (M8X1.25X35-MM)	
	165-9439	1	BUSHING	
	4I-6365	1	JOINT	
M	**131-5915**	1	NUT-SPECIAL	
	7Y-0468	1	PIN-SPRING	
	165-9431	1	PLATE	
	168-0794	1	PLATE	
	165-9438	1	PLATE	
	096-1628	4	PLUG	
	118-4086	4	ROD	
	094-0876	4	SEAL	
	165-9448	1	SEAL-O-RING	
	095-1586	4	SEAL-O-RING	
	165-9436	2	SEAT	
	165-9435	2	SEAT	
	165-9444	2	SEAT-SPRING	
	165-9443	2	SEAT-SPRING	
	118-4087	4	SPRING	
	165-9460	1	SPRING	
	225-4815	1	SPRING	
B	**190-7750**	4	SPRING	
	165-9442	2	SPRING	
B	**099-6137**	4	WASHER (6.1X9X0.2-MM THK)	
	096-4498	2	WASHER-SEAL	

B-USE AS REQUIRED
M-METRIC PART

<END>

270-5947 VALVE GP-PILOT–TRAVEL

S/N: M4T1-258

PART OF 248-9825 LINES GP-PILOT

FIELD REPLACEMENT ORDER 310-0414–PAGE 795

SMCS-5059 **i02497097**

NOTE	REF NO	GRAPHIC REF	PART NUMBER	QTY	PART NAME 1 2 3 4 5 6 (PRODUCT LEVEL)	SEE PAGE
	1	1	**270-5950**	4	SPRING	
	2	1	**131-5818**	4	SPRING	
	3	1	**099-6136**	8	WASHER (5.1X12.5X1-MM THK)	
	4	1	**095-0936**	4	RING-RETAINING	
	5	1	**126-1865**	4	SPRING	
	6	1	**126-1866**	4	SPRING	
	7	1	**270-5949**	4	PISTON	
	8	1	**6V-8400**	4	SEAL-O-RING	
	9	1	**165-9554**	4	PLUG	
	10	1	**119-5389**	4	PACKING	
	11	1	**165-9552**	4	PUSHROD	
M	12	1	**087-4710**	4	SETSCREW (M10X21-MM)	
M	13	1	**8T-4133**	4	NUT (M10X1.5-THD)	
	14	1	**087-5709**	2	BELLOWS	
	15	1	**087-5708**	2	PEDAL	
M	16	1	**8T-0343**	2	BOLT-SOCKET HEAD (M12X1.75X55-MM)	
	17	1	**119-5388**	4	CAP	
	18	1	**165-9463**	2	COVER	
	19	1	**119-5391**	4	SEAT	
	20	1	**119-5392**	4	BUSHING	
	21	1	**153-5223**	12	BALL	
	22	1	**165-9551**	4	SEAT	
	23	1	**099-6137**	4	WASHER (6.1X9X0.2-MM THK)	
	24	1	**099-6141**	4	WASHER (6.1X11X1.5-MM THK)	
M	25	1	**8T-1158**	2	BOLT-SOCKET HEAD (M8X1.25X20-MM)	
	26	1	**099-6145**	2	CAMSHAFT	
	27	1	**099-6144**	4	BUSHING-TERMINAL	
M	28	1	**095-1260**	2	SETSCREW-SOCKET (M6X1X6-MM)	
	29	1	**8T-6759**	6	PLUG-PIPE	
	30	1	**9M-5590**	2	BALL	
	31	1	**107-6479**	2	PLUG	
	32	1	**095-1578**	2	SEAL-O-RING	
	33	1	**165-9464**	2	SEAT	
	34	1	**165-9553**	1	COVER	

M-METRIC PART

270-5947 VALVE GP-PILOT *(contd.)* i02497097

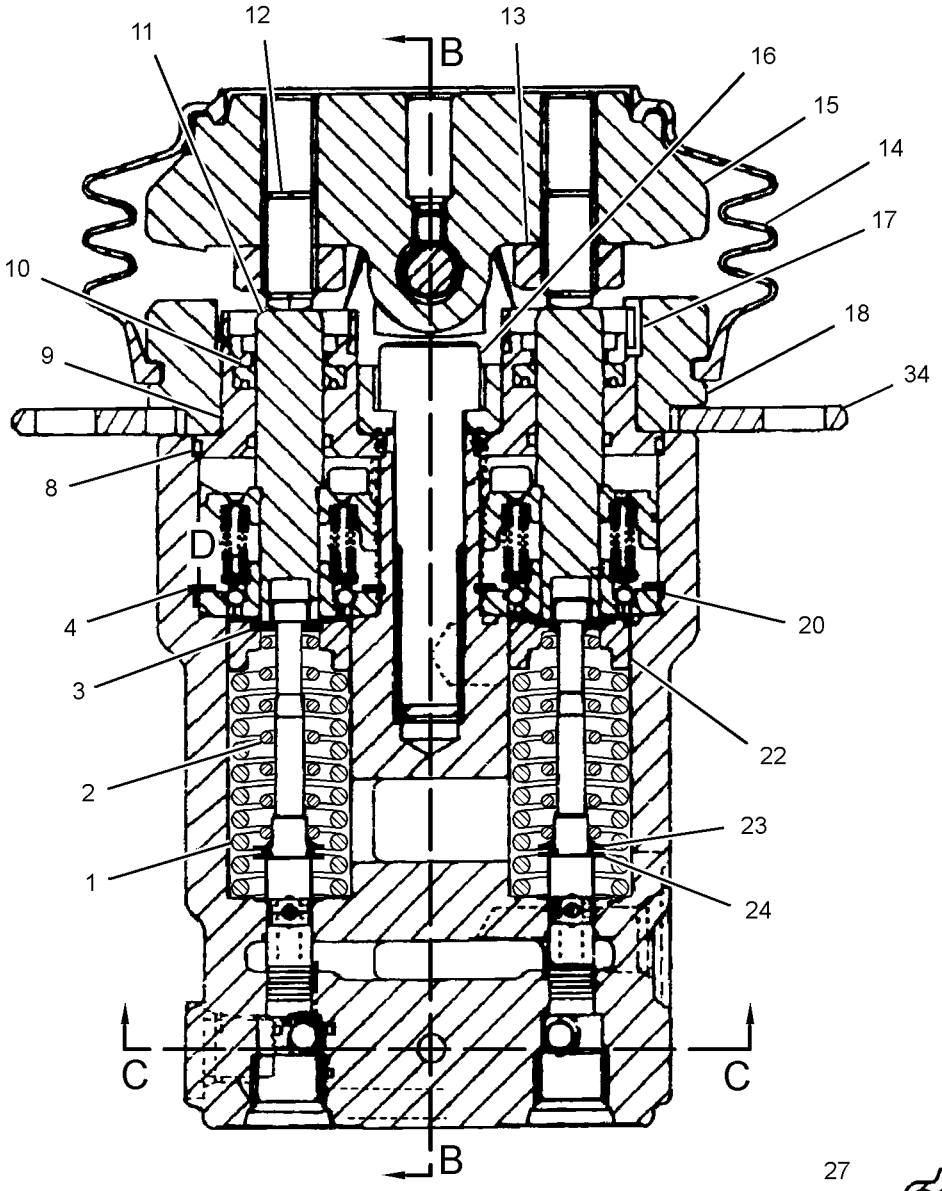

SECTION A-A

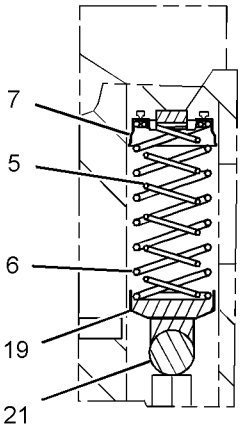

VIEW OF AREA D

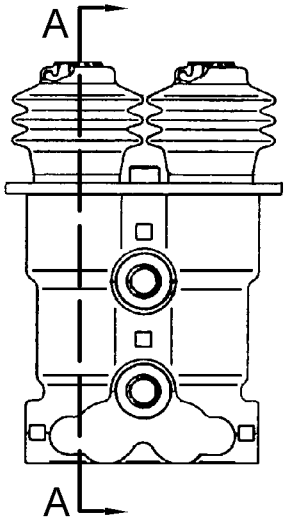

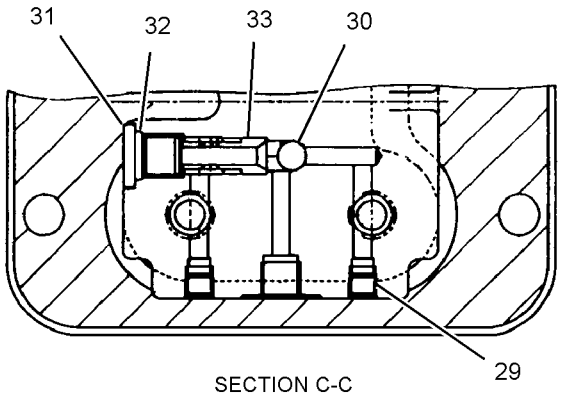

SECTION C-C

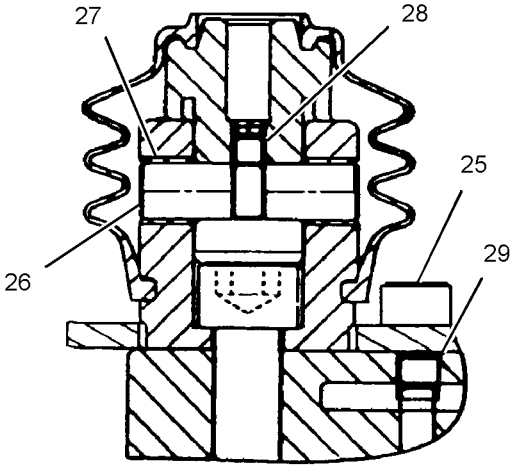

SECTION B-B

GRAPHIC #1 **<END>** g01237519

285-1765 VALVE GP-PILOT–ALT PATTERN CONTROL, 2-WAY

S/N: D3P1-UP; M4T1-UP
PART OF 255-1851 LINES GP-PILOT
AN ATTACHMENT

SMCS-5059 **i03631051**

NOTE	REF NO	GRAPHIC REF	PART NUMBER	QTY	PART NAME 1 2 3 4 5 6 (PRODUCT LEVEL)	SEE PAGE
	1	1	**118-5983**	1	SEAL-RUBBER	
	2	1	**285-1764**	1	BOLT-WING	
	3	1	**285-1766**	1	LEVER	
	4	1	**285-1767**	1	COVER	
	5	1	**1J-9671**	4	SEAL-O-RING	
	6	1	**4J-0528**	2	SEAL-O-RING	
	7	1	**5I-4000**	1	HOUSING	
	8	1	**5I-4002**	1	COVER	
	9	1	**6I-6758**	1	SPOOL AS	
	9A	1	**7Y-5272**	1	PIN-SPRING	
M	10	1	**6V-3938**	4	BOLT (M10X1.5X20-MM)	
	11	1	**7Y-5219**	1	SEAL-O-RING	
M	12	1	**8T-1159**	4	BOLT-SOCKET HEAD (M10X1.5X25-MM)	
	13	1	**8T-4121**	1	WASHER-HARD (11X21X2.5-MM THK)	
M	14	1	**8T-4133**	1	NUT (M10X1.5-THD)	
	15	1	**9S-8003**	4	PLUG	

M-METRIC PART

285-1765 VALVE GP-PILOT *(contd.)* **i03631051**

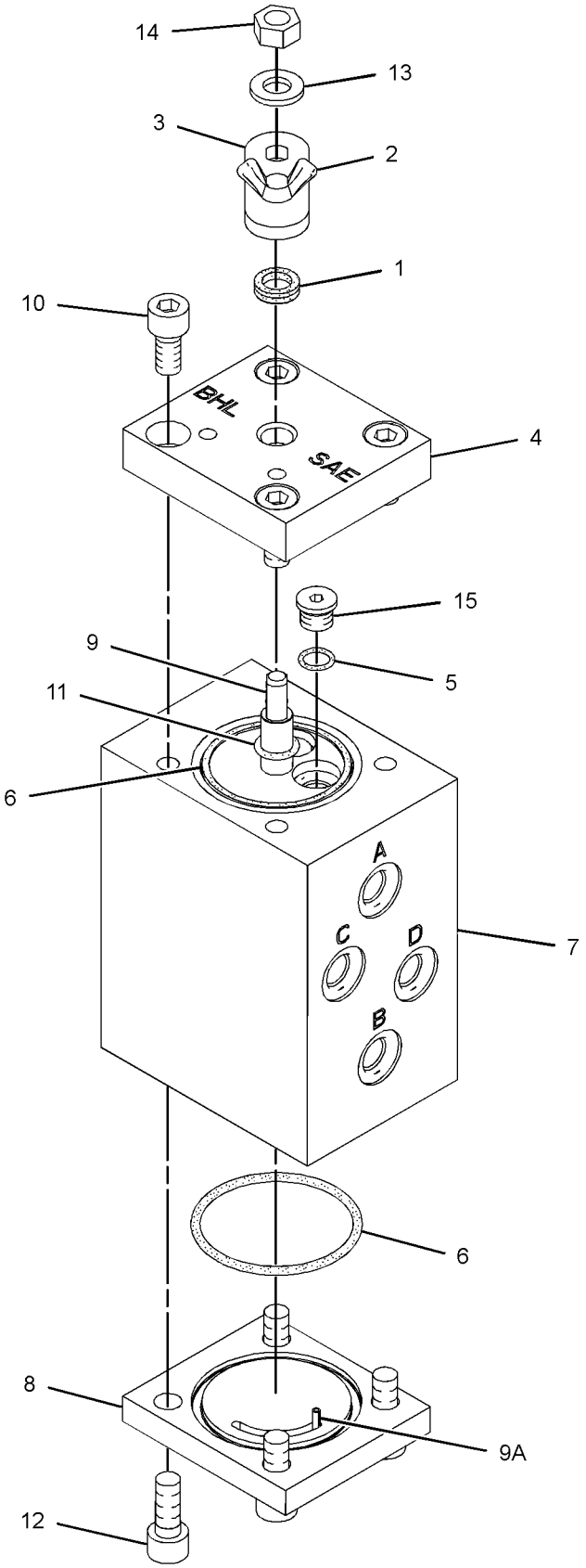

GRAPHIC #1 **<END>** g01335005

HYDRAULIC SYSTEM

297-0529 VALVE GP-PILOT–JOYSTICK

S/N: D3P1-UP; M4T1-UP

PART OF 297-0532, 297-0533 CONTROL GP-JOYSTICK

AN ATTACHMENT

SMCS-5059 **i03257559**

NOTE	REF NO	GRAPHIC REF	PART NUMBER	QTY	PART NAME 1 2 3 4 5 6 (PRODUCT LEVEL)	SEE PAGE
	1	1	**270-5953**	4	SPRING	
	2	1	**095-1586**	4	SEAL-O-RING	
	3	1	**4I-6365**	1	JOINT	
	4	1	**094-0876**	4	SEAL	
	5	1	**096-1628**	4	PLUG	
B	6	1	**099-6137**	4	WASHER (6.1X9X0.2-MM THK)	
	7	1	**118-4086**	4	ROD	
	8	1	**118-4087**	4	SPRING	
M	9	1	**131-5915**	1	NUT-SPECIAL	
	10	1	**165-9431**	1	PLATE	
	11	1	**165-9435**	2	SEAT	
	12	1	**165-9436**	2	SEAT	
	13	1	**165-9438**	1	PLATE	
	14	1	**165-9442**	2	SPRING	
	15	1	**165-9443**	2	SEAT-SPRING	
	16	1	**165-9444**	2	SEAT-SPRING	
	17	1	**165-9460**	2	SPRING	
	18	1	**171-0087**	1	BELLOWS	

PARTS SHOWN IN GRAPHIC(S) WITHOUT A REFERENCE NUMBER ARE NOT SERVICED SEPARATELY

B-USE AS REQUIRED
M-METRIC PART

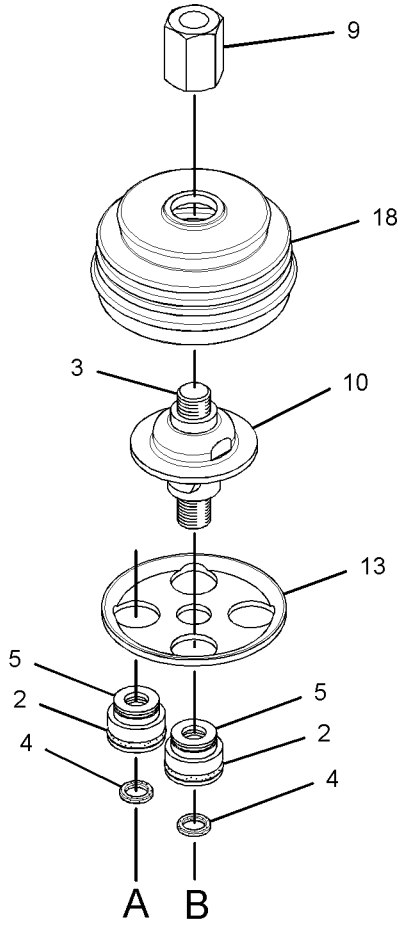

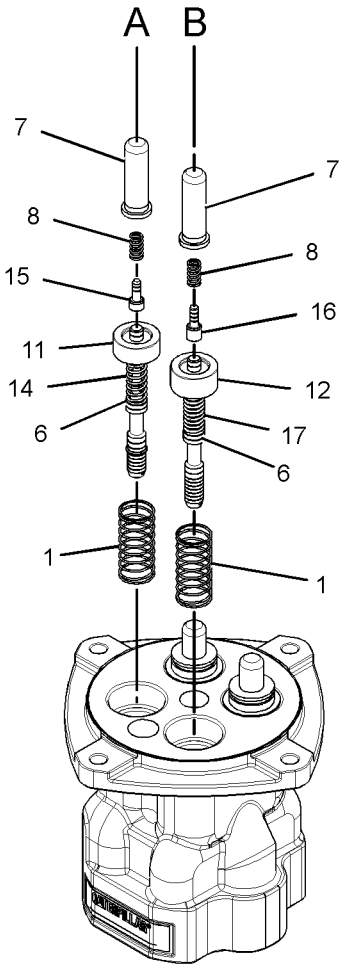

GRAPHIC #1 **<END>** g01528724

297-0530 VALVE GP-PILOT—JOYSTICK, RH

S/N: M4T1-UP
PART OF 297-0540 CONTROL GP-PILOT OPERATED HYD
FIELD REPLACEMENT FOR 225-4813—PAGE 783
AN ATTACHMENT

SMCS-5059 **i03713128**

NOTE	REF NO	GRAPHIC REF	PART NUMBER	QTY	PART NAME 1 2 3 4 5 6 (PRODUCT LEVEL)	SEE PAGE
	1	1	**4I-6365**	1	JOINT	
	2	1	**094-0876**	4	SEAL	
	3	1	**095-1586**	4	SEAL-O-RING	
	4	1	**096-1628**	4	PLUG	
B	5	1	**099-6137**	4	WASHER (6.1X9X0.2-MM THK)	
	6	1	**118-4086**	4	ROD	
	7	1	**118-4087**	4	SPRING	
M	8	1	**131-5915**	1	NUT-SPECIAL	
	9	1	**165-9431**	1	PLATE	
	10	1	**165-9435**	2	SEAT	
	11	1	**165-9436**	2	SEAT	
	12	1	**165-9438**	1	PLATE	
	13	1	**165-9442**	2	SPRING	
	14	1	**165-9443**	2	SEAT-SPRING	
	15	1	**165-9444**	2	SEAT-SPRING	
	16	1	**165-9460**	1	SPRING	
	17	1	**171-0087**	1	BELLOWS	
	18	1	**190-7750**	4	SPRING	
	19	1	**225-4815**	1	SPRING	

B-USE AS REQUIRED
M-METRIC PART

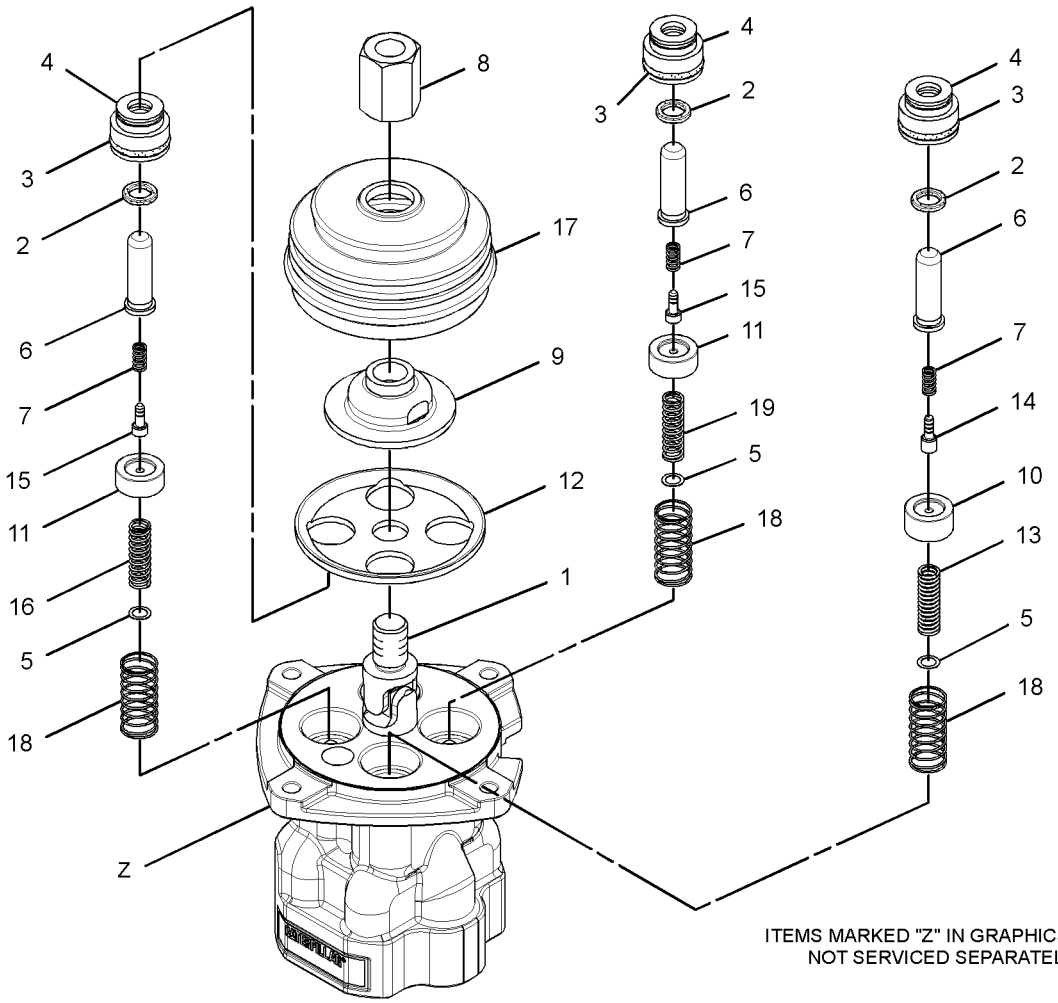

GRAPHIC #1 **<END>** g01515022

297-0531 VALVE GP-PILOT—JOYSTICK, LH

S/N: M4T1-UP
PART OF 297-0541 CONTROL GP-PILOT OPERATED HYD
FIELD REPLACEMENT FOR 232-4100—PAGE 784
AN ATTACHMENT AND FIELD INSTALLATION

SMCS-5059 **i03713061**

NOTE	REF NO	GRAPHIC REF	PART NUMBER	QTY	PART NAME 1 2 3 4 5 6 (PRODUCT LEVEL)	SEE PAGE
	1	1	**4I-6365**	1	JOINT	
	2	1	**094-0876**	4	SEAL	
	3	1	**095-1586**	4	SEAL-O-RING	
	4	1	**096-1628**	4	PLUG	
B	5	1	**099-6137**	4	WASHER (6.1X9X0.2-MM THK)	
	6	1	**118-4086**	4	ROD	
	7	1	**118-4087**	4	SPRING	
M	8	1	**131-5915**	1	NUT-SPECIAL	
	9	1	**165-9431**	1	PLATE	
	10	1	**165-9435**	2	SEAT	
	11	1	**165-9436**	2	SEAT	
	12	1	**165-9438**	1	PLATE	
	13	1	**165-9442**	2	SPRING	
	14	1	**165-9443**	2	SEAT-SPRING	
	15	1	**165-9444**	2	SEAT-SPRING	
	16	1	**165-9460**	1	SPRING	
	17	1	**171-0087**	1	BELLOWS	
	18	1	**190-7750**	4	SPRING	
	19	1	**225-4815**	1	SPRING	

B-USE AS REQUIRED
M-METRIC PART

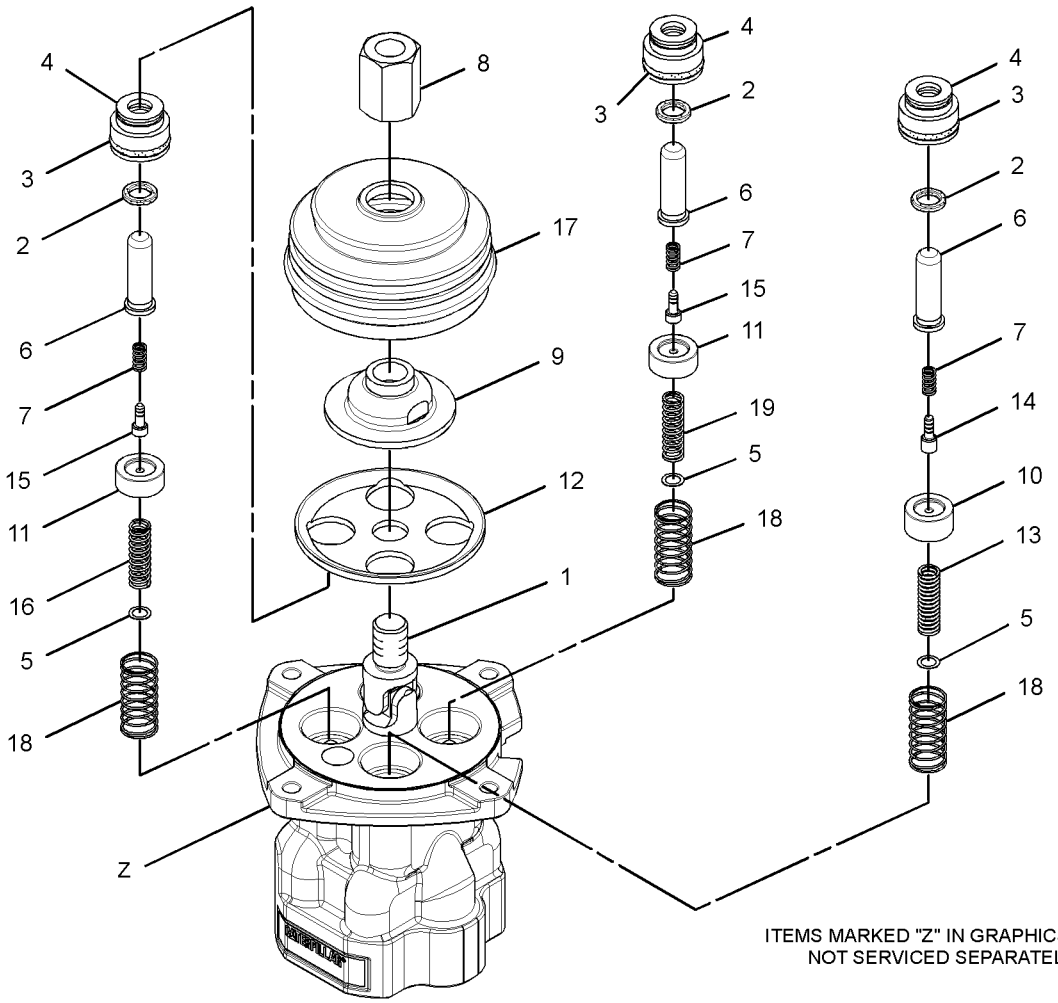

GRAPHIC #1 **<END>** g01515022

310-0414 VALVE GP-PILOT

S/N: D3P1-UP; M4T259-UP

PART OF 248-9825 LINES GP-PILOT

SMCS-5059 **i03681421**

NOTE	REF NO	GRAPHIC REF	PART NUMBER	QTY	PART NAME 1 2 3 4 5 6 (PRODUCT LEVEL)	SEE PAGE
	1	1	**087-5708**	2	PEDAL	
M	2	1	**095-0673**	2	BOLT-SOCKET HEAD (M12X1.75X60-MM)	
	3	1	**099-6137**	4	WASHER (6.1X9X0.2-MM THK)	
	4	1	**099-6141**	4	WASHER (6.1X11X1.5-MM THK)	
	5	1	**099-6144**	4	BUSHING-TERMINAL	
	6	1	**099-6145**	2	CAMSHAFT	
	7	1	**119-5388**	4	CAP	
	8	1	**119-5389**	4	PACKING	
	9	1	**119-5391**	4	SEAT	
	10	1	**126-1865**	4	SPRING	
	11	1	**126-1866**	4	SPRING	
	12	1	**131-5818**	4	SPRING	
	13	1	**147-4131**	2	BOOT-PROTECTION	
	14	1	**153-5223**	12	BALL	
	15	1	**165-9463**	2	COVER	
	16	1	**165-9552**	4	PUSHROD	
	17	1	**165-9553**	1	COVER	
	18	1	**165-9554**	4	PLUG	
	19	1	**196-3784**	2	PLUG	
	20	1	**270-5949**	4	PISTON	
	21	1	**270-5950**	4	SPRING	
	22	1	**310-0419**	4	SEAT	
	23	1	**310-0420**	4	SEAL-O-RING	
	24	1	**310-0421**	2	BUSHING	
	25	1	**310-0422**	2	SEAT	
	26	1	**323-7770**	2	ADAPTER	
M	27	1	**087-4710**	4	SETSCREW (M10X21-MM)	
M	28	1	**095-1260**	2	SETSCREW-SOCKET (M6X1X6-MM)	
	29	1	**095-1575**	4	SEAL-O-RING	
	30	1	**3J-7354**	2	SEAL-O-RING	
	31	1	**3Y-9267**	2	BALL	
	32	1	**6V-8400**	4	SEAL-O-RING	
M	33	1	**8C-6965**	2	BOLT-SOCKET HEAD (M6X1X45-MM)	
M	34	1	**8T-1158**	2	BOLT-SOCKET HEAD (M8X1.25X20-MM)	
M	35	1	**8T-4133**	4	NUT (M10X1.5-THD)	
	36	1	**8T-6759**	4	PLUG-PIPE	

M-METRIC PART

310-0414 VALVE GP-PILOT *(contd.)* i03681421

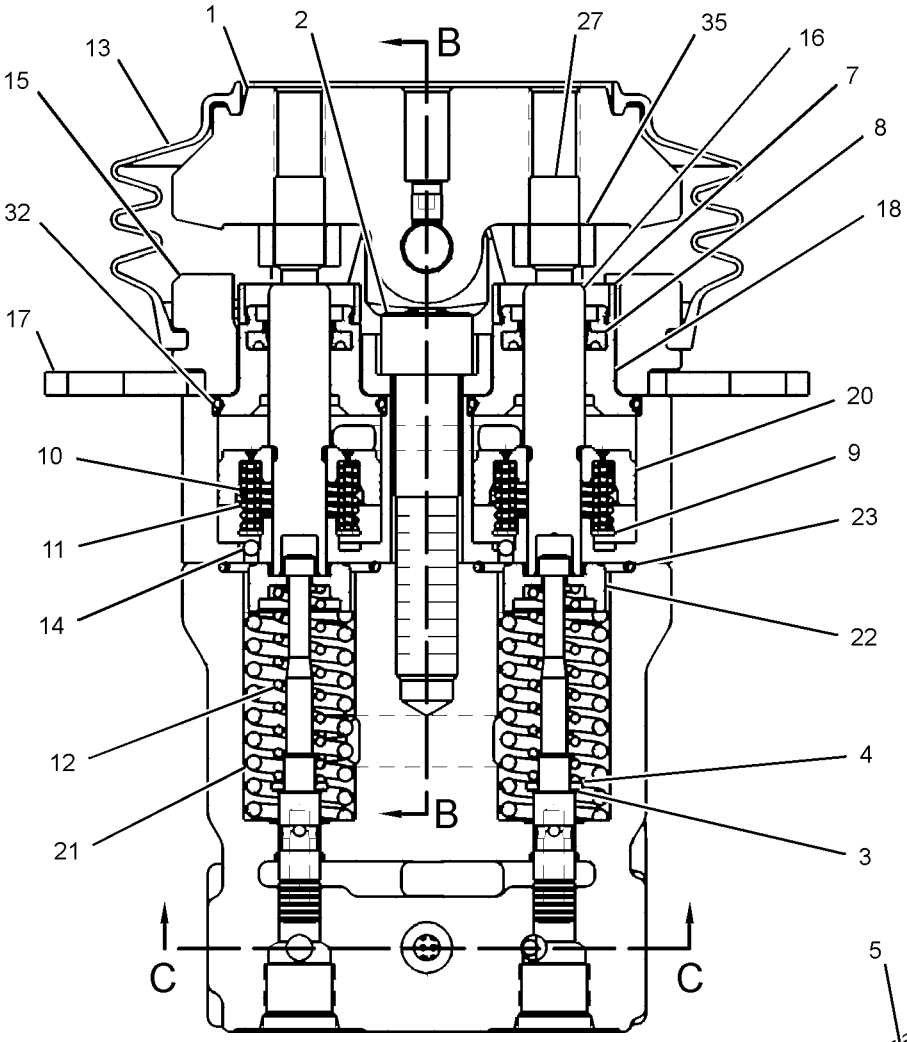

SECTION A-A

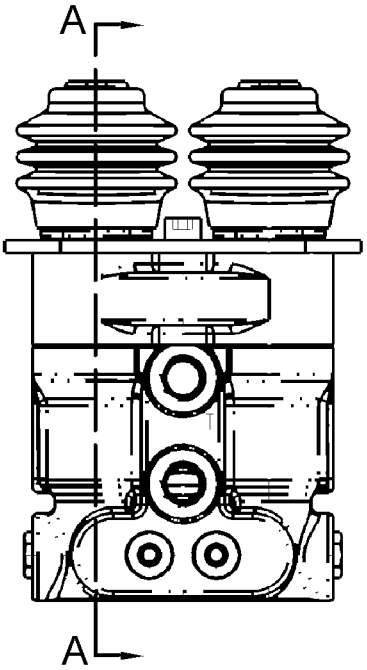

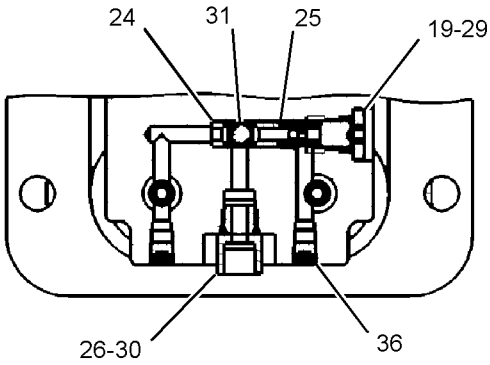

SECTION C-C

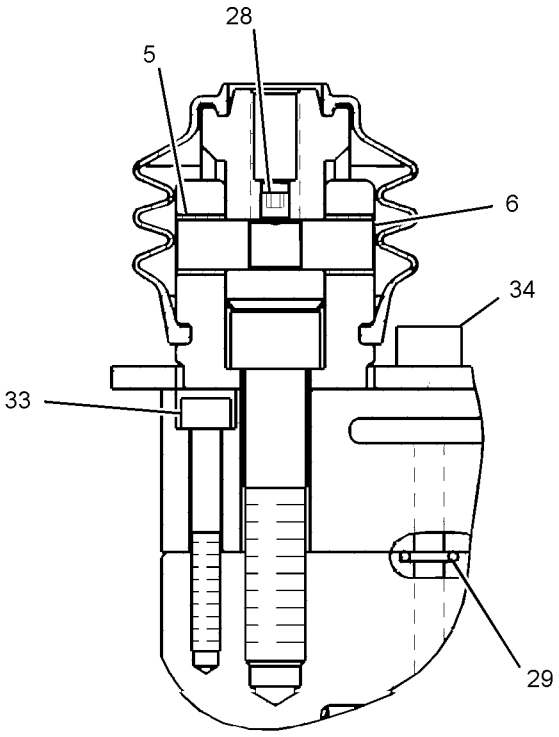

SECTION B-B

GRAPHIC #1 **<END>** g02006813

105-1321 VALVE GP-PILOT RELIEF

S/N: D3P1-UP; M4T1-UP
PART OF 201-9352 VALVE GP-RELIEF
AN ATTACHMENT

SMCS-5072 **i01889480**

NOTE	REF NO	GRAPHIC REF	PART NUMBER	QTY	PART NAME 1 2 3 4 5 6 (PRODUCT LEVEL)	SEE PAGE
	1	1	**030-0167**	1	RING-BACKUP	
	2	1	**8L-2779**	1	SEAL-O-RING	
	3	1	**033-6036**	2	SEAL-O-RING	
	4	1	**3P-0647**	1	SEAL-O-RING	
	5	1	**9J-0707**	1	RING-BACKUP	
	6	1	**8T-7877**	1	SEAL-O-RING	

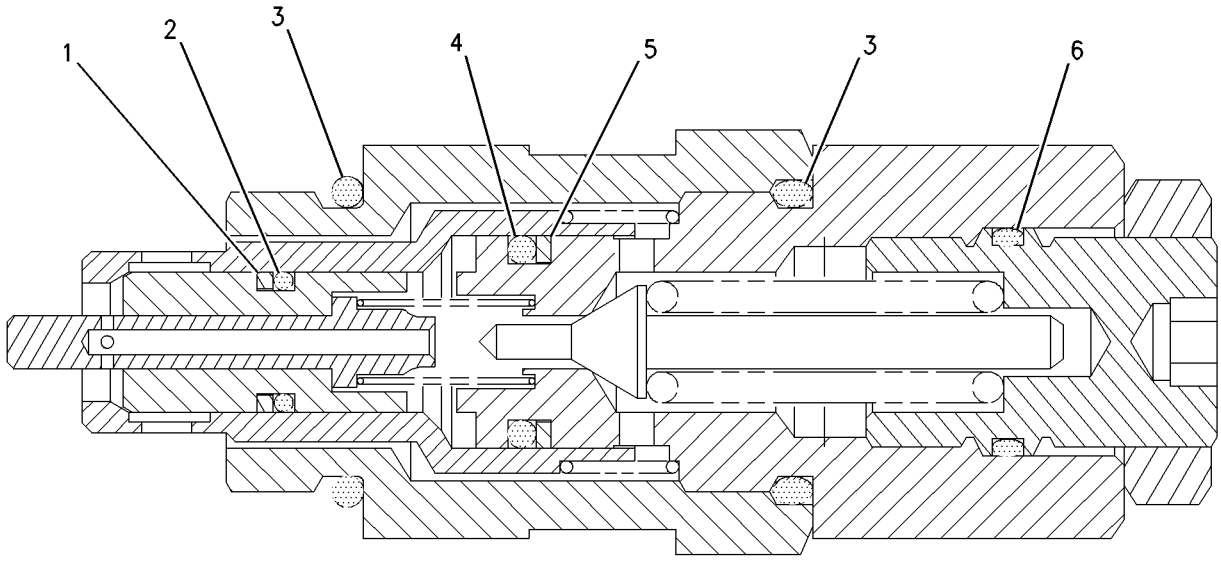

GRAPHIC #1 **<END>** g00826154

HYDRAULIC SYSTEM

201-9353 VALVE GP-PILOT RELIEF

S/N: D3P1-UP; M4T1-UP
PART OF 201-9352 VALVE GP-RELIEF
AN ATTACHMENT

SMCS-5072 **i01889481**

NOTE	REF NO	GRAPHIC REF	PART NUMBER	QTY	PART NAME 1 2 3 4 5 6 (PRODUCT LEVEL)	SEE PAGE
	1	1	**095-1578**	1	SEAL-O-RING	
	2	1	**3D-2824**	2	SEAL-O-RING	
	3	1	**103-8255**	1	SEAL-O-RING	
	4	1	**103-8252**	2	RING	
	5	1	**103-8254**	1	SEAL-O-RING	
	6	1	**103-8253**	2	RING	

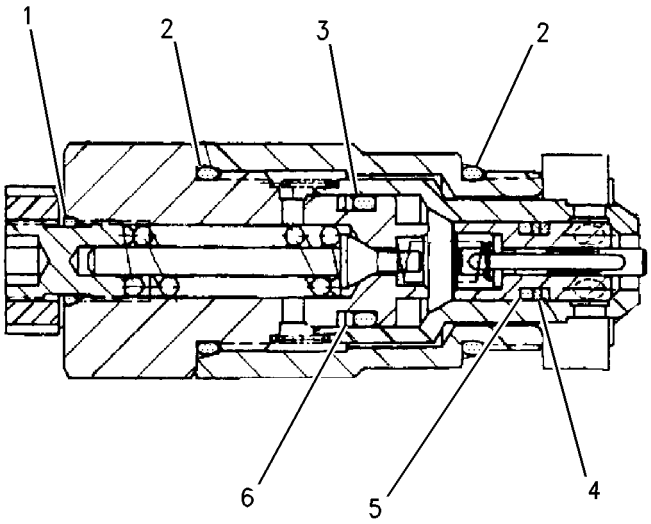

GRAPHIC #1 **<END>** g00831254

310-0210 VALVE GP-PRESSURE REDUCING–
BOOM, SWING PRIORITY
S/N: D3P1-UP; M4T1-UP
PART OF 248-9843 LINES GP-PILOT

SMCS-5117 **i03177861**

NOTE	REF NO	GRAPHIC REF	PART NUMBER	QTY	PART NAME 1 2 3 4 5 6 (PRODUCT LEVEL)	SEE PAGE
	1	1	**111-9998**	2	PLUG	
	2	1	**171-0123**	2	PLUG	
M	3	1	**171-0124**	2	SETSCREW (M8X1.25X18-MM)	
	4	1	**171-0126**	2	SEAT-SPRING	
	5	1	**171-0127**	2	SEAT-SPRING	
	6	1	**171-0128**	2	SPRING	
	7	1	**185-0423**	2	STOP	
	8	1	**095-1580**	2	SEAL-O-RING	
	9	1	**095-1582**	2	SEAL-O-RING	
	10	1	**095-1590**	2	SEAL-O-RING	
M	11	1	**5C-7261**	2	NUT (M8X1.25-THD)	

M-METRIC PART

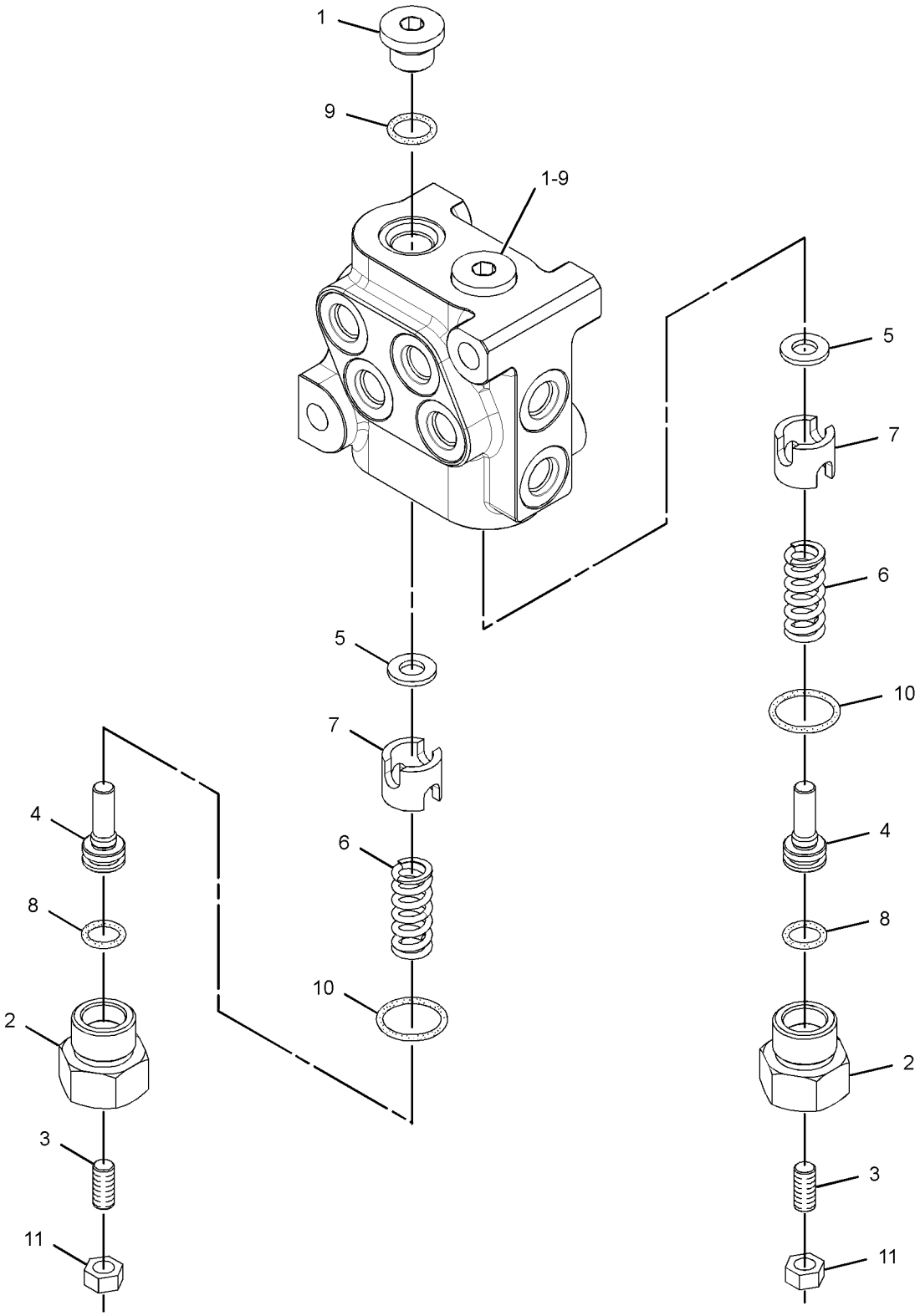

GRAPHIC #1 **<END>** g01506435

153-5295 VALVE GP-PRIORITY–SWING

S/N: D3P1-UP; M4T1-UP

PART OF 259-7448 VALVE GP-CONTROL

SMCS-506P **i02697143**

NOTE	REF NO	GRAPHIC REF	PART NUMBER	QTY	PART NAME 1 2 3 4 5 6 (PRODUCT LEVEL)	SEE PAGE
Z	1	1		1	SLEEVE	
Z	2	1		1	STEM	
Z	3	1		1	SPRING	
	4	1	**158-8186**	1	SPRING	
	5	1	**102-0889**	2	SEAL-O-RING	
	6	1	**103-8173**	2	SEAL-O-RING	
	7	1	**140-0674**	1	VALVE	
	8	1	**140-0677**	1	PIN	
Z	9	1		1	ROD	
Z	10	1		1	SLEEVE	

Z-NOT SERVICED SEPARATELY

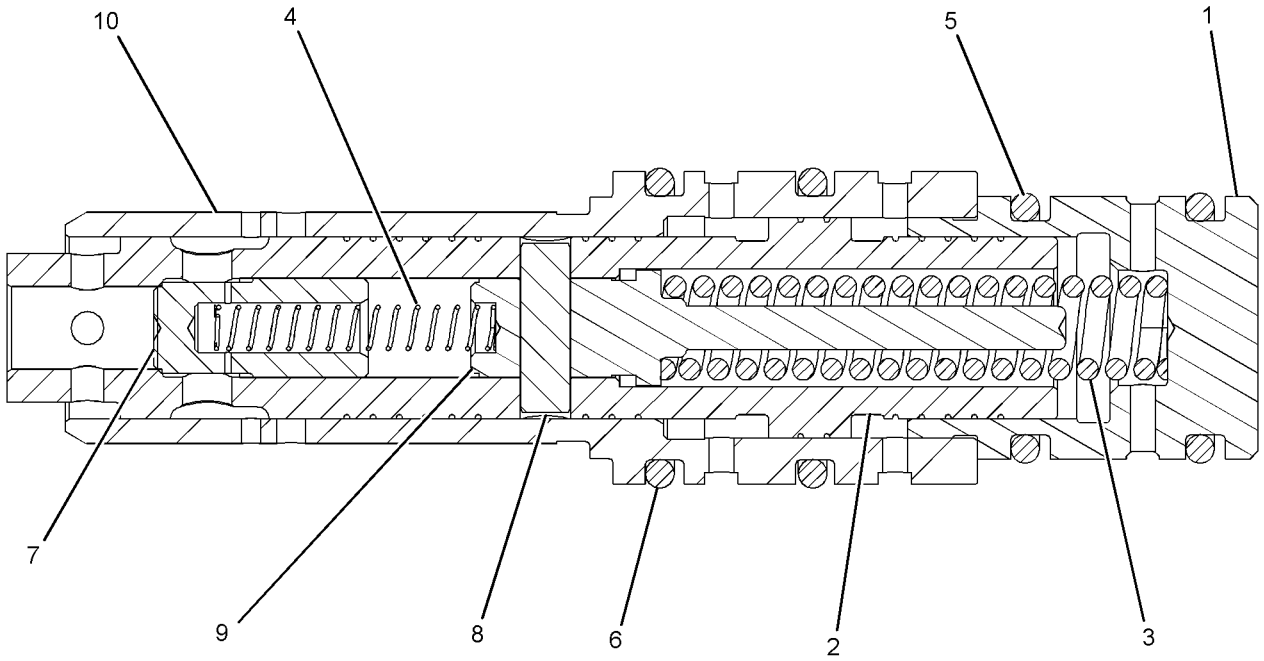

GRAPHIC #1 **<END>** g01266687

HYDRAULIC SYSTEM

259-0907 VALVE GP-PUMP CONTROL—HYDRAULIC FAN

S/N: D3P1-UP; M4T1-UP

PART OF 259-0815 PUMP GP-PISTON

SMCS-5455 **i02500117**

NOTE	REF NO	GRAPHIC REF	PART NUMBER	QTY	PART NAME 1 2 3 4 5 6 (PRODUCT LEVEL)	SEE PAGE
	1	1	**134-7489**	1	PLUG	
	2	1	**6E-6528**	1	SEAL	
	3	1	**033-5853**	2	SEAL-O-RING	
	4	1	**213-9244**	1	SEAL-O-RING	
	5	1	**209-6003**	1	RING	
	6	1	**209-5941**	1	PLUG	
M	7	1	**5C-7261**	1	NUT (M8X1.25-THD)	
	8	1	**213-9242**	1	SEAL-O-RING	
	9	1	**213-9247**	1	SEAL-O-RING	
	10	1	**209-6004**	1	RING	
	11	1	**213-9243**	1	SEAL-O-RING	
	12	1	**209-5940**	1	ORIFICE	
	13	1	**9S-8002**	2	PLUG-O-RING	
	14	1	**213-9246**	1	SEAL-O-RING	
	15	1	**033-6043**	1	SEAL-O-RING	
	16	1	**209-6005**	1	RING	
	17	1	**209-5942**	1	PLUG	
M	18	1	**5C-2890**	1	NUT (M6X1-THD)	

M-METRIC PART

259-0907 VALVE GP-PUMP CONTROL *(contd.)* **i02500117**

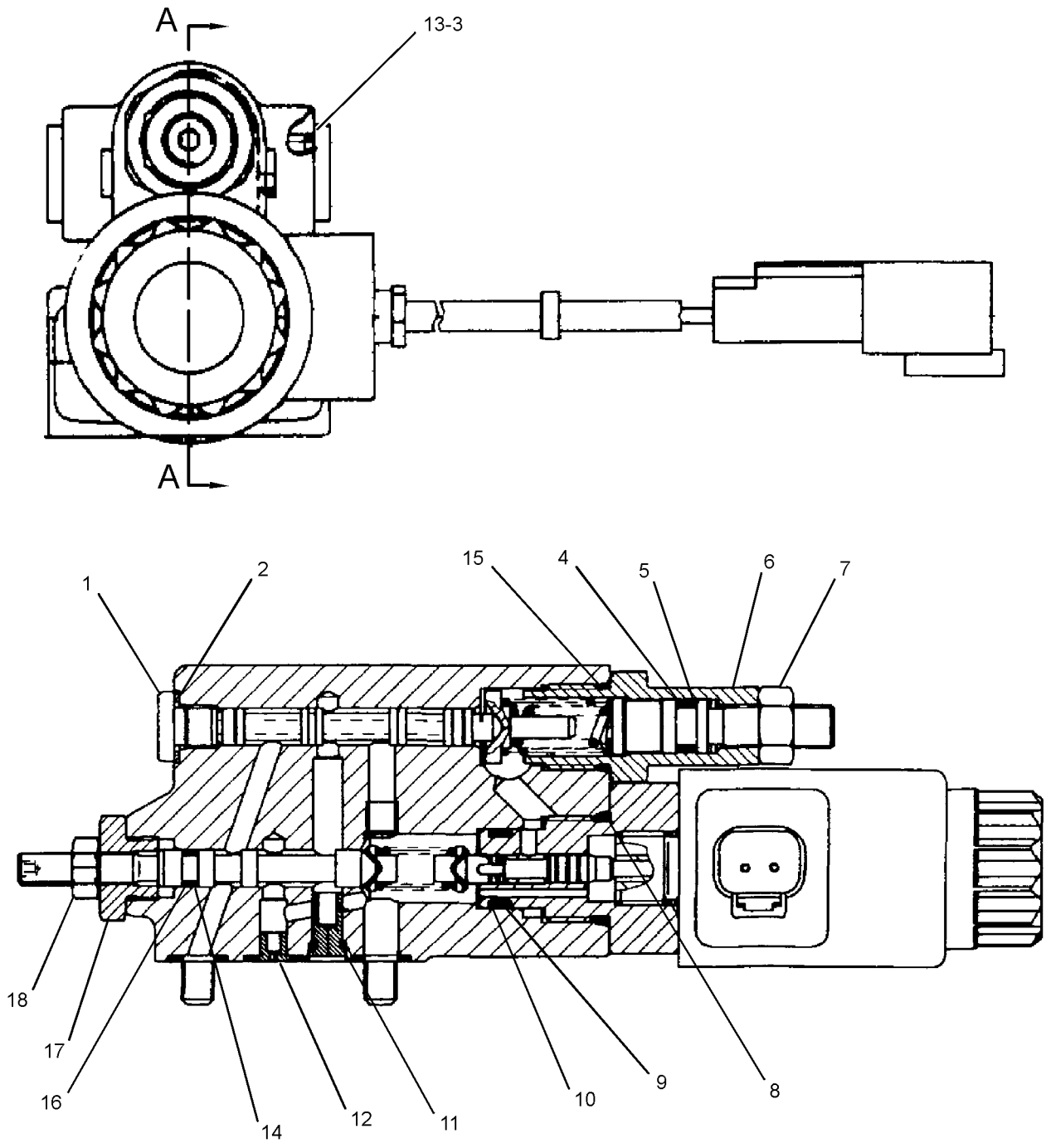

SECTION A-A

GRAPHIC #1 **<END>** g01201080

147-4161 VALVE GP-RELIEF—NEGATIVE FLOW CONTROL

S/N: D3P1-UP; M4T1-UP

PART OF 206-3164 VALVE GP-RELIEF

SMCS-5069, 5117 **i01682852**

NOTE	REF NO	GRAPHIC REF	PART NUMBER	QTY	PART NAME 1 2 3 4 5 6 (PRODUCT LEVEL)	SEE PAGE
	1	1	**5I-4111**	1	PLUG	
	2	1	*147-4162*	1	BODY-VALVE	
	3	1	**107-6370**	1	SPRING	
	4	1	**107-6371**	1	VALVE	
	5	1	**5P-3108**	1	SEAL-O-RING	
	6	1	**4K-1388**	2	SEAL-O-RING	
B	7	1	**4J-7386**	1	SHIM (0.01-IN THK)	
B	8	1	**4J-7385**	1	SHIM (0.048-IN THK)	

B-USE AS REQUIRED

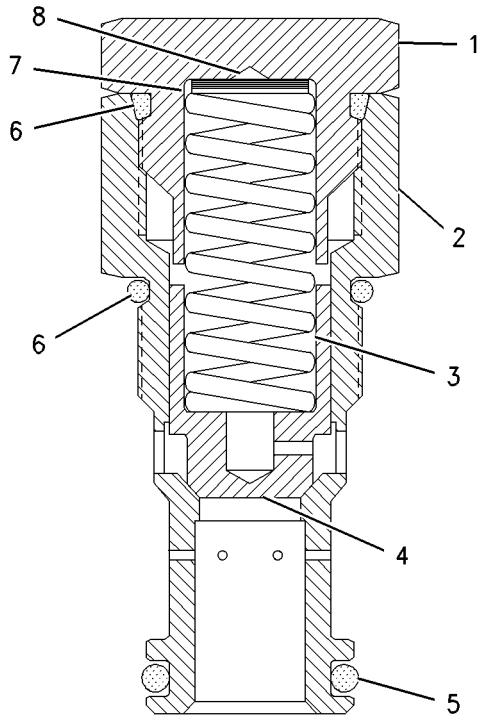

GRAPHIC #1 **<END>** g00833789

147-4163 VALVE GP-RELIEF

S/N: D3P1-UP; M4T1-UP

PART OF 285-1537 VALVE GP-CONTROL

SMCS-5069, 5117 **i01683242**

NOTE	REF NO	GRAPHIC REF	PART NUMBER	QTY	PART NAME 1 2 3 4 5 6 (PRODUCT LEVEL)	SEE PAGE
	1	1	**5I-4111**	1	PLUG	
	2	1	**147-4164**	1	BODY-VALVE	
	3	1	**107-6370**	1	SPRING	
	4	1	**107-6371**	1	VALVE	
	5	1	**5P-3108**	1	SEAL-O-RING	
	6	1	**4K-1388**	2	SEAL-O-RING	
B	7	1	**4J-7386**	1	SHIM (0.01-IN THK)	
B	8	1	**4J-7385**	1	SHIM (0.048-IN THK)	

B-USE AS REQUIRED

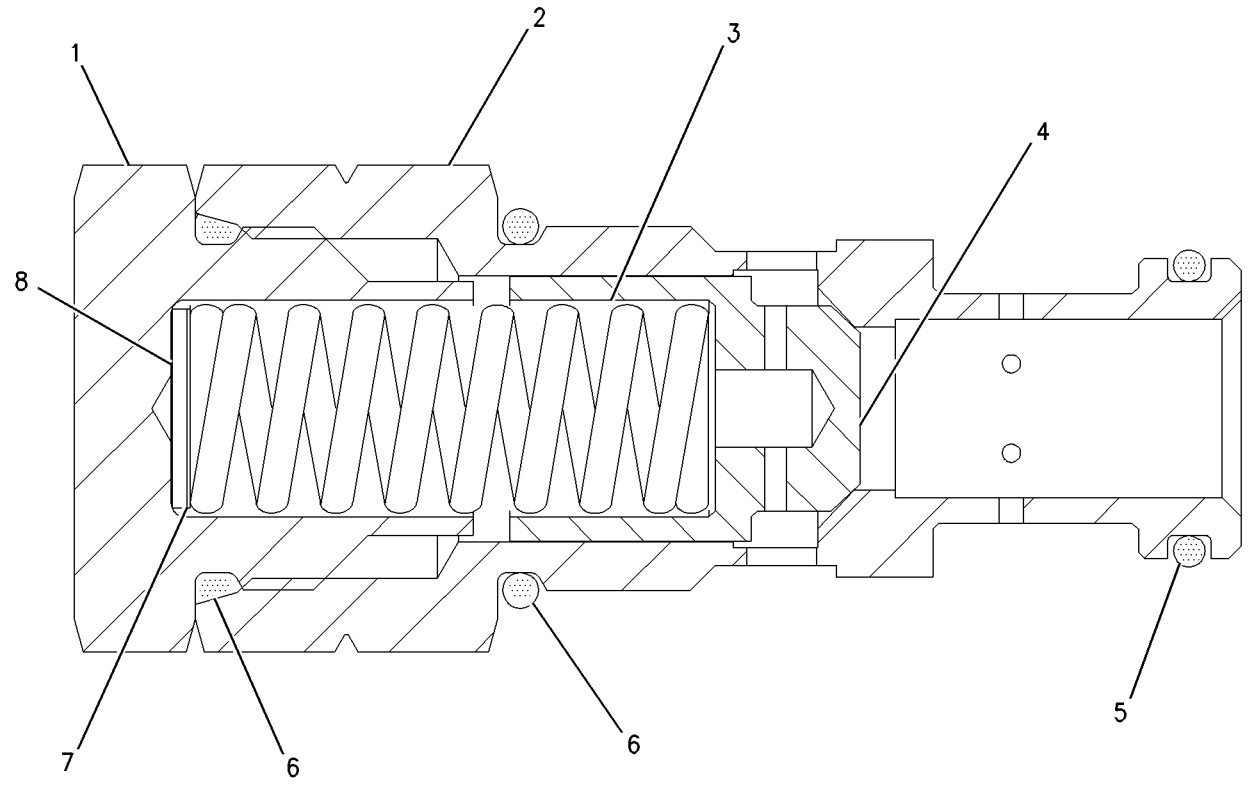

GRAPHIC #1 **<END>** g00833759

HYDRAULIC SYSTEM

173-3536 VALVE GP-RELIEF

S/N: D3P1-UP; M4T1-UP

PART OF 322-8716 VALVE GP-SWING CUSHION

SMCS-5069, 5117 **i02444489**

NOTE	REF NO	GRAPHIC REF	PART NUMBER	QTY	PART NAME 1 2 3 4 5 6 (PRODUCT LEVEL)	SEE PAGE
	1	1	**095-1785**	1	RING-BACKUP	
	2	1	**095-1586**	1	SEAL-O-RING	

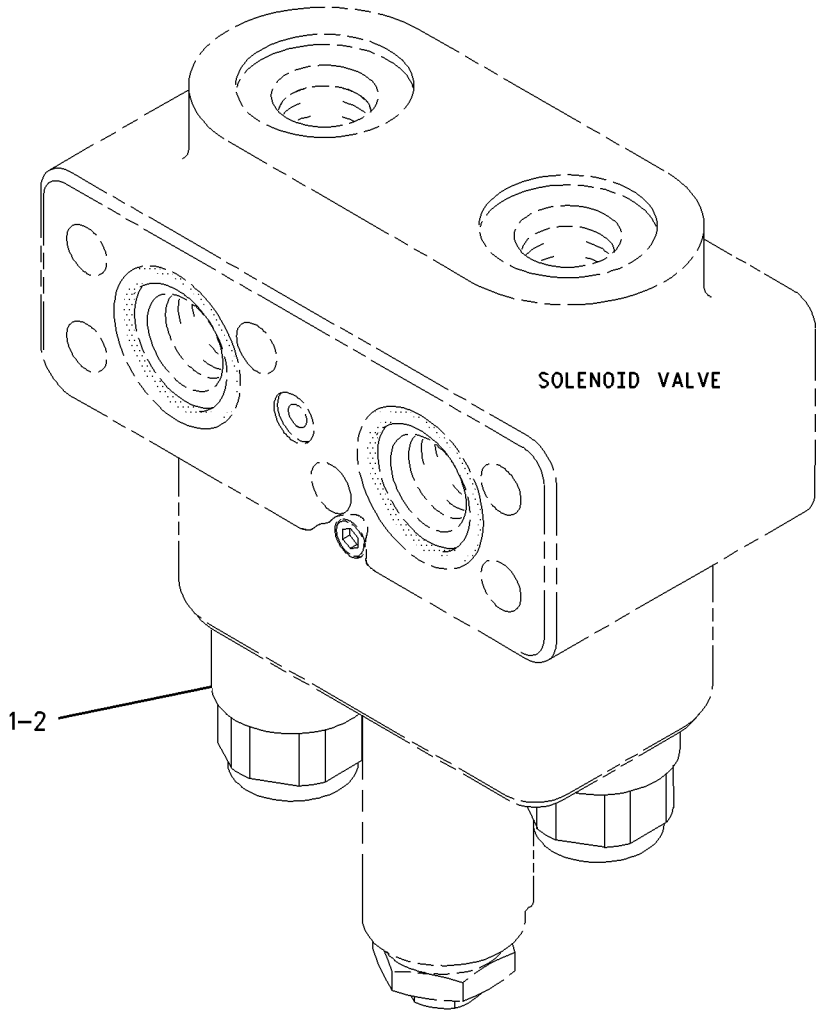

GRAPHIC #1 **<END>** g00672771

HYDRAULIC SYSTEM

177-2653 VALVE GP-RELIEF–WITH BLOCK

S/N: D3P1-UP; M4T1-UP

PART OF 255-1919, 255-1920, 255-1923 LINES GP-FRONT

AN ATTACHMENT

SMCS-5069, 5117 **i03090003**

NOTE	REF NO	GRAPHIC REF	PART NUMBER	QTY	PART NAME 1 2 3 4 5 6 (PRODUCT LEVEL)	SEE PAGE
CY	1	1	**310-0394**	1	VALVE GP-RELIEF (LINE)	819

C-CHANGE FROM PREVIOUS TYPE
Y-SEPARATE ILLUSTRATION

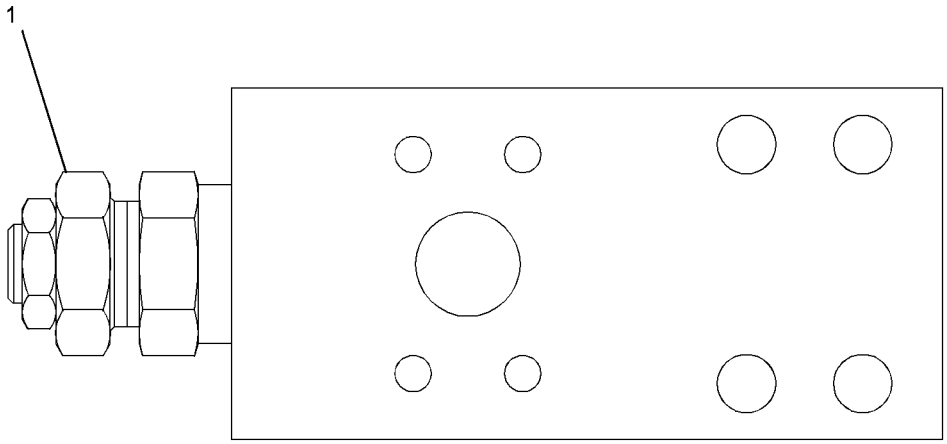

GRAPHIC #1 **<END>** g01534233

HYDRAULIC SYSTEM

201-9352 VALVE GP-RELIEF

S/N: D3P1-UP; M4T1-UP
PART OF 185-0490 VALVE GP-FLOW CONTROL & RELIEF
AN ATTACHMENT

SMCS-5069, 5117 **i01889473**

NOTE	PART NUMBER	QTY	PART NAME 1 2 3 4 5 6 (PRODUCT LEVEL)	SEE PAGE
Y	**201-9353**	1	VALVE GP-PILOT RELIEF	798
			-OR-	
Y	**105-1321**	1	VALVE GP-PILOT RELIEF	797

Y-SEPARATE ILLUSTRATION

<END>

204-2678 VALVE GP-RELIEF

S/N: D3P1-UP; M4T1-UP

PART OF 200-3373, 334-9973 MOTOR GP-SWING

SMCS-5069, 5117 **i01683270**

NOTE	REF NO	GRAPHIC REF	PART NUMBER	QTY	PART NAME 1 2 3 4 5 6 (PRODUCT LEVEL)	SEE PAGE
	1	1	**168-0765**	1	RING-BACKUP	
	2	1	**7J-9933**	1	SEAL-O-RING	
	3	1	**7I-0966**	1	RING-BACKUP	
	4	1	**6V-5556**	1	SEAL-O-RING	
	5	1	**095-1698**	1	SEAL-O-RING	

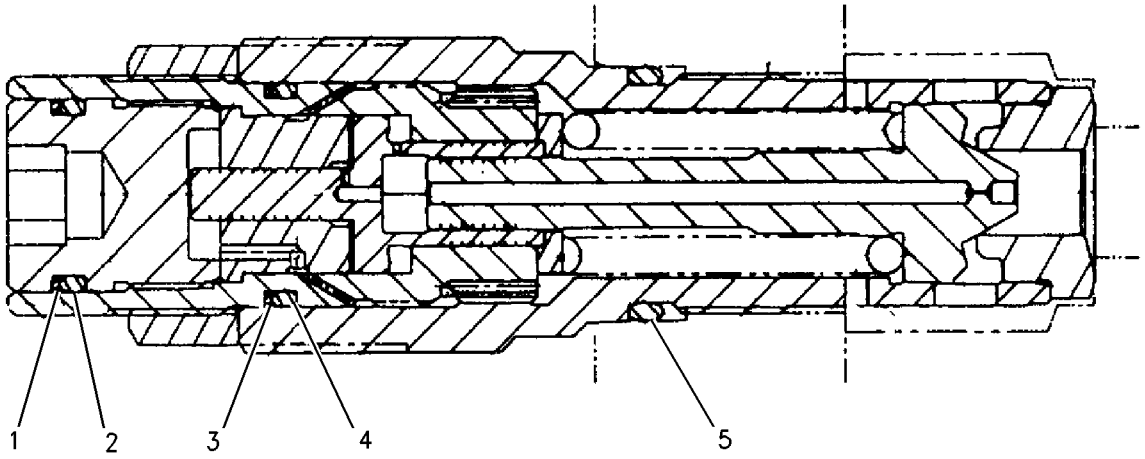

GRAPHIC #1 **<END>** g00766908

HYDRAULIC SYSTEM

204-2755 VALVE GP-RELIEF

S/N: D3P1-UP; M4T1-UP

PART OF 204-2819 VALVE GP-TRAVEL COUNTERBALANCE

SMCS-5069, 5117 **i02069521**

NOTE	REF NO	GRAPHIC REF	PART NUMBER	QTY	PART NAME 1 2 3 4 5 6 (PRODUCT LEVEL)	SEE PAGE
M	1	1	**7Y-8436**	1	SETSCREW (M27X2X27-MM)	
M	2	1	**7Y-8437**	1	NUT (M27X2-THD)	
	3	1	**095-1601**	1	SEAL-O-RING	
	4	1	**095-1787**	2	RING-BACKUP	
	5	1	**095-1590**	1	SEAL-O-RING	
	6	1	**121-1459**	2	RING-BACKUP	
	7	1	**095-1586**	2	SEAL-O-RING	
	8	1	**095-1785**	1	RING-BACKUP	

M-METRIC PART

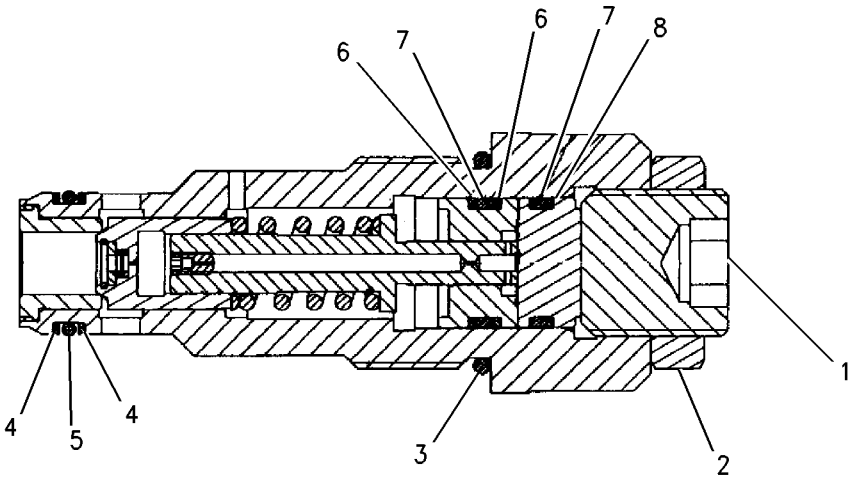

GRAPHIC #1 **<END>** g00826520

206-3164 VALVE GP-RELIEF—NEGATIVE FLOW CONTROL

S/N: D3P1-UP; M4T1-UP

PART OF 285-1540 VALVE GP-MAIN CONTROL

SMCS-5069, 5117 **i01682849**

NOTE	REF NO	GRAPHIC REF	PART NUMBER	QTY	PART NAME 1 2 3 4 5 6 (PRODUCT LEVEL)	SEE PAGE
	1	1	**4J-8998**	2	SEAL-O-RING	
Y	2	1	**147-4161**	1	VALVE GP-RELIEF	804
	3	1	**153-5239**	1	COVER	
	4	1	**1P-3702**	2	SEAL-RECTANGULAR	

Y-SEPARATE ILLUSTRATION

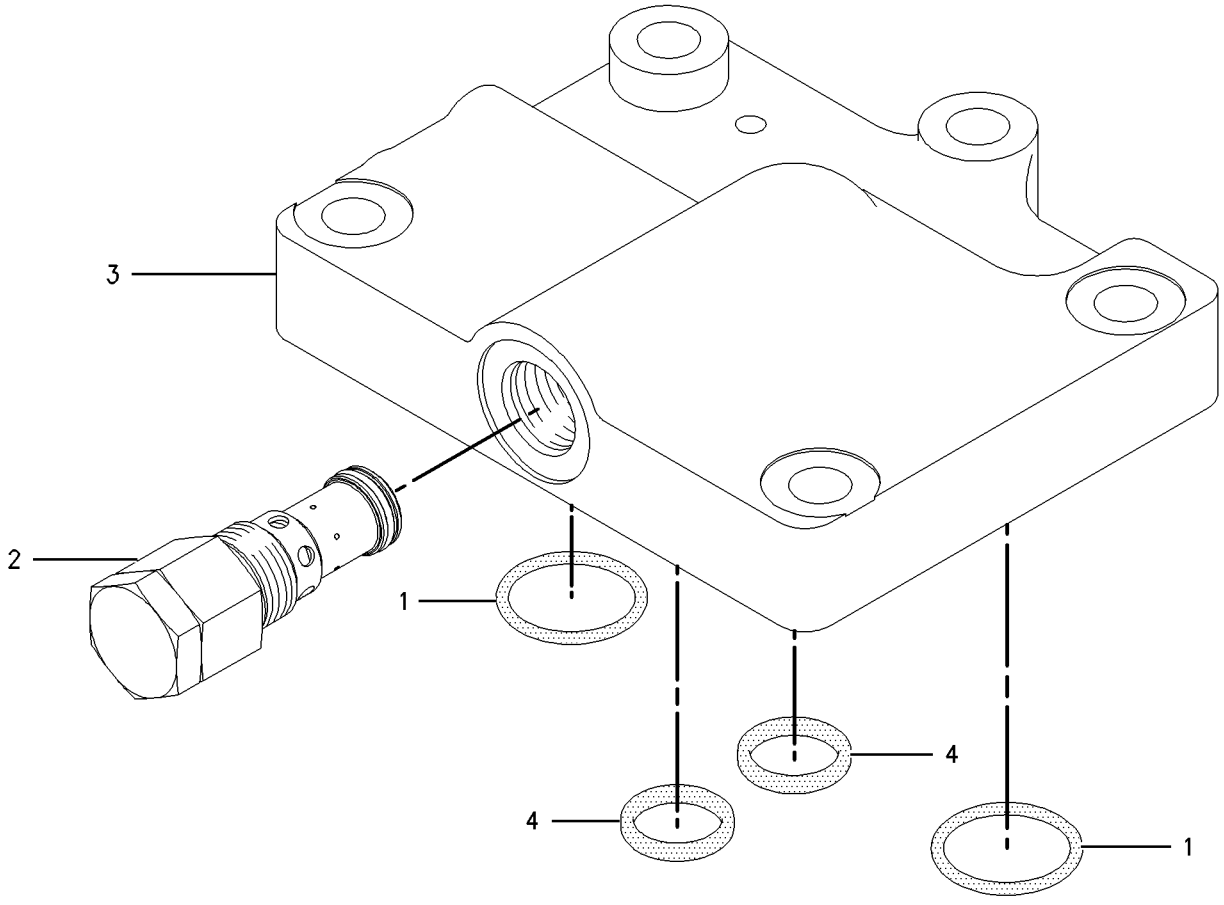

GRAPHIC #1 **<END>** g00833760

239-8774 VALVE GP-RELIEF—MAIN, HEAVY LIFT

S/N: D3P1-UP; M4T1-UP
PART OF 259-7448 VALVE GP-CONTROL
FIELD REPLACEMENT ORDER 310-0393—PAGE 817

SMCS-5069, 5117 **i02499332**

NOTE	REF NO	GRAPHIC REF	PART NUMBER	QTY	PART NAME 1 2 3 4 5 6 (PRODUCT LEVEL)	SEE PAGE
	1	1	**4I-3510**	1	SPRING	
	2	1	**4I-7714**	1	NUT (3/4-16-THD)	
	3	1	**6I-6795**	1	SPRING	
	4	1	**095-1786**	1	RING-BACKUP	
	5	1	**107-6540**	1	COLLAR	
	6	1	**107-6541**	1	RING-RETAINING	
	7	1	**119-5398**	1	SCREEN	
Z	8	1		1	VALVE GP-RELIEF	
	9	1	**171-0034**	1	SEAT	
	10	1	**171-0037**	1	VALVE	
	11	1	**259-7848**	1	SLEEVE	
	12	1	**259-7849**	1	PISTON	
	13	1	**259-7850**	1	SLEEVE	
	14	1	**259-7851**	1	ADJUSTER	
M	15	1	**259-7852**	1	NUT (M24X2-THD)	
	16	1	**095-1579**	1	SEAL-O-RING	
	17	1	**095-1584**	1	SEAL-O-RING	
	18	1	**095-1587**	1	SEAL-O-RING	
	19	1	**095-1590**	1	SEAL-O-RING	
	20	1	**3D-2824**	1	SEAL-O-RING	
	21	1	**6V-8218**	1	SEAL-O-RING	
	22	1	**6V-8978**	1	SEAL-O-RING	

M-METRIC PART
Z-NOT SERVICED SEPARATELY

239-8774 VALVE GP-RELIEF *(contd.)* **i02499332**

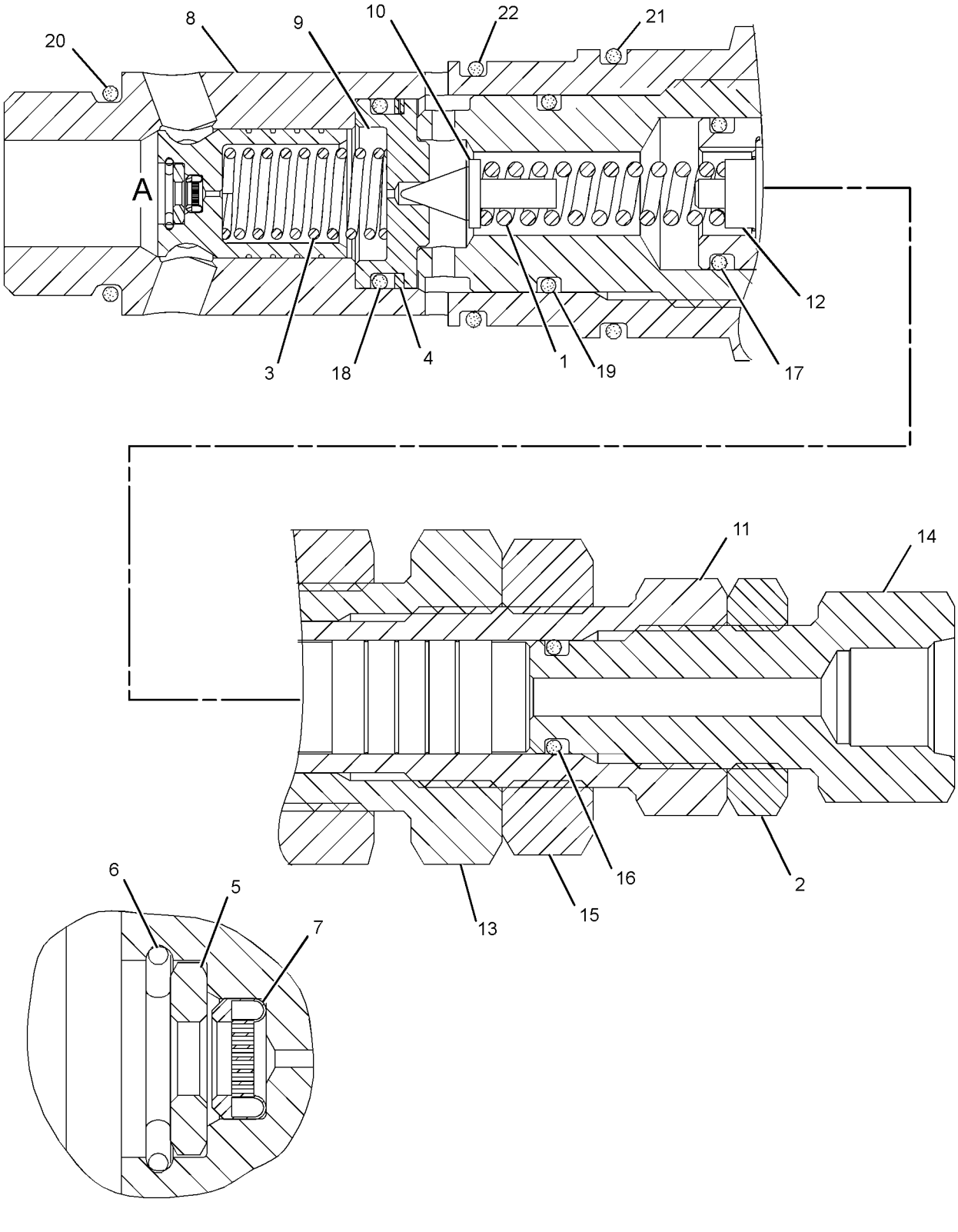

VIEW OF AREA A

GRAPHIC #1 **<END>** g01202793

255-5661 VALVE GP-RELIEF–LINE

S/N: D3P1-UP; M4T1-UP

PART OF 259-7378, 259-7448, 285-1537 VALVE GP-CONTROL

ALSO AN ATTACHMENT

SMCS-5069, 5117 **i02498673**

NOTE	REF NO	GRAPHIC REF	PART NUMBER	QTY	PART NAME 1 2 3 4 5 6 (PRODUCT LEVEL)	SEE PAGE
	1	1	**095-1578**	1	SEAL-O-RING	
	2	1	**103-8252**	2	RING	
	3	1	**103-8253**	2	RING	
	4	1	**103-8254**	1	SEAL-O-RING	
	5	1	**103-8255**	1	SEAL-O-RING	
	6	1	**3D-2824**	2	SEAL-O-RING	

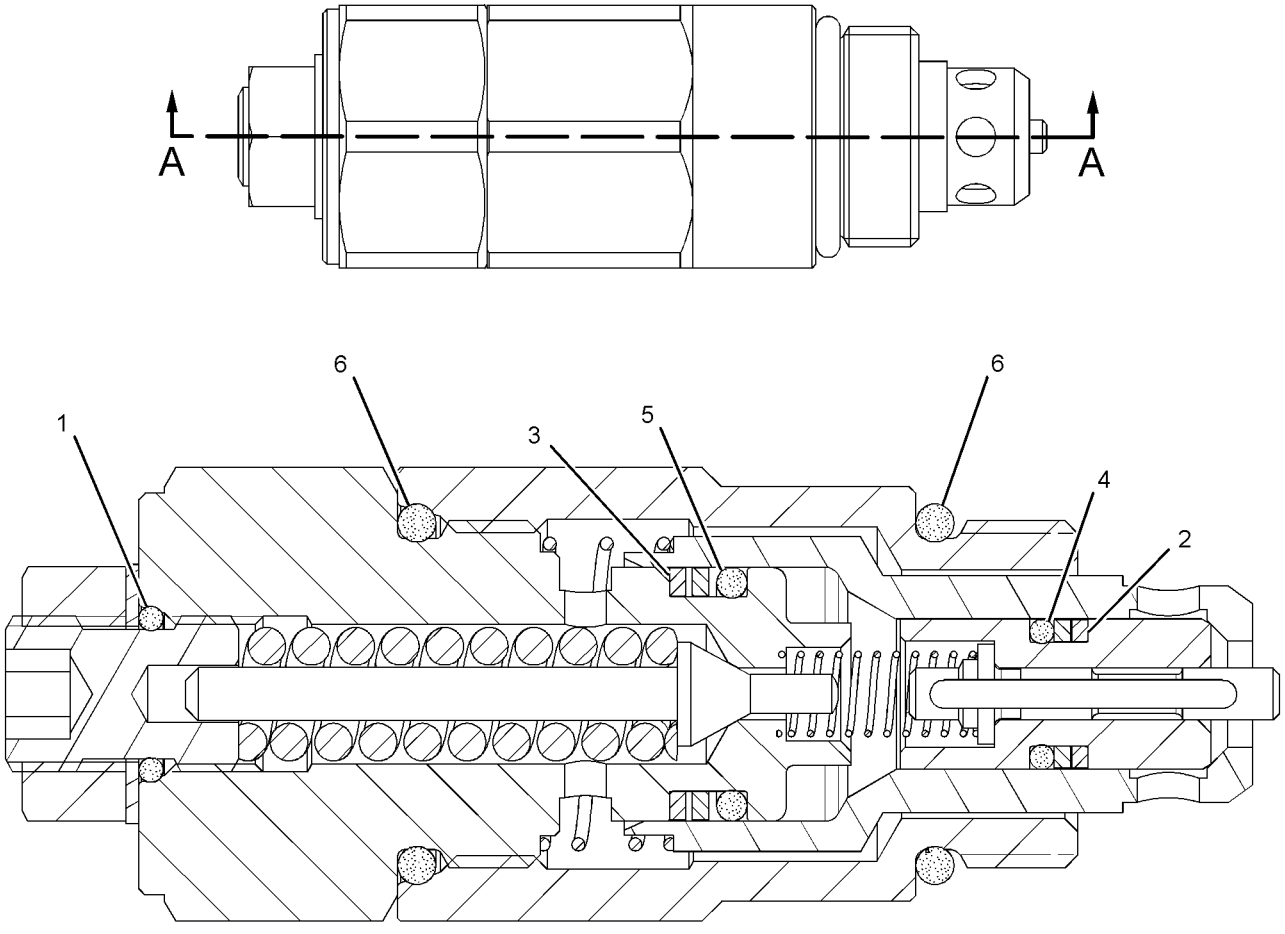

SECTION A-A

GRAPHIC #1 **<END>** g01251398

255-5662 VALVE GP-RELIEF–LINE

S/N: D3P1-UP; M4T1-UP

PART OF 255-5680, 255-5683 VALVE GP-LOAD CONTROL

SMCS-5069, 5117 **i03631249**

NOTE	REF NO	GRAPHIC REF	PART NUMBER	QTY	PART NAME 1 2 3 4 5 6 (PRODUCT LEVEL)	SEE PAGE
	1	1	**095-1578**	1	SEAL-O-RING	
	2	1	**103-8252**	2	RING	
	3	1	**103-8253**	2	RING	
	4	1	**103-8254**	1	SEAL-O-RING	
	5	1	**103-8255**	1	SEAL-O-RING	
	6	1	**3D-2824**	2	SEAL-O-RING	

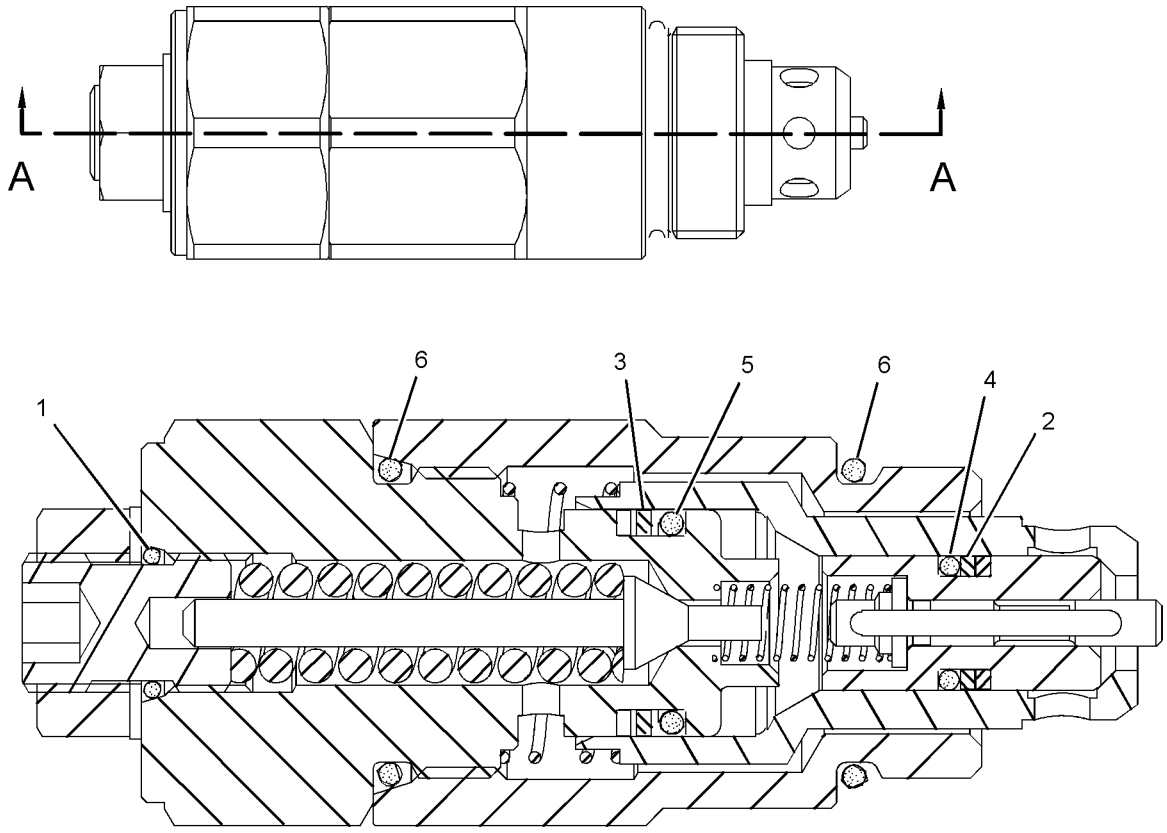

SECTION A-A

GRAPHIC #1 **<END>** g01948015

HYDRAULIC SYSTEM

255-5747 VALVE GP-RELIEF–LINE

S/N: M4T1-UP

PART OF 263-1962 VALVE GP-LOAD CONTROL

AN ATTACHMENT

SMCS-5069, 5117 **i02518496**

NOTE	REF NO	GRAPHIC REF	PART NUMBER	QTY	PART NAME 1 2 3 4 5 6 (PRODUCT LEVEL)	SEE PAGE
	1	1	**095-1578**	1	SEAL-O-RING	
	2	1	**3D-2824**	2	SEAL-O-RING	
	3	1	**103-8255**	1	SEAL-O-RING	
	4	1	**103-8252**	2	RING	
	5	1	**103-8254**	1	SEAL-O-RING	
	6	1	**103-8253**	2	RING	

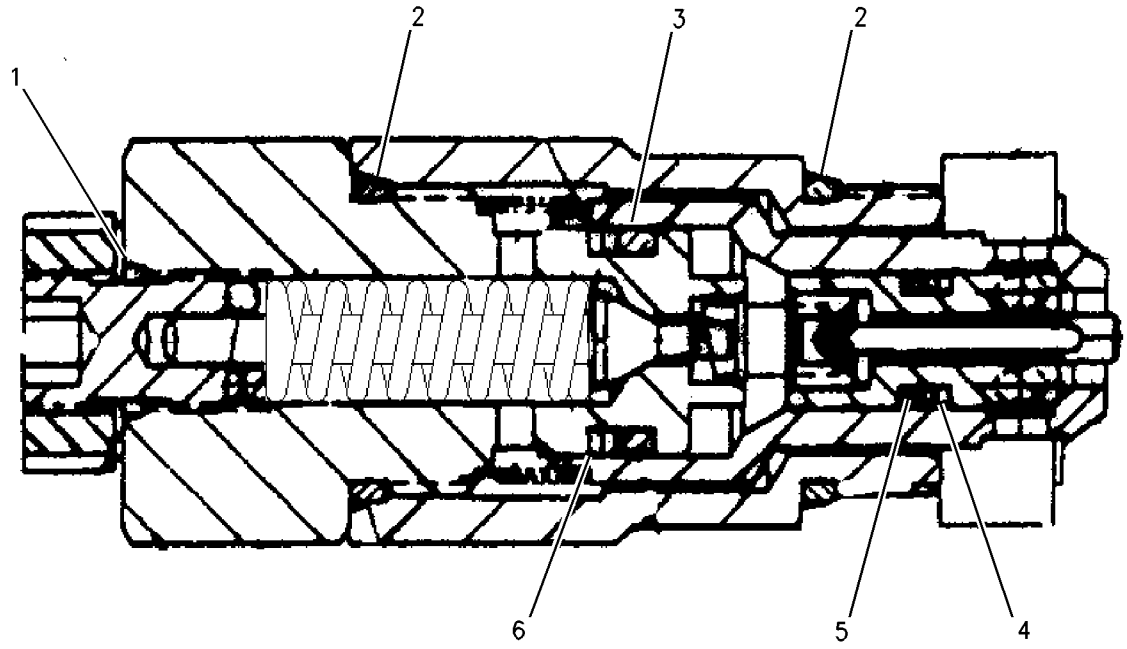

GRAPHIC #1 **<END>** g00862849

310-0393 VALVE GP-RELIEF—MAIN, HEAVY LIFT

S/N: D3P1-UP; M4T1-UP

FIELD REPLACEMENT FOR 239-8774—PAGE 812

SMCS-5069, 5117 **i02940693**

NOTE	REF NO	GRAPHIC REF	PART NUMBER	QTY	PART NAME 1 2 3 4 5 6 (PRODUCT LEVEL)	SEE PAGE
	1	1	**4I-3510**	1	SPRING	
	2	1	**4I-7714**	1	NUT (3/4-16-THD)	
	3	1	**6I-6795**	1	SPRING	
	4	1	**095-1786**	1	RING-BACKUP	
	5	1	**107-6540**	1	COLLAR	
	6	1	**107-6541**	1	RING-RETAINING	
	7	1	**119-5398**	1	SCREEN	
	8	1	**171-0034**	1	SEAT	
	9	1	**171-0037**	1	VALVE	
	10	1	**259-7848**	1	SLEEVE	
	11	1	**259-7849**	1	PISTON	
	12	1	**259-7850**	1	SLEEVE	
	13	1	**259-7851**	1	ADJUSTER	
M	14	1	**259-7852**	1	NUT (M24X2-THD)	
	16	1	**095-1579**	1	SEAL-O-RING	
	17	1	**095-1584**	1	SEAL-O-RING	
	18	1	**095-1587**	1	SEAL-O-RING	
	19	1	**095-1590**	1	SEAL-O-RING	
	20	1	**3D-2824**	1	SEAL-O-RING	
	21	1	**6V-8218**	1	SEAL-O-RING	
	22	1	**6V-8978**	1	SEAL-O-RING	

M-METRIC PART

310-0393 VALVE GP-RELIEF *(contd.)* **i02940693**

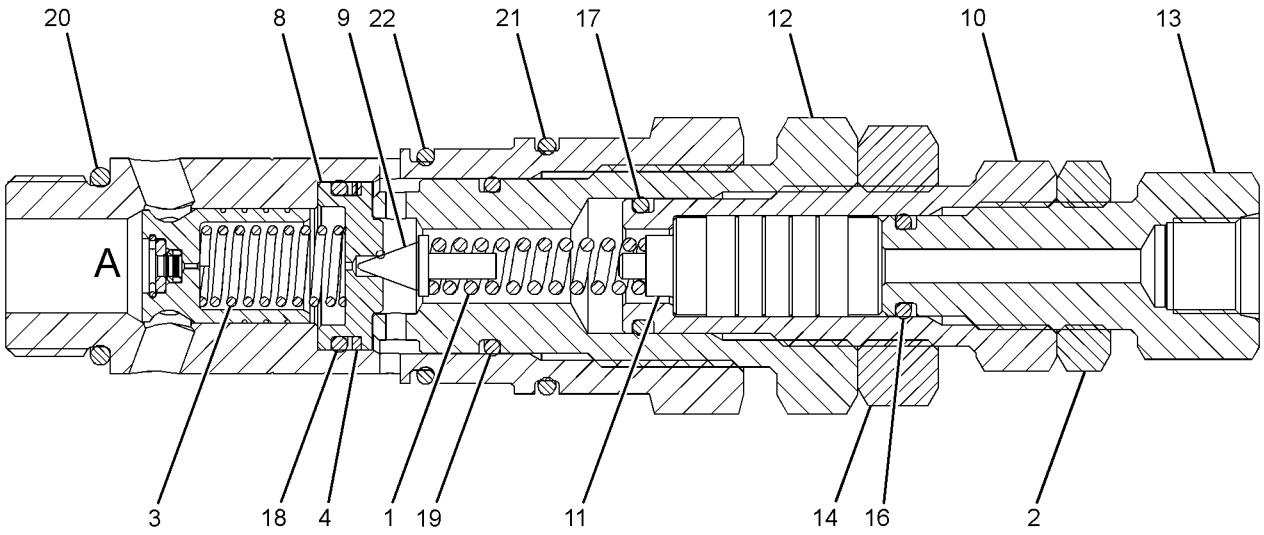

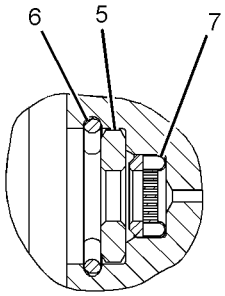

VIEW OF AREA A

GRAPHIC #1 **<END>** g01460589

310-0394 VALVE GP-RELIEF

S/N: D3P1-UP; M4T1-UP
PART OF 177-2653 VALVE GP-RELIEF
AN ATTACHMENT

SMCS-5069, 5117 **i03090183**

NOTE	REF NO	GRAPHIC REF	PART NUMBER	QTY	PART NAME 1 2 3 4 5 6 (PRODUCT LEVEL)	SEE PAGE
Z	1	1		1	VALVE GP-RELIEF	
	2	1	**6I-6795**	1	SPRING	
	3	1	**171-0034**	1	SEAT	
	4	1	**171-0037**	1	VALVE	
	5	1	**4I-3510**	1	SPRING	
	6	1	**171-0035**	1	HOLDER	
	7	1	**222-0085**	1	NUT (3/4-16-THD)	
	8	1	**171-0036**	1	ADJUSTER	
	9	1	**095-1579**	1	SEAL-O-RING	
	10	1	**6V-8218**	1	SEAL-O-RING	
	11	1	**095-1590**	1	SEAL-O-RING	
	12	1	**6V-8978**	1	SEAL-O-RING	
	13	1	**095-1786**	1	RING-BACKUP	
	14	1	**095-1587**	1	SEAL-O-RING	
	15	1	**3D-2824**	1	SEAL-O-RING	

Z-NOT SERVICED SEPARATELY

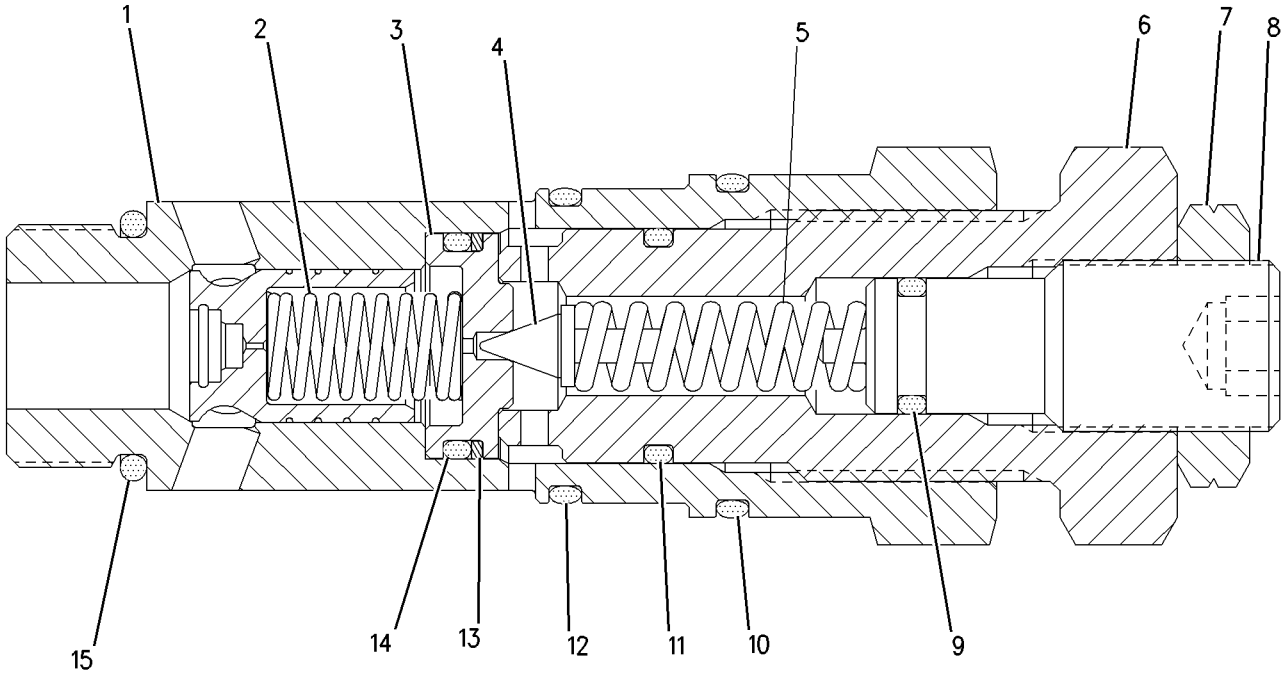

GRAPHIC #1 **<END>** g00927977

HYDRAULIC SYSTEM

112-0083 VALVE GP-SHUTTLE

S/N: D3P1-UP; M4T1-UP
PART OF 255-1843 LINES GP-PILOT
AN ATTACHMENT

SMCS-5079 **i01683227**

NOTE	REF NO	GRAPHIC REF	PART NUMBER	QTY	PART NAME 1 2 3 4 5 6 (PRODUCT LEVEL)	SEE PAGE
	1	1	**2D-6642**	4	BALL	
	2	1	**112-0085**	4	PLUG	
	3	1	**3J-1907**	4	SEAL-O-RING	

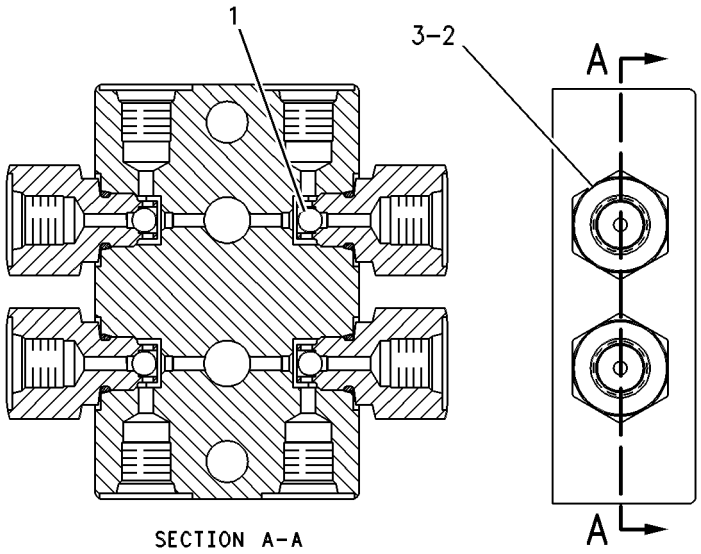

GRAPHIC #1 **<END>** g00258739

HYDRAULIC SYSTEM

123-2430 VALVE GP-SHUTTLE

S/N: D3P1-UP; M4T1-UP

PART OF 248-9843 LINES GP-PILOT

SMCS-5079 **i01374203**

NOTE	REF NO	GRAPHIC REF	PART NUMBER	QTY	PART NAME 1 2 3 4 5 6 (PRODUCT LEVEL)	SEE PAGE
	1	1	*123-2431*	1	BODY-VALVE	
	2	1	**4B-9783**	1	BALL	
	3	1	**3J-1907**	2	SEAL-O-RING	
	4	1	**123-2552**	2	CONNECTOR	

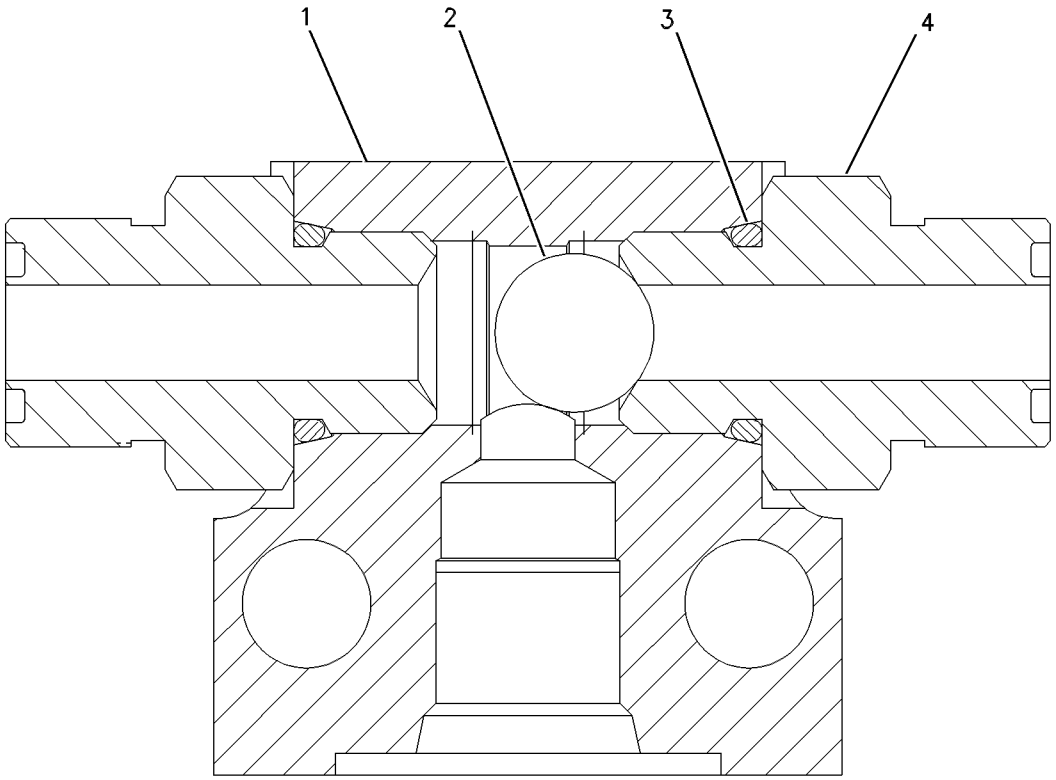

GRAPHIC #1 **<END>** g00652899

HYDRAULIC SYSTEM

123-2549 VALVE GP-SHUTTLE

S/N: D3P1-UP; M4T1-UP
PART OF 269-9562 LINES GP-FRONT
AN ATTACHMENT

SMCS-5079 **i02663291**

NOTE	REF NO	GRAPHIC REF	PART NUMBER	QTY	PART NAME 1 2 3 4 5 6 (PRODUCT LEVEL)	SEE PAGE
	1	1	**123-2511**	1	TEE	
	2	1	**4B-9783**	1	BALL	
	3	1	**123-2552**	2	CONNECTOR	
	4	1	**3J-1907**	2	SEAL-O-RING	

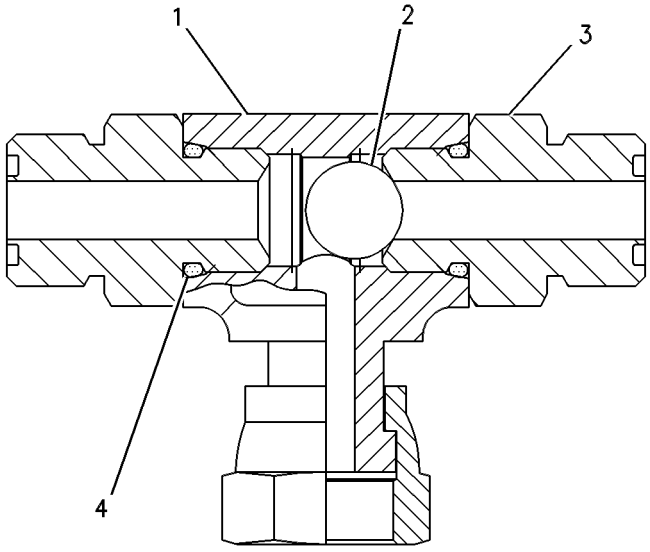

GRAPHIC #1 **<END>** g00274258

185-0462 VALVE GP-SHUTTLE

S/N: D3P1-UP; M4T1-UP

PART OF 248-9825 LINES GP-PILOT

SMCS-5079 **i01375688**

NOTE	REF NO	GRAPHIC REF	PART NUMBER	QTY	PART NAME 1 2 3 4 5 6 (PRODUCT LEVEL)	SEE PAGE
	1	1	**7I-8084**	4	PLUG	
	2	1	**185-0463**	1	SEAT	
	3	1	**4B-9880**	7	BALL	
	4	1	**165-9464**	6	SEAT	
	5	1	**095-1578**	7	SEAL-O-RING	
	6	1	**107-6479**	7	PLUG	

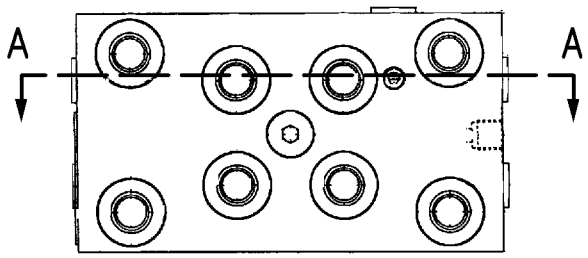

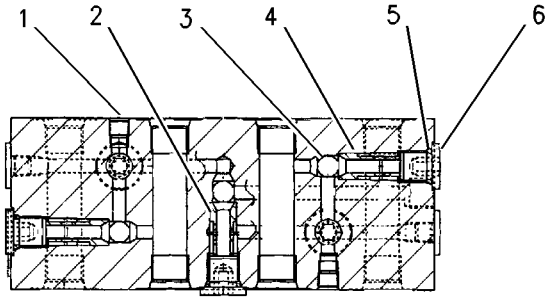

SECTION A-A

GRAPHIC #1 **<END>** g00699270

HYDRAULIC SYSTEM

111-9916 VALVE GP-SOLENOID

S/N: D3P1-UP; M4T1-UP

PART OF 171-0188, 259-7429, 259-7430 VALVE GP-SOLENOID

AN ATTACHMENT

SMCS-5479 **i02840105**

NOTE	REF NO	GRAPHIC REF	PART NUMBER	QTY	PART NAME 1 2 3 4 5 6 (PRODUCT LEVEL)	SEE PAGE
	1	1	**095-1750**	1	SEAL-O-RING	
	2	1	**6V-8398**	1	SEAL-O-RING	
	3	1	**095-1751**	1	SEAL-O-RING	
	4	1	**095-1586**	1	SEAL-O-RING	
M	5	1	**114-0623**	1	NUT AS (M6X1-THD)	

M-METRIC PART

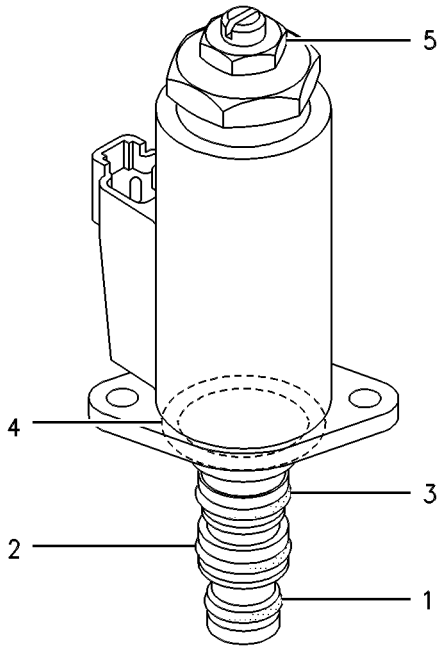

GRAPHIC #1 **<END>** g00258219

121-1491 VALVE GP-SOLENOID

S/N: D3P1-UP; M4T1-UP

PART OF 239-8697, 239-8998 MANIFOLD GP-CONTROL, 254-3080, 259-7448 VALVE GP-CONTROL, 165-9549, 242-6880, 258-6749 VALVE GP-SOLENOID

ALSO AN ATTACHMENT

SMCS-5479 **i02198057**

NOTE	REF NO	GRAPHIC REF	PART NUMBER	QTY	PART NAME 1 2 3 4 5 6 (PRODUCT LEVEL)	SEE PAGE
	1	1	**095-1750**	1	SEAL-O-RING	
	2	1	**6V-8398**	1	SEAL-O-RING	
	3	1	**095-1751**	1	SEAL-O-RING	
	4	1	**095-1586**	1	SEAL-O-RING	
M	5	1	**114-0623**	1	NUT AS (M6X1-THD)	

M-METRIC PART

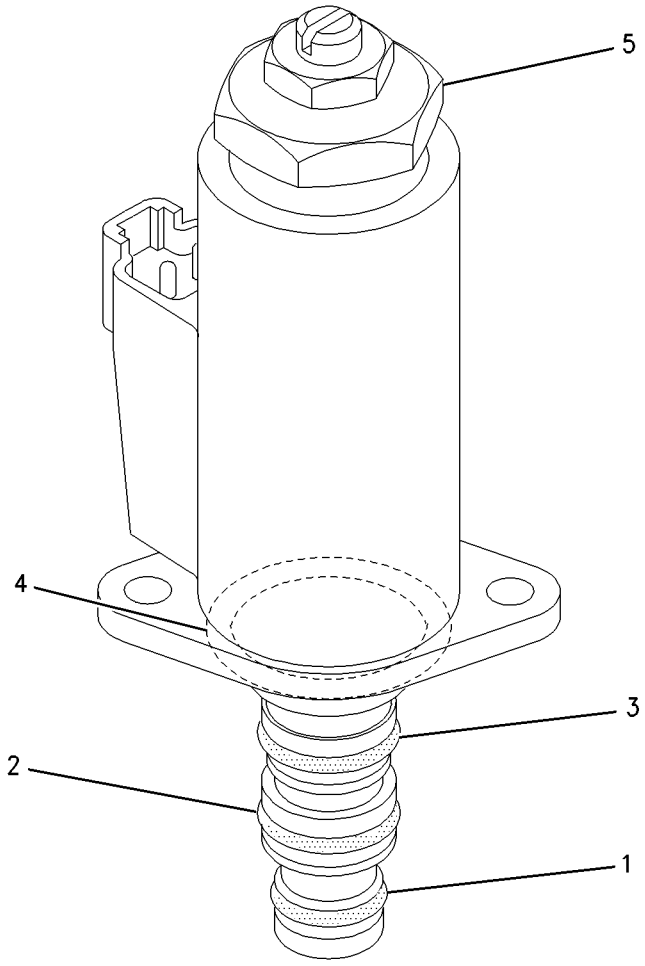

GRAPHIC #1 **<END>** g00928680

HYDRAULIC SYSTEM

121-6303 VALVE GP-SOLENOID

S/N: D3P1-UP; M4T1-UP

PART OF 255-1659 LINES GP-PILOT

SMCS-5479 **i01404813**

NOTE	REF NO	GRAPHIC REF	PART NUMBER	QTY	PART NAME 1 2 3 4 5 6 (PRODUCT LEVEL)	SEE PAGE
	1	1	*7I-8102*	1	VALVE AS	
	2	1	**121-6304**	1	COIL GP	
M	3	1	**099-0822**	2	BOLT-SOCKET HEAD (M5X0.8X10-MM)	
	4	1	**095-1519**	1	SEAL-O-RING	
	5	1	**7I-0986**	1	PLUG	
	6	1	**7I-7403**	1	SPRING	
	7	1	**095-1578**	1	SEAL-O-RING	

M-METRIC PART

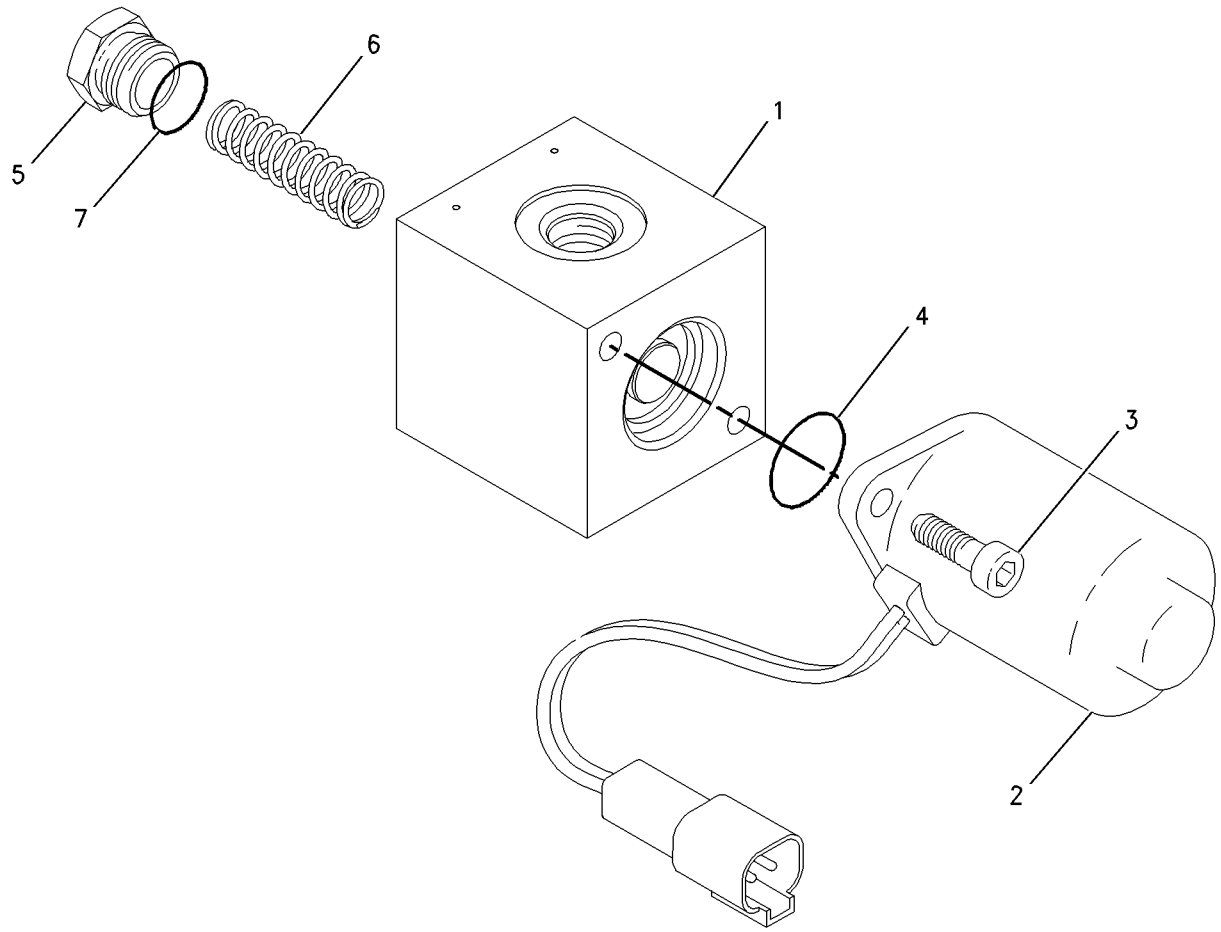

GRAPHIC #1 **<END>** g00685554

165-9549 VALVE GP-SOLENOID

S/N: D3P1-UP; M4T1-UP
PART OF 260-7854 LINES GP-PILOT
AN ATTACHMENT

SMCS-5479 **i02786789**

NOTE	REF NO	GRAPHIC REF	PART NUMBER	QTY	PART NAME 1 2 3 4 5 6 (PRODUCT LEVEL)	SEE PAGE
	1	1	**7I-8084**	4	PLUG	
Y	2	1	**121-1491**	3	VALVE GP-SOLENOID	825
M	3	1	**8T-0288**	6	BOLT (M5X0.8X12-MM)	

M-METRIC PART
Y-SEPARATE ILLUSTRATION

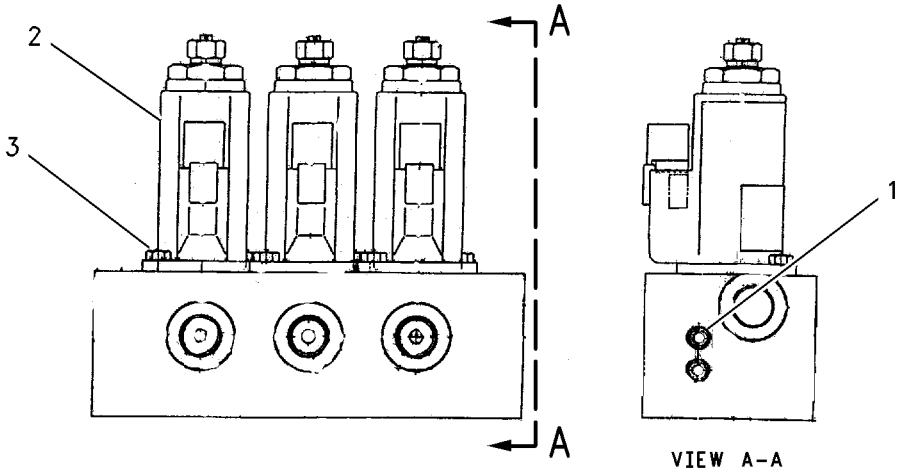

GRAPHIC #1 **<END>** g00754979

HYDRAULIC SYSTEM

171-0188 VALVE GP-SOLENOID

S/N: D3P1-UP; M4T1-UP
PART OF 260-7854, 260-7855, 260-7857, 330-2390 LINES GP-PILOT
AN ATTACHMENT

SMCS-5479 **i03631122**

NOTE	REF NO	GRAPHIC REF	PART NUMBER	QTY	PART NAME 1 2 3 4 5 6 (PRODUCT LEVEL)	SEE PAGE
Y	1	1	**111-9916**	1	VALVE GP-SOLENOID	824
M	2	1	**8T-0288**	2	BOLT (M5X0.8X12-MM)	
J	3	1	**171-0198**	2	VALVE GP-SHUTTLE	
	4	1	**7I-8084**	6	PLUG	
					AVAILABLE REPAIR KIT(S):	
			185-0407	1	KIT-SEAL (SHUTTLE VALVE)	

J-KIT MARKED J SERVICES PART(S) MARKED J
M-METRIC PART
Y-SEPARATE ILLUSTRATION

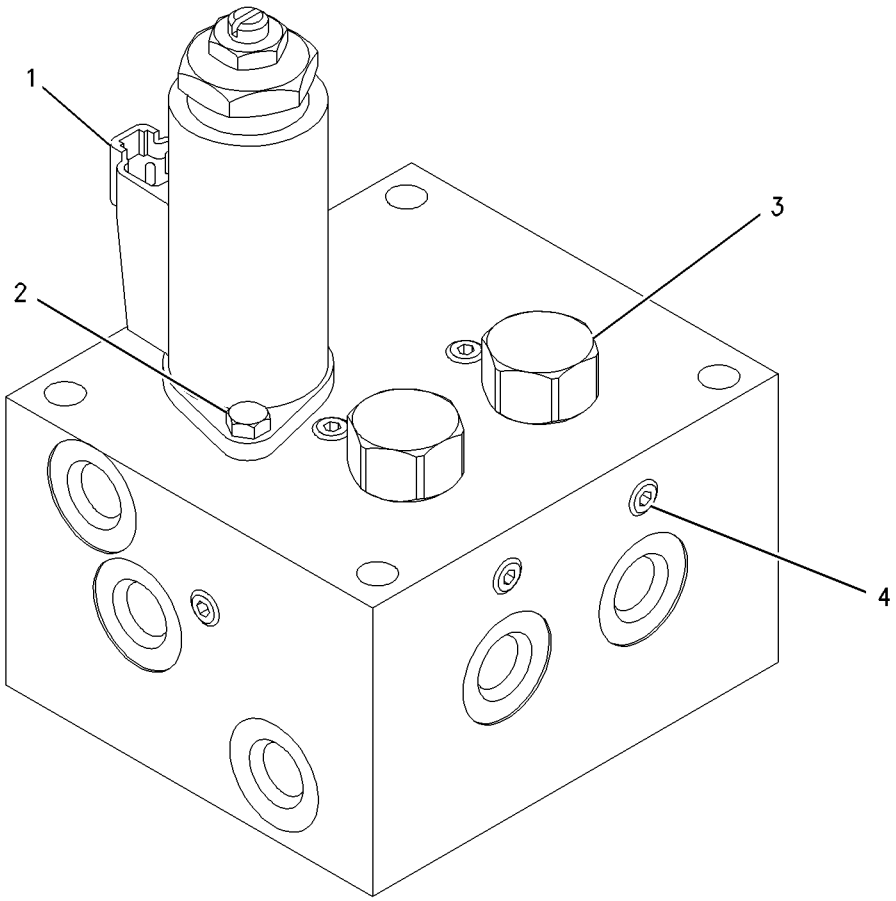

GRAPHIC #1 **<END>** g00681111

185-0472 VALVE GP-SOLENOID

S/N: M4T1-UP

PART OF 255-1853 LINES GP-PILOT

AN ATTACHMENT

SMCS-5479 **i03341722**

NOTE	REF NO	GRAPHIC REF	PART NUMBER	QTY	PART NAME 1 2 3 4 5 6 (PRODUCT LEVEL)	SEE PAGE
	1	1	**185-0473**	1	VALVE GP-CONTROL	
	2	1	**121-6304**	1	COIL GP	
M	3	1	**099-0822**	2	BOLT-SOCKET HEAD (M5X0.8X10-MM)	
	4	1	**095-1519**	1	SEAL-O-RING	
	5	1	**7I-0986**	1	PLUG	
	6	1	**7I-7403**	1	SPRING	
	7	1	**095-1578**	1	SEAL-O-RING	

M-METRIC PART

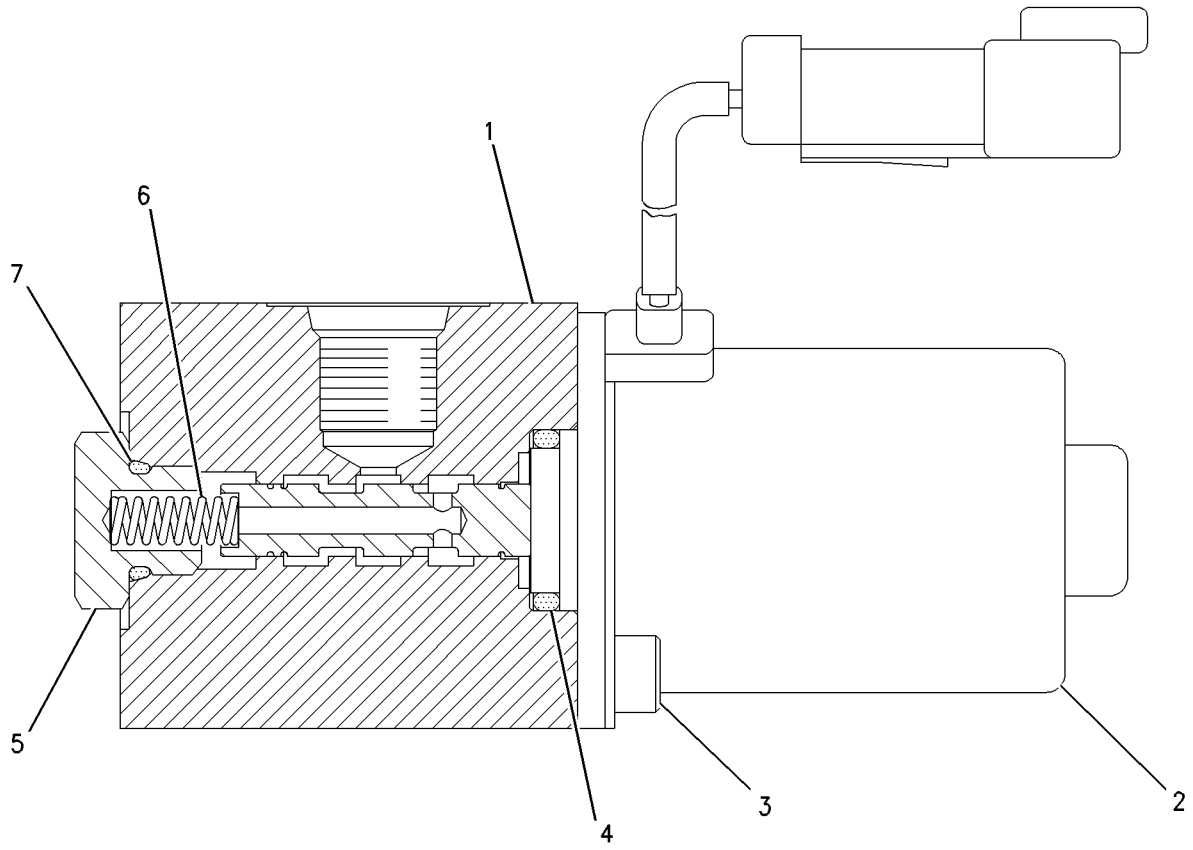

GRAPHIC #1 **<END>** g00804262

HYDRAULIC SYSTEM

225-4518 VALVE GP-SOLENOID

S/N: D3P1-UP; M4T1-UP

PART OF 322-8733 PUMP GP-PISTON

SMCS-5479 **i02501194**

NOTE	REF NO	GRAPHIC REF	PART NUMBER	QTY	PART NAME 1 2 3 4 5 6 (PRODUCT LEVEL)	SEE PAGE
Z	1	1		1	BODY	
M	2	1	**8T-2922**	3	BOLT-SOCKET HEAD (M6X1X65-MM)	
M	3	1	**8T-0288**	2	BOLT (M5X0.8X12-MM)	
	4	1	**110-5525**	1	PLUG	
	5	1	**7I-8084**	11	PLUG	
	6	1	**206-9290**	4	SEAL-O-RING	
	7	1	**153-4906**	1	SEAL-O-RING	
Y	8	1	**225-4558**	1	VALVE GP-SOLENOID	831

M-METRIC PART
Y-SEPARATE ILLUSTRATION
Z-NOT SERVICED SEPARATELY

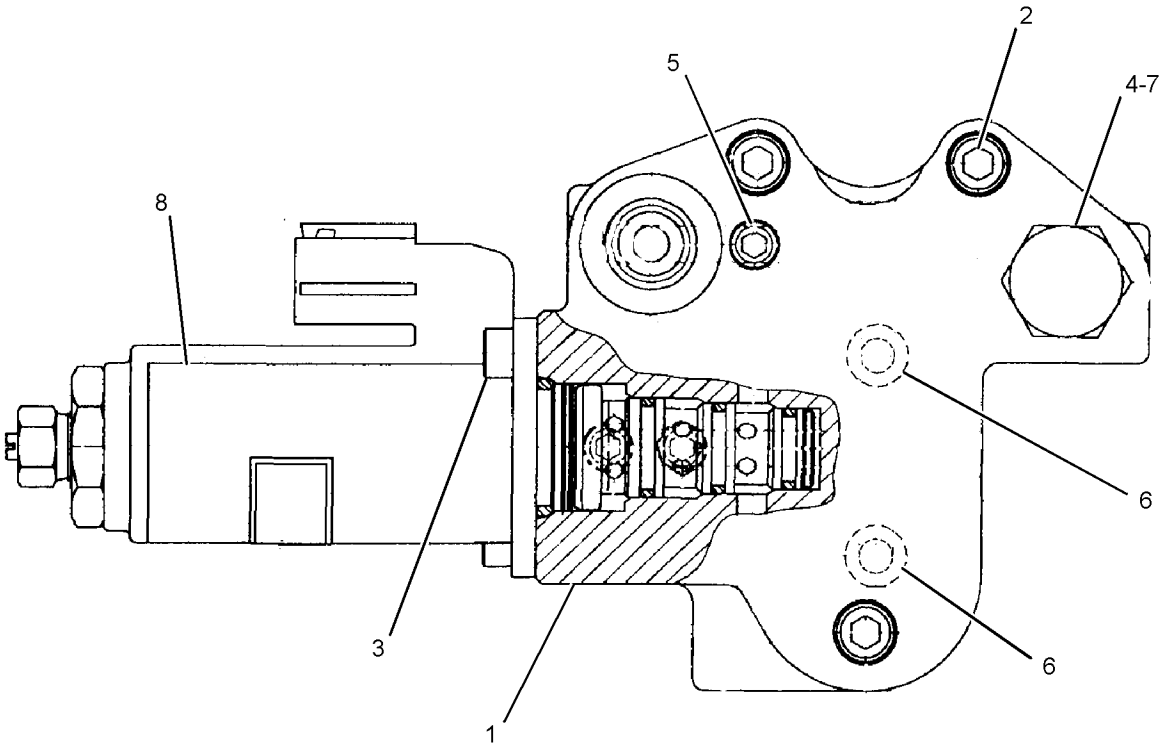

GRAPHIC #1 **<END>** g01098210

225-4558 VALVE GP-SOLENOID

S/N: D3P1-UP; M4T1-UP

PART OF 225-4518 VALVE GP-SOLENOID

SMCS-5479 **i02501206**

NOTE	REF NO	GRAPHIC REF	PART NUMBER	QTY	PART NAME 1 2 3 4 5 6 (PRODUCT LEVEL)	SEE PAGE
	1	1	**4K-2039**	1	SEAL-O-RING	
	2	1	**5L-4758**	1	SEAL-O-RING	
	3	1	**6M-5062**	1	SEAL-O-RING	
	4	1	**095-1586**	1	SEAL-O-RING	
M	5	1	**114-0623**	1	NUT AS (M6X1-THD)	

M-METRIC PART

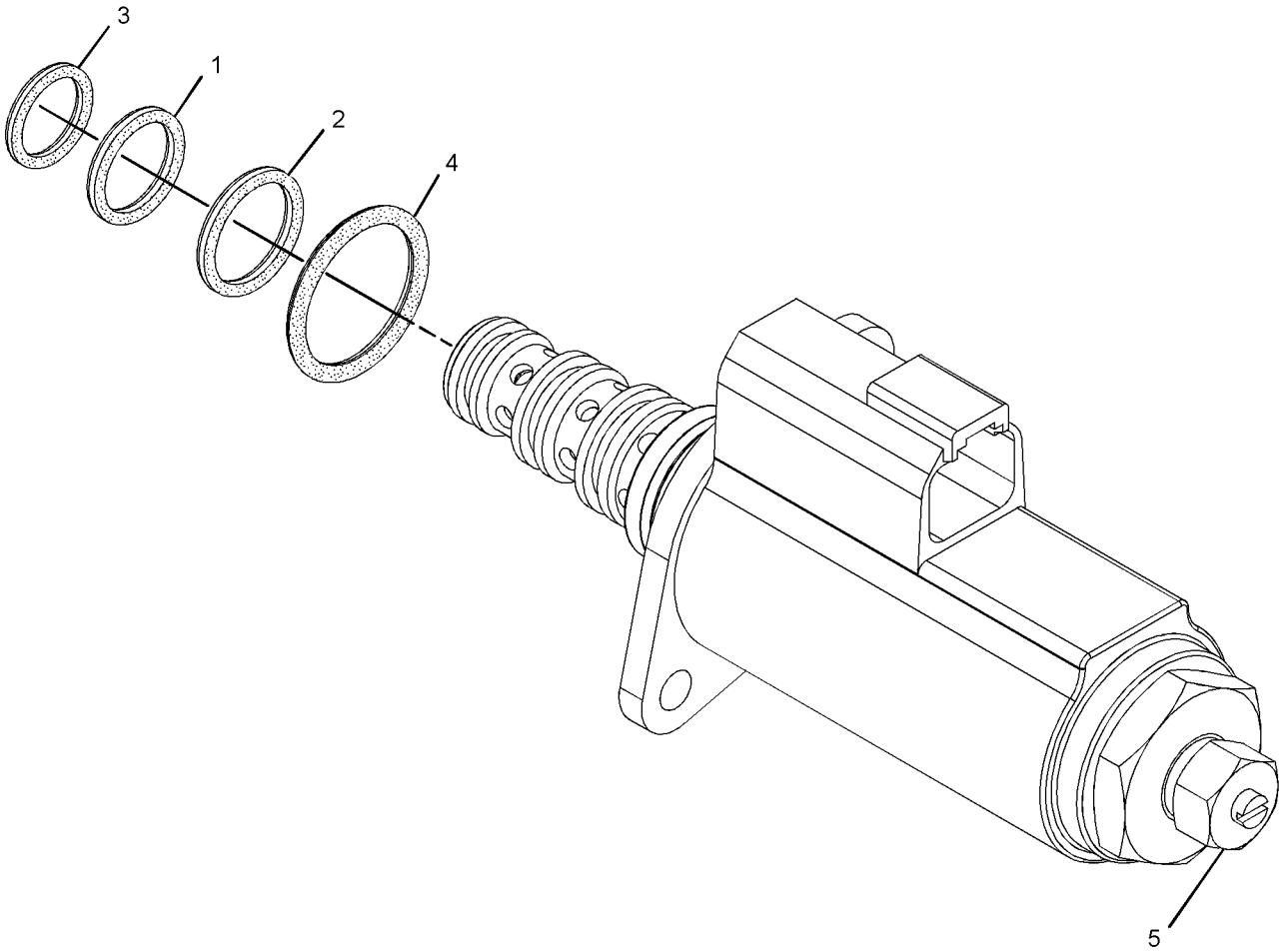

GRAPHIC #1 **<END>** g01098138

HYDRAULIC SYSTEM

242-6880 VALVE GP-SOLENOID

S/N: D3P1-UP; M4T1-UP
PART OF 255-2079 LINES GP-MOTOR
AN ATTACHMENT

SMCS-5479 **i03745219**

NOTE	REF NO	GRAPHIC REF	PART NUMBER	QTY	PART NAME 1 2 3 4 5 6 (PRODUCT LEVEL)	SEE PAGE
Y	1	1	**121-1491**	1	VALVE GP-SOLENOID (REVERSING FAN)	825
	2	1	**242-6893**	1	BLOCK	
	3	1	**4J-7533**	3	SEAL-O-RING	
M	4	1	**7I-2272**	2	BOLT (M5X0.8X12-MM)	
	5	1	**9S-8001**	3	PLUG-O-RING	

M-METRIC PART
Y-SEPARATE ILLUSTRATION

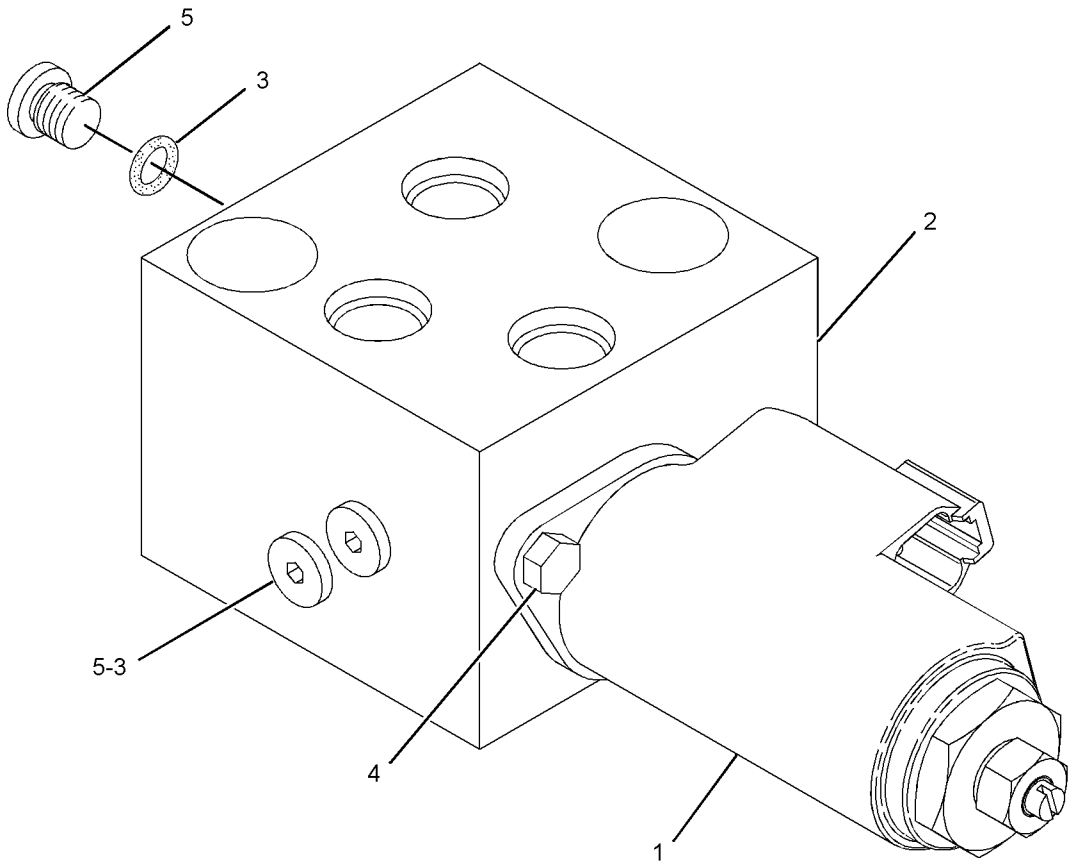

GRAPHIC #1 **<END>** g01084421

HYDRAULIC SYSTEM

258-6749 VALVE GP-SOLENOID

S/N: D3P1-UP; M4T1-UP
PART OF 269-9562 LINES GP-FRONT
AN ATTACHMENT

SMCS-5479 **i02663308**

NOTE	REF NO	GRAPHIC REF	PART NUMBER	QTY	PART NAME 1 2 3 4 5 6 (PRODUCT LEVEL)	SEE PAGE
Y	1	1	**121-1491**	1	VALVE GP-SOLENOID (QUICK COUPLER PIN)	825
Z	2	1		1	BODY-VALVE	
M	3	1	**8T-0288**	2	BOLT (M5X0.8X12-MM)	

M-METRIC PART
Y-SEPARATE ILLUSTRATION
Z-NOT SERVICED SEPARATELY

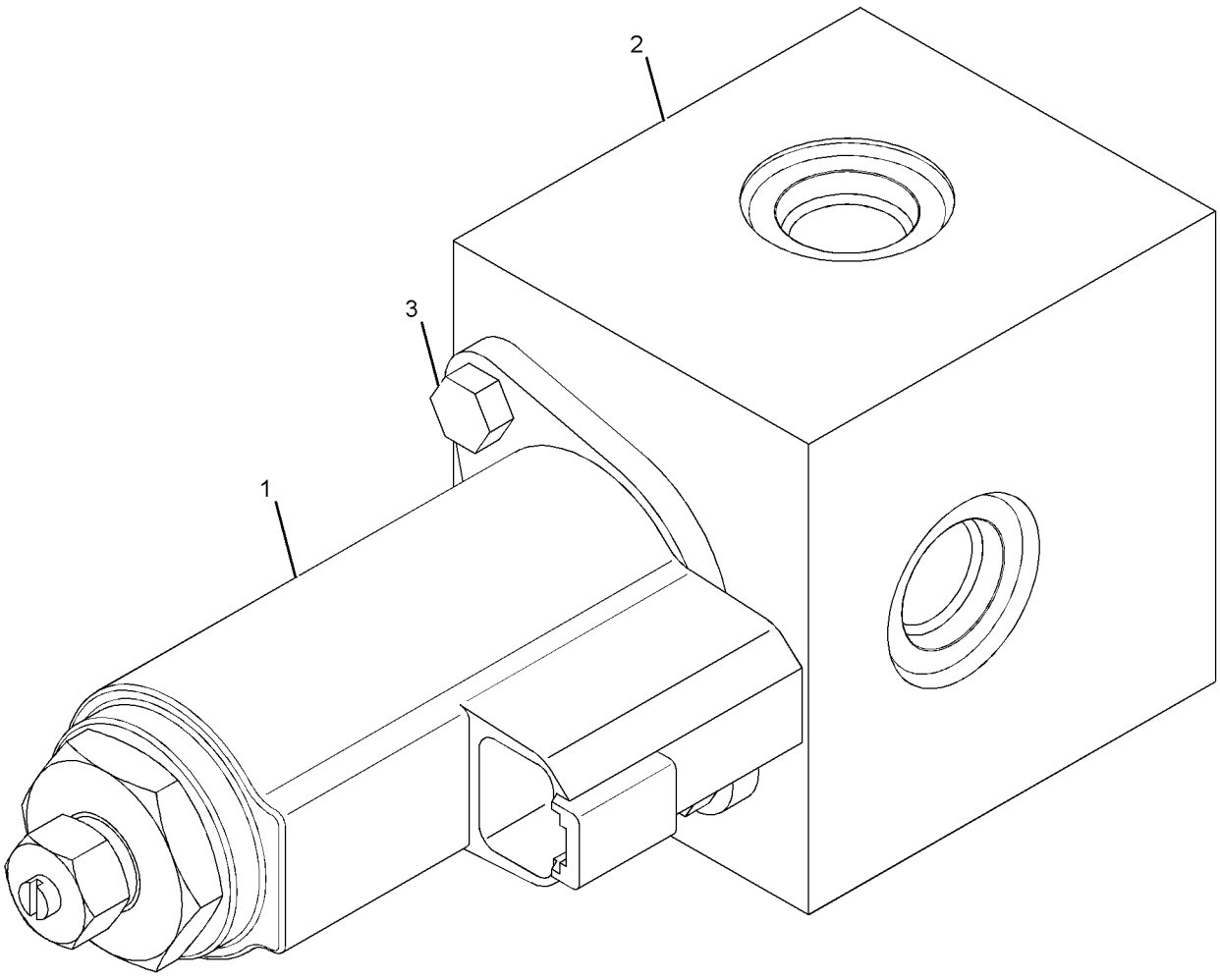

GRAPHIC #1 **<END>** g01137453

259-7429 VALVE GP-SOLENOID

S/N: D3P1-UP; M4T1-UP
PART OF 260-7857, 330-2390 LINES GP-PILOT
AN ATTACHMENT

SMCS-5479 **i02567824**

NOTE	REF NO	GRAPHIC REF	PART NUMBER	QTY	PART NAME 1 2 3 4 5 6 (PRODUCT LEVEL)	SEE PAGE
M	1	1	**8T-0288**	8	BOLT (M5X0.8X12-MM)	
Y	2	1	**111-9916**	4	VALVE GP-SOLENOID (WORK TOOL, 4-FUNCTION)	824

M-METRIC PART
Y-SEPARATE ILLUSTRATION

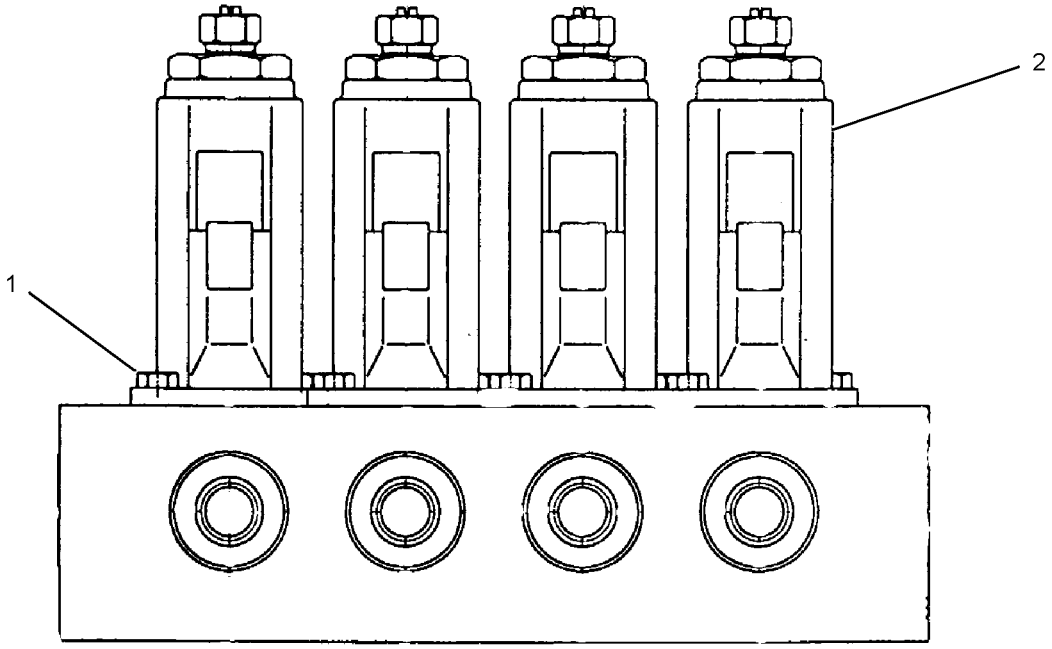

GRAPHIC #1 **<END>** g01014124

259-7430 VALVE GP-SOLENOID

S/N: D3P1-UP; M4T1-UP
PART OF 260-7855, 260-7861 LINES GP-PILOT
AN ATTACHMENT

SMCS-5479 **i02508673**

NOTE	REF NO	GRAPHIC REF	PART NUMBER	QTY	PART NAME 1 2 3 4 5 6 (PRODUCT LEVEL)	SEE PAGE
M	1	1	**8T-0288**	4	BOLT (M5X0.8X12-MM)	
Y	2	1	**111-9916**	2	VALVE GP-SOLENOID (1-PUMP/2-PUMP, 1-WAY FLOW)	824

M-METRIC PART
Y-SEPARATE ILLUSTRATION

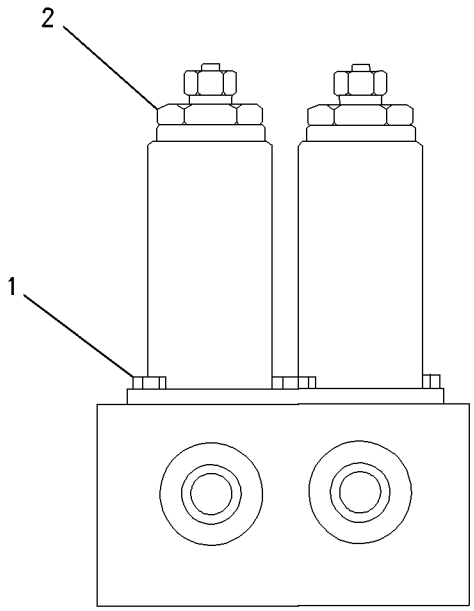

GRAPHIC #1 **<END>** g00785417

HYDRAULIC SYSTEM

297-0371 VALVE GP-SOLENOID

S/N: M4T1-UP
PART OF 255-2078 LINES GP-RETURN
AN ATTACHMENT

SMCS-5479 **i03744428**

NOTE	REF NO	GRAPHIC REF	PART NUMBER	QTY	PART NAME 1 2 3 4 5 6 (PRODUCT LEVEL)	SEE PAGE
	1	1	**095-1657**	1	SEAL-O-RING	
	2	1	**225-4804**	3	PLUG	
	3	1	**4J-7533**	3	SEAL-O-RING	
	4	1	**095-1602**	1	SEAL-O-RING	
	5	1	**232-4113**	1	RING	
	6	1	**095-1601**	1	SEAL-O-RING	
	7	1	**8T-3008**	1	RING-BACKUP	
	8	1	**095-1700**	1	SEAL-O-RING	
	9	1	**7M-8485**	1	SEAL-O-RING	
	10	1	**095-1585**	1	SEAL-O-RING	
	11	1	**232-4114**	2	RING	

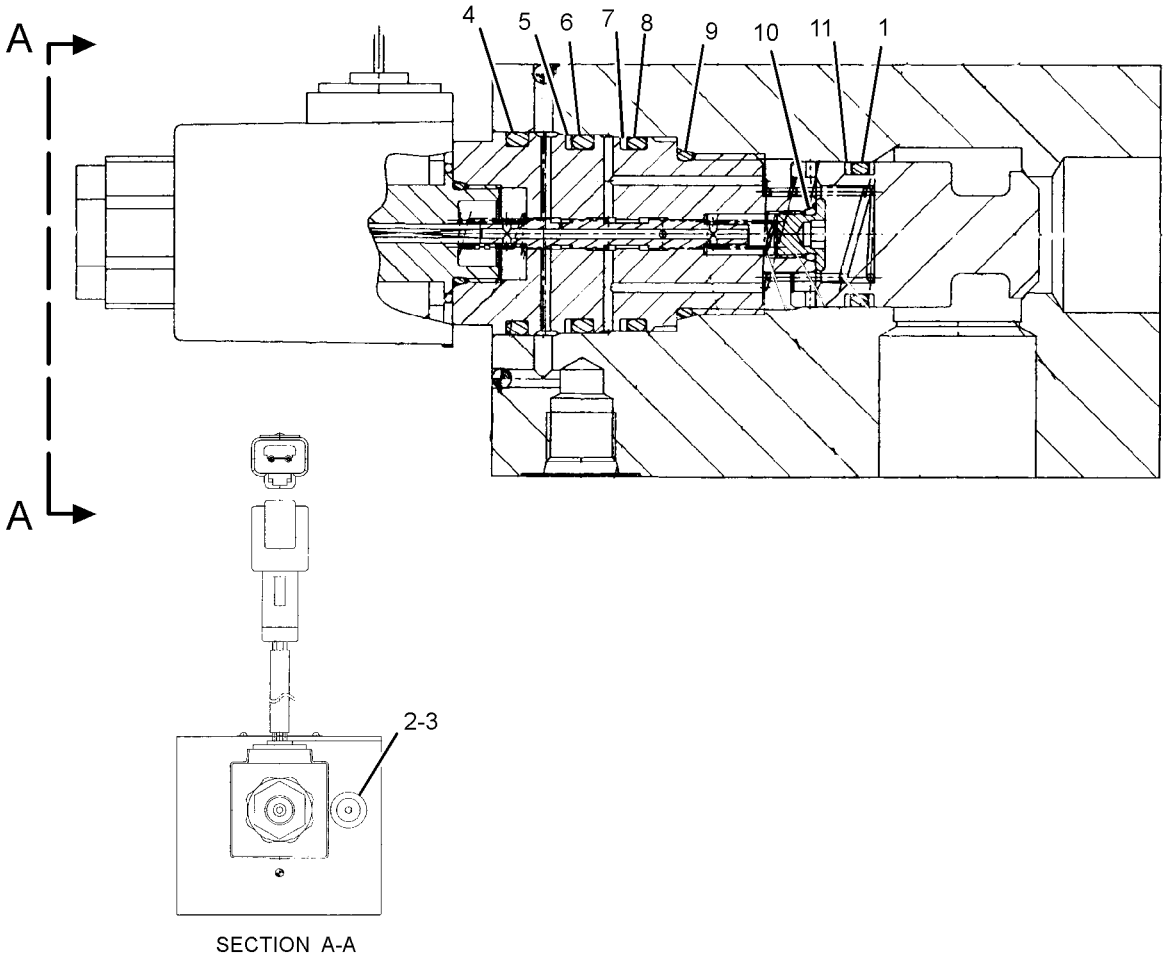

SECTION A-A

GRAPHIC #1 **<END>** g02023793

315-4412 VALVE GP-SOLENOID

S/N: D3P1-UP; M4T1-UP

PART OF 322-8716 VALVE GP-SWING CUSHION

SMCS-5479 **i03146249**

NOTE	REF NO	GRAPHIC REF	PART NUMBER	QTY	PART NAME 1 2 3 4 5 6 (PRODUCT LEVEL)	SEE PAGE
	1	1	**126-6514**	1	SEAL-O-RING	
	2	1	**126-6515**	1	SEAL-O-RING	
	3	1	**126-6516**	1	SEAL-O-RING	
	4	1	**095-1586**	1	SEAL-O-RING	

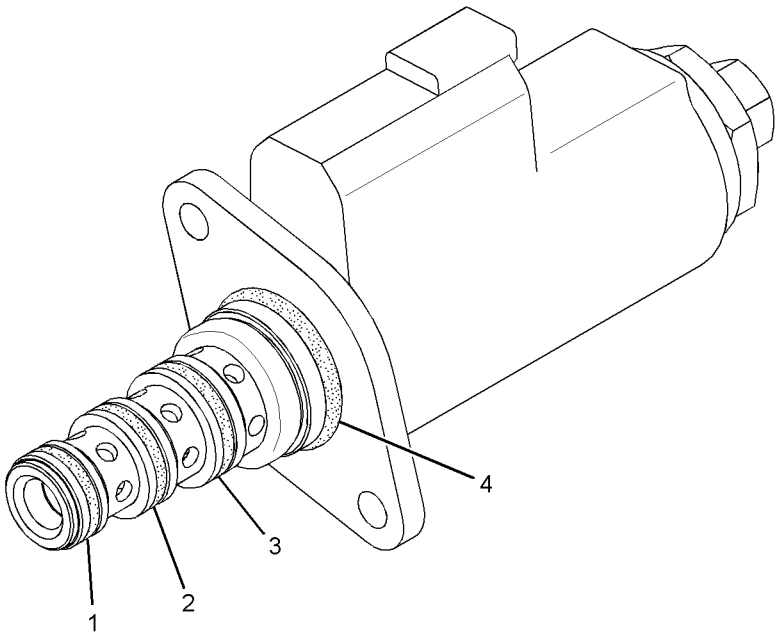

GRAPHIC #1 **<END>** g01456627

HYDRAULIC SYSTEM

328-2035 VALVE GP-SOLENOID & MANIFOLD

S/N: D3P1-UP
PART OF 337-1244 LINES GP-FRONT
AN ATTACHMENT

SMCS-5264, 5479 **i03091820**

NOTE	REF NO	GRAPHIC REF	PART NUMBER	QTY	PART NAME 1 2 3 4 5 6 (PRODUCT LEVEL)	SEE PAGE
	1	1	**156-5970**	1	NUT (1/2-20-THD)	
	2	1	**260-3883**	1	COIL AS-SOLENOID	
		1	**1S-9593**	2	STRAP-CABLE	
		1	**186-3735**	2	PIN-CONNECTOR (16-GA TO 18-GA)	
		1	**230-4012**	1	RECEPTACLE AS-CONNECTOR (2-PIN)	

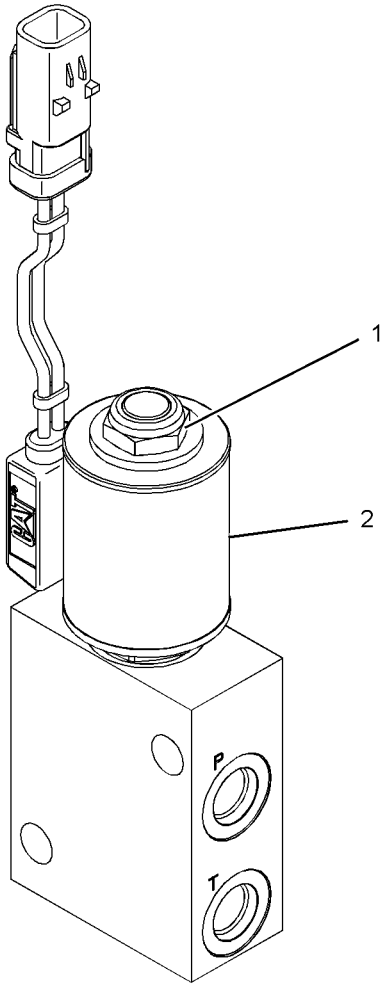

GRAPHIC #1 **<END>** g01573003

297-0265 VALVE GP-SOLENOID & RELIEF

S/N: D3P1-UP; M4T1-UP
PART OF 330-2389, 330-2391 LINES GP-FRONT
AN ATTACHMENT

SMCS-5571 **i03748115**

NOTE	REF NO	GRAPHIC REF	PART NUMBER	QTY	PART NAME 1 2 3 4 5 6 (PRODUCT LEVEL)	SEE PAGE
Y	1	1	**335-0084**	1	VALVE GP-SOLENOID & RELIEF	843

Y-SEPARATE ILLUSTRATION

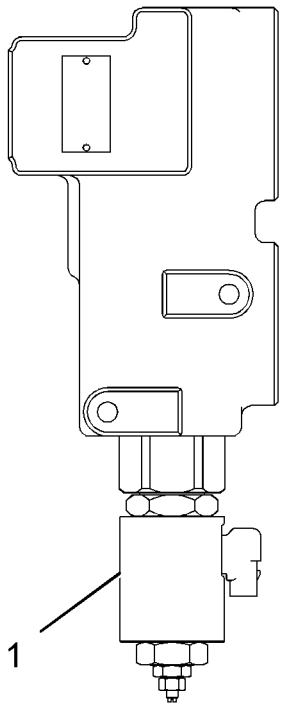

GRAPHIC #1 **<END>** g02022925

HYDRAULIC SYSTEM

323-7558 VALVE GP-SOLENOID & RELIEF

S/N: D3P1-UP; M4T1-UP
PART OF 255-1922, 255-1924 LINES GP-FRONT
AN ATTACHMENT

SMCS-5571 **i03631221**

NOTE	REF NO	GRAPHIC REF	PART NUMBER	QTY	PART NAME 1 2 3 4 5 6 (PRODUCT LEVEL)	SEE PAGE
Y	1	1	**323-7559**	1	VALVE GP-SOLENOID & RELIEF	841

Y-SEPARATE ILLUSTRATION

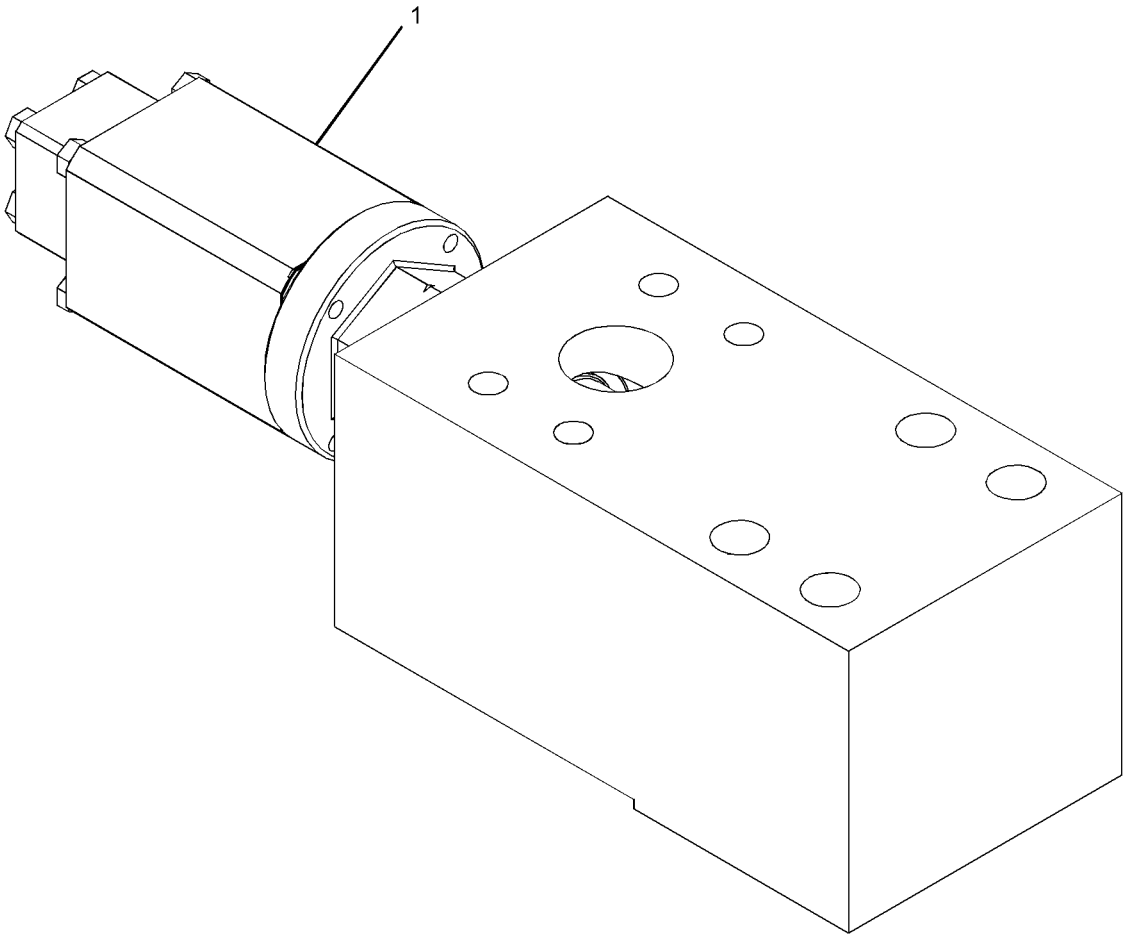

GRAPHIC #1 **<END>** g01586597

HYDRAULIC SYSTEM

323-7559 VALVE GP-SOLENOID & RELIEF

S/N: D3P1-UP; M4T1-UP
PART OF 323-7558 VALVE GP-SOLENOID & RELIEF
AN ATTACHMENT

SMCS-5571 **i03631225**

NOTE	REF NO	GRAPHIC REF	PART NUMBER	QTY	PART NAME 1 2 3 4 5 6 (PRODUCT LEVEL)	SEE PAGE
	1	1	**107-6541**	1	RING-RETAINING	
	2	1	**107-7017**	1	SPRING	
B	3	1	**111-9977**	2	SHIM (0.1-MM THK)	
	4	1	**111-9985**	1	RING	
	5	1	**112-0090**	1	COIL AS	
	6	1	**119-5259**	1	VALVE	
	7	1	**119-5260**	1	ADAPTER	
B	8	1	**119-5262**	2	SHIM (0.2-MM THK)	
B	9	1	**123-2516**	2	SHIM (0.15-MM THK)	
	10	1	**171-0023**	1	SEAT	
B	11	1	**197-0252**	2	SHIM (0.5-MM THK)	
	12	1	**6V-9746**	1	SEAL-O-RING	
	13	1	**323-7772**	1	COLLAR	
	15	1	**085-7538**	1	SEAL-O-RING	
	16	1	**107-7018**	1	RING-BACKUP	
	17	1	**111-9986**	1	SEAL-O-RING	
M	18	1	**114-0489**	4	BOLT (M5X0.8X75-MM)	
	19	1	**3D-2824**	1	SEAL-O-RING	

PARTS SHOWN IN GRAPHIC(S) WITHOUT A REFERENCE NUMBER ARE NOT SERVICED SEPARATELY

B-USE AS REQUIRED
M-METRIC PART

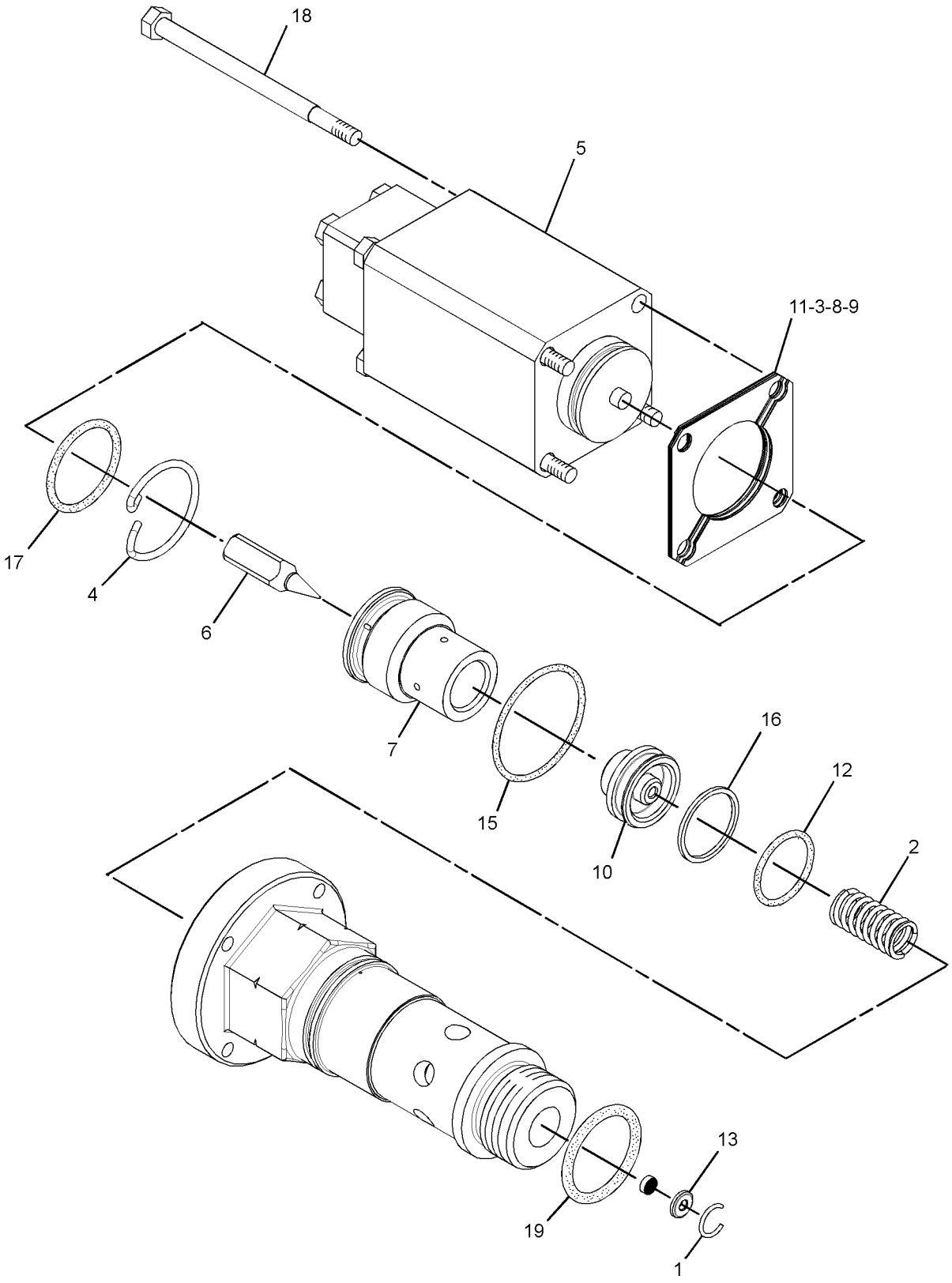

GRAPHIC #1 **<END>** g01950696

335-0084 VALVE GP-SOLENOID & RELIEF

S/N: D3P1-UP; M4T1-UP
PART OF 297-0265 VALVE GP-SOLENOID & RELIEF
AN ATTACHMENT

SMCS-5571 **i03748121**

NOTE	REF NO	GRAPHIC REF	PART NUMBER	QTY	PART NAME 1 2 3 4 5 6 (PRODUCT LEVEL)	SEE PAGE
	1	1	**095-1597**	1	SEAL-O-RING	
	2	1	**095-1604**	1	SEAL-O-RING	
	3	1	**095-1791**	1	RING-BACKUP	

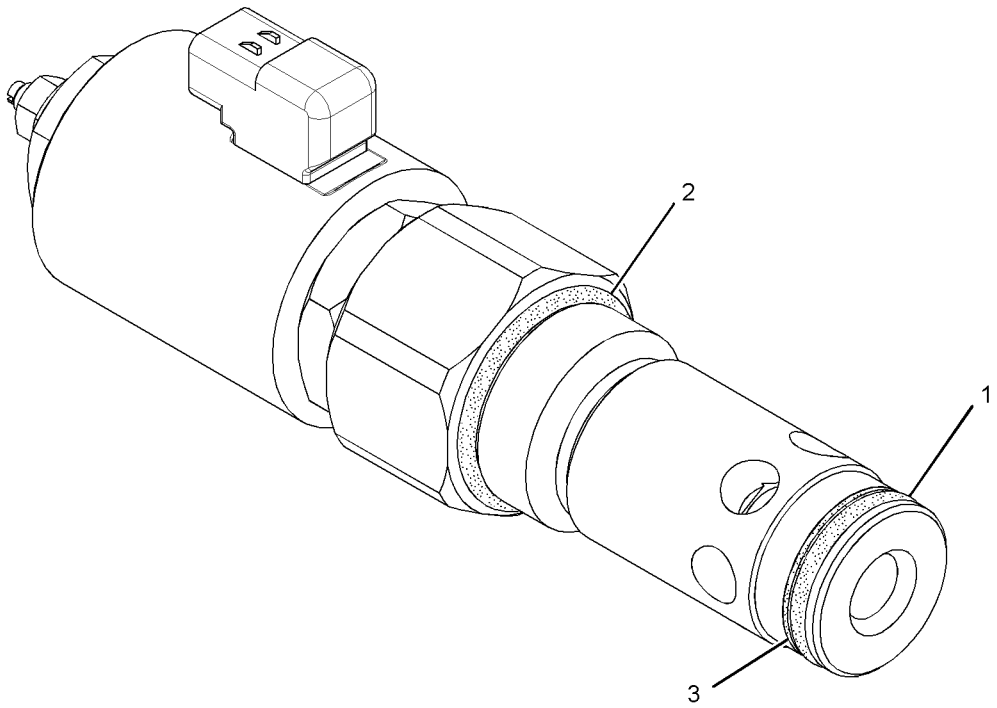

GRAPHIC #1 **<END>** g02022940

HYDRAULIC SYSTEM

158-9085 VALVE GP-SWING CUSHION

S/N: M4T1-UP

PART OF 259-0680 VALVE GP-SWING CUSHION

AN ATTACHMENT

SMCS-5480 **i01694828**

NOTE	REF NO	GRAPHIC REF	PART NUMBER	QTY	PART NAME 1 2 3 4 5 6 (PRODUCT LEVEL)	SEE PAGE
	1	1	*173-3535*	1	BODY	
	2	1	**095-1576**	1	SEAL-O-RING	
	3	1	**173-3536**	2	VALVE GP-RELIEF	
					(EACH INCLUDES)	
		1	**095-1785**	1	RING-BACKUP	
		1	**095-1586**	1	SEAL-O-RING	
	4	1	**095-1698**	2	SEAL-O-RING	
	5	1	**8T-6759**	4	PLUG-PIPE	

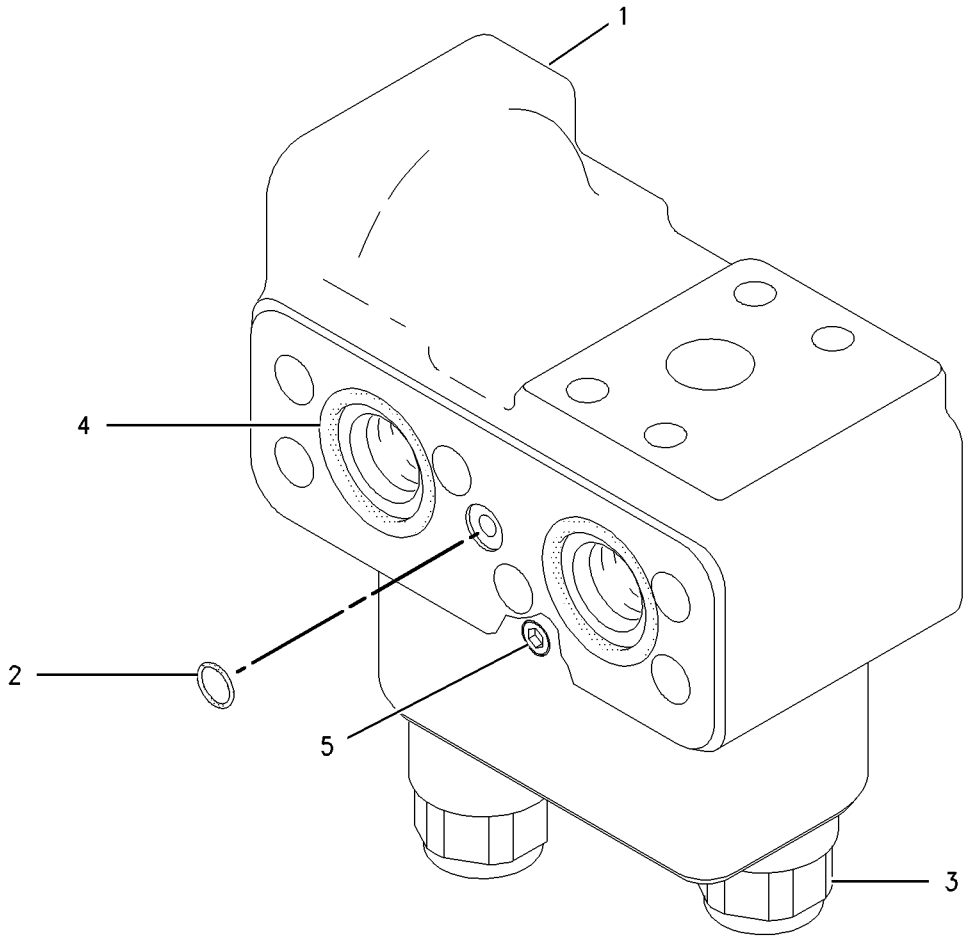

GRAPHIC #1 **<END>** g00729313

259-0680 VALVE GP-SWING CUSHION

S/N: M4T1-UP
PART OF 247-7500 VALVE AR-SWING
AN ATTACHMENT

SMCS-5480 **i03711840**

NOTE	REF NO	GRAPHIC REF	PART NUMBER	QTY	PART NAME 1 2 3 4 5 6 (PRODUCT LEVEL)	SEE PAGE
Y	1	1	**158-9085**	1	VALVE GP-SWING CUSHION	844

Y-SEPARATE ILLUSTRATION

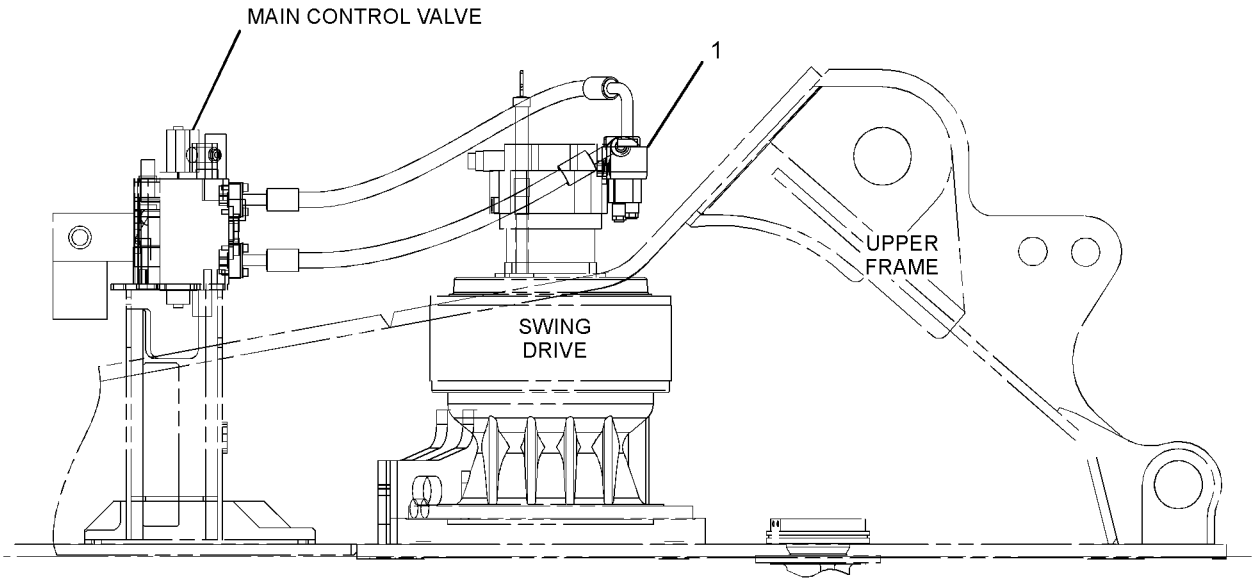

RIGHT SIDE VIEW

GRAPHIC #1 **<END>** g01212011

322-8716 VALVE GP-SWING CUSHION—FINE SWING

S/N: D3P1-UP; M4T1-UP

PART OF 260-7870 LINES GP-FRONT

SMCS-5480 **i03631235**

NOTE	REF NO	GRAPHIC REF	PART NUMBER	QTY	PART NAME 1 2 3 4 5 6 (PRODUCT LEVEL)	SEE PAGE
Y	1	1	**315-4412**	1	VALVE GP-SOLENOID (FINE SWING)	837
Y	2	1	**173-3536**	2	VALVE GP-RELIEF	806
	3	1	**095-1698**	2	SEAL-O-RING	
M	4	1	**8T-0288**	2	BOLT (M5X0.8X12-MM)	
	5	1	**133-6788**	2	ORIFICE	
	6	1	**8T-6759**	6	PLUG-PIPE	
	7	1	**095-1576**	1	SEAL-O-RING	

M-METRIC PART
Y-SEPARATE ILLUSTRATION

322-8716 VALVE GP-SWING CUSHION *(contd.)* **i03631235**

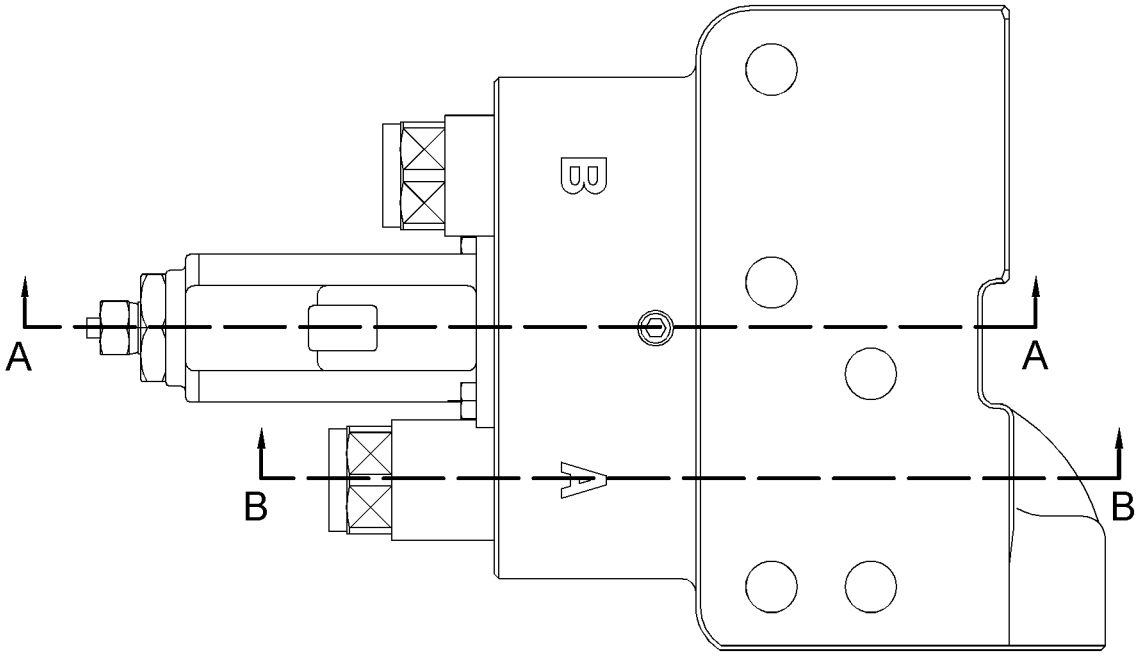

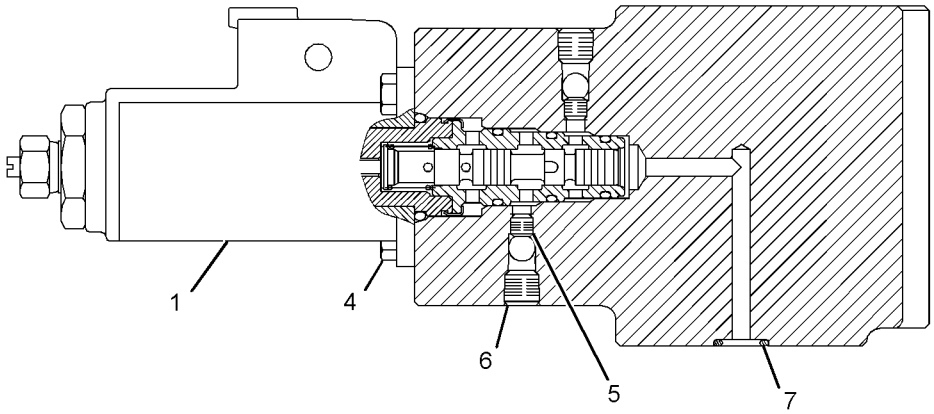

SECTION A-A

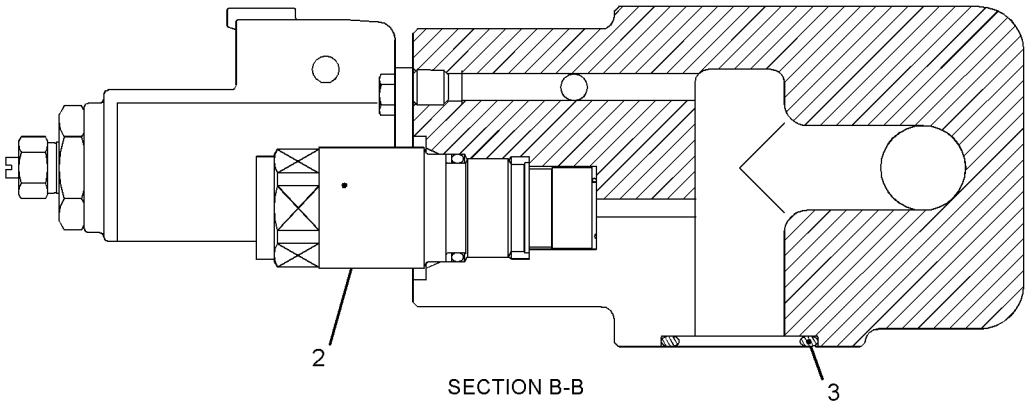

SECTION B-B

GRAPHIC #1 **<END>** g01572033

204-2819 VALVE GP-TRAVEL COUNTERBALANCE

S/N: D3P1-UP; M4T1-UP

PART OF 191-5606 MOTOR & MTG GP-TRAVEL

SMCS-5811 **i03294801**

NOTE	REF NO	GRAPHIC REF	PART NUMBER	QTY	PART NAME 1 2 3 4 5 6 (PRODUCT LEVEL)	SEE PAGE
	1	1	*209-5917*	1	VALVE GP-COUNTERBALANCE (TRAVEL)	
Y	2	1	**204-2755**	2	VALVE GP-RELIEF (CROSSOVER)	810
	3	1	**9S-8004**	2	PLUG	
	4	1	**3J-1907**	2	SEAL-O-RING	
	5	1	**096-1545**	2	WASHER (28.5X37X2-MM THK)	
	6	1	**209-5920**	2	SPRING	
	7	1	**334-9940**	2	COVER	
M	8	1	**8T-7811**	8	BOLT-SOCKET HEAD (M12X1.75X50-MM)	
	9	1	**5P-2568**	2	SEAL-O-RING	

M-METRIC PART
Y-SEPARATE ILLUSTRATION

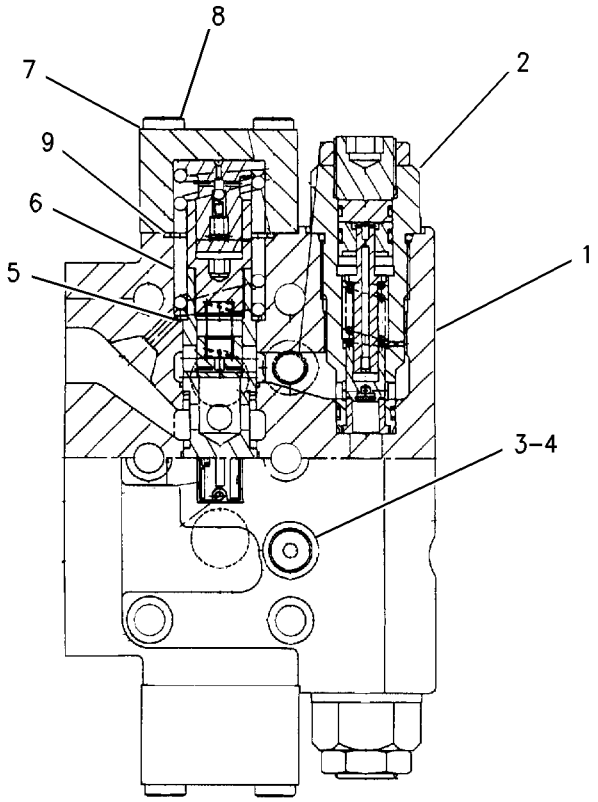

GRAPHIC #1 **<END>** g00835139

290-1817 BOOM AR-1 PIECE LONG

S/N: M4T1-UP
6.5-M (21.3-FT)
REPLACED BY 302-7339—PAGE 849
AN ATTACHMENT

SMCS-6501 **i02825477**

NOTE	PART NUMBER	QTY	PART NAME 1 2 3 4 5 6 (PRODUCT LEVEL)	SEE PAGE
Y	*290-9204*	1	BOOM GP	851
Y	*289-8018*	1	CYLINDER & LINES GP-BOOM (LH)	458
Y	*289-8019*	1	CYLINDER & LINES GP-BOOM (RH)	458
Y	*289-8029*	1	CYLINDER & LINES GP-STICK	459
Y	*238-1584*	1	LIGHTING GP-FLOOD (BOOM)	218
Y	*260-7871*	1	LINES GP-BOOM	529
Y	*192-8320*	1	LINES GP-GREASE	859
Y-SEPARATE ILLUSTRATION				

<END>

302-7339 BOOM AR-1 PIECE LONG

S/N: D3P1-UP; M4T1-UP
6.5-M (21.3-FT)
PART OF 337-4116, 337-4153, 345-2282, 345-2283, 345-2284, 345-2285, 345-2286
OPTION AR-LINKAGE
FOR USE WITH 290-1819—PAGE 870, 290-1820—PAGE 870
AN ATTACHMENT

SMCS-6501 **i03150953**

NOTE	PART NUMBER	QTY	PART NAME 1 2 3 4 5 6 (PRODUCT LEVEL)	SEE PAGE
Y	*290-9236*	1	BOOM GP	853
Y	*289-8018*	1	CYLINDER & LINES GP-BOOM (LH)	458
Y	*289-8019*	1	CYLINDER & LINES GP-BOOM (RH)	458
Y	*289-8029*	1	CYLINDER & LINES GP-STICK	459
Y	*238-1584*	1	LIGHTING GP-FLOOD (BOOM)	218
Y	*260-7871*	1	LINES GP-BOOM	529
Y	*192-8320*	1	LINES GP-GREASE	859
Y-SEPARATE ILLUSTRATION				

<END>

314-3615 BOOM AR-1 PIECE LONG—ACCUGRADE

S/N: D3P1-UP; M4T1-UP
6.5-M (21.3-FT)
PART OF 337-4154 OPTION AR-LINKAGE
FOR USE WITH 278-3932—PAGE 350
AN ATTACHMENT

SMCS-6501 **i03166309**

NOTE	PART NUMBER	QTY	PART NAME 1 2 3 4 5 6 (PRODUCT LEVEL)	SEE PAGE
Y	*324-1093*	1	BOOM GP	857
Y	*289-8018*	1	CYLINDER & LINES GP-BOOM (LH)	458
Y	*289-8019*	1	CYLINDER & LINES GP-BOOM (RH)	458
Y	*289-8029*	1	CYLINDER & LINES GP-STICK	459
Y	*238-1584*	1	LIGHTING GP-FLOOD (BOOM)	218
Y	*260-7871*	1	LINES GP-BOOM	529
Y	*192-8320*	1	LINES GP-GREASE	859

Y-SEPARATE ILLUSTRATION

<END>

290-1818 BOOM AR-1 PIECE SHORT

S/N: D3P1-UP; M4T1-UP
6.18-M (20.3-FT)
PART OF 337-4117, 337-4118, 337-4119, 337-4120, 340-9478, 340-9479, 340-9480, 340-9481 OPTION AR-LINKAGE
AN ATTACHMENT

SMCS-6501 **i03631253**

NOTE	PART NUMBER	QTY	PART NAME 1 2 3 4 5 6 (PRODUCT LEVEL)	SEE PAGE
Y	*290-9248*	1	BOOM GP	855
Y	*289-8018*	1	CYLINDER & LINES GP-BOOM (LH)	458
Y	*289-8019*	1	CYLINDER & LINES GP-BOOM (RH)	458
Y	*289-8029*	1	CYLINDER & LINES GP-STICK	459
Y	*238-1586*	1	LIGHTING GP-FLOOD (MASS BOOM)	219
Y	*239-1626*	1	LINES GP-BOOM	527
Y	*201-2816*	1	LINES GP-GREASE	860

Y-SEPARATE ILLUSTRATION

<END>

290-9204 BOOM GP

S/N: M4T1-UP
6.5-M (21.3-FT)
PART OF 290-1817 BOOM AR-1 PIECE LONG
AN ATTACHMENT

SMCS-6301, 6302, 6460, 6501, 6516, 6521, 6535, 6536 **i02825472**

NOTE	REF NO	GRAPHIC REF	PART NUMBER	QTY	PART NAME 1 2 3 4 5 6 (PRODUCT LEVEL)	SEE PAGE
	1	1	**093-0074**	1	SHIM (1-MM THK)	
	2	1	**093-0349**	1	WASHER (22X60X6-MM THK)	
	3	1	**166-1489**	2	SHIM (2-MM THK)	
	4	1	**192-8321**	1	PIN	
	5	1	**201-2771**	1	WASHER (26X90X8-MM THK)	
	6	1	**251-2547**	1	PIN AS	
	7	1	**290-9205**	1	BOOM & BEARING AS	
	7B	1	**228-5621**	2	BEARING-SLEEVE	
	8	1	**093-0366**	1	SPACER (93X130X12-MM THK)	
	9	1	**103-5246**	1	SPACER (123X150X14-MM THK)	
	10	1	**113-2963**	1	PIN AS	
B	11	1	**147-3957**	1	SHIM (0.5-MM THK)	
	12	1	**166-1490**	2	SHIM (2-MM THK)	
	13	1	**166-1498**	2	SEAL-LIP TYPE	
	14	1	**4I-4978**	2	SPACER (113X150X8-MM THK)	
	15	1	**4I-5005**	2	PLATE	
M	16	1	**7X-2573**	1	BOLT (M24X3X40-MM)	
	17	1	**8T-4123**	1	WASHER (22X35X3.5-MM THK)	
	18	1	**8T-4167**	1	WASHER-HARD (26X44X4-MM THK)	
M	19	1	**8T-4779**	6	BOLT (M16X2X35-MM)	
M	20	1	**8T-4780**	1	BOLT (M20X2.5X30-MM)	
	21	1	**9X-8257**	6	WASHER (17.5X30X3.5-MM THK)	

B-USE AS REQUIRED
M-METRIC PART

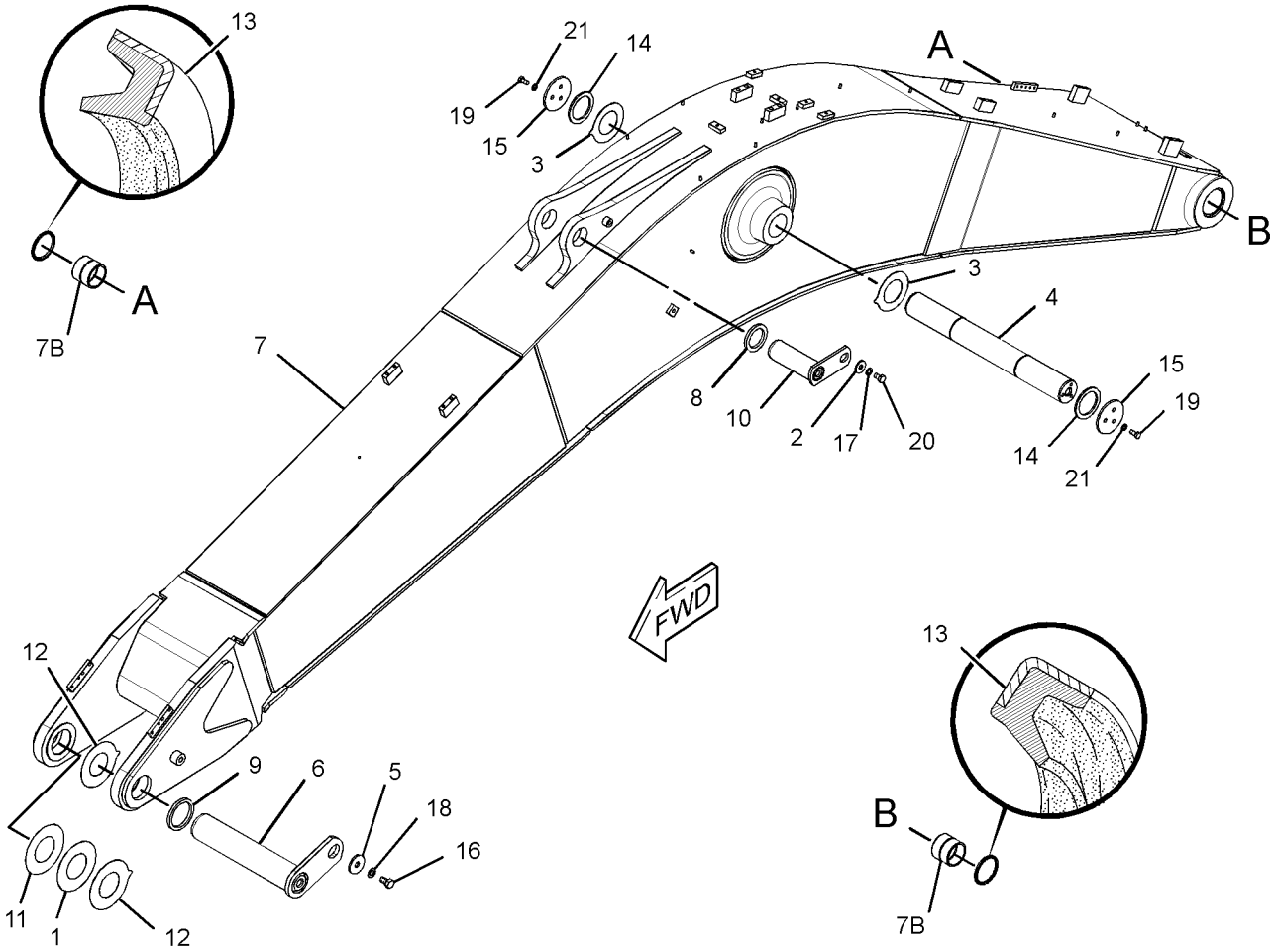

GRAPHIC #1 **<END>** g01348391

290-9236 BOOM GP

S/N: D3P1-UP; M4T1-UP
6.5-M (21.3-FT)
PART OF 302-7339 BOOM AR-1 PIECE LONG
AN ATTACHMENT

SMCS-6301, 6302, 6460, 6501, 6516, 6521, 6535, 6536 **i03150966**

NOTE	REF NO	GRAPHIC REF	PART NUMBER	QTY	PART NAME 1 2 3 4 5 6 (PRODUCT LEVEL)	SEE PAGE
B	1	1	**093-0074**	1	SHIM (1-MM THK)	
	2	1	**093-0349**	1	WASHER (22X60X6-MM THK)	
	3	1	**166-1489**	2	SHIM (2-MM THK)	
	4	1	**192-8321**	1	PIN	
	5	1	**201-2771**	1	WASHER (26X90X8-MM THK)	
	6	1	**251-2547**	1	PIN AS	
	7	1	**290-9237**	1	BOOM & BEARING AS	
	7A	1	**236-8561**	2	BEARING-SLEEVE	
	8	1	**093-0366**	1	SPACER (93X130X12-MM THK)	
	9	1	**103-5246**	1	SPACER (123X150X14-MM THK)	
	10	1	**113-2963**	1	PIN AS	
B	11	1	**147-3957**	1	SHIM (0.5-MM THK)	
	12	1	**166-1490**	2	SHIM (2-MM THK)	
	13	1	**166-1498**	2	SEAL-LIP TYPE	
	14	1	**4I-4978**	2	SPACER (113X150X8-MM THK)	
	15	1	**4I-5005**	2	PLATE	
M	16	1	**7X-2573**	1	BOLT (M24X3X40-MM)	
	17	1	**8T-4123**	1	WASHER (22X35X3.5-MM THK)	
	18	1	**8T-4167**	1	WASHER-HARD (26X44X4-MM THK)	
M	19	1	**8T-4779**	6	BOLT (M16X2X35-MM)	
M	20	1	**8T-4780**	1	BOLT (M20X2.5X30-MM)	
	21	1	**9X-8257**	6	WASHER (17.5X30X3.5-MM THK)	

B-USE AS REQUIRED
M-METRIC PART

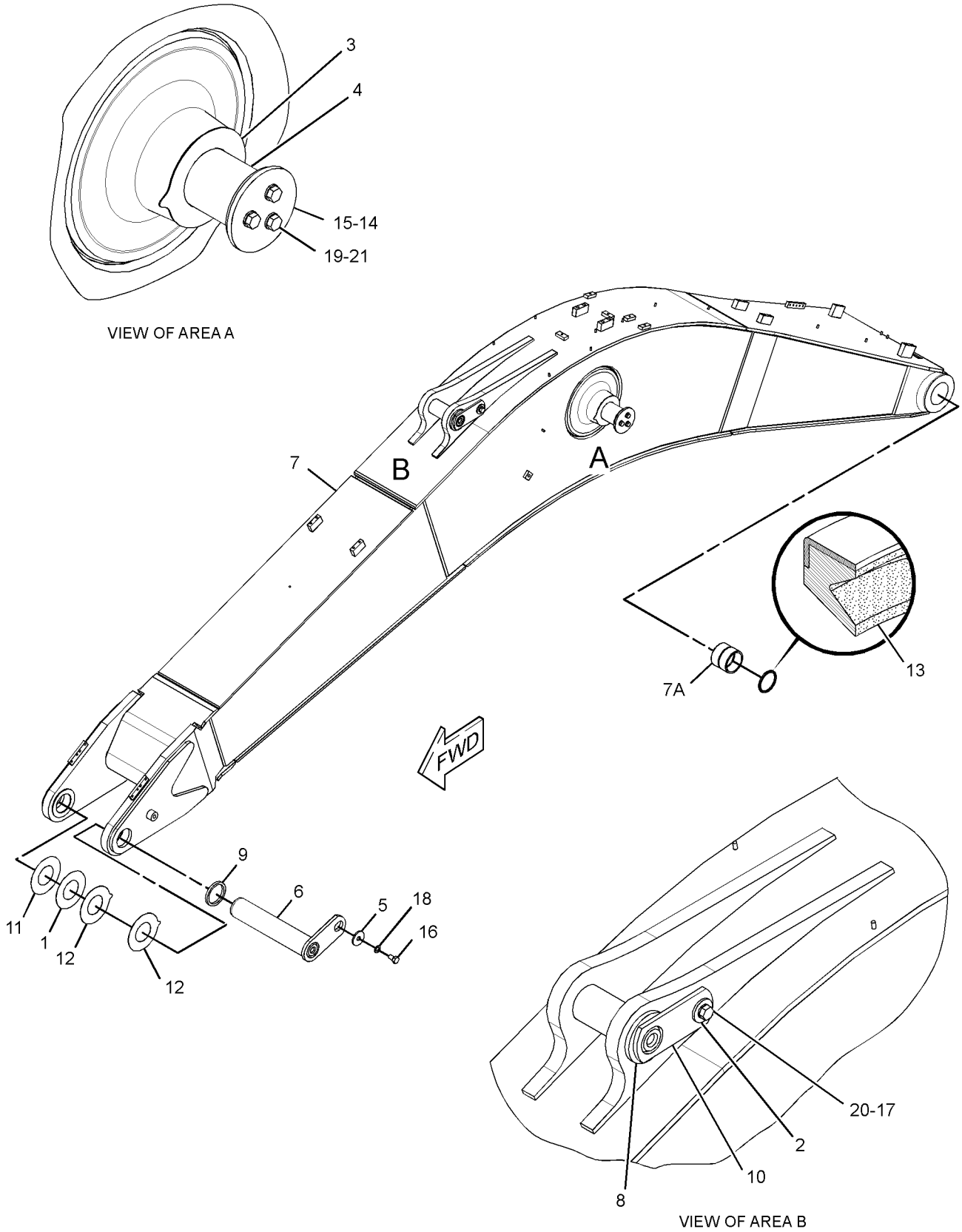

GRAPHIC #1 **<END>** g01368227

290-9248 BOOM GP

S/N: D3P1-UP; M4T1-UP
6.18-M (20.3-FT)
PART OF 290-1818 BOOM AR-1 PIECE SHORT
AN ATTACHMENT

SMCS-6301, 6302, 6460, 6501, 6516, 6521, 6535, 6536 **i02767047**

NOTE	REF NO	GRAPHIC REF	PART NUMBER	QTY	PART NAME 1 2 3 4 5 6 (PRODUCT LEVEL)	SEE PAGE
	1	1	**093-0074**	1	SHIM (1-MM THK)	
	2	1	**093-0349**	1	WASHER (22X60X6-MM THK)	
	3	1	**166-1489**	2	SHIM (2-MM THK)	
	4	1	**192-8321**	1	PIN	
	5	1	**201-2771**	1	WASHER (26X90X8-MM THK)	
	6	1	**251-2547**	1	PIN AS	
	7	1	**290-9249**	1	BOOM & BEARING AS	
	7A	1	**236-8561**	2	BEARING-SLEEVE	
	8	1	**093-0366**	1	SPACER (93X130X12-MM THK)	
	9	1	**103-5246**	1	SPACER (123X150X14-MM THK)	
	10	1	**113-2963**	1	PIN AS	
B	11	1	**147-3957**	1	SHIM (0.5-MM THK)	
	12	1	**166-1490**	2	SHIM (2-MM THK)	
	13	1	**166-1498**	2	SEAL-LIP TYPE	
	14	1	**4I-4978**	2	SPACER (113X150X8-MM THK)	
	15	1	**4I-5005**	2	PLATE	
M	16	1	**7X-2573**	1	BOLT (M24X3X40-MM)	
	17	1	**8T-4123**	1	WASHER (22X35X3.5-MM THK)	
	18	1	**8T-4167**	1	WASHER-HARD (26X44X4-MM THK)	
M	19	1	**8T-4779**	6	BOLT (M16X2X35-MM)	
M	20	1	**8T-4780**	1	BOLT (M20X2.5X30-MM)	
	21	1	**9X-8257**	6	WASHER (17.5X30X3.5-MM THK)	

B-USE AS REQUIRED
M-METRIC PART

290-9248 **BOOM GP** *(contd.)* **i02767047**

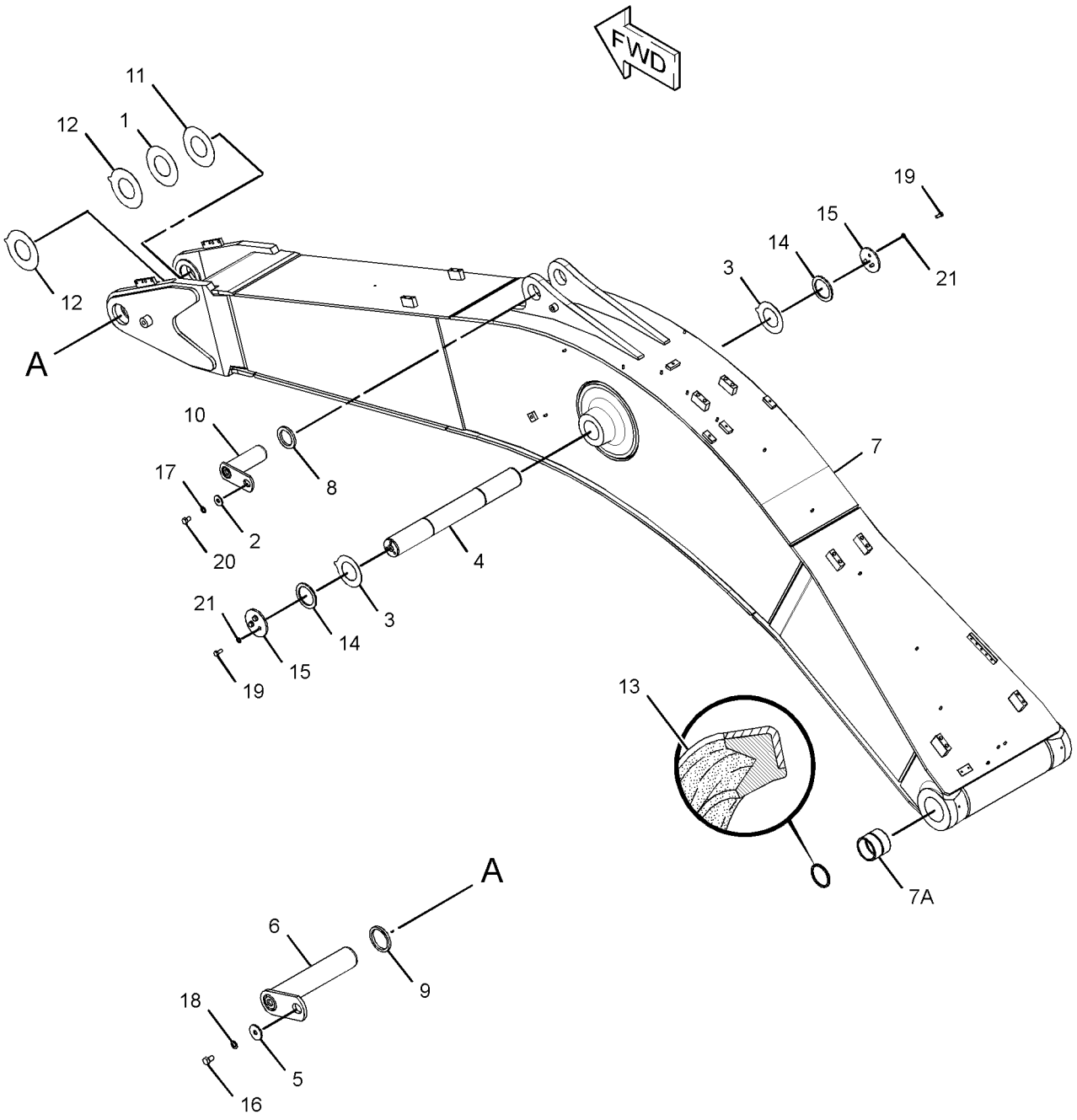

GRAPHIC #1 **<END>** g01394486

324-1093 BOOM GP–ACCUGRADE

S/N: D3P1-UP; M4T1-UP
6.5-M (21.3-FT)
PART OF 314-3615 BOOM AR-1 PIECE LONG
AN ATTACHMENT

SMCS-6301, 6302, 6460, 6501, 6516, 6521, 6535, 6536 **i03168985**

NOTE	REF NO	GRAPHIC REF	PART NUMBER	QTY	PART NAME 1 2 3 4 5 6 (PRODUCT LEVEL)	SEE PAGE
	1	1	**093-0074**	1	SHIM (1-MM THK)	
	2	1	**093-0349**	1	WASHER (22X60X6-MM THK)	
	3	1	**166-1489**	2	SHIM (2-MM THK)	
	4	1	**192-8321**	1	PIN	
	5	1	**201-2771**	1	WASHER (26X90X8-MM THK)	
	6	1	**251-2547**	1	PIN AS	
	7	1	**324-1094**	1	BOOM & BEARING AS	
	7A	1	**236-8561**	2	BEARING-SLEEVE	
	8	1	**093-0366**	1	SPACER (93X130X12-MM THK)	
	9	1	**103-5246**	1	SPACER (123X150X14-MM THK)	
	10	1	**113-2963**	1	PIN AS	
B	11	1	**147-3957**	1	SHIM (0.5-MM THK)	
	12	1	**166-1490**	2	SHIM (2-MM THK)	
	13	1	**166-1498**	2	SEAL-LIP TYPE	
	14	1	**4I-4978**	2	SPACER (113X150X8-MM THK)	
	15	1	**4I-5005**	2	PLATE	
M	16	1	**7X-2573**	1	BOLT (M24X3X40-MM)	
	17	1	**8T-4123**	1	WASHER (22X35X3.5-MM THK)	
	18	1	**8T-4167**	1	WASHER-HARD (26X44X4-MM THK)	
M	19	1	**8T-4779**	6	BOLT (M16X2X35-MM)	
M	20	1	**8T-4780**	1	BOLT (M20X2.5X30-MM)	
	21	1	**9X-8257**	6	WASHER (17.5X30X3.5-MM THK)	

B-USE AS REQUIRED
M-METRIC PART

324-1093 **BOOM GP** *(contd.)* **i03168985**

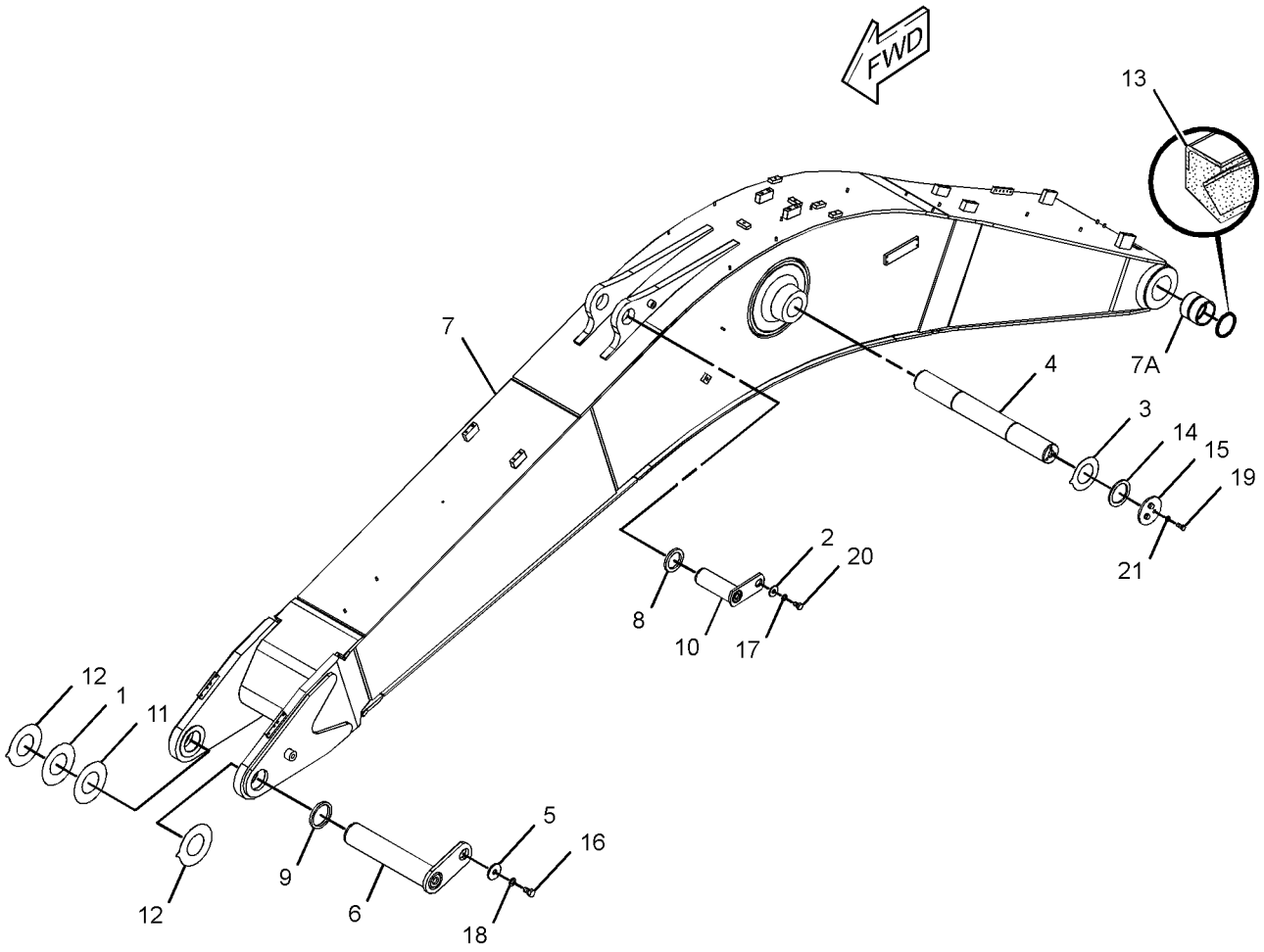

GRAPHIC #1 **<END>** g01371850

192-8320 LINES GP-GREASE—LONG BOOM

S/N: D3P1-UP; M4T1-UP

PART OF 290-1817, 302-7339, 314-3615 BOOM AR-1 PIECE LONG

AN ATTACHMENT

SMCS-7510 **i02662312**

NOTE	REF NO	GRAPHIC REF	PART NUMBER	QTY	PART NAME 1 2 3 4 5 6 (PRODUCT LEVEL)	SEE PAGE
	1	1	**3B-8489**	5	FITTING-GREASE	
	2	1	**5K-9243**	2	ELBOW-FLARED	
	3	1	**134-9137**	1	HOSE AS	
		1	**105-6431**	1	CONNECTOR	
	4	1	**141-3538**	1	HOSE AS	
		1	**105-6431**	1	CONNECTOR	
	5	1	**166-1579**	4	CLIP	
I	6	1	**294-1455**	1	HOSE AS	
	7	1	**212-2829**	1	TUBE AS	
	8	1	**212-2830**	1	TUBE AS	
	9	1	**033-8248**	5	CLIP	
	10	1	**6L-3616**	2	CONNECTOR	
	11	1	**8M-2772**	2	CLIP	
	12	1	**8T-4121**	11	WASHER-HARD (11X21X2.5-MM THK)	
M	13	1	**8T-4133**	6	NUT (M10X1.5-THD)	
M	14	1	**8T-4191**	5	BOLT (M10X1.5X16-MM)	

I-REFER TO HYDRAULIC INFORMATION SYSTEM
M-METRIC PART

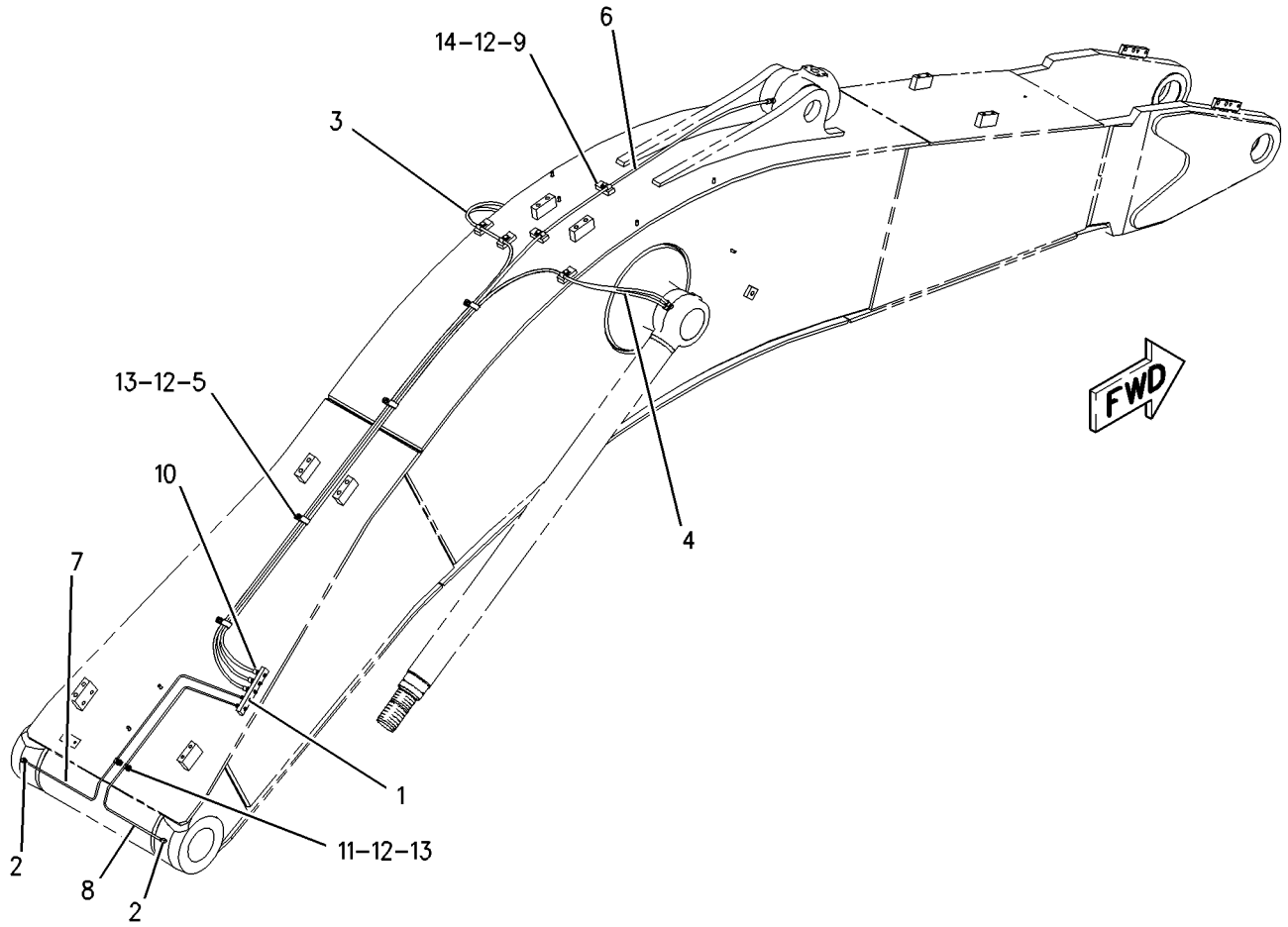

GRAPHIC #1 **<END>** g00836445

201-2816 LINES GP-GREASE–SHORT BOOM

S/N: D3P1-UP; M4T1-UP
PART OF 290-1818 BOOM AR-1 PIECE SHORT
AN ATTACHMENT

SMCS-7510 **i01669675**

NOTE	REF NO	GRAPHIC REF	PART NUMBER	QTY	PART NAME 1 2 3 4 5 6 (PRODUCT LEVEL)	SEE PAGE
	1	1	**3B-8489**	5	FITTING-GREASE	
	2	1	**5K-9243**	2	ELBOW-FLARED	
	3	1	**130-4410**	1	HOSE AS	
	4	1	**141-3538**	1	HOSE AS	
I	5	1	**154-0690**	1	HOSE AS	
	6	1	**166-1579**	3	CLIP	
	7	1	**212-2829**	1	TUBE AS	
	8	1	**212-2830**	1	TUBE AS	
	9	1	**033-8248**	4	CLIP	
	10	1	**6L-3616**	2	CONNECTOR	
	11	1	**8M-2772**	2	CLIP	
	12	1	**8T-4121**	9	WASHER-HARD (11X21X2.5-MM THK)	
M	13	1	**8T-4133**	5	NUT (M10X1.5-THD)	
M	14	1	**8T-4191**	4	BOLT (M10X1.5X16-MM)	

I-REFER TO HYDRAULIC INFORMATION SYSTEM
M-METRIC PART

201-2816 **LINES GP-GREASE** *(contd.)* **i01669675**

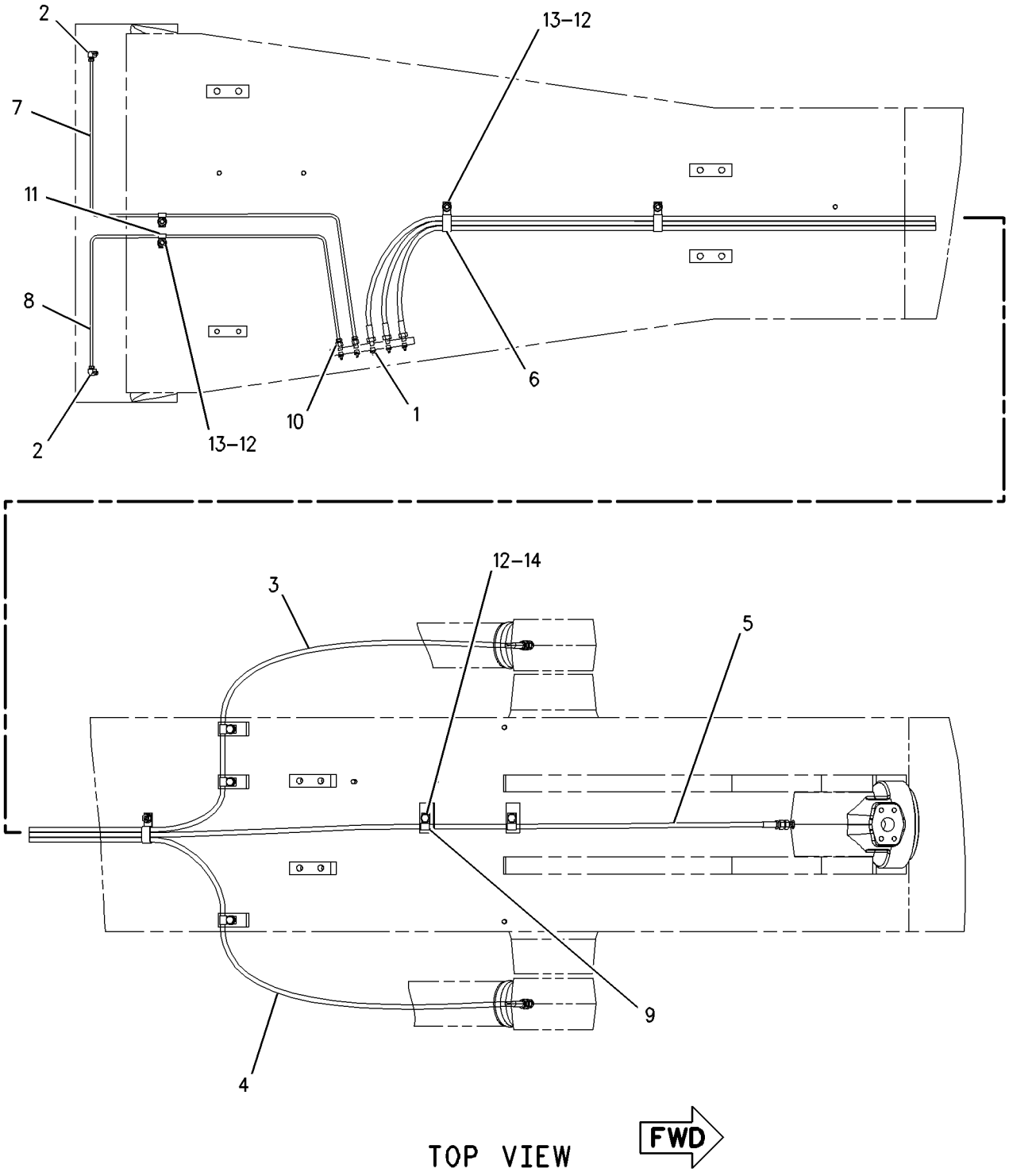

GRAPHIC #1 **<END>** g00863320

290-1825 LINKAGE AR-BUCKET—DB-FAMILY, WITH LIFTING EYE

S/N: D3P1-UP; M4T1-UP
PART OF 337-4116, 337-4153, 345-2282, 345-2283, 345-2284, 345-2285, 345-2286 OPTION AR-LINKAGE
AN ATTACHMENT

SMCS-6513 **i02830933**

NOTE	PART NUMBER	QTY	PART NAME 1 2 3 4 5 6 (PRODUCT LEVEL)	SEE PAGE
Y	*289-8010*	1	CYLINDER & LINES GP-BUCKET	458
Y	*236-8415*	1	LINKAGE GP-BUCKET	863

Y-SEPARATE ILLUSTRATION

<END>

290-1826 LINKAGE AR-BUCKET—TB1-FAMILY, WITH LIFTING EYE

S/N: D3P1-UP; M4T1-UP
PART OF 337-4117, 337-4118, 337-4119, 337-4120, 340-9478, 340-9479, 340-9480, 340-9481 OPTION AR-LINKAGE
AN ATTACHMENT

SMCS-6513 **i02772615**

NOTE	PART NUMBER	QTY	PART NAME 1 2 3 4 5 6 (PRODUCT LEVEL)	SEE PAGE
Y	**289-8039**	1	CYLINDER & LINES GP-BUCKET	458
Y	*251-2651*	1	LINKAGE GP-BUCKET (TB-FAMILY, WITH LIFTING EYE)	865

Y-SEPARATE ILLUSTRATION

<END>

290-1830 LINKAGE AR-BUCKET—DB-FAMILY, WITH LIFTING EYE

S/N: D3P1-UP; M4T1-UP
PART OF 337-4154 OPTION AR-LINKAGE
FOR USE WITH 290-1829—PAGE 872, 290-1828—PAGE 871
AN ATTACHMENT

SMCS-6513 **i03168804**

NOTE	PART NUMBER	QTY	PART NAME 1 2 3 4 5 6 (PRODUCT LEVEL)	SEE PAGE
Y	*289-8010*	1	CYLINDER & LINES GP-BUCKET	458
Y	*282-4566*	1	LINKAGE GP-BUCKET	867

Y-SEPARATE ILLUSTRATION

<END>

236-8415 LINKAGE GP-BUCKET—DB-FAMILY, WITH LIFTING EYE

S/N: D3P1-UP; M4T1-UP

PART OF 290-1825 LINKAGE AR-BUCKET

AN ATTACHMENT

SMCS-6513 **i03314190**

NOTE	REF NO	GRAPHIC REF	PART NUMBER	QTY	PART NAME 1 2 3 4 5 6 (PRODUCT LEVEL)	SEE PAGE
	1	1	**3B-8489**	5	FITTING-GREASE	
	2	1	**093-0349**	1	WASHER (22X60X6-MM THK)	
	3	1	**166-1496**	4	SEAL-LIP TYPE	
	4	1	**189-3922**	1	PIN	
	5	1	**201-2771**	1	WASHER (26X90X8-MM THK)	
M	6	1	**201-2836**	1	BOLT (M24X3X200-MM)	
	7	1	**241-7129**	1	LINK	
	8	1	**241-7150**	1	LINK AS	
	9	1	**251-2552**	1	PIN AS	
	10	1	**251-2557**	1	PIN	
	11	1	**251-2558**	1	PIN AS	
	12	1	**254-3025**	1	LINK & BEARING AS	
	12A	1	**241-7280**	2	BEARING-SLEEVE	
	12B	1	**228-5615**	2	BEARING-SLEEVE	
	13	1	**093-1345**	2	SEAL-O-RING	
	14	1	**093-1349**	2	SEAL-O-RING	
	15	1	**166-1488**	2	SHIM (2-MM THK)	
	16	1	**166-1495**	2	SEAL-LIP TYPE	
M	17	1	**186-5649**	1	BOLT (M20X2.5X160-MM)	
M	18	1	**8T-4001**	2	NUT (M24X3-THD)	
	19	1	**8T-4123**	1	WASHER (22X35X3.5-MM THK)	
M	20	1	**8T-4131**	2	NUT (M20X2.5-THD)	
	21	1	**8T-4167**	1	WASHER-HARD (26X44X4-MM THK)	
M	22	1	**8T-5379**	1	BOLT (M24X3X50-MM)	
M	23	1	**8T-5460**	1	BOLT (M20X2.5X40-MM)	

M-METRIC PART

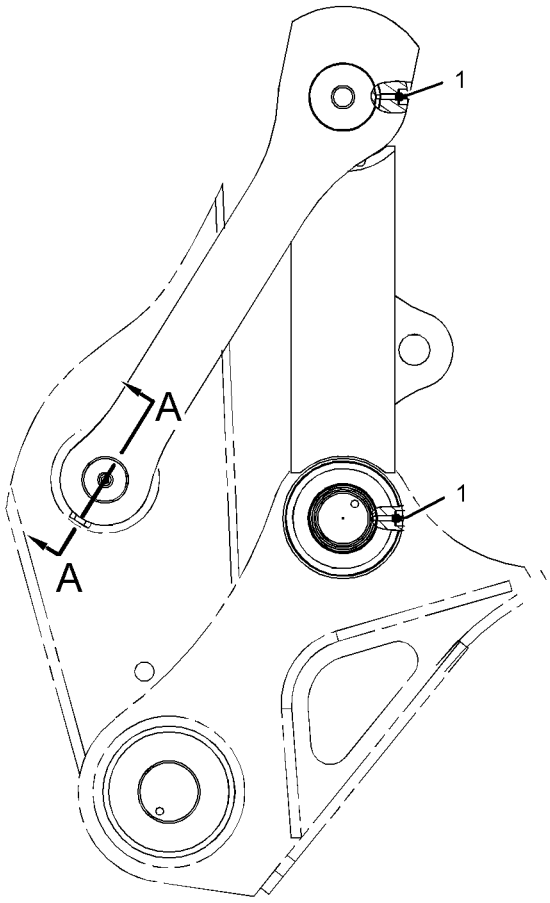

RIGHT SIDE VIEW

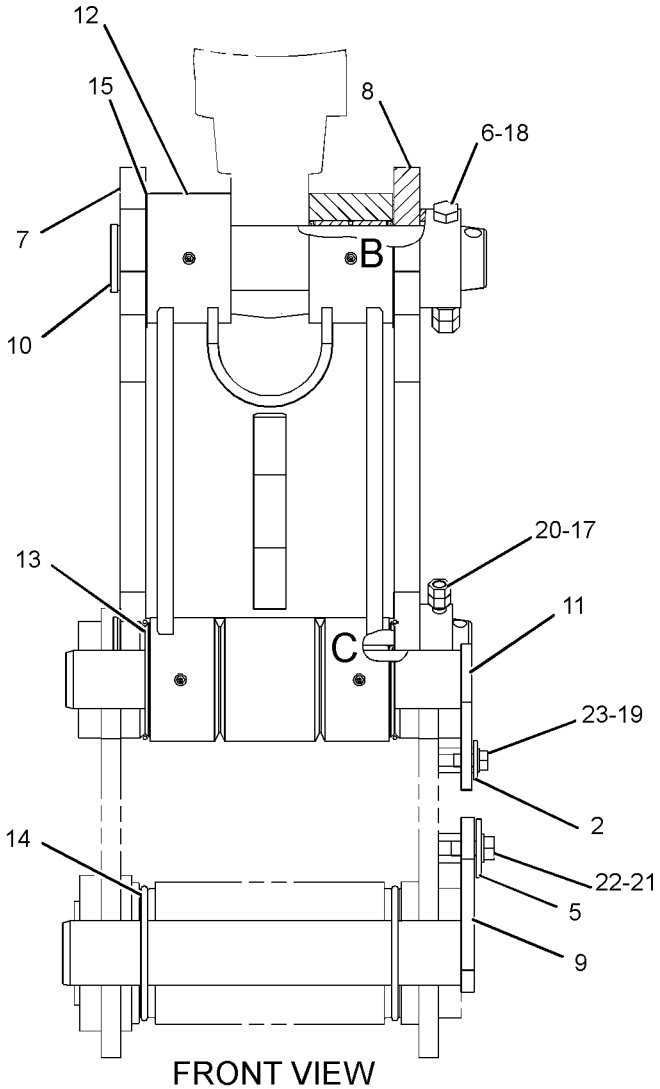

FRONT VIEW

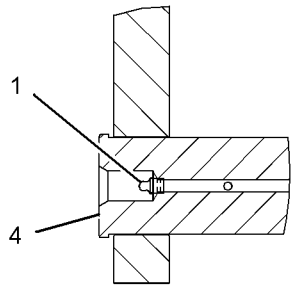

SECTION A-A

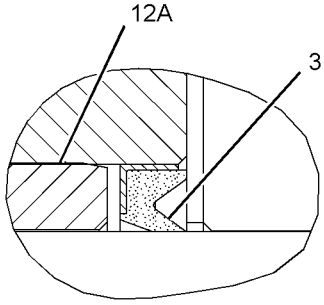

VIEW OF AREA B

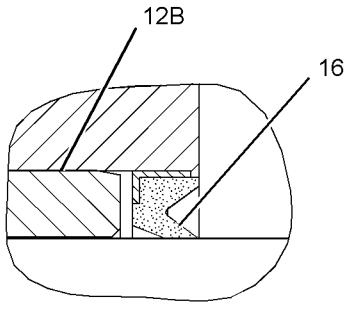

VIEW OF AREA C

GRAPHIC #1 **<END>** g01262517

251-2651 LINKAGE GP-BUCKET—TB-FAMILY, WITH LIFTING EYE

S/N: D3P1-UP; M4T1-UP

PART OF 290-1826 LINKAGE AR-BUCKET

AN ATTACHMENT

SMCS-6513 **i03765609**

NOTE	REF NO	GRAPHIC REF	PART NUMBER	QTY	PART NAME 1 2 3 4 5 6 (PRODUCT LEVEL)	SEE PAGE
	1	1	**3B-8489**	4	FITTING-GREASE	
	2	1	**5B-0651**	1	FITTING-STRAIGHT	
	3	1	**093-1347**	2	SEAL-O-RING	
	4	1	**341-5272**	1	PLATE	
	5	1	**201-2771**	2	WASHER (26X90X8-MM THK)	
	6	1	**341-5135**	1	PLATE	
	7	1	**235-7626**	1	LINK AS	
	8	1	**235-7627**	1	LINK	
	9	1	**235-7628**	1	PIN AS	
	10	1	**235-7636**	1	PIN AS	
	11	1	**235-7639**	1	PIN AS	
	12	1	**235-7642**	1	PIN AS	
	13	1	**251-2652**	1	LINK & BEARING AS	
	13A	1	**7Y-2397**	2	BEARING-SLEEVE	
	13B	1	**087-5548**	2	BEARING-SLEEVE	
	14	1	**9X-4597**	6	SEAL-LIP TYPE	
	15	1	**093-1345**	2	SEAL-O-RING	
M	16	1	**8T-4140**	6	BOLT (M16X2X60-MM)	
	17	1	**8T-4167**	2	WASHER-HARD (26X44X4-MM THK)	
M	18	1	**8T-5379**	2	BOLT (M24X3X50-MM)	
	19	1	**7X-0513**	6	WASHER-HARD (17X30X5-MM THK)	

M-METRIC PART

251-2651 **LINKAGE GP-BUCKET** *(contd.)* **i03765609**

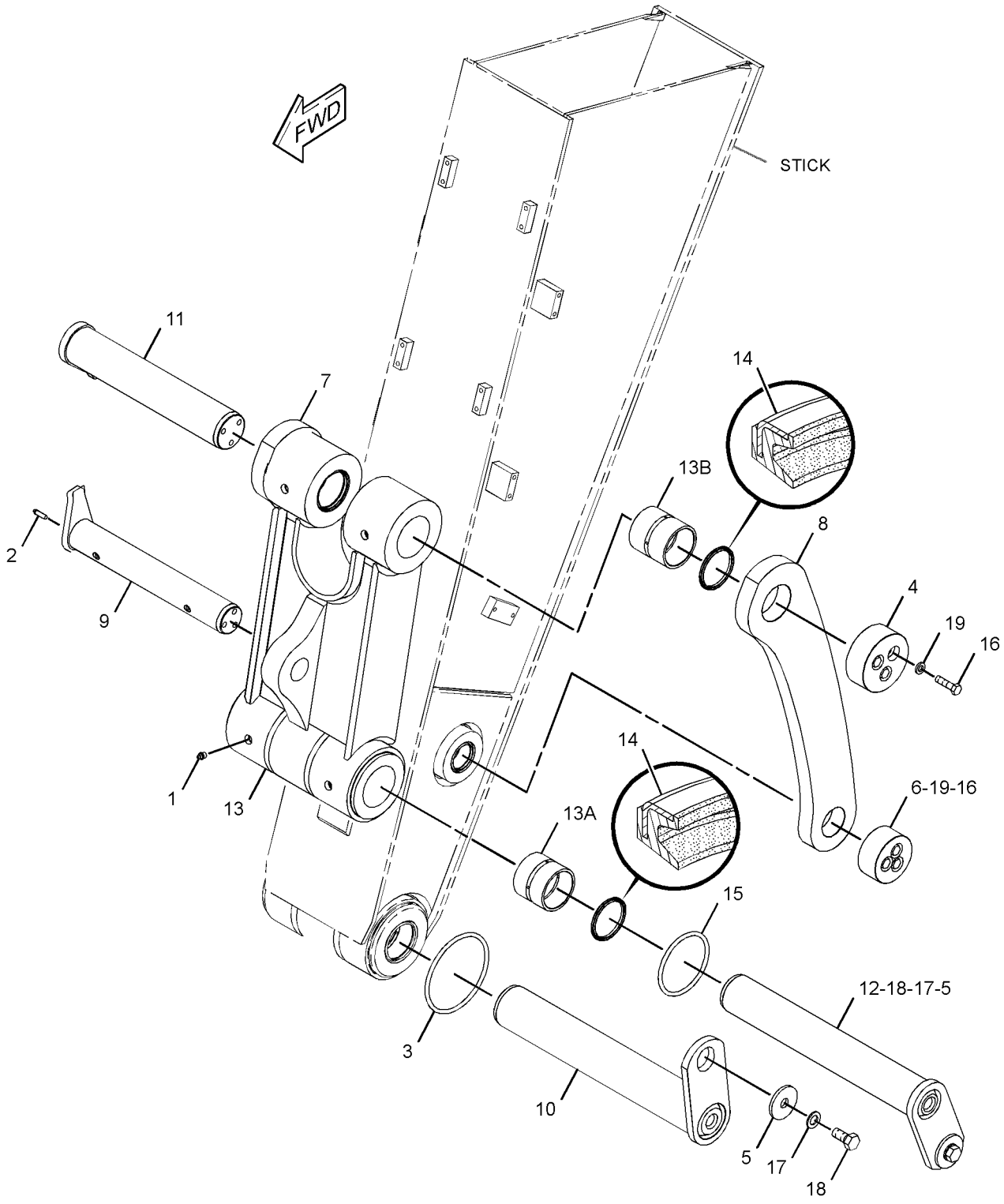

GRAPHIC #1 **<END>** g01955054

282-4566 LINKAGE GP-BUCKET—DB-FAMILY, ACCUGRADE READY

S/N: D3P1-UP; M4T1-UP
PART OF 290-1830 LINKAGE AR-BUCKET
AN ATTACHMENT

SMCS-6513 **i02830908**

NOTE	REF NO	GRAPHIC REF	PART NUMBER	QTY	PART NAME 1 2 3 4 5 6 (PRODUCT LEVEL)	SEE PAGE
	1	1	**3B-8489**	5	FITTING-GREASE	
	2	1	**093-0349**	1	WASHER (22X60X6-MM THK)	
	3	1	**166-1496**	4	SEAL-LIP TYPE	
	4	1	**189-3922**	1	PIN	
	5	1	**201-2771**	1	WASHER (26X90X8-MM THK)	
M	6	1	**201-2836**	1	BOLT (M24X3X200-MM)	
	7	1	**241-7129**	1	LINK	
	8	1	**282-4567**	1	LINK AS-BUCKET	
	9	1	**251-2552**	1	PIN AS	
	10	1	**251-2557**	1	PIN	
	11	1	**251-2558**	1	PIN AS	
	12	1	**254-3025**	1	LINK & BEARING AS	
	12A	1	**228-5615**	2	BEARING-SLEEVE	
	12B	1	**241-7280**	2	BEARING-SLEEVE	
	13	1	**093-1345**	2	SEAL-O-RING	
	14	1	**093-1349**	2	SEAL-O-RING	
	15	1	**166-1488**	2	SHIM (2-MM THK)	
	16	1	**166-1495**	2	SEAL-LIP TYPE	
M	17	1	**186-5649**	1	BOLT (M20X2.5X160-MM)	
M	18	1	**8T-4001**	2	NUT (M24X3-THD)	
	19	1	**8T-4123**	1	WASHER (22X35X3.5-MM THK)	
M	20	1	**8T-4131**	2	NUT (M20X2.5-THD)	
	21	1	**8T-4167**	1	WASHER-HARD (26X44X4-MM THK)	
M	22	1	**8T-5379**	1	BOLT (M24X3X50-MM)	
M	23	1	**8T-5460**	1	BOLT (M20X2.5X40-MM)	

M-METRIC PART

282-4566 **LINKAGE GP-BUCKET** *(contd.)* **i02830908**

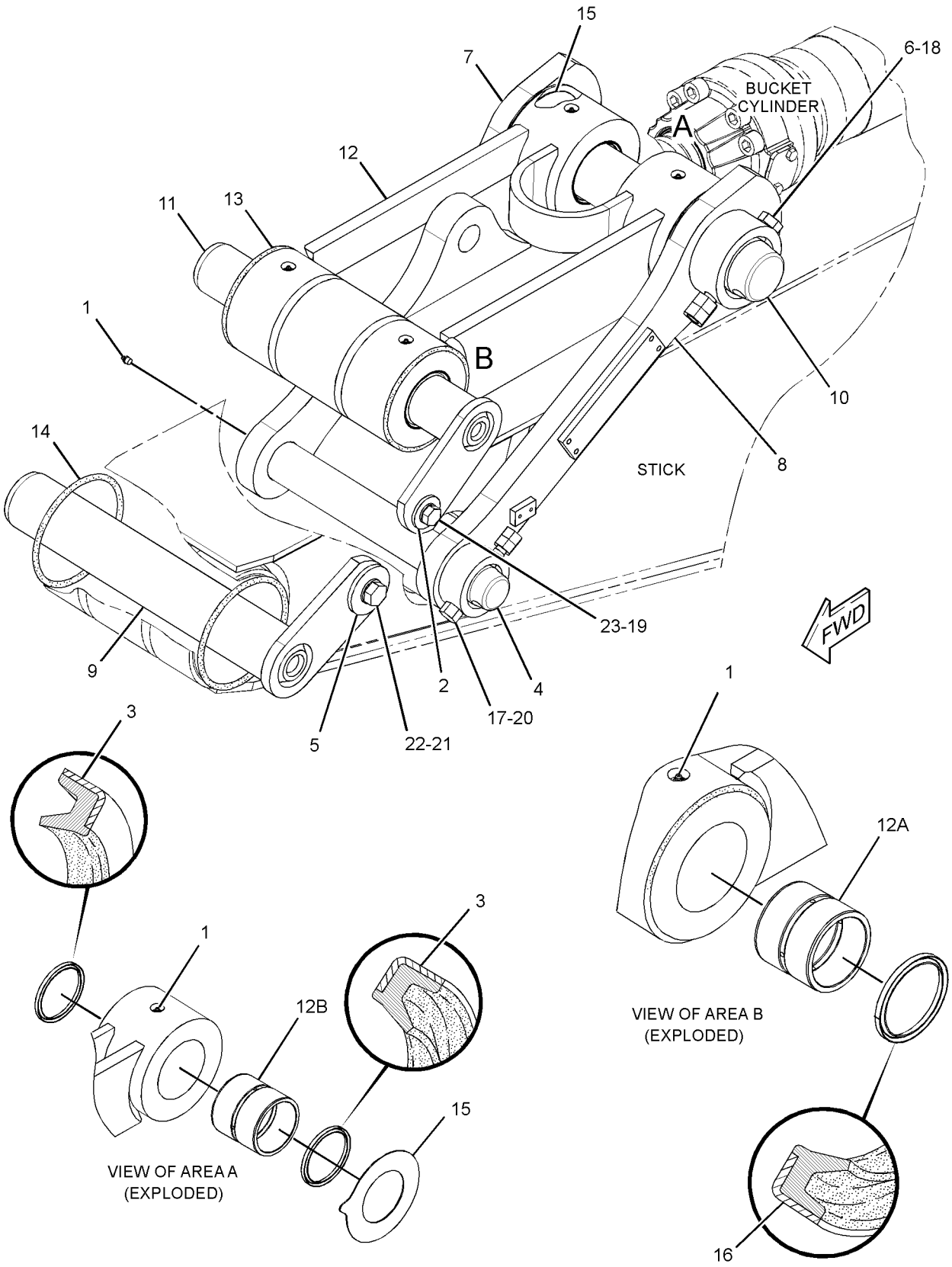

GRAPHIC #1 **<END>** g01437792

287-2918 LINKAGE GP-BUCKET

S/N: D3P1-UP; M4T1-UP
PART OF 287-2919 GUARD AR-CYLINDER
AN ATTACHMENT

SMCS-6513 **i03680726**

NOTE	REF NO	GRAPHIC REF	PART NUMBER	QTY	PART NAME 1 2 3 4 5 6 (PRODUCT LEVEL)	SEE PAGE
	1	1	**251-0677**	1	BOSS	
	2	1	**256-0985**	1	PIN AS	
	3	1	**256-0987**	1	BOSS	
M	4	1	**8T-4140**	3	BOLT (M16X2X60-MM)	
M	5	1	**8C-8723**	1	BOLT (M30X3.5X80-MM)	
	6	1	**9X-8257**	3	WASHER (17.5X30X3.5-MM THK)	
	7	1	**9X-8258**	1	WASHER (33X56X6-MM THK)	

M-METRIC PART

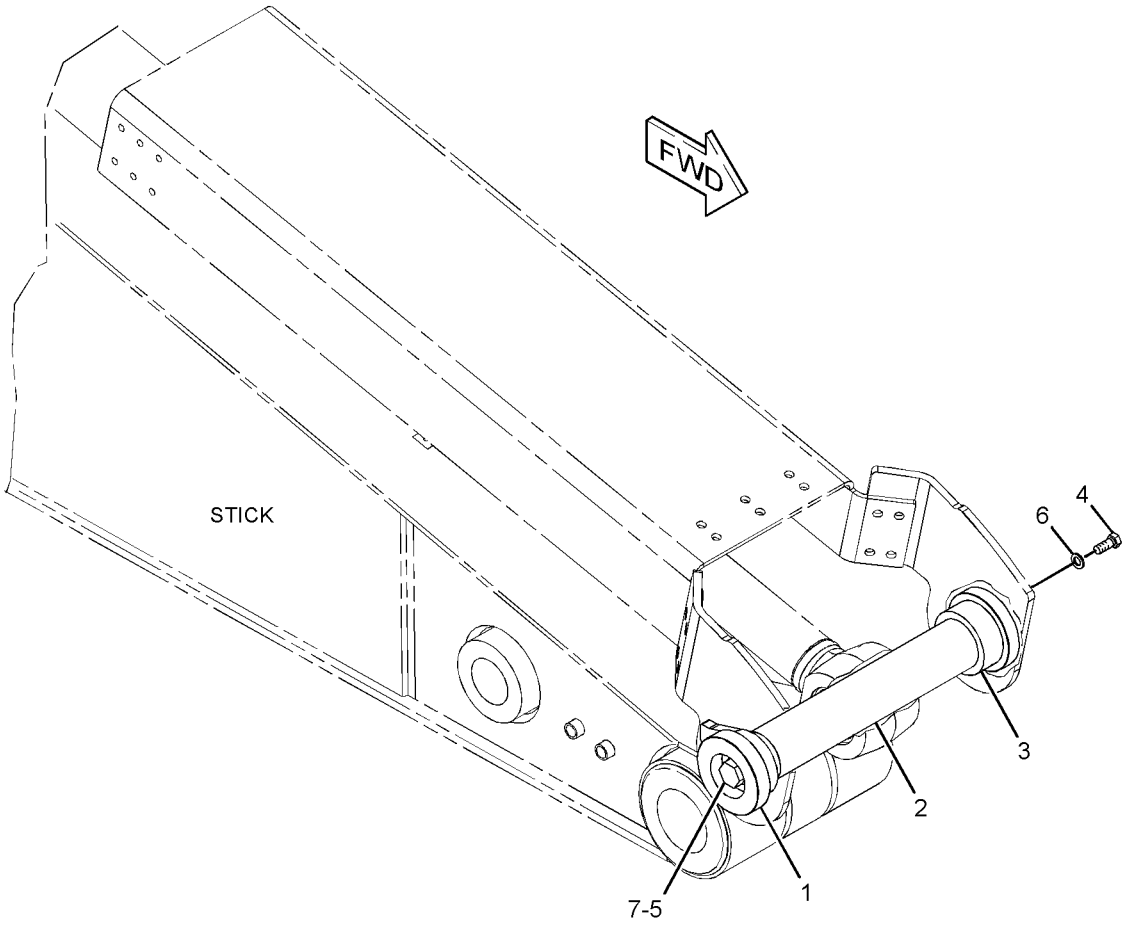

GRAPHIC #1 **<END>** g01398100

270-0090 STICK AR—AUX HYD, QUICK COUPLER

S/N: D3P1-UP; M4T1-UP
2.15-M (7.1-FT). TB-FAMILY
PART OF 337-4117, 337-4119 OPTION AR-LINKAGE
AN ATTACHMENT

SMCS-6502 **i02764426**

NOTE	PART NUMBER	QTY	PART NAME 1 2 3 4 5 6 (PRODUCT LEVEL)	SEE PAGE
Y	*260-8254*	1	LINES GP-STICK (BUCKET CYLINDER)	684
Y	*270-0091*	1	STICK GP-HOE	873

Y-SEPARATE ILLUSTRATION

<END>

272-2896 STICK AR—AUX HYD, QUICK COUPLER

S/N: D3P1-UP; M4T1-UP
2.55-M (8.4-FT). TB-FAMILY
PART OF 337-4118, 337-4120 OPTION AR-LINKAGE
AN ATTACHMENT

SMCS-6502 **i02567595**

NOTE	PART NUMBER	QTY	PART NAME 1 2 3 4 5 6 (PRODUCT LEVEL)	SEE PAGE
Y	*113-6859*	1	LINES GP-STICK (BUCKET CYLINDER)	682
Y	*272-2897*	1	STICK GP-HOE	875

Y-SEPARATE ILLUSTRATION

<END>

290-1819 STICK AR-HOE—AUX HYD, QUICK COUPLER

S/N: D3P1-UP; M4T1-UP
3.9-M (12.8-FT). DB-FAMILY
PART OF 337-4153, 345-2286 OPTION AR-LINKAGE
AN ATTACHMENT

SMCS-6502 **i02830967**

NOTE	PART NUMBER	QTY	PART NAME 1 2 3 4 5 6 (PRODUCT LEVEL)	SEE PAGE
Y	*113-6851*	1	LINES GP-STICK (BUCKET CYLINDER)	680
Y	*290-9251*	1	STICK GP-HOE	877

Y-SEPARATE ILLUSTRATION

<END>

290-1820 STICK AR-HOE—AUX HYD, QUICK COUPLER

S/N: D3P1-UP; M4T1-UP
3.2-M (10.5-FT). DB-FAMILY
PART OF 337-4116, 345-2282, 345-2283 OPTION AR-LINKAGE
AN ATTACHMENT

SMCS-6502 **i02830959**

NOTE	PART NUMBER	QTY	PART NAME 1 2 3 4 5 6 (PRODUCT LEVEL)	SEE PAGE
Y	*113-6853*	1	LINES GP-STICK (BUCKET CYLINDER)	681
Y	*290-9263*	1	STICK GP-HOE	878

Y-SEPARATE ILLUSTRATION

<END>

290-1821 STICK AR-HOE—REACH

S/N: M4T1-UP
2.8-M (9.2-FT). DB-FAMILY
PART OF 345-2284, 345-2285 OPTION AR-LINKAGE
AN ATTACHMENT

SMCS-6502 **i03730634**

NOTE	PART NUMBER	QTY	PART NAME 1 2 3 4 5 6 (PRODUCT LEVEL)	SEE PAGE
Y	*192-6901*	1	LINES GP-STICK (BUCKET CYLINDER)	683
Y	*290-9275*	1	STICK GP-HOE (REACH)	879

Y-SEPARATE ILLUSTRATION

<END>

290-1823 STICK AR-HOE—COUPLER

S/N: M4T1-UP
2.6-M (8.4-FT) MASS. TB-FAMILY
PART OF 340-9478, 340-9479 OPTION AR-LINKAGE
AN ATTACHMENT

SMCS-6502 **i03729561**

NOTE	PART NUMBER	QTY	PART NAME 1 2 3 4 5 6 (PRODUCT LEVEL)	SEE PAGE
Y	*113-6859*	1	LINES GP-STICK (BUCKET CYLINDER)	682
Y	*290-9287*	1	STICK GP-HOE (MASS)	881

Y-SEPARATE ILLUSTRATION

<END>

290-1824 STICK AR-HOE—MASS

S/N: M4T1-UP
2.2-M (7.1-FT). TB1-FAMILY, QUICK COUPLER
PART OF 340-9480, 340-9481 OPTION AR-LINKAGE
AN ATTACHMENT

SMCS-6502 **i03731744**

NOTE	PART NUMBER	QTY	PART NAME 1 2 3 4 5 6 (PRODUCT LEVEL)	SEE PAGE
Y	*260-8254*	1	LINES GP-STICK (BUCKET CYLINDER)	684
Y	*290-9318*	1	STICK GP-HOE	883

Y-SEPARATE ILLUSTRATION

<END>

290-1828 STICK AR-HOE

S/N: D3P1-UP; M4T1-UP
AN ATTACHMENT

SMCS-6502 **i03166307**

NOTE	PART NUMBER	QTY	PART NAME 1 2 3 4 5 6 (PRODUCT LEVEL)	SEE PAGE
Y	*113-6851*	1	LINES GP-STICK (BUCKET CYLINDER)	680
Y	*294-1504*	1	STICK GP-HOE	885

Y-SEPARATE ILLUSTRATION

<END>

290-1829 STICK AR-HOE—REACH, ACCUGRADE READY

S/N: D3P1-UP; M4T1-UP
3.2-M (10.4-FT)
PART OF 337-4154 OPTION AR-LINKAGE
FOR USE WITH 290-1830—PAGE 862
AN ATTACHMENT

SMCS-6502 **i03166341**

NOTE	PART NUMBER	QTY	PART NAME 1 2 3 4 5 6 (PRODUCT LEVEL)	SEE PAGE
Y	*113-6853*	1	LINES GP-STICK (BUCKET CYLINDER)	681
Y	*294-1507*	1	STICK GP-HOE	886

Y-SEPARATE ILLUSTRATION

<END>

270-0091 STICK GP-HOE—AUXILIARY, COUPLER

S/N: D3P1-UP; M4T1-UP
2.15-M (7.1-FT)
PART OF 270-0090 STICK AR
AN ATTACHMENT

SMCS-6502 **i02567598**

NOTE	REF NO	GRAPHIC REF	PART NUMBER	QTY	PART NAME 1 2 3 4 5 6 (PRODUCT LEVEL)	SEE PAGE
	1	1	**3B-8489**	4	FITTING-GREASE	
	2	1	**093-0349**	2	WASHER (22X60X6-MM THK)	
	3	1	**166-1494**	2	SEAL-LIP TYPE	
	4	1	**166-1487**	2	SHIM (2-MM THK)	
	5	1	**9X-4598**	2	SEAL-LIP TYPE	
	6	1	**191-3180**	2	PIN AS	
	7	1	**270-0092**	1	STICK & BEARING AS	
	7A	1	**228-5619**	2	BEARING-SLEEVE	
	7B	1	**4I-6897**	2	BEARING-SLEEVE	
	7C	1	**236-8561**	2	BEARING-SLEEVE	
	8	1	**201-3003**	2	SPACER (92X160X7-MM THK)	
	9	1	**093-0366**	2	SPACER (93X130X12-MM THK)	
	10	1	**166-1498**	2	SEAL-LIP TYPE	
	11	1	**8T-4123**	2	WASHER (22X35X3.5-MM THK)	
M	12	1	**8T-4780**	2	BOLT (M20X2.5X30-MM)	

M-METRIC PART

270-0091 **STICK GP-HOE** *(contd.)* **i02567598**

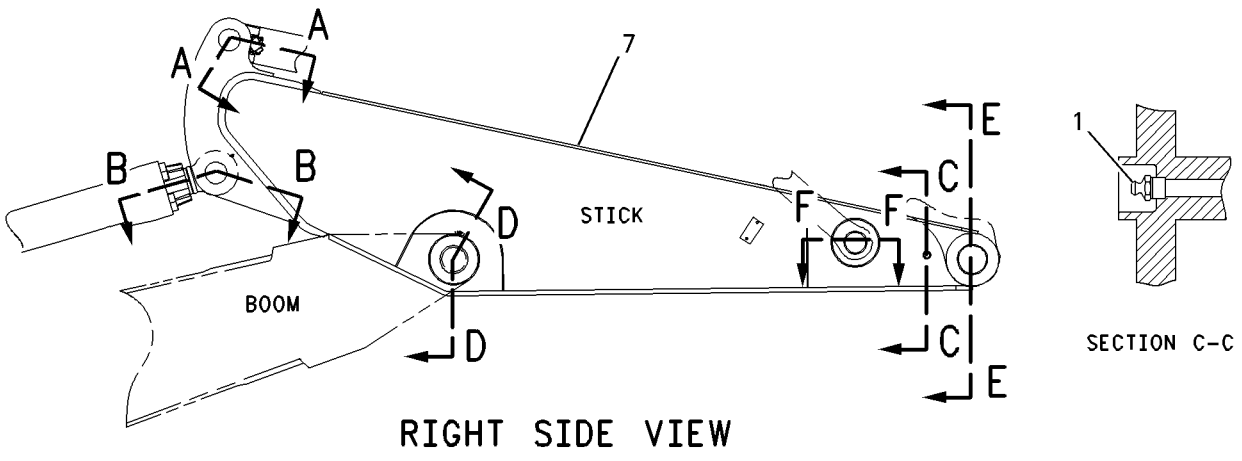

RIGHT SIDE VIEW

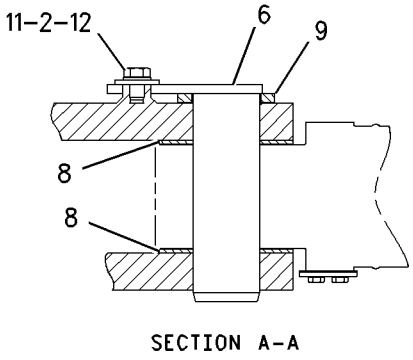

SECTION A-A

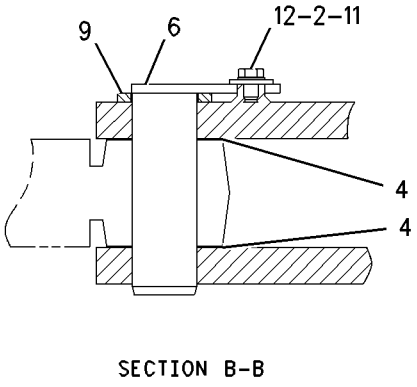

SECTION B-B

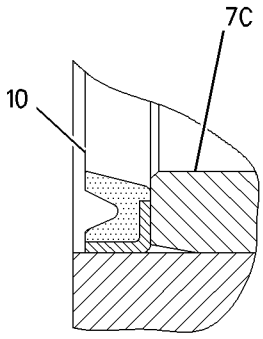

VIEW OF AREA G

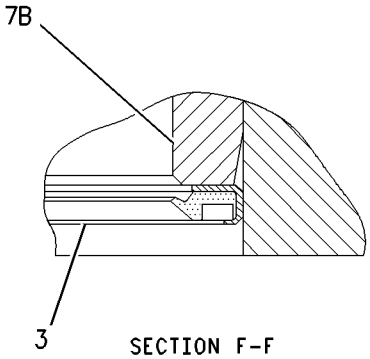

SECTION F-F

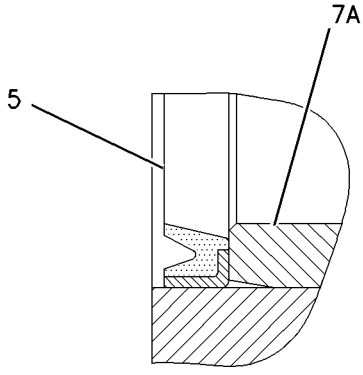

SECTION E-E

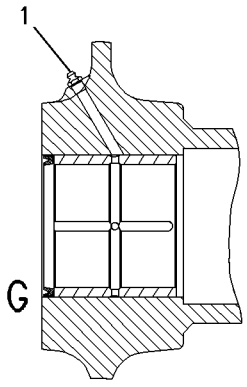

SECTION D-D

GRAPHIC #1 **<END>** g00838681

272-2897 STICK GP-HOE—AUXILIARY, COUPLER

S/N: D3P1-UP; M4T1-UP
2.55-M (8.4-FT)
PART OF 272-2896 STICK AR
AN ATTACHMENT

SMCS-6502 **i02567596**

NOTE	REF NO	GRAPHIC REF	PART NUMBER	QTY	PART NAME 1 2 3 4 5 6 (PRODUCT LEVEL)	SEE PAGE
	1	1	**3B-8489**	4	FITTING-GREASE	
	2	1	**9X-4598**	2	SEAL-LIP TYPE	
	3	1	**093-0349**	2	WASHER (22X60X6-MM THK)	
	4	1	**191-3180**	2	PIN AS	
	5	1	**201-3003**	2	SPACER (92X160X7-MM THK)	
	6	1	**272-2898**	1	STICK & BEARING AS	
	6A	1	**4I-6897**	2	BEARING-SLEEVE	
	6B	1	**228-5619**	2	BEARING-SLEEVE	
	6C	1	**236-8561**	2	BEARING-SLEEVE	
	7	1	**093-0366**	2	SPACER (93X130X12-MM THK)	
	8	1	**166-1487**	2	SHIM (2-MM THK)	
	9	1	**166-1494**	2	SEAL-LIP TYPE	
	10	1	**166-1498**	2	SEAL-LIP TYPE	
	11	1	**8T-4123**	2	WASHER (22X35X3.5-MM THK)	
M	12	1	**8T-4780**	2	BOLT (M20X2.5X30-MM)	

M-METRIC PART

272-2897 **STICK GP-HOE** *(contd.)* **i02567596**

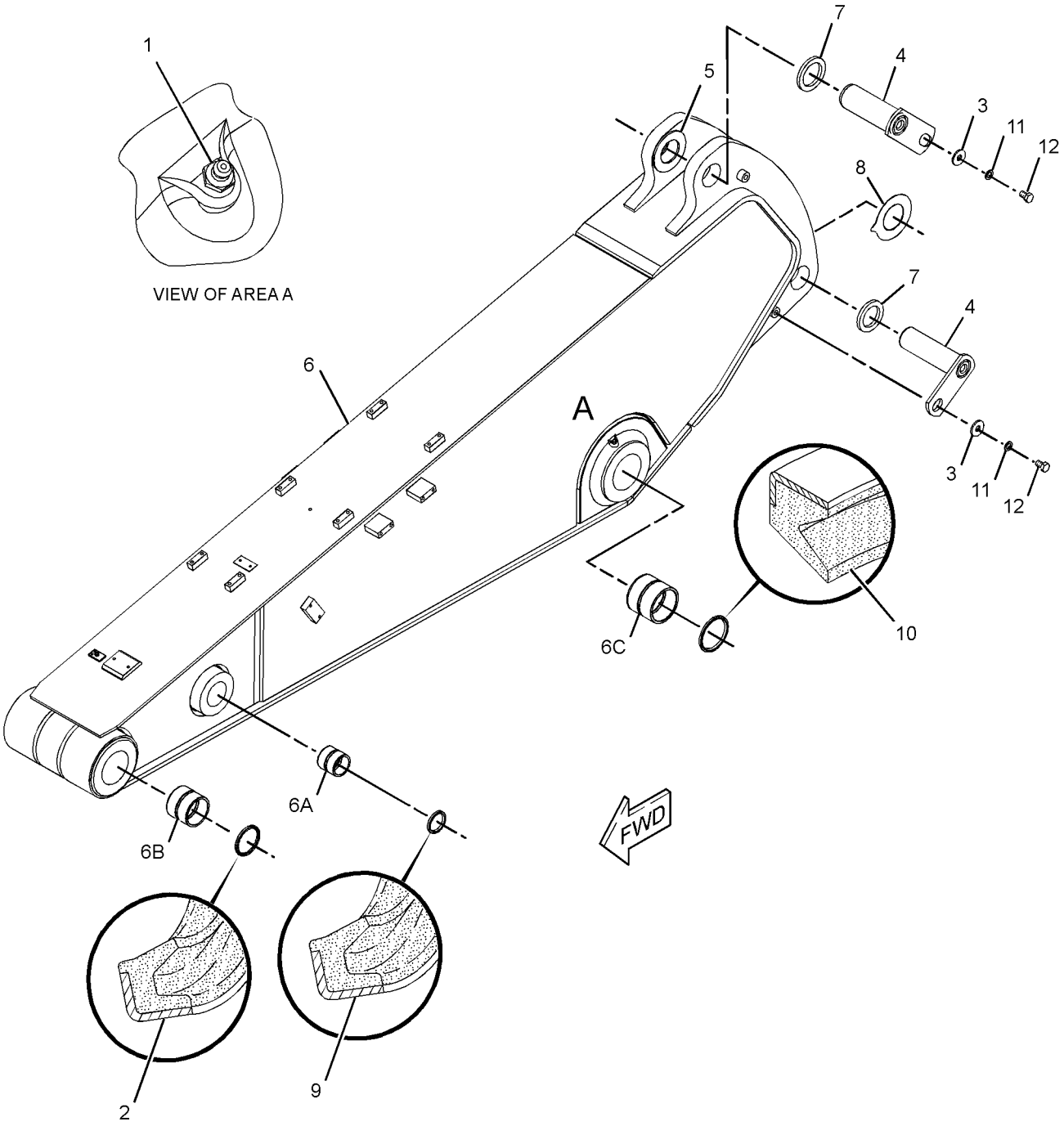

GRAPHIC #1 **<END>** g01198593

290-9251 STICK GP-HOE—AUXILIARY, COUPLER

S/N: D3P1-UP; M4T1-UP
3.9-M (12.8-FT)
PART OF 290-1819 STICK AR-HOE
AN ATTACHMENT

SMCS-6502 **i02830968**

NOTE	REF NO	GRAPHIC REF	PART NUMBER	QTY	PART NAME 1 2 3 4 5 6 (PRODUCT LEVEL)	SEE PAGE
	1	1	**3B-8489**	3	FITTING-GREASE	
	2	1	**5I-3299**	1	PIN AS	
	3	1	**093-0349**	2	WASHER (22X60X6-MM THK)	
	4	1	**093-0363**	1	SPACER (83X120X12-MM THK)	
	5	1	**166-1496**	2	SEAL-LIP TYPE	
	6	1	**235-7679**	2	SEAL-LIP TYPE	
	7	1	**290-9252**	1	STICK & BEARING AS	
	7A	1	**228-5617**	2	BEARING-SLEEVE	
	7B	1	**236-8561**	2	BEARING-SLEEVE	
	7C	1	**241-7231**	2	BEARING-SLEEVE	
	8	1	**093-0366**	1	SPACER (93X130X12-MM THK)	
	9	1	**113-2963**	1	PIN AS	
	10	1	**166-1487**	2	SHIM (2-MM THK)	
	11	1	**166-1498**	2	SEAL-LIP TYPE	
	12	1	**8T-4123**	2	WASHER (22X35X3.5-MM THK)	
M	13	1	**8T-4780**	2	BOLT (M20X2.5X30-MM)	

M-METRIC PART

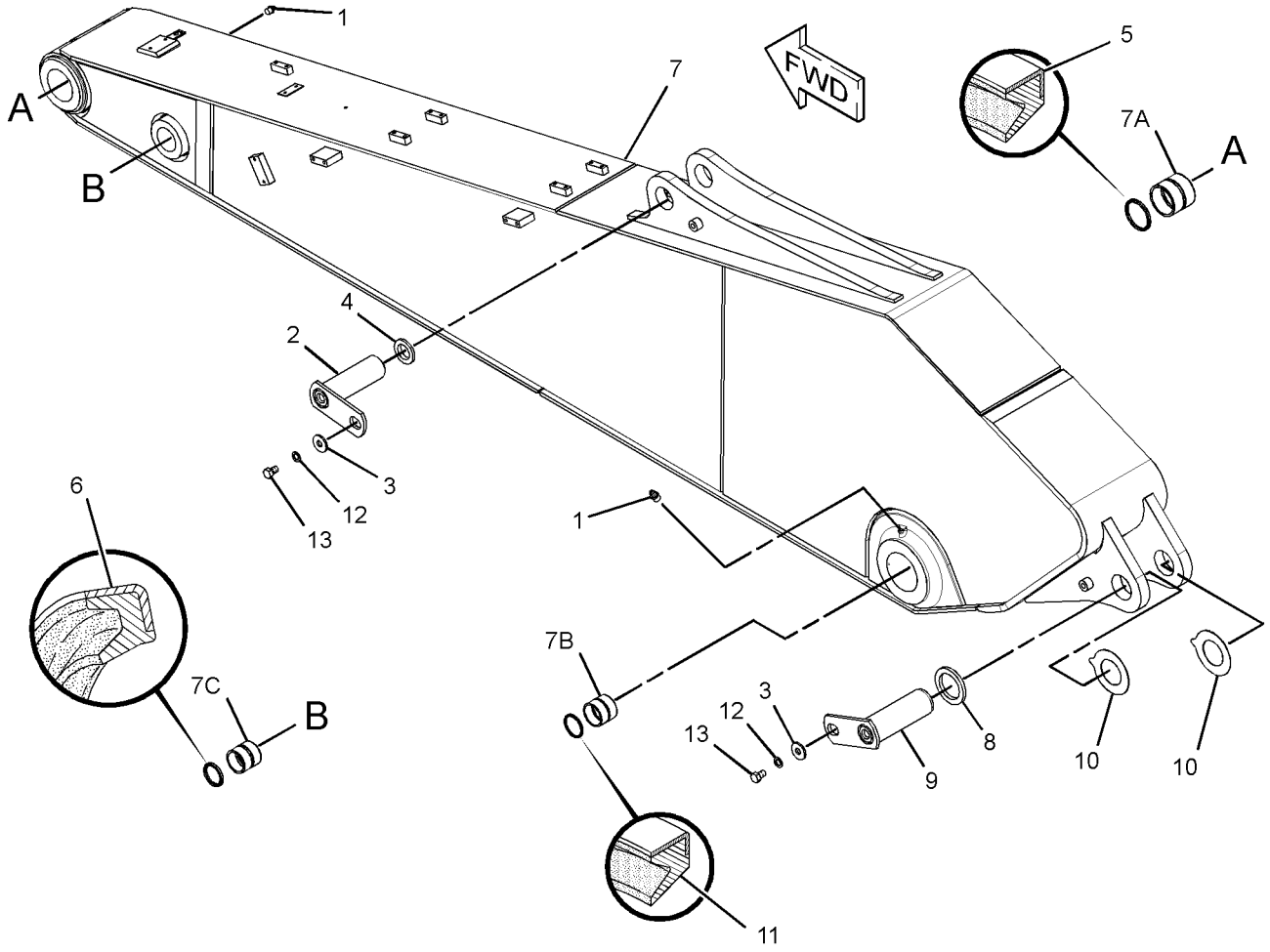

GRAPHIC #1 **<END>** g01427686

290-9263 STICK GP-HOE—AUXILIARY, COUPLER

S/N: D3P1-UP; M4T1-UP
3.2-M (10.5-FT)
PART OF 290-1820 STICK AR-HOE
AN ATTACHMENT

SMCS-6502 **i02830963**

NOTE	REF NO	GRAPHIC REF	PART NUMBER	QTY	PART NAME 1 2 3 4 5 6 (PRODUCT LEVEL)	SEE PAGE
	1	1	**3B-8489**	3	FITTING-GREASE	
	2	1	**5I-3299**	1	PIN AS	
	3	1	**093-0349**	2	WASHER (22X60X6-MM THK)	
	4	1	**093-0363**	1	SPACER (83X120X12-MM THK)	
	5	1	**166-1496**	2	SEAL-LIP TYPE	
	6	1	**235-7679**	2	SEAL-LIP TYPE	
	7	1	**290-9264**	1	STICK & BEARING AS	
	7A	1	**228-5617**	2	BEARING-SLEEVE	
	7B	1	**236-8561**	2	BEARING-SLEEVE	
	7C	1	**241-7231**	2	BEARING-SLEEVE	
	8	1	**093-0366**	1	SPACER (93X130X12-MM THK)	
	9	1	**113-2963**	1	PIN AS	
	10	1	**166-1487**	2	SHIM (2-MM THK)	
	11	1	**166-1498**	2	SEAL-LIP TYPE	
	12	1	**8T-4123**	2	WASHER (22X35X3.5-MM THK)	
M	13	1	**8T-4780**	2	BOLT (M20X2.5X30-MM)	

M-METRIC PART

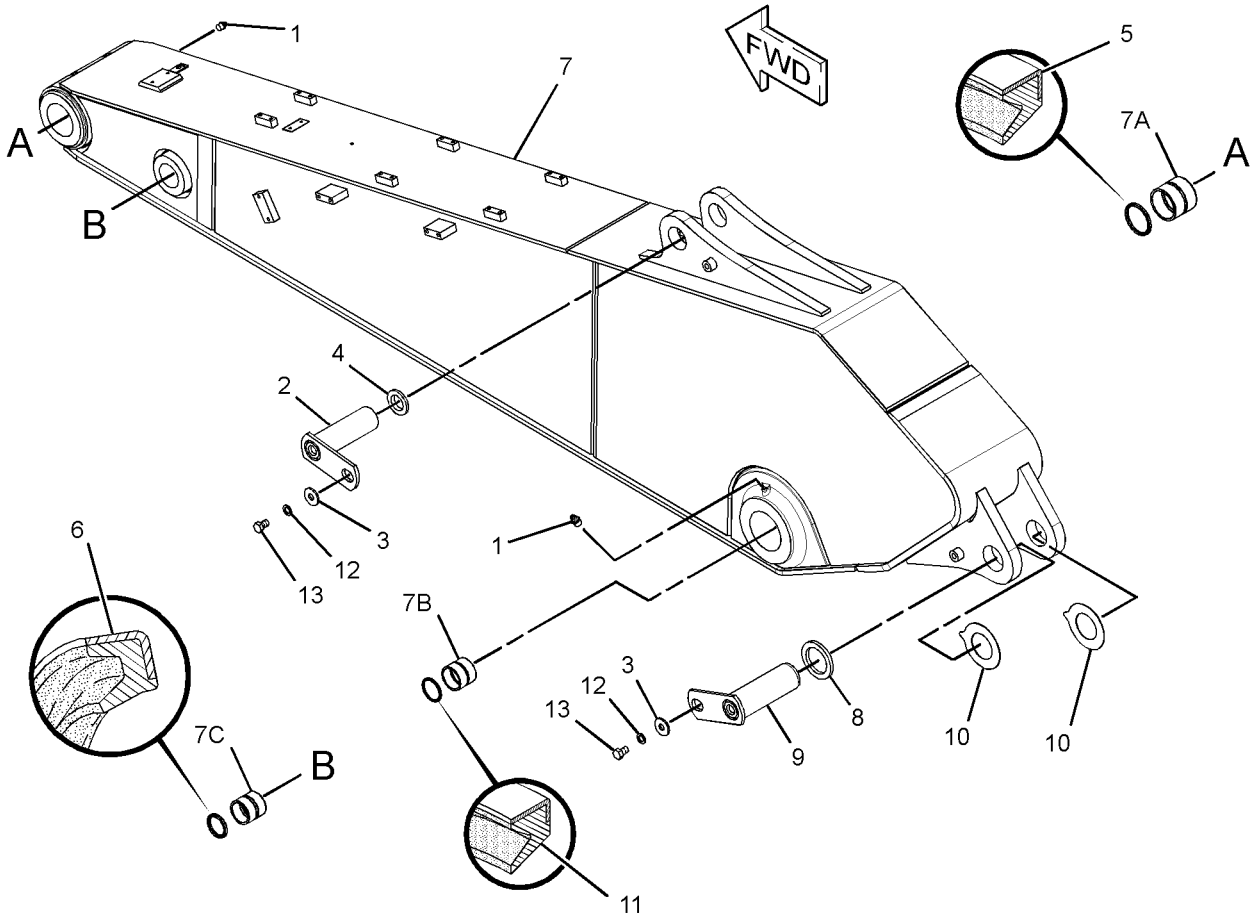

GRAPHIC #1 **<END>** g01427692

290-9275 STICK GP-HOE–REACH

S/N: M4T1-UP
2.8-M (9.2-FT). DB-FAMILY
PART OF 290-1821 STICK AR-HOE
AN ATTACHMENT

SMCS-6502 **i03730721**

NOTE	REF NO	GRAPHIC REF	PART NUMBER	QTY	PART NAME 1 2 3 4 5 6 (PRODUCT LEVEL)	SEE PAGE
	1	1	**3B-8489**	3	FITTING-GREASE	
	2	1	**5I-3299**	1	PIN AS	
	3	1	**093-0349**	2	WASHER (22X60X6-MM THK)	
	4	1	**093-0363**	1	SPACER (83X120X12-MM THK)	
	5	1	**166-1496**	2	SEAL-LIP TYPE	
	6	1	**235-7679**	2	SEAL-LIP TYPE	
	7	1	**290-9276**	1	STICK & BEARING AS	
	7A	1	**241-7231**	2	BEARING-SLEEVE	
	7B	1	**228-5621**	2	BEARING-SLEEVE	
	7C	1	**228-5617**	2	BEARING-SLEEVE	
	8	1	**093-0366**	1	SPACER (93X130X12-MM THK)	
	9	1	**113-2963**	1	PIN AS	
	10	1	**166-1487**	2	SHIM (2-MM THK)	
	11	1	**166-1498**	2	SEAL-LIP TYPE	
	12	1	**8T-4123**	2	WASHER (22X35X3.5-MM THK)	
M	13	1	**8T-4780**	2	BOLT (M20X2.5X30-MM)	

M-METRIC PART

290-9275 **STICK GP-HOE** *(contd.)* **i03730721**

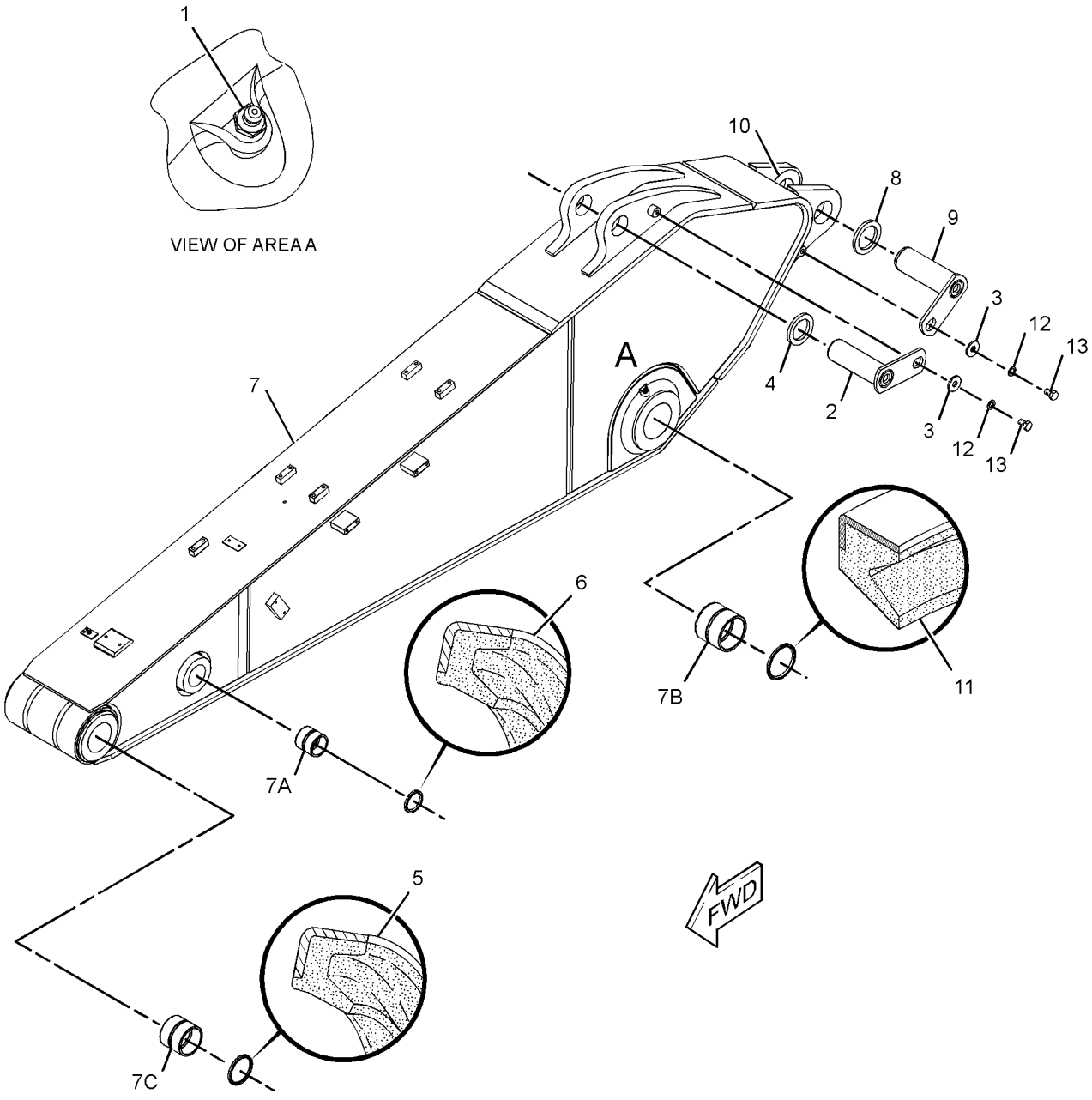

GRAPHIC #1 **<END>** g01198647

290-9287 STICK GP-HOE—MASS

S/N: M4T1-UP
2.6-M (8.4-FT). TB1-FAMILY, QUICK COUPLER
PART OF 290-1823 STICK AR-HOE
AN ATTACHMENT

SMCS-6502 **i03729600**

NOTE	REF NO	GRAPHIC REF	PART NUMBER	QTY	PART NAME 1 2 3 4 5 6 (PRODUCT LEVEL)	SEE PAGE
	1	1	**3B-8489**	4	FITTING-GREASE	
	2	1	**9X-4598**	2	SEAL-LIP TYPE	
	3	1	**093-0349**	2	WASHER (22X60X6-MM THK)	
	4	1	**148-3386**	2	PIN AS	
	5	1	**201-3003**	2	SPACER (92X160X7-MM THK)	
	6	1	**290-9288**	1	STICK & BEARING AS	
	6A	1	**4I-6897**	2	BEARING-SLEEVE	
	6B	1	**228-5619**	2	BEARING-SLEEVE	
	6C	1	**236-8561**	2	BEARING-SLEEVE	
	7	1	**093-0366**	2	SPACER (93X130X12-MM THK)	
	8	1	**166-1487**	2	SHIM (2-MM THK)	
	9	1	**166-1494**	2	SEAL-LIP TYPE	
	10	1	**166-1498**	2	SEAL-LIP TYPE	
	11	1	**8T-4123**	2	WASHER (22X35X3.5-MM THK)	
M	12	1	**8T-4780**	2	BOLT (M20X2.5X30-MM)	

M-METRIC PART

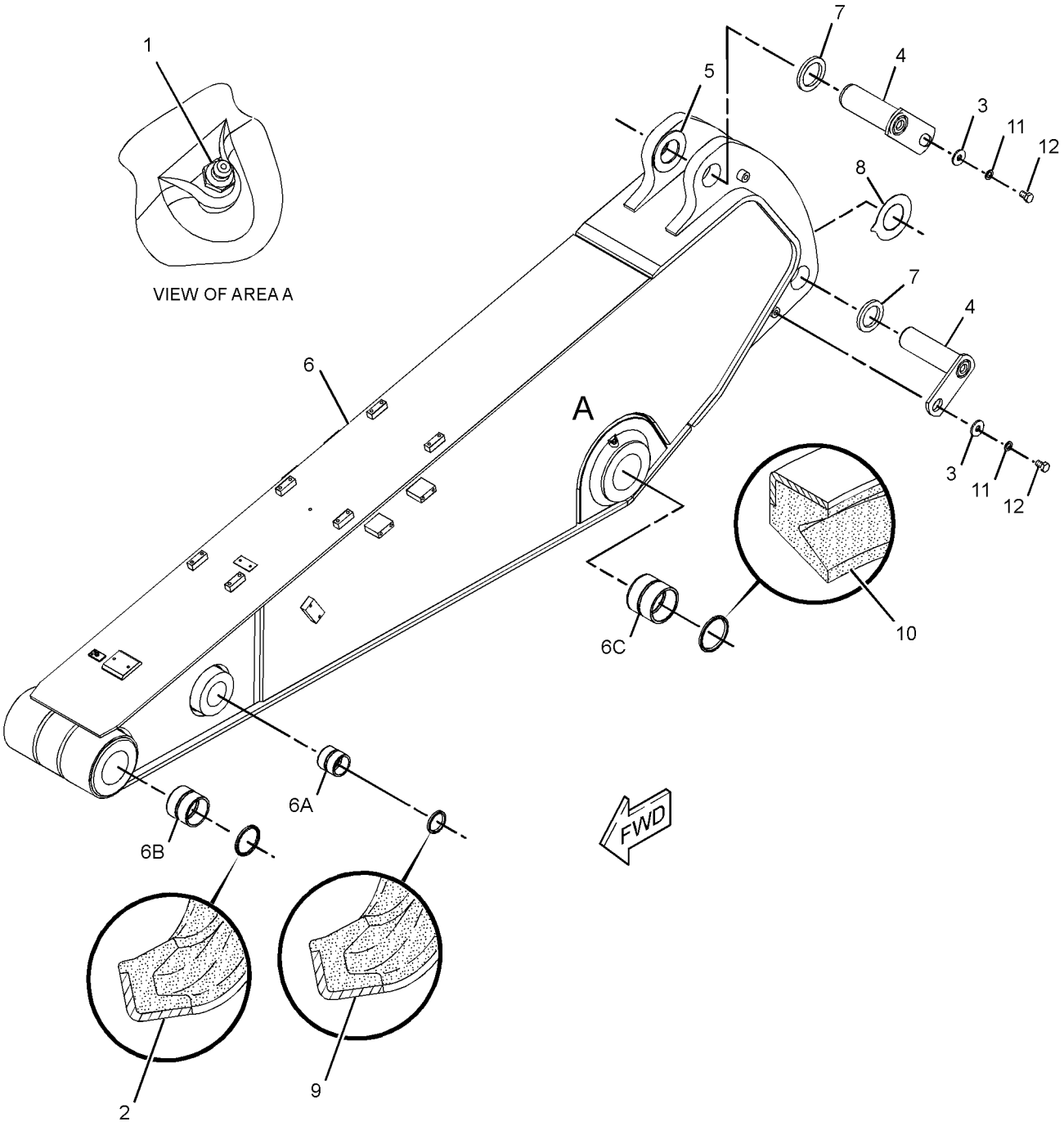

GRAPHIC #1 **<END>** g01198593

290-9318 STICK GP-HOE—MASS

S/N: M4T1-UP
2.2-M (7.1-FT). TB1-FAMILY, QUICK COUPLER
PART OF 290-1824 STICK AR-HOE
AN ATTACHMENT

SMCS-6502 **i03731841**

NOTE	REF NO	GRAPHIC REF	PART NUMBER	QTY	PART NAME 1 2 3 4 5 6 (PRODUCT LEVEL)	SEE PAGE
	1	1	**3B-8489**	4	FITTING-GREASE	
	2	1	**093-0349**	2	WASHER (22X60X6-MM THK)	
	3	1	**166-1494**	2	SEAL-LIP TYPE	
	4	1	**166-1487**	2	SHIM (2-MM THK)	
	5	1	**9X-4598**	2	SEAL-LIP TYPE	
	6	1	**148-3386**	2	PIN AS	
	7	1	**290-9319**	1	STICK & BEARING AS	
	7A	1	**228-5619**	2	BEARING-SLEEVE	
	7B	1	**4I-6897**	2	BEARING-SLEEVE	
	7C	1	**228-5621**	2	BEARING-SLEEVE	
	8	1	**201-3003**	2	SPACER (92X160X7-MM THK)	
	9	1	**093-0366**	2	SPACER (93X130X12-MM THK)	
	10	1	**166-1498**	2	SEAL-LIP TYPE	
	11	1	**8T-4123**	2	WASHER (22X35X3.5-MM THK)	
M	12	1	**8T-4780**	2	BOLT (M20X2.5X30-MM)	

M-METRIC PART

290-9318 **STICK GP-HOE** *(contd.)* **i03731841**

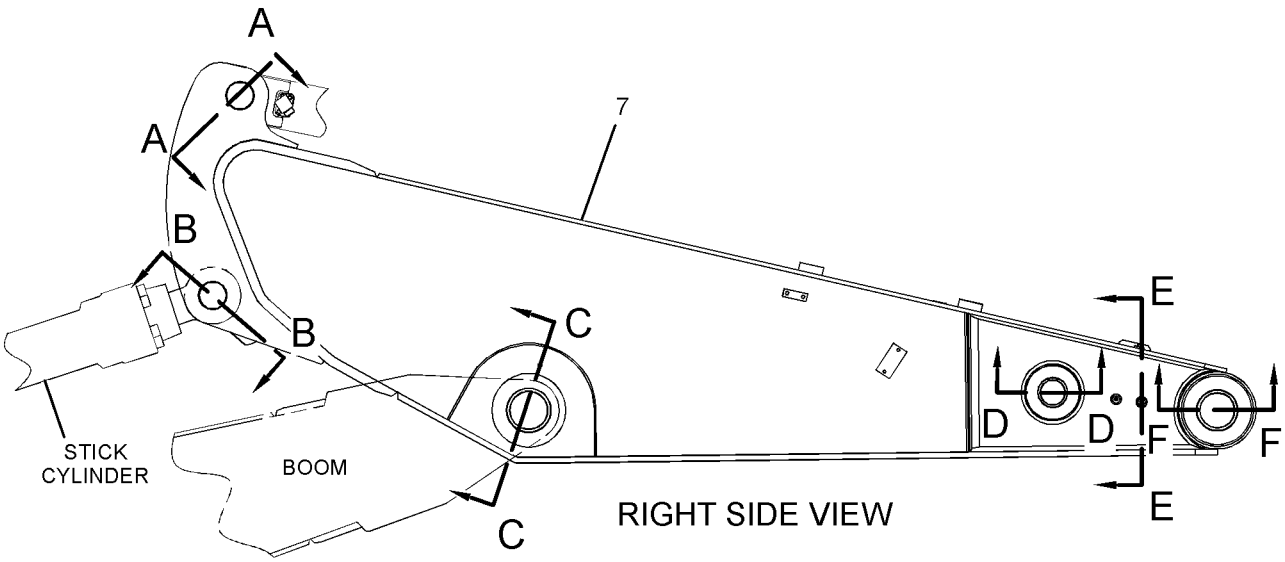

RIGHT SIDE VIEW

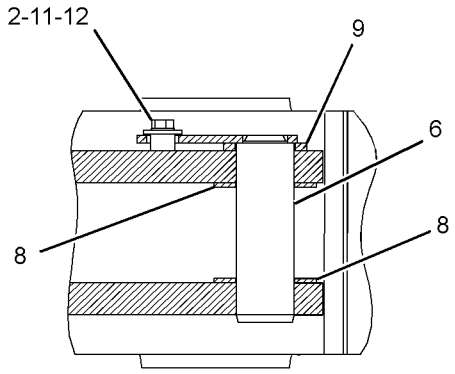

SECTION A-A

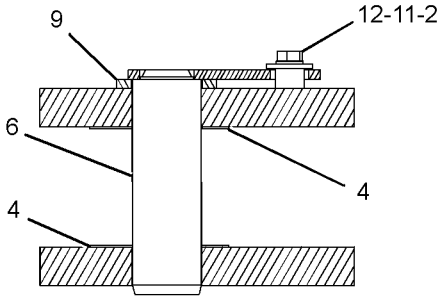

SECTION B-B

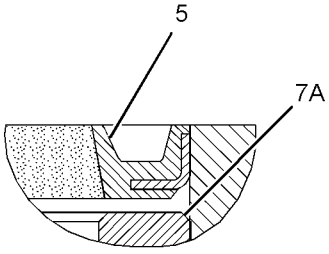

SECTION F-F

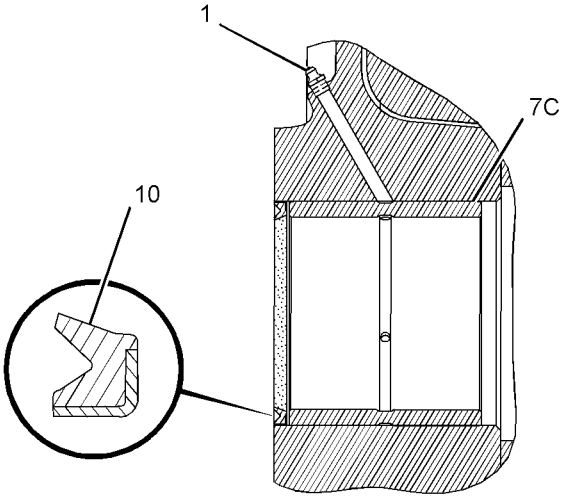

SECTION C-C

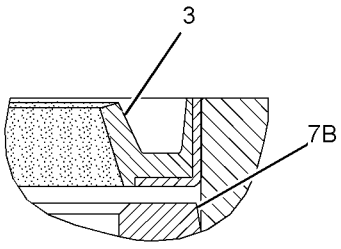

SECTION D-D

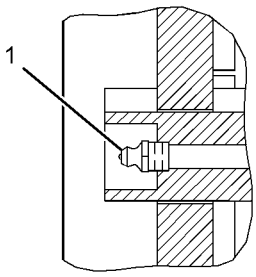

SECTION E-E

GRAPHIC #1 **<END>** g01343467

294-1504 STICK GP-HOE–ACCUGRADE READY

S/N: D3P1-UP; M4T1-UP
PART OF 290-1828 STICK AR-HOE
AN ATTACHMENT

SMCS-6502 **i03167549**

NOTE	REF NO	GRAPHIC REF	PART NUMBER	QTY	PART NAME 1 2 3 4 5 6 (PRODUCT LEVEL)	SEE PAGE
	1	1	**3B-8489**	3	FITTING-GREASE	
	2	1	**5I-3299**	1	PIN AS	
	3	1	**093-0349**	2	WASHER (22X60X6-MM THK)	
	4	1	**093-0363**	1	SPACER (83X120X12-MM THK)	
	5	1	**166-1496**	2	SEAL-LIP TYPE	
	6	1	**235-7679**	2	SEAL-LIP TYPE	
	7	1	**294-1505**	1	STICK & BEARING AS	
	7A	1	**228-5617**	2	BEARING-SLEEVE	
	7B	1	**236-8561**	2	BEARING-SLEEVE	
	7C	1	**241-7231**	2	BEARING-SLEEVE	
	8	1	**093-0366**	1	SPACER (93X130X12-MM THK)	
	9	1	**113-2963**	1	PIN AS	
	10	1	**166-1487**	2	SHIM (2-MM THK)	
	11	1	**166-1498**	2	SEAL-LIP TYPE	
	12	1	**8T-4123**	2	WASHER (22X35X3.5-MM THK)	
M	13	1	**8T-4780**	2	BOLT (M20X2.5X30-MM)	

M-METRIC PART

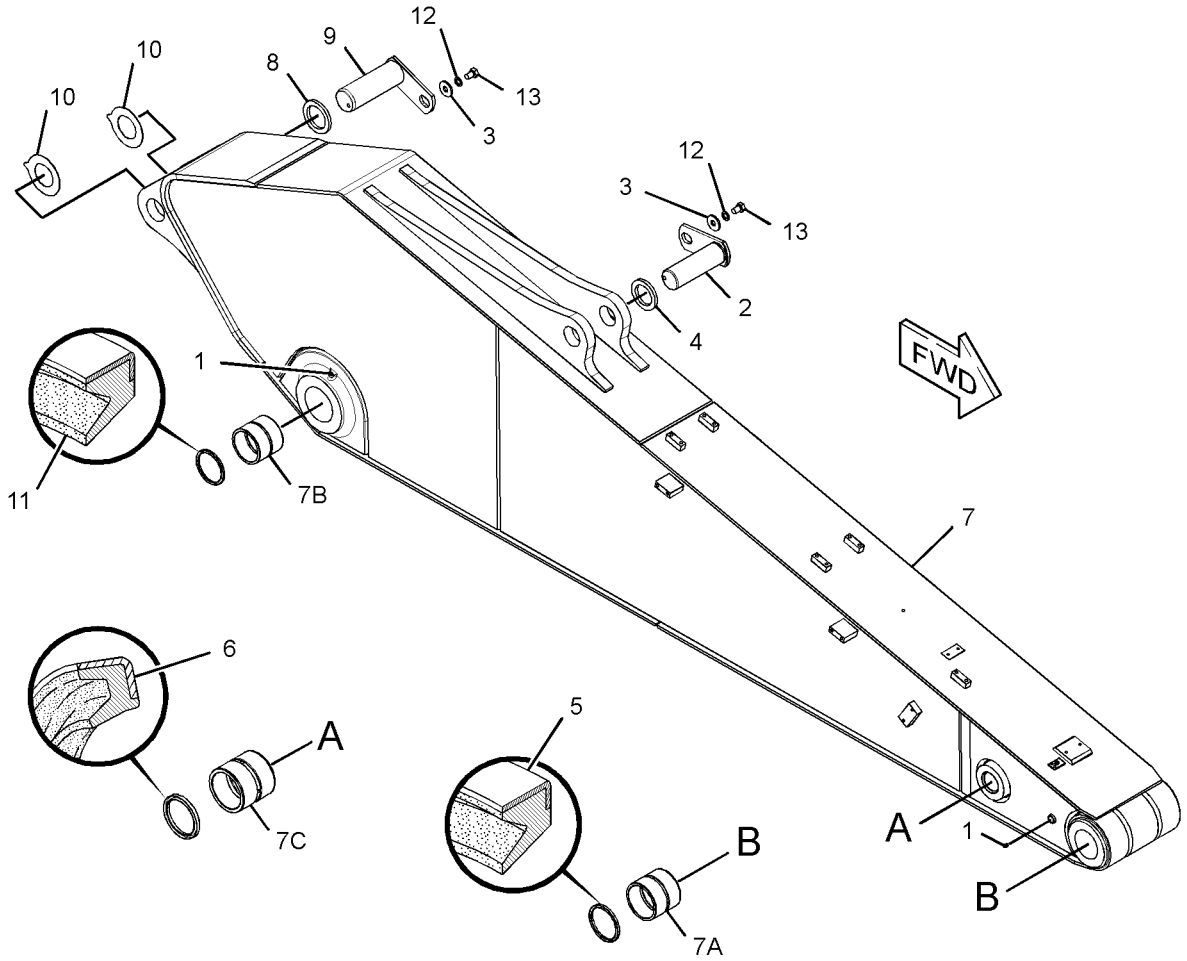

GRAPHIC #1 **<END>** g01376572

294-1507 STICK GP-HOE–ACCUGRADE

S/N: D3P1-UP; M4T1-UP
PART OF 290-1829 STICK AR-HOE
AN ATTACHMENT

SMCS-6502 **i03168800**

NOTE	REF NO	GRAPHIC REF	PART NUMBER	QTY	PART NAME 1 2 3 4 5 6 (PRODUCT LEVEL)	SEE PAGE
	1	1	**3B-8489**	3	FITTING-GREASE	
	2	1	**5I-3299**	1	PIN AS	
	3	1	**093-0349**	2	WASHER (22X60X6-MM THK)	
	4	1	**093-0363**	1	SPACER (83X120X12-MM THK)	
	5	1	**166-1496**	2	SEAL-LIP TYPE	
	6	1	**235-7679**	2	SEAL-LIP TYPE	
	7	1	**294-1508**	1	STICK & BEARING AS	
	7A	1	**228-5617**	2	BEARING-SLEEVE	
	7B	1	**236-8561**	2	BEARING-SLEEVE	
	7C	1	**241-7231**	2	BEARING-SLEEVE	
	8	1	**093-0366**	1	SPACER (93X130X12-MM THK)	
	9	1	**113-2963**	1	PIN AS	
	10	1	**166-1487**	2	SHIM (2-MM THK)	
	11	1	**166-1498**	2	SEAL-LIP TYPE	
	12	1	**8T-4123**	2	WASHER (22X35X3.5-MM THK)	
M	13	1	**8T-4780**	2	BOLT (M20X2.5X30-MM)	

M-METRIC PART

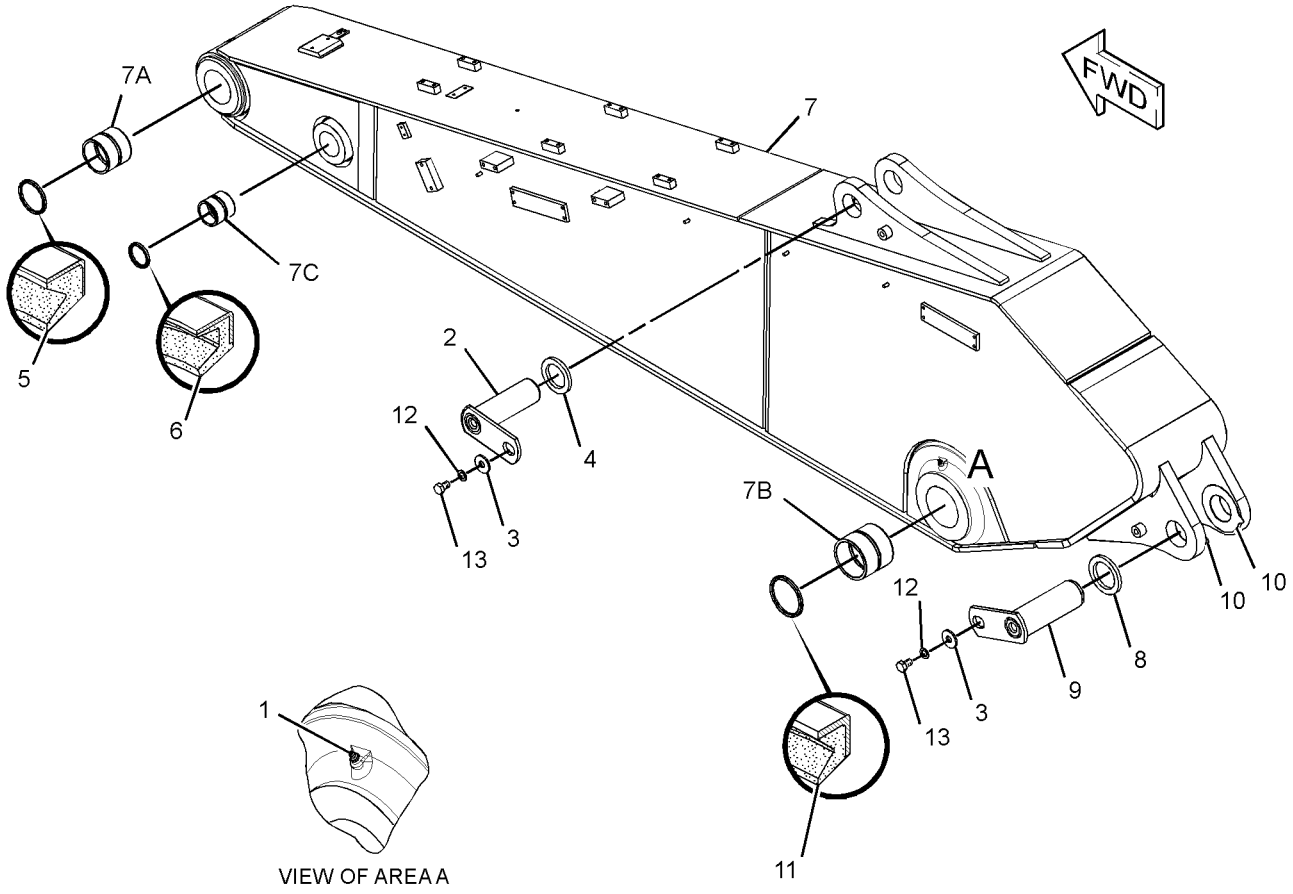

GRAPHIC #1 **<END>** g01371444

4I-4070 ADJUSTER GP-BUCKET–G/U/V/TB-FAMILY

S/N: D3P1-UP; M4T1-UP

PART OF 324-0057, 324-0177, 324-3632, 343-2083 BUCKET & ADJUSTER GP

AN ATTACHMENT

SMCS-6513, 6700 **i02504130**

NOTE	REF NO	GRAPHIC REF	PART NUMBER	QTY	PART NAME 1 2 3 4 5 6 (PRODUCT LEVEL)	SEE PAGE
	1	1	**4I-6626**	1	PIN	
	2	1	**134-8952**	1	PLATE	
	3	1	**250-6448**	1	FLANGE	
B	4	1	**4I-4039**	6	SHIM (1-MM THK)	
B	5	1	**4I-4043**	4	SHIM (0.5-MM THK)	
M	6	1	**7X-2563**	6	BOLT (M20X2.5X60-MM)	
	7	1	**8T-4123**	6	WASHER (22X35X3.5-MM THK)	

B-USE AS REQUIRED
M-METRIC PART

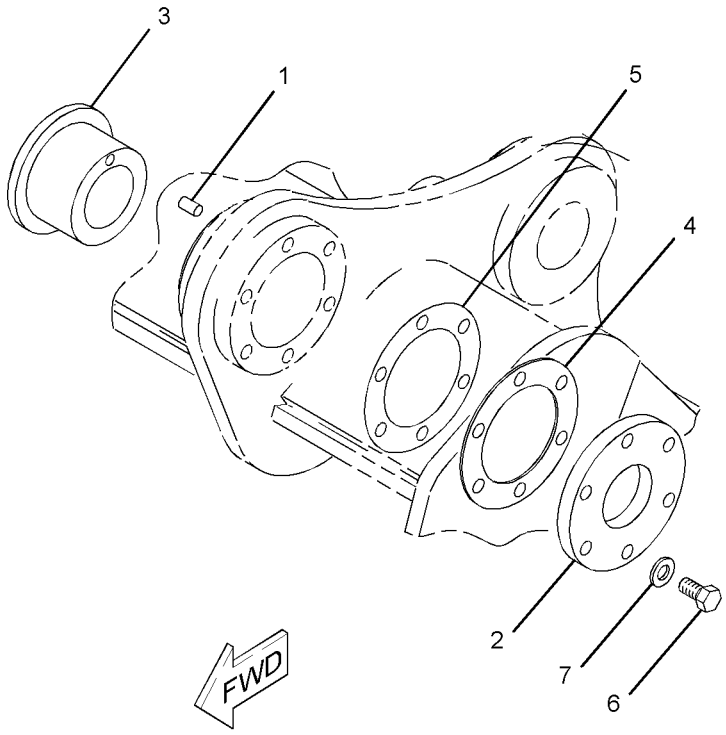

GRAPHIC #1 **<END>** g01096218

250-6430 ADJUSTER GP-BUCKET—DB-FAMILY

S/N: D3P1-UP; M4T1-UP

PART OF 269-2673, 269-2674, 269-2675 BUCKET & ADJUSTER GP

AN ATTACHMENT

SMCS-6513, 6700 **i02503015**

NOTE	REF NO	GRAPHIC REF	PART NUMBER	QTY	PART NAME 1 2 3 4 5 6 (PRODUCT LEVEL)	SEE PAGE
	1	1	**4I-6626**	1	PIN	
	2	1	**4I-6604**	4	SHIM (0.5-MM THK)	
	3	1	**4I-6605**	6	SHIM (1-MM THK)	
	4	1	**134-8951**	1	PLATE	
	5	1	**250-6457**	1	FLANGE	
M	6	1	**7X-2563**	5	BOLT (M20X2.5X60-MM)	
	7	1	**8T-4123**	5	WASHER (22X35X3.5-MM THK)	

M-METRIC PART

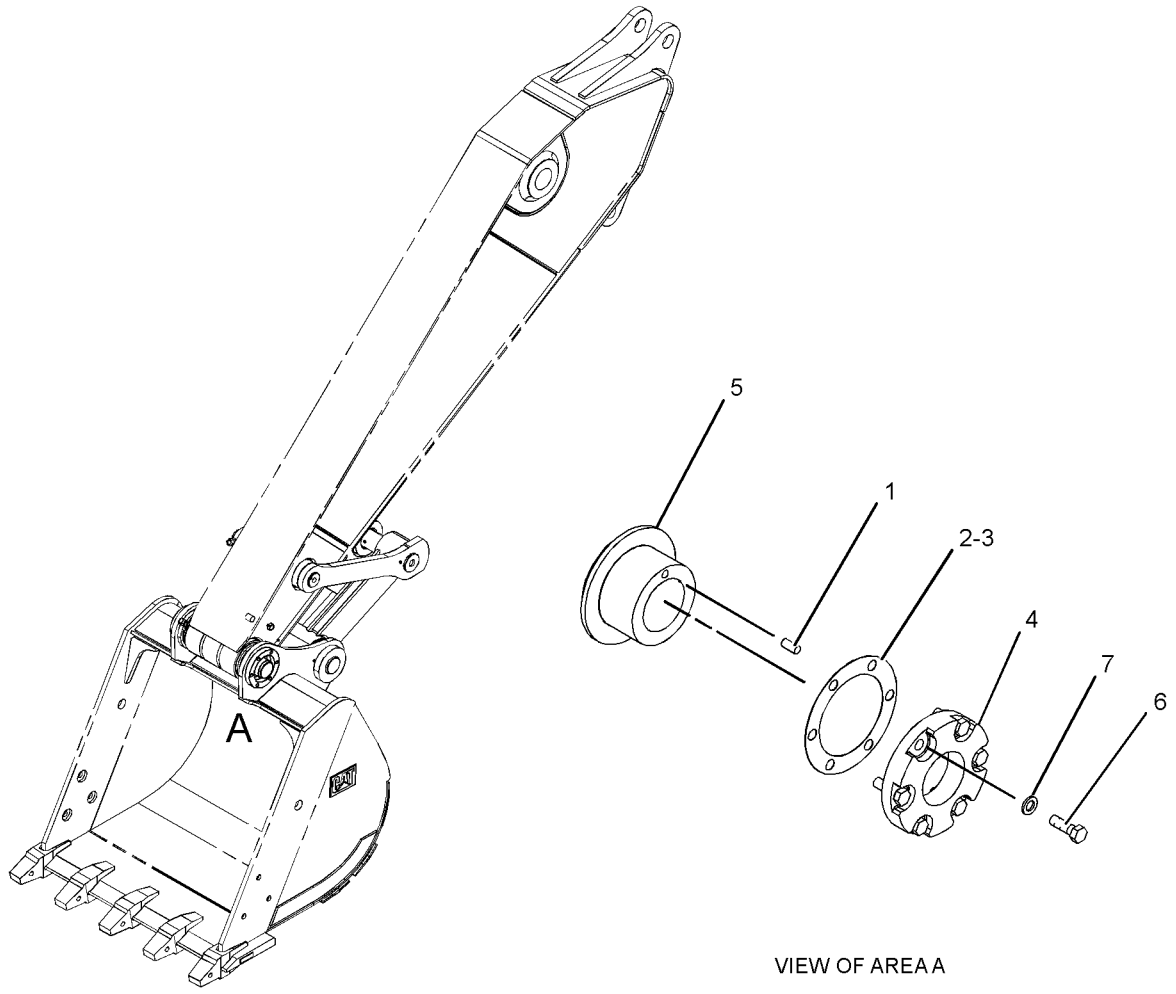

VIEW OF AREA A

GRAPHIC #1 **<END>** g01218311

269-2673 BUCKET & ADJUSTER GP–
GENERAL PURPOSE, DB-FAMILY
S/N: D3P1-UP; M4T1-UP
1067-MM (42-IN) WIDE X 1.46-CU M (1.9-CU YD) CAPACITY. K-100 ADAPTERS, (5X)
AN ATTACHMENT

SMCS-6503, 6513 **i02502995**

NOTE	REF NO	GRAPHIC REF	PART NUMBER	QTY	PART NAME 1 2 3 4 5 6 (PRODUCT LEVEL)	SEE PAGE
	1	1	**279-4103**	1	EDGE AS	
	1A	1	**232-2106**	1	ADAPTER-TIP (K-100, 2-STRAP, LH)	
	1B	1	**220-9104**	3	ADAPTER-TIP (K-100, 2-STRAP, CENTER)	
	1C	1	**232-2105**	1	ADAPTER-TIP (K-100, 2-STRAP, RH)	
	1D	1	**8P-9770**	1	PLATE	
	2	1	**279-4099**	1	PLATE AS-BOX	
	3	1	**273-3420**	2	PLATE-WEAR	
	4	1	**276-5799**	6	PLATE-WEAR	
	5	1	**273-3424**	1	PLATE-REINFORCEMENT	
	6	1	**2C-9259**	2	PLATE-IDENTIFICATION (CAT)	
Y	7	1	**250-6430**	1	ADJUSTER GP-BUCKET (DB-FAMILY)	888

Y-SEPARATE ILLUSTRATION

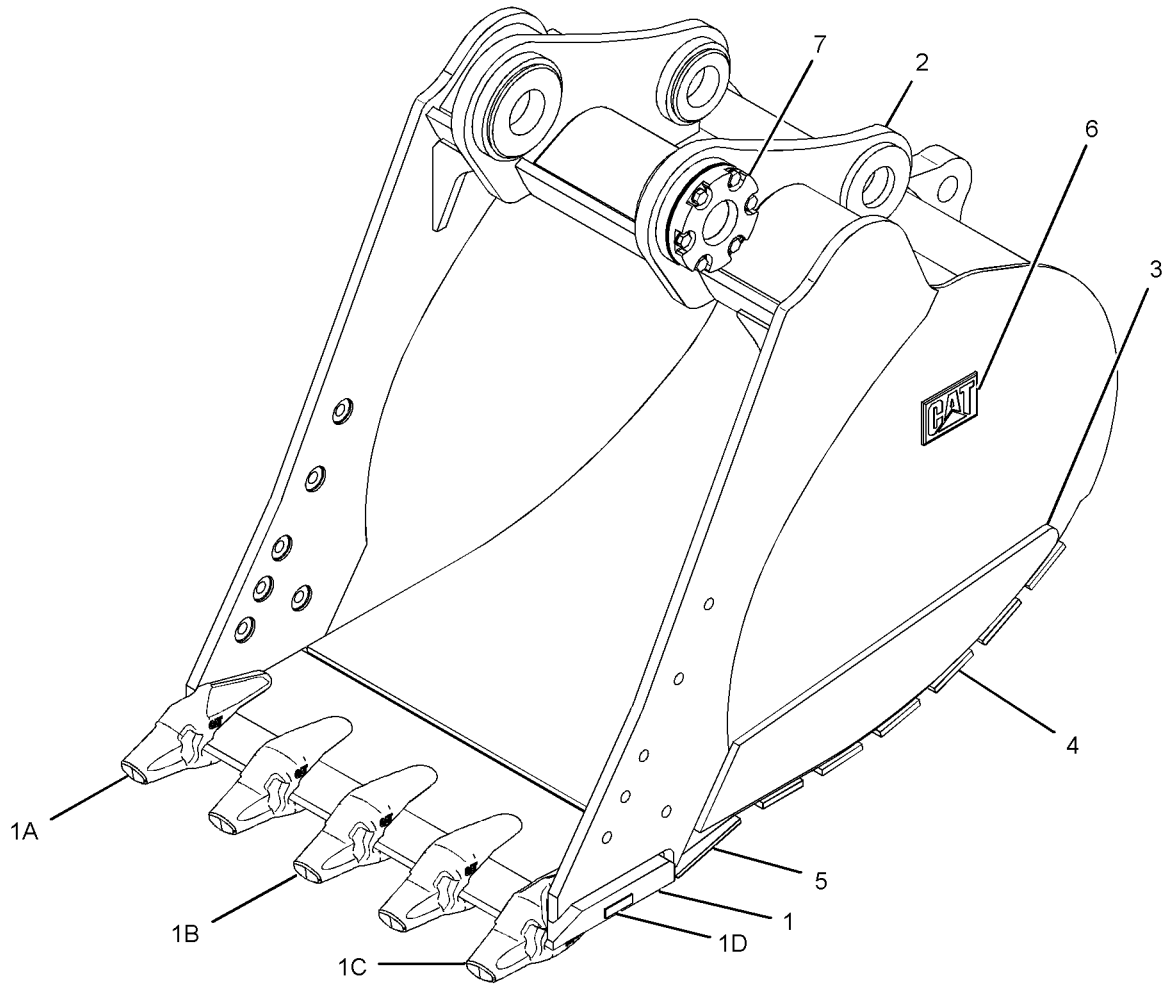

GRAPHIC #1 **<END>** g01252460

WORK TOOLS

269-2674 BUCKET & ADJUSTER GP–
GENERAL PURPOSE, DB-FAMILY
S/N: D3P1-UP; M4T1-UP
1219-MM (48-IN) WIDE X 1.73-CU M (2.26-CU YD) CAPACITY. K-100 ADAPTERS, (5X)
AN ATTACHMENT

SMCS-6503, 6513 **i02600681**

NOTE	REF NO	GRAPHIC REF	PART NUMBER	QTY	PART NAME 1 2 3 4 5 6 (PRODUCT LEVEL)	SEE PAGE
	1	1	**279-4104**	1	EDGE AS	
	1A	1	**232-2106**	1	ADAPTER-TIP (K-100, 2-STRAP, LH)	
	1B	1	**220-9104**	3	ADAPTER-TIP (K-100, 2-STRAP, CENTER)	
	1C	1	**232-2105**	1	ADAPTER-TIP (K-100, 2-STRAP, RH)	
	1D	1	**8P-9770**	1	PLATE	
	2	1	**279-4118**	1	PLATE AS-BOX	
	3	1	**273-3420**	2	PLATE-WEAR	
	4	1	**276-5801**	6	PLATE-WEAR	
	5	1	**262-3840**	1	PLATE-REINFORCEMENT	
	6	1	**2C-9259**	2	PLATE-IDENTIFICATION (CAT)	
Y	7	1	**250-6430**	1	ADJUSTER GP-BUCKET (DB-FAMILY)	888

Y-SEPARATE ILLUSTRATION

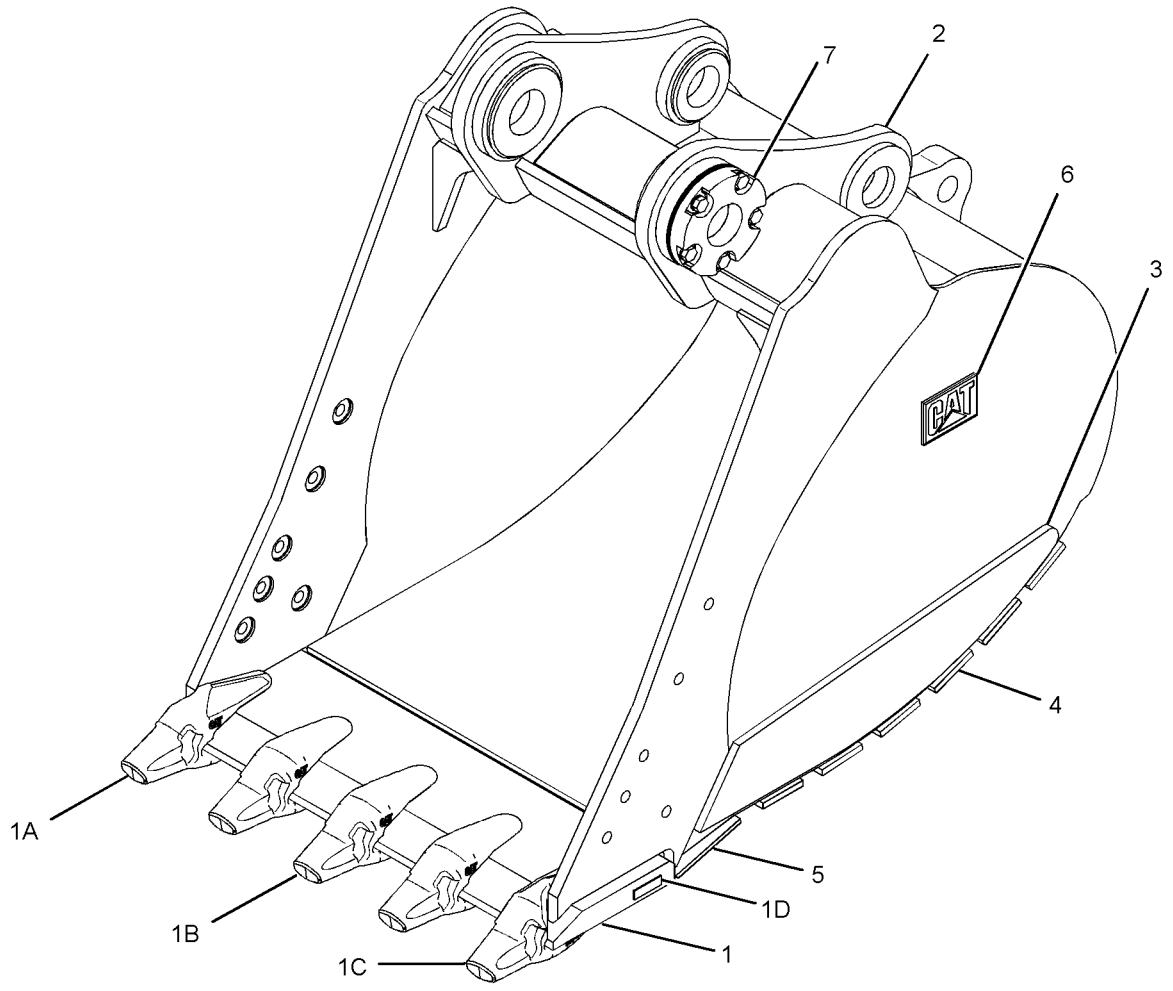

GRAPHIC #1 **<END>** g01306000

269-2675 BUCKET & ADJUSTER GP–
GENERAL PURPOSE, DB-FAMILY
S/N: D3P1-UP; M4T1-UP
1372-MM (54-IN) WIDE X 2-CU M (2.6-CU YD) CAPACITY. K-100 ADAPTERS, (6X)
AN ATTACHMENT

SMCS-6503, 6513 **i03128800**

NOTE	PART NUMBER	QTY	PART NAME 1 2 3 4 5 6 (PRODUCT LEVEL)	SEE PAGE
Y	**250-6430**	1	ADJUSTER GP-BUCKET (DB-FAMILY)	888
Y	*269-2681*	1	BUCKET AS-GENERAL PURPOSE	896

Y-SEPARATE ILLUSTRATION

<END>

324-0057 BUCKET & ADJUSTER GP–

HEAVY-DUTY POWER, TB-FAMILY

S/N: D3P1-UP; M4T1-UP

1757-MM (69-IN) WIDE X 2.4-CU M (3.1-CU YD) CAPACITY. K-110 ADAPTERS, (5X)

AN ATTACHMENT

SMCS-6503, 6513 **i03132314**

NOTE	REF NO	GRAPHIC REF	PART NUMBER	QTY	PART NAME 1 2 3 4 5 6 (PRODUCT LEVEL)	SEE PAGE
Y	1	1	**4I-4070**	1	ADJUSTER GP-BUCKET (G/U/V/TB-FAMILY)	887
Y	2	1	*324-0058*	1	BUCKET AS-HEAVY DUTY	897

Y-SEPARATE ILLUSTRATION

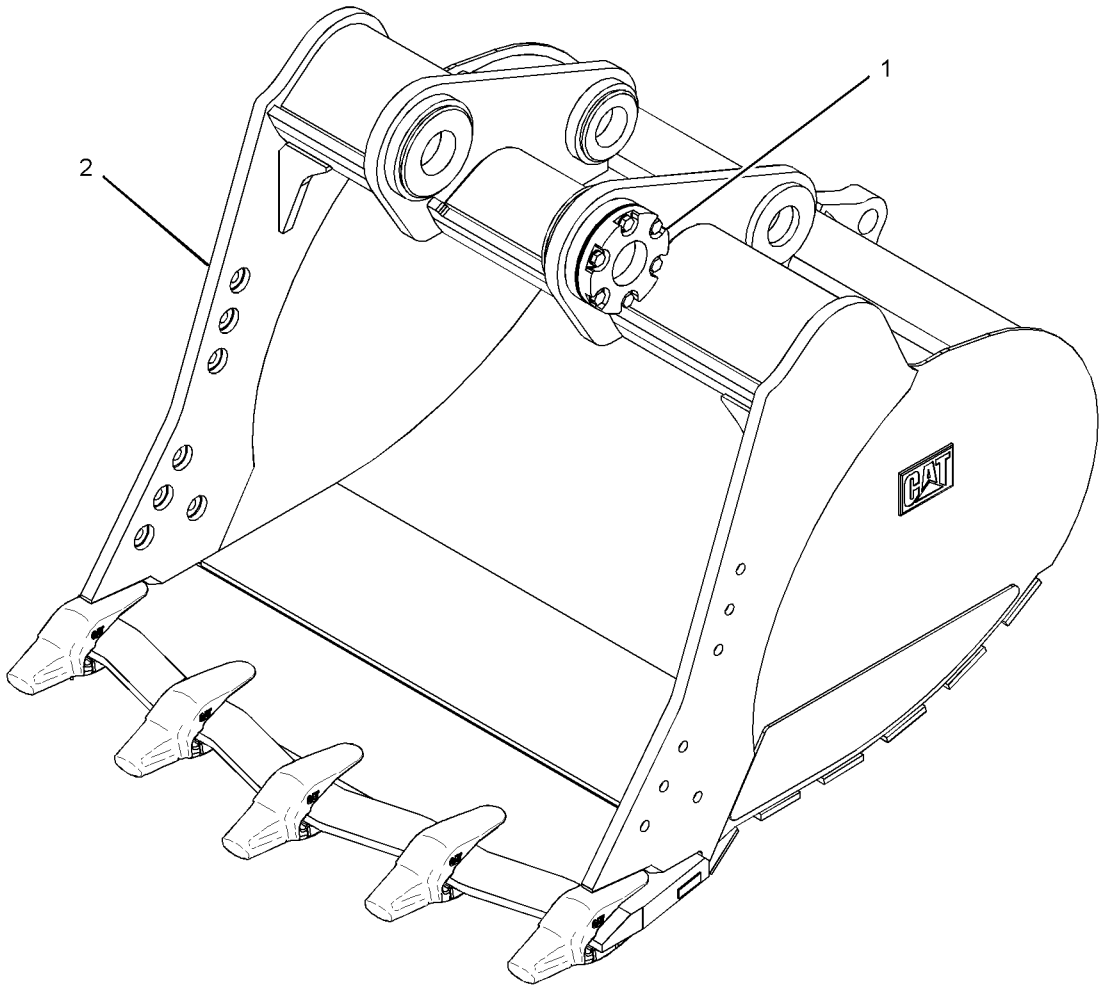

GRAPHIC #1 **<END>** g01614733

324-0177 BUCKET & ADJUSTER GP–

HEAVY-DUTY POWER, TB-FAMILY

S/N: D3P1-UP; M4T1-UP

1524-MM (60-IN) WIDE X 2-CU M (2.6-CU YD). K-110 ADAPTERS, (5X)

AN ATTACHMENT

SMCS-6503, 6513 **i03132375**

NOTE	REF NO	GRAPHIC REF	PART NUMBER	QTY	PART NAME 1 2 3 4 5 6 (PRODUCT LEVEL)	SEE PAGE
Y	1	1	**4I-4070**	1	ADJUSTER GP-BUCKET (G/U/V/TB-FAMILY)	887
Y	2	1	*324-0178*	1	BUCKET AS-HEAVY DUTY	898

Y-SEPARATE ILLUSTRATION

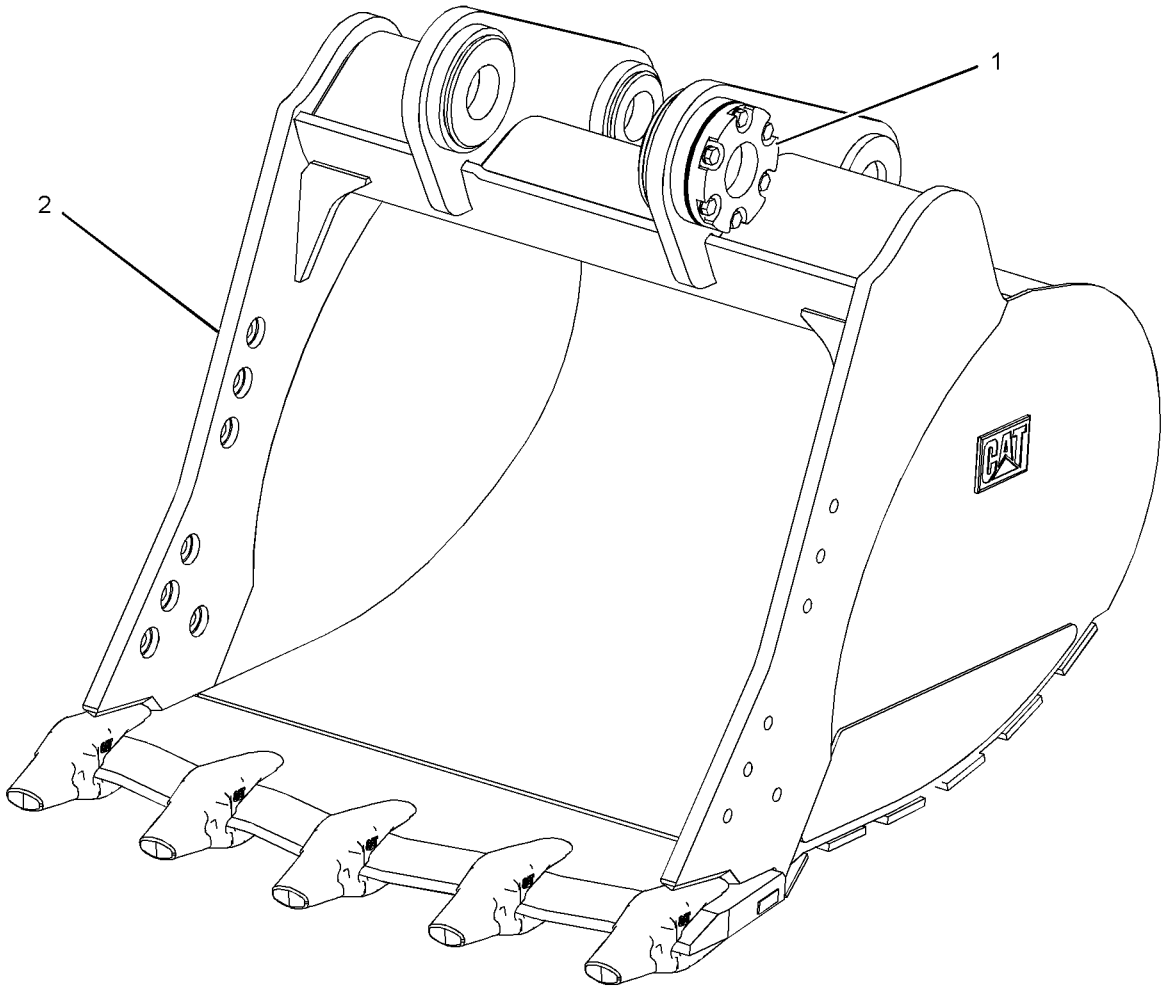

GRAPHIC #1 **<END>** g01614833

WORK TOOLS

324-3632 BUCKET & ADJUSTER GP–

HEAVY-DUTY POWER, TB-FAMILY

S/N: D3P1-UP; M4T1-UP

1360-MM (53.5-IN) WIDE X 1.7-CU M (2.2-CU YD) CAPACITY. K-100 ADAPTERS (4X)

AN ATTACHMENT

SMCS-6503, 6513 **i03132512**

NOTE	REF NO	GRAPHIC REF	PART NUMBER	QTY	PART NAME 1 2 3 4 5 6 (PRODUCT LEVEL)	SEE PAGE
Y	1	1	**4I-4070**	1	ADJUSTER GP-BUCKET (G/U/V/TB-FAMILY)	887
Y	2	1	*324-3633*	1	BUCKET AS-HEAVY DUTY	899

Y-SEPARATE ILLUSTRATION

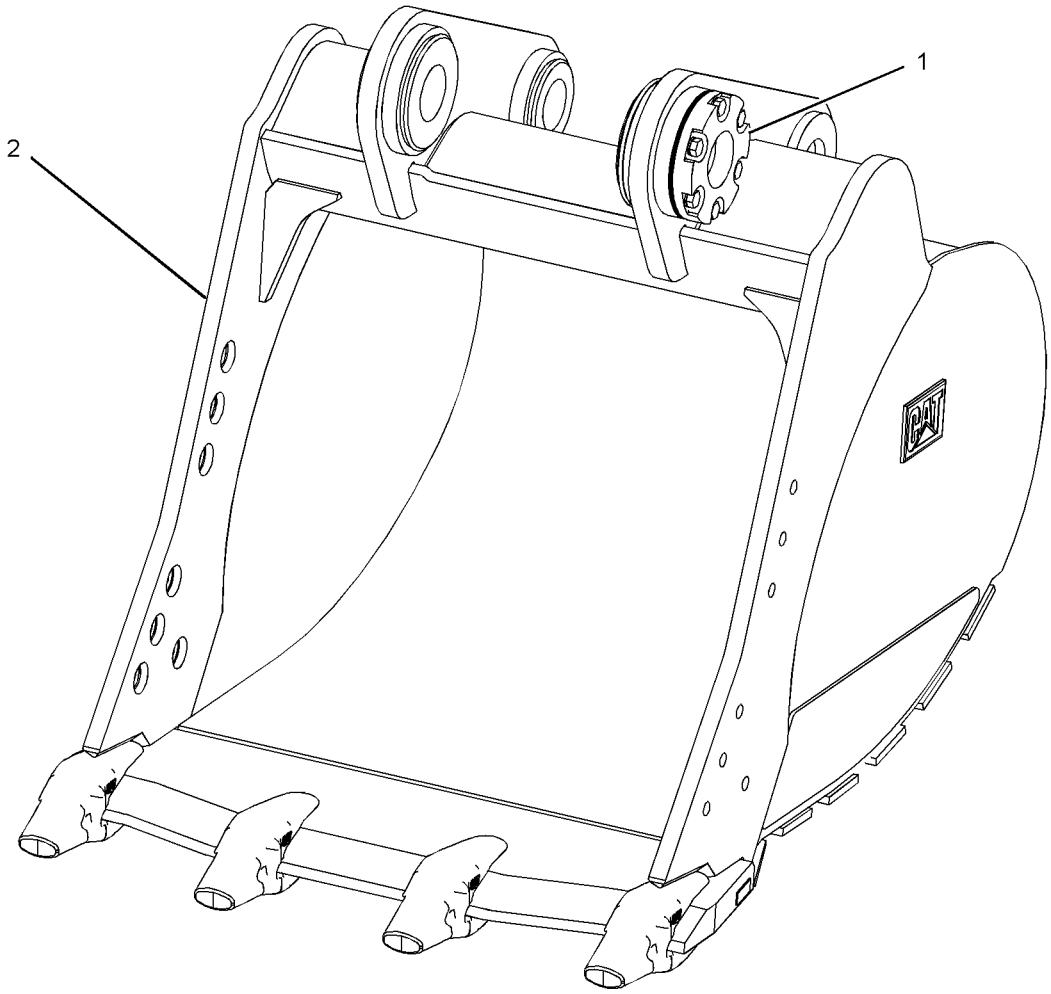

GRAPHIC #1 **<END>** g01614794

343-2083 BUCKET & ADJUSTER GP–
HEAVY-DUTY ROCK, TB-FAMILY
S/N: D3P1-UP; M4T1-UP
1757-MM (69.2-IN) WIDE X 2.4-CU M (3.2-CU YD) CAPACITY.
K-110 ADAPTERS, QTY OF 5
AN ATTACHMENT

SMCS-6503, 6513 **i03731042**

NOTE	PART NUMBER	QTY	PART NAME 1 2 3 4 5 6 (PRODUCT LEVEL)	SEE PAGE
Y	**4I-4070**	1	ADJUSTER GP-BUCKET (G/U/V/TB-FAMILY)	887
Y	*343-2084*	1	BUCKET AS-HEAVY DUTY ROCK	900

Y-SEPARATE ILLUSTRATION

<END>

269-2681 BUCKET AS-GENERAL PURPOSE—DB-FAMILY

S/N: D3P1-UP; M4T1-UP
1372-MM (54-IN) WIDE X 2-CU M (2.6-CU YD) CAPACITY. K-100 ADAPTERS, (6X)
PART OF 269-2675 BUCKET & ADJUSTER GP
AN ATTACHMENT

SMCS-6101 **i03128807**

NOTE	REF NO	GRAPHIC REF	PART NUMBER	QTY	PART NAME 1 2 3 4 5 6 (PRODUCT LEVEL)	SEE PAGE
	1	1	**279-4105**	1	EDGE AS	
	1A	1	**232-2106**	1	ADAPTER-TIP (K-100, 2-STRAP, LH)	
	1B	1	**220-9104**	4	ADAPTER-TIP (K-100, 2-STRAP, CENTER)	
	1C	1	**232-2105**	1	ADAPTER-TIP (K-100, 2-STRAP, RH)	
	1D	1	**8P-9770**	1	PLATE	
	2	1	**279-4119**	1	PLATE AS-BOX	
	3	1	**273-3420**	2	PLATE-WEAR	
	4	1	**276-5802**	6	PLATE-WEAR	
	5	1	**262-3841**	1	PLATE-REINFORCEMENT	
	6	1	**2C-9259**	2	PLATE-IDENTIFICATION (CAT)	

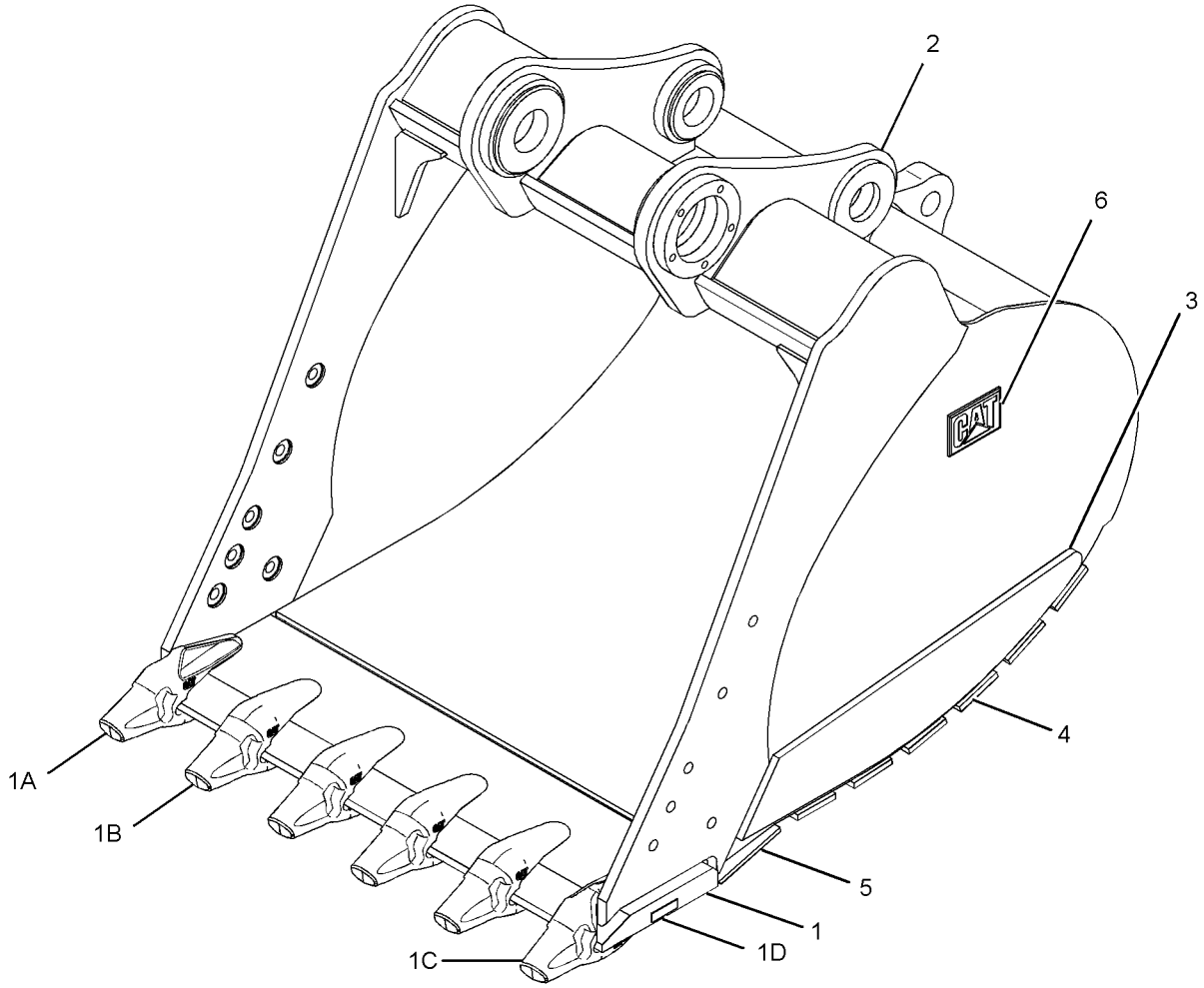

GRAPHIC #1 **<END>** g01238242

WORK TOOLS

324-0058 BUCKET AS-HEAVY DUTY—TB-FAMILY

S/N: D3P1-UP; M4T1-UP
1757-MM (69-IN) WIDE X 2.4-CU M (3.1-CU YD) CAPACITY. K-110 ADAPTERS, (5X)
PART OF 324-0057 BUCKET & ADJUSTER GP
AN ATTACHMENT

SMCS-6531 **i03132514**

NOTE	REF NO	GRAPHIC REF	PART NUMBER	QTY	PART NAME 1 2 3 4 5 6 (PRODUCT LEVEL)	SEE PAGE
	1	1	**324-0059**	1	EDGE AS	
	1A	1	**8P-9770**	1	PLATE	
	1B	1	**309-1114**	5	ADAPTER-TIP (K-110, 2-STRAP, CENTER)	
	2	1	**259-1930**	1	PLATE AS-BOX	
	3	1	**290-2816**	2	PLATE-WEAR	
	4	1	**290-2819**	5	PLATE-WEAR	
	5	1	**290-2817**	1	PLATE-REINFORCEMENT	
	6	1	**2C-9259**	2	PLATE-IDENTIFICATION (CAT)	

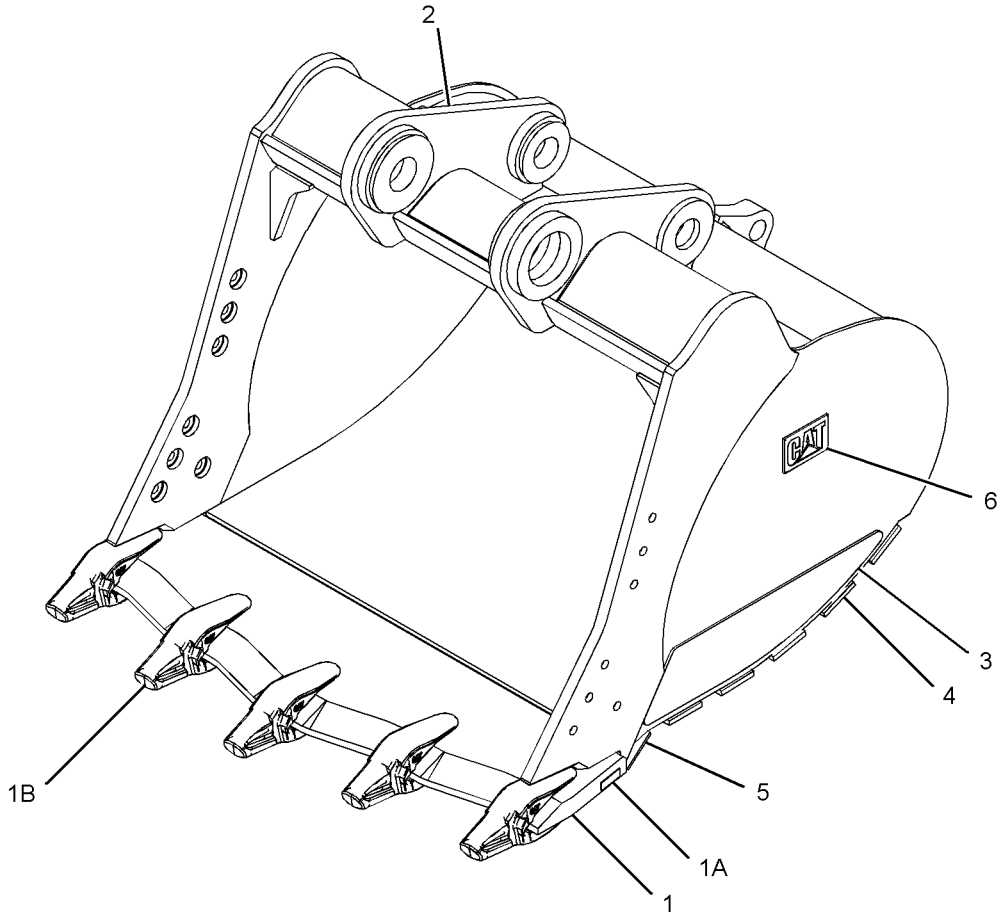

GRAPHIC #1 **<END>** g01614176

324-0178 BUCKET AS-HEAVY DUTY—TB-FAMILY

S/N: D3P1-UP; M4T1-UP
1524-MM (60-IN) WIDE X 2-CU M (2.6-CU YD). K-110 ADAPTERS, (5X)
PART OF 324-0177 BUCKET & ADJUSTER GP
AN ATTACHMENT

SMCS-6531 **i03132480**

NOTE	REF NO	GRAPHIC REF	PART NUMBER	QTY	PART NAME 1 2 3 4 5 6 (PRODUCT LEVEL)	SEE PAGE
	1	1	**324-0162**	1	EDGE AS	
	1A	1	**8P-9770**	1	PLATE	
	1B	1	**309-1114**	5	ADAPTER-TIP (K-110, 2-STRAP, CENTER)	
	2	1	**324-0180**	1	PLATE AS-BOX	
	3	1	**290-2816**	2	PLATE-WEAR	
	4	1	**324-0184**	1	PLATE-REINFORCEMENT	
	5	1	**324-3900**	5	PLATE-WEAR	
	6	1	**2C-9259**	2	PLATE-IDENTIFICATION (CAT)	

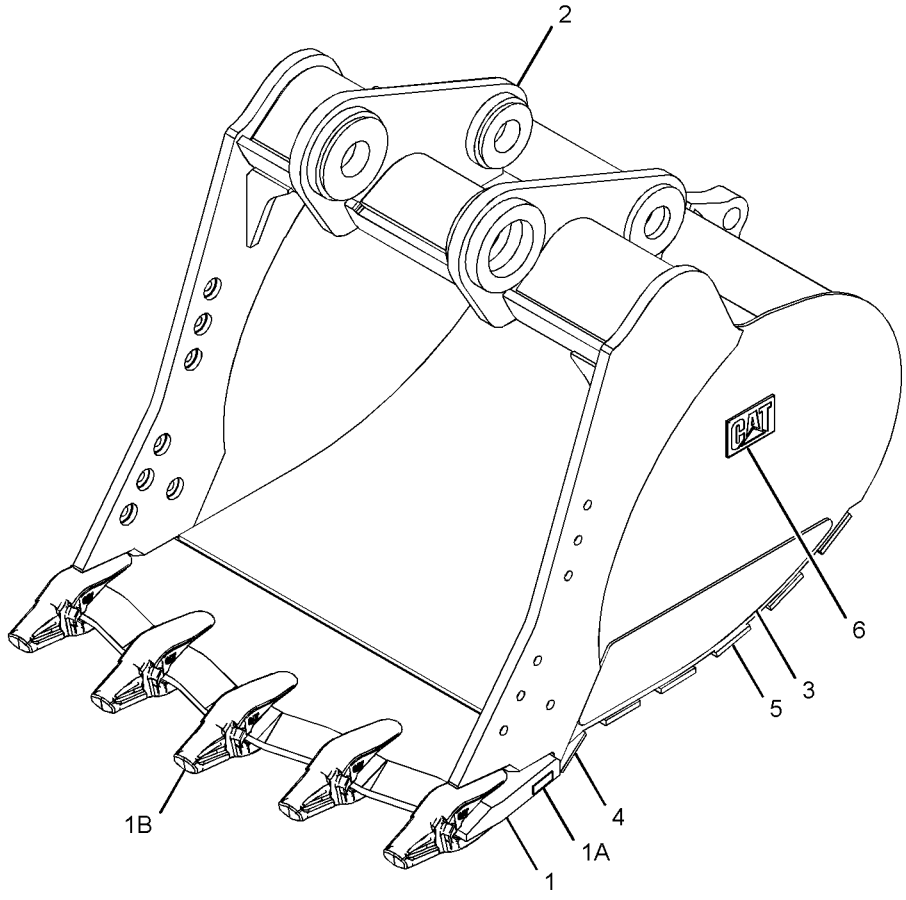

GRAPHIC #1 **<END>** g01614813

324-3633 BUCKET AS-HEAVY DUTY–TB-FAMILY

S/N: D3P1-UP; M4T1-UP
1360-MM (53.5-IN) WIDE X 1.7-CU M (2.2-CU YD) CAPACITY. K-100 ADAPTERS, (4X)
PART OF 324-3632 BUCKET & ADJUSTER GP
AN ATTACHMENT

SMCS-6531 **i03132513**

NOTE	REF NO	GRAPHIC REF	PART NUMBER	QTY	PART NAME 1 2 3 4 5 6 (PRODUCT LEVEL)	SEE PAGE
	1	1	**324-0164**	1	EDGE AS	
	1A	1	**8P-9770**	1	PLATE	
	1B	1	**309-1114**	4	ADAPTER-TIP (K-110, 2-STRAP, CENTER)	
	2	1	**324-3635**	1	PLATE AS-BOX	
	3	1	**290-2816**	2	PLATE-WEAR	
	4	1	**324-3640**	5	PLATE-WEAR	
	5	1	**324-3639**	1	PLATE-REINFORCEMENT	
	6	1	**2C-9259**	2	PLATE-IDENTIFICATION (CAT)	

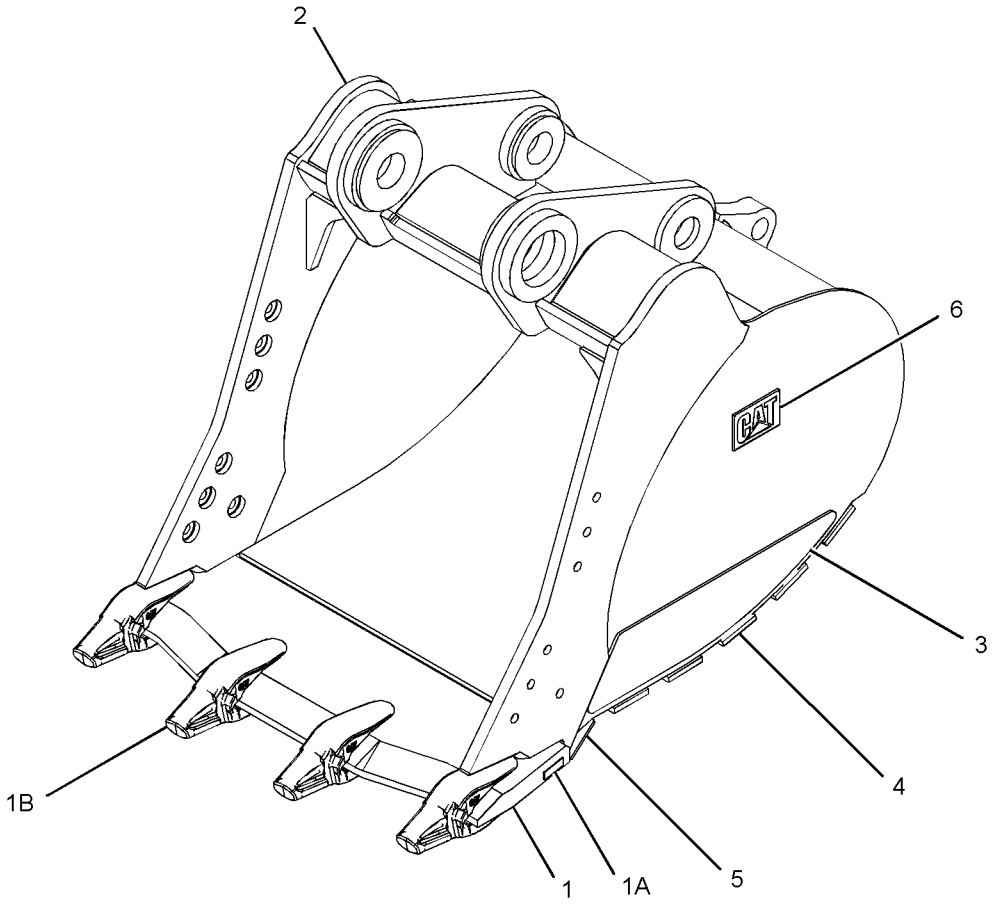

GRAPHIC #1 **<END>** g01614074

343-2084 BUCKET AS-HEAVY DUTY ROCK–TB-FAMILY

S/N: D3P1-UP; M4T1-UP
1757-MM (69.2-IN) WIDE X 2.4-CU M (3.2-CU YD) CAPACITY.
K-110 ADAPTERS, QTY OF 5
PART OF 343-2083 BUCKET & ADJUSTER GP
AN ATTACHMENT

SMCS-6102 **i03731083**

NOTE	REF NO	GRAPHIC REF	PART NUMBER	QTY	PART NAME 1 2 3 4 5 6 (PRODUCT LEVEL)	SEE PAGE
	1	1	**324-0059**	1	EDGE AS	
	1A	1	**8P-9770**	1	PLATE	
	1B	1	**309-1114**	5	ADAPTER-TIP (K-110, 2-STRAP, CENTER)	
	2	1	**290-2816**	2	PLATE-WEAR	
	3	1	**290-2819**	5	PLATE-WEAR	
	4	1	**290-2817**	1	PLATE-REINFORCEMENT	
	5	1	**259-1930**	1	PLATE AS-BOX	
	6	1	**2C-9259**	2	PLATE-IDENTIFICATION (CAT)	

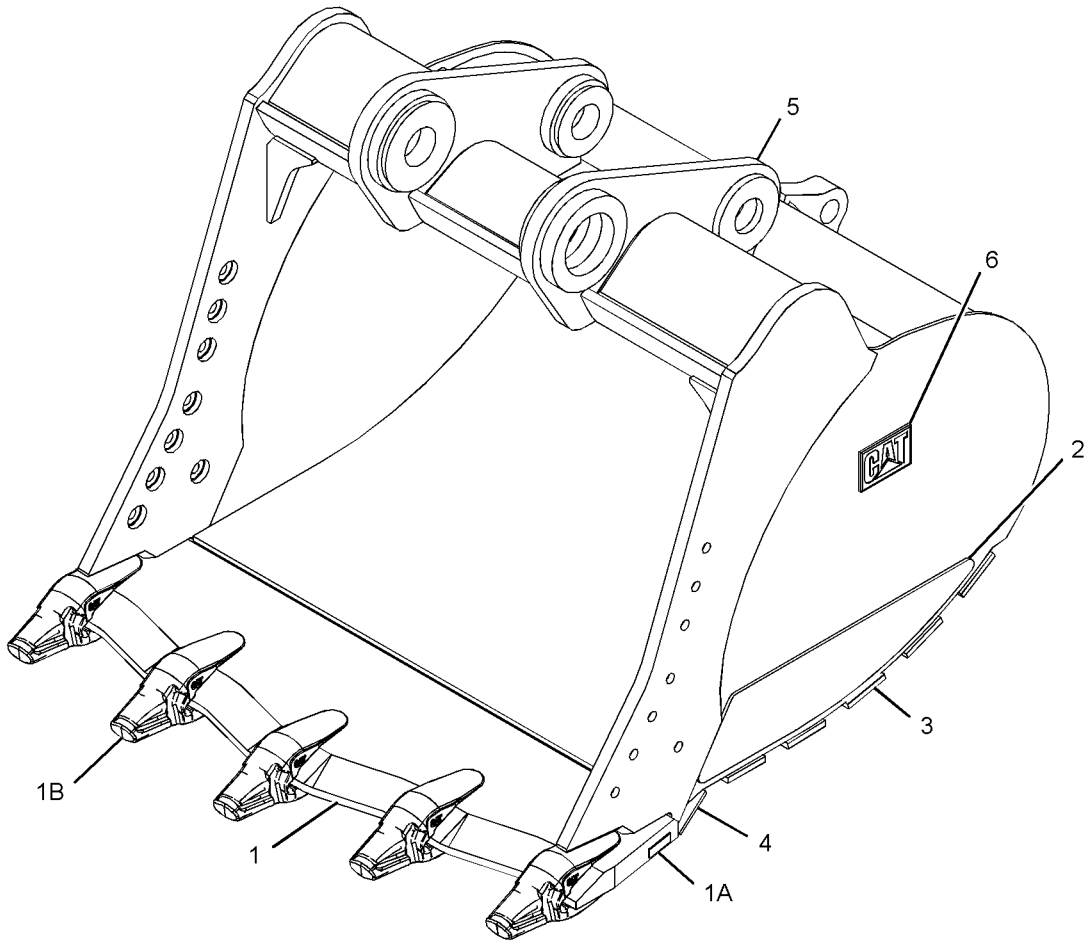

GRAPHIC #1 **<END>** g02023458

264-8028 BUCKET GP-ROCK–QUICK COUPLER

S/N: D3P1-UP; M4T1-UP
1500-MM (59.1-IN) WIDE X 1.93-CU M (2.5-CU YD) CAPACITY.
K-110 ADAPTERS, (4X)
AN ATTACHMENT

SMCS-6102 **i03631830**

NOTE	REF NO	GRAPHIC REF	PART NUMBER	QTY	PART NAME 1 2 3 4 5 6 (PRODUCT LEVEL)	SEE PAGE
	1	1	*264-8043*	1	BUCKET AS-ROCK	
	2	1	**266-8403**	1	EDGE AS-CUTTING	
	2A	1	**309-1118**	1	ADAPTER-TIP (K-110, 2-STRAP, LH)	
	2B	1	**309-1114**	2	ADAPTER-TIP (K-110, 2-STRAP, CENTER)	
	2C	1	**309-1117**	1	ADAPTER-TIP (K-110, 2-STRAP, RH)	
	2D	1	**8P-9770**	1	PLATE	
	3	1	**266-8429**	1	PLATE AS-BOX	
	4	1	**266-8425**	2	PLATE-WEAR	
	5	1	**266-8816**	6	PLATE-WEAR	
	6	1	**2C-9259**	2	PLATE-IDENTIFICATION (CAT)	

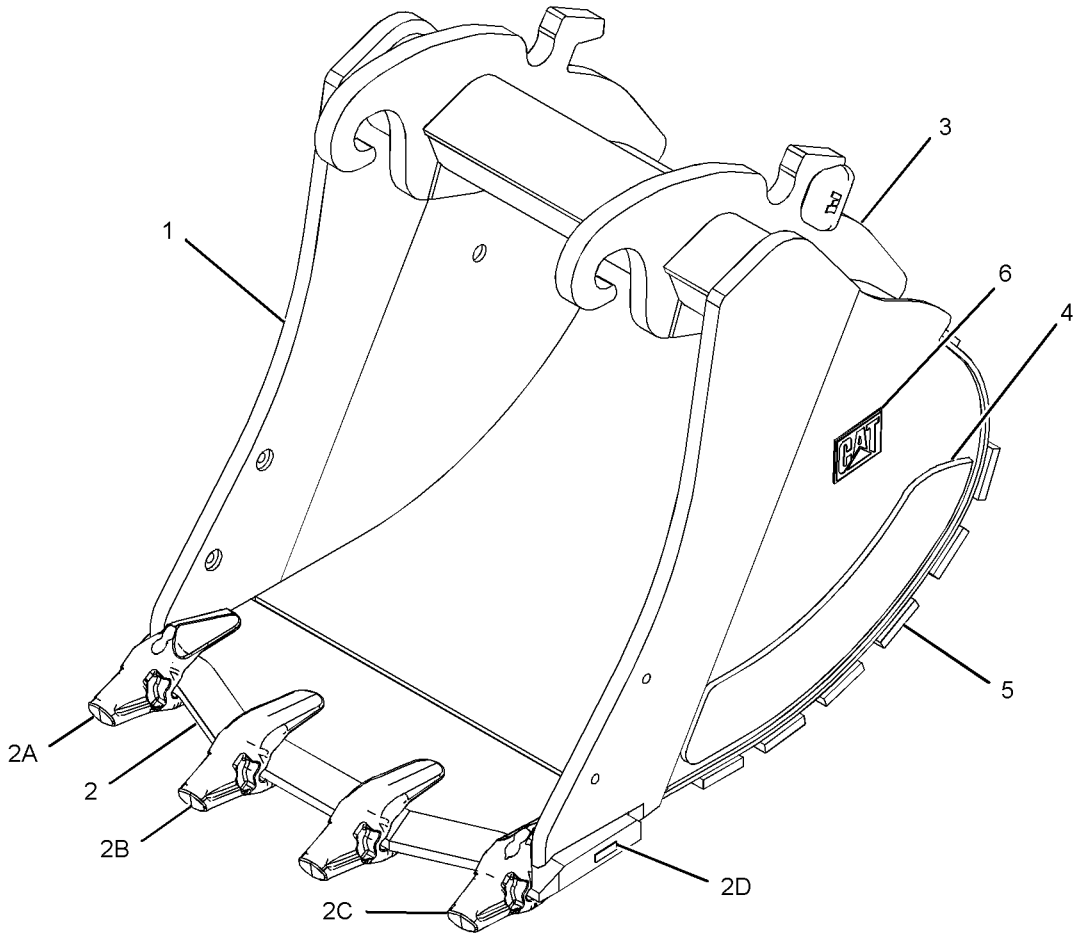

GRAPHIC #1 **<END>** g01619503

WORK TOOLS

264-8029 BUCKET GP-ROCK–QUICK COUPLER

S/N: D3P1-UP; M4T1-UP
1800-MM (71-IN) WIDE X 2.4-CU M(3.1-CU YD) CAPACITY.
K-110 ADAPTERS, QTY OF 5
AN ATTACHMENT

SMCS-6102 **i02895998**

NOTE	REF NO	GRAPHIC REF	PART NUMBER	QTY	PART NAME 1 2 3 4 5 6 (PRODUCT LEVEL)	SEE PAGE
	1	1	**266-8404**	1	EDGE AS-CUTTING	
	1A	1	**232-0116**	1	ADAPTER-TIP (K-110, 2-STRAP, LH)	
	1B	1	**232-0114**	3	ADAPTER-TIP (K-110, 2-STRAP, CENTER)	
	1C	1	**232-0115**	1	ADAPTER-TIP (K-110, 2-STRAP, RH)	
	1D	1	**8P-9770**	1	PLATE	
	2	1	**266-8431**	1	PLATE AS-BOX	
	3	1	**266-8425**	2	PLATE-WEAR	
	4	1	**266-8817**	6	PLATE-WEAR	
	5	1	**2C-9259**	2	PLATE-IDENTIFICATION (CAT)	

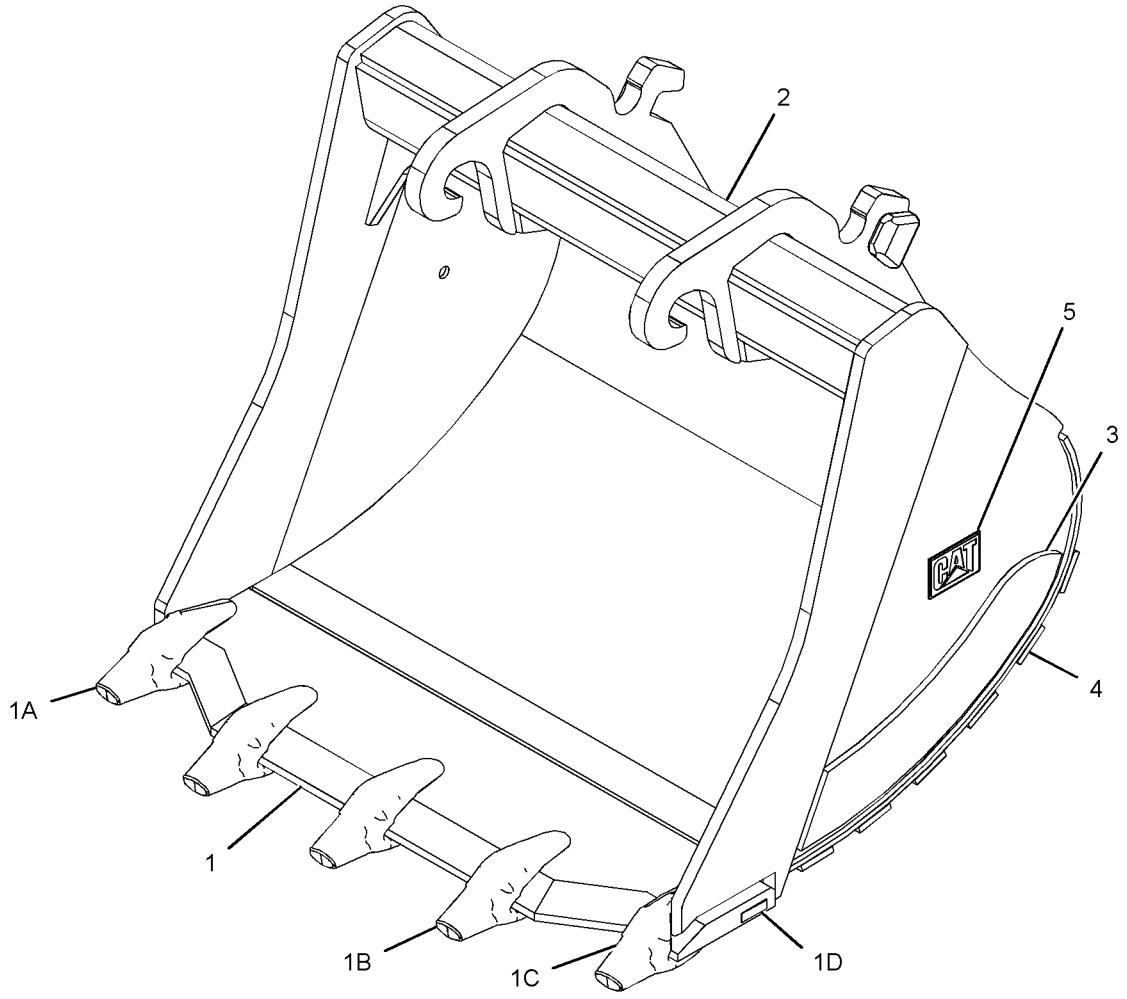

GRAPHIC #1 **<END>** g01238005

WORK TOOLS

282-4232 BUSHING GP-SLEEVE

S/N: D3P1-UP; M4T1-UP
AN ATTACHMENT

SMCS-6513 **i03166320**

NOTE	REF NO	GRAPHIC REF	PART NUMBER	QTY	PART NAME 1 2 3 4 5 6 (PRODUCT LEVEL)	SEE PAGE
	1	1	**282-4230**	2	SLEEVE AS	
					(EACH INCLUDES)	
	1A	1	**8U-0580**	1	SEAL-O-RING	
	1B	1	**283-0177**	1	SEAL-O-RING	
	2	1	**282-4233**	2	SLEEVE AS	
					(EACH INCLUDES)	
	2A	1	**192-5166**	1	SEAL-O-RING	
	2B	1	**291-1010**	1	SEAL-O-RING	
	3	1	**093-1344**	2	SEAL-O-RING	
	4	1	**093-1345**	2	SEAL-O-RING	

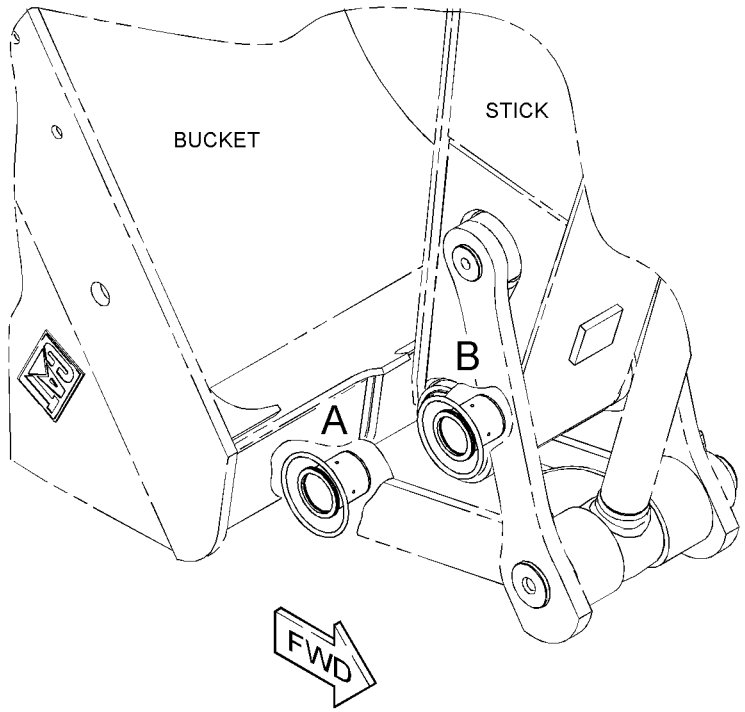

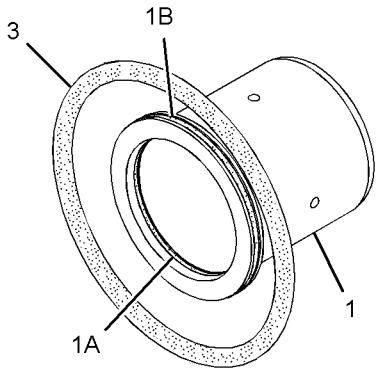

VIEW OF AREA B

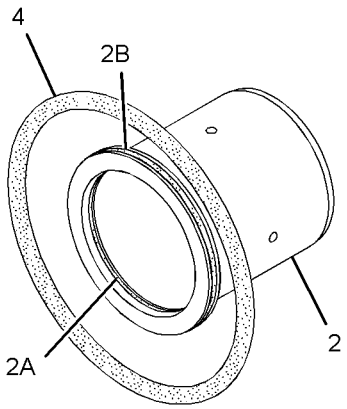

VIEW OF AREA A

GRAPHIC #1 **<END>** g01325702

WORK TOOLS

275-7752 COUPLER AR-QUICK—WITH HOOK

S/N: D3P1-UP; M4T1-UP
PART OF 337-4113, 337-4114 OPTION AR-COUPLER
FOR USE WITH TB-FAMILY LINKAGE
AN ATTACHMENT

SMCS-1408, 5057, 6129 **i02663689**

NOTE	PART NUMBER	QTY	PART NAME 1 2 3 4 5 6 (PRODUCT LEVEL)	SEE PAGE
Y	*275-6321*	1	COUPLER GP-QUICK (WITH HOOK)	905
Y	*275-7738*	1	LINES GP-COUPLER (QUICK, HOOK)	550

Y-SEPARATE ILLUSTRATION

<END>

275-6321 COUPLER GP-QUICK–WITH HOOK

S/N: D3P1-UP; M4T1-UP
PART OF 275-7752 COUPLER AR-QUICK
FOR USE WITH TB-FAMILY LINKAGE
AN ATTACHMENT

SMCS-1408, 5057, 6129 **i02663725**

NOTE	REF NO	GRAPHIC REF	PART NUMBER	QTY	PART NAME 1 2 3 4 5 6 (PRODUCT LEVEL)	SEE PAGE
Y	1	1	*209-3464*	1	LOCK GP-QUICK COUPLER (HYDRAULIC)	907
Y	2	1	*173-9957*	1	HOOK GP-LIFTING	906
	3	1	**168-8672**	1	PLATE-SERIAL NUMBER	
M	4	1	**136-0155**	2	SETSCREW (M4X0.7X8-MM)	
	5	1	**159-8036**	2	FILM-WARNING (READ OMM)	
	6	1	**150-8896**	2	FILM-NOTICE (LIFT EYE LOCATION)	
Z	7	1		1	HOUSING AS-COUPLER	

M-METRIC PART
Y-SEPARATE ILLUSTRATION
Z-NOT SERVICED SEPARATELY

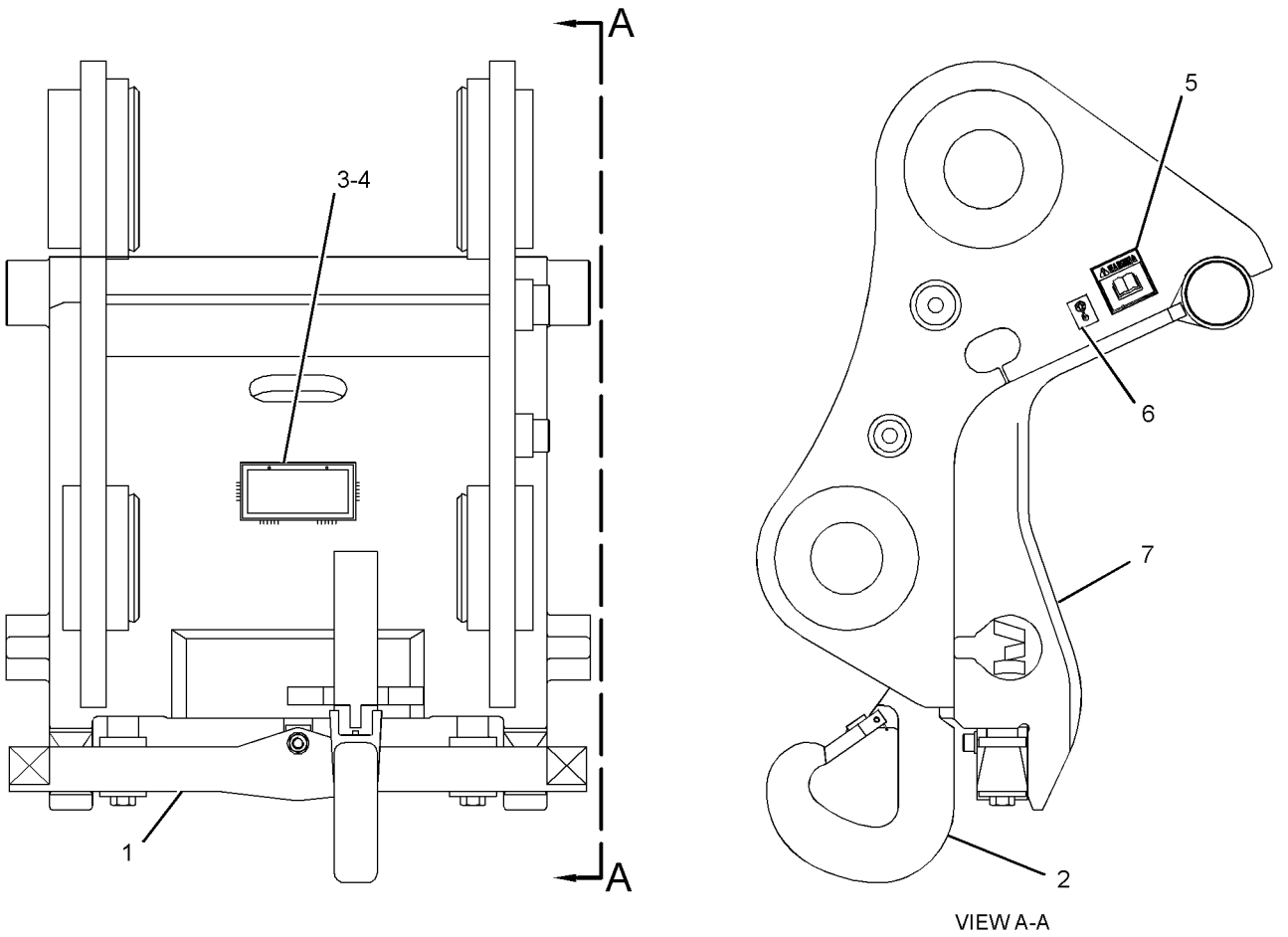

VIEW A-A

GRAPHIC #1 **<END>** g01293899

WORK TOOLS

173-9957 HOOK GP-LIFTING

S/N: D3P1-UP; M4T1-UP
PART OF 275-6321 COUPLER GP-QUICK
AN ATTACHMENT

SMCS-6459 **i02663838**

NOTE	REF NO	GRAPHIC REF	PART NUMBER	QTY	PART NAME 1 2 3 4 5 6 (PRODUCT LEVEL)	SEE PAGE
	1	1	**173-9971**	1	KIT-LATCH (QUICK COUPLER)	
					(INCLUDES PIN, SPRING & LATCH)	

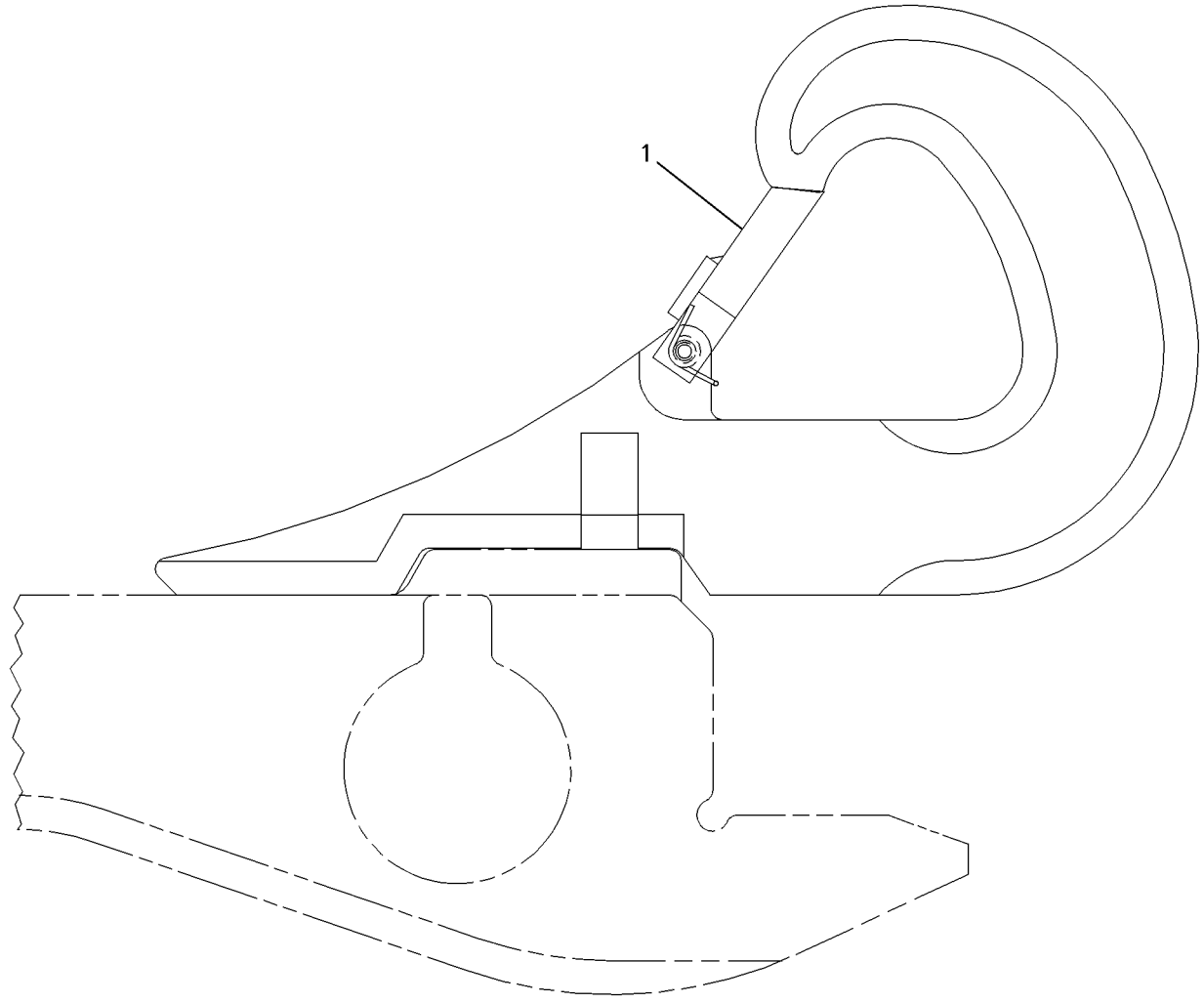

GRAPHIC #1 **<END>** g00576288

WORK TOOLS

209-3464 LOCK GP-QUICK COUPLER—HYDRAULIC

S/N: D3P1-UP; M4T1-UP
PART OF 275-6321 COUPLER GP-QUICK
AN ATTACHMENT

SMCS-6129 **i02821963**

NOTE	REF NO	GRAPHIC REF	PART NUMBER	QTY	PART NAME 1 2 3 4 5 6 (PRODUCT LEVEL)	SEE PAGE
Y	1	1	**169-0753**	1	CYLINDER GP-COUPLER	470
M	2	1	**8T-4183**	4	BOLT (M12X1.75X40-MM)	
	3	1	**8T-4223**	4	WASHER-HARD (13.5X25.5X3-MM THK)	
M	4	1	**095-0705**	1	BOLT-SOCKET HEAD (M16X2X100-MM)	
M	5	1	**098-5747**	2	NUT (M16X2-THD)	
	6	1	**9X-8257**	2	WASHER (17.5X30X3.5-MM THK)	
	7	1	**169-0756**	2	SPACER (26.4X42.4X75-MM THK)	
	8	1	**169-0737**	2	SHAFT AS	
	9	1	**169-0738**	2	SPRING	
	10	1	**169-0739**	2	RING	
	11	1	**169-0740**	2	RING	
	12	1	**209-3466**	1	WEDGE	
	13	1	**169-0745**	2	PLATE (LOCK)	
M	14	1	**8T-4141**	2	BOLT (M20X2.5X70-MM)	
M	15	1	**169-2519**	2	BOLT (M24X3X180-MM)	

M-METRIC PART
Y-SEPARATE ILLUSTRATION

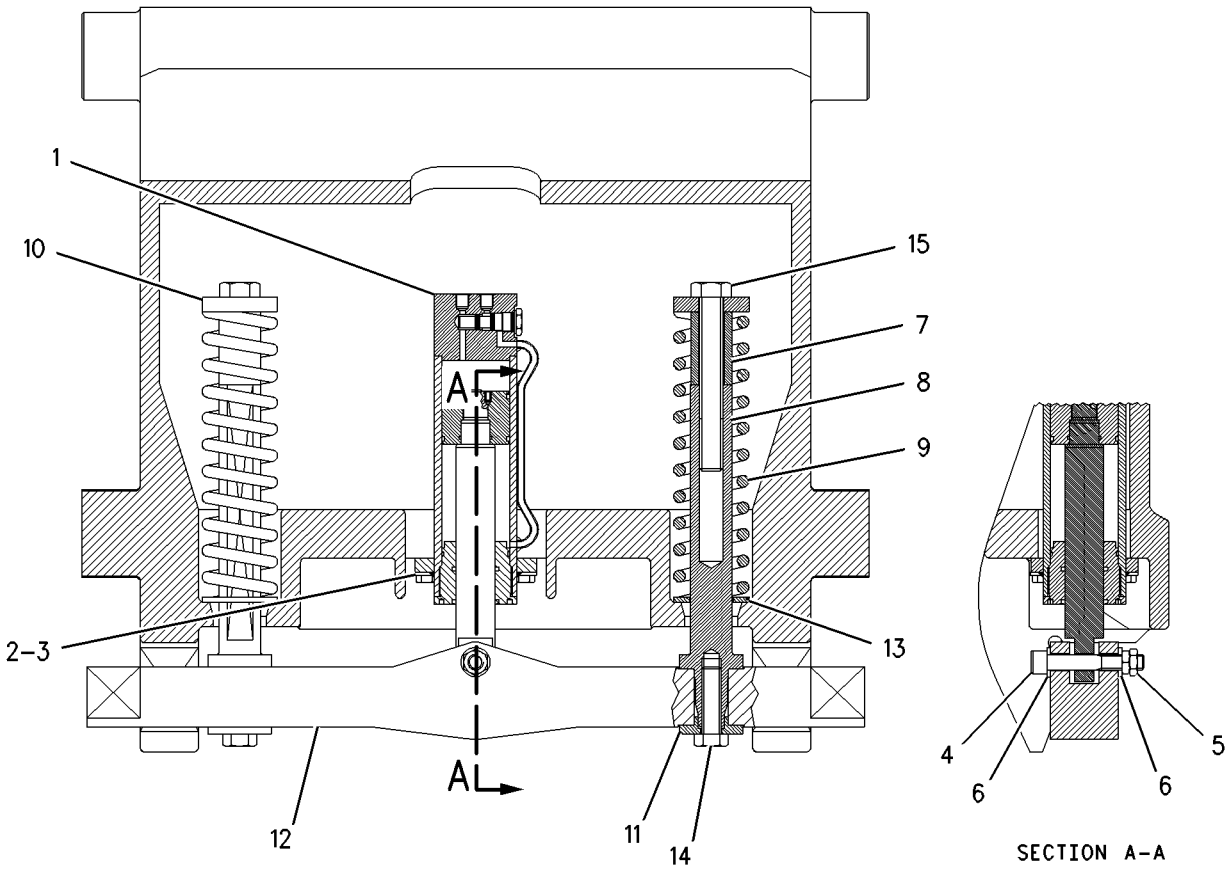

GRAPHIC #1 **<END>** g00950212

WORK TOOLS

112-2482 PROTECTOR GP-SIDE BAR

S/N: D3P1-UP; M4T1-UP
FOR USE WITH TB-FAMILY BUCKETS
AN ATTACHMENT

SMCS-6817 **i02822868**

NOTE	REF NO	GRAPHIC REF	PART NUMBER	QTY	PART NAME 1 2 3 4 5 6 (PRODUCT LEVEL)	SEE PAGE
	1	1	**112-2489**	2	PROTECTOR-SIDE BAR	
	2	1	**275-5982**	4	PIN	
	3	1	**132-0999**	4	RETAINER AS	

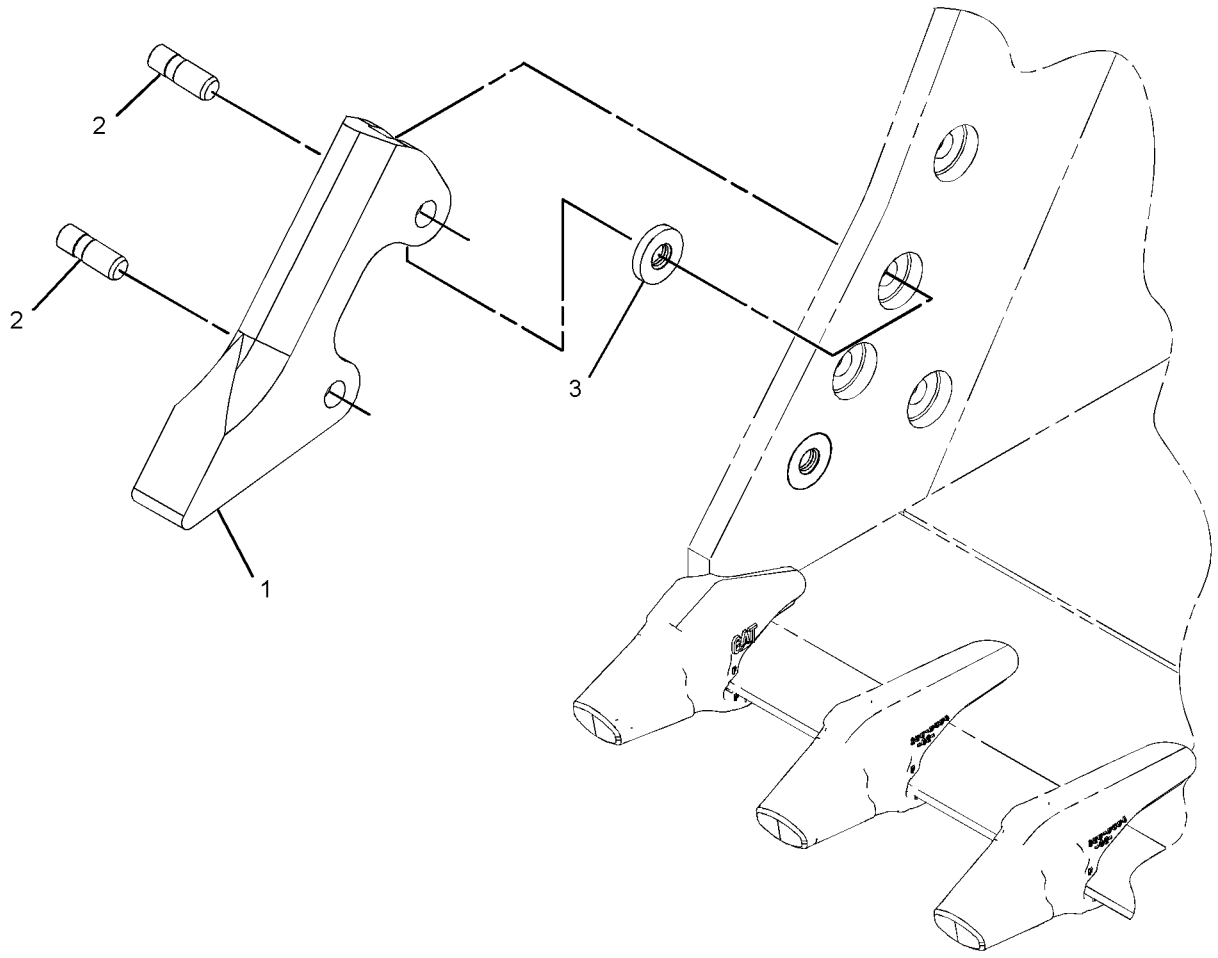

GRAPHIC #1 **<END>** g01422555

WORK TOOLS

166-3511 PROTECTOR GP-SIDE BAR

S/N: D3P1-UP; M4T1-UP
FOR USE WITH DB-FAMILY BUCKETS
AN ATTACHMENT

SMCS-6817 **i02662535**

NOTE	REF NO	GRAPHIC REF	PART NUMBER	QTY	PART NAME 1 2 3 4 5 6 (PRODUCT LEVEL)	SEE PAGE
	1	1	**166-2877**	2	PROTECTOR-SIDE BAR	
	2	1	**132-0998**	4	PIN	
	3	1	**132-0999**	4	RETAINER AS	

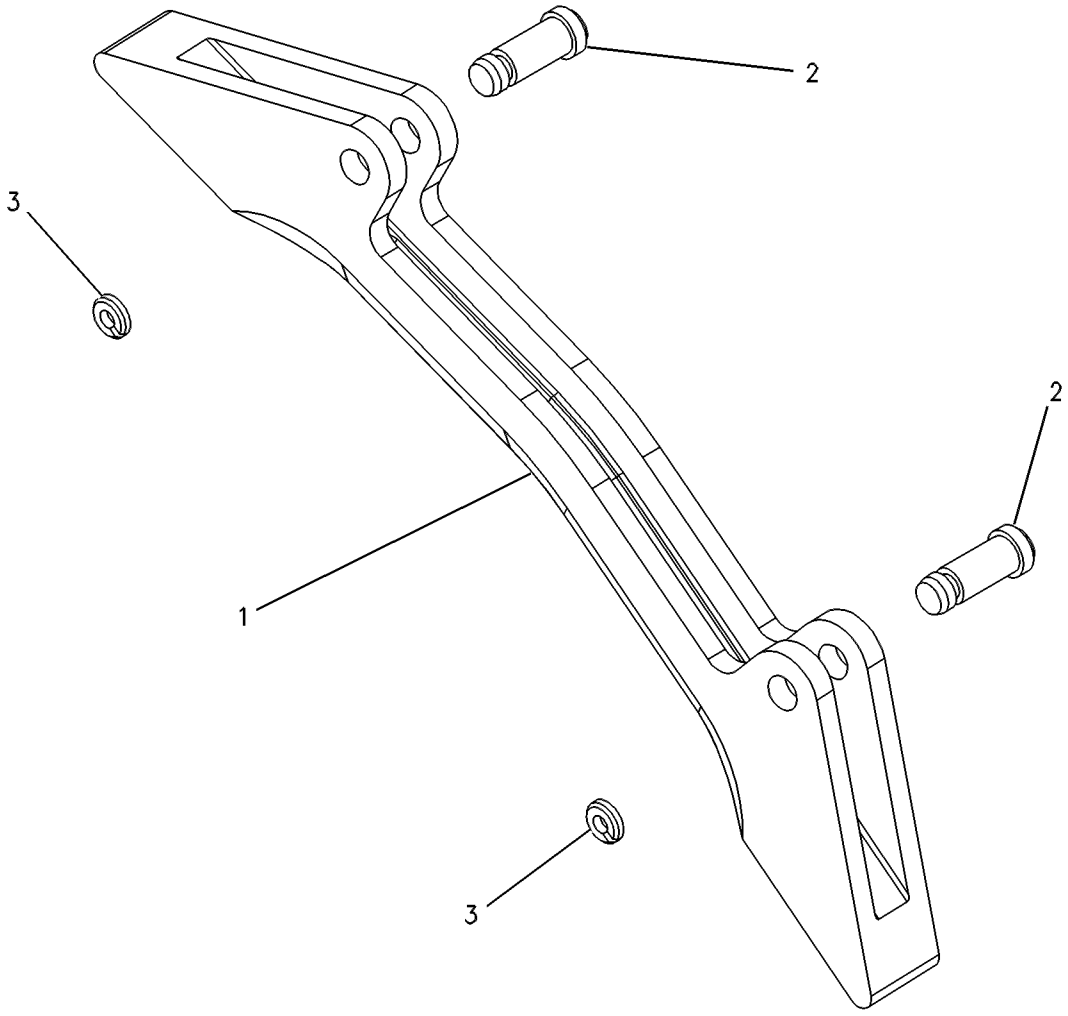

GRAPHIC #1 **<END>** g00266245

WORK TOOLS

195-7216 PROTECTOR GP-SIDE BAR

S/N: D3P1-UP; M4T1-UP
FOR USE WITH DB-FAMILY BUCKETS
AN ATTACHMENT

SMCS-6817 **i02818644**

NOTE	REF NO	GRAPHIC REF	PART NUMBER	QTY	PART NAME 1 2 3 4 5 6 (PRODUCT LEVEL)	SEE PAGE
	1	1	**112-2489**	4	PROTECTOR-SIDE BAR	
	2	1	**275-5982**	8	PIN	
	3	1	**132-0999**	8	RETAINER AS	

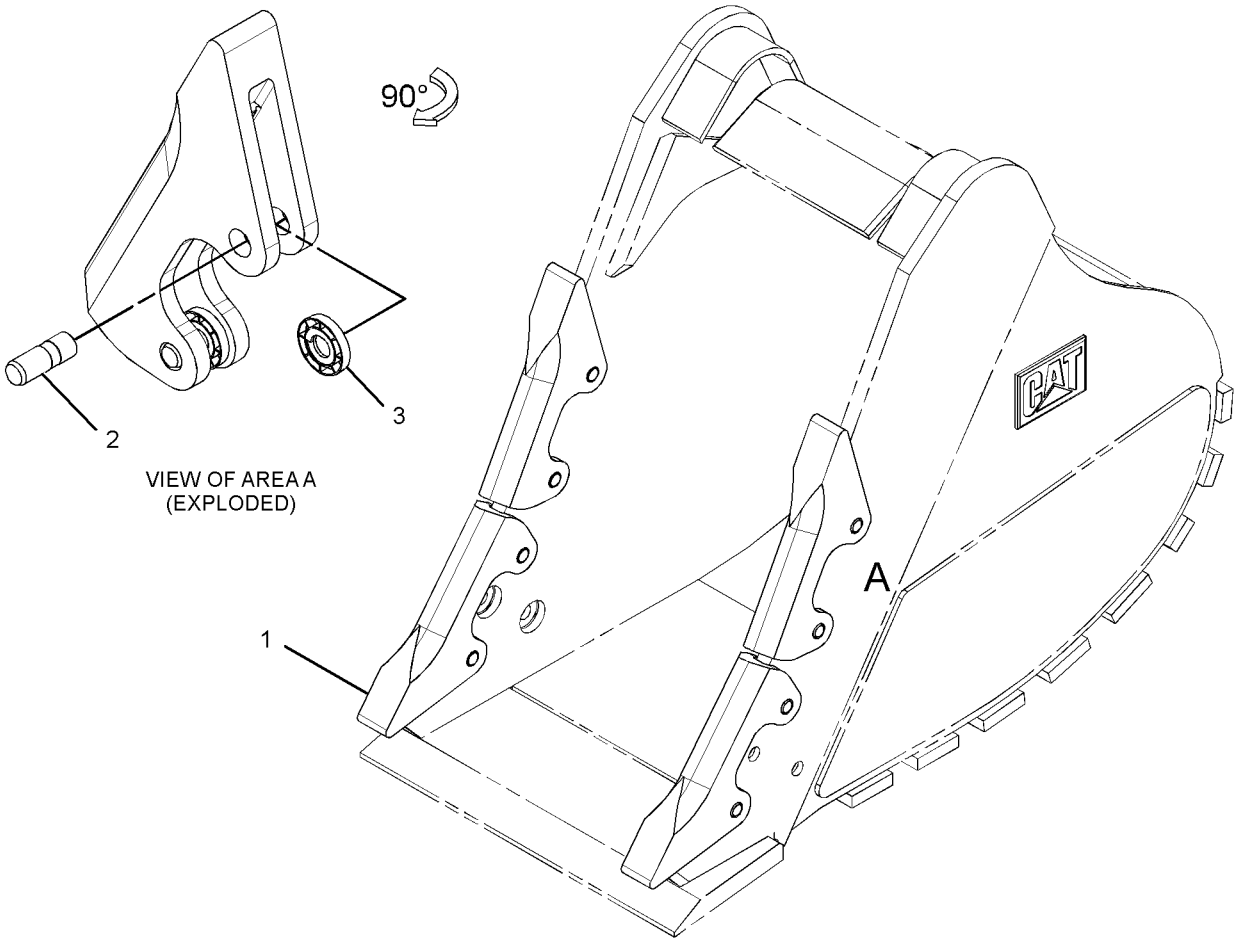

GRAPHIC #1 **<END>** g01407074

195-7217 PROTECTOR GP-SIDE BAR

S/N: D3P1-UP; M4T1-UP
FOR USE WITH TB-FAMILY BUCKETS
AN ATTACHMENT

SMCS-6817 **i02507172**

NOTE	REF NO	GRAPHIC REF	PART NUMBER	QTY	PART NAME 1 2 3 4 5 6 (PRODUCT LEVEL)	SEE PAGE
	1	1	**166-2877**	4	PROTECTOR-SIDE BAR	
	2	1	**132-0998**	8	PIN	
	3	1	**132-0999**	8	RETAINER AS	

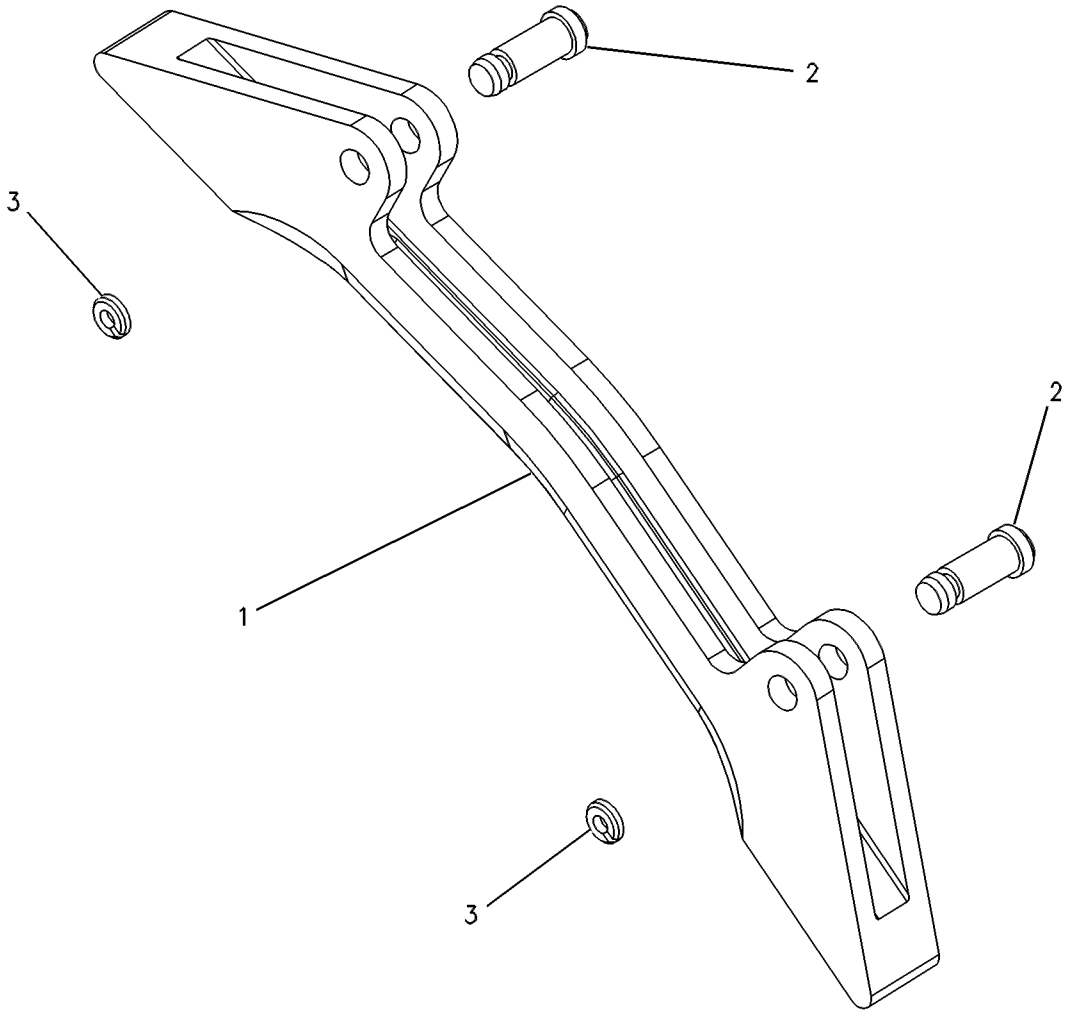

GRAPHIC #1 **<END>** g00266245

WORK TOOLS

112-2481 SIDECUTTER GP

S/N: D3P1-UP; M4T1-UP
FOR USE WITH DB-FAMILY BUCKETS
AN ATTACHMENT

SMCS-6813 **i02498676**

NOTE	REF NO	GRAPHIC REF	PART NUMBER	QTY	PART NAME 1 2 3 4 5 6 (PRODUCT LEVEL)	SEE PAGE
	1	1	**232-2147**	1	SIDECUTTER (RH)	
	2	1	**232-2148**	1	SIDECUTTER (LH)	
	3	1	**1D-4635**	8	BOLT (1-8X2.5-IN)	
	4	1	**2J-3507**	8	NUT-FULL (1-8-THD)	
	5	1	**3K-5234**	8	WASHER-HARD (28X49X6-MM THK)	

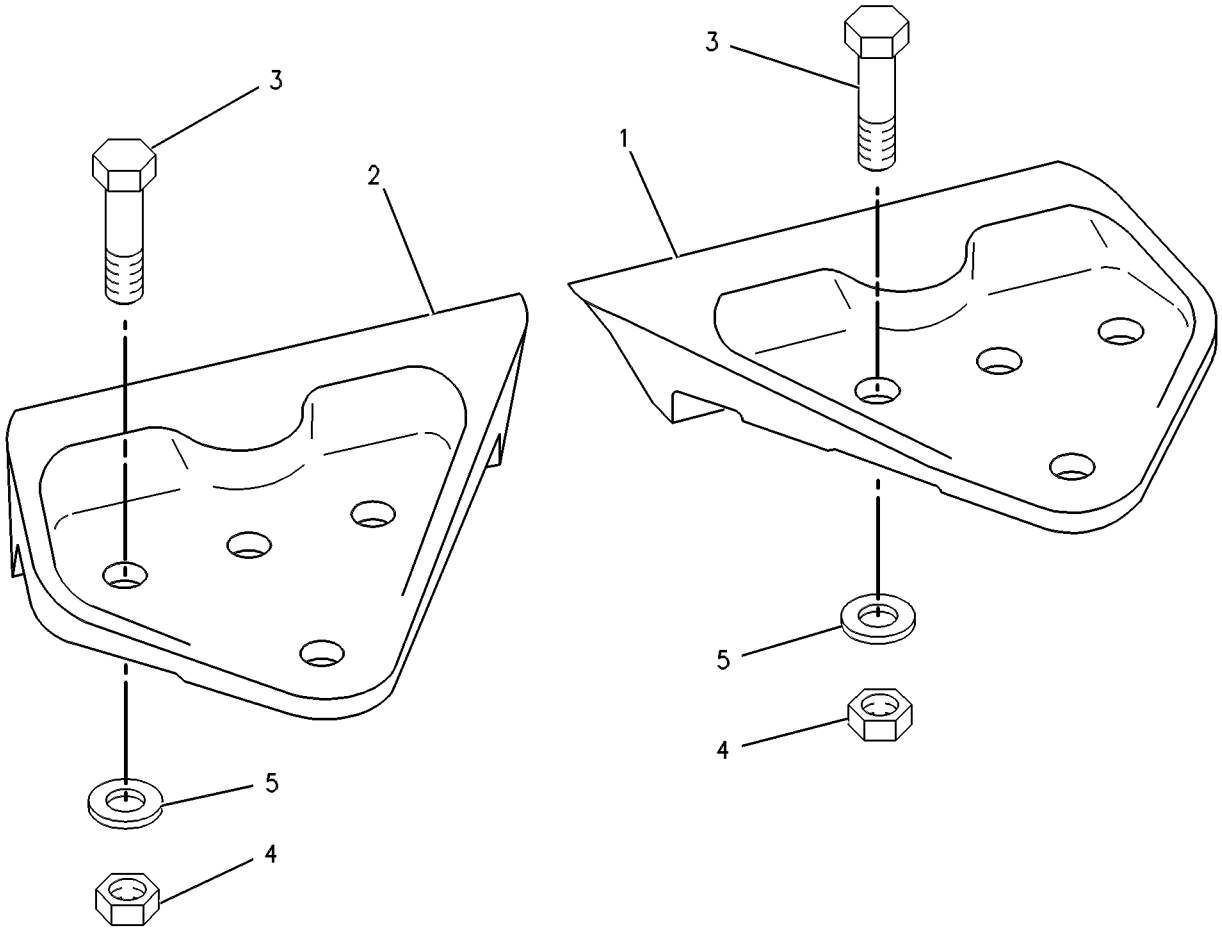

GRAPHIC #1 **<END>** g00276567

WORK TOOLS

195-7120 SIDECUTTER GP

S/N: D3P1-UP; M4T1-UP
FOR USE WITH TB-FAMILY BUCKETS
AN ATTACHMENT

SMCS-6813 **i03013307**

NOTE	REF NO	GRAPHIC REF	PART NUMBER	QTY	PART NAME 1 2 3 4 5 6 (PRODUCT LEVEL)	SEE PAGE
	1	1	**195-5136**	2	SIDECUTTER (UPPER)	
	2	1	**275-5998**	1	SIDECUTTER (RH)	
	3	1	**275-5999**	1	SIDECUTTER (LH)	
	4	1	**1D-4637**	12	BOLT (1-8X3.25-IN)	
	5	1	**2J-3507**	12	NUT-FULL (1-8-THD)	
	6	1	**3K-5234**	12	WASHER-HARD (28X49X6-MM THK)	

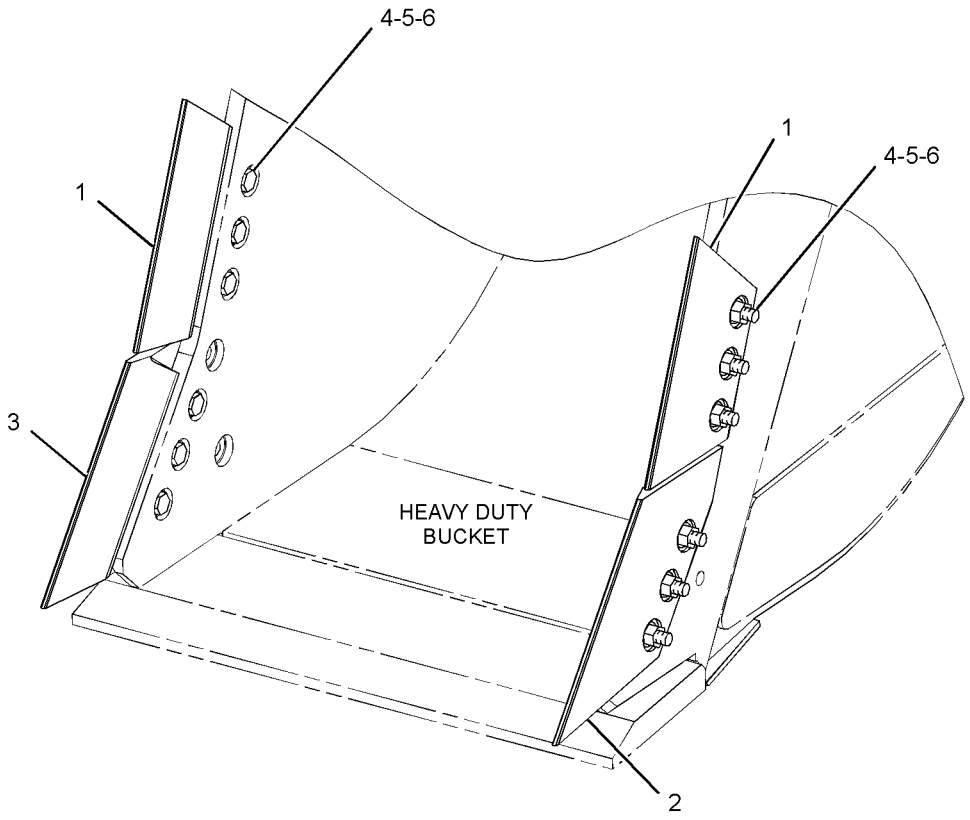

GRAPHIC #1 **<END>** g01614716

WORK TOOLS

277-5814 SIDECUTTER GP

S/N: D3P1-UP; M4T1-UP
FOR USE WITH TB-FAMILY BUCKETS
AN ATTACHMENT

SMCS-6813 **i02989636**

NOTE	REF NO	GRAPHIC REF	PART NUMBER	QTY	PART NAME 1 2 3 4 5 6 (PRODUCT LEVEL)	SEE PAGE
	1	1	**256-8690**	1	SIDECUTTER (RH)	
	2	1	**256-8691**	1	SIDECUTTER (LH)	
	3	1	**1D-4637**	10	BOLT (1-8X3.25-IN)	
	4	1	**2J-3507**	10	NUT-FULL (1-8-THD)	
	5	1	**3K-5234**	10	WASHER-HARD (28X49X6-MM THK)	

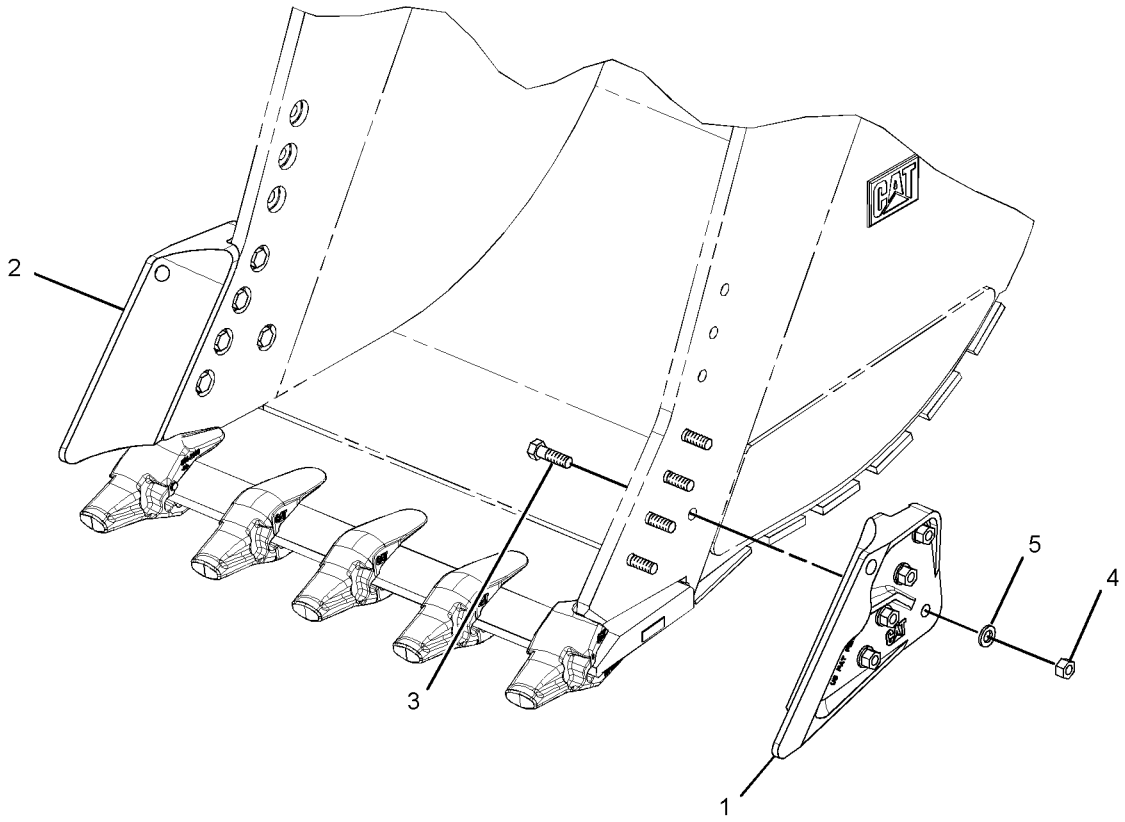

GRAPHIC #1 **<END>** g01427753

WORK TOOLS

229-6978 TIP GP-GENERAL PURPOSE–K-100

S/N: D3P1-UP; M4T1-UP

AN ATTACHMENT

SMCS-6805 **i03631901**

NOTE	PART NUMBER	QTY	PART NAME 1 2 3 4 5 6 (PRODUCT LEVEL)	SEE PAGE
	220-9090	1	RETAINER-G.E.T.	
	220-9109	1	TIP-GENERAL PURPOSE (K-100)	

<END>

WORK TOOLS

309-1127 TIP GP-GENERAL PURPOSE–K-110

S/N: D3P1-UP; M4T1-UP
AN ATTACHMENT

SMCS-6805 **i03631908**

NOTE	REF NO	GRAPHIC REF	PART NUMBER	QTY	PART NAME 1 2 3 4 5 6 (PRODUCT LEVEL)	SEE PAGE
	1	1	**286-2110**	1	RETAINER-G.E.T. (K-110)	
	2	1	**286-2117**	1	TIP-GENERAL PURPOSE (K-110)	

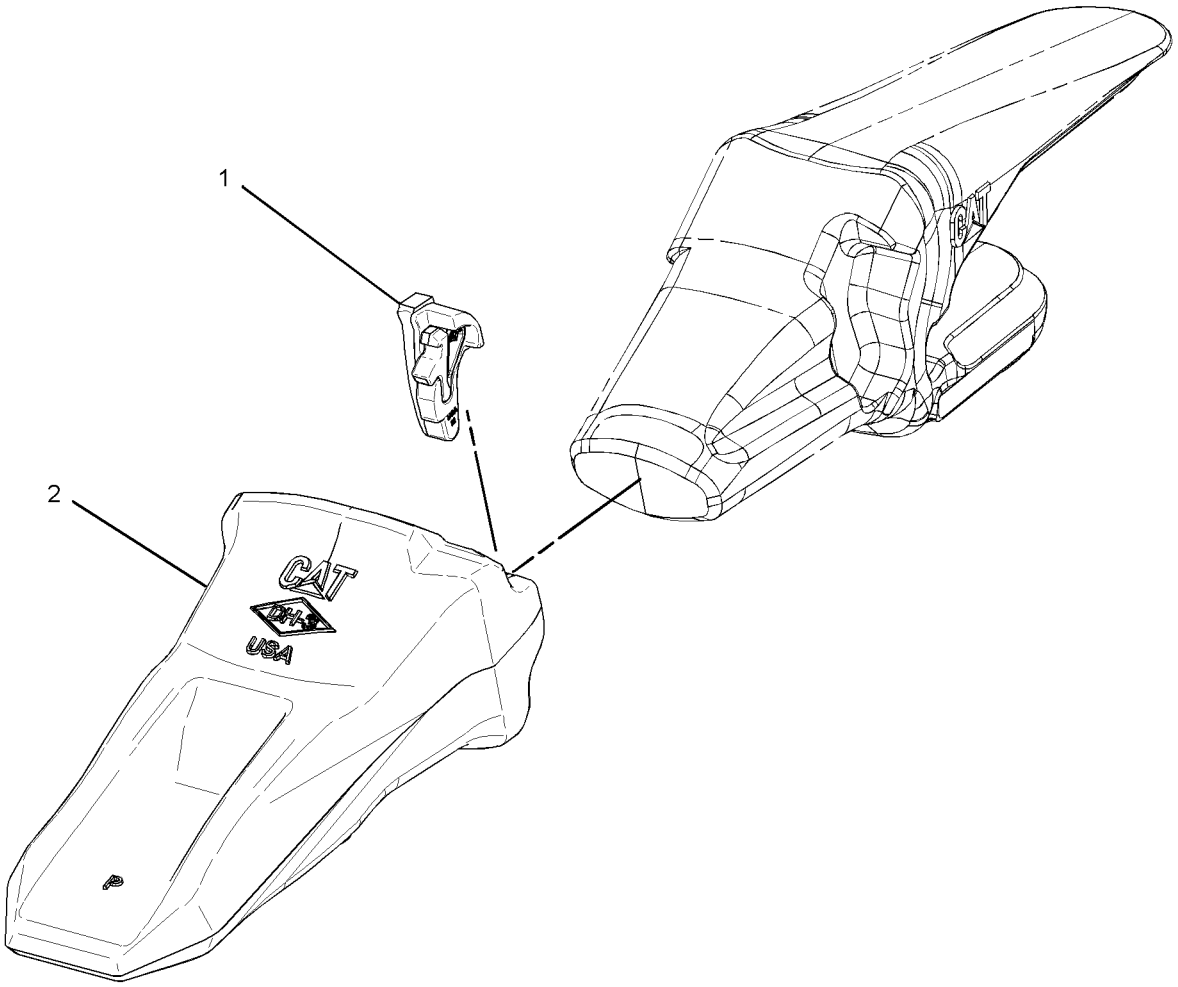

GRAPHIC #1 **<END>** g01519264

WORK TOOLS

309-1129 TIP GP-HEAVY ABRASION–K-110

S/N: D3P1-UP; M4T1-UP
AN ATTACHMENT

SMCS-6805 **i03631940**

NOTE	REF NO	GRAPHIC REF	PART NUMBER	QTY	PART NAME 1 2 3 4 5 6 (PRODUCT LEVEL)	SEE PAGE
	1	1	**286-2110**	1	RETAINER-G.E.T. (K-110)	
	2	1	**286-2119**	1	TIP-HEAVY ABRASION (K-110)	

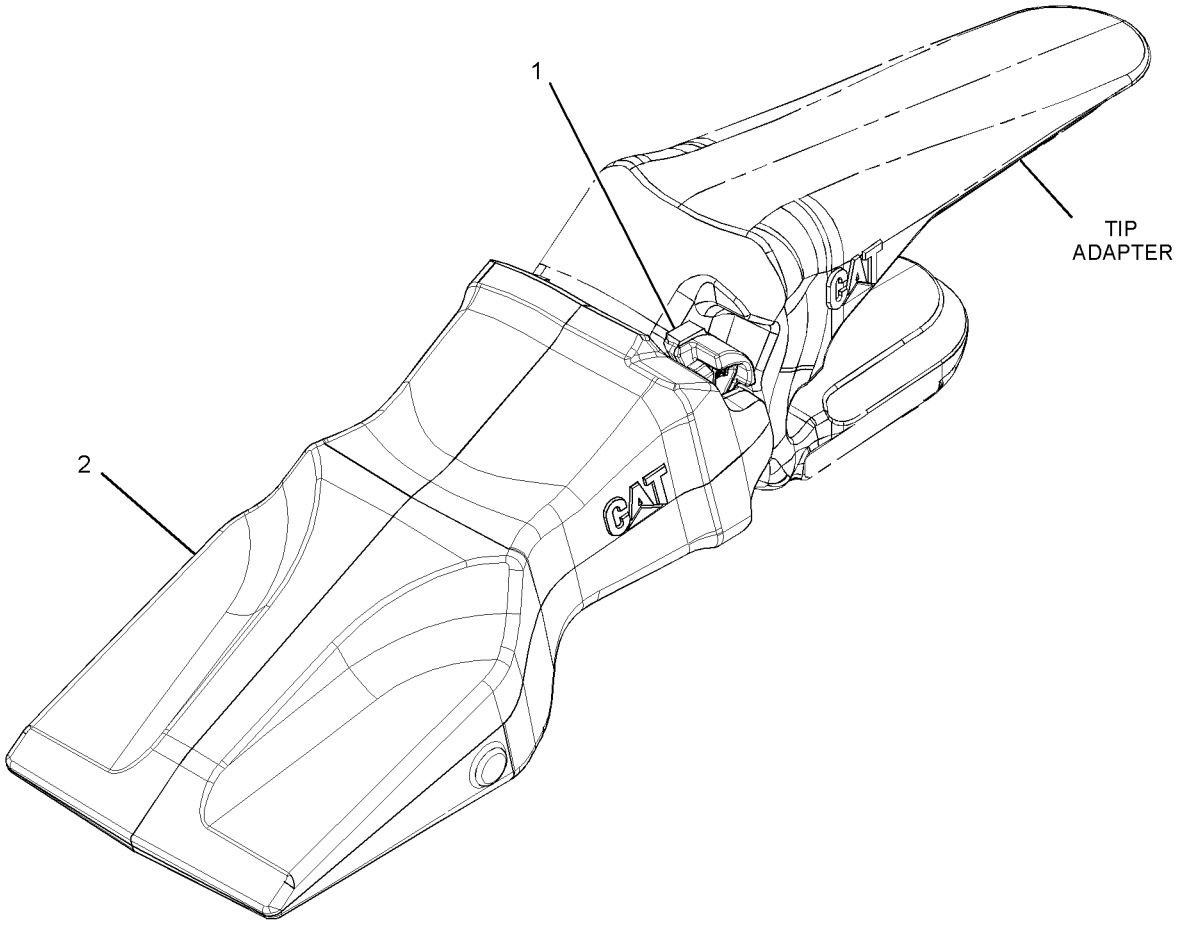

GRAPHIC #1 **<END>** g01521854

WORK TOOLS

229-6974 TIP GP-PENETRATION—K-100

S/N: D3P1-UP; M4T1-UP

AN ATTACHMENT

SMCS-6805 **i03631945**

NOTE	REF NO	GRAPHIC REF	PART NUMBER	QTY	PART NAME 1 2 3 4 5 6 (PRODUCT LEVEL)	SEE PAGE
	1	1	**220-9090**	1	RETAINER-G.E.T.	
	2	1	**220-9102**	1	TIP-PENETRATION (K-100)	

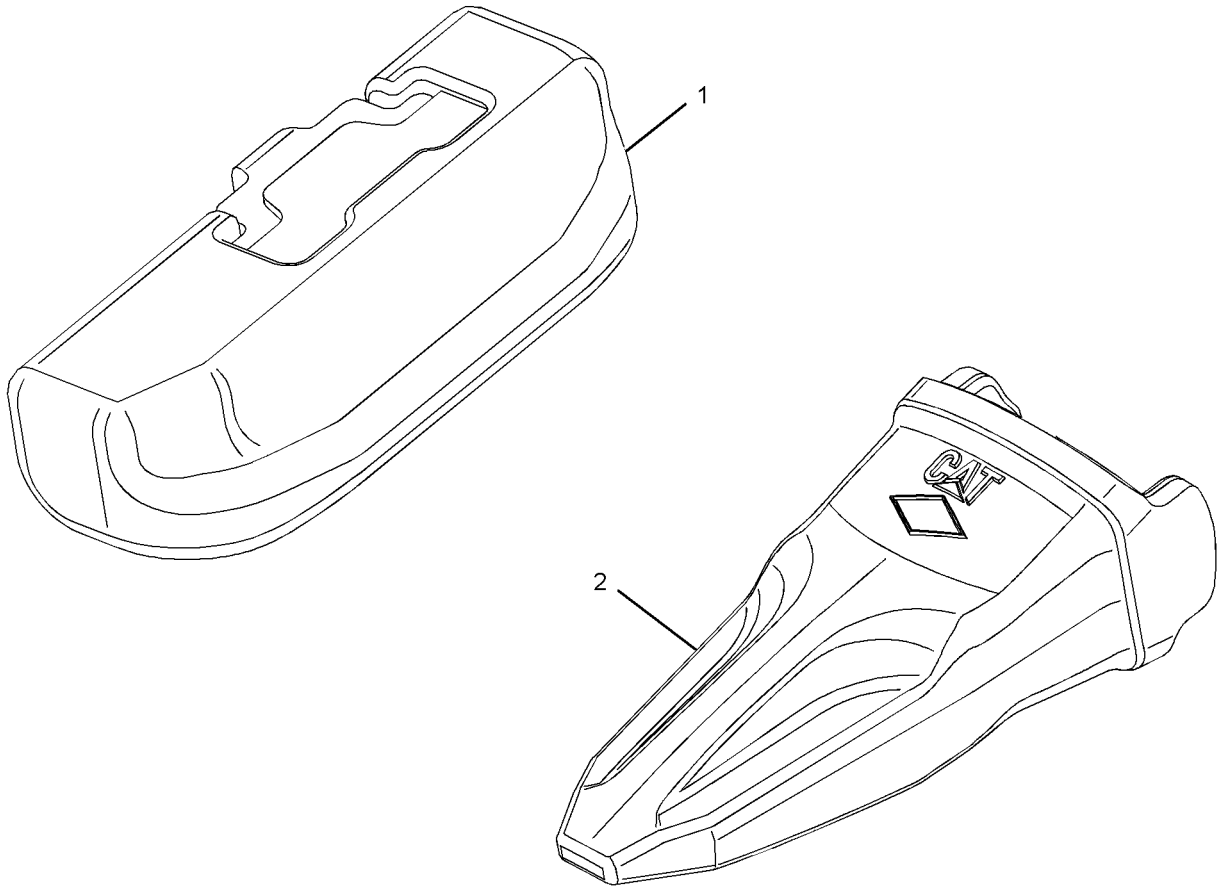

GRAPHIC #1 **<END>** g01144259

WORK TOOLS

309-1123 TIP GP-PENETRATION–K-110

S/N: D3P1-UP; M4T1-UP

AN ATTACHMENT

SMCS-6805 **i03631950**

NOTE	REF NO	GRAPHIC REF	PART NUMBER	QTY	PART NAME 1 2 3 4 5 6 (PRODUCT LEVEL)	SEE PAGE
	1	1	**286-2110**	1	RETAINER-G.E.T. (K-110)	
	2	1	**286-2113**	1	TIP-PENETRATION (K-110)	

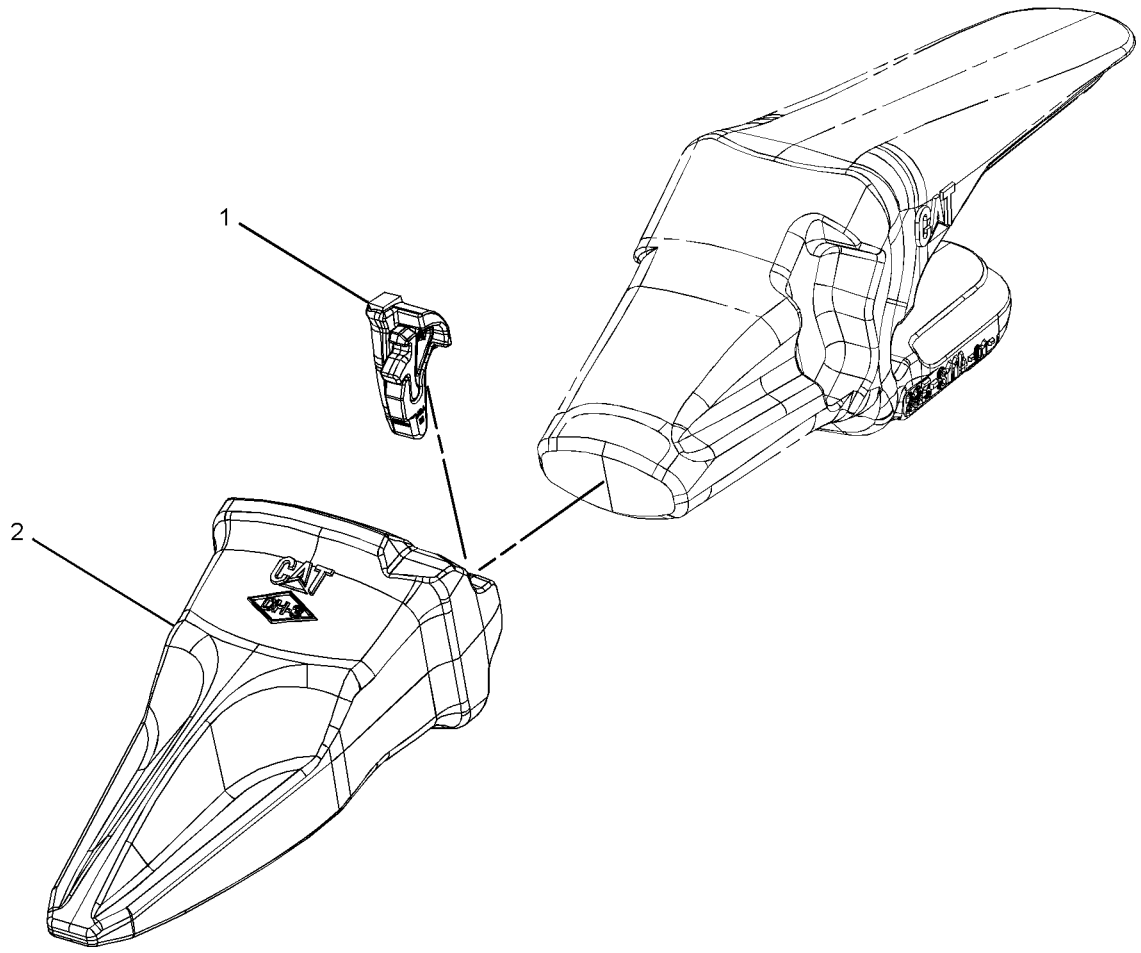

GRAPHIC #1 **<END>** g01465507

229-6975 TIP GP-PENETRATION PLUS–K-100

S/N: D3P1-UP; M4T1-UP

AN ATTACHMENT

SMCS-6805 **i03631960**

NOTE	PART NUMBER	QTY	PART NAME 1 2 3 4 5 6 (PRODUCT LEVEL)	SEE PAGE
	220-9090	1	RETAINER-G.E.T.	
	220-9103	1	TIP-PENETRATION PLUS (K-100)	

<END>

WORK TOOLS

309-1124 TIP GP-PENETRATION PLUS–K-110

S/N: D3P1-UP; M4T1-UP
AN ATTACHMENT

SMCS-6805 **i03632044**

NOTE	REF NO	GRAPHIC REF	PART NUMBER	QTY	PART NAME 1 2 3 4 5 6 (PRODUCT LEVEL)	SEE PAGE
	1	1	**286-2110**	1	RETAINER-G.E.T. (K-110)	
	2	1	**286-2114**	1	TIP-PENETRATION PLUS (K-110)	

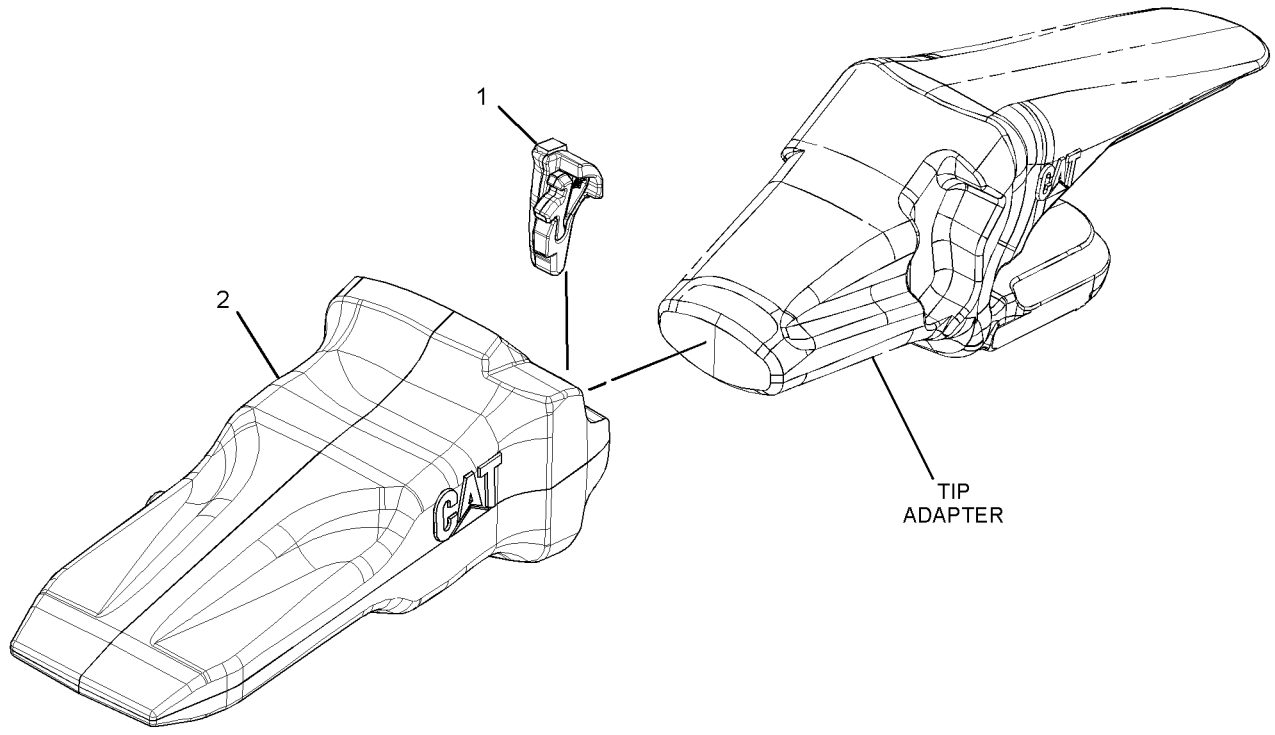

GRAPHIC #1 **<END>** g01478333

OPERATOR STATION

245-7896 ADJUSTER GP-SEAT—LOWER SLIDE

S/N: D3P1-UP; M4T1-UP
PART OF 229-9077 SUSPENSION GP-SEAT
AN ATTACHMENT

SMCS-7321 **i02502956**

NOTE	REF NO	GRAPHIC REF	PART NUMBER	QTY	PART NAME 1 2 3 4 5 6 (PRODUCT LEVEL)	SEE PAGE
M	1	1	**198-3899**	2	SCREW-BUTTON HEAD (M8X1.25X20-MM)	
	2	1	**245-7886**	2	PLATE	
	3	1	**245-7897**	4	PLATE	
M	4	1	**245-7898**	2	SCREW-BUTTON HEAD (M8X1.25X25-MM)	
M	5	1	**5C-7261**	4	NUT (M8X1.25-THD)	
	6	1	**8T-4224**	4	WASHER-HARD (8.8X16X2-MM THK)	

M-METRIC PART

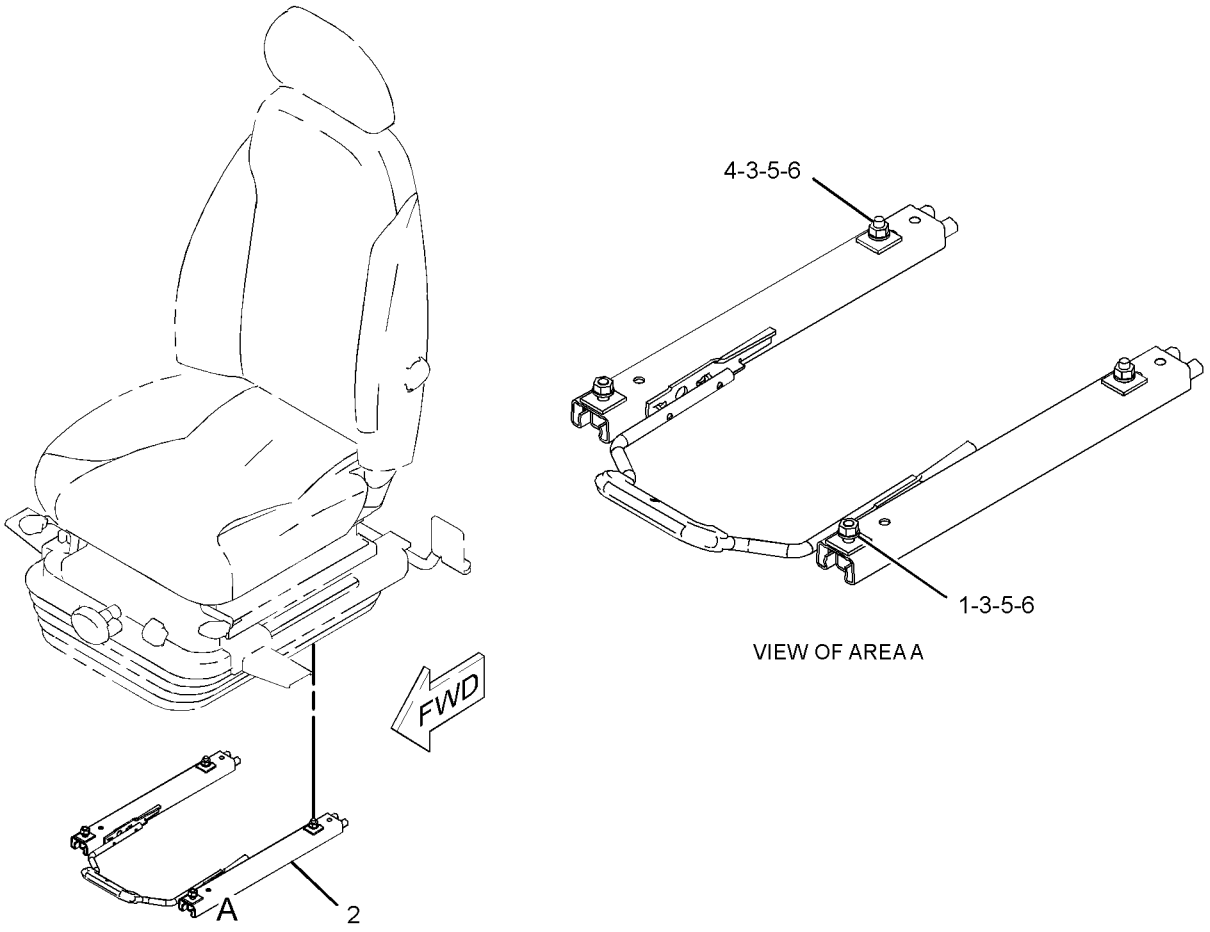

GRAPHIC #1 **<END>** g01172620

OPERATOR STATION

229-9080 AIR CONDITIONER & MOUNTING GP

S/N: D3P1-UP; M4T1-224
PART OF 229-9079 AIR CONDITIONER AR
AN ATTACHMENT

SMCS-7320 **i03137621**

NOTE	REF NO	GRAPHIC REF	PART NUMBER	QTY	PART NAME 1 2 3 4 5 6 (PRODUCT LEVEL)	SEE PAGE
	1	1	**293-1136**	1	PANEL AS-CONTROL	
	2	1	**235-8873**	1	HARNESS AS-HEATER & AIR COND (CONTROL PANEL SWITCHES)	
	3	1	**235-8874**	1	SENSOR-TEMPERATURE (AMBIENT AIR)	
	4	1	**235-8875**	1	BRACKET	
	5	1	**235-9006**	1	HARNESS AS-HEATER & AIR COND	
	6	1	**9X-8256**	1	WASHER (6.6X12X2-MM THK)	
M	7	1	**099-2374**	2	BOLT-SOCKET HEAD (M5X0.8X12-MM)	
	8	1	**111-4836**	3	CLIP	
CY	9	1	**316-8812**	1	AIR CONDITIONER GP	928
	10	1	**3S-2093**	2	STRAP-CABLE	
M	11	1	**5C-9553**	1	BOLT (M6X1X16-MM)	
	12	1	**7X-7729**	7	WASHER (11X25X3-MM THK)	
	13	1	**8T-0328**	2	WASHER-HARD (5.5X10X1-MM THK)	
	14	1	**8T-4121**	3	WASHER-HARD (11X21X2.5-MM THK)	
M	15	1	**8T-4136**	7	BOLT (M10X1.5X25-MM)	
M	16	1	**8T-4137**	3	BOLT (M10X1.5X20-MM)	

C-CHANGE FROM PREVIOUS TYPE
M-METRIC PART
Y-SEPARATE ILLUSTRATION

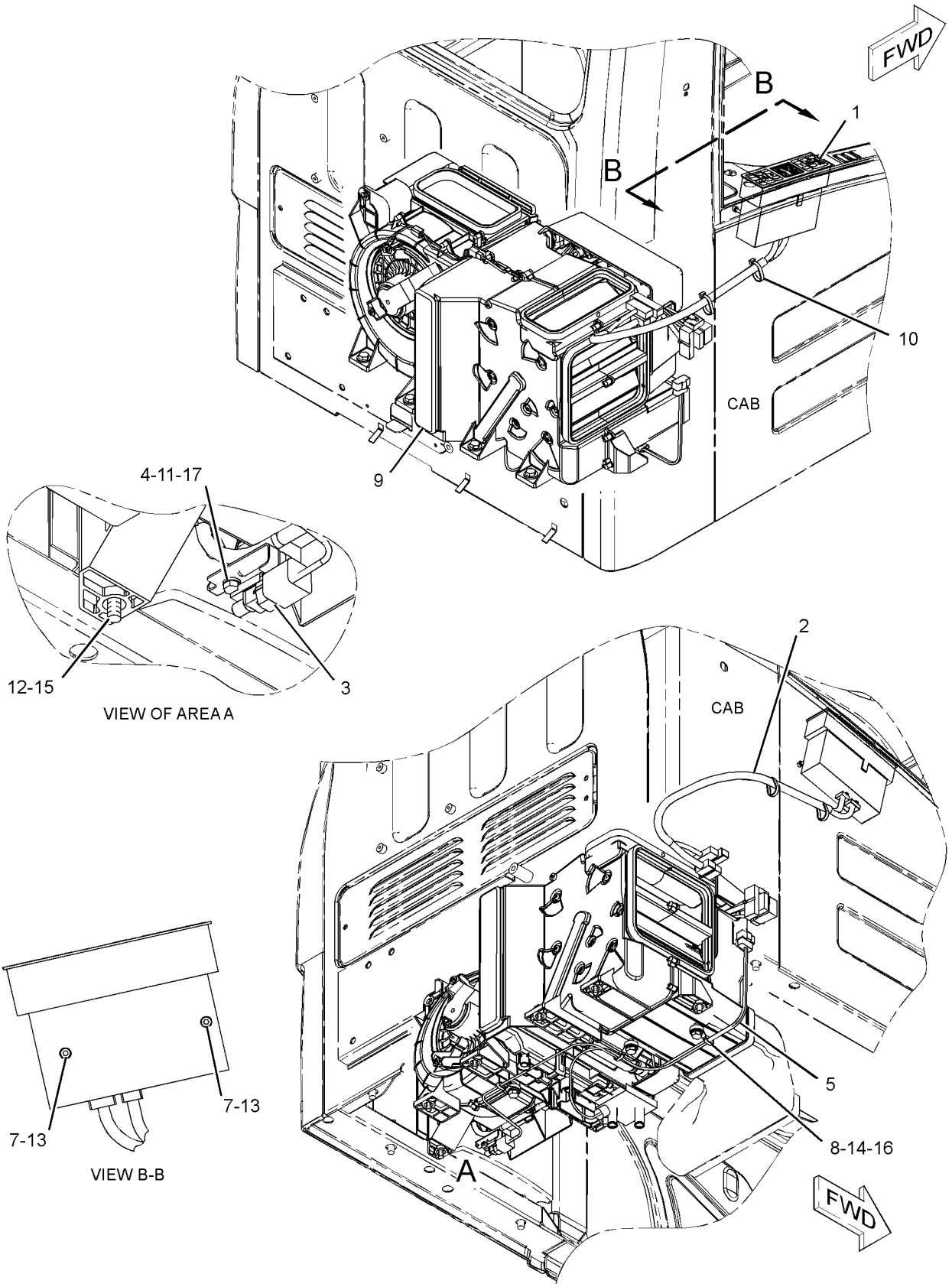

GRAPHIC #1 **<END>** g01435098

OPERATOR STATION

229-9080 AIR CONDITIONER & MOUNTING GP

S/N: D3P1-UP; M4T225-UP
PART OF 229-9079 AIR CONDITIONER AR
AN ATTACHMENT

SMCS-7320 **i03676480**

NOTE	REF NO	GRAPHIC REF	PART NUMBER	QTY	PART NAME 1 2 3 4 5 6 (PRODUCT LEVEL)	SEE PAGE
	1	1	**293-1136**	1	PANEL AS-CONTROL	
	2	1	**235-8873**	1	HARNESS AS-HEATER & AIR COND (CONTROL PANEL SWITCHES)	
	3	1	**235-8874**	1	SENSOR-TEMPERATURE (AMBIENT AIR)	
	4	1	**235-8875**	1	BRACKET	
	5	1	**235-9006**	1	HARNESS AS-HEATER & AIR COND	
M	7	1	**099-2374**	2	BOLT-SOCKET HEAD (M5X0.8X12-MM)	
	8	1	**111-4836**	3	CLIP	
CY	9	1	**316-8917**	1	AIR CONDITIONER GP	931
	10	1	**3S-2093**	2	STRAP-CABLE	
M	11	1	**5C-9553**	1	BOLT (M6X1X16-MM)	
	12	1	**7X-7729**	7	WASHER (11X25X3-MM THK)	
	13	1	**8T-0328**	2	WASHER-HARD (5.5X10X1-MM THK)	
	14	1	**8T-4121**	3	WASHER-HARD (11X21X2.5-MM THK)	
M	15	1	**8T-4136**	7	BOLT (M10X1.5X25-MM)	
M	16	1	**8T-4137**	3	BOLT (M10X1.5X20-MM)	
	17	1	**9X-8256**	1	WASHER (6.6X12X2-MM THK)	

C-CHANGE FROM PREVIOUS TYPE
M-METRIC PART
Y-SEPARATE ILLUSTRATION

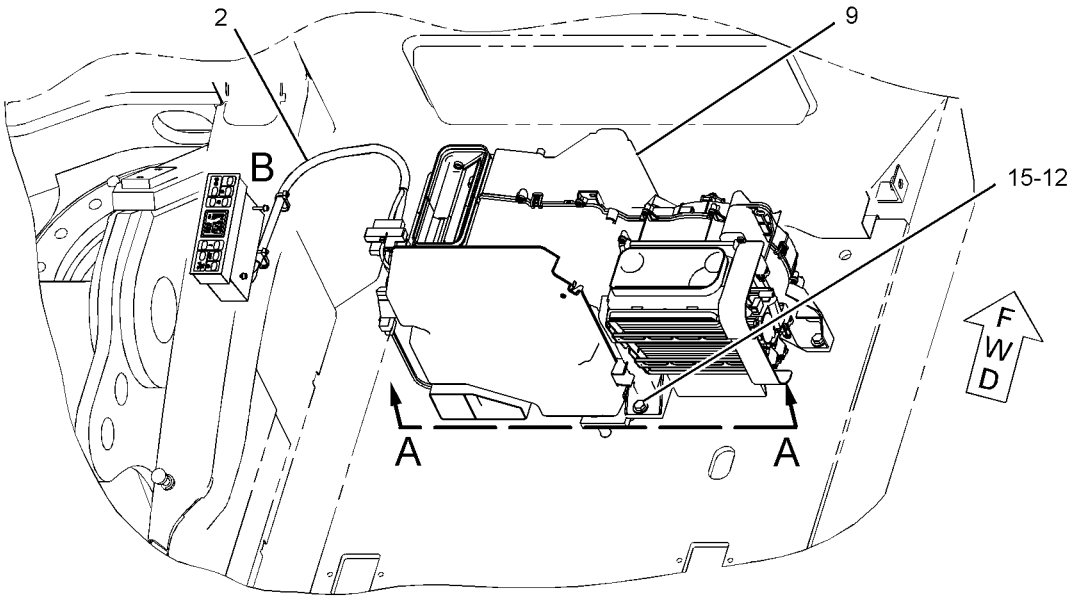

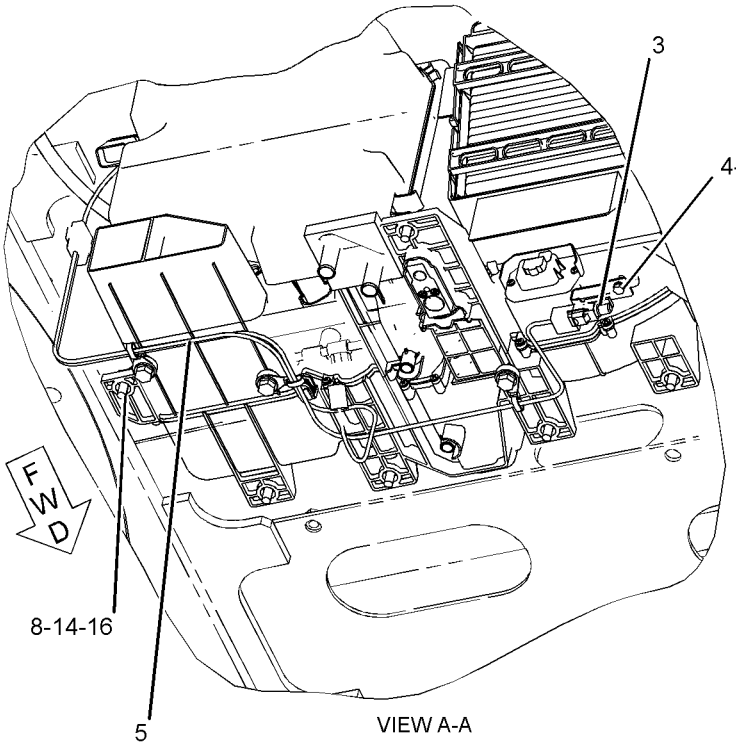

VIEW A-A

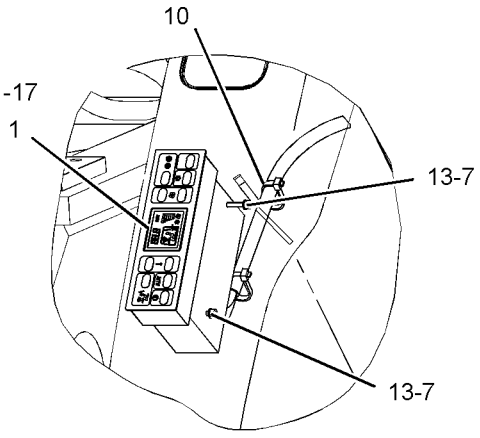

VIEW OF AREA B

GRAPHIC #1 **<END>** g01401004

OPERATOR STATION

229-9079 AIR CONDITIONER AR

S/N: D3P1-UP; M4T1-UP

PART OF 345-2287, 345-2288 CAB AR, 337-4122, 337-4125 OPTION AR-CAB

AN ATTACHMENT

SMCS-7320 **i02500223**

NOTE	PART NUMBER	QTY	PART NAME 1 2 3 4 5 6 (PRODUCT LEVEL)	SEE PAGE
Y	*229-9080*	1	AIR CONDITIONER & MOUNTING GP	923
Y	*229-9082*	1	DUCT GP-CAB AIR	995

Y-SEPARATE ILLUSTRATION

<END>

OPERATOR STATION

316-8812 AIR CONDITIONER GP

S/N: D3P1-UP; M4T1-224
PART OF 229-9080 AIR CONDITIONER & MOUNTING GP
AN ATTACHMENT

SMCS-7320 **i03137623**

NOTE	REF NO	GRAPHIC REF	PART NUMBER	QTY	PART NAME 1 2 3 4 5 6 (PRODUCT LEVEL)	SEE PAGE
	1	1,2	**185-8300**	35	SCREW-TAPPING	
	2	2	**185-8302**	3	SCREW AS-TAPPING	
Y	3	1	**245-7812**	1	HOUSING GP-AIR CONDITIONER (INLET AIR)	1014
	4	1	**245-7817**	2	MOTOR AS	
	5	1	**245-7818**	3	CLIP	
	6	2	**245-7819**	2	CLIP	
	7	1	**245-7820**	1	COVER-FRONT	
	8	1	**245-7821**	1	HARNESS AS-HEATER & AIR COND	
	9	1	**245-7825**	1	INSULATOR	
	10	1	**245-7826**	1	INSULATOR	
	11	1	**245-7827**	1	INSULATOR	
	12	1	**245-7828**	1	INSULATOR	
	13	2	**245-7829**	1	PACKING	
	14	1	**245-7830**	1	CLIP	
	15	1	**245-7831**	1	SENSOR AS-TEMPERATURE (COOLANT)	
	16	2	**245-7832**	1	CONTROL AS	
	17	1	**245-7833**	1	CORE AS-HEATER	
	18	1	**245-7834**	1	DAMPER AS	
	19	2	**245-7835**	1	SENSOR AS-TEMPERATURE (AMBIENT AIR TEMP)	
Y	20	1	**245-7836**	1	COIL GP-EVAPORATOR	947
	21	1	**245-7838**	1	PACKING	
	22	1	**245-7839**	1	MOTOR AS (WITH FAN)	
	23	1	**245-7856**	3	SCREW AS-TAPPING	
	24	1	**293-1137**	1	FILTER GP-AIR (AIR CONDITIONER)	
		1	**245-7823**	1	FILTER ELEMENT-CAB AIR	
		1	**245-7824**	1	PACKING	
	25	1	**316-8845**	1	PLATE	
	26	1	**316-8846**	1	PLATE	
	27	2	**316-8847**	2	ROD	
	28	2	**316-8848**	1	ROD	
	29	2	**316-8849**	1	ROD	
	30	2	**316-8850**	1	ROD	

Y-SEPARATE ILLUSTRATION

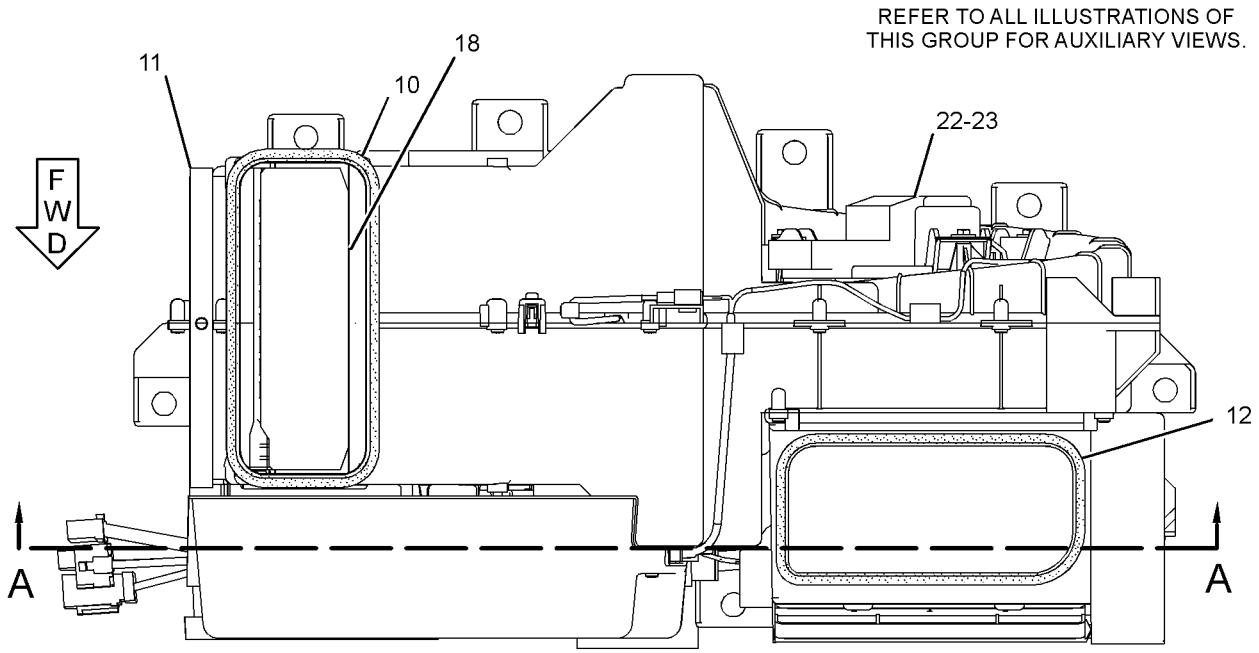

TOP VIEW

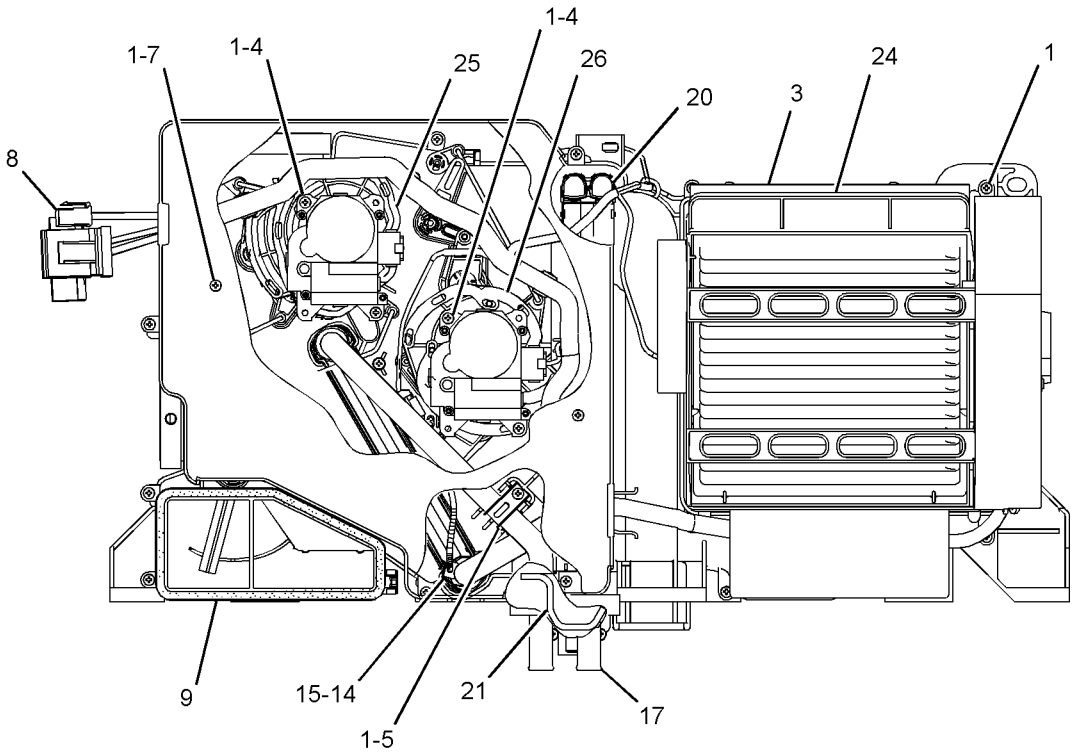

FRONT VIEW

GRAPHIC #1 g01520271

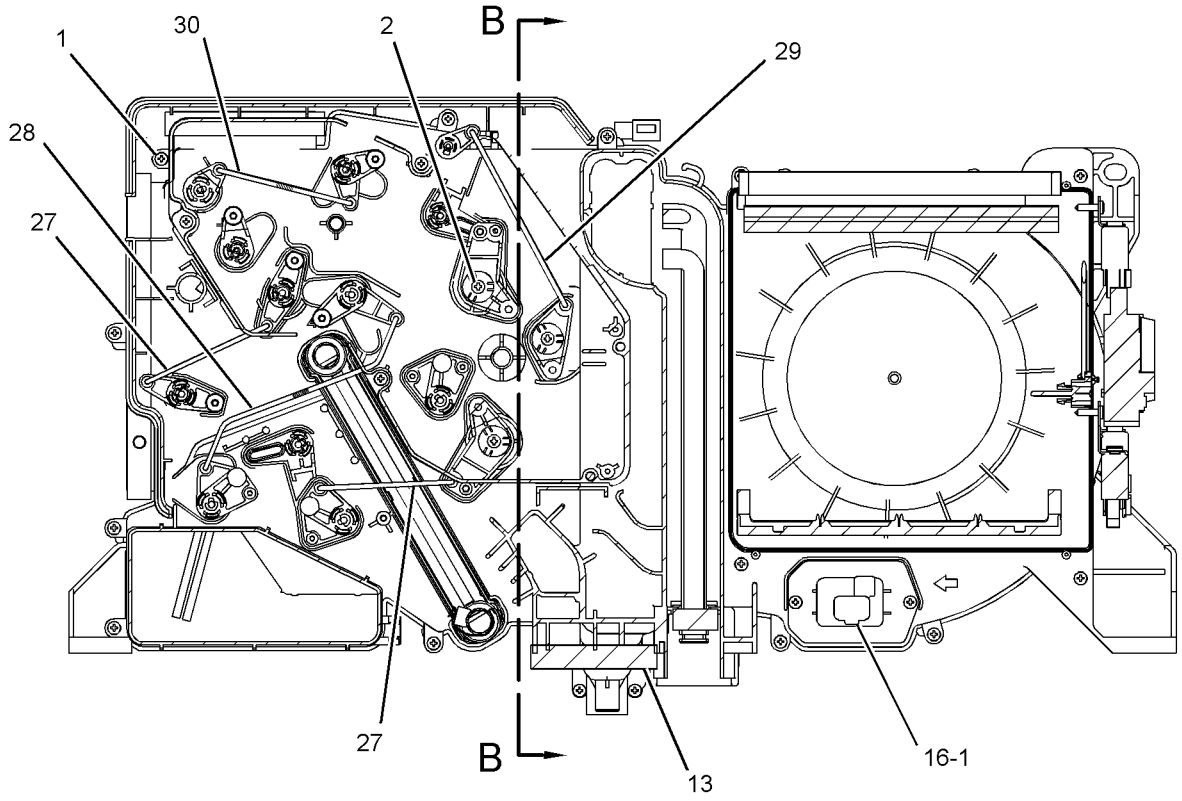

SECTION A-A

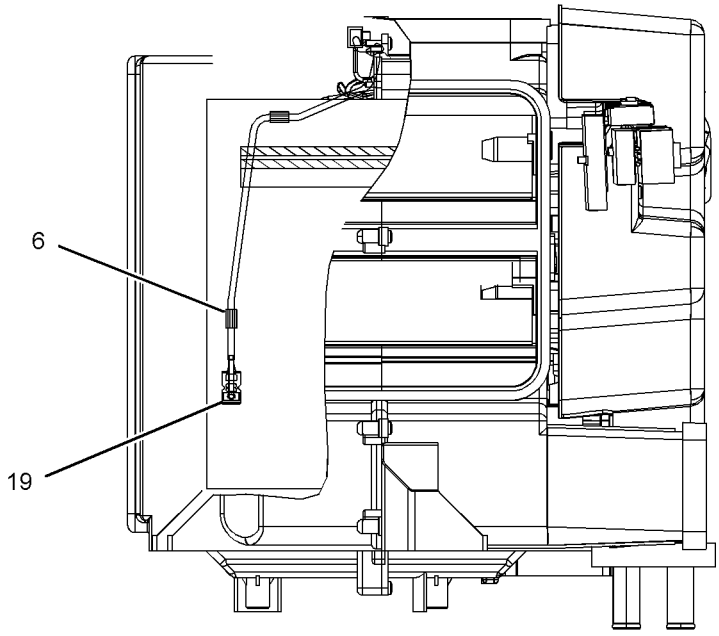

SECTION B-B

GRAPHIC #2 **<END>** g01520275

OPERATOR STATION

316-8917 AIR CONDITIONER GP

S/N: D3P1-UP; M4T225-UP
PART OF 229-9080 AIR CONDITIONER & MOUNTING GP
AN ATTACHMENT

SMCS-7320 **i03676500**

NOTE	REF NO	GRAPHIC REF	PART NUMBER	QTY	PART NAME 1 2 3 4 5 6 (PRODUCT LEVEL)	SEE PAGE
	1	1	**185-8300**	35	SCREW-TAPPING	
	2	1	**185-8302**	3	SCREW AS-TAPPING	
Y	3	1	**245-7812**	1	HOUSING GP-AIR CONDITIONER (INLET AIR)	1014
	4	1	**245-7817**	2	MOTOR AS	
	5	1	**245-7818**	3	CLIP	
	6	1	**245-7819**	2	CLIP	
	7	1	**245-7820**	1	COVER-FRONT	
	8	1	**245-7821**	1	HARNESS AS-HEATER & AIR COND	
	9	1	**245-7825**	1	INSULATOR	
	10	1	**245-7826**	1	INSULATOR	
	11	1	**245-7827**	1	INSULATOR	
	12	1	**245-7828**	1	INSULATOR	
	13	1	**245-7829**	1	PACKING	
	14	1	**245-7830**	1	CLIP	
	15	1	**245-7831**	1	SENSOR AS-TEMPERATURE (COOLANT)	
	16	1	**245-7832**	1	CONTROL AS	
	17	1	**245-7833**	1	CORE AS-HEATER	
	18	1	**245-7834**	1	DAMPER AS	
	19	1	**245-7835**	1	SENSOR AS-TEMPERATURE (AMBIENT AIR)	
Y	20	1	**245-7836**	1	COIL GP-EVAPORATOR	947
	21	1	**245-7838**	1	PACKING	
	22	1	**245-7839**	1	MOTOR AS (WITH FAN)	
	23	1	**245-7856**	3	SCREW AS-TAPPING	
	24	1	**293-1137**	1	FILTER GP-AIR (AIR CONDITIONER)	
		1	**245-7823**	1	FILTER ELEMENT-CAB AIR	
		1	**245-7824**	1	PACKING	
	25	1	**316-8846**	1	PLATE	
	26	1	**316-8847**	2	ROD	
	27	1	**316-8849**	1	ROD	
	28	1	**316-8918**	1	PLATE	
	29	1	**316-8920**	1	ROD	
	30	1	**316-8921**	1	ROD	

Y-SEPARATE ILLUSTRATION

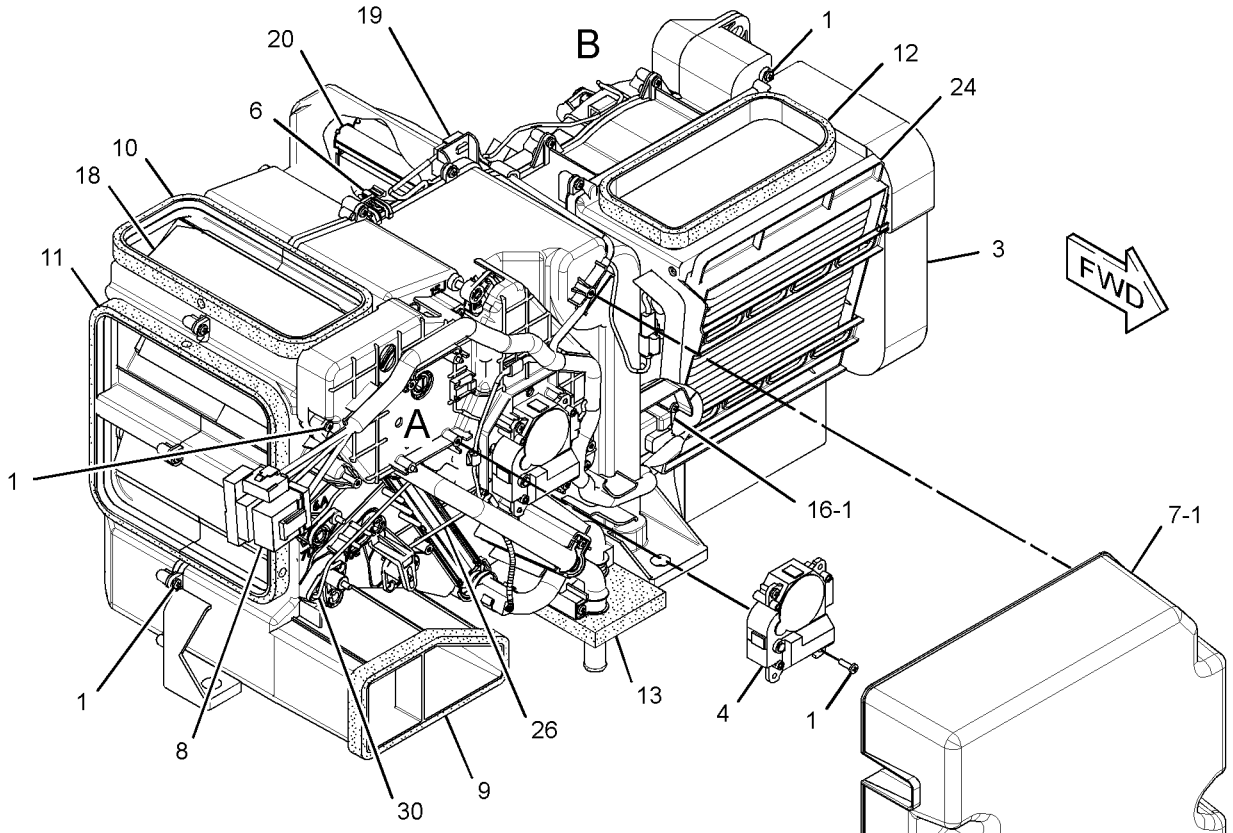

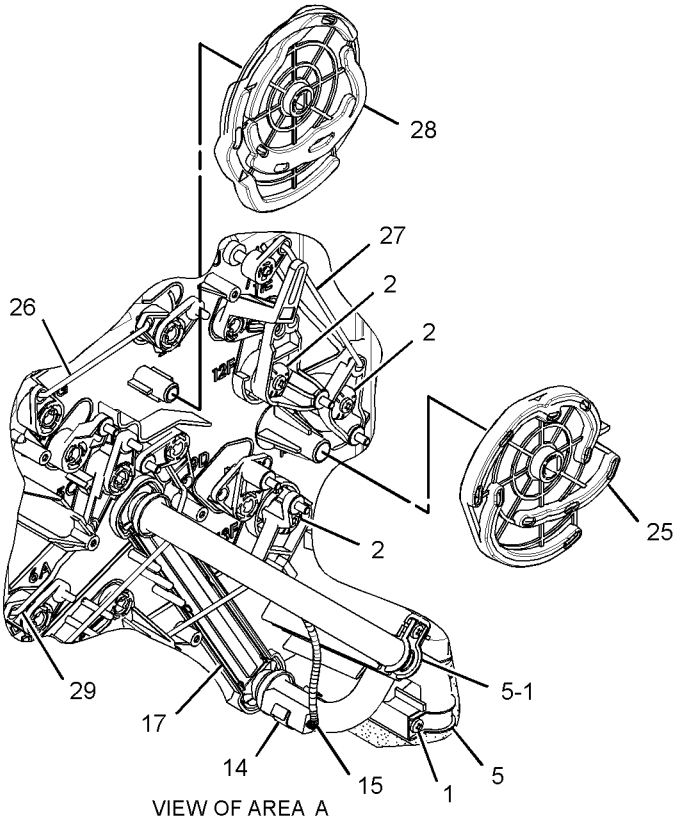

VIEW OF AREA A
(PARTS REMOVED)

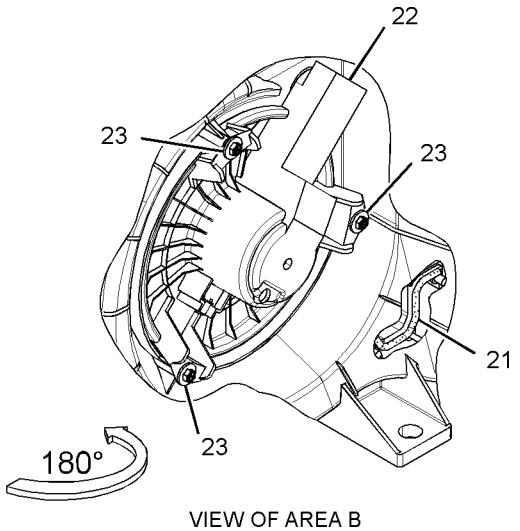

VIEW OF AREA B

GRAPHIC #1 **<END>** g01825495

OPERATOR STATION

309-5789 ANTENNA & MOUNTING GP—PRODUCT LINK

S/N: D3P1-UP; M4T1-UP
PART OF 314-3533 INSTALLATION AR-COMMUNICATION
AN ATTACHMENT

SMCS-7606 **i03093541**

NOTE	REF NO	GRAPHIC REF	PART NUMBER	QTY	PART NAME 1 2 3 4 5 6 (PRODUCT LEVEL)	SEE PAGE
	1	1	**309-5751**	1	BRACKET	
	2	1	**310-2393**	1	ANTENNA AS	
		1	**301-0589**	1	ANTENNA (FLEXIBLE)	
	3	1	**095-0910**	4	CLIP	
	4	1	**161-6987**	3	WASHER-HARD (5.2X16X1.5-MM THK)	
M	5	1	**143-9397**	3	SCREW-PAN HEAD (M4X0.7X12-MM)	
M	6	1	**8T-4190**	1	BOLT (M16X2X25-MM)	
M	7	1	**8T-4138**	1	BOLT (M6X1X20-MM)	
	8	1	**9X-2026**	1	WASHER (6.5X17X1-MM THK)	
	9	1	**9X-6165**	1	WASHER (6.5X22X2.5-MM THK)	
	10	1	**9X-8257**	1	WASHER (17.5X30X3.5-MM THK)	

M-METRIC PART

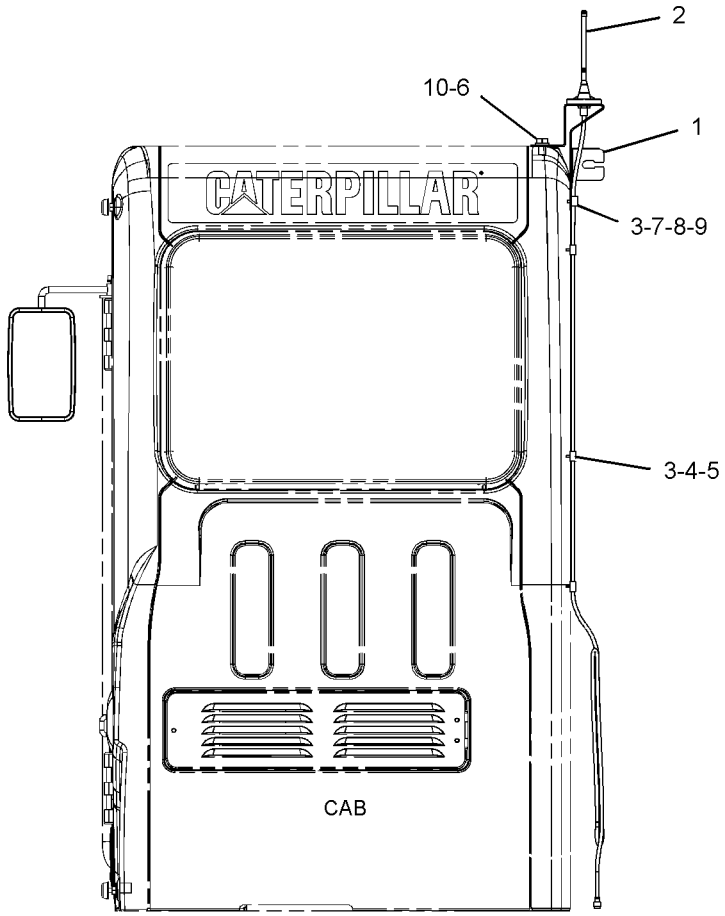

REAR VIEW

GRAPHIC #1 **<END>** g01444711

OPERATOR STATION

259-7346 ARMREST GP–RH

S/N: D3P1-UP; M4T1-UP

PART OF 259-7348 CONSOLE GP-OPERATOR

SMCS-7307 **i02604398**

NOTE	REF NO	GRAPHIC REF	PART NUMBER	QTY	PART NAME 1 2 3 4 5 6 (PRODUCT LEVEL)	SEE PAGE
M	1	1	**171-7325**	3	SCREW-TAPPING (M5X0.8-THD)	
M	2	1	**185-8286**	2	SCREW-MACHINE (M4X0.7X8-MM)	
	3	1	**235-8951**	1	SUPPORT AS	
	4	1	**235-8996**	1	COVER	
	5	1	**235-8997**	1	KNOB	
	6	1	**279-3161**	1	CUSHION	

M-METRIC PART

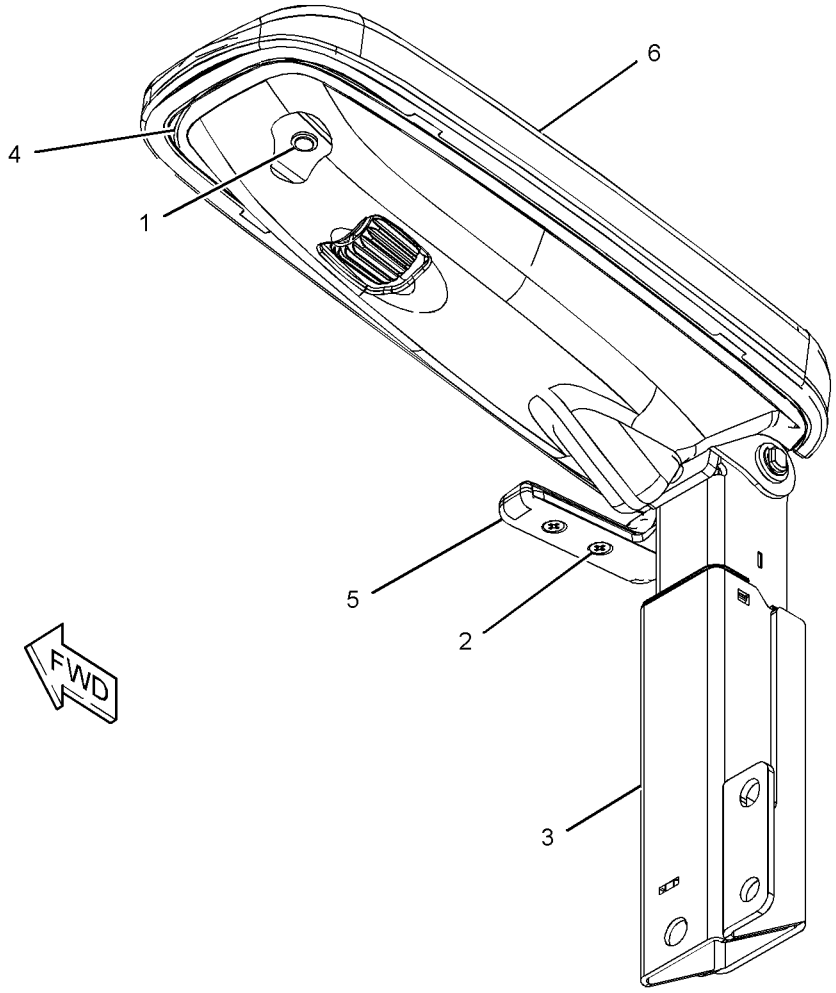

GRAPHIC #1 **<END>** g01217218

OPERATOR STATION

259-7347 ARMREST GP–LH

S/N: D3P1-UP; M4T1-UP

PART OF 259-7349 CONSOLE GP-OPERATOR

SMCS-7307 **i02604406**

NOTE	REF NO	GRAPHIC REF	PART NUMBER	QTY	PART NAME 1 2 3 4 5 6 (PRODUCT LEVEL)	SEE PAGE
M	1	1	**171-7325**	3	SCREW-TAPPING (M5X0.8-THD)	
M	2	1	**185-8286**	2	SCREW-MACHINE (M4X0.7X8-MM)	
	3	1	**235-8952**	1	SUPPORT AS	
	4	1	**235-8996**	1	COVER	
	5	1	**235-8998**	1	KNOB	
	6	1	**259-7345**	1	CUSHION	

M-METRIC PART

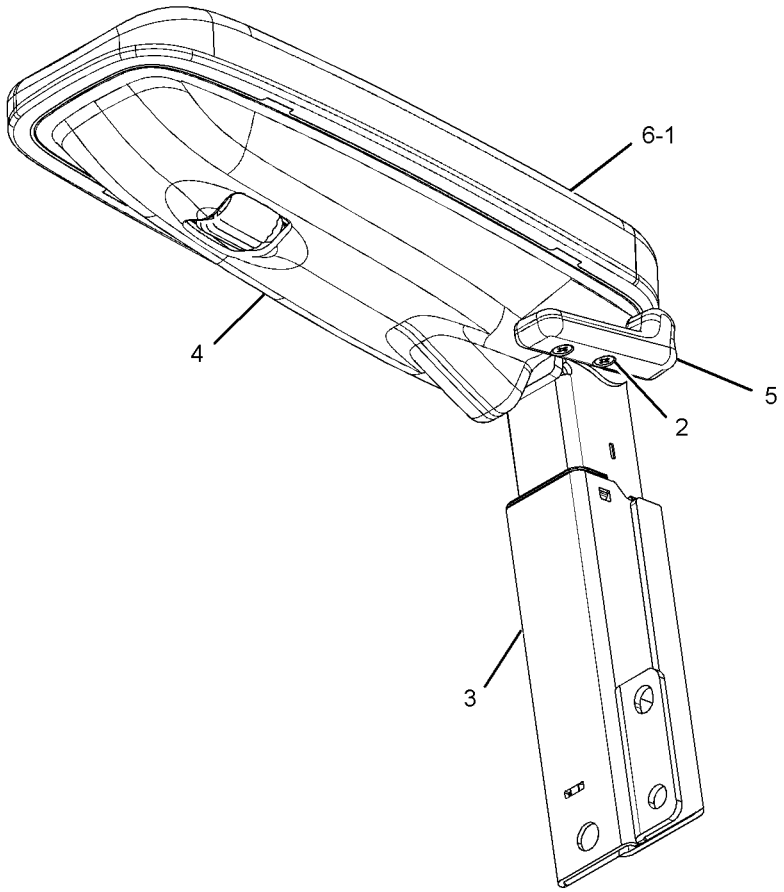

GRAPHIC #1 **<END>** g01210886

OPERATOR STATION

345-2287 CAB AR

S/N: M4T1-UP

AN ATTACHMENT

SMCS-7301, 7325 **i03729742**

NOTE	PART NUMBER	QTY	PART NAME 1 2 3 4 5 6 (PRODUCT LEVEL)	SEE PAGE
Y	*229-9079*	1	AIR CONDITIONER AR	927
Y	*229-9098*	1	CAB GP	937
Y	**234-6500**	1	COVER GP-STORAGE (CAB, REAR)	991
Y	*327-6503*	1	SEAT & MOUNTING GP (HIGH BACK, WITH HEATER)	1044
Y	*305-0466*	1	SEAT BELT GP (RETRACTABLE, 76-MM)	1045
Y	*251-0485*	1	WIRING GP-CONVERTER (12-VOLT, 7-AMPERE)	321

Y-SEPARATE ILLUSTRATION

<END>

345-2288 CAB AR

S/N: M4T1-UP

PART OF 345-2289, 345-2290 DISTRIBUTION AR

AN ATTACHMENT

SMCS-7301, 7325 **i03727115**

NOTE	PART NUMBER	QTY	PART NAME 1 2 3 4 5 6 (PRODUCT LEVEL)	SEE PAGE
Y	*229-9079*	1	AIR CONDITIONER AR	927
Y	*229-9098*	1	CAB GP	937
Y	**234-6500**	1	COVER GP-STORAGE (CAB, REAR)	991
Y	*327-6501*	1	SEAT & MOUNTING GP (HIGH BACK, TILT)	1043
Y	*305-0466*	1	SEAT BELT GP (RETRACTABLE, 76-MM)	1045
Y	*251-0485*	1	WIRING GP-CONVERTER (12-VOLT, 7-AMPERE)	321

Y-SEPARATE ILLUSTRATION

<END>

OPERATOR STATION

229-9098 CAB GP

S/N: D3P1-UP; M4T1-UP

PART OF 345-2287, 345-2288 CAB AR, 337-4122, 337-4125 OPTION AR-CAB

AN ATTACHMENT

SMCS-7301, 7325 **i02660461**

NOTE	REF NO	GRAPHIC REF	PART NUMBER	QTY	PART NAME 1 2 3 4 5 6 (PRODUCT LEVEL)	SEE PAGE
M	1	1	**128-2135**	5	SCREW-TRUSS HEAD (M6X1X13-MM)	
	2	1	**164-8474**	2	LOUVER AS-VENT	
Y	3	1	*274-7468*	1	CAB GP	946
Y	4	1	**234-6501**	1	COVER GP-CAB (REAR)	990
	5	1	**235-9001**	1	SUPPORT	
M	6	1	**8T-4179**	5	BOLT (M12X1.75X20-MM)	
M	7	1	**8T-4190**	4	BOLT (M16X2X25-MM)	
	8	1	**8T-4223**	13	WASHER-HARD (13.5X25.5X3-MM THK)	
M	9	1	**8T-4910**	6	BOLT (M12X1.75X60-MM)	
M	10	1	**8T-6868**	2	BOLT (M12X1.75X80-MM)	
	11	1	**8Y-6967**	2	LOUVER AS-VENT	
	12	1	**9X-8257**	6	WASHER (17.5X30X3.5-MM THK)	

M-METRIC PART
Y-SEPARATE ILLUSTRATION

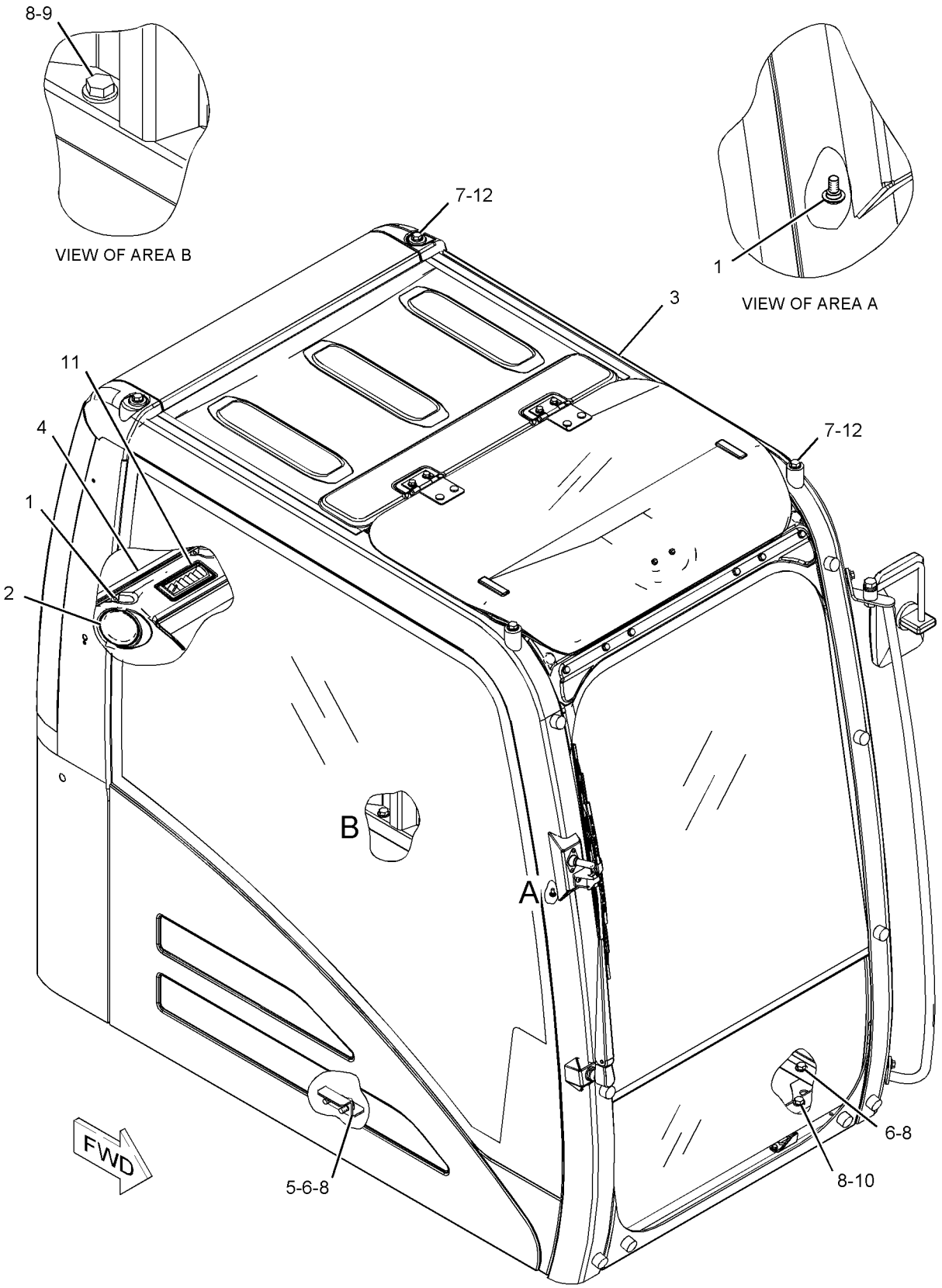

GRAPHIC #1 **<END>** g01119695

OPERATOR STATION

229-9099 CAB GP

S/N: D3P1-UP; M4T1-UP
PART OF 274-7468 CAB GP
AN ATTACHMENT

SMCS-7301, 7325 **i02500946**

NOTE	PART NUMBER	QTY	PART NAME 1 2 3 4 5 6 (PRODUCT LEVEL)	SEE PAGE
Y	*235-8910*	1	CAB GP (EXTERIOR)	942
Y	*235-8908*	1	CAB GP (INTERIOR)	940
Y	*139-7100*	1	DOOR GP-CAB	993
Y	*139-7099*	1	HATCH GP-ROOF	1010
Y	*235-8909*	1	WINDOW GP-CAB (SIDE, REAR)	1070
Y	*139-7101*	1	WINDOW GP-CAB (FRONT, UPPER)	1064
Y	*176-1958*	1	WINDOW GP-CAB (FRONT, LOWER)	1068
Y	*234-6594*	1	WIPER GP-WINDOW (FRONT, UPPER)	1076

Y-SEPARATE ILLUSTRATION

<END>

OPERATOR STATION

235-8908 CAB GP—INTERIOR

S/N: D3P1-UP; M4T1-UP
PART OF 229-9099 CAB GP
AN ATTACHMENT

SMCS-7301, 7325 **i02501127**

NOTE	REF NO	GRAPHIC REF	PART NUMBER	QTY	PART NAME 1 2 3 4 5 6 (PRODUCT LEVEL)	SEE PAGE
	1	1	**8Y-6352**	1	LOUVER AS	
	2	1	**156-6656**	1	RAIL	
	3	1	**156-6657**	1	RAIL	
	4	1	**164-0646**	1	CUP	
	5	1	**164-0655**	1	PANEL-SWITCH (OPERATOR CONSOLE)	
	6	1	**164-8474**	2	LOUVER AS-VENT	
	7	1	**170-9724**	5	CLIP	
	8	1	**171-7420**	6	CLIP	
	9	1	**176-1946**	1	PLATE	
	10	1	**176-1947**	1	PLATE	
	11	1	**176-1972**	1	COVER	
	12	1	**185-8214**	1	BRACKET AS	
	13	1	**189-2678**	3	SPACER	
	14	1	**234-6468**	1	COVER AS	
	15	1	**234-6470**	1	COVER-MONITOR	
	16	1	**234-6471**	1	COVER-DUCT	
	17	1	**234-6472**	1	COVER	
	18	1	**234-6473**	1	COVER-FRONT (UPPER, RH)	
	19	1	**234-6474**	1	COVER (UPPER, RH)	
	20	1	**234-6475**	1	COVER (LOWER, RH)	
	21	1	**234-6476**	1	DUCT	
	22	1	**234-6477**	1	BRACKET AS	
	23	1	**234-6478**	1	BRACKET AS	
	24	1	**234-6480**	1	BRACKET AS	
	25	1	**234-6483**	1	BRACKET AS	
	26	1	**234-6485**	1	BRACKET AS	
	27	1	**234-6490**	1	CUP	
	28	1	**156-6573**	1	COVER	
	29	1	**234-6497**	1	COVER	
	30	1	**234-6498**	3	RIVET	
	31	1	**234-6521**	1	COVER	
	32	1	**234-6547**	1	COVER	
	33	1	**234-6548**	1	COVER	
	34	1	**156-6575**	1	COVER	
	35	1	**234-6550**	1	COVER	
	36	1	**234-6579**	2	NUT-SPEED	
	37	1	**235-8922**	1	COVER	
	38	1	**235-8923**	2	CAP	
	39	1	**284-3682**	1	VISOR	
	40	1	**235-8928**	1	LINER	
	41	1	**235-8929**	2	HANDLE	
	42	1	**185-8205**	5	CLIP	
	43	1	**235-8950**	12	CLIP	
	44	1	**245-7790**	2	SCREW-TAPPING	
M	45	1	**128-2135**	13	SCREW-TRUSS HEAD (M6X1X13-MM)	
M	46	1	**128-2136**	1	SCREW-TRUSS HEAD (M6X1X16-MM)	
	47	1	**189-2855**	1	COVER	
	48	1	**234-6469**	1	COVER	
M	49	1	**9X-2042**	23	SCREW-TRUSS HEAD (M6X1X12-MM)	
M	50	1	**9X-2044**	8	SCREW-TRUSS HEAD (M6X1X16-MM)	
	51	1	**231-2294**	1	BRACKET	

M-METRIC PART

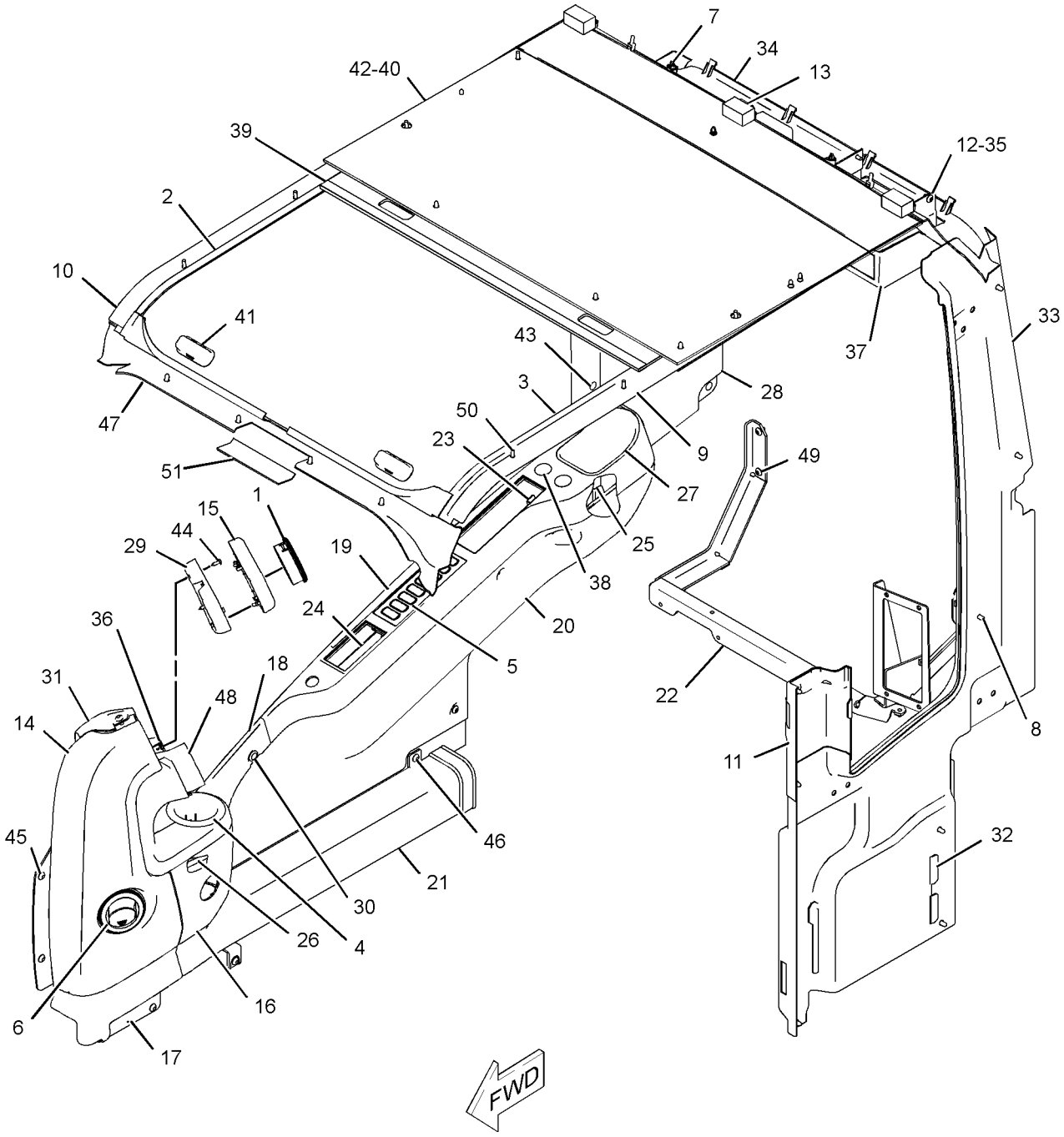

GRAPHIC #1 **<END>** g01241062

OPERATOR STATION

235-8910 CAB GP–EXTERIOR

S/N: D3P1-UP; M4T1-UP
PART OF 229-9099 CAB GP
AN ATTACHMENT

SMCS-7301, 7325 **i03632086**

NOTE	REF NO	GRAPHIC REF	PART NUMBER	QTY	PART NAME 1 2 3 4 5 6 (PRODUCT LEVEL)	SEE PAGE
	1	2	**139-7126**	1	HOLDER	
	2	2	**139-7127**	1	HOLDER	
	3	1	**156-6599**	1	STRIKER	
	4	2	**161-3685**	1	ROD	
	5	1	**235-8933**	1	HANDLE AS	
	6	1	**161-3697**	1	GUARD	
	7	2	**164-0523**	1	LEVER AS	
	8	2	**164-0527**	1	ROD	
	9	2	*164-0528*	1	LEVER GP-CAB DOOR	
		2	**156-6642**	1	LEVER AS	
		2	**164-0664**	1	BRACKET	
		2	**176-1941**	1	PIN	
		2	**185-8280**	1	WASHER-WAVE (10.5X15X0.3-MM THK)	
		2	**185-8281**	1	SPRING	
	10	1	**167-7018**	1	COVER AS	
	11	2	**167-7042**	2	SEAL	
	12	2	**171-7426**	1	CABLE AS	
	13	2	*176-1939*	1	LEVER AS	
M		2	**9X-2044**	1	SCREW-TRUSS HEAD (M6X1X16-MM)	
		2	**176-1937**	1	BRACKET AS	
		2	**176-1938**	1	LEVER	
	14	2	**176-1942**	1	COVER	
	15	1	**178-5570**	2	GROMMET	
	16	2	**185-8196**	1	GROMMET	
	17	2	**189-2704**	1	SEAL	
M	18	1,2	**189-3396**	5	NUT (M10X1.5-THD)	
	19	2	**4B-4278**	3	WASHER (10.2X20.5X1.6-MM THK)	
	20	2	**201-4530**	1	BRACKET AS	
	21	2	**205-6295**	1	LATCH AS	
	22	1	**210-5808**	1	SEAL	
	23	1	**235-8912**	1	HANDLE AS	
M	24	1	**099-0823**	3	SCREW-MACHINE (M6X1X6-MM)	
M	25	1	**127-0580**	2	SCREW-FLAT HEAD (M8X1.25X20-MM)	
	26	2	**133-8016**	1	PACKING	
	27	1	**156-6617**	1	MIRROR	
C	28	1	**259-7295**	1	BRACKET GP-MIRROR	
	29	2	**176-1986**	1	LAMP AS-DOME	
		2	**201-4417**	1	LAMP (24-VOLT, 10-WATT)	
	30	1	**1R-5998**	2	LOCKWASHER	
M	32	2	**3E-8020**	6	SCREW-TRUSS HEAD (M6X1X25-MM)	
M	33	2	**095-0755**	2	SCREW-MACHINE (M4X0.7X12-MM)	
	34	1	**4I-1205**	2	BUMPER	
	35	2	**4I-1206**	2	GUIDE	
	36	2	**4I-3063**	1	SPRING	
M	37	1	**8T-4137**	2	BOLT (M10X1.5X20-MM)	
	38	1	**4I-3144**	2	WASHER-HARD (10.2X22X3.2-MM THK)	
	39	2	**4I-4270**	1	HOLDER-GLASS	
	40	2	**4I-4392**	3	CLIP	
	41	2	**5C-7793**	1	HOOK-COAT	
	42	2	**6V-7636**	4	PIN AS-SPRING	
	43	1	**7X-0578**	2	WASHER-HARD (10.2X32X2.5-MM THK)	
CM	44	1	**8T-4779**	1	BOLT (M16X2X35-MM)	
M	45	2	**9X-2041**	1	SCREW-TRUSS HEAD (M10X1.5X20-MM)	
M	46	2	**9X-2042**	5	SCREW-TRUSS HEAD (M6X1X12-MM)	
M	47	2	**9X-2044**	5	SCREW-TRUSS HEAD (M6X1X16-MM)	

235-8910 **CAB GP** *(contd.)* **i03632086**

NOTE	REF NO	GRAPHIC REF	PART NUMBER	QTY	PART NAME 1 2 3 4 5 6 (PRODUCT LEVEL)	SEE PAGE
M	48	2	**9X-2045**	2	SCREW-TRUSS HEAD (M6X1X20-MM)	
	49	1	**9X-8257**	1	WASHER (17.5X30X3.5-MM THK)	
E	50	2	**6I-5470**		SEAL (150-CM)	
	51	1	**1R-5998**	2	LOCKWASHER	
M	52	1	**105-2169**	3	BOLT AS	
M	53	1	**189-2864**	2	SCREW-FLAT HEAD (M8X1.25X30-MM)	
	54	1	**4I-3090**	4	SEAL	

C-CHANGE FROM PREVIOUS TYPE
E-ORDER BY THE CENTIMETER
M-METRIC PART

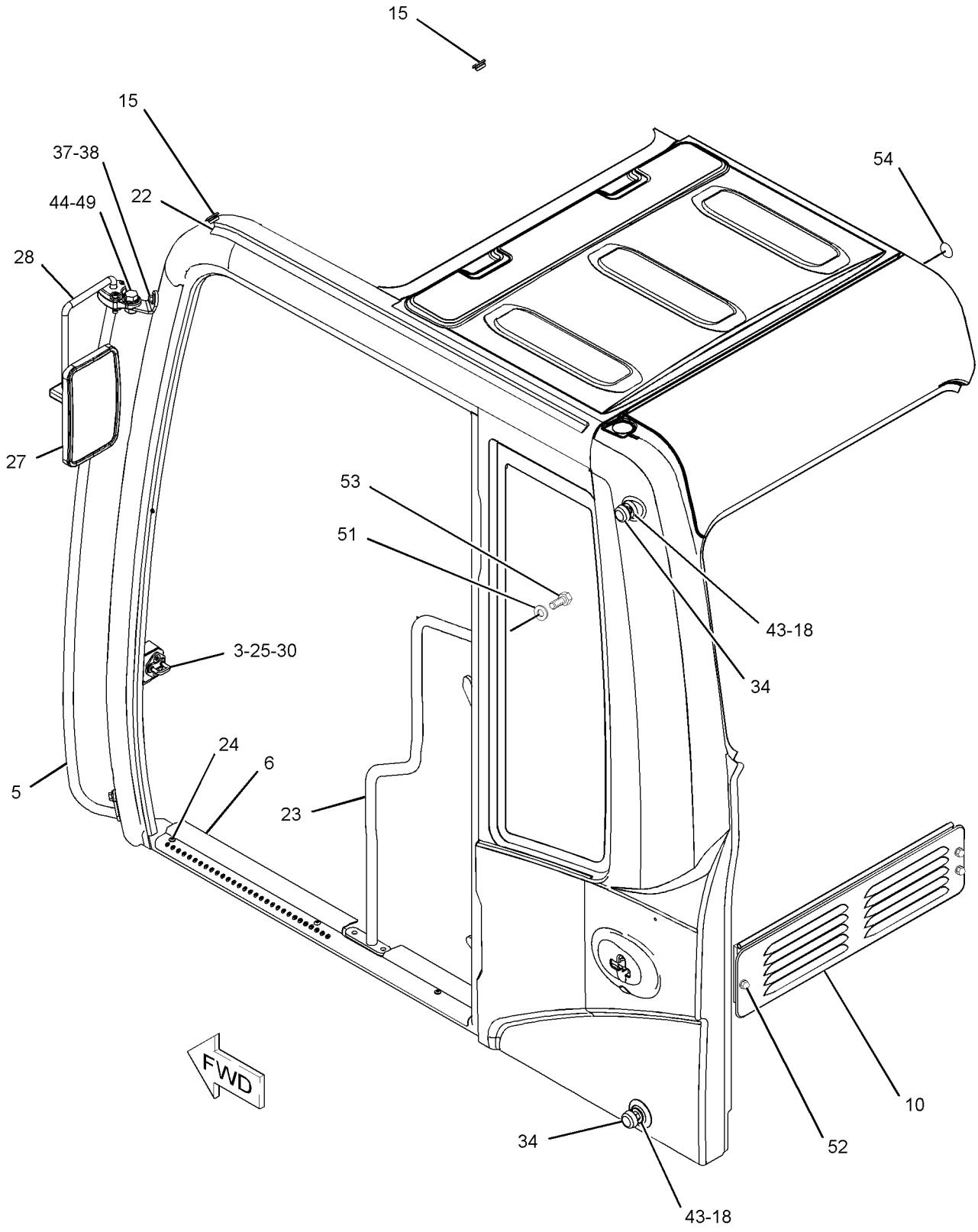

GRAPHIC #1 g01253581

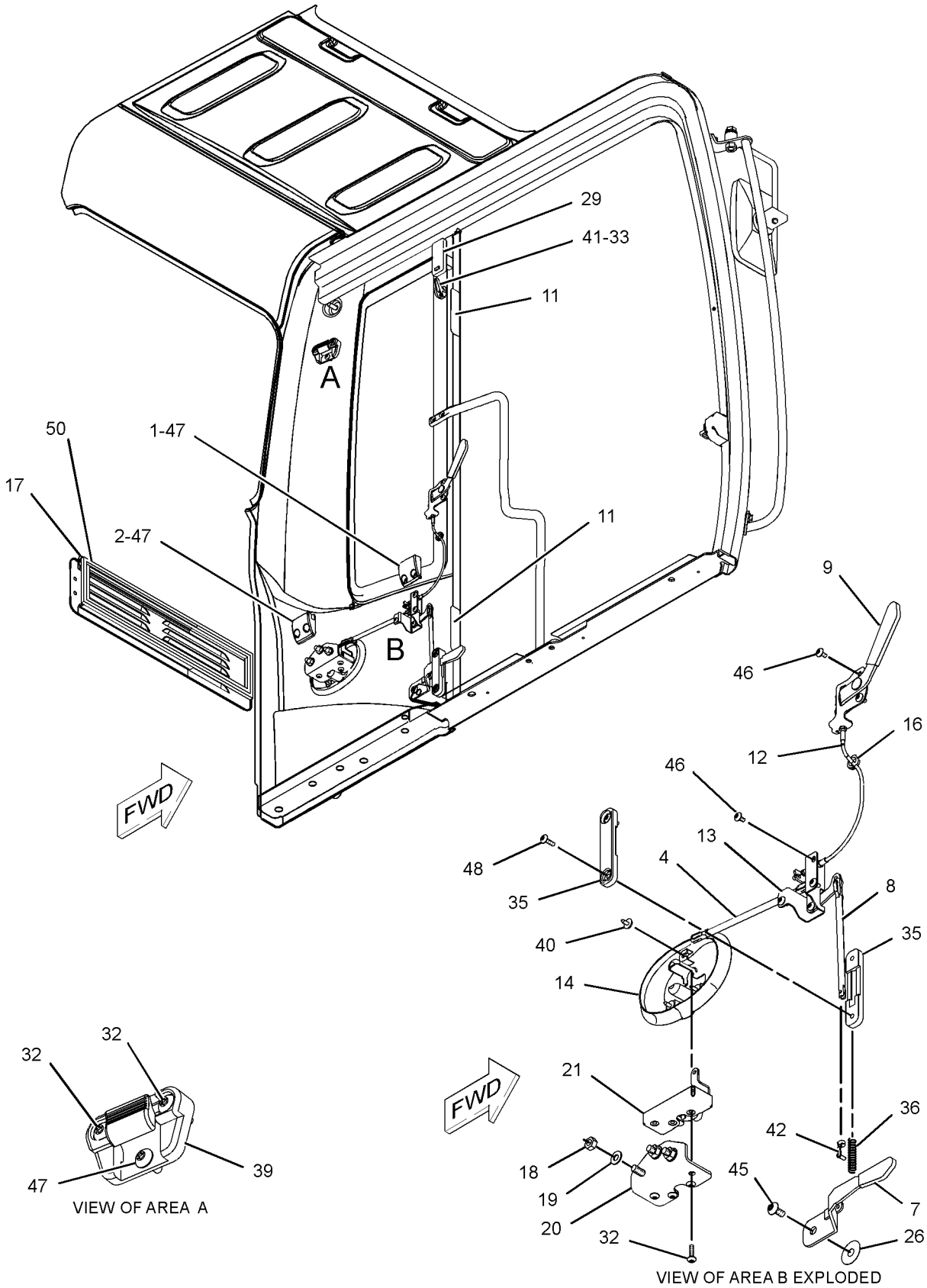

GRAPHIC #2 **<END>** g01253579

OPERATOR STATION

274-7468 CAB GP

S/N: D3P1-UP; M4T1-UP
PART OF 229-9098 CAB GP
AN ATTACHMENT

SMCS-7301, 7325 **i02817699**

NOTE	PART NUMBER	QTY	PART NAME 1 2 3 4 5 6 (PRODUCT LEVEL)	SEE PAGE
Y	**229-9099**	1	CAB GP	939
Y	*221-8813*	1	MONITOR & MTG GP-OPERATOR	1027
Y	*251-0432*	1	WIRING GP-CAB	294
	293-1183	1	FILTER GP-CAB AIR	
	293-1184	1	FILTER ELEMENT-CAB AIR	
M	**8T-4190**	4	BOLT (M16X2X25-MM)	
	257-4502	1	FILM-IDENTIFICATION (CATERPILLAR)	
E	**134-6146**		FILM-STRIPE (RED) (50-CM)	
	9X-8257	6	WASHER (17.5X30X3.5-MM THK)	

E-ORDER BY THE CENTIMETER
M-METRIC PART
Y-SEPARATE ILLUSTRATION

<END>

OPERATOR STATION

245-7836 COIL GP-EVAPORATOR

S/N: D3P1-UP; M4T1-UP
PART OF 316-8812, 316-8917 AIR CONDITIONER GP
AN ATTACHMENT

SMCS-7343 **i02500473**

NOTE	REF NO	GRAPHIC REF	PART NUMBER	QTY	PART NAME 1 2 3 4 5 6 (PRODUCT LEVEL)	SEE PAGE
	1	1	**245-7837**	1	VALVE AS-EXPANSION	
	2	1	**245-7905**	1	INSULATOR	
M	3	1	**8T-0266**	2	BOLT-SOCKET HEAD (M5X0.8X40-MM)	
	4	1	**121-7136**	1	SEAL-O-RING	
	5	1	**121-7138**	1	SEAL-O-RING	

M-METRIC PART

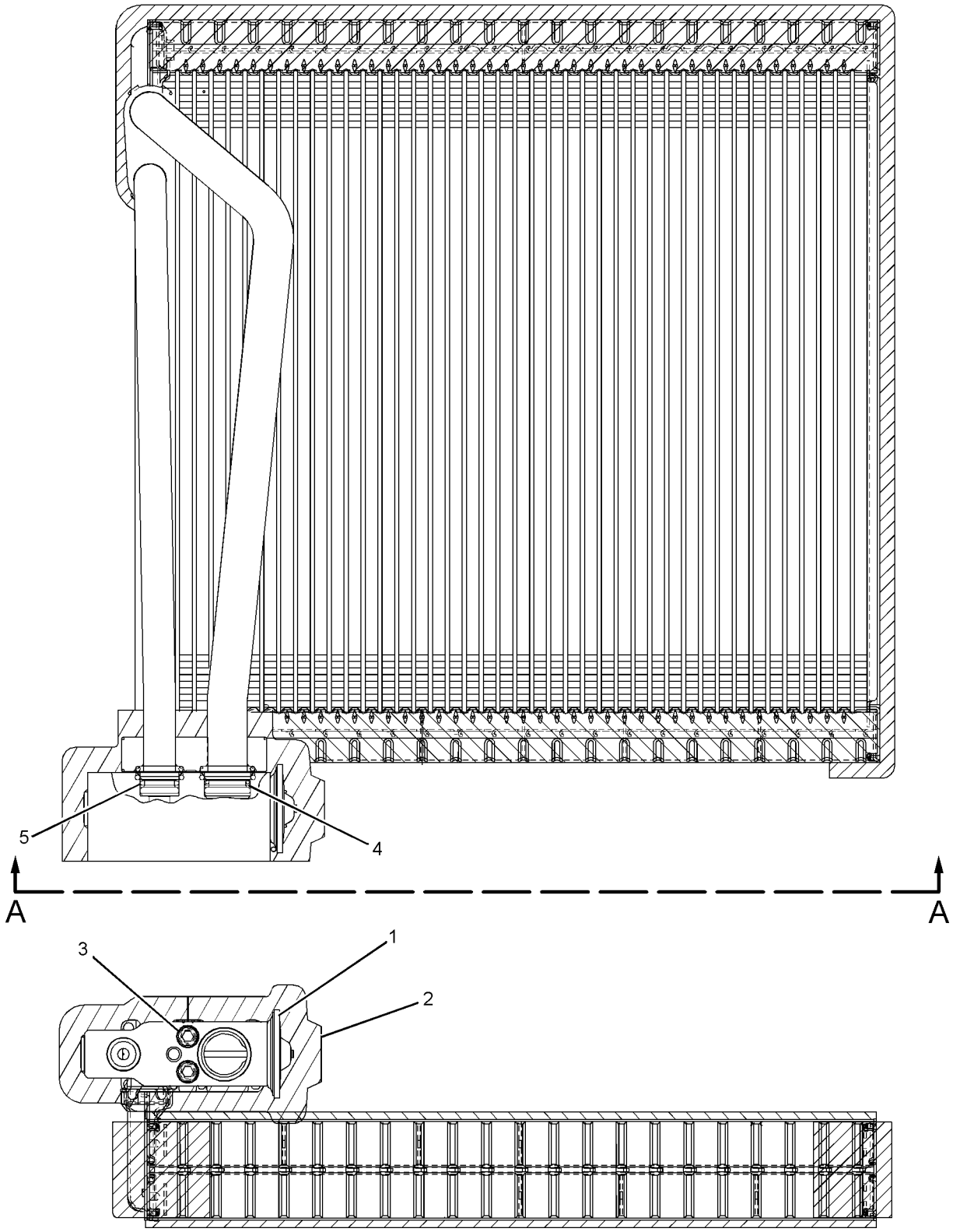

VIEW A-A

GRAPHIC #1 **<END>** g01134658

OPERATOR STATION

276-3814 COMPRESSOR GP-REFRIGERANT

S/N: D3P1-UP; M4T1-UP

PART OF 262-1359, 266-6263 ENGINE AR

SMCS-1802 **i03632089**

NOTE	REF NO	GRAPHIC REF	PART NUMBER	QTY	PART NAME 1 2 3 4 5 6 (PRODUCT LEVEL)	SEE PAGE
M	1	1	**258-9892**	2	BOLT (M8X1.25X80-MM)	
	2	1	**259-7243**	1	COMPRESSOR GP-REFRIGERANT	
		1	**259-7285**	1	COIL AS (24-VOLT) (REFRIGERANT COMPRESSOR)	
		1	**243-4505**	1	RECEPTACLE AS-CONNECTOR (2-PIN)	
B		1	**264-9982**	1	WASHER (6.2X12.2X0.1-MM THK)	
B		1	**264-9983**	1	WASHER (6.2X12.2X0.3-MM THK)	
B		1	**264-9984**	1	WASHER (6.2X12.2X0.5-MM THK)	
	3	1	**132-5789**	2	CLIP	
M	4	1	**8T-3647**	2	BOLT (M8X1.25X80-MM)	
	5	1	**8T-4224**	4	WASHER-HARD (8.8X16X2-MM THK)	

B-USE AS REQUIRED
M-METRIC PART

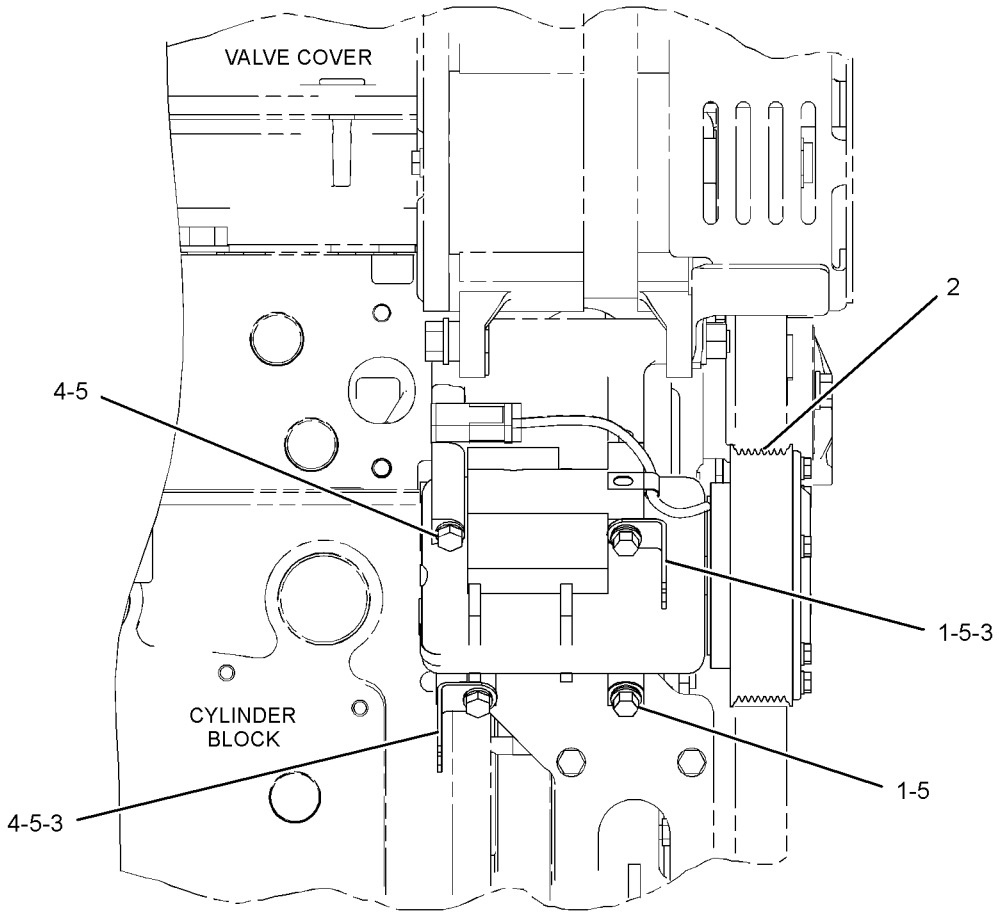

RIGHT SIDE VIEW

GRAPHIC #1 **<END>** g01217731

OPERATOR STATION

245-7940 CONDENSER & MTG GP-REFRIGERANT

S/N: M4T1-270

PART OF 279-7825 INSTALLATION AR-ENGINE

SMCS-1805 **i02495129**

NOTE	REF NO	GRAPHIC REF	PART NUMBER	QTY	PART NAME 1 2 3 4 5 6 (PRODUCT LEVEL)	SEE PAGE
	1	1	**245-7942**	1	BRACKET AS	
	2	1	**245-7943**	1	BRACKET AS	
Y	3	1	**273-5315**	1	CONDENSER GP-REFRIGERANT	953
	4	1	**8T-4121**	8	WASHER-HARD (11X21X2.5-MM THK)	
M	5	1	**8T-4137**	8	BOLT (M10X1.5X20-MM)	

M-METRIC PART
Y-SEPARATE ILLUSTRATION

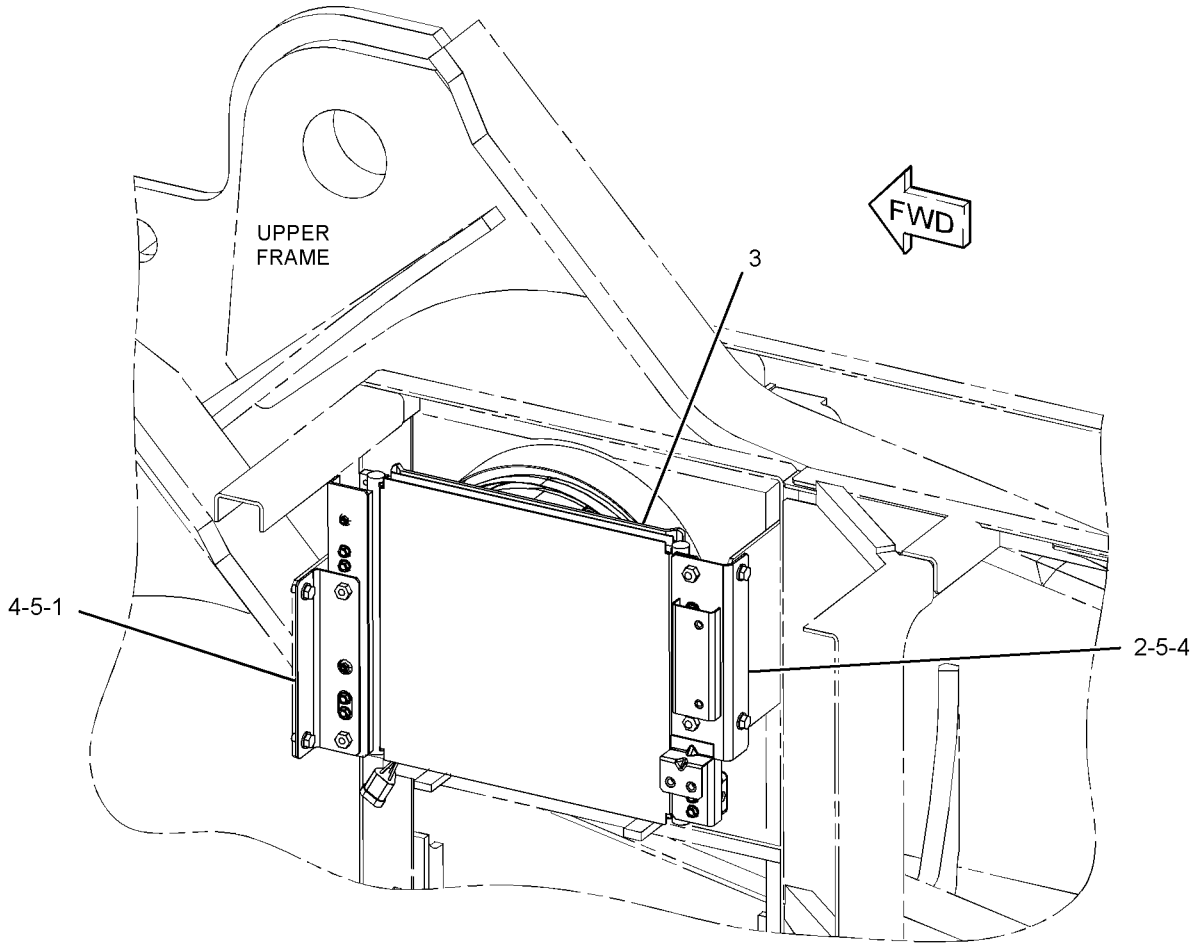

GRAPHIC #1 **<END>** g01197454

OPERATOR STATION

245-7940 CONDENSER & MTG GP-REFRIGERANT

S/N: D3P1-UP; M4T271-UP

PART OF 279-7825 INSTALLATION AR-ENGINE

SMCS-1805 **i03751241**

NOTE	REF NO	GRAPHIC REF	PART NUMBER	QTY	PART NAME 1 2 3 4 5 6 (PRODUCT LEVEL)	SEE PAGE
	1	1	**245-7942**	1	BRACKET AS	
	2	1	**245-7943**	1	BRACKET AS	
CY	3	1	**334-6569**	1	CONDENSER GP-REFRIGERANT	954
	4	1	**8T-4121**	8	WASHER-HARD (11X21X2.5-MM THK)	
M	5	1	**8T-4137**	8	BOLT (M10X1.5X20-MM)	

C-CHANGE FROM PREVIOUS TYPE
M-METRIC PART
Y-SEPARATE ILLUSTRATION

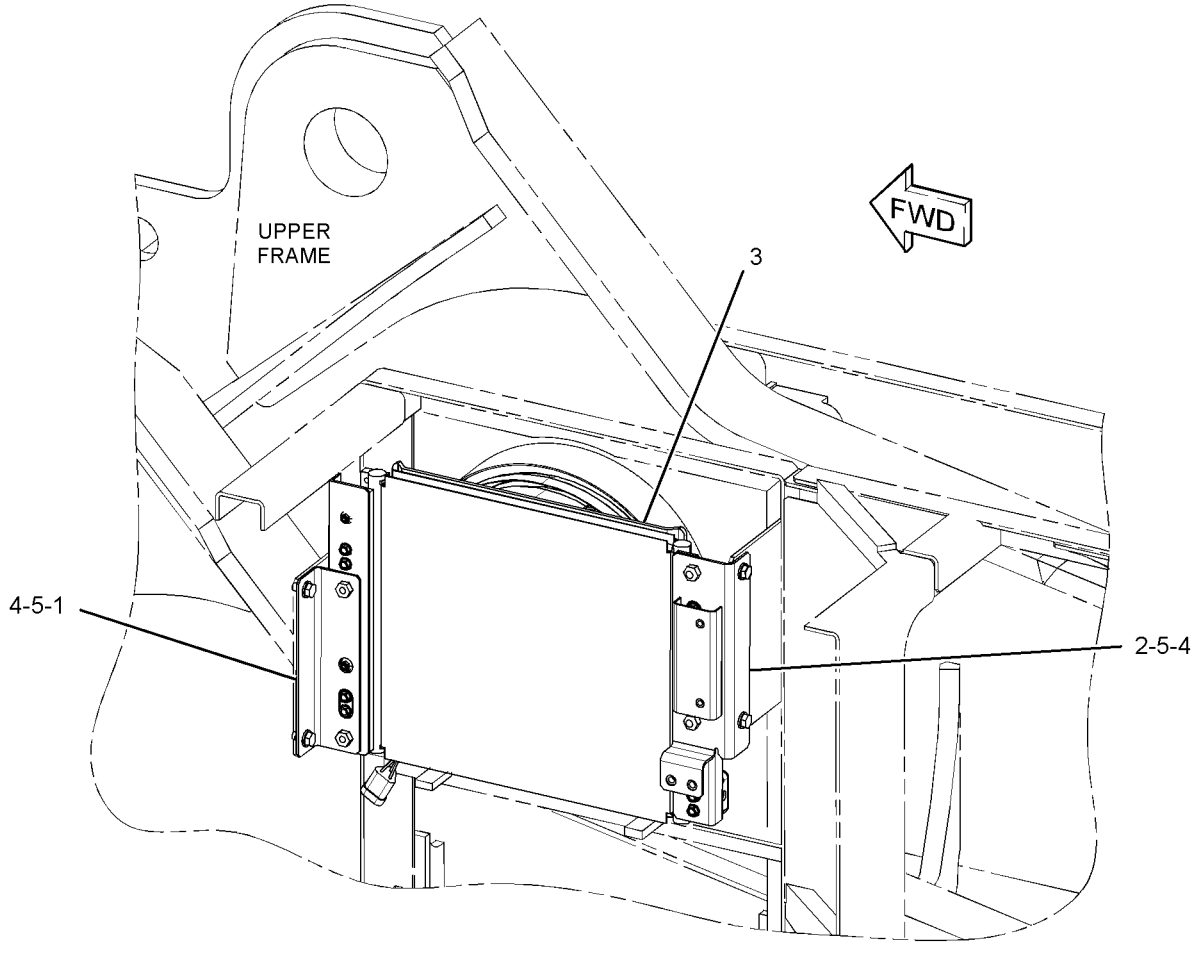

GRAPHIC #1 **<END>** g01911156

OPERATOR STATION

273-5315 CONDENSER GP-REFRIGERANT

S/N: M4T1-270

PART OF 245-7940 CONDENSER & MTG GP-REFRIGERANT

SMCS-1805 **i03516601**

NOTE	REF NO	GRAPHIC REF	PART NUMBER	QTY	PART NAME 1 2 3 4 5 6 (PRODUCT LEVEL)	SEE PAGE
	1	1	**161-3732**	1	MOTOR AS	
	2	1	**161-3734**	1	RESISTOR AS	
M	3	1	**164-0499**	1	NUT-FLANGE (M5X0.8-THD)	
M	4	1	**164-0500**	4	NUT-FLANGE (M8X1.25-THD)	
M	5	1	**227-6846**	8	BOLT AS	
	6	1	**245-7868**	4	BUSHING AS	
	7	1	**245-7870**	1	STRAP-CABLE	
M	8	1	**245-7871**	4	NUT-FLANGE (M6X1-THD)	
M	9	1	**245-7876**	3	BOLT AS	
M	10	1	**245-7877**	3	SCREW AS (M4X0.7X11-MM)	
M	11	1	**245-7903**	1	BOLT AS	
	12	1	**245-7906**	2	PACKING-RUBBER	
	13	1	**273-5316**	1	HARNESS AS-MOTOR (CONDENSER FAN)	
M	14	1	**273-5337**	1	BOLT AS	
	15	1	**245-7911**	1	CONDENSER AS	
	16	1	**273-5307**	1	FAN AS-CONDENSER (4-BLADE)	

M-METRIC PART

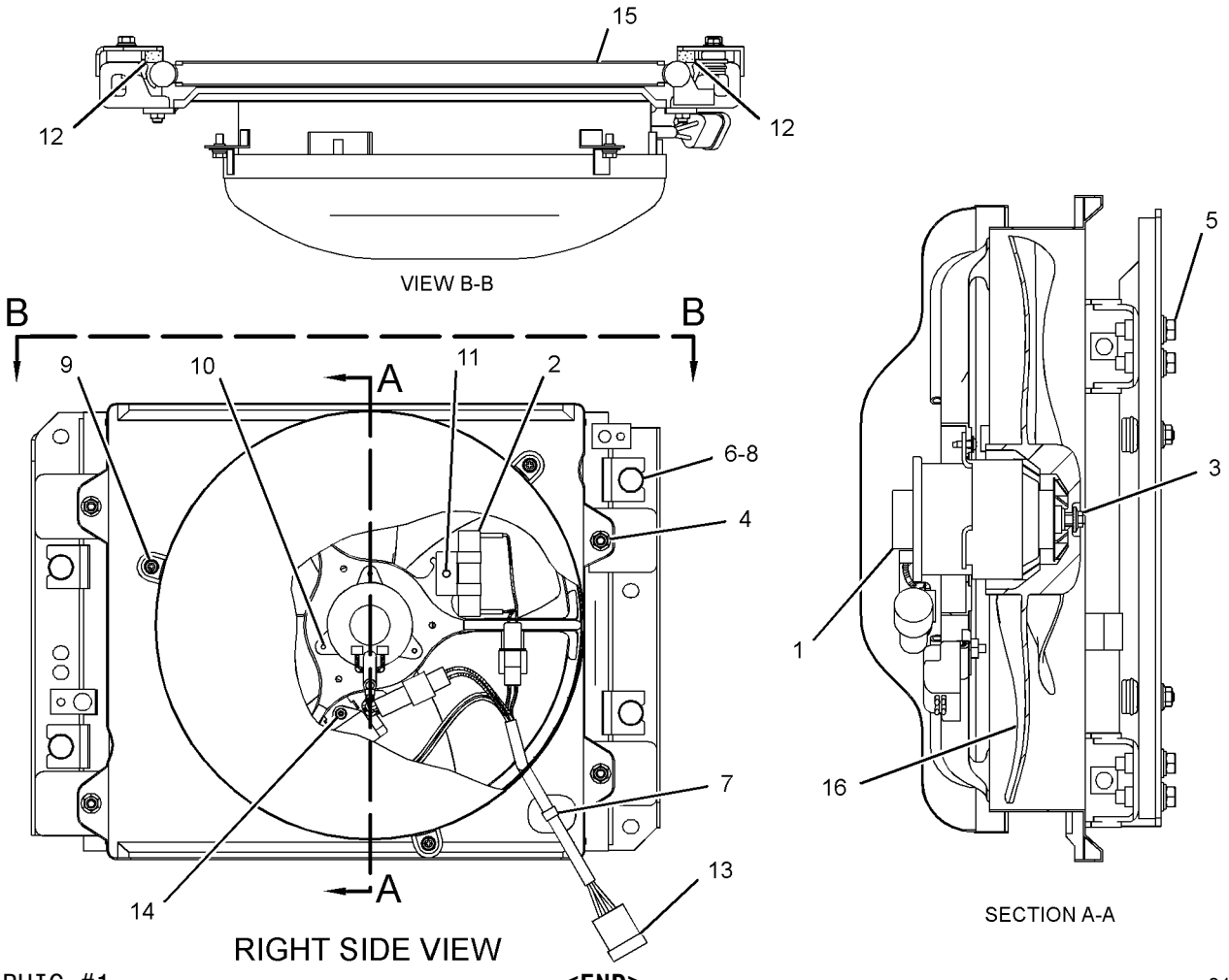

GRAPHIC #1 **<END>** g01848953

OPERATOR STATION

334-6569 CONDENSER GP-REFRIGERANT

S/N: D3P1-UP; M4T271-UP

PART OF 245-7940 CONDENSER & MTG GP-REFRIGERANT

SMCS-1805 **i03751253**

NOTE	REF NO	GRAPHIC REF	PART NUMBER	QTY	PART NAME 1 2 3 4 5 6 (PRODUCT LEVEL)	SEE PAGE
M	1	1	**164-0500**	4	NUT-FLANGE (M8X1.25-THD)	
M	2	1	**227-6846**	8	BOLT AS	
	3	1	**245-7868**	4	BUSHING AS	
	4	1	**245-7869**	2	PACKING-RUBBER	
	5	1	**245-7870**	1	STRAP-CABLE	
M	6	1	**245-7871**	4	NUT-FLANGE (M6X1-THD)	
M	7	1	**245-7876**	3	BOLT AS	
	8	1	**245-7906**	2	PACKING-RUBBER	
	9	1	**245-7911**	1	CONDENSER AS	
	10	1	**273-5316**	1	HARNESS AS-MOTOR (CONDENSER FAN)	
		1	**102-8803**	1	KIT-RECEPTACLE (3-PIN)	
					(INCLUDES RECEPTACLE AS & WEDGE)	
		1	**9W-0852**	3	PIN-CONNECTOR (14-GA)	
M	11	1	**273-5337**	1	BOLT AS	
Y	12	1	**336-1156**	1	FAN & MOTOR GP (CONDENSER)	98

M-METRIC PART
Y-SEPARATE ILLUSTRATION

334-6569 CONDENSER GP-REFRIGERANT *(contd.)* i03751253

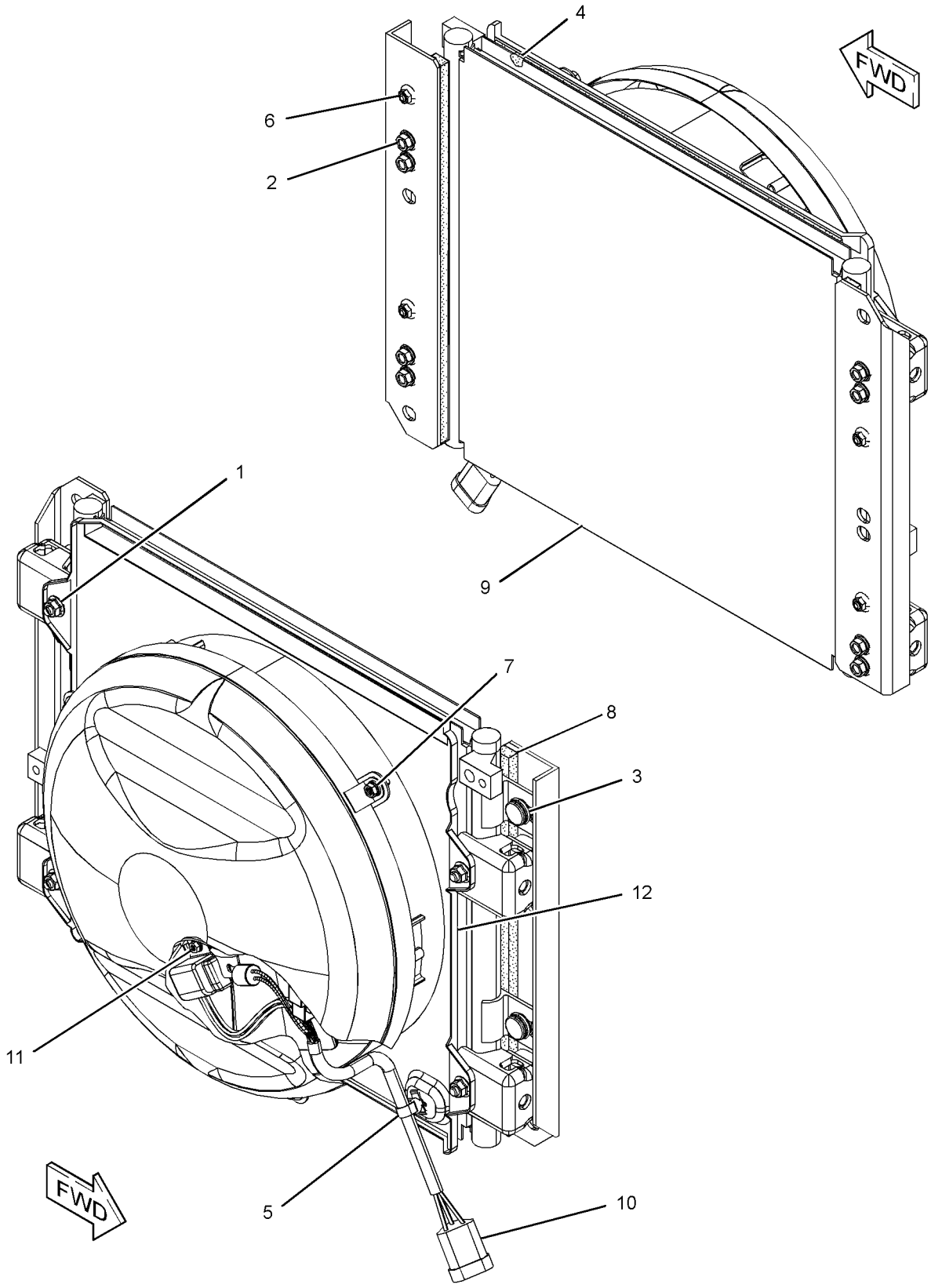

GRAPHIC #1 **<END>** g01752718

OPERATOR STATION

245-7922 CONSOLE GP-OPERATOR

S/N: D3P1-UP; M4T1-UP

PART OF 229-9072 OPERATOR AR

SMCS-5258 **i03510206**

NOTE	REF NO	GRAPHIC REF	PART NUMBER	QTY	PART NAME 1 2 3 4 5 6 (PRODUCT LEVEL)	SEE PAGE
	1	1	**176-1916**	2	GROMMET	
	2	1	**178-5422**	2	GROMMET	
	3	1	**178-5423**	2	GROMMET	
	4	1	**185-8161**	2	INSULATOR	
	5	1	**235-8893**	2	SUPPORT	
	6	1	**235-8894**	2	SUPPORT	
Y	7	1	*259-7349*	1	CONSOLE GP-OPERATOR (LH)	960
Y	8	1	*259-7348*	1	CONSOLE GP-OPERATOR (RH)	958
	9	1	**8T-4121**	4	WASHER-HARD (11X21X2.5-MM THK)	
M	10	1	**8T-4195**	4	BOLT (M10X1.5X30-MM)	
CM	11	1	**9X-2046**	8	SCREW-TRUSS HEAD (M6X1X35-MM)	
CM	12	1	**9X-2045**	12	SCREW-TRUSS HEAD (M6X1X20-MM)	
	13	1	**7K-1181**	4	STRAP-CABLE	
	14	1	**122-9617**	2	GUARD	

C-CHANGE FROM PREVIOUS TYPE
M-METRIC PART
Y-SEPARATE ILLUSTRATION

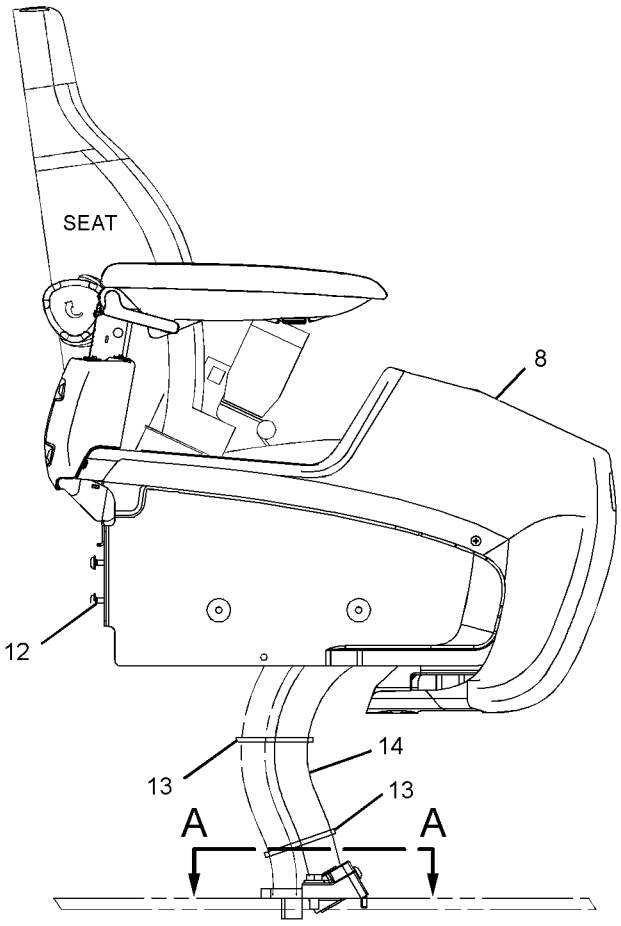

RIGHT SIDE VIEW

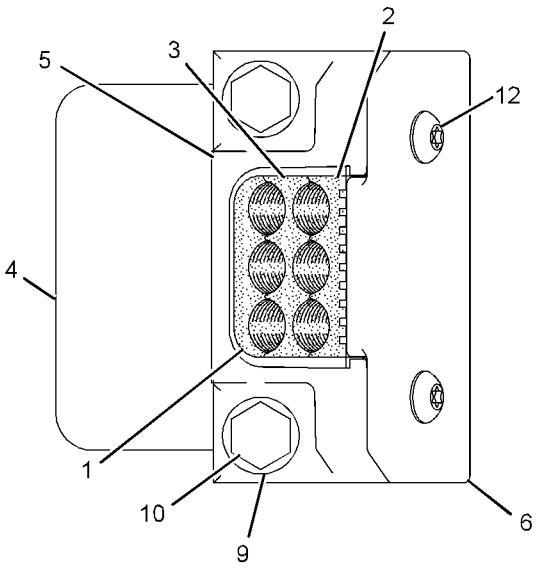

SECTION A-A

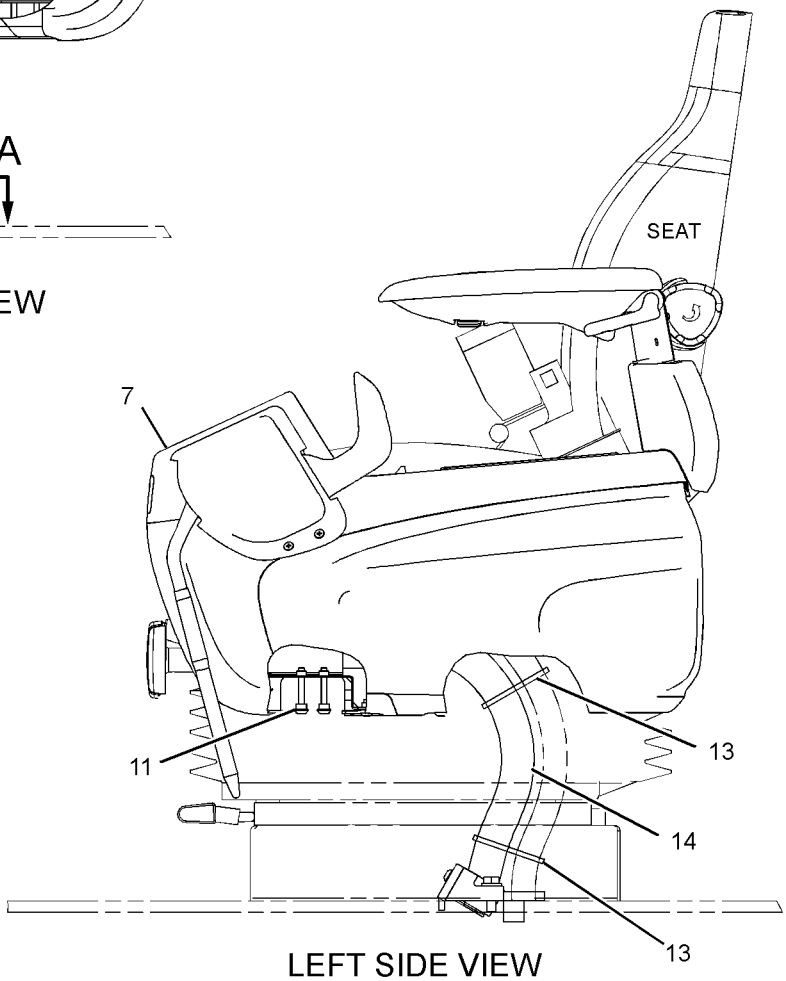

LEFT SIDE VIEW

GRAPHIC #1 **<END>** g01844714

OPERATOR STATION

259-7348 CONSOLE GP-OPERATOR—RH

S/N: D3P1-UP; M4T1-UP

PART OF 245-7922, 274-7466 CONSOLE GP-OPERATOR

SMCS-5258 **i02604394**

NOTE	REF NO	GRAPHIC REF	PART NUMBER	QTY	PART NAME 1 2 3 4 5 6 (PRODUCT LEVEL)	SEE PAGE
M	1	1	**128-2135**	4	SCREW-TRUSS HEAD (M6X1X13-MM)	
	2	1	**185-8284**	1	COVER	
	3	1	**234-6579**	2	NUT-SPEED	
	4	1	**234-6580**	2	CAP	
	5	1	**234-6602**	1	COVER	
	6	1	**234-6604**	1	COVER	
	7	1	**234-6608**	1	COVER	
	8	1	**234-6609**	1	COVER	
	9	1	**234-6610**	1	COVER	
	10	1	**235-8914**	4	NUT-SPEED	
	11	1	**235-8966**	2	BASE-MOUNTING	
	12	1	**245-7790**	2	SCREW-TAPPING	
	13	1	**245-7926**	1	SUPPORT AS	
	14	1	**245-7948**	4	SCREW-TAPPING	
Y	15	1	**259-7346**	1	ARMREST GP (RH)	934
M	16	1	**9X-2041**	3	SCREW-TRUSS HEAD (M10X1.5X20-MM)	

M-METRIC PART
Y-SEPARATE ILLUSTRATION

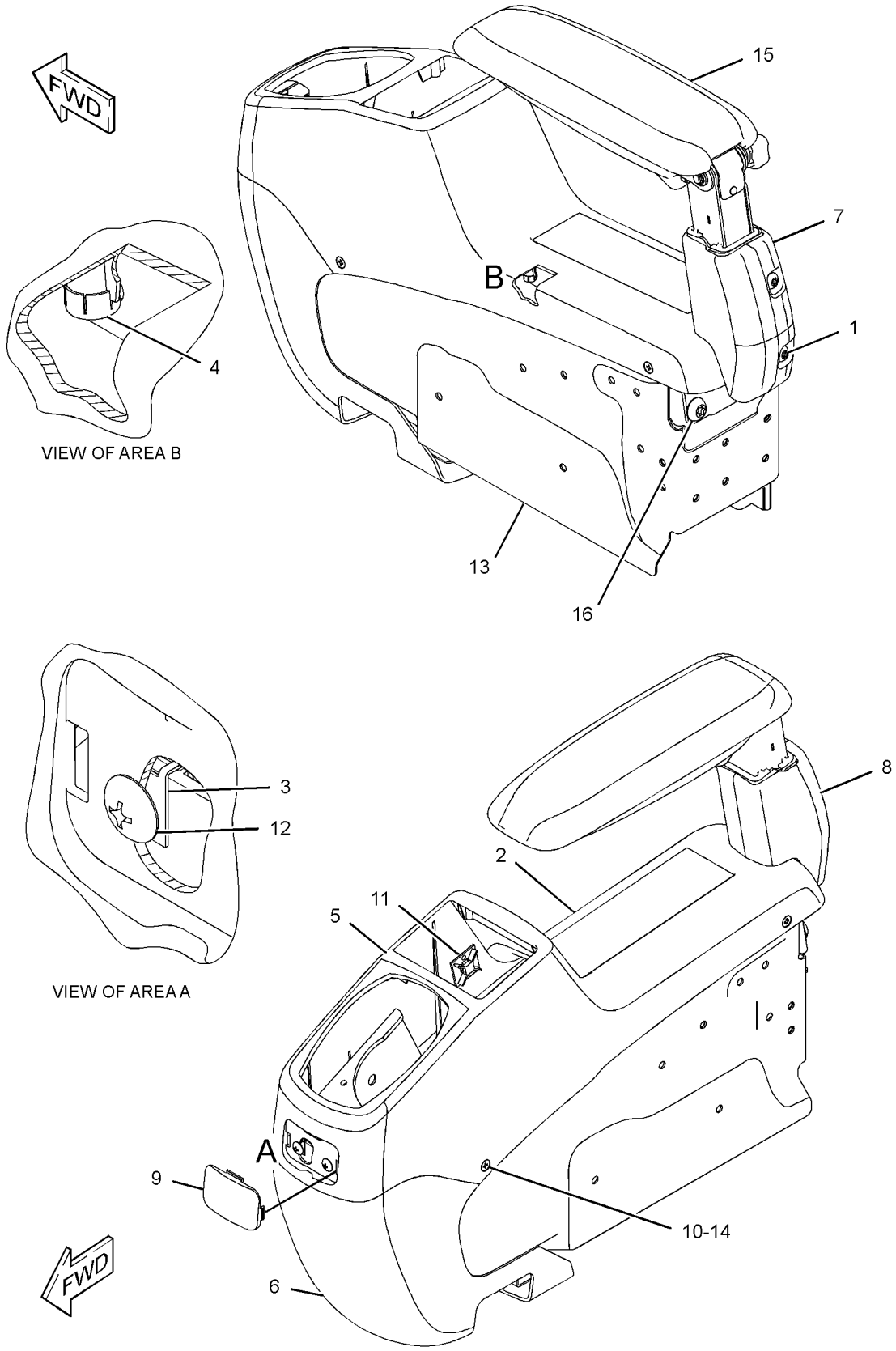

GRAPHIC #1 **<END>** g01217107

OPERATOR STATION

259-7349 CONSOLE GP-OPERATOR—LH

S/N: D3P1-UP; M4T1-UP

PART OF 245-7922, 274-7465 CONSOLE GP-OPERATOR

SMCS-5258 **i02604395**

NOTE	REF NO	GRAPHIC REF	PART NUMBER	QTY	PART NAME 1 2 3 4 5 6 (PRODUCT LEVEL)	SEE PAGE
M	1	1	**128-2135**	5	SCREW-TRUSS HEAD (M6X1X13-MM)	
M	2	1	**171-7325**	3	SCREW-TAPPING (M5X0.8-THD)	
	3	1	**234-6579**	6	NUT-SPEED	
	4	1	**234-6580**	4	CAP	
	5	1	**234-6603**	1	COVER	
	6	1	**234-6605**	1	COVER	
	7	1	**234-6608**	1	COVER	
	8	1	**234-6609**	1	COVER	
	9	1	**234-6610**	1	COVER	
	10	1	**234-6611**	1	CASE	
	11	1	**234-6612**	1	COVER	
Y	12	1	**234-6613**	1	SWITCH GP-POSITION (HYDRAULIC LOCKOUT)	267
	13	1	**234-6614**	1	COVER	
	14	1	**235-8914**	4	NUT-SPEED	
	15	1	**235-8965**	1	GUARD	
	16	1	**245-7790**	3	SCREW-TAPPING	
	17	1	**245-7925**	1	SUPPORT AS	
	18	1	**245-7948**	7	SCREW-TAPPING	
	19	1	**259-7202**	1	ASHTRAY	
Y	20	1	**259-7347**	1	ARMREST GP (LH)	935
M	21	1	**9X-2041**	3	SCREW-TRUSS HEAD (M10X1.5X20-MM)	
M	22	1	**9X-2042**	2	SCREW-TRUSS HEAD (M6X1X12-MM)	

M-METRIC PART
Y-SEPARATE ILLUSTRATION

259-7349 **CONSOLE GP-OPERATOR** *(contd.)* **i02604395**

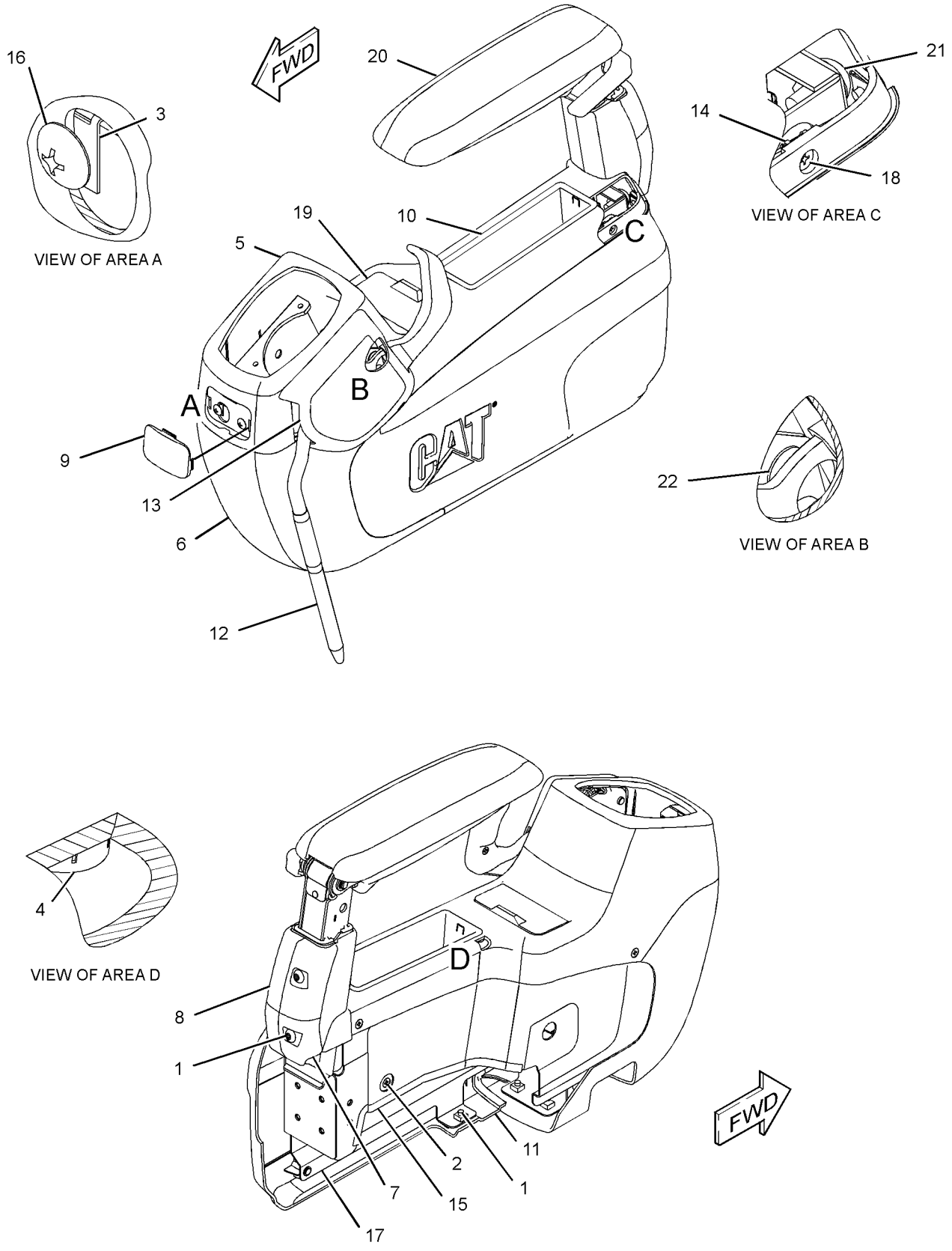

GRAPHIC #1 **<END>** g01217096

OPERATOR STATION

274-7465 CONSOLE GP-OPERATOR—LH

S/N: D3P1-UP; M4T1-UP

PART OF 314-3698, 314-3699 GENERAL AR

SMCS-5258 **i02781626**

NOTE	PART NUMBER	QTY	PART NAME 1 2 3 4 5 6 (PRODUCT LEVEL)	SEE PAGE
Y	*259-7349*	1	CONSOLE GP-OPERATOR (LH)	960
Y	*231-1836*	1	WIRING GP-CONSOLE (LH)	316

Y-SEPARATE ILLUSTRATION

<END>

274-7466 CONSOLE GP-OPERATOR—RH

S/N: D3P1-UP; M4T1-UP

PART OF 314-3698, 314-3699 GENERAL AR

SMCS-5258 **i02781629**

NOTE	PART NUMBER	QTY	PART NAME 1 2 3 4 5 6 (PRODUCT LEVEL)	SEE PAGE
Y	*259-7348*	1	CONSOLE GP-OPERATOR (RH)	958
Y	*251-0542*	1	PANEL GP-SWITCH (ENGINE SPEED, START)	224
Y	*251-0435*	1	WIRING GP-CONSOLE (RH)	318

Y-SEPARATE ILLUSTRATION

<END>

200-6741 CONTROL & MTG GP-JOYSTICK–

WITH SLIDE CONTROL

S/N: D3P1-UP; M4T1-UP

PART OF 270-8795, 270-8796, 307-9975 CONTROL AR-AUXILIARY AN ATTACHMENT

SMCS-5063, 5705 **i02508771**

NOTE	REF NO	GRAPHIC REF	PART NUMBER	QTY	PART NAME 1 2 3 4 5 6 (PRODUCT LEVEL)	SEE PAGE
Y	1	1	**259-7762**	1	CONTROL GP-JOYSTICK (RH)	982
Y	2	1	**259-7763**	1	CONTROL GP-JOYSTICK (LH)	983
M	3	1	**6V-7357**	6	BOLT (M6X1X25-MM)	
	4	1	**9X-8256**	6	WASHER (6.6X12X2-MM THK)	

M-METRIC PART
Y-SEPARATE ILLUSTRATION

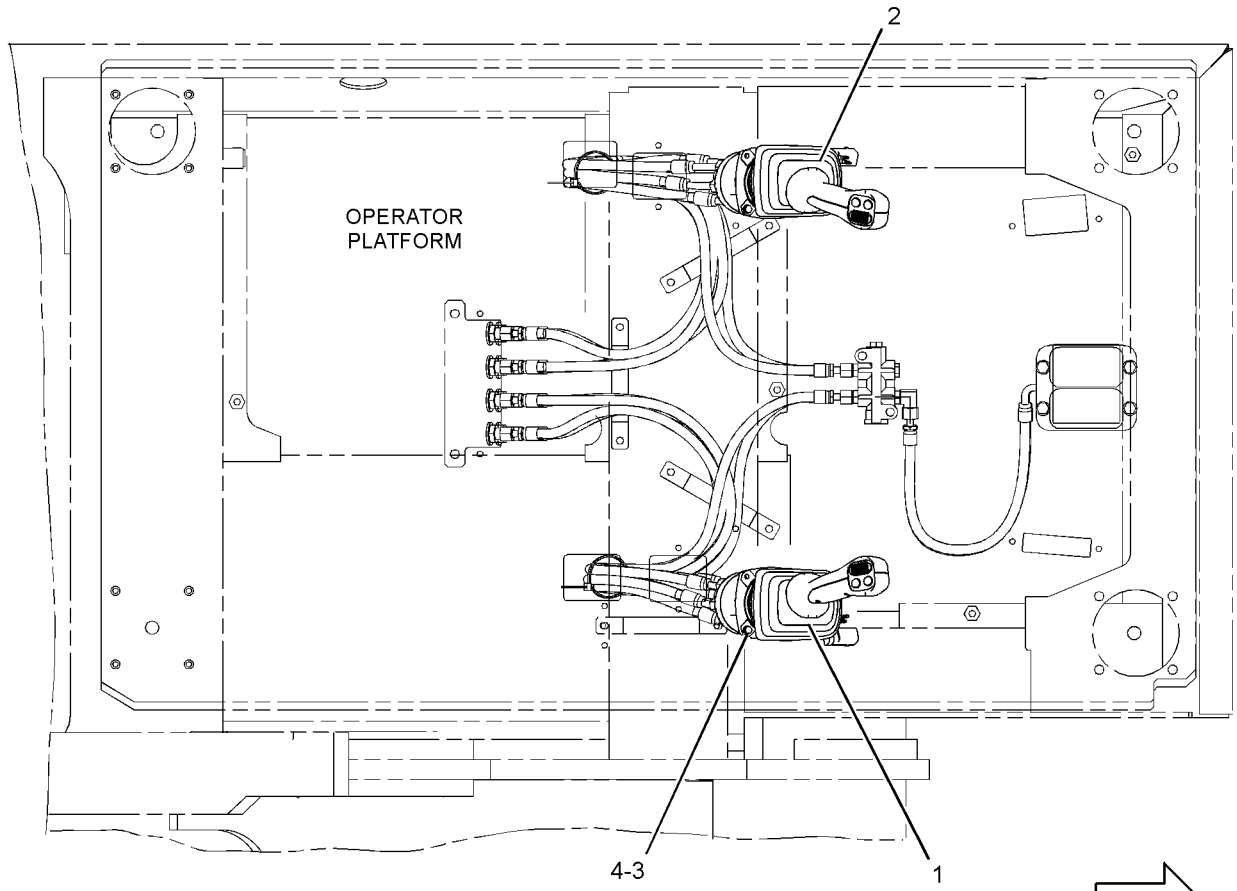

TOP VIEW

GRAPHIC #1 **<END>** g01242505

OPERATOR STATION

270-5687 CONTROL & MTG GP-JOYSTICK–

JOYSTICK, 2-BN, SLIDE, TRIG SW

S/N: M4T1-UP

PART OF 340-9468 OPTION AR-CONTROL

AN ATTACHMENT

SMCS-5063, 5705 **i03712681**

NOTE	PART NUMBER	QTY	PART NAME 1 2 3 4 5 6 (PRODUCT LEVEL)	SEE PAGE
Y	*270-5689*	1	CONTROL & MTG GP-JOYSTICK (2-BUTTON, SLIDE, TRIGGER SW)	965
Y	*259-5295*	1	FASTENER GP-WIRING HARNESS (JOYSTICK)	205
Y	*247-7410*	1	FILM GP (OPERATOR CONTROLS, NOTICE)	1079

Y-SEPARATE ILLUSTRATION

<END>

270-5688 CONTROL & MTG GP-JOYSTICK

S/N: M4T1-UP

PART OF 345-2289 DISTRIBUTION AR, 340-9469 OPTION AR-CONTROL

AN ATTACHMENT

SMCS-5063, 5705 **i03727780**

NOTE	PART NUMBER	QTY	PART NAME 1 2 3 4 5 6 (PRODUCT LEVEL)	SEE PAGE
Y	*270-5690*	1	CONTROL & MTG GP-JOYSTICK (3-BUTTON, TRIGGER SWITCH)	966
Y	*259-5295*	1	FASTENER GP-WIRING HARNESS (JOYSTICK)	205
Y	*247-7411*	1	FILM GP (OPERATOR CONTROLS, NOTICE)	1081

Y-SEPARATE ILLUSTRATION

<END>

270-5689 CONTROL & MTG GP-JOYSTICK–
2-BUTTON, SLIDE, TRIGGER SW
S/N: M4T1-UP
PART OF 270-5687 CONTROL & MTG GP-JOYSTICK
AN ATTACHMENT

SMCS-5063, 5705 **i03712745**

NOTE	REF NO	GRAPHIC REF	PART NUMBER	QTY	PART NAME 1 2 3 4 5 6 (PRODUCT LEVEL)	SEE PAGE
Y	1	1	**259-7706**	1	CONTROL GP-JOYSTICK (LH)	981
Y	2	1	**259-7705**	1	CONTROL GP-JOYSTICK (RH)	980
M	3	1	**6V-7357**	6	BOLT (M6X1X25-MM)	
	4	1	**9X-8256**	6	WASHER (6.6X12X2-MM THK)	

M-METRIC PART
Y-SEPARATE ILLUSTRATION

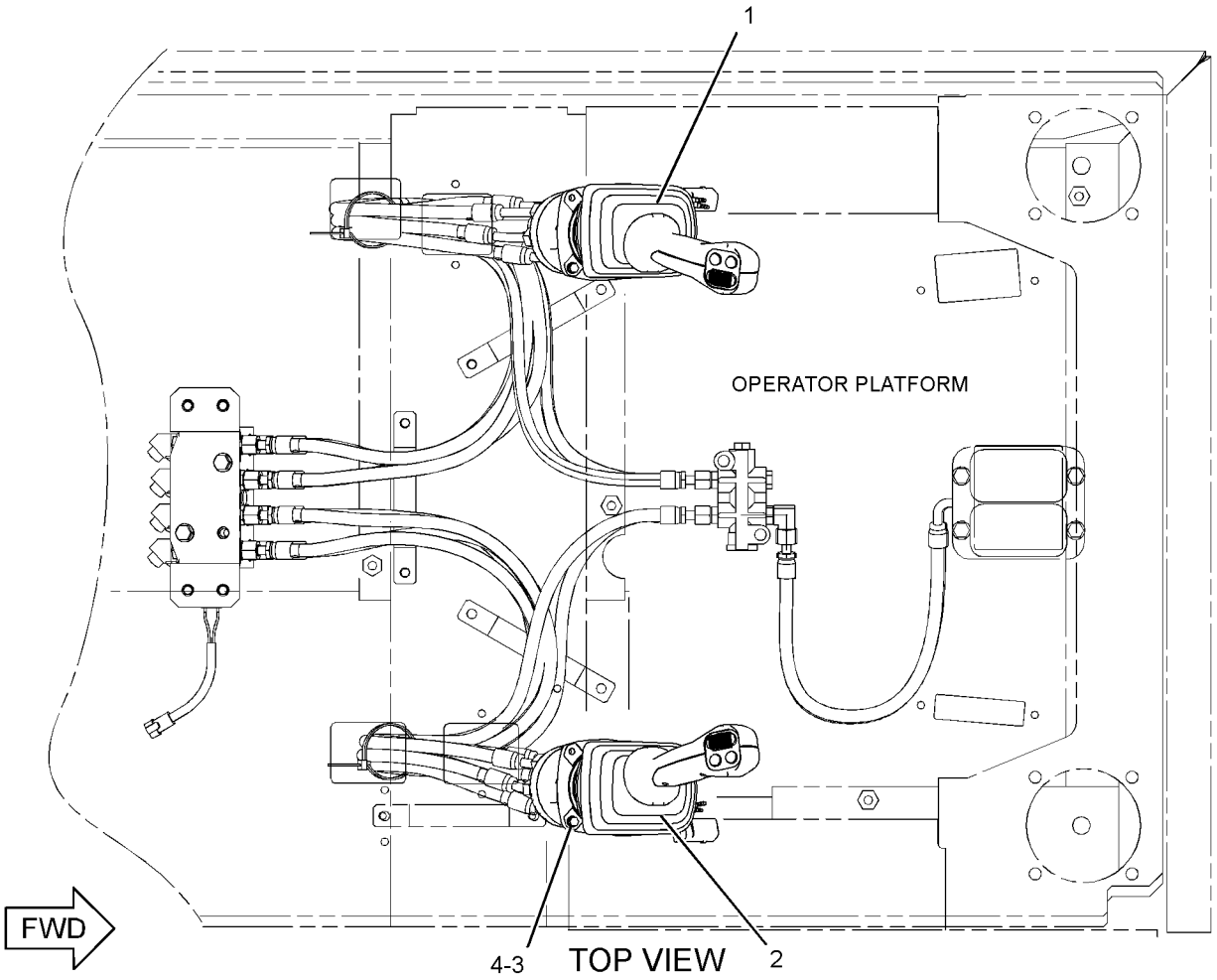

GRAPHIC #1 **<END>** g01236540

OPERATOR STATION

270-5690 CONTROL & MTG GP-JOYSTICK

S/N: M4T1-UP

PART OF 270-5688 CONTROL & MTG GP-JOYSTICK

AN ATTACHMENT

SMCS-5063, 5705 **i03727868**

NOTE	REF NO	GRAPHIC REF	PART NUMBER	QTY	PART NAME 1 2 3 4 5 6 (PRODUCT LEVEL)	SEE PAGE
Y	1	1	**297-0540**	1	CONTROL GP-PILOT OPERATED HYD (RH)	988
Y	2	1	**297-0541**	1	CONTROL GP-PILOT OPERATED HYD (LH)	989
M	3	1	**6V-7357**	6	BOLT (M6X1X25-MM)	
	4	1	**9X-8256**	6	WASHER (6.6X12X2-MM THK)	

M-METRIC PART
Y-SEPARATE ILLUSTRATION

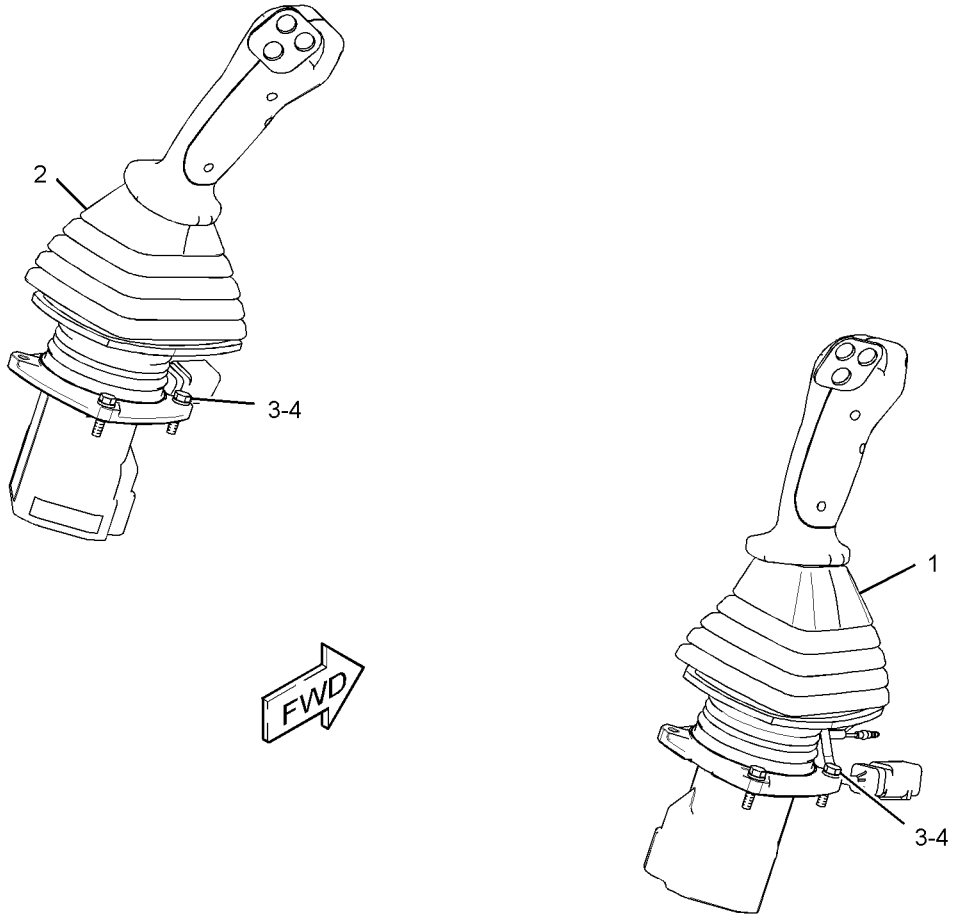

GRAPHIC #1 **<END>** g01620003

310-0078 CONTROL & MTG GP-JOYSTICK

S/N: D3P1-UP; M4T1-UP
PART OF 337-4126 OPTION AR-CONTROL, 337-4108, 337-4109, 337-4112, 337-4152 OPTION AR-HYDRAULIC
AN ATTACHMENT

SMCS-5063, 5705 **i03247145**

NOTE	REF NO	GRAPHIC REF	PART NUMBER	QTY	PART NAME 1 2 3 4 5 6 (PRODUCT LEVEL)	SEE PAGE
Y	1	1	**297-0532**	1	CONTROL GP-JOYSTICK (RH)	984
Y	2	1	**297-0533**	1	CONTROL GP-JOYSTICK (LH)	985
M	3	1	**6V-7357**	6	BOLT (M6X1X25-MM)	
	4	1	**9X-8256**	6	WASHER (6.6X12X2-MM THK)	

M-METRIC PART
Y-SEPARATE ILLUSTRATION

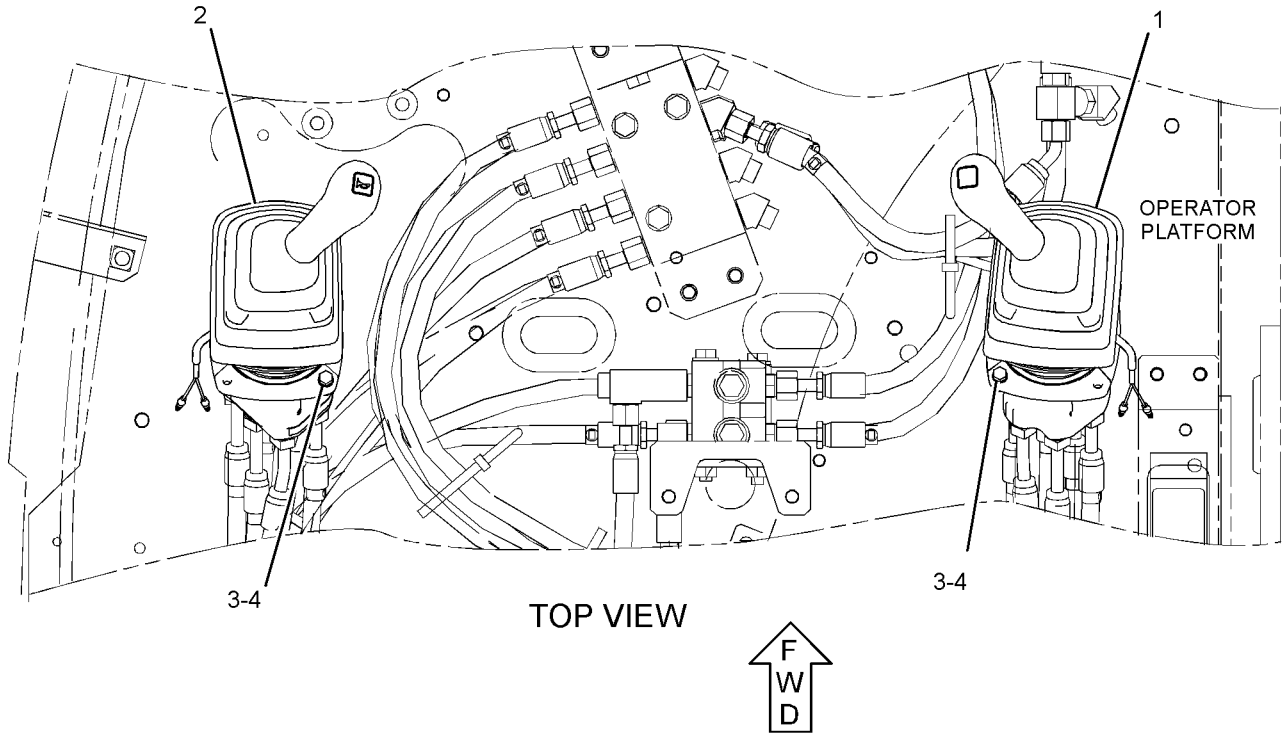

GRAPHIC #1 **<END>** g01442248

OPERATOR STATION

221-8884 CONTROL & MTG GP-PEDAL–LH

S/N: M4T1-UP
PART OF 255-5845 PEDAL AR-AUXILIARY
AN ATTACHMENT

SMCS-5462 **i02888424**

NOTE	REF NO	GRAPHIC REF	PART NUMBER	QTY	PART NAME 1 2 3 4 5 6 (PRODUCT LEVEL)	SEE PAGE
	1	1	**5I-7090**	1	CHAIN AS	
	2	1	**121-1865**	1	PEDAL-RUBBER (LH)	
	3	1	**128-2173**	1	PIN	
	4	1	**153-8723**	1	PEDAL AS	
CY	5	1	**309-5808**	1	CONTROL GP-PEDAL (ELECTRIC)	986
	6	1	**227-7625**	1	SUPPORT AS	
M	7	1	**095-0735**	2	SCREW-MACHINE (M5X0.8X8-MM)	
M	8	1	**7X-2536**	2	BOLT (M8X1.25X14-MM)	
	9	1	**8T-0114**	1	PIN-SPRING	
	10	1	**8T-4121**	3	WASHER-HARD (11X21X2.5-MM THK)	
M	11	1	**8T-4136**	2	BOLT (M10X1.5X25-MM)	
M	12	1	**8T-4191**	1	BOLT (M10X1.5X16-MM)	
	13	1	**8T-4224**	2	WASHER-HARD (8.8X16X2-MM THK)	

C-CHANGE FROM PREVIOUS TYPE
M-METRIC PART
Y-SEPARATE ILLUSTRATION

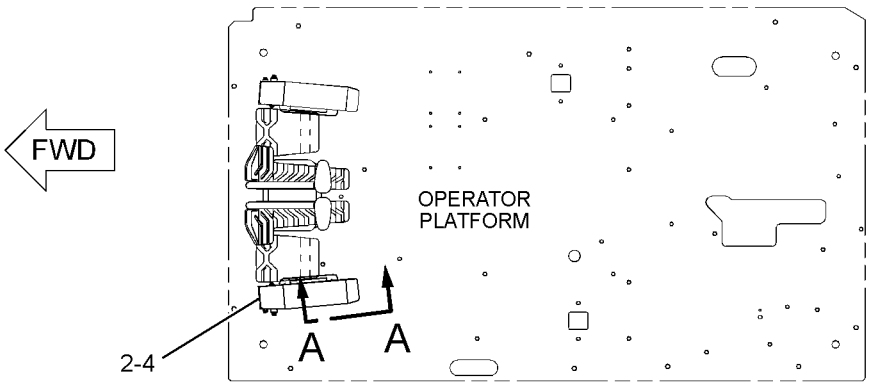

TOP VIEW

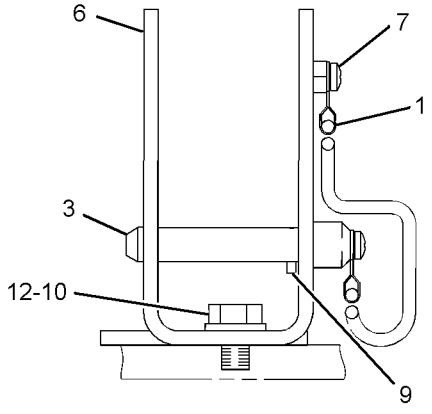

VIEW B-B

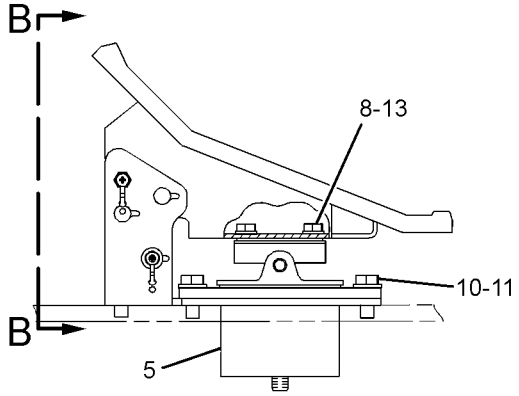

VIEW A-A

GRAPHIC #1 **<END>** g01439827

OPERATOR STATION

239-8696 CONTROL GP-FOOT—WORK TOOL

S/N: D3P1-UP; M4T1-UP

PART OF 272-9663 CONTROL AR-AUXILIARY

AN ATTACHMENT

SMCS-1435 **i03632096**

NOTE	REF NO	GRAPHIC REF	PART NUMBER	QTY	PART NAME 1 2 3 4 5 6 (PRODUCT LEVEL)	SEE PAGE
	1	1	**4H-1225**	2	WASHER (11X22X6-MM THK)	
	2	1	**142-5834**	1	STRIP	
	3	1	*205-1339*	1	SWITCH GP-PEDAL (WORK TOOL)	
		1	**2Q-4703**	1	SWITCH AS-FOOT	
		1	**205-1340**	1	HARNESS AS-OPERATOR CONTROLS	
		1	**155-2270**	1	KIT-CONNECTING PLUG (2-PIN)	
					(INCLUDES PLUG AS,WEDGE & INTERFACE SEAL)	
	4	1	**1A-0621**	1	GROMMET	
	5	1	**8T-4121**	2	WASHER-HARD (11X21X2.5-MM THK)	
M	6	1	**8T-4137**	2	BOLT (M10X1.5X20-MM)	

M-METRIC PART

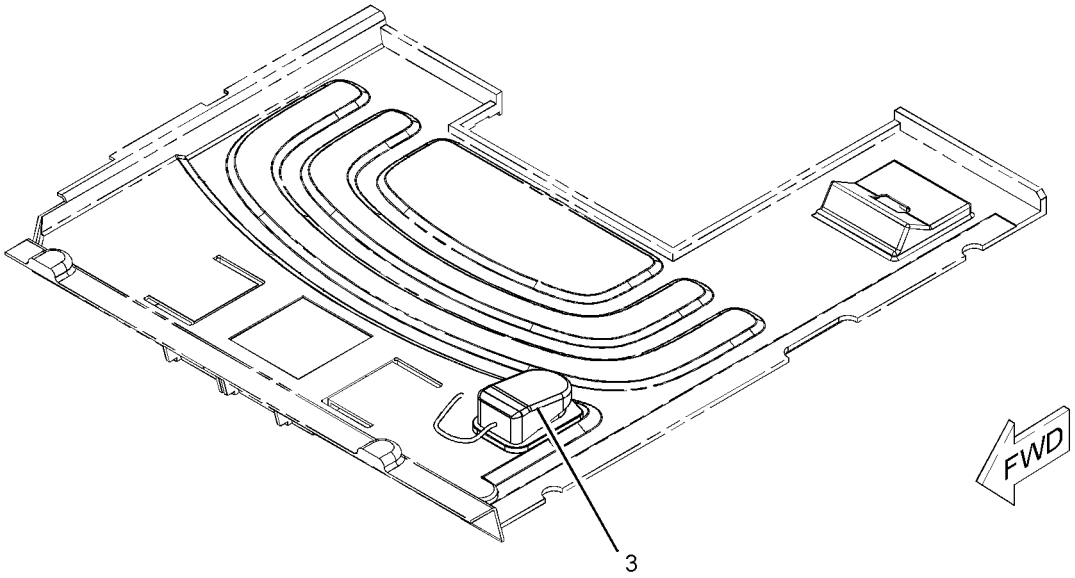

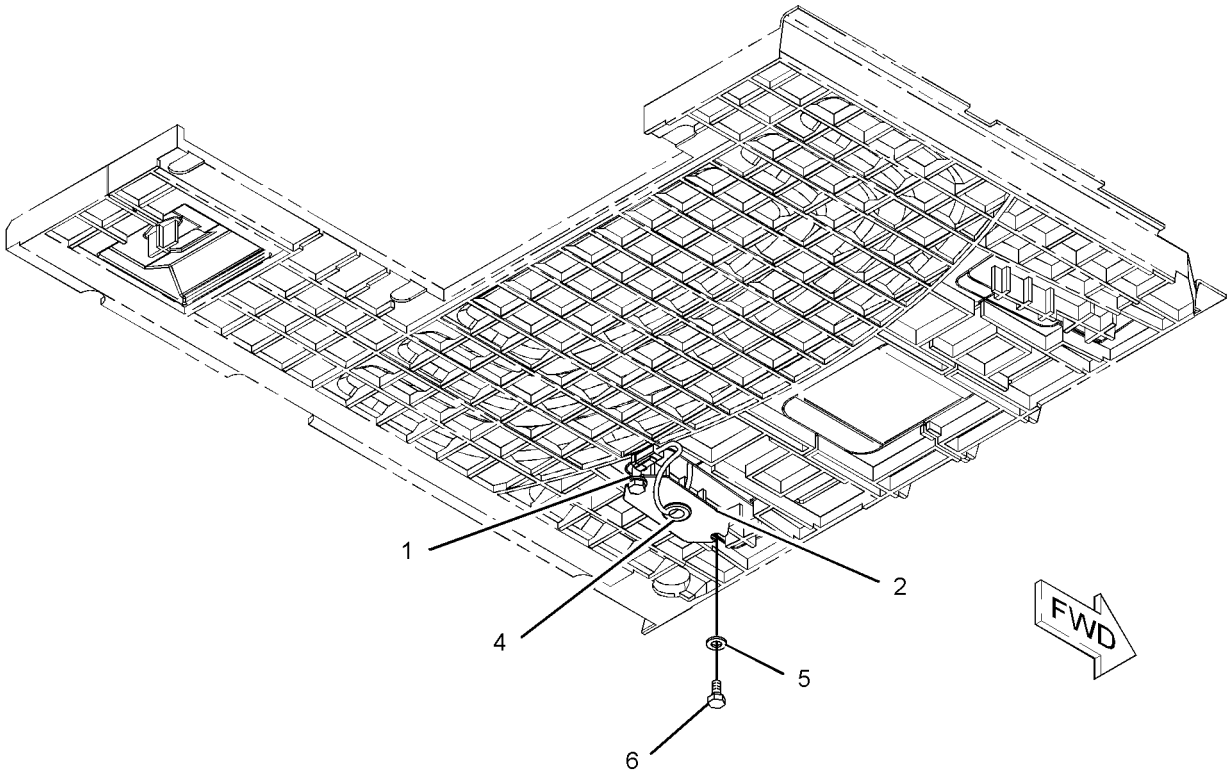

GRAPHIC #1 **<END>** g01122155

235-8969 CONTROL GP-HANDLE—JOYSTICK, LH

S/N: D3P1-UP; M4T1-UP
PART OF 297-0533 CONTROL GP-JOYSTICK
AN ATTACHMENT

SMCS-5705 **i02924513**

NOTE	REF NO	GRAPHIC REF	PART NUMBER	QTY	PART NAME 1 2 3 4 5 6 (PRODUCT LEVEL)	SEE PAGE
	1	1	**124-4010**	1	LEVER	
	2	1	**235-8971**	1	BOOT	
	3	1	**245-7842**	1	KNOB AS	
M		1	**6I-5298**	1	SCREW-TAPPING	
		1	**124-4009**	1	SHAFT	
		1	**222-0225**	1	SWITCH AS-PUSH BUTTON (HORN)	
M	4	1	**096-2617**	2	SCREW-MACHINE (M5X0.8X6-MM)	

M-METRIC PART

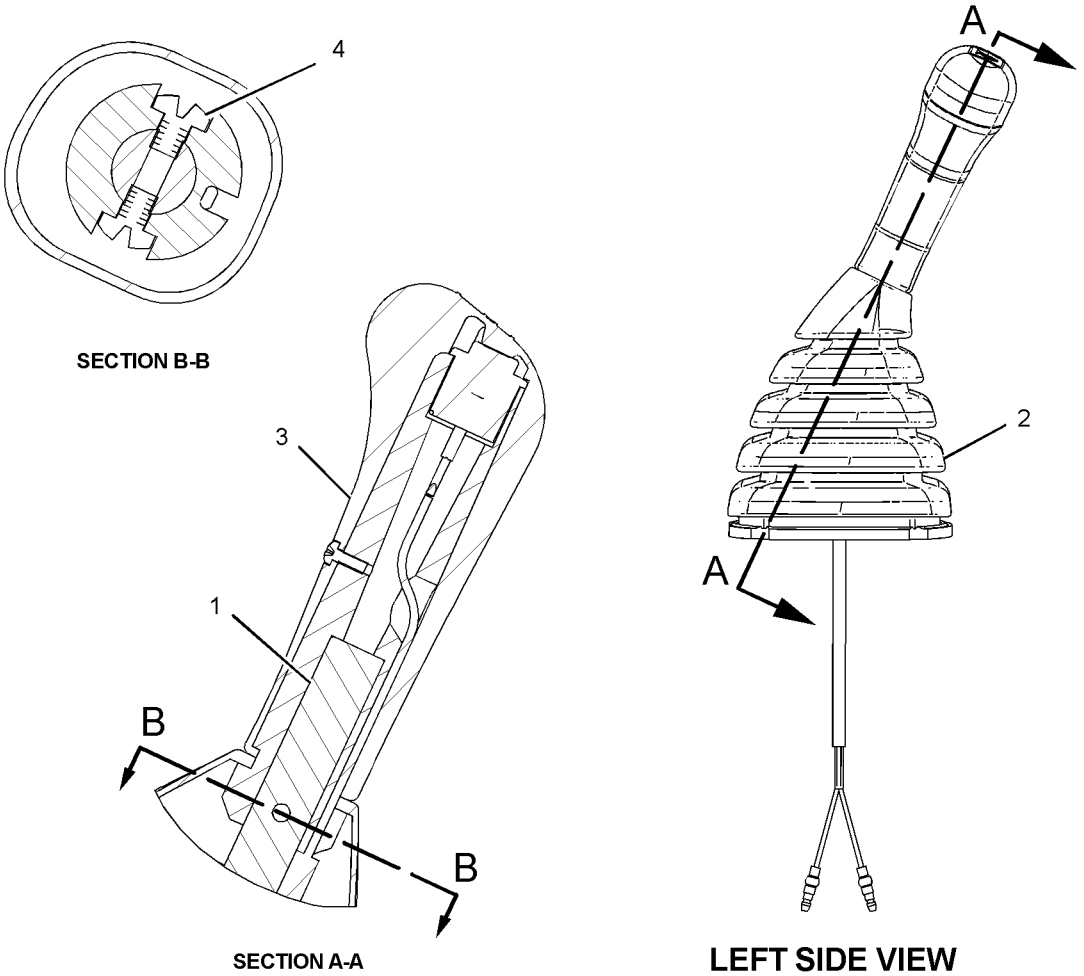

GRAPHIC #1 **<END>** g01253539

OPERATOR STATION

235-8970 CONTROL GP-HANDLE–JOYSTICK, RH

S/N: D3P1-UP; M4T1-UP
PART OF 297-0532 CONTROL GP-JOYSTICK
AN ATTACHMENT

SMCS-5705 **i02923994**

NOTE	REF NO	GRAPHIC REF	PART NUMBER	QTY	PART NAME 1 2 3 4 5 6 (PRODUCT LEVEL)	SEE PAGE
	1	1	**124-4010**	1	LEVER	
	2	1	**235-8972**	1	BOOT	
	3	1	**245-7844**	1	KNOB AS	
M		1	**6I-5298**	1	SCREW-TAPPING	
		1	**124-4009**	1	SHAFT	
		1	**222-0225**	1	SWITCH AS-PUSH BUTTON (MANUAL LOW IDLE)	
M	4	1	**096-2617**	2	SCREW-MACHINE (M5X0.8X6-MM)	

M-METRIC PART

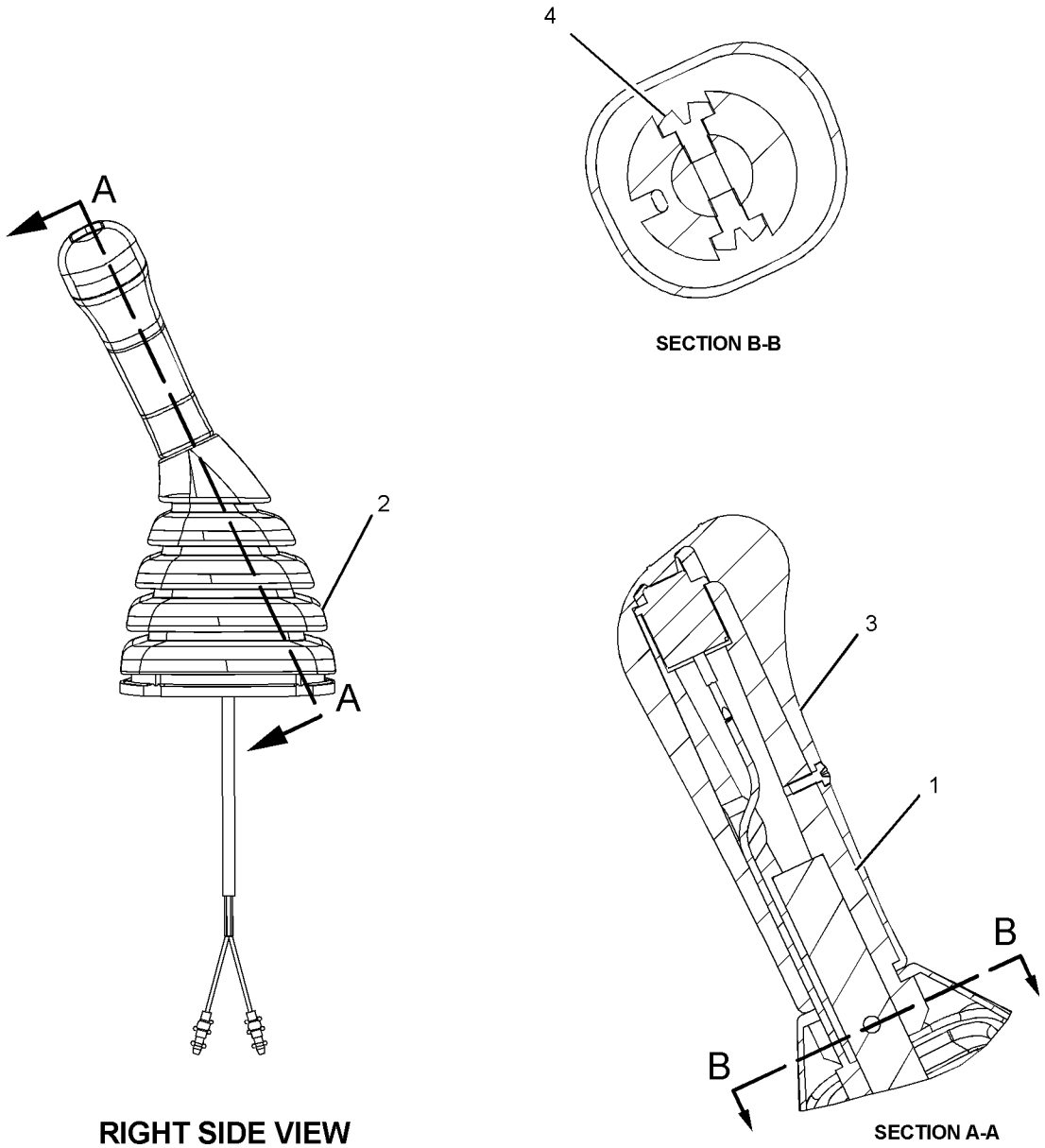

SECTION B-B

RIGHT SIDE VIEW

SECTION A-A

GRAPHIC #1 **<END>** g01082427

OPERATOR STATION

260-2109 CONTROL GP-HANDLE–JOYSTICK, RH

S/N: D3P1-UP; M4T1-UP
PART OF 259-7705, 259-7762 CONTROL GP-JOYSTICK
AN ATTACHMENT

SMCS-5705 **i03438360**

NOTE	REF NO	GRAPHIC REF	PART NUMBER	QTY	PART NAME 1 2 3 4 5 6 (PRODUCT LEVEL)	SEE PAGE
M	1	1	**7Y-8463**	1	NUT (M14X2-THD)	
	2	1	**117-8683**	1	PIN-SPRING	
	3	1	**260-2111**	1	LEVER	
	4	1	**227-7616**	1	HANDLE GP-JOYSTICK (RH)	
		1	**247-2693**	1	RECEPTACLE AS-CONNECTOR (6-PIN)	
		1	**9X-3401**	6	PIN-CONNECTOR (16-GA TO 18-GA)	
					–OR–	
		1	**126-1767**	6	PIN-CONNECTOR (14-GA)	
	5	1	**240-5066**	1	BOOT	

M-METRIC PART

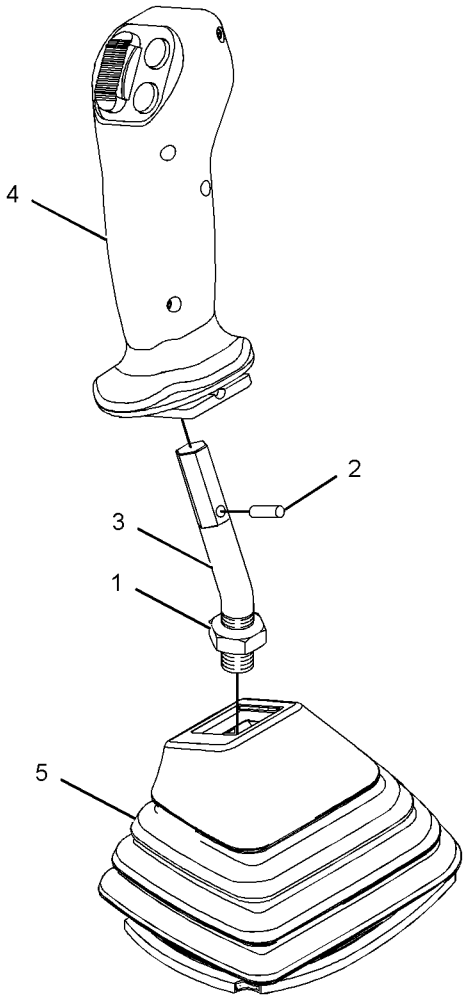

GRAPHIC #1

<END>

g01220527

OPERATOR STATION

260-2110 CONTROL GP-HANDLE–JOYSTICK, LH

S/N: D3P1-UP; M4T1-UP
PART OF 259-7706, 259-7763 CONTROL GP-JOYSTICK
AN ATTACHMENT

SMCS-5705 **i02508828**

NOTE	REF NO	GRAPHIC REF	PART NUMBER	QTY	PART NAME 1 2 3 4 5 6 (PRODUCT LEVEL)	SEE PAGE
M	1	1	**7Y-8463**	1	NUT (M14X2-THD)	
	2	1	**113-2532**	1	PIN	
	3	1	**260-2111**	1	LEVER	
	4	1	**227-7617**	1	HANDLE GP-JOYSTICK (LH)	
		1	**9X-3401**	6	PIN-CONNECTOR (16-GA TO 18-GA)	
					–OR–	
		1	**126-1767**	6	PIN-CONNECTOR (14-GA)	
		1	**247-2693**	1	RECEPTACLE AS-CONNECTOR (6-PIN)	
	5	1	**240-5067**	1	BOOT	

M-METRIC PART

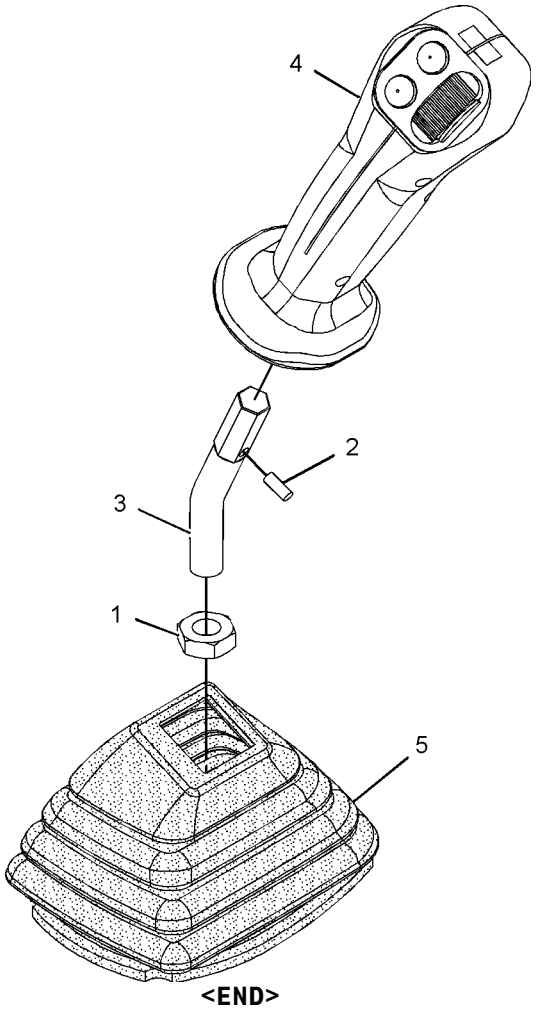

GRAPHIC #1 **<END>** g01127317

OPERATOR STATION

260-2127 CONTROL GP-HANDLE–RH

S/N: M4T1-UP
PART OF 297-0540 CONTROL GP-PILOT OPERATED HYD
AN ATTACHMENT

SMCS-5705 **i02518815**

NOTE	REF NO	GRAPHIC REF	PART NUMBER	QTY	PART NAME 1 2 3 4 5 6 (PRODUCT LEVEL)	SEE PAGE
M	1	1	**7Y-8463**	1	NUT (M14X2-THD)	
	2	1	**117-8683**	1	PIN-SPRING	
	3	1	**240-5066**	1	BOOT	
	4	1	**247-5185**	1	CONTROL GP-HANDLE	
		1	**8T-8737**	2	PLUG-SEAL	
		1	**9X-3401**	4	PIN-CONNECTOR (16-GA TO 18-GA)	
					–OR–	
		1	**126-1767**	4	PIN-CONNECTOR (14-GA)	
		1	**247-2693**	1	RECEPTACLE AS-CONNECTOR (6-PIN)	
	5	1	**260-2111**	1	LEVER	

M-METRIC PART

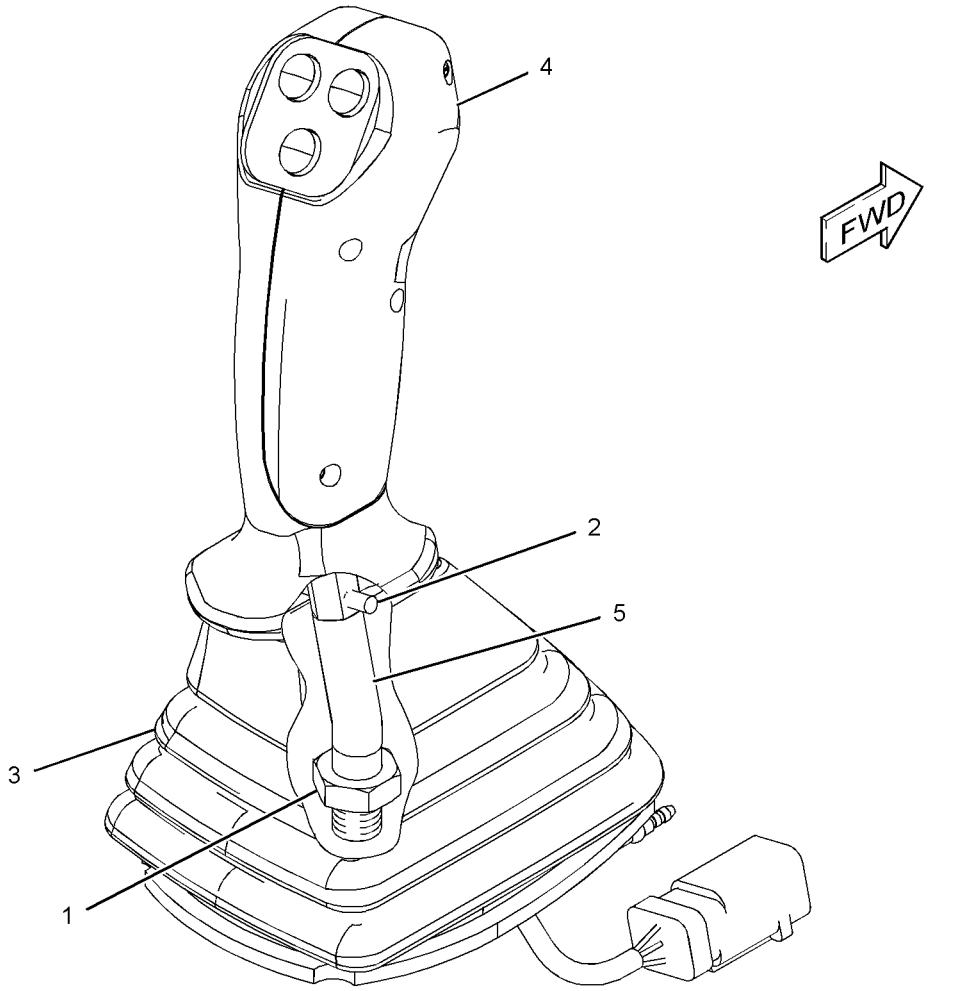

GRAPHIC #1 **<END>** g01216159

OPERATOR STATION

260-2128 CONTROL GP-HANDLE—LH

S/N: M4T1-UP
PART OF 297-0541 CONTROL GP-PILOT OPERATED HYD
AN ATTACHMENT

SMCS-5705 **i02518884**

NOTE	REF NO	GRAPHIC REF	PART NUMBER	QTY	PART NAME 1 2 3 4 5 6 (PRODUCT LEVEL)	SEE PAGE
M	1	1	**7Y-8463**	1	NUT (M14X2-THD)	
	2	1	**117-8683**	1	PIN-SPRING	
	3	1	**240-5067**	1	BOOT	
	4	1	**247-5185**	1	CONTROL GP-HANDLE	
		1	**8T-8737**	2	PLUG-SEAL	
		1	**9X-3401**	4	PIN-CONNECTOR (16-GA TO 18-GA)	
					—OR—	
		1	**126-1767**	4	PIN-CONNECTOR (14-GA)	
		1	**247-2693**	1	RECEPTACLE AS-CONNECTOR (6-PIN)	
	5	1	**260-2111**	1	LEVER	

M-METRIC PART

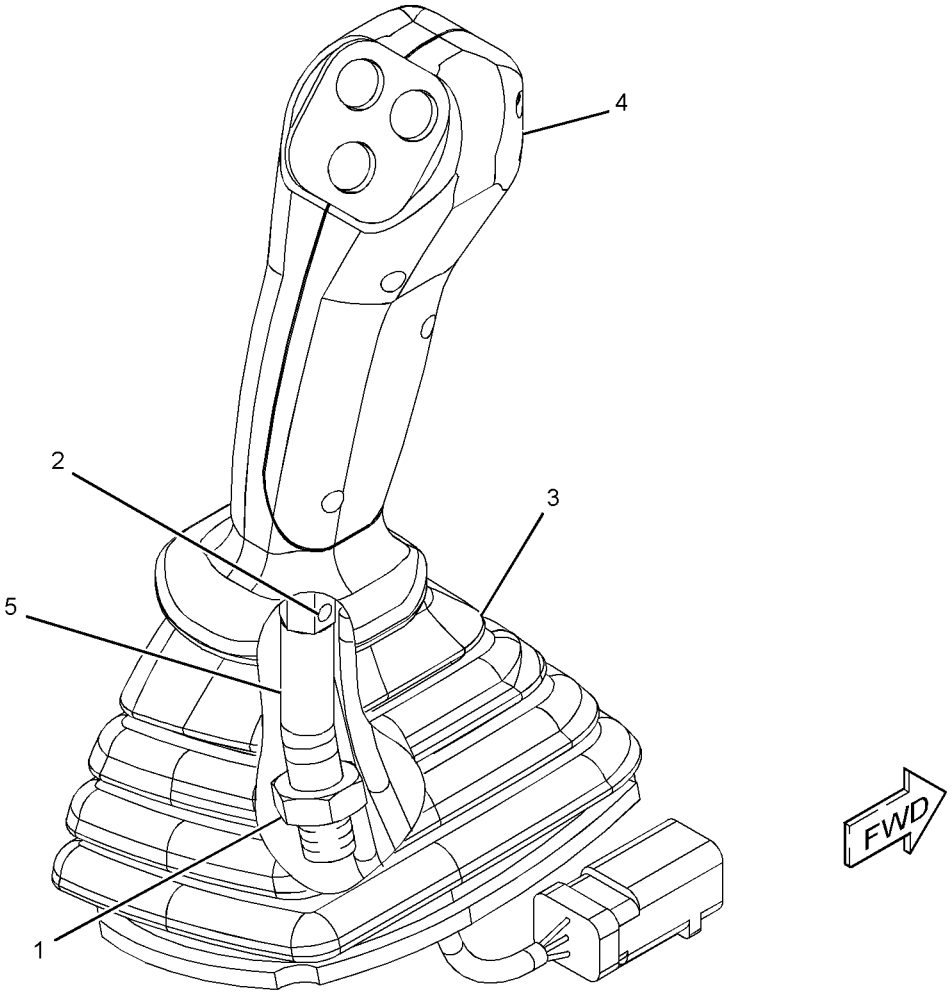

GRAPHIC #1 **<END>** g01214242

OPERATOR STATION

239-8695 CONTROL GP-HYDRAULIC PEDAL

S/N: D3P1-UP; M4T1-UP
PART OF 255-5770 CONTROL AR-AUXILIARY
AN ATTACHMENT

SMCS-5059, 5063 **i02786403**

NOTE	REF NO	GRAPHIC REF	PART NUMBER	QTY	PART NAME 1 2 3 4 5 6 (PRODUCT LEVEL)	SEE PAGE
	1	1	**5I-7090**	2	CHAIN AS	
	2	1	**121-1865**	1	PEDAL-RUBBER (LH)	
	3	1	**122-9611**	1	PEDAL-RUBBER (RH)	
	4	1	**128-2173**	2	PIN	
	5	1	**153-8753**	1	PEDAL AS	
	6	1	**153-8762**	1	PEDAL AS	
	7	1	**153-8763**	1	SUPPORT AS	
	8	1	**206-3336**	2	VALVE GP-PILOT	
	9	1	**259-7877**	1	SUPPORT AS	
M	10	1	**095-0735**	4	SCREW-MACHINE (M5X0.8X8-MM)	
M	11	1	**7X-2536**	4	BOLT (M8X1.25X14-MM)	
	12	1	**8T-0114**	2	PIN-SPRING	
	13	1	**8T-4121**	6	WASHER-HARD (11X21X2.5-MM THK)	
M	14	1	**8T-4136**	4	BOLT (M10X1.5X25-MM)	
M	15	1	**8T-4137**	2	BOLT (M10X1.5X20-MM)	
	16	1	**8T-4224**	4	WASHER-HARD (8.8X16X2-MM THK)	

M-METRIC PART

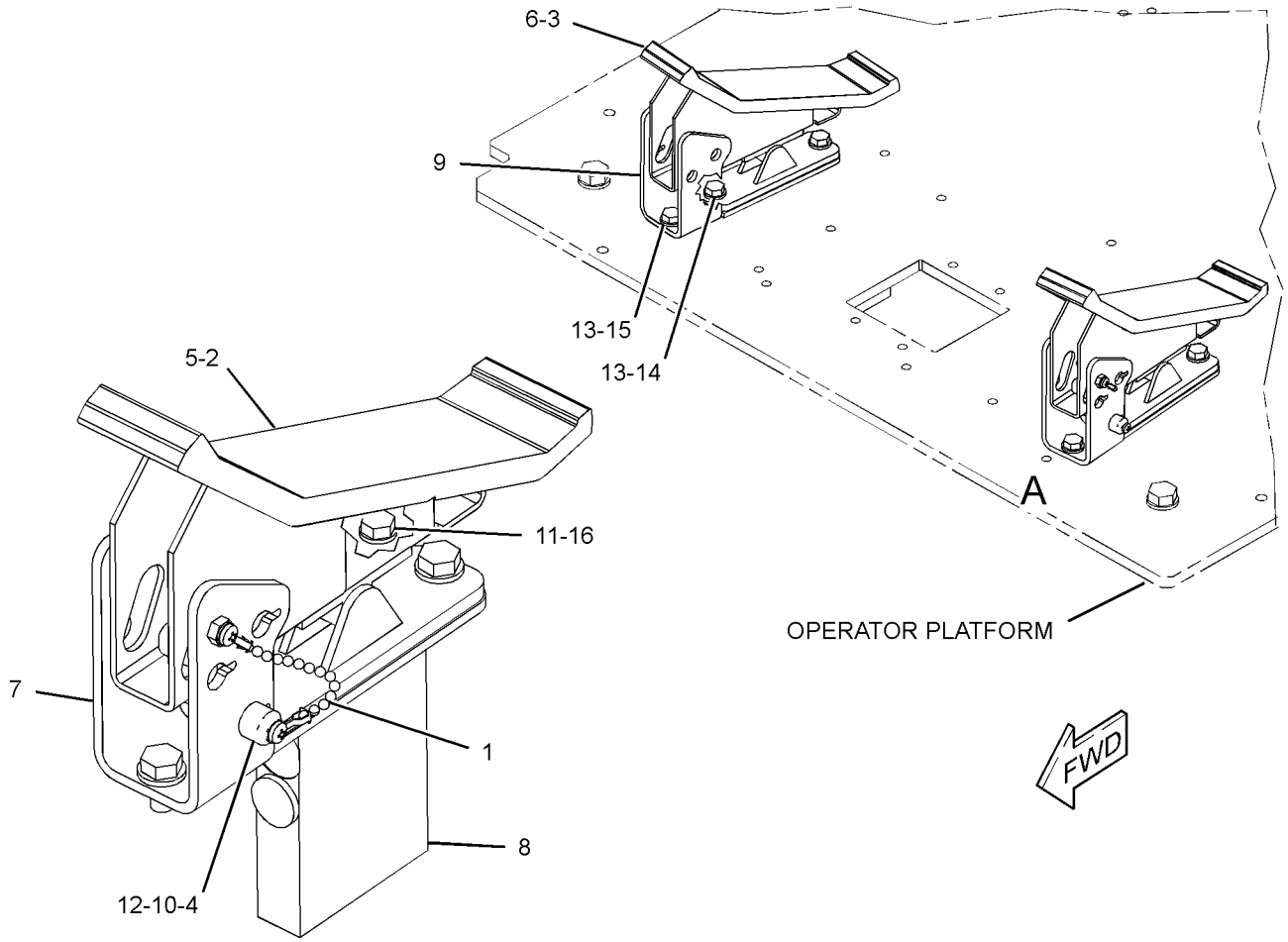

VIEW OF AREA A

GRAPHIC #1 **<END>** g01231524

OPERATOR STATION

259-7179 CONTROL GP-HYDRAULIC PEDAL

S/N: D3P1-UP; M4T1-UP
PART OF 259-7176 PEDAL AR-AUXILIARY
AN ATTACHMENT

SMCS-5059, 5063 **i02518115**

NOTE	REF NO	GRAPHIC REF	PART NUMBER	QTY	PART NAME 1 2 3 4 5 6 (PRODUCT LEVEL)	SEE PAGE
	1	1	**5I-7090**	1	CHAIN AS	
	2	1	**128-2173**	1	PIN	
	3	1	**135-2274**	1	PEDAL-RUBBER	
	4	1	**164-0614**	1	PEDAL AS	
	5	1	**164-0617**	1	SUPPORT AS	
	6	1	**206-3336**	1	VALVE GP-PILOT (THIRD PEDAL, STRAIGHT TRAVEL)	
		1	**190-7819**	2	SPRING	
M	7	1	**095-0735**	2	SCREW-MACHINE (M5X0.8X8-MM)	
M	8	1	**7X-2536**	2	BOLT (M8X1.25X14-MM)	
	9	1	**8T-0114**	1	PIN-SPRING	
	10	1	**8T-4121**	3	WASHER-HARD (11X21X2.5-MM THK)	
M	11	1	**8T-4136**	2	BOLT (M10X1.5X25-MM)	
M	12	1	**8T-4191**	1	BOLT (M10X1.5X16-MM)	
	13	1	**8T-4224**	2	WASHER-HARD (8.8X16X2-MM THK)	

M-METRIC PART

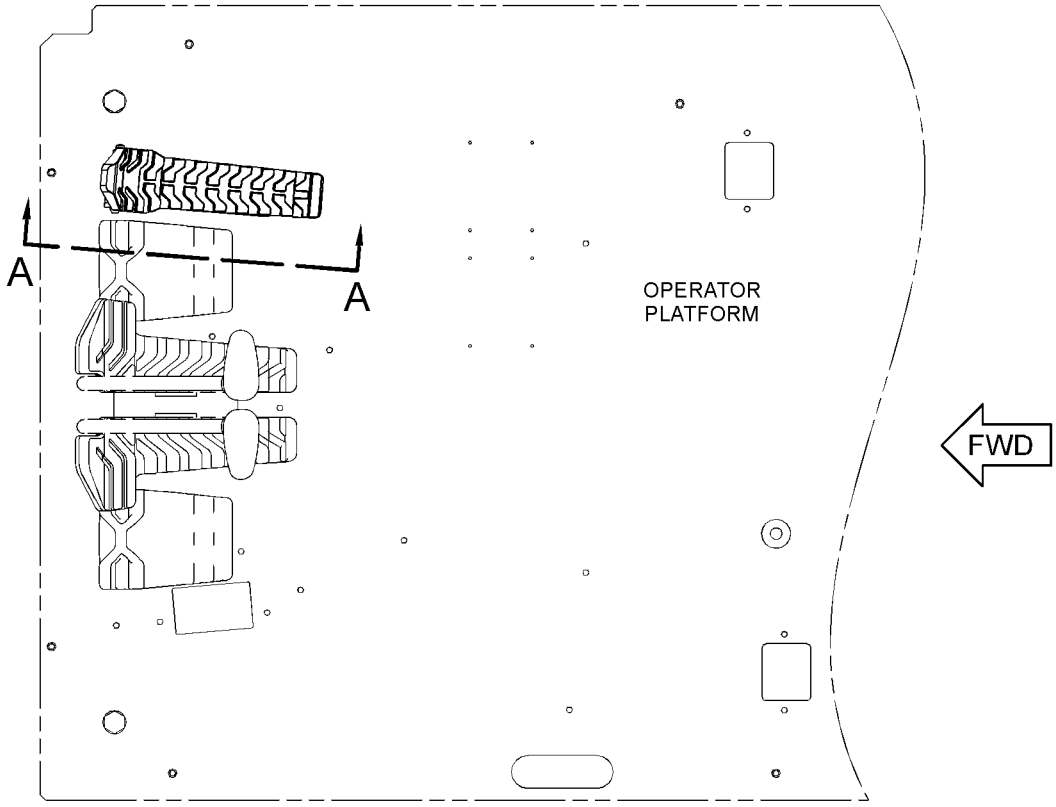

TOP VIEW

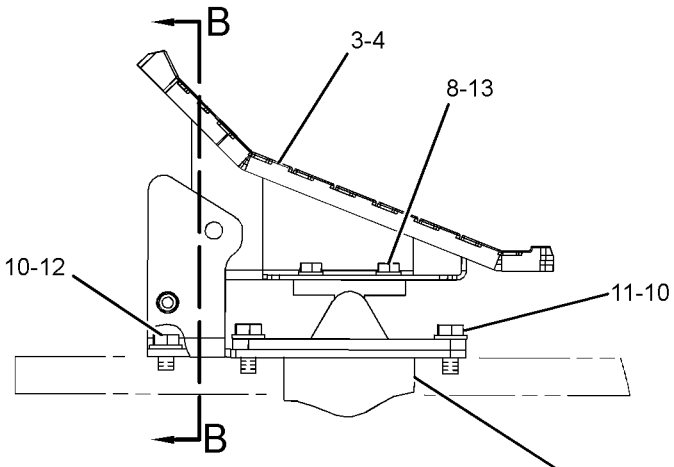

SECTION A-A

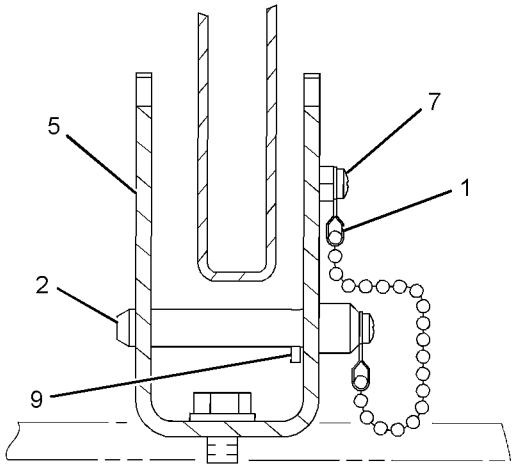

SECTION B-B

GRAPHIC #1 **<END>** g01182505

OPERATOR STATION

259-7705 CONTROL GP-JOYSTICK–RH

S/N: M4T1-UP

PART OF 270-5689 CONTROL & MTG GP-JOYSTICK

AN ATTACHMENT

SMCS-5705 **i03712956**

NOTE	REF NO	GRAPHIC REF	PART NUMBER	QTY	PART NAME 1 2 3 4 5 6 (PRODUCT LEVEL)	SEE PAGE
	1	1	**6K-0806**	1	STRAP-CABLE	
Y	2	1	*225-4813*	1	VALVE GP-PILOT (JOYSTICK, RH)	783
Y	3	1	**260-2109**	1	CONTROL GP-HANDLE (JOYSTICK, RH)	973

Y-SEPARATE ILLUSTRATION

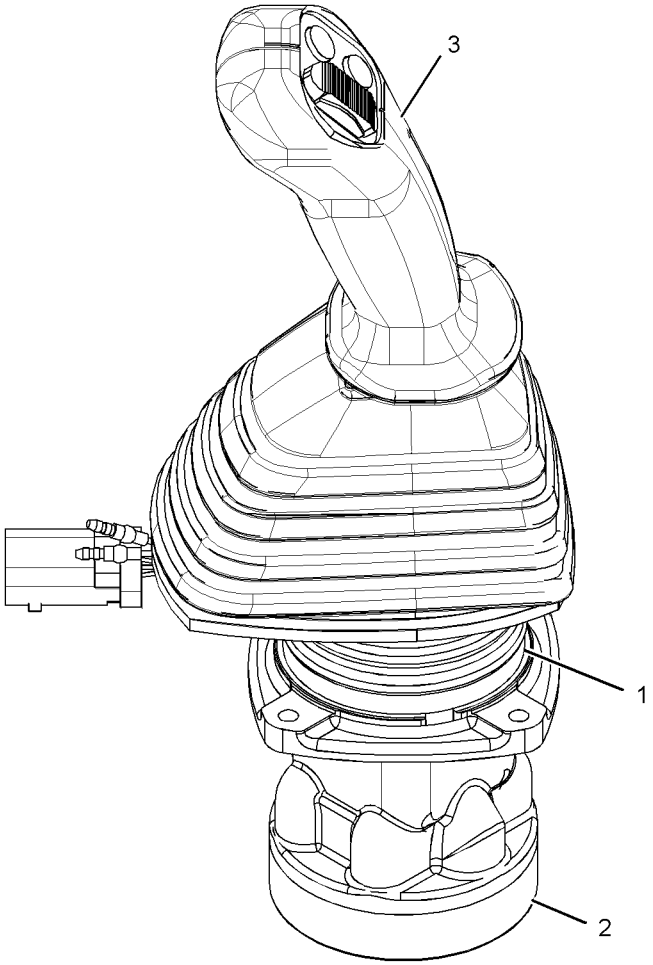

GRAPHIC #1 **<END>** g02024420

259-7706 CONTROL GP-JOYSTICK–LH

S/N: M4T1-UP

PART OF 270-5689 CONTROL & MTG GP-JOYSTICK

AN ATTACHMENT

SMCS-5705 **i03712952**

NOTE	REF NO	GRAPHIC REF	PART NUMBER	QTY	PART NAME 1 2 3 4 5 6 (PRODUCT LEVEL)	SEE PAGE
	1	1	**6K-0806**	1	STRAP-CABLE	
Y	2	1	*232-4100*	1	VALVE GP-PILOT (JOYSTICK, LH)	784
Y	3	1	**260-2110**	1	CONTROL GP-HANDLE (JOYSTICK, LH)	974

Y-SEPARATE ILLUSTRATION

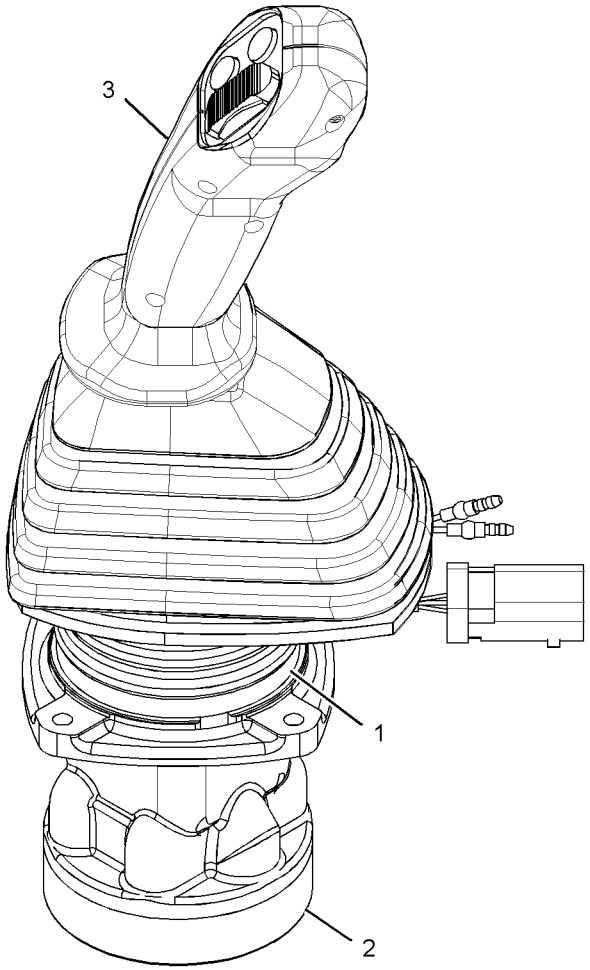

GRAPHIC #1 **<END>** g02024433

OPERATOR STATION

259-7762 CONTROL GP-JOYSTICK–RH

S/N: D3P1-UP; M4T1-UP
PART OF 200-6741 CONTROL & MTG GP-JOYSTICK
AN ATTACHMENT

SMCS-5705 **i03036977**

NOTE	REF NO	GRAPHIC REF	PART NUMBER	QTY	PART NAME 1 2 3 4 5 6 (PRODUCT LEVEL)	SEE PAGE
	1	1	**6K-0806**	1	STRAP-CABLE	
Y	2	1	**206-3305**	1	VALVE GP-PILOT (JOYSTICK)	779
Y	3	1	**260-2109**	1	CONTROL GP-HANDLE (JOYSTICK, RH)	973

Y-SEPARATE ILLUSTRATION

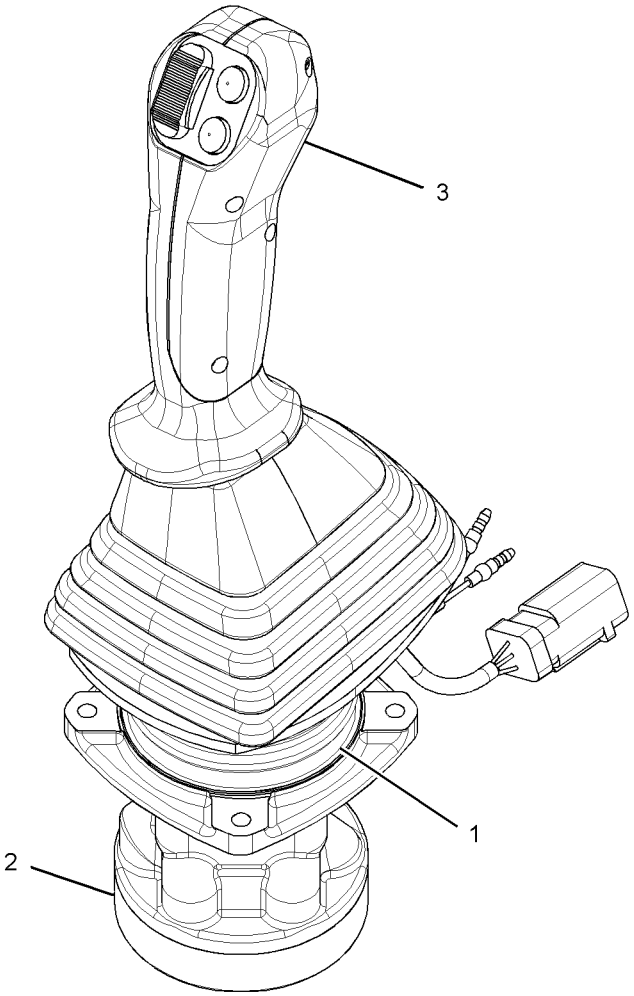

GRAPHIC #1

<END>

g01453642

259-7763 CONTROL GP-JOYSTICK–LH

S/N: D3P1-UP; M4T1-UP
PART OF 200-6741 CONTROL & MTG GP-JOYSTICK
AN ATTACHMENT

SMCS-5705 **i02981343**

NOTE	REF NO	GRAPHIC REF	PART NUMBER	QTY	PART NAME 1 2 3 4 5 6 (PRODUCT LEVEL)	SEE PAGE
	1	1	**6K-0806**	1	STRAP-CABLE	
Y	2	1	**206-3305**	1	VALVE GP-PILOT (JOYSTICK)	779
Y	3	1	**260-2110**	1	CONTROL GP-HANDLE (JOYSTICK, LH)	974

Y-SEPARATE ILLUSTRATION

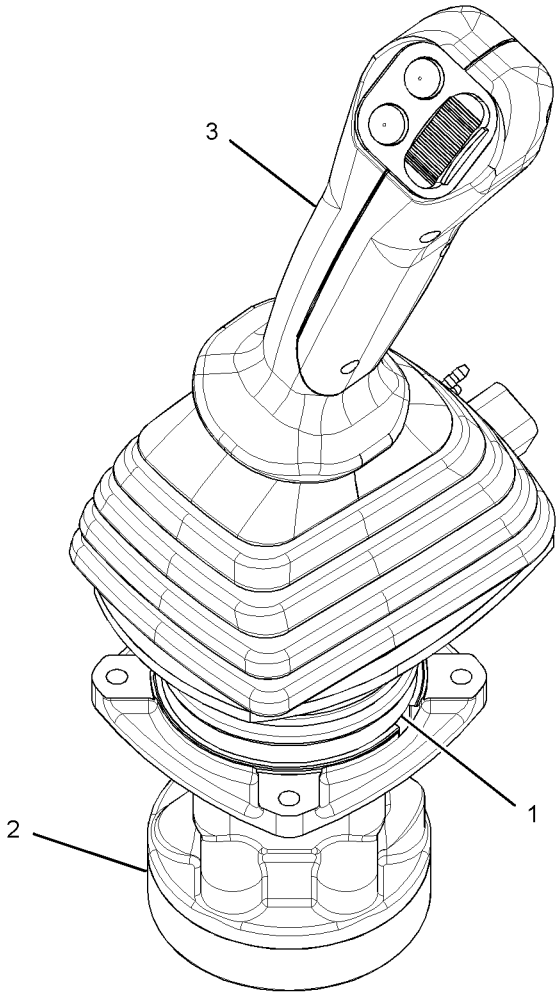

GRAPHIC #1 **<END>** g01453715

OPERATOR STATION

297-0532 CONTROL GP-JOYSTICK–RH

S/N: D3P1-UP; M4T1-UP
PART OF 310-0078 CONTROL & MTG GP-JOYSTICK
AN ATTACHMENT

SMCS-5705 **i03247141**

NOTE	REF NO	GRAPHIC REF	PART NUMBER	QTY	PART NAME 1 2 3 4 5 6 (PRODUCT LEVEL)	SEE PAGE
M	1	1	**7Y-8463**	1	NUT (M14X2-THD)	
Y	2	1	**235-8970**	1	CONTROL GP-HANDLE (JOYSTICK, RH)	972
Y	3	1	**297-0529**	1	VALVE GP-PILOT (JOYSTICK)	789
	4	1	**6K-0806**	1	STRAP-CABLE	

M-METRIC PART
Y-SEPARATE ILLUSTRATION

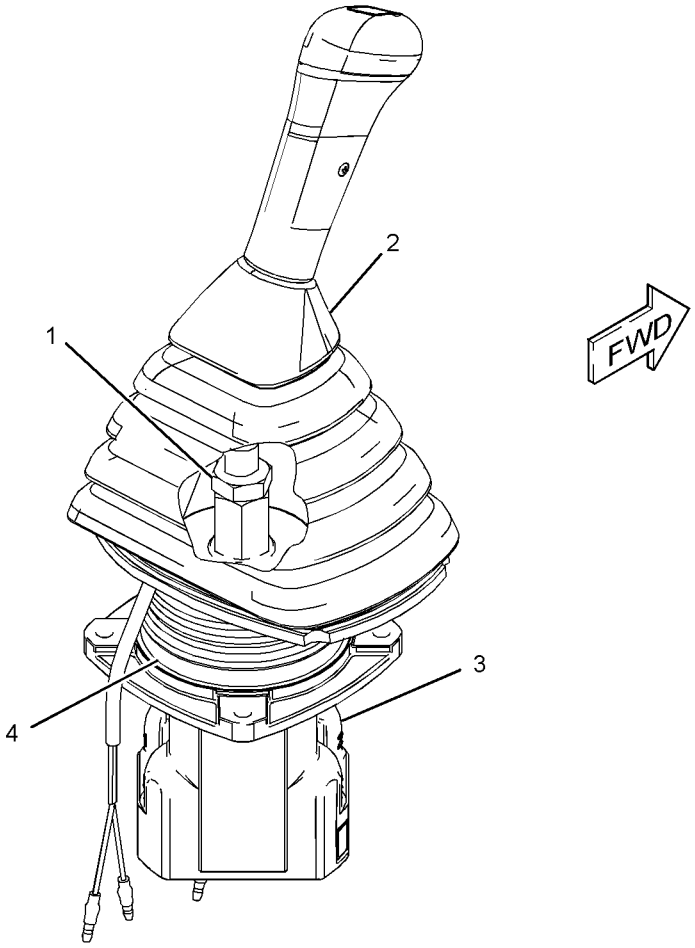

GRAPHIC #1 **<END>** g01452407

OPERATOR STATION

297-0533 CONTROL GP-JOYSTICK–LH

S/N: D3P1-UP; M4T1-UP
PART OF 310-0078 CONTROL & MTG GP-JOYSTICK
AN ATTACHMENT

SMCS-5705 **i03247144**

NOTE	REF NO	GRAPHIC REF	PART NUMBER	QTY	PART NAME 1 2 3 4 5 6 (PRODUCT LEVEL)	SEE PAGE
M	1	1	**7Y-8463**	1	NUT (M14X2-THD)	
Y	2	1	**235-8969**	1	CONTROL GP-HANDLE (JOYSTICK, LH)	971
Y	3	1	**297-0529**	1	VALVE GP-PILOT (JOYSTICK)	789
	4	1	**6K-0806**	1	STRAP-CABLE	

M-METRIC PART
Y-SEPARATE ILLUSTRATION

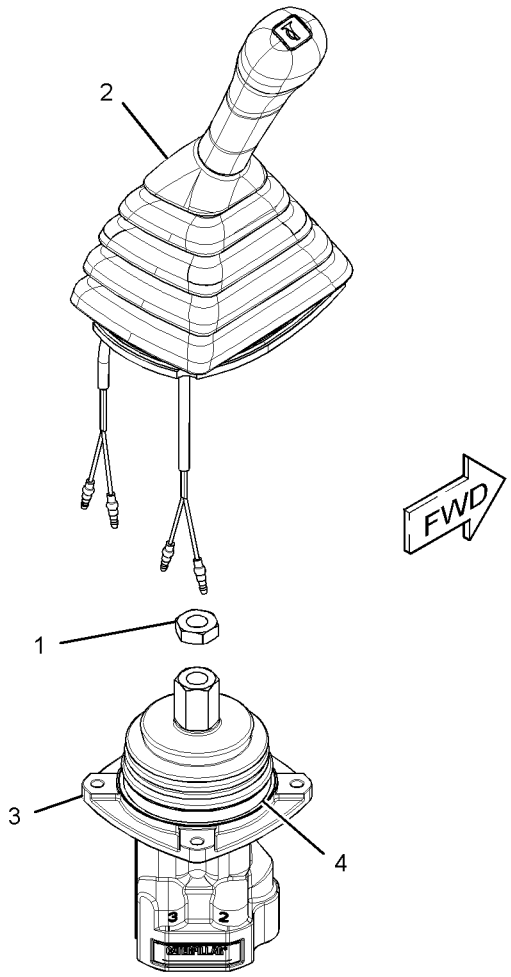

GRAPHIC #1 **<END>** g01452496

309-5808 CONTROL GP-PEDAL–ELECTRIC

S/N: M4T1-UP

PART OF 221-8884 CONTROL & MTG GP-PEDAL

AN ATTACHMENT

SMCS-1435, 5702 **i02888453**

NOTE	REF NO	GRAPHIC REF	PART NUMBER	QTY	PART NAME 1 2 3 4 5 6 (PRODUCT LEVEL)	SEE PAGE
	1	1	**8T-8737**	1	PLUG-SEAL	
	2	1	**9X-3401**	5	PIN-CONNECTOR (16-GA TO 18-GA)	
					–OR–	
		1	**126-1767**	5	PIN-CONNECTOR (14-GA)	
	3	1	**247-2693**	1	RECEPTACLE AS-CONNECTOR (6-PIN)	
	4	1	**247-5112**	1	BOOT	

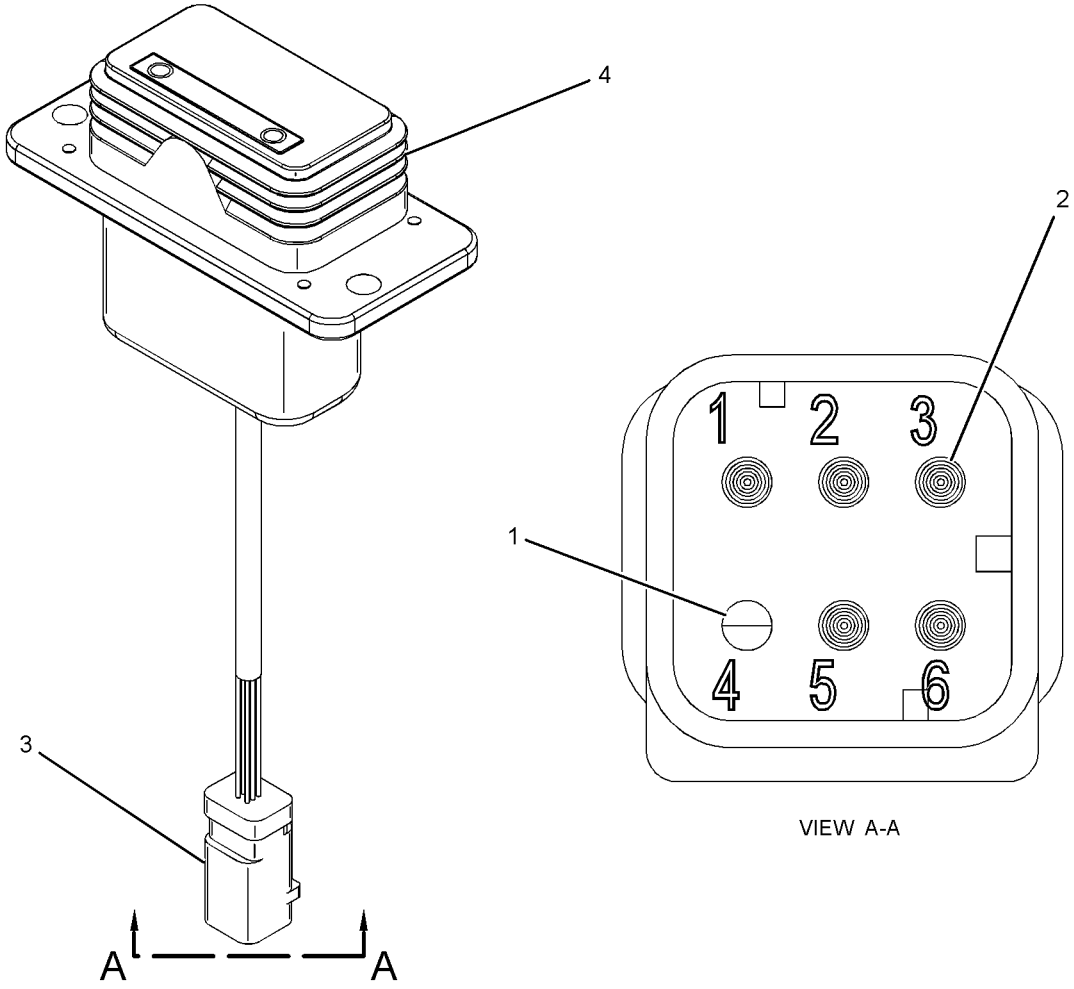

GRAPHIC #1 **<END>** g01219365

OPERATOR STATION

170-9497 CONTROL GP-PILOT OPERATED HYD—TRAVEL

S/N: D3P1-UP; M4T1-UP
PART OF 229-9072 OPERATOR AR

SMCS-5059 **i01364060**

NOTE	REF NO	GRAPHIC REF	PART NUMBER	QTY	PART NAME 1 2 3 4 5 6 (PRODUCT LEVEL)	SEE PAGE
	1	1	**096-6166**	1	WASHER-HARD (4.5X9X1-MM THK)	
M	2	1	**095-0728**	2	SCREW-MACHINE (M4X0.7X12-MM)	
	3	1	**8T-4121**	12	WASHER-HARD (11X21X2.5-MM THK)	
M	4	1	**8T-4136**	4	BOLT (M10X1.5X25-MM)	
M	5	1	**8T-4191**	8	BOLT (M10X1.5X16-MM)	
	6	1	**142-5546**	2	KNOB	
	7	1	**117-6356**	2	STEP AS	
	8	1	**122-9610**	2	STEP	
	9	1	**170-9499**	1	LEVER AS (LH)	
	10	1	**170-9498**	1	LEVER AS (RH)	
	11	1	**122-9608**	1	PEDAL-RUBBER (RH)	
	12	1	**117-6350**	1	PEDAL AS (RH)	
M		1	**8T-3490**	2	NUT-WELD (M10X1.5-THD)	
	13	1	**122-9609**	1	PEDAL-RUBBER (LH)	
	14	1	**117-6349**	1	PEDAL AS (LH)	
M		1	**8T-3490**	2	NUT-WELD (M10X1.5-THD)	

M-METRIC PART

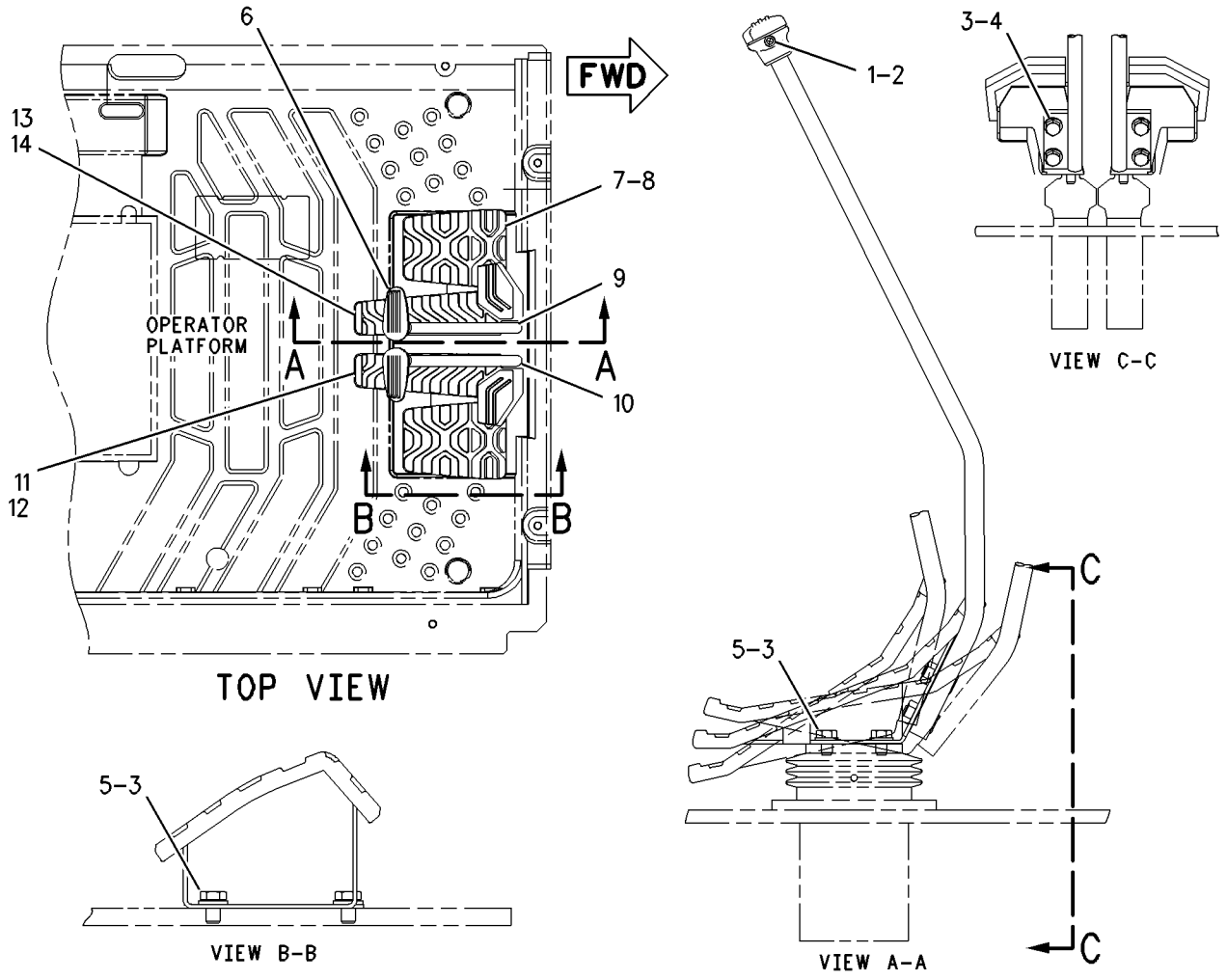

GRAPHIC #1 **<END>** g00672963

OPERATOR STATION

297-0540 CONTROL GP-PILOT OPERATED HYD–RH

S/N: M4T1-UP
PART OF 270-5690 CONTROL & MTG GP-JOYSTICK
AN ATTACHMENT

SMCS-5059 **i03727900**

NOTE	REF NO	GRAPHIC REF	PART NUMBER	QTY	PART NAME 1 2 3 4 5 6 (PRODUCT LEVEL)	SEE PAGE
	1	1	**6K-0806**	1	STRAP-CABLE	
Y	2	1	**260-2127**	1	CONTROL GP-HANDLE (JOYSTICK, RH)	975
Y	3	1	**297-0530**	1	VALVE GP-PILOT (JOYSTICK, RH)	791

Y-SEPARATE ILLUSTRATION

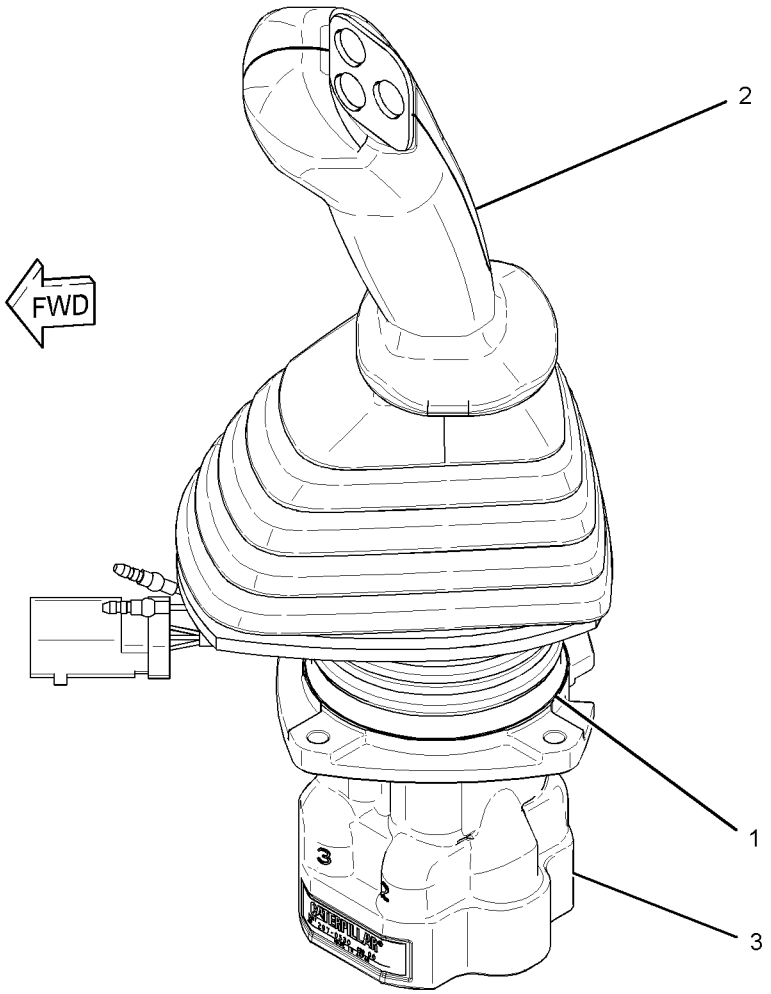

GRAPHIC #1 **<END>** g01620085

297-0541 CONTROL GP-PILOT OPERATED HYD–LH

S/N: M4T1-UP
PART OF 270-5690 CONTROL & MTG GP-JOYSTICK
AN ATTACHMENT

SMCS-5059 **i03727903**

NOTE	REF NO	GRAPHIC REF	PART NUMBER	QTY	PART NAME 1 2 3 4 5 6 (PRODUCT LEVEL)	SEE PAGE
	1	1	**6K-0806**	1	STRAP-CABLE	
Y	2	1	**260-2128**	1	CONTROL GP-HANDLE (JOYSTICK, LH)	976
Y	3	1	**297-0531**	1	VALVE GP-PILOT (JOYSTICK, LH)	793

Y-SEPARATE ILLUSTRATION

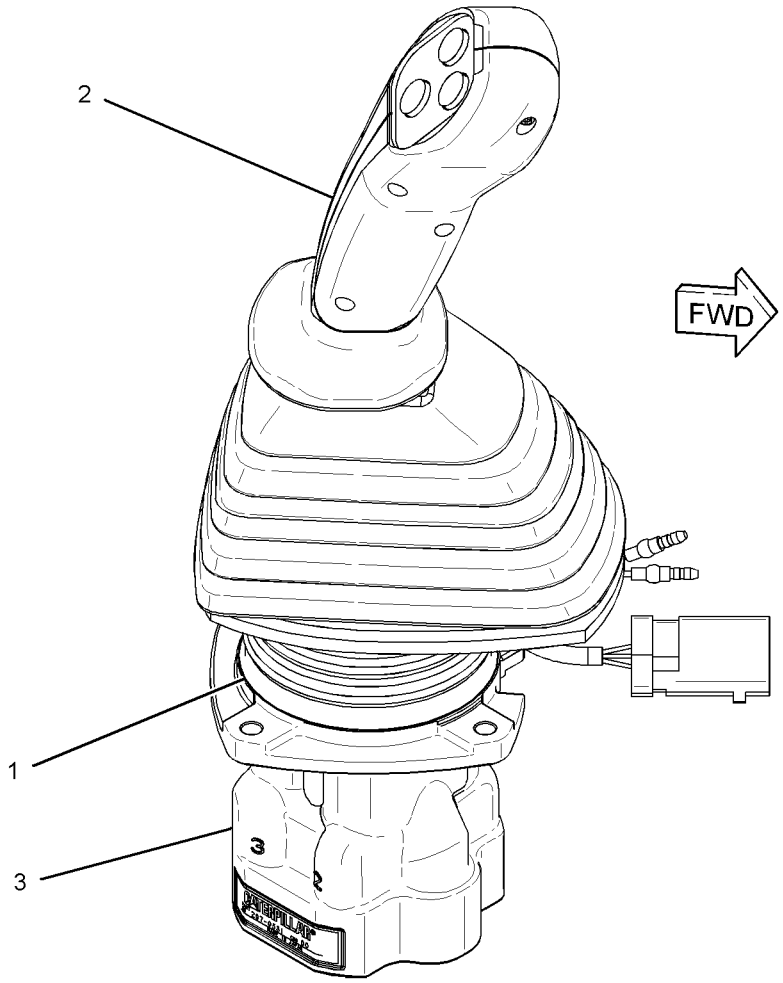

GRAPHIC #1 **<END>** g01620033

OPERATOR STATION

234-6501 COVER GP-CAB–REAR

S/N: D3P1-UP; M4T1-UP
PART OF 229-9098 CAB GP
AN ATTACHMENT

SMCS-7301, 7308 **i03159182**

NOTE	REF NO	GRAPHIC REF	PART NUMBER	QTY	PART NAME 1 2 3 4 5 6 (PRODUCT LEVEL)	SEE PAGE
	1	1	**234-6499**	1	COVER AS	
	2	1	**234-6502**	1	COVER-ACCESS (FUSE-REAR PANEL)	
	3	1	**234-6593**	2	FASTENER	
					USE WITH COVER WITH A 9-MM DIAMETER UPPER MOUNTING HOLE	
					–OR–	
		1	**245-7929**	2	CLIP	
					USE WITH COVER WITH A 7.6-MM DIAMETER UPPER MOUNTING HOLE	

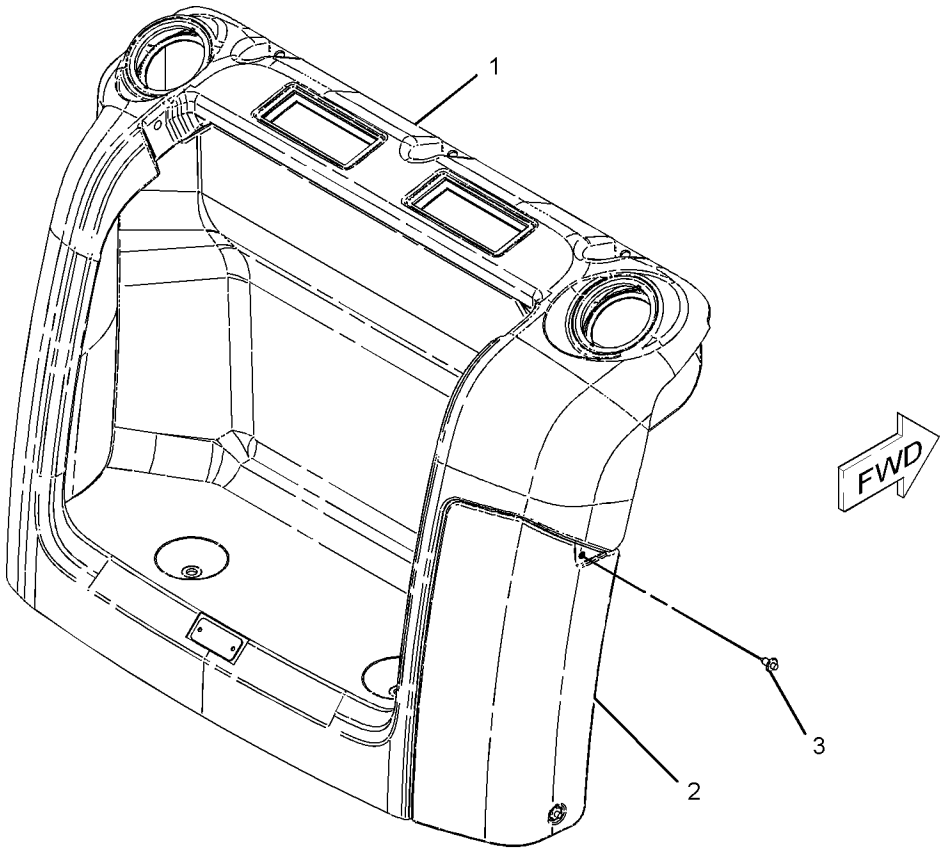

GRAPHIC #1 **<END>** g01101423

OPERATOR STATION

234-6500 COVER GP-STORAGE

S/N: D3P1-UP; M4T1-UP
LUNCHBOX LID
PART OF 345-2287, 345-2288 CAB AR, 337-4122, 337-4125 OPTION AR-CAB
AN ATTACHMENT

SMCS-7268 **i02502121**

NOTE	REF NO	GRAPHIC REF	PART NUMBER	QTY	PART NAME 1 2 3 4 5 6 (PRODUCT LEVEL)	SEE PAGE
					(NO SERVICED PARTS)	

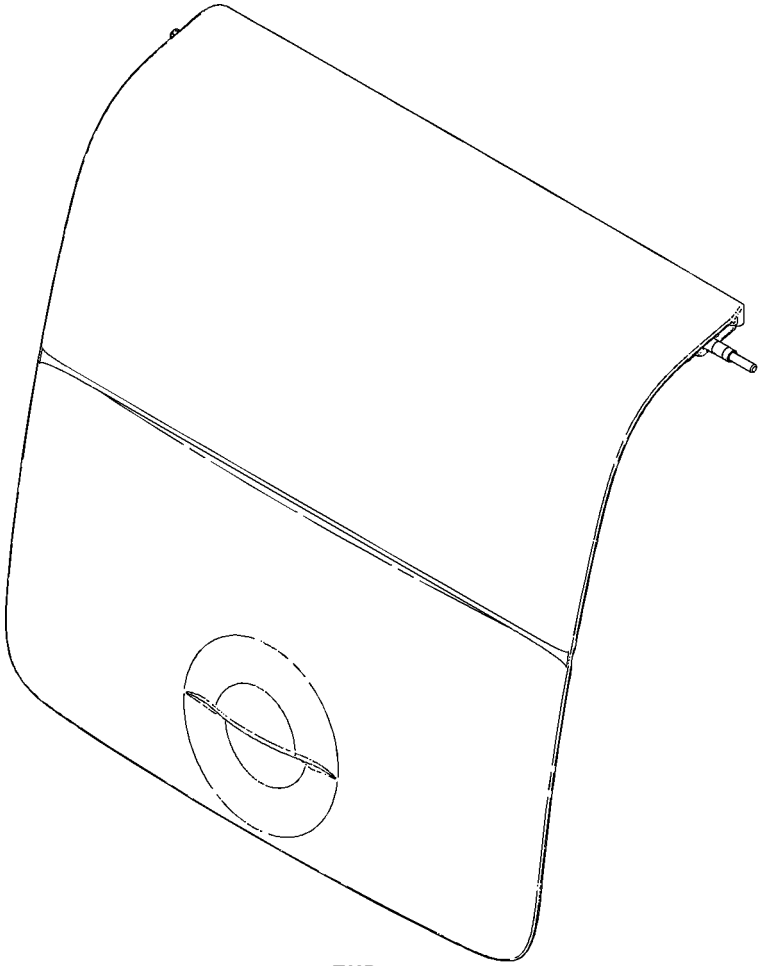

GRAPHIC #1 **<END>** g01092876

OPERATOR STATION

286-0134 DISPLAY GP-MONITOR—CD700

S/N: D3P1-UP; M4T1-UP

PART OF 292-0276 GRADE CONTROL AR-SATELLITE

SMCS-7490 **i02926873**

NOTE	PART NUMBER	QTY	PART NAME 1 2 3 4 5 6 (PRODUCT LEVEL)	SEE PAGE
R	**244-1716**	1	DISPLAY GP-MONITOR (CD700)	
	283-4426	1	CARD AS-MEMORY (FLASH)	
	194-8031	1	ADAPTER (COMPACT)	
M	**8T-4171**	4	BOLT (M6X1X12-MM)	
	292-0311	1	CASE-CARRYING	
	318-5081	1	COMPACT DISC (ACCUGRADE V10.71)	
M	**8T-0285**	6	SCREW-MACHINE (M4X0.7X12-MM)	
	9X-8256	4	WASHER (6.6X12X2-MM THK)	
	096-6166	6	WASHER-HARD (4.5X9X1-MM THK)	

M-METRIC PART
R-REMFG PART MAY BE AVAILABLE

<END>

OPERATOR STATION

139-7100 DOOR GP-CAB

S/N: D3P1-UP; M4T1-UP
PART OF 229-9099 CAB GP
AN ATTACHMENT

SMCS-7308 **i03632110**

NOTE	REF NO	GRAPHIC REF	PART NUMBER	QTY	PART NAME 1 2 3 4 5 6 (PRODUCT LEVEL)	SEE PAGE
Y	1	1	**151-6792**	1	WINDOW GP-DOOR	1071
	2	1	**151-9461**	4	SPACER	
	3	1	**156-6600**	1	LOCK AS	
		1	**164-0514**	1	CLIP	
	3A	1	**164-0519**	1	CLIP	
	4	1	**156-6645**	1	HANDLE AS	
		1	**201-4391**	1	CLIP	
	5	1	**161-3639**	1	HANDLE AS	
	6	1	**161-3650**	1	COVER AS	
	7	1	**161-3663**	1	SEAL AS	
		1	**151-9497**	45	CLIP	
	8	1	**161-3665**	1	SEAL	
	9	1	**189-2690**	1	HANDLE AS	
M	10	1	**096-2622**	2	SCREW-MACHINE (M4X0.7X8-MM)	
M	11	1	**096-3884**	2	NUT-SPRING	
M	12	1	**101-8899**	2	SCREW AS (M6X1X16-MM)	
M	13	1	**101-8900**	2	SCREW AS (M6X1X20-MM)	
	14	1	**151-6703**	1	HANDLE-PULL	
	15	1	**151-6704**	2	CAP	
	16	1	**156-6471**	1	GLASS	
	17	1	**156-6598**	1	HOOK	
	18	1	**156-6643**	1	COVER	
	19	1	**156-6644**	1	COVER	
	20	1	**161-3699**	1	COVER	
	21	1	**164-0515**	1	JOINT	
	22	1	**167-7039**	1	GROMMET	
	23	1	**4I-4286**	1	KNOB	
M	24	1	**185-8180**	3	SCREW (M6X1X16-MM)	
	25	1	**189-2711**	2	WASHER (8.5X16X2.3-MM THK)	
M	26	1	**9X-2042**	10	SCREW-TRUSS HEAD (M6X1X12-MM)	
	27	1	**178-5574**	2	SPACER	
	28	1	**178-5573**	4	SPACER	

M-METRIC PART
Y-SEPARATE ILLUSTRATION

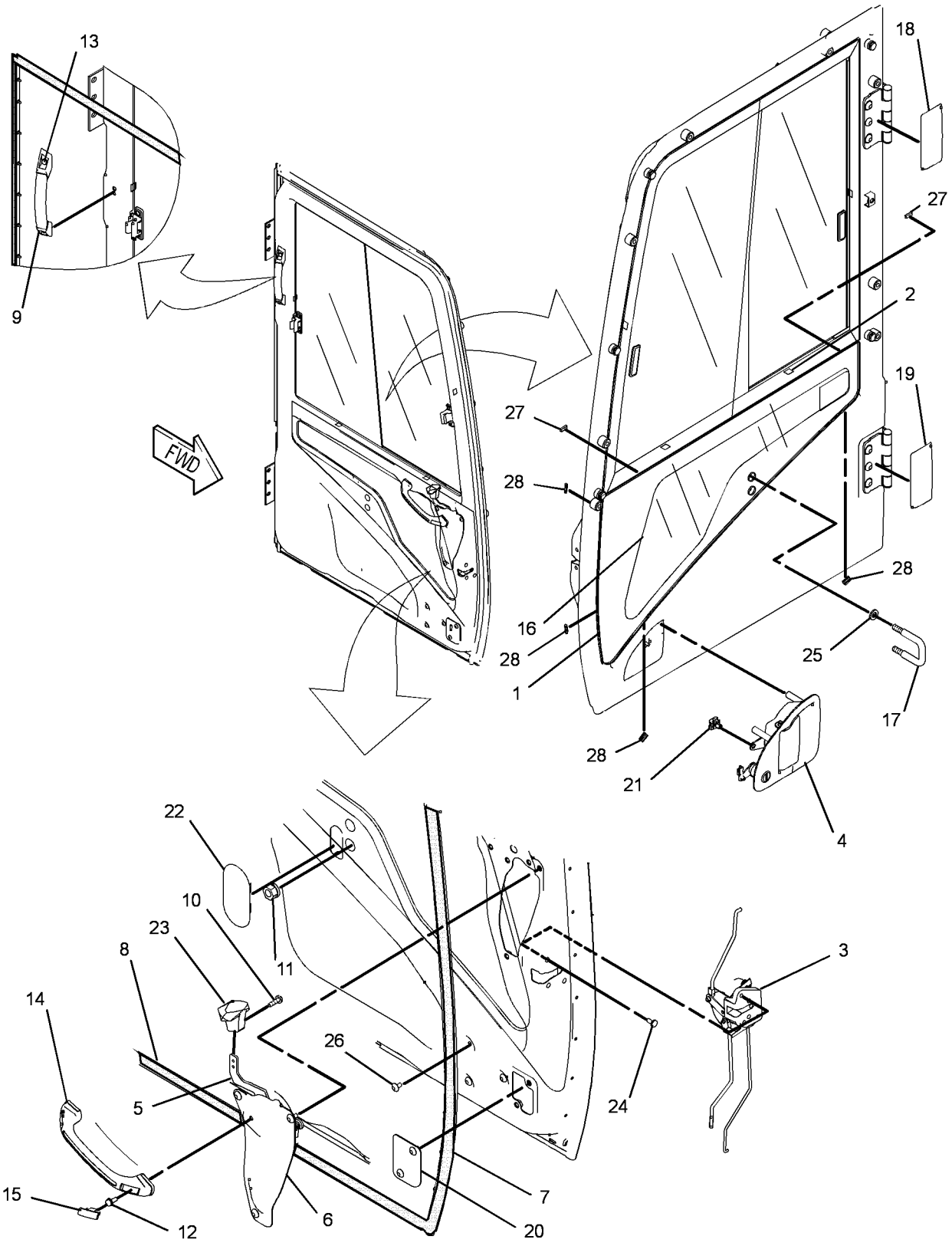

GRAPHIC #1 **<END>** g01948506

OPERATOR STATION

229-9082 DUCT GP-CAB AIR

S/N: D3P1-UP; M4T1-UP
PART OF 229-9079 AIR CONDITIONER AR
AN ATTACHMENT

SMCS-734D **i03632122**

NOTE	REF NO	GRAPHIC REF	PART NUMBER	QTY	PART NAME 1 2 3 4 5 6 (PRODUCT LEVEL)	SEE PAGE
	1	1	**305-0329**	1	FILTER ELEMENT AS-CAB AIR	
	2	1	**235-8876**	1	DUCT AS (FRESH AIR, UPPER)	
		1	**245-7872**	1	INSULATOR	
	3	1	**235-8877**	1	DUCT AS (VENT, REAR)	
		1	**245-7792**	1	INSULATOR	
	4	1	**235-8878**	1	DUCT AS (VENT, FRONT)	
		1	**245-7793**	1	INSULATOR	
	5	1	**235-8879**	1	DUCT AS (FLOOR)	
		1	**245-7873**	1	INSULATOR	
	6	1	**240-5074**	1	DUCT AS (FRESH AIR, LOWER)	
		1	**245-7791**	1	INSULATOR	
M	7	1	**101-8899**	2	SCREW AS (M6X1X16-MM)	
	8	1	**176-1996**	5	CLIP	

M-METRIC PART

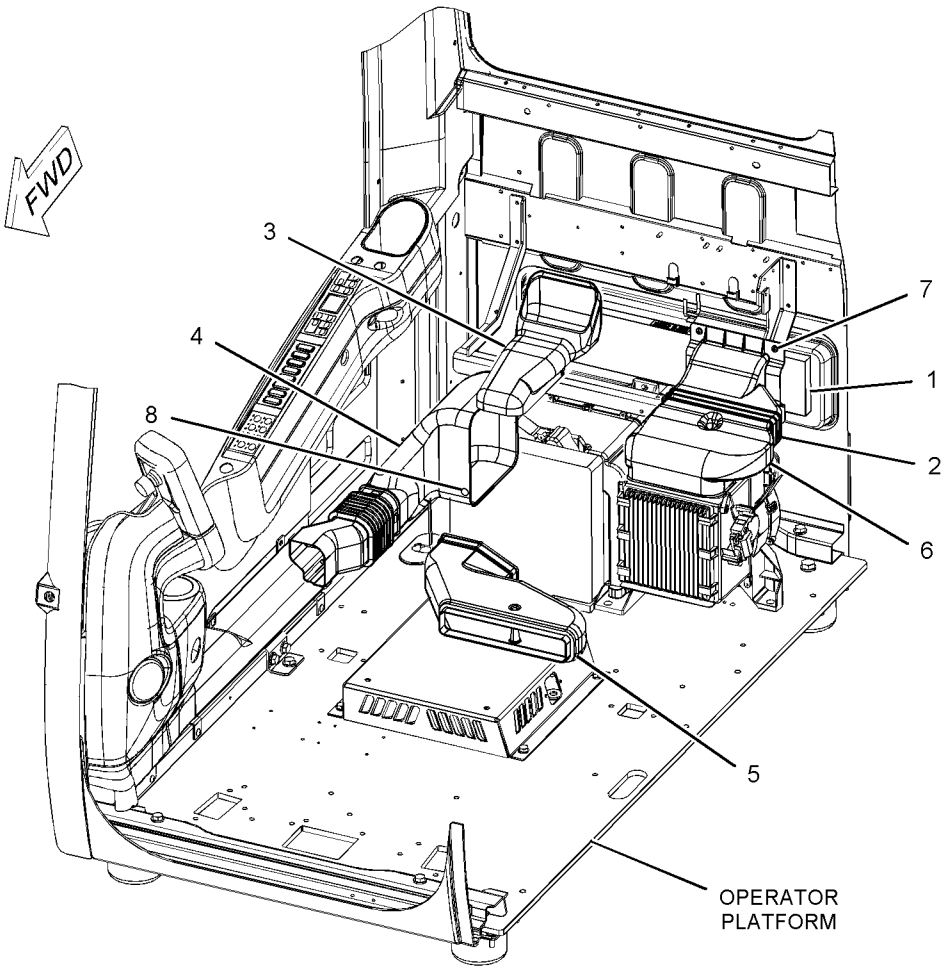

GRAPHIC #1 **<END>** g01098322

OPERATOR STATION

240-5071 FLOOR MAT

S/N: D3P1-UP; M4T1-UP
PART OF 337-4108 OPTION AR-HYDRAULIC
FIELD REPLACEMENT FOR 245-7794—PAGE 998
AN ATTACHMENT

SMCS-726M **i02605554**

NOTE	REF NO	GRAPHIC REF	PART NUMBER	QTY	PART NAME 1 2 3 4 5 6 (PRODUCT LEVEL)	SEE PAGE
					(NO SERVICED PARTS)	

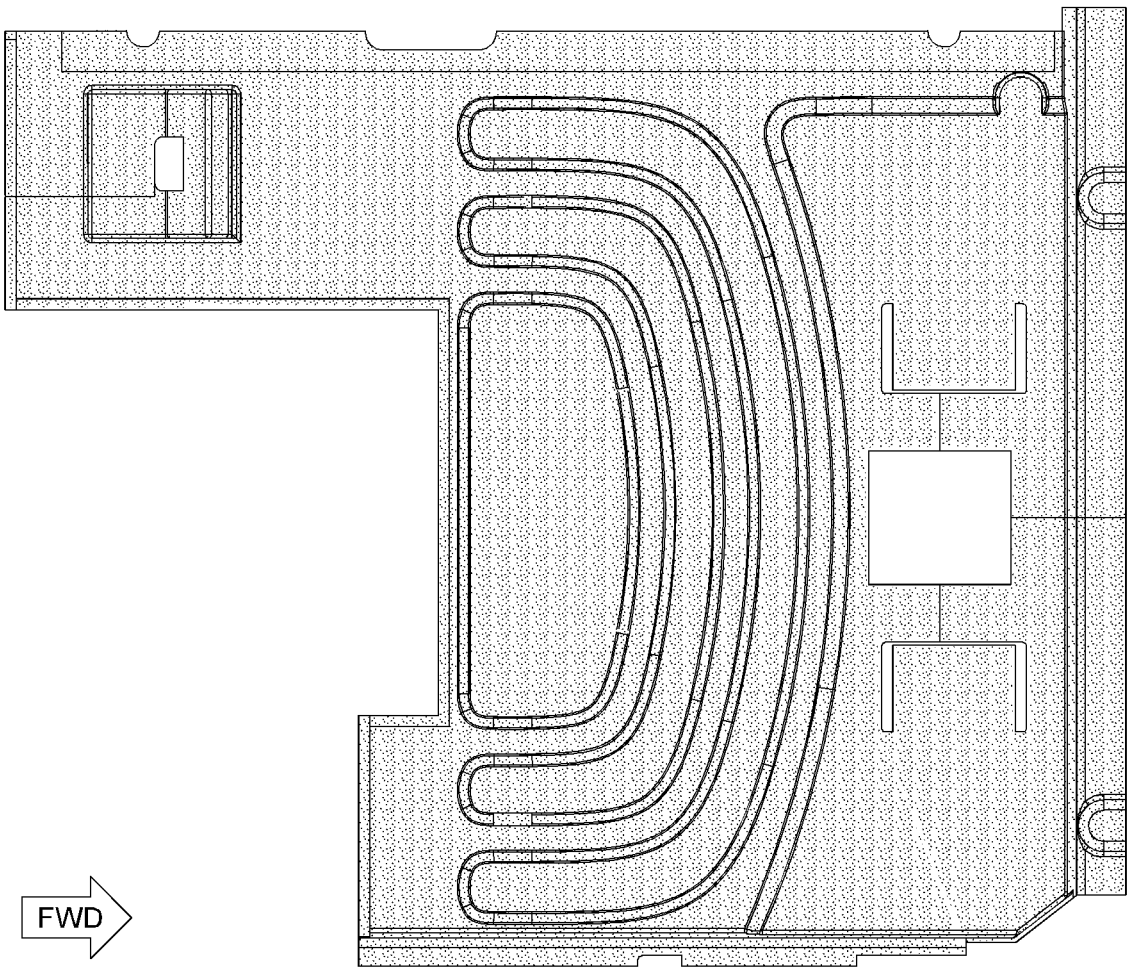

GRAPHIC #1 **<END>** g01305327

OPERATOR STATION

240-5073 FLOOR MAT

S/N: D3P1-UP; M4T1-UP
PART OF 337-4126 OPTION AR-CONTROL, 337-4112 OPTION AR-HYDRAULIC
AN ATTACHMENT

SMCS-726M **i02963440**

NOTE	REF NO	GRAPHIC REF	PART NUMBER	QTY	PART NAME 1 2 3 4 5 6 (PRODUCT LEVEL)	SEE PAGE
					(NO SERVICED PARTS)	

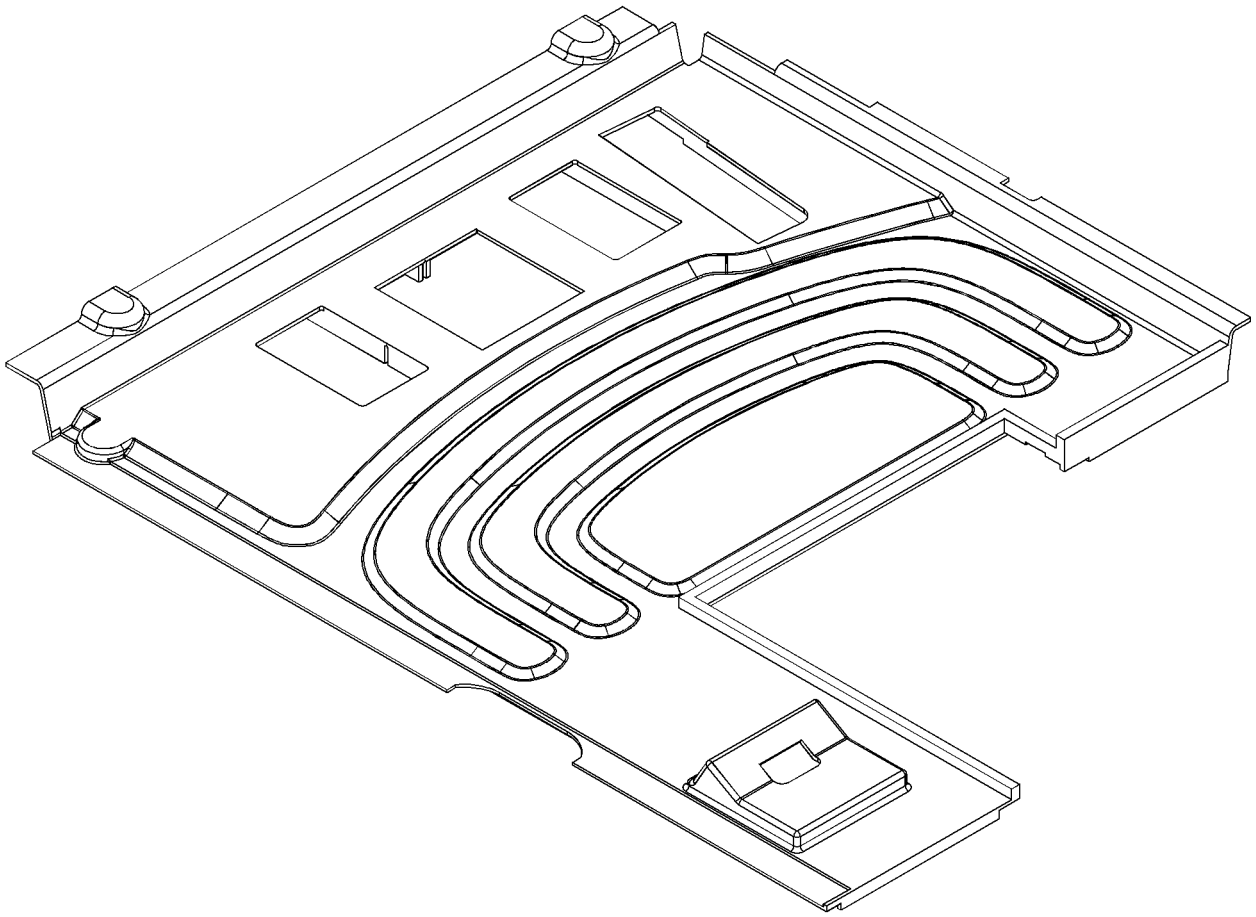

GRAPHIC #1 **<END>** g01124624

OPERATOR STATION

245-7794 FLOOR MAT

S/N: D3P1-UP; M4T1-UP
PART OF 337-4152 OPTION AR-HYDRAULIC
FIELD REPLACEMENT ORDER 240-5071—PAGE 996
AN ATTACHMENT

SMCS-726M **i02963480**

NOTE	REF NO	GRAPHIC REF	PART NUMBER	QTY	PART NAME 1 2 3 4 5 6 (PRODUCT LEVEL)	SEE PAGE
					(NO SERVICED PARTS)	

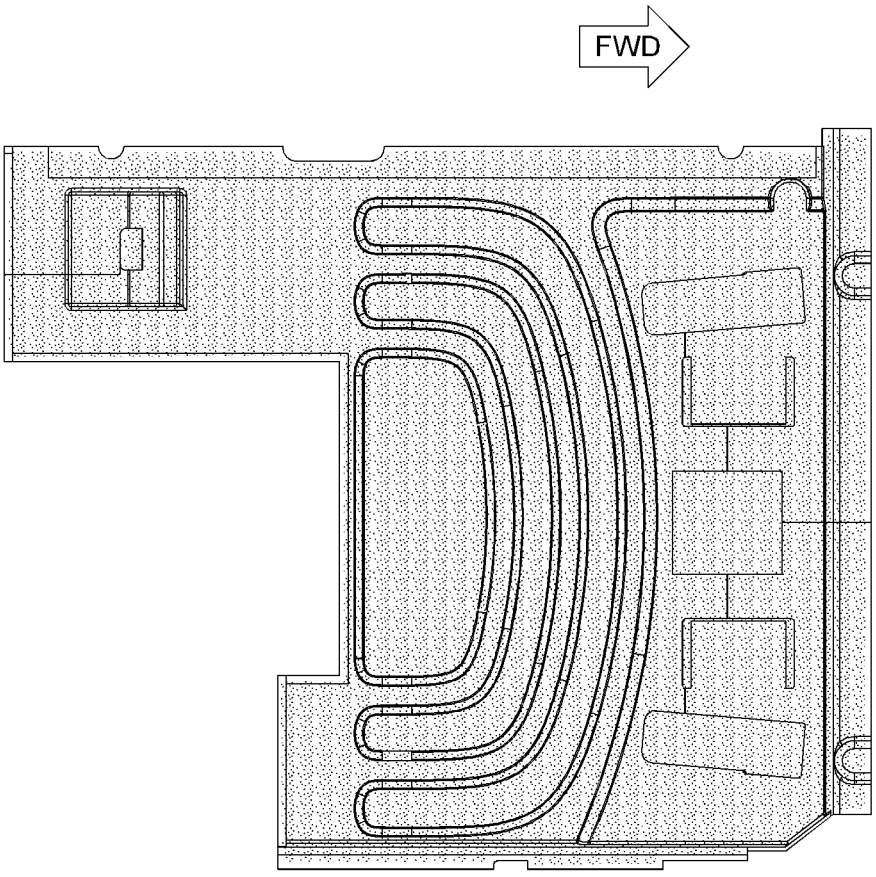

TOP VIEW

GRAPHIC #1 **<END>** g01125036

OPERATOR STATION

273-5358 FLOOR MAT GP

S/N: D3P1-UP; M4T1-UP
PART OF 290-1780 CONVERSION AR-MACHINE
AN ATTACHMENT

SMCS-7265, 726M **i03173023**

NOTE	REF NO	GRAPHIC REF	PART NUMBER	QTY	PART NAME 1 2 3 4 5 6 (PRODUCT LEVEL)	SEE PAGE
	1	1	**240-5071**	1	FLOOR MAT	
	2	1	**273-5359**	1	PLATE-RUBBER	
	3	1	**273-5360**	1	PLATE-RUBBER	

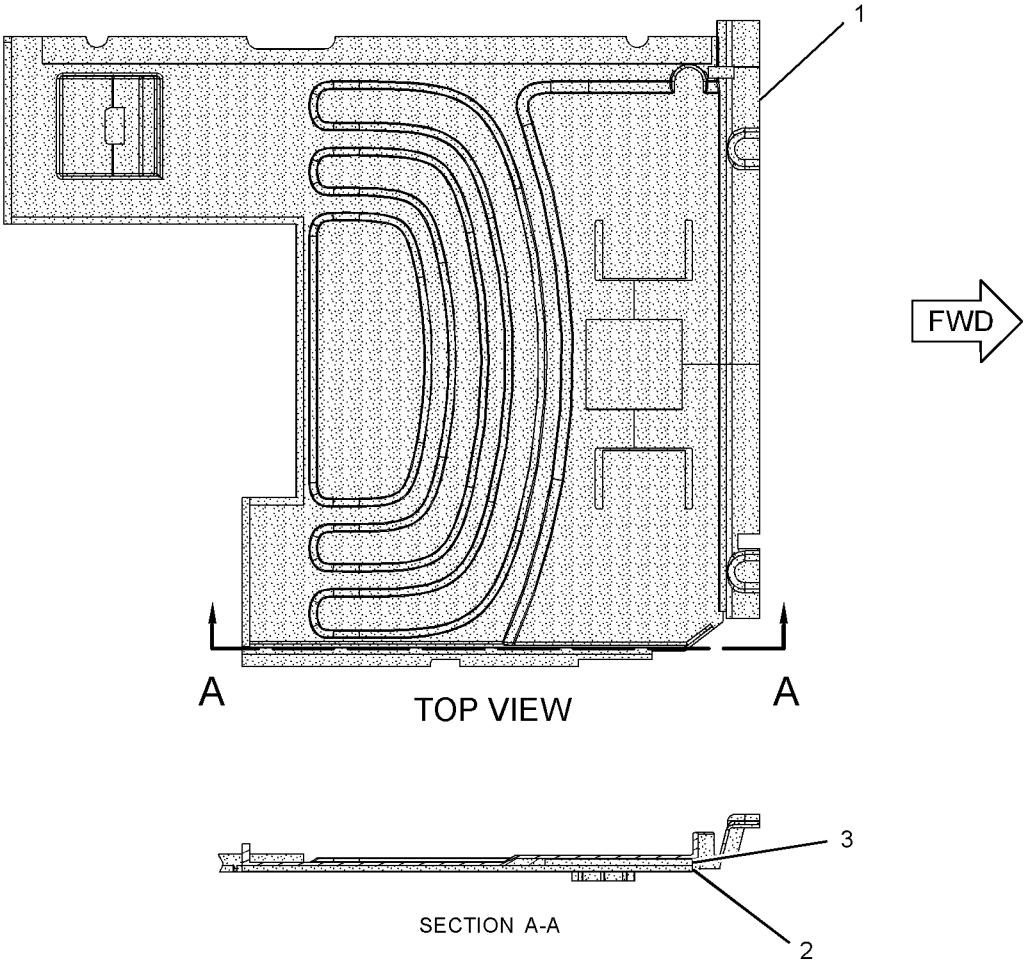

GRAPHIC #1 **<END>** g01235480

OPERATOR STATION

178-5549 GUARD AR-OVERHEAD

S/N: M4T1-UP
CANNOT BE USED WITH GUARD AR-VANDAL, GUARD GP-WINDOW
AN ATTACHMENT

SMCS-7159 **i01677826**

NOTE	PART NUMBER	QTY	PART NAME 1 2 3 4 5 6 (PRODUCT LEVEL)	SEE PAGE
Y	*171-7485*	1	GUARD GP-FRONT WINDOW	1001
Y	*164-0497*	1	GUARD GP-OVERHEAD	1003
Y-SEPARATE ILLUSTRATION				

<END>

240-3740 GUARD AR-VANDALISM

S/N: D3P1-UP
PART OF 337-9027 OPTION AR-GUARD
CANNOT BE USED WITH 229-9098—PAGE 937, 161-3750—PAGE 1060
AN ATTACHMENT

SMCS-7315 **i02502298**

NOTE	PART NUMBER	QTY	PART NAME 1 2 3 4 5 6 (PRODUCT LEVEL)	SEE PAGE
Y	*237-8801*	1	STORAGE GP-VANDALISM GUARD	408
Y	*207-0159*	1	GUARD GP-VANDALISM (CAB)	1005
Y-SEPARATE ILLUSTRATION				

<END>

OPERATOR STATION

171-7485 GUARD GP-FRONT WINDOW

S/N: M4T1-UP

PART OF 178-5549 GUARD AR-OVERHEAD

AN ATTACHMENT

SMCS-7182, 7315 **i03351285**

NOTE	REF NO	GRAPHIC REF	PART NUMBER	QTY	PART NAME 1 2 3 4 5 6 (PRODUCT LEVEL)	SEE PAGE
	1	1	**5D-4822**	4	RING-RETAINING	
	2	1	**6C-8382**	2	SPRING-LATCH	
	4	1	**316-8908**	1	GUARD AS-WINDOW	
	5	1	**176-1925**	2	SPRING AS-GAS	
	6	1	**176-1928**	2	BRACKET AS	
	7	1	**196-1569**	1	SUPPORT AS	
	8	1	**196-1571**	1	SUPPORT AS	
	9	1	**196-1572**	2	LATCH AS	
	10	1	**258-0330**	2	BRACKET AS	
	11	1	**201-4534**	2	PIN	
	12	1	**201-4535**	2	PIN	
M	13	1	**096-4882**	2	LOCKNUT (M8X1.25-THD)	
B	15	1	**4I-6602**	8	BOSS (M12X1.75X20-MM)	
M	16	1	**7X-2553**	2	BOLT (M16X2X40-MM)	
M	17	1	**7Y-0623**	2	LOCKNUT (M16X2-THD)	
M	18	1	**8T-4139**	6	BOLT (M12X1.75X30-MM)	
M	19	1	**8T-4192**	2	BOLT (M12X1.75X25-MM)	
	20	1	**8T-4223**	8	WASHER-HARD (13.5X25.5X3-MM THK)	
	21	1	**8T-4224**	4	WASHER-HARD (8.8X16X2-MM THK)	
	22	1	**9X-8257**	4	WASHER (17.5X30X3.5-MM THK)	
	23	1	**298-4195**	1	FILM-CERTIFICATION (OPS GUARD, READ OMM, ENGLISH)	
	25	1	**219-0305**	1	FILM-WARNING (NO WELD, NO DRILL, READ OMM)	

B-USE AS REQUIRED
M-METRIC PART

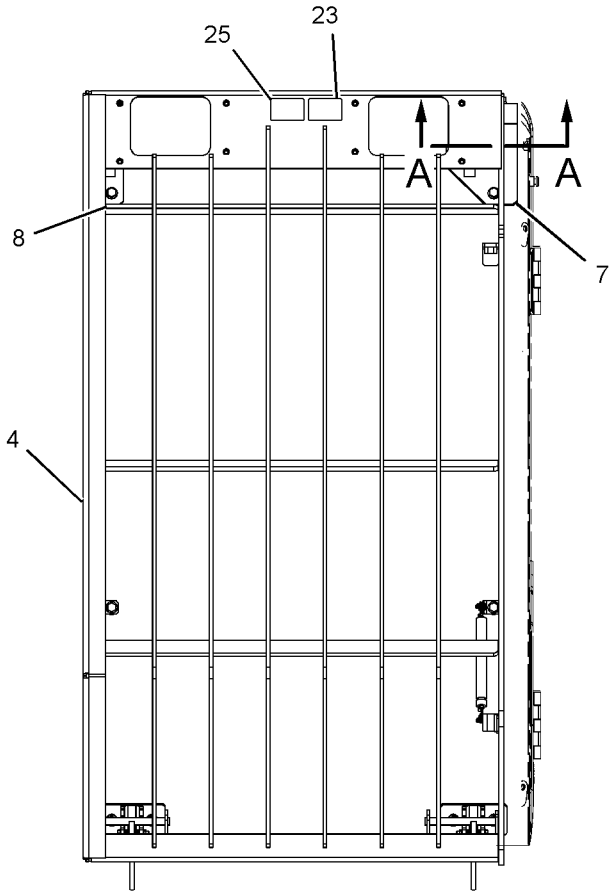

FRONT VIEW

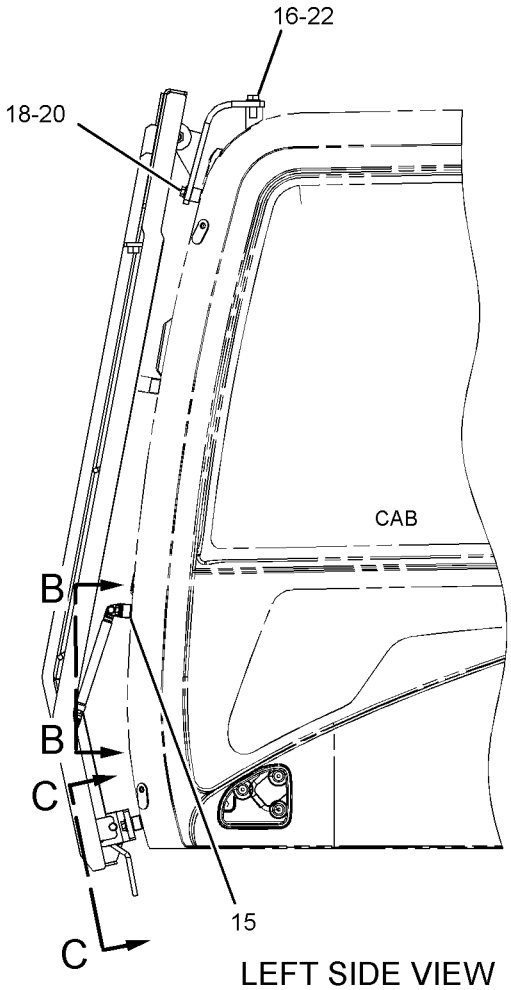

LEFT SIDE VIEW

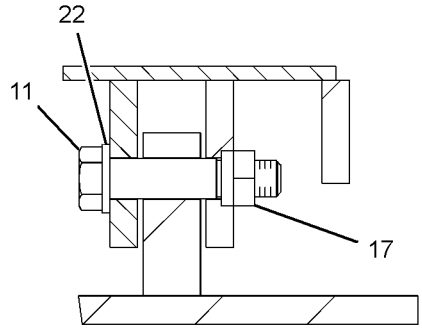

SECTION A-A

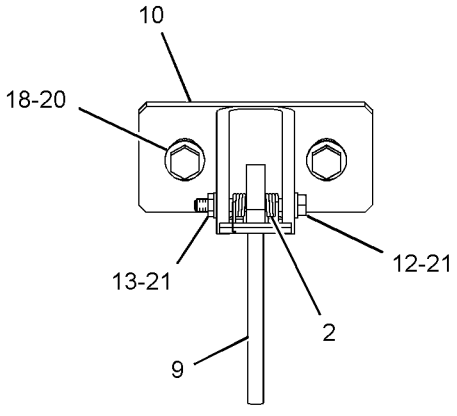

SECTION C-C

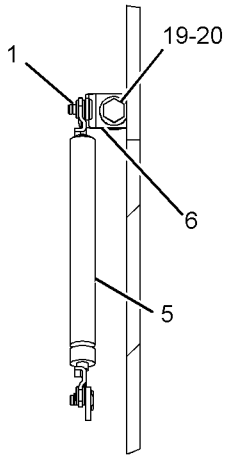

SECTION B-B

GRAPHIC #1 **<END>** g01620958

OPERATOR STATION

164-0497 GUARD GP-OVERHEAD

S/N: M4T1-UP

PART OF 178-5549 GUARD AR-OVERHEAD

AN ATTACHMENT

SMCS-7159 **i01682709**

NOTE	REF NO	GRAPHIC REF	PART NUMBER	QTY	PART NAME 1 2 3 4 5 6 (PRODUCT LEVEL)	SEE PAGE
	1	1	**167-7141**	1	GUARD AS	
M	2	1	**8T-4174**	2	BOLT (M16X2X120-MM)	
	3	1	**9X-8257**	4	WASHER (17.5X30X3.5-MM THK)	
M	4	1	**7X-2559**	2	BOLT (M16X2X160-MM)	
	5	1	**090-8865**	2	SPACER (17X40X3-MM THK)	
	6	1	**116-1517**	1	PLATE-WARNING (STRUCTURE MODIFICATION)	
	7	1	**4B-4158**	4	SCREW-DRIVE (NO 4X0.25-IN)	
	8	1	**8V-1715**	1	SPACER (20.5X35X12-MM THK)	

M-METRIC PART

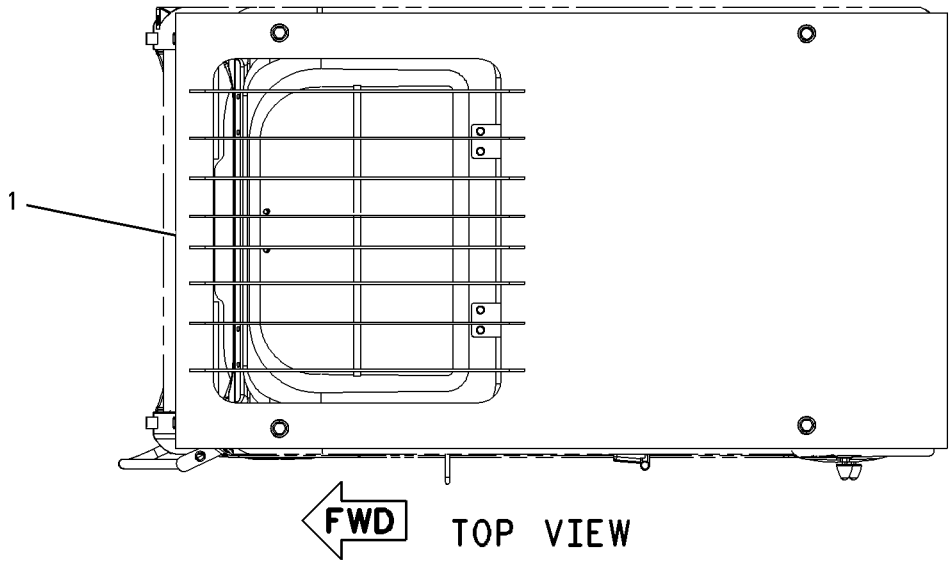

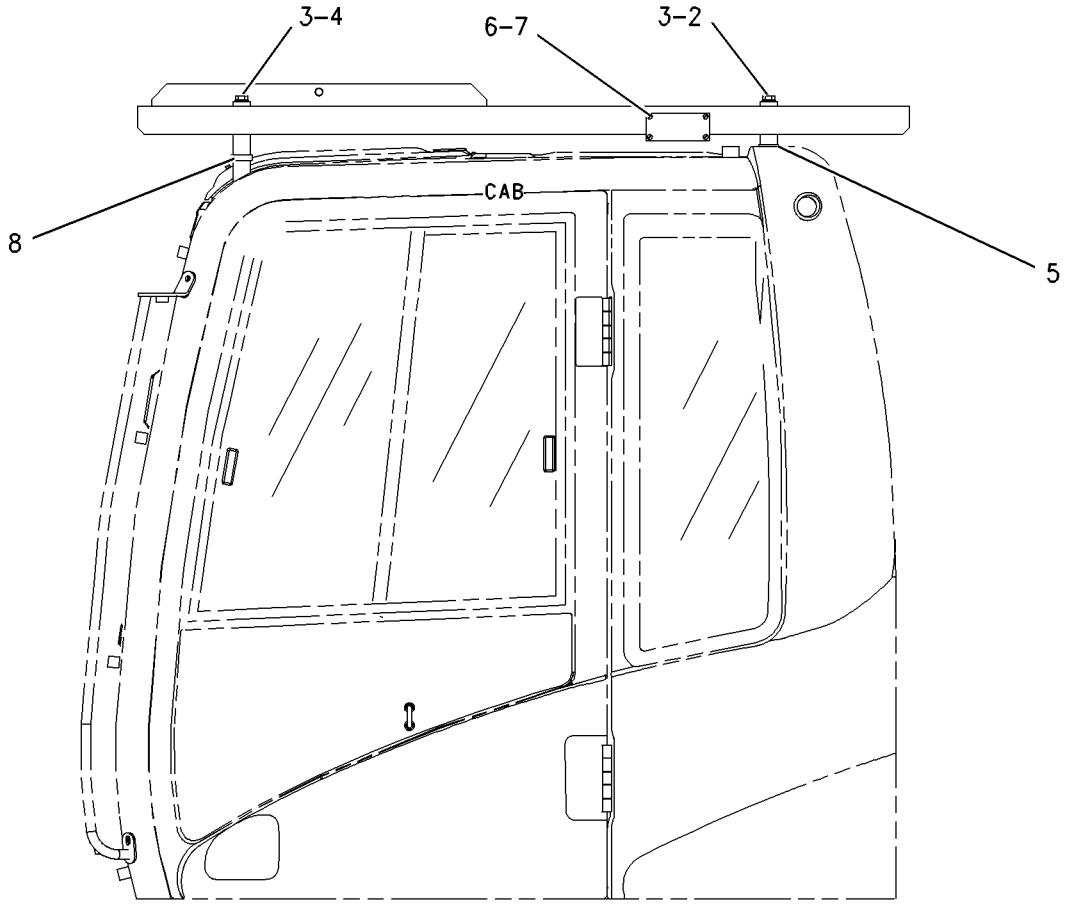

GRAPHIC #1 **<END>** g00867851

OPERATOR STATION

207-0159 GUARD GP-VANDALISM—CAB

S/N: D3P1-UP
PART OF 240-3740 GUARD AR-VANDALISM
AN ATTACHMENT

SMCS-7315 **i03756741**

NOTE	REF NO	GRAPHIC REF	PART NUMBER	QTY	PART NAME 1 2 3 4 5 6 (PRODUCT LEVEL)	SEE PAGE
	1	1	**7Y-8621**	6	PIN	
	2	1	**7Y-8622**	1	PIN	
	3	1	**207-0161**	1	GUARD AS	
		1	**8H-2282**	2	HINGE	
	4	1	**207-0164**	1	GUARD AS	
		1	**8H-2282**	2	HINGE	
	5	1	**207-0167**	1	GUARD AS	
		1	**8H-2282**	2	HINGE	
	6	1	**207-0170**	1	GUARD AS	
		1	**8H-2282**	2	HINGE	
	7	1	**207-0173**	1	GUARD AS	
		1	**8H-2282**	2	HINGE	
M	8	1	**8T-4200**	2	BOLT (M8X1.25X16-MM)	
	9	1	**8T-4224**	2	WASHER-HARD (8.8X16X2-MM THK)	

M-METRIC PART

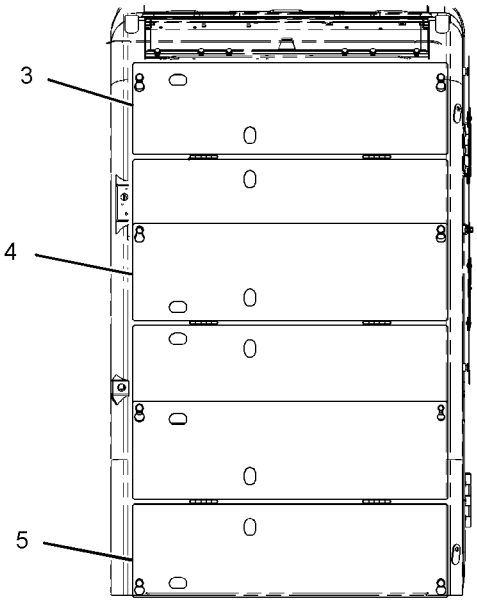

FRONT VIEW

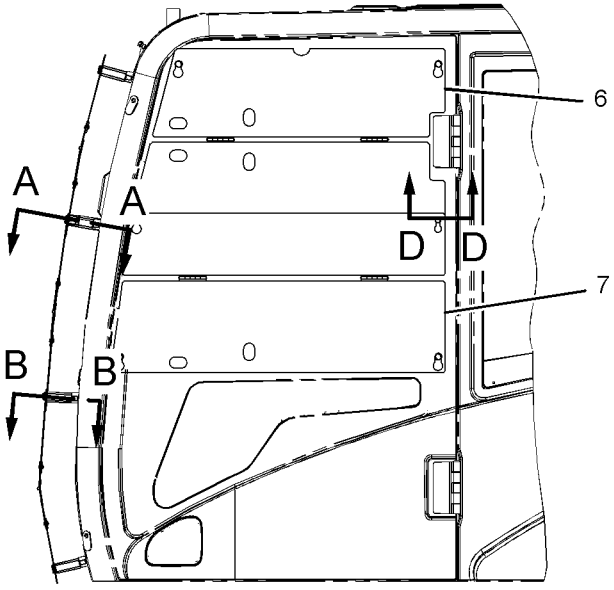

LEFT SIDE VIEW

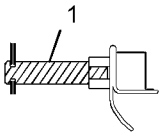

SECTION A-A

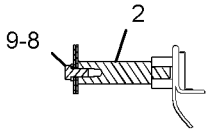

SECTION B-B

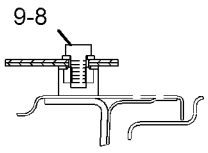

SECTION D-D

GRAPHIC #1 **<END>** g02026334

OPERATOR STATION

215-6662 GUARD GP-WINDOW

S/N: D3P1-UP; M4T1-UP
PART OF 337-5231 DISTRIBUTION AR
CANNOT BE USED WITH FOG OR VANDALISM GUARDS
AN ATTACHMENT

SMCS-7182, 7315 **i03632144**

NOTE	REF NO	GRAPHIC REF	PART NUMBER	QTY	PART NAME 1 2 3 4 5 6 (PRODUCT LEVEL)	SEE PAGE
	1	1	**5D-4822**	4	RING-RETAINING	
	2	1	**6C-8382**	2	SPRING-LATCH	
	3	1	**176-1928**	2	BRACKET AS	
	4	1	**183-1035**	2	LAMP GP-FLOOD (24-VOLT)	
					(EACH INCLUDES)	
		1	**9X-3463**	1	LAMP-HALOGEN (24-VOLT, 70-WATT)	
	5	1	**196-1569**	1	SUPPORT AS	
	6	1	**196-1571**	1	SUPPORT AS	
	7	1	**196-1572**	2	LATCH AS	
	8	1	**196-1574**	2	BRACKET AS	
	9	1	**196-1599**	1	FRAME AS	
	10	1	**201-4534**	2	PIN	
	11	1	**201-4535**	2	PIN	
	12	1	**207-0216**	2	SPRING AS-GAS	
M	13	1	**096-4882**	2	LOCKNUT (M8X1.25-THD)	
M	14	1	**7X-2553**	2	BOLT (M16X2X40-MM)	
M	15	1	**7Y-0623**	2	LOCKNUT (M16X2-THD)	
	16	1	**8T-4121**	4	WASHER-HARD (11X21X2.5-MM THK)	
M	17	1	**8T-4133**	2	NUT (M10X1.5-THD)	
M	18	1	**8T-4137**	2	BOLT (M10X1.5X20-MM)	
M	19	1	**8T-4139**	6	BOLT (M12X1.75X30-MM)	
M	20	1	**8T-4192**	2	BOLT (M12X1.75X25-MM)	
	21	1	**8T-4223**	8	WASHER-HARD (13.5X25.5X3-MM THK)	
	22	1	**8T-4224**	4	WASHER-HARD (8.8X16X2-MM THK)	
	23	1	**9X-8257**	4	WASHER (17.5X30X3.5-MM THK)	

M-METRIC PART

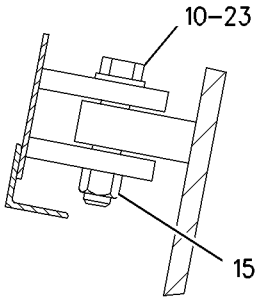

SECTION B-B

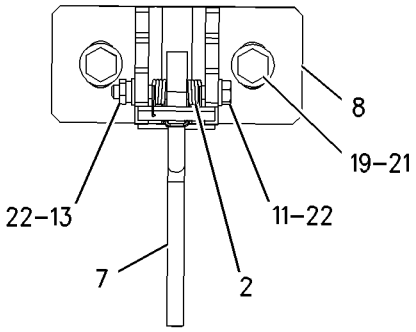

VIEW OF AREA A

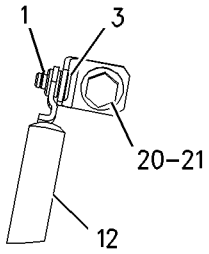

VIEW C-C

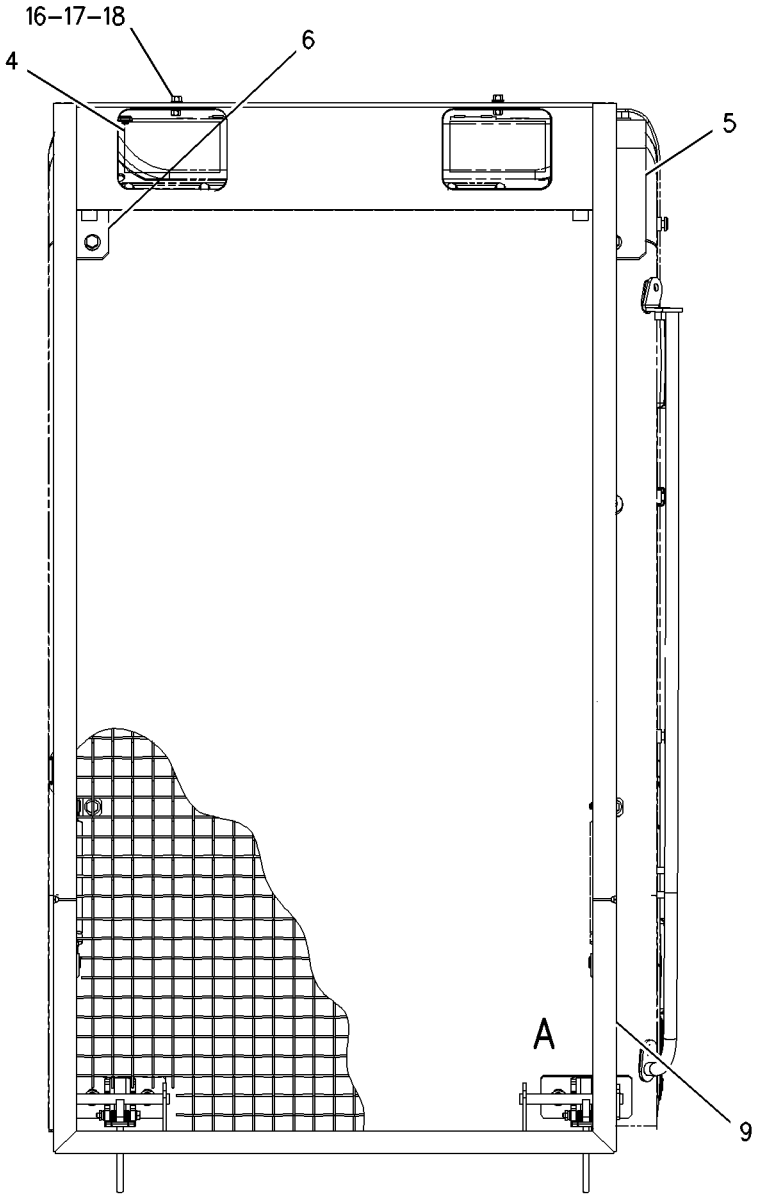

FRONT VIEW

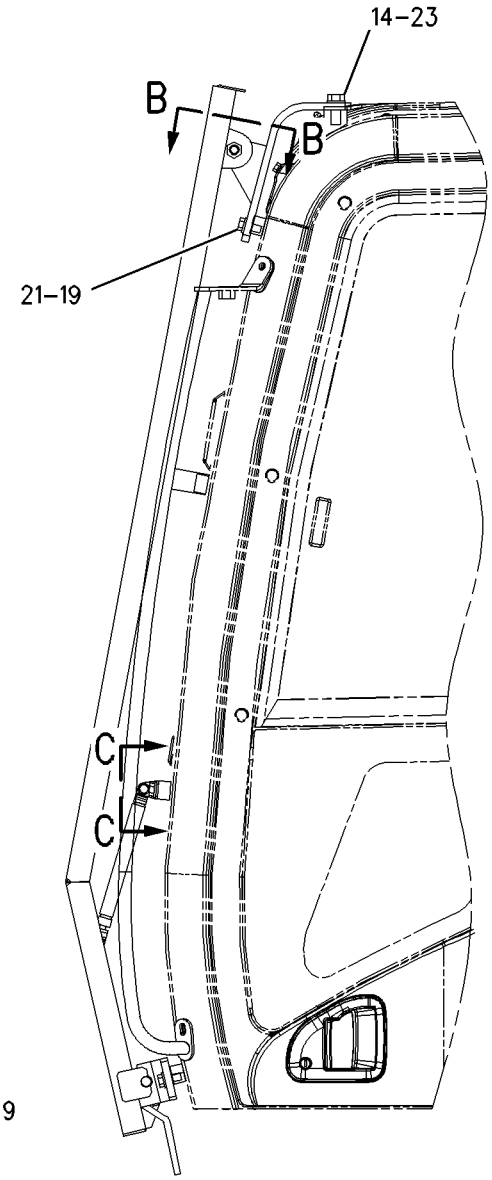

LEFT SIDE VIEW

GRAPHIC #1 **<END>** g00862409

OPERATOR STATION

216-0611 GUARD GP-WINDOW

S/N: D3P1-UP; M4T1-UP
CANNOT BE USED WITH VANDALISM GUARDS, WINDOW MESH GUARD AN ATTACHMENT

SMCS-7182, 7315 **i03486025**

NOTE	REF NO	GRAPHIC REF	PART NUMBER	QTY	PART NAME 1 2 3 4 5 6 (PRODUCT LEVEL)	SEE PAGE
	1	1	**5D-4822**	4	RING-RETAINING	
	2	1	**266-0546**	1	FILM-WARNING (FRONT GUARD, READ OMM)	
	3	1	**6C-8382**	2	SPRING-LATCH	
	4	1	**266-0545**	1	FILM-WARNING (TOP GUARD, READ OMM)	
	5	1	**219-0305**	2	FILM-WARNING (NO WELD, NO DRILL, READ OMM)	
	6	1	**167-7141**	1	GUARD AS	
	7	1	**171-7486**	1	GUARD AS	
	8	1	**176-1925**	2	SPRING AS-GAS	
	9	1	**176-1928**	2	BRACKET AS	
	10	1	**183-1035**	2	LAMP GP-FLOOD (24-VOLT) (CANOPY)	
					(EACH INCLUDES)	
		1	**9X-3463**	1	LAMP-HALOGEN (24-VOLT, 70-WATT)	
	11	1	**196-1569**	1	SUPPORT AS	
	12	1	**196-1571**	1	SUPPORT AS	
	13	1	**196-1572**	2	LATCH AS	
	14	1	**196-1574**	2	BRACKET AS	
	15	1	**201-4534**	2	PIN	
	16	1	**201-4535**	2	PIN	
M	17	1	**096-4882**	2	LOCKNUT (M8X1.25-THD)	
M	18	1	**7X-2559**	2	BOLT (M16X2X160-MM)	
M	19	1	**7Y-0623**	2	LOCKNUT (M16X2-THD)	
	20	1	**8T-4121**	4	WASHER-HARD (11X21X2.5-MM THK)	
M	21	1	**8T-4133**	2	NUT (M10X1.5-THD)	
M	22	1	**8T-4137**	2	BOLT (M10X1.5X20-MM)	
M	23	1	**8T-4139**	6	BOLT (M12X1.75X30-MM)	
M	24	1	**8T-4174**	2	BOLT (M16X2X120-MM)	
M	25	1	**8T-4192**	2	BOLT (M12X1.75X25-MM)	
	26	1	**8T-4223**	8	WASHER-HARD (13.5X25.5X3-MM THK)	
	27	1	**8T-4224**	4	WASHER-HARD (8.8X16X2-MM THK)	
	28	1	**9X-8257**	6	WASHER (17.5X30X3.5-MM THK)	

M-METRIC PART

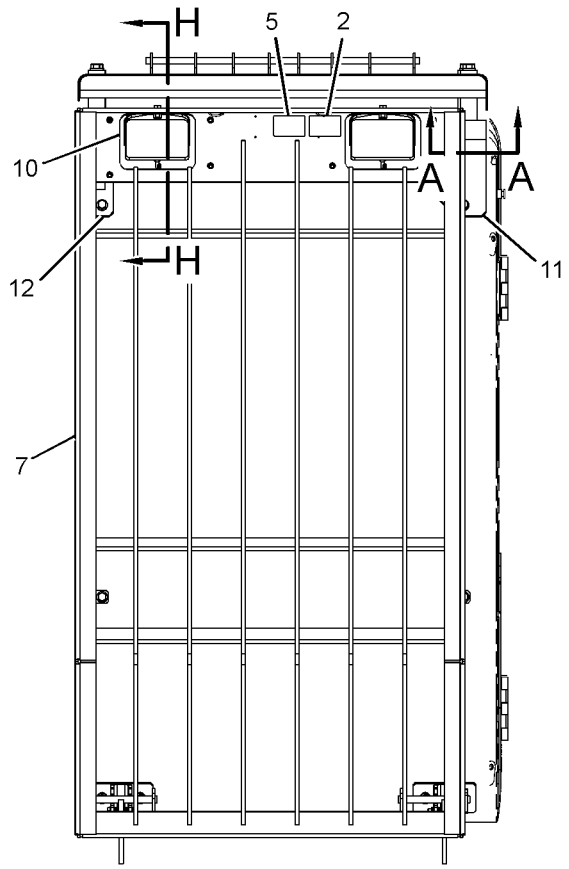

FRONT VIEW

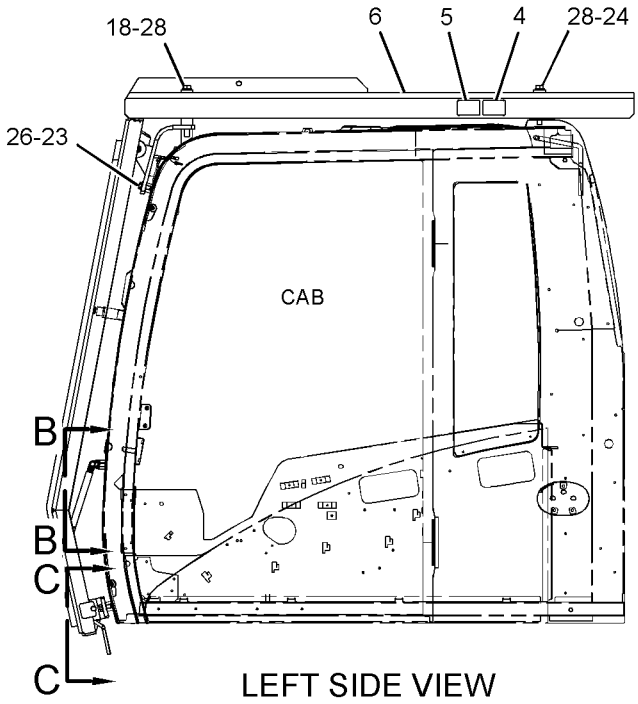

LEFT SIDE VIEW

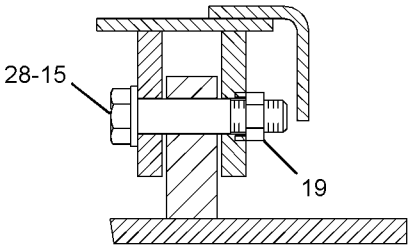

SECTION A-A

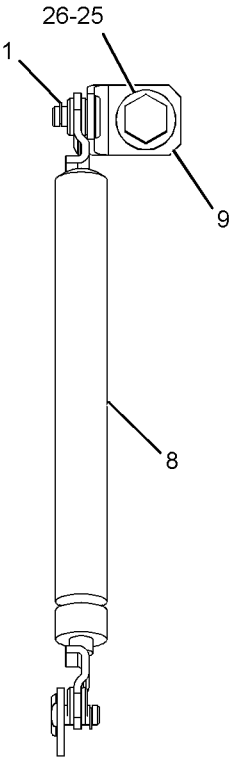

SECTION B-B

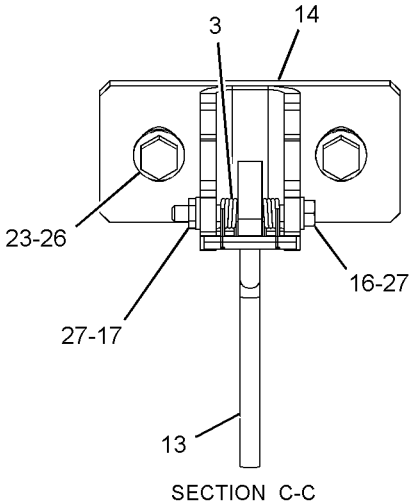

SECTION C-C

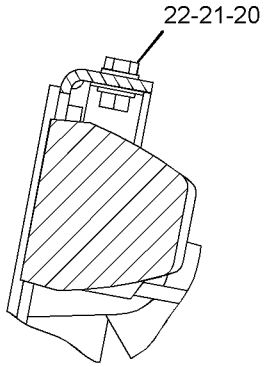

SECTION H-H

GRAPHIC #1

<END>

g01731934

OPERATOR STATION

139-7099 HATCH GP-ROOF

S/N: D3P1-UP; M4T1-UP
PART OF 229-9099 CAB GP
AN ATTACHMENT

SMCS-7303 **i01891973**

NOTE	REF NO	GRAPHIC REF	PART NUMBER	QTY	PART NAME 1 2 3 4 5 6 (PRODUCT LEVEL)	SEE PAGE
	1	1	**2Y-5685**	4	RING-RETAINING	
	2	1	**099-3506**	2	SPRING AS-GAS	
M	3	1	**105-2169**	4	BOLT AS	
CY	4	1	**189-2849**	1	HATCH GP-ROOF	1011
C	5	1	**189-2847**	1	SEAL	

C-CHANGE FROM PREVIOUS TYPE
M-METRIC PART
Y-SEPARATE ILLUSTRATION

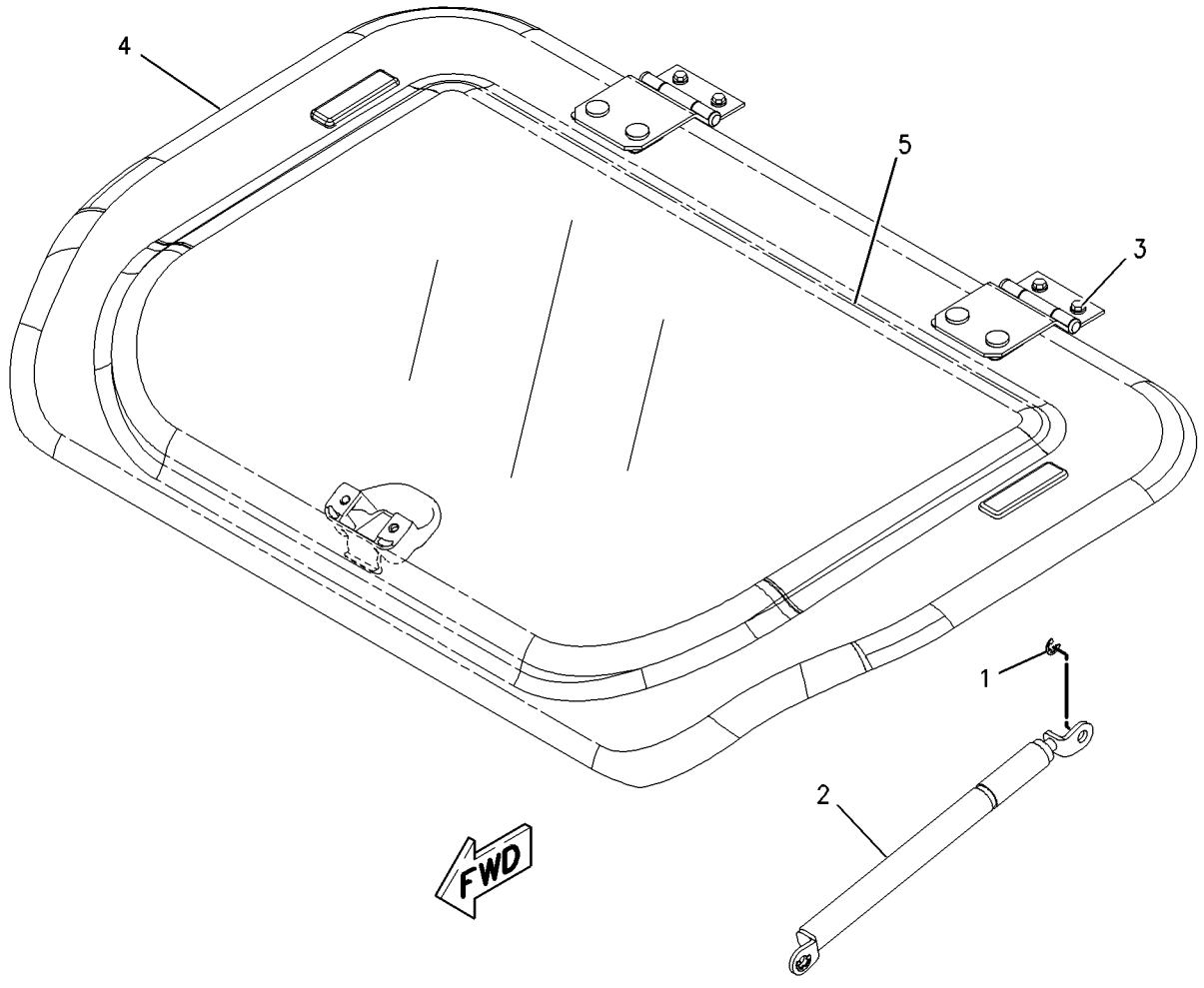

GRAPHIC #1 **<END>** g00737364

OPERATOR STATION

189-2849 HATCH GP-ROOF

S/N: D3P1-UP; M4T1-UP
PART OF 139-7099 HATCH GP-ROOF
AN ATTACHMENT

SMCS-7303 **i03523503**

NOTE	REF NO	GRAPHIC REF	PART NUMBER	QTY	PART NAME 1 2 3 4 5 6 (PRODUCT LEVEL)	SEE PAGE
	1	1	**161-3694**	1	CATCH	
	2	1	**189-2693**	1	BRACKET AS (RH)	
	3	1	**189-2694**	1	BRACKET AS (LH)	
	4	1	**189-2716**	2	HINGE AS	
	6	1	**085-6449**	2	PACKING	
M	7	1	**100-2881**	4	SCREW-TRUSS HEAD	
	8	1	**171-7477**	2	NUT	
	9	1	**4I-1260**	2	PACKING	
	10	1	**4I-4361**	2	RETAINER	
M	11	1	**6I-5342**	4	NUT (M8X1.25-THD)	
M	12	1	**9X-2045**	2	SCREW-TRUSS HEAD (M6X1X20-MM)	

M-METRIC PART

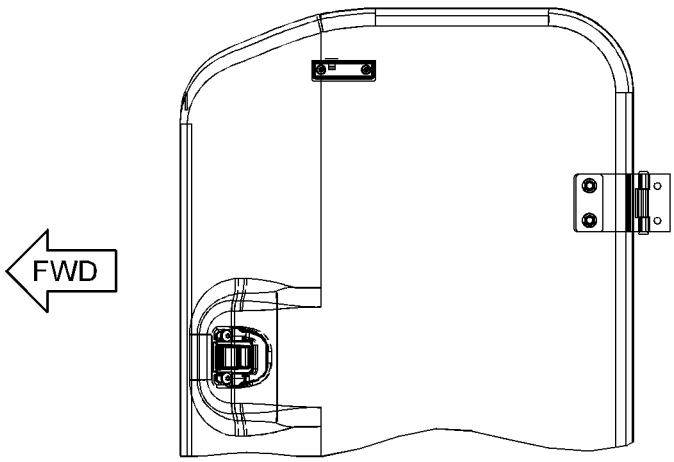

TOP VIEW

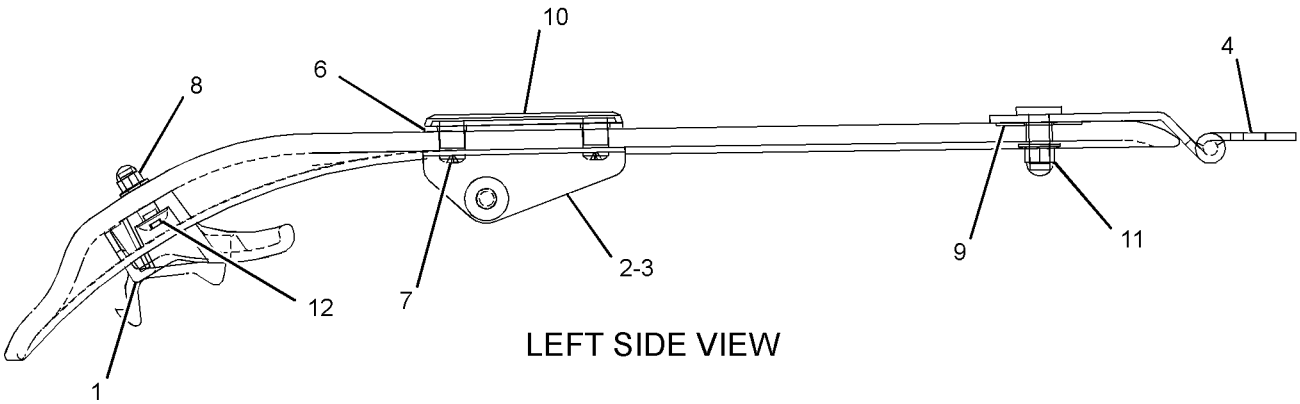

LEFT SIDE VIEW

GRAPHIC #1 **<END>** g01852853

OPERATOR STATION

267-8071 HORN GP-ELECTRIC

S/N: D3P1-UP; M4T1-UP
PART OF 314-3709 CHASSIS AR

SMCS-7402 **i02752416**

NOTE	REF NO	GRAPHIC REF	PART NUMBER	QTY	PART NAME 1 2 3 4 5 6 (PRODUCT LEVEL)	SEE PAGE
CY	1	1	*291-7559*	1	HORN GP-ELECTRIC	1013
	2	1	**8T-4121**	2	WASHER-HARD (11X21X2.5-MM THK)	
M	3	1	**8T-4195**	2	BOLT (M10X1.5X30-MM)	

C-CHANGE FROM PREVIOUS TYPE
M-METRIC PART
Y-SEPARATE ILLUSTRATION

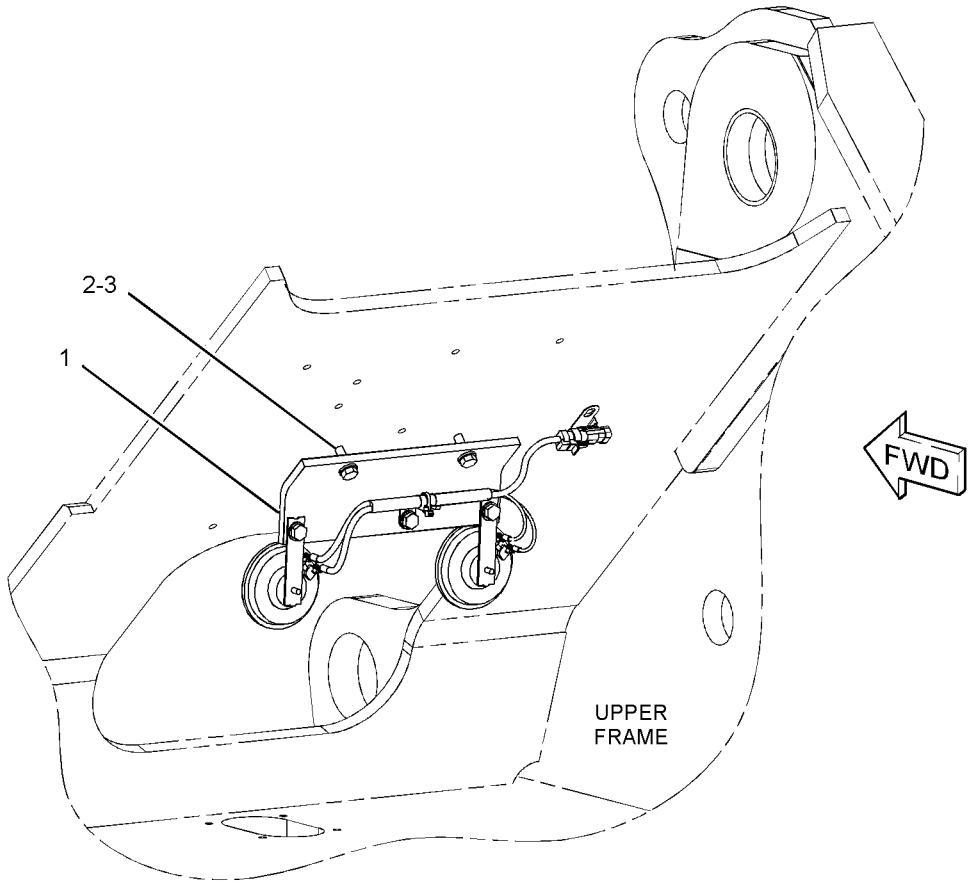

GRAPHIC #1 **<END>** g01289732

291-7559 HORN GP-ELECTRIC

S/N: D3P1-UP; M4T1-UP

PART OF 267-8071 HORN GP-ELECTRIC

SMCS-7402 **i03361357**

NOTE	REF NO	GRAPHIC REF	PART NUMBER	QTY	PART NAME 1 2 3 4 5 6 (PRODUCT LEVEL)	SEE PAGE
	1	1	**3S-2093**	1	STRAP-CABLE	
	2	1	**7Y-3919**	1	HORN AS (24-VOLT, LOW TONE)	
		1	**095-0826**	2	LOCKWASHER	
M		1	**095-7930**	2	SCREW-MACHINE (M4X0.7X6-MM)	
	3	1	**7Y-3920**	1	HORN AS (24-VOLT, HIGH TONE)	
		1	**095-0826**	2	LOCKWASHER	
M		1	**095-7930**	2	SCREW-MACHINE (M4X0.7X6-MM)	
	4	1	**291-7560**	1	HARNESS AS-CHASSIS (HORN)	
	5	1	**291-7561**	1	BRACKET	
	6	1	**132-5789**	1	CLIP	
	7	1	**8T-4121**	3	WASHER-HARD (11X21X2.5-MM THK)	
M	8	1	**8T-4191**	3	BOLT (M10X1.5X16-MM)	

M-METRIC PART

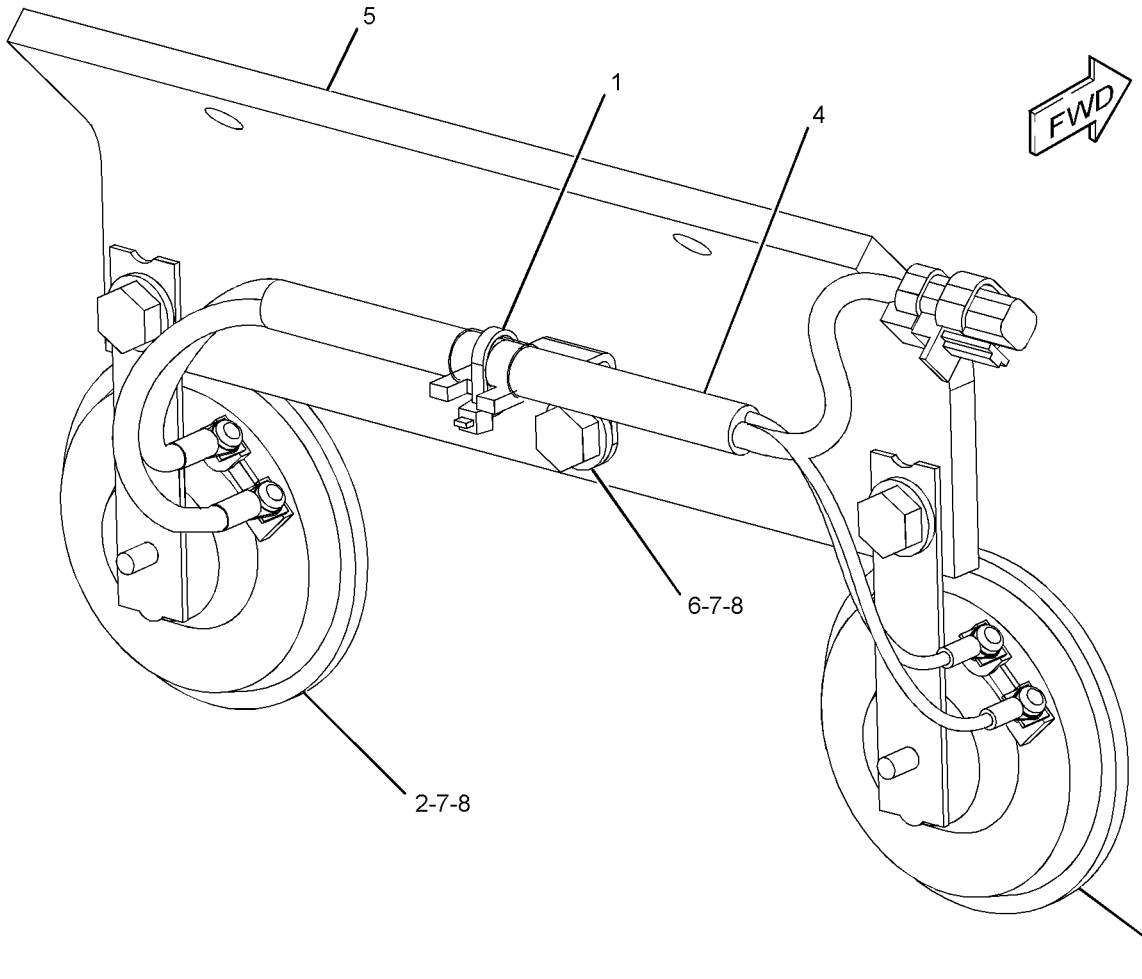

GRAPHIC #1 **<END>** g01302495

OPERATOR STATION

245-7812 HOUSING GP-AIR CONDITIONER–INLET AIR

S/N: D3P1-UP; M4T1-UP
PART OF 316-8812, 316-8917 AIR CONDITIONER GP
AN ATTACHMENT

SMCS-7320 **i02500470**

NOTE	REF NO	GRAPHIC REF	PART NUMBER	QTY	PART NAME 1 2 3 4 5 6 (PRODUCT LEVEL)	SEE PAGE
	1	1	**185-8300**	6	SCREW-TAPPING	
	2	1	**196-1666**	1	RELAY (COMPRESSOR CLUTCH)	
	2A	1	**196-1666**	1	RELAY (BLOWER)	
	2B	1	**196-1666**	1	RELAY (CONDENSER)	
	2C	1	**196-1666**	1	RELAY (CONDENSER, HIGH)	
	3	1	**245-7813**	1	MOTOR AS	
	4	1	**245-7814**	1	BRACKET	
	5	1	**245-7815**	1	SENSOR AS-TEMPERATURE (AIR)	
	6	1	**245-7816**	1	DAMPER AS	

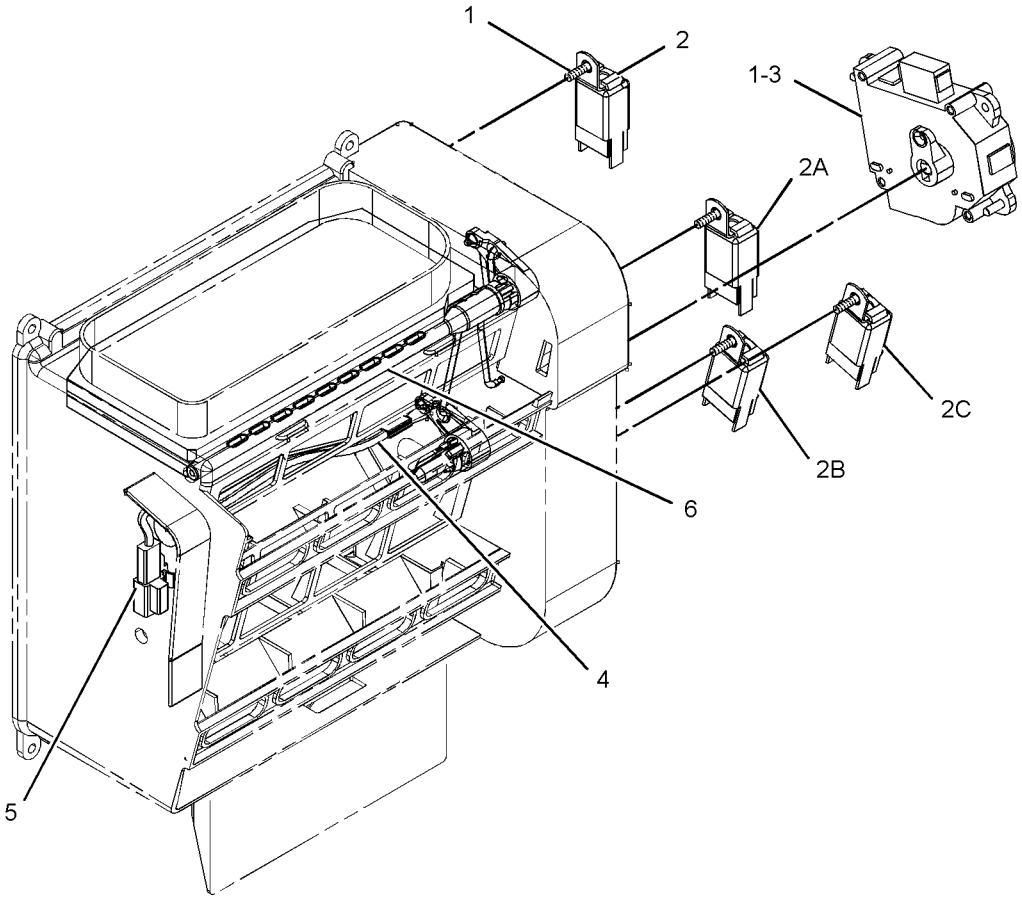

GRAPHIC #1 **<END>** g01253117

OPERATOR STATION

231-1768 INSTALLATION GP-RADIO

S/N: M4T1-UP
PART OF 345-2289, 345-2290 DISTRIBUTION AR
CANNOT BE USED WITH 251-0538—PAGE 1039
AN ATTACHMENT

SMCS-7338 **i03726880**

NOTE	REF NO	GRAPHIC REF	PART NUMBER	QTY	PART NAME 1 2 3 4 5 6 (PRODUCT LEVEL)	SEE PAGE
	1	1	**3S-2093**	9	STRAP-CABLE	
	2	1	**7K-1181**	8	STRAP-CABLE	
	3	1	**283-2783**	1	CONVERTER-POWER (24-VOLT TO 12-VOLT)	
	4	1	**234-1124**	1	HARNESS AS-RADIO	
		1	**8T-8729**	2	PIN-CONNECTOR (16-GA TO 18-GA)	
		1	**8T-8730**	18	SOCKET-CONNECTOR (16-GA TO 18-GA)	
		1	**3S-2093**	15	STRAP-CABLE	
		1	**8T-8737**	10	PLUG-SEAL	
		1	**9W-0844**	2	SOCKET-CONNECTOR (14-GA)	
		1	**230-5010**	1	PLUG AS-CONNECTOR (6-PIN)	
		1	**264-7032**	1	SEAL-CONNECTOR	
		1	**231-2295**	2	PLUG AS-CONNECTOR (8-PIN)	
					(EACH INCLUDES)	
		1	**264-7033**	1	SEAL-CONNECTOR	
		1	**243-4505**	1	RECEPTACLE AS-CONNECTOR (2-PIN)	
		1	**243-4509**	1	RECEPTACLE AS-CONNECTOR (8-PIN)	
	5	1	**238-1463**	1	RECEPTACLE AS (8-PIN)	
		1	**8T-8737**	8	PLUG-SEAL	
		1	**243-4509**	1	RECEPTACLE AS-CONNECTOR (8-PIN)	
	6	1	**238-2216**	1	SWITCH AS-ROCKER (RADIO MUTE)	
		1	**167-3543**	5	TERMINAL (MALE)	
		1	**167-3542**	1	CONNECTOR-RECEPTACLE	
M	7	1	**8T-4171**	4	BOLT (M6X1X12-MM)	
	8	1	**9X-8256**	4	WASHER (6.6X12X2-MM THK)	

M-METRIC PART

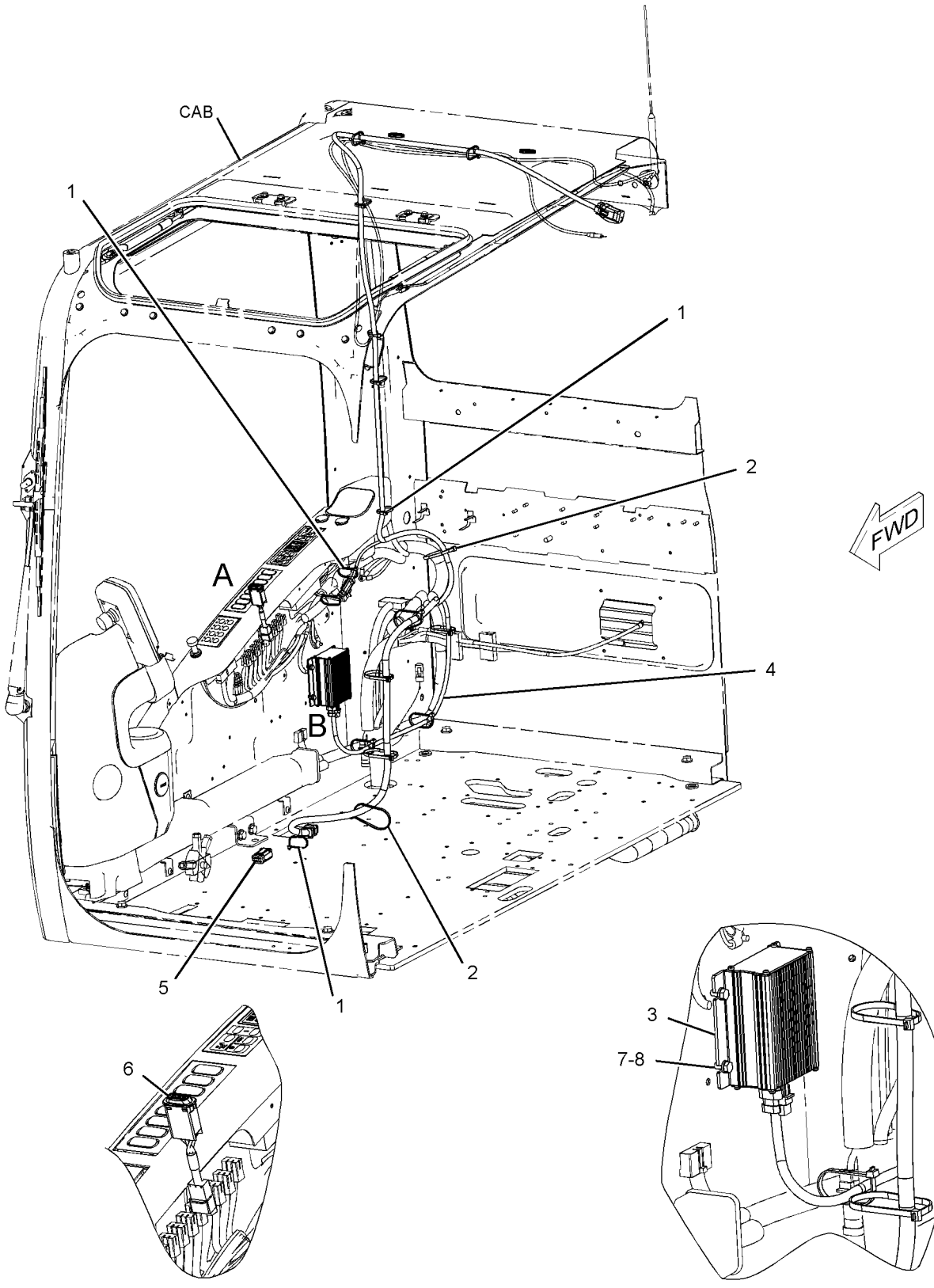

GRAPHIC #1 **<END>** g01199689

OPERATOR STATION

327-6645 KIT-SEAT SUSPENSION—MECHANICAL

S/N: D3P1-UP; M4T1-UP
PART OF 327-6520 SUSPENSION GP-SEAT
AN ATTACHMENT

SMCS-7312 **i03500701**

NOTE	REF NO	GRAPHIC REF	PART NUMBER	QTY	PART NAME 1 2 3 4 5 6 (PRODUCT LEVEL)	SEE PAGE
	1	1	**327-6646**	1	KIT-CYLINDER (DAMPENER)	
J	2	1	**327-6647**	1	KIT-COVER (SUSPENSION SEAT)	
					(INCLUDES COVER & CLIP KIT)	
	3	1	**333-4180**	6	SCREW-BUTTON HEAD (M8X1.25X20-MM)	
	4	1	**333-4181**	1	KIT-HANDLE (SEAT HEIGHT)	
M	5	1	**7Y-7394**	4	SCREW-BUTTON HEAD (M8X1.25X25-MM)	
					PARTS SHOWN IN GRAPHIC(S) WITHOUT A REFERENCE NUMBER ARE NOT SERVICED SEPARATELY	
					AVAILABLE REPAIR KIT(S):	
J			**245-7895**	1	KIT-CLIP (SUSPENSION SEAT)	
					(INCLUDES 28 CLIPS)	

J-KIT MARKED J SERVICES PART(S) MARKED J
M-METRIC PART

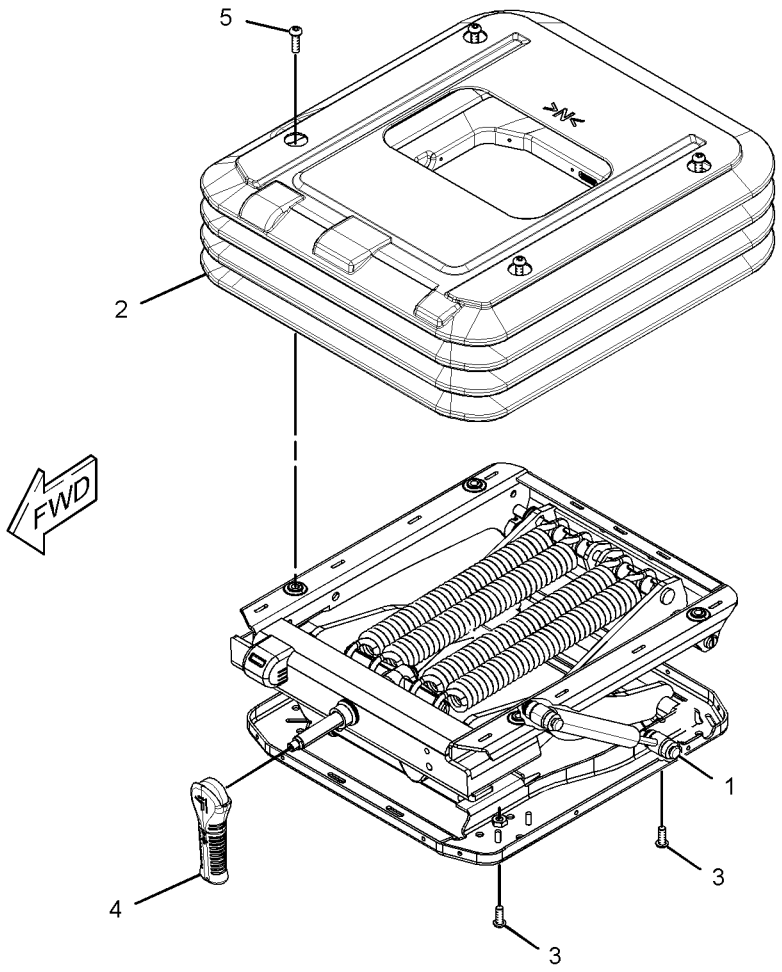

GRAPHIC #1 **<END>** g01689513

OPERATOR STATION

333-4157 KIT-SEAT SUSPENSION–AIR

S/N: D3P1-UP; M4T1-UP
PART OF 327-6521 SUSPENSION GP-SEAT
AN ATTACHMENT

SMCS-7312 **i03493861**

NOTE	REF NO	GRAPHIC REF	PART NUMBER	QTY	PART NAME 1 2 3 4 5 6 (PRODUCT LEVEL)	SEE PAGE
	1	1	**327-6646**	1	KIT-CYLINDER (DAMPENER)	
J	2	1	**333-4158**	1	KIT-COVER (AIR SEAT)	
					(INCLUDES COVER & CLIP KIT)	
	3	1	**333-4159**	1	KIT-VALVE (AIR SEAT)	
		1	**333-4178**	1	NUT	
	4	1	**333-4180**	6	SCREW-BUTTON HEAD (M8X1.25X20-MM)	
M	5	1	**7Y-7394**	4	SCREW-BUTTON HEAD (M8X1.25X25-MM)	
					PARTS SHOWN IN GRAPHIC(S) WITHOUT A REFERENCE NUMBER ARE NOT SERVICED SEPARATELY	
					AVAILABLE REPAIR KIT(S):	
J			**245-7895**	1	KIT-CLIP (SUSPENSION SEAT)	
					(INCLUDES 28 CLIPS)	

J-MARKED J SERVICES PART(S) MARKED J
M-METRIC PART

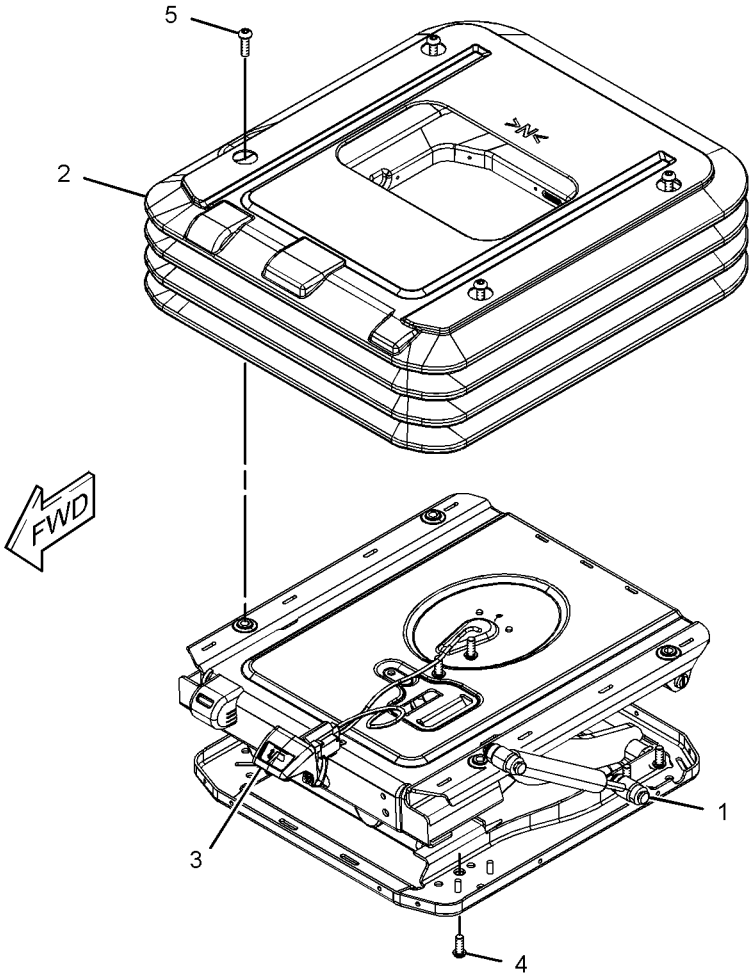

GRAPHIC #1 **<END>** g01689529

OPERATOR STATION

235-9021 LINES GP-AIR CONDITIONER

S/N: D3P1-UP; M4T1-UP

PART OF 314-3709 CHASSIS AR

SMCS-1808 **i03367925**

NOTE	REF NO	GRAPHIC REF	PART NUMBER	QTY	PART NAME 1 2 3 4 5 6 (PRODUCT LEVEL)	SEE PAGE
	1	2	**3S-8536**	1	SPACER (0.406X0.656X0.38-IN THK)	
	2	2	**7I-2673**	2	STRAP-CABLE	
	4	2	**122-9657**	2	CLAMP	
	5	2	**176-1902**	1	RECEIVER-REFRIGERANT DRYER	
	6	2	**189-3434**	1	ELBOW	
	7	2	**235-8891**	1	PLATE	
CL	8	2	**235-9014**	4	CLAMP-SPRING	
					—OR—	
CL		2	**5D-1026**	4	CLAMP-BAND	
	9	2	**327-6548**	1	TUBE AS	
		2	**121-7137**	1	SEAL-O-RING	
	10	2	**240-5043**	1	HOSE AS	
		2	**121-7138**	2	SEAL-O-RING	
		2	**196-1665**	1	SWITCH AS-PRESSURE (REFRIGERANT)	
		2	**185-8293**	1	SEAL-O-RING	
	11	2	**240-5044**	1	HOSE AS	
		2	**121-7136**	2	SEAL-O-RING	
		2	**245-7851**	1	PLUG	
	12	2	**327-6549**	1	HOSE AS	
		2	**121-7137**	2	SEAL-O-RING	
		2	**245-7850**	1	PLUG	
	13	2	**245-7928**	1	HOSE AS	
		2	**121-7138**	2	SEAL-O-RING	
	14	1	**273-5428**	1	GUARD	
	15	1,2	**104-3173**	8	CLIP	
	16	2	**121-7098**	1	BRACKET AS	
M		2	**8T-4138**	2	BOLT (M6X1X20-MM)	
		2	**9X-8256**	2	WASHER (6.6X12X2-MM THK)	
	17	2	**130-0252**	2	HOSE-DRAIN	
	18	2	**1S-0994**	1	CLIP	
	19	2	**204-1673**	1	STRAP-CABLE	
	20	2	**3K-0360**	3	SEAL-O-RING	
	21	1	**4I-3503**	1	GROMMET	
	22	2	**6V-3265**	1	CLIP	
	23	2	**6V-7238**	2	VALVE-SHUTOFF (HEATER, LINES)	
M	24	2	**6V-7357**	4	BOLT (M6X1X25-MM)	
	25	1	**7Y-8165**	1	GROMMET	
	26	1	**7Y-8167**	1	GROMMET	
	27	2	**8M-2773**	5	CLIP	
	28	1,2	**8T-4121**	15	WASHER-HARD (11X21X2.5-MM THK)	
M	29	1,2	**8T-4137**	13	BOLT (M10X1.5X20-MM)	
M	30	2	**8T-4191**	1	BOLT (M10X1.5X16-MM)	
M	31	2	**8T-4195**	1	BOLT (M10X1.5X30-MM)	
M	32	2	**8T-4200**	2	BOLT (M8X1.25X16-MM)	
	33	2	**8T-4224**	2	WASHER-HARD (8.8X16X2-MM THK)	
M	34	2	**8T-4971**	2	BOLT (M6X1X30-MM)	
	35	2	**9X-8256**	7	WASHER (6.6X12X2-MM THK)	
CE	36	2	**5P-0767**		HOSE (400-CM)	
CE	36A	2	**5P-0767**		HOSE (360-CM)	
	37	2	**7K-1181**	1	STRAP-CABLE	
	38	2	**132-5789**	1	CLIP	
E	39	2	**225-5714**		GUARD (65-CM)	
E	40	1	**293-1135**		GUARD (15-CM)	
M	41	2	**7X-2533**	1	BOLT (M6X1X35-MM)	
					—OR—	
M		2	**8T-4971**	1	BOLT (M6X1X30-MM)	

235-9021 **LINES GP-AIR CONDITIONER** *(contd.)* **i03367925**

NOTE	REF NO	GRAPHIC REF	PART NUMBER	QTY	PART NAME 1 2 3 4 5 6 (PRODUCT LEVEL)	SEE PAGE
	42	2	**305-0441**	2	BAND-MARKER (HS)	
	43	2	**305-0442**	2	BAND-MARKER (HR)	

C-CHANGE FROM PREVIOUS TYPE
E-ORDER BY THE CENTIMETER
L-THESE PARTS ARE DIRECTLY INTERCHANGEABLE
M-METRIC PART

REFER TO ALL ILLUSTRATIONS OF THIS GROUP FOR AUXILIARY VIEWS

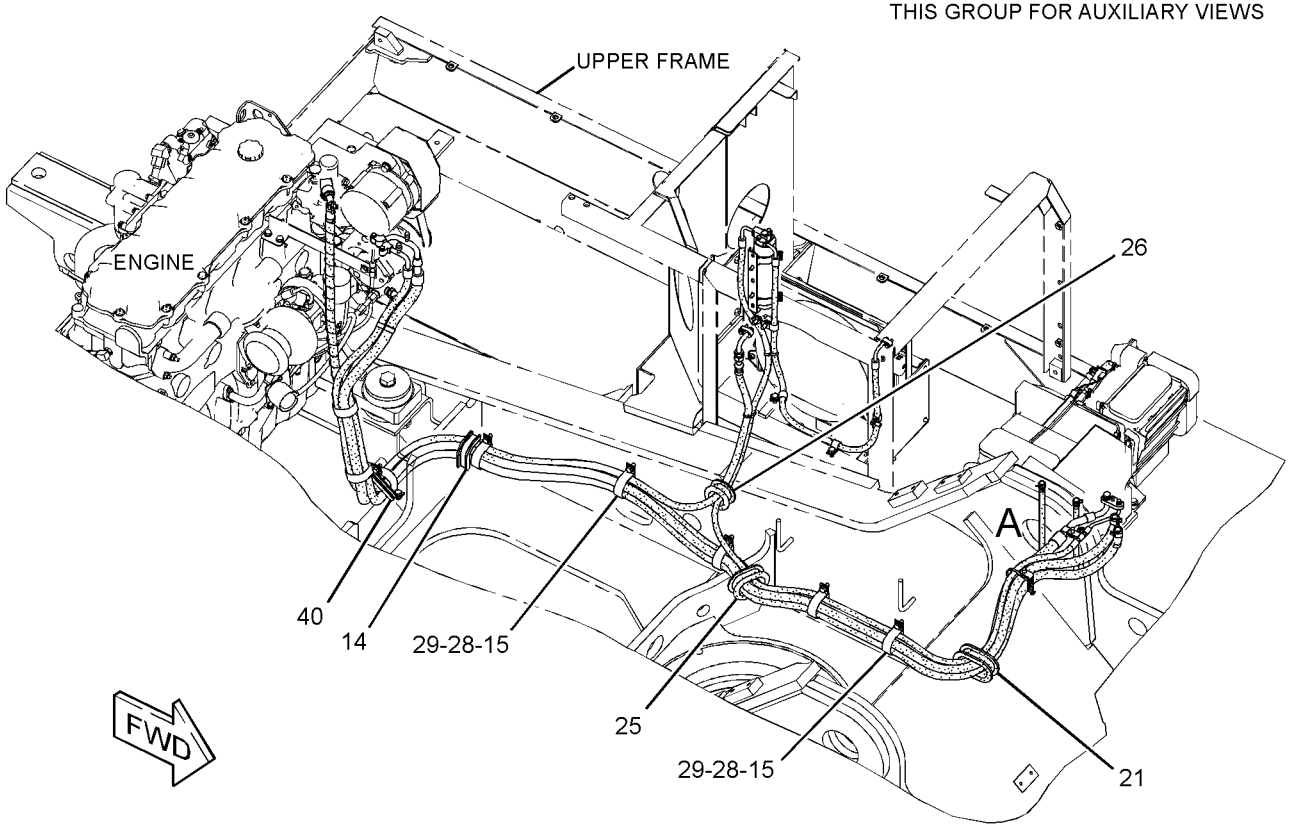

GRAPHIC #1 g01730373

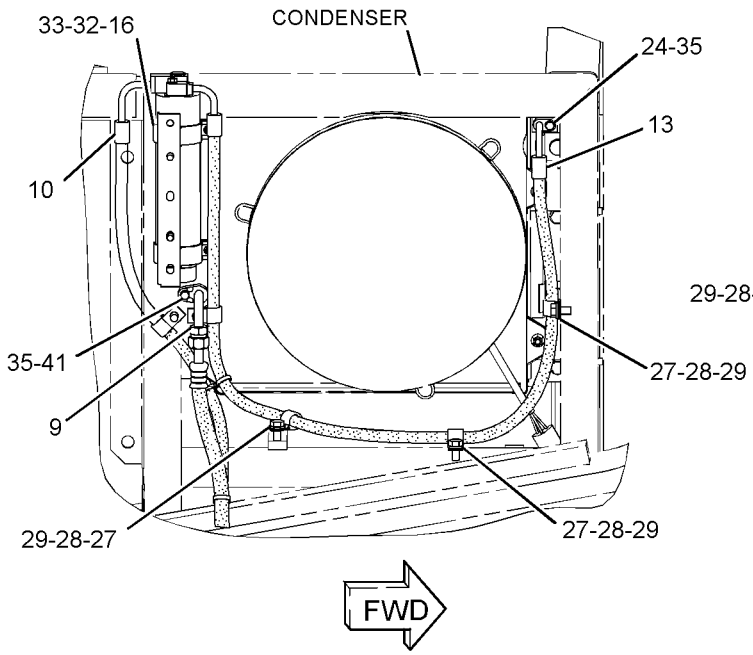

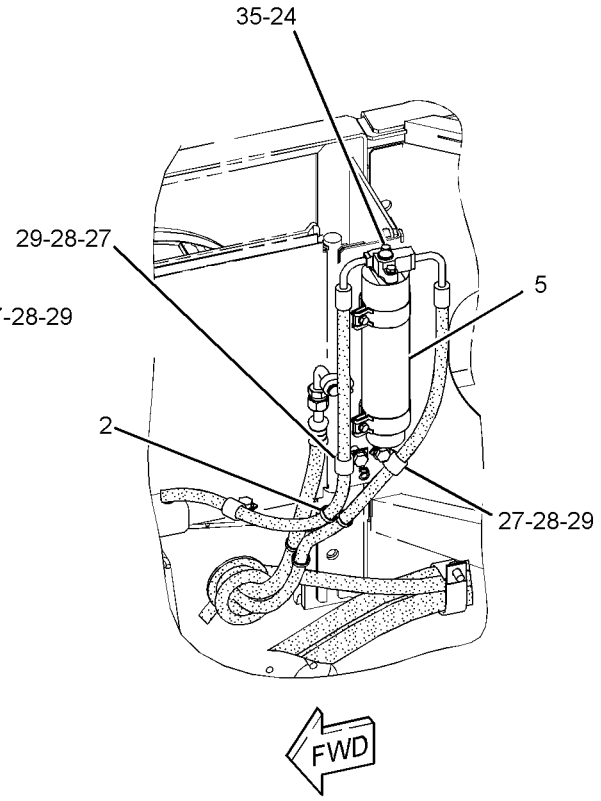

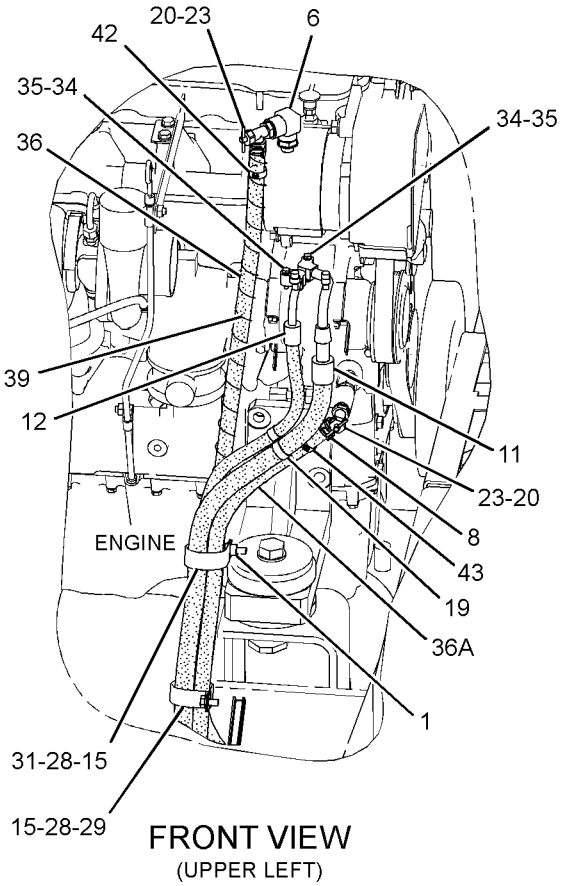

FRONT VIEW
(UPPER LEFT)

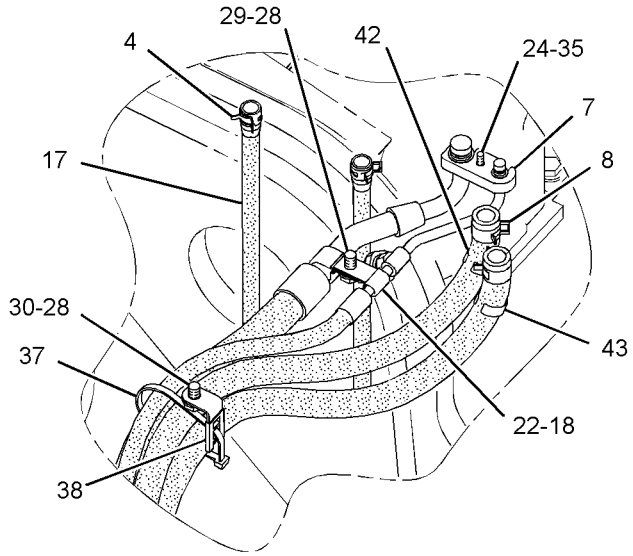

VIEW OF AREA A

GRAPHIC #2 **<END>** g01730374

OPERATOR STATION

7Y-0059 LITERATURE GP

S/N: D3P1-UP; M4T1-UP

PART OF 314-3709 CHASSIS AR

SMCS-7300 **i00831590**

NOTE	PART NUMBER	QTY	PART NAME 1 2 3 4 5 6 (PRODUCT LEVEL)	SEE PAGE
	099-3645	1	CABLE-LANYARD	
	5P-8500	2	KEY	
	5P-7958	2	SLEEVE-CABLE SPLICE	

<END>

OPERATOR STATION

142-3836 MIRROR GP-REAR VIEW—FRONT, RH

S/N: D3P1-UP; M4T1-UP

PART OF 314-3709 CHASSIS AR

SMCS-7319 **i02770409**

NOTE	REF NO	GRAPHIC REF	PART NUMBER	QTY	PART NAME 1 2 3 4 5 6 (PRODUCT LEVEL)	SEE PAGE
	1	1	**2M-0849**	4	WASHER-HARD (13.5X25.5X5-MM THK)	
	2	1	**137-2270**	1	MIRROR	
	3	1	**165-3065**	1	BRACKET-MIRROR	
	4	1	**177-6315**	4	PLUG	
M	5	1	**8T-4192**	4	BOLT (M12X1.75X25-MM)	

M-METRIC PART

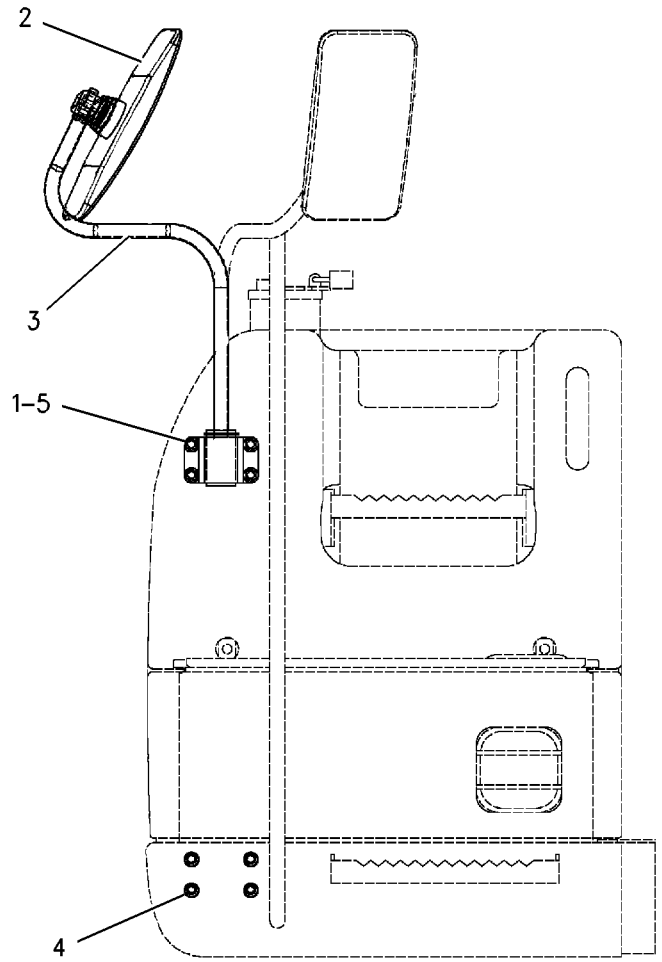

FRONT VIEW

GRAPHIC #1 **<END>** g00682738

OPERATOR STATION

327-6550 MIRROR GP-REAR VIEW

S/N: D3P1-UP

PART OF 327-6552, 327-6553 MIRROR GP-REAR VIEW

AN ATTACHMENT

SMCS-7319 **i03678553**

NOTE	REF NO	GRAPHIC REF	PART NUMBER	QTY	PART NAME 1 2 3 4 5 6 (PRODUCT LEVEL)	SEE PAGE
M	1	1	**8T-0269**	2	BOLT-SOCKET HEAD (M6X1X20-MM)	
	2	1	**9X-8256**	2	WASHER (6.6X12X2-MM THK)	

M-METRIC PART

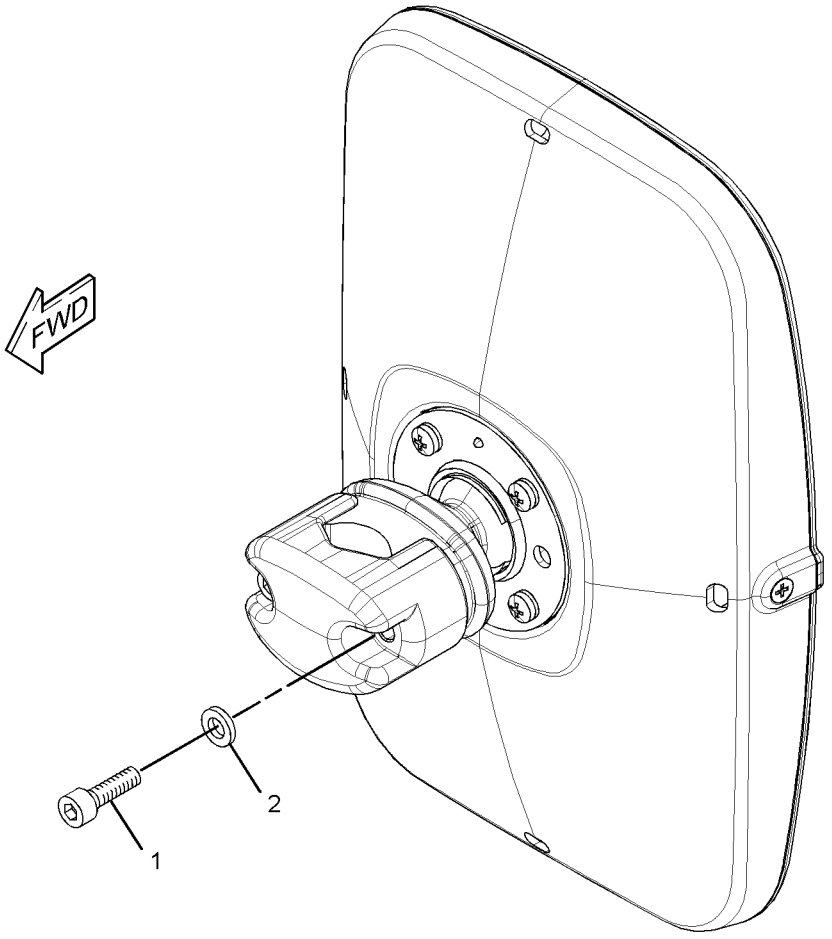

GRAPHIC #1 **<END>** g01615528

OPERATOR STATION

327-6552 MIRROR GP-REAR VIEW

S/N: D3P1-UP
CANNOT BE USED WITH FALLING OPTION GUARDS
AN ATTACHMENT

SMCS-7319 **i03678520**

NOTE	REF NO	GRAPHIC REF	PART NUMBER	QTY	PART NAME 1 2 3 4 5 6 (PRODUCT LEVEL)	SEE PAGE
Y	1	1	**327-6550**	1	MIRROR GP-REAR VIEW	1024
	2	1	**327-6576**	1	SUPPORT AS	
M	3	1	**8T-4175**	1	BOLT (M16X2X90-MM)	
	4	1	**9X-8257**	1	WASHER (17.5X30X3.5-MM THK)	

M-METRIC PART
Y-SEPARATE ILLUSTRATION

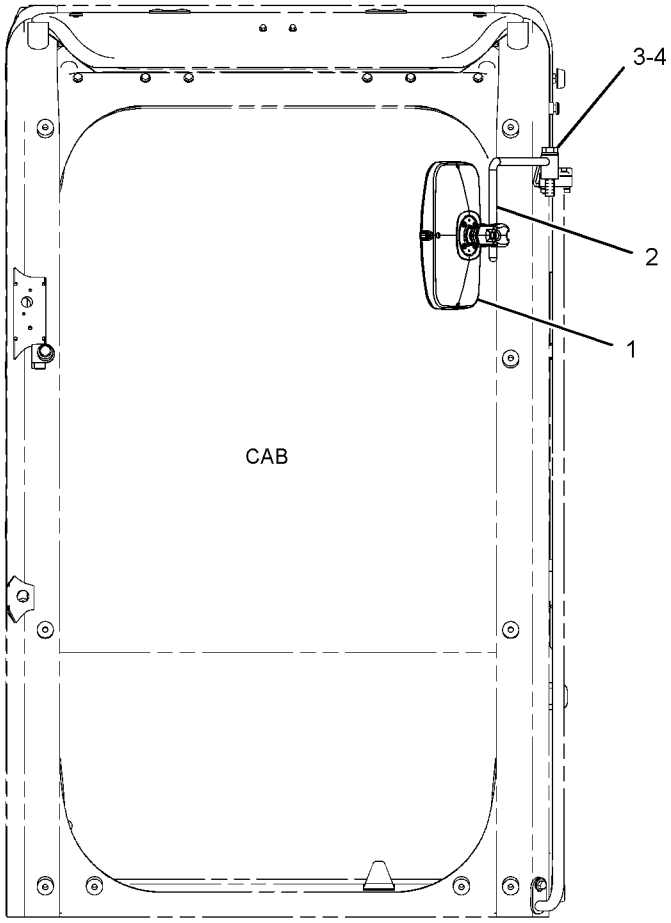

FRONT VIEW

GRAPHIC #1 **<END>** g01615557

OPERATOR STATION

327-6553 MIRROR GP-REAR VIEW

S/N: D3P1-UP

AN ATTACHMENT

SMCS-7319 **i03678560**

NOTE	REF NO	GRAPHIC REF	PART NUMBER	QTY	PART NAME 1 2 3 4 5 6 (PRODUCT LEVEL)	SEE PAGE
	1	1	**316-8989**	1	SUPPORT AS	
Y	2	1	**327-6550**	1	MIRROR GP-REAR VIEW	1024
M	3	1	**8T-4193**	1	BOLT (M16X2X50-MM)	
	4	1	**9X-8257**	1	WASHER (17.5X30X3.5-MM THK)	

M-METRIC PART
Y-SEPARATE ILLUSTRATION

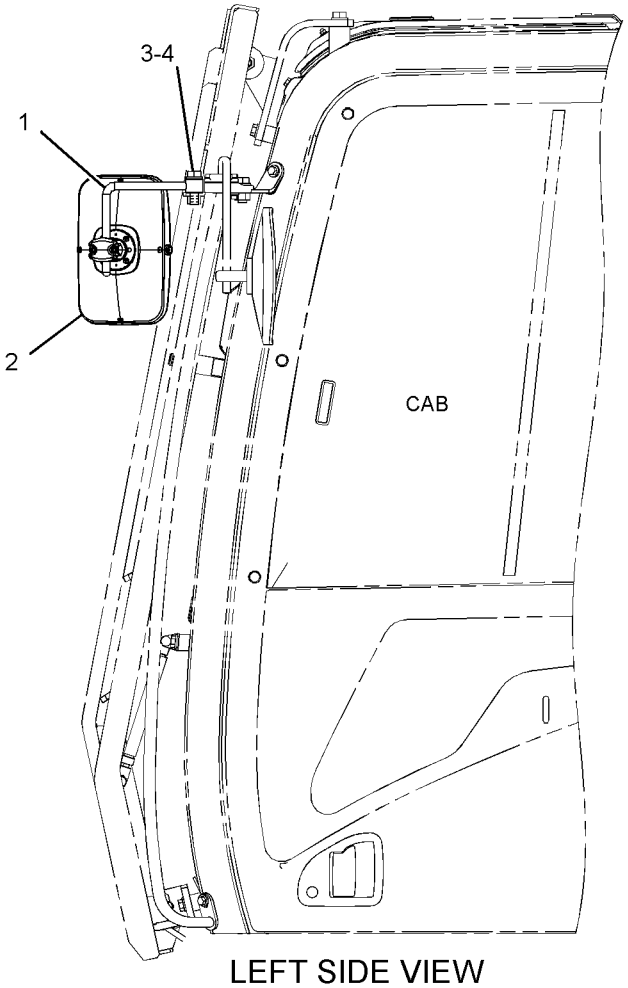

LEFT SIDE VIEW

GRAPHIC #1

<END>

g01615542

OPERATOR STATION

221-8813 MONITOR & MTG GP-OPERATOR

S/N: D3P1-UP; M4T1-UP
PART OF 274-7468 CAB GP
AN ATTACHMENT
TYPE 1

SMCS-7490 **i02489583**

NOTE	REF NO	GRAPHIC REF	PART NUMBER	QTY	PART NAME 1 2 3 4 5 6 (PRODUCT LEVEL)	SEE PAGE
Y	1	1	**260-2193**	1	MONITOR GP-OPERATOR	1029
M	2	1	**9X-2046**	3	SCREW-TRUSS HEAD (M6X1X35-MM)	

M-METRIC PART
Y-SEPARATE ILLUSTRATION

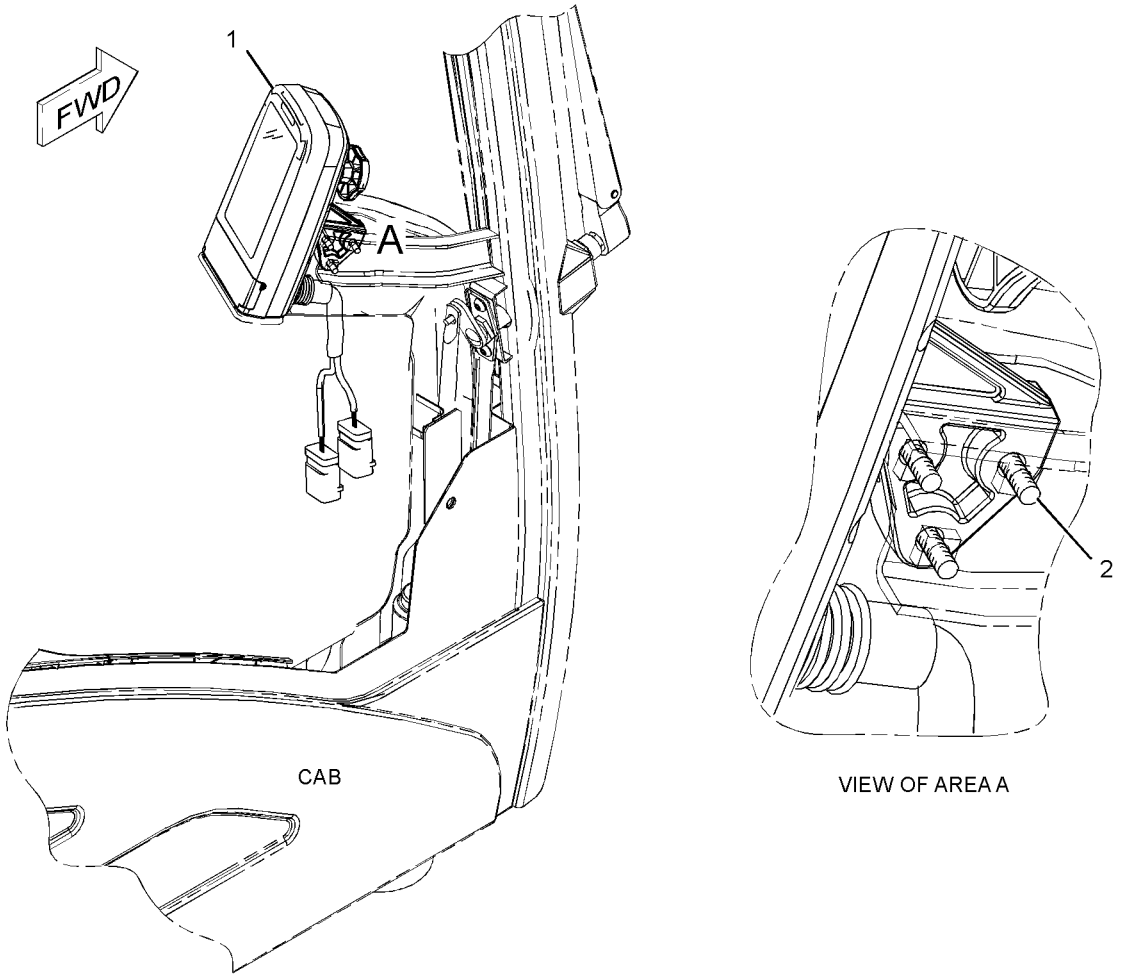

GRAPHIC #1 **<END>** g01231835

OPERATOR STATION

221-8813 MONITOR & MTG GP-OPERATOR

S/N: D3P1-UP; M4T1-UP
PART OF 274-7468 CAB GP, 229-9072 OPERATOR AR
ALSO AN ATTACHMENT
TYPE 2

SMCS-7490 **i03291885**

NOTE	REF NO	GRAPHIC REF	PART NUMBER	QTY	PART NAME 1 2 3 4 5 6 (PRODUCT LEVEL)	SEE PAGE
CY	1	1	**319-4354**	1	SERVICE GP-MONITOR	1053
M	2	1	**9X-2046**	3	SCREW-TRUSS HEAD (M6X1X35-MM)	

C-CHANGE FROM PREVIOUS TYPE
M-METRIC PART
Y-SEPARATE ILLUSTRATION

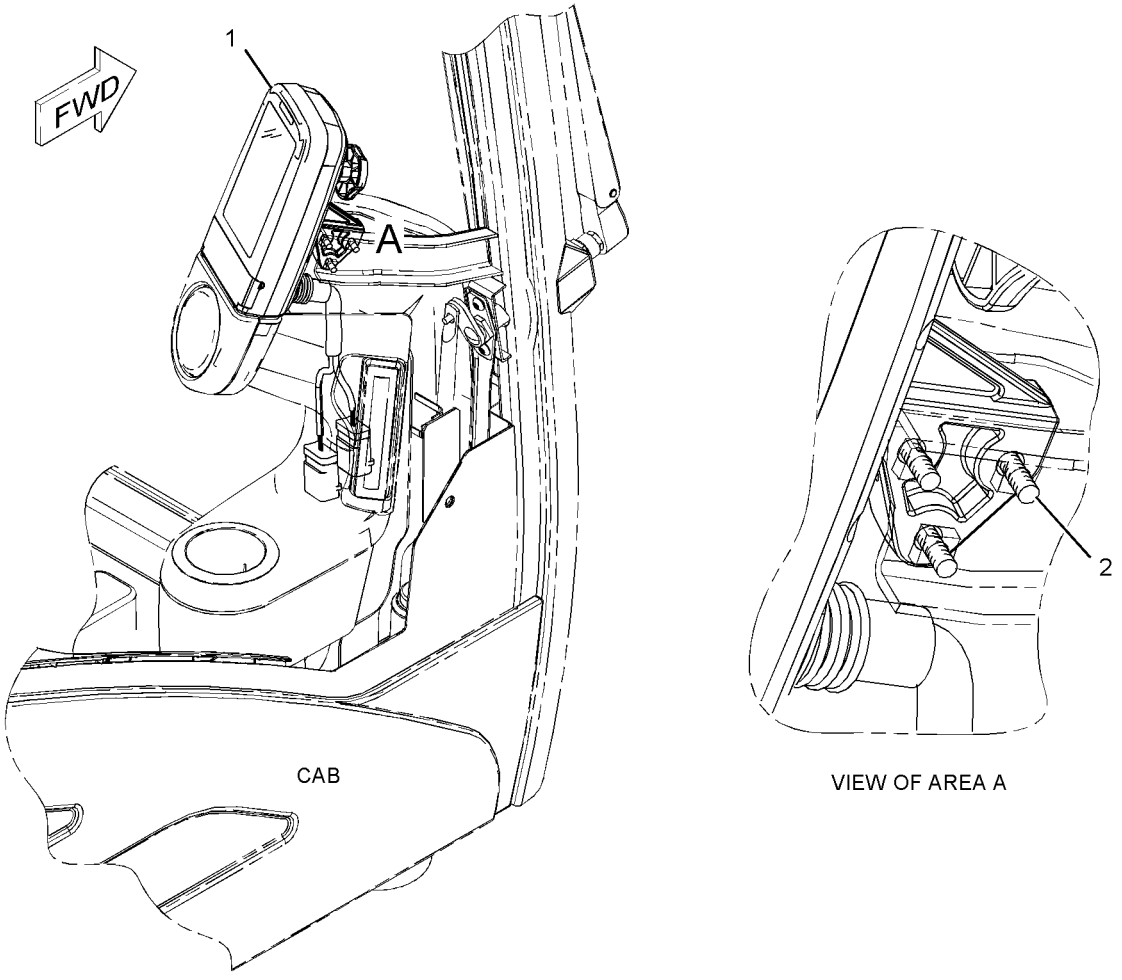

GRAPHIC #1 **<END>** g01129076

OPERATOR STATION

260-2193 MONITOR GP-OPERATOR

S/N: D3P1-UP; M4T1-UP
PART OF 221-8813 MONITOR & MTG GP-OPERATOR
AN ATTACHMENT

SMCS-7490 **i02489585**

NOTE	REF NO	GRAPHIC REF	PART NUMBER	QTY	PART NAME 1 2 3 4 5 6 (PRODUCT LEVEL)	SEE PAGE
	1	1	**247-2694**	1	RECEPTACLE AS-CONNECTOR (12-PIN)	
	2	1	**247-2695**	1	RECEPTACLE AS-CONNECTOR (12-PIN)	
	3	1	**9X-3401**	17	PIN-CONNECTOR (16-GA TO 18-GA)	
					—OR—	
		1	**126-1767**	17	PIN-CONNECTOR (14-GA)	
	4	1	**8T-8737**	7	PLUG-SEAL	

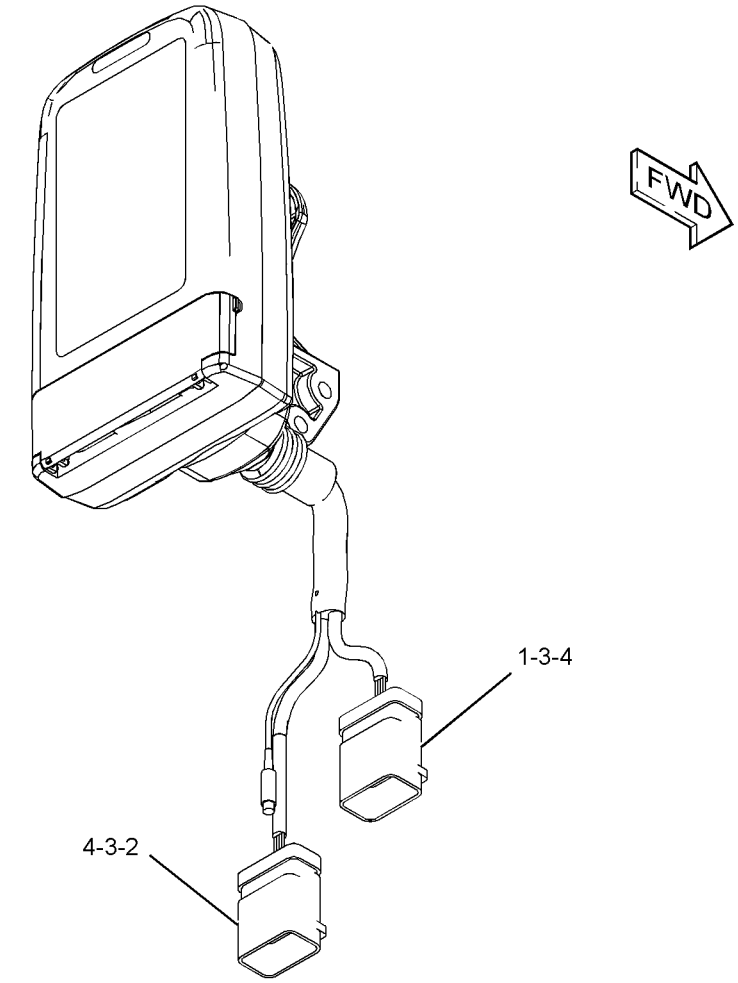

GRAPHIC #1 **<END>** g01232266

OPERATOR STATION

319-4353 MONITOR GP-OPERATOR

S/N: D3P1-UP; M4T1-UP
PART OF 319-4354 SERVICE GP-MONITOR
ALSO AN ATTACHMENT

SMCS-7490 **i03632404**

NOTE	REF NO	GRAPHIC REF	PART NUMBER	QTY	PART NAME 1 2 3 4 5 6 (PRODUCT LEVEL)	SEE PAGE
	1	1	**247-2694**	1	RECEPTACLE AS-CONNECTOR (12-PIN)	
	2	1	**247-2695**	1	RECEPTACLE AS-CONNECTOR (12-PIN)	
	3	1	**9X-3401**	17	PIN-CONNECTOR (16-GA TO 18-GA)	
					—OR—	
		1	**126-1767**	17	PIN-CONNECTOR (14-GA)	
	4	1	**8T-8737**	7	PLUG-SEAL	

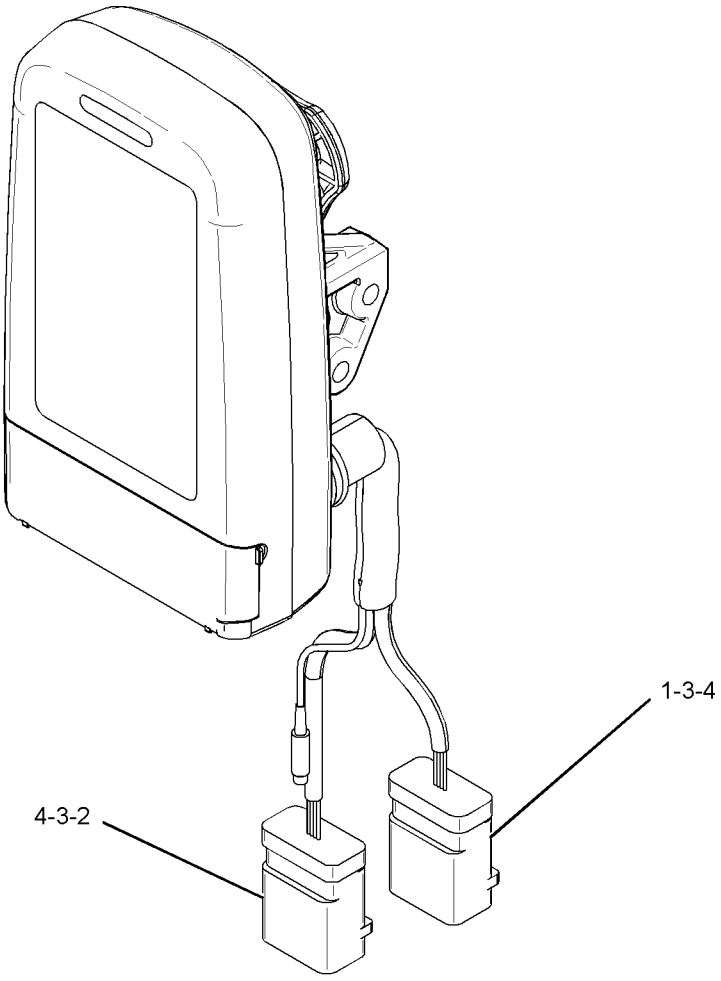

GRAPHIC #1 **<END>** g01528758

OPERATOR STATION

270-5603 MOUNTING GP-ANTENNA–ACCUGRADE

S/N: D3P1-UP; M4T1-UP
PART OF 290-1780 CONVERSION AR-MACHINE
AN ATTACHMENT

SMCS-7338, 7606 **i03120389**

NOTE	REF NO	GRAPHIC REF	PART NUMBER	QTY	PART NAME 1 2 3 4 5 6 (PRODUCT LEVEL)	SEE PAGE
	1	1	**309-5849**	1	BRACKET AS	
M	2	1	**7X-2552**	2	BOLT (M16X2X30-MM)	
	3	1	**9X-8257**	2	WASHER (17.5X30X3.5-MM THK)	

M-METRIC PART

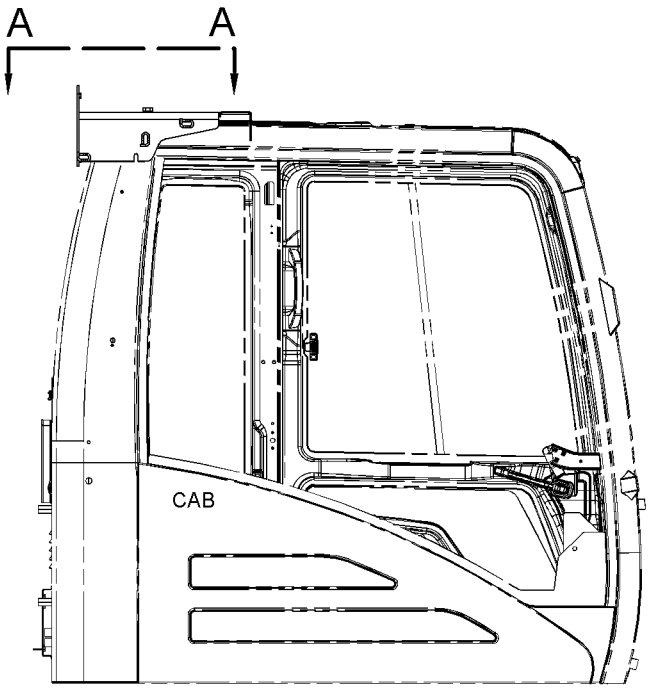

RIGHT SIDE VIEW
(WITHOUT CAB GUARD)

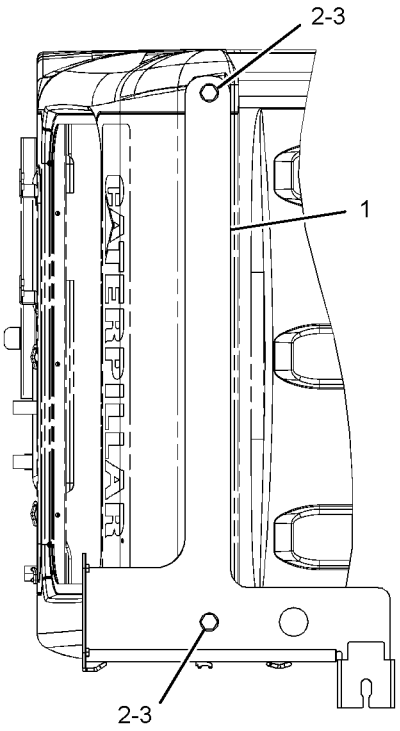

VIEW A-A

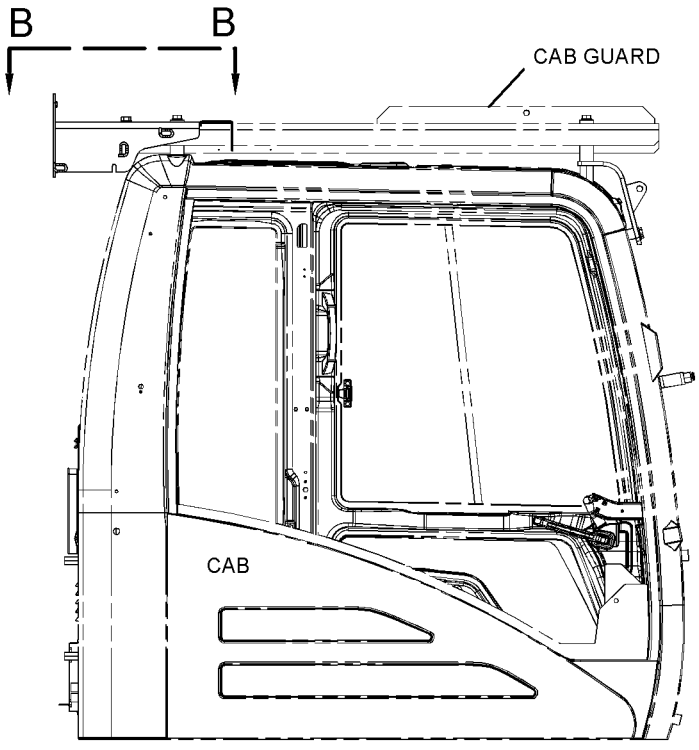

RIGHT SIDE VIEW
(WITH CAB GUARD)

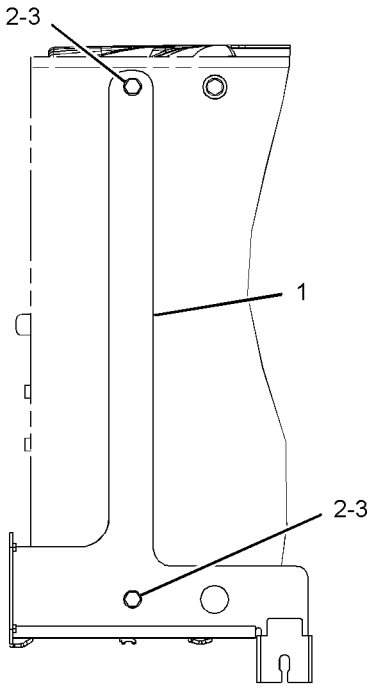

VIEW B-B

GRAPHIC #1 **<END>** g01435822

OPERATOR STATION

292-0304 MOUNTING GP-MONITOR

S/N: D3P1-UP; M4T1-UP

PART OF 292-0276 GRADE CONTROL AR-SATELLITE

SMCS-7220, 7490, 7604 **i03129242**

NOTE	PART NUMBER	QTY	PART NAME 1 2 3 4 5 6 (PRODUCT LEVEL)	SEE PAGE
	295-1921	2	BALL	
M	**5C-9553**	9	BOLT (M6X1X16-MM)	
M	**8T-0325**	4	BOLT (M5X0.8X14-MM)	
M	**8T-4136**	3	BOLT (M10X1.5X25-MM)	
M	**8T-4176**	2	BOLT (M12X1.75X90-MM)	
	270-5582	1	BRACKET AS (MONITOR)	
	270-5589	1	BRACKET AS (LIGHT BAR)	
	202-0943	1	CLAMP-MOUNTING	
	275-6839	1	HARNESS AS-MONITOR (HIGH MOUNT)	
	202-0901	1	HARNESS AS-MONITOR (LOW MOUNT)	
	267-8024	1	HARNESS AS-WIRING (LIGHT BAR)	
	226-9258	1	PLATE	
M	**8T-0337**	6	SCREW-MACHINE (M4X0.7X12-MM)	
	3S-2093	8	STRAP-CABLE	
	7I-2673	1	STRAP-CABLE	
	167-8853	1	TUBE AS (DISPLAY MOUNT)	
	9X-8256	9	WASHER (6.6X12X2-MM THK)	
	2M-0849	3	WASHER-HARD (13.5X25.5X5-MM THK)	
	8T-0328	4	WASHER-HARD (5.5X10X1-MM THK)	
	096-6166	6	WASHER-HARD (4.5X9X1-MM THK)	

M-METRIC PART

<END>

OPERATOR STATION

245-7811 MOUNTING GP-PLATFORM

S/N: D3P1-UP; M4T1-UP
PART OF 314-3709 CHASSIS AR

SMCS-7253 **i02495888**

NOTE	REF NO	GRAPHIC REF	PART NUMBER	QTY	PART NAME 1 2 3 4 5 6 (PRODUCT LEVEL)	SEE PAGE
	1	1	**235-8862**	4	MOUNT AS	
	2	1	**8T-4121**	16	WASHER-HARD (11X21X2.5-MM THK)	
M	3	1	**8T-4195**	16	BOLT (M10X1.5X30-MM)	

M-METRIC PART

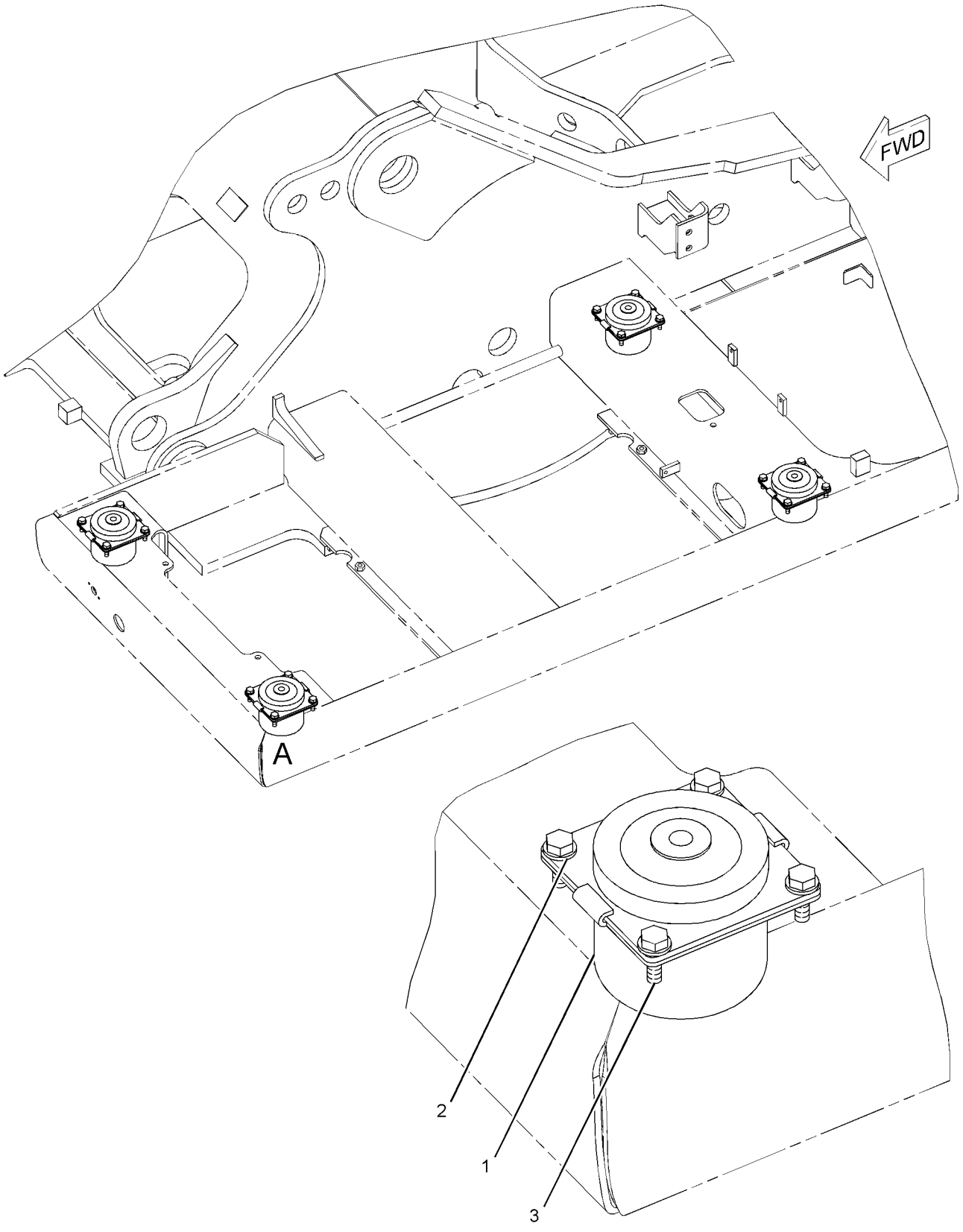

VIEW OF AREA A

GRAPHIC #1 **<END>** g01101486

OPERATOR STATION

259-4746 MOUNTING GP-RADIO

S/N: D3P1-UP; M4T1-UP
GLOBAL POSITIONING SYSTEM
PART OF 292-0276 GRADE CONTROL AR-SATELLITE

SMCS-7338 **i02618867**

NOTE	REF NO	GRAPHIC REF	PART NUMBER	QTY	PART NAME 1 2 3 4 5 6 (PRODUCT LEVEL)	SEE PAGE
	1	1	**8C-5607**	6	MOUNT-ISOLATION	
	2	1	**8C-5608**	3	SPACER (6.5X9.5X25.4-MM THK)	
	3	1	**140-7480**	1	BRACKET-MOUNTING	
	4	1	**167-8610**	1	BRACKET AS	
	5	1	**5S-7349**	2	BOLT (1/4-20X0.5-IN)	
	6	1	**8T-4205**	2	WASHER-HARD (7.2X14.5X2-MM THK)	
M	7	1	**9X-2480**	3	BOLT (M6X1X45-MM)	
	8	1	**9X-6165**	3	WASHER (6.5X22X2.5-MM THK)	
BJM	9	1	**7X-2533**	3	BOLT (M6X1X35-MM)	

B-USE AS REQUIRED
J-TO BE USED ON HYDRAULIC EXCAVATOR
M-METRIC PART

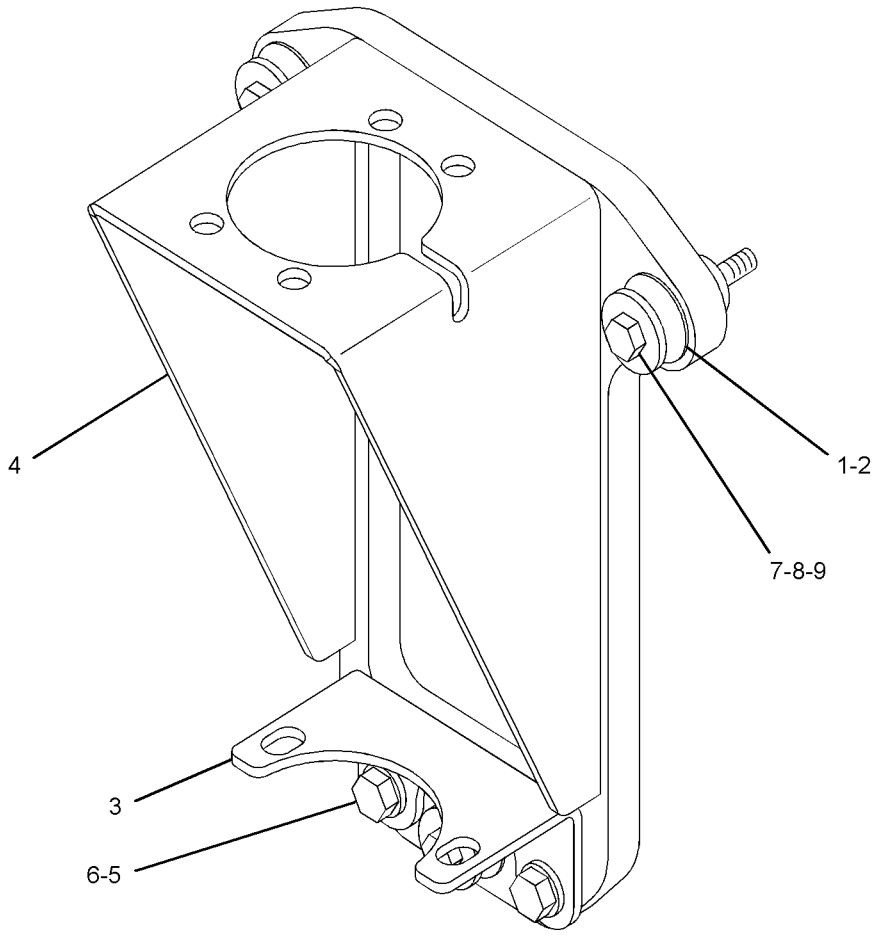

GRAPHIC #1 **<END>** g01259563

OPERATOR STATION

229-9072 OPERATOR AR

S/N: D3P1-UP; M4T1-UP
PART OF 314-3709 CHASSIS AR

SMCS-7301 **i03130909**

NOTE	PART NUMBER	QTY	PART NAME 1 2 3 4 5 6 (PRODUCT LEVEL)	SEE PAGE
Y	*245-7922*	1	CONSOLE GP-OPERATOR	956
Y	*221-8872*	1	CONTROL & MTG GP-MACHINE	199
Y	*170-9497*	1	CONTROL GP-PILOT OPERATED HYD (TRAVEL)	987
Y	*221-8813*	1	MONITOR & MTG GP-OPERATOR	1027
Y	*238-1432*	1	PANEL & MTG GP-CIRCUIT BREAKER	221
Y	*229-9078*	1	PLATFORM GP-OPERATOR	1038
Y	*327-6523*	1	SUPPORT GP-SEAT	1054
Y	*251-0432*	1	WIRING GP-CAB	294
Y	*251-0433*	1	WIRING GP-CONSOLE	317
Y	*251-0430*	1	WIRING GP-PLATFORM	332

Y-SEPARATE ILLUSTRATION

<END>

255-5845 PEDAL AR-AUXILIARY–LH

S/N: M4T1-UP
AN ATTACHMENT

SMCS-5059 **i02518553**

NOTE	PART NUMBER	QTY	PART NAME 1 2 3 4 5 6 (PRODUCT LEVEL)	SEE PAGE
Y	*221-8884*	1	CONTROL & MTG GP-PEDAL (LH)	968
Y	*259-5293*	1	FASTENER GP-WIRING HARNESS (PEDAL CONTROL)	203
Y	*247-7418*	1	FILM GP (OPERATOR CONTROLS, NOTICE)	1082

Y-SEPARATE ILLUSTRATION

<END>

259-7176 PEDAL AR-AUXILIARY–
THIRD PEDAL, STRAIGHT TRAVEL

S/N: D3P1-UP; M4T1-UP
PART OF 337-4126 OPTION AR-CONTROL, 337-4112 OPTION AR-HYDRAULIC
AN ATTACHMENT

SMCS-5059 **i03632384**

NOTE	PART NUMBER	QTY	PART NAME 1 2 3 4 5 6 (PRODUCT LEVEL)	SEE PAGE
Y	*259-7179*	1	CONTROL GP-HYDRAULIC PEDAL (THIRD PEDAL, STRAIGHT TRAVEL)	978
Y	*251-0526*	1	FASTENER GP-WIRING HARNESS (STRAIGHT TRAVEL)	201
Y	*255-1843*	1	LINES GP-PILOT (THIRD PEDAL, PILOT VALVE)	625
Y	*255-1844*	1	LINES GP-PILOT (CONTROL VALVE, TRAVEL VALVE)	627
	260-6948	1	FILM-INSTRUCTION (OPERATOR CONTROLS, READ OMM)	
			(ON RH CAB WINDOW)	

Y-SEPARATE ILLUSTRATION

<END>

OPERATOR STATION

229-9078 PLATFORM GP-OPERATOR

S/N: D3P1-UP; M4T1-UP

PART OF 229-9072 OPERATOR AR

SMCS-7253 **i02489588**

NOTE	REF NO	GRAPHIC REF	PART NUMBER	QTY	PART NAME 1 2 3 4 5 6 (PRODUCT LEVEL)	SEE PAGE
	1	1	**135-8965**	1	GROMMET	
	2	1	**135-8966**	1	GROMMET	
	3	1	**245-7916**	1	PLATFORM AS	
	4	1	**161-3717**	1	STRIP	
	5	1	**4I-3266**	1	STRIP	
M	6	1	**7X-2553**	4	BOLT (M16X2X40-MM)	
	7	1	**8T-4121**	4	WASHER-HARD (11X21X2.5-MM THK)	
M	8	1	**8T-4191**	4	BOLT (M10X1.5X16-MM)	
	9	1	**9X-8257**	4	WASHER (17.5X30X3.5-MM THK)	

M-METRIC PART

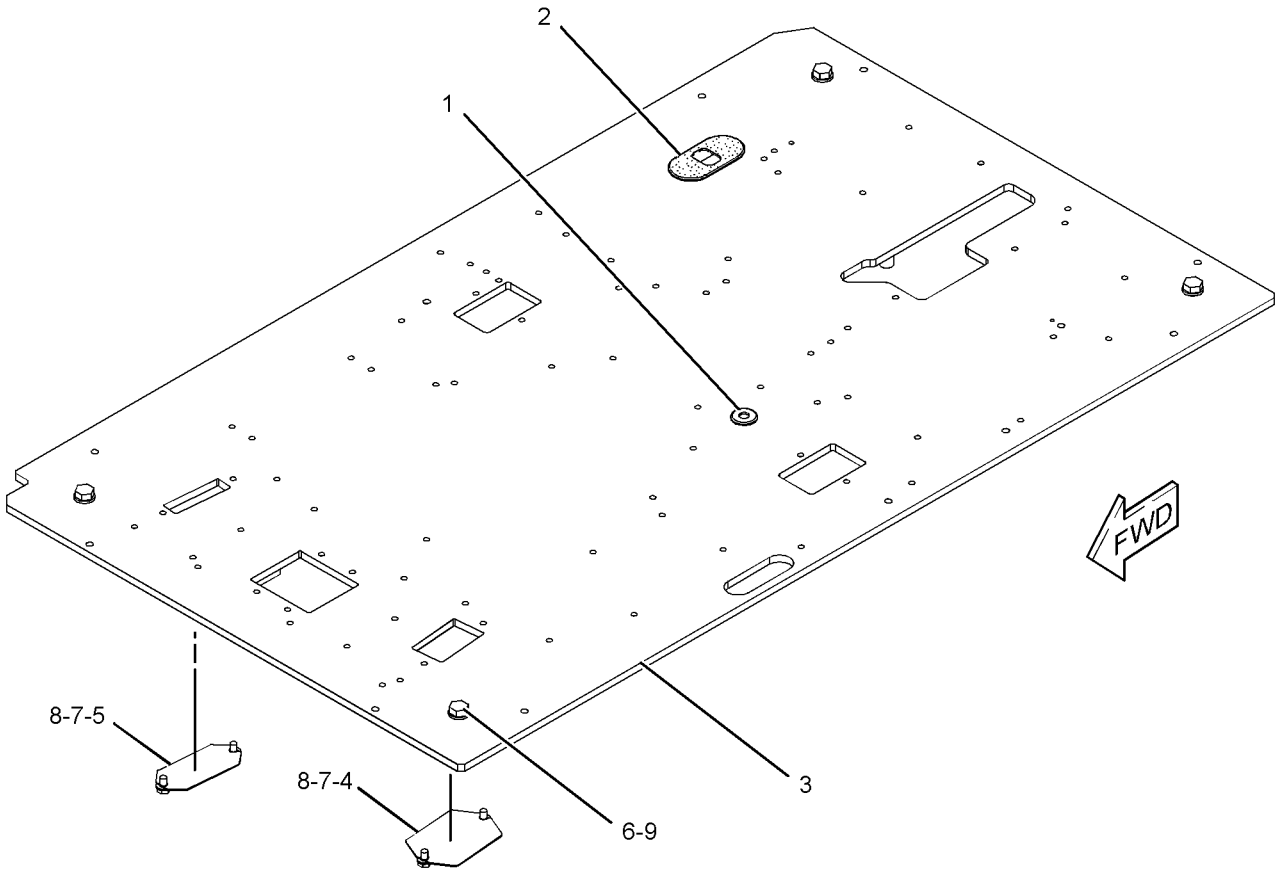

GRAPHIC #1 **<END>** g01188224

OPERATOR STATION

251-0538 RADIO GP–AM, FM

S/N: D3P1-UP; M4T1-UP
PART OF 337-4122, 337-4125 OPTION AR-CAB
AN ATTACHMENT

SMCS-7338, 733C **i03024521**

NOTE	REF NO	GRAPHIC REF	PART NUMBER	QTY	PART NAME 1 2 3 4 5 6 (PRODUCT LEVEL)	SEE PAGE
	1	1	**3S-2093**	2	STRAP-CABLE	
	2	1	**7K-1181**	2	STRAP-CABLE	
	3	1	**106-2704**	2	SCREW AS (M5X0.8X10-MM)	
	4	1	**238-2260**	1	CABLE	
	5	1	**306-8802**	1	RADIO-AM/FM	
	6	1	**259-4914**	1	BRACKET AS	
	7	1	**119-5026**	2	SCREW-PAN HEAD (10-16X0.63-IN)	

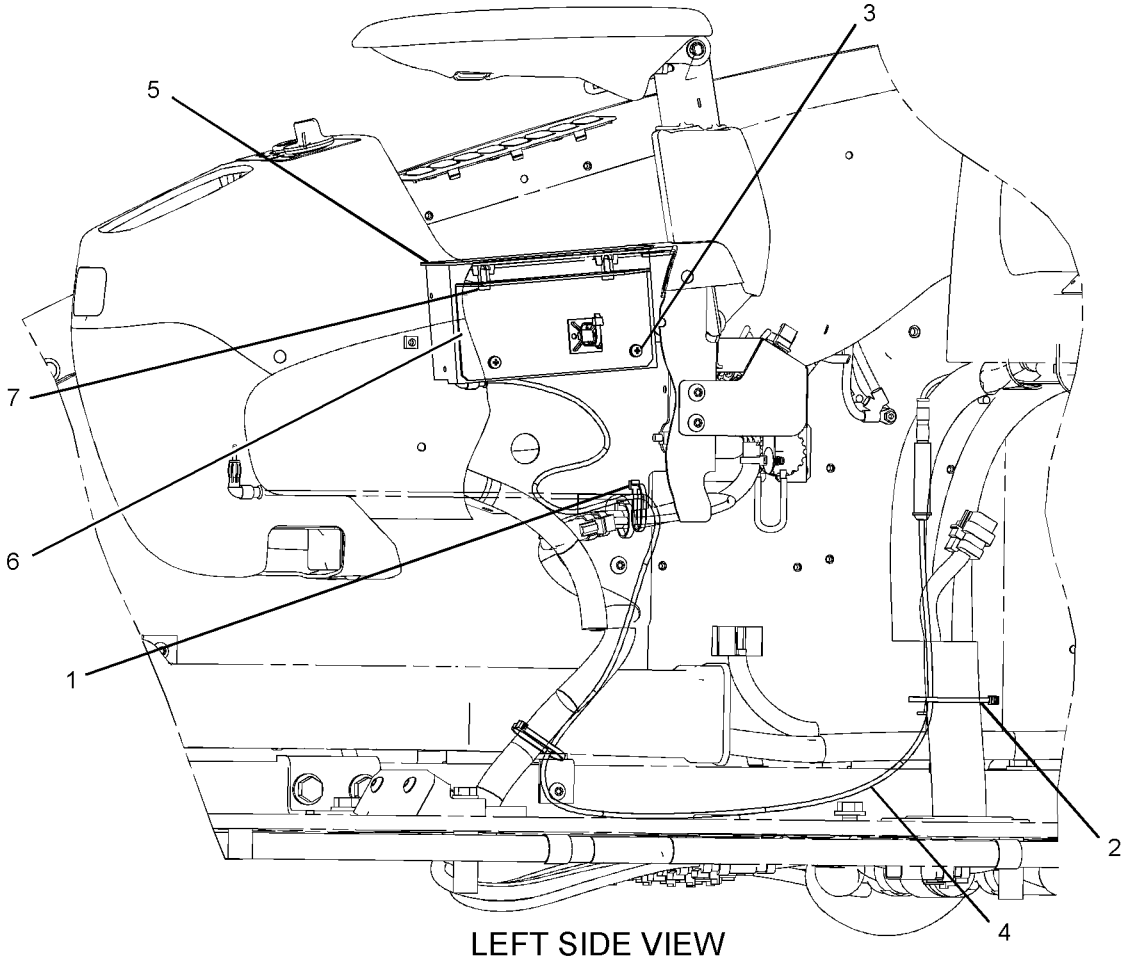

LEFT SIDE VIEW

GRAPHIC #1 **<END>** g01225602

OPERATOR STATION

263-9088 RADIO GP-COMMUNICATION—PRODUCT LINK 121SR

S/N: D3P1-UP; M4T1-UP
PART OF 309-5887 CONTROL & MTG GP-COMMUNICATION
AN ATTACHMENT

SMCS-733T **i03194501**

NOTE	PART NUMBER	QTY	PART NAME 1 2 3 4 5 6 (PRODUCT LEVEL)	SEE PAGE
	330-3408	1	SOFTWARE GP-COMMUNICATION (PRODUCT LINK 121SR)	

<END>

OPERATOR STATION

245-7881 SCREEN GP-SUN

S/N: D3P1-UP; M4T1-UP
PART OF 337-4125 OPTION AR-CAB
AN ATTACHMENT

SMCS-7165 **i02502996**

NOTE	REF NO	GRAPHIC REF	PART NUMBER	QTY	PART NAME 1 2 3 4 5 6 (PRODUCT LEVEL)	SEE PAGE
	1	1	**255-4410**	1	SCREEN AS (CAB)	
	2	1	**259-7214**	3	HOOK-RETAINER	
	3	1	**259-7215**	3	HOOK-RETAINER	
M	4	1	**099-0822**	6	BOLT-SOCKET HEAD (M5X0.8X10-MM)	

M-METRIC PART

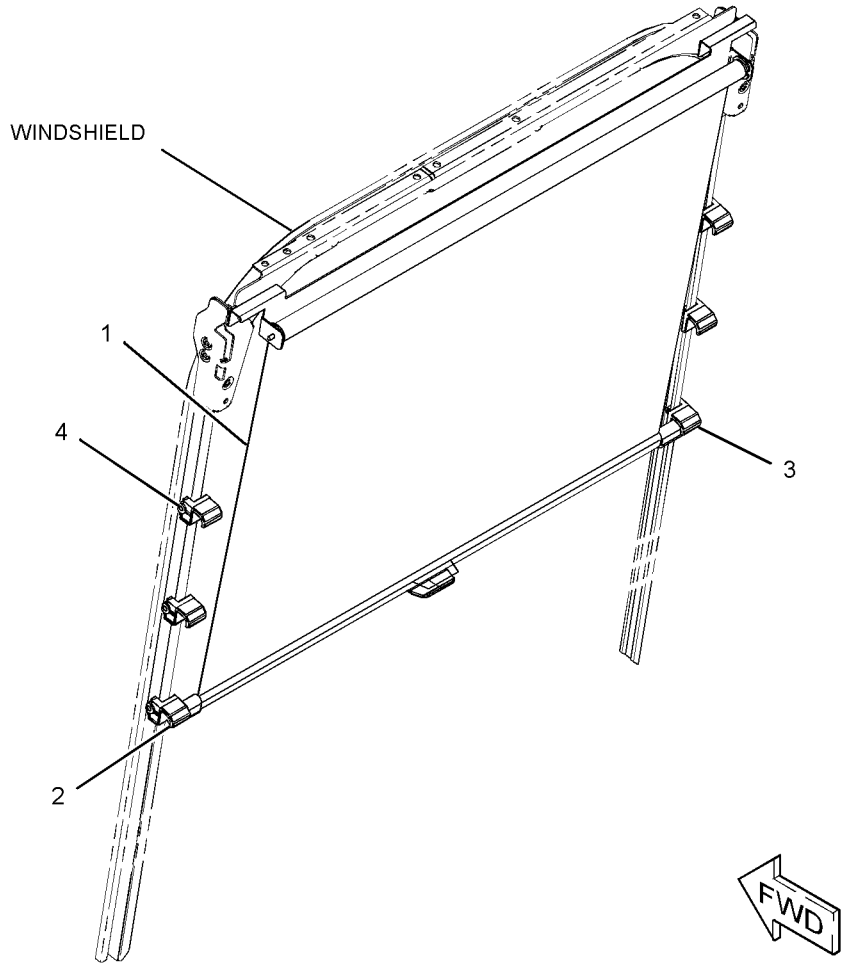

GRAPHIC #1 **<END>** g01177458

OPERATOR STATION

240-5003 SEAT & MOUNTING GP—HIGH BACK, TILT

S/N: D3P1-UP; M4T1-UP
PART OF 242-3122 SEAT GP
AN ATTACHMENT

SMCS-7312 **i02502634**

NOTE	REF NO	GRAPHIC REF	PART NUMBER	QTY	PART NAME 1 2 3 4 5 6 (PRODUCT LEVEL)	SEE PAGE
Y	1	1	*229-9089*	1	SEAT GP-SUSPENSION (HIGH BACK, TILT)	1050
M	2	1	**6V-8202**	4	BOLT-SOCKET HEAD (M8X1.25X16-MM)	

M-METRIC PART
Y-SEPARATE ILLUSTRATION

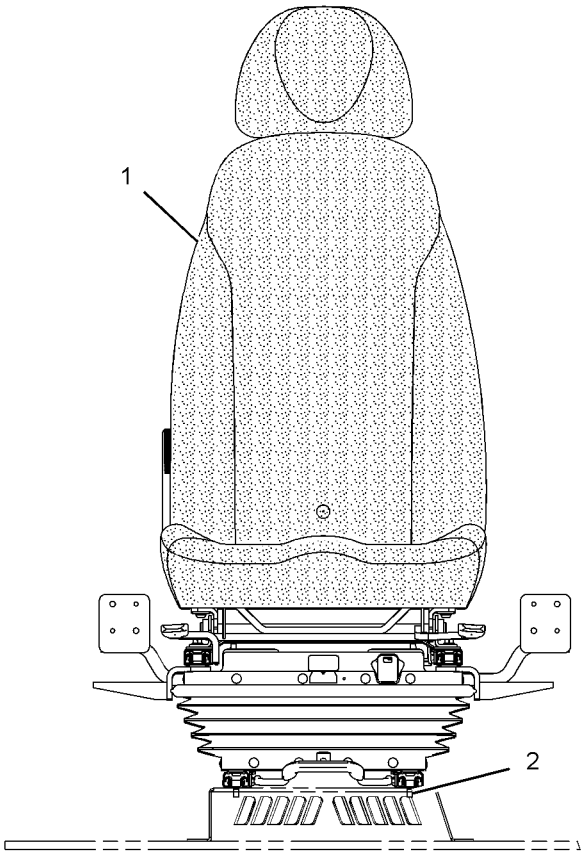

FRONT VIEW

GRAPHIC #1 **<END>** g01172584

OPERATOR STATION

327-6501 SEAT & MOUNTING GP—HIGH BACK, TILT

S/N: D3P1-UP; M4T1-UP
CLOTH
PART OF 345-2288 CAB AR, 337-4122 OPTION AR-CAB
AN ATTACHMENT

SMCS-7312 **i03485870**

NOTE	REF NO	GRAPHIC REF	PART NUMBER	QTY	PART NAME 1 2 3 4 5 6 (PRODUCT LEVEL)	SEE PAGE
Y	1	1	*327-6507*	1	SEAT GP-SUSPENSION (HIGH BACK, TILT)	1051
M	2	1	**6V-8202**	4	BOLT-SOCKET HEAD (M8X1.25X16-MM)	

M-METRIC PART
Y-SEPARATE ILLUSTRATION

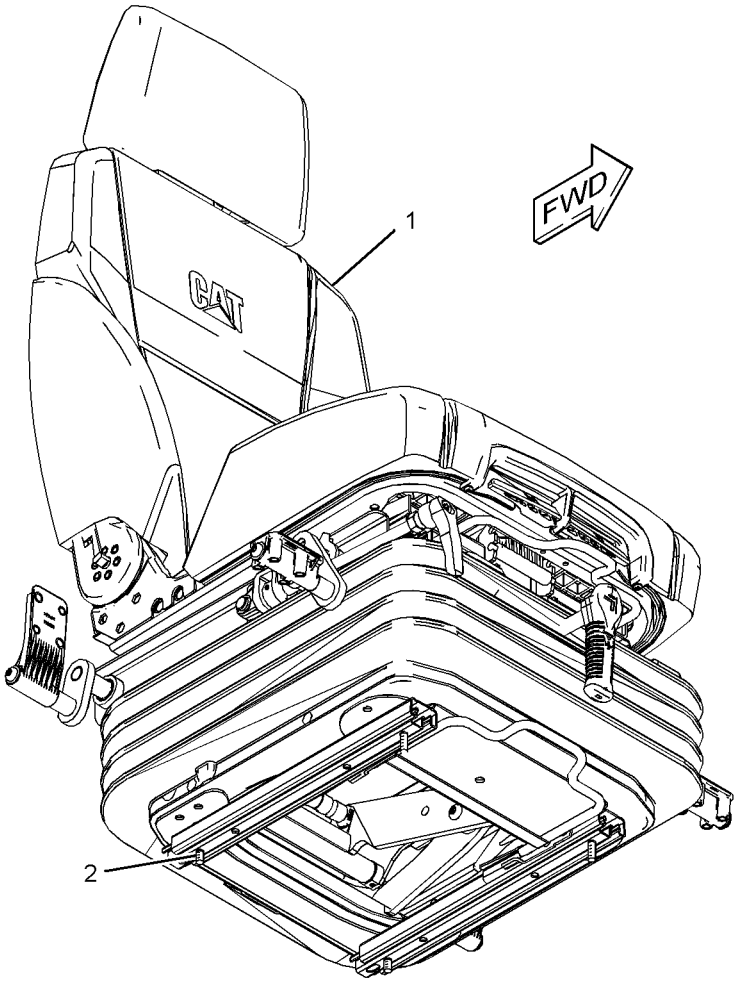

GRAPHIC #1 **<END>** g01803395

OPERATOR STATION

327-6503 SEAT & MOUNTING GP—HIGH BACK, WITH HEATER

S/N: D3P1-UP; M4T1-UP
CLOTH
PART OF 345-2287 CAB AR, 337-4125 OPTION AR-CAB
AN ATTACHMENT

SMCS-7312 **i03485871**

NOTE	REF NO	GRAPHIC REF	PART NUMBER	QTY	PART NAME 1 2 3 4 5 6 (PRODUCT LEVEL)	SEE PAGE
	1	1	**238-2211**	1	SWITCH AS-ROCKER (HEATED SEAT)	
		1	**167-3542**	1	CONNECTOR-RECEPTACLE	
		1	**167-3543**	4	TERMINAL (MALE)	
Y	2	1	*327-6509*	1	SEAT GP-SUSPENSION (HIGH BACK, WITH HEATER)	1052
M	3	1	**6V-8202**	4	BOLT-SOCKET HEAD (M8X1.25X16-MM)	

M-METRIC PART
Y-SEPARATE ILLUSTRATION

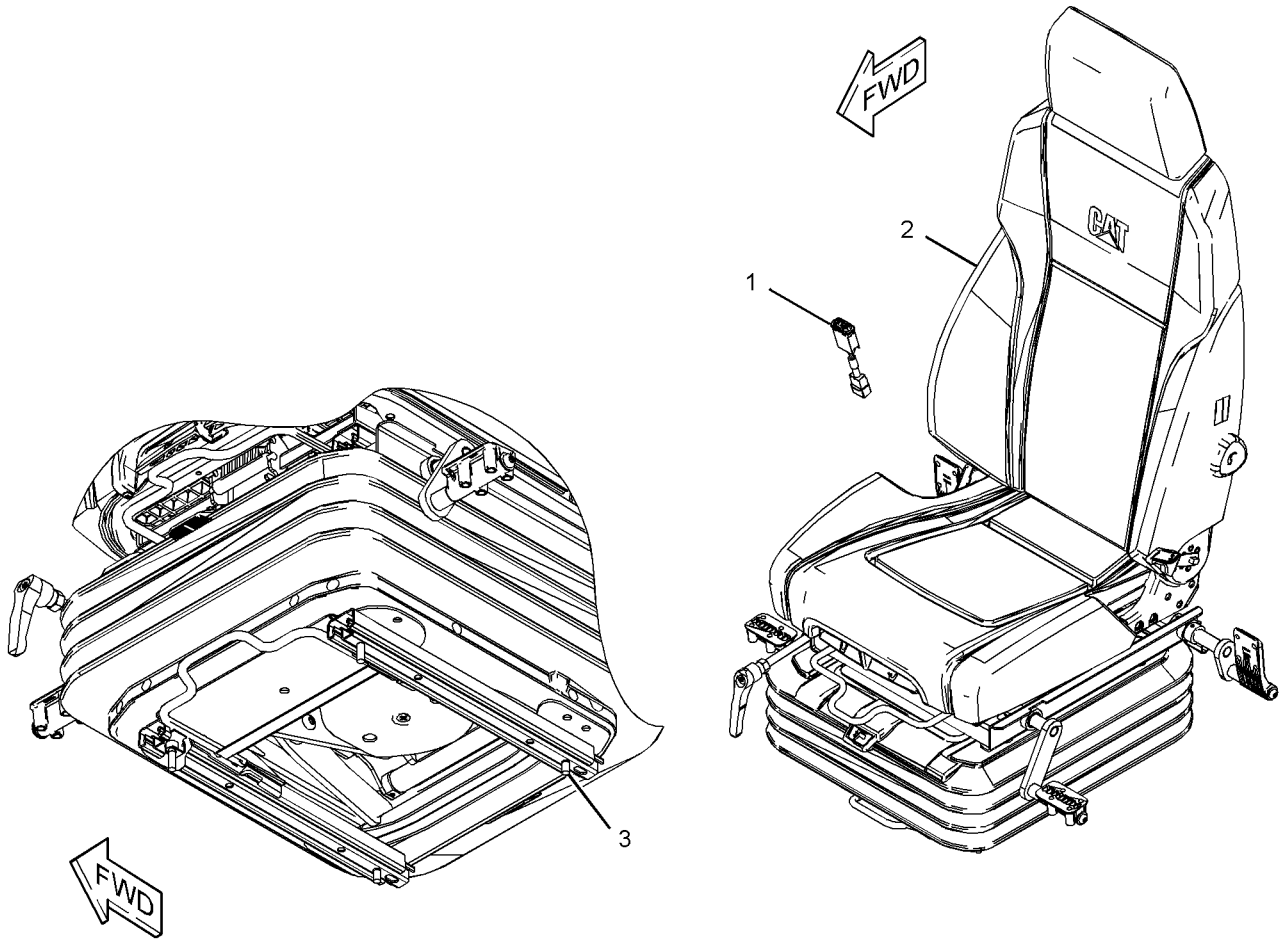

GRAPHIC #1 **<END>** g01796379

305-0466 SEAT BELT GP–RETRACTABLE, 76-MM

S/N: D3P1-UP; M4T1-UP

PART OF 345-2287, 345-2288 CAB AR, 337-4122, 337-4125 OPTION AR-CAB

AN ATTACHMENT

SMCS-7327 **i03728500**

NOTE	REF NO	GRAPHIC REF	PART NUMBER	QTY	PART NAME 1 2 3 4 5 6 (PRODUCT LEVEL)	SEE PAGE
	1	1	**327-6540**	1	SEAT BELT GP (RETRACTABLE, 76-MM)	

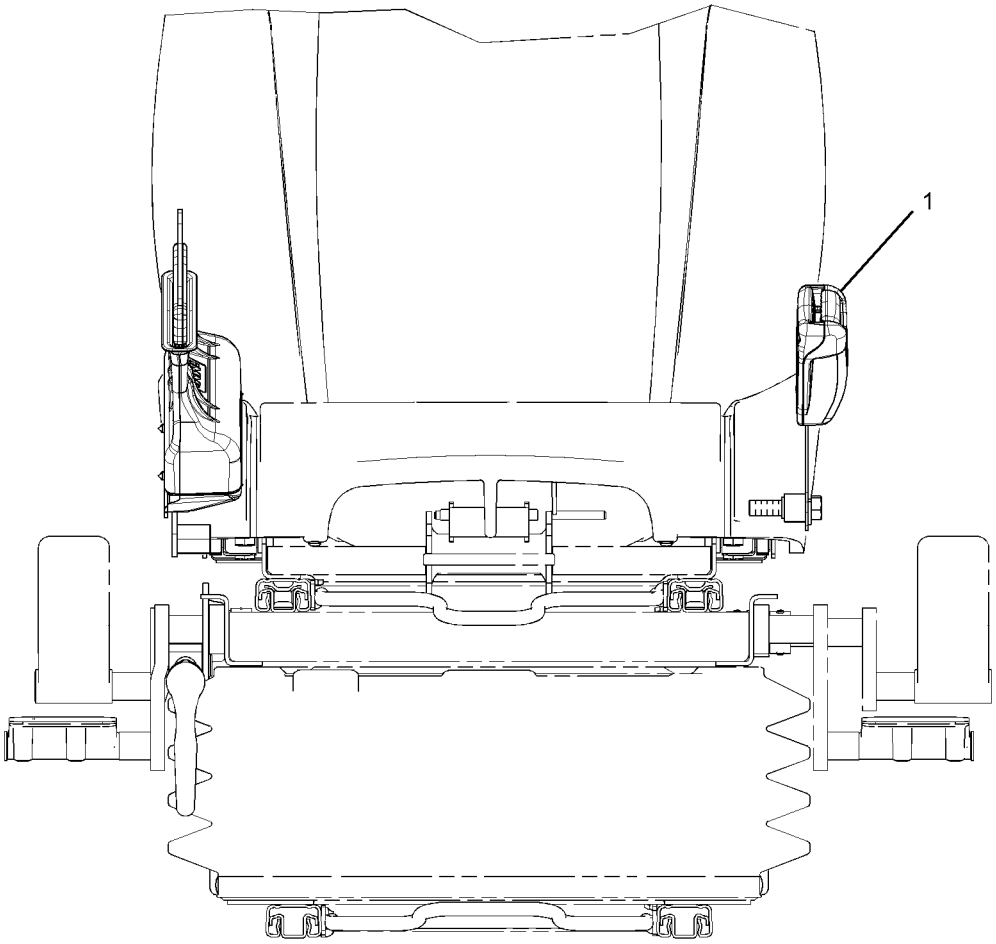

FRONT VIEW

GRAPHIC #1 **<END>** g01576875

OPERATOR STATION

229-9090 SEAT GP—HIGH BACK, TILT

S/N: D3P1-UP; M4T1-UP
PART OF 229-9089 SEAT GP-SUSPENSION
AN ATTACHMENT

SMCS-7312 **i03597962**

NOTE	REF NO	GRAPHIC REF	PART NUMBER	QTY	PART NAME 1 2 3 4 5 6 (PRODUCT LEVEL)	SEE PAGE
	1	1	**245-7884**	1	KIT-SEAT	
M	1A	1	**245-7898**	4	SCREW-BUTTON HEAD (M8X1.25X25-MM)	
	1B	1	**8T-4224**	4	WASHER-HARD (8.8X16X2-MM THK)	
	1C	1	**178-5659**	1	HANDLE (LUMBAR SUPPORT ADJUSTER)	
	1D	1	**229-9094**	1	HEADREST AS-SEAT	
	1E	1	**245-7887**	1	LEVER-CONTROL	
	2	1	**245-7888**	1	KIT-SEAT SUPPORT	
M	2A	1	**245-7898**	4	SCREW-BUTTON HEAD (M8X1.25X25-MM)	
	2B	1	**8T-4224**	8	WASHER-HARD (8.8X16X2-MM THK)	
M	2C	1	**5C-7261**	4	NUT (M8X1.25-THD)	
					J-PARTS INCLUDED IN BOTH SEAT KIT AND SEAT SUPPORT KIT	

M-METRIC PART

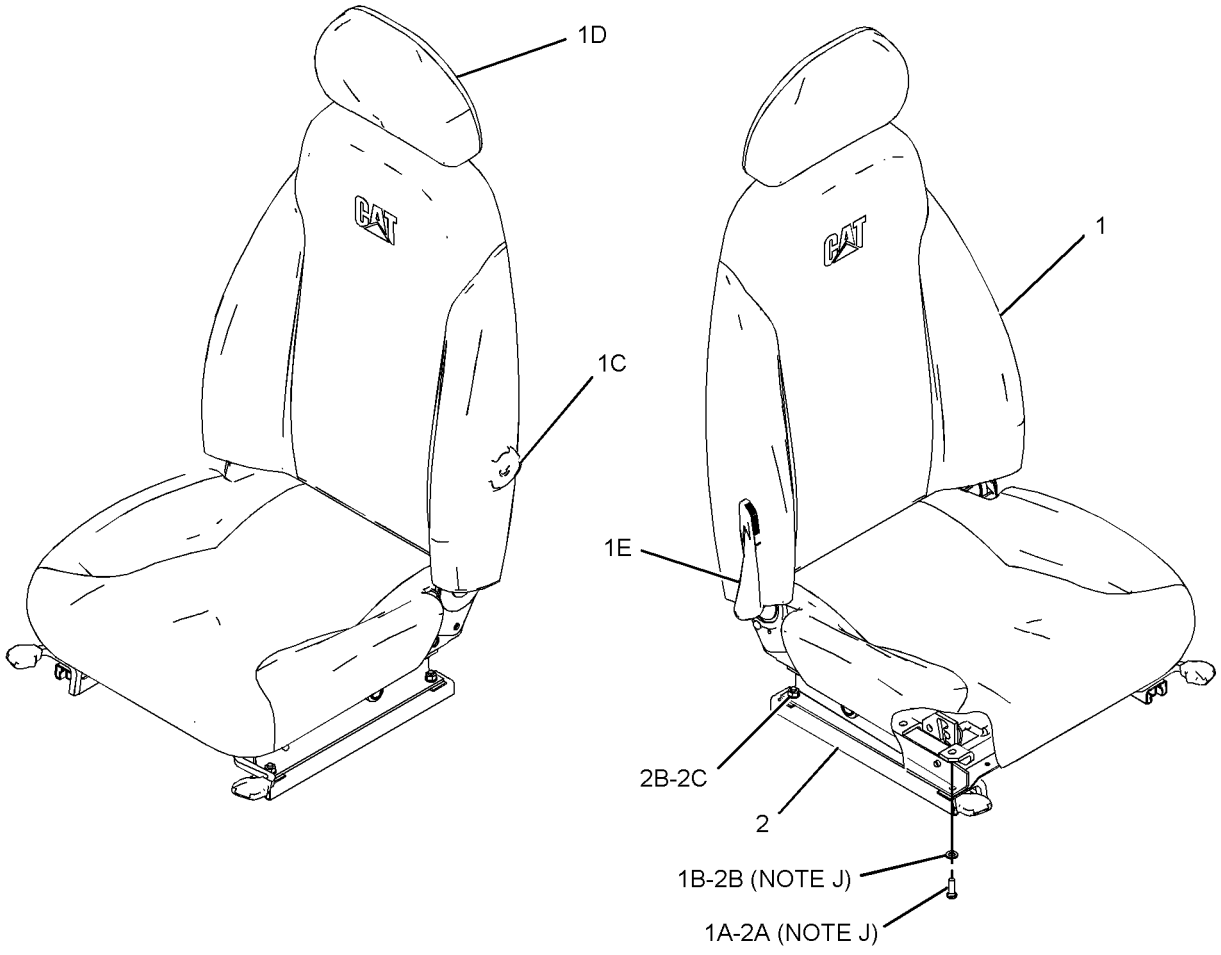

GRAPHIC #1 **<END>** g01118558

OPERATOR STATION

242-3122 SEAT GP—HIGH BACK, TILT

S/N: D3P1-UP; M4T1-UP

AN ATTACHMENT

SMCS-7312 **i02502551**

NOTE	PART NUMBER	QTY	PART NAME 1 2 3 4 5 6 (PRODUCT LEVEL)	SEE PAGE
Y	*240-5003*	1	SEAT & MOUNTING GP (HIGH BACK, TILT)	1042
	235-9020	1	SEAT BELT GP (RETRACTABLE, 3-IN)	
	8S-0934	1	LOCKNUT-FLANGE (7/16-20-THD)	
	8S-4723	1	BOLT (7/16-20X1.5-IN)	
	8S-4724	1	BOLT (7/16-20X2.25-IN)	

Y-SEPARATE ILLUSTRATION

<END>

OPERATOR STATION

327-6512 SEAT GP—HIGH BACK, TILT

S/N: D3P1-UP; M4T1-UP
PART OF 327-6507 SEAT GP-SUSPENSION
AN ATTACHMENT

SMCS-7312 **i03607597**

NOTE	REF NO	GRAPHIC REF	PART NUMBER	QTY	PART NAME 1 2 3 4 5 6 (PRODUCT LEVEL)	SEE PAGE
	1	1	**327-6515**	1	HEADREST AS-SEAT	
	2	1	**327-6642**	1	KIT-SEAT TILT	
		1	**333-4179**	2	BOLT-SHOULDER (M10X1.5X26.2-MM)	
		1	**333-4180**	4	SCREW-BUTTON HEAD (M8X1.25X20-MM)	
	3	1	**327-6643**	1	KIT-ADJUSTER (CUSHION POSITIONING)	
M		1	**9X-2616**	4	SCREW-SOCKET (M8X1.25X16-MM)	
		1	**316-8987**	2	BRACKET	
	4	1	**333-4160**	1	KIT-SEAT (HIGH BACK, MANUAL) (CLOTH, HIGH BACK)	
		1	**178-5659**	1	HANDLE (LUMBAR SUPPORT ADJUSTER)	
		1	**327-6640**	1	KIT-HANDLE (RECLINER)	
		1	**333-4179**	2	BOLT-SHOULDER (M10X1.5X26.2-MM)	

M-METRIC PART

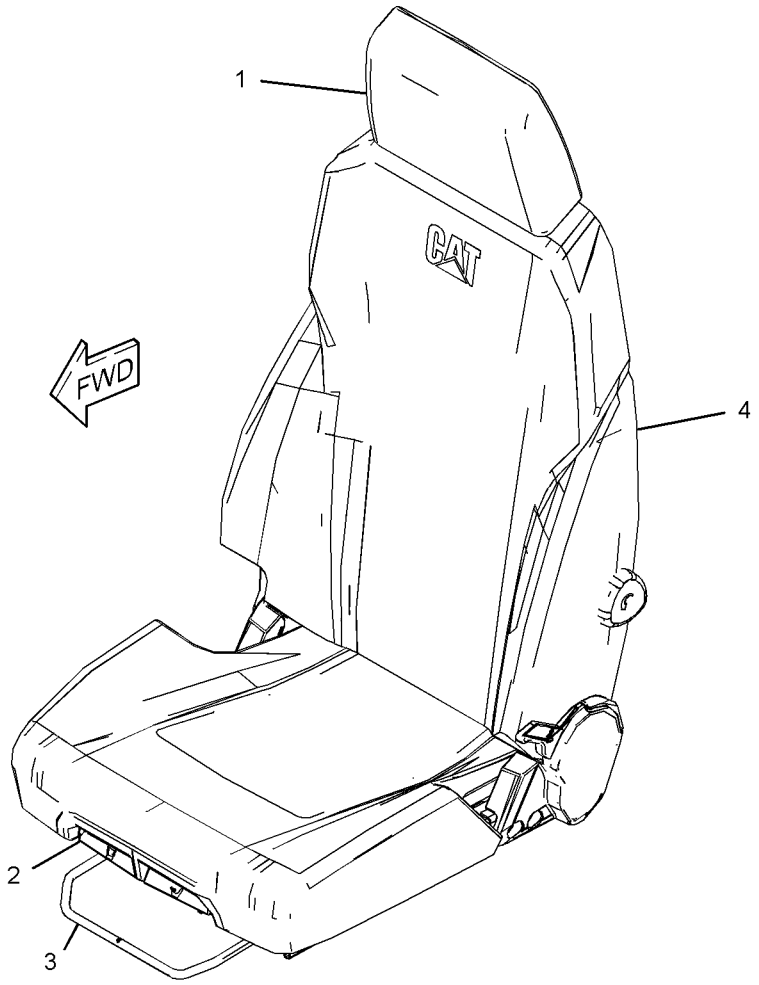

GRAPHIC #1 **<END>** g01842318

327-6513 SEAT GP–HIGH BACK, WITH HEATER

S/N: D3P1-UP; M4T1-UP

PART OF 327-6509 SEAT GP-SUSPENSION

AN ATTACHMENT

SMCS-7312 **i03710848**

NOTE	REF NO	GRAPHIC REF	PART NUMBER	QTY	PART NAME 1 2 3 4 5 6 (PRODUCT LEVEL)	SEE PAGE
	1	1	**327-6515**	1	HEADREST AS-SEAT	
	2	1	**327-6642**	1	KIT-SEAT TILT	
		1	**333-4179**	2	BOLT-SHOULDER (M10X1.5X26.2-MM)	
		1	**333-4180**	4	SCREW-BUTTON HEAD (M8X1.25X20-MM)	
	3	1	**327-6643**	1	KIT-ADJUSTER (CUSHION POSITIONING)	
M		1	**9X-2616**	4	SCREW-SOCKET (M8X1.25X16-MM)	
		1	**316-8987**	2	BRACKET	
	4	1	**333-4160**	1	KIT-SEAT (HIGH BACK, MANUAL)	
	4A	1	**178-5659**	1	HANDLE (LUMBAR SUPPORT ADJUSTER)	
	4B	1	**327-6640**	1	KIT-HANDLE (RECLINER)	
		1	**333-4179**	2	BOLT-SHOULDER (M10X1.5X26.2-MM)	

M-METRIC PART

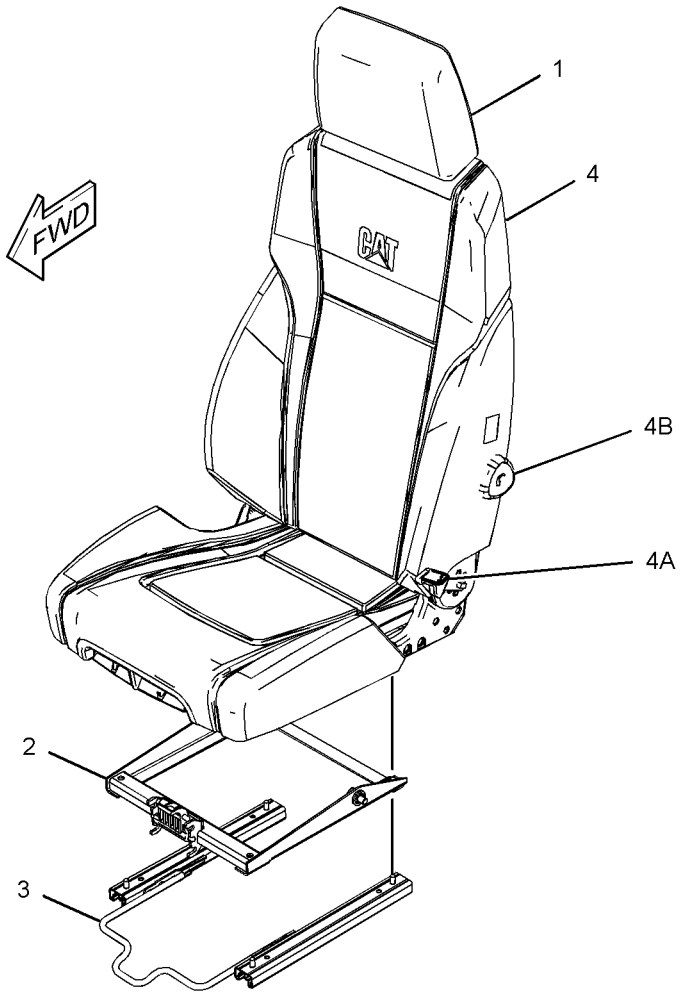

GRAPHIC #1

<END>

g01997973

OPERATOR STATION

229-9089 SEAT GP-SUSPENSION—HIGH BACK, TILT

S/N: D3P1-UP; M4T1-UP
PART OF 240-5003 SEAT & MOUNTING GP
AN ATTACHMENT

SMCS-7324, 7336 **i03423842**

NOTE	REF NO	GRAPHIC REF	PART NUMBER	QTY	PART NAME 1 2 3 4 5 6 (PRODUCT LEVEL)	SEE PAGE
Y	1	1	**229-9077**	2	SUSPENSION GP-SEAT (MECHANICAL)	1055
Y	2	1	**229-9090**	1	SEAT GP (HIGH BACK, TILT)	1046
M	3	1	**5C-7261**	4	NUT (M8X1.25-THD)	
	4	1	**8T-4224**	4	WASHER-HARD (8.8X16X2-MM THK)	

M-METRIC PART
Y-SEPARATE ILLUSTRATION

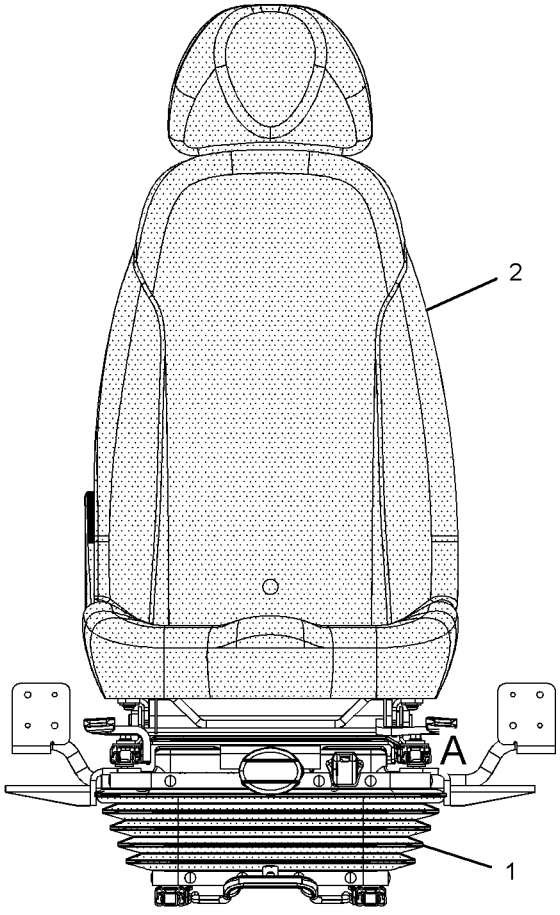

FRONT VIEW

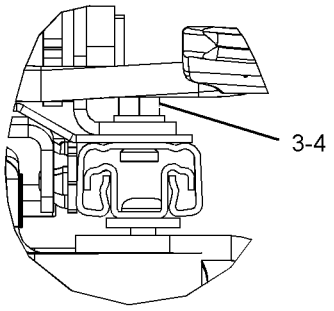

VIEW OF AREA A

GRAPHIC #1 **<END>** g01172597

OPERATOR STATION

327-6507 SEAT GP-SUSPENSION—HIGH BACK, TILT

S/N: D3P1-UP; M4T1-UP
PART OF 327-6501 SEAT & MOUNTING GP
AN ATTACHMENT

SMCS-7324, 7336 **i03485884**

NOTE	REF NO	GRAPHIC REF	PART NUMBER	QTY	PART NAME 1 2 3 4 5 6 (PRODUCT LEVEL)	SEE PAGE
	1	1	**316-8987**	2	BRACKET	
Y	2	1	**327-6512**	1	SEAT GP (HIGH BACK, TILT)	1048
Y	3	1	**327-6520**	1	SUSPENSION GP-SEAT (MECHANICAL)	1057
M	4	1	**5A-3604**	4	BOLT-SOCKET HEAD (M8X1.25X25-MM)	

M-METRIC PART
Y-SEPARATE ILLUSTRATION

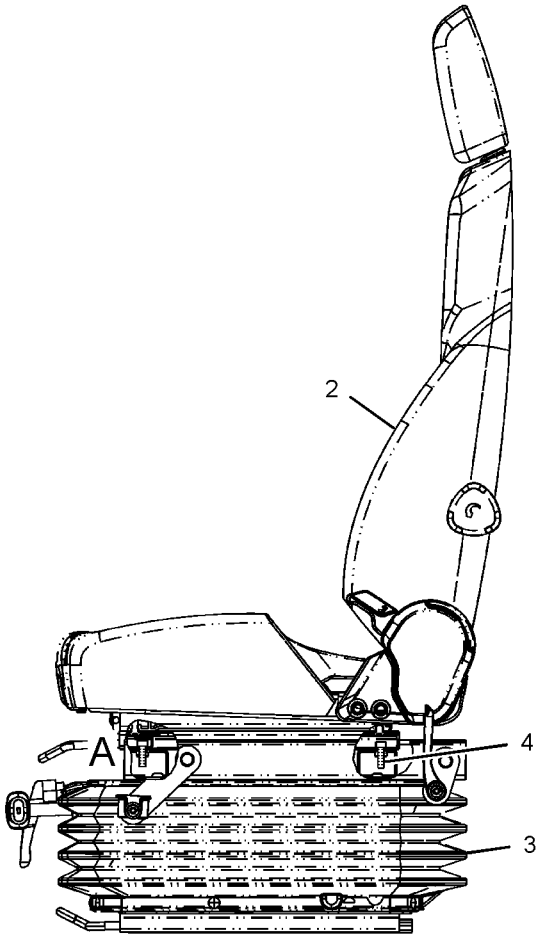

LEFT SIDE VIEW

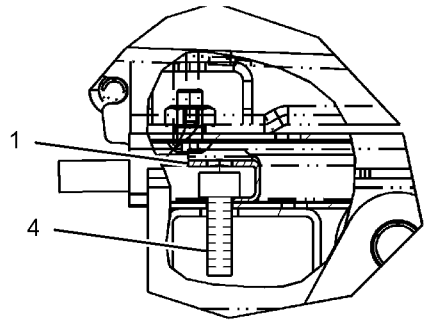

VIEW OF AREA A

GRAPHIC #1 **<END>** g01794435

OPERATOR STATION

327-6509 SEAT GP-SUSPENSION—HIGH BACK, WITH HEATER

S/N: D3P1-UP; M4T1-UP
PART OF 327-6503 SEAT & MOUNTING GP
AN ATTACHMENT

SMCS-7324, 7336 **i03485887**

NOTE	REF NO	GRAPHIC REF	PART NUMBER	QTY	PART NAME 1 2 3 4 5 6 (PRODUCT LEVEL)	SEE PAGE
	1	1	**7I-2673**	1	STRAP-CABLE	
	2	1	**316-8987**	2	BRACKET	
Y	3	1	**327-6513**	1	SEAT GP (HIGH BACK, WITH HEATER)	1049
Y	4	1	**327-6521**	1	SUSPENSION GP-SEAT (AIR)	1058
M	5	1	**5A-3604**	4	BOLT-SOCKET HEAD (M8X1.25X25-MM)	

M-METRIC PART
Y-SEPARATE ILLUSTRATION

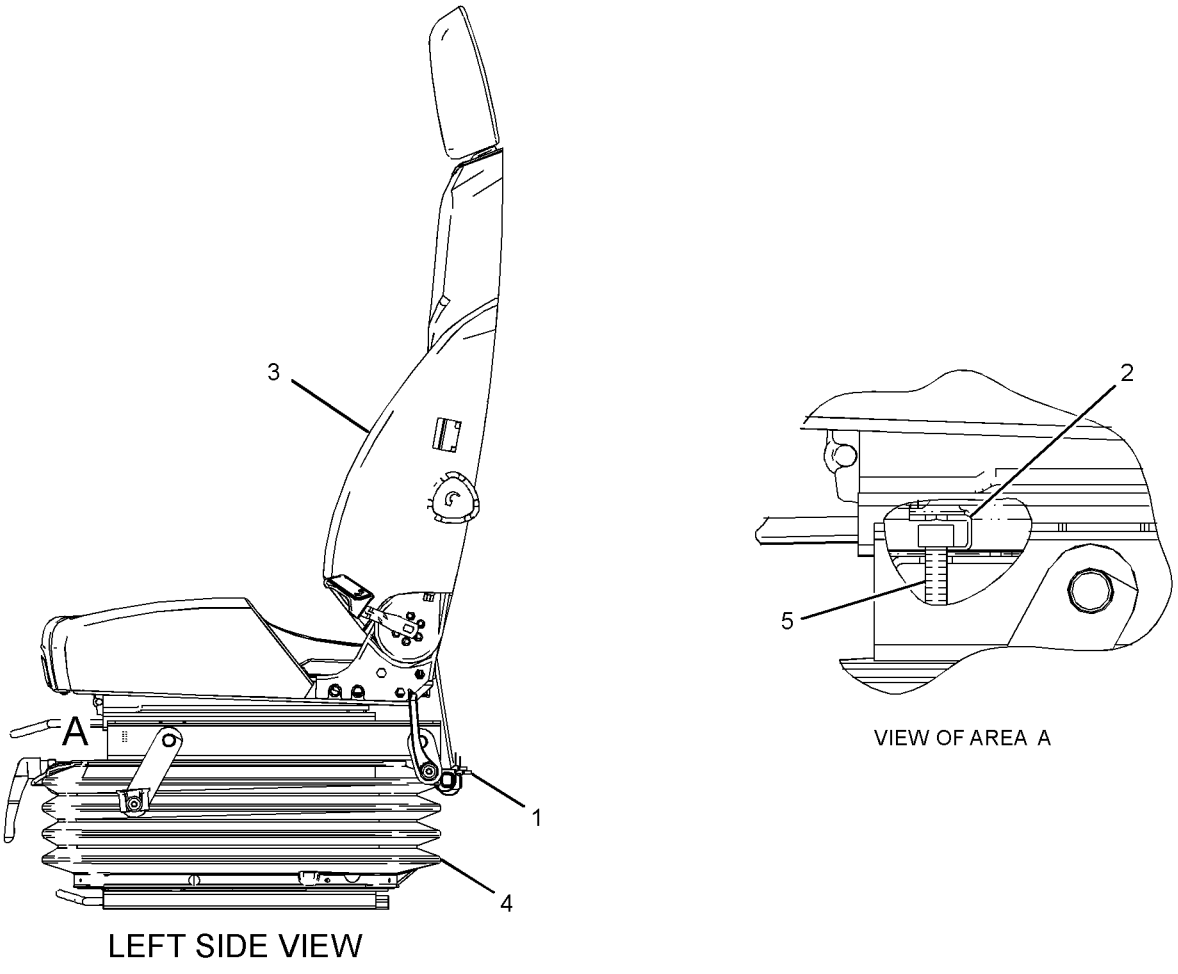

LEFT SIDE VIEW

GRAPHIC #1 **<END>** g01810781

OPERATOR STATION

319-4354 SERVICE GP-MONITOR

S/N: D3P1-UP; M4T1-UP
PART OF 221-8813 MONITOR & MTG GP-OPERATOR
ALSO AN ATTACHMENT

SMCS-7610 **i03632415**

NOTE	REF NO	GRAPHIC REF	PART NUMBER	QTY	PART NAME 1 2 3 4 5 6 (PRODUCT LEVEL)	SEE PAGE
Y	1	1	**319-4353**	1	MONITOR GP-OPERATOR	1030
	2	1	**319-4357**	1	SOFTWARE GP-MONITOR	

Y-SEPARATE ILLUSTRATION

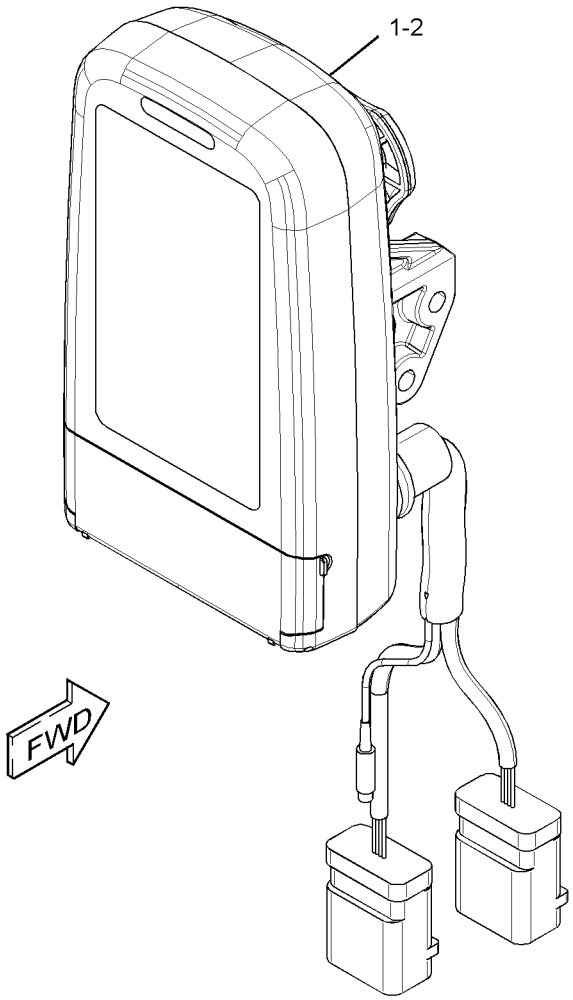

GRAPHIC #1 **<END>** g01677217

OPERATOR STATION

327-6523 SUPPORT GP-SEAT

S/N: D3P1-UP; M4T1-UP

PART OF 229-9072 OPERATOR AR

SMCS-7321 **i03722760**

NOTE	REF NO	GRAPHIC REF	PART NUMBER	QTY	PART NAME 1 2 3 4 5 6 (PRODUCT LEVEL)	SEE PAGE
	1	1	**327-6538**	1	SUPPORT AS-SEAT	
	2	1	**8T-4121**	4	WASHER-HARD (11X21X2.5-MM THK)	
M	3	1	**8T-4191**	4	BOLT (M10X1.5X16-MM)	

M-METRIC PART

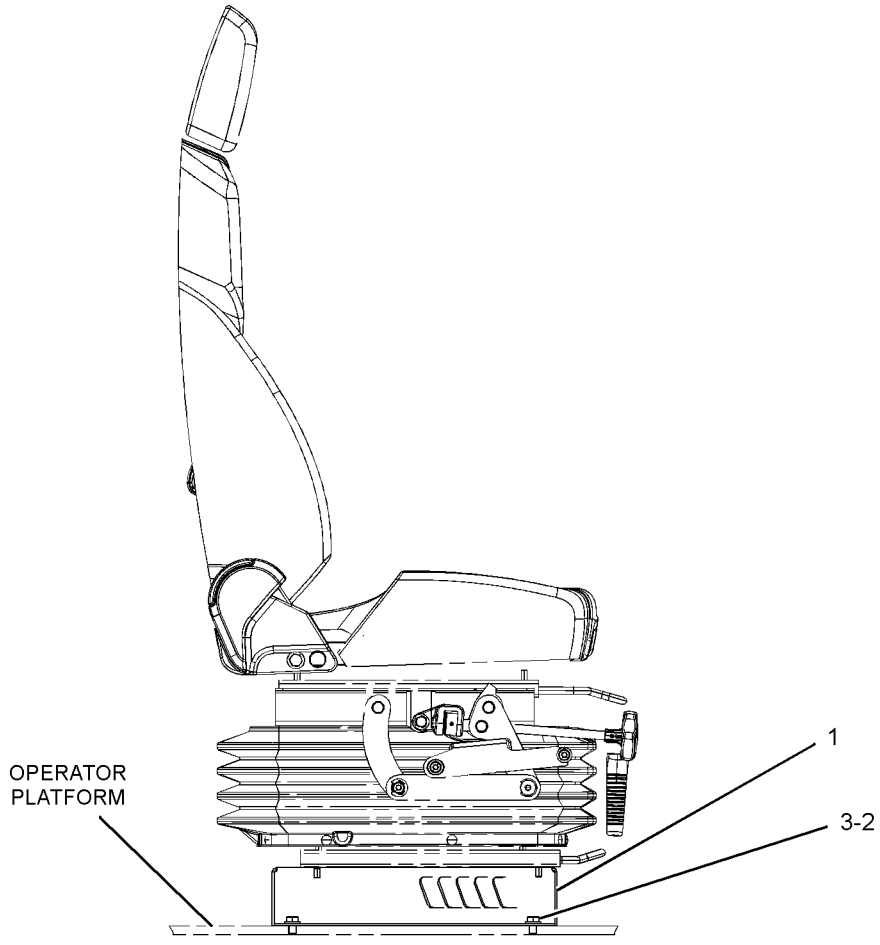

RIGHT SIDE VIEW

GRAPHIC #1

<END>

g01809475

229-9077 SUSPENSION GP-SEAT—MECHANICAL

S/N: D3P1-UP; M4T1-UP
PART OF 229-9089 SEAT GP-SUSPENSION
AN ATTACHMENT

SMCS-7324 **i02502941**

NOTE	REF NO	GRAPHIC REF	PART NUMBER	QTY	PART NAME 1 2 3 4 5 6 (PRODUCT LEVEL)	SEE PAGE
	1	1	**242-8768**	1	COVER AS	
		1	**147-4921**	1	KIT-CLIP (SEAT)	
	2	1	**245-7889**	1	ADJUSTER GP-SEAT (UPPER SLIDE)	
M		1	**5C-7261**	8	NUT (M8X1.25-THD)	
		1	**8T-4224**	8	WASHER-HARD (8.8X16X2-MM THK)	
		1	**245-7897**	4	PLATE	
M		1	**245-7899**	4	SCREW-BUTTON HEAD (M8X1.25X30-MM)	
	3	1	**245-7890**	1	BRACKET GP-MOUNTING (SUSPENSION SEAT)	
M		1	**5C-7261**	4	NUT (M8X1.25-THD)	
		1	**8T-4224**	4	WASHER-HARD (8.8X16X2-MM THK)	
		1	**245-7897**	4	PLATE	
M		1	**245-7899**	4	SCREW-BUTTON HEAD (M8X1.25X30-MM)	
Y	4	1	**245-7892**	1	SUSPENSION GP-SEAT (MECHANICAL)	1056
	5	1	**245-7895**	1	KIT-CLIP (INCLUDES 28-CLIPS)	
Y	6	1	**245-7896**	1	ADJUSTER GP-SEAT (LOWER SLIDE)	922

M-METRIC PART
Y-SEPARATE ILLUSTRATION

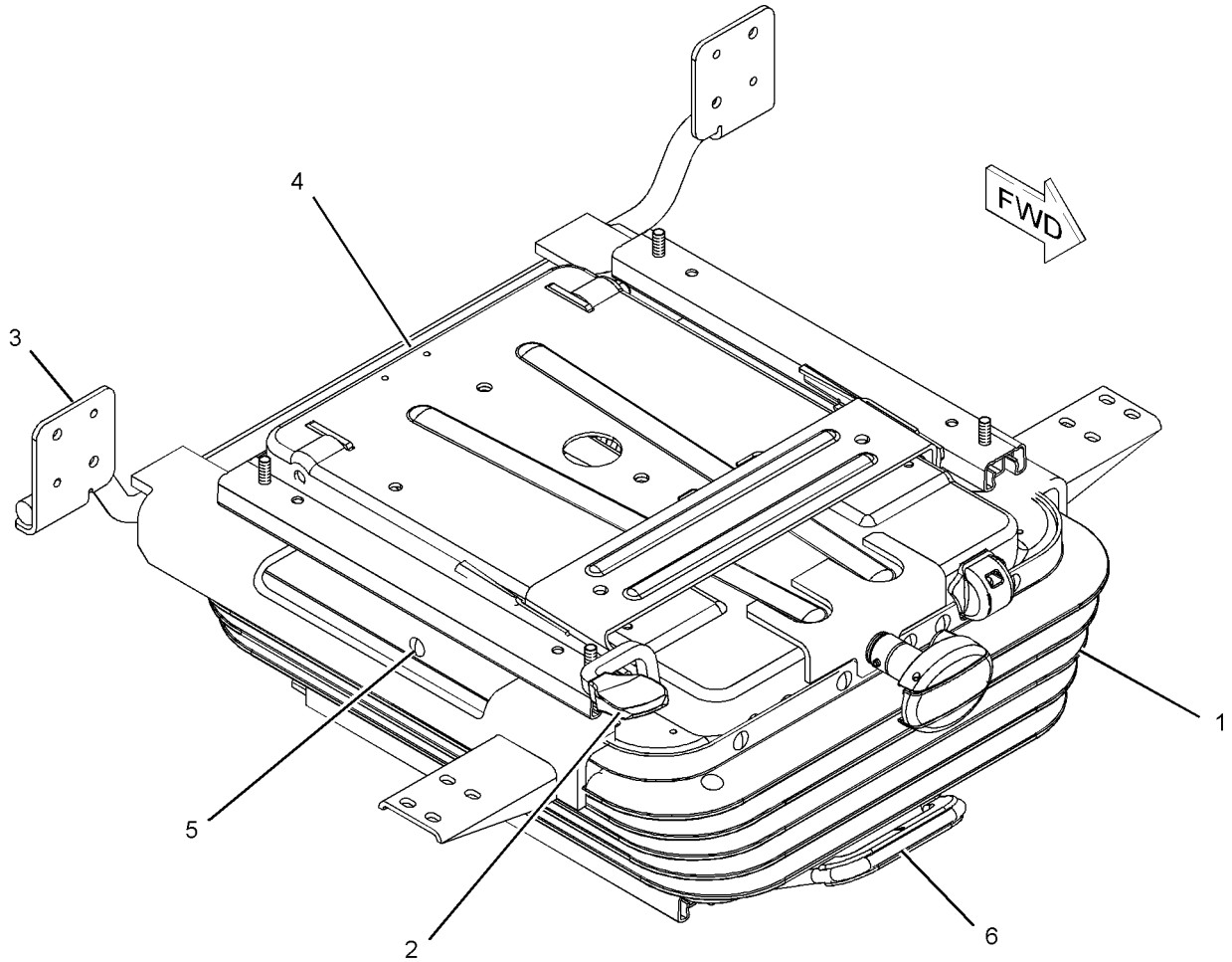

GRAPHIC #1 **<END>** g01087842

OPERATOR STATION

245-7892 SUSPENSION GP-SEAT

S/N: D3P1-UP; M4T1-UP
PART OF 229-9077 SUSPENSION GP-SEAT
AN ATTACHMENT

SMCS-7324 **i03597969**

NOTE	REF NO	GRAPHIC REF	PART NUMBER	QTY	PART NAME 1 2 3 4 5 6 (PRODUCT LEVEL)	SEE PAGE
M	1	1	**198-3899**	2	SCREW-BUTTON HEAD (M8X1.25X20-MM)	
	2	1	**209-4280**	1	CYLINDER-DAMPER	
	3	1	**245-7897**	8	PLATE	
M	4	1	**245-7898**	2	SCREW-BUTTON HEAD (M8X1.25X25-MM)	
M	5	1	**245-7899**	4	SCREW-BUTTON HEAD (M8X1.25X30-MM)	
M	6	1	**5C-7261**	8	NUT (M8X1.25-THD)	
	7	1	**8T-4224**	8	WASHER-HARD (8.8X16X2-MM THK)	

M-METRIC PART

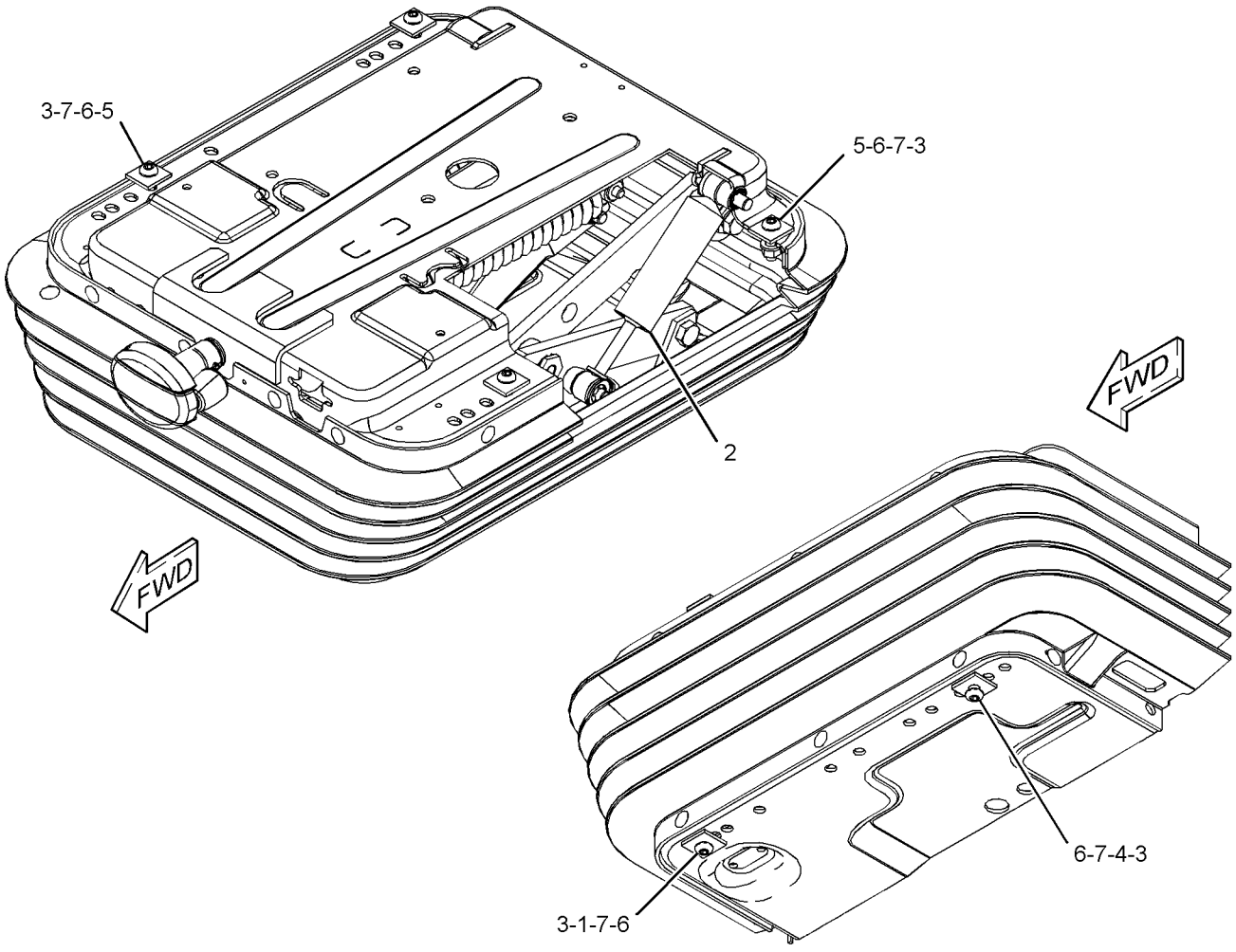

GRAPHIC #1 **<END>** g01920616

OPERATOR STATION

327-6520 SUSPENSION GP-SEAT—MECHANICAL

S/N: D3P1-UP; M4T1-UP
PART OF 327-6507 SEAT GP-SUSPENSION
AN ATTACHMENT

SMCS-7324 **i03485929**

NOTE	REF NO	GRAPHIC REF	PART NUMBER	QTY	PART NAME 1 2 3 4 5 6 (PRODUCT LEVEL)	SEE PAGE
	1	1	**327-6644**	1	KIT-BRACKET (CONSOLE RAISE, LOWER)	
M		1	**7Y-7394**	4	SCREW-BUTTON HEAD (M8X1.25X25-MM)	
Y	2	1	**327-6645**	1	KIT-SEAT SUSPENSION (MECHANICAL)	1017
	3	1	**327-6648**	1	KIT-ADJUSTER (SEAT POSITION)	
		1	**333-4180**	6	SCREW-BUTTON HEAD (M8X1.25X20-MM)	

M-METRIC PART
Y-SEPARATE ILLUSTRATION

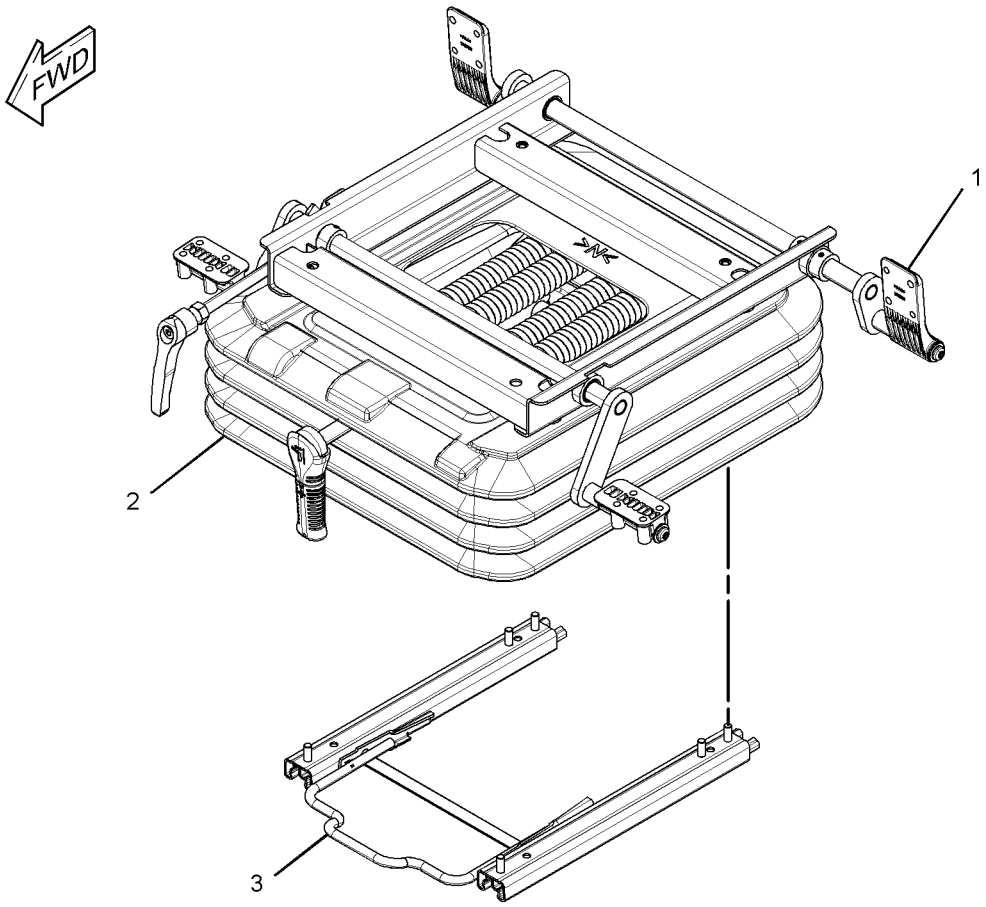

GRAPHIC #1 **<END>** g01637856

OPERATOR STATION

327-6521 SUSPENSION GP-SEAT–AIR

S/N: D3P1-UP; M4T1-UP
PART OF 327-6509 SEAT GP-SUSPENSION
AN ATTACHMENT

SMCS-7324 **i03485932**

NOTE	REF NO	GRAPHIC REF	PART NUMBER	QTY	PART NAME 1 2 3 4 5 6 (PRODUCT LEVEL)	SEE PAGE
	1	1	**7I-2673**	1	STRAP-CABLE	
	2	1	**327-6644**	1	KIT-BRACKET (CONSOLE RAISE, LOWER)	
M		1	**7Y-7394**	4	SCREW-BUTTON HEAD (M8X1.25X25-MM)	
	3	1	**327-6648**	1	KIT-ADJUSTER (SEAT POSITION)	
		1	**333-4180**	6	SCREW-BUTTON HEAD (M8X1.25X20-MM)	
Y	4	1	**333-4157**	1	KIT-SEAT SUSPENSION (AIR)	1018

M-METRIC PART
Y-SEPARATE ILLUSTRATION

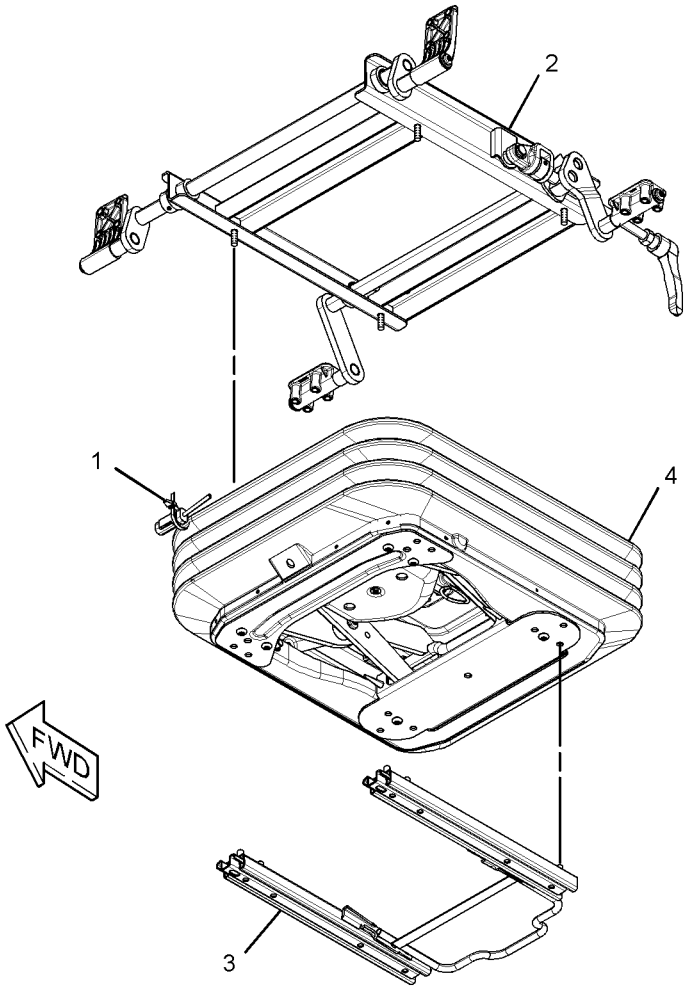

GRAPHIC #1 **<END>** g01637857

OPERATOR STATION

161-3751 VISOR GP-CAB–SUN

S/N: D3P1-UP; M4T1-UP

AN ATTACHMENT

SMCS-7301 **i02912370**

NOTE	REF NO	GRAPHIC REF	PART NUMBER	QTY	PART NAME 1 2 3 4 5 6 (PRODUCT LEVEL)	SEE PAGE
	1	1	**164-0639**	1	BRACKET AS	
	2	1	**210-5827**	1	PLATE	
	3	1	**210-5828**	1	PLATE	
	4	1	**210-5829**	2	BOLT	
	5	1	**210-5834**	1	BRACKET AS	
	6	1	**210-5836**	1	VISOR	
	7	1	**210-5837**	2	STRIP	
	8	1	**210-5838**	4	PACKING	
	9	1	**8H-3481**	2	LOCKWASHER	
M	10	1	**9X-2044**	8	SCREW-TRUSS HEAD (M6X1X16-MM)	
M	11	1	**9X-2046**	2	SCREW-TRUSS HEAD (M6X1X35-MM)	
	12	1	**9X-8256**	2	WASHER (6.6X12X2-MM THK)	

M-METRIC PART

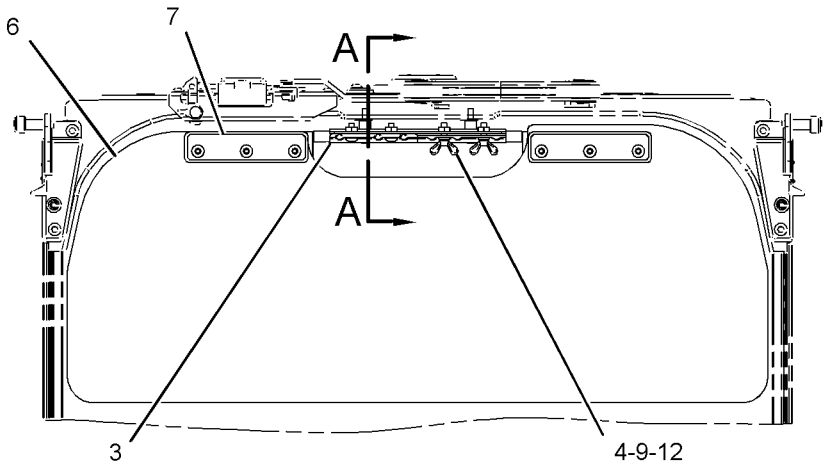

FRONT VIEW

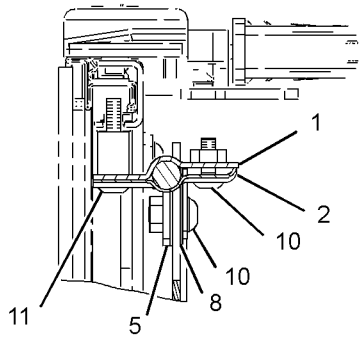

SECTION A-A

GRAPHIC #1 **<END>** g01447299

OPERATOR STATION

161-3750 VISOR GP-PROTECTION—RAIN

S/N: D3P1-UP; M4T1-UP

AN ATTACHMENT

SMCS-7340 **i03120334**

NOTE	REF NO	GRAPHIC REF	PART NUMBER	QTY	PART NAME 1 2 3 4 5 6 (PRODUCT LEVEL)	SEE PAGE
M	1	1	**4I-5049**	8	NUT-SPACER (M6X1-THD)	
	2	1	**164-0618**	2	BRACKET	
	3	1	**164-0619**	1	BRACKET	
	4	1	**164-0620**	1	BRACKET	
	5	1	**327-6581**	1	VISOR	
M	6	1	**6V-7357**	8	BOLT (M6X1X25-MM)	
M	7	1	**8T-4189**	4	BOLT (M8X1.25X20-MM)	
	8	1	**8T-4224**	4	WASHER-HARD (8.8X16X2-MM THK)	
	9	1	**9X-8256**	8	WASHER (6.6X12X2-MM THK)	
D	10	1	**5P-8292**		SEAL (1.4-M)	

D-ORDER BY THE METER
M-METRIC PART

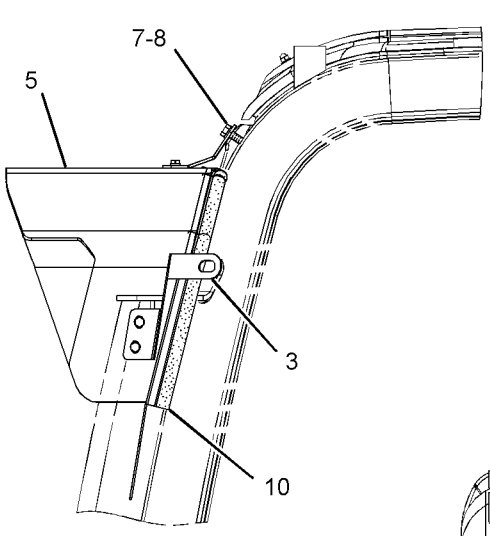

LEFT SIDE VIEW

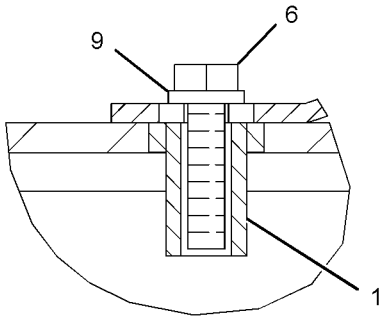

SECTION A-A

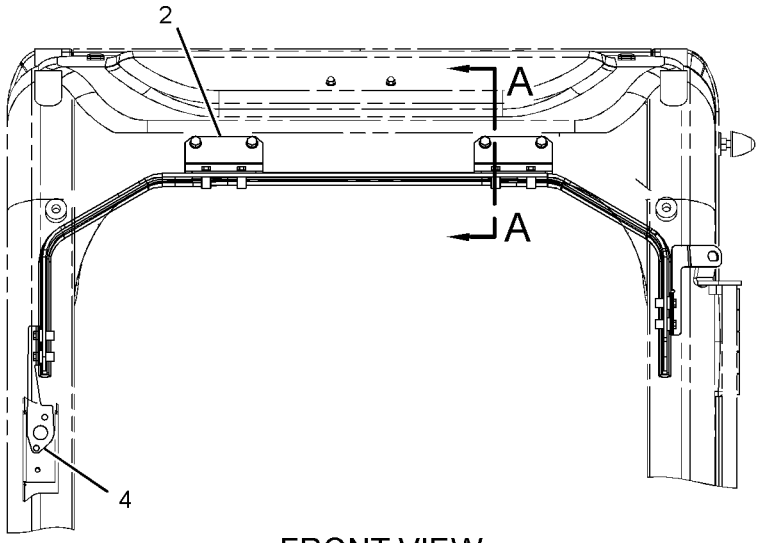

FRONT VIEW

GRAPHIC #1 **<END>** g01592616

OPERATOR STATION

229-9070 WASHER GP-WINDOW

S/N: D3P1-UP; M4T1-UP
PART OF 337-4122 OPTION AR-CAB
CANNOT BE USED WITH 229-9086—PAGE 1075
AN ATTACHMENT

SMCS-7306 **i02593861**

NOTE	REF NO	GRAPHIC REF	PART NUMBER	QTY	PART NAME 1 2 3 4 5 6 (PRODUCT LEVEL)	SEE PAGE
	1	1	**7Y-3474**	1	VALVE AS-CHECK (WINDOW WASHER)	
	2	1	**163-6795**	2	STRAP-CABLE	
	3	1	**176-1931**	1	TANK AS-WINDOW WASHER	
		1	**5C-8138**	1	GROMMET	
		1	**7T-8890**	1	PUMP AS-WASHER	
		1	**178-5431**	1	CAP AS (WINDOW WASHER)	
		1	**3W-6399**		PACKING	
	4	1	**235-9012**	1	SUPPORT AS	
M	5	1	**8T-4970**	2	BOLT (M6X1X14-MM)	
	6	1	**9X-8256**	2	WASHER (6.6X12X2-MM THK)	
CE	7	1	**144-0195**		HOSE (13-CM)	
	8	1	**3S-2093**	1	STRAP-CABLE	

C-CHANGE FROM PREVIOUS TYPE
E-ORDER BY THE CENTIMETER
M-METRIC PART

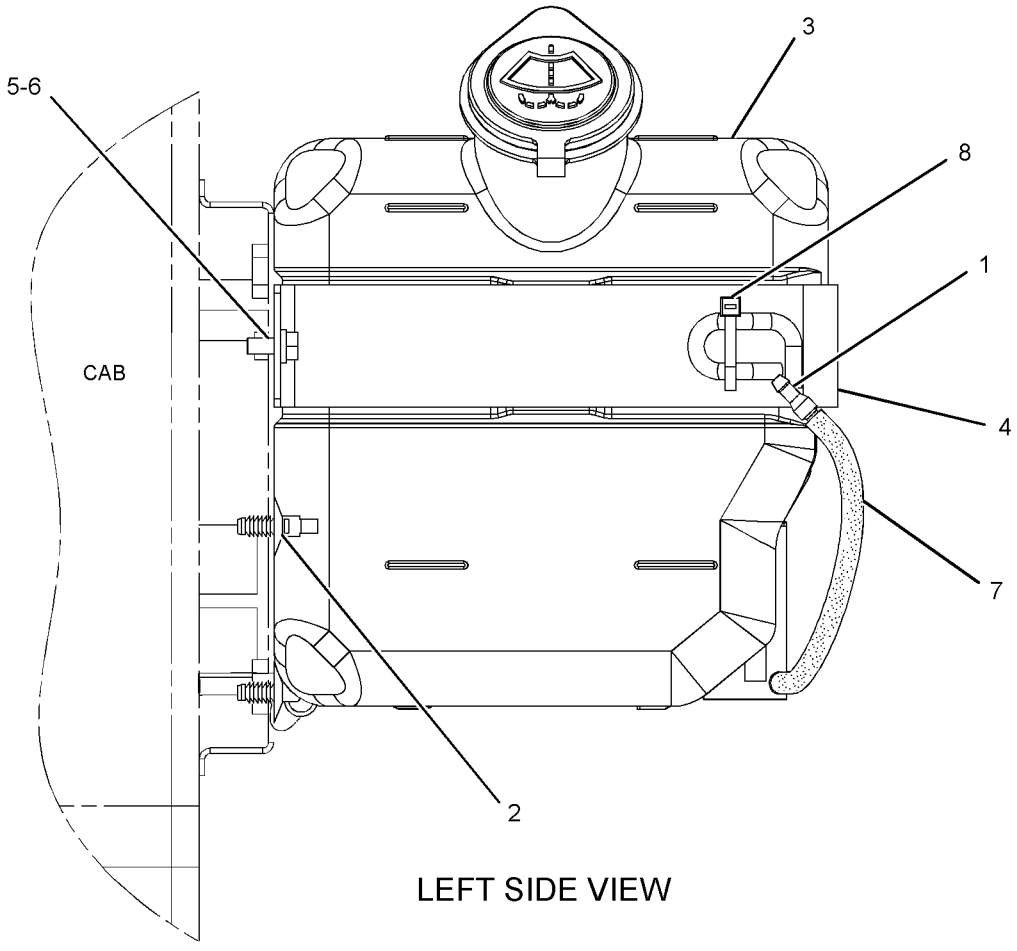

LEFT SIDE VIEW

GRAPHIC #1 **<END>** g01307642

OPERATOR STATION

229-9088 WASHER GP-WINDOW—LOWER

S/N: D3P1-UP; M4T1-UP
PART OF 229-9086 WIPER AR-WINDOW
AN ATTACHMENT

SMCS-7306 **i02818914**

NOTE	REF NO	GRAPHIC REF	PART NUMBER	QTY	PART NAME 1 2 3 4 5 6 (PRODUCT LEVEL)	SEE PAGE
	1	1	**3S-2093**	2	STRAP-CABLE	
	2	1	**7Y-3474**	1	VALVE AS-CHECK (WINDOW WASHER)	
	3	1	**163-6795**	2	STRAP-CABLE	
	4	1	**170-9492**	1	PLATE	
E	5	1	**144-0195**		HOSE (290-CM)	
E	5A	1	**144-0195**		HOSE (30-CM)	
E	5B	1	**144-0195**		HOSE (13-CM)	
	6	1	**235-9012**	1	SUPPORT AS	
	7	1	**176-1932**	1	TANK AS-WINDOW WASHER	
	8	1	**178-5500**	1	NOZZLE AS	
		1	**085-8037**	1	NOZZLE	
		1	**105-9526**	1	ADAPTER	
		1	**105-9527**	1	GASKET	
M	9	1	**3E-9872**	2	SCREW AS (M4X0.7X12-MM)	
	10	1	**6V-3265**	10	CLIP	
	11	1	**8T-4121**	10	WASHER-HARD (11X21X2.5-MM THK)	
M	12	1	**8T-4191**	10	BOLT (M10X1.5X16-MM)	
M	13	1	**8T-4970**	2	BOLT (M6X1X14-MM)	
	14	1	**9X-8256**	2	WASHER (6.6X12X2-MM THK)	
	15	1	**293-1256**	1	VALVE AS-CHECK	

E-ORDER BY THE CENTIMETER
M-METRIC PART

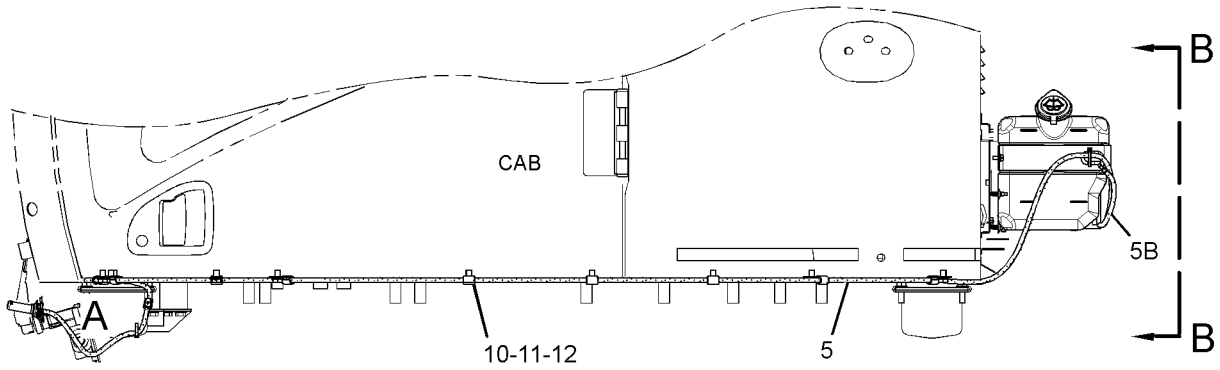

LEFT SIDE VIEW

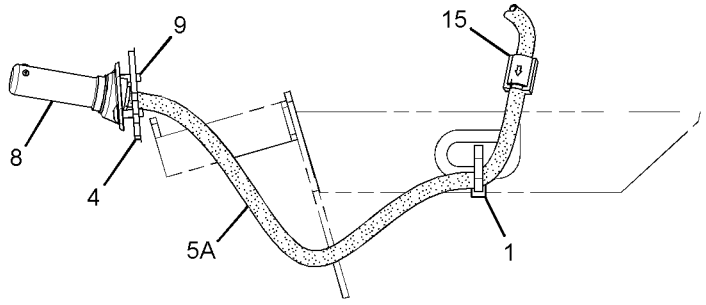

VIEW OF AREA A

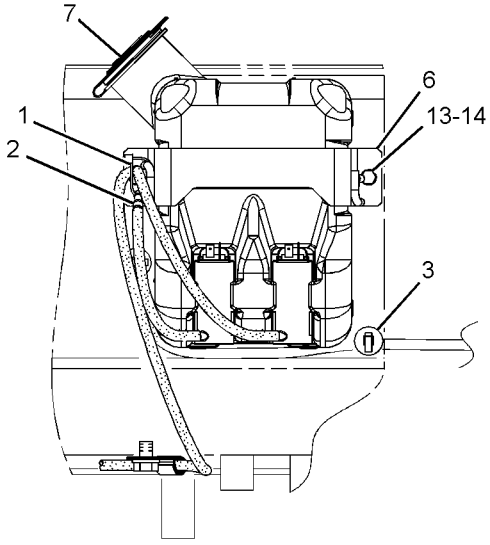

VIEW B-B

GRAPHIC #1 **<END>** g01416170

OPERATOR STATION

139-7101 WINDOW GP-CAB—FRONT, UPPER

S/N: D3P1-UP; M4T1-UP
PART OF 229-9099 CAB GP
AN ATTACHMENT

SMCS-7310 **i03615740**

NOTE	REF NO	GRAPHIC REF	PART NUMBER	QTY	PART NAME 1 2 3 4 5 6 (PRODUCT LEVEL)	SEE PAGE
	1	2	**170-9722**	1	CUSHION	
	2	1	**151-6703**	1	HANDLE-PULL	
	3	1	**151-6704**	2	CAP	
	4	2	**151-6778**	1	FRAME AS	
	4A	2	**156-6470**	1	HANDLE	
	5	1	**151-6785**	1	BRACKET AS	
	6	1	**151-6813**	1	BRACKET AS	
	7	1	**151-6815**	1	BRACKET AS	
	8	1	**273-5345**	1	LINK AS	
	9	1	**273-5346**	1	LINK AS	
	10	1	**151-6831**	1	LOCK AS	
	11	1	**151-6832**	1	LEVER AS	
	12	2	**151-6844**	1	COVER	
	13	1	**151-9557**	2	STOP-RUBBER	
	14	2	**156-6472**	1	GLASS	
	15	2	**156-6554**	1	CABLE AS	
	16	1	**156-6555**	1	STRIKER AS	
	17	2	**156-6562**	1	BRACKET	
	18	2	**273-5274**	1	CATCH AS	
	19	2	**156-6579**	1	STOP	
	20	2	**156-6601**	1	SEAL AS	
	21	2	**156-6627**	1	STOP AS	
	22	1	**161-3684**	2	STOP	
	23	1	**161-3698**	1	SEAL	
	24	2	**164-0648**	1	BRACKET AS	
	25	1	**178-5576**	1	STOP	
M	26	2	**185-8181**	2	SCREW (M4X0.7X10-MM)	
M	27	2	**185-8182**	4	BOLT (M10X1.5X20-MM)	
M	28	2	**5C-8312**	1	NUT (M4X0.7-THD)	
	29	2	**185-8187**	4	WASHER (10.2X22X3.2-MM THK)	
M	30	1	**185-8197**	1	NUT (M10X1.5-THD)	
	31	1	**185-8221**	1	STOP	
M	32	1	**099-0823**	2	SCREW-MACHINE (M6X1X6-MM)	
M	33	1	**101-8900**	2	SCREW AS (M6X1X20-MM)	
	34	1	**117-6306**	1	SWITCH (WINDOW LOWER LIMIT)	
	35	1	**151-9576**	4	ROLLER	
	36	1	**4I-0420**	1	STRIP	
	37	1	**7X-0578**	1	WASHER-HARD (10.2X32X2.5-MM THK)	
M	38	2	**9X-2042**	20	SCREW-TRUSS HEAD (M6X1X12-MM)	
M	39	1,2	**9X-2044**	5	SCREW-TRUSS HEAD (M6X1X16-MM)	
M	40	2	**9X-2045**	3	SCREW-TRUSS HEAD (M6X1X20-MM)	
	41	2	**9X-8256**	2	WASHER (6.6X12X2-MM THK)	

M-METRIC PART

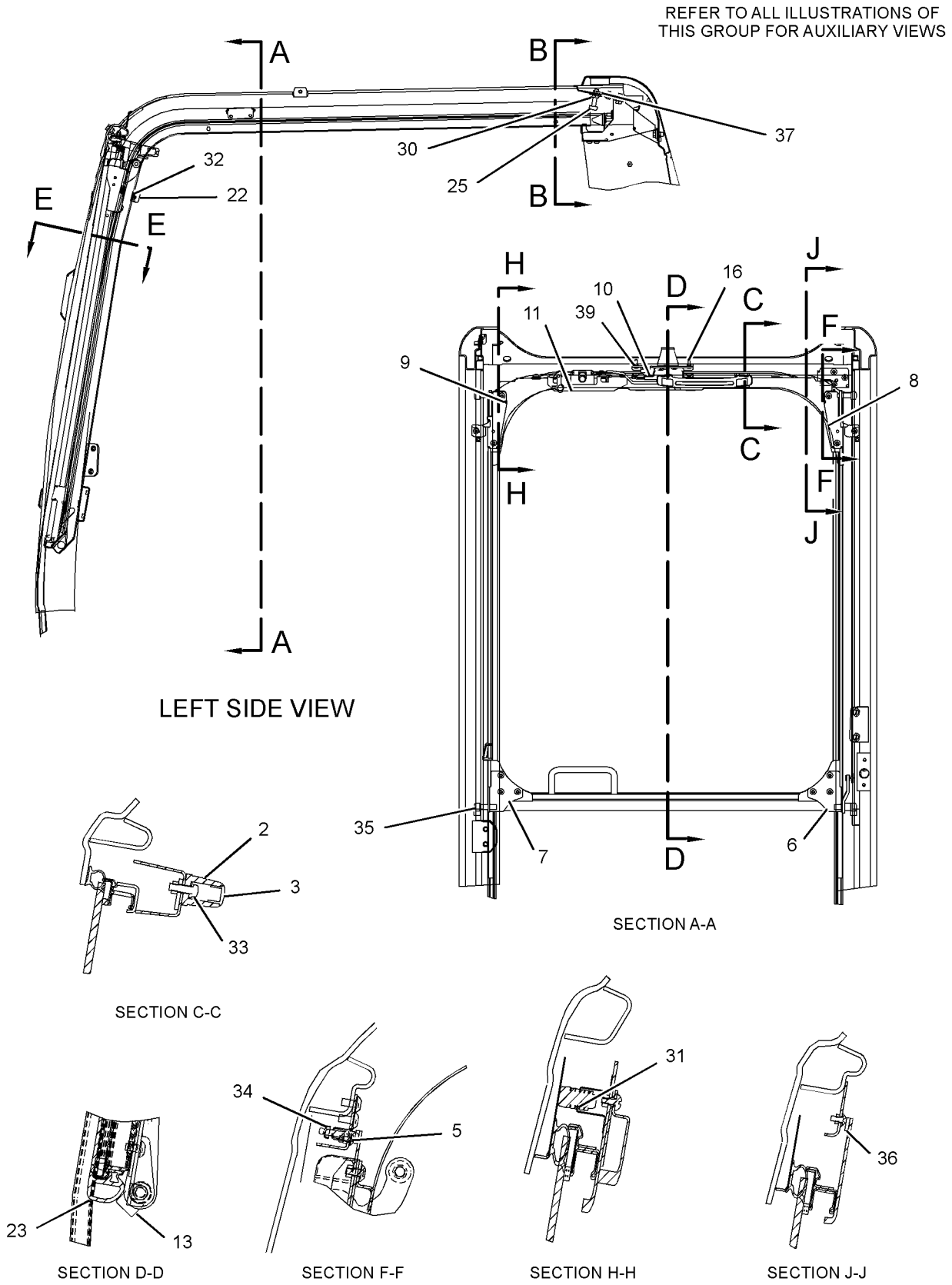

GRAPHIC #1

g01231378

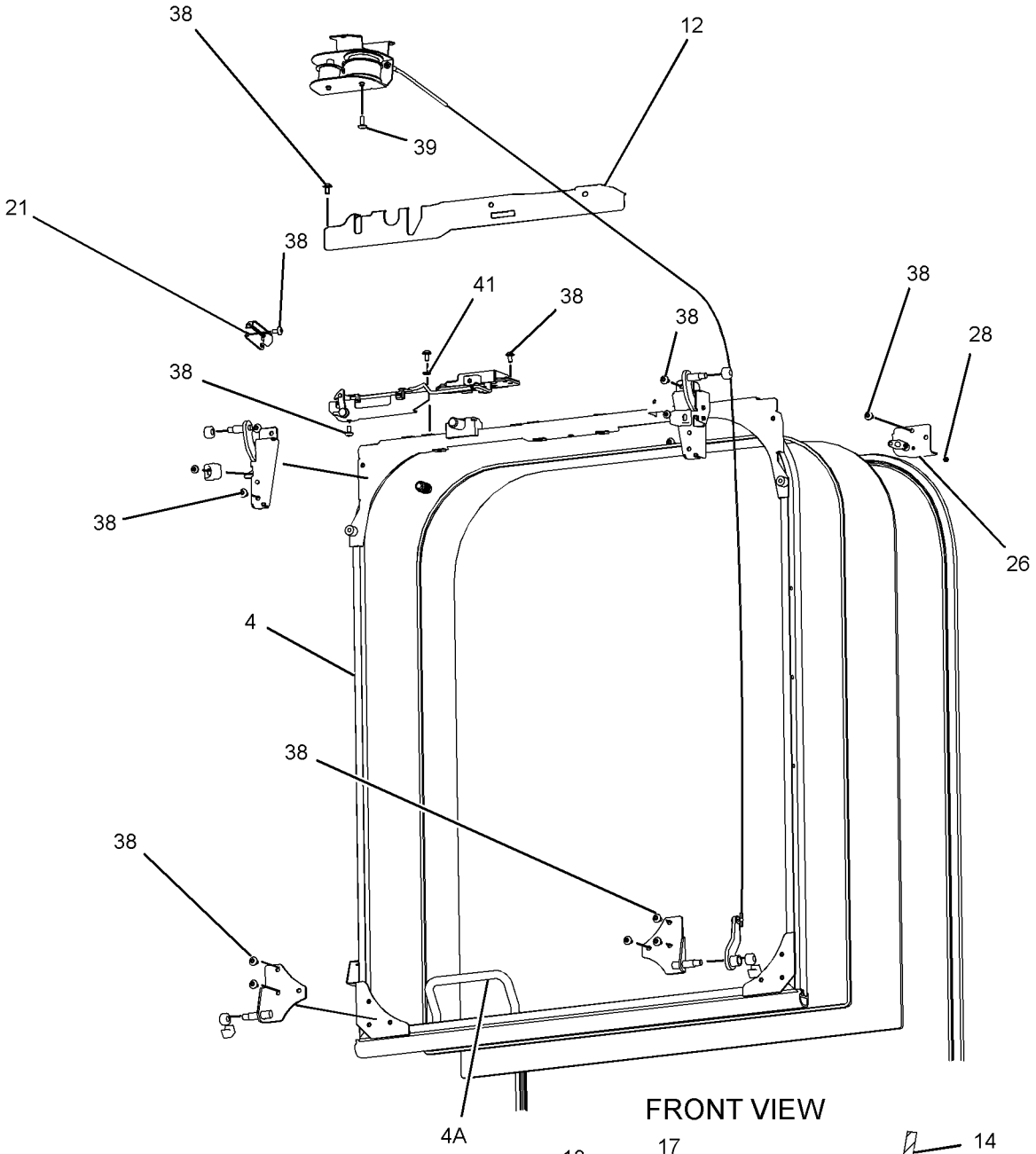

FRONT VIEW

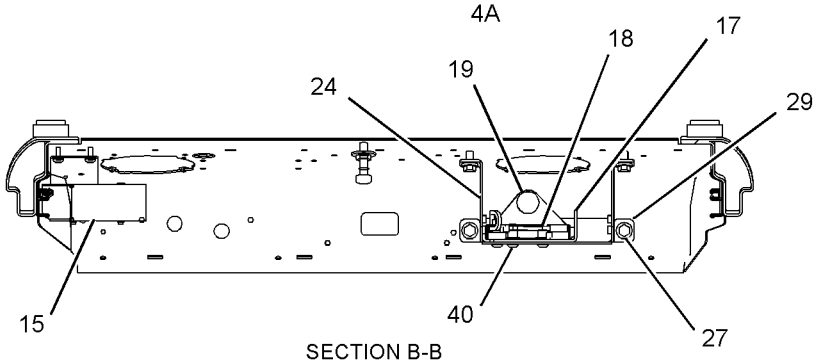

SECTION B-B

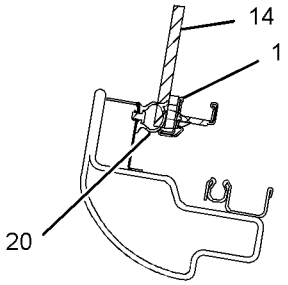

SECTION E-E

GRAPHIC #2 **<END>** g01938993

156-6647 WINDOW GP-CAB–FRONT, LOWER

S/N: D3P1-UP; M4T1-UP
PART OF 229-9087 WIPER & WASHER GP-WINDOW
AN ATTACHMENT

SMCS-7310 **i03173033**

NOTE	REF NO	GRAPHIC REF	PART NUMBER	QTY	PART NAME 1 2 3 4 5 6 (PRODUCT LEVEL)	SEE PAGE
	1	1	*156-6648*	1	GLASS	
M	2	1	**9X-2042**	2	SCREW-TRUSS HEAD (M6X1X12-MM)	
	3	1	**151-6705**	1	PACKING	
	4	1	**124-3966**	1	STOP	
	5	1	**144-9692**	2	RETAINER	
	6	1	**144-9691**	2	PACKING	

M-METRIC PART

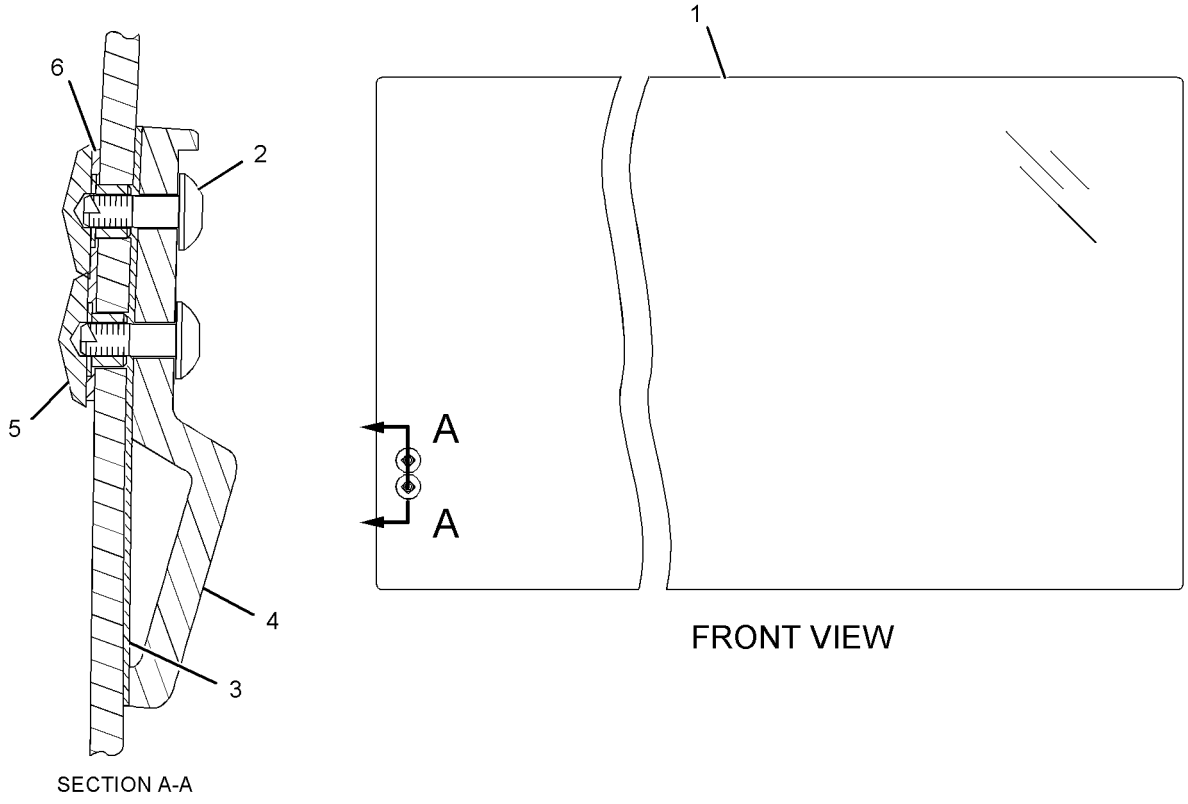

GRAPHIC #1 **<END>** g01131367

OPERATOR STATION

176-1958 WINDOW GP-CAB—FRONT, LOWER

S/N: D3P1-UP; M4T1-UP
PART OF 229-9099 CAB GP
AN ATTACHMENT

SMCS-7310 **i03632483**

NOTE	REF NO	GRAPHIC REF	PART NUMBER	QTY	PART NAME 1 2 3 4 5 6 (PRODUCT LEVEL)	SEE PAGE
	1	1	**156-6473**	1	GLASS (LOWER FRONT)	
	2	1	**156-6631**	2	STOP	
	3	1	**305-0361**	1	SEAL	
	4	1	**178-5569**	2	SEAL	
	5	1	**189-2702**	2	SEAL	
	6	1	**139-7119**	2	PLUG	

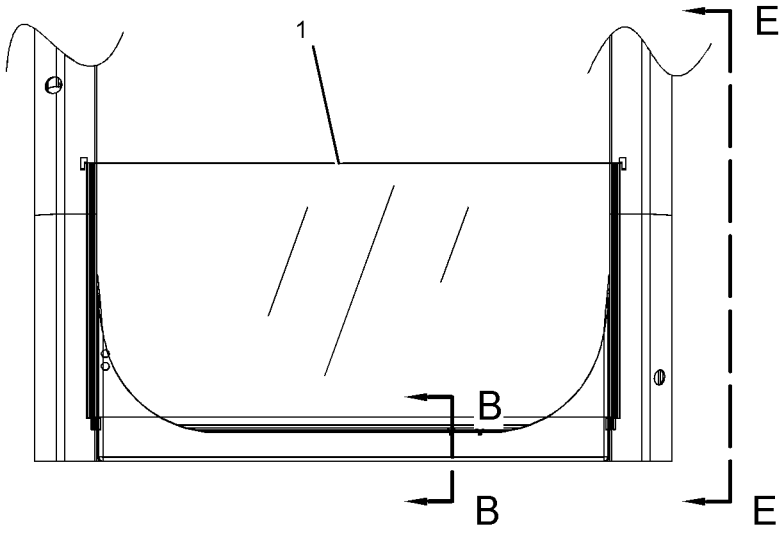

FRONT VIEW

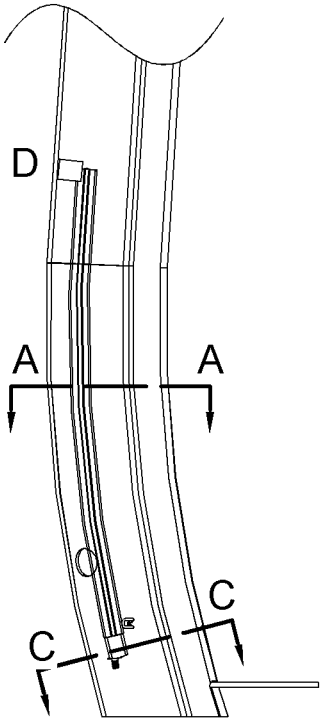

VIEW E-E

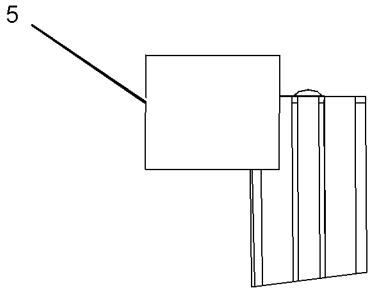

VIEW OF AREA D

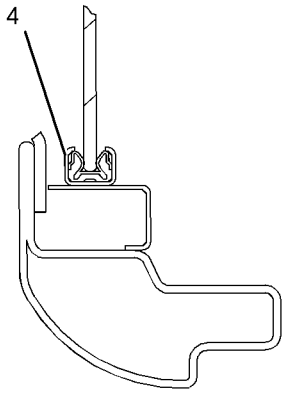

SECTION A-A

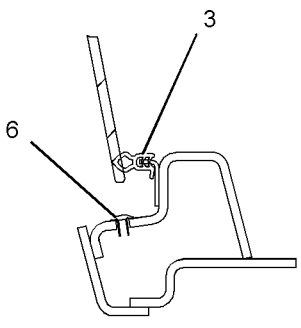

SECTION B-B

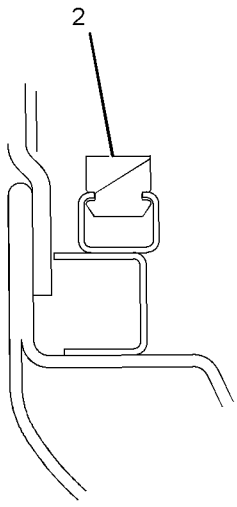

SECTION C-C

GRAPHIC #1 **<END>** g01398601

OPERATOR STATION

235-8909 WINDOW GP-CAB—SIDE, REAR

S/N: D3P1-UP; M4T1-UP
PART OF 229-9099 CAB GP
AN ATTACHMENT

SMCS-7310 **i03632486**

NOTE	REF NO	GRAPHIC REF	PART NUMBER	QTY	PART NAME 1 2 3 4 5 6 (PRODUCT LEVEL)	SEE PAGE
	1	1	**151-6790**	1	GLASS (LH)	
	2	1	**156-6469**	1	GLASS	
	3	1	**164-0666**	1	SEAL	
	4	1	**178-5572**	5	SPACER	
	5	1	**234-6489**	1	GLASS (RH)	
	6	1	**099-3629**	1	RING-KEY	
	7	1	**178-5573**	4	SPACER	
	8	1	**178-5574**	9	SPACER	

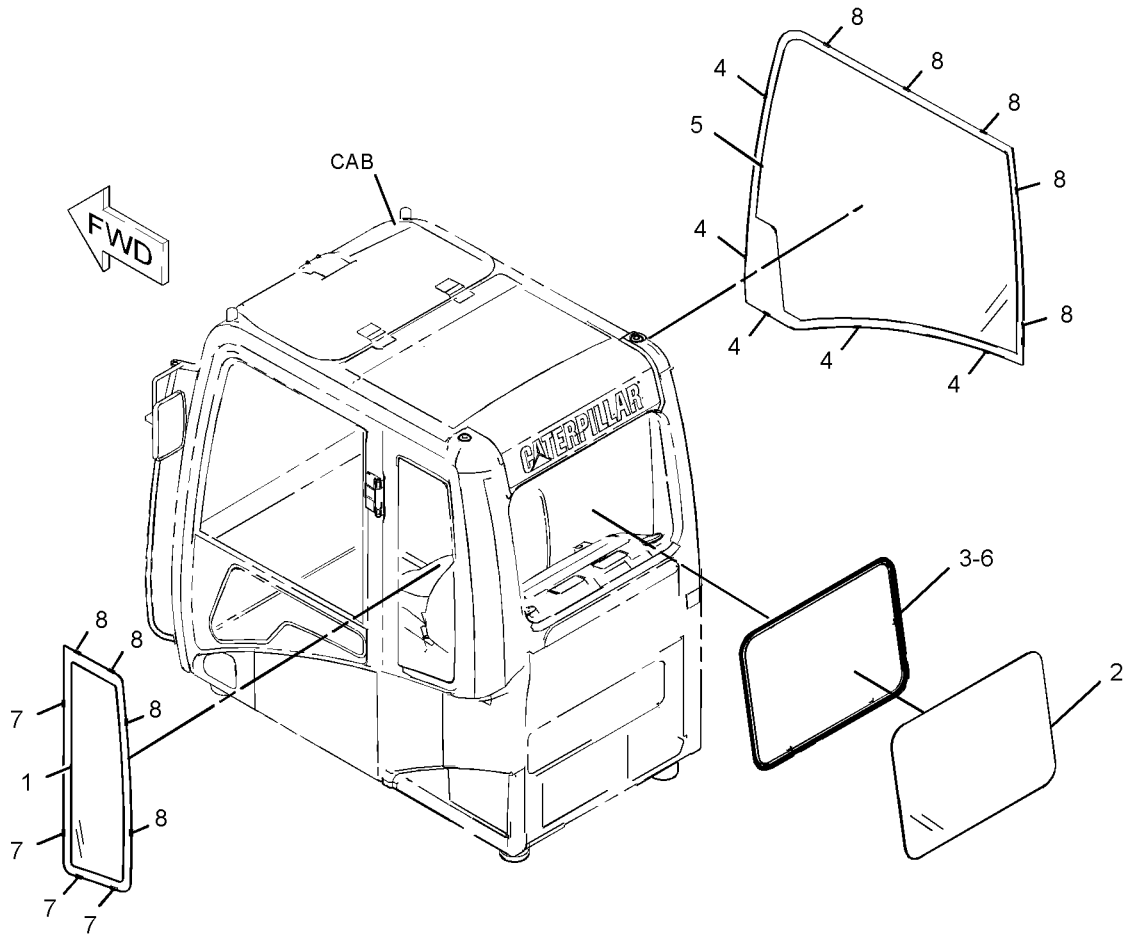

GRAPHIC #1 **<END>** g01118561

OPERATOR STATION

151-6792 WINDOW GP-DOOR

S/N: D3P1-UP; M4T1-UP
PART OF 139-7100 DOOR GP-CAB
AN ATTACHMENT

SMCS-7308, 7310 **i03632584**

NOTE	REF NO	GRAPHIC REF	PART NUMBER	QTY	PART NAME 1 2 3 4 5 6 (PRODUCT LEVEL)	SEE PAGE
	1	1	**085-6444**	2	LATCH GP-FRONT WINDOW	
					(EACH INCLUDES)	
		1	**085-6447**	1	RETAINER	
M		1	**085-6448**	2	SCREW-TAPPING	
		1	**085-6449**	1	PACKING	
	2	1	**151-6793**	1	FRAME AS	
		1	**4I-4298**	1	STOPPER	
		1	**4I-4300**	1	CATCH	
		1	**099-0139**	3	RIVET	
	3	1	**151-6841**	1	SEAL	
	4	1	**156-6474**	1	GLASS	
	5	1	**156-6475**	1	GLASS	
	6	1	**161-3695**	1	SEAL	
	7	1	**161-3705**	1	SEAL	
	8	1	**164-0516**	1	RUBBER	
	9	1	**164-0517**	1	RUBBER	
	10	1	**164-0518**	1	RUBBER	
	11	1	**171-7413**	1	SPACER	
	12	1	**171-7414**	1	SPACER	
	13	1	**176-1951**	1	SPACER	
	14	1	**176-1952**	1	SPACER	
	15	1	**176-1953**	1	STOP	
	16	1	**176-1954**	1	SEAL	
	17	1	**176-1955**	1	SEAL	
	18	1	**176-1956**	1	SEAL	
	19	1	**176-1957**	1	SEAL	

M-METRIC PART

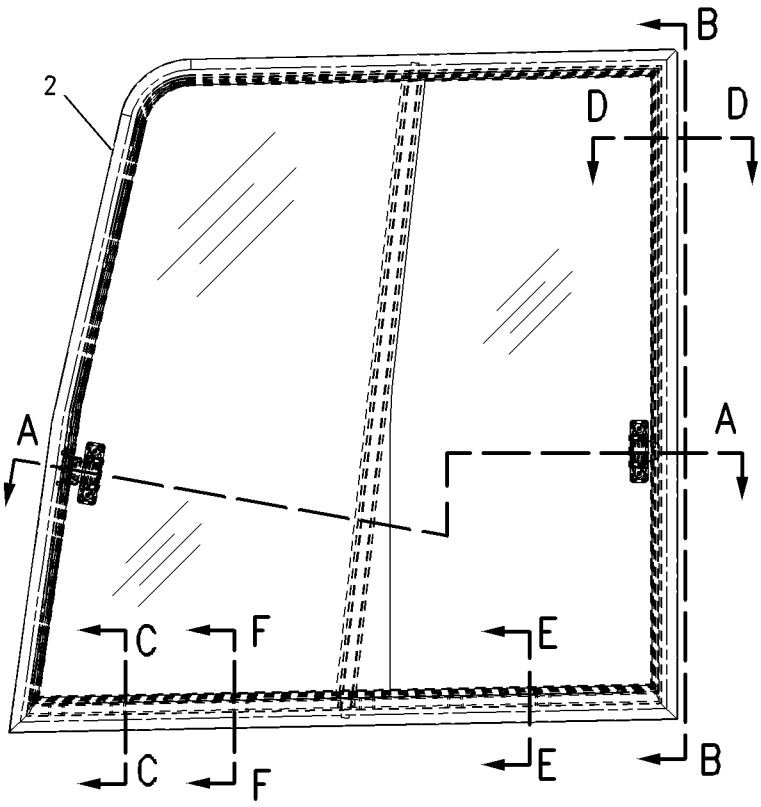

LEFT SIDE VIEW

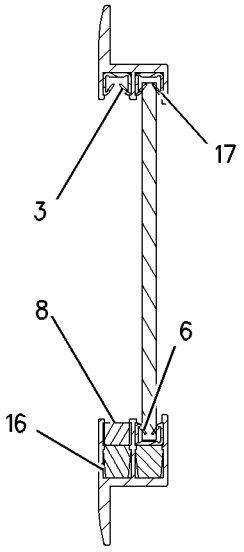

SECTION B-B

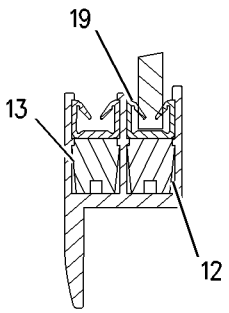

SECTION E-E

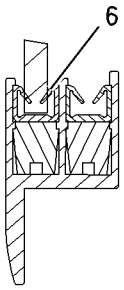

SECTION F-F

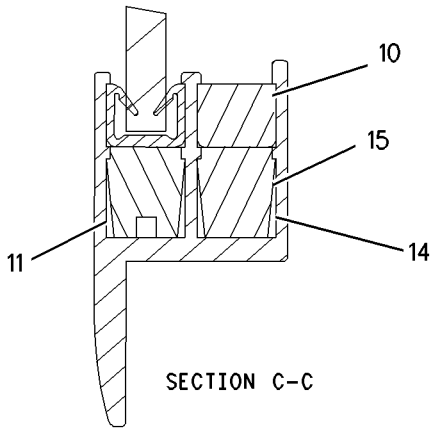

SECTION C-C

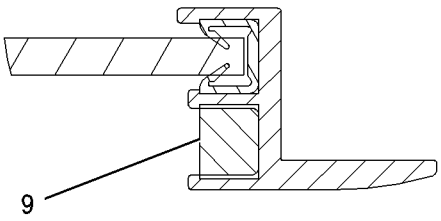

SECTION D-D

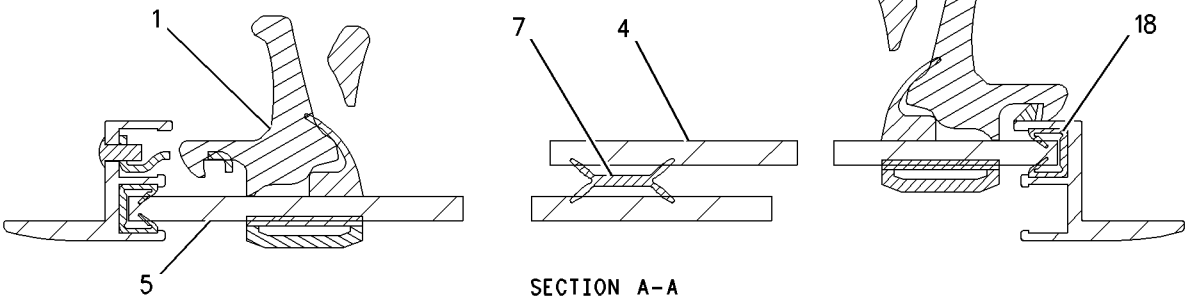

SECTION A-A

GRAPHIC #1 **<END>** g00722948

OPERATOR STATION

229-9087 WIPER & WASHER GP-WINDOW—LOWER

S/N: D3P1-UP; M4T1-UP
PART OF 229-9086 WIPER AR-WINDOW
AN ATTACHMENT

SMCS-7305, 7306 **i03021171**

NOTE	REF NO	GRAPHIC REF	PART NUMBER	QTY	PART NAME 1 2 3 4 5 6 (PRODUCT LEVEL)	SEE PAGE
	1	1	**4I-5021**	1	BLADE AS-WIPER (275-MM) (LOWER)	
	2	1	**235-8974**	1	BRACKET AS	
C	3	1	**293-1140**	1	MOTOR AS-WINDOW WIPER (LOWER)	
	4	1	**3S-2093**	1	STRAP-CABLE	
	5	1	**9X-8256**	5	WASHER (6.6X12X2-MM THK)	
M	6	1	**5C-2890**	3	NUT (M6X1-THD)	
M	7	1	**9X-2044**	2	SCREW-TRUSS HEAD (M6X1X16-MM)	
	8	1	**156-6646**	1	BRACKET	
	9	1	**8T-4121**	4	WASHER-HARD (11X21X2.5-MM THK)	
	10	1	**4I-5020**	1	ARM AS-WIPER	
M	11	1	**8T-4191**	4	BOLT (M10X1.5X16-MM)	
	12	1	**4I-1163**	1	BRACKET	
M	13	1	**5C-9553**	2	BOLT (M6X1X16-MM)	
Y	14	1	**156-6647**	1	WINDOW GP-CAB (FRONT, LOWER)	1067
	15	1	**129-6466**	1	SWITCH AS-ROLLER (WIPER, LOWER)	
	15A	1	**9X-0199**	1	BOOT-SWITCH	
	15B	1	**6V-8370**	1	NUT-HEX (3/4-32-THD)	
		1	**2H-3922**	1	LOCKWASHER	
	15C	1	**6V-8363**	2	SCREW (10-32X0.312-IN)	
		1	**8F-1434**	2	LOCKWASHER	

C-CHANGE FROM PREVIOUS TYPE
M-METRIC PART
Y-SEPARATE ILLUSTRATION

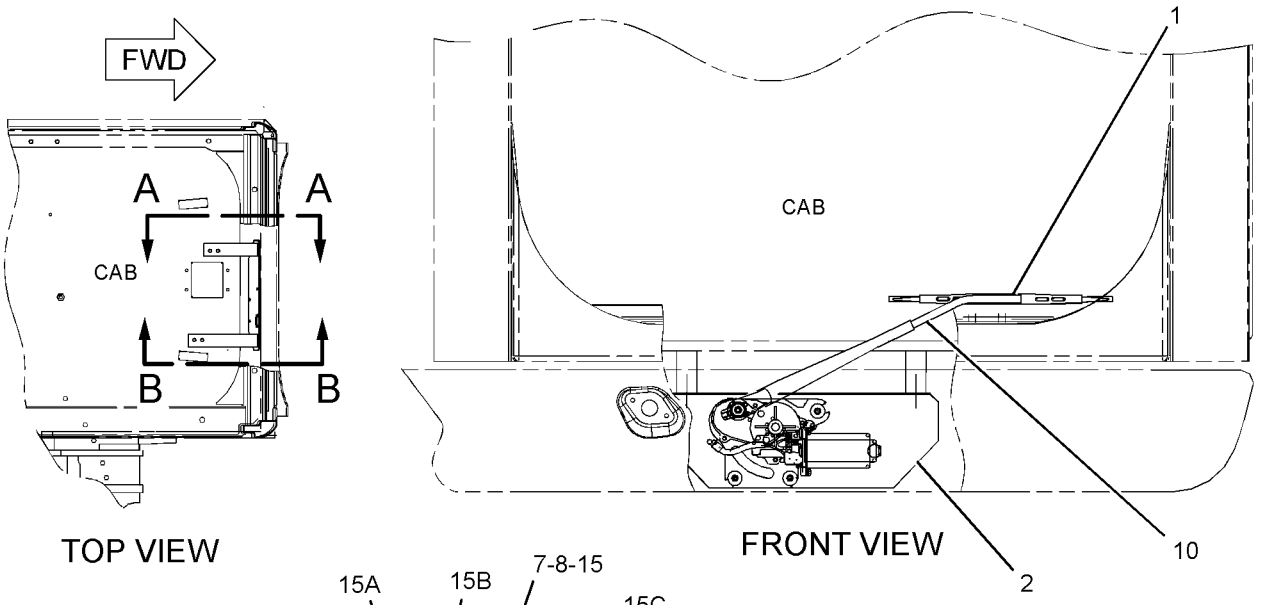

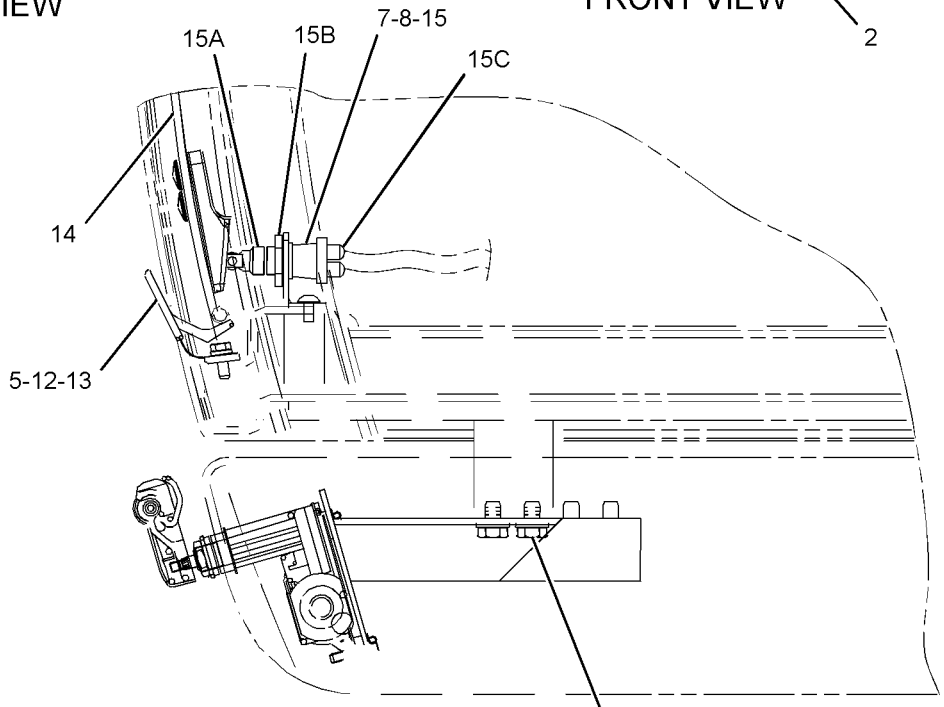

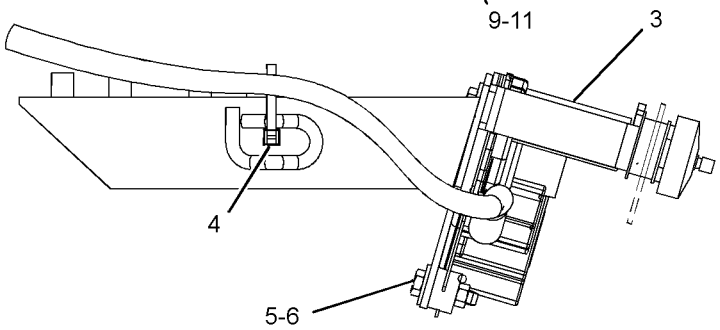

GRAPHIC #1 **<END>** g01527310

229-9086 WIPER AR-WINDOW—LOWER

S/N: D3P1-UP; M4T1-UP
PART OF 337-4125 OPTION AR-CAB
AN ATTACHMENT

SMCS-7305 **i02500689**

NOTE	PART NUMBER	QTY	PART NAME 1 2 3 4 5 6 (PRODUCT LEVEL)	SEE PAGE
Y	*229-9088*	1	WASHER GP-WINDOW (LOWER)	1062
Y	*229-9087*	1	WIPER & WASHER GP-WINDOW (LOWER)	1073
Y	*238-2208*	1	SWITCH GP-WIPER (LOWER)	277

Y-SEPARATE ILLUSTRATION

<END>

OPERATOR STATION

234-6594 WIPER GP-WINDOW—FRONT, UPPER

S/N: D3P1-UP; M4T1-UP
PART OF 229-9099 CAB GP
AN ATTACHMENT

SMCS-7305 **i03632592**

NOTE	REF NO	GRAPHIC REF	PART NUMBER	QTY	PART NAME 1 2 3 4 5 6 (PRODUCT LEVEL)	SEE PAGE
	1	1	**161-3677**	1	HOLDER	
	2	1	**245-7931**	1	MOTOR AS (WIPER)	
M		1	**6V-8231**	1	NUT (M10X1.25-THD)	
M		1	**7Y-3470**	1	NUT (M20X1-THD)	
		1	**7Y-3472**	1	CAP	
		1	**124-3953**	1	WASHER (20.5X30X2-MM THK)	
	3	1	**235-8932**	1	NOZZLE AS	
	4	1	**155-7042**	1	RELAY AS (UPPER) (WIPER)	
	5	1	**161-3668**	1	ARM AS-WIPER	
		1	**161-3669**	1	GUIDE	
		1	**161-3670**	1	BLADE AS-WIPER (600-MM) (UPPER)	
		1	**185-8290**	1	SCREW AS (M3.5X0.6X9-MM)	
	6	1	**163-6795**	1	STRAP-CABLE	
M	7	1	**3E-9872**	2	SCREW AS (M4X0.7X12-MM)	
	8	1	**4I-3090**	1	SEAL	
	9	1	**7Y-7364**	1	GROMMET	
M	10	1	**8T-4134**	4	NUT (M6X1-THD)	
M	11	1	**9X-2042**	2	SCREW-TRUSS HEAD (M6X1X12-MM)	
M	12	1	**9X-2044**	3	SCREW-TRUSS HEAD (M6X1X16-MM)	

M-METRIC PART

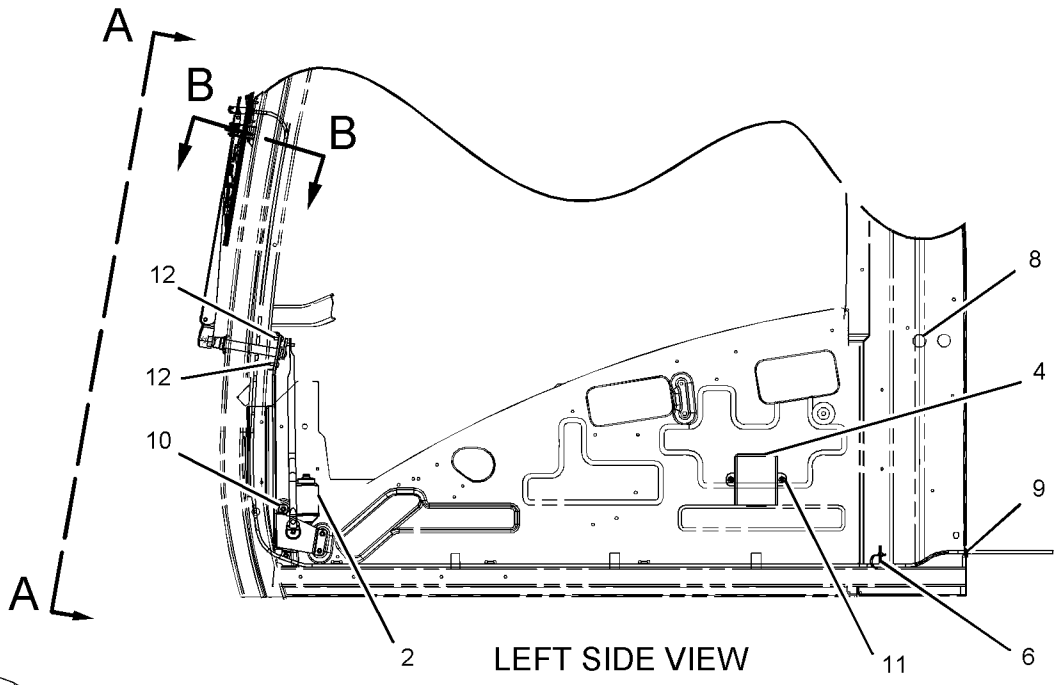

LEFT SIDE VIEW

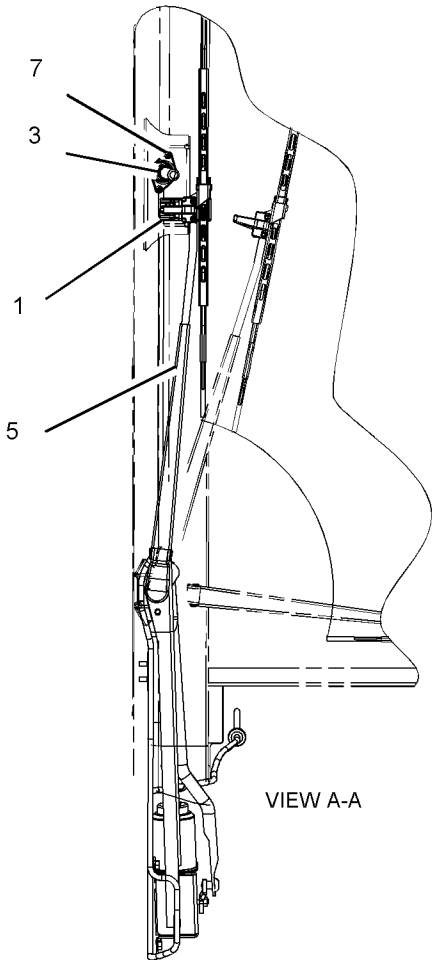

VIEW A-A

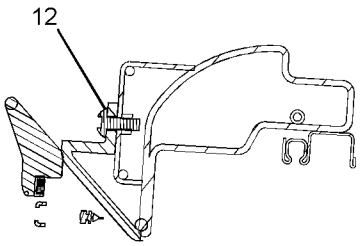

SECTION B-B

GRAPHIC #1 **<END>** g01098021

SERVICE EQUIPMENT AND SUPPLIES

240-3776 FILM GP—MASS EXCAVATOR

S/N: D3P1-UP; M4T1-UP

PART OF 337-4117, 337-4118, 337-4119, 337-4120 OPTION AR-LINKAGE AN ATTACHMENT

SMCS-7405, 7557 **i03632606**

NOTE	REF NO	GRAPHIC REF	PART NUMBER	QTY	PART NAME 1 2 3 4 5 6 (PRODUCT LEVEL)	SEE PAGE
	1	1	**290-1757**	2	FILM-IDENTIFICATION (MASS EXCAVATOR)	

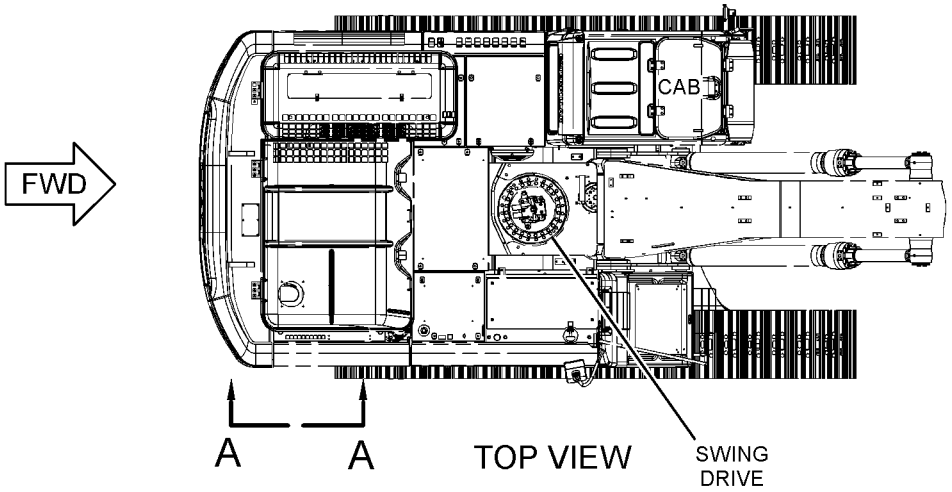

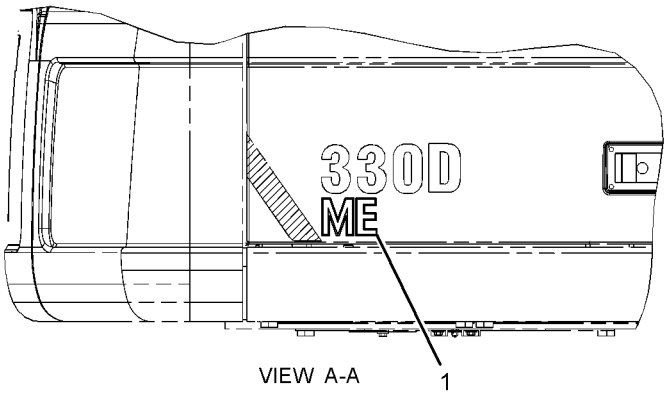

GRAPHIC #1 **<END>** g01414227

SERVICE EQUIPMENT AND SUPPLIES

247-7410 FILM GP—OPERATOR CONTROLS, NOTICE

S/N: D3P1-UP; M4T1-UP

PART OF 270-5687 CONTROL & MTG GP-JOYSTICK, 270-8795, 270-8796, 307-9975

CONTROL AR-AUXILIARY

AN ATTACHMENT

SMCS-7405, 7557 **i02508869**

NOTE	REF NO	GRAPHIC REF	PART NUMBER	QTY	PART NAME 1 2 3 4 5 6 (PRODUCT LEVEL)	SEE PAGE
	1	1	**250-8054**	1	FILM-NOTICE (HAMMER, READ OMM)	
	2	1	**260-6941**	1	FILM-INFORMATION (OPERATOR CONTROLS, READ OMM)	

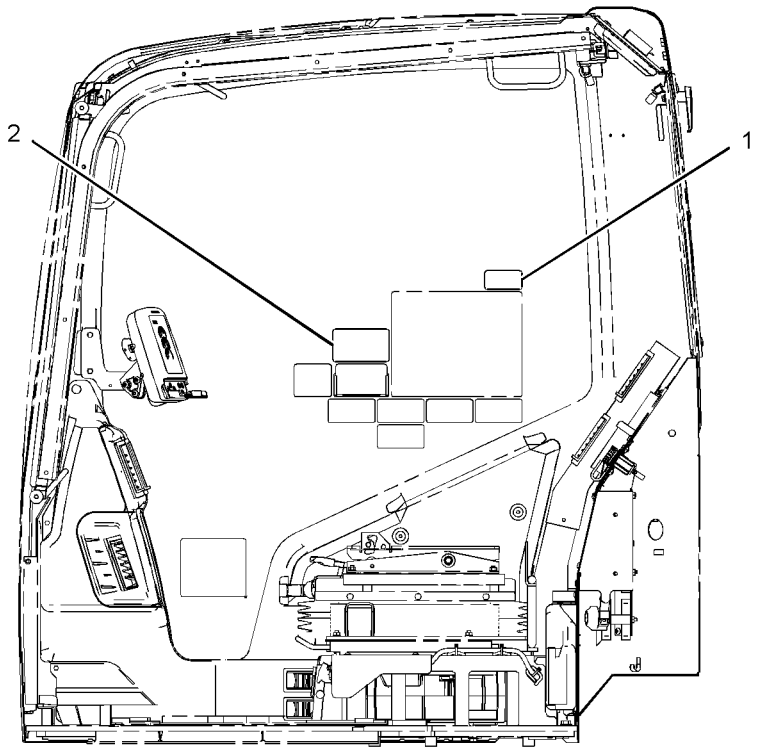

LEFT SIDE VIEW
(328D MODELS)

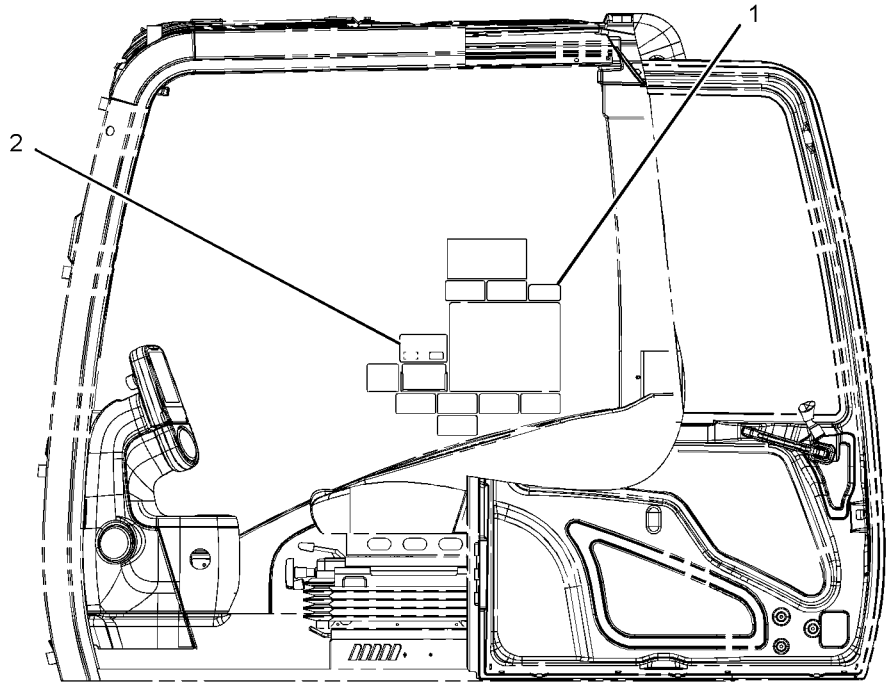

LEFT SIDE VIEW
(ALL OTHER MODELS)

GRAPHIC #1 **<END>** g01246655

SERVICE EQUIPMENT AND SUPPLIES

247-7411 FILM GP–OPERATOR CONTROLS, NOTICE

S/N: M4T1-UP

PART OF 270-5688 CONTROL & MTG GP-JOYSTICK

AN ATTACHMENT

SMCS-7405, 7557 **i02518648**

NOTE	REF NO	GRAPHIC REF	PART NUMBER	QTY	PART NAME 1 2 3 4 5 6 (PRODUCT LEVEL)	SEE PAGE
	1	1	**260-6942**	1	FILM-INFORMATION (OPERATOR CONTROLS, READ OMM)	
	2	1	**250-8054**	1	FILM-NOTICE (HAMMER, READ OMM)	

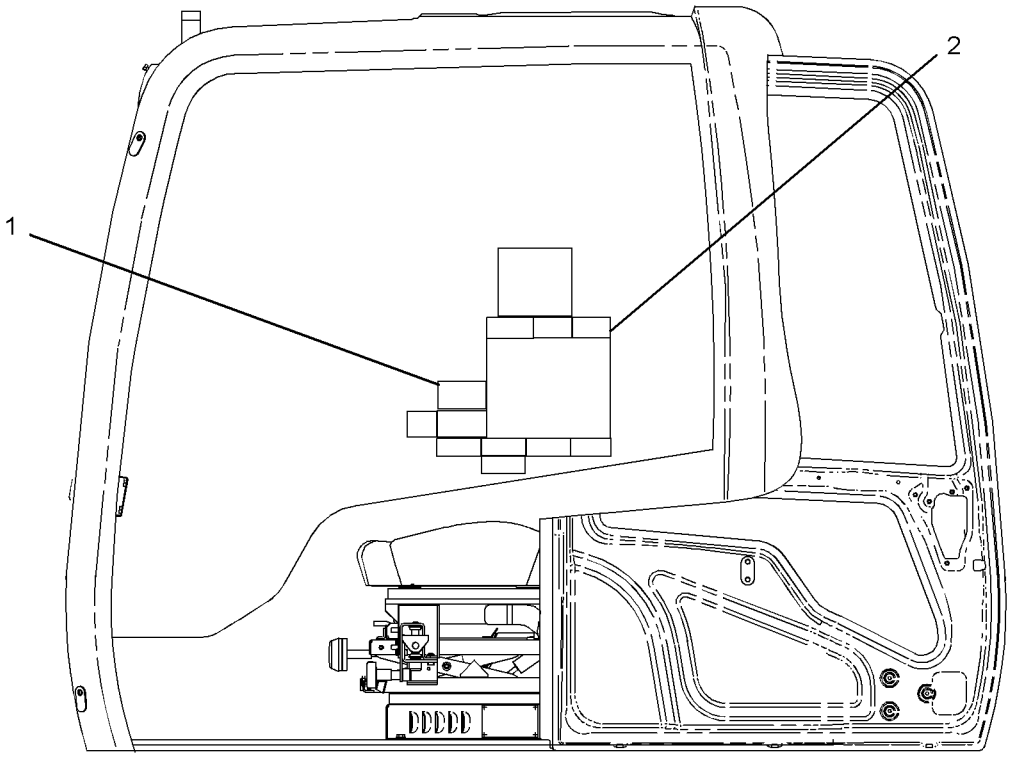

LEFT SIDE VIEW

GRAPHIC #1 **<END>** g01212938

SERVICE EQUIPMENT AND SUPPLIES

247-7418 FILM GP–OPERATOR CONTROLS, NOTICE

S/N: M4T1-UP

PART OF 255-5845 PEDAL AR-AUXILIARY

AN ATTACHMENT

SMCS-7405, 7557 **i03632610**

NOTE	REF NO	GRAPHIC REF	PART NUMBER	QTY	PART NAME 1 2 3 4 5 6 (PRODUCT LEVEL)	SEE PAGE
	1	1	**250-8054**	1	FILM-NOTICE (HAMMER, READ OMM)	
	2	1	**260-6948**	1	FILM-INSTRUCTION (OPERATOR CONTROLS, READ OMM)	

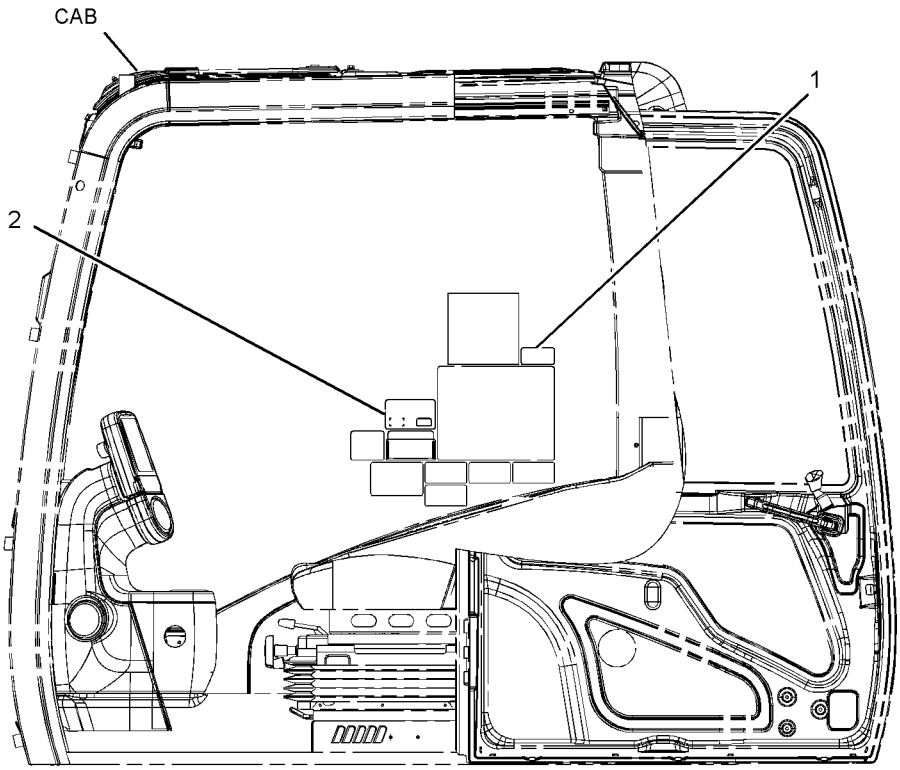

LEFT SIDE VIEW

GRAPHIC #1 **<END>** g01203264

SERVICE EQUIPMENT AND SUPPLIES

247-7423 FILM GP

S/N: D3P1-UP; M4T1-UP
PART OF 255-5770 CONTROL AR-AUXILIARY
AN ATTACHMENT

SMCS-7405, 7557 **i02765722**

NOTE	REF NO	GRAPHIC REF	PART NUMBER	QTY	PART NAME 1 2 3 4 5 6 (PRODUCT LEVEL)	SEE PAGE
	1	1	**260-6945**	1	FILM-INSTRUCTION (OPERATOR CONTROL PEDALS)	
	2	1	**250-8054**	1	FILM-NOTICE (HAMMER, READ OMM)	

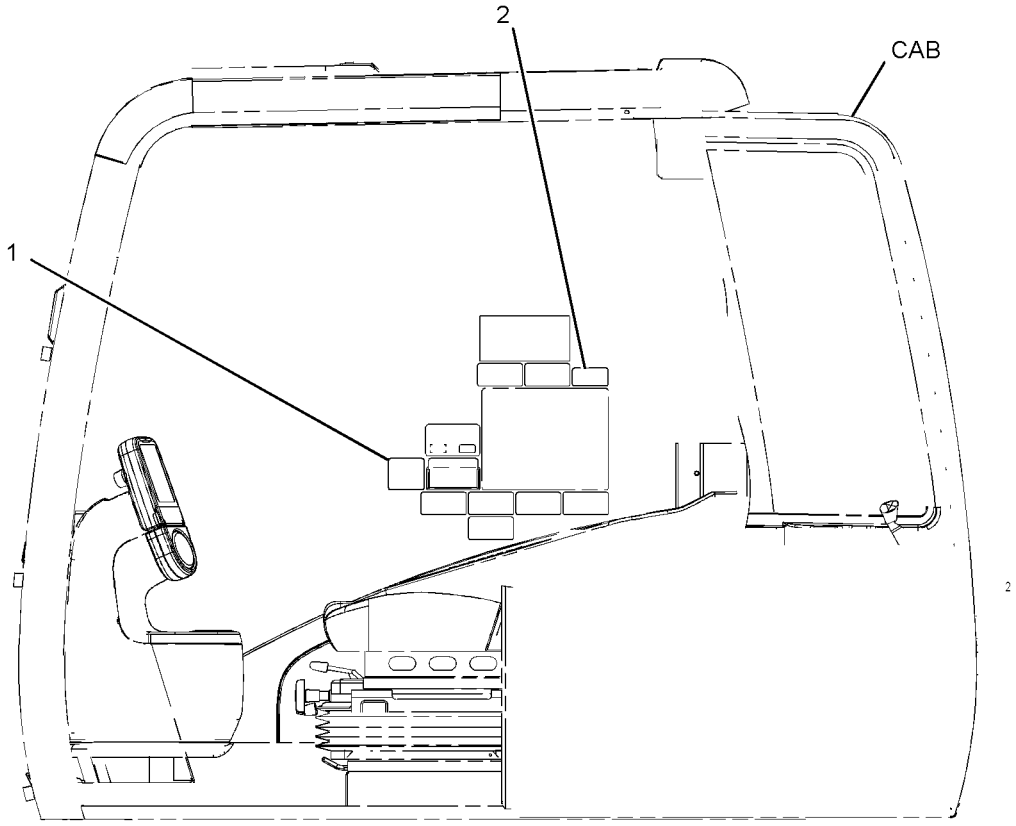

LEFT SIDE VIEW

GRAPHIC #1 **<END>** g01231531

247-7465 FILM GP–HAMMER CONTROL, FOOT SWITCH

S/N: D3P1-UP; M4T1-UP
PART OF 272-9663 CONTROL AR-AUXILIARY
AN ATTACHMENT

SMCS-7405, 7557 **i02509635**

NOTE	REF NO	GRAPHIC REF	PART NUMBER	QTY	PART NAME 1 2 3 4 5 6 (PRODUCT LEVEL)	SEE PAGE
	1	1	**176-2815**	1	FILM-INSTRUCTION (HAMMER CONTROL)	
	2	1	**250-8054**	1	FILM-NOTICE (HAMMER, READ OMM)	

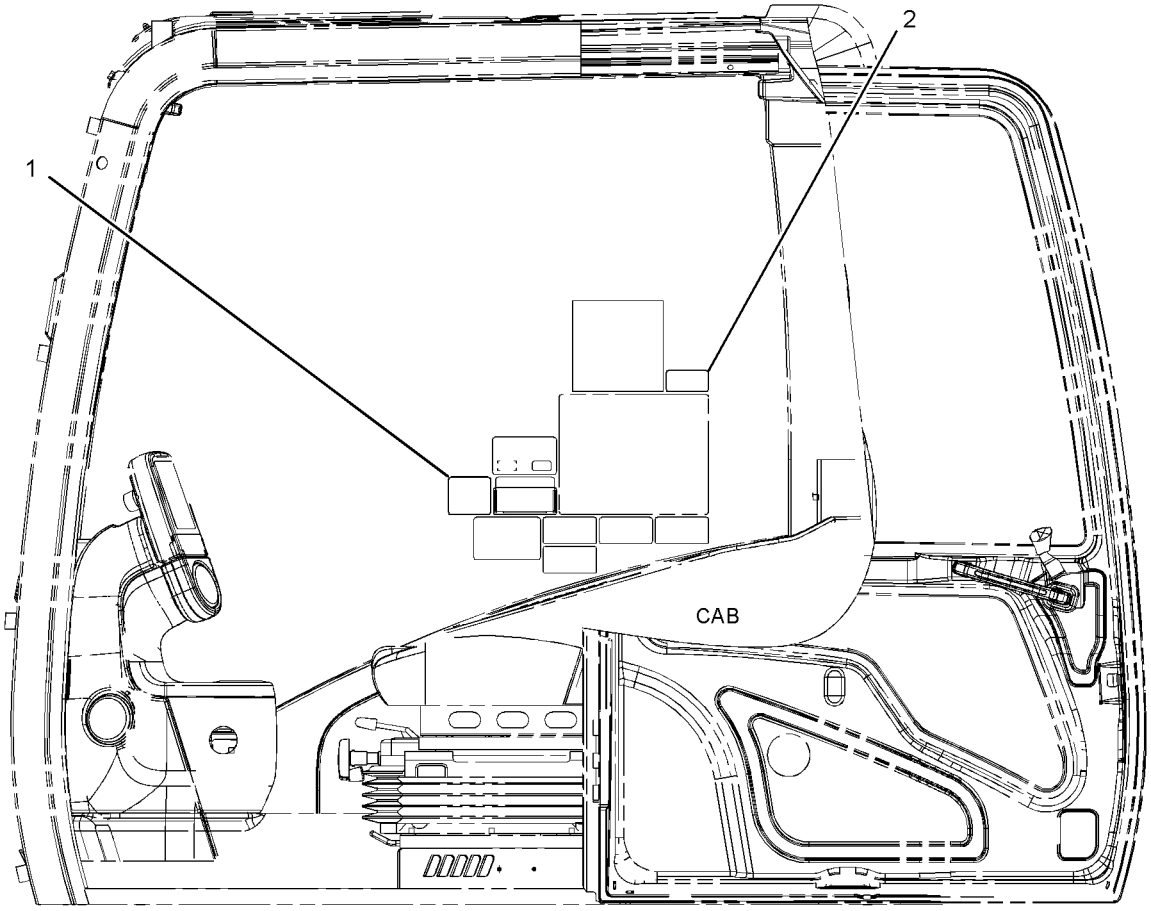

LEFT SIDE VIEW

GRAPHIC #1 **<END>** g01157047

247-7490 FILM GP—ALT PATTERN CONTROL, WARNING

S/N: D3P1-UP; M4T1-UP
PART OF 259-7422 VALVE AR-ALT PATTERN CONTROL
AN ATTACHMENT

SMCS-7405, 7557 **i03632827**

NOTE	REF NO	GRAPHIC REF	PART NUMBER	QTY	PART NAME 1 2 3 4 5 6 (PRODUCT LEVEL)	SEE PAGE
	1	1	**4I-2885**	1	CASE	
	2	1	**255-3170**	1	FILM-INSTRUCTION (ALT PATTERN CONTROL, READ OMM)	
	3	1	**255-3171**	1	PLATE-INSTRUCTION (CONTROL PATTERN, READ OMM)	
	4	1	**255-3173**	1	FILM-WARNING (CRUSH HAZARD, READ OMM, INTL)	
					—OR—	
		1	**257-5015**	1	FILM-WARNING (CRUSH HAZARD, READ OMM, U.S.)	

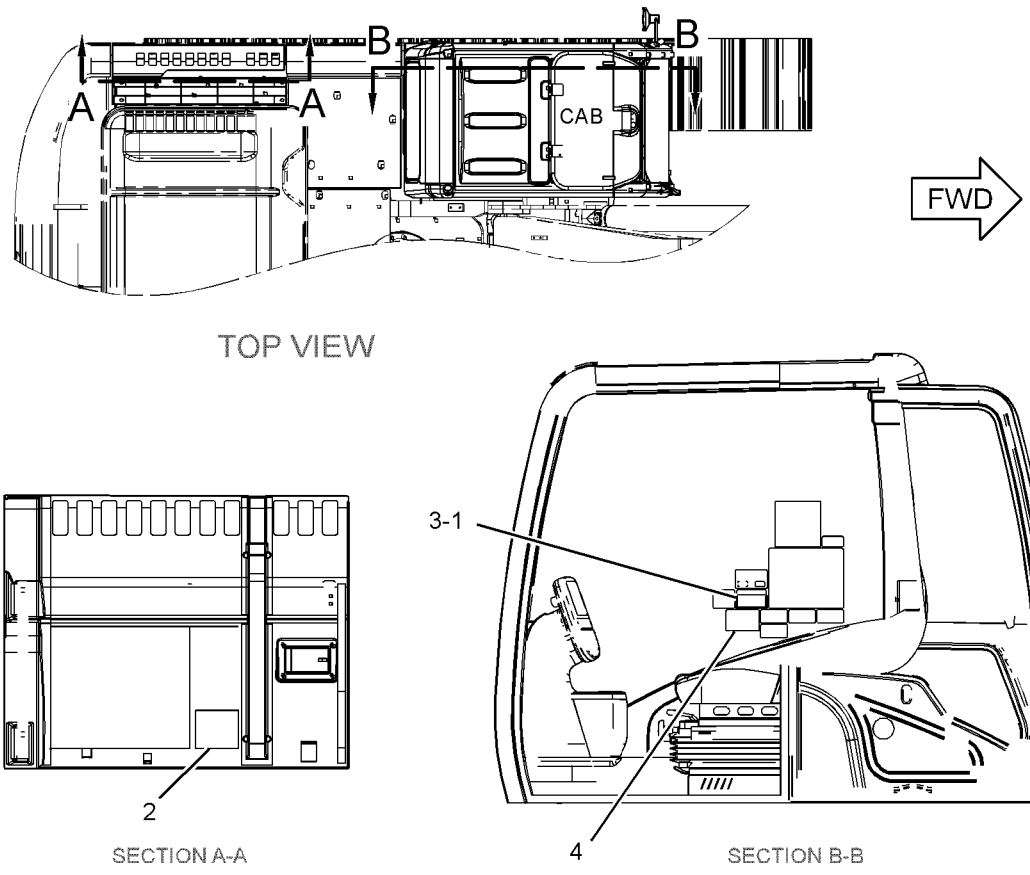

GRAPHIC #1 **<END>** g01949034

SERVICE EQUIPMENT AND SUPPLIES

247-7494 FILM GP—CONTROL PATTERN, QUICK CHANGE

S/N: D3P1-UP; M4T1-UP

PART OF 259-7417 VALVE AR-ALT PATTERN CONTROL

AN ATTACHMENT

SMCS-7405, 7557 **i02517843**

NOTE	REF NO	GRAPHIC REF	PART NUMBER	QTY	PART NAME 1 2 3 4 5 6 (PRODUCT LEVEL)	SEE PAGE
	1	1	**4I-2885**	1	CASE	
	2	1	**109-1839**	1	FILM-INSTRUCTION (OPERATOR CONTROLS, READ OMM)	
	3	1	**214-4531**	1	PLATE-INSTRUCTION (OPERATOR CONTROLS, READ OMM) (MHI, SCM PATTERNS)	
	4	1	**214-4532**	1	PLATE-INSTRUCTION (OPERATOR CONTROLS, READ OMM) (KOBELCO, SAE PATTERNS)	
	5	1	**257-4547**	1	FILM-WARNING (CRUSH HAZARD, READ OMM, INTL)	

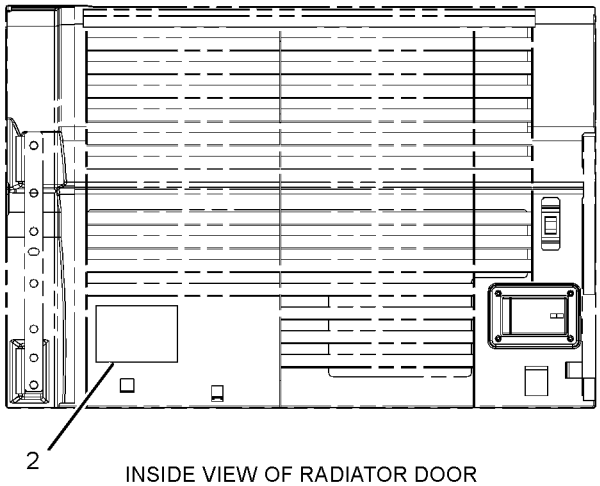

INSIDE VIEW OF RADIATOR DOOR

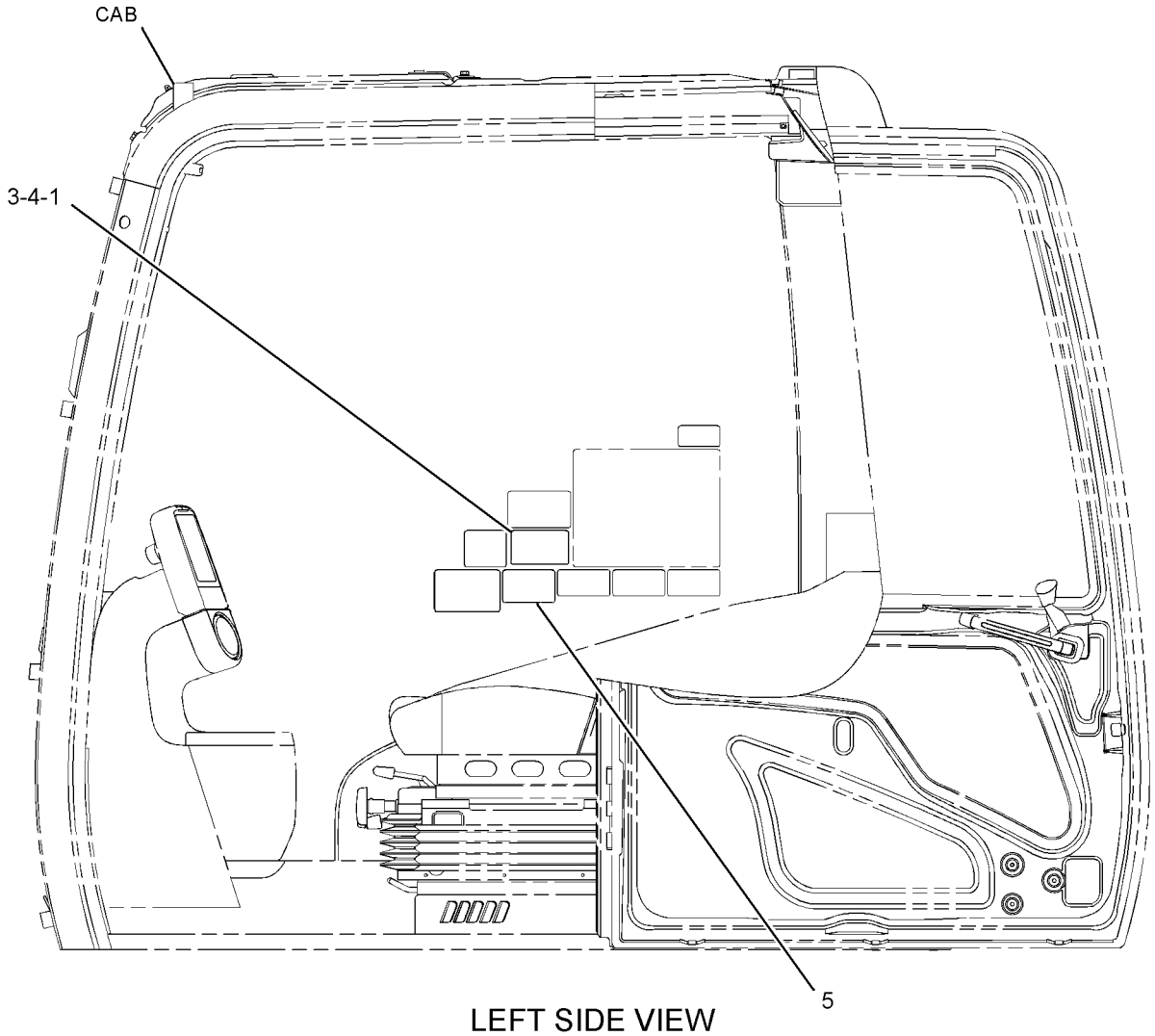

LEFT SIDE VIEW

GRAPHIC #1 **<END>** g01238061

SERVICE EQUIPMENT AND SUPPLIES

268-6816 FILM GP–QUICK COUPLER

S/N: D3P1-UP; M4T1-UP
PART OF 268-6821 CONTROL AR-COUPLER
AN ATTACHMENT

SMCS-7405, 7557 **i02663261**

NOTE	REF NO	GRAPHIC REF	PART NUMBER	QTY	PART NAME 1 2 3 4 5 6 (PRODUCT LEVEL)	SEE PAGE
	1	1	**268-6817**	1	FILM-IDENTIFICATION (QUICK COUPLER)	

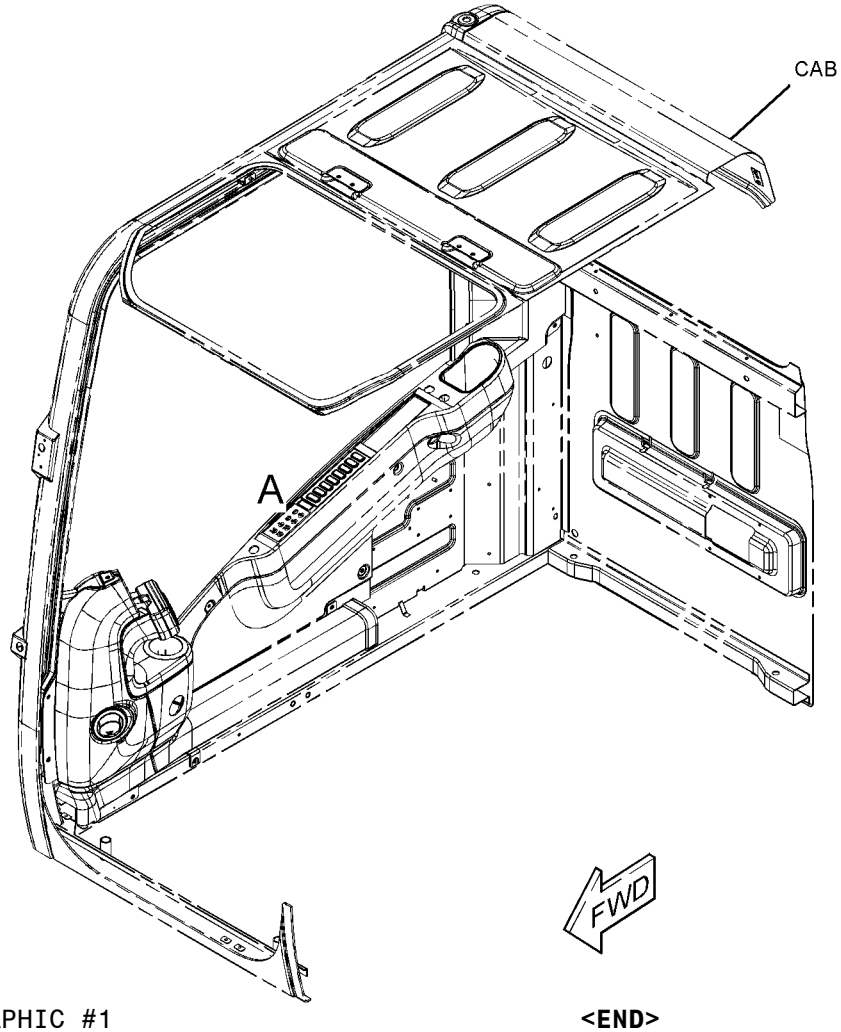

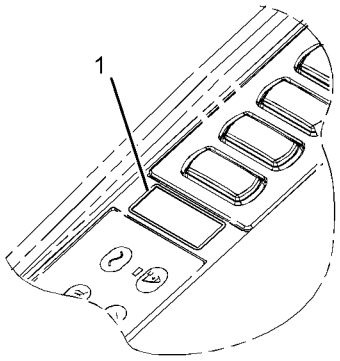

VIEW OF AREA A

GRAPHIC #1 **<END>** g01199575

SERVICE EQUIPMENT AND SUPPLIES

275-3812 FILM GP–FAN, FLYING DEBRIS

S/N: D3P1-UP; M4T1-UP
PART OF 264-8479 CONTROL AR-FAN
AN ATTACHMENT

SMCS-7405, 7557 **i03745167**

NOTE	REF NO	GRAPHIC REF	PART NUMBER	QTY	PART NAME 1 2 3 4 5 6 (PRODUCT LEVEL)	SEE PAGE
	1	1	**225-4130**	1	FILM-WARNING (FLYING DEBRIS, STAY BACK, U.S.)	
					–OR–	
		1	**225-4131**	1	FILM-WARNING (FLYING DEBRIS, STAY BACK, ANSI)	

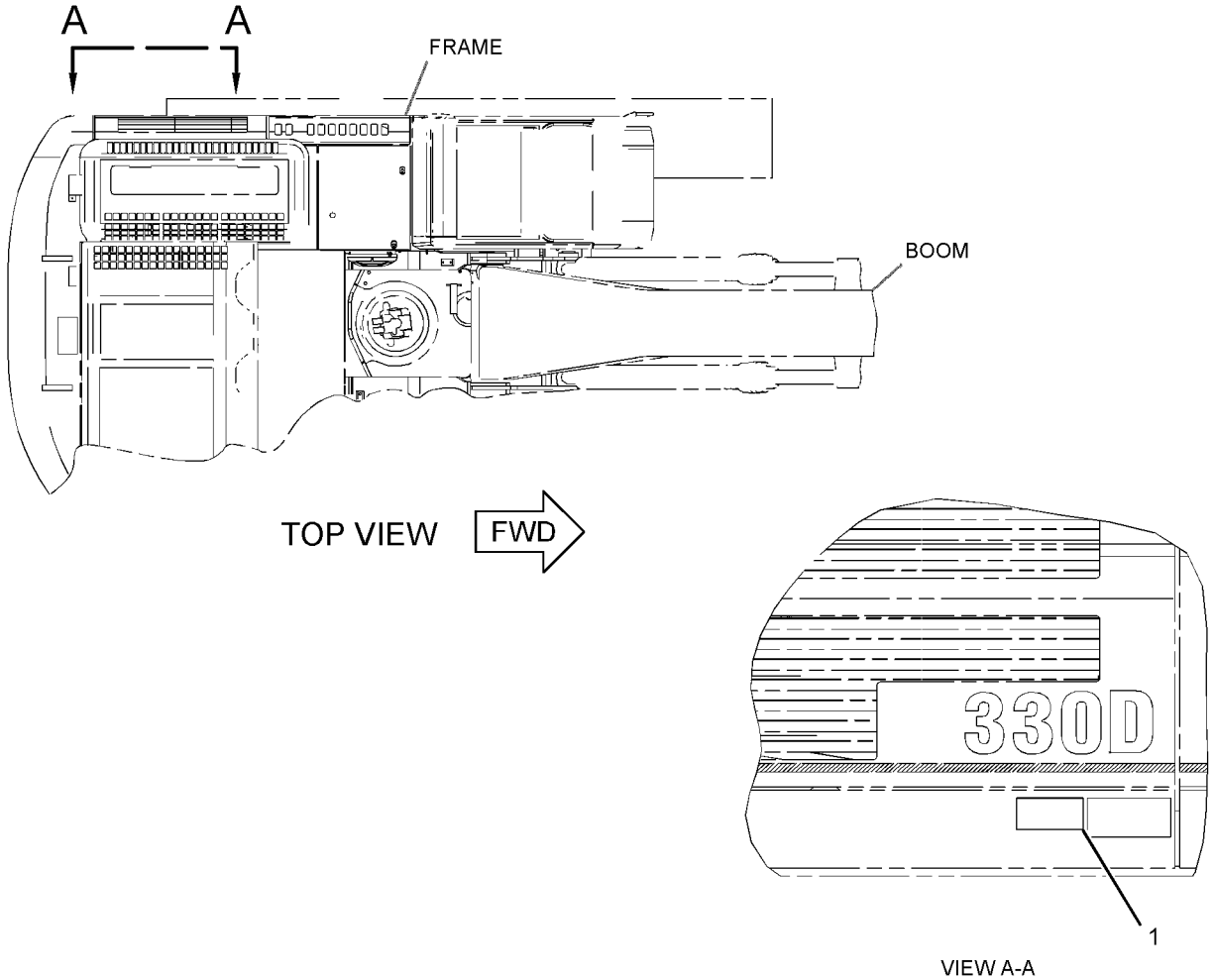

GRAPHIC #1 **<END>** g01305076

SERVICE EQUIPMENT AND SUPPLIES

282-5705 FILM GP—QUICK COUPLER

S/N: D3P1-UP
PART OF 344-4212 CONTROL AR-COUPLER
AN ATTACHMENT

SMCS-7405, 7557 **i02956553**

NOTE	REF NO	GRAPHIC REF	PART NUMBER	QTY	PART NAME 1 2 3 4 5 6 (PRODUCT LEVEL)	SEE PAGE
	1	1	**268-4530**	1	FILM-WARNING (CRUSH HAZARD, READ OMM, U.S.)	
					—OR—	
		1	**269-0120**	1	FILM-WARNING (CRUSH HAZARD, READ OMM, INTL)	
	2	1	**268-4531**	1	FILM-INSTRUCTION (COUPLER OPERATION)	
	3	1	**268-8872**	1	FILM-WARNING (CRUSH HAZARD, READ OMM, U.S.)	
					—OR—	
		1	**269-0121**	1	FILM-WARNING (CRUSH HAZARD, READ OMM, INTL)	

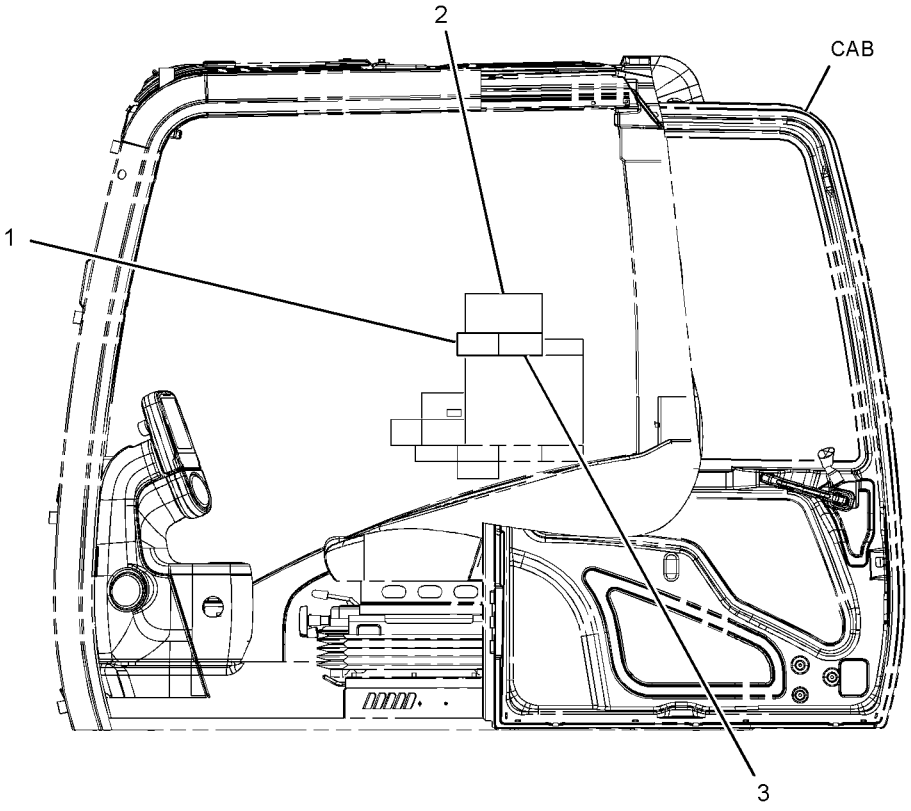

LEFT SIDE VIEW

GRAPHIC #1 **<END>** g01238116

SERVICE EQUIPMENT AND SUPPLIES

298-4258 FILM GP–FUEL TRANSFER PUMP

S/N: D3P1-UP; M4T1-UP
PART OF 229-1784 PUMP AR-FUEL TRANSFER
AN ATTACHMENT

SMCS-7405, 7557 **i02861636**

NOTE	REF NO	GRAPHIC REF	PART NUMBER	QTY	PART NAME 1 2 3 4 5 6 (PRODUCT LEVEL)	SEE PAGE
	1	1	**309-3872**	1	FILM-WARNING (EXPLOSION HAZARD, READ OMM)	

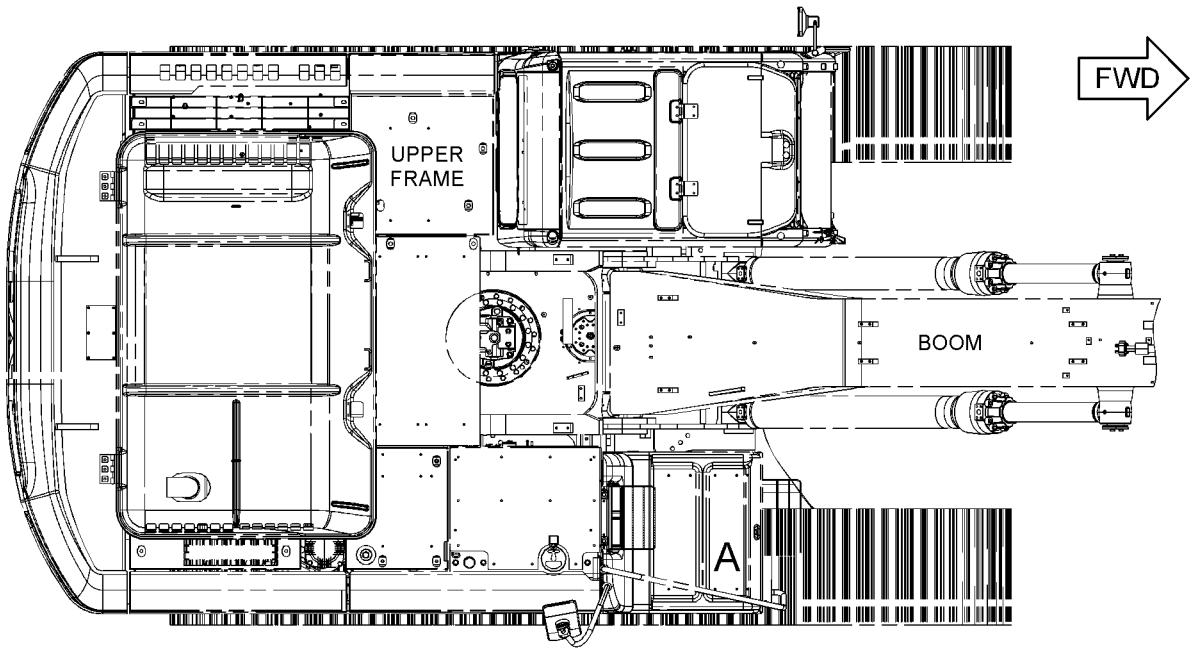

TOP VIEW

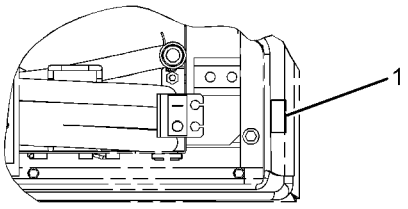

VIEW OF AREA A

GRAPHIC #1 **<END>** g01428719

SERVICE EQUIPMENT AND SUPPLIES

298-4341 FILM GP—SMARTBOOM

S/N: M4T1-UP

PART OF 329-6564 CONTROL AR-BOOM

AN ATTACHMENT

SMCS-7405, 7557 **i03744445**

NOTE	REF NO	GRAPHIC REF	PART NUMBER	QTY	PART NAME 1 2 3 4 5 6 (PRODUCT LEVEL)	SEE PAGE
	1	1	**236-0563**	1	FILM-IDENTIFICATION (SMARTBOOM)	
	2	1	**260-6944**	1	FILM-WARNING (BOOM FLOAT)	
	3	1	**322-4582**	1	FILM-WARNING (TIPPING HAZARD, READ OMM)	

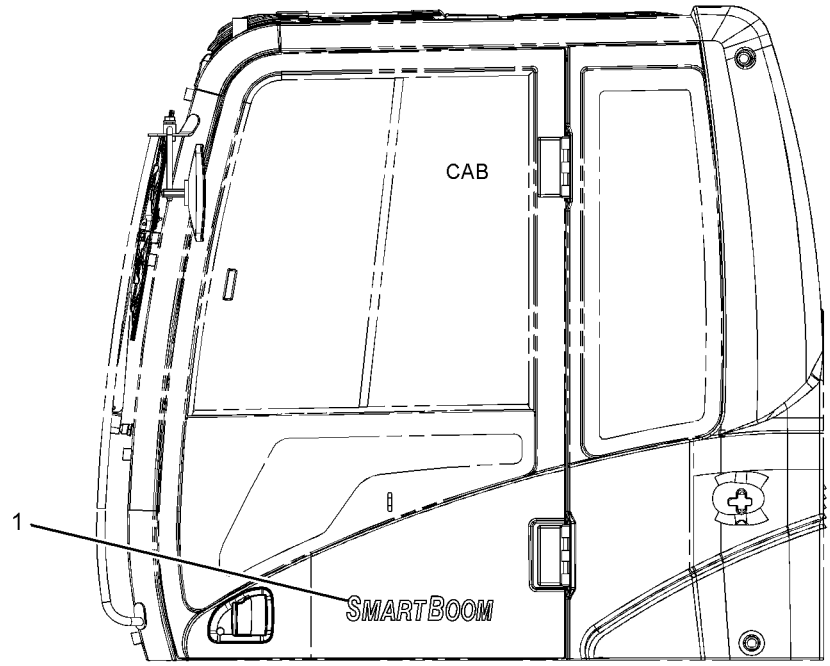

LEFT SIDE VIEW

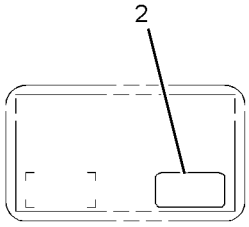

VIEW OF AREA A

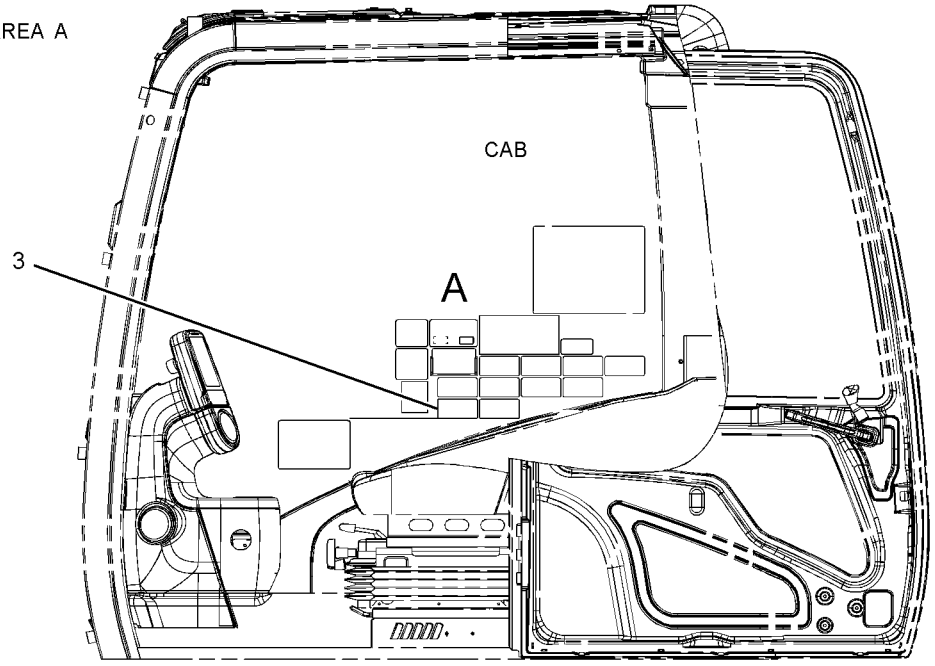

LEFT SIDE VIEW
(DOOR OPEN)

GRAPHIC #1 **<END>** g01621999

SERVICE EQUIPMENT AND SUPPLIES

303-2787 FILM GP—WORK AREA VISUAL SYSTEM, REAR

S/N: M4T1-UP
PART OF 329-6574 CAMERA AR
AN ATTACHMENT

SMCS-7405, 7557 **i03682800**

NOTE	REF NO	GRAPHIC REF	PART NUMBER	QTY	PART NAME 1 2 3 4 5 6 (PRODUCT LEVEL)	SEE PAGE
	1	1	**319-9152**	1	FILM-INSTRUCTION (BATTERY LIFE, CAMERA)	

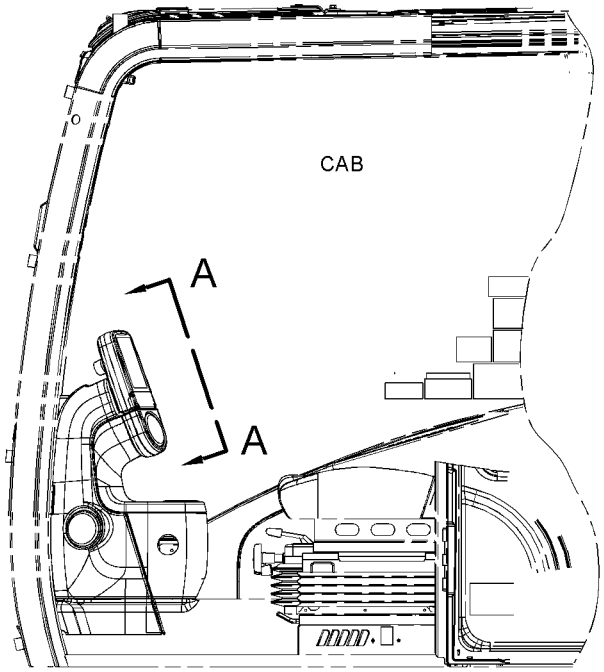

LEFT SIDE VIEW

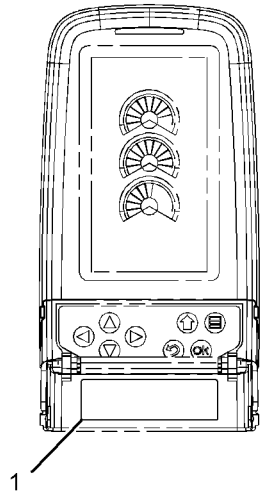

VIEW A-A

GRAPHIC #1 **<END>** g01620358

SERVICE EQUIPMENT AND SUPPLIES

329-6578 FILM GP-U.S.

S/N: D3P1-UP

AN ATTACHMENT

SMCS-7405, 7557 **i03304263**

NOTE	REF NO	GRAPHIC REF	PART NUMBER	QTY	PART NAME 1 2 3 4 5 6 (PRODUCT LEVEL)	SEE PAGE
	1	1	**329-6505**	1	FILM (LIFTING CAPACITY)	
FY			*314-3538*	1	PLATE & FILM GP	1097

F-NOT SHOWN
Y-SEPARATE ILLUSTRATION

336D L

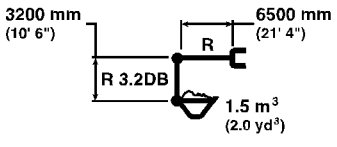

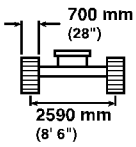

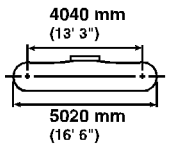

1

		1.5 m (5.0 ft)		3.0 m (10.0 ft)		4.5 m (15.0 ft)		6.0 m (20.0 ft)		7.5 m (25.0 ft)		9.0 m (30.0 ft)				
9.0 m (30.0 ft)	kg													*5000		7.12
	(lb)													(*10,250)		24.09
7.5 m (25.0 ft)	kg									*6250				*4900		8.20
	(lb)									(*13,800)				(*10,800)		(26.68)
6.0 m (20.0 ft)	kg									*6500	6500			*4750	4400	9.09
	(lb)									(*14,200)	(13,900)			(*10,400)	(9800)	(29.67)
4.5 m (15.0 ft)	kg					*11 200		*8550		*7250	6200	*6550	4400	*4750	3800	9.66
	(lb)							(*18,350)		(*15,700)	(13,250)	(*14,300)	(9350)	(*10,400)	(8350)	(31.63)
3.0 m (10.0 ft)	kg							*10 300	8350	*8150	5800	*7000	4200	*4900	3450	9.94
	(lb)					(*32,550)	(27,650)	(*22,200)	(17,950)	(*17,650)	(12,500)	(*15,200)	(9000)	(*10,750)	(7600)	(32.61)
1.5 m (5.0 ft)	kg							*11 800	7750	*9000	5500	6900	4050	*5250	3350	9.97
	(lb)							(*25,400)	(16,700)	(*19,450)	(11,800)	(14,800)	(8600)	(*11,550)	(7300)	(32.72)
0.0 m (0.0 ft)	kg					*13 900	11 750	*12 500	7450	9100	5250	6750	3900	*5800	3400	9.75
	(lb)					(*33,200)	(25,150)	(*27,000)	(16,000)	(19,500)	(11,300)	(14,500)	(8350)	(*12,800)	(7450)	(32.00)
-1.5 m (- 5.0 ft)	kg			*8500		*16 100	11 750	*12 400	7350	8950	5150	6700	3850	6450	3700	9.27
	(lb)			(*19,650)		(*35,050)	(25,150)	(*26,850)	(15,750)	(19,250)	(11,050)	(14,450)	(8250)	(14,200)	(8100)	(30.36)
- 3.0 m (- 10.0 ft)	kg			*18 800		*15 000	11 900	*11 550	7400	*8900	5200			*7350	4350	8.46
	(lb)			(*40,600)		(*32,500)	(25,450)	(*24,900)	(15,900)	(*19,100)	(11,150)			(*16,100)	(9550)	(27.67)
- 4.5 m (- 15.0 ft)	kg			*15 400		*12 300	12 200	*9550	7650					*7200	5700	7.26
	(lb)					(*26,350)	(26,250)	(*20,300)	(16,400)					(*15,750)	(*12,800)	(23.57)
- 6.0 m (- 20.0 ft)	kg															
	(lb)															

* ISO 10567

GRAPHIC #1 **<END>** g01774416

SERVICE EQUIPMENT AND SUPPLIES

240-3768 PLATE & FILM GP—BIODEGRADABLE OIL

S/N: D3P1-UP; M4T1-UP
AN ATTACHMENT

SMCS-7405, 7557 **i03726940**

NOTE	REF NO	GRAPHIC REF	PART NUMBER	QTY	PART NAME 1 2 3 4 5 6 (PRODUCT LEVEL)	SEE PAGE
	1	1	**169-3530**	1	FILM-IDENTIFICATION (BIODEGRADABLE HYDRAULIC OIL)	

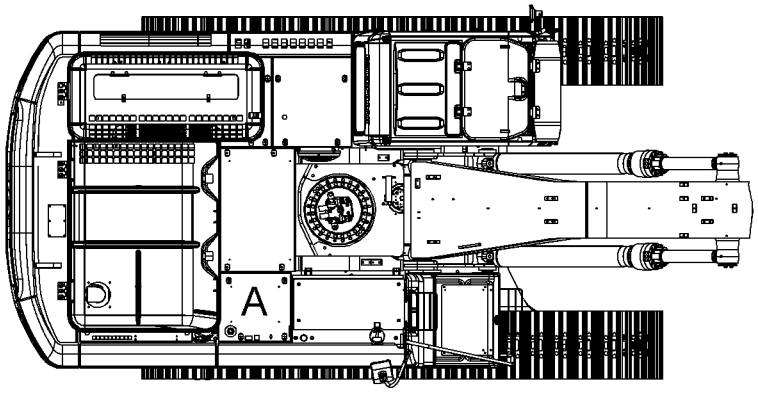

TOP VIEW

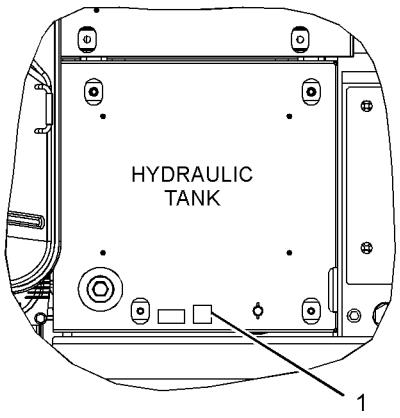

VIEW OF AREA A

GRAPHIC #1 **<END>** g01836956

SERVICE EQUIPMENT AND SUPPLIES

314-3538 PLATE & FILM GP–U.S.

S/N: D3P1-UP
PART OF 329-6578 FILM GP-U.S.
AN ATTACHMENT

SMCS-7405, 7557 **i03021042**

NOTE	REF NO	GRAPHIC REF	PART NUMBER	QTY	PART NAME 1 2 3 4 5 6 (PRODUCT LEVEL)	SEE PAGE
	1	2	**224-7717**	1	FILM-WARNING (SEAT BELT, U.S.)	
	2	2	**224-8945**	1	FILM-WARNING (DO NOT USE ETHER, U.S)	
	3	2	**225-0313**	1	FILM-WARNING (JUMP START, READ OMM, U.S.)	
	4	2	**225-3305**	1	FILM-WARNING (UNIVERSAL, READ OMM, U.S.)	
	5	1,2	**225-4256**	2	FILM-WARNING (HOT FLUID UNDER PRESSURE, U.S.)	
	6	2	**228-2780**	2	FILM-WARNING (MACHINE SWING, CRUSHING, U.S.)	
	7	1,2	**228-7315**	4	FILM-WARNING (HOT SURFACE, HANDS CLEAR, U.S.)	
	8	2	**228-9253**	1	FILM-WARNING (ELECTRICAL HAZARD, U.S.)	
	9	2	**242-1589**	1	FILM-WARNING (FRONT WINDOW, READ OMM, U.S.)	
	10	2	**267-4495**	1	FILM-WARNING (CRUSH HAZARD, READ OMM, U.S.)	

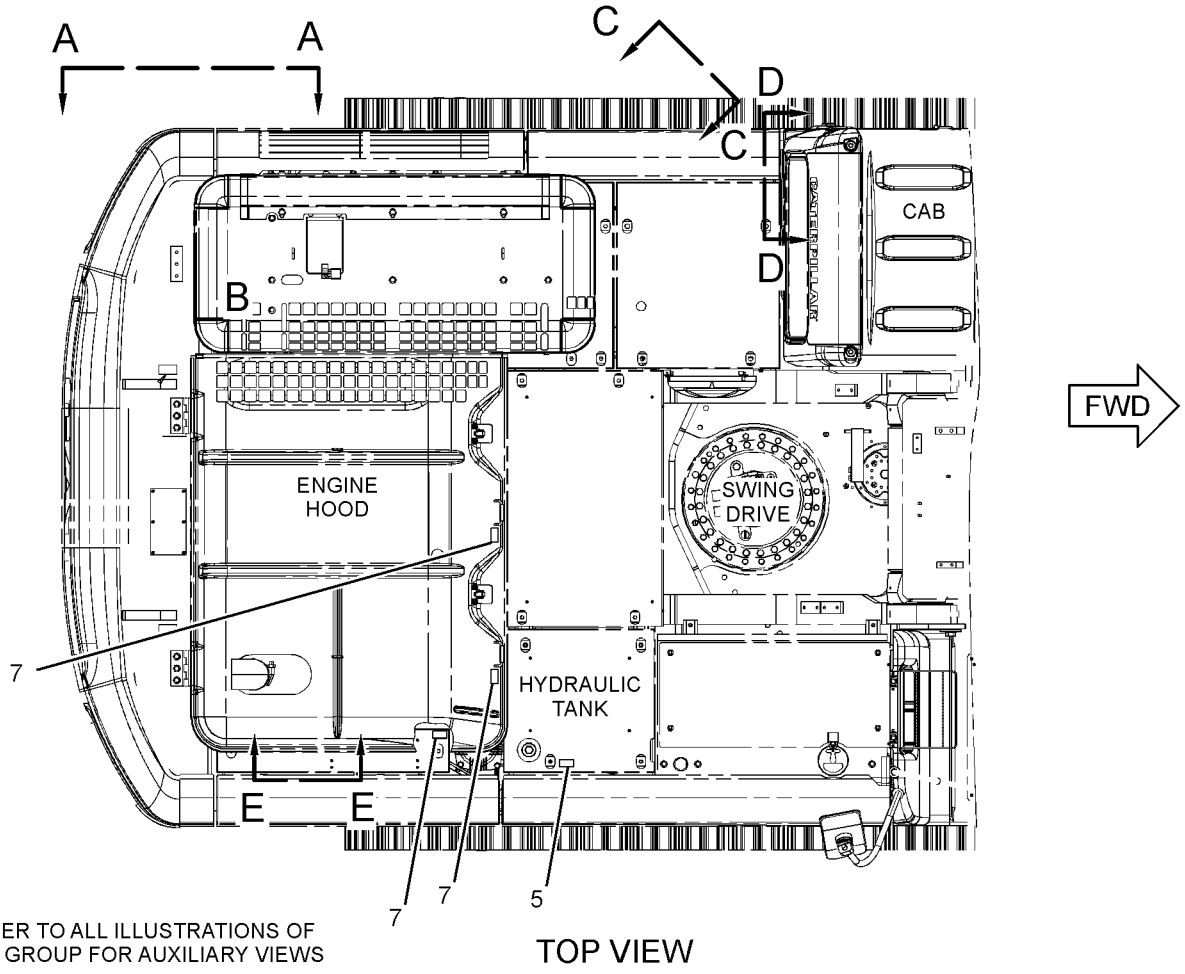

REFER TO ALL ILLUSTRATIONS OF THIS GROUP FOR AUXILIARY VIEWS

TOP VIEW

GRAPHIC #1 g01448864

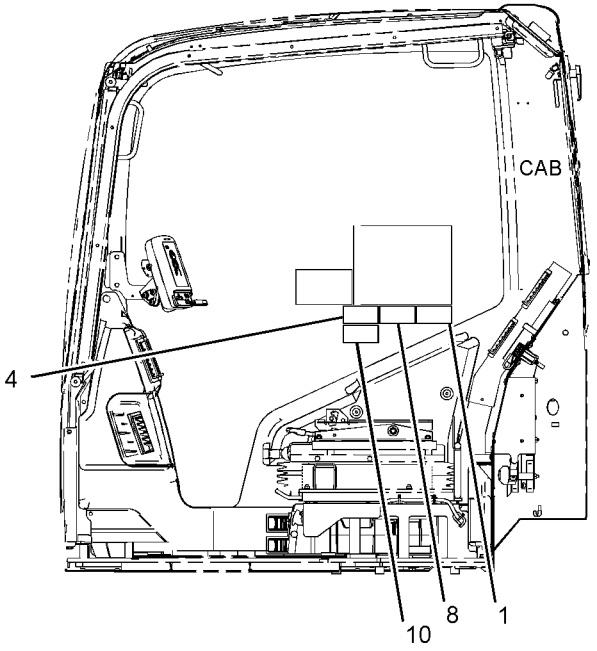

LEFT SIDE VIEW

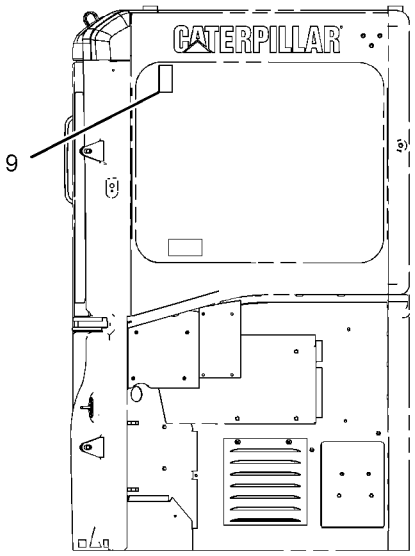

REAR VIEW
(CAB)

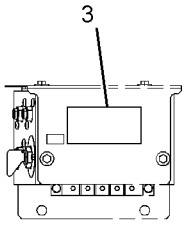

VIEW D-D

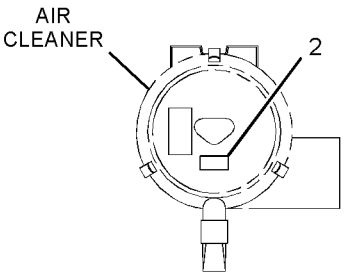

VIEW C-C

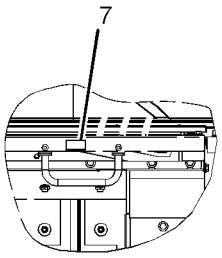

VIEW E-E

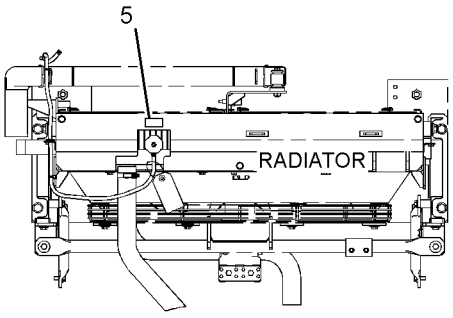

VIEW OF AREA B
(ENGINE HOOD REMOVED)

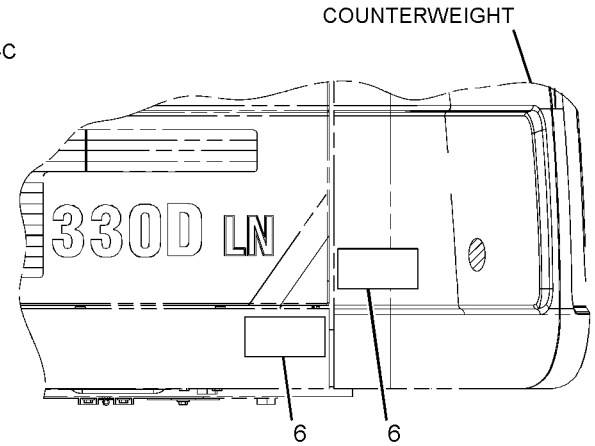

VIEW A-A

GRAPHIC #2 **<END>** g01448865

SERVICE EQUIPMENT AND SUPPLIES

314-3716 PLATE & FILM GP

S/N: D3P1-UP; M4T1-UP

PART OF 314-3709 CHASSIS AR

SMCS-7405, 7557 **i03494940**

NOTE	REF NO	GRAPHIC REF	PART NUMBER	QTY	PART NAME 1 2 3 4 5 6 (PRODUCT LEVEL)	SEE PAGE
	1	1,3	**1P-2807**	4	FILM-INFORMATION (LIFT EYE LOCATION)	
	2	4	**7X-7644**	4	FILM-INFORMATION (TIE-DOWN)	
	3	4	**134-7258**	1	FILM-INFORMATION (EXTENDED LIFE COOLANT,READ OMM)	
	4	4	**146-6747**	1	FILM-INFORMATION (24-VOLT)	
	5	1	**167-7270**	1	FILM-INSTRUCTION (NO STEP)	
	6	2	**190-5386**	2	FILM-STRIPE (ROUND RED REFLECTIVE)	
	7	4	**224-8946**	1	FILM-WARNING (NO ETHER SPRAY/AIR INTK, INTL)	
	8	4	**225-0312**	1	FILM-WARNING (JUMP START, READ OMM)	
	9	1,4	**225-4257**	2	FILM-WARNING (HOT FLUID UNDER PRESS, INTL)	
	10	2	**228-2781**	2	FILM-WARNING (MACHINE SWING, CRUSHING, INTL)	
	11	1,4	**228-7316**	4	FILM-WARNING (HOT SURFACE, HANDS CLEAR, INTL)	
	12	4	**229-0887**	1	FILM-INFORMATION (AIR CLEANER)	
	13	4	**239-6986**	1	PLATE-IDENTIFICATION (MACHINE)	
	14	4	**242-1510**	1	FILM-INSTRUCTION (HYDRAULIC OIL CHECK)	
	15	4	**242-6092**	1	FILM-WARNING (ACCUMULATOR PRESSURE)	
	16	2	**247-7436**	1	FILM-IDENTIFICATION (CAT)	
	17	4	**247-7437**	1	FILM-IDENTIFICATION (BATTERY CIRCUIT BREAKER)	
	18	4	**247-7438**	2	FILM-IDENTIFICATION (ELECTRICAL CIRCUIT BREAKER)	
	19	1,2	**253-0861**	2	FILM-INFORMATION (CAT POWER, ACERT TECHNOLOGY)	
	20	2	**257-4502**	1	FILM-IDENTIFICATION (CATERPILLAR)	
	21	1	**290-1727**	1	FILM-IDENTIFICATION (CAT BOOM, RH)	
	22	2	**290-1728**	1	FILM-IDENTIFICATION (CAT BOOM, LH)	
	23	1,2	**290-1729**	2	FILM-IDENTIFICATION (CAT UPPER STRUCTURE)	
E	24	1	**290-1906**		FILM-STRIPE (RED) (45-CM EACH)	
	25	1,2	**329-6508**	2	FILM-IDENTIFICATION (336D L)	
	26	3	**4I-8472**	1	FILM-INSTRUCTION (OPERATOR CONTROLS)	
	27	3	**8T-6842**	1	FILM-INSTRUCTION (PULL RING, ALTERNATE EXIT)	
	28	3	**187-0661**	1	FILM-INSTRUCTION (ALTERNATE EXIT)	
	29	3	**214-7915**	1	FILM-INSTRUCTION (ENGINE SHUTOFF)	
	30	3	**221-8045**	1	FILM-WARNING (SEAT BELT, INTERNATIONAL)	
	31	3	**223-9818**	1	FILM-INSTRUCTION (WINDOW CLEANING, READ OMM)	
	32	3	**224-0554**	1	FILM-WARNING (UNIVERSAL, READ OMM, INTL)	
	33	3	**228-9254**	1	FILM-WARNING (ELEC HAZARD, READ OMM, INTL)	
	34	3	**242-1588**	1	FILM-WARNING (FRONT WINDOW, READ OMM, INTL)	
	35	3	**245-5457**	1	FILM-INSTRUCTION (BACKUP CONTROL)	
	36	3	**247-7441**	1	FILM-IDENTIFICATION (FUSE PANEL)	
	37	3	**266-5431**	1	FILM-WARNING (CRUSH HAZARD, READ OMM, INTL)	
	38	3	**310-6252**	1	FILM-INSTRUCTION (BACKUP CONTROL, READ OMM)	
BJ	39	1	**334-4603**	1	FILM-INFORMATION (HYDO ADVANCED 10)	
	40	3	**303-2668**	1	PLATE-INSTRUCTION (AIR CONDITIONER, READ OMM)	
AF			**4W-1413**	1	PLATE-SERIAL NUMBER (ENGINE)	
					(ON LH SIDE OF CYLINDER BLOCK TOWARD THE TOP AND REAR FLAT AREA BEHIND THE ECM)	

A-NOT PART OF THIS GROUP
B-USE AS REQUIRED
E-ORDER BY THE CENTIMETER
F-NOT SHOWN
J-REQUIRED ONLY WHEN HYDRAULIC TANK IS FILLED WITH HYDO ADVANCED 10 OIL

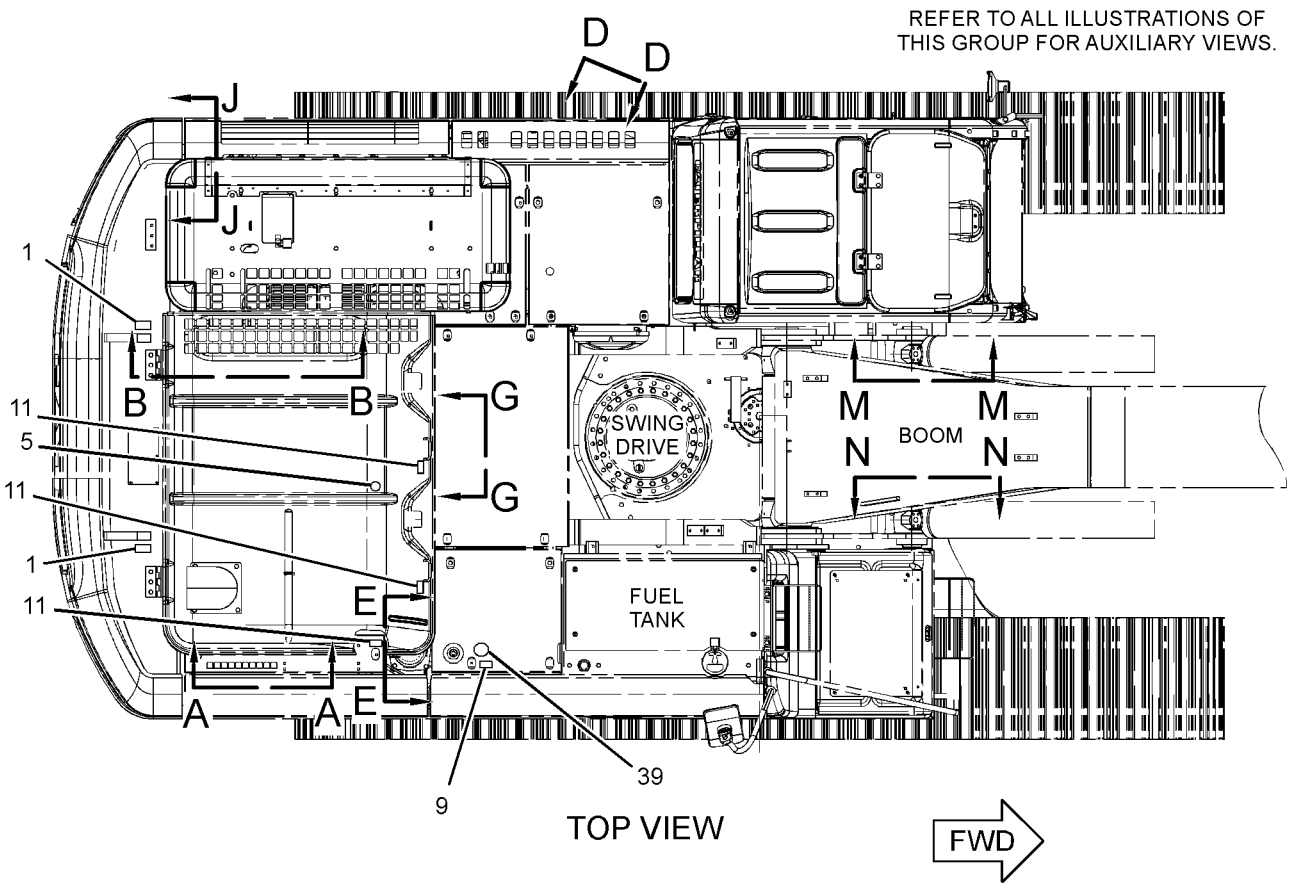

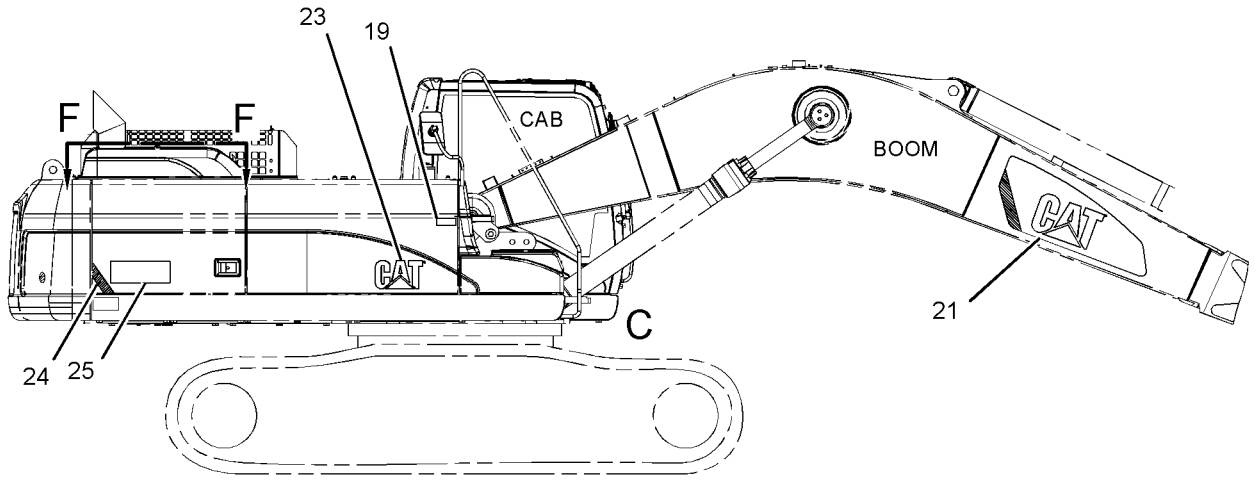

RIGHT SIDE VIEW

GRAPHIC #1 g01811053

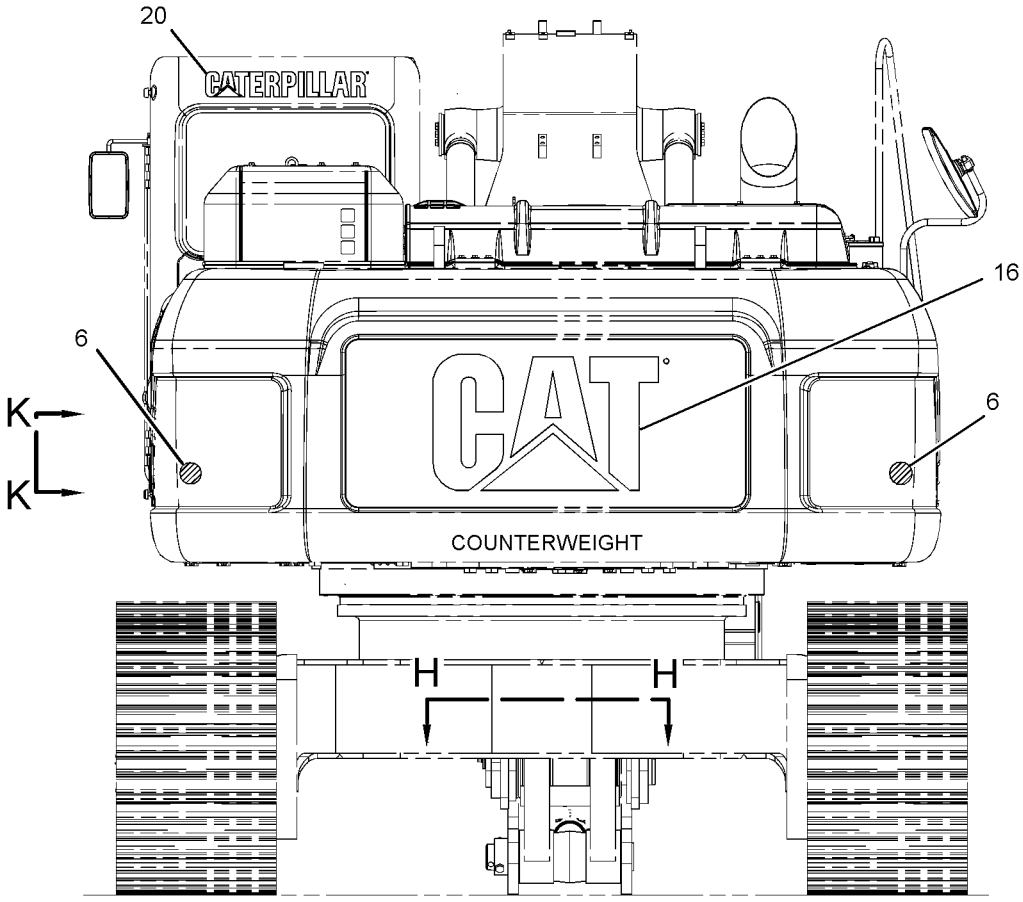

REAR VIEW

REFER TO ALL ILLUSTRATIONS OF
THIS GROUP FOR AUXILIARY VIEWS.

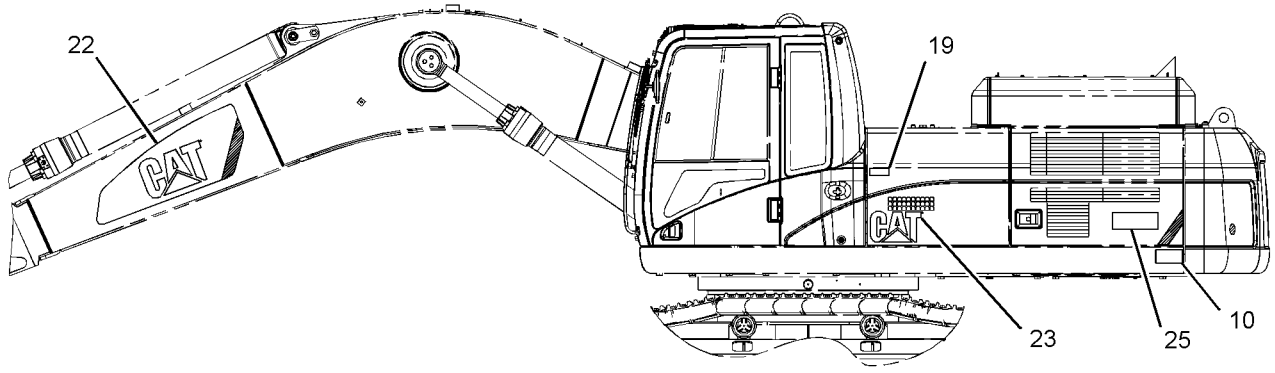

LEFT SIDE VIEW

GRAPHIC #2 g01604277

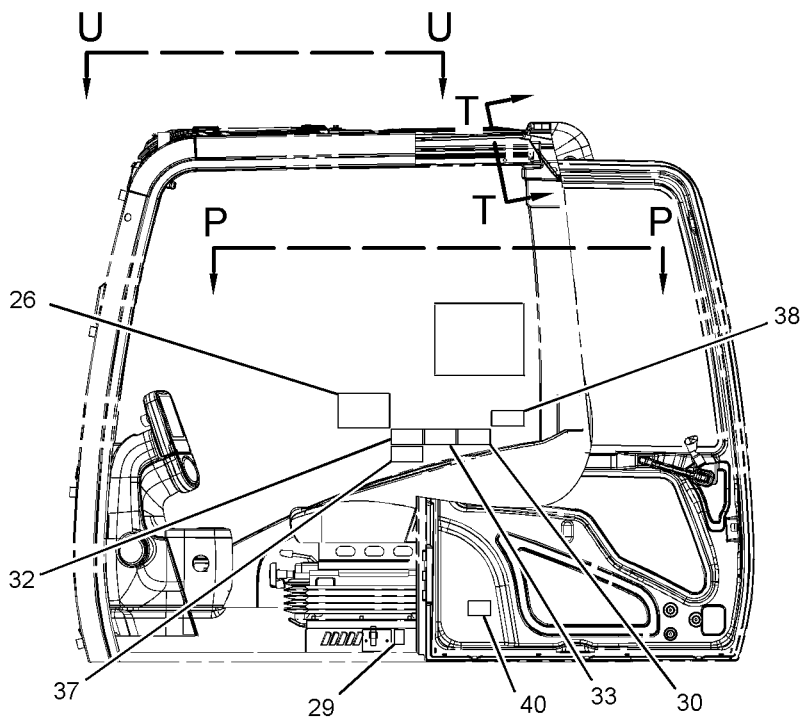

LEFT SIDE VIEW
(CAB)

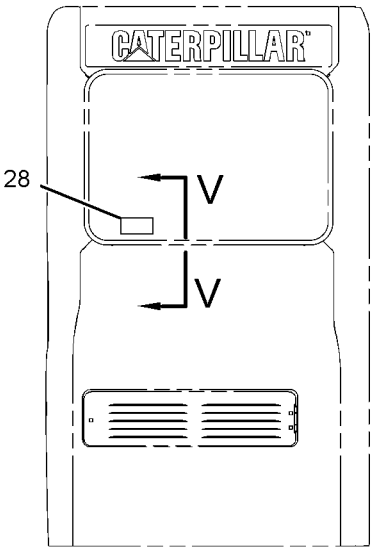

REAR VIEW
(CAB)

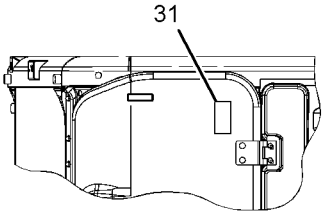

VIEW U-U

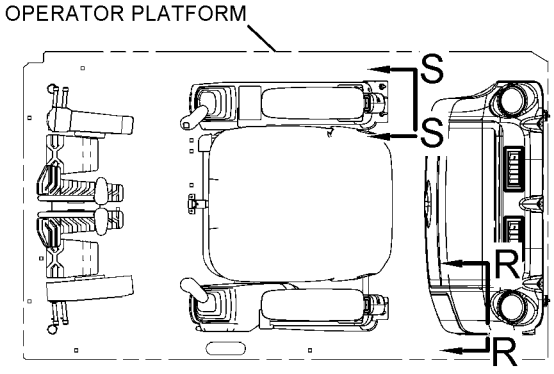

VIEW P-P

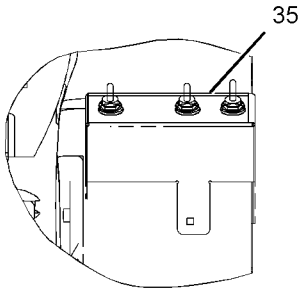

VIEW S-S

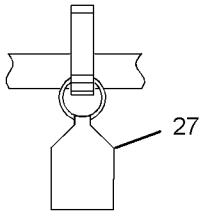

VIEW V-V

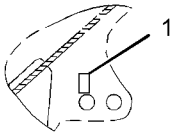

VIEW N-N

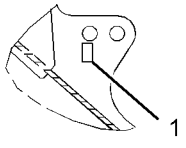

VIEW M-M

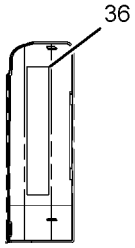

VIEW R-R

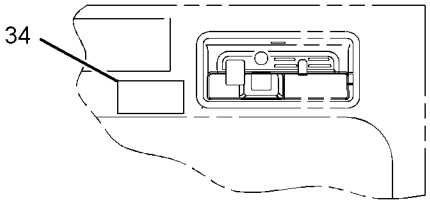

VIEW T-T

GRAPHIC #3

g01833563

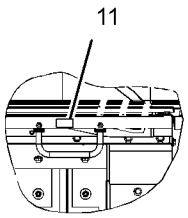

VIEW A-A

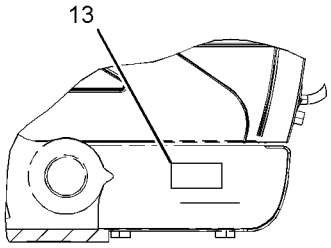

VIEW OF AREA C

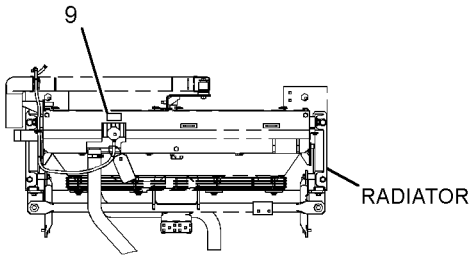

VIEW F-F

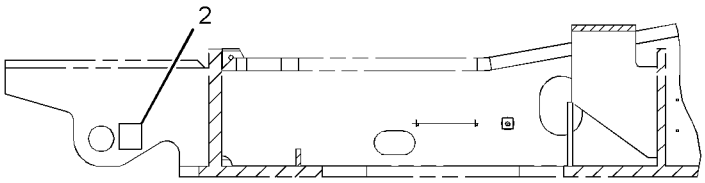

VIEW B-B

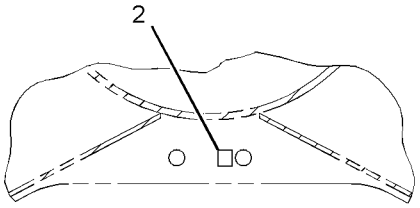

VIEW H-H

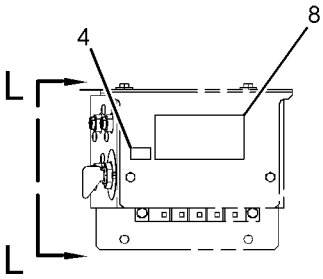

VIEW K-K

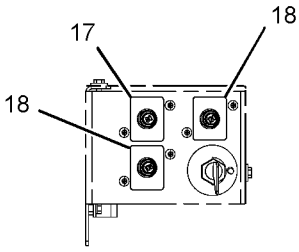

VIEW L-L

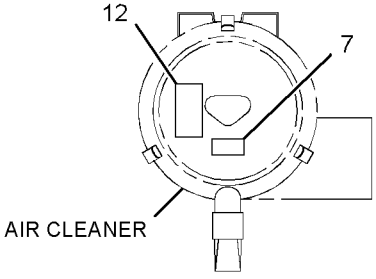

VIEW D-D

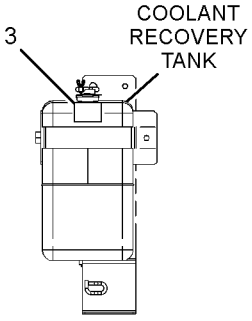

VIEW J-J

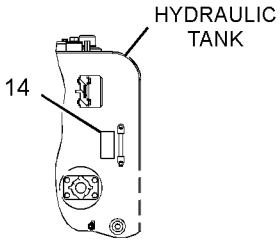

VIEW E-E

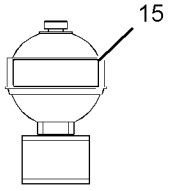

VIEW G-G

GRAPHIC #4 **<END>** g01604278

MEMORANDA

PART NUMBER INDEX

Part	Page
0	
0L-1026	34
0S-0519	36
0S-1589	29
0S-1597	261
1	
1A-0621	969
1B-3581	256
1B-8705	27
	33
1D-4635	912
1D-4637	913
	914
1F-7960	161
1H-1023	261
1H-2629	261
1H-3244	176
1H-3338	265
1H-7339	421
1J-9671	574
	787
1K-8850	390
	391
1M-3097	427
1M-6119	178
	180
	181
	279
1M-6120	178
	180
	181
	279
1M-9968	262
1M-9971	261
1N-8062	161
1P-0451	128
1P-2807	1099
1P-3702	553
	556
	561
	564
	569
	576
	587
	590
	676
	736
	737
	738
	744
	748
	757
	766
	774
	811
1P-3703	501
	504
	532
	533
	534
	538
1P-3704	506
	510
	514
	517
	518
	521
	524
	527
	529
	534
	537
	539
	561
	569
	576
	587
	590
	670
	676
	680
	681
	682
	683
	684
	686
1P-3705	506
	510
	527
	529
	676
	685
1P-3706	685
1P-4578	553
	556
	561
	564
	569
	587
	591
	663
	666
	668
1P-5411	106
1P-5412	106
1P-5767	506
	510
	514
	517
	518
	521
	524
	527
	529
	576
	587
	591
	668
	670
	682
	684
1R-0762	134
	137
	141
	145
1R-1808	81
	83
1R-5998	942
	943
1R-9953	118
	119
1R-9958	379
1S-0812	269
	270
1S-0994	1019
1S-7251	178
	181
	260
	279
1S-7252	178
	180
	260
1S-7446	261
1S-9593	838
1T-0808	261
1T-0936	704
1U-8846	65
	66
	120
	255
	341
	371
	477
	480
	482
	686
1W-2715	43
	45
	47
1W-8407	36
2	
2A-3746	42
	49
2A-4429	43
	45
	47
2B-7561	371
	482
2C-9259	889
	890
	896
	897
	898
	899
	900
	901
	902
2D-1290	134
	138
	142
	145
2D-6392	261
2D-6642	704
	776
	820
2F-6678	262
2G-1830	279
2G-8767	180
2H-3429	261
2H-3922	264
	1073
2J-3507	912
	913
	914
2J-8163	261
2K-4821	176
2L-0273	330
2L-6679	261
2L-8069	284
2L-8075	228
2L-8079	284
	290
	292
	326
	336
2M-0849	1023
	1033
2M-4453	110
2M-9780	81
	83
	137
	138
	141
	142
	145
	146
	256
	574
	596
	599
	657
	673
	686
	704
	750
	760
	766
2P-1279	550
2P-3628	340
2P-4304	81
	83
2Q-4703	969
2R-1236	704
2R-6806	132
2S-1647	311
2S-2596	755
	772
2S-4078	157

► **PRIMARY REFERENCE**

PART NUMBER INDEX

Part	Page	Part	Page	Part	Page	Part	Page
	167		657		451		104
	169		663		534		111
	553		670		550		132
	556		673		574		134
	561		674		579		137
	564		686		581		141
	569		704		582		145
	587		709		594		449
	590		712		599		477
	666		734		602		480
	668		798		603		515
	670		812		606		519
2S-5926	413		814		607		522
2W-1145	474		815		610		525
2W-7381	50		816		613		535
2W-8147	33		817		614		552
2Y-5685	1010		819		619		556
2Y-5829	76		841		621		560
	77	3D-5102	256		623		579
		3D-9143	346		625		587
		3E-2310	635		629		590
3			639		632		596
			644		635		599
3B-0551	167		648		636		602
	169		659		638		606
3B-0623	34	3E-2338	340		639		613
3B-4501	211	3E-3371	274		644		614
	212		290		647		615
	213		560		648		635
3B-4618	380		590		651		638
3B-8489	368		679		653		639
	370	3E-3383	271		655		653
	371	3E-4297	487		657		668
	460	3E-4352	120		659		670
	461		232		668		673
	462		233		676		676
	463	3E-5169	332		686		679
	859	3E-6910	694		689		689
	860	3E-7771	262		699		690
	863	3E-8004	515		702		695
	865		519		729		697
	867		525		731		704
	873	3E-8005	28		742		718
	875	3E-8017	124		746		734
	877		128		750		742
	878	3E-8020	942		768		755
	879	3E-8025	493		770		768
	881	3E-8048	220		772		770
	883	3E-8320	222		776		1019
	885	3E-9412	159		777	3K-0835	269
	886	3E-9872	1062		820		270
3D-2824	74		1076		821	3K-5234	912
	534	3F-1547	694		822		913
	552	3F-9556	176		848		914
	553		266	3J-5390	75	3K-8460	65
	556	3G-8054	615	3J-7354	81	3L-2875	256
	560	3G-8057	615		83	3L-3380	261
	561	3H-0442	776		534	3L-8187	220
	564	3J-1907	129		729		304
	568		132		731	3N-3763	262
	569		134		772	3P-0647	248
	579		167		795		797
	582		169	3K-0360	43	3P-1156	90
	587		172		45	3P-9847	639
	590		234		70		645

PART NUMBER INDEX

Part	Page	Part	Page	Part	Page	Part	Page
	648	3T-4709	261		447	4I-6027	629
	660	3T-4710	261	4I-1539	444		632
3R-8797	261	3T-7528	487	4I-1671	644	4I-6030	610
3R-8801	262	3T-9494	261	4I-1683	587	4I-6046	682
3R-9965	311		262		590		684
3S-2093	180	3T-9524	262	4I-1688	644	4I-6121	613
	189	3T-9525	261		647	4I-6130	684
	195	3V-4791	310		659	4I-6236	638
	201	3W-6399	1061	4I-1694	635	4I-6248	619
	205	3Y-9267	795	4I-1704	581	4I-6365	779
	220				623		783
	224				625		784
	226	**4**		4I-1739	613		789
	228				638		791
	230	4B-2049	262	4I-2187	346		793
	267	4B-3665	55	4I-2599	379	4I-6397	750
	275	4B-4158	413	4I-2885	1085		760
	281		704		1086	4I-6602	1001
	284		1003	4I-3038	267	4I-6604	888
	286	4B-4278	942	4I-3063	942	4I-6605	888
	288	4B-9044	256	4I-3090	943	4I-6626	887
	290	4B-9783	821		1076		888
	292		822	4I-3144	942	4I-6897	873
	294	4B-9880	823	4I-3266	1038		875
	298	4C-9612	70	4I-3503	1019		881
	302	4D-1836	332	4I-3510	812		883
	304	4D-3704	29		817	4I-7714	812
	307	4D-7388	93		819		817
	308	4D-7733	134	4I-3511	610	4I-7889	314
	310		138	4I-3569	750		625
	311		142	4I-3695	680		663
	314	4F-5695	34	4I-3941	638		666
	316	4G-4972	36	4I-4039	887	4I-7924	357
	318	4H-1225	969	4I-4043	887		392
	322	4H-6112	477	4I-4070	▶887		393
	324		480		892		395
	326	4I-0117	379		893		396
	328	4I-0118	379		894		397
	329	4I-0191	349		895		398
	330		350	4I-4270	942		400
	331		351	4I-4286	993		402
	332	4I-0232	379	4I-4298	1071		403
	334	4I-0378	167	4I-4300	1071		404
	336		169	4I-4361	1011	4I-8019	379
	337	4I-0379	134	4I-4392	942	4I-8267	445
	923		137	4I-4978	851	4I-8472	1099
	925		141		853	4I-8799	610
	1013		145		855		629
	1015	4I-0420	1064		857	4I-8965	768
	1033	4I-0716	610	4I-5005	851		770
	1039	4I-0800	635		853	4I-9521	535
	1061	4I-0806	638		855		581
	1062		647		857		594
	1073	4I-0812	686	4I-5020	1073		602
3S-6050	178	4I-0836	613	4I-5021	1073		606
3S-8536	1019	4I-0839	613	4I-5049	1060		610
3S-9643	103	4I-0995	640	4I-5394	734		613
	105	4I-1025	581	4I-5409	1		627
3T-3418	261		623		▶214		629
3T-3422	261	4I-1031	599	4I-5490	734		632
3T-3423	261	4I-1163	1073	4I-5849	699		638
	262	4I-1205	942		702		644
3T-3424	261	4I-1206	942	4I-5862	444		647
	262	4I-1260	1011	4I-5900	613		659
3T-3434	261	4I-1536	▶444	4I-5906	613	4I-9522	535

▶ **PRIMARY REFERENCE**

PART NUMBER INDEX

Part	Page
	581
	594
	602
	606
	610
	613
	619
	621
	627
	629
	638
	644
	647
	659
4I-9523	581
	602
	606
	610
	613
	619
	621
	629
	632
	638
	644
	647
	651
	659
4I-9524	602
	606
	610
	613
	619
	621
	629
	638
	644
	647
	659
4I-9525	535
	581
	602
	606
	610
	613
	627
	629
	632
	638
	644
	647
	659
4I-9526	535
	602
	606
	610
	627
	629
	640
	651
	653
4I-9527	581
	602
	606
	610
	613
	629
	635
	638
	644
	647
	653
	659
4I-9528	602
	606
	610
	613
	629
	638
	644
	647
	659
4J-0519	774
4J-0520	500
	503
	760
4J-0522	553
	556
	561
	564
	569
	588
	591
	663
	666
	668
4J-0524	670
4J-0525	110
4J-0527	596
	663
	666
	670
	734
4J-0528	787
4J-5267	576
	588
	591
	596
	599
	668
	744
	746
4J-5268	576
	676
4J-5309	750
4J-5477	544
	545
	546
	547
	549
	550
	581
	582
	594
	635
	655
4J-7385	804
	805
4J-7386	804
	805
4J-7533	487
	689
	740
	750
	768
	770
	772
	776
	832
	836
4J-8998	736
	737
	738
	744
	748
	757
	811
4K-1388	742
	804
	805
4K-2039	831
4K-4284	704
4K-8864	178
	181
	615
4L-2729	262
4M-0189	99
4M-1827	261
4M-1828	261
4M-1831	261
4M-1853	261
4M-1854	261
4M-1896	262
4N-0205	180
4N-1059	260
4N-1114	29
4N-2514	63
4N-9170	371
4N-9624	134
4P-4369	124
4P-5820	▶247
	249
4P-7428	181
	311
4P-7581	281
	284
	290
	294
	311
	322
	324
	334
	603
	607
4P-8134	322
	324
4R-9999	78
4S-4455	639
4S-9191	103
	105
4T-3148	750
4T-5074	750
4W-1413	1099
4W-2026	30

PART NUMBER INDEX

Part	Page
5I-4396	599
	613
	644
	651
5I-6881	765
5I-7090	968
	977
	978
5I-8251	▶211
	214
5I-8270	178
	180
5I-8416	▶445
	447
5I-8511	768
	770
5I-8670	484
5I-8708	613
5I-8748	181
	663
	666
5I-8754	474
5I-8790	493
5I-8791	493
5I-8799	493
5I-8800	493
5I-8802	493
5I-8808	493
5I-8809	493
5I-8810	493
5I-8811	493
5I-8812	493
5I-8813	493
5I-8815	493
5I-8820	493
5I-8853	629
5J-2383	699
	702
5J-5314	261
5K-0430	256
5K-8451	651
	653
5K-9090	498
	501
	504
	532
	533
	534
	552
	553
	556
	560
	561
	564
	568
	569
	576
	579
	587
	588
	590
	591
	666
	668
	670
5K-9243	371
5L-3233	118
	119
	123
5L-4758	451
	831
5M-3034	261
5M-4454	477
	480
5M-9624	772
5N-4185	28
5P-0597	85
5P-0743	89
5P-0747	178
	180
	260
	279
5P-0761	178
	180
	181
	279
5P-0767	482
	1019
5P-1075	256
	346
	364
	663
	666
5P-1076	99
	117
	125
	377
	380
	419
	420
	579
	599
5P-1318	574
5P-1442	135
	138
	142
	146
5P-2424	175
5P-2568	848
5P-3108	804
	805
5P-3264	159
5P-3454	330
5P-4115	222
	279
	380
5P-4116	174
	181
	346
5P-4325	85
	632
5P-4536	127
5P-4924	167
	169
5P-5148	673
5P-5952	390
5P-5998	267
5P-6298	261
5P-6312	256
5P-6313	256
5P-6314	256
5P-7175	145
5P-7462	615
	657
5P-7463	615
	657
5P-7464	673
5P-7465	674
5P-7468	553
	556
	561
	588
	591
	663
	666
	670
5P-7469	553
	556
	561
	588
	591
	663
	666
	670
5P-7470	557
	561
	564
	569
	588
	591
	663
	666
5P-7471	557
	561
	564
	569
	588
	591
	663
	666
5P-7530	88
	92
5P-7701	65
	81
	83
5P-7814	65
5P-7958	408
	1022
5P-7970	85
	322
	324
5P-8068	734
5P-8077	527
	529
5P-8182	557
	561
	564
	569
	588
	591
	663
5P-8196	81
	83
5P-8245	30
	60
	65
	67
	79
	86
5P-8247	63
	176
5P-8292	1060
5P-8309	379
	390
	391
	392
	393
	397
	398
	401
5P-8347	198
5P-8439	181
5P-8444	670
5P-8500	165
	379
	1022
5P-9120	421
5P-9297	132
5Q-4212	540
	542
	544
	545
	546
	547
	549
5S-7349	176
	1036
5V-3854	390
	391
6B-5072	103
	105
6C-3679	393
6C-6760	515
	519
	522
	525
6C-8382	1001
	1006
	1008
6D-1641	651
6D-3479	639
	648
6D-4244	329
6D-4246	596
	599
6D-5257	311
6D-9157	734
6E-1435	639
	648
6E-2163	755
6E-2271	743

6

▶ **PRIMARY REFERENCE**

PART NUMBER INDEX

Part	Page
	755
	764
6E-2274	744
	748
	750
	757
	760
6E-2313	746
6E-2745	708
	711
6E-2746	▶708
	710
6E-3653	750
6E-4793	▶709
	710
6E-4815	709
6E-4816	▶710
	757
	760
6E-5102	51
	53
6E-5169	750
6E-5431	746
6E-5434	746
6E-5438	746
6E-5439	746
6E-5643	750
6E-5731	744
	748
	750
	757
	760
6E-6528	802
6F-0253	269
	270
6F-4855	490
6F-7045	264
6G-2256	180
6G-2263	180
6H-4746	256
6I-0723	734
6I-0724	734
6I-5298	971
	972
6I-5342	1011
6I-5470	943
6I-6033	379
6I-6758	787
6I-6795	812
	817
	819
6I-6798	464
6I-6904	765
6I-6905	765
6I-6907	765
6I-6923	778
6I-8454	437
	442
6J-2680	565
	569
	588
	670
	674
	729
	731
6J-6855	772
6K-0806	980
	981
	982
	983
	984
	985
	988
	989
6K-8178	178
	181
	639
6L-3616	859
	860
6M-5062	709
	712
	831
6N-1604	207
6N-3279	261
6N-3826	261
6P-2216	357
	392
	393
	395
	396
	397
	398
	400
	402
	403
	404
6T-0363	261
6T-0371	261
6T-0372	261
6T-3631	274
	304
6T-3632	274
	304
6T-3633	274
	304
6T-9442	269
6V-0400	576
	680
	681
	682
	683
	684
	686
6V-0405	550
6V-0545	553
	557
	561
	666
6V-0683	615
	657
6V-0852	574
	582
	639
	645
	648
	651
	657
	659
	729
	731
6V-0974	615
6V-1322	261
6V-1572	670
6V-1573	670
6V-1819	95
	96
6V-1874	588
	591
	663
6V-1875	670
6V-1889	134
	138
	582
	594
6V-2317	31
6V-2369	294
6V-2606	138
	142
	146
6V-2722	178
	188
	279
6V-3265	86
	218
	219
	1019
	1062
6V-3324	273
6V-3382	704
6V-3538	36
6V-3551	716
6V-3822	132
6V-3908	81
	83
6V-3918	28
	66
	70
	111
6V-3922	750
	760
6V-3938	787
6V-3940	27
	28
	72
	73
	88
	90
	92
	232
	233
6V-3965	574
	582
	639
	645
	648
	651
	657
	660
	729
	731
6V-4249	59
6V-4298	485
6V-4369	322
6V-4589	134
	159
	268
6V-5048	232
	233
	238
	239
	242
	243
6V-5049	74
	90
	163
	164
	232
	235
	237
	246
6V-5050	159
6V-5192	704
6V-5204	692
	693
	720
6V-5210	211
	212
	213
	294
6V-5217	66
	85
	322
	324
6V-5218	51
	53
	81
	83
	92
6V-5219	65
6V-5326	772
6V-5393	750
6V-5556	750
	809
6V-5590	55
6V-5597	744
	748
	750
	757
	760
6V-5645	222
6V-5696	30
6V-5782	574
6V-5839	51
	53
	85
	86
	95
	96
	124
	132
	159
	322
	324
	330
6V-5842	51
	53
6V-5843	64
6V-6317	85
	86
	322

▶ **PRIMARY REFERENCE**

PART NUMBER INDEX

Part	Page	Part	Page	Part	Page	Part	Page
	324		138		599		659
	330		141		602		686
6V-6609	103		142		606	6V-8637	663
	104		145		613		673
	105		146		614		686
	251		167		615	6V-8639	596
	254		169		657		599
6V-6707	663		534		668		614
	666		544		670		673
	734		545		673	6V-8641	581
6V-6715	209		546		824	6V-8642	596
6V-7238	70		547		825	6V-8675	67
	477		549	6V-8399	782	6V-8713	534
	480		550	6V-8400	553	6V-8714	560
	1019		579		557		568
6V-7357	134		581		561	6V-8715	137
	138		582		564		141
	142		594		569		145
	146		599		587	6V-8716	560
	963		602		590		568
	965		603		785		663
	966		606		795	6V-8721	657
	967		607	6V-8553	638		673
	1019		610	6V-8554	550	6V-8722	579
	1060		613	6V-8625	613		639
6V-7604	38		614		670	6V-8724	132
	40		615	6V-8626	596		534
6V-7636	942		619	6V-8627	581		581
6V-7658	487		621		594		594
6V-7981	159		623	6V-8629	686		599
6V-8077	651		625	6V-8632	638		602
6V-8132	371		629	6V-8634	134		606
6V-8133	340		632		137		610
6V-8149	30		635		141		614
6V-8186	266		636		145		619
6V-8187	222		638	6V-8635	81		621
6V-8188	175		639		83		623
	262		644		552		625
6V-8189	176		647		556		629
6V-8197	65		648		560		632
6V-8200	720		651		564		635
6V-8201	692		653		568		638
	693		655		576		644
6V-8202	1042		657		676		647
	1043		659	6V-8636	90		651
	1044		673		92		655
6V-8212	220		686		132		657
6V-8213	493		770		159		659
6V-8218	812	6V-8398	508		534	6V-8730	135
	817		512		579		138
	819		515		581		142
6V-8231	1076		519		599	6V-8754	765
6V-8237	340		522		602	6V-8774	615
6V-8336	60		525		606		635
6V-8337	779		540		614	6V-8775	673
	783		542		619	6V-8781	582
	784		544		621		599
6V-8362	273		545		623		610
6V-8363	1073		546		625		613
6V-8370	1073		547		638		619
6V-8374	304		549		644		621
6V-8378	266		572		647		639
6V-8397	132		574		651		653
	134		582		653	6V-8784	553
	137		596		655		561

► **PRIMARY REFERENCE**

PART NUMBER INDEX

Part	Page
	569
6V-8785	676
6V-8934	635
6V-8935	544
	545
	546
	547
	549
	550
	582
	594
6V-8936	544
	545
	546
	547
	549
	582
6V-8943	579
	582
6V-8978	812
	817
	819
6V-8979	550
6V-9001	579
	581
	594
	602
	606
	614
	623
	625
	629
	655
6V-9002	602
	606
	614
	673
6V-9004	552
	556
	561
	564
	569
	587
	590
	673
6V-9005	579
6V-9007	534
	552
	556
	561
	564
	568
	657
	673
6V-9008	666
	670
	676
6V-9009	564
	569
	587
6V-9182	587
	590
	663
6V-9200	534
6V-9491	224
	226
	228
6V-9512	668
6V-9672	294
6V-9746	534
	552
	553
	556
	561
	564
	568
	569
	572
	579
	582
	587
	588
	590
	591
	657
	663
	673
	674
	676
	677
	686
	841
6V-9829	639
	653
6V-9836	599
	613
	635
	639
	644
	647
	653
6V-9837	582
6V-9839	579
6V-9843	582
	648
6V-9846	582
	686
6V-9850	137
	141
	145
	579
	614
	619
	647
6V-9852	582
	596
	639
6V-9853	676
6V-9854	676
6V-9876	635
	673
6W-6005	178
	180
6Y-2589	424
	425
6Y-2590	424
	425
6Y-2748	425
6Y-2751	424
	425
6Y-2792	428
6Y-5323	426
	▶427
6Y-5685	344
6Y-8023	421
6Y-8028	421
6Y-8029	421
6Y-8075	427
6Y-8076	427
6Y-8077	427
6Y-8180	436
6Y-9855	427
6Y-9856	427
6Y-9858	427
6Y-9859	427
	1019
7B-7501	104
7C-1445	31
	65
7C-1493	81
	83
7E-5714	255
7E-6455	125
7F-0560	188
7F-3488	261
7F-3525	261
7F-7259	264
7F-8268	32
7G-1060	332
7H-3171	421
	427
7I-0717	352
	354
	355
7I-0966	809
7I-0986	826
	829
7I-1026	736
	738
7I-1097	638
7I-1248	744
	748
	750
	757
	760
7I-1418	379
7I-2272	322
	324
	689
	690
	746
	751
	832
7I-2673	112
	180
	202
	218
	219
	281
	284
	292
	1033
	1052
	1058
7I-7131	727
7I-7403	826
	829
7I-7420	514
7I-7611	477
	480
7I-7619	477
	480
7I-7684	477
	480
7I-8084	493
	720
	823
	827
	828
	830
7I-8102	826
7I-8152	720
7I-8154	720
7I-8166	720
7I-8171	720
7I-8172	720
7J-5925	380
7J-9108	508
	512
	534
	535
	579
	582
	594
	596
	599
	638
	639
	668
	670
	712
7J-9933	809
7K-1181	135
	138
	142
	146
	157
	180
	195
	220
	281
	284
	286
	288
	290
	292
	298
	302
	304
	306
	307
	308
	310
	311
	314
	316

7

▶ **PRIMARY REFERENCE**

PART NUMBER INDEX

Part	Page	Part	Page	Part	Page	Part	Page
	318		751	7X-2559	1003	7Y-0731	340
	320		760		1008	7Y-1056	340
	326		772	7X-2563	112	7Y-1057	340
	328		836		422	7Y-1094	340
	329	7M-8651	261		887	7Y-1095	371
	331	7N-0140	256		888	7Y-1113	348
	332	7N-0296	256	7X-2567	68		366
	334	7N-0719	222	7X-2572	366	7Y-1507	371
	336		▶264	7X-2573	851	7Y-1647	371
	337	7N-2059	256		853	7Y-1648	371
	534	7N-2353	275		855	7Y-1650	371
	550	7N-5274	178		857	7Y-1838	117
	581	7N-5683	36	7X-2575	344	7Y-1976	106
	594	7N-9801	278	7X-2576	482		112
	596	7T-3974	261	7X-2577	426	7Y-2292	352
	599	7T-6799	273	7X-2619	337		354
	602	7T-8890	1061	7X-2621	181		355
	606	7T-9123	262		201	7Y-2397	865
	610	7W-3447	132		203	7Y-2853	379
	613	7X-0339	175		204	7Y-2854	380
	619	7X-0513	865		298	7Y-2916	380
	621	7X-0515	99		332	7Y-3470	1076
	627	7X-0562	262		751	7Y-3472	1076
	629	7X-0578	942	7X-2908	72	7Y-3474	1061
	632		1064		73		1062
	635	7X-0579	138	7X-3164	515	7Y-3729	552
	638		142		519		561
	644		146		522		568
	647	7X-0618	106		525		587
	651	7X-0818	655	7X-3373	261		591
	653	7X-0872	594	7X-4803	462	7Y-3730	576
	659	7X-2454	426		463	7Y-3731	501
	673	7X-2501	153	7X-6315	200		552
	676	7X-2533	209	7X-7644	1099		556
	686		1019	7X-7700	167		560
	956		1036		169		564
	1015	7X-2536	968	7X-7729	93		568
	1019		977		99	7Y-3732	508
	1039		978		106		512
7L-2894	261	7X-2539	138		121		537
7L-7556	109		142		125		538
7M-0324	261		146		923		539
7M-0325	262	7X-2543	515		925	7Y-3919	1013
7M-0326	261		519	7Y-0059	1	7Y-3920	1013
7M-0327	261		522		▶1022	7Y-3950	275
7M-7410	690		525	7Y-0468	779		304
7M-8485	340	7X-2545	744		783	7Y-3951	228
	552	7X-2546	670		784		294
	556	7X-2548	181	7Y-0595	340	7Y-3952	228
	560	7X-2549	639	7Y-0623	1001	7Y-3953	275
	561		648		1006		304
	564	7X-2550	492		1008	7Y-3954	294
	568		540	7Y-0639	340	7Y-3962	217
	569		574	7Y-0642	340		228
	576	7X-2552	1031	7Y-0643	340		307
	579	7X-2553	68	7Y-0644	340		308
	587		99	7Y-0645	340	7Y-3963	217
	590		685	7Y-0656	340		228
	663		1001	7Y-0659	340		307
	666		1006	7Y-0661	340	7Y-3964	217
	670		1038	7Y-0662	340	7Y-3965	217
	676	7X-2554	68	7Y-0663	340	7Y-4199	613
	677	7X-2555	508	7Y-0667	340	7Y-4294	699
	685		512	7Y-0673	340		702
	740	7X-2557	685	7Y-0676	340	7Y-4387	581

▶ **PRIMARY REFERENCE**

PART NUMBER INDEX

Part	Page
	629
	639
	644
	647
	659
7Y-4390	581
7Y-4399	610
7Y-4660	464
	466
7Y-4669	464
	466
7Y-4672	464
	466
7Y-4673	464
	466
7Y-4695	464
	466
7Y-4817	727
7Y-4941	468
7Y-4944	468
7Y-4945	471
7Y-4956	471
7Y-5010	742
7Y-5011	742
7Y-5215	464
	466
7Y-5219	704
	751
	787
7Y-5221	699
	702
7Y-5226	776
7Y-5235	340
7Y-5239	468
	471
7Y-5243	737
7Y-5247	596
	670
7Y-5272	451
	787
7Y-5286	211
7Y-5288	211
7Y-5456	180
7Y-5458	271
	272
7Y-5464	271
	272
7Y-5505	294
7Y-7364	1076
7Y-7394	1017
	1018
	1057
	1058
7Y-8099	760
7Y-8165	134
	137
	141
	145
	180
	1019
7Y-8167	1019
7Y-8169	220
7Y-8436	810
7Y-8437	810
7Y-8463	973
	974
	975
	976
	984
	985
7Y-8621	1005
7Y-8622	1005
7Y-8876	390
	391

8

Part	Page
8B-6561	181
8C-0564	582
8C-3089	261
8C-3095	209
8C-3206	500
	503
8C-3334	314
8C-3445	81
	83
8C-3446	81
	83
	729
	731
8C-3451	729
	731
8C-4984	57
	58
8C-5607	209
	1036
8C-5608	194
	209
	1036
8C-5748	120
8C-5917	178
	181
	279
8C-5918	178
	180
8C-6358	188
8C-6561	153
8C-6711	161
8C-6868	134
	137
	141
8C-6869	167
	169
8C-6921	188
8C-6965	795
8C-8400	663
	674
8C-8451	194
8C-8723	869
8C-8988	134
	137
	141
	145
	636
8C-8989	673
8C-8992	377
	419
	420
	514
	517
	518
	524
8C-9660	261
8F-0212	746
8F-1434	262
	266
	1073
8F-6575	79
8F-7219	129
8F-8882	428
8H-2282	1005
8H-3481	1059
8H-5303	264
8H-5306	264
8H-5352	474
8J-1256	220
8J-2559	704
8K-5440	256
8L-2779	90
	92
	797
8L-2786	65
	74
	90
	92
	135
	138
	142
	146
	250
	253
8L-8413	178
	180
	181
	311
8M-0505	104
8M-2770	181
8M-2772	859
	860
8M-2773	135
	138
	1019
8M-5860	38
	40
8N-0869	181
	279
8P-9770	889
	890
	896
	897
	898
	899
	900
	901
	902
8R-1803	231
8S-0934	1047
8S-2332	260
8S-2634	279
8S-4723	1047
8S-4724	1047
8T-0075	581
	619
	621
8T-0078	553
	561
	569
8T-0100	31
	62
	120
8T-0114	968
	977
	978
8T-0164	655
8T-0198	552
	556
	560
	564
	568
	587
	590
8T-0266	947
8T-0267	734
8T-0269	493
	1024
8T-0285	992
8T-0288	827
	828
	830
	833
	834
	835
	846
8T-0292	88
8T-0293	86
8T-0325	1033
8T-0328	167
	169
	172
	220
	222
	262
	294
	322
	324
	337
	392
	393
	485
	923
	925
	1033
8T-0337	1033
8T-0341	695
	697
8T-0343	720
	785
8T-0376	106
8T-0404	670
8T-0643	51
	53
8T-0644	103
	105

► **PRIMARY REFERENCE**

PART NUMBER INDEX

Part	Page	Part	Page	Part	Page	Part	Page
	110		203		615		883
8T-0646	79		204		619		885
	716		217		621		886
8T-0670	371		218		632		887
8T-1158	785		219		639		888
	795		220		645	8T-4127	295
8T-1159	427		221		648	8T-4131	720
	778		235		651		863
	787		256		653		867
8T-1482	68		279		655	8T-4132	99
8T-1576	599		281		657	8T-4133	93
8T-1683	134		284		660		117
	137		286		663		135
	141		288		666		138
	145		290		668		142
8T-1685	552		292		670		146
8T-1686	668		298		685		178
8T-1687	615		310		686		181
8T-1715	104		311		715		217
	134		314		727		218
	137		320		729		219
	141		321		731		329
	145		327		734		346
8T-1779	613		329		744		390
	625		331		748		391
	686		332		751		508
8T-1905	134		334		757		512
	582		371		760		599
	594		380		787		726
	623		390		859		785
	625		391		860		787
	629		508		923		795
	632		512		925		859
	644		514		950		860
	648		515		952		1006
	659		517		956		1008
8T-2393	704		518		968	8T-4134	1076
8T-2883	582		519		969	8T-4136	93
8T-2920	674		521		977		112
8T-2922	830		522		978		121
8T-3008	740		524		987		125
	836		525		1006		135
8T-3490	279		532		1008		138
	987		533		1012		142
8T-3518	188		534		1013		146
8T-3519	188		537		1019		175
8T-3647	949		538		1034		181
8T-3666	50		539		1038		256
8T-4001	863		550		1054		279
	867		553		1062		314
8T-4121	93		557		1073		320
	99		561	8T-4123	112		321
	112		565		366		327
	115		569		851		334
	121		572		853		371
	125		576		855		515
	135		579		857		519
	138		582		863		522
	142		588		867		525
	146		591		873		553
	175		594		875		557
	181		596		877		561
	191		599		878		565
	195		603		879		569
	201		607		881		582

► **PRIMARY REFERENCE**

PART NUMBER INDEX

Part	Page	Part	Page	Part	Page	Part	Page
	588		639		774		477
	591		648		865		480
	596		651		869		506
	603		734	8T-4141	907		510
	607		923	8T-4149	587		514
	615		925		590		517
	621		942	8T-4167	68		518
	639		950		340		524
	645		952		366		527
	648		969		416		529
	651		977		417		729
	655		1006		418		731
	660		1008		426		907
	663		1019		482	8T-4184	99
	666	8T-4138	195		851		125
	668		380		853		352
	686		933		855		354
	727		1019		857		355
	729	8T-4139	99		863		492
	731		106		865		506
	768		256		867		508
	770		506	8T-4171	222		510
	923		508		320		512
	925		510		321		540
	968		512		381		542
	977		515		992		680
	978		519		1015		681
	987		522	8T-4172	181		682
	1033		525		615		683
8T-4137	99		527	8T-4174	506		684
	106		529		510		686
	115		532		1003	8T-4185	117
	125		533		1008		125
	135		534	8T-4175	1025		181
	138		537	8T-4176	106		314
	142		538		534		508
	146		539		553		512
	181		540		557		515
	191		542		561		519
	195		553		565		522
	217		557		569		525
	220		561		1033		534
	221		565	8T-4177	639		596
	235		569		645		632
	256		579		648		640
	281		582		660		648
	284		588	8T-4178	553	8T-4186	93
	288		591		579		181
	290		594		625		561
	292		636	8T-4179	195		569
	322		653		256		588
	324		663		281		591
	327		666		284		670
	332		668		290		715
	371		670		352	8T-4189	174
	550		674		354		256
	572		677		355		381
	582		1001		937		636
	594		1006	8T-4182	181		657
	596		1008		579		1060
	599	8T-4140	165		588	8T-4190	218
	603		220		591		219
	607		527		594		350
	615		529		640		351
	619		733	8T-4183	112		933

PART NUMBER INDEX

Part	Page	Part	Page	Part	Page	Part	Page
	937		599		175		615
	946		615		181		629
8T-4191	181		640		195		632
	281		645		211		636
	284		648		212		640
	286		657		213		645
	288		660		256		648
	290		663		281		653
	310		666		284		660
	311		668		290		663
	314		729		311		666
	413		731		346		668
	859		744		348		670
	860		746		352		674
	968		748		354		677
	978		751		355		680
	987		757		378		681
	1013		760		381		682
	1019		956		457		683
	1038		1012		477		684
	1054		1019		480		686
	1062		1034		485		714
	1073	8T-4196	93		492		729
8T-4192	106		99		506		731
	112		125		508		734
	117		135		510		907
	256		138		512		937
	378		142		514		1001
	615		146		515		1006
	640		181		517		1008
	663		532		518	8T-4224	31
	677		533		519		61
	729		534		521		135
	1001		537		522		138
	1006		538		524		142
	1008		539		525		146
	1023		557		527		153
8T-4193	492		565		529		176
	774		663		532		220
	1026		666		533		256
8T-4194	99		668		534		337
	157		685		537		346
	485	8T-4198	331		538		381
	506		603		539		574
	508		607		540		636
	510		653		542		640
	512	8T-4199	181		544		645
	514		337		545		648
	517		371		546		655
	518	8T-4200	220		547		657
	521		346		549		660
	524		1005		553		729
	527		1019		557		731
	529	8T-4205	153		561		746
	576		176		565		922
	588		222		569		949
	591		261		572		968
	668		322		574		977
	670		324		576		978
8T-4195	93		1036		579		1001
	112	8T-4223	99		582		1005
	135		106		588		1006
	181		112		591		1008
	364		125		594		1019
	380		157		596		1046

► **PRIMARY REFERENCE**

PART NUMBER INDEX

Part	Page
	1050
	1055
	1056
	1060
8T-4226	178
	181
8T-4240	340
8T-4241	720
8T-4244	99
	125
	157
	212
	213
	348
	480
	508
	512
	540
	542
8T-4648	311
	381
	508
	512
	534
	579
	685
8T-4779	99
	851
	853
	855
	857
	942
8T-4780	366
	851
	853
	855
	857
	873
	875
	877
	878
	879
	881
	883
	885
	886
8T-4908	135
	138
	142
	146
	729
	731
8T-4910	532
	533
	534
	537
	538
	539
	937
8T-4944	474
8T-4956	99
	106
	125
	480
	527
	529
	540
	542
	544
	545
	546
	547
	549
	553
	557
	561
	565
	569
	572
	588
	591
	596
	629
	632
	640
	645
	648
	660
	670
	673
	677
	714
	729
	734
8T-4970	215
	222
	619
	621
	1061
	1062
8T-4971	1019
8T-4986	123
8T-4987	117
	123
8T-5001	680
	681
	683
8T-5005	181
	314
	663
	666
	677
8T-5041	106
	542
	682
	684
8T-5092	553
	557
	561
	565
	569
8T-5379	416
	417
	418
	863
	865
	867
8T-5412	561
	569
8T-5436	639
	653
8T-5451	322
	324
8T-5460	863
	867
8T-5878	482
8T-6383	477
	480
8T-6404	692
	693
8T-6411	215
8T-6412	215
8T-6430	423
8T-6466	181
8T-6684	561
	569
8T-6685	514
	517
	518
	521
	524
	751
8T-6693	295
	392
	393
	485
8T-6703	112
8T-6759	690
	727
	746
	751
	772
	785
	795
	844
	846
8T-6761	109
	734
8T-6764	43
	47
8T-6842	1099
8T-6868	492
	677
	937
8T-6869	138
	142
	146
8T-6870	640
	645
	648
	651
	660
	746
8T-7044	124
8T-7338	68
	407
	668
8T-7811	848
8T-7852	220
8T-7877	797
8T-7910	550
8T-7927	83
8T-7934	220
8T-7971	515
	519
8T-8442	493
	718
8T-8729	266
	284
	286
	290
	292
	326
	1015
8T-8730	284
	286
	290
	292
	308
	326
	336
	1015
8T-8737	70
	220
	228
	230
	249
	271
	272
	284
	286
	290
	298
	308
	318
	324
	326
	336
	975
	976
	986
	1015
	1029
	1030
8T-8748	269
	270
8T-8887	550
8T-8920	457
8T-8987	668
8T-9080	429
	474
	721
8T-9388	231
8T-9403	576
	579
	588
	591
8T-9597	474
	695
	697
	718
8T-9655	137
	141
	145
	198
8T-9756	178
	180

► **PRIMARY REFERENCE**

PART NUMBER INDEX

Part	Page
8T-9757	180
8U-0580	903
8V-1715	1003
8Y-6352	940
8Y-6967	937
8Y-9603	260
9	
9B-7233	273
9D-1829	135
	138
	142
9D-3769	112
9F-2167	527
	529
	579
9F-2247	45
9F-4446	28
9F-5599	261
9F-7283	668
9G-0002	178
	180
9G-0003	180
9G-0004	178
	181
	279
9G-0005	178
	180
9G-4101	261
	262
9G-4343	294
9G-6655	207
9G-7641	224
	226
	228
	▶273
9G-8909	180
9H-3757	261
9J-0705	709
	712
9J-0707	797
9L-6770	176
9M-1974	28
	51
	53
	57
	58
	65
	66
	70
	81
	83
	85
	88
	90
	92
	104
	111
	120
	198
	322
	324
9M-2307	395
9M-3786	668
9M-5590	782
	785
9M-5732	395
	397
9M-7609	261
9M-7958	157
9M-8406	135
	138
	142
	146
	647
9N-0869	62
	198
9N-1941	125
9N-5253	207
9S-2544	261
9S-4167	134
	145
9S-4180	487
	750
	776
9S-4181	81
	83
	556
	561
	564
	569
	576
	670
	685
9S-4182	81
	83
9S-4183	74
9S-4185	65
	103
	104
	105
	535
	552
	556
	587
	590
	639
	653
	673
	676
9S-4191	74
	602
	606
	614
	639
	653
	655
	668
	746
	770
	777
9S-6130	167
	169
	670
9S-8001	689
	832
9S-8002	802
9S-8003	787
9S-8004	129
	135
	159
	582
	689
	742
	768
	848
9S-8005	43
	45
	47
	70
	74
	111
	135
	138
	142
	146
	689
	690
	695
	697
	704
	718
	768
	770
9S-8006	137
	141
	145
	766
9S-8008	705
9S-9334	65
9T-1614	772
9T-4506	708
	711
9U-8693	477
	480
9V-3659	390
	391
9W-0335	294
9W-0742	▶188
	279
9W-0844	284
	336
	1015
9W-0852	284
	336
	954
9W-2146	428
9X-0199	1073
9X-0261	232
	233
9X-0262	232
	233
9X-1386	247
9X-1813	174
	236
	240
	265
	268
9X-2021	63
9X-2026	933
9X-2041	942
	958
9X-2042	276
	295
	304
	318
	940
	942
	960
	993
	1064
	1067
	1076
9X-2044	295
	940
	942
	1059
	1064
	1073
	1076
9X-2045	943
	956
	1011
	1064
9X-2046	956
	1027
	1028
	1059
9X-2099	31
9X-2205	167
	169
9X-2332	324
9X-2480	199
	329
	1036
9X-2616	1048
	1049
9X-3401	70
	272
	284
	290
	292
	308
	324
	560
	590
	602
	606
	623
	625
	636
	639
	679
	734
	973
	974
	975
	976
	986
	1029
	1030
9X-3402	220
	228
	284
	290
	292

▶ **PRIMARY REFERENCE**

PART NUMBER INDEX

Part	Page
	308
9X-3463	211
	212
	213
	215
	217
	1006
	1008
9X-3495	314
	337
9X-3601	464
	466
9X-3604	468
9X-3607	471
9X-4184	270
9X-4597	460
	462
	865
9X-4598	873
	875
	881
	883
9X-6032	341
	718
9X-6165	194
	209
	933
	1036
9X-6419	695
	697
9X-6582	544
	545
	546
	547
	549
	581
	594
9X-6654	668
9X-7680	718
9X-7712	81
	83
9X-7737	171
	268
9X-8256	135
	138
	142
	146
	181
	189
	195
	199
	215
	220
	222
	255
	295
	298
	302
	308
	320
	321
	329
	337
	346
	381
	619
	621
	636
	734
	923
	925
	963
	965
	966
	967
	992
	1015
	1019
	1024
	1033
	1059
	1060
	1061
	1062
	1064
	1073
9X-8257	68
	218
	219
	407
	477
	480
	492
	506
	508
	510
	512
	527
	529
	668
	685
	692
	693
	707
	774
	851
	853
	855
	857
	869
	907
	933
	937
	943
	946
	1001
	1003
	1006
	1008
	1025
	1026
	1031
	1038
9X-8258	869
9X-8267	161
9X-8268	34
	56
	58
9X-8488	211
9X-8600	167
	169
9X-8979	695
	697
9X-9896	194
9Y-0810	33
9Y-6089	29
9Y-8389	134
	137
	141
	145
	153

0

Part	Page
003-7764	134
	137
	141
	145
005-4362	132
012-0380	265
030-0167	797
030-7935	81
030-7950	159
030-8188	132
030-8194	155
033-5853	81
	83
	802
033-6034	88
033-6036	797
033-6043	802
033-8248	859
	860
036-1865	106
036-9821	261
045-4065	262
061-9455	31
	65
081-6344	352
	354
	355
085-6444	1071
085-6447	1071
085-6448	1071
085-6449	1011
	1071
085-6455	629
	▶778
085-7075	778
085-7076	778
085-7077	778
085-7078	778
085-7079	778
085-7080	778
085-7081	778
085-7082	778
085-7083	778
085-7084	778
085-7085	778
085-7356	599
	623
	635
	644
	647
085-7538	841
085-8037	1062
085-9310	165
	220
	733
087-3908	379
087-3909	379
087-4402	602
	606
	619
	621
	623
	625
087-4405	632
087-4411	613
	647
087-4438	599
087-4454	445
	▶446
087-4456	▶447
	449
087-4531	613
087-4534	613
087-4575	446
087-4576	446
087-4577	446
087-4587	180
087-4683	267
087-4710	785
	795
087-4786	704
087-4932	576
087-4935	576
087-4944	668
087-5166	768
	770
087-5303	638
087-5306	638
	647
087-5548	468
	865
087-5550	468
087-5551	468
087-5661	680
	681
	683
087-5708	785
	795
087-5709	785
087-5760	613
087-5762	613
	625
087-5765	625
087-5766	619
	621
	625
087-5771	635
087-5772	613
	621
087-5773	613
087-5774	613
087-5780	629
	632

▶ PRIMARY REFERENCE

PART NUMBER INDEX

Part	Page	Part	Page	Part	Page	Part	Page
087-6583	635		480	095-1579	782	095-1698	809
	638	093-1731	340		812		844
	644	093-7521	489		817		846
	647	094-0577	340		819	095-1700	704
	659	094-0578	340	095-1580	799		740
087-6584	627	094-0579	340	095-1582	765		836
087-6643	681	094-0580	340		778	095-1710	778
090-8865	1003	094-0584	340		799	095-1716	727
091-9035	180	094-0876	779	095-1584	484	095-1726	471
	314		783		782	095-1735	734
	632		784		812	095-1750	824
	638		789		817		825
093-0020	371		791	095-1585	704	095-1751	824
093-0074	851		793		740		825
	853	094-1528	477		836	095-1777	657
	855		480	095-1586	780	095-1778	750
	857	095-0673	795		783	095-1785	806
093-0090	366	095-0705	907		784		810
093-0332	220	095-0723	294		789		844
093-0334	220	095-0728	332		791	095-1786	812
093-0349	851		987		793		817
	853	095-0735	968		806		819
	855		977		810	095-1787	744
	857		978		824		748
	863	095-0736	167		825		750
	867		169		831		757
	873	095-0755	942		837		760
	875	095-0826	734		844		778
	877		1013	095-1587	812		810
	878	095-0843	346		817	095-1789	768
	879	095-0882	720		819		770
	881	095-0891	340	095-1590	484	095-1791	843
	883	095-0910	933		744	095-2927	413
	885	095-0929	721		748	095-6639	726
	886	095-0930	471		750	095-7380	704
093-0363	877	095-0936	785		757	095-7424	55
	878	095-0944	720		760	095-7930	1013
	879	095-0965	720		778	095-7944	424
	885	095-0966	720		799	096-0008	694
	886	095-1260	785		810	096-0015	724
093-0364	366		795		812	096-0061	235
093-0366	851	095-1386	134		817	096-1441	477
	853		137		819		480
	855		141	095-1594	768	096-1533	699
	857		145		770		702
	873	095-1388	89	095-1596	484	096-1545	848
	875	095-1519	490		704	096-1598	742
	877		826	095-1597	843	096-1628	779
	878		829	095-1600	699		783
	879	095-1522	765		702		784
	881	095-1572	704	095-1601	740		789
	883	095-1575	750		810		791
	885		782		836		793
	886		795	095-1602	740	096-2323	493
093-1291	508	095-1576	844		836	096-2591	337
	512		846	095-1603	750	096-2617	971
093-1344	903	095-1578	782	095-1604	843		972
093-1345	863		785	095-1608	734	096-2622	993
	865		798	095-1625	727	096-3216	340
	867		814	095-1633	464	096-3773	766
	903		815		466	096-3780	346
093-1347	865		816	095-1635	468	096-3884	993
093-1349	863		823	095-1657	740	096-3978	704
	867		826		836	096-4035	106
093-1730	477		829	095-1681	487		112

► **PRIMARY REFERENCE**

PART NUMBER INDEX

Part	Page
096-4129	392
	393
096-4498	779
	783
	784
096-4755	482
096-4882	1001
	1006
	1008
096-4883	596
	670
096-4884	380
096-5919	704
096-5962	294
096-6166	224
	226
	228
	294
	332
	987
	992
	1033
096-6467	366
098-5747	907
099-0139	1071
099-0365	765
099-0822	826
	829
	1041
099-0823	942
	1064
099-2374	493
	923
	925
099-3095	716
099-3506	1010
099-3629	1070
099-3645	1022
099-3649	61
	614
099-5194	477
	480
099-6136	785
099-6137	779
	783
	784
	785
	789
	791
	793
	795
099-6141	785
	795
099-6144	785
	795
099-6145	785
	795
099-6418	362
	363
099-7030	704
099-7127	294
099-7857	376
099-8111	457
	699
	702
099-8232	552
	556
	560
	564
	568
100-2881	1011
100-3320	322
	324
100-3866	707
101-2846	295
101-3128	198
101-7396	596
101-7397	576
101-7398	579
101-7400	599
101-7401	552
	556
	560
	564
	568
	576
	579
	587
	590
	596
	670
101-7402	552
	596
	670
101-7403	576
101-7404	552
	556
	560
	564
	568
	576
	579
	587
	590
	668
101-8899	993
	995
101-8900	993
	1064
101-9848	379
	392
	393
	395
	398
	409
	410
102-0889	801
102-1157	613
102-3596	18
	19
	▶63
102-5828	81
	83
102-5829	81
	83
102-7685	629
	632
102-7886	331
102-7965	304
102-8016	294
102-8802	70
	167
	169
	173
	174
	224
	228
	247
	265
	266
	268
	278
	281
	288
	290
	322
	324
	332
	334
	602
	606
	623
	625
	635
	639
	676
	734
102-8803	180
	267
	274
	281
	288
	290
	311
	322
	954
102-8804	234
	332
102-8805	271
102-8806	230
	318
103-1384	581
	614
103-5246	851
	853
	855
	857
103-8173	750
	801
103-8177	750
103-8252	798
	814
	815
	816
103-8253	798
	814
	815
	816
103-8254	798
	814
	815
	816
103-8255	798
	814
	815
	816
103-8345	471
104-3173	1019
104-6871	311
104-7293	743
	755
	764
104-7294	755
	764
104-7296	755
	764
104-8771	653
104-8783	638
	647
	659
104-8838	613
104-8903	613
104-8976	635
105-1321	▶797
	808
105-1797	322
	324
105-2169	943
	1010
105-3477	552
	556
	560
	564
	568
	576
	676
105-3479	560
	568
105-3483	576
105-3484	614
105-3485	560
	568
	576
105-3487	346
	380
105-3489	594
	670
105-5175	304
105-6324	416
	418
105-6431	859
105-9526	1062
105-9527	1062
106-0001	211
106-0002	211
106-0003	211
106-0004	211
106-0005	211
106-0107	224
	▶271
106-0210	271
	272
106-2704	1039
106-6248	710
	▶711
106-8715	663
	674
106-9586	81
	83
107-2724	676

▶ PRIMARY REFERENCE

PART NUMBER INDEX

Part	Page
107-4749	329
107-6370	804
	805
107-6371	804
	805
107-6479	782
	785
	823
107-6540	812
	817
107-6541	812
	817
	841
107-6579	471
107-6631	603
	607
	623
	625
107-6933	471
107-7017	841
107-7018	841
107-7068	742
107-7694	27
107-8618	180
108-1781	473
	717
108-1782	587
	590
	676
108-3819	564
	568
	587
108-4282	552
	560
	568
	587
	590
108-6503	704
108-7118	686
108-7191	668
108-7203	629
108-7369	635
108-7387	581
	635
108-7516	623
	625
	635
108-7550	532
	533
	534
	579
109-0881	421
109-1294	720
109-1296	720
109-1641	716
109-1839	1086
109-3207	130
	131
109-7556	594
109-9437	68
110-5496	613
110-5525	699
	702
	720
	830
110-7149	477
	480
110-7183	368
110-7231	340
111-0985	635
111-2416	322
	324
111-4799	267
111-4836	180
	195
	218
	219
	281
	284
	288
	290
	292
	327
	329
	332
	923
	925
111-4837	180
	218
	219
	314
	327
111-4838	180
	332
111-4839	180
	332
111-6752	581
	653
111-9916	▶824
	828
	834
	835
111-9959	742
	760
111-9977	841
111-9985	841
111-9986	841
111-9998	799
112-0083	625
	▶820
112-0085	820
112-0090	841
112-2481	▶912
112-2482	▶908
112-2489	908
	910
112-4550	180
113-0693	231
113-2003	668
113-2532	974
113-2824	413
113-2963	851
	853
	855
	857
	877
	878
	879
	885
	886
113-6069	64
113-6479	504
	576
	587
	591
113-6738	629
	632
	635
113-6741	610
113-6851	▶680
	870
	871
113-6853	▶681
	870
	872
113-6859	▶682
	870
	871
113-8490	294
113-8491	294
	306
113-8493	294
114-0489	841
114-0623	824
	825
	831
114-0760	464
	466
114-0762	468
114-1322	477
	480
114-1398	477
	480
114-1399	477
	480
114-1541	340
114-6285	380
114-6289	392
	393
114-8229	772
115-3667	599
115-3699	421
115-4072	64
115-4219	64
115-8634	673
115-8645	610
	629
	632
115-8694	458
	▶537
115-8739	579
115-8856	532
	533
	534
115-8961	537
116-0118	180
	201
	203
	204
	218
	219
	220
	292
	298
	314
	332
116-0128	148
116-0210	294
116-1517	1003
116-3715	124
116-4556	18
	19
	▶60
117-5372	415
117-5435	366
117-6306	1064
117-6349	987
117-6350	987
117-6356	987
117-8683	973
	975
	976
118-0911	104
118-1727	18
	19
	▶30
118-4044	768
	770
118-4057	704
118-4086	780
	783
	784
	789
	791
	793
118-4087	779
	783
	784
	789
	791
	793
118-5983	787
118-7302	424
118-7303	424
119-2378	538
119-2379	538
119-3662	311
119-5026	224
	226
	228
	1039
119-5162	734
119-5259	841
119-5260	841
119-5262	841
119-5388	785
	795
119-5389	785
	795
119-5391	785
	795
119-5392	785
119-5398	812
	817
119-5708	125
	132
120-4394	718
120-5114	157
120-9027	267
120-9127	104

▶ **PRIMARY REFERENCE**

PART NUMBER INDEX

Part	Page
121-0140	431
	443
121-0141	432
121-0987	320
	321
121-1023	222
121-1038	148
121-1039	148
121-1168	228
121-1173	228
	304
121-1459	810
121-1491	689
	690
	746
	750
	▶825
	827
	832
	833
121-1865	968
	977
121-6303	619
	621
	▶826
121-6304	826
	829
121-7098	1019
121-7136	947
	1019
121-7137	1019
121-7138	947
	1019
122-3979	379
122-3980	379
122-4101	362
122-4120	379
122-7797	772
122-9608	987
122-9609	987
122-9610	987
122-9611	977
122-9617	956
122-9657	1019
123-1373	178
	180
123-2003	485
123-2112	468
123-2139	699
	702
123-2423	766
123-2430	614
	▶821
123-2431	655
	821
123-2485	750
123-2511	822
123-2516	841
123-2549	581
	▶822
123-2552	821
	822
123-2809	579
123-4750	581
124-0887	532
124-0891	533
124-0903	685
124-0909	685
124-0910	537
124-0911	537
	539
124-1008	629
	632
	638
	653
124-1035	581
124-1067	668
124-1106	527
	529
124-1107	527
	529
124-1108	527
	529
124-1109	527
	529
124-1253	668
124-1541	704
124-1561	704
124-3548	294
124-3953	1076
124-3966	1067
124-4009	971
	972
124-4010	971
	972
125-1302	222
	▶265
125-6535	262
125-6536	262
125-6537	262
125-7874	284
	286
	288
	290
	292
	304
	308
	311
	314
	324
	334
125-7875	218
	219
	269
	270
	288
	290
	292
	304
	307
	311
	314
	324
126-1757	31
126-1767	70
	272
	324
	560
	590
	602
	606
	623
	625
	636
	639
	679
	973
	974
	975
	976
	986
	1029
	1030
126-1774	314
126-1865	785
	795
126-1866	785
	795
126-1913	663
	666
126-5011	322
	324
126-5066	434
	440
126-6514	837
126-6515	837
126-6516	837
126-7574	200
127-0580	942
127-3872	480
127-5728	18
	19
	▶29
128-2135	937
	940
	958
	960
128-2136	940
128-2173	968
	977
	978
128-4411	167
	169
128-8886	180
128-9170	477
	480
128-9265	464
	466
128-9266	468
129-3181	599
129-3399	352
	354
	355
129-5096	175
129-5874	527
	529
129-6466	1073
129-7784	726
129-7925	55
129-7970	493
129-7971	493
129-7973	493
129-7974	493
129-8034	485
130-0252	1019
130-1433	180
130-3280	117
130-4410	860
131-0353	120
131-5818	785
	795
131-5915	779
	783
	784
	789
	791
	793
131-8826	118
	119
131-8828	118
131-8829	118
131-8847	125
131-9453	596
131-9547	579
131-9548	579
131-9750	663
	666
132-0998	909
	911
132-0999	908
	909
	910
	911
132-1806	180
132-1829	▶173
	294
132-5789	181
	220
	281
	284
	286
	288
	290
	294
	310
	311
	314
	329
	331
	949
	1013
	1019
133-2427	366
133-5813	602
	606
	635
	640
133-6788	846
133-8016	942
134-2540	311
134-3284	218
	219
134-4126	200
134-6146	946
134-6852	134
	137
	141
	145
134-6918	648
	659

▶ **PRIMARY REFERENCE**

PART NUMBER INDEX

Part	Page	Part	Page	Part	Page	Part	Page
134-6921	638	137-3708	704		▶448		686
134-7258	1099	137-3746	55	146-4936	393	148-8330	552
134-7489	802	137-3749	55	146-6747	1099		556
134-8887	5	137-3780	718	147-3957	851		560
	374	137-6606	328		853		564
	▶377	137-6645	250		855		568
134-8888	377		253		857		587
134-8891	377		254	147-4131	795		590
134-8951	888	138-5709	527	147-4161	▶804	148-8335	552
134-8952	887		529		811		556
134-9137	859	138-8175	724	147-4162	804		560
135-2274	978	139-0246	433	147-4163	760		564
135-3980	540	139-6873	134		▶805		568
	542		▶171	147-4164	805		576
	546	139-7099	939	147-4184	768		676
	547		▶1010	147-4921	1055	148-8336	132
135-8572	157	139-7100	939	147-5088	111		534
	165		▶993	147-7170	99		579
	381	139-7101	939	148-2903	130		581
135-8573	157		▶1064		131		599
	364	139-7119	1068	148-3386	881		602
	378	139-7126	942		883		606
	379	139-7127	942	148-3533	428		614
135-8574	379	139-8736	68	148-4600	477		619
135-8575	134	139-8737	68		480		621
	137	139-8794	118	148-4601	477		623
	141	139-8873	68		480		625
	145	140-0674	801	148-4602	477		638
	379	140-0677	801		480		644
	408	140-3048	416	148-4603	477		647
135-8576	375		418		480		651
	376	140-7480	1036	148-4604	477		653
135-8577	345	141-1313	552		480		655
	379		556	148-4605	477		659
135-8578	378		564		480		686
	379	141-2759	294	148-4607	477	148-8338	581
135-8965	1038	141-3538	859		480		619
135-8966	1038		860	148-4608	477		621
135-9819	30	141-7251	657		480		638
136-0155	905	142-1339	118	148-4609	477		644
136-0207	638		119		480		647
	644	142-1404	118	148-4611	477		651
	647		119		480		653
	659	142-3836	1	148-4685	370		659
136-0822	31		▶1023	148-4703	371	148-8339	560
136-2422	▶421	142-5546	987	148-4704	371		568
	423	142-5834	969	148-5018	180		663
136-2802	480	142-7764	501	148-8311	134	148-8340	596
136-2803	480	142-7765	498		137		599
136-3842	716	143-4254	613		141		614
136-3847	421	143-9392	198		145		673
136-4182	99	143-9397	933	148-8315	596	148-8341	534
136-4183	64	144-0195	1061	148-8317	560	148-8342	638
136-4303	70		1062		568	148-8346	668
136-7227	155	144-0367	112	148-8318	134	148-8347	534
137-1602	127		121		137		552
137-2270	1023		596		141		556
137-3623	487		670		145		561
137-3624	487	144-1636	271	148-8319	137		564
137-3625	487	144-6650	81		141		568
137-3626	451	144-9691	1067		145		657
	487	144-9692	1067	148-8321	582		673
137-3628	451	145-2237	582	148-8325	581	148-8352	676
	487	145-2264	83	148-8327	663	148-8353	579
137-3631	451	145-5106	447		673		581

▶ **PRIMARY REFERENCE**

PART NUMBER INDEX

Part	Page
	594
	602
	606
	614
	623
	625
	629
	655
148-8354	602
	606
	614
	673
148-8355	579
148-8356	564
	569
	587
148-8357	666
	670
	676
148-8360	587
	590
	663
148-8361	534
148-8362	561
	569
148-8363	635
	673
148-8364	613
	670
148-8367	137
	141
	145
	579
	614
	619
	647
148-8368	581
	594
148-8371	134
	137
	141
	145
	636
148-8372	657
	673
148-8378	132
	534
	581
	594
	599
	602
	606
	610
	614
	619
	621
	623
	625
	629
	632
	635
	638
	644
	647
	651
	655
	657
	659
	670
148-8382	134
148-8383	137
	141
	145
148-8384	550
148-8388	686
148-8390	596
148-8391	668
148-8392	676
148-8393	581
	596
	638
148-8395	43
	45
	70
	768
	770
148-8407	602
	606
	614
	639
	653
	655
	668
	746
	770
148-8408	74
148-8411	104
	534
	552
	556
	587
	590
	639
	653
	673
	676
148-8413	635
148-8414	579
	582
148-8415	544
	545
	546
	547
	549
	582
148-8419	544
	545
	546
	547
	549
	550
	582
	594
148-8421	582
148-8431	676
148-8433	599
	613
	635
	639
	644
148-8434	582
	647
148-8435	582
	599
	610
	613
	619
	621
	639
	653
148-8436	673
148-8439	614
	635
148-8442	552
148-8444	582
148-8447	594
148-8449	579
149-1738	534
149-5050	298
	302
	304
	308
	337
149-5051	308
149-5069	304
	308
149-5070	304
	308
149-5240	130
	131
150-3033	655
150-3036	134
	582
	594
	623
	625
	629
	632
	644
	648
	659
150-3073	668
150-4027	635
	639
	644
	648
	659
150-4033	582
	686
150-4044	613
	625
	686
150-4048	579
	639
150-4049	587
	590
150-8896	905
151-2939	33
151-6703	993
	1064
151-6704	993
	1064
151-6705	1067
151-6778	1064
151-6785	1064
151-6790	1070
151-6792	993
	▶1071
151-6793	1071
151-6813	1064
151-6815	1064
151-6831	1064
151-6832	1064
151-6841	1071
151-6844	1064
151-9461	993
151-9497	993
151-9557	1064
151-9576	1064
153-1036	50
153-2521	▶212
	218
	219
153-2523	▶213
	214
153-2540	228
153-2541	228
153-2620	332
153-4906	159
	720
	830
153-5223	785
	795
153-5239	811
153-5276	743
	755
	764
153-5286	760
153-5288	750
	760
153-5289	750
	760
153-5290	750
	760
153-5291	750
	760
153-5292	750
	760
153-5293	750
	760
153-5295	750
	▶801
153-5298	750
153-5299	750
153-5306	750
153-5309	750
153-5311	750
153-6237	552
	556
	561
	564
	569
	587
	590
	673
153-6241	673
153-7036	161
153-8723	968

▶ **PRIMARY REFERENCE**

PART NUMBER INDEX

Part	Page	Part	Page	Part	Page	Part	Page
153-8753	977	156-6554	1064	161-3411	124	164-0516	1071
153-8762	977	156-6555	1064	161-3424	72	164-0517	1071
153-8763	977	156-6562	1064	161-3639	993	164-0518	1071
153-8867	572	156-6573	940	161-3650	993	164-0519	993
154-0690	860	156-6575	940	161-3663	993	164-0523	942
154-9025	103	156-6579	1064	161-3665	993	164-0527	942
	105	156-6598	993	161-3668	1076	164-0528	942
155-2255	314	156-6599	942	161-3669	1076	164-0614	978
155-2260	236	156-6600	993	161-3670	1076	164-0617	978
	240	156-6601	1064	161-3677	1076	164-0618	1060
	281	156-6617	942	161-3684	1064	164-0619	1060
	288	156-6627	1064	161-3685	942	164-0620	1060
	290	156-6631	1068	161-3694	1011	164-0639	1059
	292	156-6642	942	161-3695	1071	164-0646	940
	311	156-6643	993	161-3697	942	164-0648	1064
	316	156-6644	993	161-3698	1064	164-0655	940
	322	156-6645	993	161-3699	993	164-0664	942
	328	156-6646	1073	161-3705	1071	164-0666	1070
155-2265	318	156-6647	▶1067	161-3717	1038	164-4180	556
	322		1073	161-3732	98		561
	324	156-6648	1067		953		564
155-2270	70	156-6656	940	161-3734	98		569
	224	156-6657	940		953		576
	228	157-0670	103	161-3750	▶1060		670
	234		105	161-3751	▶1059		685
	249	157-0935	772	161-6963	127	164-5547	635
	281	157-9338	540	161-6987	220	164-5567	574
	284	158-8150	750		933		582
	286	158-8159	744	162-0177	582		639
	288		748		768		644
	290		750	163-0424	63		648
	292		757	163-2437	80		651
	322		760	163-2445	79		657
	324	158-8186	801	163-2447	76		660
	326	158-8206	750	163-2459	79		729
	328	158-8207	750	163-2478	43		731
	331	158-8987	▶484		45	164-5574	553
	332		729		47		561
	334		731	163-3729	348		569
	969	158-9085	▶844		366	164-5590	729
155-2271	332		845	163-6700	167		731
155-2272	332	159-4700	448		169	164-5597	134
155-2274	224	159-7667	118	163-6711	318		137
155-2276	240	159-7782	727	163-6758	294		141
155-7042	1076	159-7784	485	163-6772	5	164-5603	104
155-9117	725	159-8036	905		▶215	164-5606	553
155-9122	695	159-9322	314	163-6795	215		561
	697	160-6631	428		217		569
155-9125	718	160-7690	314		294	164-5608	615
155-9127	718	160-8194	72		316	164-5616	670
155-9131	718		73		318	164-5619	137
155-9134	718	160-8197	72		1061		141
155-9137	725		73		1062		145
155-9139	450	160-8199	72		1076	164-5628	603
155-9141	450		73	163-6803	304		607
155-9142	450	161-1703	237	163-6813	215		623
155-9143	450	161-1704	239	163-6814	215		625
156-5970	838	161-1705	238	164-0497	1000	164-5629	623
156-6469	1070	161-3128	294		▶1003		625
156-6470	1064	161-3398	124	164-0499	98		635
156-6471	993	161-3406	21		953	164-5669	79
156-6472	1064		22	164-0500	953	164-6148	21
156-6473	1068		23		954		22
156-6474	1071		24	164-0514	993		23
156-6475	1071		▶36	164-0515	993		24

▶ **PRIMARY REFERENCE**

PART NUMBER INDEX

Part	Page
	▶33
164-6872	673
164-6874	599
	623
	635
	644
	647
	657
	659
164-6981	▶449
	613
164-8474	937
	940
164-8977	613
164-8983	613
164-9640	582
165-2976	361
	362
	363
165-3065	1023
165-3165	498
165-3169	501
165-3173	504
165-3256	734
165-3260	673
165-4444	18
	19
	▶124
165-4465	18
	19
	▶90
	▶92
165-4557	18
	19
	▶50
165-4931	651
165-5970	▶274
	328
165-9154	134
	▶153
165-9290	464
	466
165-9291	468
165-9431	779
	783
	784
	789
	791
	793
165-9435	780
	783
	784
	789
	791
	793
165-9436	779
	783
	784
	789
	791
	793
165-9438	780
	783
	784
	789
	791
165-9439	779
	783
	784
165-9442	779
	783
	784
	789
	791
	793
165-9443	780
	783
	784
	789
	791
	793
165-9444	779
	783
	784
	789
	791
	793
165-9448	779
	783
	784
165-9460	779
	783
	784
	789
	791
	793
165-9461	779
165-9463	785
	795
165-9464	785
	823
165-9473	▶712
	744
165-9474	712
165-9497	766
165-9513	776
165-9514	776
165-9549	639
	▶827
165-9551	785
165-9552	785
	795
165-9553	785
	795
165-9554	785
	795
165-9595	750
166-1487	873
	875
	877
	878
	879
	881
	883
	885
	886
166-1488	366
	863
	867
	791
	793
166-1489	851
	853
	855
	857
166-1490	851
	853
	855
	857
166-1494	461
	873
	875
	881
	883
166-1495	863
	867
166-1496	461
	863
	867
	877
	878
	879
	885
	886
166-1497	460
166-1498	851
	853
	855
	857
	873
	875
	877
	878
	879
	881
	883
	885
	886
166-1579	859
	860
166-1776	31
166-1781	31
166-1785	67
166-2877	909
	911
166-3511	▶909
166-3648	72
	73
167-0024	37
167-0166	90
167-0171	▶56
	57
167-3437	215
167-3438	215
167-3441	215
167-3456	215
167-3542	277
	294
	304
	308
	1015
	1044
167-3543	277
	294
	308
	1015
	1044
167-3593	294
167-3855	704
167-3857	704
167-3858	704
167-3859	704
167-3862	704
167-3863	704
167-3865	704
167-3866	704
167-3867	704
167-3868	704
167-3872	704
167-7018	942
167-7039	993
167-7042	942
167-7141	1003
	1008
167-7270	1099
167-8121	50
167-8610	1036
167-8853	1033
167-8987	311
168-0765	809
168-0794	779
	783
	784
168-1969	574
168-6727	343
	▶344
168-7211	72
168-7940	724
168-7941	724
168-7942	724
168-8672	905
168-9523	504
168-9759	602
	606
	653
168-9760	497
168-9762	503
169-0737	907
169-0738	907
169-0739	907
169-0740	907
169-0745	907
169-0753	▶470
	907
169-0756	907
169-1165	778
169-2519	907
169-3105	18
	19
	▶74
169-3530	1096
169-3923	470
169-6064	457
170-1612	704
170-1616	704
170-1626	704
170-1627	704
170-3015	360
170-3016	379
170-6888	294
170-6929	178

▶ **PRIMARY REFERENCE**

PART NUMBER INDEX

Part	Page	Part	Page	Part	Page	Part	Page
	180	171-7325	934	176-1932	1062	178-5422	956
170-6993	212		935	176-1937	942	178-5423	956
	213		960	176-1938	942	178-5431	1061
170-8553	663	171-7413	1071	176-1939	942	178-5500	1062
	666	171-7414	1071	176-1941	942	178-5549	▶1000
170-9294	▶217	171-7420	940	176-1942	942	178-5569	1068
170-9295	217	171-7426	942	176-1946	940	178-5570	942
170-9324	224	171-7477	1011	176-1947	940	178-5572	1070
	226	171-7485	1000	176-1951	1071	178-5573	993
170-9360	346		▶1001	176-1952	1071		1070
170-9417	212	171-7486	1008	176-1953	1071	178-5574	993
	213	171-9413	477	176-1954	1071		1070
170-9418	212		480	176-1955	1071	178-5576	1064
	213	171-9892	119	176-1956	1071	178-5659	1046
170-9492	1062	172-0907	629	176-1957	1071		1048
170-9497	▶987	172-4432	746	176-1958	939		1049
	1037	172-6062	322		▶1068	178-6473	68
170-9498	987		324	176-1972	940	178-6474	68
170-9499	987	172-6064	324	176-1986	942	179-1292	427
170-9722	1064	172-6065	324	176-1996	995	179-1497	428
170-9724	940	173-3503	▶451	176-2815	1084	179-1499	428
170-9864	464		485	176-4463	613	179-3037	429
	466	173-3505	451	176-4469	613	179-3038	429
170-9865	468	173-3506	451	176-4708	610	179-3040	429
170-9964	474	173-3507	485		613	179-3044	413
170-9985	699	173-3510	485	176-4746	610	179-3046	413
	702	173-3513	487	176-4755	613	179-3047	413
170-9986	699	173-3515	487	176-4770	673	179-3048	413
	702	173-3516	487	176-4853	414	179-3426	424
170-9996	699	173-3517	487		▶426		425
	702	173-3518	485	176-5913	79	179-3428	424
171-0023	841	173-3529	487	176-5914	79		425
171-0034	812	173-3535	844	177-1044	111	179-4324	220
	817	173-3536	▶806	177-1052	111	179-5235	540
	819		844	177-1056	111		542
171-0035	819		846	177-2553	487	179-7456	625
171-0036	819	173-4063	704	177-2619	451	179-7616	629
171-0037	812	173-4066	704	177-2653	552		635
	817	173-4816	670		556		638
	819	173-7916	506		564	179-7782	638
171-0087	779		510		▶807	179-8128	161
	783		514	177-3941	329	179-9806	487
	784		517	177-3942	329	180-2435	16
	789		518	177-3943	329		17
	791		524	177-5739	360		▶260
	793	173-9957	905	177-5879	378	180-3861	212
171-0123	799		▶906	177-5880	378		213
171-0124	799	173-9971	906	177-6315	1023	180-6769	704
171-0126	799	174-5415	117	177-6395	362	180-6770	704
171-0127	799	174-7791	212	177-6972	16	180-7521	348
171-0128	799		213		17	180-7525	348
171-0150	748	174-9570	▶129		▶175	180-7529	348
	757		134	177-7707	311	180-7537	348
171-0188	639		156	177-8407	549	180-9340	236
	645	175-0454	34	177-8572	519	183-1035	217
	648	175-7436	704		547		1006
	659	175-7887	704	177-9778	134		1008
	▶828	176-1902	1019	178-2334	234	183-2823	153
171-0198	828	176-1916	956	178-2335	234	183-2874	426
171-0596	560	176-1925	1001	178-2345	▶234		▶428
	590		1008		235	183-2875	428
	679	176-1928	1001	178-2513	330	183-2883	428
171-2210	222		1006	178-3899	18	183-3398	90
171-3370	112		1008		19	183-3399	92
171-5349	247	176-1931	1061		▶78		159

▶ **PRIMARY REFERENCE**

PART NUMBER INDEX

Part	Page
183-3404	90
	92
183-3406	74
183-3407	159
183-4494	26
	51
183-5163	56
184-3835	699
	702
184-5394	112
184-8580	381
	393
184-8722	352
	354
	355
184-8862	363
184-9336	602
	606
184-9508	552
	560
	568
184-9593	614
184-9595	614
185-0230	468
185-0231	468
185-0232	468
185-0303	695
	697
185-0383	602
	606
185-0400	766
185-0407	828
185-0423	799
185-0462	602
	606
	▶823
185-0463	823
185-0472	635
	▶829
185-0473	829
185-0488	676
185-0490	744
	▶766
185-2638	176
185-2639	176
185-2642	176
185-2644	176
185-2645	176
185-2647	176
185-2648	176
185-2650	176
185-2651	176
185-2653	176
185-2654	176
185-2655	176
185-2658	176
185-5294	175
	▶176
185-8161	956
185-8180	993
185-8181	1064
185-8182	1064
185-8187	1064
185-8196	942
185-8197	1064
185-8205	940
185-8214	940
185-8221	1064
185-8280	942
185-8281	942
185-8284	3
	4
	958
185-8286	267
	934
	935
185-8290	1076
185-8293	1019
185-8300	928
	931
	1014
185-8302	928
	931
185-9208	224
	226
	228
186-0359	132
186-3735	157
	167
	169
	173
	174
	180
	234
	247
	265
	267
	268
	274
	278
	676
	838
186-3736	234
186-5175	704
186-5611	348
186-5614	348
186-5649	863
	867
187-0472	18
	19
	▶70
187-0474	18
	19
	▶81
	▶83
187-0661	1099
187-1315	42
	49
187-5853	556
	564
187-5854	552
187-5855	552
187-6720	560
	568
187-7108	572
187-7109	572
187-9833	508
	512
187-9981	515
	519
	525
188-0055	522
188-0056	522
188-2128	249
188-3066	424
188-3826	21
	22
	23
	24
	▶97
188-4140	▶485
	729
	731
188-4142	485
	▶487
188-4143	487
188-4162	699
	702
188-4163	699
	702
188-4164	699
	702
188-4165	699
	702
188-4166	699
	702
188-4167	699
	702
188-4170	699
	702
188-4171	699
	702
188-4172	699
	702
188-4173	699
	702
188-4176	699
	702
188-4216	464
	466
188-4217	464
	466
188-4218	464
	466
188-6121	137
	141
	145
	▶155
189-2449	51
	53
189-2678	940
189-2690	993
189-2693	1011
189-2694	1011
189-2702	1068
189-2704	942
189-2711	993
189-2716	1011
189-2847	1010
189-2849	1010
	▶1011
189-2855	940
189-2864	943
189-3189	704
189-3396	942
189-3434	1019
189-3860	15
	▶416
189-3861	416
	418
189-3862	416
	418
189-3922	863
	867
189-9377	70
189-9380	724
189-9382	724
190-0643	51
	53
190-3562	37
190-5386	1099
190-6114	70
190-6115	43
	45
	47
190-6117	43
	45
	47
190-7062	376
190-7745	670
190-7750	779
	783
	784
	791
	793
190-7751	779
190-7819	782
	978
190-7865	770
190-8970	156
190-8977	155
	▶156
191-1782	137
	141
	145
191-1783	137
	141
	145
191-2511	477
	480
191-2513	477
	480
191-2514	477
	480
191-2521	340
191-2524	477
	480
191-2526	340
191-2576	3
	4
	▶343
191-2577	343
	▶482
191-2645	340
191-3063	18
	19
	▶67
191-3180	873
	875
191-4457	103

▶ **PRIMARY REFERENCE**

PART NUMBER INDEX

Part	Page	Part	Page	Part	Page	Part	Page
	105		▶498		▶85	199-7891	176
191-5602	471	194-0177	▶499	196-1831	85	199-8436	176
191-5603	471		576	196-3784	795		
191-5604	471	194-0178	499	196-4987	704		
191-5605	471		▶500	196-6838	163	2	
191-5606	339	194-0179	499	197-0196	689		
	▶694		▶501		690	200-3292	720
191-5619	466	194-0180	▶502	197-0199	689	200-3311	55
191-5643	471		576		690	200-3372	476
191-5644	471	194-0181	502	197-0252	841		479
191-5645	471		▶503	197-0273	689		▶692
191-5646	471	194-0182	502		690		▶693
191-5647	471		▶504	197-0758	778	200-3373	692
191-5648	471	194-0242	670	197-2100	506		▶698
191-5705	471	194-0243	670	197-2101	506	200-4495	64
191-7581	718	194-0280	576	197-2362	519	200-6741	453
191-7582	695	194-0354	676	197-2384	515		454
	697	194-4741	772		519		455
	718	194-5226	240		525		▶963
191-7583	695	194-5227	240	197-2471	695	201-0828	424
	697	194-6725	▶236	197-2472	695		425
	718		242	197-2474	695	201-2771	366
191-7584	450	194-8031	992	197-4385	332		851
191-7823	322	194-9473	695	197-8391	134		853
	324		697		137		855
192-4697	124		718		141		857
192-5166	903	194-9479	725		145		863
192-6901	▶683	194-9480	725		▶250		865
	871	194-9481	725	197-8393	232		867
192-6908	458	195-0452	88		▶237	201-2774	▶418
	▶532	195-5136	913	197-8394	232	201-2816	850
192-6909	458	195-7120	▶913		▶238		▶860
	▶533	195-7216	▶910	197-8419	92	201-2836	863
192-8302	414	195-7217	▶911	197-8940	599		867
	▶417	195-8098	21	197-9367	72	201-3003	873
192-8303	417		22		73		875
192-8320	849		23	197-9392	72		881
	850		24	197-9581	111		883
	▶859		▶95	197-9642	51	201-3145	772
192-8321	851		▶96		53	201-3146	772
	853	196-0477	529	198-3899	922	201-4391	993
	855	196-0478	527		1056	201-4417	942
	857		529	199-1286	576	201-4530	942
192-8358	416	196-0480	529	199-1609	638	201-4534	1001
	418	196-0481	527	199-1773	552		1006
193-0158	132		529		556		1008
193-2162	159	196-0482	527		560	201-4535	1001
193-2839	125		529		590		1006
193-2844	125	196-0711	707	199-1918	561		1008
193-6648	506	196-1569	1001		569	201-9119	▶424
193-6650	506		1006	199-2002	635		431
193-6662	508		1008	199-2004	635		432
	512	196-1571	1001	199-2012	676		433
193-7901	704		1006	199-4523	371		434
193-9389	352		1008	199-4524	371		435
	354	196-1572	1001	199-4538	343		436
	355		1006		▶476		437
193-9438	363		1008	199-4539	476		438
193-9994	560	196-1574	1006		▶477	201-9236	635
	568		1008	199-4540	477		▶765
194-0101	576	196-1599	1006		480	201-9263	750
194-0115	576	196-1665	1019	199-4559	▶368	201-9299	487
194-0174	▶497	196-1666	1014		369	201-9352	766
	576	196-1829	18	199-4582	340		▶808
194-0176	497		19	199-4583	340	201-9353	▶798

▶ **PRIMARY REFERENCE**

PART NUMBER INDEX

Part	Page
	808
202-0901	1033
202-0943	1033
202-3301	18
	19
	▶28
202-3762	635
202-6603	18
	19
	▶88
202-6758	506
	510
202-6857	510
202-6858	510
202-6859	510
202-6981	515
202-7001	515
	519
	522
	525
202-7002	515
	519
	522
	525
202-7021	508
	512
202-7674	18
	19
	▶110
202-9002	676
203-0199	175
203-0860	▶431
203-0861	▶432
203-0862	▶433
	439
203-1022	81
203-1023	81
203-2059	167
	169
203-2076	772
203-3237	43
	45
203-3238	43
	45
203-4927	360
203-4930	375
203-5057	392
	393
203-5805	34
203-6090	34
203-7775	124
204-0909	112
204-0920	112
204-1611	180
	281
	284
	292
	331
	334
204-1614	180
204-1673	178
	181
	1019
204-2676	699
	702
204-2677	699
	702
204-2678	698
	701
	▶809
204-2679	698
	▶699
204-2755	▶810
	848
204-2762	487
204-2763	451
204-2799	718
204-2819	694
	▶848
204-3461	206
	▶329
204-7368	716
204-7369	716
204-8210	527
204-8212	527
204-8358	532
204-8359	532
204-8360	533
204-8361	533
204-8428	560
	568
204-8505	572
205-0826	228
205-1306	132
	▶163
205-1320	64
205-1321	21
	22
	23
	24
	▶64
205-1339	969
205-1340	969
205-4013	18
	19
	▶109
205-6295	942
205-6642	125
205-9114	340
206-3164	774
	▶811
206-3305	▶779
	982
	983
206-3336	▶782
	977
	978
206-3719	78
206-5162	209
206-5165	209
206-5208	228
206-9290	493
	720
	830
206-9291	493
	721
206-9294	493
206-9295	493
206-9296	493
206-9297	493
206-9298	474
206-9299	493
206-9300	493
206-9301	493
207-0159	1000
	▶1005
207-0161	1005
207-0164	1005
207-0167	1005
207-0170	1005
207-0173	1005
207-0216	1006
207-5542	547
207-5549	547
207-6228	534
207-6229	534
207-6231	574
207-6282	683
207-6395	529
207-6398	529
207-6403	734
207-6404	734
207-6443	552
	556
	564
207-6683	579
207-8235	714
	▶716
208-4289	361
	362
208-9277	330
208-9282	88
209-1434	109
209-3464	905
	▶907
209-3466	907
209-4280	1056
209-5011	716
209-5582	▶266
	330
209-5917	848
209-5920	848
209-5940	802
209-5941	802
209-5942	802
209-5982	▶450
	718
209-6000	726
209-6003	802
209-6004	802
209-6005	802
209-7290	81
	83
209-7291	81
	83
209-7293	97
209-9234	155
210-1747	232
	▶239
210-5522	95
210-5808	942
210-5827	1059
210-5828	1059
210-5829	1059
210-5834	1059
210-5836	1059
210-5837	1059
210-5838	1059
211-0546	95
211-2134	43
	45
211-3285	18
	▶31
211-4185	772
211-6807	324
211-7730	155
212-2829	859
	860
212-2830	859
	860
212-2841	366
212-5148	556
	564
212-5185	380
212-5443	579
212-5580	527
212-5583	527
212-7002	34
212-8917	38
	40
212-8926	▶79
	80
213-0677	70
	734
213-0772	294
	337
213-1971	▶425
	440
	441
	442
	443
213-2410	28
213-2411	28
213-3190	72
	73
213-3745	581
213-4363	21
	22
	23
	24
	▶57
	▶58
213-5213	88
213-9100	174
213-9242	802
213-9243	802
213-9244	802
213-9246	802
213-9247	802
213-9248	718
213-9250	718
213-9320	▶76
	79
214-4531	1086
214-4532	1086
214-7566	245
214-7567	241
	244

▶ **PRIMARY REFERENCE**

PART NUMBER INDEX

Part	Page	Part	Page	Part	Page	Part	Page
214-7568	43		119	223-9818	1099	227-6190	340
	45	220-1718	85	224-0554	1099	227-6191	340
	47	220-1952	36	224-1377	330	227-6192	340
	92		▶37	224-3247	27	227-6195	343
	159	220-8678	129	224-4536	▶240	227-6215	477
	233	220-9090	915		241		480
	660		918	224-7717	1097	227-6221	477
214-7915	1099		920	224-8945	1097	227-6846	953
214-8110	376	220-9102	918	224-8946	1099		954
214-8310	379	220-9103	920	225-0312	1099	227-7575	294
215-3249	322	220-9104	889	225-0313	1097	227-7581	▶209
	324		890	225-3305	1097	227-7616	973
215-4909	484		896	225-4130	1089	227-7617	974
215-5037	614	220-9109	915	225-4131	1089	227-7625	968
	▶688	221-0144	95	225-4256	1097	228-2780	1097
215-6662	2		96	225-4257	1099	228-2781	1099
	▶1006	221-3494	92	225-4516	721	228-3621	59
216-0611	▶1008		159	225-4517	474	228-4766	67
216-2941	111	221-5138	772	225-4518	721	228-5615	863
216-2942	111	221-6809	120		▶830		867
216-4027	3	221-7155	772	225-4548	727	228-5617	466
	▶434	221-8045	1099	225-4549	727		877
216-4970	222	221-8813	946	225-4558	830		878
216-5586	34		▶1027		▶831		879
216-6485	545		▶1028	225-4625	468		885
216-6578	506		1037	225-4804	740		886
	510	221-8859	560		768	228-5619	873
216-6579	506		590		770		875
	510		679		772		881
216-6580	506	221-8861	3		836		883
	510		4	225-4813	▶783	228-5621	851
217-0609	43		▶200		980		879
	45	221-8872	▶199	225-4815	779		883
	47		1037		783	228-5897	161
217-5199	105	221-8874	199		784	228-7094	83
217-5200	103	221-8884	▶968		791	228-7096	43
	105		1037		793		45
218-0404	209	221-8912	657	225-4816	779		47
218-0859	18	221-9806	70	225-4818	768	228-7315	1097
	19	222-0085	819		770	228-7316	1099
	▶59	222-0225	971		772	228-9253	1097
218-1002	560		972	225-4820	772	228-9254	1099
	568	222-0298	772	225-4821	772	229-0887	1099
218-1059	610	222-3347	772	225-5714	1019	229-0999	134
	627	222-3901	111	225-5927	209		137
	629	222-4737	750	226-9169	231		141
	632		776	226-9258	1033		145
218-1125	676	222-8300	16	227-0428	670	229-1784	▶149
218-1126	676		17	227-0590	734	229-1785	149
218-1128	576		▶125	227-0620	▶490		▶157
218-1130	676	223-3040	1		734	229-1857	157
218-1139	552		▶345	227-1200	38	229-1859	▶148
	556	223-3041	345		40		157
218-1172	676		▶346	227-4002	322	229-1860	157
218-1173	676	223-6748	676	227-4531	32	229-1861	157
218-1174	676	223-6768	610	227-5904	159	229-1898	3
218-1175	676	223-6876	539	227-6074	370		4
219-0305	1001	223-6915	527	227-6089	▶369		▶414
	1008		529		371	229-2665	18
219-1322	470	223-7098	534	227-6090	369		▶21
219-4452	110	223-7100	534		▶370	229-3568	18
	▶111	223-7103	534	227-6105	371		19
219-6314	209	223-7105	534	227-6106	371		▶65
219-6607	209	223-9020	22	227-6145	▶371	229-3569	65
220-0453	118		23		414	229-6974	▶918

▶ **PRIMARY REFERENCE**

PART NUMBER INDEX

Part	Page
229-6975	▶920
229-6978	▶915
229-9070	4
	▶1061
229-9072	1
	▶1037
229-9077	1050
	▶1055
229-9078	1037
	▶1038
229-9079	4
	5
	▶927
	936
229-9080	▶923
	▶925
	927
229-9082	927
	▶995
229-9086	5
	▶1075
229-9087	▶1073
	1075
229-9088	▶1062
	1075
229-9089	1042
	▶1050
229-9090	▶1046
	1050
229-9094	1046
229-9098	4
	5
	936
	▶937
229-9099	▶939
	946
230-0155	546
230-0156	546
230-1340	195
230-1341	195
230-2866	121
230-2896	25
	▶112
230-2898	25
	▶121
230-2899	25
	▶99
230-2930	112
230-2931	112
230-2933	121
230-2939	121
230-2940	121
230-2946	99
230-2953	99
230-2956	99
230-2960	99
230-4009	220
	311
	318
	332
230-4011	290
	316
	318
	324
	332
230-4012	838
230-4013	308
	324
230-5008	302
	304
	308
	318
230-5010	228
	284
	314
	316
	318
	332
	1015
231-1756	221
	▶222
231-1768	3
	▶1015
231-1771	9
	▶174
231-1806	279
231-1827	180
231-1836	▶316
	317
	962
231-1978	18
	19
	▶232
231-2294	940
231-2295	311
	318
	1015
231-3039	18
	19
	▶132
231-3043	132
231-4707	695
	697
231-6843	471
231-6844	471
232-0114	902
232-0115	902
232-0116	902
232-0343	163
	▶164
232-2105	889
	890
	896
232-2106	889
	890
	896
232-2147	912
232-2148	912
232-4100	▶784
	981
232-4113	740
	836
232-4114	740
	836
233-0423	18
	19
	▶62
233-0891	198
233-1124	1
	▶235
233-2530	695
	697
	▶724
233-2535	724
233-4880	725
233-4885	724
234-0203	88
234-1035	222
234-1037	222
234-1038	222
234-1097	294
234-1122	332
234-1124	1015
234-1156	224
	226
	228
234-1158	224
	226
234-4440	686
	▶727
234-4492	579
234-4539	720
234-4620	453
	▶473
	713
234-4624	599
	▶742
234-4638	99
	▶695
234-5012	233
	▶251
234-5013	233
	▶252
234-6468	940
234-6469	940
234-6470	940
234-6471	940
234-6472	940
234-6473	940
234-6474	940
234-6475	940
234-6476	940
234-6477	940
234-6478	940
234-6480	940
234-6483	940
234-6485	940
234-6489	1070
234-6490	940
234-6497	940
234-6498	940
234-6499	990
234-6500	4
	5
	936
	▶991
234-6501	937
	▶990
234-6502	990
234-6521	940
234-6547	940
234-6548	940
234-6550	940
234-6579	940
	958
	960
234-6580	958
	960
234-6593	990
234-6594	939
	▶1076
234-6602	958
234-6603	960
234-6604	958
234-6605	960
234-6608	958
	960
234-6609	958
	960
234-6610	958
	960
234-6611	960
234-6612	960
234-6613	▶267
	960
234-6614	960
234-6615	267
235-5507	127
235-7626	865
235-7627	865
235-7628	865
235-7636	492
	865
235-7639	865
235-7642	492
	865
235-7679	877
	878
	879
	885
	886
235-7764	▶407
	430
	439
235-7765	407
235-7770	466
235-8174	18
	19
	▶32
235-8200	18
	19
	▶230
235-8202	322
235-8862	1034
235-8873	923
	925
235-8874	923
	925
235-8875	923
	925
235-8876	995
235-8877	995
235-8878	995
235-8879	995
235-8891	1019
235-8893	956
235-8894	956
235-8908	939
	▶940

▶ **PRIMARY REFERENCE**

PART NUMBER INDEX

Part	Page
235-8909	939
	▶1070
235-8910	939
	▶942
235-8912	942
235-8914	958
	960
235-8922	940
235-8923	940
235-8928	940
235-8929	940
235-8932	1076
235-8933	942
235-8950	940
235-8951	934
235-8952	935
235-8965	960
235-8966	958
235-8969	▶971
	985
235-8970	▶972
	984
235-8971	971
235-8972	972
235-8974	1073
235-8996	934
	935
235-8997	934
235-8998	935
235-9001	937
235-9006	923
	925
235-9012	1061
	1062
235-9014	1019
235-9020	1047
235-9021	1
	▶1019
235-9651	150
	151
236-0563	1092
236-2839	579
236-2843	602
	606
236-2844	602
	606
236-2848	602
	606
236-3170	734
236-3257	490
236-3258	490
236-3259	490
236-3670	346
236-3671	346
236-3702	364
236-3703	364
236-4545	256
236-6220	232
	▶241
236-6221	232
	233
	▶248
236-6226	18
	19
	▶322
236-6339	596
236-6419	744
	748
	750
	757
	760
236-6421	750
	760
236-6422	750
236-6919	474
	714
	717
236-7315	18
	19
	▶61
236-8335	414
	▶415
236-8338	415
236-8339	415
236-8415	862
	▶863
236-8561	853
	855
	857
	873
	875
	877
	878
	881
	885
	886
236-9435	346
236-9437	346
236-9438	346
236-9440	346
236-9568	360
237-0227	324
237-1962	260
	▶261
237-3191	13
	14
	▶506
237-3192	13
	▶508
237-3194	7
	▶540
237-3195	10
	11
	12
	13
	▶510
237-3196	▶512
237-3198	6
	7
	▶542
237-5176	103
	105
237-5586	408
237-7621	1
	▶207
237-8752	1
	▶134
237-8753	1
	▶375
237-8754	5
	374
	▶376
237-8759	1
	▶349
237-8768	1
	▶379
237-8783	1
	▶165
237-8784	165
	▶166
237-8801	▶408
	1000
237-8802	116
	▶387
237-8868	375
237-8869	375
237-8875	376
237-8877	375
237-8880	376
237-8882	376
237-9312	134
	137
	141
	145
238-1432	▶221
	1037
238-1463	1015
238-1506	222
238-1568	1
	▶327
238-1570	149
	▶337
238-1579	337
238-1580	▶326
	456
238-1584	▶218
	849
	850
238-1585	218
238-1586	▶219
	850
238-1587	219
238-1594	▶269
	337
238-1595	269
238-1596	▶270
	337
238-1597	270
238-1601	326
238-2171	327
238-2208	▶277
	1075
238-2209	277
238-2210	277
238-2211	1044
238-2212	294
238-2214	308
238-2216	1015
238-2260	1039
238-2279	222
238-2280	222
238-2318	294
238-2366	228
238-2390	294
238-2391	294
238-2478	▶275
	276
238-2479	275
238-2485	▶276
	456
238-2501	178
	181
238-2528	178
	181
238-3215	18
	19
	▶255
238-3216	255
238-5080	47
	252
238-8591	435
238-8592	438
	441
239-1134	256
	▶278
239-1610	505
	▶733
239-1611	▶729
	▶731
	733
239-1618	505
	▶686
239-1626	▶527
	850
239-1627	458
	▶538
239-1632	455
	▶534
239-1872	527
	529
239-1876	459
	▶685
239-1877	685
239-1878	685
239-1892	686
239-1986	538
239-2396	134
	137
	141
	145
	▶242
239-2402	161
239-4320	414
	▶422
239-4321	422
	▶423
239-4322	423
	▶429
239-4323	429
239-4324	429
239-4326	429
239-4330	429
239-6406	25
	▶123
239-6407	25
	▶115
239-6408	25
	▶89
239-6409	25
	▶93

▶ **PRIMARY REFERENCE**

PART NUMBER INDEX

Part	Page
239-6411	116
	▶117
239-6474	25
	▶68
239-6475	68
239-6494	125
239-6500	93
	599
239-6677	▶256
	259
239-6986	1099
239-7352	316
	318
	332
239-7356	311
239-8695	452
	▶977
239-8696	454
	▶969
239-8697	688
	▶689
239-8774	750
	▶812
239-8998	688
	▶690
239-9097	614
239-9098	614
239-9117	614
239-9118	614
240-0041	28
240-1861	16
	▶18
240-3740	8
	▶1000
240-3768	▶1096
240-3769	15
	▶116
240-3776	10
	11
	▶1078
240-3920	157
240-5003	▶1042
	1047
240-5043	1019
240-5044	1019
240-5066	973
	975
240-5067	974
	976
240-5071	8
	▶996
	999
240-5073	5
	9
	▶997
240-5074	995
241-0985	2
	▶435
241-1900	376
241-1902	376
241-1904	375
241-1933	408
241-2139	361
241-2147	379
241-2163	379
241-2195	375
241-2311	408
241-2320	379
241-2323	379
241-2324	379
241-2325	360
241-2365	352
	354
	355
241-2366	352
	354
	355
241-2367	352
	354
	355
241-2368	352
	354
	355
241-4194	256
241-7129	863
	867
241-7150	863
241-7231	877
	878
	879
	885
	886
241-7280	863
	867
241-7333	414
	▶419
241-7334	419
241-7335	5
	374
	▶420
241-7336	420
241-7337	420
241-7340	464
241-7341	464
241-7342	471
241-7604	51
	53
241-7605	19
	▶51
241-8382	43
	45
241-8383	43
	45
	47
241-8384	43
	45
	47
241-8385	43
	45
	47
241-8386	43
	45
	47
241-8387	43
	45
	47
241-8388	38
	40
241-8390	43
	45
	47
241-9265	125
242-0328	77
242-0329	▶77
	79
242-0447	21
	22
	23
	24
	▶80
242-0672	21
	22
	▶42
242-0673	27
242-0674	21
	22
	23
	24
	▶27
242-1510	1099
242-1586	18
	19
	▶86
242-1588	1099
242-1589	1097
242-1598	86
242-1599	86
242-1934	18
	19
	▶120
242-3122	▶1047
242-3360	127
242-3864	81
	83
242-6092	1099
242-6776	691
	▶697
242-6787	466
242-6833	464
242-6840	464
242-6880	599
	▶832
242-6890	742
242-6891	742
242-6892	742
242-6893	832
242-6912	720
242-6913	720
242-6914	720
242-6915	720
242-6916	720
242-6918	720
242-6919	720
242-6920	720
242-6925	742
242-8768	1055
242-9982	18
	19
	▶249
243-4505	157
	218
	219
	302
	316
	318
	326
	332
	336
	949
	1015
243-4506	292
243-4507	292
	308
	328
	332
	334
243-4508	272
	298
	314
	316
	331
	332
243-4509	281
	286
	288
	290
	332
	1015
243-4510	281
	284
	288
	290
	311
	318
	332
243-5362	311
243-6716	33
244-0988	104
244-0989	18
	19
	▶104
244-1716	992
244-1720	231
244-4500	62
244-5891	80
244-6715	676
244-7979	363
244-7980	361
244-8045	352
	354
	355
244-8046	352
	354
	355
244-8400	▶743
	744
	748
	757
244-8419	737
	▶744
244-8494	779
244-8495	779
244-8496	779
244-8497	780
244-8498	779
244-8499	779
244-8500	779
244-8501	780
245-2184	508
245-2187	508

▶ **PRIMARY REFERENCE**

PART NUMBER INDEX

Part	Page
245-2190	508
245-2193	508
245-2196	508
245-2199	508
245-2223	540
245-2294	540
245-2425	515
	546
245-3259	66
245-3260	21
	22
	23
	24
	▶66
245-4630	248
245-5079	602
	606
245-5080	455
	▶679
245-5110	534
245-5113	534
245-5116	534
245-5120	534
245-5122	534
245-5457	1099
245-7339	78
245-7760	294
245-7790	940
	958
	960
245-7791	995
245-7792	995
245-7793	995
245-7794	9
	▶998
245-7811	1
	▶1034
245-7812	928
	931
	▶1014
245-7813	1014
245-7814	1014
245-7815	1014
245-7816	1014
245-7817	928
	931
245-7818	928
	931
245-7819	928
	931
245-7820	928
	931
245-7821	928
	931
245-7823	928
	931
245-7824	928
	931
245-7825	928
	931
245-7826	928
	931
245-7827	928
	931
245-7828	928
	931
245-7829	928
	931
245-7830	928
	931
245-7831	928
	931
245-7832	928
	931
245-7833	928
	931
245-7834	928
	931
245-7835	928
	931
245-7836	928
	931
	▶947
245-7837	947
245-7838	928
	931
245-7839	928
	931
245-7842	971
245-7844	972
245-7850	1019
245-7851	1019
245-7856	928
	931
245-7868	953
	954
245-7869	954
245-7870	953
	954
245-7871	953
	954
245-7872	995
245-7873	995
245-7876	953
	954
245-7877	98
	953
245-7881	5
	▶1041
245-7884	1046
245-7886	922
245-7887	1046
245-7888	1046
245-7889	1055
245-7890	1055
245-7892	1055
	▶1056
245-7895	1017
	1018
	1055
245-7896	▶922
	1055
245-7897	922
	1055
	1056
245-7898	922
	1046
	1056
245-7899	1055
	1056
245-7900	366
245-7901	366
245-7903	98
	953
245-7905	947
245-7906	953
	954
245-7911	953
	954
245-7916	1038
245-7922	▶956
	1037
245-7925	960
245-7926	958
245-7928	1019
245-7929	990
245-7931	1076
245-7940	25
	▶950
	▶952
245-7942	950
	952
245-7943	950
	952
245-7948	958
	960
245-9170	112
245-9171	99
245-9174	112
245-9206	112
245-9287	112
245-9288	112
245-9289	112
245-9292	99
245-9293	99
245-9294	99
245-9359	106
245-9360	106
246-2641	165
	379
246-3150	33
246-6036	92
246-9353	230
246-9867	720
247-2693	316
	318
	332
	973
	974
	975
	976
	986
247-2694	1029
	1030
247-2695	1029
	1030
247-5112	986
247-5185	975
	976
247-7133	105
247-7410	453
	454
	455
	964
	▶1079
247-7411	964
	▶1081
247-7418	1037
	▶1082
247-7423	452
	▶1083
247-7436	1099
247-7437	1099
247-7438	1099
247-7441	1099
247-7465	454
	▶1084
247-7490	739
	▶1085
247-7494	739
	▶1086
247-7500	5
	▶739
247-7501	15
	▶154
247-7587	746
247-8712	720
247-8713	721
247-8715	720
247-8717	721
247-8718	720
247-8719	720
247-8720	721
247-8725	720
247-8726	721
247-8729	720
247-8732	493
247-8733	493
247-8734	493
247-8735	493
247-8736	493
247-8737	493
247-8738	493
247-8786	720
247-8787	720
247-8834	456
	▶691
247-8841	720
247-8904	468
247-8928	493
247-8929	493
247-8985	720
248-2169	244
248-5513	103
248-5576	127
248-7177	413
248-8835	18
	19
	▶103
248-8984	375
248-9337	349
	350
	351
248-9825	505
	▶602
	▶606
248-9838	505
	▶670
248-9840	505
	▶596

▶ **PRIMARY REFERENCE**

PART NUMBER INDEX

Part	Page	Part	Page	Part	Page	Part	Page
248-9842	505	251-0542	▶224	253-6495	7		1037
	▶610		▶226		▶544	255-1844	▶627
248-9843	505		962	253-6501	7		1037
	▶613	251-0543	224		▶545	255-1849	▶629
248-9845	▶673	251-0544	209	253-6548	544		739
	733		▶228	253-6551	544	255-1850	629
249-1306	720	251-0580	316	253-6554	544		632
249-1307	721	251-0598	298	253-6562	524	255-1851	▶632
249-6657	720	251-0602	318	253-6566	525		739
249-6658	493	251-0614	308	253-6594	14	255-1853	455
249-6659	493	251-0619	▶292		▶514		▶635
249-6660	493		455	253-6595	▶515	255-1892	552
249-6661	493	251-0620	▶178	253-6596	7		556
249-6670	474		259		▶546		560
	721	251-0621	1	253-6599	14		564
249-9230	90		▶279		▶517		568
	92	251-0623	▶281	253-6601	7		587
250-1440	515		453		▶547		590
	519		454	253-6603	11	255-1894	552
	522	251-0625	181		12		556
	525	251-0637	294		▶518		560
250-2446	750	251-0677	869	253-6604	▶519		564
250-2447	750	251-0686	492	253-6607	10		568
250-6430	▶888	251-0687	492		13		587
	889	251-2542	366		▶521		590
	890	251-2547	851	253-6608	▶522	255-1900	638
	891		853	253-6609	6		653
250-6448	887		855		▶549	255-1919	452
250-6457	888		857	253-6611	13		▶552
250-7700	▶127	251-2552	863		▶524	255-1920	454
	128		867	253-6635	540		▶556
250-8054	1079	251-2557	863		542	255-1922	453
	1081		867	253-6682	521		454
	1082	251-2558	863	253-6688	545		▶560
	1083		867	253-6691	545	255-1923	452
	1084	251-2651	862	254-3025	863		▶564
251-0153	181		▶865		867	255-1924	454
251-0299	332	251-2652	865	254-3080	581		▶568
251-0303	222	251-2755	1		▶746	255-1925	452
251-0304	222		▶366	254-3941	43		▶572
251-0430	▶332	251-2756	366		45	255-1926	453
	1037	251-4162	193	254-3942	43		▶574
251-0432	▶294	252-7803	47		45	255-1933	685
	946	252-8439	42	254-3946	38	255-1936	556
	1037		▶43		40		564
251-0433	▶317		▶45	254-3947	38	255-1939	668
	1037	252-9628	231		40	255-1941	668
251-0435	317	253-0861	1099	255-0939	231	255-1947	668
	▶318	253-1346	413	255-1659	505	255-1971	670
	962	253-2111	222		▶619	255-1979	670
251-0467	181	253-2695	311		▶621	255-1981	670
251-0482	4	253-4522	18	255-1663	452	255-1986	670
	▶320		19		▶623	255-1989	670
251-0483	320		▶198	255-1665	602	255-2021	596
	321	253-6434	506		606	255-2024	666
251-0485	5		510	255-1666	602	255-2025	596
	▶321	253-6441	506		606	255-2028	596
	936		510	255-1671	629	255-2078	455
251-0526	▶201	253-6444	540		632		▶676
	1037		542	255-1745	576	255-2079	456
251-0529	▶298	253-6454	524	255-1749	576		▶599
	452	253-6455	525	255-1826	574	255-2272	340
251-0538	4	253-6458	508		638	255-2900	125
	5		512		647	255-2914	115
	▶1039	253-6489	517	255-1843	▶625		▶118

▶ **PRIMARY REFERENCE**

PART NUMBER INDEX

Part	Page	Part	Page	Part	Page	Part	Page
255-2929	117	256-1826	379		22		393
255-2966	123		▶399		23	259-3699	392
255-2991	256	256-1828	399		24		393
255-3170	1085	256-1829	399		▶159	259-3700	392
255-3171	1085	256-1830	379	258-9892	949		393
255-3173	1085		▶409	259-0680	739	259-3701	392
255-4410	1041	256-1841	409		▶845		393
255-5285	198	256-1853	379	259-0682	453	259-3815	380
255-5661	748		▶400		713	259-3865	352
	750	256-1858	400		▶714		354
	760	256-1859	400	259-0815	717		355
	▶814	256-1860	400		▶718	259-3915	137
255-5662	768	256-1861	400	259-0824	596		141
	770	256-1863	400	259-0831	721		145
	▶815	256-1864	400	259-0832	720	259-3918	▶137
255-5680	576	256-1865	400	259-0907	718		▶141
	▶768	256-1866	400		▶802		154
255-5683	576	256-1886	379	259-0908	718	259-3953	380
	▶770	256-1890	379	259-0918	726	259-4746	206
255-5713	453		▶401	259-0922	▶726		▶1036
	454	256-1892	401		734	259-4877	318
	455	256-1893	401	259-1930	897	259-4883	294
	▶736	256-1894	379		900	259-4884	276
255-5716	452	256-1897	379	259-2993	92		304
	▶737	256-1905	398	259-2994	92	259-4887	314
255-5747	772	256-1906	398	259-3509	376	259-4914	1039
	▶816	256-1907	379	259-3543	364	259-4940	314
255-5770	9	256-1911	379	259-3546	404	259-4962	▶284
	▶452	256-1912	379	259-3547	404		452
255-5774	6		▶402	259-3548	404	259-4963	▶286
	▶452	256-1915	402	259-3549	380		452
255-5822	6	256-1916	402	259-3552	▶357	259-4964	▶331
	▶453	256-1917	402		380		453
255-5823	6	256-1918	402	259-3557	357	259-5062	154
	▶713	256-1919	380	259-3559	380		▶328
255-5845	▶1037		▶403	259-3563	380	259-5071	281
255-8674	80	256-1922	403	259-3575	380		284
256-0985	869	256-1923	403	259-3589	380		290
256-0987	869	256-1924	403	259-3591	380	259-5075	281
256-0991	492	256-1925	380		▶405		284
256-0994	492		▶404	259-3593	405	259-5118	154
256-0997	492	256-1939	375	259-3595	409		▶302
256-1001	492	256-6453	251	259-3609	410	259-5119	302
256-1004	492		252		411	259-5125	331
256-1644	1	256-8690	914		412	259-5126	178
	▶378	256-8691	914	259-3610	410	259-5127	279
256-1794	379	257-4502	946	259-3611	410	259-5128	279
	▶395		1099	259-3615	380	259-5130	181
256-1797	395	257-4547	1086	259-3622	379	259-5132	181
256-1799	395	257-5015	1085	259-3629	380	259-5206	279
256-1802	379	258-0330	1001	259-3631	380	259-5237	▶202
	▶396	258-0883	134	259-3633	380		505
256-1805	396		137	259-3634	380	259-5293	▶203
256-1806	396		141	259-3636	380		1037
256-1807	379		145	259-3637	405	259-5294	▶204
	▶397		▶268	259-3662	387		454
256-1810	397	258-6749	581		388	259-5295	▶205
256-1811	397		▶833	259-3667	▶358		453
256-1814	397	258-7531	175		387		454
256-1815	379	258-8337	21	259-3669	380		455
256-1818	379		22	259-3696	392		964
256-1820	379		23		393	259-5340	▶288
	▶398		24	259-3697	392		454
256-1824	398		▶128		393	259-5829	43
256-1825	398	258-8745	21	259-3698	392		45

▶ **PRIMARY REFERENCE**

PART NUMBER INDEX

Part	Page
	47
259-7176	5
	9
	▶1037
259-7179	▶978
	1037
259-7180	276
259-7202	960
259-7214	1041
259-7215	1041
259-7220	304
259-7243	949
259-7285	949
259-7295	942
259-7345	935
259-7346	▶934
	958
259-7347	▶935
	960
259-7348	956
	▶958
	962
259-7349	956
	▶960
	962
259-7378	736
	737
	▶748
259-7417	▶739
259-7422	5
	9
	▶739
259-7429	647
	659
	▶834
259-7430	644
	651
	▶835
259-7448	▶750
	774
259-7705	965
	▶980
259-7706	965
	▶981
259-7762	963
	▶982
259-7763	963
	▶983
259-7766	3
	4
	▶505
259-7848	812
	817
259-7849	812
	817
259-7850	812
	817
259-7851	812
	817
259-7852	812
	817
259-7877	977
260-2042	194
260-2109	▶973
	980
	982
260-2110	▶974
	981
	983
260-2111	973
	974
	975
	976
260-2127	▶975
	988
260-2128	▶976
	989
260-2180	657
260-2191	657
260-2193	1027
	▶1029
260-2552	468
260-3003	759
260-3883	838
260-4856	43
	45
	47
260-5716	161
260-6692	172
260-6941	1079
260-6942	1081
260-6944	1092
260-6945	1083
260-6948	1037
	1082
260-7524	76
	77
260-7840	663
	666
260-7841	663
	666
260-7842	663
	666
260-7845	663
	666
260-7854	452
	▶638
260-7855	452
	454
	▶644
260-7857	453
	454
	▶647
260-7861	453
	▶651
260-7862	453
	▶663
260-7863	6
	453
	454
	455
	▶653
260-7864	▶666
	713
260-7868	505
	▶707
260-7869	505
	▶576
260-7870	505
	▶579
260-7871	▶529
	849
	850
260-7895	596
260-7904	707
260-7906	707
260-7912	500
260-7956	663
260-7959	552
	556
	560
	564
	568
260-8027	560
	568
260-8030	552
	556
	560
	564
	568
260-8045	560
	568
260-8098	552
	556
	564
260-8145	655
260-8148	638
	647
260-8193	564
	568
	587
260-8197	576
260-8254	▶684
	870
	871
260-8278	534
260-8281	676
260-9446	430
	▶436
260-9452	15
	▶437
260-9454	▶438
261-1544	33
262-0284	161
262-1359	3
	▶16
262-1421	194
	▶200
262-2134	380
	▶406
262-2137	406
262-2138	406
262-2139	406
262-2140	406
262-2141	406
262-2145	380
262-2157	361
262-2176	390
	391
262-2179	392
	393
262-2192	359
262-2209	378
262-2222	166
	▶167
262-2223	166
	▶169
262-2435	390
	391
262-2440	406
262-2559	400
	411
	412
262-2571	358
262-2572	358
262-2573	358
262-2592	380
262-2595	1
	▶364
262-2596	364
262-2598	134
262-2604	137
	141
	145
262-3147	13
	▶525
262-3152	549
262-3155	549
262-3169	517
262-3177	512
262-3180	512
262-3183	512
262-3186	512
262-3189	512
262-3192	512
262-3213	542
262-3216	542
262-3219	542
262-3222	542
262-3225	518
262-3233	514
262-3347	518
262-3348	519
262-3390	522
262-3840	890
262-3841	896
262-6074	159
262-9965	86
263-1193	86
263-1962	534
	▶772
263-2211	539
263-2915	58
263-6699	220
	311
263-7825	32
263-9088	195
	▶1040
263-9574	178
	180
264-4297	250
	253
	254
264-5732	324
264-6156	80
264-7029	290
	324
	336
264-7030	308
	324

▶ PRIMARY REFERENCE

PART NUMBER INDEX

Part	Page	Part	Page	Part	Page	Part	Page
264-7031	308	266-1303	552		▶314		▶873
264-7032	228		556	267-7813	314	270-0092	873
	284		560	267-7830	334	270-4216	19
	1015		564	267-7867	281		▶22
264-7033	1015		568	267-7915	292	270-5455	195
264-7034	220	266-5431	1099	267-7976	224	270-5582	1033
264-8028	▶901	266-6189	117		226	270-5589	1033
264-8029	▶902	266-6190	117	267-7977	228	270-5603	2
264-8043	901		▶119	267-8024	1033		▶1031
264-8266	720	266-6217	123	267-8071	1	270-5661	750
264-8479	▶456	266-6263	4		▶1012		▶755
264-8494	▶430		▶17	267-8840	▶1	270-5687	6
264-8495	▶439	266-7833	718		2		▶964
264-9982	949		▶725	268-0507	357	270-5688	3
264-9983	949	266-7834	718	268-0508	357		6
264-9984	949	266-7835	718	268-0514	411		▶964
265-1400	21	266-7836	725	268-1964	294	270-5689	964
	22	266-7837	725	268-3490	32		▶965
	▶72	266-7838	725	268-4530	1090	270-5690	964
265-1401	72	266-8403	901	268-4531	1090		▶966
	73	266-8404	902	268-6816	456	270-5692	534
265-3505	380	266-8425	901		▶1088		▶776
265-3506	380		902	268-6817	1088	270-5693	776
265-3534	106	266-8429	901	268-6821	6	270-5947	602
265-3535	106	266-8431	902		7		▶785
265-3536	106	266-8650	233		▶456	270-5949	785
265-3537	106		▶243	268-7112	508		795
265-3539	106	266-8816	901		512	270-5950	785
265-3540	106	266-8817	902	268-8643	310		795
265-3542	106	267-0118	8	268-8872	1090	270-5953	789
265-3543	106		▶348	269-0120	1090	270-8795	▶453
265-3544	106	267-1402	233	269-0121	1090	270-8796	▶454
265-3552	99		▶244	269-1167	2	270-9626	352
265-3553	▶106	267-3361	▶150		8		354
	112		▶151		▶374		355
265-3561	121		152	269-2673	▶889	270-9627	352
265-3571	380	267-3362	21	269-2674	▶890		354
265-3595	112		22	269-2675	▶891		355
265-8047	231		23	269-2681	891	270-9783	395
265-8059	231		24		▶896	271-2418	32
265-8145	220		▶152	269-3410	18	271-6376	694
265-8146	220	267-4047	594		19		▶704
265-9492	231	267-4048	594		▶330	271-6377	704
266-0545	1008	267-4495	1097	269-8788	92	271-6432	695
266-0546	1008	267-6785	477	269-9562	456		697
266-0953	552	267-6809	340		▶581	271-7442	43
	560	267-6810	340	269-9714	657		45
	568	267-6811	340	269-9754	651		47
266-0954	560	267-6812	340	269-9761	579	272-0290	705
	568	267-6813	340	269-9775	673	272-2896	10
266-0982	594	267-6814	340	269-9864	581		11
	635	267-6815	340	269-9919	619		▶870
266-1029	666	267-6816	340		621	272-2897	870
266-1278	552	267-6817	340	269-9932	668		▶875
	556	267-7591	294	269-9952	581	272-2898	875
	560	267-7592	332		594	272-4194	599
	564	267-7642	▶304	269-9955	581	272-4252	599
	568		456	270-0012	574	272-4255	599
	587	267-7644	304	270-0013	574	272-4650	457
	590	267-7671	304	270-0014	574	272-4669	▶457
266-1279	552	267-7672	304	270-0015	574		715
	556	267-7676	304	270-0020	572	272-5000	311
	560	267-7748	▶334	270-0090	10	272-9625	21
	564		456		▶870		24
	568	267-7803	208	270-0091	870	272-9663	8

▶ **PRIMARY REFERENCE**

PART NUMBER INDEX

Part	Page
	9
	▶454
273-2838	32
273-3420	889
	890
	896
273-3424	889
273-5274	1064
273-5307	98
	953
273-5315	950
	▶953
273-5316	953
	954
273-5337	953
	954
273-5345	1064
273-5346	1064
273-5358	2
	▶999
273-5359	999
273-5360	999
273-5428	1019
273-6729	348
273-7668	363
273-7836	380
273-7852	380
273-7854	380
273-7856	380
273-7859	380
273-7864	380
273-7867	380
273-7873	▶359
	380
273-7902	359
273-7905	380
	▶410
273-7909	388
	▶411
273-7911	380
	▶391
273-7918	390
	391
273-7919	390
	391
273-7920	390
	391
273-7921	390
	391
273-7933	380
273-7934	380
273-7943	397
273-7946	380
273-7963	408
273-7964	346
274-4512	704
274-4513	704
274-6719	245
274-7395	232
	▶253
274-7396	232
	▶254
274-7465	3
	4
	▶962
274-7466	3
	4
	▶962
274-7468	937
	▶946
275-1361	673
275-1362	729
	731
275-1384	552
	556
	560
	564
	568
275-1388	560
	568
275-1392	560
	568
275-1396	560
275-1418	676
275-1422	676
275-1425	676
275-1439	552
	556
275-1440	552
	560
	568
275-1442	638
	644
	647
	659
275-1443	638
	644
	647
	659
275-1444	638
	644
	647
	659
275-1475	676
275-1487	594
275-1495	455
	▶655
275-1540	552
	568
275-1541	552
275-1545	552
275-1624	614
275-1663	581
275-1675	670
275-1680	663
	666
275-1693	638
	644
	647
	659
275-1722	666
275-1731	673
275-1739	596
	599
275-1740	596
	599
275-1741	596
	599
275-1818	644
	647
	659
275-3719	3
	▶116
275-3812	456
	▶1089
275-5982	908
	910
275-5998	913
275-5999	913
275-6321	904
	▶905
275-6631	81
	83
275-6839	1033
275-6841	311
275-6842	311
275-6865	327
275-6935	284
275-6936	281
	288
	290
275-6937	286
275-6938	328
275-6993	337
275-7194	2
	▶311
275-7738	▶550
	904
275-7752	6
	7
	▶904
276-3814	16
	17
	▶949
276-5799	889
276-5801	890
276-5802	896
276-6793	243
276-9067	233
	▶245
277-0954	514
	517
	518
	521
	524
	▶777
277-5814	▶914
277-6304	550
277-8279	18
	19
	▶53
277-9864	550
277-9865	550
278-3581	346
278-3818	364
278-3819	388
278-3820	358
278-3905	116
	▶388
278-3932	11
	▶350
	▶351
278-3933	350
	▶352
278-4016	381
278-4018	381
278-4048	352
278-6523	673
279-0344	340
279-3161	934
279-4099	889
279-4103	889
279-4104	890
279-4105	896
279-4118	890
279-4119	896
279-7609	311
279-7820	25
	▶75
279-7825	3
	4
	▶25
279-7887	256
279-7888	256
280-2747	553
	557
	561
	565
	569
	588
	591
280-6794	103
	105
281-3510	121
281-3512	121
281-3515	121
281-3546	112
281-3548	99
281-9154	16
	17
	▶26
282-1771	33
282-1772	33
282-2478	72
	73
282-2479	72
	73
282-4230	903
282-4232	▶903
282-4233	903
282-4566	862
	▶867
282-4567	867
282-5705	456
	▶1090
282-7050	657
282-7092	594
	614
282-7106	596
	673
282-7126	729
282-7373	596
282-7566	639
	645
	647
	659
282-7569	614

▶ **PRIMARY REFERENCE**

PART NUMBER INDEX

Part	Page
283-0177	903
283-1226	330
283-2783	320
	321
	1015
283-3000	284
283-3074	318
283-4426	992
283-5990	742
284-3682	940
285-1375	738
	▶757
285-1376	452
	▶738
285-1399	614
285-1465	614
285-1531	574
	▶759
285-1537	▶760
	774
285-1538	760
	▶764
285-1540	505
	▶774
285-1764	787
285-1765	632
	▶787
285-1766	787
285-1767	787
285-1777	759
285-2520	579
285-4073	78
285-4106	32
286-0134	206
	▶992
286-2110	916
	917
	919
	921
286-2113	919
286-2114	921
286-2117	916
286-2119	917
286-2484	329
286-3017	231
286-4106	542
286-4271	189
	▶193
286-6528	668
286-6554	638
286-6556	644
	647
	659
286-6824	686
287-0169	457
287-0215	68
287-0216	68
287-2352	746
287-2917	491
	▶492
287-2918	491
	▶869
287-2919	▶491
288-7324	324
288-7412	512
288-7413	512
288-7416	512
288-7417	512
288-7641	508
288-7643	540
288-7646	540
289-5283	639
	645
	647
	659
289-5286	639
	645
	647
	659
289-5289	639
	645
	647
	659
289-5347	670
289-5355	596
289-5565	729
	731
	▶734
289-5657	603
	607
289-6758	380
289-6761	380
289-6762	380
289-6765	379
289-6766	379
289-6767	380
	▶392
289-6768	392
289-6796	379
289-6893	▶362
	379
289-6894	362
289-6895	▶363
	379
289-6896	363
289-7917	720
289-8010	▶458
	862
289-8011	458
	▶461
289-8012	461
	▶466
289-8013	466
289-8018	▶458
	849
	850
289-8019	▶458
	849
	850
289-8020	458
	▶460
289-8021	460
	▶464
289-8022	464
289-8027	464
289-8029	▶459
	849
	850
289-8030	459
	▶463
289-8031	463
	▶471
289-8032	471
289-8037	471
289-8039	▶458
	862
289-8040	458
	▶462
289-8041	462
	▶468
289-8042	468
289-8172	720
289-8173	720
289-8174	720
289-8175	720
289-8179	493
289-8180	493
289-8194	▶489
	729
	731
289-8195	489
289-8449	231
290-1727	1099
290-1728	1099
290-1729	1099
290-1757	1078
290-1780	▶2
	11
290-1817	▶849
290-1818	10
	11
	12
	13
	▶850
290-1819	11
	14
	▶870
290-1820	9
	13
	▶870
290-1821	14
	▶871
290-1823	12
	▶871
290-1824	12
	13
	▶871
290-1825	9
	11
	13
	14
	▶862
290-1826	10
	11
	12
	13
	▶862
290-1828	▶871
290-1829	11
	▶872
290-1830	11
	▶862
290-1906	1099
290-2816	897
	898
290-2817	897
	900
290-2819	897
	900
290-6884	58
290-9204	849
	▶851
290-9205	851
290-9236	849
	▶853
290-9237	853
290-9248	850
	▶855
290-9249	855
290-9251	870
	▶877
290-9252	877
290-9263	870
	▶878
290-9264	878
290-9275	871
	▶879
290-9276	879
290-9287	871
	▶881
290-9288	881
290-9318	871
	▶883
290-9319	883
291-1010	903
291-1913	231
291-7457	178
291-7547	222
291-7559	1012
	▶1013
291-7560	1013
291-7561	1013
291-7780	181
292-0276	▶206
292-0291	206
	▶231
292-0304	206
	▶1033
292-0305	220
292-0311	992
292-7223	670
292-7299	729
	731
293-0653	772
293-0730	130
	131
293-1135	1019
293-1136	923
	925
293-1137	928
	931
293-1140	1073
293-1183	946
293-1184	946
293-1256	1062
293-4072	▶130
	150
293-6867	2

▶ **PRIMARY REFERENCE**

PART NUMBER INDEX

Part	Page
	▶389
293-6873	389
	▶393
293-6883	206
293-6895	389
293-6931	389
293-6935	389
293-6960	389
293-9367	97
294-1455	859
294-1504	871
	▶885
294-1505	885
294-1507	872
	▶886
294-1508	886
294-3794	508
	512
294-3795	508
	512
294-3798	508
	512
294-3799	508
	512
294-8620	164
295-1061	491
	▶539
295-1803	163
295-1921	1033
295-9439	▶55
	99
295-9441	473
	▶474
295-9552	695
	697
295-9553	695
295-9554	695
	697
295-9555	695
295-9556	697
295-9574	493
295-9575	494
295-9577	493
295-9578	493
295-9579	493
295-9580	493
295-9583	493
295-9584	493
295-9656	720
295-9657	721
295-9658	720
295-9659	720
295-9660	▶493
	721
295-9674	715
	▶717
295-9686	699
295-9695	720
296-6217	▶339
	343
296-6218	339
	▶340
296-6219	341
296-6980	596
296-7024	587
	590
296-7072	686
296-7079	668
296-7081	668
296-7250	638
296-7348	529
296-7350	529
296-7351	529
296-7352	527
296-7354	527
296-7355	527
296-8060	246
297-0265	587
	590
	▶839
297-0370	552
	560
	568
	676
	▶740
297-0371	676
	▶836
297-0494	▶454
297-0529	▶789
	984
	985
297-0530	▶791
	988
297-0531	▶793
	989
297-0532	967
	▶984
297-0533	967
	▶985
297-0540	966
	▶988
297-0541	966
	▶989
297-4426	3
	4
	▶200
297-5592	206
	▶220
297-5594	206
	▶231
297-6828	256
297-7710	256
297-7711	256
297-7713	256
297-7920	83
297-9151	▶413
	422
297-9156	413
298-2942	362
	363
298-2974	361
298-2975	▶360
	379
298-3111	380
298-3112	380
298-3147	134
	137
	141
	145
	▶172
298-3191	▶361
	380
298-3257	172
298-3258	172
298-4195	1001
298-4258	149
	▶1091
298-4341	455
	▶1092
298-7781	539
	3
301-0091	279
301-0589	933
301-3082	17
	▶19
302-3208	614
302-7339	9
	11
	13
	14
	▶849
302-9466	777
303-2668	1099
303-2787	192
	▶1094
303-3357	233
	▶246
303-9626	375
303-9627	376
303-9933	167
	169
303-9937	167
	169
304-5260	80
305-0329	995
305-0361	1068
305-0441	1020
305-0442	1020
305-0466	4
	5
	936
	▶1045
305-4903	93
305-5362	324
305-7812	632
306-3998	261
306-8349	2
	▶306
306-8350	306
306-8361	311
306-8527	1
	▶180
306-8590	307
306-8721	192
	▶310
306-8797	181
306-8802	1039
306-8803	181
307-0047	195
307-2673	47
307-5106	505
	▶657
307-5122	505
	▶668
307-5123	668
307-5129	668
307-5130	668
307-6480	83
307-6481	83
307-7862	393
307-8119	408
307-8428	324
307-9975	▶455
308-8784	366
308-8785	366
308-8786	366
309-0175	132
309-1114	897
	898
	899
	900
	901
309-1117	901
309-1118	901
309-1123	▶919
309-1124	▶921
309-1127	▶916
309-1129	▶917
309-3872	1091
309-5751	933
309-5769	602
	606
	623
	625
	635
	639
309-5789	208
	▶933
309-5808	968
	▶986
309-5842	▶194
	208
309-5849	1031
309-5887	▶195
	208
309-9941	759
310-0078	5
	8
	9
	▶967
310-0210	614
	▶799
310-0393	▶817
310-0394	807
	▶819
310-0414	606
	▶795
310-0419	795
310-0420	795
310-0421	795
310-0422	795
310-2393	933
310-6252	1099
310-7255	38
	40
310-7257	38
	40

▶ **PRIMARY REFERENCE**

PART NUMBER INDEX

Part	Page
310-9486	505
	▶715
310-9725	125
310-9771	125
311-7229	▶38
	43
	47
311-8150	431
	432
	433
	434
	435
	436
	437
	438
	440
	441
	442
	443
311-9548	720
312-2645	157
313-4620	161
313-7833	▶189
	191
313-8153	134
313-8154	134
313-8155	134
	137
	141
313-8156	134
	137
313-8157	134
	137
313-8170	134
	137
313-8232	137
	141
313-8238	137
314-3533	9
	▶208
314-3538	1095
	▶1097
314-3587	1
	▶259
314-3615	11
	▶850
314-3698	▶3
314-3699	▶4
314-3709	▶1
	3
	4
314-3716	1
	▶1099
314-8113	651
315-4412	▶837
	846
316-3915	540
316-3918	540
316-8812	923
	▶928
316-8845	928
316-8846	928
	931
316-8847	928
	931
316-8848	928
316-8849	928
	931
316-8850	928
316-8908	1001
316-8917	925
	▶931
316-8918	931
316-8920	931
316-8921	931
316-8987	1048
	1049
	1051
	1052
316-8989	1026
317-4881	529
317-4882	527
317-7210	40
317-7211	40
317-7212	40
317-7213	40
318-2082	262
318-2558	431
	432
	433
	436
	437
	438
	441
	442
	443
318-2559	434
	435
	440
318-5081	992
318-5883	542
318-5884	542
318-6357	161
319-0677	159
	▶161
319-1335	337
319-4353	▶1030
	1053
319-4354	1028
	▶1053
319-4357	1053
319-4420	226
	228
	▶272
319-6237	43
	45
	47
319-9152	1094
319-9702	576
319-9771	663
320-5392	189
320-5396	191
321-1463	424
	425
321-8635	47
321-8638	43
	45
	47
322-4582	1092
322-8716	579
	▶846
322-8733	717
	▶720
322-8734	720
323-7558	560
	568
	▶840
323-7559	840
	▶841
323-7770	795
323-7772	841
323-9140	324
324-0057	▶892
324-0058	892
	▶897
324-0059	897
	900
324-0162	898
324-0164	899
324-0177	▶893
324-0178	893
	▶898
324-0180	898
324-0184	898
324-1093	850
	▶857
324-1094	857
324-3632	▶894
324-3633	894
	▶899
324-3635	899
324-3639	899
324-3640	899
324-3900	898
324-4169	123
324-5761	157
324-7380	72
	73
325-3915	▶34
	37
325-9029	574
325-9220	596
326-1644	129
326-3898	106
326-4405	657
327-3329	▶191
	192
327-6501	4
	936
	▶1043
327-6503	5
	936
	▶1044
327-6507	1043
	▶1051
327-6509	1044
	▶1052
327-6512	▶1048
	1051
327-6513	▶1049
	1052
327-6515	1048
	1049
327-6520	1051
	▶1057
327-6521	1052
	▶1058
327-6523	1037
	▶1054
327-6538	1054
327-6540	1045
327-6548	1019
327-6549	1019
327-6550	▶1024
	1025
	1026
327-6552	▶1025
327-6553	▶1026
327-6576	1025
327-6581	1060
327-6640	1048
	1049
327-6642	1048
	1049
327-6643	1048
	1049
327-6644	1057
	1058
327-6645	▶1017
	1057
327-6646	1017
	1018
327-6647	1017
327-6648	1057
	1058
327-7535	200
327-7536	200
327-9998	307
328-0021	226
	228
328-0028	308
328-0048	192
	▶307
328-0093	▶308
	455
328-0370	▶290
	455
328-0371	290
328-0372	290
328-0373	290
328-2035	594
	▶838
328-2574	▶131
	151
329-6505	1095
329-6508	1099
329-6564	▶455
329-6574	▶192
329-6578	▶1095
330-1278	349
	▶354
330-1279	354
330-1284	351
	▶355
330-1285	355
330-1417	389
	▶390
330-1444	387
	▶412
330-1447	412

▶ **PRIMARY REFERENCE**

PART NUMBER INDEX

Part	Page
330-2316	614
330-2389	455
	▶587
330-2390	455
	▶659
330-2391	455
	▶590
330-2444	587
	590
330-2445	587
	590
330-2446	587
	590
330-2447	587
	590
330-2448	590
330-2460	587
	590
330-2463	587
	590
330-2466	587
	590
330-2467	587
	590
330-2468	587
	590
330-2469	587
	590
330-2470	587
	590
330-2471	587
	590
330-2568	615
330-3408	1040
330-3409	200
330-3410	200
330-6018	18
	19
	▶324
330-6034	18
	19
	▶233
331-8905	96
331-8906	96
332-3619	▶40
	45
333-2958	343
	▶479
333-2959	479
	▶480
333-4157	▶1018
	1058
333-4158	1018
333-4159	1018
333-4160	1048
	1049
333-4178	1018
333-4179	1048
	1049
333-4180	1017
	1018
	1048
	1049
	1057
	1058
333-4181	1017
333-5075	142
333-5091	141
333-5092	141
333-5093	141
333-5094	141
333-7060	639
	653
334-4603	1099
334-6569	952
	▶954
334-6572	98
334-9940	848
334-9973	693
	▶701
334-9979	701
	▶702
334-9982	702
335-0084	839
	▶843
335-0136	782
335-0138	782
336-1156	▶98
	954
336-2583	415
336-3339	6
	▶455
337-1157	576
337-1161	576
337-1165	576
337-1205	610
337-1220	594
337-1244	456
	▶594
337-1245	594
337-4107	2
	▶9
337-4108	2
	▶8
337-4109	2
	▶8
337-4112	▶9
337-4113	▶6
337-4114	▶7
337-4116	▶9
337-4117	▶10
337-4118	2
	▶10
337-4119	2
	▶10
337-4120	▶11
337-4121	2
	▶15
337-4122	2
	▶4
337-4125	2
	▶5
337-4126	▶5
337-4134	2
	▶15
337-4138	▶8
337-4152	▶9
337-4153	▶11
337-4154	▶11
337-5230	▶2
337-5231	▶2
337-9027	▶8
340-9468	▶6
340-9469	3
	▶6
340-9471	▶7
340-9478	3
	▶12
340-9479	▶12
340-9480	▶12
340-9481	▶13
341-0087	103
	105
341-5135	865
341-5272	865
342-1110	346
342-3026	▶336
	456
342-3027	336
343-2083	▶895
343-2084	895
	▶900
343-2385	145
343-2386	145
343-2392	▶145
	154
343-2395	145
343-2396	145
343-2397	145
343-2398	145
343-2399	145
343-5527	129
344-2149	▶47
	49
344-4212	7
	▶456
345-2281	3
	▶5
345-2282	3
	▶13
345-2283	▶13
345-2284	▶14
345-2285	▶14
345-2286	▶14
345-2287	▶936
345-2288	3
	▶936
345-2289	▶3
345-2290	▶3
345-8414	23
	24
	▶49
347-2343	3
	▶440
347-2344	▶441
347-2345	▶442
347-2346	▶443
347-2380	73
347-2381	73
347-2382	73
347-7908	23
	24
	▶73
347-8786	▶7
347-8787	▶7
348-2746	19
	▶23
348-2747	18
	▶24
348-4301	18
	19
	▶105
349-5408	200
349-5410	200

▶ **PRIMARY REFERENCE**



© 2009 CATERPILLAR
ALL RIGHTS
RESERVED

CAT, CATERPILLAR, THEIR RESPECTIVE LOGOS, “CATERPILLAR YELLOW” AND THE POWER EDGE TRADE DRESS, AS WELL AS CORPORATE AND PRODUCT IDENTITY USED HEREIN, ARE TRADEMARKS OF CATERPILLAR AND MAY NOT BE USED WITHOUT PERMISSION.

PRINTED IN
U.S.A.