CATERPILLAR®

SEBP5218
March 2008

VOLUME II
Pages 439-1076

RUTHZIL TRATOR COMERCIAL DE PEÇAS LTDA 11 97083-6812 ROLANDO CITRANGULO

Parts Manual

SIS

See "General Information" for New Parts Manual Features.

345D L Excavator

YEE1-Up (Machine)
MHX4500-Up (Engine)

Powered By C13 Engine

SAFETY.CAT.COM

Product and Dealer Information

Note: For product identification plate locations, see the section "Product Identification Information" in the Operation and Maintenance Manual.

Delivery Date: _____

Product Information

Model: _____

Product Identification Number: _____

Engine Serial Number: _____

Transmission Serial Number: _____

Generator Serial Number: _____

Attachment Serial Numbers: _____

Attachment Information: _____

Customer Equipment Number: _____

Dealer Equipment Number: _____

Dealer Information

Name: _____ Branch: _____

Address: _____

_____

_____

	Dealer Contact	Phone Number	Hours
Sales:	_____	_____	_____
Parts:	_____	_____	_____
Service:	_____	_____	_____

Informations produit et concessionnaire

Nota: Voir l'emplacement de la plaque signalétique du produit au chapitre "Informations produit" du guide d'utilisation et d'entretien.

Date de livraison: _____

Informations produit

Modèle: _____

Numéro d'identification produit: _____

Numéro de série du moteur: _____

Numéro de série de la boîte de vitesses: _____

Numéro de série de l'alternateur: _____

Numéros de série d'équipement: _____

Informations sur l'équipement: _____

Numéro matériel client: _____

Numéro matériel concessionnaire: _____

Informations concessionnaire

Nom: _____ Agence: _____

Adresse: _____

_____

_____

	Contact concessionnaire	Numéro de téléphone	Heures
Ventes:	_____	_____	_____
Pièces:	_____	_____	_____
Service:	_____	_____	_____

Información del Producto/Distribuidor

Nota: Para saber la ubicación de las placas de identificación del producto, ver la sección "Información sobre identificación del producto" en el Manual de Operación y Mantenimiento.

Fecha de entrega: _____

Información del producto

Modelo: _____

Número de identificación del producto: _____

Número de serie del motor: _____

Número de serie de la transmisión: _____

Número de serie del generador: _____

Números de serie de los accesorios: _____

Información sobre los accesorios: _____

Número del equipo del cliente: _____

Número del equipo del distribuidor: _____

Información del distribuidor

Nombre: _____ Sucursal: _____

Dirección: _____

_____

_____

	Comunicación con el distribuidor	Número de teléfono	Horas
Ventas:	_____	_____	_____
Piezas:	_____	_____	_____
Servicio:	_____	_____	_____

Informações Sobre Produto e Revendedor

Nota: Para localizações da placa de identificação do produto, consulte a seção, "Informações Sobre Identificação do Produto" no Manual de Operação e Manutenção.

Data de Entrega: _____

Informações Sobre o Produto

Modelo: _____

Número de Identificação do Produto: _____

Número de Série do Motor: _____

Número de Série da Transmissão: _____

Número de Série do Gerador: _____

Números de Série de Acessórios: _____

Informações Sobre Acessórios: _____

Número do Equipamento do Cliente: _____

Número do Equipamento do Revendedor: _____

Informações Sobre o Revendedor

Nome: _____ Filial: _____

Endereço: _____

_____

_____

	Contato do Revendedor	Telefone	Horas
Vendas:	_____	_____	_____
Peças:	_____	_____	_____
Serviço:	_____	_____	_____

Produkt- und Händlerinformation

Anmerkung: Für die Lage der Produkt-Identnummer und Seriennummern siehe Abschnitt "Produkt-Identinformation" im Betriebs- und Wartungshandbuch.

Lieferdatum: _____

Produkt-Identinformation

Modell: _____

Produkt-Identnummer: _____

Seriennummer des Motors: _____

Seriennummer des Getriebes: _____

Seriennummer des Generators: _____

Seriennummern der Arbeitsgeräte: _____

Arbeitsgeräteinformation: _____

Kundennummer: _____

Händlernummer: _____

Händlerinformation

Name: _____ Niederlassung: _____

Adresse: _____

_____

_____

	Kontaktperson beim Händler	Telefon	Dienststunden
Verkauf:	_____	_____	_____
Ersatzteile:	_____	_____	_____
Service:	_____	_____	_____

MEMORANDA

TABLE OF CONTENTS

Name	Page
GENERAL INFORMATION	A27
REPAIR ALTERNATIVES	A46
SUPPLEMENTAL COOLANT ADDITIVES	A51
MAINTENANCE PARTS	A56
INDEX	A72
MACHINE ARRANGEMENT	1
CHASSIS AR	1
GENERAL AR	1
SPECIAL AR	2
ENGINE ARRANGEMENT	4
ENGINE AR	4
ENGINE AR-COMPLETE	5
ENGINE AR-CORE	6
INSTALLATION AR-ENGINE	7
BASIC ENGINE	8
BASE GP-VALVE COVER	8
BELT GP-SERPENTINE	9
BELT TENSIONER GP	10
CAMSHAFT GP	11
COVER GP-FLYWHEEL HOUSING	12
COVER GP-FRONT HOUSING	13
COVER GP-VALVE MECHANISM	15
CRANKSHAFT GP	16
CYLINDER BLOCK AS	18
CYLINDER BLOCK GP	21
CYLINDER HEAD AS	23
CYLINDER HEAD GP	25
DAMPER GP	28
DRIVE GP-FAN	29
FASTENER GP-CYLINDER HEAD	30
FASTENER GP-DAMPER & PULLEY	31
FASTENER GP-FLYWHEEL	32
FLYWHEEL GP	33
GEAR GP-FRONT	34
HOUSING GP-FLYWHEEL	35
HOUSING GP-FRONT	38
LIFTER GP-VALVE	40
LIFTING GP-ENGINE	41
MOUNTING GP-ENGINE	42
MOUNTING GP-FAN DRIVE	44
MOUNTING GP-VALVE MECHANISM	45
PAN GP-OIL	46
PISTON & ROD GP	48
PLUG GP-CYLINDER BLOCK	49
PLUG GP-ENGINE	52
PULLEY GP-CRANKSHAFT	53
PULLEY GP-FAN & ALT DRIVE	54
ROCKER ARM GP	55
SEAL GP-CRANKSHAFT	59
SUPPORT GP-ENGINE	60
VALVE MECHANISM GP	61
LUBRICATION SYSTEM	63
BASE GP-OIL FILTER	63
BREATHER GP	66
COVER GP-OIL FILTER BASE	67
FILLER GP-ENGINE OIL	68
FILTER GP-ENGINE OIL	70
FUMES DISPOSAL GP	72
GAUGE GP-OIL LEVEL (DIPSTICK)	73
LINES GP-ENGINE OIL DRAIN	75
LINES GP-TURBOCHARGER OIL	76
MOUNTING GP-ENGINE OIL FILTER	77
PUMP GP-ENGINE OIL	79
COOLING SYSTEM	82
CONTROL AR-VARIABLE-SPEED FAN	82
COOLER GP-ENGINE OIL	83
FAN GP-SUCTION	85
LINES GP-COOLING	89
LINES GP-TURBOCHARGER WATER	91
LINES GP-WATER	93
PLUG GP-ENGINE OIL COOLER	96
PUMP GP-WATER	97
RADIATOR & HYD OIL COOLER GP	100
SCREEN GP-RADIATOR	104
AIR INLET AND EXHAUST SYSTEM	105
AIR CLEANER AR	105
AIR CLEANER GP	106
DRAIN GP-MUFFLER	109
EXTENSION GP-EXHAUST	110
LINES GP-AIR	111
LINES GP-COOLING AIR	115
MANIFOLD GP-EXHAUST	116
MANIFOLD GP-INLET	117
MOUNTING GP-AIR CLEANER	118
MUFFLER GP	119
PRECLEANER GP	121
TURBOCHARGER GP	122
FUEL SYSTEM	124
COOLER GP-FUEL	124
FILTER GP-FUEL	125
FILTER GP-WATER SEP & FUEL	129
FITTING GP-FUEL LINES	130
INJECTOR GP-FUEL	131
LINES GP-FUEL	132
PUMP GP-FUEL INJECTION	141
PUMP GP-FUEL TRANSFER	142
REGULATOR GP-FUEL PRESSURE	143
TANK & MTG GP-FUEL	144
TANK GP-FUEL	145

TABLE OF CONTENTS

Name	Page
VALVE GP-CHECK	147
ELECTRICAL AND STARTING SYSTEM	148
ALARM GP	148
ALARM GP-TRAVEL	149
ALTERNATOR GP-CHARGING	150
BATTERY & WIRING GP	153
BLOCK GP-JUNCTION	162
CAMERA AR	163
CAMERA GP	164
CONNECTION GP-ELECTRICAL	165
CONTROL & MTG GP-COMMUNICATION	166
CONTROL & MTG GP-ENGINE ELEK	170
CONTROL & MTG GP-MACHINE	171
CONTROL GP-COMMUNICATION	172
ELECTRONICS GP-COMMUNICATION	173
ELECTRONICS GP-MACHINE	174
FASTENER GP-WIRING HARNESS	175
INSTALLATION AR-COMMUNICATION	178
INSTALLATION GP-SECURITY	179
LAMP GP-FLOOD	181
LIGHTING GP-CHASSIS	184
LIGHTING GP-FLOOD	185
MOUNTING GP-CAMERA	195
MOUNTING GP-SENSOR	199
PANEL & MTG GP-CIRCUIT BREAKER	200
PANEL GP-CIRCUIT BREAKER	201
PANEL GP-SWITCH	203
SENSOR & MTG GP-POSITION	207
SENSOR GP-ENGINE	209
SENSOR GP-LIQUID LEVEL	211
SENSOR GP-POSITION	213
SENSOR GP-PRESSURE	214
SENSOR GP-SPEED	220
SENSOR GP-TEMPERATURE	226
SERVICE GP-MONITOR	229
STARTING AID GP-ETHER	230
STARTING MOTOR GP-ELECTRIC	233
SWITCH GP-DISCONNECT	237
SWITCH GP-MAGNETIC	238
SWITCH GP-POSITION	239
SWITCH GP-PRESSURE	240
SWITCH GP-ROTARY	241
SWITCH GP-START	242
SWITCH GP-TOGGLE	243
SWITCH GP-WIPER	244
VALVE GP-ETHER STARTING	245
WIRING GP-AUX START RECEPTACLE	246
WIRING GP-AUXILIARY CONTROL	248
WIRING GP-CAB	250
WIRING GP-CAMERA	266
WIRING GP-CHASSIS	268
WIRING GP-COMMUNICATION	275
WIRING GP-CONSOLE	279
WIRING GP-CONTROL	283
WIRING GP-CONVERTER	285
WIRING GP-COUNTERWEIGHT	289
WIRING GP-COUPLER	290
WIRING GP-ELECTRONIC CONTROL	293
WIRING GP-FAN	295
WIRING GP-FINE SWING	297
WIRING GP-GRADE CONTROL	298
WIRING GP-MEDIUM PRESSURE	301
WIRING GP-MONITOR	302
WIRING GP-PLATFORM	304
WIRING GP-RADIO	308
WIRING GP-UNIT INJECTOR	310
POWER TRAIN	311
FINAL DRIVE GP	311
POWER TRAIN AR	315
SPROCKET GP	316
FRAME AND BODY	317
BOX & MTG GP-STORAGE	317
BOX GP-STORAGE	318
CHAIN GP-COUNTERWEIGHT	320
COUNTERWEIGHT AR	322
COUNTERWEIGHT GP	323
COVER AS-SOUND SUPPRESSION	328
COVER GP-ACCESS	329
COVER GP-HOOD	330
DOOR AS-ACCESS	331
DOOR GP-ACCESS	334
FRAME GP-UPPER	336
GEAR & BEARING GP-SWING	345
GUARD AR-BOTTOM	350
GUARD GP-BOTTOM	351
GUARD GP-SWIVEL	353
HANDRAIL GP	354
HOOD & GUARD GP	356
HOOD AS	365
HOOD AS-ENGINE	367
HOOD GP	370
HOOD GP-ENGINE	372
SHEET AS-SOUND SUPPRESSION	374
STEP GP	396
STORAGE GP-VANDALISM GUARD	398
SUPPORT AS-ENCLOSURE	399
SUPPORT GP-HOOD	401
UNDERCARRIAGE	408
ADJUSTMENT GP-HYDRAULIC TRACK	408
FRAME AR-UNDERCARRIAGE	410
FRAME AS-UNDERCARRIAGE	411
GUARD GP-TRACK GUIDE	412

TABLE OF CONTENTS

Name	Page
GUARD GP-TRAVEL MOTOR	415
IDLER GP-FRONT	416
LINK AS-TRACK	422
ROLLER AR-TRACK & CARRIER	424
ROLLER GP-TRACK CARRIER	425
ROLLER GP-TRACK-SINGLE FLANGE	426
SPRING GP-RECOIL	427
TRACK GP	429
HYDRAULIC SYSTEM	439
ACCUMULATOR GP-HYDRAULIC	439
BLOCK GP-HYDRAULIC	447
CONTROL AR-AUXILIARY	448
CONTROL AR-COUPLER	453
COUPLING GP-PUMP	454
CYLINDER & LINES GP-BOOM	455
CYLINDER & LINES GP-BUCKET	455
CYLINDER & LINES GP-STICK	456
CYLINDER & SEAL GP-BOOM	457
CYLINDER & SEAL GP-BUCKET	458
CYLINDER & SEAL GP-CTWT	461
CYLINDER & SEAL GP-STICK	462
CYLINDER GP-BOOM	463
CYLINDER GP-BUCKET	465
CYLINDER GP-COUNTERWEIGHT	471
CYLINDER GP-COUPLER	472
CYLINDER GP-STICK	473
DRIVE GP-AUXILIARY PUMP	475
DRIVE GP-SWING	479
FASTENER GP-SWING & FINAL DR	487
FILTER & VALVE GP-PILOT	490
FILTER GP-OIL	493
GAUGE GP-SIGHT	498
GUARD GP-CYLINDER	499
HEAD GP-PUMP	501
HOUSING GP-FILTER	504
HYDRAULIC AR	505
LINES GP-AUXILIARY HYDRAULIC	506
LINES GP-BOOM	536
LINES GP-BOOM CYLINDER	549
LINES GP-BUCKET CYLINDER	557
LINES GP-CONNECTING	560
LINES GP-COUPLER	562
LINES GP-FRONT	571
LINES GP-HYDRAULIC	596
LINES GP-HYDRAULIC OIL COOLER	603
LINES GP-MOTOR	605
LINES GP-PILOT	607
LINES GP-PUMP	660
LINES GP-REAR ATTACHMENT	666
LINES GP-RETURN	672
LINES GP-SENSOR	676
LINES GP-STICK	677
LINES GP-STICK CYLINDER	682
LINES GP-SWING MOTOR	685
LINES GP-TRAVEL MOTOR	687
MANIFOLD GP-CONTROL	689
MOTOR & MTG GP-HYDRAULIC FAN	692
MOTOR & MTG GP-SWING	693
MOTOR & MTG GP-TRAVEL	694
MOTOR GP-PISTON	695
MOTOR GP-SWING	702
MOUNTING GP-CYLINDER	705
MOUNTING GP-MAIN CONTROL VALVE	707
PLUG GP-CONTROL VALVE	708
PUMP & MTG GP-AUXILIARY	709
PUMP & MTG GP-MAIN HYDRAULIC	710
PUMP GP-GEAR	711
PUMP GP-MAIN HYDRAULIC	713
PUMP GP-PISTON	714
PUMP GP-PISTON & GEAR	716
ROTATING GP-PUMP	720
SCREEN GP-HYDRAULIC	722
SWIVEL GP	723
TANK & FILTER GP-HYDRAULIC	724
TANK & MTG GP-HYDRAULIC	727
TUBE GP-HYDRAULIC	727
VALVE AR-ALT PATTERN CONTROL	731
VALVE AR-CHECK & RELIEF	731
VALVE GP-CHECK	733
VALVE GP-CONTROL	737
VALVE GP-COUNTERWEIGHT CONTROL	754
VALVE GP-COUPLER	755
VALVE GP-FLOW CONTROL	757
VALVE GP-LOAD CONTROL	759
VALVE GP-MAIN CONTROL	768
VALVE GP-MANIFOLD & REDUCING	771
VALVE GP-MANUAL	772
VALVE GP-PILOT	774
VALVE GP-PILOT RELIEF	794
VALVE GP-PRESSURE CONTROL	795
VALVE GP-PRESSURE REDUCING	796
VALVE GP-PUMP CONTROL	797
VALVE GP-REGENERATION	798
VALVE GP-RELIEF	799
VALVE GP-SHUTTLE	810
VALVE GP-SOLENOID	815
VALVE GP-SOLENOID & MANIFOLD	831
VALVE GP-SOLENOID & PRESS REDC	832
VALVE GP-SWING CUSHION	833
VALVE GP-TRAVEL COUNTERBALANCE	835
IMPLEMENTS	837
BOOM AR-LONG REACH	837
BOOM AR-MASS	837
BOOM AR-REACH	837

TABLE OF CONTENTS

Name	Page
BOOM GP	838
GUARD GP-SENSOR	846
LINES GP-GREASE	847
LINKAGE AR-BUCKET	854
LINKAGE GP-BUCKET	855
STICK AR	861
STICK AR-HOE	861
STICK GP-HOE	863
WORK TOOLS	876
ADJUSTER GP-BUCKET	876
BUCKET & ADJUSTER GP	878
BUCKET AR-GENERAL PURPOSE	904
BUCKET AS-GENERAL PURPOSE	905
BUCKET AS-HEAVY DUTY	907
BUCKET AS-HEAVY DUTY ROCK	910
BUCKET AS-ROCK	911
BUCKET GP-HEAVY DUTY ROCK	912
BUCKET GP-ROCK	913
COUPLER AR-QUICK	915
COUPLER GP-QUICK	916
PIN GP-COUPLER	917
PROTECTOR GP-SIDE BAR	918
RIPPER GP	920
SIDECUTTER GP	921
TIP GP-DOUBLE SPIKE	923
TIP GP-EXTRA-DUTY	924
TIP GP-GENERAL PURPOSE	925
TIP GP-HEAVY PENETRATION	926
TIP GP-PENETRATION	927
TIP GP-PENETRATION PLUS	928
TIP GP-SPIKE	929
TIP GP-WIDE	930
OPERATOR STATION	932
ADJUSTER GP-SEAT	932
AIR CONDITIONER & MOUNTING GP	933
AIR CONDITIONER AR	935
AIR CONDITIONER GP	936
ARMREST GP	938
CAB GP	940
COIL GP-EVAPORATOR	949
COMPRESSOR GP-REFRIGERANT	951
CONDENSER & MTG GP-REFRIGERANT	953
CONDENSER GP-REFRIGERANT	954
CONSOLE GP-OPERATOR	955
CONTROL & MTG GP-JOYSTICK	961
CONTROL & MTG GP-PEDAL	963
CONTROL GP-FOOT	964
CONTROL GP-HANDLE	966
CONTROL GP-HEAT & AIR COND	973
CONTROL GP-HYDRAULIC PEDAL	974
CONTROL GP-JOYSTICK	975
CONTROL GP-PEDAL	981
CONTROL GP-PILOT OPERATED HYD	982
COVER GP-CAB	983
DOOR GP-CAB	985
DUCT GP-CAB AIR	988
FLOOR MAT GP	989
GUARD AR-VANDALISM	990
GUARD GP-VANDALISM	991
GUARD GP-WINDOW	992
HATCH GP-ROOF	996
HORN GP-ELECTRIC	998
HOUSING GP-AIR CONDITIONER	999
INSTALLATION AR-RADIO	1000
INSTALLATION GP-RADIO	1001
LEVER GP-AIR & TEMP CONTROL	1002
LINES GP-AIR CONDITIONER	1003
LITERATURE GP	1005
MIRROR GP-REAR VIEW	1006
MONITOR & MTG GP-OPERATOR	1007
MONITOR GP-OPERATOR	1008
MOUNTING GP-ANTENNA	1009
MOUNTING GP-DISPLAY	1015
MOUNTING GP-PLATFORM	1017
OPERATOR AR	1019
PANEL-CONTROL	1020
PEDAL AR-AUXILIARY	1021
PLATFORM GP-OPERATOR	1023
SCREEN GP-SUN	1024
SEAT BELT GP	1025
SEAT GP	1026
SEAT GP-SUSPENSION	1029
SUPPORT GP-SEAT	1035
SUSPENSION GP-SEAT	1036
WASHER GP-WINDOW	1041
WINDOW GP-CAB	1042
WINDOW GP-DOOR	1050
WINDOW GP-REAR	1052
WIPER GP-WINDOW	1055
SERVICE EQUIPMENT AND SUPPLIES	1058
FILM GP	1058
PLATE & FILM GP	1069
PART NUMBER INDEX	B1

TABLE DES MATIÈRES

Désignation	Page
GÉNÉRALITÉS	A30
OPTIONS DE RÉPARATION	A47
ADDITIFS POUR LIQUIDE DE REFROIDISSEMENT	A52
PIÈCES DE RECHANGE	A59
INDEX	A85
VERSION DE MACHINE	1
VERSION DE CHASSIS	1
VUE DU MODÈLE	1
VERSION SPÉCIALE	2
MOTEUR (VERSION)	4
MOTEUR (VERSION)	4
VERSION DE MOTEUR COMPLET	5
MOTEUR - PARTIE CENTRALE (VERSION)	6
MONTAGE DE MOTEUR (VERSION)	7
MOTEUR STANDARD	8
SUPPORT - CACHE-SOUPAPES (ASS)	8
COURROIE D'ENTRAÎNEMENT MULTIPLE (ASS)	9
TENDEUR DE COURROIE (ASS)	10
ARBRE A CAMES (ASS)	11
COUVERCLE DE CARTER DE VOLANT (ASS)	12
COUVERCLE DE CARTER AV (ASS)	13
CACHE-SOUPAPES (ASS)	15
VILEBREQUIN (ASS)	16
BLOC-CYLINDRES (ENS)	18
BLOC-CYLINDRES (ASS)	21
CULASSE (ENS)	23
CULASSE (ASS)	25
AMORTISSEUR DE VIBRATIONS (ASS)	28
ENTRAÎNEMENT DE VENTILATEUR (ASS)	29
BOULONNERIE DE LA CULASSE (ASS)	30
BOULONNERIE D'AMORTISSEUR ET DE POULIE	31
VOLANT - BOULONNERIE (ASS)	32
VOLANT MOTEUR (ASS)	33
PIGNONNERIE AV (ASS)	34
CARTER DE VOLANT (ASS)	35
CARTER AV (ASS)	38
POUSSOIR DE SOUPAPE (ASS)	40
OEILLETONS DE LEVAGE MOTEUR (ASS)	41
MONTAGE DE MOTEUR (ASS)	42
MONTAGE D'ENTRAÎNEMENT DE VENTILATEUR (ASS)	44
MONTAGE DE CULBUTERIE (ASS)	45
HUILE MOTEUR - CARTER (ASS)	46
PISTON ET BIELLE (ASS)	48
BOUCHON DE BLOC-CYLINDRES (ASS)	49
BOUCHON DE MOTEUR (ASS)	52
VILEBREQUIN - POULIE (ASS)	53
POULIE - ENTRAÎNEMENT D'ALTERNA. ET DE VENTI	54
AXE DE CULBUTEUR (ASS)	55
JOINT DE VILEBREQUIN (ASS)	59
SUPPORT DE MOTEUR (ASS)	60
CULBUTERIE (ASS)	61
CIRCUIT DE GRAISSAGE	63
SUPPORT DE FILTRE À HUILE (ASS)	63
RENIFLARD (ASS)	66
COUVERCLE DU SUPPORT DE FILTRE A HUILE (ASS)	67
BOUCHON DE REMPLISSAGE D'HUILE MOTEUR (ASS)	68
FILTRE À HUILE MOTEUR (ASS)	70
DISPOSITIF D'EVACUATION DES VAPEURS DE CARTER	72
JAUGE D'HUILE MOTEUR (BAIONNETTE) (ASS)	73
CANALISATIONS-VIDANGE D'HUILE DE MOTEUR (ASS)	75
CANALISATIONS D'HUILE DE TURBOCOMPRESSEUR (ASS)	76
MONTAGE DE FILTRE À HUILE MOTEUR (ASS)	77
POMPE A HUILE MOTEUR (ASS)	79
CIRCUIT DE REFROIDISSEMENT	82
COMMANDE DE VITESSE DE VENTILATEUR VARIABLE	82
REFROIDISSEUR D'HUILE MOTEUR (ASS)	83
VENTILATEUR ASPIRANT (ASS)	85
CANALISATIONS DE REFROIDISSEMENT (ASS)	89
CANALISATIONS D'EAU DE TURBOCOMPRESSEUR	91
CANALISATIONS D'EAU (ASS)	93
BOUCHON DE REFROIDISSEUR D'HUILE MOTEUR (ASS)	96
POMPE A EAU (ASS)	97

* TRADUCTION NON DISPONIBLE AU MOMENT DE LA PUBLICATION

TABLE DES MATIÈRES

Désignation	Page
RADIATEUR ET REFROIDISSEUR D'HUILE HYDRAULIQUE (ASS)	100
GRILLE DE RADIATEUR (ASS)	104
CIRCUIT D'ADMISSION D'AIR ET D'ÉCHAPPEMENT	105
FILTRE À AIR (VERSION)	105
FILTRE A AIR (ASS)	106
VIDANGE-SILENCIEUX (ASS)	109
RALLONGE D'ÉCHAPPEMENT (ASS)	110
CANALISATIONS D'AIR (ASS)	111
CANALISATIONS DE REFROIDISSEMENT (ASS)	115
COLLECTEUR D'ÉCHAPPEMENT (ASS)	116
COLLECTEUR D'ADMISSION (ASS)	117
MONTAGE DE FILTRE À AIR (ASS)	118
SILENCIEUX (ASS)	119
PREFILTRE (ASS)	121
TURBOCOMPRESSEUR (ASS)	122
CIRCUIT DE CARBURANT	124
REFROIDISSEUR DE CARBURANT	124
FILTRE A CARBURANT (ASS)	125
FILTRE DE SÉPARATEUR D'EAU ET DE CARBURANT (ASS)	129
RACCORD - CANALISATIONS DE CARBURANT (ASS)	130
INJECTEUR DE CARBURANT (ASS)	131
CANALISATIONS DE CARBURANT (ASS)	132
POMPE D'INJECTION DE CARBURANT (ASS)	141
POMPE D'ALIMENTATION EN CARBURANT (ASS)	142
REGULATEUR DE PRESSION DE CARBURANT (ASS)	143
RÉSERVOIR DE CARBURANT ET MONTAGE (ASS)	144
RÉSERVOIR DE CARBURANT (ASS)	145
CLAPET DE RETENUE (ENS)	147
CIRCUIT ÉLECTRIQUE ET DE DÉMARRAGE	148
AVERTISSEUR (ASS)	148
AVERTISSEUR DE TRANSLATION (ASS)	149
ALTERNATEUR DE CHARGE (ASS)	150
BATTERIE ET CÂBLAGE	153
BLOC DE BRANCHEMENT (ASS)	162
VERSION DE CAMÉRA	163
CAMÉRA (ASS)	164
BRANCHEMENT ÉLECTRIQUE (ASS)	165
COMMANDE ET MONTAGE-COMMUNICATION (ASS)	166
COMMANDE ET MONTAGE - MOTEUR	170
COMMANDE ET MONTAGE (ASS)-MACHINE	171
COMMANDE DE COMMUNICATION (ASS)	172
ÉLECTRONIQUE - COMMUNICATION (ASS)	173
ÉLECTRONIQUE - MACHINE (ENS)	174
BOULONNERIE DE FAISCEAU DE CABLES	175
VERSION DE MONTAGE-COMMUNICATION	178
MONTAGE-SÉCURITÉ (ASS)	179
LAMPE - PHARE (ASS)	181
ÉCLAIRAGE DE CHÂSSIS (ASS)	184
ÉCLAIRAGE - PROJECTEURS (ASS)	185
MONTAGE DE CAMÉRA (ASS)	195
MONTAGE - CAPTEUR (ASS)	199
PANNEAU DE DISJONCTEURS ET MONTAGE (ASS)	200
DISJONCTEUR DU PANNEAU DE COMMANDE (ASS)	201
INTERRUPTEURS DU PANNEAU (ASS)	203
CAPTEUR ET MONTAGE-POSITION (ASS)	207
CAPTEUR - MOTEUR (ASS)	209
CAPTEUR DE NIVEAU DU LIQUIDE (ASS)	211
SONDE - CIRCUIT DE CARBURANT	213
CAPTEUR DE PRESSION (ASS)	214
CAPTEUR DE VITESSE (ASS)	220
CAPTEUR DE TEMPERATURE (ASS)	226
ENTRETIEN DU MONITEUR (ASS)	229
AUXILIAIRE DE DÉMARRAGE À L'ÉTHER	230
DÉMARREUR ÉLECTRIQUE (ASS)	233
ROBINET DE BATTERIE (ASS)	237
CONTACTEUR MAGNETIQUE (ASS)	238
CONTACTEUR DE POSITION (ASS)	239
MANOCONTACT	240
CONTACTEUR ROTATIF (ASS)	241
INTERRUPTEUR DE DÉMARRAGE (ASS)	242
INTERRUPTEUR À BASCULE (ASS)	243
INTERRUPTEUR D'ESSUIE-GLACE (ASS)	244
SOUPAPE DE DÉMARRAGE À L'ÉTHER (ASS)	245
CÂBLAGE DE PRISE POUR DÉMARRAGE AUXILIAIRE (ASS)	246

* TRADUCTION NON DISPONIBLE AU MOMENT DE LA PUBLICATION

TABLE DES MATIÈRES

Désignation	Page
CABLAGE DE COMMANDE AUXILIAIRE (ASS)	248
CABLAGE DE CABINE (ASS)	250
CÂBLAGE DE CAMÉRA (ASS)	266
CABLAGE DE CHASSIS (ASS)	268
CÂBLAGE DE COMMUNICATION (ASS)	275
CABLAGE DE CONSOLE (ASS)	279
CABLAGE - COMMANDE (ASS)	283
CÂBLAGE-TRANSFORMATION (ASS)	285
CÂBLAGE - CONTREPOIDS (ASS)	289
CÂBLAGE-COUPLEUR (ASS)	290
COMMANDE ÉLECTRONIQUE - CABLAGE	293
CÂBLAGE DE VENTILATEUR	295
CABLAGE - ORIENTATION DE PRECISION (ASS)	297
AVERTISSEMENT DE PROFIL LONGITUDINAL (ASS)	298
CÂBLAGE - PRESSION MOYENNE (ASS)	301
CABLAGE DU PANNEAU DE COMMANDE	302
CABLAGE - PLATE-FORME (ASS)	304
CABLAGE DE RADIO (ASS)	308
CABLAGE D'INJECTEUR	310
TRANSMISSION	311
RÉDUCTEURS (ASS)	311
TRANSMISSION (VERSION)	315
ROUE AV (ASS)	316
CHÂSSIS ET BENNE	317
COFFRE ET MONTAGE - RANGEMENT (ASS)	317
COFFRE DE RANGEMENT (ASS)	318
CHAÎNE DE LEVAGE DE CONTREPOIDS (ASS)	320
CONTREPOIDS (VERSION)	322
CONTREPOIDS (ASS)	323
COUVERCLE D'INSONORISATION (ENS)	328
COUVERCLE DE VISITE (ASS)	329
COUVERCLE - CAPOT (ASS)	330
PORTE DE VISITE (ENS)	331
PORTE DE VISITE (ASS)	334
CHASSIS DE TOURELLE (ASS)	336
ENGRENAGE ET PALIER D'ORIENTATION	345
BLINDAGE INFÉRIEUR (VERSION)	350
BLINDAGE INFÉRIEUR (ASS)	351
PROTECTION DE PIVOT (ASS)	353
MAIN COURANTE (ASS)	354
CAPOT ET PROTECTION (ASS)	356
CAPOT (ENS)	365
CAPOT MOTEUR (ENS)	367
CAPOT (ASS)	370
CAPOT DU MOTEUR (ASS)	372
TÔLE D'INSONORISATION (ENS)	374
MARCHEPIED (ASS)	396
REMISAGE - PROTECTION ANTIVANDALISME (ASS)	398
SUPPORT DE CAPOTAGE (ENS)	399
SUPPORT DE CAPOT	401
TRAIN DE ROULEMENT	408
RÉGLAGE DE CHAÎNE HYDRAULIQUE (ASS)	408
CHÂSSIS PORTEUR (VERSION)	410
CHÂSSIS PORTEUR (ENS)	411
GUIDE PROTECTEUR DE CHAÎNE (ASS)	412
PROTECTION DE MOTEUR DE TRANSLATION (ASS)	415
ROUE AV (ASS)	416
MAILLON DE CHAINE (ENS)	422
GALET SUPÉRIEUR (VERSION)	424
GALET SUPERIEUR (ASS)	425
GALET A BOUDIN SIMPLE (ASS)	426
RESSORT AMORTISSEUR (ASS)	427
CHAINES (ASS)	429
CIRCUIT HYDRAULIQUE	439
ACCUMULATEUR HYDRAULIQUE (ASS)	439
BLOC - HYDRAULIQUE (ASS)	447
COMMANDE AUXILIAIRE (VERSION)	448
VERSION DE COMMANDE DE COUPLEUR	453
ACCOUPLEMENT DE POMPE (ASS)	454
VÉRIN ET CANALISATIONS DE FLÈCHE (ASS)	455
VÉRIN ET CANALISATIONS DE GODET (ASS)	455
VÉRIN ET CANALISATIONS DE BRAS (ASS)	456
VERIN DE FLECHE ET JOINT (ASS)	457
VÉRIN DE GODET ET JOINT (ASS)	458
VERIN ET JOINT CONTREPOIDS (ASS)	461
VERIN DE BRAS ET JOINT (ASS)	462
VERIN DE FLECHE (ASS)	463
VERIN DE GODET (ASS)	465
VERIN DU CONTREPOIDS (ASS)	471
VÉRIN DE COUPLEUR (ASS)	472
VERIN DE BRAS (ASS)	473

* TRADUCTION NON DISPONIBLE AU MOMENT DE LA PUBLICATION

TABLE DES MATIÈRES

Désignation	Page
ENTRAÎNEMENT DE POMPE AUXILIAIRE (ASS)	475
ENTRAINEMENT D'ORIENTATION (ASS)	479
BOULONNERIE DE BÂTI D'ORIENT. ET DE RÉDUCT. LAT.	487
FILTRE ET SOUPAPE PILOTE (ASS)	490
FILTRE A HUILE (ASS)	493
REGARD DE NIVEAU (ASS)	498
PROTECTION DE VÉRIN (ASS)	499
TÊTE DE POMPE (ASS)	501
CARTER DE FILTRE (ASS)	504
VERSION HYDRAULIQUE	505
CANALISATIONS HYDRAULIQUES AUXILIAIRES (ASS)	506
FLECHE - CANALISATIONS	536
CANALISATIONS DE VERIN DE FLECHE (ASS)	549
CANALISATIONS DE VÉRIN DE GODET (ASS)	557
CANALISATIONS - BRANCHEMENT (ASS)	560
CANALISATIONS DE COUPLEUR (ASS)	562
CANALISATIONS AV	571
CANALISATIONS HYDRAULIQUES (ASS)	596
CANALISATIONS DE REFROIDISSEUR D'HUILE HYDR. (ASS)	603
CANALISATIONS DU MOTEUR (ASS)	605
CANALISATIONS A COMMANDE PILOTE (ASS)	607
CANALISATIONS DE POMPE (ASS)	660
CANALISATIONS D'EQUIPEMENT AR (ASS)	666
CANALISATIONS DE RETOUR (ASS)	672
CANALISATIONS DE CAPTEUR (ASS)	676
CANALISATIONS DE BRAS (ASS)	677
CANALISATIONS DU VÉRIN DE BRAS (ASS)	682
CANALISATIONS DU MOTEUR D'ORIENTATION	685
CANALISATIONS DE MOTEUR DE TRANSLATION	687
COLLECTEUR - COMMANDE (ASS)	689
MOTEUR ET MONTAGE DE VENTILATEUR HYDRAULIQUE (ASS)	692
MOTEUR ET MONTAGE - BÂTI D'ORIENTATION (ASS)	693
MOTEUR DE TRANSLATION ET MONTAGE (ASS)	694
GROUPE DE MOTEUR A PISTONS	695
MOTEUR DE JOINT TOURNANT (ASS)	702
MONTAGE DE VÉRIN (ASS)	705
MONTAGE (ASS)-DISTRIBUTEUR PRINCIPAL	707
BOUCHON-DISTRIBUTEUR (ASS)	708
POMPE AUXILIAIRE ET MONTAGE (ASS)	709
POMPE ET MONTAGE - HYDRAULIQUE PRINCIPAL	710
POMPE A ENGRENAGES (ASS)	711
POMPE HYDRAULIQUE PRINCIPALE (ASS)	713
POMPE A PISTONS (ASS)	714
POMPES DE PISTONS ET ENGRENAGES (ASS)	716
GROUPE DE ROTATION DE POMPE	720
ÉCRAN (ASS)-HYDRAULIQUE	722
GROUPE D'ORIENTATION	723
RÉSERVOIR HYDRAULIQUE ET FILTRE (ASS)	724
RÉSERVOIR HYDRAULIQUE ET MONTAGE (ASS)	727
TUYAU HYDRAULIQUE (ASS)	727
SOUPAPE - COMMANDE D'ALTERNATEUR (VERSION)	731
CLAPET DE RETENUE ET DE DÉCHARGE (VERSION)	731
CLAPET DE RETENUE (ENS)	733
DISTRIBUTEUR (ASS)	737
SOUPAPE DE COMMANDE DE CONTREPOIDS (ASS)	754
SOUPAPE DE COUPLEUR (ASS)	755
DISTRIBUTEUR DE DÉBIT (ASS)	757
DISTRIBUTEUR DE CHARGE (ASS)	759
SOUPAPE DE COMMANDE PRINCIPALE (ASS)	768
SOUPAPE RÉDUCTRICE ET COLLECTEUR (ASS)	771
SOUPAPE A COMMANDE MANUELLE (ASS)	772
SOUPAPE PILOTE (ASS)	774
CLAPET DE DÉCHARGE PILOTE (ASS)	794
DISTRIBUTEUR DE PRESSION (ASS)	795
SOUPAPE RÉDUCTRICE DE PRESSION (ASS)	796
DISTRIBUTEUR DE POMPE (ASS)	797
SOUPAPE DE REGÉNÉRATION (ASS)	798
CLAPET DE DECHARGE (ASS)	799
VANNE PILOTE (ASS)	810
SOUPAPE - SOLÉNOÏDE (ASS)	815
SOUPAGE - SOLÉNOIDE ET COLLECTEUR	831

* TRADUCTION NON DISPONIBLE AU MOMENT DE LA PUBLICATION

TABLE DES MATIÈRES

Désignation	Page
SOUPAPE-SOLÉNOÏDE ET RÉDUCTION DE PRESSION	832
DISTRIBUTEUR-AMORTISSEUR DE ROTATION	833
SOUPAPE D'EQUILIBRAGE DE TRANSLATION (ASS)	835
ÉQUIPEMENTS	837
FLÈCHE LONGUE PORTÉE (VERSION)	837
VERSION DE FLÈCHE POUR CREUSEMENT INTENSIF	837
FLÈCHE NORMALE	837
FLECHE (ASS)	838
PROTÈGE-CAPTEUR (ASS)	846
CANALISATIONS DE GRAISSAGE (ASS)	847
TIMONERIE DU GODET (VERSION)	854
TRINGLERIE DE GODET (ASS)	855
BRAS (VERSION)	861
PELLE RÉTRO - BRAS	861
BRAS DE PELLE RETRO (ASS)	863
OUTILS DE TRAVAIL	876
MÉCANISME DE RÉGLAGE DE GODET (ASS)	876
GODET ET TENDEUR DE CHAÎNE (ASS)	878
GODET NORMAL (VERSION)	904
GODET NORMAL (ENS)	905
GODET EXTRA-ROBUSTE (ENS)	907
GODET ROCHE EXTRA-ROBUSTE (ENS)	910
GODET-ROCHE (ENS)	911
GODET À ROCHE EXTRA-ROBUSTE (ASS)	912
GODET-ROCHE (ASS)	913
COUPLEUR EXPRESS (VERSION)	915
COUPLEUR EXPRESS (ASS)	916
AXE DU COUPLER (ASS)	917
PROTECTEUR DE LONGERON (ASS)	918
RIPPER (ASS)	920
COUTEAUX LATÉRAUX (ASS)	921
POINTE DOUBLE ÉPERON (ASS)	923
POINTE EXTRA-ROBUSTE (ASS)	924
POINTE - UNIVERSELLE (ASS)	925
POINTE DE PÉNÉTRATION EXTRA-ROBUSTE (ASS)	926
POINTE PENETRATION	927
POINTE PÉNÉTRATION PLUS (ASS)	928
POINTE ÉPERON (ASS)	929
POINTE LARGE (ASS)	930
POSTE DE CONDUITE	932
REGLAGE DE SIEGE (ASS)	932
CLIMATISEUR ET MONTAGE (ASS)	933
CLIMATISEUR (VERSION)	935
CLIMATISEUR (ASS)	936
ACCOUDOIR (ASS)	938
CABINE (ASS)	940
BOBINE D'ÉVAPORATEUR (ASS)	949
COMPRESSEUR DE REFRIGERANT (ASS)	951
CONDENSATEUR ET MONTAGE (RÉFRIGÉRANT)	953
CONDENSEUR DE RÉFRIGÉRANT	954
CONSOLE DE CONDUITE (ASS)	955
COMMANDE ET MONTAGE - LEVIER (ASS)	961
COMMANDE ET MONTAGE DE PÉDALE (ASS)	963
COMMANDE DE PIED (ASS)	964
COMMANDE DE POIGNÉE (ASS)	966
COMMANDE DE CHALEUR ET DE CLIMATISATION (ASS)	973
COMMANDE HYDRAULIQUE DE PÉDALE (ASS)	974
PALONNIER - GROUPE DE COMMANDE (ASS)	975
COMMANDE DE PÉDALE (ASS)	981
COMMANDE HYDRAULIQUE PILOTE (ASS)	982
COUVERCLE - CABINE (ASS)	983
PORTIÈRE DE CABINE (ASS)	985
GAINE D'AIR (ASS)	988
TAPIS DU PLANCHER (ASS)	989
PROTECTION ANTI-VANDALISME (VERSION)	990
PROTECTION ANTIVANDALISME (ASS)	991
PROTECTION DE GLACE (ASS)	992
TOIT OUVRANT (ASS)	996
KLAXON ÉLECTRIQUE (ASS)	998
BOÎTIER DE CLIMATISEUR (ASS)	999
MONTAGE DE RADIO (VERSION)	1000
MONTAGE DE RADIO (ASS)	1001
LEVIER DE COMMANDE - AIR ET TEMP. (ASS)	1002
CANALISATIONS DE CLIMATISEUR (ASS)	1003
LITTÉRATURE (ASS)	1005
RÉTROVISEUR (ASS)	1006
MONITEUR ET MONTAGE - POSTE DE CONDUITE (ASS)	1007
ÉLECTROMODULE DE SURVEILLANCE (ASS)	1008

* TRADUCTION NON DISPONIBLE AU MOMENT DE LA PUBLICATION

TABLE DES MATIÈRES

Désignation	Page
MONTAGE-ANTENNE (ASS)	1009
MONTAGE D'AFFICHAGE (ASS)	1015
MONTAGE DE PLATE-FORME (ASS)	1017
POSTE DE CONDUITE (VERSION)	1019
*PANEL-CONTROL	1020
PEDALE AUXILIAIRE (VERSION)	1021
PLATE-FORME DE CABINE	1023
PARE-SOLEIL (ASS)	1024
CEINTURE DE SECURITE (ASS)	1025
SIÈGE (ASS)	1026
SIÈGE AVEC SUSPENSION (ASS)	1029
SUPPORT DE SIÈGE (ASS)	1035
SIÈGE AVEC SUSPENSION (ASS)	1036
LAVE-GLACE - VITRE (ASS)	1041
VITRE DE CABINE (ASS)	1042
GLACE DE PORTIÈRE (ASS)	1050
GLACE AR	1052
ESSUIE-GLACE (ASS)	1055
MATÉRIEL ET FOURNITURES D'ENTRETIEN	1058
PLAQUE SIGNALÉTIQUE (ASS)	1058
PLAQUES SIGNALETIQUES ET AUTOCOLLANTS (ASS)	1069
INDEX DE NUMÉROS DE PIÈCES	B1

* TRADUCTION NON DISPONIBLE AU MOMENT DE LA PUBLICATION

CONTENIDO

Nombre	Página
INFORMACIÓN GENERAL	A34
ALTERNATIVAS DE REPARACIÓN	A48
ADITIVOS DE REFRIGERANTE SUPLEMENTARIOS	A53
PIEZAS DE MANTENIMIENTO	A62
INDICE	A99
CONFIGURACIÓN DE MÁQUINA	1
CHASIS (CONFIG)	1
CONFIGURACIÓN GENERAL	1
CONFIGURACION ESPECIAL	2
CONFIGURACIÓN DE MOTOR	4
CONFIGURACIÓN DE MOTORES	4
*ENGINE AR-COMPLETE	5
MOTOR - NÚCLEO (CONFIG)	6
CONFIGURACIÓN DE INSTALACIÓN DEL MOTOR	7
MOTOR BÁSICO	8
BASE DE LA TAPA DE VÁLVULAS (GR)	8
GRUPO DE CORREA- SERPENTIN	9
TENSOR DE CORREA (GR)	10
ÁRBOL DE LEVAS (GR)	11
TAPA DE LA CAJA DE VOLANTE (GR)	12
TAPA DE LA CAJA DELANTERA (GR)	13
TAPA DEL MECANISMO DE VÁLVULAS (GR)	15
CIGÜEÑAL (GR)	16
BLOQUE MOTOR (CONJ)	18
BLOQUE MOTOR (GR)	21
CULATA DE CILINDROS (CONJ)	23
CULATA DE CILINDROS (GR)	25
AMORTIGUADOR DE VIBRACIONES (GR)	28
IMPULSOR DE VENTILADOR (GR)	29
CULATA DE CILINDROS - TORNILLERÍA DE LA (GR)	30
GRUPO DE TORNILLERIA-AMORTIGUADOR Y POLEA	31
TORNILLERÍA DE VOLANTE (GR)	32
VOLANTE (GR)	33
ENGRANAJE DELANTERO (GR)	34
VOLANTE - CAJA DE (GR)	35
CAJA DELANTERA (GR)	38
VÁLVULA DE LEVANTAMIENTO (GR)	40
CÁNCAMOS DE LEVANTAMIENTO DEL MOTOR (GR)	41
MONTAJE DEL MOTOR (GR)	42
MONTAJE DEL MANDO DE VENTILADOR (GR)	44
MECANISMO DE LA VÁLVULA - MONTAJE DEL (GR)	45
CÁRTER - COLECTOR DEL (GR)	46
PISTÓN Y BIELA (GR)	48
TAPÓN DEL BLOQUE MOTOR (GR)	49
TAPÓN DEL MOTOR (GR)	52
CIGÜEÑAL - POLEA DE (GR)	53
POLEA DE MANDO DEL ALTERNADOR Y VENTILADOR (GR)	54
BALANCÍN (GR)	55
SELLO DE CIGÜEÑAL (GR)	59
MOTOR - SOPORTE DEL (GR)	60
MECANISMO DE VÁLVULAS (GR)	61
SISTEMA DE LUBRICACIÓN	63
FILTRO DE ACEITE - BASE DEL (GR)	63
RESPIRADERO (GR)	66
TAPA DE LA BASE DEL FILTRO DE ACEITE (GR)	67
TUBO DE LLENADO DE ACEITE (GR)	68
FILTRO DE ACEITE DEL MOTOR (GR)	70
ESCAPE DE GASES (GR)	72
INDICADOR DEL NIVEL DE ACEITE (VARILLA) (GR)	73
TUBERIAS DE DRENAJE DE ACEITE DE MOTOR (GR)	75
TURBOCOMPRESOR - TUBERÍAS DE ACEITE DEL (GR)	76
FILTRO DE ACEITE DEL MOTOR Y MONTAJE (GR)	77
BOMBA DE ACEITE DEL MOTOR (GR)	79
SISTEMA DE ENFRIAMIENTO	82
CONTROL DE VENTILADOR DE VELOCIDAD VARIABLE (CONFIG)	82
ENFRIADOR DE ACEITE DEL MOTOR (GR)	83
SUCCIÓN - VENTILADOR DE (GR)	85
TUBERIAS DE ENFRIAMIENTO (GR)	89
TUBERIAS DE AGUA DEL TURBOCOMPRESOR (GR)	91
TUBERÍAS DEL AGUA (GR)	93
GRUPO DE TAPON, REFRIGERANTE DE ACEITE DE MOTOR	96
BOMBA DE AGUA (GR)	97
RADIADOR Y ENFRIADOR DE ACEITE HIDRÁULICO (GR)	100
REJILLA DEL RADIADOR (GR)	104

* NO HAY TRADUCCION DISPONIBLE EN EL MOMENTO DE LA IMPRESION

CONTENIDO

Nombre	Página
SISTEMA DE ADMISION Y ESCAPE DE AIRE	105
LIMPIADOR DE AIRE (CONFIG)	105
FILTRO DE AIRE (GR)	106
DRENAJE (GR), MUFLER	109
EXTENSIÓN DEL ESCAPE (GR)	110
AIRE - TUBERÍAS DE (GR)	111
TUBERIAS DE AIRE DE ENFRIAMIENTO (GR)	115
MÚLTIPLE DE ESCAPE (GR)	116
MÚLTIPLE DE ADMISIÓN (GR)	117
MONTAJE DEL FILTRO DE AIRE (GR)	118
SILENCIADOR (GR)	119
ANTEFILTRO (GR)	121
TURBOCOMPRESOR (GR)	122
SISTEMA DE COMBUSTIBLE	124
ENFRIADOR DEL COMBUSTIBLE (GR)	124
FILTRO DE COMBUSTIBLE (GR)	125
FILTRO DE COMBUSTIBLE Y SEPARADOR DE AGUA (GR)	129
CONEXIÓN DE ENGRASE DE LAS TUBERÍAS DE COMBUSTIBLE	130
INYECTOR DE COMBUSTIBLE (GR)	131
TUBERÍAS DE COMBUSTIBLE (GR)	132
BOMBA DE INYECCIÓN DE COMBUSTIBLE (GR)	141
BOMBA DE TRANSFERENCIA DE COMBUSTIBLE (GR)	142
REGULADOR DE LA PRESION DE COMBUSTIBLE (GR)	143
TANQUE DE COMBUSTIBLE Y GRUPO DE MONTAJE	144
COMBUSTIBLE - TANQUE DE (GR)	145
VÁLVULA DE RETENCIÓN (GR)	147
SISTEMA ELÉCTRICO Y DE ARRANQUE	148
ALARMA (GR)	148
ALARMA DE DESPLAZAMIENTO (GR)	149
CARGA - ALTERNADOR DE (GR)	150
BATERÍA Y CABLES (GR)	153
BLOQUE DE EMPALME (GR)	162
CONFIGURACIÓN DE CÁMARA	163
GRUPO DE CÁMARA	164
CONEXIÓN ELÉCTRICA (GR)	165
CONTROL DE COMUNICACION Y MONTAJE (GR)	166
CONTROL ELECTRÓNICO DEL MOTOR Y MONTAJE	170
CONTROL DE MAQUINA Y MONTAJE (GR)	171
CONTROL DE COMUNICACION (GR)	172
GRUPO ELECTRONICO-COMUNICACION	173
ELECTRÓNICA DE LA MÁQUINA (GR)	174
TORNILLERIA DE MAZO DE CABLES (GR)	175
INSTALACION DE COMUNICATION (CONFIG)	178
INSTALACION DE SEGURIDAD (GR)	179
REFLECTOR (GR)	181
LUCES DEL CHASÍS (GR)	184
LUCES DE REFLECTOR (GR)	185
GRUPO DE MONTAJE DE CÁMARA	195
MONTAJE DEL SENSOR (GR)	199
DISYUNTOR, TABLERO Y MONTAJE (GR)	200
PANEL DE DISYUNTORES (GR)	201
TABLERO DE INTERRUPTOR (GR)	203
SENSOR DE POSICION Y MONTAJE (GR)	207
SENSOR DEL MOTOR (GR)	209
SENSOR DEL NIVEL DE LÍQUIDO	211
DETECTOR DE POSICIÓN (SISTEMA DE COMBUST.) (GR)	213
SENSOR DE PRESIÓN (GR)	214
SENSOR DE VELOCIDAD (GR)	220
SENSOR DE TEMPERATURA (GR)	226
SERVICIO DE MONITOR (GR)	229
AUXILIAR DE ARRANQUE CON ÉTER (GR)	230
MOTOR DE ARRANQUE ELÉCTRICO (GR)	233
DISYUNTOR (GR)	237
INTERRUPTOR MAGNÉTICO (GR)	238
GRUPO DE INTERRUPTOR-POSICIÓN	239
INTERRUPTOR DE PRESIÓN (GR)	240
GRUPO DE INTERRUPTOR ROTATORIO	241
ARRANQUE - INTERRUPTOR DE (GR)	242
INTERRUPTOR DE VOLQUETE (GR)	243
INTERRUPTOR DEL LIMPIADOR (GR)	244
GRUPO DE VÁLVULA-ARRANQUE CON ÉTER	245
CABLES AUXILIARES DEL RECEPTÁCULO DE ARRANQUE (GR)	246
CABLES DEL CONTROL AUXILIAR (GR)	248
CABLES DE LA CABINA (GR)	250
GRUPO DE CABLES DE CÁMARA	266
CABLES DEL CHASIS (GR)	268
ALAMBRADO DE COMUNICACION (GR)	275
CABLES DE LA CONSOLA (GR)	279

* NO HAY TRADUCCION DISPONIBLE EN EL MOMENTO DE LA IMPRESION

CONTENIDO

Nombre	Página
CABLES DEL CONTROL (GR)	283
ALAMBRADO DE CONVERTIDOR (GR)	285
CONTRAPESO-GRUPO DE CABLES	289
ALAMBRADO DE ACOPLADOR (GR)	290
CABLES DEL CONTROL ELECTRÓNICO (GR)	293
GRUPO DE CABLES, VENTILADOR	295
CABLES DE ROTACIÓN PRECISA (GR)	297
CABLE GR-GRADO DE CONTROL	298
CABLE GR-PRESIÓN MEDIA	301
CABLES DEL TABLERO MONITOR (GR)	302
CABLES DE LA PLATAFORMA (GR)	304
CABLES DE RADIO (GR)	308
CABLES DE INYECTOR (GR)	310
TREN DE FUERZA	311
MANDO FINAL (GR)	311
TREN DE FUERZA (CONFIG)	315
RUEDA MOTRIZ (GR)	316
BASTIDOR Y CARROCERIA	317
CAJA DE ALMACENAMIENTO Y MONTAJE (GR)	317
CAJA DE ALMACENAMIENTO	318
GRUPO DE CADENA DE LEVANTAMIENTO DEL CONTRAPESO	320
CONTRAPESO	322
CONTRAPESO (GR)	323
CONJUNTO DE CUBIERTA DE SUPRESIÓN DE RUIDO	328
GRUPO DE TAPA, ACCESO	329
TAPA DEL CAPO (GR)	330
PUERTA DE ACCESO (GR)	331
BASTIDOR SUPERIOR (GR)	336
ENGRANAJE DE ROTACIÓN Y COJINETE (GR)	345
PROTECTOR INFERIOR (CONFIG)	350
PROTECTOR INFERIOR (GR)	351
PROTECTOR DE LA UNIÓN GIRATORIA (GR)	353
*HANDRAIL GP	354
CAPO Y PROTECTOR (GR)	356
CAPÓ (CONJ)	365
CAPÓ (GR)	370
CAPÓ DEL MOTOR (GR)	372
*SHEET AS-SOUND SUPPRESSION	374
ESTRIBO DEL OPERADOR (GR)	396
ALMACENAMIENTO DEL PROTECTOR CONTRA VANDALISMO (GR)	398
CONJUNTO DE SOPORTE DE COMPARTIMIENTO	399
SOPORTE DEL CAPO (GR)	401
TREN DE RODAJE	408
AJUSTADOR DE LA CADENA HIDRÁULICA (GR)	408
BASTIDOR DEL TREN DE RODAJE (CONFIG)	410
BASTIDOR DEL TREN DE RODAJE (CONJ)	411
PROTECTOR GUÍA DE CADENA (GR)	412
PROTECTOR DEL MOTOR DE DESPLAZAMIENTO (GR)	415
RUEDA GUÍA DELANTERA (GR)	416
ESLABÓN DE CADENA (CONJ)	422
RODILLO SUPERIOR (CONFIG)	424
RODILLO SUPERIOR DE CADENAS (GR)	425
RODILLOS DE PESTAÑA SIMPLE (GR)	426
RESORTE TENSOR (GR)	427
CADENAS (GR)	429
SISTEMA HIDRÁULICO	439
ACUMULADOR HIDRAULICO (GR)	439
BLOQUE HIDRÁULICO (GR)	447
CONTROL AUXILIAR (CONFIG)	448
CONTROL (CONFIG), ACOPLADOR	453
ACOPLAMIENTO DE BOMBA (GR)	454
CILINDRO DE LA PLUMA Y TUBERÍAS (GR)	455
CILINDRO DEL CUCHARÓN Y TUBERÍAS (GR)	455
CILINDRO DEL BRAZO Y TUBERÍAS (GR)	456
CILINDRO DE LA PLUMA Y SELLO (GR)	457
CILINDRO DEL CUCHARÓN Y SELLO (GR)	458
CONTRAPESO - CILINDRO Y SELLO (GR)	461
CILINDRO DEL BRAZO Y SELLO (GR)	462
CILINDRO DE LA PLUMA (GR)	463
CILINDRO DE CUCHARÓN (GR)	465
CILINDRO DE CONTRAPESO (GR)	471
CILINDRO DEL ACOPLADOR (GR)	472
CILINDRO DEL BRAZO (GR)	473
MANDO DE BOMBA AUXILIAR (GR)	475
MANDO DE ROTACIÓN (GR)	479
SUJETADORES DEL ROTADOR Y DEL MANDO FINAL (GR)	487

* NO HAY TRADUCCION DISPONIBLE EN EL MOMENTO DE LA IMPRESION

CONTENIDO

Nombre	Página
GRUPO DE FILTRO Y VÁLVULA, PILOTO	490
FILTRO DE ACEITE (GR)	493
MIRILLA DE MEDIDOR (GR)	498
PROTECTOR DE CILINDRO (GR)	499
CABEZA DE BOMBA (GR)	501
FILTRO DE AIRE DE LA CABINA - CÁRTER DEL (GR)	504
HIDRÁULICA (CONFIG)	505
TUBERÍAS HIDRÁULICAS AUXILIARES (GR)	506
TUBERÍAS DE LA PLUMA (GR)	536
CILINDRO DE LA PLUMA - TUBERÍAS DEL	549
TUBERÍAS DEL CILINDRO DEL CUCHARÓN (GR)	557
TUBERIAS DE CONEXION (GR)	560
ACOPLADOR - TUBERÍAS DE (GR)	562
TUBERÍAS DELANTERAS (GR)	571
TUBERÍAS HIDRÁULICAS (GR)	596
TUBERÍAS DEL ENFRIADOR DE ACEITE HIDRÁULICO (GR)	603
TUBERIAS DEL MOTOR (GR)	605
TUBERÍAS CON SERVOMANDO (GR)	607
BOMBA - TUBERÍAS DE (GR)	660
TUBERÍAS DE ACCESORIO POSTERIOR (GR)	666
TUBERÍAS DE RETORNO (GR)	672
TUBERIAS DEL SENSOR (GR)	676
TUBERÍAS DEL BRAZO (GR)	677
TUBERÍAS DEL CILINDRO DEL BRAZO (GR)	682
TUBERÍAS DEL MOTOR DE ROTACIÓN (GR)	685
TUBERÍAS DEL MOTOR DE DESPLAZAMIENTO (GR)	687
CONTROL DEL MULTIPLE (GR)	689
MOTOR Y MONTAJE DE VENTILADOR HIDRAULICO (GR)	692
MOTOR Y MONTAJE DE ROTACIÓN (GR)	693
MOTOR DE DESPLAZAMIENTO Y MONTAJE (GR)	694
PISTONES DEL MOTOR (GR)	695
MOTOR DE LA ROTACIÓN (GR)	702
MONTAJE DE CILINDRO (GR)	705
MONTAJE DE VALVULA DE CONTROL PRINCIPAL (GR)	707
TAPON DE VALVULA DE CONTROL (GR)	708
BOMBA AUXILIAR Y MONTAJE (GR)	709
BOMBA HIDRÁULICA PRINCIPAL Y MONTAJE (GR)	710
BOMBA DE ENGRANAJES (GR)	711
BOMBA HIDRÁULICA PRINCIPAL (GR)	713
BOMBA DE PISTONES (GR)	714
BOMBAS DE PISTONES Y ENGRANAJES (GR)	716
GRUPO GIRATORIO DE BOMBA	720
REJILLA DEL SISTEMA HIDRÁULICO(GR)	722
UNIÓN GIRATORIA (GR)	723
TANQUE Y FILTRO HIDRÁULICOS (GR)	724
TANQUE HIDRÁULICO Y MONTAJE (GR)	727
*TUBE GP-HYDRAULIC	727
VALVULA DE CONTROL DEL PATRON DEL ALTERNADOR (CONFIG)	731
VÁLVULA DE RETENCIÓN Y ALIVIO (CONFIG)	731
VÁLVULA DE RETENCIÓN (GR)	733
VÁLVULA DE CONTROL (GR)	737
VALVULA DE CONTROL DEL CONTRAPESO (GR)	754
GRUPO DE VÁLVULA, ACOPLADOR	755
VÁLVULA DE CONTROL DE FLUJO (GR)	757
VÁLVULA DE CONTROL DE CARGA (GR)	759
VÁLVULA DEL CONTROL PRINCIPAL (GR)	768
MÚLTIPLE Y VÁLVULA DE REDUCCIÓN (GR)	771
VÁLVULA DE CONTROL MANUAL (GR)	772
VÁLVULA PILOTO (GR)	774
VÁLVULA PILOTO DE ALIVIO (GR)	794
PRESIÓN - VÁLVULA DE CONTROL DE (GR)	795
VÁLVULA REDUCTORA DE PRESIÓN (GR)	796
VALVULA DE CONTROL DE LA BOMBA (GR)	797
*VALVE GP-REGENERATION	798
VÁLVULA DE ALIVIO (GR)	799
VÁLVULA DE LANZADERA (GR)	810
VÁLVULA DE SOLENOIDE (GR)	815
VÁLVULA DE SOLENOIDE Y MÚLTIPLE (GR)	831
VALVULA SOLENOIDE Y DE PRESION REDUCIDA (GR)	832
VALVULA AMORTIGUADORA DE ROTACION (GR)	833
VALV. COMPENSADORA DE EQUILIBRIO DE DESPLAZAMIENTO (GR)	835

* NO HAY TRADUCCION DISPONIBLE EN EL MOMENTO DE LA IMPRESION

CONTENIDO

Nombre	Página
IMPLEMENTOS	837
PLUMA DE LARGO ALCANCE (CONFIG)	837
*BOOM AR-MASS	837
PLUMA DE ALCANCE (CONFIG)	837
PLUMA (GR)	838
PROTECTOR GR-SENSOR	846
TUBERÍAS DE ENGRASE (GR)	847
VARILLAJE DEL CUCHARÓN (CONFIG)	854
VARILLAJE DEL CUCHARÓN (GR)	855
BRAZO (CONFIG)	861
BRAZO DE RETROEXCAVADOR (CONFIG)	861
BRAZO DE RETROEXCAVADOR (GR)	863
HERRAMIENTAS	876
GRUPO DE AJUSTADOR DE CUCHARÓN	876
CUCHARÓN Y AJUSTADOR (GR)	878
CUCHARÓN DE USO GENERAL (CONFIG)	904
CUCHARÓN DE USO GENERAL (CONJ)	905
CUCHARON DE SERVICIO PESADO (CONJ)	907
CUCHARON PARA ROCAS DE SERVICIO PESADO (CONJ)	910
CUCHARÓN PARA ROCA (CONJ)	911
*BUCKET GP-HEAVY DUTY ROCK	912
CUCHARÓN PARA ROCA (GR)	913
ACOPLADOR RÁPIDO (CONFIG)	915
ACOPLADOR RÁPIDO (GR)	916
PASADOR DE ACOPLADOR (GR)	917
GRUPO DE PROTECTOR DE BARRA LATERAL	918
DESGARRADOR (GR)	920
OREJETAS (GR)	921
*TIP GP-DOUBLE SPIKE	923
GRUPO DE PUNTA-SERVICIO ADICIONAL	924
PUNTA PARA CUCHARON DE USO GENERAL (GR)	925
*TIP GP-HEAVY PENETRATION	926
PUNTA PARA PENETRACIÓN (GR)	927
*TIP GP-PENETRATION PLUS	928
*TIP GP-SPIKE	929
PUNTA ANCHA (GR)	930
COMPARTIMIENTO DEL OPERADOR	932
AJUSTADOR DEL ASIENTO (GR)	932
ACONDICIONADOR DE AIRE Y MONTAJE (GR)	933
ACONDICIONADOR DE AIRE (CONFIG)	935
ACONDICIONADOR DE AIRE (GR)	936
POSABRAZOS (GR)	938
CABINA (GR)	940
*COIL GP-EVAPORATOR	949
COMPRESOR DE REFRIGERANTE (GR)	951
CONDENSADOR DEL REFRIGERANTE Y MONTAJE (GR)	953
CONDENSADOR DE REFRIGERANTE (GR)	954
CONSOLA DEL OPERADOR (GR)	955
PALANCA UNIVERSAL-CONTROL Y MONTAJE (GR)	961
PEDAL-GRUPO DE CONTROL Y MONTAJE	963
CONTROL DE PIE (GR)	964
CONTROL DE MANIJA (GR)	966
GRUPO DE CONTROL, CALEFACIÓN Y ACONDICIONADOR DE AIRE	973
GRUPO DE CONTROL DE PEDAL HIDRÁULICO	974
PALANCA UNIVERSAL DE CONTROL (GR)	975
CONTROL DE PEDAL (GR)	981
CONTROL HIDRÁULICO DE OPERACIÓN PILOTO (GR)	982
TAPA DE LA CABINA (GR)	983
PUERTA DE CABINA	985
CONDUCTO DE AIRE (GR)	988
ALFOMBRILLA DEL PISO (GR)	989
PROTECCIÓN CONTRA EL VANDALISMO (CONFIG)	990
PROTECTOR CONTRA EL VANDALISMO (GR)	991
PROTECTOR DE LA VENTANA	992
COMPUERTA DE TECHO (GR)	996
BOCINA ELÉCTRICA (GR)	998
CAJA DE ACONDICIONADOR DE AIRE (GR)	999
INSTALACIÓN DE RADIO (CONFIG)	1000
INSTALACIÓN DE RADIO (GR)	1001
PALANCA DE CONTROL DE AIRE Y TEMP (GR)	1002
TUBERÍAS DE ACONDICIONADOR DE AIRE (GR)	1003
PUBLICACIONES (GR)	1005
RETROVISOR (GR)	1006
MONITOR Y MONTAJE DEL OPERADOR (GR)	1007
CONTROL ELECTRÓNICO DEL OPERADOR (GR)	1008

* NO HAY TRADUCCION DISPONIBLE EN EL MOMENTO DE LA IMPRESION

CONTENIDO

Nombre	Página	Nombre	Página
MONTAJE DE ANTENA (GR)	1009		
MONTAJE DE PANTALLA (GR)	1015		
MONTAJE DE LA PLATAFORMA (GR)	1017		
COMPARTIMIENTO DEL OPERADOR (CONFIG)	1019		
*PANEL-CONTROL	1020		
PEDAL AUXILIAR (CONFIG)	1021		
PLATAFORMA DE LA CABINA	1023		
PERSIANA PARA EL SOL (GR)	1024		
CINTURÓN DE SEGURIDAD (GR)	1025		
ASIENTO (GR)	1026		
SUSPENSIÓN - ASIENTO CON (GR)	1029		
SOPORTE DEL ASIENTO (GR)	1035		
ASIENTO CON SUSPENSIÓN (GR)	1036		
LAVAPARABRISAS DE LA VENTANA (GR)	1041		
VENTANA DE LA CABINA (GR)	1042		
VENTANA DE LA PUERTA (GR)	1050		
VENTANA TRASERA (GR)	1052		
LIMPIAPARABRISAS DE LA VENTANA (GR)	1055		
HERRAMIENTAS Y EQUIPO DE SERVICIO	1058		
ETIQUETA DE ADVERTENCIA (GR)	1058		
CALCOMANÍAS Y PLACAS DE IDENTIFICACIÓN (GR)	1069		
INDICE DE NUMEROS DE PIEZA	B1		

* NO HAY TRADUCCION DISPONIBLE EN EL MOMENTO DE LA IMPRESION

ÍNDICE

Designação	Página
INFORMAÇÃO GERAL	A38
ALTERNATIVAS DE REPARO	A49
ADITIVOS SUPLEMENTARES DO LÍQUIDO ARREFECEDOR	A54
PEÇAS DE MANUTENÇÃO	A66
ÍNDICE	A113
MÁQUINA - ARRANJO	1
CHASSI	1
ARRANJO GERAL	1
ARRANJO ESPECIAL	2
MOTOR - ARRANJO	4
MOTOR	4
MOTOR COMPLETO	5
MOTOR - NÚCLEO	6
GRUPO DE INSTALAÇÃO - MOTOR	7
MOTOR BÁSICO	8
BASE - TAMPA DA VÁLVULA	8
CORREIA - SERPENTINA	9
TENSOR DA CORREIA	10
EIXO-COMANDO DE VÁLVULA	11
TAMPA - CAIXA DO VOLANTE	12
TAMPA - CAIXA DIANTEIRA	13
TAMPA - MECANISMO DAS VÁLVULAS	15
VIRABREQUIM	16
BLOCO DO MOTOR	18
CABEÇOTE DO MOTOR	23
AMORTECEDOR	28
COMANDO DO VENTILADOR	29
FIXADORES - CABEÇOTE DO MOTOR	30
FIXADOR - AMORTECEDOR E POLIA	31
FIXADORES DO VOLANTE DO MOTOR	32
VOLANTE DO MOTOR	33
ENGRENAGENS DE DISTRIBUIÇÃO	34
CAIXA DO VOLANTE DO MOTOR	35
CAIXA DIANTEIRA	38
TUCHO DA VÁLVULA	40
LEVANTAMENTO DO MOTOR	41
MONTAGEM - MOTOR	42
MONTAGEM - COMANDO DO VENTILADOR	44
MONTAGEM - MECANISMO DAS VÁLVULAS	45
CÁRTER DO ÓLEO DO MOTOR	46
PISTÃO E BIELA	48
BUJÃO DO BLOCO DO CILINDRO	49
BUJÃO DO MOTOR	52
POLIA DO VIRABREQUIM	53
POLIA - VENTILADOR E COMANDO DO ALTERNADOR	54
BALANCIM	55
RETENTOR DO VIRABREQUIM	59
SUPORTE DO MOTOR	60
MECANISMO DAS VÁLVULAS	61
SISTEMA DE LUBRIFICAÇÃO	63
BASE DO FILTRO DE ÓLEO	63
RESPIRO	66
TAMPA - BASE DO FILTRO DE ÓLEO	67
BOCAL DE ENCHIMENTO DE ÓLEO DO MOTOR	68
FILTRO - ÓLEO DO MOTOR	70
ELIMINAÇÃO DE VAPORES DO CÁRTER	72
INDICADOR - NÍVEL DO ÓLEO (VARETA)	73
TUBULAÇÕES - DRENAGEM DE ÓLEO DO MOTOR	75
TUBOS - ÓLEO DO TURBOALIMENTADOR	76
MONTAGEM - FILTRO DE ÓLEO DO MOTOR	77
BOMBA DE ÓLEO - MOTOR	79
SISTEMA DE ARREFECIMENTO	82
CONTROLE VARIÁVEL - VELOCIDADE DO VENTILADOR	82
ARREFECEDOR - ÓLEO DO MOTOR	83
VENTILADOR DE SUCÇÃO	85
TUBOS - SISTEMA DE ARREFECIMENTO	89
TUBOS - ÁGUA DO TURBOALIMENTADOR	91
TUBOS - ÁGUA	93
BUJÃO - ARREFECEDOR DO ÓLEO DO MOTOR	96
BOMBA DE ÁGUA	97
RADIADOR E ARREFECEDOR DO ÓLEO HIDRÁULICO	100
TELA DO RADIADOR	104
SISTEMA DA ADMISSÃO DE AR E DE ESCAPE	105
PURIFICADOR DE AR	105
DRENO - SILENCIADOR	109
EXTENSÃO DO TUBO DE ESCAPE	110
TUBOS - AR	111
TUBOS - AR DE ARREFECIMENTO	115

* TRADUÇÃO NÃO DISPONÍVEL NO MOMENTO DA IMPRESSÃO

ÍNDICE

Designação	Página
COLETOR DE ESCAPE	116
COLETOR DE ADMISSÃO	117
MONTAGEM - PURIFICADOR DE AR	118
SILENCIADOR	119
PRÉ-PURIFICADOR	121
TURBOALIMENTADOR	122
SISTEMA DE COMBUSTÍVEL	124
ARREFECEDOR DO COMBUSTÍVEL	124
FILTRO - COMBUSTÍVEL	125
FILTRO DE COMBUSTÍVEL E SEPARADOR DE ÁGUA	129
CONEXÃO - TUBOS DE COMBUSTÍVEL	130
INJETOR DE COMBUSTÍVEL	131
TUBOS - COMBUSTÍVEL	132
BOMBA DE INJEÇÃO DO COMBUSTÍVEL	141
BOMBA DE TRANSFERÊNCIA DO COMBUSTÍVEL	142
REGULADOR DE PRESSÃO DO COMBUSTÍVEL	143
TANQUE DE COMBUSTÍVEL E MONTAGEM	144
TANQUE DE COMBUSTÍVEL	145
VÁLVULA DE RETENÇÃO	147
SISTEMA ELÉTRICO E DE PARTIDA	148
ALARME	148
ALARME DE PERCURSO	149
ALTERNADOR DE CORRENTE	150
BATERIA E CABOS / FIOS ELÉTRICOS	153
BLOCO DE JUNÇÃO	162
CÂMERA	163
CONEXÃO - ELÉTRICA	165
CONTROLE & MONTAGEM-COMUNICAÇÃO	166
CONTROLE ELETRÔNICO E MONTAGEM - MOTOR	170
CONTROLE & MONTAGEM-MÁQUINA	171
CONTROLE-COMUNICAÇÃO	172
SISTEMA ELETRÔNICO-COMUNICAÇÃO	173
SISTEMA ELETRÔNICO - MÁQUINA	174
FIXADORES - CHICOTE	175
INSTALAÇÃO-COMUNICAÇÃO	178
INSTALAÇÃO-SEGURANÇA	179
LÂMPADA - FAROL	181
ILUMINAÇÃO - CHASSI	184
SISTEMA DE ILUMINAÇÃO - FARÓIS	185
MONTAGEM-CÂMERA	195
MONTAGEM - SENSOR	199
PANIEL E MONTAGEM - DISJUNTOR	200
PAINEL - DISJUNTOR ELÉTRICO AUTOMÁTICO	201
PAINEL - INTERRUPTOR	203
SENSOR DE POSIÇÃO E MONTAGEM	207
SENSOR DO MOTOR	209
SENSOR - NÍVEL DE LÍQUIDO	211
EMISSOR - POSIÇÃO	213
SENSOR - PRESSÃO	214
SENSOR DE VELOCIDADE	220
SENSOR - TEMPERATURA	226
MONITOR DE SERVIÇO	229
AUXILIAR DE PARTIDA A ÉTER	230
MOTOR ELÉTRICO DE PARTIDA	233
CHAVE GERAL	237
INTERRUPTOR - MAGNÉTICO	238
INTERRUPTOR - POSIÇÃO	239
INTERRUPTOR - PRESSÃO	240
INTERRUPTOR GIRATÓRIO	241
INTERRUPTOR - PARTIDA	242
INTERRUPTOR - BALANCIM	243
INTERRUPTOR - LIMPADOR DO PÁRA-BRISA	244
VALVULA - PARTIDA A ETER	245
CABOS/FIOS ELÉTRICOS - RECEPTÁCULO PARA PARTIDA AUXILIAR	246
CABOS/FIOS ELÉTRICOS - CONTROLE AUXILIAR	248
CABOS/FIOS ELÉTRICOS - CABINE	250
FIAÇÃO-CÂMERA	266
CABOS/FIOS ELÉTRICOS - CHASSI	268
CABO/FIOS ELÉTRICOS-COMUNICAÇÃO	275
CABOS/FIOS ELÉTRICOS DO CONSOLE	279
CABOS/FIOS ELÉTRICOS - CONTROLE	283
CABOS/FIOS ELÉTRICOS - CONVERSOR	285
CABOS/FIOS ELÉTRICOS - CONTRAPESO	289
CABOS/FIOS ELÉTRICOS - ACOPLADOR	290
CABOS/FIOS ELÉTRICOS - CONTROLE ELETRÔNICO	293
CABOS/FIOS ELÉTRICOS - VENTILADOR	295
CABOS/FIOS ELÉTRICOS - GIRO PRECISO	297
FIACAO - CONTROLE DO NIVEL	298
FIAÇÃO-PRESSÃO MÉDIA	301
CABOS/FIOS ELÉTRICOS - PAINEL MONITOR	302

* TRADUÇÃO NÃO DISPONÍVEL NO MOMENTO DA IMPRESSÃO

ÍNDICE

Designação	Página
CABOS/FIOS ELÉTRICOS - PLATAFORMA	304
CABOS/FIOS ELÉTRICOS - RÁDIO	308
CABOS/FIOS ELÉTRICOS - INJETOR	310
TREM DE FORÇA	311
COMANDO FINAL	311
TREM DE FORÇA	315
RODA MOTRIZ	316
CHASSI E CARROCERIA	317
CAIXA PARA ARMAZENAMENTO E MONTAGEM	317
CAIXA DE ARMAZENAMENTO	318
CORRENTE DE LEVANTAMENTO DO CONTRAPESO	320
CONTRAPESO	322
TAMPA-SUPRESSÃO DE RUÍDOS	328
TAMPA - ACESSO	329
TAMPA DO CAPÔ	330
PORTA-ACESSO	331
PORTA DE ACESSO	334
CHASSI SUPERIOR	336
ENGRENAGEM E MANCAL DE GIRO	345
PROTETOR - INFERIOR	350
PROTETOR INFERIOR	351
PROTETOR - ARTICULAÇÃO GIRATÓRIA	353
CORRIMAO, BALAUSTRE	354
CAPÔ E PROTETOR	356
CAPÔ (CONJ)	365
CAPÔ DO MOTOR	367
CAPÔ	370
CAPÔ DO MOTOR	372
FOLHA-SUPRESSÃO DE RUÍDOS	374
DEGRAU	396
ARMAZENAGEM - PROTETOR CONTRA VANDALISMO	398
SUPORTE-COBERTURA	399
SUPORTE DO CAPÔ	401
MATERIAL RODANTE	408
AJUSTADOR HIDRÁULICO DA ESTEIRA	408
CHASSI - MATERIAL RODANTE	410
ARMAÇÃO - MATERIAL RODANTE	411
PROTETOR - GUIA DOS ROLETES DAS ESTEIRAS	412
PROTETOR - MOTOR DAS ESTEIRAS	415
RODA-GUIA DIANTEIRA	416
ELO DA ESTEIRA	422
ROLETE SUPERIOR E INFERIOR DAS ESTEIRAS	424
ROLETE SUPERIOR DA ESTEIRA	425
ROLETE DE ESTEIRA DE FLANGE SIMPLES	426
MOLA TENSORA	427
ESTEIRA	429
SISTEMA HIDRÁULICO	439
ACUMULADOR HIDRÁULICO	439
BLOCO HIDRÁULICO	447
CONTROLE HIDRÁULICO AUXILIAR	448
CONTROLE - ACOPLADOR	453
ACOPLAMENTO DA BOMBA	454
CILINDRO E TUBOS - LANÇA	455
CILINDRO E TUBOS - CAÇAMBA	455
CILINDRO E TUBOS - BRAÇO	456
CILINDRO E RETENTOR - LANÇA	457
CILINDRO E RETENTOR - CAÇAMBA	458
CILINDRO E RETENTOR - CONTRAPESO	461
CILINDRO E RETENTOR - BRAÇO	462
CILINDRO DA LANÇA	463
CILINDRO DA CAÇAMBA	465
CILINDRO DO CONTRAPESO	471
CILINDRO - ACOPLADOR	472
CILINDRO DO BRAÇO	473
COMANDO AUXILIAR DA BOMBA	475
COMANDO DE GIRO	479
FIXADORES - GIRO E COMANDO FINAL	487
FILTRO E VÁLVULA - PILOTO	490
FILTRO - ÓLEO	493
VISOR DE NÍVEL	498
PROTETOR - CILINDRO	499
CABEÇA DA BOMBA	501
CAIXA DO FILTRO	504
COMANDO HIDRÁULICO	505
TUBOS HIDRÁULICOS AUXILIARES	506
TUBOS - LANÇA	536
TUBOS - CILINDRO DA LANÇA	549
TUBOS - CILINDRO DA CAÇAMBA	557
TUBOS DE CONEXÃO	560
TUBOS - ACOPLADOR	562
TUBOS - DIANTEIROS	571
TUBOS - ÓLEO HIDRÁULICO	596
TUBOS - ARREFECEDOR DE ÓLEO HIDRÁULICO	603
TUBOS - MOTOR	605
TUBOS - CIRCUITO PILOTO	607
TUBOS - BOMBA	660
TUBOS - ACESSÓRIO TRASEIRO	666
TUBOS - RETORNO	672
TUBOS - SENSOR	676
TUBOS - BRAÇO	677

* TRADUÇÃO NÃO DISPONÍVEL NO MOMENTO DA IMPRESSÃO

ÍNDICE

Designação	Página
TUBOS - CILINDRO DO BRAÇO	682
TUBOS - MOTOR DE GIRO	685
TUBOS - MOTOR DAS ESTEIRAS	687
COLETOR - CONTROLE	689
MOTOR E MONTAGEM - VENTILADOR HIDRÁULICO	692
MOTOR DE GIRO E MONTAGEM	693
MOTOR DE PERCURSO E MONTAGEM	694
MOTOR - PISTÃO	695
MOTOR - GIRO	702
MONTAGEM - CILINDRO	705
MONTAGEM-VÁLVULA DE CONTROLE PRINCIPAL	707
BUJÃO - VÁLVULA DE CONTROLE	708
BOMBA AUXILIAR E MONTAGEM	709
BOMBA HIDRÁULICA PRINCIPAL E MONTAGEM	710
BOMBA DE ENGRENAGENS	711
BOMBA HIDRÁULICA PRINCIPAL	713
BOMBA DE PISTÃO	714
BOMBA DE PISTÃO E ENGRENAGEM	716
GRUPO ROTATIVO DA BOMBA	720
TELA - SIST. HIDRÁULICO	722
ARTICULAÇÃO GIRATÓRIA	723
TANQUE HIDRÁULICO E FILTRO	724
TANQUE DE ÓLEO HIDRÁULICO E MONTAGEM	727
TUBO-HIDRÁULICO	727
VÁLVULA DE CONTROLE DO PADRÃO DO ALTERNADOR	731
VÁLVULA DE RETENÇÃO E DE ALÍVIO	731
VÁLVULA DE RETENÇÃO	733
VÁLVULA DE CONTROLE	737
VÁLVULA DE CONTROLE DE CONTRAPESO	754
VÁLVULA - ACOPLADOR	755
VÁLVULA DE CONTROLE - FLUXO	757
VÁLVULA - CONTROLE DE CARGA	759
VÁLVULA - CONTROLE PRINCIPAL	768
VALVULA REDUTORA E COLETOR	771
VÁLVULA MANUAL	772
VÁLVULA DE CONTROLE PILOTO	774
VÁLVULA PILOTO DE ALÍVIO	794
VÁLVULA DE CONTROLE DE PRESSÃO	795
VÁLVULA DE REDUÇÃO DE PRESSÃO	796
VÁLVULA DE CONTROLE DA BOMBA	797
VÁLVULA-REGENERAÇÃO	798
VÁLVULA DE ALÍVIO	799
VÁLVULA DE SEPARAÇÃO	810
VÁLVULA SOLENÓIDE	815
VÁLVULA - COLETOR E SOLENÓIDE	831
VÁLVULA - SOLENÓIDE E REDUÇÃO DE PRESSÃO	832
VÁLVULA-ESTOFAMENTO DE GIRO	833
VÁLVULA-CONTRAPESO DE PERCURSO	835
ACESSÓRIOS	837
LANÇA - LONGO ALCANCE	837
LANÇA-SERVIÇOS DE GRANDE VOLUME	837
LANÇA - ALCANCE	837
LANÇA	838
PROTETOR - SENSOR	846
TUBOS - GRAXA	847
ELOS DE ARTICULAÇÃO DA CAÇAMBA	854
BRAÇO	861
BRAÇO - CAÇAMBA RETRO-ESCAVADORA	861
FERRAMENTAS DE TRABALHO	876
AJUSTADOR-CAÇAMBA	876
CAÇAMBA E AJUSTADOR	878
CAÇAMBA - PARA APLICAÇAO GERAL	904
CAÇAMBA PARA APLICAÇÃO GERAL	905
CAÇAMBA - SERVIÇO PESADO	907
CAÇAMBA - SERVIÇOS PESADOS PARA ROCHAS	910
CAÇAMBA PARA ROCHAS	911
CAÇAMBA-REFORÇADA PARA ROCHAS	912
CAÇAMBA PARA ROCHAS	913
ACOPLADOR RÁPIDO	915
PINO-ACOPLADOR	917
PROTETOR - BARRA LATERAL	918
RIPER	920
CORTADOR LATERAL	921
PONTA-CAVILHA DUPLA	923
PONTA-SERVIÇO PESADO	924
PONTA PARA APLICAÇÕES GERAIS	925
PONTA-PENETRAÇÃO PESADA	926
PONTA - PENETRAÇÃO	927
PONTA-PENETRAÇÃO PLUS	928
PONTA-CAVILHA	929
PONTA LARGA	930
POSTO DO OPERADOR	932
AJUSTADOR DO ASSENTO	932
CONDICIONADOR DE AR E MONTAGEM	933
CONDICIONADOR DE AR	935

* TRADUÇÃO NÃO DISPONÍVEL NO MOMENTO DA IMPRESSÃO

ÍNDICE

Designação	Página
BRAÇO DO ASSENTO	938
CABINE	940
BOBINA-EVAPORADOR	949
COMPRESSOR DE REFRIGERANTE	951
CONDENSADOR DO REFRIGERANTE E MONTAGEM	953
CONDENSADOR DE REFRIGERANTE	954
CONSOLE DO OPERADOR	955
ALAVANCA DE CONTROLE E MONTAGEM	961
CONTROLE DO PEDAL E MONTAGEM	963
CONTROLE - PEDAL	964
CONTROLE-CABO	966
CONTROLE - AQUECIMENTO E AR CONDICIONADO	973
CONTROLE - PEDAL HIDRÁULICO	974
CONTROLE - ALAVANCA	975
CONTROLE - PEDAL	981
CONTROLE HIDRÁULICO DE OPERAÇÃO PILOTO	982
TAMPA - CABINE	983
PORTA DA CABINE	985
DUCTO DE AR	988
TAPETE	989
PROTETOR CONTRA VANDALISMO	990
PROTETOR - JANELA	992
ALÇAPÃO DO TETO	996
BUZINA ELÉTRICA	998
ALOJAMENTO - CONDICIONADOR DE AR	999
INSTALAÇÃO DO RÁDIO - ARRANJO	1000
INSTALAÇÃO DO RÁDIO	1001
ALAVANCA - CONTROLE DE TEMPERATURA E AR	1002
TUBOS - AR CONDICIONADO	1003
PUBLICAÇÃO	1005
ESPELHO RETROVISOR	1006
MONITOR DO OPERADOR E MONTAGEM	1007
MONITOR DO OPERADOR	1008
MONTAGEM-ANTENA	1009
MONTAGEM - VISOR	1015
MONTAGEM - PLATAFORMA	1017
CABINE	1019
*PANEL-CONTROL	1020
PEDAL AUXILIAR	1021
PLATAFORMA DO OPERADOR	1023
TELA PÁRA-SOL	1024
CINTO DE SEGURANÇA	1025
ASSENTO	1026
ASSENTO COM SUSPENSÃO	1029
SUPORTE - ASSENTO	1035
SUSPENSÃO - ASSENTO	1036
LAVADOR DO VIDRO	1041
JANELA DA CABINE	1042
VIDRO DA PORTA	1050
VIDRO TRASEIRO	1052
LIMPADOR DO VIDRO	1055
EQUIPAMENTOS DE SERVIÇO E SUPRIMENTOS	1058
DECALQUE	1058
PLACA E DECALQUE	1069
ÍNDICE DE NÚMERO DE PEÇA	B1

* TRADUÇÃO NÃO DISPONÍVEL NO MOMENTO DA IMPRESSÃO

INHALTSVERZEICHNIS

Bezeichnung	Seite
ALLGEMEINE HINWEISE	A42
REPARATURALTERNATIVEN	A50
KÜHLMITTELZUSATZ	A55
WARTUNGSTEILE	A69
STICHWORTVERZEICHNIS	A126
MASCHINE	1
FAHRWERK	1
GRUNDAUSFÜHRUNG	1
SONDERAUSRÜSTUNG	2
MOTORAUSFÜHRUNG	4
MOTORAUSFÜHRUNG	4
MOTOR, KOMPLETT	5
MOTORKÜHLERBLOCK	6
MOTOR-EINBAUSATZ	7
MOTOR (GRUNDAUSFÜHRUNG)	8
VENTILDECKEL - UNTERTEIL	8
SERPENTINENFÖRMIGER RIEMEN	9
RIEMENSPANNER	10
NOCKENWELLE	11
SCHWUNGRADGEHÄUSEDECKEL	12
STIRNRADGEHÄUSEDECKEL	13
VENTILDECKEL	15
KURBELWELLE	16
MOTORBLOCK	18
ZYLINDERKOPF	23
DÄMPFER	28
LÜFTERANTRIEB	29
ZYLINDERKOPF-HALTETEILE	30
BEFESTIGUNG - DÄMPFER U. RIEMENSCHEIBE	31
SCHWUNGRAD-HALTETEILE	32
SCHWUNGRAD	33
STIRNRAD	34
SCHWUNGRADGEHÄUSE	35
STIRNRADGEHÄUSE	38
HUBVENTIL	40
MOTORHUBÖSE	41
MOTORAUFLAGER	42
LÜFTERANTRIEBSAUFHÄNGUNG	44
VENTILMECHANISMUSAUFHÄNGUNG	45
ÖLWANNE	46
PLEUELSTANGE UND KOLBEN	48
ZYLINDERBLOCKSCHRAUBE	49
MOTORSTOPFEN	52
KURBELWELLEN-RIEMENSCHEIBE	53
RIEMENSCHEIBE - LÜFTER- U. DREHSTROMGENERATOR	54
VENTILKIPPHEBEL	55
KURBELWELLENDICHTUNG	59
MOTORAUFHÄNGUNG	60
VENTILSTEUERUNG	61
SCHMIERSYSTEM	63
ÖLFILTERSOCKEL	63
ENTLÜFTER	66
ÖLFILTERSOCKELDECKEL	67
MOTORÖLEINFÜLLSTUTZEN	68
ÖLFILTER	70
ENTDUNSTER	72
ÖLMESSSTAB	73
MOTORÖLABLASSLEITUNGEN	75
TURBOLADERÖLLEITUNGEN	76
MOTORÖLFILTERBEFESTIGUNG	77
SCHMIERPUMPE	79
KÜHLSYSTEM	82
LÜFTERDREHZAHLREGELSTEUERUNG	82
MOTORÖLKÜHLER	83
SAUGLÜFTER	85
KÜHLWASSERLEITUNGEN	89
TURBOLADER-KÜHLWASSERLEITUNGEN	91
KÜHLWASSERLEITUNGEN	93
MOTORÖLKÜHLERSCHRAUBE	96
KÜHLWASSERPUMPE	97
KÜHLER UND HYDRAULIKÖLKÜHLER	100
KÜHLERSCHUTZGITTER	104
LUFTANSAUG - U. ABGASSYSTEM	105
LUFTREINIGER	105
ABLASS - SCHALLDÄMPFER	109
AUSPUFFROHRVERLÄNGERUNG	110
DRUCKLUFTLEITUNGEN	111
KÜHLLUFTLEITUNGEN	115
AUSPUFFKRÜMMER	116
ANSAUGKRÜMMER	117
LUFTREINIGER-ANBAUSATZ	118
SCHALLDÄMPFER	119
VORREINIGER	121
TURBOLADER	122
KRAFTSTOFFSYSTEM	124
KRAFTSTOFFKÜHLER	124
KRAFTSTOFFILTER	125
WASSERABSCHEIDER- U. KRAFTSTOFFILTER	129

* ÜBERSETZUNG ZUM ZEITPUNKT DER DRUCKLEGUNG NICHT VORHANDEN

INHALTSVERZEICHNIS

Bezeichnung	Seite
ANSCHLUSSSTÜCK (KRAFTSTOFFLEITUNGEN)	130
KRAFTSTOFFEINSPRITZDÜSE	131
KRAFTSTOFFLEITUNGEN	132
KRAFTSTOFFEINSPRITZPUMPE	141
KRAFTSTOFFÖRDERPUMPE	142
KRAFTSTOFFDRUCKREGLER	143
KRAFTSTOFFTANK U. BEFESTIGUNG	144
KRAFTSTOFFTANK	145
SPERRVENTIL	147
ELEKTRISCHE ANLAGE U. STARTSYSTEM	148
WARNVORRICHTUNG	148
FAHRALARM	149
DREHSTROMGENERATOR	150
BATTERIE UND VERDRAHTUNG	153
KLEMMLEISTE	162
KAMERA	163
CAMERA	164
ANSCHLUSS, ELEKTR.	165
ÜBERTRAGUNGSSTEUERUNG U. BEFESTIGUNG	166
STEUERUNGSEINHEIT, ELEKTRON. FÜR MOTOR UND BEFEST.	170
MASCHINENSTEUERUNG U. BEFESTIGUNG	171
ÜBERTRAGUNGSSTEURUNG	172
ELEKTRONIK, KOMMUNIKATION	173
ELEKTRONIK - MASCHINE	174
VERDRAHTUNGSKABELBAUMHALTETEILE	175
ÜBERTRAGUNGSEINBAUSATZ	178
SICHERHEITSEINBAUSATZ	179
ARBEITSLEUCHTEN	181
FAHRWERKBELEUCHTUNG	184
ARBEITSLEUCHTEN	185
CAMERABEFESTIGUNG	195
SENSORBEFESTIGUNG	199
TAFEL U. BEFESTIGUNG - SCHUTZSCHALTER	200
UNTERBRECHER - INSTRUMENTENTAFEL	201
SCHALTTAFEL	203
STELLUNGSSENSOR U. BEFESTIGUNG	207
MOTORSENSOR	209
FLÜSSIGKEITSSTANDSENSOR	211
STELLUNGSSENSOR	213
DRUCKSENSOR	214
DREHZAHLSENSOR	220
TEMPERATURSENSOR	226
MONITOR - SERVICE	229
ÄTHERSTARTHILFE	230
STARTERMOTOR	233
TRENNSCHALTER	237
MAGNETSCHALTER	238
STELLUNGSSCHALTER	239
DRUCKSCHALTER	240
DREHSCHALTER	241
STARTSCHALTER	242
KIPPSCHALTER	243
SCHEIBENWISCHERSCHALTER	244
ÄTHERSTARTVENTIL	245
STARTHILFEANSCHLUSSVERDRAHTUNG	246
ZUSATZSTEUERUNGSVERDRAHTUNG	248
FAHRERHAUSVERDRAHTUNG	250
KAMERA, VERDRAHTUNG	266
FAHRGESTELLVERDRAHTUNG	268
ÜBERTRAGUNGSVERDRAHTUNG	275
KONSOLENVERDRAHTUNG	279
STEUERUNGSVERDRAHTUNG	283
UMFORMERVERDRAHTUNG	285
GEGENGEWICHT - VERDRAHTUNG	289
SCHNELLWECHSELEINRICHTUNG - VERDRAHTUNG	290
VERDRAHTUNG (ELEKTRON. STEUERUNG)	293
LÜFTERVERDRAHTUNG	295
DREHWERKFEINSTEUERUNG - VERDRAHTUNG	297
NIEGUNGSSTEUER VERDRAHTUNG	298
VERDRAHTUNG, MITTLERER DRUCK	301
ÜBERWACHUNGSTAFELVERDRAHTUNG	302
FAHRERPLATTFORMVERDRAHTUNG	304
RADIOVERDRAHTUNG	308
VERDRAHTUNG (EINSPRITZEINHEIT)	310
KRAFTÜBERTRAGUNG	311
SEITENANTRIEB	311
KRAFTÜBERTRAGUNG	315
ANTRIEBSRAD	316
FAHRGESTELL U. OBERWAGEN	317
AUFBEWAHRUNGSKASTEN U. BEFESTIGUNG	317
VERSTAUKASTEN	318
GEGENGEWICHT - HUBKETTE	320
GEGENGEWICHT	322
SCHALLDÄMMUNG, ABDECKUNG	328

* ÜBERSETZUNG ZUM ZEITPUNKT DER DRUCKLEGUNG NICHT VORHANDEN

INHALTSVERZEICHNIS

Bezeichnung	Seite
ZUGANGSKLAPPE	329
MOTORHAUBENVERKLEIDUNG	330
ZUGANGSKLAPPE	331
OBERWAGENRAHMEN	336
SCHWENKGETRIEBELAGER	345
PANZERWANNE	350
SCHWENKVERKLEIDUNG	353
GELAENDER	354
MOTORHAUBE UND VERKLEIDUNG	356
MOTORHAUBE	365
HAUBE	370
MOTORHAUBE	372
SCHALLDÄMMUNGSMATERIAL	374
STEIGLEITER	396
SCHUTZVERKLEIDUNG - VERSTAUKASTEN	398
RAUM, STÜTZVORRICHTUNG	399
HAUBENABSTÜTZUNG	401
UNTERWAGEN	408
KETTENSPANNER, HYDR.	408
LAUFWERKSRAHMEN	410
KETTENFÜHRUNGSSCHUTZ	412
FAHRMOTORSCHUTZ	415
LEITRAD, VORN	416
KETTENGLIEDER	422
TRAGROLLE	424
EINZELFLANSCHROLLEN	426
KETTENSPANNFEDER	427
LAUFWERKSKETTE	429
HYDRAULIKSYSTEM	439
HYDRAULIKDRUCKSPEICHER	439
HYDRAULIKBLOCK	447
ZUSATZSTEUERUNG	448
SCHNELLWECHSELEINRICHTUNG - STEUERUNG	453
PUMPENANSCHLUSS	454
AUSLEGERZYLINDER U. LEITUNGEN	455
LÖFFELZYLINDER U. LEITUNGEN	455
STIELZYLINDER UND LEITUNGEN	456
AUSLEGERZYLINDER UND DICHTUNG	457
LÖFFELZYLINDER UND DICHTUNG	458
ZYLINDER U. DICHTUNG - GEGENGEWICHT	461
STIELZYLINDER UND DICHTUNG	462
AUSLEGERZYLINDER	463
LÖFFELZYLINDER	465
GEGENGEWICHTSZYLINDER	471
SCHNELLWECHSELANSCHLUSSZYLINDER	472
LÖFFELSTIELZYLINDER	473
ZUSATZPUMPENANTRIEB	475
SCHWENKANTRIEB	479
DREHWERK- UND FAHRANTRIEB-HALTETEILE	487
FILTER U. VENTIL - VORSTEUERUNG	490
ÖLFILTER	493
SCHAUGLAS	498
ZYLINDERVERKLEIDUNG	499
PUMPENKOPF	501
FILTERGEHÄUSE	504
HYDRAULIKSYSTEM	505
ZUSATZHYDRAULIKLEITUNGEN	506
AUSLEGERLEITUNGEN	536
AUSLEGERZYLINDERLEITUNGEN	549
LÖFFELZYLINDERLEITUNGEN	557
ANSCHLUSSLEITUNGEN	560
ANSCHLUSSKUPPLUNGSLEITUNGEN	562
LEITUNGEN, VORNE	571
HYDRAULIKLEITUNGEN	596
HYDRAULIKÖLKÜHLERLEITUNGEN	603
MOTORLEITUNGEN	605
VORSTEUERLEITUNGEN	607
HYDRAULIKPUMPE UND LEITUNGEN	660
HECKARBEITSGERÄTELEITUNGEN	666
RÜCKLAUFLEITUNG	672
SENSORLEITUNGEN	676
STIELZYLINDERLEITUNGEN	677
SCHWENKMOTORLEITUNGEN	685
FAHRMOTORLEITUNGEN	687
STEUERKRÜMMER	689
HYDRAULIKKÜHLERMOTOR U. BEFESTIGUNG	692
SCHWENKMOTOR U. BEFESTIGUNGSTEILE	693
FAHRMOTOR U. BEFESTIGUNGSTEILE	694
KOLBENMOTOR	695
DREHWERKMOTOR	702
ZYLINDERAUFHÄNGUNG	705
HAUPTSTEUERVENTILBEFESTIGUNG	707
STEUERVENTILSTOPFEN	708
ZUSATZPUMPE U. BEFESTIGUNGSTEILE	709
HAUPTHYDRAULIKPUMPE U. BEFESTIGUNGSTEILE	710
ZAHNRADPUMPE	711
HAUPTHYDRAULIKPUMPE	713
KOLBENPUMPE	714
KOLBEN- UND ZAHNRADPUMPE	716
KOLBENPUMPENUMLAUFSATZ	720
HYDRAULIKSIEB	722

* ÜBERSETZUNG ZUM ZEITPUNKT DER DRUCKLEGUNG NICHT VORHANDEN

INHALTSVERZEICHNIS

Bezeichnung	Seite
SCHWENKBLOCK	723
HYDRAULIKTANK UND SCHMIERFILTER	724
HYDRAULIKTANK UND BEFESTIGUNGSTEILE	727
HYDRAULIKROHR	727
UMSCHALTVENTIL - SCHALTSCHEMA	731
SPERR- UND ÜBERDRUCKVENTIL	731
SPERRVENTIL	733
STEUERVENTIL	737
GEGENGEWICHTSTEUERUNGSVENTIL	754
ANSCHLUSSVENTIL	755
ZUFLUSSREGULIERVENTIL	757
LASTSTEUERVENTIL	759
HAUPTSTEUERVENTIL	768
VERTEILER- UND REDUZIERVENTIL	771
VENTIL, MECH.	772
VORSTEUERVENTIL	774
VORSTEUERÜBERDRUCKVENTIL	794
DRUCKSTEUERVENTIL	795
DRUCKREDUZIERVENTIL	796
PUMPENSTEUERVENTIL	797
REGENERIERUNGSVENTIL	798
ÜBERDRUCKVENTIL	799
PENDELVENTIL	810
MAGNETVENTIL	815
VENTILSOLENOID U. -KRÜMMER	831
VENTIL - SOLENOID U. DRUCKMINDERUNG	832
SCHWENKDÄMPFUNGSVENTIL	833
FAHRAUSGLEICHSVENTIL	835
ARBEITSGERÄTE	837
AUSLEGER (GROSSE REICHWEITE)	837
M-AUSLEGER	837
AUSLEGER FÜR GROSSE REICHWEITE	837
AUSLEGER	838
SENSORSCHUTZ	846
SCHMIERLEITUNGEN	847
LÖFFELGESTÄNGE	854
STIEL	861
LÖFFELSTIEL	861
ARBEITSGERÄTE	876
LÖFFELEINSTELLER	876
LÖFFEL UND -EINSTELLER	878
UNIVERSALSCHAUFEL	904
UNIVERSALLÖFFEL	905
HD-LÖFFEL	907
HD-FELSLÖFFEL	910
FELSLÖFFEL	911
HD FELSSCHAUFEL	912
FELSLÖFFEL	913
SCHNELLWECHSELVORRICHTUNG	915
SCHNELLWECHSELEINRICHTUNG	916
KUPPLUNGSBOLZEN	917
SEITENSCHNEIDENSCHUTZ	918
AUFREISSER	920
SEITENMESSER	921
SPITZE - DOPPELDORN	923
ZAHN, HD AUSFÜHRUNG	924
NORMALZAHNSPITZE	925
*TIP GP-HEAVY PENETRATION	926
ZAHNSPITZE, SCHARF	927
SCHARFE SPITZE PLUS	928
*TIP GP-SPIKE	929
SPITZE (BREIT)	930
FAHRERHAUS	932
FAHRERSITZVERSTELLER	932
KLIMAANLAGE UND AUFHÄNGUNG	933
KLIMAANLAGE	935
ARMLEHNE	938
FAHRERHAUS	940
SPULE, VERDAMPFER	949
KÄLTEMITTELKOMPRESSOR	951
KÄLTEMITTELKONDENSATOR U. BEFESTIGUNGSTEILE	953
KÄLTEMITTELKONDENSATOR	954
STEUERKONSOLE	955
JOYSTICKSTEUERUNG U. BEFESTIGUNG	961
STEUERPEDAL U. BEFESTIGUNG	963
FUSSTEUERUNG	964
STEUERHEBEL	966
HEIZUNGS- U. KLIMAANLAGENSTEUERUNG	973
HYDRAULIKPEDALSTEUERUNG	974
JOYSTICK -STEUERUNG	975
PEDALSTEUERUNG	981
HYDRAULIKBEDIENUNG (MIT VORSTEUERUNG)	982
FAHRERHAUSABDECKUNG	983
FAHRERHAUSTÜR	985
LUFTKANAL	988
FUSSMATTE	989
SCHUTZVERKLEIDUNG	990
SCHEIBENSCHUTZ	992
DACHLUKE	996
WARNHORN, ELEKTR.	998
KLIMAANLAGENGEHÄUSE	999
RADIOEINBAUSATZ	1000

* ÜBERSETZUNG ZUM ZEITPUNKT DER DRUCKLEGUNG NICHT VORHANDEN

INHALTSVERZEICHNIS

Bezeichnung	Seite
LUFT- UND TEMPERATURREGELUNGSHEBEL	1002
KLIMAANLAGENLEITUNGEN	1003
DOKUMENTATION	1005
RÜCKSPIEGEL	1006
BETRIEBSMONITOR U. BEFESTIGUNG	1007
ELEKTR. ÜBERWACHUNGSSYSTEM	1008
ANTENNENBEFESTIGUNG	1009
*MOUNTING GP-DISPLAY	1015
PLATTFORM-ANBAUSATZ	1017
FAHRERHAUSAUSRÜSTUNG	1019
*PANEL-CONTROL	1020
ZUSATZPEDAL	1021
FAHRERPLATTFORM	1023
SONNENBLENDE	1024
SICHERHEITSGURT	1025
FAHRERSITZ	1026
SCHWINGSITZ	1029
SITZUNTERBAU	1035
FAHRERSITZFEDERUNG	1036
SCHEIBENWASCHANLAGE	1041
FAHRERHAUSFENSTER	1042
TÜRFENSTER	1050
HECKFENSTER	1052
SCHEIBENWISCHER	1055
WARTUNGSAUSRÜSTUNG	1058
AUFKLEBER	1058
SCHILD UND AUFKLEBER	1069
ERSATZTEILNUMMERNINDEX	B1

* ÜBERSETZUNG ZUM ZEITPUNKT DER DRUCKLEGUNG NICHT VORHANDEN

4I-1536 ACCUMULATOR GP-HYDRAULIC–CHARGED

S/N: YEE1-UP

PART OF 087-4456 ACCUMULATOR GP-HYDRAULIC

SMCS-5077 **i00613049**

NOTE	REF NO	GRAPHIC REF	PART NUMBER	QTY	PART NAME 1 2 3 4 5 6 (PRODUCT LEVEL)	SEE PAGE
	1	1	4I-5862	1	CAP	
	2	1	4I-1539	1	CORE	

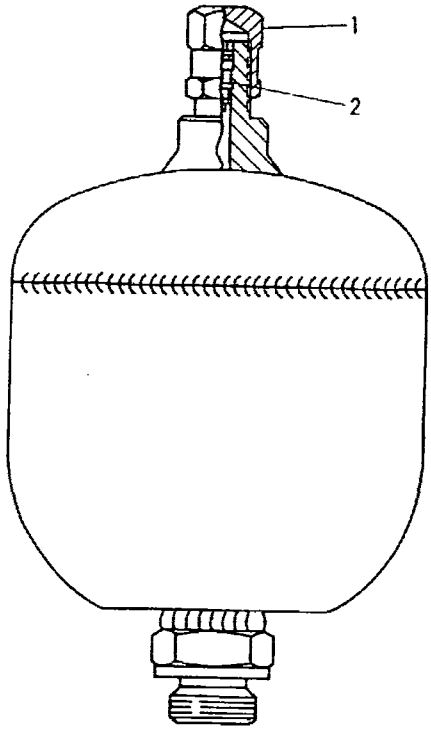

GRAPHIC #1

<END>

g00222004

5I-8416 ACCUMULATOR GP-HYDRAULIC–CHARGED

S/N: YEE1-UP

PART OF 087-4456 ACCUMULATOR GP-HYDRAULIC

SMCS-5077 i00781802

NOTE	REF NO	GRAPHIC REF	PART NUMBER	QTY	PART NAME 1 2 3 4 5 6 (PRODUCT LEVEL)	SEE PAGE
	1	1	**4I-8267**	1	CAP-ACCUMULATOR	
Y	2	1	*087-4454*	1	ACCUMULATOR GP-HYDRAULIC (CHARGED)	441

Y-SEPARATE ILLUSTRATION

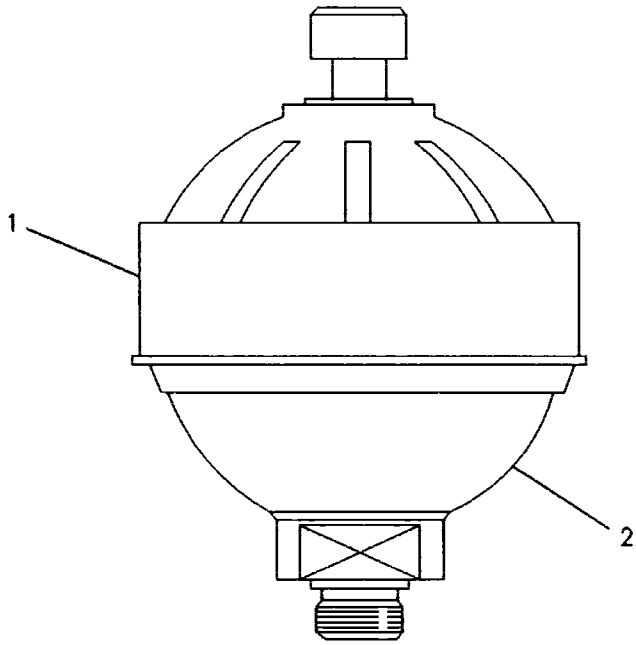

GRAPHIC #1 **<END>** g00237219

HYDRAULIC SYSTEM

087-4454 ACCUMULATOR GP-HYDRAULIC–CHARGED

S/N: YEE1-UP

PART OF 5I-8416 ACCUMULATOR GP-HYDRAULIC

SMCS-5077 **i02613223**

NOTE	REF NO	GRAPHIC REF	PART NUMBER	QTY	PART NAME 1 2 3 4 5 6 (PRODUCT LEVEL)	SEE PAGE
	1	1	087-4577	1	SEAL	
	2	1	087-4576	1	CAP	
	3	1	087-4575	1	CORE	

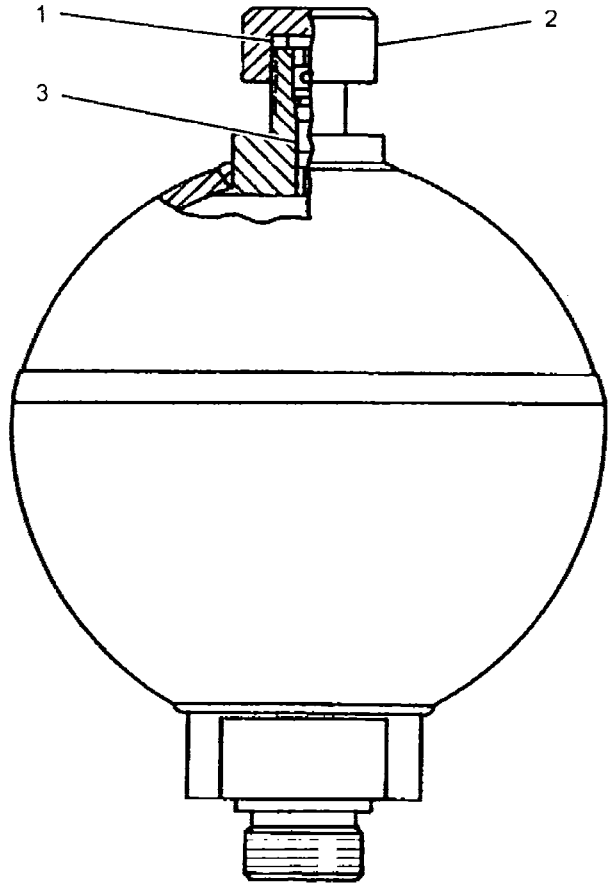

GRAPHIC #1 **<END>** g01308115

087-4456 ACCUMULATOR GP-HYDRAULIC–CHARGED

S/N: YEE1-UP

PART OF 164-6981 ACCUMULATOR GP-HYDRAULIC

FIELD REPLACEMENT ORDER 199-7447–PAGE 445, 227-8807–PAGE 446

SMCS-5077 **i02299052**

NOTE	PART NUMBER	QTY	PART NAME 1 2 3 4 5 6 (PRODUCT LEVEL)	SEE PAGE
Y	*4I-1536*	1	ACCUMULATOR GP-HYDRAULIC (CHARGED)	439
			–OR–	
Y	*5I-8416*	1	ACCUMULATOR GP-HYDRAULIC (CHARGED)	440
			–OR–	
Y	*145-5106*	1	ACCUMULATOR GP-HYDRAULIC (CHARGED)	443

Y-SEPARATE ILLUSTRATION

<END>

145-5106 ACCUMULATOR GP-HYDRAULIC–CHARGED

S/N: YEE1-UP

PART OF 087-4456 ACCUMULATOR GP-HYDRAULIC

SMCS-5077 i02299074

NOTE	REF NO	GRAPHIC REF	PART NUMBER	QTY	PART NAME 1 2 3 4 5 6 (PRODUCT LEVEL)	SEE PAGE
	1	1	159-4700	1	FILM-WARNING (HIGH PRESSURE CYLINDER)	

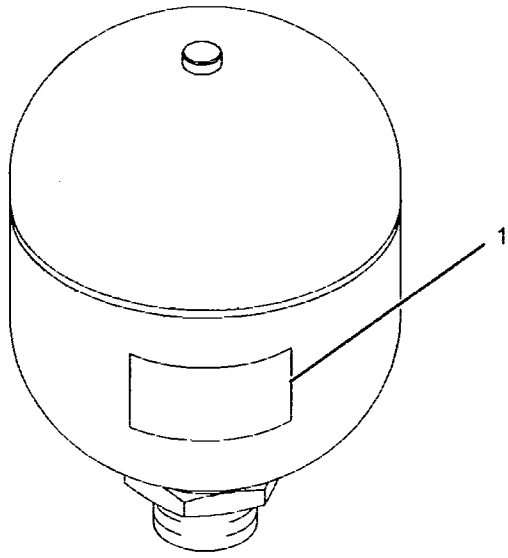

GRAPHIC #1 <END> g01135721

164-6981 ACCUMULATOR GP-HYDRAULIC–CHARGED

S/N: YEE1-UP

PART OF 302-2985 LINES GP-PILOT

SMCS-5077 **i02841690**

NOTE	PART NUMBER	QTY	PART NAME 1 2 3 4 5 6 (PRODUCT LEVEL)	SEE PAGE
Y	*087-4456*	1	ACCUMULATOR GP-HYDRAULIC (CHARGED)	442
	3K-0360	1	SEAL-O-RING	

Y-SEPARATE ILLUSTRATION

<END>

HYDRAULIC SYSTEM

199-7447 ACCUMULATOR GP-HYDRAULIC–UNCHARGED

S/N: YEE1-UP

FIELD REPLACEMENT FOR 087-4456–PAGE 442

SMCS-5077 **i02613234**

NOTE	REF NO	GRAPHIC REF	PART NUMBER	QTY	PART NAME 1 2 3 4 5 6 (PRODUCT LEVEL)	SEE PAGE
	1	1	4I-5862	1	CAP	
	2	1	4I-1539	1	CORE	

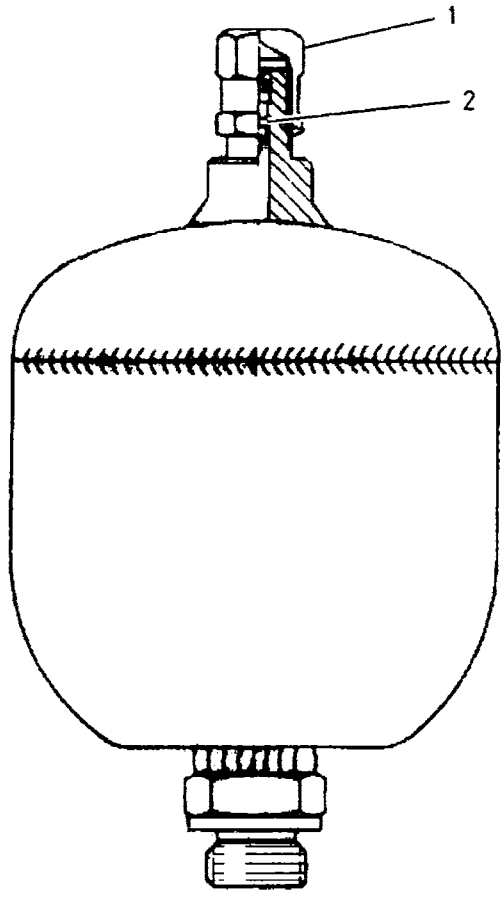

GRAPHIC #1 **<END>** g00877049

HYDRAULIC SYSTEM

227-8807 ACCUMULATOR GP-HYDRAULIC–UNCHARGED

S/N: YEE1-UP

FIELD REPLACEMENT FOR 087-4456–PAGE 442: FOR 145-5106–PAGE 443

SMCS-5077 **i02036588**

NOTE	PART NUMBER	QTY	PART NAME 1 2 3 4 5 6 (PRODUCT LEVEL)	SEE PAGE
			(NO SERVICED PARTS)	

<END>

HYDRAULIC SYSTEM

177-2617 BLOCK GP-HYDRAULIC

S/N: YEE1-UP

PART OF 188-4145 FILTER GP-OIL

SMCS-5264 **i02160182**

NOTE	REF NO	GRAPHIC REF	PART NUMBER	QTY	PART NAME 1 2 3 4 5 6 (PRODUCT LEVEL)	SEE PAGE
Z	1	1		1	BLOCK	
	2	1	**177-2619**	2	PACKING	
	3	1	**179-9618**	1	PLATE-SLIDE	
	4	1	**5L-4758**	1	SEAL-O-RING	
M	5	1	**137-3626**	1	BOLT-SHOULDER (M6X1X28.75-MM)	
	6	1	**137-3628**	1	SHIM (0.1-MM THK)	

M-METRIC PART
Z-NOT SERVICED SEPARATELY

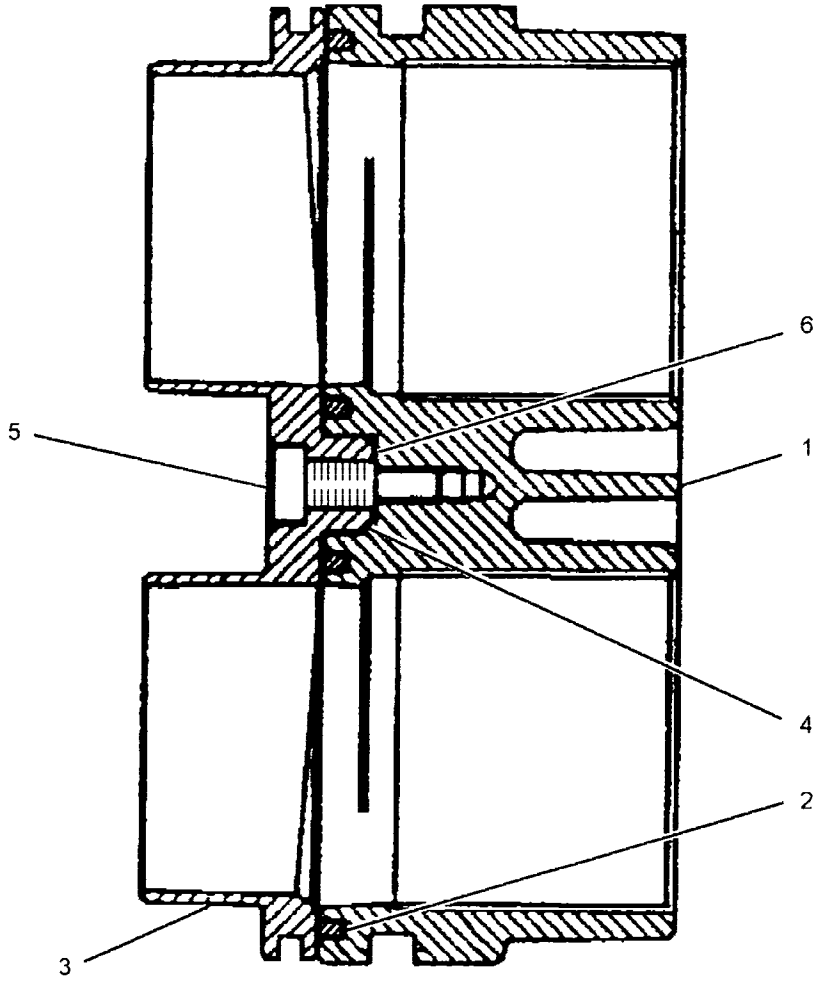

GRAPHIC #1

<END>

g01096481

255-5843 CONTROL AR-AUXILIARY–JOYSTICK WITH SLIDE CONTROL

S/N: YEE1-UP

PART OF 310-0015, 310-0016, 310-0017 CONTROL AR-AUXILIARY AN ATTACHMENT

SMCS-5051 i02844790

NOTE	PART NUMBER	QTY	PART NAME 1 2 3 4 5 6 (PRODUCT LEVEL)	SEE PAGE
Y	259-7598	1	CONTROL & MTG GP-JOYSTICK (WITH SLIDE CONTROL)	961
Y	259-5295	1	FASTENER GP-WIRING HARNESS (JOYSTICK)	177
Y	247-7410	1	FILM GP (OPERATOR CONTROLS, NOTICE)	1062

Y-SEPARATE ILLUSTRATION

<END>

255-5844 CONTROL AR-AUXILIARY–JOYSTICK, 3-BUTTON, TRIGGER SW

S/N: YEE1-UP

CANNOT BE USED WITH 259-7707–PAGE 982, 310-0017–PAGE 453, 310-0016–PAGE 452, 310-0015–PAGE 452, 310-0014–PAGE 452, 310-0013–PAGE 451 AN ATTACHMENT

SMCS-5051 i02862257

NOTE	PART NUMBER	QTY	PART NAME 1 2 3 4 5 6 (PRODUCT LEVEL)	SEE PAGE
Y	259-7599	1	CONTROL & MTG GP-JOYSTICK	962
Y	259-5295	1	FASTENER GP-WIRING HARNESS (JOYSTICK)	177
Y	247-7411	1	FILM GP (OPERATOR CONTROLS, NOTICE)	1063

Y-SEPARATE ILLUSTRATION

<END>

270-6106 CONTROL AR-AUXILIARY–LEFT FOOT SWITCH

S/N: YEE1-UP

PART OF 310-0013 CONTROL AR-AUXILIARY AN ATTACHMENT

SMCS-5051 i02845490

NOTE	PART NUMBER	QTY	PART NAME 1 2 3 4 5 6 (PRODUCT LEVEL)	SEE PAGE
Y	270-6107	1	CONTROL GP-FOOT	964
Y	259-5294	1	FASTENER GP-WIRING HARNESS (FOOT SWITCH)	176
Y	247-7465	1	FILM GP (HAMMER CONTROL, FOOT SWITCH)	1065

Y-SEPARATE ILLUSTRATION

<END>

285-1784 CONTROL AR-AUXILIARY–SYSTEM 3, 1-WAY, 2-PUMP

S/N: YEE1-UP

PART OF 310-0013 CONTROL AR-AUXILIARY

AN ATTACHMENT

SMCS-5051 i02845510

NOTE	PART NUMBER	QTY	PART NAME 1 2 3 4 5 6 (PRODUCT LEVEL)	SEE PAGE
Y	292-7166	1	LINES GP-FRONT	575
Y	260-7891	1	LINES GP-PILOT (PUMP CONTROL, SHUTTLE VALVE)	616
Y	296-7127	1	LINES GP-PILOT (SYSTEMS 3, 16)	623
Y	299-2600	1	WIRING GP-AUXILIARY CONTROL (PLATFORM)	248

Y-SEPARATE ILLUSTRATION

<END>

285-1785 CONTROL AR-AUXILIARY–SYSTEM 5, 2-WAY, 1-PUMP

S/N: YEE1-UP

PART OF 310-0014, 310-0015 CONTROL AR-AUXILIARY

AN ATTACHMENT

SMCS-5051 i02847216

NOTE	PART NUMBER	QTY	PART NAME 1 2 3 4 5 6 (PRODUCT LEVEL)	SEE PAGE
Y	292-7167	1	LINES GP-FRONT	578
Y	296-7128	1	LINES GP-PILOT	627
Y	299-2600	1	WIRING GP-AUXILIARY CONTROL (PLATFORM)	248

Y-SEPARATE ILLUSTRATION

<END>

285-1786 CONTROL AR-AUXILIARY–SYSTEM 14, COMBINED FUNCTION

S/N: YEE1-UP

PART OF 310-0016, 310-0017 CONTROL AR-AUXILIARY

AN ATTACHMENT

SMCS-5051 i02844913

NOTE	PART NUMBER	QTY	PART NAME 1 2 3 4 5 6 (PRODUCT LEVEL)	SEE PAGE
Y	292-7169	1	LINES GP-FRONT	580
Y	260-7891	1	LINES GP-PILOT (PUMP CONTROL, SHUTTLE VALVE)	616
Y	302-3143	1	LINES GP-PILOT (SYSTEM 14, SYSTEM 17)	646
Y	291-7757	1	WIRING GP-PLATFORM (SYSTEM 14, SYSTEM 17)	304

Y-SEPARATE ILLUSTRATION

<END>

HYDRAULIC SYSTEM

285-1787 CONTROL AR-AUXILIARY–SYSTEM 16, 1-WAY, 2-PUMP

S/N: YEE1-UP
AN ATTACHMENT

SMCS-5051 **i02915608**

NOTE	PART NUMBER	QTY	PART NAME 1 2 3 4 5 6 (PRODUCT LEVEL)	SEE PAGE
Y	296-7129	1	LINES GP-FRONT (SYSTEM 16, 1-WAY, 2-PUMP)	584
Y	260-7891	1	LINES GP-PILOT (PUMP CONTROL, SHUTTLE VALVE)	616
Y	296-7127	1	LINES GP-PILOT (SYSTEMS 3, 16)	623
Y	299-2602	1	WIRING GP-CONTROL (SYSTEM 16, 1-WAY, 2-PUMP)	283

Y-SEPARATE ILLUSTRATION

<END>

285-1788 CONTROL AR-AUXILIARY–SYSTEM 17, COMBINED FN, MED PR

S/N: YEE1-UP
AN ATTACHMENT

SMCS-5051 **i02915682**

NOTE	PART NUMBER	QTY	PART NAME 1 2 3 4 5 6 (PRODUCT LEVEL)	SEE PAGE
Y	296-7131	1	LINES GP-FRONT (SYSTEM 17, COMBINED FN, MED PR)	588
Y	260-7891	1	LINES GP-PILOT (PUMP CONTROL, SHUTTLE VALVE)	616
Y	302-3143	1	LINES GP-PILOT (SYSTEM 14, SYSTEM 17)	646
Y	291-7757	1	WIRING GP-PLATFORM (SYSTEM 14, SYSTEM 17)	304

Y-SEPARATE ILLUSTRATION

<END>

285-1789 CONTROL AR-AUXILIARY–MEDIUM PRESSURE AUXILIARY

S/N: YEE1-UP
PART OF 310-0017 CONTROL AR-AUXILIARY
AN ATTACHMENT

SMCS-5051 **i02845001**

NOTE	PART NUMBER	QTY	PART NAME 1 2 3 4 5 6 (PRODUCT LEVEL)	SEE PAGE
Y	225-4515	1	DRIVE GP-AUXILIARY PUMP	475
Y	227-0585	1	LINES GP-FRONT (MEDIUM PRESSURE)	571
Y	302-3148	1	LINES GP-PILOT (MEDIUM PRESSURE AUXILIARY)	652
Y	292-7168	1	LINES GP-PUMP (MEDIUM PRESSURE)	663
Y	242-6805	1	PUMP & MTG GP-AUXILIARY	709
Y	291-7758	1	WIRING GP-MEDIUM PRESSURE	301

Y-SEPARATE ILLUSTRATION

<END>

HYDRAULIC SYSTEM

285-1790 CONTROL AR-AUXILIARY–COOLING CIRCUIT, HYDRAULIC OIL

S/N: YEE1-UP

AN ATTACHMENT

SMCS-5051 **i02915721**

NOTE	PART NUMBER	QTY	PART NAME 1 2 3 4 5 6 (PRODUCT LEVEL)	SEE PAGE
Y	*225-4515*	1	DRIVE GP-AUXILIARY PUMP	475
Y	*296-7136*	1	LINES GP-COOLING	89
Y	*242-6805*	1	PUMP & MTG GP-AUXILIARY	709

Y-SEPARATE ILLUSTRATION

<END>

294-1277 CONTROL AR-AUXILIARY–BOOM FLOAT

S/N: YEE1-UP

FOR USE WITH 255-5844–PAGE 448. CANNOT BE USED WITH 297-0252–PAGE 731, 259-7707–PAGE 982

AN ATTACHMENT

SMCS-5051 **i02970045**

NOTE	PART NUMBER	QTY	PART NAME 1 2 3 4 5 6 (PRODUCT LEVEL)	SEE PAGE
Y	*228-8267*	1	FILM GP	1060
Y	*296-7134*	1	LINES GP-BOOM CYLINDER (LOWERING CONTROL)	551
Y	*302-3142*	1	LINES GP-PILOT	643
Y	*302-3141*	1	LINES GP-RETURN	673
Y	*239-1607*	1	LINES GP-SENSOR	676
Y	*251-0613*	1	WIRING GP-CAB (BOOM FLOAT)	250
Y	*291-7765*	1	WIRING GP-CHASSIS (BOOM FLOAT)	270

Y-SEPARATE ILLUSTRATION

<END>

310-0013 CONTROL AR-AUXILIARY–SYSTEM 3, 1-WAY, 2-PUMP

S/N: YEE1-UP

AN ATTACHMENT

SMCS-5051 **i02856352**

NOTE	PART NUMBER	QTY	PART NAME 1 2 3 4 5 6 (PRODUCT LEVEL)	SEE PAGE
Y	*285-1784*	1	CONTROL AR-AUXILIARY	449
Y	*302-3147*	1	LINES GP-PILOT (PRIMARY)	650
Y	*270-6106*	1	CONTROL AR-AUXILIARY	448

Y-SEPARATE ILLUSTRATION

<END>

310-0014 CONTROL AR-AUXILIARY–SYSTEM 5, 2-WAY, 1-PUMP

S/N: YEE1-UP

AN ATTACHMENT

SMCS-5051 i02847156

NOTE	PART NUMBER	QTY	PART NAME 1 2 3 4 5 6 (PRODUCT LEVEL)	SEE PAGE
Y	*285-1785*	1	CONTROL AR-AUXILIARY	449
Y	*302-3147*	1	LINES GP-PILOT (PRIMARY)	650
Y	*255-5845*	1	PEDAL AR-AUXILIARY (LH)	1022

Y-SEPARATE ILLUSTRATION

<END>

310-0015 CONTROL AR-AUXILIARY–SYSTEM 5, 2-WAY, 1-PUMP

S/N: YEE1-UP

AN ATTACHMENT

SMCS-5051 i02847344

NOTE	PART NUMBER	QTY	PART NAME 1 2 3 4 5 6 (PRODUCT LEVEL)	SEE PAGE
Y	*255-5843*	1	CONTROL AR-AUXILIARY (JOYSTICK WITH SLIDE CONTROL)	448
Y	*285-1785*	1	CONTROL AR-AUXILIARY	449
Y	*302-3147*	1	LINES GP-PILOT (PRIMARY)	650

Y-SEPARATE ILLUSTRATION

<END>

310-0016 CONTROL AR-AUXILIARY–SYSTEM 14, COMBINED FUNCTION

S/N: YEE1-UP

AN ATTACHMENT

SMCS-5051 i02847381

NOTE	PART NUMBER	QTY	PART NAME 1 2 3 4 5 6 (PRODUCT LEVEL)	SEE PAGE
Y	*255-5843*	1	CONTROL AR-AUXILIARY (JOYSTICK WITH SLIDE CONTROL)	448
Y	*285-1786*	1	CONTROL AR-AUXILIARY (SYSTEM 14, COMBINED FUNCTION)	449
Y	*302-3147*	1	LINES GP-PILOT (PRIMARY)	650

Y-SEPARATE ILLUSTRATION

<END>

310-0017 CONTROL AR-AUXILIARY-
SYSTEM 14, COMBINED FUNCTION
S/N: YEE1-UP
AN ATTACHMENT

SMCS-5051 **i02844664**

NOTE	PART NUMBER	QTY	PART NAME 1 2 3 4 5 6 (PRODUCT LEVEL)	SEE PAGE
Y	*255-5843*	1	CONTROL AR-AUXILIARY (JOYSTICK WITH SLIDE CONTROL)	448
Y	*285-1786*	1	CONTROL AR-AUXILIARY (SYSTEM 14, COMBINED FUNCTION)	449
Y	*285-1789*	1	CONTROL AR-AUXILIARY (MEDIUM PRESSURE AUXILIARY)	450
Y	*302-3147*	1	LINES GP-PILOT (PRIMARY)	650

Y-SEPARATE ILLUSTRATION

<END>

302-9403 CONTROL AR-COUPLER-UNIVERSAL
S/N: YEE1-UP
AN ATTACHMENT

SMCS-6129 **i02903166**

NOTE	PART NUMBER	QTY	PART NAME 1 2 3 4 5 6 (PRODUCT LEVEL)	SEE PAGE
Y	*268-6816*	1	FILM GP (QUICK COUPLER)	1067
Y	*296-7133*	1	LINES GP-FRONT (UNIVERSAL QUICK COUPLER)	592
Y	*267-7642*	1	WIRING GP-CAB (COUPLER)	252
Y	*299-2604*	1	WIRING GP-COUPLER	291

Y-SEPARATE ILLUSTRATION

<END>

306-1528 CONTROL AR-COUPLER
S/N: YEE1-UP
AN ATTACHMENT

SMCS-6129 **i02932347**

NOTE	PART NUMBER	QTY	PART NAME 1 2 3 4 5 6 (PRODUCT LEVEL)	SEE PAGE
Y	*282-5705*	1	FILM GP (QUICK COUPLER)	1068
Y	*227-0461*	1	LINES GP-PILOT	612
Y	*238-2485*	1	WIRING GP-COUPLER (QUICK COUPLER)	290
Y	*259-4889*	1	WIRING GP-CHASSIS (QUICK COUPLER)	268

Y-SEPARATE ILLUSTRATION

<END>

HYDRAULIC SYSTEM

305-4935 COUPLING GP-PUMP

S/N: YEE1-UP

PART OF 296-4670 PUMP & MTG GP-MAIN HYDRAULIC

SMCS-5062 **i02841453**

NOTE	REF NO	GRAPHIC REF	PART NUMBER	QTY	PART NAME 1 2 3 4 5 6 (PRODUCT LEVEL)	SEE PAGE
	1	1	**310-9497**	1	COUPLING GP-FLEXIBLE	
	2	1	**9B-7237**	8	BOLT (3/8-16X1.25-IN)	

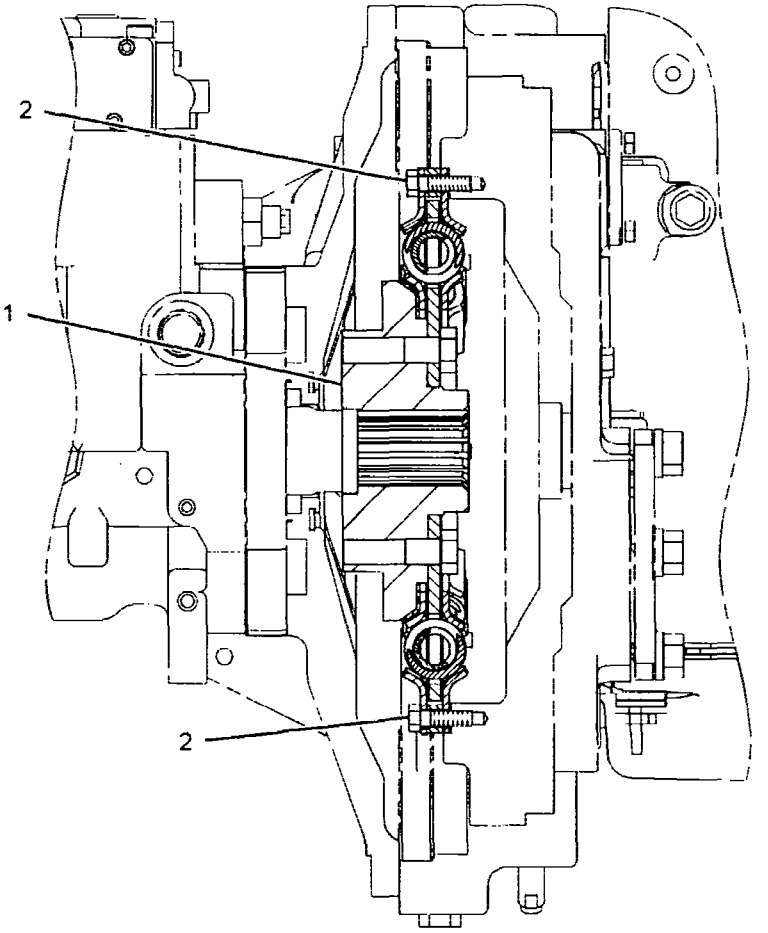

FRONT VIEW

GRAPHIC #1 **<END>** g01454406

HYDRAULIC SYSTEM

289-7844 CYLINDER & LINES GP-BOOM–LH

S/N: YEE1-UP

PART OF 294-1247 BOOM AR-LONG REACH, 294-1252 BOOM AR-MASS, 294-1250 BOOM AR-REACH, 324-0190, 324-0191 SPECIAL AR

AN ATTACHMENT

SMCS-5456, 7562 **i02861063**

NOTE	PART NUMBER	QTY	PART NAME 1 2 3 4 5 6 (PRODUCT LEVEL)	SEE PAGE
Y	*225-4522*	1	CYLINDER & SEAL GP-BOOM	457
Y	*289-5734*	1	LINES GP-BOOM CYLINDER	549

Y-SEPARATE ILLUSTRATION

<END>

289-7845 CYLINDER & LINES GP-BOOM–RH

S/N: YEE1-UP

PART OF 294-1247 BOOM AR-LONG REACH, 294-1252 BOOM AR-MASS, 294-1250 BOOM AR-REACH, 324-0190, 324-0191 SPECIAL AR

AN ATTACHMENT

SMCS-5456, 7562 **i02861065**

NOTE	PART NUMBER	QTY	PART NAME 1 2 3 4 5 6 (PRODUCT LEVEL)	SEE PAGE
Y	*225-4522*	1	CYLINDER & SEAL GP-BOOM	457
Y	*289-5735*	1	LINES GP-BOOM CYLINDER	550

Y-SEPARATE ILLUSTRATION

<END>

225-4527 CYLINDER & LINES GP-BUCKET

S/N: YEE1-UP

PART OF 245-5584, 257-4556 LINKAGE AR-BUCKET

AN ATTACHMENT

SMCS-5457 **i02155502**

NOTE	PART NUMBER	QTY	PART NAME 1 2 3 4 5 6 (PRODUCT LEVEL)	SEE PAGE
Y	*225-4528*	1	CYLINDER & SEAL GP-BUCKET	458
Y	*115-8694*	1	LINES GP-BUCKET CYLINDER	557

Y-SEPARATE ILLUSTRATION

<END>

225-4530 CYLINDER & LINES GP-BUCKET

S/N: YEE1-UP

PART OF 220-2502 LINKAGE AR-BUCKET

AN ATTACHMENT

SMCS-5457 **i02155231**

NOTE	PART NUMBER	QTY	PART NAME 1 2 3 4 5 6 (PRODUCT LEVEL)	SEE PAGE
Y	*225-4531*	1	CYLINDER & SEAL GP-BUCKET	459
Y	*239-1603*	1	LINES GP-BUCKET CYLINDER	558

Y-SEPARATE ILLUSTRATION

<END>

HYDRAULIC SYSTEM

300-1590 CYLINDER & LINES GP-BUCKET

S/N: YEE1-UP
PART OF 324-0190, 324-0191 SPECIAL AR
AN ATTACHMENT

SMCS-5457 **i02944970**

NOTE	PART NUMBER	QTY	PART NAME 1 2 3 4 5 6 (PRODUCT LEVEL)	SEE PAGE
Y	*300-1591*	1	CYLINDER & SEAL GP-BUCKET	460
Y	*302-3351*	1	LINES GP-BUCKET CYLINDER	559

Y-SEPARATE ILLUSTRATION

<END>

225-4524 CYLINDER & LINES GP-STICK

S/N: YEE1-UP
PART OF 294-1247 BOOM AR-LONG REACH, 294-1252 BOOM AR-MASS, 294-1250 BOOM AR-REACH, 324-0190, 324-0191 SPECIAL AR
AN ATTACHMENT

SMCS-5458 **i02155086**

NOTE	PART NUMBER	QTY	PART NAME 1 2 3 4 5 6 (PRODUCT LEVEL)	SEE PAGE
Y	*225-4525*	1	CYLINDER & SEAL GP-STICK	462
Y	*129-5973*	1	LINES GP-STICK CYLINDER	682

Y-SEPARATE ILLUSTRATION

<END>

HYDRAULIC SYSTEM

225-4522 CYLINDER & SEAL GP-BOOM

S/N: YEE1-UP

PART OF 289-7844, 289-7845 CYLINDER & LINES GP-BOOM

AN ATTACHMENT

SMCS-5456 **i02155071**

NOTE	REF NO	GRAPHIC REF	PART NUMBER	QTY	PART NAME 1 2 3 4 5 6 (PRODUCT LEVEL)	SEE PAGE
	1	1	**3B-8489**	1	FITTING-GREASE	
	2	1	**9X-4598**	4	SEAL-LIP TYPE	
Y	3	1	**225-4523**	1	CYLINDER GP-BOOM	463
	4	1	**8T-6757**	1	PLUG-PIPE	

Y-SEPARATE ILLUSTRATION

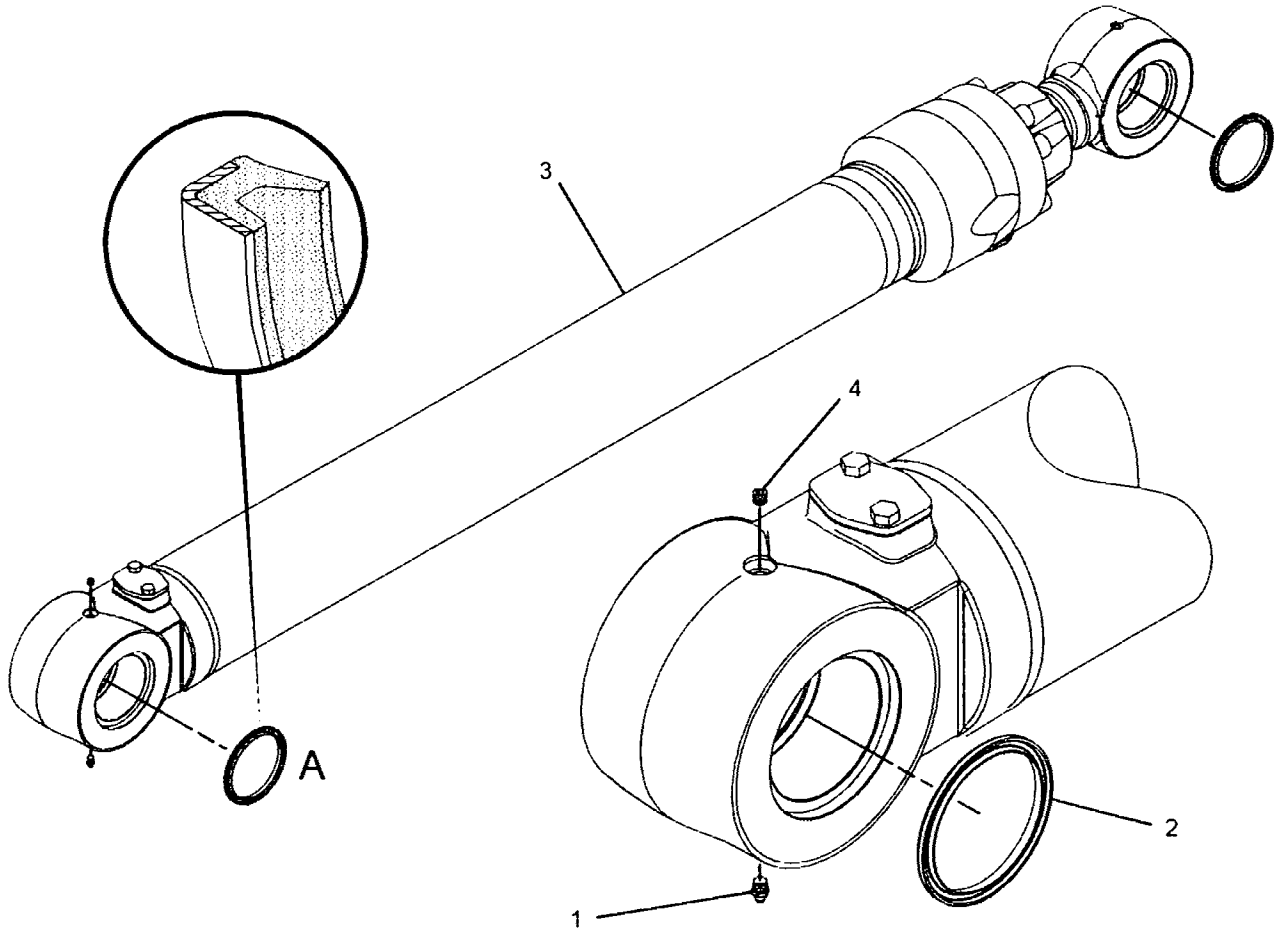

VIEW OF AREA A

GRAPHIC #1 **<END>** g01095756

HYDRAULIC SYSTEM

225-4528 CYLINDER & SEAL GP-BUCKET

S/N: YEE1-UP

PART OF 225-4527 CYLINDER & LINES GP-BUCKET

AN ATTACHMENT

SMCS-5457 **102155508**

NOTE	REF NO	GRAPHIC REF	PART NUMBER	QTY	PART NAME 1 2 3 4 5 6 (PRODUCT LEVEL)	SEE PAGE
	1	1	**3B-8489**	2	FITTING-GREASE	
	2	1	**7X-4803**	2	SEAL-LIP TYPE	
Y	3	1	**225-4529**	1	CYLINDER GP-BUCKET	465
	4	1	**9X-4597**	2	SEAL-LIP TYPE	

Y-SEPARATE ILLUSTRATION

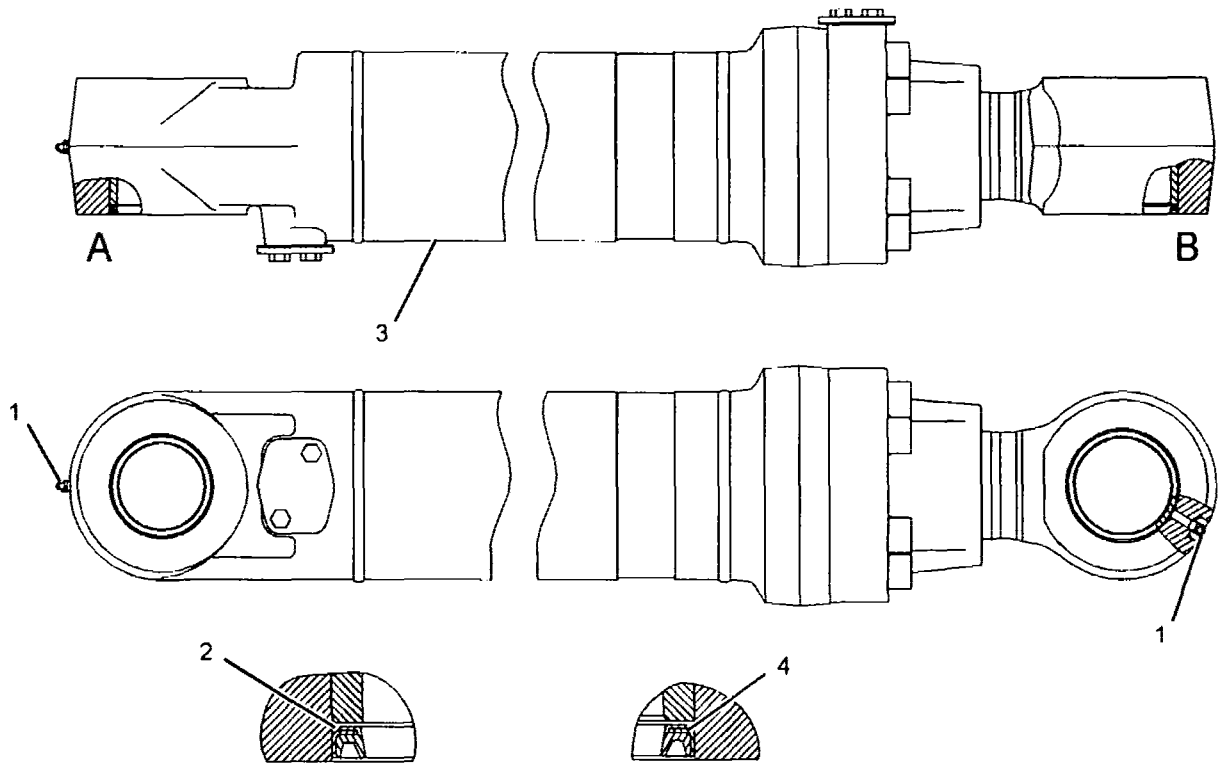

GRAPHIC #1

<END>

g01095108

225-4531 CYLINDER & SEAL GP-BUCKET

S/N: YEE1-UP

PART OF 225-4530 CYLINDER & LINES GP-BUCKET

AN ATTACHMENT

SMCS-5457 **i02155274**

NOTE	REF NO	GRAPHIC REF	PART NUMBER	QTY	PART NAME 1 2 3 4 5 6 (PRODUCT LEVEL)	SEE PAGE
	1	1	**3B-8489**	2	FITTING-GREASE	
	2	1	**9X-4598**	2	SEAL-LIP TYPE	
Y	3	1	**225-4532**	1	CYLINDER GP-BUCKET	467
	4	1	**9X-4597**	2	SEAL-LIP TYPE	

Y-SEPARATE ILLUSTRATION

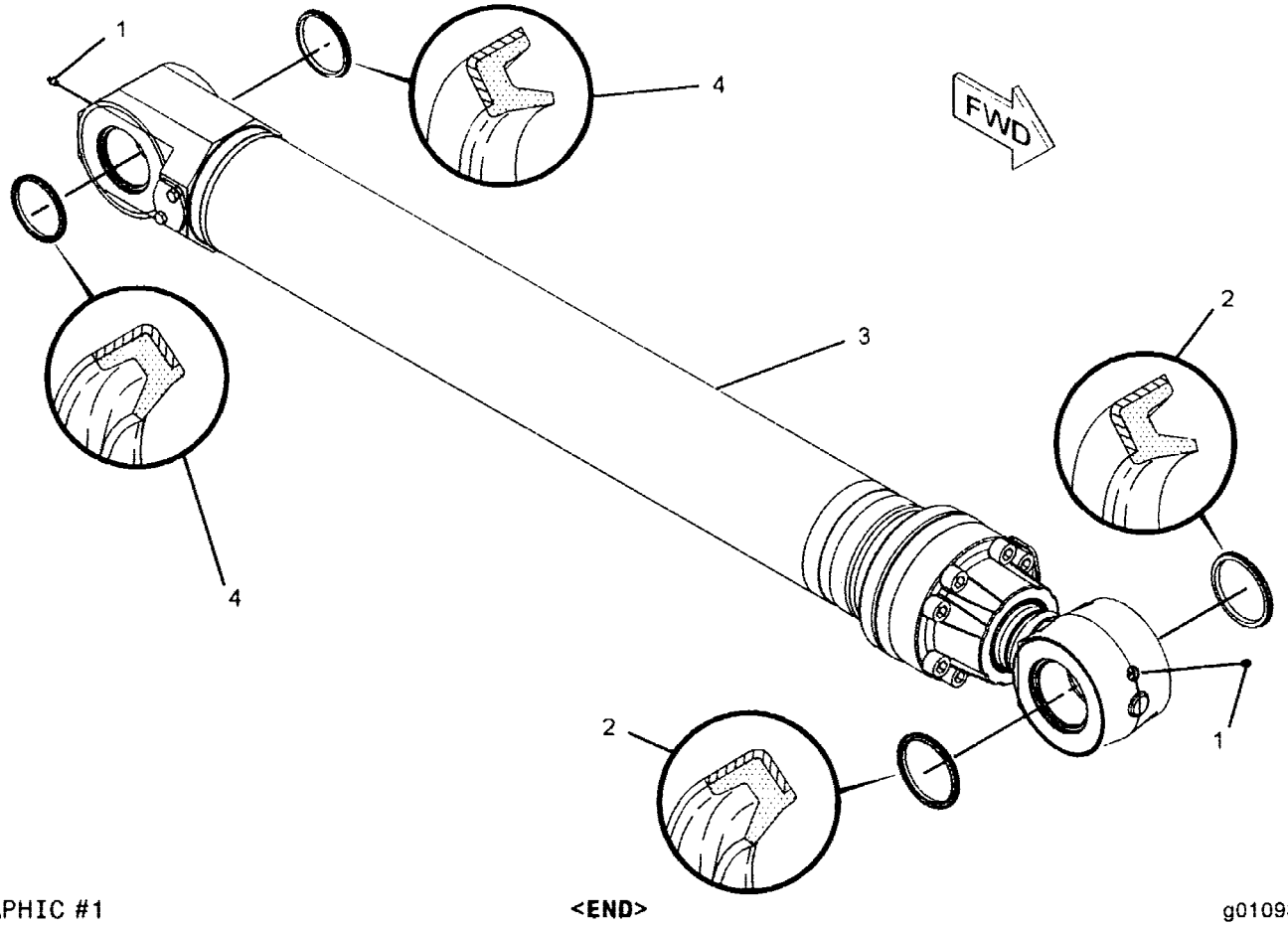

GRAPHIC #1 **<END>** g01093826

300-1591 CYLINDER & SEAL GP-BUCKET

S/N: YEE1-UP
PART OF 300-1590 CYLINDER & LINES GP-BUCKET
AN ATTACHMENT

SMCS-5457 **i02944996**

NOTE	REF NO	GRAPHIC REF	PART NUMBER	QTY	PART NAME 1 2 3 4 5 6 (PRODUCT LEVEL)	SEE PAGE
	1	1	**3B-8489**	2	FITTING-GREASE	
	2	1	**7X-4803**	2	SEAL-LIP TYPE	
Y	3	1	*293-7678*	1	CYLINDER GP-BUCKET	469
	4	1	**9X-4597**	2	SEAL-LIP TYPE	

Y-SEPARATE ILLUSTRATION

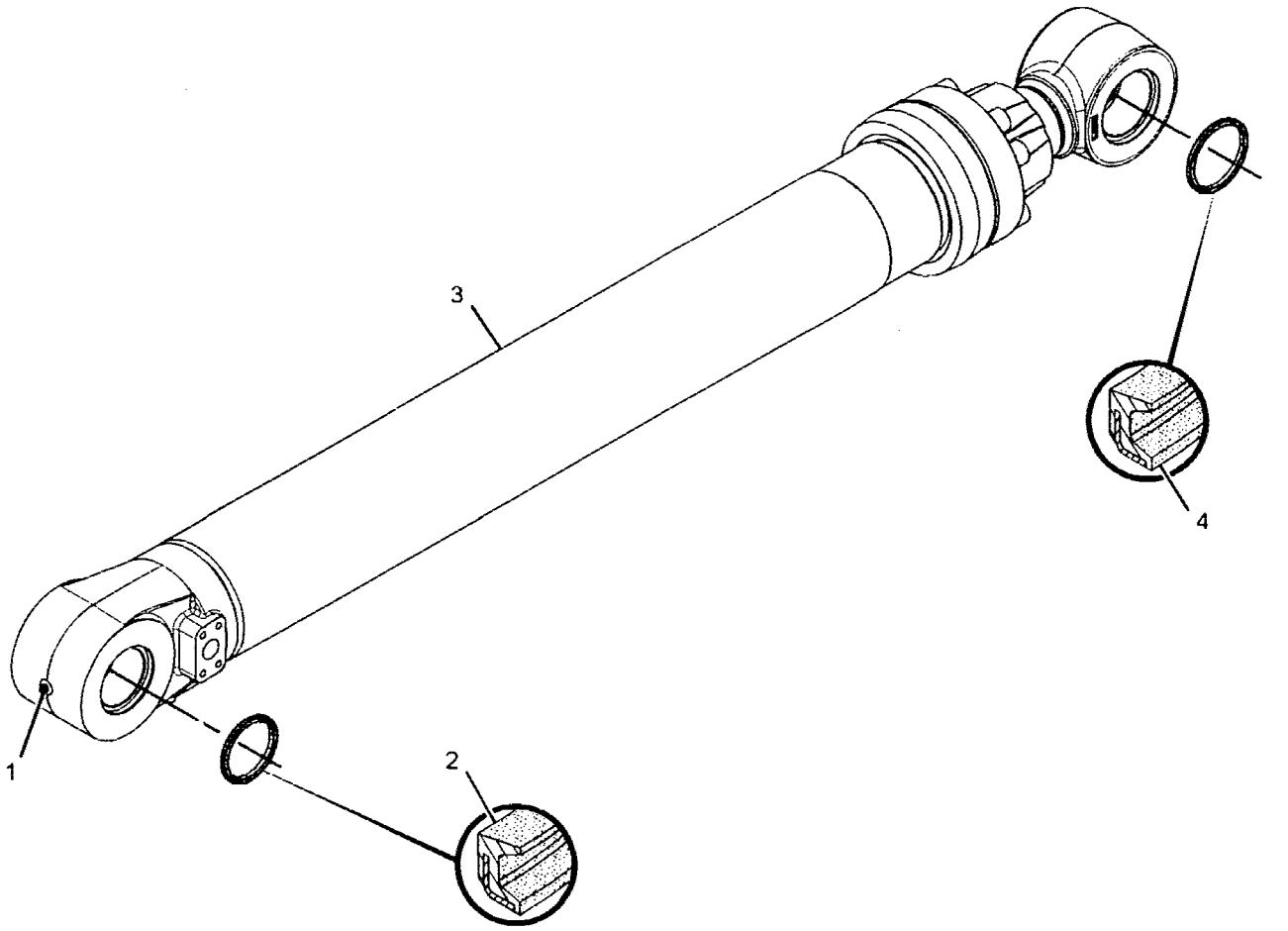

GRAPHIC #1 **<END>** g01471993

225-4533 CYLINDER & SEAL GP-CTWT

S/N: YEE1-UP

PART OF 309-0166, 309-0167 COUNTERWEIGHT AR

AN ATTACHMENT

SMCS-5409 **i02158557**

NOTE	REF NO	GRAPHIC REF	PART NUMBER	QTY	PART NAME 1 2 3 4 5 6 (PRODUCT LEVEL)	SEE PAGE
	1	1	**093-1434**	4	SEAL-LIP TYPE	
Y	2	1	**236-9769**	1	CYLINDER GP-COUNTERWEIGHT	471
	3	1	**3B-8489**	2	FITTING-GREASE	

Y-SEPARATE ILLUSTRATION

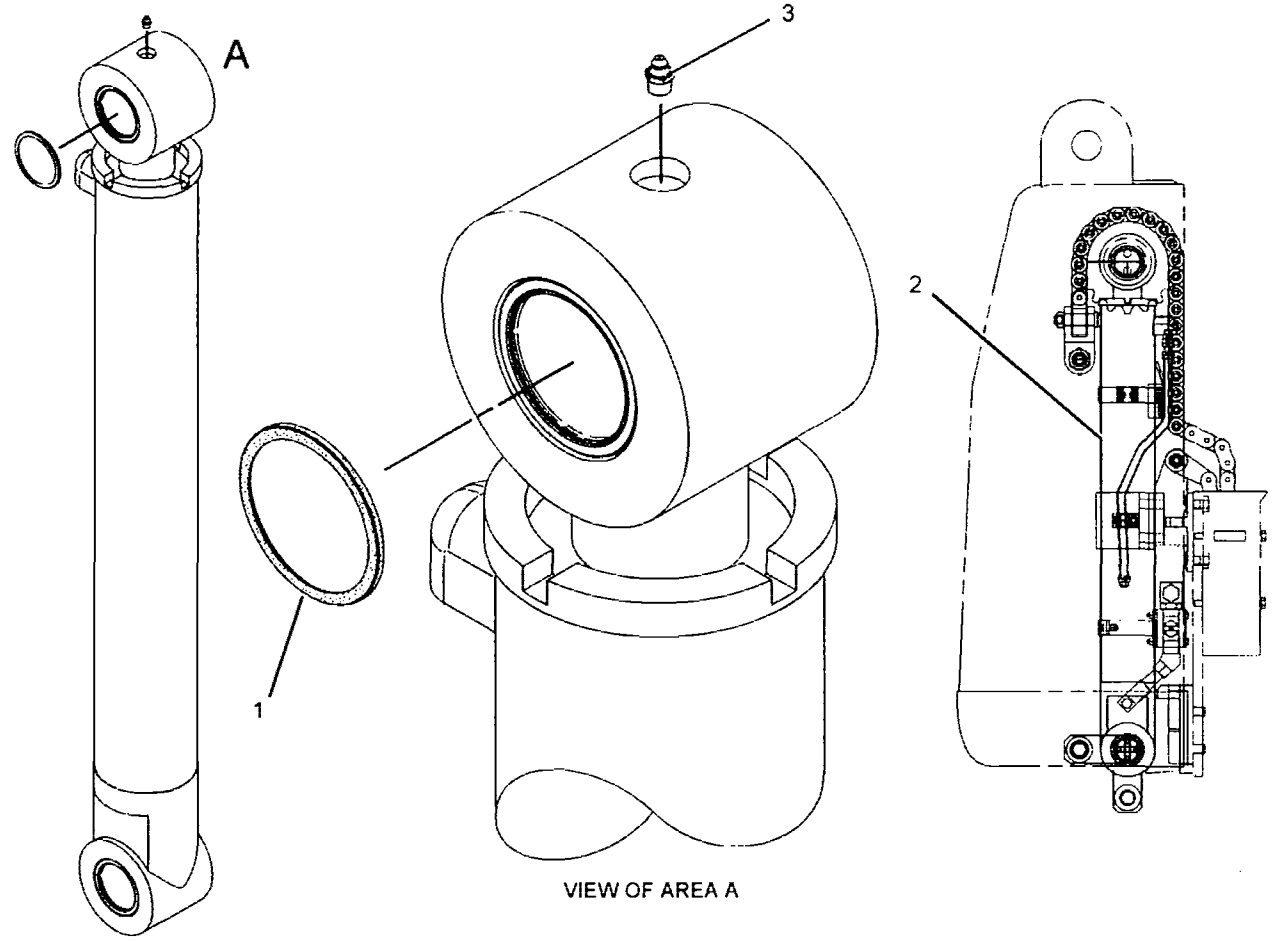

VIEW OF AREA A

GRAPHIC #1

<END>

g01098026

HYDRAULIC SYSTEM

225-4525 CYLINDER & SEAL GP-STICK

S/N: YEE1-UP

PART OF 225-4524 CYLINDER & LINES GP-STICK

AN ATTACHMENT

SMCS-5458 **i02155087**

NOTE	REF NO	GRAPHIC REF	PART NUMBER	QTY	PART NAME 1 2 3 4 5 6 (PRODUCT LEVEL)	SEE PAGE
Y	1	1	**225-4526**	1	CYLINDER GP-STICK	473
	2	1	**9X-4597**	4	SEAL-LIP TYPE	
	3	1	**3B-8489**	1	FITTING-GREASE	

Y-SEPARATE ILLUSTRATION

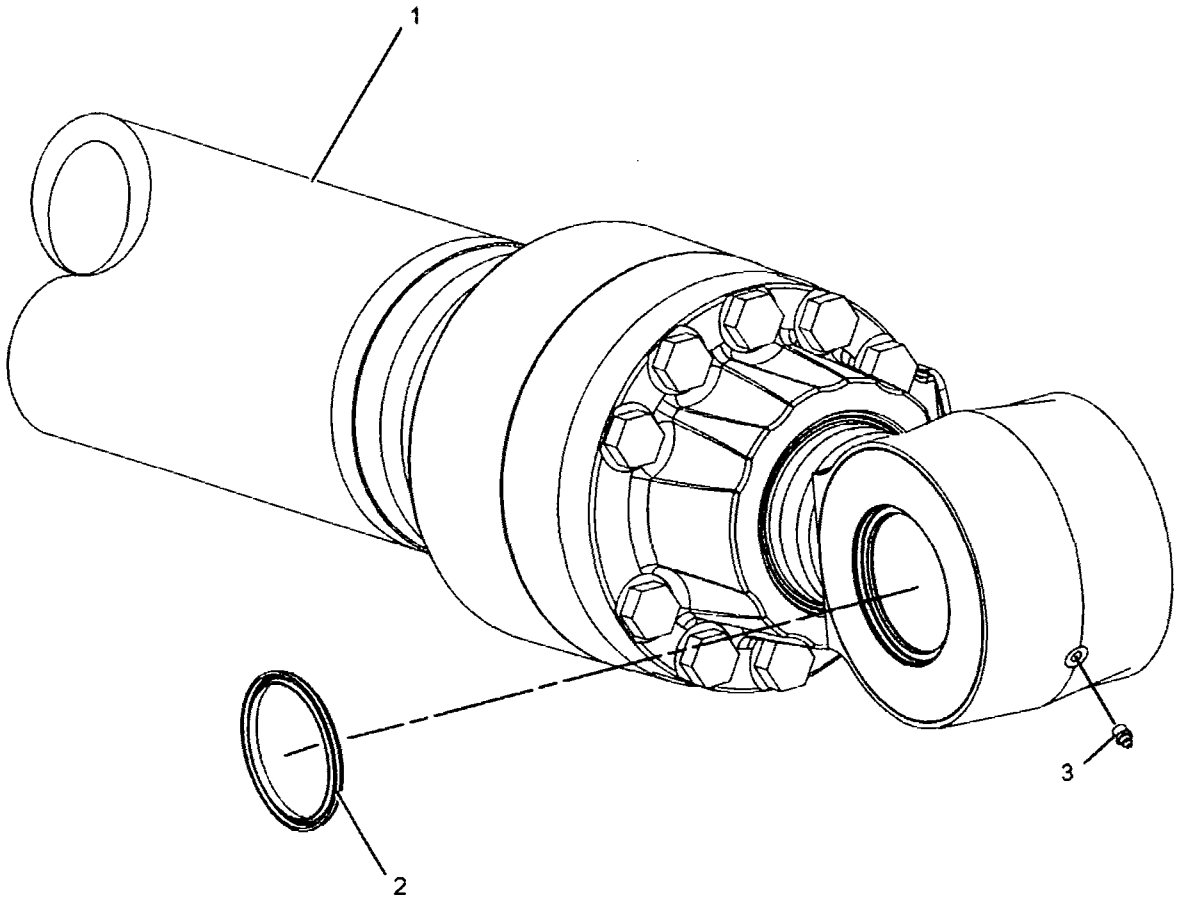

GRAPHIC #1 **<END>** g01095762

HYDRAULIC SYSTEM

225-4523 CYLINDER GP-BOOM

S/N: YEE1-UP
160-MM (6.3-IN) BORE X 1575-MM (62-IN) STROKE
PART OF 225-4522 CYLINDER & SEAL GP-BOOM
AN ATTACHMENT

SMCS-5456 **i02970048**

NOTE	REF NO	GRAPHIC REF	PART NUMBER	QTY	PART NAME 1 2 3 4 5 6 (PRODUCT LEVEL)	SEE PAGE
J	1	1	9X-3604	1	SEAL AS	
M	2	1	123-2112	1	LOCKNUT-SPECIAL (M90X2-THD)	
	3	1	126-2084	1	STOP	
J	4	1	191-3128	1	RING-SEAL	
R	5	1	225-4617	1	CYLINDER AS	
	5A	1	228-5620	1	BEARING-SLEEVE	
R	6	1	234-4463	1	ROD AS	
	6A	1	235-7527	1	BEARING-SLEEVE	
J	7	1	7Y-4941	1	RING-BACKUP	
	8	1	7Y-4944	1	RING-RETAINING	
	9	1	087-5551	1	HEAD	
J	10	1	128-9266	1	SEAL-BUFFER	
J	11	1	165-9291	1	SEAL-LIP TYPE	
J	12	1	185-0230	2	RING	
J	13	1	185-0231	1	RING	
	14	1	185-0232	1	PISTON	
J	15	1	087-5550	1	RING-BACKUP	
J	16	1	095-1635	1	SEAL-O-RING	
	17	1	114-0762	1	BEARING-SLEEVE	
J	18	1	170-9865	1	SEAL-U-CUP	
M	19	1	7Y-5239	8	BOLT-SOCKET HEAD (M24X3X100-MM)	
	20	1	8T-8378	1	SEAL-HEAD	
					AVAILABLE REPAIR KIT(S):	
J			225-4625	1	KIT-SEAL (BOOM CYLINDER)	

J-KIT MARKED J SERVICES PARTS MARKED J
M-METRIC PART
R-REMFG PART MAY BE AVAILABLE

225-4523 CYLINDER GP-BOOM *(contd.)* i02970048

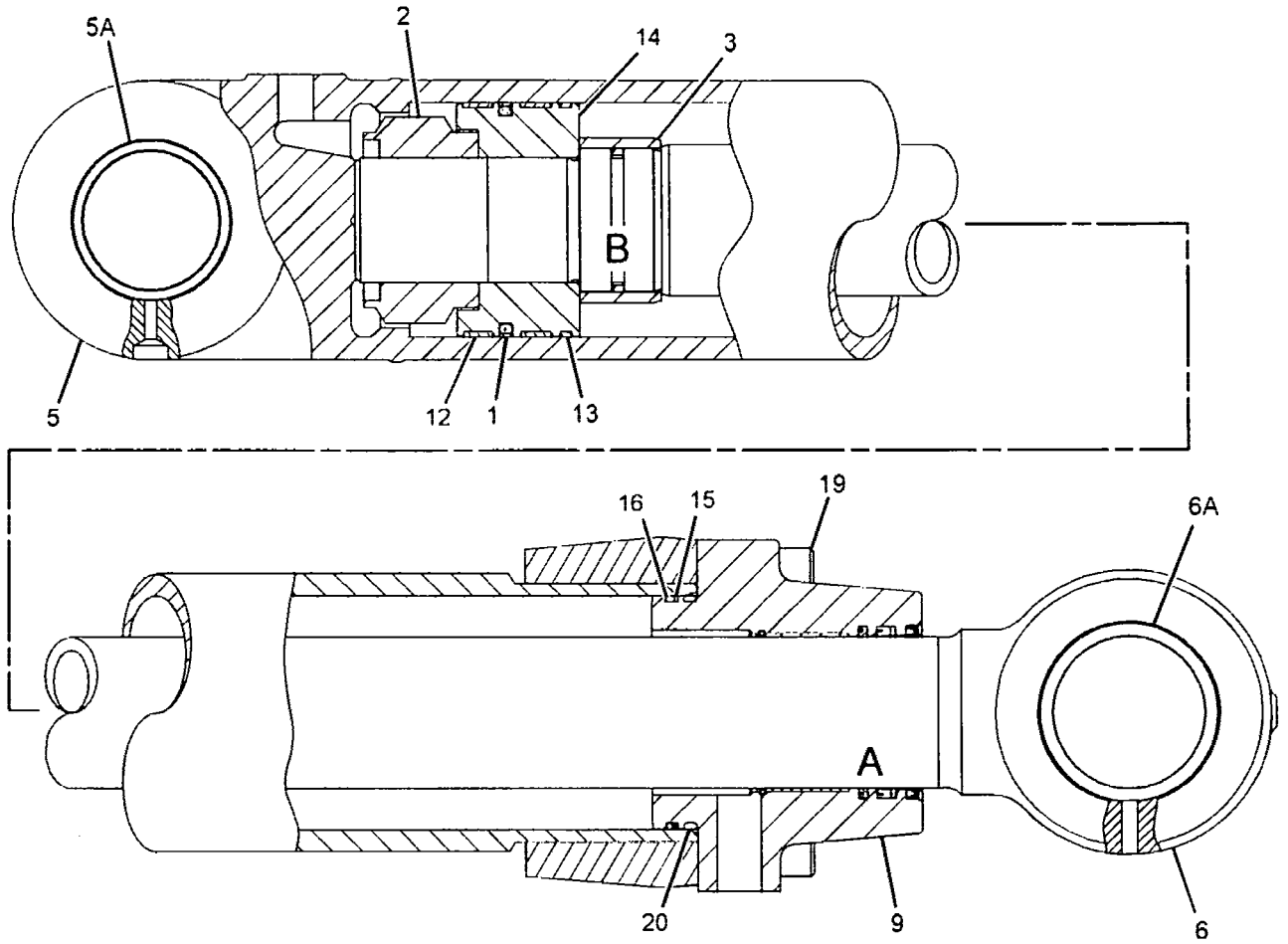

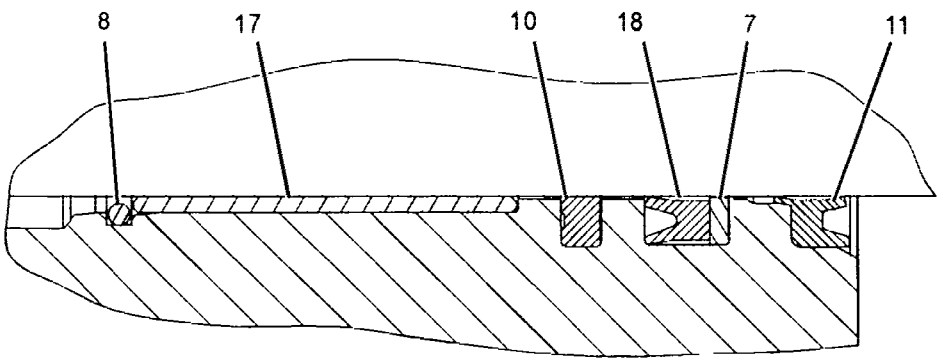

VIEW OF AREA A

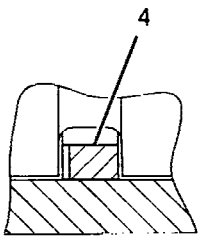

VIEW OF AREA B

GRAPHIC #1 **<END>** g01375970

HYDRAULIC SYSTEM

225-4529 CYLINDER GP-BUCKET

S/N: YEE1-UP
160-MM (6.30-IN) BORE X 1356-MM (53.39-IN) STROKE
PART OF 225-4528 CYLINDER & SEAL GP-BUCKET
AN ATTACHMENT

SMCS-5457 **i02970049**

NOTE	REF NO	GRAPHIC REF	PART NUMBER	QTY	PART NAME 1 2 3 4 5 6 (PRODUCT LEVEL)	SEE PAGE
J	1	1	9X-3604	1	SEAL AS	
R	2	1	118-3936	1	CYLINDER AS	
	2A	1	087-5533	1	BEARING-SLEEVE	
	3	1	7Y-4944	1	RING-RETAINING	
	4	1	087-5551	1	HEAD	
CR	5	1	247-8904	1	ROD AS	
	5A	1	087-5548	1	BEARING-SLEEVE	
M	6	1	123-2112	1	LOCKNUT-SPECIAL (M90X2-THD)	
J	7	1	128-9266	1	SEAL-BUFFER	
J	8	1	165-9291	1	SEAL-LIP TYPE	
J	9	1	185-0230	2	RING	
J	10	1	185-0231	1	RING	
	11	1	185-0232	1	PISTON	
J	12	1	087-5550	1	RING-BACKUP	
J	13	1	095-1635	1	SEAL-O-RING	
	14	1	114-0762	1	BEARING-SLEEVE	
J	15	1	170-9865	1	SEAL-U-CUP	
J	16	1	7Y-4941	1	RING-BACKUP	
M	17	1	7Y-5239	8	BOLT-SOCKET HEAD (M24X3X100-MM)	
					AVAILABLE REPAIR KIT(S):	
J			225-4625	1	KIT-SEAL (BUCKET CYLINDER)	

C-CHANGE FROM PREVIOUS TYPE
J-KIT MARKED J SERVICES PART(S) MARKED J
M-METRIC PART
R-REMFG PART MAY BE AVAILABLE

225-4529 CYLINDER GP-BUCKET *(contd.)* i02970049

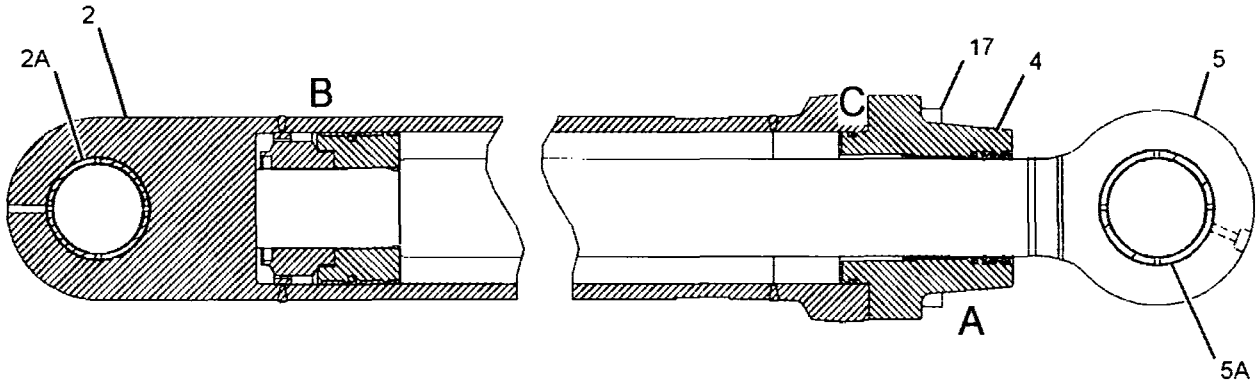

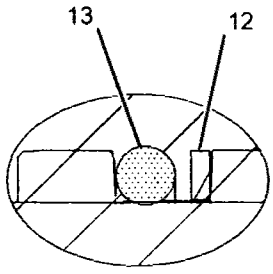

VIEW OF AREA C

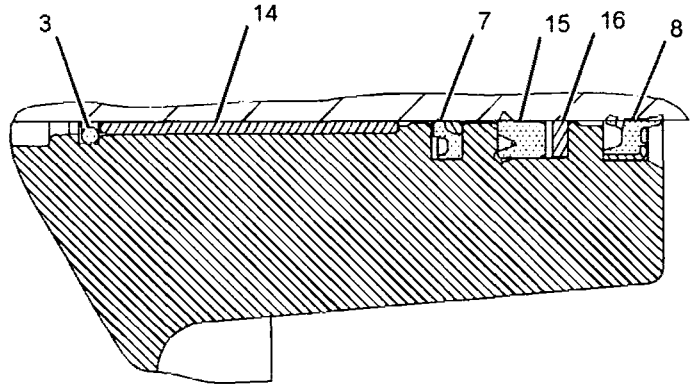

VIEW OF AREA A

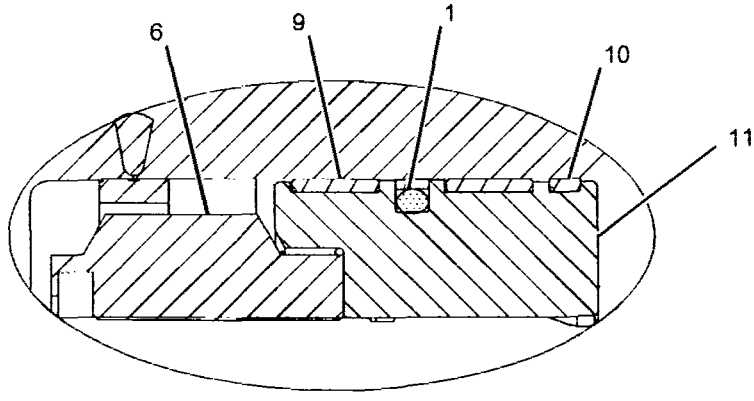

VIEW OF AREA B

GRAPHIC #1

<END>

g01094228

HYDRAULIC SYSTEM

225-4532 CYLINDER GP-BUCKET

S/N: YEE1-UP
170-MM (6.69-IN) BORE X 1396-MM (54.96-IN) STROKE
PART OF 225-4531 CYLINDER & SEAL GP-BUCKET
AN ATTACHMENT

SMCS-5457 **i02730928**

NOTE	REF NO	GRAPHIC REF	PART NUMBER	QTY	PART NAME 1 2 3 4 5 6 (PRODUCT LEVEL)	SEE PAGE
	1	1	**7Y-4932**	1	HEAD	
M	2	1	**7Y-4956**	1	LOCKNUT (M90X2-THD)	
J	3	1	**9X-3607**	1	SEAL AS	
R	4	1	**247-8897**	1	ROD AS	
	4A	1	**4I-1520**	1	BEARING-SLEEVE	
	5	1	**234-4516**	1	CYLINDER AS	
	5A	1	**087-5379**	1	BEARING-SLEEVE	
J	6	1	**7Y-4941**	1	RING-BACKUP	
	7	1	**7Y-4944**	1	RING-RETAINING	
J	8	1	**128-9266**	1	SEAL-BUFFER	
J	9	1	**165-9291**	1	SEAL-LIP TYPE	
	10	1	**191-5603**	1	PISTON	
J	11	1	**191-5604**	2	RING	
J	12	1	**191-5605**	1	RING	
J	13	1	**095-1726**	1	SEAL-O-RING	
	14	1	**114-0761**	1	BEARING-SLEEVE	
J	15	1	**170-9865**	1	SEAL-U-CUP	
J	16	1	**7Y-4945**	1	RING-BACKUP	
M	17	1	**7Y-5239**	8	BOLT-SOCKET HEAD (M24X3X100-MM)	
					AVAILABLE REPAIR KIT(S):	
J			**234-4442**		KIT-SEAL (BUCKET CYLINDER)	

J-KIT MARKED J SERVICES PART(S) MARKED J
M-METRIC PART
R-REMFG PART MAY BE AVAILABLE

225-4532 CYLINDER GP-BUCKET *(contd.)* i02730928

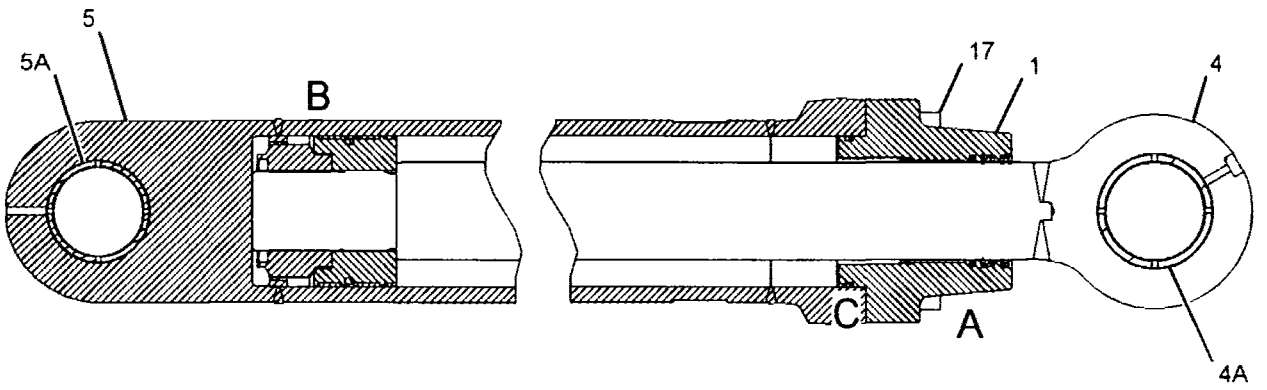

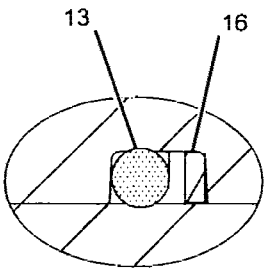

VIEW OF AREA C

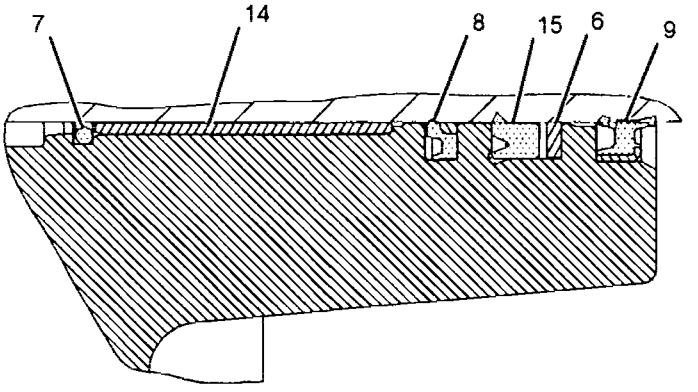

VIEW OF AREA A

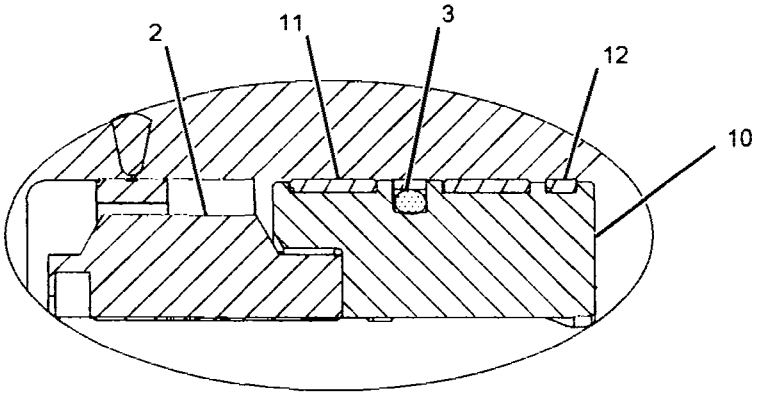

VIEW OF AREA B

GRAPHIC #1 **<END>** g01131580

HYDRAULIC SYSTEM

293-7678 CYLINDER GP-BUCKET

S/N: YEE1-UP
160-MM (6.3-IN) BORE X 1356-MM (53.4-IN) STROKE
PART OF 300-1591 CYLINDER & SEAL GP-BUCKET
AN ATTACHMENT

SMCS-5457 **i02973824**

NOTE	REF NO	GRAPHIC REF	PART NUMBER	QTY	PART NAME 1 2 3 4 5 6 (PRODUCT LEVEL)	SEE PAGE
	1	1	**3E-3377**	1	WEDGE-RECEPTACLE LOCK (4-PIN)	
	2	1	**087-5551**	1	HEAD	
	3	1	**102-2244**	1	GROMMET	
J	4	1	**165-9291**	1	SEAL-LIP TYPE	
	5	1	**212-0907**	1	PLATE-CONNECTOR	
	6	1	**214-1639**	1	MAGNET	
	7	1	**217-8763**	1	COVER-PROTECTION	
	8	1	**243-3177**	1	RETAINER	
	9	1	**293-7688**	1	ROD AS	
	9A	1	**087-5548**	1	BEARING-SLEEVE	
	10	1	**293-7693**	1	PISTON	
	11	1	**294-2963**	1	SENSOR GP-POSITION (LINEAR) (BUCKET CYLINDER)	
		1	**9X-3401**	3	PIN-CONNECTOR (16-GA TO 18-GA)	
	12	1	**302-1762**	1	CYLINDER AS	
	12A	1	**087-5533**	1	BEARING-SLEEVE	
	12B	1	**095-0879**	1	PIN-SPRING	
J	13	1	**185-0230**	2	RING	
J	14	1	**087-5550**	1	RING-BACKUP	
M	15	1	**095-1280**	2	SETSCREW-SOCKET (M16X2X20-MM)	
J	16	1	**095-1635**	1	SEAL-O-RING	
	17	1	**096-3201**	1	RING	
	18	1	**114-0762**	1	BEARING-SLEEVE	
J	19	1	**128-9266**	1	SEAL-BUFFER	
J	20	1	**170-9865**	1	SEAL-U-CUP	
	21	1	**188-2199**	1	SEAL-O-RING	
	22	1	**215-1942**	1	RING-BACKUP	
	23	1	*102-8804*	1	KIT-RECEPTACLE (4-PIN) (INCLUDES RECEPTACLE AS & WEDGE)	
	24	1	**3V-2431**	2	WASHER (10.2X16X2-MM THK)	
M	25	1	**6V-8223**	1	SETSCREW-SOCKET (M10X1.5X16-MM)	
J	26	1	**7Y-4941**	1	RING-BACKUP	
	27	1	**7Y-4944**	1	RING-RETAINING	
M	28	1	**7Y-5239**	8	BOLT-SOCKET HEAD (M24X3X100-MM)	
	29	1	**8T-8737**	1	PLUG-SEAL	
M	30	1	**8T-8894**	2	BOLT-SOCKET HEAD (M10X1.5X20-MM)	
J	31	1	**9X-3604**	1	SEAL AS	
E	32	1	**9X-1386**	18	SLEEVE (18-CM)	
					AVAILABLE REPAIR KIT(S):	
J			**225-4625**	1	KIT-SEAL (BUCKET CYLINDER) (ALSO INCLUDES RING & SEAL RING)	

E-ORDER BY THE CENTIMETER
J-KIT MARKED J SERVICES PART(S) MARKED J
M-METRIC PART

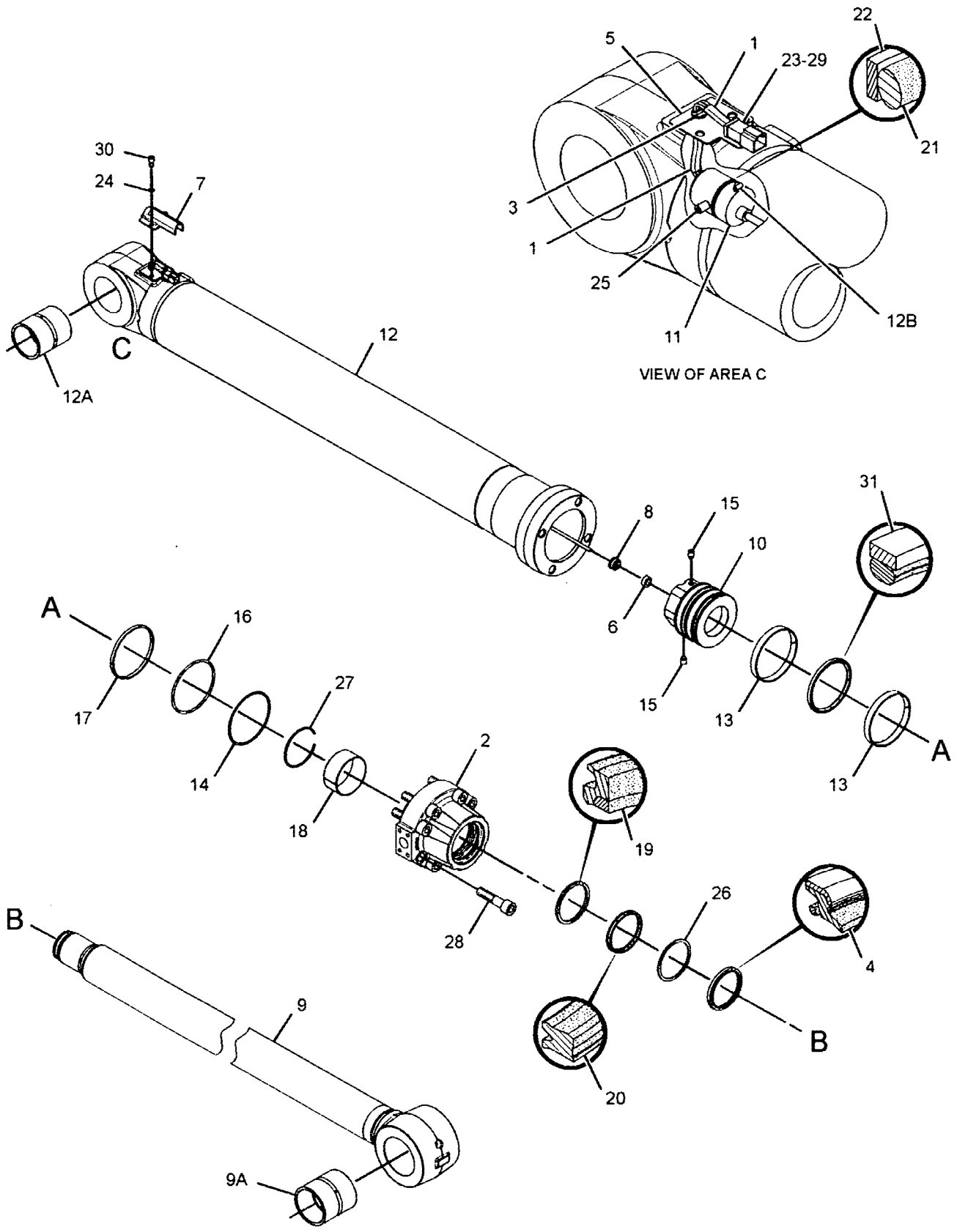

GRAPHIC #1 **<END>** g01475494

236-9769 CYLINDER GP-COUNTERWEIGHT

S/N: YEE1-UP
120.6-MM (4.7-IN) BORE X 845-MM (33.2-IN) STROKE
PART OF 225-4533 CYLINDER & SEAL GP-CTWT
AN ATTACHMENT

SMCS-5409 **i02158559**

NOTE	REF NO	GRAPHIC REF	PART NUMBER	QTY	PART NAME 1 2 3 4 5 6 (PRODUCT LEVEL)	SEE PAGE
	1	1	236-9966	1	CYLINDER AS	
	1A	1	123-3790	1	BEARING-SLEEVE	
	2	1	5J-3488	1	LOCKNUT (2-1/4-12-2B-THD)	
	3	1	4T-8588	1	SEAL AS	
	4	1	8T-8390	1	RING-WEAR	
	5	1	139-3326	1	PISTON	
	6	1	2J-3961	1	RING-BACKUP	
	7	1	175-7903	1	SEAL-O-RING	
	8	1	114-8135	1	HEAD	
		1	225-3284	1	SEAL-WIPER	
	9	1	236-9967	1	ROD AS	
	9A	1	123-3790	1	BEARING-SLEEVE	
	10	1	225-3284	1	SEAL-WIPER	
	11	1	167-2319	1	SEAL-U-CUP	
	12	1	167-2208	1	SEAL AS-BUFFER	
	13	1	8C-9161	1	RING-WEAR	

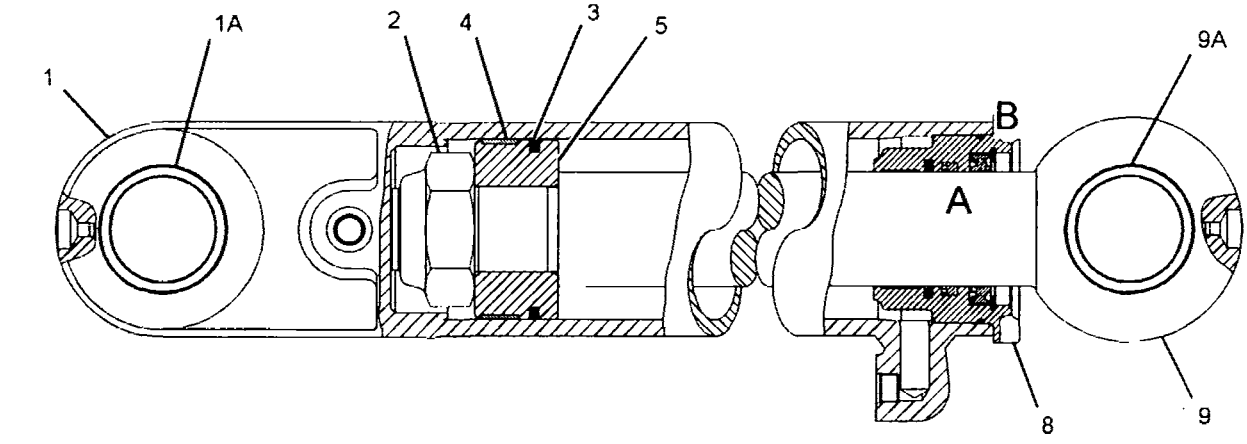

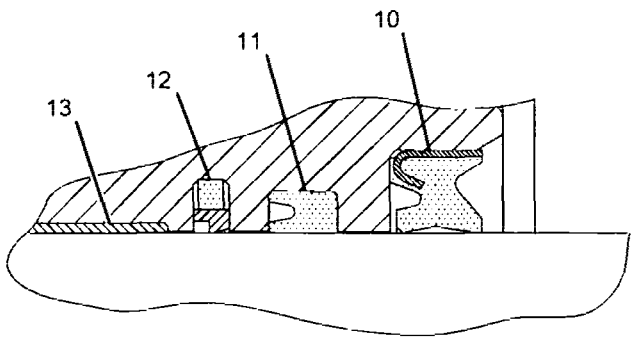

VIEW OF AREA A

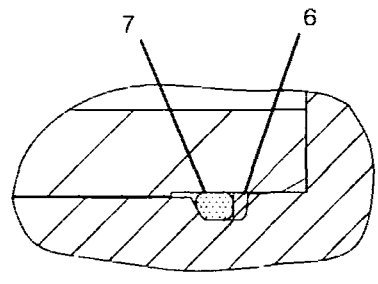

VIEW OF AREA B

GRAPHIC #1 **<END>** g01097792

HYDRAULIC SYSTEM

269-2106 CYLINDER GP-COUPLER

S/N: YEE1-UP
100-MM (3.9-IN) BORE X 130-MM (5.1-IN) STROKE
PART OF 246-8115 COUPLER GP-QUICK
AN ATTACHMENT

SMCS-5133 **i02743612**

NOTE	REF NO	GRAPHIC REF	PART NUMBER	QTY	PART NAME 1 2 3 4 5 6 (PRODUCT LEVEL)	SEE PAGE
	1	1	**172-8406**	1	VALVE GP-CHECK	
	1A	1	**2U-5338**	1	SEAL-O-RING	
	1B	1	**107-7640**	1	SEAL-O-RING	
	1C	1	**9W-3340**	1	SEAL-O-RING	
	2	1	**091-5928**	2	FITTING-GREASE	
					AVAILABLE REPAIR KIT(S):	
			172-8488	1	KIT-SEAL (COUPLER CYLINDER)	

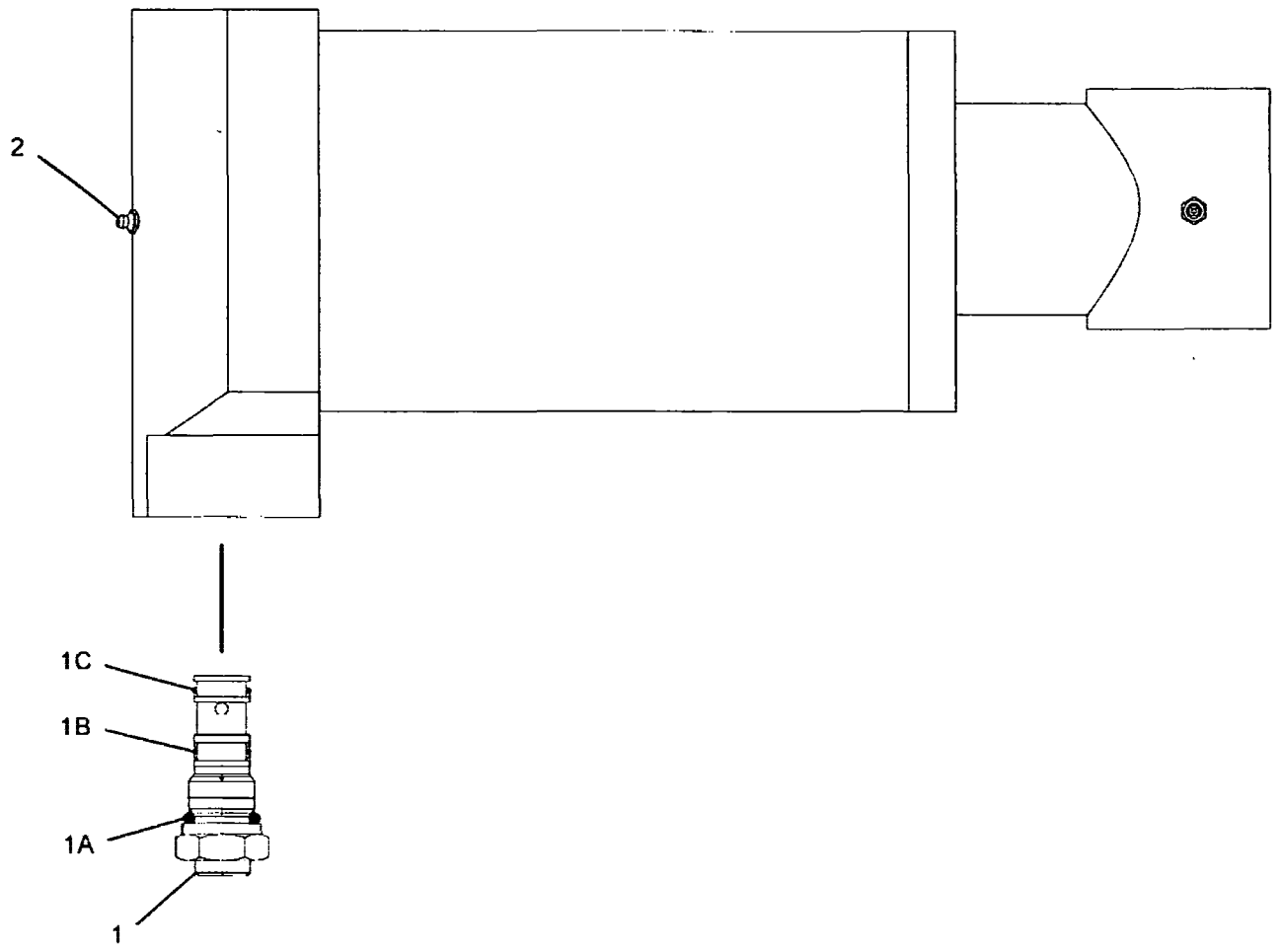

GRAPHIC #1 **<END>** g01389978

HYDRAULIC SYSTEM

225-4526 CYLINDER GP-STICK

S/N: YEE1-UP
190-MM (7.5-IN) BORE X 1758-MM (69.2-IN) STROKE
PART OF 225-4525 CYLINDER & SEAL GP-STICK
AN ATTACHMENT

SMCS-5458 **i02970050**

NOTE	REF NO	GRAPHIC REF	PART NUMBER	QTY	PART NAME 1 2 3 4 5 6 (PRODUCT LEVEL)	SEE PAGE
	1	1	**103-8353**	1	STOP	
J	2	1	**125-1286**	1	SEAL AS	
	3	1	**126-2047**	1	HEAD	
J	4	1	**200-3620**	1	RING-SEAL	
J	5	1	**216-0008**	1	SEAL-U-CUP	
R	6	1	**225-4626**	1	CYLINDER AS	
	6A	1	**126-1956**	1	BEARING-SLEEVE	
	7	1	**225-4633**	1	ROD AS	
	7A	1	**228-5618**	1	BEARING-SLEEVE	
	8	1	**225-4641**	1	RING-RETAINING	
	9	1	**225-4642**	1	RING	
	10	1	**087-5390**	1	STOP	
	11	1	**087-5393**	1	RING-RETAINING	
J	12	1	**087-5397**	1	RING-BACKUP	
	13	1	**114-0763**	1	BEARING-SLEEVE	
M	14	1	**126-1971**	1	LOCKNUT-SPECIAL	
J	15	1	**165-9293**	1	SEAL-LIP TYPE	
J	16	1	**170-9850**	1	SEAL-BUFFER	
	17	1	**204-2844**	1	PISTON	
J	18	1	**204-2845**	2	RING	
J	19	1	**204-2846**	1	RING	
	20	1	**095-0930**	2	RING-RETAINING (EXTERNAL)	
J	21	1	**095-1730**	1	SEAL-O-RING	
J	22	1	**126-1978**	1	RING-BACKUP	
M	23	1	**7X-2489**	10	BOLT (M24X3X100-MM)	
					AVAILABLE REPAIR KIT(S):	
J			**225-4646**	1	KIT-SEAL (STICK CYLINDER)	

J-KIT MARKED J SERVICES PART(S) MARKED J
M-METRIC PART
R-REMFG PART MAY BE AVAILABLE

225-4526 CYLINDER GP-STICK (contd.) i02970050

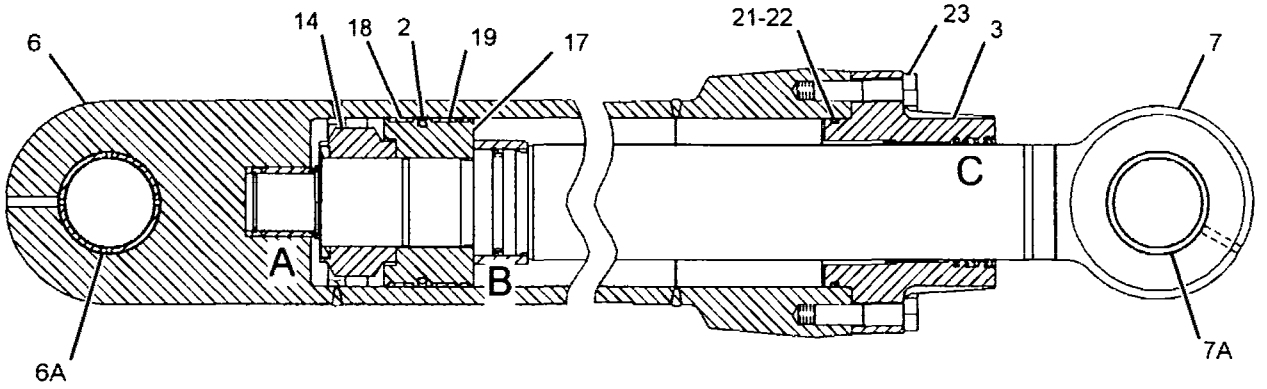

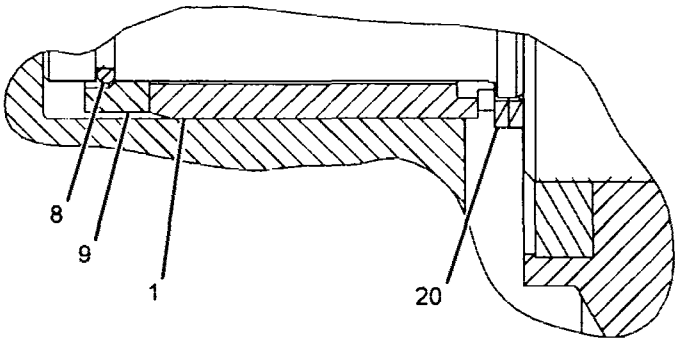

VIEW OF AREA A

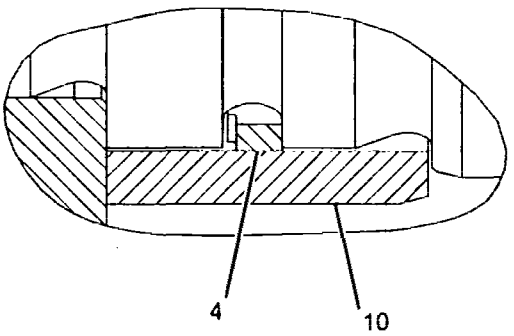

VIEW OF AREA B

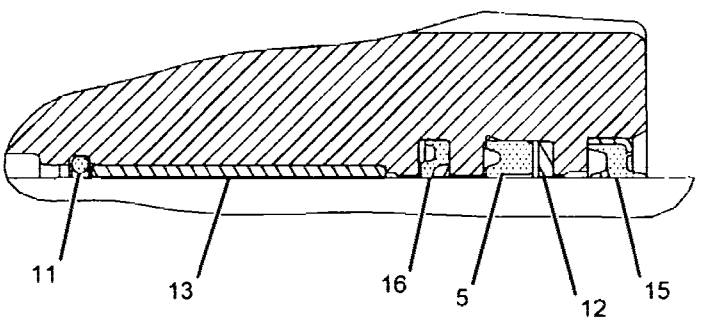

VIEW OF AREA C

GRAPHIC #1 **<END>** g01093964

HYDRAULIC SYSTEM

225-4515 DRIVE GP-AUXILIARY PUMP

S/N: YEE1-UP

PART OF 285-1789, 285-1790 CONTROL AR-AUXILIARY AN ATTACHMENT

SMCS-3108 **i02158838**

NOTE	REF NO	GRAPHIC REF	PART NUMBER	QTY	PART NAME 1 2 3 4 5 6 (PRODUCT LEVEL)	SEE PAGE
Y	1	1	**234-4620**	1	DRIVE GP-AUXILIARY PUMP	476

Y-SEPARATE ILLUSTRATION

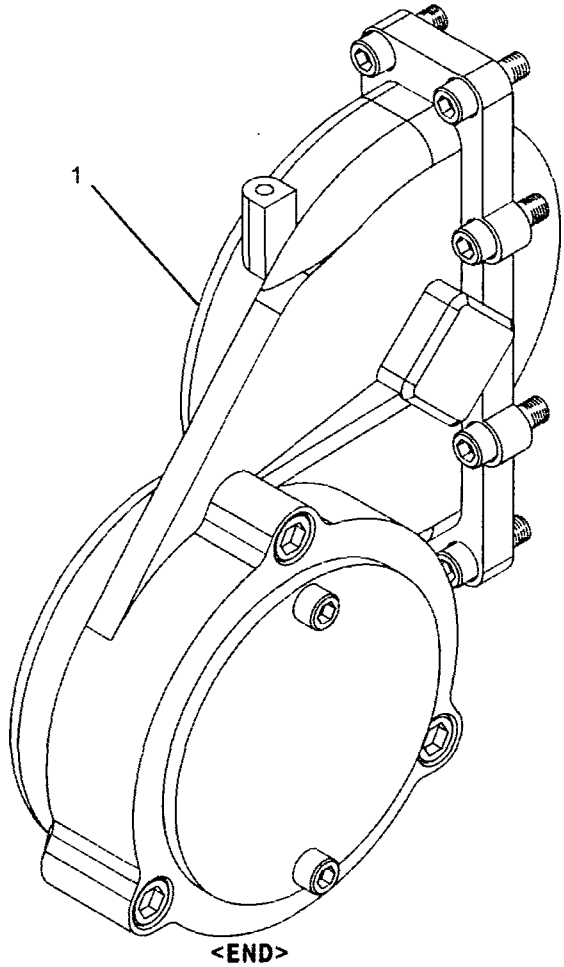

GRAPHIC #1

<END>

g01098392

HYDRAULIC SYSTEM

234-4620 DRIVE GP-AUXILIARY PUMP

S/N: YEE1-UP

PART OF 225-4515 DRIVE GP-AUXILIARY PUMP

AN ATTACHMENT

SMCS-3108 **i02730292**

NOTE	REF NO	GRAPHIC REF	PART NUMBER	QTY	PART NAME 1 2 3 4 5 6 (PRODUCT LEVEL)	SEE PAGE
Y	1	1	**295-9441**	1	DRIVE GP-AUXILIARY PUMP	477
M	2	1	**108-1781**	8	BOLT-SOCKET HEAD (M12X1.75X35-MM)	

M-METRIC PART
Y-SEPARATE ILLUSTRATION

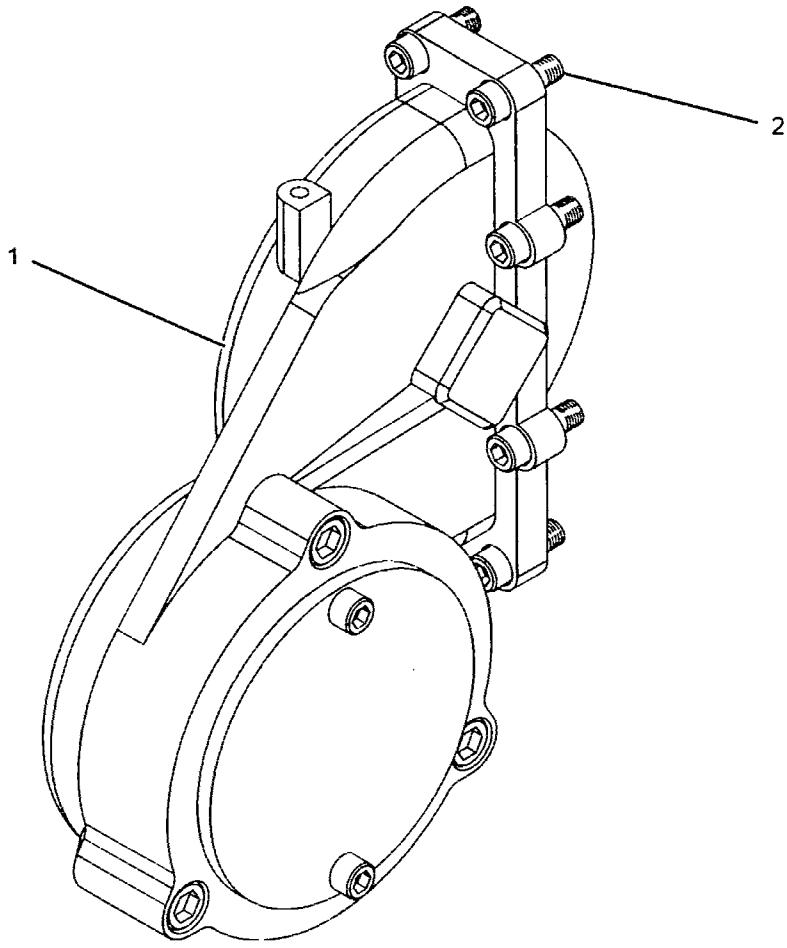

GRAPHIC #1 **<END>** g01369295

295-9441 DRIVE GP-AUXILIARY PUMP

S/N: YEE1-UP

PART OF 234-4620 DRIVE GP-AUXILIARY PUMP

AN ATTACHMENT

SMCS-3108 i02683871

NOTE	REF NO	GRAPHIC REF	PART NUMBER	QTY	PART NAME 1 2 3 4 5 6 (PRODUCT LEVEL)	SEE PAGE
	1	1	5I-8754	3	SPACER-BEARING	
	2	1	170-9964	1	BEARING	
	3	1	2W-1145	1	RING-RETAINING	
	4	1	206-9298	1	SEAL-O-RING	
	5	1	8T-9597	1	RING-RETAINING	
	6	1	236-6919	1	SEAL-O-RING	
	7	1	8H-5352	2	BALL BEARING	
M	8	1	8T-9080	2	BOLT-SOCKET HEAD (M12X1.75X20-MM)	
	9	1	249-6670	1	SEAL-O-RING	
	10	1	225-4517	1	PLATE	
M	11	1	8T-4944	3	BOLT-SOCKET HEAD (M16X2X40-MM)	

M-METRIC PART

295-9441 DRIVE GP-AUXILIARY PUMP *(contd.)* i02683871

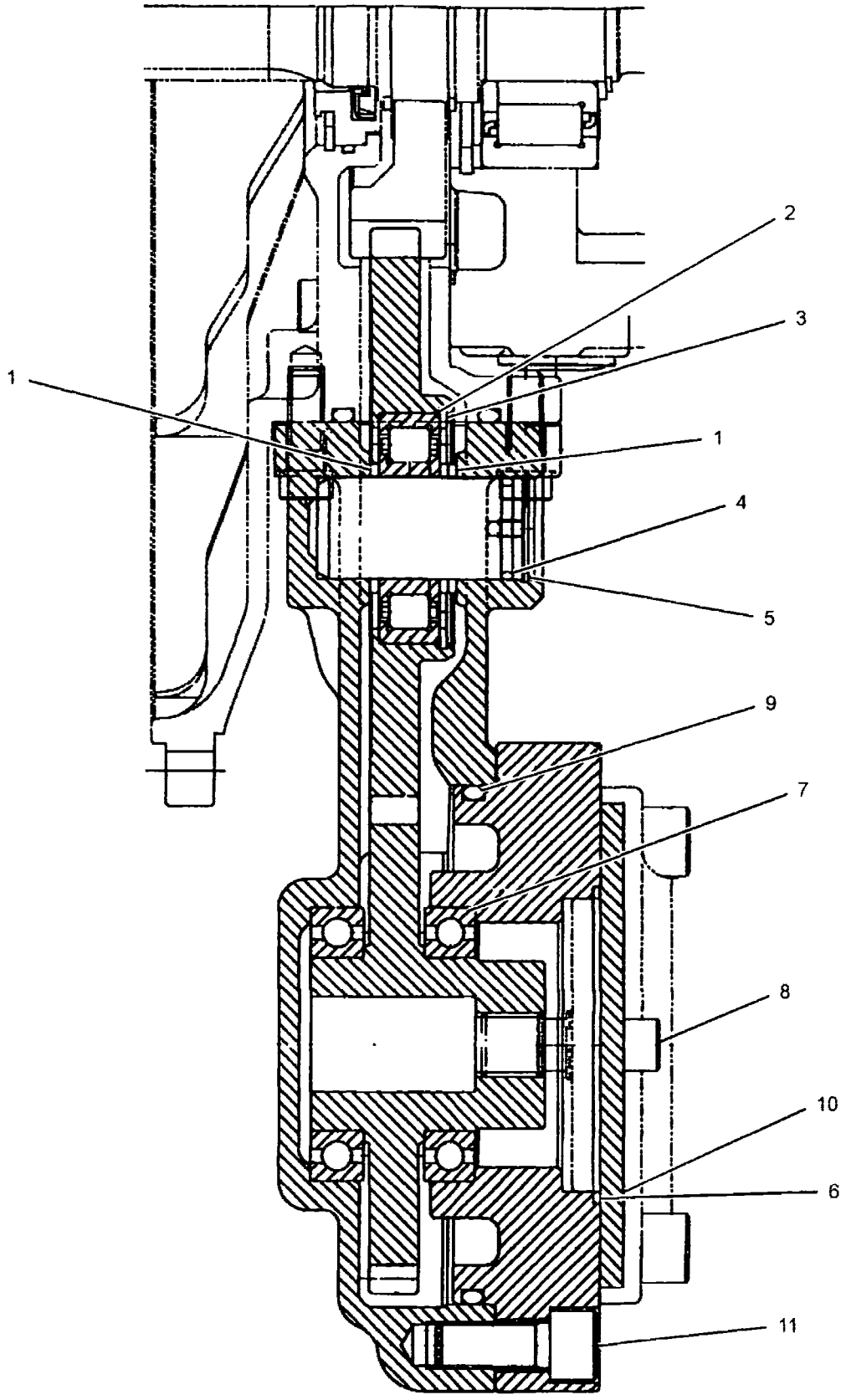

GRAPHIC #1

<END>

g01348494

HYDRAULIC SYSTEM

296-6249 DRIVE GP-SWING–WITH MOTOR, RH

S/N: YEE1-UP

PART OF 227-6042 POWER TRAIN AR

SMCS-5459 **i02877398**

NOTE	REF NO	GRAPHIC REF	PART NUMBER	QTY	PART NAME 1 2 3 4 5 6 (PRODUCT LEVEL)	SEE PAGE
Y	1	1	*225-4505*	1	MOTOR & MTG GP-SWING	693
Y	2	1	*296-6250*	1	DRIVE GP-SWING	480

Y-SEPARATE ILLUSTRATION

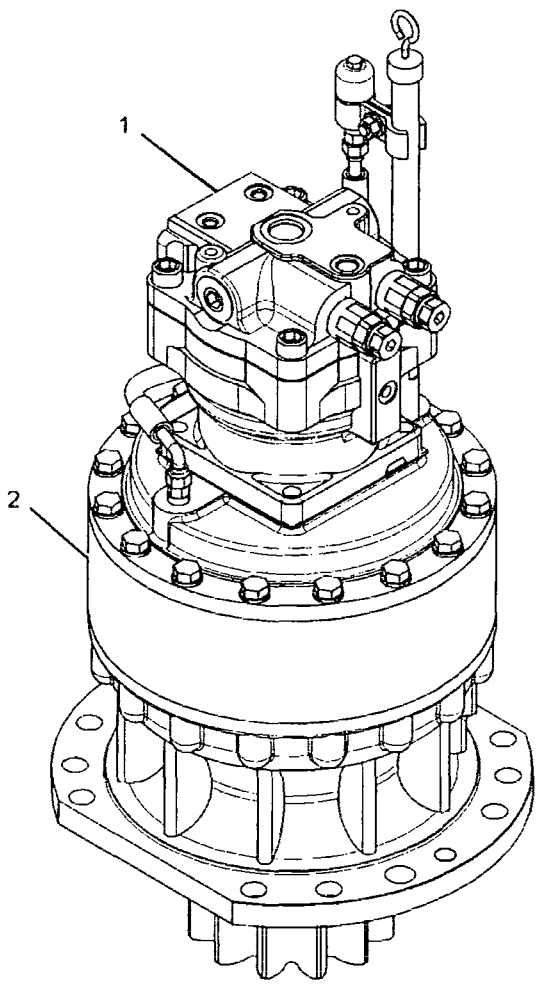

GRAPHIC #1

<END>

g01434213

HYDRAULIC SYSTEM

296-6250 DRIVE GP-SWING—WITHOUT MOTOR, RH

S/N: YEE1-UP

PART OF 296-6249 DRIVE GP-SWING

SMCS-5459 **i02877442**

NOTE	REF NO	GRAPHIC REF	PART NUMBER	QTY	PART NAME 1 2 3 4 5 6 (PRODUCT LEVEL)	SEE PAGE
	1	1	4H-6112	1	BREATHER AS (SWING DRIVE)	
	2	2	4I-7464	4	GEAR-PLANETARY (25-TEETH)	
	3	2	4I-7466	4	GEAR-PLANETARY (23-TEETH)	
	4	1	4I-7467	1	GEAR-RING (72-TEETH)	
	5	1	6V-7238	1	VALVE-SHUTOFF	
	6	2	7I-7728	1	CARRIER-PLANETARY	
	7	2	7Y-0597	1	SPACER-SPECIAL	
	8	2	7Y-1238	1	CARRIER	
	9	2	093-1730	2	RING-RETAINING	
	10	2	094-1509	4	SHAFT-PLANETARY	
M	11	2	094-1528	8	WASHER (53X84X1-MM THK)	
	12	2	095-1806	1	BEARING-ROLLER	
	13	2	096-2653	1	RING-RETAINING	
	14	2	4D-7956	1	RACE-ROLLER BEARING	
	15	2	110-7216	1	GEAR-SUN (24-TEETH)	
	16	2	114-1383	4	SHAFT-PLANETARY	
	17	1	114-1398	1	GAUGE-OIL LEVEL (SWING DRIVE)	
	18	1	114-1399	1	PIPE-GAUGE	
	19	1	114-1401	1	COVER-HOUSING	
	20	1	114-1403	1	CAGE	
	21	1	136-2802	2	CONNECTOR	
	22	1	136-2803	2	CLIP	
	23	1	169-5534	1	HOUSING	
	24	2	169-5535	1	GEAR-SUN (20-TEETH)	
	25	1	227-6108	1	SHAFT-PINION	
	26	1	227-6215	1	BOSS	
I	27	1	296-6251	1	HOSE AS	
	28	2	093-1731	1	RING-RETAINING	
	29	2	094-0584	8	WASHER (40.3X72X1-MM THK)	
	30	2	199-4582	4	BEARING AS	
	31	2	095-0886	4	PIN-SPRING	
	32	2	095-0891	4	PIN-SPRING	
	33	2	135-9044	2	SEAL-LIP TYPE	
	34	1	3K-0360	1	SEAL-O-RING	
	35	2	5P-2235	1	SEAL-O-RING	
	36	2	191-2513	8	BEARING AS-ROLLER	
	37	2	7Y-0595	1	SPACER (58X79.6X6-MM THK)	
	38	2	7Y-1434	1	SPACER (40X69.5X6-MM THK)	
M	39	1	8T-4183	8	BOLT (M12X1.75X40-MM)	
	40	1	8T-4223	10	WASHER-HARD (13.5X25.5X3-MM THK)	
M	41	1	8T-4244	1	NUT (M12X1.75-THD)	
M	42	1	8T-4956	1	BOLT (M12X1.75X35-MM)	
M	43	1	8T-6385	16	BOLT (M16X2X180-MM)	
	44	1	9X-8257	16	WASHER (17.5X30X3.5-MM THK)	
B	45	2	1U-8846		SEALANT-GASKET	

B-USE AS REQUIRED
I-REFER TO HYDRAULIC INFORMATION SYSTEM
M-METRIC PART

296-6250 DRIVE GP-SWING *(contd.)* i02877442

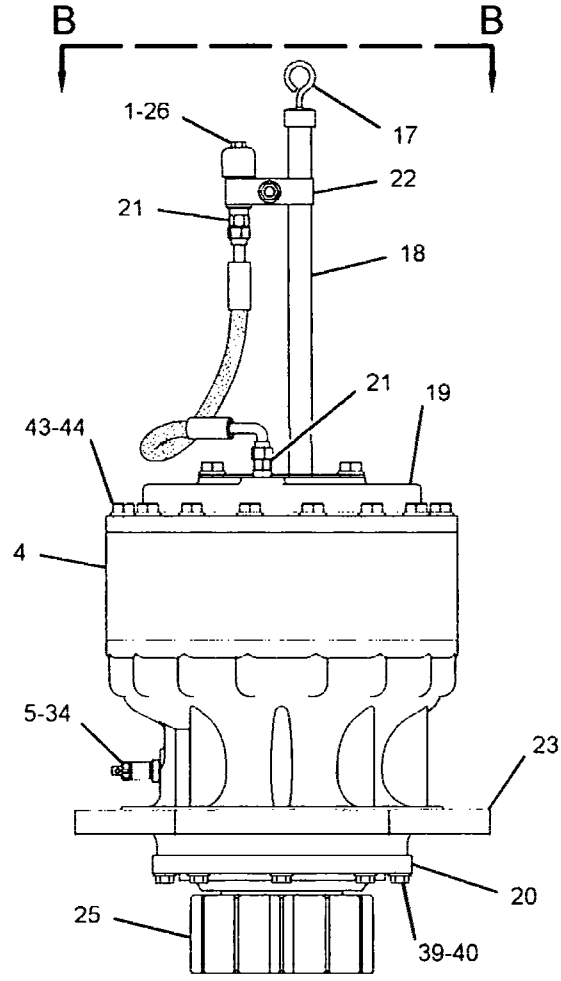

GRAPHIC #1

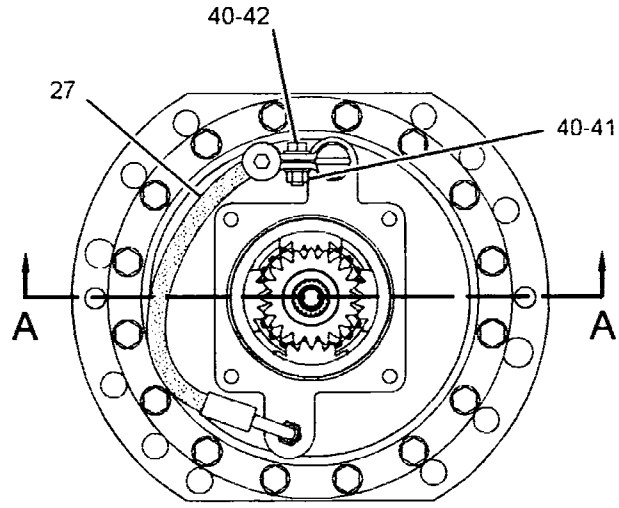

VIEW B-B

REFER TO ALL ILLUSTRATIONS OF THIS GROUP FOR AUXILIARY VIEWS

g01446675

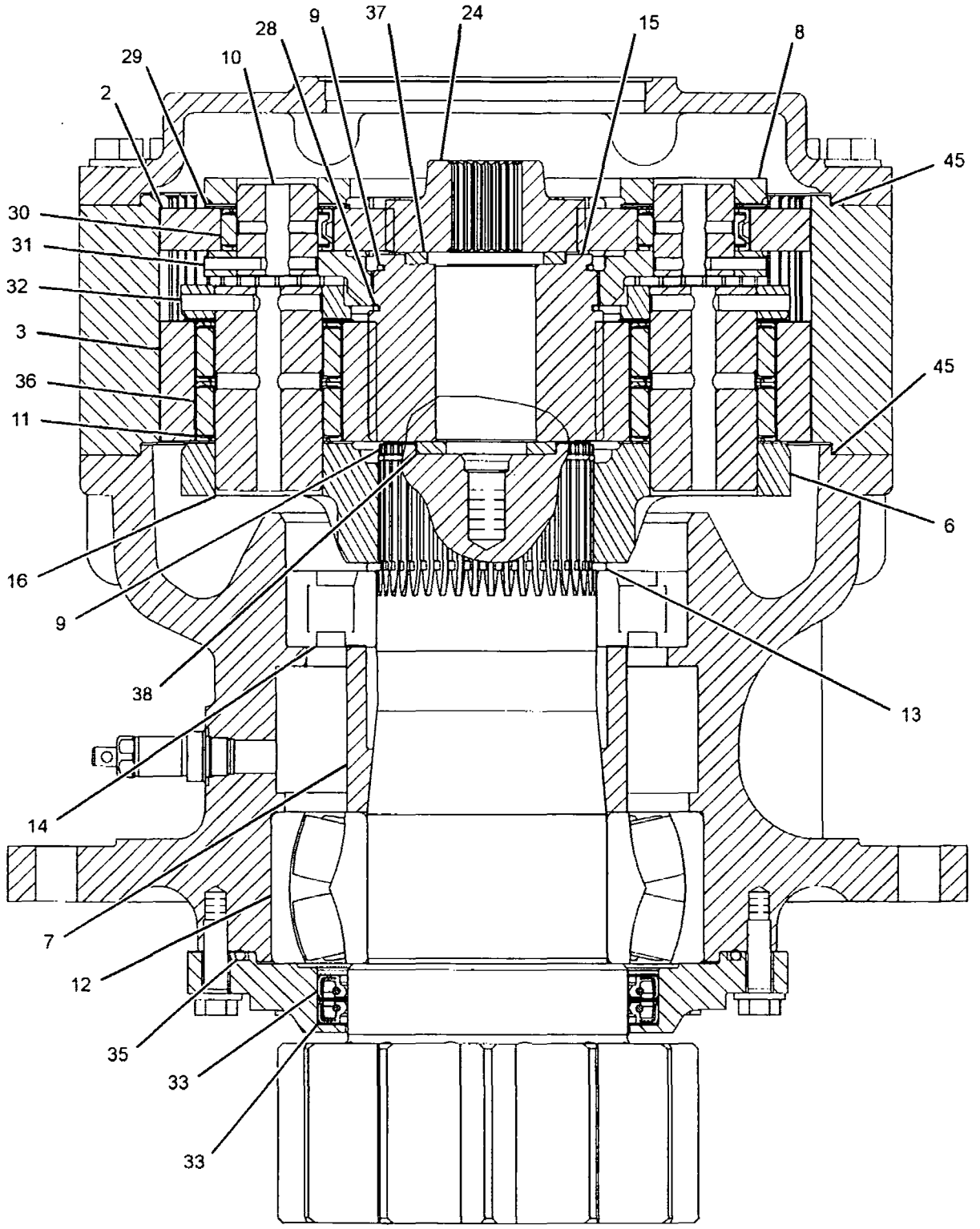

SECTION A-A

GRAPHIC #2 **<END>** g01446825

296-6252 DRIVE GP-SWING–WITH MOTOR, LH

S/N: YEE1-UP

PART OF 227-6042 POWER TRAIN AR

SMCS-5459 i02877459

NOTE	REF NO	GRAPHIC REF	PART NUMBER	QTY	PART NAME 1 2 3 4 5 6 (PRODUCT LEVEL)	SEE PAGE
Y	1	1	225-4505	1	MOTOR & MTG GP-SWING	693
Y	2	1	296-6253	1	DRIVE GP-SWING (WITHOUT MOTOR, LH)	484

Y-SEPARATE ILLUSTRATION

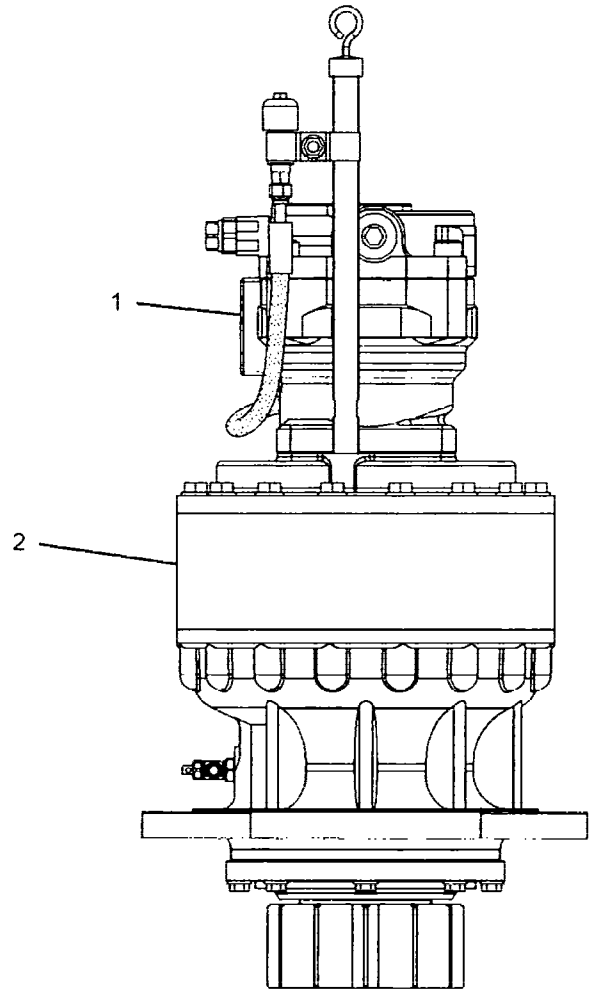

GRAPHIC #1

<END>

g01446707

HYDRAULIC SYSTEM

296-6253 DRIVE GP-SWING—WITHOUT MOTOR, LH

S/N: YEE1-UP

PART OF 296-6252 DRIVE GP-SWING

SMCS-5459 **102877486**

NOTE	REF NO	GRAPHIC REF	PART NUMBER	QTY	PART NAME 1 2 3 4 5 6 (PRODUCT LEVEL)	SEE PAGE
	1	1	4H-6112	1	BREATHER AS (SWING DRIVE)	
	2	2	4I-7464	4	GEAR-PLANETARY (25-TEETH)	
	3	2	4I-7466	4	GEAR-PLANETARY (23-TEETH)	
	4	1	4I-7467	1	GEAR-RING (72-TEETH)	
	5	1	6V-7238	1	VALVE-SHUTOFF	
	6	2	7I-7728	1	CARRIER-PLANETARY	
	7	2	7Y-0597	1	SPACER-SPECIAL	
	8	2	7Y-1238	1	CARRIER	
	9	2	093-1730	2	RING-RETAINING	
	10	2	094-1509	4	SHAFT-PLANETARY	
M	11	2	094-1528	8	WASHER (53X84X1-MM THK)	
	12	2	095-1806	1	BEARING-ROLLER	
	13	2	096-2653	1	RING-RETAINING	
	14	2	4D-7956	1	RACE-ROLLER BEARING	
	15	2	110-7216	1	GEAR-SUN (24-TEETH)	
	16	2	114-1383	4	SHAFT-PLANETARY	
	17	1	114-1398	1	GAUGE-OIL LEVEL (SWING DRIVE)	
	18	1	114-1399	1	PIPE-GAUGE	
	19	1	114-1401	1	COVER-HOUSING	
	20	1	114-1403	1	CAGE	
	21	1	136-2802	2	CONNECTOR	
	22	1	136-2803	2	CLIP	
	23	1	169-5534	1	HOUSING	
	24	2	169-5535	1	GEAR-SUN (20-TEETH)	
	25	1	227-6108	1	SHAFT-PINION	
	26	1	227-6215	1	BOSS	
I	27	1	296-6251	1	HOSE AS	
	28	2	093-1731	1	RING-RETAINING	
	29	2	094-0584	8	WASHER (40.3X72X1-MM THK)	
	30	2	199-4582	4	BEARING AS	
	31	2	095-0886	4	PIN-SPRING	
	32	2	095-0891	4	PIN-SPRING	
	33	2	135-9044	2	SEAL-LIP TYPE	
	34	1	3K-0360	1	SEAL-O-RING	
	35	2	5P-2235	1	SEAL-O-RING	
	36	2	191-2513	8	BEARING AS-ROLLER	
	37	2	7Y-0595	1	SPACER (58X79.6X6-MM THK)	
	38	2	7Y-1434	1	SPACER (40X69.5X6-MM THK)	
M	39	1	8T-4183	8	BOLT (M12X1.75X40-MM)	
	40	1	8T-4223	10	WASHER-HARD (13.5X25.5X3-MM THK)	
M	41	1	8T-4244	1	NUT (M12X1.75-THD)	
M	42	1	8T-4956	1	BOLT (M12X1.75X35-MM)	
M	43	1	8T-6385	16	BOLT (M16X2X180-MM)	
	44	1	9X-8257	16	WASHER (17.5X30X3.5-MM THK)	
B	45	2	1U-8846		SEALANT-GASKET	

B-USE AS REQUIRED
I-REFER TO HYDRAULIC INFORMATION SYSTEM
M-METRIC PART

296-6253 DRIVE GP-SWING *(contd.)* i02877486

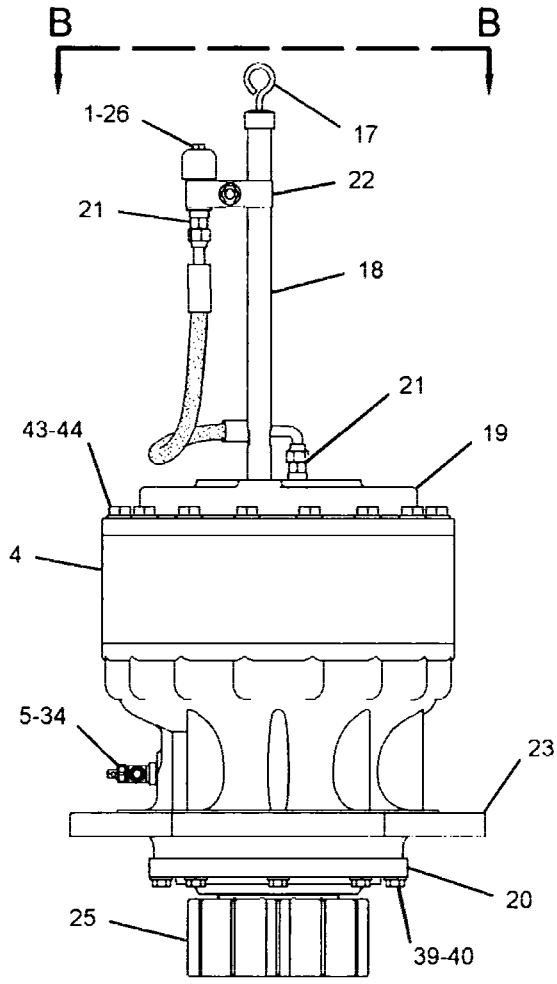

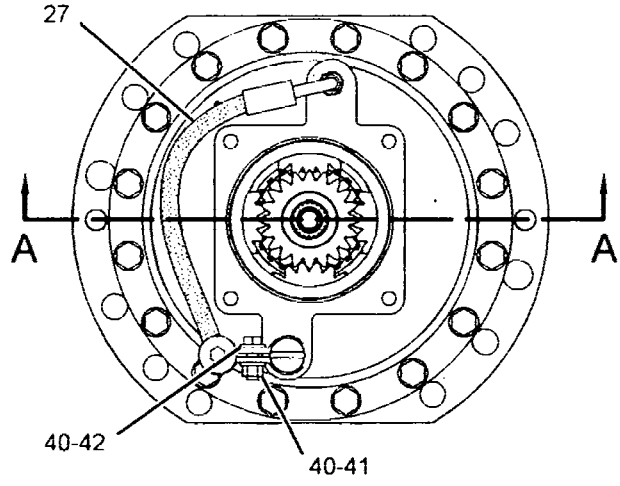

VIEW B-B

REFER TO ALL ILLUSTRATIONS OF THIS GROUP FOR AUXILIARY VIEWS

GRAPHIC #1

g01446769

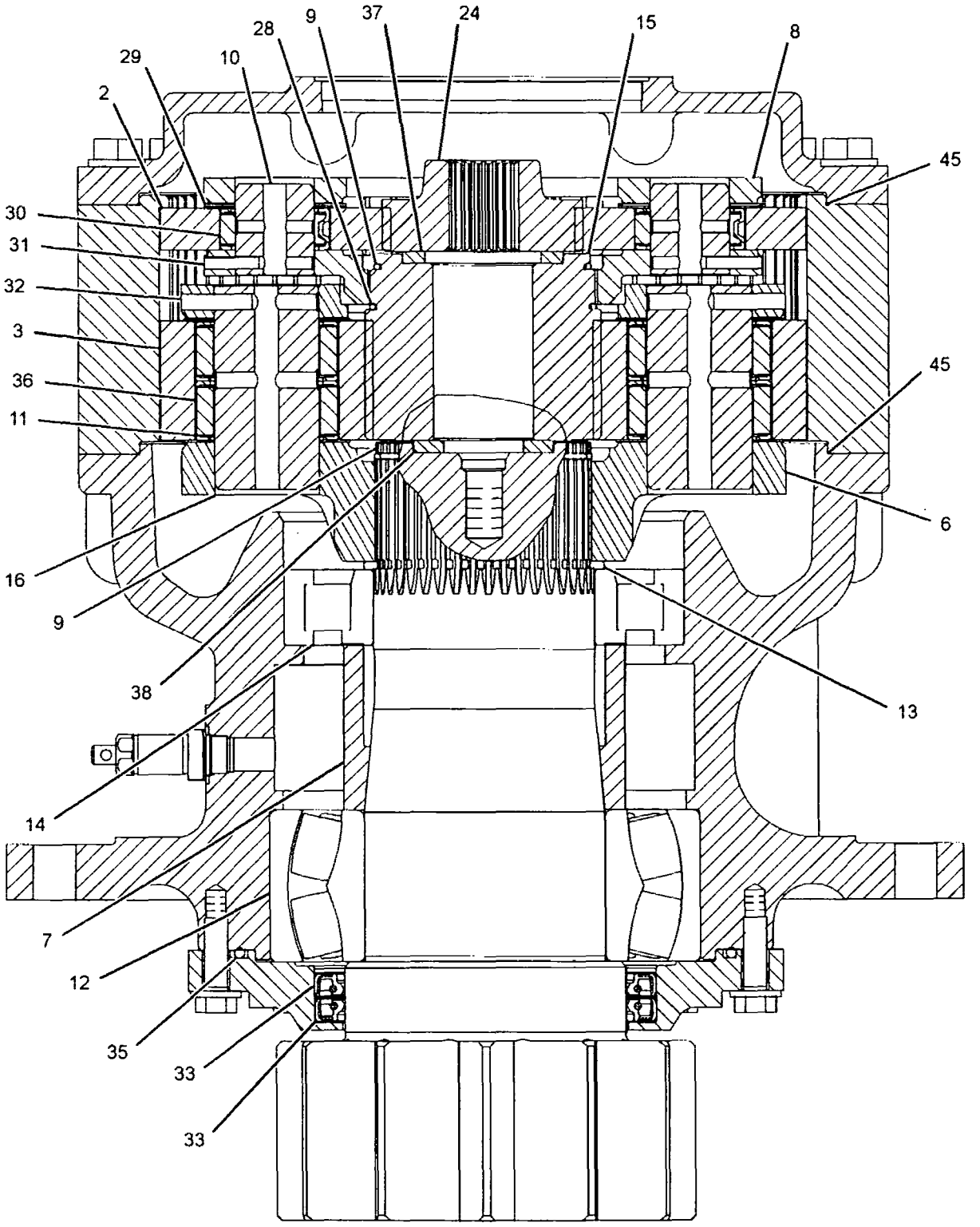

SECTION A-A

GRAPHIC #2 **<END>** g01446770

227-6050 FASTENER GP-SWING & FINAL DR

S/N: YEE1-UP

PART OF 227-6042 POWER TRAIN AR

SMCS-4050, 5459 **i02161207**

NOTE	REF NO	GRAPHIC REF	PART NUMBER	QTY	PART NAME 1 2 3 4 5 6 (PRODUCT LEVEL)	SEE PAGE
	1	2	**2B-7561**	4	CORK	
	2	2	**5D-1026**	2	CLAMP-HOSE	
	3	2	**096-4755**	4	PIN	
M	4	2	**7X-2576**	20	BOLT (M24X3X70-MM)	
	5	1,2	**8T-4167**	60	WASHER-HARD (26X44X4-MM THK)	
M	6	1	**8T-5878**	40	BOLT (M24X3X80-MM)	
E	7	2	**5P-0767**		HOSE (130-CM EACH)	
B	8	2	**1U-8846**	1	SEALANT-GASKET	

B-USE AS REQUIRED
E-ORDER BY THE CENTIMETER
M-METRIC PART

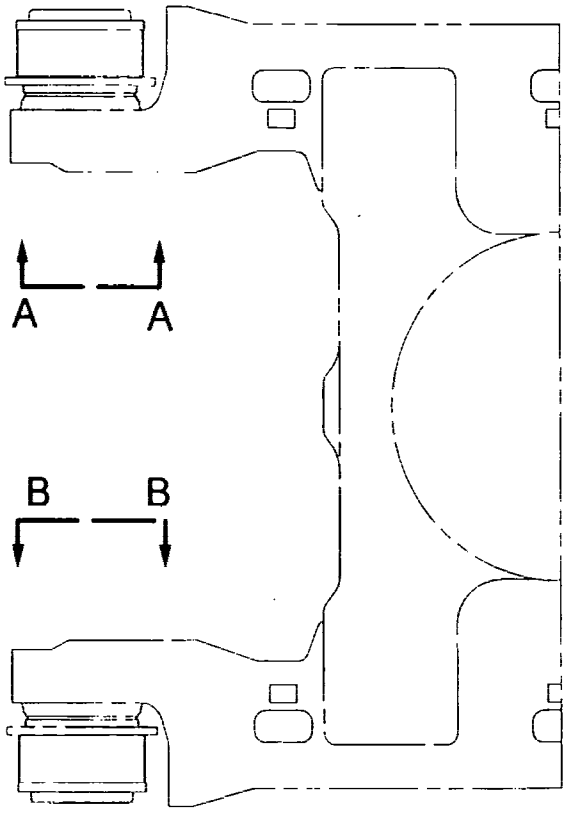

TOP VIEW

FWD

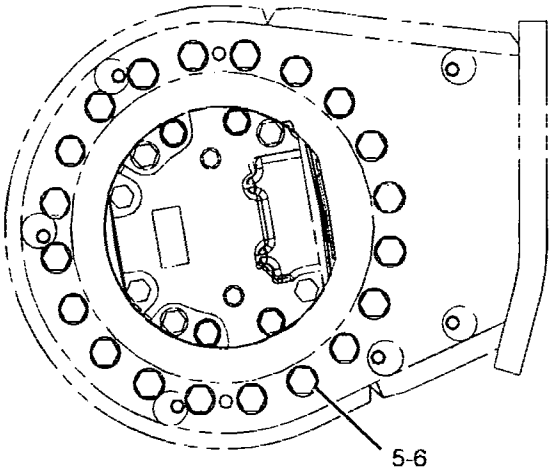

SECTION A-A

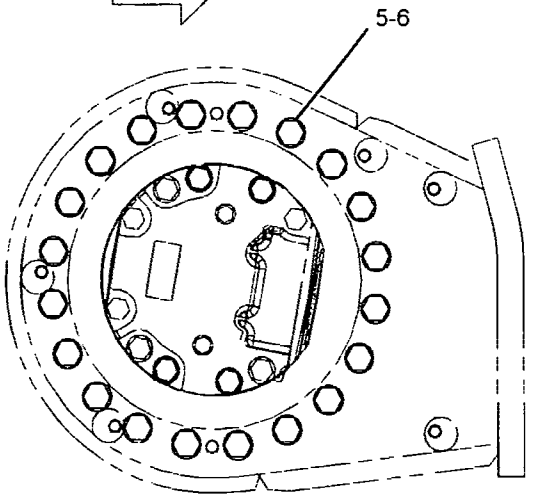

SECTION B-B

GRAPHIC #1

g01098496

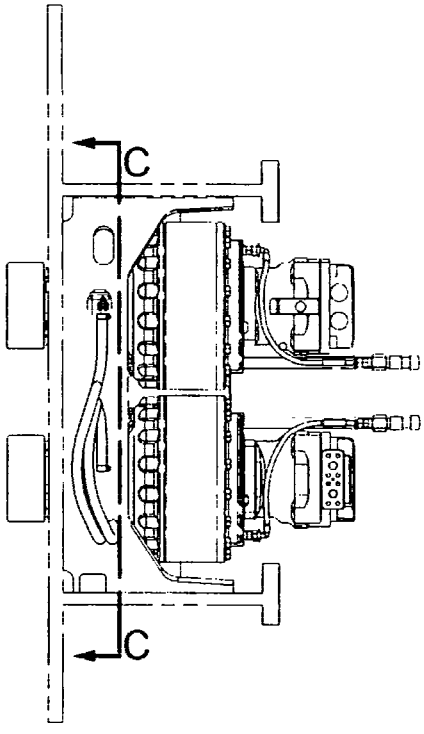

REAR VIEW

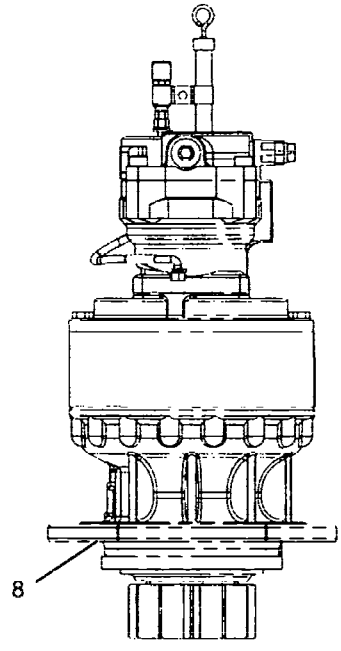

SECTION D-D

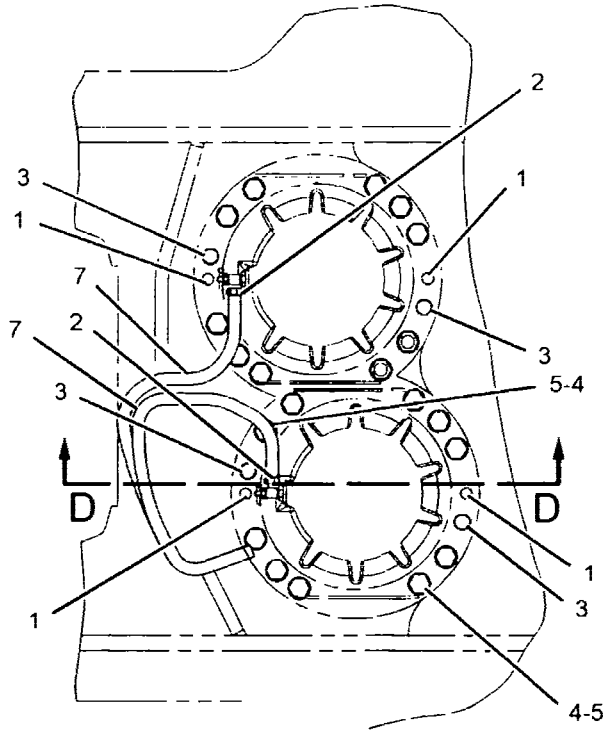

SECTION C-C

GRAPHIC #2

<END>

g01098510

HYDRAULIC SYSTEM

158-8987 FILTER & VALVE GP-PILOT–HYDRAULIC OIL

S/N: YEE1-UP

PART OF 227-0431 TANK & FILTER GP-HYDRAULIC

SMCS-5072, 5092 **i02699305**

NOTE	PART NUMBER	QTY	PART NAME 1 2 3 4 5 6 (PRODUCT LEVEL)	SEE PAGE
Y	*188-2084*	1	FILTER & VALVE GP-PILOT (HYDRAULIC OIL)	491
			(REQUIRES FILTER AS WITH 2-12-THD)	
			–OR–	
Y	*289-7836*	1	FILTER & VALVE GP-PILOT (HYDRAULIC OIL)	492
			(REQUIRES FILTER AS WITH M45X2-THD)	

Y-SEPARATE ILLUSTRATION

<END>

188-2084 FILTER & VALVE GP-PILOT–HYDRAULIC OIL

S/N: YEE1-UP

PART OF 158-8987 FILTER & VALVE GP-PILOT

SMCS-5072, 5092 **i02881845**

NOTE	REF NO	GRAPHIC REF	PART NUMBER	QTY	PART NAME 1 2 3 4 5 6 (PRODUCT LEVEL)	SEE PAGE
	1	1	**103-8236**	1	RING	
	2	1	**126-1813**	1	FILTER-OIL (ULTRA HIGH EFFICIENCY) (HYDRAULIC)	
	3	1	**215-4909**	1	VALVE GP-PILOT RELIEF	
	3A	1	**095-1584**	1	SEAL-O-RING	
	3B	1	**095-1590**	1	SEAL-O-RING	
	3C	1	**095-1596**	1	SEAL-O-RING	
Z	4	1		1	BASE	

Z-NOT SERVICED SEPARATELY

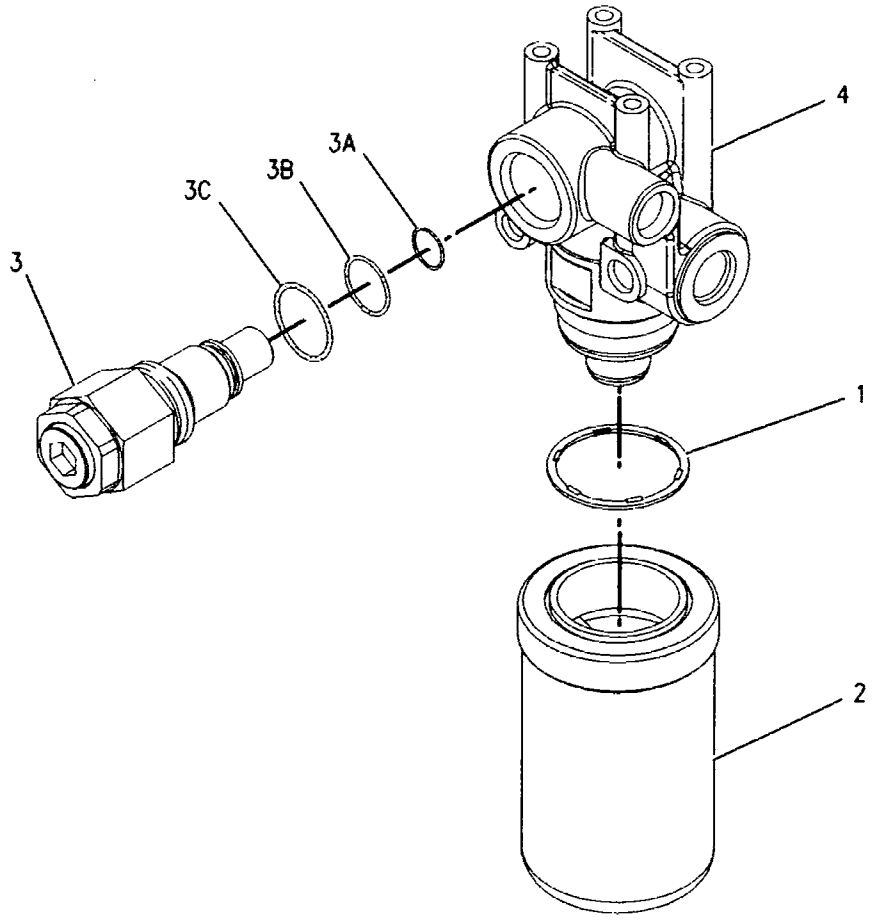

GRAPHIC #1 **<END>** g00949881

289-7836 FILTER & VALVE GP-PILOT–HYDRAULIC OIL

S/N: YEE1-UP

PART OF 158-8987 FILTER & VALVE GP-PILOT

SMCS-5072, 5092 **i02673863**

NOTE	REF NO	GRAPHIC REF	PART NUMBER	QTY	PART NAME 1 2 3 4 5 6 (PRODUCT LEVEL)	SEE PAGE
	1	1	**5I-8670**	1	FILTER-OIL (ADVANCED EFFICIENCY) (HYDRAULIC)	
	2	1	**215-4909**	1	VALVE GP-PILOT RELIEF	
	2A	1	**095-1584**	1	SEAL-O-RING	
	2B	1	**095-1590**	1	SEAL-O-RING	
	2C	1	**095-1596**	1	SEAL-O-RING	

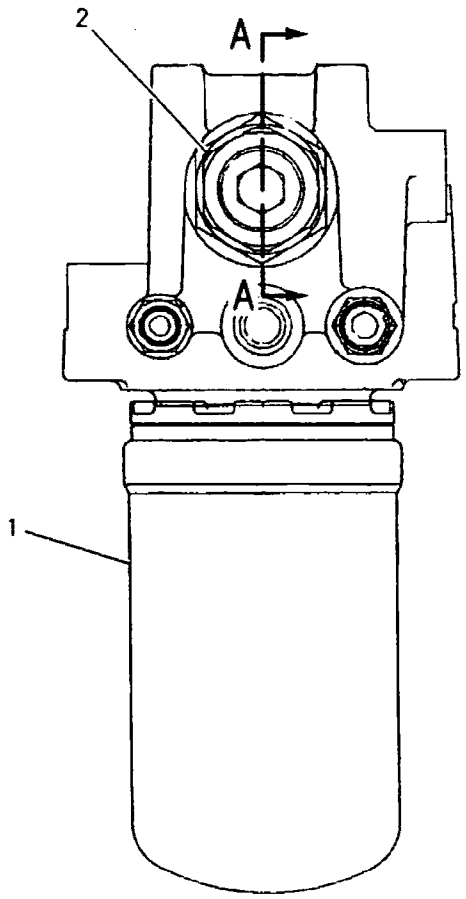

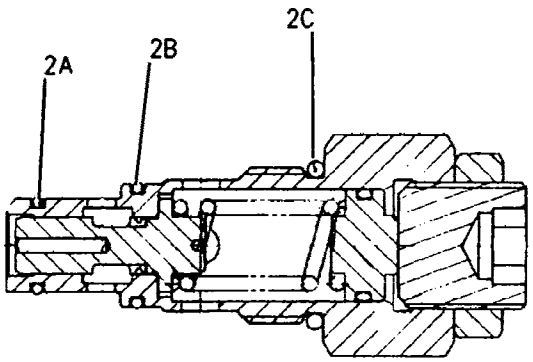

SECTION A-A

GRAPHIC #1 **<END>** g00842119

HYDRAULIC SYSTEM

188-4142 FILTER GP-OIL—HYDRAULIC RETURN

S/N: YEE1-UP

PART OF 188-4145 FILTER GP-OIL

SMCS-3004, 4295, 431F, 5068, 5091, 5092 **i02881847**

NOTE	REF NO	GRAPHIC REF	PART NUMBER	QTY	PART NAME 1 2 3 4 5 6 (PRODUCT LEVEL)	SEE PAGE
	1	1	**204-2762**	1	PLATE	
JM	2	1	**173-3529**	6	BOLT (M6X1X15-MM)	
J	3	1	**3T-7528**	6	SEAL-O-RING	
	4	1	**173-3513**	1	BASE	
J	5	1	**3E-4297**	2	SEAL-O-RING	
M	6	1	**137-3626**	1	BOLT-SHOULDER (M6X1X28.75-MM)	
Z	7	1		1	SHELL AS	
	8	1	**179-9806**	1	FILTER ELEMENT AS-OIL (HYDRAULIC RETURN)	
J	9	1	**137-3623**	4	SEAL-O-RING	
J	10	1	**6V-7658**	2	SEAL-O-RING	
J	11	1	**177-2553**	1	SEAL	
J	12	1	**095-1681**	1	SEAL-O-RING	
	13	1	**173-3515**	1	RING-RETAINING	
	14	1	**173-3516**	1	HANDLE	
J	15	1	**4J-7533**	1	SEAL-O-RING	
J	16	1	**9S-4180**	1	PLUG	
JM	17	1	**137-3624**	8	SCREW (M3X0.5X5-MM)	
J	18	1	**137-3625**	2	PAD	
	19	1	**173-3517**	1	PLATE	
BJ	20	1	**137-3628**	1	SHIM (0.1-MM THK)	
	21	1	**188-4143**	1	FILM-INSTRUCTION (HYDRAULIC OIL RETURN FILTER)	
					AVAILABLE REPAIR KIT(S):	
J			**201-9299**	1	KIT-SERVICE (HYDRAULIC FILTER)	
					(INCLUDES SEALS, BLOTTING PAD, SHIM, BOLT & SCREW)	

B-USE AS REQUIRED
J-KIT MARKED J SERVICES PARTS MARKED J
M-METRIC PART
Z-NOT SERVICED SEPARATELY

188-4142 **FILTER GP-OIL** *(contd.)* **i02881847**

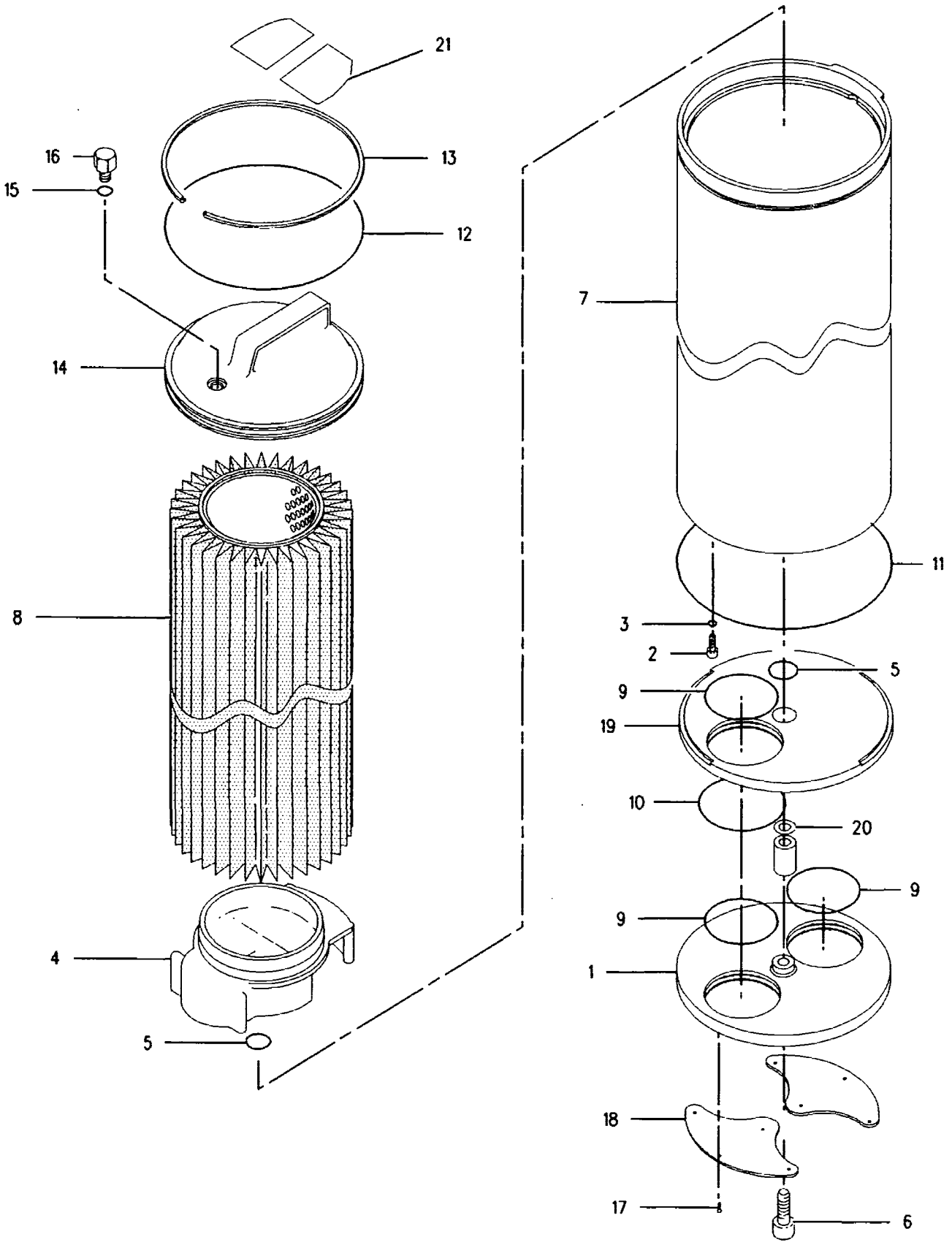

GRAPHIC #1 **<END>** g00923879

HYDRAULIC SYSTEM

188-4145 FILTER GP-OIL—HYDRAULIC RETURN

S/N: YEE1-UP

PART OF 227-0431 TANK & FILTER GP-HYDRAULIC

SMCS-3004, 4295, 431F, 5068, 5091, 5092 **i02495385**

NOTE	REF NO	GRAPHIC REF	PART NUMBER	QTY	PART NAME 1 2 3 4 5 6 (PRODUCT LEVEL)	SEE PAGE
Y	1	1	**177-2620**	1	HOUSING GP-FILTER	504
Y	2	1	**177-2617**	1	BLOCK GP-HYDRAULIC	447
	3	1	**177-2625**	1	PACKING	
	4	1	**095-1682**	1	SEAL-O-RING	
M	5	1	**8T-4189**	4	BOLT (M8X1.25X20-MM)	
	6	1	**8T-4224**	4	WASHER-HARD (8.8X16X2-MM THK)	
Y	7	1	**188-4142**	1	FILTER GP-OIL (HYDRAULIC RETURN)	493
	8	1	**173-3510**	1	COVER	
	9	1	**123-2003**	1	SEAL-O-RING	
M	10	1	**8T-4184**	4	BOLT (M12X1.75X45-MM)	
	11	1	**8T-4223**	4	WASHER-HARD (13.5X25.5X3-MM THK)	
	12	1	**175-6178**	1	HOUSING	
	13	1	**177-2623**	1	VALVE AS (BYPASS)	
	14	1	**175-6174**	1	PIPE	
M	15	1	**8T-4970**	2	BOLT (M6X1X14-MM)	
	16	1	**175-6176**	1	SEAL-O-RING	
M	17	1	**6V-8932**	1	SETSCREW-SOCKET (M6X1X10-MM)	
	18	1	**095-1663**	2	SEAL-O-RING	
	19	1	**187-7171**	2	BOLT (M8X1.25X14-MM)	
	20	1	**175-6175**	1	PIPE	

M-METRIC PART
Y-SEPARATE ILLUSTRATION

188-4145 **FILTER GP-OIL** *(contd.)* **i02495385**

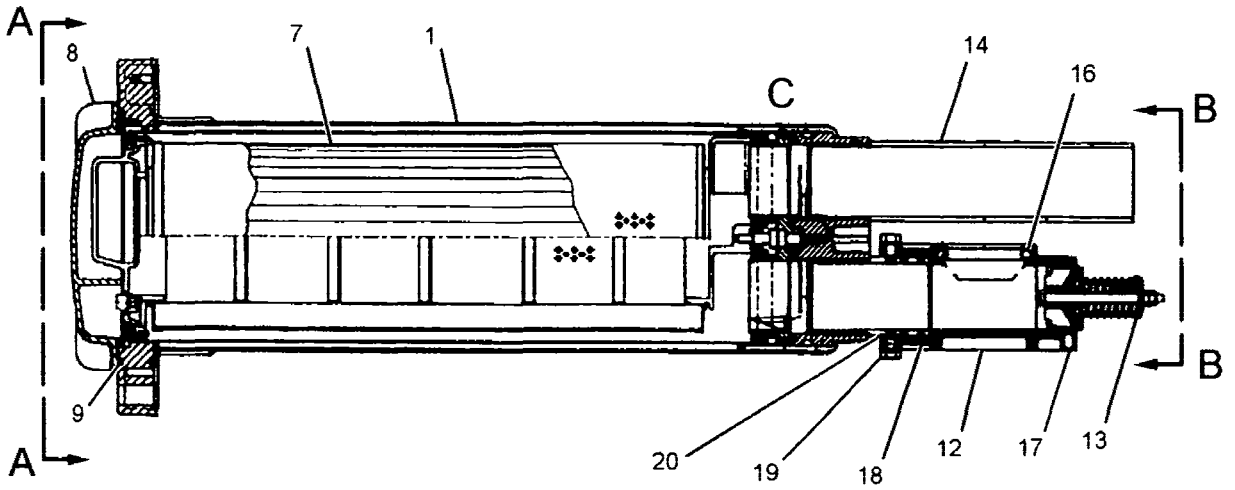

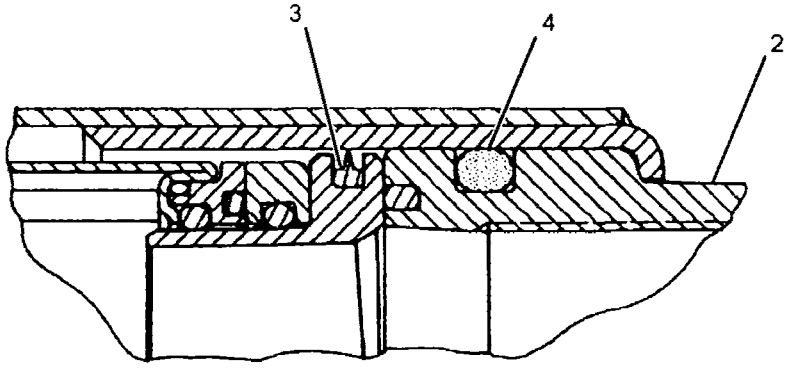

VIEW OF AREA C

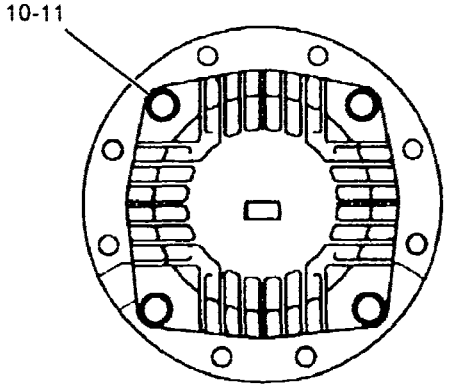

VIEW A-A

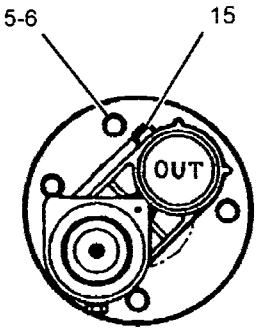

VIEW B-B

GRAPHIC #1 **<END>** g01123506

289-8194 FILTER GP-OIL–HYDRAULIC, CASE DRAIN

S/N: YEE1-UP

PART OF 227-0431 TANK & FILTER GP-HYDRAULIC

SMCS-3004, 4295, 431F, 5068, 5091, 5092 **i02881848**

NOTE	REF NO	GRAPHIC REF	PART NUMBER	QTY	PART NAME 1 2 3 4 5 6 (PRODUCT LEVEL)	SEE PAGE
	1	1	**093-7521**	1	FILTER-OIL (ADVANCED EFFICIENCY) (HYDRAULIC)	
	2	1	**289-8195**	1	HEAD AS-FILTER	

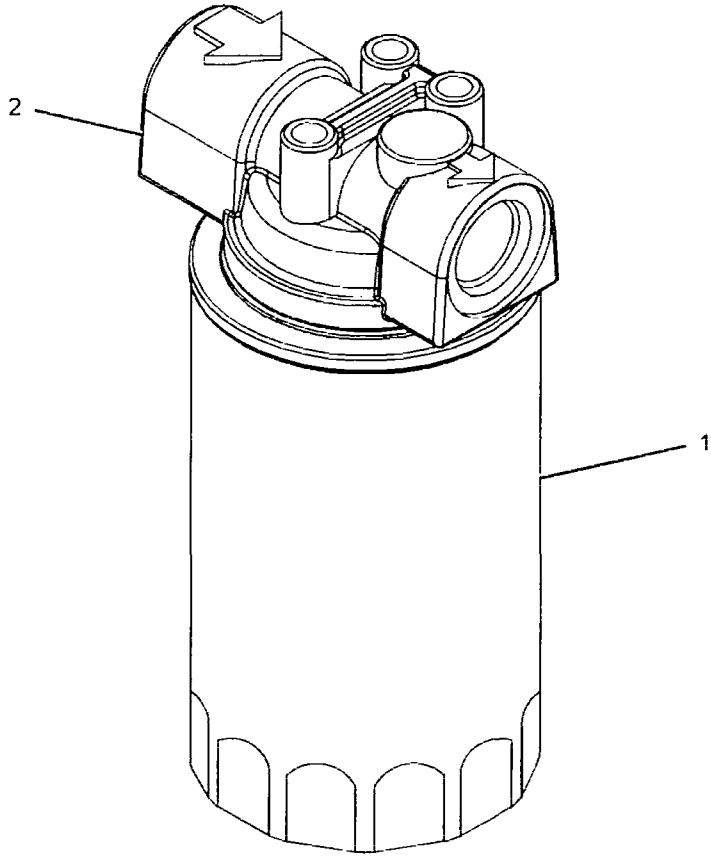

GRAPHIC #1 **<END>** g01388302

227-0620 GAUGE GP-SIGHT–HYDRAULIC OIL LEVEL

S/N: YEE1-UP

PART OF 227-0431 TANK & FILTER GP-HYDRAULIC

SMCS-7479 i02461221

NOTE	REF NO	GRAPHIC REF	PART NUMBER	QTY	PART NAME 1 2 3 4 5 6 (PRODUCT LEVEL)	SEE PAGE
	1	1	236-3258	2	BLOCK	
M	2	1	236-3259	2	BOLT-SPECIAL	
	3	1	236-3257	1	PIPE	
	4	1	095-1519	4	SEAL-O-RING	
	5	1	6F-4855	4	SEAL-O-RING	

M-METRIC PART

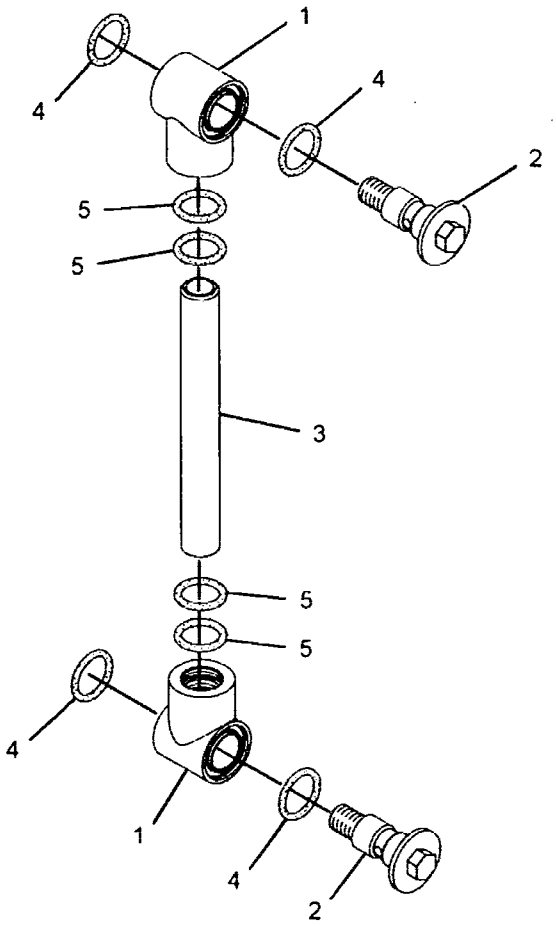

GRAPHIC #1

<END>

g01091508

HYDRAULIC SYSTEM

295-9600 GUARD GP-CYLINDER

S/N: YEE1-UP
PART OF 324-0190, 324-0191 SPECIAL AR
AN ATTACHMENT

SMCS-7164 **i02920250**

NOTE	REF NO	GRAPHIC REF	PART NUMBER	QTY	PART NAME 1 2 3 4 5 6 (PRODUCT LEVEL)	SEE PAGE
	1	1	**295-9601**	1	GUARD AS-CYLINDER	
	2	1	**295-9682**	1	SUPPORT AS	
	3	1	**295-9684**	1	SUPPORT	
M	4	1	**8T-4001**	2	NUT (M24X3-THD)	
M	5	1	**8T-4139**	4	BOLT (M12X1.75X30-MM)	
	6	1	**8T-4167**	2	WASHER-HARD (26X44X4-MM THK)	
	7	1	**8T-4223**	4	WASHER-HARD (13.5X25.5X3-MM THK)	

M-METRIC PART

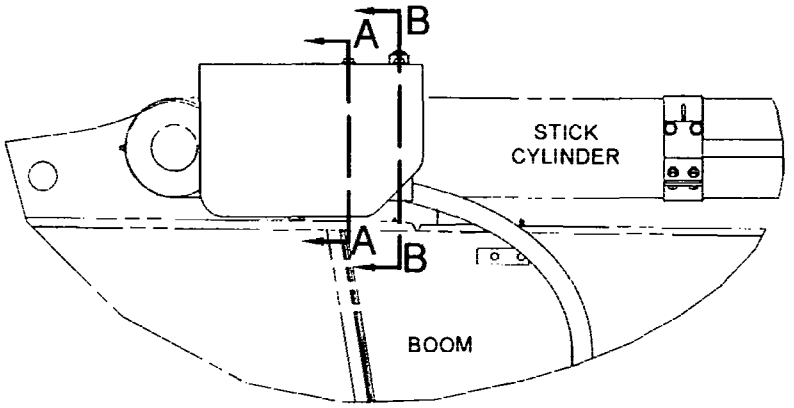

RIGHT SIDE VIEW

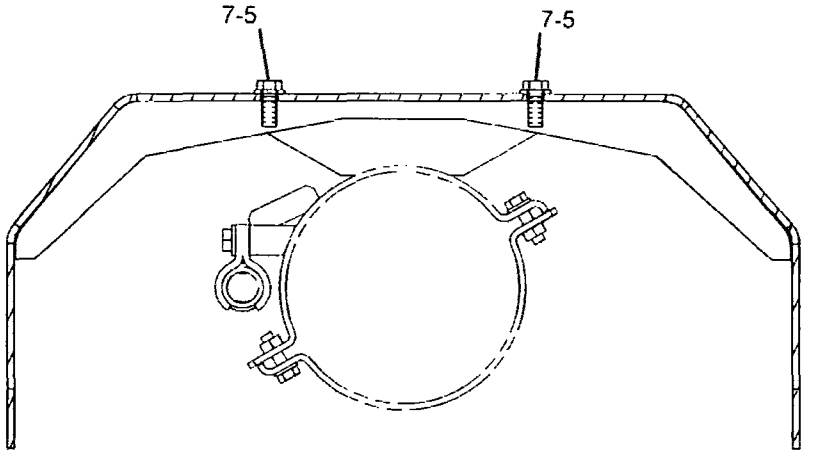

SECTION A-A

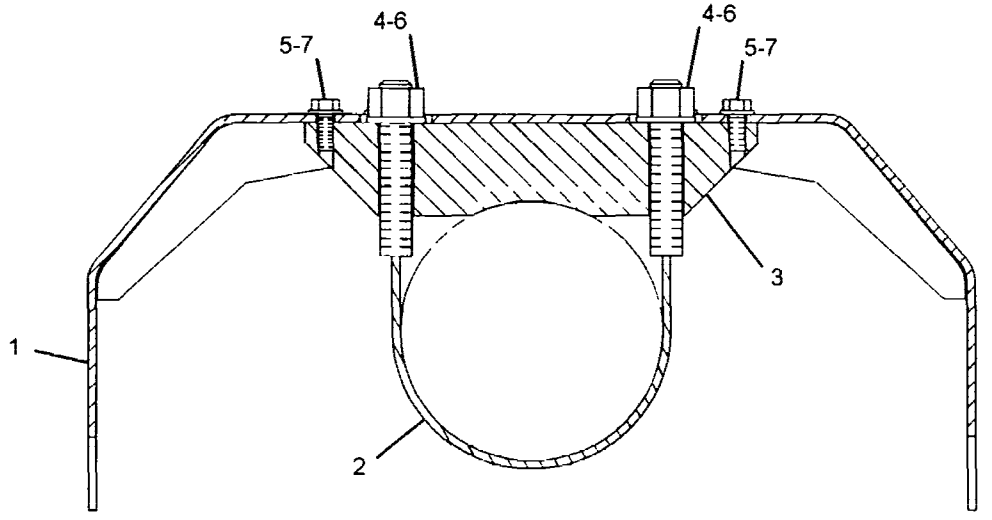

SECTION B-B

GRAPHIC #1 **<END>** g01458420

HYDRAULIC SYSTEM

295-9497 HEAD GP-PUMP

S/N: YEE1-UP

PART OF 295-9663 PUMP GP-PISTON & GEAR

SMCS-3222, 5070, 5086 **i02841424**

NOTE	REF NO	GRAPHIC REF	PART NUMBER	QTY	PART NAME 1 2 3 4 5 6 (PRODUCT LEVEL)	SEE PAGE
	1	2	247-8929	1	BODY AS	
	2	2	295-9585	1	SLEEVE AS	
	3	1	247-8733	1	LEVER AS	
	4	1	247-8734	1	LEVER AS	
	5	1	247-8735	1	PIN AS	
	6	1	247-8732	1	LEVER AS	
M	7	1	3E-8025	2	BOLT-SOCKET HEAD (M8X1.25X50-MM)	
M	8	1	6V-8213	2	BOLT-SOCKET HEAD (M8X1.25X70-MM)	
M	9	1	8T-8442	2	BOLT-SOCKET HEAD (M6X1X30-MM)	
M	10	1,2	8T-0269	10	BOLT-SOCKET HEAD (M6X1X20-MM)	
M	11	1	099-2374	4	BOLT-SOCKET HEAD (M5X0.8X12-MM)	
	12	1	7I-8084	5	PLUG	
	13	1	5I-8790	1	PLUG	
	14	2	5I-8791	1	PISTON-COMPENSATOR	
	15	2	129-7970	1	SLEEVE	
	16	2	295-9584	1	ROD	
	17	2	295-9583	1	SEAT	
	18	2	295-9582	1	SPRING	
	19	2	295-9581	1	SPRING	
	20	2	295-9580	1	SCREW	
	21	2	295-9579	1	SETSCREW	
	22	2	5I-8799	1	COVER	
	23	2	5I-8800	1	LOCKNUT (M30X1.5-THD)	
	24	2	129-7973	1	SLEEVE	
	25	2	5I-8802	1	COVER-PILOT	
	26	2	295-9578	1	PISTON	
	27	2	295-9577	1	SEAT	
	28	2	5I-8805	1	RETAINER	
	29	2	295-9576	1	SPRING	
	30	2	5I-8809	1	SEAT-SPRING	
	31	2	5I-8810	1	SPRING-RETURN	
	32	2	5I-8811	1	SPRING	
	33	1	5I-8812	1	COVER-BLOCK	
	34	1	247-8928	1	COVER	
	35	2	206-9300	1	SEAL-O-RING	
	36	1	249-6658	3	SEAL-O-RING	
	37	1	206-9290	9	SEAL-O-RING	
	38	1	206-9291	1	SEAL-O-RING	
	39	2	206-9295	1	SEAL-O-RING	
	40	2	206-9297	1	SEAL-O-RING	
	41	2	206-9294	1	SEAL-O-RING	
	42	2	206-9296	1	SEAL-O-RING	
	43	2	249-6659	1	SEAL-O-RING	
	44	1	249-6660	1	SEAL-O-RING	
	45	2	295-9575	1	SEAL	
	46	1	249-6661	2	SEAL-O-RING	
	47	2	206-9301	1	SEAL-O-RING	
	48	2	206-9299	1	SEAL-O-RING	
M	49	2	5C-7261	1	NUT (M8X1.25-THD)	
	50	2	295-9574	1	NUT	
	51	2	096-2323	1	RING-RETAINING (EXTERNAL)	
	52	2	5I-8813	1	RING-RETAINING	
	53	1	5I-8815	1	PIN	
M	54	2	5I-8820	1	SETSCREW (M8X20-MM)	
	55	2	129-7974	1	PIN	

M-METRIC PART

295-9497 **HEAD GP-PUMP** *(contd.)* **i02841424**

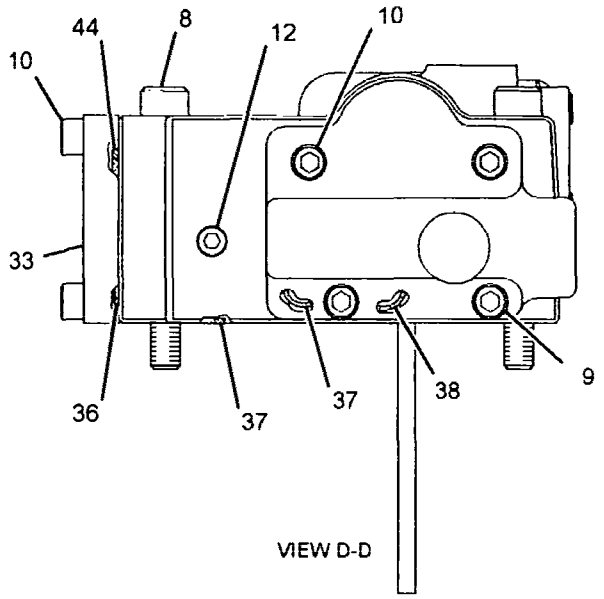

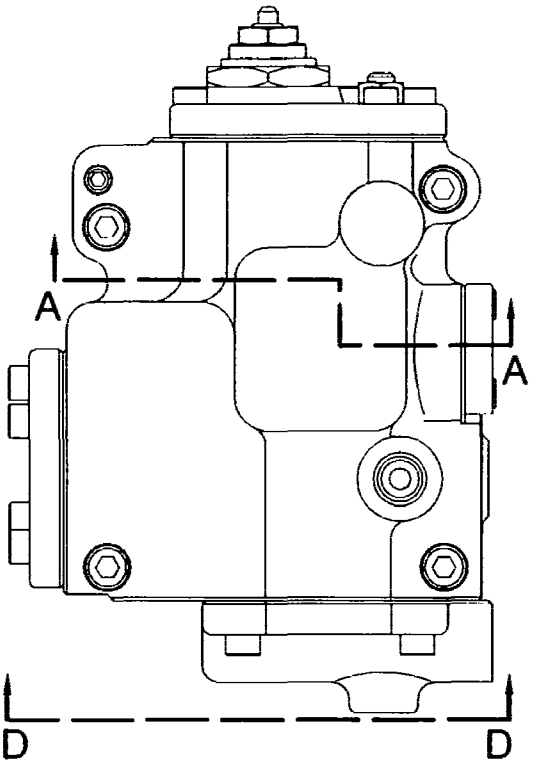

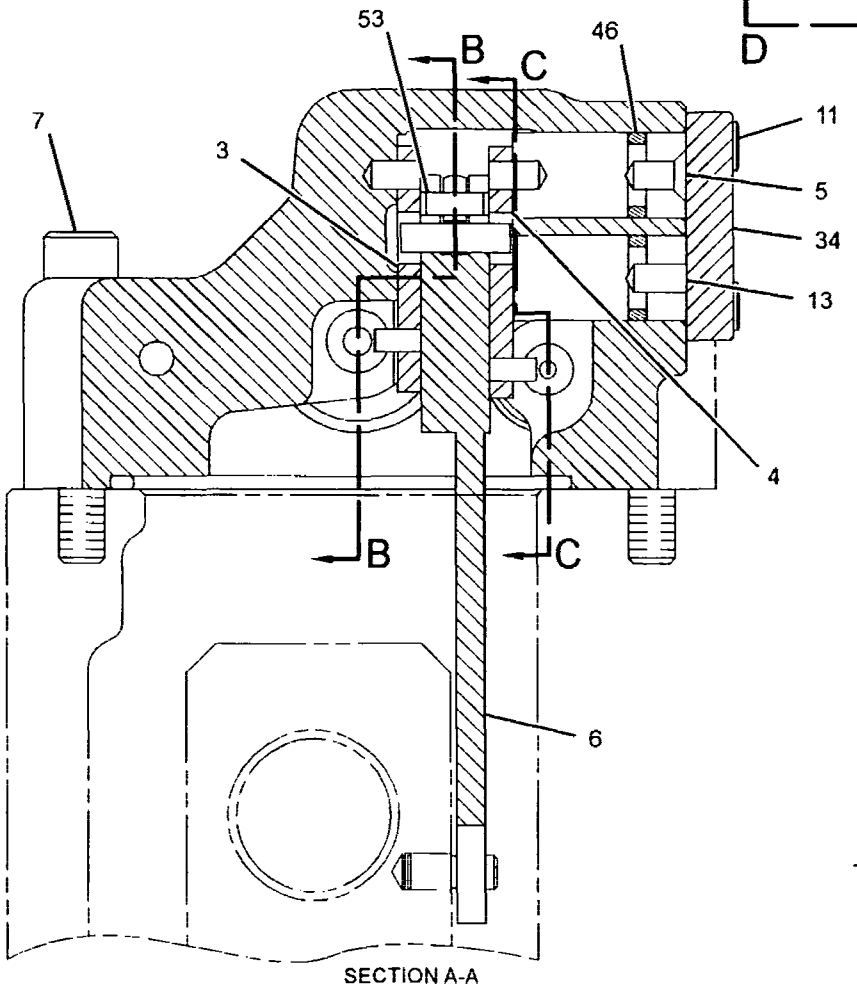

REFER TO ALL ILLUSTRATIONS OF THIS GROUP FOR AUXILIARY VIEWS

GRAPHIC #1

g01454642

295-9497 **HEAD GP-PUMP** *(contd.)* **i02841424**

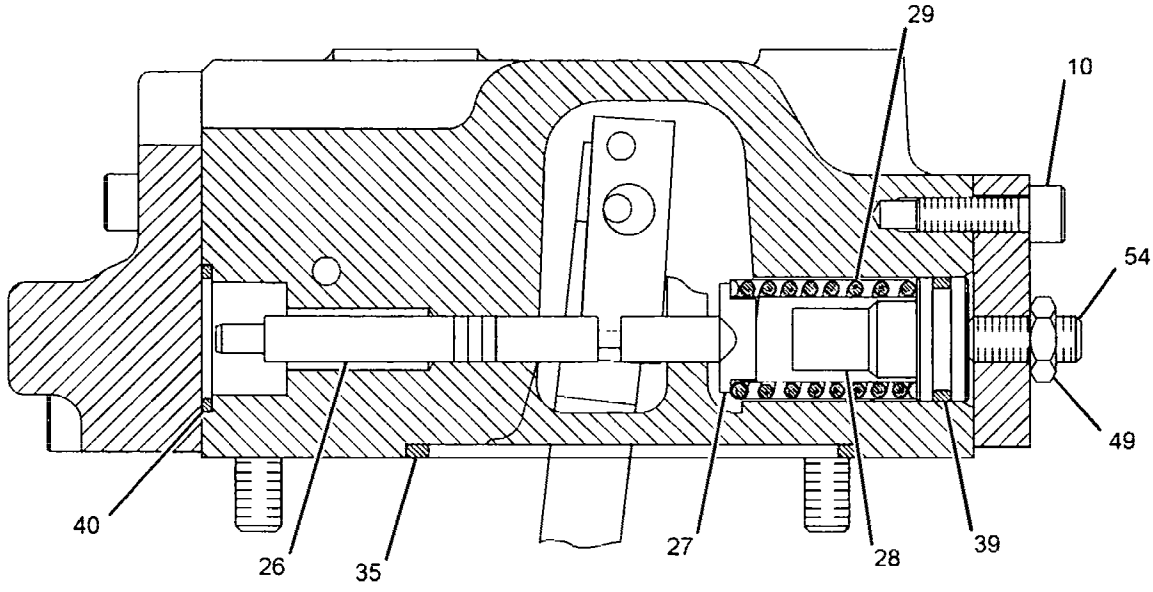

SECTION C-C

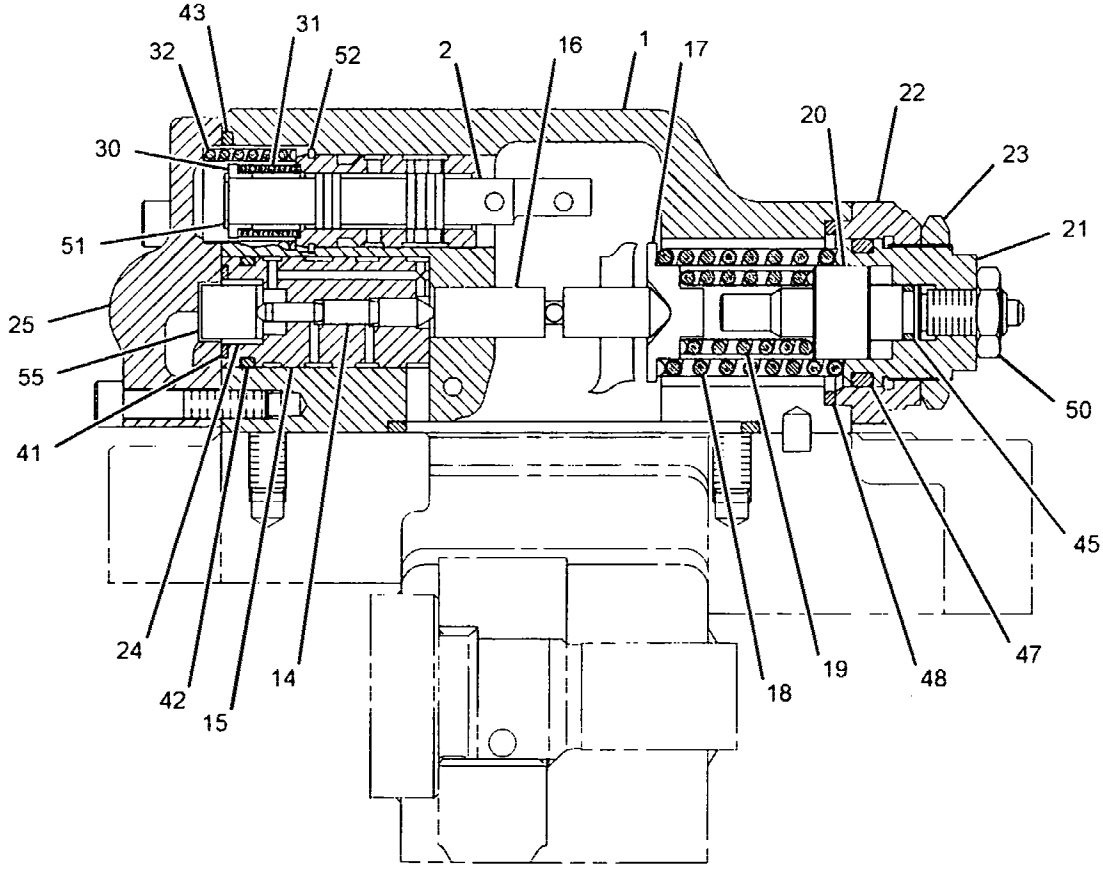

SECTION B-B

GRAPHIC #2

<END>

g01455431

HYDRAULIC SYSTEM

177-2620 HOUSING GP-FILTER

S/N: YEE1-UP

PART OF 188-4145 FILTER GP-OIL

SMCS-5068 **i02160178**

NOTE	REF NO	GRAPHIC REF	PART NUMBER	QTY	PART NAME 1 2 3 4 5 6 (PRODUCT LEVEL)	SEE PAGE
	1	1	**177-2621**	1	FLANGE AS	
Z	2	1		1	HOUSING AS	
	3	1	**123-2003**	1	SEAL-O-RING	
M	4	1	**095-0757**	4	SCREW-MACHINE (M6X1X8.6-MM)	

M-METRIC PART
Z-NOT SERVICED SEPARATELY

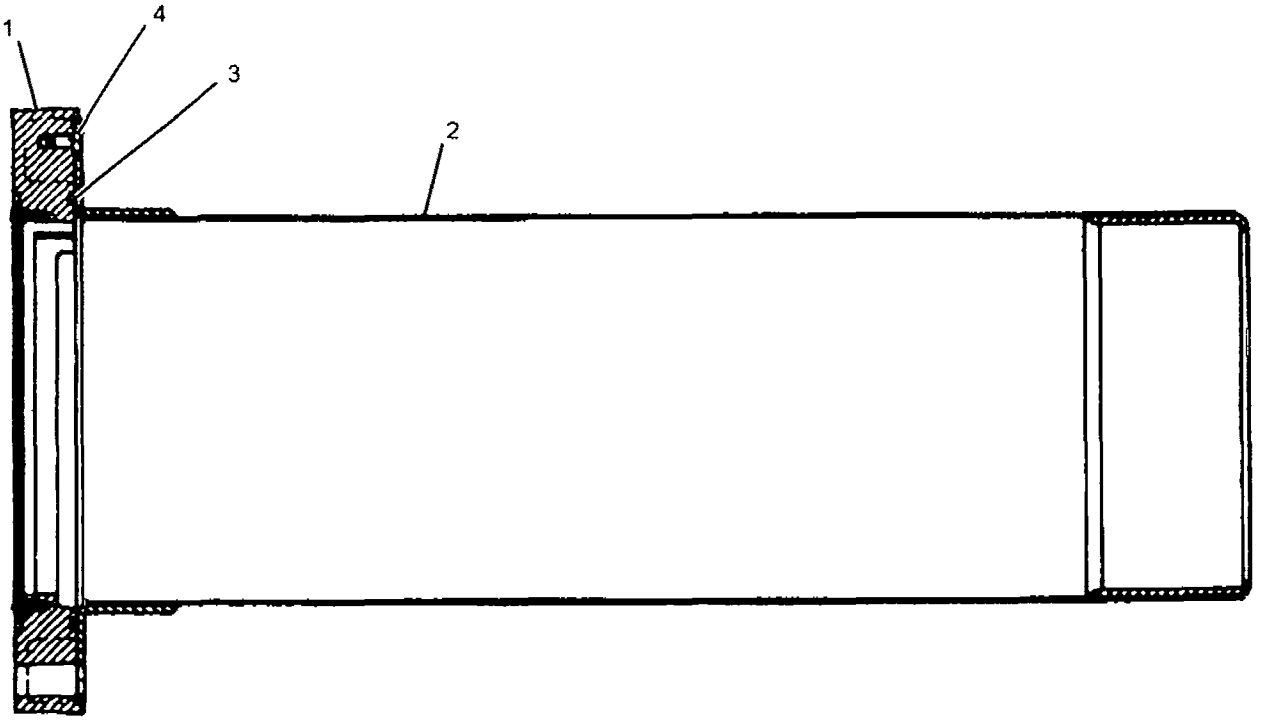

GRAPHIC #1 **<END>** g01096512

HYDRAULIC SYSTEM

297-0243 HYDRAULIC AR

S/N: YEE1-UP

PART OF 302-6422 GENERAL AR

SMCS-5050 **i02881039**

NOTE	PART NUMBER	QTY	PART NAME 1 2 3 4 5 6 (PRODUCT LEVEL)	SEE PAGE
Y	*307-4848*	1	LINES GP-BOOM CYLINDER	554
Y	*292-7159*	1	LINES GP-HYDRAULIC (REAR)	599
Y	*292-7161*	1	LINES GP-FRONT (IMPLEMENT, TRAVEL)	572
Y	*292-7164*	1	LINES GP-HYDRAULIC OIL COOLER	603
Y	*302-2984*	1	LINES GP-PILOT (CONTROL VALVE)	629
Y	*302-2985*	1	LINES GP-PILOT (CONTROL VALVE)	633
Y	*302-3097*	1	LINES GP-PILOT (PUMP, MOTOR)	639
Y	*227-0460*	1	LINES GP-PILOT (HEAVY LIFT)	610
Y	*296-7123*	1	LINES GP-PILOT (JOYSTICK)	620
Y	*292-7163*	1	LINES GP-PUMP	660
Y	*292-7162*	1	LINES GP-SWING MOTOR	685
Y	*302-3185*	1	LINES GP-TRAVEL MOTOR	687
Y	*302-3084*	1	MOUNTING GP-MAIN CONTROL VALVE	707
Y	*296-4670*	1	PUMP & MTG GP-MAIN HYDRAULIC	710
Y	*227-0430*	1	TANK & MTG GP-HYDRAULIC	727
Y	**310-0101**	1	VALVE GP-MAIN CONTROL	768

Y-SEPARATE ILLUSTRATION

<END>

HYDRAULIC SYSTEM

127-6690 LINES GP-AUXILIARY HYDRAULIC-STICK, HIGH PRESSURE

S/N: YEE1-UP
TB-FAMILY
FOR USE WITH 3.35-M (11-FT) STICK
AN ATTACHMENT

SMCS-5057 **i02783331**

NOTE	REF NO	GRAPHIC REF	PART NUMBER	QTY	PART NAME 1 2 3 4 5 6 (PRODUCT LEVEL)	SEE PAGE
	1	1	**142-6583**	1	TUBE AS	
C	2	1	**294-6485**	1	TUBE AS	
I	3	1	**216-6540**	1	HOSE AS	
I	4	1	**216-6539**	1	HOSE AS	
C	5	1	**292-7752**	1	VALVE AS-MANUAL (AUXILIARY, RH)	
Y	6	1	**277-0954**	1	VALVE GP-MANUAL (AUXILIARY, LH)	773
	7	1	**306-1354**	4	CLAMP-HALF	
	8	1	**306-1355**	4	CLAMP-HALF	
	9	1	**1P-5767**	4	FLANGE-HALF	
	10	1	**5P-8077**	4	FLANGE-HALF	
M	11	1	**8T-4140**	8	BOLT (M16X2X60-MM)	
M	12	1	**8T-4183**	4	BOLT (M12X1.75X40-MM)	
M	13	1	**8T-4193**	4	BOLT (M16X2X50-MM)	
M	14	1	**8T-4194**	8	BOLT (M12X1.75X50-MM)	
M	15	1	**8T-6685**	2	BOLT (M10X1.5X110-MM)	
M	16	1	**100-4982**	8	BOLT-SELF-LOCKING (M16X2X45-MM)	
	17	1	**8T-4121**	2	WASHER-HARD (11X21X2.5-MM THK)	
	18	1	**8T-4223**	8	WASHER-HARD (13.5X25.5X3-MM THK)	
	19	1	**9X-8257**	18	WASHER (17.5X30X3.5-MM THK)	
	20	1	**1P-3704**	3	SEAL-RECTANGULAR	
C	21	1	**1P-3705**	3	SEAL-RECTANGULAR	
M	23	1	**7X-2557**	2	BOLT (M16X2X140-MM)	

C-CHANGE FROM PREVIOUS TYPE
I-REFER TO HYDRAULIC INFORMATION SYSTEM
M-METRIC PART
Y-SEPARATE ILLUSTRATION

127-6690 LINES GP-AUXILIARY HYDRAULIC *(contd.)* i02783331

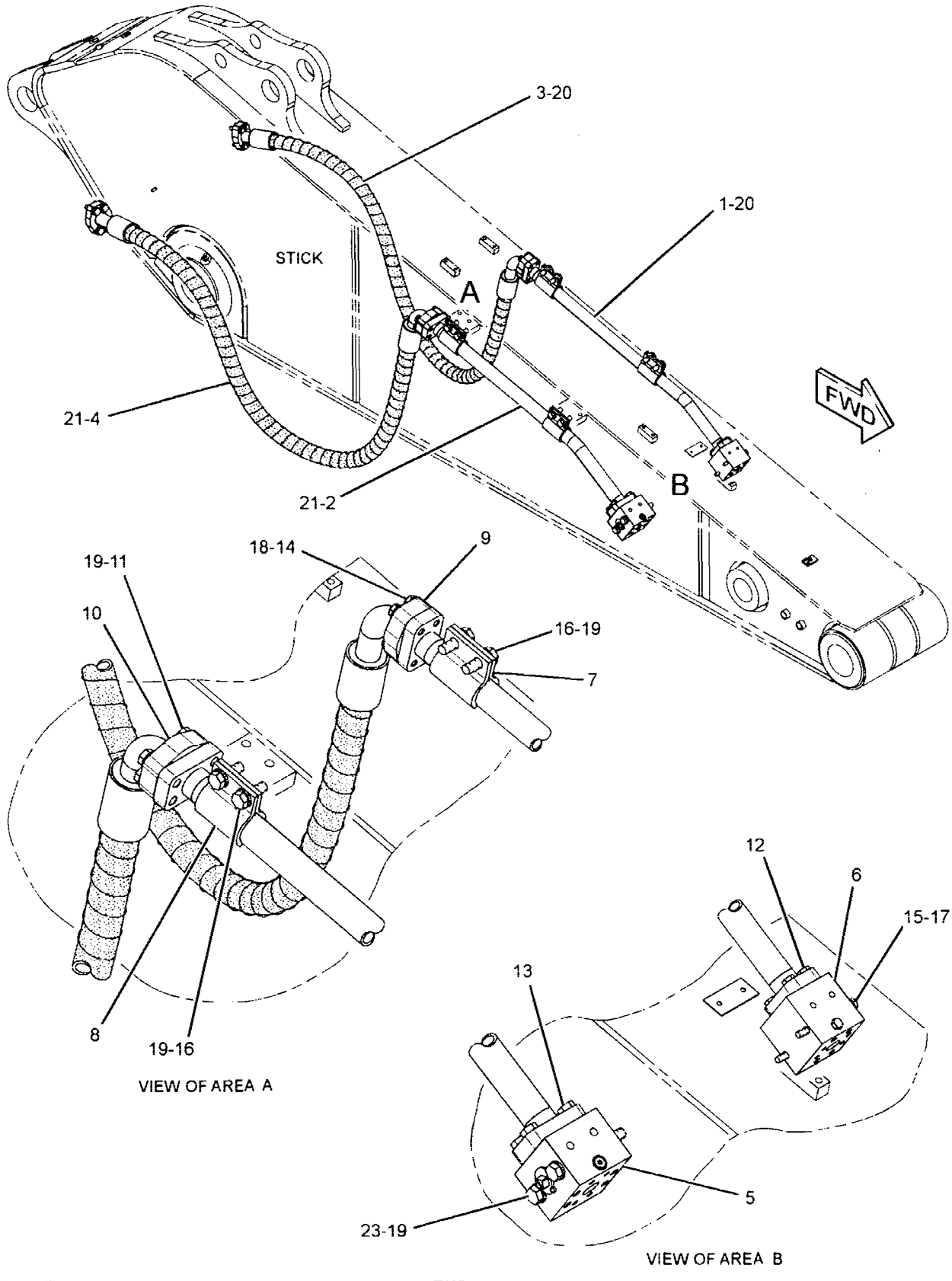

GRAPHIC #1 **<END>** g01356702

HYDRAULIC SYSTEM

135-3910 LINES GP-AUXILIARY HYDRAULIC-STICK, HIGH PRESSURE

S/N: YEE1-UP

TB-FAMILY

FOR USE WITH 2.9-M (9.5-FT) STICK

AN ATTACHMENT

SMCS-5057 **i02783332**

NOTE	REF NO	GRAPHIC REF	PART NUMBER	QTY	PART NAME 1 2 3 4 5 6 (PRODUCT LEVEL)	SEE PAGE
M	1	1	**7X-2557**	2	BOLT (M16X2X140-MM)	
M	2	1	**8T-4140**	8	BOLT (M16X2X60-MM)	
M	3	1	**8T-4183**	4	BOLT (M12X1.75X40-MM)	
M	4	1	**8T-4193**	4	BOLT (M16X2X50-MM)	
M	5	1	**8T-4194**	8	BOLT (M12X1.75X50-MM)	
M	6	1	**8T-6685**	2	BOLT (M10X1.5X110-MM)	
M	7	1	**100-4982**	8	BOLT-SELF-LOCKING (M16X2X45-MM)	
	8	1	**306-1354**	4	CLAMP-HALF	
	9	1	**306-1355**	4	CLAMP-HALF	
	10	1	**1P-5767**	4	FLANGE-HALF	
	11	1	**5P-8077**	4	FLANGE-HALF	
I	12	1	**216-6541**	1	HOSE AS	
I	13	1	**216-6542**	1	HOSE AS	
	14	1	**1P-3704**	3	SEAL-RECTANGULAR	
	15	1	**1P-3705**	3	SEAL-RECTANGULAR	
	17	1	**187-9917**	1	TUBE AS	
	18	1	**294-6501**	1	TUBE AS	
Y	19	1	**277-0954**	1	VALVE GP-MANUAL (AUXILIARY, LH)	773
	20	1	**292-7752**	1	VALVE AS-MANUAL (AUXILIARY, RH)	
	21	1	**9X-8257**	18	WASHER (17.5X30X3.5-MM THK)	
	22	1	**8T-4121**	2	WASHER-HARD (11X21X2.5-MM THK)	
	23	1	**8T-4223**	8	WASHER-HARD (13.5X25.5X3-MM THK)	

I-REFER TO HYDRAULIC INFORMATION SYSTEM
M-METRIC PART
Y-SEPARATE ILLUSTRATION

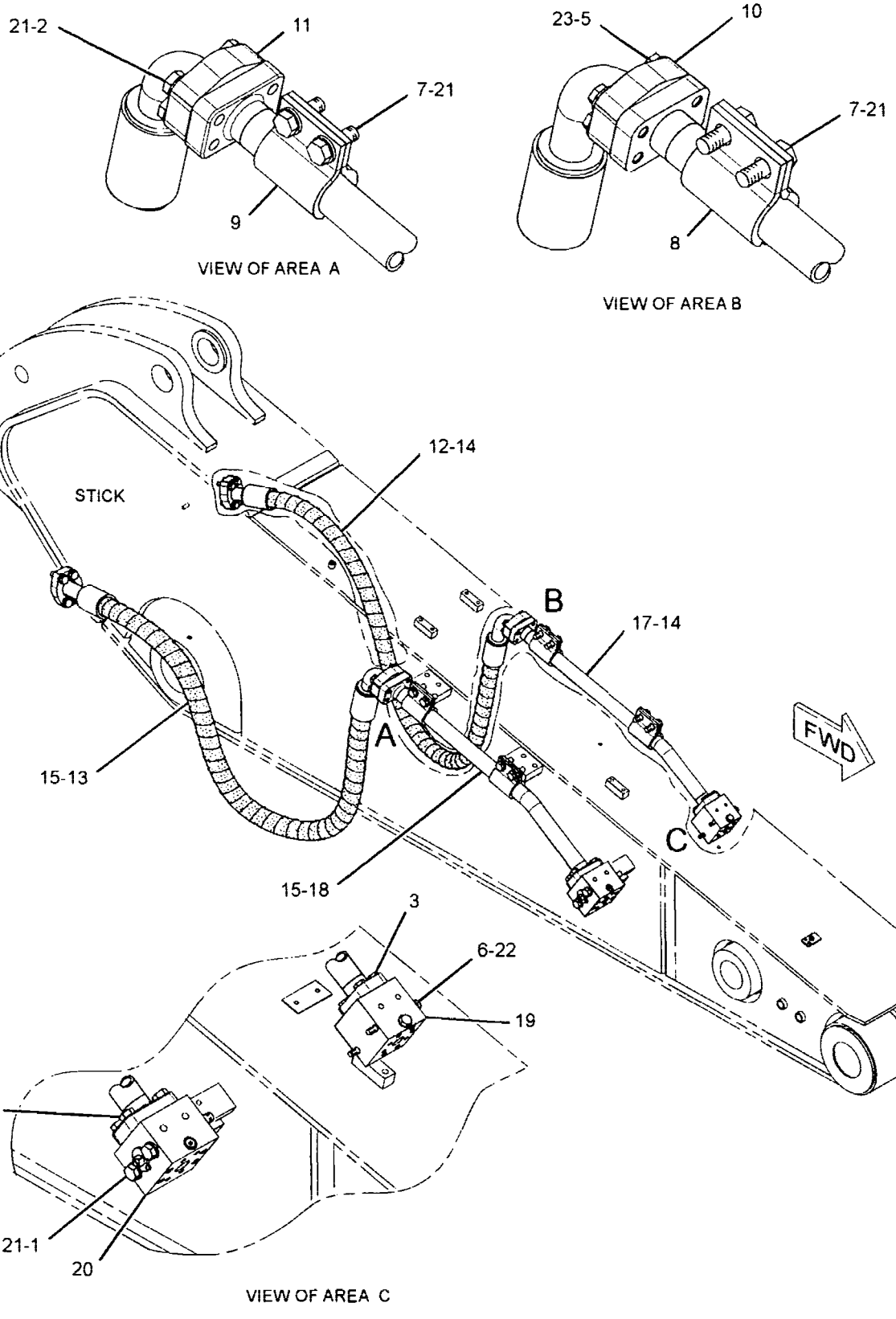

GRAPHIC #1 **<END>** g01440580

HYDRAULIC SYSTEM

135-4096 LINES GP-AUXILIARY HYDRAULIC-STICK, HIGH PRESSURE

S/N: YEE1-UP
TB-FAMILY
FOR USE WITH 3.9-M (12.8-FT) STICK
AN ATTACHMENT

SMCS-5057 **i02783333**

NOTE	REF NO	GRAPHIC REF	PART NUMBER	QTY	PART NAME 1 2 3 4 5 6 (PRODUCT LEVEL)	SEE PAGE
Y	1	1	**277-0954**	1	VALVE GP-MANUAL (AUXILIARY, LH)	773
	2	1	**187-9915**	1	TUBE AS	
I	3	1	**216-6539**	1	HOSE AS	
I	4	1	**216-6540**	1	HOSE AS	
C	5	1	**292-7752**	1	VALVE AS-MANUAL (AUXILIARY, RH)	
C	6	1	**294-6467**	1	TUBE AS	
	7	1	**306-1354**	4	CLAMP-HALF	
	8	1	**306-1355**	4	CLAMP-HALF	
	9	1	**1P-3704**	3	SEAL-RECTANGULAR	
C	10	1	**1P-3705**	3	SEAL-RECTANGULAR	
	12	1	**1P-5767**	4	FLANGE-HALF	
	13	1	**5P-8077**	4	FLANGE-HALF	
M	14	1	**7X-2557**	2	BOLT (M16X2X140-MM)	
	15	1	**8T-4121**	2	WASHER-HARD (11X21X2.5-MM THK)	
M	16	1	**8T-4140**	8	BOLT (M16X2X60-MM)	
M	17	1	**8T-4183**	4	BOLT (M12X1.75X40-MM)	
M	18	1	**8T-4193**	4	BOLT (M16X2X50-MM)	
M	19	1	**8T-4194**	8	BOLT (M12X1.75X50-MM)	
	20	1	**8T-4223**	8	WASHER-HARD (13.5X25.5X3-MM THK)	
M	21	1	**8T-6685**	2	BOLT (M10X1.5X110-MM)	
M	22	1	**100-4982**	8	BOLT-SELF-LOCKING (M16X2X45-MM)	
	23	1	**9X-8257**	18	WASHER (17.5X30X3.5-MM THK)	

C-CHANGE FROM PREVIOUS TYPE
I-REFER TO HYDRAULIC INFORMATION SYSTEM
M-METRIC PART
Y-SEPARATE ILLUSTRATION

135-4096 LINES GP-AUXILIARY HYDRAULIC *(contd.)* i02783333

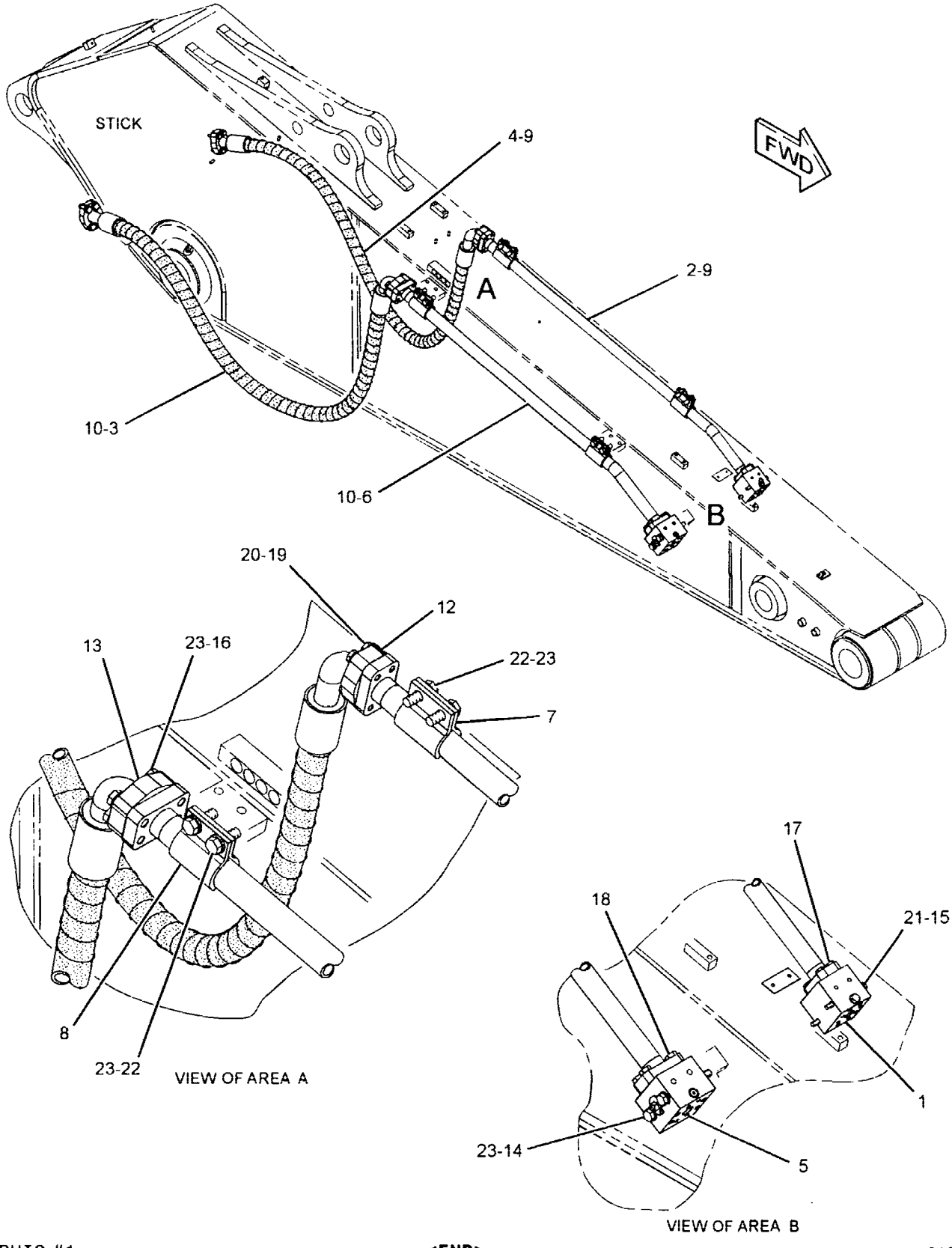

GRAPHIC #1

<END>

g01356700

HYDRAULIC SYSTEM

230-0114 LINES GP-AUXILIARY HYDRAULIC-BOOM, MEDIUM PRESSURE

S/N: YEE1-UP

AN ATTACHMENT

SMCS-5057 **i02673918**

NOTE	REF NO	GRAPHIC REF	PART NUMBER	QTY	PART NAME 1 2 3 4 5 6 (PRODUCT LEVEL)	SEE PAGE
M	1	1	**8T-4139**	12	BOLT (M12X1.75X30-MM)	
M	2	1	**8T-4140**	4	BOLT (M16X2X60-MM)	
M	3	1	**8T-4173**	2	BOLT (M16X2X110-MM)	
M	4	1	**8T-4175**	4	BOLT (M16X2X90-MM)	
M	5	1	**8T-4183**	2	BOLT (M12X1.75X40-MM)	
CM	6	1	**8T-4648**	4	BOLT (M12X1.75X70-MM)	
M	7	1	**8T-4956**	4	BOLT (M12X1.75X35-MM)	
C	8	1	**179-5260**	12	CLIP	
	9	1	**202-7001**	4	CLIP	
	10	1	**202-7021**	6	CLIP	
M	11	1	**8T-4132**	4	NUT (M16X2-THD)	
M	12	1	**8T-4244**	12	NUT (M12X1.75-THD)	
	13	1	**132-1596**	1	PLATE	
	14	1	**179-5090**	1	PLATE	
	15	1	**193-6662**	2	PLATE	
C	16	1	**203-3560**	1	PLATE	
	17	1	**6V-8398**	4	SEAL-O-RING	
	18	1	**7J-9108**	4	SEAL-O-RING	
	19	1	**237-3016**	1	SUPPORT AS	
	20	1	**247-9440**	2	SUPPORT AS	
C	21	1	**268-7036**	1	TUBE AS	
C	22	1	**268-7039**	1	TUBE AS	
C	23	1	**277-0771**	2	TUBE AS	
C	24	1	**277-0774**	1	TUBE AS	
C	25	1	**277-0777**	1	TUBE AS	
	26	1	**9X-8257**	10	WASHER (17.5X30X3.5-MM THK)	
	27	1	**8T-4223**	22	WASHER-HARD (13.5X25.5X3-MM THK)	

C-CHANGE FROM PREVIOUS TYPE
M-METRIC PART

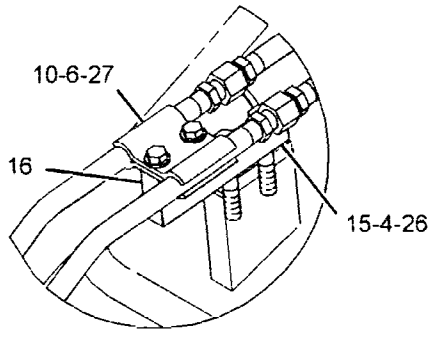

VIEW OF AREA B

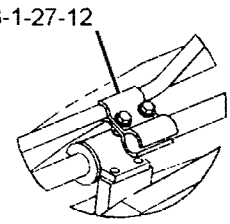

VIEW OF AREA C

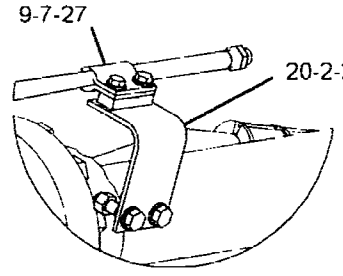

VIEW OF AREA D

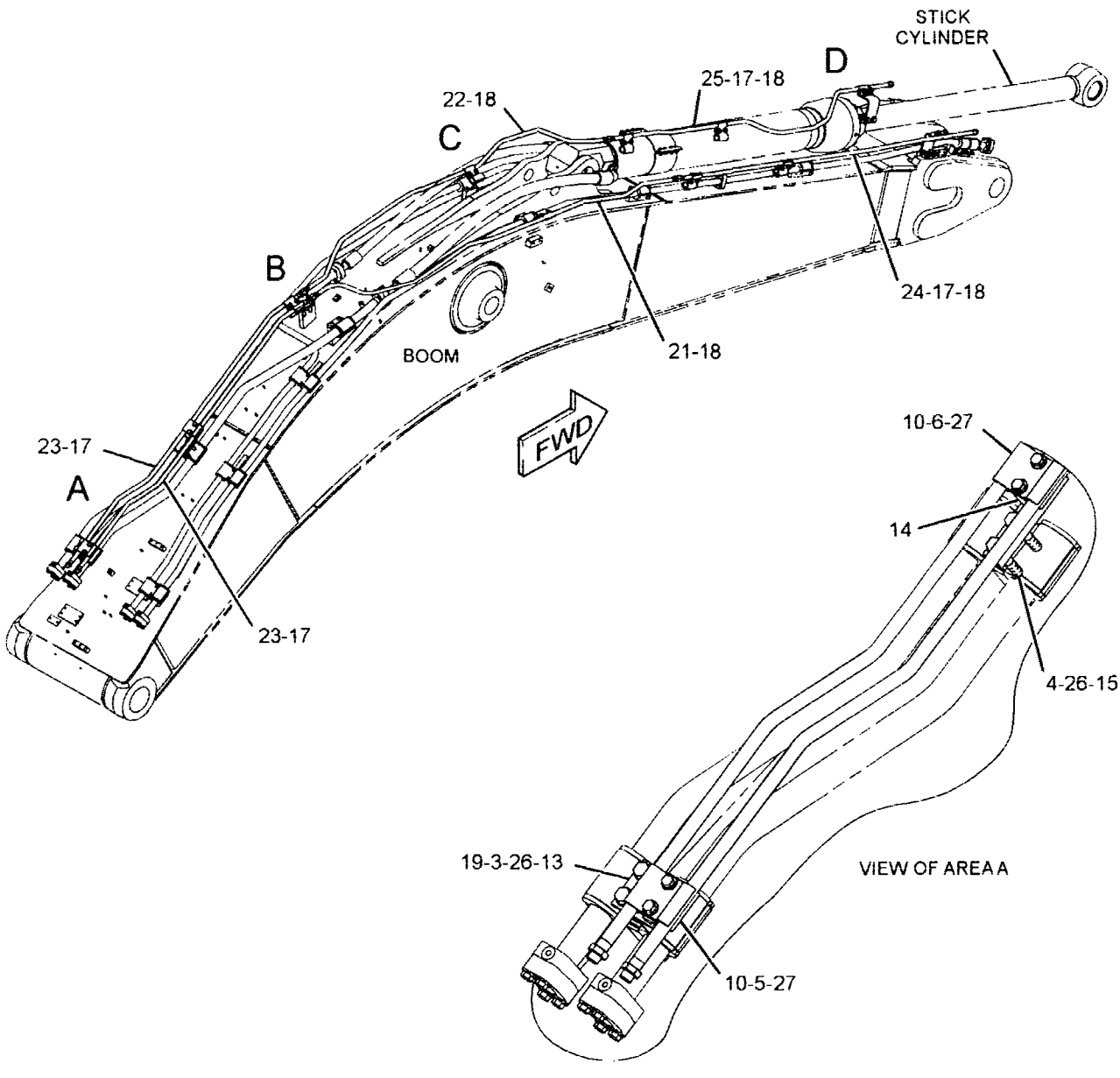

VIEW OF AREA A

GRAPHIC #1

<END>

g01285307

HYDRAULIC SYSTEM

230-0117 LINES GP-AUXILIARY HYDRAULIC-MASS BOOM, MEDIUM PRESSURE

S/N: YEE1-UP

AN ATTACHMENT

SMCS-5057 **i02884439**

NOTE	REF NO	GRAPHIC REF	PART NUMBER	QTY	PART NAME 1 2 3 4 5 6 (PRODUCT LEVEL)	SEE PAGE
M	1	1	**8T-4139**	12	BOLT (M12X1.75X30-MM)	
M	2	1	**8T-4140**	4	BOLT (M16X2X60-MM)	
M	3	1	**8T-4173**	2	BOLT (M16X2X110-MM)	
M	4	1	**8T-4175**	4	BOLT (M16X2X90-MM)	
M	5	1	**8T-4183**	2	BOLT (M12X1.75X40-MM)	
C	6	1	**277-1024**	1	TUBE AS	
M	7	1	**8T-6868**	4	BOLT (M12X1.75X80-MM)	
M	8	1	**8T-4956**	4	BOLT (M12X1.75X35-MM)	
C	9	1	**277-1027**	1	TUBE AS	
	10	1	**202-7001**	4	CLIP	
	11	1	**202-7021**	6	CLIP	
	12	1	**179-5260**	12	CLIP	
	13	1	**9X-8257**	10	WASHER (17.5X30X3.5-MM THK)	
M	14	1	**8T-4132**	4	NUT (M16X2-THD)	
	15	1	**8T-4223**	22	WASHER-HARD (13.5X25.5X3-MM THK)	
M	16	1	**8T-4244**	12	NUT (M12X1.75-THD)	
	17	1	**132-1596**	1	PLATE	
	18	1	**179-5090**	1	PLATE	
	19	1	**187-9862**	1	PLATE	
	20	1	**193-6662**	2	PLATE	
	21	1	**6V-8398**	4	SEAL-O-RING	
	22	1	**7J-9108**	4	SEAL-O-RING	
	23	1	**237-3016**	1	SUPPORT AS	
	24	1	**247-9440**	2	SUPPORT AS	
C	25	1	**277-1015**	1	TUBE AS	
C	26	1	**277-1018**	1	TUBE AS	
C	27	1	**277-1021**	1	TUBE AS	

C-CHANGE FROM PREVIOUS TYPE
M-METRIC PART

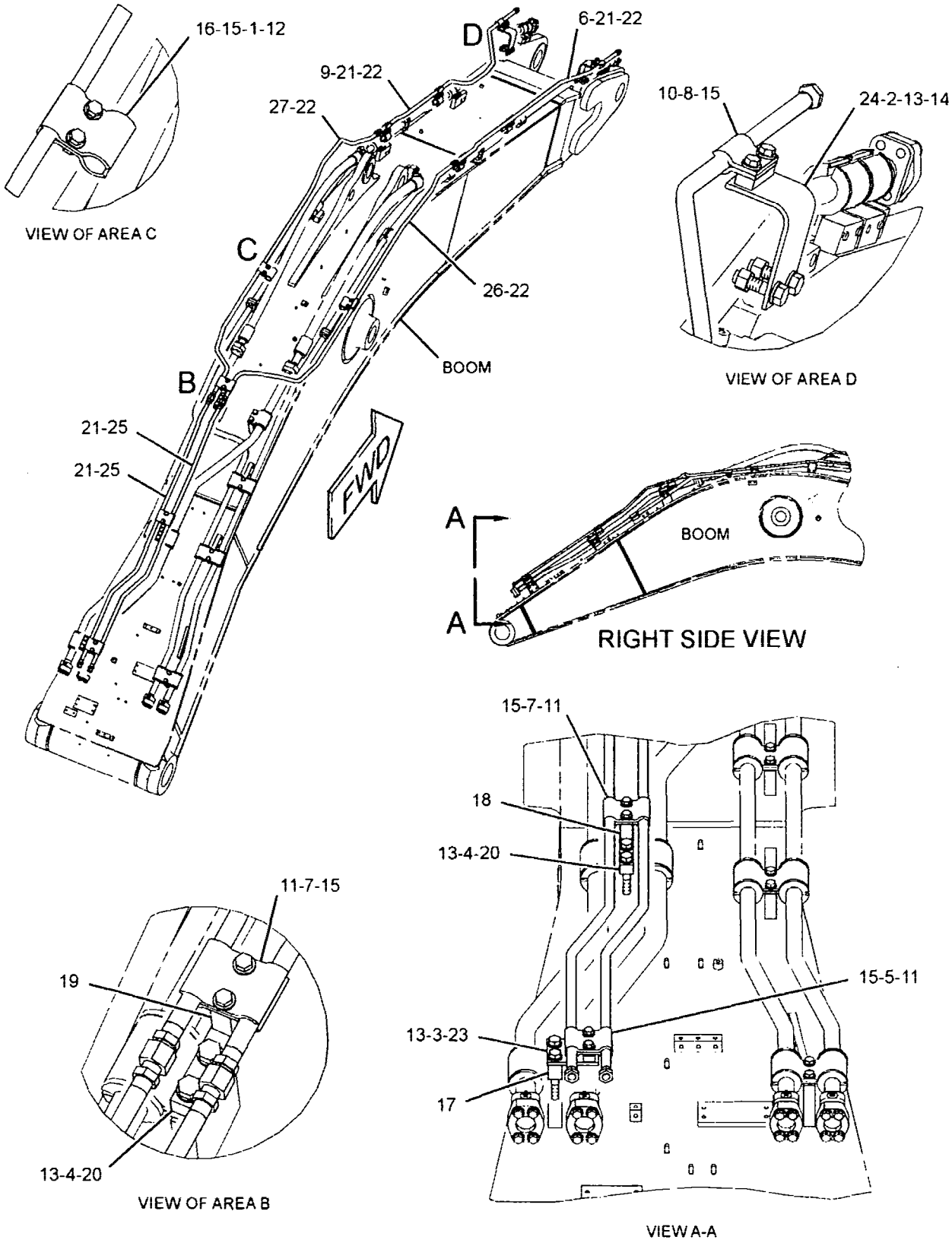

GRAPHIC #1 **<END>** g01293573

HYDRAULIC SYSTEM

230-0120 LINES GP-AUXILIARY HYDRAULIC-STICK, MEDIUM PRESSURE

S/N: YEE1-UP
TB-FAMILY
FOR USE WITH 3.9-M (12.8-FT) STICK
AN ATTACHMENT

SMCS-5057 **i02765780**

NOTE	REF NO	GRAPHIC REF	PART NUMBER	QTY	PART NAME 1 2 3 4 5 6 (PRODUCT LEVEL)	SEE PAGE
	1	1	**6C-6760**	2	MANIFOLD	
	2	1	*250-1440*	2	ADAPTER AS	
					(EACH INCLUDES)	
		1	**3K-0360**	1	SEAL-O-RING	
		1	**7X-3164**	1	ADAPTER-SWIVEL	
	3	1	**202-7001**	8	CLIP	
	4	1	**230-0458**	2	SUPPORT AS	
	5	1	**230-0460**	2	SUPPORT AS	
					(EACH INCLUDES)	
M		1	**8T-4244**	2	NUT (M12X1.75-THD)	
I	6	1	**245-2425**	2	HOSE AS	
	7	1	**247-9442**	1	TUBE AS	
	8	1	**247-9445**	1	TUBE AS	
	10	1	**6V-8398**	4	SEAL-O-RING	
	11	1	**8T-4121**	4	WASHER-HARD (11X21X2.5-MM THK)	
M	12	1	**8T-4139**	8	BOLT (M12X1.75X30-MM)	
	13	1	**8T-4223**	16	WASHER-HARD (13.5X25.5X3-MM THK)	
M	14	1	**8T-4910**	8	BOLT (M12X1.75X60-MM)	
M	15	1	**8T-6466**	4	BOLT (M10X1.5X60-MM)	

I-REFER TO HYDRAULIC INFORMATION SYSTEM
M-METRIC PART

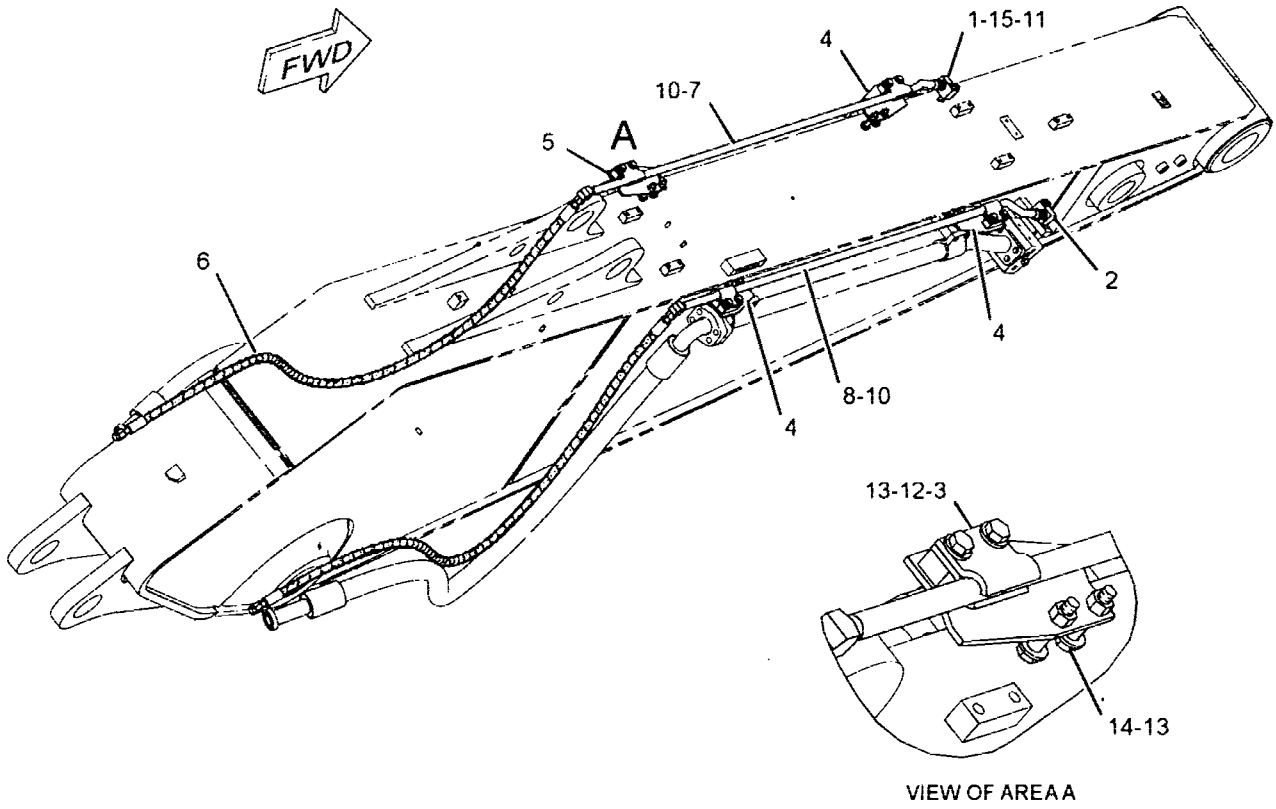

VIEW OF AREA A

GRAPHIC #1 **<END>** g01386098

HYDRAULIC SYSTEM

230-0123 LINES GP-AUXILIARY HYDRAULIC-STICK, MEDIUM PRESSURE

S/N: YEE1-UP
TB-FAMILY
FOR USE WITH 3.35-M (11-FT) STICK
AN ATTACHMENT

SMCS-5057 **i02765824**

NOTE	REF NO	GRAPHIC REF	PART NUMBER	QTY	PART NAME 1 2 3 4 5 6 (PRODUCT LEVEL)	SEE PAGE
	1	1	**6C-6760**	2	MANIFOLD	
	2	1	*250-1440*	2	ADAPTER AS	
					(EACH INCLUDES)	
		1	**3K-0360**	1	SEAL-O-RING	
		1	**7X-3164**	1	ADAPTER-SWIVEL	
	3	1	**202-7001**	8	CLIP	
	4	1	**230-0458**	2	SUPPORT AS	
	5	1	**230-0460**	2	SUPPORT AS	
					(EACH SUPPORT AS INCLUDES)	
M		1	**8T-4244**	2	NUT (M12X1.75-THD)	
I	6	1	**230-0483**	2	HOSE AS	
	7	1	**247-9373**	1	TUBE AS	
	8	1	**247-9376**	1	TUBE AS	
	10	1	**6V-8398**	4	SEAL-O-RING	
	11	1	**8T-4121**	4	WASHER-HARD (11X21X2.5-MM THK)	
M	12	1	**8T-4139**	8	BOLT (M12X1.75X30-MM)	
	13	1	**8T-4223**	16	WASHER-HARD (13.5X25.5X3-MM THK)	
M	14	1	**8T-4910**	8	BOLT (M12X1.75X60-MM)	
M	15	1	**8T-6466**	4	BOLT (M10X1.5X60-MM)	

I-REFER TO HYDRAULIC INFORMATION SYSTEM
M-METRIC PART

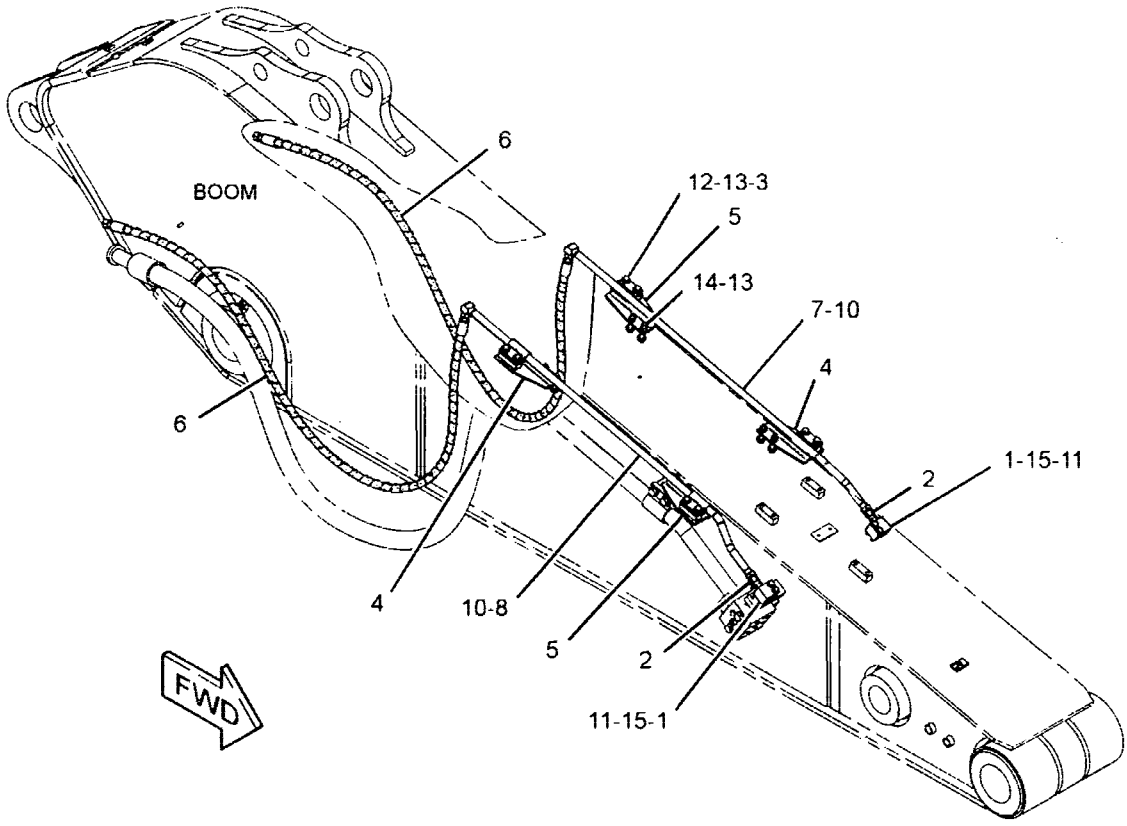

GRAPHIC #1

<END>

g01404984

HYDRAULIC SYSTEM

230-0128 LINES GP-AUXILIARY HYDRAULIC-STICK, HIGH PRESSURE

S/N: YEE1-UP

VB-FAMILY

FOR USE WITH 3-M (9.8-FT) STICK

AN ATTACHMENT

SMCS-5057 **i02838458**

NOTE	REF NO	GRAPHIC REF	PART NUMBER	QTY	PART NAME 1 2 3 4 5 6 (PRODUCT LEVEL)	SEE PAGE
M	1	1	**7X-2557**	2	BOLT (M16X2X140-MM)	
M	2	1	**8T-4140**	8	BOLT (M16X2X60-MM)	
M	3	1	**8T-4183**	4	BOLT (M12X1.75X40-MM)	
M	4	1	**8T-4193**	4	BOLT (M16X2X50-MM)	
M	5	1	**8T-4194**	8	BOLT (M12X1.75X50-MM)	
M	6	1	**8T-6685**	2	BOLT (M10X1.5X110-MM)	
M	7	1	**100-4982**	4	BOLT-SELF-LOCKING (M16X2X45-MM)	
	8	1	**306-1354**	2	CLAMP-HALF	
	9	1	**306-1355**	2	CLAMP-HALF	
	10	1	**1P-5767**	4	FLANGE-HALF	
	11	1	**5P-8077**	4	FLANGE-HALF	
I	12	1	**253-6432**	1	HOSE AS	
I	13	1	**253-6433**	1	HOSE AS	
	14	1	**1P-3704**	3	SEAL-RECTANGULAR	
	15	1	**1P-3705**	3	SEAL-RECTANGULAR	
	16	1	**245-2325**	1	TUBE AS	
	17	1	**294-6502**	1	TUBE AS	
Y	18	1	**277-0954**	1	VALVE GP-MANUAL (AUXILIARY,SHUTOFF,LH)	773
	19	1	**292-7752**	1	VALVE AS-MANUAL (AUXILIARY,SHUTOFF,RH)	
	20	1	**9X-8257**	14	WASHER (17.5X30X3.5-MM THK)	
	21	1	**8T-4121**	2	WASHER-HARD (11X21X2.5-MM THK)	
	22	1	**8T-4223**	8	WASHER-HARD (13.5X25.5X3-MM THK)	

I-REFER TO HYDRAULIC INFORMATION SYSTEM
M-METRIC PART
Y-SEPARATE ILLUSTRATION

230-0128 LINES GP-AUXILIARY HYDRAULIC *(contd.)* i02838458

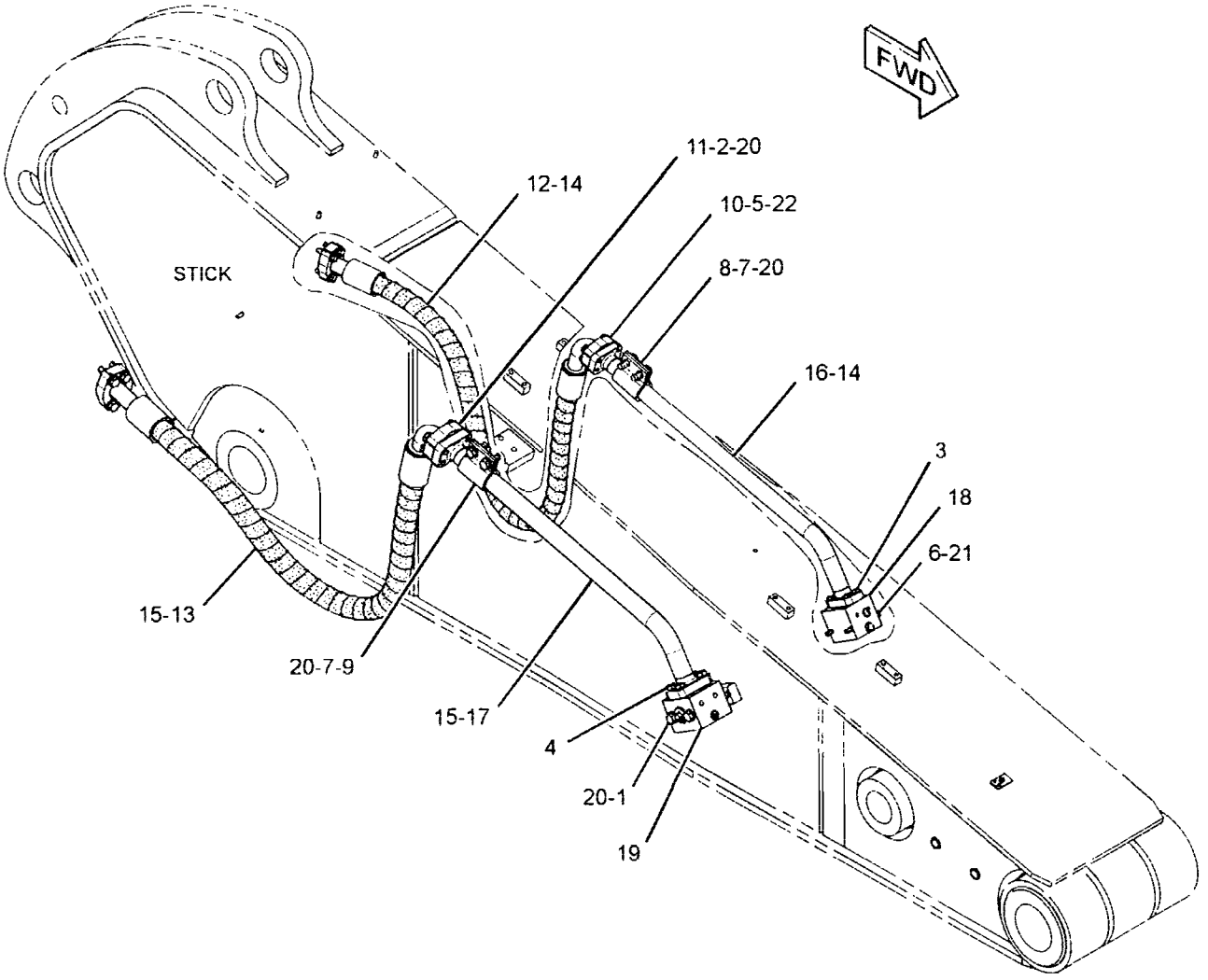

GRAPHIC #1 **<END>** g01417426

HYDRAULIC SYSTEM

242-6543 LINES GP-AUXILIARY HYDRAULIC-BOOM, HIGH PRESSURE

S/N: YEE1-UP

AN ATTACHMENT

SMCS-5057 **i02666657**

NOTE	REF NO	GRAPHIC REF	PART NUMBER	QTY	PART NAME 1 2 3 4 5 6 (PRODUCT LEVEL)	SEE PAGE
CM	1	1	**8T-4140**	32	BOLT (M16X2X60-MM)	
M	2	1	**8T-4174**	2	BOLT (M16X2X120-MM)	
M	3	1	**8T-4175**	2	BOLT (M16X2X90-MM)	
M	4	1	**8T-4183**	4	BOLT (M12X1.75X40-MM)	
CM	5	1	**8T-4193**	28	BOLT (M16X2X50-MM)	
M	6	1	**8T-4194**	8	BOLT (M12X1.75X50-MM)	
	7	1	**124-0909**	12	CLIP	
	8	1	**128-7514**	14	CLIP	
	9	1	**1P-5767**	4	FLANGE-HALF	
	10	1	**5P-8077**	4	FLANGE-HALF	
I	11	1	**216-6545**	1	HOSE AS	
I	12	1	**216-6546**	1	HOSE AS	
	13	1	**121-1948**	1	PLATE	
C	14	1	**247-9303**	3	PLATE	
	15	1	**247-9305**	4	PLATE	
	16	1	**253-6381**	1	PLATE	
	17	1	**253-6382**	1	PLATE	
C	18	1	**268-7042**	2	PLATE	
C	19	1	**268-7050**	2	PLATE	
	20	1	**1P-3704**	2	SEAL-RECTANGULAR	
	21	1	**1P-3705**	3	SEAL-RECTANGULAR	
	22	1	**1P-3706**	1	SEAL-RECTANGULAR	
	23	1	**245-2457**	1	TUBE AS	
	24	1	**245-2458**	1	TUBE AS	
C	25	1	**268-7051**	1	TUBE AS	
C	26	1	**268-7052**	1	TUBE AS	
	27	1	**9X-8257**	60	WASHER (17.5X30X3.5-MM THK)	
	28	1	**8T-4223**	8	WASHER-HARD (13.5X25.5X3-MM THK)	

C-CHANGE FROM PREVIOUS TYPE
I-REFER TO HYDRAULIC INFORMATION SYSTEM
M-METRIC PART

242-6543 LINES GP-AUXILIARY HYDRAULIC (contd.) i02666657

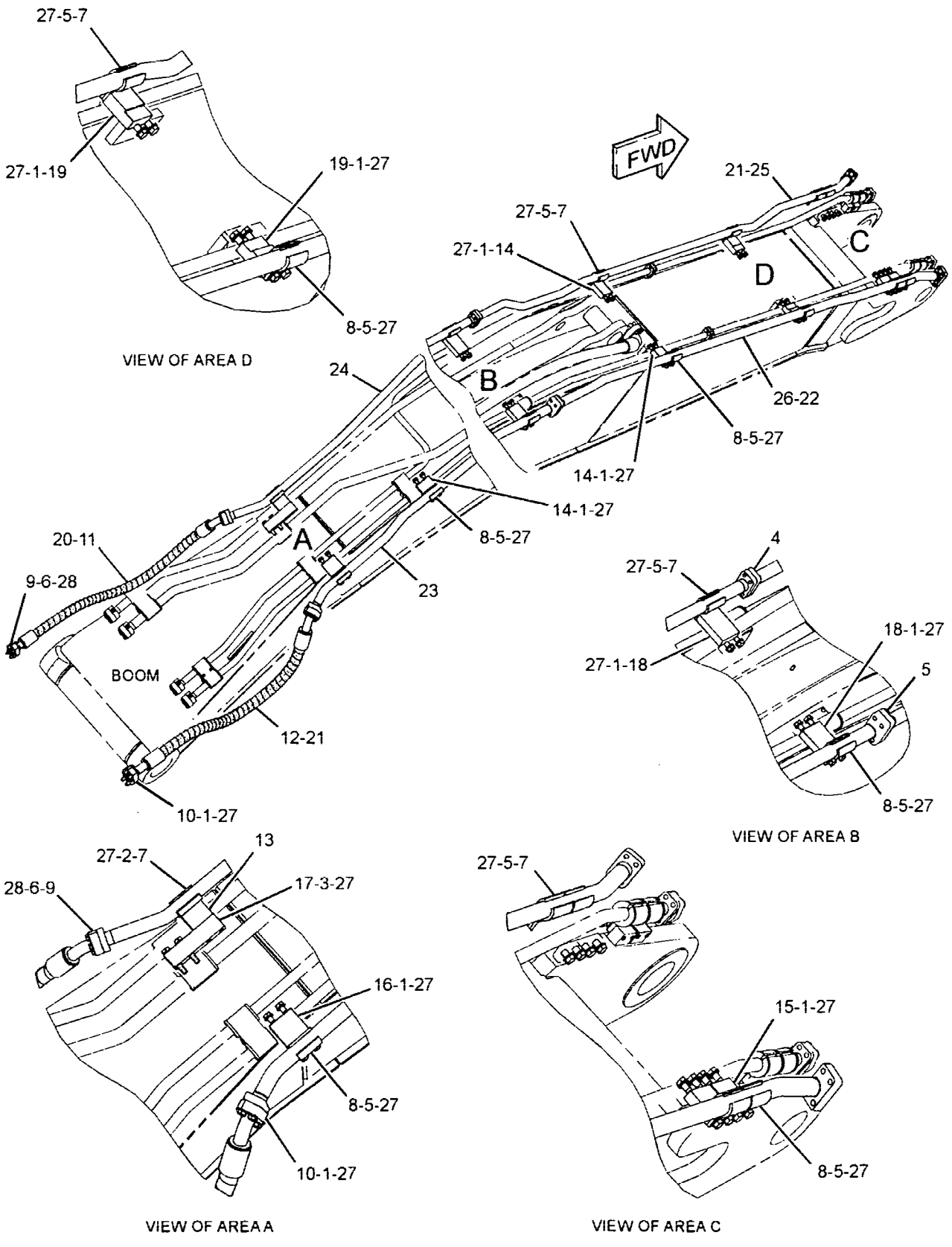

GRAPHIC #1 **<END>** g01340525

HYDRAULIC SYSTEM

242-6544 LINES GP-AUXILIARY HYDRAULIC-
LONG REACH BOOM, MEDIUM PRESSURE
S/N: YEE1-UP
AN ATTACHMENT

SMCS-5057 i02666664

NOTE	REF NO	GRAPHIC REF	PART NUMBER	QTY	PART NAME 1 2 3 4 5 6 (PRODUCT LEVEL)	SEE PAGE
M	1	1	8T-4139	12	BOLT (M12X1.75X30-MM)	
M	2	1	8T-4140	4	BOLT (M16X2X60-MM)	
M	3	1	8T-4173	2	BOLT (M16X2X110-MM)	
M	4	1	8T-4175	4	BOLT (M16X2X90-MM)	
M	5	1	8T-4183	2	BOLT (M12X1.75X40-MM)	
M	6	1	8T-4648	2	BOLT (M12X1.75X70-MM)	
M	7	1	8T-4956	4	BOLT (M12X1.75X35-MM)	
M	8	1	8T-6868	2	BOLT (M12X1.75X80-MM)	
C	9	1	179-5260	12	CLIP	
	10	1	202-7001	4	CLIP	
	11	1	202-7021	6	CLIP	
M	12	1	8T-4132	4	NUT (M16X2-THD)	
M	13	1	8T-4244	12	NUT (M12X1.75-THD)	
	14	1	132-1596	1	PLATE	
	15	1	179-5090	1	PLATE	
	16	1	187-9862	1	PLATE	
	17	1	193-6662	2	PLATE	
	18	1	6V-8398	4	SEAL-O-RING	
	19	1	7J-9108	4	SEAL-O-RING	
	20	1	237-3016	1	SUPPORT AS	
	21	1	247-9440	2	SUPPORT AS	
C	22	1	268-7083	1	TUBE AS	
C	23	1	268-7086	1	TUBE AS	
C	24	1	268-7089	1	TUBE AS	
C	25	1	268-7092	1	TUBE AS	
C	26	1	277-0871	2	TUBE AS	
	27	1	9X-8257	10	WASHER (17.5X30X3.5-MM THK)	
	28	1	8T-4223	22	WASHER-HARD (13.5X25.5X3-MM THK)	

C-CHANGE FROM PREVIOUS TYPE
M-METRIC PART

242-6544 LINES GP-AUXILIARY HYDRAULIC (contd.) i02666664

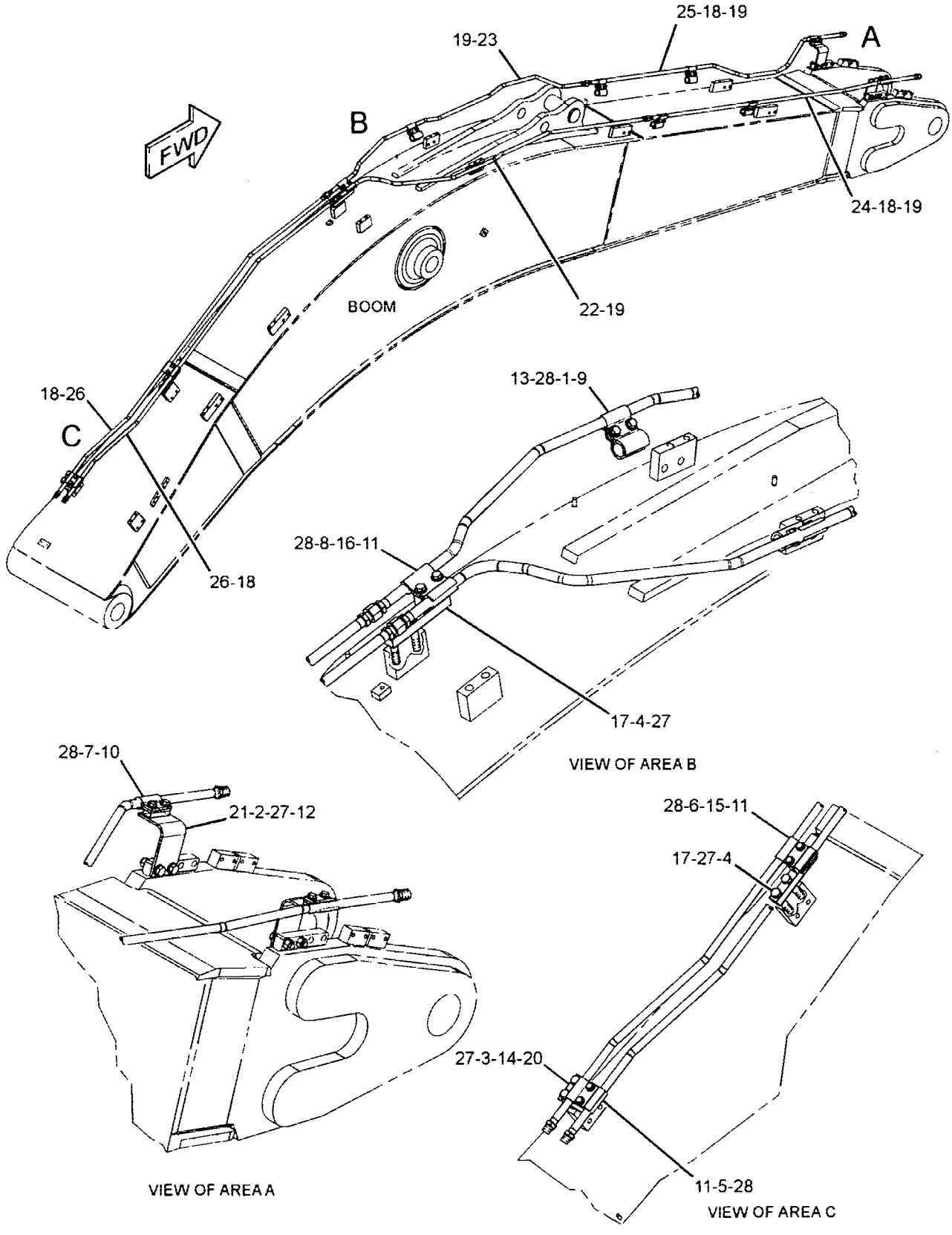

GRAPHIC #1 **<END>** g01350404

HYDRAULIC SYSTEM

242-6547 LINES GP-AUXILIARY HYDRAULIC-STICK, HIGH PRESSURE

S/N: YEE1-UP
TB-FAMILY
FOR USE WITH 4.3-M (14.1-FT) STICK
AN ATTACHMENT

SMCS-5057 **i02783334**

NOTE	REF NO	GRAPHIC REF	PART NUMBER	QTY	PART NAME 1 2 3 4 5 6 (PRODUCT LEVEL)	SEE PAGE
M	1	1	7X-2557	2	BOLT (M16X2X140-MM)	
M	2	1	8T-4140	8	BOLT (M16X2X60-MM)	
M	3	1	8T-4183	4	BOLT (M12X1.75X40-MM)	
M	4	1	8T-4193	4	BOLT (M16X2X50-MM)	
M	5	1	8T-4194	8	BOLT (M12X1.75X50-MM)	
M	6	1	8T-6685	2	BOLT (M10X1.5X110-MM)	
M	7	1	100-4982	8	BOLT-SELF-LOCKING (M16X2X45-MM)	
	8	1	306-1354	4	CLAMP-HALF	
	9	1	306-1355	4	CLAMP-HALF	
	10	1	1P-5767	4	FLANGE-HALF	
	11	1	5P-8077	4	FLANGE-HALF	
I	12	1	242-6551	1	HOSE AS	
I	13	1	247-9115	1	HOSE AS	
	14	1	1P-3704	3	SEAL-RECTANGULAR	
C	15	1	1P-3705	3	SEAL-RECTANGULAR	
	17	1	247-9082	1	TUBE AS	
C	18	1	294-6503	1	TUBE AS	
Y	19	1	277-0954	1	VALVE GP-MANUAL (AUXILIARY, LH)	773
C	20	1	292-7752	1	VALVE AS-MANUAL (AUXILIARY, RH)	
	21	1	9X-8257	18	WASHER (17.5X30X3.5-MM THK)	
	22	1	8T-4121	2	WASHER-HARD (11X21X2.5-MM THK)	
	23	1	8T-4223	8	WASHER-HARD (13.5X25.5X3-MM THK)	

C-CHANGE FROM PREVIOUS TYPE
I-REFER TO HYDRAULIC INFORMATION SYSTEM
M-METRIC PART
Y-SEPARATE ILLUSTRATION

242-6547 LINES GP-AUXILIARY HYDRAULIC (contd.) i02783334

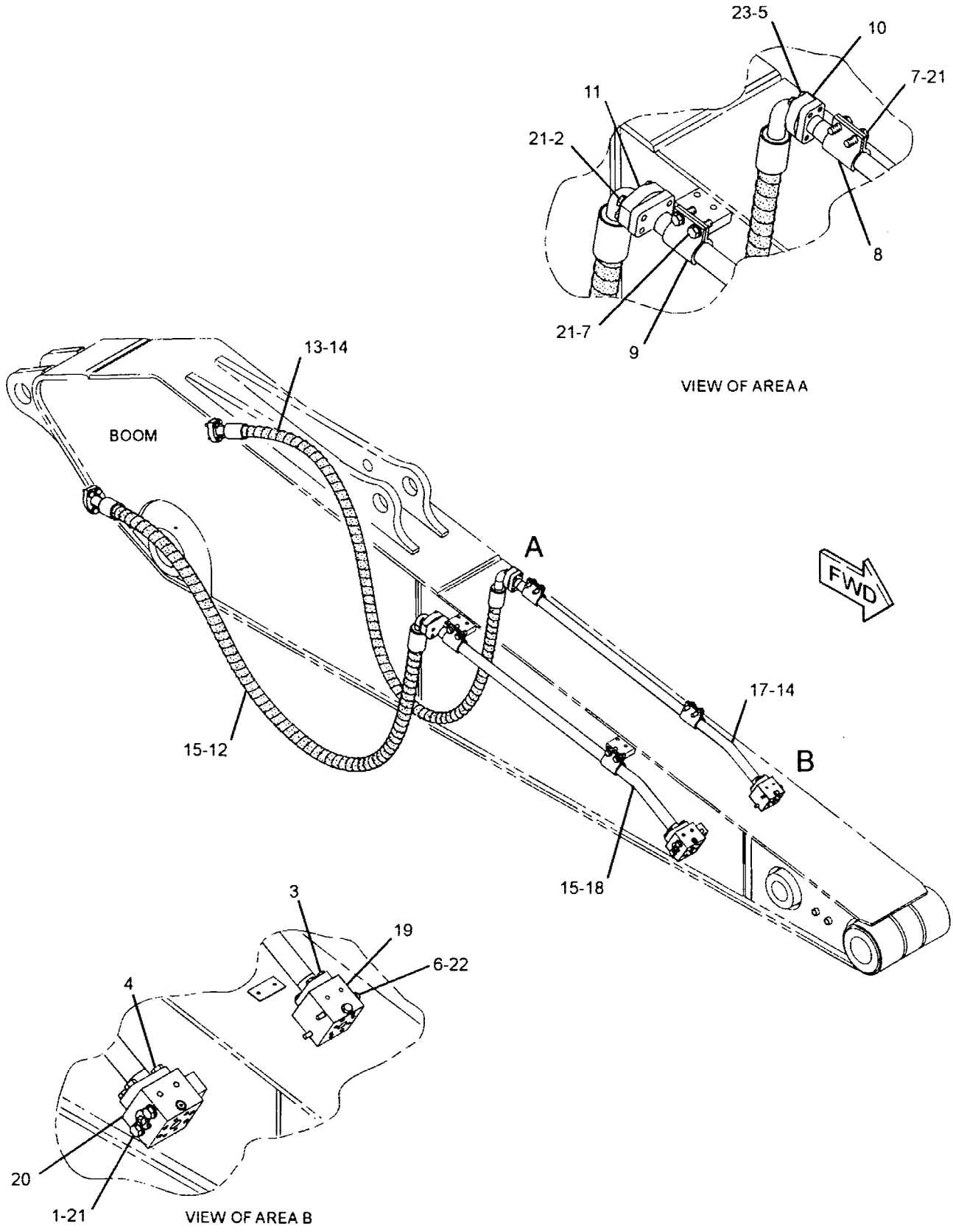

GRAPHIC #1 **<END>** g01356698

HYDRAULIC SYSTEM

242-6548 LINES GP-AUXILIARY HYDRAULIC-STICK, MEDIUM PRESSURE

S/N: YEE1-UP
TB-FAMILY
FOR USE WITH 1.3-M (14.1-FT) STICK
AN ATTACHMENT

SMCS-5057 **i02765742**

NOTE	REF NO	GRAPHIC REF	PART NUMBER	QTY	PART NAME 1 2 3 4 5 6 (PRODUCT LEVEL)	SEE PAGE
	1	1	*250-1440*	2	ADAPTER AS	
					(EACH INCLUDES)	
		1	**3K-0360**	1	SEAL-O-RING	
		1	**7X-3164**	1	ADAPTER-SWIVEL	
M	2	1	**8T-4139**	8	BOLT (M12X1.75X30-MM)	
M	3	1	**8T-4910**	8	BOLT (M12X1.75X60-MM)	
M	4	1	**8T-6466**	4	BOLT (M10X1.5X60-MM)	
	5	1	**202-7001**	8	CLIP	
I	6	1	**253-6461**	2	HOSE AS	
	7	1	**6C-6760**	2	MANIFOLD	
	9	1	**6V-8398**	4	SEAL-O-RING	
	10	1	**230-0458**	2	SUPPORT AS	
	11	1	**230-0460**	2	SUPPORT AS	
	12	1	**253-6464**	1	TUBE AS	
	13	1	**253-6467**	1	TUBE AS	
	14	1	**8T-4121**	4	WASHER-HARD (11X21X2.5-MM THK)	
	15	1	**8T-4223**	16	WASHER-HARD (13.5X25.5X3-MM THK)	

I-REFER TO HYDRAULIC INFORMATION SYSTEM
M-METRIC PART

242-6548 LINES GP-AUXILIARY HYDRAULIC *(contd.)* i02765742

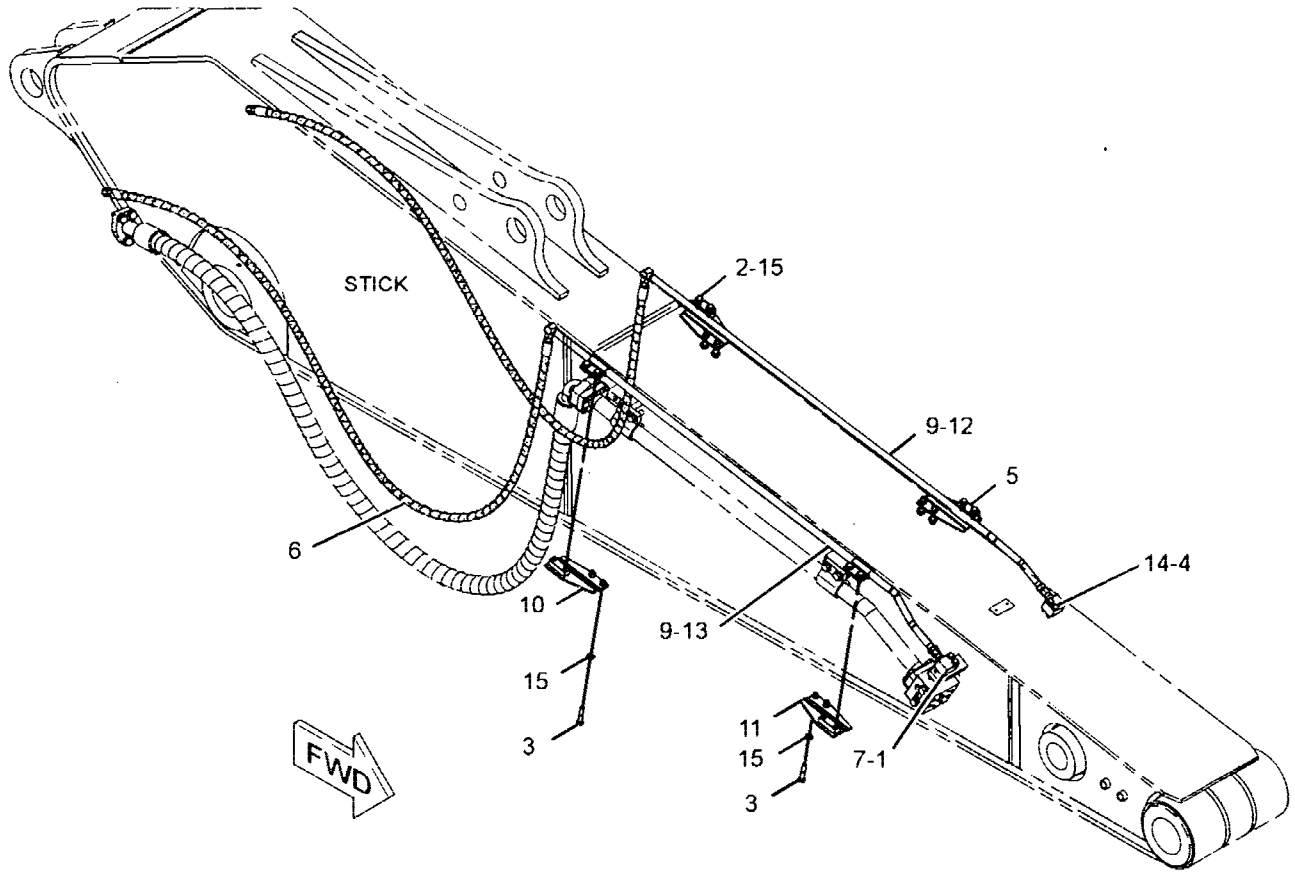

GRAPHIC #1 **<END>** g01386069

HYDRAULIC SYSTEM

247-9306 LINES GP-AUXILIARY HYDRAULIC-BOOM, HIGH PRESSURE

S/N: YEE1-UP

AN ATTACHMENT

SMCS-5057 **i02902481**

NOTE	REF NO	GRAPHIC REF	PART NUMBER	QTY	PART NAME 1 2 3 4 5 6 (PRODUCT LEVEL)	SEE PAGE
	1	1	**121-1948**	1	PLATE	
C	2	1	**318-5859**	1	TUBE AS	
C	3	1	**318-5860**	1	TUBE AS	
I	4	1	**216-6545**	1	HOSE AS	
I	5	1	**216-6546**	1	HOSE AS	
	6	1	**230-0236**	1	TUBE AS	
	7	1	**230-0237**	1	TUBE AS	
	8	1	**247-9302**	1	PLATE	
C	9	1	**247-9303**	4	PLATE	
	10	1	**247-9304**	2	PLATE	
	11	1	**247-9305**	4	PLATE	
	12	1	**124-0909**	12	CLIP	
	13	1	**128-7514**	14	CLIP	
	14	1	**1P-3704**	2	SEAL-RECTANGULAR	
	15	1	**1P-3705**	3	SEAL-RECTANGULAR	
	16	1	**1P-3706**	1	SEAL-RECTANGULAR	
	17	1	**1P-5767**	4	FLANGE-HALF	
	18	1	**5P-8077**	4	FLANGE-HALF	
M	19	1	**7X-2555**	4	BOLT (M16X2X80-MM)	
M	20	1	**8T-4140**	28	BOLT (M16X2X60-MM)	
M	21	1	**8T-4174**	2	BOLT (M16X2X120-MM)	
M	22	1	**8T-4175**	2	BOLT (M16X2X90-MM)	
M	23	1	**8T-4183**	4	BOLT (M12X1.75X40-MM)	
M	24	1	**8T-4193**	24	BOLT (M16X2X50-MM)	
M	25	1	**8T-4194**	8	BOLT (M12X1.75X50-MM)	
	26	1	**8T-4223**	8	WASHER-HARD (13.5X25.5X3-MM THK)	
	27	1	**9X-8257**	56	WASHER (17.5X30X3.5-MM THK)	
C	28	1	**318-5861**	2	PLATE	

C-CHANGE FROM PREVIOUS TYPE
I-REFER TO HYDRAULIC INFORMATION SYSTEM
M-METRIC PART

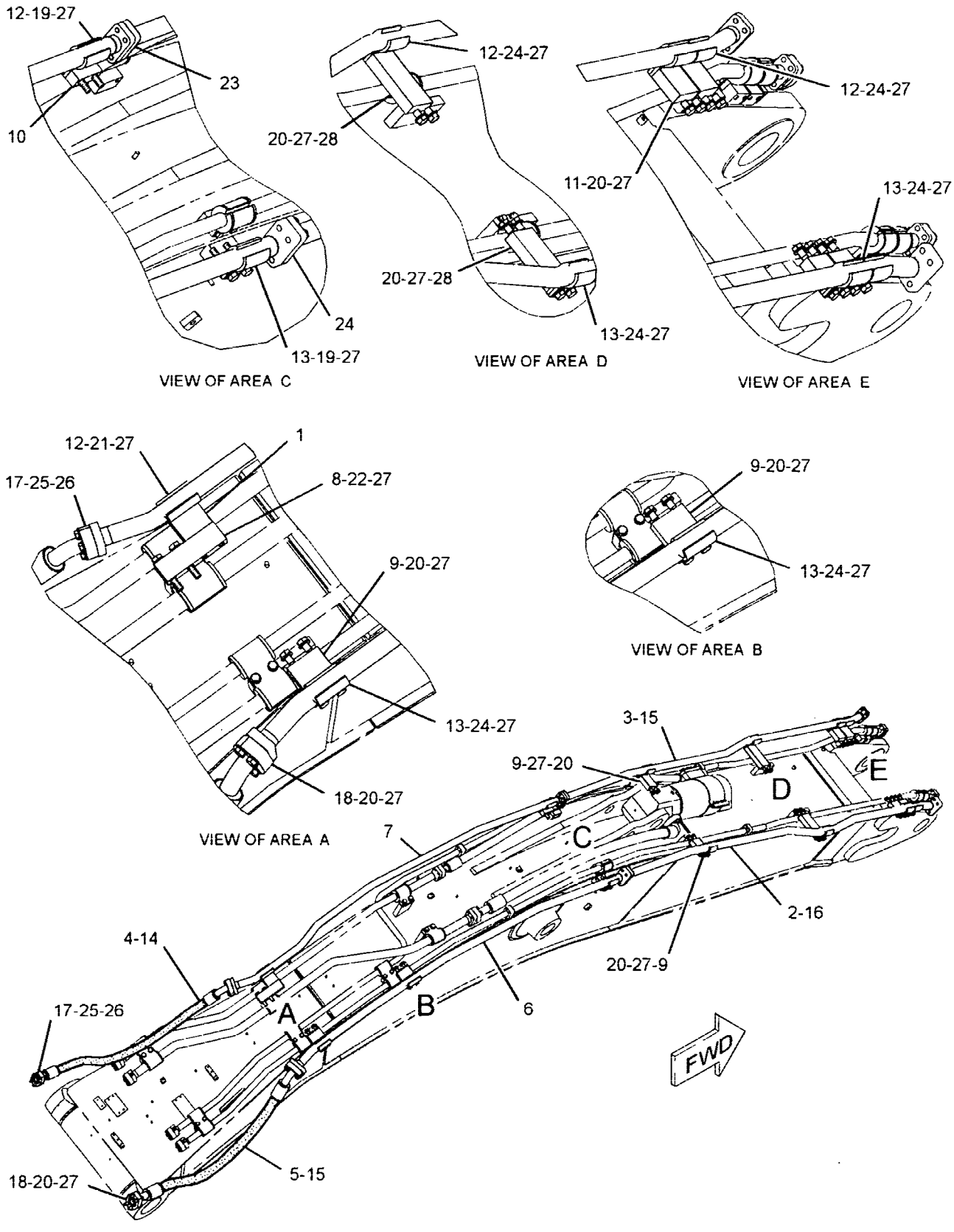

GRAPHIC #1 **<END>** g01446617

247-9307 LINES GP-AUXILIARY HYDRAULIC-MASS BOOM, HIGH PRESSURE

S/N: YEE1-UP

AN ATTACHMENT

SMCS-5057 **i02704564**

NOTE	REF NO	GRAPHIC REF	PART NUMBER	QTY	PART NAME 1 2 3 4 5 6 (PRODUCT LEVEL)	SEE PAGE
	1	1	**121-1948**	1	PLATE	
	2	1	**124-0909**	12	CLIP	
	3	1	**128-7514**	12	CLIP	
	4	1	**146-1217**	1	TUBE AS	
	5	1	**146-1220**	1	TUBE AS	
I	6	1	**216-6545**	1	HOSE AS	
I	7	1	**216-6546**	1	HOSE AS	
	8	1	**230-0238**	1	TUBE AS	
	9	1	**230-0239**	1	TUBE AS	
	10	1	**247-9302**	1	PLATE	
	11	1	**247-9303**	5	PLATE	
	12	1	**247-9304**	2	PLATE	
	13	1	**247-9305**	4	PLATE	
	14	1	**1P-3704**	2	SEAL-RECTANGULAR	
	15	1	**1P-3705**	3	SEAL-RECTANGULAR	
	16	1	**1P-3706**	1	SEAL-RECTANGULAR	
	17	1	**1P-5767**	4	FLANGE-HALF	
	18	1	**5P-8077**	4	FLANGE-HALF	
M	19	1	**7X-2555**	4	BOLT (M16X2X80-MM)	
M	20	1	**8T-4140**	26	BOLT (M16X2X60-MM)	
M	21	1	**8T-4174**	2	BOLT (M16X2X120-MM)	
M	22	1	**8T-4175**	2	BOLT (M16X2X90-MM)	
M	23	1	**8T-4183**	4	BOLT (M12X1.75X40-MM)	
M	24	1	**8T-4193**	22	BOLT (M16X2X50-MM)	
M	25	1	**8T-4194**	8	BOLT (M12X1.75X50-MM)	
	26	1	**8T-4223**	8	WASHER-HARD (13.5X25.5X3-MM THK)	
	27	1	**9X-8257**	52	WASHER (17.5X30X3.5-MM THK)	

I-REFER TO HYDRAULIC INFORMATION SYSTEM
M-METRIC PART

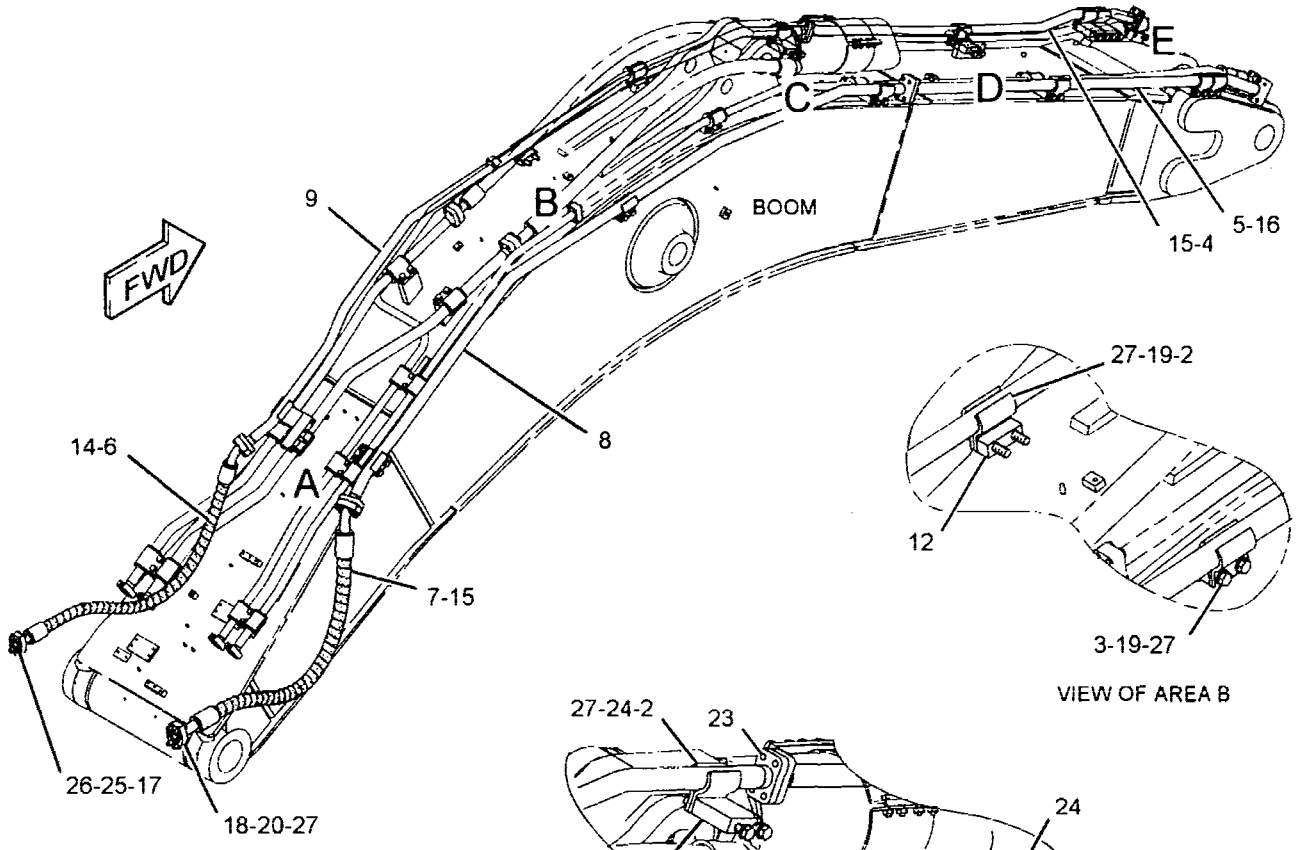

VIEW OF AREA B

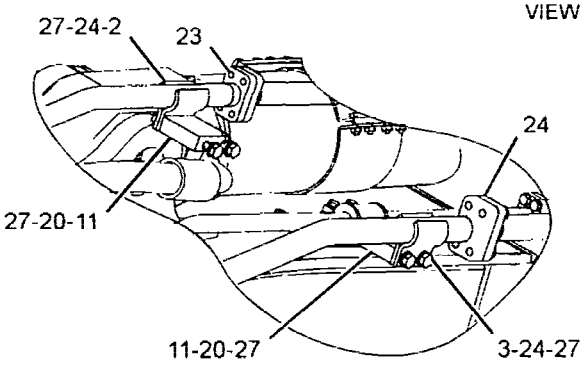

VIEW OF AREA C

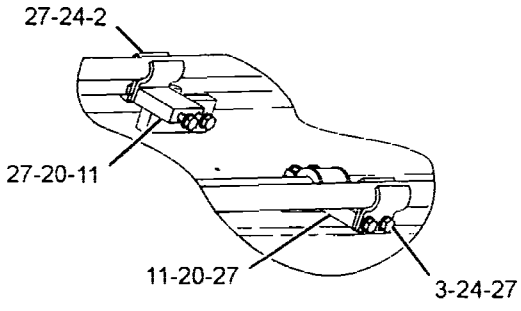

VIEW OF AREA D

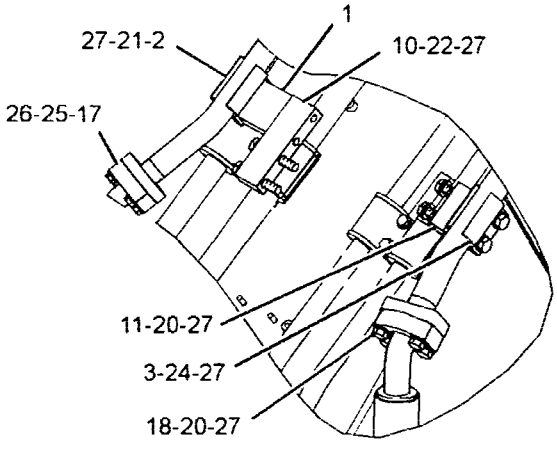

VIEW OF AREA A

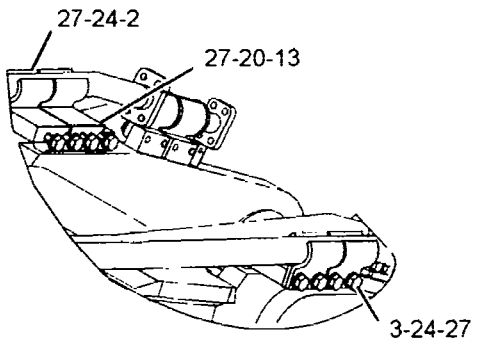

VIEW OF AREA E

GRAPHIC #1 **<END>** g01362380

HYDRAULIC SYSTEM

253-6383 LINES GP-AUXILIARY HYDRAULIC-STICK, HIGH PRESSURE

S/N: YEE1-UP
VB-FAMILY
FOR USE WITH 2.5-M (8.2-FT) STICK
AN ATTACHMENT

SMCS-5057 **i02838454**

NOTE	REF NO	GRAPHIC REF	PART NUMBER	QTY	PART NAME 1 2 3 4 5 6 (PRODUCT LEVEL)	SEE PAGE
I	1	1	**5I-8510**	1	HOSE AS	
	2	1	**142-6704**	1	TUBE AS	
I	3	1	**251-4482**	1	HOSE AS	
Y	4	1	**277-0954**	1	VALVE GP-MANUAL (AUXILIARY,SHUTOFF,LH)	773
	5	1	**292-7752**	1	VALVE AS-MANUAL (AUXILIARY,SHUTOFF,RH)	
	6	1	**294-6504**	1	TUBE AS	
	7	1	**306-1354**	2	CLAMP-HALF	
	8	1	**306-1355**	2	CLAMP-HALF	
M	9	1	**100-4982**	4	BOLT-SELF-LOCKING (M16X2X45-MM)	
	10	1	**1P-3704**	3	SEAL-RECTANGULAR	
	11	1	**1P-3705**	3	SEAL-RECTANGULAR	
	12	1	**1P-5767**	4	FLANGE-HALF	
	13	1	**5P-8077**	4	FLANGE-HALF	
M	14	1	**7X-2557**	2	BOLT (M16X2X140-MM)	
	15	1	**8T-4121**	2	WASHER-HARD (11X21X2.5-MM THK)	
M	16	1	**8T-4140**	8	BOLT (M16X2X60-MM)	
M	17	1	**8T-4183**	4	BOLT (M12X1.75X40-MM)	
M	18	1	**8T-4193**	4	BOLT (M16X2X50-MM)	
M	19	1	**8T-4194**	8	BOLT (M12X1.75X50-MM)	
	20	1	**8T-4223**	8	WASHER-HARD (13.5X25.5X3-MM THK)	
M	21	1	**8T-6685**	2	BOLT (M10X1.5X110-MM)	
	22	1	**9X-8257**	14	WASHER (17.5X30X3.5-MM THK)	

I-REFER TO HYDRAULIC INFORMATION SYSTEM
M-METRIC PART
Y-SEPARATE ILLUSTRATION

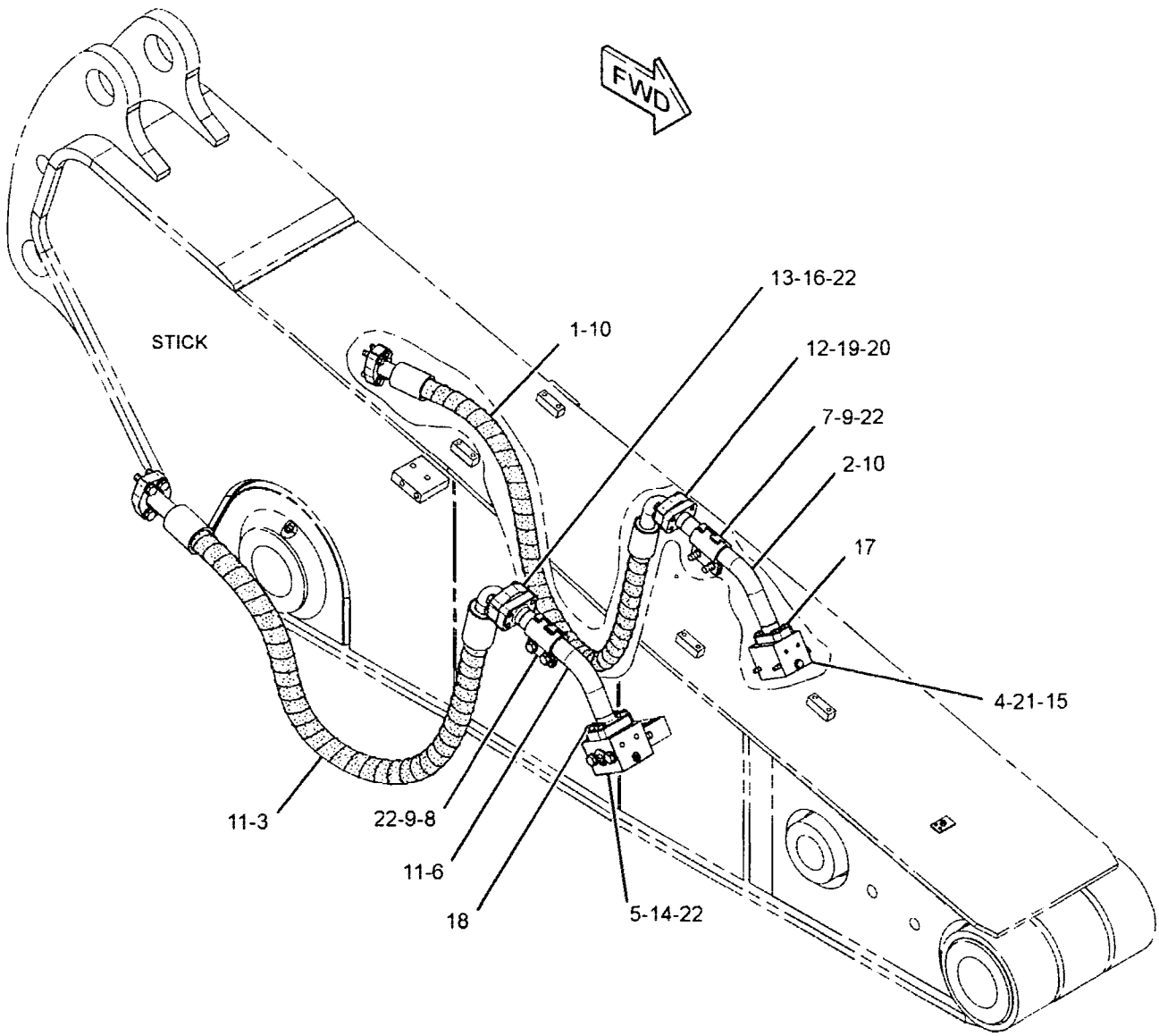

GRAPHIC #1 **<END>** g01417418

230-0138 LINES GP-BOOM–REACH BOOM, STICK LOAD CONTROL

S/N: YEE1-UP

PART OF 297-0257 VALVE AR-CHECK & RELIEF

AN ATTACHMENT

SMCS-5057 **i02933541**

NOTE	REF NO	GRAPHIC REF	PART NUMBER	QTY	PART NAME 1 2 3 4 5 6 (PRODUCT LEVEL)	SEE PAGE
CM	1	1	**7X-2549**	2	BOLT (M12X1.75X100-MM)	
CM	2	1	**8T-4173**	2	BOLT (M16X2X110-MM)	
					–OR–	
M		1	**8T-4174**	2	BOLT (M16X2X120-MM)	
					(LONGER BOLTS REQUIRED IF MACHINE EQUIPPED WITH MEDIUM PRESSURE AUXILIARY HYD LINES)	
CM	3	1	**8T-4779**	6	BOLT (M16X2X35-MM)	
C	4	1	**216-6515**	6	CLIP	
C	5	1	**5Q-4212**	2	CLIP	
C	6	1	**153-8669**	1	HOSE AS	
I	7	1	**212-5419**	2	HOSE AS	
CM	8	1	**8T-4132**	6	NUT (M16X2-THD)	
	9	1	**6V-9168**	2	NUT (11/16-16-THD)	
C	10	1	**321-0529**	1	TUBE AS	
C	11	1	**157-9338**	1	PLATE	
C	13	1	**302-9564**	1	PLATE	
C	14	1	**6V-8398**	2	SEAL-O-RING	
C	15	1	**7K-1181**	7	STRAP-CABLE	
	16	1	*149-5452*	2	UNION AS	
					(EACH INCLUDES)	
		1	**6V-8397**	2	SEAL-O-RING	
		1	**6V-8994**	1	UNION	
BC	17	1	**9X-8257**	10	WASHER (17.5X30X3.5-MM THK)	
C	18	1	**8T-4223**	2	WASHER-HARD (13.5X25.5X3-MM THK)	

B-USE AS REQUIRED
C-CHANGE FROM PREVIOUS TYPE
I-REFER TO HYDRAULIC INFORMATION SYSTEM
M-METRIC PART

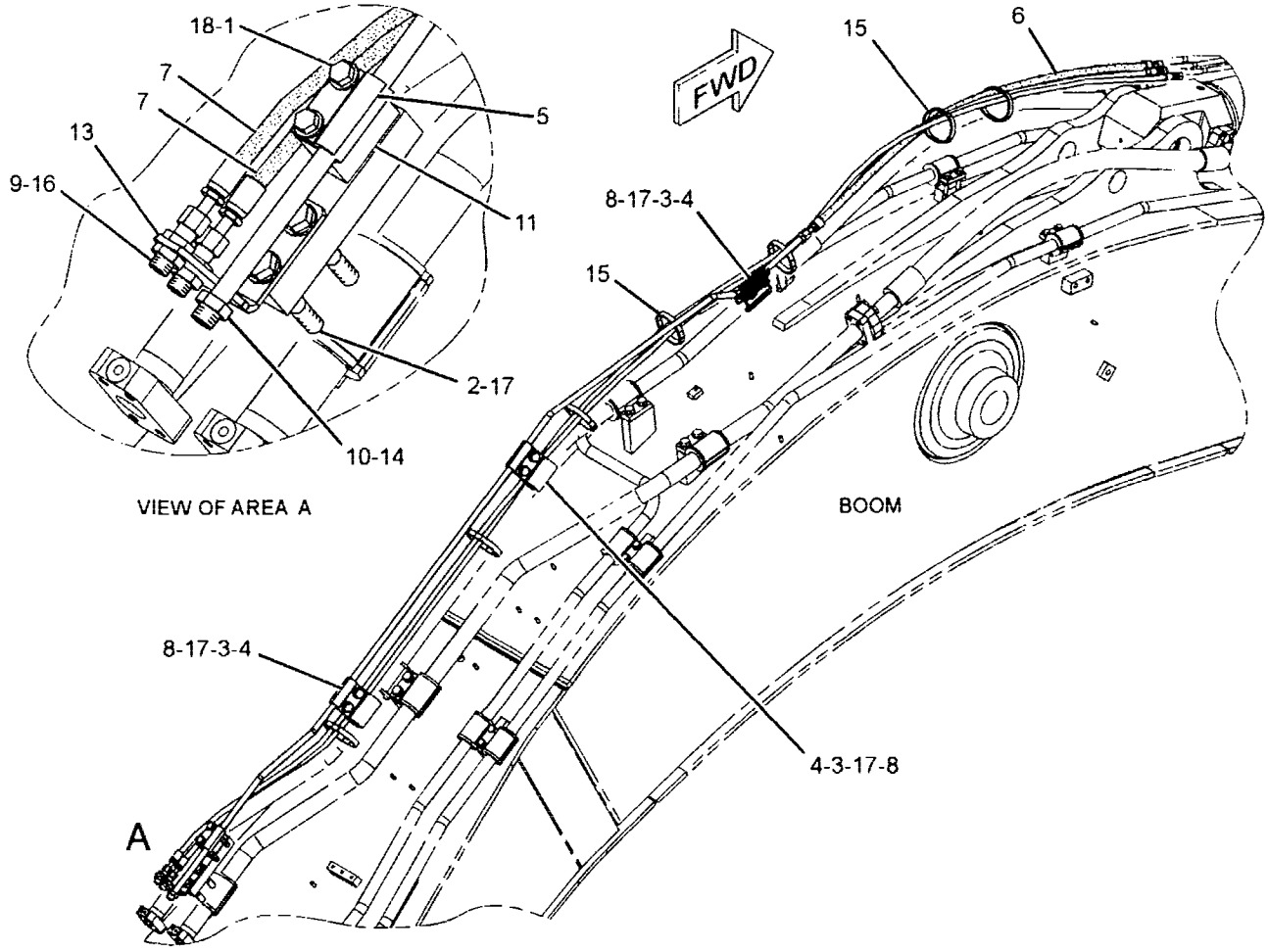

GRAPHIC #1 **<END>** g01469818

HYDRAULIC SYSTEM

230-0140 LINES GP-BOOM–MASS BOOM, STICK LOAD CONTROL

S/N: YEE1-UP

PART OF 297-0258 VALVE AR-CHECK & RELIEF

AN ATTACHMENT

SMCS-5057 **i02927437**

NOTE	REF NO	GRAPHIC REF	PART NUMBER	QTY	PART NAME 1 2 3 4 5 6 (PRODUCT LEVEL)	SEE PAGE
CM	1	1	**7X-2549**	2	BOLT (M12X1.75X100-MM)	
CM	2	1	**8T-4139**	2	BOLT (M12X1.75X30-MM)	
CM	3	1	**8T-4173**	2	BOLT (M16X2X110-MM)	
					–OR–	
M		1	**8T-4174**	2	BOLT (M16X2X120-MM)	
					(LONGER BOLTS REQUIRED IF MACHINE EQUIPPED WITH MEDIUM PRESSURE AUXILIARY HYD LINES)	
CM	4	1	**8T-4779**	4	BOLT (M16X2X35-MM)	
C	5	1	**179-5235**	2	CLIP	
C	6	1	**216-6515**	4	CLIP	
C	7	1	**5Q-4212**	2	CLIP	
I	8	1	**4I-3514**	2	HOSE AS	
CI	9	1	**302-9565**	1	HOSE AS	
CM	10	1	**8T-4132**	4	NUT (M16X2-THD)	
CM	11	1	**8T-4244**	2	NUT (M12X1.75-THD)	
	12	1	**6V-9168**	2	NUT (11/16-16-THD)	
C	13	1	**302-9580**	1	TUBE AS	
C	14	1	**157-9338**	1	PLATE	
C	16	1	**302-9564**	1	PLATE	
C	17	1	**6V-8398**	2	SEAL-O-RING	
C	18	1	**7K-1181**	6	STRAP-CABLE	
	19	1	*149-5452*	2	UNION AS	
					(EACH INCLUDES)	
		1	**6V-8397**	2	SEAL-O-RING	
		1	**6V-8994**	1	UNION	
BC	20	1	**9X-8257**	8	WASHER (17.5X30X3.5-MM THK)	
C	21	1	**8T-4223**	4	WASHER-HARD (13.5X25.5X3-MM THK)	

B-USE AS REQUIRED
C-CHANGE FROM PREVIOUS TYPE
I-REFER TO HYDRAULIC INFORMATION SYSTEM
M-METRIC PART

230-0140 **LINES GP-BOOM** *(contd.)* **i02927437**

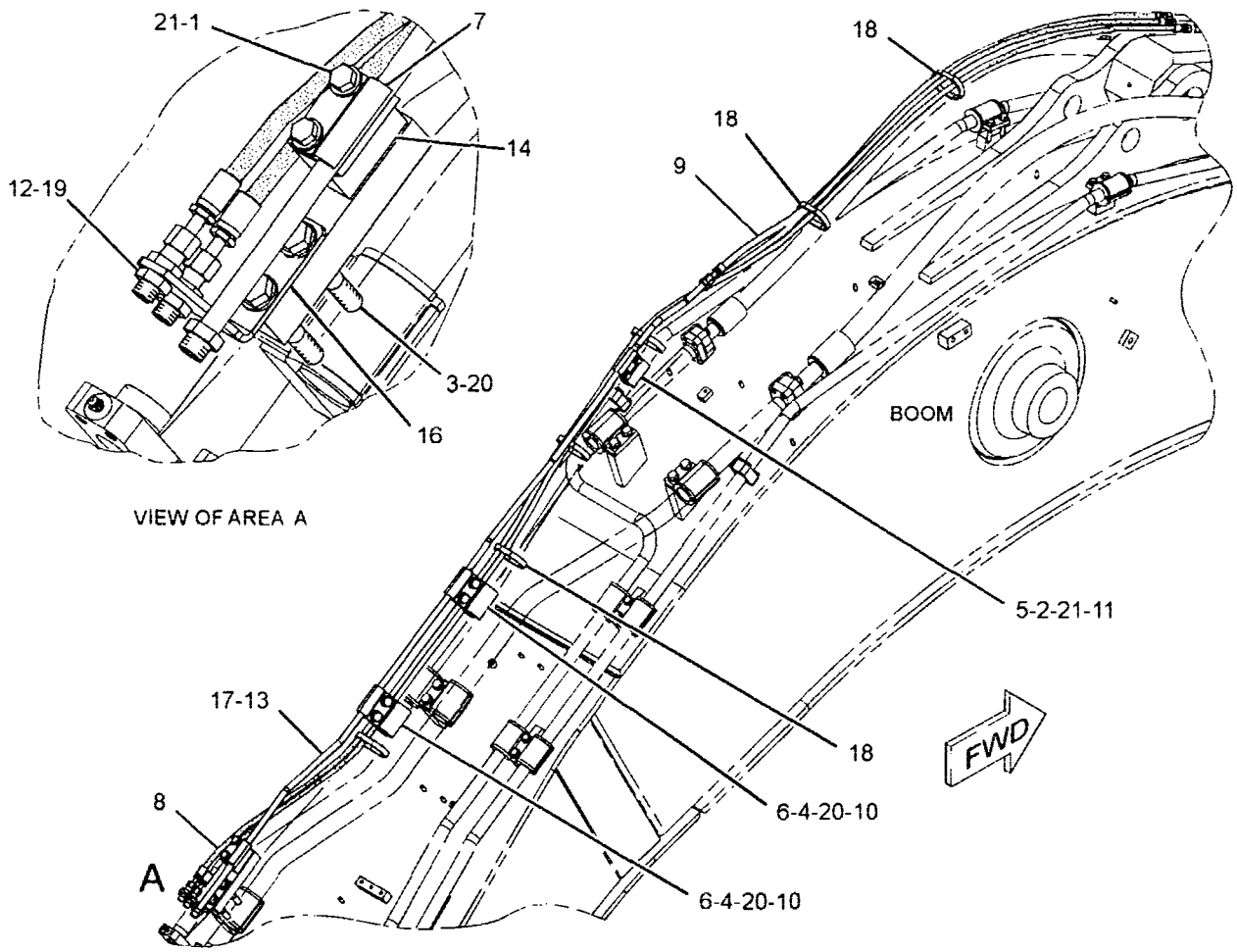

GRAPHIC #1 **<END>** g01467227

HYDRAULIC SYSTEM

245-4930 LINES GP-BOOM

S/N: YEE1-UP

PART OF 294-1247 BOOM AR-LONG REACH

AN ATTACHMENT

SMCS-5057 **i02857464**

NOTE	REF NO	GRAPHIC REF	PART NUMBER	QTY	PART NAME 1 2 3 4 5 6 (PRODUCT LEVEL)	SEE PAGE
	1	1	**9F-2167**	4	SCREW-PURGE (3/8-24X1.164-IN)	
	2	1	**124-1107**	3	GROMMET	
	3	1	**129-5874**	14	GROMMET	
	4	1	**138-5708**	4	CLIP-HALF	
	5	1	**138-5709**	3	GROMMET	
	6	1	**199-1875**	2	GROMMET	
CI	7	1	**307-4994**	1	HOSE AS	
C	8	1	**307-4992**	1	TUBE AS	
C	9	1	**307-4993**	1	TUBE AS	
CI	10	1	**307-5018**	1	HOSE AS	
	11	1	**248-9789**	1	TUBE AS	
	12	1	**248-9790**	1	TUBE AS	
	13	1	**255-1644**	1	TUBE AS	
	14	1	**255-1645**	1	TUBE AS	
	15	1	**255-1646**	2	TUBE AS	
M	16	1	**096-9986**	18	BOLT (M12X1.75X55-MM)	
	17	1	**124-1106**	4	CLIP	
	18	1	**124-1108**	20	CLIP	
	19	1	**124-1109**	6	CLIP	
	20	1	**1P-3703**	8	SEAL-RECTANGULAR	
	21	1	**1P-3704**	4	SEAL-RECTANGULAR	
	22	1	**1P-3705**	2	SEAL-RECTANGULAR	
	23	1	**1P-5767**	8	FLANGE-HALF	
	24	1	**5P-0047**	4	COVER	
	25	1	**5P-0048**	2	COVER	
	26	1	**5P-8077**	4	FLANGE-HALF	
	27	1	**6V-0400**	8	FLANGE-HALF	
M	28	1	**7X-2554**	4	BOLT (M16X2X70-MM)	
M	29	1	**8T-4139**	16	BOLT (M12X1.75X30-MM)	
M	30	1	**8T-4140**	12	BOLT (M16X2X60-MM)	
M	31	1	**8T-4184**	8	BOLT (M12X1.75X45-MM)	
M	32	1	**8T-4194**	32	BOLT (M12X1.75X50-MM)	
	33	1	**8T-4223**	58	WASHER-HARD (13.5X25.5X3-MM THK)	
	34	1	**9X-8257**	16	WASHER (17.5X30X3.5-MM THK)	

C-CHANGE FROM PREVIOUS TYPE
I-REFER TO HYDRAULIC INFORMATION SYSTEM
M-METRIC PART

245-4930 LINES GP-BOOM (contd.) i02857464

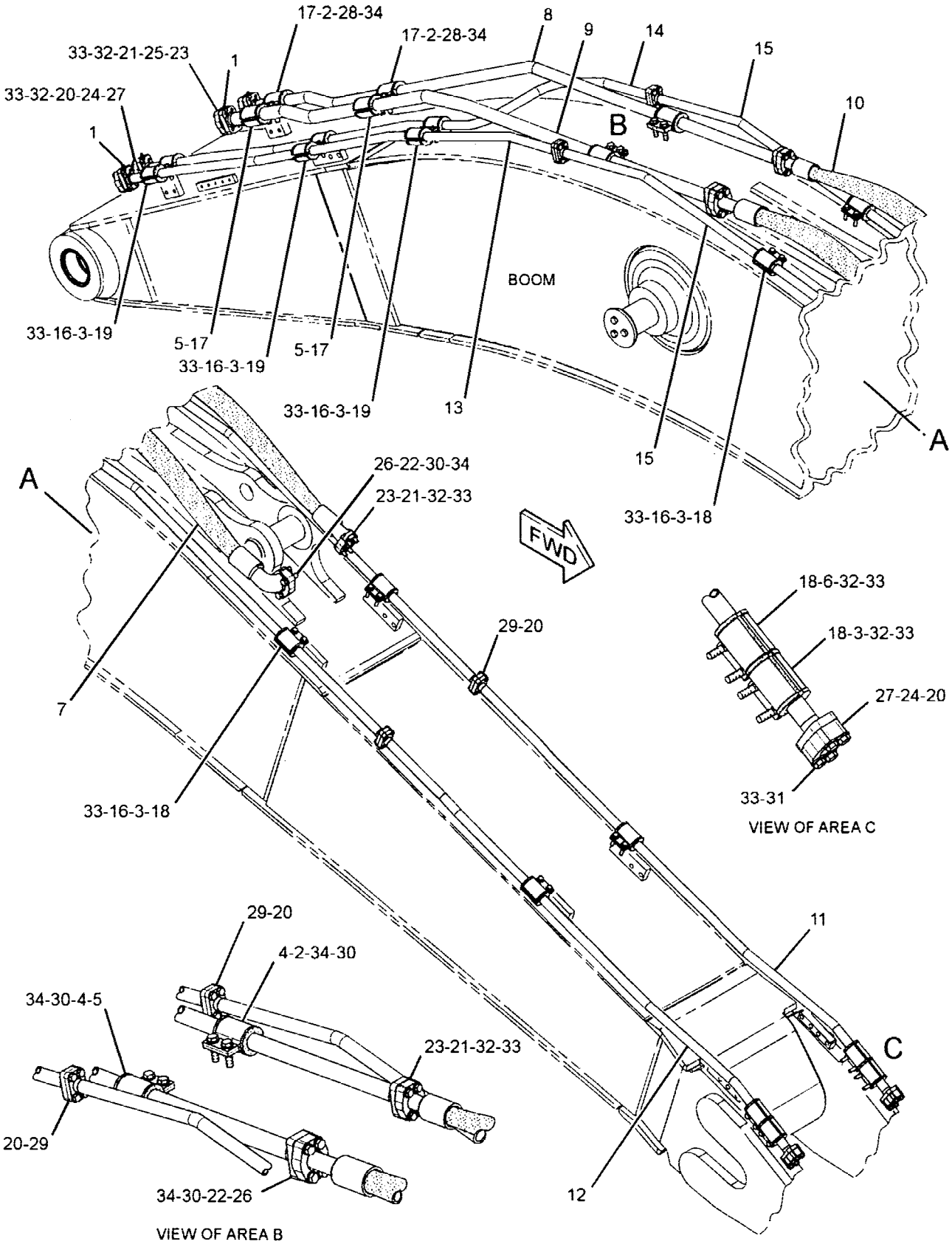

GRAPHIC #1 **<END>** g01427167

HYDRAULIC SYSTEM

245-5317 LINES GP-BOOM

S/N: YEE1-UP

PART OF 294-1250 BOOM AR-REACH, 324-0190, 324-0191 SPECIAL AR AN ATTACHMENT

TYPE 1

SMCS-5057 **102155145**

NOTE	REF NO	GRAPHIC REF	PART NUMBER	QTY	PART NAME 1 2 3 4 5 6 (PRODUCT LEVEL)	SEE PAGE
	1	1	**9F-2167**	4	SCREW-PURGE (3/8-24X1.164-IN)	
	2	2	**124-1107**	3	GROMMET	
	3	2	**129-5874**	14	GROMMET	
	4	2	**138-5708**	4	CLIP-HALF	
	5	2	**138-5709**	3	GROMMET	
	6	1	**143-4211**	1	TUBE AS	
	7	1	**143-4212**	1	TUBE AS	
	8	1	**199-1875**	2	GROMMET	
	9	2	**210-9907**	2	PLATE	
I	10	1	**218-1200**	1	HOSE AS	
	11	1	**245-5384**	1	TUBE AS	
	12	1	**245-5385**	1	TUBE AS	
	13	1	**248-9717**	2	TUBE AS	
	14	1	**248-9718**	1	TUBE AS	
	15	1	**248-9719**	1	TUBE AS	
I	16	1	**248-9720**	1	HOSE AS	
M	17	2	**096-9986**	18	BOLT (M12X1.75X55-MM)	
	18	2	**124-1106**	4	CLIP	
	19	1,2	**124-1108**	20	CLIP	
	20	2	**124-1109**	6	CLIP	
	21	1	**1P-3703**	8	SEAL-RECTANGULAR	
	22	1	**1P-3704**	4	SEAL-RECTANGULAR	
	23	1	**1P-3705**	2	SEAL-RECTANGULAR	
	24	1	**1P-5767**	8	FLANGE-HALF	
	25	1	**5P-0047**	4	COVER	
	26	1	**5P-0048**	2	COVER	
	27	1	**5P-8077**	4	FLANGE-HALF	
	28	1	**6V-0400**	8	FLANGE-HALF	
M	29	2	**7X-2554**	8	BOLT (M16X2X70-MM)	
M	30	1	**8T-4139**	16	BOLT (M12X1.75X30-MM)	
M	31	1	**8T-4140**	8	BOLT (M16X2X60-MM)	
M	32	1	**8T-4184**	24	BOLT (M12X1.75X45-MM)	
M	33	1,2	**8T-4194**	16	BOLT (M12X1.75X50-MM)	
	34	1,2	**8T-4223**	58	WASHER-HARD (13.5X25.5X3-MM THK)	
	35	1,2	**9X-8257**	16	WASHER (17.5X30X3.5-MM THK)	

I-REFER TO HYDRAULIC INFORMATION SYSTEM
M-METRIC PART

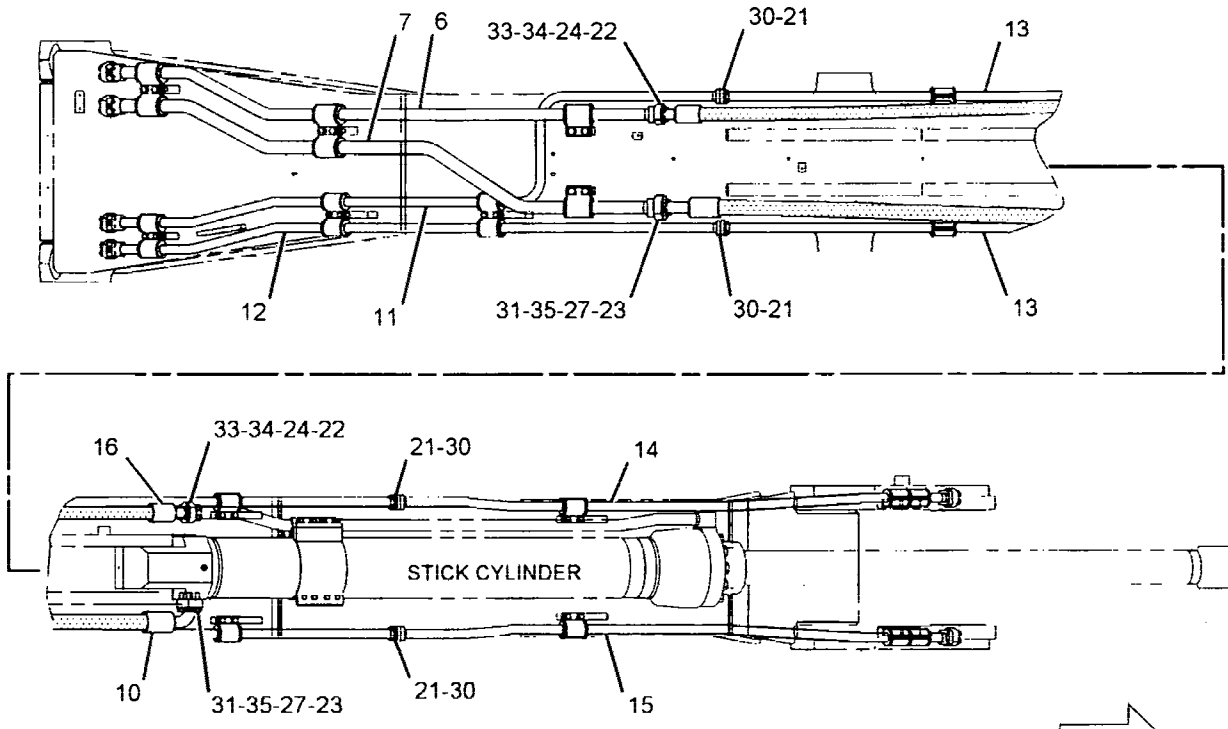

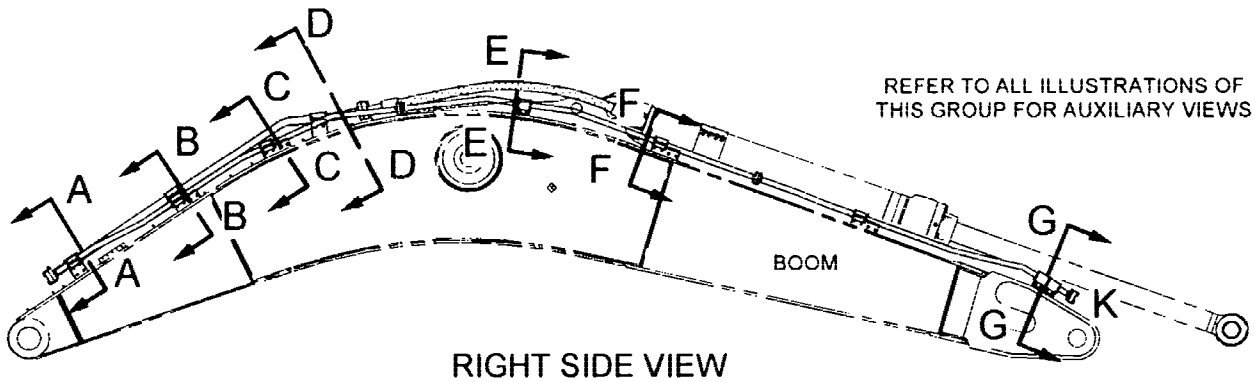

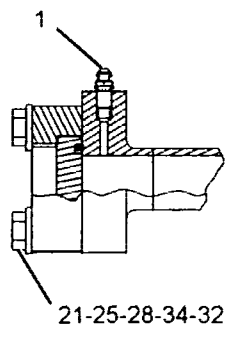

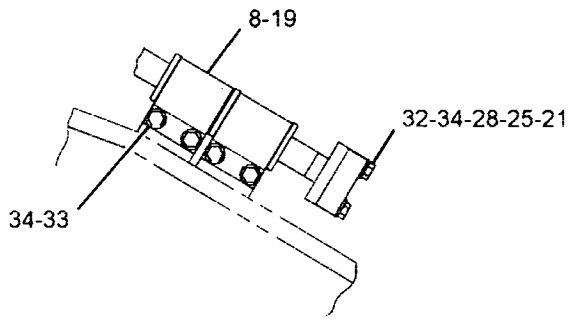

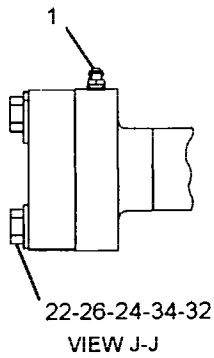

GRAPHIC #1 g01099397

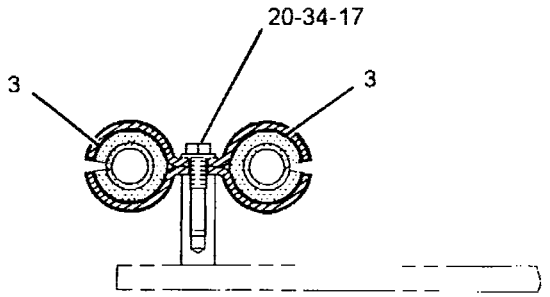

SECTION C-C

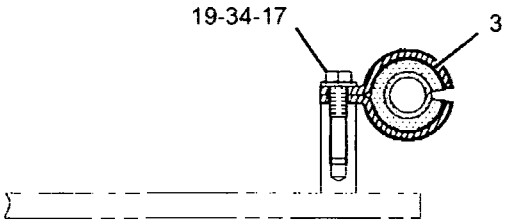

SECTION F-F

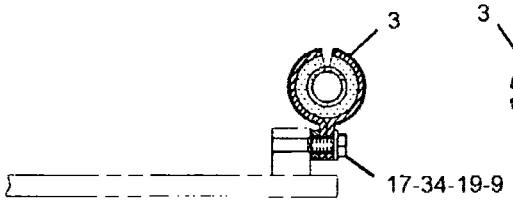

SECTION E-E

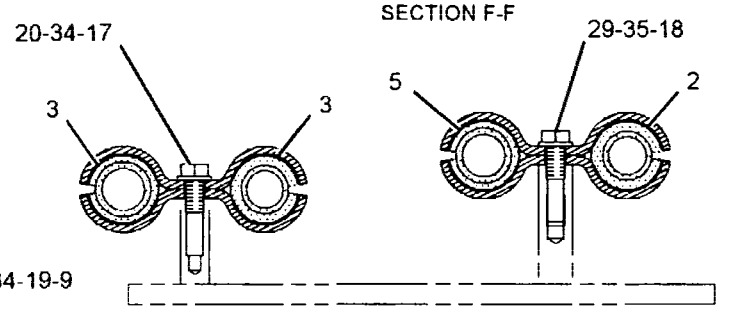

SECTION B-B

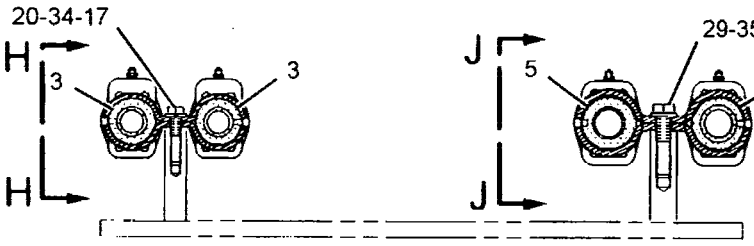

SECTION A-A

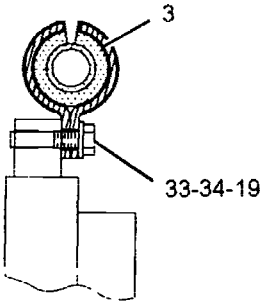

SECTION G-G

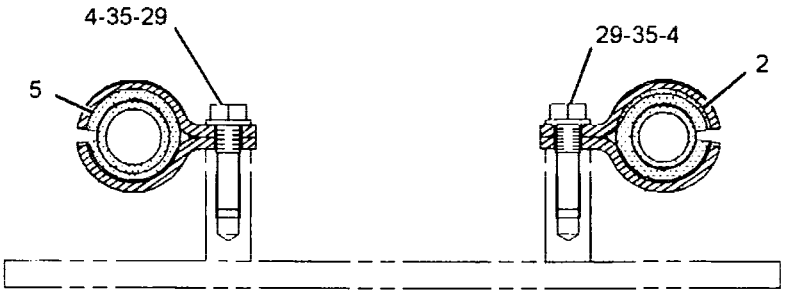

SECTION D-D

REFER TO ALL ILLUSTRATIONS OF THIS GROUP FOR AUXILIARY VIEWS

GRAPHIC #2

<END>

g01099398

HYDRAULIC SYSTEM

245-5317 LINES GP-BOOM

S/N: YEE1-UP
PART OF 294-1250 BOOM AR-REACH
AN ATTACHMENT
TYPE 2

SMCS-5057 **i02832147**

NOTE	REF NO	GRAPHIC REF	PART NUMBER	QTY	PART NAME 1 2 3 4 5 6 (PRODUCT LEVEL)	SEE PAGE
	1	1	**9F-2167**	4	SCREW-PURGE (3/8-24X1.164-IN)	
	2	1	**124-1107**	3	GROMMET	
	3	1	**129-5874**	14	GROMMET	
	4	1	**138-5708**	4	CLIP-HALF	
	5	1	**138-5709**	3	GROMMET	
C	6	1	**302-3114**	1	TUBE AS	
C	7	1	**302-3115**	1	TUBE AS	
	8	1	**199-1875**	2	GROMMET	
CI	9	1	**302-3117**	1	HOSE AS	
	10	1	**248-9718**	1	TUBE AS	
	11	1	**248-9719**	1	TUBE AS	
CI	12	1	**302-3116**	1	HOSE AS	
J	13	1	**248-9910**	1	TUBE GP	
J	14	1	**248-9913**	1	TUBE GP	
					(EACH TUBE GP INCLUDES)	
L		1	**1P-3703**	1	SEAL-RECTANGULAR	
LM		1	**8T-4139**	4	BOLT (M12X1.75X30-MM)	
M	15	1	**096-9986**	18	BOLT (M12X1.75X55-MM)	
	16	1	**124-1106**	4	CLIP	
	17	1	**124-1108**	20	CLIP	
	18	1	**124-1109**	6	CLIP	
	19	1	**1P-3703**	6	SEAL-RECTANGULAR	
	20	1	**1P-3704**	4	SEAL-RECTANGULAR	
	21	1	**1P-3705**	2	SEAL-RECTANGULAR	
	22	1	**1P-5767**	8	FLANGE-HALF	
	23	1	**5P-0047**	4	COVER	
	24	1	**5P-0048**	2	COVER	
	25	1	**5P-8077**	4	FLANGE-HALF	
	26	1	**6V-0400**	8	FLANGE-HALF	
M	27	1	**7X-2554**	8	BOLT (M16X2X70-MM)	
M	28	1	**8T-4139**	8	BOLT (M12X1.75X30-MM)	
M	29	1	**8T-4140**	8	BOLT (M16X2X60-MM)	
M	30	1	**8T-4184**	8	BOLT (M12X1.75X45-MM)	
M	31	1	**8T-4194**	32	BOLT (M12X1.75X50-MM)	
	32	1	**8T-4223**	58	WASHER-HARD (13.5X25.5X3-MM THK)	
	33	1	**9X-8257**	16	WASHER (17.5X30X3.5-MM THK)	

C-CHANGE FROM PREVIOUS TYPE
I-REFER TO HYDRAULIC INFORMATION SYSTEM
J-TUBE MAY BE 1-PIECE OR 2-PIECE DESIGN (1-PIECE SHOWN)
L-PARTS REQUIRED ONLY WITH 2-PIECE TUBE DESIGN
M-METRIC PART

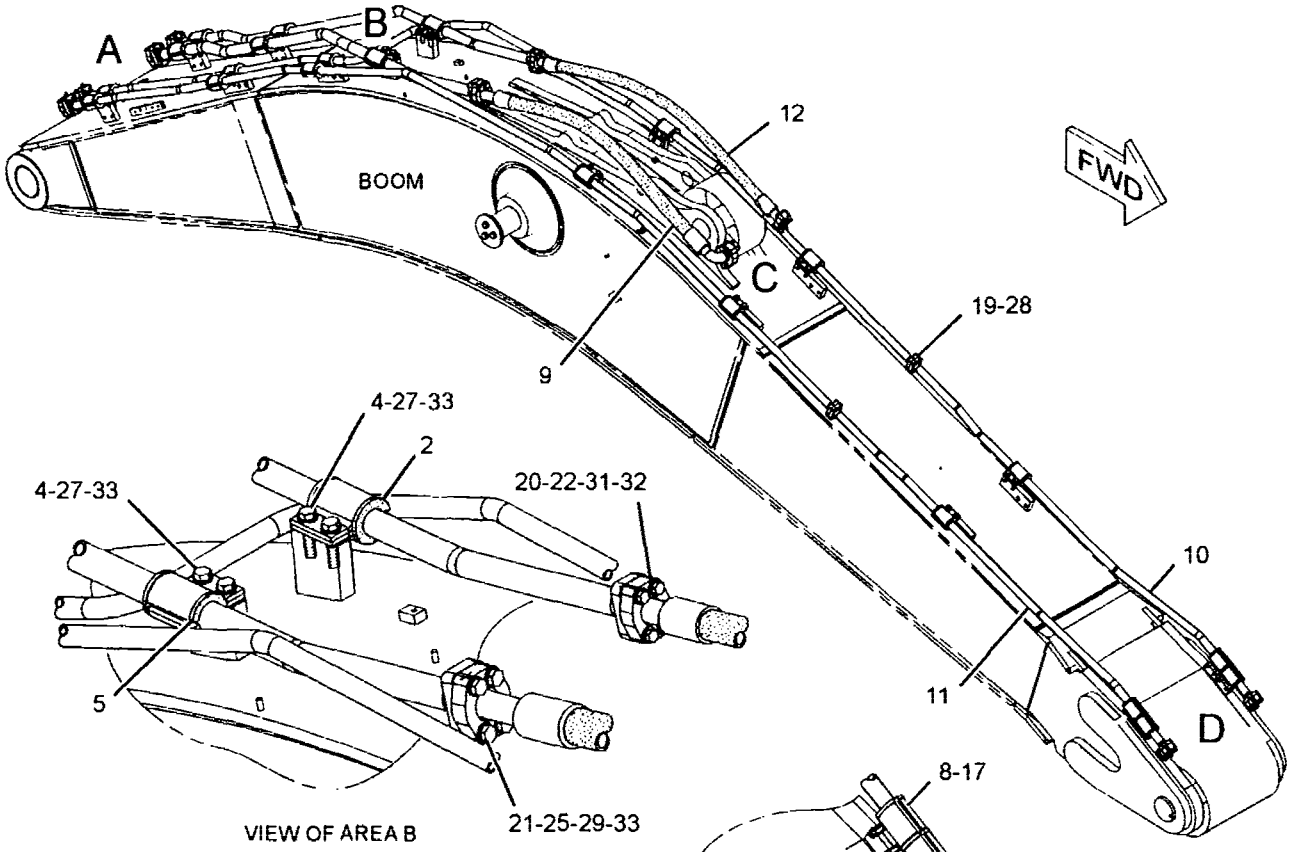

VIEW OF AREA B

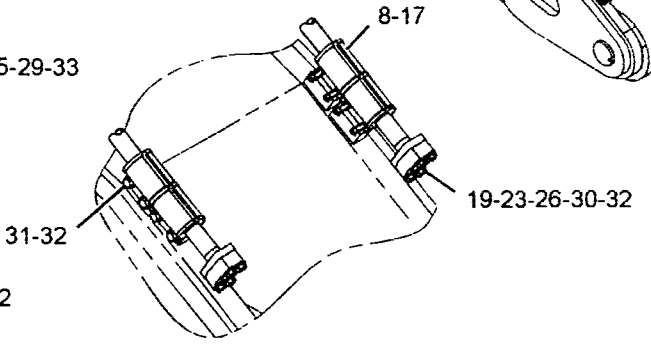

VIEW OF AREA D

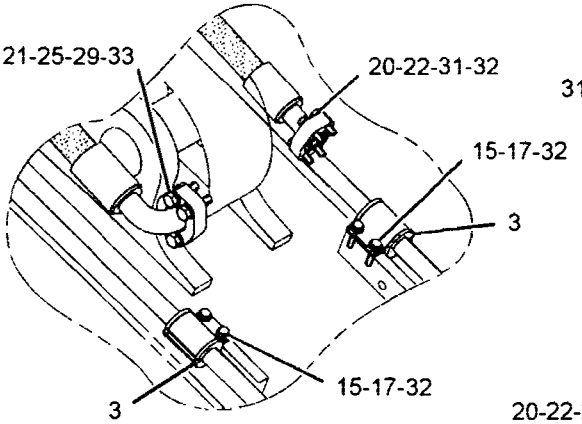

VIEW OF AREA C

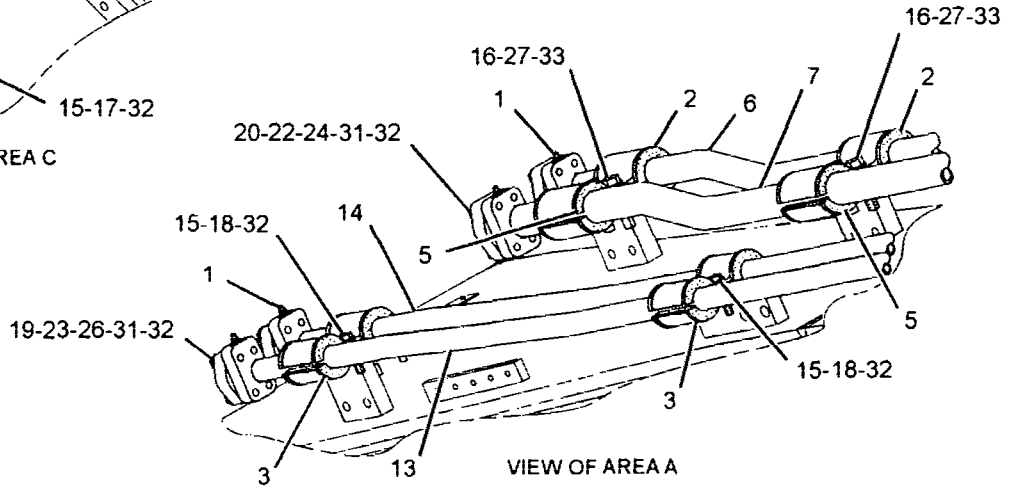

VIEW OF AREA A

GRAPHIC #1 **<END>** g01413601

HYDRAULIC SYSTEM

248-9445 LINES GP-BOOM

S/N: YEE1-UP
PART OF 294-1252 BOOM AR-MASS
AN ATTACHMENT

SMCS-5057 **i02725809**

NOTE	REF NO	GRAPHIC REF	PART NUMBER	QTY	PART NAME 1 2 3 4 5 6 (PRODUCT LEVEL)	SEE PAGE
	1	1	9F-2167	4	SCREW-PURGE (3/8-24X1.164-IN)	
	2	1	124-1107	3	GROMMET	
	3	1	129-5874	14	GROMMET	
	4	1	138-5708	4	CLIP-HALF	
	5	1	138-5709	3	GROMMET	
	6	1	143-4237	1	TUBE AS	
	7	1	143-4238	1	TUBE AS	
	8	1	199-1875	2	GROMMET	
	9	1	210-9907	2	PLATE	
I	10	1	212-5537	1	HOSE AS	
	11	1	248-9447	1	TUBE AS	
	12	1	248-9448	1	TUBE AS	
I	13	1	248-9720	1	HOSE AS	
	14	1	248-9834	2	TUBE AS	
	15	1	248-9835	1	TUBE AS	
	16	1	248-9836	1	TUBE AS	
M	17	1	096-9986	18	BOLT (M12X1.75X55-MM)	
	18	1	124-1106	4	CLIP	
	19	1	124-1108	20	CLIP	
	20	1	124-1109	6	CLIP	
	21	1	1P-3703	8	SEAL-RECTANGULAR	
	22	1	1P-3704	4	SEAL-RECTANGULAR	
	23	1	1P-3705	2	SEAL-RECTANGULAR	
	24	1	1P-5767	8	FLANGE-HALF	
	25	1	5P-0047	4	COVER	
	26	1	5P-0048	2	COVER	
	27	1	5P-8077	4	FLANGE-HALF	
	28	1	6V-0400	8	FLANGE-HALF	
M	29	1	7X-2554	8	BOLT (M16X2X70-MM)	
M	30	1	8T-4139	16	BOLT (M12X1.75X30-MM)	
M	31	1	8T-4140	8	BOLT (M16X2X60-MM)	
M	32	1	8T-4184	24	BOLT (M12X1.75X45-MM)	
M	33	1	8T-4194	16	BOLT (M12X1.75X50-MM)	
	34	1	8T-4223	58	WASHER-HARD (13.5X25.5X3-MM THK)	
	35	1	9X-8257	16	WASHER (17.5X30X3.5-MM THK)	

I-REFER TO HYDRAULIC INFORMATION SYSTEM
M-METRIC PART

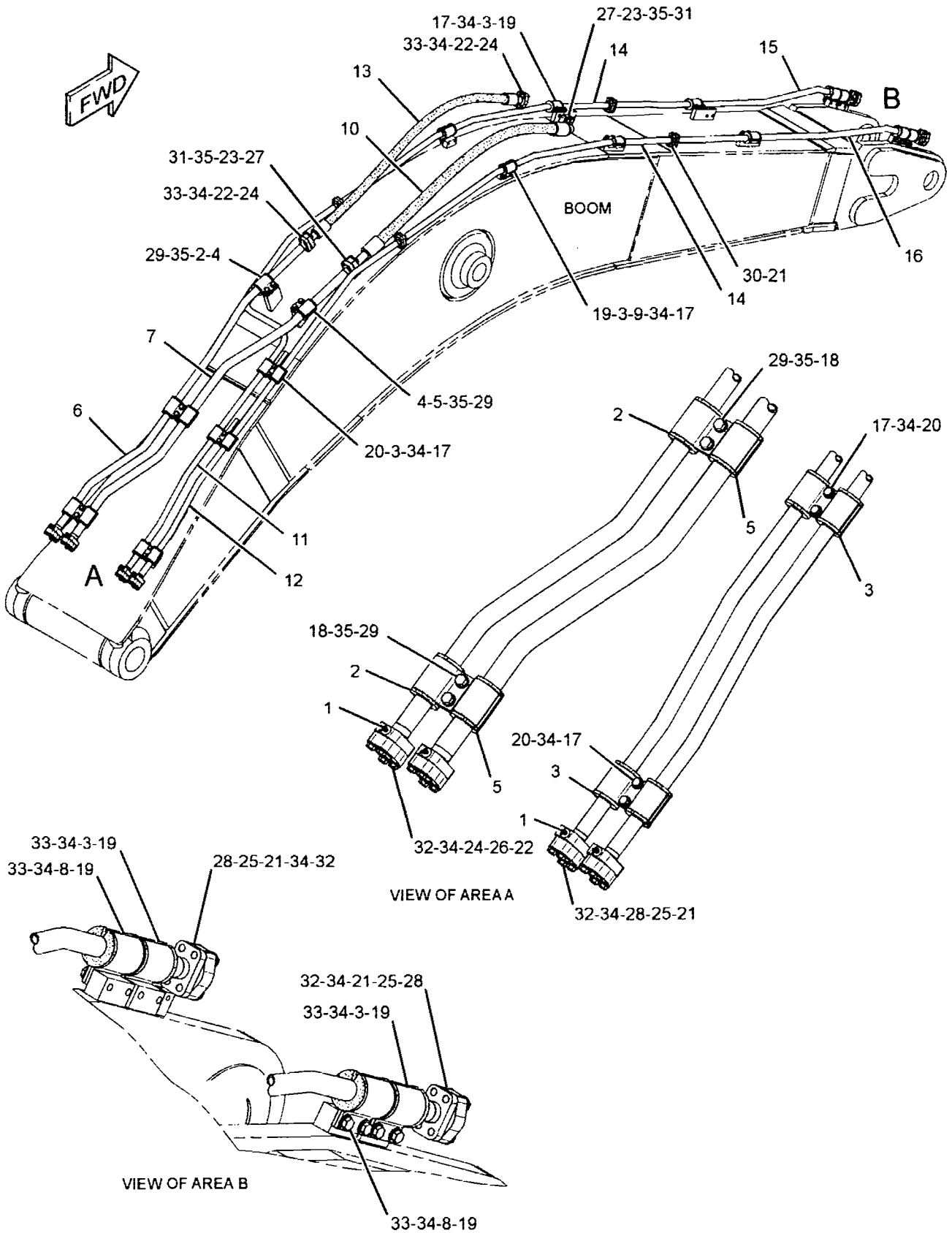

GRAPHIC #1 **<END>** g01306453

HYDRAULIC SYSTEM

289-5734 LINES GP-BOOM CYLINDER–LH

S/N: YEE1-UP

PART OF 289-7844 CYLINDER & LINES GP-BOOM

AN ATTACHMENT

SMCS-5057, 5456 **i02861064**

NOTE	REF NO	GRAPHIC REF	PART NUMBER	QTY	PART NAME 1 2 3 4 5 6 (PRODUCT LEVEL)	SEE PAGE
	1	1	**108-7550**	2	CLIP	
	2	1	**124-0911**	1	SUPPORT AS	
	3	1	**143-4146**	1	SUPPORT AS	
	4	1	**292-7437**	1	TUBE AS	
	5	1	**292-7438**	1	TUBE AS	
	6	1	**1P-3704**	1	SEAL-RECTANGULAR	
	7	1	**1P-3705**	1	SEAL-RECTANGULAR	
	8	1	**8T-4121**	4	WASHER-HARD (11X21X2.5-MM THK)	
M	9	1	**8T-4139**	2	BOLT (M12X1.75X30-MM)	
M	10	1	**8T-4196**	4	BOLT (M10X1.5X35-MM)	
	11	1	**8T-4223**	10	WASHER-HARD (13.5X25.5X3-MM THK)	
M	12	1	**8T-4648**	8	BOLT (M12X1.75X70-MM)	

M-METRIC PART

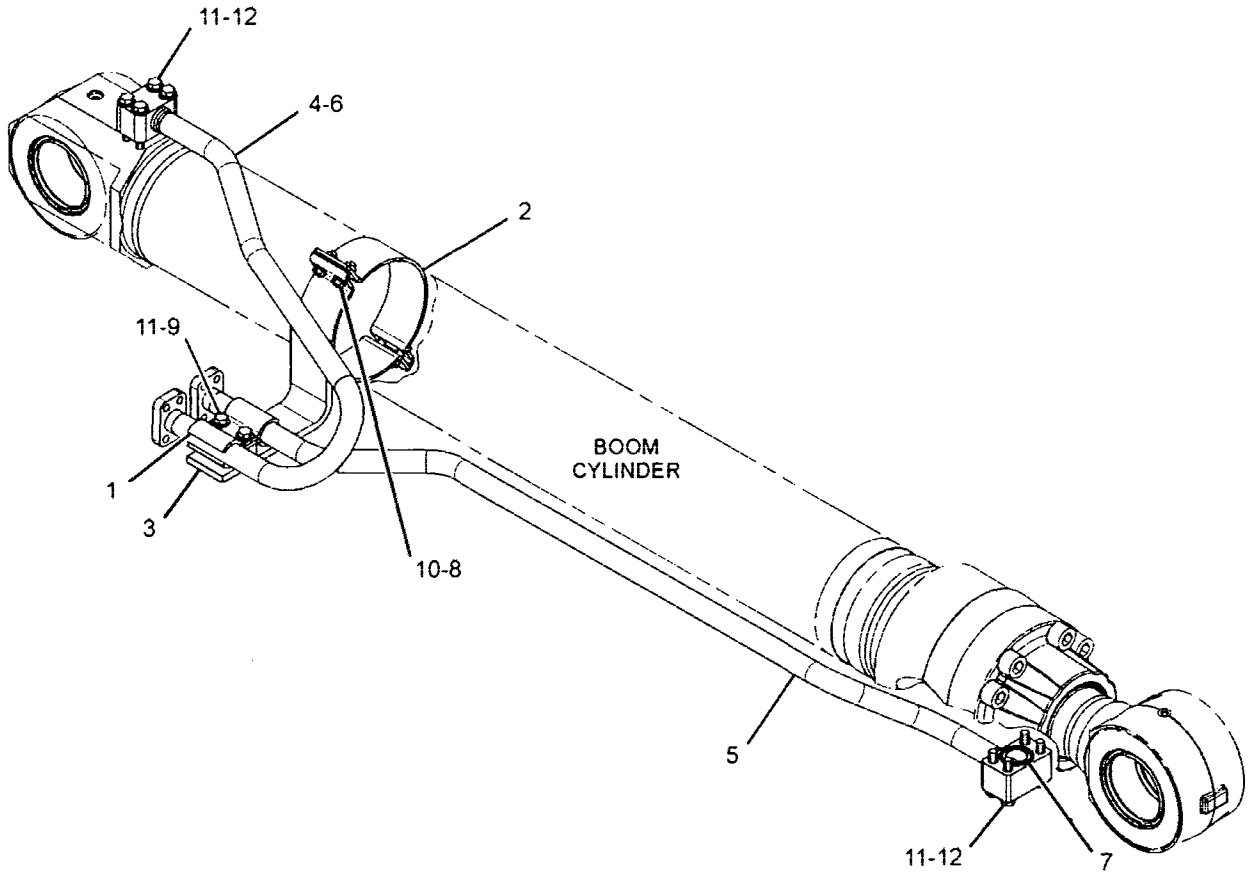

GRAPHIC #1 **<END>** g01429018

HYDRAULIC SYSTEM

289-5735 LINES GP-BOOM CYLINDER–RH

S/N: YEE1-UP

PART OF 289-7845 CYLINDER & LINES GP-BOOM

AN ATTACHMENT

SMCS-5057, 5456 **i02861066**

NOTE	REF NO	GRAPHIC REF	PART NUMBER	QTY	PART NAME 1 2 3 4 5 6 (PRODUCT LEVEL)	SEE PAGE
	1	1	**108-7550**	2	CLIP	
	2	1	**124-0911**	1	SUPPORT AS	
	3	1	**143-4146**	1	SUPPORT AS	
	4	1	**292-7439**	1	TUBE AS	
	5	1	**292-7440**	1	TUBE AS	
	6	1	**1P-3704**	1	SEAL-RECTANGULAR	
	7	1	**1P-3705**	1	SEAL-RECTANGULAR	
	8	1	**8T-4121**	4	WASHER-HARD (11X21X2.5-MM THK)	
M	9	1	**8T-4139**	2	BOLT (M12X1.75X30-MM)	
M	10	1	**8T-4196**	4	BOLT (M10X1.5X35-MM)	
	11	1	**8T-4223**	10	WASHER-HARD (13.5X25.5X3-MM THK)	
M	12	1	**8T-4648**	8	BOLT (M12X1.75X70-MM)	

M-METRIC PART

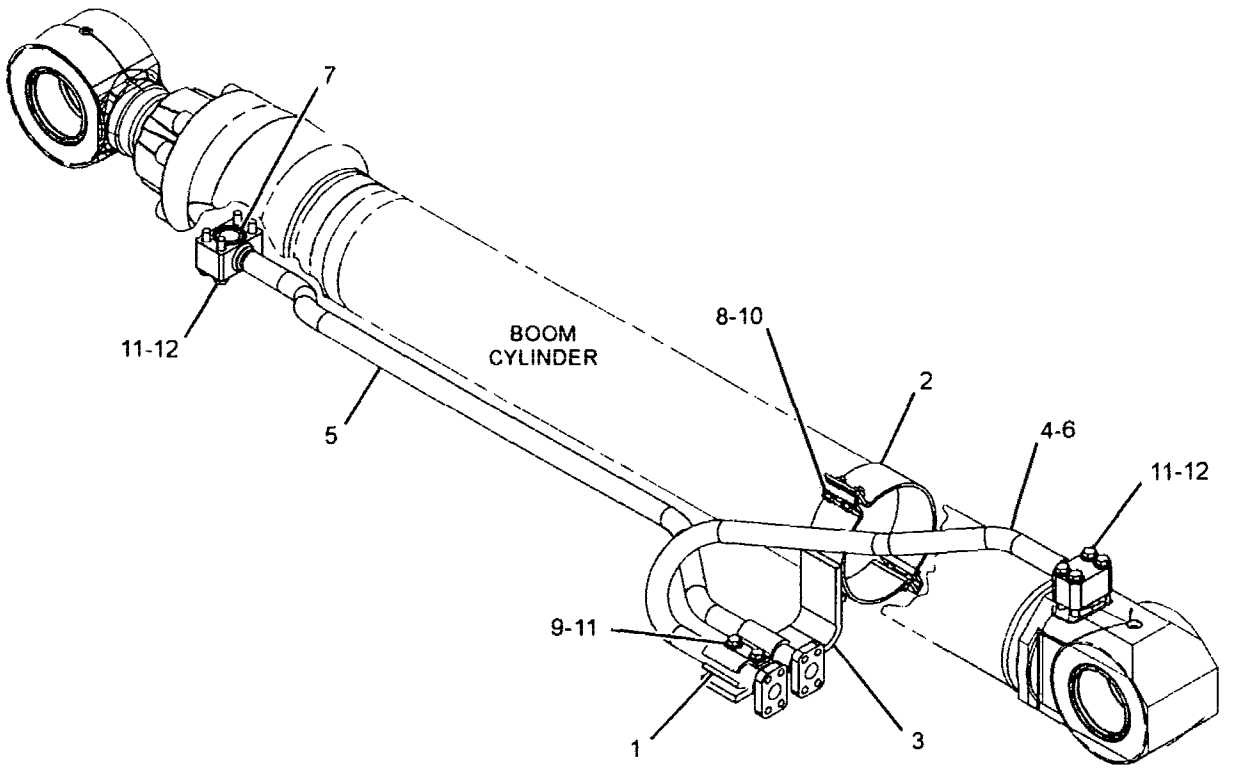

GRAPHIC #1 **<END>** g01428981

HYDRAULIC SYSTEM

296-7134 LINES GP-BOOM CYLINDER–LOWERING CONTROL

S/N: YEE1-UP

PART OF 294-1277 CONTROL AR-AUXILIARY, 297-0252 VALVE AR-CHECK & RELIEF AN ATTACHMENT

SMCS-5057, 5456 **i02863203**

NOTE	REF NO	GRAPHIC REF	PART NUMBER	QTY	PART NAME 1 2 3 4 5 6 (PRODUCT LEVEL)	SEE PAGE
	1	1	7K-1181	18	STRAP-CABLE	
	2	1	7Y-4868	4	CLIP	
	3	1	108-7550	4	CLIP	
	4	1	133-5813	4	BAND-MARKER (GRAY, P)	
	5	1	239-1575	1	TUBE AS	
	6	1	239-1576	1	TUBE AS	
	7	1	239-1577	2	SUPPORT AS	
	8	1	239-1582	1	HOSE AS	
		1	7I-7439		GUARD (232-CM)	
I	9	1	239-1585	2	HOSE AS	
	10	1	245-5122	1	BLOCK	
	11	1	248-9461	1	SUPPORT AS	
I	12	1	248-9488	2	HOSE AS	
Y	13	1	263-1964	2	VALVE GP-LOAD CONTROL (BOOM CYLINDER)	759
Y	14	1	270-5692	1	VALVE GP-MANUAL (BOOM LOWER)	772
	15	1	292-7279	1	HOSE AS	
		1	7I-7439		GUARD (209-CM)	
	16	1	302-3340	1	TUBE AS	
	17	1	302-3341	1	TUBE AS	
	18	1	319-9785	2	HOSE AS	
					(EACH INCLUDES)	
		1	7I-7439		GUARD (193-CM)	
	19	1	*148-8317*	1	CONNECTOR AS	
		1	3D-2824	1	SEAL-O-RING	
		1	5K-9090	1	SEAL-O-RING	
		1	6V-8714	1	CONNECTOR	
	20	1	*148-8327*	2	CONNECTOR AS	
					(EACH INCLUDES)	
		1	3D-2824	1	SEAL-O-RING	
		1	6V-8637	1	CONNECTOR	
		1	6V-9746	1	SEAL-O-RING	
	21	1	*148-8336*	6	CONNECTOR AS	
					(EACH INCLUDES)	
		1	3J-1907	1	SEAL-O-RING	
		1	6V-8397	1	SEAL-O-RING	
		1	6V-8636	1	CONNECTOR	
	22	1	*148-8347*	2	ELBOW AS	
					(EACH INCLUDES)	
		1	3D-2824	1	SEAL-O-RING	
		1	6V-9007	1	ELBOW	
		1	6V-9746	1	SEAL-O-RING	
	23	1	*148-8361*	2	ELBOW AS	
					(EACH INCLUDES)	
		1	3J-7354	1	SEAL-O-RING	
		1	6V-8397	1	SEAL-O-RING	
		1	6V-9200	1	ELBOW	
	24	1	*148-8378*	4	ELBOW AS	
					(EACH INCLUDES)	
		1	3J-1907	1	SEAL-O-RING	
		1	6V-8397	1	SEAL-O-RING	
		1	6V-8724	1	ELBOW	
B	25	1	*148-8411*	1	PLUG AS	
		1	3K-0360	1	SEAL-O-RING	
		1	9S-4185	1	PLUG-O-RING	
	26	1	*148-8435*	1	TEE AS	

296-7134 LINES GP-BOOM CYLINDER *(contd.)* i02863203

NOTE	REF NO	GRAPHIC REF	PART NUMBER	QTY	PART NAME 1 2 3 4 5 6 (PRODUCT LEVEL)	SEE PAGE
		1	**3J-1907**	1	SEAL-O-RING	
		1	**6V-8397**	2	SEAL-O-RING	
		1	**6V-8781**	1	TEE-FACE SEAL	
	27	1	*164-5589*	1	CONNECTOR AS	
		1	**3J-1907**	1	SEAL-O-RING	
		1	**6V-8397**	1	SEAL-O-RING	
		1	**8C-0597**	1	CONNECTOR	
	28	1	**1P-3704**	4	SEAL-RECTANGULAR	
	29	1	**6V-9746**	2	SEAL-O-RING	
	30	1	**8T-4121**	2	WASHER-HARD (11X21X2.5-MM THK)	
M	31	1	**8T-4176**	2	BOLT (M12X1.75X90-MM)	
M	32	1	**8T-4185**	2	BOLT (M10X1.5X50-MM)	
	33	1	**8T-4223**	18	WASHER-HARD (13.5X25.5X3-MM THK)	
M	34	1	**8T-4648**	16	BOLT (M12X1.75X70-MM)	
M	35	1	**8T-4956**	8	BOLT (M12X1.75X35-MM)	

B-USE AS REQUIRED
I-REFER TO HYDRAULIC INFORMATION SYSTEM
M-METRIC PART
Y-SEPARATE ILLUSTRATION

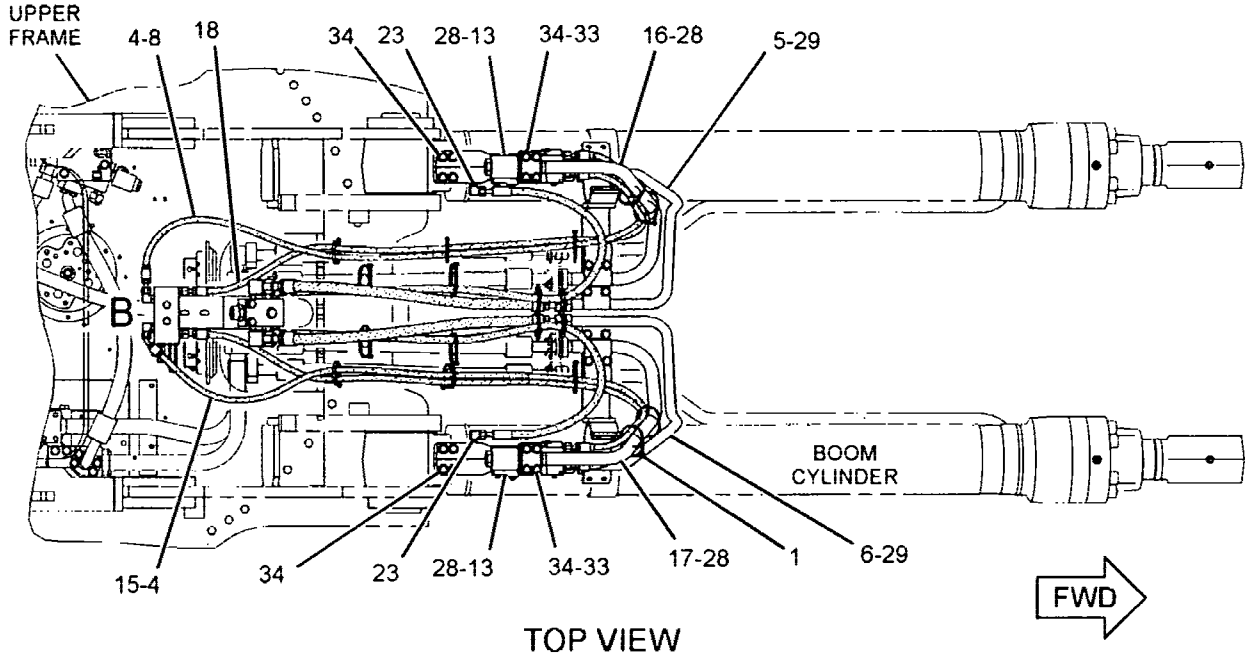

TOP VIEW

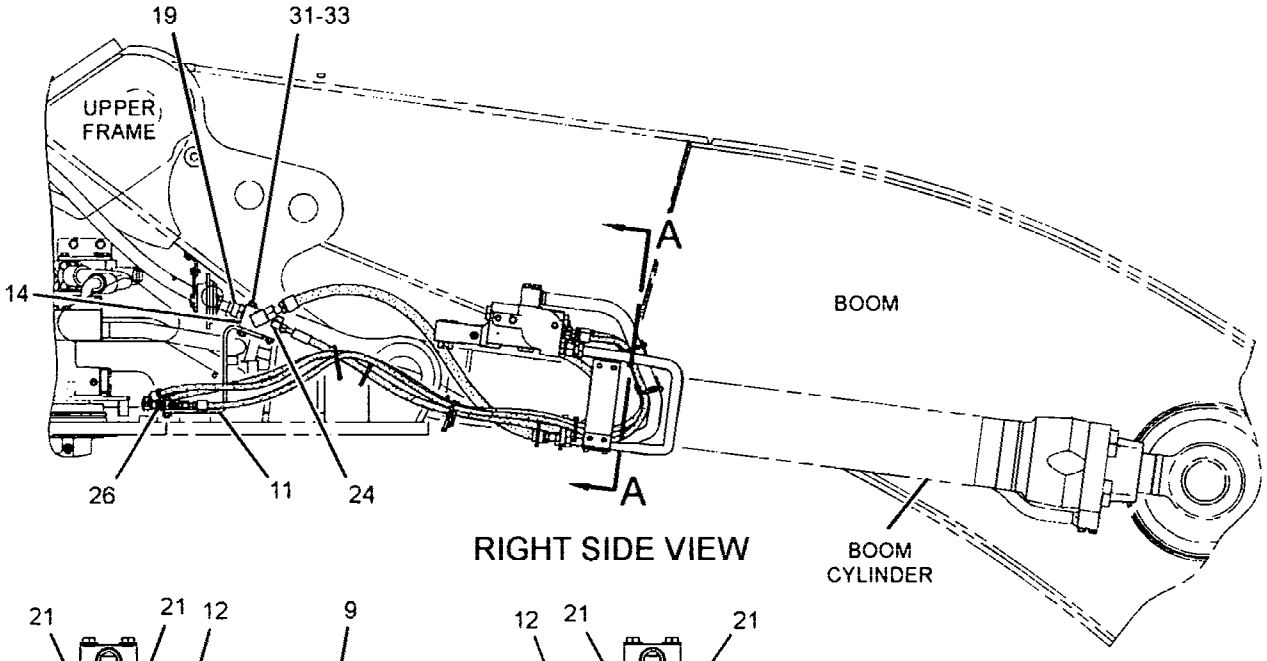

RIGHT SIDE VIEW

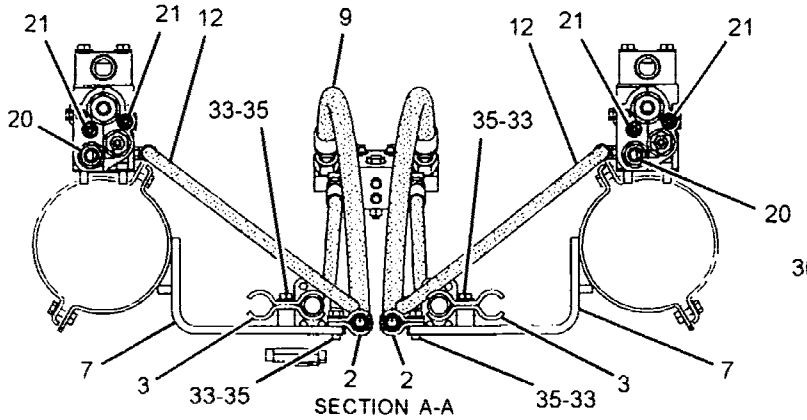

SECTION A-A

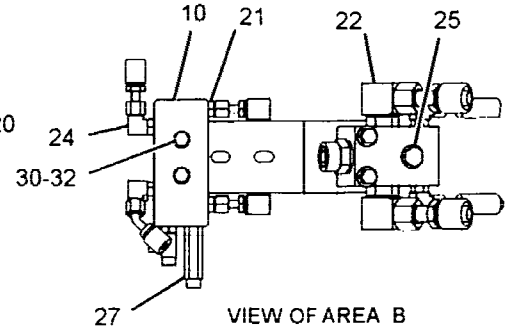

VIEW OF AREA B

GRAPHIC #1

<END>

g01452738

HYDRAULIC SYSTEM

307-4848 LINES GP-BOOM CYLINDER

S/N: YEE1-UP

PART OF 297-0243 HYDRAULIC AR

SMCS-5057, 5456 **i02905842**

NOTE	REF NO	GRAPHIC REF	PART NUMBER	QTY	PART NAME 1 2 3 4 5 6 (PRODUCT LEVEL)	SEE PAGE
	1	1	**9F-2167**	1	SCREW-PURGE (3/8-24X1.164-IN)	
M	2	1	**113-2004**	4	BOLT-SOCKET HEAD (M12X1.75X45-MM)	
	3	1	**102-1174**	2	GUARD	
	4	1	**128-7591**	1	SUPPORT AS	
M	5	1	**170-8553**	4	BOLT-SOCKET HEAD (M12X1.75X40-MM)	
	6	1	**221-8859**	1	SENSOR AS-PRESSURE (BOOM LOWERING CONTROL)	
		1	**3K-0360**	1	SEAL-O-RING	
		1	**9X-3401**	3	PIN-CONNECTOR (16-GA TO 18-GA)	
					–OR–	
		1	**126-1767**	3	PIN-CONNECTOR (14-GA)	
		1	**3E-3371**	1	WEDGE-RECEPTACLE LOCK (3-PIN)	
		1	**171-0596**	1	RECEPTACLE AS	
	7	1	**234-4492**	1	SUPPORT	
	8	1	**292-7367**	1	FLANGE	
I	9	1	**292-7370**	4	HOSE AS	
Y	10	1	**310-0147**	1	VALVE GP-PILOT	787
	11	1	**319-9716**	1	TUBE AS	
	12	1	**319-9717**	1	TUBE AS	
	13	1	**319-9718**	1	TUBE AS	
	14	1	**319-9719**	1	SUPPORT AS	
	15	1	**319-9721**	1	SUPPORT AS	
I	16	1	**319-9725**	1	HOSE AS	
I	17	1	**319-9726**	1	HOSE AS	
I	18	1	**319-9727**	1	HOSE AS	
	19	1	**319-9798**	1	SUPPORT AS	
M	20	1	**101-7397**	4	BOLT-SOCKET HEAD (M12X1.75X50-MM)	
M	21	1	**105-3489**	4	BOLT-SOCKET HEAD (M12X1.75X80-MM)	
	22	1	**108-7550**	2	CLIP	
	23	1	*148-8322*	1	CONNECTOR AS	
		1	**2M-9780**	1	SEAL-O-RING	
		1	**6V-8640**	1	CONNECTOR	
		1	**6V-9746**	1	SEAL-O-RING	
	24	1	*148-8336*	1	CONNECTOR AS	
		1	**3J-1907**	1	SEAL-O-RING	
		1	**6V-8397**	1	SEAL-O-RING	
		1	**6V-8636**	1	CONNECTOR	
	25	1	*148-8353*	1	ELBOW AS	
		1	**3J-1907**	1	SEAL-O-RING	
		1	**6V-8397**	1	SEAL-O-RING	
		1	**6V-9001**	1	ELBOW	
	26	1	*148-8371*	1	ELBOW AS	
		1	**6V-8397**	1	SEAL-O-RING	
		1	**8C-8988**	1	ELBOW	
	27	1	**1P-3703**	10	SEAL-RECTANGULAR	
	28	1	**1P-3704**	6	SEAL-RECTANGULAR	
	29	1	**1P-5767**	8	FLANGE-HALF	
	30	1	**5P-1076**	2	WASHER-HARD (13.5X30X4-MM THK)	
	31	1	**6V-0400**	16	FLANGE-HALF	
	32	1	**6V-1324**	1	GROMMET	
	33	1	**7G-3413**	1	CLIP (SLOT)	
	34	1	**7G-3414**	1	CLIP (TAB)	
M	35	1	**8T-4136**	2	BOLT (M10X1.5X25-MM)	
M	36	1	**8T-4139**	16	BOLT (M12X1.75X30-MM)	
M	37	1	**8T-4184**	16	BOLT (M12X1.75X45-MM)	
M	38	1	**8T-4194**	32	BOLT (M12X1.75X50-MM)	
	39	1	**8T-4223**	64	WASHER-HARD (13.5X25.5X3-MM THK)	

307-4848 LINES GP-BOOM CYLINDER *(contd.)*

i02905842

NOTE	REF NO	GRAPHIC REF	PART NUMBER	QTY	PART NAME 1 2 3 4 5 6 (PRODUCT LEVEL)	SEE PAGE
M	40	1	8T-4648	2	BOLT (M12X1.75X70-MM)	

I-REFER TO HYDRAULIC INFORMATION SYSTEM
M-METRIC PART
Y-SEPARATE ILLUSTRATION

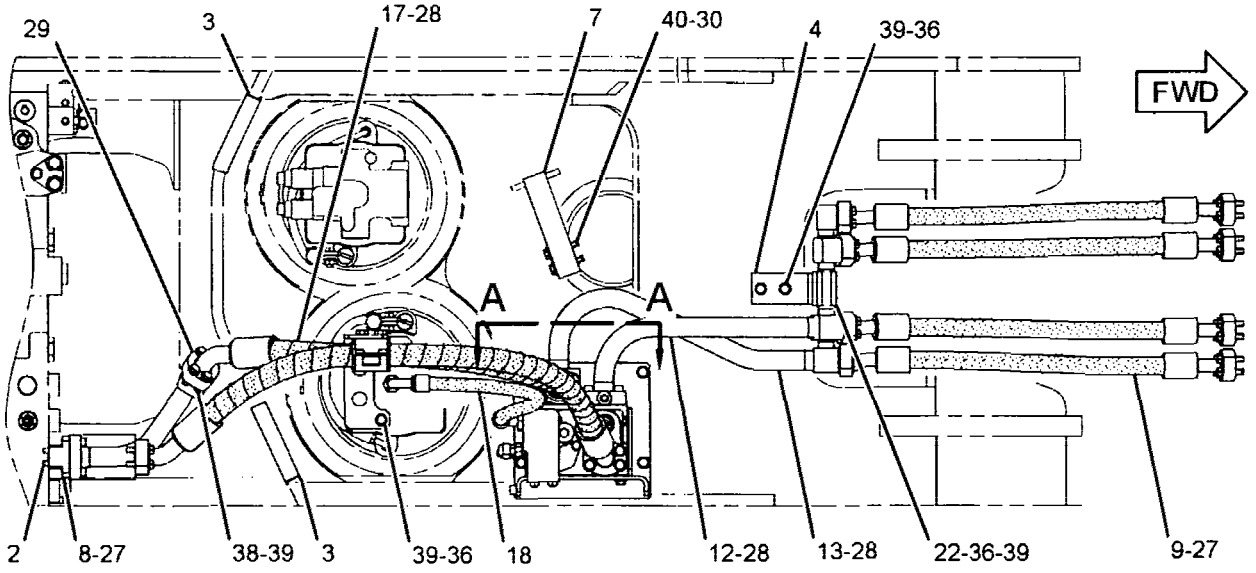

TOP VIEW

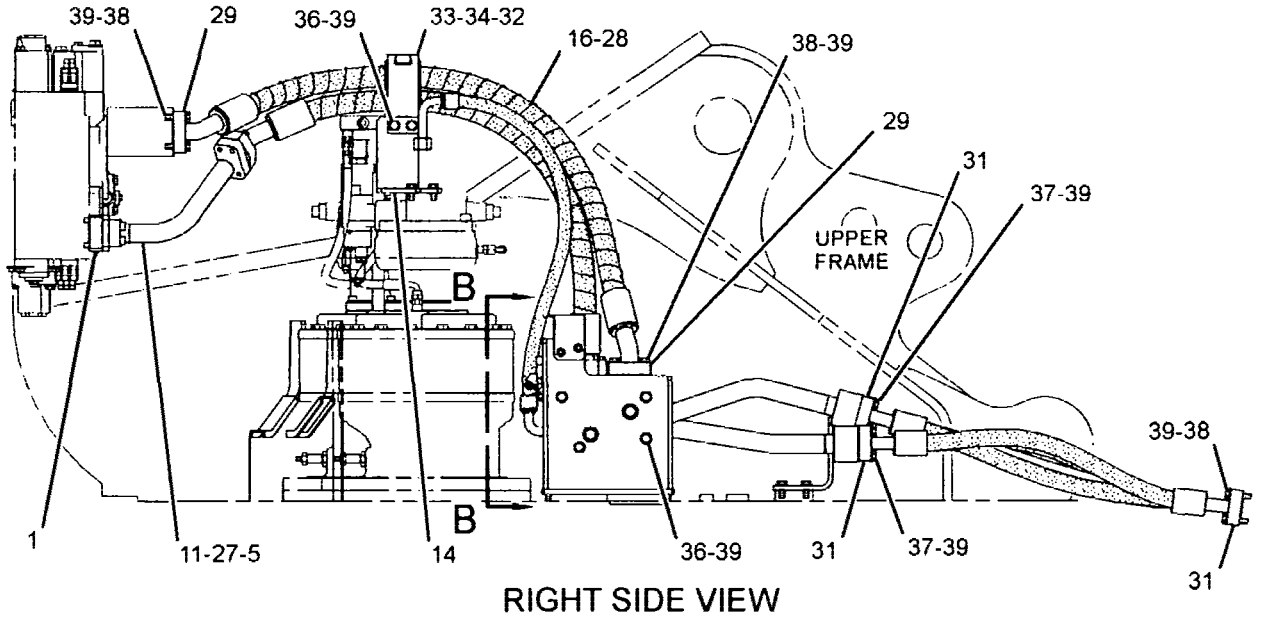

RIGHT SIDE VIEW

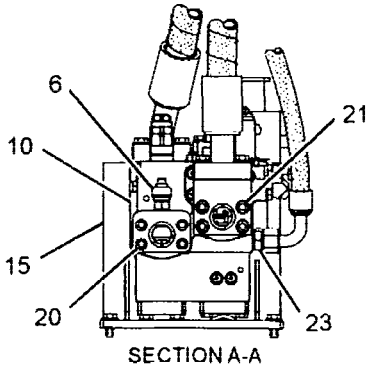

SECTION A-A

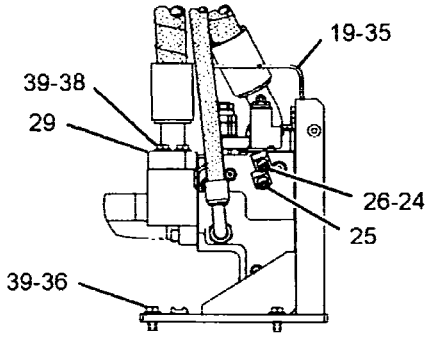

VIEW B-B

GRAPHIC #1 **<END>** g01462909

HYDRAULIC SYSTEM

115-8694 LINES GP-BUCKET CYLINDER

S/N: YEE1-UP

PART OF 225-4527 CYLINDER & LINES GP-BUCKET

AN ATTACHMENT

SMCS-5457 **i02155503**

NOTE	REF NO	GRAPHIC REF	PART NUMBER	QTY	PART NAME 1 2 3 4 5 6 (PRODUCT LEVEL)	SEE PAGE
	1	1	**115-8961**	1	TUBE AS	
	2	1	**1P-3704**	1	SEAL-RECTANGULAR	
M	3	1	**8T-4910**	4	BOLT (M12X1.75X60-MM)	
M	4	1	**8T-4139**	4	BOLT (M12X1.75X30-MM)	
	5	1	**8T-4223**	4	WASHER-HARD (13.5X25.5X3-MM THK)	
	6	1	**7Y-3732**	4	CLIP	
	7	1	**223-6876**	2	SUPPORT AS	
	8	1	**8T-4121**	8	WASHER-HARD (11X21X2.5-MM THK)	
M	9	1	**8T-4196**	8	BOLT (M10X1.5X35-MM)	
	10	1	**124-0911**	2	SUPPORT AS	

M-METRIC PART

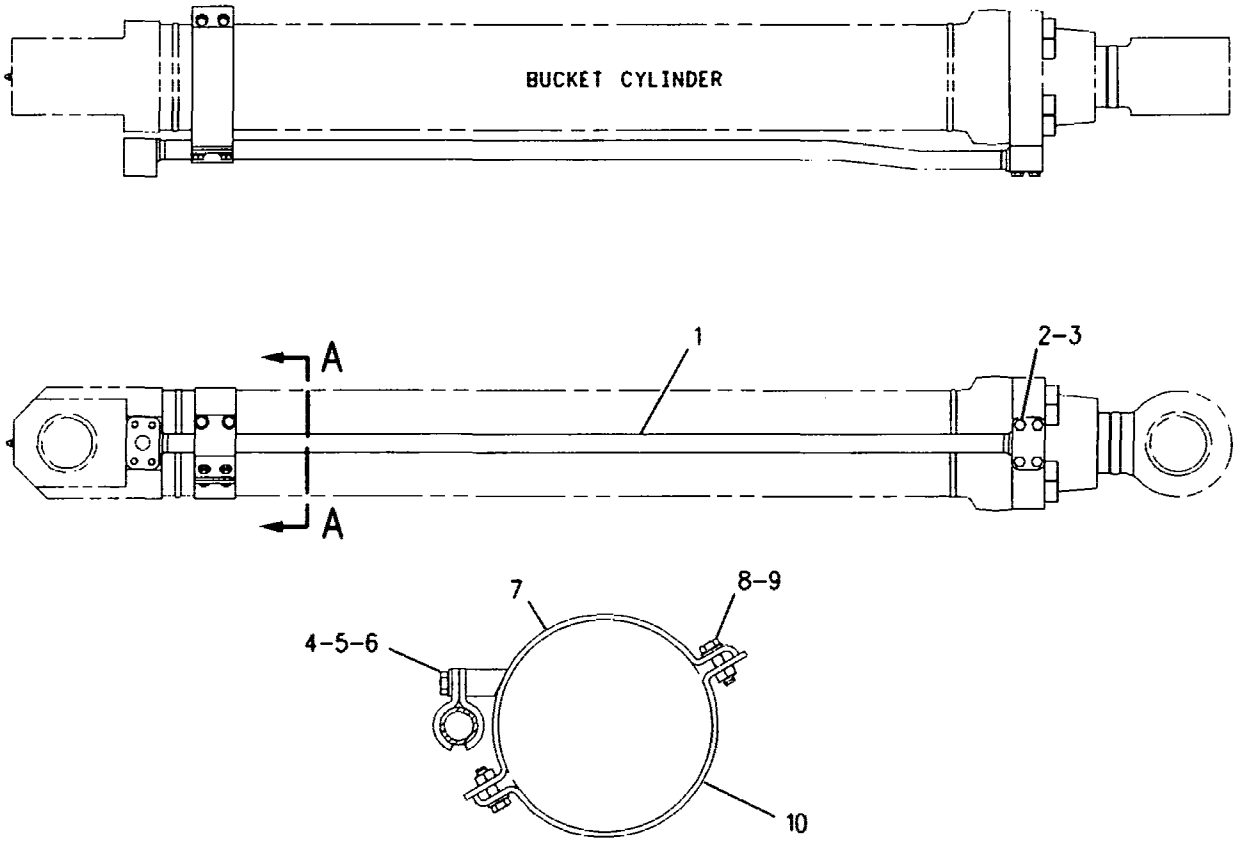

SECTION A-A

GRAPHIC #1 **<END>** g00850187

239-1603 LINES GP-BUCKET CYLINDER

S/N: YEE1-UP

PART OF 225-4530 CYLINDER & LINES GP-BUCKET

AN ATTACHMENT

SMCS-5457 **i02155266**

NOTE	REF NO	GRAPHIC REF	PART NUMBER	QTY	PART NAME 1 2 3 4 5 6 (PRODUCT LEVEL)	SEE PAGE
	1	1	**7Y-3732**	2	CLIP	
	2	1	**129-6056**	1	SUPPORT AS	
	3	1	**223-6873**	1	SUPPORT AS	
	4	1	**239-1604**	1	TUBE AS	
	5	1	**1P-3704**	1	SEAL-RECTANGULAR	
	6	1	**8T-4121**	4	WASHER-HARD (11X21X2.5-MM THK)	
M	7	1	**8T-4139**	2	BOLT (M12X1.75X30-MM)	
M	8	1	**8T-4196**	4	BOLT (M10X1.5X35-MM)	
	9	1	**8T-4223**	2	WASHER-HARD (13.5X25.5X3-MM THK)	
M	10	1	**8T-4910**	4	BOLT (M12X1.75X60-MM)	

M-METRIC PART

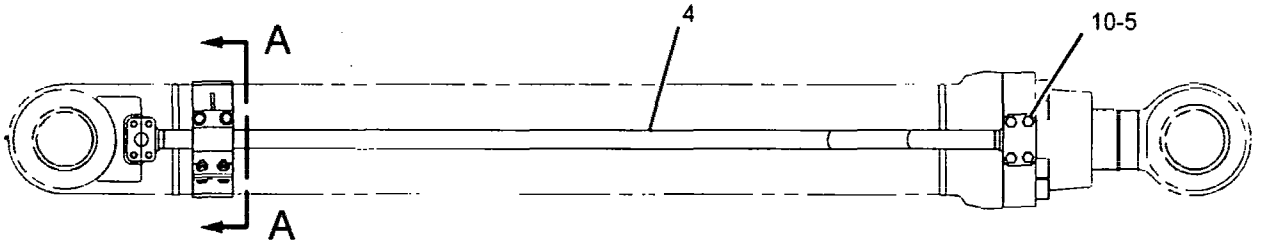

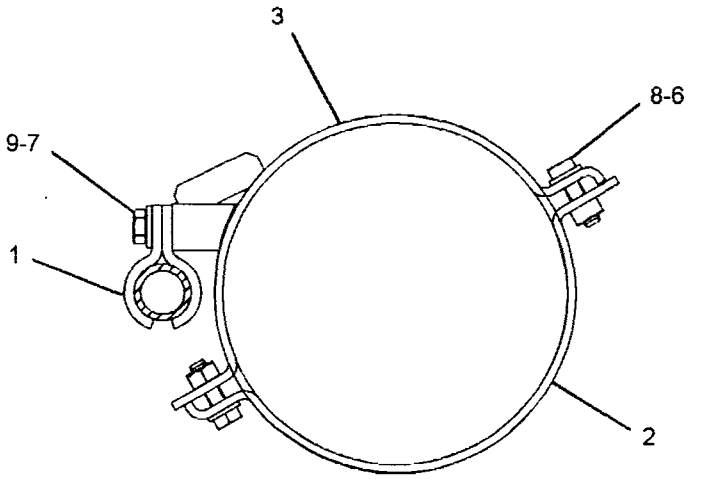

SECTION A-A

GRAPHIC #1 **<END>** g01097707

302-3351 LINES GP-BUCKET CYLINDER

S/N: YEE1-UP

PART OF 300-1590 CYLINDER & LINES GP-BUCKET

AN ATTACHMENT

SMCS-5457 **i02945089**

NOTE	REF NO	GRAPHIC REF	PART NUMBER	QTY	PART NAME 1 2 3 4 5 6 (PRODUCT LEVEL)	SEE PAGE
	1	1	**7Y-3732**	4	CLIP	
	2	1	**124-0911**	2	SUPPORT AS	
	3	1	**223-6876**	1	SUPPORT AS	
	4	1	**295-9680**	1	SUPPORT AS	
	5	1	**302-3352**	1	TUBE AS	
	6	1	**1P-3704**	1	SEAL-RECTANGULAR	
	7	1	**8T-4121**	8	WASHER-HARD (11X21X2.5-MM THK)	
M	8	1	**8T-4139**	4	BOLT (M12X1.75X30-MM)	
M	9	1	**8T-4196**	8	BOLT (M10X1.5X35-MM)	
	10	1	**8T-4223**	4	WASHER-HARD (13.5X25.5X3-MM THK)	
M	11	1	**8T-4910**	4	BOLT (M12X1.75X60-MM)	

M-METRIC PART

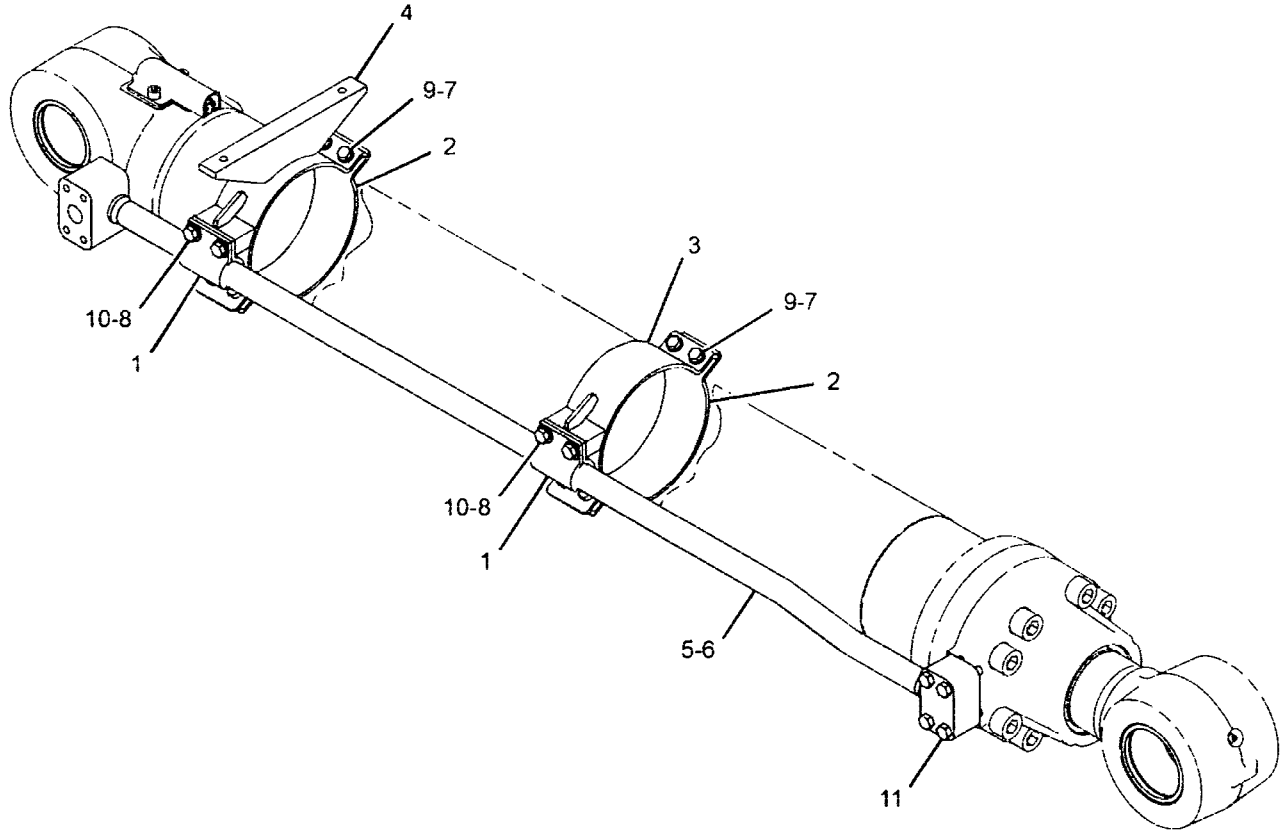

GRAPHIC #1 **<END>** g01473135

HYDRAULIC SYSTEM

205-7219 LINES GP-CONNECTING

S/N: YEE1-UP

PART OF 246-8114 COUPLER AR-QUICK

AN ATTACHMENT

SMCS-5057 **i02833909**

NOTE	REF NO	GRAPHIC REF	PART NUMBER	QTY	PART NAME 1 2 3 4 5 6 (PRODUCT LEVEL)	SEE PAGE
	1	1	**3V-0046**	1	PLATE	
	2	1	**6W-2464**	2	CLAMP	
I	3	1	**315-6133**	1	HOSE AS	
I	4	1	**247-9197**	1	HOSE AS	
	5	1	**3J-1907**	1	SEAL-O-RING	
	6	1	**3J-7354**	1	SEAL-O-RING	
	7	1	**4J-5477**	1	SEAL-O-RING	
	8	1	**6V-8397**	1	SEAL-O-RING	
	9	1	**8C-6561**	1	BOLT (5/16-18X1.375-IN)	

I-REFER TO HYDRAULIC INFORMATION SYSTEM

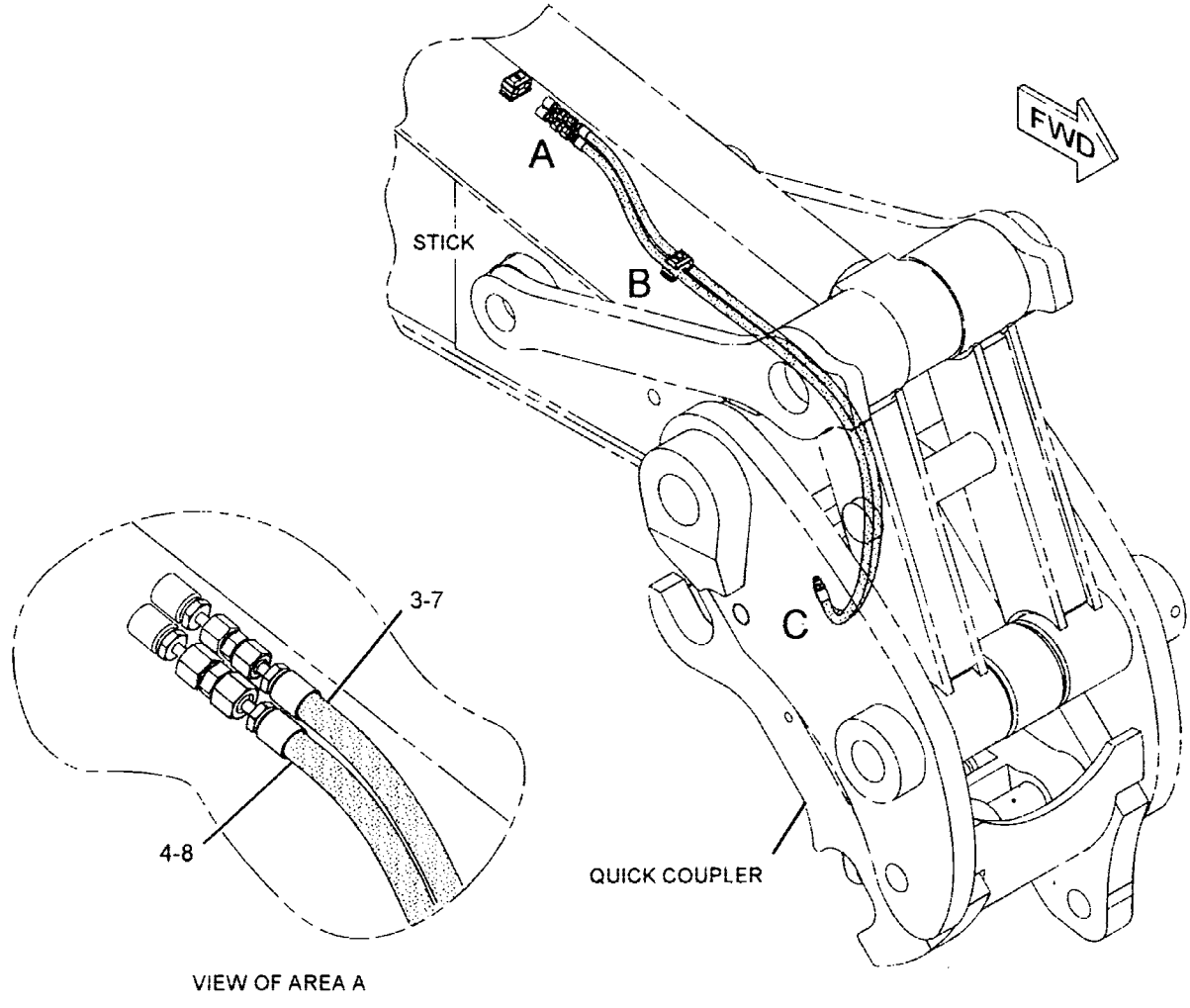

VIEW OF AREA A

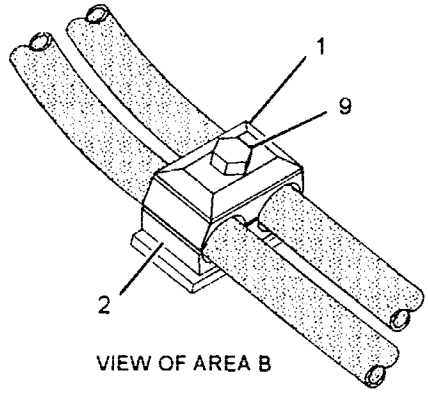

VIEW OF AREA B

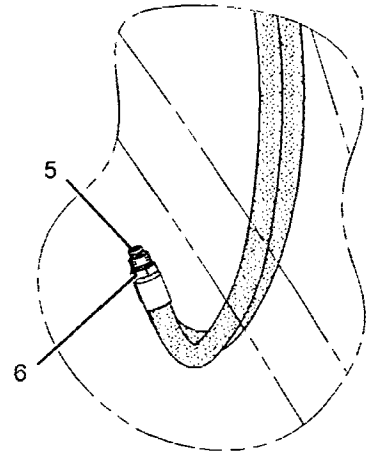

VIEW OF AREA C

GRAPHIC #1 **<END>** g01136314

HYDRAULIC SYSTEM

230-0135 LINES GP-COUPLER-BOOM

S/N: YEE1-UP
AN ATTACHMENT

SMCS-5057, 5133 **i02945440**

NOTE	REF NO	GRAPHIC REF	PART NUMBER	QTY	PART NAME 1 2 3 4 5 6 (PRODUCT LEVEL)	SEE PAGE
M	1	1	**8T-4139**	12	BOLT (M12X1.75X30-MM)	
M	2	1	**8T-4140**	4	BOLT (M16X2X60-MM)	
M	3	1	**8T-4175**	2	BOLT (M16X2X90-MM)	
M	4	1	**8T-4184**	2	BOLT (M12X1.75X45-MM)	
CM	5	1	**8T-4910**	2	BOLT (M12X1.75X60-MM)	
M	6	1	**8T-4956**	4	BOLT (M12X1.75X35-MM)	
M	7	1	**8T-5001**	2	BOLT (M12X1.75X130-MM)	
M	8	1	**7X-2550**	2	BOLT (M12X1.75X110-MM)	
C	9	1	**179-5235**	12	CLIP	
	10	1	**135-3980**	5	CLIP	
	11	1	**5Q-4212**	4	CLIP	
	12	1	**173-8074**	1	CLIP AS	
M	13	1	**8T-4132**	4	NUT (M16X2-THD)	
M	14	1	**8T-4244**	12	NUT (M12X1.75-THD)	
C	15	1	**153-8800**	1	PLATE	
C	16	1	**187-9862**	1	PLATE	
	17	1	**193-6662**	1	PLATE	
	18	1	**253-6276**	1	PLATE	
	19	1	**6V-8398**	8	SEAL-O-RING	
	20	1	**237-3018**	1	SUPPORT AS	
	21	1	**247-9440**	2	SUPPORT AS	
C	22	1	**268-7027**	1	TUBE AS	
C	23	1	**268-7030**	1	TUBE AS	
C	24	1	**277-0762**	2	TUBE AS	
C	25	1	**277-0765**	1	TUBE AS	
C	26	1	**277-0768**	1	TUBE AS	
	27	1	**9X-8257**	6	WASHER (17.5X30X3.5-MM THK)	
	28	1	**8T-4223**	24	WASHER-HARD (13.5X25.5X3-MM THK)	

C-CHANGE FROM PREVIOUS TYPE
M-METRIC PART

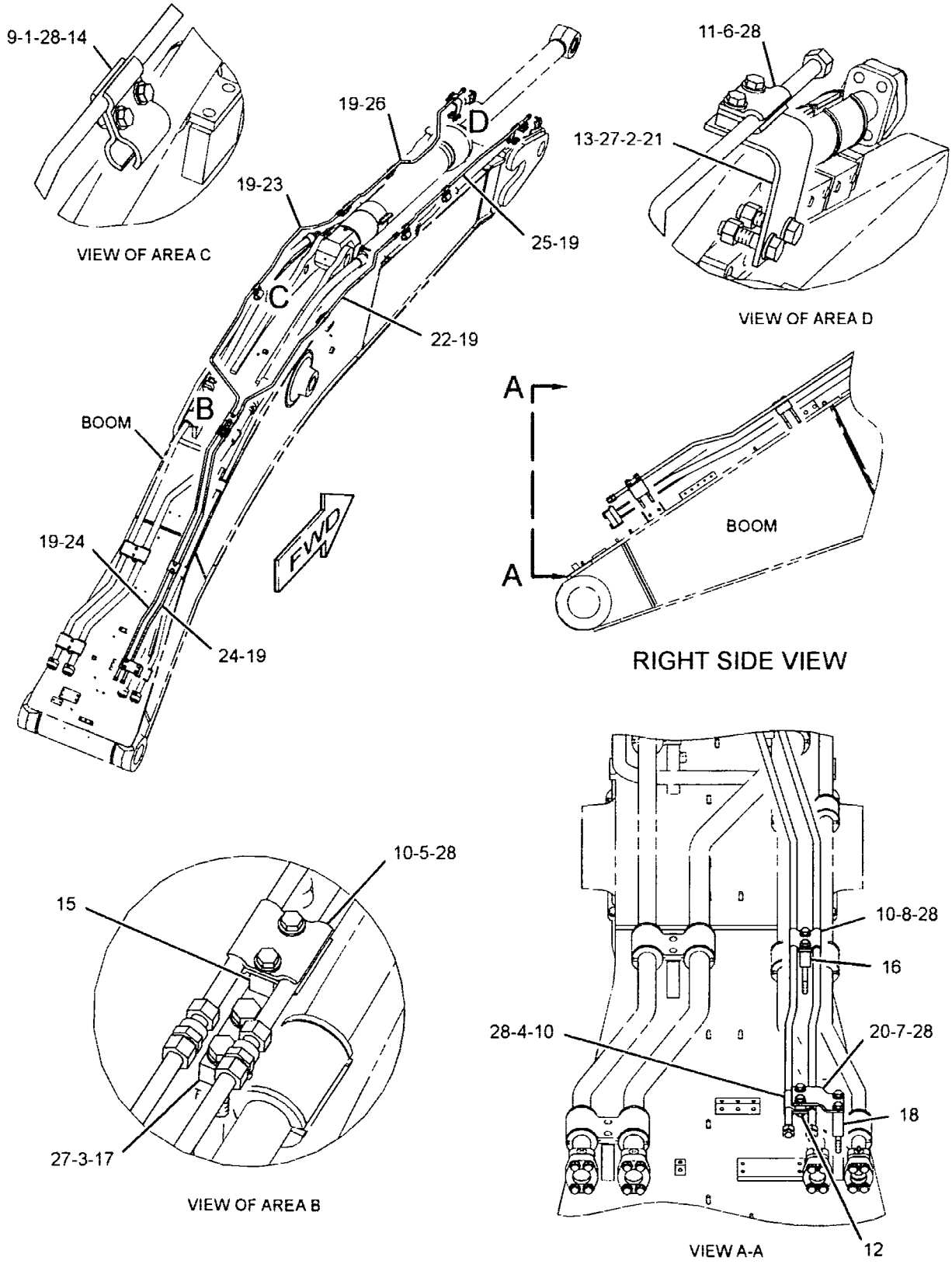

GRAPHIC #1 **<END>** g01293710

HYDRAULIC SYSTEM

230-0136 LINES GP-COUPLER–STICK, TB-FAMILY

S/N: YEE1-UP
FOR USE WITH 3.35-M (11-FT) STICK
AN ATTACHMENT

SMCS-5057, 5133 **i02158145**

NOTE	REF NO	GRAPHIC REF	PART NUMBER	QTY	PART NAME 1 2 3 4 5 6 (PRODUCT LEVEL)	SEE PAGE
	1	1	**9X-6582**	1	NUT (13/16-16-THD)	
I	2	1	**230-0483**	2	HOSE AS	
	3	1	**247-9379**	1	TUBE AS	
	4	1	**247-9383**	1	TUBE AS	
	5	1	**135-3980**	2	CLIP	
	6	1	*148-8415*	1	REDUCER AS	
		1	**6V-8397**	1	SEAL-O-RING	
		1	**6V-8936**	1	REDUCER	
	7	1	*148-8419*	1	REDUCER AS	
		1	**4J-5477**	1	SEAL-O-RING	
		1	**6V-8935**	1	REDUCER-O-RING	
	8	1	**5Q-4212**	8	CLIP	
	9	1	**6V-8398**	4	SEAL-O-RING	
	10	1	**8T-4223**	10	WASHER-HARD (13.5X25.5X3-MM THK)	
M	11	1	**8T-4956**	10	BOLT (M12X1.75X35-MM)	

I-REFER TO HYDRAULIC INFORMATION SYSTEM
M-METRIC PART

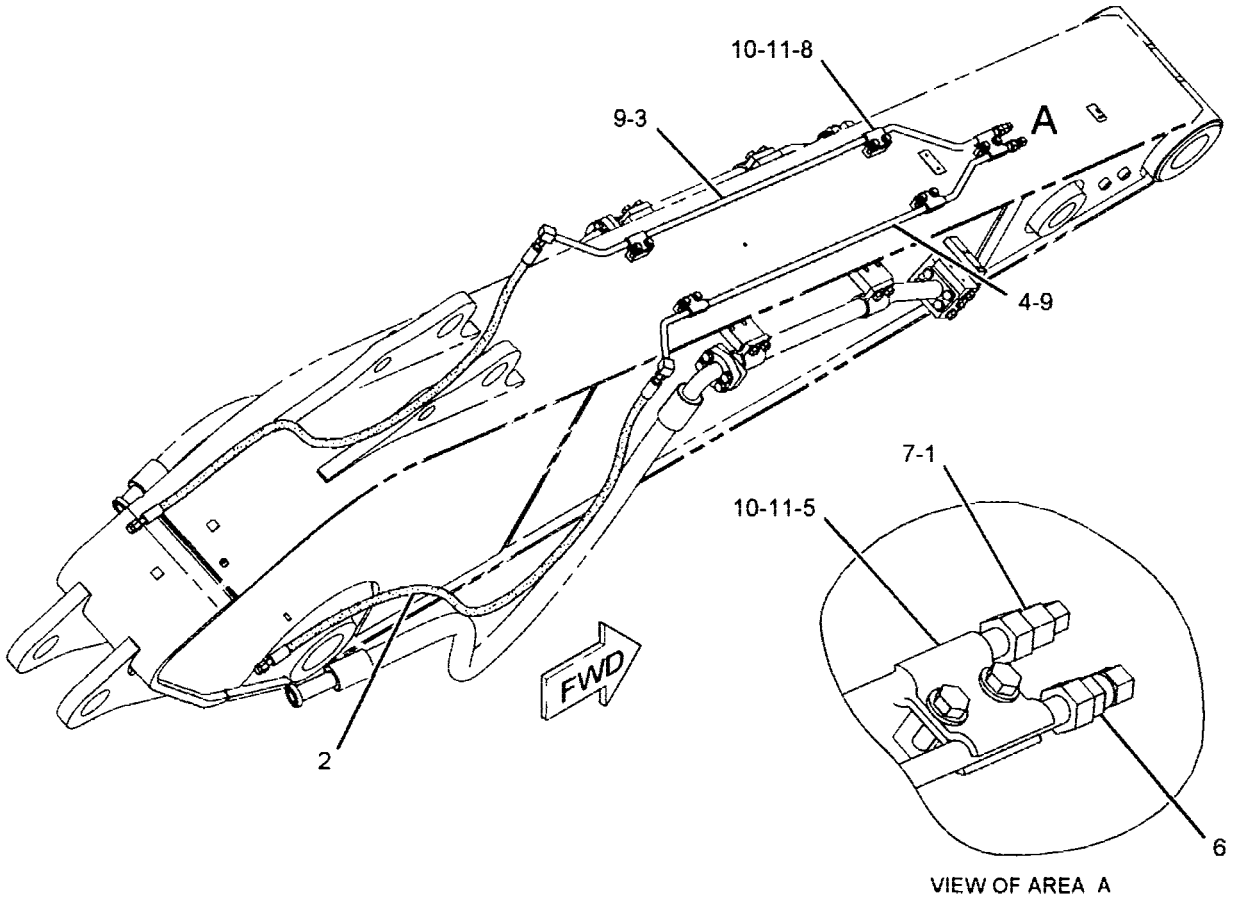

VIEW OF AREA A

GRAPHIC #1 **<END>** g01098780

HYDRAULIC SYSTEM

242-6535 LINES GP-COUPLER–MASS BOOM

S/N: YEE1-UP
AN ATTACHMENT

SMCS-5057, 5133 **i02663804**

NOTE	REF NO	GRAPHIC REF	PART NUMBER	QTY	PART NAME 1 2 3 4 5 6 (PRODUCT LEVEL)	SEE PAGE
M	1	1	**7X-2550**	2	BOLT (M12X1.75X110-MM)	
M	2	1	**8T-4139**	12	BOLT (M12X1.75X30-MM)	
M	3	1	**8T-4140**	4	BOLT (M16X2X60-MM)	
M	4	1	**8T-4175**	2	BOLT (M16X2X90-MM)	
M	5	1	**8T-4184**	2	BOLT (M12X1.75X45-MM)	
	6	1	**8T-4223**	24	WASHER-HARD (13.5X25.5X3-MM THK)	
M	7	1	**8T-4648**	2	BOLT (M12X1.75X70-MM)	
M	8	1	**8T-4956**	4	BOLT (M12X1.75X35-MM)	
M	9	1	**8T-5001**	2	BOLT (M12X1.75X130-MM)	
	10	1	**9X-8257**	6	WASHER (17.5X30X3.5-MM THK)	
	11	1	**179-5235**	12	CLIP	
	12	1	**135-3980**	5	CLIP	
	13	1	**5Q-4212**	4	CLIP	
	14	1	**277-1042**	1	TUBE AS	
	15	1	**173-8074**	1	CLIP AS	
M	16	1	**8T-4132**	4	NUT (M16X2-THD)	
	17	1	**277-1039**	1	TUBE AS	
M	18	1	**8T-4244**	12	NUT (M12X1.75-THD)	
	19	1	**179-5090**	2	PLATE	
	20	1	**193-6662**	1	PLATE	
	21	1	**253-6276**	1	PLATE	
	22	1	**6V-8398**	8	SEAL-O-RING	
	23	1	**237-3018**	1	SUPPORT AS	
	24	1	**247-9440**	2	SUPPORT AS	
	25	1	**277-1030**	2	TUBE AS	
	26	1	**277-1033**	1	TUBE AS	
	27	1	**277-1036**	1	TUBE AS	

M-METRIC PART

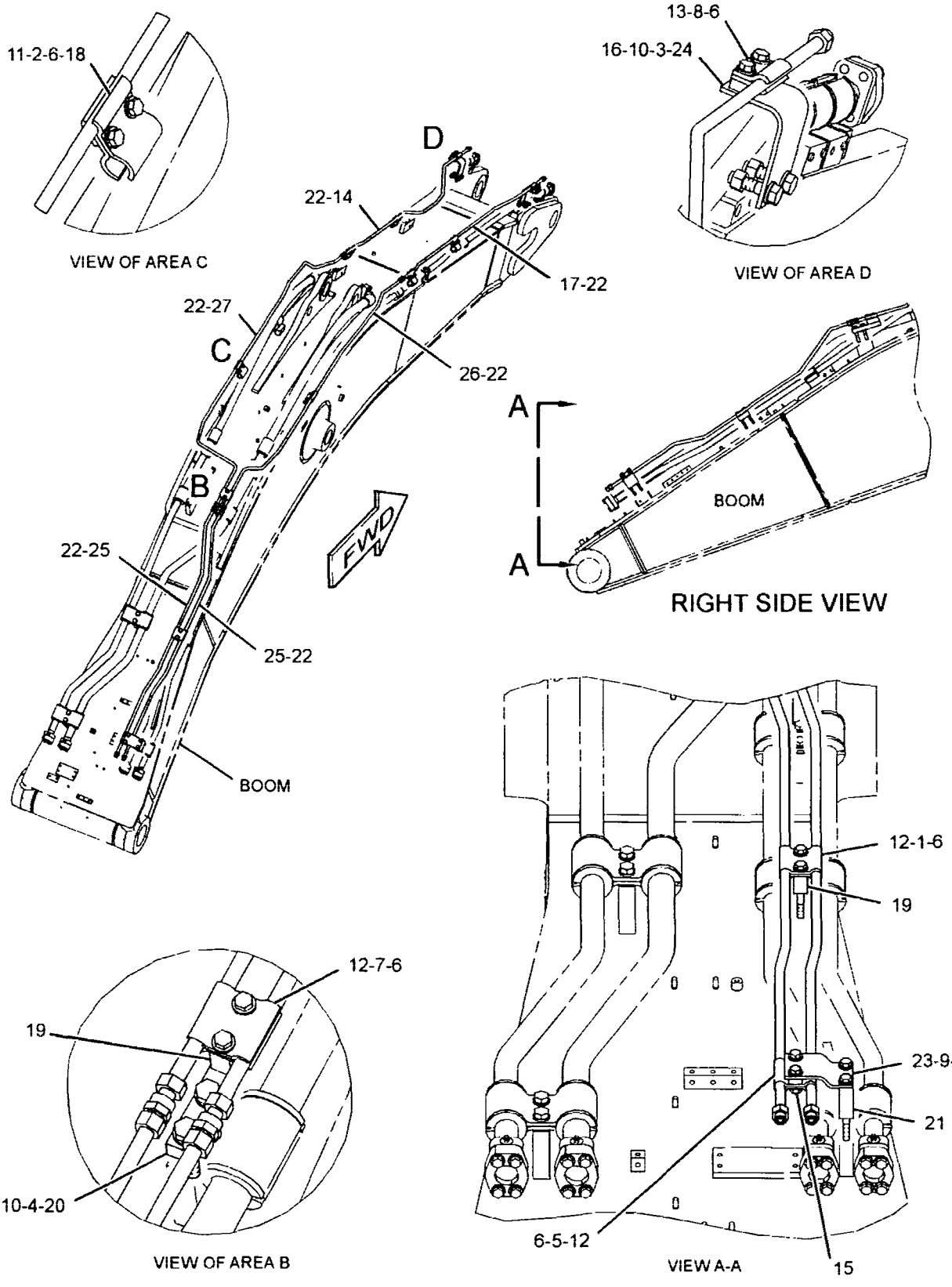

GRAPHIC #1 **<END>** g01294841

HYDRAULIC SYSTEM

242-6537 LINES GP-COUPLER–STICK, TB-FAMILY

S/N: YEE1-UP
FOR USE WITH 2.9-M (9.5-FT) STICK
AN ATTACHMENT

SMCS-5057, 5133 **i02712629**

NOTE	REF NO	GRAPHIC REF	PART NUMBER	QTY	PART NAME 1 2 3 4 5 6 (PRODUCT LEVEL)	SEE PAGE
M	1	1	**8T-4956**	10	BOLT (M12X1.75X35-MM)	
	2	1	**135-3980**	2	CLIP	
	3	1	**5Q-4212**	8	CLIP	
I	4	1	**207-5546**	2	HOSE AS	
	5	1	**9X-6582**	1	NUT (13/16-16-THD)	
	6	1	*148-8415*	1	REDUCER AS	
		1	**6V-8397**	1	SEAL-O-RING	
		1	**6V-8936**	1	REDUCER	
	7	1	*148-8419*	1	REDUCER AS	
		1	**4J-5477**	1	SEAL-O-RING	
		1	**6V-8935**	1	REDUCER-O-RING	
	8	1	**6V-8398**	4	SEAL-O-RING	
	9	1	**247-9518**	1	TUBE AS	
	10	1	**247-9522**	1	TUBE AS	
	11	1	**8T-4223**	10	WASHER-HARD (13.5X25.5X3-MM THK)	

I-REFER TO HYDRAULIC INFORMATION SYSTEM
M-METRIC PART

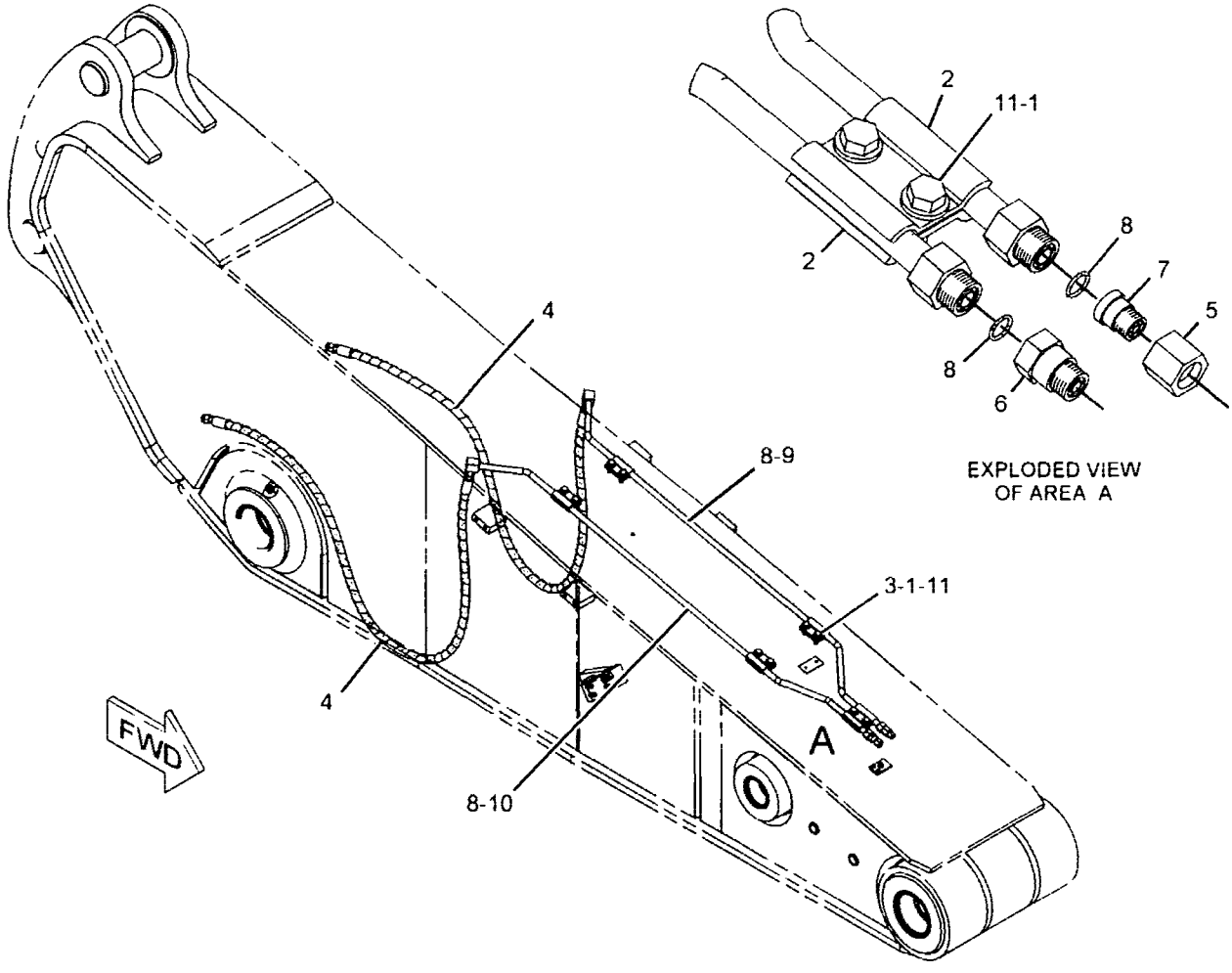

GRAPHIC #1 **<END>** g01104289

HYDRAULIC SYSTEM

242-6538 LINES GP-COUPLER–STICK, VB FAMILY

S/N: YEE1-UP

FOR USE WITH 3-M (9.8-FT) STICK

AN ATTACHMENT

SMCS-5057, 5133 **102712630**

NOTE	REF NO	GRAPHIC REF	PART NUMBER	QTY	PART NAME 1 2 3 4 5 6 (PRODUCT LEVEL)	SEE PAGE
M	1	1	**8T-4956**	10	BOLT (M12X1.75X35-MM)	
	2	1	**135-3980**	2	CLIP	
	3	1	**5Q-4212**	8	CLIP	
I	4	1	**177-8506**	2	HOSE AS	
	5	1	**9X-6582**	1	NUT (13/16-16-THD)	
	6	1	*148-8415*	1	REDUCER AS	
		1	**6V-8397**	1	SEAL-O-RING	
		1	**6V-8936**	1	REDUCER	
	7	1	*148-8419*	1	REDUCER AS	
		1	**4J-5477**	1	SEAL-O-RING	
		1	**6V-8935**	1	REDUCER-O-RING	
	8	1	**6V-8398**	4	SEAL-O-RING	
	9	1	**247-9379**	1	TUBE AS	
	10	1	**247-9383**	1	TUBE AS	
	11	1	**8T-4223**	10	WASHER-HARD (13.5X25.5X3-MM THK)	

I-REFER TO HYDRAULIC INFORMATION SYSTEM
M-METRIC PART

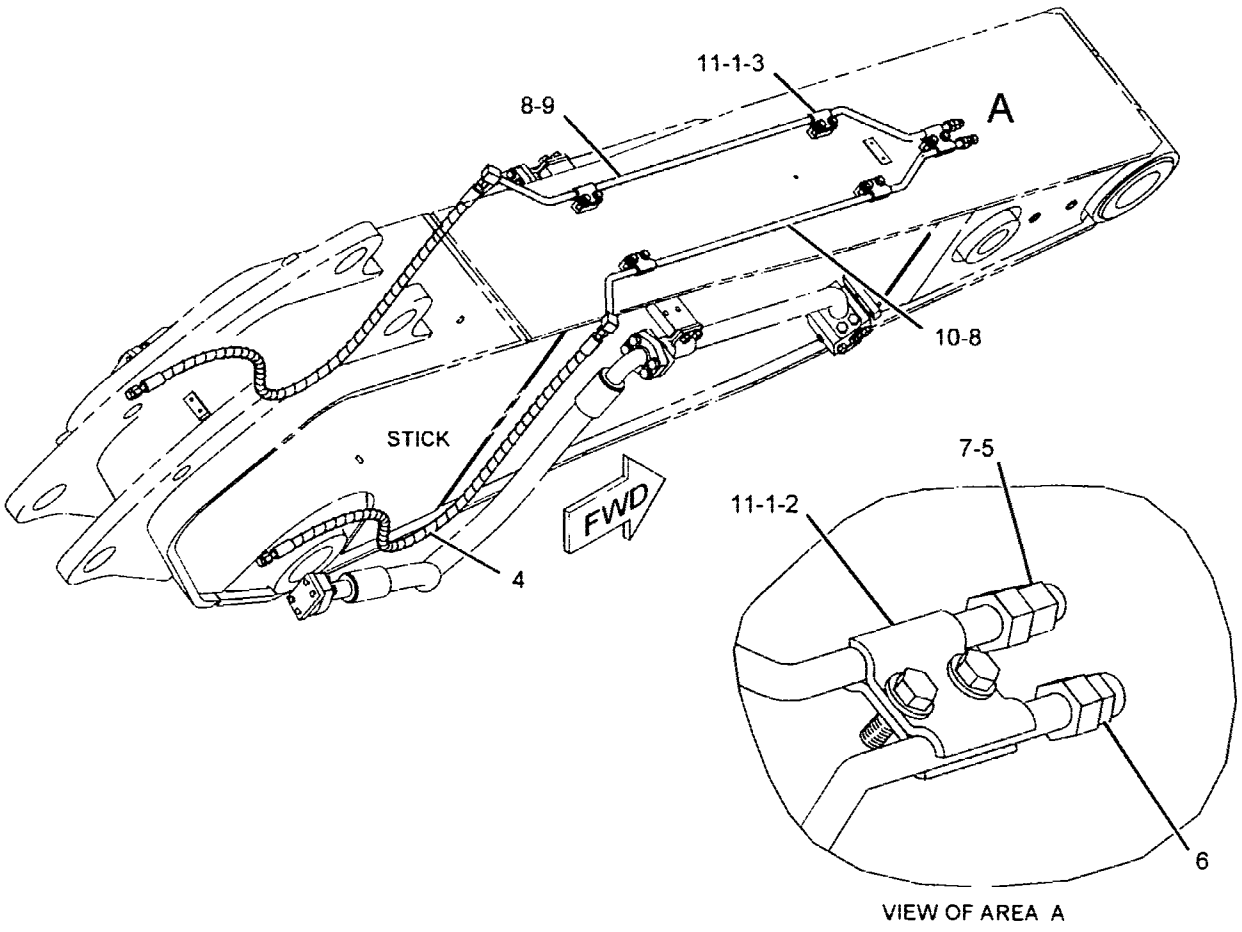

GRAPHIC #1 **<END>** g01110806

HYDRAULIC SYSTEM

242-6539 LINES GP-COUPLER–STICK, VB FAMILY

S/N: YEE1-UP
FOR USE WITH 2.5-M (8.2-FT) STICK
AN ATTACHMENT

SMCS-5057, 5133 **i02712635**

NOTE	REF NO	GRAPHIC REF	PART NUMBER	QTY	PART NAME 1 2 3 4 5 6 (PRODUCT LEVEL)	SEE PAGE
	1	1	**9X-6582**	1	NUT (13/16-16-THD)	
I	2	1	**216-6485**	2	HOSE AS	
	3	1	**247-9022**	1	TUBE AS	
	4	1	**247-9026**	1	TUBE AS	
	5	1	**135-3980**	2	CLIP	
	6	1	*148-8415*	1	REDUCER AS	
		1	**6V-8397**	1	SEAL-O-RING	
		1	**6V-8936**	1	REDUCER	
	7	1	*148-8419*	1	REDUCER AS	
		1	**4J-5477**	1	SEAL-O-RING	
		1	**6V-8935**	1	REDUCER-O-RING	
	8	1	**5Q-4212**	8	CLIP	
	9	1	**6V-8398**	4	SEAL-O-RING	
	10	1	**8T-4223**	10	WASHER-HARD (13.5X25.5X3-MM THK)	
M	11	1	**8T-4956**	10	BOLT (M12X1.75X35-MM)	

I-REFER TO HYDRAULIC INFORMATION SYSTEM
M-METRIC PART

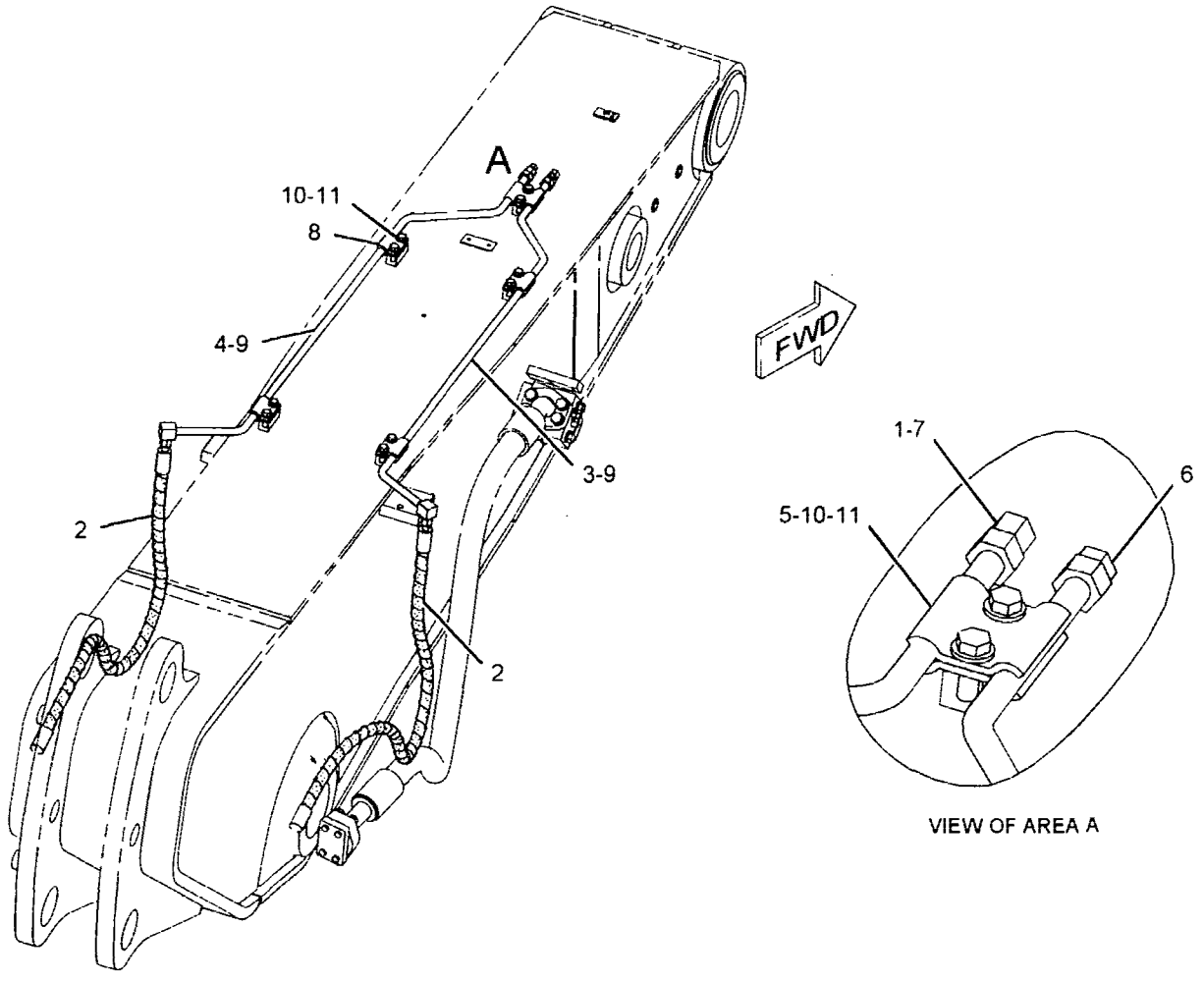

GRAPHIC #1 **<END>** g01127055

HYDRAULIC SYSTEM

302-9475 LINES GP-COUPLER–STICK, TB-FAMILY

S/N: YEE1-UP

FOR USE WITH 3.9-M (12.8-FT) STICK

AN ATTACHMENT

SMCS-5057, 5133 **i02852779**

NOTE	REF NO	GRAPHIC REF	PART NUMBER	QTY	PART NAME 1 2 3 4 5 6 (PRODUCT LEVEL)	SEE PAGE
M	1	1	**8T-4956**	10	BOLT (M12X1.75X35-MM)	
	2	1	**135-3980**	2	CLIP	
	3	1	**5Q-4212**	8	CLIP	
I	4	1	**245-2425**	2	HOSE AS	
	5	1	**9X-6582**	1	NUT (13/16-16-THD)	
	6	1	*148-8415*	1	REDUCER AS	
		1	**6V-8397**	1	SEAL-O-RING	
		1	**6V-8936**	1	REDUCER	
	7	1	*148-8419*	1	REDUCER AS	
		1	**4J-5477**	1	SEAL-O-RING	
		1	**6V-8935**	1	REDUCER-O-RING	
	8	1	**6V-8398**	4	SEAL-O-RING	
	9	1	**302-9479**	1	TUBE AS	
	10	1	**302-9476**	1	TUBE AS	
	11	1	**8T-4223**	10	WASHER-HARD (13.5X25.5X3-MM THK)	

I-REFER TO HYDRAULIC INFORMATION SYSTEM
M-METRIC PART

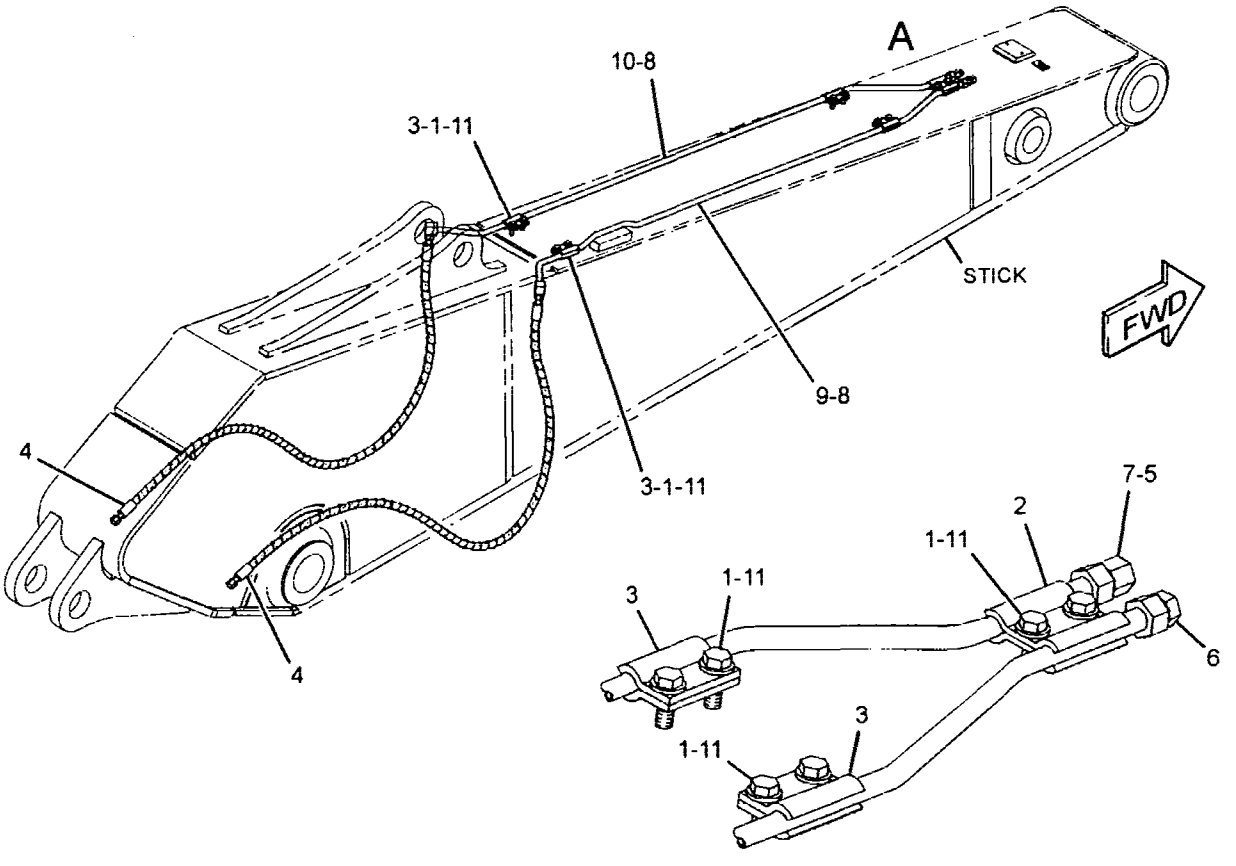

VIEW OF AREA A

GRAPHIC #1 **<END>** g01429290

HYDRAULIC SYSTEM

227-0585 LINES GP-FRONT—MEDIUM PRESSURE

S/N: YEE1-UP

PART OF 285-1789 CONTROL AR-AUXILIARY

AN ATTACHMENT

SMCS-5057 **i02900436**

NOTE	REF NO	GRAPHIC REF	PART NUMBER	QTY	PART NAME 1 2 3 4 5 6 (PRODUCT LEVEL)	SEE PAGE
CI	1	1	**307-5257**	1	HOSE AS	
CI	2	1	**307-5260**	1	HOSE AS	

C-CHANGE FROM PREVIOUS TYPE
I-REFER TO HYDRAULIC INFORMATION SYSTEM

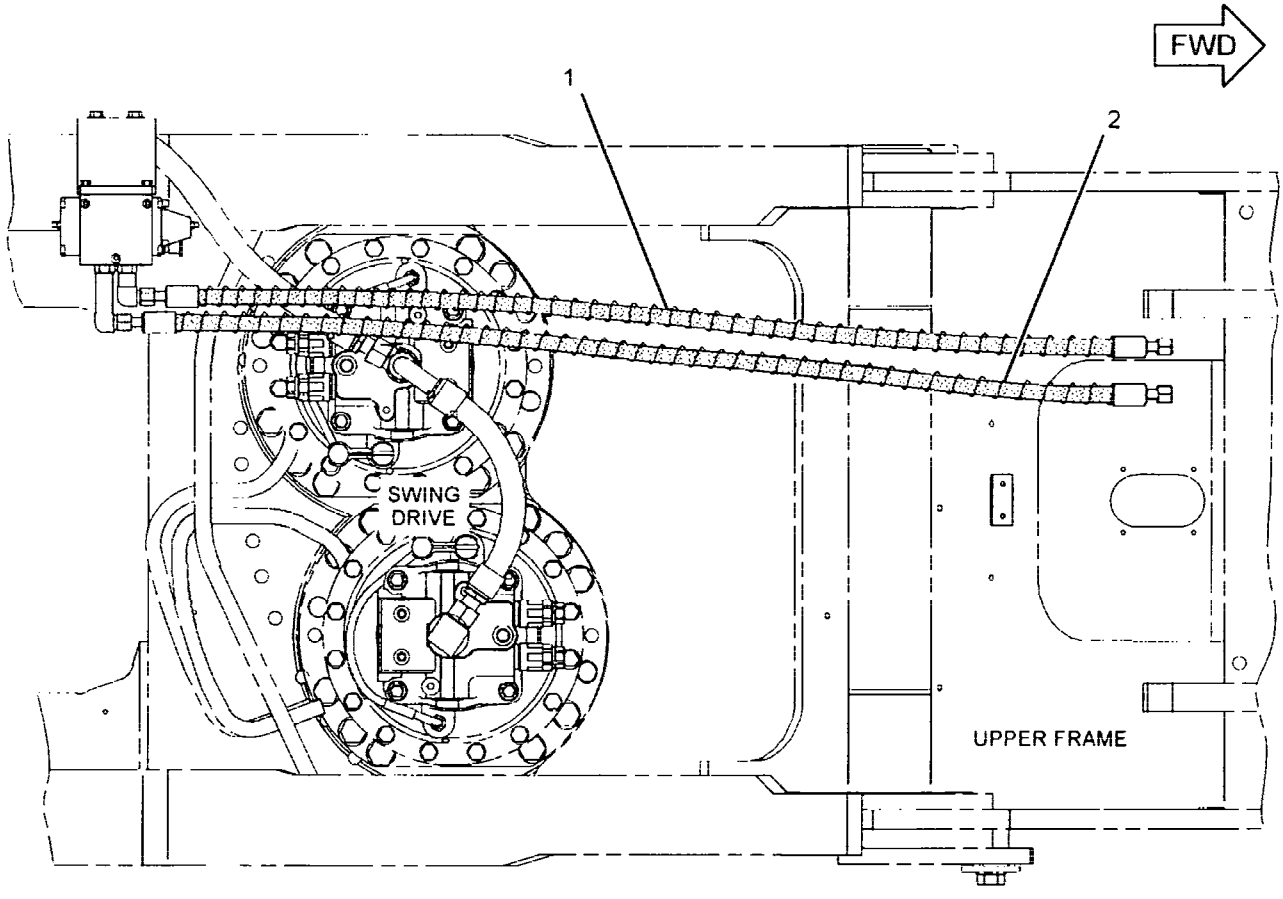

TOP VIEW

GRAPHIC #1 **<END>** g01457259

HYDRAULIC SYSTEM

292-7161 LINES GP-FRONT-IMPLEMENT, TRAVEL

S/N: YEE1-UP

PART OF 297-0243 HYDRAULIC AR

SMCS-5057 **i02902087**

NOTE	REF NO	GRAPHIC REF	PART NUMBER	QTY	PART NAME 1 2 3 4 5 6 (PRODUCT LEVEL)	SEE PAGE
	1	2	4I-7822	2	COVER	
	2	1	9F-2167	1	SCREW-PURGE (3/8-24X1.164-IN)	
I	3	2	113-6666	1	HOSE AS	
	4	2	143-4203	1	TUBE AS	
	5	2	168-9595	1	TUBE AS	
I	6	1	212-5314	1	HOSE AS	
I	7	1	212-5316	1	HOSE AS	
I	8	1	212-5317	1	HOSE AS	
	9	2	227-0616	1	TUBE AS	
	10	2	227-0617	1	FLANGE	
I	11	2	248-9796	1	HOSE AS	
I	12	1	266-1079	1	HOSE AS	
	13	2	286-6565	1	TUBE AS	
	14	2	292-7273	1	FLANGE	
I	15	2	292-7274	1	HOSE AS	
I	16	2	292-7282	1	HOSE AS	
I	17	2	292-7384	1	HOSE AS	
	18	1	302-3286	1	SUPPORT AS	
	19	1	314-8079	1	HOSE AS	
		1	7Y-5074		GUARD-HOSE (204-CM)	
	20	1	314-8080	1	HOSE AS	
		1	7Y-5074		GUARD-HOSE (182-CM)	
	21	1	314-8081	1	HOSE AS	
		1	7Y-5074		GUARD-HOSE (211-CM)	
I	22	1	314-8082	1	HOSE AS	
	23	2	319-9713	1	BLOCK	
	24	1	319-9755	1	FLANGE	
M	25	2	101-7397	4	BOLT-SOCKET HEAD (M12X1.75X50-MM)	
M	26	1,2	101-7402	8	BOLT-SOCKET HEAD (M12X1.75X30-MM)	
M	27	2	108-1784	4	BOLT-SOCKET HEAD (M12X1.75X120-MM)	
	28	1,2	1P-3703	24	SEAL-RECTANGULAR	
	29	1,2	1P-3704	5	SEAL-RECTANGULAR	
	30	2	1P-3705	4	SEAL-RECTANGULAR	
	31	2	1P-3706	1	SEAL-RECTANGULAR	
	32	1	1P-5767	8	FLANGE-HALF	
	33	2	4K-8864	1	CLIP	
	34	2	5P-7468	2	CLIP (SLOT)	
	35	2	5P-7469	2	CLIP (TAB)	
	36	1,2	6V-0400	32	FLANGE-HALF	
	37	2	6V-0545	2	GROMMET	
	38	2	8T-4121	1	WASHER-HARD (11X21X2.5-MM THK)	
M	39	2	8T-4136	1	BOLT (M10X1.5X25-MM)	
M	40	2	8T-4139	16	BOLT (M12X1.75X30-MM)	
M	41	1	8T-4183	2	BOLT (M12X1.75X40-MM)	
M	42	1,2	8T-4184	36	BOLT (M12X1.75X45-MM)	
M	43	2	8T-4193	8	BOLT (M16X2X50-MM)	
M	44	1,2	8T-4194	44	BOLT (M12X1.75X50-MM)	
	45	1,2	8T-4223	84	WASHER-HARD (13.5X25.5X3-MM THK)	
M	46	2	8T-4956	2	BOLT (M12X1.75X35-MM)	

I-REFER TO HYDRAULIC INFORMATION SYSTEM
M-METRIC PART

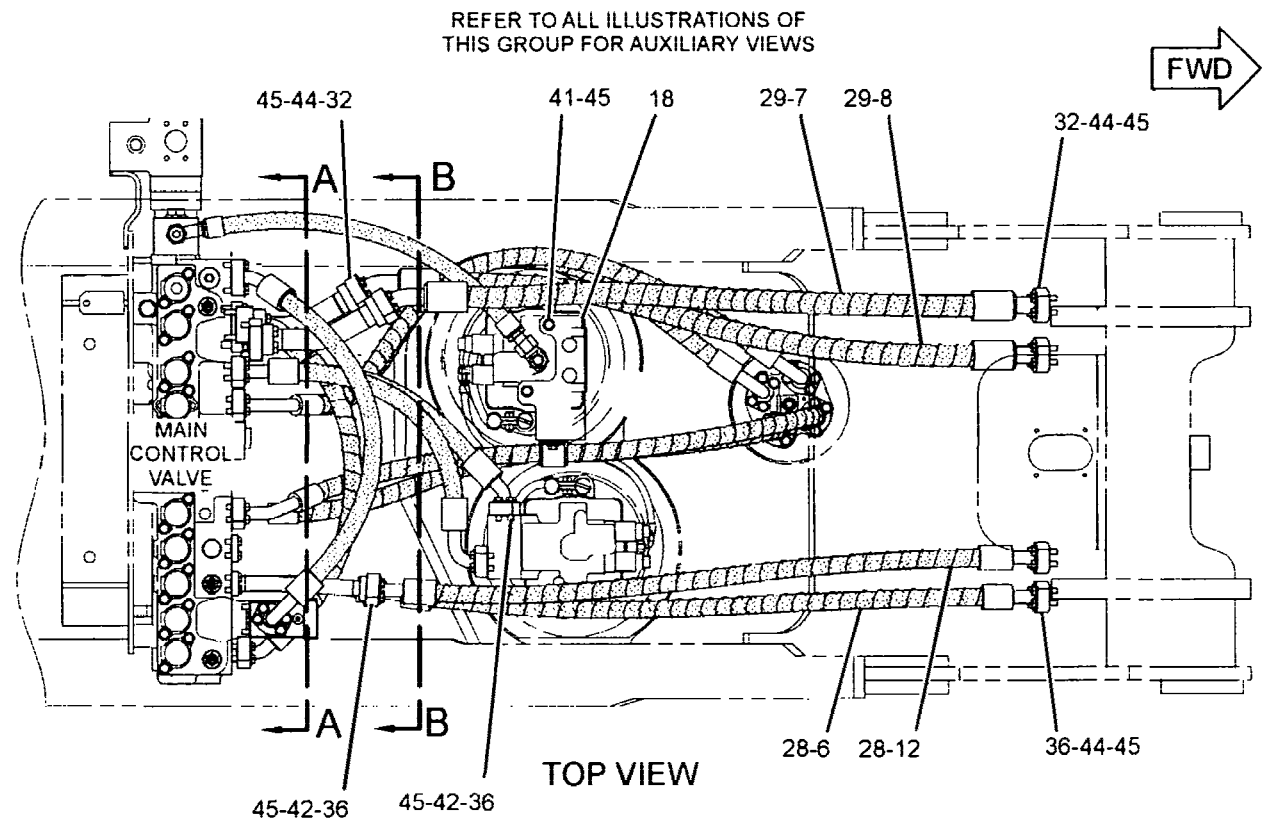

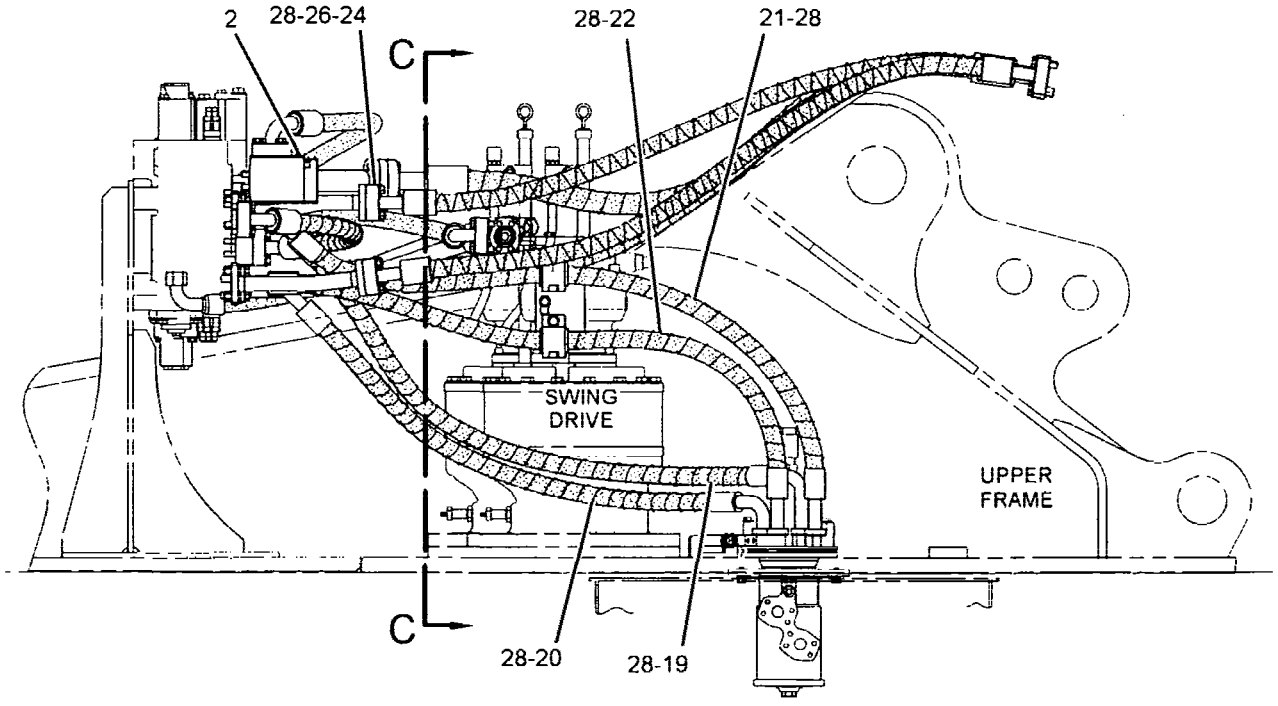

GRAPHIC #1 g01471277

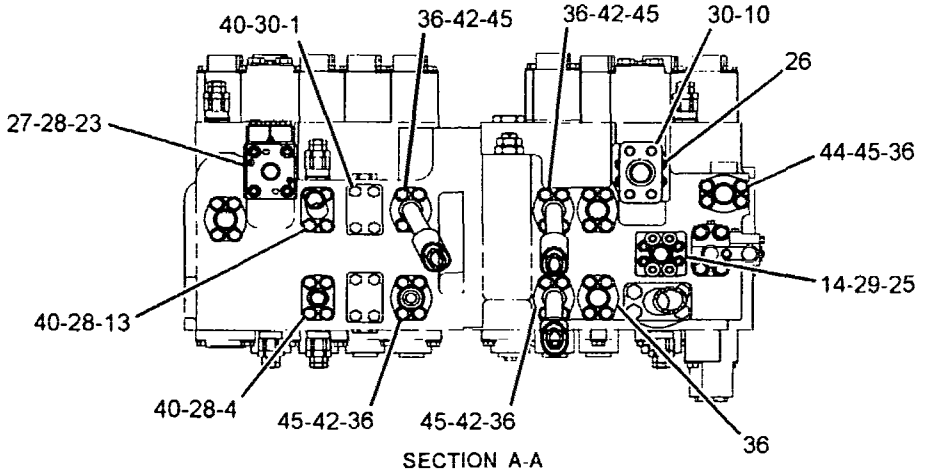

SECTION A-A

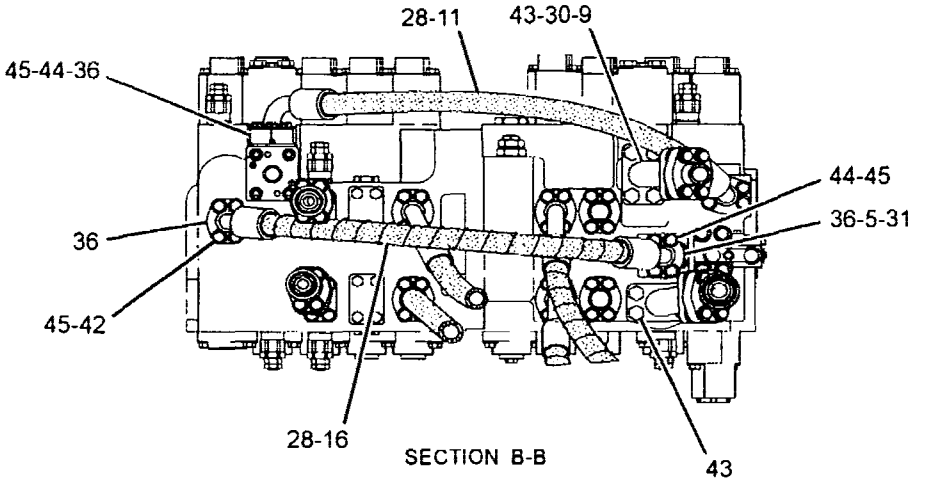

SECTION B-B

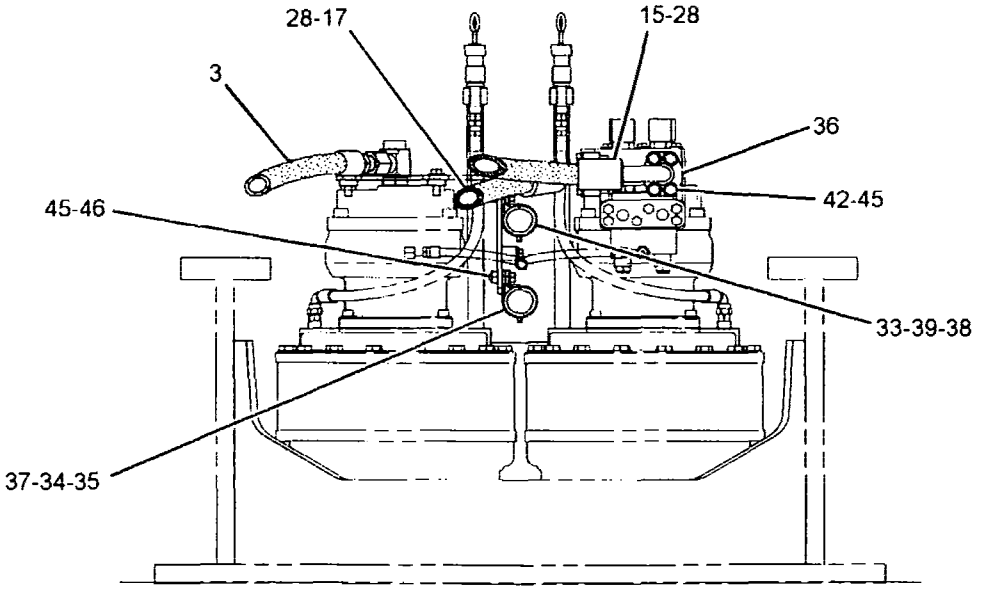

SECTION C-C

GRAPHIC #2 **<END>** g01471279

HYDRAULIC SYSTEM

292-7166 LINES GP-FRONT–SYSTEM 3, 1-WAY, 2-PUMP

S/N: YEE1-UP

PART OF 285-1784 CONTROL AR-AUXILIARY

AN ATTACHMENT

SMCS-5057 **i02845534**

NOTE	REF NO	GRAPHIC REF	PART NUMBER	QTY	PART NAME 1 2 3 4 5 6 (PRODUCT LEVEL)	SEE PAGE
	1	2	4I-7822	1	COVER	
	2	2	6I-6721	1	ELBOW	
	3	1	171-2637	1	BOSS	
	4	2	173-4664	1	FLANGE	
	5	2	212-5148	1	BLOCK	
	6	2	239-1794	1	BLOCK	
	7	2	239-1798	1	BLOCK	
I	8	1	239-1808	1	HOSE AS	
Y	9	1	239-9036	1	VALVE GP-CHECK	736
I	10	1	272-4610	1	HOSE AS	
I	11	1	296-7020	1	HOSE AS	
	12	2	296-7024	1	BLOCK	
	13	1,2	296-7165	2	SUPPORT	
	14	1	296-7166	1	SUPPORT AS	
		1	7I-6677	1	PLATE	
	15	2	296-7167	1	SUPPORT AS	
		2	7I-6677	1	PLATE	
	16	2	297-0265	1	VALVE GP-SOLENOID & RELIEF (WITH BLOCK)	
	17	2	302-2971	1	SUPPORT AS	
	18	2	302-2981	1	BLOCK	
I	19	1	302-2990	1	HOSE AS	
	20	1	319-9866	1	HOSE AS	
	21	1	319-9867	1	HOSE AS	
M	22	2	101-7402	4	BOLT-SOCKET HEAD (M12X1.75X30-MM)	
M	23	2	105-3489	4	BOLT-SOCKET HEAD (M12X1.75X80-MM)	
M	24	2	108-4282	4	BOLT-SOCKET HEAD (M10X1.5X100-MM)	
	25	2	*148-8357*	1	ELBOW AS	
		2	5K-9090	1	SEAL-O-RING	
		2	6V-9008	1	ELBOW	
		2	7M-8485	1	SEAL-O-RING	
	26	2	*148-8408*	1	PLUG AS	
		2	3D-2824	1	SEAL-O-RING	
		2	9S-4183	1	PLUG-O-RING	
	27	2	*148-8411*	1	PLUG AS	
		2	3K-0360	1	SEAL-O-RING	
		2	9S-4185	1	PLUG-O-RING	
	28	2	*164-4180*	1	PLUG AS	
		2	7M-8485	1	SEAL-O-RING	
		2	9S-4181	1	PLUG-O-RING	
	29	2	1P-3703	1	SEAL-RECTANGULAR	
	30	1,2	1P-3704	5	SEAL-RECTANGULAR	
	31	2	1P-3705	2	SEAL-RECTANGULAR	
	32	2	1P-4578	8	FLANGE-HALF	
	33	1,2	1P-5767	6	FLANGE-HALF	
	34	1,2	4J-0522	5	SEAL-O-RING	
	35	2	5K-9090	2	SEAL-O-RING	
	36	1	5P-7468	1	CLIP (SLOT)	
	37	1	5P-7469	1	CLIP (TAB)	
	38	2	6J-2680	1	SEAL-O-RING	
M	39	2	7X-2550	2	BOLT (M12X1.75X110-MM)	
	40	1	8T-2525	1	GROMMET	
	41	2	8T-4121	16	WASHER-HARD (11X21X2.5-MM THK)	
M	42	1,2	8T-4139	8	BOLT (M12X1.75X30-MM)	
M	43	1,2	8T-4184	12	BOLT (M12X1.75X45-MM)	
M	44	1,2	8T-4194	9	BOLT (M12X1.75X50-MM)	

292-7166 LINES GP-FRONT (contd.)

i02845534

NOTE	REF NO	GRAPHIC REF	PART NUMBER	QTY	PART NAME 1 2 3 4 5 6 (PRODUCT LEVEL)	SEE PAGE
M	45	2	8T-4196	16	BOLT (M10X1.5X35-MM)	
	46	1,2	8T-4223	41	WASHER-HARD (13.5X25.5X3-MM THK)	
M	47	2	8T-4648	4	BOLT (M12X1.75X70-MM)	
M	48	2	8T-4956	6	BOLT (M12X1.75X35-MM)	
M	49	2	8T-5041	4	BOLT (M12X1.75X120-MM)	

I-REFER TO HYDRAULIC INFORMATION SYSTEM
M-METRIC PART
Y-SEPARATE ILLUSTRATION

REFER TO ALL ILLUSTRATIONS OF THIS GROUP FOR AUXILIARY VIEWS

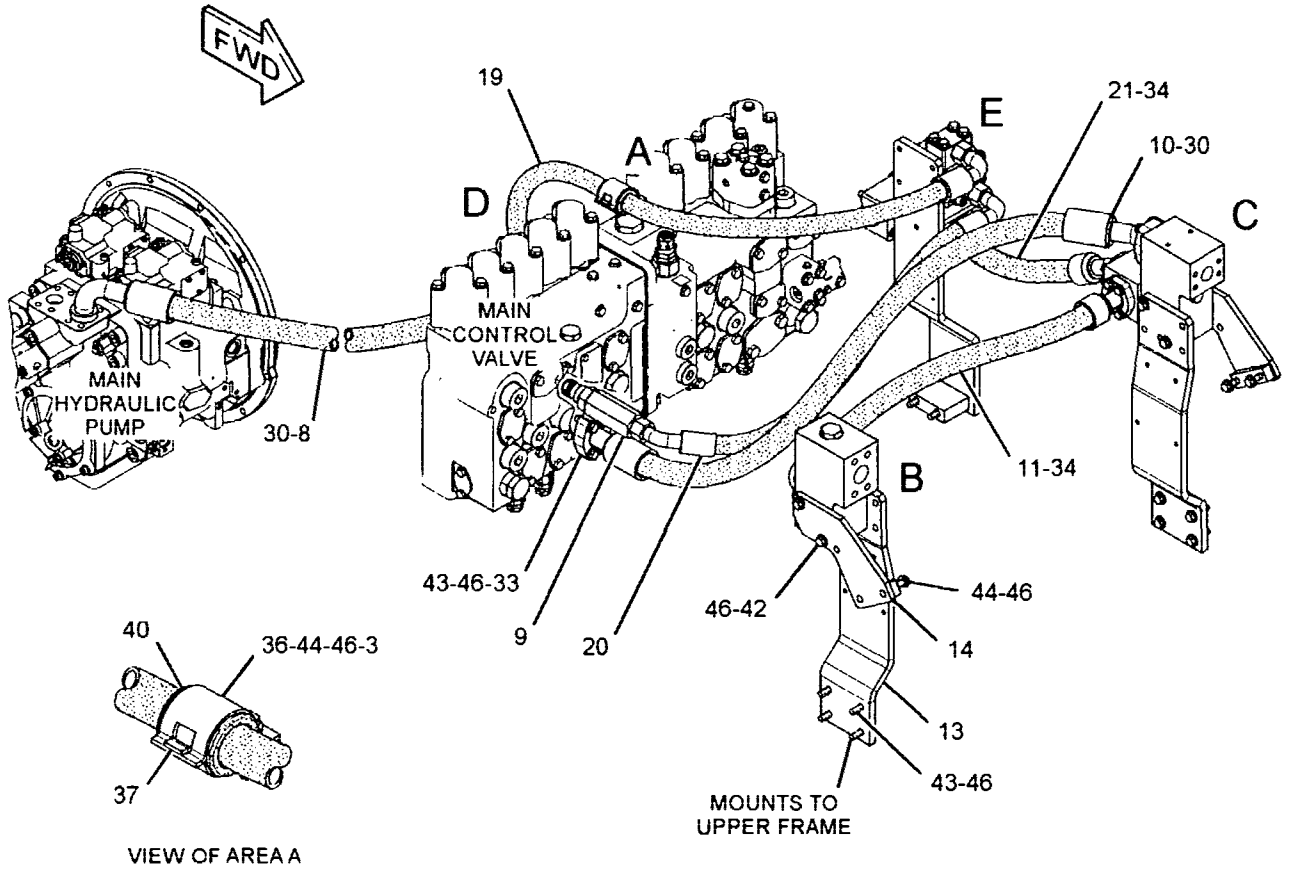

GRAPHIC #1

g01448943

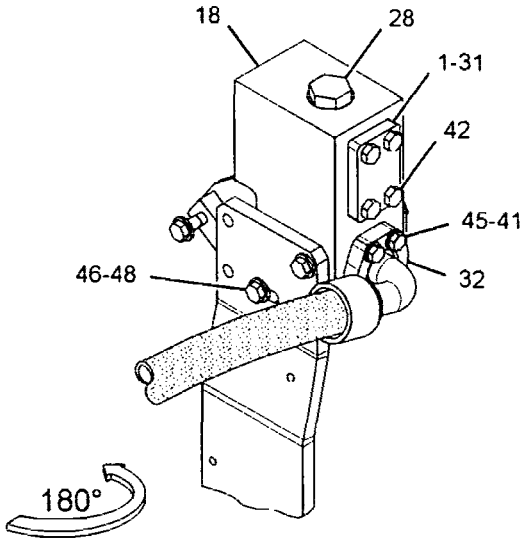

VIEW OF AREA B

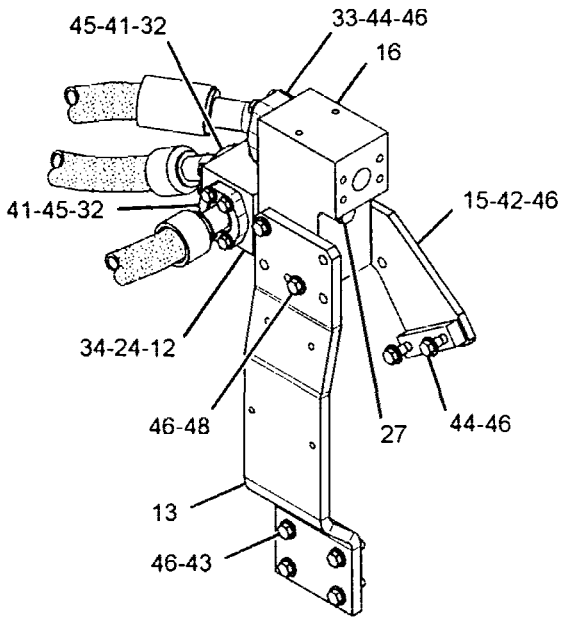

VIEW OF AREA C

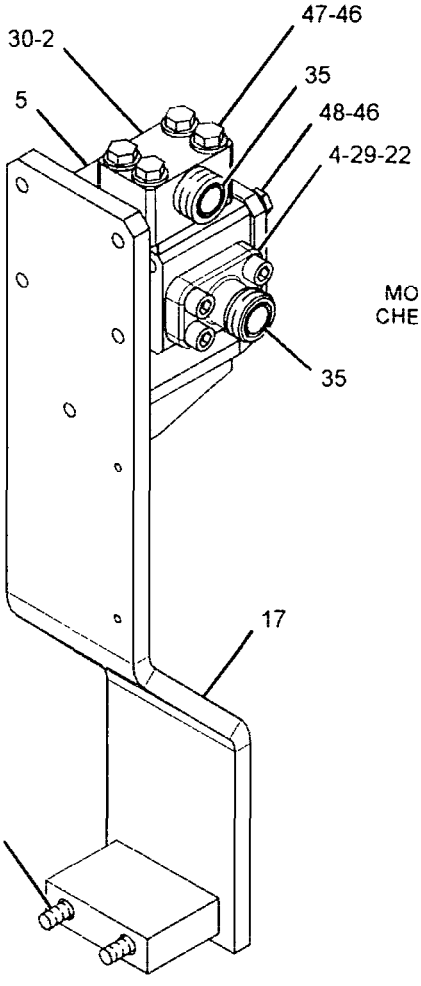

VIEW OF AREA E
(HOSES REMOVED FOR CLARITY)

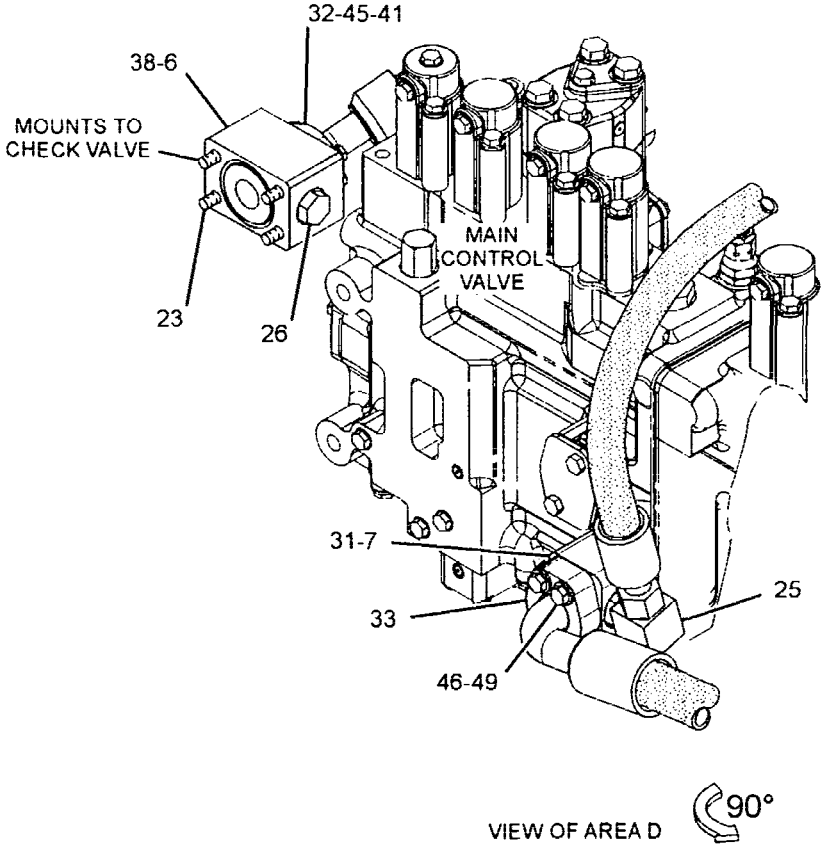

VIEW OF AREA D

GRAPHIC #2 **<END>** g01448944

HYDRAULIC SYSTEM

292-7167 LINES GP-FRONT–SYSTEM 5, 2-WAY, 1-PUMP

S/N: YEE1-UP

PART OF 285-1785 CONTROL AR-AUXILIARY

AN ATTACHMENT

SMCS-5057 **i02847227**

NOTE	REF NO	GRAPHIC REF	PART NUMBER	QTY	PART NAME 1 2 3 4 5 6 (PRODUCT LEVEL)	SEE PAGE
Y	1	1	**239-8984**	2	VALVE GP-RELIEF	803
	2	1	**250-4800**	2	COVER	
I	3	1	**272-4610**	1	HOSE AS	
	4	1	**296-7165**	2	SUPPORT	
	5	1	**296-7166**	1	SUPPORT AS	
	6	1	**296-7167**	1	SUPPORT AS	
	7	1	**302-2981**	1	BLOCK	
	8	1	**307-5003**	1	BLOCK	
	9	1	**319-9865**	1	HOSE AS	
	10	1	*164-4180*	2	PLUG AS	
					(EACH INCLUDES)	
		1	**7M-8485**	1	SEAL-O-RING	
		1	**9S-4181**	1	PLUG-O-RING	
	11	1	**1P-3704**	4	SEAL-RECTANGULAR	
	12	1	**1P-5767**	8	FLANGE-HALF	
	13	1	**4J-0522**	2	SEAL-O-RING	
	14	1	**8T-4121**	8	WASHER-HARD (11X21X2.5-MM THK)	
M	15	1	**8T-4139**	4	BOLT (M12X1.75X30-MM)	
M	16	1	**8T-4184**	8	BOLT (M12X1.75X45-MM)	
M	17	1	**8T-4194**	20	BOLT (M12X1.75X50-MM)	
M	18	1	**8T-4196**	8	BOLT (M10X1.5X35-MM)	
	19	1	**8T-4223**	36	WASHER-HARD (13.5X25.5X3-MM THK)	
M	20	1	**8T-4956**	4	BOLT (M12X1.75X35-MM)	

I-REFER TO HYDRAULIC INFORMATION SYSTEM
M-METRIC PART
Y-SEPARATE ILLUSTRATION

292-7167 **LINES GP-FRONT** *(contd.)* **i02847227**

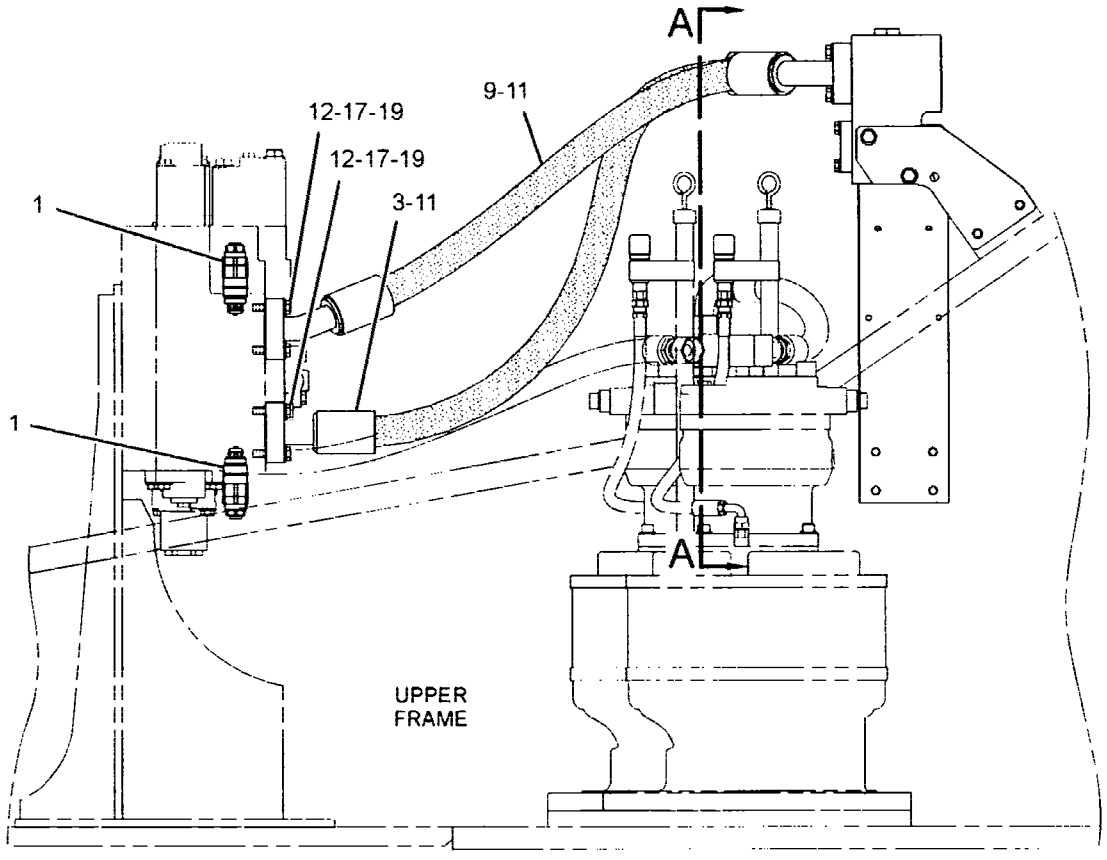

RIGHT SIDE VIEW

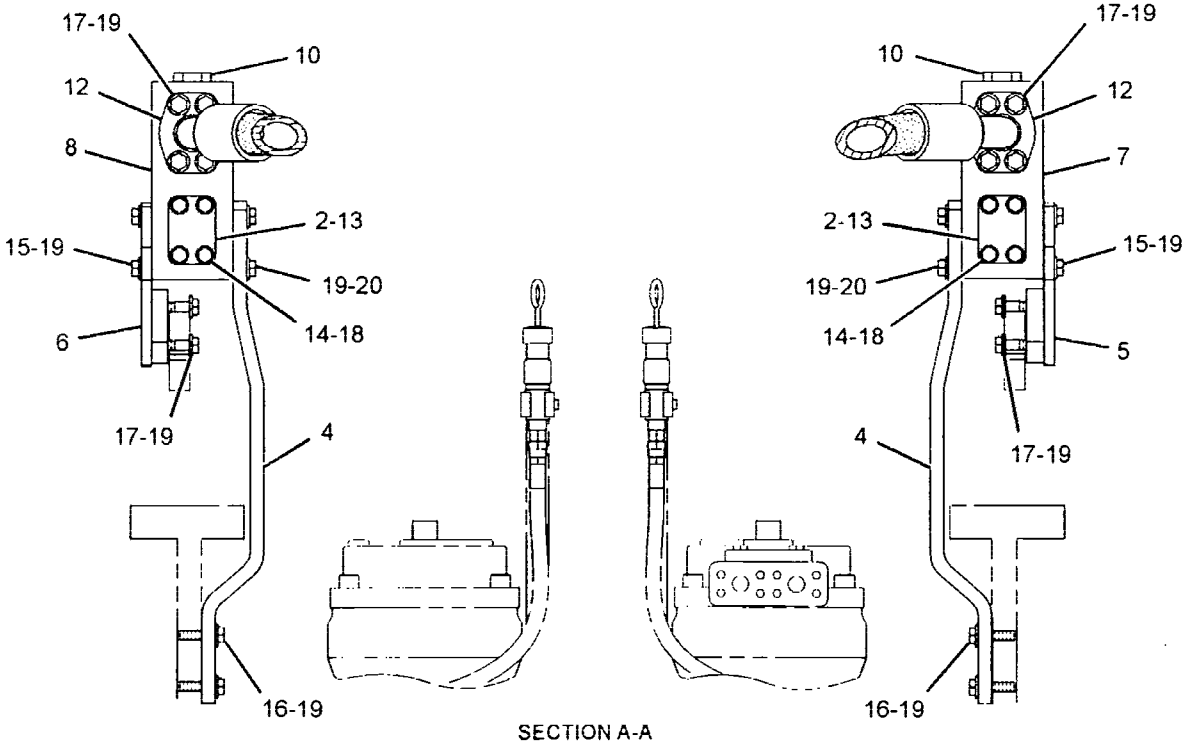

SECTION A-A

GRAPHIC #1

<END>

g01481233

HYDRAULIC SYSTEM

292-7169 LINES GP-FRONT–SYSTEM 14, COMBINED FUNCTION

S/N: YEE1-UP

PART OF 285-1786 CONTROL AR-AUXILIARY

AN ATTACHMENT

SMCS-5057 **i02974720**

NOTE	REF NO	GRAPHIC REF	PART NUMBER	QTY	PART NAME 1 2 3 4 5 6 (PRODUCT LEVEL)	SEE PAGE
	1	1	**6I-6721**	1	ELBOW	
	2	1	**171-2637**	1	BOSS	
	3	2	**173-4664**	1	FLANGE	
	4	1	**221-8859**	1	SENSOR AS-PRESSURE (BOOM CYLINDER)	
		1	**3E-3371**	1	WEDGE-RECEPTACLE LOCK (3-PIN)	
		1	**3K-0360**	1	SEAL-O-RING	
		1	**9X-3401**	3	PIN-CONNECTOR (16-GA TO 18-GA)	
					–OR–	
		1	**126-1767**	3	PIN-CONNECTOR (14-GA)	
		1	**171-0596**	1	RECEPTACLE AS	
	5	2	**239-1794**	1	BLOCK	
	6	1	**239-1798**	1	BLOCK	
I	7	1	**239-1808**	1	HOSE AS	
	8	1	**319-9865**	1	HOSE AS	
I	9	1	**272-4610**	1	HOSE AS	
Y	10	1	**239-8984**	2	VALVE GP-RELIEF	803
Y	11	1	**239-9036**	1	VALVE GP-CHECK	736
	12	1	**319-9867**	1	HOSE AS	
I	13	1	**296-7020**	1	HOSE AS	
	14	2	**296-7024**	1	BLOCK	
	15	1,2	**296-7165**	2	SUPPORT	
	16	1	**296-7166**	1	SUPPORT AS	
		1	**7I-6677**	1	PLATE	
	17	2	**296-7167**	1	SUPPORT AS	
		2	**7I-6677**	1	PLATE	
	18	1	**297-0265**	1	VALVE GP-SOLENOID & RELIEF	
	19	1	**297-0266**	1	VALVE GP-SOLENOID & RELIEF	
Y	20	2	**297-0370**	1	VALVE GP-SOLENOID	829
	21	2	**302-2971**	1	SUPPORT AS	
I	22	1	**302-2990**	1	HOSE AS	
	23	1	**319-9866**	1	HOSE AS	
M	24	2	**108-1781**	4	BOLT-SOCKET HEAD (M12X1.75X35-MM)	
M	25	2	**108-4282**	4	BOLT-SOCKET HEAD (M10X1.5X100-MM)	
	26	1	*148-8357*	1	ELBOW AS	
		1	**5K-9090**	1	SEAL-O-RING	
		1	**6V-9008**	1	ELBOW	
		1	**7M-8485**	1	SEAL-O-RING	
	27	2	**1P-3703**	1	SEAL-RECTANGULAR	
	28	1,2	**1P-3704**	8	SEAL-RECTANGULAR	
	29	1	**1P-3705**	1	SEAL-RECTANGULAR	
	30	2	**1P-4578**	8	FLANGE-HALF	
	31	1,2	**1P-5767**	10	FLANGE-HALF	
	32	1	**4J-0522**	4	SEAL-O-RING	
	33	1	**5K-9090**	2	SEAL-O-RING	
	34	1	**5P-7468**	1	CLIP (SLOT)	
	35	1	**5P-7469**	1	CLIP (TAB)	
	36	2	**6J-2680**	1	SEAL-O-RING	
M	37	2	**7X-2550**	2	BOLT (M12X1.75X110-MM)	
M	38	1	**105-3489**	4	BOLT-SOCKET HEAD (M12X1.75X80-MM)	
	39	1	**8T-2525**	1	GROMMET	
	40	2	**8T-4121**	16	WASHER-HARD (11X21X2.5-MM THK)	
M	41	1	**8T-4139**	4	BOLT (M12X1.75X30-MM)	
M	42	1,2	**8T-4184**	16	BOLT (M12X1.75X45-MM)	
M	43	1,2	**8T-4194**	13	BOLT (M12X1.75X50-MM)	
M	44	2	**8T-4196**	16	BOLT (M10X1.5X35-MM)	

292-7169 LINES GP-FRONT (contd.) i02974720

NOTE	REF NO	GRAPHIC REF	PART NUMBER	QTY	PART NAME 1 2 3 4 5 6 (PRODUCT LEVEL)	SEE PAGE
	45	1,2	8T-4223	49	WASHER-HARD (13.5X25.5X3-MM THK)	
M	46	1	8T-4648	4	BOLT (M12X1.75X70-MM)	
M	47	1,2	8T-4956	6	BOLT (M12X1.75X35-MM)	
M	48	1	8T-5041	4	BOLT (M12X1.75X120-MM)	

I-REFER TO HYDRAULIC INFORMATION SYSTEM
M-METRIC PART
Y-SEPARATE ILLUSTRATION

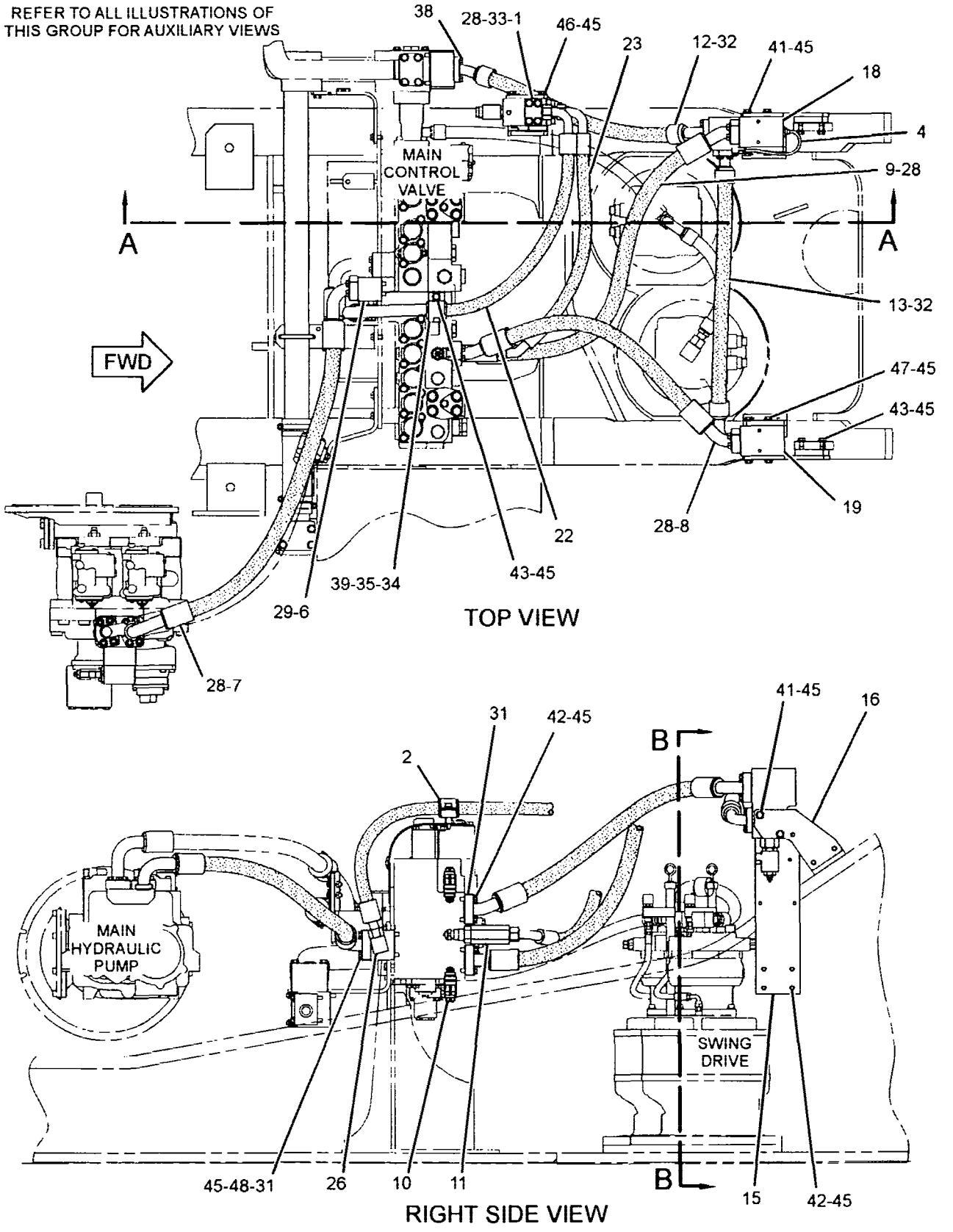

GRAPHIC #1 g01457088

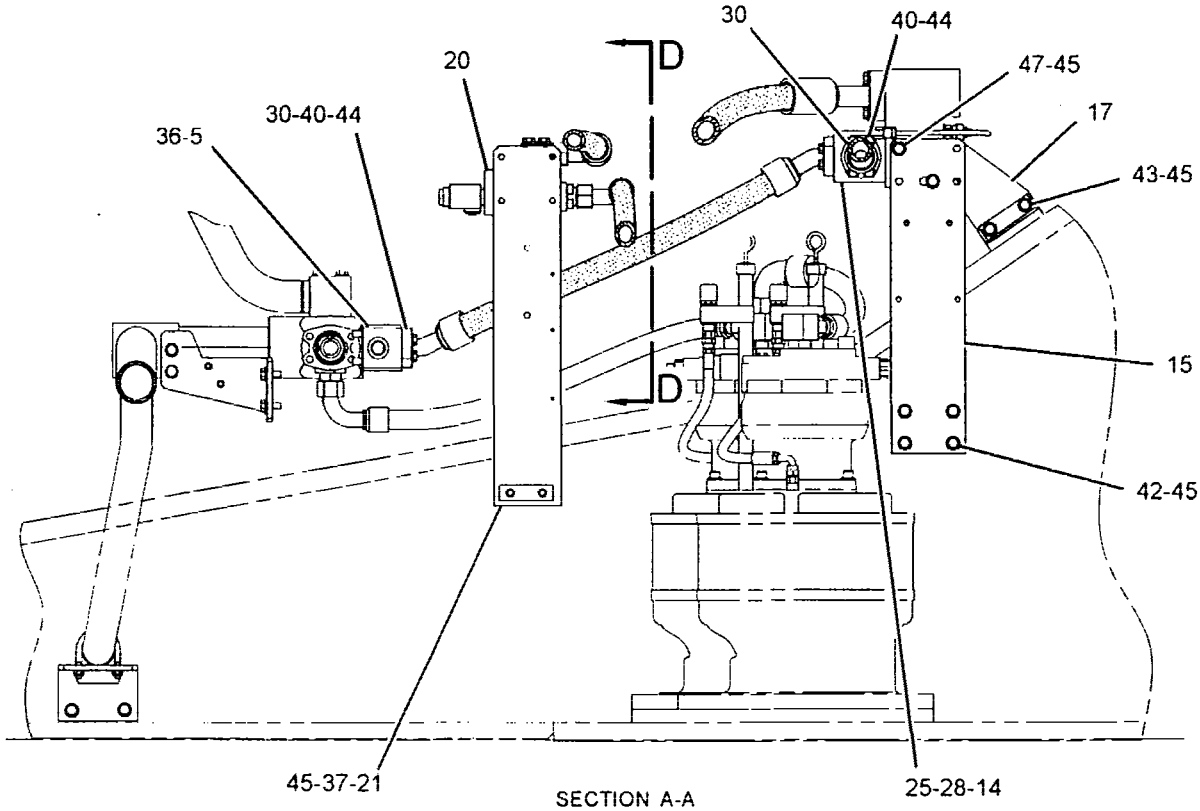

SECTION A-A

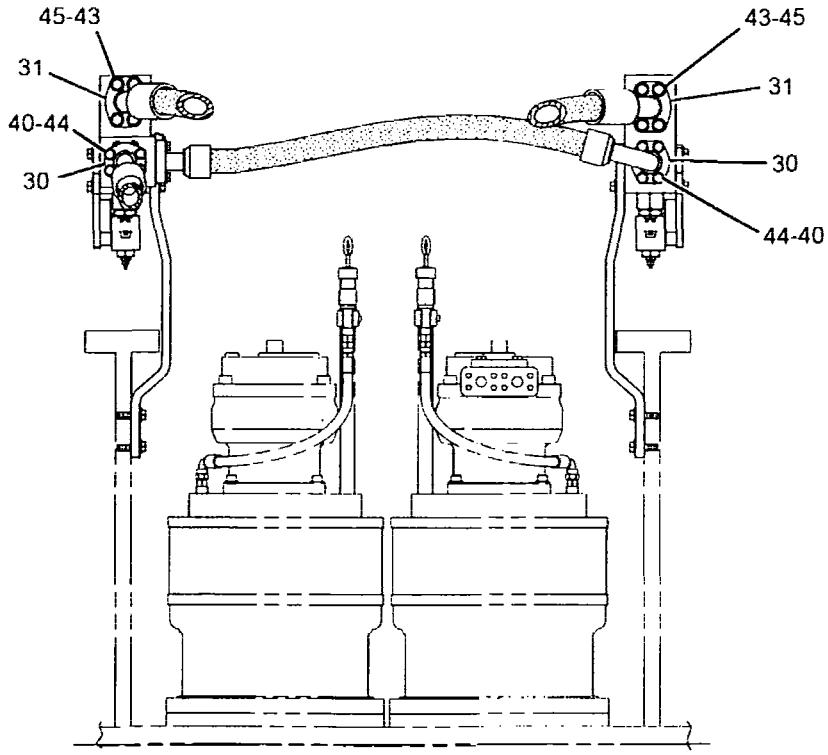

SECTION B-B

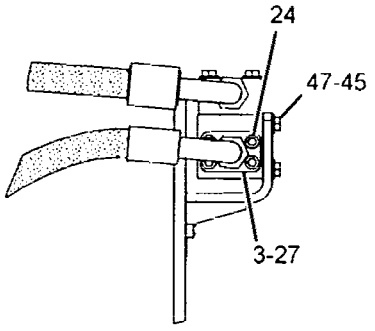

SECTION D-D

GRAPHIC #2 **<END>** g01457090

HYDRAULIC SYSTEM

296-7129 LINES GP-FRONT–SYSTEM 16, 1-WAY, 2-PUMP

S/N: YEE1-UP

PART OF 285-1787 CONTROL AR-AUXILIARY

AN ATTACHMENT

SMCS-5057 **i02915977**

NOTE	REF NO	GRAPHIC REF	PART NUMBER	QTY	PART NAME 1 2 3 4 5 6 (PRODUCT LEVEL)	SEE PAGE
	1	2	**4I-7822**	1	COVER	
	2	2	**123-2505**	1	VALVE AS-CHECK (COOLER BYPASS)	
	3	1	**171-2637**	1	BOSS	
	4	1	**239-1798**	1	BLOCK	
I	5	1	**239-1808**	1	HOSE AS	
Y	6	1	**239-9036**	1	VALVE GP-CHECK	736
Y	7	2	**270-5694**	1	VALVE GP-RELIEF	806
	8	2	**272-4608**	1	SUPPORT	
I	9	1	**272-4610**	1	HOSE AS	
I	10	1	**272-4611**	1	HOSE AS	
	11	2	**272-4616**	1	SUPPORT AS	
I	12	2	**275-1380**	1	HOSE AS	
	13	2	**292-7350**	1	TUBE AS	
	14	1	**296-7165**	1	SUPPORT	
	15	1	**296-7166**	1	SUPPORT AS	
	16	2	**302-2971**	1	SUPPORT AS	
	17	1	**302-2981**	1	BLOCK	
I	18	2	**319-9963**	1	HOSE AS	
	19	2	*148-8356*	1	ELBOW AS	
		2	**2S-4078**	1	SEAL-O-RING	
		2	**6V-8400**	1	SEAL-O-RING	
		2	**6V-9009**	1	ELBOW	
	20	1	*148-8357*	1	ELBOW AS	
		1	**5K-9090**	1	SEAL-O-RING	
		1	**6V-9008**	1	ELBOW	
		1	**7M-8485**	1	SEAL-O-RING	
	21	2	*148-8411*	1	PLUG AS	
		2	**3K-0360**	1	SEAL-O-RING	
		2	**9S-4185**	1	PLUG-O-RING	
	22	1	*164-4180*	1	PLUG AS	
		1	**7M-8485**	1	SEAL-O-RING	
		1	**9S-4181**	1	PLUG-O-RING	
	23	2	*164-5616*	1	PLUG AS	
		2	**2S-4078**	1	SEAL-O-RING	
		2	**9S-6130**	1	PLUG	
	24	1	**1P-3704**	4	SEAL-RECTANGULAR	
	25	1,2	**1P-3705**	2	SEAL-RECTANGULAR	
	26	2	**1P-4578**	6	FLANGE-HALF	
	27	1,2	**1P-5767**	6	FLANGE-HALF	
	28	2	**4J-0522**	3	SEAL-O-RING	
	29	1	**5P-7468**	1	CLIP (SLOT)	
	30	1	**5P-7469**	1	CLIP (TAB)	
	31	2	**5P-7470**	1	CLIP (SLOT)	
	32	2	**5P-7471**	1	CLIP (TAB)	
	33	2	**5P-8182**	1	GROMMET	
	34	1	**6J-2680**	1	SEAL-O-RING	
	35	1	**6J-4834**	1	COVER	
M	36	2	**7X-2550**	2	BOLT (M12X1.75X110-MM)	
	37	1	**8T-2525**	1	GROMMET	
	38	2	**8T-4121**	12	WASHER-HARD (11X21X2.5-MM THK)	
M	39	1,2	**8T-4139**	12	BOLT (M12X1.75X30-MM)	
M	40	2	**8T-4183**	1	BOLT (M12X1.75X40-MM)	
M	41	1,2	**8T-4184**	12	BOLT (M12X1.75X45-MM)	
M	42	1,2	**8T-4194**	9	BOLT (M12X1.75X50-MM)	
M	43	2	**8T-4196**	12	BOLT (M10X1.5X35-MM)	

296-7129 LINES GP-FRONT (contd.) i02915977

NOTE	REF NO	GRAPHIC REF	PART NUMBER	QTY	PART NAME 1 2 3 4 5 6 (PRODUCT LEVEL)	SEE PAGE
	44	1,2	**8T-4223**	42	WASHER-HARD (13.5X25.5X3-MM THK)	
M	45	1	**8T-4956**	2	BOLT (M12X1.75X35-MM)	
M	46	1	**8T-5041**	4	BOLT (M12X1.75X120-MM)	
M	47	2	**8T-5092**	4	BOLT (M12X1.75X150-MM)	
M	48	2	**8T-7338**	2	BOLT (M16X2X45-MM)	
	49	2	**9X-8257**	2	WASHER (17.5X30X3.5-MM THK)	

I-REFER TO HYDRAULIC INFORMATION SYSTEM
M-METRIC PART
Y-SEPARATE ILLUSTRATION

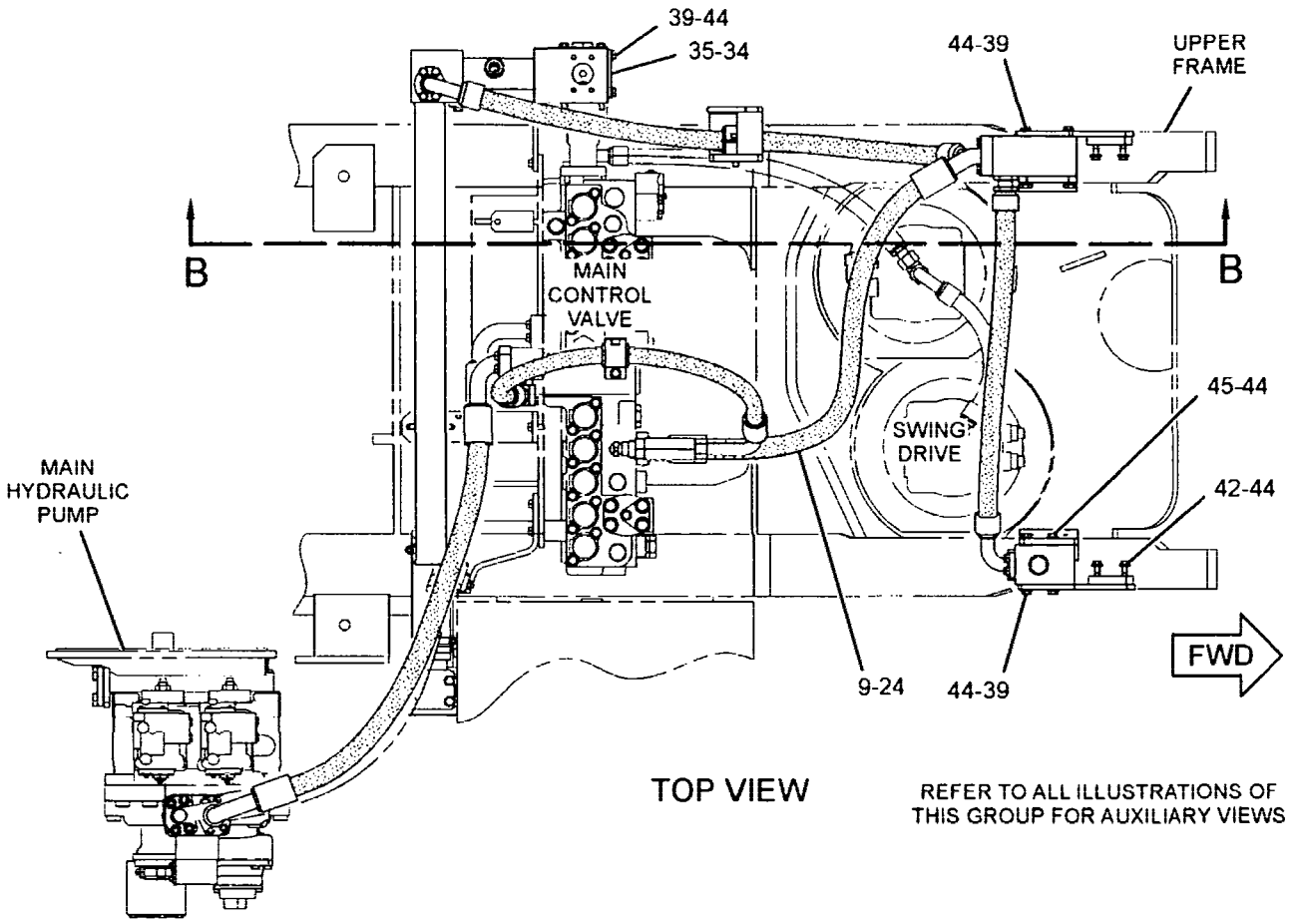

TOP VIEW

REFER TO ALL ILLUSTRATIONS OF THIS GROUP FOR AUXILIARY VIEWS

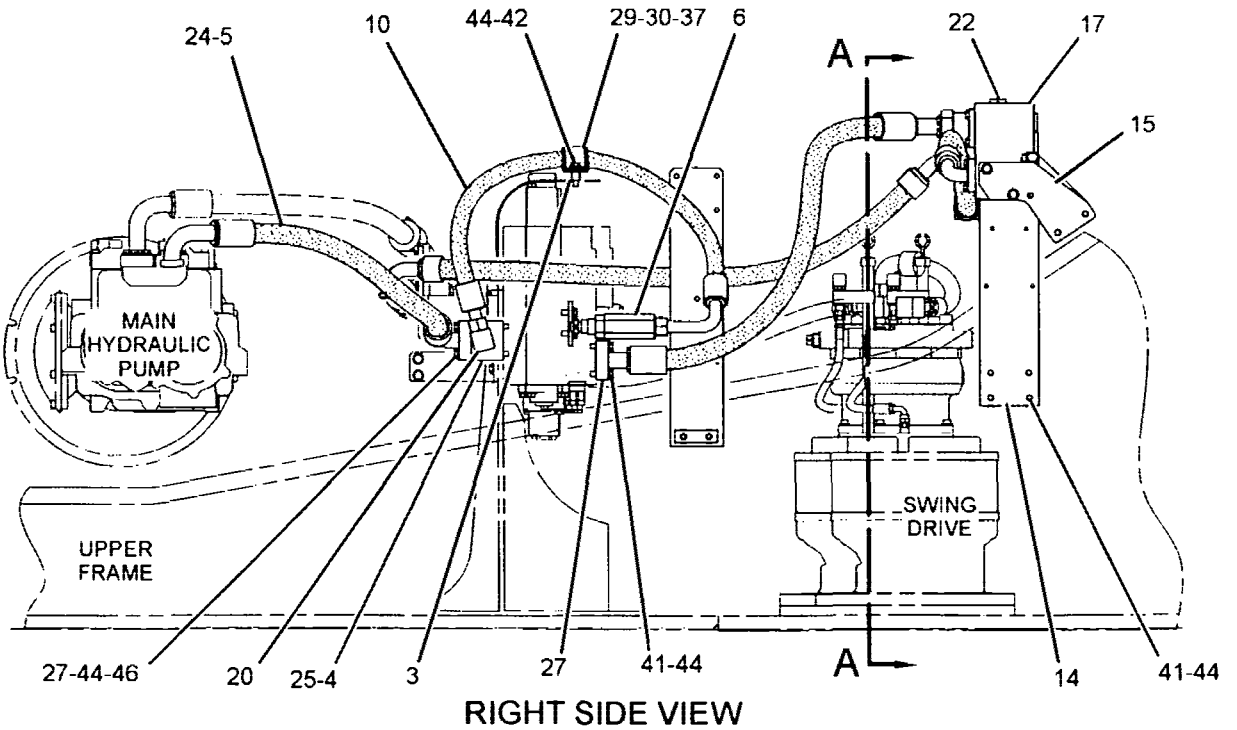

RIGHT SIDE VIEW

GRAPHIC #1

g01478294

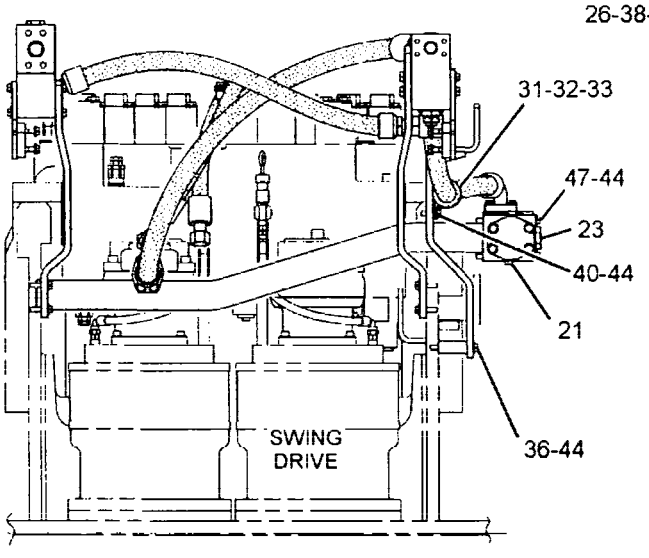

FRONT VIEW

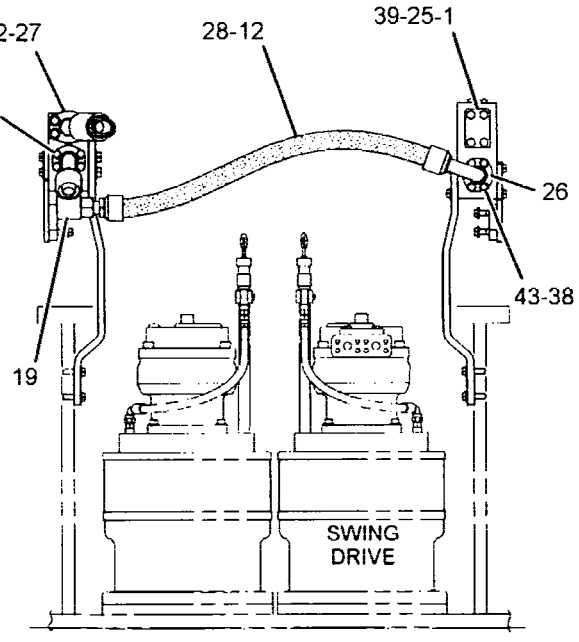

SECTION A-A

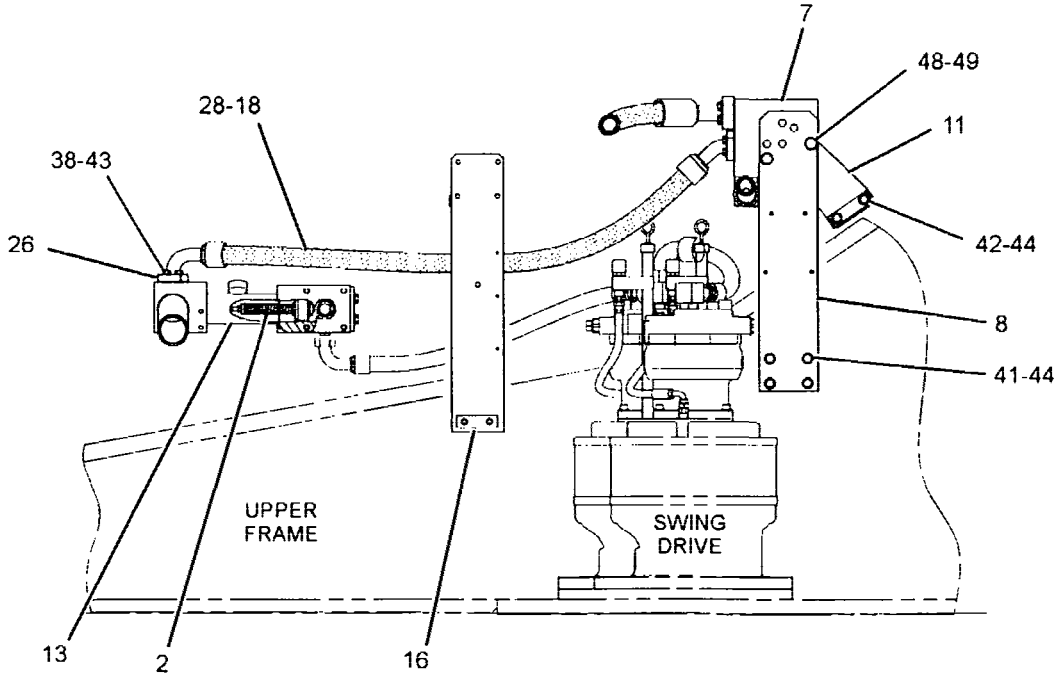

SECTION B-B

GRAPHIC #2 **<END>** g01478295

HYDRAULIC SYSTEM

296-7131 LINES GP-FRONT–SYSTEM 17, COMBINED FN, MED PR

S/N: YEE1-UP

PART OF 285-1788 CONTROL AR-AUXILIARY

AN ATTACHMENT

SMCS-5057 **i02916109**

NOTE	REF NO	GRAPHIC REF	PART NUMBER	QTY	PART NAME 1 2 3 4 5 6 (PRODUCT LEVEL)	SEE PAGE
	1	1	6I-6721	1	ELBOW	
	2	2	123-2505	1	VALVE AS-CHECK (COOLER BYPASS)	
	3	1	171-2637	1	BOSS	
	4	2	173-4664	1	FLANGE	
	5	1	239-1798	1	BLOCK	
I	6	1	239-1808	1	HOSE AS	
Y	7	1	239-8984	2	VALVE GP-RELIEF	803
Y	8	1	239-9036	1	VALVE GP-CHECK	736
I	9	2	272-4610	1	HOSE AS	
	10	1	292-7350	1	TUBE AS	
I	11	2	296-7020	1	HOSE AS	
	12	2	296-7024	1	BLOCK	
	13	1,2	296-7165	2	SUPPORT	
	14	1	296-7166	1	SUPPORT AS	
	15	2	296-7167	1	SUPPORT AS	
	16	2	297-0265	1	VALVE GP-SOLENOID & RELIEF	
	17	2	297-0266	1	VALVE GP-SOLENOID & RELIEF	
Y	18	1	297-0370	1	VALVE GP-SOLENOID	829
	19	2	302-2971	1	SUPPORT AS	
I	20	1	302-2990	1	HOSE AS	
I	21	1	302-3119	1	HOSE AS	
	22	1	319-9865	1	HOSE AS	
	23	1	319-9866	1	HOSE AS	
M	24	2	108-1781	4	BOLT-SOCKET HEAD (M12X1.75X35-MM)	
M	25	2	108-4282	4	BOLT-SOCKET HEAD (M10X1.5X100-MM)	
	26	1	*148-8357*	1	ELBOW AS	
		1	5K-9090	1	SEAL-O-RING	
		1	6V-9008	1	ELBOW	
		1	7M-8485	1	SEAL-O-RING	
	27	2	*148-8411*	1	PLUG AS	
		2	3K-0360	1	SEAL-O-RING	
		2	9S-4185	1	PLUG-O-RING	
	28	2	*164-5616*	1	PLUG AS	
		2	2S-4078	1	SEAL-O-RING	
		2	9S-6130	1	PLUG	
	29	2	1P-3703	1	SEAL-RECTANGULAR	
	30	1,2	1P-3704	7	SEAL-RECTANGULAR	
	31	1	1P-3705	1	SEAL-RECTANGULAR	
	32	1,2	1P-4578	8	FLANGE-HALF	
	33	1,2	1P-5767	10	FLANGE-HALF	
	34	1,2	4J-0522	5	SEAL-O-RING	
	35	1,2	5K-9090	2	SEAL-O-RING	
	36	1	5P-7468	1	CLIP (SLOT)	
	37	1	5P-7469	1	CLIP (TAB)	
	38	2	5P-7470	1	CLIP (SLOT)	
	39	2	5P-7471	1	CLIP (TAB)	
	40	2	5P-8182	1	GROMMET	
	41	2	6J-2680	1	SEAL-O-RING	
	42	2	6J-4834	1	COVER	
M	43	2	7X-2550	2	BOLT (M12X1.75X110-MM)	
	44	1	8T-2525	1	GROMMET	
	45	1,2	8T-4121	16	WASHER-HARD (11X21X2.5-MM THK)	
M	46	1,2	8T-4139	11	BOLT (M12X1.75X30-MM)	
M	47	1,2	8T-4184	16	BOLT (M12X1.75X45-MM)	
M	48	2	8T-4186	4	BOLT (M10X1.5X40-MM)	

296-7131 LINES GP-FRONT *(contd.)* i02916109

NOTE	REF NO	GRAPHIC REF	PART NUMBER	QTY	PART NAME 1 2 3 4 5 6 (PRODUCT LEVEL)	SEE PAGE
M	49	1,2	**8T-4194**	13	BOLT (M12X1.75X50-MM)	
M	50	1,2	**8T-4196**	12	BOLT (M10X1.5X35-MM)	
	51	1,2	**8T-4223**	58	WASHER-HARD (13.5X25.5X3-MM THK)	
M	52	1	**8T-4648**	4	BOLT (M12X1.75X70-MM)	
M	53	1,2	**8T-4956**	4	BOLT (M12X1.75X35-MM)	
M	54	1	**8T-5041**	4	BOLT (M12X1.75X120-MM)	
M	55	2	**8T-5092**	4	BOLT (M12X1.75X150-MM)	

I-REFER TO HYDRAULIC INFORMATION SYSTEM
M-METRIC PART
Y-SEPARATE ILLUSTRATION

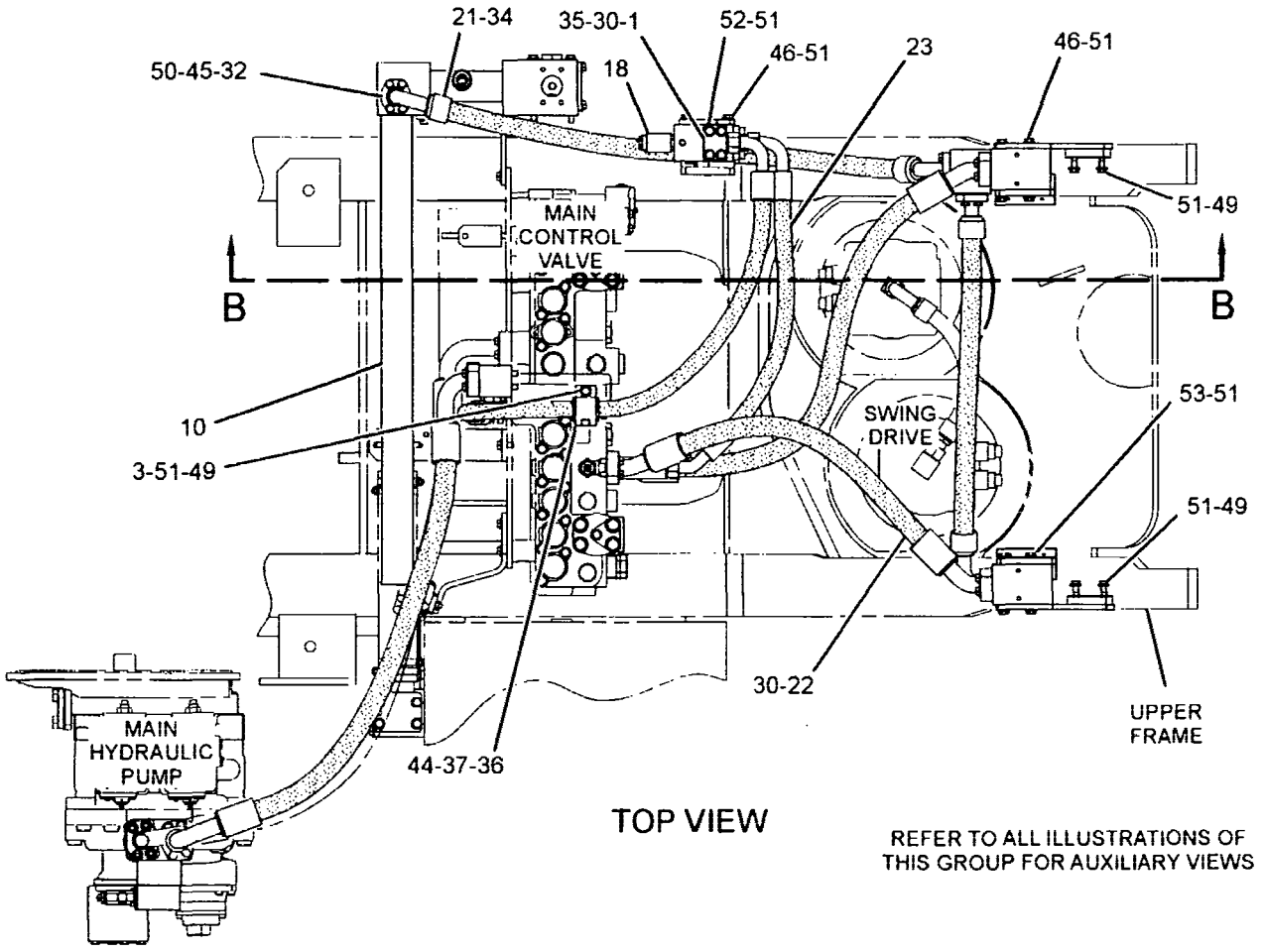

TOP VIEW

REFER TO ALL ILLUSTRATIONS OF THIS GROUP FOR AUXILIARY VIEWS

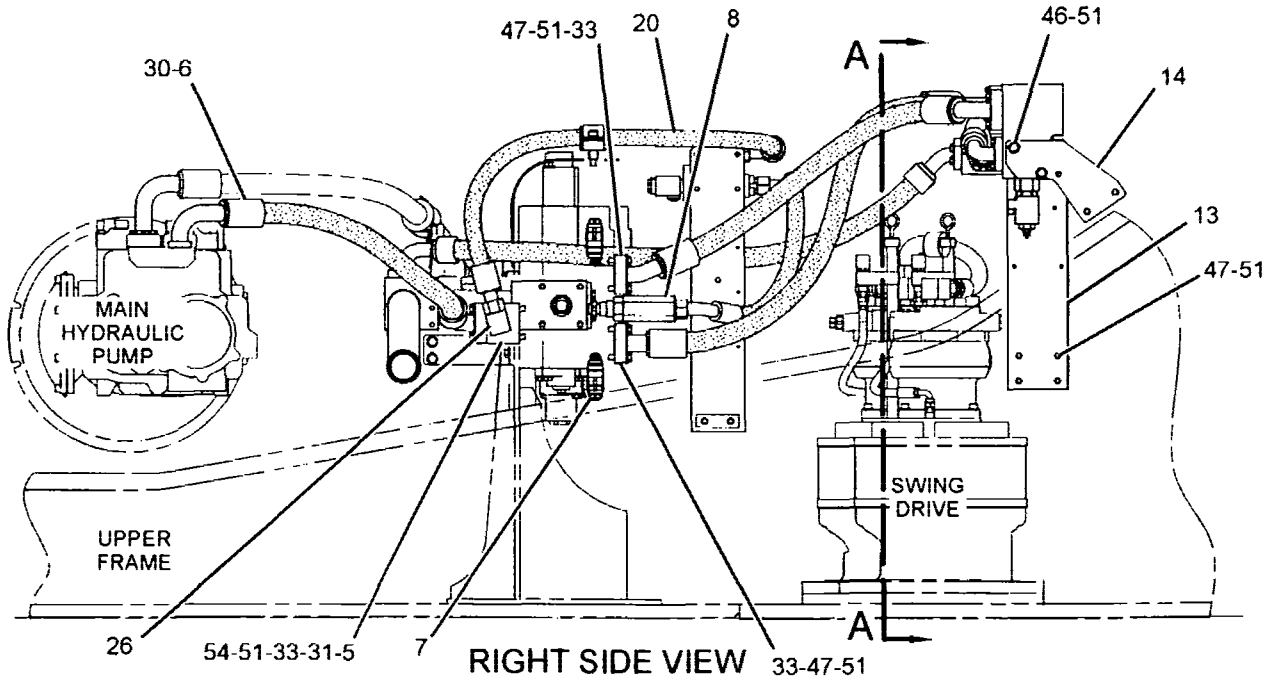

RIGHT SIDE VIEW

GRAPHIC #1

g01481261

296-7131 **LINES GP-FRONT** *(contd.)* **i02916109**

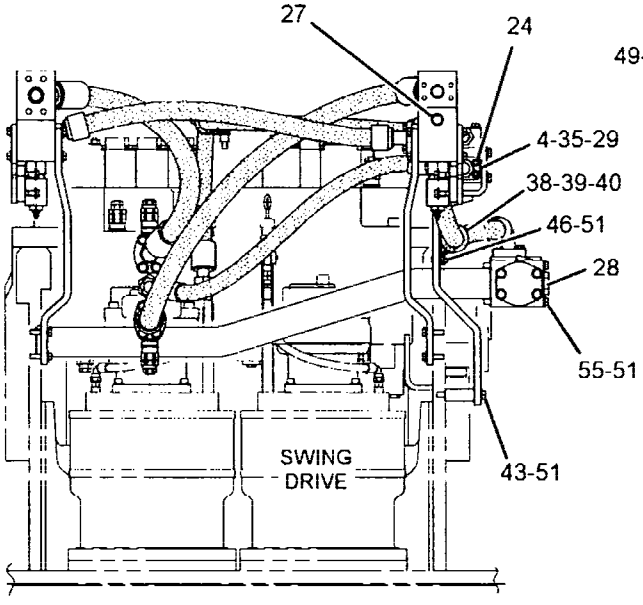

FRONT VIEW

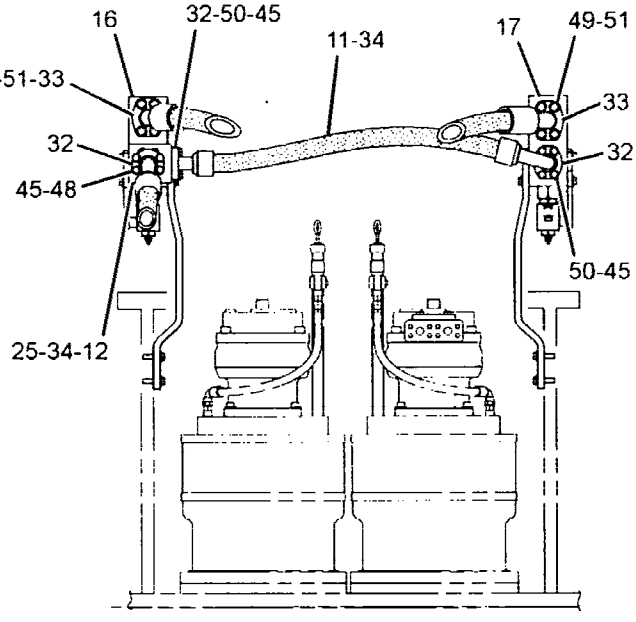

SECTION A-A

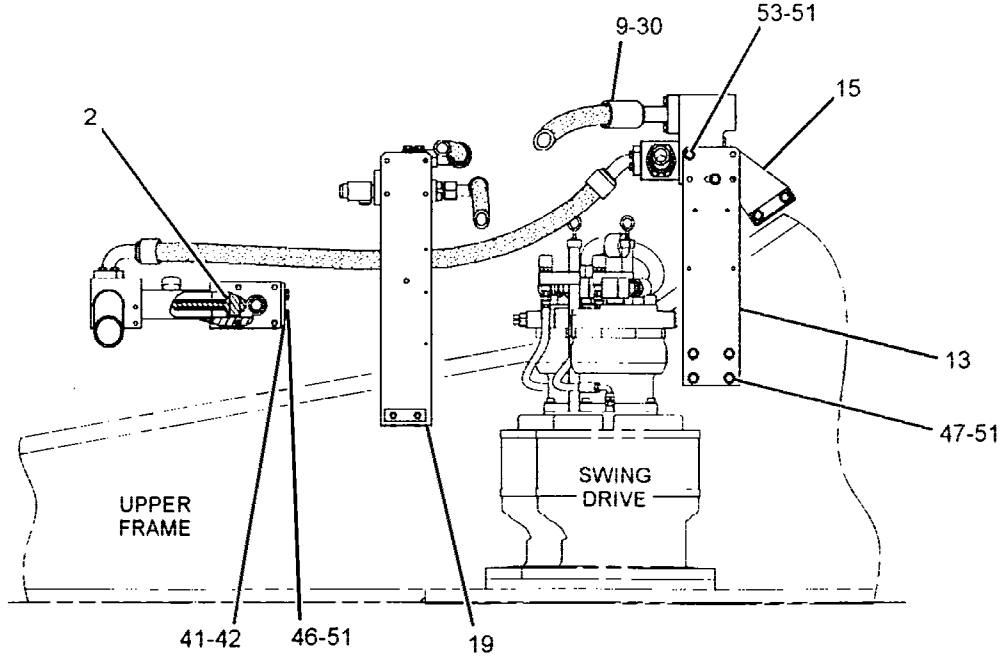

SECTION B-B

GRAPHIC #2 **<END>** g01481262

HYDRAULIC SYSTEM

296-7133 LINES GP-FRONT—UNIVERSAL QUICK COUPLER

S/N: YEE1-UP

PART OF 302-9403 CONTROL AR-COUPLER

AN ATTACHMENT

SMCS-5057 **i02902122**

NOTE	REF NO	GRAPHIC REF	PART NUMBER	QTY	PART NAME 1 2 3 4 5 6 (PRODUCT LEVEL)	SEE PAGE
	1	2	5I-4376	1	FITTING	
	2	1	7K-1181	7	STRAP-CABLE	
Y	3	1	123-2549	1	VALVE GP-SHUTTLE (1-PUMP/2-PUMP)	812
	4	2	123-4750	1	VALVE-CHECK	
	6	2	*164-5586*	1	TEE AS	
		2	6V-8398	1	SEAL-O-RING	
		2	7X-0871	1	TEE	
	7	2	*164-9640*	2	CONNECTOR AS	
					(EACH INCLUDES)	
		2	3J-1907	1	SEAL-O-RING	
		2	4J-5477	1	SEAL-O-RING	
		2	145-2237	1	CONNECTOR	
	8	2	213-3745	2	ELBOW	
	9	2	230-7899	1	HOSE AS	
Y	10	2	254-3080	1	VALVE GP-COUPLER (QUICK COUPLER)	755
Y	11	2	258-6749	1	VALVE GP-SOLENOID	827
	12	2	280-1918	1	SUPPORT	
I	13	1	280-2412	1	HOSE AS	
I	14	1	280-2413	1	HOSE AS	
	15	2	282-8737	1	HOSE AS	
	16	1	307-4833	1	SUPPORT	
	17	2	307-4834	1	BOSS	
	18	2	307-4839	1	PLATE AS	
I	19	1	307-4841	1	HOSE AS	
I	20	1	111-0976	1	HOSE AS	
	21	2	307-5088	1	BOSS	
I	22	1	307-5089	1	HOSE AS	
I	23	1	307-5090	1	HOSE AS	
I	24	1	307-5093	1	HOSE AS	
	25	1	307-5199	1	TUBE AS	
	26	2	100-4336	2	CLIP	
	27	2	*148-8321*	1	CONNECTOR AS	
		2	3J-1907	1	SEAL-O-RING	
		2	6V-8397	1	SEAL-O-RING	
		2	8C-0564	1	CONNECTOR	
	28	2	*148-8325*	2	CONNECTOR AS	
					(EACH INCLUDES)	
		2	3J-1907	1	SEAL-O-RING	
		2	4J-5477	1	SEAL-O-RING	
		2	6V-8641	1	CONNECTOR	
	29	2	*148-8336*	4	CONNECTOR AS	
					(EACH INCLUDES)	
		2	3J-1907	1	SEAL-O-RING	
		2	6V-8397	1	SEAL-O-RING	
		2	6V-8636	1	CONNECTOR	
	31	2	*148-8340*	1	CONNECTOR AS	
		2	3K-0360	1	SEAL-O-RING	
		2	6V-8398	1	SEAL-O-RING	
		2	6V-8639	1	CONNECTOR	
	32	1,2	*148-8353*	2	ELBOW AS	
					(EACH INCLUDES)	
		1,2	3J-1907	1	SEAL-O-RING	
		1,2	6V-8397	1	SEAL-O-RING	
		1,2	6V-9001	1	ELBOW	
	33	2	*148-8361*	1	ELBOW AS	

296-7133 LINES GP-FRONT *(contd.)* i02902122

NOTE	REF NO	GRAPHIC REF	PART NUMBER	QTY	PART NAME 1 2 3 4 5 6 (PRODUCT LEVEL)	SEE PAGE
		2	**3J-7354**	1	SEAL-O-RING	
		2	**6V-8397**	1	SEAL-O-RING	
		2	**6V-9200**	1	ELBOW	
	34	1,2	*148-8367*	4	ELBOW AS	
					(EACH INCLUDES)	
		1,2	**6V-8397**	1	SEAL-O-RING	
		1,2	**6V-9850**	1	ELBOW	
	35	2	*148-8378*	2	ELBOW AS	
					(EACH INCLUDES)	
		2	**3J-1907**	1	SEAL-O-RING	
		2	**6V-8397**	1	SEAL-O-RING	
		2	**6V-8724**	1	ELBOW	
	36	1	*148-8407*	1	PLUG AS	
		1	**3J-1907**	1	SEAL-O-RING	
		1	**9S-4191**	1	PLUG-O-RING	
	37	2	*148-8433*	1	TEE AS	
		2	**6V-8397**	2	SEAL-O-RING	
		2	**6V-9836**	1	TEE-SWIVEL	
	38	2	*148-8435*	2	TEE AS	
					(EACH INCLUDES)	
		2	**3J-1907**	1	SEAL-O-RING	
		2	**6V-8397**	2	SEAL-O-RING	
		2	**6V-8781**	1	TEE-FACE SEAL	
	39	2	*150-4050*	1	ELBOW AS	
		2	**3J-1907**	1	SEAL-O-RING	
		2	**8T-0788**	1	ELBOW	
	40	2	*164-5567*	3	COUPLER AS-QUICK DISCONNECT	
					(EACH INCLUDES)	
		2	**3J-1907**	1	SEAL-O-RING	
		2	**6V-3965**	1	COUPLER AS-QUICK DISCONNECT	
	41	1	**4I-9521**	2	BAND-MARKER (RED, L1)	
	42	1	**4I-9522**	2	BAND-MARKER (YELLOW, L2)	
	43	1	**4I-9523**	2	BAND-MARKER (BLUE, L3)	
	44	1	**4I-9525**	2	BAND-MARKER (ORANGE, R1)	
	45	1	**4I-9527**	2	BAND-MARKER (GREEN, R3)	
	46	2	**6D-2834**	2	CLIP	
	47	1	**6J-2680**	1	SEAL-O-RING	
	48	2	**6V-0852**	3	CAP-DUST	
	49	1	**6V-8397**	2	SEAL-O-RING	
	50	1,2	**8T-4121**	12	WASHER-HARD (11X21X2.5-MM THK)	
M	51	2	**8T-4136**	7	BOLT (M10X1.5X25-MM)	
M	52	2	**8T-4184**	4	BOLT (M12X1.75X45-MM)	
M	53	1,2	**8T-4186**	3	BOLT (M10X1.5X40-MM)	
M	54	2	**8T-4196**	2	BOLT (M10X1.5X35-MM)	
	55	2	**8T-4223**	4	WASHER-HARD (13.5X25.5X3-MM THK)	

I-REFER TO HYDRAULIC INFORMATION SYSTEM
M-METRIC PART
Y-SEPARATE ILLUSTRATION

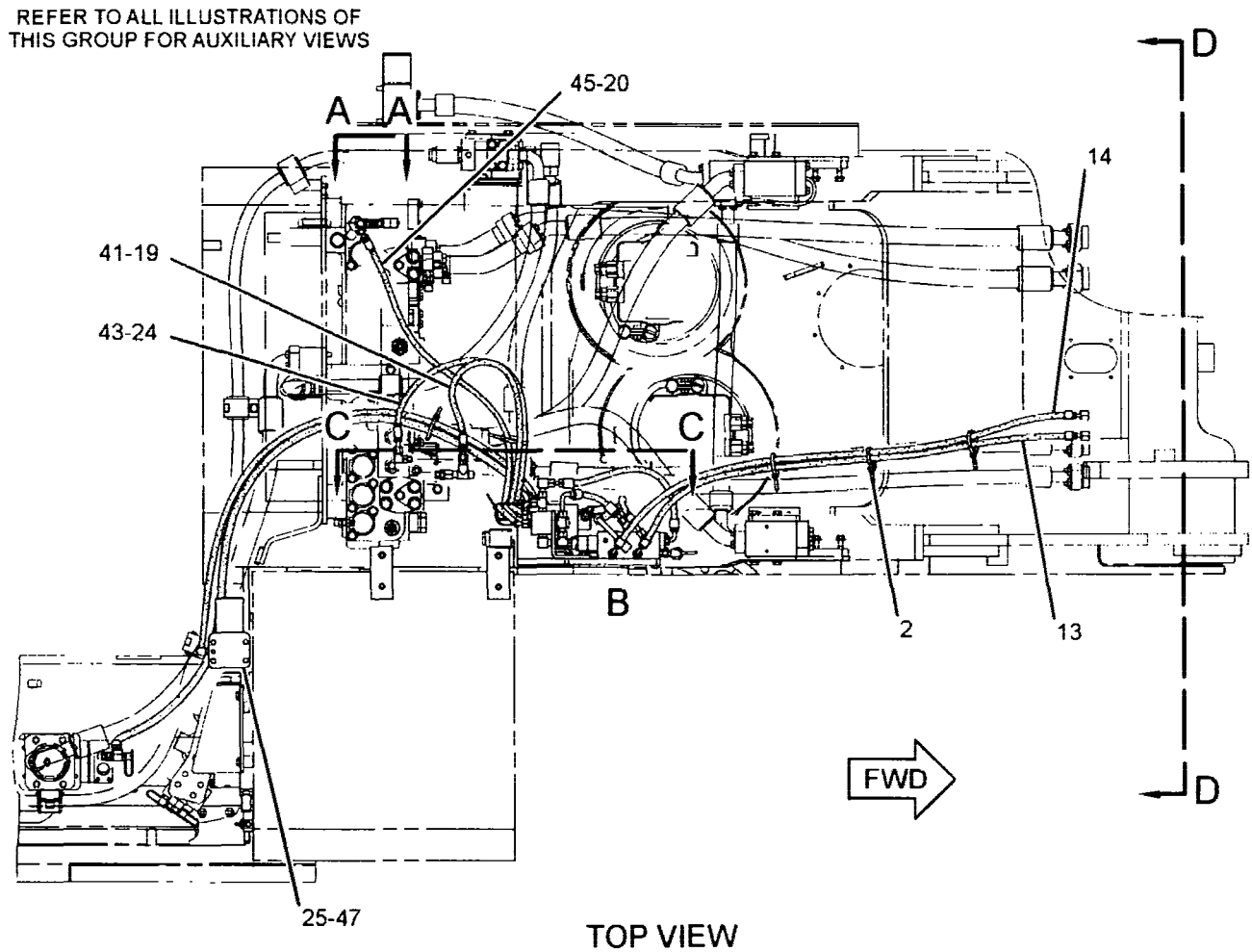

TOP VIEW

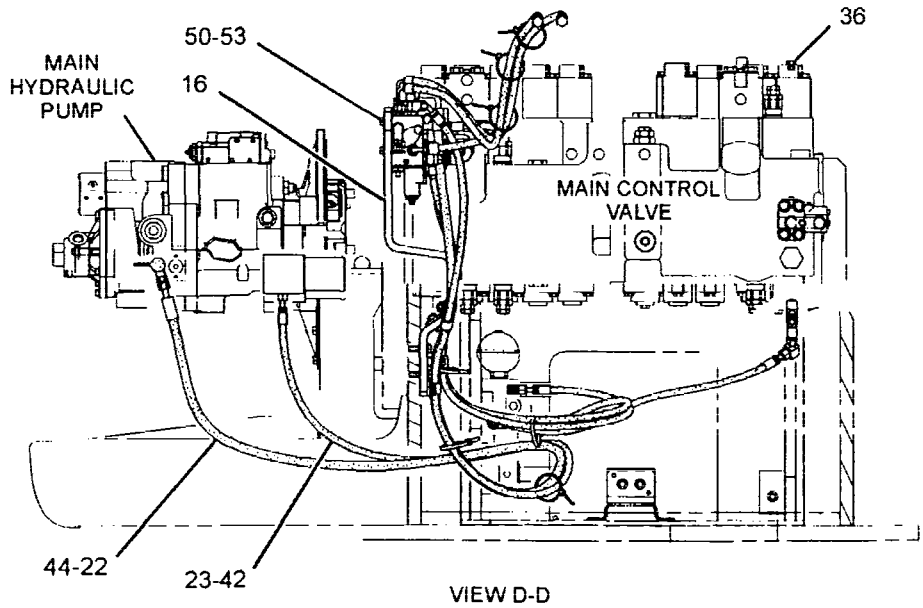

VIEW D-D

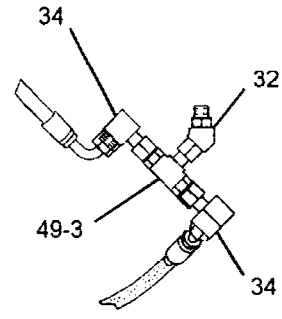

VIEW A-A

GRAPHIC #1 g01454664

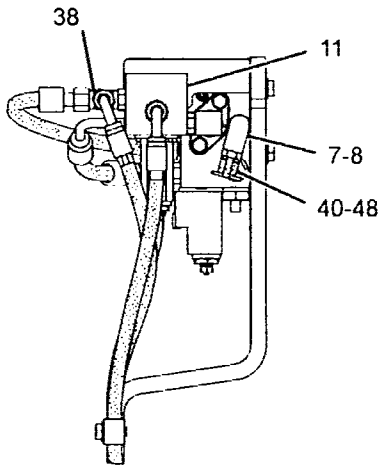

VIEW E-E

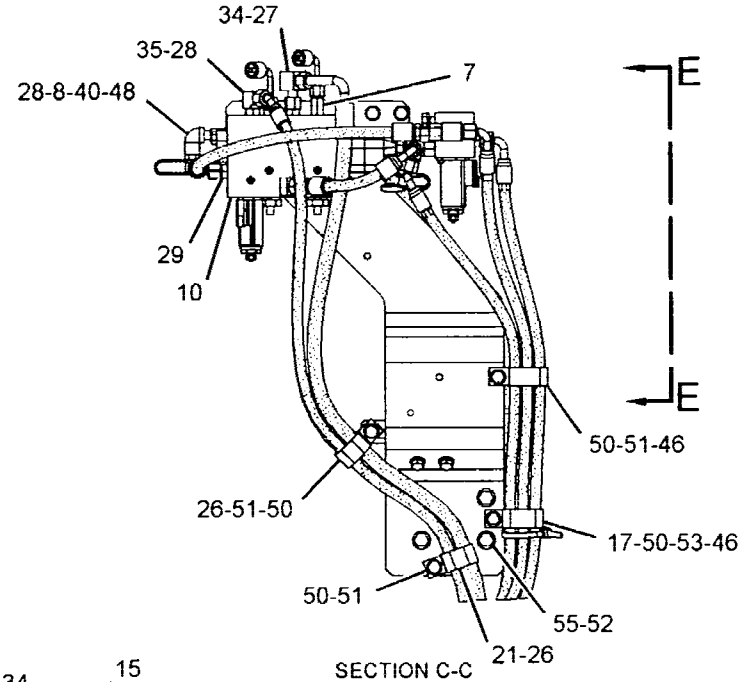

SECTION C-C

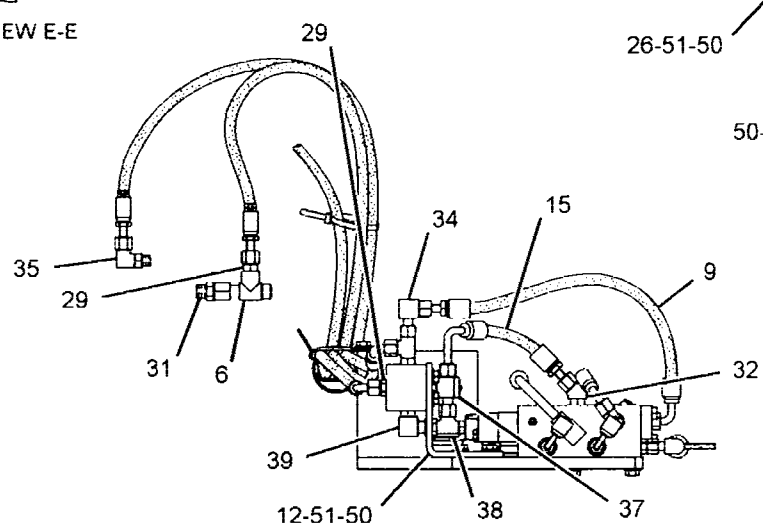

VIEW OF AREA B

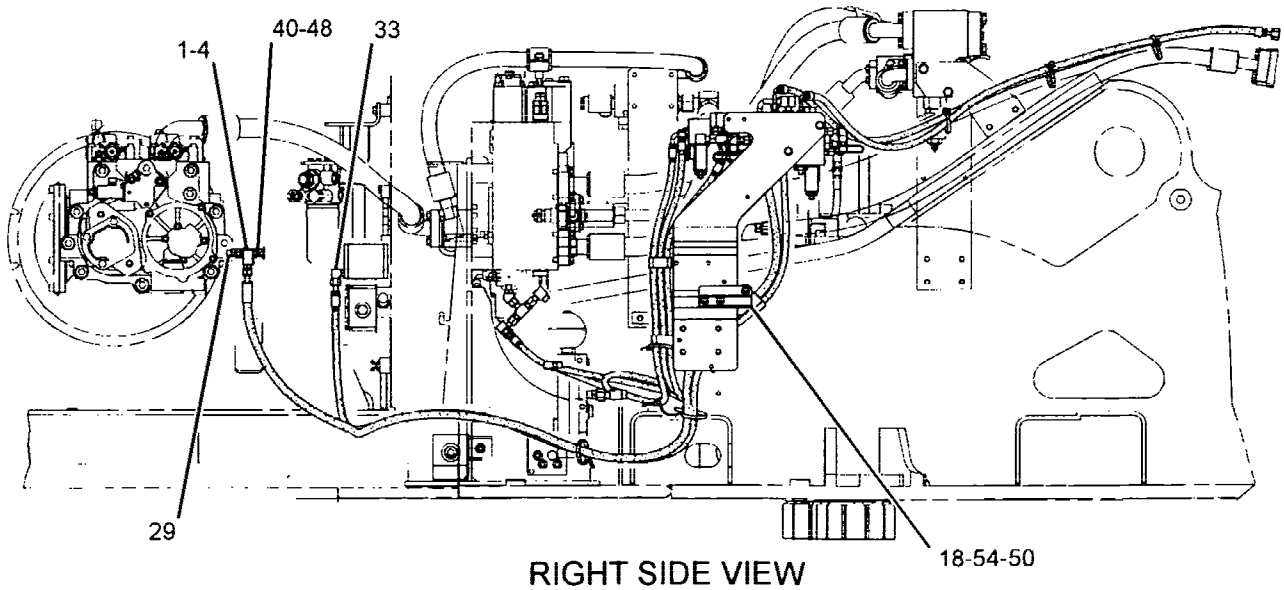

RIGHT SIDE VIEW

GRAPHIC #2

<END>

g01454665

HYDRAULIC SYSTEM

239-1820 LINES GP-HYDRAULIC—HYDRAULIC TANK

S/N: YEE1-UP

PART OF 249-8125 TANK & MTG GP-HYDRAULIC

SMCS-5057 **i02497083**

NOTE	REF NO	GRAPHIC REF	PART NUMBER	QTY	PART NAME 1 2 3 4 5 6 (PRODUCT LEVEL)	SEE PAGE
	1	1	8C-0620	2	PROTECTOR-THREAD	
C	2	1	209-4575	2	CLAMP	
I	3	1	227-0292	1	HOSE AS	
C	4	1	236-2860	1	TUBE AS	
C	5	1	236-2862	1	TUBE AS	
	6	1	245-5137	1	TUBE AS	
C	7	1	245-5240	1	HOSE	
C	8	1	255-1929	1	HOSE AS	
CI	9	1	255-1930	1	HOSE AS	
C	10	1	260-8071	1	HOSE AS	
C	11	1	260-8072	1	HOSE AS	
	12	1	*148-8339*	1	CONNECTOR AS	
		1	6V-8716	1	CONNECTOR	
		1	6V-9746	1	SEAL-O-RING	
		1	7M-8485	1	SEAL-O-RING	
	13	1	*148-8340*	1	CONNECTOR AS	
		1	3K-0360	1	SEAL-O-RING	
		1	6V-8398	1	SEAL-O-RING	
		1	6V-8639	1	CONNECTOR	
	14	1	*148-8345*	1	CONNECTOR AS	
		1	2M-9780	1	SEAL-O-RING	
		1	6V-8398	1	SEAL-O-RING	
		1	6V-8638	1	CONNECTOR	
C	15	1	*148-8347*	2	ELBOW AS	
					(EACH INCLUDES)	
		1	3D-2824	1	SEAL-O-RING	
		1	6V-9007	1	ELBOW	
		1	6V-9746	1	SEAL-O-RING	
	16	1	*148-8360*	1	ELBOW AS	
		1	6V-9182	1	ELBOW	
		1	6V-9746	1	SEAL-O-RING	
		1	7M-8485	1	SEAL-O-RING	
	17	1	*148-8362*	1	ELBOW AS	
		1	3D-2824	1	SEAL-O-RING	
		1	5K-9090	1	SEAL-O-RING	
		1	8T-6684	1	ELBOW	
C	18	1	*148-8364*	3	ELBOW AS	
					(EACH INCLUDES)	
		1	3K-0360	1	SEAL-O-RING	
		1	6V-8398	1	SEAL-O-RING	
		1	6V-8625	1	ELBOW	
C	19	1	*148-8378*	1	ELBOW AS	
		1	3J-1907	1	SEAL-O-RING	
		1	6V-8397	1	SEAL-O-RING	
		1	6V-8724	1	ELBOW	
C	20	1	*148-8408*	2	PLUG AS	
					(EACH INCLUDES)	
		1	3D-2824	1	SEAL-O-RING	
		1	9S-4183	1	PLUG-O-RING	
C	21	1	*148-8418*	1	REDUCER AS	
		1	6V-8398	1	SEAL-O-RING	
		1	6V-8942	1	REDUCER-O-RING	
C	23	1	*164-5641*	1	TEE AS	
		1	5K-9090	1	SEAL-O-RING	
		1	6V-9746	1	SEAL-O-RING	
		1	3D-2824	1	SEAL-O-RING	

239-1820 LINES GP-HYDRAULIC *(contd.)* i02497083

NOTE	REF NO	GRAPHIC REF	PART NUMBER	QTY	PART NAME 1 2 3 4 5 6 (PRODUCT LEVEL)	SEE PAGE
		1	**128-7625**	1	TEE	
	24	1	*164-6872*	1	TEE AS	
		1	**2M-9780**	1	SEAL-O-RING	
		1	**6V-8398**	2	SEAL-O-RING	
		1	**115-8634**	1	TEE-O-RING	
C	25	1	**175-6176**	1	SEAL-O-RING	
	26	1	**2H-3934**	1	SEAL-O-RING	
C	27	1	**4J-0528**	1	SEAL-O-RING	
	28	1	**6J-2680**	1	SEAL-O-RING	
	29	1	**7K-1181**	1	STRAP-CABLE	
M	30	1	**7X-2550**	4	BOLT (M12X1.75X110-MM)	
M	31	1	**8T-4176**	4	BOLT (M12X1.75X90-MM)	
	32	1	**8T-4223**	12	WASHER-HARD (13.5X25.5X3-MM THK)	
M	33	1	**8T-5412**	4	BOLT (M12X1.75X140-MM)	
C	34	1	**9X-6580**	1	NUT (1-3/16-12-THD)	

C-CHANGE FROM PREVIOUS TYPE
I-REFER TO HYDRAULIC INFORMATION SYSTEM
M-METRIC PART

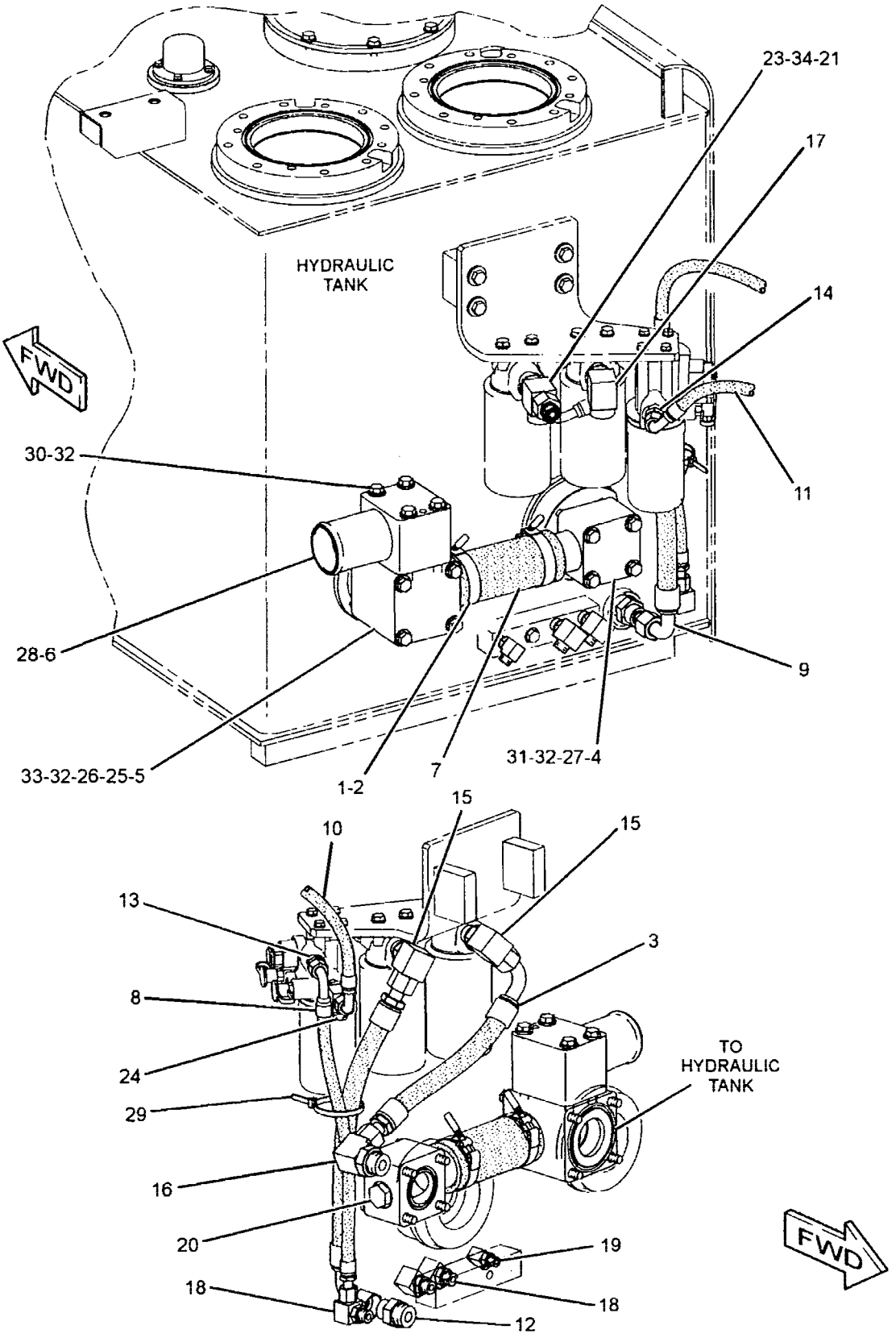

GRAPHIC #1

<END>

g01250332

HYDRAULIC SYSTEM

292-7159 LINES GP-HYDRAULIC–COOLER, PUMP, TANK, VALVE

S/N: YEE1-UP

PART OF 297-0243 HYDRAULIC AR

SMCS-5057 **i02839792**

NOTE	REF NO	GRAPHIC REF	PART NUMBER	QTY	PART NAME 1 2 3 4 5 6 (PRODUCT LEVEL)	SEE PAGE
	1	2	6J-4834	1	COVER	
	2	1	8T-4985	4	CLAMP-HOSE	
	3	2	123-2505	1	VALVE AS-CHECK (COOLER BYPASS)	
M	4	2	170-8553	4	BOLT-SOCKET HEAD (M12X1.75X40-MM)	
	5	2	236-2993	1	SUPPORT	
	6	3	236-2996	1	SUPPORT	
I	7	2	236-3023	1	HOSE AS	
I	8	2	245-5130	1	HOSE AS	
	9	1	255-1819	1	HOSE	
	10	2	285-1715	1	VALVE GP-CHECK	
	11	3	292-7247	1	SUPPORT AS	
	12	1	292-7249	1	SUPPORT AS	
	13	1	292-7255	1	SUPPORT AS	
	14	3	292-7264	1	TUBE AS	
	15	1	292-7268	1	TUBE AS	
	16	3	296-6970	1	TUBE AS	
M	17	3	096-4883	4	LOCKNUT (M10X1.15-THD)	
M	18	2	096-4884	2	LOCKNUT (M12X1.75-THD)	
M	19	3	101-7402	8	BOLT-SOCKET HEAD (M12X1.75X30-MM)	
	20	2	132-2155	1	U-BOLT	
	21	2	*148-8335*	1	CONNECTOR AS	
		2	5K-9090	1	SEAL-O-RING	
		2	6V-8635	1	CONNECTOR	
		2	7M-8485	1	SEAL-O-RING	
	22	2	*148-8411*	1	PLUG AS	
		2	3K-0360	1	SEAL-O-RING	
		2	9S-4185	1	PLUG-O-RING	
	23	2	*164-5616*	1	PLUG AS	
		2	2S-4078	1	SEAL-O-RING	
		2	9S-6130	1	PLUG	
	24	2	1P-3704	4	SEAL-RECTANGULAR	
	25	1	1P-5767	4	FLANGE-HALF	
	26	2,3	4J-0527	3	SEAL-O-RING	
	27	2	6J-2680	2	SEAL-O-RING	
	28	3	6V-1572	2	CLIP (SLOT)	
	29	3	6V-1573	2	CLIP (TAB)	
	30	3	6V-1875	2	GROMMET	
M	31	3	7Y-5247	1	U-BOLT	
	32	3	8T-4121	6	WASHER-HARD (11X21X2.5-MM THK)	
M	33	1,2,3	8T-4139	14	BOLT (M12X1.75X30-MM)	
M	34	3	8T-4186	2	BOLT (M10X1.5X40-MM)	
M	35	1	8T-4192	2	BOLT (M12X1.75X25-MM)	
M	36	1	8T-4194	8	BOLT (M12X1.75X50-MM)	
	37	1,2,3	8T-4223	30	WASHER-HARD (13.5X25.5X3-MM THK)	
M	38	2	8T-5092	4	BOLT (M12X1.75X150-MM)	

I-REFER TO HYDRAULIC INFORMATION SYSTEM
M-METRIC PART

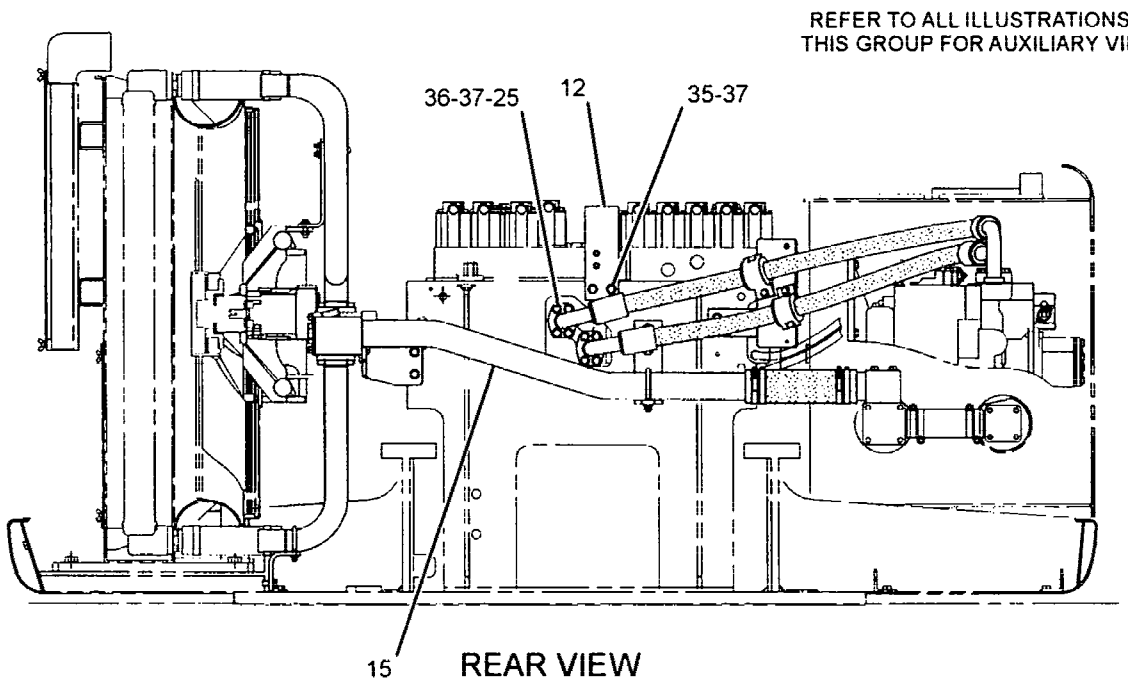

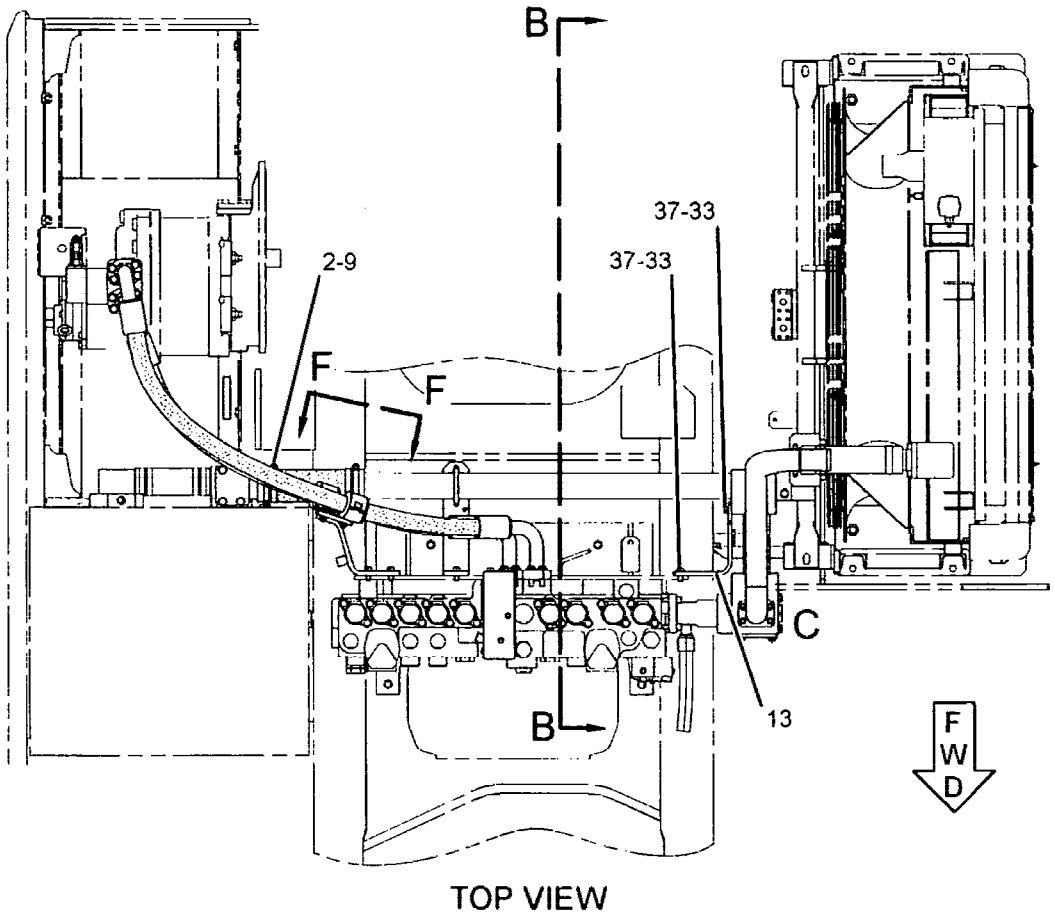

GRAPHIC #1 g01457252

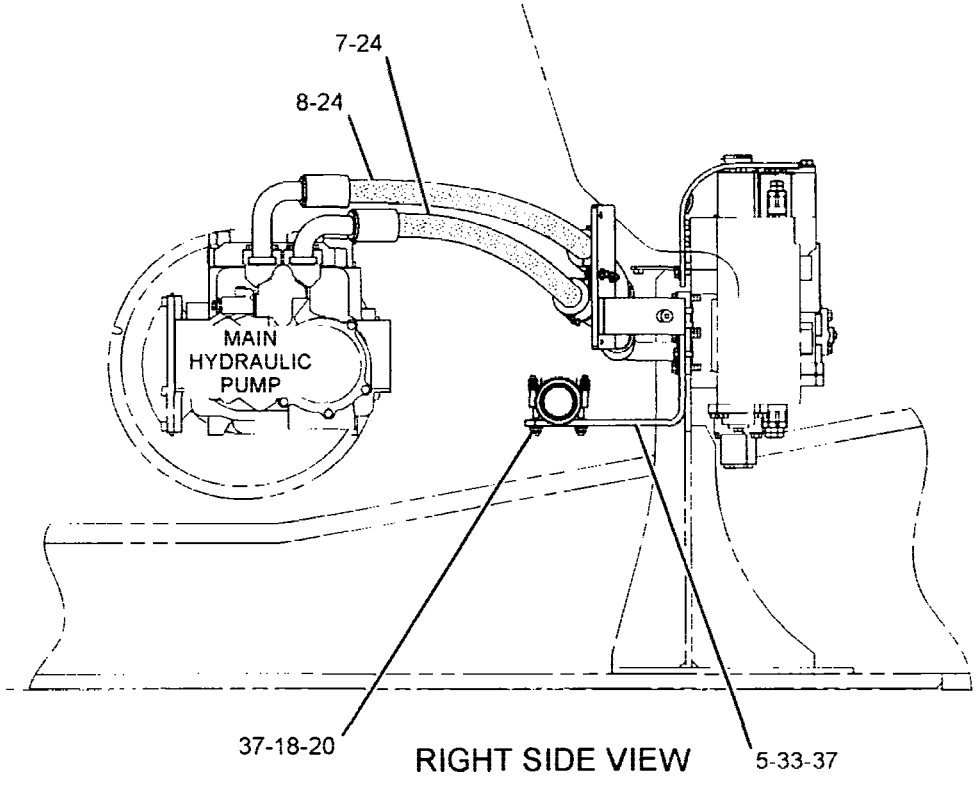

RIGHT SIDE VIEW

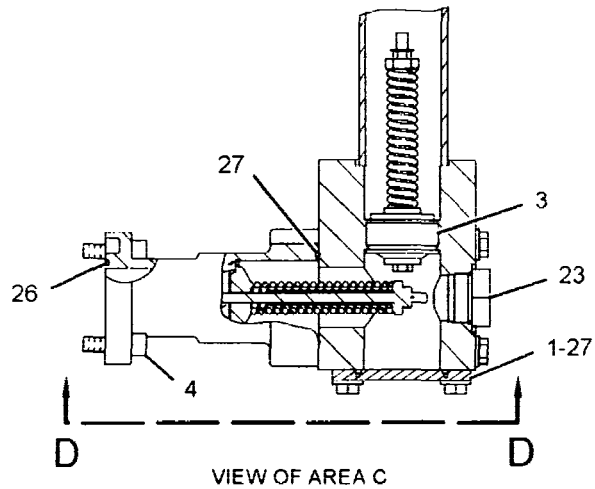

VIEW OF AREA C

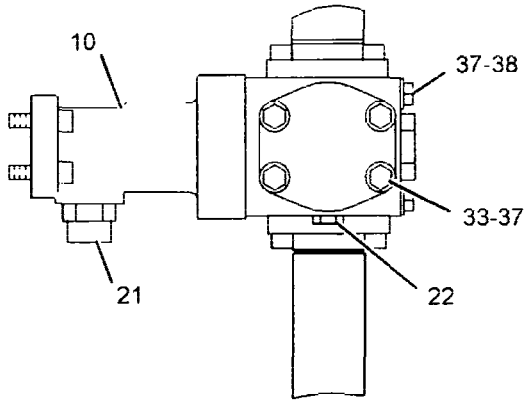

VIEW D-D

GRAPHIC #2 g01457471

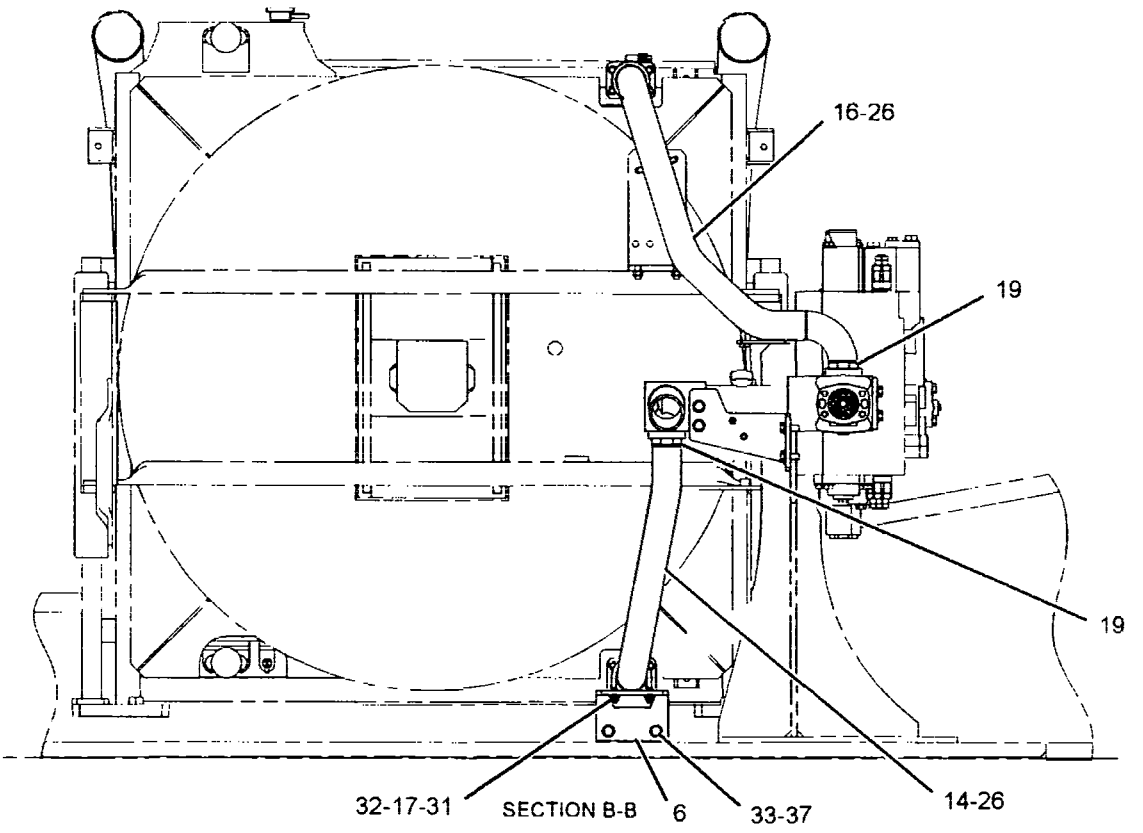

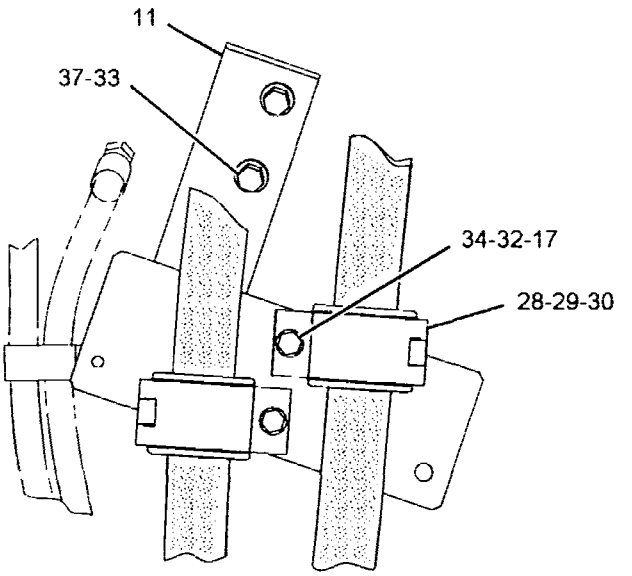

VIEW F-F

GRAPHIC #3 **<END>** g01457532

HYDRAULIC SYSTEM

292-7164 LINES GP-HYDRAULIC OIL COOLER

S/N: YEE1-UP

PART OF 297-0243 HYDRAULIC AR

SMCS-1374 **i02902109**

NOTE	REF NO	GRAPHIC REF	PART NUMBER	QTY	PART NAME 1 2 3 4 5 6 (PRODUCT LEVEL)	SEE PAGE
	1	1	**144-0367**	8	CLAMP-HOSE	
	2	1	**236-2992**	2	HOSE	
	3	1	**245-5214**	2	TUBE AS	
I	4	1	**319-9800**	1	HOSE AS	
	5	1	**307-5116**	1	SUPPORT	
M	6	1	**096-4883**	2	LOCKNUT (M10X1.15-THD)	
M	7	1	**101-7402**	8	BOLT-SOCKET HEAD (M12X1.75X30-MM)	
	8	1	*148-8341*	1	CONNECTOR AS	
		1	**3D-2824**	1	SEAL-O-RING	
		1	**6V-8713**	1	CONNECTOR	
		1	**7J-9108**	1	SEAL-O-RING	
	9	1	*148-8372*	1	ELBOW AS	
		1	**2M-9780**	1	SEAL-O-RING	
		1	**6V-8398**	1	SEAL-O-RING	
		1	**6V-8721**	1	ELBOW	
	10	1	*148-8382*	2	ELBOW AS	
					(EACH INCLUDES)	
		1	**3D-2824**	1	SEAL-O-RING	
		1	**7J-9108**	1	SEAL-O-RING	
		1	**8T-0404**	1	ELBOW	
	11	1	**4J-0527**	2	SEAL-O-RING	
	12	1	**6D-4246**	1	CLIP	
M	13	1	**7Y-5247**	1	U-BOLT	
	14	1	**8T-4121**	3	WASHER-HARD (11X21X2.5-MM THK)	
M	15	1	**8T-4136**	1	BOLT (M10X1.5X25-MM)	
M	16	1	**8T-4183**	2	BOLT (M12X1.75X40-MM)	
	17	1	**8T-4223**	2	WASHER-HARD (13.5X25.5X3-MM THK)	

I-REFER TO HYDRAULIC INFORMATION SYSTEM
M-METRIC PART

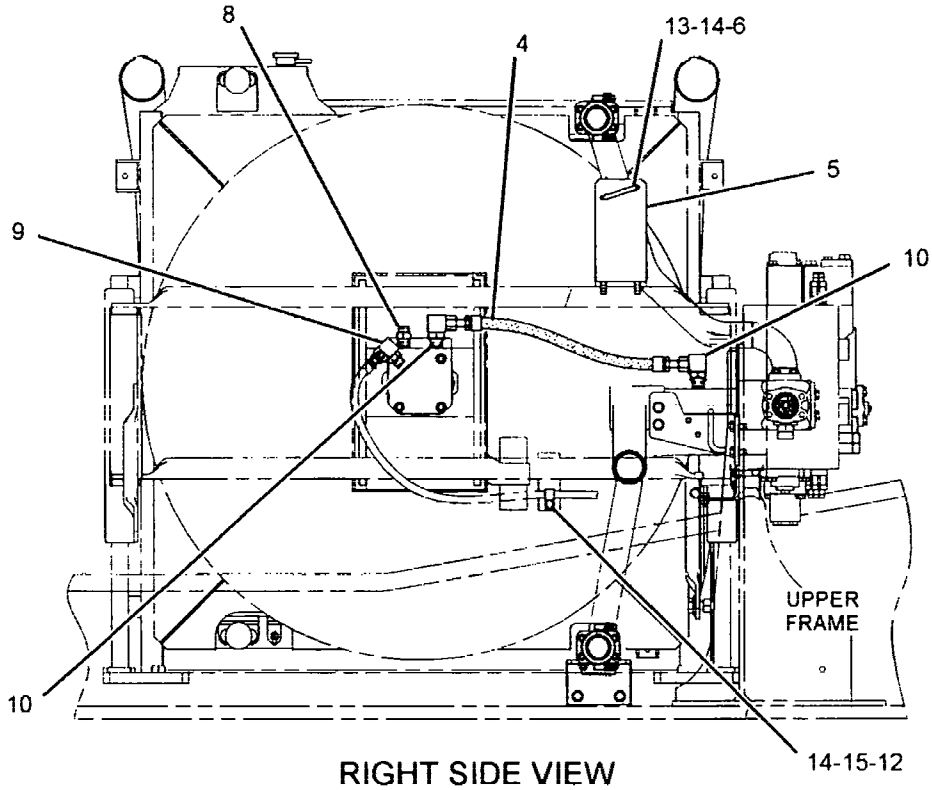

RIGHT SIDE VIEW

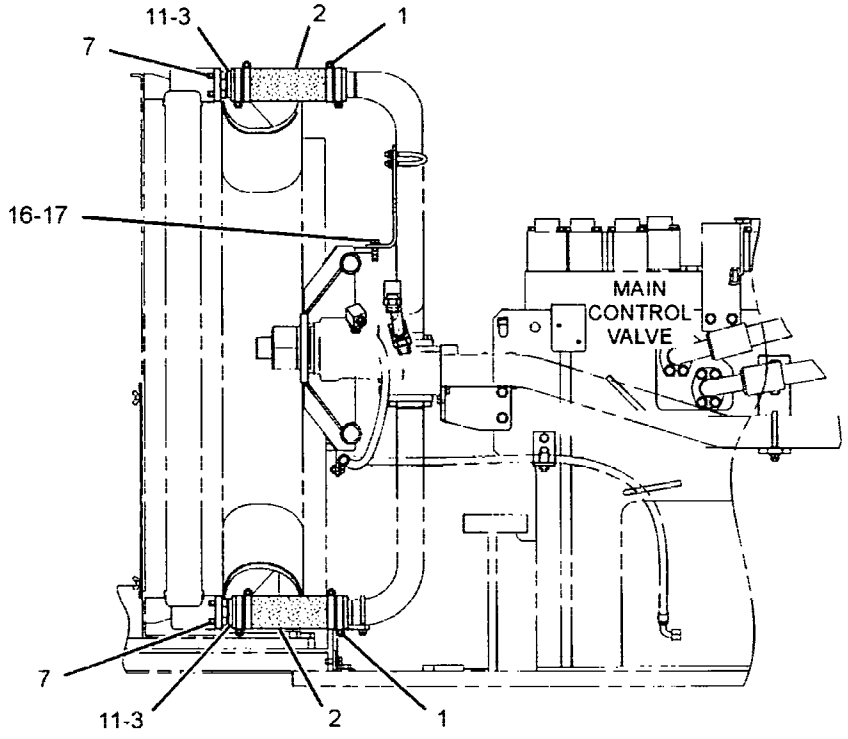

REAR VIEW

GRAPHIC #1 **<END>** g01457347

HYDRAULIC SYSTEM

292-7175 LINES GP-MOTOR–REVERSE FAN

S/N: YEE1-UP

PART OF 294-1275 CONTROL AR-VARIABLE-SPEED FAN AN ATTACHMENT

SMCS-5057, 5058 **i02853783**

NOTE	REF NO	GRAPHIC REF	PART NUMBER	QTY	PART NAME 1 2 3 4 5 6 (PRODUCT LEVEL)	SEE PAGE
	1	1	**7K-1181**	3	STRAP-CABLE	
I	2	1	**087-4503**	1	HOSE AS	
M	3	1	**101-7400**	6	BOLT-SOCKET HEAD (M10X1.5X110-MM)	
I	4	1	**104-8821**	1	HOSE AS	
I	5	1	**108-7313**	1	HOSE AS	
Y	6	1	**234-4624**	1	VALVE GP-CONTROL (REVERSE FLOW)	737
Y	7	1	**242-6880**	1	VALVE GP-SOLENOID	826
I	8	1	**319-9988**	1	HOSE AS	
M	9	1	**129-3181**	2	BOLT-SOCKET HEAD (M10X1.5X55-MM)	
	10	1	*148-8315*	1	CONNECTOR AS	
		1	**2M-9780**	1	SEAL-O-RING	
		1	**6V-8642**	1	CONNECTOR	
		1	**7J-9108**	1	SEAL-O-RING	
	11	1	*148-8336*	3	CONNECTOR AS	
					(EACH INCLUDES)	
		1	**3J-1907**	1	SEAL-O-RING	
		1	**6V-8397**	1	SEAL-O-RING	
		1	**6V-8636**	1	CONNECTOR	
	12	1	*148-8378*	1	ELBOW AS	
		1	**3J-1907**	1	SEAL-O-RING	
		1	**6V-8397**	1	SEAL-O-RING	
		1	**6V-8724**	1	ELBOW	
	13	1	*148-8390*	1	ELBOW AS	
		1	**2M-9780**	1	SEAL-O-RING	
		1	**6V-8626**	1	ELBOW	
		1	**7J-9108**	1	SEAL-O-RING	
	14	1	*148-8415*	1	REDUCER AS	
		1	**6V-8397**	1	SEAL-O-RING	
		1	**6V-8936**	1	REDUCER	
	15	1	*148-8428*	1	TEE AS	
		1	**3K-0360**	1	SEAL-O-RING	
		1	**6V-8398**	2	SEAL-O-RING	
		1	**6V-8782**	1	TEE	
	16	1	*148-8433*	1	TEE AS	
		1	**6V-8397**	2	SEAL-O-RING	
		1	**6V-9836**	1	TEE-SWIVEL	
	17	1	**4J-5267**	2	SEAL-O-RING	
	18	1	**4K-8302**	1	CLIP	
	19	1	**8T-4121**	1	WASHER-HARD (11X21X2.5-MM THK)	
M	20	1	**8T-4137**	1	BOLT (M10X1.5X20-MM)	

I-REFER TO HYDRAULIC INFORMATION SYSTEM
M-METRIC PART
Y-SEPARATE ILLUSTRATION

292-7175 **LINES GP-MOTOR** *(contd.)* **i02853783**

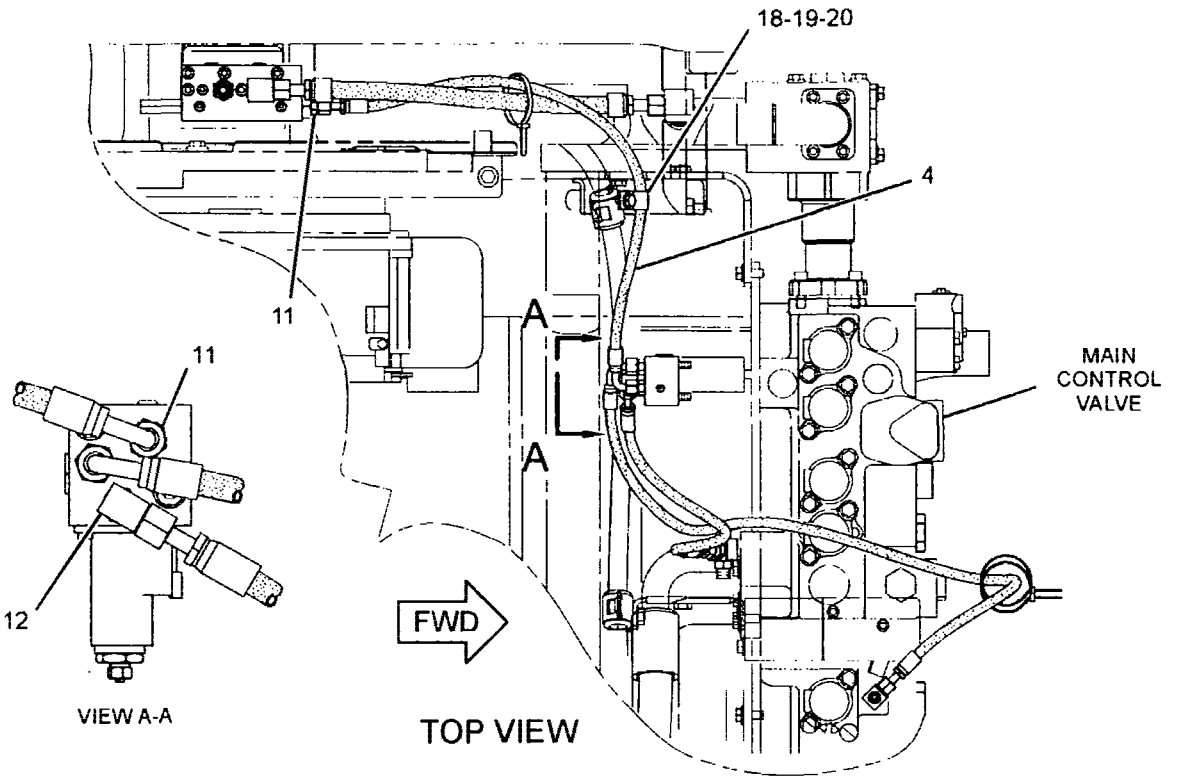

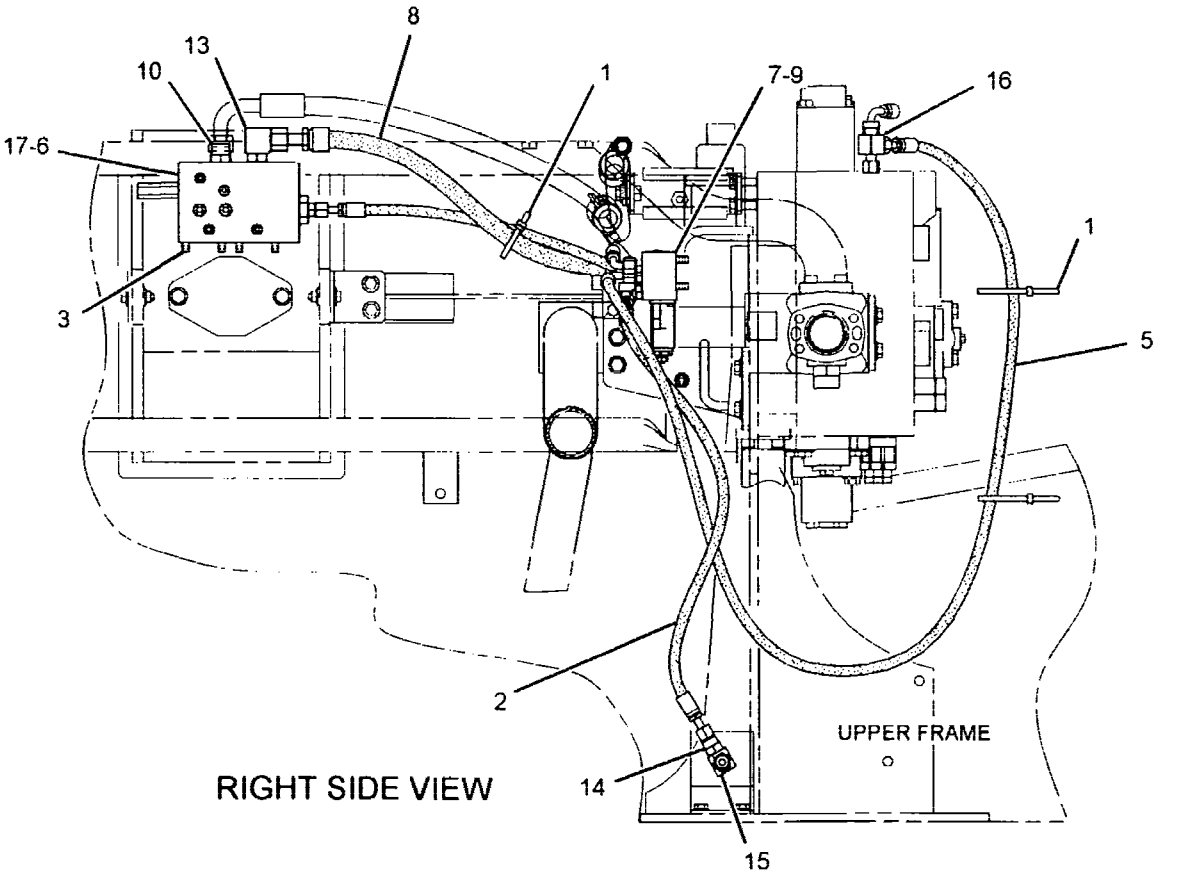

GRAPHIC #1 **<END>** g01462705

227-0454 LINES GP-PILOT–CONTROL PATTERN, QUICK CHANGE

S/N: YEE1-UP

PART OF 310-0387 VALVE AR-ALT PATTERN CONTROL AN ATTACHMENT

SMCS-5057, 5059 i02755512

NOTE	REF NO	GRAPHIC REF	PART NUMBER	QTY	PART NAME 1 2 3 4 5 6 (PRODUCT LEVEL)	SEE PAGE
I	1	2	4I-0833	1	HOSE AS	
I	2	2	4I-1037	1	HOSE AS	
I	3	1	4I-3988	2	HOSE AS	
I	4	1	4I-3994	1	HOSE AS	
	5	1,2	4I-9521	4	BAND-MARKER (RED, L1)	
	6	1,2	4I-9522	4	BAND-MARKER (YELLOW, L2)	
	7	1,2	4I-9523	4	BAND-MARKER (BLUE, L3)	
	8	1,2	4I-9524	4	BAND-MARKER (BROWN, L4)	
	9	1,2	4I-9525	4	BAND-MARKER (ORANGE, R1)	
	10	1,2	4I-9526	4	BAND-MARKER (WHITE, R2)	
	11	1,2	4I-9527	4	BAND-MARKER (GREEN, R3)	
	12	1,2	4I-9528	4	BAND-MARKER (PURPLE, R4)	
I	13	2	5I-4076	1	HOSE AS	
I	14	1	7Y-4193	1	HOSE AS	
	15	1,2	7K-1181	10	STRAP-CABLE	
I	16	2	087-5778	1	HOSE AS	
I	17	1	103-1361	2	HOSE AS	
	18	1,2	8T-4223	10	WASHER-HARD (13.5X25.5X3-MM THK)	
I	19	1	104-8771	2	HOSE AS	
I	20	2	104-8783	1	HOSE AS	
I	21	2	108-7313	1	HOSE AS	
I	22	2	108-7402	1	HOSE AS	
I	23	2	115-3667	1	HOSE AS	
CY	24	1	285-1765	1	VALVE GP-PILOT (ALT PATTERN CONTROL, 2-WAY) (ALT PATTERN CONTROL, 2-WAY)	785
	25	1	236-3250	1	SUPPORT AS	
	26	1	236-3251	1	BLOCK	
	27	1	*148-8378*	8	ELBOW AS	
					(EACH INCLUDES)	
		1	3J-1907	1	SEAL-O-RING	
		1	6V-8397	1	SEAL-O-RING	
		1	6V-8724	1	ELBOW	
	28	1	*150-3036*	8	ELBOW AS	
					(EACH INCLUDES)	
		1	3J-1907	1	SEAL-O-RING	
		1	6V-8397	1	SEAL-O-RING	
		1	8T-1905	1	ELBOW	
M	29	1,2	8T-4192	10	BOLT (M12X1.75X25-MM)	

C-CHANGE FROM PREVIOUS TYPE
I-REFER TO HYDRAULIC INFORMATION SYSTEM
M-METRIC PART
Y-SEPARATE ILLUSTRATION

REFER TO ALL ILLUSTRATIONS OF
THIS GROUP FOR AUXILIARY VIEWS

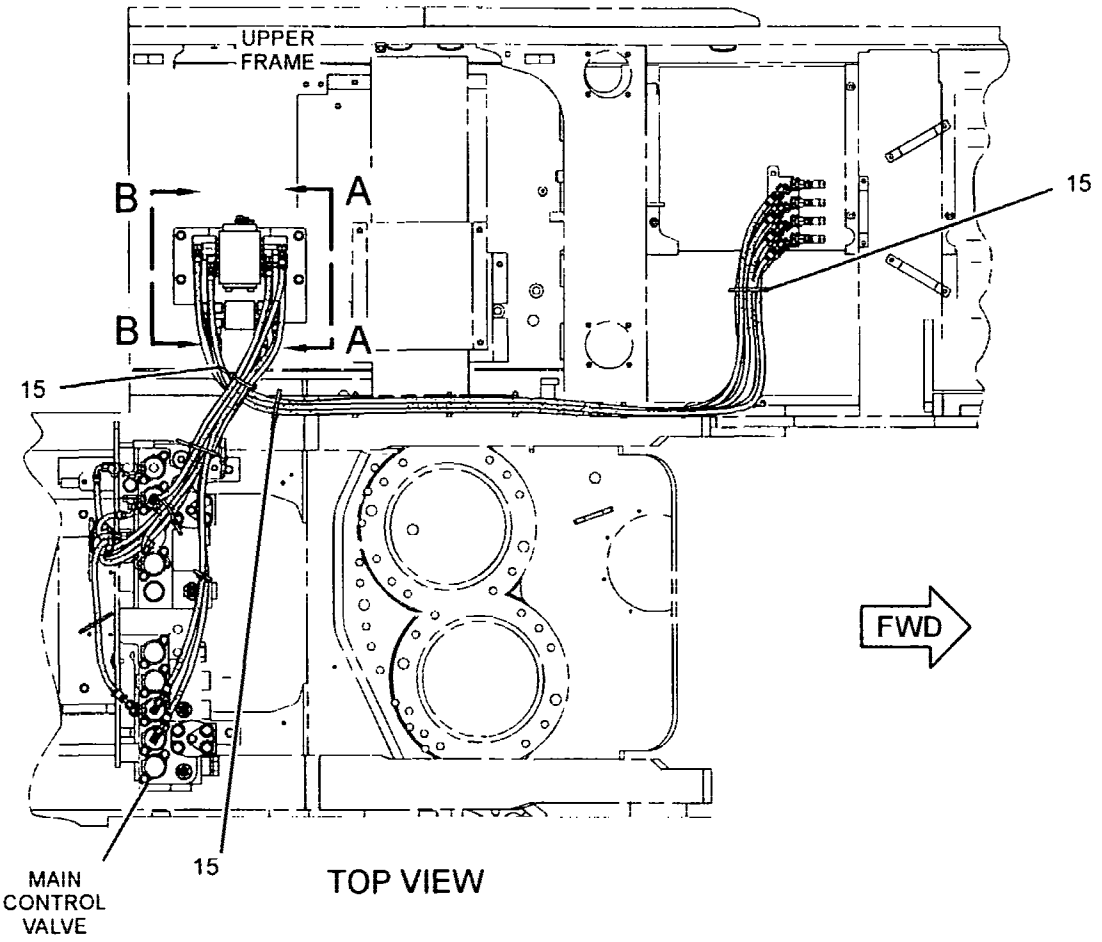

TOP VIEW

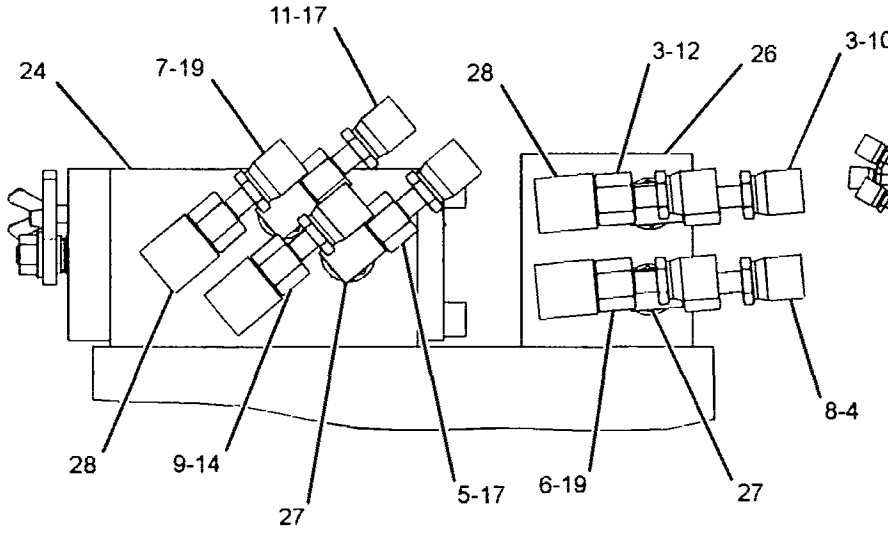

VIEW B-B

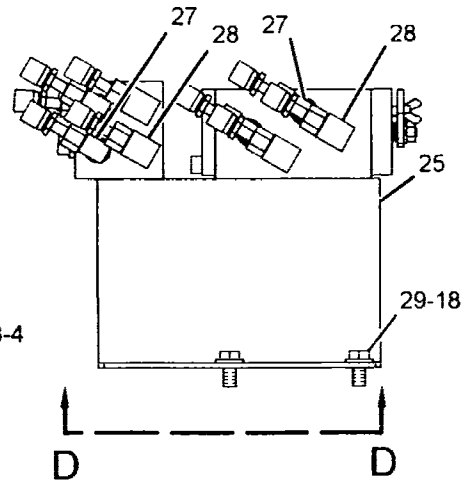

VIEW A-A

GRAPHIC #1 g01409449

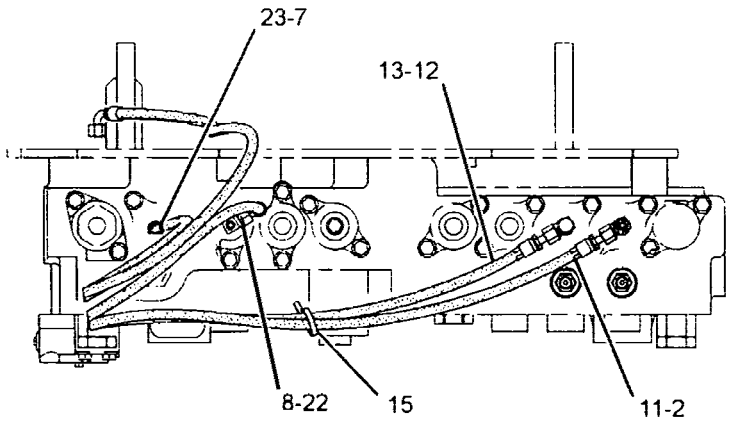

VIEW C-C

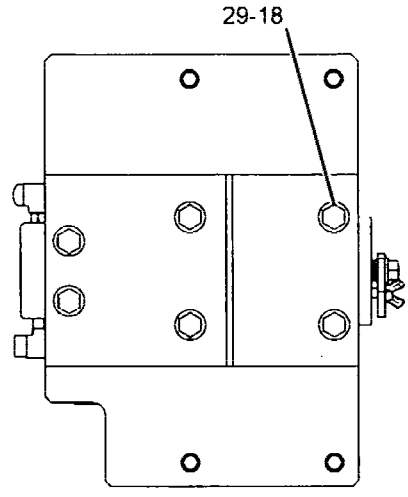

VIEW D-D

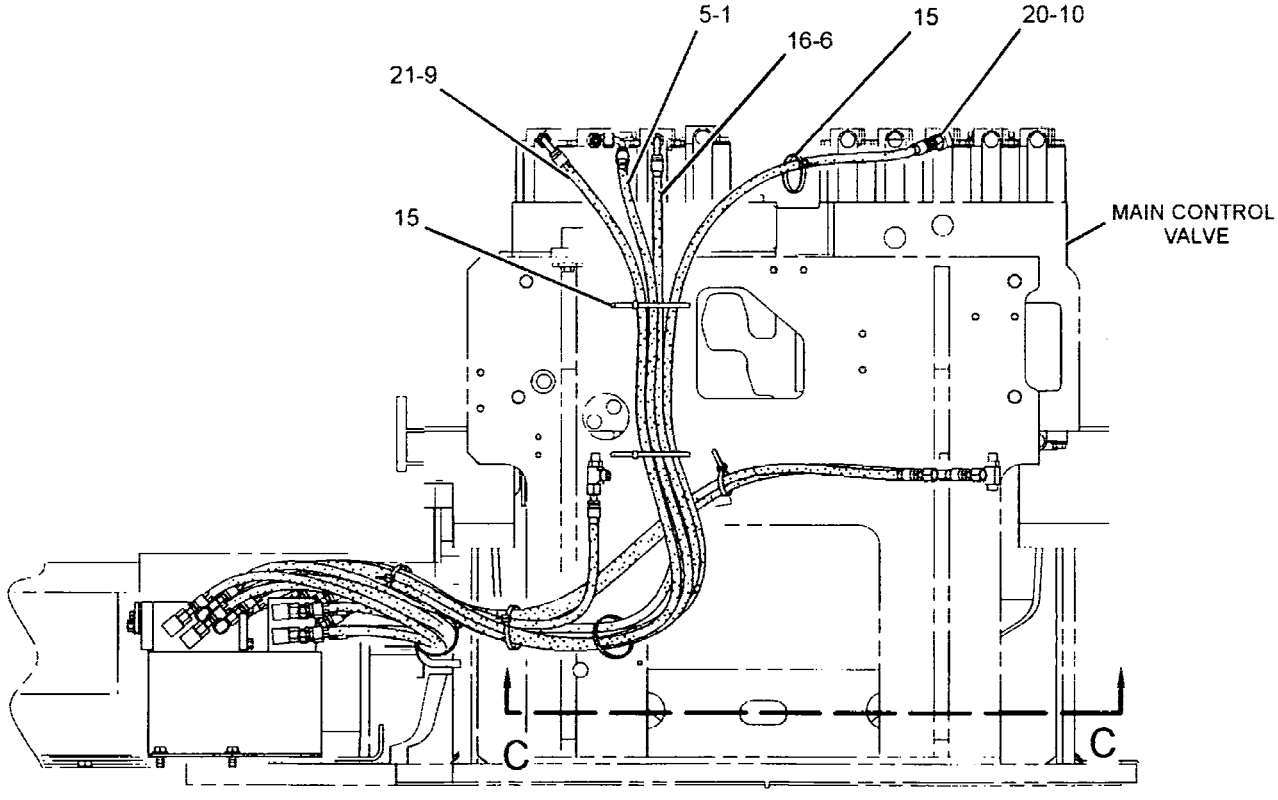

REAR VIEW

GRAPHIC #2 **<END>** g01409450

HYDRAULIC SYSTEM

227-0460 LINES GP-PILOT—HEAVY LIFT

S/N: YEE1-UP

PART OF 297-0243 HYDRAULIC AR

SMCS-5057, 5059 **i02234098**

NOTE	REF NO	GRAPHIC REF	PART NUMBER	QTY	PART NAME 1 2 3 4 5 6 (PRODUCT LEVEL)	SEE PAGE
	1	1	**4I-9522**	2	BAND-MARKER (YELLOW, L2)	
	2	1	**4I-9523**	2	BAND-MARKER (BLUE, L3)	
	3	1	**4I-9524**	2	BAND-MARKER (BROWN, L4)	
	4	1	**7K-1181**	3	STRAP-CABLE	
I	5	1	**087-5759**	1	HOSE AS	
I	6	1	**087-5767**	1	HOSE AS	
I	7	1	**102-8274**	1	HOSE AS	
Y	8	1	**121-6303**	1	VALVE GP-SOLENOID (PILOT OIL PRESSURE)	821
	10	1	**245-5223**	1	PLATE	
	11	1	*148-8336*	2	CONNECTOR AS	
					(EACH INCLUDES)	
		1	**3J-1907**	1	SEAL-O-RING	
		1	**6V-8397**	1	SEAL-O-RING	
		1	**6V-8636**	1	CONNECTOR	
	12	1	*148-8353*	1	ELBOW AS	
		1	**3J-1907**	1	SEAL-O-RING	
		1	**6V-8397**	1	SEAL-O-RING	
		1	**6V-9001**	1	ELBOW	
	13	1	*148-8378*	3	ELBOW AS	
					(EACH INCLUDES)	
		1	**3J-1907**	1	SEAL-O-RING	
		1	**6V-8397**	1	SEAL-O-RING	
		1	**6V-8724**	1	ELBOW	
	14	1	**8T-4121**	2	WASHER-HARD (11X21X2.5-MM THK)	
M	15	1	**8T-4136**	2	BOLT (M10X1.5X25-MM)	
M	16	1	**8T-4138**	2	BOLT (M6X1X20-MM)	
	17	1	**9X-8256**	2	WASHER (6.6X12X2-MM THK)	

I-REFER TO HYDRAULIC INFORMATION SYSTEM
M-METRIC PART
Y-SEPARATE ILLUSTRATION

227-0460 LINES GP-PILOT (contd.) i02234098

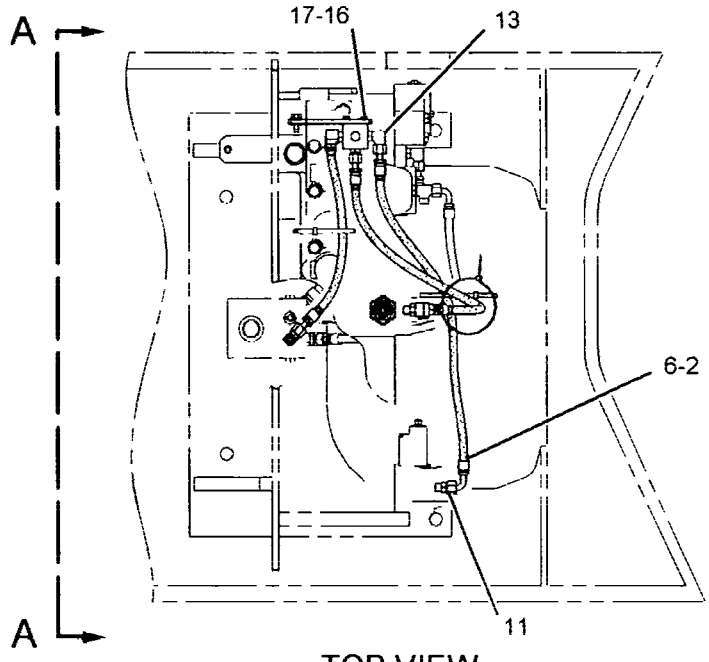

TOP VIEW

FWD

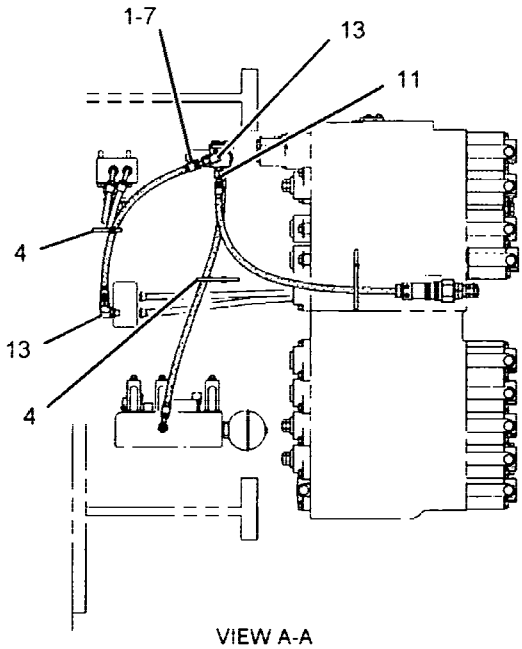

VIEW A-A

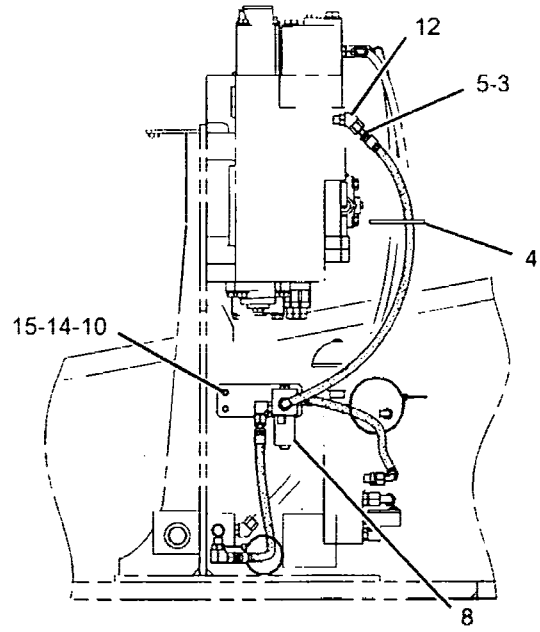

RIGHT SIDE VIEW

GRAPHIC #1 **<END>** g01126589

HYDRAULIC SYSTEM

227-0461 LINES GP-PILOT–QUICK COUPLER

S/N: YEE1-UP

PART OF 306-1528 CONTROL AR-COUPLER

AN ATTACHMENT

SMCS-5057, 5059 **i02913347**

NOTE	REF NO	GRAPHIC REF	PART NUMBER	QTY	PART NAME 1 2 3 4 5 6 (PRODUCT LEVEL)	SEE PAGE
I	1	1	**4I-1783**	1	HOSE AS	
	2	2	**5I-4376**	1	FITTING	
	4	2	**286-6192**	2	SPACER	
Y	5	2	**260-3877**	1	VALVE GP-SOLENOID & MANIFOLD (QUICK COUPLER)	831
	6	1	**203-3470**	1	CONNECTOR	
	7	1	**302-2929**	1	SUPPORT AS	
	8	2	**245-5244**	1	SUPPORT AS	
I	9	1	**314-8259**	1	HOSE AS	
CI	10	1	**302-2891**	2	HOSE AS	
	11	1	**091-9035**	1	SPACER (11X25X20-MM THK)	
C	13	2	*148-8336*	4	CONNECTOR AS	
					(EACH INCLUDES)	
		2	**3J-1907**	1	SEAL-O-RING	
		2	**6V-8397**	1	SEAL-O-RING	
		2	**6V-8636**	1	CONNECTOR	
	14	1,2	*148-8378*	3	ELBOW AS	
					(EACH INCLUDES)	
		1,2	**3J-1907**	1	SEAL-O-RING	
		1,2	**6V-8397**	1	SEAL-O-RING	
		1,2	**6V-8724**	1	ELBOW	
C	15	1	*148-8415*	2	REDUCER AS	
					(EACH INCLUDES)	
		1	**6V-8397**	1	SEAL-O-RING	
		1	**6V-8936**	1	REDUCER	
	16	2	*164-5567*	1	COUPLER AS-QUICK DISCONNECT	
		2	**3J-1907**	1	SEAL-O-RING	
		2	**6V-3965**	1	COUPLER AS-QUICK DISCONNECT	
	17	1	**3J-1907**	1	SEAL-O-RING	
	18	1,2	**6D-4246**	3	CLIP	
	19	2	**6V-0852**	1	CAP-DUST	
	21	1	**7K-1181**	7	STRAP-CABLE	
	22	1,2	**8T-4121**	7	WASHER-HARD (11X21X2.5-MM THK)	
M	23	2	**8T-4136**	2	BOLT (M10X1.5X25-MM)	
M	24	1,2	**8T-4137**	2	BOLT (M10X1.5X20-MM)	
M	25	1	**8T-4184**	4	BOLT (M12X1.75X45-MM)	
M	26	1	**8T-4186**	1	BOLT (M10X1.5X40-MM)	
	27	1	**8T-4223**	5	WASHER-HARD (13.5X25.5X3-MM THK)	
M	28	2	**8T-4198**	2	BOLT (M10X1.5X100-MM)	
	29	1	**314-8140**	1	SUPPORT AS	
M	30	1	**135-8575**	2	BOLT AS-LOCKING (M12X1.75X30-MM)	
M	31	1	**8T-4139**	1	BOLT (M12X1.75X30-MM)	
	32	1	**6V-0683**	1	GROMMET	
	33	1	**5P-7463**	1	CLIP (TAB)	
	34	1	**5P-7462**	1	CLIP (SLOT)	

C-CHANGE FROM PREVIOUS TYPE
I-REFER TO HYDRAULIC INFORMATION SYSTEM
M-METRIC PART
Y-SEPARATE ILLUSTRATION

REFER TO ALL ILLUSTRATIONS OF
THIS GROUP FOR AUXILIARY VIEWS

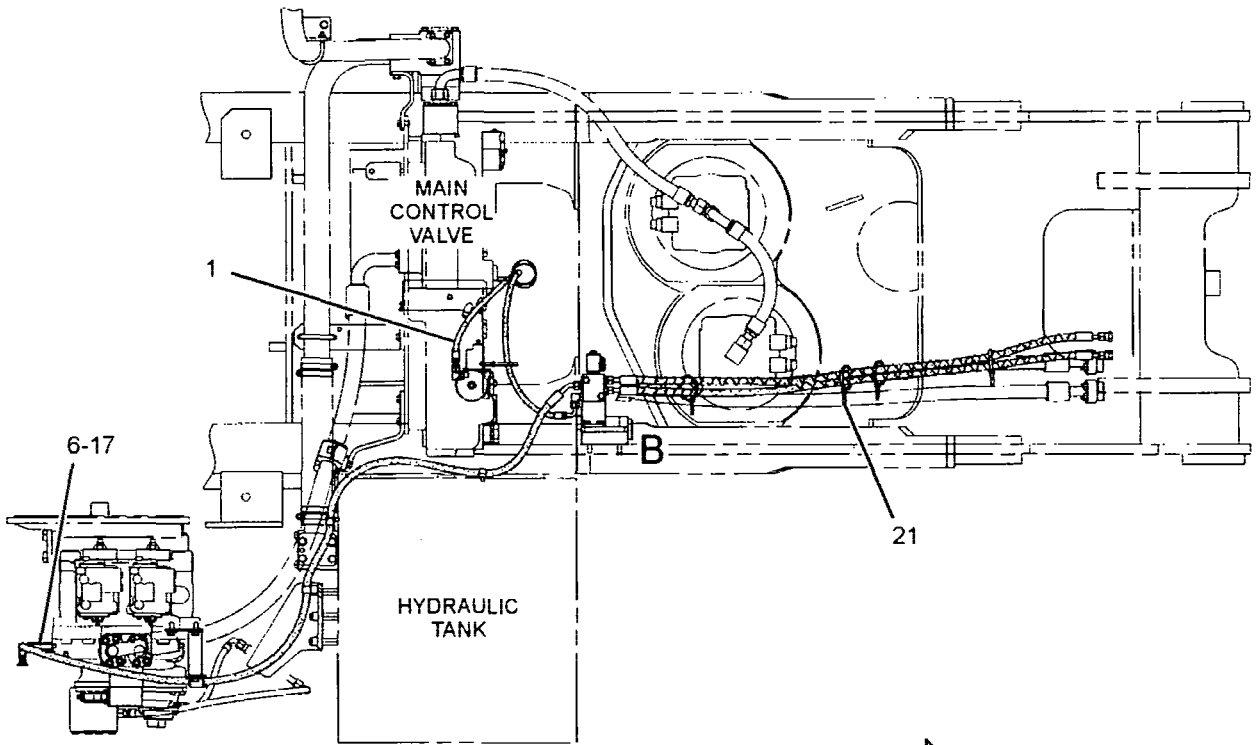

TOP VIEW FWD

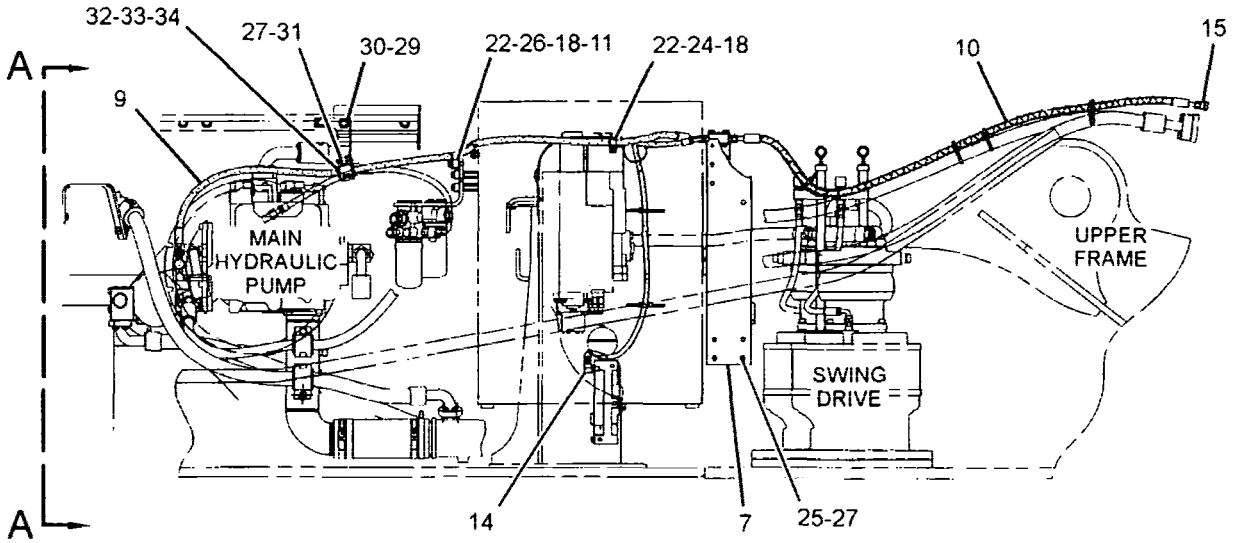

RIGHT SIDE VIEW

GRAPHIC #1 g01451146

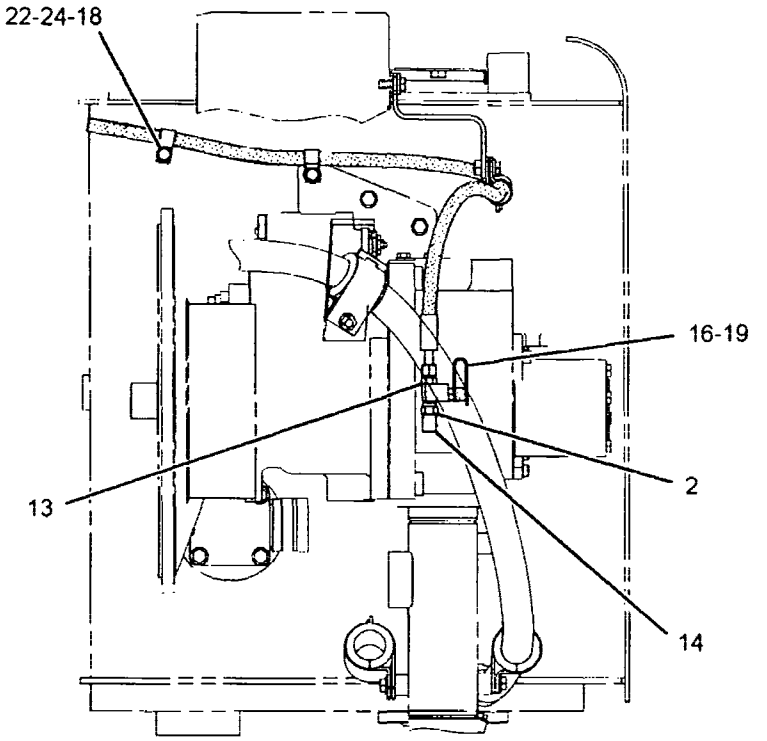

VIEW A-A

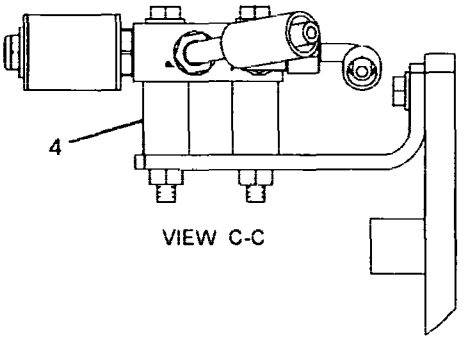

VIEW C-C

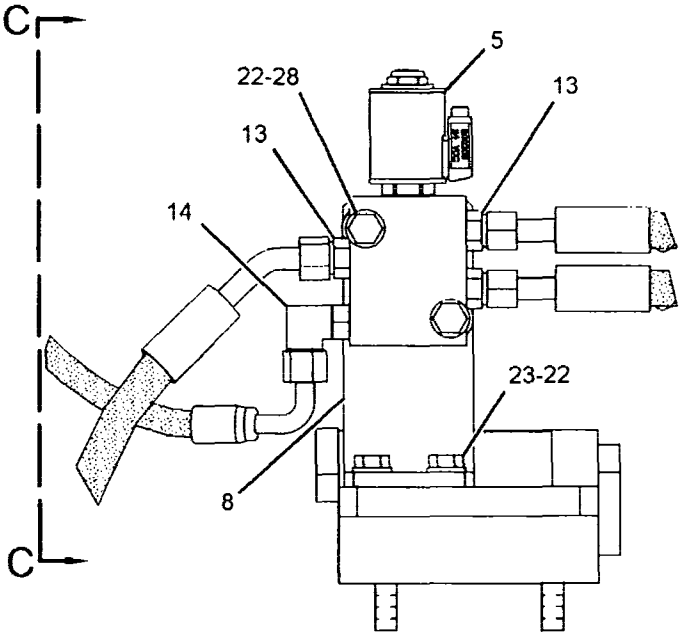

VIEW OF AREA B

GRAPHIC #2 **<END>** g01451147

HYDRAULIC SYSTEM

227-0619 LINES GP-PILOT

S/N: YEE1-UP
3RD PEDAL
PART OF 225-5729 PEDAL AR-AUXILIARY
AN ATTACHMENT

SMCS-5057, 5059 **i02237406**

NOTE	REF NO	GRAPHIC REF	PART NUMBER	QTY	PART NAME 1 2 3 4 5 6 (PRODUCT LEVEL)	SEE PAGE
I	1	1	4I-3511	1	HOSE AS	
	2	1	4I-9521	4	BAND-MARKER (RED, L1)	
	3	1	4I-9522	4	BAND-MARKER (YELLOW, L2)	
	4	1	4I-9525	4	BAND-MARKER (ORANGE, R1)	
	5	1	4I-9526	4	BAND-MARKER (WHITE, R2)	
	6	1	7K-1181	11	STRAP-CABLE	
I	7	1	179-7782	1	HOSE AS	
I	8	1	212-5149	1	HOSE AS	
	9	1	245-5219	1	HOSE AS	

I-REFER TO HYDRAULIC INFORMATION SYSTEM

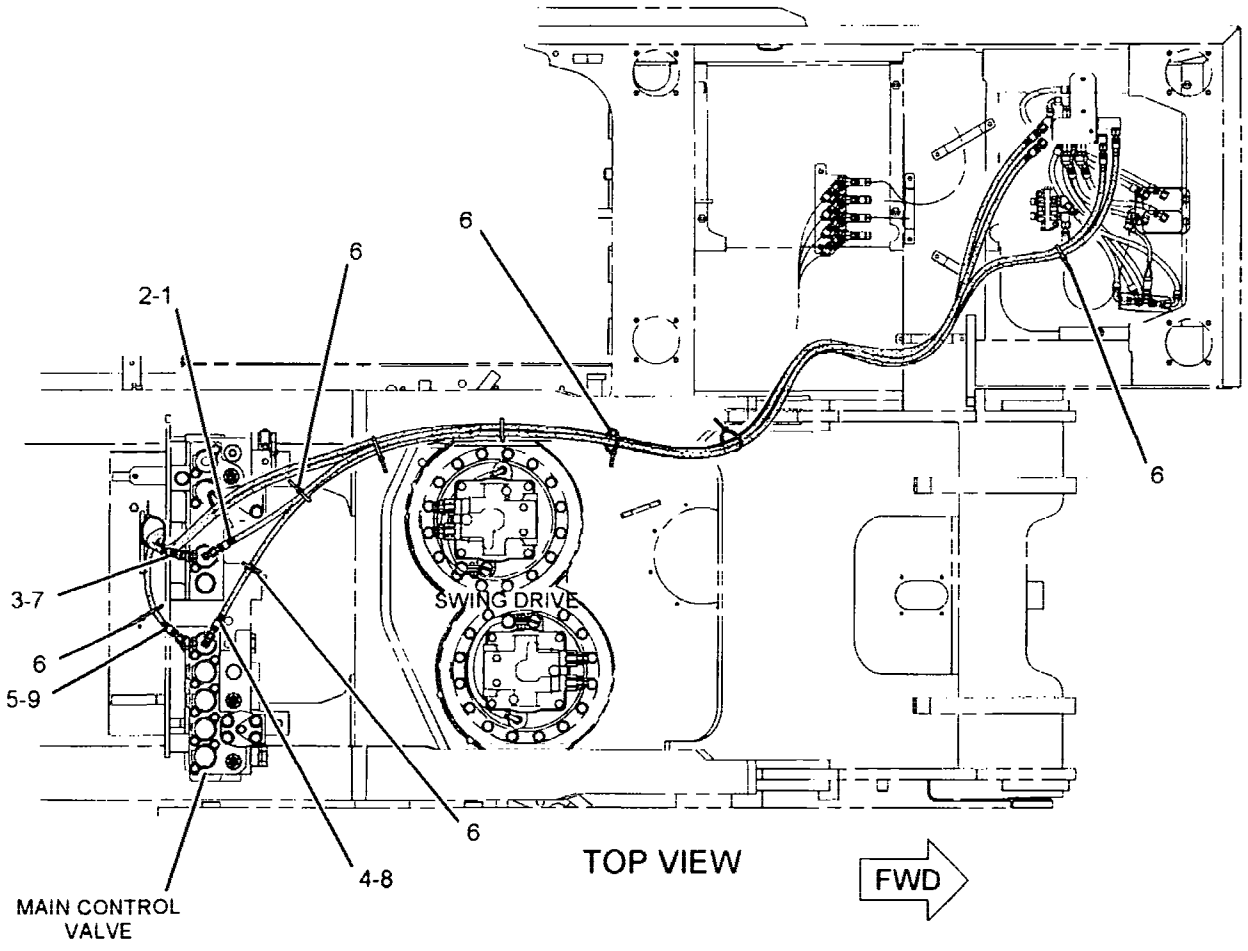

GRAPHIC #1 **<END>** g01131938

HYDRAULIC SYSTEM

260-7891 LINES GP-PILOT–PUMP CONTROL, SHUTTLE VALVE

S/N: YEE1-UP

PART OF 285-1784, 285-1786, 285-1787, 285-1788 CONTROL AR-AUXILIARY AN ATTACHMENT

SMCS-5057, 5059 **i02934299**

NOTE	REF NO	GRAPHIC REF	PART NUMBER	QTY	PART NAME 1 2 3 4 5 6 (PRODUCT LEVEL)	SEE PAGE
	1	1	**309-5769**	1	SWITCH AS-PRESSURE (IMPLEMENT, SWING)	
		1	**102-8802**	1	KIT-RECEPTACLE (2-PIN)	
					(INCLUDES RECEPTACLE AS & WEDGE)	
		1	**9X-3401**	2	PIN-CONNECTOR (16-GA TO 18-GA)	
					–OR–	
		1	**126-1767**	2	PIN-CONNECTOR (14-GA)	
	2	1	**185-0383**	1	BRACKET	
Y	3	1	**185-0462**	1	VALVE GP-SHUTTLE (PILOT)	813
	4	1	*148-8336*	8	CONNECTOR AS	
					(EACH INCLUDES)	
		1	**3J-1907**	1	SEAL-O-RING	
		1	**6V-8397**	1	SEAL-O-RING	
		1	**6V-8636**	1	CONNECTOR	
	5	1	*148-8353*	8	ELBOW AS	
					(EACH INCLUDES)	
		1	**3J-1907**	1	SEAL-O-RING	
		1	**6V-8397**	1	SEAL-O-RING	
		1	**6V-9001**	1	ELBOW	
	6	1	**8T-4121**	7	WASHER-HARD (11X21X2.5-MM THK)	
M	7	1	**8T-4136**	3	BOLT (M10X1.5X25-MM)	
M	8	1	**8T-4137**	4	BOLT (M10X1.5X20-MM)	

M-METRIC PART
Y-SEPARATE ILLUSTRATION

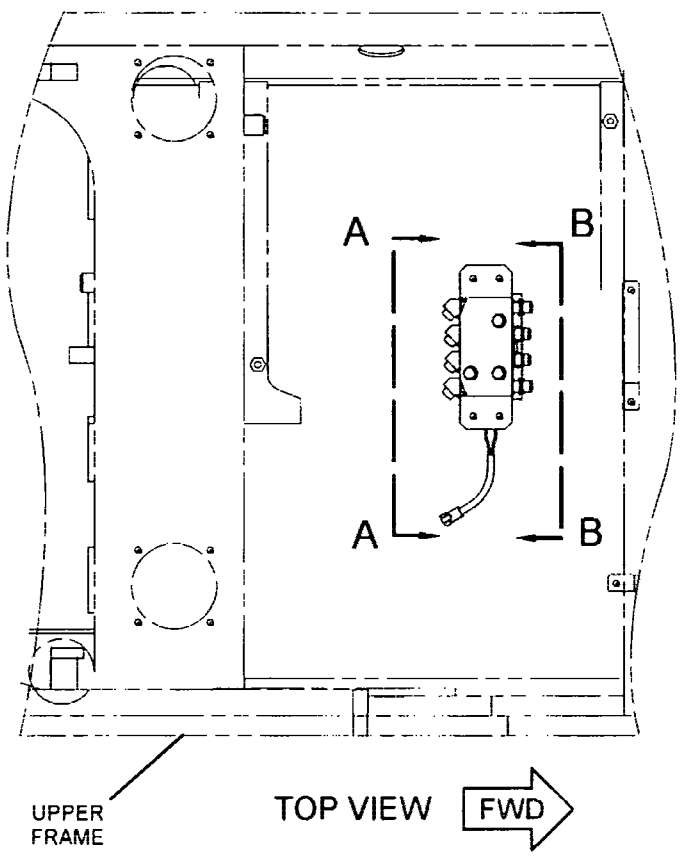

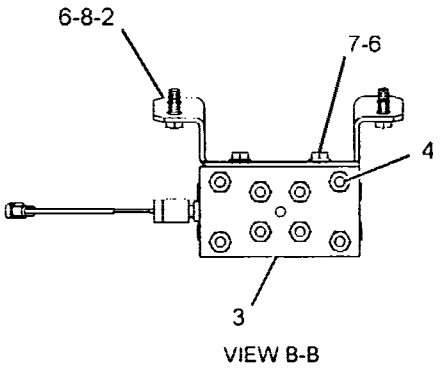

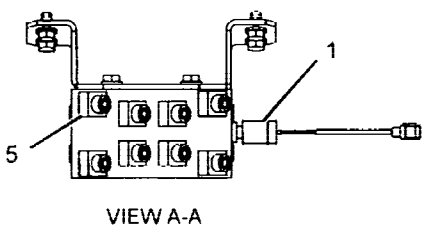

GRAPHIC #1 **<END>** g01151832

HYDRAULIC SYSTEM

260-8047 LINES GP-PILOT–TRAVEL, STRAIGHT TRAVEL

S/N: YEE1-UP

PART OF 225-5729 PEDAL AR-AUXILIARY

AN ATTACHMENT

SMCS-5057, 5059 **i02881481**

NOTE	REF NO	GRAPHIC REF	PART NUMBER	QTY	PART NAME 1 2 3 4 5 6 (PRODUCT LEVEL)	SEE PAGE
I	1	1	**4I-1704**	1	HOSE AS	
CI	2	1	**087-4402**	1	HOSE AS	
I	3	1	**087-5762**	1	HOSE AS	
I	4	1	**087-5765**	2	HOSE AS	
I	5	1	**087-5766**	1	HOSE AS	
I	6	1	**179-7456**	2	HOSE AS	
Y	7	1	**112-0083**	1	VALVE GP-SHUTTLE (THIRD PEDAL, STRAIGHT TRAVEL)	810
	8	1	*148-8336*	3	CONNECTOR AS	
					(EACH INCLUDES)	
		1	**3J-1907**	1	SEAL-O-RING	
		1	**6V-8397**	1	SEAL-O-RING	
		1	**6V-8636**	1	CONNECTOR	
	9	1	*148-8353*	6	ELBOW AS	
					(EACH INCLUDES)	
		1	**3J-1907**	1	SEAL-O-RING	
		1	**6V-8397**	1	SEAL-O-RING	
		1	**6V-9001**	1	ELBOW	
	10	1	*148-8378*	4	ELBOW AS	
					(EACH INCLUDES)	
		1	**3J-1907**	1	SEAL-O-RING	
		1	**6V-8397**	1	SEAL-O-RING	
		1	**6V-8724**	1	ELBOW	
	11	1	*150-3036*	1	ELBOW AS	
		1	**3J-1907**	1	SEAL-O-RING	
		1	**6V-8397**	1	SEAL-O-RING	
		1	**8T-1905**	1	ELBOW	
	12	1	*150-4044*	1	CONNECTOR AS	
		1	**3J-1907**	1	SEAL-O-RING	
		1	**6V-8397**	1	SEAL-O-RING	
		1	**8T-1779**	1	CONNECTOR	
	13	1	*164-5628*	1	CONNECTOR AS	
		1	**3J-1907**	1	SEAL-O-RING	
		1	**6V-8397**	1	SEAL-O-RING	
		1	**107-6631**	1	CONNECTOR-FILTER	
C	14	1	**4I-7889**	2	SPACER (11X25X45-MM THK)	
CM	15	1	**8T-4178**	2	BOLT (M10X1.5X90-MM)	

C-CHANGE FROM PREVIOUS TYPE
I-REFER TO HYDRAULIC INFORMATION SYSTEM
M-METRIC PART
Y-SEPARATE ILLUSTRATION

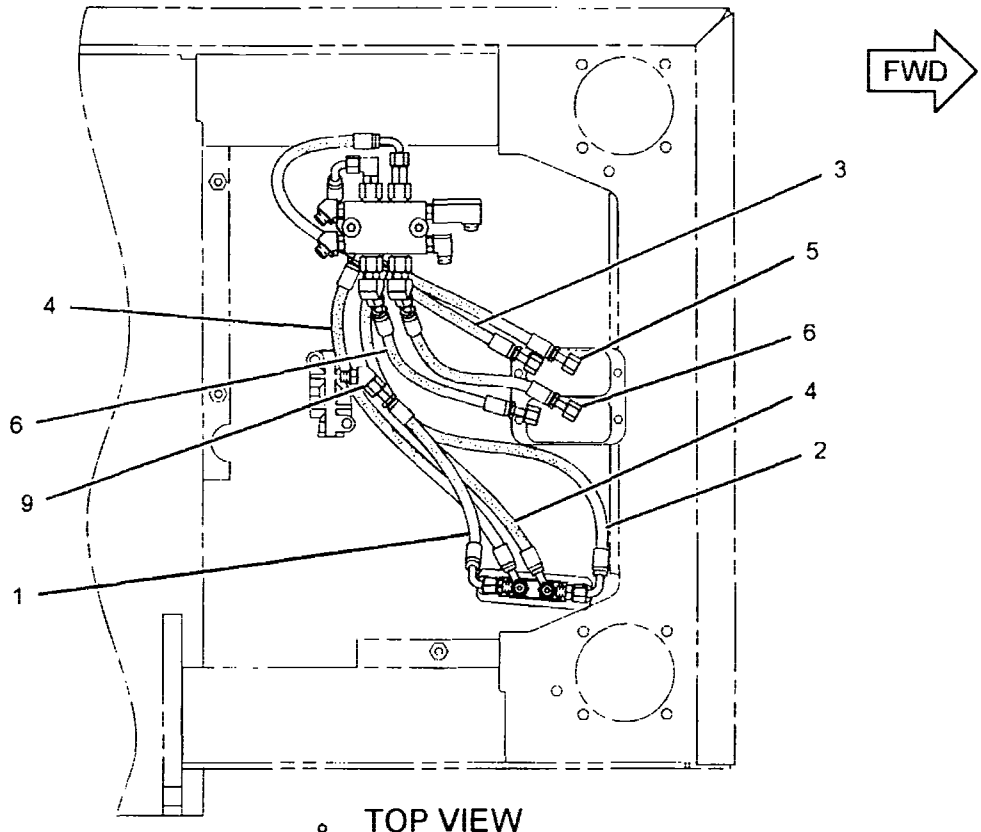

TOP VIEW

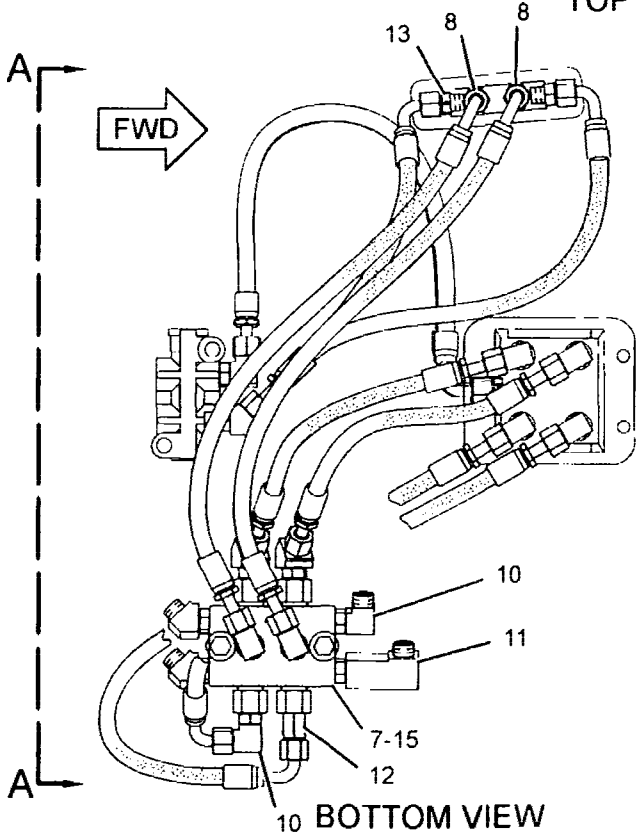

BOTTOM VIEW

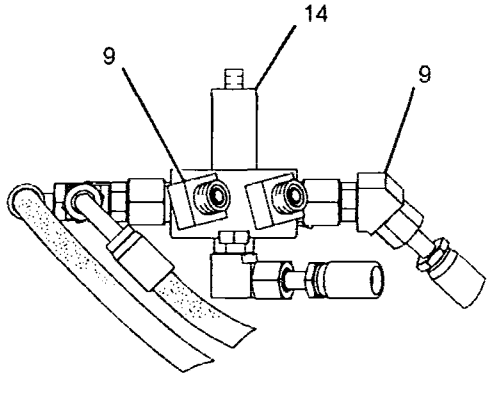

VIEW A-A

GRAPHIC #1 **<END>** g01436139

HYDRAULIC SYSTEM

296-7123 LINES GP-PILOT–JOYSTICK

S/N: YEE1-UP

PART OF 297-0243 HYDRAULIC AR

SMCS-5057, 5059 **i02841498**

NOTE	REF NO	GRAPHIC REF	PART NUMBER	QTY	PART NAME 1 2 3 4 5 6 (PRODUCT LEVEL)	SEE PAGE
	1	2	**4I-9521**	2	BAND-MARKER (RED, L1)	
	2	2	**4I-9522**	2	BAND-MARKER (YELLOW, L2)	
	3	2	**4I-9523**	2	BAND-MARKER (BLUE, L3)	
	4	2	**4I-9524**	2	BAND-MARKER (BROWN, L4)	
	5	2	**4I-9525**	2	BAND-MARKER (ORANGE, R1)	
	6	2	**4I-9526**	2	BAND-MARKER (WHITE, R2)	
	7	2	**4I-9527**	2	BAND-MARKER (GREEN, R3)	
	8	2	**4I-9528**	2	BAND-MARKER (PURPLE, R4)	
	9	1,2	**7K-1181**	4	STRAP-CABLE	
I	10	1	**087-4402**	2	HOSE AS	
	11	2	**133-5813**	4	BAND-MARKER (GRAY, P)	
	12	2	*148-8366*	8	ELBOW AS	
					(EACH INCLUDES)	
		2	**6V-8397**	2	SEAL-O-RING	
		2	**6V-8987**	1	ELBOW	
	13	1,2	*164-5628*	3	CONNECTOR AS	
					(EACH INCLUDES)	
		1,2	**3J-1907**	1	SEAL-O-RING	
		1,2	**6V-8397**	1	SEAL-O-RING	
		1,2	**107-6631**	1	CONNECTOR-FILTER	
Y	14	1	**165-9522**	1	VALVE GP-PILOT (TRAVEL)	776
	15	2	**168-9759**	1	BLOCK	
	16	1	**184-9336**	3	SUPPORT	
	17	2	**236-2838**	1	PLATE	
	18	2	**236-2843**	4	HOSE AS	
	19	2	**236-2844**	3	HOSE AS	
	20	2	**236-2848**	1	HOSE AS	
	21	2	**245-5079**	1	HOSE AS	
	22	2	**255-1665**	1	HOSE AS	
	23	2	**255-1666**	1	HOSE AS	
	24	2	**289-5657**	1	HOSE AS	
	25	2	**099-7241**	8	WASHER-HARD (19X34X3-MM THK)	
	26	1,2	*148-8336*	15	CONNECTOR AS	
					(EACH INCLUDES)	
		1,2	**3J-1907**	1	SEAL-O-RING	
		1,2	**6V-8397**	1	SEAL-O-RING	
		1,2	**6V-8636**	1	CONNECTOR	
	27	2	*148-8364*	2	ELBOW AS	
					(EACH INCLUDES)	
		2	**3K-0360**	1	SEAL-O-RING	
		2	**6V-8398**	1	SEAL-O-RING	
		2	**6V-8625**	1	ELBOW	
	28	1,2	*148-8378*	6	ELBOW AS	
					(EACH INCLUDES)	
		1,2	**3J-1907**	1	SEAL-O-RING	
		1,2	**6V-8397**	1	SEAL-O-RING	
		1,2	**6V-8724**	1	ELBOW	
	29	2	*148-8407*	4	PLUG AS	
					(EACH INCLUDES)	
		2	**3J-1907**	1	SEAL-O-RING	
		2	**9S-4191**	1	PLUG-O-RING	
	30	2	**6V-9168**	8	NUT (11/16-16-THD)	
	31	1,2	**8T-4121**	14	WASHER-HARD (11X21X2.5-MM THK)	
M	32	1	**8T-4136**	4	BOLT (M10X1.5X25-MM)	
M	33	1	**8T-4137**	6	BOLT (M10X1.5X20-MM)	
M	34	2	**8T-4191**	2	BOLT (M10X1.5X16-MM)	

296-7123 **LINES GP-PILOT** *(contd.)* **i02841498**

NOTE	REF NO	GRAPHIC REF	PART NUMBER	QTY	PART NAME 1 2 3 4 5 6 (PRODUCT LEVEL)	SEE PAGE
M	35	2	**8T-4198**	2	BOLT (M10X1.5X100-MM)	

I-REFER TO HYDRAULIC INFORMATION SYSTEM
M-METRIC PART
Y-SEPARATE ILLUSTRATION

REFER TO ALL ILLUSTRATIONS OF THIS GROUP FOR AUXILIARY VIEWS

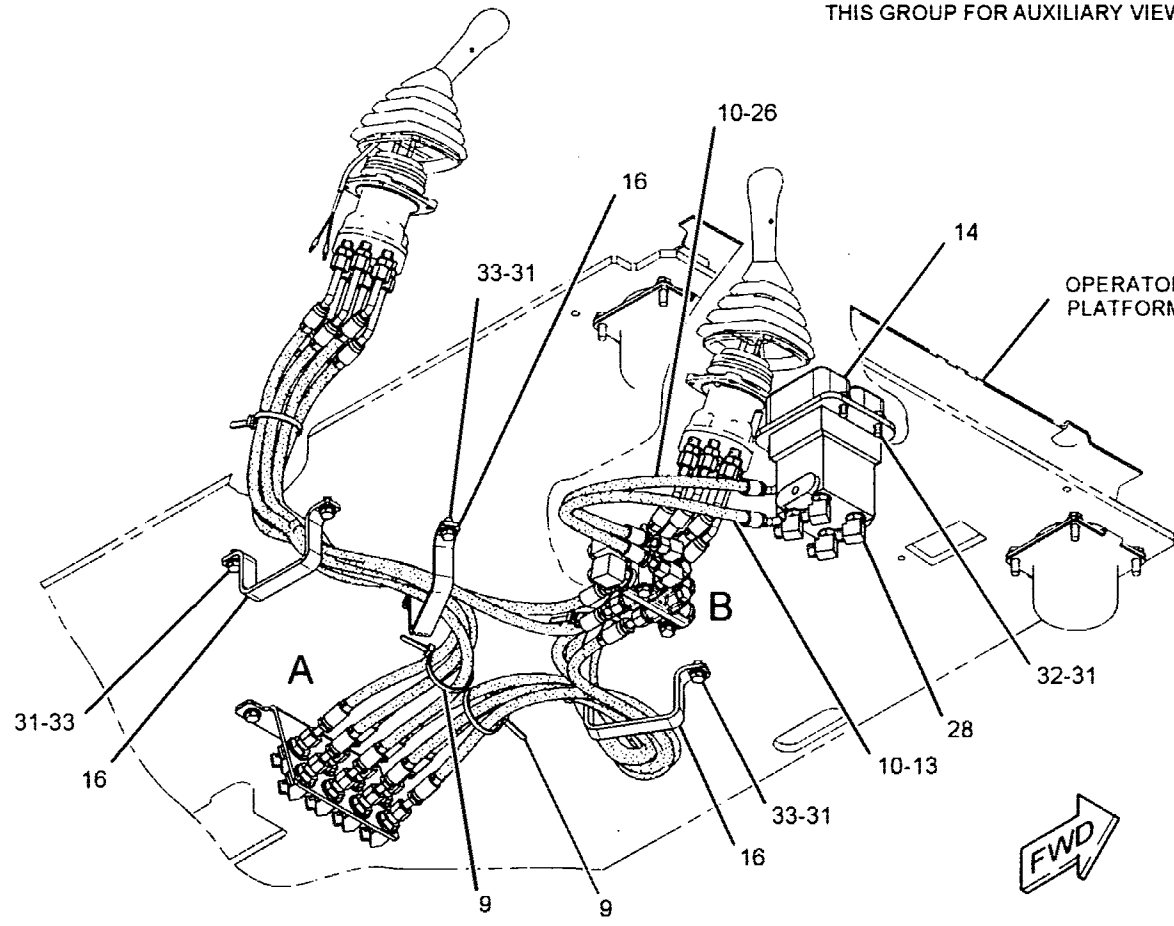

GRAPHIC #1 g01466048

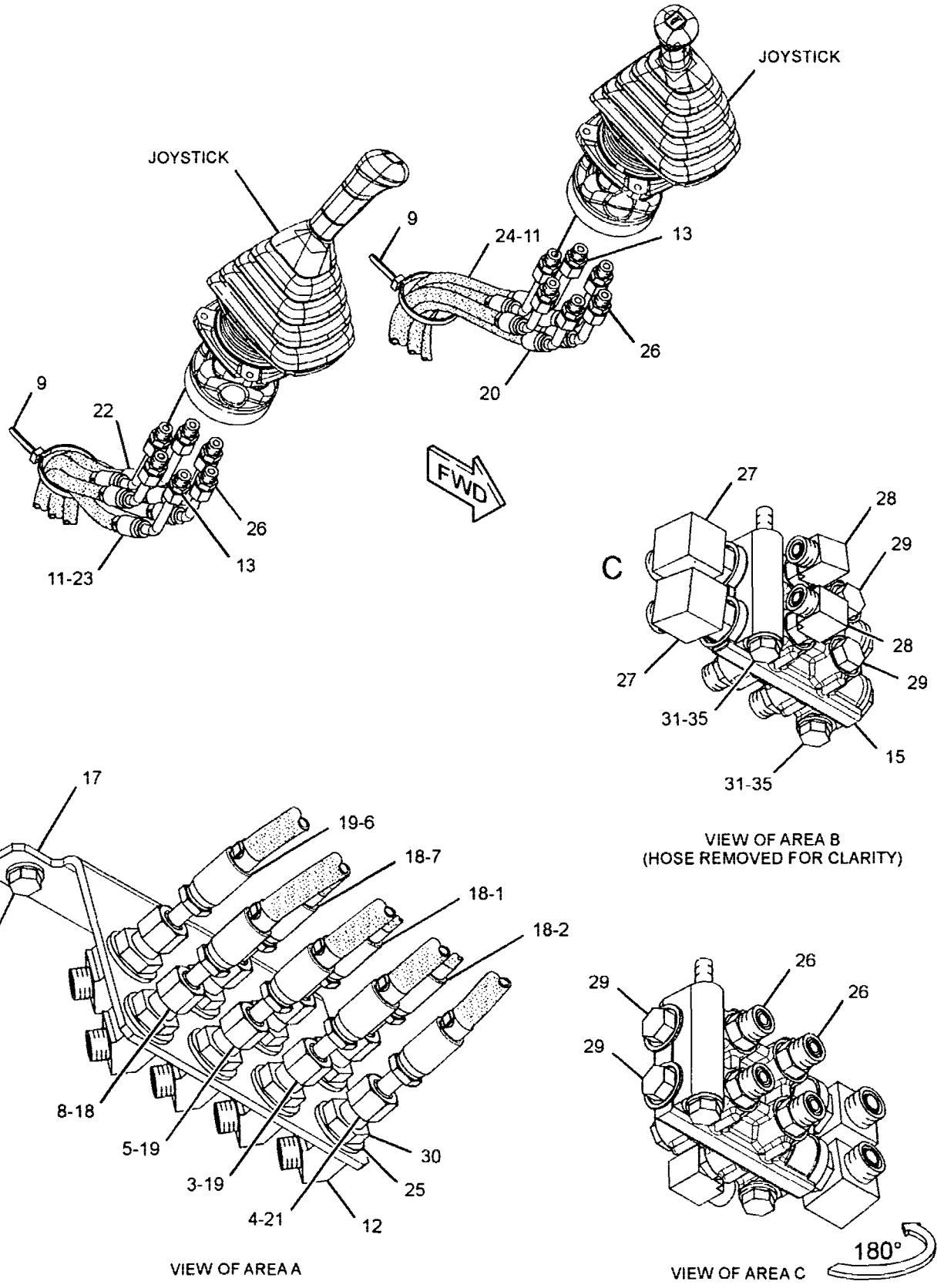

VIEW OF AREA B
(HOSE REMOVED FOR CLARITY)

VIEW OF AREA A

VIEW OF AREA C

GRAPHIC #2 **<END>** g01466050

HYDRAULIC SYSTEM

296-7127 LINES GP-PILOT–SYSTEMS 3, 16

S/N: YEE1-UP

PART OF 285-1784, 285-1787 CONTROL AR-AUXILIARY AN ATTACHMENT

SMCS-5057, 5059 **i02974961**

NOTE	REF NO	GRAPHIC REF	PART NUMBER	QTY	PART NAME 1 2 3 4 5 6 (PRODUCT LEVEL)	SEE PAGE
I	1	2	4I-0797	1	HOSE AS	
I	2	1	4I-5795	1	HOSE AS	
Y	3	2	4I-7836	1	VALVE GP-FLOW CONTROL (PILOT OIL)	757
	4	1	4I-9521	2	BAND-MARKER (RED, L1)	
	5	1,2	4I-9523	6	BAND-MARKER (BLUE, L3)	
	6	2	4I-9524	2	BAND-MARKER (BROWN, L4)	
	7	1	4I-9525	2	BAND-MARKER (ORANGE, R1)	
	8	2	4I-9528	2	BAND-MARKER (PURPLE, R4)	
I	9	2	5I-4396	2	HOSE AS	
	10	2	7K-1181	3	STRAP-CABLE	
I	11	2	087-4441	1	HOSE AS	
I	12	2	087-5777	1	HOSE AS	
I	13	2	104-8777	1	HOSE AS	
Y	14	2	119-5219	1	VALVE GP-PILOT (BOOM PRIORITY)	774
	15	2	*164-5550*	1	TEE AS	
		2	3J-1907	1	SEAL-O-RING	
		2	4I-6327	1	TEE-ORIFICE	
		2	6V-8397	1	SEAL-O-RING	
	16	1	*164-6874*	1	FITTING AS-ELBOW	
		1	3J-1907	1	SEAL-O-RING	
		1	085-7356	1	FITTING	
	17	2	*168-1968*	1	TEE AS	
		2	3J-1907	1	SEAL-O-RING	
		2	6V-8397	1	SEAL-O-RING	
		2	126-6872	1	TEE	
I	18	1,2	192-6775	2	HOSE AS	
	19	2	239-1760	1	SUPPORT AS	
	20	1	245-5237	1	SUPPORT AS	
Y	21	1	259-7430	1	VALVE GP-SOLENOID (PRESSURE REDUCING)	828
I	22	1	272-4137	1	HOSE AS	
I	23	2	272-4139	1	HOSE AS	
Y	24	1	297-0641	1	VALVE GP-PUMP CONTROL (NEGATIVE FLOW CONTROL)	797
	25	1,2	*148-8336*	4	CONNECTOR AS (EACH INCLUDES)	
		1,2	3J-1907	1	SEAL-O-RING	
		1,2	6V-8397	1	SEAL-O-RING	
		1,2	6V-8636	1	CONNECTOR	
	26	1,2	*148-8353*	2	ELBOW AS (EACH INCLUDES)	
		1,2	3J-1907	1	SEAL-O-RING	
		1,2	6V-8397	1	SEAL-O-RING	
		1,2	6V-9001	1	ELBOW	
	27	1,2	*148-8367*	2	ELBOW AS (EACH INCLUDES)	
		1,2	6V-8397	1	SEAL-O-RING	
		1,2	6V-9850	1	ELBOW	
	28	1	*148-8374*	1	ELBOW AS	
		1	3K-0360	1	SEAL-O-RING	
		1	6V-8397	1	SEAL-O-RING	
		1	6V-8723	1	ELBOW	
	29	1,2	*148-8378*	3	ELBOW AS (EACH INCLUDES)	
		1,2	3J-1907	1	SEAL-O-RING	
		1,2	6V-8397	1	SEAL-O-RING	
		1,2	6V-8724	1	ELBOW	

HYDRAULIC SYSTEM

296-7127 LINES GP-PILOT (contd.) i02974961

NOTE	REF NO	GRAPHIC REF	PART NUMBER	QTY	PART NAME 1 2 3 4 5 6 (PRODUCT LEVEL)	SEE PAGE
	30	1	*148-8407*	3	PLUG AS	
					(EACH INCLUDES)	
		1	**3J-1907**	1	SEAL-O-RING	
		1	**9S-4191**	1	PLUG-O-RING	
	31	1,2	*148-8435*	3	TEE AS	
					(EACH INCLUDES)	
		1,2	**3J-1907**	1	SEAL-O-RING	
		1,2	**6V-8397**	2	SEAL-O-RING	
		1,2	**6V-8781**	1	TEE-FACE SEAL	
	32	2	*150-3036*	1	ELBOW AS	
		2	**3J-1907**	1	SEAL-O-RING	
		2	**6V-8397**	1	SEAL-O-RING	
		2	**8T-1905**	1	ELBOW	
	33	1	*150-4027*	1	TEE AS	
		1	**3E-2310**	1	TEE	
		1	**3J-1907**	1	SEAL-O-RING	
		1	**6V-8397**	1	SEAL-O-RING	
	34	2	*153-6248*	1	ADAPTER AS	
		2	**6V-8397**	1	SEAL-O-RING	
		2	**8T-6663**	1	ADAPTER-PORT	
	35	1	*164-5567*	2	COUPLER AS-QUICK DISCONNECT	
					(EACH INCLUDES)	
		1	**3J-1907**	1	SEAL-O-RING	
		1	**6V-3965**	1	COUPLER AS-QUICK DISCONNECT	
	36	1	*164-5605*	1	CONNECTOR AS	
		1	**3K-0360**	1	SEAL-O-RING	
		1	**8T-0076**	1	CONNECTOR	
		1	**6V-8634**	1	CONNECTOR	
	37	2	*164-5609*	1	ELBOW AS	
		2	**3J-1907**	1	SEAL-O-RING	
		2	**8T-2335**	1	ELBOW	
	38	1	*164-9869*	1	CONNECTOR AS	
		1	**3J-1907**	1	SEAL-O-RING	
		1	**6V-8397**	1	SEAL-O-RING	
		1	**9X-2297**	1	CONNECTOR	
	39	2	**3G-8054**	2	CLIP (TAB)	
	40	2	**3G-8057**	2	CLIP (SLOT)	
	41	2	**3J-1907**	1	SEAL-O-RING	
	42	1	**6V-0852**	2	CAP-DUST	
	43	2	**6V-0974**	2	GROMMET	
	44	2	**6V-8397**	1	SEAL-O-RING	
M	45	1	**8T-3647**	2	BOLT (M8X1.25X80-MM)	
	46	2	**8T-4121**	8	WASHER-HARD (11X21X2.5-MM THK)	
M	47	2	**8T-4137**	6	BOLT (M10X1.5X20-MM)	
M	48	1	**8T-4139**	2	BOLT (M12X1.75X30-MM)	
M	49	2	**8T-4185**	2	BOLT (M10X1.5X50-MM)	
	50	1	**8T-4223**	2	WASHER-HARD (13.5X25.5X3-MM THK)	
	51	1	**8T-4224**	2	WASHER-HARD (8.8X16X2-MM THK)	

I-REFER TO HYDRAULIC INFORMATION SYSTEM
M-METRIC PART
Y-SEPARATE ILLUSTRATION

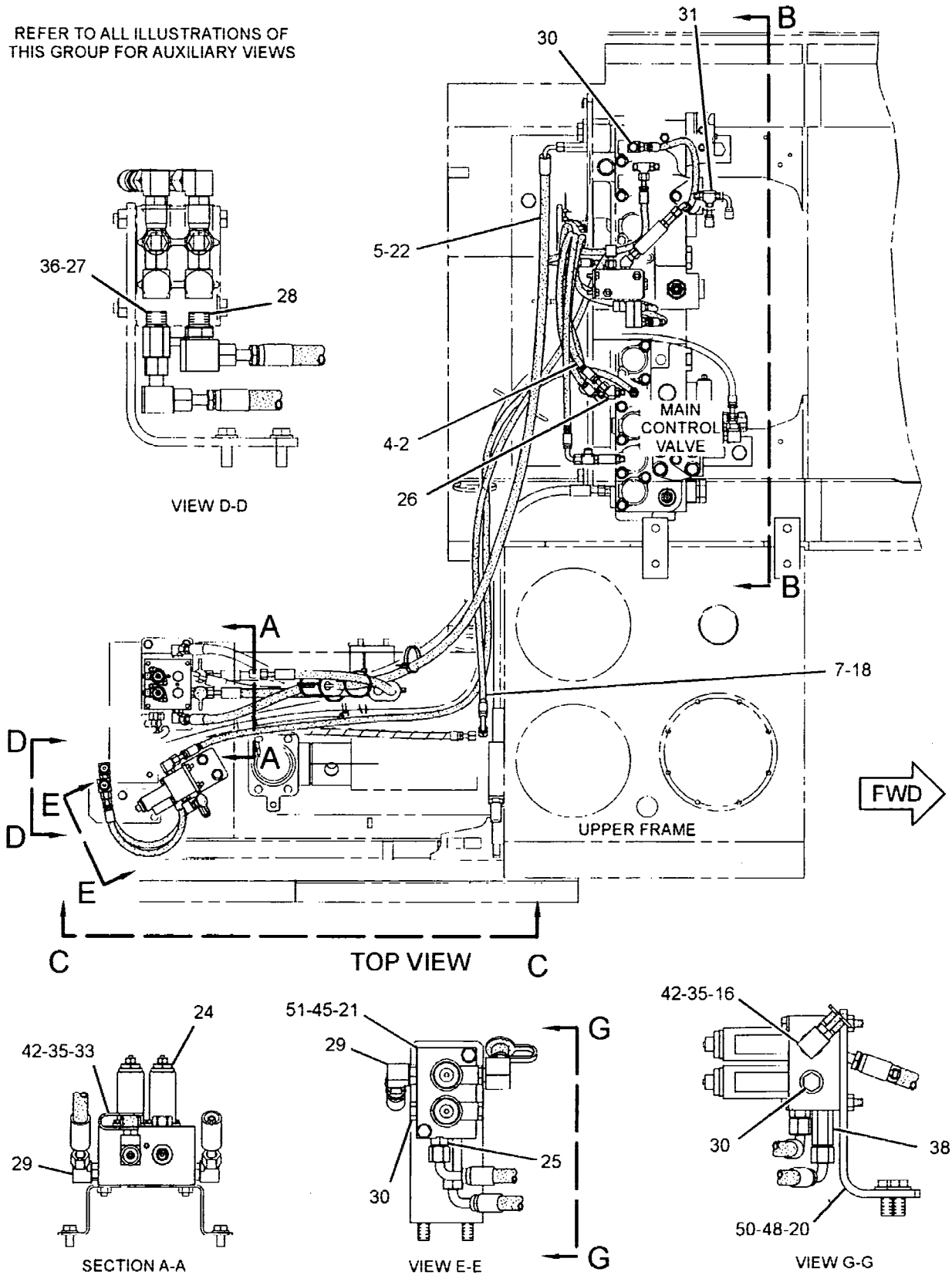

GRAPHIC #1

g01475255

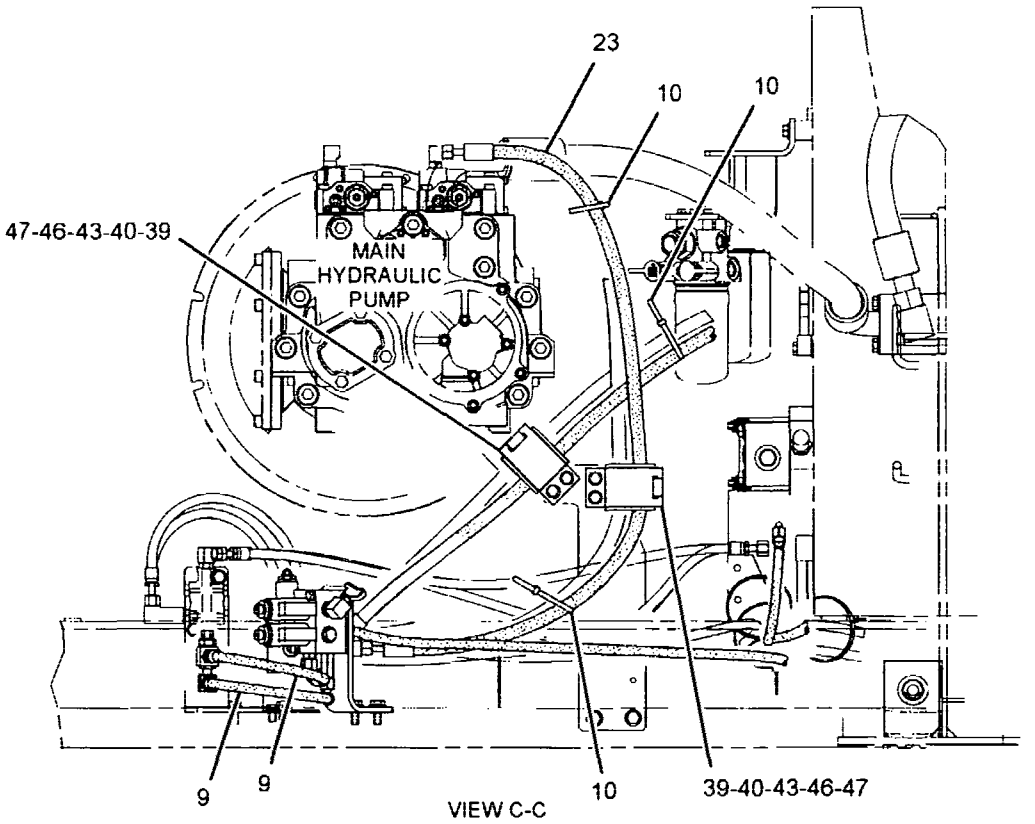

VIEW C-C

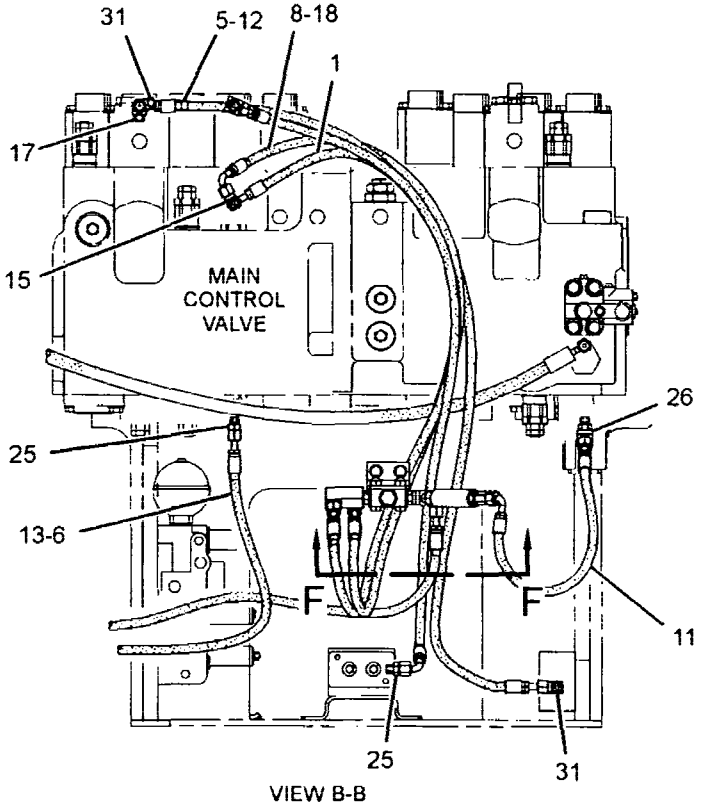

VIEW B-B

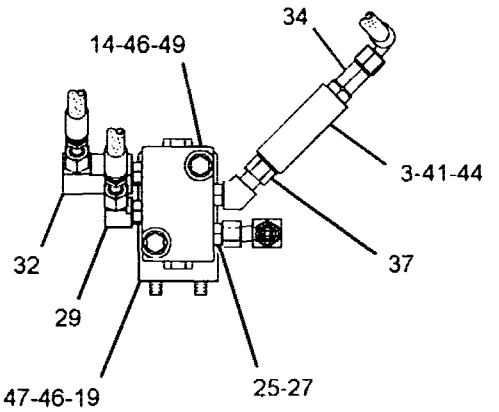

SECTION F-F

GRAPHIC #2 **<END>** g01475259

HYDRAULIC SYSTEM

296-7128 LINES GP-PILOT–SYSTEM 5, 2-WAY, 1-PUMP

S/N: YEE1-UP

PART OF 285-1785 CONTROL AR-AUXILIARY AN ATTACHMENT

SMCS-5057, 5059 **i02847244**

NOTE	REF NO	GRAPHIC REF	PART NUMBER	QTY	PART NAME 1 2 3 4 5 6 (PRODUCT LEVEL)	SEE PAGE
I	1	1	**4I-3981**	1	HOSE AS	
	2	1	**4I-9521**	2	BAND-MARKER (RED, L1)	
	3	1	**4I-9524**	2	BAND-MARKER (BROWN, L4)	
I	4	1	**5I-4396**	2	HOSE AS	
	5	1	**6V-0852**	2	CAP-DUST	
I	6	1	**104-8777**	1	HOSE AS	
	7	1	*164-6874*	2	FITTING AS-ELBOW	
					(EACH INCLUDES)	
		1	**3J-1907**	1	SEAL-O-RING	
		1	**085-7356**	1	FITTING	
	8	1	**245-5237**	1	SUPPORT AS	
M		1	**8T-3612**	2	NUT-WELD (M8X1.25-THD)	
Y	9	1	**259-7430**	1	VALVE GP-SOLENOID (PRESSURE REDUCING)	828
	10	1	*148-8336*	2	CONNECTOR AS	
					(EACH INCLUDES)	
		1	**3J-1907**	1	SEAL-O-RING	
		1	**6V-8397**	1	SEAL-O-RING	
		1	**6V-8636**	1	CONNECTOR	
	11	1	*148-8353*	1	ELBOW AS	
		1	**3J-1907**	1	SEAL-O-RING	
		1	**6V-8397**	1	SEAL-O-RING	
		1	**6V-9001**	1	ELBOW	
	12	1	*148-8367*	1	ELBOW AS	
		1	**6V-8397**	1	SEAL-O-RING	
		1	**6V-9850**	1	ELBOW	
	13	1	*148-8374*	1	ELBOW AS	
		1	**3K-0360**	1	SEAL-O-RING	
		1	**6V-8397**	1	SEAL-O-RING	
		1	**6V-8723**	1	ELBOW	
	14	1	*148-8378*	2	ELBOW AS	
					(EACH INCLUDES)	
		1	**3J-1907**	1	SEAL-O-RING	
		1	**6V-8397**	1	SEAL-O-RING	
		1	**6V-8724**	1	ELBOW	
	15	1	*164-5567*	2	COUPLER AS-QUICK DISCONNECT	
					(EACH INCLUDES)	
		1	**3J-1907**	1	SEAL-O-RING	
		1	**6V-3965**	1	COUPLER AS-QUICK DISCONNECT	
	16	1	*164-5605*	1	CONNECTOR AS	
		1	**3K-0360**	1	SEAL-O-RING	
		1	**6V-8397**	1	SEAL-O-RING	
		1	**8T-0076**	1	CONNECTOR	
	17	1	*164-9869*	1	CONNECTOR AS	
		1	**3J-1907**	1	SEAL-O-RING	
		1	**6V-8397**	1	SEAL-O-RING	
		1	**9X-2297**	1	CONNECTOR	
M	18	1	**8T-3647**	2	BOLT (M8X1.25X80-MM)	
M	19	1	**8T-4139**	2	BOLT (M12X1.75X30-MM)	
	20	1	**8T-4223**	2	WASHER-HARD (13.5X25.5X3-MM THK)	
	21	1	**8T-4224**	2	WASHER-HARD (8.8X16X2-MM THK)	

I-REFER TO HYDRAULIC INFORMATION SYSTEM
M-METRIC PART
Y-SEPARATE ILLUSTRATION

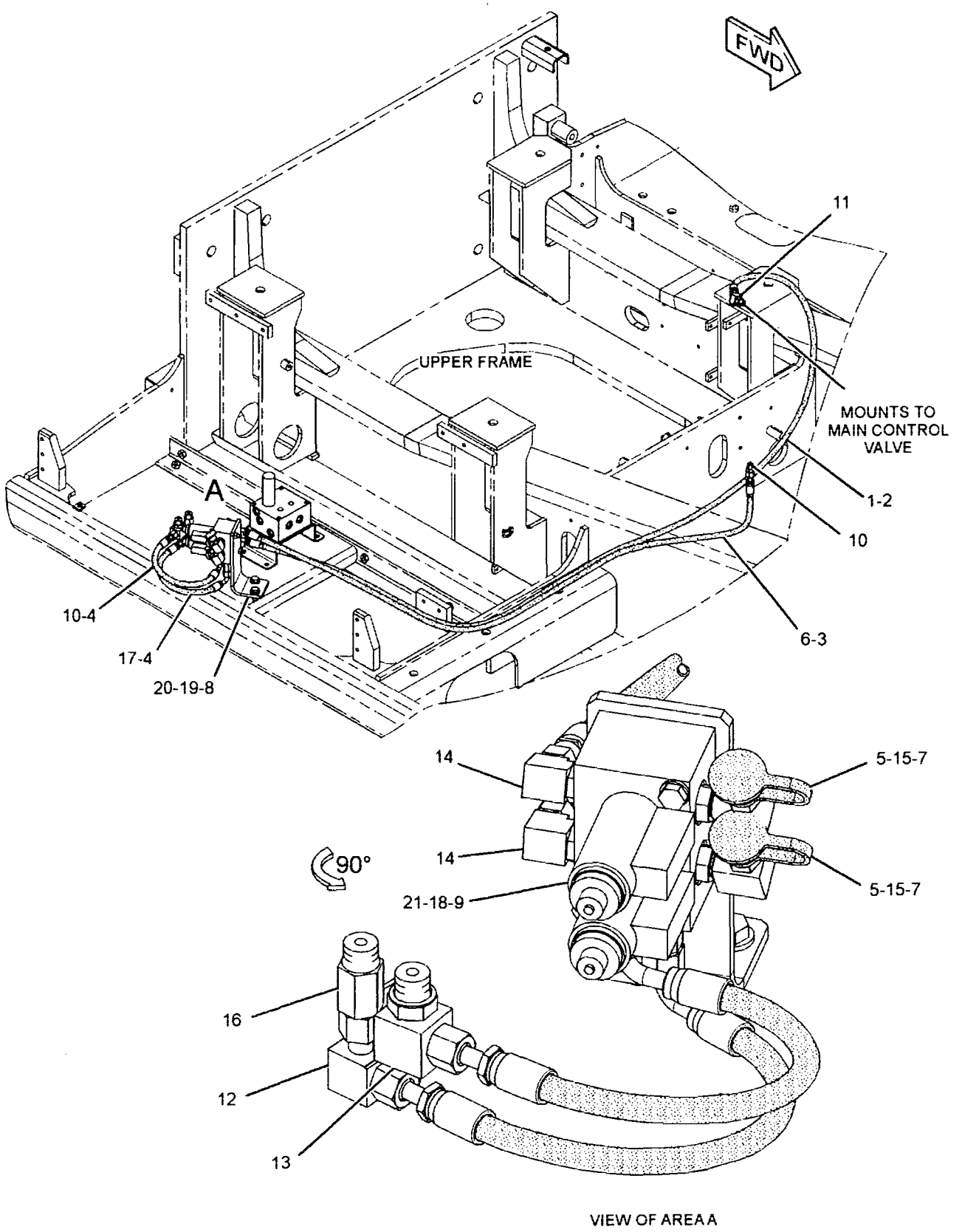

VIEW OF AREA A

GRAPHIC #1 **<END>** g01475220

HYDRAULIC SYSTEM

302-2984 LINES GP-PILOT–CONTROL VALVE

S/N: YEE1-UP

PART OF 297-0243 HYDRAULIC AR

SMCS-5057, 5059 **i02975086**

NOTE	REF NO	GRAPHIC REF	PART NUMBER	QTY	PART NAME 1 2 3 4 5 6 (PRODUCT LEVEL)	SEE PAGE
I	1	2	4I-3511	1	HOSE AS	
I	2	2	4I-3514	1	HOSE AS	
I	3	2	4I-6003	1	HOSE AS	
	4	2	4I-9521	6	BAND-MARKER (RED, L1)	
	5	2	4I-9522	6	BAND-MARKER (YELLOW, L2)	
	6	2	4I-9523	2	BAND-MARKER (BLUE, L3)	
	7	2	4I-9524	2	BAND-MARKER (BROWN, L4)	
	8	2	4I-9525	6	BAND-MARKER (ORANGE, R1)	
	9	2	4I-9526	6	BAND-MARKER (WHITE, R2)	
	10	2	4I-9527	2	BAND-MARKER (GREEN, R3)	
	11	2	4I-9528	2	BAND-MARKER (PURPLE, R4)	
	12	2	5I-4376	1	FITTING	
I	13	2	5I-8825	1	HOSE AS	
	14	1,2	7K-1181	16	STRAP-CABLE	
I	15	2	087-5591	1	HOSE AS	
I	16	2	087-6584	1	HOSE AS	
I	17	2	102-7685	1	HOSE AS	
	18	1	108-7118	1	GROMMET	
I	19	2	113-6738	1	HOSE AS	
	20	1	124-1008	1	GUARD	
I	21	2	134-6946	3	HOSE AS	
	22	1	149-6549	1	GROMMET	
	23	2	*164-5629*	2	FITTING AS	
					(EACH INCLUDES)	
		2	3J-1907	1	SEAL-O-RING	
		2	108-7516	1	FITTING	
	24	2	*168-1968*	1	TEE AS	
		2	3J-1907	1	SEAL-O-RING	
		2	6V-8397	1	SEAL-O-RING	
		2	126-6872	1	TEE	
I	25	2	194-0289	1	HOSE AS	
	26	2	236-2850	1	HOSE AS	
	27	1	245-5081	1	GROMMET	
	28	2	297-4483	1	SENSOR AS-PRESSURE (BOOM DOWN)	
		2	095-1516	1	SEAL-O-RING	
	29	2	*309-5795*	2	SWITCH AS-PRESSURE (IMPLEMENT, TRAVEL)	
					(EACH INCLUDES)	
		2	9X-3402	2	SOCKET-CONNECTOR (16-GA TO 18-GA)	
		2	155-2270	1	KIT-CONNECTING PLUG (2-PIN)	
					(INCLUDES PLUG AS, WEDGE & INTERFERENCE SEAL)	
	30	2	096-0061	2	STRAP-CABLE	
	31	2	*148-8336*	1	CONNECTOR AS	
		2	3J-1907	1	SEAL-O-RING	
		2	6V-8397	1	SEAL-O-RING	
		2	6V-8636	1	CONNECTOR	
	32	2	*148-8353*	4	ELBOW AS	
					(EACH INCLUDES)	
		2	3J-1907	1	SEAL-O-RING	
		2	6V-8397	1	SEAL-O-RING	
		2	6V-9001	1	ELBOW	
	33	2	*148-8378*	2	ELBOW AS	
					(EACH INCLUDES)	
		2	3J-1907	1	SEAL-O-RING	
		2	6V-8397	1	SEAL-O-RING	
		2	6V-8724	1	ELBOW	
	34	2	*148-8433*	1	TEE AS	

302-2984 LINES GP-PILOT *(contd.)*

i02975086

NOTE	REF NO	GRAPHIC REF	PART NUMBER	QTY	PART NAME 1 2 3 4 5 6 (PRODUCT LEVEL)	SEE PAGE
		2	**6V-8397**	2	SEAL-O-RING	
		2	**6V-9836**	1	TEE-SWIVEL	
	35	2	*148-8435*	6	TEE AS	
					(EACH INCLUDES)	
		2	**3J-1907**	1	SEAL-O-RING	
		2	**6V-8397**	2	SEAL-O-RING	
		2	**6V-8781**	1	TEE-FACE SEAL	
	36	2	*150-3036*	1	ELBOW AS	
		2	**3J-1907**	1	SEAL-O-RING	
		2	**6V-8397**	1	SEAL-O-RING	
		2	**8T-1905**	1	ELBOW	

I-REFER TO HYDRAULIC INFORMATION SYSTEM

302-2984 **LINES GP-PILOT** *(contd.)* **i02975086**

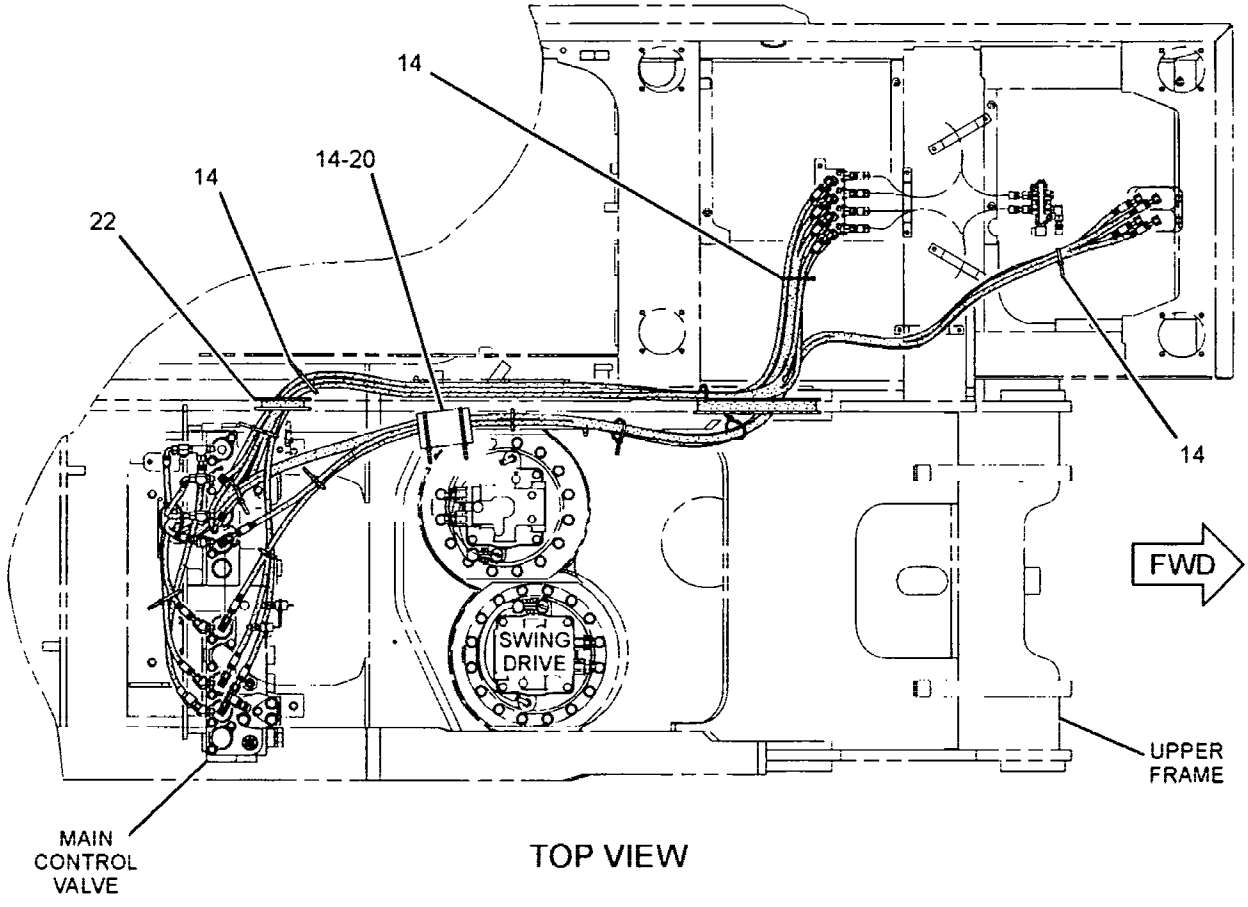

TOP VIEW

REFER TO ALL ILLUSTRATIONS OF THIS GROUP FOR AUXILIARY VIEWS

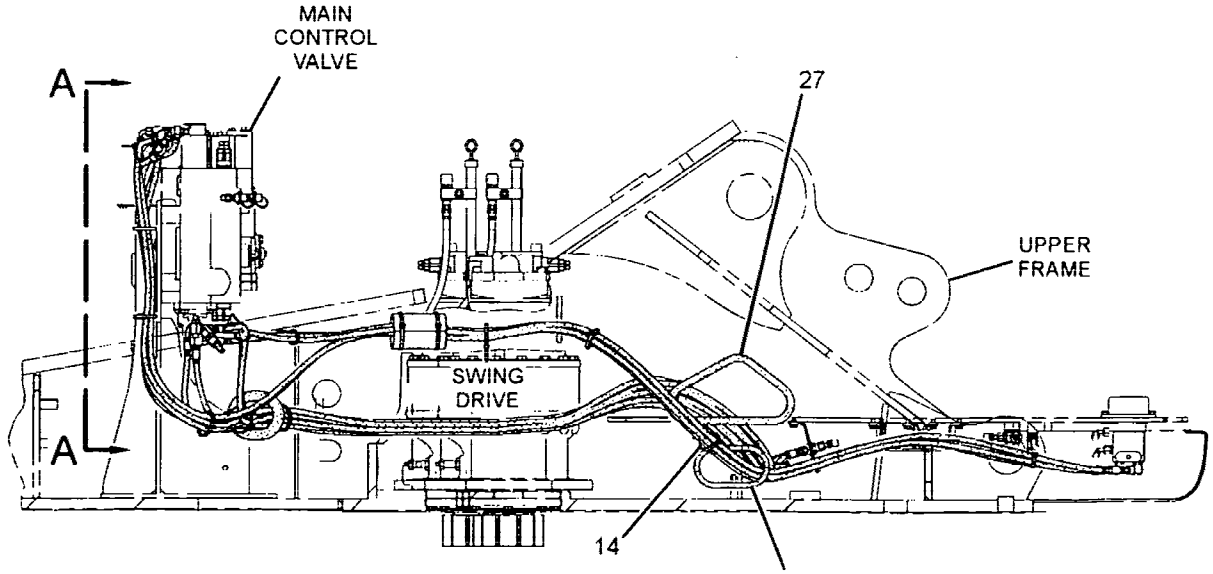

RIGHT SIDE VIEW

GRAPHIC #1

g01429155

302-2984 LINES GP-PILOT (contd.) i02975086

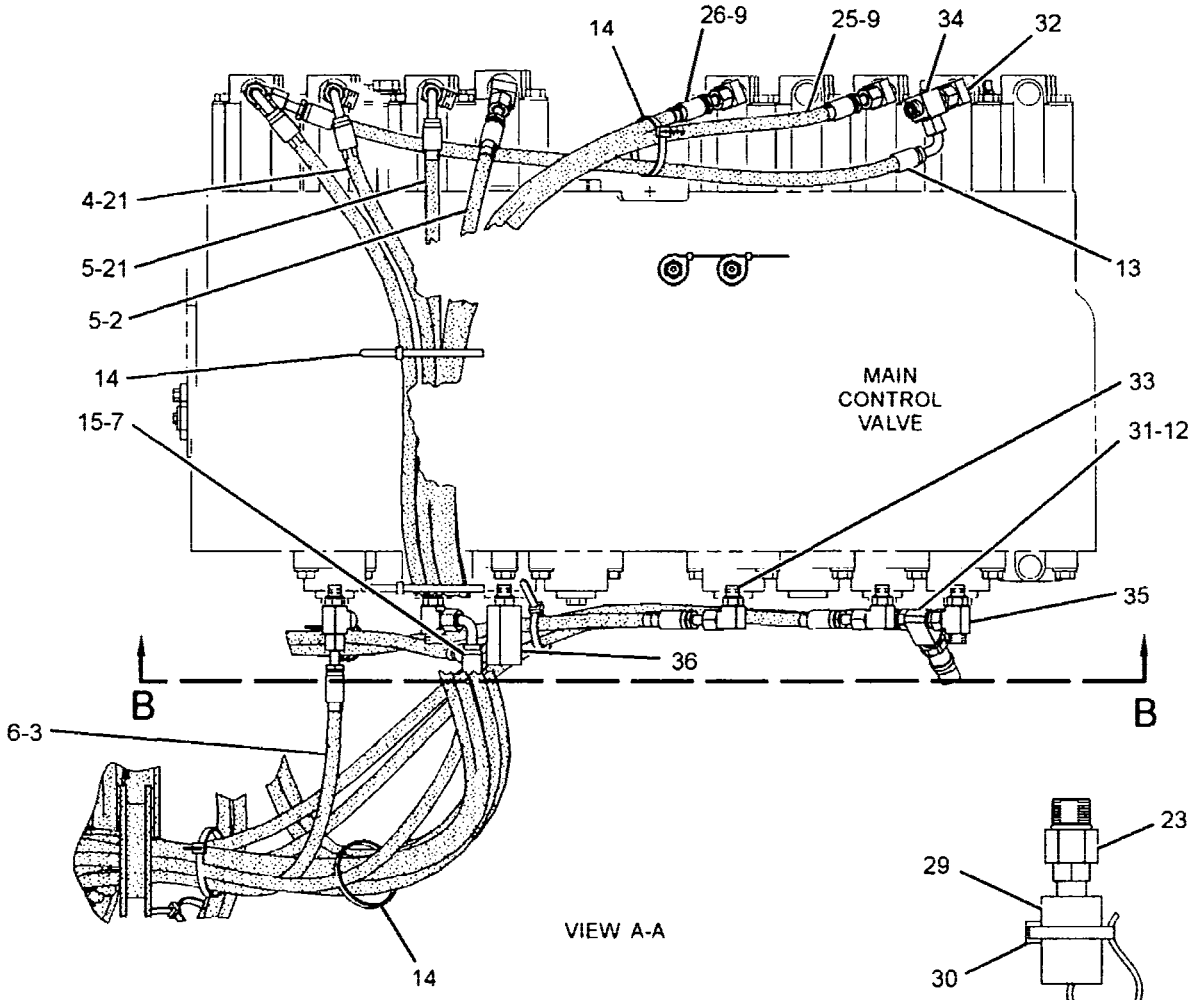

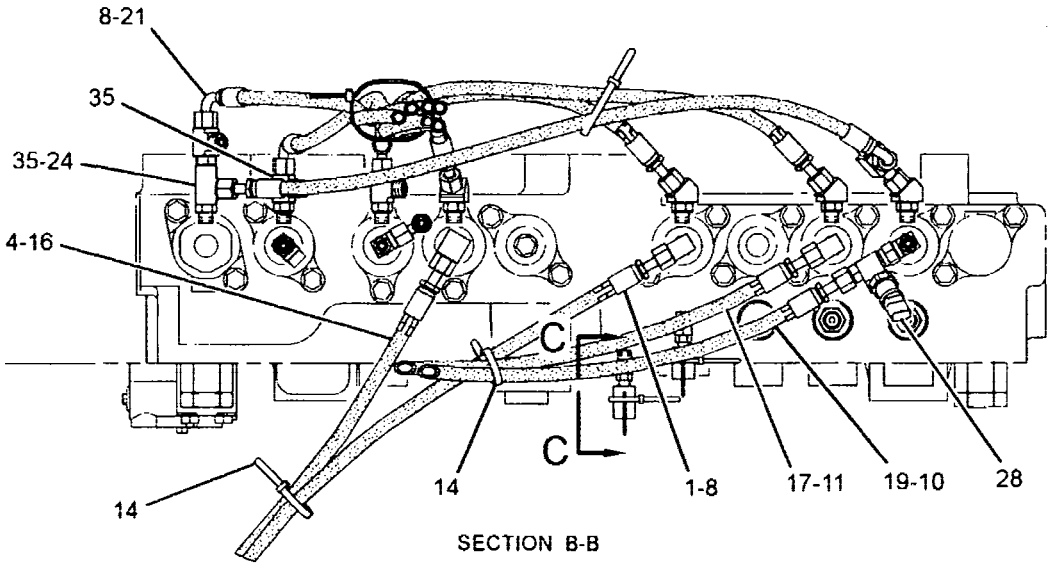

GRAPHIC #2 **<END>** g01429156

HYDRAULIC SYSTEM

302-2985 LINES GP-PILOT–CONTROL VALVE

S/N: YEE1-UP

PART OF 297-0243 HYDRAULIC AR

SMCS-5057, 5059 **i02903118**

NOTE	REF NO	GRAPHIC REF	PART NUMBER	QTY	PART NAME 1 2 3 4 5 6 (PRODUCT LEVEL)	SEE PAGE
I	1	3	**4I-0800**	1	HOSE AS	
	2	2	**278-6796**	1	HOSE AS	
I	3	2	**4I-0821**	1	HOSE AS	
I	4	3	**4I-1704**	1	HOSE AS	
I	5	2	**4I-1780**	1	HOSE AS	
I	6	1	**4I-3573**	1	HOSE AS	
	7	3	**4I-3941**	2	FITTING AS	
					(EACH INCLUDES)	
		3	**6V-8553**	1	NUT (11/16-16-THD)	
I	9	3	**4I-5795**	2	HOSE AS	
	10	2	**4I-9521**	4	BAND-MARKER (RED, L1)	
	11	1,2	**4I-9522**	8	BAND-MARKER (YELLOW, L2)	
	12	1,2,3	**4I-9523**	14	BAND-MARKER (BLUE, L3)	
	13	1,3	**4I-9524**	6	BAND-MARKER (BROWN, L4)	
	14	1,2	**4I-9525**	2	BAND-MARKER (ORANGE, R1)	
	15	2	**4I-9527**	2	BAND-MARKER (GREEN, R3)	
I	16	2	**5I-4076**	3	HOSE AS	
I	17	3	**5I-4396**	1	HOSE AS	
I	18	2	**5I-8825**	1	HOSE AS	
	19	1,2,3	**7K-1181**	17	STRAP-CABLE	
I	21	2	**087-4532**	1	HOSE AS	
	22	1	**087-4587**	1	GROMMET	
I	23	2	**087-5759**	1	HOSE AS	
I	24	2	**087-5764**	1	HOSE AS	
I	25	2,3	**087-5771**	2	HOSE AS	
I	26	3	**087-5782**	1	HOSE AS	
	27	1	**103-1384**	1	GUARD	
I	28	2	**104-8803**	1	HOSE AS	
I	29	3	**111-0985**	1	HOSE AS	
I	30	1	**111-6752**	1	HOSE AS	
I	31	2	**113-6761**	1	HOSE AS	
I	32	2	**115-3667**	1	HOSE AS	
Y	33	3	**123-2430**	1	VALVE GP-SHUTTLE	811
I	34	2	**124-1266**	1	HOSE AS	
I	35	2	**131-9493**	1	HOSE AS	
	36	1,2	**133-5813**	10	BAND-MARKER (GRAY, P)	
	37	2	**134-6918**	1	HOSE AS	
I	38	2	**135-8997**	1	HOSE AS	
I	39	1	**143-4254**	1	HOSE AS	
	40	3	*164-5546*	1	TEE AS	
		3	**3E-7410**	1	TEE-O-RING	
		3	**3J-1907**	1	SEAL-O-RING	
	41	2	*164-5628*	1	CONNECTOR AS	
		2	**3J-1907**	1	SEAL-O-RING	
		2	**6V-8397**	1	SEAL-O-RING	
		2	**107-6631**	1	CONNECTOR-FILTER	
	42	2	*164-5642*	1	STOPPER AS	
		2	**3J-1907**	1	SEAL-O-RING	
		2	**131-5676**	1	STOPPER	
	43	2	*164-5644*	1	ELBOW AS	
		2	**7J-9108**	1	SEAL-O-RING	
		2	**131-9534**	1	ELBOW	
Y	44	2	*164-6981*	1	ACCUMULATOR GP-HYDRAULIC (CHARGED)	444
	45	1	*177-1061*	1	ELBOW AS	
		1	**5K-9090**	1	SEAL-O-RING	
		1	**142-0038**	1	ELBOW	

HYDRAULIC SYSTEM

302-2985 LINES GP-PILOT (contd.) i02903118

NOTE	REF NO	GRAPHIC REF	PART NUMBER	QTY	PART NAME 1 2 3 4 5 6 (PRODUCT LEVEL)	SEE PAGE
	46	3	**198-2003**	2	CONNECTOR	
Y	47	2	**215-5037**	1	MANIFOLD GP-CONTROL (PILOT OIL SUPPLY)	689
	48	1	**218-1336**	1	HOSE AS	
Y	49	3	**232-4102**	1	VALVE GP-PRESSURE REDUCING (BOOM, SWING PRIORITY)	796
	50	3	**236-3051**	1	PLATE	
	51	3	**236-3052**	1	BLOCK	
	52	3	**236-3053**	1	BLOCK	
	53	3	**236-3054**	1	PLATE	
	54	1	**236-3204**	2	HOSE AS	
	55	3	**248-9469**	1	HOSE AS	
	56	2	**255-2009**	1	SUPPORT AS	
Y	57	3	**259-7732**	1	VALVE GP-SHUTTLE	814
I	58	2	**260-8079**	1	HOSE AS	
I	59	2	**266-1217**	1	HOSE AS	
I	60	2	**266-1395**	1	HOSE AS	
	61	3	*281-5898*	1	TEE AS	
		3	**3J-1907**	1	SEAL-O-RING	
		3	**6V-8398**	2	SEAL-O-RING	
		3	**153-6270**	1	TEE	
	62	3	**285-2893**	1	SUPPORT AS	
	63	3	**286-6399**	1	HOSE AS	
	64	3	**302-2880**	1	SUPPORT AS	
I	65	1	**302-3308**	1	HOSE AS	
	66	3	**309-5769**	2	SWITCH AS-PRESSURE (IMPLEMENT, SWING) (EACH INCLUDES)	
		3	**102-8802**	1	KIT-RECEPTACLE (2-PIN) (INCLUDES RECEPTACLE AS & WEDGE)	
		3	**9X-3401**	2	PIN-CONNECTOR (16-GA TO 18-GA)	
	67	3	*148-8335*	2	CONNECTOR AS (EACH INCLUDES)	
		3	**5K-9090**	1	SEAL-O-RING	
		3	**6V-8635**	1	CONNECTOR	
		3	**7M-8485**	1	SEAL-O-RING	
	68	2,3	*148-8336*	10	CONNECTOR AS (EACH INCLUDES)	
		2,3	**3J-1907**	1	SEAL-O-RING	
		2,3	**6V-8397**	1	SEAL-O-RING	
		2,3	**6V-8636**	1	CONNECTOR	
	69	3	*148-8338*	3	CONNECTOR AS (EACH INCLUDES)	
		3	**3J-1907**	1	SEAL-O-RING	
		3	**6V-8397**	1	SEAL-O-RING	
		3	**8T-0075**	1	CONNECTOR	
	70	2	*148-8339*	1	CONNECTOR AS	
		2	**6V-8716**	1	CONNECTOR	
		2	**6V-9746**	1	SEAL-O-RING	
		2	**7M-8485**	1	SEAL-O-RING	
	71	2,3	*148-8340*	5	CONNECTOR AS (EACH INCLUDES)	
		2,3	**3K-0360**	1	SEAL-O-RING	
		2,3	**6V-8398**	1	SEAL-O-RING	
		2,3	**6V-8639**	1	CONNECTOR	
	72	2,3	*148-8353*	8	ELBOW AS (EACH INCLUDES)	
		2,3	**3J-1907**	1	SEAL-O-RING	
		2,3	**6V-8397**	1	SEAL-O-RING	
		2,3	**6V-9001**	1	ELBOW	
	73	2,3	*148-8378*	5	ELBOW AS (EACH INCLUDES)	

302-2985 LINES GP-PILOT (contd.)

i02903118

NOTE	REF NO	GRAPHIC REF	PART NUMBER	QTY	PART NAME 1 2 3 4 5 6 (PRODUCT LEVEL)	SEE PAGE
		2,3	3J-1907	1	SEAL-O-RING	
		2,3	6V-8397	1	SEAL-O-RING	
		2,3	6V-8724	1	ELBOW	
	74	2	148-8393	1	ELBOW AS	
		2	6V-9852	1	ELBOW	
		2	7J-9108	1	SEAL-O-RING	
	75	2,3	148-8407	11	PLUG AS	
					(EACH INCLUDES)	
		2,3	3J-1907	1	SEAL-O-RING	
		2,3	9S-4191	1	PLUG-O-RING	
	76	2	148-8414	1	REDUCER AS	
		2	6V-8943	1	REDUCER	
		2	7J-9108	1	SEAL-O-RING	
	77	3	148-8433	1	TEE AS	
		3	6V-8397	2	SEAL-O-RING	
		3	6V-9836	1	TEE-SWIVEL	
	78	2,3	148-8435	3	TEE AS	
					(EACH INCLUDES)	
		2,3	3J-1907	1	SEAL-O-RING	
		2,3	6V-8397	2	SEAL-O-RING	
		2,3	6V-8781	1	TEE-FACE SEAL	
	79	2,3	150-3036	2	ELBOW AS	
					(EACH INCLUDES)	
		2,3	3J-1907	1	SEAL-O-RING	
		2,3	6V-8397	1	SEAL-O-RING	
		2,3	8T-1905	1	ELBOW	
	80	3	153-6258	1	CONNECTOR AS	
		3	3J-1907	1	SEAL-O-RING	
		3	6V-8398	1	SEAL-O-RING	
		3	8T-5050	1	CONNECTOR	
	81	3	164-5589	1	CONNECTOR AS	
		3	3J-1907	1	SEAL-O-RING	
		3	6V-8397	1	SEAL-O-RING	
		3	8C-0597	1	CONNECTOR	
	82	3	3J-1907	2	SEAL-O-RING	
	83	1	6D-1641	1	CLIP	
	84	2	6D-4246	1	CLIP	
	85	1,3	6K-8178	2	CLIP	
	86	2	6V-0357	1	SEAL-O-RING	
	87	3	6V-8397	4	SEAL-O-RING	
	88	2	6V-9829	1	CAP AS	
M	89	3	7X-0818	2	BOLT (M8X1.25X45-MM)	
M	90	3	7X-2621	1	BOLT (M10X1.5X12-MM)	
	91	1,2,3	8T-4121	13	WASHER-HARD (11X21X2.5-MM THK)	
M	92	2	8T-4136	1	BOLT (M10X1.5X25-MM)	
M	93	1,2,3	8T-4137	5	BOLT (M10X1.5X20-MM)	
M	94	3	8T-4172	2	BOLT (M10X1.5X80-MM)	
M	95	2	8T-4182	2	BOLT (M10X1.5X45-MM)	
M	96	2	8T-4184	2	BOLT (M12X1.75X45-MM)	
M	97	3	8T-4189	4	BOLT (M8X1.25X20-MM)	
M	98	3	8T-4191	4	BOLT (M10X1.5X16-MM)	
	99	2	8T-4223	2	WASHER-HARD (13.5X25.5X3-MM THK)	
	100	3	8T-4224	4	WASHER-HARD (8.8X16X2-MM THK)	
M	101	3	8T-6870	2	BOLT (M8X1.25X70-MM)	
M	102	3	8T-6912	2	BOLT (M8X1.25X50-MM)	

I-REFER TO HYDRAULIC INFORMATION SYSTEM
M-METRIC PART
Y-SEPARATE ILLUSTRATION

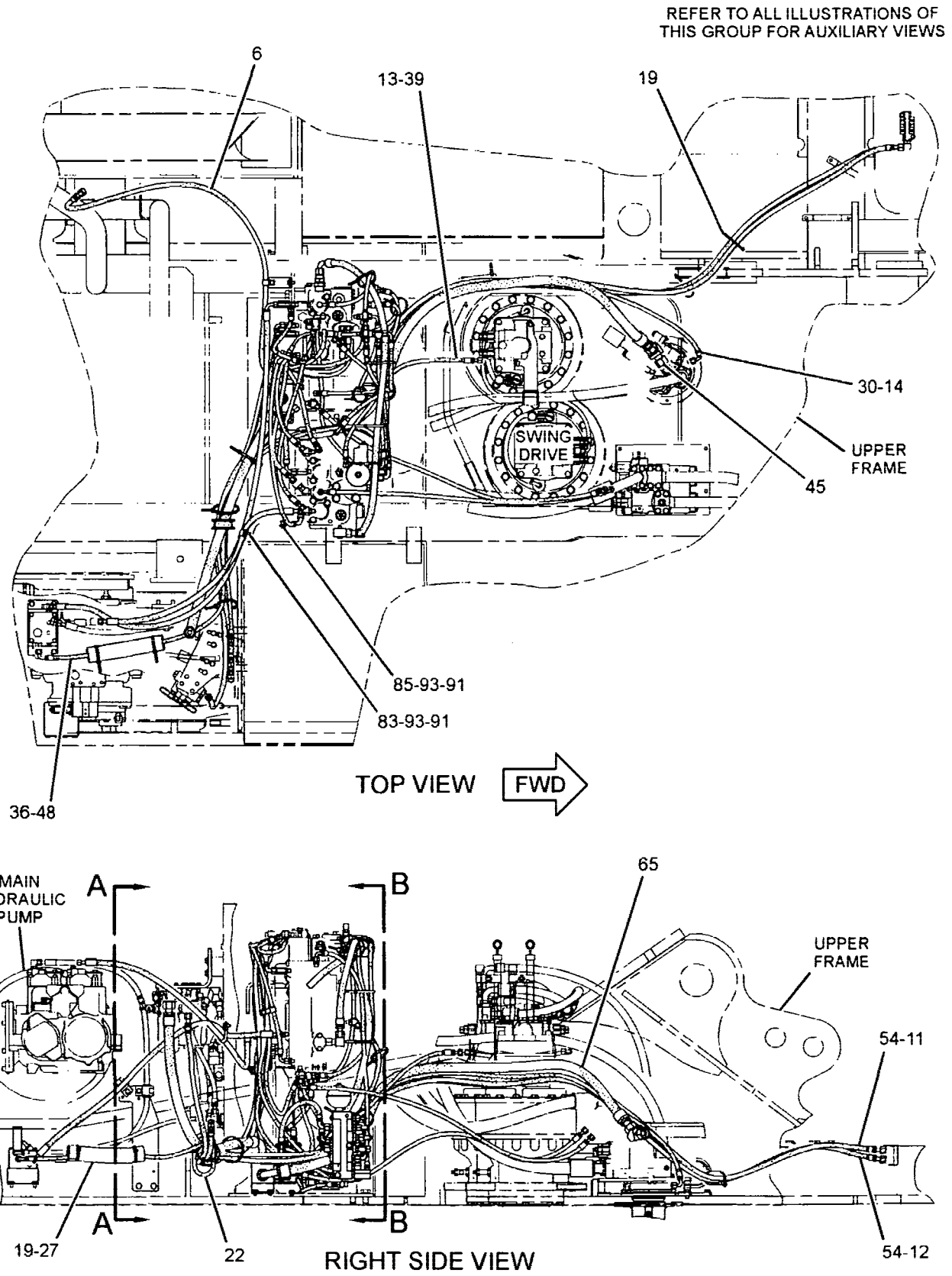

GRAPHIC #1 g01482613

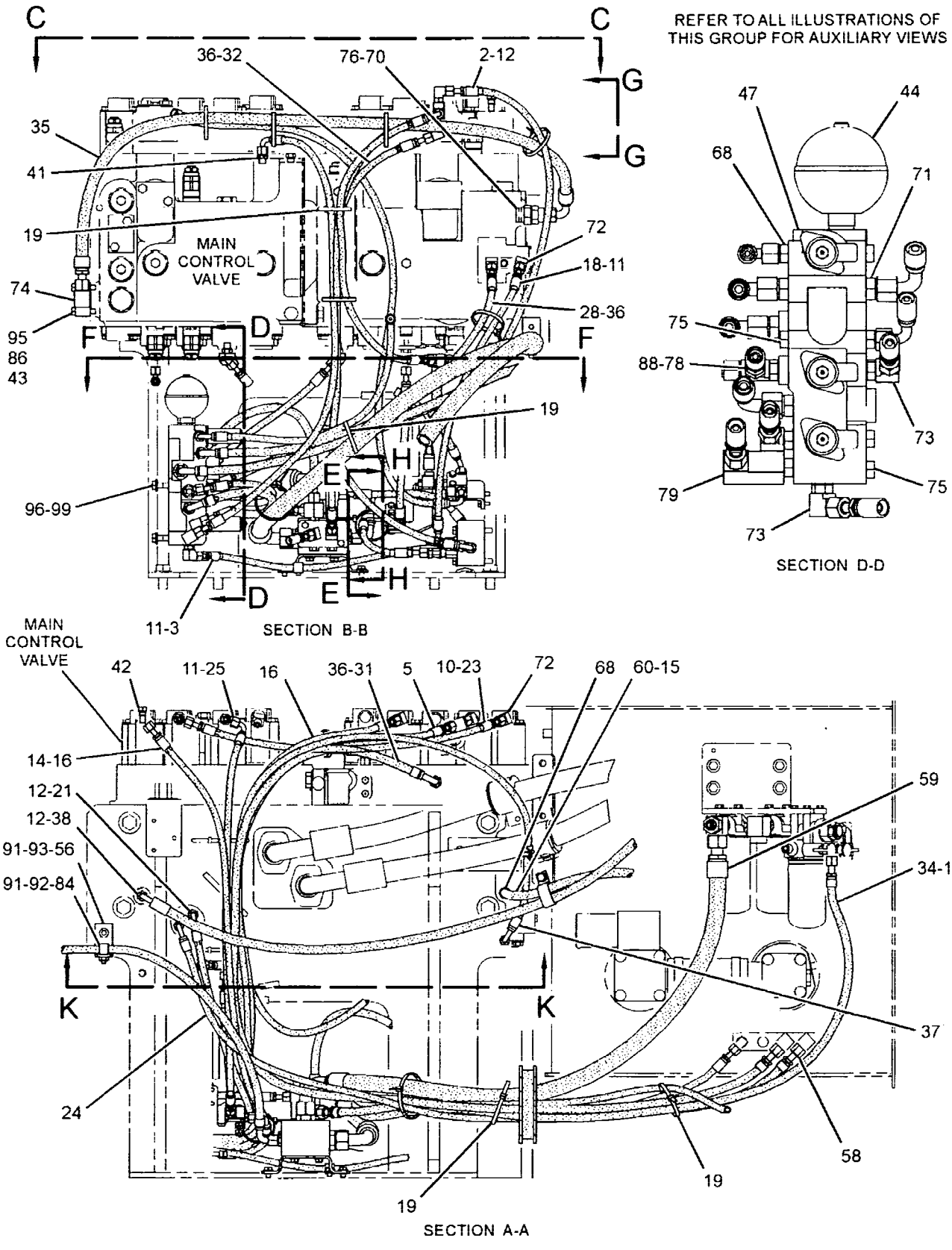

GRAPHIC #2

g01482614

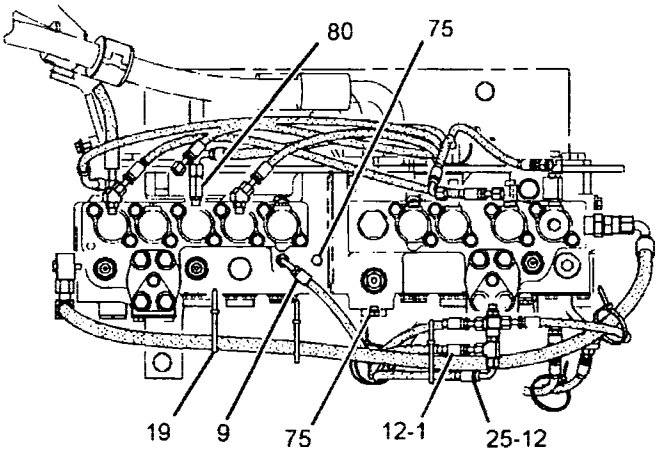

VIEW C-C

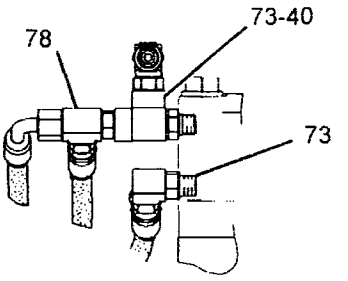

VIEW G-G

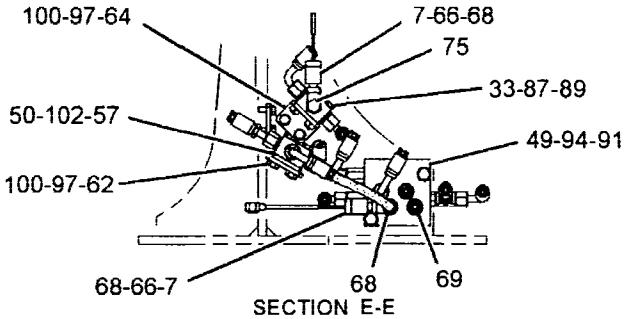

SECTION E-E

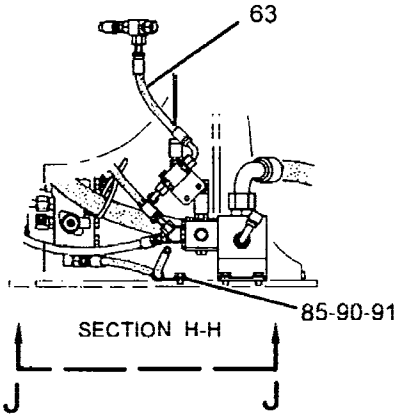

SECTION H-H

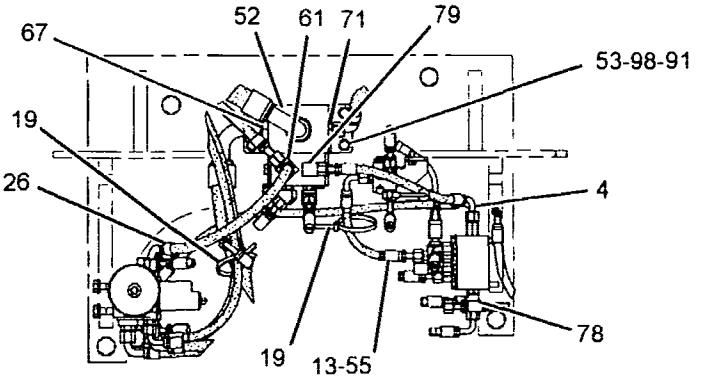

SECTION F-F

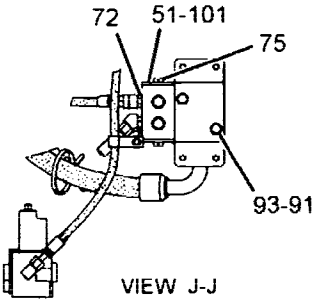

VIEW J-J

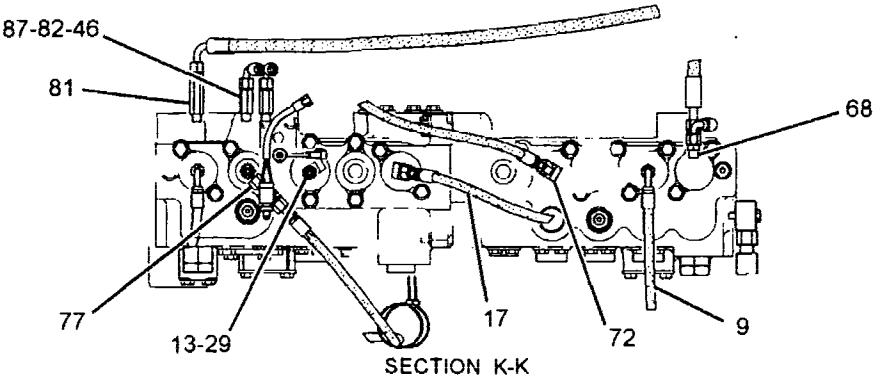

SECTION K-K

GRAPHIC #3

<END>

g01482615

HYDRAULIC SYSTEM

302-3097 LINES GP-PILOT–PUMP, MOTOR

S/N: YEE1-UP

PART OF 297-0243 HYDRAULIC AR

SMCS-5057, 5059 **i02975181**

NOTE	REF NO	GRAPHIC REF	PART NUMBER	QTY	PART NAME 1 2 3 4 5 6 (PRODUCT LEVEL)	SEE PAGE
	1	1	4I-9527	2	BAND-MARKER (GREEN, R3)	
	2	1	6V-0852	5	CAP-DUST	
I	3	1	7Y-8379	1	HOSE AS	
	4	1	164-6874	1	FITTING AS-ELBOW	
		1	3J-1907	1	SEAL-O-RING	
		1	085-7356	1	FITTING	
Y	5	1	171-0188	1	VALVE GP-SOLENOID (NEG FLOW CONT, PROPN RED VALVE)	822
	6	1	221-8912	2	FLANGE	
	7	1	239-1756	1	SUPPORT AS	
I	8	1	245-5096	1	HOSE AS	
	9	1	260-2180	2	SENSOR AS-PRESSURE (PUMP OUTPUT) (EACH INCLUDES)	
		1	095-1777	1	RING-BACKUP	
		1	260-2191	1	SEAL-O-RING	
I	10	1	272-4138	1	HOSE AS	
	11	1	302-2986	1	SUPPORT AS	
	12	1	322-8727	1	ELBOW AS	
		1	3J-1907	1	SEAL-O-RING	
		1	6V-8398	1	SEAL-O-RING	
		1	322-8728	1	ELBOW	
	13	1	148-8338	3	CONNECTOR AS (EACH INCLUDES)	
		1	3J-1907	1	SEAL-O-RING	
		1	6V-8397	1	SEAL-O-RING	
		1	8T-0075	1	CONNECTOR	
	14	1	148-8345	1	CONNECTOR AS	
		1	2M-9780	1	SEAL-O-RING	
		1	6V-8398	1	SEAL-O-RING	
		1	6V-8638	1	CONNECTOR	
	15	1	148-8362	1	ELBOW AS	
		1	3D-2824	1	SEAL-O-RING	
		1	5K-9090	1	SEAL-O-RING	
		1	8T-6684	1	ELBOW	
	16	1	148-8378	3	ELBOW AS (EACH INCLUDES)	
		1	3J-1907	1	SEAL-O-RING	
		1	6V-8397	1	SEAL-O-RING	
		1	6V-8724	1	ELBOW	
	17	1	148-8407	2	PLUG AS (EACH INCLUDES)	
		1	3J-1907	1	SEAL-O-RING	
		1	9S-4191	1	PLUG-O-RING	
	18	1	150-4027	1	TEE AS	
		1	3E-2310	1	TEE	
		1	3J-1907	1	SEAL-O-RING	
		1	6V-8397	1	SEAL-O-RING	
	19	1	164-5567	5	COUPLER AS-QUICK DISCONNECT (EACH INCLUDES)	
		1	3J-1907	1	SEAL-O-RING	
		1	6V-3965	1	COUPLER AS-QUICK DISCONNECT	
	20	1	5P-7462	2	CLIP (SLOT)	
	21	1	5P-7463	2	CLIP (TAB)	
	22	1	5P-7468	1	CLIP (SLOT)	
	23	1	5P-7469	1	CLIP (TAB)	
	24	1	6V-0683	2	GROMMET	

302-3097 LINES GP-PILOT (contd.) i02975181

NOTE	REF NO	GRAPHIC REF	PART NUMBER	QTY	PART NAME 1 2 3 4 5 6 (PRODUCT LEVEL)	SEE PAGE
	25	1	8T-2525	1	GROMMET	
	26	1	8T-4121	6	WASHER-HARD (11X21X2.5-MM THK)	
M	27	1	8T-4137	6	BOLT (M10X1.5X20-MM)	
M	28	1	8T-4139	2	BOLT (M12X1.75X30-MM)	
M	29	1	8T-4177	4	BOLT (M8X1.25X90-MM)	
M	30	1	8T-4189	4	BOLT (M8X1.25X20-MM)	
	31	1	8T-4223	3	WASHER-HARD (13.5X25.5X3-MM THK)	
	32	1	8T-4224	8	WASHER-HARD (8.8X16X2-MM THK)	
M	33	1	8T-4956	1	BOLT (M12X1.75X35-MM)	

I-REFER TO HYDRAULIC INFORMATION SYSTEM
M-METRIC PART
Y-SEPARATE ILLUSTRATION

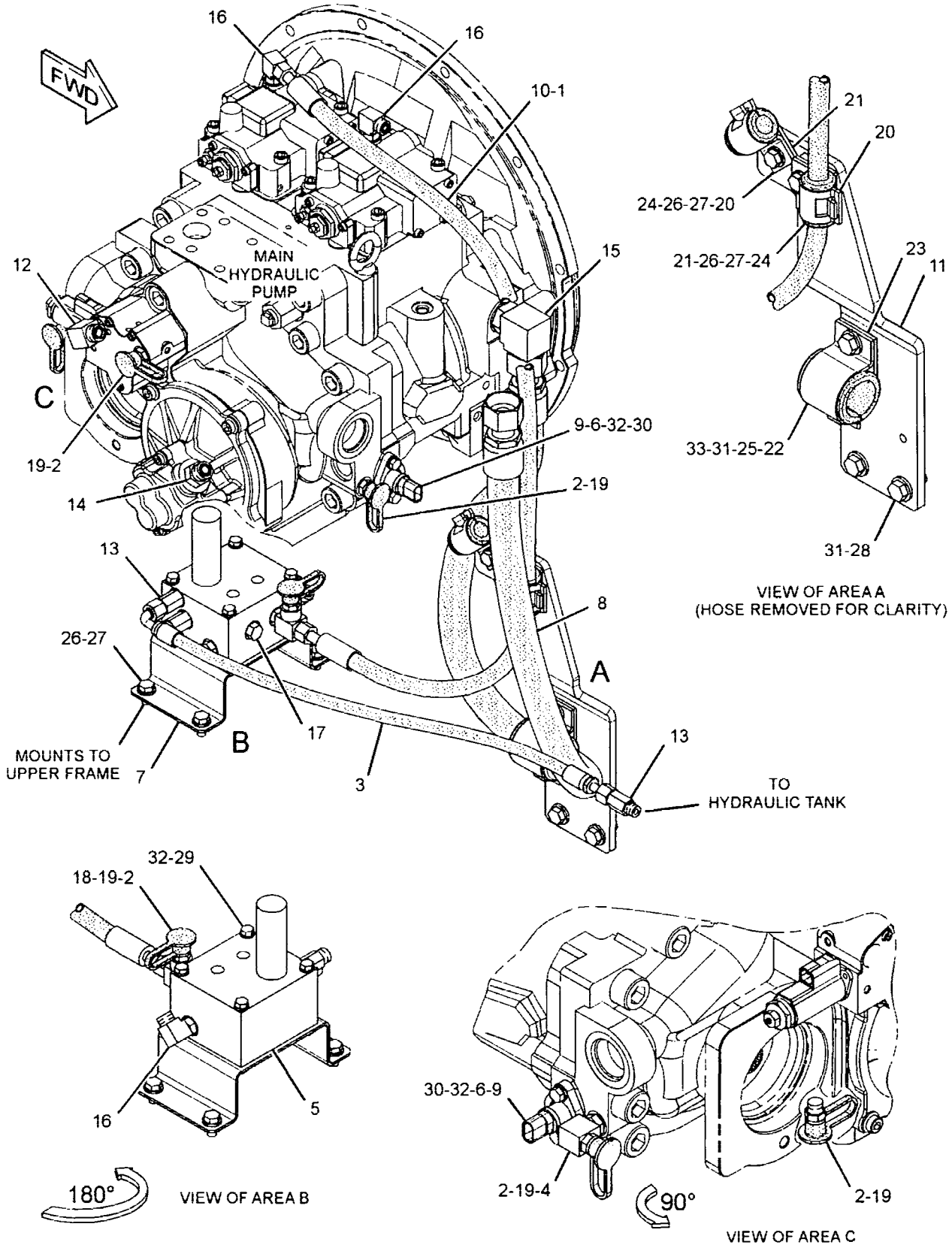

GRAPHIC #1 **<END>** g01474652

302-3140 LINES GP-PILOT–BOOM LOWERING CONTROL

S/N: YEE1-UP

PART OF 297-0252 VALVE AR-CHECK & RELIEF

AN ATTACHMENT

SMCS-5057, 5059 i02868125

NOTE	REF NO	GRAPHIC REF	PART NUMBER	QTY	PART NAME 1 2 3 4 5 6 (PRODUCT LEVEL)	SEE PAGE
	1	1	7K-1181	4	STRAP-CABLE	
I	2	1	7Y-8309	1	HOSE AS	
	3	1	296-7278	1	HOSE AS	
	4	1	319-9887	1	HOSE AS	
	5	1	*148-8318*	1	CONNECTOR AS	
		1	3K-0360	1	SEAL-O-RING	
		1	6V-8397	1	SEAL-O-RING	
		1	6V-8634	1	CONNECTOR	
	6	1	*148-8367*	2	ELBOW AS	
					(EACH INCLUDES)	
		1	6V-8397	1	SEAL-O-RING	
		1	6V-9850	1	ELBOW	

I-REFER TO HYDRAULIC INFORMATION SYSTEM

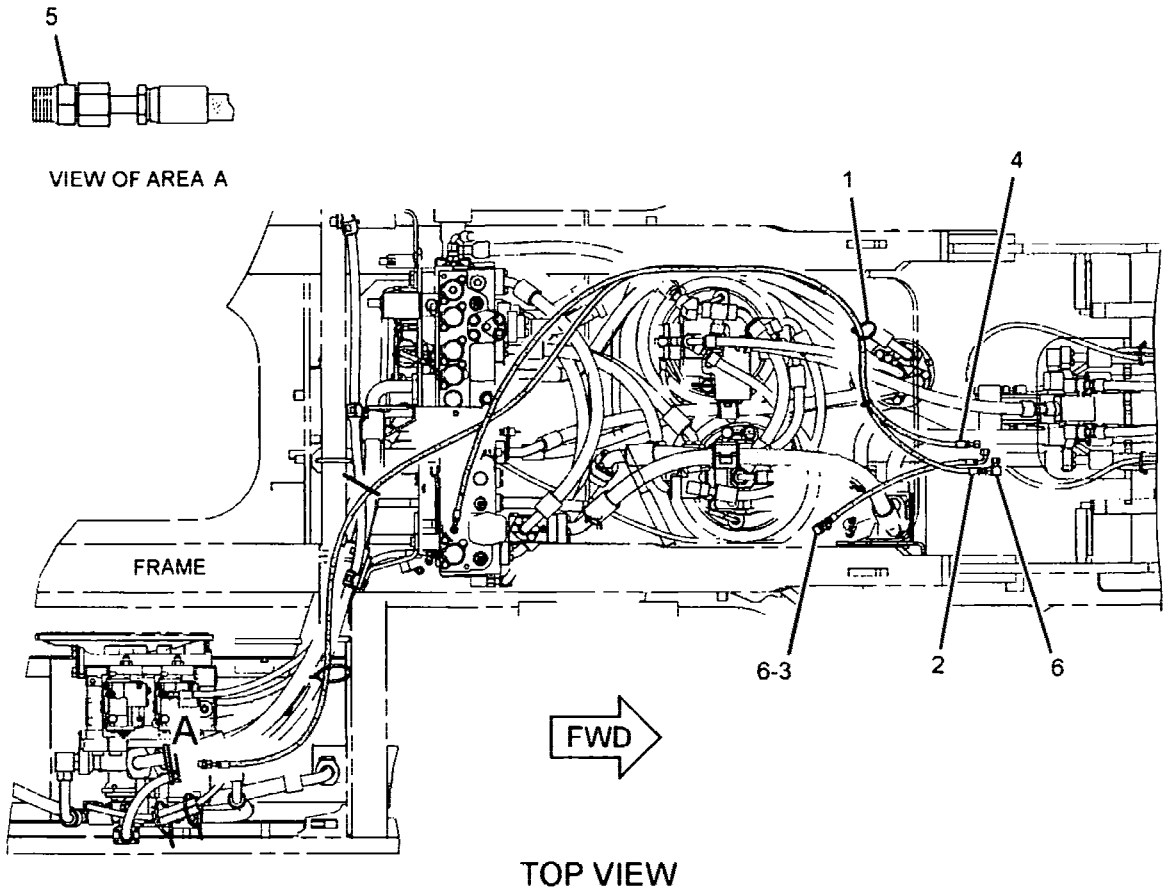

TOP VIEW

GRAPHIC #1 <END> g01457031

HYDRAULIC SYSTEM

302-3142 LINES GP-PILOT–BOOM FLOAT

S/N: YEE1-UP
PART OF 294-1277 CONTROL AR-AUXILIARY
AN ATTACHMENT

SMCS-5057, 5059 **i02918976**

NOTE	REF NO	GRAPHIC REF	PART NUMBER	QTY	PART NAME 1 2 3 4 5 6 (PRODUCT LEVEL)	SEE PAGE
I	1	1	**4I-1034**	1	HOSE AS	
I	2	1	**4I-8799**	1	HOSE AS	
	3	1	**4I-9527**	2	BAND-MARKER (GREEN, R3)	
	4	1	**5I-4376**	1	FITTING	
I	5	1	**5I-8825**	1	HOSE AS	
I	6	1	**7I-8252**	1	HOSE AS	
	7	1	**7K-1181**	4	STRAP-CABLE	
I	8	1	**087-4405**	1	HOSE AS	
	9	1	**133-5813**	2	BAND-MARKER (GRAY, P)	
	10	1	*164-5547*	1	CONNECTOR AS	
		1	**3J-1907**	1	SEAL-O-RING	
		1	**4I-1694**	1	CONNECTOR	
	11	1	*164-5629*	1	FITTING AS	
		1	**3J-1907**	1	SEAL-O-RING	
		1	**108-7516**	1	FITTING	
Y	12	1	**185-0472**	1	VALVE GP-SOLENOID	823
Y	13	1	**255-5745**	1	VALVE GP-FLOW CONTROL	758
	14	1	**296-7278**	1	HOSE AS	
	15	1	**297-4483**	1	SENSOR AS-PRESSURE (BOOM FLOAT)	
		1	**095-1516**	1	SEAL-O-RING	
I	16	1	**302-3161**	1	HOSE AS	
	17	1	**302-3162**	1	PLATE	
	18	1	**309-5769**	1	SWITCH AS-PRESSURE (BOOM FLOAT)	
		1	**102-8802**	1	KIT-RECEPTACLE (2-PIN)	
					(INCLUDES RECEPTALCE AS & WEDGE)	
		1	**9X-3401**	2	PIN-CONNECTOR (16-GA TO 18-GA)	
					–OR–	
		1	**126-1767**	2	PIN-CONNECTOR (14-GA)	
	19	1	*148-8340*	1	CONNECTOR AS	
		1	**3K-0360**	1	SEAL-O-RING	
		1	**6V-8398**	1	SEAL-O-RING	
		1	**6V-8639**	1	CONNECTOR	
	20	1	*148-8367*	1	ELBOW AS	
		1	**6V-8397**	1	SEAL-O-RING	
		1	**6V-9850**	1	ELBOW	
	21	1	*148-8378*	2	ELBOW AS	
					(EACH INCLUDES)	
		1	**3J-1907**	1	SEAL-O-RING	
		1	**6V-8397**	1	SEAL-O-RING	
		1	**6V-8724**	1	ELBOW	
	22	1	*148-8433*	2	TEE AS	
					(EACH INCLUDES)	
		1	**6V-8397**	2	SEAL-O-RING	
		1	**6V-9836**	1	TEE-SWIVEL	
	23	1	*148-8435*	1	TEE AS	
		1	**3J-1907**	1	SEAL-O-RING	
		1	**6V-8397**	2	SEAL-O-RING	
		1	**6V-8781**	1	TEE-FACE SEAL	
	24	1	*150-4043*	1	CONNECTOR AS	
		1	**3J-1907**	1	SEAL-O-RING	
		1	**6V-8398**	1	SEAL-O-RING	
		1	**6V-9873**	1	CONNECTOR	
	25	1	**3J-1907**	1	SEAL-O-RING	
M	26	1	**5C-9553**	2	BOLT (M6X1X16-MM)	
	27	1	**6V-8397**	1	SEAL-O-RING	

302-3142 LINES GP-PILOT (contd.) i02918976

NOTE	REF NO	GRAPHIC REF	PART NUMBER	QTY	PART NAME 1 2 3 4 5 6 (PRODUCT LEVEL)	SEE PAGE
	28	1	**8T-4224**	2	WASHER-HARD (8.8X16X2-MM THK)	
M	29	1	**8T-4908**	2	BOLT (M8X1.25X25-MM)	
	30	1	**9X-8256**	2	WASHER (6.6X12X2-MM THK)	

I-REFER TO HYDRAULIC INFORMATION SYSTEM
M-METRIC PART
Y-SEPARATE ILLUSTRATION

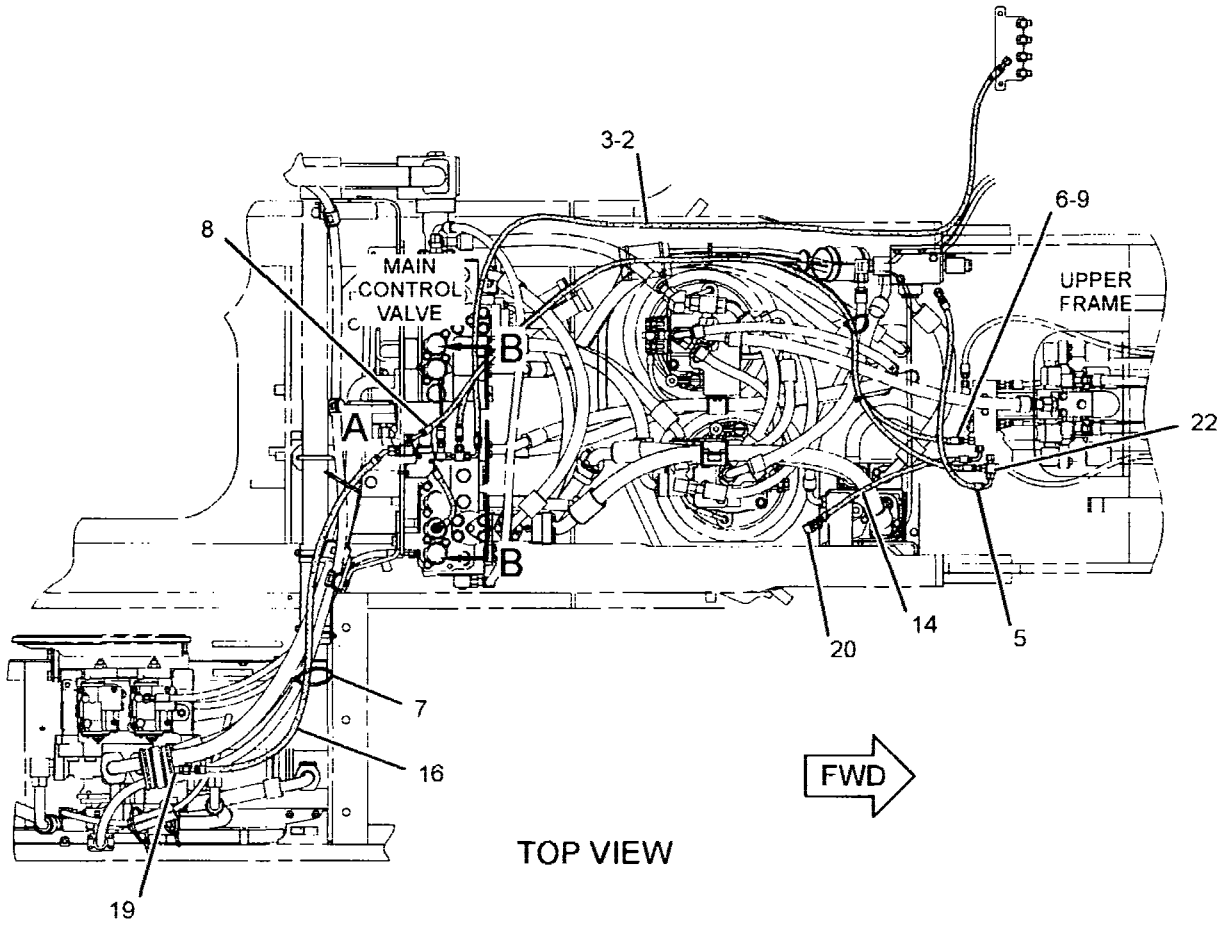

TOP VIEW

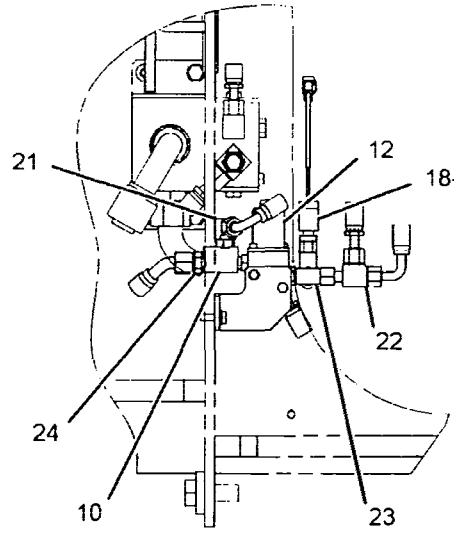

VIEW OF AREA A

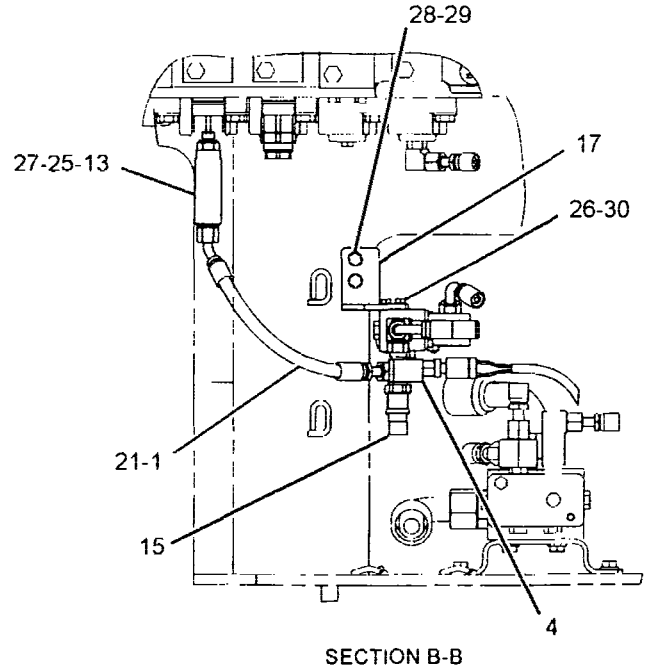

SECTION B-B

GRAPHIC #1 **<END>** g01481269

HYDRAULIC SYSTEM

302-3143 LINES GP-PILOT–SYSTEM 14, SYSTEM 17

S/N: YEE1-UP

PART OF 285-1786, 285-1788 CONTROL AR-AUXILIARY

AN ATTACHMENT

SMCS-5057, 5059 **i02903145**

NOTE	REF NO	GRAPHIC REF	PART NUMBER	QTY	PART NAME 1 2 3 4 5 6 (PRODUCT LEVEL)	SEE PAGE
I	1	2	**4I-0797**	1	HOSE AS	
I	2	1	**4I-0821**	1	HOSE AS	
I	3	1	**4I-0833**	1	HOSE AS	
I	4	1	**4I-3981**	1	HOSE AS	
Y	5	2	**4I-7836**	1	VALVE GP-FLOW CONTROL (DRAIN, BOOM II)	757
	6	1	**4I-9521**	2	BAND-MARKER (RED, L1)	
	7	1,2	**4I-9523**	8	BAND-MARKER (BLUE, L3)	
	8	2	**4I-9524**	2	BAND-MARKER (BROWN, L4)	
	9	1	**4I-9525**	2	BAND-MARKER (ORANGE, R1)	
	10	1	**4I-9528**	2	BAND-MARKER (PURPLE, R4)	
I	11	2	**5I-4396**	2	HOSE AS	
	12	1	**6V-0852**	3	CAP-DUST	
	13	1,2	**7K-1181**	13	STRAP-CABLE	
I	14	2	**087-4441**	1	HOSE AS	
I	15	1	**087-5777**	1	HOSE AS	
I	16	1	**103-1399**	1	HOSE AS	
I	17	2	**104-8777**	1	HOSE AS	
I	18	1	**104-8821**	1	HOSE AS	
Y	19	2	**119-5219**	1	VALVE GP-PILOT (1-PUMP/2-PUMP, BOOM PRIORITY)	774
Y	20	1	**121-6303**	1	VALVE GP-SOLENOID (HEAVY LIFT)	821
	21	1	**124-1008**	1	GUARD	
	22	2	*164-5550*	1	TEE AS	
		2	**3J-1907**	1	SEAL-O-RING	
		2	**4I-6327**	1	TEE-ORIFICE	
		2	**6V-8397**	1	SEAL-O-RING	
	23	1	*164-6874*	2	FITTING AS-ELBOW	
					(EACH INCLUDES)	
		1	**3J-1907**	1	SEAL-O-RING	
		1	**085-7356**	1	FITTING	
	24	1	*168-1968*	1	TEE AS	
		1	**3J-1907**	1	SEAL-O-RING	
		1	**6V-8397**	1	SEAL-O-RING	
		1	**126-6872**	1	TEE	
I	25	1	**192-6775**	1	HOSE AS	
	26	1	**239-1753**	1	PLATE	
	27	2	**239-1760**	1	SUPPORT AS	
	28	1	**245-5237**	1	SUPPORT AS	
Y	29	1	**259-7430**	1	VALVE GP-SOLENOID (PRESSURE REDUCING)	828
I	30	1	**272-4137**	1	HOSE AS	
I	31	2	**272-4139**	1	HOSE AS	
Y	32	1	**297-0641**	1	VALVE GP-PUMP CONTROL (NEGATIVE FLOW CONTROL)	797
	33	1,2	*148-8336*	5	CONNECTOR AS	
					(EACH INCLUDES)	
		1,2	**3J-1907**	1	SEAL-O-RING	
		1,2	**6V-8397**	1	SEAL-O-RING	
		1,2	**6V-8636**	1	CONNECTOR	
	34	1,2	*148-8353*	2	ELBOW AS	
					(EACH INCLUDES)	
		1,2	**3J-1907**	1	SEAL-O-RING	
		1,2	**6V-8397**	1	SEAL-O-RING	
		1,2	**6V-9001**	1	ELBOW	
	35	1	*148-8367*	1	ELBOW AS	
		1	**6V-8397**	1	SEAL-O-RING	
		1	**6V-9850**	1	ELBOW	
	36	1	*148-8374*	1	ELBOW AS	

HYDRAULIC SYSTEM

302-3143 LINES GP-PILOT (contd.) i02903145

NOTE	REF NO	GRAPHIC REF	PART NUMBER	QTY	PART NAME 1 2 3 4 5 6 (PRODUCT LEVEL)	SEE PAGE
		1	3K-0360	1	SEAL-O-RING	
		1	6V-8397	1	SEAL-O-RING	
		1	6V-8723	1	ELBOW	
	37	1,2	148-8378	8	ELBOW AS	
					(EACH INCLUDES)	
		1,2	3J-1907	1	SEAL-O-RING	
		1,2	6V-8397	1	SEAL-O-RING	
		1,2	6V-8724	1	ELBOW	
	38	2	148-8407	1	PLUG AS	
		2	3J-1907	1	SEAL-O-RING	
		2	9S-4191	1	PLUG-O-RING	
	39	1	148-8433	1	TEE AS	
		1	6V-8397	2	SEAL-O-RING	
		1	6V-9836	1	TEE-SWIVEL	
	40	1,2	148-8435	3	TEE AS	
					(EACH INCLUDES)	
		1,2	3J-1907	1	SEAL-O-RING	
		1,2	6V-8397	2	SEAL-O-RING	
		1,2	6V-8781	1	TEE-FACE SEAL	
	41	1	150-4027	1	TEE AS	
		1	3E-2310	1	TEE	
		1	3J-1907	1	SEAL-O-RING	
		1	6V-8397	1	SEAL-O-RING	
	42	2	153-6248	1	ADAPTER AS	
		2	6V-8397	1	SEAL-O-RING	
		2	8T-6663	1	ADAPTER-PORT	
	43	1	164-5567	3	COUPLER AS-QUICK DISCONNECT	
					(EACH INCLUDES)	
		1	3J-1907	1	SEAL-O-RING	
		1	6V-3965	1	COUPLER AS-QUICK DISCONNECT	
	44	1	164-5605	1	CONNECTOR AS	
		1	3K-0360	1	SEAL-O-RING	
		1	6V-8397	1	SEAL-O-RING	
		1	8T-0076	1	CONNECTOR	
	45	2	164-5609	1	ELBOW AS	
		2	3J-1907	1	SEAL-O-RING	
		2	8T-2335	1	ELBOW	
	46	1	164-9869	1	CONNECTOR AS	
		1	3J-1907	1	SEAL-O-RING	
		1	6V-8397	1	SEAL-O-RING	
		1	9X-2297	1	CONNECTOR	
	47	2	3G-8054	2	CLIP (TAB)	
	48	2	3G-8057	2	CLIP (SLOT)	
	49	2	3J-1907	1	SEAL-O-RING	
	50	2	6V-0974	2	GROMMET	
	51	2	6V-8397	1	SEAL-O-RING	
M	52	1	8T-3647	2	BOLT (M8X1.25X80-MM)	
	53	2	8T-4121	8	WASHER-HARD (11X21X2.5-MM THK)	
M	54	2	8T-4137	6	BOLT (M10X1.5X20-MM)	
M	55	1	8T-4138	2	BOLT (M6X1X20-MM)	
M	56	1	8T-4139	4	BOLT (M12X1.75X30-MM)	
M	57	2	8T-4185	2	BOLT (M10X1.5X50-MM)	
	58	1	8T-4223	4	WASHER-HARD (13.5X25.5X3-MM THK)	
	59	1	8T-4224	2	WASHER-HARD (8.8X16X2-MM THK)	
	60	1	9X-8256	2	WASHER (6.6X12X2-MM THK)	

I-REFER TO HYDRAULIC INFORMATION SYSTEM
M-METRIC PART
Y-SEPARATE ILLUSTRATION

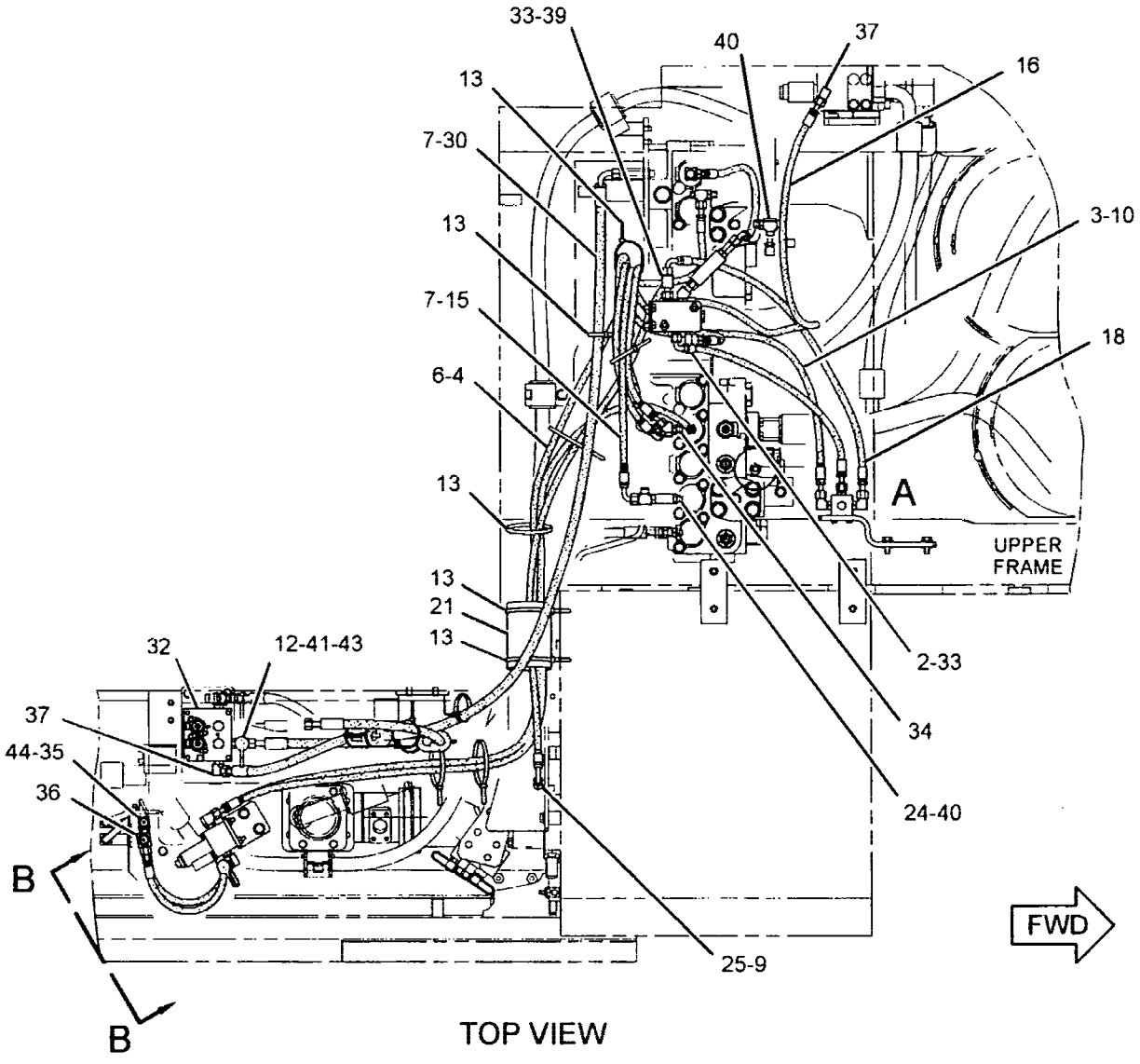

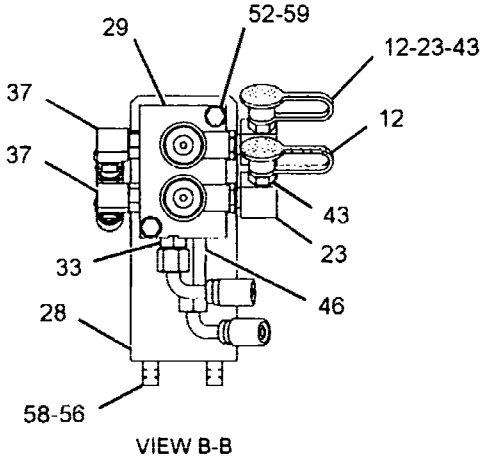

VIEW B-B

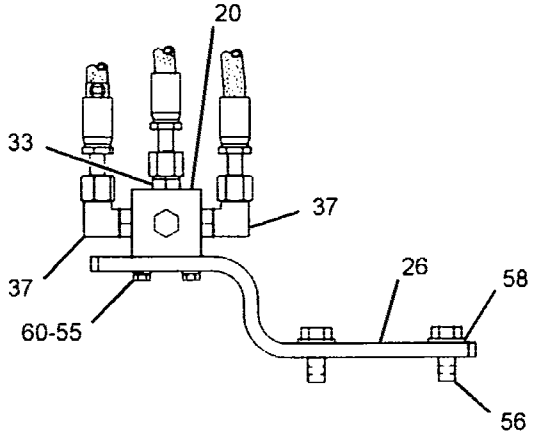

VIEW OF AREA A

GRAPHIC #1 g01465908

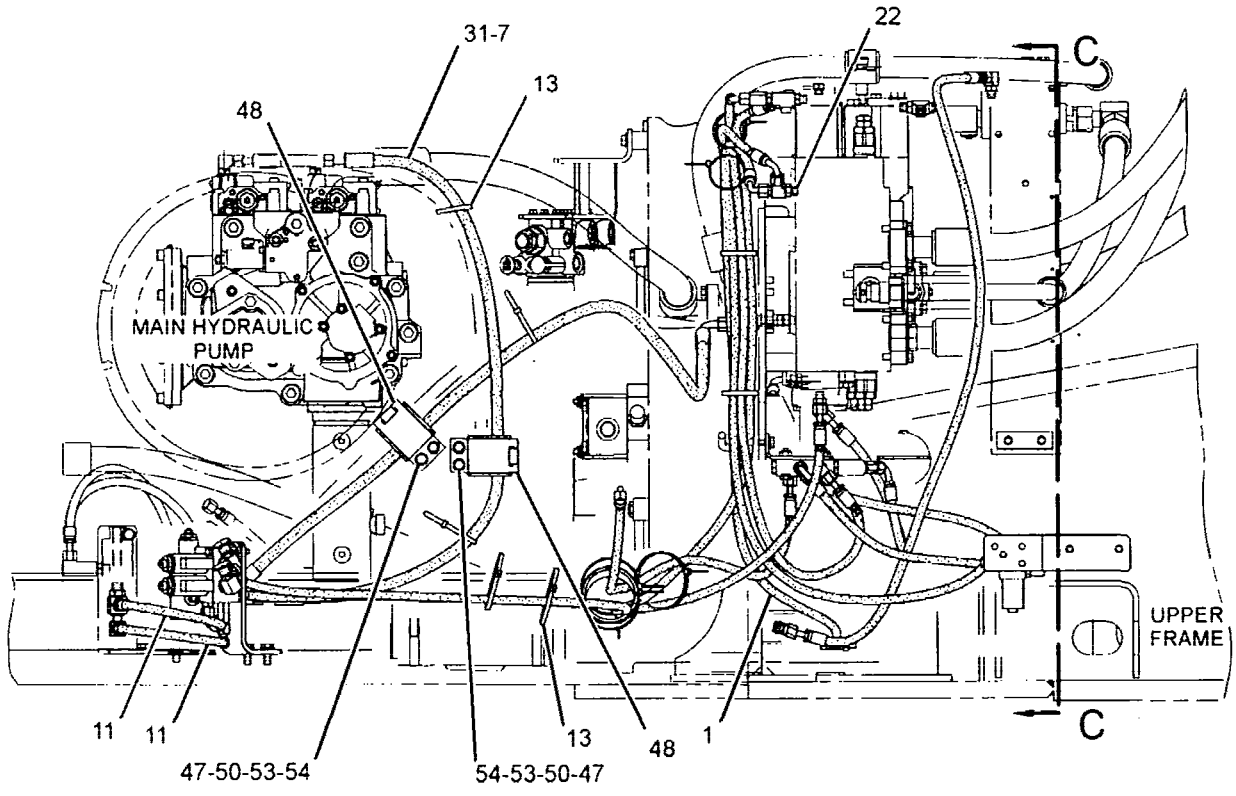

RIGHT SIDE VIEW

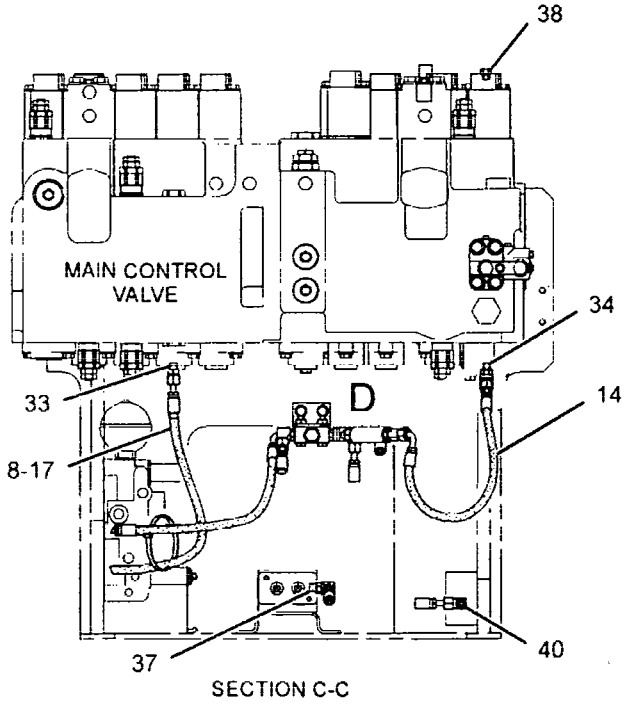

SECTION C-C

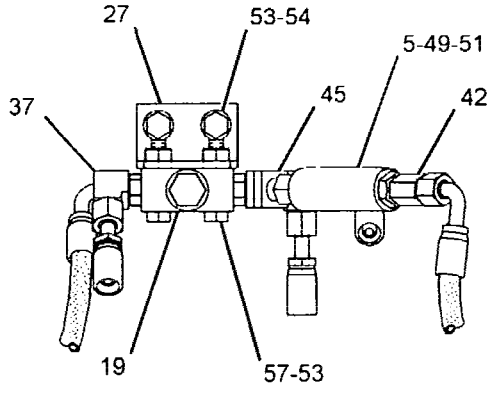

VIEW OF AREA D

GRAPHIC #2 **<END>** g01465910

HYDRAULIC SYSTEM

302-3147 LINES GP-PILOT–PRIMARY

S/N: YEE1-UP

PART OF 310-0013, 310-0014, 310-0015, 310-0016, 310-0017 CONTROL AR-AUXILIARY AN ATTACHMENT

SMCS-5057, 5059 **i02845025**

NOTE	REF NO	GRAPHIC REF	PART NUMBER	QTY	PART NAME 1 2 3 4 5 6 (PRODUCT LEVEL)	SEE PAGE
I	1	1	**4I-1760**	2	HOSE AS	
	2	1	**4I-9526**	2	BAND-MARKER (WHITE, R2)	
	3	1	**4I-9527**	2	BAND-MARKER (GREEN, R3)	
I	4	1	**7I-8252**	1	HOSE AS	
	5	1	**7K-1181**	1	STRAP-CABLE	
	6	1	**168-9759**	1	BLOCK	
I	7	1	**296-7087**	1	HOSE AS	
	8	1	**296-7088**	1	PLATE AS	
	9	1	*148-8336*	2	CONNECTOR AS	
					(EACH INCLUDES)	
		1	**3J-1907**	1	SEAL-O-RING	
		1	**6V-8397**	1	SEAL-O-RING	
		1	**6V-8636**	1	CONNECTOR	
	10	1	*148-8378*	2	ELBOW AS	
					(EACH INCLUDES)	
		1	**3J-1907**	1	SEAL-O-RING	
		1	**6V-8397**	1	SEAL-O-RING	
		1	**6V-8724**	1	ELBOW	
	11	1	*148-8407*	6	PLUG AS	
					(EACH INCLUDES)	
		1	**3J-1907**	1	SEAL-O-RING	
		1	**9S-4191**	1	PLUG-O-RING	
	12	1	*148-8411*	2	PLUG AS	
					(EACH INCLUDES)	
		1	**3K-0360**	1	SEAL-O-RING	
		1	**9S-4185**	1	PLUG-O-RING	
	13	1	*148-8435*	1	TEE AS	
		1	**3J-1907**	1	SEAL-O-RING	
		1	**6V-8397**	2	SEAL-O-RING	
		1	**6V-8781**	1	TEE-FACE SEAL	
	14	1	*150-3036*	2	ELBOW AS	
					(EACH INCLUDES)	
		1	**3J-1907**	1	SEAL-O-RING	
		1	**6V-8397**	1	SEAL-O-RING	
		1	**8T-1905**	1	ELBOW	
	15	1	**6V-9829**	1	CAP AS	
	16	1	**8T-4121**	4	WASHER-HARD (11X21X2.5-MM THK)	
M	17	1	**8T-4195**	2	BOLT (M10X1.5X30-MM)	
M	18	1	**8T-4198**	2	BOLT (M10X1.5X100-MM)	

I-REFER TO HYDRAULIC INFORMATION SYSTEM
M-METRIC PART

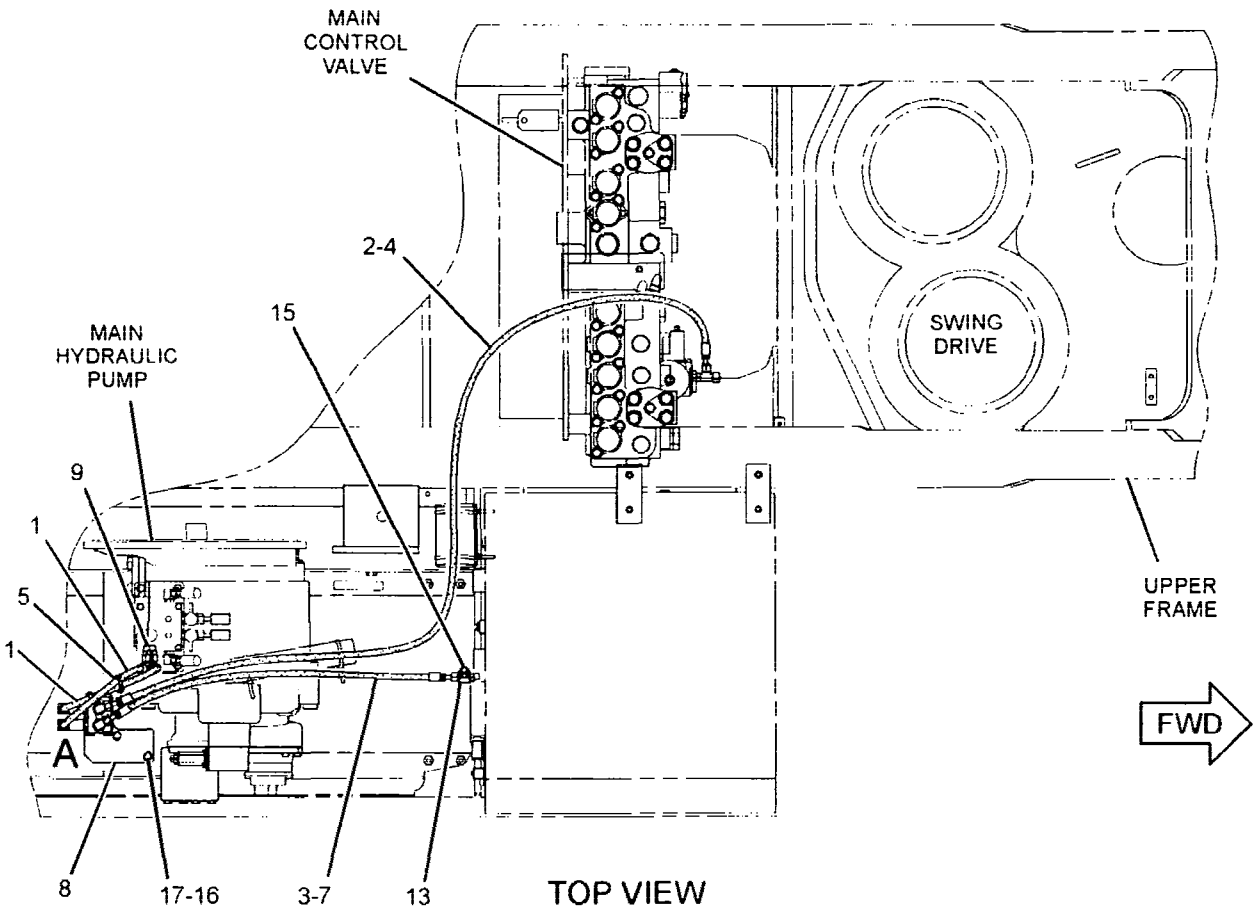

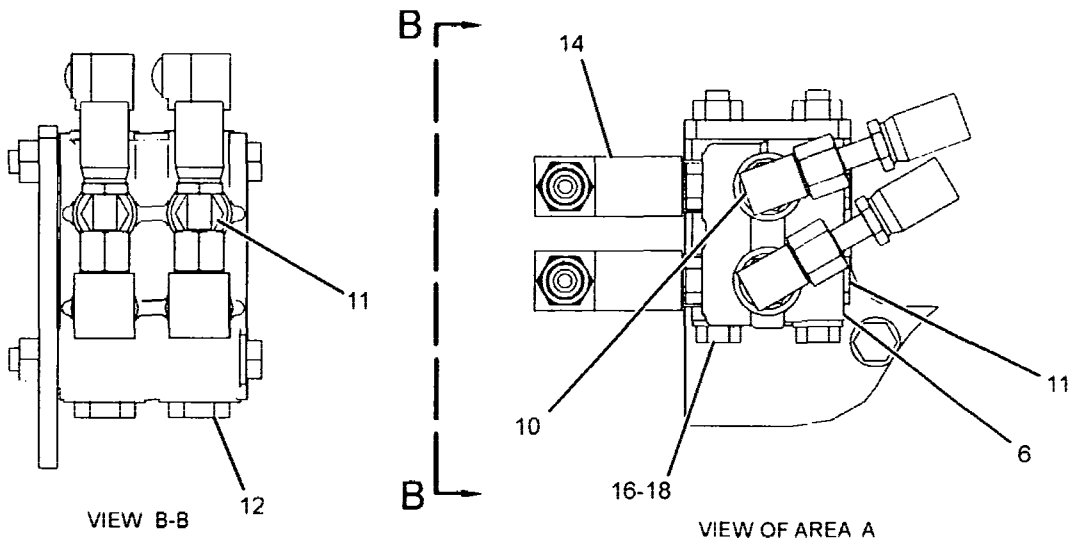

GRAPHIC #1 **<END>** g01429560

HYDRAULIC SYSTEM

302-3148 LINES GP-PILOT–MEDIUM PRESSURE AUXILIARY

S/N: YEE1-UP
PART OF 285-1789 CONTROL AR-AUXILIARY
AN ATTACHMENT

SMCS-5057, 5059 **i02845010**

NOTE	REF NO	GRAPHIC REF	PART NUMBER	QTY	PART NAME 1 2 3 4 5 6 (PRODUCT LEVEL)	SEE PAGE
I	1	1	**4I-6027**	2	HOSE AS	
	2	1	**4I-9523**	2	BAND-MARKER (BLUE, L3)	
	3	1	**4I-9526**	2	BAND-MARKER (WHITE, R2)	
	4	1	**6V-0852**	2	CAP-DUST	
M	5	1	**105-3489**	4	BOLT-SOCKET HEAD (M12X1.75X80-MM)	
	6	1	**114-0741**	1	COVER	
	7	1	**133-5813**	2	BAND-MARKER (GRAY, P)	
	8	1	*164-6874*	2	FITTING AS-ELBOW	
					(EACH INCLUDES)	
		1	**3J-1907**	1	SEAL-O-RING	
		1	**085-7356**	1	FITTING	
	9	1	**239-1794**	1	BLOCK	
Y	10	1	**259-7430**	1	VALVE GP-SOLENOID (PRESSURE REDUCING)	828
I	11	1	**278-6768**	2	HOSE AS	
	12	1	**296-7025**	1	SUPPORT AS	
	13	1	*148-8336*	3	CONNECTOR AS	
					(EACH INCLUDES)	
		1	**3J-1907**	1	SEAL-O-RING	
		1	**6V-8397**	1	SEAL-O-RING	
		1	**6V-8636**	1	CONNECTOR	
	14	1	*148-8338*	1	CONNECTOR AS	
		1	**3J-1907**	1	SEAL-O-RING	
		1	**6V-8397**	1	SEAL-O-RING	
		1	**8T-0075**	1	CONNECTOR	
	15	1	*148-8378*	4	ELBOW AS	
					(EACH INCLUDES)	
		1	**3J-1907**	1	SEAL-O-RING	
		1	**6V-8397**	1	SEAL-O-RING	
		1	**6V-8724**	1	ELBOW	
	16	1	*164-5567*	2	COUPLER AS-QUICK DISCONNECT	
					(EACH INCLUDES)	
		1	**3J-1907**	1	SEAL-O-RING	
		1	**6V-3965**	1	COUPLER AS-QUICK DISCONNECT	
	17	1	**4J-0522**	1	SEAL-O-RING	
	18	1	**6J-2680**	1	SEAL-O-RING	
M	19	1	**8T-4136**	4	BOLT (M10X1.5X25-MM)	
M	20	1	**8T-4139**	2	BOLT (M12X1.75X30-MM)	
	21	1	**8T-4223**	2	WASHER-HARD (13.5X25.5X3-MM THK)	
	22	1	**8T-4224**	2	WASHER-HARD (8.8X16X2-MM THK)	
M	23	1	**8T-6870**	2	BOLT (M8X1.25X70-MM)	

I-REFER TO HYDRAULIC INFORMATION SYSTEM
M-METRIC PART
Y-SEPARATE ILLUSTRATION

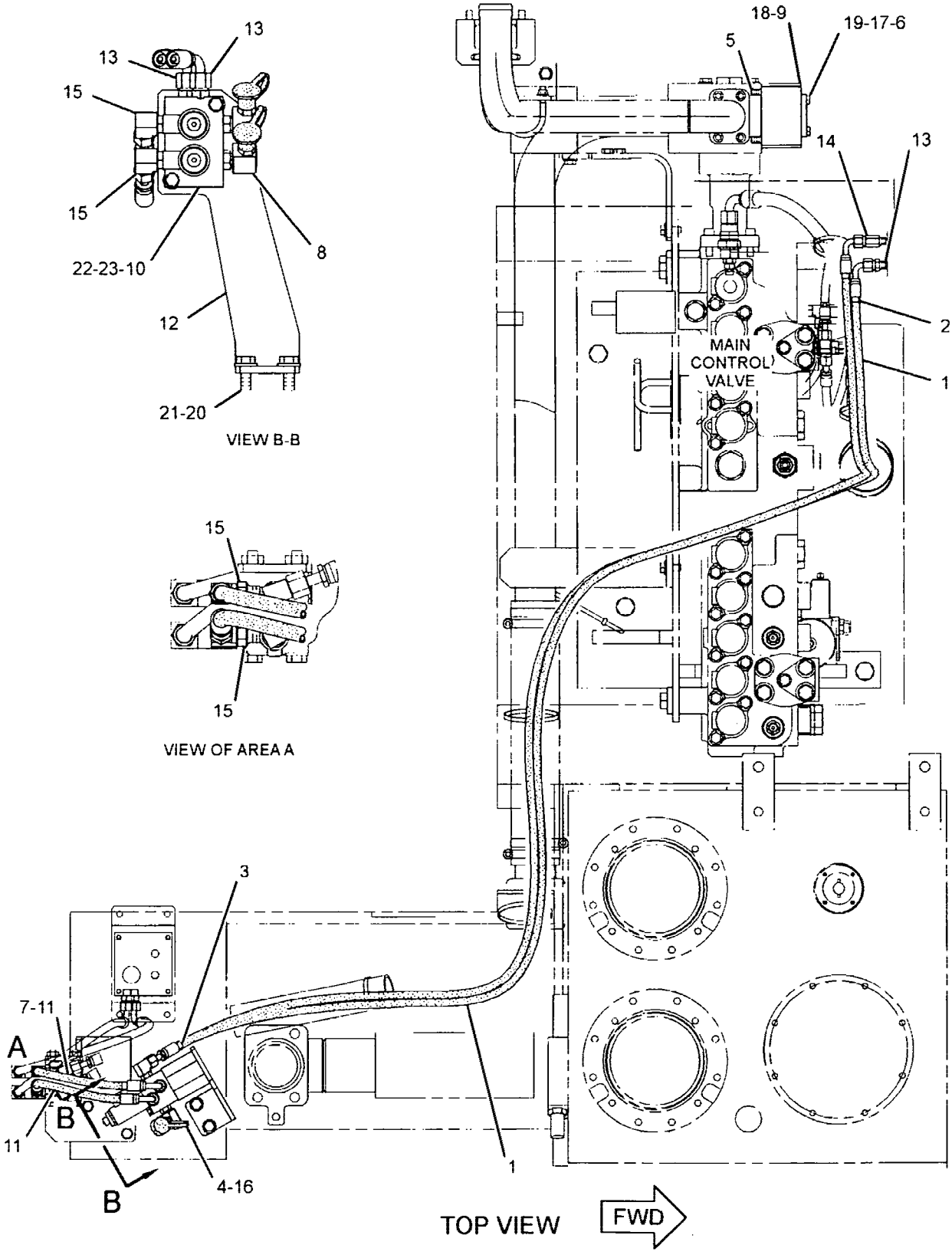

GRAPHIC #1

<END>

g01464567

HYDRAULIC SYSTEM

302-3283 LINES GP-PILOT–STICK LOWERING CONTROL

S/N: YEE1-UP

PART OF 297-0257, 297-0258 VALVE AR-CHECK & RELIEF

AN ATTACHMENT

SMCS-5057, 5059 **i02922512**

NOTE	REF NO	GRAPHIC REF	PART NUMBER	QTY	PART NAME 1 2 3 4 5 6 (PRODUCT LEVEL)	SEE PAGE
I	1	1	**4I-6236**	1	HOSE AS	
	2	1	**7K-1181**	10	STRAP-CABLE	
I	3	1	**087-5591**	1	HOSE AS	
	4	1	*148-8425*	1	TEE AS	
		1	**5K-9090**	1	SEAL-O-RING	
		1	**8T-4834**	1	TEE-SWIVEL ORIFICE	
	5	1	**248-9553**	1	BLOCK	
	6	1	**319-9969**	1	HOSE AS	
E		1	**7I-7439**		GUARD (278-CM)	
I	7	1	**319-9970**	1	HOSE AS	
	8	1	*148-8318*	1	CONNECTOR AS	
		1	**3K-0360**	1	SEAL-O-RING	
		1	**6V-8397**	1	SEAL-O-RING	
		1	**6V-8634**	1	CONNECTOR	
	9	1	*148-8357*	1	ELBOW AS	
		1	**5K-9090**	1	SEAL-O-RING	
		1	**6V-9008**	1	ELBOW	
		1	**7M-8485**	1	SEAL-O-RING	
	10	1	*148-8407*	1	PLUG AS	
		1	**3J-1907**	1	SEAL-O-RING	
		1	**9S-4191**	1	PLUG-O-RING	
	11	1	*148-8433*	1	TEE AS	
		1	**6V-8397**	2	SEAL-O-RING	
		1	**6V-9836**	1	TEE-SWIVEL	
	12	1	*150-4043*	1	CONNECTOR AS	
		1	**3J-1907**	1	SEAL-O-RING	
		1	**6V-8398**	1	SEAL-O-RING	
		1	**6V-9873**	1	CONNECTOR	
	13	1	**4J-0523**	1	SEAL-O-RING	
	14	1	**6V-6793**	1	RING-BACKUP	
M	15	1	**7X-2475**	4	BOLT (M16X2X130-MM)	
	16	1	**9X-8257**	4	WASHER (17.5X30X3.5-MM THK)	

E-ORDER BY THE CENTIMETER
I-REFER TO HYDRAULIC INFORMATION SYSTEM
M-METRIC PART

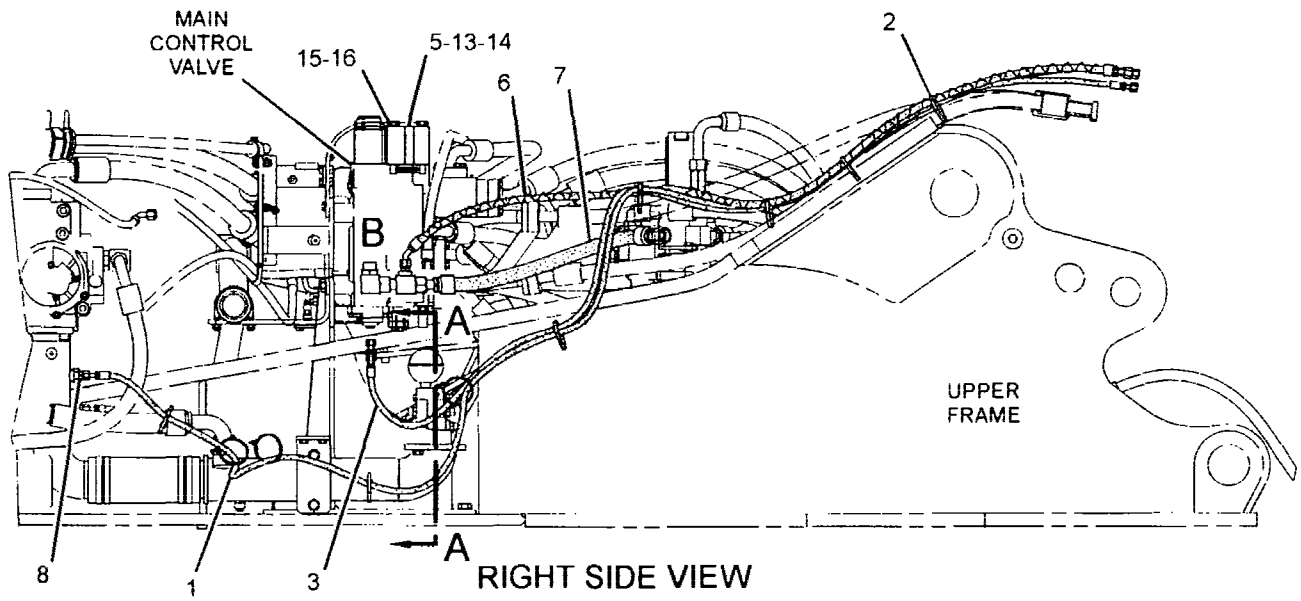

RIGHT SIDE VIEW

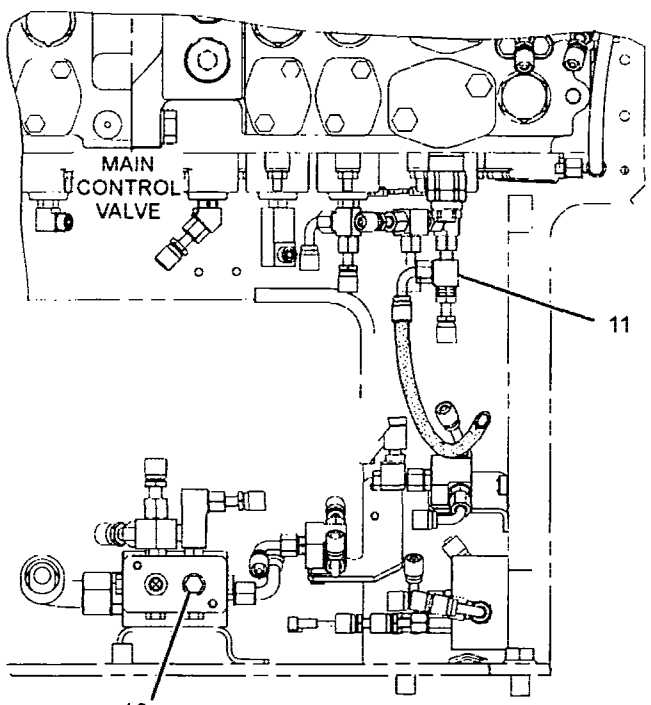

SECTION A-A

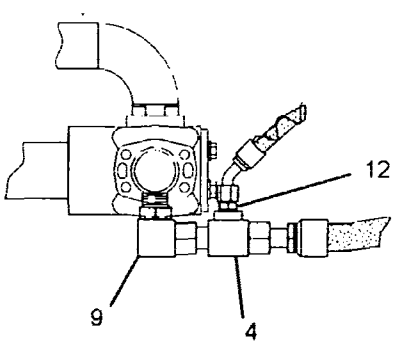

VIEW OF AREA B

GRAPHIC #1 **<END>** g01478792

HYDRAULIC SYSTEM

307-5265 LINES GP-PILOT–ACCUGRADE

S/N: YEE1-UP

PART OF 324-0190, 324-0191 SPECIAL AR

AN ATTACHMENT

SMCS-5057, 5059 **i02921116**

NOTE	REF NO	GRAPHIC REF	PART NUMBER	QTY	PART NAME 1 2 3 4 5 6 (PRODUCT LEVEL)	SEE PAGE
I	1	2	**4I-3994**	2	HOSE AS	
I	2	2	**4I-5906**	1	HOSE AS	
I	3	2	**4I-5933**	1	HOSE AS	
I	4	2	**4I-6248**	1	HOSE AS	
	5	2	**4I-9521**	6	BAND-MARKER (RED, L1)	
	6	2	**4I-9523**	4	BAND-MARKER (BLUE, L3)	
	7	2	**4I-9525**	6	BAND-MARKER (ORANGE, R1)	
	8	2	**4I-9526**	4	BAND-MARKER (WHITE, R2)	
	9	1,2	**4I-9527**	4	BAND-MARKER (GREEN, R3)	
	10	1,2	**4I-9528**	4	BAND-MARKER (PURPLE, R4)	
I	11	1	**5I-4076**	1	HOSE AS	
	12	2	**6V-0852**	7	CAP-DUST	
I	13	2	**087-6583**	2	HOSE AS	
I	14	2	**102-7685**	1	HOSE AS	
I	15	2	**104-8771**	1	HOSE AS	
I	16	2	**104-8777**	1	HOSE AS	
I	17	2	**108-7313**	1	HOSE AS	
I	18	1	**110-5499**	1	HOSE AS	
I	19	2	**111-0988**	1	HOSE AS	
Y	20	2	**123-2430**	1	VALVE GP-SHUTTLE	811
	21	2	*148-8424*	1	TEE AS	
		2	**6V-8397**	1	SEAL-O-RING	
		2	**8T-8902**	1	TEE	
	22	2	**157-3180**	1	SENSOR AS-PRESSURE (PILOT, BOOM UP)	
		2	**3E-3371**	1	WEDGE-RECEPTACLE LOCK (3-PIN)	
		2	**9X-3401**	3	PIN-CONNECTOR (16-GA TO 18-GA)	
					–OR–	
		2	**126-1767**	3	PIN-CONNECTOR (14-GA)	
		2	**171-0596**	1	RECEPTACLE AS	
		2	**185-2478**	1	SEAL	
	23	2	**202-1771**	1	CONNECTOR	
I	24	2	**207-6418**	1	HOSE AS	
Y	25	2	**215-5002**	1	VALVE GP-MANIFOLD & REDUCING	771
	26	1	**307-5235**	2	PLATE AS	
	27	1	**307-5266**	1	BRACKET AS	
	28	2	**148-8353**	7	ELBOW AS	
					(EACH INCLUDES)	
		2	**3J-1907**	1	SEAL-O-RING	
		2	**6V-8397**	1	SEAL-O-RING	
		2	**6V-9001**	1	ELBOW	
	29	2	*148-8367*	1	ELBOW AS	
		2	**6V-8397**	1	SEAL-O-RING	
		2	**6V-9850**	1	ELBOW	
	30	2	*148-8378*	9	ELBOW AS	
					(EACH INCLUDES)	
		2	**3J-1907**	1	SEAL-O-RING	
		2	**6V-8397**	1	SEAL-O-RING	
		2	**6V-8724**	1	ELBOW	
	31	2	*148-8433*	1	TEE AS	
		2	**6V-8397**	2	SEAL-O-RING	
		2	**6V-9836**	1	TEE-SWIVEL	
	32	2	*164-5567*	7	COUPLER AS-QUICK DISCONNECT	
					(EACH INCLUDES)	
		2	**3J-1907**	1	SEAL-O-RING	
		2	**6V-3965**	1	COUPLER AS-QUICK DISCONNECT	

307-5265 LINES GP-PILOT *(contd.)* i02921116

NOTE	REF NO	GRAPHIC REF	PART NUMBER	QTY	PART NAME 1 2 3 4 5 6 (PRODUCT LEVEL)	SEE PAGE
	33	2	*164-5609*	1	ELBOW AS	
		2	**3J-1907**	1	SEAL-O-RING	
		2	**8T-2335**	1	ELBOW	
	34	2	**3J-1907**	1	SEAL-O-RING	
	35	1	**7K-1181**	2	STRAP-CABLE	
	36	1	**8T-4121**	4	WASHER-HARD (11X21X2.5-MM THK)	
M	37	1	**8T-4137**	4	BOLT (M10X1.5X20-MM)	
M	38	1	**8T-4139**	4	BOLT (M12X1.75X30-MM)	
M	39	1	**8T-4195**	4	BOLT (M10X1.5X30-MM)	
	40	1	**8T-4223**	4	WASHER-HARD (13.5X25.5X3-MM THK)	

I-REFER TO HYDRAULIC INFORMATION SYSTEM
M-METRIC PART
Y-SEPARATE ILLUSTRATION

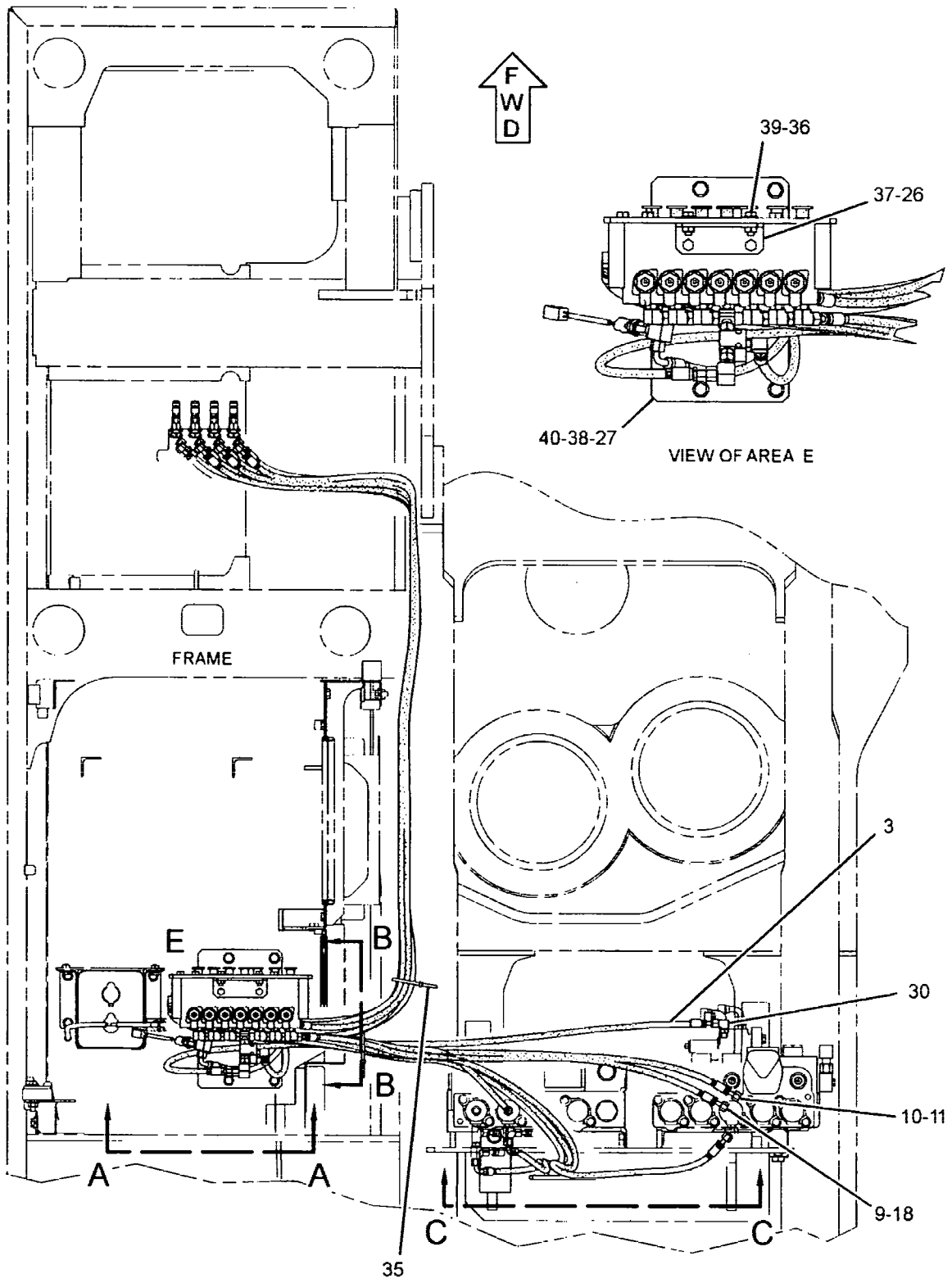

TOP VIEW

REFER TO ALL ILLUSTRATIONS OF THIS GROUP FOR AUXILIARY VIEWS

GRAPHIC #1

g01456818

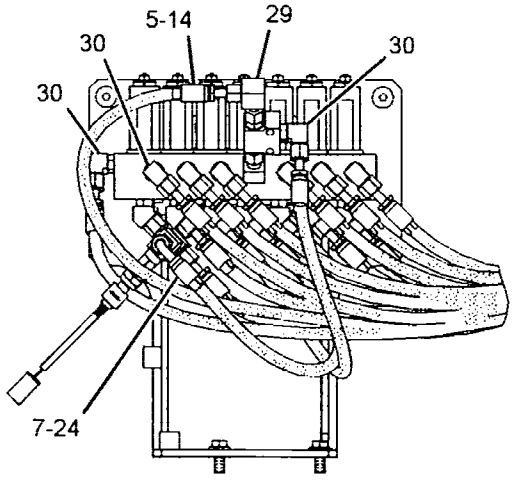

VIEW A-A

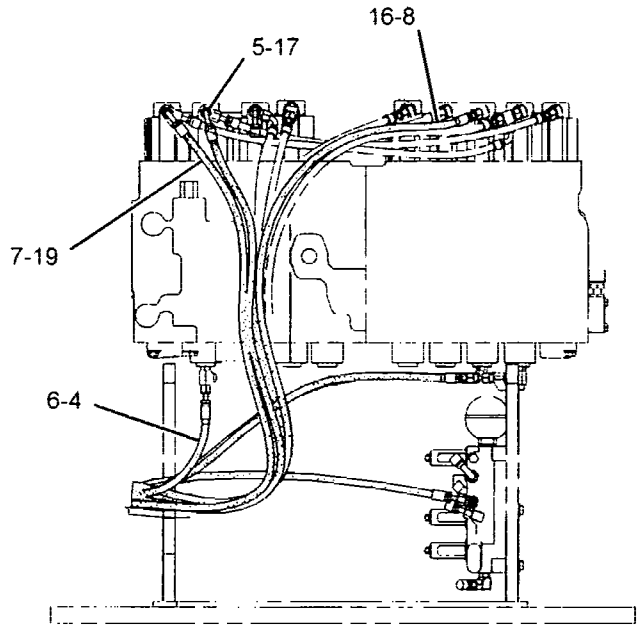

VIEW C-C

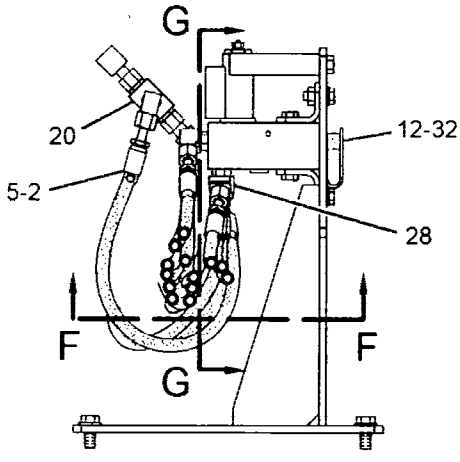

SECTION B-B

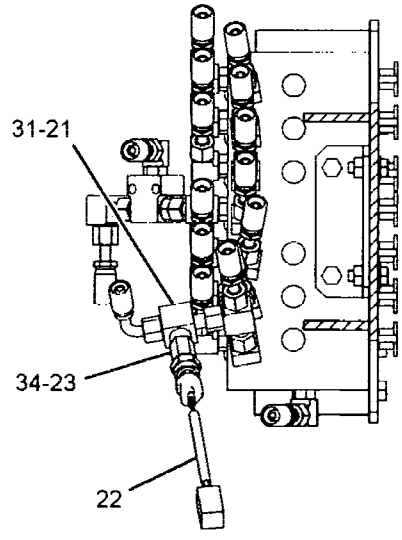

SECTION F-F

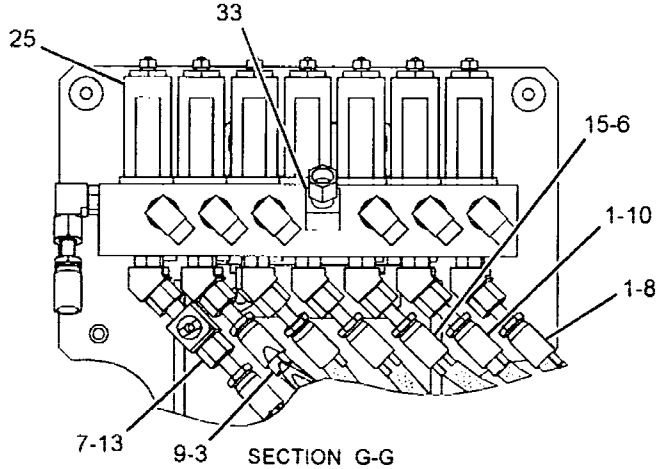

SECTION G-G

GRAPHIC #2 **<END>** g01456819

HYDRAULIC SYSTEM

292-7163 LINES GP-PUMP-SUPPLY

S/N: YEE1-UP

PART OF 297-0243 HYDRAULIC AR

SMCS-5057 **i02839859**

NOTE	REF NO	GRAPHIC REF	PART NUMBER	QTY	PART NAME 1 2 3 4 5 6 (PRODUCT LEVEL)	SEE PAGE
	1	1	**8T-4986**	4	CLAMP-HOSE	
M	2	1	**113-2003**	4	BOLT-SOCKET HEAD (M16X2X40-MM)	
	3	1	**124-1067**	2	PLATE	
	4	1	**124-1253**	4	GROMMET	
	5	1	**204-2281**	2	STRAP-TIE	
I	6	1	**230-0185**	1	HOSE AS	
	7	1	**236-3034**	1	HOSE	
I	8	1	**266-1282**	1	HOSE AS	
	9	1	**266-1296**	1	SUPPORT AS	
	10	1	**266-1298**	1	SUPPORT AS	
I	11	1	**292-7306**	1	HOSE AS	
I	12	1	**292-7309**	1	HOSE AS	
	13	1	**292-7312**	1	SUPPORT AS	
	14	1	**292-7314**	1	SUPPORT AS	
	15	1	**292-7320**	1	GROMMET	
Y	16	1	**307-4954**	1	TUBE GP-HYDRAULIC	727
	17	1	**307-4958**	1	TUBE AS	
I	18	1	**307-4962**	1	HOSE AS	
	19	1	**307-4965**	1	TUBE AS	
	20	1	**319-9804**	1	GUARD	
M	21	1	**096-4884**	1	LOCKNUT (M12X1.75-THD)	
M	22	1	**105-3478**	4	BOLT-SOCKET HEAD (M10X1.5X35-MM)	
	23	1	*148-8341*	1	CONNECTOR AS	
		1	**6V-8713**	1	CONNECTOR	
		1	**3D-2824**	1	SEAL-O-RING	
		1	**7J-9108**	1	SEAL-O-RING	
	24	1	*148-8364*	1	ELBOW AS	
		1	**3K-0360**	1	SEAL-O-RING	
		1	**6V-8398**	1	SEAL-O-RING	
		1	**6V-8625**	1	ELBOW	
	25	1	*148-8391*	2	ELBOW AS	
					(EACH INCLUDES)	
		1	**2S-4078**	1	SEAL-O-RING	
		1	**5K-9090**	1	SEAL-O-RING	
		1	**8T-8987**	1	ELBOW	
	26	1	*148-8407*	1	PLUG AS	
		1	**3J-1907**	1	SEAL-O-RING	
		1	**9S-4191**	1	PLUG-O-RING	
	27	1	*148-8411*	2	PLUG AS	
					(EACH INCLUDES)	
		1	**3K-0360**	1	SEAL-O-RING	
		1	**9S-4185**	1	PLUG-O-RING	
	28	1	*150-3073*	2	PLUG AS	
					(EACH INCLUDES)	
		1	**5K-9090**	1	SEAL-O-RING	
		1	**6V-9512**	1	PLUG (1-7/16-12-THD)	
	29	1	*153-6256*	1	ELBOW AS	
		1	**8C-7563**	1	ELBOW	
		1	**7J-9108**	1	SEAL-O-RING	
	30	1	**1P-4579**	4	FLANGE-HALF	
	31	1	**1P-5767**	4	FLANGE-HALF	
	32	1	**4J-0522**	1	SEAL-O-RING	
	33	1	**4J-0524**	2	SEAL-O-RING	
	34	1	**5H-8624**	1	SEAL-O-RING	
	35	1	**5P-7464**	3	CLIP (SLOT)	
	36	1	**5P-7465**	3	CLIP (TAB)	

292-7163 LINES GP-PUMP (contd.) i02839859

NOTE	REF NO	GRAPHIC REF	PART NUMBER	QTY	PART NAME 1 2 3 4 5 6 (PRODUCT LEVEL)	SEE PAGE
	37	1	8T-2920	3	GROMMET	
	38	1	8T-4121	6	WASHER-HARD (11X21X2.5-MM THK)	
M	39	1	8T-4136	4	BOLT (M10X1.5X25-MM)	
M	40	1	8T-4139	3	BOLT (M12X1.75X30-MM)	
M	41	1	8T-4183	5	BOLT (M12X1.75X40-MM)	
M	42	1	8T-4184	4	BOLT (M12X1.75X45-MM)	
M	43	1	8T-4192	2	BOLT (M12X1.75X25-MM)	
M	44	1	8T-4194	8	BOLT (M12X1.75X50-MM)	
M	45	1	8T-4195	2	BOLT (M10X1.5X30-MM)	
	46	1	8T-4223	28	WASHER-HARD (13.5X25.5X3-MM THK)	
M	47	1	8T-4956	5	BOLT (M12X1.75X35-MM)	
M	48	1	8T-7338	4	BOLT (M16X2X45-MM)	
	49	1	9M-3786	1	SEAL-O-RING	
	50	1	9X-8257	4	WASHER (17.5X30X3.5-MM THK)	

I-REFER TO HYDRAULIC INFORMATION SYSTEM
M-METRIC PART
Y-SEPARATE ILLUSTRATION

292-7163 LINES GP-PUMP (contd.) i02839859

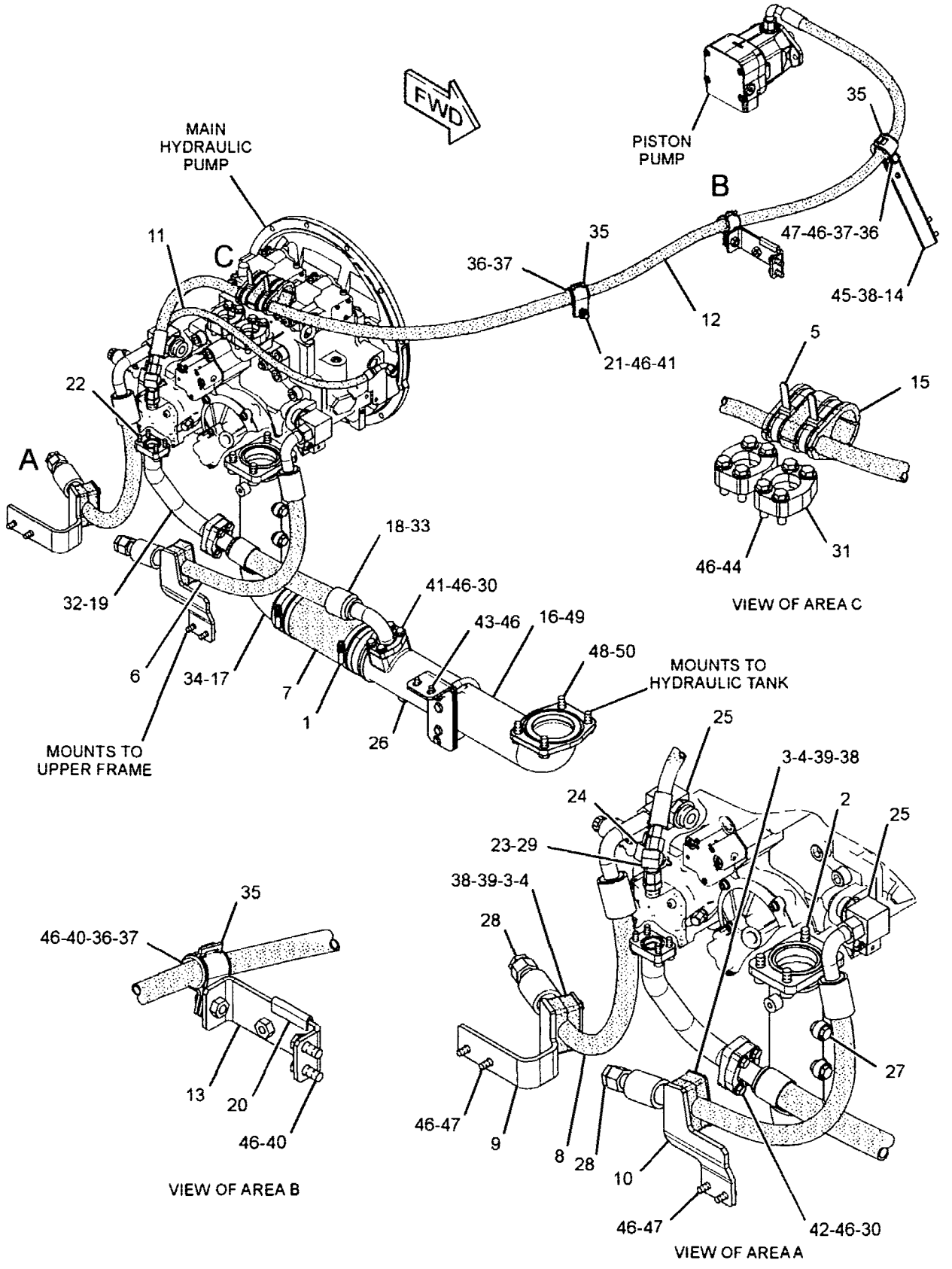

GRAPHIC #1 **<END>** g01475513

HYDRAULIC SYSTEM

292-7168 LINES GP-PUMP–MEDIUM PRESSURE

S/N: YEE1-UP
PART OF 285-1789 CONTROL AR-AUXILIARY
AN ATTACHMENT

SMCS-5057 **i02845009**

NOTE	REF NO	GRAPHIC REF	PART NUMBER	QTY	PART NAME 1 2 3 4 5 6 (PRODUCT LEVEL)	SEE PAGE
	1	1	6V-0852	1	CAP-DUST	
	2	1	126-1913	1	PLATE	
	3	1	131-9750	1	SCREEN AS (HYDRAULIC TANK)	
	4	1	171-2637	2	BOSS	
	5	1	239-1838	1	BLOCK	
	6	1	260-8062	1	BLOCK	
	7	1	260-8063	1	BLOCK	
I	8	1	260-8067	1	HOSE AS	
	9	1	270-0012	1	ELBOW AS	
		1	2M-9780	1	SEAL-O-RING	
		1	6V-8398	1	SEAL-O-RING	
		1	270-0013	1	ELBOW	
	10	1	270-0014	1	ELBOW AS	
		1	2M-9780	1	SEAL-O-RING	
		1	6V-8398	1	SEAL-O-RING	
		1	270-0015	1	ELBOW	
	11	1	275-1743	1	SUPPORT AS	
Y	12	1	285-1531	1	VALVE GP-CONTROL (MEDIUM PRESSURE)	738
I	13	1	292-7510	1	HOSE AS	
J	14	1	302-2971	1	SUPPORT AS	
I	15	1	302-3146	1	HOSE AS	
	16	1	148-8327	2	CONNECTOR AS (EACH INCLUDES)	
		1	3D-2824	1	SEAL-O-RING	
		1	6V-8637	1	CONNECTOR	
		1	6V-9746	1	SEAL-O-RING	
	17	1	148-8347	1	ELBOW AS	
		1	3D-2824	1	SEAL-O-RING	
		1	6V-9007	1	ELBOW	
		1	6V-9746	1	SEAL-O-RING	
	18	1	164-4180	1	PLUG AS	
		1	7M-8485	1	SEAL-O-RING	
		1	9S-4181	1	PLUG-O-RING	
	19	1	164-5567	1	COUPLER AS-QUICK DISCONNECT	
		1	3J-1907	1	SEAL-O-RING	
		1	6V-3965	1	COUPLER AS-QUICK DISCONNECT	
	20	1	168-1969	1	ADAPTER AS	
		1	1J-9671	1	SEAL-O-RING	
		1	5P-1318	1	ADAPTER	
	21	1	171-6723	1	ELBOW AS	
		1	6V-9746	1	SEAL-O-RING	
		1	8T-8899	1	ELBOW	
	22	1	1P-3702	1	SEAL-RECTANGULAR	
	23	1	1P-3703	1	SEAL-RECTANGULAR	
	24	1	1P-4578	4	FLANGE-HALF	
	25	1	4J-0522	3	SEAL-O-RING	
	26	1	4J-0527	1	SEAL-O-RING	
	27	1	5P-7468	5	CLIP (SLOT)	
	28	1	5P-7469	5	CLIP (TAB)	
	29	1	5P-7470	1	CLIP (SLOT)	
	30	1	5P-7471	1	CLIP (TAB)	
	31	1	5P-8182	1	GROMMET	
	32	1	6V-1874	5	GROMMET	
	33	1	6V-5782	4	BOLT (5/16-18X1.125-IN)	
	34	1	6V-6707	1	SEAL-O-RING	

292-7168 LINES GP-PUMP *(contd.)*

i02845009

NOTE	REF NO	GRAPHIC REF	PART NUMBER	QTY	PART NAME 1 2 3 4 5 6 (PRODUCT LEVEL)	SEE PAGE
M	35	1	7X-2550	2	BOLT (M12X1.75X110-MM)	
	36	1	7Y-3283	1	SPACER (13.88X21.34X95-MM THK)	
	37	1	8T-4121	24	WASHER-HARD (11X21X2.5-MM THK)	
M	38	1	8T-4136	4	BOLT (M10X1.5X25-MM)	
M	39	1	8T-4139	2	BOLT (M12X1.75X30-MM)	
M	40	1	8T-4178	8	BOLT (M10X1.5X90-MM)	
M	41	1	8T-4182	4	BOLT (M10X1.5X45-MM)	
M	42	1	8T-4184	1	BOLT (M12X1.75X45-MM)	
M	43	1	8T-4192	2	BOLT (M12X1.75X25-MM)	
M	44	1	8T-4194	1	BOLT (M12X1.75X50-MM)	
M	45	1	8T-4196	8	BOLT (M10X1.5X35-MM)	
	46	1	8T-4223	13	WASHER-HARD (13.5X25.5X3-MM THK)	
	47	1	8T-4224	4	WASHER-HARD (8.8X16X2-MM THK)	
M	48	1	8T-5041	1	BOLT (M12X1.75X120-MM)	
M	49	1	8T-5412	4	BOLT (M12X1.75X140-MM)	
	50	1	8T-9403	2	FLANGE-HALF	

I-REFER TO HYDRAULIC INFORMATION SYSTEM
J-NOT REQUIRED WHEN USED WITH CONFIG. 11 & SYSTEM 14,16,17
M-METRIC PART
Y-SEPARATE ILLUSTRATION

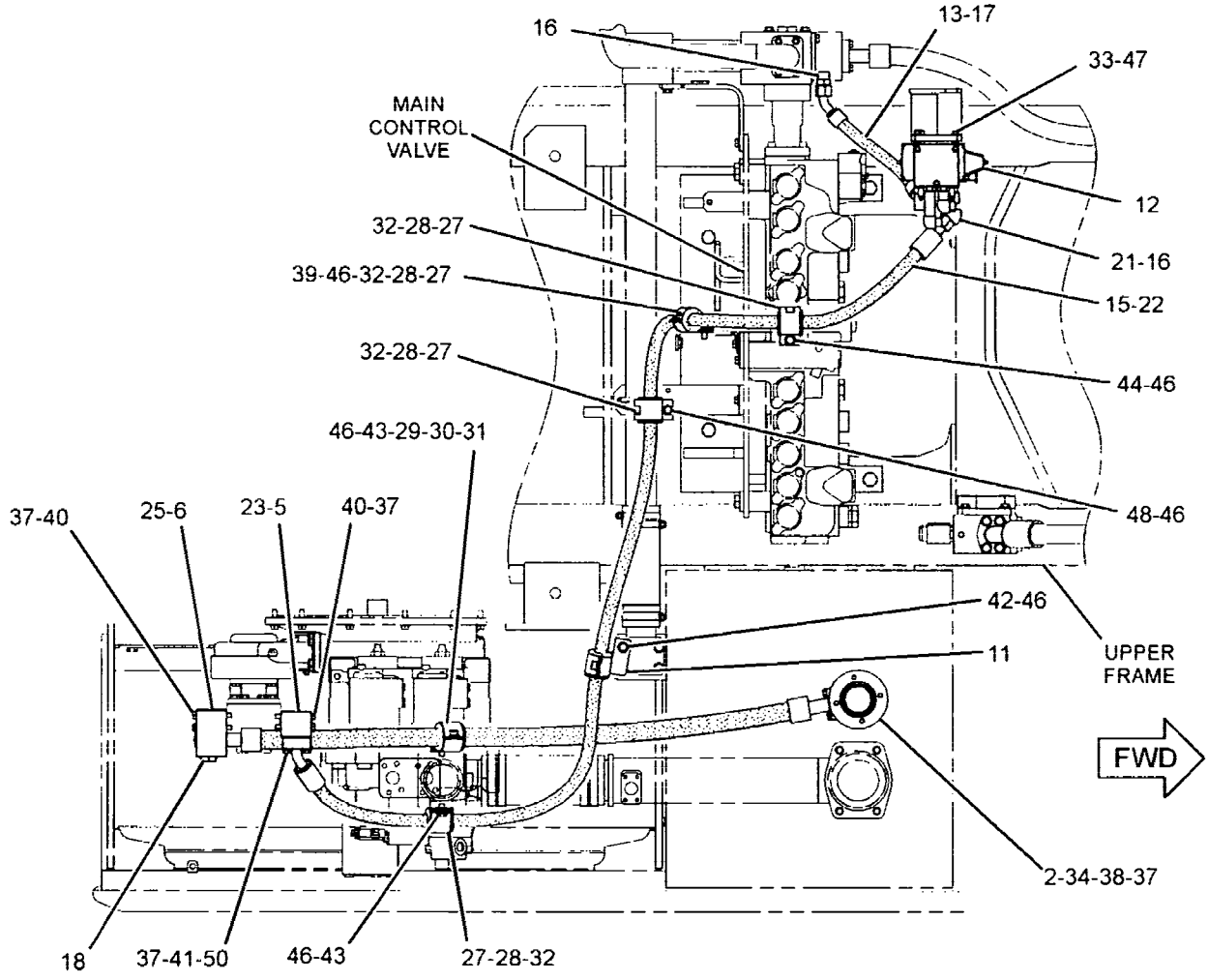

TOP VIEW

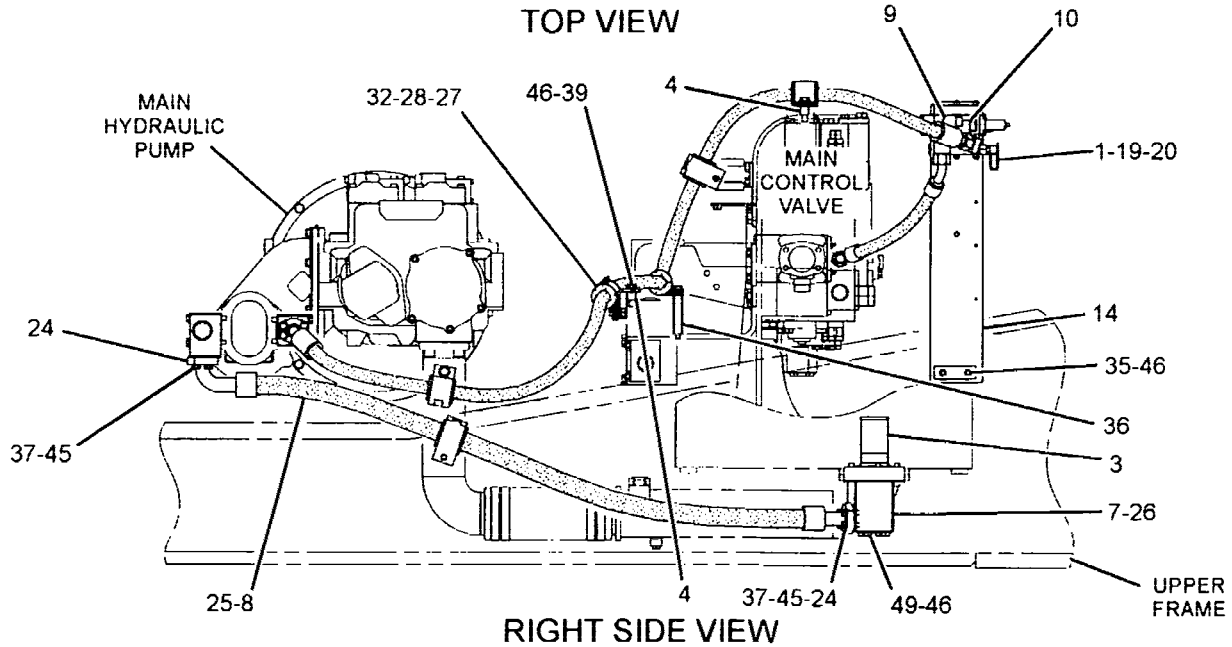

RIGHT SIDE VIEW

GRAPHIC #1

<END>

g01458193

HYDRAULIC SYSTEM

227-0459 LINES GP-REAR ATTACHMENT

S/N: YEE1-UP

PART OF 309-0166, 309-0167 COUNTERWEIGHT AR

AN ATTACHMENT

SMCS-5409 **102549898**

NOTE	REF NO	GRAPHIC REF	PART NUMBER	QTY	PART NAME 1 2 3 4 5 6 (PRODUCT LEVEL)	SEE PAGE
	1	2	**4I-6188**	2	VALVE AS-MANUAL (COUNTERWEIGHT)	
					(EACH INCLUDES)	
		2	**134-7113**	1	HANDLE	
M		2	**134-7114**	1	BOLT-SPECIAL	
		2	**134-7115**	1	PLATE	
		2	**195-0090**	1	PLATE	
	2	1,2	**4I-9521**	2	BAND-MARKER (RED, L1)	
	3	1	**4I-9522**	2	BAND-MARKER (YELLOW, L2)	
	4	2	**4I-9523**	2	BAND-MARKER (BLUE, L3)	
	5	1	**4I-9524**	2	BAND-MARKER (BROWN, L4)	
	6	1	**4I-9525**	2	BAND-MARKER (ORANGE, R1)	
	7	1	**4I-9526**	2	BAND-MARKER (WHITE, R2)	
	8	2	**4I-9527**	2	BAND-MARKER (GREEN, R3)	
	9	1	**4I-9528**	2	BAND-MARKER (PURPLE, R4)	
I	10	1	**5I-4076**	1	HOSE AS	
	11	2	**5P-5148**	2	STRAP-TIE	
	12	2	**7I-0970**	2	SUPPORT	
	13	2	**7I-0972**	2	BAR	
	14	1,2	**7K-1181**	10	STRAP-CABLE	
	15	2	**7Y-8165**	1	GROMMET	
	16	2	**087-4962**	1	LINK	
Y	17	1	**087-5087**	1	VALVE GP-CHECK (PILOT OPERATED)	733
M	18	2	**105-3483**	3	BOLT-SOCKET HEAD (M10X1.5X70-MM)	
Y	19	2	**123-2514**	1	VALVE GP-PILOT (COUNTERWEIGHT)	775
Y	20	2	**123-2515**	1	VALVE GP-COUNTERWEIGHT CONTROL	754
CY	21	1	**123-2549**	2	VALVE GP-SHUTTLE (PUMP)	812
	22	1	**131-9522**	1	SUPPORT AS	
	23	2	**131-9537**	1	HANDLE	
I	24	2	**133-5733**	1	HOSE AS	
	25	1	**133-5813**	2	BAND-MARKER (GRAY, P)	
I	26	2	**134-6898**	1	HOSE AS	
I	27	1	**134-6904**	1	HOSE AS	
	28	2	**134-6963**	1	HOSE AS	
	29	2	**134-6964**	1	HOSE AS	
	30	1	**134-6966**	1	SUPPORT AS	
	31	2	**134-6967**	1	HOSE AS	
	32	1	*174-2250*	1	COUPLING AS	
		1	**143-4262**	1	COUPLING AS	
		1	**3K-0360**	1	SEAL-O-RING	
I	33	1	**179-7616**	1	HOSE AS	
I	34	1	**212-5424**	1	HOSE AS	
	35	1	**236-2841**	1	HOSE AS	
I	36	2	**236-2849**	1	HOSE AS	
	37	1	**236-2851**	1	HOSE AS	
I	38	1	**236-3022**	1	HOSE AS	
	39	1	**236-3024**	1	BLOCK	
	40	2	**236-3050**	1	SUPPORT AS	
I	41	1	**260-8080**	1	HOSE AS	
C	42	1	**270-0032**	1	PLATE	
	43	2	**275-1819**	1	TUBE AS	
C	44	1	**091-9035**	1	SPACER (11X25X20-MM THK)	
	45	2	**095-0840**	3	PIN-COTTER	
	46	2	**095-1310**	3	PIN-CLEVIS	
C	47	1	*148-8336*	2	CONNECTOR AS	
					(EACH INCLUDES)	

227-0459 LINES GP-REAR ATTACHMENT (contd.) i02549898

NOTE	REF NO	GRAPHIC REF	PART NUMBER	QTY	PART NAME 1 2 3 4 5 6 (PRODUCT LEVEL)	SEE PAGE
		1	6V-8636	1	CONNECTOR	
		1	3J-1907	1	SEAL-O-RING	
		1	6V-8397	1	SEAL-O-RING	
	48	2	148-8338	1	CONNECTOR AS	
		2	8T-0075	1	CONNECTOR	
		2	3J-1907	1	SEAL-O-RING	
		2	6V-8397	1	SEAL-O-RING	
	49	2	148-8340	2	CONNECTOR AS	
					(EACH INCLUDES)	
		2	6V-8639	1	CONNECTOR	
		2	3K-0360	1	SEAL-O-RING	
		2	6V-8398	1	SEAL-O-RING	
	50	2	148-8345	3	CONNECTOR AS	
					(EACH INCLUDES)	
		2	6V-8638	1	CONNECTOR	
		2	2M-9780	1	SEAL-O-RING	
		2	6V-8398	1	SEAL-O-RING	
	51	1	148-8354	1	ELBOW AS	
		1	6V-9002	1	ELBOW	
		1	3K-0360	1	SEAL-O-RING	
		1	6V-8398	1	SEAL-O-RING	
	52	1	148-8361	1	ELBOW AS	
		1	6V-9200	1	ELBOW	
		1	3J-7354	1	SEAL-O-RING	
		1	6V-8397	1	SEAL-O-RING	
	53	2	148-8364	1	ELBOW AS	
		2	6V-8625	1	ELBOW	
		2	3K-0360	1	SEAL-O-RING	
		2	6V-8398	1	SEAL-O-RING	
	54	2	148-8372	2	ELBOW AS	
					(EACH INCLUDES)	
		2	6V-8721	1	ELBOW	
		2	2M-9780	1	SEAL-O-RING	
		2	6V-8398	1	SEAL-O-RING	
	55	2	148-8374	1	ELBOW AS	
		2	6V-8723	1	ELBOW	
		2	3K-0360	1	SEAL-O-RING	
		2	6V-8397	1	SEAL-O-RING	
	56	2	148-8391	1	ELBOW AS	
		2	8T-8987	1	ELBOW	
		2	2S-4078	1	SEAL-O-RING	
		2	5K-9090	1	SEAL-O-RING	
C	57	1	148-8367	2	ELBOW AS	
					(EACH INCLUDES)	
		1	6V-8397	1	SEAL-O-RING	
		1	6V-9850	1	ELBOW	
	58	2	148-8412	1	REDUCER AS	
		2	6V-8944	1	REDUCER-O-RING	
		2	6V-8398	1	SEAL-O-RING	
	59	1,2	148-8415	2	REDUCER AS	
					(EACH INCLUDES)	
		1,2	6V-8936	1	REDUCER	
		1,2	6V-8397	1	SEAL-O-RING	
	60	1	148-8428	2	TEE AS	
					(EACH INCLUDES)	
		1	6V-8782	1	TEE	
		1	3K-0360	1	SEAL-O-RING	
		1	6V-8398	2	SEAL-O-RING	
	61	1	148-8433	1	TEE AS	

HYDRAULIC SYSTEM

227-0459 LINES GP-REAR ATTACHMENT (contd.) i02549898

NOTE	REF NO	GRAPHIC REF	PART NUMBER	QTY	PART NAME 1 2 3 4 5 6 (PRODUCT LEVEL)	SEE PAGE
		1	6V-9836	1	TEE-SWIVEL	
		1	6V-8397	2	SEAL-O-RING	
	62	2	148-8435	1	TEE AS	
		2	6V-8781	1	TEE-FACE SEAL	
		2	3J-1907	1	SEAL-O-RING	
		2	6V-8397	2	SEAL-O-RING	
	63	2	148-8444	2	TEE AS-SWIVEL	
					(EACH INCLUDES)	
		2	6V-9837	1	TEE-SWIVEL	
		2	6V-8398	2	SEAL-O-RING	
	64	2	150-3036	1	ELBOW AS	
		2	8T-1905	1	ELBOW	
		2	3J-1907	1	SEAL-O-RING	
		2	6V-8397	1	SEAL-O-RING	
	65	2	164-5605	1	CONNECTOR AS	
		2	8T-0076	1	CONNECTOR	
		2	3K-0360	1	SEAL-O-RING	
		2	6V-8397	1	SEAL-O-RING	
	66	2	164-5608	2	CONNECTOR AS	
					(EACH INCLUDES)	
		2	8T-1687	1	CONNECTOR	
		2	3K-0360	1	SEAL-O-RING	
		2	6V-8398	1	SEAL-O-RING	
	67	1	164-5662	1	ELBOW AS	
		1	143-4281	1	ELBOW	
		1	2S-4078	1	SEAL-O-RING	
		1	5K-9090	1	SEAL-O-RING	
	68	1	1P-3704	2	SEAL-RECTANGULAR	
	69	1	1P-3705	1	SEAL-RECTANGULAR	
	70	1	1P-5767	4	FLANGE-HALF	
C	71	1	4K-8864	1	CLIP	
	72	2	4P-7582	2	CLIP	
	73	1	5K-8451	1	CLIP	
	74	1	5P-2369	2	CLIP	
	75	2	5P-7460	1	CLIP (SLOT)	
	76	2	5P-7461	1	CLIP (TAB)	
C	77	1	5P-7464	1	CLIP (SLOT)	
C	78	1	5P-7465	1	CLIP (TAB)	
	79	1	6V-8397	4	SEAL-O-RING	
	80	2	6V-8398	1	SEAL-O-RING	
	81	2	7X-7729	2	WASHER (11X25X3-MM THK)	
	82	2	8B-6561	2	SPACER (5.56X22.22X55.58-MM THK)	
	83	1	8T-2920	1	GROMMET	
C	84	1,2	8T-4121	9	WASHER-HARD (11X21X2.5-MM THK)	
CM	85	1,2	8T-4136	5	BOLT (M10X1.5X25-MM)	
M	86	2	8T-4138	4	BOLT (M6X1X20-MM)	
CM	87	1	8T-4139	2	BOLT (M12X1.75X30-MM)	
M	88	2	8T-4172	2	BOLT (M10X1.5X80-MM)	
CM	89	1	8T-4179	1	BOLT (M12X1.75X20-MM)	
M	90	1	8T-4184	4	BOLT (M12X1.75X45-MM)	
CM	91	1	8T-4191	1	BOLT (M10X1.5X16-MM)	
M	92	2	8T-4192	1	BOLT (M12X1.75X25-MM)	
CM	93	1	8T-4196	3	BOLT (M10X1.5X35-MM)	
M	94	1	8T-4198	2	BOLT (M10X1.5X100-MM)	
C	95	1,2	8T-4223	16	WASHER-HARD (13.5X25.5X3-MM THK)	
M	96	2	8T-4956	4	BOLT (M12X1.75X35-MM)	
M	97	1	8T-5041	4	BOLT (M12X1.75X120-MM)	
	98	2	9X-6165	4	WASHER (6.5X22X2.5-MM THK)	
	99	2	9X-6579	1	NUT-ORIFICE (7/16-12-THD)	
	100	2	9X-8256	3	WASHER (6.6X12X2-MM THK)	

227-0459 LINES GP-REAR ATTACHMENT *(contd.)* i02549898

C-CHANGE FROM PREVIOUS TYPE
I-REFER TO HYDRAULIC INFORMATION SYSTEM
M-METRIC PART
Y-SEPARATE ILLUSTRATION

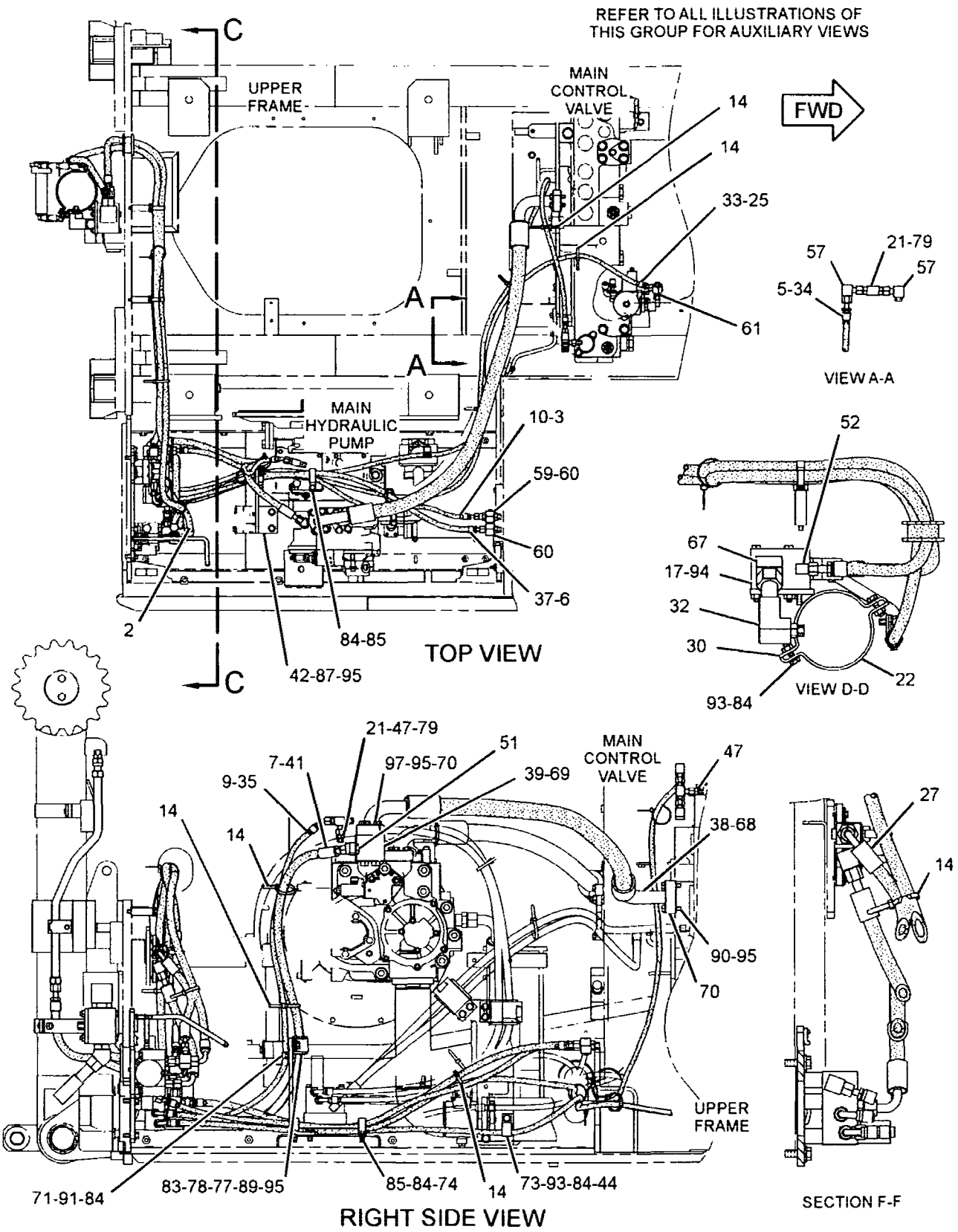

GRAPHIC #1 g01332498

227-0459 LINES GP-REAR ATTACHMENT (contd.) i02549898

REFER TO ALL ILLUSTRATIONS OF THIS GROUP FOR AUXILIARY VIEWS

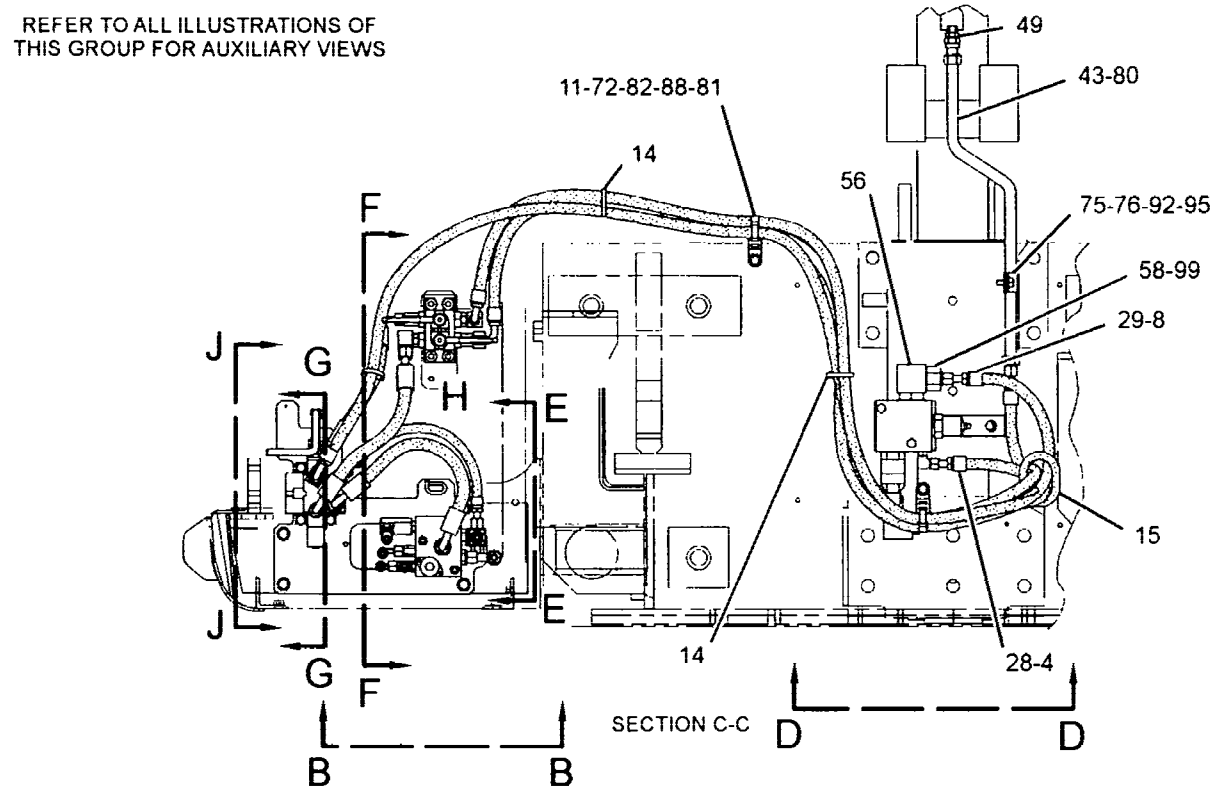

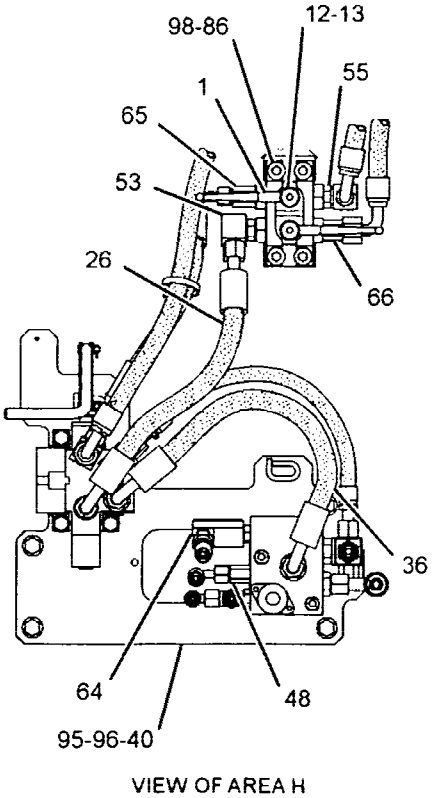

VIEW OF AREA H

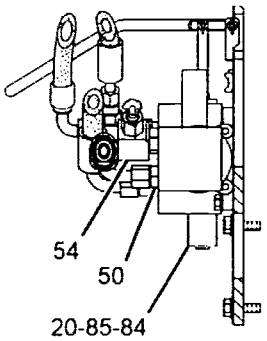

SECTION G-G

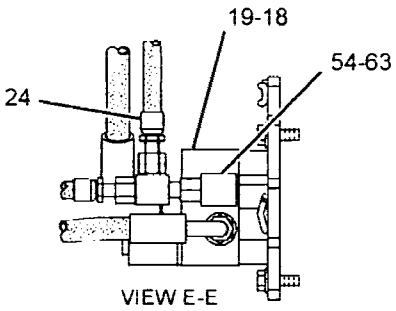

VIEW E-E

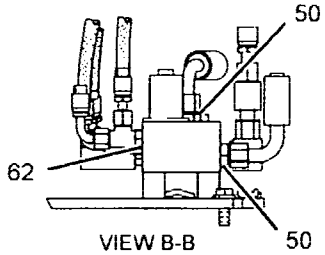

VIEW B-B

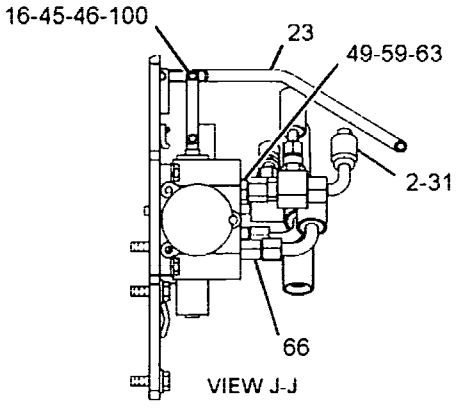

VIEW J-J

GRAPHIC #2 **<END>** g01332499

HYDRAULIC SYSTEM

302-3139 LINES GP-RETURN–BOOM LOWERING CONTROL

S/N: YEE1-UP

PART OF 297-0252 VALVE AR-CHECK & RELIEF

AN ATTACHMENT

SMCS-5057 **i02863296**

NOTE	REF NO	GRAPHIC REF	PART NUMBER	QTY	PART NAME 1 2 3 4 5 6 (PRODUCT LEVEL)	SEE PAGE
	1	1	**7K-1181**	2	STRAP-CABLE	
	2	1	*177-1061*	1	ELBOW AS	
		1	**5K-9090**	1	SEAL-O-RING	
		1	**142-0038**	1	ELBOW	
I	3	1	**193-9994**	1	HOSE AS	
I	4	1	**194-0343**	1	HOSE AS	
I	5	1	**302-3150**	1	HOSE AS	
Y	6	1	**310-0149**	1	VALVE GP-PILOT	790
	7	1	*148-8335*	1	CONNECTOR AS	
		1	**5K-9090**	1	SEAL-O-RING	
		1	**6V-8635**	1	CONNECTOR	
		1	**7M-8485**	1	SEAL-O-RING	
	8	1	*148-8429*	1	TEE AS	
		1	**5K-9090**	2	SEAL-O-RING	
		1	**6V-9840**	1	TEE-SWIVEL	
	9	1	*148-8445*	1	TEE AS	
		1	**5K-9090**	2	SEAL-O-RING	
		1	**6V-9847**	1	TEE-SWIVEL	

I-REFER TO HYDRAULIC INFORMATION SYSTEM
Y-SEPARATE ILLUSTRATION

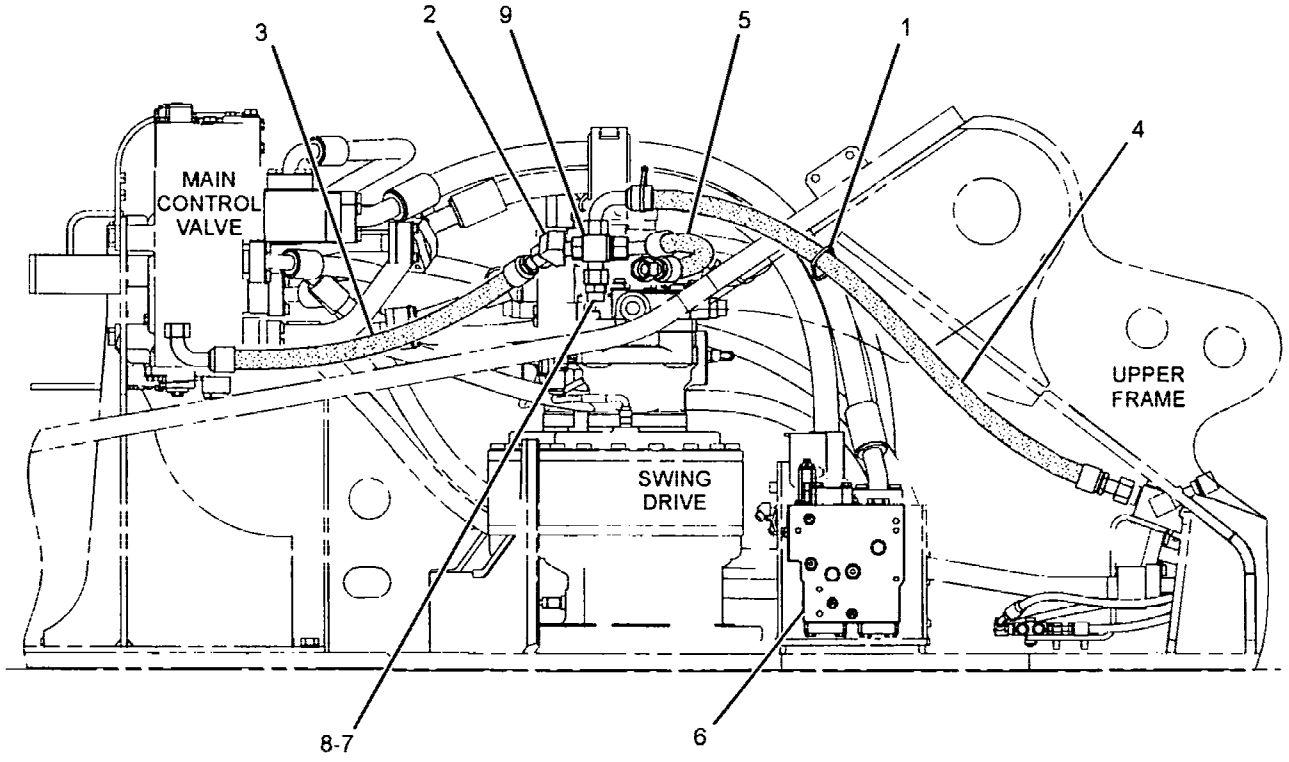

RIGHT SIDE VIEW

GRAPHIC #1 **<END>** g01452646

HYDRAULIC SYSTEM

302-3141 LINES GP-RETURN–BOOM FLOAT

S/N: YEE1-UP

PART OF 294-1277 CONTROL AR-AUXILIARY

AN ATTACHMENT

SMCS-5057 i02918765

NOTE	REF NO	GRAPHIC REF	PART NUMBER	QTY	PART NAME 1 2 3 4 5 6 (PRODUCT LEVEL)	SEE PAGE
	1	1	7K-1181	4	STRAP-CABLE	
M	2	1	113-2004	4	BOLT-SOCKET HEAD (M12X1.75X45-MM)	
I	3	1	115-8954	1	HOSE AS	
	4	1	124-1008	1	GUARD	
	5	1	177-1061	1	ELBOW AS	
		1	5K-9090	1	SEAL-O-RING	
		1	142-0038	1	ELBOW	
I	6	1	193-9994	1	HOSE AS	
I	7	1	194-0343	1	HOSE AS	
	8	1	202-9002	1	SWITCH AS-PRESSURE (BOOM LOWERING)	
		1	102-8802	1	KIT-RECEPTACLE (2-PIN) (INCLUDES RECEPTACLE AS & WEDGE)	
		1	3J-1907	1	SEAL-O-RING	
		1	186-3735	1	PIN-CONNECTOR (16-GA TO 18-GA)	
	9	1	259-7504	1	PLATE	
	10	1	296-6939	1	TEE-ORP TO ORFS	
Y	11	1	297-0370	1	VALVE GP-SOLENOID	829
I	12	1	302-3150	1	HOSE AS	
	13	1	307-4942	1	FLANGE	
Y	14	1	310-0150	1	VALVE GP-LOAD CONTROL	765
	15	1	319-9835	1	SUPPORT	
	16	1	319-9874	1	TUBE AS	
	17	1	319-9876	1	ELBOW	
I	18	1	319-9877	1	HOSE AS	
I	19	1	319-9880	1	HOSE AS	
M	20	1	105-3489	4	BOLT-SOCKET HEAD (M12X1.75X80-MM)	
M	21	1	108-3819	4	BOLT-SOCKET HEAD (M12X1.75X70-MM)	
	22	1	148-8335	1	CONNECTOR AS	
		1	5K-9090	1	SEAL-O-RING	
		1	6V-8635	1	CONNECTOR	
		1	7M-8485	1	SEAL-O-RING	
	23	1	148-8347	1	ELBOW AS	
		1	3D-2824	1	SEAL-O-RING	
		1	6V-9007	1	ELBOW	
		1	6V-9746	1	SEAL-O-RING	
	24	1	148-8353	1	ELBOW AS	
		1	3J-1907	1	SEAL-O-RING	
		1	6V-8397	1	SEAL-O-RING	
		1	6V-9001	1	ELBOW	
	25	1	148-8429	1	TEE AS	
		1	5K-9090	2	SEAL-O-RING	
		1	6V-9840	1	TEE-SWIVEL	
	26	1	148-8445	1	TEE AS	
		1	5K-9090	2	SEAL-O-RING	
		1	6V-9847	1	TEE-SWIVEL	
	27	1	155-2027	1	CONNECTOR AS	
		1	5K-9090	1	SEAL-O-RING	
		1	7M-8485	1	SEAL-O-RING	
		1	8T-8898	1	CONNECTOR	
	28	1	1P-3703	3	SEAL-RECTANGULAR	
	29	1	1P-3704	2	SEAL-RECTANGULAR	
	30	1	1P-3705	1	SEAL-RECTANGULAR	
	31	1	3J-1907	1	SEAL-O-RING	
	32	1	5K-9090	2	SEAL-O-RING	
	33	1	6V-0400	4	FLANGE-HALF	

302-3141 LINES GP-RETURN *(contd.)* i02918765

NOTE	REF NO	GRAPHIC REF	PART NUMBER	QTY	PART NAME 1 2 3 4 5 6 (PRODUCT LEVEL)	SEE PAGE
	34	1	**7M-8485**	1	SEAL-O-RING	
M	35	1	**8T-4139**	4	BOLT (M12X1.75X30-MM)	
M	36	1	**8T-4184**	4	BOLT (M12X1.75X45-MM)	
	37	1	**8T-4223**	12	WASHER-HARD (13.5X25.5X3-MM THK)	
M	38	1	**8T-4910**	4	BOLT (M12X1.75X60-MM)	

I-REFER TO HYDRAULIC INFORMATION SYSTEM
M-METRIC PART
Y-SEPARATE ILLUSTRATION

302-3141 **LINES GP-RETURN** *(contd.)* **i02918765**

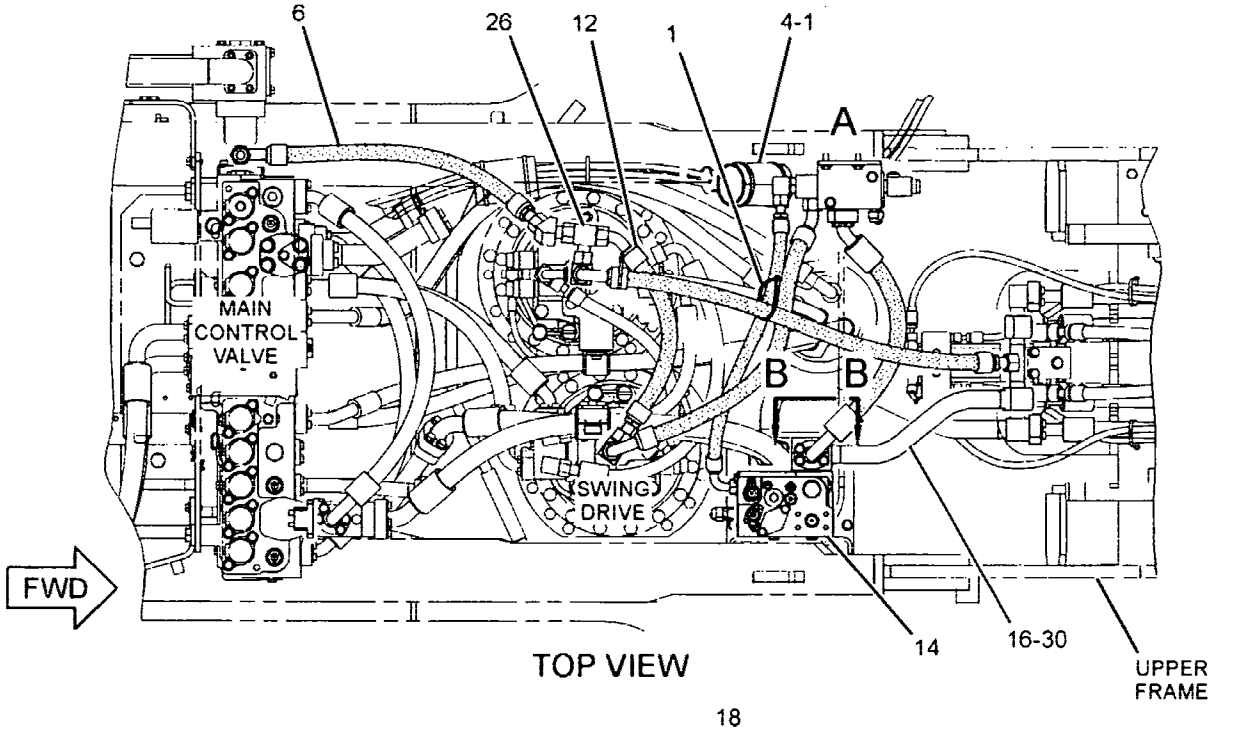

TOP VIEW

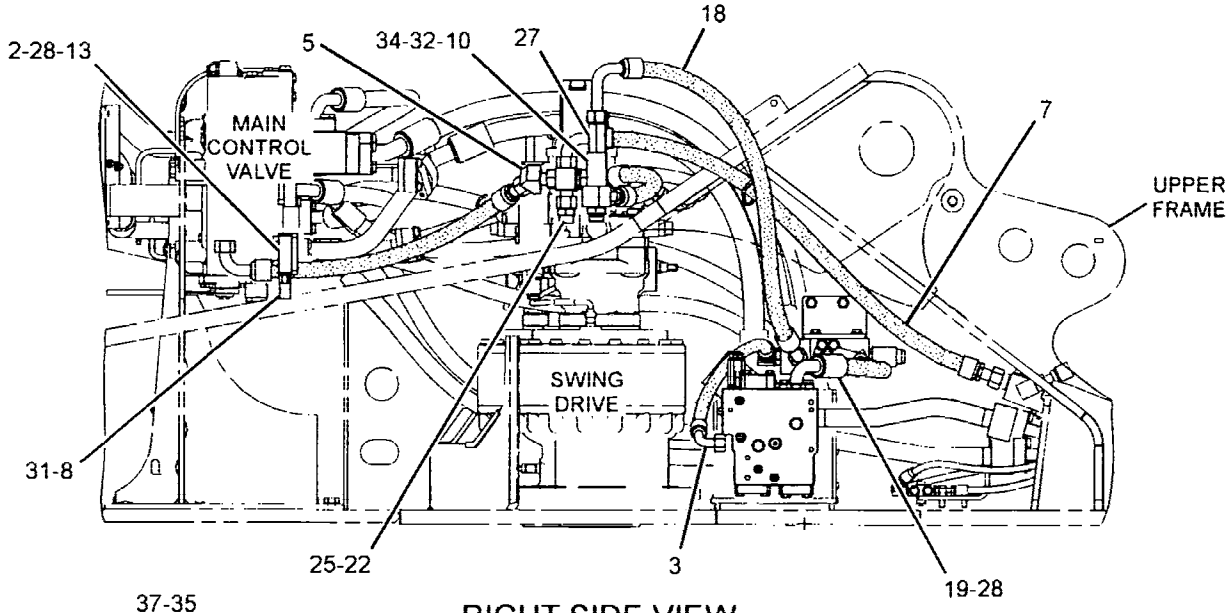

RIGHT SIDE VIEW

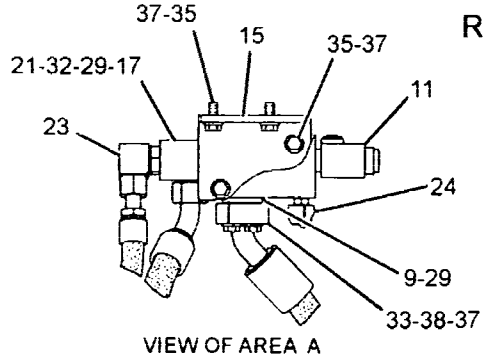

VIEW OF AREA A

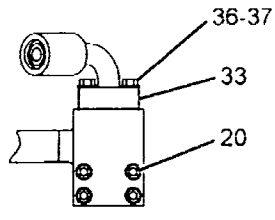

VIEW B-B

GRAPHIC #1

<END>

g01481245

239-1607 LINES GP-SENSOR–OVERLOAD WARNING

S/N: YEE1-UP

PART OF 294-1277 CONTROL AR-AUXILIARY

AN ATTACHMENT

SMCS-1439, 5057 **i02703770**

NOTE	REF NO	GRAPHIC REF	PART NUMBER	QTY	PART NAME 1 2 3 4 5 6 (PRODUCT LEVEL)	SEE PAGE
	1	1	**221-8859**	1	SENSOR AS-PRESSURE (OVERLOAD WARNING)	
		1	**3K-0360**	1	SEAL-O-RING	
		1	**3E-3371**	1	WEDGE-RECEPTACLE LOCK (3-PIN)	
		1	**171-0596**	1	RECEPTACLE AS	
		1	**9X-3401**	3	PIN-CONNECTOR (16-GA TO 18-GA)	
					–OR–	
		1	**126-1767**	3	PIN-CONNECTOR (14-GA)	

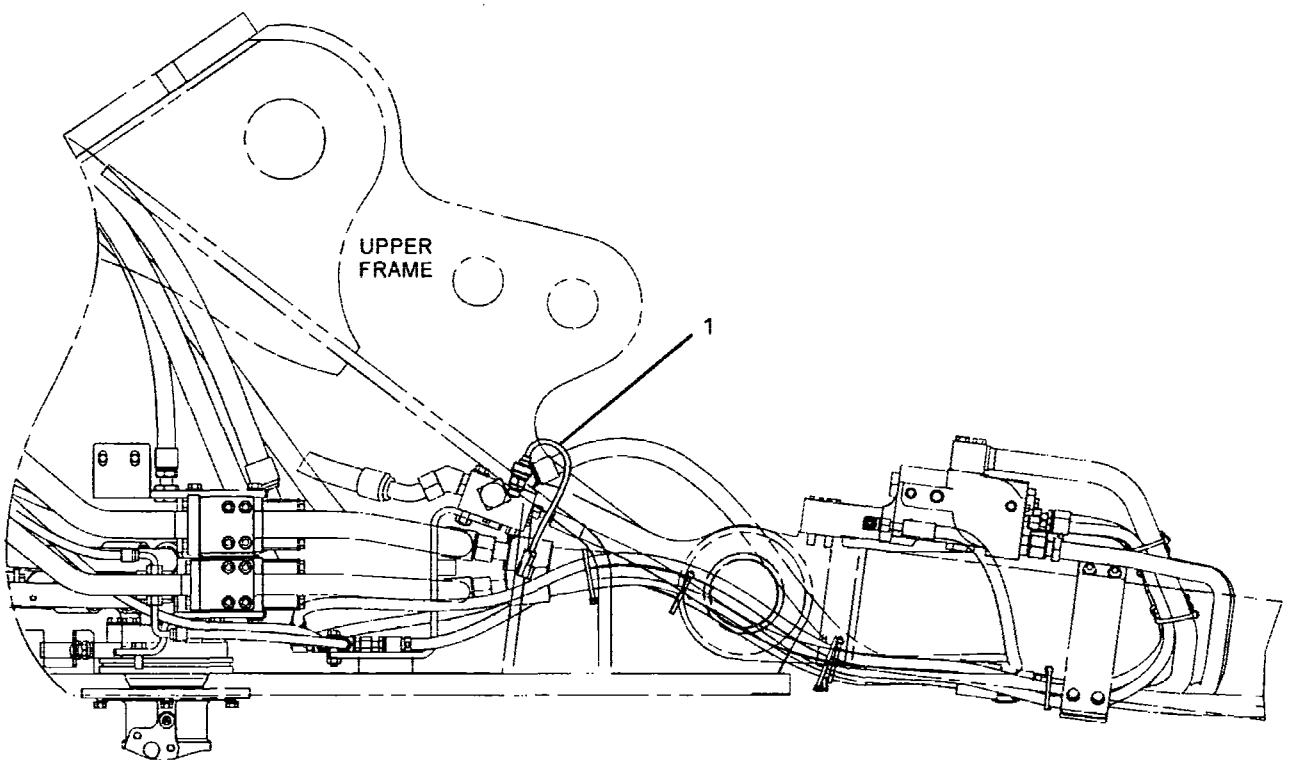

RIGHT SIDE VIEW

GRAPHIC #1 **<END>** g01233751

HYDRAULIC SYSTEM

128-7448 LINES GP-STICK

S/N: YEE1-UP
PART OF 220-2498 STICK AR
FOR USE WITH 3-M (9.8-FT) STICK
AN ATTACHMENT

SMCS-5057, 5458 **i02163145**

NOTE	REF NO	GRAPHIC REF	PART NUMBER	QTY	PART NAME 1 2 3 4 5 6 (PRODUCT LEVEL)	SEE PAGE
I	1	1	**212-5325**	2	HOSE AS	
	2	1	**8T-4223**	16	WASHER-HARD (13.5X25.5X3-MM THK)	
M	3	1	**8T-4184**	12	BOLT (M12X1.75X45-MM)	
	4	1	**1P-3703**	5	SEAL-RECTANGULAR	
	5	1	**6V-0400**	8	FLANGE-HALF	
	6	1	**134-6793**	1	BLOCK	
M	7	1	**8T-5412**	4	BOLT (M12X1.75X140-MM)	

I-REFER TO HYDRAULIC INFORMATION SYSTEM
M-METRIC PART

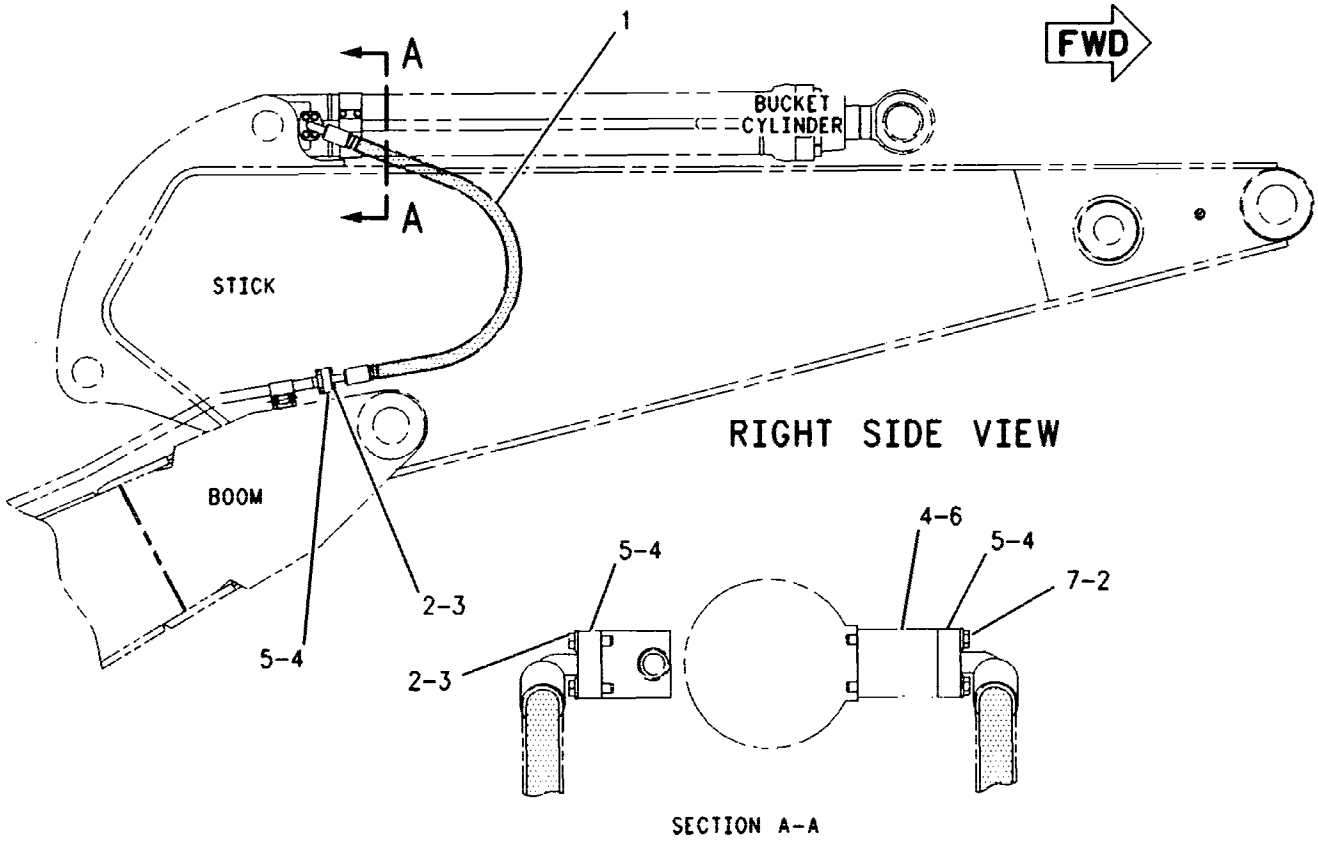

GRAPHIC #1 **<END>** g00924778

HYDRAULIC SYSTEM

128-7449 LINES GP-STICK

S/N: YEE1-UP
PART OF 220-2500 STICK AR
FOR USE WITH 2.5-M (8.2-FT)
AN ATTACHMENT

SMCS-5057, 5458 **i02538466**

NOTE	REF NO	GRAPHIC REF	PART NUMBER	QTY	PART NAME 1 2 3 4 5 6 (PRODUCT LEVEL)	SEE PAGE
I	1	1	**212-5326**	2	HOSE AS	
	2	1	**8T-4223**	16	WASHER-HARD (13.5X25.5X3-MM THK)	
M	3	1	**8T-4184**	12	BOLT (M12X1.75X45-MM)	
	4	1	**1P-3703**	5	SEAL-RECTANGULAR	
	5	1	**6V-0400**	8	FLANGE-HALF	
	6	1	**275-1410**	1	BLOCK	
M	7	1	**8T-5412**	4	BOLT (M12X1.75X140-MM)	

I-REFER TO HYDRAULIC INFORMATION SYSTEM
M-METRIC PART

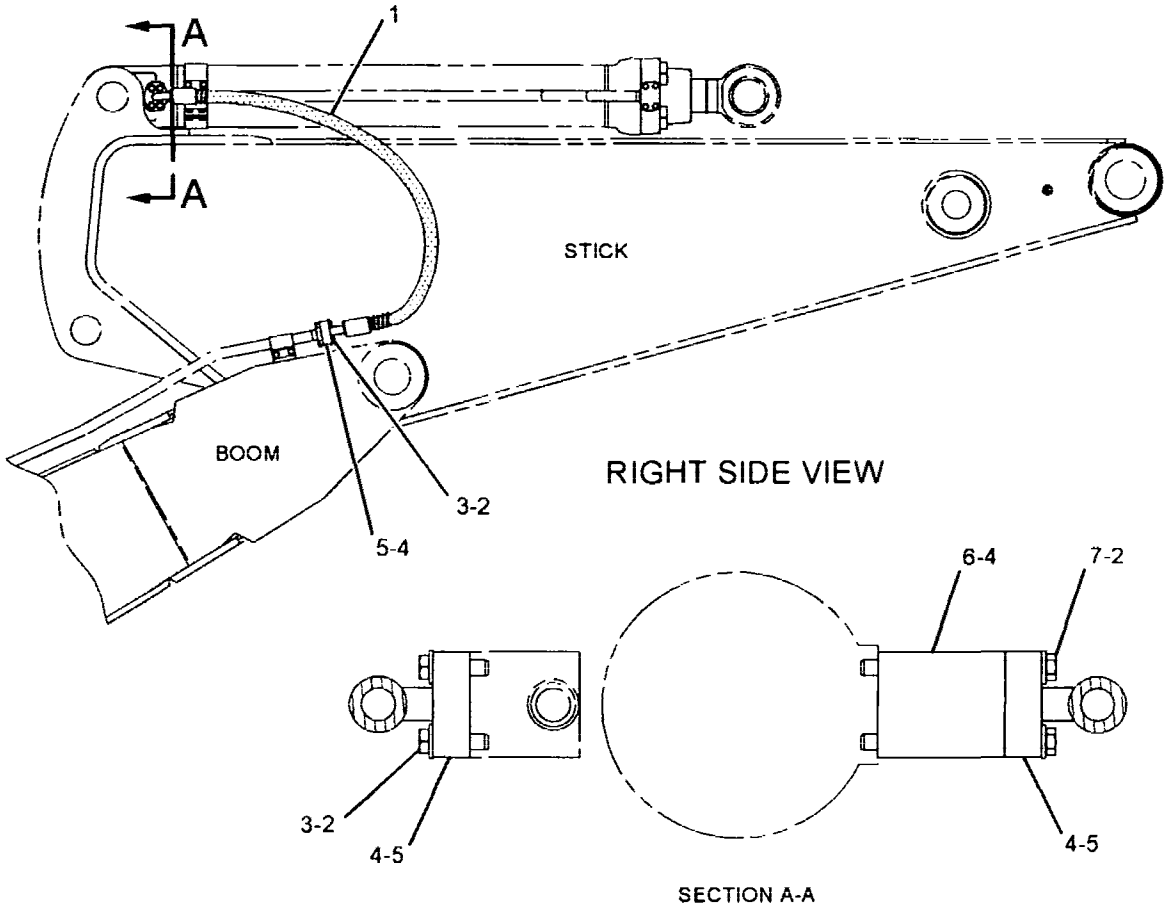

GRAPHIC #1 **<END>** g01039975

HYDRAULIC SYSTEM

245-4931 LINES GP-STICK

S/N: YEE1-UP
PART OF 294-1255 STICK AR-HOE
FOR USE WITH 4.3-M (14.1-FT) STICK
AN ATTACHMENT

SMCS-5057, 5458 **i02157964**

NOTE	REF NO	GRAPHIC REF	PART NUMBER	QTY	PART NAME 1 2 3 4 5 6 (PRODUCT LEVEL)	SEE PAGE
	1	1	**4I-6046**	1	BLOCK	
I	2	1	**245-5106**	2	HOSE AS	
	3	1	**1P-3703**	2	SEAL-RECTANGULAR	
	4	1	**1P-3704**	3	SEAL-RECTANGULAR	
	5	1	**1P-5767**	4	FLANGE-HALF	
	6	1	**6V-0400**	4	FLANGE-HALF	
M	7	1	**8T-4184**	12	BOLT (M12X1.75X45-MM)	
	8	1	**8T-4223**	16	WASHER-HARD (13.5X25.5X3-MM THK)	
M	9	1	**8T-5041**	4	BOLT (M12X1.75X120-MM)	

I-REFER TO HYDRAULIC INFORMATION SYSTEM
M-METRIC PART

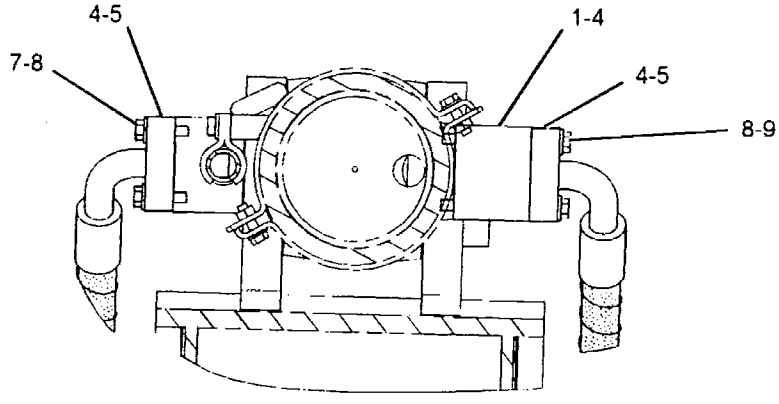

VIEW A-A

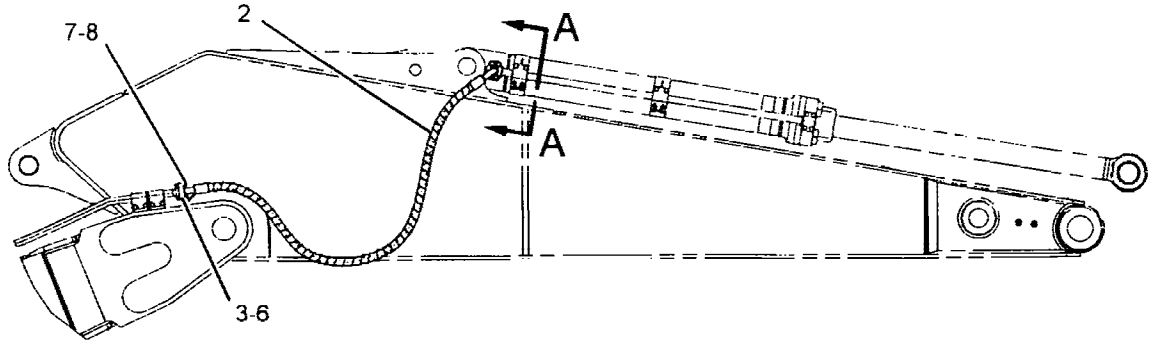

RIGHT SIDE VIEW

GRAPHIC #1 **<END>** g01098841

HYDRAULIC SYSTEM

289-5758 LINES GP-STICK

S/N: YEE1-UP
PART OF 294-1258, 294-1267 STICK AR-HOE
FOR USE WITH 3.4-M (11.2-FT) STICK
AN ATTACHMENT

SMCS-5057, 5458 **i02861047**

NOTE	REF NO	GRAPHIC REF	PART NUMBER	QTY	PART NAME 1 2 3 4 5 6 (PRODUCT LEVEL)	SEE PAGE
	1	1	4I-6046	1	BLOCK	
I	2	1	292-7593	2	HOSE AS	
	3	1	1P-3703	2	SEAL-RECTANGULAR	
	4	1	1P-3704	3	SEAL-RECTANGULAR	
	5	1	1P-5767	4	FLANGE-HALF	
	6	1	6V-0400	4	FLANGE-HALF	
M	7	1	8T-4184	12	BOLT (M12X1.75X45-MM)	
	8	1	8T-4223	16	WASHER-HARD (13.5X25.5X3-MM THK)	
M	9	1	8T-5041	4	BOLT (M12X1.75X120-MM)	

I-REFER TO HYDRAULIC INFORMATION SYSTEM
M-METRIC PART

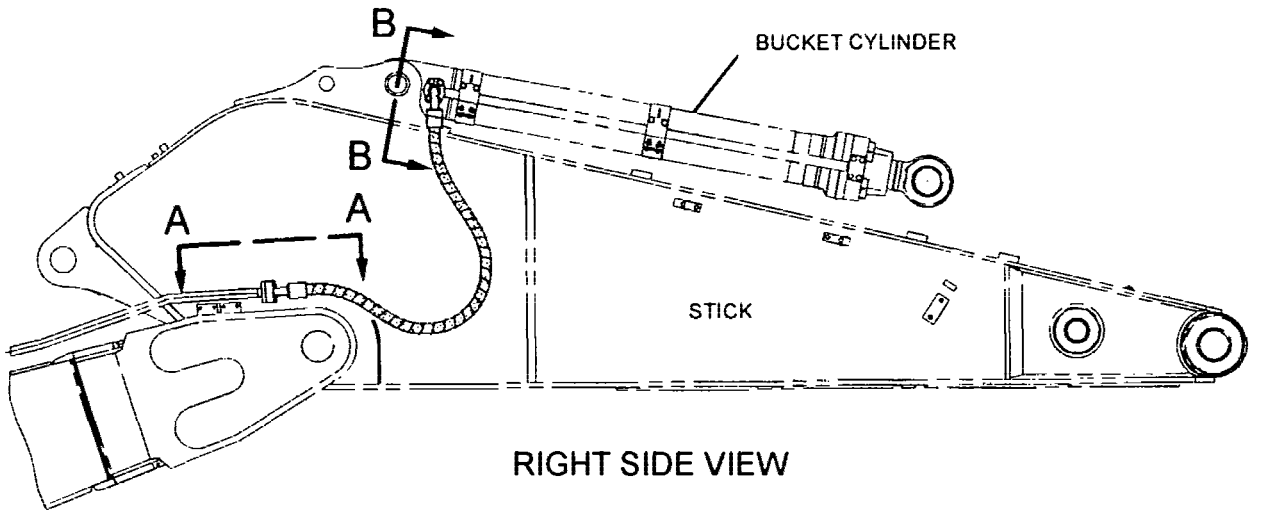

RIGHT SIDE VIEW

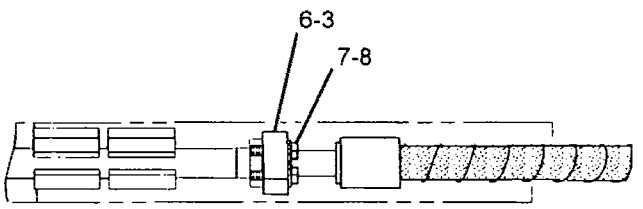

VIEW A-A

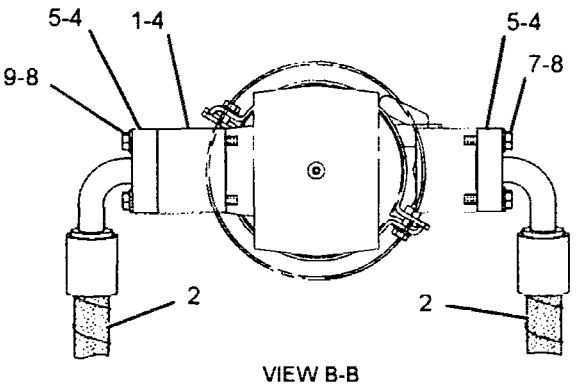

VIEW B-B

GRAPHIC #1 **<END>** g01369304

HYDRAULIC SYSTEM

289-5759 LINES GP-STICK

S/N: YEE1-UP
PART OF 294-1257, 294-1265 STICK AR-HOE
FOR USE WITH 3.9-M (12.8-FT) STICK
AN ATTACHMENT

SMCS-5057, 5458 **i02861055**

NOTE	REF NO	GRAPHIC REF	PART NUMBER	QTY	PART NAME 1 2 3 4 5 6 (PRODUCT LEVEL)	SEE PAGE
	1	1	**6V-0400**	4	FLANGE-HALF	
	2	1	**1P-3703**	2	SEAL-RECTANGULAR	
	3	1	**8T-4223**	16	WASHER-HARD (13.5X25.5X3-MM THK)	
M	4	1	**8T-4184**	12	BOLT (M12X1.75X45-MM)	
I	5	1	**4I-6130**	2	HOSE AS	
	6	1	**1P-5767**	4	FLANGE-HALF	
	7	1	**1P-3704**	3	SEAL-RECTANGULAR	
	8	1	**4I-6046**	1	BLOCK	
M	9	1	**8T-5041**	4	BOLT (M12X1.75X120-MM)	

I-REFER TO HYDRAULIC INFORMATION SYSTEM
M-METRIC PART

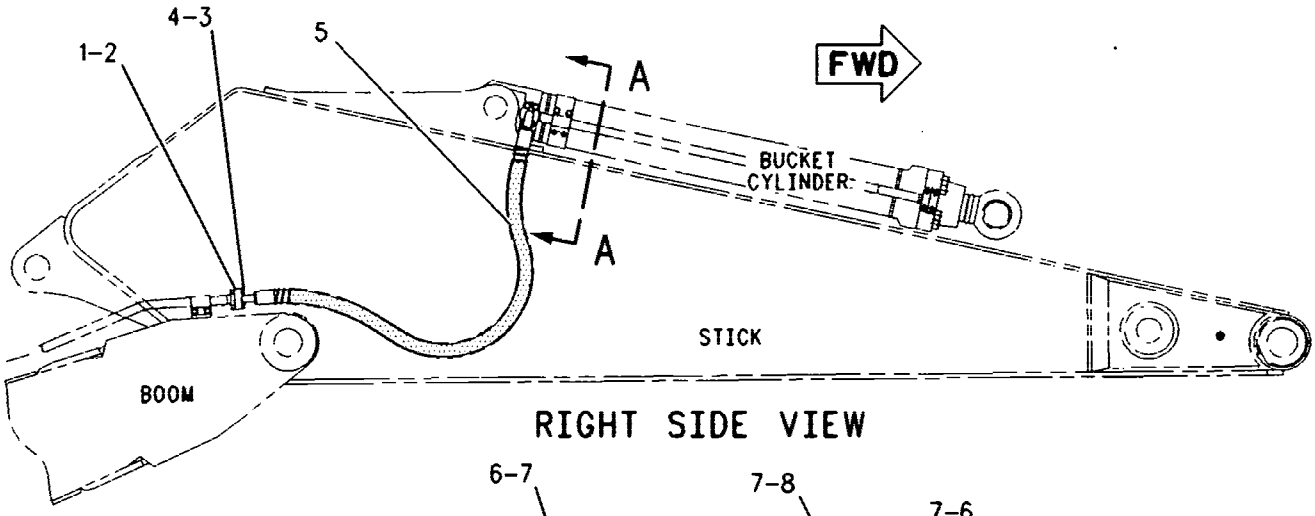

RIGHT SIDE VIEW

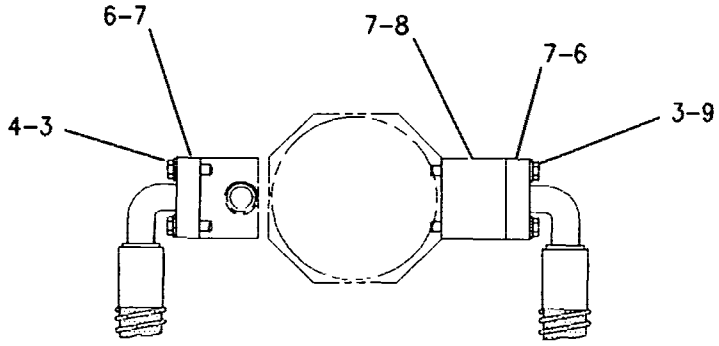

SECTION A-A

GRAPHIC #1 **<END>** g00924773

129-5973 LINES GP-STICK CYLINDER

S/N: YEE1-UP

PART OF 225-4524 CYLINDER & LINES GP-STICK

AN ATTACHMENT

SMCS-5458 i00812708

NOTE	REF NO	GRAPHIC REF	PART NUMBER	QTY	PART NAME 1 2 3 4 5 6 (PRODUCT LEVEL)	SEE PAGE
	1	1	134-6844	1	TUBE AS	
	2	1	1P-3704	1	SEAL-RECTANGULAR	
M	3	1	8T-4648	4	BOLT (M12X1.75X70-MM)	
	4	1	131-9482	2	SUPPORT AS	
	5	1	124-0909	4	CLIP	
	6	1	3E-4356	4	WASHER-HARD (17.5X30X6-MM THK)	
M	7	1	8T-4140	4	BOLT (M16X2X60-MM)	
	8	1	8T-4121	8	WASHER-HARD (11X21X2.5-MM THK)	
M	9	1	8T-4196	8	BOLT (M10X1.5X35-MM)	
	10	1	124-1216	2	SUPPORT AS	

M-METRIC PART

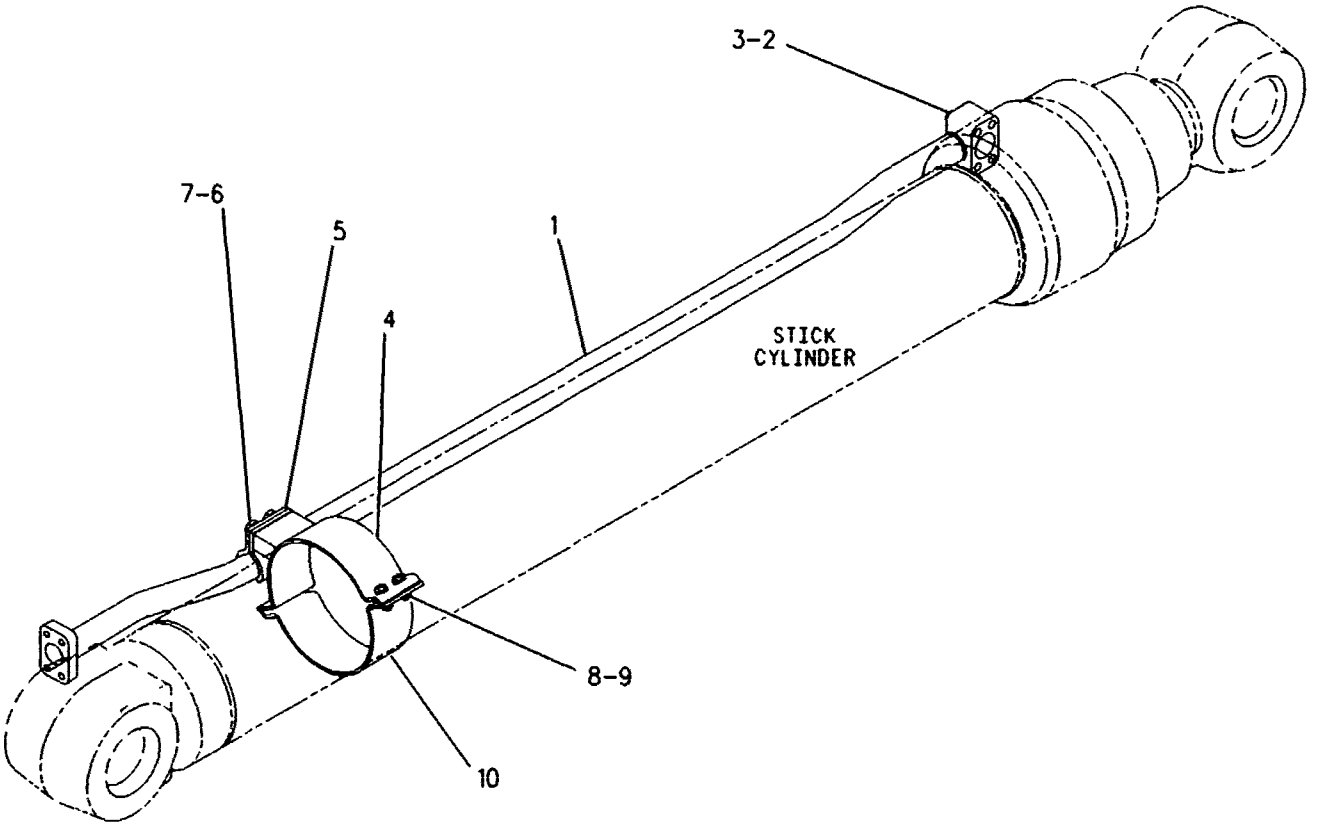

GRAPHIC #1 <END> g00268541

HYDRAULIC SYSTEM

302-9546 LINES GP-STICK CYLINDER–STICK LOWERING CONTROL

S/N: YEE1-UP

PART OF 297-0257, 297-0258 VALVE AR-CHECK & RELIEF

AN ATTACHMENT

SMCS-5458 **i02922522**

NOTE	REF NO	GRAPHIC REF	PART NUMBER	QTY	PART NAME 1 2 3 4 5 6 (PRODUCT LEVEL)	SEE PAGE
M	1	1	**8T-4140**	6	BOLT (M16X2X60-MM)	
M	2	1	**8T-4186**	2	BOLT (M10X1.5X40-MM)	
M	3	1	**8T-4196**	8	BOLT (M10X1.5X35-MM)	
M	4	1	**8T-6868**	4	BOLT (M12X1.75X80-MM)	
M	5	1	**108-1782**	4	BOLT-SOCKET HEAD (M12X1.75X90-MM)	
	6	1	**093-1294**	2	CLAMP	
	7	1	**216-6515**	4	CLIP	
	8	1	*148-8328*	1	CONNECTOR AS	
		1	**3D-2824**	1	SEAL-O-RING	
		1	**6V-8398**	1	SEAL-O-RING	
		1	**6V-8633**	1	CONNECTOR	
	9	1	*148-8368*	2	ELBOW AS	
					(EACH INCLUDES)	
		1	**3J-1907**	1	SEAL-O-RING	
		1	**4J-5477**	1	SEAL-O-RING	
		1	**6V-8627**	1	ELBOW	
	10	1	**302-9548**	1	TUBE AS	
	11	1	**302-9550**	1	TUBE AS	
	12	1	**302-9552**	1	TUBE AS	
	13	1	**6V-8397**	2	SEAL-O-RING	
	14	1	**6V-8398**	1	SEAL-O-RING	
	15	1	**1P-3705**	2	SEAL-RECTANGULAR	
	16	1	**124-1216**	2	SUPPORT AS	
	17	1	**237-3231**	2	SUPPORT AS	
	18	1	**302-9547**	1	TUBE AS	
Y	19	1	**285-1768**	1	VALVE GP-LOAD CONTROL	763
	20	1	**3E-4356**	6	WASHER-HARD (17.5X30X6-MM THK)	
	21	1	**8T-4121**	10	WASHER-HARD (11X21X2.5-MM THK)	
	22	1	**8T-4223**	4	WASHER-HARD (13.5X25.5X3-MM THK)	

M-METRIC PART
Y-SEPARATE ILLUSTRATION

302-9546 LINES GP-STICK CYLINDER *(contd.)* i02922522

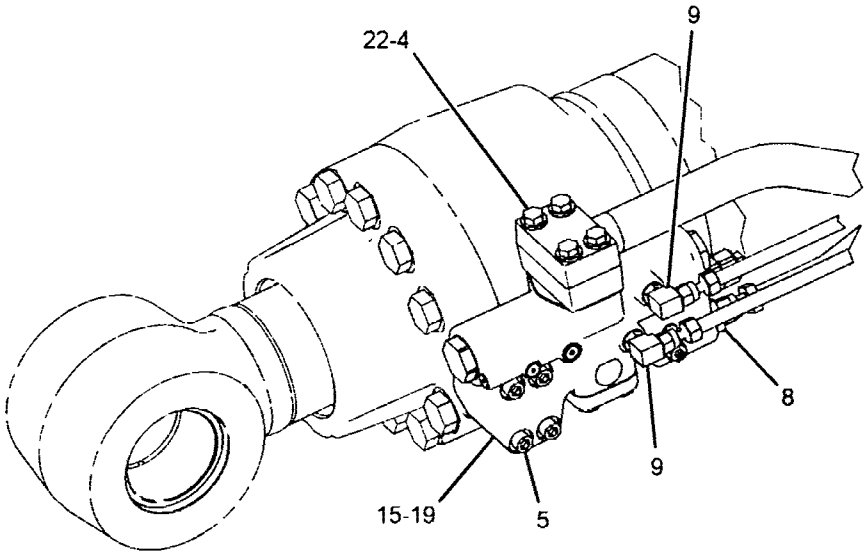

VIEW OF AREA A

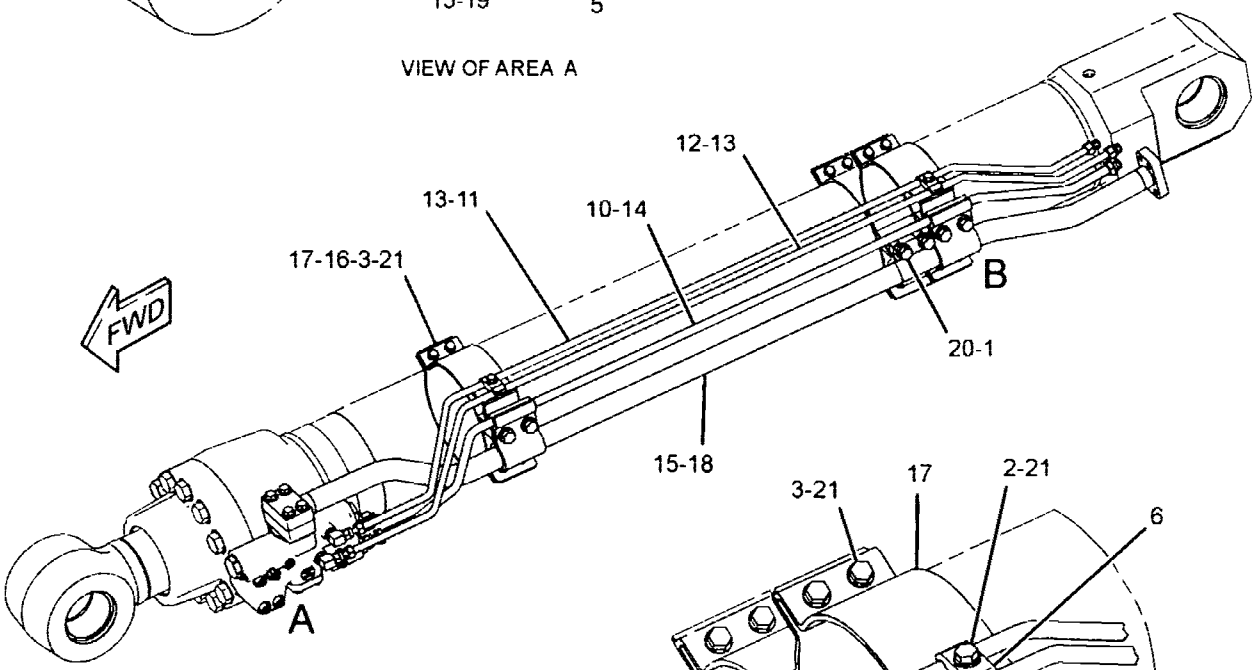

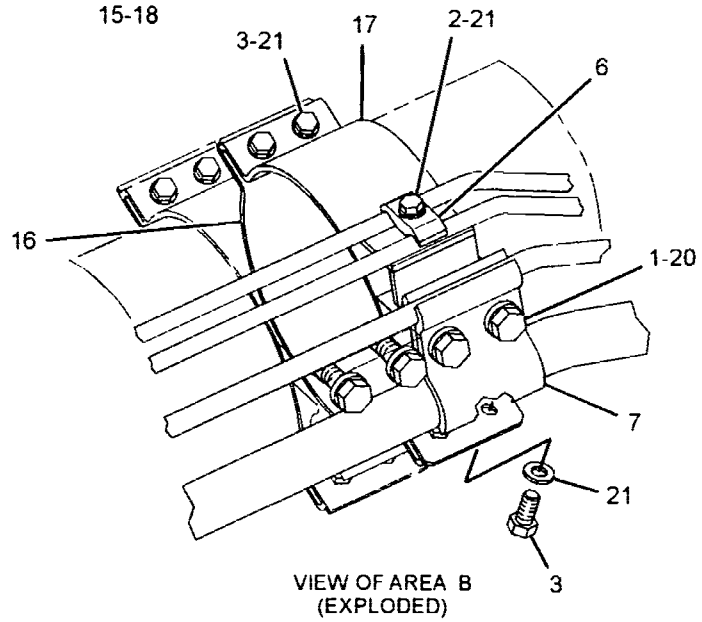

VIEW OF AREA B
(EXPLODED)

GRAPHIC #1 **<END>** g01457649

HYDRAULIC SYSTEM

292-7162 LINES GP-SWING MOTOR–WITH FINE SWING

S/N: YEE1-UP

PART OF 297-0243 HYDRAULIC AR

SMCS-5057 **i02934422**

NOTE	REF NO	GRAPHIC REF	PART NUMBER	QTY	PART NAME 1 2 3 4 5 6 (PRODUCT LEVEL)	SEE PAGE
I	1	1	**087-5767**	1	HOSE AS	
	2	1	**126-2132**	1	BLOCK AS	
I	3	1	**176-4774**	1	HOSE AS	
I	4	1	**194-0383**	1	HOSE AS	
I	5	1	**245-5061**	1	HOSE AS	
I	6	1	**269-9684**	1	HOSE AS	
Y	7	1	**295-9423**	1	VALVE GP-SWING CUSHION (FINE SWING)	833
I	8	1	**319-9775**	1	HOSE AS	
	9	1	*148-8324*	1	CONNECTOR AS	
		1	**3K-0360**	1	SEAL-O-RING	
		1	**6V-9746**	1	SEAL-O-RING	
		1	**6V-9874**	1	CONNECTOR	
	10	1	*148-8336*	1	CONNECTOR AS	
		1	**3J-1907**	1	SEAL-O-RING	
		1	**6V-8397**	1	SEAL-O-RING	
		1	**6V-8636**	1	CONNECTOR	
	11	1	*148-8347*	4	ELBOW AS	
					(EACH INCLUDES)	
		1	**3D-2824**	1	SEAL-O-RING	
		1	**6V-9007**	1	ELBOW	
		1	**6V-9746**	1	SEAL-O-RING	
	12	1	*148-8359*	1	ELBOW AS	
		1	**3K-0360**	1	SEAL-O-RING	
		1	**6V-9746**	1	SEAL-O-RING	
		1	**6V-9877**	1	ELBOW	
	13	1	*148-8431*	2	TEE AS	
					(EACH INCLUDES)	
		1	**5K-9090**	2	SEAL-O-RING	
		1	**6V-8785**	1	TEE	
		1	**7M-8485**	1	SEAL-O-RING	
	14	1	*148-8435*	1	TEE AS	
		1	**3J-1907**	1	SEAL-O-RING	
		1	**6V-8397**	2	SEAL-O-RING	
		1	**6V-8781**	1	TEE-FACE SEAL	
	15	1	*148-8449*	1	TEE AS-SWIVEL	
		1	**6V-9746**	2	SEAL-O-RING	
		1	**6V-9839**	1	TEE-SWIVEL	
	16	1	*153-6236*	1	REDUCER AS	
		1	**6V-8946**	1	REDUCER	
		1	**6V-9746**	1	SEAL-O-RING	
M	17	1	**8T-4178**	12	BOLT (M10X1.5X90-MM)	

I-REFER TO HYDRAULIC INFORMATION SYSTEM
M-METRIC PART
Y-SEPARATE ILLUSTRATION

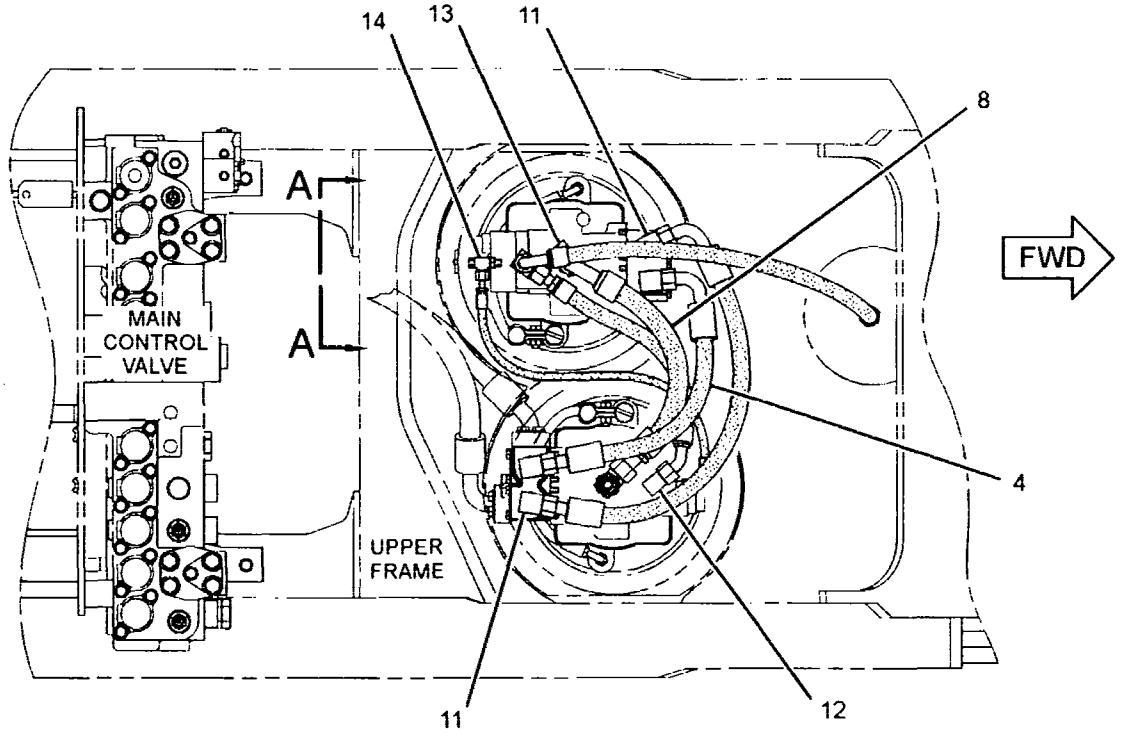

TOP VIEW

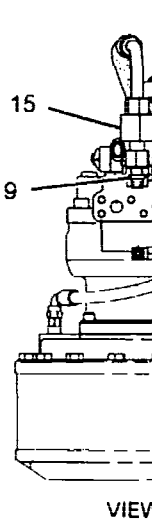

VIEW A-A

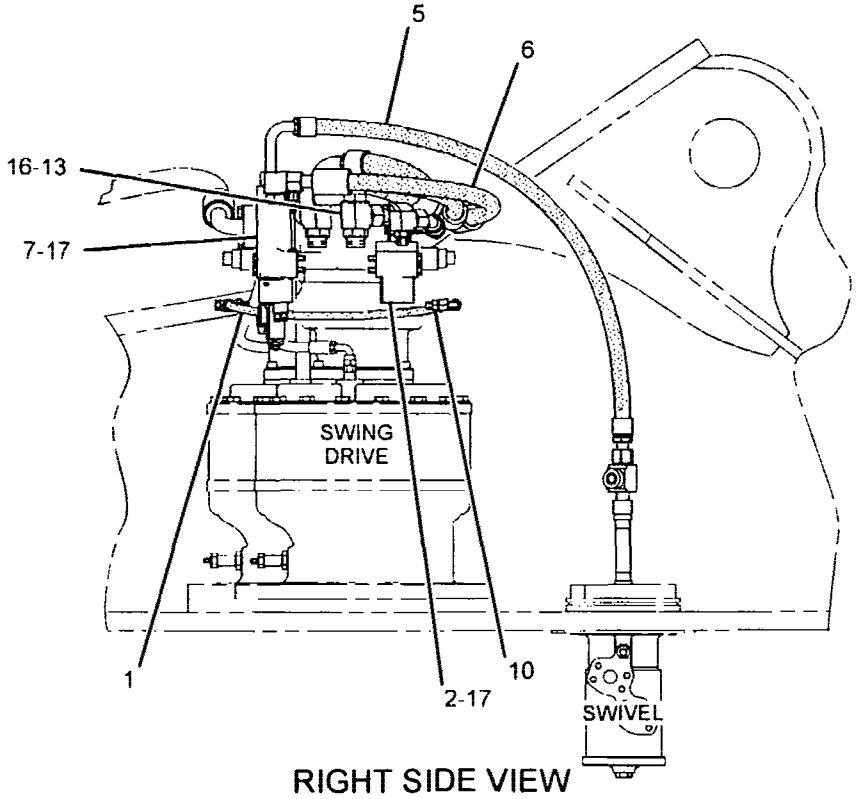

RIGHT SIDE VIEW

GRAPHIC #1 **<END>** g01460713

HYDRAULIC SYSTEM

302-3185 LINES GP-TRAVEL MOTOR–LONG UNDERCARRIAGE

S/N: YEE1-UP

PART OF 297-0243 HYDRAULIC AR

SMCS-5057, 5058 **i02841679**

NOTE	REF NO	GRAPHIC REF	PART NUMBER	QTY	PART NAME 1 2 3 4 5 6 (PRODUCT LEVEL)	SEE PAGE
	1	1	7K-1181	6	STRAP-CABLE	
	2	1	108-7118	2	GROMMET	
I	3	1	113-6741	2	HOSE AS	
	4	1	129-5947	2	GROMMET	
	5	1	148-8347	2	ELBOW AS	
					(EACH INCLUDES)	
		1	3D-2824	1	SEAL-O-RING	
		1	6V-9007	1	ELBOW	
		1	6V-9746	1	SEAL-O-RING	
M	6	1	165-5085	12	BOLT-SOCKET HEAD (M12X1.75X160-MM)	
Y	7	1	225-4547	1	SWIVEL GP	723
I	8	1	227-0727	2	HOSE AS	
I	9	1	245-5051	4	HOSE AS	
Y	10	1	266-7843	2	VALVE GP-TRAVEL COUNTERBALANCE	835
	11	1	285-2520	1	CONNECTOR AS	
		1	3D-2824	1	SEAL-O-RING	
		1	6V-9746	1	SEAL-O-RING	
		1	236-2839	1	TUBE AS	
	12	1	148-8336	1	CONNECTOR AS	
		1	3J-1907	1	SEAL-O-RING	
		1	6V-8397	1	SEAL-O-RING	
		1	6V-8636	1	CONNECTOR	
	13	1	148-8338	2	CONNECTOR AS	
					(EACH INCLUDES)	
		1	3J-1907	1	SEAL-O-RING	
		1	6V-8397	1	SEAL-O-RING	
		1	8T-0075	1	CONNECTOR	
	14	1	148-8378	2	ELBOW AS	
					(EACH INCLUDES)	
		1	3J-1907	1	SEAL-O-RING	
		1	6V-8397	1	SEAL-O-RING	
		1	6V-8724	1	ELBOW	
	15	1	148-8392	1	ELBOW AS	
		1	6V-9746	1	SEAL-O-RING	
		1	6V-9853	1	ELBOW	
	16	1	153-6259	1	TEE AS	
		1	3D-2824	1	SEAL-O-RING	
		1	6V-8777	1	TEE-FACE SEAL	
		1	6V-9746	2	SEAL-O-RING	
	17	1	1P-3703	4	SEAL-RECTANGULAR	
	18	1	1P-3704	4	SEAL-RECTANGULAR	
	19	1	1P-5767	8	FLANGE-HALF	
	20	1	5K-9090	1	SEAL-O-RING	
	21	1	6V-0400	16	FLANGE-HALF	
	22	1	6V-9746	1	SEAL-O-RING	
	23	1	8T-4121	6	WASHER-HARD (11X21X2.5-MM THK)	
M	24	1	8T-4136	6	BOLT (M10X1.5X25-MM)	
M	25	1	8T-4184	32	BOLT (M12X1.75X45-MM)	
M	26	1	8T-4194	16	BOLT (M12X1.75X50-MM)	
	27	1	8T-4223	48	WASHER-HARD (13.5X25.5X3-MM THK)	
	28	1	9X-2235	1	TEE-SWIVEL	
B	29	1	1U-8846		SEALANT-GASKET	

B-USE AS REQUIRED
I-REFER TO HYDRAULIC INFORMATION SYSTEM
M-METRIC PART
Y-SEPARATE ILLUSTRATION

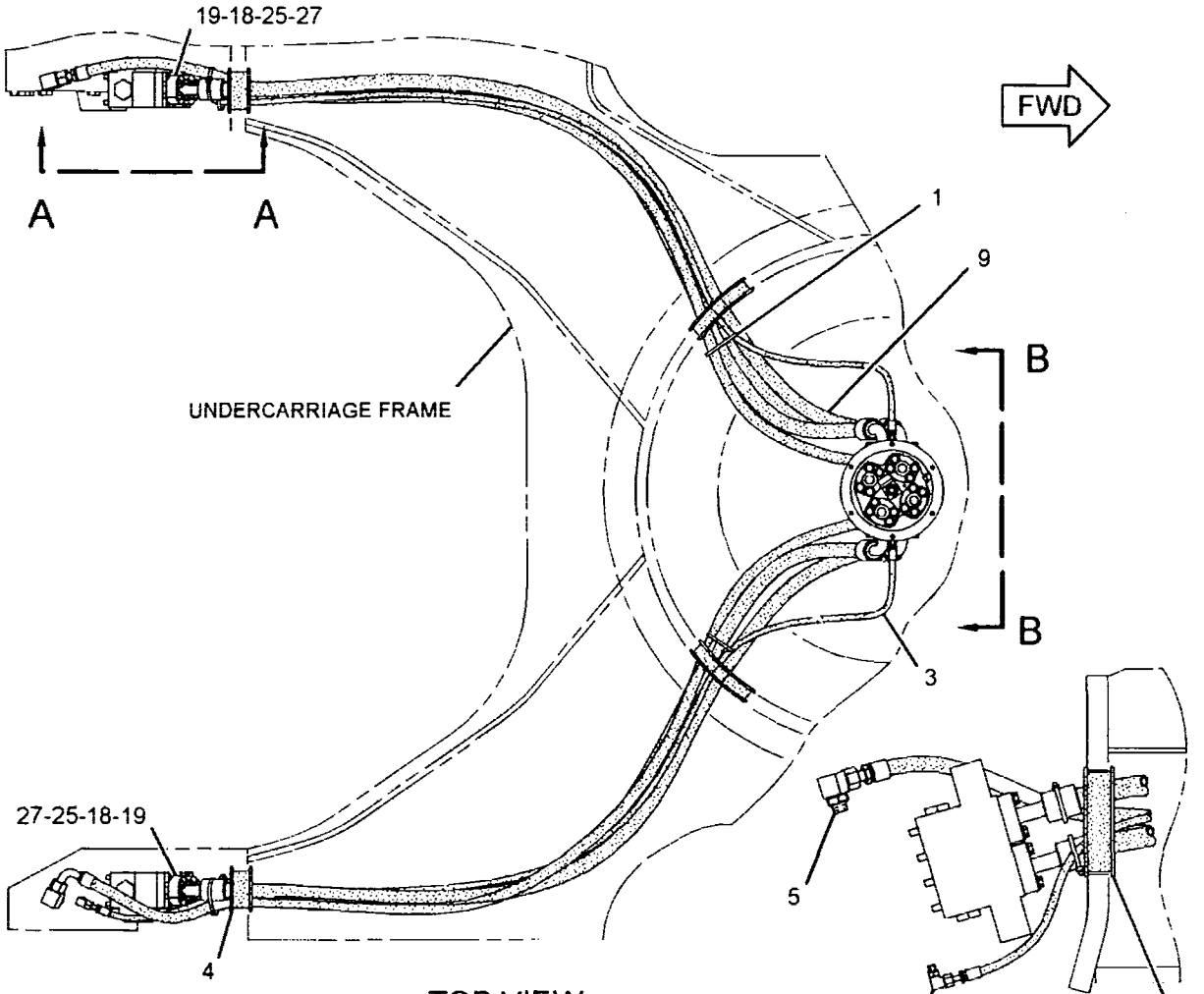

GRAPHIC #1 **<END>** g01461049

215-5037 MANIFOLD GP-CONTROL–PILOT OIL SUPPLY

S/N: YEE1-UP

PART OF 302-2985 LINES GP-PILOT

SMCS-5264 **i02841130**

NOTE	PART NUMBER	QTY	PART NAME 1 2 3 4 5 6 (PRODUCT LEVEL)	SEE PAGE
Y	*239-8697*	1	MANIFOLD GP-CONTROL (PILOT OIL SUPPLY) (ALUMINUM BODY)	690
			–OR–	
Y	*239-8998*	1	MANIFOLD GP-CONTROL (PILOT OIL SUPPLY) (STEEL BODY)	691

Y-SEPARATE ILLUSTRATION

<END>

HYDRAULIC SYSTEM

239-8697 MANIFOLD GP-CONTROL—PILOT OIL SUPPLY

S/N: YEE1-UP
ALUMINUM BODY
PART OF 215-5037 MANIFOLD GP-CONTROL

SMCS-5264 **i02297484**

NOTE	REF NO	GRAPHIC REF	PART NUMBER	QTY	PART NAME 1 2 3 4 5 6 (PRODUCT LEVEL)	SEE PAGE
Y	1	1	**121-1491**	1	VALVE GP-SOLENOID (SWING BRAKE RELEASE)	820
Y	2	1	**121-1491**	1	VALVE GP-SOLENOID (HYDRAULIC LOCKOUT)	820
Y	3	1	**121-1491**	1	VALVE GP-SOLENOID (TRAVEL SPEED)	820
	4	1	**197-0196**	1	VALVE-CHECK	
	5	1	**197-0199**	1	SPRING	
	6	1	**197-0273**	1	SPRING	
Z	7	1		1	MANIFOLD GP-CONTROL	
	8	1	**3J-1907**	1	SEAL-O-RING	
	9	1	**3K-0360**	4	SEAL-O-RING	
	10	1	**4J-7533**	6	SEAL-O-RING	
M	11	1	**7I-2272**	6	BOLT (M5X0.8X12-MM)	
	12	1	**9S-8001**	6	PLUG-O-RING	
	13	1	**9S-8004**	1	PLUG-O-RING	
	14	1	**9S-8005**	4	PLUG-O-RING	

M-METRIC PART
Y-SEPARATE ILLUSTRATION
Z-NOT SERVICED SEPARATELY

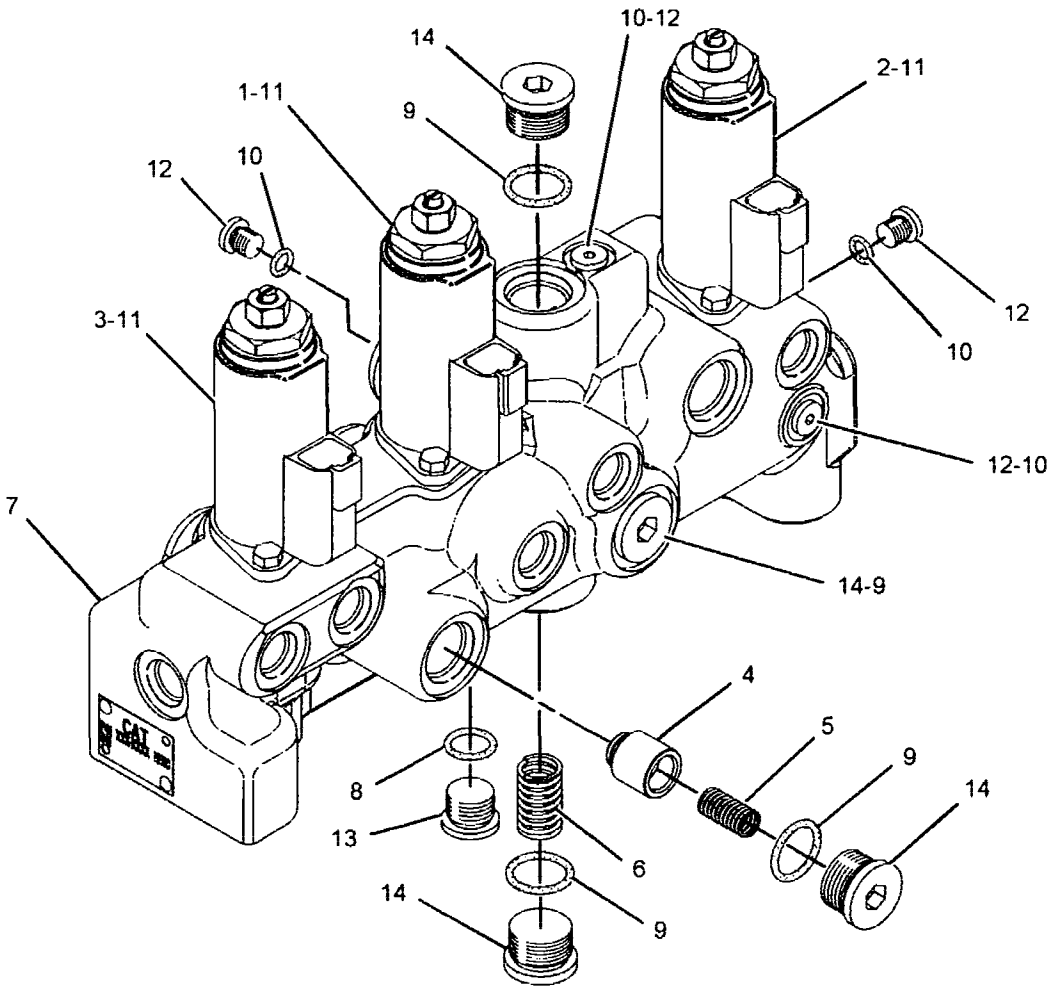

GRAPHIC #1

<END>

g01084474

239-8998 MANIFOLD GP-CONTROL–PILOT OIL SUPPLY

S/N: YEE1-UP
STEEL BODY
PART OF 215-5037 MANIFOLD GP-CONTROL

SMCS-5264 **i02228258**

NOTE	REF NO	GRAPHIC REF	PART NUMBER	QTY	PART NAME 1 2 3 4 5 6 (PRODUCT LEVEL)	SEE PAGE
Y	1	1	**121-1491**	1	VALVE GP-SOLENOID (SWING BRAKE RELEASE)	820
Y	2	1	**121-1491**	1	VALVE GP-SOLENOID (HYDRAULIC LOCKOUT)	820
Y	3	1	**121-1491**	1	VALVE GP-SOLENOID (TRAVEL SPEED)	820
	4	1	**197-0196**	1	VALVE-CHECK	
Z	5	1		1	MANIFOLD GP-CONTROL	
	6	1	**197-0199**	1	SPRING	
	7	1	**197-0273**	1	SPRING	
	8	1	**3K-0360**	3	SEAL-O-RING	
M	9	1	**7I-2272**	6	BOLT (M5X0.8X12-MM)	
	10	1	**7M-7410**	2	PLUG-PIPE	
	11	1	**8T-6759**	6	PLUG-PIPE	
	12	1	**9S-8005**	3	PLUG-O-RING	

M-METRIC PART
Y-SEPARATE ILLUSTRATION
Z-NOT SERVICED SEPARATELY

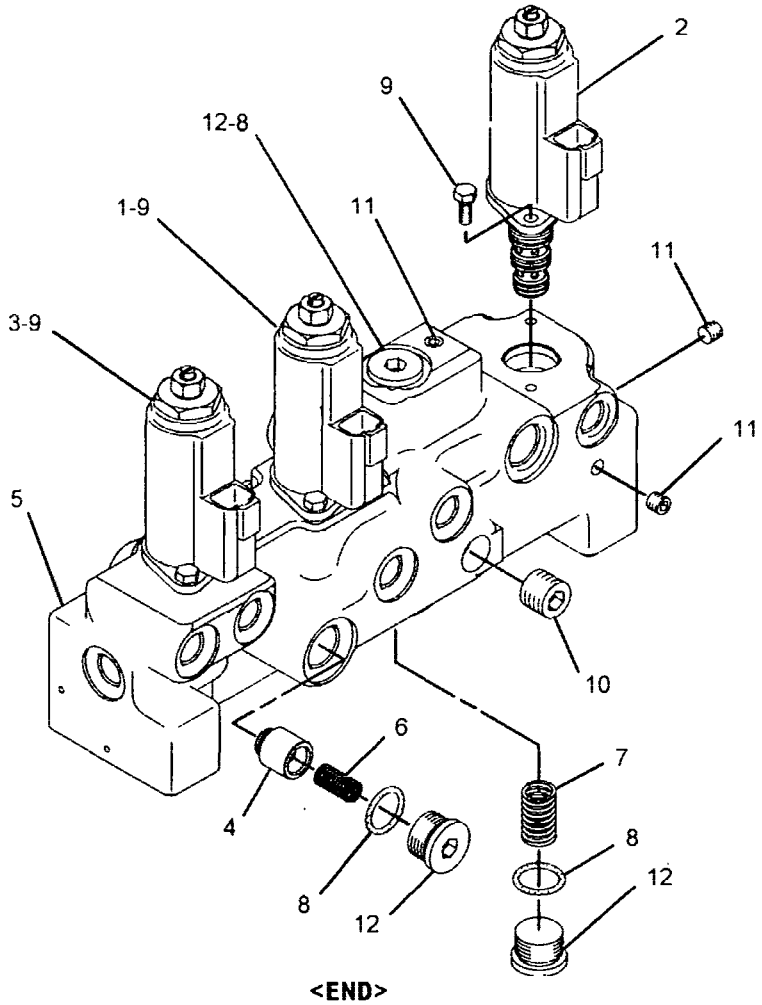

GRAPHIC #1 **<END>** g01083316

295-9442 MOTOR & MTG GP-HYDRAULIC FAN–REVERSING

S/N: YEE1-UP

PART OF 294-1275 CONTROL AR-VARIABLE-SPEED FAN AN ATTACHMENT

SMCS-1386 i02853798

NOTE	REF NO	GRAPHIC REF	PART NUMBER	QTY	PART NAME 1 2 3 4 5 6 (PRODUCT LEVEL)	SEE PAGE
Y	1	1	315-4375	1	MOTOR GP-PISTON	701

Y-SEPARATE ILLUSTRATION

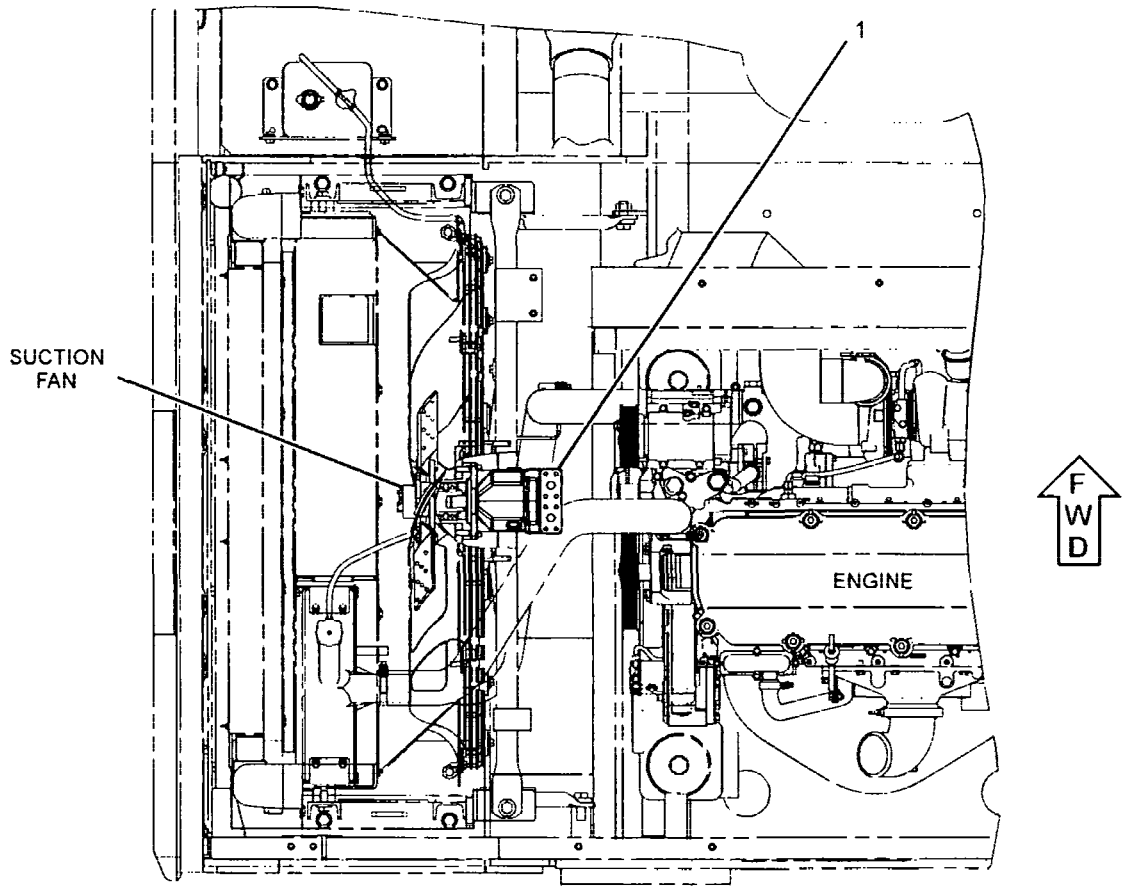

TOP VIEW

GRAPHIC #1 <END> g01429447

HYDRAULIC SYSTEM

225-4505 MOTOR & MTG GP-SWING

S/N: YEE1-UP

PART OF 296-6249, 296-6252 DRIVE GP-SWING

SMCS-5058 **i02161178**

NOTE	REF NO	GRAPHIC REF	PART NUMBER	QTY	PART NAME 1 2 3 4 5 6 (PRODUCT LEVEL)	SEE PAGE
YR	1	1	**225-4506**	1	MOTOR GP-SWING	702
	2	1	**6V-5200**	1	RING-RETAINING	
M	3	1	**8T-4944**	4	BOLT-SOCKET HEAD (M16X2X40-MM)	
	4	1	**8T-6404**	1	SEAL-O-RING	
	5	1	**9X-8257**	4	WASHER (17.5X30X3.5-MM THK)	

M-METRIC PART
R-REMFG PART MAY BE AVAILABLE
Y-SEPARATE ILLUSTRATION

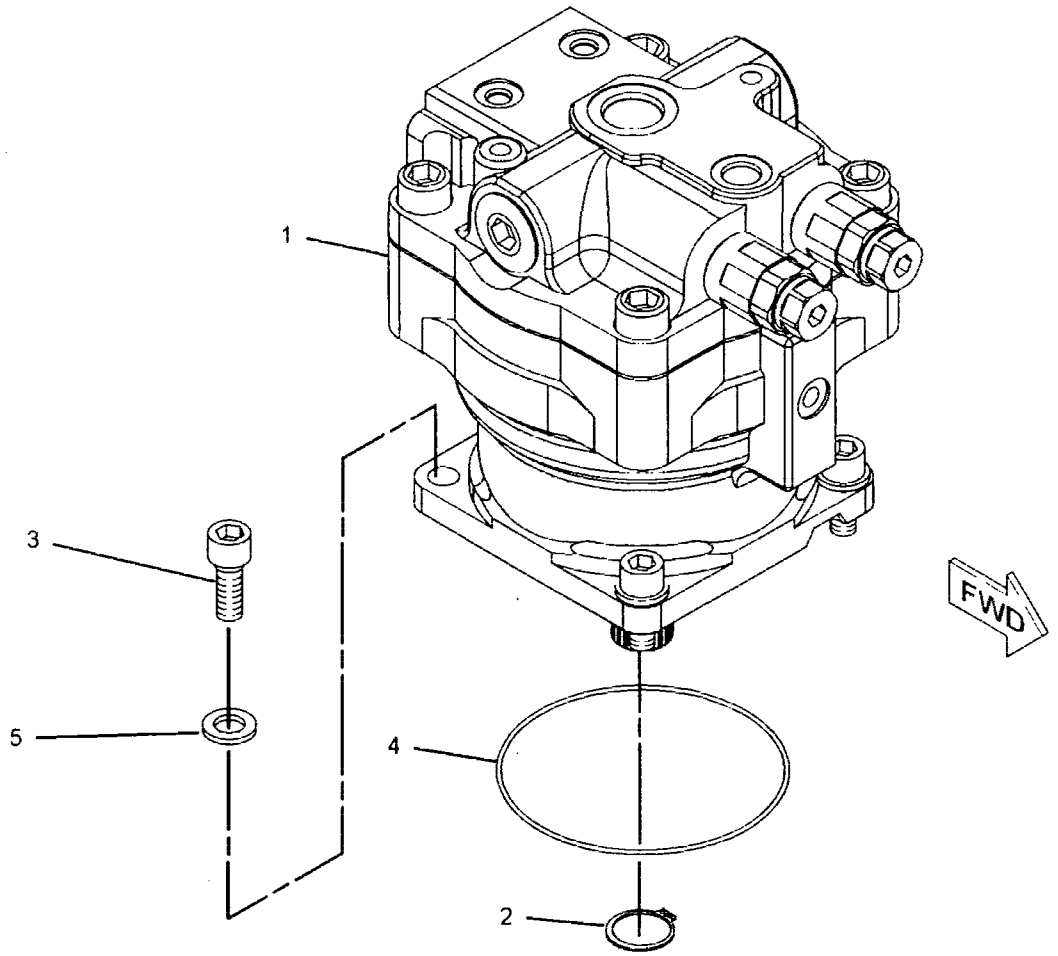

GRAPHIC #1 **<END>** g01096296

HYDRAULIC SYSTEM

225-4504 MOTOR & MTG GP-TRAVEL

S/N: YEE1-UP

PART OF 227-6044 FINAL DRIVE GP

SMCS-4351 **i02293398**

NOTE	REF NO	GRAPHIC REF	PART NUMBER	QTY	PART NAME 1 2 3 4 5 6 (PRODUCT LEVEL)	SEE PAGE
Y	1	1	**232-6180**	1	MOTOR GP-PISTON (TRAVEL)	695
	2	1	**1T-0132**	1	SEAL-O-RING	
M	3	1	**7X-2569**	4	BOLT (M20X2.5X200-MM)	
	4	1	**8T-4123**	4	WASHER (22X35X3.5-MM THK)	

M-METRIC PART
Y-SEPARATE ILLUSTRATION

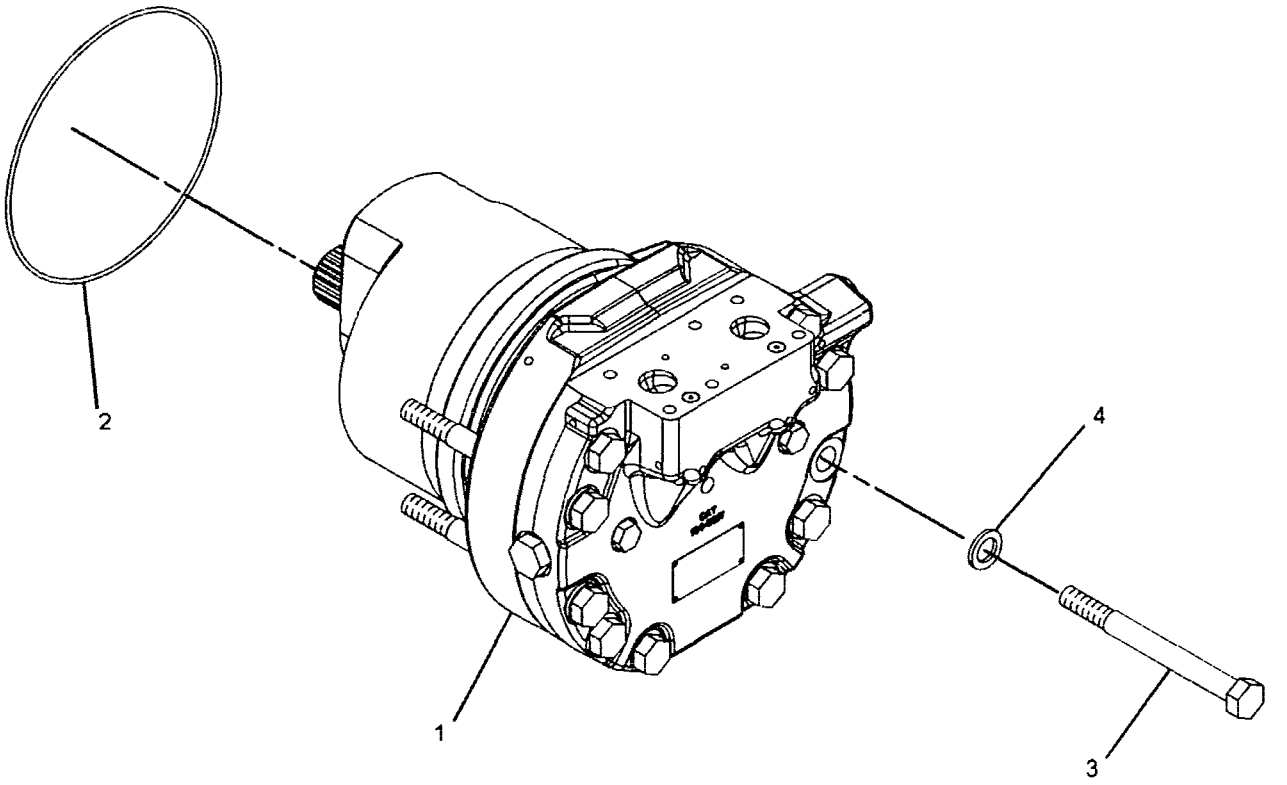

GRAPHIC #1 **<END>** g01096170

HYDRAULIC SYSTEM

232-6180 MOTOR GP-PISTON–TRAVEL*R

S/N: YEE1-UP

PART OF 225-4504 MOTOR & MTG GP-TRAVEL

SMCS-5058 **i02971581**

NOTE	REF NO	GRAPHIC REF	PART NUMBER	QTY	PART NAME 1 2 3 4 5 6 (PRODUCT LEVEL)	SEE PAGE
	1	2	1T-0936	2	PLUG-PIPE	
J	2	1	4B-4158	4	SCREW-DRIVE (3/16X0.25-IN)	
	3	1	6V-3382	1	SEAL-LIP TYPE	
	4	1	8J-2559	1	PLATE-CAUTION (OIL FILL)	
	5	2	087-4786	1	ADAPTER	
	6	1	118-5805	1	BEARING-SPECIAL RACE	
	7	1	124-1530	1	BARREL AS	
		1	140-8407	9	BEARING-SLEEVE	
	8	2	124-1536	5	DISC-FRICTION	
	9	2	124-1537	6	PLATE-SEPARATOR	
	10	1	124-1541	2	PIN	
	11	2	124-1554	1	SPRING	
	12	2	124-1557	2	RETAINER	
	13	1	124-1561	20	SPRING-BRAKE	
J	14	2	126-4002	2	SEAL-O-RING	
J	15	2	126-4003	1	SEAL-O-RING	
J	16	2	126-4004	1	RING-BACKUP	
	17	2	126-4040	1	RING-BACKUP	
	18	2	135-3859	1	SPACER (70.4X80X1.57-MM THK)	
	19	2	137-5646	1	SPACER (70.4X87.5X7.6-MM THK)	
	20	1	143-7140	2	KEY	
	21	1	148-3548	1	BEARING	
	22	1	149-1207	1	PLATE	
	23	1	155-4897	9	PISTON AS	
	24	1	159-7320	1	PLATE-RETAINER	
	25	2	167-3872	1	SPOOL	
	26	1	175-7887	2	DOWEL	
	27	1	184-6014	1	BODY AS	
		1	124-1555	4	PLUG	
	28	1	184-6015	1	HEAD GP-PUMP	
		1	096-5916	2	SEAT	
		1	124-1555	8	PLUG	
	29	1	193-2301	1	SHAFT	
	30	2	195-4456	1	PLUG-ORIFICE	
	31	1	226-6544	1	PISTON-BRAKE	
	32	2	230-5483	1	SPRING	
	33	1	231-6550	1	HOLD-DOWN	
	34	2	232-3868	4	WASHER-BELLEVILE	
	35	1	232-6181	1	PISTON-ACTUATOR	
	36	1	232-6654	1	PLATE-CAM	
J	37	2	095-1572	2	SEAL-O-RING	
J	38	2	096-5919	2	RING-BACKUP	
	39	1	143-7319	1	RACE-ROLLER BEARING	
	40	2	2D-6642	2	BALL	
J	41	2	2M-9780	1	SEAL-O-RING	
	42	1	2R-1236	1	RING-RETAINING	
J	43	1	3D-2824	2	SEAL-O-RING	
J	44	1	3K-0360	2	SEAL-O-RING	
	45	2	5B-9318	1	BALL	
	46	1	5P-7684	1	PLUG	
J	47	1	6K-6307	1	SEAL-O-RING	
J	48	2	7Y-5219	2	SEAL-O-RING	
M	49	1	8T-4187	6	BOLT (M20X2.5X80-MM)	
	50	1	9S-4183	2	PLUG-O-RING	
	51	1	9S-4185	2	PLUG-O-RING	

232-6180 MOTOR GP-PISTON *(contd.)* i02971581

NOTE	REF NO	GRAPHIC REF	PART NUMBER	QTY	PART NAME 1 2 3 4 5 6 (PRODUCT LEVEL)	SEE PAGE
					AVAILABLE REPAIR KIT(S):	
J			226-6473	1	KIT-SEAL (TRAVEL MOTOR)	

J-(KIT MARKED J SERVICES PARTS MARKED J)
M-METRIC PART

232-6180 MOTOR GP-PISTON *(contd.)*

i02971581

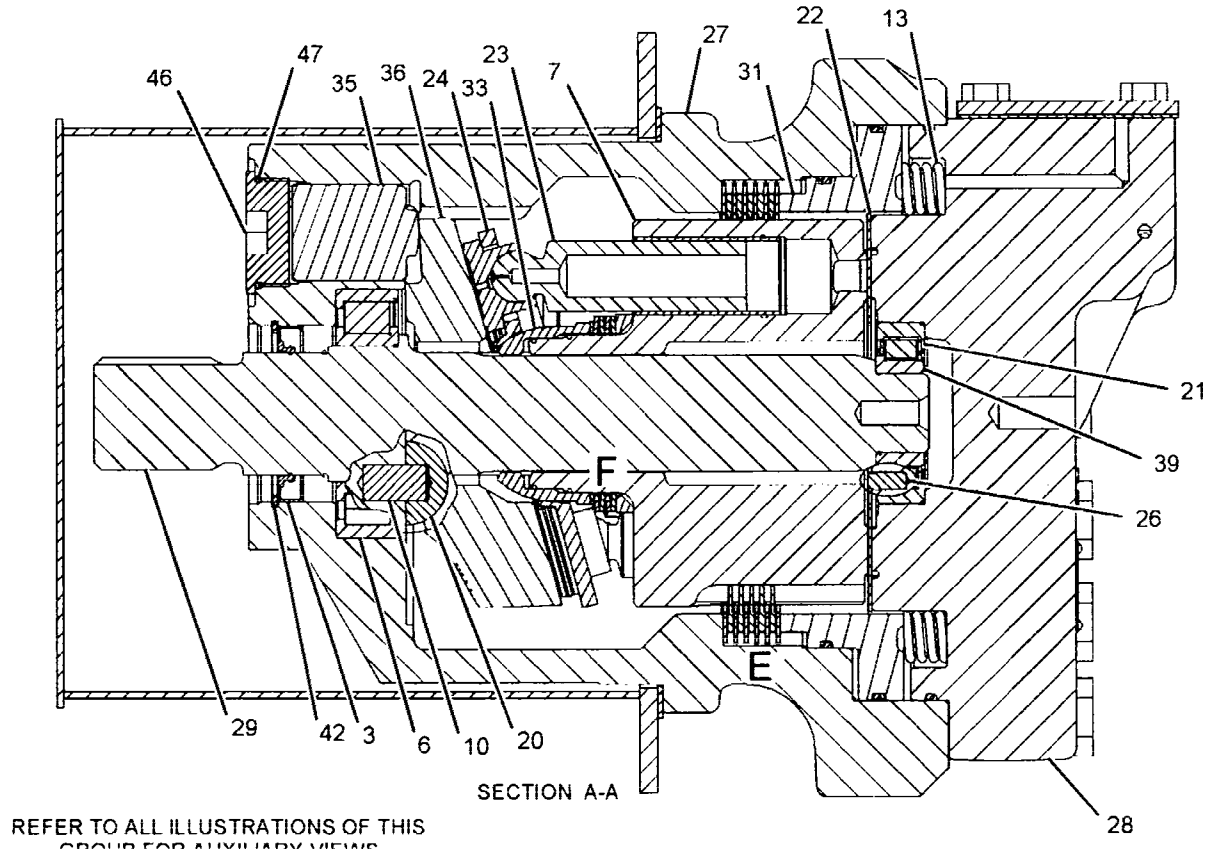

REFER TO ALL ILLUSTRATIONS OF THIS GROUP FOR AUXILIARY VIEWS

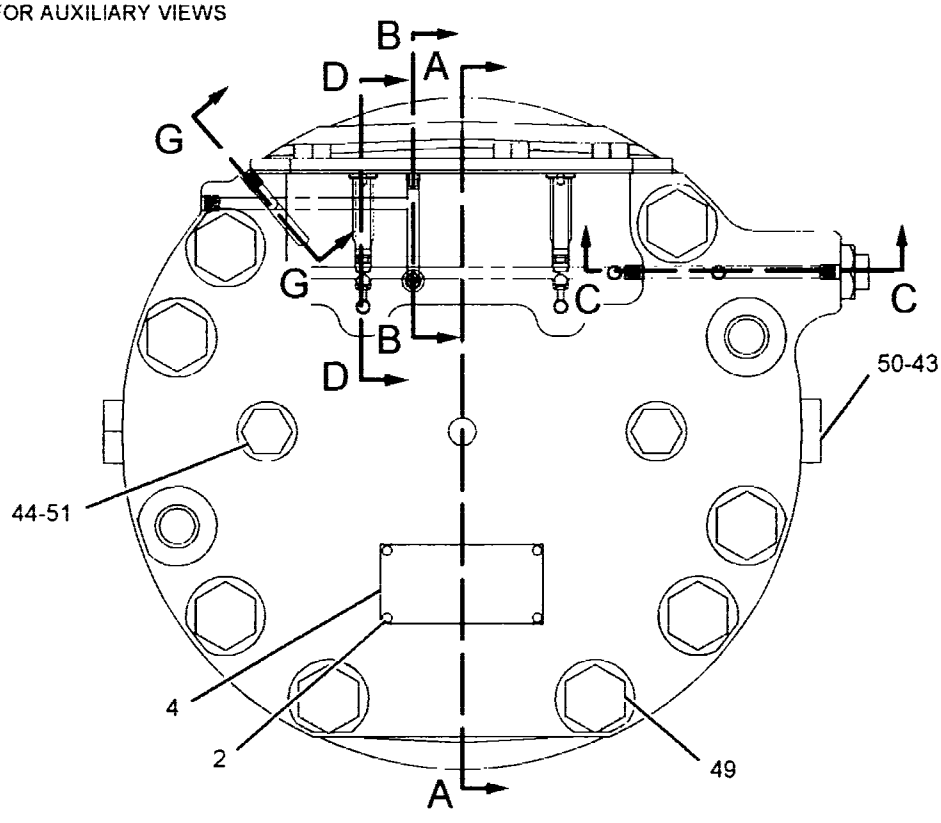

GRAPHIC #1

g01099008

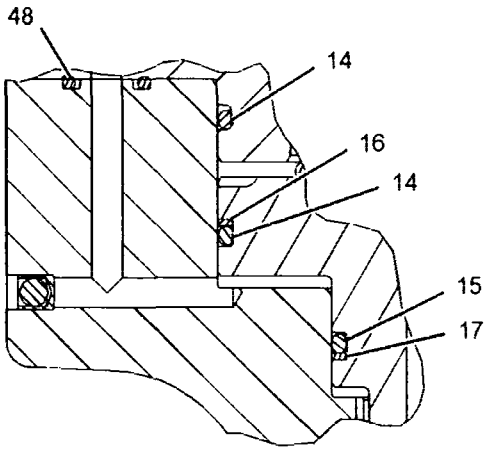

SECTION G-G

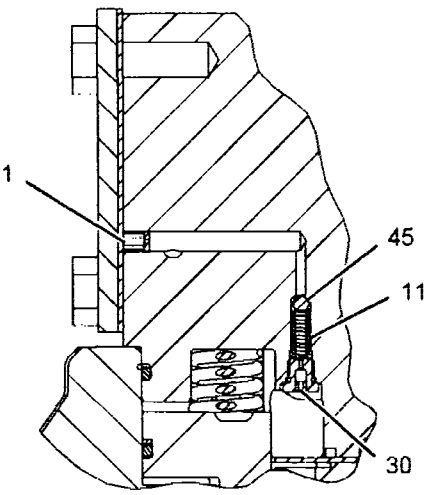

SECTION B-B

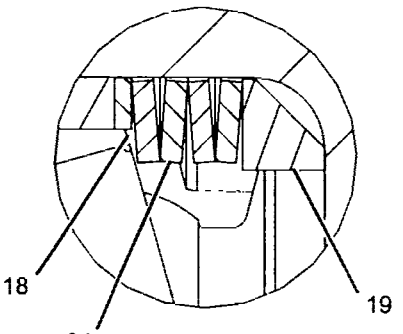

VIEW OF AREA F

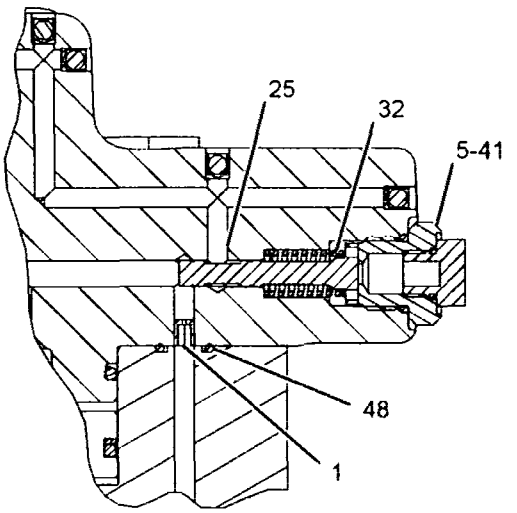

SECTION C-C

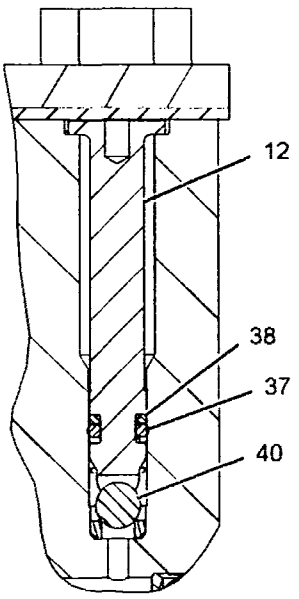

SECTION D-D

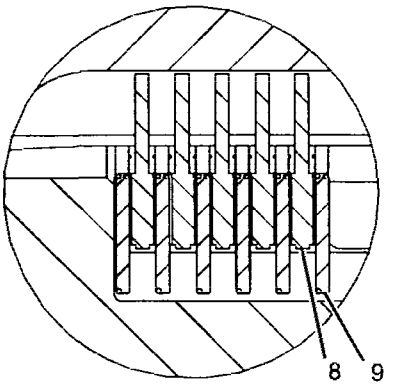

VIEW OF AREA E

GRAPHIC #2

<END>

g01099014

HYDRAULIC SYSTEM

295-9429 MOTOR GP-PISTON–HYDRAULIC FAN

S/N: YEE1-UP

PART OF 281-3554 FAN GP-SUCTION

SMCS-5058 **i02842859**

NOTE	REF NO	GRAPHIC REF	PART NUMBER	QTY	PART NAME 1 2 3 4 5 6 (PRODUCT LEVEL)	SEE PAGE
	1	1	209-6063	1	SHAFT	
	2	1	7Y-5267	1	RING-RETAINING	
	3	1	168-7319	1	SEAL-SHAFT	
	4	1	9T-9529	2	PIN	
	5	1	295-9551	1	SWASHPLATE	
Y	6	1	295-9547	1	ROTATING GP-PUMP	721
	7	1	192-7470	1	SEAL-O-RING	
M	8	1	095-0690	4	BOLT-SOCKET HEAD (M14X2X60-MM)	
	9	1	242-6844	1	COVER	
	10	1	185-0296	1	BEARING	
	11	1	9X-8979	1	DOWEL	
	12	1	168-2203	1	SHIM-SHAFT	
	13	1	295-9550	1	HOUSING	
	14	1	185-0295	1	BEARING	
	15	1	185-0280	1	PLATE	
	16	1	197-2471	1	PLUG AS	
		1	197-2472	1	SEAL	
	17	1	9S-8006	1	PLUG-O-RING	
	18	1	2M-9780	1	SEAL-O-RING	
	19	1	242-3374	1	SLEEVE	
	20	1	197-2474	1	VALVE AS	

M-METRIC PART
Y-SEPARATE ILLUSTRATION

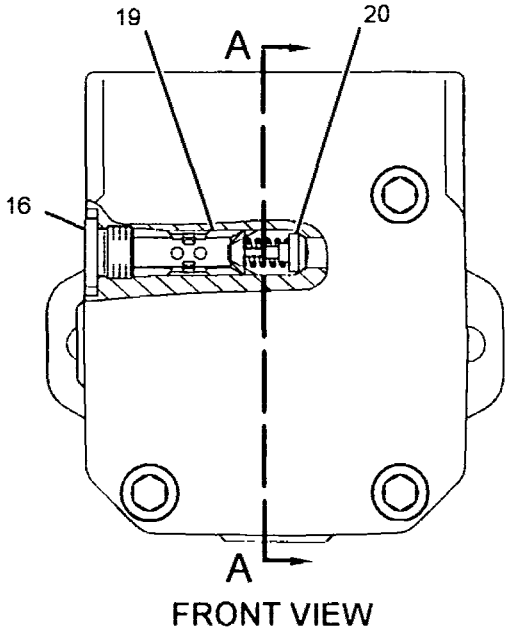

FRONT VIEW

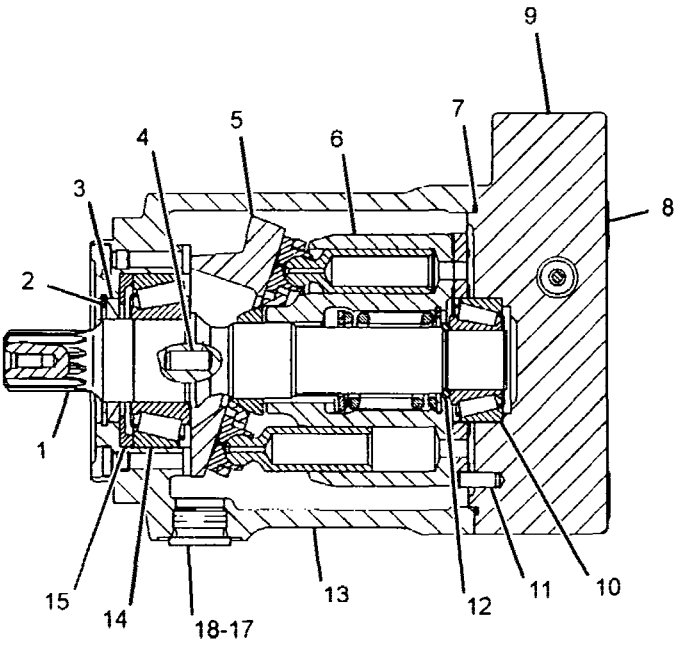

SECTION A-A

GRAPHIC #1 **<END>** g01457912

315-4375 MOTOR GP-PISTON–REVERSING HYDRAULIC FAN

S/N: YEE1-UP

PART OF 295-9442 MOTOR & MTG GP-HYDRAULIC FAN

AN ATTACHMENT

SMCS-5058 **i02853818**

NOTE	REF NO	GRAPHIC REF	PART NUMBER	QTY	PART NAME 1 2 3 4 5 6 (PRODUCT LEVEL)	SEE PAGE
	1	1	209-6063	1	SHAFT	
	2	1	7Y-5267	1	RING-RETAINING	
	3	1	168-7319	1	SEAL-SHAFT	
	4	1	9T-9529	2	PIN	
	5	1	295-9551	1	SWASHPLATE	
Y	6	1	295-9547	1	ROTATING GP-PUMP	721
	7	1	192-7470	1	SEAL-O-RING	
M	8	1	095-0690	4	BOLT-SOCKET HEAD (M14X2X60-MM)	
	9	1	185-0277	1	COVER	
	10	1	185-0296	1	BEARING	
	11	1	9X-8979	1	DOWEL	
	12	1	168-2203	1	SHIM-SHAFT	
	13	1	295-9550	1	HOUSING	
	14	1	185-0295	1	BEARING	
	15	1	185-0280	1	PLATE	
	16	1	9S-8006	1	PLUG-O-RING	
	17	1	2M-9780	1	SEAL-O-RING	

M-METRIC PART
Y-SEPARATE ILLUSTRATION

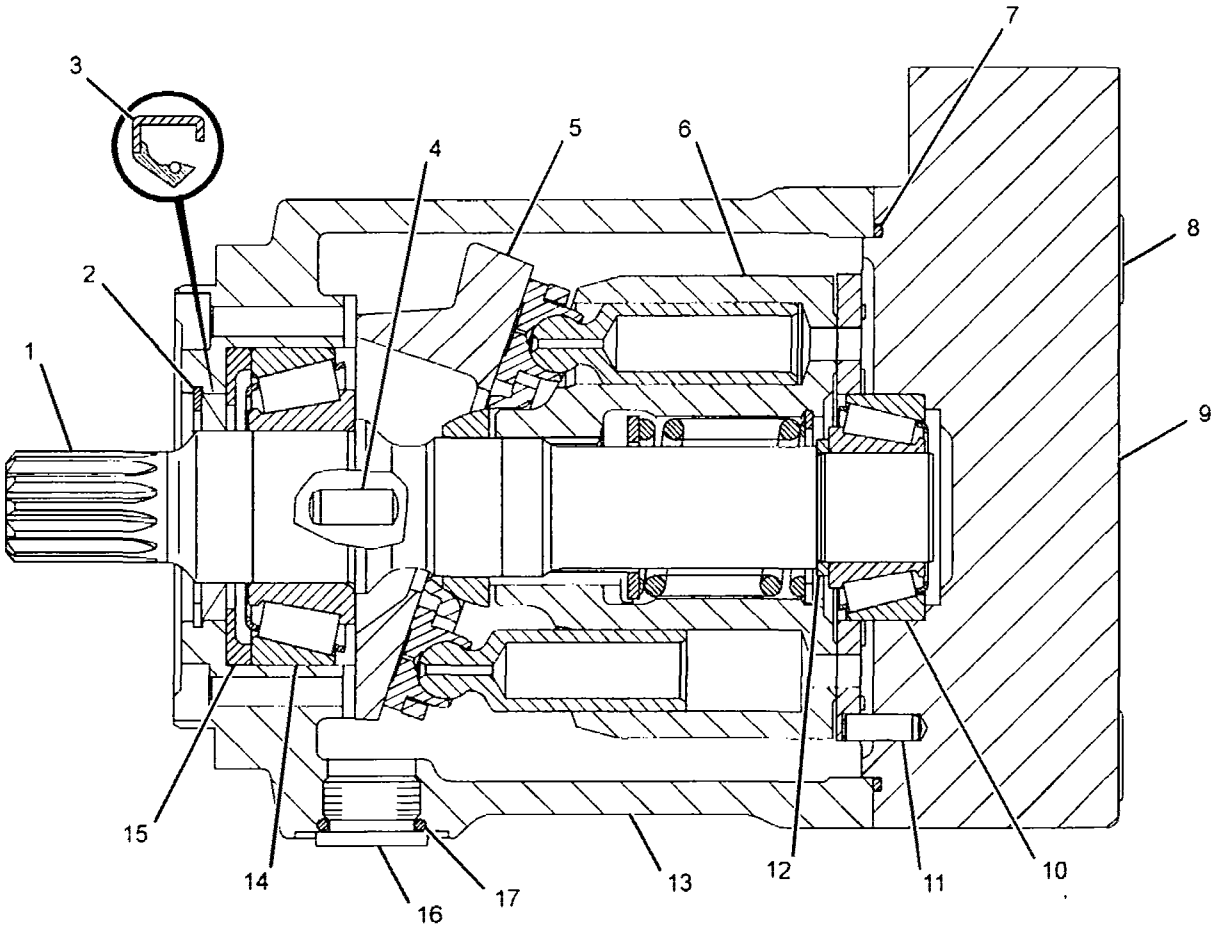

GRAPHIC #1 **<END>** g01458710

HYDRAULIC SYSTEM

225-4506 MOTOR GP-SWING

S/N: YEE1-UP

PART OF 225-4505 MOTOR & MTG GP-SWING

SMCS-5058 **i02403069**

NOTE	REF NO	GRAPHIC REF	PART NUMBER	QTY	PART NAME 1 2 3 4 5 6 (PRODUCT LEVEL)	SEE PAGE
Y	1	1	**184-3830**	2	VALVE GP-RELIEF (SWING MOTOR)	801
Y	2	1	**234-4448**	1	MOTOR GP-SWING	703

Y-SEPARATE ILLUSTRATION

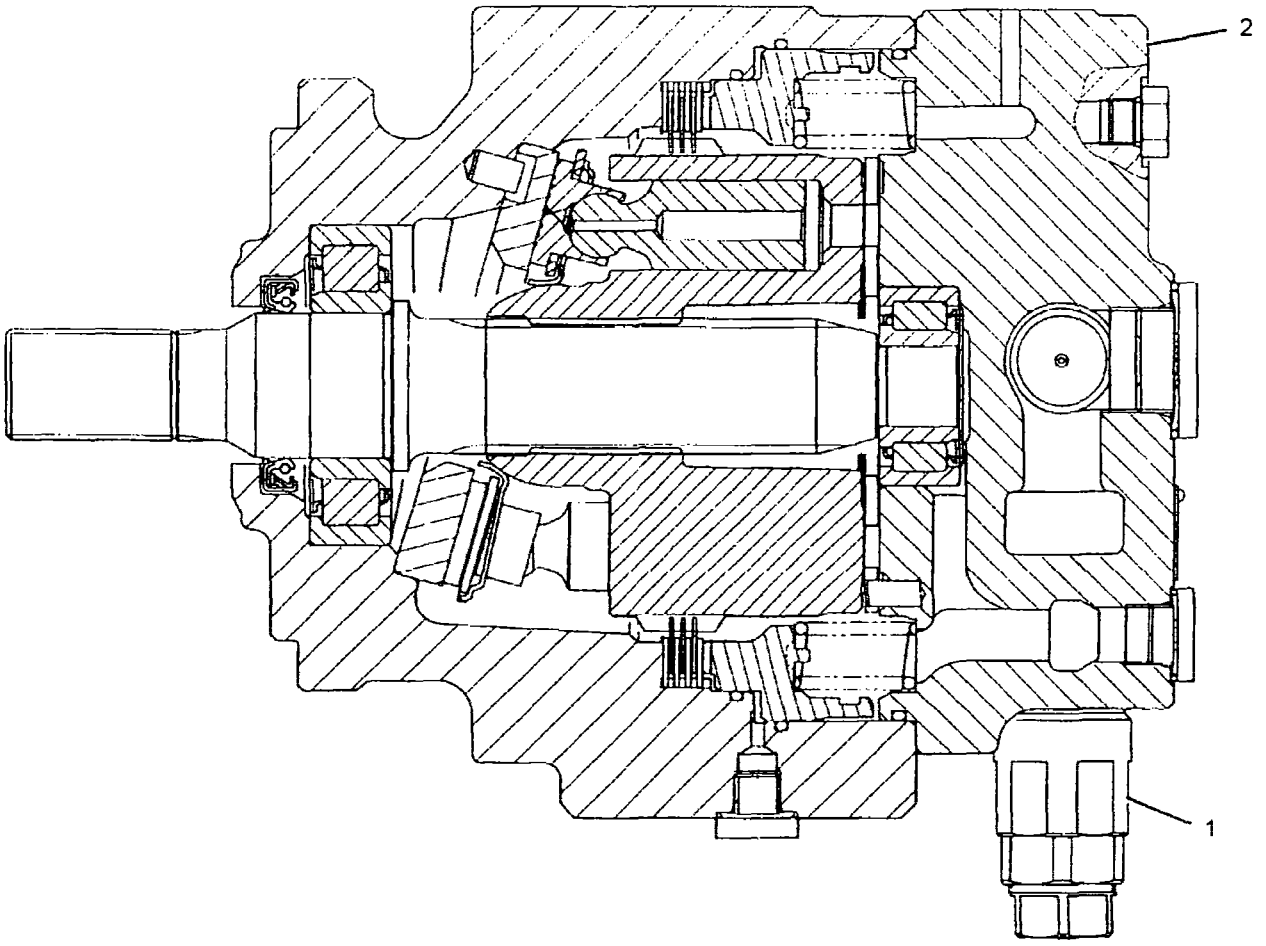

GRAPHIC #1 **<END>** g01096524

HYDRAULIC SYSTEM

234-4448 MOTOR GP-SWING

S/N: YEE1-UP

PART OF 225-4506 MOTOR GP-SWING

SMCS-5058 **i02639593**

NOTE	REF NO	GRAPHIC REF	PART NUMBER	QTY	PART NAME 1 2 3 4 5 6 (PRODUCT LEVEL)	SEE PAGE
	1	1	**234-4450**	1	SHAFT	
J	2	1	**096-1533**	1	SEAL-LIP TYPE	
	3	1	**188-4170**	1	BEARING	
	4	1	**234-4449**	1	BODY	
	5	1	**188-4165**	1	PLATE	
	6	1	**234-4533**	1	PLATE	
	7	1	**234-4539**	1	DOWEL	
	8	1	**188-4161**	1	PISTON AS	
	9	1	**188-4166**	1	PLATE	
	10	1	**188-4164**	1	BARREL	
	11	1	**188-4172**	3	PLATE-FRICTION	
	12	1	**188-4173**	4	PLATE-SEPARATOR	
	13	1	**184-3835**	1	PISTON	
J	14	1	**5J-2383**	1	SEAL-O-RING	
J	15	1	**7Y-4294**	1	SEAL-O-RING	
J	16	1	**4I-5849**	1	SEAL-O-RING	
	17	1	**123-2139**	20	SPRING	
	18	1	**188-4162**	1	HEAD GP-MOTOR	
	18A	1	**099-8111**	2	PIN-SPRING	
J	19	1	**3J-1907**	2	SEAL-O-RING	
	20	1	**110-5525**	2	PLUG	
	21	1	**204-2677**	1	PLATE-VALVE	
	22	1	**188-4171**	1	BEARING	
	23	1	**170-9996**	2	PLUG	
J	24	1	**095-1600**	2	SEAL-O-RING	
	25	1	**170-9986**	2	SPRING	
M	26	1	**7Y-5221**	4	BOLT-SOCKET HEAD (M20X2.5X45-MM)	
	27	1	**170-9985**	2	VALVE	
					AVAILABLE REPAIR KIT(S):	
J			**188-4176**	1	KIT-SEAL (SWING MOTOR)	

J-KIT MARKED J SERVICES PART(S) MARKED J
M-METRIC PART

234-4448 MOTOR GP-SWING *(contd.)* i02639593

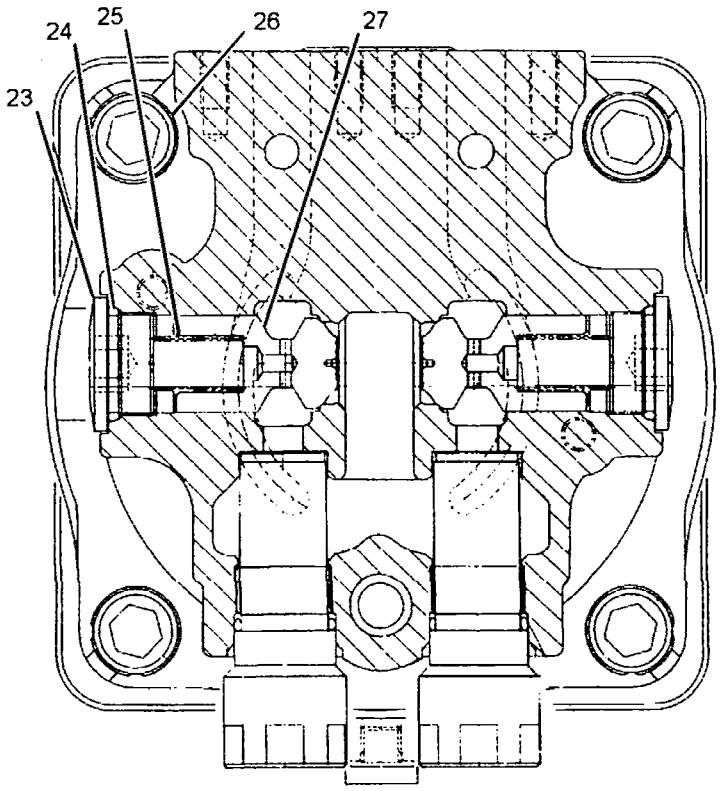

SECTION A-A

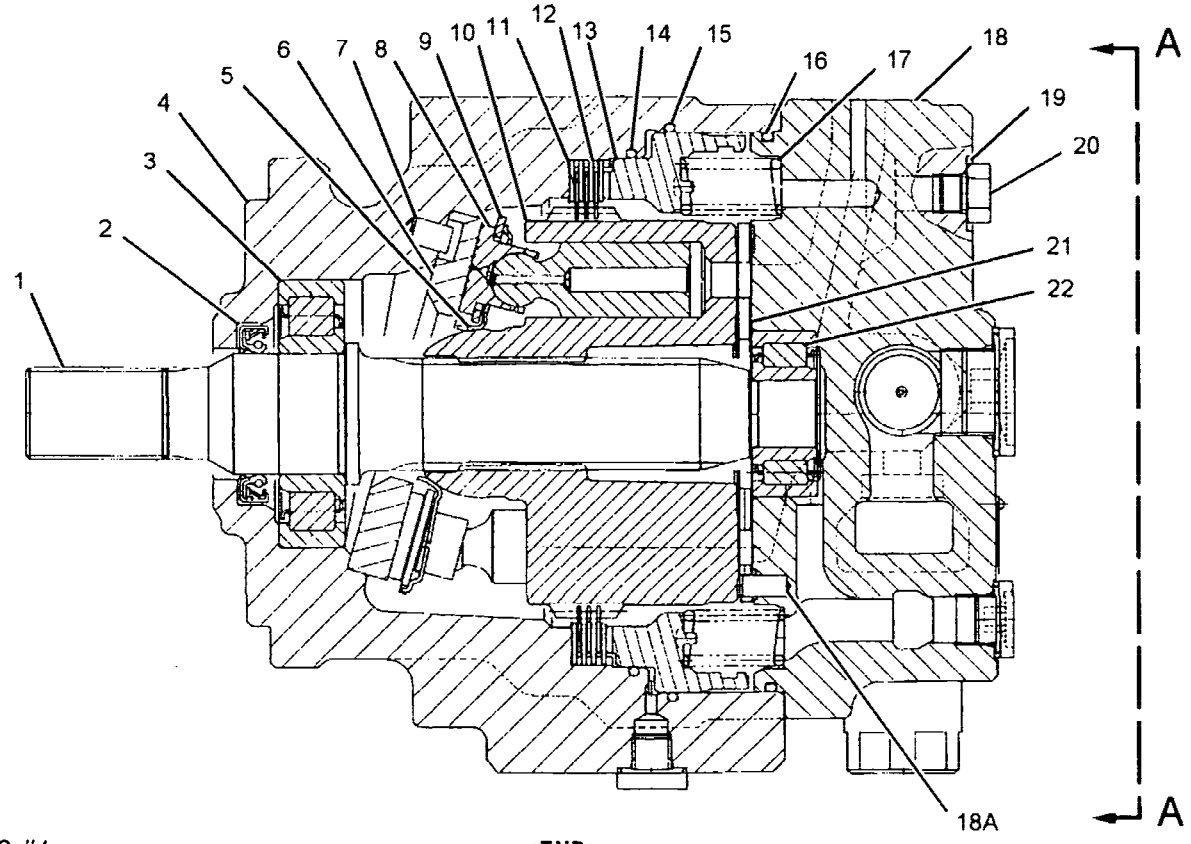

GRAPHIC #1

<END>

g01099043

HYDRAULIC SYSTEM

230-0141 MOUNTING GP-CYLINDER–COUNTERWEIGHT REMOVAL

S/N: YEE1-UP

PART OF 309-0166, 309-0167 COUNTERWEIGHT AR

AN ATTACHMENT

SMCS-5102, 6068, 7562 **i02158598**

NOTE	REF NO	GRAPHIC REF	PART NUMBER	QTY	PART NAME 1 2 3 4 5 6 (PRODUCT LEVEL)	SEE PAGE
	1	1	**146-1415**	1	BRACKET AS	
	2	1	**127-6754**	1	BAND AS	
	3	1	**127-6757**	1	PIN	
	4	1	**127-6758**	1	PIN AS	
	5	1	**135-4180**	1	BRACKET AS	
M	6	1	**8T-4195**	2	BOLT (M10X1.5X30-MM)	
M	7	1	**7X-2562**	4	BOLT (M20X2.5X45-MM)	
M	8	1	**7X-2576**	14	BOLT (M24X3X70-MM)	
M	9	1	**8T-5041**	1	BOLT (M12X1.75X120-MM)	
M	10	1	**8T-4244**	2	NUT (M12X1.75-THD)	
M	11	1	**8T-4001**	4	NUT (M24X3-THD)	
	12	1	**8T-4121**	2	WASHER-HARD (11X21X2.5-MM THK)	
	13	1	**8T-4167**	14	WASHER-HARD (26X44X4-MM THK)	
B	14	1	**093-0086**	2	SHIM (1-MM THK)	
B	15	1	**7Y-2496**	1	SHIM (1.6-MM THK)	
B	16	1	**093-0118**	1	SHIM (2-MM THK)	
B	17	1	**121-1891**	2	SHIM (1-MM THK)	
B	18	1	**127-6680**	4	SHIM (0.5-MM THK)	
	19	1	**8T-4123**	4	WASHER (22X35X3.5-MM THK)	
	20	1	**135-3924**	2	GUIDE AS	
	21	1	**5R-5927**	1	WASHER (14X65X6-MM THK)	
M	22	1	**135-8575**	1	BOLT AS-LOCKING (M12X1.75X30-MM)	

B-USE AS REQUIRED
M-METRIC PART

230-0141 **MOUNTING GP-CYLINDER** *(contd.)* **i02158598**

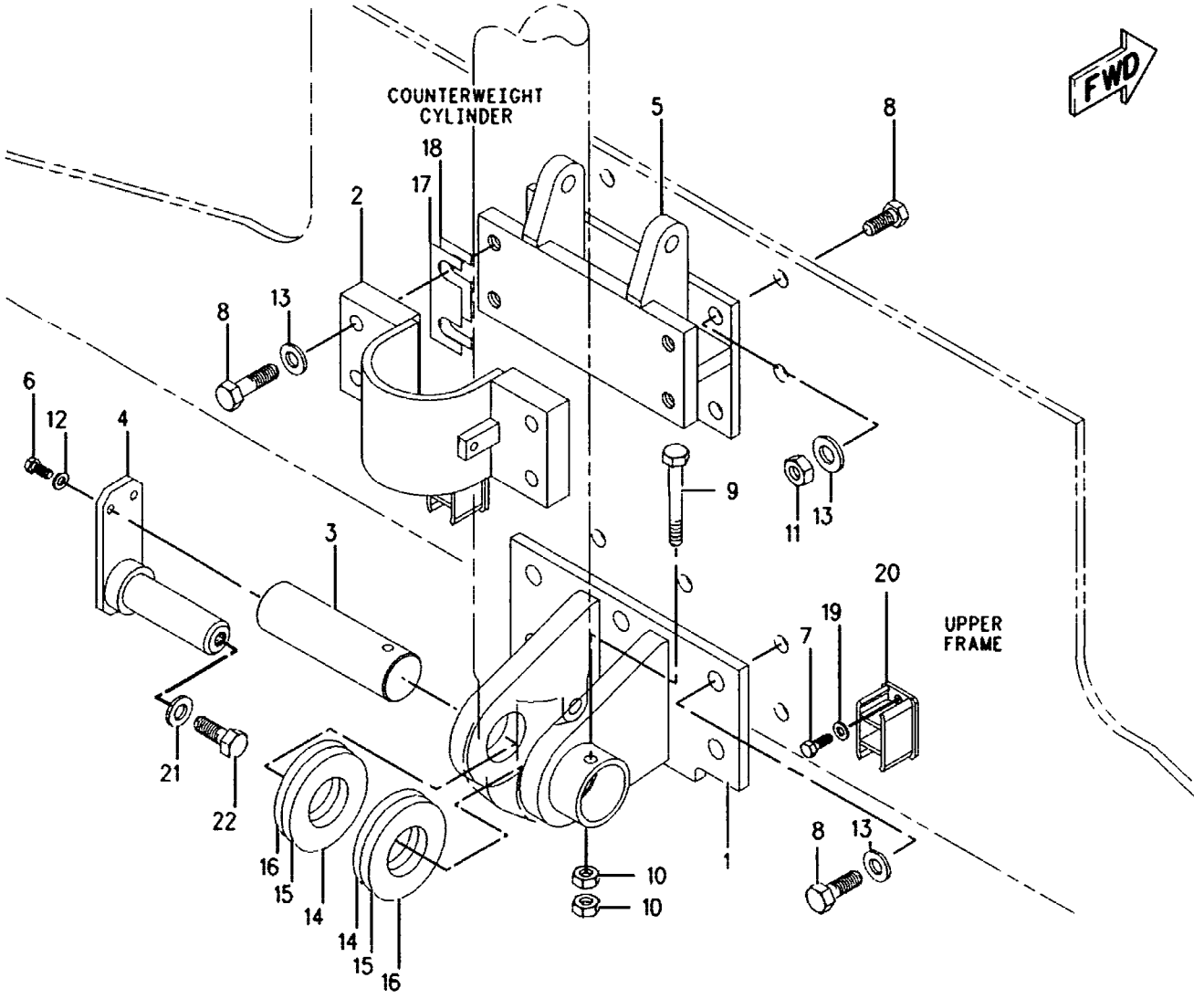

GRAPHIC #1 **<END>** g00615267

302-3084 MOUNTING GP-MAIN CONTROL VALVE

S/N: YEE1-UP

PART OF 297-0243 HYDRAULIC AR

SMCS-5051 i02841546

NOTE	REF NO	GRAPHIC REF	PART NUMBER	QTY	PART NAME 1 2 3 4 5 6 (PRODUCT LEVEL)	SEE PAGE
	1	1	302-3085	1	BRACKET AS	
	2	1	245-5082	1	GUARD	
	3	1	6C-9149	4	WASHER (22X50X10-MM THK)	
	4	1	8T-4123	4	WASHER (22X35X3.5-MM THK)	
M	5	1	8T-5460	4	BOLT (M20X2.5X40-MM)	
M	6	1	8T-6430	4	BOLT (M20X2.5X50-MM)	

M-METRIC PART

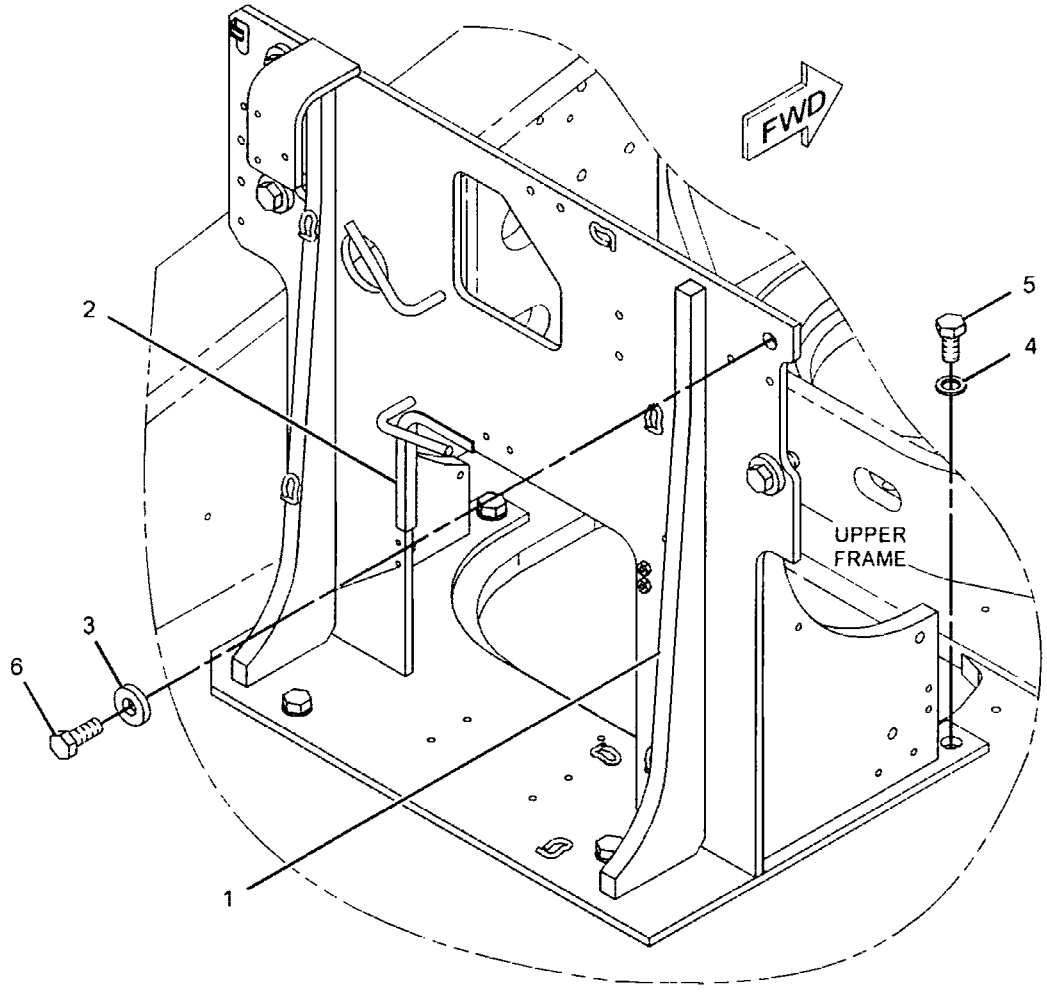

GRAPHIC #1 <END> g01125479

122-7768 PLUG GP-CONTROL VALVE

S/N: YEE1-UP

PART OF 310-0096, 310-0105 VALVE GP-CONTROL, 310-0150 VALVE GP-LOAD CONTROL, 310-0149 VALVE GP-PILOT

ALSO AN ATTACHMENT

SMCS-5051 i00612882

NOTE	REF NO	GRAPHIC REF	PART NUMBER	QTY	PART NAME 1 2 3 4 5 6 (PRODUCT LEVEL)	SEE PAGE
	1	1	122-7767	1	RING	
	2	1	5J-2974	1	SEAL-O-RING	
	3	1	7M-8485	1	SEAL-O-RING	

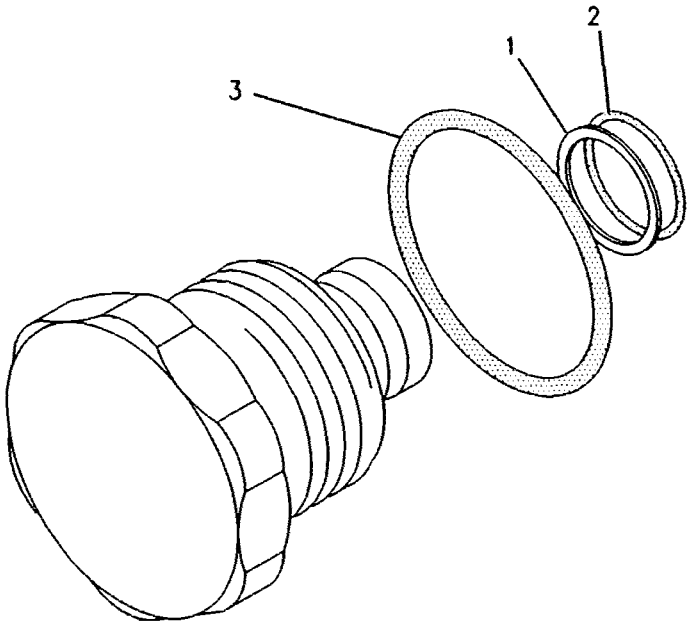

GRAPHIC #1 <END> g00267814

HYDRAULIC SYSTEM

242-6805 PUMP & MTG GP-AUXILIARY

S/N: YEE1-UP

PART OF 285-1789, 285-1790 CONTROL AR-AUXILIARY

AN ATTACHMENT

SMCS-5070, 5073 **i02290020**

NOTE	REF NO	GRAPHIC REF	PART NUMBER	QTY	PART NAME 1 2 3 4 5 6 (PRODUCT LEVEL)	SEE PAGE
Y	1	1	**136-8899**	1	PUMP GP-GEAR (AUXILIARY)	711
	2	1	**236-6919**	1	SEAL-O-RING	
	3	1	**8T-4223**	2	WASHER-HARD (13.5X25.5X3-MM THK)	
M	4	1	**8T-4956**	2	BOLT (M12X1.75X35-MM)	

M-METRIC PART
Y-SEPARATE ILLUSTRATION

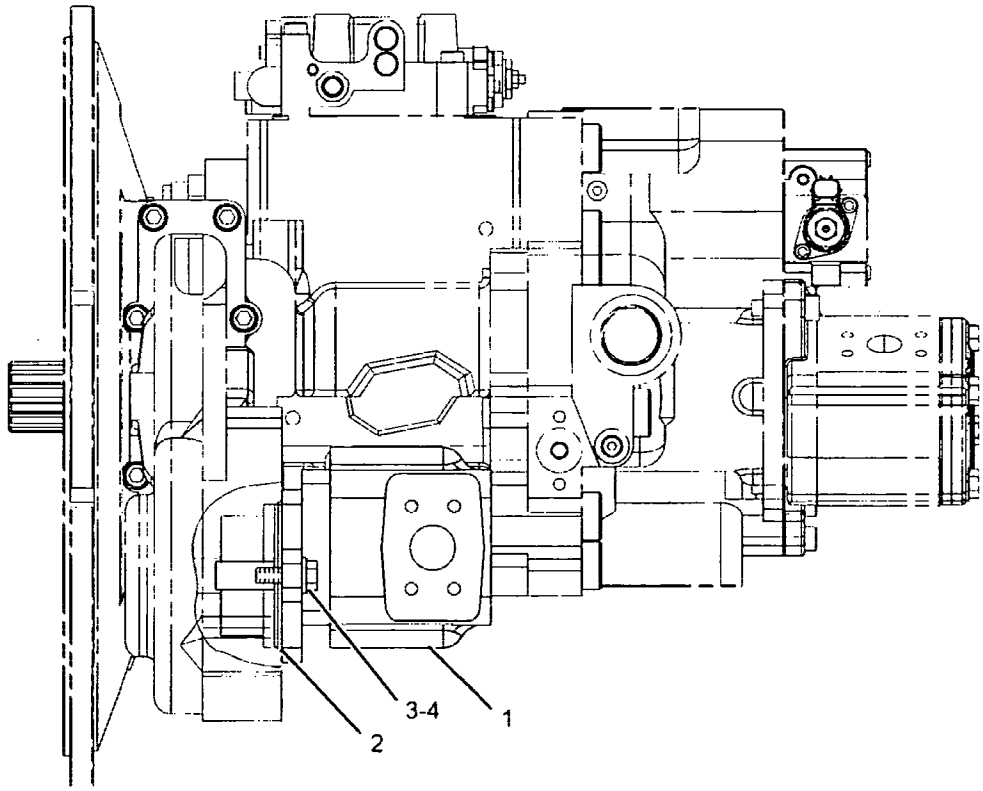

GRAPHIC #1 **<END>** g01098752

HYDRAULIC SYSTEM

296-4670 PUMP & MTG GP-MAIN HYDRAULIC

S/N: YEE1-UP

PART OF 297-0243 HYDRAULIC AR

SMCS-5070 **i02975205**

NOTE	REF NO	GRAPHIC REF	PART NUMBER	QTY	PART NAME 1 2 3 4 5 6 (PRODUCT LEVEL)	SEE PAGE
	1	1	**4H-6112**	1	BREATHER AS (MAIN HYDRAULIC PUMP)	
	2	1	**6V-5043**	1	SEAL-O-RING	
	3	1	**9Y-9236**	1	GAUGE-SIGHT (OIL LEVEL)	
	4	1	**152-2939**	1	SEAL-O-RING	
	5	1	**238-5084**	1	SEAL-O-RING	
Y	6	1	*295-9424*	1	PUMP GP-MAIN HYDRAULIC (WITH PILOT GEAR PUMP)	713
	7	1	**297-7704**	1	ADAPTER	
Y	8	1	*305-4935*	1	COUPLING GP-PUMP	454
	9	1	**8T-5360**	7	WASHER (12X22.5X2.5-MM THK)	
	10	1	**8T-8916**	7	BOLT (7/16-14X1.5-IN)	

Y-SEPARATE ILLUSTRATION

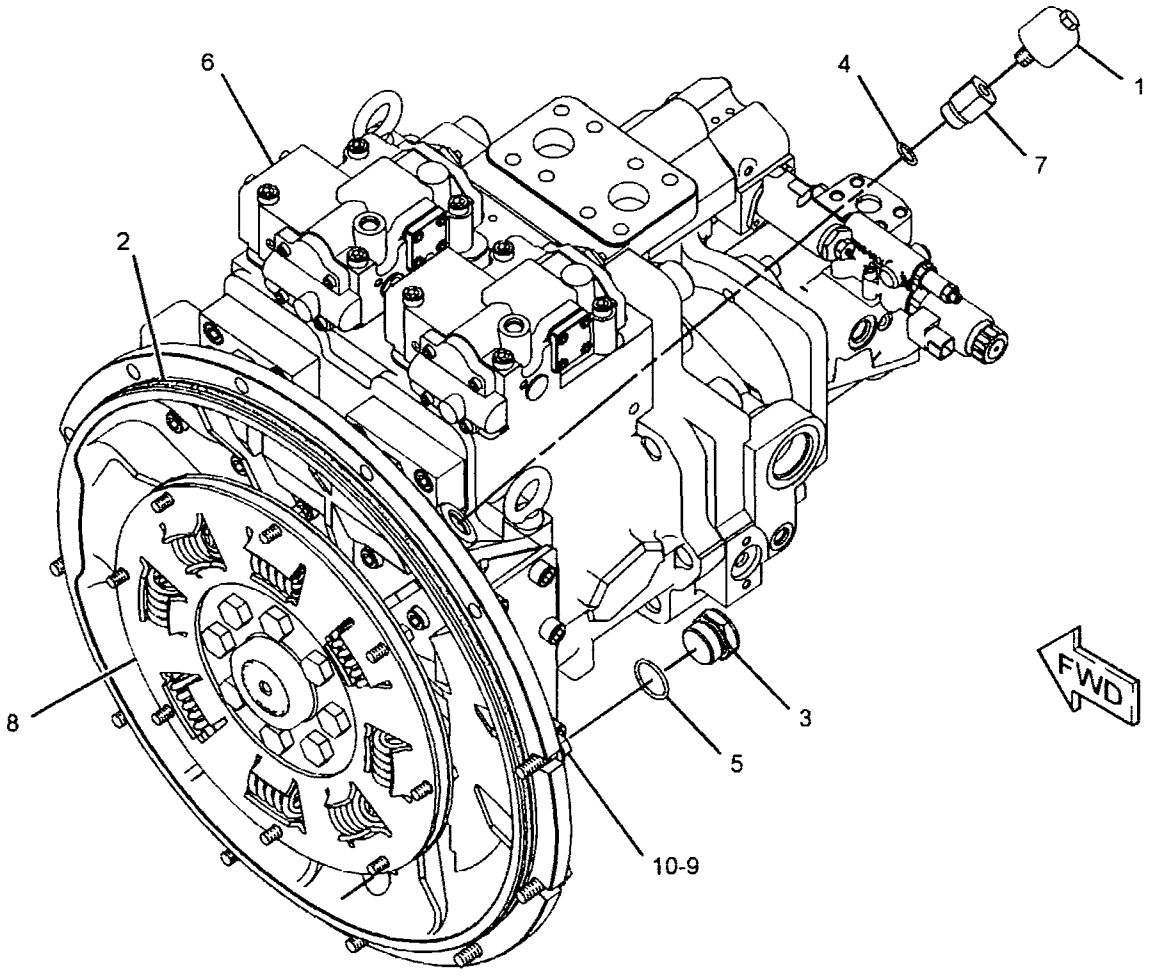

GRAPHIC #1 **<END>** g01454447

136-8899 PUMP GP-GEAR–AUXILIARY

S/N: YEE1-UP
PART OF 242-6805 PUMP & MTG GP-AUXILIARY
AN ATTACHMENT

SMCS-5073 **i02730927**

NOTE	REF NO	GRAPHIC REF	PART NUMBER	QTY	PART NAME 1 2 3 4 5 6 (PRODUCT LEVEL)	SEE PAGE
M	1	1	**7X-3342**	4	STUD-LOCKING (M12X1.75X60-MM)	
M	2	1	**095-1207**	4	NUT (M12X1.75-THD)	
	3	1	**136-9030**	4	WASHER (12.5X18X1.5-MM THK)	
					AVAILABLE REPAIR KIT(S):	
			136-9032	1	KIT-SEAL (GEAR PUMP)	
					(INCLUDES 2 ELEMENT SEALS, 2 ENERGISER SEALS, O-RING SEAL, SHAFT SEAL & RETAINING RING)	

M-METRIC PART

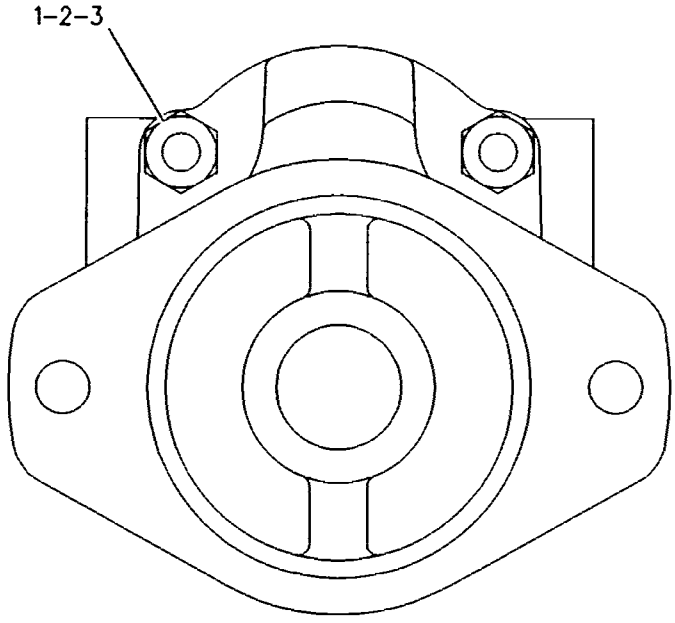

GRAPHIC #1 **<END>** g00274065

HYDRAULIC SYSTEM

274-2483 PUMP GP-GEAR–PILOT

S/N: YEE1-UP

PART OF 295-9663 PUMP GP-PISTON & GEAR

SMCS-5073 **i02495465**

NOTE	REF NO	GRAPHIC REF	PART NUMBER	QTY	PART NAME 1 2 3 4 5 6 (PRODUCT LEVEL)	SEE PAGE
M	1	1	**247-8841**	5	BOLT (M10X30-MM)	
	2	1	**249-6671**	1	SEAL-O-RING	

M-METRIC PART

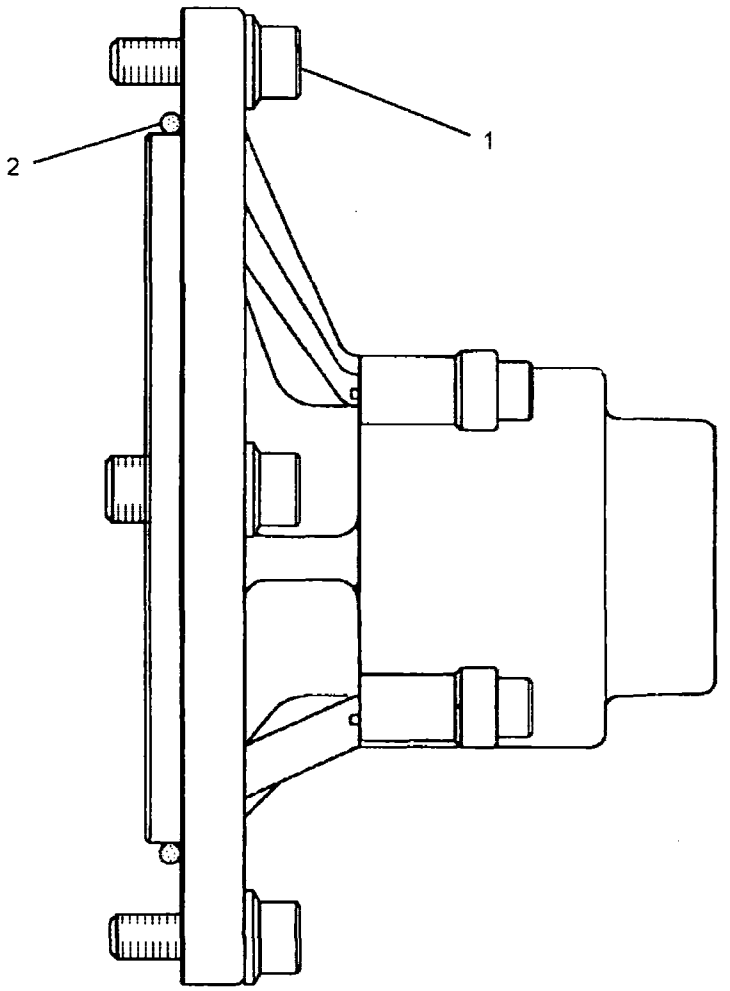

GRAPHIC #1 **<END>** g01254562

HYDRAULIC SYSTEM

295-9424 PUMP GP-MAIN HYDRAULIC

S/N: YEE1-UP

PART OF 296-4670 PUMP & MTG GP-MAIN HYDRAULIC

SMCS-5070 **i02841405**

NOTE	REF NO	GRAPHIC REF	PART NUMBER	QTY	PART NAME 1 2 3 4 5 6 (PRODUCT LEVEL)	SEE PAGE
	1	1	**236-6919**	1	SEAL-O-RING	
Y	2	1	**295-9426**	1	PUMP GP-PISTON	714
Y	3	1	**295-9663**	1	PUMP GP-PISTON & GEAR	716
M	4	1	**108-1781**	2	BOLT-SOCKET HEAD (M12X1.75X35-MM)	

M-METRIC PART
Y-SEPARATE ILLUSTRATION

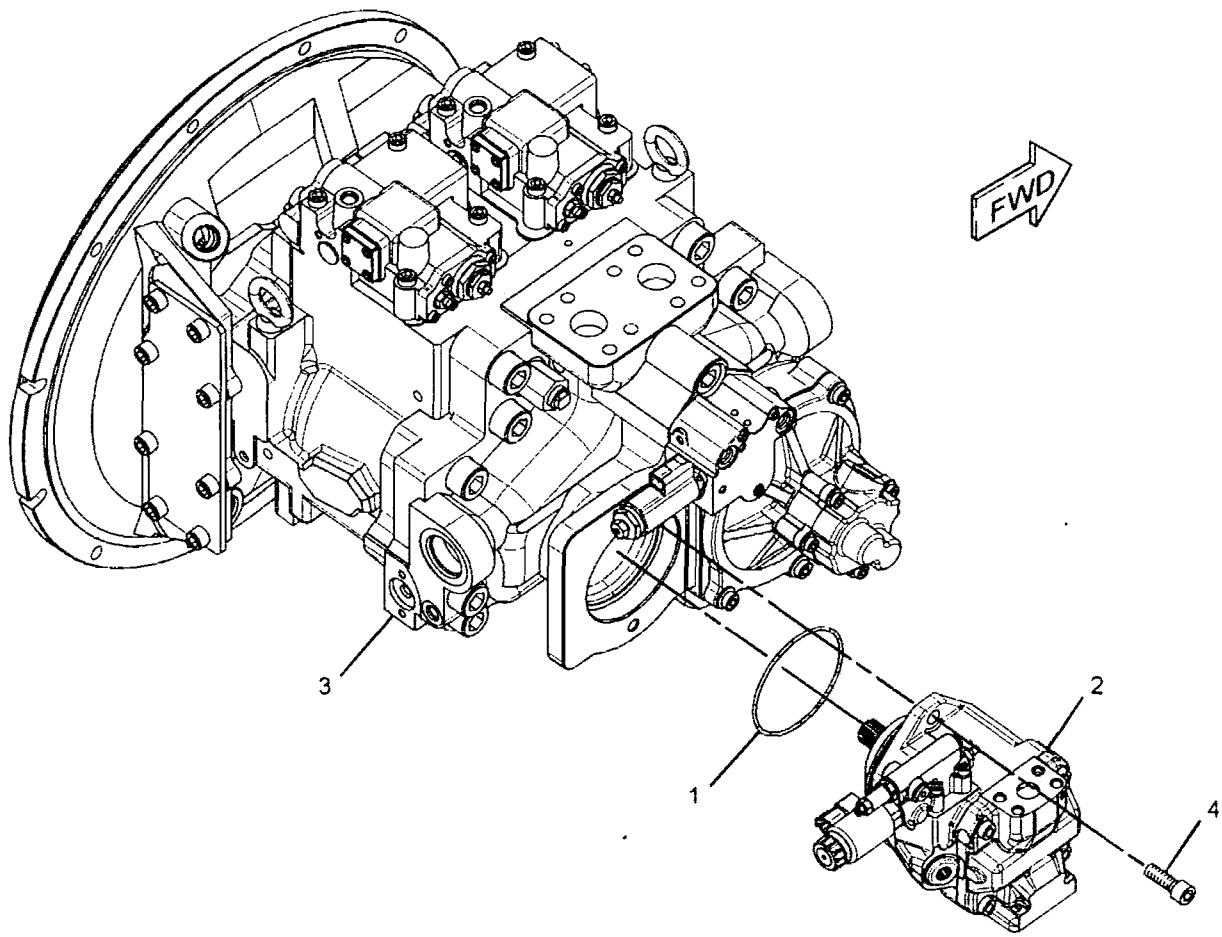

GRAPHIC #1 **<END>** g01454523

HYDRAULIC SYSTEM

295-9426 PUMP GP-PISTON

S/N: YEE1-UP

PART OF 295-9424 PUMP GP-MAIN HYDRAULIC

SMCS-5070 **i02841411**

NOTE	REF NO	GRAPHIC REF	PART NUMBER	QTY	PART NAME 1 2 3 4 5 6 (PRODUCT LEVEL)	SEE PAGE
	1	1	**8T-9597**	1	RING-RETAINING	
	2	1	**185-0303**	1	SEAL-OIL	
	3	1	**271-6432**	1	BEARING AS-TAPERED ROLLER	
	4	1	**279-3393**	1	SWASHPLATE	
	5	1	**259-5507**	1	ROD-PISTON	
	6	1	**188-6299**	1	PISTON	
	7	1	**295-9544**	1	PLUG AS	
	8	1	**191-7582**	1	SHIM (2.5-MM THK)	
	9	1	**9X-8979**	1	DOWEL	
	10	1	**191-7583**	1	BEARING AS-ROLLER	
M	11	1	**9X-6032**	4	BOLT-SOCKET HEAD (M10X1.5X30-MM)	
	12	1	**311-9540**	1	COVER	
	13	1	**231-4707**	1	SEAL-O-RING	
	14	1	**295-9546**	1	NUT	
	15	1	**095-1750**	2	SEAL-O-RING	
	16	1	**244-4468**	1	NUT (M10X1-THD)	
Y	17	1	**295-9535**	1	ROTATING GP-PUMP	720
	18	1	**295-9545**	1	ROD	
	19	1	**194-9474**	2	BEARING-CRADLE	
	20	1	**194-9473**	1	RING	
	21	1	**295-9542**	1	HOUSING	
	22	1	**191-7581**	1	SHAFT	
	23	1	**168-3504**	1	SEAL	
Y	24	1	**244-4120**	1	VALVE GP-PILOT (PRESSURE, FLOW COMPENSATOR)	781
	25	1	**120-4394**	1	PLUG-BREAK OFF	

M-METRIC PART
Y-SEPARATE ILLUSTRATION

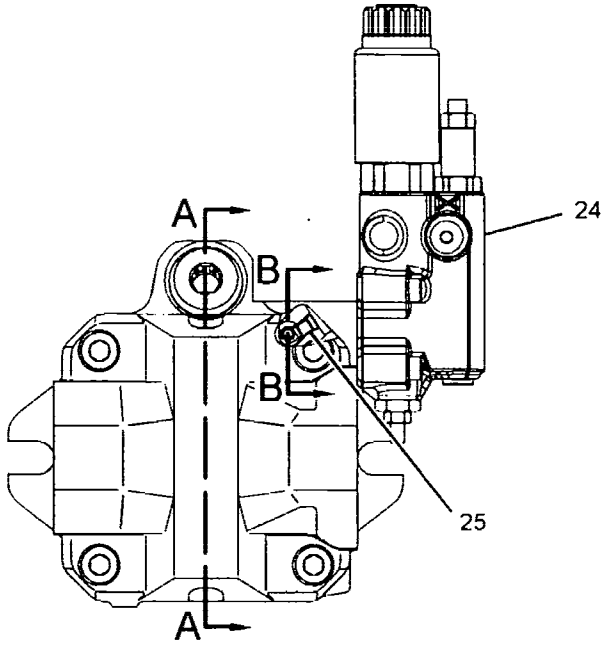

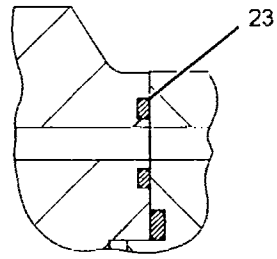

SECTION B-B

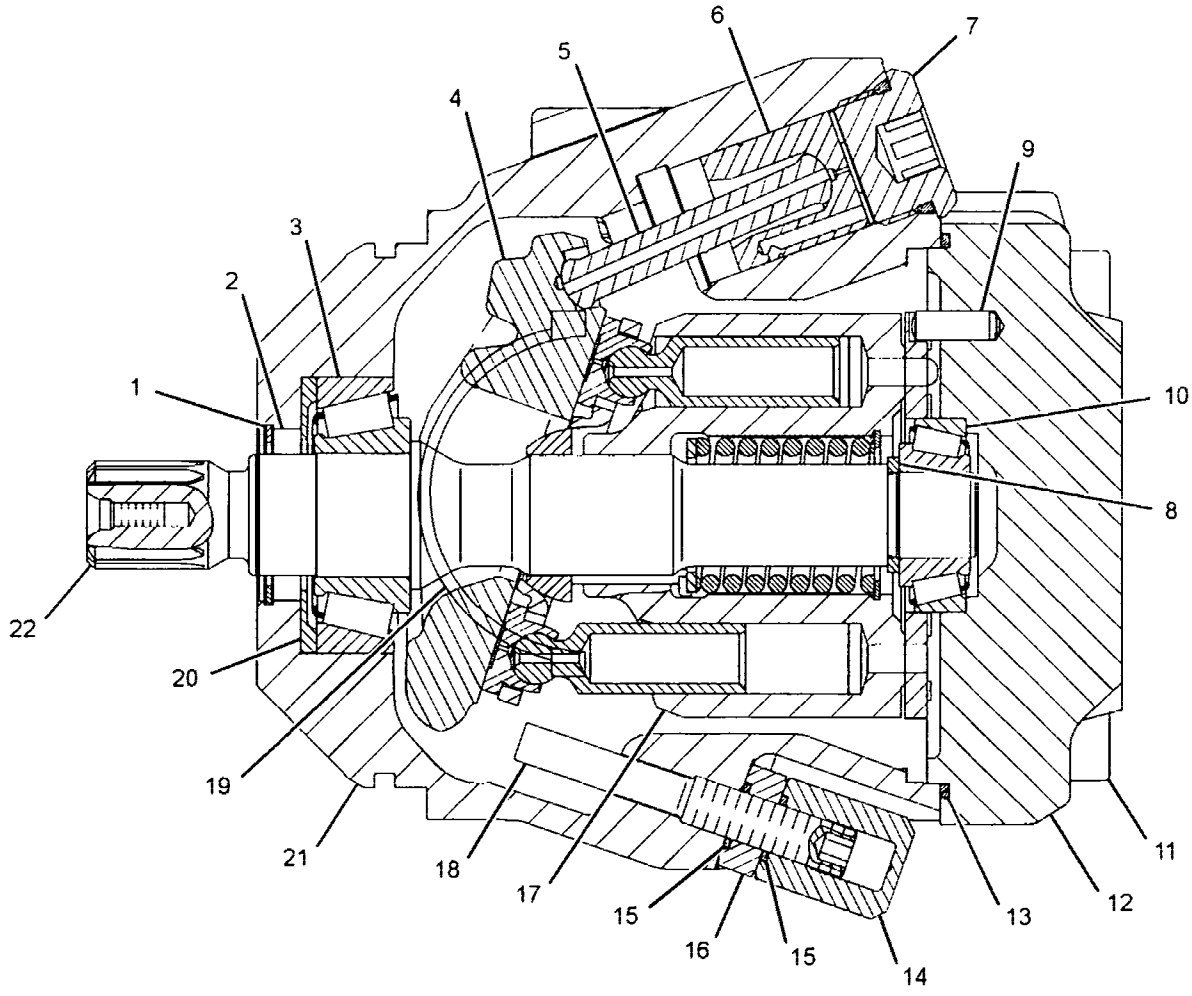

SECTION A-A

GRAPHIC #1

<END>

g01454586

HYDRAULIC SYSTEM

295-9663 PUMP GP-PISTON & GEAR

S/N: YEE1-UP

PART OF 295-9424 PUMP GP-MAIN HYDRAULIC

SMCS-507G, 5084 **i02975212**

NOTE	REF NO	GRAPHIC REF	PART NUMBER	QTY	PART NAME 1 2 3 4 5 6 (PRODUCT LEVEL)	SEE PAGE
	1	3	295-9693	1	BEARING-NEEDLE	
M	2	2	242-6920	8	BOLT (M8X12X38-MM)	
	3	2,3	247-8985	4	DOWEL	
	4	2	247-8729	2	COVER	
M	5	2	242-6919	2	SETSCREW (M20X2.5X56-MM)	
M	6	2	8T-4131	2	NUT (M20X2.5-THD)	
M	7	2	6V-8200	8	BOLT-SOCKET HEAD (M12X1.75X35-MM)	
	8	2	7I-8166	2	STOPPER	
	9	2	109-1296	2	SEAL-O-RING	
	10	2	7I-8172	2	RING-BACKUP	
	11	2	242-6914	2	PISTON-SERVO	
	12	2	247-8712	2	PIN AS	
	13	2	295-9506	18	SPRING	
	14	2	109-1294	2	SEAL-O-RING	
	15	2	7I-8171	2	RING-BACKUP	
	16	2	242-6915	2	STOPPER	
	17	2	095-0965	12	PLUG	
	18	2	095-0966	2	PLUG	
M	19	2	242-6918	2	NUT (M20X2.5-THD)	
M	20	2	200-3292	2	SETSCREW (M20X2.5X90-MM)	
M	21	2	249-1308	1	BOLT-SOCKET HEAD (M22X2.5X180-MM)	
	22	2	234-4539	2	DOWEL	
M	23	2	249-1306	9	BOLT-SOCKET HEAD (M22X2.5X60-MM)	
	24	2,3	242-6916	2	GASKET	
	25	2	295-9518	2	PISTON AS	
	26	1,2,3	110-5525	4	PLUG	
	27	1,2,3	153-4906	4	SEAL-O-RING	
	28	2	295-9510	2	PLATE	
	29	2	295-9504	2	PLATE	
	30	2	295-9505	2	RETAINER-BALL	
	31	2	295-9521	2	SWASHPLATE AS	
	32	2,3	7I-8084	21	PLUG	
	33	2	7I-8164	4	ORIFICE	
	34	2	095-0882	4	PIN-SPRING	
	35	2	247-8786	2	DOWEL	
	36	2	206-9290	9	SEAL-O-RING	
	37	3	295-9695	1	SEAL-LIP TYPE	
	38	3	095-0944	1	RING-RETAINING	
	39	3	249-6657	1	SEAL-O-RING	
	40	3	295-9508	1	GEAR-DRIVE (31-TEETH)	
	41	3	295-9509	1	GEAR-DRIVEN (31-TEETH)	
	42	3	8T-4241	2	RING-RETAINING	
	43	3	295-9501	1	SPACER (49.5X73X3-MM THK)	
	44	3	295-9507	1	FLANGE	
	45	3	096-5516	2	RING-RETAINING	
M	46	3	8T-0343	11	BOLT-SOCKET HEAD (M12X1.75X55-MM)	
	47	3	295-9502	2	SPACER (55X69X3-MM THK)	
	48	3	295-9516	1	RING	
	49	3	295-9503	1	SPACER (104X120X3.2-MM THK)	
	50	3	295-9500	1	BEARING-ROLLER	
	51	3	295-9511	1	PLATE	
	52	3	295-9499	1	SHAFT-DRIVEN	
	53	3	295-9513	1	BODY	
	54	3	311-9506	1	BARREL AS-PUMP	
	55	3	247-8715	1	BEARING-NEEDLE	
	56	3	247-8721	1	IMPELLER	

295-9663 PUMP GP-PISTON & GEAR *(contd.)* i02975212

NOTE	REF NO	GRAPHIC REF	PART NUMBER	QTY	PART NAME 1 2 3 4 5 6 (PRODUCT LEVEL)	SEE PAGE
	57	3	247-8730	1	RING-RETAINING	
	58	3	247-8944	1	BEARING-SLEEVE	
	59	3	295-9694	1	BLOCK-PORT	
M	60	3	249-1307	2	BOLT-SOCKET HEAD (M22X2.5X95-MM)	
	61	3	311-9505	1	BARREL AS-PUMP	
	62	3	247-8719	1	SPACER (50X64X3-MM THK)	
	63	3	247-8725	1	PLATE	
	64	3	247-8713	1	BEARING-ROLLER	
M	65	3	8T-9080	8	BOLT-SOCKET HEAD (M12X1.75X20-MM)	
	66	3	249-6670	1	SEAL-O-RING	
	67	3	295-9512	1	COVER	
	68	3	247-8720	1	SPACER (95X110X3.2-MM THK)	
	69	3	247-8787	1	RING-RETAINING	
	70	3	247-8717	2	SPACER (65X90X1-MM THK)	
	71	3	095-0929	2	RING-RETAINING	
	72	3	247-8726	1	COVER	
	73	3	295-9498	1	SHAFT-DRIVE	
	74	2	206-9291	2	SEAL-O-RING	
	75	3	295-9517	1	DOWEL	
Y	76	1	295-9497	2	HEAD GP-PUMP	501
Y	77	1	274-2483	1	PUMP GP-GEAR	712
Y	78	1	225-4518	1	VALVE GP-SOLENOID (PUMP CONTROL)	824

M-METRIC PART
Y-SEPARATE ILLUSTRATION

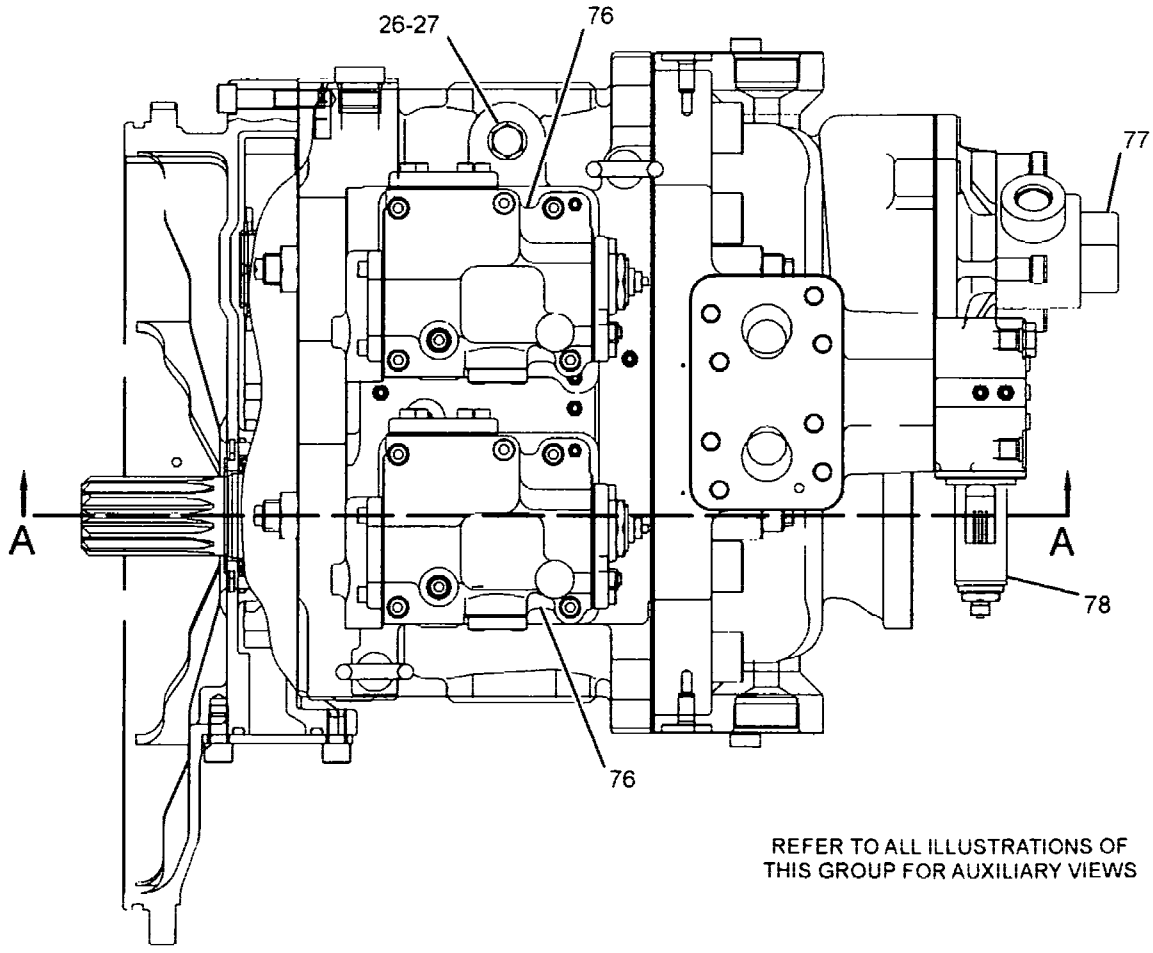

REFER TO ALL ILLUSTRATIONS OF THIS GROUP FOR AUXILIARY VIEWS

GRAPHIC #1 g01457546

295-9663 PUMP GP-PISTON & GEAR *(contd.)*

i02975212

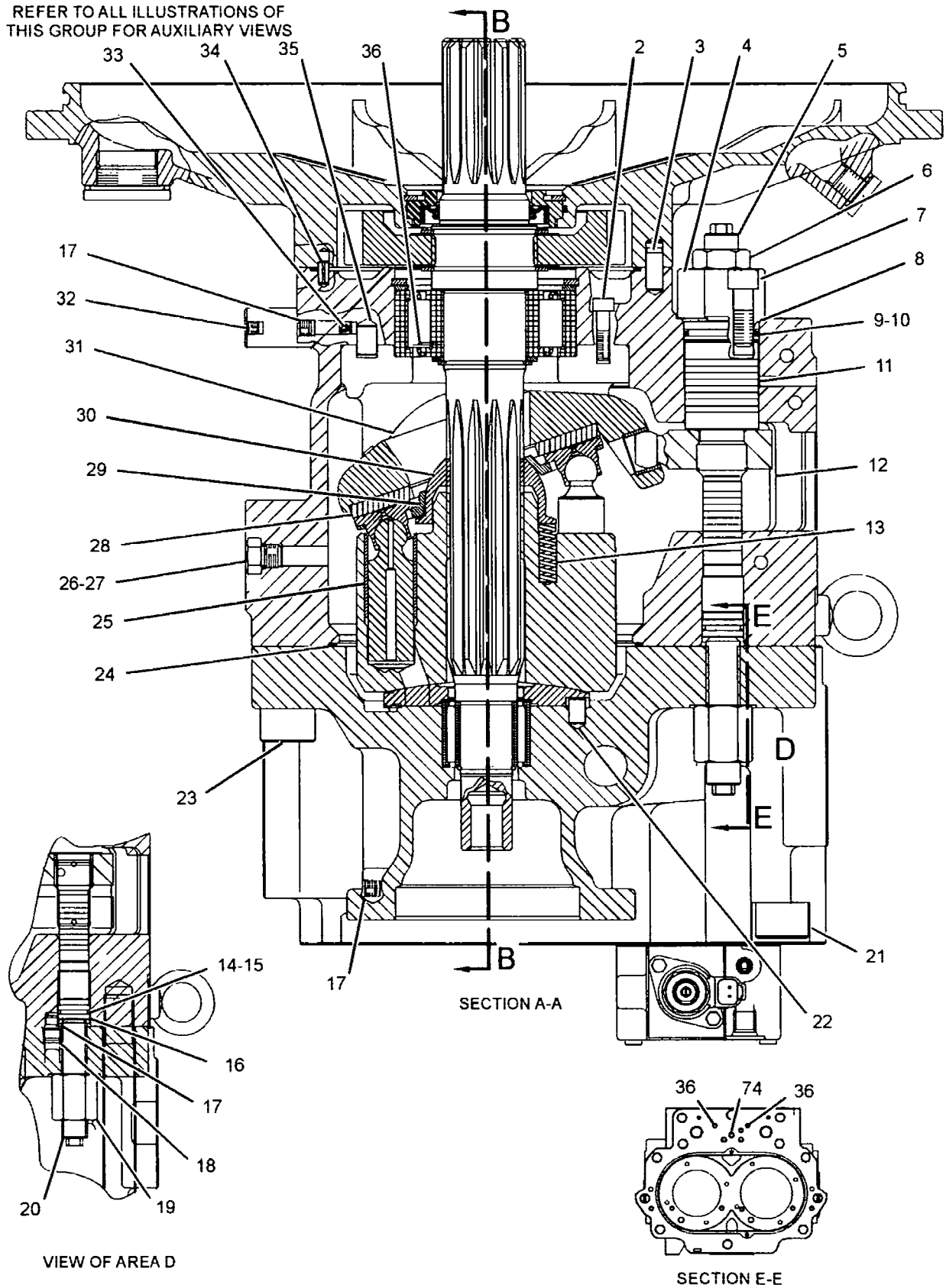

GRAPHIC #2

g01457548

295-9663 PUMP GP-PISTON & GEAR *(contd.)* i02975212

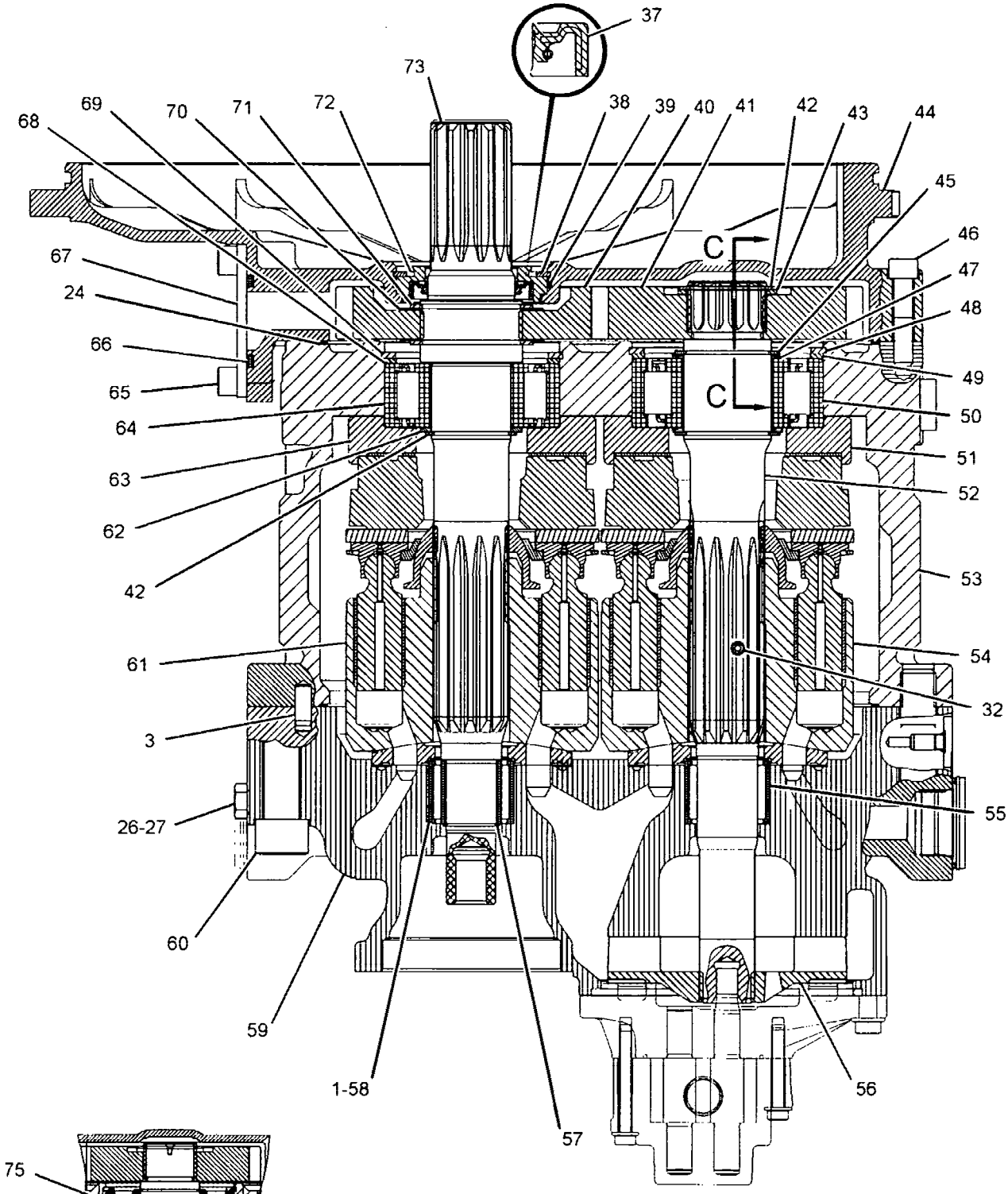

SECTION B-B

SECTION C-C

GRAPHIC #3 **<END>** g01457549

HYDRAULIC SYSTEM

295-9535 ROTATING GP-PUMP

S/N: YEE1-UP

PART OF 295-9426 PUMP GP-PISTON

SMCS-5070 **i02841412**

NOTE	REF NO	GRAPHIC REF	PART NUMBER	QTY	PART NAME 1 2 3 4 5 6 (PRODUCT LEVEL)	SEE PAGE
	1	1	**295-9540**	1	RETAINER-BALL	
	2	1	**194-9479**	3	PIN	
	3	1	**194-9481**	1	DISC-THRUST	
	4	1	**295-9536**	1	PLATE-VALVE	
	5	1	**194-9480**	1	RING-RETAINING	
	6	1	**295-9538**	1	BARREL	
	7	1	**295-9541**	1	SPRING	
	8	1	**295-9537**	9	PISTON AS	
	9	1	**295-9539**	1	RETAINER	

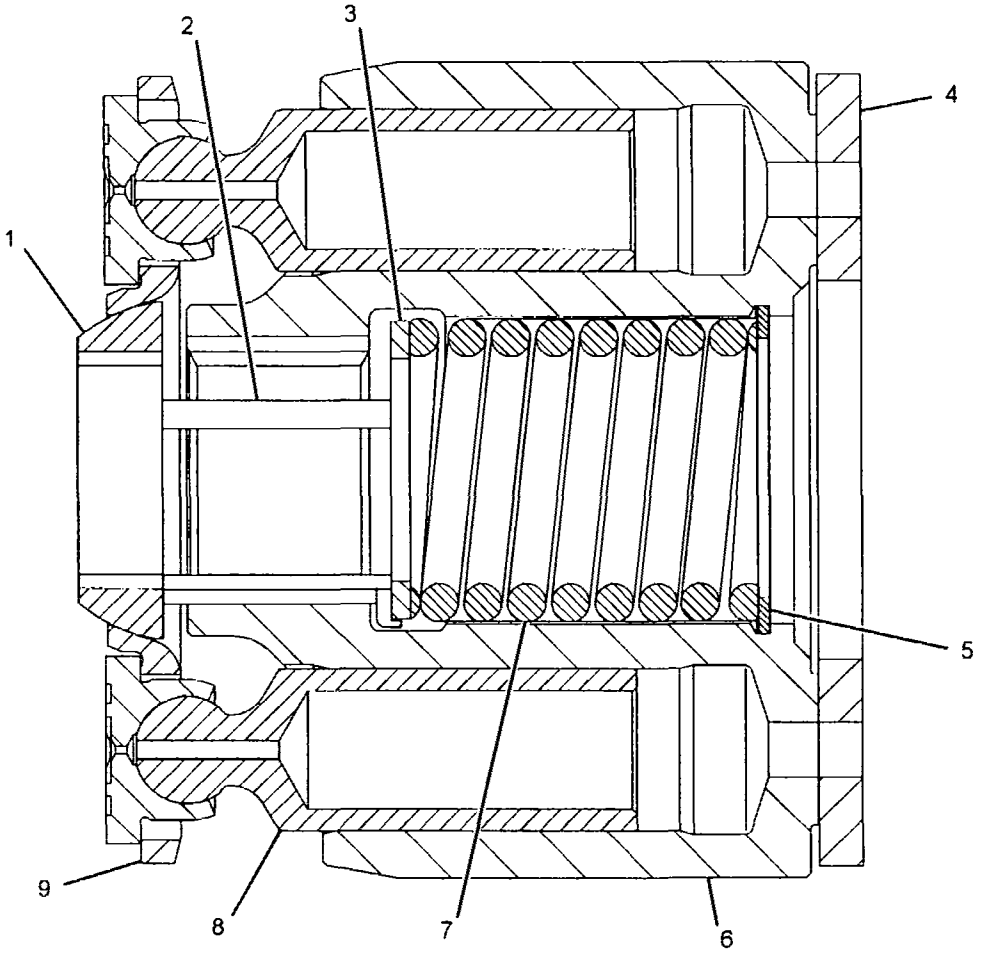

GRAPHIC #1

<END>

g01454516

HYDRAULIC SYSTEM

295-9547 ROTATING GP-PUMP–HYDRAULIC FAN

S/N: YEE1-UP

PART OF 295-9429, 315-4375 MOTOR GP-PISTON

ALSO AN ATTACHMENT

SMCS-5070 **i02842907**

NOTE	REF NO	GRAPHIC REF	PART NUMBER	QTY	PART NAME 1 2 3 4 5 6 (PRODUCT LEVEL)	SEE PAGE
	1	1	168-3378	1	BEARING-SPHERICAL	
	2	1	168-3379	3	PIN	
	3	1	168-3382	1	WASHER (42-MM ODX2.7-MM THK)	
	4	1	311-9549	1	PLATE-VALVE	
	5	1	6V-7723	1	RING-RETAINING	
	6	1	295-9549	1	BARREL	
	7	1	185-0292	1	SPRING	
	8	1	168-3384	9	PISTON AS-PUMP	
	9	1	168-3385	1	PLATE-RETRACTION	

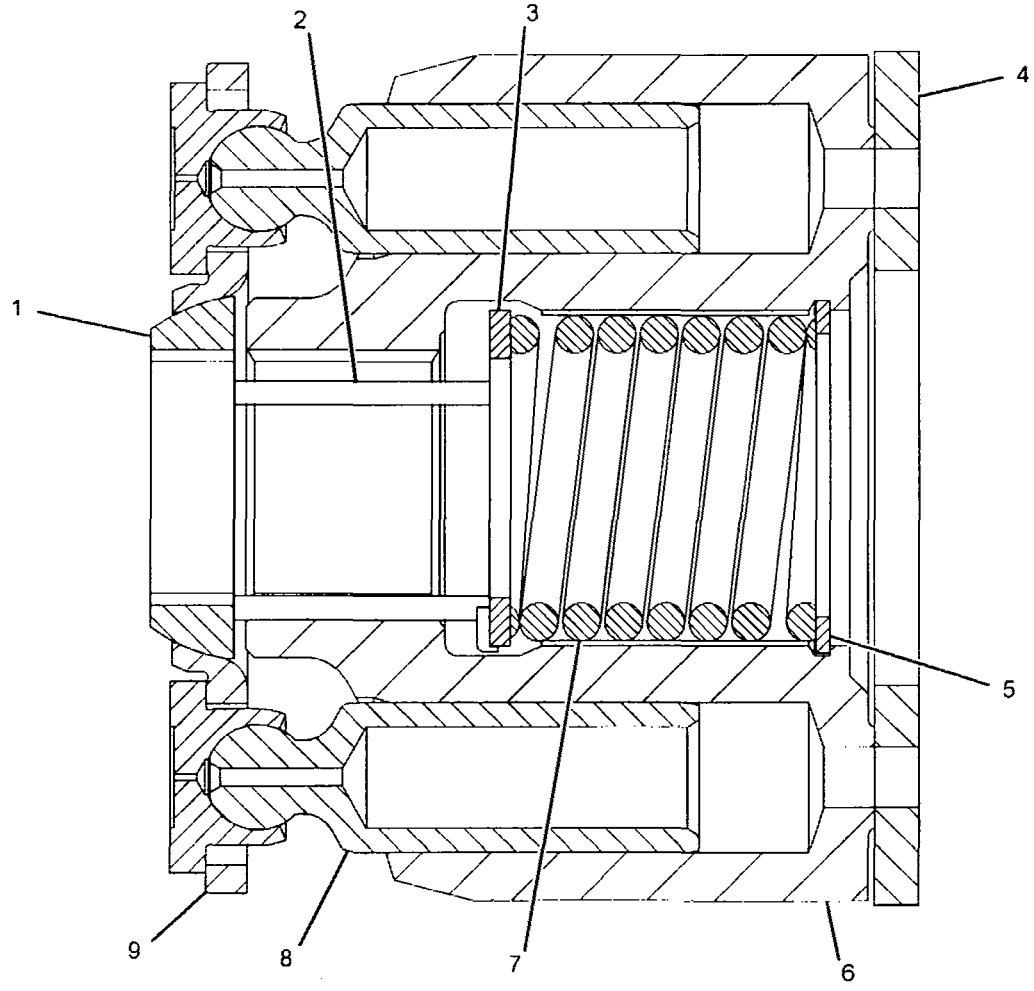

GRAPHIC #1

<END>

g01454449

HYDRAULIC SYSTEM

225-4610 SCREEN GP-HYDRAULIC-TANK

S/N: YEE1-UP

PART OF 227-0431 TANK & FILTER GP-HYDRAULIC

SMCS-5068 **i02894574**

NOTE	REF NO	GRAPHIC REF	PART NUMBER	QTY	PART NAME 1 2 3 4 5 6 (PRODUCT LEVEL)	SEE PAGE
	1	1	**095-6641**	1	GUIDE	
	2	1	**095-6639**	1	SPRING	
M	3	1	**8T-4133**	2	NUT (M10X1.5-THD)	
	4	1	**158-8933**	1	ROD	
	5	1	**209-6001**	1	SCREEN AS (HYDRAULIC TANK)	
	6	1	**5H-5672**	1	SEAL-O-RING	

M-METRIC PART

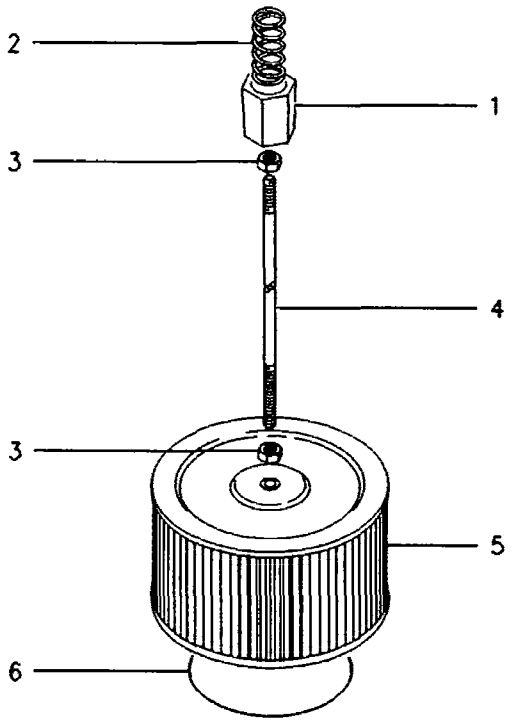

GRAPHIC #1

<END>

g00267878

HYDRAULIC SYSTEM

225-4547 SWIVEL GP

S/N: YEE1-UP

PART OF 302-3185 LINES GP-TRAVEL MOTOR

SMCS-5060 **i02781842**

NOTE	REF NO	GRAPHIC REF	PART NUMBER	QTY	PART NAME 1 2 3 4 5 6 (PRODUCT LEVEL)	SEE PAGE
M	1	1	**8T-4136**	6	BOLT (M10X1.5X25-MM)	
	2	1	**8T-4121**	2	WASHER-HARD (11X21X2.5-MM THK)	
	3	1	**137-3797**	1	COVER	
	4	1	**095-1716**	1	SEAL-O-RING	
	5	1	**7I-7131**	1	RETAINER	
	6	1	**225-4548**	1	HOUSING	
	7	1	**159-7782**	5	SEAL	
	8	1	**095-1625**	3	SEAL-O-RING	
	9	1	**225-4549**	1	ROTOR	
	10	1	**8T-6759**	1	PLUG-PIPE	

M-METRIC PART

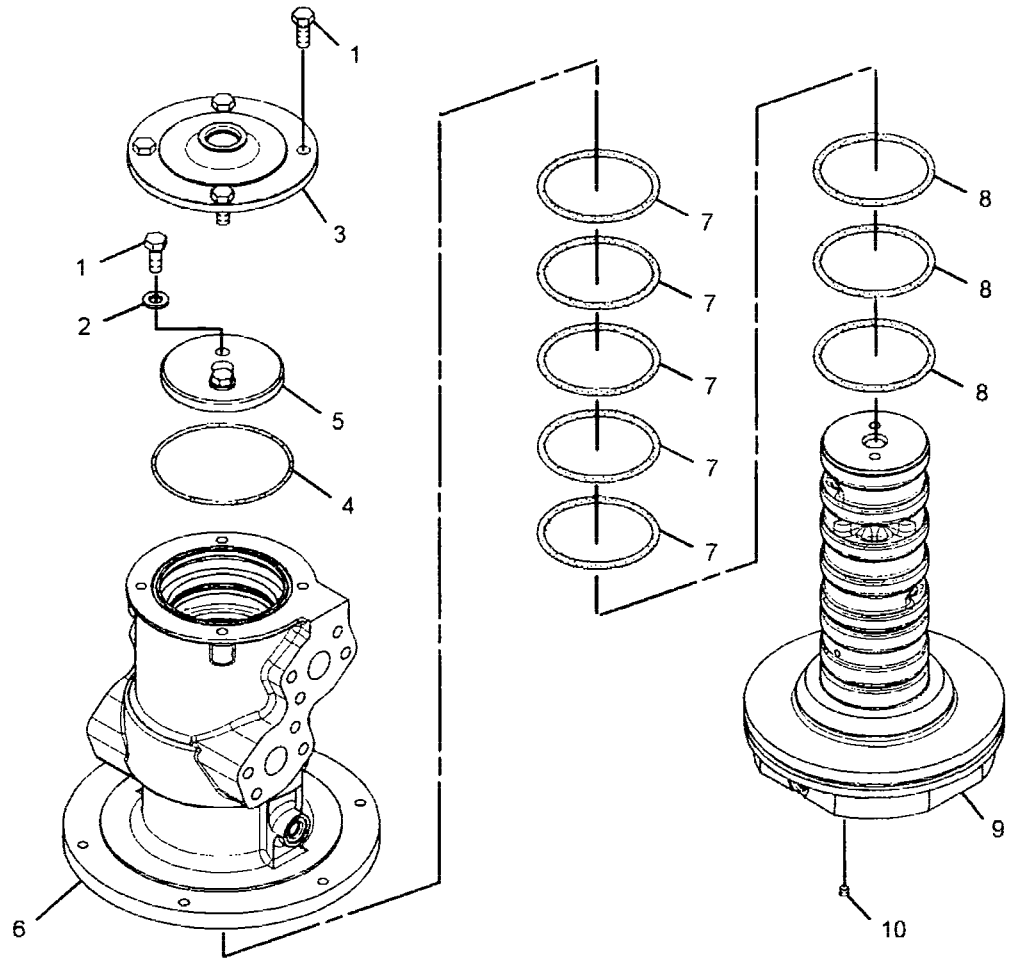

GRAPHIC #1 **<END>** g01393541

HYDRAULIC SYSTEM

227-0431 TANK & FILTER GP-HYDRAULIC

S/N: YEE1-UP
430-L (114-US GAL)
PART OF 249-8125 TANK & MTG GP-HYDRAULIC

SMCS-5056, 5068 **i02939188**

NOTE	REF NO	GRAPHIC REF	PART NUMBER	QTY	PART NAME 1 2 3 4 5 6 (PRODUCT LEVEL)	SEE PAGE
	1	1	4I-5394	1	SENDER AS-TEMPERATURE (HYDRAULIC OIL)	
M		1	4I-5490	2	SCREW-MACHINE (M4X0.7X6-MM)	
		1	095-0826	2	LOCKWASHER	
	2	1	119-5162	1	COVER	
	3	1	170-9419	1	SWITCH AS-PRESSURE (HYDRAULIC OIL)	
		1	2M-9780	1	SEAL-O-RING	
		1	4I-0754	1	SEAL-O-RING	
		1	186-3735	2	PIN-CONNECTOR (16-GA TO 18-GA)	
		1	102-8802	1	KIT-RECEPTACLE (2-PIN)	
					(INCLUDES RECEPTACLE AS & WEDGE)	
Y	4	1	*188-4145*	2	FILTER GP-OIL (HYDRAULIC RETURN)	495
	5	1	175-6173	2	PIPE	
	6	1	175-6177	1	FLANGE AS	
		1	175-6176	1	SEAL-O-RING	
Y	7	1	158-8987	1	FILTER & VALVE GP-PILOT (HYDRAULIC OIL)	490
	8	1	213-0677	1	SWITCH AS-LIQUID LEVEL (HYDRAULIC OIL)	
		1	102-8802	1	KIT-RECEPTACLE (2-PIN)	
					(INCLUDES RECEPTACLE AS & WEDGE)	
		1	9X-3401	2	PIN-CONNECTOR (16-GA TO 18-GA)	
Y	9	1	*225-4610*	1	SCREEN GP-HYDRAULIC	722
	10	1	227-0590	1	BREATHER GP (HYDRAULIC TANK)	
	12	1	227-0592	1	COVER AS	
Y	13	1	227-0620	1	GAUGE GP-SIGHT (HYDRAULIC OIL LEVEL)	498
	14	1	248-9854	1	SUPPORT	
	15	1	207-6403	1	PLUG	
	16	1	207-6404	1	WASHER (49.5X60.5X1.5-MM THK)	
	17	1	095-1608	1	SEAL-O-RING	
	18	1	095-1735	1	SEAL-O-RING	
Y	19	1	*289-8194*	2	FILTER GP-OIL (HYDRAULIC, CASE DRAIN)	497
	20	1	*148-8407*	1	PLUG AS	
		1	3J-1907	1	SEAL-O-RING	
		1	9S-4191	1	PLUG-O-RING	
	21	1	*164-5567*	1	COUPLER AS-QUICK DISCONNECT	
		1	3J-1907	1	SEAL-O-RING	
		1	6V-3965	1	COUPLER AS-QUICK DISCONNECT	
	22	1	*164-5590*	1	VALVE AS-FLUID SAMPLING (HYDRAULIC OIL)	
		1	3J-7354	1	SEAL-O-RING	
		1	8C-3446	1	VALVE-FLUID SAMPLING (HYDRAULIC OIL)	
	23	1	165-3256	1	PIPE AS	
	24	1	1H-8278	2	SEAL-O-RING	
	25	1	2H-3934	1	SEAL-O-RING	
	26	1	3D-2824	1	SEAL-O-RING	
	27	1	3K-0360	1	SEAL-O-RING	
	28	1	4J-0527	1	SEAL-O-RING	
M	29	1	5C-9553	4	BOLT (M6X1X16-MM)	
	30	1	5P-1076	4	WASHER-HARD (13.5X30X4-MM THK)	
	31	1	5P-8068	1	SEAL-O-RING	
	32	1	6D-9157	1	SEAL-O-RING	
	33	1	6I-0723	1	PLUG-OIL DRAIN	
	34	1	6I-0724	1	ADAPTER-PLUG	
	35	1	6V-0852	1	CAP-DUST	
	36	1	6V-6707	1	SEAL-O-RING	
	37	1	8C-3451	1	CAP-DUST	
M	38	1	8T-0267	2	BOLT-SOCKET HEAD (M6X1X12-MM)	
M	39	1	170-8553	4	BOLT-SOCKET HEAD (M12X1.75X40-MM)	

227-0431 TANK & FILTER GP-HYDRAULIC *(contd.)* i02939188

NOTE	REF NO	GRAPHIC REF	PART NUMBER	QTY	PART NAME 1 2 3 4 5 6 (PRODUCT LEVEL)	SEE PAGE
	40	1	**8T-4121**	18	WASHER-HARD (11X21X2.5-MM THK)	
M	41	1	**8T-4136**	6	BOLT (M10X1.5X25-MM)	
M	42	1	**8T-4137**	12	BOLT (M10X1.5X20-MM)	
M	43	1	**8T-4194**	16	BOLT (M12X1.75X50-MM)	
	44	1	**8T-4223**	18	WASHER-HARD (13.5X25.5X3-MM THK)	
	45	1	**8T-4224**	4	WASHER-HARD (8.8X16X2-MM THK)	
M	46	1	**8T-4908**	4	BOLT (M8X1.25X25-MM)	
M	47	1	**8T-4956**	6	BOLT (M12X1.75X35-MM)	
	48	1	**8T-6761**	1	PLUG-PIPE	
	49	1	**9X-8256**	4	WASHER (6.6X12X2-MM THK)	

M-METRIC PART
Y-SEPARATE ILLUSTRATION

227-0431 TANK & FILTER GP-HYDRAULIC *(contd.)* i02939188

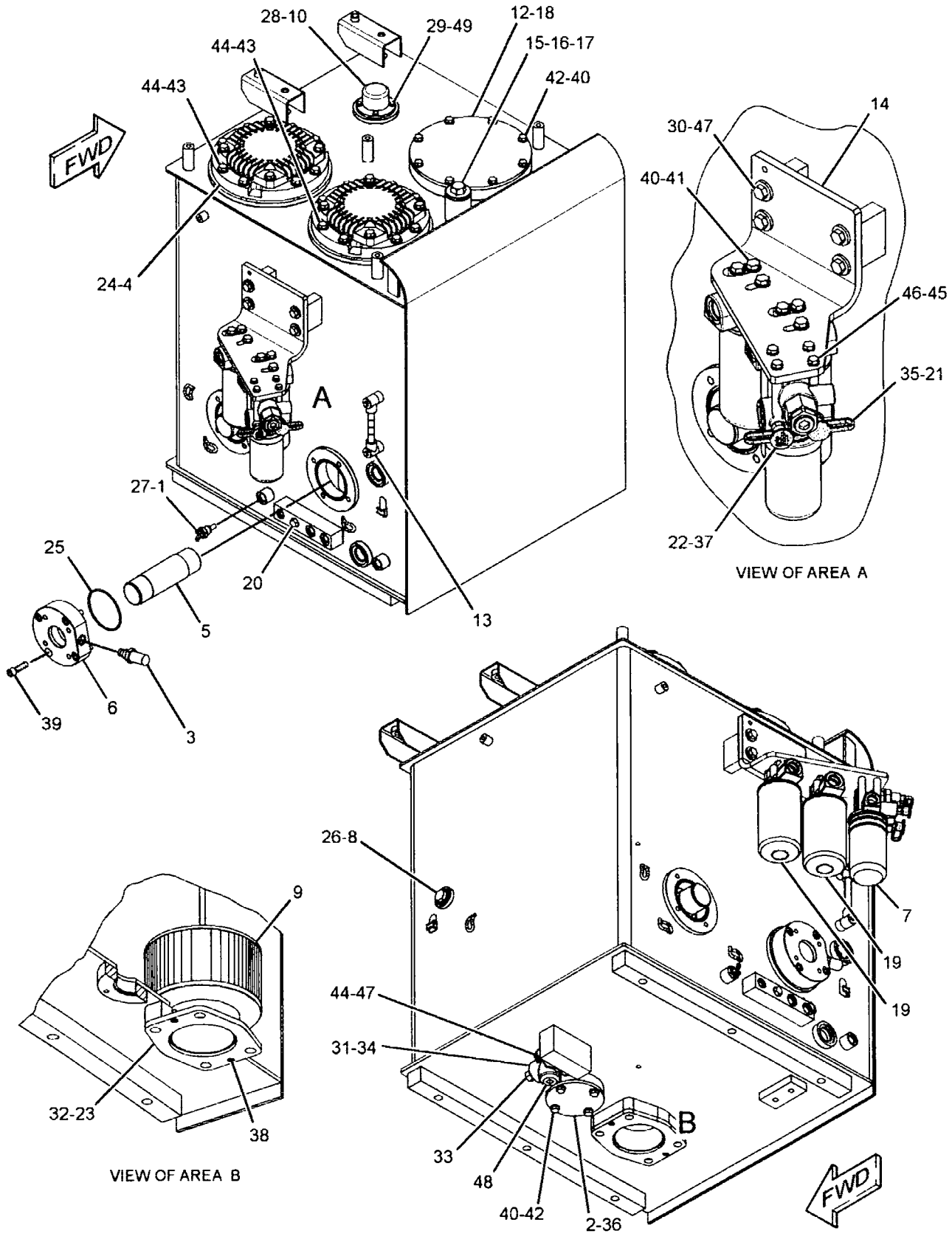

GRAPHIC #1 **<END>** g01423349

HYDRAULIC SYSTEM

227-0430 TANK & MTG GP-HYDRAULIC

S/N: YEE1-UP

PART OF 297-0243 HYDRAULIC AR

SMCS-5056 **i02160153**

NOTE	PART NUMBER	QTY	PART NAME 1 2 3 4 5 6 (PRODUCT LEVEL)	SEE PAGE
Y	*249-8125*	1	TANK & MTG GP-HYDRAULIC	727
M	**8T-4187**	6	BOLT (M20X2.5X80-MM)	
	087-8906	6	SHIM (2-MM THK)	
	087-8907	6	SHIM (1-MM THK)	
	087-8909	6	SHIM (0.4-MM THK)	
	9S-8178	6	SPACER (0.89X1.625X1.5-IN THK)	

M-METRIC PART
Y-SEPARATE ILLUSTRATION

<END>

249-8125 TANK & MTG GP-HYDRAULIC

S/N: YEE1-UP

PART OF 227-0430 TANK & MTG GP-HYDRAULIC

SMCS-5056 **i02235545**

NOTE	PART NUMBER	QTY	PART NAME 1 2 3 4 5 6 (PRODUCT LEVEL)	SEE PAGE
Y	**227-0431**	1	TANK & FILTER GP-HYDRAULIC	724
Y	*239-1820*	1	LINES GP-HYDRAULIC (HYDRAULIC TANK)	596

Y-SEPARATE ILLUSTRATION

<END>

307-4954 TUBE GP-HYDRAULIC–SUPPLY, MAIN PUMP

S/N: YEE1-UP

PART OF 292-7163 LINES GP-PUMP

SMCS-5057 **i02842183**

NOTE	PART NUMBER	QTY	PART NAME 1 2 3 4 5 6 (PRODUCT LEVEL)	SEE PAGE
Y	*307-5270*	1	TUBE GP-HYDRAULIC (SUPPLY, MAIN PUMP)	728
			–OR–	
Y	*307-5271*	1	TUBE GP-HYDRAULIC (SUPPLY, MAIN PUMP)	729
			–OR–	
Y	*307-5272*	1	TUBE GP-HYDRAULIC (SUPPLY, MAIN PUMP)	730

Y-SEPARATE ILLUSTRATION

<END>

HYDRAULIC SYSTEM

307-5270 TUBE GP-HYDRAULIC–SUPPLY, MAIN PUMP

S/N: YEE1-UP

PART OF 307-4954 TUBE GP-HYDRAULIC

SMCS-5057 **i02842208**

NOTE	REF NO	GRAPHIC REF	PART NUMBER	QTY	PART NAME 1 2 3 4 5 6 (PRODUCT LEVEL)	SEE PAGE
	1	1	**8T-4223**	2	WASHER-HARD (13.5X25.5X3-MM THK)	
	2	1	**307-5276**	1	SUPPORT	
M	3	1	**8T-4139**	2	BOLT (M12X1.75X30-MM)	

M-METRIC PART

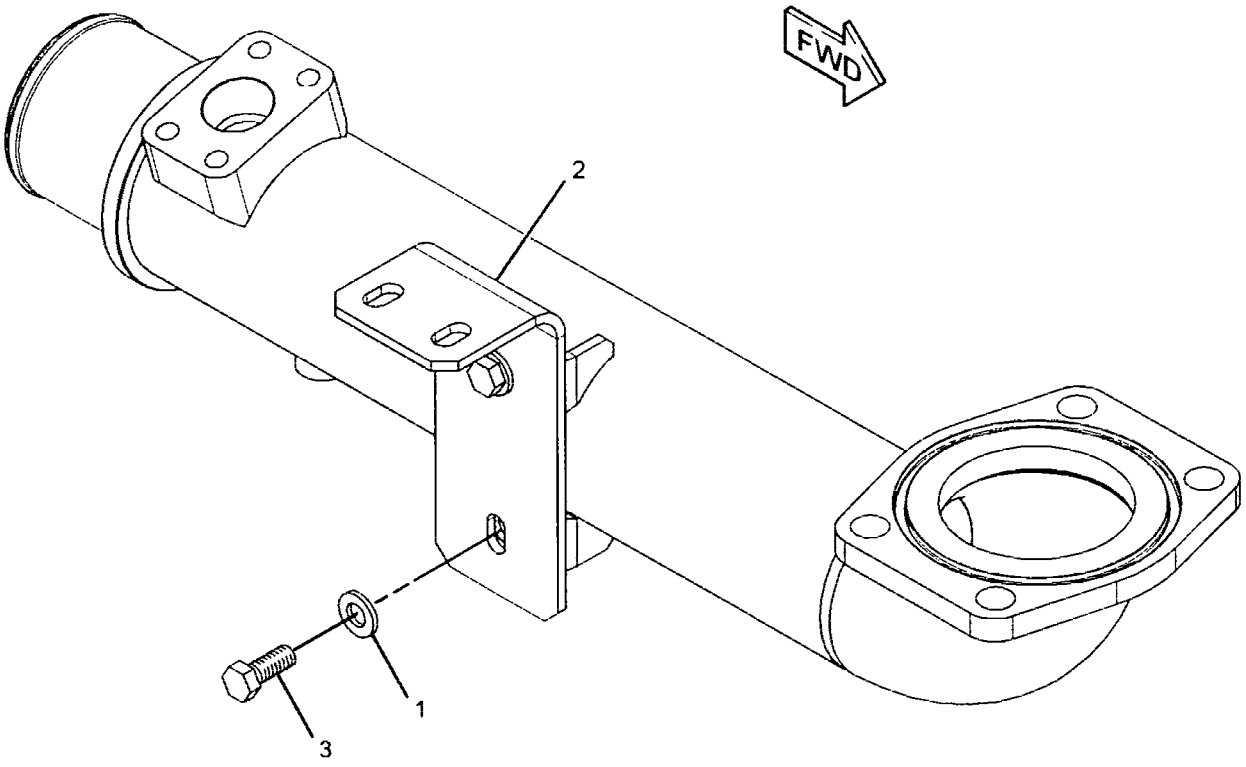

GRAPHIC #1 **<END>** g01457500

307-5271 TUBE GP-HYDRAULIC–SUPPLY, MAIN PUMP

S/N: YEE1-UP

PART OF 307-4954 TUBE GP-HYDRAULIC

SMCS-5057 i02842317

NOTE	REF NO	GRAPHIC REF	PART NUMBER	QTY	PART NAME 1 2 3 4 5 6 (PRODUCT LEVEL)	SEE PAGE
	1	1	307-4955	1	TUBE AS	
	2	1	307-5274	1	SUPPORT	
M	3	1	096-4885	2	LOCKNUT (M16X2-THD)	
M	4	1	7Y-5250	1	U-BOLT	
	5	1	9X-8257	2	WASHER (17.5X30X3.5-MM THK)	

M-METRIC PART

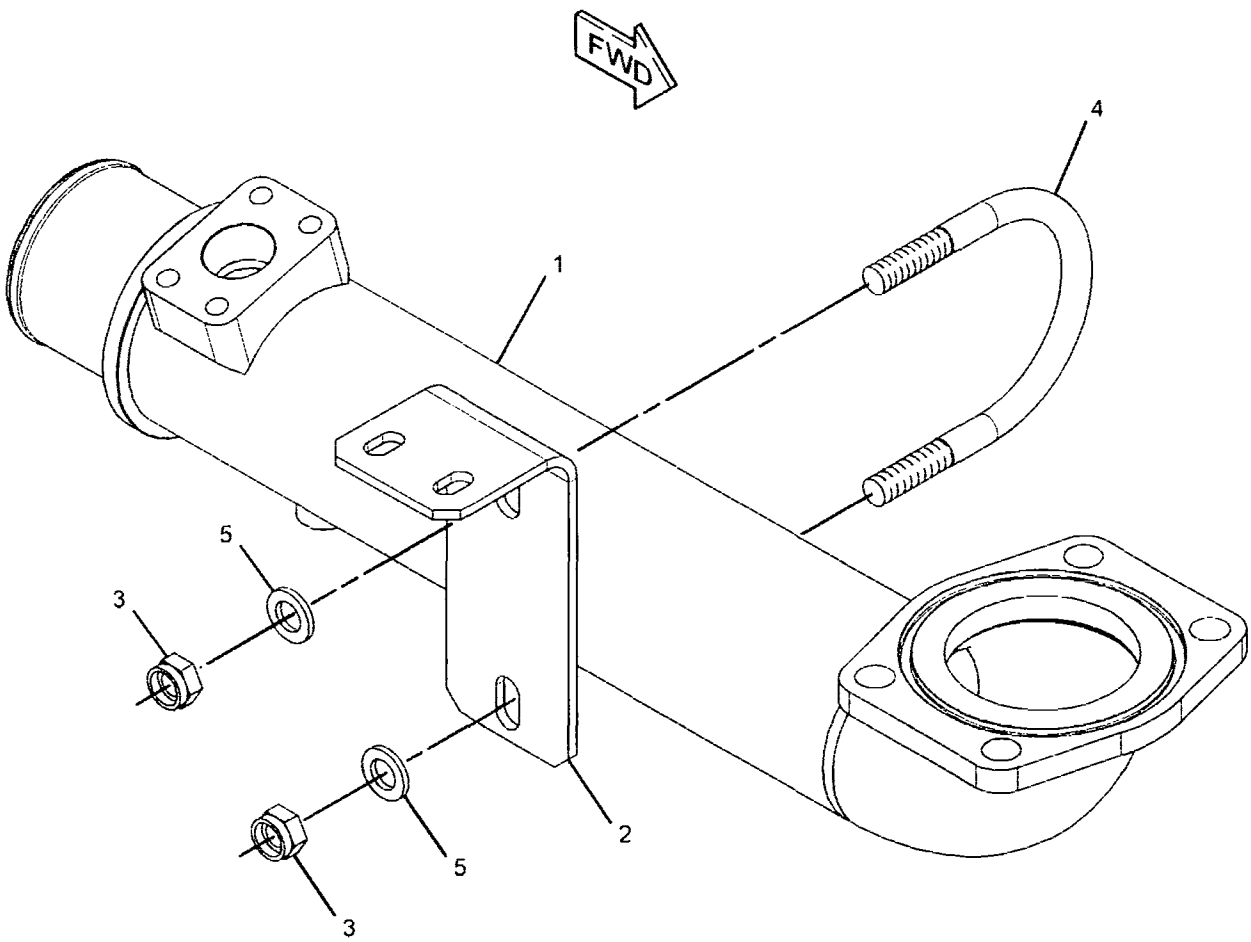

GRAPHIC #1 <END> g01454420

HYDRAULIC SYSTEM

307-5272 TUBE GP-HYDRAULIC–SUPPLY, MAIN PUMP

S/N: YEE1-UP

PART OF 307-4954 TUBE GP-HYDRAULIC

SMCS-5057 **i02971841**

NOTE	REF NO	GRAPHIC REF	PART NUMBER	QTY	PART NAME 1 2 3 4 5 6 (PRODUCT LEVEL)	SEE PAGE
	1	1	8T-4223	2	WASHER-HARD (13.5X25.5X3-MM THK)	
	2	1	307-5276	1	SUPPORT	
M	3	1	8T-4139	2	BOLT (M12X1.75X30-MM)	

M-METRIC PART

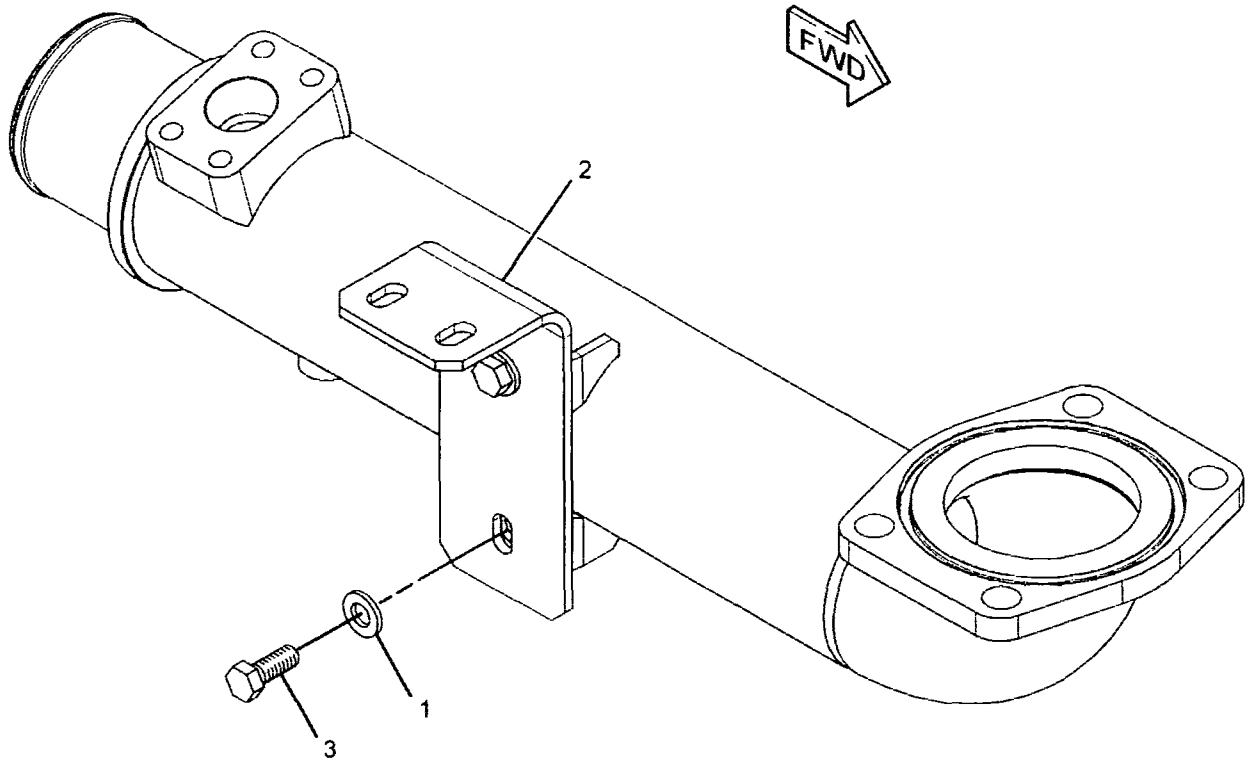

GRAPHIC #1 **<END>** g01457500

310-0387 VALVE AR-ALT PATTERN CONTROL

S/N: YEE1-UP

AN ATTACHMENT

SMCS-5065 i02934916

NOTE	PART NUMBER	QTY	PART NAME 1 2 3 4 5 6 (PRODUCT LEVEL)	SEE PAGE
Y	320-5609	1	SHEET AS-SOUND SUPPRESSION	394
Y	227-0454	1	LINES GP-PILOT (CONTROL PATTERN, QUICK CHANGE)	607
Y	228-8110	1	PLATE & FILM GP (CONTROL PATTERN, QUICK CHANGE)	1069

Y-SEPARATE ILLUSTRATION

<END>

297-0252 VALVE AR-CHECK & RELIEF-
BOOM LOWERING CONTROL VALVE, HEAVY LIFT

S/N: YEE1-UP

FOR USE WITH 294-1247–PAGE 837, 294-1250–PAGE 837, 294-1252–PAGE 837

AN ATTACHMENT

SMCS-5117, 5453 i02863158

NOTE	PART NUMBER	QTY	PART NAME 1 2 3 4 5 6 (PRODUCT LEVEL)	SEE PAGE
Y	296-7134	1	LINES GP-BOOM CYLINDER	551
Y	302-3140	1	LINES GP-PILOT	642
Y	302-3139	1	LINES GP-RETURN	672

Y-SEPARATE ILLUSTRATION

<END>

297-0257 VALVE AR-CHECK & RELIEF-
STICK LOAD CONTROL, HEAVY LIFT

S/N: YEE1-UP

FOR USE WITH 294-1250–PAGE 837, 324-0190–PAGE 2, 324-0191–PAGE 3, 297-0252–PAGE 731

AN ATTACHMENT

SMCS-5117, 5453 i02924381

NOTE	PART NUMBER	QTY	PART NAME 1 2 3 4 5 6 (PRODUCT LEVEL)	SEE PAGE
Y	230-0138	1	LINES GP-BOOM (REACH BOOM, STICK LOAD CONTROL)	536
Y	302-3283	1	LINES GP-PILOT (STICK LOWERING CONTROL)	654
Y	302-9546	1	LINES GP-STICK CYLINDER (STICK LOWERING CONTROL)	683
Y	310-0104	1	VALVE GP-MAIN CONTROL (STICK LOWERING CONTROL VALVE)	769

Y-SEPARATE ILLUSTRATION

<END>

297-0258 VALVE AR-CHECK & RELIEF-

STICK LOAD CONTROL, HEAVY LIFT

S/N: YEE1-UP

FOR USE WITH 294-1252–PAGE 837, 297-0252–PAGE 731

AN ATTACHMENT

SMCS-5117, 5453 **i02922495**

NOTE	PART NUMBER	QTY	PART NAME 1 2 3 4 5 6 (PRODUCT LEVEL)	SEE PAGE
Y	*230-0140*	1	LINES GP-BOOM (MASS BOOM, STICK LOAD CONTROL)	538
Y	*302-3283*	1	LINES GP-PILOT (STICK LOWERING CONTROL)	654
Y	*302-9546*	1	LINES GP-STICK CYLINDER (STICK LOWERING CONTROL)	683
Y	**310-0104**	1	VALVE GP-MAIN CONTROL (STICK LOWERING CONTROL VALVE)	769

Y-SEPARATE ILLUSTRATION

<END>

HYDRAULIC SYSTEM

087-5087 VALVE GP-CHECK

S/N: YEE1-UP

PART OF 227-0459 LINES GP-REAR ATTACHMENT

AN ATTACHMENT

SMCS-5067 **i01066006**

NOTE	REF NO	GRAPHIC REF	PART NUMBER	QTY	PART NAME 1 2 3 4 5 6 (PRODUCT LEVEL)	SEE PAGE
Y	1	1	**114-0649**	1	VALVE GP-CHECK	734
	2	1	**114-0648**	1	BODY	

Y-SEPARATE ILLUSTRATION

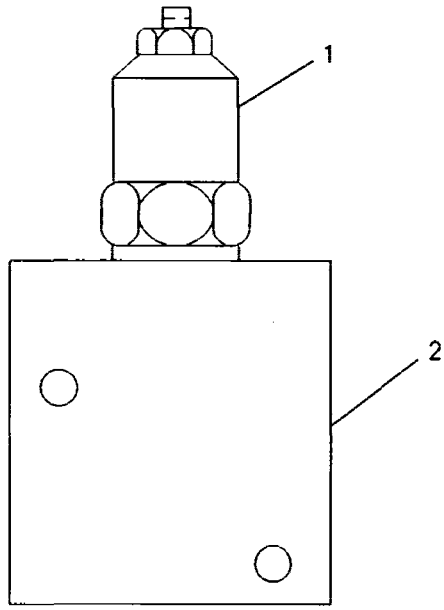

GRAPHIC #1 **<END>** g00250127

HYDRAULIC SYSTEM

114-0649 VALVE GP-CHECK

S/N: YEE1-UP

PART OF 087-5087 VALVE GP-CHECK

AN ATTACHMENT

SMCS-5067 **i00613227**

NOTE	REF NO	GRAPHIC REF	PART NUMBER	QTY	PART NAME 1 2 3 4 5 6 (PRODUCT LEVEL)	SEE PAGE
	1	1	**7M-8485**	1	SEAL-O-RING	
	2	1	**115-9865**	2	RING-BACKUP	
	3	1	**8C-3101**	1	SEAL-O-RING	
	4	1	**8C-3102**	1	SEAL-O-RING	
	5	1	**115-9864**	1	RING-BACKUP	

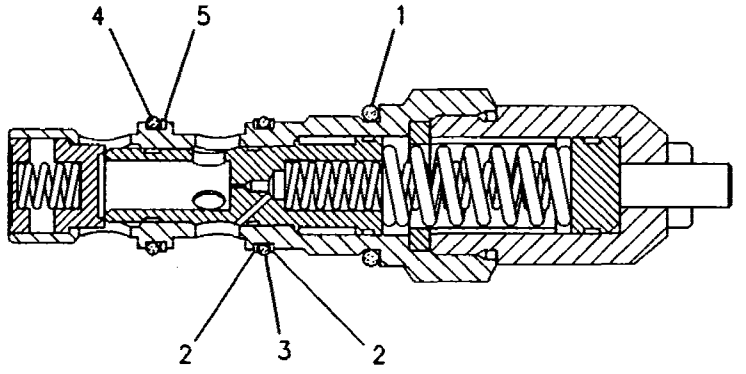

GRAPHIC #1 **<END>** g00250128

122-7690 VALVE GP-CHECK

S/N: YEE1-UP

PART OF 310-0102, 310-0105 VALVE GP-CONTROL

ALSO AN ATTACHMENT

SMCS-5067 **i01739131**

NOTE	REF NO	GRAPHIC REF	PART NUMBER	QTY	PART NAME 1 2 3 4 5 6 (PRODUCT LEVEL)	SEE PAGE
	1	1	122-7687	1	PLUG	
	2	1	2M-9780	1	SEAL-O-RING	
	3	1	122-7689	1	SPRING	
Z	4	1		1	VALVE-CHECK	
Z	5	1		1	VALVE	

Z-NOT SERVICED SEPARATELY

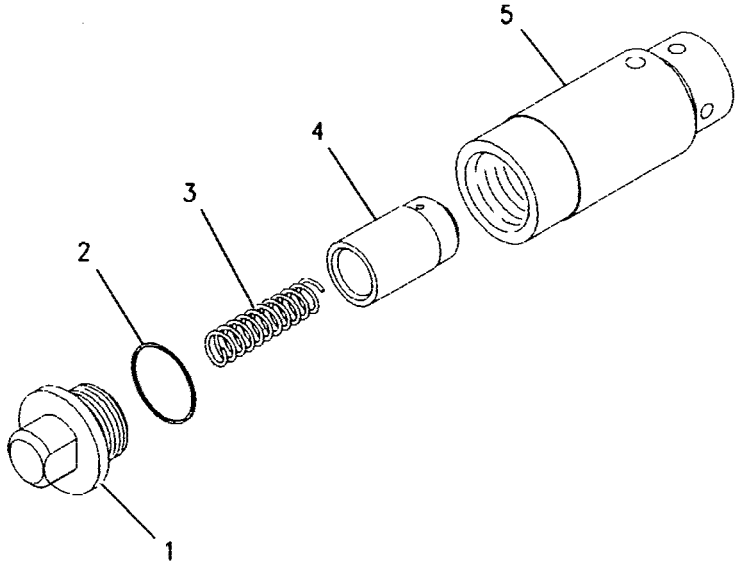

GRAPHIC #1 **<END>** g00890777

HYDRAULIC SYSTEM

239-9036 VALVE GP-CHECK

S/N: YEE1-UP

PART OF 292-7166, 292-7169, 296-7129, 296-7131 LINES GP-FRONT AN ATTACHMENT

SMCS-5067 **i02243720**

NOTE	REF NO	GRAPHIC REF	PART NUMBER	QTY	PART NAME 1 2 3 4 5 6 (PRODUCT LEVEL)	SEE PAGE
	1	1	**123-2535**	1	VALVE	
	2	1	**123-2537**	1	SPRING	
	3	1	**239-9037**	1	FITTING	
Z	4	1		1	BODY	
	5	1	**239-9039**	1	VALVE	
	6	1	**239-9040**	1	SPRING	
	7	1	**095-1597**	2	SEAL-O-RING	
	8	1	**095-1791**	2	RING-BACKUP	
	9	1	**5K-9090**	1	SEAL-O-RING	

Z-NOT SERVICED SEPARATELY

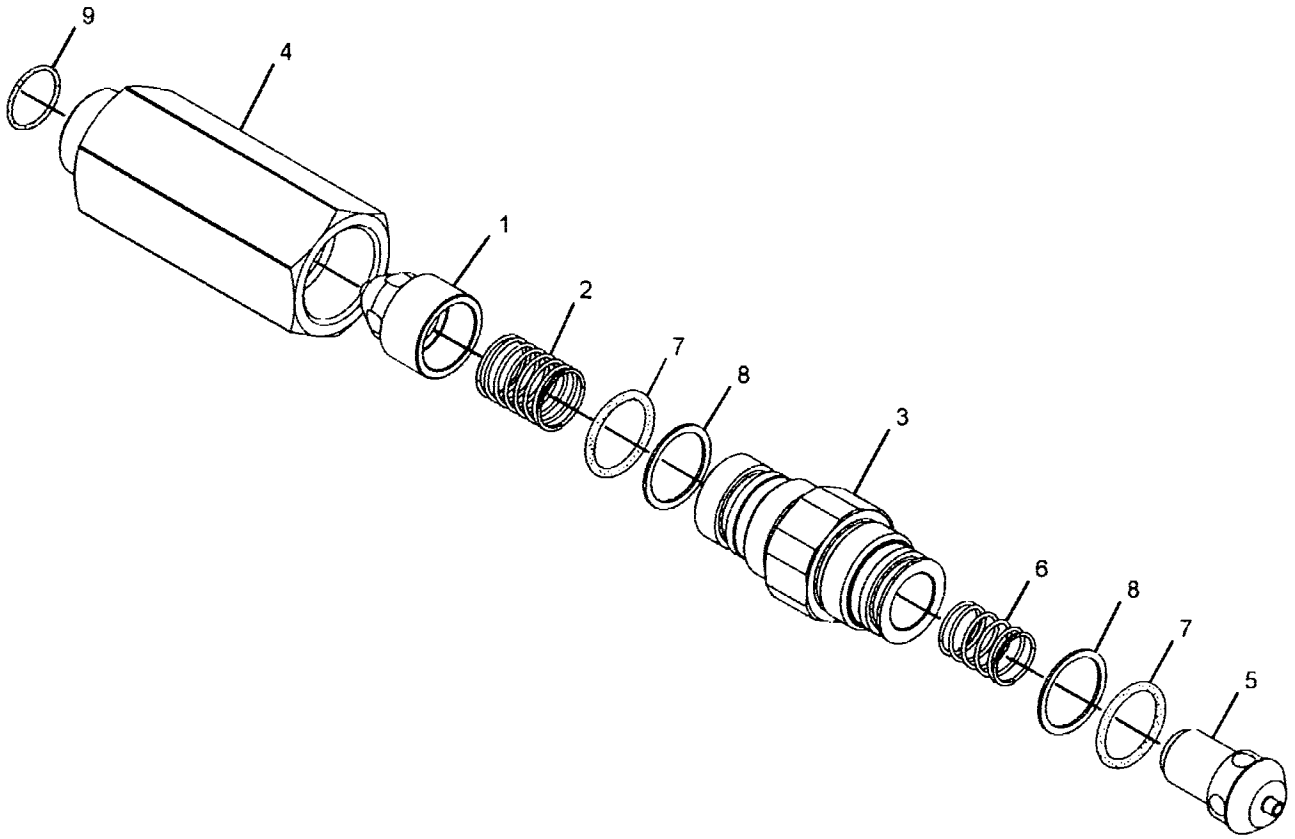

GRAPHIC #1 **<END>** g01130758

HYDRAULIC SYSTEM

234-4624 VALVE GP-CONTROL–REVERSE FLOW

S/N: YEE1-UP

PART OF 292-7175 LINES GP-MOTOR

AN ATTACHMENT

SMCS-5051 **i02158022**

NOTE	REF NO	GRAPHIC REF	PART NUMBER	QTY	PART NAME 1 2 3 4 5 6 (PRODUCT LEVEL)	SEE PAGE
	1	1	7Y-5010	1	PLUG	
Z	2	1		1	BODY-VALVE	
	3	1	242-6889	1	SPOOL	
	4	1	242-6890	1	SPRING	
	5	1	242-6891	1	PLUG	
	6	1	242-6892	1	VALVE GP-RELIEF (LINE)	
		1	242-6925	1	KIT-SEAL (LINE RELIEF VALVE)	
	7	1	095-0966	11	PLUG	
	8	1	095-0967	3	PLUG	
	9	1	096-1598	1	SPRING	
	10	1	3J-1907	2	SEAL-O-RING	
	11	1	3K-0360	1	SEAL-O-RING	
	12	1	4K-1388	1	SEAL-O-RING	
	13	1	7Y-5011	1	VALVE	
	14	1	9S-8004	2	PLUG-O-RING	

Z-NOT SERVICED SEPARATELY

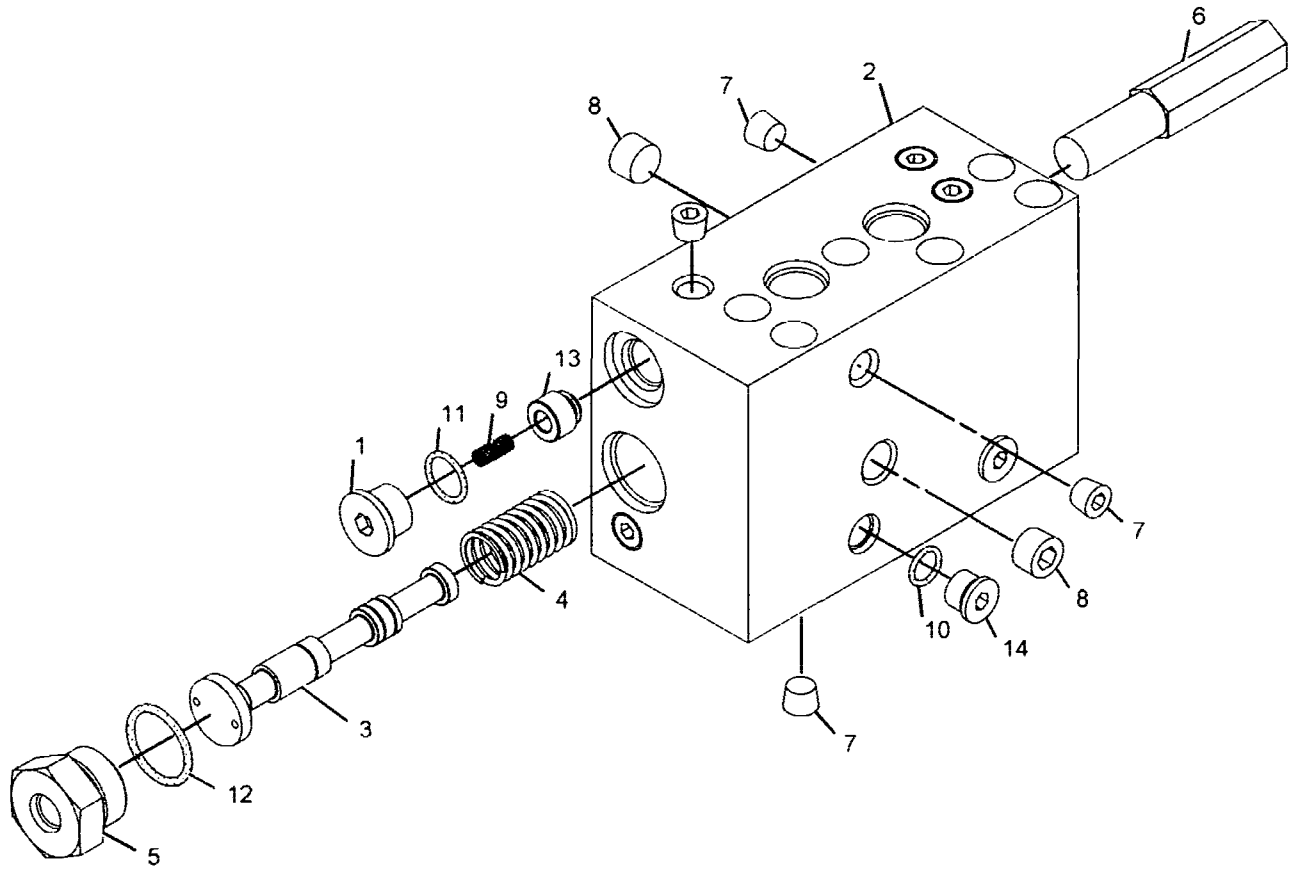

GRAPHIC #1 **<END>** g01093739

HYDRAULIC SYSTEM

285-1531 VALVE GP-CONTROL–MEDIUM PRESSURE

S/N: YEE1-UP

PART OF 292-7168 LINES GP-PUMP

AN ATTACHMENT

SMCS-5051 **i02783421**

NOTE	REF NO	GRAPHIC REF	PART NUMBER	QTY	PART NAME 1 2 3 4 5 6 (PRODUCT LEVEL)	SEE PAGE
	1	1	**285-1777**	2	VALVE GP-RELIEF (230-BAR (3336-PSI))	
					–OR–	
A			**260-3003**	2	VALVE GP-RELIEF (160-BAR (2321-PSI))	
					(OPTIONAL SERVICE REPLACEMENT)	
					–OR–	
A			**309-9941**	2	VALVE GP-RELIEF (80-BAR (1161-PSI))	
					(OPTIONAL SERVICE REPLACEMENT)	

A-NOT PART OF THIS GROUP

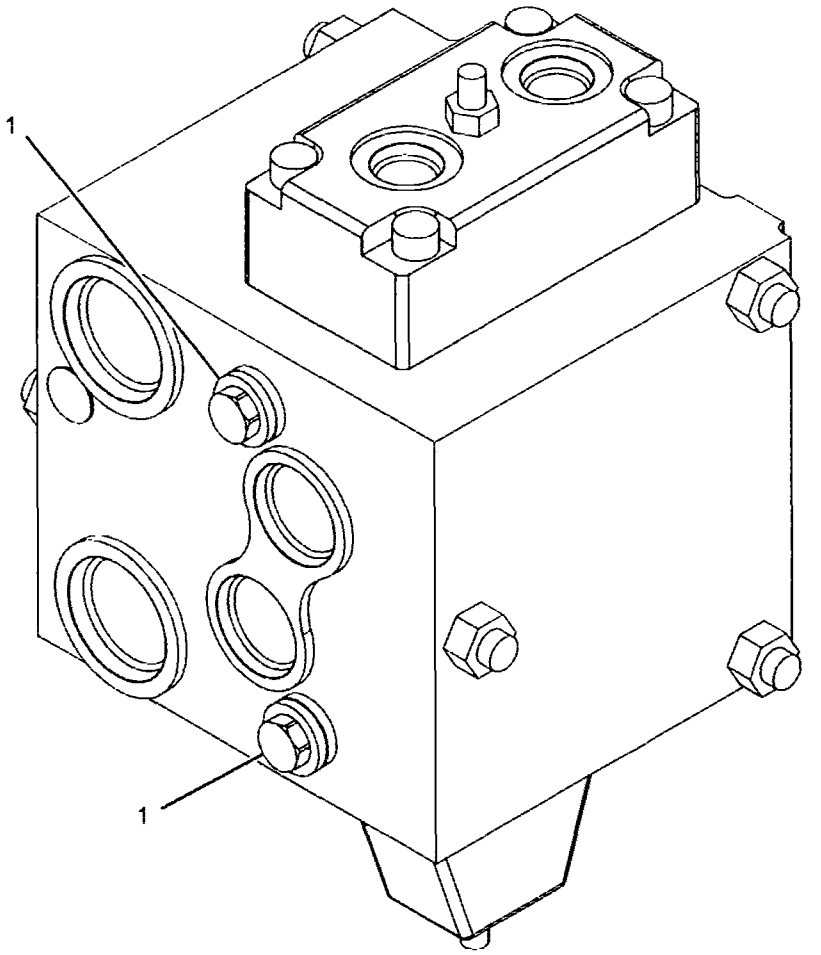

GRAPHIC #1 **<END>** g01384393

310-0096 VALVE GP-CONTROL–MAIN CONTROL VALVE, RH

S/N: YEE1-UP

PART OF 310-0101, 310-0104 VALVE GP-MAIN CONTROL

ALSO AN ATTACHMENT

SMCS-5051 i02975215

NOTE	REF NO	GRAPHIC REF	PART NUMBER	QTY	PART NAME 1 2 3 4 5 6 (PRODUCT LEVEL)	SEE PAGE
	1	1	122-7663	4	COVER	
	2	2	122-7666	3	SPRING	
	3	2	122-7682	3	VALVE	
	4	2	122-7720	1	ADAPTER	
Y	5	2	122-7756	1	VALVE GP-RELIEF (NEGATIVE FLOW CONTROL)	800
	6	1	122-7765	2	PLUG-PIPE	
Y	7	2	122-7768	3	PLUG GP-CONTROL VALVE (WORK TOOL)	708
	8	1	122-7785	1	COVER	
	9	1	122-7787	5	COVER	
	10	1	140-0681	1	COVER	
	11	2	147-4297	2	VALVE	
	12	2	147-4299	2	SPRING	
	13	2	*225-4818*	2	PLUG AS	
					(EACH INCLUDES)	
		2	4J-7533	1	SEAL-O-RING	
		2	225-4804	1	PLUG	
	14	2	230-2770	2	PLUG	
	15	2	230-2771	1	PLUG	
	16	2	230-2772	3	PLUG	
Y	17	1	239-8984	1	VALVE GP-RELIEF (BOOM CYLINDER ROD END)	803
Y	17A	2	239-8984	1	VALVE GP-RELIEF (BUCKET CYLINDER HEAD END)	803
Y	17B	2	239-8984	1	VALVE GP-RELIEF (BUCKET CYLINDER ROD END)	803
Y	18	1	*310-0097*	1	VALVE GP-CONTROL (RH, WITHOUT COVERS, HOUSINGS)	742
	19	2	095-1597	6	SEAL-O-RING	
	20	2	095-1791	6	RING-BACKUP	
	21	1	*148-8395*	1	PLUG AS	
		1	3K-0360	1	SEAL-O-RING	
		1	9S-8005	1	PLUG-O-RING	
	22	2	*148-8407*	1	PLUG AS	
		2	3J-1907	1	SEAL-O-RING	
		2	9S-4191	1	PLUG-O-RING	
	23	1	4J-0523	1	SEAL-O-RING	
	24	2	4J-0525	5	SEAL-O-RING	
	25	2	4J-0526	5	SEAL-O-RING	
	26	2	4J-5309	2	SEAL-O-RING	
	27	2	5P-2568	1	SEAL-O-RING	
	28	1	6V-6793	1	RING-BACKUP	
M	29	1	7X-2550	8	BOLT (M12X1.75X110-MM)	
M	30	1	7X-2553	4	BOLT (M16X2X40-MM)	
	31	1	8T-4223	20	WASHER-HARD (13.5X25.5X3-MM THK)	
M	32	1	8T-4956	10	BOLT (M12X1.75X35-MM)	
M	33	1	8T-5041	2	BOLT (M12X1.75X120-MM)	
	34	1	9X-8257	4	WASHER (17.5X30X3.5-MM THK)	

M-METRIC PART
Y-SEPARATE ILLUSTRATION

REFER TO ALL ILLUSTRATIONS OF
THIS GROUP FOR AUXILIARY VIEWS

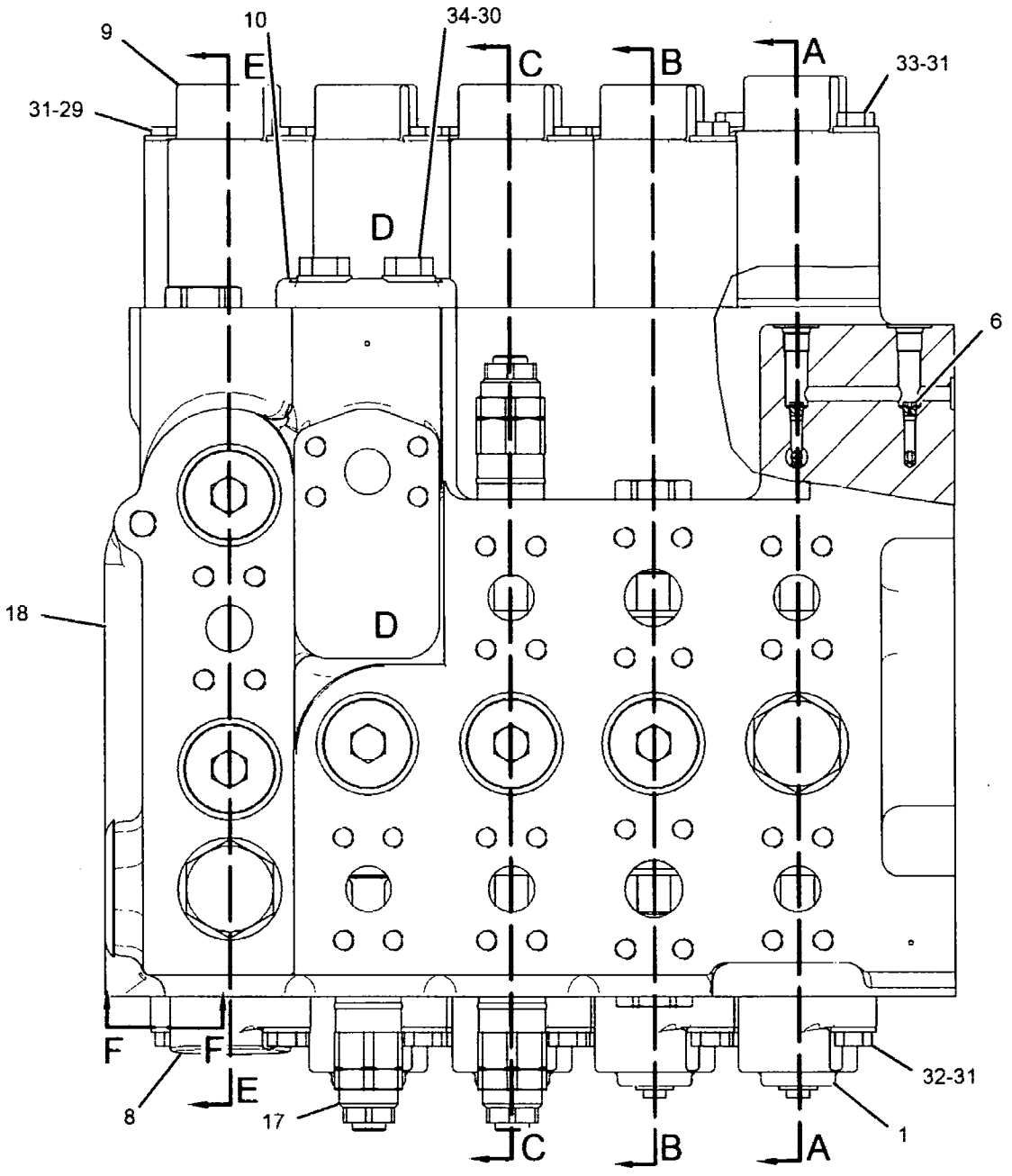

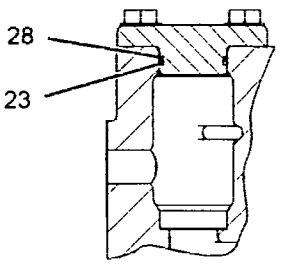

SECTION D-D

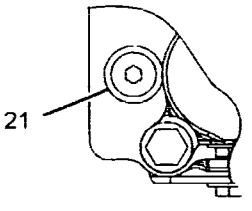

SECTION F-F

GRAPHIC #1

g01450747

310-0096 VALVE GP-CONTROL *(contd.)* i02975215

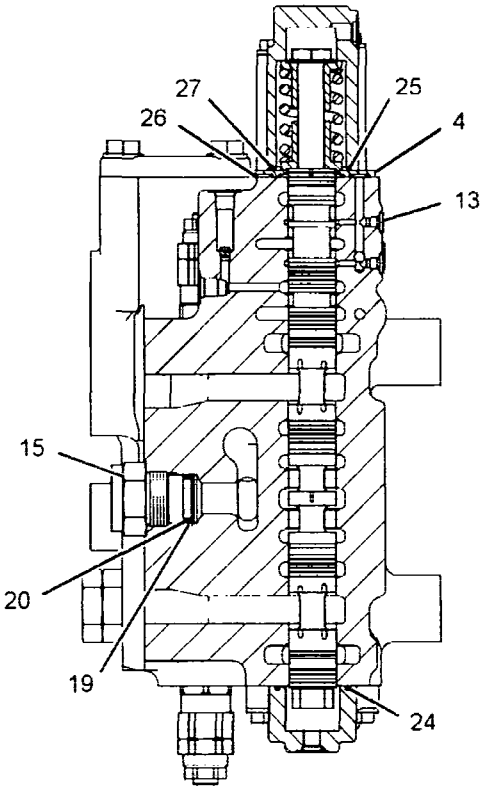

SECTION A-A

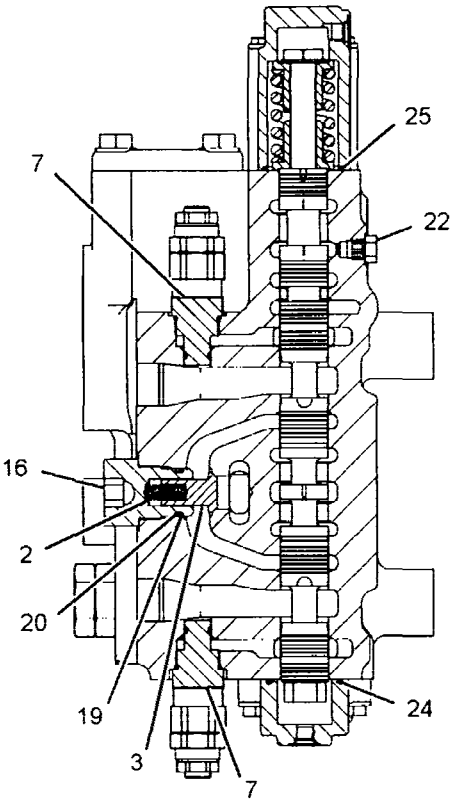

SECTION B-B

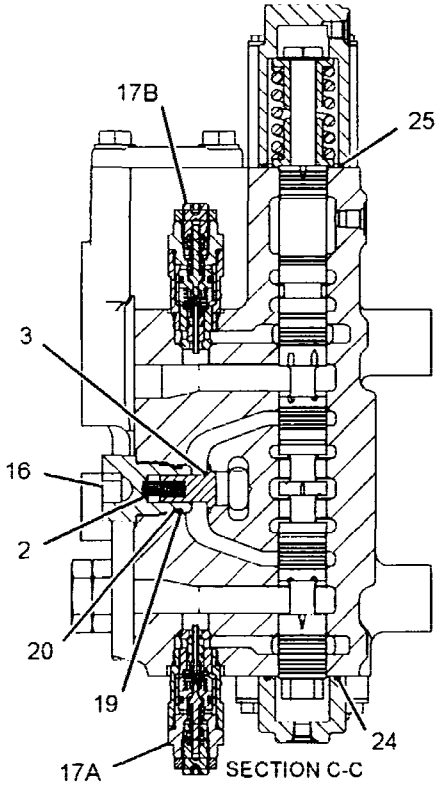

SECTION C-C

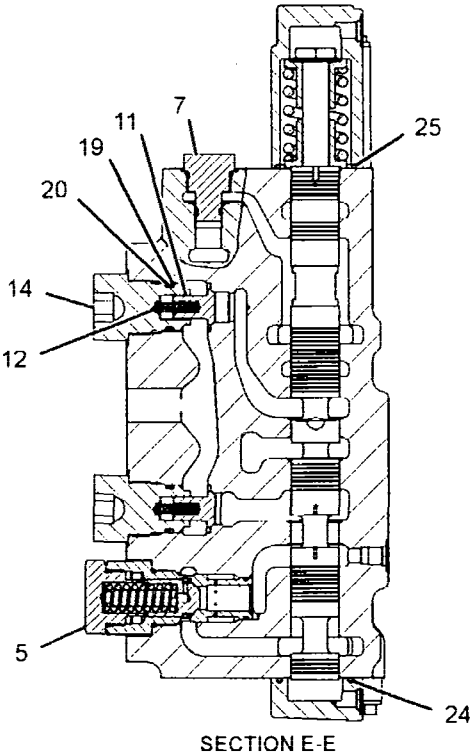

SECTION E-E

GRAPHIC #2

<END>

g01450748

HYDRAULIC SYSTEM

310-0097 VALVE GP-CONTROL–WITHOUT COVERS, HOUSINGS

S/N: YEE1-UP

PART OF 310-0096 VALVE GP-CONTROL

ALSO AN ATTACHMENT

SMCS-5051 **i02881464**

NOTE	REF NO	GRAPHIC REF	PART NUMBER	QTY	PART NAME 1 2 3 4 5 6 (PRODUCT LEVEL)	SEE PAGE
M	1	1	**122-7673**	5	BOLT-SHOULDER (M12X1.75X10-MM)	
	2	1	**122-7674**	10	RETAINER	
	3	1	**122-7692**	1	SPRING	
	4	1	**122-7693**	1	SPRING	
	5	1	**122-7694**	3	SPRING	

M-METRIC PART

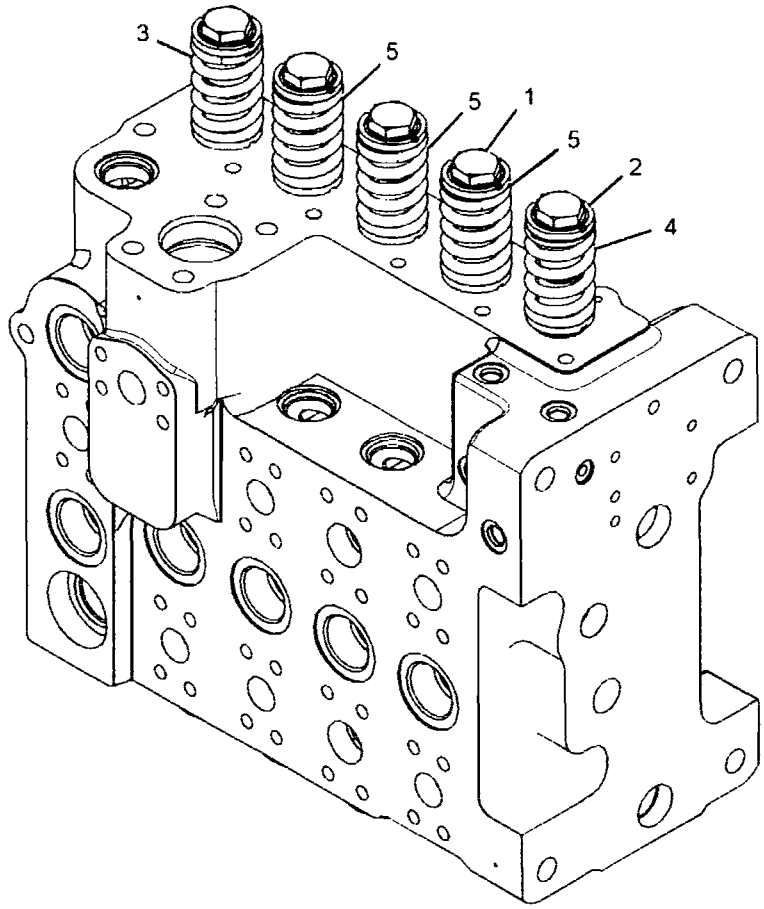

GRAPHIC #1 **<END>** g01449534

310-0099 VALVE GP-CONTROL–WITHOUT COVERS, HOUSINGS

S/N: YEE1-UP

PART OF 310-0102, 310-0105 VALVE GP-CONTROL

ALSO AN ATTACHMENT

SMCS-5051 i02881610

NOTE	REF NO	GRAPHIC REF	PART NUMBER	QTY	PART NAME 1 2 3 4 5 6 (PRODUCT LEVEL)	SEE PAGE
M	1	1	**122-7673**	4	BOLT-SHOULDER (M12X1.75X10-MM)	
	2	1	**122-7674**	8	RETAINER	
	3	1	**122-7692**	1	SPRING	
	4	1	**122-7693**	1	SPRING	
	5	1	**122-7694**	2	SPRING	
	6	1	**122-7695**	1	SPRING	
	7	1	**131-5938**	1	VALVE	
	8	1	**131-5939**	1	DOWEL	
	9	1	*148-8409*	1	PLUG AS	
		1	**3D-2824**	1	SEAL-O-RING	
		1	**9S-8008**	1	PLUG-O-RING	

M-METRIC PART

310-0099 **VALVE GP-CONTROL** *(contd.)* **i02881610**

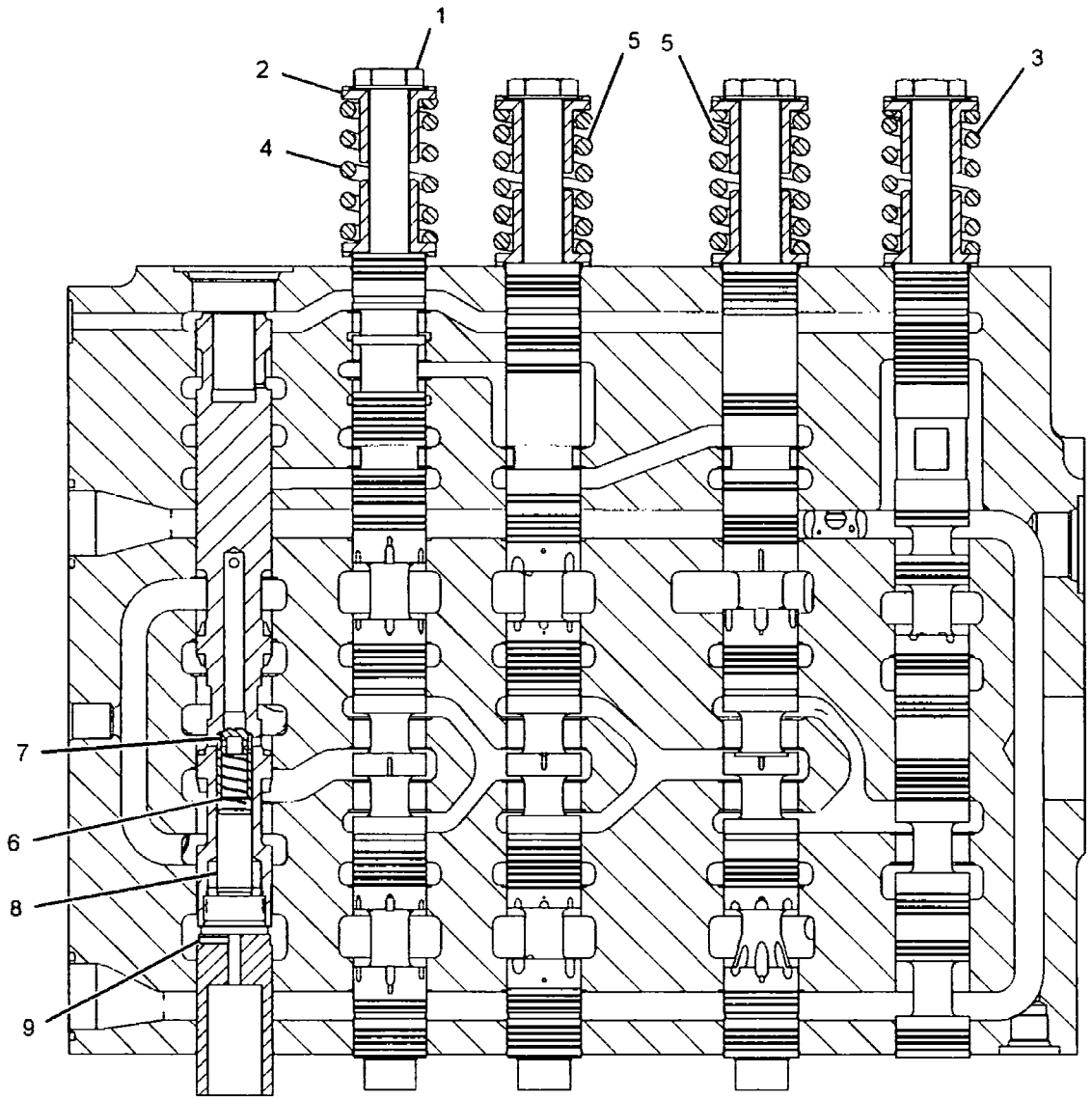

GRAPHIC #1 **<END>** g01449375

310-0102 VALVE GP-CONTROL–MAIN CONTROL VALVE, LH

S/N: YEE1-UP

PART OF 310-0101 VALVE GP-MAIN CONTROL

SMCS-5051 i02975217

NOTE	REF NO	GRAPHIC REF	PART NUMBER	QTY	PART NAME 1 2 3 4 5 6 (PRODUCT LEVEL)	SEE PAGE
	1	1	6E-3653	1	PLUG	
	2	1	122-7663	5	COVER	
	3	2	122-7666	1	SPRING	
	4	2	122-7676	1	PILOT	
	5	2	122-7677	1	VALVE	
	6	2	122-7678	1	SLEEVE	
	7	2	122-7682	1	VALVE	
Y	8	3	122-7690	1	VALVE GP-CHECK (BOOM II)	735
Y	9	1	122-7708	1	VALVE GP-PRESSURE CONTROL (BOOM II, SWING)	795
	10	3	122-7712	1	PLUG	
	11	3	122-7714	1	SPRING	
	12	3	122-7716	1	SLEEVE	
	13	2	122-7719	1	SPRING	
	14	2	122-7720	1	ADAPTER	
Y	15	3	122-7750	1	VALVE GP-RELIEF (NEGATIVE FLOW CONTROL)	799
	16	3	122-7753	1	SPRING	
	18	1	122-7787	3	COVER	
	19	2	122-7788	1	FLANGE	
	20	3	122-7789	1	COVER	
	21	3	122-7848	1	PLUG	
	22	1	131-5675	1	COVER	
	23	2	131-5935	1	SPRING	
	24	2	131-5936	1	PLUG	
	25	2	131-5937	1	PISTON	
	26	1,2	147-4297	3	VALVE	
	27	2	147-4298	2	PLUG	
	28	1,2	147-4299	3	SPRING	
	29	1,2	*225-4818*	3	PLUG AS	
					(EACH INCLUDES)	
		1,2	4J-7533	1	SEAL-O-RING	
		1,2	225-4804	1	PLUG	
	30	1	*225-4820*	1	PLUG AS	
		1	3J-7354	1	SEAL-O-RING	
		1	225-4821	1	PLUG	
	31	2	230-2771	1	PLUG	
	32	2	230-2772	1	PLUG	
	33	1	230-2773	1	PLUG	
	34	2	232-4030	1	SLEEVE	
Y	35	2	239-8983	1	VALVE GP-RELIEF (LINE) (STICK)	802
Y	36	3	255-5588	1	VALVE GP-REGENERATION (STICK)	798
Y	37	3	270-5691	1	VALVE GP-RELIEF (LINE) (STICK)	805
Y	38	1	270-5696	1	VALVE GP-LOAD CONTROL (STICK DRIFT REDUCTION)	761
Y	39	2	270-5730	1	VALVE GP-RELIEF	807
Y	40	1	*310-0099*	1	VALVE GP-CONTROL (LH, WITHOUT COVERS, HOUSINGS)	743
M	41	1	085-8091	4	BOLT (M10X1.5X55-MM)	
	42	2	095-1597	2	SEAL-O-RING	
	43	2	095-1791	2	RING-BACKUP	
	44	1,2	122-7797	3	RING	
	45	1	*148-8395*	1	PLUG AS	
		1	3K-0360	1	SEAL-O-RING	
		1	9S-8005	1	PLUG-O-RING	
	46	3	*173-3993*	2	PLUG AS	
					(EACH INCLUDES)	
		3	4J-7533	1	SEAL-O-RING	
		3	9S-8001	1	PLUG-O-RING	
	47	3	2J-1826	1	SEAL-O-RING	

310-0102 VALVE GP-CONTROL *(contd.)* i02975217

NOTE	REF NO	GRAPHIC REF	PART NUMBER	QTY	PART NAME 1 2 3 4 5 6 (PRODUCT LEVEL)	SEE PAGE
	48	2	**2S-4078**	1	SEAL-O-RING	
	49	3	**3D-2824**	1	SEAL-O-RING	
	50	1	**4I-3569**	1	RING-BACKUP	
	51	2,3	**4J-0525**	5	SEAL-O-RING	
	52	2,3	**4J-0526**	4	SEAL-O-RING	
	53	2,3	**4J-5309**	4	SEAL-O-RING	
	54	2	**5P-2568**	1	SEAL-O-RING	
	55	2	**6V-1250**	1	SEAL-O-RING	
	56	1,2	**6V-5326**	3	SEAL-O-RING	
M	57	1	**7X-2475**	2	BOLT (M16X2X130-MM)	
M	58	1	**7X-2550**	6	BOLT (M12X1.75X110-MM)	
M	59	3	**7X-2621**	1	BOLT (M10X1.5X12-MM)	
	60	1	**7Y-5219**	1	SEAL-O-RING	
	61	1	**8T-4121**	4	WASHER-HARD (11X21X2.5-MM THK)	
M	62	1	**8T-4174**	2	BOLT (M16X2X120-MM)	
	63	1	**8T-4223**	22	WASHER-HARD (13.5X25.5X3-MM THK)	
M	64	1	**8T-4648**	4	BOLT (M12X1.75X70-MM)	
M	65	1	**8T-4956**	10	BOLT (M12X1.75X35-MM)	
M	66	1	**8T-5041**	2	BOLT (M12X1.75X120-MM)	
	67	1	**9X-8257**	4	WASHER (17.5X30X3.5-MM THK)	

M-METRIC PART
Y-SEPARATE ILLUSTRATION

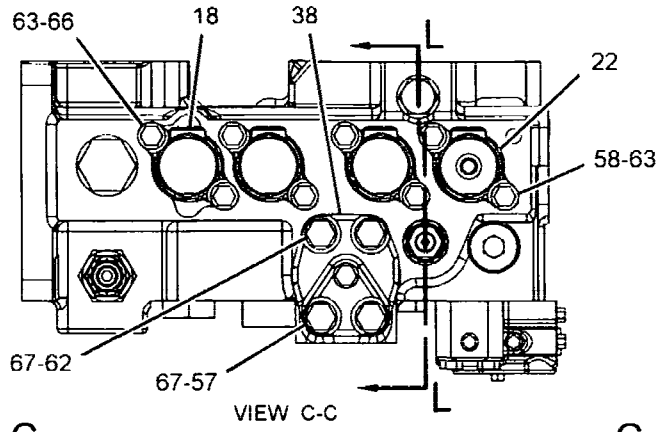

VIEW C-C

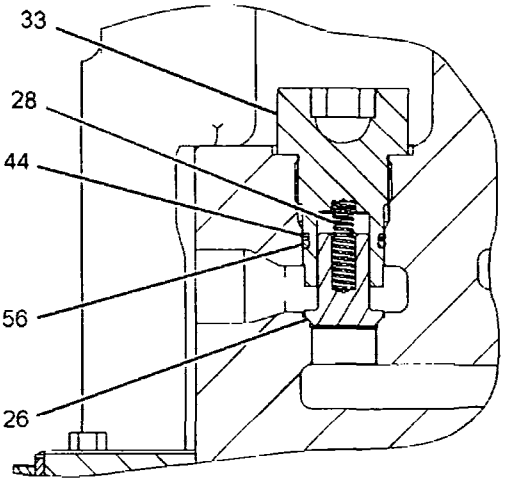

SECTION K-K

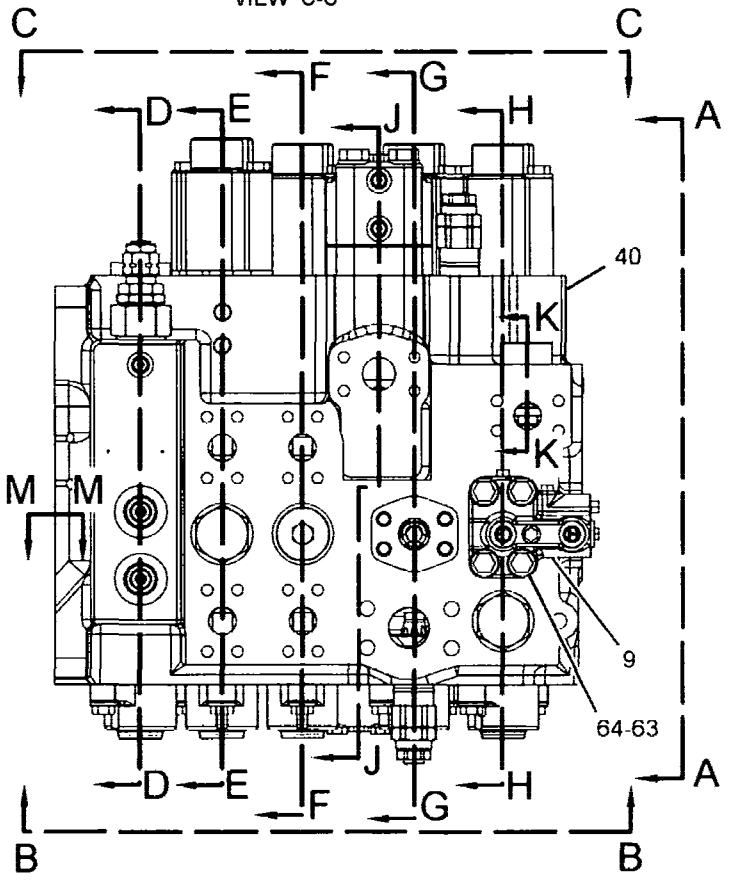

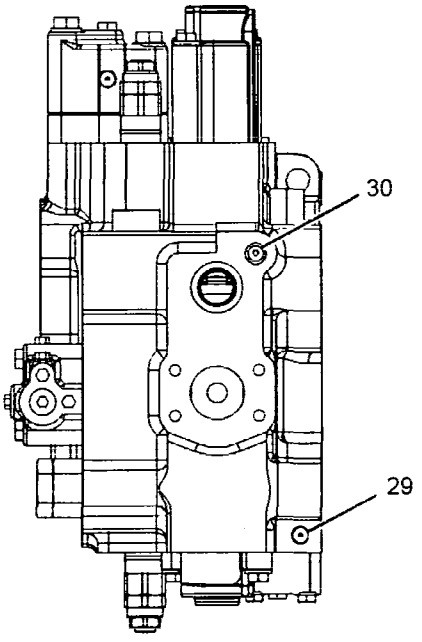

VIEW A-A

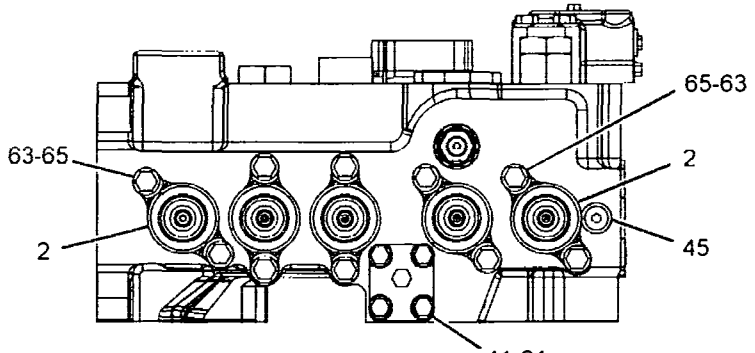

VIEW B-B

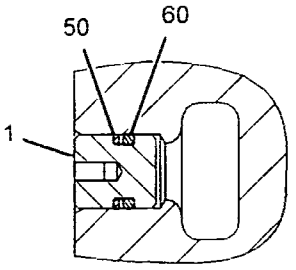

SECTION M-M

REFER TO ALL ILLUSTRATIONS OF THIS GROUP FOR AUXILIARY VIEWS

GRAPHIC #1

g01479034

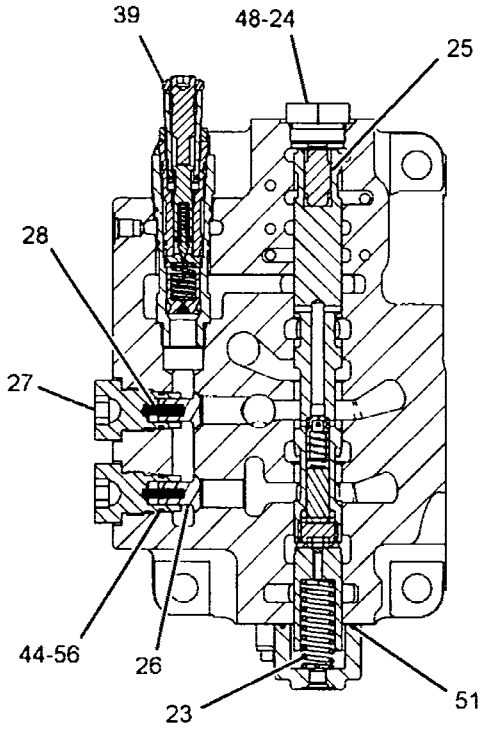

SECTION D-D

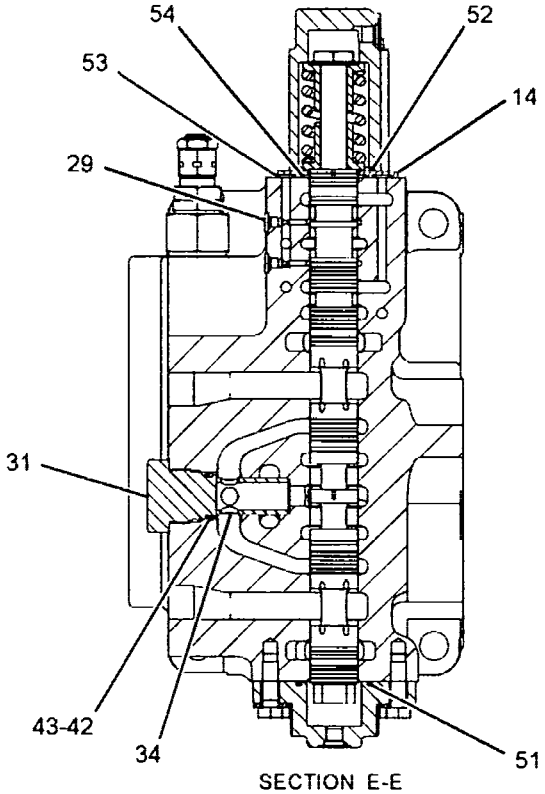

SECTION E-E

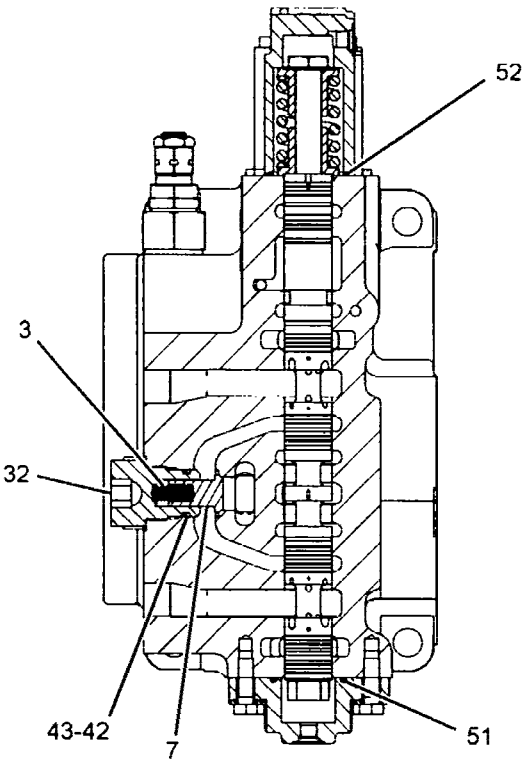

SECTION F-F

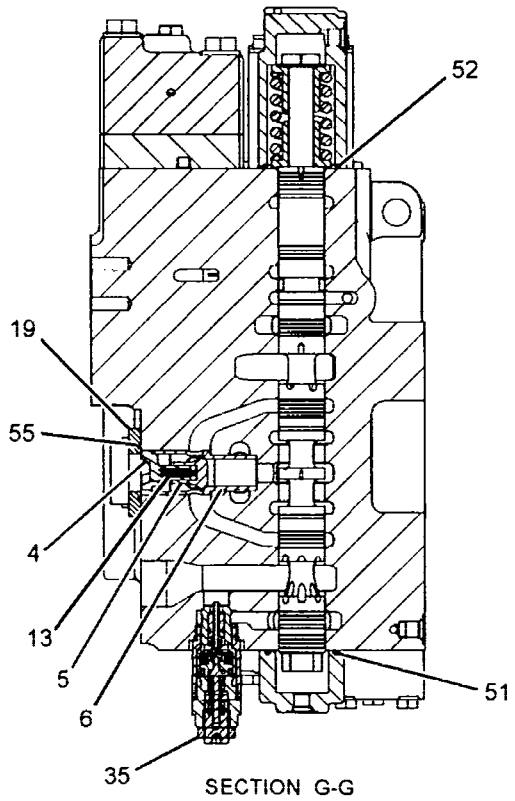

SECTION G-G

GRAPHIC #2

g01455412

310-0102 VALVE GP-CONTROL *(contd.)* i02975217

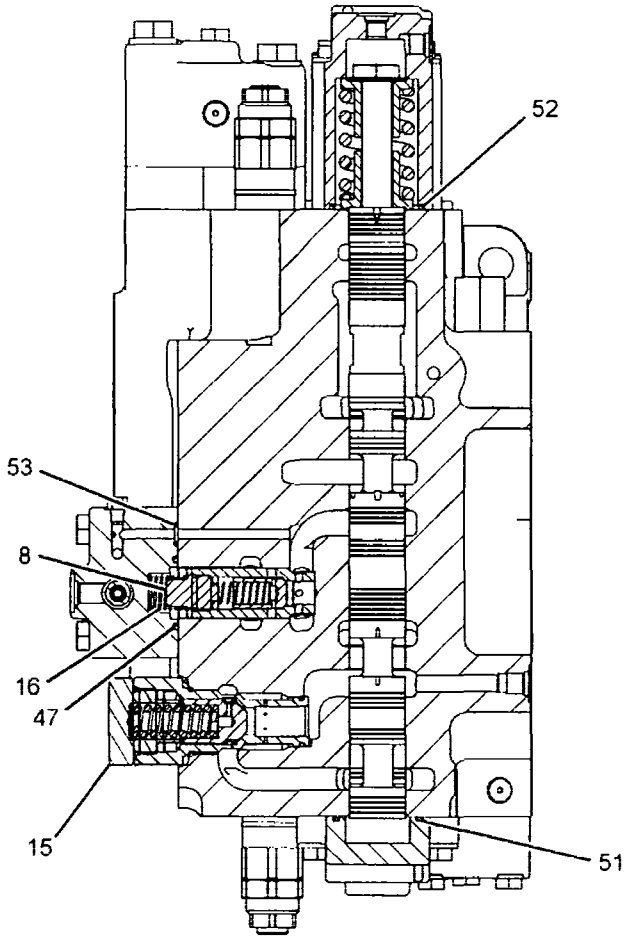

SECTION H-H

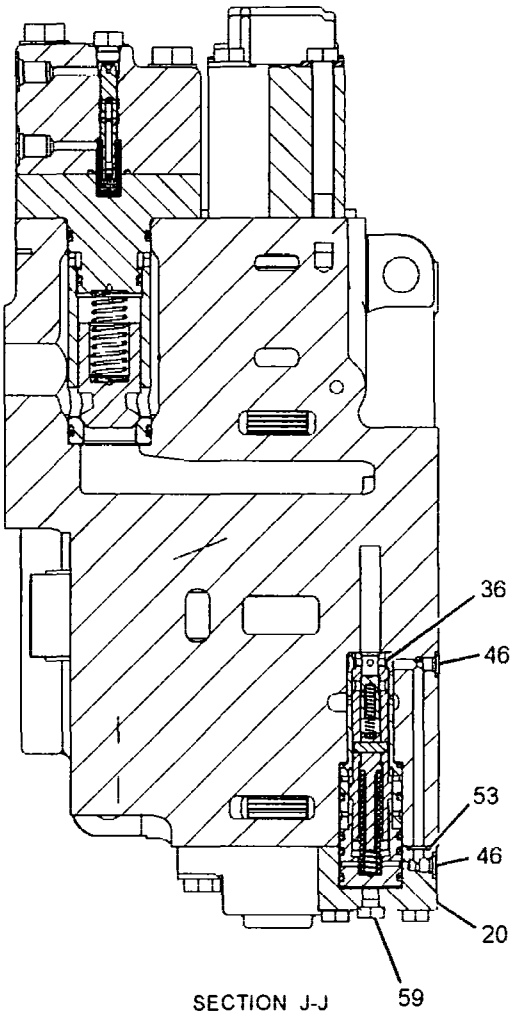

SECTION J-J

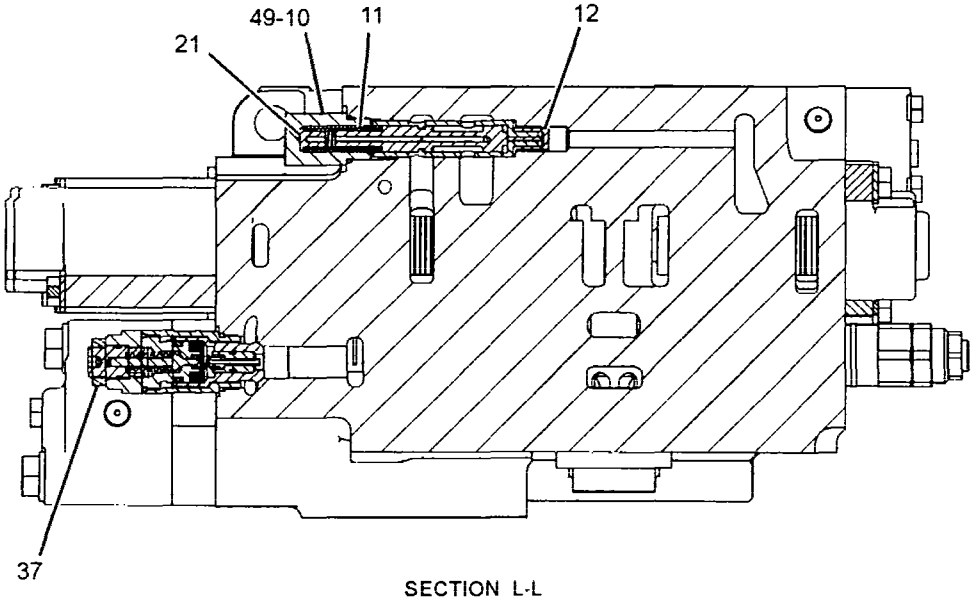

SECTION L-L

GRAPHIC #3 **<END>** g01455413

HYDRAULIC SYSTEM

310-0105 VALVE GP-CONTROL–MAIN CONTROL VALVE, LH

S/N: YEE1-UP

PART OF 310-0104 VALVE GP-MAIN CONTROL

AN ATTACHMENT

SMCS-5051 i02975251

NOTE	REF NO	GRAPHIC REF	PART NUMBER	QTY	PART NAME 1 2 3 4 5 6 (PRODUCT LEVEL)	SEE PAGE
	1	1	6E-3653	1	PLUG	
	2	1,2	122-7663	5	COVER	
	3	1	122-7666	1	SPRING	
	4	1	122-7676	1	PILOT	
	5	1	122-7677	1	VALVE	
	6	1	122-7678	1	SLEEVE	
	7	1	122-7682	1	VALVE	
Y	8	1	122-7690	1	VALVE GP-CHECK (BOOM II)	735
Y	9	1	122-7708	1	VALVE GP-PRESSURE CONTROL (BOOM II, SWING)	795
	10	2	122-7712	1	PLUG	
	11	2	122-7714	1	SPRING	
	12	2	122-7716	1	SLEEVE	
	13	1	122-7719	1	SPRING	
	14	2	122-7720	1	ADAPTER	
Y	15	1	122-7750	1	VALVE GP-RELIEF (NEGATIVE FLOW CONTROL)	799
	16	1	122-7753	1	SPRING	
Y	17	1	122-7768	1	PLUG GP-CONTROL VALVE	708
	18	2	122-7787	3	COVER	
	19	1	122-7788	1	FLANGE	
	20	2	122-7789	1	COVER	
	21	2	122-7848	1	PLUG	
	22	2	131-5675	1	COVER	
	23	2	131-5935	1	SPRING	
	24	2	131-5936	1	PLUG	
	25	2	131-5937	1	PISTON	
	26	1	140-0681	1	COVER	
	27	1	147-4297	3	VALVE	
	28	1	147-4298	2	PLUG	
	29	1	147-4299	3	SPRING	
	30	1	*225-4818*	3	PLUG AS	
					(EACH INCLUDES)	
		1	4J-7533	1	SEAL-O-RING	
		1	225-4804	1	PLUG	
	31	1	*225-4820*	1	PLUG AS	
		1	3J-7354	1	SEAL-O-RING	
		1	225-4821	1	PLUG	
	32	1	230-2771	1	PLUG	
	33	1	230-2772	1	PLUG	
	34	1	230-2773	1	PLUG	
	35	1	232-4030	1	SLEEVE	
Y	36	1	239-8983	1	VALVE GP-RELIEF (LINE) (STICK)	802
Y	37	2	255-5588	1	VALVE GP-REGENERATION (STICK)	798
Y	38	1	270-5730	1	VALVE GP-RELIEF (MAIN)	807
Y	39	2	*310-0099*	1	VALVE GP-CONTROL (LH, WITHOUT COVERS, HOUSINGS)	743
M	40	2	085-8091	4	BOLT (M10X1.5X55-MM)	
	41	1	095-1597	2	SEAL-O-RING	
	42	1	095-1791	2	RING-BACKUP	
	43	1	122-7797	3	RING	
	44	1	*148-8395*	1	PLUG AS	
		1	3K-0360	1	SEAL-O-RING	
		1	9S-8005	1	PLUG-O-RING	
	45	2	*173-3993*	2	PLUG AS	
					(EACH INCLUDES)	
		2	4J-7533	1	SEAL-O-RING	
		2	9S-8001	1	PLUG-O-RING	

310-0105 VALVE GP-CONTROL *(contd.)*

i02975251

NOTE	REF NO	GRAPHIC REF	PART NUMBER	QTY	PART NAME 1 2 3 4 5 6 (PRODUCT LEVEL)	SEE PAGE
	46	1	**2J-1826**	1	SEAL-O-RING	
	47	2	**2S-4078**	1	SEAL-O-RING	
	48	2	**3D-2824**	1	SEAL-O-RING	
	49	1	**4I-3569**	1	RING-BACKUP	
	50	1	**4J-0523**	1	SEAL-O-RING	
	51	1,2	**4J-0525**	5	SEAL-O-RING	
	52	2	**4J-0526**	4	SEAL-O-RING	
	53	2	**4J-5309**	4	SEAL-O-RING	
	54	2	**5P-2568**	1	SEAL-O-RING	
	55	1	**6V-1250**	1	SEAL-O-RING	
	56	1	**6V-5326**	3	SEAL-O-RING	
	57	1	**6V-6793**	1	RING-BACKUP	
M	58	2	**7X-2550**	6	BOLT (M12X1.75X110-MM)	
M	59	1	**7X-2553**	4	BOLT (M16X2X40-MM)	
M	60	2	**7X-2621**	1	BOLT (M10X1.5X12-MM)	
	61	1	**7Y-5219**	1	SEAL-O-RING	
	62	2	**8T-4121**	4	WASHER-HARD (11X21X2.5-MM THK)	
	63	1,2	**8T-4223**	22	WASHER-HARD (13.5X25.5X3-MM THK)	
M	64	1	**8T-4648**	4	BOLT (M12X1.75X70-MM)	
M	65	1,2	**8T-4956**	10	BOLT (M12X1.75X35-MM)	
M	66	2	**8T-5041**	2	BOLT (M12X1.75X120-MM)	
	67	1	**9X-8257**	4	WASHER (17.5X30X3.5-MM THK)	

M-METRIC PART
Y-SEPARATE ILLUSTRATION

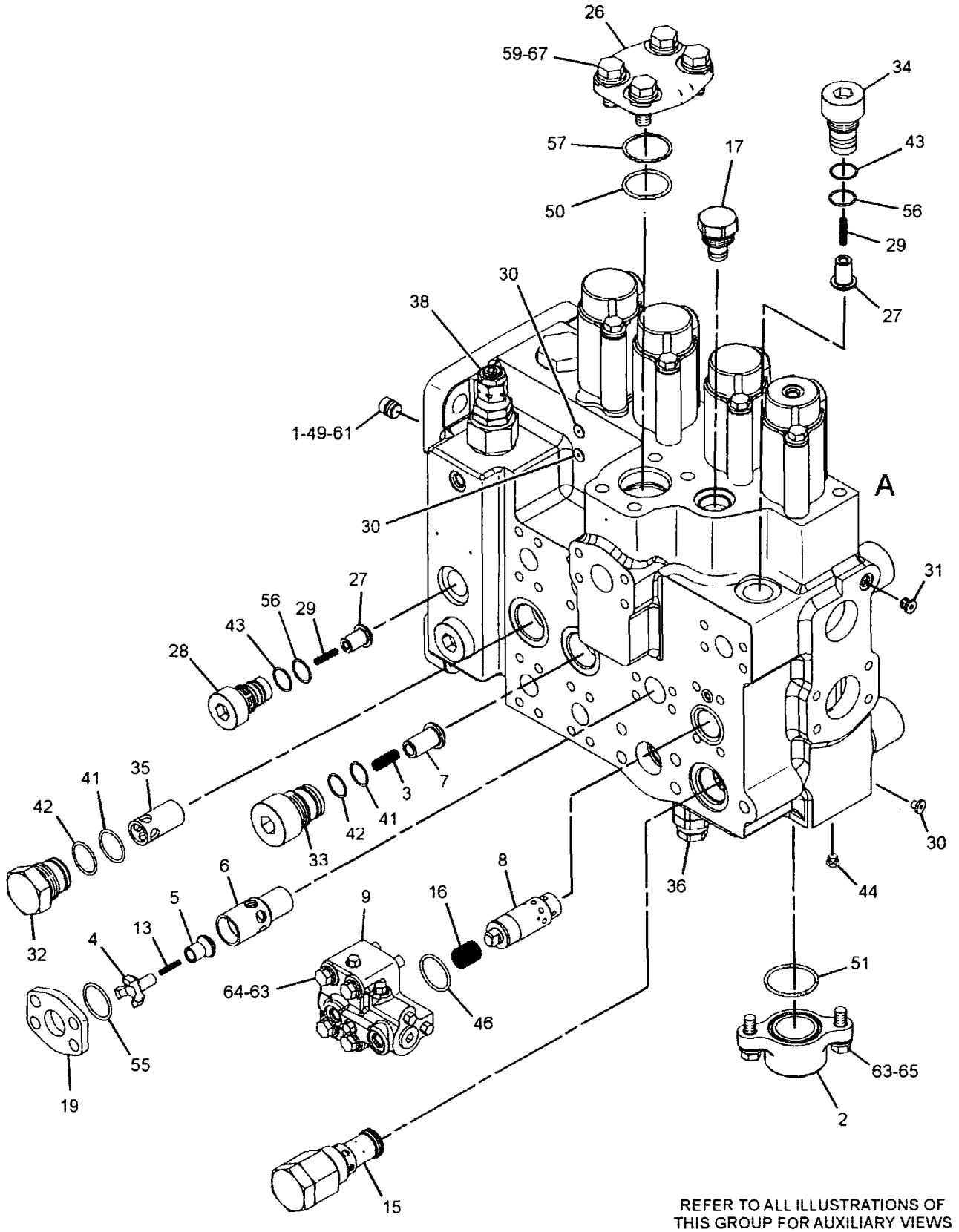

REFER TO ALL ILLUSTRATIONS OF THIS GROUP FOR AUXILIARY VIEWS

GRAPHIC #1

g01458212

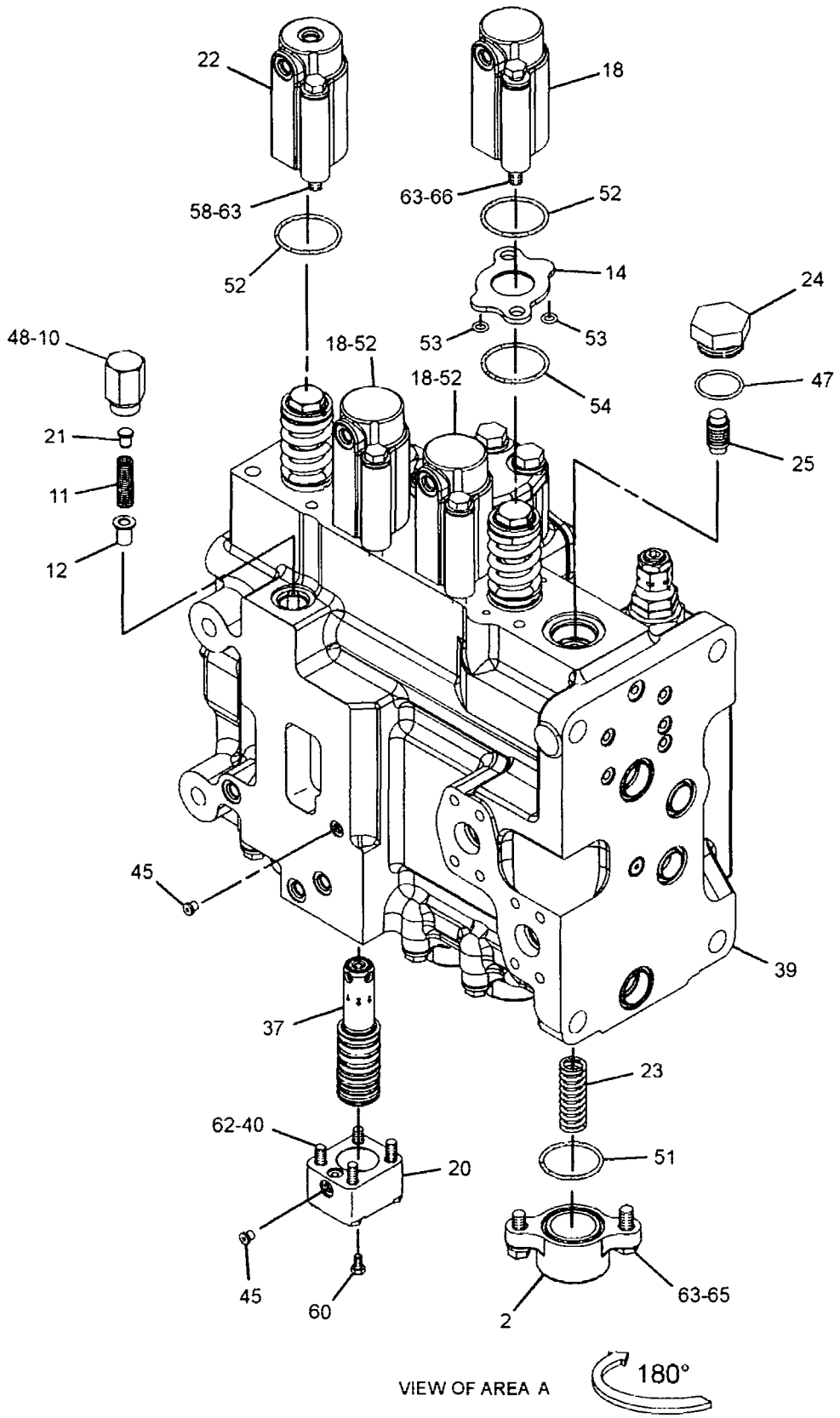

GRAPHIC #2

<END>

g01458213

HYDRAULIC SYSTEM

123-2515 VALVE GP-COUNTERWEIGHT CONTROL

S/N: YEE1-UP

PART OF 227-0459 LINES GP-REAR ATTACHMENT

AN ATTACHMENT

SMCS-5408 **i01233936**

NOTE	REF NO	GRAPHIC REF	PART NUMBER	QTY	PART NAME 1 2 3 4 5 6 (PRODUCT LEVEL)	SEE PAGE
	1	1	7I-0135	2	PLUG	
	2	1	099-3990	1	BODY	
	3	1	093-3093	1	ROD	
M	4	1	1R-6484	2	NUT (M10X1.25-THD)	
	5	1	093-3094	2	ROD	
M	6	1	095-6636	4	NUT	
	7	1	102-7024	1	VALVE GP-RELIEF	
		1	093-3328	1	SEAL-O-RING	
		1	095-1578	1	SEAL-O-RING	
	8	1	7I-0134	2	PLUG	

M-METRIC PART

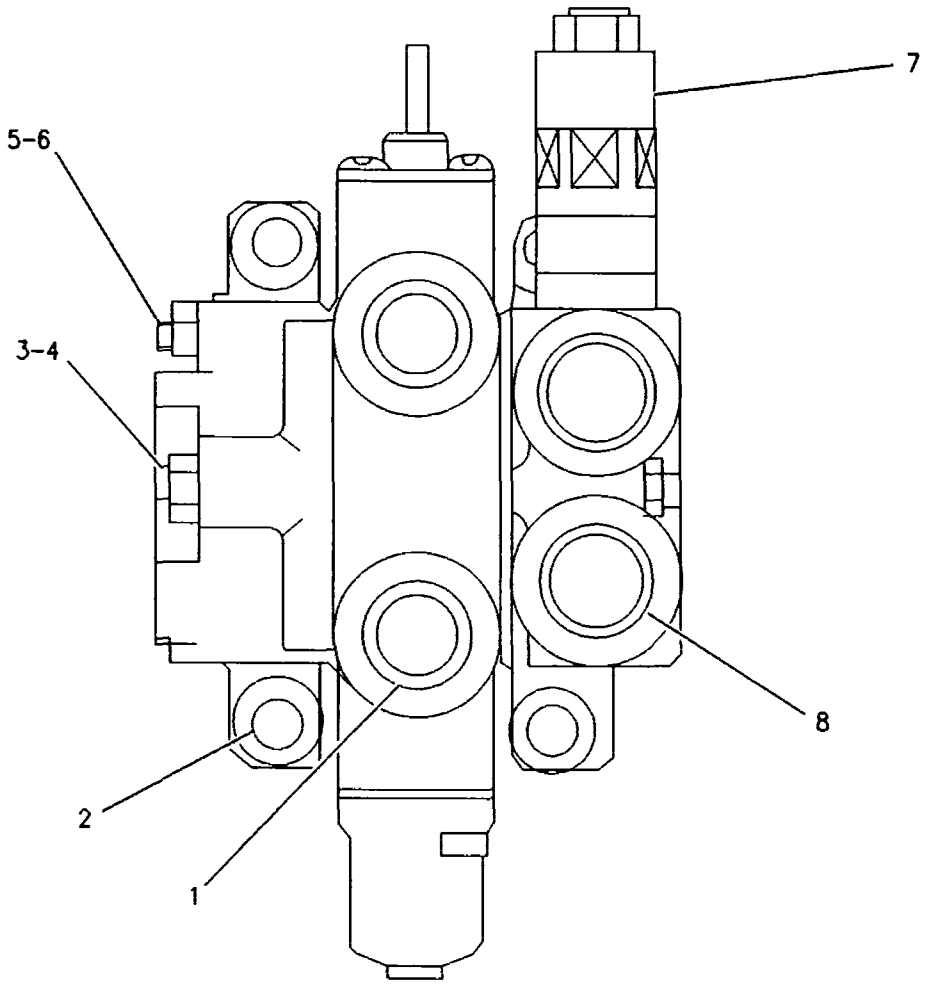

GRAPHIC #1 **<END>** g00268644

HYDRAULIC SYSTEM

254-3080 VALVE GP-COUPLER–QUICK COUPLER

S/N: YEE1-UP
PART OF 296-7133 LINES GP-FRONT
AN ATTACHMENT

SMCS-5491 **i02473781**

NOTE	REF NO	GRAPHIC REF	PART NUMBER	QTY	PART NAME 1 2 3 4 5 6 (PRODUCT LEVEL)	SEE PAGE
	1	1	**6E-5436**	1	RETAINER-SPRING	
	2	1	**6E-5438**	1	SPRING	
	3	1	**6E-5439**	1	SPRING	
Y	4	1	**121-1491**	1	VALVE GP-SOLENOID (QUICK COUPLER)	820
	5	1	**247-7587**	2	VALVE GP-PRESSURE REDUCING (QUICK COUPLER)	
					(EACH INCLUDES)	
		1	**172-4432**	1	KIT-SEAL (QUICK COUPLER)	
Z	6	1		1	BODY-VALVE	
Z	7	1		1	STEM	
	8	1	*148-8407*	2	PLUG AS	
					(EACH INCLUDES)	
		1	**3J-1907**	1	SEAL-O-RING	
		1	**9S-4191**	1	PLUG-O-RING	
	9	1	**4J-5267**	1	SEAL-O-RING	
	10	1	**6E-2313**	1	COVER	
	11	1	**6E-5431**	5	SHIM (0.5-MM THK)	
	12	1	**6E-5434**	1	HOUSING-PILOT	
M	13	1	**7I-2272**	2	BOLT (M5X0.8X12-MM)	
	14	1	**8F-0212**	1	SEAL-O-RING	
M	15	1	**8T-4195**	2	BOLT (M10X1.5X30-MM)	
	16	1	**8T-4224**	2	WASHER-HARD (8.8X16X2-MM THK)	
	17	1	**8T-6759**	12	PLUG-PIPE	
M	18	1	**8T-6870**	2	BOLT (M8X1.25X70-MM)	

M-METRIC PART
Y-SEPARATE ILLUSTRATION
Z-NOT SERVICED SEPARATELY

254-3080 VALVE GP-COUPLER *(contd.)* i02473781

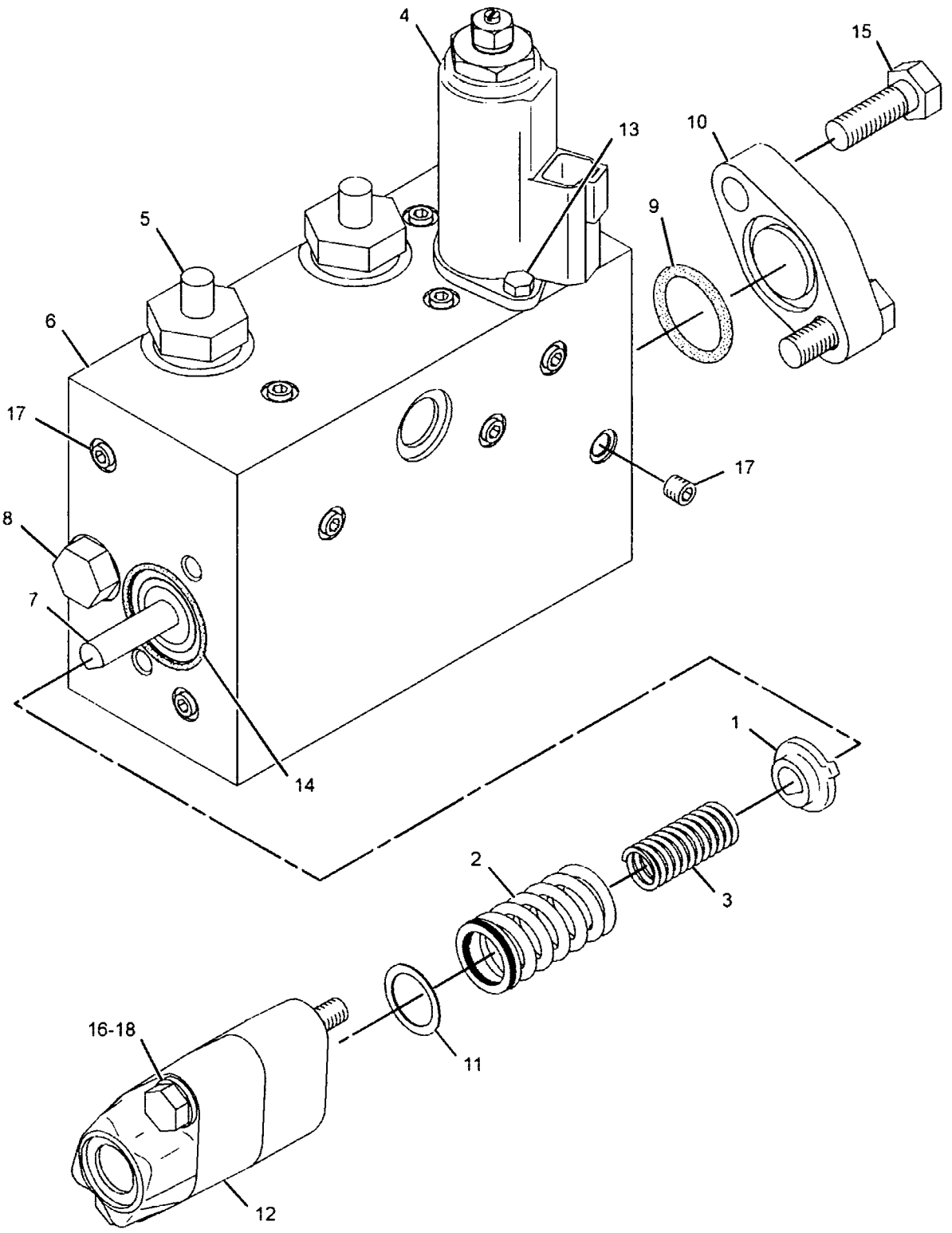

GRAPHIC #1 **<END>** g01203204

4I-7836 VALVE GP-FLOW CONTROL–PILOT OIL–DRAIN, BOOM II

S/N: YEE1-UP

PART OF 296-7127, 302-3143 LINES GP-PILOT

AN ATTACHMENT

SMCS-5137 i00619511

NOTE	REF NO	GRAPHIC REF	PART NUMBER	QTY	PART NAME 1 2 3 4 5 6 (PRODUCT LEVEL)	SEE PAGE
	1	1	6I-6904	1	CONNECTOR	
	2	1	095-1582	1	SEAL-O-RING	
	3	1	6I-6905	1	BODY	
	4	1	099-0365	2	SPRING	
	5	1	099-0367	1	PLUNGER AS	
	6	1	6I-6907	1	SLEEVE	
	7	1	095-1522	2	SEAL-O-RING	
	8	1	6V-8754	1	RING-RETAINING	

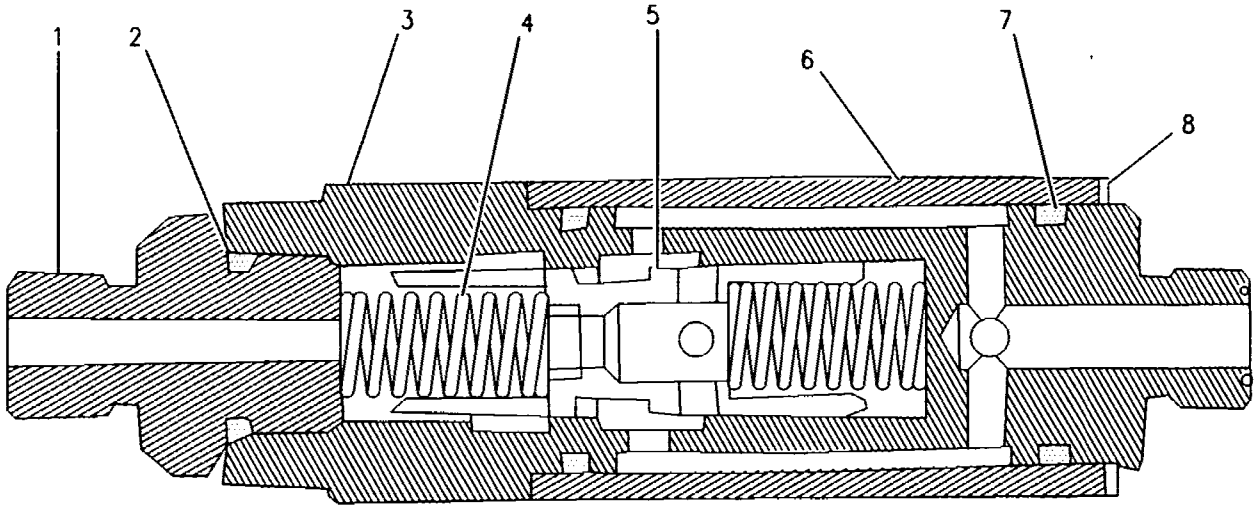

GRAPHIC #1 <END> g00259248

HYDRAULIC SYSTEM

255-5745 VALVE GP-FLOW CONTROL–SMARTBOOM

S/N: YEE1-UP
PART OF 302-3142 LINES GP-PILOT
AN ATTACHMENT

SMCS-5137 **i02704019**

NOTE	REF NO	GRAPHIC REF	PART NUMBER	QTY	PART NAME 1 2 3 4 5 6 (PRODUCT LEVEL)	SEE PAGE
	1	1	**6I-6904**	1	CONNECTOR	
	2	1	**095-1582**	1	SEAL-O-RING	
	3	1	**6I-6905**	1	BODY	
	4	1	**099-0365**	2	SPRING	
	5	1	**147-4256**	1	PLUNGER AS	
	6	1	**6I-6907**	1	SLEEVE	
	7	1	**095-1522**	2	SEAL-O-RING	
	8	1	**6V-8754**	1	RING-RETAINING	

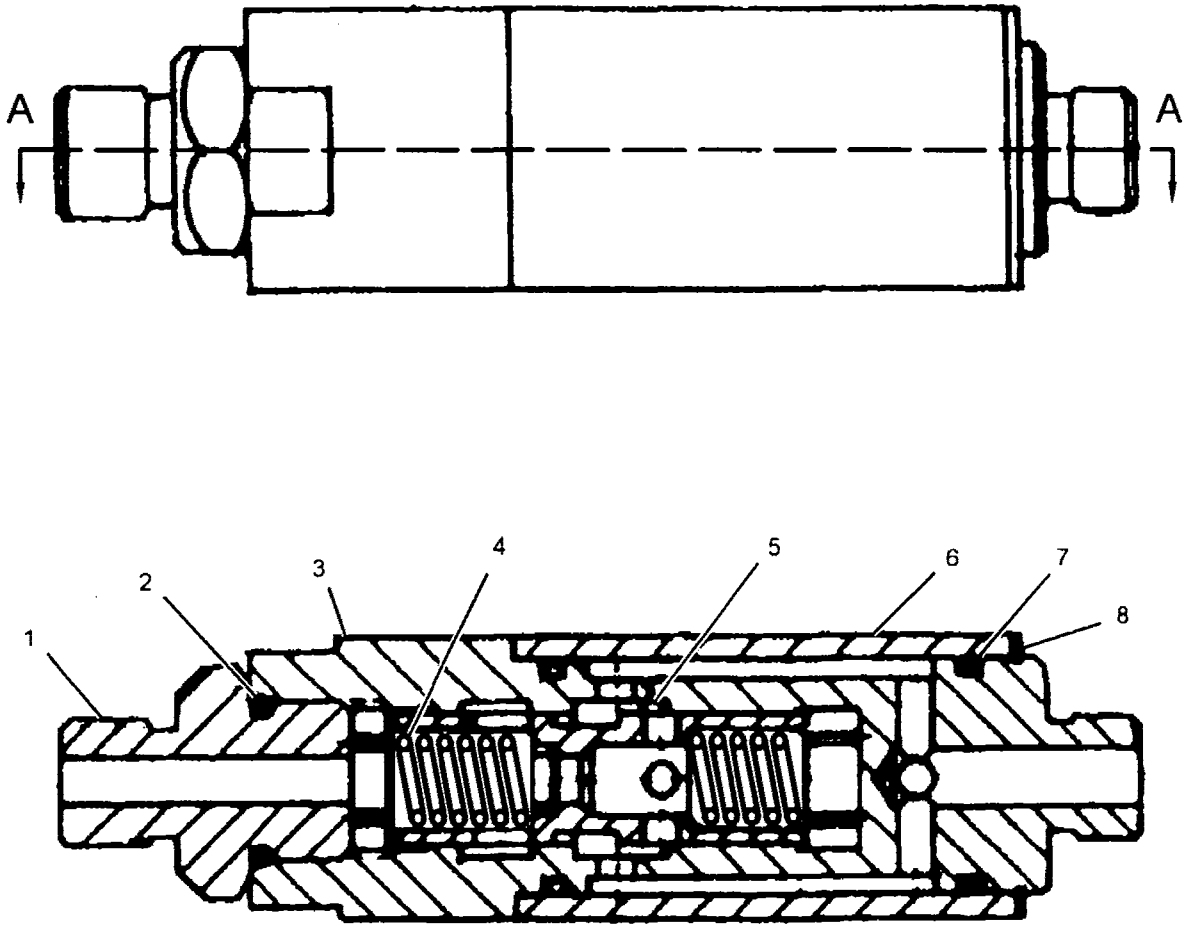

SECTION A-A

GRAPHIC #1 **<END>** g01213813

263-1964 VALVE GP-LOAD CONTROL–BOOM CYLINDER

S/N: YEE1-UP
PART OF 296-7134 LINES GP-BOOM CYLINDER
AN ATTACHMENT

SMCS-5067, 5117, 5147, 5811 **i02660368**

NOTE	REF NO	GRAPHIC REF	PART NUMBER	QTY	PART NAME 1 2 3 4 5 6 (PRODUCT LEVEL)	SEE PAGE
	1	1	**2S-2596**	1	SPRING	
	2	1	**9T-1614**	1	VALVE	
	3	1	**114-8229**	3	ORIFICE	
	4	1	**156-0975**	1	GUIDE AS	
	5	1	**157-0935**	3	SHIM (0.1-MM THK)	
	6	1	**194-4741**	1	PLUG AS	
Z	7	1		1	BODY-VALVE	
	8	1	**201-3145**	1	PLUG	
	9	1	**201-3146**	1	PISTON	
	10	1	**203-2076**	1	SPRING	
	11	1	**8T-6759**	1	PLUG-PIPE	
	12	1	**211-4185**	1	POPPET	
CY	13	1	**270-5731**	1	VALVE GP-RELIEF (LINE)	809
	14	1	**221-5138**	1	RETAINER	
	15	1	**263-7047**	1	POPPET	
	16	1	**222-0298**	1	GUIDE	
	17	1	**222-3347**	1	VALVE GP-FLOW CONTROL (BOOM MANUAL LOWERING)	
		1	**152-5441**	1	PLUG	
	18	1	**122-7797**	1	RING	
	19	1	*173-3993*	4	PLUG AS	
					(EACH INCLUDES)	
		1	**4J-7533**	1	SEAL-O-RING	
		1	**9S-8001**	1	PLUG-O-RING	
	20	1	*183-7263*	4	PLUG AS	
					(EACH INCLUDES)	
		1	**9S-8002**	1	PLUG-O-RING	
		1	**3J-7354**	1	SEAL-O-RING	
	21	1	**1P-3704**	1	SEAL-RECTANGULAR	
	22	1	**3J-1907**	1	SEAL-O-RING	
B	23	1	**5M-9624**	9	SHIM (0.25-MM THK)	
	24	1	**6J-6855**	9	SHIM (0.12-MM THK)	
	25	1	**6V-5326**	1	SEAL-O-RING	
	26	1	**7M-8485**	3	SEAL-O-RING	

B-USE AS REQUIRED
C-CHANGE FROM PREVIOUS TYPE
Y-SEPARATE ILLUSTRATION
Z-NOT SERVICED SEPARATELY

263-1964 VALVE GP-LOAD CONTROL *(contd.)* i02660368

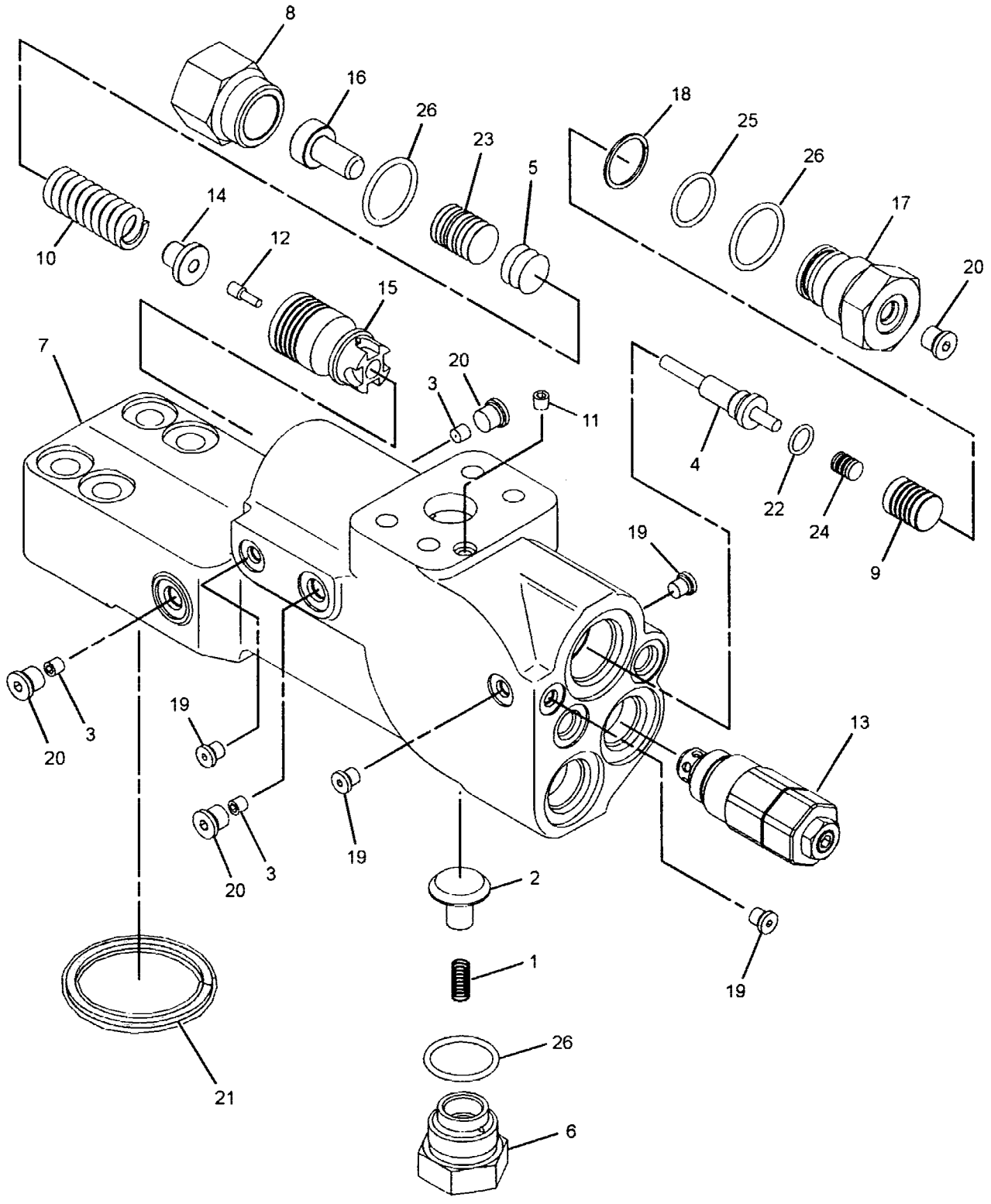

GRAPHIC #1 **<END>** g01234526

270-5696 VALVE GP-LOAD CONTROL–STICK DRIFT REDUCTION

S/N: YEE1-UP

PART OF 310-0102 VALVE GP-CONTROL

FIELD REPLACEMENT FOR 153-5233 VALVE GP-LOAD CONTROL

SMCS-5067, 5117, 5147, 5811 **i02496698**

NOTE	REF NO	GRAPHIC REF	PART NUMBER	QTY	PART NAME 1 2 3 4 5 6 (PRODUCT LEVEL)	SEE PAGE
	1	1	**4I-6107**	1	PLUG	
	2	1	**4I-8965**	1	GUIDE	
	3	1	**5I-8511**	1	SPRING	
	4	1	**122-7774**	1	SPRING	
Z	5	1		1	VALVE GP	
	6	1	*225-4818*	2	PLUG AS	
					(EACH INCLUDES)	
		1	**4J-7533**	1	SEAL-O-RING	
		1	**225-4804**	1	PLUG	
	7	1	**270-5697**	1	ADAPTER	
	8	1	**270-5698**	1	VALVE GP-PILOT (LOAD CONTROL, BOOM CYLINDER)	
	9	1	**095-1576**	2	SEAL-O-RING	
	10	1	**122-7773**	1	RING	
	11	1	**3J-1907**	1	SEAL-O-RING	
	12	1	**4J-0520**	1	SEAL-O-RING	
	13	1	**4J-0523**	2	SEAL-O-RING	
	14	1	**5P-3108**	1	SEAL-O-RING	
M	15	1	**6V-5192**	2	BOLT-SOCKET HEAD (M8X1.25X30-MM)	
	16	1	**6V-6793**	2	RING-BACKUP	

M-METRIC PART
Z-NOT SERVICED SEPARATELY

270-5696 VALVE GP-LOAD CONTROL *(contd.)* i02496698

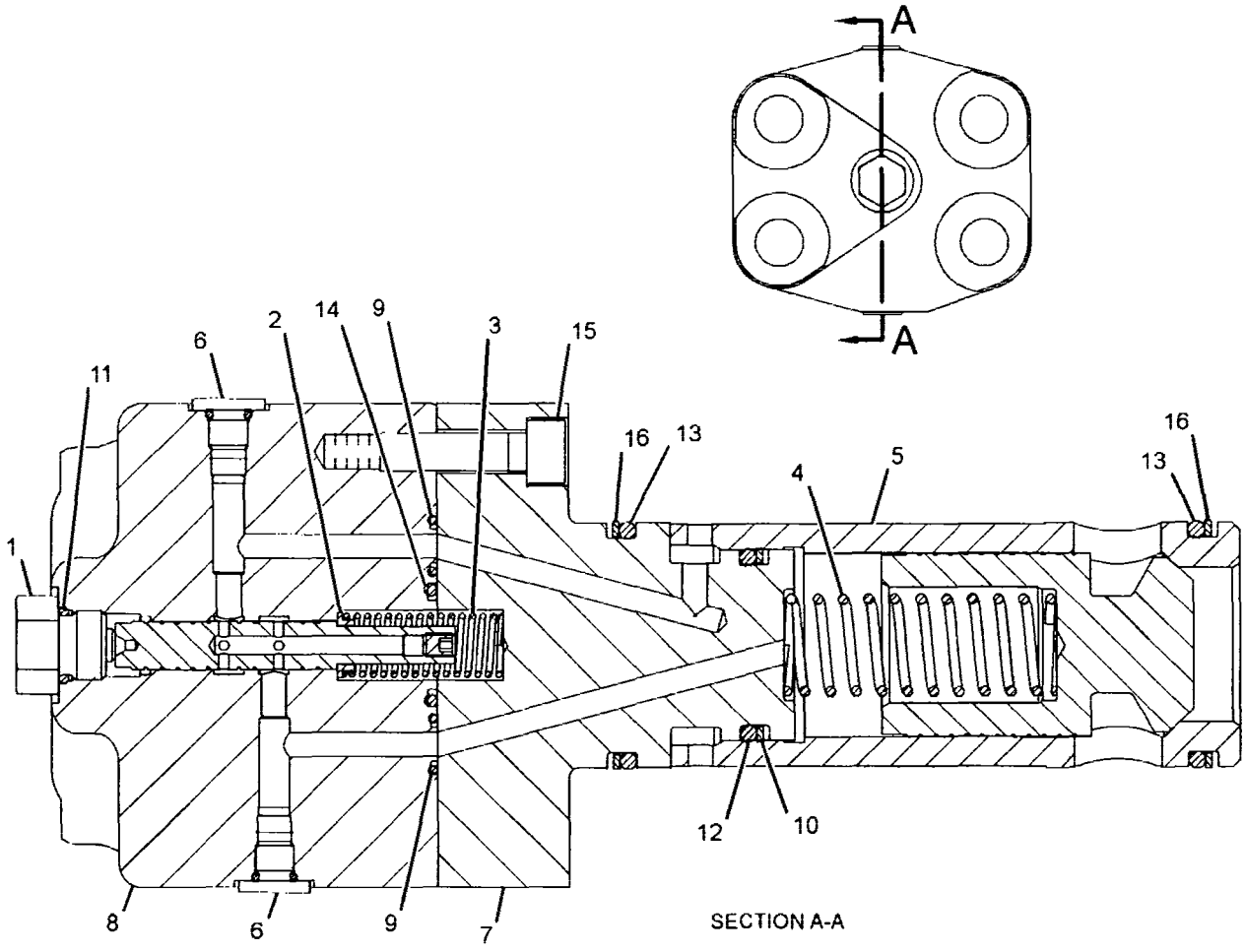

GRAPHIC #1 **<END>** g01265893

HYDRAULIC SYSTEM

285-1768 VALVE GP-LOAD CONTROL-
STICK LOWERING CONTROL VALVE
S/N: YEE1-UP
PART OF 302-9546 LINES GP-STICK CYLINDER
AN ATTACHMENT

SMCS-5067, 5117, 5147, 5811 **i02933779**

NOTE	REF NO	GRAPHIC REF	PART NUMBER	QTY	PART NAME 1 2 3 4 5 6 (PRODUCT LEVEL)	SEE PAGE
	1	1	2S-2596	1	SPRING	
	3	1	9T-1614	1	VALVE	
	4	1	114-8229	1	ORIFICE	
	5	1	165-9513	1	SEAT	
	6	1	165-9514	1	PLUG	
	7	1	225-4787	1	VALVE	
	8	1	225-4789	1	VALVE	
	9	1	225-4790	1	SPRING	
	10	1	225-4791	1	GUIDE	
	11	1	225-4792	1	PLUG	
	12	1	225-4793	1	VALVE AS	
	13	1	225-4796	1	PISTON	
	14	1	225-4797	1	VALVE AS	
	15	1	225-4803	1	COVER	
	16	1	*225-4818*	6	PLUG AS	
					(EACH INCLUDES)	
		1	4J-7533	1	SEAL-O-RING	
		1	225-4804	1	PLUG	
	17	1	*225-4820*	2	PLUG AS	
					(EACH INCLUDES)	
		1	3J-7354	1	SEAL-O-RING	
		1	225-4821	1	PLUG	
B	18	1	225-4830	1	SHIM (1.0-MM THK)	
B	19	1	225-4831	2	SHIM (0.5-MM THK)	
B	20	1	225-4832	2	SHIM (0.2-MM THK)	
B	21	1	225-4833	1	SHIM (0.1-MM THK)	
	23	1	259-7788	1	GUIDE AS	
		1	4T-0987	1	BEARING-SLEEVE	
Y	24	1	270-5731	1	VALVE GP-RELIEF (LINE)	809
	26	1	095-1594	2	SEAL-O-RING	
	27	1	095-1789	2	RING	
	28	1	122-7797	2	RING	
	29	1	2D-6642	1	BALL	
	30	1	3H-0442	1	SEAL-O-RING	
	31	1	3J-1907	2	SEAL-O-RING	
	32	1	6V-5326	2	SEAL-O-RING	
M	33	1	7Y-5226	1	NUT (M5X0.8-THD)	
M	34	1	8T-4139	4	BOLT (M12X1.75X30-MM)	
	35	1	8T-6759	1	PLUG-PIPE	

B-USE AS REQUIRED
M-METRIC PART
Y-SEPARATE ILLUSTRATION

285-1768 VALVE GP-LOAD CONTROL *(contd.)* i02933779

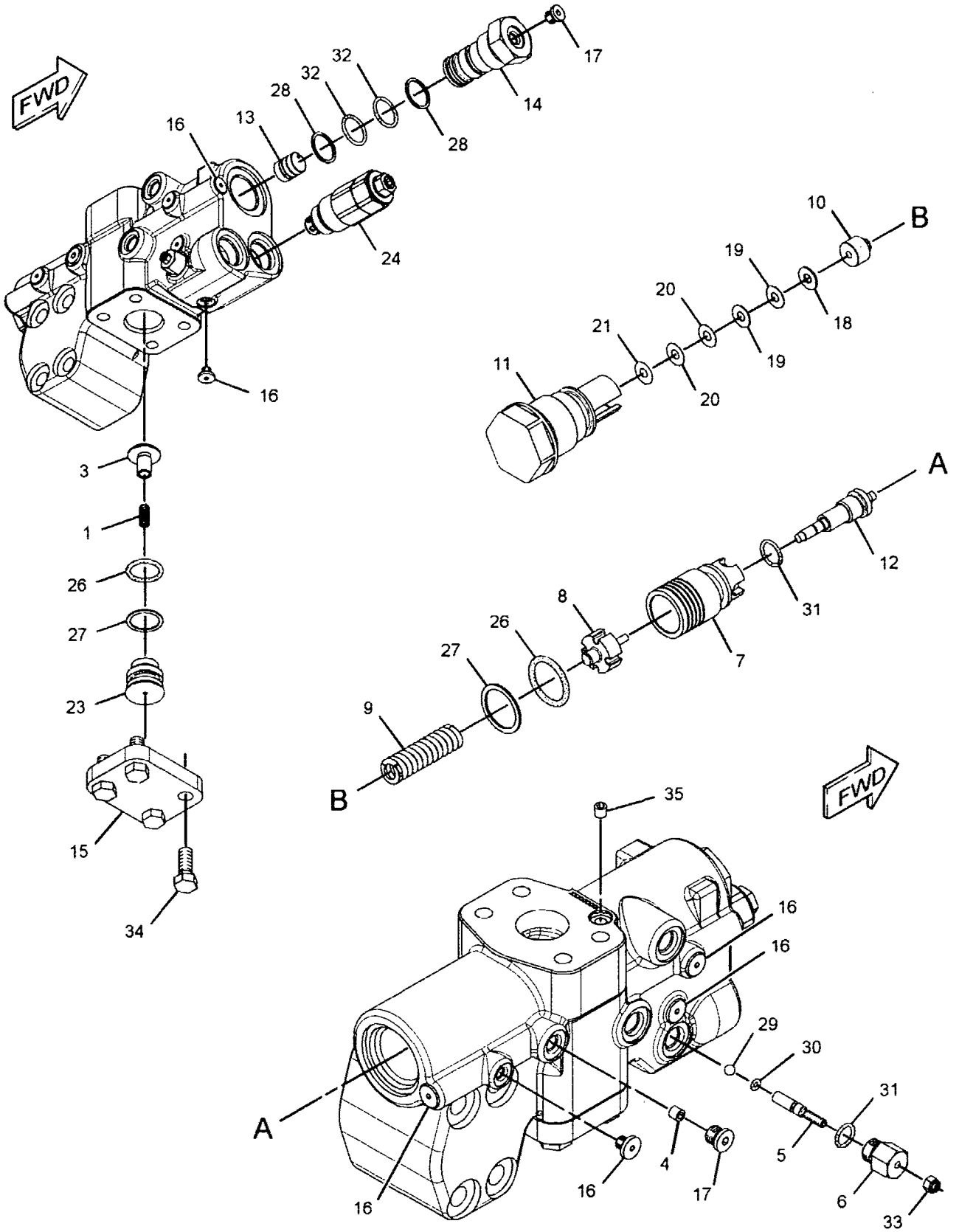

GRAPHIC #1 **<END>** g01465787

310-0150 VALVE GP-LOAD CONTROL-
BOOM LOWERING, REGENERATION
S/N: YEE1-UP
PART OF 302-3141 LINES GP-RETURN
AN ATTACHMENT

SMCS-5067, 5117, 5147, 5811 **i02918780**

NOTE	REF NO	GRAPHIC REF	PART NUMBER	QTY	PART NAME 1 2 3 4 5 6 (PRODUCT LEVEL)	SEE PAGE
M	1	2	8T-4196	4	BOLT (M10X1.5X35-MM)	
	2	2	005-8593	1	SEAL-O-RING	
Y	3	2	122-7768	1	PLUG GP-CONTROL VALVE	708
	4	2	165-9513	1	SEAT	
	5	2	165-9514	1	PLUG	
	6	1,2	*225-4820*	18	PLUG AS	
		1,2	3J-7354	1	SEAL-O-RING	
		1,2	225-4821	1	PLUG	
	7	2	297-0346	1	COVER	
	8	2	297-0350	1	SPRING	
	9	2	297-0351	1	PLUG	
	10	2	297-0356	1	COVER	
Y	11	1	297-0500	1	VALVE GP-SOLENOID & PRESS REDC	832
	12	2	297-0605	1	VALVE	
	13	2	310-0129	1	PLUG	
	14	2	310-0137	1	COVER	
	15	2	310-0138	1	GUIDE	
	16	2	310-0139	1	WASHER (24X36.5X3-MM THK)	
	17	2	310-0140	1	SPRING	
B	18	2	310-0141	1	SHIM (1-MM THK)	
B	19	2	310-0142	1	SHIM (0.5-MM THK)	
B	20	2	310-0143	2	SHIM (0.25-MM THK)	
	21	1	*310-0151*	1	VALVE GP-CONTROL	
	23	2	310-0203	1	VALVE GP-SOLENOID (BOOM FLOAT)	
	24	2	095-1592	1	SEAL-O-RING	
	25	2	095-1599	1	SEAL-O-RING	
	26	2	095-1788	1	RING-BACKUP	
	27	2	095-1793	1	RING-BACKUP	
	28	1,2	*148-8395*	3	PLUG AS	
		1,2	3K-0360	1	SEAL-O-RING	
		1,2	9S-8005	1	PLUG-O-RING	
	29	1,2	*148-8407*	2	PLUG AS	
		1,2	3J-1907	1	SEAL-O-RING	
		1,2	9S-4191	1	PLUG-O-RING	
	30	2	*148-8411*	2	PLUG AS	
		2	3K-0360	1	SEAL-O-RING	
		2	9S-4185	1	PLUG-O-RING	
	31	1,2	*162-0177*	3	PLUG AS	
		1,2	3J-1907	1	SEAL-O-RING	
		1,2	9S-8004	1	PLUG-O-RING	
	32	2	2D-6642	1	BALL	
	33	2	3H-0442	1	SEAL-O-RING	
	34	2	3J-1907	1	SEAL-O-RING	
	35	2	6V-5597	1	SEAL-O-RING	
M	36	1	7I-2272	2	BOLT (M5X0.8X12-MM)	
M	37	2	7Y-5226	1	NUT (M5X0.8-THD)	
	38	2	8T-4121	2	WASHER-HARD (11X21X2.5-MM THK)	
M	39	2	8T-4183	4	BOLT (M12X1.75X40-MM)	
M	40	2	8T-4185	2	BOLT (M10X1.5X50-MM)	

B-USE AS REQUIRED
M-METRIC PART
Y-SEPARATE ILLUSTRATION

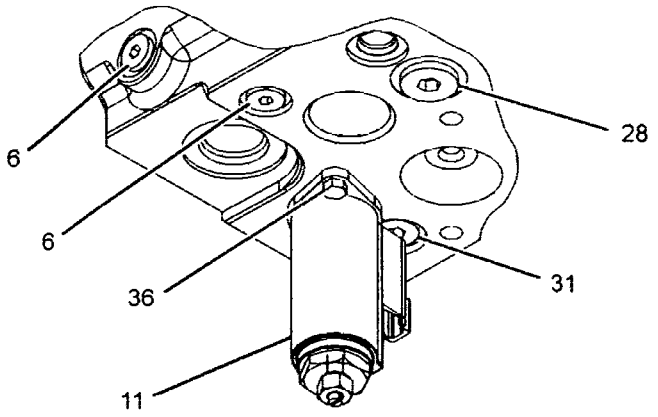

VIEW OF AREA A

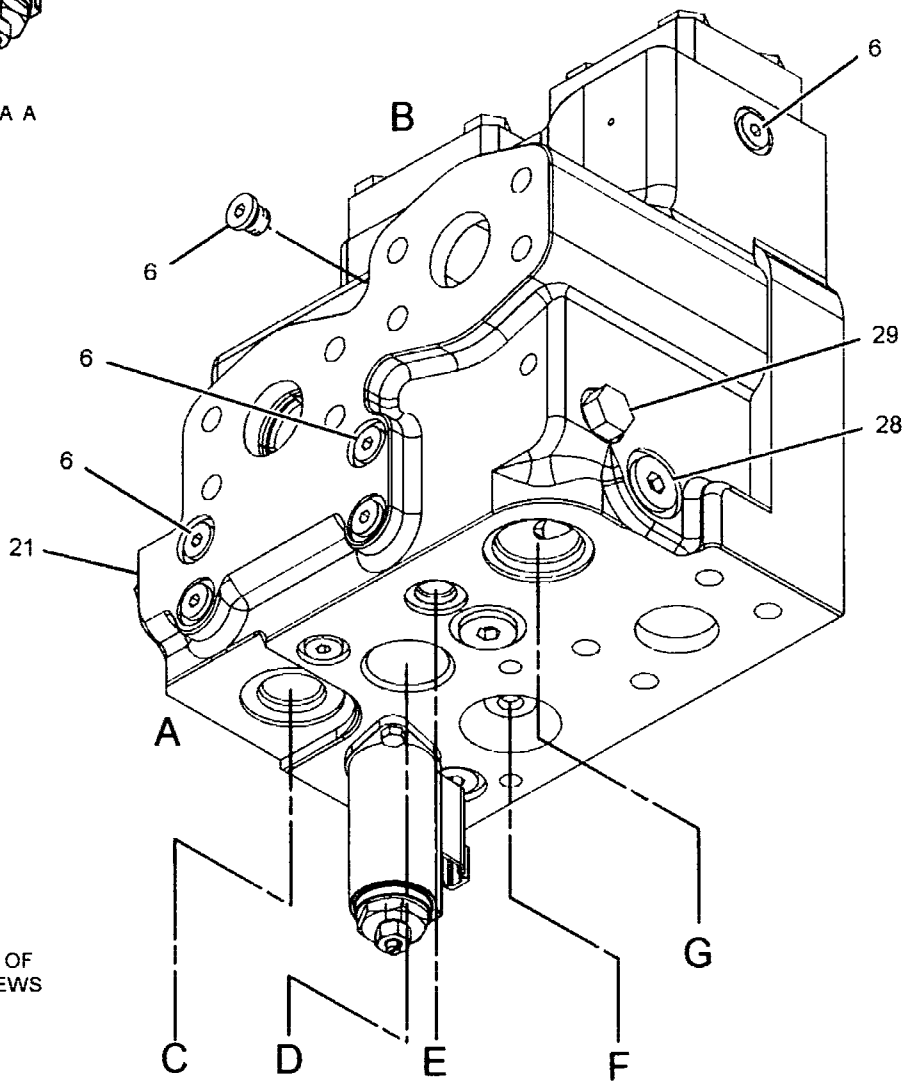

REFER TO ALL ILLUSTRATIONS OF THIS GROUP FOR AUXILIARY VIEWS

GRAPHIC #1 g01477454

310-0150 VALVE GP-LOAD CONTROL *(contd.)* i02918780

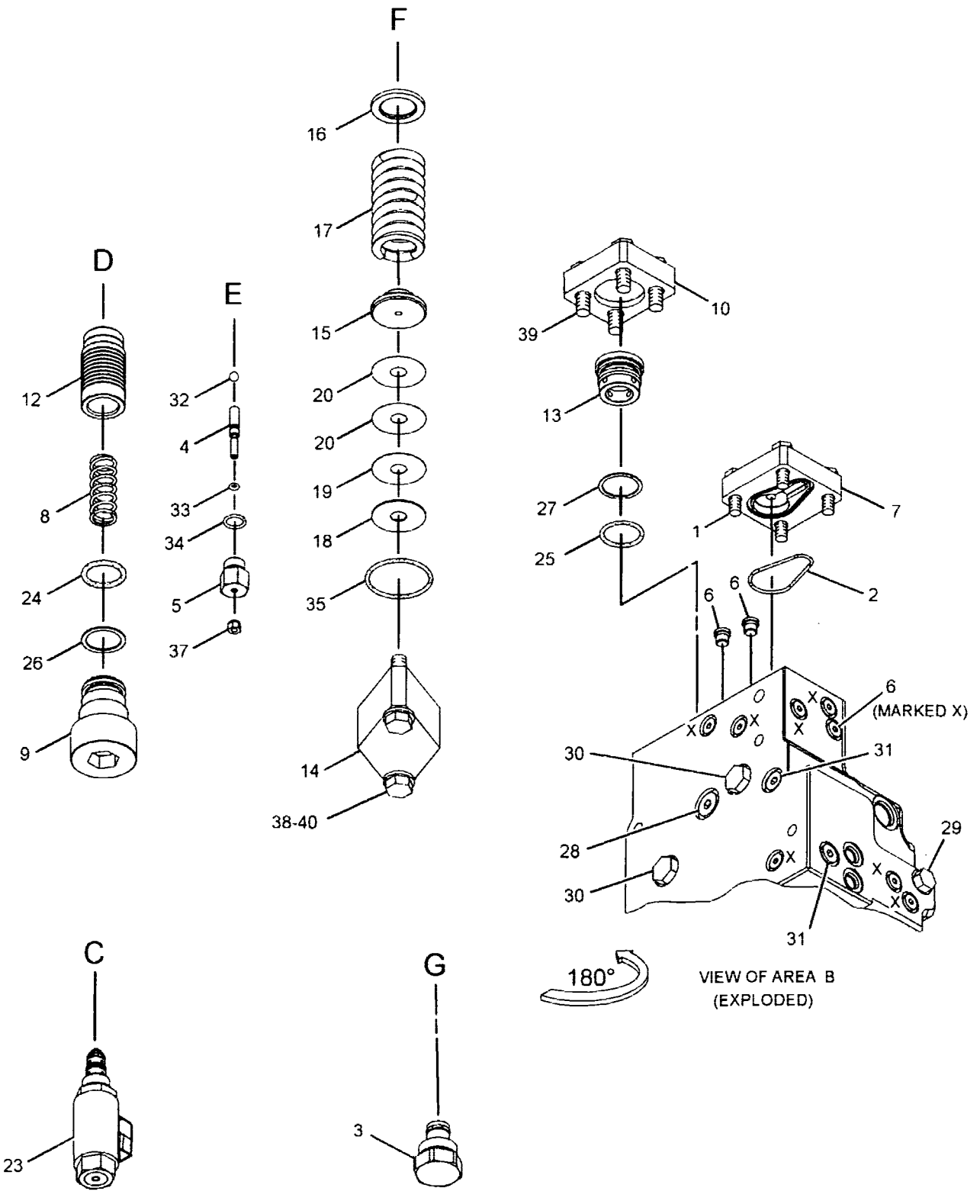

GRAPHIC #2 **<END>** g01477455

HYDRAULIC SYSTEM

310-0101 VALVE GP-MAIN CONTROL

S/N: YEE1-UP

PART OF 297-0243 HYDRAULIC AR

SMCS-5051 **i02906290**

NOTE	REF NO	GRAPHIC REF	PART NUMBER	QTY	PART NAME 1 2 3 4 5 6 (PRODUCT LEVEL)	SEE PAGE
M	1	1	**6V-6788**	4	BOLT (M20X2.5X65-MM)	
Y	2	1	**310-0096**	1	VALVE GP-CONTROL (MAIN CONTROL VALVE, RH)	739
Y	3	1	**310-0102**	1	VALVE GP-CONTROL (MAIN CONTROL VALVE, LH)	745
	4	1	**1P-3703**	2	SEAL-RECTANGULAR	
	5	1	**4J-8998**	2	SEAL-O-RING	
	6	1	**5J-2974**	1	SEAL-O-RING	
	7	1	**7Y-5219**	6	SEAL-O-RING	
	8	1	**8T-4123**	4	WASHER (22X35X3.5-MM THK)	

M-METRIC PART
Y-SEPARATE ILLUSTRATION

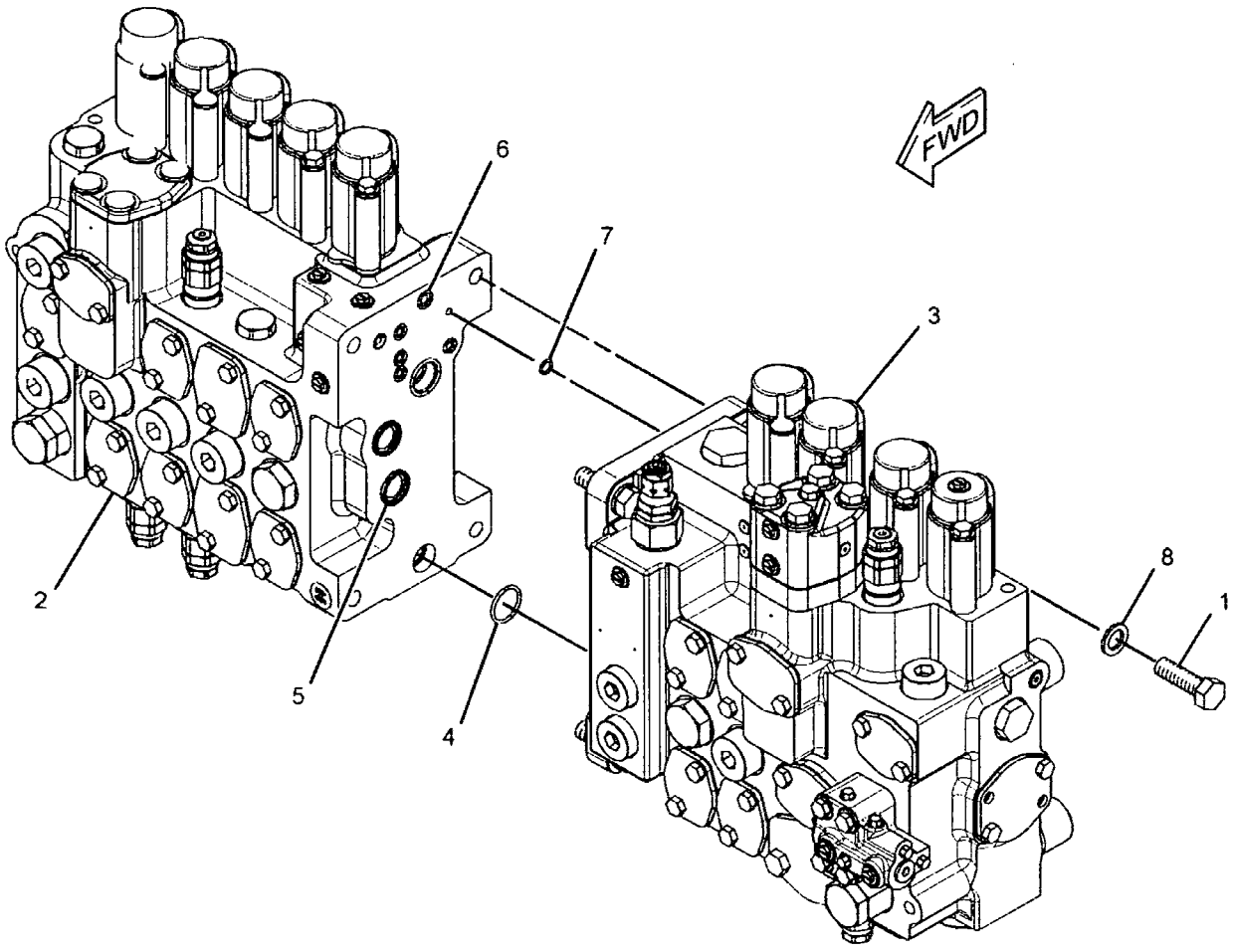

GRAPHIC #1 **<END>** g01457432

310-0104 VALVE GP-MAIN CONTROL

S/N: YEE1-UP

PART OF 297-0257, 297-0258 VALVE AR-CHECK & RELIEF

AN ATTACHMENT

SMCS-5051 **i02923375**

NOTE	REF NO	GRAPHIC REF	PART NUMBER	QTY	PART NAME 1 2 3 4 5 6 (PRODUCT LEVEL)	SEE PAGE
M	1	1	**6V-6788**	4	BOLT (M20X2.5X65-MM)	
Y	2	1	**310-0096**	1	VALVE GP-CONTROL (MAIN CONTROL VALVE, RH)	739
Y	3	1	**310-0105**	1	VALVE GP-CONTROL (MAIN CONTROL VALVE, LH)	750
	5	1	**1P-3703**	2	SEAL-RECTANGULAR	
	7	1	**4J-8998**	2	SEAL-O-RING	
	8	1	**5J-2974**	1	SEAL-O-RING	
	9	1	**7Y-5219**	6	SEAL-O-RING	
	10	1	**8T-4123**	4	WASHER (22X35X3.5-MM THK)	

M-METRIC PART
Y-SEPARATE ILLUSTRATION

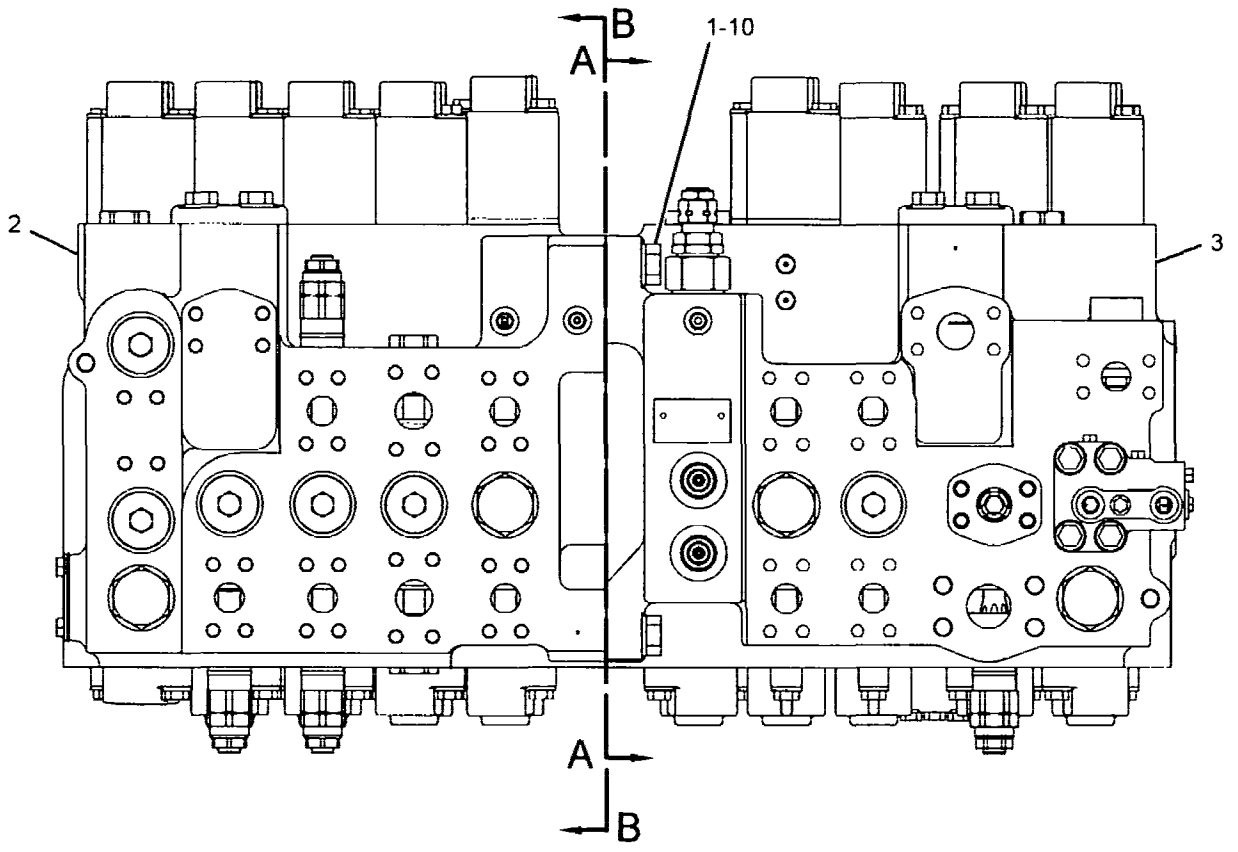

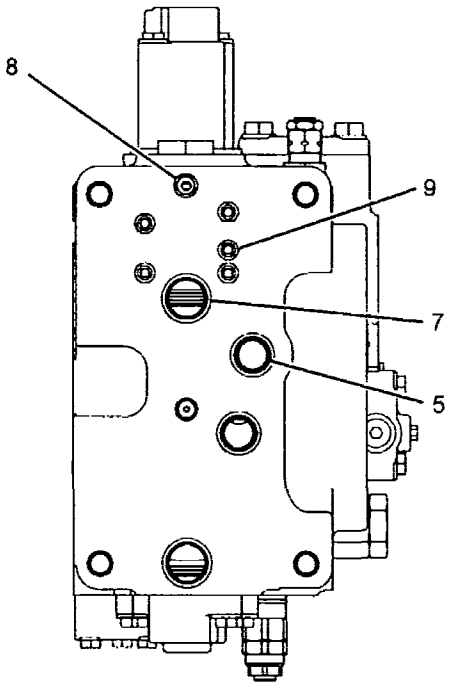

SECTION A-A

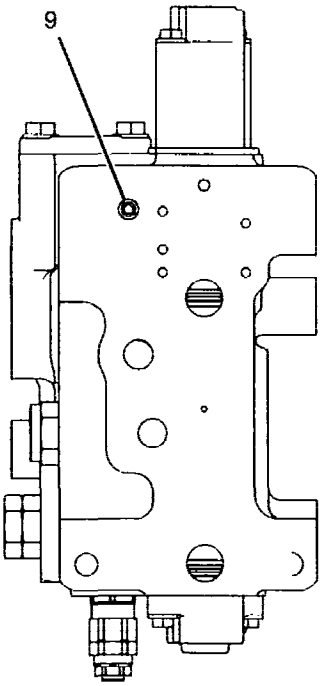

SECTION B-B

GRAPHIC #1

<END>

g01457582

215-5002 VALVE GP-MANIFOLD & REDUCING

S/N: YEE1-UP
PART OF 307-5265 LINES GP-PILOT
AN ATTACHMENT

SMCS-3206 **i02921140**

NOTE	REF NO	GRAPHIC REF	PART NUMBER	QTY	PART NAME 1 2 3 4 5 6 (PRODUCT LEVEL)	SEE PAGE
	1	1	**095-0965**	1	PLUG	
M	2	1	**8T-0288**	14	BOLT (M5X0.8X12-MM)	
Y	3	1	**111-9916**	7	VALVE GP-SOLENOID	815
	4	1	**215-5036**	1	HOUSING	
	5	1	**7I-8084**	14	PLUG	
	6	1	**215-5035**	6	VALVE	
	7	1	**095-1579**	6	SEAL-O-RING	
	8	1	**215-5032**	6	PLUG	
	9	1	**215-5033**	6	SPRING	
	10	1	**215-5034**	6	SEAT	
	11	1	**4J-5477**	6	SEAL-O-RING	

M-METRIC PART
Y-SEPARATE ILLUSTRATION

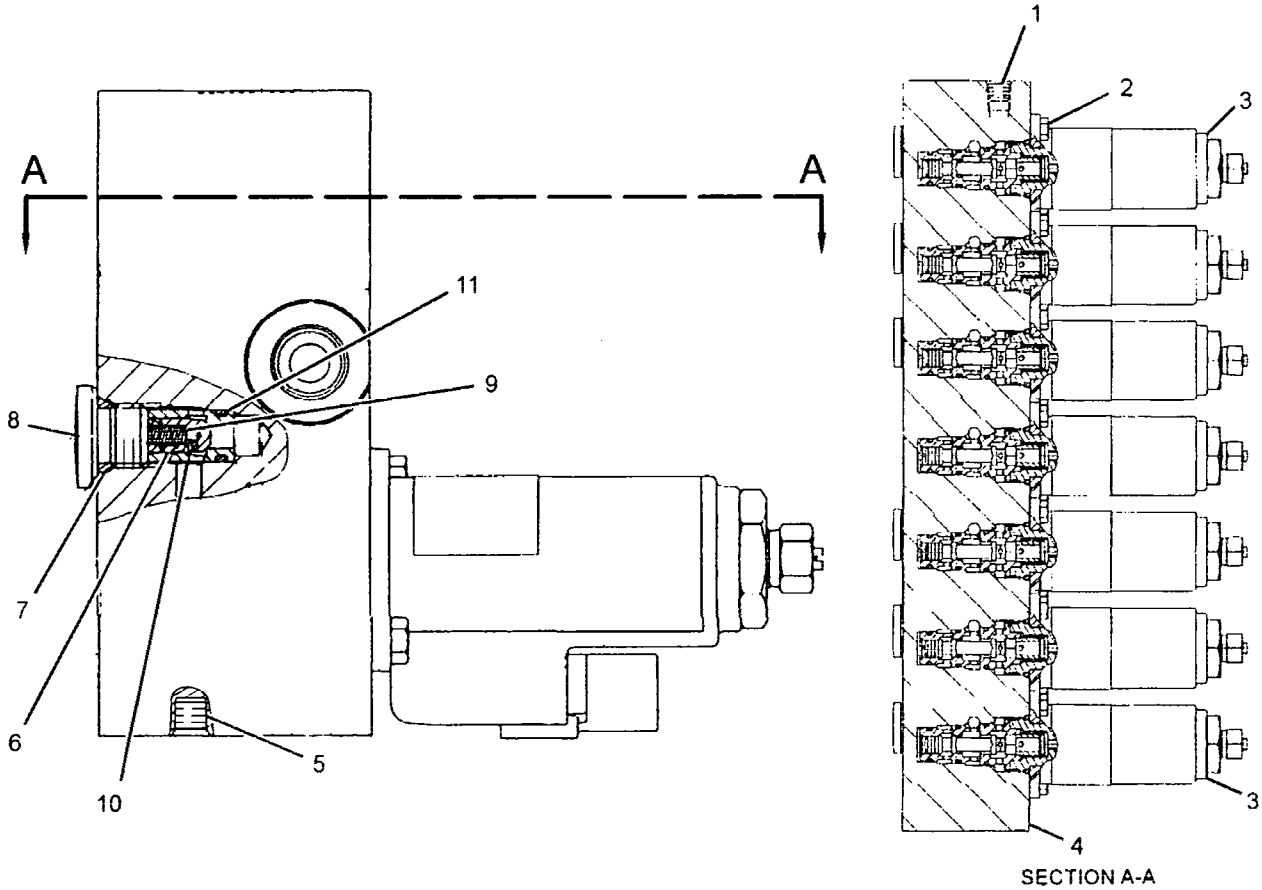

SECTION A-A

GRAPHIC #1 **<END>** g01457813

HYDRAULIC SYSTEM

270-5692 VALVE GP-MANUAL–BOOM LOWER

S/N: YEE1-UP

PART OF 296-7134 LINES GP-BOOM CYLINDER

AN ATTACHMENT

SMCS-1329, 5001, 5130, 5147 **i02461703**

NOTE	REF NO	GRAPHIC REF	PART NUMBER	QTY	PART NAME 1 2 3 4 5 6 (PRODUCT LEVEL)	SEE PAGE
	1	1	**165-9513**	1	SEAT	
	2	1	**165-9514**	1	PLUG	
	3	1	*222-4737*	3	PLUG AS	
					(EACH INCLUDES)	
		1	**4J-7533**	1	SEAL-O-RING	
		1	**9S-4180**	1	PLUG	
	4	1	**270-5693**	1	BLOCK	
	5	1	**2D-6642**	1	BALL	
	6	1	**3H-0442**	1	SEAL-O-RING	
	7	1	**3J-1907**	1	SEAL-O-RING	
M	8	1	**7Y-5226**	1	NUT (M5X0.8-THD)	

M-METRIC PART

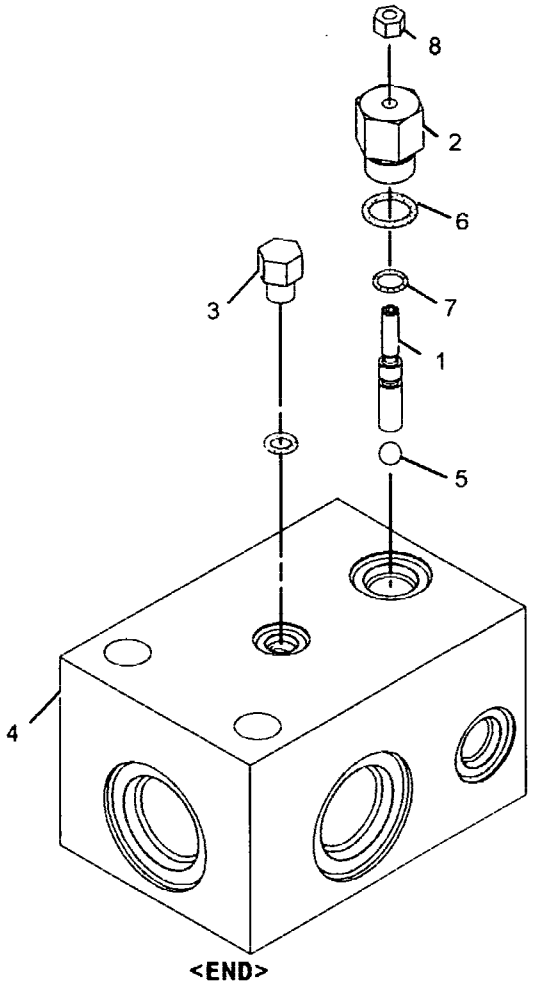

GRAPHIC #1

<END>

g01193347

HYDRAULIC SYSTEM

277-0954 VALVE GP-MANUAL–AUXILIARY, SHUTOFF

S/N: YEE1-UP

PART OF 127-6690, 135-3910, 135-4096, 230-0128, 242-6547, 253-6383 LINES

GP-AUXILIARY HYDRAULIC

AN ATTACHMENT

SMCS-1329, 5001, 5130, 5147 **i02479236**

NOTE	REF NO	GRAPHIC REF	PART NUMBER	QTY	PART NAME 1 2 3 4 5 6 (PRODUCT LEVEL)	SEE PAGE
	1	1	**119-1353**	1	HANDLE	
	2	1	**3J-1907**	1	SEAL-O-RING	
	3	1	**9S-4191**	1	PLUG-O-RING	

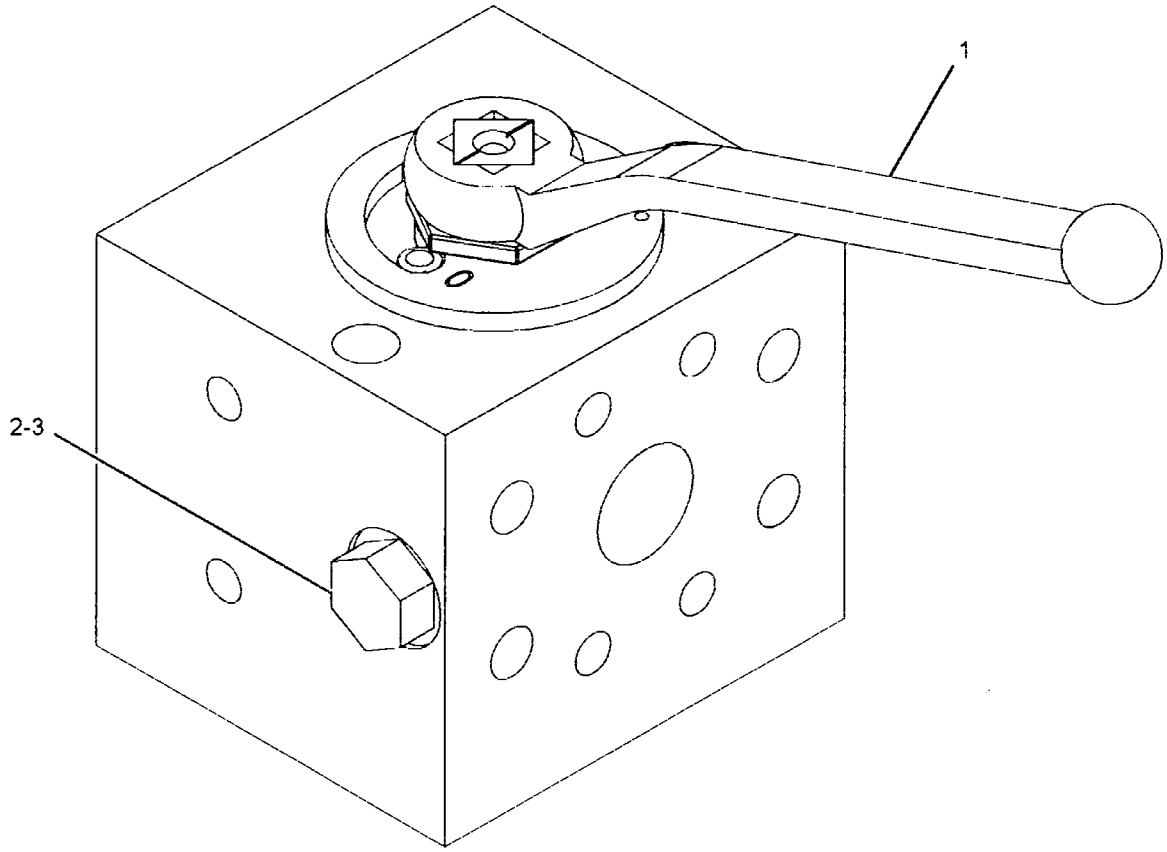

GRAPHIC #1 **<END>** g01236800

119-5219 VALVE GP-PILOT–BOOM PRIORITY

S/N: YEE1-UP

PART OF 296-7127, 302-3143 LINES GP-PILOT

AN ATTACHMENT

SMCS-5059 **i02158931**

NOTE	REF NO	GRAPHIC REF	PART NUMBER	QTY	PART NAME 1 2 3 4 5 6 (PRODUCT LEVEL)	SEE PAGE
Z	1	1		1	VALVE GP-PILOT	
	2	1	**096-3376**	1	SPRING-GUIDE	
	3	1	**3K-0360**	2	SEAL-O-RING	
	4	1	**9S-4185**	2	PLUG-O-RING	
	5	1	**096-3375**	1	SPRING	

Z-NOT SERVICED SEPARATELY

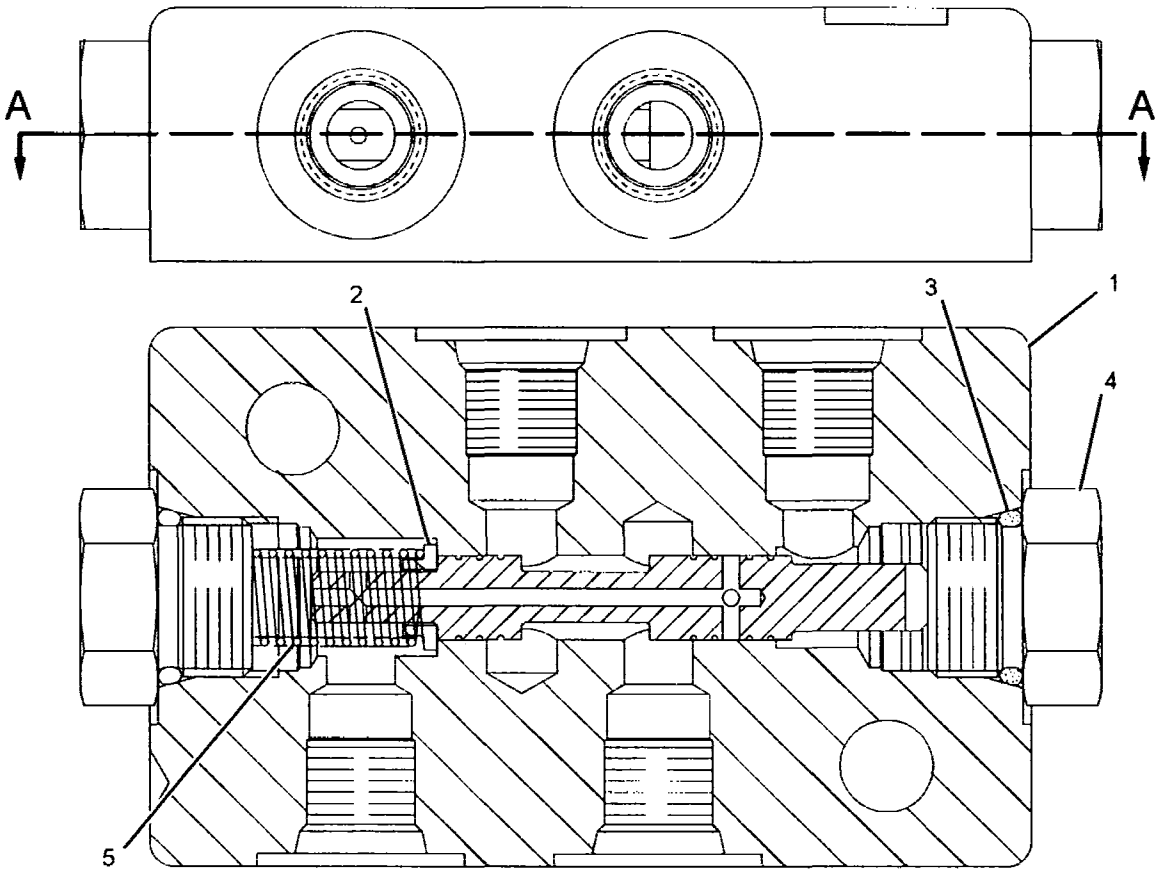

SECTION A-A

GRAPHIC #1

<END>

g01097450

123-2514 VALVE GP-PILOT–COUNTERWEIGHT

S/N: YEE1-UP
PART OF 227-0459 LINES GP-REAR ATTACHMENT
AN ATTACHMENT

SMCS-5059 **i00612951**

NOTE	REF NO	GRAPHIC REF	PART NUMBER	QTY	PART NAME 1 2 3 4 5 6 (PRODUCT LEVEL)	SEE PAGE
M	1	1	099-0822	2	BOLT-SOCKET HEAD (M5X0.8X10-MM)	
	2	1	7I-9001	1	STOP	
	3	1	096-4509	1	SPRING	
	4	1	7I-2789	1	WASHER (4.3X9X0.8-MM THK)	
	5	1	095-1519	1	SEAL-O-RING	
	6	1	8T-6759	1	PLUG-PIPE	
	7	1	126-9992	1	SOLENOID AS	
	8	1	131-5894	1	SPRING	
	9	1	096-4514	2	PLUG	
	10	1	095-1582	2	SEAL-O-RING	

M-METRIC PART

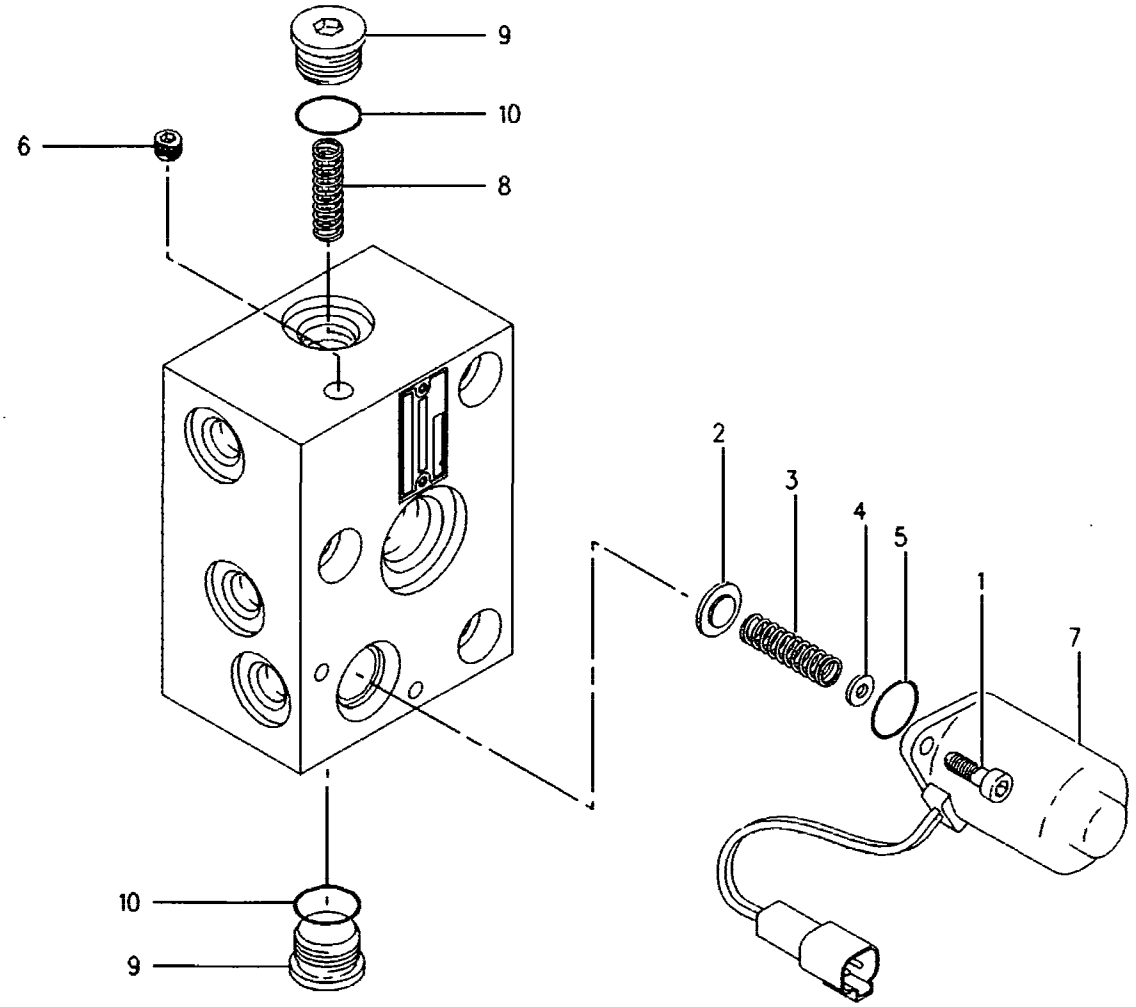

GRAPHIC #1 **<END>** g00268646

HYDRAULIC SYSTEM

165-9522 VALVE GP-PILOT–TRAVEL

S/N: YEE1-UP

PART OF 296-7123 LINES GP-PILOT

SMCS-5059 **i02160272**

NOTE	REF NO	GRAPHIC REF	PART NUMBER	QTY	PART NAME 1 2 3 4 5 6 (PRODUCT LEVEL)	SEE PAGE
	1	1	087-4707	4	SPRING	
	2	1	131-5818	4	SPRING	
	3	1	095-0936	4	RING-RETAINING	
	4	1	126-1865	4	SPRING	
	5	1	126-1866	4	SPRING	
	6	1	147-4221	4	SPOOL-VALVE	
	7	1	6V-8400	4	SEAL-O-RING	
	8	1	165-9463	2	COVER	
	9	1	165-9554	4	PLUG	
	10	1	119-5389	4	PACKING	
	11	1	165-9552	4	PUSHROD	
M	12	1	8T-4133	4	NUT (M10X1.5-THD)	
M	13	1	087-4710	4	SETSCREW	
	14	1	147-4131	2	BOOT-PROTECTION	
	15	1	087-5708	2	PEDAL	
M	16	1	8T-0343	2	BOLT-SOCKET HEAD (M12X1.75X55-MM)	
	17	1	119-5388	4	CAP	
	18	1	165-9553	1	COVER	
	19	1	119-5391	4	SEAT	
	20	1	153-5223	12	BALL	
	21	1	119-5392	4	BUSHING	
	22	1	165-9551	4	SEAT	
	24	1	099-6137	4	WASHER	
	25	1	099-6141	4	WASHER (6.1X11X1.5-MM THK)	
	26	1	099-6145	2	CAMSHAFT	
	27	1	099-6144	4	BUSHING-TERMINAL	
M	28	1	095-1260	2	SETSCREW-SOCKET (M6X1X6-MM)	
M	29	1	8T-1158	2	BOLT-SOCKET HEAD (M8X1.25X20-MM)	
	30	1	8T-6759	2	PLUG-PIPE	

M-METRIC PART

165-9522 VALVE GP-PILOT *(contd.)* i02160272

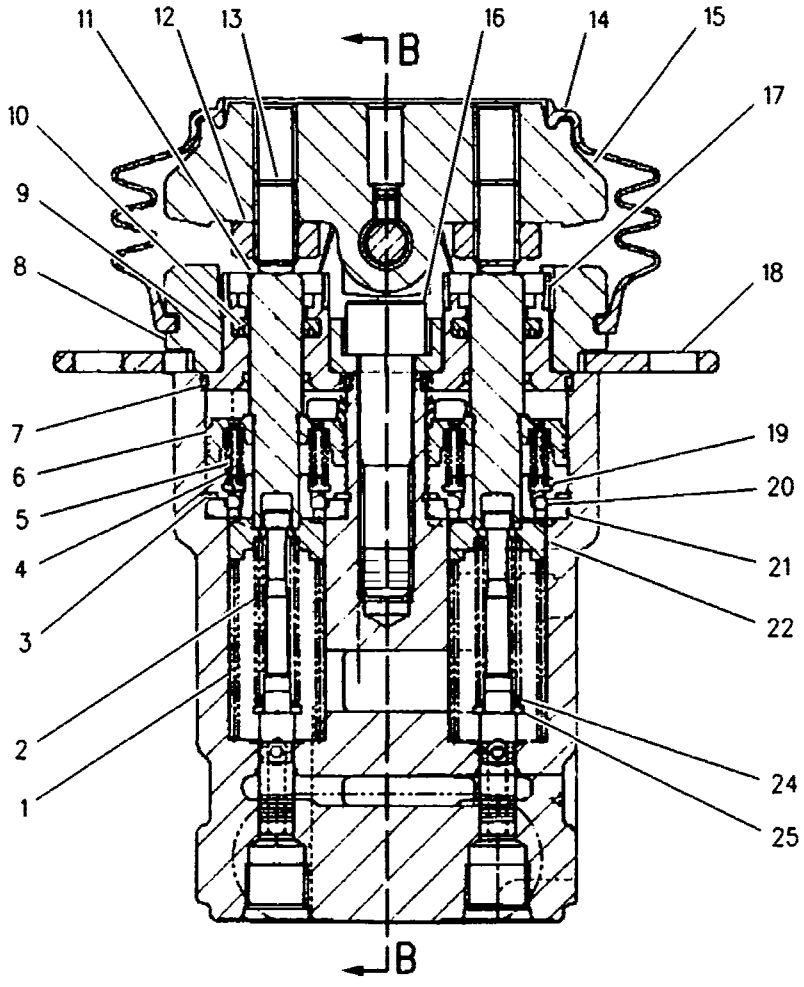

SECTION A-A

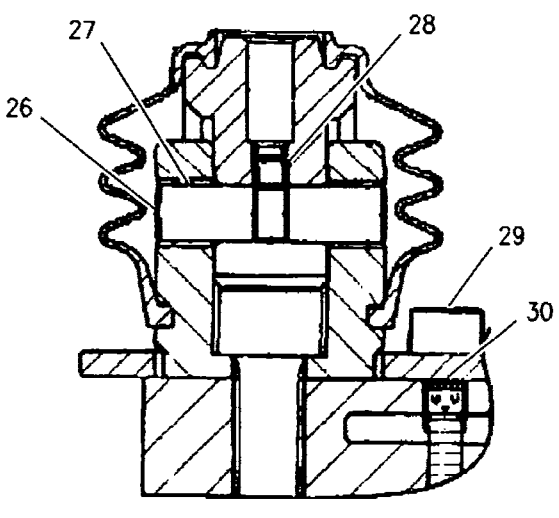

SECTION B-B

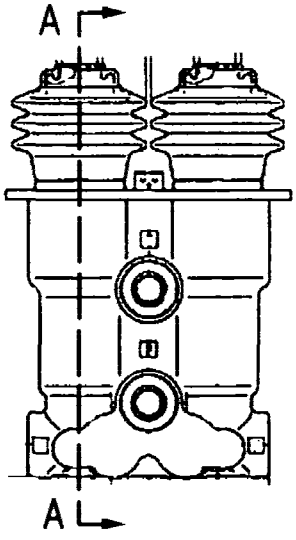

GRAPHIC #1 **<END>** g00857024

HYDRAULIC SYSTEM

206-3305 VALVE GP-PILOT-JOYSTICK

S/N: YEE1-UP

PART OF 259-7762, 259-7763, 259-7764, 259-7765 CONTROL GP-JOYSTICK

AN ATTACHMENT

SMCS-5059 **i02158726**

NOTE	REF NO	GRAPHIC REF	PART NUMBER	QTY	PART NAME 1 2 3 4 5 6 (PRODUCT LEVEL)	SEE PAGE
	1	1	165-9431	1	PLATE	
	2	1	4I-6365	1	JOINT	
	3	1	118-4087	4	SPRING	
	4	1	165-9444	2	SEAT-SPRING	
					(USED WITH REF NO 7 OR 7A SPRINGS)	
					-OR-	
J		1	244-8496	2	SEAT-SPRING	
					(USED WITH REF NO 7B SPRINGS)	
					-OR-	
L		1	244-8500	2	SEAT-SPRING	
					(USED WITH REF NO 7C SPRINGS)	
	5	1	096-1628	4	PLUG	
	6	1	165-9436	2	SEAT	
	7	1	165-9460	2	SPRING (STANDARD)	
					-OR-	
	7A	1	225-4815	2	SPRING (OPTIONAL)	
					(REDUCES OPERATING FORCE FOR IMPROVED INCHING CONTROL)	
					-OR-	
J	7B	1	244-8494	2	SPRING (OPTIONAL)	
					(PROVIDES CONTROLLABILITY EQUAL TO A-SERIES MACHINES)	
					-OR-	
L	7C	1	244-8498	2	SPRING (OPTIONAL)	
					(PROVIDES CONTROLLABILITY COMPARABLE TO A AND B-SERIES MACHINES)	
	8	1	165-9461	4	SPRING (STANDARD)	
					-OR-	
		1	190-7750	4	SPRING (OPTIONAL)	
					(REDUCES OPERATING FORCE BY 30%)	
					-OR-	
		1	190-7751	4	SPRING (OPTIONAL)	
					(REDUCES OPERATING FORCE BY 20%)	
	9	1	165-9439	1	BUSHING	
	10	1	165-9448	1	SEAL-O-RING	
	11	1	168-0794	1	PLATE	
	12	1	096-4498	2	WASHER	
M	13	1	6V-8337	2	BOLT-SOCKET HEAD (M8X1.25X35-MM)	
	14	1	171-0087	1	BELLOWS	
M	15	1	131-5915	1	NUT	
	16	1	7Y-0468	1	PIN-SPRING	
	17	1	094-0876	4	SEAL	
B	18	1	099-6137	4	WASHER	
	19	1	165-9442	2	SPRING (STANDARD)	
					-OR-	
	19A	1	225-4816	2	SPRING (OPTIONAL)	
					(REDUCES OPERATING FORCE FOR IMPROVED INCHING CONTROL)	
					-OR-	
J	19B	1	244-8495	2	SPRING (OPTIONAL)	
					(PROVIDES CONTROLLABILITY EQUAL TO A-SERIES MACHINES)	
					-OR-	
L	19C	1	244-8499	2	SPRING (OPTIONAL)	
					(PROVIDES CONTROLLABILITY COMPARABLE TO A AND B-SERIES MACHINES)	

206-3305 VALVE GP-PILOT *(contd.)* i02158726

NOTE	REF NO	GRAPHIC REF	PART NUMBER	QTY	PART NAME 1 2 3 4 5 6 (PRODUCT LEVEL)	SEE PAGE
	20	1	**165-9435**	2	SEAT	
	21	1	**095-1586**	4	SEAL-O-RING	
	22	1	**165-9443**	2	SEAT-SPRING	
					(USED WITH REF NO 19 OR 19A SPRINGS)	
					–OR–	
J		1	**244-8497**	2	SEAT-SPRING	
					(USED WITH REF NO 19B SPRINGS)	
					–OR–	
L		1	**244-8501**	2	SEAT-SPRING	
					(USED WITH REF NO 19C SPRINGS)	
	23	1	**165-9438**	1	PLATE	
	24	1	**118-4086**	4	ROD	

B-USE AS REQUIRED
J-PARTS MARKED J MUST BE USED TOGETHER AS A SET
L-PARTS MARKED L MUST BE USED TOGETHER AS A SET
M-METRIC PART

206-3305 VALVE GP-PILOT *(contd.)* i02158726

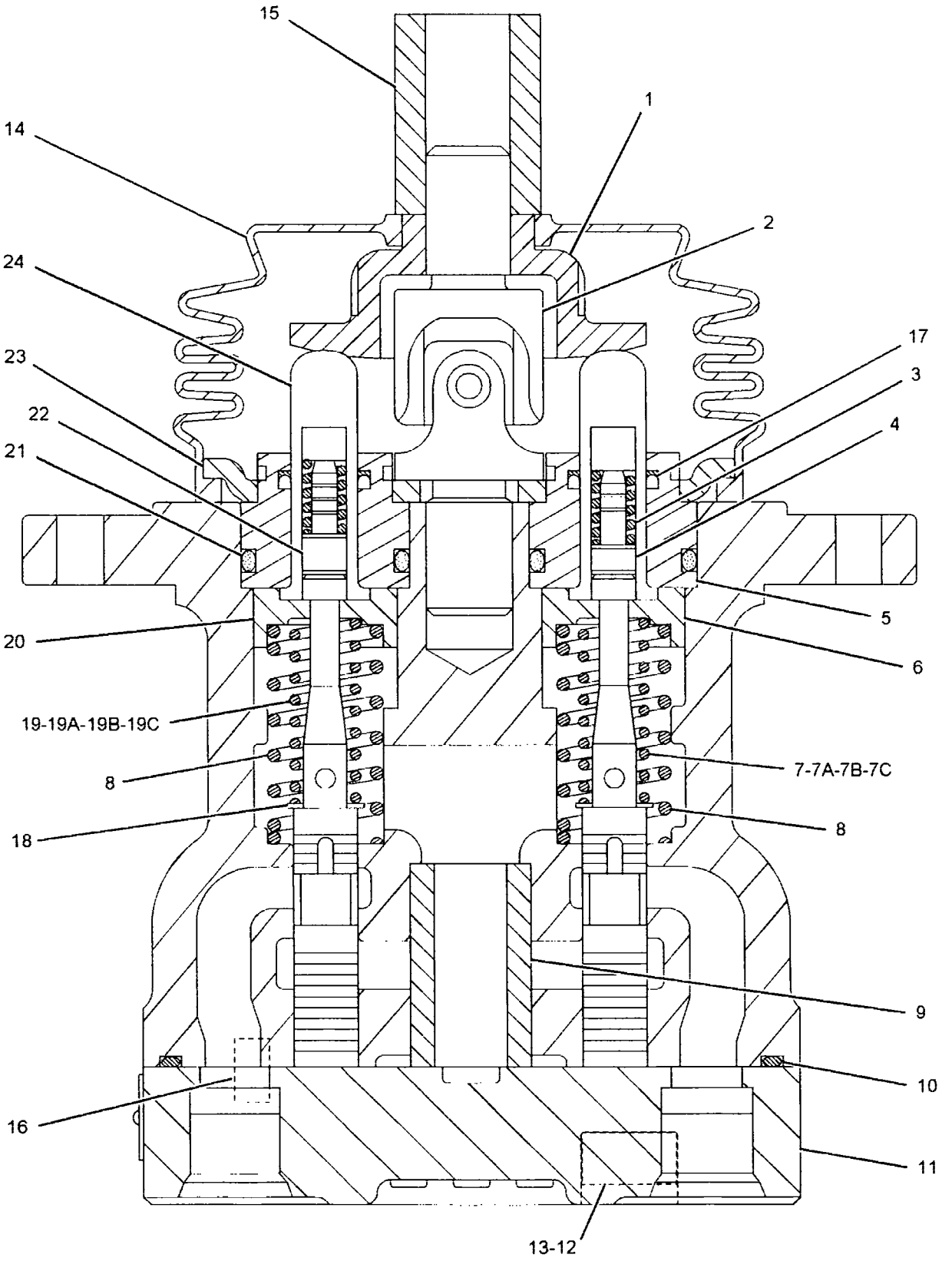

GRAPHIC #1 **<END>** g01102305

244-4120 VALVE GP-PILOT–PRESSURE, FLOW COMPENSATOR

S/N: YEE1-UP

PART OF 295-9426 PUMP GP-PISTON

SMCS-5059 **i02252980**

NOTE	REF NO	GRAPHIC REF	PART NUMBER	QTY	PART NAME 1 2 3 4 5 6 (PRODUCT LEVEL)	SEE PAGE
	1	1	**9X-7680**	3	SEAL-O-RING	
M	2	1	**8T-8442**	4	BOLT-SOCKET HEAD (M6X1X30-MM)	

M-METRIC PART

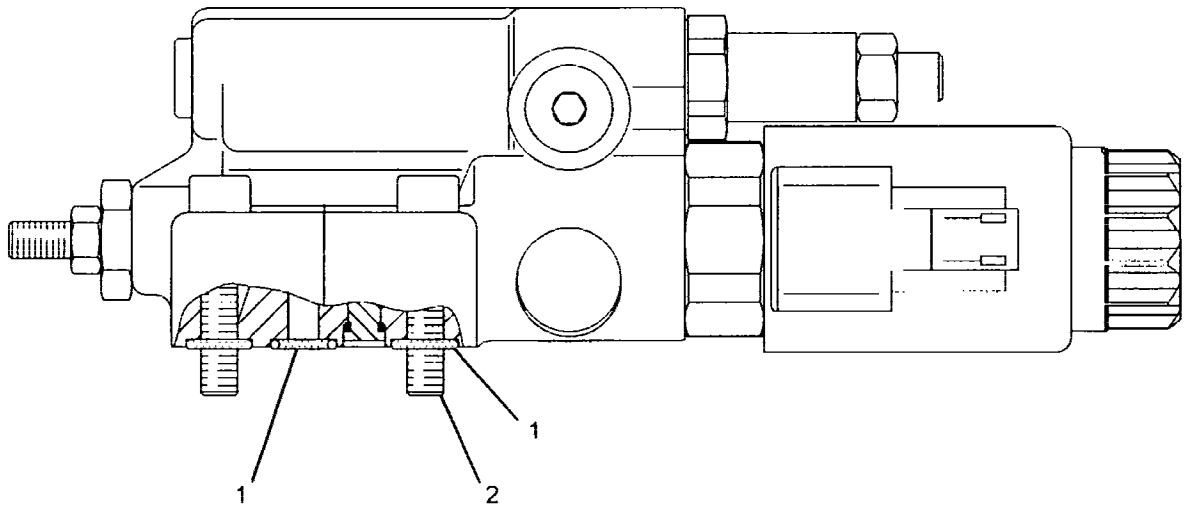

GRAPHIC #1 **<END>** g01135515

HYDRAULIC SYSTEM

285-1327 VALVE GP-PILOT–JOYSTICK

S/N: YEE1-UP

PART OF 270-5951, 270-5952 CONTROL GP-JOYSTICK

AN ATTACHMENT

SMCS-5059 **i02635287**

NOTE	REF NO	GRAPHIC REF	PART NUMBER	QTY	PART NAME 1 2 3 4 5 6 (PRODUCT LEVEL)	SEE PAGE
	1	1	165-9431	1	PLATE	
	2	1	4I-6365	1	JOINT	
	3	1	118-4087	4	SPRING	
	4	1	165-9444	2	SEAT-SPRING	
					(USED WITH REF NO 7 OR 7A SPRINGS)	
					–OR–	
J		1	244-8496	2	SEAT-SPRING	
					(USED WITH REF NO 7B SPRINGS)	
					–OR–	
L		1	244-8500	2	SEAT-SPRING	
					(USED WITH REF NO 7C SPRINGS)	
	5	1	096-1628	4	PLUG	
	6	1	165-9436	2	SEAT	
	7	1	165-9460	2	SPRING (STANDARD)	
					–OR–	
	7A	1	225-4815	2	SPRING (OPTIONAL)	
					(REDUCES OPERATING FORCE FOR IMPROVED INCHING CONTROL)	
					–OR–	
J	7B	1	244-8494	2	SPRING (OPTIONAL)	
					(PROVIDES CONTROLLABILITY EQUAL TO A-SERIES MACHINES)	
					–OR–	
L	7C	1	244-8498	2	SPRING (OPTIONAL)	
					(PROVIDES CONTROLLABILITY COMPARABLE TO A AND B-SERIES MACHINES)	
	8	1	270-5953	4	SPRING (STANDARD)	
					–OR–	
		1	190-7750	4	SPRING (OPTIONAL)	
					(REDUCES OPERATING FORCE BY 30%)	
					–OR–	
		1	190-7751	4	SPRING (OPTIONAL)	
					(REDUCES OPERATING FORCE BY 20%)	
	9	1	165-9439	1	BUSHING	
	10	1	165-9448	1	SEAL-O-RING	
	11	1	168-0794	1	PLATE	
	12	1	096-4498	2	WASHER	
M	13	1	6V-8337	2	BOLT-SOCKET HEAD (M8X1.25X35-MM)	
	14	1	171-0087	1	BELLOWS	
M	15	1	131-5915	1	NUT	
	16	1	7Y-0468	1	PIN-SPRING	
	17	1	094-0876	4	SEAL	
B	18	1	099-6137	4	WASHER	
	19	1	165-9442	2	SPRING (STANDARD)	
					–OR–	
	19A	1	225-4816	2	SPRING (OPTIONAL)	
					(REDUCES OPERATING FORCE FOR IMPROVED INCHING CONTROL)	
					–OR–	
J	19B	1	244-8495	2	SPRING (OPTIONAL)	
					(PROVIDES CONTROLLABILITY EQUAL TO A-SERIES MACHINES)	
					–OR–	
L	19C	1	244-8499	2	SPRING (OPTIONAL)	
					(PROVIDES CONTROLLABILITY COMPARABLE TO A AND B-SERIES MACHINES)	

285-1327 VALVE GP-PILOT (contd.)

i02635287

NOTE	REF NO	GRAPHIC REF	PART NUMBER	QTY	PART NAME 1 2 3 4 5 6 (PRODUCT LEVEL)	SEE PAGE
	20	1	**165-9435**	2	SEAT	
	21	1	**095-1586**	4	SEAL-O-RING	
	22	1	**165-9443**	2	SEAT-SPRING	
					(USED WITH REF NO 19 OR 19A SPRINGS)	
					–OR–	
J		1	**244-8497**	2	SEAT-SPRING	
					(USED WITH REF NO 19B SPRINGS)	
					–OR–	
L		1	**244-8501**	2	SEAT-SPRING	
					(USED WITH REF NO 19C SPRINGS)	
	23	1	**165-9438**	1	PLATE	
	24	1	**118-4086**	4	ROD	

B-USE AS REQUIRED
J-PARTS MARKED J MUST BE USED TOGETHER AS A SET
L-PARTS MARKED L MUST BE USED TOGETHER AS A SET
M-METRIC PART

285-1327 **VALVE GP-PILOT** *(contd.)* **i02635287**

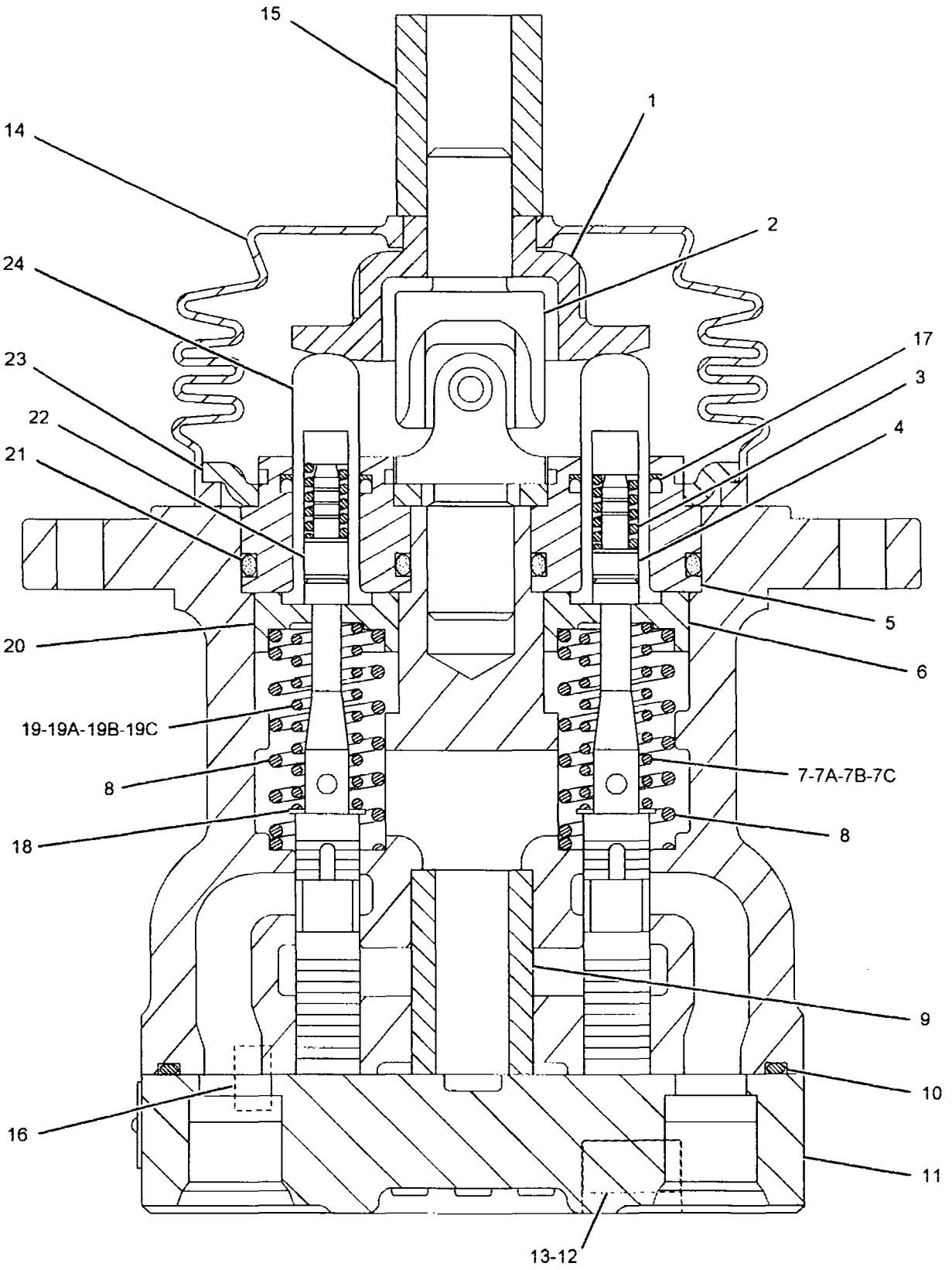

GRAPHIC #1 **<END>** g01102305

HYDRAULIC SYSTEM

285-1765 VALVE GP-PILOT–ALT PATTERN CONTROL, 2-WAY

S/N: YEE1-UP

PART OF 227-0454 LINES GP-PILOT

AN ATTACHMENT

SMCS-5059 **i02724369**

NOTE	REF NO	GRAPHIC REF	PART NUMBER	QTY	PART NAME 1 2 3 4 5 6 (PRODUCT LEVEL)	SEE PAGE
	1	1	**118-5983**	1	SEAL-RUBBER	
	2	1	**285-1764**	1	BOLT-WING	
	3	1	**285-1766**	1	LEVER	
	4	1	**285-1767**	1	COVER	
	5	1	**1J-9671**	4	SEAL-O-RING	
	6	1	**4J-0528**	2	SEAL-O-RING	
	7	1	**5I-4000**	1	HOUSING	
	8	1	**5I-4002**	1	COVER	
	9	1	**6I-6758**	1	SPOOL AS	
	9A	1	**7Y-5272**	1	PIN-SPRING	
M	10	1	**6V-3938**	4	BOLT (M10X1.5X20-MM)	
	11	1	**7Y-5219**	1	SEAL-O-RING	
M	12	1	**8T-1159**	4	BOLT-SOCKET HEAD (M10X1.5X25-MM)	
	13	1	**8T-4121**	1	WASHER-HARD (11X21X2.5-MM THK)	
M	14	1	**8T-4133**	1	NUT (M10X1.5-THD)	
	15	1	**9S-8003**	4	PLUG	

M-METRIC PART

285-1765 VALVE GP-PILOT *(contd.)* i02724369

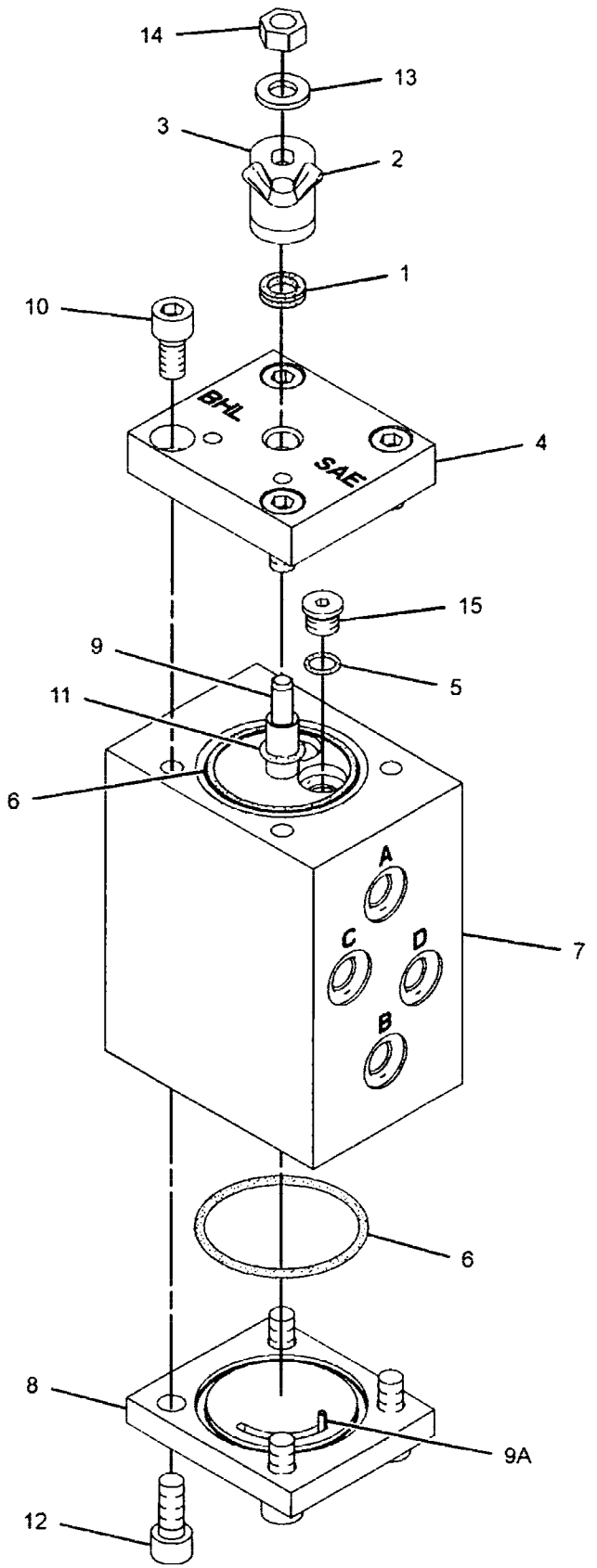

GRAPHIC #1

<END>

g01335005

HYDRAULIC SYSTEM

310-0147 VALVE GP-PILOT–DRIFT REDUCTION

S/N: YEE1-UP

PART OF 307-4848 LINES GP-BOOM CYLINDER

SMCS-5059 **i02975521**

NOTE	REF NO	GRAPHIC REF	PART NUMBER	QTY	PART NAME 1 2 3 4 5 6 (PRODUCT LEVEL)	SEE PAGE
M	1	2	**8T-4196**	4	BOLT (M10X1.5X35-MM)	
	2	2	**005-8593**	1	SEAL-O-RING	
	3	2	**165-9513**	1	SEAT	
	4	2	**165-9514**	1	PLUG	
	5	1,2	*225-4820*	18	PLUG AS	
					(EACH INCLUDES)	
		1,2	**3J-7354**	1	SEAL-O-RING	
		1,2	**225-4821**	1	PLUG	
Y	6	1	**270-5691**	1	VALVE GP-RELIEF (LINE) (BOOM)	805
	7	2	**297-0346**	1	COVER	
	8	2	**297-0349**	1	VALVE	
	9	2	**297-0350**	1	SPRING	
	10	2	**297-0351**	1	PLUG	
	11	2	**297-0354**	1	SPRING	
	12	2	**297-0356**	1	COVER	
Y	13	1	**297-0500**	1	VALVE GP-SOLENOID & PRESS REDC	832
	14	1	*297-0604*	1	PLUG AS	
		1	**095-1590**	1	SEAL-O-RING	
		1	**297-0606**	1	PLUG	
		1	**297-0607**	1	SEAL-O-RING	
		1	**297-0608**	2	RING-BACKUP	
	15	2	**310-0129**	1	PLUG	
	16	2	**310-0137**	1	COVER	
	17	2	**310-0138**	1	GUIDE	
	18	2	**310-0139**	1	WASHER (24X36.5X3-MM THK)	
	19	2	**310-0140**	1	SPRING	
B	20	2	**310-0141**	1	SHIM (1-MM THK)	
B	21	2	**310-0142**	1	SHIM (0.5-MM THK)	
B	22	2	**310-0143**	2	SHIM (0.25-MM THK)	
	23	2	**310-0145**	1	VALVE	
	26	2	**095-1592**	1	SEAL-O-RING	
	27	2	**095-1599**	1	SEAL-O-RING	
	28	2	**095-1788**	1	RING-BACKUP	
	29	2	**095-1793**	1	RING-BACKUP	
	30	1,2	*148-8395*	3	PLUG AS	
					(EACH INCLUDES)	
		1,2	**3K-0360**	1	SEAL-O-RING	
		1,2	**9S-8005**	1	PLUG-O-RING	
	31	1,2	*148-8407*	2	PLUG AS	
					(EACH INCLUDES)	
		1,2	**3J-1907**	1	SEAL-O-RING	
		1,2	**9S-4191**	1	PLUG-O-RING	
	32	2	*148-8411*	2	PLUG AS	
					(EACH INCLUDES)	
		2	**3K-0360**	1	SEAL-O-RING	
		2	**9S-4185**	1	PLUG-O-RING	
	33	1,2	*162-0177*	3	PLUG AS	
					(EACH INCLUDES)	
		1,2	**3J-1907**	1	SEAL-O-RING	
		1,2	**9S-8004**	1	PLUG-O-RING	
	34	2	**2D-6642**	1	BALL	
	35	2	**3H-0442**	1	SEAL-O-RING	
	36	2	**3J-1907**	1	SEAL-O-RING	
	37	2	**6V-5597**	1	SEAL-O-RING	
M	38	1	**7I-2272**	2	BOLT (M5X0.8X12-MM)	
M	39	2	**7Y-5226**	1	NUT (M5X0.8-THD)	

310-0147 VALVE GP-PILOT *(contd.)* i02975521

NOTE	REF NO	GRAPHIC REF	PART NUMBER	QTY	PART NAME 1 2 3 4 5 6 (PRODUCT LEVEL)	SEE PAGE
	40	2	**8T-4121**	2	WASHER-HARD (11X21X2.5-MM THK)	
M	41	2	**8T-4183**	4	BOLT (M12X1.75X40-MM)	
M	42	2	**8T-4185**	2	BOLT (M10X1.5X50-MM)	

B-USE AS REQUIRED
M-METRIC PART
Y-SEPARATE ILLUSTRATION

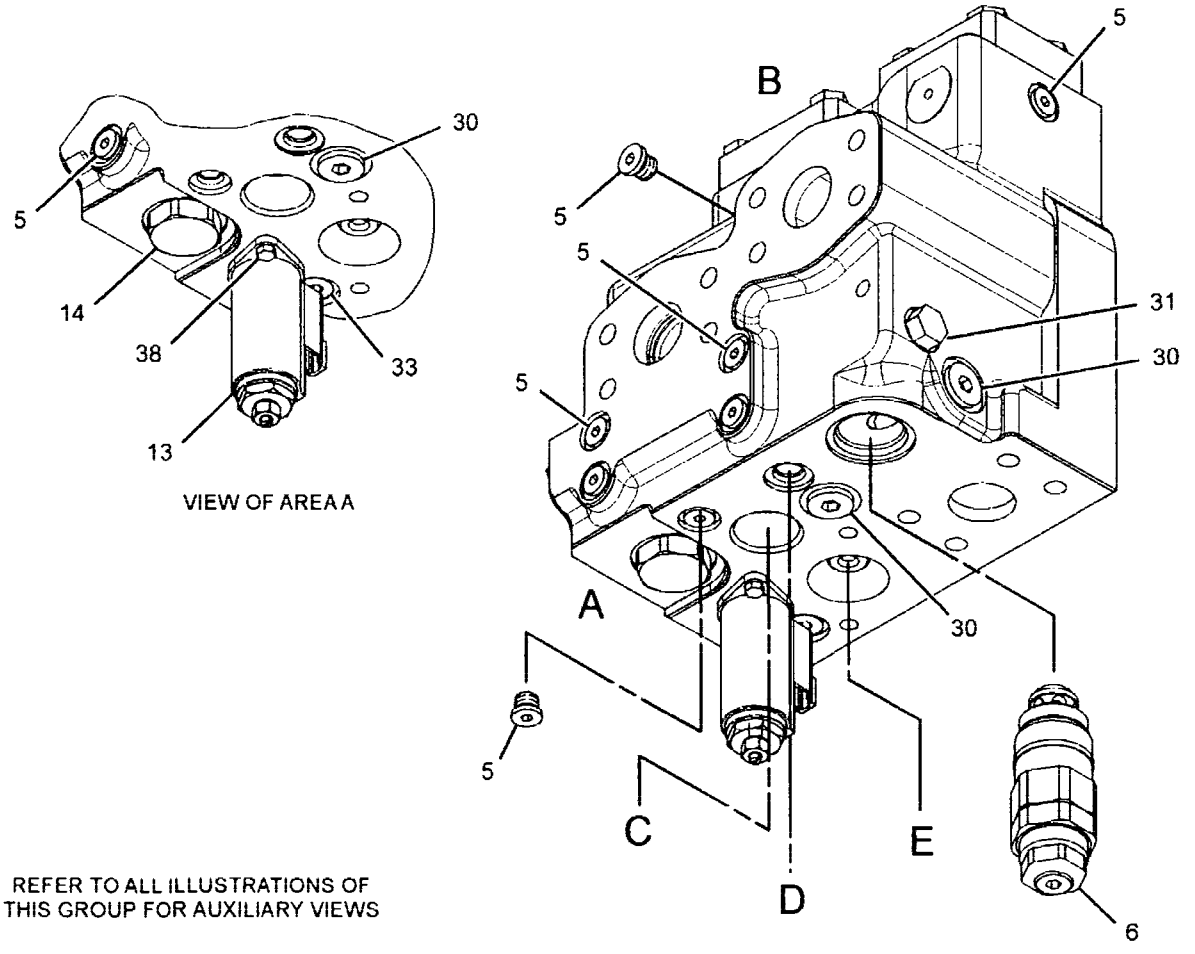

GRAPHIC #1 g01462607

310-0147 VALVE GP-PILOT *(contd.)* i02975521

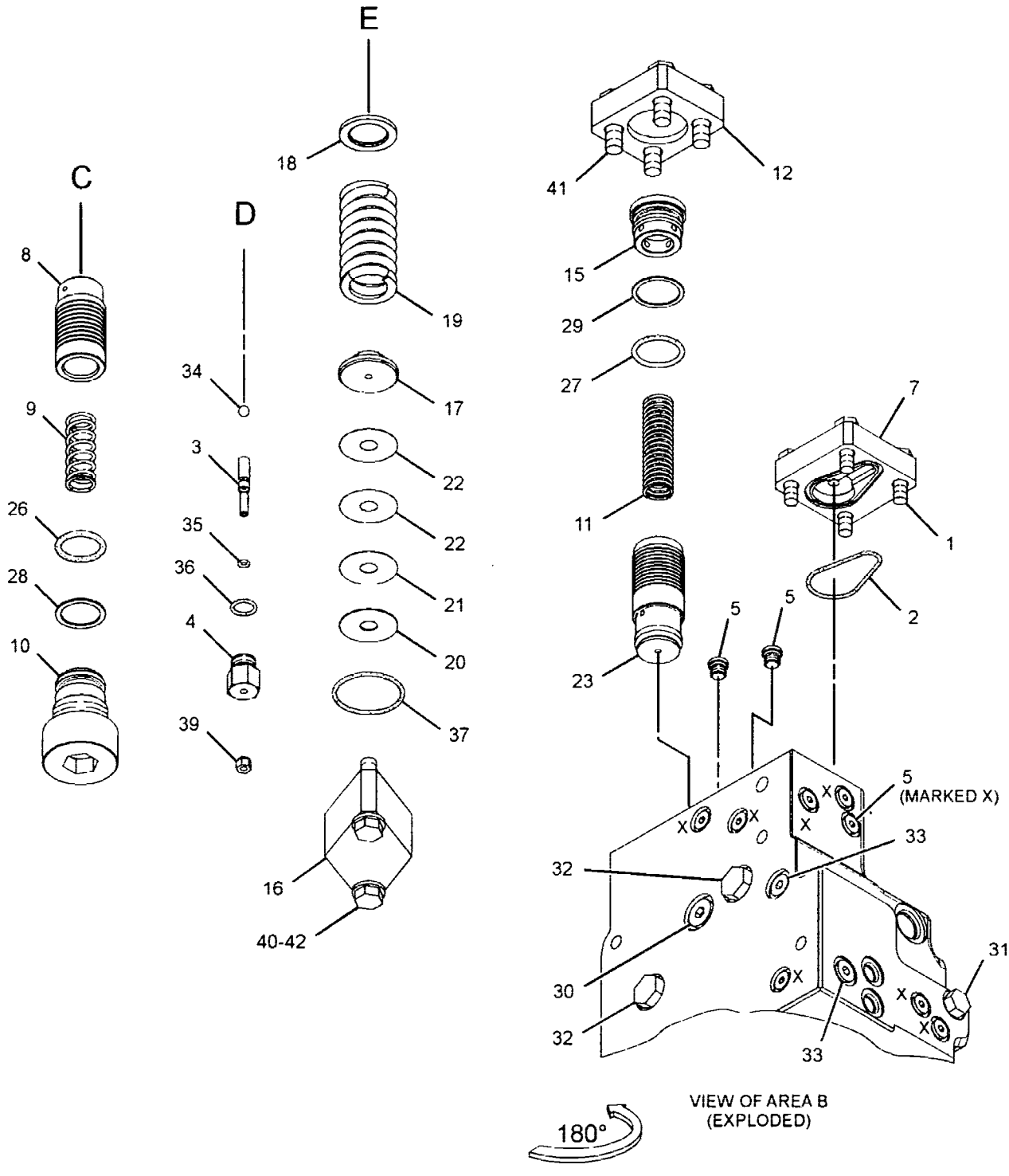

REFER TO ALL ILLUSTRATIONS OF
THIS GROUP FOR AUXILIARY VIEWS

GRAPHIC #2 **<END>** g01462608

HYDRAULIC SYSTEM

310-0149 VALVE GP-PILOT–BOOM LOWERING CONTROL

S/N: YEE1-UP

PART OF 302-3139 LINES GP-RETURN

AN ATTACHMENT

SMCS-5059 **i02939187**

NOTE	REF NO	GRAPHIC REF	PART NUMBER	QTY	PART NAME 1 2 3 4 5 6 (PRODUCT LEVEL)	SEE PAGE
M	1	1	**8T-4196**	4	BOLT (M10X1.5X35-MM)	
	2	2	**005-8593**	1	SEAL-O-RING	
Y	3	1	**122-7768**	1	PLUG GP-CONTROL VALVE	708
	4	2	**165-9513**	1	SEAT	
	5	2	**165-9514**	1	PLUG	
	6	1,2	*225-4820*	18	PLUG AS	
					(EACH INCLUDES)	
		1,2	**3J-7354**	1	SEAL-O-RING	
		1,2	**225-4821**	1	PLUG	
	7	1	**297-0346**	1	COVER	
	8	2	**297-0349**	1	VALVE	
	9	2	**297-0350**	1	SPRING	
	10	2	**297-0351**	1	PLUG	
	11	1	**297-0356**	1	COVER	
Y	12	1	**297-0500**	1	VALVE GP-SOLENOID & PRESS REDC	832
	13	1	*297-0604*	1	PLUG AS	
		1	**095-1590**	1	SEAL-O-RING	
		1	**297-0606**	1	PLUG	
		1	**297-0607**	1	SEAL-O-RING	
		1	**297-0608**	2	RING-BACKUP	
	14	2	**310-0129**	1	PLUG	
	15	1	**310-0137**	1	COVER	
	16	2	**310-0138**	1	GUIDE	
	17	2	**310-0139**	1	WASHER (24X36.5X3-MM THK)	
	18	2	**310-0140**	1	SPRING	
B	19	2	**310-0141**	1	SHIM (1-MM THK)	
B	20	2	**310-0142**	1	SHIM (0.5-MM THK)	
B	21	2	**310-0143**	2	SHIM (0.25-MM THK)	
M	22	1	**8T-4183**	4	BOLT (M12X1.75X40-MM)	
M	23	1	**8T-4185**	2	BOLT (M10X1.5X50-MM)	
	24	2	**095-1592**	1	SEAL-O-RING	
	25	2	**095-1599**	1	SEAL-O-RING	
	26	2	**095-1788**	1	RING-BACKUP	
	27	2	**095-1793**	1	RING-BACKUP	
	28	1	*148-8395*	3	PLUG AS	
					(EACH INCLUDES)	
		1	**3K-0360**	1	SEAL-O-RING	
		1	**9S-8005**	1	PLUG-O-RING	
	29	1,2	*148-8407*	2	PLUG AS	
					(EACH INCLUDES)	
		1,2	**3J-1907**	1	SEAL-O-RING	
		1,2	**9S-4191**	1	PLUG-O-RING	
	30	1	*148-8411*	2	PLUG AS	
					(EACH INCLUDES)	
		1	**3K-0360**	1	SEAL-O-RING	
		1	**9S-4185**	1	PLUG-O-RING	
	31	1,2	*162-0177*	3	PLUG AS	
					(EACH INCLUDES)	
		1,2	**3J-1907**	1	SEAL-O-RING	
		1,2	**9S-8004**	1	PLUG-O-RING	
	32	2	**2D-6642**	1	BALL	
	33	2	**3H-0442**	1	SEAL-O-RING	
	34	2	**3J-1907**	1	SEAL-O-RING	
	35	2	**6V-5597**	1	SEAL-O-RING	
M	36	1	**7I-2272**	2	BOLT (M5X0.8X12-MM)	

310-0149 VALVE GP-PILOT *(contd.)* i02939187

NOTE	REF NO	GRAPHIC REF	PART NUMBER	QTY	PART NAME 1 2 3 4 5 6 (PRODUCT LEVEL)	SEE PAGE
M	37	2	7Y-5226	1	NUT (M5X0.8-THD)	
	38	1	8T-4121	2	WASHER-HARD (11X21X2.5-MM THK)	

B-USE AS REQUIRED
M-METRIC PART
Y-SEPARATE ILLUSTRATION

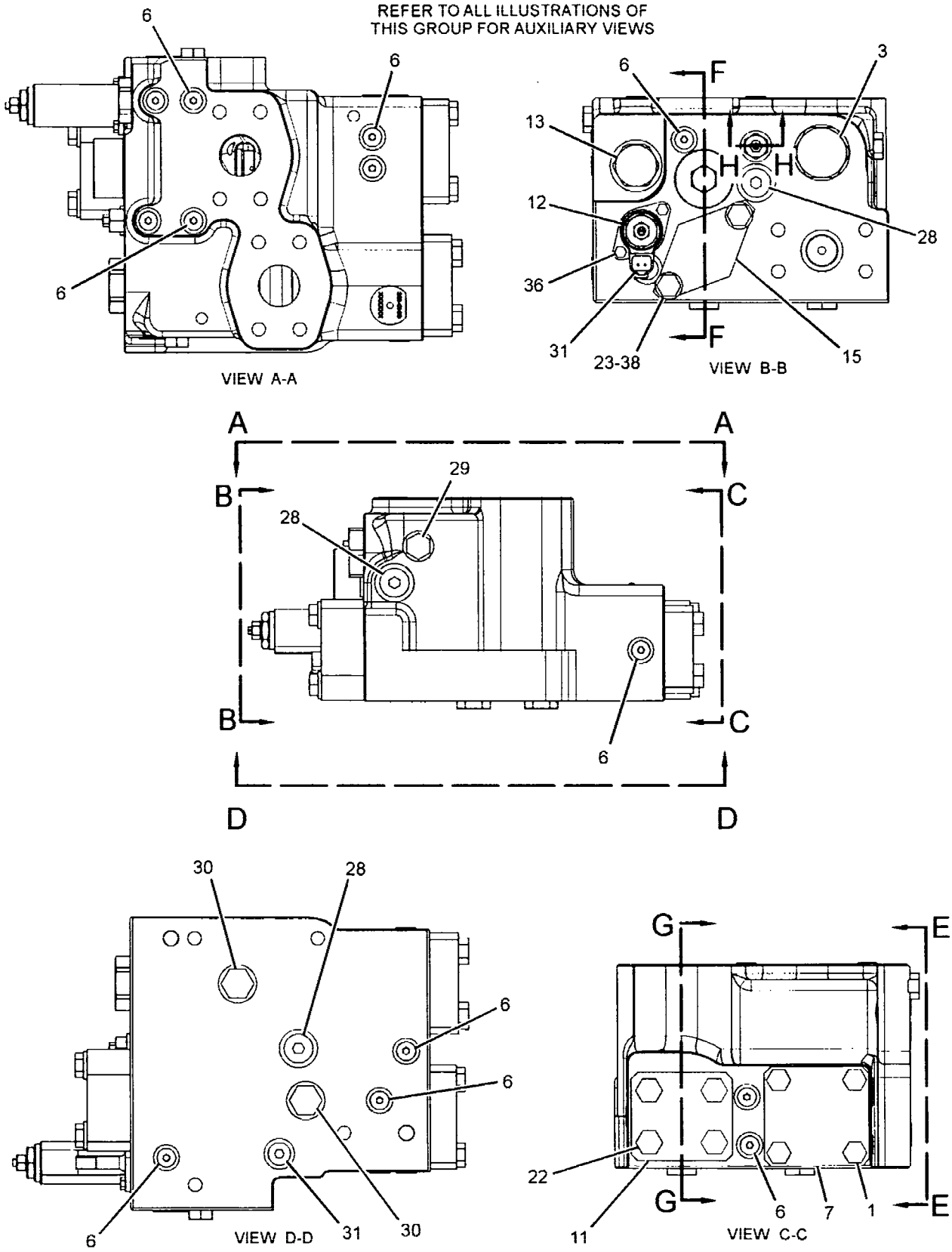

GRAPHIC #1 g01452634

310-0149 VALVE GP-PILOT *(contd.)* i02939187

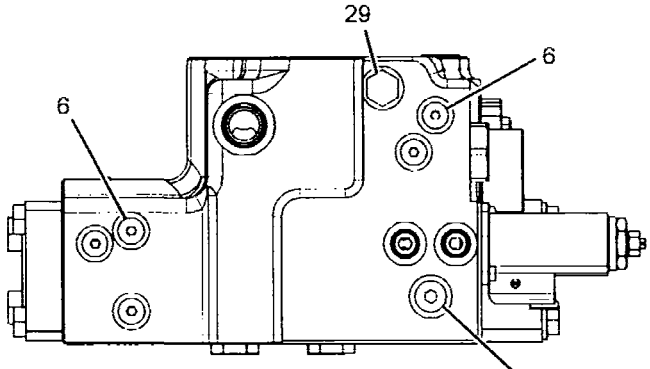

VIEW E-E

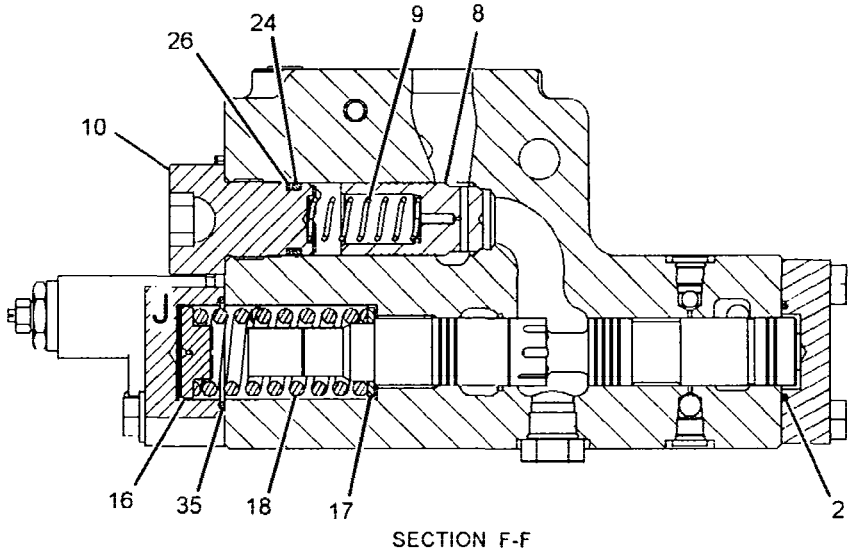

SECTION F-F

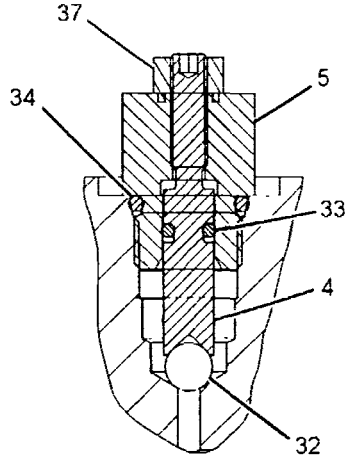

SECTION H-H

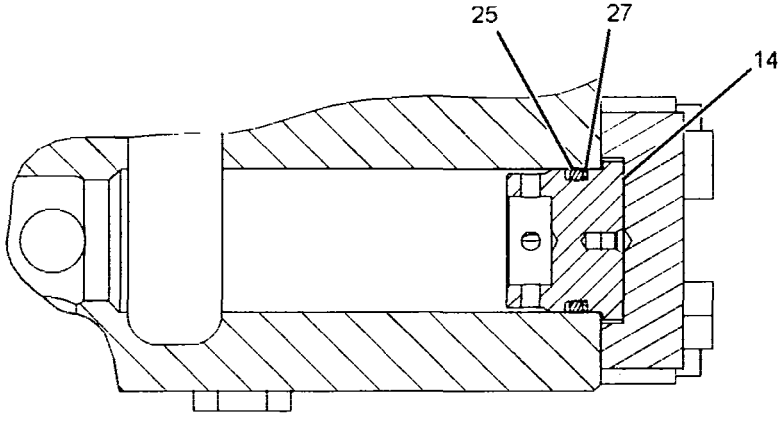

SECTION G-G

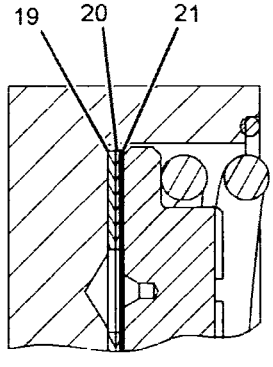

VIEW OF AREA J

GRAPHIC #2 **<END>** g01452636

HYDRAULIC SYSTEM

191-5700 VALVE GP-PILOT RELIEF

S/N: YEE1-UP

PART OF 266-7843 VALVE GP-TRAVEL COUNTERBALANCE

SMCS-5072 **i01494953**

NOTE	REF NO	GRAPHIC REF	PART NUMBER	QTY	PART NAME 1 2 3 4 5 6 (PRODUCT LEVEL)	SEE PAGE
	1	1	**180-7460**	2	RING-BACKUP	
	2	1	**180-7459**	2	RING-BACKUP	
	3	1	**3D-4245**	1	SEAL-O-RING	
	4	1	**096-6100**	1	SEAL-O-RING	
	5	1	**122-9250**	1	SEAL-O-RING	
	6	1	**4D-9986**	1	SEAL-O-RING	

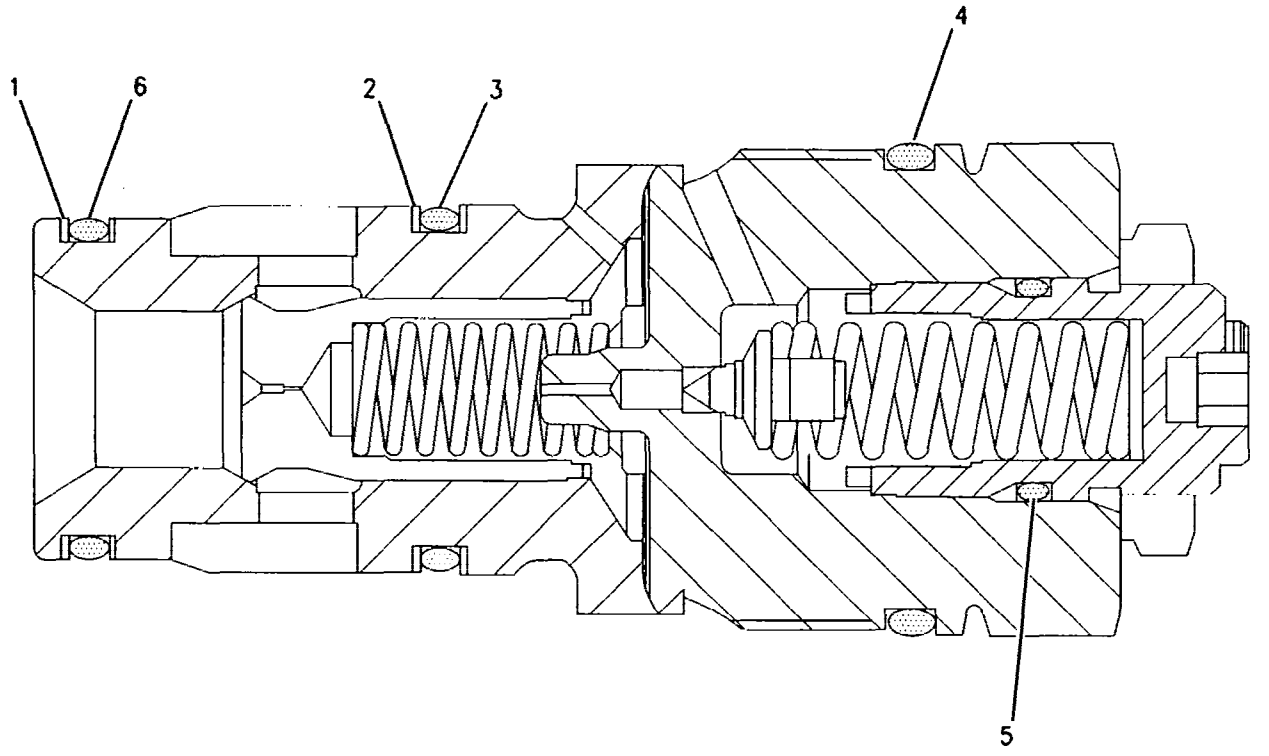

GRAPHIC #1 **<END>** g00668200

122-7708 VALVE GP-PRESSURE CONTROL-BOOM II, SWING

S/N: YEE1-UP

PART OF 310-0102, 310-0105 VALVE GP-CONTROL

ALSO AN ATTACHMENT

SMCS-5117 i01269282

NOTE	REF NO	GRAPHIC REF	PART NUMBER	QTY	PART NAME 1 2 3 4 5 6 (PRODUCT LEVEL)	SEE PAGE
	1	1	9S-8006	2	PLUG-O-RING	
	2	1	2M-9780	2	SEAL-O-RING	
	3	1	122-7664	1	BODY	
	4	1	6E-2790	1	SPRING	
	5	1	6E-4280	1	VALVE GP	
	6	1	9S-4180	5	PLUG	
	7	1	4J-7533	5	SEAL-O-RING	

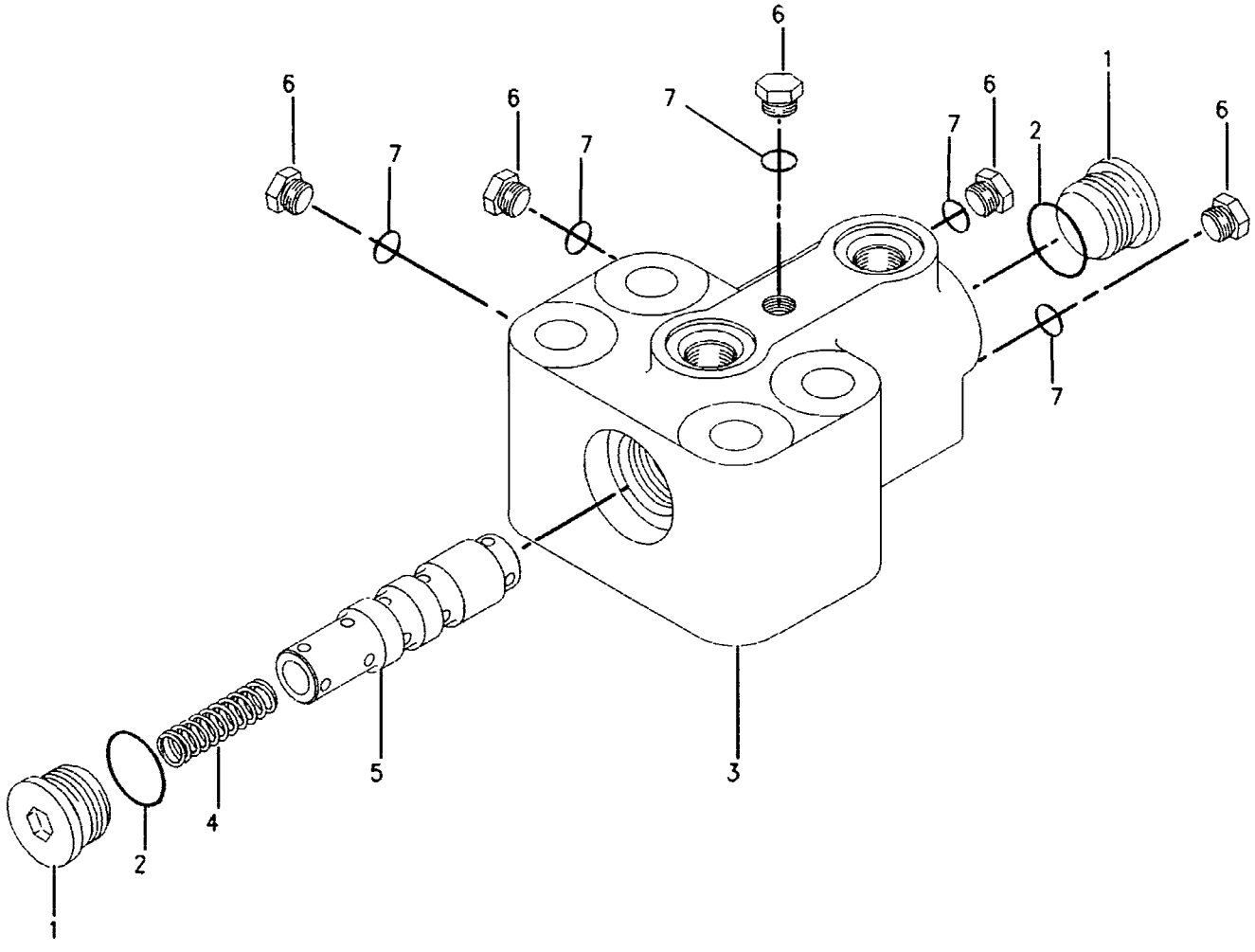

GRAPHIC #1 <END> g00285867

232-4102 VALVE GP-PRESSURE REDUCING-

BOOM, SWING PRIORITY

S/N: YEE1-UP

PART OF 302-2985 LINES GP-PILOT

SMCS-5117 **i02100107**

NOTE	REF NO	GRAPHIC REF	PART NUMBER	QTY	PART NAME 1 2 3 4 5 6 (PRODUCT LEVEL)	SEE PAGE
	1	1	111-9998	2	PLUG	
	2	1	095-1582	2	SEAL-O-RING	
	3	1	171-0127	2	SEAT-SPRING	
	4	1	185-0423	2	STOP	
	5	1	171-0126	2	SEAT-SPRING	
	6	1	171-0123	2	PLUG	
M	7	1	5C-7261	2	NUT (M8X1.25-THD)	
M	8	1	171-0124	2	SETSCREW (M8X1.25X18-MM)	
	9	1	095-1580	2	SEAL-O-RING	
	10	1	095-1590	2	SEAL-O-RING	
	11	1	171-0128	2	SPRING	

M-METRIC PART

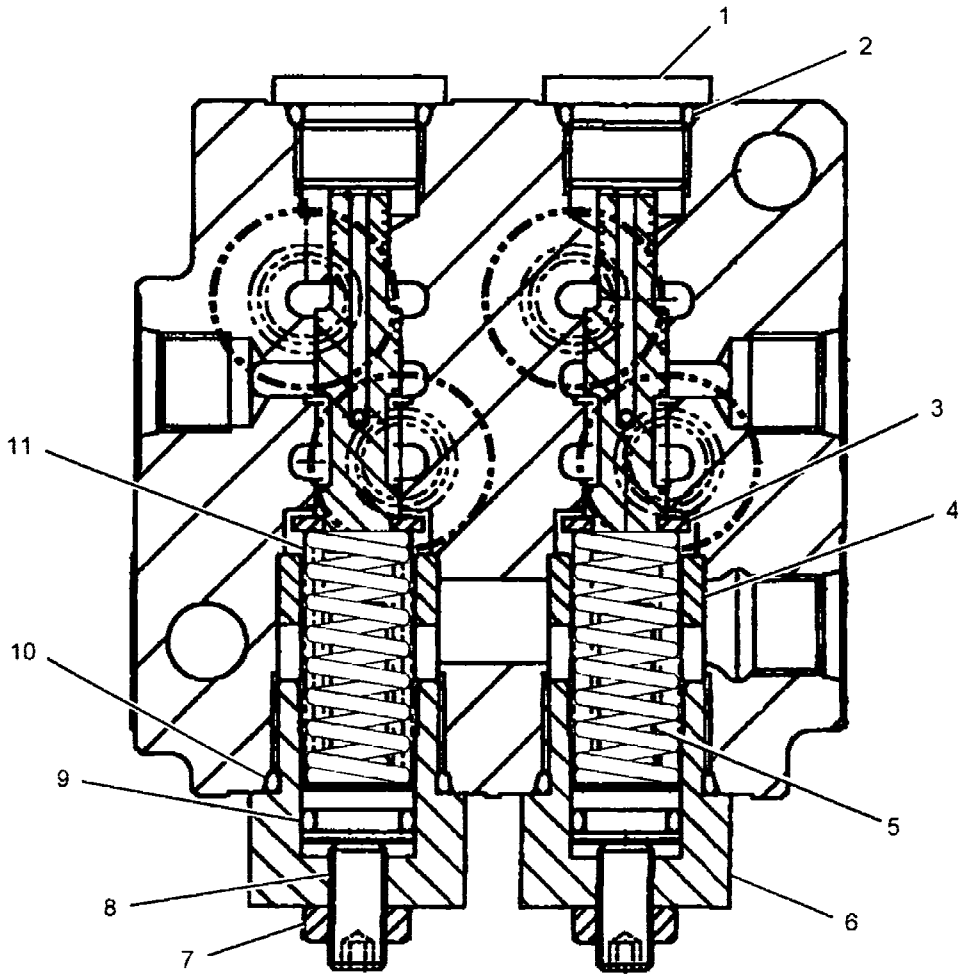

GRAPHIC #1 **<END>** g01095267

HYDRAULIC SYSTEM

297-0641 VALVE GP-PUMP CONTROL–NEGATIVE FLOW CONTROL

S/N: YEE1-UP

PART OF 296-7127, 302-3143 LINES GP-PILOT

AN ATTACHMENT

SMCS-5455 **i02844999**

NOTE	REF NO	GRAPHIC REF	PART NUMBER	QTY	PART NAME 1 2 3 4 5 6 (PRODUCT LEVEL)	SEE PAGE
M	1	1	**8T-0288**	4	BOLT (M5X0.8X12-MM)	
	2	1	**7I-8084**	11	PLUG	
Y	3	1	**111-9916**	1	VALVE GP-SOLENOID (PRESSURE REDUCING)	815
Y	4	1	**121-1491**	1	VALVE GP-SOLENOID (AUXILIARY, 1-PUMP/2-PUMP)	820
J	5	1	**171-0198**	2	VALVE GP-SHUTTLE	
					AVAILABLE REPAIR KIT(S):	
J			**185-0407**	1	KIT-SEAL (SHUTTLE VALVE)	
					(INCLUDES O-RING SEALS & BACKUP RINGS)	

J-KIT MARKED J SERVICES PART(S) MARKED J
M-METRIC PART
Y-SEPARATE ILLUSTRATION

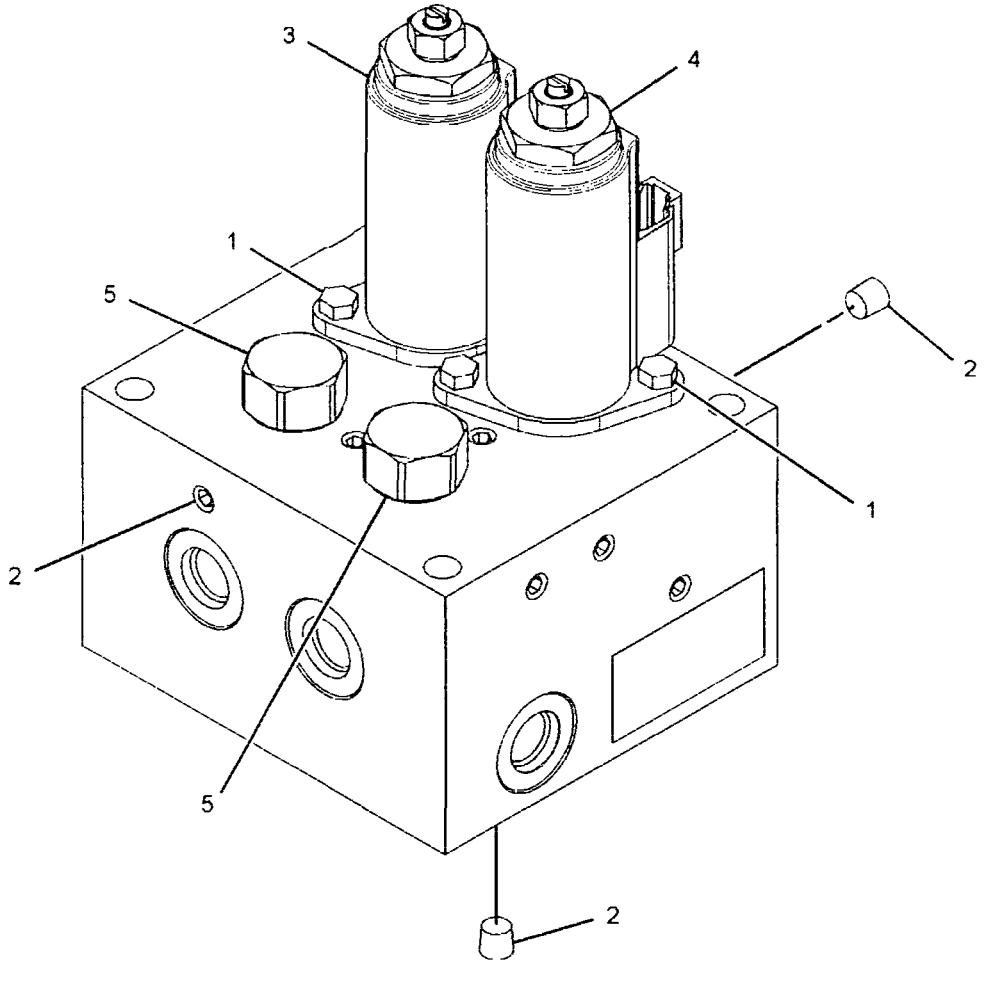

GRAPHIC #1 **<END>** g01454349

HYDRAULIC SYSTEM

255-5588 VALVE GP-REGENERATION

S/N: YEE1-UP

PART OF 310-0102, 310-0105 VALVE GP-CONTROL

ALSO AN ATTACHMENT

SMCS-5051 **i02189634**

NOTE	REF NO	GRAPHIC REF	PART NUMBER	QTY	PART NAME 1 2 3 4 5 6 (PRODUCT LEVEL)	SEE PAGE
B	1	1	**131-5945**	1	SHIM (0.1-MM THK)	
	2	1	**147-4158**	1	SPRING	
	3	1	**255-5589**	1	VALVE AS	
		1	**158-8186**	1	SPRING	
	4	1	**255-5590**	1	SLEEVE	
	5	1	**255-5591**	1	SLEEVE	
	6	1	**255-5594**	5	SEAL-O-RING	
B	7	1	**131-5942**	1	SHIM (1-MM THK)	
B	8	1	**131-5943**	1	SHIM (0.5-MM THK)	
B	9	1	**131-5944**	1	SHIM (0.2-MM THK)	

B-USE AS REQUIRED

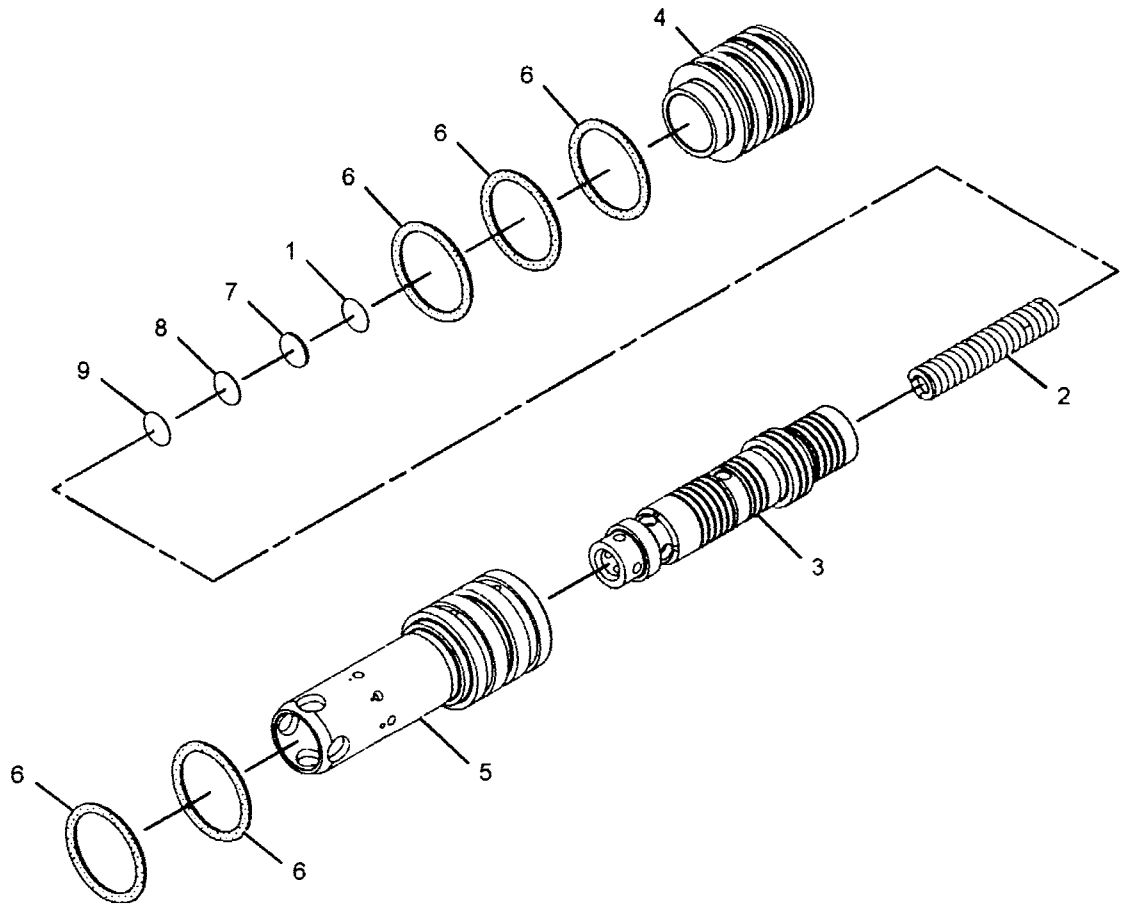

GRAPHIC #1 **<END>** g01112263

122-7750 VALVE GP-RELIEF–NEGATIVE FLOW CONTROL

S/N: YEE1-UP

PART OF 310-0102, 310-0105 VALVE GP-CONTROL

ALSO AN ATTACHMENT

SMCS-5069, 5117 **i00611669**

NOTE	REF NO	GRAPHIC REF	PART NUMBER	QTY	PART NAME 1 2 3 4 5 6 (PRODUCT LEVEL)	SEE PAGE
	1	1	**122-7752**	1	PLUG	
	2	1	**122-7751**	1	BODY-VALVE	
	3	1	**122-7748**	1	SPRING	
	4	1	**122-7749**	1	VALVE	
	5	1	**7E-4846**	1	SEAL-O-RING	
	6	1	**2S-4078**	2	SEAL-O-RING	
B	7	1	**4J-6806**	1	SHIM (1.2-MM THK)	
B	8	1	**5M-9624**	2	SHIM (0.25-MM THK)	

B-USE AS REQUIRED

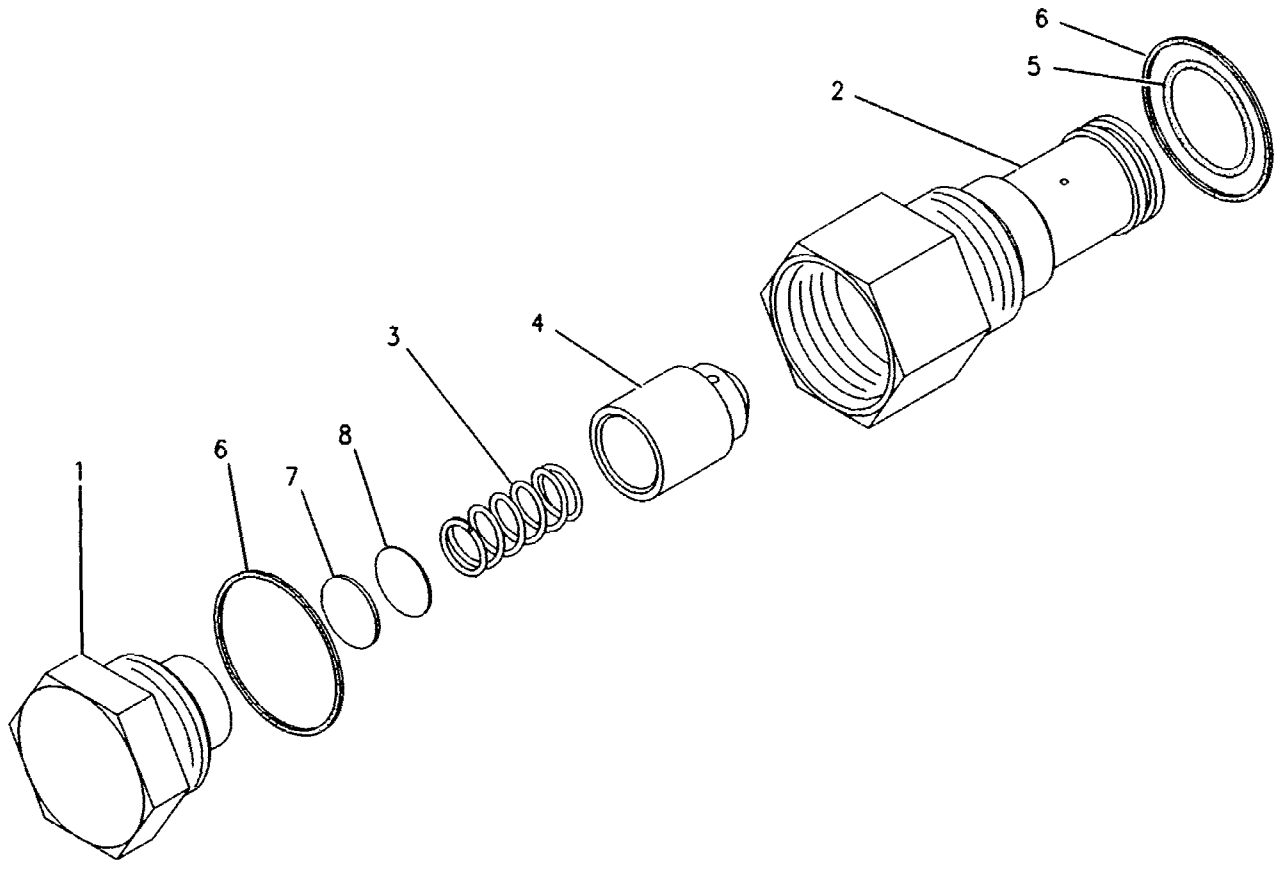

GRAPHIC #1 **<END>** g00267794

122-7756 VALVE GP-RELIEF–NEGATIVE FLOW CONTROL

S/N: YEE1-UP

PART OF 310-0096 VALVE GP-CONTROL

ALSO AN ATTACHMENT

SMCS-5069, 5117 i00611673

NOTE	REF NO	GRAPHIC REF	PART NUMBER	QTY	PART NAME 1 2 3 4 5 6 (PRODUCT LEVEL)	SEE PAGE
	1	1	122-7752	1	PLUG	
	2	1	122-7757	1	BODY-VALVE	
	3	1	122-7748	1	SPRING	
	4	1	122-7749	1	VALVE	
	5	1	7E-4846	1	SEAL-O-RING	
	6	1	2S-4078	2	SEAL-O-RING	
B	7	1	4J-6806	1	SHIM (1.2-MM THK)	
B	8	1	5M-9624	2	SHIM (0.25-MM THK)	

B-USE AS REQUIRED

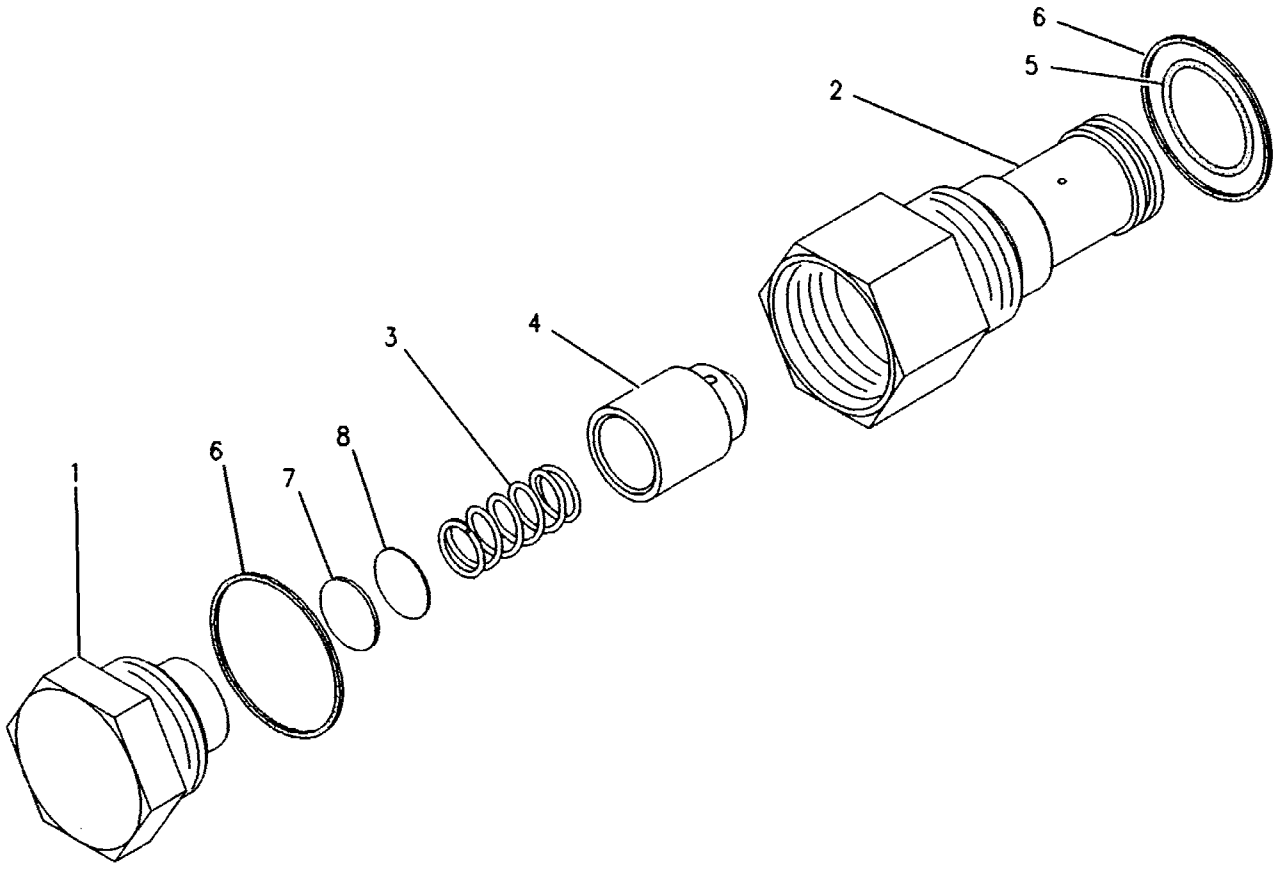

GRAPHIC #1 <END> g00267794

HYDRAULIC SYSTEM

184-3830 VALVE GP-RELIEF–SWING MOTOR

S/N: YEE1-UP

PART OF 225-4506 MOTOR GP-SWING

SMCS-5069, 5117 **i01819078**

NOTE	REF NO	GRAPHIC REF	PART NUMBER	QTY	PART NAME 1 2 3 4 5 6 (PRODUCT LEVEL)	SEE PAGE
	1	1	**168-0766**	1	PLUG	
	2	1	**168-0765**	1	RING-BACKUP	
	3	1	**7J-9933**	1	SEAL-O-RING	
M	4	1	**168-0764**	1	LOCKNUT (M33X1.5-THD)	
	5	1	**7I-0966**	1	RING-BACKUP	
	6	1	**6V-5556**	1	SEAL-O-RING	
	7	1	**168-0763**	1	RETAINER	
	8	1	**095-1698**	1	SEAL-O-RING	
	9	1	**168-0713**	1	BODY AS	
	10	1	**191-3201**	1	SPRING	

M-METRIC PART

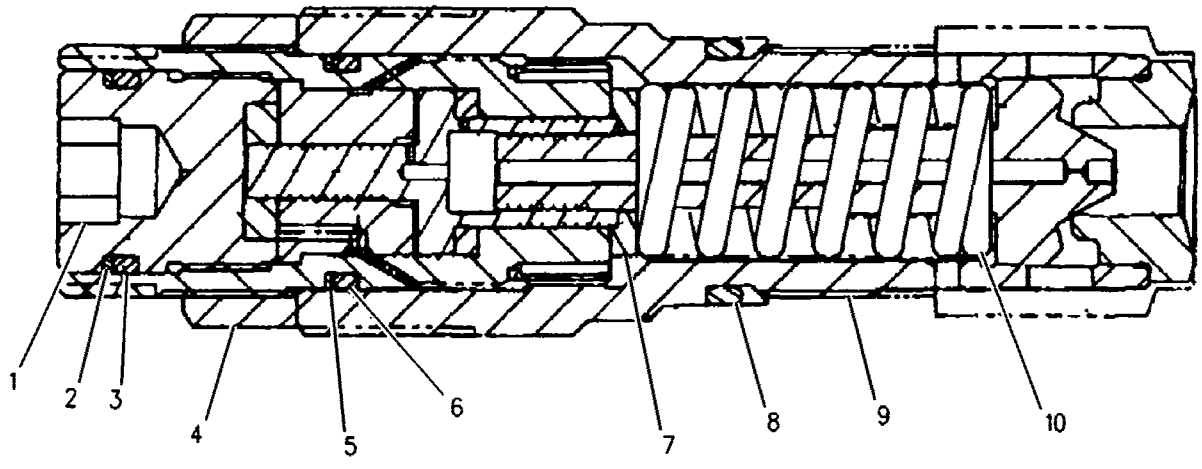

GRAPHIC #1 **<END>** g00928673

239-8983 VALVE GP-RELIEF

S/N: YEE1-UP

PART OF 310-0102, 310-0105 VALVE GP-CONTROL

ALSO AN ATTACHMENT

SMCS-5069, 5117 **i02482031**

NOTE	REF NO	GRAPHIC REF	PART NUMBER	QTY	PART NAME 1 2 3 4 5 6 (PRODUCT LEVEL)	SEE PAGE
	1	1	**030-0167**	1	RING-BACKUP	
	2	1	**183-8068**	2	RING-BACKUP	
	3	1	**2P-2975**	1	SEAL-O-RING	
	4	1	**2T-2695**	1	SEAL	
	5	1	**6V-8397**	1	SEAL-O-RING	
	6	1	**7M-8485**	2	SEAL-O-RING	

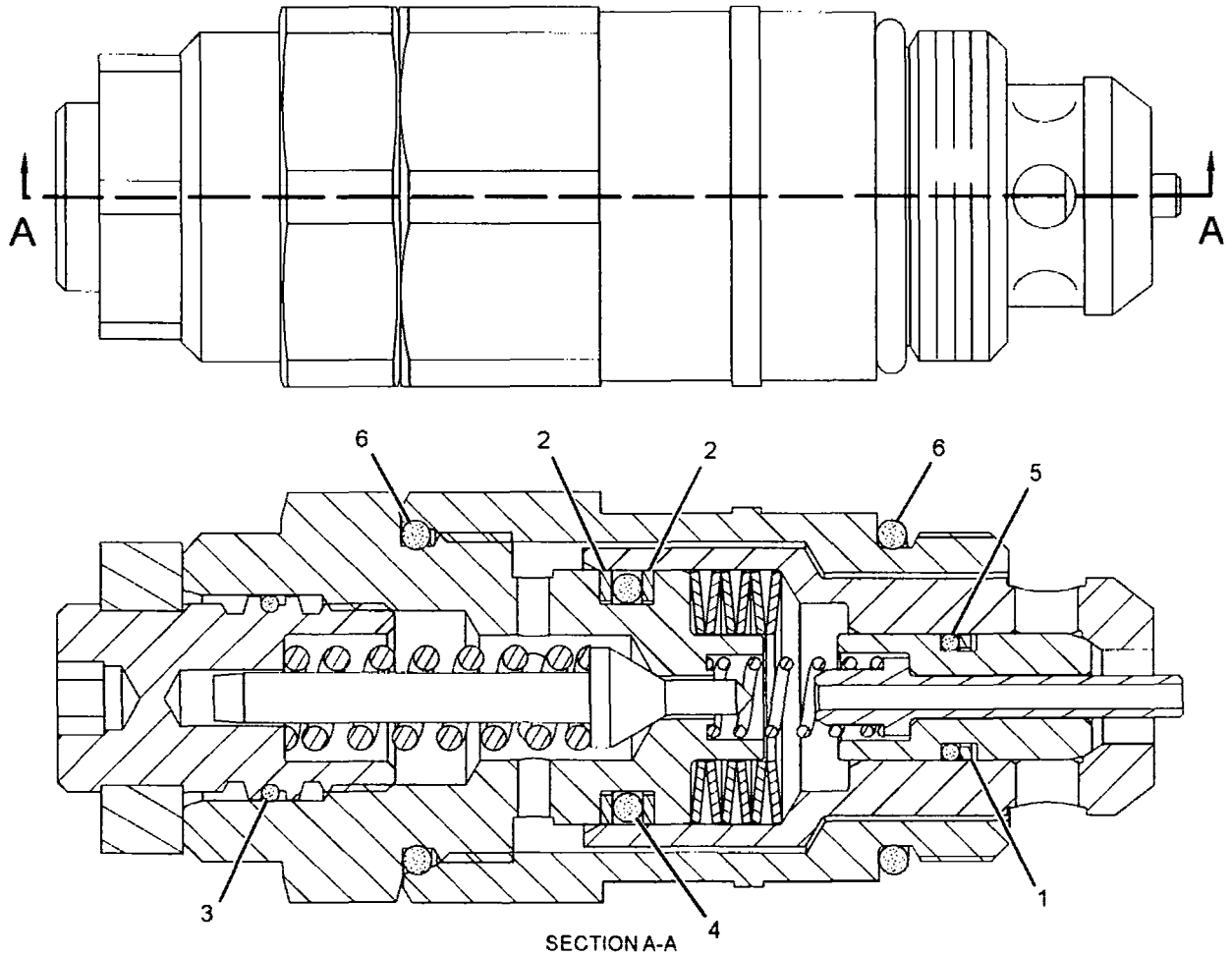

SECTION A-A

GRAPHIC #1 **<END>** g01217845

HYDRAULIC SYSTEM

239-8984 VALVE GP-RELIEF-LINE

S/N: YEE1-UP

PART OF 292-7167, 292-7169, 296-7131 LINES GP-FRONT, 310-0096 VALVE GP-CONTROL

ALSO AN ATTACHMENT

SMCS-5069, 5117 **i02495427**

NOTE	REF NO	GRAPHIC REF	PART NUMBER	QTY	PART NAME 1 2 3 4 5 6 (PRODUCT LEVEL)	SEE PAGE
	1	1	**030-0167**	1	RING-BACKUP	
	2	1	**183-8068**	2	RING-BACKUP	
	3	1	**2P-2975**	1	SEAL-O-RING	
	4	1	**2T-2695**	1	SEAL	
	5	1	**6V-8397**	1	SEAL-O-RING	
	6	1	**7M-8485**	2	SEAL-O-RING	

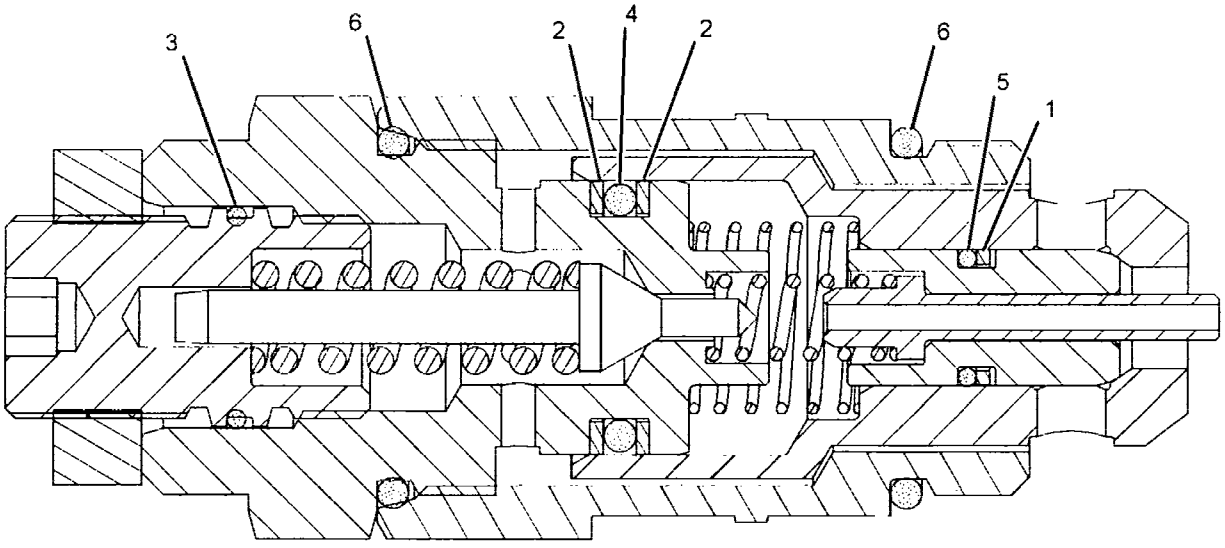

GRAPHIC #1 **<END>** g01250943

HYDRAULIC SYSTEM

239-9103 VALVE GP-RELIEF

S/N: YEE1-UP
PART OF 270-5694 VALVE GP-RELIEF
AN ATTACHMENT

SMCS-5069, 5117 **i02221716**

NOTE	REF NO	GRAPHIC REF	PART NUMBER	QTY	PART NAME 1 2 3 4 5 6 (PRODUCT LEVEL)	SEE PAGE
	1	1	**4I-3510**	1	SPRING	
	2	1	**8U-7381**	1	SEAL-O-RING	
	3	1	**122-7704**	1	SPRING	
	4	1	**171-0036**	1	ADJUSTER	
	5	1	**171-0037**	1	VALVE	
Z	6	1		1	VALVE GP-CONTROL	
	7	1	**171-0063**	1	SEAT	
	8	1	**171-0064**	1	ADAPTER	
	9	1	**225-4842**	1	NUT (3/4-16-THD)	
	10	1	**095-1579**	1	SEAL-O-RING	
	11	1	**3D-4245**	1	SEAL-O-RING	
	12	1	**4T-7791**	1	RING-BACKUP	
	13	1	**5P-8215**	1	SEAL-O-RING	
	14	1	**6J-2419**	1	SEAL-O-RING	
	15	1	**7M-8485**	1	SEAL-O-RING	

Z-NOT SERVICED SEPARATELY

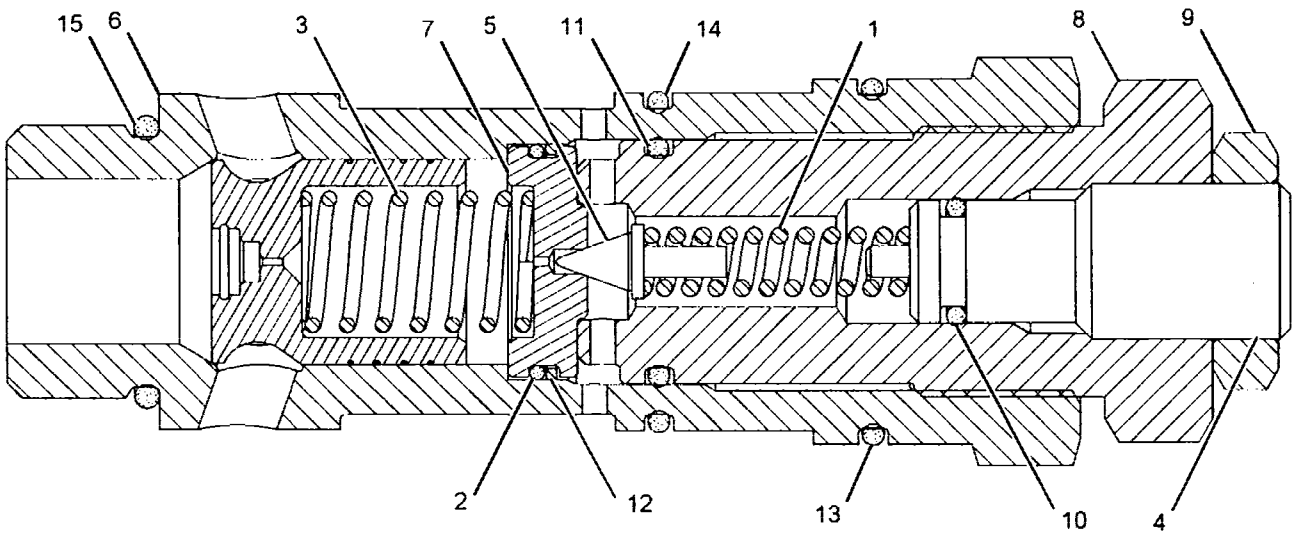

GRAPHIC #1 **<END>** g01121636

270-5691 VALVE GP-RELIEF

S/N: YEE1-UP

PART OF 310-0102 VALVE GP-CONTROL, 310-0147 VALVE GP-PILOT

SMCS-5069, 5117 **i02496696**

NOTE	REF NO	GRAPHIC REF	PART NUMBER	QTY	PART NAME 1 2 3 4 5 6 (PRODUCT LEVEL)	SEE PAGE
	1	1	030-0167	1	RING-BACKUP	
	2	1	183-8068	2	RING-BACKUP	
	3	1	2P-2975	1	SEAL-O-RING	
	4	1	6V-8397	1	SEAL-O-RING	
	5	1	7M-8485	2	SEAL-O-RING	
	6	1	2T-2695	1	SEAL	

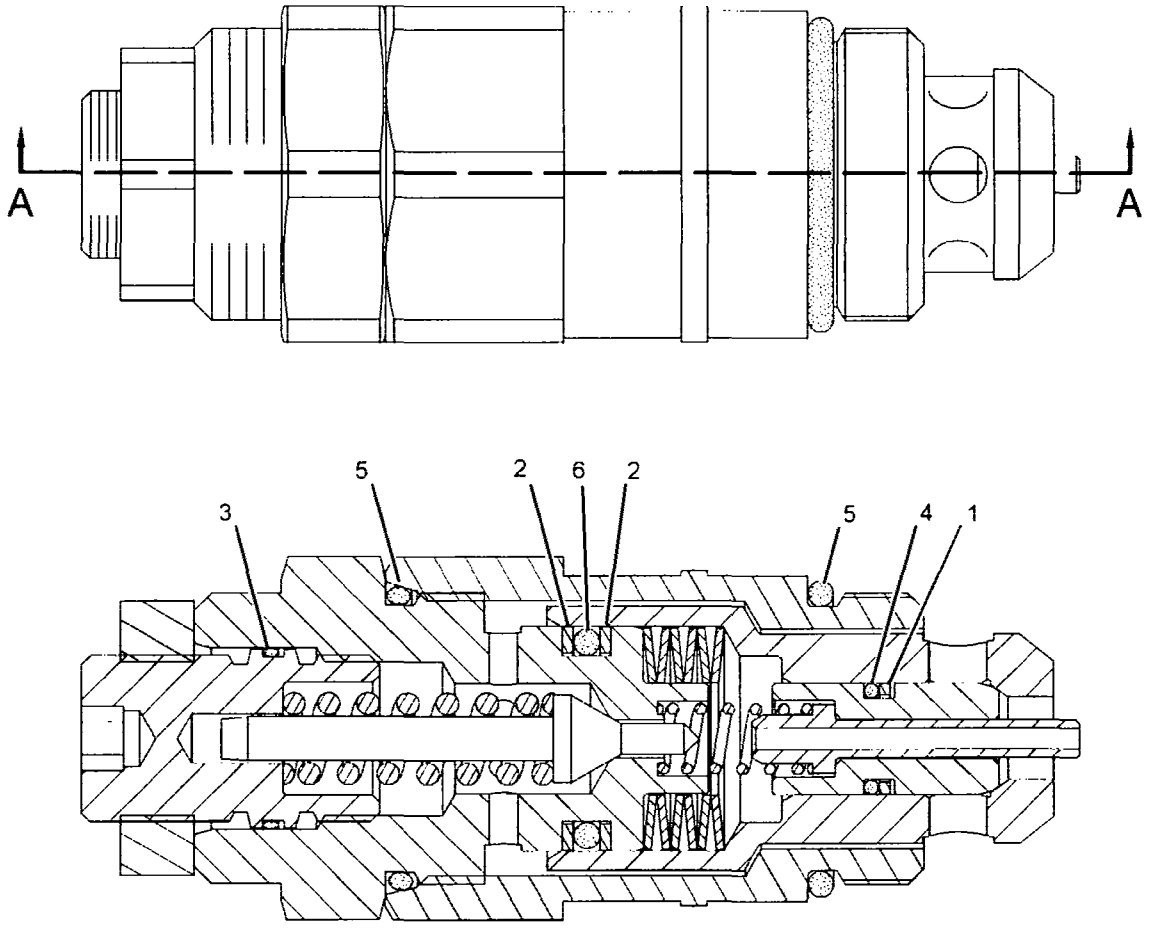

SECTION A-A

GRAPHIC #1 **<END>** g01225039

HYDRAULIC SYSTEM

270-5694 VALVE GP-RELIEF

S/N: YEE1-UP

PART OF 296-7129 LINES GP-FRONT

AN ATTACHMENT

SMCS-5069, 5117 **i02916333**

NOTE	REF NO	GRAPHIC REF	PART NUMBER	QTY	PART NAME 1 2 3 4 5 6 (PRODUCT LEVEL)	SEE PAGE
Y	1	1	**239-9103**	1	VALVE GP-RELIEF (SYSTEM 16, AUXILIARY)	804
	2	1	**270-5695**	1	BLOCK	

Y-SEPARATE ILLUSTRATION

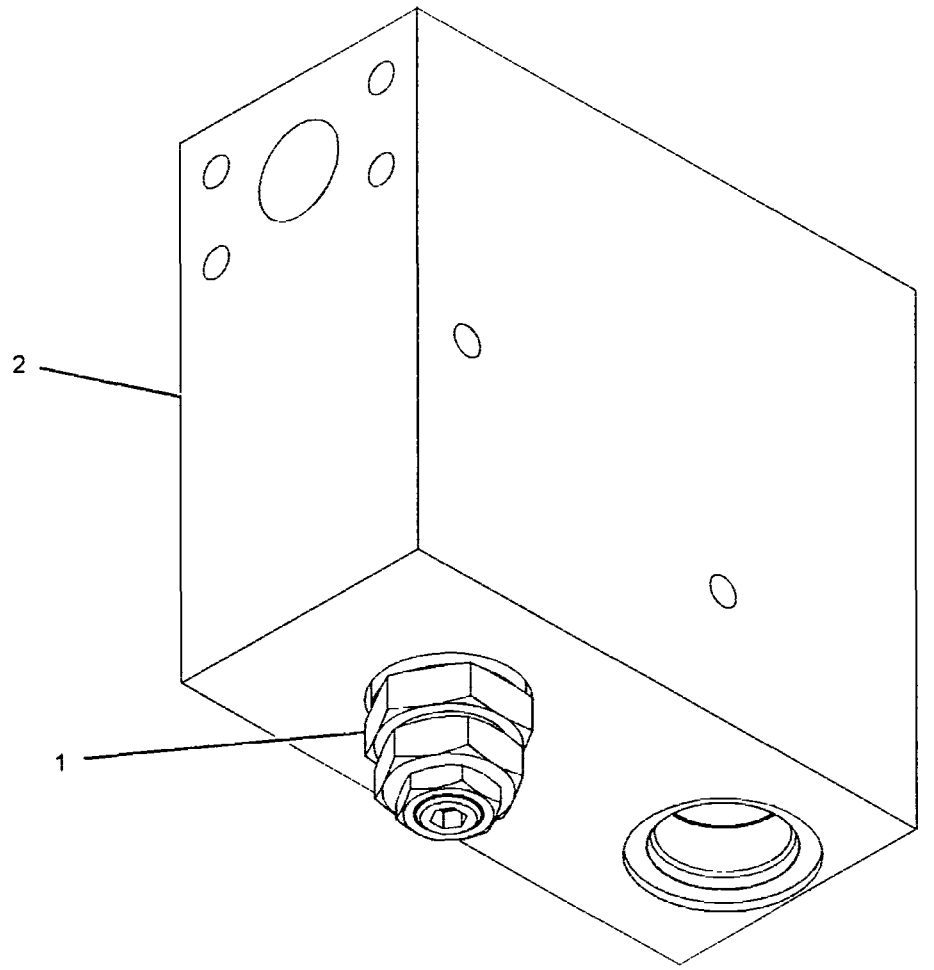

GRAPHIC #1 **<END>** g01478103

HYDRAULIC SYSTEM

270-5730 VALVE GP-RELIEF

S/N: YEE1-UP

PART OF 310-0102, 310-0105 VALVE GP-CONTROL

ALSO AN ATTACHMENT

SMCS-5069, 5117 **i02541207**

NOTE	REF NO	GRAPHIC REF	PART NUMBER	QTY	PART NAME 1 2 3 4 5 6 (PRODUCT LEVEL)	SEE PAGE
	1	1	**4I-3510**	1	SPRING	
	2	1	**6I-6777**	1	RETAINER	
	3	1	**8U-7381**	1	SEAL-O-RING	
	4	1	**107-6540**	1	COLLAR	
	5	1	**107-6541**	1	RING-RETAINING	
	6	1	**111-9973**	1	ADJUSTER	
	7	1	**111-9974**	1	ADJUSTER	
	8	1	**119-5398**	1	FILTER	
	9	1	**122-7704**	1	SPRING	
	10	1	**171-0037**	1	VALVE	
	11	1	**171-0063**	1	SEAT	
	12	1	**225-4824**	1	VALVE AS	
	13	1	**225-4825**	1	VALVE AS	
	14	1	**225-4842**	1	NUT (3/4-16-THD)	
	15	1	**095-1584**	1	SEAL-O-RING	
	16	1	**3D-4245**	1	SEAL-O-RING	
	17	1	**4T-7791**	1	RING-BACKUP	
	18	1	**5P-8215**	1	SEAL-O-RING	
	19	1	**6J-2419**	1	SEAL-O-RING	
	20	1	**6V-3922**	1	SEAL-O-RING	
	21	1	**6V-8978**	1	SEAL-O-RING	
	22	1	**7M-8485**	1	SEAL-O-RING	

270-5730 VALVE GP-RELIEF *(contd.)* i02541207

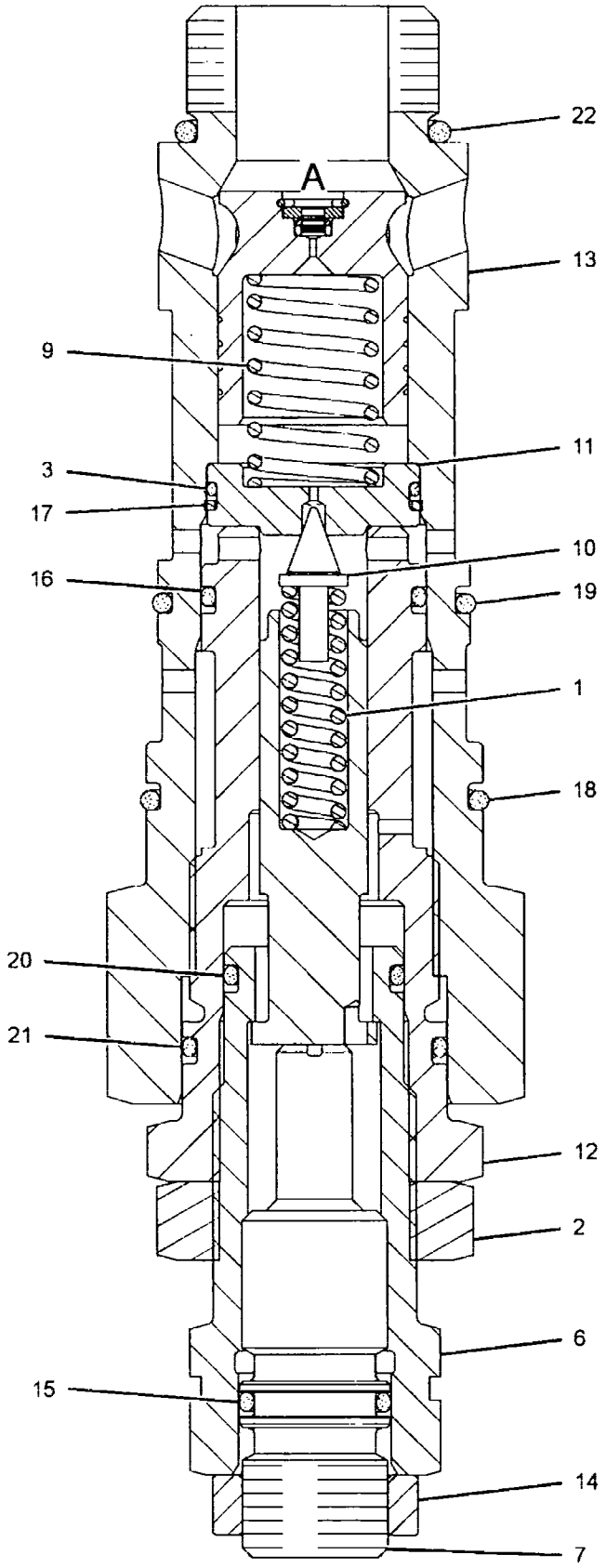

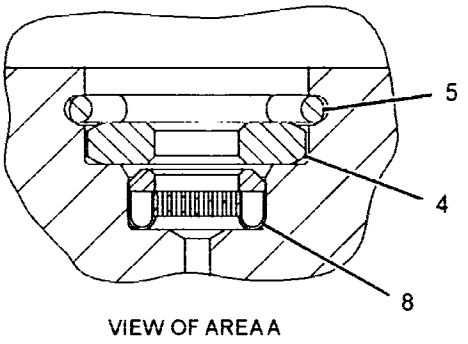

VIEW OF AREA A

GRAPHIC #1 **<END>** g01232688

270-5731 VALVE GP-RELIEF

S/N: YEE1-UP

PART OF 263-1964, 285-1768 VALVE GP-LOAD CONTROL

AN ATTACHMENT

SMCS-5069, 5117 **i02660388**

NOTE	REF NO	GRAPHIC REF	PART NUMBER	QTY	PART NAME 1 2 3 4 5 6 (PRODUCT LEVEL)	SEE PAGE
	1	1	095-1578	1	SEAL-O-RING	
	2	1	103-8252	2	RING	
	3	1	103-8253	2	RING	
	4	1	103-8254	1	SEAL-O-RING	
	5	1	103-8255	1	SEAL-O-RING	
	6	1	3D-2824	2	SEAL-O-RING	

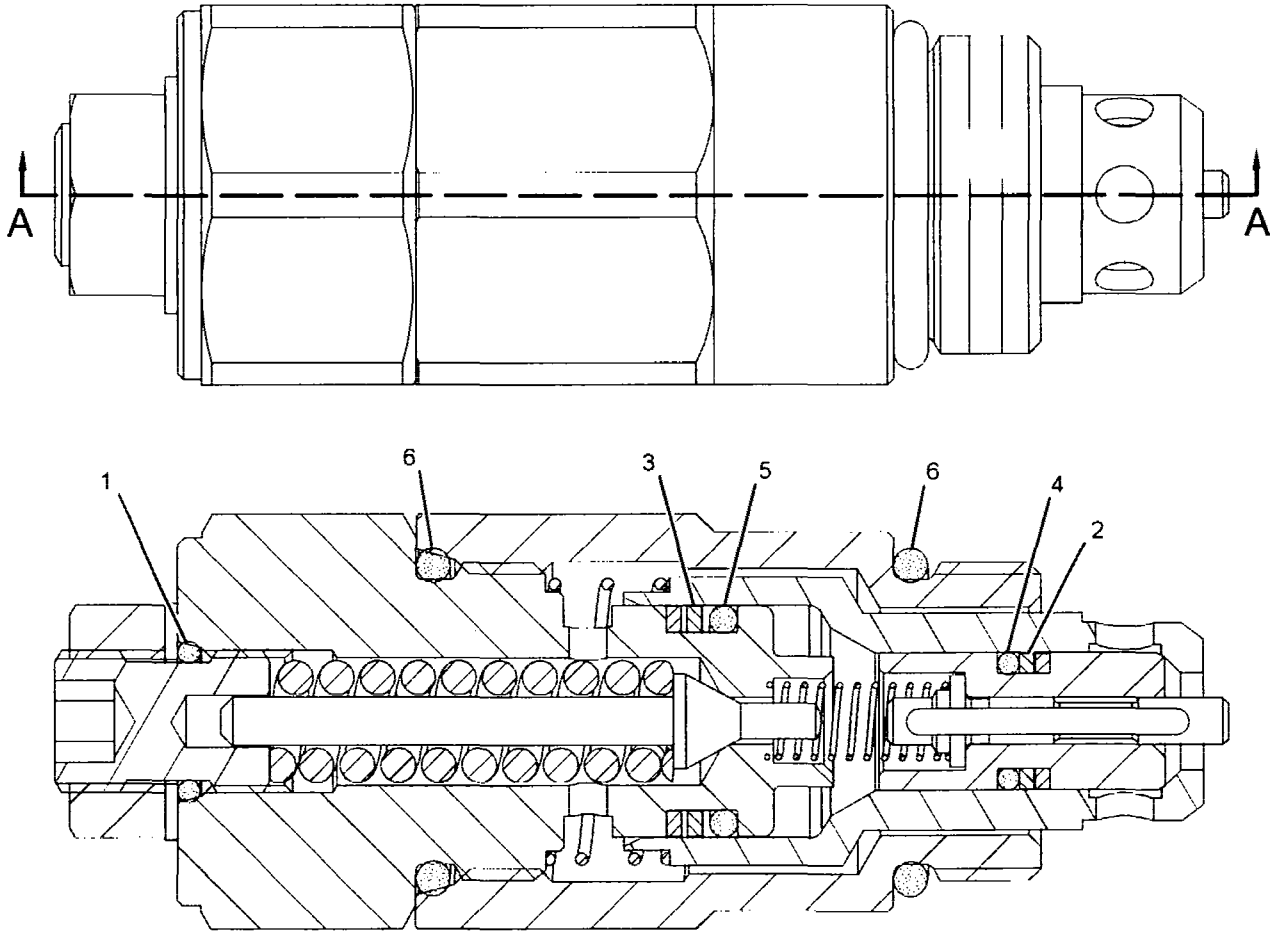

SECTION A-A

GRAPHIC #1 **<END>** g01234398

HYDRAULIC SYSTEM

112-0083 VALVE GP-SHUTTLE

S/N: YEE1-UP

PART OF 260-8047 LINES GP-PILOT

AN ATTACHMENT

SMCS-5079 **i01882781**

NOTE	REF NO	GRAPHIC REF	PART NUMBER	QTY	PART NAME 1 2 3 4 5 6 (PRODUCT LEVEL)	SEE PAGE
	1	1	**2D-6642**	4	BALL	
	2	1	**112-0085**	4	PLUG	
	3	1	**3J-1907**	4	SEAL-O-RING	

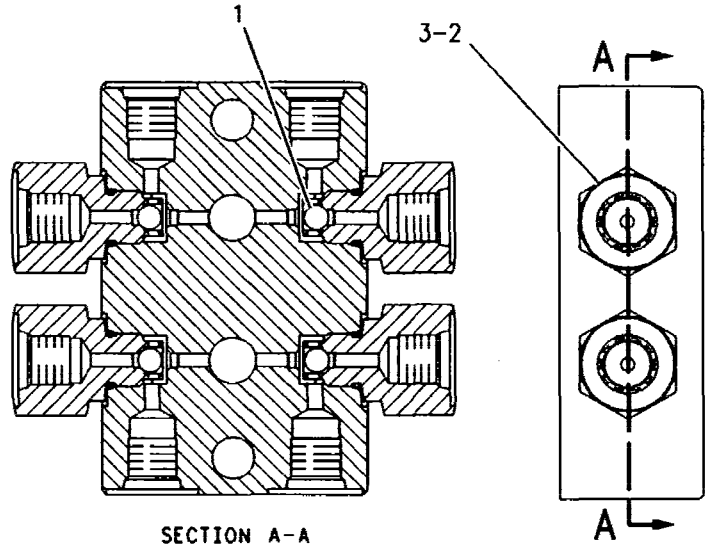

SECTION A-A

GRAPHIC #1 **<END>** g00258739

HYDRAULIC SYSTEM

123-2430 VALVE GP-SHUTTLE

S/N: YEE1-UP

PART OF 302-2985, 307-5265 LINES GP-PILOT

ALSO AN ATTACHMENT

SMCS-5079 **i01726907**

NOTE	REF NO	GRAPHIC REF	PART NUMBER	QTY	PART NAME 1 2 3 4 5 6 (PRODUCT LEVEL)	SEE PAGE
	1	1	**123-2431**	1	BODY-VALVE	
	2	1	**4B-9783**	1	BALL	
	3	1	**3J-1907**	2	SEAL-O-RING	
	4	1	**123-2552**	2	CONNECTOR	

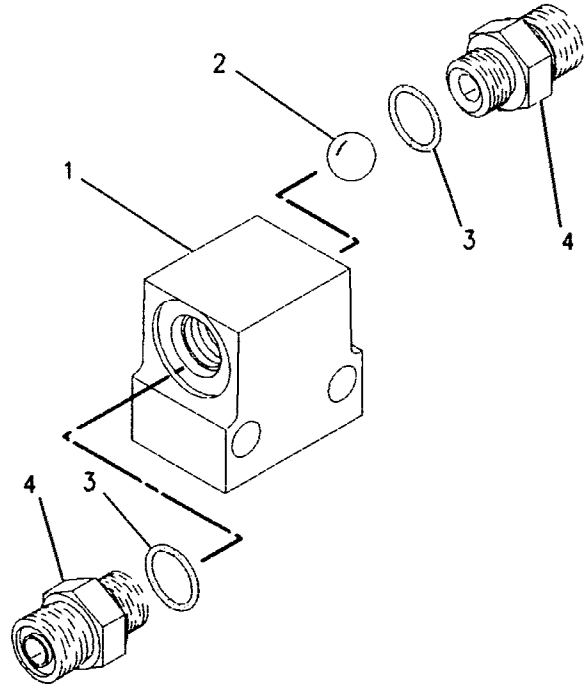

GRAPHIC #1 **<END>** g00887102

HYDRAULIC SYSTEM

123-2549 VALVE GP-SHUTTLE

S/N: YEE1-UP

PART OF 296-7133 LINES GP-FRONT, 227-0459 LINES GP-REAR ATTACHMENT AN ATTACHMENT

SMCS-5079 **i01152380**

NOTE	REF NO	GRAPHIC REF	PART NUMBER	QTY	PART NAME 1 2 3 4 5 6 (PRODUCT LEVEL)	SEE PAGE
	1	1	**123-2511**	1	TEE	
	2	1	**4B-9783**	1	BALL	
	3	1	**123-2552**	2	CONNECTOR	
	4	1	**3J-1907**	2	SEAL-O-RING	

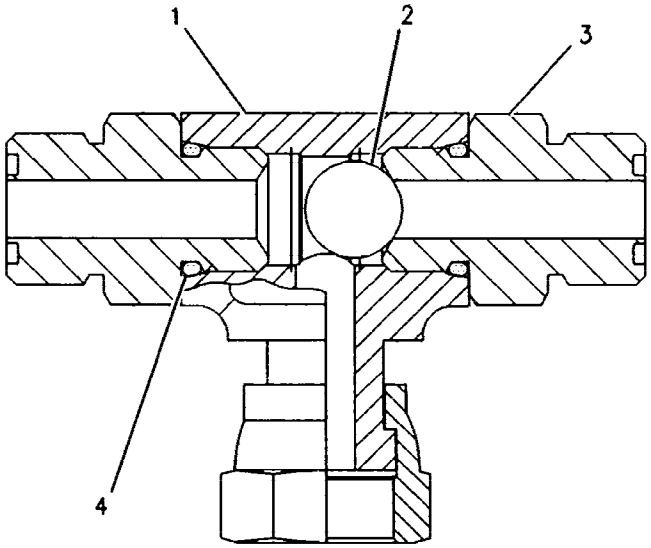

GRAPHIC #1 **<END>** g00274258

HYDRAULIC SYSTEM

185-0462 VALVE GP-SHUTTLE

S/N: YEE1-UP

PART OF 260-7891 LINES GP-PILOT

AN ATTACHMENT

SMCS-5079 **i01819099**

NOTE	REF NO	GRAPHIC REF	PART NUMBER	QTY	PART NAME 1 2 3 4 5 6 (PRODUCT LEVEL)	SEE PAGE
	1	1	**7I-8084**	4	PLUG	
	2	1	**185-0463**	1	SEAT	
	3	1	**4B-9880**	7	BALL	
	4	1	**165-9464**	6	SEAT	
	5	1	**095-1578**	7	SEAL-O-RING	
	6	1	**107-6479**	7	PLUG	

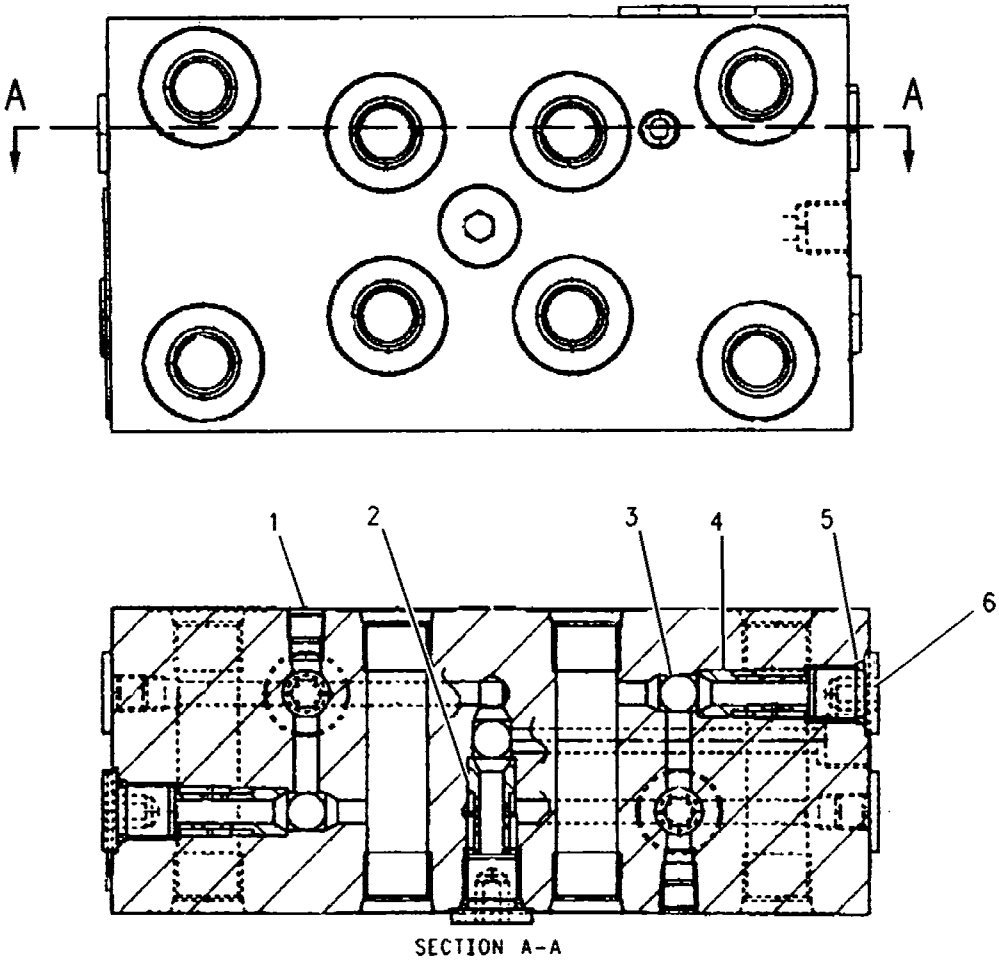

SECTION A-A

GRAPHIC #1 **<END>** g00683437

HYDRAULIC SYSTEM

259-7732 VALVE GP-SHUTTLE

S/N: YEE1-UP

PART OF 302-2985 LINES GP-PILOT

SMCS-5079 **i02596193**

NOTE	REF NO	GRAPHIC REF	PART NUMBER	QTY	PART NAME 1 2 3 4 5 6 (PRODUCT LEVEL)	SEE PAGE
Z	1	1		1	BODY-VALVE	
	2	1	**259-7733**	3	CONNECTOR	
	3	1	**3J-1907**	3	SEAL-O-RING	
	4	1	**4B-9783**	1	BALL	
	5	1	**6V-8397**	3	SEAL-O-RING	

Z-NOT SERVICED SEPARATELY

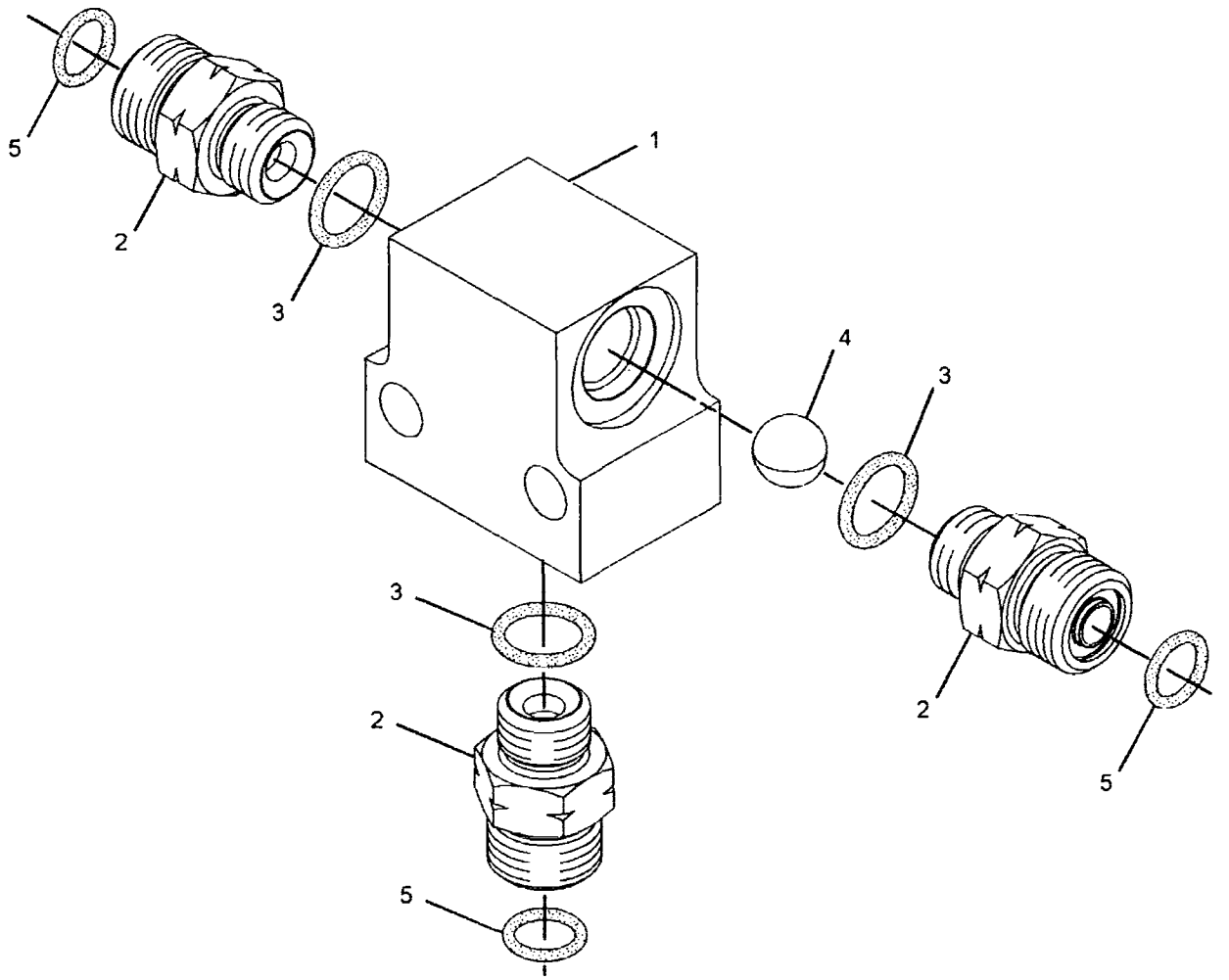

GRAPHIC #1

<END>

g01254120

111-9916 VALVE GP-SOLENOID

S/N: YEE1-UP

PART OF 297-0641 VALVE GP-PUMP CONTROL, 171-0188, 259-7430 VALVE GP-SOLENOID

ALSO AN ATTACHMENT

TYPE 1

SMCS-5479 **i02701506**

NOTE	REF NO	GRAPHIC REF	PART NUMBER	QTY	PART NAME 1 2 3 4 5 6 (PRODUCT LEVEL)	SEE PAGE
	1	1	**095-1750**	1	SEAL-O-RING	
	2	1	**6V-8398**	1	SEAL-O-RING	
	3	1	**095-1751**	1	SEAL-O-RING	
	4	1	**095-1586**	1	SEAL-O-RING	
M	5	1	**114-0623**	1	NUT AS (M6X1-THD)	

M-METRIC PART

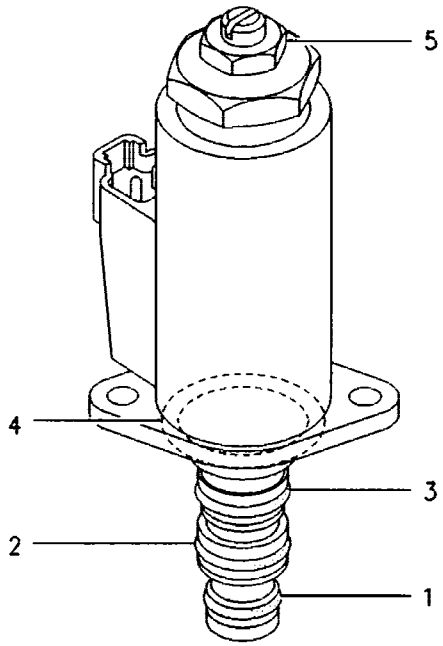

GRAPHIC #1 **<END>** g00258219

111-9916 VALVE GP-SOLENOID

S/N: YEE1-UP
PART OF 215-5002 VALVE GP-MANIFOLD & REDUCING
AN ATTACHMENT
TYPE 2

SMCS-5479 **i01887249**

NOTE	PART NUMBER	QTY	PART NAME 1 2 3 4 5 6 (PRODUCT LEVEL)	SEE PAGE
Y	*114-0615*	1	VALVE GP-SOLENOID	817
			-OR-	
Y	*114-0616*	1	VALVE GP-SOLENOID	818

Y-SEPARATE ILLUSTRATION

<END>

114-0615 VALVE GP-SOLENOID–PRESSURE REDUCING

S/N: YEE1-UP

PART OF 111-9916 VALVE GP-SOLENOID

AN ATTACHMENT

SMCS-5479 **i01819105**

NOTE	REF NO	GRAPHIC REF	PART NUMBER	QTY	PART NAME 1 2 3 4 5 6 (PRODUCT LEVEL)	SEE PAGE
	1	1	**6M-5062**	1	SEAL-O-RING	
	2	1	**4K-2039**	1	SEAL-O-RING	
	3	1	**5L-4758**	1	SEAL-O-RING	
	4	1	**095-1586**	1	SEAL-O-RING	
M	5	1	**114-0623**	1	NUT AS (M6X1-THD)	

M-METRIC PART

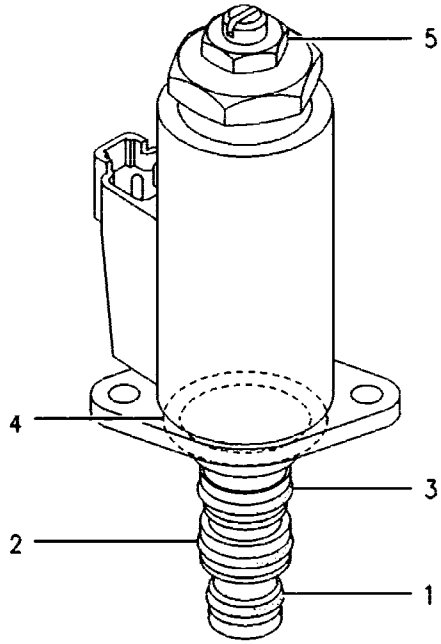

GRAPHIC #1 **<END>** g00258219

114-0616 VALVE GP-SOLENOID

S/N: YEE1-UP

PART OF 111-9916 VALVE GP-SOLENOID

AN ATTACHMENT

SMCS-5479 **i01819108**

NOTE	REF NO	GRAPHIC REF	PART NUMBER	QTY	PART NAME 1 2 3 4 5 6 (PRODUCT LEVEL)	SEE PAGE
	1	1	**095-1750**	1	SEAL-O-RING	
	2	1	**6V-8398**	1	SEAL-O-RING	
	3	1	**095-1751**	1	SEAL-O-RING	
	4	1	**095-1586**	1	SEAL-O-RING	

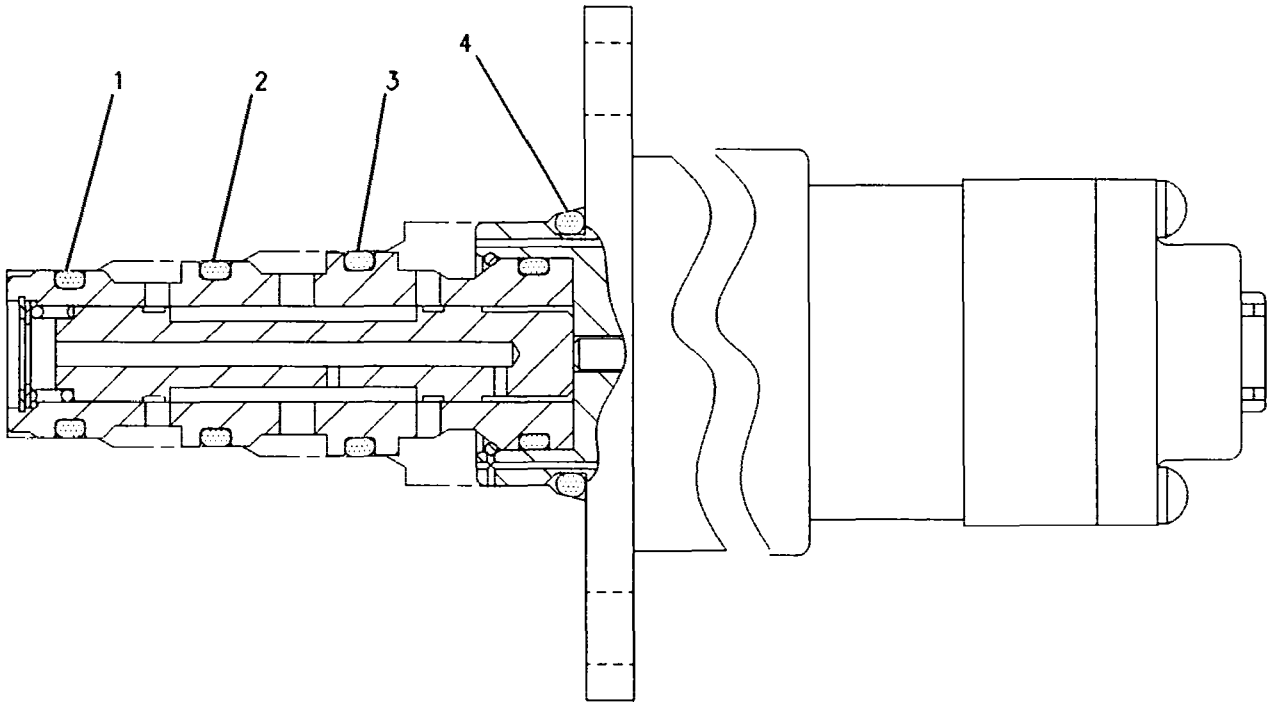

GRAPHIC #1 **<END>** g00928695

116-3526 VALVE GP-SOLENOID–FINE SWING

S/N: YEE1-UP

24-VOLT

PART OF 295-9423 VALVE GP-SWING CUSHION

SMCS-5479 i01819110

NOTE	REF NO	GRAPHIC REF	PART NUMBER	QTY	PART NAME 1 2 3 4 5 6 (PRODUCT LEVEL)	SEE PAGE
	1	1	126-6514	1	SEAL-O-RING	
	2	1	126-6515	1	SEAL-O-RING	
	3	1	126-6516	1	SEAL-O-RING	
	4	1	095-1586	1	SEAL-O-RING	

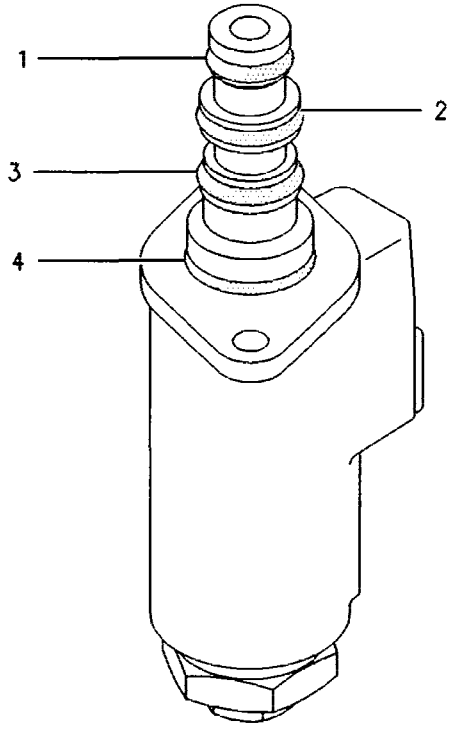

GRAPHIC #1

<END>

g00087220

HYDRAULIC SYSTEM

121-1491 VALVE GP-SOLENOID

S/N: YEE1-UP

PART OF 239-8697, 239-8998 MANIFOLD GP-CONTROL, 254-3080 VALVE GP-COUPLER, 297-0641 VALVE GP-PUMP CONTROL, 242-6880, 258-6749 VALVE GP-SOLENOID

ALSO AN ATTACHMENT

SMCS-5479 **i01819115**

NOTE	REF NO	GRAPHIC REF	PART NUMBER	QTY	PART NAME 1 2 3 4 5 6 (PRODUCT LEVEL)	SEE PAGE
	1	1	**095-1750**	1	SEAL-O-RING	
	2	1	**6V-8398**	1	SEAL-O-RING	
	3	1	**095-1751**	1	SEAL-O-RING	
	4	1	**095-1586**	1	SEAL-O-RING	
M	5	1	**114-0623**	1	NUT AS (M6X1-THD)	

M-METRIC PART

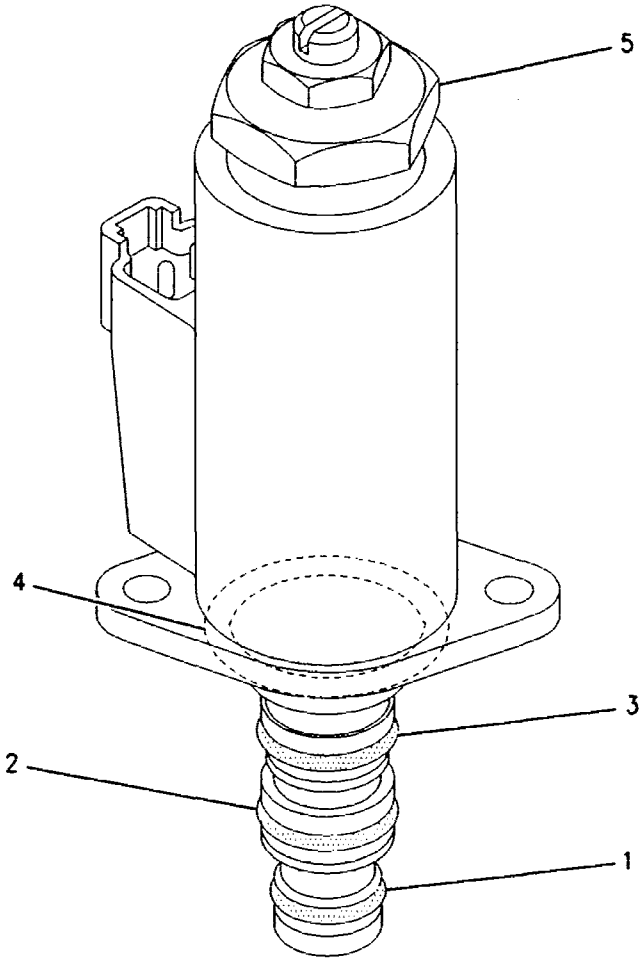

GRAPHIC #1 **<END>** g00928680

HYDRAULIC SYSTEM

121-6303 VALVE GP-SOLENOID

S/N: YEE1-UP

PART OF 227-0460, 302-3143 LINES GP-PILOT

ALSO AN ATTACHMENT

SMCS-5479 **i01573710**

NOTE	REF NO	GRAPHIC REF	PART NUMBER	QTY	PART NAME 1 2 3 4 5 6 (PRODUCT LEVEL)	SEE PAGE
	1	1	**7I-8102**	1	VALVE AS	
	2	1	*121-6304*	1	COIL GP	
M	3	1	**099-0822**	2	BOLT-SOCKET HEAD (M5X0.8X10-MM)	
	4	1	**095-1519**	1	SEAL-O-RING	
	5	1	**7I-0986**	1	PLUG	
	6	1	**7I-7403**	1	SPRING	
	7	1	**095-1578**	1	SEAL-O-RING	

M-METRIC PART

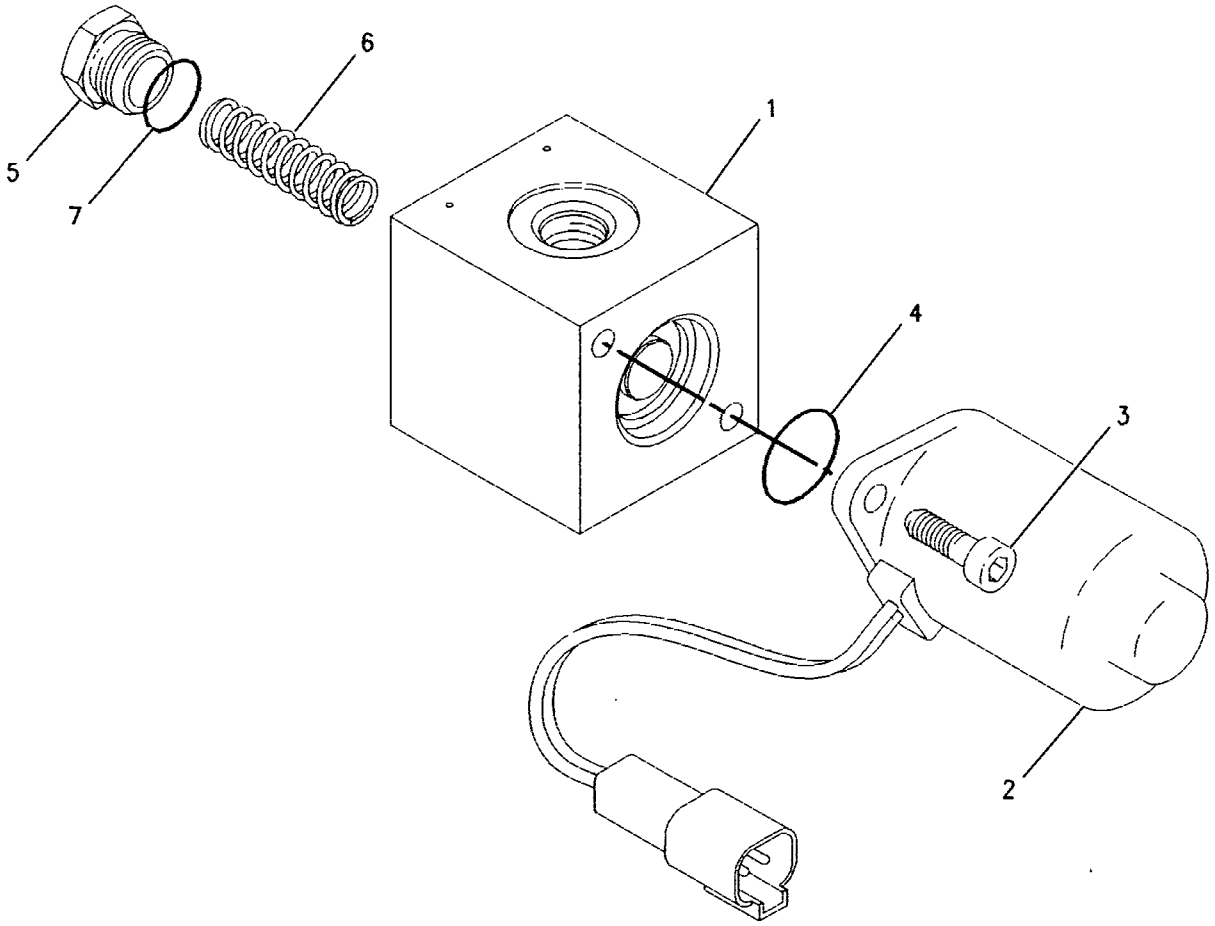

GRAPHIC #1 **<END>** g00685554

HYDRAULIC SYSTEM

171-0188 VALVE GP-SOLENOID

S/N: YEE1-UP

PART OF 302-3097 LINES GP-PILOT

SMCS-5479 **i02882068**

NOTE	REF NO	GRAPHIC REF	PART NUMBER	QTY	PART NAME 1 2 3 4 5 6 (PRODUCT LEVEL)	SEE PAGE
Y	1	1	**111-9916**	1	VALVE GP-SOLENOID	815
M	2	1	**8T-0288**	2	BOLT (M5X0.8X12-MM)	
	3	1	**171-0198**	2	VALVE GP-SHUTTLE	
		1	**185-0407**	1	KIT-SEAL (SHUTTLE VALVE)	
	4	1	**7I-8084**	6	PLUG	

M-METRIC PART
Y-SEPARATE ILLUSTRATION

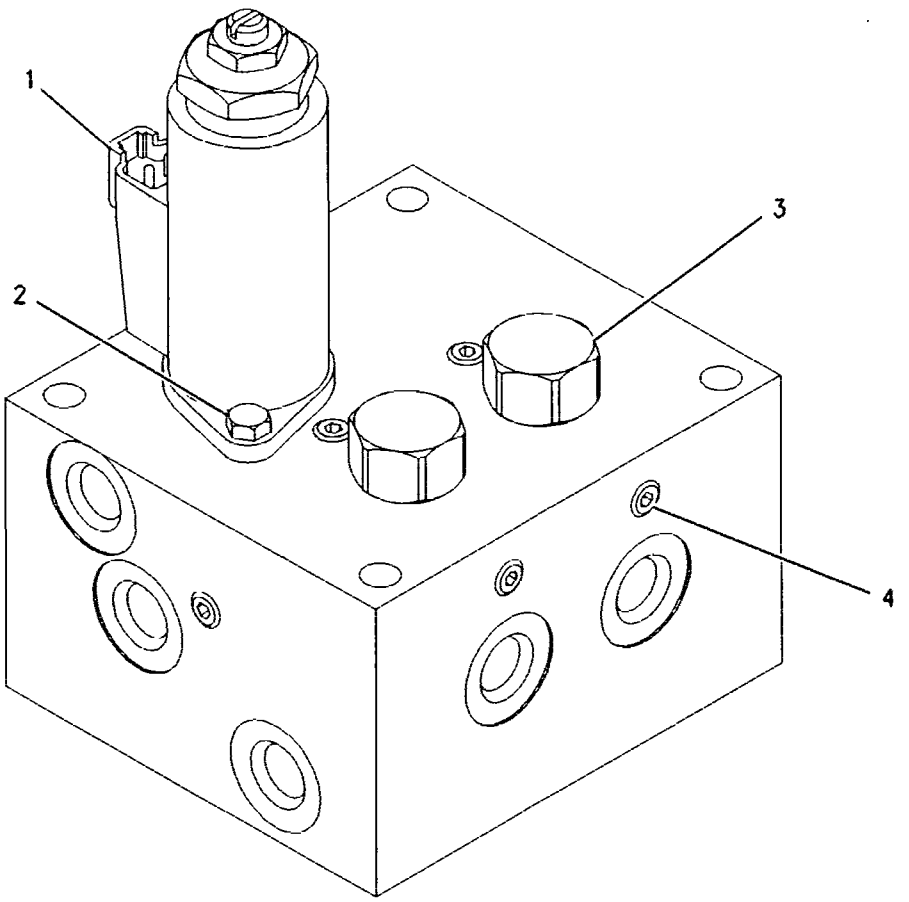

GRAPHIC #1 **<END>** g00681111

HYDRAULIC SYSTEM

185-0472 VALVE GP-SOLENOID

S/N: YEE1-UP

PART OF 302-3142 LINES GP-PILOT

AN ATTACHMENT

SMCS-5479 **i02729465**

NOTE	REF NO	GRAPHIC REF	PART NUMBER	QTY	PART NAME 1 2 3 4 5 6 (PRODUCT LEVEL)	SEE PAGE
	1	1	**185-0473**	1	VALVE GP-CONTROL	
	2	1	**121-6304**	1	COIL GP	
M	3	1	**099-0822**	2	BOLT-SOCKET HEAD (M5X0.8X10-MM)	
	4	1	**095-1519**	1	SEAL-O-RING	
	5	1	**7I-0986**	1	PLUG	
	6	1	**7I-7403**	1	SPRING	
	7	1	**095-1578**	1	SEAL-O-RING	

M-METRIC PART

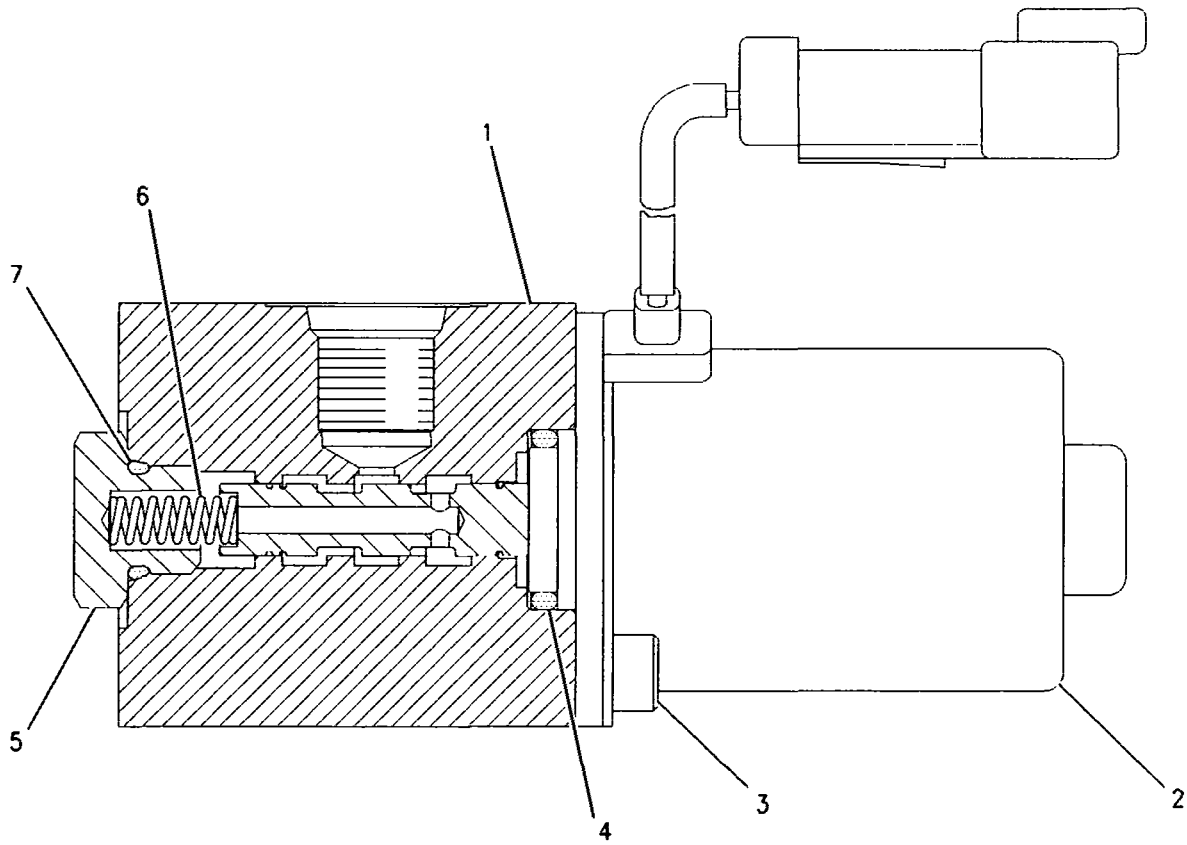

GRAPHIC #1 **<END>** g00804262

HYDRAULIC SYSTEM

225-4518 VALVE GP-SOLENOID

S/N: YEE1-UP

PART OF 295-9663 PUMP GP-PISTON & GEAR

SMCS-5479 **i02854627**

NOTE	REF NO	GRAPHIC REF	PART NUMBER	QTY	PART NAME 1 2 3 4 5 6 (PRODUCT LEVEL)	SEE PAGE
Z	1	1		1	BODY	
M	2	1	**8T-2922**	3	BOLT-SOCKET HEAD (M6X1X65-MM)	
M	3	1	**8T-0288**	2	BOLT (M5X0.8X12-MM)	
	4	1	**110-5525**	1	PLUG	
	5	1	**7I-8084**	11	PLUG	
	6	1	**206-9290**	4	SEAL-O-RING	
	7	1	**153-4906**	1	SEAL-O-RING	
Y	8	1	**225-4558**	1	VALVE GP-SOLENOID	825

M-METRIC PART
Y-SEPARATE ILLUSTRATION
Z-NOT SERVICED SEPARATELY

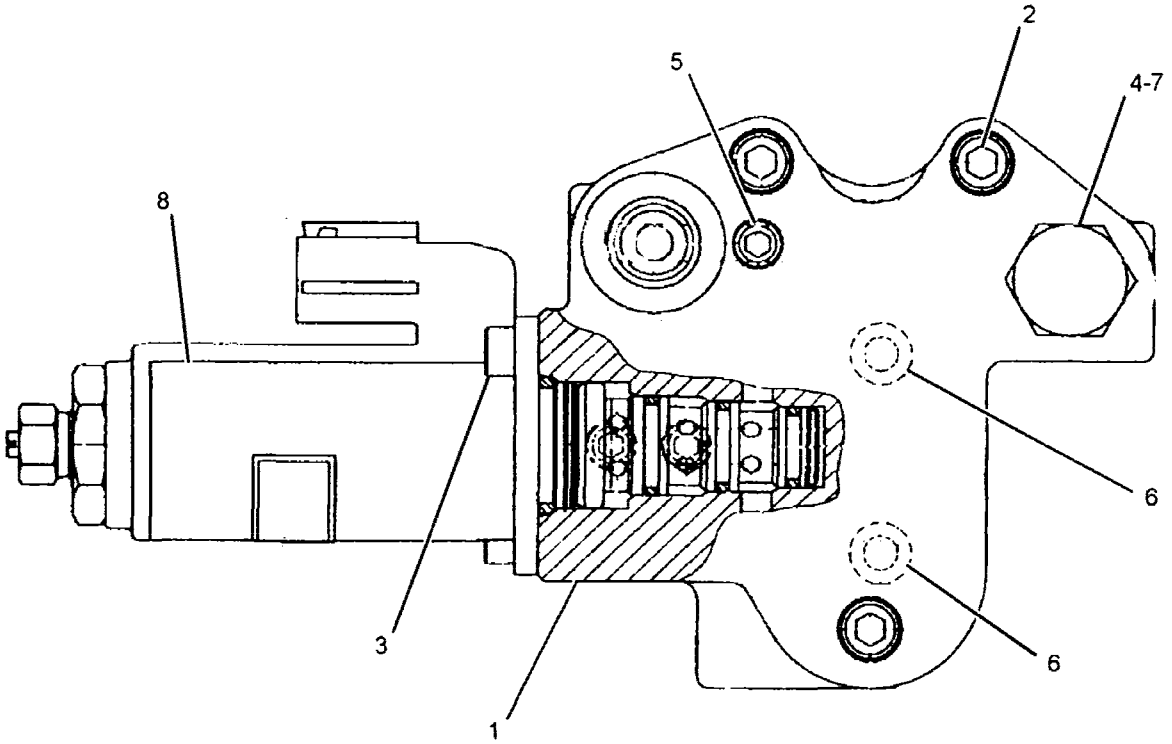

GRAPHIC #1 **<END>** g01098210

HYDRAULIC SYSTEM

225-4558 VALVE GP-SOLENOID

S/N: YEE1-UP

PART OF 225-4518 VALVE GP-SOLENOID

SMCS-5479 **i02159997**

NOTE	REF NO	GRAPHIC REF	PART NUMBER	QTY	PART NAME 1 2 3 4 5 6 (PRODUCT LEVEL)	SEE PAGE
	1	1	**4K-2039**	1	SEAL-O-RING	
	2	1	**5L-4758**	1	SEAL-O-RING	
	3	1	**6M-5062**	1	SEAL-O-RING	
	4	1	**095-1586**	1	SEAL-O-RING	
M	5	1	**114-0623**	1	NUT AS (M6X1-THD)	

M-METRIC PART

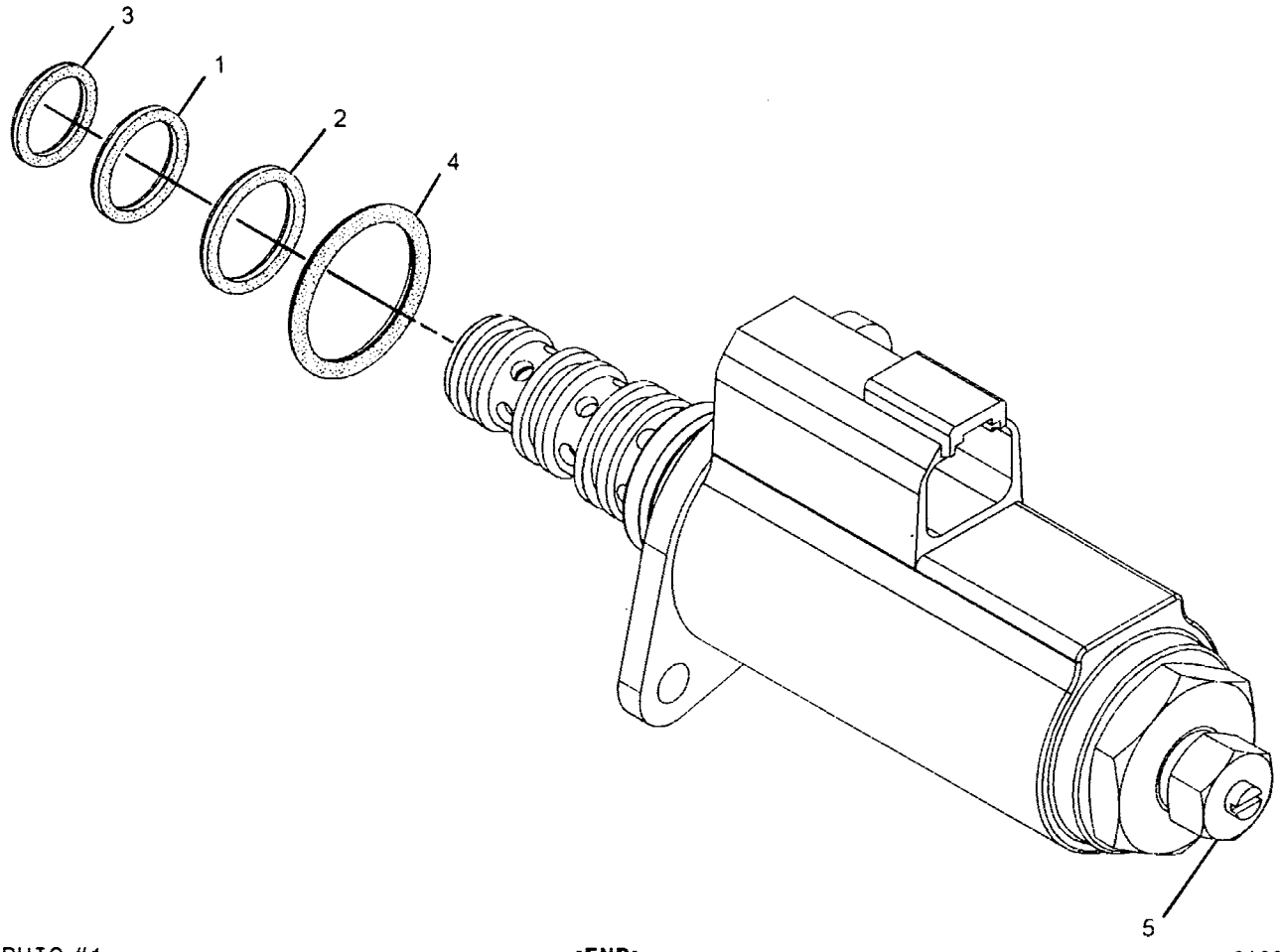

GRAPHIC #1 **<END>** g01098138

HYDRAULIC SYSTEM

242-6880 VALVE GP-SOLENOID

S/N: YEE1-UP
PART OF 292-7175 LINES GP-MOTOR
AN ATTACHMENT

SMCS-5479 **i02854667**

NOTE	REF NO	GRAPHIC REF	PART NUMBER	QTY	PART NAME 1 2 3 4 5 6 (PRODUCT LEVEL)	SEE PAGE
Y	1	1	**121-1491**	1	VALVE GP-SOLENOID	820
	2	1	**242-6893**	1	BLOCK	
	3	1	**4J-7533**	3	SEAL-O-RING	
M	4	1	**7I-2272**	2	BOLT (M5X0.8X12-MM)	
	5	1	**9S-8001**	3	PLUG-O-RING	

M-METRIC PART
Y-SEPARATE ILLUSTRATION

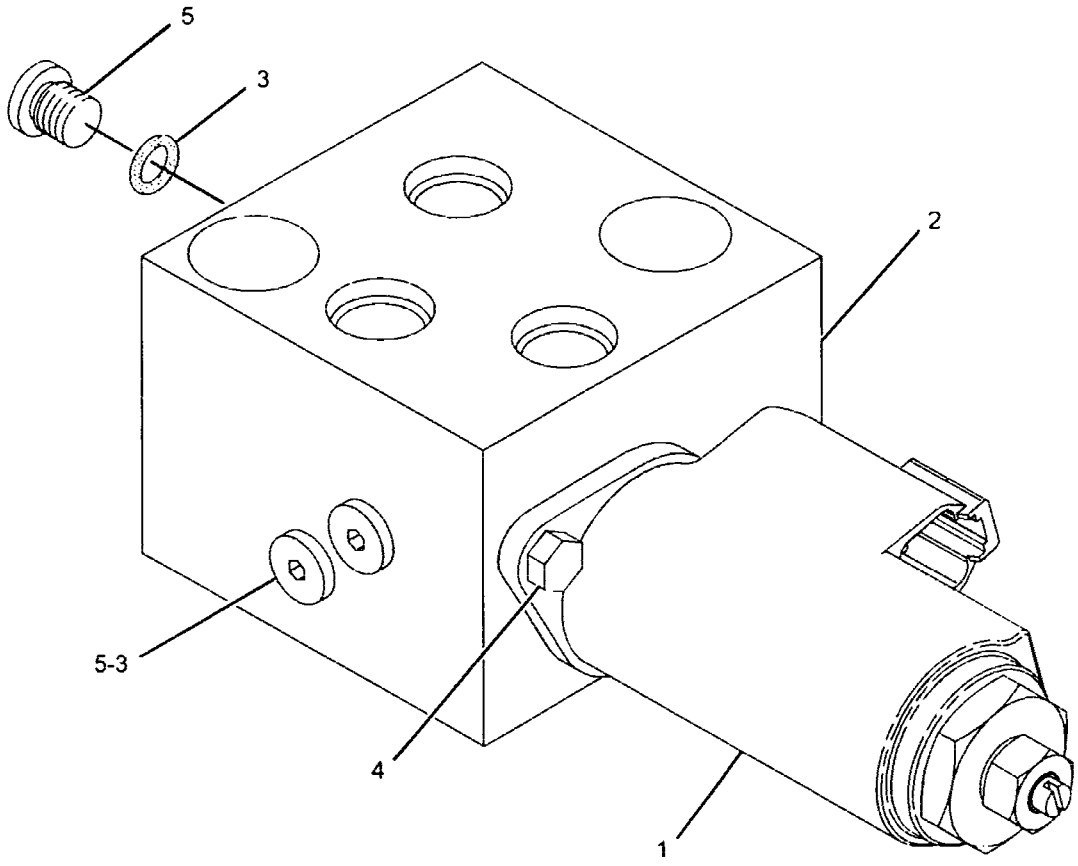

GRAPHIC #1 **<END>** g01084421

HYDRAULIC SYSTEM

258-6749 VALVE GP-SOLENOID

S/N: YEE1-UP
PART OF 296-7133 LINES GP-FRONT
AN ATTACHMENT

SMCS-5479 **i02477396**

NOTE	REF NO	GRAPHIC REF	PART NUMBER	QTY	PART NAME 1 2 3 4 5 6 (PRODUCT LEVEL)	SEE PAGE
Y	1	1	**121-1491**	1	VALVE GP-SOLENOID (QUICK COUPLER PIN)	820
Z	2	1		1	BODY-VALVE	
M	3	1	**8T-0288**	2	BOLT (M5X0.8X12-MM)	

M-METRIC PART
Y-SEPARATE ILLUSTRATION
Z-NOT SERVICED SEPARATELY

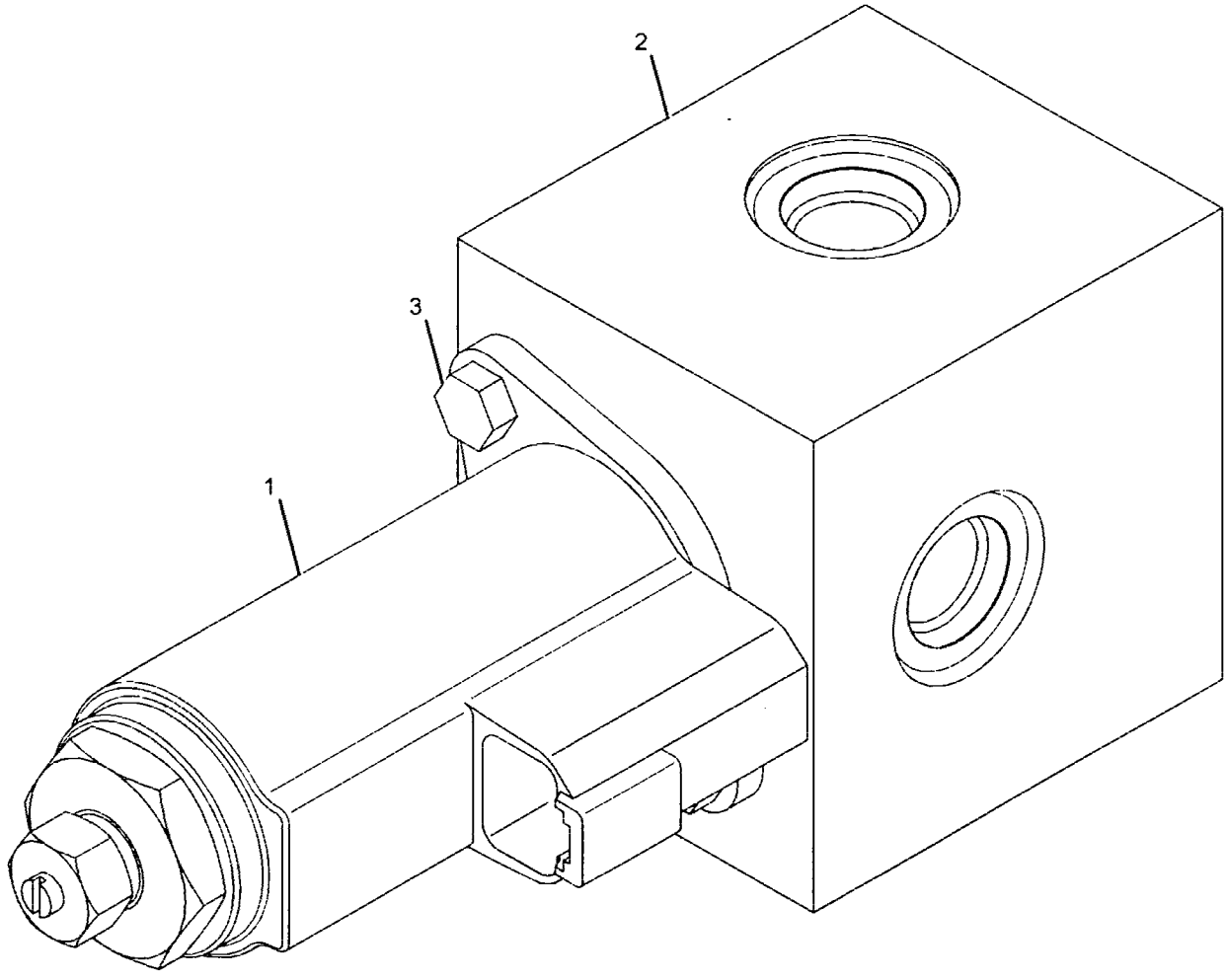

GRAPHIC #1 **<END>** g01137453

HYDRAULIC SYSTEM

259-7430 VALVE GP-SOLENOID

S/N: YEE1-UP

PART OF 296-7127, 296-7128, 302-3143, 302-3148 LINES GP-PILOT AN ATTACHMENT

SMCS-5479 **i02784408**

NOTE	REF NO	GRAPHIC REF	PART NUMBER	QTY	PART NAME 1 2 3 4 5 6 (PRODUCT LEVEL)	SEE PAGE
M	1	1	**8T-0288**	4	BOLT (M5X0.8X12-MM)	
Y	2	1	**111-9916**	2	VALVE GP-SOLENOID	815

M-METRIC PART
Y-SEPARATE ILLUSTRATION

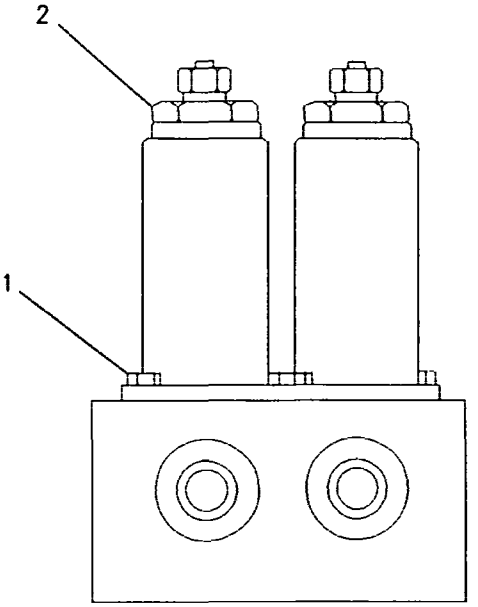

GRAPHIC #1 **<END>** g00785417

HYDRAULIC SYSTEM

297-0370 VALVE GP-SOLENOID

S/N: YEE1-UP

PART OF 292-7169, 296-7131 LINES GP-FRONT, 302-3141 LINES GP-RETURN

AN ATTACHMENT

SMCS-5479 **i02862729**

NOTE	REF NO	GRAPHIC REF	PART NUMBER	QTY	PART NAME 1 2 3 4 5 6 (PRODUCT LEVEL)	SEE PAGE
	1	1	095-1585	1	SEAL-O-RING	
	2	1	225-4804	3	PLUG	
	3	1	4J-7533	3	SEAL-O-RING	
	4	1	095-1602	1	SEAL-O-RING	
	5	1	232-4113	1	RING	
	6	1	095-1601	1	SEAL-O-RING	
	7	1	8T-3008	1	RING-BACKUP	
	8	1	095-1700	1	SEAL-O-RING	
	9	1	7M-8485	1	SEAL-O-RING	
	10	1	095-1657	1	SEAL-O-RING	
	11	1	232-4114	2	RING	

297-0370 VALVE GP-SOLENOID *(contd.)* i02862729

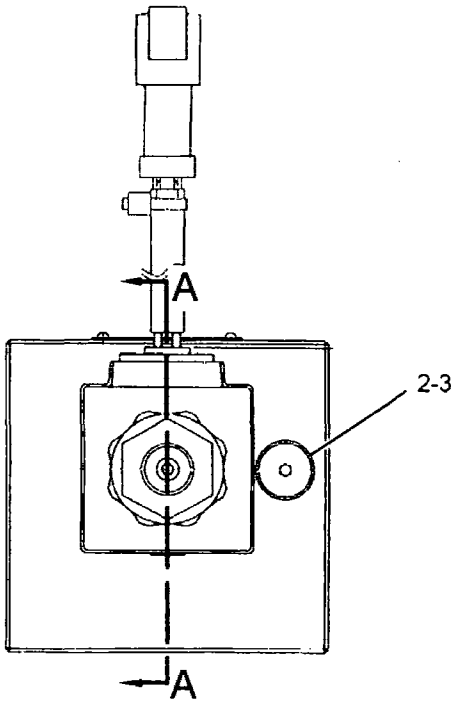

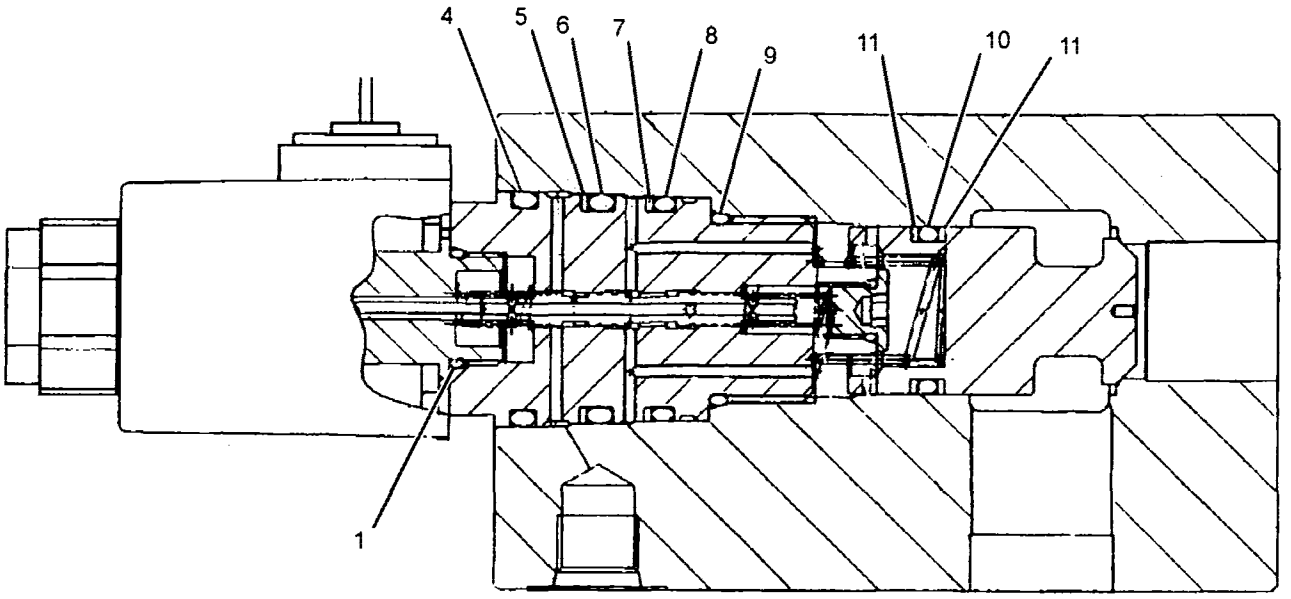

SECTION A-A

GRAPHIC #1 **<END>** g01382946

HYDRAULIC SYSTEM

260-3877 VALVE GP-SOLENOID & MANIFOLD

S/N: YEE1-UP
PART OF 227-0461 LINES GP-PILOT
AN ATTACHMENT

SMCS-5264, 5479 **i02730932**

NOTE	REF NO	GRAPHIC REF	PART NUMBER	QTY	PART NAME 1 2 3 4 5 6 (PRODUCT LEVEL)	SEE PAGE
Z	1	1		1	MANIFOLD	
J	2	1	**260-3876**	1	VALVE GP-SOLENOID (QUICK COUPLER)	
		1	**156-5970**	1	NUT (1/2-20-2B-THD)	
		1	**260-3883**	1	COIL AS-SOLENOID	
		1	**1S-9593**	2	STRAP-CABLE	
		1	**186-3735**	2	PIN-CONNECTOR (16-GA TO 18-GA)	
					AVAILABLE REPAIR KIT(S):	
J			**268-8209**	1	KIT-SEAL (QUICK COUPLER SOLENOID)	
					(INCLUDES RINGS AND SEALS)	

J-KIT MARKED J SERVICES PART MARKED J
Z-NOT SERVICED SEPARATELY

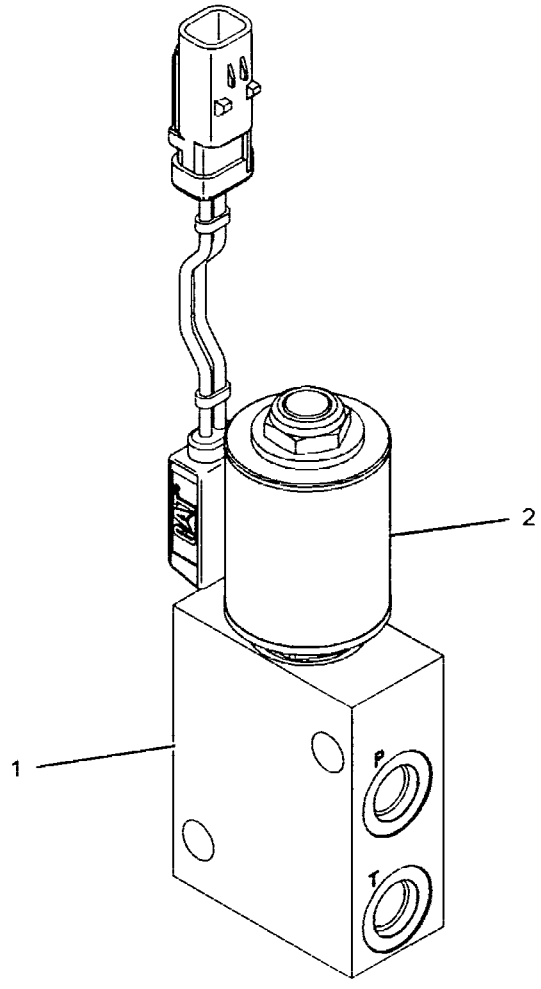

GRAPHIC #1 **<END>** g01186590

HYDRAULIC SYSTEM

297-0500 VALVE GP-SOLENOID & PRESS REDC

S/N: YEE1-UP

PART OF 310-0150 VALVE GP-LOAD CONTROL, 310-0147, 310-0149 VALVE GP-PILOT

ALSO AN ATTACHMENT

SMCS-5467, 5479 **i02842051**

NOTE	REF NO	GRAPHIC REF	PART NUMBER	QTY	PART NAME 1 2 3 4 5 6 (PRODUCT LEVEL)	SEE PAGE
M	1	1	**114-0623**	1	NUT AS (M6X1-THD)	
	2	1	**095-1586**	1	SEAL-O-RING	
	3	1	**095-1751**	1	SEAL-O-RING	
	4	1	**6V-8398**	1	SEAL-O-RING	
	5	1	**7J-9108**	1	SEAL-O-RING	

M-METRIC PART

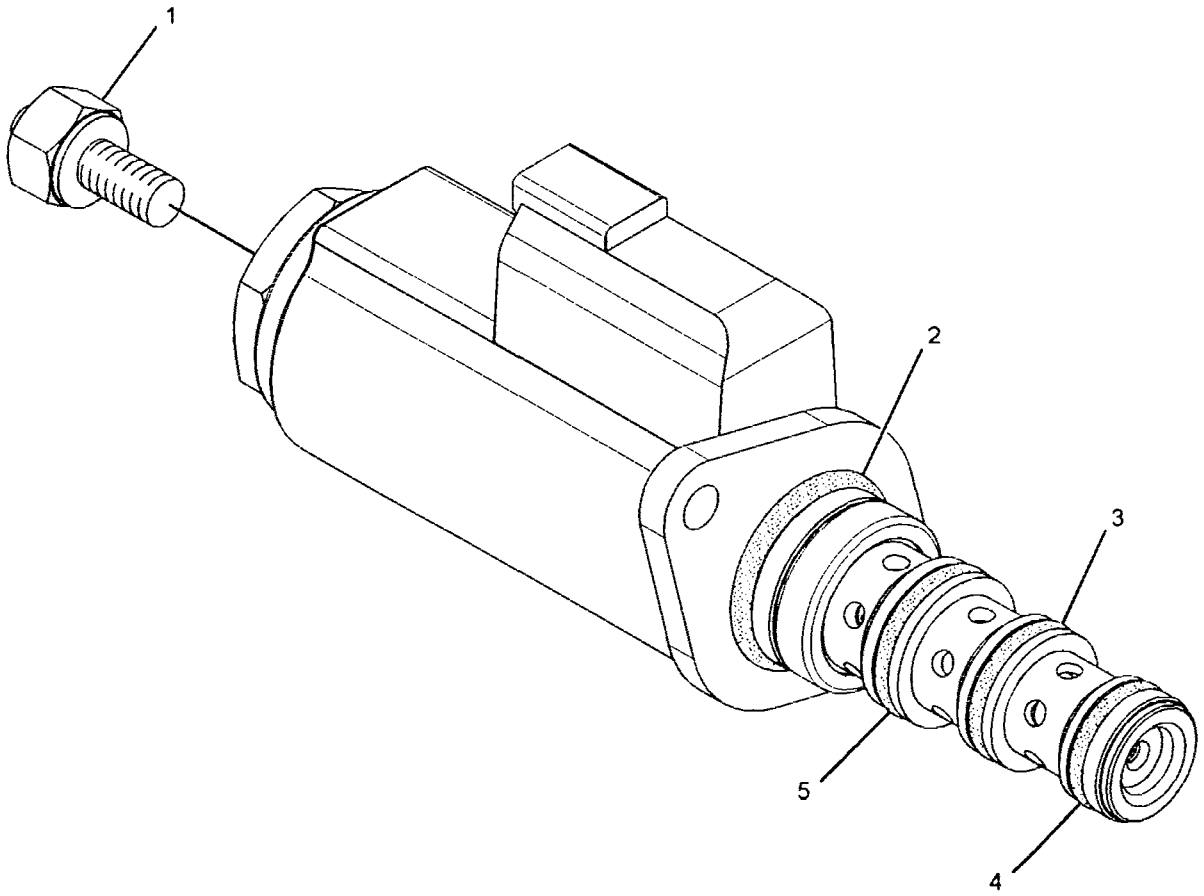

GRAPHIC #1 **<END>** g01458593

HYDRAULIC SYSTEM

295-9423 VALVE GP-SWING CUSHION

S/N: YEE1-241

PART OF 292-7162 LINES GP-SWING MOTOR

SMCS-5480 **i02839822**

NOTE	REF NO	GRAPHIC REF	PART NUMBER	QTY	PART NAME 1 2 3 4 5 6 (PRODUCT LEVEL)	SEE PAGE
	1	1	**114-0550**	1	VALVE GP-RELIEF (CUSHION CROSSOVER)	
	2	1	**095-1785**	2	RING-BACKUP	
	3	1	**095-1576**	1	SEAL-O-RING	
	4	1	**133-6788**	2	ORIFICE	
	5	1	**8T-6759**	6	PLUG-PIPE	
M	6	1	**8T-0288**	2	BOLT (M5X0.8X12-MM)	
Y	7	1	**116-3526**	1	VALVE GP-SOLENOID (24-VOLT)	819
	8	1	**095-1698**	2	SEAL-O-RING	
	9	1	**095-1586**	2	SEAL-O-RING	

M-METRIC PART
Y-SEPARATE ILLUSTRATION

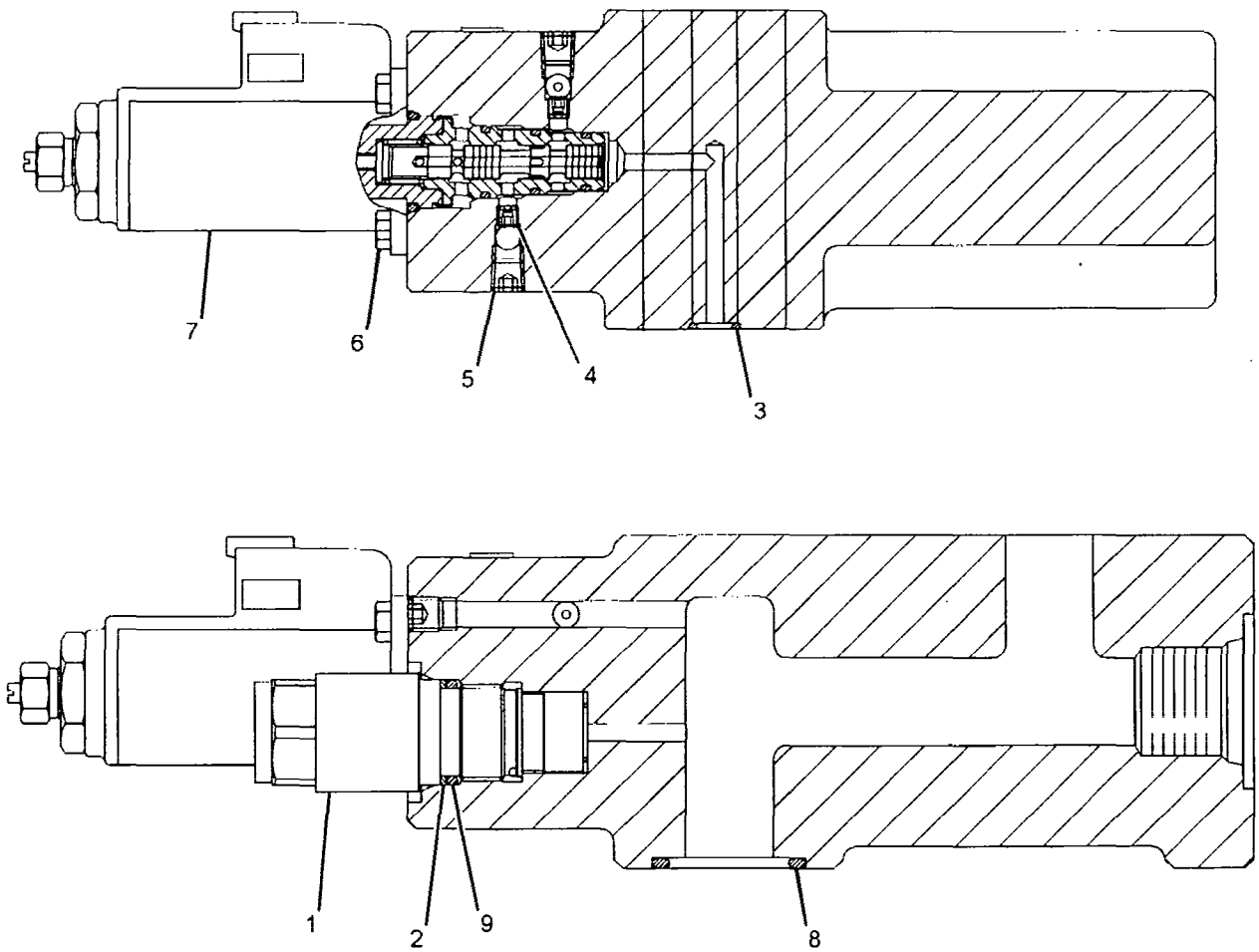

GRAPHIC #1 **<END>** g01436788

HYDRAULIC SYSTEM

295-9423 VALVE GP-SWING CUSHION

S/N: YEE242-UP

PART OF 292-7162 LINES GP-SWING MOTOR

SMCS-5480 **i02881358**

NOTE	REF NO	GRAPHIC REF	PART NUMBER	QTY	PART NAME 1 2 3 4 5 6 (PRODUCT LEVEL)	SEE PAGE
	1	1	**114-0550**	1	VALVE GP-RELIEF (CUSHION CROSSOVER)	
	2	1	**095-1785**	2	RING-BACKUP	
	3	1	**095-1576**	1	SEAL-O-RING	
C	4	1	**315-4413**	2	ORIFICE	
	5	1	**8T-6759**	6	PLUG-PIPE	
M	6	1	**8T-0288**	2	BOLT (M5X0.8X12-MM)	
C	7	1	**315-4412**	1	VALVE GP-SOLENOID (FINE SWING)	
		1	**095-1586**	1	SEAL-O-RING	
		1	**126-6514**	1	SEAL-O-RING	
		1	**126-6515**	1	SEAL-O-RING	
		1	**126-6516**	1	SEAL-O-RING	
	8	1	**095-1698**	2	SEAL-O-RING	
	9	1	**095-1586**	2	SEAL-O-RING	

C-CHANGE FROM PREVIOUS TYPE
M-METRIC PART

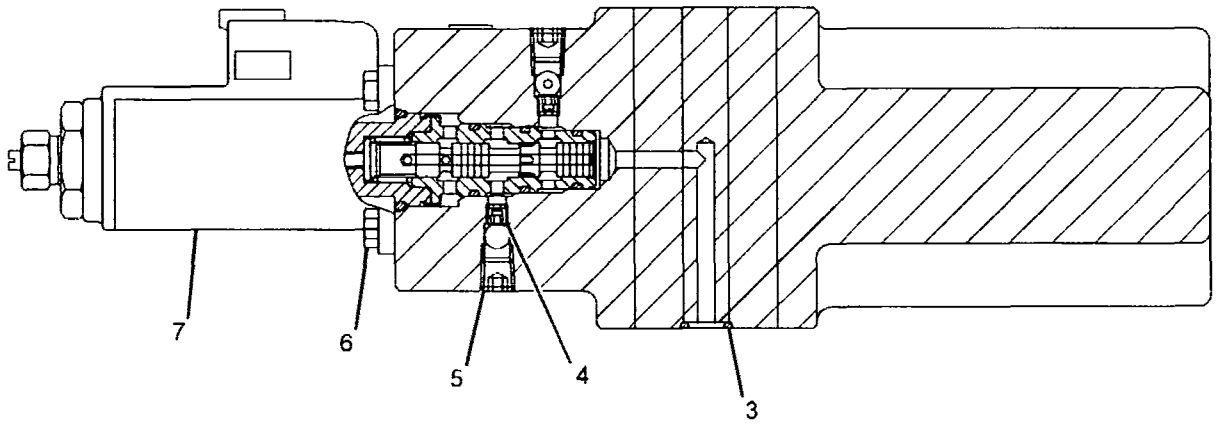

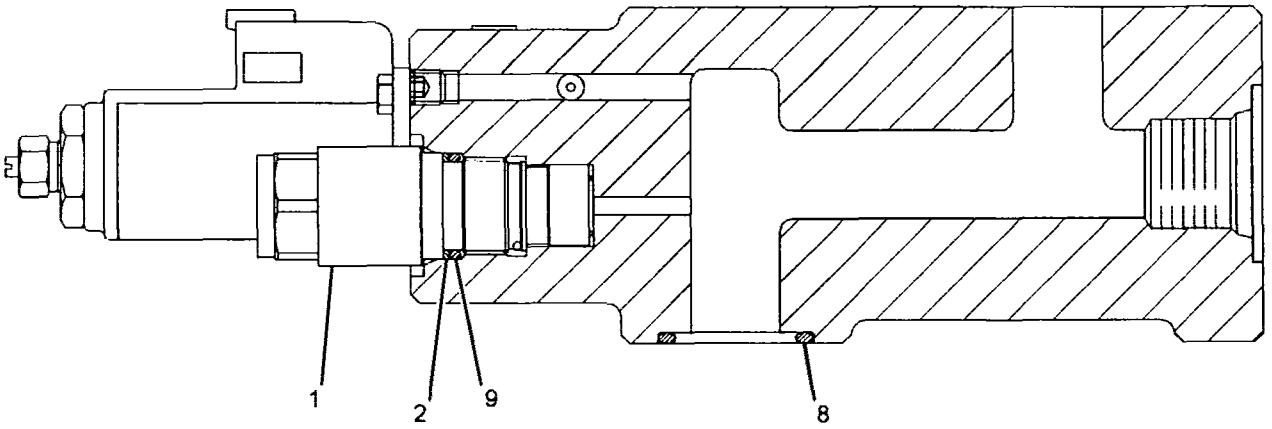

GRAPHIC #1 **<END>** g01436788

HYDRAULIC SYSTEM

266-7843 VALVE GP-TRAVEL COUNTERBALANCE

S/N: YEE1-UP

PART OF 302-3185 LINES GP-TRAVEL MOTOR

SMCS-5811 **i02637748**

NOTE	REF NO	GRAPHIC REF	PART NUMBER	QTY	PART NAME 1 2 3 4 5 6 (PRODUCT LEVEL)	SEE PAGE
	1	1	**116-3510**	2	PLUG	
J	2	1	**095-1592**	2	SEAL-O-RING	
	3	1	**173-3524**	2	SPRING	
	4	1	**173-3527**	2	SEAT	
	5	1	**150-5733**	2	PLUG	
	6	1	**116-3504**	2	ORIFICE	
Y	7	1	**191-5700**	2	VALVE GP-PILOT RELIEF	794
	8	1	**110-5525**	2	PLUG	
J	9	1	**3J-1907**	2	SEAL-O-RING	
M	10	1	**3E-6910**	8	BOLT-SOCKET HEAD (M12X1.75X70-MM)	
J	11	1	**095-1582**	1	SEAL-O-RING	
	12	1	**116-3500**	1	PLUG	
	13	1	**116-3501**	1	SLEEVE	
	14	1	**116-3503**	1	SPRING	
	15	1	**173-3520**	1	VALVE AS	
	16	1	**095-1575**	2	SEAL-O-RING	
	17	1	**173-3522**	2	VALVE	
J	18	1	**095-1750**	2	SEAL-O-RING	
	19	1	**134-7515**	4	PLUG	
	20	1	**7I-7586**	2	SEAT-SPRING	
J	21	1	**032-9882**	2	SEAL-O-RING	
	22	1	**173-3523**	2	SPRING	
	23	1	**165-9242**	2	COVER	
J	24	1	**095-1701**	2	SEAL-O-RING	
					AVAILABLE REPAIR KIT(S):	
J			**177-2626**	1	KIT-SEAL (COUNTERBALANCE VALVE)	

J-KIT MARKED J SERVICES PARTS MARKED J
M-METRIC PART
Y-SEPARATE ILLUSTRATION

266-7843 VALVE GP-TRAVEL COUNTERBALANCE *(contd.)* i02637748

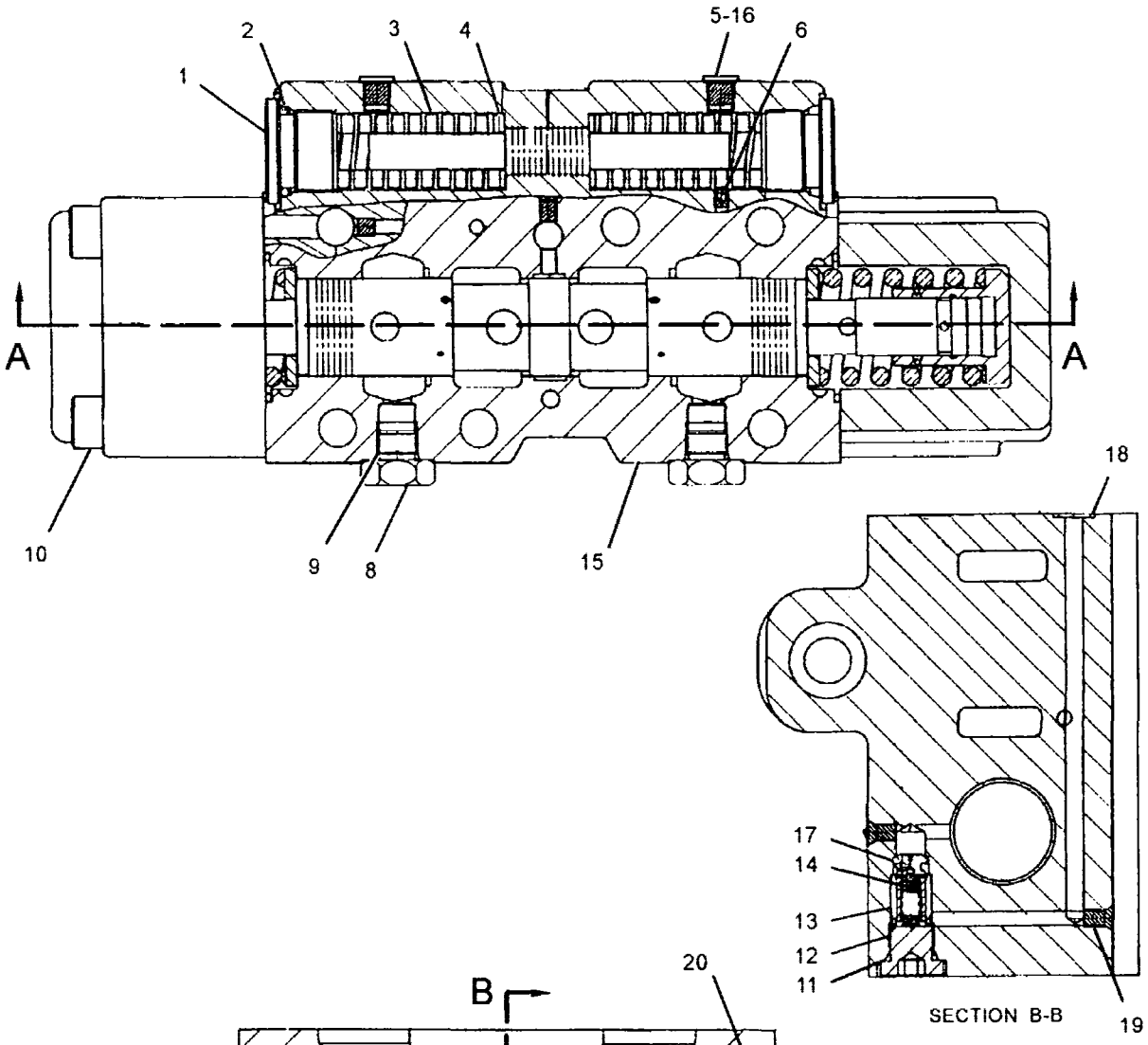

GRAPHIC #1 **<END>** g01176904

IMPLEMENTS

294-1247 BOOM AR-LONG REACH

S/N: YEE1-UP
7.4-M (24.3-FT) LONG
AN ATTACHMENT

SMCS-6501, 7000 **i02861062**

NOTE	PART NUMBER	QTY	PART NAME 1 2 3 4 5 6 (PRODUCT LEVEL)	SEE PAGE
Y	241-7358	1	BOOM GP	842
Y	289-7844	1	CYLINDER & LINES GP-BOOM (LH)	455
Y	289-7845	1	CYLINDER & LINES GP-BOOM (RH)	455
Y	225-4524	1	CYLINDER & LINES GP-STICK	456
Y	238-2188	1	LIGHTING GP-FLOOD	189
Y	245-4930	1	LINES GP-BOOM	540
Y	241-7363	1	LINES GP-GREASE	849

Y-SEPARATE ILLUSTRATION

<END>

294-1252 BOOM AR-MASS–HEAVY-DUTY

S/N: YEE1-UP
6.6-M (21.6-FT)
AN ATTACHMENT

SMCS-6501, 7000 **i02861068**

NOTE	PART NUMBER	QTY	PART NAME 1 2 3 4 5 6 (PRODUCT LEVEL)	SEE PAGE
Y	235-7721	1	BOOM GP	840
Y	289-7844	1	CYLINDER & LINES GP-BOOM (LH)	455
Y	289-7845	1	CYLINDER & LINES GP-BOOM (RH)	455
Y	225-4524	1	CYLINDER & LINES GP-STICK	456
Y	238-2157	1	LIGHTING GP-FLOOD (BOOM)	187
Y	248-9445	1	LINES GP-BOOM	547
Y	127-1347	1	LINES GP-GREASE	848

Y-SEPARATE ILLUSTRATION

<END>

294-1250 BOOM AR-REACH–HEAVY-DUTY

S/N: YEE1-UP
FOR USE WITH 294-1258–PAGE 862
AN ATTACHMENT

SMCS-7000 **i02861067**

NOTE	PART NUMBER	QTY	PART NAME 1 2 3 4 5 6 (PRODUCT LEVEL)	SEE PAGE
Y	228-5418	1	BOOM GP	838
Y	289-7844	1	CYLINDER & LINES GP-BOOM (LH)	455
Y	289-7845	1	CYLINDER & LINES GP-BOOM (RH)	455
Y	225-4524	1	CYLINDER & LINES GP-STICK	456
Y	238-2157	1	LIGHTING GP-FLOOD (BOOM)	187
Y	245-5317	1	LINES GP-BOOM	542
Y	127-1343	1	LINES GP-GREASE	847

Y-SEPARATE ILLUSTRATION

<END>

IMPLEMENTS

228-5418 BOOM GP

S/N: YEE1-UP
6.9-M (22.6-FT)
PART OF 294-1250 BOOM AR-REACH
AN ATTACHMENT

SMCS-6301, 6302, 6460, 6501, 6516, 6521, 6535, 6536 **i02155156**

NOTE	REF NO	GRAPHIC REF	PART NUMBER	QTY	PART NAME 1 2 3 4 5 6 (PRODUCT LEVEL)	SEE PAGE
	1	1	3B-8489	1	FITTING-GREASE	
	2	1	9X-4600	2	SEAL-LIP TYPE	
B	3	1	093-0090	2	SHIM (1-MM THK)	
B	4	1	093-0122	1	SHIM (2-MM THK)	
	5	1	093-0349	1	WASHER (22X60X6-MM THK)	
	6	1	093-0364	1	SPACER (103X140X12-MM THK)	
	7	1	130-4360	1	PIN AS	
B	8	1	133-2427	1	SHIM (0.5-MM THK)	
	9	1	148-3391	1	PIN	
	10	1	201-2771	1	WASHER (26X90X8-MM THK)	
	11	1	228-5419	1	BOOM & BEARING AS	
	11A	1	228-5622	2	BEARING-SLEEVE	
	12	1	235-7567	1	PIN AS	
B	13	1	093-0074	2	SHIM (1-MM THK)	
B	14	1	093-0106	1	SHIM (2-MM THK)	
	15	1	103-5246	1	SPACER (123X150X14-MM THK)	
B	16	1	147-3957	1	SHIM (0.5-MM THK)	
	17	1	4I-4978	2	SPACER (113X150X8-MM THK)	
	18	1	4I-5005	2	PLATE	
M	19	1	7X-2573	1	BOLT (M24X3X40-MM)	
	20	1	8D-5054	6	WASHER-HARD (17X30X3-MM THK)	
	21	1	8T-4123	1	WASHER (22X35X3.5-MM THK)	
	22	1	8T-4167	1	WASHER-HARD (26X44X4-MM THK)	
M	23	1	8T-4779	6	BOLT (M16X2X35-MM)	
M	24	1	8T-4780	1	BOLT (M20X2.5X30-MM)	
	25	1	8T-6764	1	PLUG-PIPE	

B-USE AS REQUIRED
M-METRIC PART

228-5418 **BOOM GP** *(contd.)* **i02155156**

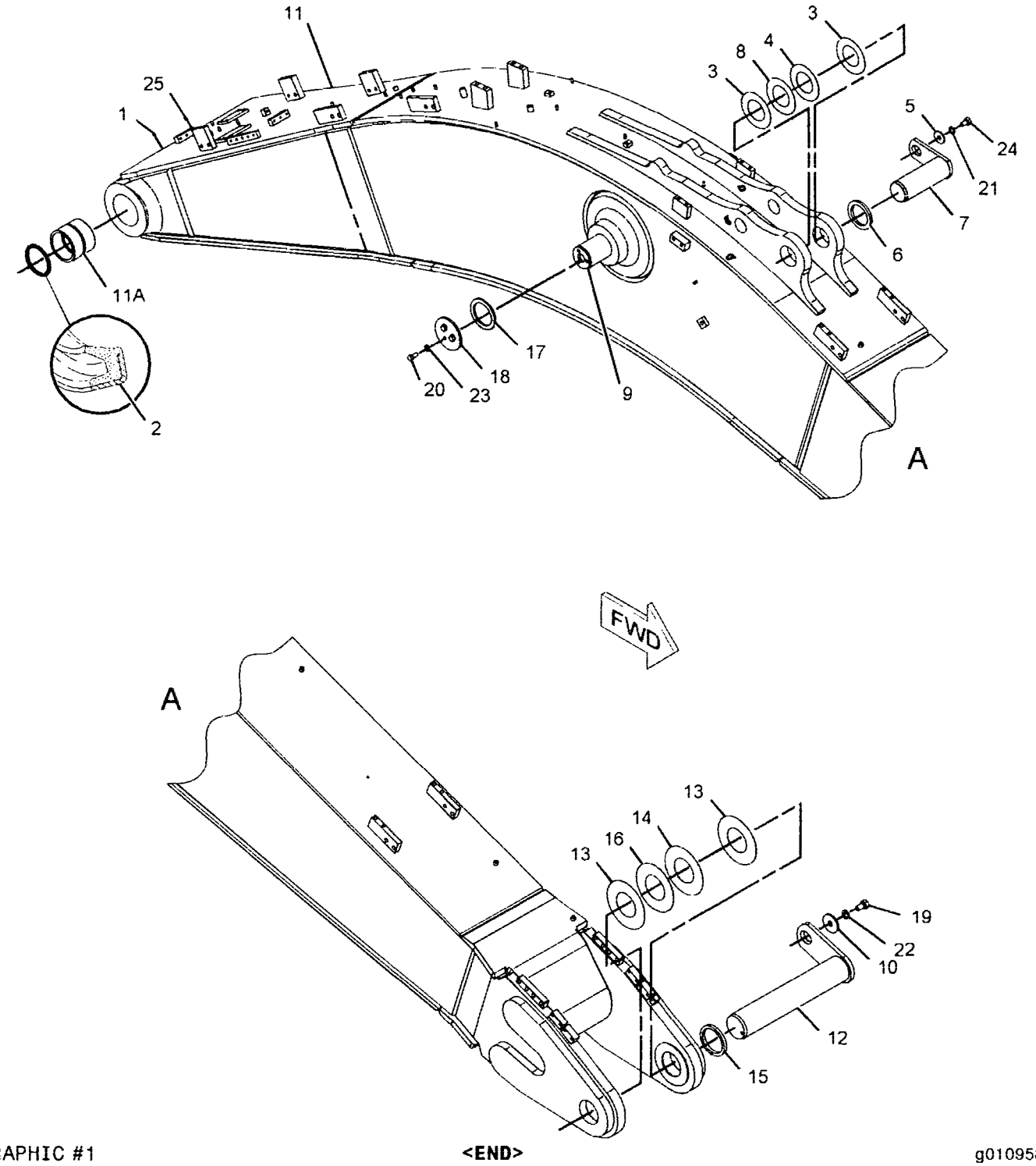

GRAPHIC #1 **<END>** g01095849

IMPLEMENTS

235-7721 BOOM GP–MASS

S/N: YEE1-UP
6.6-M (21.6-FT)
PART OF 294-1252 BOOM AR-MASS
AN ATTACHMENT

SMCS-6301, 6302, 6460, 6501, 6516, 6521, 6535, 6536 **i02155164**

NOTE	REF NO	GRAPHIC REF	PART NUMBER	QTY	PART NAME 1 2 3 4 5 6 (PRODUCT LEVEL)	SEE PAGE
	1	1	3B-8489	1	FITTING-GREASE	
	2	1	9X-4600	2	SEAL-LIP TYPE	
B	3	1	093-0090	2	SHIM (1-MM THK)	
B	4	1	093-0122	1	SHIM (2-MM THK)	
	5	1	093-0349	1	WASHER (22X60X6-MM THK)	
	6	1	093-0364	1	SPACER (103X140X12-MM THK)	
B	7	1	133-2427	1	SHIM (0.5-MM THK)	
	8	1	134-9031	1	PIN AS	
	9	1	148-3391	1	PIN	
	10	1	201-2771	1	WASHER (26X90X8-MM THK)	
	11	1	235-7722	1	BOOM & BEARING AS	
		1	228-5622	2	BEARING-SLEEVE	
	12	1	235-7736	1	PIN AS	
B	13	1	093-0074	2	SHIM (1-MM THK)	
B	14	1	093-0106	1	SHIM (2-MM THK)	
	15	1	103-5246	1	SPACER (123X150X14-MM THK)	
B	16	1	147-3957	1	SHIM (0.5-MM THK)	
	17	1	4I-4978	2	SPACER (113X150X8-MM THK)	
	18	1	4I-5005	2	PLATE	
M	19	1	7X-2573	1	BOLT (M24X3X40-MM)	
	20	1	8D-5054	6	WASHER-HARD (17X30X3-MM THK)	
	21	1	8T-4123	1	WASHER (22X35X3.5-MM THK)	
	22	1	8T-4167	1	WASHER-HARD (26X44X4-MM THK)	
M	23	1	8T-4779	6	BOLT (M16X2X35-MM)	
M	24	1	8T-4780	1	BOLT (M20X2.5X30-MM)	
	25	1	8T-6764	1	PLUG-PIPE	

B-USE AS REQUIRED
M-METRIC PART

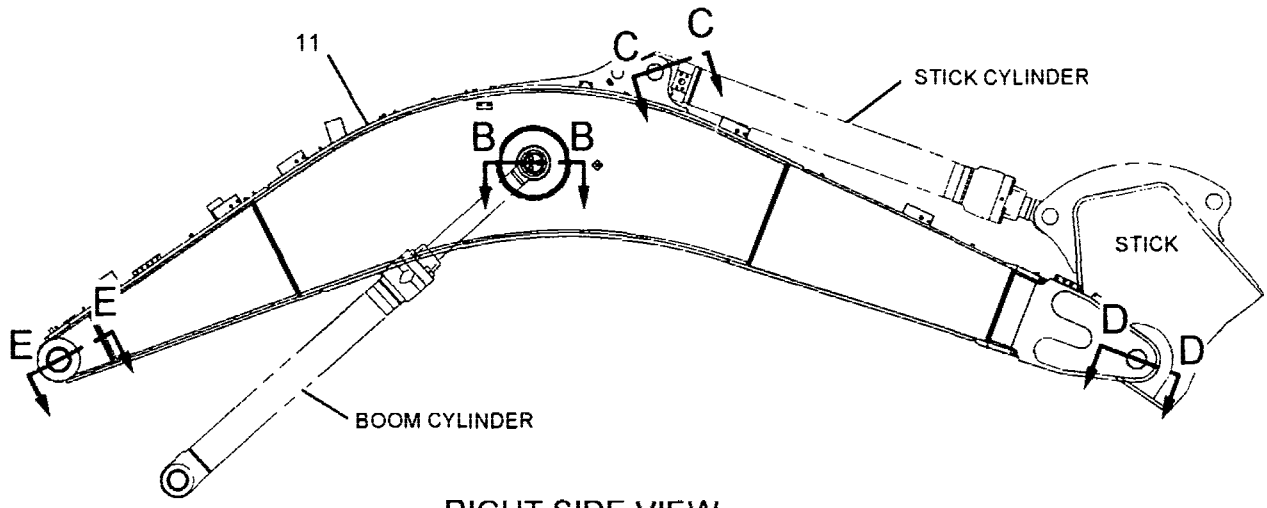

RIGHT SIDE VIEW

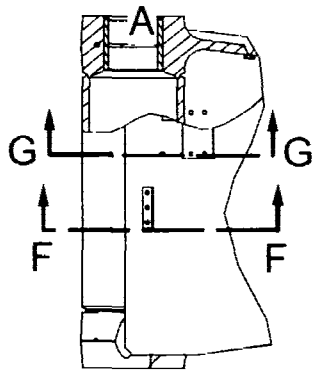

SECTION E-E

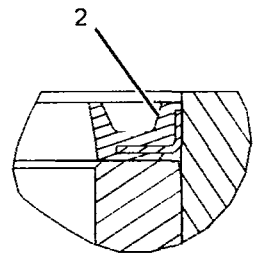

VIEW OF AREA A

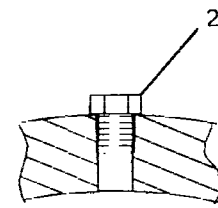

SECTION G-G

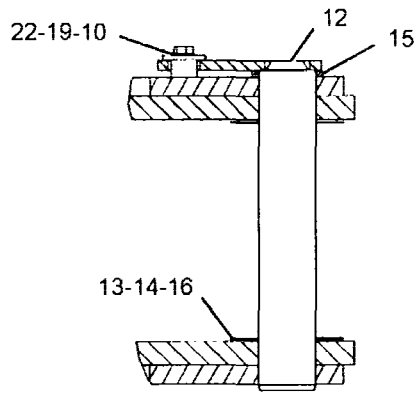

SECTION D-D

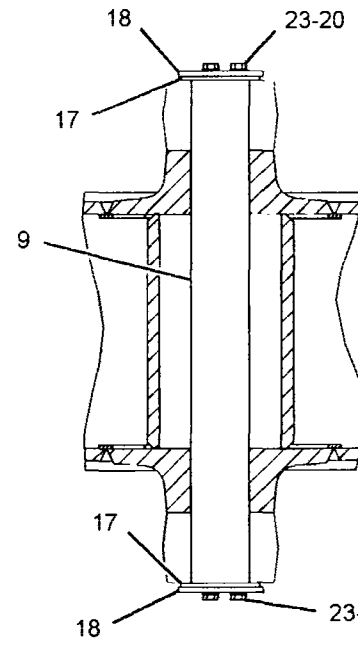

SECTION B-B

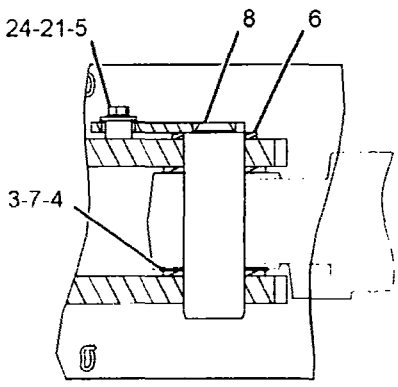

SECTION C-C

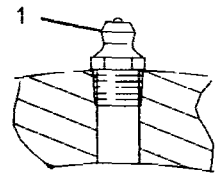

SECTION F-F

GRAPHIC #1

<END>

g01099285

IMPLEMENTS

241-7358 BOOM GP

S/N: YEE1-UP
7.4-M (24.3-FT)
PART OF 294-1247 BOOM AR-LONG REACH
AN ATTACHMENT

SMCS-6301, 6302, 6460, 6501, 6516, 6521, 6535, 6536 **i02155645**

NOTE	REF NO	GRAPHIC REF	PART NUMBER	QTY	PART NAME 1 2 3 4 5 6 (PRODUCT LEVEL)	SEE PAGE
	1	1	**3B-8489**	1	FITTING-GREASE	
	2	1	**9X-4600**	2	SEAL-LIP TYPE	
B	3	1	**093-0090**	2	SHIM (1-MM THK)	
B	4	1	**093-0122**	1	SHIM (2-MM THK)	
	5	1	**093-0349**	1	WASHER (22X60X6-MM THK)	
	6	1	**093-0364**	1	SPACER (103X140X12-MM THK)	
	7	1	**130-4360**	1	PIN AS	
B	8	1	**133-2427**	1	SHIM (0.5-MM THK)	
	9	1	**148-3391**	1	PIN	
	10	1	**201-2771**	1	WASHER (26X90X8-MM THK)	
	11	1	**235-7567**	1	PIN AS	
	12	1	**241-7359**	1	BOOM & BEARING AS	
	12A	1	**228-5622**	2	BEARING-SLEEVE	
B	13	1	**093-0074**	2	SHIM (1-MM THK)	
B	14	1	**093-0106**	1	SHIM (2-MM THK)	
	15	1	**103-5246**	1	SPACER (123X150X14-MM THK)	
B	16	1	**147-3957**	1	SHIM (0.5-MM THK)	
	17	1	**4I-4978**	2	SPACER (113X150X8-MM THK)	
	18	1	**4I-5005**	2	PLATE	
M	19	1	**7X-2573**	1	BOLT (M24X3X40-MM)	
	20	1	**8D-5054**	6	WASHER-HARD (17X30X3-MM THK)	
	21	1	**8T-4123**	1	WASHER (22X35X3.5-MM THK)	
	22	1	**8T-4167**	1	WASHER-HARD (26X44X4-MM THK)	
M	23	1	**8T-4779**	6	BOLT (M16X2X35-MM)	
M	24	1	**8T-4780**	1	BOLT (M20X2.5X30-MM)	
	25	1	**8T-6764**	1	PLUG-PIPE	

B-USE AS REQUIRED
M-METRIC PART

241-7358 **BOOM GP** *(contd.)* **i02155645**

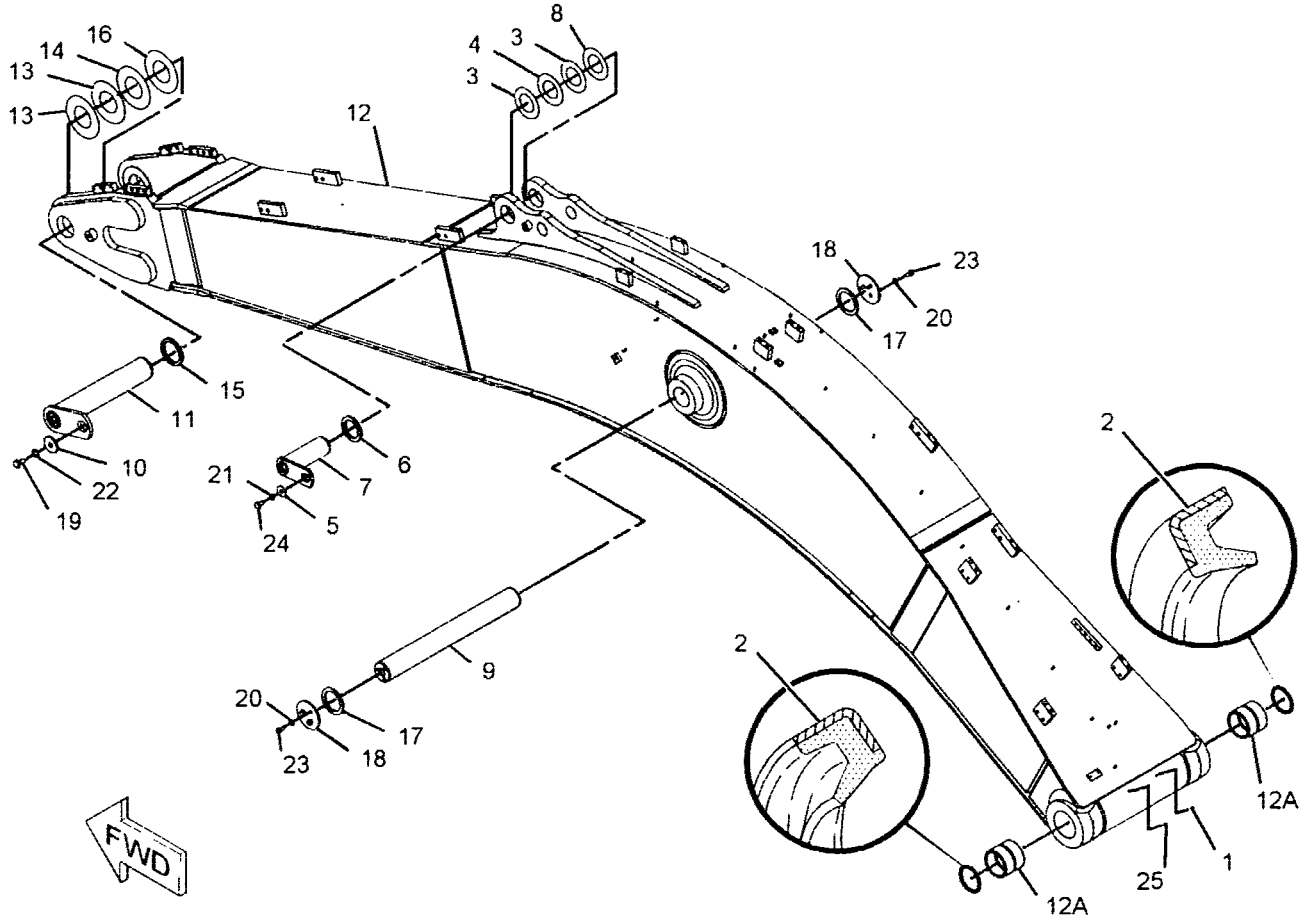

GRAPHIC #1 **<END>** g01100489

IMPLEMENTS

297-7439 BOOM GP–ACCUGRADE READY

S/N: YEE1-UP
6.9-M (22.6-FT)
PART OF 324-0190, 324-0191 SPECIAL AR
AN ATTACHMENT

SMCS-6301, 6302, 6460, 6501, 6516, 6521, 6535, 6536 i02920362

NOTE	REF NO	GRAPHIC REF	PART NUMBER	QTY	PART NAME 1 2 3 4 5 6 (PRODUCT LEVEL)	SEE PAGE
	1	1	3B-8489	1	FITTING-GREASE	
	2	1	9X-4600	2	SEAL-LIP TYPE	
B	3	1	093-0090	2	SHIM (1-MM THK)	
B	4	1	093-0122	1	SHIM (2-MM THK)	
	5	1	093-0349	1	WASHER (22X60X6-MM THK)	
	6	1	093-0364	1	SPACER (103X140X12-MM THK)	
	7	1	130-4360	1	PIN AS	
B	8	1	133-2427	1	SHIM (0.5-MM THK)	
	9	1	148-3391	1	PIN	
	10	1	308-8952	1	PLATE	
	11	1	308-8953	1	PLATE	
	12	1	308-8981	1	PIN AS	
	13	1	308-8995	1	BOOM & BEARING AS	
	13A	1	228-5622	2	BEARING-SLEEVE	
B	14	1	093-0074	2	SHIM (1-MM THK)	
B	15	1	093-0106	1	SHIM (2-MM THK)	
M	16	1	096-4885	2	LOCKNUT (M16X2-THD)	
	17	1	103-5246	1	SPACER (123X150X14-MM THK)	
B	18	1	147-3957	1	SHIM (0.5-MM THK)	
	19	1	4I-4978	2	SPACER (113X150X8-MM THK)	
	20	1	4I-5005	2	PLATE	
M	21	1	5A-3604	4	BOLT-SOCKET HEAD (M8X1.25X25-MM)	
M	22	1	7X-2574	1	BOLT (M24X3X45-MM)	
	23	1	8D-5054	6	WASHER-HARD (17X30X3-MM THK)	
	24	1	8T-4123	1	WASHER (22X35X3.5-MM THK)	
M	25	1	8T-4140	2	BOLT (M16X2X60-MM)	
	26	1	8T-4167	1	WASHER-HARD (26X44X4-MM THK)	
M	27	1	8T-4779	6	BOLT (M16X2X35-MM)	
M	28	1	8T-4780	1	BOLT (M20X2.5X30-MM)	
	29	1	8T-6764	1	PLUG-PIPE	
	30	1	9X-8257	2	WASHER (17.5X30X3.5-MM THK)	

B-USE AS REQUIRED
M-METRIC PART

297-7439 **BOOM GP** *(contd.)* **i02920362**

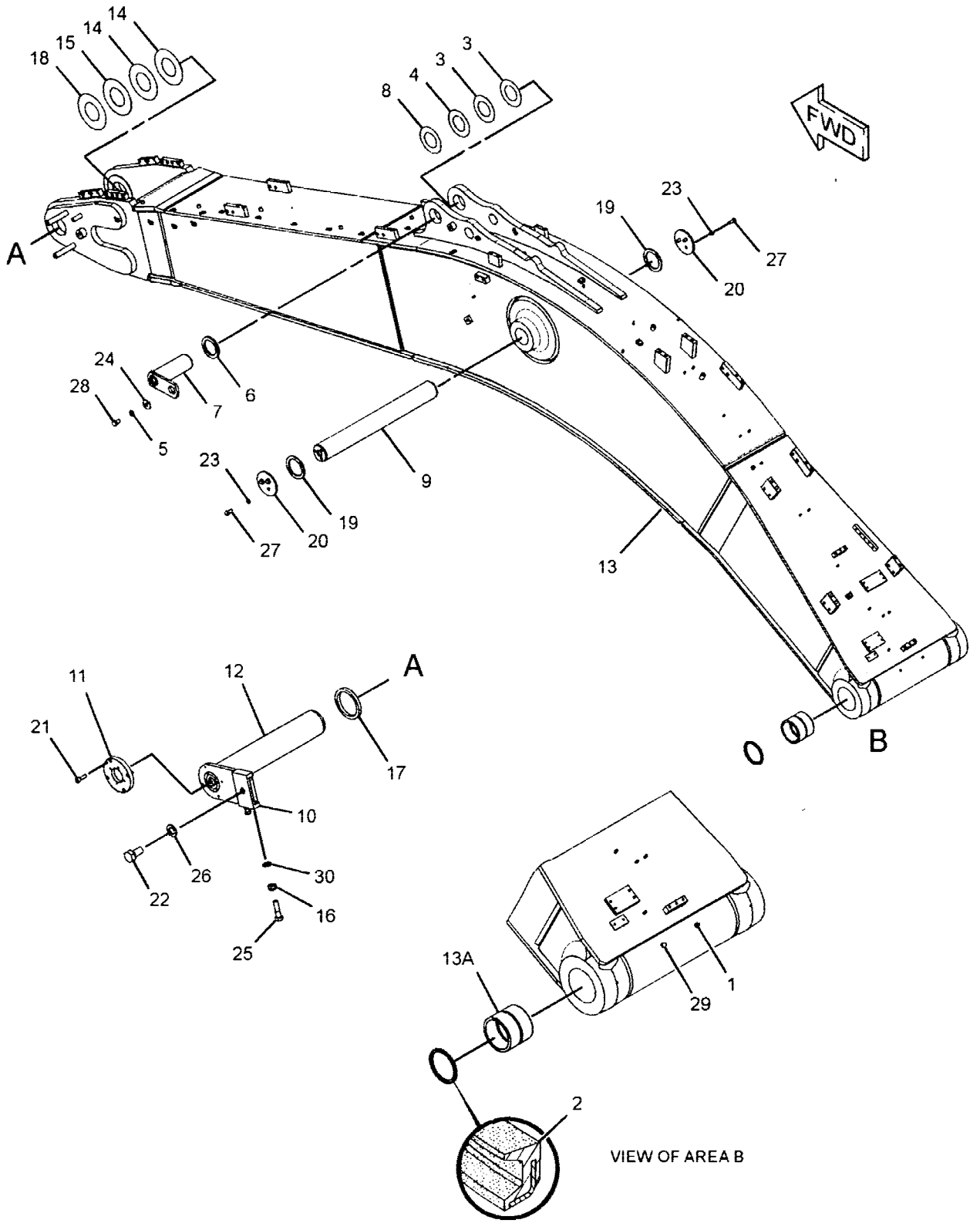

GRAPHIC #1 **<END>** g01460847

IMPLEMENTS

309-5797 GUARD GP-SENSOR

S/N: YEE1-UP

PART OF 324-0190, 324-0191 SPECIAL AR

AN ATTACHMENT

SMCS-5736, 7150 **i02921234**

NOTE	REF NO	GRAPHIC REF	PART NUMBER	QTY	PART NAME 1 2 3 4 5 6 (PRODUCT LEVEL)	SEE PAGE
	1	1	**319-4289**	1	GUARD AS	
	2	1	**5P-1076**	2	WASHER-HARD (13.5X30X4-MM THK)	
M	3	1	**8T-4179**	2	BOLT (M12X1.75X20-MM)	

M-METRIC PART

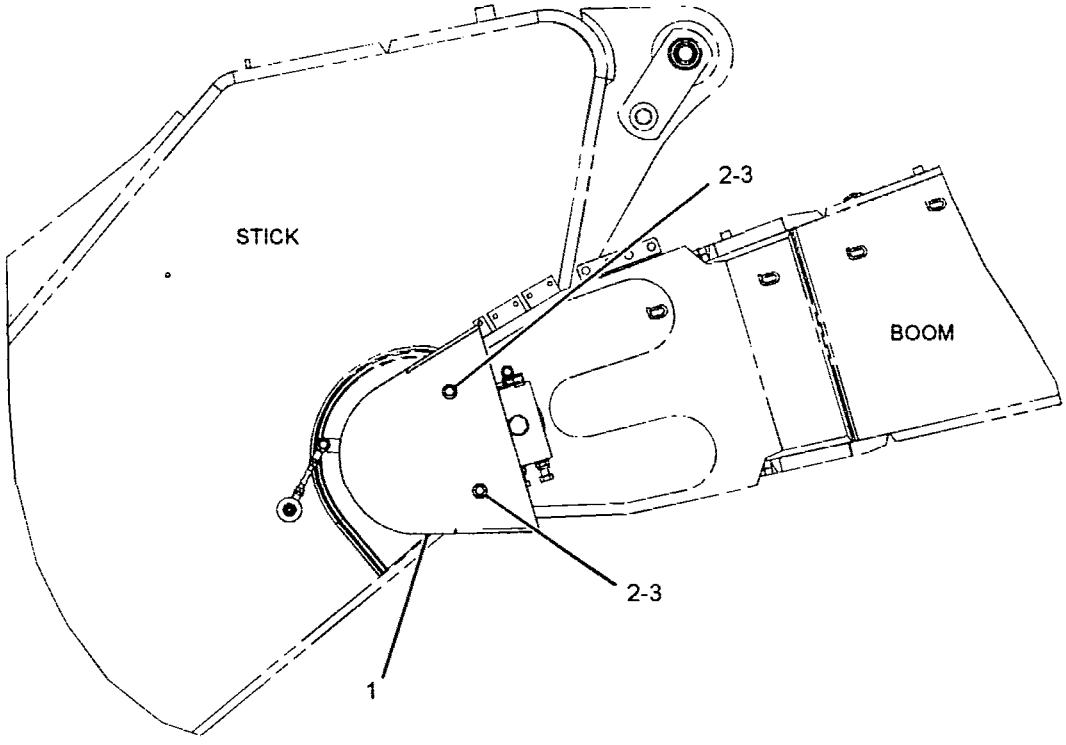

LEFT SIDE VIEW

GRAPHIC #1 **<END>** g01456773

127-1343 LINES GP-GREASE–BOOM, BOOM CYLS, STICK CYL

S/N: YEE1-UP

PART OF 294-1250 BOOM AR-REACH, 324-0190, 324-0191 SPECIAL AR

FOR USE WITH 6.9-M (22.6-FT) BOOM

AN ATTACHMENT

SMCS-7510 **i01233344**

NOTE	REF NO	GRAPHIC REF	PART NUMBER	QTY	PART NAME 1 2 3 4 5 6 (PRODUCT LEVEL)	SEE PAGE
	2	1	130-4407	1	HOSE AS	
	3	1	130-4410	2	HOSE AS	
	4	1	137-2781	1	TUBE AS	
	5	1	137-3194	1	TUBE AS	
	6	1	8M-2772	2	CLIP	
M	7	1	8T-4133	10	NUT (M10X1.5-THD)	
	8	1	8T-4121	12	WASHER-HARD (11X21X2.5-MM THK)	
	9	1	3B-8489	5	FITTING-GREASE	
	10	1	6L-3616	2	CONNECTOR	
	11	1	087-5840	3	PLATE	
	12	1	5K-9243	2	ELBOW-FLARED	
	13	1	033-8248	4	CLIP	
M	14	1	8T-4191	2	BOLT (M10X1.5X16-MM)	
	15	1	141-3538	1	HOSE AS	

M-METRIC PART

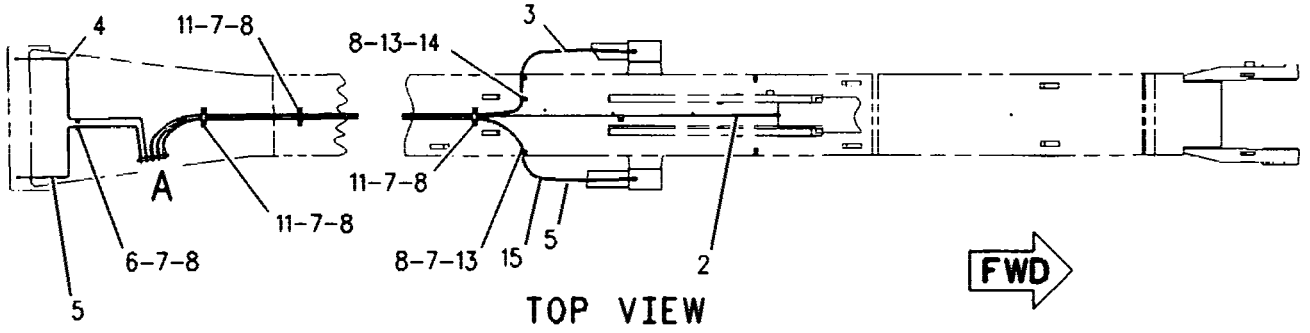

TOP VIEW

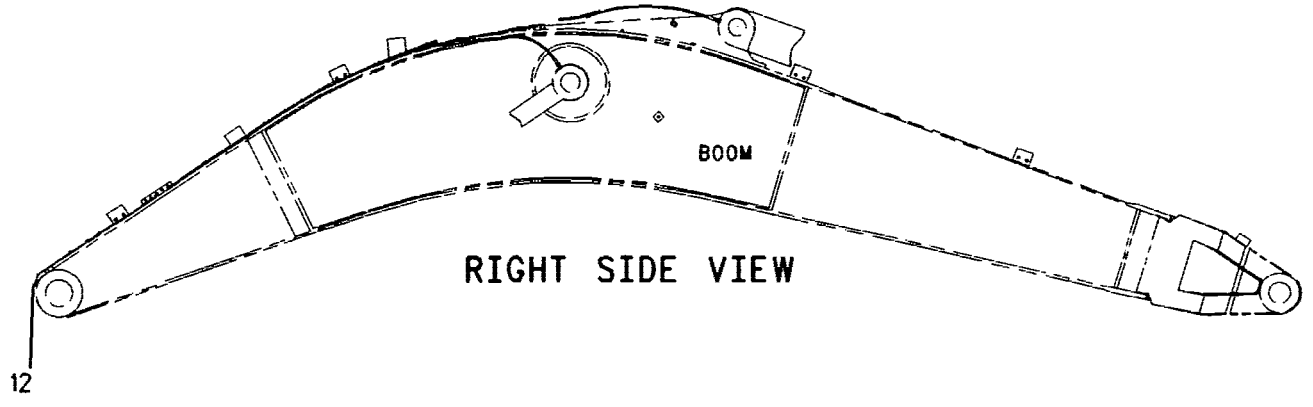

RIGHT SIDE VIEW

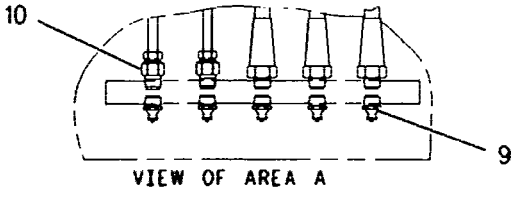

VIEW OF AREA A

GRAPHIC #1

<END>

g00619983

IMPLEMENTS

127-1347 LINES GP-GREASE–BOOM, BOOM CYLS, STICK CYL

S/N: YEE1-UP
PART OF 294-1252 BOOM AR-MASS
FOR USE WITH 6.6-M (21.6-FT) BOOM
AN ATTACHMENT

SMCS-7510 **i01025891**

NOTE	REF NO	GRAPHIC REF	PART NUMBER	QTY	PART NAME 1 2 3 4 5 6 (PRODUCT LEVEL)	SEE PAGE
	1	1	**141-3538**	1	HOSE AS	
I	2	1	**120-7227**	1	HOSE AS	
I	3	1	**120-7226**	1	HOSE AS	
	4	1	**137-3194**	1	TUBE AS	
	5	1	**137-2781**	1	TUBE AS	
	6	1	**8M-2772**	2	CLIP	
M	7	1	**8T-4133**	10	NUT (M10X1.5-THD)	
	8	1	**8T-4121**	12	WASHER-HARD (11X21X2.5-MM THK)	
	9	1	**3B-8489**	5	FITTING-GREASE	
	10	1	**6L-3616**	2	CONNECTOR	
	11	1	**087-5840**	3	PLATE	
	12	1	**5K-9243**	2	ELBOW-FLARED	
	13	1	**033-8248**	4	CLIP	
M	14	1	**8T-4191**	2	BOLT (M10X1.5X16-MM)	

I-REFER TO HYDRAULIC INFORMATION SYSTEM
M-METRIC PART

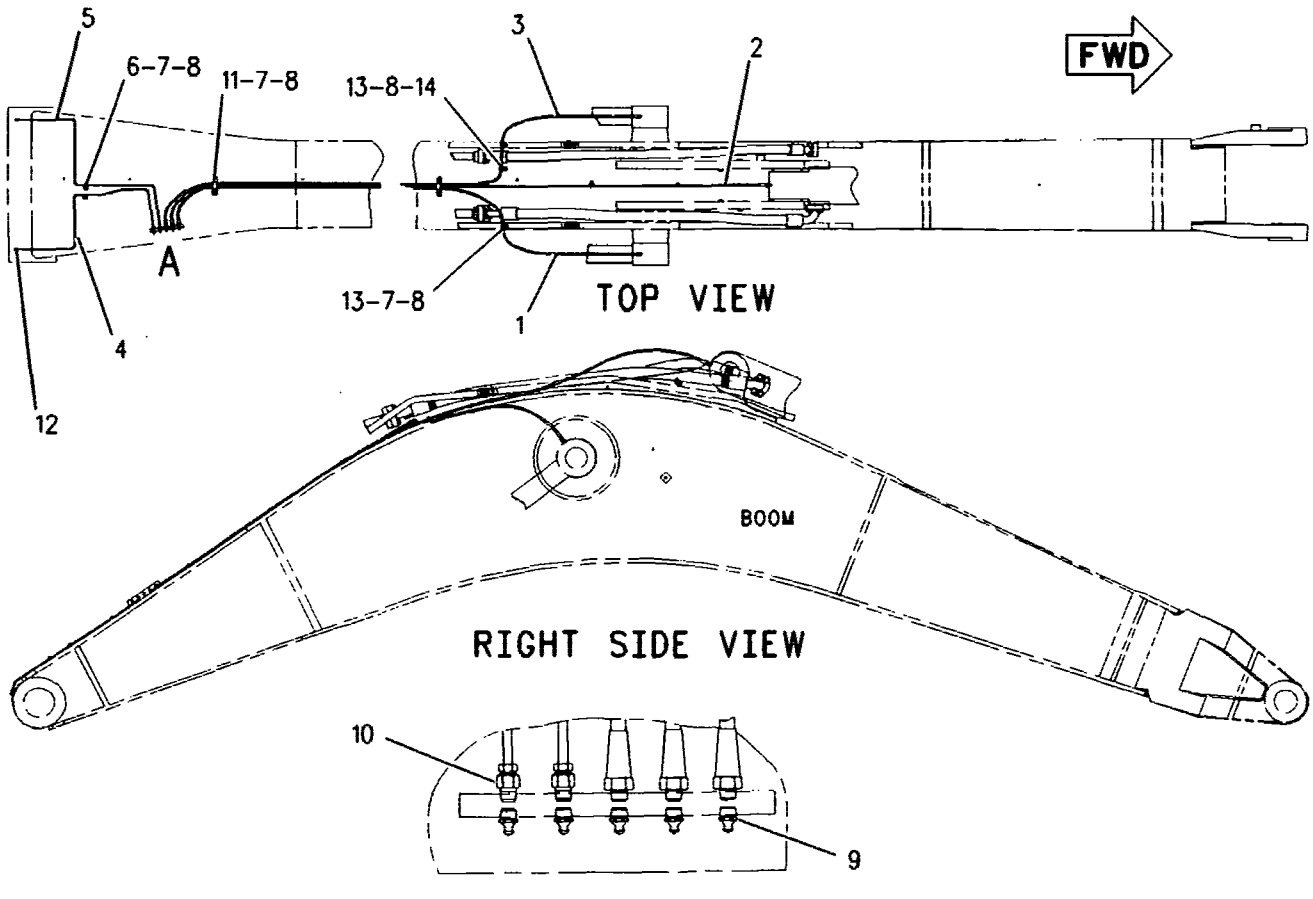

GRAPHIC #1 **<END>** g00528917

241-7363 LINES GP-GREASE–BOOM, BOOM CYLS, STICK CYL

S/N: YEE1-UP
PART OF 294-1247 BOOM AR-LONG REACH
FOR USE WITH 7.4-M (24.3-FT) BOOM
AN ATTACHMENT

SMCS-7510 **i02242517**

NOTE	REF NO	GRAPHIC REF	PART NUMBER	QTY	PART NAME 1 2 3 4 5 6 (PRODUCT LEVEL)	SEE PAGE
	1	2	5K-9243	2	ELBOW-FLARED	
	2	1	134-9137	1	HOSE AS	
	3	1	137-2781	1	TUBE AS	
	4	1	137-3194	1	TUBE AS	
	5	1	141-3538	1	HOSE AS	
	6	1	166-1579	3	CLIP	
	7	1	248-1697	1	HOSE AS	
	8	1,2	033-8248	5	CLIP	
	9	1	3B-8489	5	FITTING-GREASE	
	10	1	6L-3616	2	CONNECTOR	
	11	2	8M-2772	2	CLIP	
	12	1,2	8T-4121	10	WASHER-HARD (11X21X2.5-MM THK)	
M	13	1,2	8T-4133	8	NUT (M10X1.5-THD)	
M	14	2	8T-4191	2	BOLT (M10X1.5X16-MM)	

M-METRIC PART

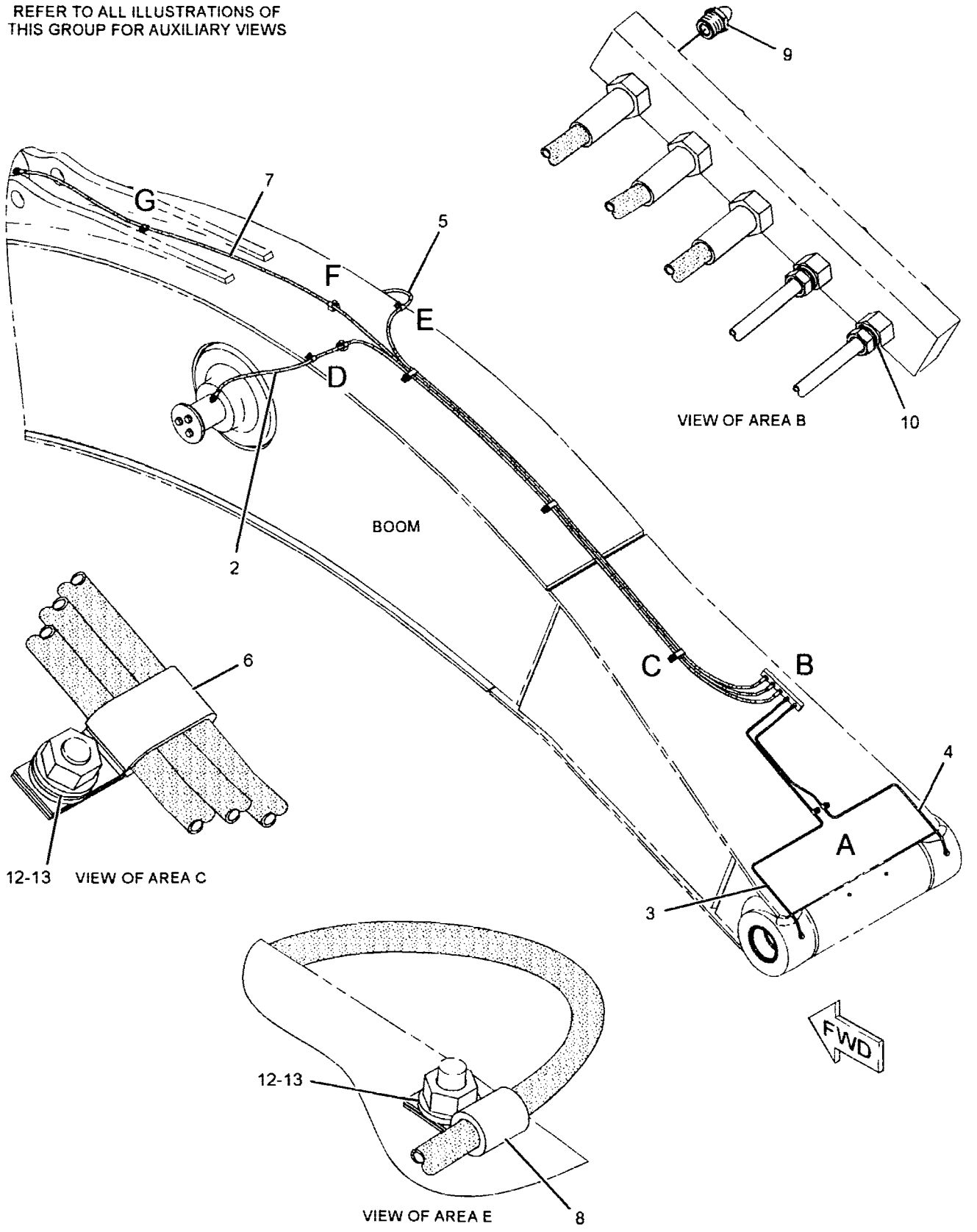

GRAPHIC #1 g01129095

241-7363 **LINES GP-GREASE** *(contd.)* **i02242517**

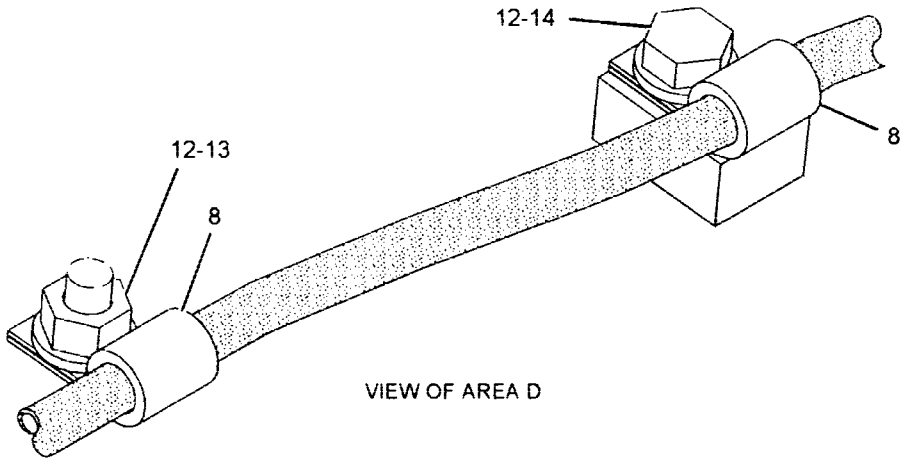

VIEW OF AREA D

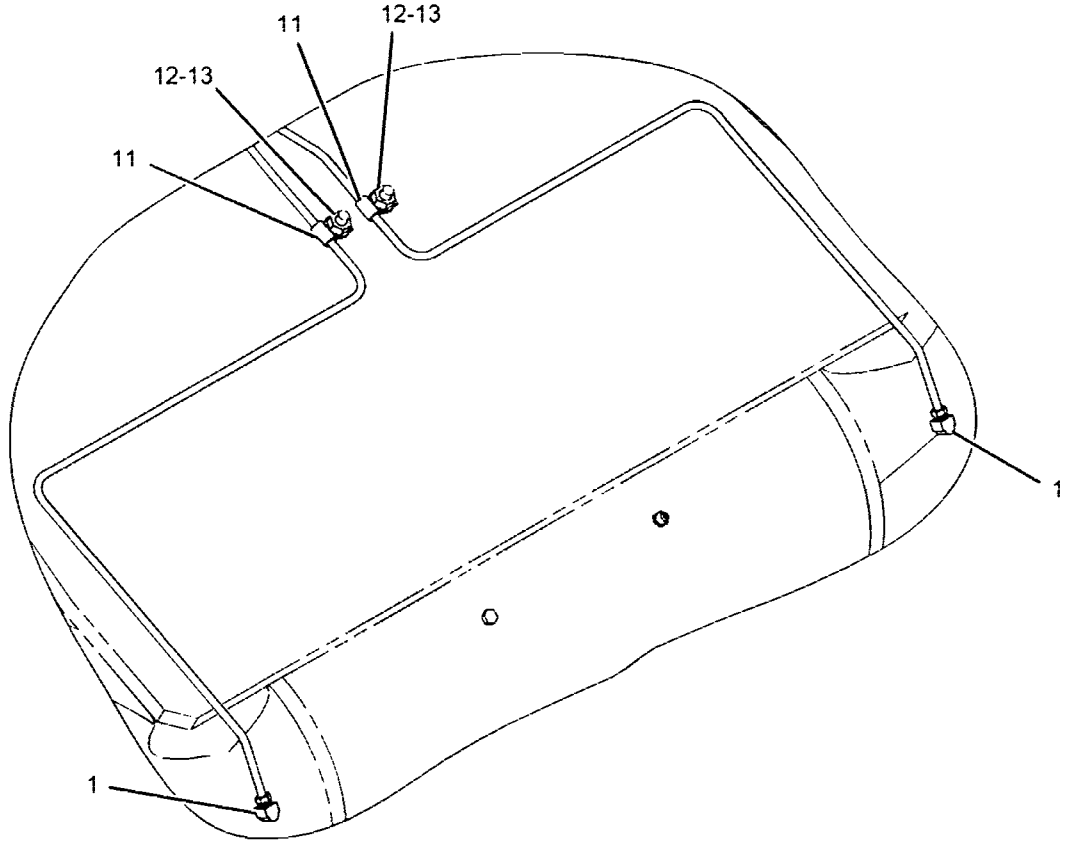

VIEW OF AREA A

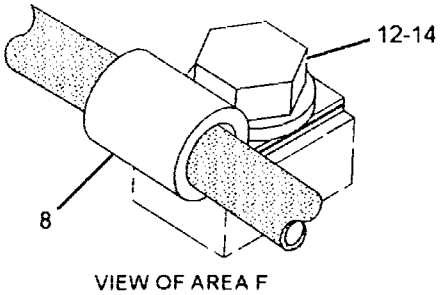

VIEW OF AREA F

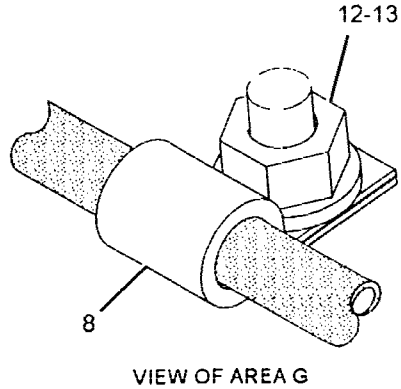

VIEW OF AREA G

GRAPHIC #2 **<END>** g01129096

294-1426 LINES GP-GREASE–BUCKET CYL, STICK, STICK CYL

S/N: YEE1-UP
PART OF 294-1257, 294-1265 STICK AR-HOE
FOR USE WITH 3.9-M (12.8-FT) STICK
AN ATTACHMENT

SMCS-7510 i02861056

NOTE	REF NO	GRAPHIC REF	PART NUMBER	QTY	PART NAME 1 2 3 4 5 6 (PRODUCT LEVEL)	SEE PAGE
	1	1	294-1429	1	TUBE AS	
	2	1	294-1430	1	TUBE AS	
	3	1	294-1431	1	TUBE AS	
	4	1	294-1434	1	TUBE AS	
	5	1	5K-9242	3	UNION-FLARED	
	6	1	294-1433	1	TUBE AS	
	7	1	294-1435	1	TUBE AS	
I	8	1	7Y-2670	1	HOSE AS	
	9	1	6V-3342	1	ELBOW-PIPE	
	10	1	6L-3616	8	CONNECTOR	
	11	1	8T-4121	8	WASHER-HARD (11X21X2.5-MM THK)	
M	12	1	8T-4133	8	NUT (M10X1.5-THD)	
	13	1	8M-2772	7	CLIP	
	14	1	3B-8489	4	FITTING-GREASE	
	15	1	087-5838	1	PLATE	
	16	1	7J-8611	1	ELBOW-PIPE	
	17	1	294-1432	1	TUBE AS	
I	18	1	087-5891	1	HOSE AS	
	19	1	5H-8936	1	ADAPTER	

I-REFER TO HYDRAULIC INFORMATION SYSTEM
M-METRIC PART

294-1426 **LINES GP-GREASE** *(contd.)* **i02861056**

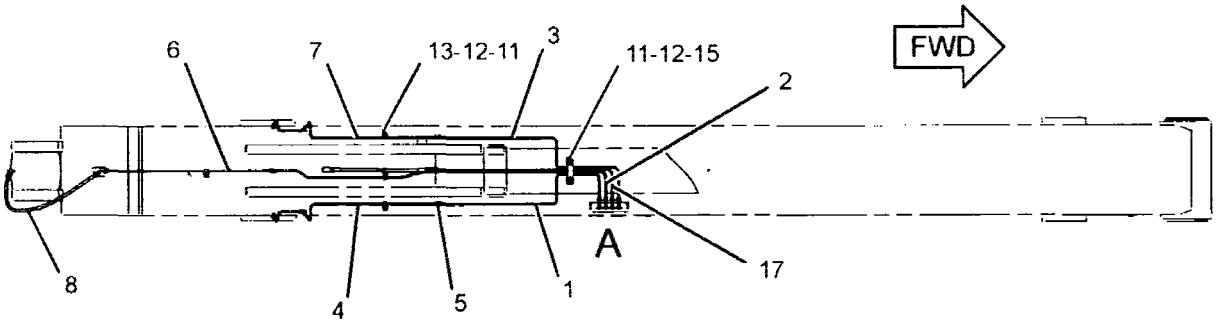

TOP VIEW

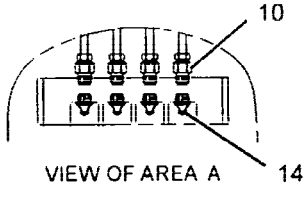

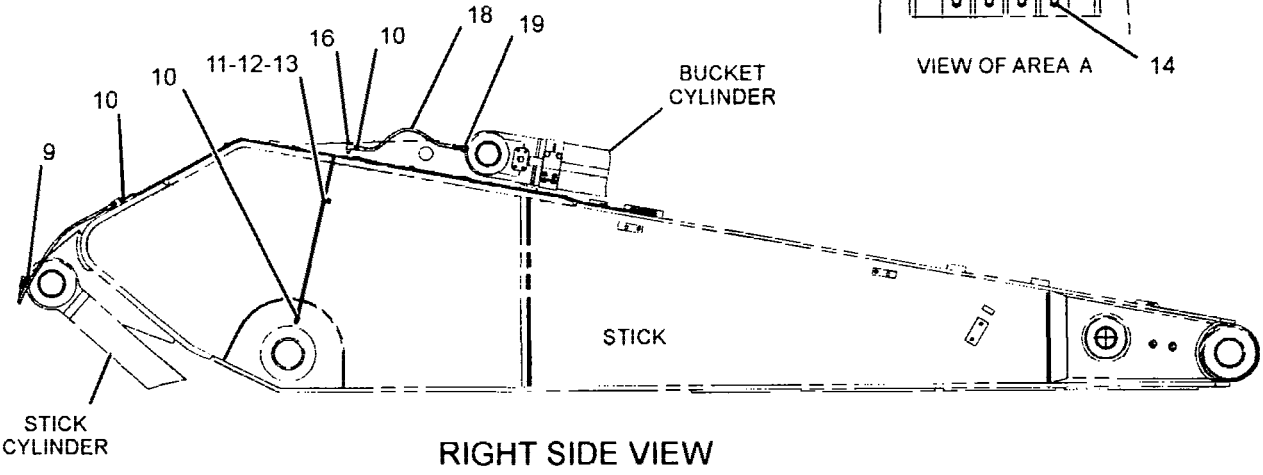

RIGHT SIDE VIEW

GRAPHIC #1 **<END>** g01432128

220-2502 LINKAGE AR-BUCKET—UB-FAMILY

S/N: YEE1-UP
AN ATTACHMENT

SMCS-6513 i02155225

NOTE	PART NUMBER	QTY	PART NAME 1 2 3 4 5 6 (PRODUCT LEVEL)	SEE PAGE
Y	225-4530	1	CYLINDER & LINES GP	455
Y	219-8341	1	LINKAGE GP-BUCKET	855

Y-SEPARATE ILLUSTRATION

<END>

245-5584 LINKAGE AR-BUCKET—TB-FAMILY, WITH LIFTING EYE

S/N: YEE1-UP
AN ATTACHMENT

SMCS-6513 i02219110

NOTE	PART NUMBER	QTY	PART NAME 1 2 3 4 5 6 (PRODUCT LEVEL)	SEE PAGE
Y	225-4527	1	CYLINDER & LINES GP-BUCKET	455
Y	251-2651	1	LINKAGE GP-BUCKET	857

Y-SEPARATE ILLUSTRATION

<END>

257-4556 LINKAGE AR-BUCKET—TB-FAMILY, WITH LIFTING EYE

S/N: YEE1-UP
AN ATTACHMENT

SMCS-6513 i02605979

NOTE	PART NUMBER	QTY	PART NAME 1 2 3 4 5 6 (PRODUCT LEVEL)	SEE PAGE
Y	225-4527	1	CYLINDER & LINES GP-BUCKET	455
Y	273-6887	1	LINKAGE GP-BUCKET	859

Y-SEPARATE ILLUSTRATION

<END>

219-8341 LINKAGE GP-BUCKET-VB-FAMILY

S/N: YEE1-UP

PART OF 220-2502 LINKAGE AR-BUCKET

AN ATTACHMENT

SMCS-6513 i02290393

NOTE	REF NO	GRAPHIC REF	PART NUMBER	QTY	PART NAME 1 2 3 4 5 6 (PRODUCT LEVEL)	SEE PAGE
	1	1	3B-8489	4	FITTING-GREASE	
	2	1	5B-0651	1	FITTING-STRAIGHT	
	3	1	9X-4598	6	SEAL-LIP TYPE	
	4	1	148-3307	1	LINK	
	5	1	195-5479	2	PLATE	
	6	1	195-5480	1	PLATE	
	7	1	198-5647	2	SEAL-O-RING	
	8	1	212-3086	1	PIN AS	
	9	1	212-3088	1	PIN AS	
	10	1	212-3090	1	PIN AS	
	11	1	212-3092	1	PIN AS	
	12	1	212-3094	1	LINK AS	
	13	1	212-3095	1	PLATE	
	14	1	219-8342	1	LINK & BEARING AS	
	14B	1	4I-6718	4	BEARING-SLEEVE	
	15	1	093-1349	2	SEAL-O-RING	
M	16	1	7X-2553	9	BOLT (M16X2X40-MM)	
M	17	1	7X-2562	3	BOLT (M20X2.5X45-MM)	
	18	1	8T-4123	3	WASHER (22X35X3.5-MM THK)	
	19	1	9X-8257	9	WASHER (17.5X30X3.5-MM THK)	

M-METRIC PART

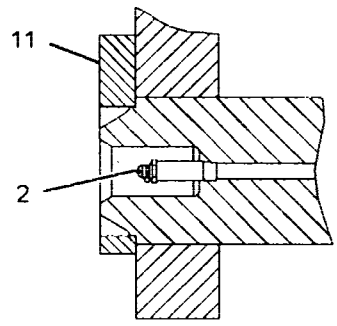

SECTION D-D

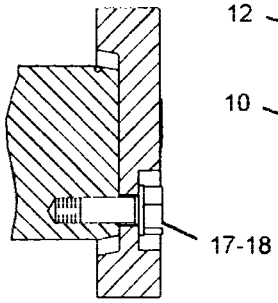

SECTION A-A

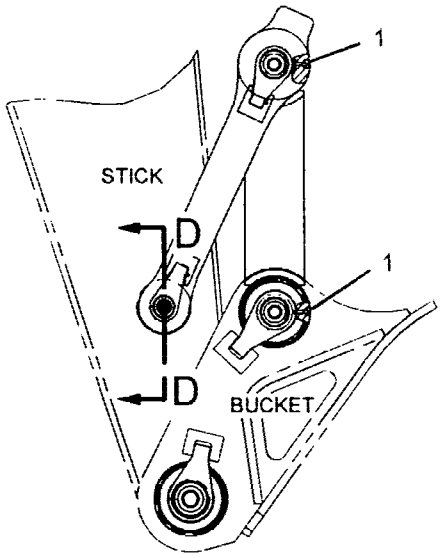

LEFT SIDE VIEW

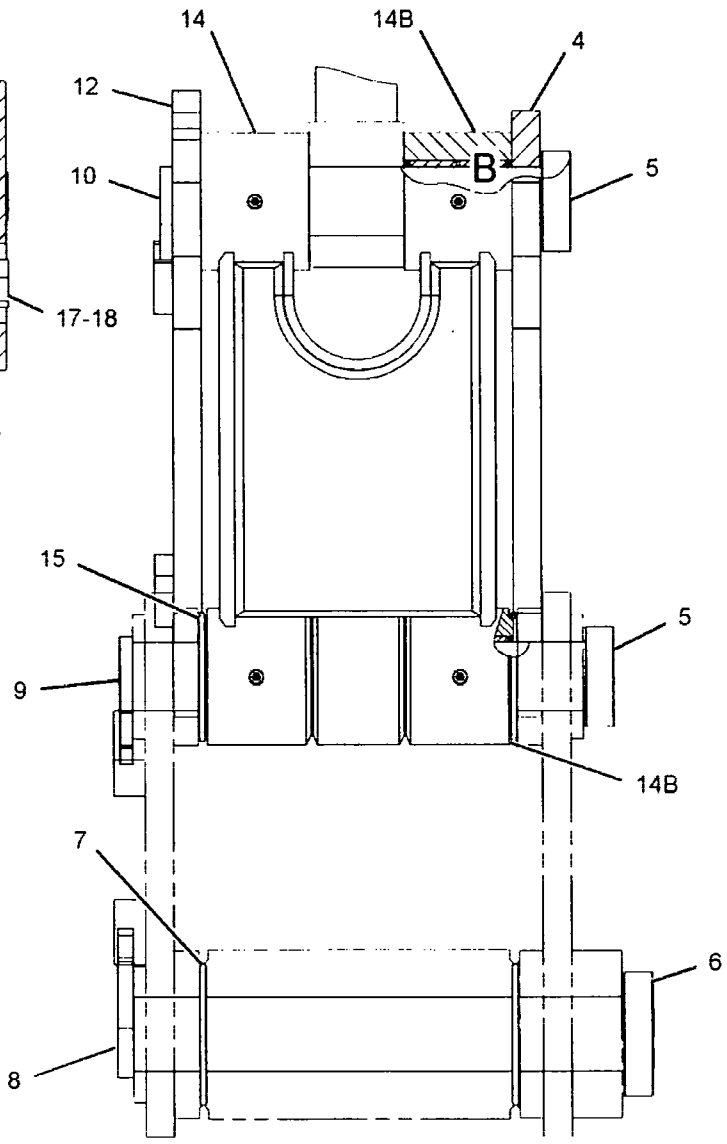

REAR VIEW

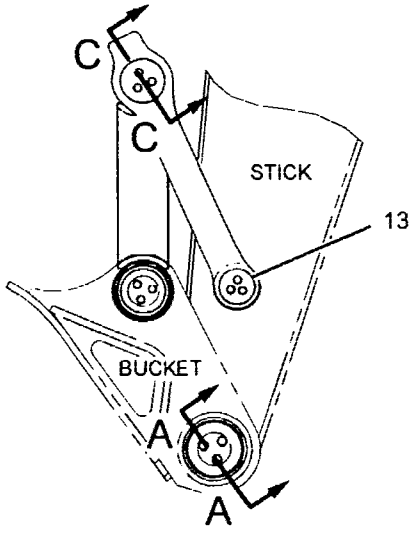

RIGHT SIDE VIEW

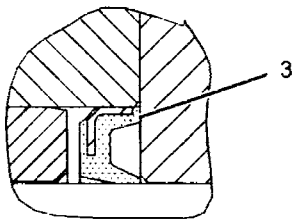

VIEW OF AREA B

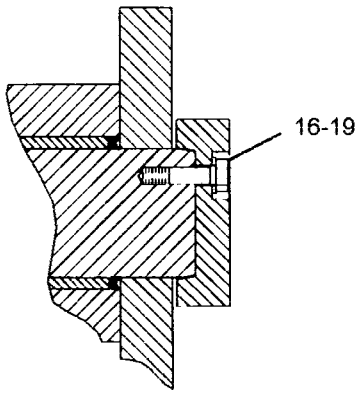

SECTION C-C

GRAPHIC #1

<END>

g01146755

251-2651 LINKAGE GP-BUCKET–TB-FAMILY, WITHOUT HOOK

S/N: YEE1-UP

PART OF 245-5584 LINKAGE AR-BUCKET

AN ATTACHMENT

SMCS-6513 i02223440

NOTE	REF NO	GRAPHIC REF	PART NUMBER	QTY	PART NAME 1 2 3 4 5 6 (PRODUCT LEVEL)	SEE PAGE
	1	1	3B-8489	4	FITTING-GREASE	
	2	1	5B-0651	1	FITTING-STRAIGHT	
	3	1	093-1347	2	SEAL-O-RING	
	4	1	195-5479	1	PLATE	
	5	1	201-2771	2	WASHER (26X90X8-MM THK)	
	6	1	212-3095	1	PLATE	
	7	1	235-7626	1	LINK AS	
	8	1	235-7627	1	LINK	
	9	1	235-7628	1	PIN AS	
	10	1	235-7636	1	PIN AS	
	11	1	235-7639	1	PIN AS	
	12	1	235-7642	1	PIN AS	
	13	1	251-2652	1	LINK & BEARING AS	
	13A	1	087-5548	2	BEARING-SLEEVE	
	13B	1	7Y-2397	2	BEARING-SLEEVE	
	14	1	9X-4597	6	SEAL-LIP TYPE	
	15	1	093-1345	2	SEAL-O-RING	
M	16	1	7X-2553	6	BOLT (M16X2X40-MM)	
	17	1	8T-4167	2	WASHER-HARD (26X44X4-MM THK)	
M	18	1	8T-5379	2	BOLT (M24X3X50-MM)	
	19	1	9X-8257	6	WASHER (17.5X30X3.5-MM THK)	

M-METRIC PART

251-2651 LINKAGE GP-BUCKET (contd.) i02223440

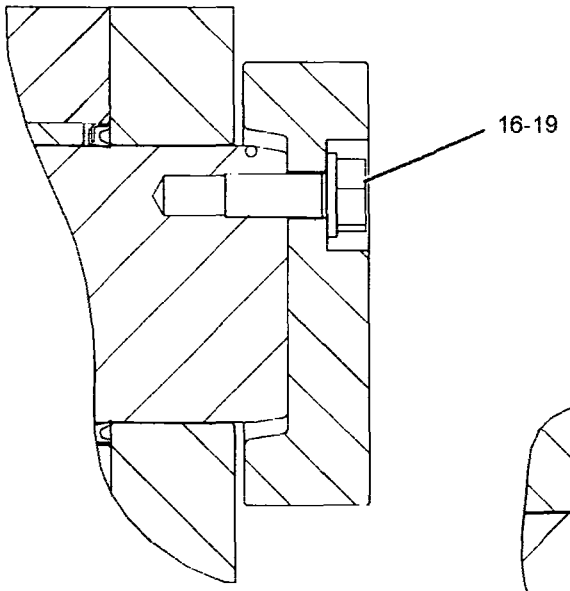

SECTION E-E

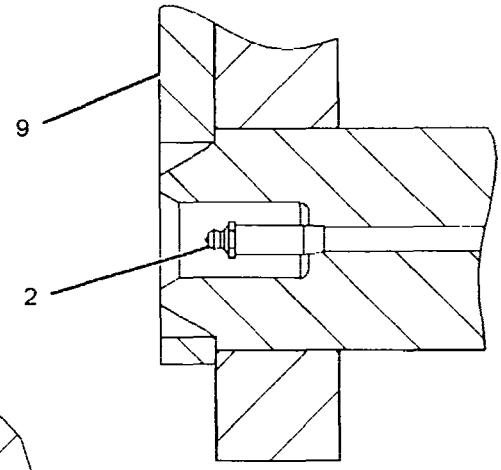

SECTION D-D

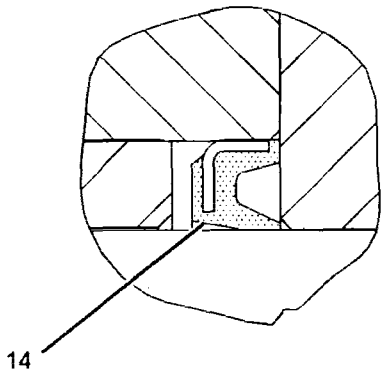

VIEW OF AREA C

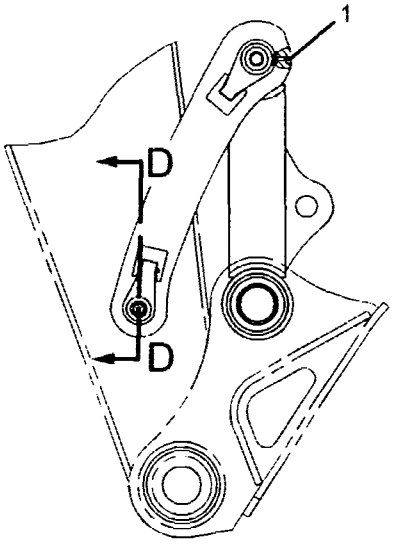

VIEW A-A

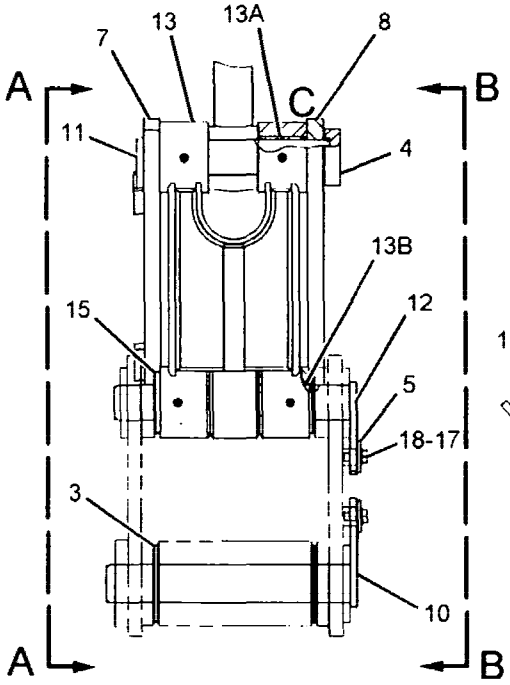

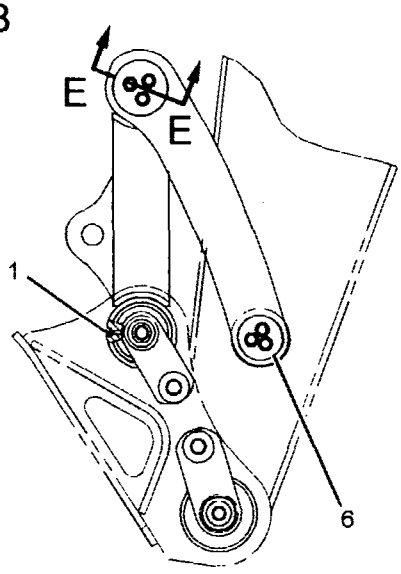

VIEW B-B

GRAPHIC #1 <END> g01122838

273-6887 LINKAGE GP-BUCKET–TB-FAMILY, WITHOUT HOOK

S/N: YEE1-UP

PART OF 257-4556 LINKAGE AR-BUCKET

AN ATTACHMENT

SMCS-6513 i02605974

NOTE	REF NO	GRAPHIC REF	PART NUMBER	QTY	PART NAME 1 2 3 4 5 6 (PRODUCT LEVEL)	SEE PAGE
	1	1	3B-8489	4	FITTING-GREASE	
	2	1	5B-0651	1	FITTING-STRAIGHT	
	3	1	093-1347	2	SEAL-O-RING	
	4	1	195-5479	1	PLATE	
	5	1	201-2771	2	WASHER (26X90X8-MM THK)	
	6	1	212-3095	1	PLATE	
	7	1	235-7626	1	LINK AS	
	8	1	273-6806	1	LINK AS	
	9	1	235-7628	1	PIN AS	
	10	1	235-7636	1	PIN AS	
	11	1	235-7639	1	PIN AS	
	12	1	235-7642	1	PIN AS	
	13	1	251-2652	1	LINK & BEARING AS	
	13A	1	087-5548	2	BEARING-SLEEVE	
	13B	1	7Y-2397	2	BEARING-SLEEVE	
	14	1	9X-4597	6	SEAL-LIP TYPE	
	15	1	093-1345	2	SEAL-O-RING	
M	16	1	7X-2553	6	BOLT (M16X2X40-MM)	
	17	1	8T-4167	2	WASHER-HARD (26X44X4-MM THK)	
M	18	1	8T-5379	2	BOLT (M24X3X50-MM)	
	19	1	9X-8257	6	WASHER (17.5X30X3.5-MM THK)	

M-METRIC PART

273-6887 LINKAGE GP-BUCKET *(contd.)* i02605974

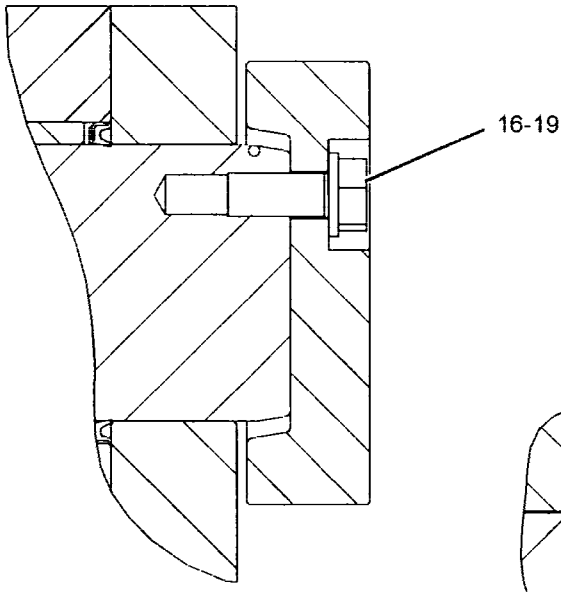

SECTION E-E

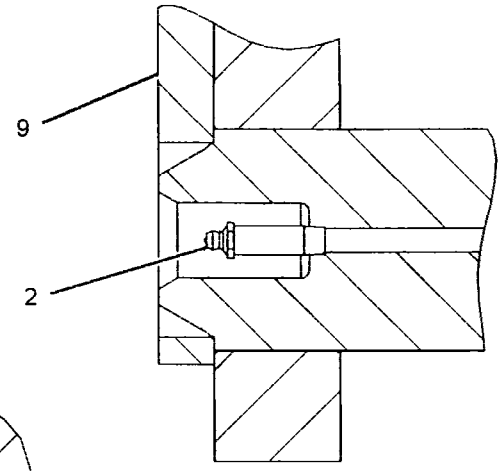

SECTION D-D

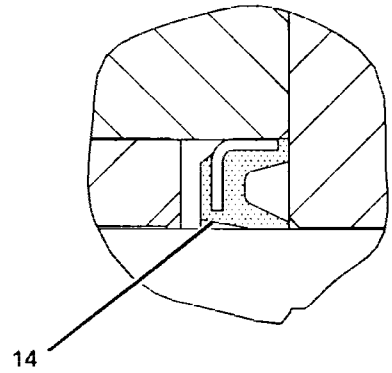

VIEW OF AREA C

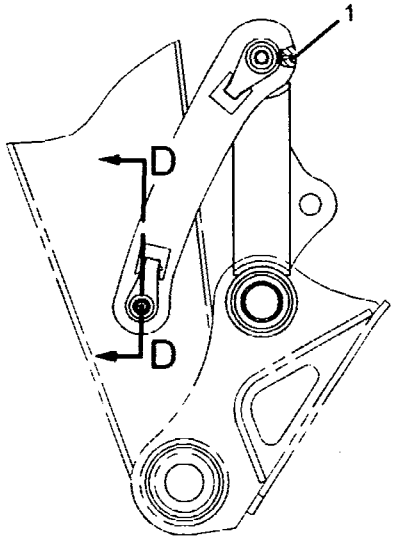

VIEW A-A

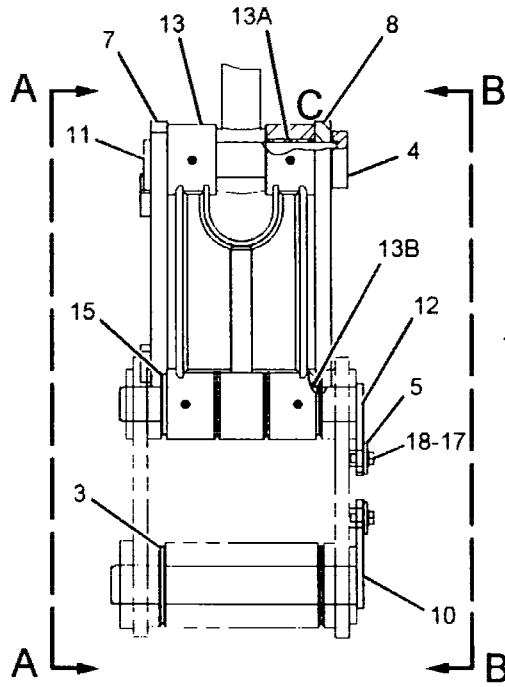

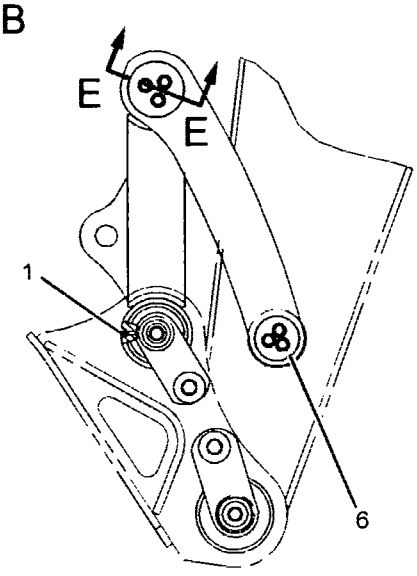

VIEW B-B

GRAPHIC #1 **<END>** g01122838

220-2498 STICK AR–MASS

S/N: YEE1-UP
3-M (9.8-FT). AUTO LUBRICATION, AUXILIARY
AN ATTACHMENT

SMCS-6502 i02155212

NOTE	PART NUMBER	QTY	PART NAME 1 2 3 4 5 6 (PRODUCT LEVEL)	SEE PAGE
Y	128-7448	1	LINES GP-STICK	677
Y	228-5440	1	STICK GP-HOE	863

Y-SEPARATE ILLUSTRATION

<END>

220-2500 STICK AR–MASS

S/N: YEE1-UP
2.5-M (8.2-FT). AUTO LUBRICATION, AUXILIARY
AN ATTACHMENT

SMCS-6502 i02155216

NOTE	PART NUMBER	QTY	PART NAME 1 2 3 4 5 6 (PRODUCT LEVEL)	SEE PAGE
Y	128-7449	1	LINES GP-STICK	678
Y	228-5447	1	STICK GP-HOE	865

Y-SEPARATE ILLUSTRATION

<END>

294-1255 STICK AR-HOE

S/N: YEE1-UP
4.3-M (14.1-FT)
AN ATTACHMENT

SMCS-6502 i02861052

NOTE	PART NUMBER	QTY	PART NAME 1 2 3 4 5 6 (PRODUCT LEVEL)	SEE PAGE
Y	245-4931	1	LINES GP-STICK	679
Y	303-9038	1	STICK GP-HOE	874

Y-SEPARATE ILLUSTRATION

<END>

294-1257 STICK AR-HOE

S/N: YEE1-UP
3.9-M (12.8-FT)
FOR USE WITH 245-5584–PAGE 854
AN ATTACHMENT

SMCS-6502 i02861054

NOTE	PART NUMBER	QTY	PART NAME 1 2 3 4 5 6 (PRODUCT LEVEL)	SEE PAGE
Y	294-1426	1	LINES GP-GREASE	852
Y	289-5759	1	LINES GP-STICK	681
Y	297-7419	1	STICK GP-HOE	869

Y-SEPARATE ILLUSTRATION

<END>

IMPLEMENTS

294-1258 STICK AR-HOE

S/N: YEE1-UP
3.4-M (11.2-FT)
AN ATTACHMENT

SMCS-6502 **i02861059**

NOTE	PART NUMBER	QTY	PART NAME 1 2 3 4 5 6 (PRODUCT LEVEL)	SEE PAGE
Y	289-5758	1	LINES GP-STICK	680
Y	290-9138	1	STICK GP-HOE	867

Y-SEPARATE ILLUSTRATION

<END>

294-1265 STICK AR-HOE–ACCUGRADE READY

S/N: YEE1-UP
3.9-M (12.8-FT)
AN ATTACHMENT

SMCS-6502 **i02860929**

NOTE	PART NUMBER	QTY	PART NAME 1 2 3 4 5 6 (PRODUCT LEVEL)	SEE PAGE
Y	294-1426	1	LINES GP-GREASE	852
Y	289-5759	1	LINES GP-STICK	681
Y	297-7442	1	STICK GP-HOE (ACCUGRADE)	870

Y-SEPARATE ILLUSTRATION

<END>

294-1267 STICK AR-HOE–ACCUGRADE READY

S/N: YEE1-UP
3.4-M (11.2-FT)
AN ATTACHMENT

SMCS-6502 **i02860939**

NOTE	PART NUMBER	QTY	PART NAME 1 2 3 4 5 6 (PRODUCT LEVEL)	SEE PAGE
Y	289-5758	1	LINES GP-STICK	680
Y	297-7443	1	STICK GP-HOE	872

Y-SEPARATE ILLUSTRATION

<END>

228-5440 STICK GP-HOE–MASS

S/N: YEE1-UP
3-M (9.8-FT)
PART OF 220-2498 STICK AR
AN ATTACHMENT

SMCS-6502 **i02155213**

NOTE	REF NO	GRAPHIC REF	PART NUMBER	QTY	PART NAME 1 2 3 4 5 6 (PRODUCT LEVEL)	SEE PAGE
	1	1	**9X-4599**	4	SEAL-LIP TYPE	
B	2	1	**093-0090**	4	SHIM (1-MM THK)	
B	3	1	**093-0122**	2	SHIM (2-MM THK)	
	4	1	**093-0349**	2	WASHER (22X60X6-MM THK)	
	5	1	**093-0364**	2	SPACER (103X140X12-MM THK)	
	6	1	**130-4360**	2	PIN AS	
B	7	1	**133-2427**	4	SHIM (0.5-MM THK)	
	8	1	**134-8944**	2	SPACER (102X180X5-MM THK)	
	9	1	**228-5441**	1	STICK & BEARING AS	
	9A	1	**228-5621**	4	BEARING-SLEEVE	
	9B	1	**4I-6897**	2	BEARING-SLEEVE	
	10	1	**166-1494**	2	SEAL-LIP TYPE	
	11	1	**3B-8489**	4	FITTING-GREASE	
	12	1	**8T-4123**	2	WASHER (22X35X3.5-MM THK)	
M	13	1	**8T-4780**	2	BOLT (M20X2.5X30-MM)	

B-USE AS REQUIRED
M-METRIC PART

228-5440 STICK GP-HOE *(contd.)* i02155213

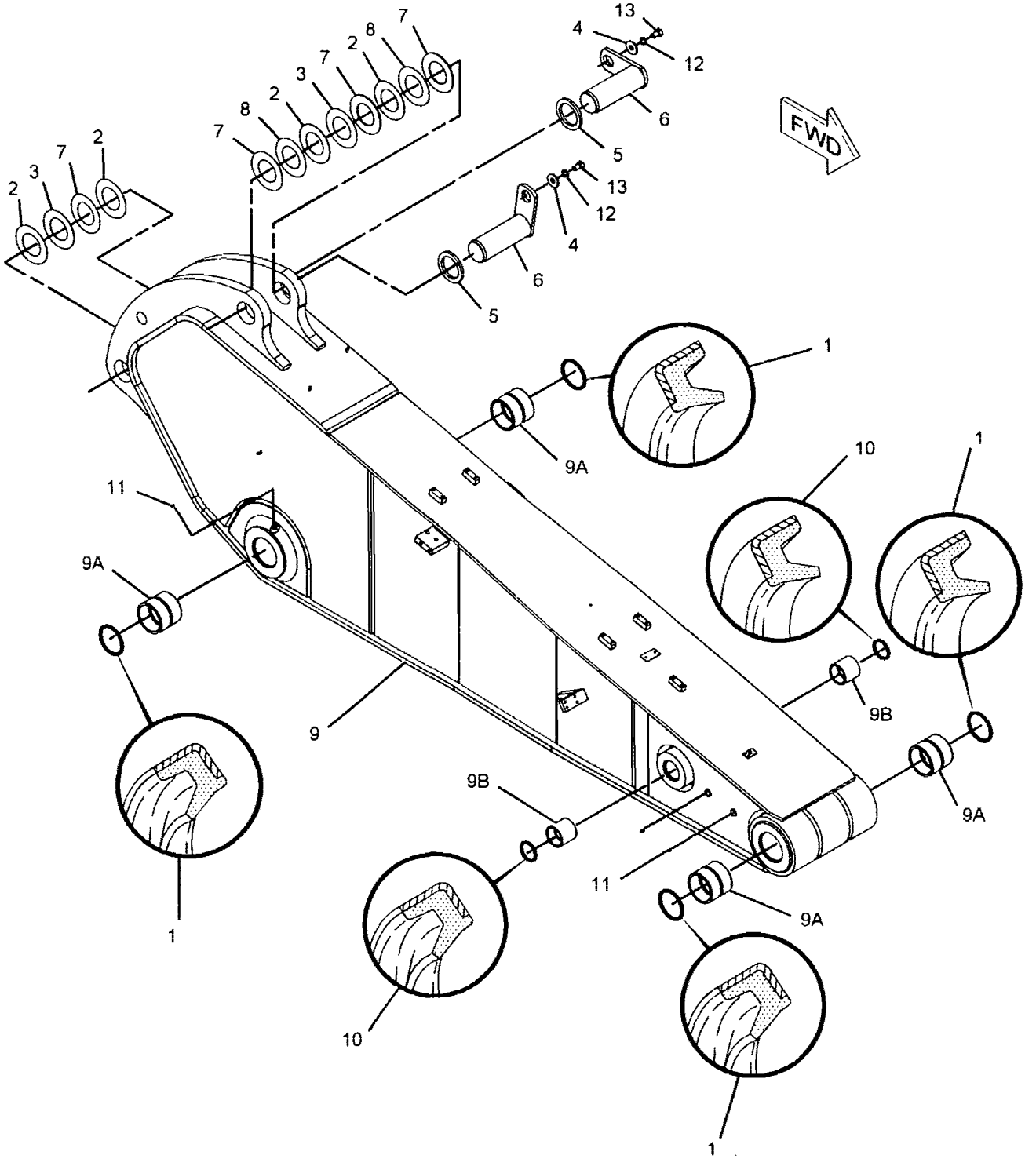

GRAPHIC #1 <END> g01094845

228-5447 STICK GP-HOE-MASS

S/N: YEE1-UP
2.5-M (8.2-FT)
PART OF 220-2500 STICK AR
AN ATTACHMENT

SMCS-6502 **i02214008**

NOTE	REF NO	GRAPHIC REF	PART NUMBER	QTY	PART NAME 1 2 3 4 5 6 (PRODUCT LEVEL)	SEE PAGE
	1	1	9X-4599	4	SEAL-LIP TYPE	
B	2	1	093-0090	4	SHIM (1-MM THK)	
B	3	1	093-0122	2	SHIM (2-MM THK)	
	4	1	093-0349	2	WASHER (22X60X6-MM THK)	
	5	1	093-0364	2	SPACER (103X140X12-MM THK)	
	6	1	130-4360	2	PIN AS	
B	7	1	133-2427	2	SHIM (0.5-MM THK)	
	8	1	134-8944	2	SPACER (102X180X5-MM THK)	
	9	1	228-5448	1	STICK & BEARING AS	
	9A	1	228-5621	4	BEARING-SLEEVE	
	9B	1	4I-6897	2	BEARING-SLEEVE	
	10	1	166-1494	2	SEAL-LIP TYPE	
	11	1	3B-8489	4	FITTING-GREASE	
	12	1	8T-4123	2	WASHER (22X35X3.5-MM THK)	
M	13	1	8T-4780	2	BOLT (M20X2.5X30-MM)	
	14	1	133-2427	2	SHIM (0.5-MM THK)	

B-USE AS REQUIRED
M-METRIC PART

228-5447 STICK GP-HOE *(contd.)* i02214008

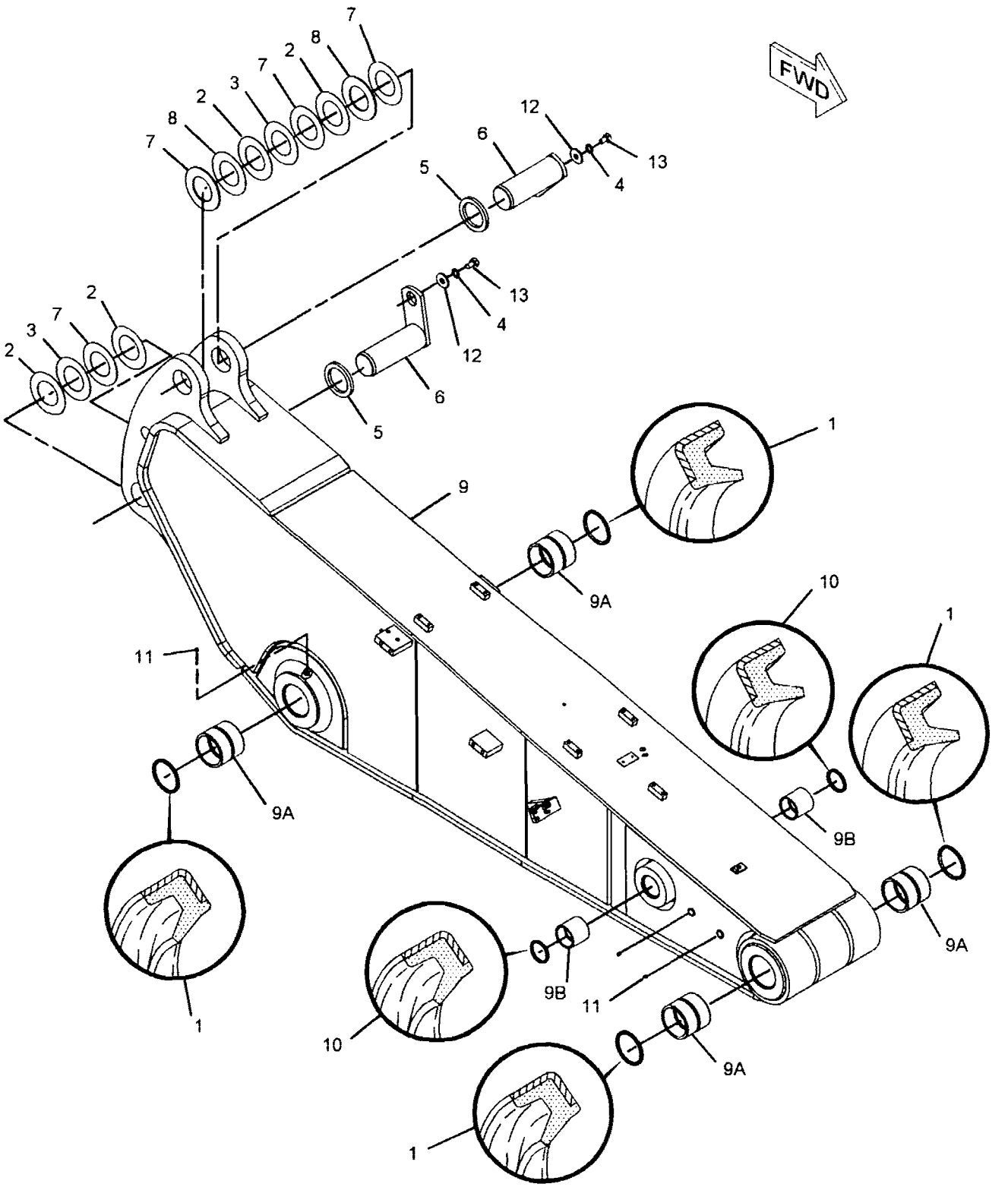

GRAPHIC #1

<END>

g01095058

290-9138 STICK GP-HOE

S/N: YEE1-UP
3.4-M (11.2-FT)
PART OF 294-1258 STICK AR-HOE
AN ATTACHMENT

SMCS-6502 i02861061

NOTE	REF NO	GRAPHIC REF	PART NUMBER	QTY	PART NAME 1 2 3 4 5 6 (PRODUCT LEVEL)	SEE PAGE
	1	1	3B-8489	4	FITTING-GREASE	
	2	1	9X-4598	2	SEAL-LIP TYPE	
	3	1	9X-4599	2	SEAL-LIP TYPE	
B	4	1	093-0084	2	SHIM (1-MM THK)	
B	5	1	093-0090	2	SHIM (1-MM THK)	
B	6	1	093-0116	1	SHIM (2-MM THK)	
B	7	1	093-0122	1	SHIM (2-MM THK)	
	8	1	093-0349	2	WASHER (22X60X6-MM THK)	
	9	1	093-0364	1	SPACER (103X140X12-MM THK)	
B	10	1	113-2127	1	SHIM (0.5-MM THK)	
	11	1	130-4360	1	PIN AS	
B	12	1	133-2427	1	SHIM (0.5-MM THK)	
	13	1	141-3550	1	PIN AS	
	14	1	290-9139	1	STICK & BEARING AS	
	14A	1	228-5621	2	BEARING-SLEEVE	
	14B	1	4I-6897	2	BEARING-SLEEVE	
	14C	1	228-5619	2	BEARING-SLEEVE	
	15	1	093-0366	1	SPACER (93X130X12-MM THK)	
	16	1	166-1494	2	SEAL-LIP TYPE	
	17	1	8T-4123	2	WASHER (22X35X3.5-MM THK)	
M	18	1	8T-4780	2	BOLT (M20X2.5X30-MM)	

B-USE AS REQUIRED
M-METRIC PART

290-9138 **STICK GP-HOE** *(contd.)* **i02861061**

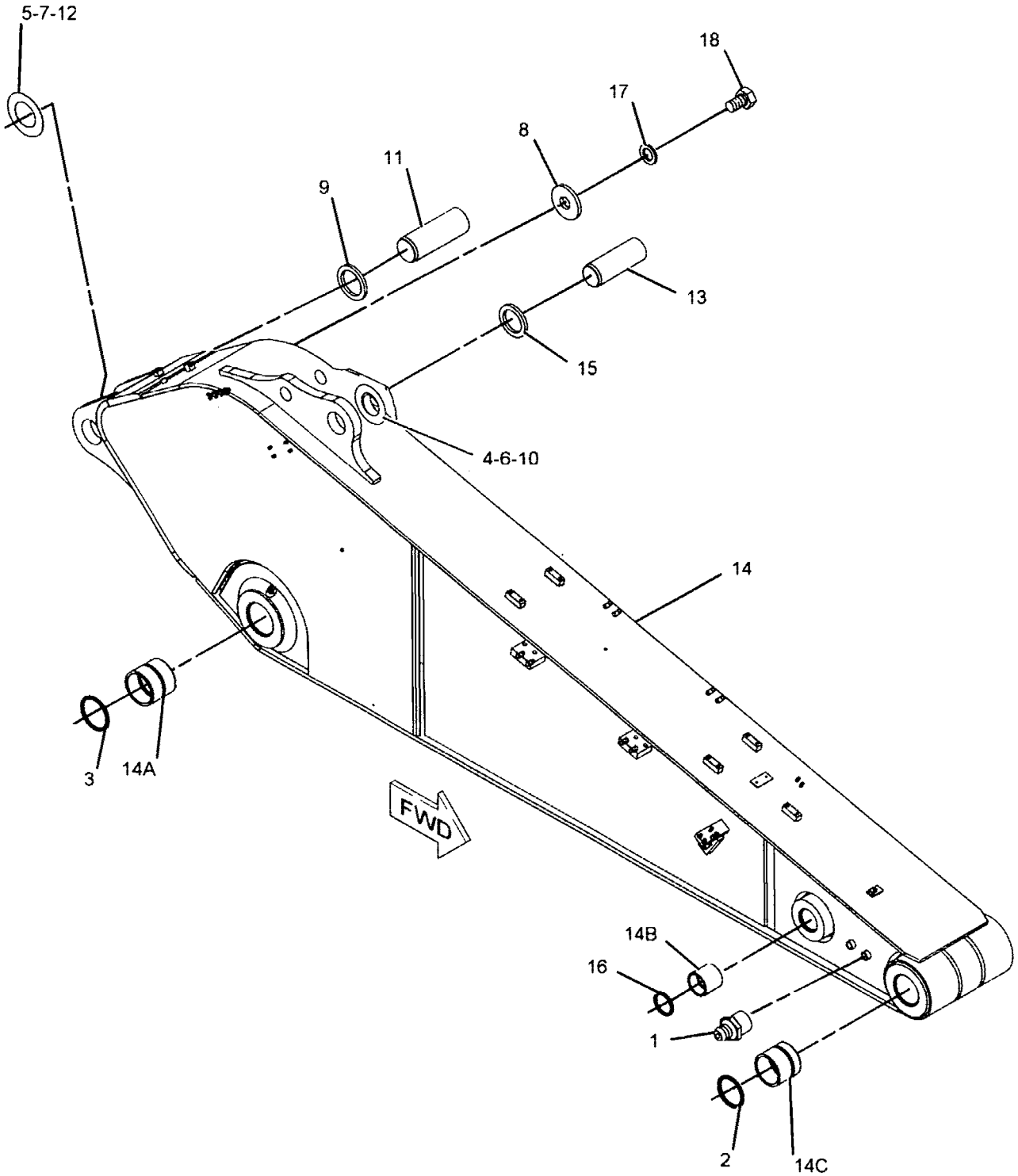

GRAPHIC #1 **<END>** g01095119

IMPLEMENTS

297-7419 STICK GP-HOE

S/N: YEE1-UP
3.9-M (12.8-FT)
PART OF 294-1257 STICK AR-HOE
AN ATTACHMENT

SMCS-6502 **i02861057**

NOTE	REF NO	GRAPHIC REF	PART NUMBER	QTY	PART NAME 1 2 3 4 5 6 (PRODUCT LEVEL)	SEE PAGE
	1	1	3B-8489	4	FITTING-GREASE	
	2	1	9X-4599	2	SEAL-LIP TYPE	
B	3	1	093-0084	2	SHIM (1-MM THK)	
B	4	1	093-0090	2	SHIM (1-MM THK)	
B	5	1	093-0116	1	SHIM (2-MM THK)	
B	6	1	093-0122	1	SHIM (2-MM THK)	
	7	1	093-0349	2	WASHER (22X60X6-MM THK)	
	8	1	093-0364	1	SPACER (103X140X12-MM THK)	
B	9	1	113-2127	1	SHIM (0.5-MM THK)	
	10	1	130-4360	1	PIN AS	
B	11	1	133-2427	1	SHIM (0.5-MM THK)	
	12	1	141-3550	1	PIN AS	
	13	1	297-7420	1	STICK & BEARING AS	
	13A	1	228-5621	2	BEARING-SLEEVE	
	13B	1	4I-6897	2	BEARING-SLEEVE	
	13C	1	228-5619	2	BEARING-SLEEVE	
	14	1	093-0366	1	SPACER (93X130X12-MM THK)	
	15	1	166-1494	2	SEAL-LIP TYPE	
	16	1	8T-4123	2	WASHER (22X35X3.5-MM THK)	
M	17	1	8T-4780	2	BOLT (M20X2.5X30-MM)	
	18	1	9X-4598	2	SEAL-LIP TYPE	

B-USE AS REQUIRED
M-METRIC PART

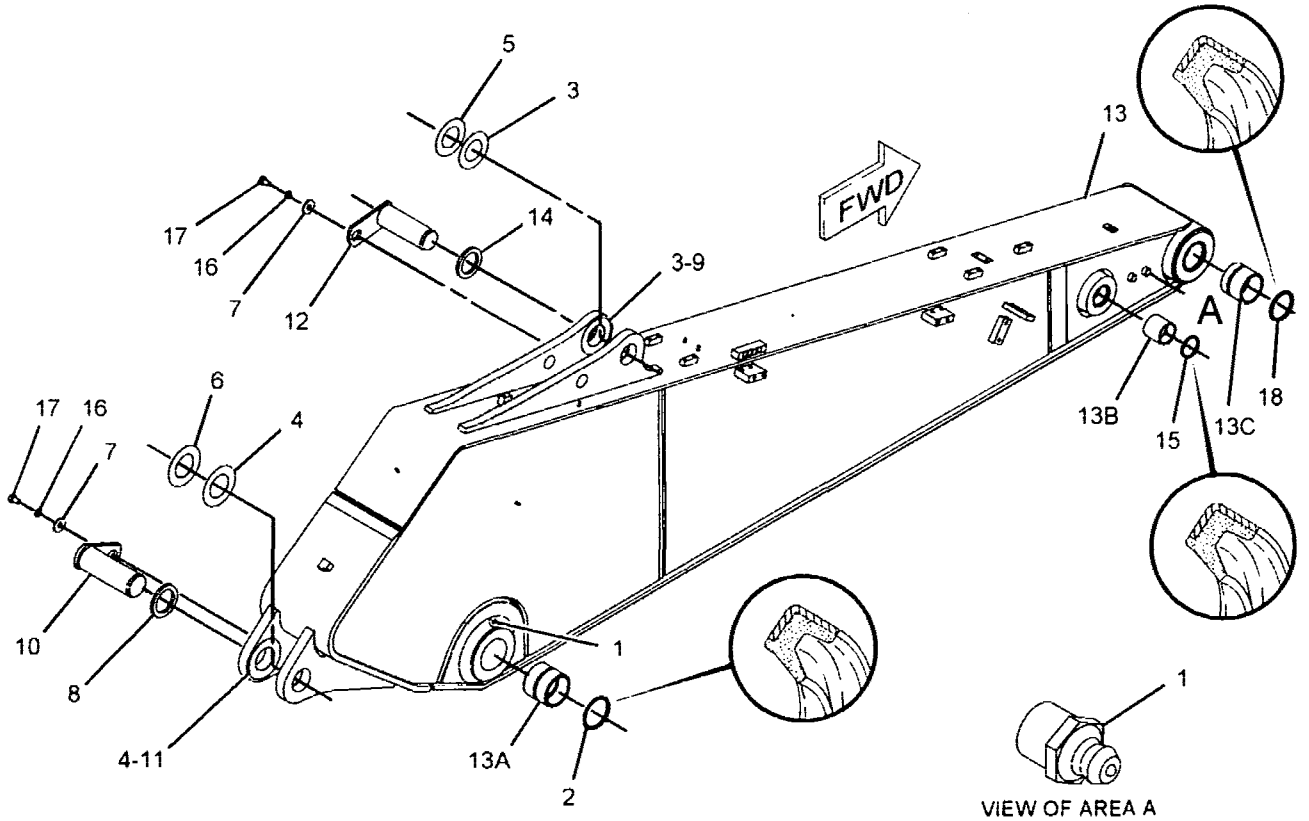

GRAPHIC #1 **<END>** g01095184

297-7442 STICK GP-HOE–ACCUGRADE READY

S/N: YEE1-UP
3.9-M (12.8-FT)
PART OF 294-1265 STICK AR-HOE
AN ATTACHMENT

SMCS-6502 i02871391

NOTE	REF NO	GRAPHIC REF	PART NUMBER	QTY	PART NAME 1 2 3 4 5 6 (PRODUCT LEVEL)	SEE PAGE
	1	1	3B-8489	4	FITTING-GREASE	
	2	1	9X-4598	2	SEAL-LIP TYPE	
	3	1	9X-4599	2	SEAL-LIP TYPE	
B	4	1	093-0084	2	SHIM (1-MM THK)	
B	5	1	093-0090	2	SHIM (1-MM THK)	
B	6	1	093-0116	1	SHIM (2-MM THK)	
B	7	1	093-0122	1	SHIM (2-MM THK)	
	8	1	093-0349	2	WASHER (22X60X6-MM THK)	
	9	1	093-0364	1	SPACER (103X140X12-MM THK)	
B	10	1	113-2127	1	SHIM (0.5-MM THK)	
	11	1	130-4360	1	PIN AS	
B	12	1	133-2427	1	SHIM (0.5-MM THK)	
	13	1	141-3550	1	PIN AS	
	14	1	308-8886	1	STICK & BEARING AS	
	14A	1	4I-6897	2	BEARING-SLEEVE	
	14B	1	228-5619	2	BEARING-SLEEVE	
	14C	1	228-5621	2	BEARING-SLEEVE	
	15	1	093-0366	1	SPACER (93X130X12-MM THK)	
	16	1	166-1494	2	SEAL-LIP TYPE	
	17	1	8T-4123	2	WASHER (22X35X3.5-MM THK)	
M	18	1	8T-4780	2	BOLT (M20X2.5X30-MM)	

B-USE AS REQUIRED
M-METRIC PART

297-7442 **STICK GP-HOE** *(contd.)* **i02871391**

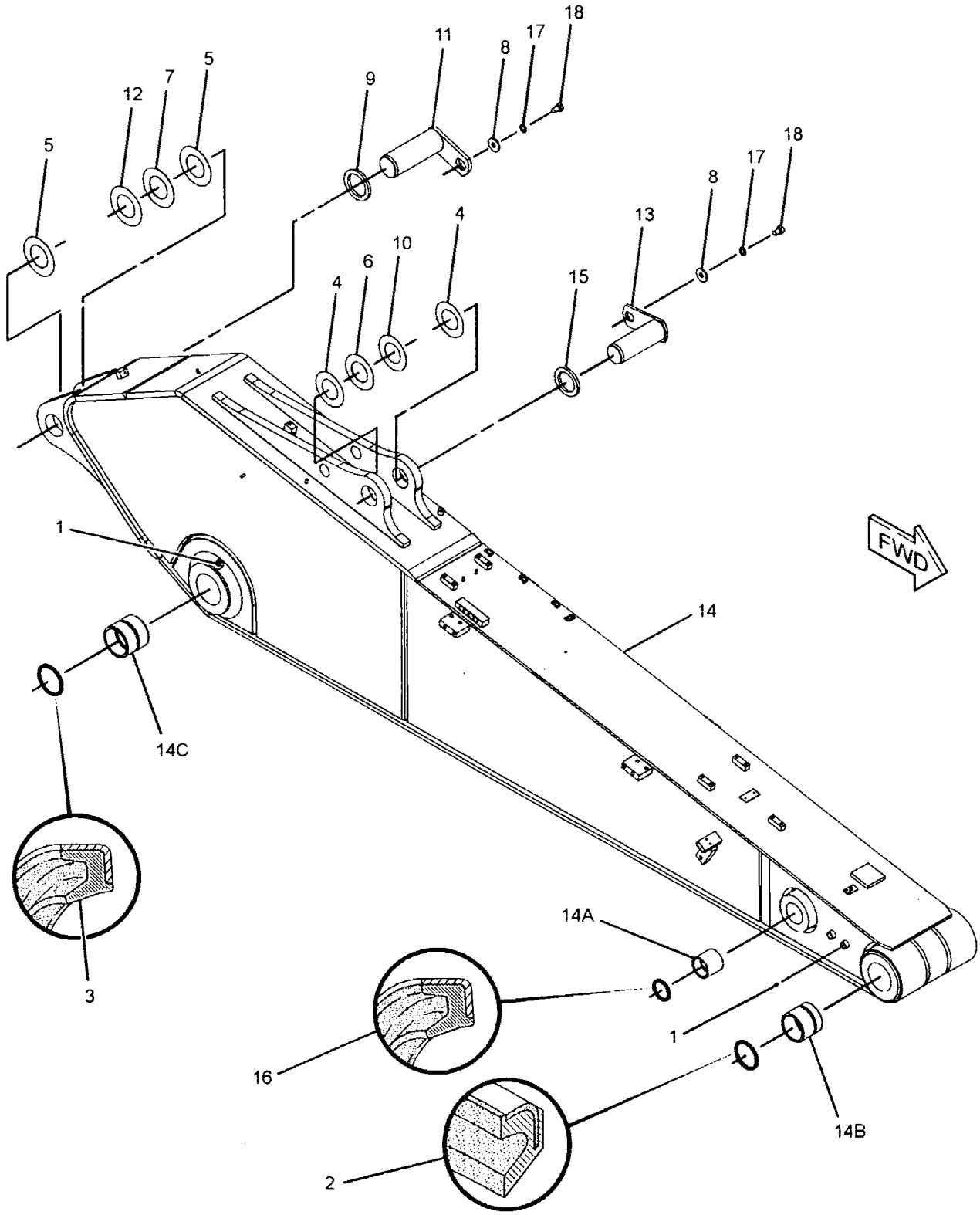

GRAPHIC #1 **<END>** g01455039

IMPLEMENTS

297-7443 STICK GP-HOE–ACCUGRADE READY

S/N: YEE1-UP
3.35-M (11-FT)
PART OF 294-1267 STICK AR-HOE
AN ATTACHMENT

SMCS-6502 **i02861048**

NOTE	REF NO	GRAPHIC REF	PART NUMBER	QTY	PART NAME 1 2 3 4 5 6 (PRODUCT LEVEL)	SEE PAGE
	1	1	**3B-8489**	4	FITTING-GREASE	
	2	1	**9X-4598**	2	SEAL-LIP TYPE	
	3	1	**9X-4599**	2	SEAL-LIP TYPE	
B	4	1	**093-0084**	2	SHIM (1-MM THK)	
B	5	1	**093-0090**	2	SHIM (1-MM THK)	
B	6	1	**093-0116**	1	SHIM (2-MM THK)	
B	7	1	**093-0122**	1	SHIM (2-MM THK)	
	8	1	**093-0349**	2	WASHER (22X60X6-MM THK)	
	9	1	**093-0364**	1	SPACER (103X140X12-MM THK)	
B	10	1	**113-2127**	1	SHIM (0.5-MM THK)	
	11	1	**130-4360**	1	PIN AS	
B	12	1	**133-2427**	1	SHIM (0.5-MM THK)	
	13	1	**141-3550**	1	PIN AS	
	14	1	**308-8888**	1	STICK & BEARING AS	
	14A	1	**4I-6897**	2	BEARING-SLEEVE	
	14B	1	**228-5619**	2	BEARING-SLEEVE	
	14C	1	**228-5621**	2	BEARING-SLEEVE	
	15	1	**093-0366**	1	SPACER (93X130X12-MM THK)	
	16	1	**166-1494**	2	SEAL-LIP TYPE	
	17	1	**8T-4123**	2	WASHER (22X35X3.5-MM THK)	
M	18	1	**8T-4780**	2	BOLT (M20X2.5X30-MM)	

B-USE AS REQUIRED
M-METRIC PART

297-7443 **STICK GP-HOE** *(contd.)* **i02861048**

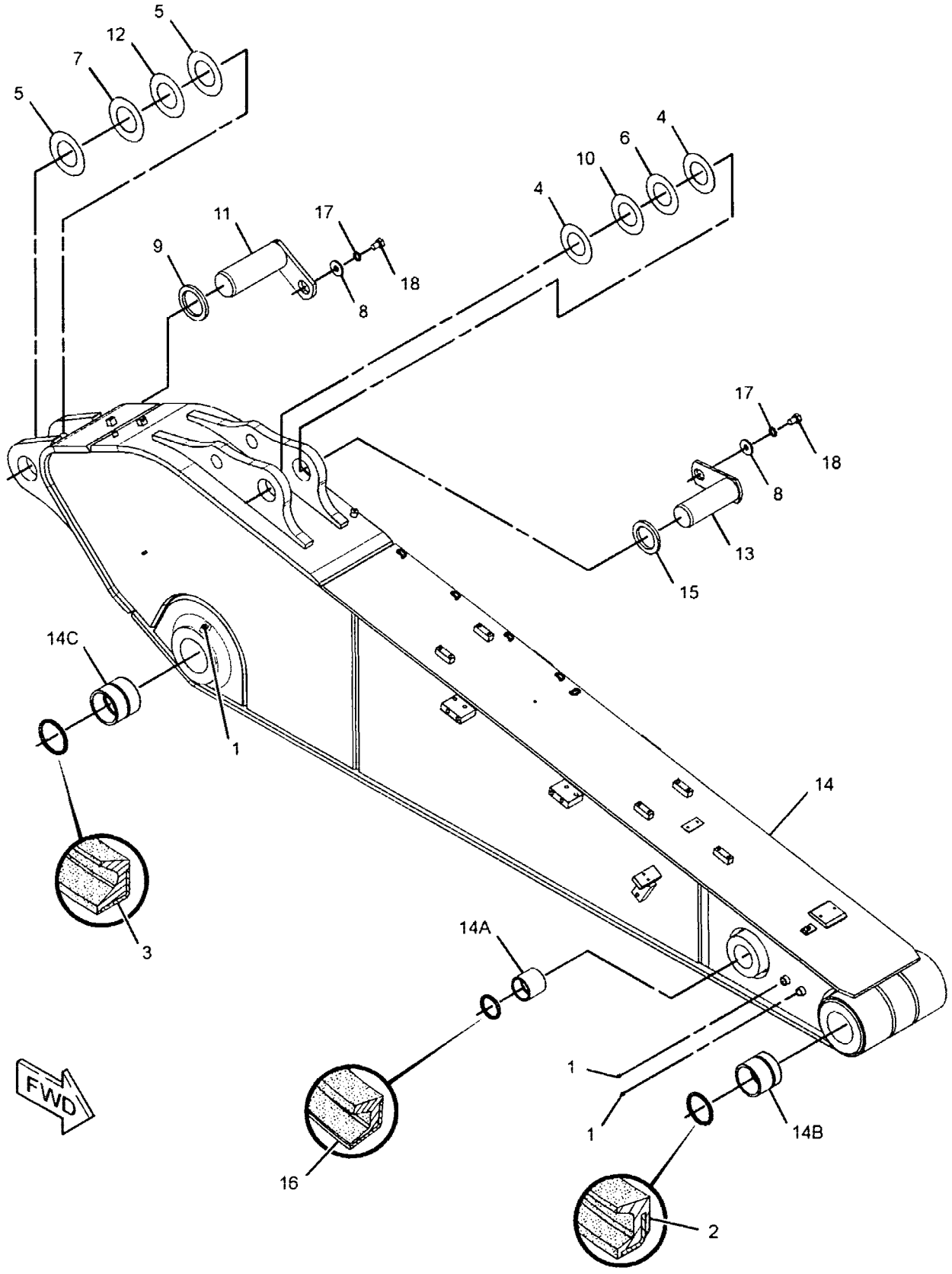

GRAPHIC #1 **<END>** g01457659

IMPLEMENTS

303-9038 STICK GP-HOE

S/N: YEE1-UP
4.3-M (14.1-FT)
PART OF 294-1255 STICK AR-HOE
AN ATTACHMENT

SMCS-6502 **i02861053**

NOTE	REF NO	GRAPHIC REF	PART NUMBER	QTY	PART NAME 1 2 3 4 5 6 (PRODUCT LEVEL)	SEE PAGE
	1	1	**3B-8489**	4	FITTING-GREASE	
	2	1	**9X-4598**	2	SEAL-LIP TYPE	
	3	1	**9X-4599**	2	SEAL-LIP TYPE	
B	4	1	**093-0084**	2	SHIM (1-MM THK)	
B	5	1	**093-0090**	2	SHIM (1-MM THK)	
B	6	1	**093-0116**	1	SHIM (2-MM THK)	
B	7	1	**093-0122**	1	SHIM (2-MM THK)	
	8	1	**093-0349**	2	WASHER (22X60X6-MM THK)	
	9	1	**093-0364**	1	SPACER (103X140X12-MM THK)	
B	10	1	**113-2127**	1	SHIM (0.5-MM THK)	
	11	1	**130-4360**	1	PIN AS	
B	12	1	**133-2427**	1	SHIM (0.5-MM THK)	
	13	1	**141-3550**	1	PIN AS	
	14	1	**166-1494**	2	SEAL-LIP TYPE	
	15	1	**303-9039**	1	STICK & BEARING AS	
	15A	1	**228-5621**	2	BEARING-SLEEVE	
	15B	1	**4I-6897**	2	BEARING-SLEEVE	
	15C	1	**228-5619**	2	BEARING-SLEEVE	
	16	1	**093-0366**	1	SPACER (93X130X12-MM THK)	
	17	1	**8T-4123**	2	WASHER (22X35X3.5-MM THK)	
M	18	1	**8T-4780**	2	BOLT (M20X2.5X30-MM)	

B-USE AS REQUIRED
M-METRIC PART

303-9038 STICK GP-HOE *(contd.)* i02861053

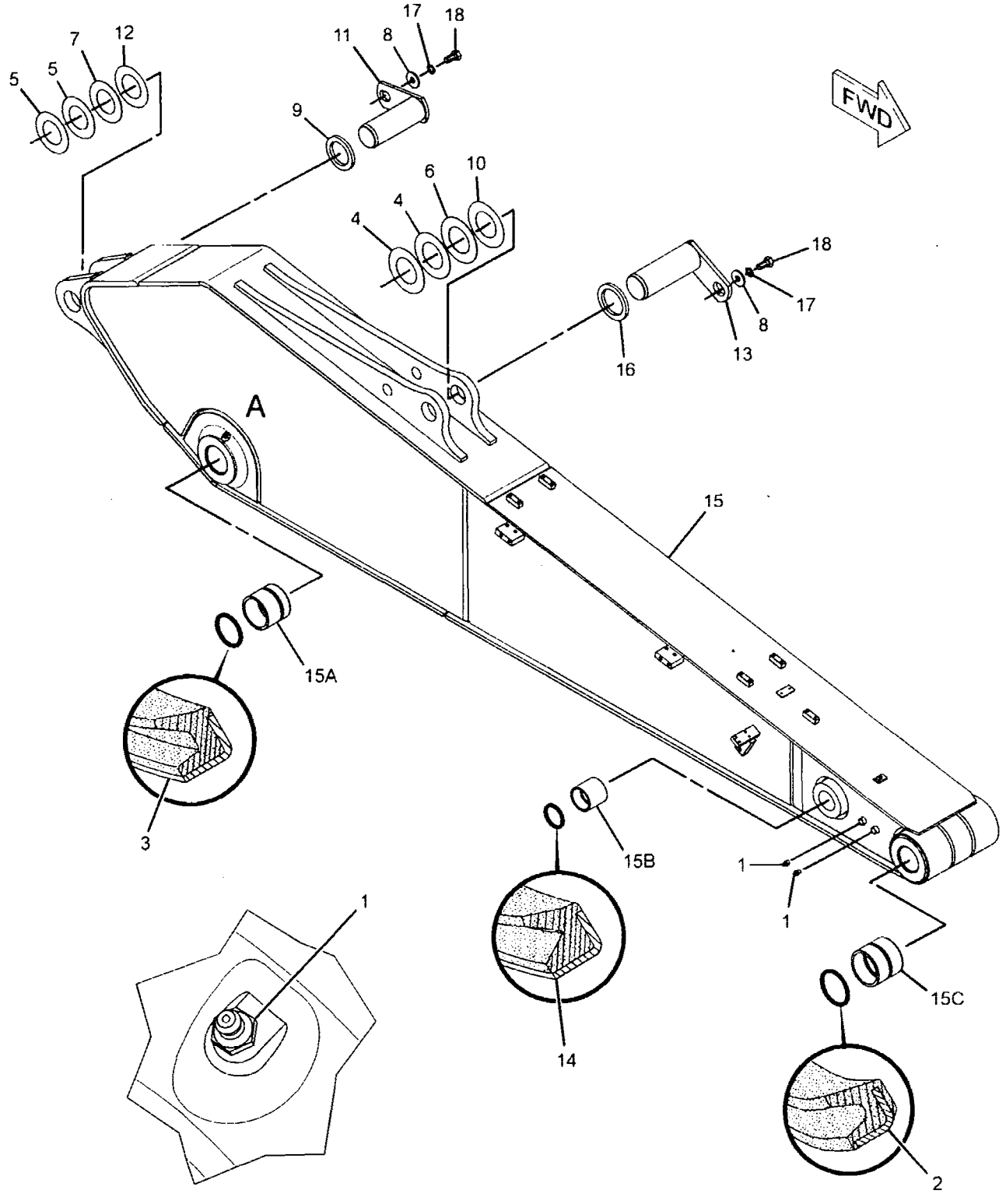

GRAPHIC #1 **<END>** g01429656

WORK TOOLS

4I-4070 ADJUSTER GP-BUCKET

S/N: YEE1-UP
G-FAMILY
PART OF 251-6960, 264-1140, 281-1793, 281-1794, 281-1795, 281-1796, 281-1798, 281-1810, 281-1812, 281-1813, 281-1815, 281-1816, 281-1818, 281-1819, 281-1820, 281-1821, 281-1822, 281-1824, 281-1846, 281-1890, 304-3111, 304-7423, 304-7425, 313-1543, 313-1546 BUCKET & ADJUSTER GP
AN ATTACHMENT

SMCS-6513, 6700 **i01000553**

NOTE	REF NO	GRAPHIC REF	PART NUMBER	QTY	PART NAME 1 2 3 4 5 6 (PRODUCT LEVEL)	SEE PAGE
B	1	1	**4I-4039**	6	SHIM (1-MM THK)	
B	2	1	**4I-4043**	4	SHIM (0.5-MM THK)	
	3	1	**4I-6626**	1	PIN	
	4	1	**134-8952**	1	PLATE	
M	5	1	**7X-2563**	6	BOLT (M20X2.5X60-MM)	
	6	1	**8T-4123**	6	WASHER (22X35X3.5-MM THK)	
	7	1	**163-3493**	1	FLANGE	

B-USE AS REQUIRED
M-METRIC PART

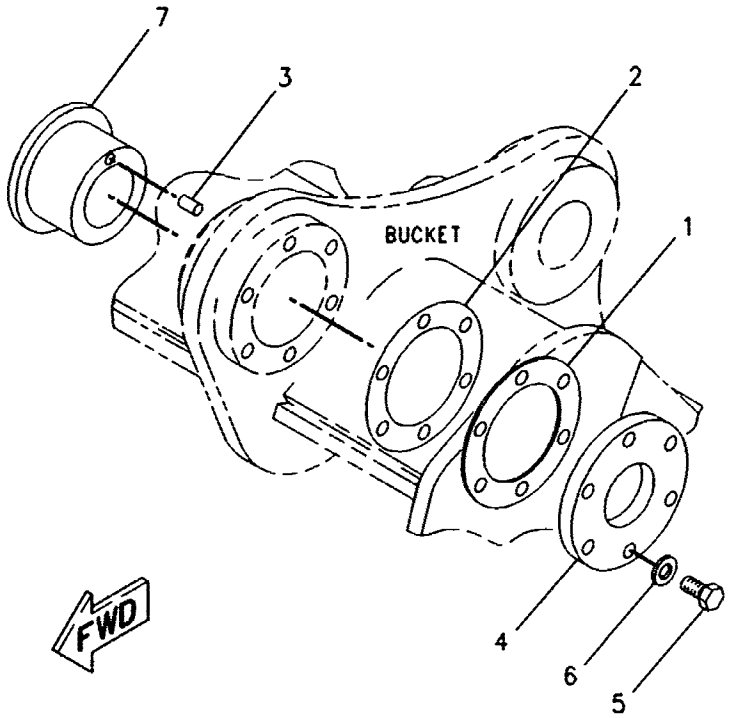

GRAPHIC #1 **<END>** g00262635

216-5734 ADJUSTER GP-BUCKET

S/N: YEE1-UP
UB, VB-FAMILY
PART OF 263-9747, 263-9748, 279-5244, 279-5253 BUCKET & ADJUSTER GP
AN ATTACHMENT

SMCS-6513, 6700 **i02312865**

NOTE	REF NO	GRAPHIC REF	PART NUMBER	QTY	PART NAME 1 2 3 4 5 6 (PRODUCT LEVEL)	SEE PAGE
	1	1	**4I-6626**	1	PIN	
	2	1	**216-5738**	1	PLATE	
B	3	1	**216-5739**	4	SHIM (0.5-MM THK)	
B	4	1	**216-5740**	6	SHIM (1-MM THK)	
	5	1	**250-6470**	1	FLANGE	
M	6	1	**7X-2563**	6	BOLT (M20X2.5X60-MM)	
	7	1	**8T-4123**	6	WASHER (22X35X3.5-MM THK)	

B-USE AS REQUIRED
M-METRIC PART

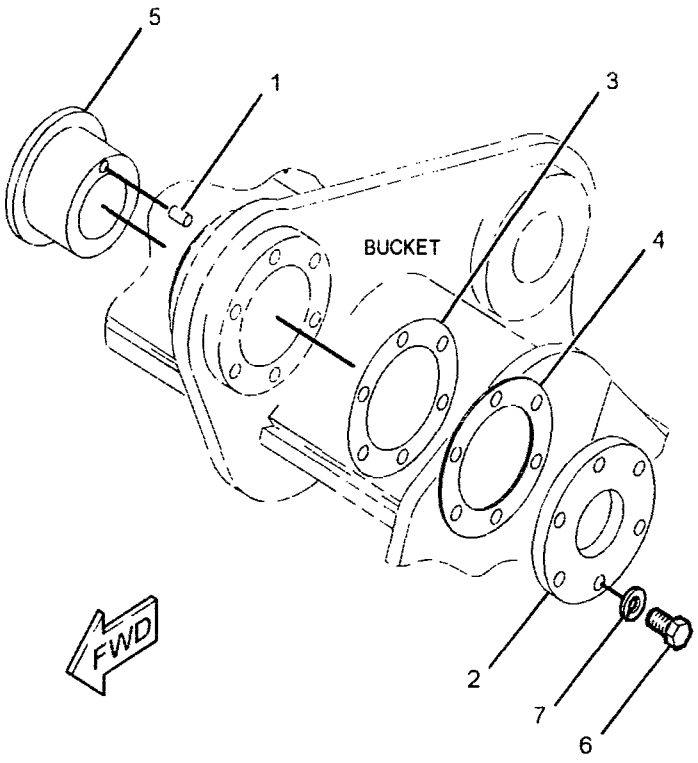

GRAPHIC #1 **<END>** g01202196

251-6960 BUCKET & ADJUSTER GP–GENERAL PURPOSE, TB-FAMILY

S/N: YEE1-UP

1372-MM (54-IN) WIDE X 2.18-CU M (2.85-CU YD) CAPACITY. K-110 ADAPTERS, (6X)

AN ATTACHMENT

SMCS-6503, 6513 i02214253

NOTE	PART NUMBER	QTY	PART NAME 1 2 3 4 5 6 (PRODUCT LEVEL)	SEE PAGE
Y	*4I-4070*	1	ADJUSTER GP-BUCKET	876
Y	*251-6967*	1	BUCKET AS-GENERAL PURPOSE (CLOSE SPACE ADAPTER, TB-FAMILY)	905

Y-SEPARATE ILLUSTRATION

<END>

263-9747 BUCKET & ADJUSTER GP–HEAVY-DUTY ROCK, UB-FAMILY

S/N: YEE1-UP

1524-MM (60-IN) WIDE X 2.42-CU M (3.16-CU YD) CAPACITY. K-130 ADAPTERS, (4X)

AN ATTACHMENT

SMCS-6503, 6513 **i02540482**

NOTE	REF NO	GRAPHIC REF	PART NUMBER	QTY	PART NAME 1 2 3 4 5 6 (PRODUCT LEVEL)	SEE PAGE
	1	1	**265-3398**	1	EDGE AS	
	1A	1	**232-0130**	4	ADAPTER-TIP (K-130, 2-STRAP, CENTER)	
	1B	1	**8P-9770**	1	PLATE	
	2	1	**264-7898**	1	PLATE AS-BOX	
	3	1	**265-3359**	2	PLATE-WEAR	
	4	1	**265-3409**	2	PLATE-WEAR	
	5	1	**265-3405**	5	PLATE-WEAR	
	6	1	**256-3029**	1	PLATE-REINFORCEMENT	
	7	1	**2C-9259**	2	PLATE-IDENTIFICATION (CAT)	
Y	8	1	*216-5734*	1	ADJUSTER GP-BUCKET	877

Y-SEPARATE ILLUSTRATION

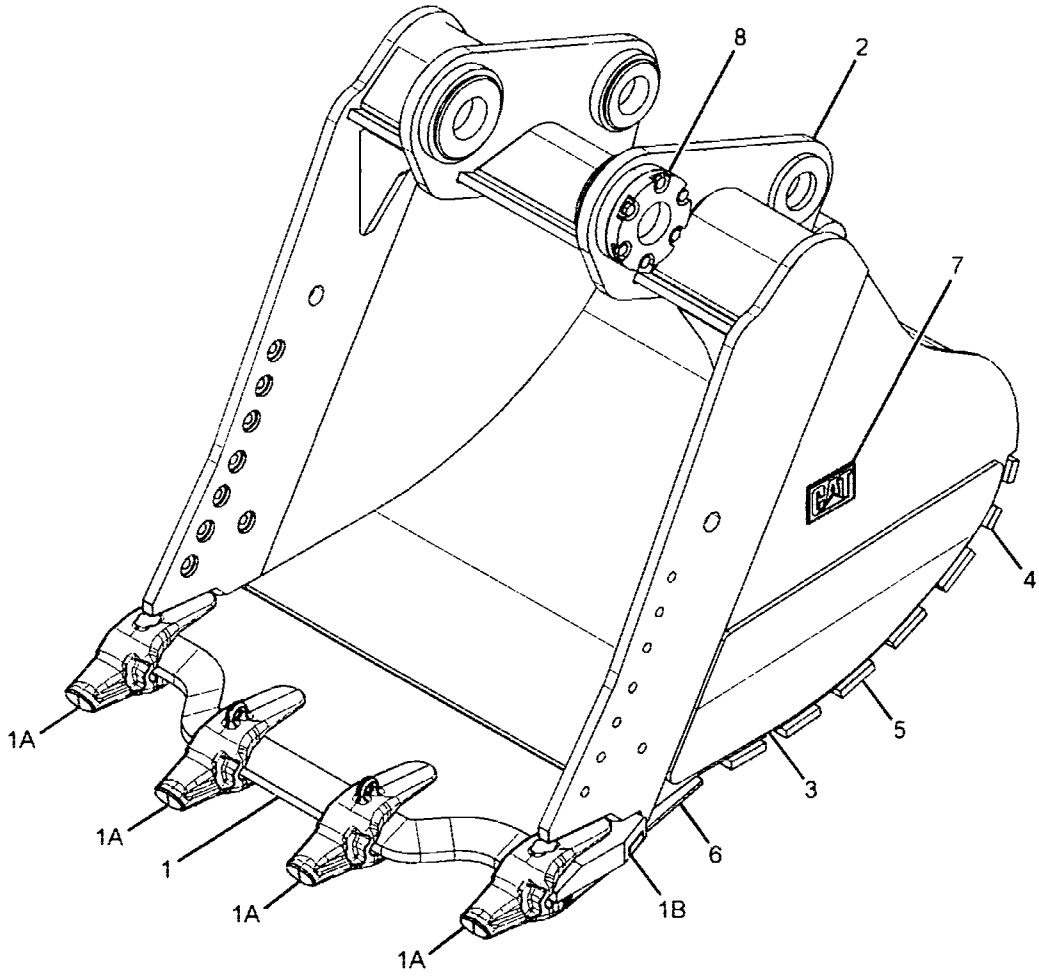

GRAPHIC #1

<END>

g01342390

263-9748 BUCKET & ADJUSTER GP–HEAVY-DUTY ROCK, UB-FAMILY

S/N: YEE1-UP

1930-MM (76-IN) WIDE X 3.11-CU M (4.07-CU YD) CAPACITY. K-130 ADAPTERS, (6X)

AN ATTACHMENT

SMCS-6503, 6513 **i02312853**

NOTE	REF NO	GRAPHIC REF	PART NUMBER	QTY	PART NAME 1 2 3 4 5 6 (PRODUCT LEVEL)	SEE PAGE
	1		*263-9752*	1	BUCKET AS-HEAVY DUTY ROCK (K-130, TB-FAMILY)	
	2	1	**265-3400**	1	EDGE AS	
	2A	1	**232-0130**	6	ADAPTER-TIP (K-130, 2-STRAP, CENTER)	
	2B	1	**8P-9770**	1	PLATE	
	3	1	**264-7899**	1	PLATE AS-BOX	
	4	1	**265-3359**	2	PLATE-WEAR	
	5	1	**265-3411**	2	PLATE-WEAR	
	6	1	**265-3410**	5	PLATE-WEAR	
	7	1	**265-3406**	1	PLATE-REINFORCEMENT	
	8	1	**2C-9259**	2	PLATE-IDENTIFICATION (CAT)	
Y	9	1	*216-5734*	1	ADJUSTER GP-BUCKET	877

Y-SEPARATE ILLUSTRATION

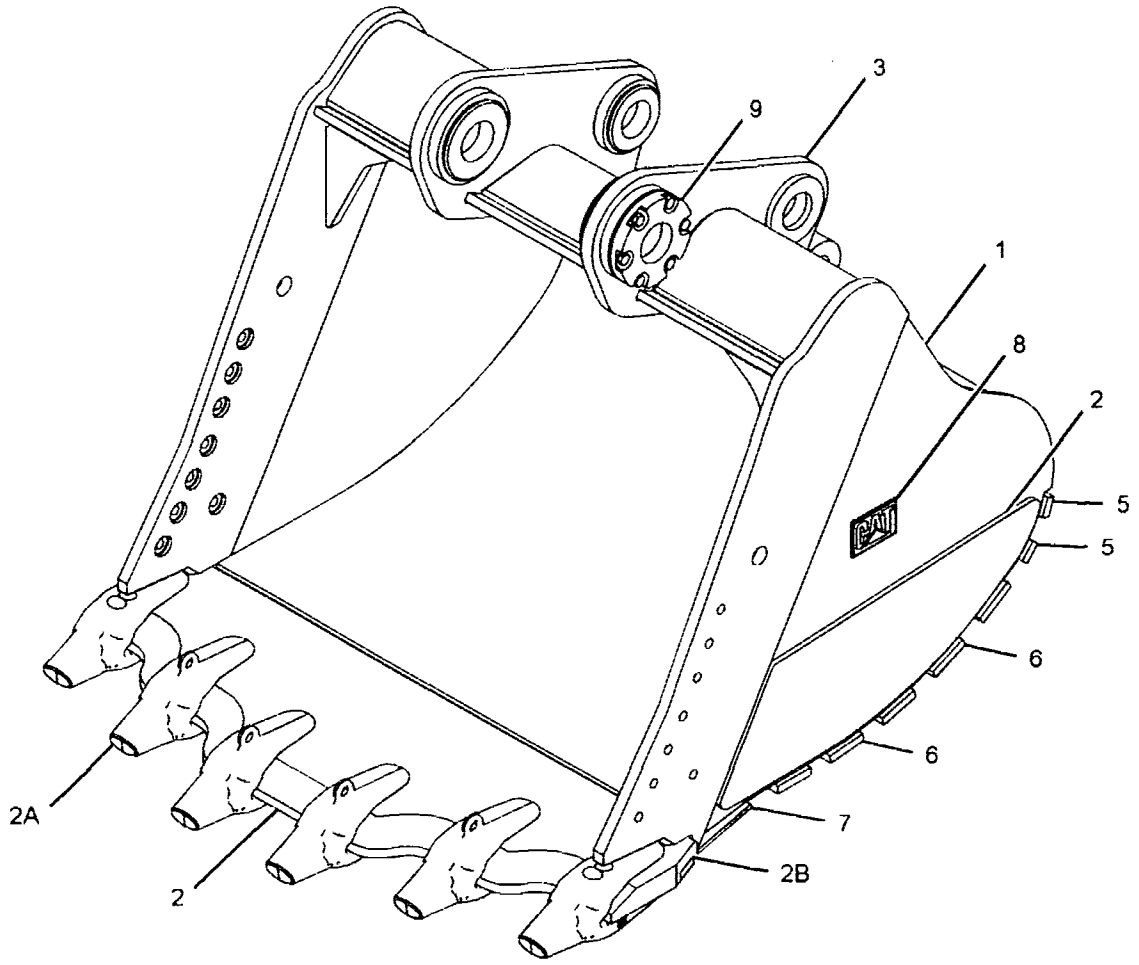

GRAPHIC #1

<END>

g01358717

264-1140 BUCKET & ADJUSTER GP–ROCK, TB-FAMILY

S/N: YEE1-UP

965-MM (38-IN) WIDE X 0.9-CU M (1.25-CU YD) CAPACITY. J-550 ADAPTER, (5X)

AN ATTACHMENT

SMCS-6503, 6513 **i02476683**

NOTE	PART NUMBER	QTY	PART NAME 1 2 3 4 5 6 (PRODUCT LEVEL)	SEE PAGE
Y	*4I-4070*	1	ADJUSTER GP-BUCKET	876
Y	*270-2601*	1	BUCKET AS-ROCK (J-550, TB-FAMILY)	911

Y-SEPARATE ILLUSTRATION

<END>

WORK TOOLS

279-5244 BUCKET & ADJUSTER GP–HEAVY-DUTY, UB,TB-FAMILY

S/N: YEE1-UP

1981-MM (78-IN) WIDE X 3.11-CU M (4.07-CU YD)CAPACITY. K-130 ADAPTERS, (6X) AN ATTACHMENT

SMCS-6503, 6513 **i02575871**

NOTE	REF NO	GRAPHIC REF	PART NUMBER	QTY	PART NAME 1 2 3 4 5 6 (PRODUCT LEVEL)	SEE PAGE
	1	1	**279-9976**	1	EDGE AS	
	1A	1	**264-2136**	1	ADAPTER-TIP (K-130, 2-STRAP, LH)	
	1B	1	**232-0130**	4	ADAPTER-TIP (K-130, 2-STRAP, CENTER)	
	1C	1	**264-2135**	1	ADAPTER-TIP (K-130, 2-STRAP, RH)	
	1D	1	**8P-9770**	1	PLATE	
	2	1	**264-7899**	1	PLATE AS-BOX	
	3	1	**263-7321**	2	PLATE-WEAR	
	4	1	**265-3407**	5	PLATE-WEAR	
	5	1	**265-3406**	1	PLATE-REINFORCEMENT	
	6	1	**2C-9259**	2	PLATE-IDENTIFICATION (CAT)	
Y	7	1	*216-5734*	1	ADJUSTER GP-BUCKET	877

Y-SEPARATE ILLUSTRATION

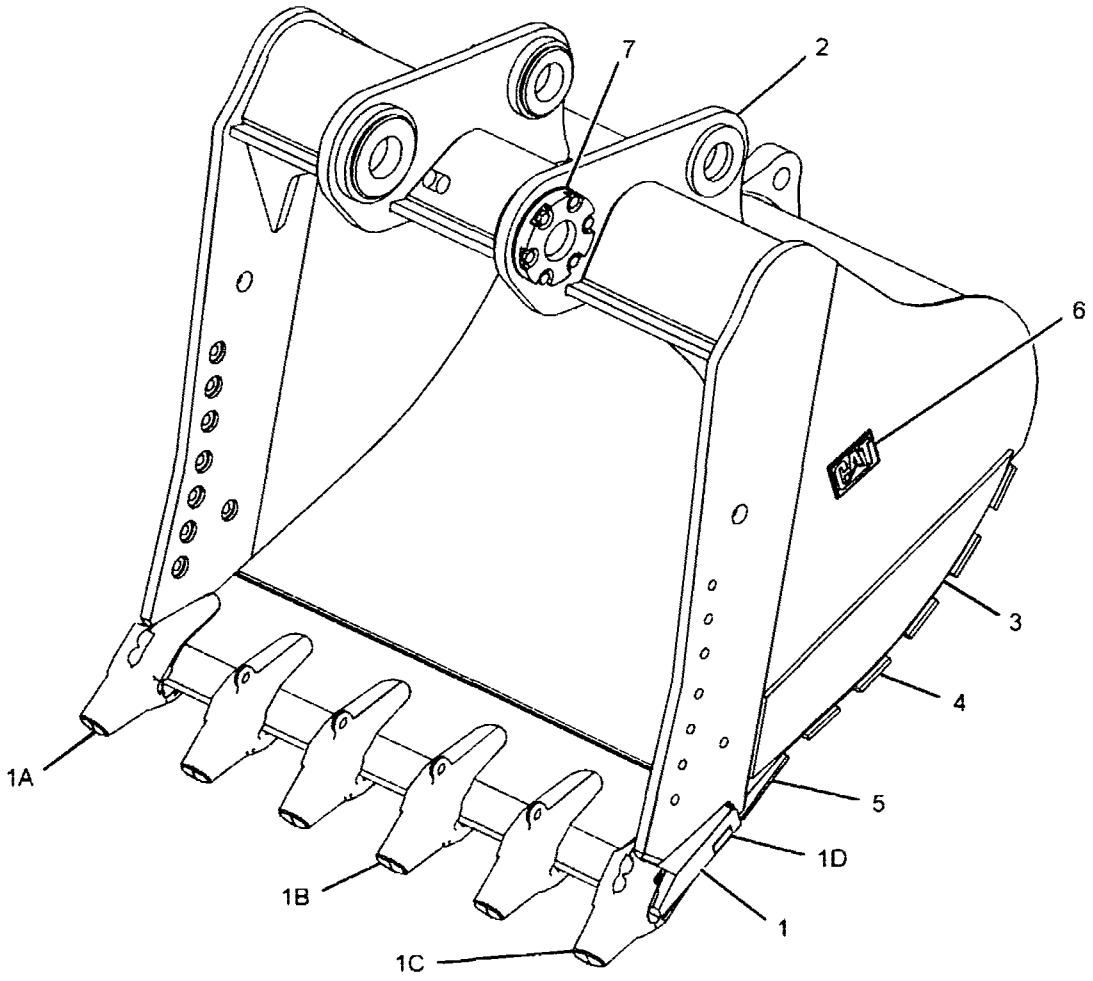

GRAPHIC #1 **<END>** g01302116

WORK TOOLS

279-5253 BUCKET & ADJUSTER GP–GENERAL PURPOSE, UB-FAMILY

S/N: YEE1-UP

1981-MM (78-IN) WIDE X 3.47-CU M (4.54-CU YD)CAPACITY. K-130 ADAPTERS, (6X) AN ATTACHMENT

SMCS-6503, 6513 **i02575924**

NOTE	REF NO	GRAPHIC REF	PART NUMBER	QTY	PART NAME 1 2 3 4 5 6 (PRODUCT LEVEL)	SEE PAGE
	1		*279-5254*	1	BUCKET AS-GENERAL PURPOSE	
	2	1	**279-9976**	1	EDGE AS	
	2A	1	**264-2136**	1	ADAPTER-TIP (K-130, 2-STRAP, LH)	
	2B	1	**232-0130**	4	ADAPTER-TIP (K-130, 2-STRAP, CENTER)	
	2C	1	**264-2135**	1	ADAPTER-TIP (K-130, 2-STRAP, RH)	
	2D	1	**8P-9770**	1	PLATE	
	3	1	**264-7899**	1	PLATE AS-BOX	
	4	1	**265-3365**	2	PLATE-WEAR	
	5	1	**265-3407**	5	PLATE-WEAR	
	6	1	**265-3406**	1	PLATE-REINFORCEMENT	
	7	1	**2C-9259**	2	PLATE-IDENTIFICATION (CAT)	
Y	8	1	*216-5734*	1	ADJUSTER GP-BUCKET	877

Y-SEPARATE ILLUSTRATION

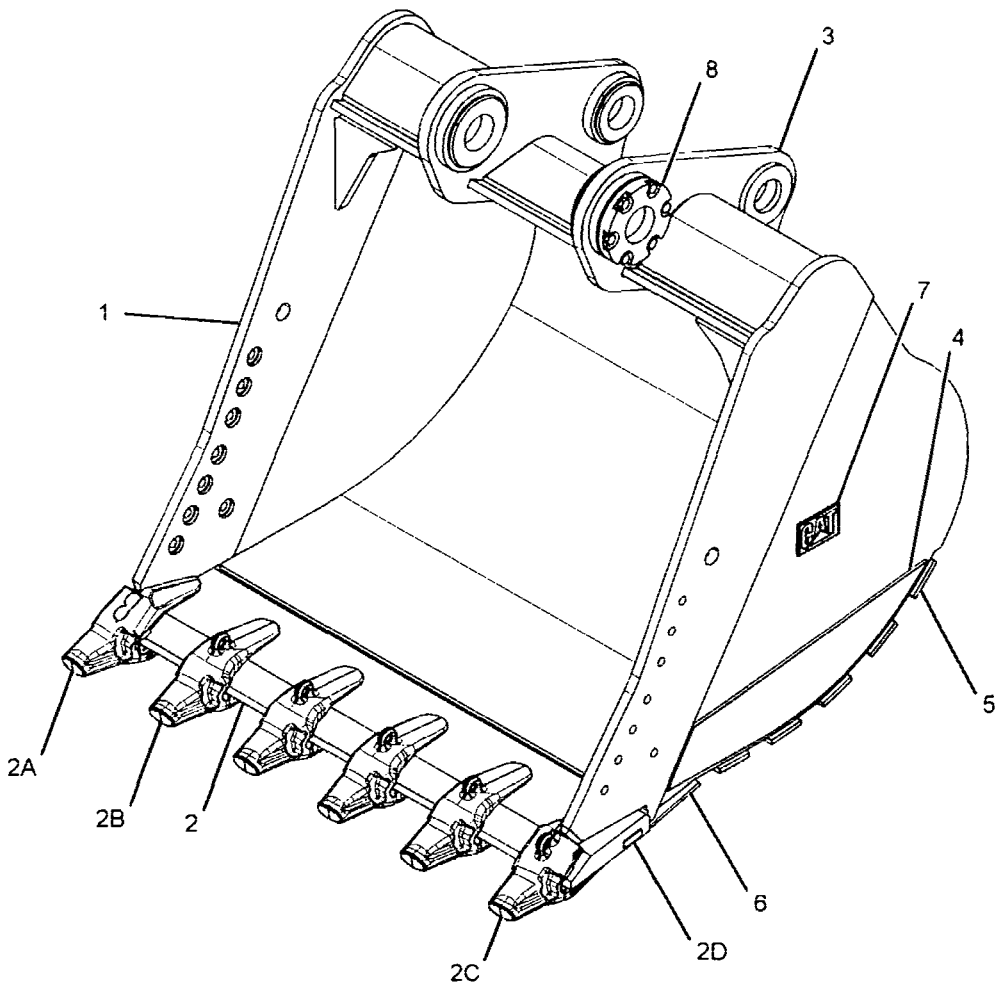

GRAPHIC #1

<END>

g01362667

WORK TOOLS

281-1791 BUCKET & ADJUSTER GP–GENERAL PURPOSE, TB-FAMILY

S/N: YEE1-UP

762-MM (30-IN) WIDE X 1.01-CU M (1.32-CU YD) CAPACITY. K-110 ADAPTERS, (3X)

AN ATTACHMENT

SMCS-6503, 6513 **i02593180**

NOTE	REF NO	GRAPHIC REF	PART NUMBER	QTY	PART NAME 1 2 3 4 5 6 (PRODUCT LEVEL)	SEE PAGE
	1	1	*281-1799*	1	BUCKET AS-GENERAL PURPOSE	
	2	1	**279-9956**	1	EDGE AS	
	2A	1	**264-2115**	1	ADAPTER-TIP (K-110, 2-STRAP, RH)	
	2B	1	**232-0114**	1	ADAPTER-TIP (K-110, 2-STRAP, CENTER)	
	2C	1	**264-2116**	1	ADAPTER-TIP (K-110, 2-STRAP, LH)	
	2D	1	**8P-9770**	1	PLATE	
	3	1	**283-4218**	1	PLATE AS-BOX	
	4	1	**273-3382**	1	PLATE-REINFORCEMENT	
	5	1	**2C-9259**	2	PLATE-IDENTIFICATION (CAT)	
	6	1	**283-4259**	1	PLATE-WEAR	
	7	1	**283-4258**	5	PLATE-WEAR	
	8	1	**279-9980**	2	PLATE-WEAR	
	9	1	**289-5983**	1	PIN AS	
	10	1	**289-5985**	1	PIN AS	
	11	1	**8T-4167**	2	WASHER-HARD (26X44X4-MM THK)	
M	12	1	**8T-5379**	2	BOLT (M24X3X50-MM)	
	13	1	**201-2771**	2	WASHER (26X90X8-MM THK)	

M-METRIC PART

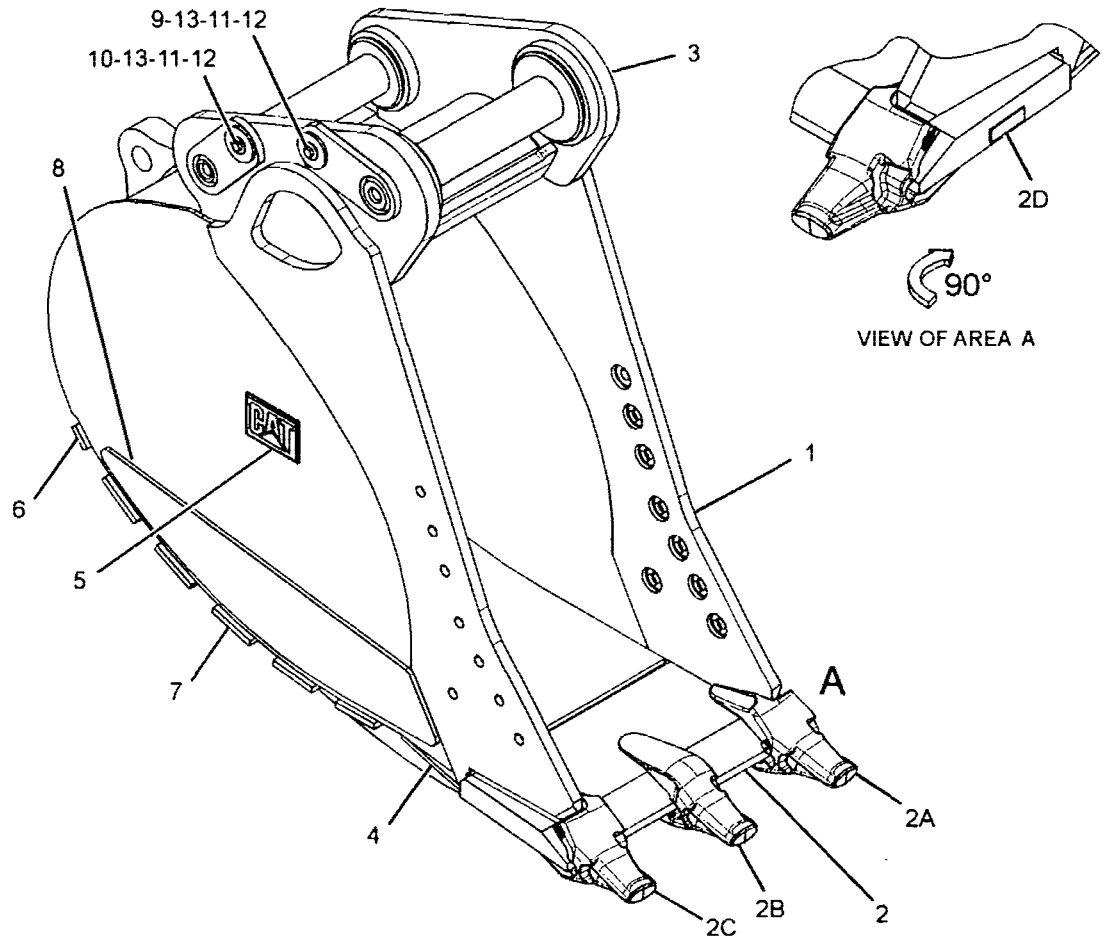

GRAPHIC #1 **<END>** g01366408

WORK TOOLS

281-1793 BUCKET & ADJUSTER GP–GENERAL PURPOSE, TB-FAMILY

S/N: YEE1-UP

1067-MM (42-IN) WIDE X 1.51-CU M (1.98-CU YD) CAPACITY. K-110 ADAPTERS, (4X)

AN ATTACHMENT

SMCS-6503, 6513 **i02593202**

NOTE	REF NO	GRAPHIC REF	PART NUMBER	QTY	PART NAME 1 2 3 4 5 6 (PRODUCT LEVEL)	SEE PAGE
	1	1	*281-1801*	1	BUCKET AS-GENERAL PURPOSE	
	2	1	**279-9958**	1	EDGE AS	
	2A	1	**264-2115**	1	ADAPTER-TIP (K-110, 2-STRAP, RH)	
	2B	1	**232-0114**	2	ADAPTER-TIP (K-110, 2-STRAP, CENTER)	
	2C	1	**264-2116**	1	ADAPTER-TIP (K-110, 2-STRAP, LH)	
	2D	1	**8P-9770**	1	PLATE	
	3	1	**283-4220**	1	PLATE AS-BOX	
	4	1	**283-4264**	5	PLATE-WEAR	
	5	1	**283-4265**	1	PLATE-WEAR	
	6	1	**279-9980**	2	PLATE-WEAR	
	7	1	**276-5769**	1	PLATE-REINFORCEMENT	
	8	1	**2C-9259**	2	PLATE-IDENTIFICATION (CAT)	
Y	9	1	*4I-4070*	1	ADJUSTER GP-BUCKET	876

Y-SEPARATE ILLUSTRATION

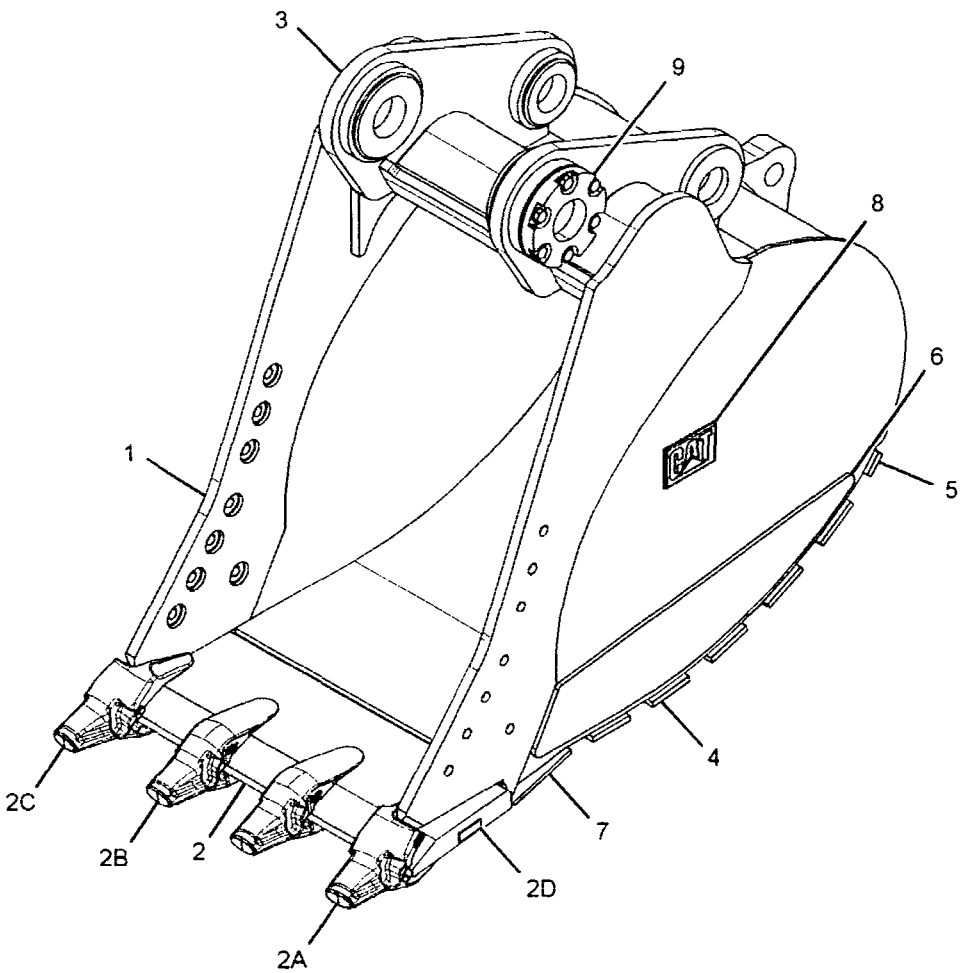

GRAPHIC #1 **<END>** g01366225

WORK TOOLS

281-1794 BUCKET & ADJUSTER GP–GENERAL PURPOSE, TB-FAMILY

S/N: YEE1-UP

1219-MM (48-IN) WIDE X 1.8-CU M (2.36-CU YD) CAPACITY. K-110 ADAPTERS, (5X)
AN ATTACHMENT

SMCS-6503, 6513 **i02593209**

NOTE	REF NO	GRAPHIC REF	PART NUMBER	QTY	PART NAME 1 2 3 4 5 6 (PRODUCT LEVEL)	SEE PAGE
	1	1	*281-1802*	1	BUCKET AS-HEAVY DUTY	
	2	1	**279-9959**	1	EDGE AS	
	2A	1	**264-2115**	1	ADAPTER-TIP (K-110, 2-STRAP, RH)	
	2B	1	**232-0114**	3	ADAPTER-TIP (K-110, 2-STRAP, CENTER)	
	2C	1	**264-2116**	1	ADAPTER-TIP (K-110, 2-STRAP, LH)	
	2D	1	**8P-9770**	1	PLATE	
	3	1	**283-4221**	1	PLATE AS-BOX	
	4	1	**283-4267**	5	PLATE-WEAR	
	5	1	**283-4268**	1	PLATE-WEAR	
	6	1	**279-9980**	2	PLATE-WEAR	
	7	1	**273-3383**	1	PLATE-REINFORCEMENT	
	8	1	**2C-9259**	2	PLATE-IDENTIFICATION (CAT)	
Y	9	1	*4I-4070*	1	ADJUSTER GP-BUCKET	876

Y-SEPARATE ILLUSTRATION

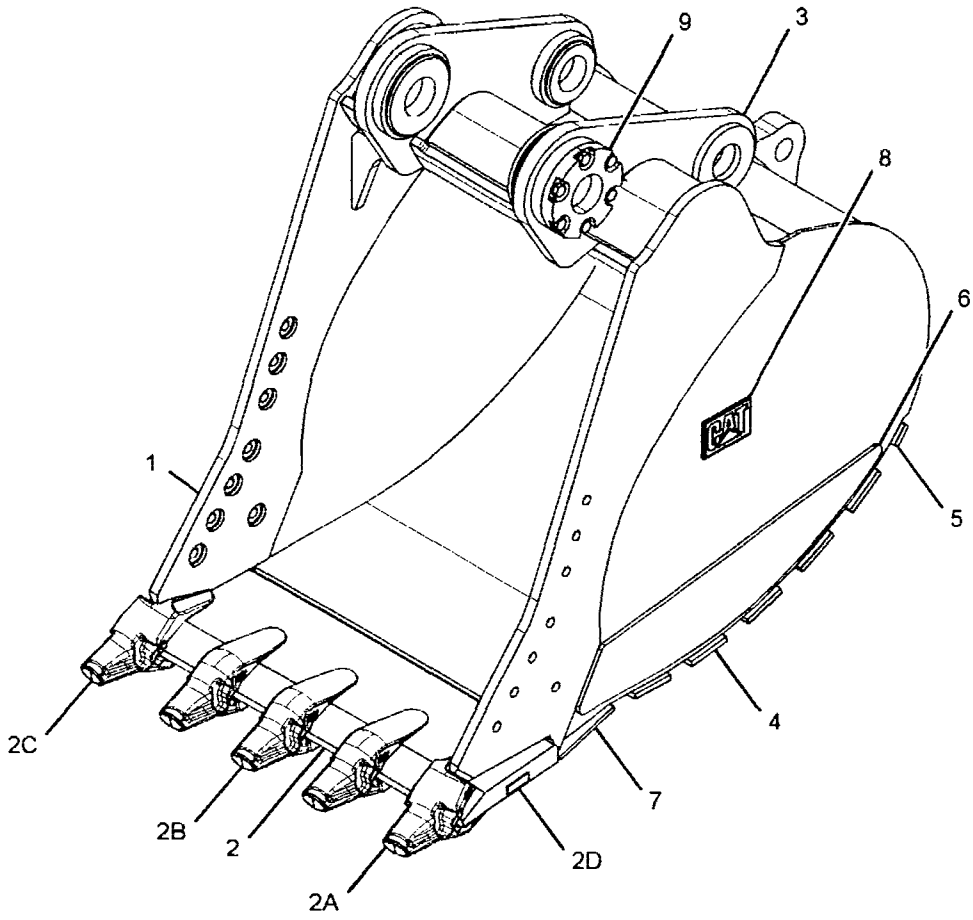

GRAPHIC #1 **<END>** g01417007

WORK TOOLS

281-1795 BUCKET & ADJUSTER GP–GENERAL PURPOSE, TB-FAMILY

S/N: YEE1-UP

1372-MM (54-IN) WIDE X 2.09-CU M (2.74-CU YD) CAPACITY. K-110 ADAPTERS, (5X)

AN ATTACHMENT

SMCS-6503, 6513 **i02593215**

NOTE	REF NO	GRAPHIC REF	PART NUMBER	QTY	PART NAME 1 2 3 4 5 6 (PRODUCT LEVEL)	SEE PAGE
	1	1	*281-1803*	1	BUCKET AS-GENERAL PURPOSE	
	2	1	**279-9960**	1	EDGE AS	
	2A	1	**264-2115**	1	ADAPTER-TIP (K-110, 2-STRAP, RH)	
	2B	1	**232-0114**	3	ADAPTER-TIP (K-110, 2-STRAP, CENTER)	
	2C	1	**264-2116**	1	ADAPTER-TIP (K-110, 2-STRAP, LH)	
	2D	1	**8P-9770**	1	PLATE	
	3	1	**283-4222**	1	PLATE AS-BOX	
	4	1	**283-4270**	5	PLATE-WEAR	
	5	1	**283-4271**	1	PLATE-WEAR	
	6	1	**279-9980**	2	PLATE-WEAR	
	7	1	**273-3384**	1	PLATE-REINFORCEMENT	
	8	1	**2C-9259**	2	PLATE-IDENTIFICATION (CAT)	
Y	9	1	*4I-4070*	1	ADJUSTER GP-BUCKET	876

Y-SEPARATE ILLUSTRATION

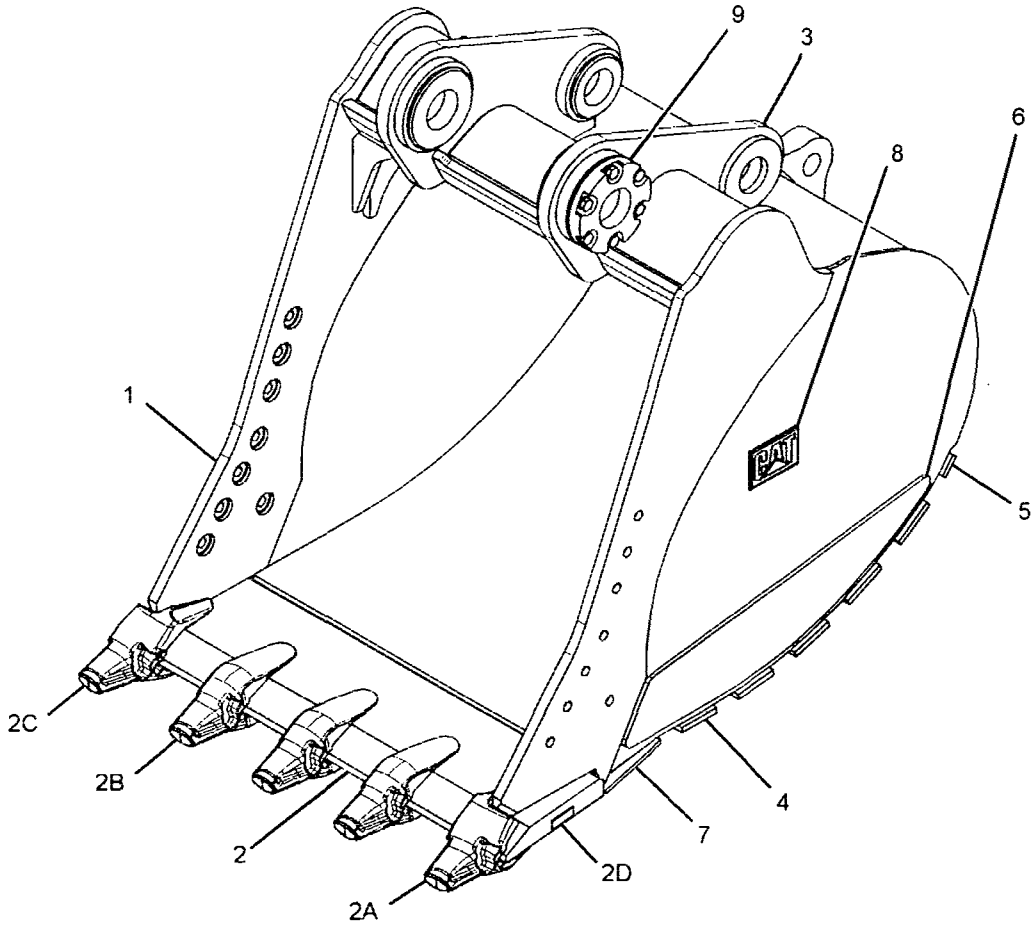

GRAPHIC #1 **<END>** g01417006

WORK TOOLS

281-1796 BUCKET & ADJUSTER GP–GENERAL PURPOSE, TB-FAMILY

S/N: YEE1-UP

1524-MM (60-IN) WIDE X 2.39-CU M (3.13-CU YD) CAPACITY. K-110 ADAPTERS, (6X) AN ATTACHMENT

SMCS-6503, 6513 **i02593221**

NOTE	REF NO	GRAPHIC REF	PART NUMBER	QTY	PART NAME 1 2 3 4 5 6 (PRODUCT LEVEL)	SEE PAGE
	1	1	*281-1804*	1	BUCKET AS-GENERAL PURPOSE	
	2	1	**279-9961**	1	EDGE AS	
	2A	1	**264-2115**	1	ADAPTER-TIP (K-110, 2-STRAP, RH)	
	2B	1	**232-0114**	4	ADAPTER-TIP (K-110, 2-STRAP, CENTER)	
	2C	1	**264-2116**	1	ADAPTER-TIP (K-110, 2-STRAP, LH)	
	2D	1	**8P-9770**	1	PLATE	
	3	1	**283-4223**	1	PLATE AS-BOX	
	4	1	**283-4273**	5	PLATE-WEAR	
	5	1	**283-4274**	1	PLATE-WEAR	
	6	1	**279-9980**	2	PLATE-WEAR	
	7	1	**273-3385**	1	PLATE-REINFORCEMENT	
	8	1	**2C-9259**	2	PLATE-IDENTIFICATION (CAT)	
Y	9	1	*4I-4070*	1	ADJUSTER GP-BUCKET	876

Y-SEPARATE ILLUSTRATION

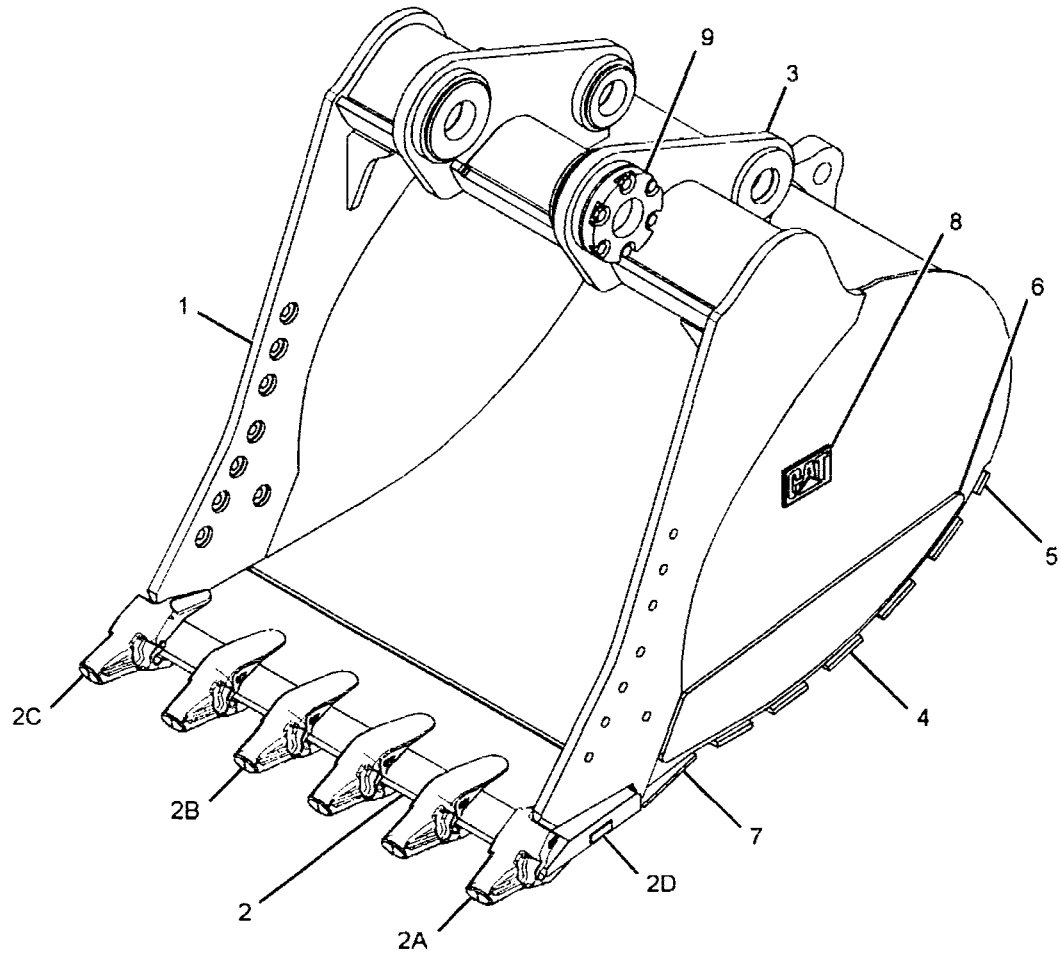

GRAPHIC #1 **<END>** g01416989

WORK TOOLS

281-1798 BUCKET & ADJUSTER GP–GENERAL PURPOSE, TB-FAMILY

S/N: YEE1-UP

1880-MM (74-IN) WIDE X 3.08-CU M (4.04-CU YD) CAPACITY. K-110 ADAPTERS, (7X)

AN ATTACHMENT

SMCS-6503, 6513 **i02593232**

NOTE	REF NO	GRAPHIC REF	PART NUMBER	QTY	PART NAME 1 2 3 4 5 6 (PRODUCT LEVEL)	SEE PAGE
	1	1	*281-1806*	1	BUCKET AS-GENERAL PURPOSE	
	2	1	**279-9963**	1	EDGE AS	
	2A	1	**264-2115**	1	ADAPTER-TIP (K-110, 2-STRAP, RH)	
	2B	1	**232-0114**	5	ADAPTER-TIP (K-110, 2-STRAP, CENTER)	
	2C	1	**264-2116**	1	ADAPTER-TIP (K-110, 2-STRAP, LH)	
	2D	1	**8P-9770**	1	PLATE	
	3	1	**283-4225**	1	PLATE AS-BOX	
	4	1	**283-4280**	1	PLATE-WEAR	
	5	1	**283-4279**	5	PLATE-WEAR	
	6	1	**283-7727**	1	PLATE-REINFORCEMENT	
	7	1	**279-9980**	2	PLATE-WEAR	
	8	1	**2C-9259**	2	PLATE-IDENTIFICATION (CAT)	
Y	9	1	*4I-4070*	1	ADJUSTER GP-BUCKET	876

Y-SEPARATE ILLUSTRATION

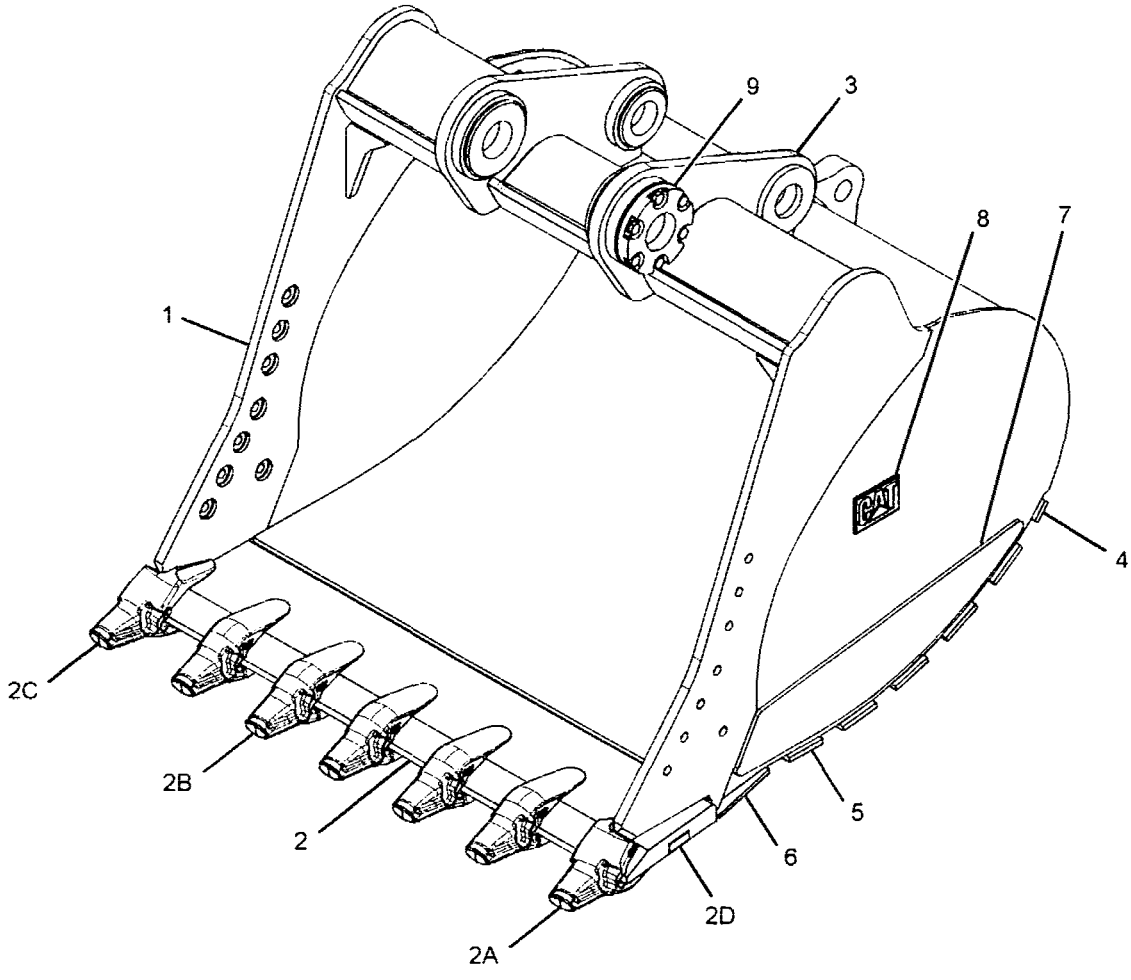

GRAPHIC #1 **<END>** g01416991

WORK TOOLS

281-1810 BUCKET & ADJUSTER GP–HEAVY-DUTY, TB-FAMILY

S/N: YEE1-UP

914-MM (36-IN) WIDE X 1.06-CU M (1.38-CU YD) CAPACITY. K-110 ADAPTERS, (4X)

AN ATTACHMENT

SMCS-6503, 6513 **i02593264**

NOTE	REF NO	GRAPHIC REF	PART NUMBER	QTY	PART NAME 1 2 3 4 5 6 (PRODUCT LEVEL)	SEE PAGE
	1	1	*281-1830*	1	BUCKET AS-HEAVY DUTY	
	2	1	**279-9957**	1	EDGE AS	
	2A	1	**264-2115**	1	ADAPTER-TIP (K-110, 2-STRAP, RH)	
	2B	1	**232-0114**	2	ADAPTER-TIP (K-110, 2-STRAP, CENTER)	
	2C	1	**264-2116**	1	ADAPTER-TIP (K-110, 2-STRAP, LH)	
	2D	1	**8P-9770**	1	PLATE	
	3	1	**283-8553**	1	PLATE AS-BOX	
	4	1	**283-8545**	2	PLATE-WEAR	
	5	1	**277-3967**	5	PLATE-WEAR	
	6	1	**276-5768**	1	PLATE-REINFORCEMENT	
	7	1	**2C-9259**	2	PLATE-IDENTIFICATION (CAT)	
Y	8	1	*4I-4070*	1	ADJUSTER GP-BUCKET	876

Y-SEPARATE ILLUSTRATION

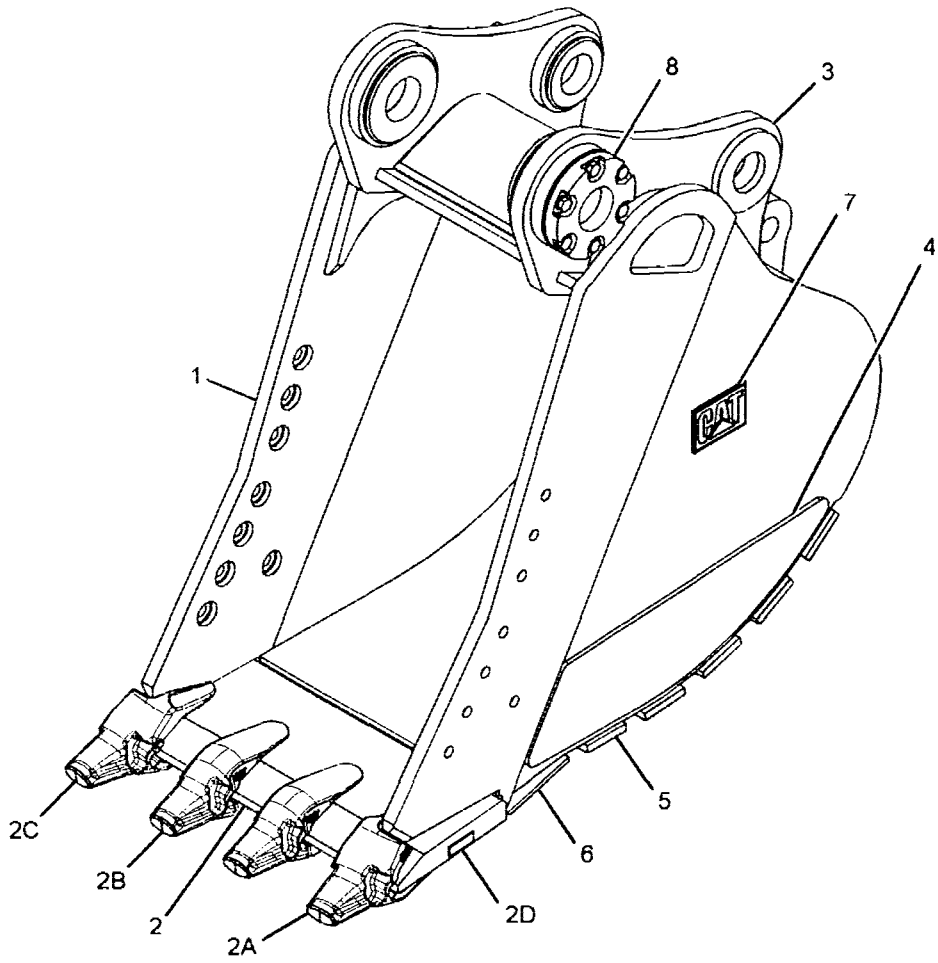

GRAPHIC #1 **<END>** g01417029

281-1812 BUCKET & ADJUSTER GP–HEAVY-DUTY, TB-FAMILY

S/N: YEE1-UP

1219-MM (48-IN) WIDE X 1.56-CU M (2.04-CU YD) CAPACITY. K-110 ADAPTERS, (5X)

AN ATTACHMENT

SMCS-6503, 6513 **i02593282**

NOTE	REF NO	GRAPHIC REF	PART NUMBER	QTY	PART NAME 1 2 3 4 5 6 (PRODUCT LEVEL)	SEE PAGE
	1	1	*281-1832*	1	BUCKET AS-HEAVY DUTY	
	2	1	**279-9959**	1	EDGE AS	
	2A	1	**264-2116**	1	ADAPTER-TIP (K-110, 2-STRAP, LH)	
	2B	1	**232-0114**	3	ADAPTER-TIP (K-110, 2-STRAP, CENTER)	
	2C	1	**264-2115**	1	ADAPTER-TIP (K-110, 2-STRAP, RH)	
	2D	1	**8P-9770**	1	PLATE	
	3	1	**283-8555**	1	PLATE AS-BOX	
	4	1	**283-8548**	5	PLATE-WEAR	
	5	1	**283-8545**	2	PLATE-WEAR	
	6	1	**273-3383**	1	PLATE-REINFORCEMENT	
	7	1	**2C-9259**	2	PLATE-IDENTIFICATION (CAT)	
Y	8	1	*4I-4070*	1	ADJUSTER GP-BUCKET	876

Y-SEPARATE ILLUSTRATION

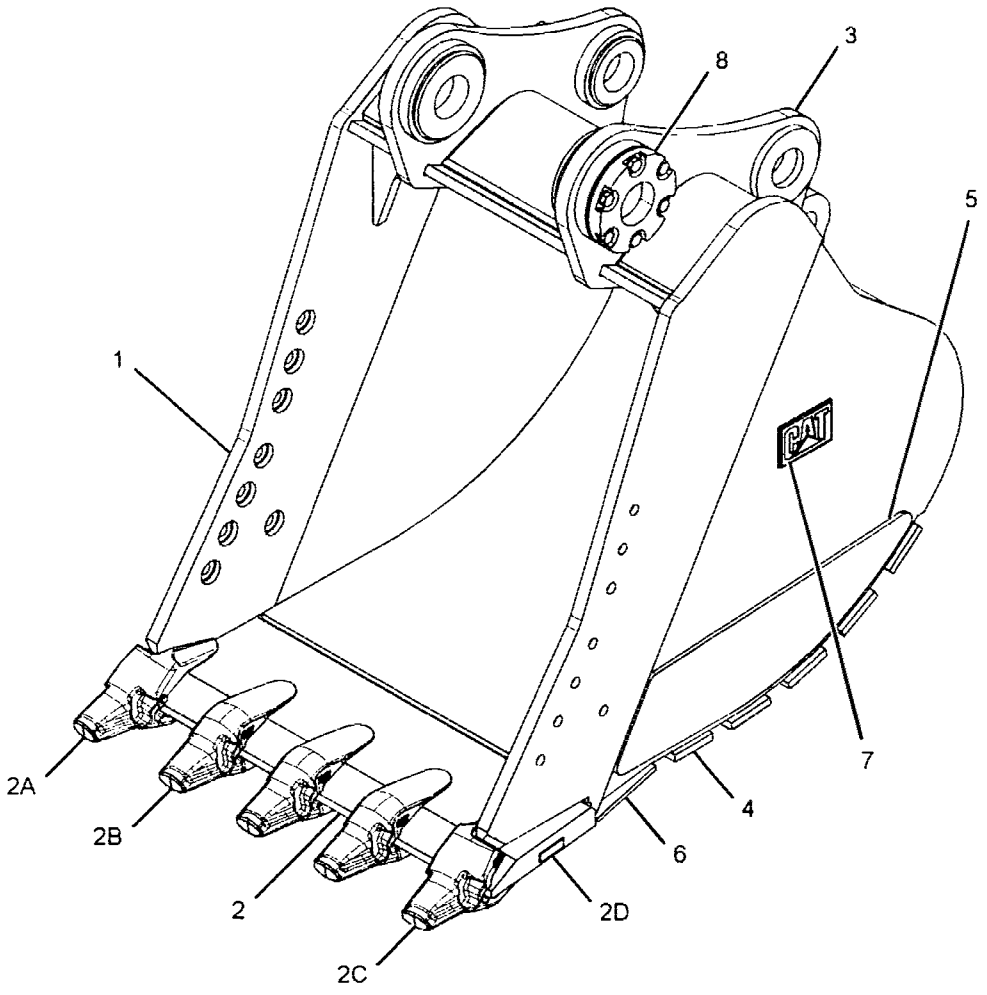

GRAPHIC #1

<END>

g01416672

WORK TOOLS

281-1813 BUCKET & ADJUSTER GP–HEAVY-DUTY, TB-FAMILY

S/N: YEE1-UP

1373-MM (54-IN) WIDE X 1.81-CU M (2.37-CU YD) CAPACITY. K-110 ADAPTERS, (5X) AN ATTACHMENT

SMCS-6503, 6513 **i02593286**

NOTE	REF NO	GRAPHIC REF	PART NUMBER	QTY	PART NAME 1 2 3 4 5 6 (PRODUCT LEVEL)	SEE PAGE
	1	1	*281-1833*	1	BUCKET AS-HEAVY DUTY	
	2	1	**279-9960**	1	EDGE AS	
	2A	1	**264-2116**	1	ADAPTER-TIP (K-110, 2-STRAP, LH)	
	2B	1	**232-0114**	3	ADAPTER-TIP (K-110, 2-STRAP, CENTER)	
	2C	1	**264-2115**	1	ADAPTER-TIP (K-110, 2-STRAP, RH)	
	2D	1	**8P-9770**	1	PLATE	
	3	1	**283-8556**	1	PLATE AS-BOX	
	4	1	**283-8549**	5	PLATE-WEAR	
	5	1	**283-8545**	2	PLATE-WEAR	
	6	1	**273-3384**	1	PLATE-REINFORCEMENT	
	7	1	**2C-9259**	2	PLATE-IDENTIFICATION (CAT)	
Y	8	1	*4I-4070*	1	ADJUSTER GP-BUCKET	876

Y-SEPARATE ILLUSTRATION

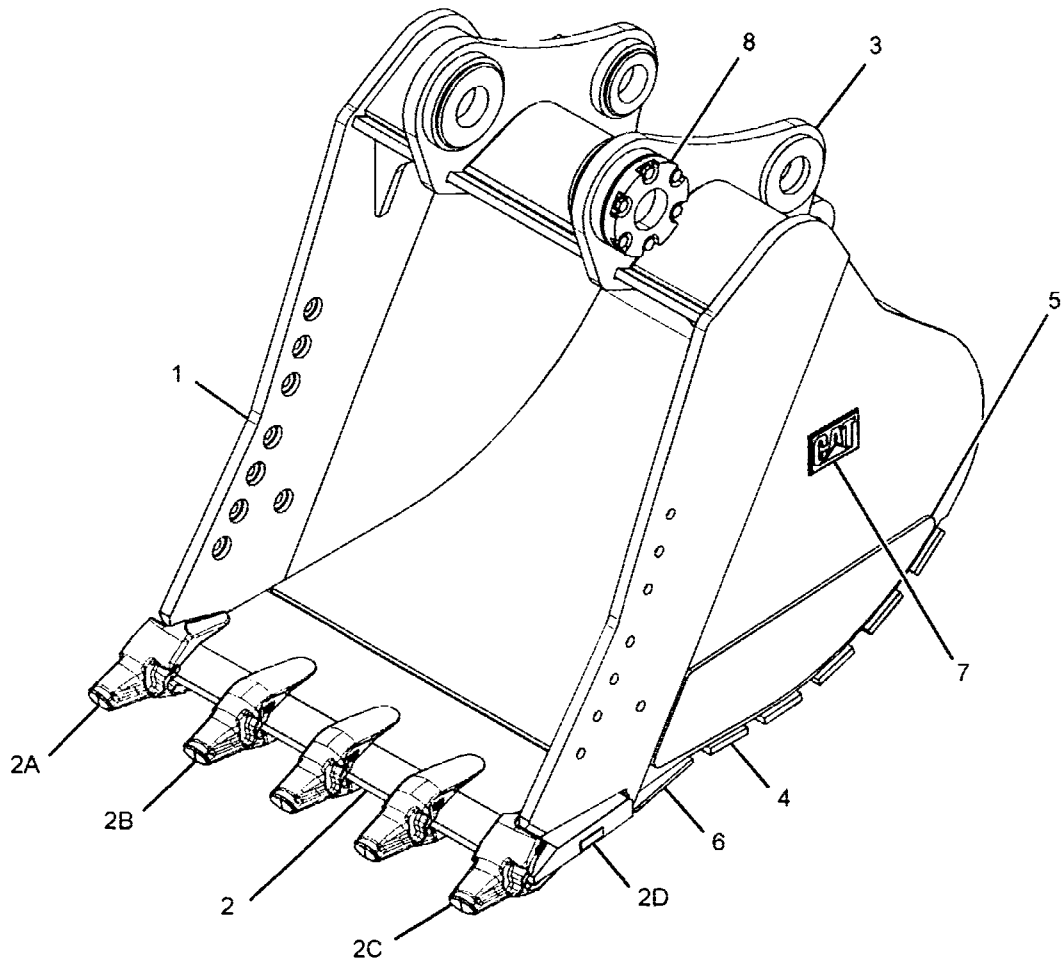

GRAPHIC #1 **<END>** g01416687

WORK TOOLS

281-1815 BUCKET & ADJUSTER GP–HEAVY-DUTY, TB-FAMILY

S/N: YEE1-UP

1676-MM (66-IN) WIDE X 2.33-CU M (3.04-CU YD) CAPACITY. K-110 ADAPTERS, (7X)

AN ATTACHMENT

SMCS-6503, 6513 **i02593452**

NOTE	REF NO	GRAPHIC REF	PART NUMBER	QTY	PART NAME 1 2 3 4 5 6 (PRODUCT LEVEL)	SEE PAGE
	1	1	**279-9962**	1	EDGE AS	
	1A	1	**264-2115**	1	ADAPTER-TIP (K-110, 2-STRAP, RH)	
	1B	1	**232-0114**	5	ADAPTER-TIP (K-110, 2-STRAP, CENTER)	
	1C	1	**264-2116**	1	ADAPTER-TIP (K-110, 2-STRAP, LH)	
	1D	1	**8P-9770**	1	PLATE	
	2	1	**283-8558**	1	PLATE AS-BOX	
	3	1	**283-8545**	2	PLATE-WEAR	
	4	1	**283-8551**	5	PLATE-WEAR	
	5	1	**276-5770**	1	PLATE-REINFORCEMENT	
	6	1	**2C-9259**	2	PLATE-IDENTIFICATION (CAT)	
Y	7	1	*4I-4070*	1	ADJUSTER GP-BUCKET	876

Y-SEPARATE ILLUSTRATION

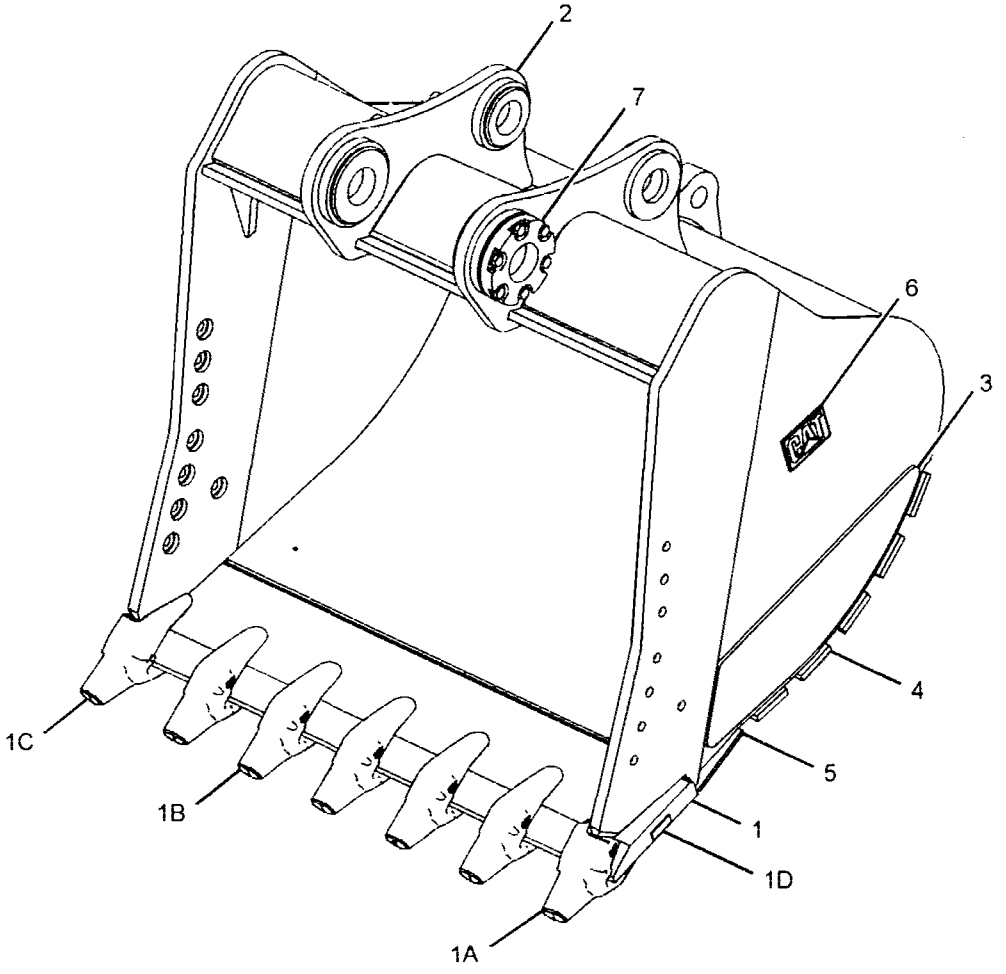

GRAPHIC #1 **<END>** g01305630

WORK TOOLS

281-1816 BUCKET & ADJUSTER GP–HEAVY-DUTY, TB-FAMILY

S/N: YEE1-UP

1880-MM (74-IN) WIDE X 2.67-CU M (3.5-CU YD) CAPACITY. K-110 ADAPTERS, (7X) AN ATTACHMENT

SMCS-6503, 6513 **i02593457**

NOTE	REF NO	GRAPHIC REF	PART NUMBER	QTY	PART NAME 1 2 3 4 5 6 (PRODUCT LEVEL)	SEE PAGE
	1	1	**279-9963**	1	EDGE AS	
	1A	1	**264-2115**	1	ADAPTER-TIP (K-110, 2-STRAP, RH)	
	1B	1	**232-0114**	5	ADAPTER-TIP (K-110, 2-STRAP, CENTER)	
	1C	1	**264-2116**	1	ADAPTER-TIP (K-110, 2-STRAP, LH)	
	1D	1	**8P-9770**	1	PLATE	
	2	1	**283-8559**	1	PLATE AS-BOX	
	3	1	**283-8545**	2	PLATE-WEAR	
	4	1	**283-8552**	5	PLATE-WEAR	
	5	1	**283-7727**	1	PLATE-REINFORCEMENT	
	6	1	**2C-9259**	2	PLATE-IDENTIFICATION (CAT)	
Y	7	1	*4I-4070*	1	ADJUSTER GP-BUCKET	876

Y-SEPARATE ILLUSTRATION

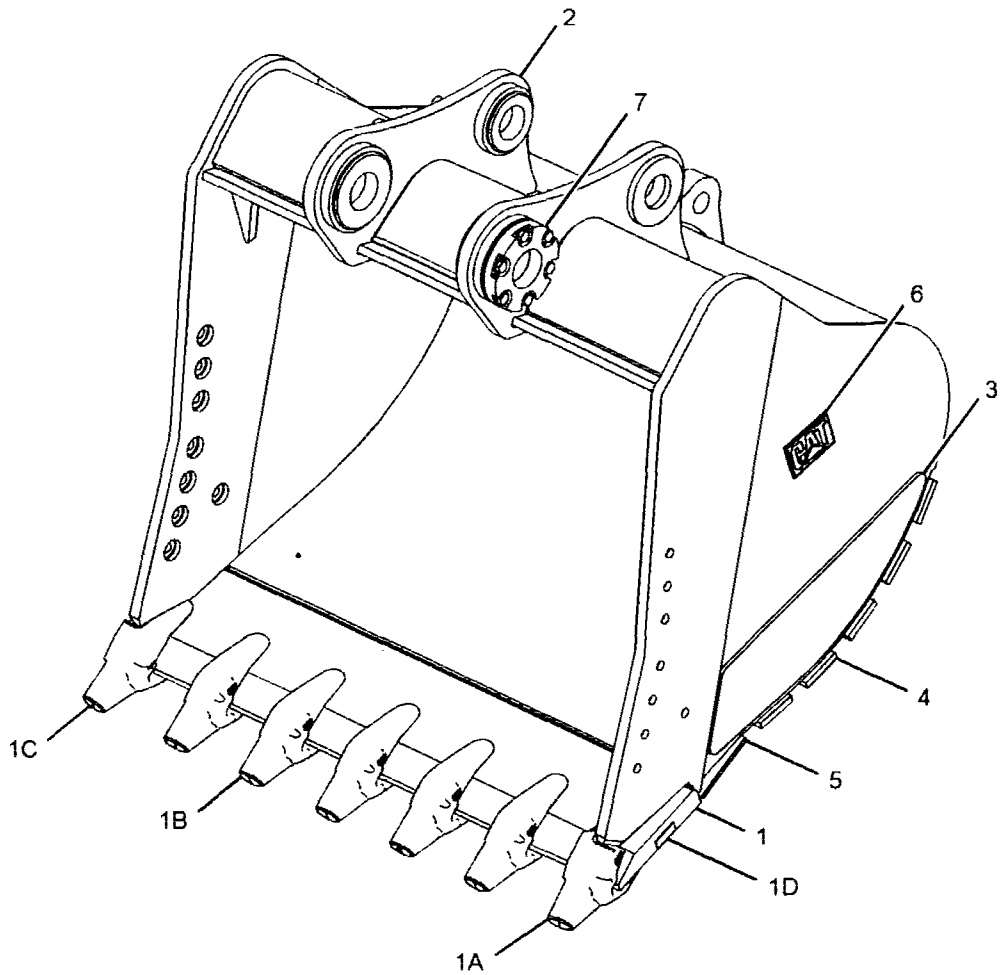

GRAPHIC #1 **<END>** g01305630

WORK TOOLS

281-1818 BUCKET & ADJUSTER GP–HEAVY-DUTY ROCK, TB-FAMILY

S/N: YEE1-UP

914-MM (36-IN) WIDE X 1.06-CU M (1.38-CU YD) CAPACITY. K-110 ADAPTERS, (4X)

AN ATTACHMENT

SMCS-6503, 6513 **i02710803**

NOTE	REF NO	GRAPHIC REF	PART NUMBER	QTY	PART NAME 1 2 3 4 5 6 (PRODUCT LEVEL)	SEE PAGE
	1	1	*281-1838*	1	BUCKET AS-HEAVY DUTY ROCK	
	2	1	**279-9957**	1	EDGE AS	
	2A	1	**232-0114**	2	ADAPTER-TIP (K-110, 2-STRAP, CENTER)	
	2B	1	**264-2115**	1	ADAPTER-TIP (K-110, 2-STRAP, RH)	
	2C	1	**264-2116**	1	ADAPTER-TIP (K-110, 2-STRAP, LH)	
	2D	1	**8P-9770**	1	PLATE	
	3	1	**283-8553**	1	PLATE AS-BOX	
	4	1	**283-8601**	5	PLATE-WEAR	
	5	1	**276-5768**	1	PLATE-REINFORCEMENT	
	6	1	**276-5784**	2	PLATE-WEAR	
	7	1	**283-8570**	2	PLATE-WEAR	
	8	1	**2C-9259**	2	PLATE-IDENTIFICATION (CAT)	
Y	9	1	*41-4070*	1	ADJUSTER GP-BUCKET	876

Y-SEPARATE ILLUSTRATION

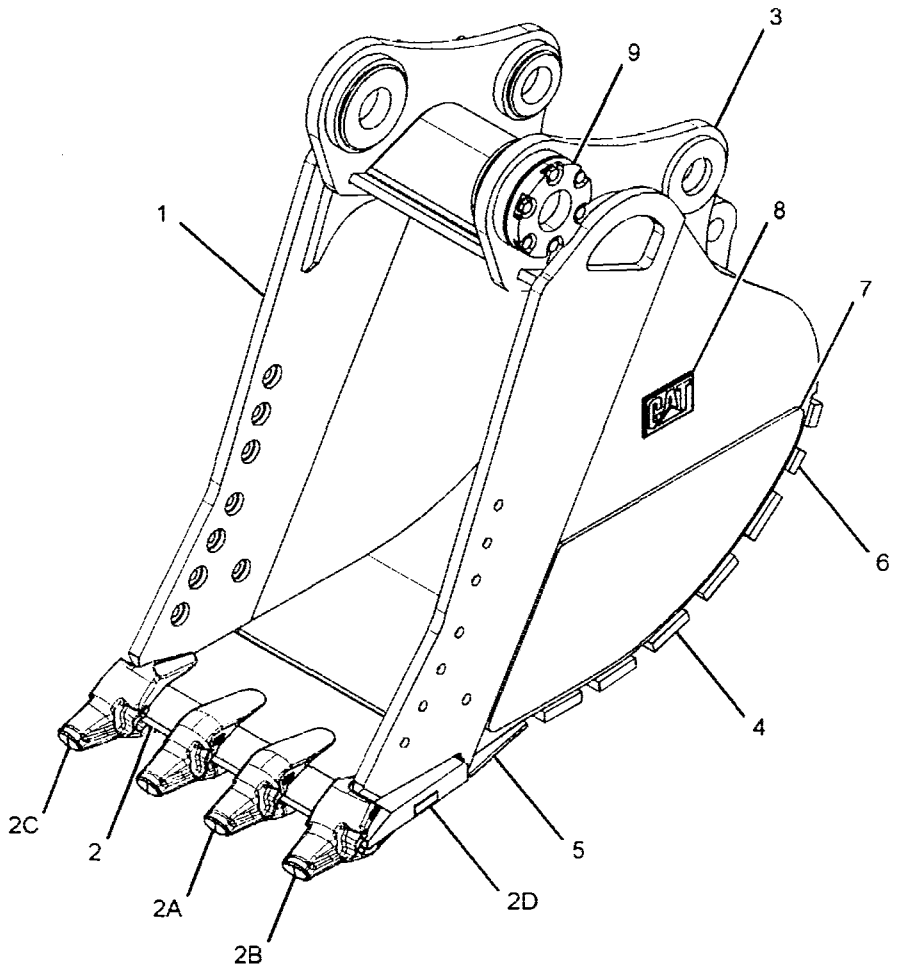

GRAPHIC #1 **<END>** g01360550

WORK TOOLS

281-1819 BUCKET & ADJUSTER GP–HEAVY-DUTY ROCK, TB-FAMILY

S/N: YEE1-UP

1067-MM (42-IN) WIDE X 1.31-CU M (1.71-CU YD) CAPACITY. K-110 ADAPTERS, (4X)

AN ATTACHMENT

SMCS-6503, 6513 **i02606385**

NOTE	REF NO	GRAPHIC REF	PART NUMBER	QTY	PART NAME 1 2 3 4 5 6 (PRODUCT LEVEL)	SEE PAGE
	1	1	*281-1839*	1	BUCKET AS-HEAVY DUTY ROCK	
	2	1	**279-9958**	1	EDGE AS	
	2A	1	**232-0114**	2	ADAPTER-TIP (K-110, 2-STRAP, CENTER)	
	2B	1	**264-2115**	1	ADAPTER-TIP (K-110, 2-STRAP, RH)	
	2C	1	**264-2116**	1	ADAPTER-TIP (K-110, 2-STRAP, LH)	
	2D	1	**8P-9770**	1	PLATE	
	3	1	**283-8554**	1	PLATE AS-BOX	
	4	1	**276-5769**	1	PLATE-REINFORCEMENT	
	5	1	**276-5785**	2	PLATE-WEAR	
	6	1	**283-8603**	5	PLATE-WEAR	
	7	1	**283-8570**	2	PLATE-WEAR	
	8	1	**2C-9259**	2	PLATE-IDENTIFICATION (CAT)	
Y	9	1	*4I-4070*	1	ADJUSTER GP-BUCKET	876

Y-SEPARATE ILLUSTRATION

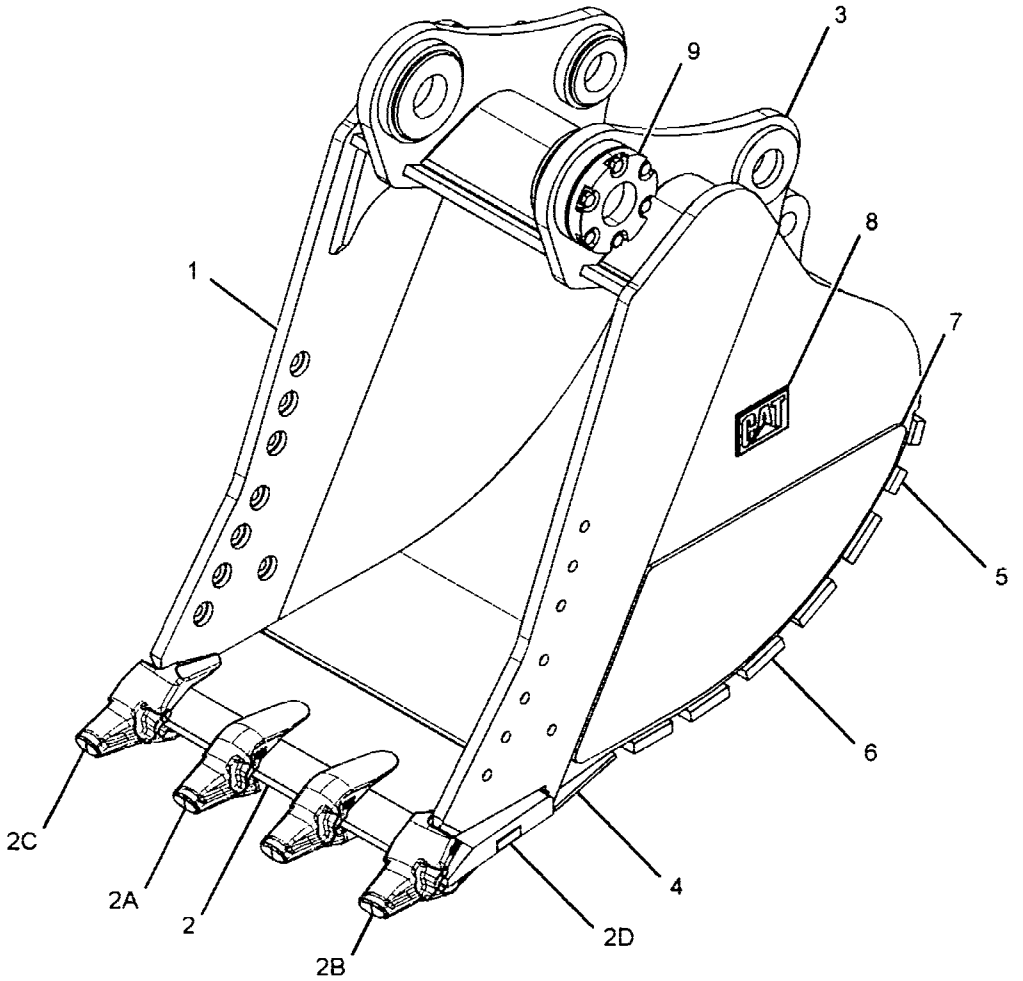

GRAPHIC #1 **<END>** g01360619

WORK TOOLS

281-1820 BUCKET & ADJUSTER GP–HEAVY-DUTY ROCK, TB-FAMILY

S/N: YEE1-UP

1219-MM (48-IN) WIDE X 1.56-CU M (2.04-CU YD) CAPACITY. K-110 ADAPTERS, (5X)

AN ATTACHMENT

SMCS-6503, 6513 **i02606393**

NOTE	REF NO	GRAPHIC REF	PART NUMBER	QTY	PART NAME 1 2 3 4 5 6 (PRODUCT LEVEL)	SEE PAGE
	1	1	*281-1840*	1	BUCKET AS-HEAVY DUTY ROCK	
	2	1	**279-9959**	1	EDGE AS	
	2A	1	**232-0114**	3	ADAPTER-TIP (K-110, 2-STRAP, CENTER)	
	2B	1	**264-2115**	1	ADAPTER-TIP (K-110, 2-STRAP, RH)	
	2C	1	**264-2116**	1	ADAPTER-TIP (K-110, 2-STRAP, LH)	
	2D	1	**8P-9770**	1	PLATE	
	3	1	**283-8555**	1	PLATE AS-BOX	
	4	1	**273-3383**	1	PLATE-REINFORCEMENT	
	5	1	**276-5786**	2	PLATE-WEAR	
	6	1	**283-8605**	5	PLATE-WEAR	
	7	1	**283-8570**	2	PLATE-WEAR	
	8	1	**2C-9259**	2	PLATE-IDENTIFICATION (CAT)	
Y	9	1	*4I-4070*	1	ADJUSTER GP-BUCKET	876

Y-SEPARATE ILLUSTRATION

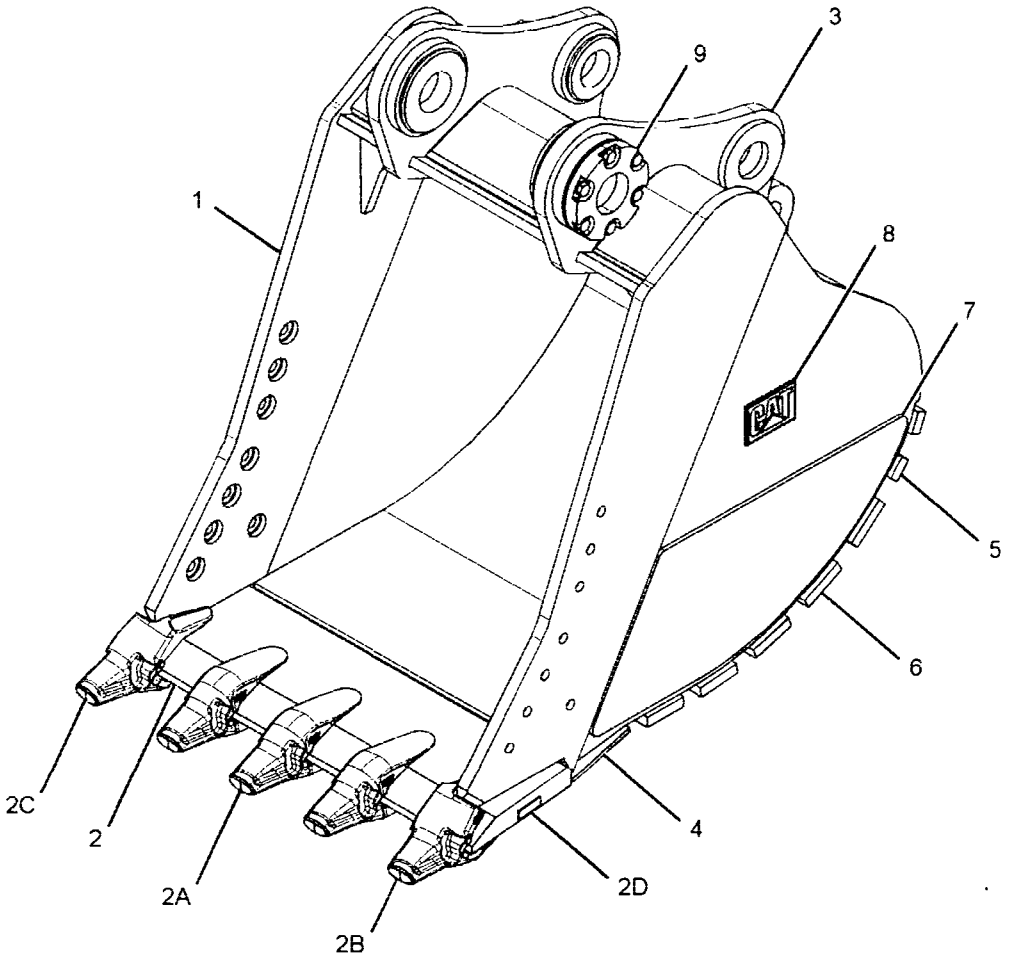

GRAPHIC #1 **<END>** g01360610

WORK TOOLS

281-1821 BUCKET & ADJUSTER GP–HEAVY-DUTY ROCK, TB-FAMILY

S/N: YEE1-UP

1372-MM (54-IN) WIDE X 1.81-CU M (2.37-CU YD) CAPACITY. K-110 ADAPTERS, (5X)

AN ATTACHMENT

SMCS-6503, 6513 **i02606405**

NOTE	REF NO	GRAPHIC REF	PART NUMBER	QTY	PART NAME 1 2 3 4 5 6 (PRODUCT LEVEL)	SEE PAGE
	1	1	*281-1841*	1	BUCKET AS-HEAVY DUTY ROCK	
	2	1	**279-9960**	1	EDGE AS	
	2A	1	**232-0114**	3	ADAPTER-TIP (K-110, 2-STRAP, CENTER)	
	2B	1	**264-2115**	1	ADAPTER-TIP (K-110, 2-STRAP, RH)	
	2C	1	**264-2116**	1	ADAPTER-TIP (K-110, 2-STRAP, LH)	
	2D	1	**8P-9770**	1	PLATE	
	3	1	**283-8556**	1	PLATE AS-BOX	
	4	1	**273-3384**	1	PLATE-REINFORCEMENT	
	5	1	**276-5787**	2	PLATE-WEAR	
	6	1	**283-8607**	5	PLATE-WEAR	
	7	1	**283-8570**	2	PLATE-WEAR	
	8	1	**2C-9259**	2	PLATE-IDENTIFICATION (CAT)	
Y	9	1	*4I-4070*	1	ADJUSTER GP-BUCKET	876

Y-SEPARATE ILLUSTRATION

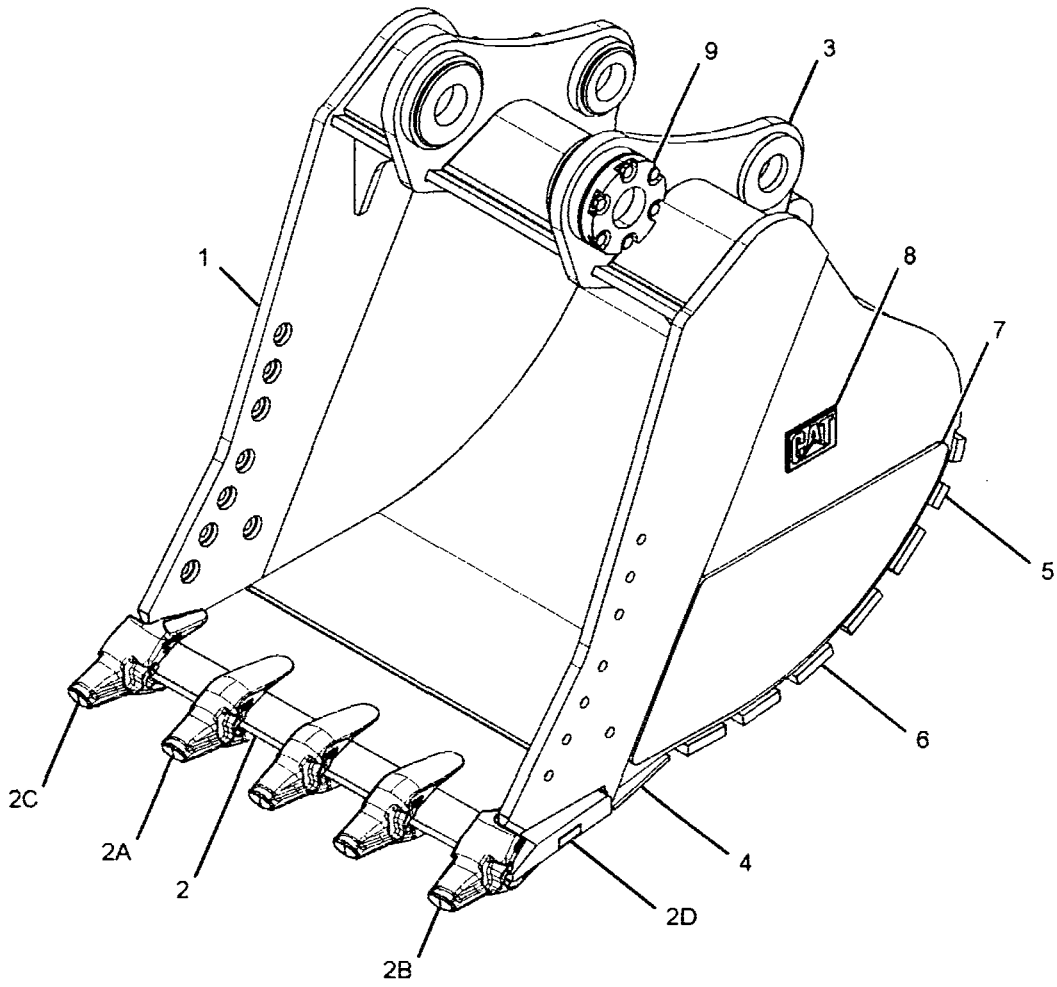

GRAPHIC #1 **<END>** g01360595

281-1822 BUCKET & ADJUSTER GP–HEAVY-DUTY ROCK, TB-FAMILY

S/N: YEE1-UP

1524-MM (60-IN) WIDE X 2.07-CU M (2.71-CU YD) CAPACITY. K-110 ADAPTERS, (6X)

AN ATTACHMENT

SMCS-6503, 6513 **i02606412**

NOTE	REF NO	GRAPHIC REF	PART NUMBER	QTY	PART NAME 1 2 3 4 5 6 (PRODUCT LEVEL)	SEE PAGE
	1	1	*281-1842*	1	BUCKET AS-HEAVY DUTY ROCK	
	2	1	**279-9961**	1	EDGE AS	
	2A	1	**232-0114**	4	ADAPTER-TIP (K-110, 2-STRAP, CENTER)	
	2B	1	**264-2115**	1	ADAPTER-TIP (K-110, 2-STRAP, RH)	
	2C	1	**264-2116**	1	ADAPTER-TIP (K-110, 2-STRAP, LH)	
	2D	1	**8P-9770**	1	PLATE	
	3	1	**283-8557**	1	PLATE AS-BOX	
	4	1	**273-3385**	1	PLATE-REINFORCEMENT	
	5	1	**283-8610**	2	PLATE-WEAR	
	6	1	**283-8609**	5	PLATE-WEAR	
	7	1	**283-8570**	2	PLATE-WEAR	
	8	1	**2C-9259**	2	PLATE-IDENTIFICATION (CAT)	
Y	9	1	*4I-4070*	1	ADJUSTER GP-BUCKET	876

Y-SEPARATE ILLUSTRATION

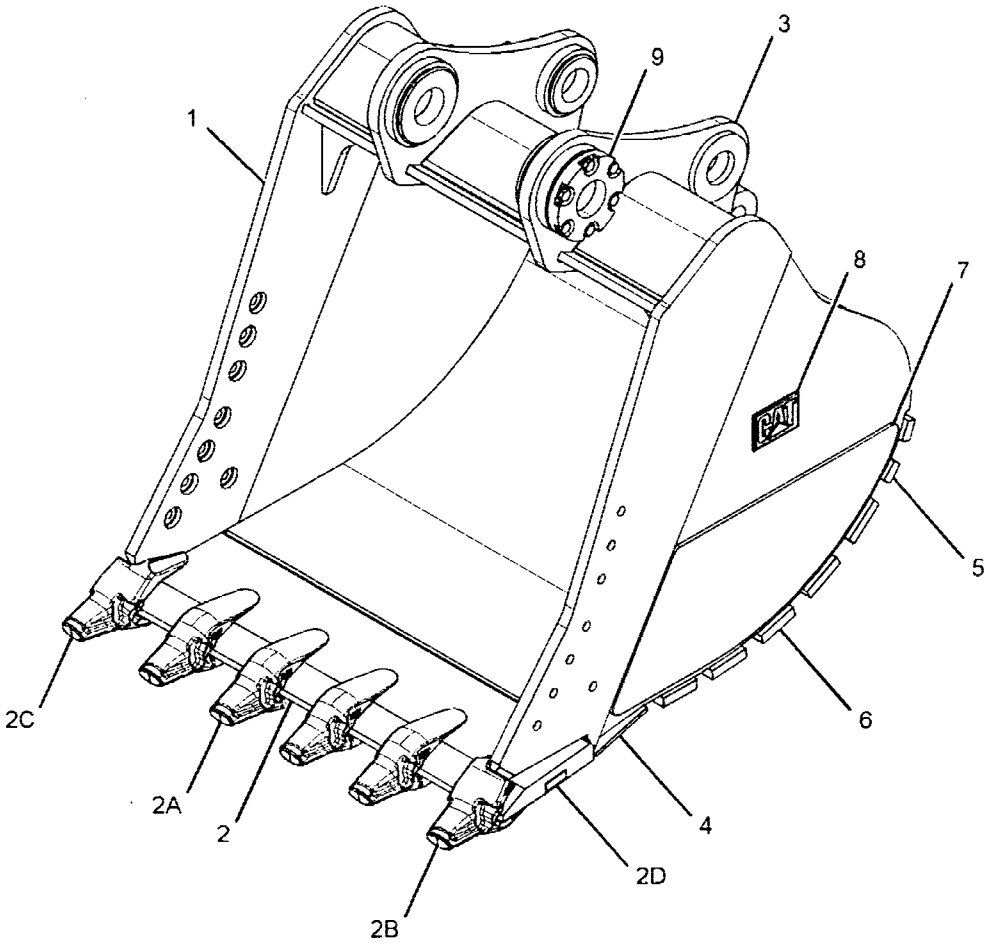

GRAPHIC #1 **<END>** g01360574

WORK TOOLS

281-1824 BUCKET & ADJUSTER GP–HEAVY-DUTY ROCK, TB-FAMILY

S/N: YEE1-UP

1880-MM (74-IN) WIDE X 2.67-CU M (3.5-CU YD) CAPACITY. K-110 ADAPTERS, (7X)

AN ATTACHMENT

SMCS-6503, 6513 **i02606471**

NOTE	REF NO	GRAPHIC REF	PART NUMBER	QTY	PART NAME 1 2 3 4 5 6 (PRODUCT LEVEL)	SEE PAGE
	1	1	*281-1844*	1	BUCKET AS-HEAVY DUTY ROCK	
	2	1	**279-9963**	1	EDGE AS	
	2A	1	**264-2116**	1	ADAPTER-TIP (K-110, 2-STRAP, LH)	
	2B	1	**232-0114**	5	ADAPTER-TIP (K-110, 2-STRAP, CENTER)	
	2C	1	**264-2115**	1	ADAPTER-TIP (K-110, 2-STRAP, RH)	
	2D	1	**8P-9770**	1	PLATE	
	3	1	**283-8559**	1	PLATE AS-BOX	
	4	1	**283-8570**	2	PLATE-WEAR	
	5	1	**283-8613**	5	PLATE-WEAR	
	6	1	**283-7727**	1	PLATE-REINFORCEMENT	
	7	1	**2C-9259**	2	PLATE-IDENTIFICATION (CAT)	
	8	1	**283-8614**	2	PLATE-WEAR	
Y	9	1	*4I-4070*	1	ADJUSTER GP-BUCKET	876

Y-SEPARATE ILLUSTRATION

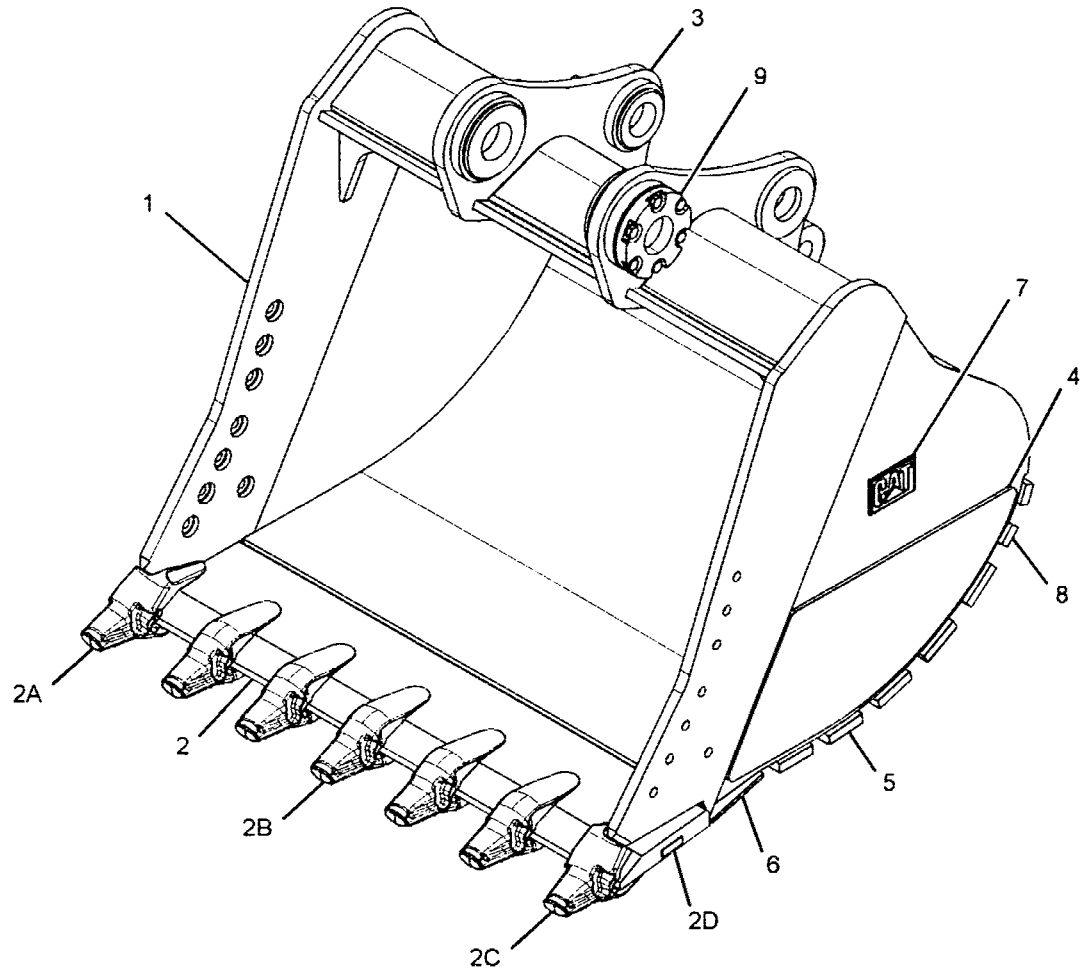

GRAPHIC #1 **<END>** g01360636

WORK TOOLS

281-1846 BUCKET & ADJUSTER GP–HEAVY-DUTY POWER, TB-FAMILY

S/N: YEE1-UP

1372-MM (54-IN) WIDE X 1.73-CU M (2.27-CU YD) CAPACITY. K-110 ADAPTERS, (4X)

AN ATTACHMENT

SMCS-6503, 6513 **i02593461**

NOTE	REF NO	GRAPHIC REF	PART NUMBER	QTY	PART NAME 1 2 3 4 5 6 (PRODUCT LEVEL)	SEE PAGE
	1	1	*281-1849*		BUCKET AS-HEAVY DUTY POWER	
	2	1	**279-9973**	1	EDGE AS	
	2A	1	**264-2136**	1	ADAPTER-TIP (K-130, 2-STRAP, LH)	
	2B	1	**232-0130**	2	ADAPTER-TIP (K-130, 2-STRAP, CENTER)	
	2C	1	**264-2135**	1	ADAPTER-TIP (K-130, 2-STRAP, RH)	
	2D	1	**8P-9770**	1	PLATE	
	3	1	**283-4222**	1	PLATE AS-BOX	
	4	1	**283-8549**	5	PLATE-WEAR	
	5	1	**273-3384**	1	PLATE-REINFORCEMENT	
	6	1	**285-8166**	2	PLATE-WEAR	
	7	1	**2C-9259**	2	PLATE-IDENTIFICATION (CAT)	
Y	8	1	*4I-4070*	1	ADJUSTER GP-BUCKET	876

Y-SEPARATE ILLUSTRATION

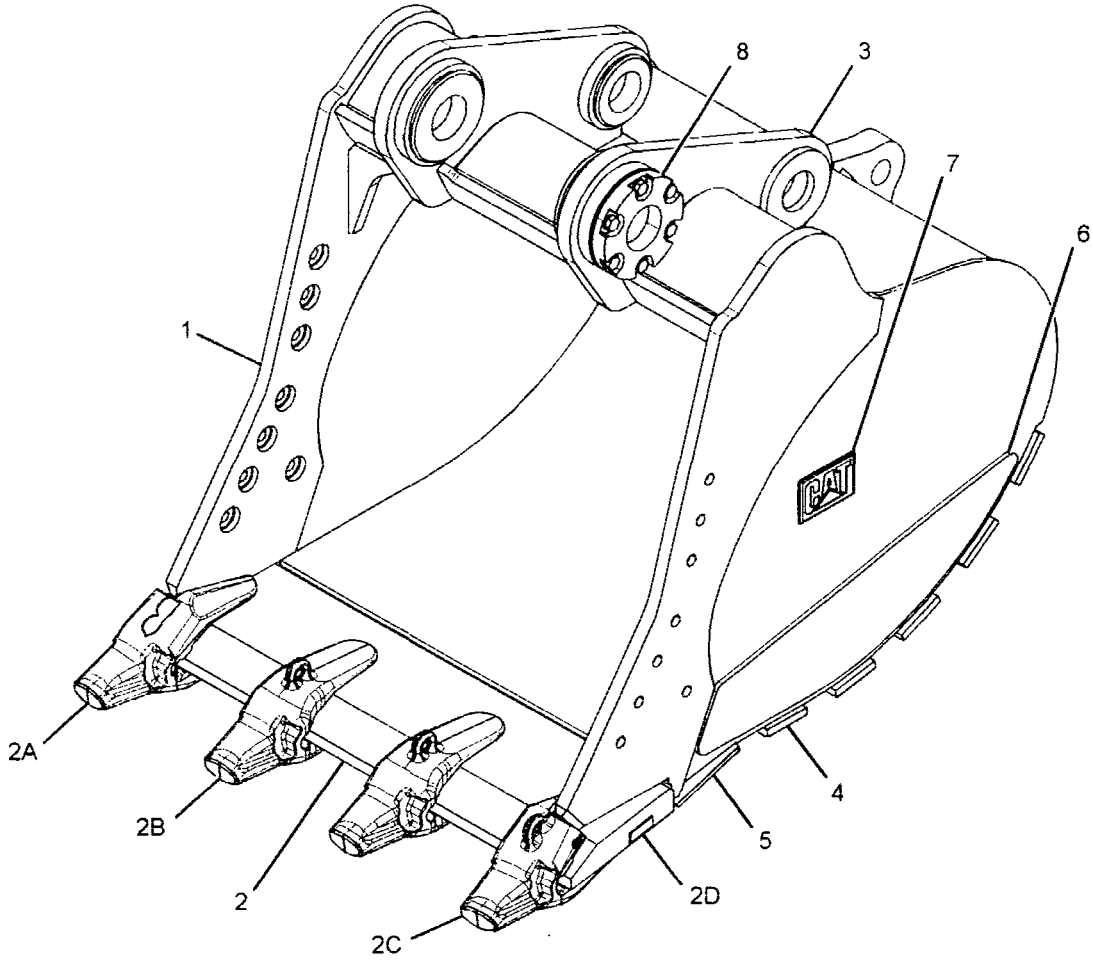

GRAPHIC #1 **<END>** g01417032

WORK TOOLS

281-1890 BUCKET & ADJUSTER GP–GENERAL PURPOSE, TB-FAMILY

S/N: YEE1-UP

1372-MM (54-IN) WIDE X 2.22-CU M (2.9-CU YD) CAPACITY. K-110 ADAPTERS, (6X)

PART OF 281-1908 BUCKET AR-GENERAL PURPOSE

AN ATTACHMENT

SMCS-6503, 6513 **i02606119**

NOTE	REF NO	GRAPHIC REF	PART NUMBER	QTY	PART NAME 1 2 3 4 5 6 (PRODUCT LEVEL)	SEE PAGE
	1	1	*281-1898*	1	BUCKET AS-GENERAL PURPOSE	
	2	1	**260-9415**	1	EDGE AS	
	2A	1	**232-0114**	6	ADAPTER-TIP (K-110, 2-STRAP, CENTER)	
	2B	1	**8P-9770**	1	PLATE	
	3	1	**256-7958**	1	PLATE AS-BOX	
	4	1	**258-8966**	5	PLATE-WEAR	
	5	1	**258-8970**	1	PLATE-WEAR	
	6	1	**253-0812**	1	PLATE-REINFORCEMENT	
	7	1	**2C-9259**	2	PLATE-IDENTIFICATION (CAT)	
	8	1	**279-9980**	2	PLATE-WEAR	
Y	9	1	*4I-4070*	1	ADJUSTER GP-BUCKET	876

Y-SEPARATE ILLUSTRATION

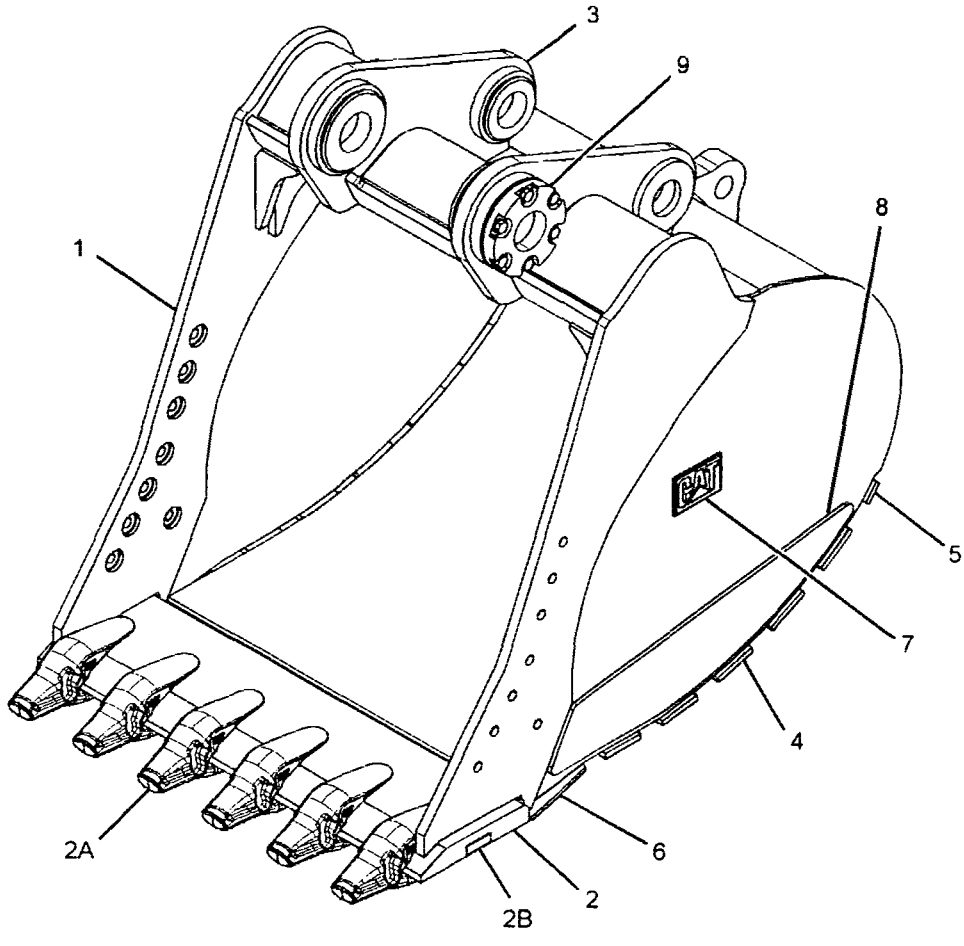

GRAPHIC #1 **<END>** g01389384

WORK TOOLS

304-3111 BUCKET & ADJUSTER GP–HEAVY-DUTY, TB-FAMILY

S/N: YEE1-UP

1720-MM (68-IN) WIDE X 2.40-CU M (3.14-CU YD) CAPACITY. K-110 ADAPTERS, (7X)

AN ATTACHMENT

SMCS-6503, 6513 **i02711515**

NOTE	PART NUMBER	QTY	PART NAME 1 2 3 4 5 6 (PRODUCT LEVEL)	SEE PAGE
Y	*4I-4070*	1	ADJUSTER GP-BUCKET	876
Y	*304-3112*	1	BUCKET AS-HEAVY DUTY	907

Y-SEPARATE ILLUSTRATION

<END>

304-7423 BUCKET & ADJUSTER GP–TB-FAMILY

S/N: YEE1-UP

1727-M (68-IN) WIDE X 2.78-CU M (3.64-CU YD) CAPACITY. K-110 ADAPTERS, (7X)

AN ATTACHMENT

SMCS-6503, 6513 **i02711244**

NOTE	PART NUMBER	QTY	PART NAME 1 2 3 4 5 6 (PRODUCT LEVEL)	SEE PAGE
Y	*4I-4070*	1	ADJUSTER GP-BUCKET	876
Y	*304-7424*	1	BUCKET AS-GENERAL PURPOSE	906

Y-SEPARATE ILLUSTRATION

<END>

304-7425 BUCKET & ADJUSTER GP–TB-FAMILY

S/N: YEE1-UP

1727-MM (68-IN) WIDE X 2.4-CU M (3.14-CU YD) CAPACITY. K-110 ADAPTERS, (7X)

AN ATTACHMENT

SMCS-6503, 6513 **i02810045**

NOTE	PART NUMBER	QTY	PART NAME 1 2 3 4 5 6 (PRODUCT LEVEL)	SEE PAGE
Y	*4I-4070*	1	ADJUSTER GP-BUCKET	876
Y	*304-7426*	1	BUCKET AS-HEAVY DUTY ROCK	910

Y-SEPARATE ILLUSTRATION

<END>

313-1543 BUCKET & ADJUSTER GP–HEAVY-DUTY, TB-FAMILY

S/N: YEE1-UP

1372-MM (54-IN) WIDE X 2.47-CU M (3.23-CU YD) CAPACITY. K-110 ADAPTERS, (5X)

AN ATTACHMENT

SMCS-6503, 6513 **i02844647**

NOTE	PART NUMBER	QTY	PART NAME 1 2 3 4 5 6 (PRODUCT LEVEL)	SEE PAGE
Y	*4I-4070*	1	ADJUSTER GP-BUCKET	876
Y	*313-1558*	1	BUCKET AS-HEAVY DUTY	908

Y-SEPARATE ILLUSTRATION

<END>

WORK TOOLS

313-1546 BUCKET & ADJUSTER GP—HEAVY-DUTY, TB-FAMILY

S/N: YEE1-UP

1830-MM (72-IN) WIDE X 2.70-CU M (3.53-CU YD) CAPACITY. K-110 ADAPTERS, (7X)

AN ATTACHMENT

SMCS-6503, 6513 i02844631

NOTE	PART NUMBER	QTY	PART NAME 1 2 3 4 5 6 (PRODUCT LEVEL)	SEE PAGE
Y	*4I-4070*	1	ADJUSTER GP-BUCKET	876
Y	*313-1561*	1	BUCKET AS-HEAVY DUTY	909

Y-SEPARATE ILLUSTRATION

<END>

281-1908 BUCKET AR-GENERAL PURPOSE—TB-FAMILY

S/N: YEE1-UP

1372-MM (54-IN) WIDE X 2.22-CU M (2.9-CU YD) CAPACITY

AN ATTACHMENT

SMCS-6101 i02606118

NOTE	PART NUMBER	QTY	PART NAME 1 2 3 4 5 6 (PRODUCT LEVEL)	SEE PAGE
Y	**281-1890**	1	BUCKET & ADJUSTER GP (TB-FAMILY)	902
Y	*217-4897*	6	TIP GP-WIDE (K-110)	930

Y-SEPARATE ILLUSTRATION

<END>

WORK TOOLS

251-6967 BUCKET AS-GENERAL PURPOSE–TB-FAMILY

S/N: YEE1-UP
1372-MM (54-IN) WIDE 2.18-CU M (2.85-CU-YD) CAPACITY. K-110 ADAPTERS, (6X)
PART OF 251-6960 BUCKET & ADJUSTER GP
AN ATTACHMENT

SMCS-6101 **i02214275**

NOTE	REF NO	GRAPHIC REF	PART NUMBER	QTY	PART NAME 1 2 3 4 5 6 (PRODUCT LEVEL)	SEE PAGE
	1	1	260-9415	1	EDGE AS	
	1A	1	232-0114	6	ADAPTER-TIP (K-110, 2-STRAP, CENTER)	
	1B	1	8P-9770	1	PLATE	
	2	1	253-0812	1	PLATE-REINFORCEMENT	
	3	1	258-8966	5	PLATE-WEAR	
	4	1	258-8970	1	PLATE-WEAR	

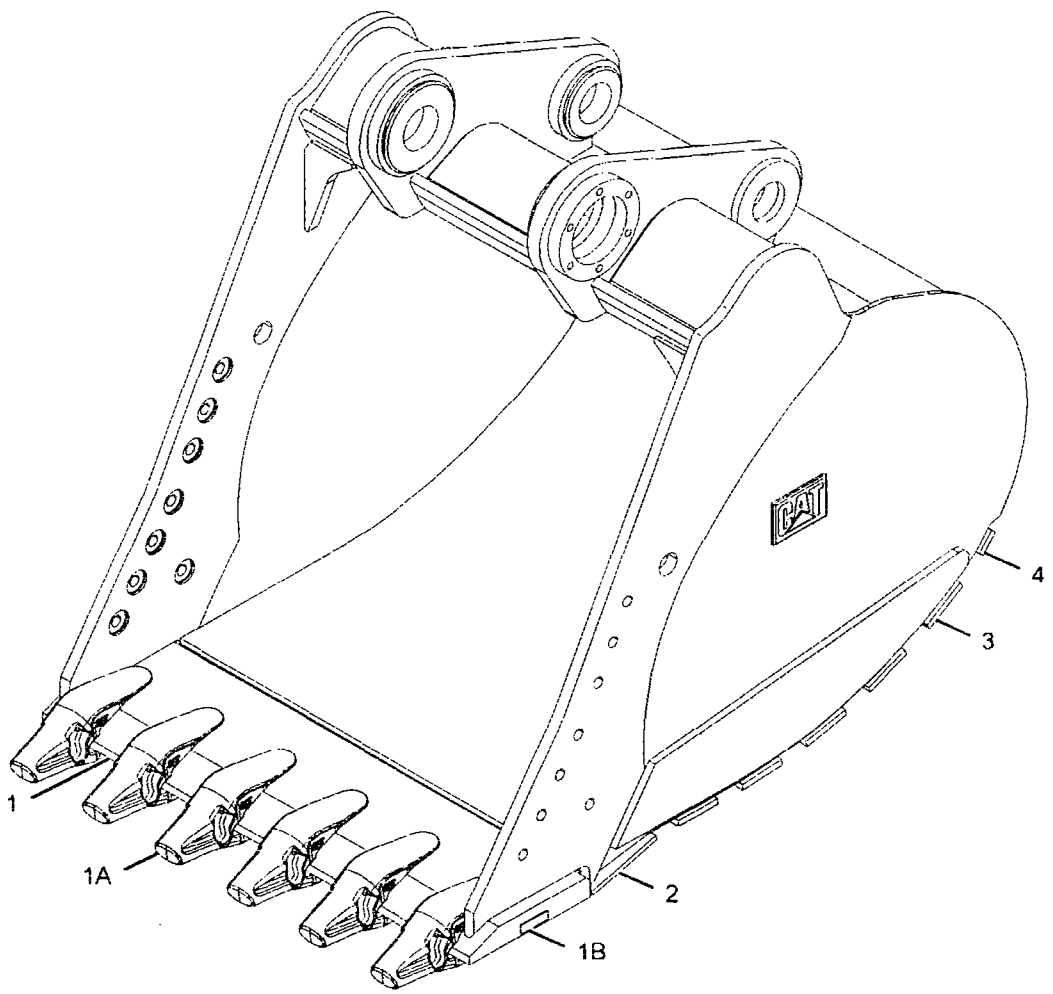

GRAPHIC #1 **<END>** g01121357

WORK TOOLS

304-7424 BUCKET AS-GENERAL PURPOSE-TB-FAMILY

S/N: YEE1-UP
1727-M (68-IN) WIDE X 2.78-CU M (3.64-CU YD) CAPACITY. K-110 ADAPTERS, (7X)
PART OF 304-7423 BUCKET & ADJUSTER GP
AN ATTACHMENT

SMCS-6101 **i02711246**

NOTE	REF NO	GRAPHIC REF	PART NUMBER	QTY	PART NAME 1 2 3 4 5 6 (PRODUCT LEVEL)	SEE PAGE
	1	1	304-3114	1	EDGE AS	
	1A	1	264-2116	1	ADAPTER-TIP (K-110, 2-STRAP, LH)	
	1B	1	232-0114	5	ADAPTER-TIP (K-110, 2-STRAP, CENTER)	
	1C	1	264-2115	1	ADAPTER-TIP (K-110, 2-STRAP, RH)	
	1D	1	8P-9770	1	PLATE	
	2	1	304-9417	1	PLATE AS-BOX	
	3	1	279-9980	2	PLATE-WEAR	
	4	1	304-9415	5	PLATE-WEAR	
	5	1	304-9416	1	PLATE-WEAR	
	6	1	304-3116	1	PLATE-REINFORCEMENT	
	7	1	2C-9259	2	PLATE-IDENTIFICATION (CAT)	

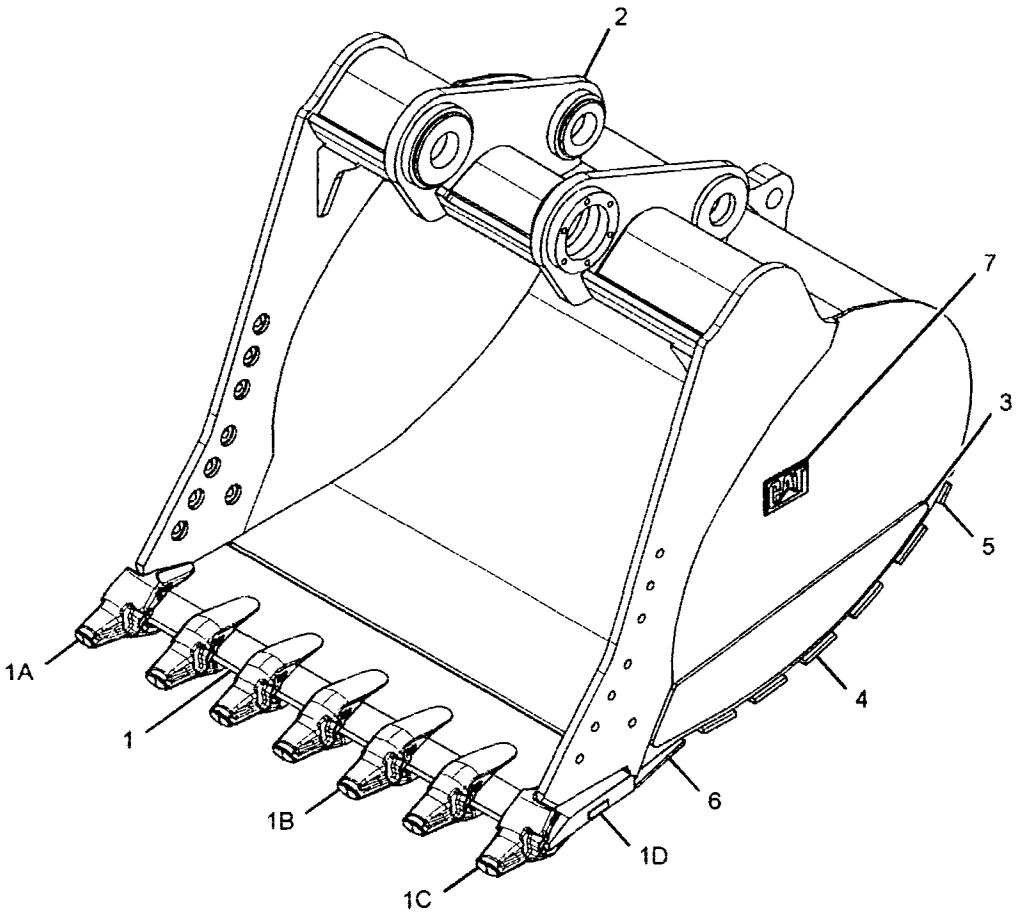

GRAPHIC #1 **<END>** g01367755

WORK TOOLS

304-3112 BUCKET AS-HEAVY DUTY–TB-FAMILY

S/N: YEE1-UP

1720-MM (68-IN) WIDE X 2.40-CU M (3.14-CU YD) CAPACITY. K-110 ADAPTERS, (7X)

PART OF 304-3111 BUCKET & ADJUSTER GP

AN ATTACHMENT

SMCS-6531 **i02711518**

NOTE	REF NO	GRAPHIC REF	PART NUMBER	QTY	PART NAME 1 2 3 4 5 6 (PRODUCT LEVEL)	SEE PAGE
	1	1	**304-3114**	1	EDGE AS	
	1A	1	**264-2116**	1	ADAPTER-TIP (K-110, 2-STRAP, LH)	
	1B	1	**232-0114**	5	ADAPTER-TIP (K-110, 2-STRAP, CENTER)	
	1C	1	**264-2115**	1	ADAPTER-TIP (K-110, 2-STRAP, RH)	
	1D	1	**8P-9770**	1	PLATE	
	2	1	**304-3118**	1	PLATE AS-BOX	
	3	1	**283-8545**	2	PLATE-WEAR	
	4	1	**304-3117**	5	PLATE-WEAR	
	5	1	**304-3116**	1	PLATE-REINFORCEMENT	
	6	1	**2C-9259**	2	PLATE-IDENTIFICATION (CAT)	

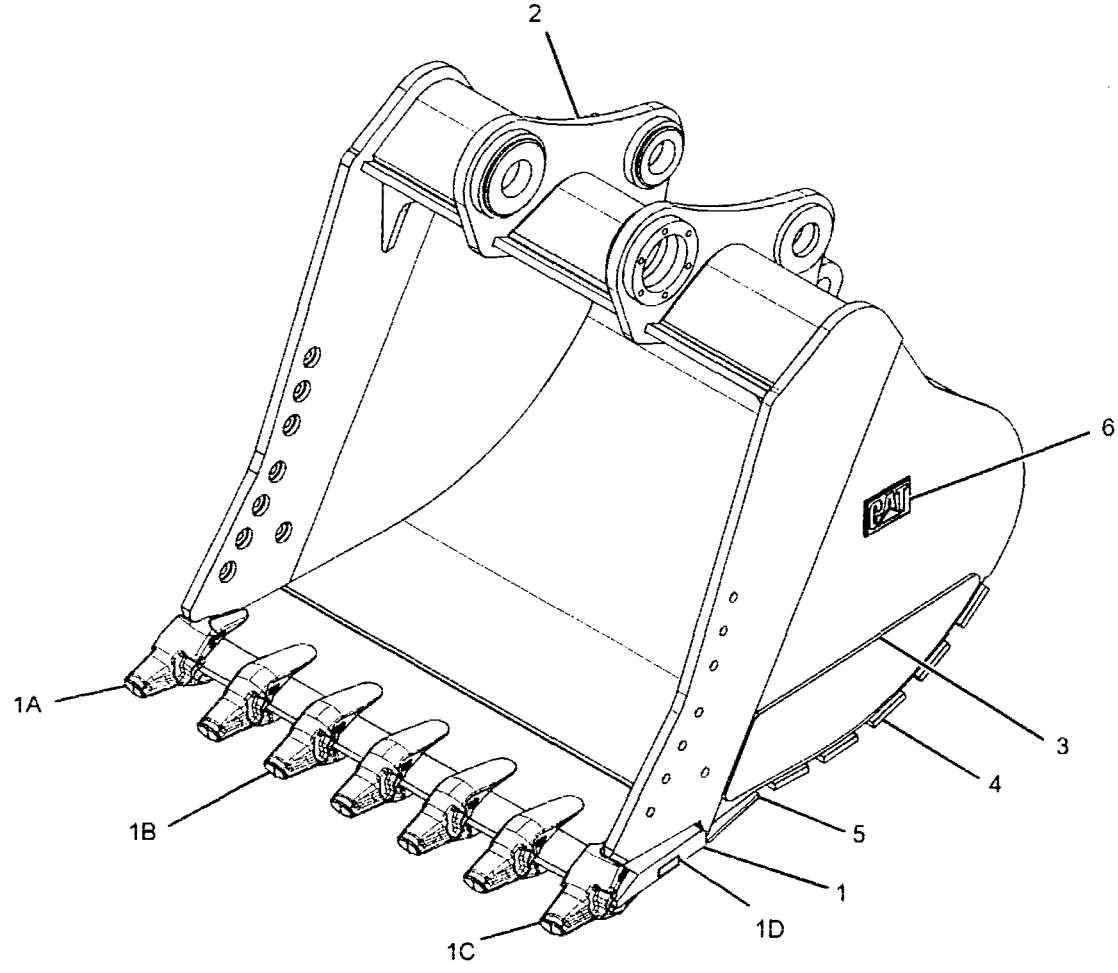

GRAPHIC #1 **<END>** g01368366

WORK TOOLS

313-1558 BUCKET AS-HEAVY DUTY–TB-FAMILY

S/N: YEE1-UP

1372-MM (54-IN) WIDE X 2.47-CU M (3.23-CU YD) CAPCITY. K-110 ADAPTERS, (5X)

PART OF 313-1543 BUCKET & ADJUSTER GP

AN ATTACHMENT

SMCS-6531 **i02844659**

NOTE	REF NO	GRAPHIC REF	PART NUMBER	QTY	PART NAME 1 2 3 4 5 6 (PRODUCT LEVEL)	SEE PAGE
	1	1	279-9960	1	EDGE AS	
	1A	1	309-1115	1	ADAPTER-TIP (K-110, 2-STRAP, RH)	
	1B	1	232-0114	3	ADAPTER-TIP (K-110, 2-STRAP, CENTER)	
	1C	1	309-1116	1	ADAPTER-TIP (K-110, 2-STRAP, LH)	
	1D	1	8P-9770	1	PLATE	
	2	1	283-8556	1	PLATE AS-BOX	
	3	1	283-8549	5	PLATE-WEAR	
	4	1	314-5663	2	PLATE-WEAR	
	5	1	313-3679	2	PLATE-WEAR	
	6	1	2C-9259	2	PLATE-IDENTIFICATION (CAT)	
	7	1	273-3384	1	PLATE-REINFORCEMENT	

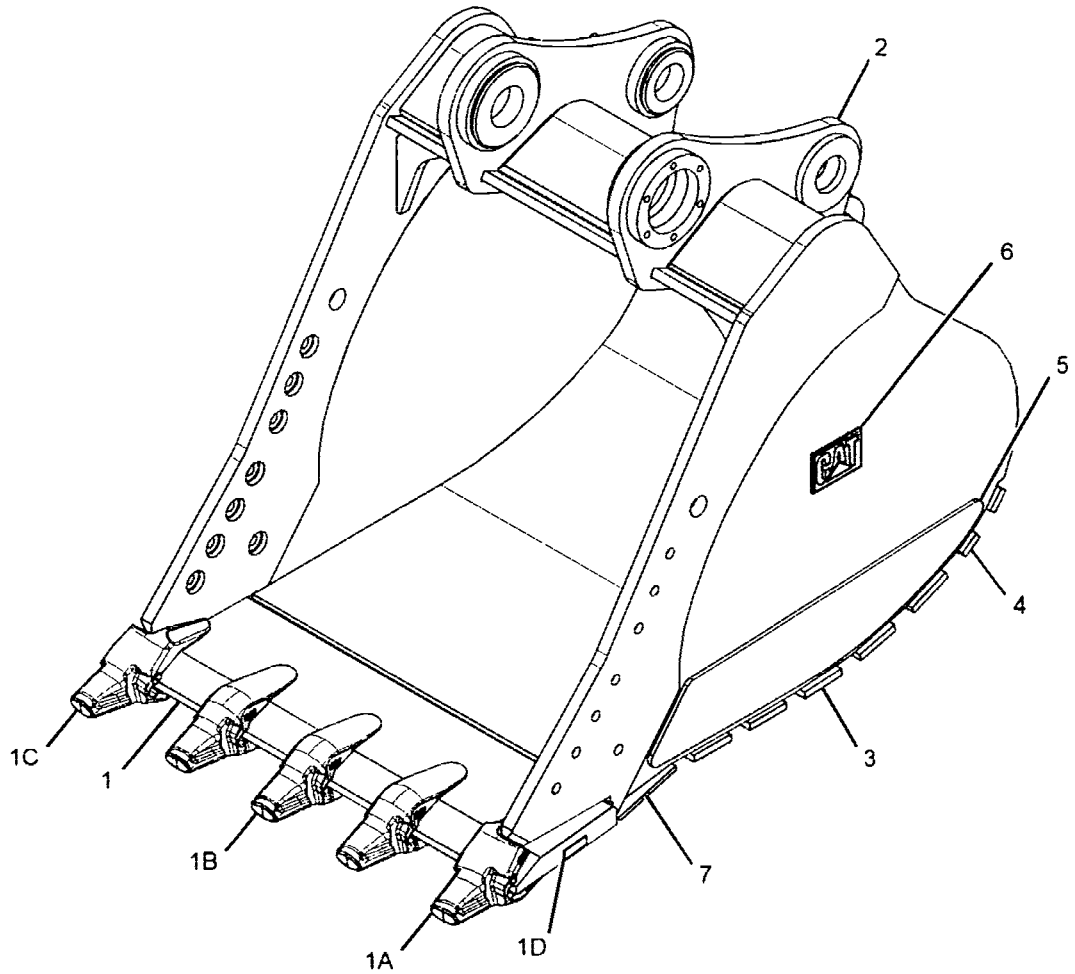

GRAPHIC #1 **<END>** g01475063

313-1561 BUCKET AS-HEAVY DUTY–TB-FAMILY

S/N: YEE1-UP

1830-MM (72-IN) WIDE X 2.70-CU M (3.53-CU YD) CAPACITY. K-110 ADAPTERS, (7X)

PART OF 313-1546 BUCKET & ADJUSTER GP

AN ATTACHMENT

SMCS-6531 **i02844635**

NOTE	REF NO	GRAPHIC REF	PART NUMBER	QTY	PART NAME 1 2 3 4 5 6 (PRODUCT LEVEL)	SEE PAGE
	1	1	315-9710	1	EDGE AS	
	1A	1	264-2115	1	ADAPTER-TIP (K-110, 2-STRAP, RH)	
	1B	1	232-0114	5	ADAPTER-TIP (K-110, 2-STRAP, CENTER)	
	1C	1	264-2116	1	ADAPTER-TIP (K-110, 2-STRAP, LH)	
	1D	1	8P-9770	1	PLATE	
	2	1	315-9714	1	PLATE AS-BOX	
	3	1	315-9713	5	PLATE-WEAR	
	4	1	314-5666	2	PLATE-WEAR	
	5	1	313-3679	2	PLATE-WEAR	
	6	1	2C-9259	2	PLATE-IDENTIFICATION (CAT)	
	7	1	274-7962	1	PLATE-REINFORCEMENT	

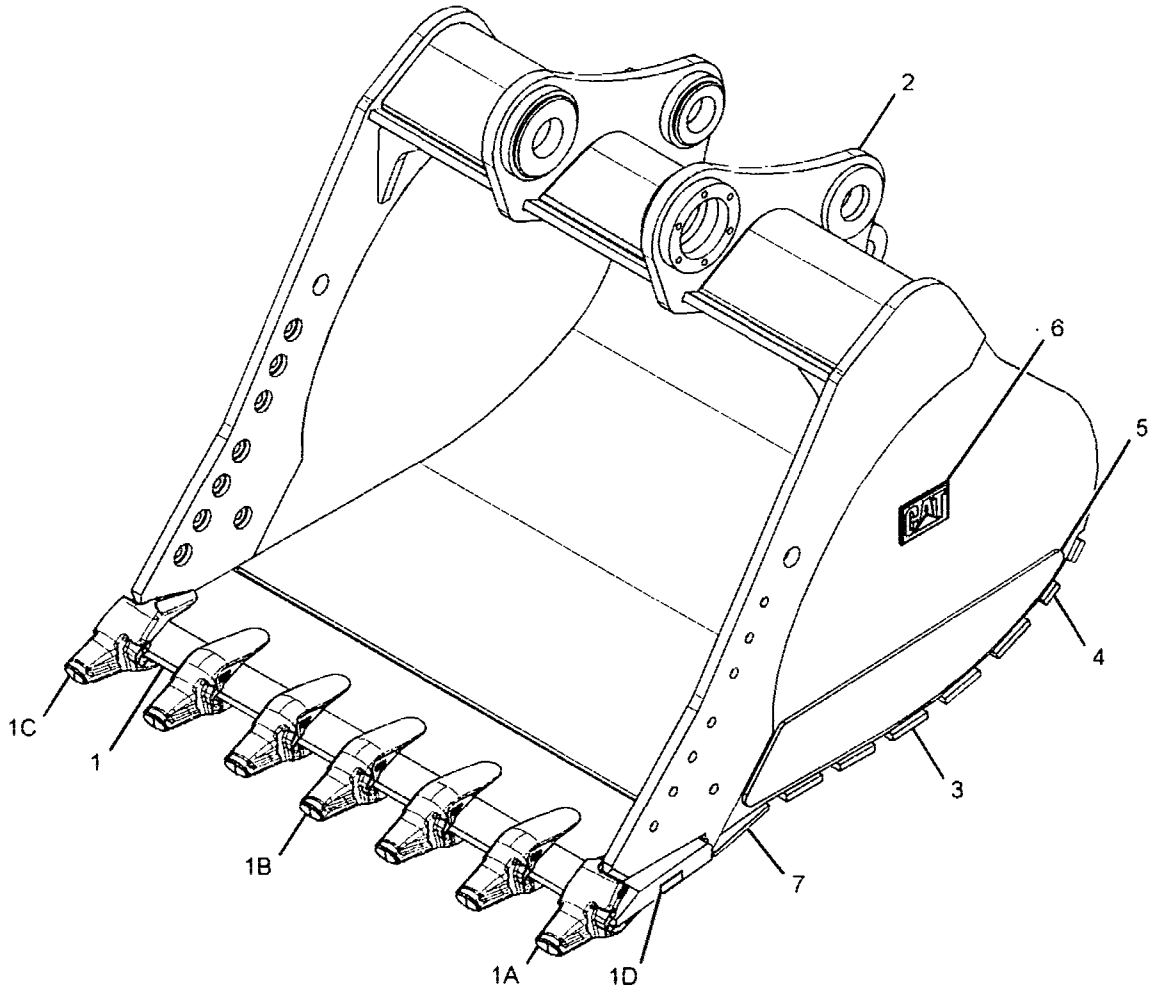

GRAPHIC #1

<END>

g01475062

WORK TOOLS

304-7426 BUCKET AS-HEAVY DUTY ROCK–TB-FAMILY

S/N: YEE1-UP

1727-MM (68-IN) WIDE X 2.4-CU M (3.14-CU YD) CAPACITY. K-110 ADAPTERS, (7X)

PART OF 304-7425 BUCKET & ADJUSTER GP

AN ATTACHMENT

SMCS-6102 **i02810048**

NOTE	REF NO	GRAPHIC REF	PART NUMBER	QTY	PART NAME 1 2 3 4 5 6 (PRODUCT LEVEL)	SEE PAGE
	1	1	**304-3114**	1	EDGE AS	
	1A	1	**264-2115**	1	ADAPTER-TIP (K-110, 2-STRAP, RH)	
	1B	1	**232-0114**	5	ADAPTER-TIP (K-110, 2-STRAP, CENTER)	
	1C	1	**264-2116**	1	ADAPTER-TIP (K-110, 2-STRAP, LH)	
	1D	1	**8P-9770**	1	PLATE	
	2	1	**304-3118**	1	PLATE AS-BOX	
	3	1	**304-9348**	5	PLATE-WEAR	
	4	1	**304-9349**	2	PLATE-WEAR	
	5	1	**283-8570**	2	PLATE-WEAR	
	6	1	**2C-9259**	2	PLATE-IDENTIFICATION (CAT)	
	7	1	**304-3116**	1	PLATE-REINFORCEMENT	

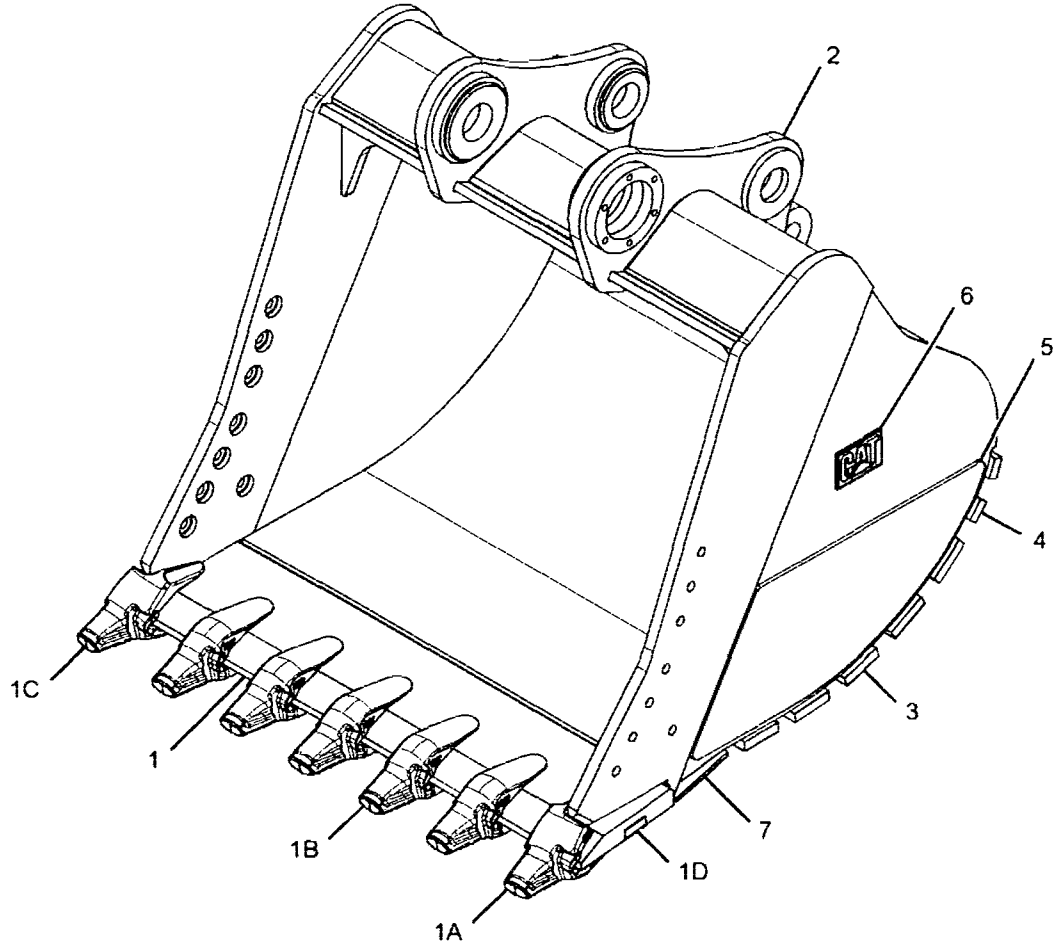

GRAPHIC #1 **<END>** g01425722

270-2601 BUCKET AS-ROCK–TB-FAMILY

S/N: YEE1-UP

965-MM (38-IN) WIDE X 0.9-CU M (1.25-CU YD) CAPACITY. J-550 ADAPTER, (5X)

PART OF 264-1140 BUCKET & ADJUSTER GP

AN ATTACHMENT

SMCS-6102 i02972464

NOTE	REF NO	GRAPHIC REF	PART NUMBER	QTY	PART NAME 1 2 3 4 5 6 (PRODUCT LEVEL)	SEE PAGE
	1	1	142-4294	1	EDGE AS	
	1A	1	107-8555	2	ADAPTER-TIP (J-550, 2-STRAP, INTERMEDIATE)	
	1B	1	107-8554	1	ADAPTER-TIP (J-550, 2-STRAP, CENTER)	
	2	1	107-8556	2	ADAPTER-TIP (J-550, 2-STRAP, CORNER)	
	3	1	145-2562	3	PLATE-WEAR	
	4	1	2C-9259	2	PLATE-IDENTIFICATION (CAT)	
	5	1	105-9725	2	PLATE-WEAR	
	6	1	270-2602	1	PLATE AS-BOX	

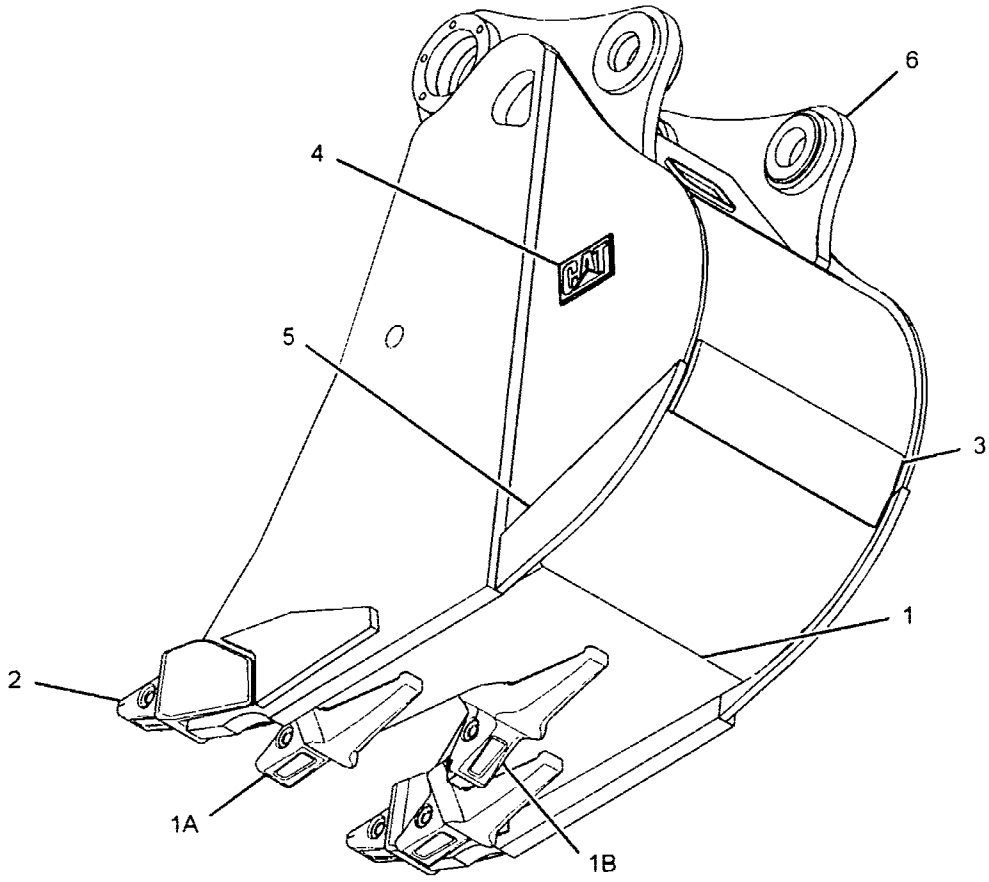

GRAPHIC #1 <END> g01362822

WORK TOOLS

281-1817 BUCKET GP-HEAVY DUTY ROCK–TB-FAMILY

S/N: YEE1-UP

762-MM (30-IN) WIDE X 0.87-CU M (1.14-CU YD) CAPACITY. K-110 ADAPTERS, (3X)

AN ATTACHMENT

SMCS-6102 **i02606274**

NOTE	REF NO	GRAPHIC REF	PART NUMBER	QTY	PART NAME 1 2 3 4 5 6 (PRODUCT LEVEL)	SEE PAGE
	1	1	*281-1837*	1	BUCKET AS-HEAVY DUTY ROCK	
	2	1	**279-9956**	1	EDGE AS	
	2A	1	**264-2115**	1	ADAPTER-TIP (K-110, 2-STRAP, RH)	
	2B	1	**232-0114**	1	ADAPTER-TIP (K-110, 2-STRAP, CENTER)	
	2C	1	**264-2116**	1	ADAPTER-TIP (K-110, 2-STRAP, LH)	
	2D	1	**8P-9770**	1	PLATE	
	3	1	**283-8546**	2	PLATE-WEAR	
	4	1	**283-8560**	1	PLATE AS-BOX	
	5	1	**2C-9259**	2	PLATE-IDENTIFICATION (CAT)	
	6	1	**283-8599**	5	PLATE-WEAR	
	7	1	**289-9890**	1	PLATE-REINFORCEMENT	
	8	1	**283-8570**	2	PLATE-WEAR	
	9	1	**289-5983**	1	PIN AS	
	10	1	**289-5985**	1	PIN AS	
	11	1	**8T-4167**	2	WASHER-HARD (26X44X4-MM THK)	
M	12	1	**8T-5379**	2	BOLT (M24X3X50-MM)	
	13	1	**201-2771**	2	WASHER (26X90X8-MM THK)	

M-METRIC PART

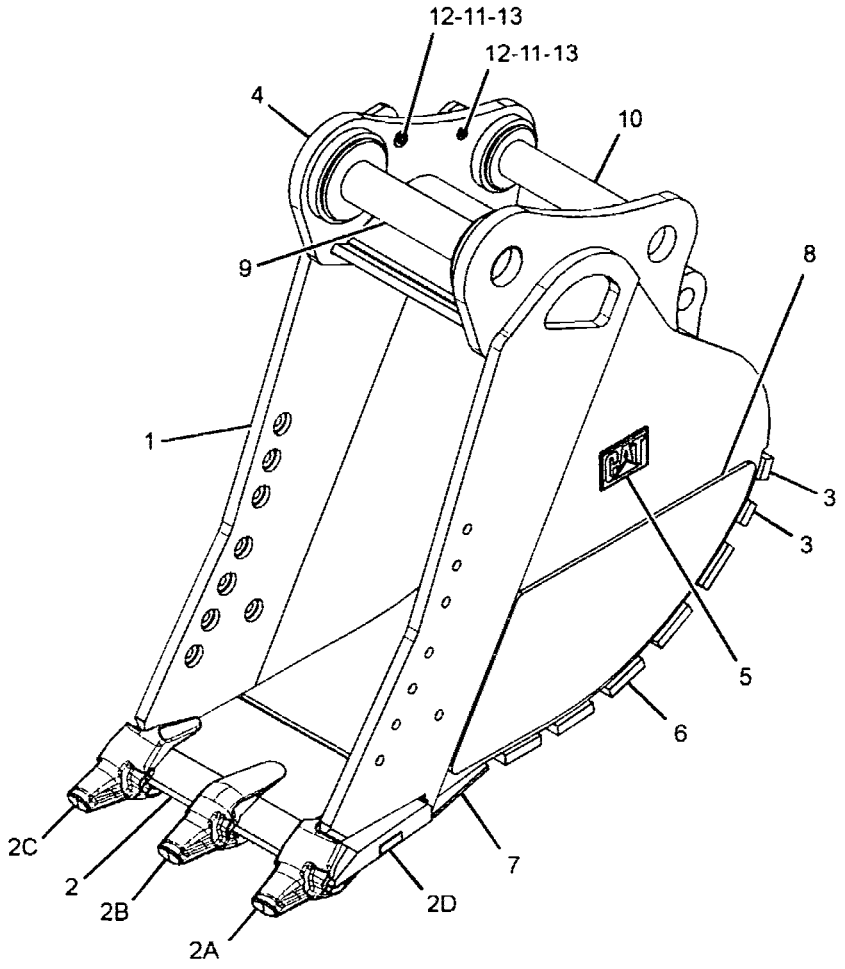

GRAPHIC #1 **<END>** g01416739

WORK TOOLS

260-1111 BUCKET GP-ROCK–UB-FAMILY

S/N: YEE1-UP

1450-MM (57-IN) WIDE X 2.60-CU M (3.66-CU YD) CAPACITY. K-130 ADAPTERS, (4X)

FOR USE WITH 220-2500–PAGE 861, 220-2498–PAGE 861

AN ATTACHMENT

SMCS-6102 **i02909265**

NOTE	REF NO	GRAPHIC REF	PART NUMBER	QTY	PART NAME 1 2 3 4 5 6 (PRODUCT LEVEL)	SEE PAGE
	1	1	*260-1165*	1	BUCKET AS-ROCK	
	2	1	**273-1409**	1	EDGE AS	
	2A	1	**232-0132**	1	ADAPTER-TIP (K-130, 2-STRAP, LH)	
	2B	1	**232-0130**	2	ADAPTER-TIP (K-130, 2-STRAP, CENTER)	
	2C	1	**232-0131**	1	ADAPTER-TIP (K-130, 2-STRAP, RH)	
	2D	1	**8P-9770**	1	PLATE	
	3	1	**256-2030**	1	PLATE AS-BOX	
	4	1	**273-1402**	2	PLATE-WEAR	
	5	1	**273-1547**	6	PLATE-WEAR	
	6	1	**273-1551**	1	PLATE-REINFORCEMENT	
	7	1	**2C-9259**	2	PLATE-IDENTIFICATION (CAT)	

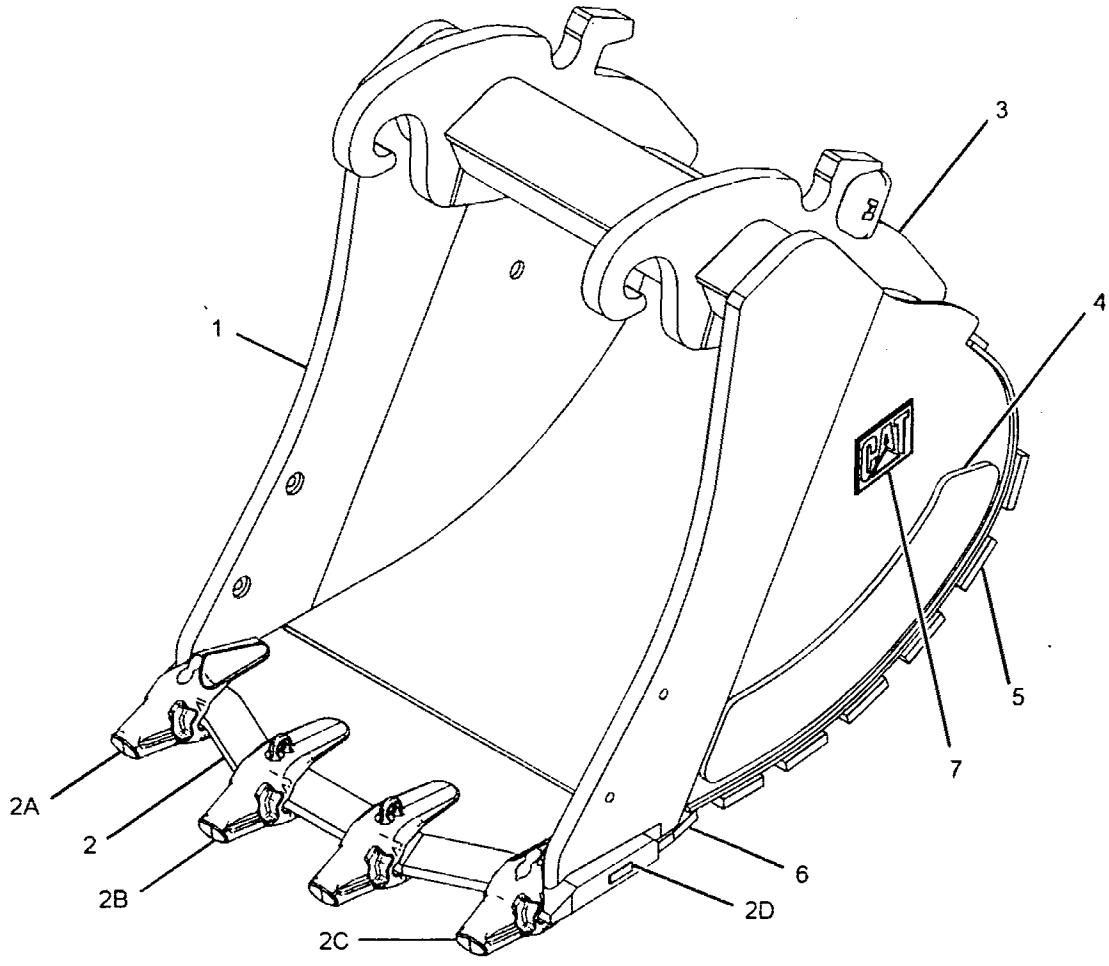

GRAPHIC #1 **<END>** g01480712

WORK TOOLS

260-1112 BUCKET GP-ROCK–UB-FAMILY

S/N: YEE1-UP

1550-MM (61-IN) WIDE X 2.80-CU M (3.66-CU YD) CAPACITY. K-130 ADAPTERS, (4X)

FOR USE WITH 220-2498–PAGE 861, 220-2500–PAGE 861

AN ATTACHMENT

SMCS-6102 **i02909356**

NOTE	REF NO	GRAPHIC REF	PART NUMBER	QTY	PART NAME 1 2 3 4 5 6 (PRODUCT LEVEL)	SEE PAGE
	1	1	**273-1428**	1	EDGE AS	
	1A	1	**232-0132**	1	ADAPTER-TIP (K-130, 2-STRAP, LH)	
	1B	1	**232-0130**	2	ADAPTER-TIP (K-130, 2-STRAP, CENTER)	
	1C	1	**232-0131**	1	ADAPTER-TIP (K-130, 2-STRAP, RH)	
	1D	1	**8P-9770**	1	PLATE	
	2	1	**256-1067**	1	PLATE AS-BOX	
	3	1	**273-1402**	2	PLATE-WEAR	
	4	1	**273-1548**	6	PLATE-WEAR	
	5	1	**273-1552**	1	PLATE-REINFORCEMENT	
	6	1	**2C-9259**	2	PLATE-IDENTIFICATION (CAT)	

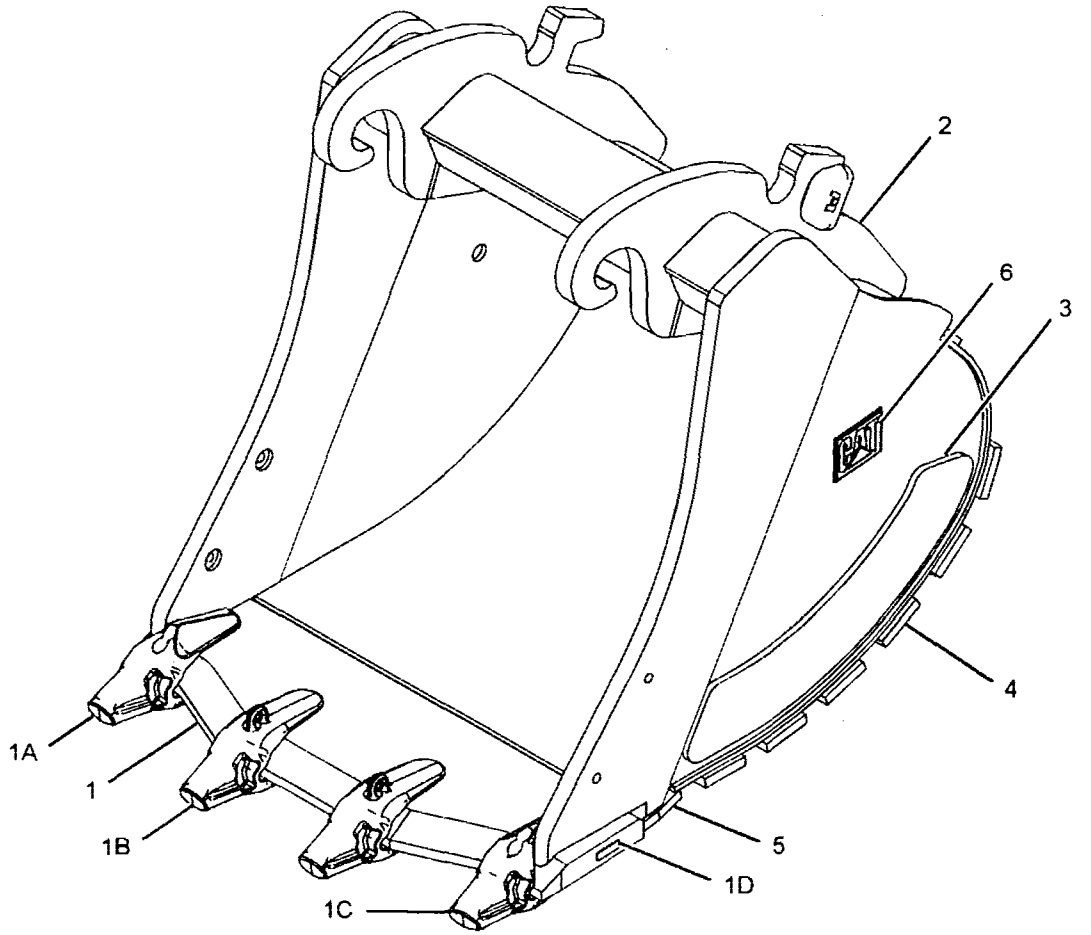

GRAPHIC #1 **<END>** g01227429

WORK TOOLS

246-8115 COUPLER GP-QUICK

S/N: YEE1-UP

PART OF 246-8114, 252-7920 COUPLER AR-QUICK

AN ATTACHMENT

SMCS-1408, 5057, 6129 **i02765140**

NOTE	REF NO	GRAPHIC REF	PART NUMBER	QTY	PART NAME 1 2 3 4 5 6 (PRODUCT LEVEL)	SEE PAGE
	1	1	**091-5928**	2	FITTING-GREASE	
	2	1	**184-7497**	1	BEARING	
	3	1	**184-7502**	1	SPACER (121X150X15-MM THK)	
	4	1	**201-3668**	1	SPRING	
	5	1	**237-8173**	1	PIN	
	6	1	**237-8174**	1	PIN	
	7	1	**237-8175**	1	PIN	
	8	1	**237-8179**	2	PIN-ROLL	
	9	1	**269-0143**	1	PLATE-RETAINING	
	10	1	**269-0144**	1	BAR	
Y	11	1	**269-2106**	1	CYLINDER GP-COUPLER	472
	12	1	**269-2107**	1	HOOK	
	13	1	**269-2554**	1	COUPLER AS	
M	14	1	**123-0368**	1	ROD-THREADED	
M	15	1	**6V-8214**	2	BOLT (M6X1X20-MM)	

M-METRIC PART
Y-SEPARATE ILLUSTRATION

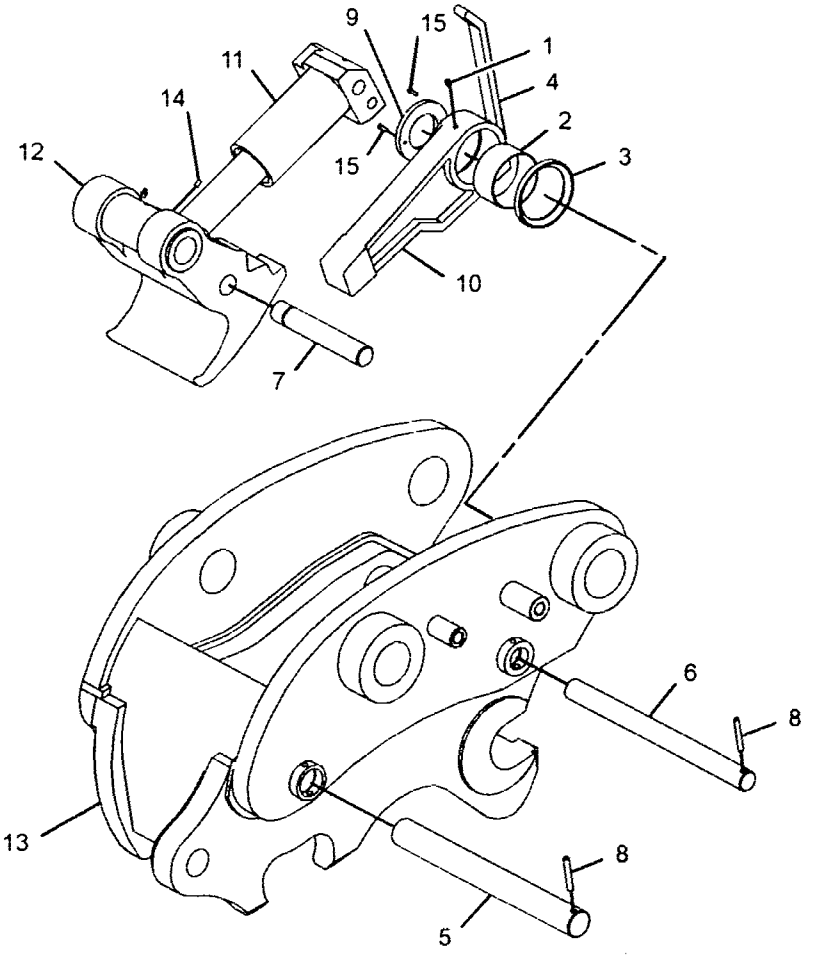

GRAPHIC #1 **<END>** g01390488

WORK TOOLS

246-8114 COUPLER AR-QUICK

S/N: YEE1-UP
FOR USE WITH 345C EXCAVATOR WITH "TB" LINKAGE
AN ATTACHMENT

SMCS-1408, 5057, 6129 **i02809223**

NOTE	PART NUMBER	QTY	PART NAME 1 2 3 4 5 6 (PRODUCT LEVEL)	SEE PAGE
Y	*246-8115*	1	COUPLER GP-QUICK	916
Y	*205-7219*	1	LINES GP-CONNECTING	560
	194-3767	2	SHIM (1.5-MM THK)	

Y-SEPARATE ILLUSTRATION

<END>

252-7920 COUPLER AR-QUICK

S/N: YEE1-UP
FOR USE WITH 345C EXCAVATORS WITH "TB" LINKAGE
AN ATTACHMENT

SMCS-1408, 5057, 6129 **i02868507**

NOTE	PART NUMBER	QTY	PART NAME 1 2 3 4 5 6 (PRODUCT LEVEL)	SEE PAGE
Y	*246-8115*	1	COUPLER GP-QUICK	916
	268-4531	1	FILM-INSTRUCTION (COUPLER OPERATION)	
	268-4530	1	FILM-WARNING (CRUSH HAZARD, READ OMM, U.S.)	
	268-8872	1	FILM-WARNING (CRUSH HAZARD, READ OMM, U.S.)	
	194-3767	2	SHIM (1.5-MM THK)	

Y-SEPARATE ILLUSTRATION

<END>

WORK TOOLS

246-8124 PIN GP-COUPLER

S/N: YEE1-UP

FOR USE WITH 345C EXCAVATOR EQUIPPED WITH "TB" LINKAGE

AN ATTACHMENT

SMCS-6129 **i02809225**

NOTE	PART NUMBER	QTY	PART NAME 1 2 3 4 5 6 (PRODUCT LEVEL)	SEE PAGE
M	**8T-5379**	2	BOLT (M24X3X50-MM)	
	235-7636	1	PIN AS	
	235-7642	1	PIN AS	
	271-2898	3	SLEEVE	
	201-2771	2	WASHER (26X90X8-MM THK)	
	8T-4167	2	WASHER-HARD (26X44X4-MM THK)	

M-METRIC PART

<END>

WORK TOOLS

166-3511 PROTECTOR GP-SIDE BAR

S/N: YEE1-UP

AN ATTACHMENT

SMCS-6817 **i01148954**

NOTE	REF NO	GRAPHIC REF	PART NUMBER	QTY	PART NAME 1 2 3 4 5 6 (PRODUCT LEVEL)	SEE PAGE
	1	1	**166-2877**	2	PROTECTOR-SIDEBAR	
	2	1	**132-0998**	4	PIN-G.E.T.	
	3	1	**132-0999**	4	RETAINER AS-G.E.T.	

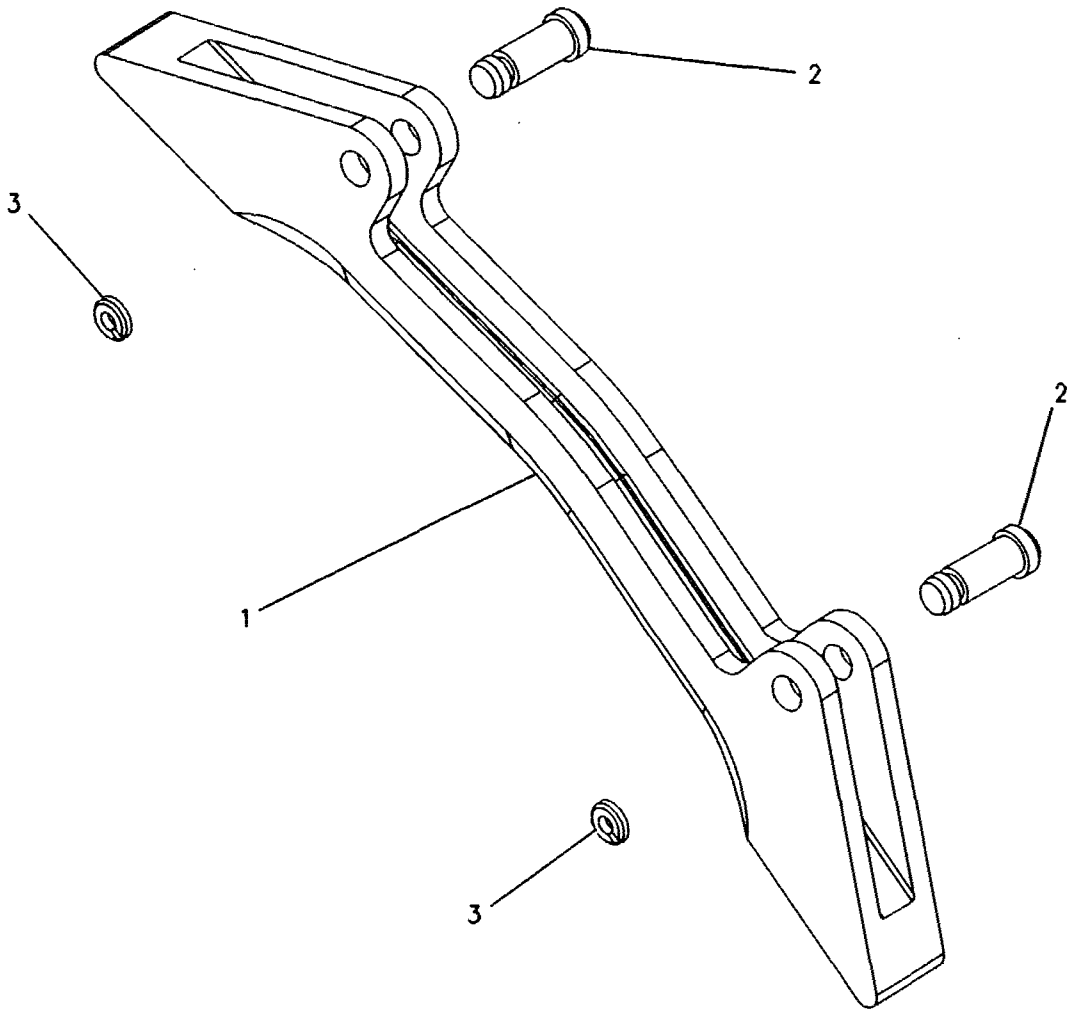

GRAPHIC #1 **<END>** g00266245

WORK TOOLS

195-7217 PROTECTOR GP-SIDE BAR

S/N: YEE1-UP

AN ATTACHMENT

SMCS-6817 **i01720011**

NOTE	REF NO	GRAPHIC REF	PART NUMBER	QTY	PART NAME 1 2 3 4 5 6 (PRODUCT LEVEL)	SEE PAGE
	1	1	**166-2877**	4	PROTECTOR-SIDE BAR	
	2	1	**132-0998**	8	PIN-G.E.T.	
	3	1	**132-0999**	8	RETAINER AS-G.E.T.	

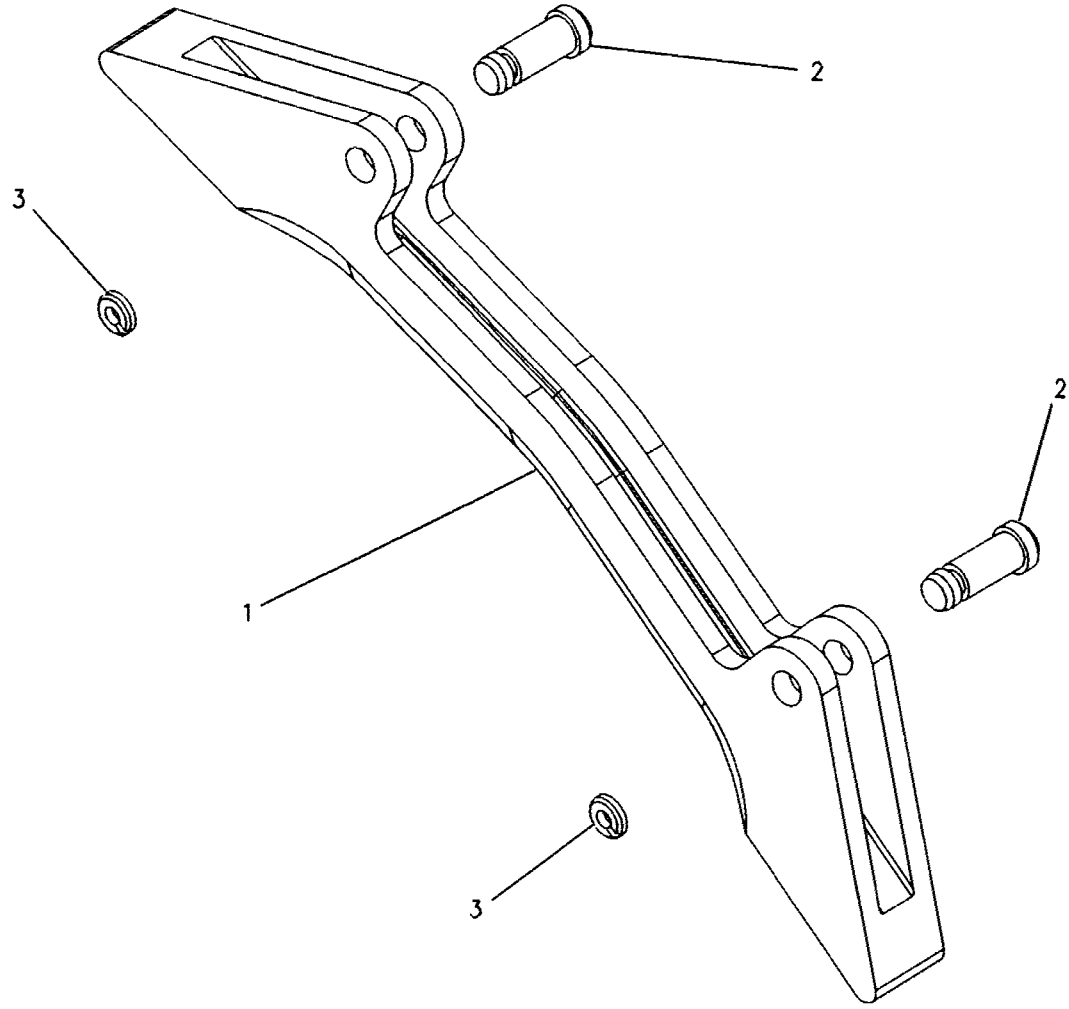

GRAPHIC #1 **<END>** g00266245

WORK TOOLS

280-0351 RIPPER GP

S/N: YEE1-UP

FOR USE WITH 220-2498–PAGE 861, 220-2500–PAGE 861

AN ATTACHMENT

SMCS-6310 **i02746806**

NOTE	REF NO	GRAPHIC REF	PART NUMBER	QTY	PART NAME 1 2 3 4 5 6 (PRODUCT LEVEL)	SEE PAGE
	1	1	**2C-9259**	2	PLATE-IDENTIFICATION (CAT)	
	2	1	**4T-4501**	1	TIP-RIPPER	
	3	1	**4T-4707**	3	RETAINER	
	4	1	**6Y-3909**	3	PIN	
	5	1	**9W-8365**	1	PROTECTOR	
	6	1	**150-8896**	1	FILM-NOTICE (LIFT EYE LOCATION)	
	7	1	**159-8036**	2	FILM-WARNING (READ OMM)	
	8	1	**241-4221**	2	FILM-WARNING (FLYING DEBRIS)	

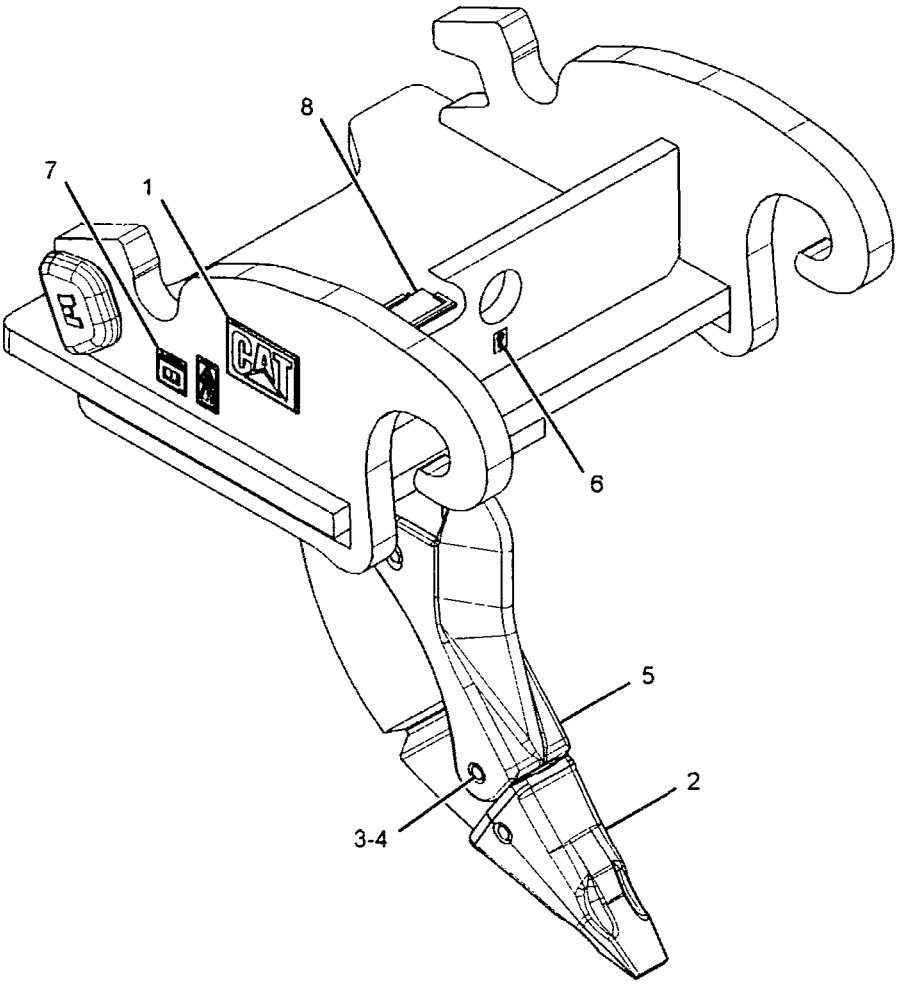

GRAPHIC #1 **<END>** g01443682

WORK TOOLS

251-4344 SIDECUTTER GP

S/N: YEE1-UP
AN ATTACHMENT

SMCS-6813 **i02860194**

NOTE	REF NO	GRAPHIC REF	PART NUMBER	QTY	PART NAME 1 2 3 4 5 6 (PRODUCT LEVEL)	SEE PAGE
	1	1	**275-5998**	1	SIDECUTTER (RH)	
	2	1	**275-5999**	1	SIDECUTTER (LH)	
	3	1	**1D-4637**	6	BOLT (1-8X3.25-IN)	
	4	1	**2J-3507**	6	NUT-FULL (1-8-THD)	
	5	1	**3K-5234**	6	WASHER-HARD (28X49X6-MM THK)	

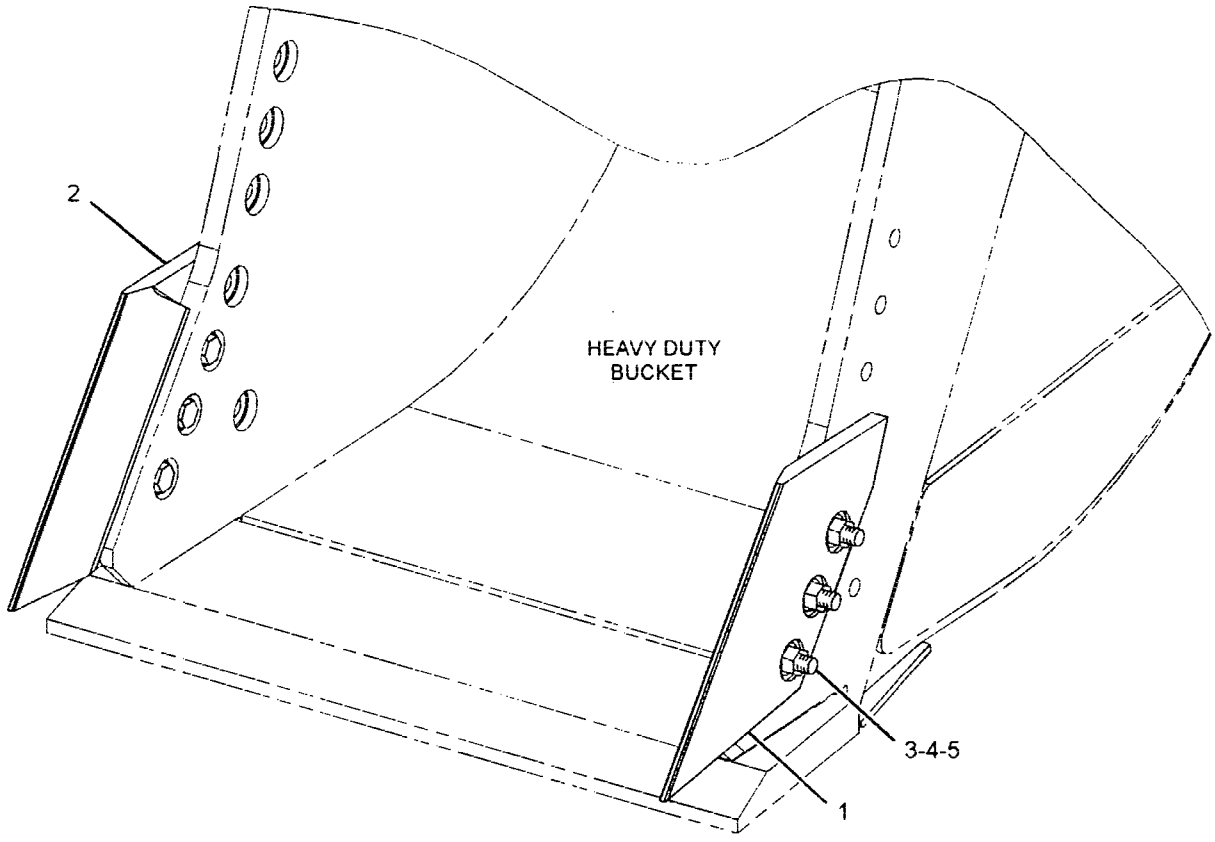

GRAPHIC #1 **<END>** g01431443

WORK TOOLS

277-5814 SIDECUTTER GP

S/N: YEE1-UP

AN ATTACHMENT

SMCS-6813 **i02863016**

NOTE	REF NO	GRAPHIC REF	PART NUMBER	QTY	PART NAME 1 2 3 4 5 6 (PRODUCT LEVEL)	SEE PAGE
	1	1	**256-8690**	1	SIDECUTTER (RH)	
	2	1	**256-8691**	1	SIDECUTTER (LH)	
	3	1	**1D-4637**	10	BOLT (1-8X3.25-IN)	
	4	1	**2J-3507**	10	NUT-FULL (1-8-THD)	
	5	1	**3K-5234**	10	WASHER-HARD (28X49X6-MM THK)	

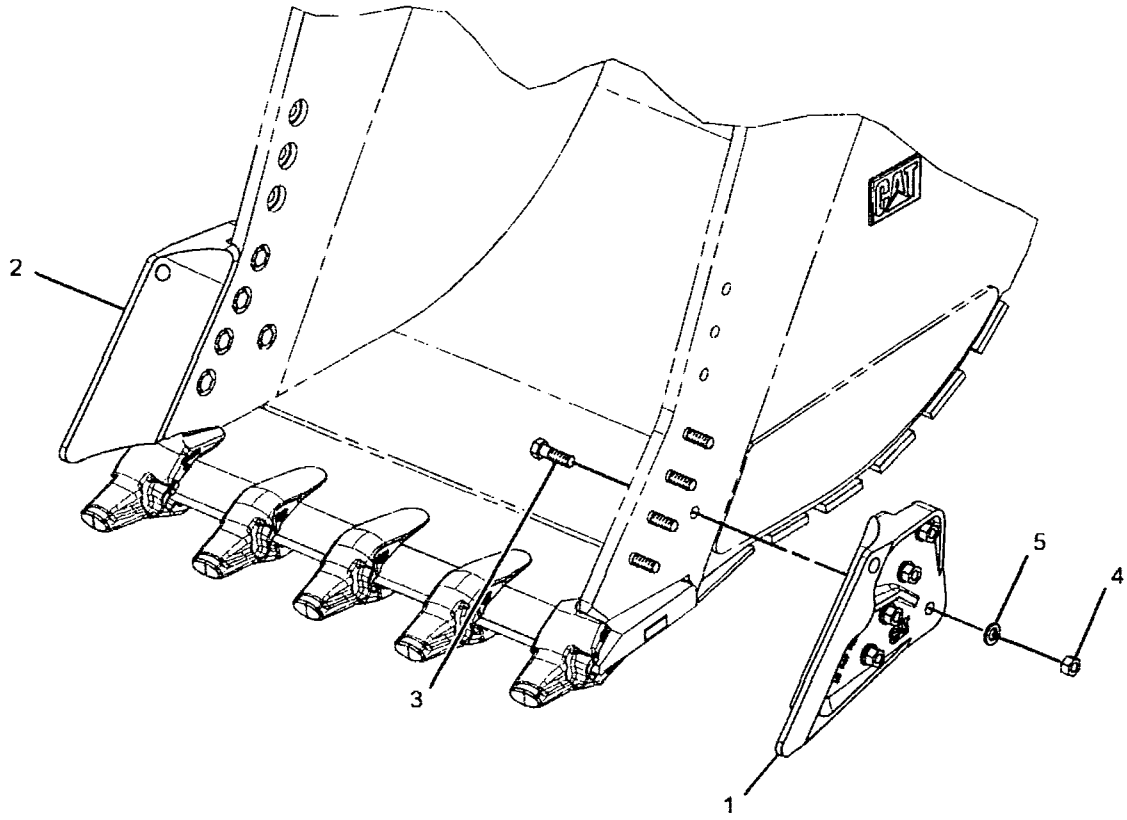

GRAPHIC #1 **<END>** g01427753

WORK TOOLS

309-1126 TIP GP-DOUBLE SPIKE–K-110

S/N: YEE1-UP

AN ATTACHMENT

SMCS-6805 **i02945213**

NOTE	REF NO	GRAPHIC REF	PART NUMBER	QTY	PART NAME 1 2 3 4 5 6 (PRODUCT LEVEL)	SEE PAGE
	1	1	**286-2110**	1	RETAINER-G.E.T.	
	2	1	**286-2116**	1	TIP-DOUBLE SPIKE	

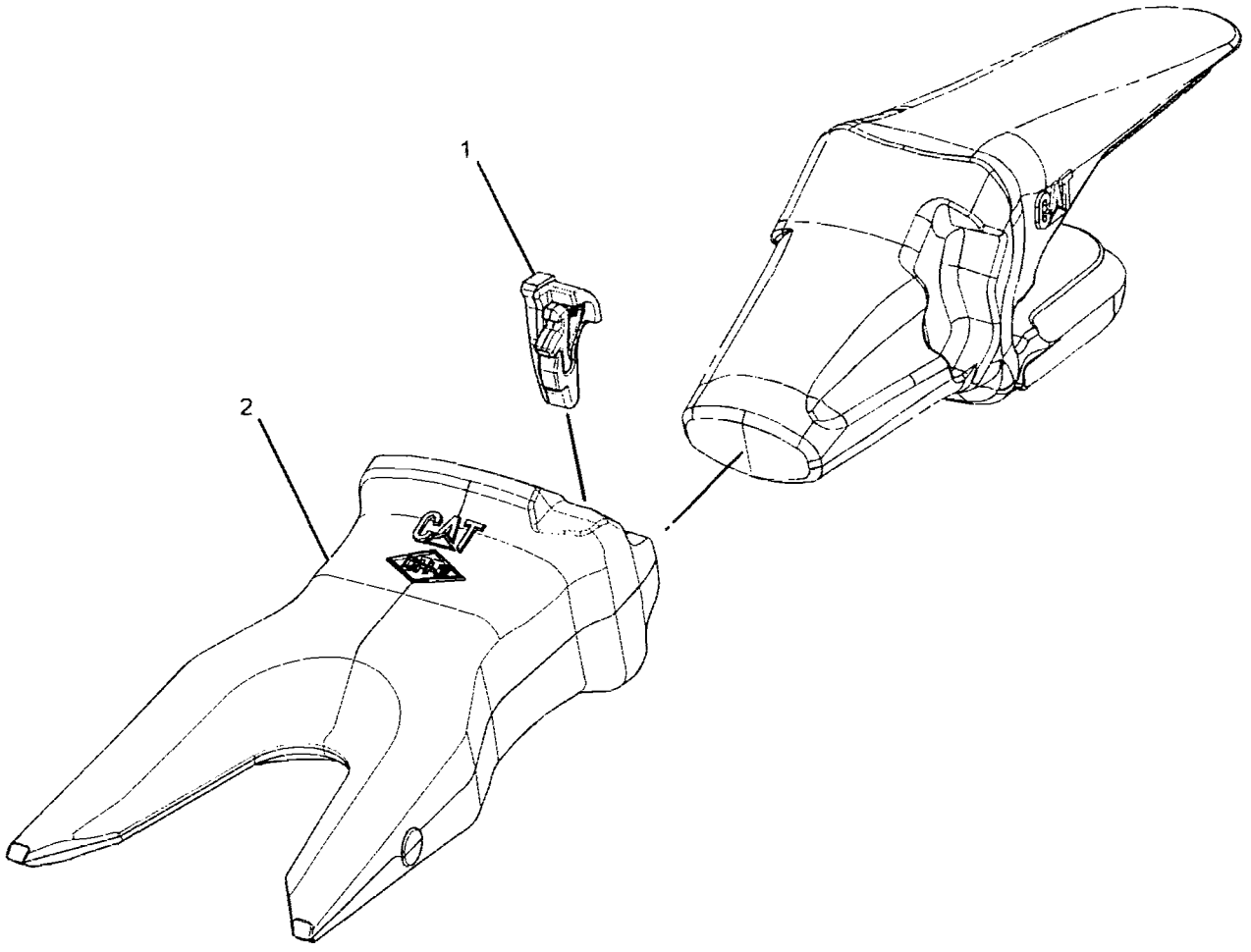

GRAPHIC #1 **<END>** g01474552

WORK TOOLS

309-1122 TIP GP-EXTRA-DUTY-K-110

S/N: YEE1-UP
AN ATTACHMENT

SMCS-6805 **i02945201**

NOTE	REF NO	GRAPHIC REF	PART NUMBER	QTY	PART NAME 1 2 3 4 5 6 (PRODUCT LEVEL)	SEE PAGE
	1	1	286-2110	1	RETAINER-G.E.T.	
	2	1	286-2112	1	TIP-EXTRA-DUTY	

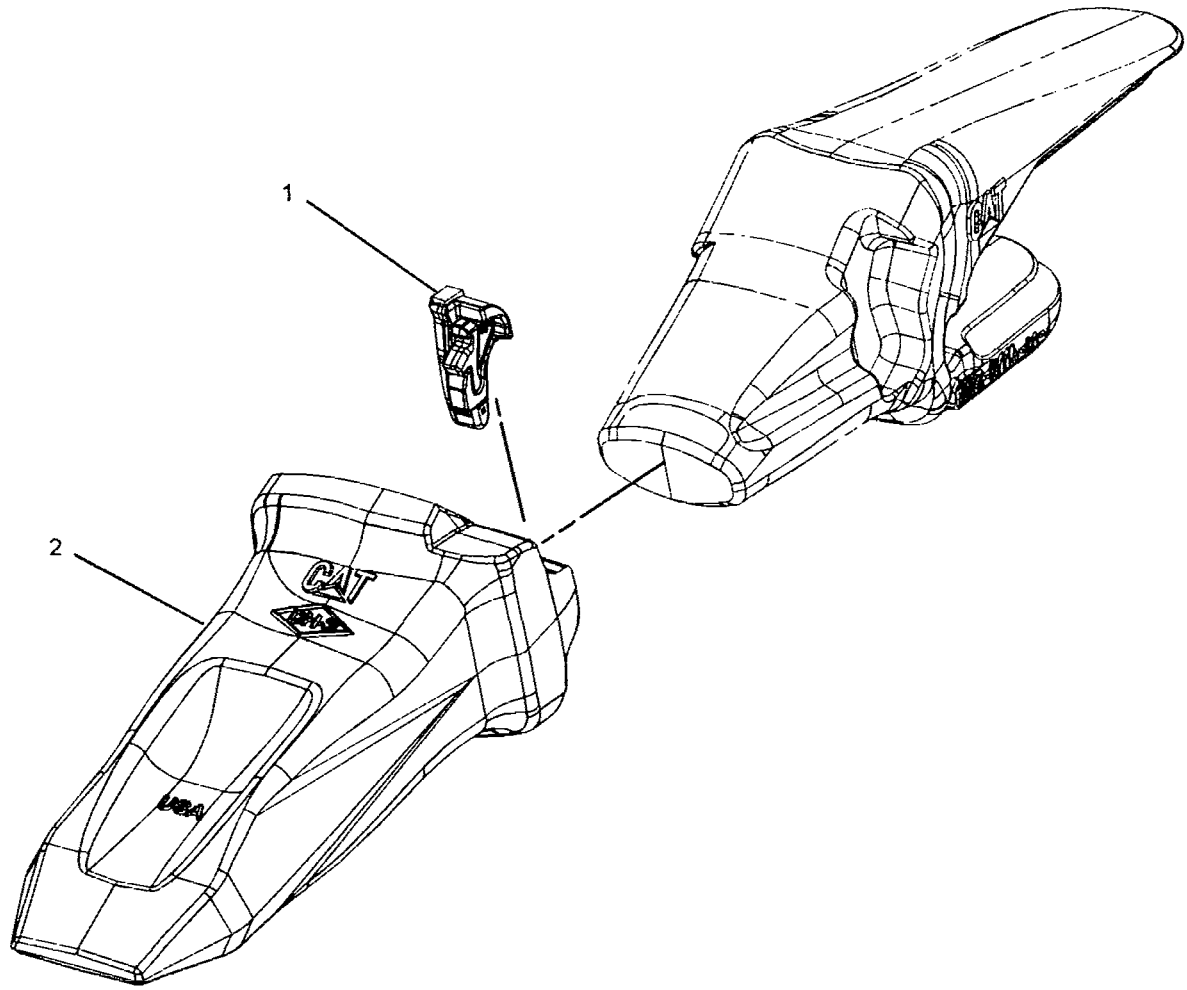

GRAPHIC #1 **<END>** g01465187

WORK TOOLS

309-1127 TIP GP-GENERAL PURPOSE–K-110

S/N: YEE1-UP

AN ATTACHMENT

SMCS-6805 **i02945231**

NOTE	REF NO	GRAPHIC REF	PART NUMBER	QTY	PART NAME 1 2 3 4 5 6 (PRODUCT LEVEL)	SEE PAGE
	1	1	**286-2110**	1	RETAINER-G.E.T.	
	2	1	**286-2117**	1	TIP	

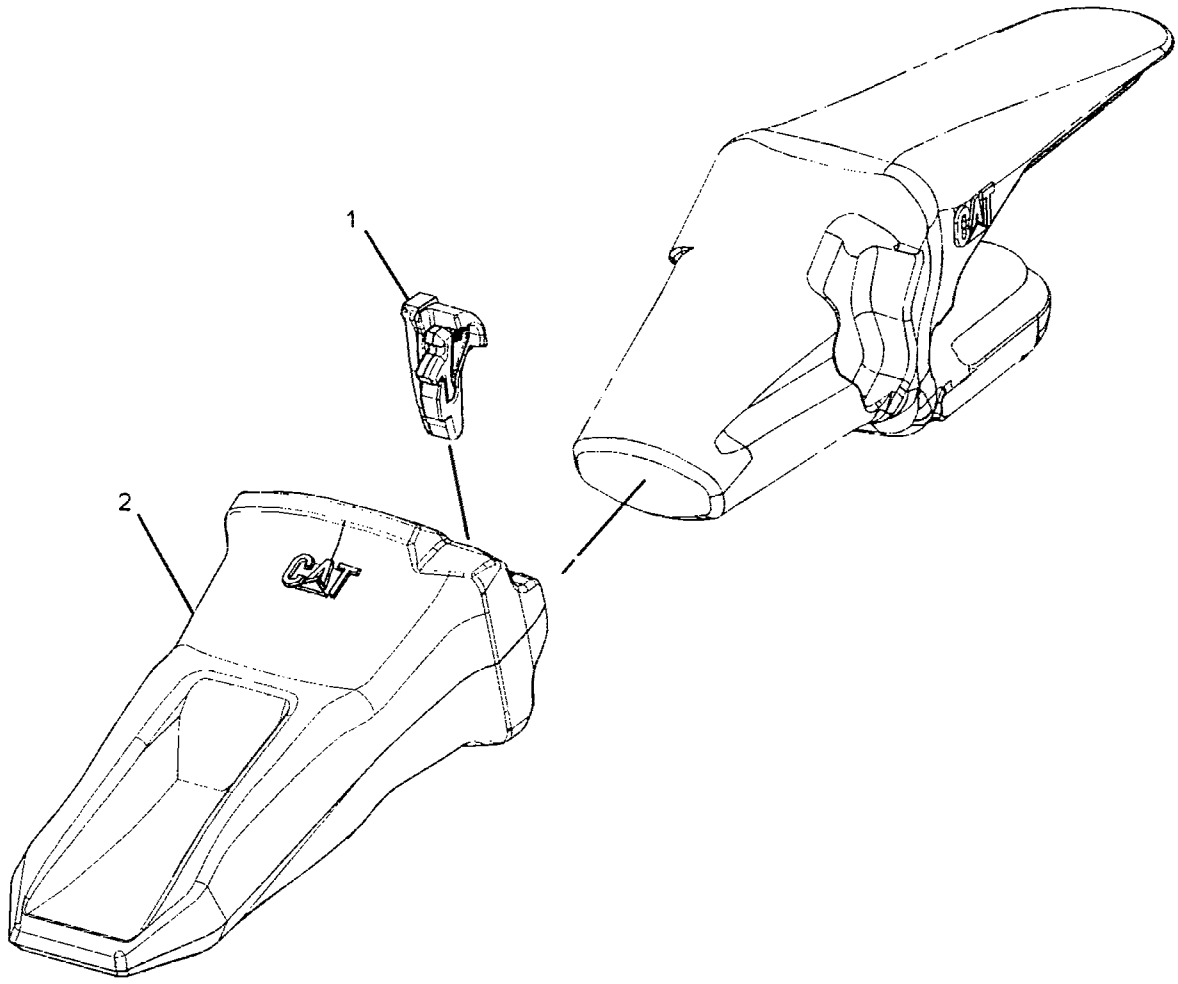

GRAPHIC #1 **<END>** g01475224

WORK TOOLS

309-1128 TIP GP-HEAVY PENETRATION–K-110

S/N: YEE1-UP

AN ATTACHMENT

SMCS-6805 **i02945220**

NOTE	REF NO	GRAPHIC REF	PART NUMBER	QTY	PART NAME 1 2 3 4 5 6 (PRODUCT LEVEL)	SEE PAGE
	1	1	**286-2110**	1	RETAINER-G.E.T.	
	2	1	**286-2118**	1	TIP-HEAVY PENETRATION	

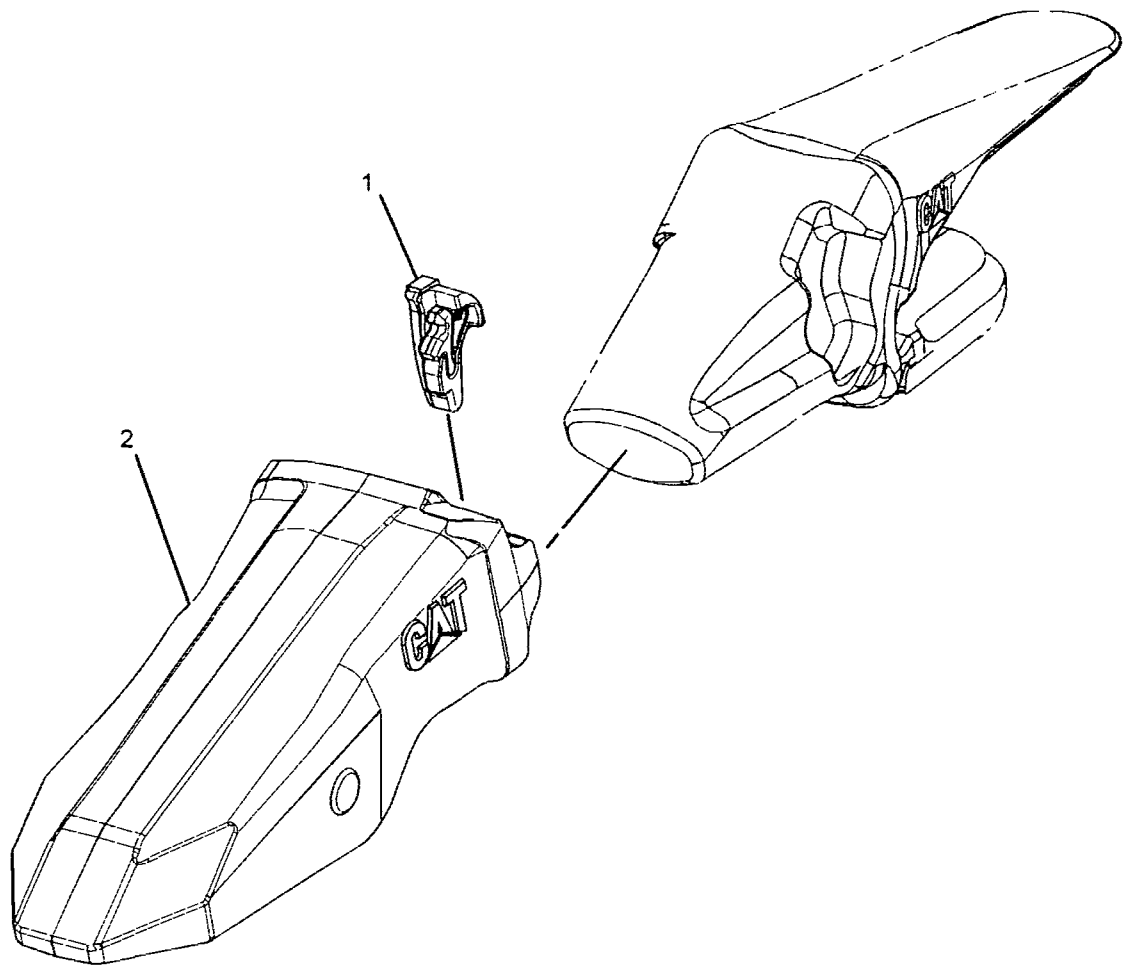

GRAPHIC #1 **<END>** g01475272

309-1123 TIP GP-PENETRATION-K-110

S/N: YEE1-UP
AN ATTACHMENT

SMCS-6805 i02945228

NOTE	REF NO	GRAPHIC REF	PART NUMBER	QTY	PART NAME 1 2 3 4 5 6 (PRODUCT LEVEL)	SEE PAGE
	1	1	286-2110	1	RETAINER-G.E.T.	
	2	1	286-2113	1	TIP-PENETRATION	

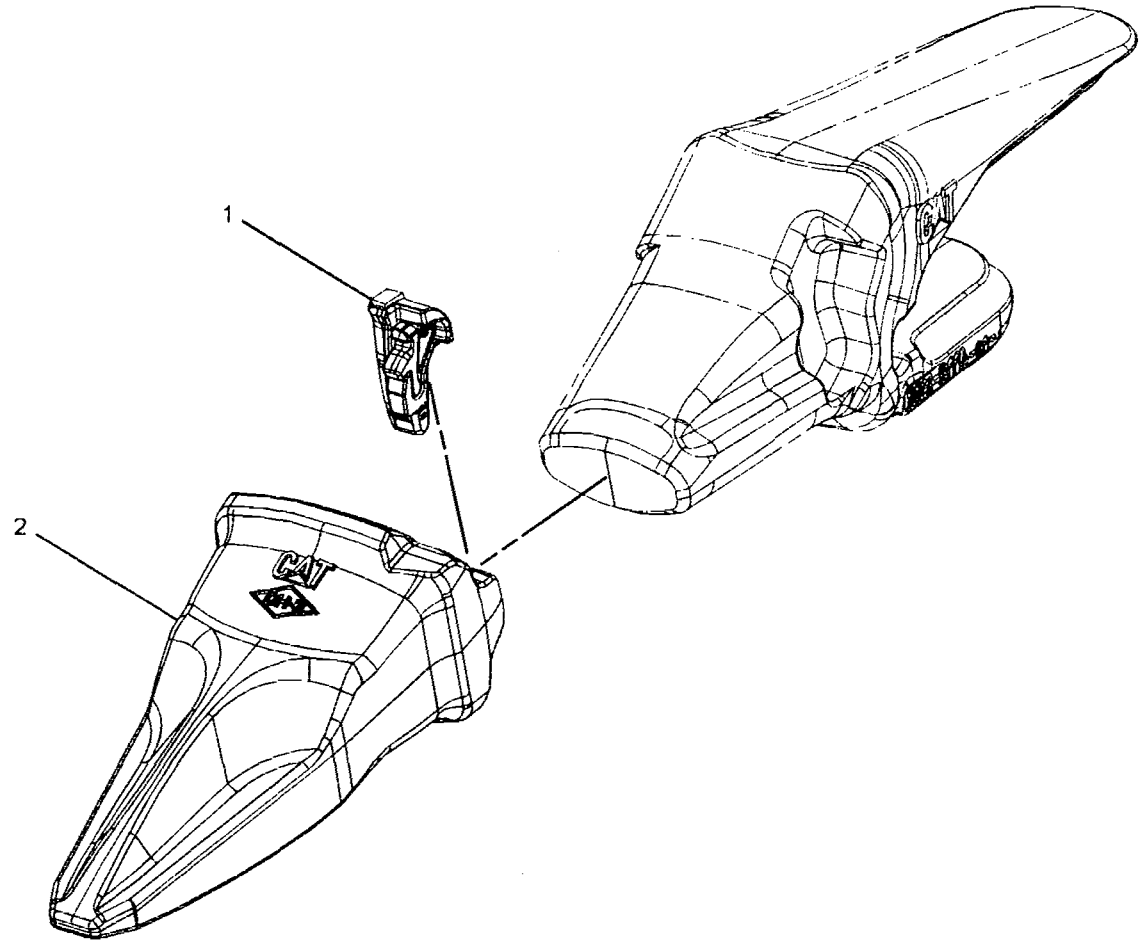

GRAPHIC #1 <END> g01465507

WORK TOOLS

309-1124 TIP GP-PENETRATION PLUS–K-110

S/N: YEE1-UP
AN ATTACHMENT

SMCS-6805 **i02960171**

NOTE	REF NO	GRAPHIC REF	PART NUMBER	QTY	PART NAME 1 2 3 4 5 6 (PRODUCT LEVEL)	SEE PAGE
	1	1	**286-2110**	1	RETAINER-G.E.T.	
	2	1	**286-2114**	1	TIP-PENETRATION PLUS	

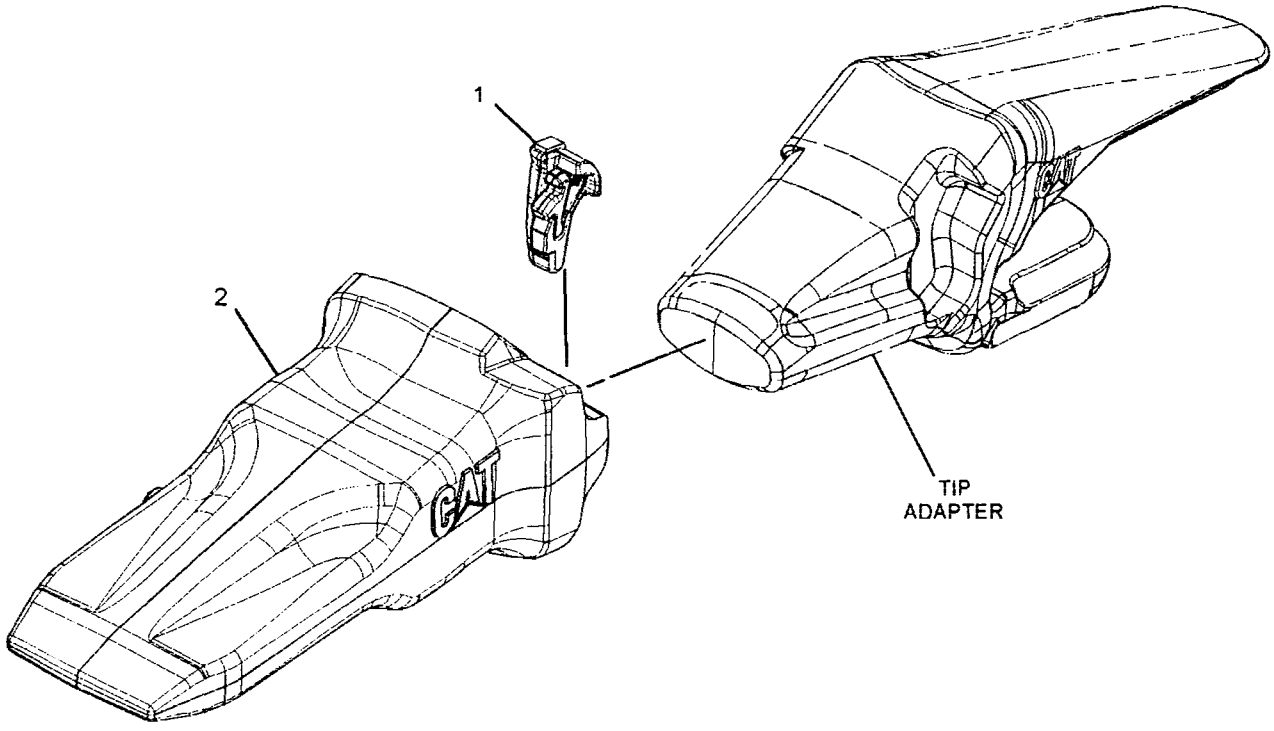

GRAPHIC #1 **<END>** g01478333

WORK TOOLS

309-1125 TIP GP-SPIKE–K-110

S/N: YEE1-UP

AN ATTACHMENT

SMCS-6805 **i02945223**

NOTE	REF NO	GRAPHIC REF	PART NUMBER	QTY	PART NAME 1 2 3 4 5 6 (PRODUCT LEVEL)	SEE PAGE
	1	1	**286-2110**	1	RETAINER-G.E.T.	
	2	1	**286-2115**	1	TIP-SPIKE	

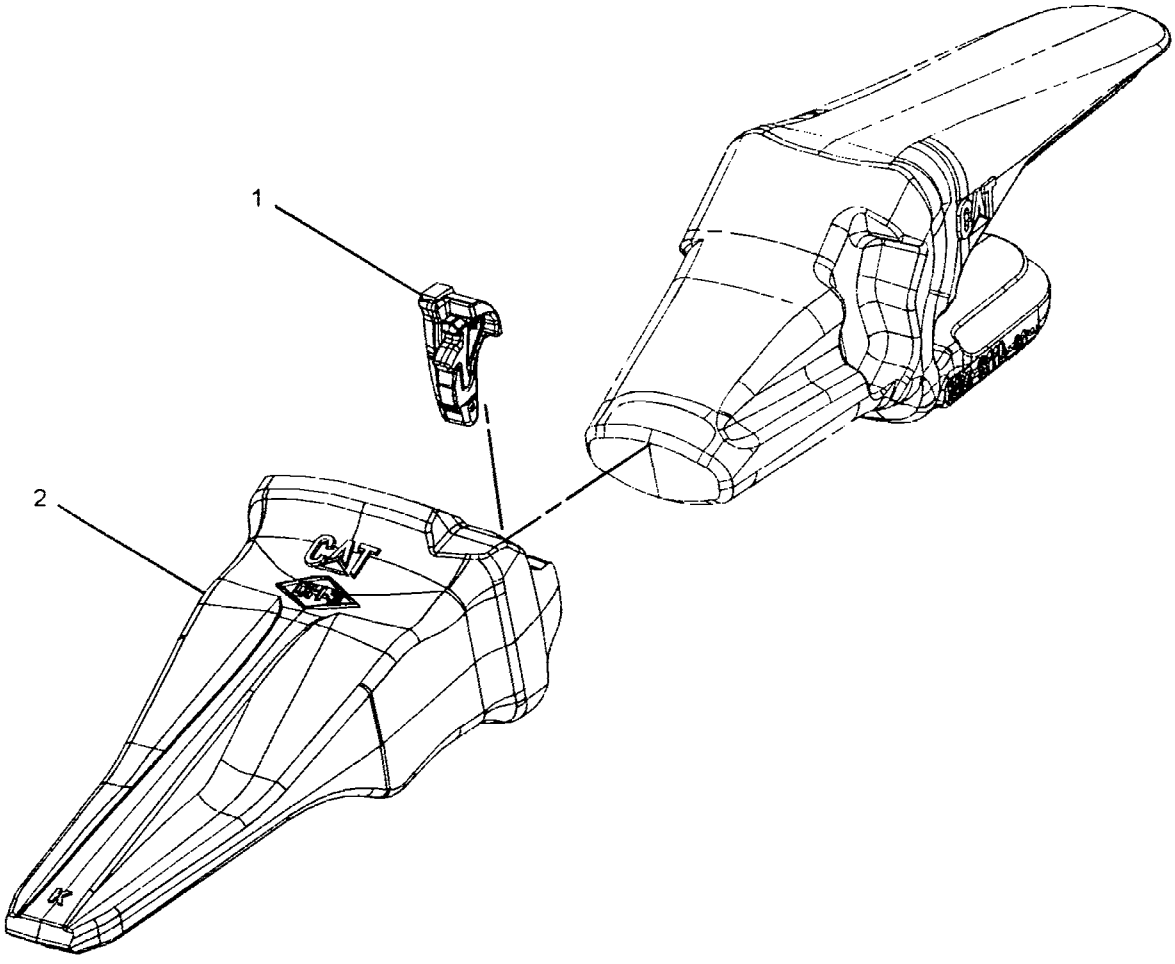

GRAPHIC #1 **<END>** g01465847

WORK TOOLS

217-4897 TIP GP-WIDE–K-110

S/N: YEE1-UP

PART OF 281-1908 BUCKET AR-GENERAL PURPOSE

AN ATTACHMENT

SMCS-6805 **i02213806**

NOTE	REF NO	GRAPHIC REF	PART NUMBER	QTY	PART NAME 1 2 3 4 5 6 (PRODUCT LEVEL)	SEE PAGE
	1	1	220-9110	1	RETAINER-G.E.T. (K-110)	
	2	1	223-8110	1	TIP-WIDE	

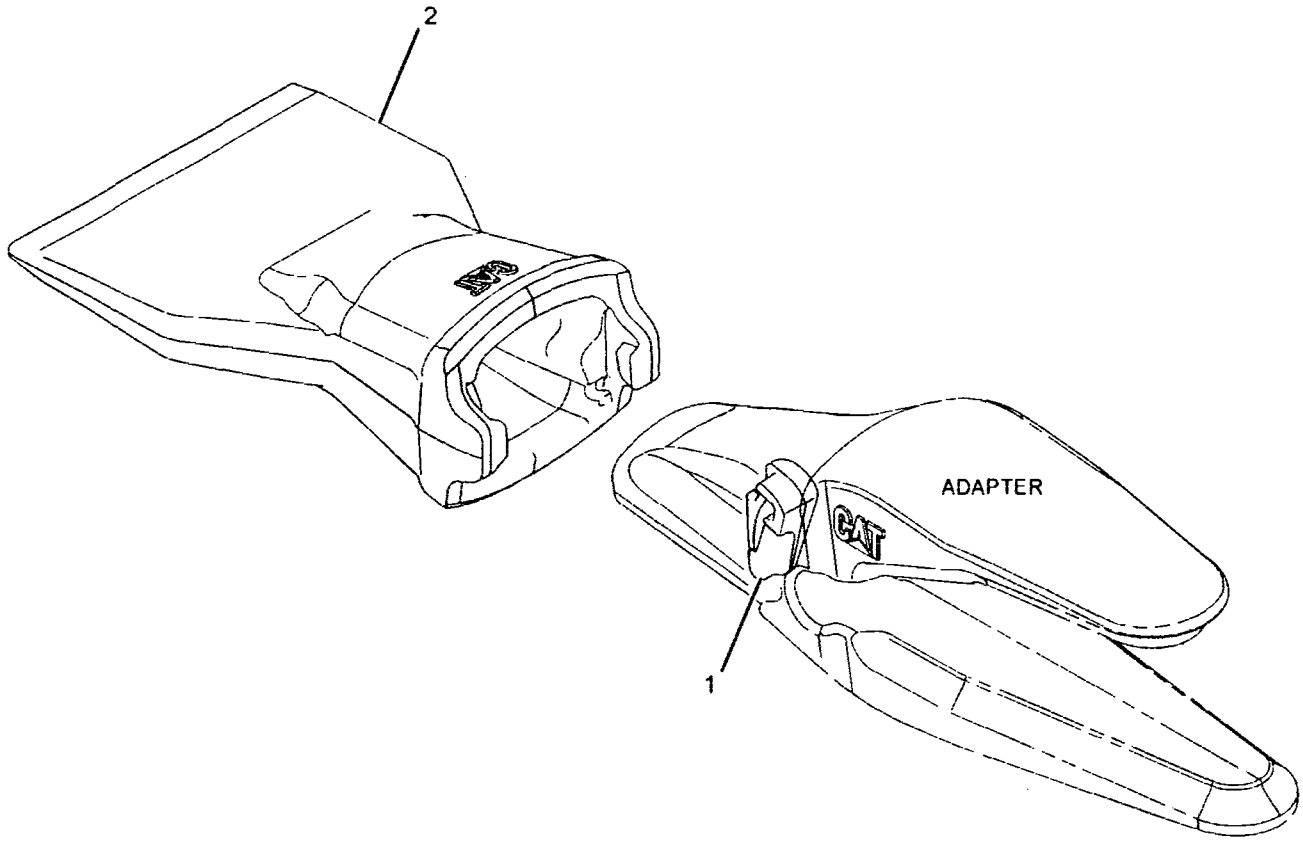

GRAPHIC #1 **<END>** g01128115

WORK TOOLS

309-1121 TIP GP-WIDE–K-110

S/N: YEE1-UP
AN ATTACHMENT

SMCS-6805 **i02945221**

NOTE	REF NO	GRAPHIC REF	PART NUMBER	QTY	PART NAME 1 2 3 4 5 6 (PRODUCT LEVEL)	SEE PAGE
	1	1	**286-2110**	1	RETAINER-G.E.T.	
	2	1	**286-2111**	1	TIP-WIDE	

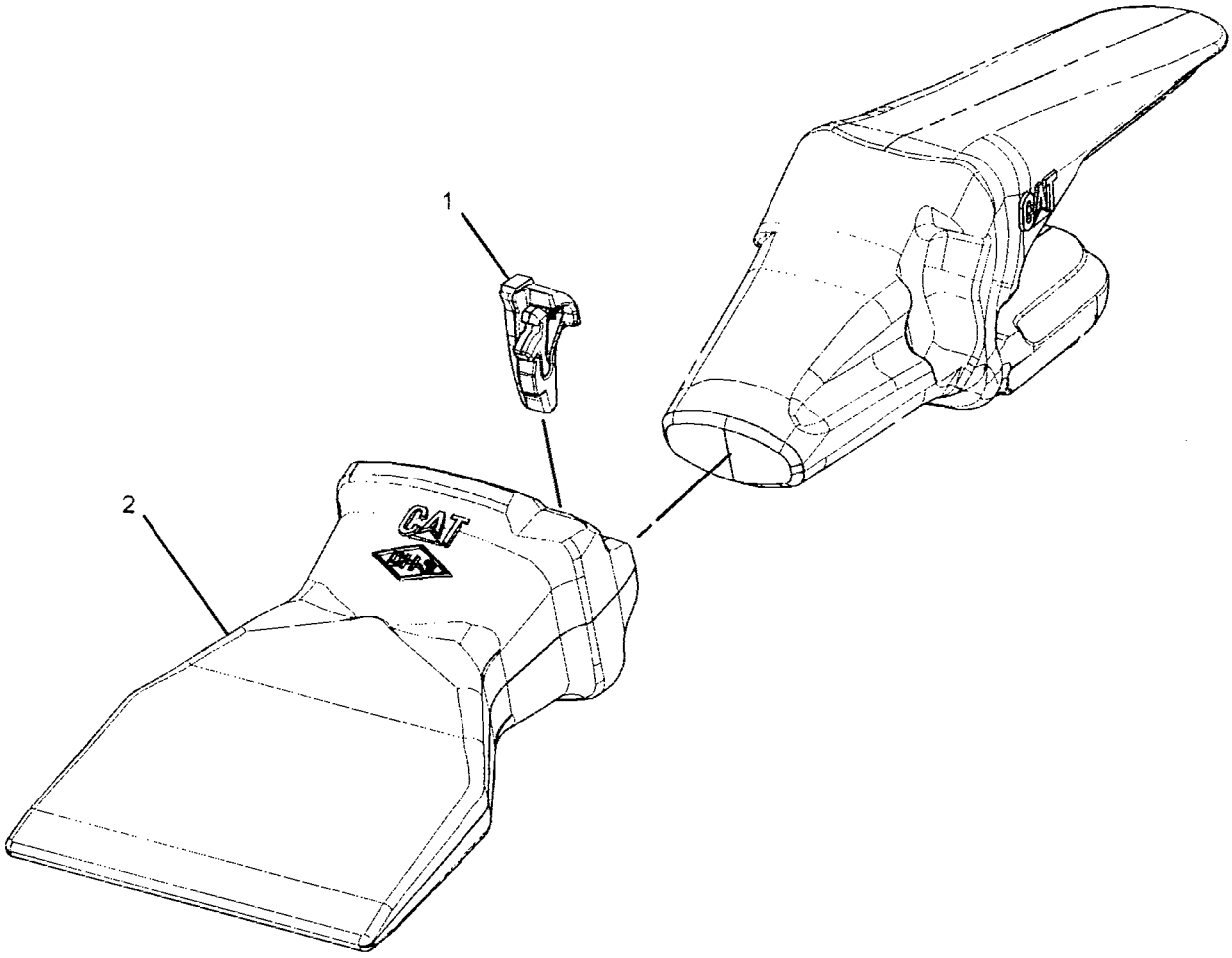

GRAPHIC #1 **<END>** g01474456

OPERATOR STATION

245-7896 ADJUSTER GP-SEAT–LOWER SLIDE

S/N: YEE1-UP

PART OF 229-9077, 240-5063, 305-0339 SUSPENSION GP-SEAT

ALSO AN ATTACHMENT

SMCS-7321 **i02346925**

NOTE	REF NO	GRAPHIC REF	PART NUMBER	QTY	PART NAME 1 2 3 4 5 6 (PRODUCT LEVEL)	SEE PAGE
M	1	1	**198-3899**	2	SCREW-BUTTON HEAD (M8X1.25X20-MM)	
	2	1	**245-7886**	2	PLATE	
	3	1	**245-7897**	4	PLATE	
M	4	1	**245-7898**	2	SCREW-BUTTON HEAD (M8X1.25X25-MM)	
M	5	1	**5C-7261**	4	NUT (M8X1.25-THD)	
	6	1	**8T-4224**	4	WASHER-HARD (8.8X16X2-MM THK)	

M-METRIC PART

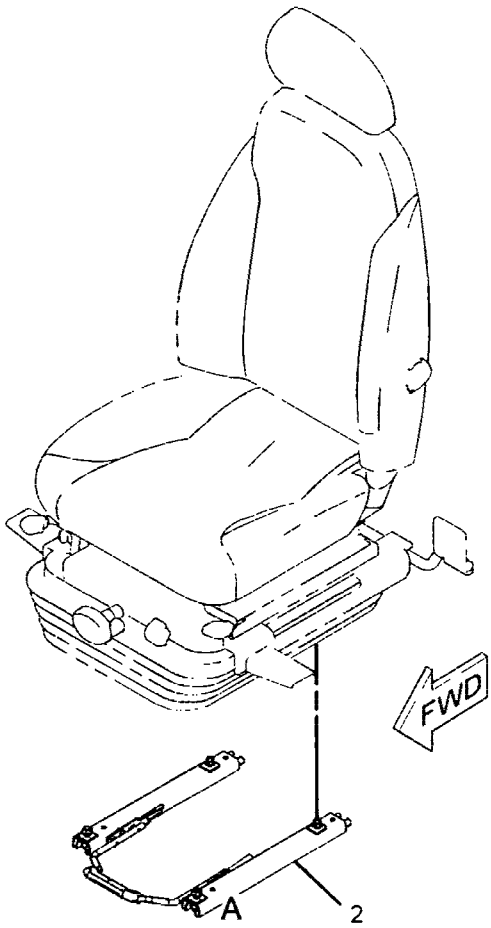

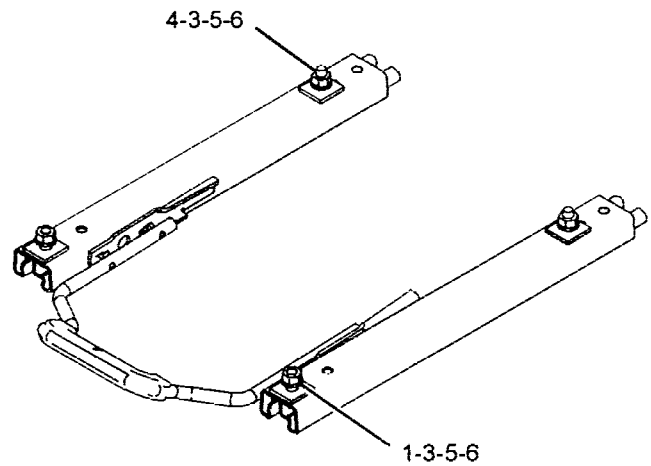

VIEW OF AREA A

GRAPHIC #1 **<END>** g01172620

OPERATOR STATION

229-9080 AIR CONDITIONER & MOUNTING GP

S/N: YEE1-UP

PART OF 229-9079 AIR CONDITIONER AR

SMCS-7320 **i02881302**

NOTE	REF NO	GRAPHIC REF	PART NUMBER	QTY	PART NAME 1 2 3 4 5 6 (PRODUCT LEVEL)	SEE PAGE
	1	1	**293-1136**	1	PANEL AS-CONTROL	
	2	1	**235-8873**	1	HARNESS AS-HEATER & AIR COND (CONTROL PANEL SWITCHES)	
	3	1	**235-8874**	1	SENSOR-TEMPERATURE (AMBIENT AIR)	
	4	1	**235-8875**	1	BRACKET	
	5	1	**235-9006**	1	HARNESS AS-HEATER & AIR COND	
	6	1	**9X-8256**	1	WASHER (6.6X12X2-MM THK)	
M	7	1	**099-2374**	2	BOLT-SOCKET HEAD (M5X0.8X12-MM)	
	8	1	**111-4836**	3	CLIP	
Y	9	1	**229-9081**	1	AIR CONDITIONER GP	936
	10	1	**3S-2093**	2	STRAP-CABLE	
M	11	1	**5C-9553**	1	BOLT (M6X1X16-MM)	
	12	1	**7X-7729**	7	WASHER (11X25X3-MM THK)	
	13	1	**8T-0328**	2	WASHER-HARD (5.5X10X1-MM THK)	
	14	1	**8T-4121**	3	WASHER-HARD (11X21X2.5-MM THK)	
M	15	1	**8T-4136**	7	BOLT (M10X1.5X25-MM)	
M	16	1	**8T-4137**	3	BOLT (M10X1.5X20-MM)	

M-METRIC PART
Y-SEPARATE ILLUSTRATION

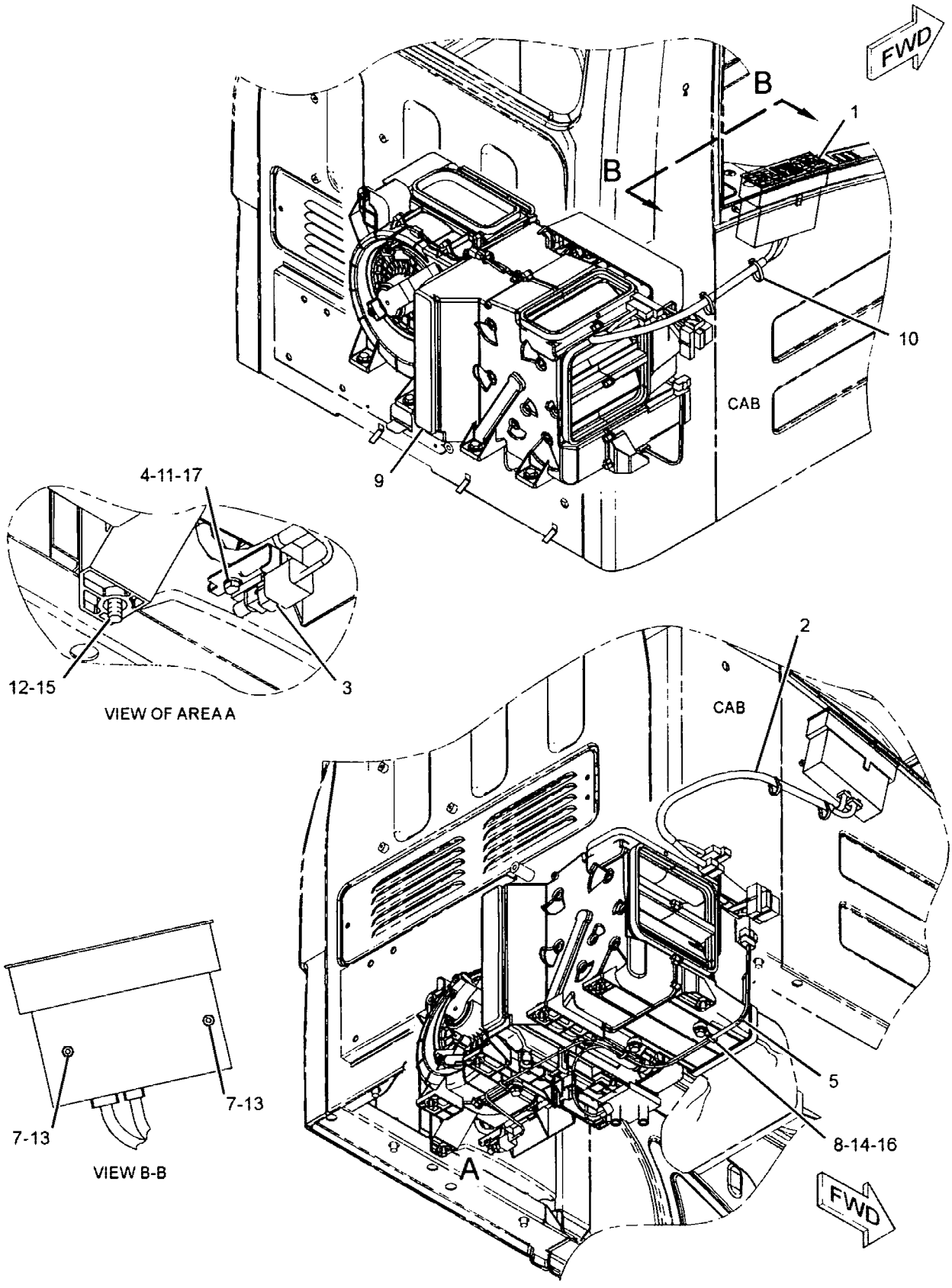

GRAPHIC #1 **<END>** g01435098

OPERATOR STATION

229-9079 AIR CONDITIONER AR

S/N: YEE1-UP

PART OF 305-8000 OPERATOR AR

SMCS-7320 **i02159119**

NOTE	PART NUMBER	QTY	PART NAME 1 2 3 4 5 6 (PRODUCT LEVEL)	SEE PAGE
Y	229-9080	1	AIR CONDITIONER & MOUNTING GP	933
Y	229-9082	1	DUCT GP-CAB AIR	988

Y-SEPARATE ILLUSTRATION

<END>

OPERATOR STATION

229-9081 AIR CONDITIONER GP

S/N: YEE1-UP

PART OF 229-9080 AIR CONDITIONER & MOUNTING GP

SMCS-7320 **i02882115**

NOTE	REF NO	GRAPHIC REF	PART NUMBER	QTY	PART NAME 1 2 3 4 5 6 (PRODUCT LEVEL)	SEE PAGE
	1	1	**185-8300**	35	SCREW-TAPPING	
	2	1	**185-8302**	3	SCREW AS-TAPPING	
Y	3	1	**245-7812**	1	HOUSING GP-AIR CONDITIONER (INLET AIR)	999
	4	1	**245-7817**	2	MOTOR AS	
	5	1	**245-7818**	3	CLIP	
	6	1	**245-7819**	2	CLIP	
	7	1	**245-7820**	1	COVER-FRONT	
	8	1	**245-7821**	1	HARNESS AS-HEATER & AIR COND	
	9	1	**293-1137**	1	FILTER GP-AIR (AIR CONDITIONER)	
		1	**245-7823**	1	FILTER ELEMENT-CAB AIR (AIR CONDITIONER)	
		1	**245-7824**	1	PACKING	
	10	1	**245-7825**	1	INSULATOR	
	11	1	**245-7826**	1	INSULATOR	
	12	1	**245-7827**	1	INSULATOR	
	13	1	**245-7828**	1	INSULATOR	
	14	1	**245-7829**	1	PACKING	
	15	1	**245-7830**	1	CLIP	
	16	1	**245-7831**	1	SENSOR AS-TEMPERATURE (COOLANT)	
	17	1	**245-7832**	1	CONTROL AS (FAN BLOWER)	
	18	1	**245-7833**	1	CORE AS-HEATER	
	19	1	**245-7834**	1	DAMPER AS	
	20	1	**245-7835**	1	SENSOR AS (AMBIENT AIR TEMP)	
Y	21	1	**245-7836**	1	COIL GP-EVAPORATOR	949
	22	1	**245-7838**	1	PACKING	
	23	1	**245-7839**	1	MOTOR AS (WITH FAN)	
	24	1	**245-7856**	3	SCREW AS-TAPPING	

Y-SEPARATE ILLUSTRATION

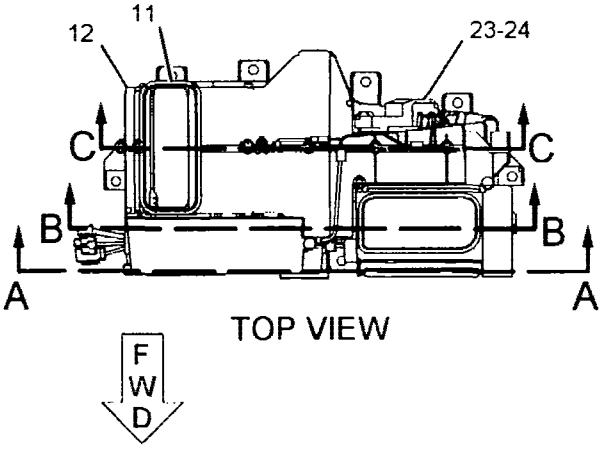

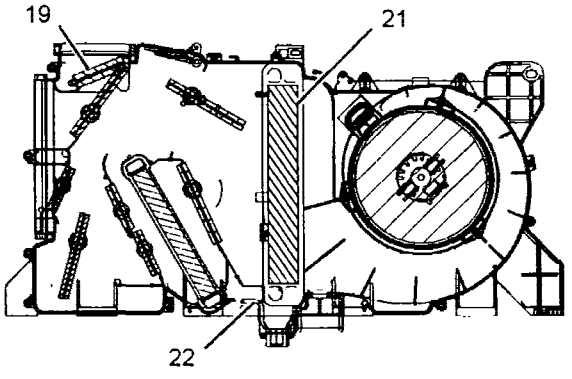

SECTION C-C

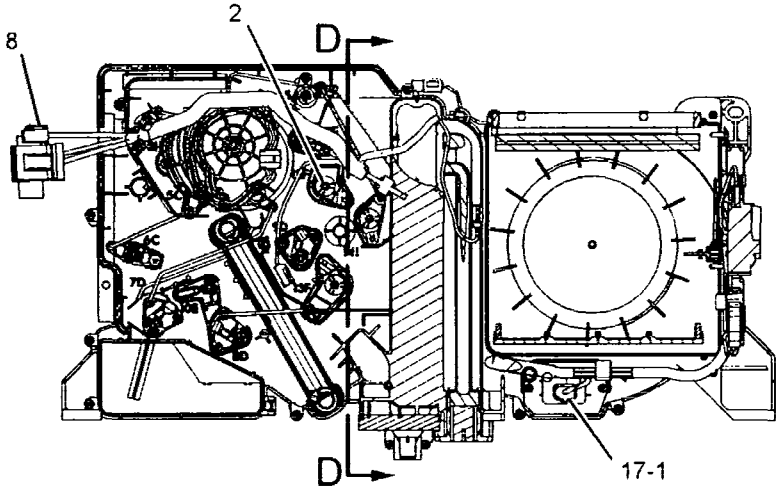

SECTION B-B

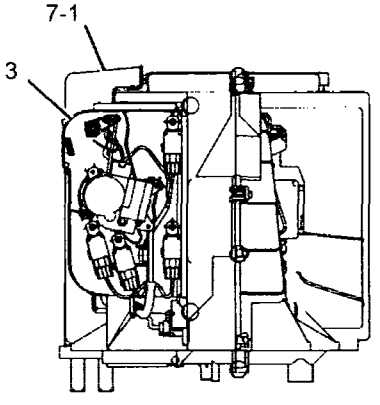

LEFT SIDE VIEW

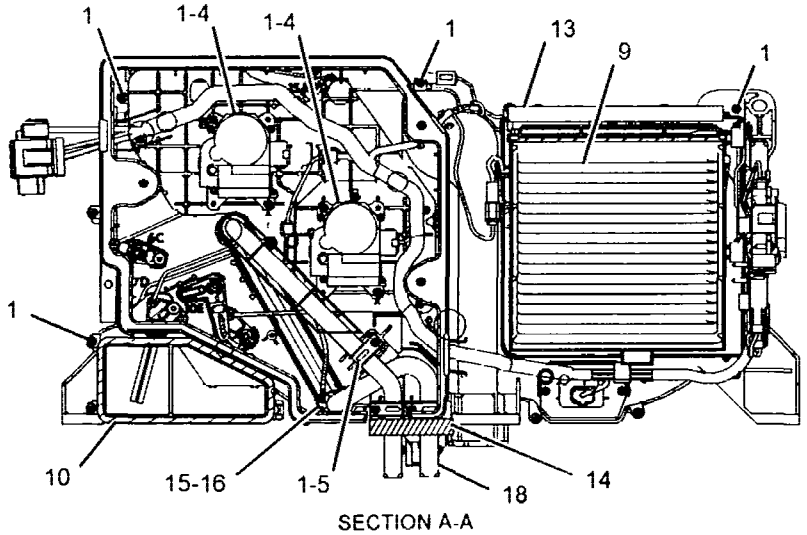

SECTION A-A

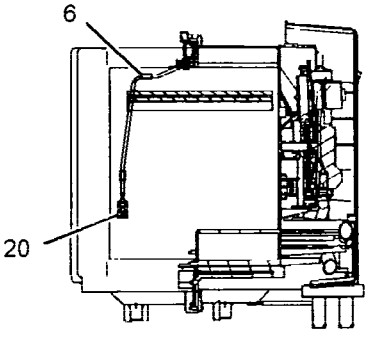

SECTION D-D

GRAPHIC #1 **<END>** g01112008

OPERATOR STATION

259-7346 ARMREST GP–RH

S/N: YEE1-UP

PART OF 259-7348 CONSOLE GP-OPERATOR

SMCS-7307 **i02488250**

NOTE	REF NO	GRAPHIC REF	PART NUMBER	QTY	PART NAME 1 2 3 4 5 6 (PRODUCT LEVEL)	SEE PAGE
	1	1	**171-7325**	3	SCREW-TAPPING	
M	2	1	**185-8286**	2	SCREW-MACHINE (M4X0.7X8-MM)	
	3	1	**235-8951**	1	SUPPORT AS	
	4	1	**235-8996**	1	COVER	
	5	1	**235-8997**	1	KNOB	
	6	1	**279-3161**	1	CUSHION	

M-METRIC PART

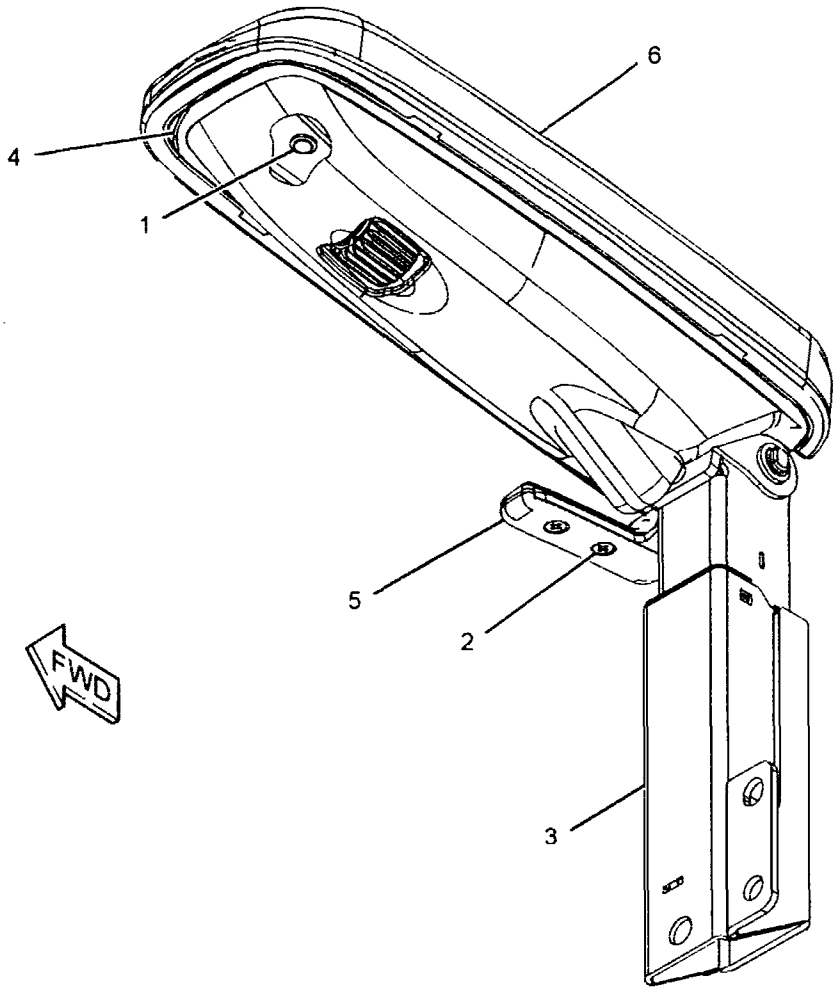

GRAPHIC #1 **<END>** g01217218

OPERATOR STATION

259-7347 ARMREST GP-LH

S/N: YEE1-UP

PART OF 259-7349 CONSOLE GP-OPERATOR

SMCS-7307 **i02474510**

NOTE	REF NO	GRAPHIC REF	PART NUMBER	QTY	PART NAME 1 2 3 4 5 6 (PRODUCT LEVEL)	SEE PAGE
	1	1	**171-7325**	3	SCREW-TAPPING	
M	2	1	**185-8286**	2	SCREW-MACHINE (M4X0.7X8-MM)	
	3	1	**235-8952**	1	SUPPORT AS	
	4	1	**235-8996**	1	COVER	
	5	1	**235-8998**	1	KNOB	
	6	1	**259-7345**	1	CUSHION	

M-METRIC PART

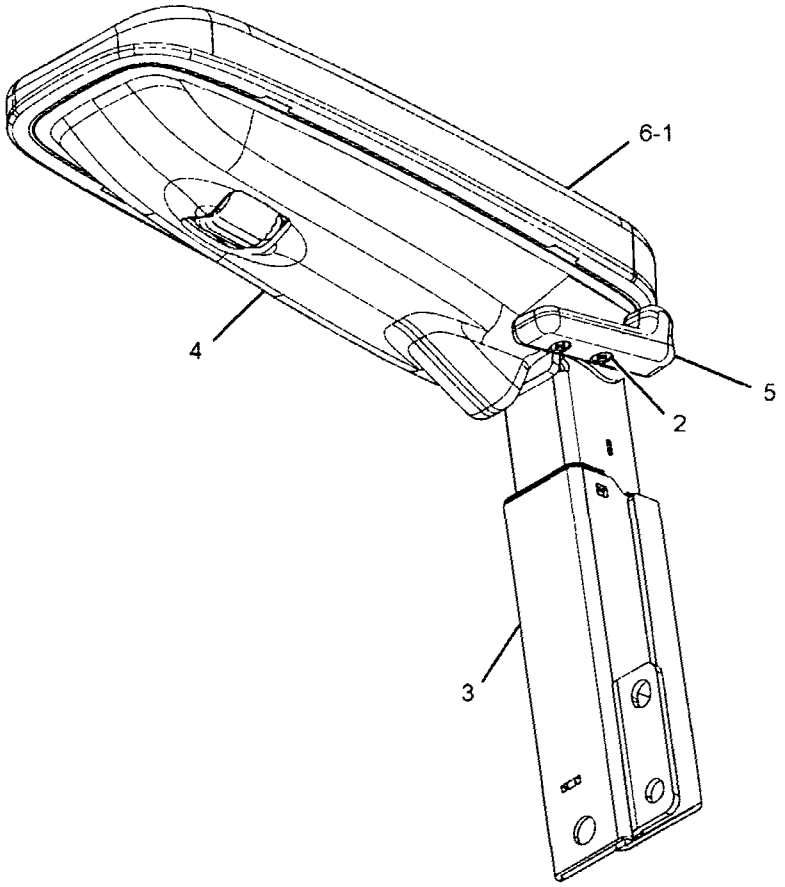

GRAPHIC #1 **<END>** g01210886

OPERATOR STATION

235-8908 CAB GP–INTERIOR

S/N: YEE1-UP

PART OF 305-8002 CAB GP

SMCS-7301, 7325 **i02663076**

NOTE	REF NO	GRAPHIC REF	PART NUMBER	QTY	PART NAME 1 2 3 4 5 6 (PRODUCT LEVEL)	SEE PAGE
	1	1	8Y-6352	1	LOUVER AS	
	2	1	156-6656	1	RAIL	
	3	1	156-6657	1	RAIL	
	4	1	164-0646	1	CUP	
	5	1	164-0655	1	PANEL-SWITCH (OPERATOR CONSOLE)	
	6	1	164-8474	2	LOUVER AS-VENT	
	7	1	170-9724	5	CLIP	
	8	1	171-7420	6	CLIP	
	9	1	176-1946	1	PLATE	
	10	1	176-1947	1	PLATE	
	11	1	176-1972	1	COVER	
	12	1	185-8214	1	BRACKET AS	
	13	1	189-2678	3	SPACER	
	14	1	234-6468	1	COVER AS	
		1	259-7353	4	CLIP	
	15	1	234-6470	1	COVER-MONITOR	
	16	1	234-6471	1	COVER-DUCT	
	17	1	234-6472	1	COVER (FRONT LOWER, RH)	
	18	1	234-6473	1	COVER-FRONT (UPPER, RH)	
	19	1	234-6474	1	COVER (UPPER, RH)	
	20	1	234-6475	1	COVER (LOWER, RH)	
	21	1	234-6476	1	DUCT	
	22	1	234-6477	1	BRACKET AS	
	23	1	234-6478	1	BRACKET AS	
	24	1	234-6480	1	BRACKET AS	
	25	1	234-6483	1	BRACKET AS	
	26	1	234-6485	1	BRACKET AS	
	27	1	234-6490	1	CUP	
	28	1	156-6573	1	COVER	
	29	1	234-6497	1	COVER	
	30	1	234-6498	3	RIVET	
	31	1	234-6521	1	COVER	
	32	1	234-6547	1	COVER	
	33	1	234-6548	1	COVER	
	34	1	156-6575	1	COVER	
	35	1	234-6550	1	COVER	
	36	1	234-6579	2	NUT-SPEED	
	37	1	235-8922	1	COVER	
	38	1	235-8923	2	CAP	
	39	1	297-4823	1	VISOR	
	40	1	235-8928	1	LINER	
	41	1	235-8929	2	HANDLE	
	42	1	185-8205	5	CLIP	
	43	1	235-8950	12	CLIP	
	44	1	245-7790	2	SCREW-TAPPING	
M	45	1	128-2135	13	SCREW-TRUSS HEAD (M6X1X13-MM)	
M	46	1	128-2136	1	SCREW-TRUSS HEAD (M6X1X16-MM)	
	47	1	189-2855	1	COVER	
	48	1	234-6469	1	COVER	
M	49	1	9X-2042	23	SCREW-TRUSS HEAD (M6X1X12-MM)	
M	50	1	9X-2044	8	SCREW-TRUSS HEAD (M6X1X16-MM)	
	51	1	231-2294	1	BRACKET	

M-METRIC PART

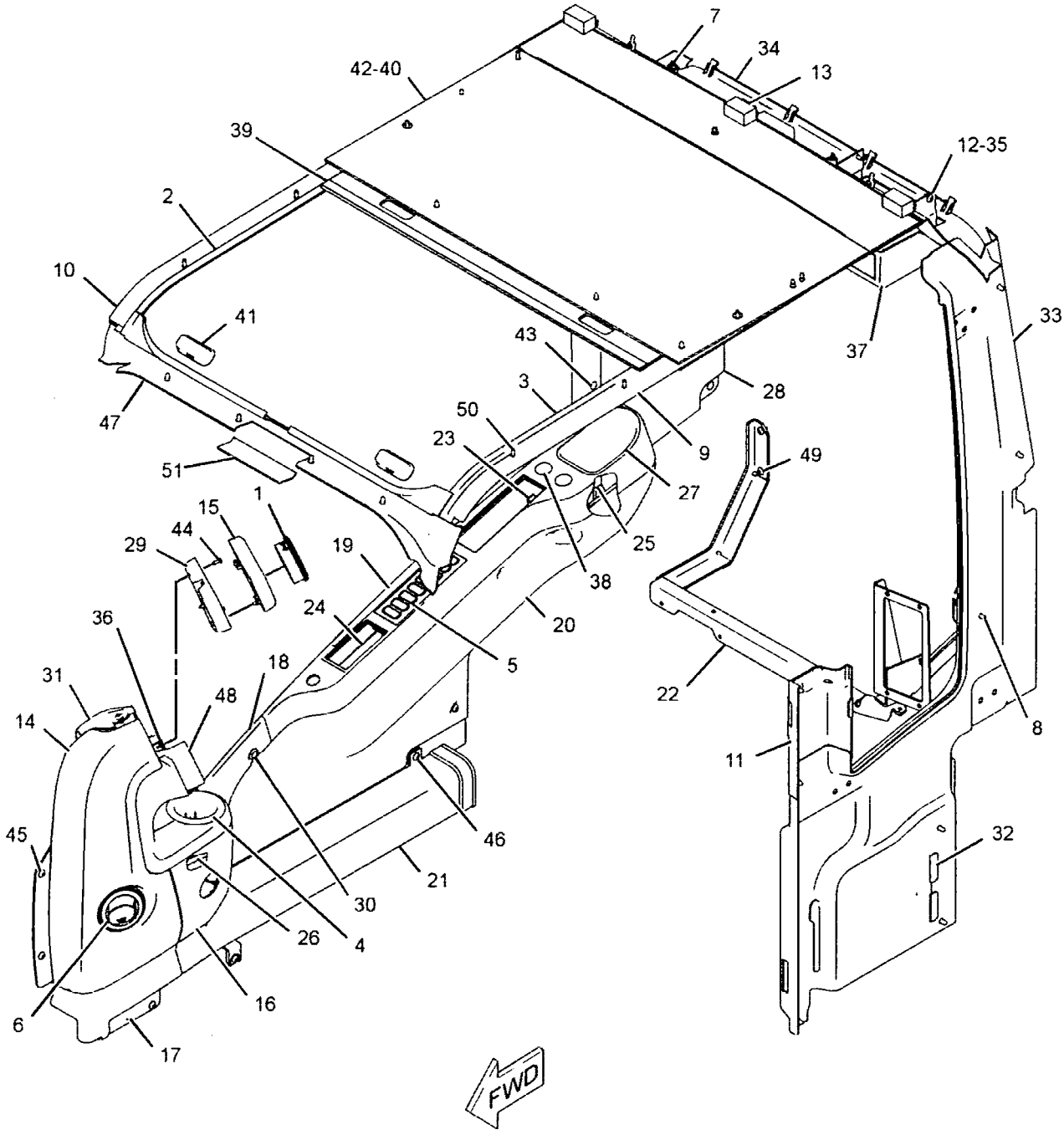

GRAPHIC #1 **<END>** g01241062

OPERATOR STATION

235-8910 CAB GP–EXTERIOR

S/N: YEE1-UP

PART OF 305-8002 CAB GP

SMCS-7301, 7325 **i02869173**

NOTE	REF NO	GRAPHIC REF	PART NUMBER	QTY	PART NAME 1 2 3 4 5 6 (PRODUCT LEVEL)	SEE PAGE
	1	2	139-7126	1	HOLDER	
	2	2	139-7127	1	HOLDER	
	3	1	156-6599	1	STRIKER	
	4	2	161-3685	1	ROD	
	5	1	161-3697	1	GUARD	
	6	2	164-0523	1	LEVER AS	
	7	2	164-0527	1	ROD	
Y	8	2	164-0528	1	LEVER GP-AIR & TEMP CONTROL	1002
	9	1	167-7018	1	COVER AS	
	10	2	167-7042	2	SEAL	
	11	2	171-7426	1	CABLE AS	
	12	2	176-1939	1	LEVER AS	
	13	2	176-1942	1	COVER	
	14	1	178-5570	2	GROMMET	
	15	2	185-8196	1	GROMMET	
	16	2	189-2704	1	SEAL	
M	17	2	189-2864	2	SCREW-FLAT HEAD (M8X1.25X30-MM)	
M	18	1,2	189-3396	5	NUT (M10X1.15-THD)	
	19	2	4B-4278	3	WASHER (10.2X20.5X1.6-MM THK)	
	20	2	201-4530	1	BRACKET AS	
	21	2	205-6295	1	LATCH AS	
	22	1	210-5808	1	SEAL	
	23	1	235-8912	1	HANDLE AS	
	24	1	235-8933	1	HANDLE AS	
	25	2	085-6452	2	WASHER	
M	26	1	099-0823	3	SCREW-MACHINE (M6X1X6-MM)	
M	27	1	105-2169	3	BOLT AS (M8X1.25X16-MM)	
M	28	1	127-0580	2	SCREW-FLAT HEAD (M8X1.25X20-MM)	
	29	2	133-8016	1	PACKING	
	30	1	156-6617	1	MIRROR	
	31	1	156-6618	1	SUPPORT AS	
	32	2	176-1986	1	LAMP AS-DOME	
		2	201-4417	1	LAMP (24-VOLT, 10-WATT)	
	33	1	1R-5998	2	LOCKWASHER	
	34	1	3B-4510	1	LOCKWASHER	
M	35	2	3E-8020	6	SCREW-TRUSS HEAD (M6X1X25-MM)	
M	36	2	095-0755	2	SCREW-MACHINE (M4X0.07X12-MM)	
	37	1	4I-1205	2	BUMPER	
	38	2	4I-1206	2	GUIDE	
	39	2	4I-3063	1	SPRING	
	40	2	4I-3090	2	SEAL	
M	41	1	8T-4137	2	BOLT (M10X1.5X20-MM)	
	42	1	4I-3144	2	WASHER-HARD (10.2X22X3.2-MM THK)	
	43	2	4I-4270	1	HOLDER-GLASS	
	44	2	4I-4392	3	CLIP	
	45	2	5C-7793	1	HOOK-COAT	
	46	2	6V-7636	4	PIN AS-SPRING	
	47	1	7X-0578	2	WASHER-HARD (10.2X32X2.5-MM THK)	
M	48	1	8T-4193	1	BOLT (M16X2X50-MM)	
M	49	2	9X-2041	1	SCREW-TRUSS HEAD (M10X1.5X20-MM)	
M	50	2	9X-2042	5	SCREW-TRUSS HEAD (M6X1X12-MM)	
M	51	2	9X-2044	5	SCREW-TRUSS HEAD (M6X1X16-MM)	
M	52	2	9X-2045	2	SCREW-TRUSS HEAD (M6X1X20-MM)	
	53	1	9X-8257	1	WASHER (17.5X30X3.5-MM THK)	
BE	54	2	6I-5470		SEAL	

B-USE AS REQUIRED
E-ORDER BY THE CENTIMETER
M-METRIC PART
Y-SEPARATE ILLUSTRATION

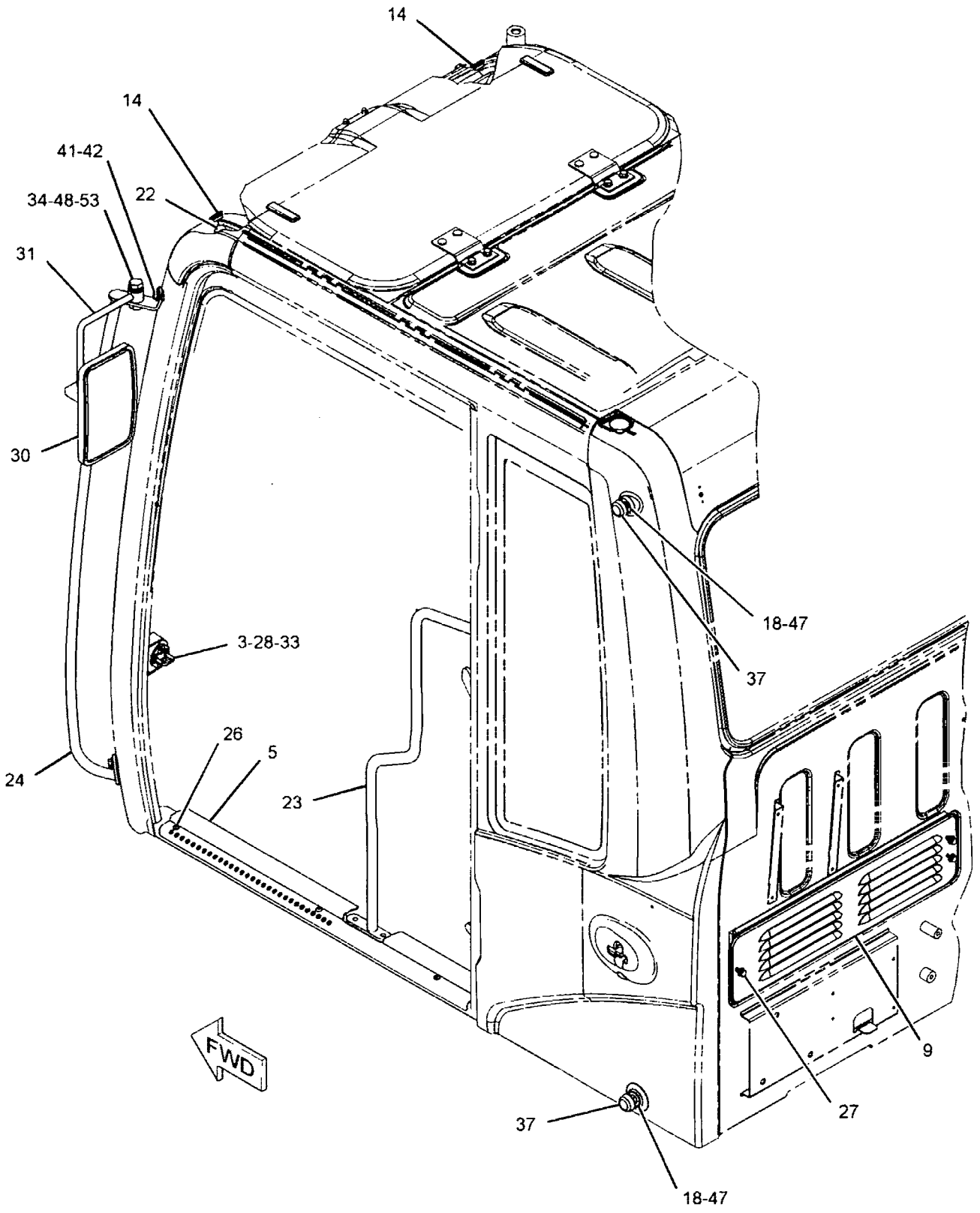

GRAPHIC #1

g01429002

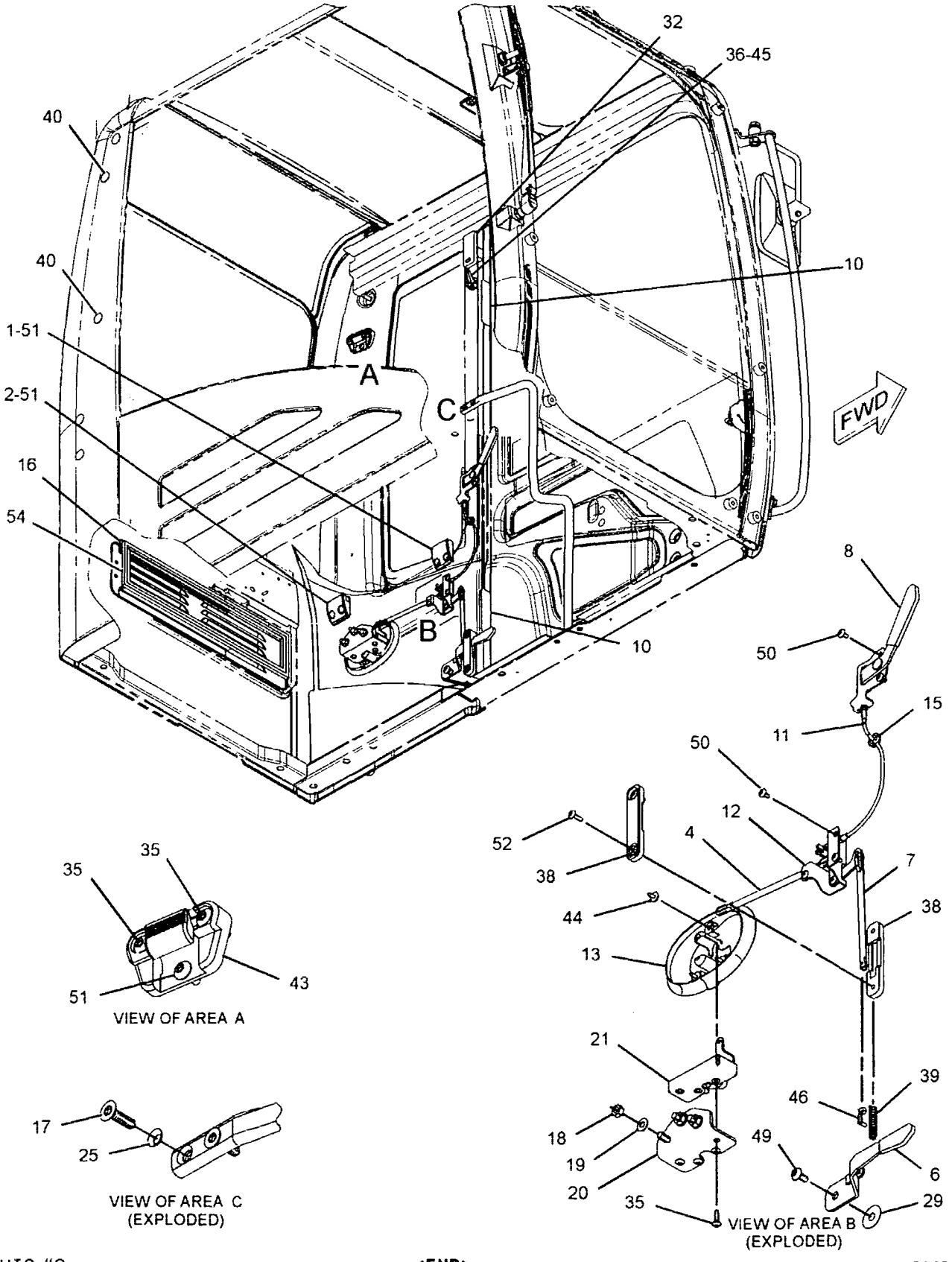

GRAPHIC #2 **<END>** g01429000

OPERATOR STATION

305-8001 CAB GP

S/N: YEE1-UP

PART OF 305-8000 OPERATOR AR

SMCS-7301, 7325 **i02843871**

NOTE	REF NO	GRAPHIC REF	PART NUMBER	QTY	PART NAME 1 2 3 4 5 6 (PRODUCT LEVEL)	SEE PAGE
M	1	1	**128-2135**	5	SCREW-TRUSS HEAD (M6X1X13-MM)	
	2	1	**164-8474**	2	LOUVER AS-VENT	
Y	3	1	**305-8002**	1	CAB GP	948
Y	4	1	**234-6501**	1	COVER GP-CAB (REAR)	983
	5	1	**235-9001**	1	SUPPORT	
M	6	1	**8T-4179**	5	BOLT (M12X1.75X20-MM)	
	7	1	**234-6500**	1	COVER GP-STORAGE	
	8	1	**8T-4223**	13	WASHER-HARD (13.5X25.5X3-MM THK)	
M	9	1	**8T-4910**	6	BOLT (M12X1.75X60-MM)	
M	10	1	**8T-6868**	2	BOLT (M12X1.75X80-MM)	
	11	1	**8Y-6967**	2	LOUVER AS	

M-METRIC PART
Y-SEPARATE ILLUSTRATION

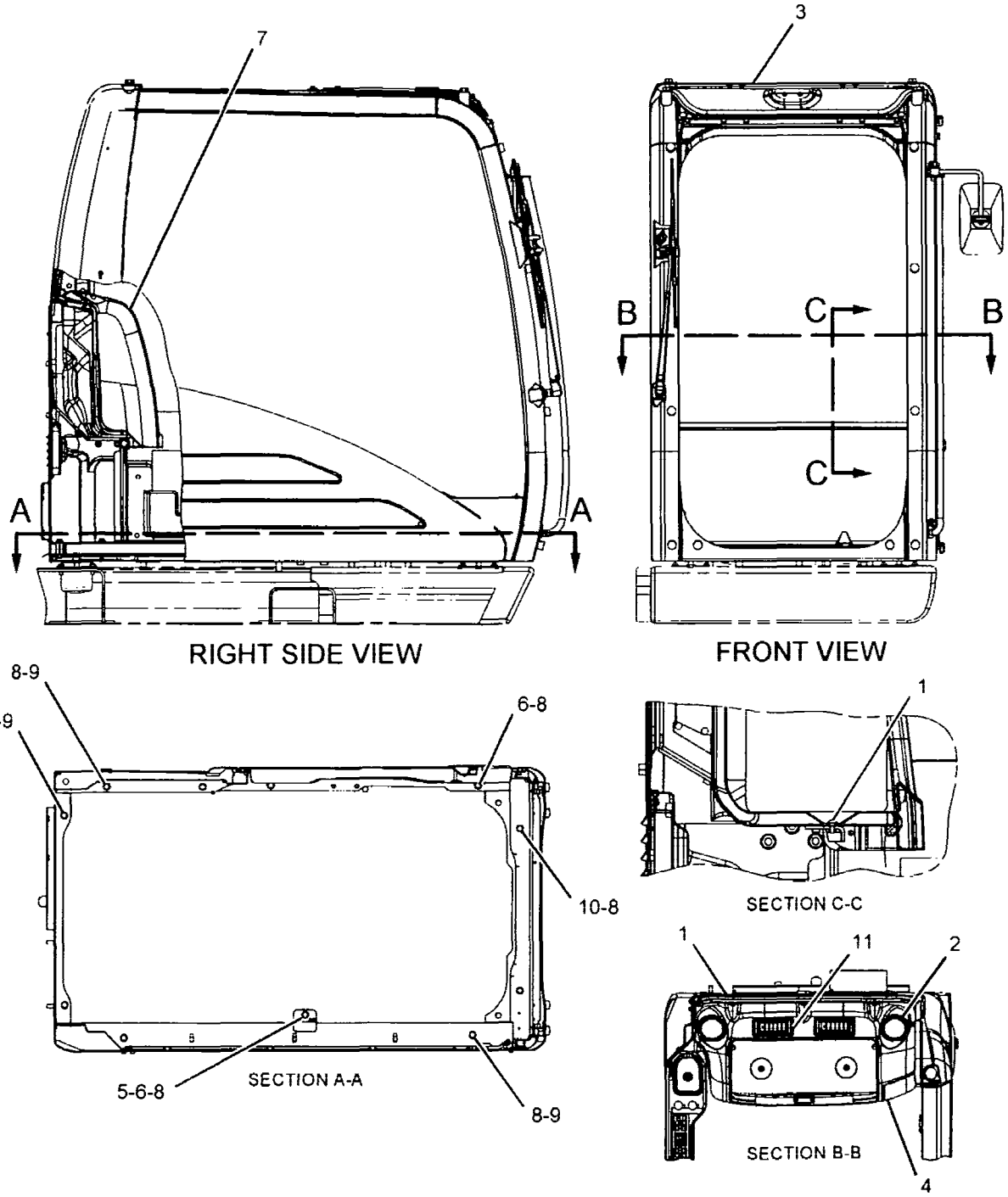

GRAPHIC #1 **<END>** g01098648

OPERATOR STATION

305-8002 CAB GP

S/N: YEE1-UP

PART OF 305-8001 CAB GP

SMCS-7301, 7325 **i02843905**

NOTE	PART NUMBER	QTY	PART NAME 1 2 3 4 5 6 (PRODUCT LEVEL)	SEE PAGE
Y	*235-8908*	1	CAB GP (INTERIOR)	940
Y	*235-8910*	1	CAB GP (EXTERIOR)	942
Y	*267-3839*	1	CONTROL GP-HEAT & AIR COND	973
Y	**189-2793**	1	DOOR GP-CAB	987
Y	*139-7099*	1	HATCH GP-ROOF	996
Y	*163-6772*	1	LIGHTING GP-FLOOD (CAB)	185
Y	*221-8813*	1	MONITOR & MTG GP-OPERATOR	1007
Y	*238-2208*	1	SWITCH GP-WIPER (LOWER)	244
Y	*227-5343*	1	WINDOW GP-CAB (FRONT, LOWER)	1047
Y	*235-8915*	1	WINDOW GP-CAB (SIDE, REAR)	1048
Y	*139-7101*	1	WINDOW GP-CAB (FRONT, UPPER)	1042
Y	*234-6594*	1	WIPER GP-WINDOW (FRONT, UPPER)	1055
Y	*291-7767*	1	WIRING GP-CAB	254

Y-SEPARATE ILLUSTRATION

<END>

OPERATOR STATION

245-7836 COIL GP-EVAPORATOR

S/N: YEE1-UP

PART OF 229-9081 AIR CONDITIONER GP

SMCS-7343 **i02218157**

NOTE	REF NO	GRAPHIC REF	PART NUMBER	QTY	PART NAME 1 2 3 4 5 6 (PRODUCT LEVEL)	SEE PAGE
	1	1	**245-7837**	1	VALVE AS-EXPANSION	
	2	1	**245-7905**	1	INSULATOR	
M	3	1	**8T-0266**	2	BOLT-SOCKET HEAD (M5X0.8X40-MM)	
	4	1	**121-7136**	1	SEAL-O-RING	
	5	1	**121-7138**	1	SEAL-O-RING	

M-METRIC PART

245-7836 COIL GP-EVAPORATOR *(contd.)* i02218157

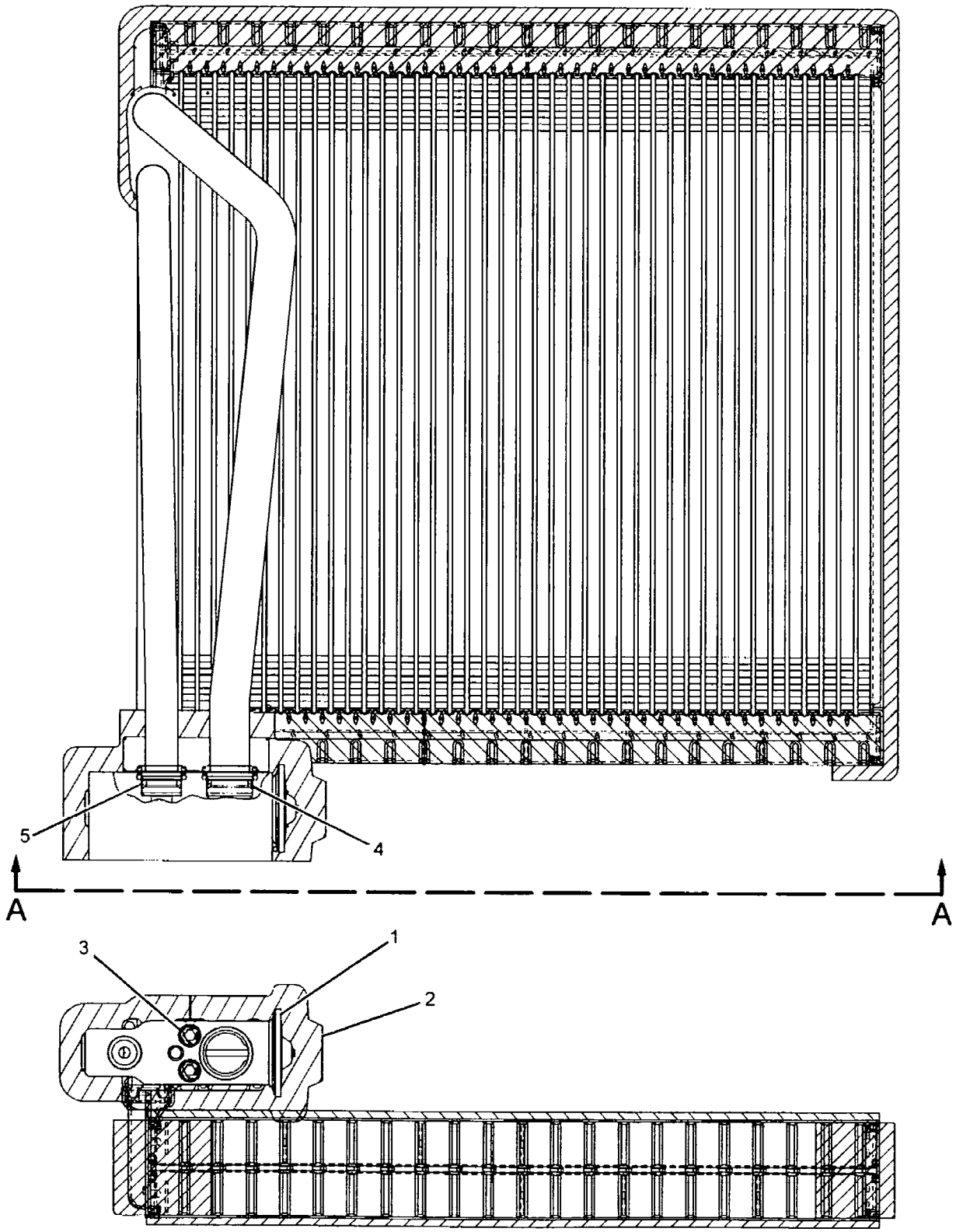

VIEW A-A

GRAPHIC #1

<END>

g01134658

OPERATOR STATION

259-7243 COMPRESSOR GP-REFRIGERANT

S/N: MHX4500-UP

PART OF 276-2403 COMPRESSOR GP-REFRIGERANT

SMCS-1802 **i02451129**

NOTE	REF NO	GRAPHIC REF	PART NUMBER	QTY	PART NAME 1 2 3 4 5 6 (PRODUCT LEVEL)	SEE PAGE
	1	1	**259-7285**	1	COIL AS (24-VOLT)	
	1A	1	**243-4505**	1	RECEPTACLE AS-CONNECTOR (2-PIN)	
BF			**264-9982**	1	WASHER (6.2X12.2X0.1-MM THK)	
BF			**264-9983**	1	WASHER (6.2X12.2X0.3-MM THK)	
BF			**264-9984**	1	WASHER (6.2X12.2X0.5-MM THK)	

B-USE AS REQUIRED
F-NOT SHOWN

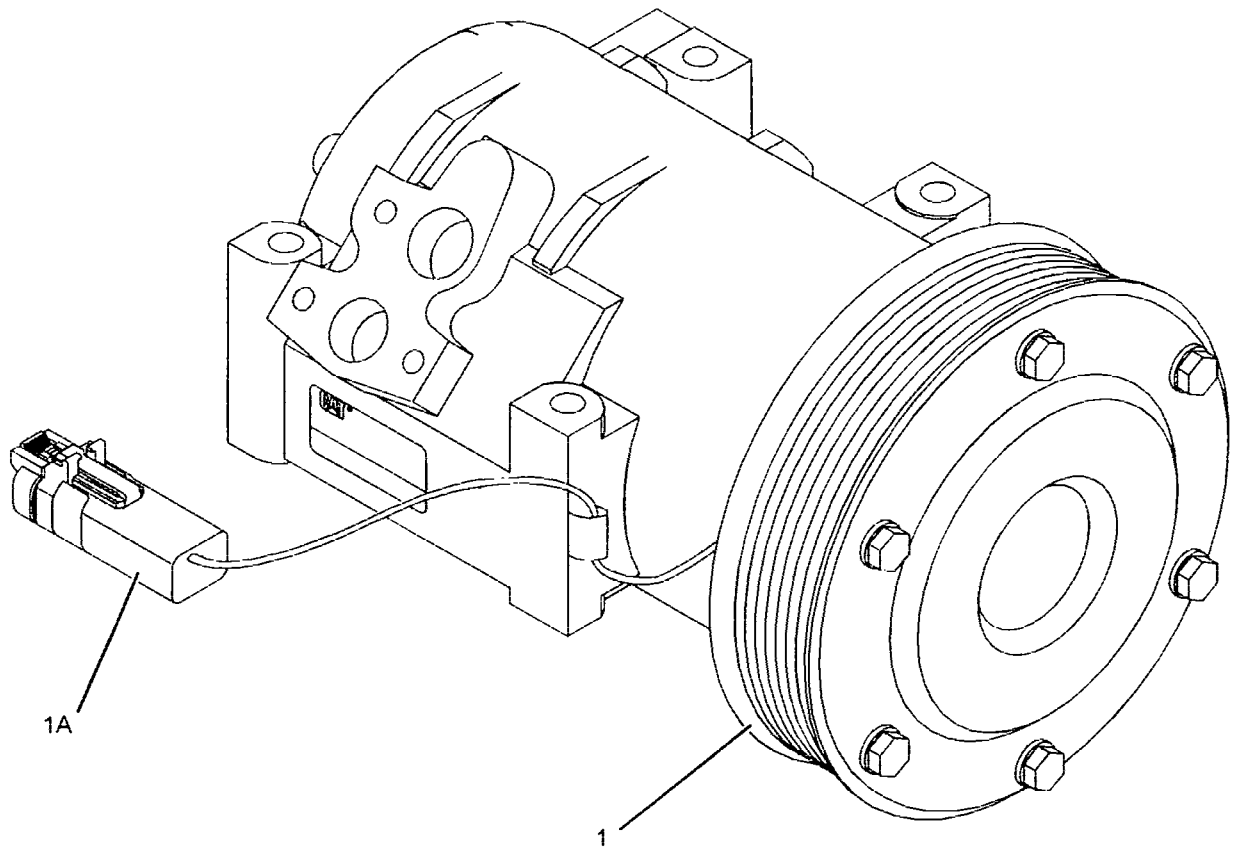

GRAPHIC #1 **<END>** g01226155

OPERATOR STATION

276-2403 COMPRESSOR GP-REFRIGERANT

S/N: MHX4524-UP

PART OF 291-9259 ENGINE AR-COMPLETE

SMCS-1802 **i02820605**

NOTE	REF NO	GRAPHIC REF	PART NUMBER	QTY	PART NAME 1 2 3 4 5 6 (PRODUCT LEVEL)	SEE PAGE
M	1	1	**258-9892**	2	BOLT (M8X1.25X80-MM)	
Y	2	1	**259-7243**	1	COMPRESSOR GP-REFRIGERANT	951
	3	1	**8T-4224**	4	WASHER-HARD (8.8X16X2-MM THK)	
M	4	1	**8T-3647**	2	BOLT (M8X1.25X80-MM)	
	5	1	**130-5300**	1	CLIP	

M-METRIC PART
Y-SEPARATE ILLUSTRATION

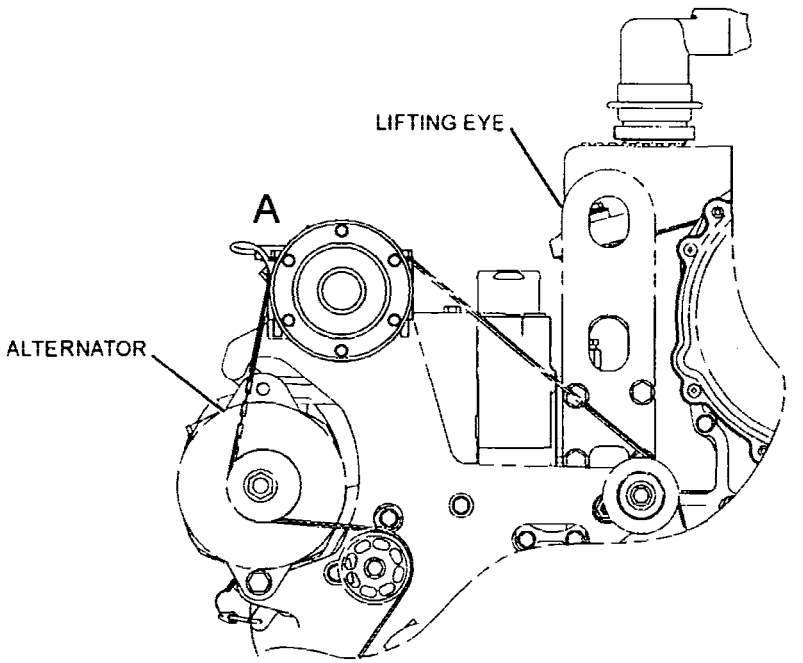

FRONT VIEW OF ENGINE

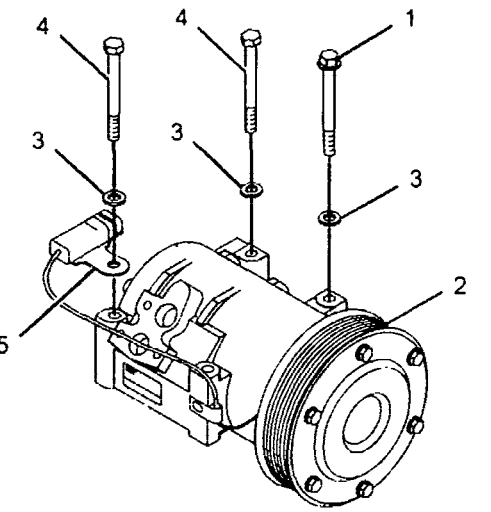

VIEW OF AREA A

GRAPHIC #1 **<END>** g01407828

OPERATOR STATION

245-7786 CONDENSER & MTG GP-REFRIGERANT

S/N: YEE1-UP

PART OF 297-7686 INSTALLATION AR-ENGINE

SMCS-1805 **i02231310**

NOTE	REF NO	GRAPHIC REF	PART NUMBER	QTY	PART NAME 1 2 3 4 5 6 (PRODUCT LEVEL)	SEE PAGE
Y	1	1	**245-7787**	1	CONDENSER GP-REFRIGERANT	954
	2	1	**245-7919**	1	COVER AS	
	3	1	**8T-4121**	8	WASHER-HARD (11X21X2.5-MM THK)	
M	4	1	**8T-4137**	8	BOLT (M10X1.5X20-MM)	

M-METRIC PART
Y-SEPARATE ILLUSTRATION

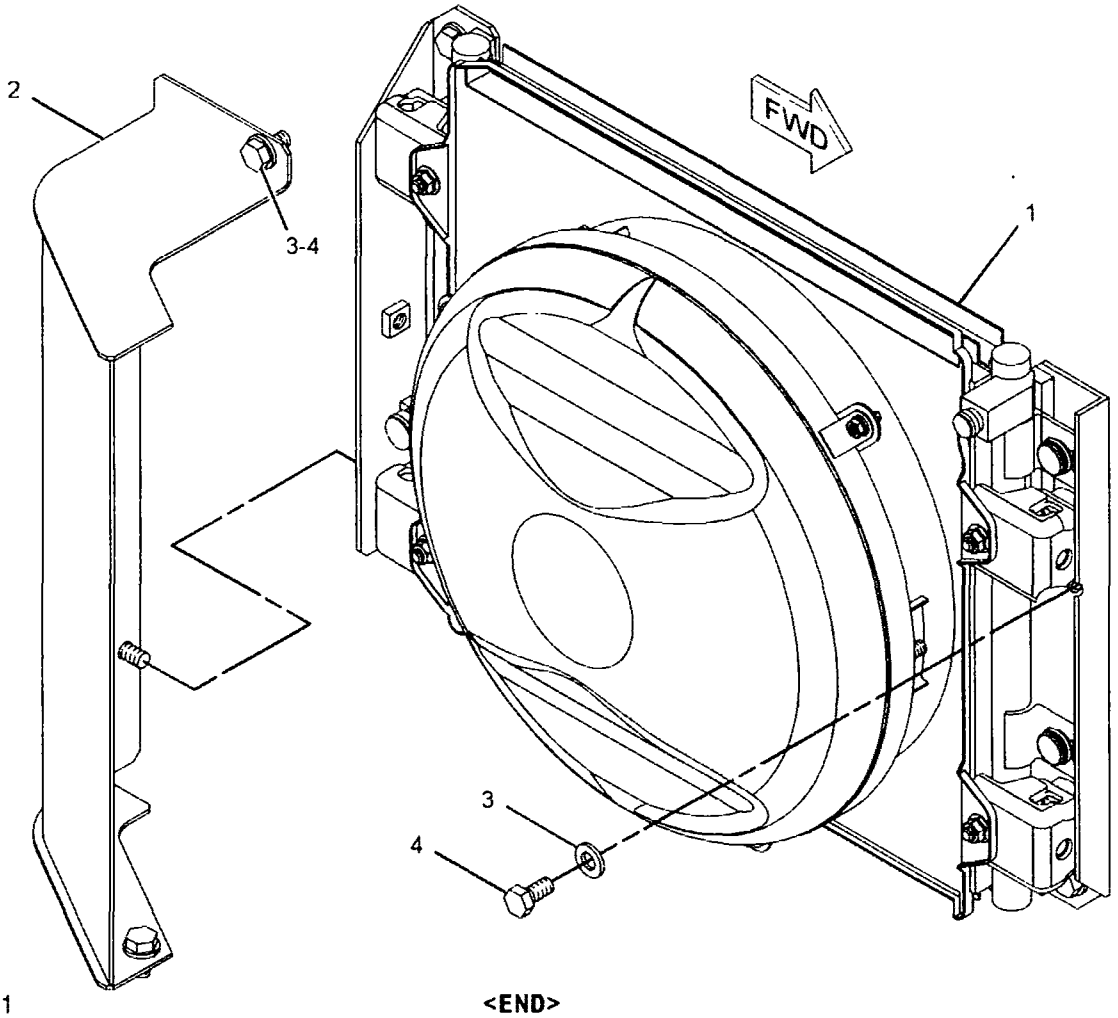

GRAPHIC #1 **<END>** g01100235

OPERATOR STATION

245-7787 CONDENSER GP-REFRIGERANT

S/N: YEE1-UP

PART OF 245-7786 CONDENSER & MTG GP-REFRIGERANT

SMCS-1805 **i02637732**

NOTE	REF NO	GRAPHIC REF	PART NUMBER	QTY	PART NAME 1 2 3 4 5 6 (PRODUCT LEVEL)	SEE PAGE
	1	1	**161-3732**	1	MOTOR AS	
	2	1	**161-3734**	1	RESISTOR AS	
M	3	1	**164-0499**	1	NUT-FLANGE (M5X0.8-THD)	
M	4	1	**164-0500**	4	NUT-FLANGE (M8X1.25-THD)	
M	5	1	**227-6846**	8	BOLT AS (M8X1.25X30-MM)	
	6	1	**245-7866**	1	CONDENSER AS	
	7	1	**245-7867**	1	HARNESS AS-WIRING (CONDENSER FAN MOTOR)	
		1	**102-8803**	1	KIT-RECEPTACLE (3-PIN) (INCLUDES RECEPTACLE AS & WEDGE)	
	8	1	**245-7868**	4	BUSHING AS	
	9	1	**245-7869**	2	PACKING-RUBBER	
	10	1	**245-7870**	1	STRAP-CABLE	
M	11	1	**245-7871**	4	NUT-FLANGE (M6X1-THD)	
M	12	1	**245-7876**	3	BOLT AS (M6X1X16-MM)	
M	13	1	**245-7877**	3	SCREW AS (M4X0.7X11-MM)	
M	14	1	**245-7903**	1	BOLT AS (M6X1X12-MM)	
	15	1	**245-7904**	2	PACKING-RUBBER	
	16	1	**245-7906**	2	PACKING-RUBBER	
	17	1	**273-5307**	1	FAN AS-CONDENSER (4-BLADE)	

M-METRIC PART

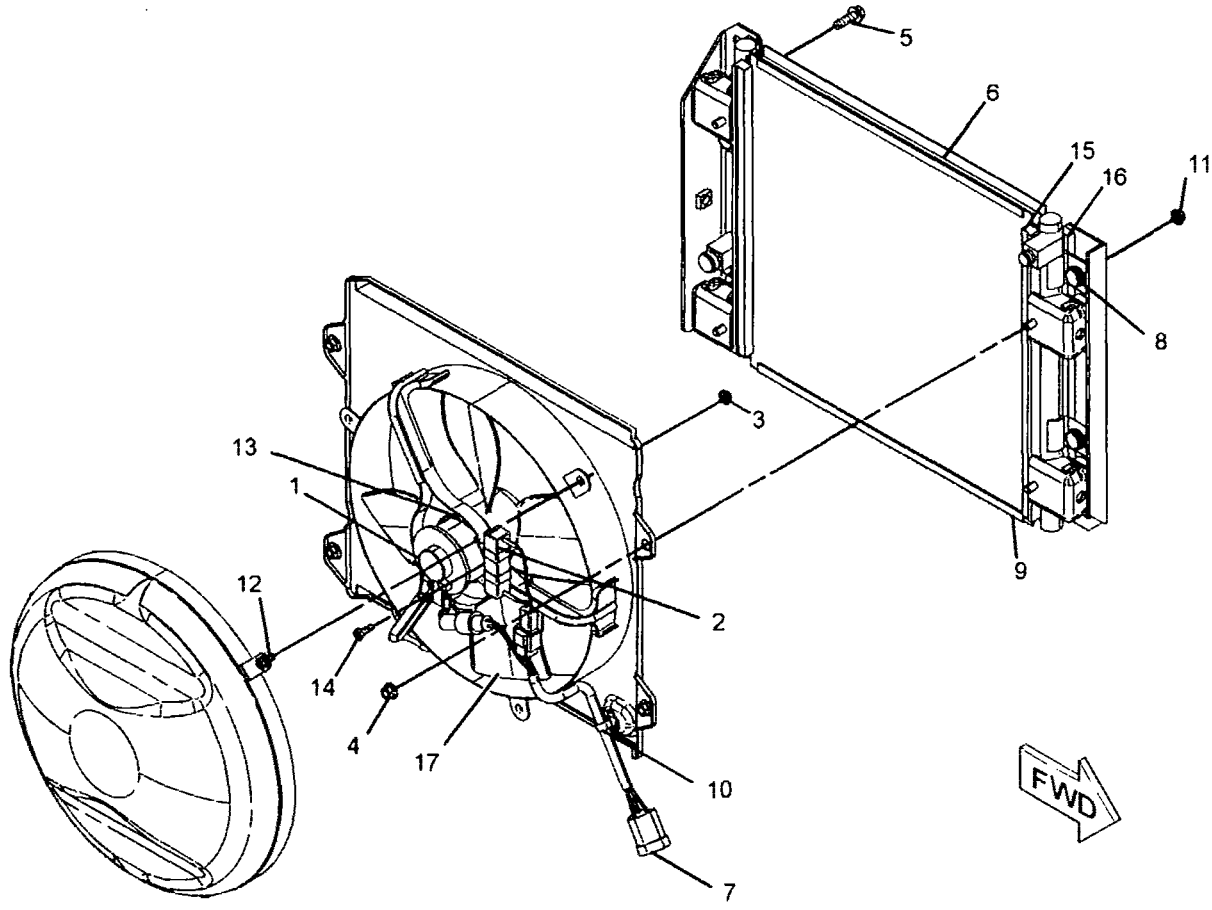

GRAPHIC #1 **<END>** g01187163

OPERATOR STATION

245-7922 CONSOLE GP-OPERATOR

S/N: YEE1-UP

PART OF 305-8000 OPERATOR AR

SMCS-5258 **i02474290**

NOTE	REF NO	GRAPHIC REF	PART NUMBER	QTY	PART NAME 1 2 3 4 5 6 (PRODUCT LEVEL)	SEE PAGE
	1	1	**176-1916**	2	GROMMET	
	2	1	**178-5422**	2	GROMMET	
	3	1	**178-5423**	2	GROMMET	
	4	1	**185-8161**	2	INSULATOR	
	5	1	**235-8893**	2	SUPPORT	
	6	1	**235-8894**	2	SUPPORT	
CY	7	1	*259-7349*	1	CONSOLE GP-OPERATOR (LH)	959
CY	8	1	*259-7348*	1	CONSOLE GP-OPERATOR (RH)	957
	9	1	**8T-4121**	4	WASHER-HARD (11X21X2.5-MM THK)	
M	10	1	**8T-4195**	4	BOLT (M10X1.5X30-MM)	
M	11	1	**9X-2043**	16	SCREW-TRUSS HEAD (M6X1X14-MM)	
M	12	1	**9X-2045**	4	SCREW-TRUSS HEAD (M6X1X20-MM)	
	13	1	**7K-1181**	4	STRAP-CABLE	
	14	1	**122-9617**	2	GUARD	

C-CHANGE FROM PREVIOUS TYPE
M-METRIC PART
Y-SEPARATE ILLUSTRATION

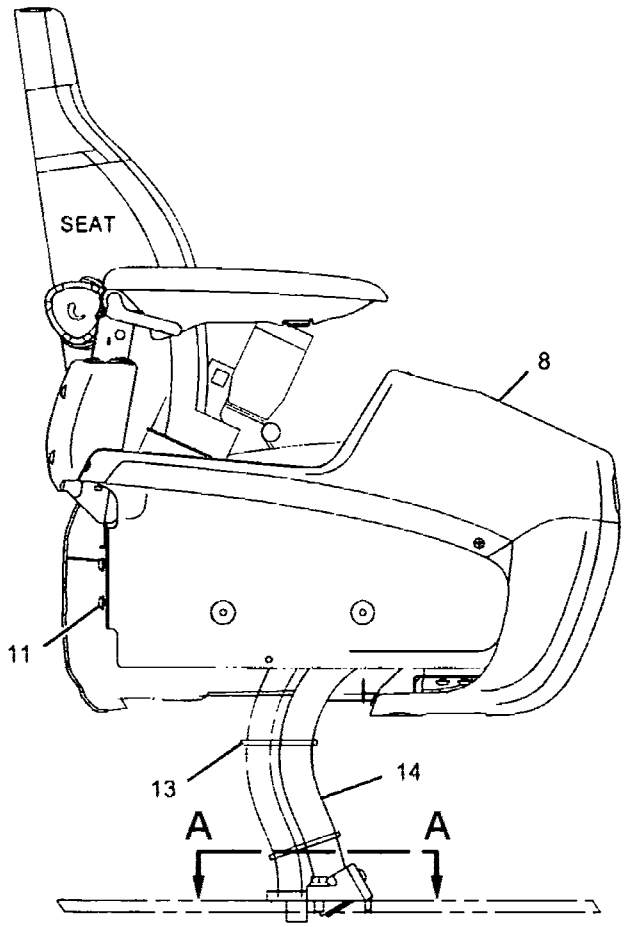

RIGHT SIDE VIEW

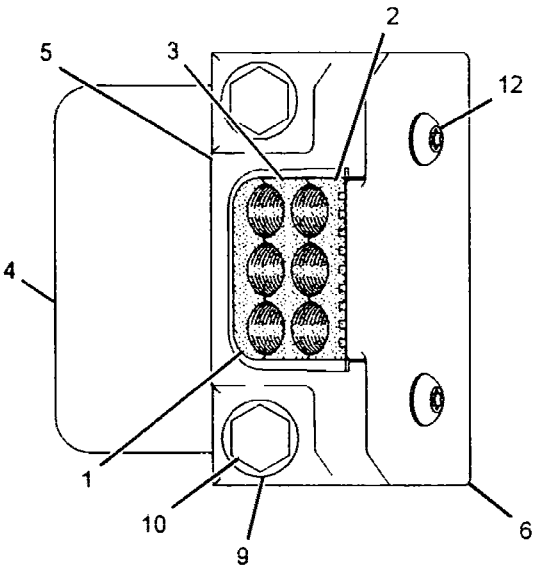

SECTION A-A

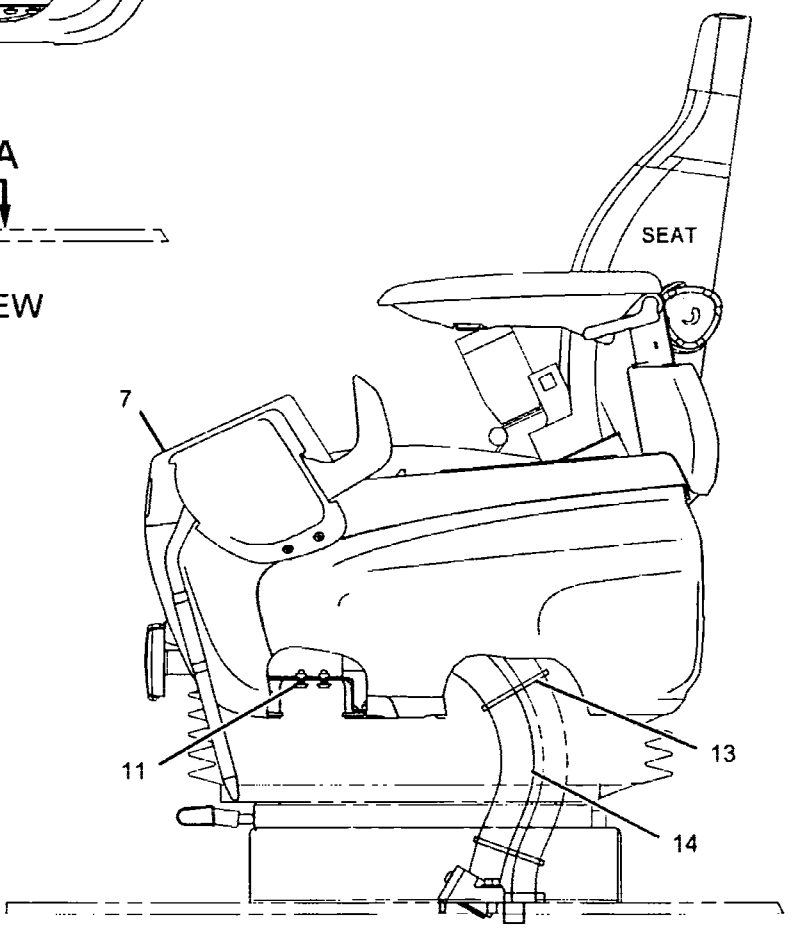

LEFT SIDE VIEW

GRAPHIC #1 **<END>** g01122806

OPERATOR STATION

259-7348 CONSOLE GP-OPERATOR-RH

S/N: YEE1-UP

PART OF 245-7922 CONSOLE GP-OPERATOR

SMCS-5258 **i02474320**

NOTE	REF NO	GRAPHIC REF	PART NUMBER	QTY	PART NAME 1 2 3 4 5 6 (PRODUCT LEVEL)	SEE PAGE
M	1	1	**128-2135**	4	SCREW-TRUSS HEAD (M6X1X13-MM)	
	2	1	**185-8284**	1	COVER	
	3	1	**234-6579**	2	NUT-SPEED	
	4	1	**234-6580**	2	CAP	
	5	1	**234-6602**	1	COVER	
	6	1	**234-6604**	1	COVER	
	7	1	**234-6608**	1	COVER	
	8	1	**234-6609**	1	COVER	
	9	1	**234-6610**	1	COVER	
	10	1	**235-8914**	4	NUT-SPEED	
	11	1	**235-8966**	2	BASE-MOUNTING	
	12	1	**245-7790**	2	SCREW-TAPPING	
	13	1	**245-7926**	1	SUPPORT AS	
	14	1	**245-7948**	4	SCREW-TAPPING	
Y	15	1	**259-7346**	1	ARMREST GP (RH)	938
M	16	1	**9X-2041**	3	SCREW-TRUSS HEAD (M10X1.5X20-MM)	

M-METRIC PART
Y-SEPARATE ILLUSTRATION

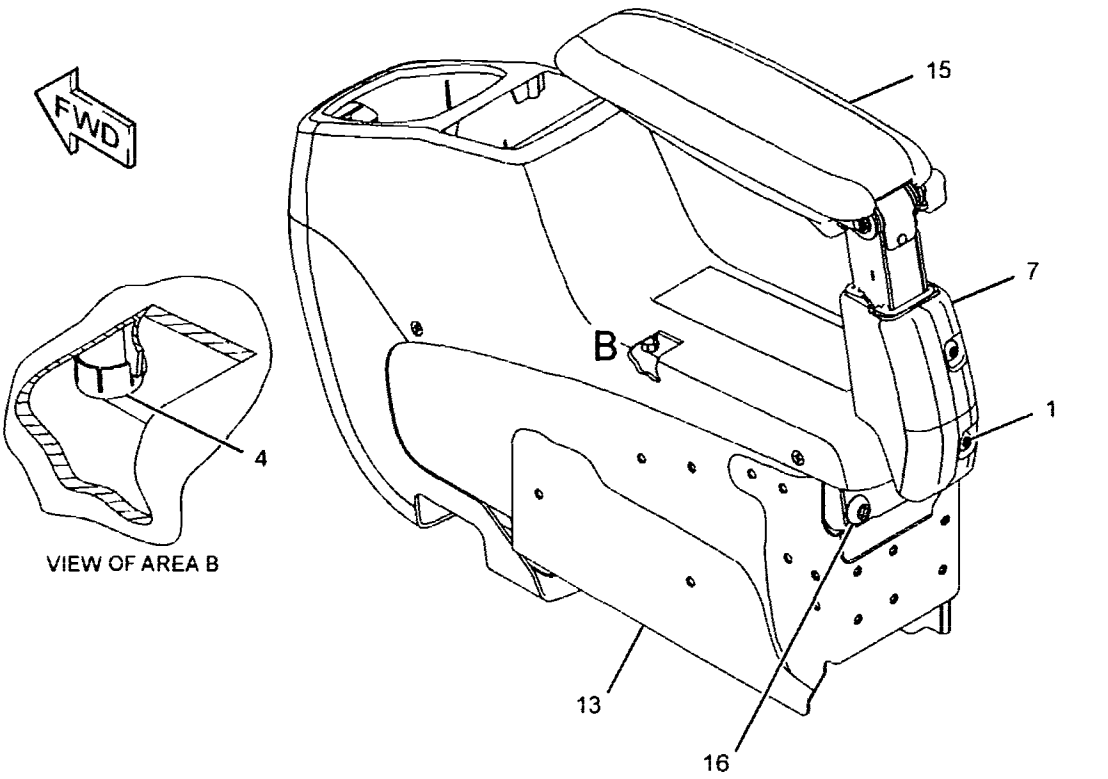

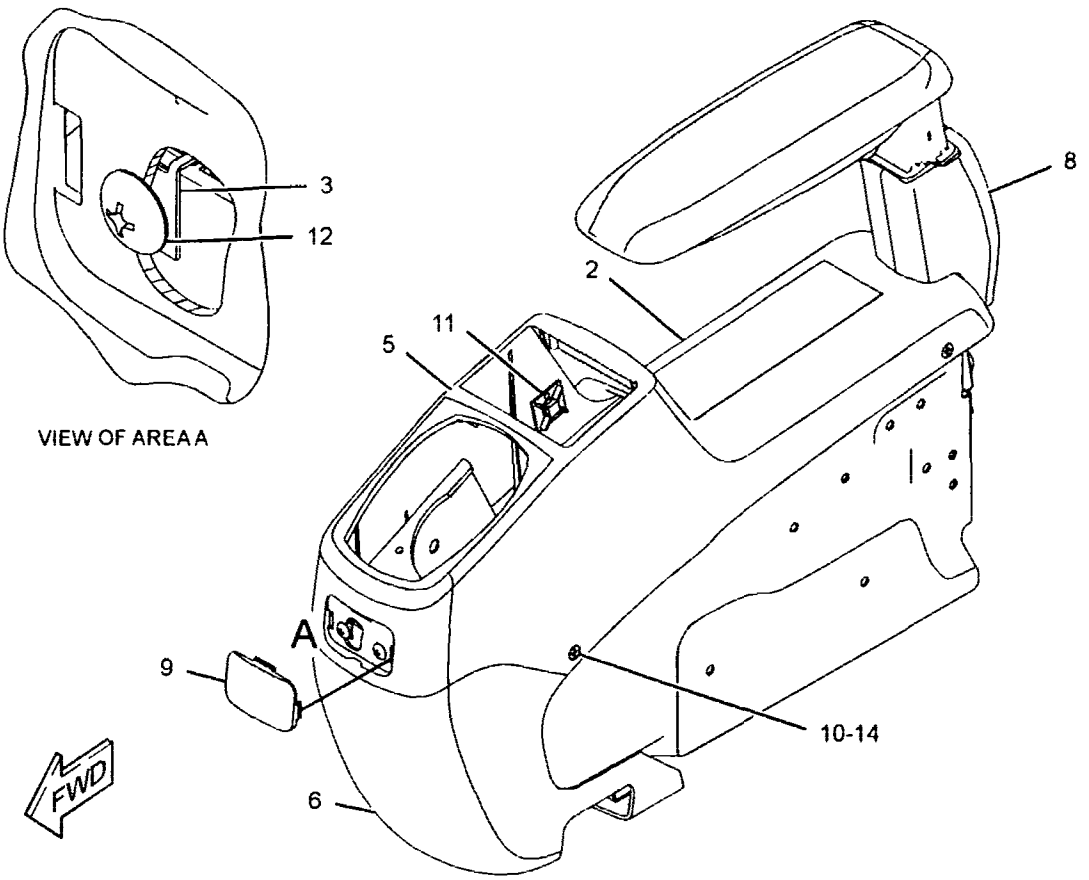

GRAPHIĆ #1

<END>

g01217107

OPERATOR STATION

259-7349 CONSOLE GP-OPERATOR–LH

S/N: YEE1-UP

PART OF 245-7922 CONSOLE GP-OPERATOR

SMCS-5258 **i02474300**

NOTE	REF NO	GRAPHIC REF	PART NUMBER	QTY	PART NAME 1 2 3 4 5 6 (PRODUCT LEVEL)	SEE PAGE
M	1	1	**128-2135**	5	SCREW-TRUSS HEAD (M6X1X13-MM)	
	2	1	**171-7325**	3	SCREW-TAPPING	
	3	1	**234-6579**	6	NUT-SPEED	
	4	1	**234-6580**	4	CAP	
	5	1	**234-6603**	1	COVER	
	6	1	**234-6605**	1	COVER	
	7	1	**234-6608**	1	COVER	
	8	1	**234-6609**	1	COVER	
	9	1	**234-6610**	1	COVER	
	10	1	**234-6611**	1	CASE	
	11	1	**234-6612**	1	COVER	
Y	12	1	**234-6613**	1	SWITCH GP-POSITION (HYDRAULIC LOCKOUT)	239
	13	1	**234-6614**	1	COVER	
	14	1	**235-8914**	4	NUT-SPEED	
	15	1	**235-8965**	1	GUARD	
	16	1	**245-7790**	3	SCREW-TAPPING	
	17	1	**245-7925**	1	SUPPORT AS	
	18	1	**245-7948**	7	SCREW-TAPPING	
	19	1	**259-7202**	1	ASHTRAY	
Y	20	1	**259-7347**	1	ARMREST GP (LH)	939
M	21	1	**9X-2041**	3	SCREW-TRUSS HEAD (M10X1.5X20-MM)	
M	22	1	**9X-2042**	2	SCREW-TRUSS HEAD (M6X1X12-MM)	

M-METRIC PART
Y-SEPARATE ILLUSTRATION

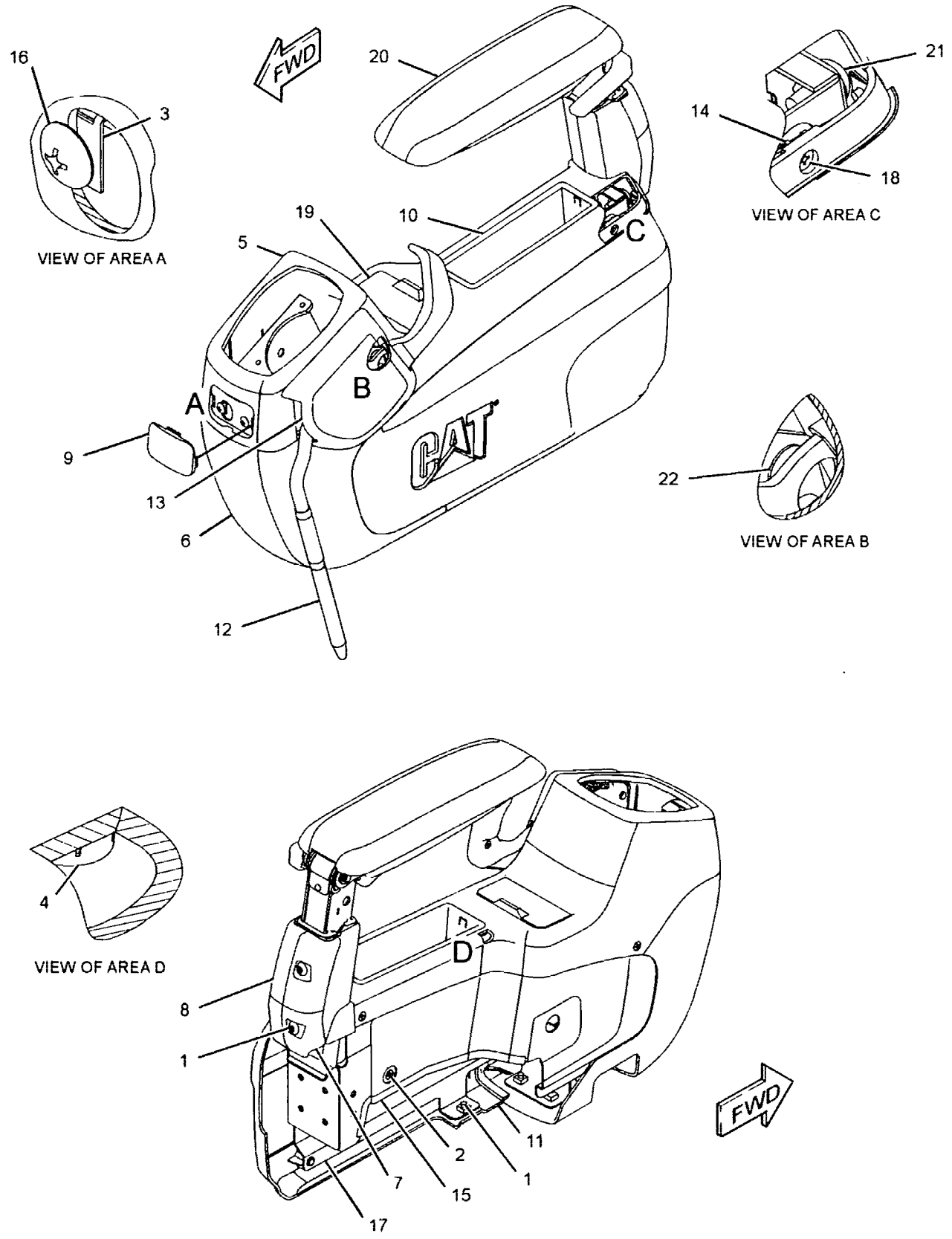

GRAPHIC #1 **<END>** g01217096

OPERATOR STATION

259-7598 CONTROL & MTG GP-JOYSTICK–WITH SLIDE CONTROL

S/N: YEE1-UP
PART OF 255-5843 CONTROL AR-AUXILIARY
AN ATTACHMENT

SMCS-5063, 5705 **i02470165**

NOTE	REF NO	GRAPHIC REF	PART NUMBER	QTY	PART NAME 1 2 3 4 5 6 (PRODUCT LEVEL)	SEE PAGE
Y	1	1	**259-7763**	1	CONTROL GP-JOYSTICK (LH)	976
Y	2	1	**259-7762**	1	CONTROL GP-JOYSTICK (RH)	975
M	3	1	**6V-7357**	6	BOLT (M6X1X25-MM)	
	4	1	**9X-8256**	6	WASHER (6.6X12X2-MM THK)	

M-METRIC PART
Y-SEPARATE ILLUSTRATION

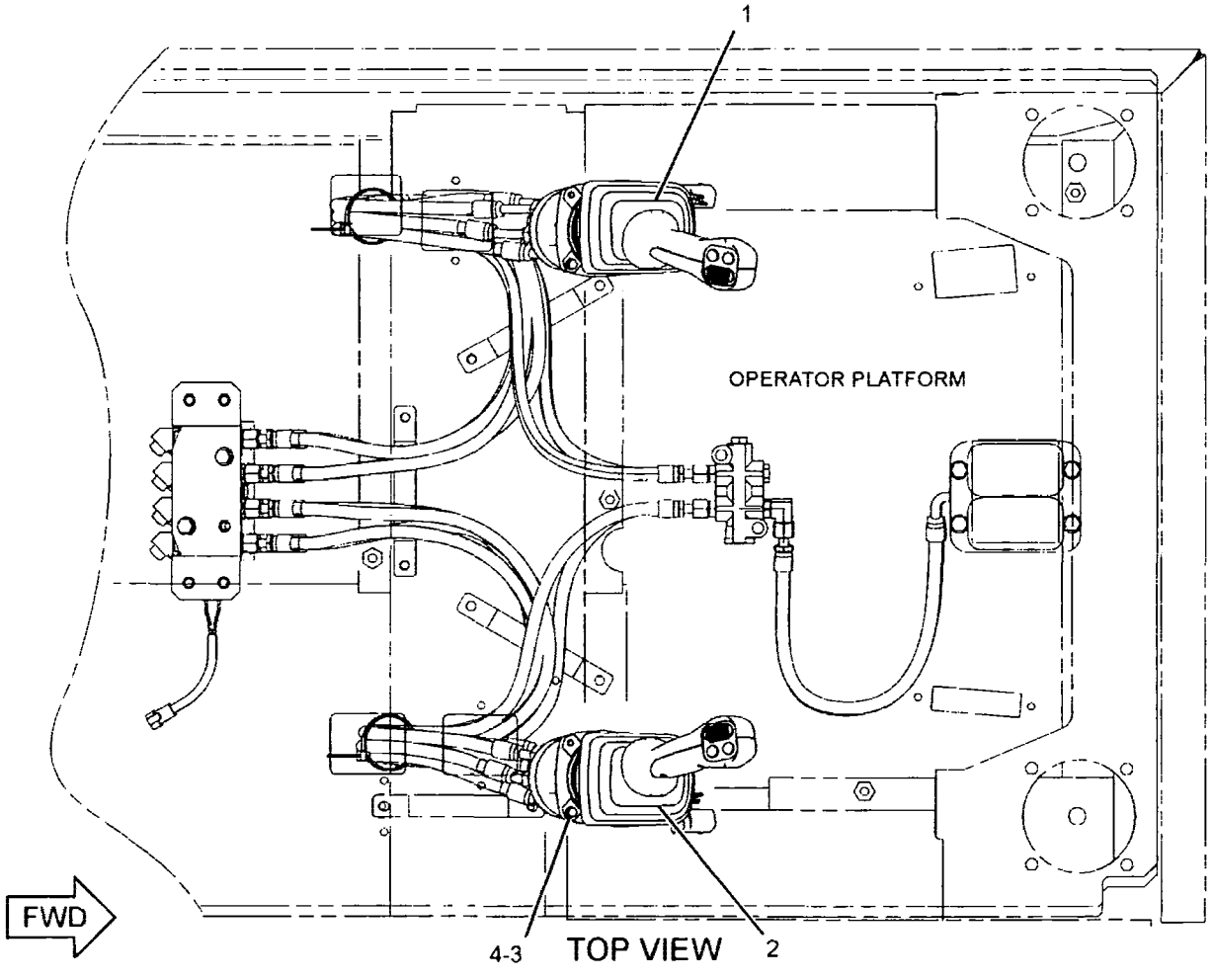

GRAPHIC #1

<END>

g01236540

OPERATOR STATION

259-7599 CONTROL & MTG GP-JOYSTICK-
3-BUTTON, TRIGGER SWITCH
S/N: YEE1-UP
PART OF 255-5844 CONTROL AR-AUXILIARY
AN ATTACHMENT

SMCS-5063, 5705 **i02862665**

NOTE	REF NO	GRAPHIC REF	PART NUMBER	QTY	PART NAME 1 2 3 4 5 6 (PRODUCT LEVEL)	SEE PAGE
Y	1	1	**259-7765**	1	CONTROL GP-JOYSTICK (LH)	978
Y	2	1	**259-7764**	1	CONTROL GP-JOYSTICK (RH)	977
M	3	1	**6V-7357**	6	BOLT (M6X1X25-MM)	
	4	1	**9X-8256**	6	WASHER (6.6X12X2-MM THK)	

M-METRIC PART
Y-SEPARATE ILLUSTRATION

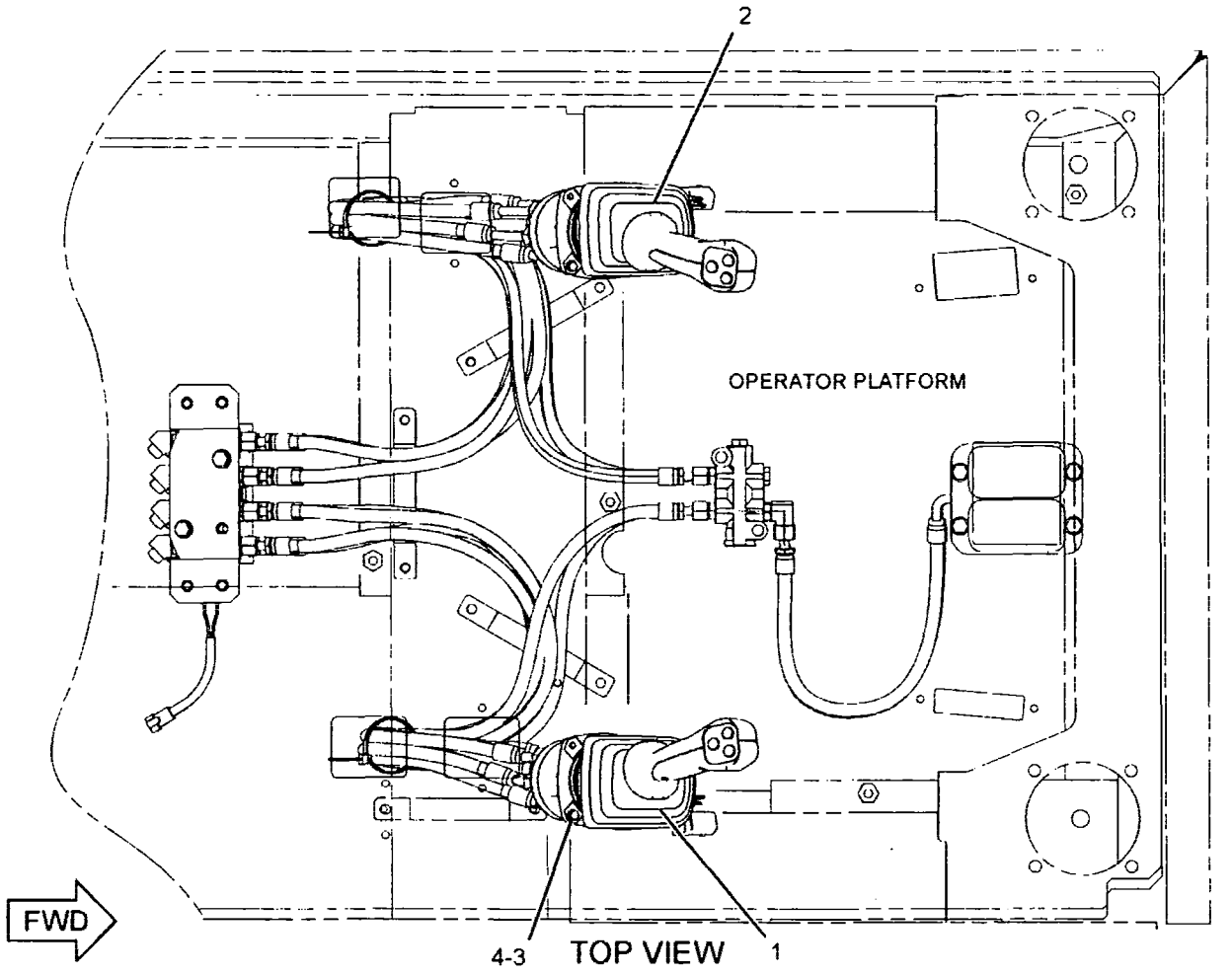

GRAPHIC #1 **<END>** g01263586

OPERATOR STATION

221-8884 CONTROL & MTG GP-PEDAL–LH

S/N: YEE1-UP
PART OF 255-5845 PEDAL AR-AUXILIARY
AN ATTACHMENT

SMCS-5462 **i02889899**

NOTE	REF NO	GRAPHIC REF	PART NUMBER	QTY	PART NAME 1 2 3 4 5 6 (PRODUCT LEVEL)	SEE PAGE
	1	1	5I-7090	1	CHAIN AS	
	2	1	121-1865	1	PEDAL-RUBBER (LH)	
	3	1	128-2173	1	PIN	
	4	1	153-8723	1	PEDAL AS	
CY	5	1	309-5808	1	CONTROL GP-PEDAL (ELECTRIC)	981
	6	1	227-7625	1	SUPPORT AS	
M	7	1	095-0735	2	SCREW-MACHINE (M5X0.8X8-MM)	
M	8	1	7X-2536	2	BOLT (M8X1.25X14-MM)	
	9	1	8T-0114	1	PIN-SPRING	
	10	1	8T-4121	3	WASHER-HARD (11X21X2.5-MM THK)	
M	11	1	8T-4136	2	BOLT (M10X1.5X25-MM)	
M	12	1	8T-4191	1	BOLT (M10X1.5X16-MM)	
	13	1	8T-4224	2	WASHER-HARD (8.8X16X2-MM THK)	

C-CHANGE FROM PREVIOUS TYPE
M-METRIC PART
Y-SEPARATE ILLUSTRATION

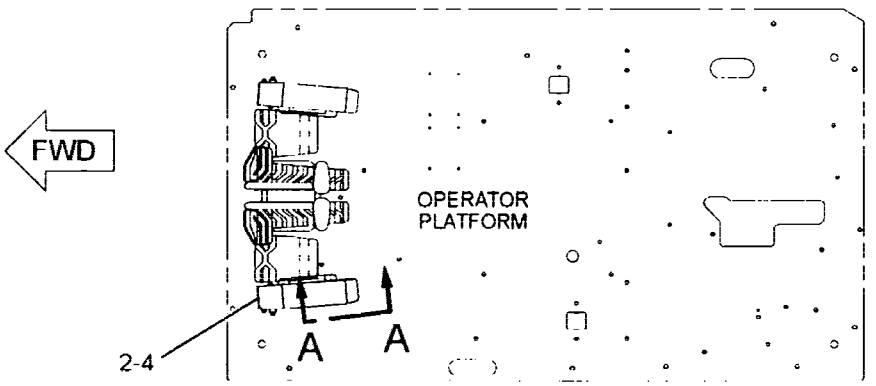

TOP VIEW

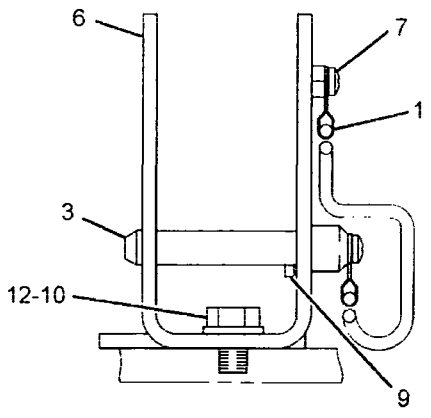

VIEW B-B

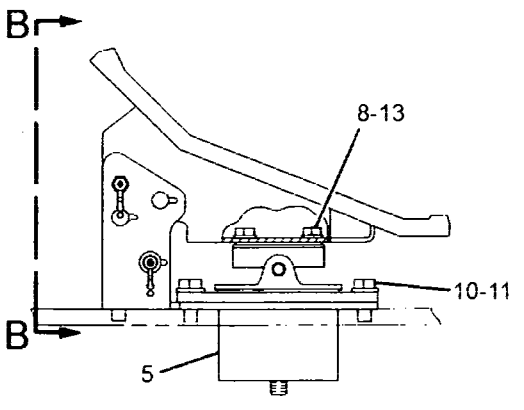

VIEW A-A

GRAPHIC #1 **<END>** g01439827

OPERATOR STATION

270-6107 CONTROL GP-FOOT–LEFT ON/OFF SWITCH

S/N: YEE1-UP

PART OF 270-6106 CONTROL AR-AUXILIARY

AN ATTACHMENT

SMCS-1435 **i02975514**

NOTE	REF NO	GRAPHIC REF	PART NUMBER	QTY	PART NAME 1 2 3 4 5 6 (PRODUCT LEVEL)	SEE PAGE
	1	1	**093-2069**	1	GROMMET	
	2	1	*205-1339*	1	SWITCH GP-PEDAL (WORK TOOL)	
		1	**2Q-4703**	1	SWITCH AS-FOOT (PEDAL)	
		1	**205-1340**	1	HARNESS AS-OPERATOR CONTROLS	
	3	1	**285-1332**	1	SUPPORT AS	
	4	1	**285-1333**	1	SUPPORT AS	
	5	1	**285-1337**	1	PLATE-STOP	
	6	1	**6V-7646**	1	WASHER-HARD (7.2X25X2-MM THK)	
M	7	1	**8C-8580**	2	BOLT-SOCKET HEAD (M5X0.8X16-MM)	
M	8	1	**8T-0269**	2	BOLT-SOCKET HEAD (M6X1X20-MM)	
	9	1	**8T-4121**	4	WASHER-HARD (11X21X2.5-MM THK)	
M	10	1	**8T-4137**	4	BOLT (M10X1.5X20-MM)	
	11	1	**9X-8256**	1	WASHER (6.6X12X2-MM THK)	

M-METRIC PART

270-6107 **CONTROL GP-FOOT** *(contd.)* **i02975514**

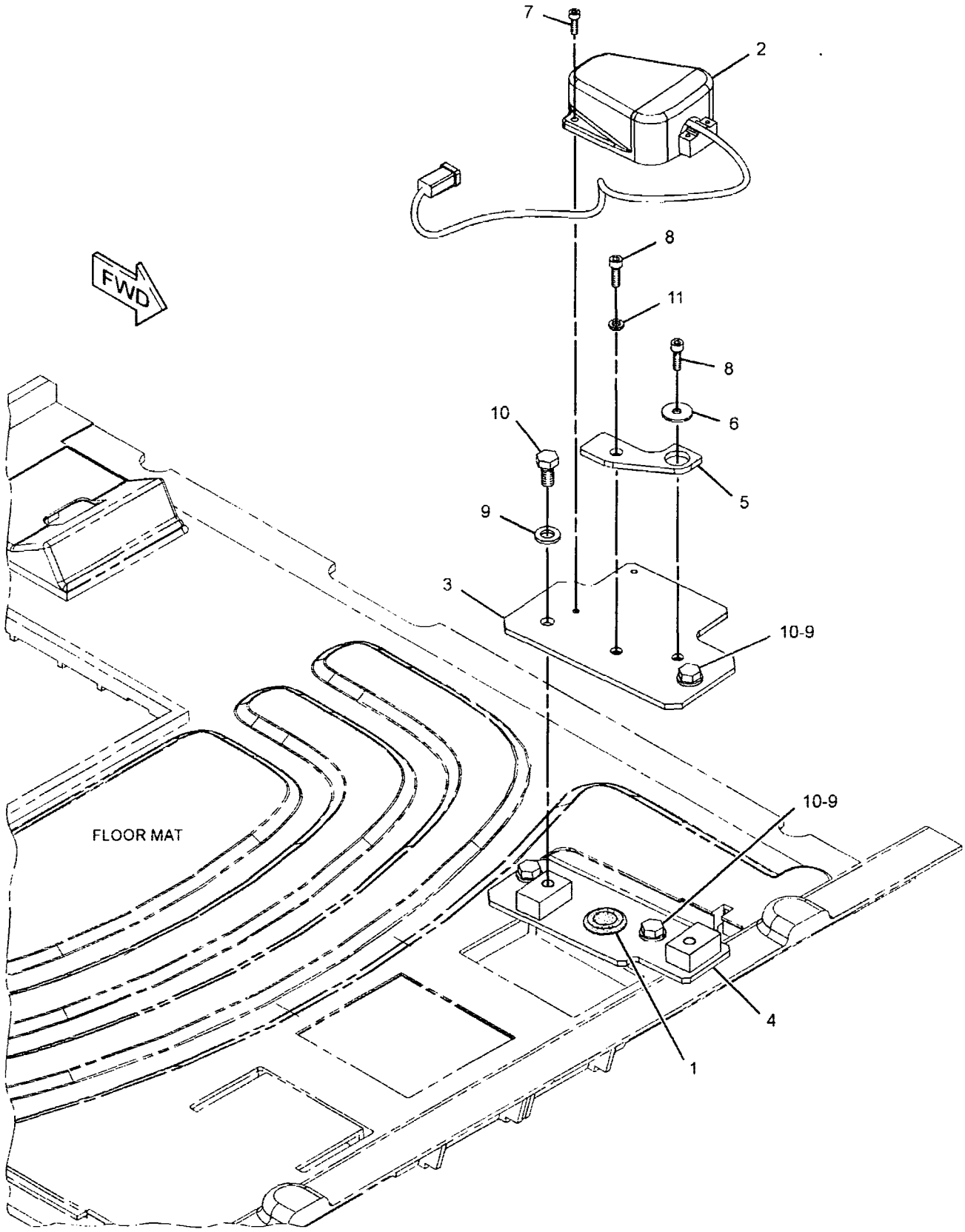

GRAPHIC #1 **<END>** g01432832

OPERATOR STATION

170-9497 CONTROL GP-HANDLE–TRAVEL

S/N: YEE1-UP

PART OF 305-8000 OPERATOR AR

SMCS-5705 **i01818773**

NOTE	REF NO	GRAPHIC REF	PART NUMBER	QTY	PART NAME 1 2 3 4 5 6 (PRODUCT LEVEL)	SEE PAGE
	1	1	**096-6166**	2	WASHER-HARD (4.5X9X1-MM THK)	
M	2	1	**095-0728**	2	SCREW-MACHINE (M4X0.7X12-MM)	
	3	1	**8T-4121**	12	WASHER-HARD (11X21X2.5-MM THK)	
M	4	1	**8T-4136**	4	BOLT (M10X1.5X25-MM)	
M	5	1	**8T-4191**	8	BOLT (M10X1.5X16-MM)	
	6	1	**142-5546**	2	KNOB	
	7	1	**117-6356**	2	STEP AS	
	8	1	**122-9610**	2	STEP	
	9	1	**170-9499**	1	LEVER AS (LH)	
	10	1	**170-9498**	1	LEVER AS (RH)	
	11	1	**122-9608**	1	PEDAL-RUBBER	
	12	1	**117-6350**	1	PEDAL AS (RH)	
	13	1	**122-9609**	1	PEDAL-RUBBER	
	14	1	**117-6349**	1	PEDAL AS (LH)	

M-METRIC PART

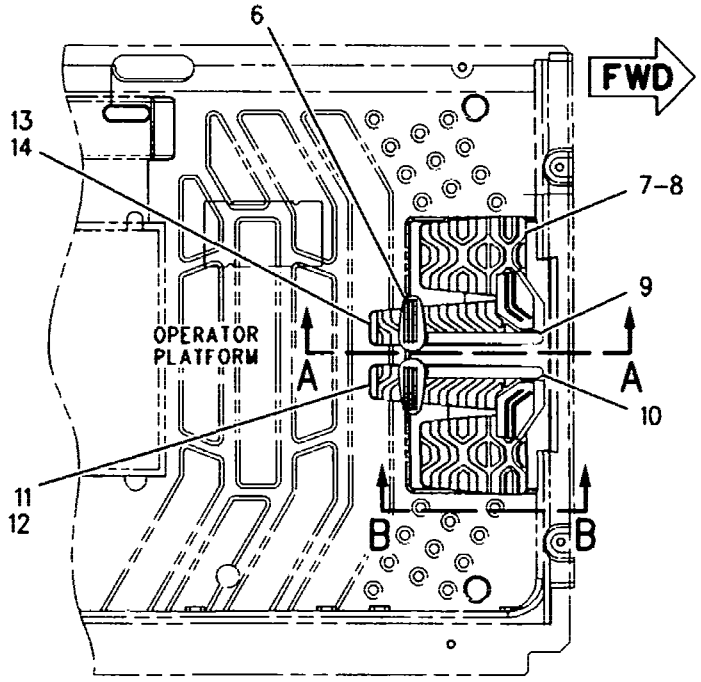

TOP VIEW

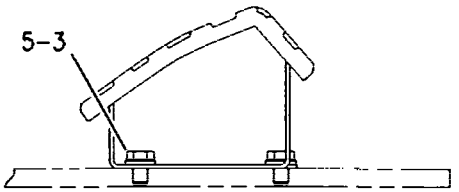

VIEW B-B

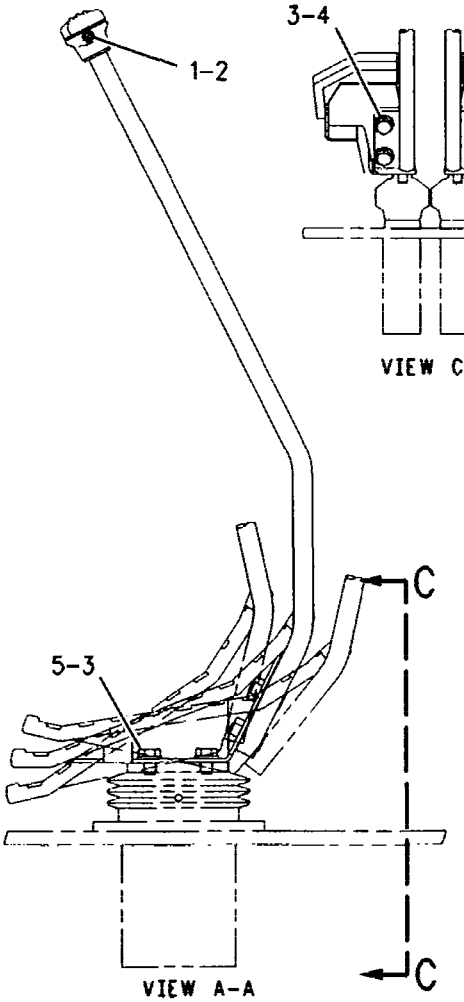

VIEW A-A

VIEW C-C

GRAPHIC #1 **<END>** g00672963

OPERATOR STATION

235-8969 CONTROL GP-HANDLE–JOYSTICK, LH

S/N: YEE1-UP

PART OF 270-5951 CONTROL GP-JOYSTICK

AN ATTACHMENT

SMCS-5705 **i02975487**

NOTE	REF NO	GRAPHIC REF	PART NUMBER	QTY	PART NAME 1 2 3 4 5 6 (PRODUCT LEVEL)	SEE PAGE
	1	1	124-4010	1	LEVER	
	2	1	235-8971	1	BOOT	
	3	1	245-7842	1	KNOB AS	
M		1	6I-5298	1	SCREW-TAPPING	
		1	124-4009	1	SHAFT	
		1	222-0225	1	SWITCH AS-PUSH BUTTON (HORN)	
M	4	1	096-2617	2	SCREW-MACHINE (M5X0.8X6-MM)	

M-METRIC PART

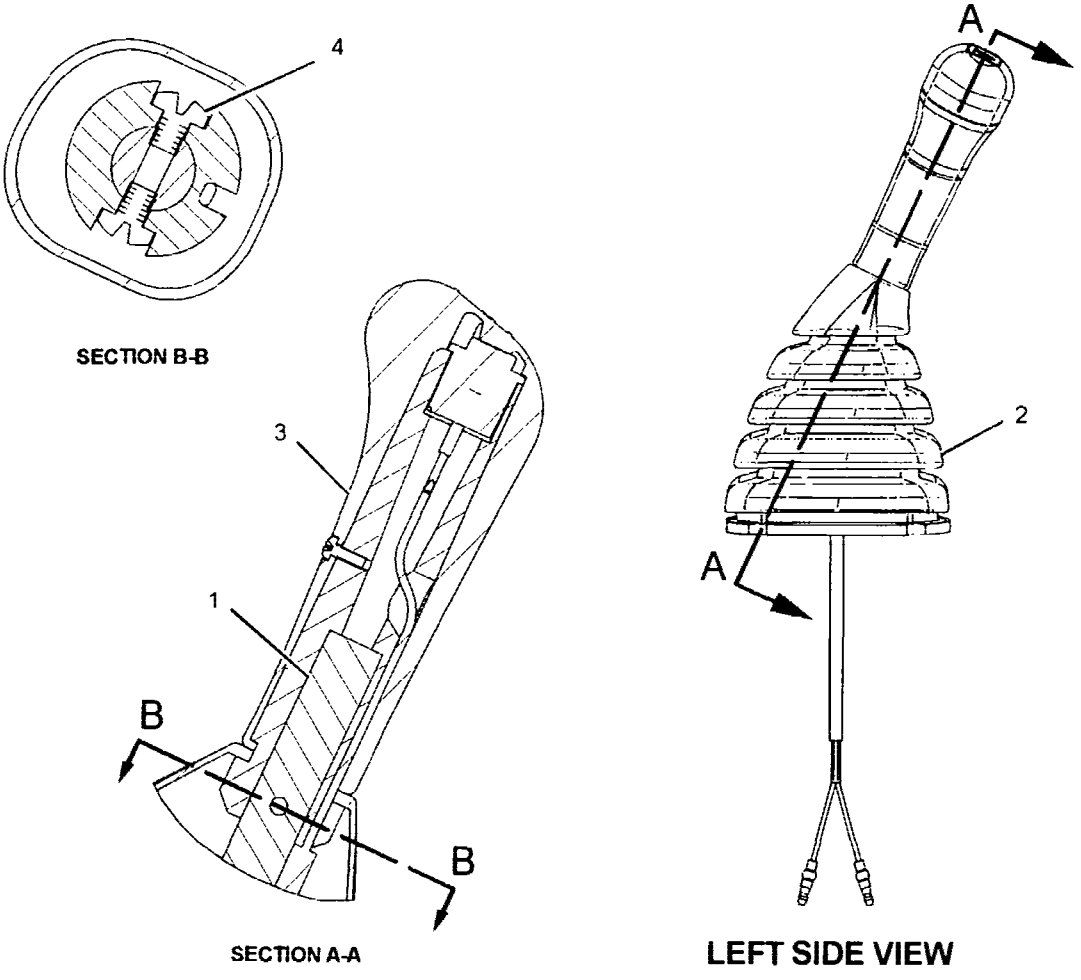

GRAPHIC #1 **<END>** g01253539

OPERATOR STATION

235-8970 CONTROL GP-HANDLE–JOYSTICK, RH

S/N: YEE1-UP
PART OF 270-5952 CONTROL GP-JOYSTICK
AN ATTACHMENT

SMCS-5705 **i02923997**

NOTE	REF NO	GRAPHIC REF	PART NUMBER	QTY	PART NAME 1 2 3 4 5 6 (PRODUCT LEVEL)	SEE PAGE
	1	1	**124-4010**	1	LEVER	
	2	1	**235-8972**	1	BOOT	
	3	1	**245-7844**	1	KNOB AS	
M		1	**6I-5298**	1	SCREW-TAPPING	
		1	**124-4009**	1	SHAFT	
		1	**222-0225**	1	SWITCH AS-PUSH BUTTON (MANUAL LOW IDLE)	
M	4	1	**096-2617**	2	SCREW-MACHINE (M5X0.8X6-MM)	

M-METRIC PART

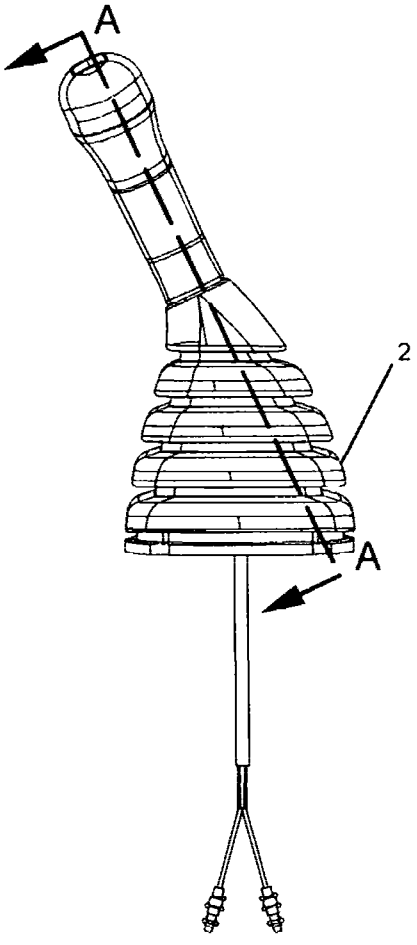

RIGHT SIDE VIEW

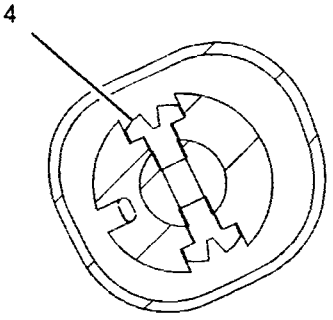

SECTION B-B

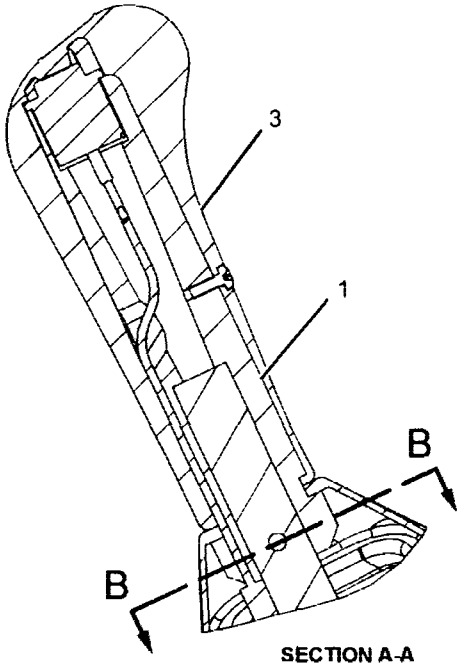

SECTION A-A

GRAPHIC #1 **<END>** g01082427

OPERATOR STATION

260-2109 CONTROL GP-HANDLE–JOYSTICK, RH

S/N: YEE1-UP

PART OF 259-7762 CONTROL GP-JOYSTICK

AN ATTACHMENT

SMCS-5705 **i02470160**

NOTE	REF NO	GRAPHIC REF	PART NUMBER	QTY	PART NAME 1 2 3 4 5 6 (PRODUCT LEVEL)	SEE PAGE
M	1	1	**7Y-8463**	1	NUT (M14X2-THD)	
	2	1	**117-8683**	1	PIN-SPRING	
	3	1	**260-2111**	1	LEVER	
	4	1	**227-7616**	1	HANDLE GP-JOYSTICK (RH)	
		1	**247-2693**	1	RECEPTACLE AS-CONNECTOR (6-PIN)	
		1	**9X-3401**	6	PIN-CONNECTOR (16-GA TO 18-GA)	
					–OR–	
		1	**126-1767**	6	PIN-CONNECTOR (14-GA)	
	5	1	**240-5066**	1	BOOT	

M-METRIC PART

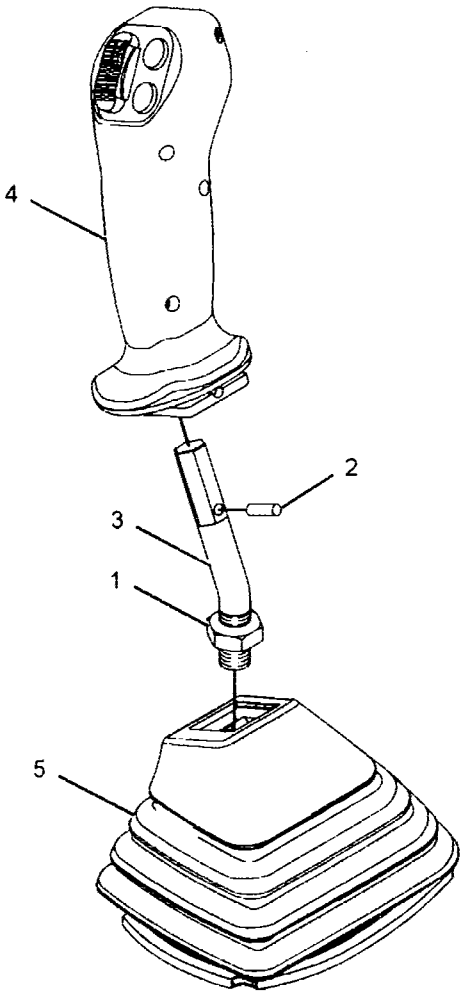

GRAPHIC #1

<END>

g01220527

OPERATOR STATION

260-2110 CONTROL GP-HANDLE–JOYSTICK, LH

S/N: YEE1-UP

PART OF 259-7763 CONTROL GP-JOYSTICK

AN ATTACHMENT

SMCS-5705 **i02470159**

NOTE	REF NO	GRAPHIC REF	PART NUMBER	QTY	PART NAME 1 2 3 4 5 6 (PRODUCT LEVEL)	SEE PAGE
M	1	1	**7Y-8463**	1	NUT (M14X2-THD)	
	2	1	**117-8683**	1	PIN-SPRING	
	3	1	**260-2111**	1	LEVER	
	4	1	**227-7617**	1	HANDLE GP-JOYSTICK (LH)	
		1	**9X-3401**	6	PIN-CONNECTOR (16-GA TO 18-GA)	
					–OR–	
		1	**126-1767**	6	PIN-CONNECTOR (14-GA)	
		1	**247-2693**	1	RECEPTACLE AS-CONNECTOR (6-PIN)	
	5	1	**240-5067**	1	BOOT	

M-METRIC PART

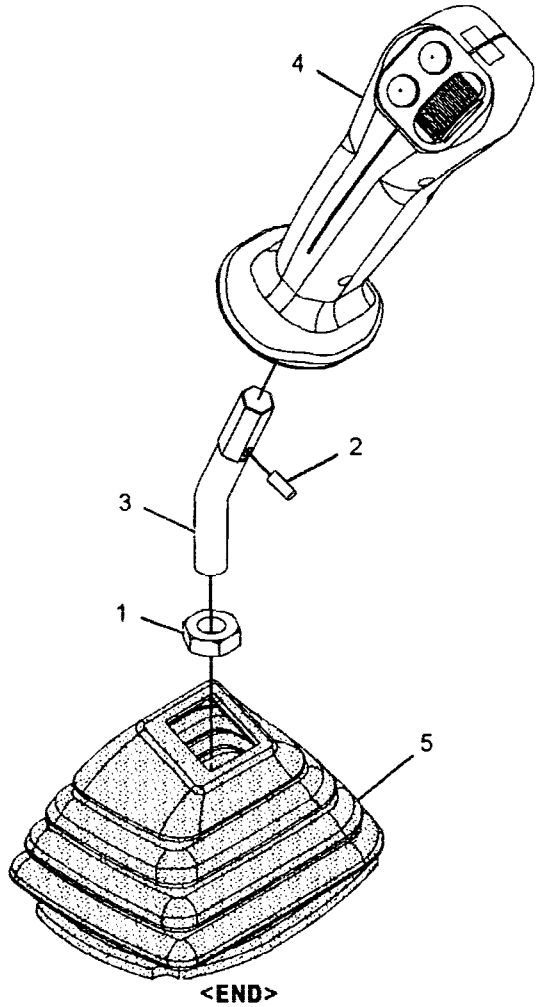

GRAPHIC #1

<END>

g01127317

OPERATOR STATION

260-2127 CONTROL GP-HANDLE–JOYSTICK, RH

S/N: YEE1-UP
PART OF 259-7764 CONTROL GP-JOYSTICK
AN ATTACHMENT

SMCS-5705 **i02567602**

NOTE	REF NO	GRAPHIC REF	PART NUMBER	QTY	PART NAME 1 2 3 4 5 6 (PRODUCT LEVEL)	SEE PAGE
M	1	1	7Y-8463	1	NUT (M14X2-THD)	
	2	1	117-8683	1	PIN-SPRING	
	3	1	240-5066	1	BOOT	
	4	1	247-5185	1	CONTROL GP-HANDLE	
		1	8T-8737	2	PLUG-SEAL	
		1	9X-3401	4	PIN-CONNECTOR (16-GA TO 18-GA)	
					–OR–	
		1	126-1767	4	PIN-CONNECTOR (14-GA)	
		1	247-2693	1	RECEPTACLE AS-CONNECTOR (6-PIN)	
	5	1	260-2111	1	LEVER	

M-METRIC PART

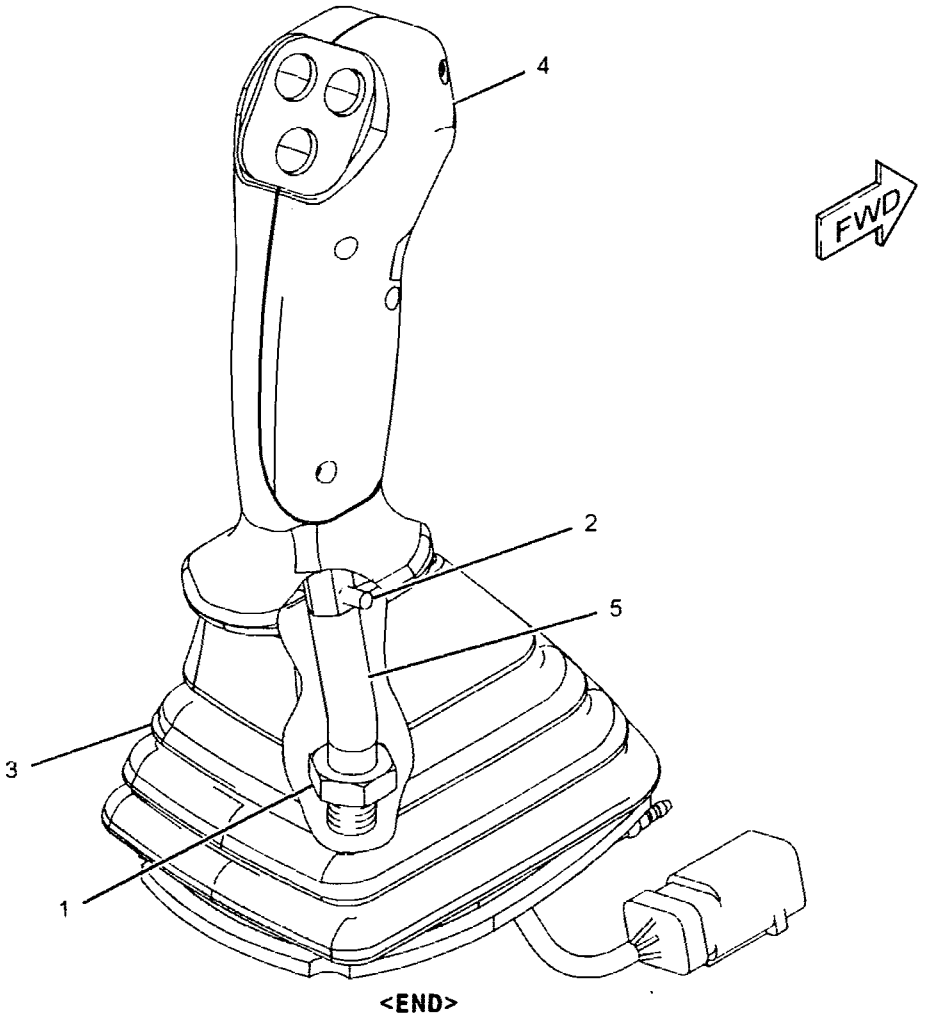

GRAPHIC #1 **<END>** g01216159

260-2128 CONTROL GP-HANDLE–JOYSTICK, LH

S/N: YEE1-UP

PART OF 259-7765 CONTROL GP-JOYSTICK

AN ATTACHMENT

SMCS-5705 **i02567660**

NOTE	REF NO	GRAPHIC REF	PART NUMBER	QTY	PART NAME 1 2 3 4 5 6 (PRODUCT LEVEL)	SEE PAGE
M	1	1	7Y-8463	1	NUT (M14X2-THD)	
	2	1	117-8683	1	PIN-SPRING	
	3	1	240-5067	1	BOOT	
	4	1	*247-5185*	1	CONTROL GP-HANDLE	
		1	8T-8737	2	PLUG-SEAL	
		1	9X-3401	4	PIN-CONNECTOR (16-GA TO 18-GA)	
					–OR–	
		1	126-1767	4	PIN-CONNECTOR (14-GA)	
		1	247-2693	1	RECEPTACLE AS-CONNECTOR (6-PIN)	
	5	1	260-2111	1	LEVER	

M-METRIC PART

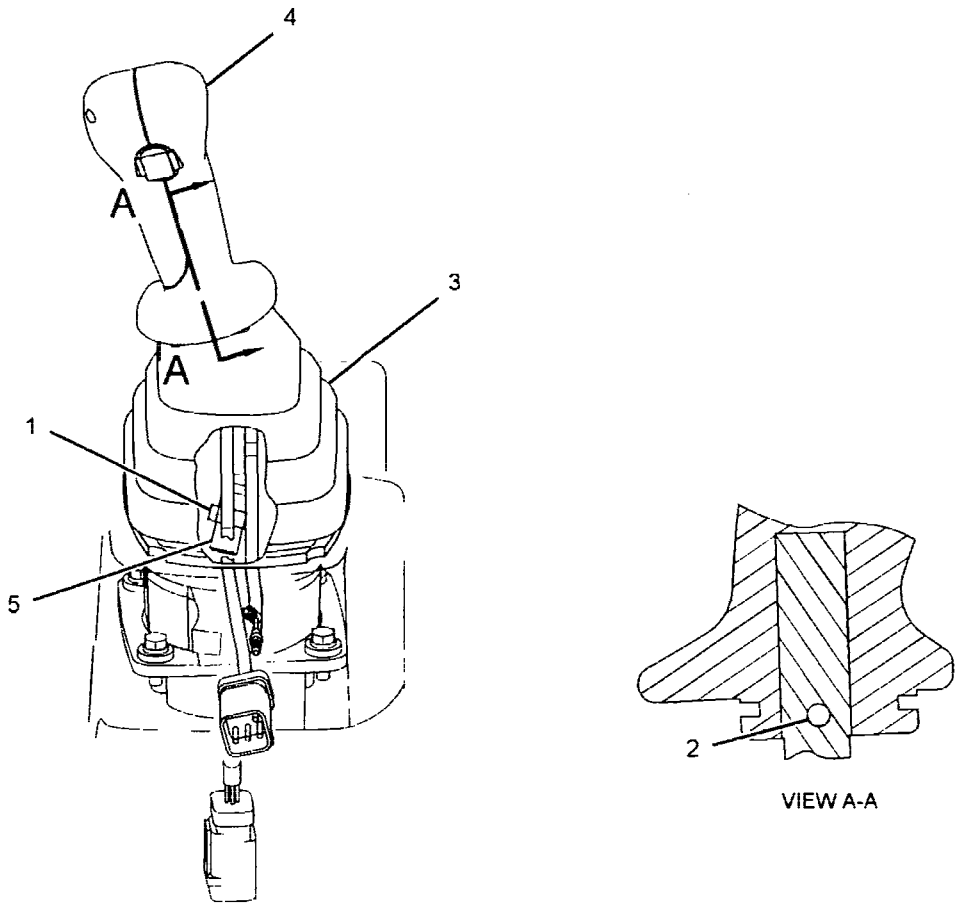

FRONT VIEW

VIEW A-A

GRAPHIC #1 **<END>** g01309545

OPERATOR STATION

267-3839 CONTROL GP-HEAT & AIR COND

S/N: YEE1-UP

PART OF 305-8002 CAB GP

SMCS-7309 **i02878750**

NOTE	REF NO	GRAPHIC REF	PART NUMBER	QTY	PART NAME 1 2 3 4 5 6 (PRODUCT LEVEL)	SEE PAGE
	1	1	**293-1136**	1	PANEL AS-CONTROL	
	2	1	**235-8873**	1	HARNESS AS-HEATER & AIR COND (CONTROL PANEL SWITCHES)	
	3	1	**8T-0328**	2	WASHER-HARD (5.5X10X1-MM THK)	
M	4	1	**099-2374**	2	BOLT-SOCKET HEAD (M5X0.8X12-MM)	
	5	1	**3S-2093**	2	STRAP-CABLE	

M-METRIC PART

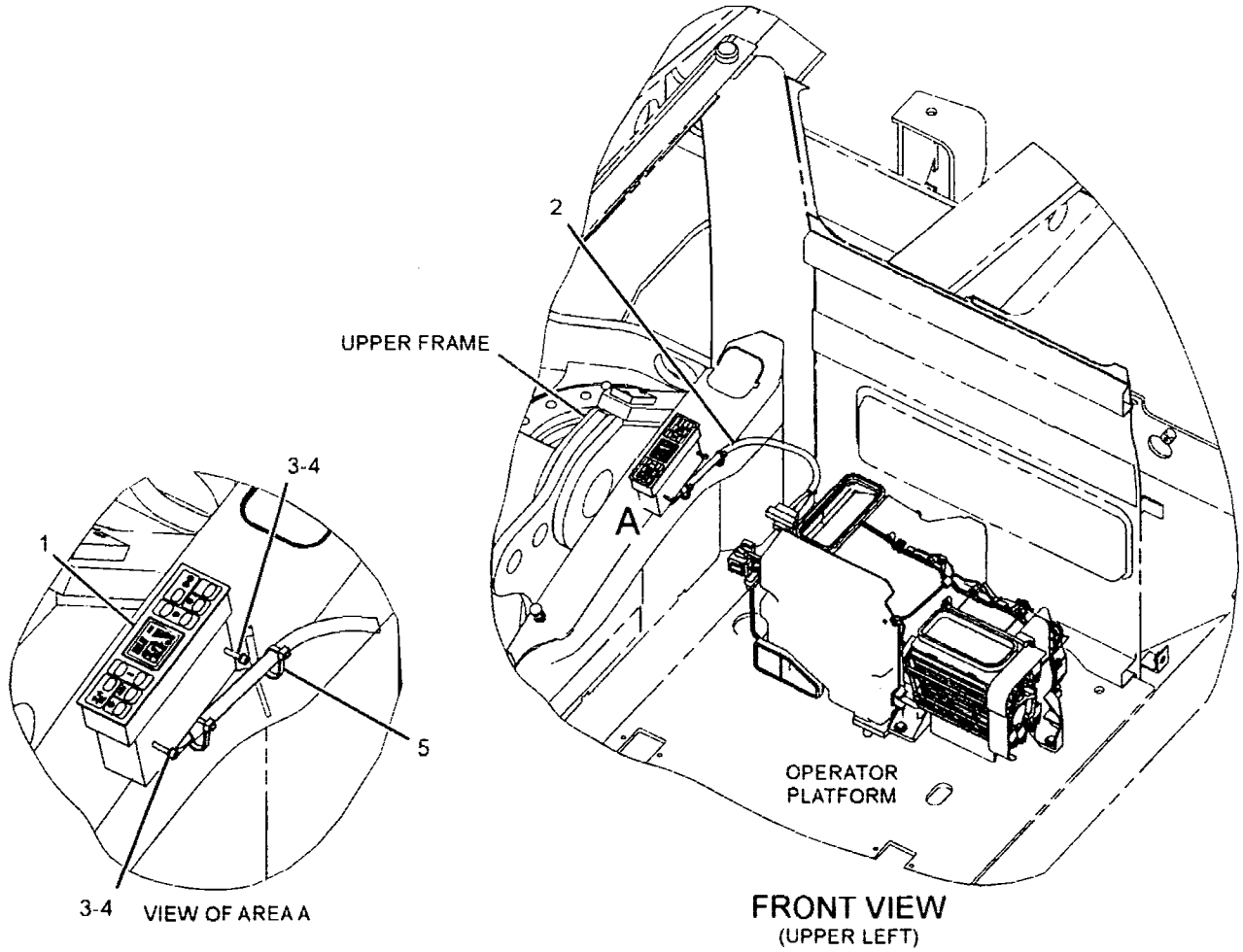

FRONT VIEW
(UPPER LEFT)

GRAPHIC #1 **<END>** g01434700

OPERATOR STATION

225-5730 CONTROL GP-HYDRAULIC PEDAL

S/N: YEE1-UP

PART OF 225-5729 PEDAL AR-AUXILIARY

AN ATTACHMENT

SMCS-5059, 5063 **i02224250**

NOTE	REF NO	GRAPHIC REF	PART NUMBER	QTY	PART NAME 1 2 3 4 5 6 (PRODUCT LEVEL)	SEE PAGE
	1	1	**5I-7090**	1	CHAIN AS	
	2	1	**128-2173**	1	PIN	
	3	1	**135-2274**	1	PEDAL-RUBBER	
	4	1	**164-0614**	1	PEDAL AS	
	5	1	**164-0617**	1	SUPPORT AS	
	6	1	**165-9523**	1	VALVE GP-PILOT (THIRD PEDAL, STRAIGHT TRAVEL)	
	7	1	**8T-4224**	2	WASHER-HARD (8.8X16X2-MM THK)	
M	8	1	**095-0735**	2	SCREW-MACHINE (M5X0.8X8-MM)	
M	9	1	**7X-2536**	2	BOLT (M8X1.25X14-MM)	
	10	1	**8T-0114**	1	PIN-SPRING	
	11	1	**8T-4121**	3	WASHER-HARD (11X21X2.5-MM THK)	
M	12	1	**8T-4136**	2	BOLT (M10X1.5X25-MM)	
M	13	1	**8T-4191**	1	BOLT (M10X1.5X16-MM)	

M-METRIC PART

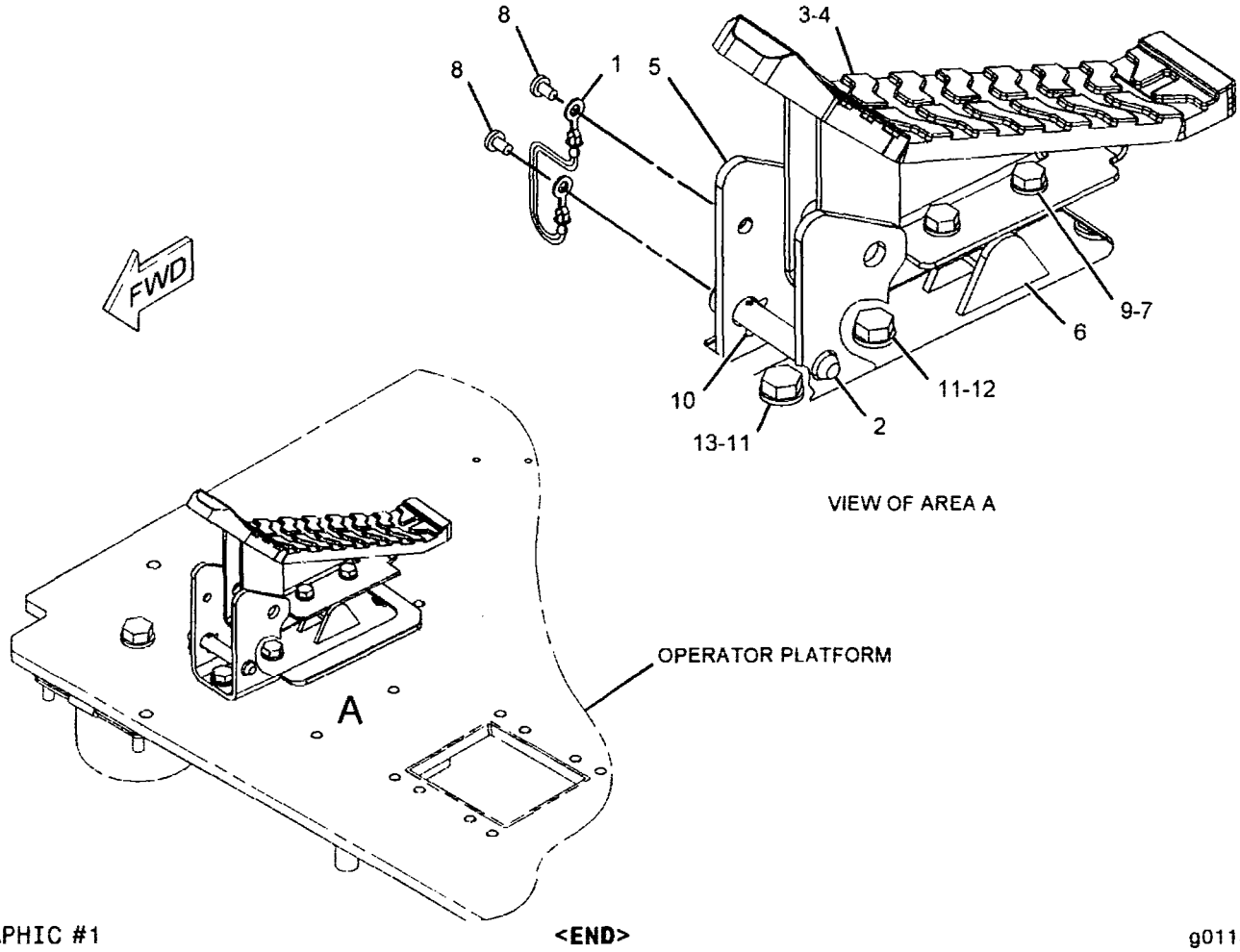

GRAPHIC #1 **<END>** g01130744

OPERATOR STATION

259-7762 CONTROL GP-JOYSTICK-RH

S/N: YEE1-UP

PART OF 259-7598 CONTROL & MTG GP-JOYSTICK

AN ATTACHMENT

SMCS-5705 **i02470158**

NOTE	REF NO	GRAPHIC REF	PART NUMBER	QTY	PART NAME 1 2 3 4 5 6 (PRODUCT LEVEL)	SEE PAGE
Y	1	1	*260-2109*	1	CONTROL GP-HANDLE (JOYSTICK, RH)	969
Y	2	1	**206-3305**	1	VALVE GP-PILOT (JOYSTICK)	778

Y-SEPARATE ILLUSTRATION

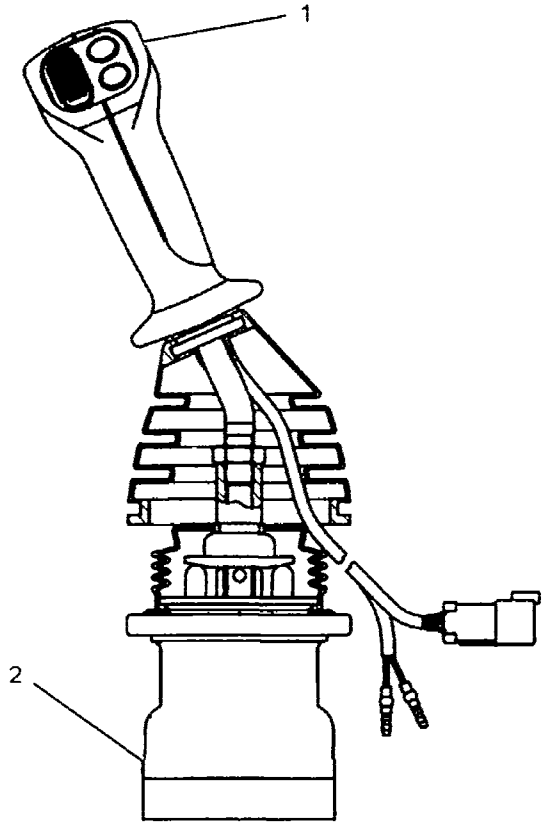

GRAPHIC #1 **<END>** g01098310

OPERATOR STATION

259-7763 CONTROL GP-JOYSTICK-LH

S/N: YEE1-UP
PART OF 259-7598 CONTROL & MTG GP-JOYSTICK
AN ATTACHMENT

SMCS-5705 **i02470157**

NOTE	REF NO	GRAPHIC REF	PART NUMBER	QTY	PART NAME 1 2 3 4 5 6 (PRODUCT LEVEL)	SEE PAGE
Y	1	1	*260-2110*	1	CONTROL GP-HANDLE (JOYSTICK, LH)	970
Y	2	1	**206-3305**	1	VALVE GP-PILOT (JOYSTICK)	778

Y-SEPARATE ILLUSTRATION

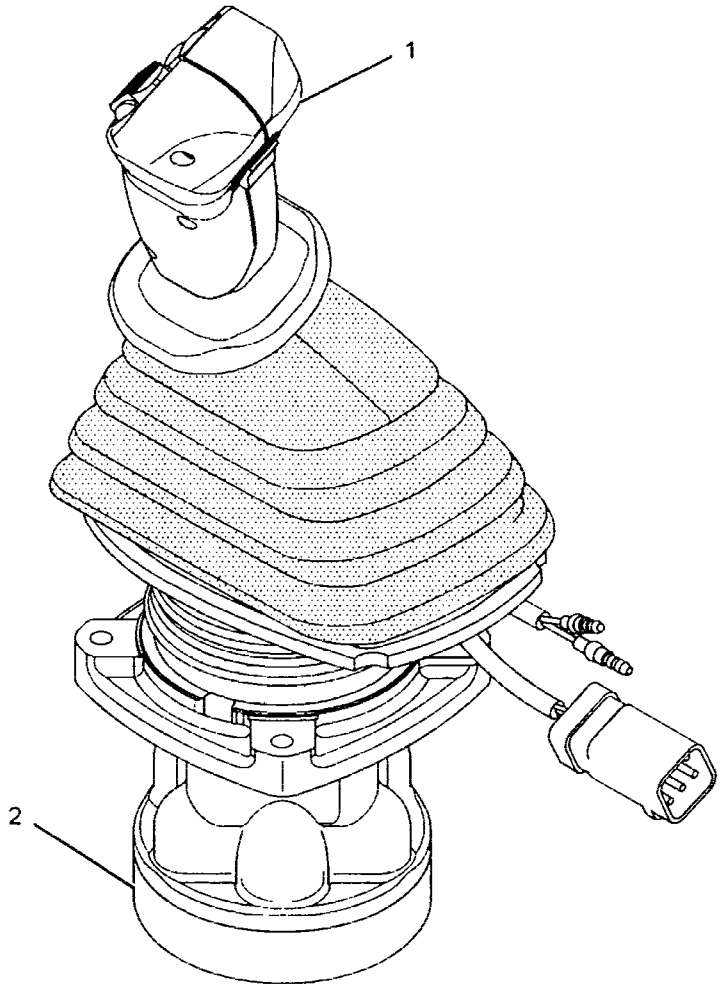

GRAPHIC #1 **<END>** g01126457

OPERATOR STATION

259-7764 CONTROL GP-JOYSTICK-RH

S/N: YEE1-UP

PART OF 259-7599 CONTROL & MTG GP-JOYSTICK

AN ATTACHMENT

SMCS-5705 **i02567589**

NOTE	REF NO	GRAPHIC REF	PART NUMBER	QTY	PART NAME 1 2 3 4 5 6 (PRODUCT LEVEL)	SEE PAGE
Y	1	1	**206-3305**	1	VALVE GP-PILOT (JOYSTICK)	778
Y	2	1	**260-2127**	1	CONTROL GP-HANDLE (JOYSTICK, RH)	971

Y-SEPARATE ILLUSTRATION

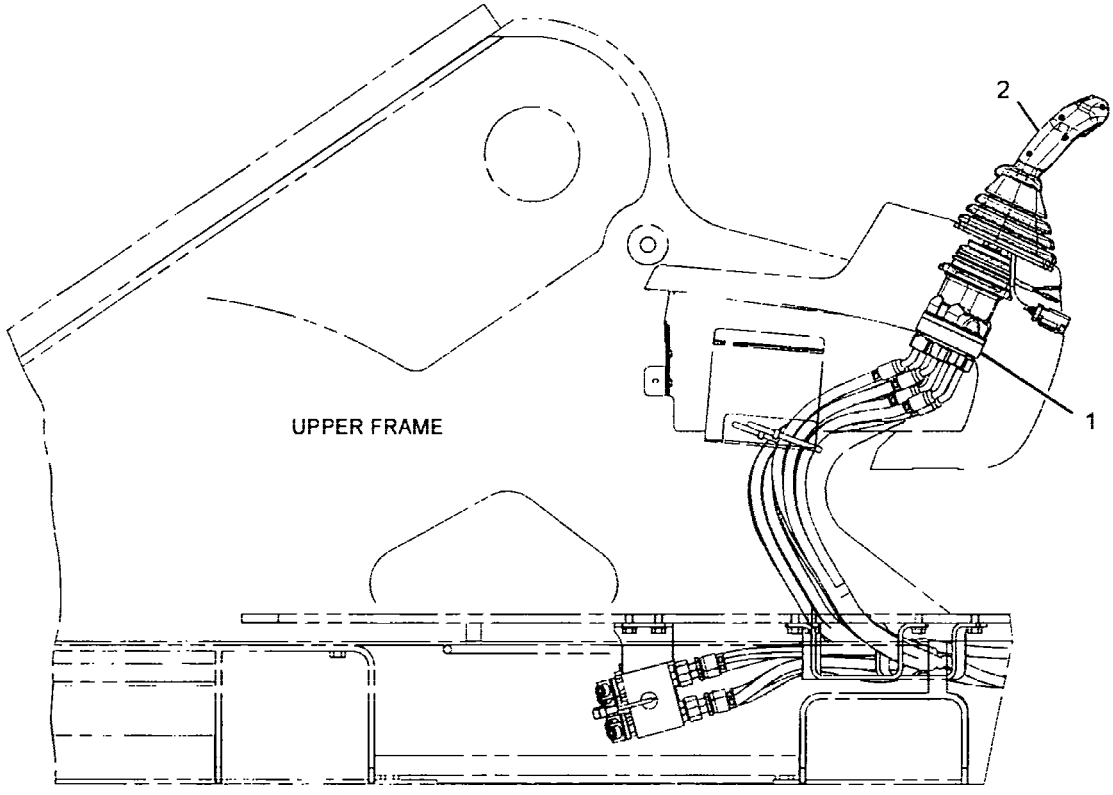

RIGHT SIDE VIEW

GRAPHIC #1 **<END>** g01307523

OPERATOR STATION

259-7765 CONTROL GP-JOYSTICK-LH

S/N: YEE1-UP
PART OF 259-7599 CONTROL & MTG GP-JOYSTICK
AN ATTACHMENT

SMCS-5705 **i02567623**

NOTE	REF NO	GRAPHIC REF	PART NUMBER	QTY	PART NAME 1 2 3 4 5 6 (PRODUCT LEVEL)	SEE PAGE
Y	1	1	**206-3305**	1	VALVE GP-PILOT (JOYSTICK)	778
Y	2	1	**260-2128**	1	CONTROL GP-HANDLE (JOYSTICK, LH)	972

Y-SEPARATE ILLUSTRATION

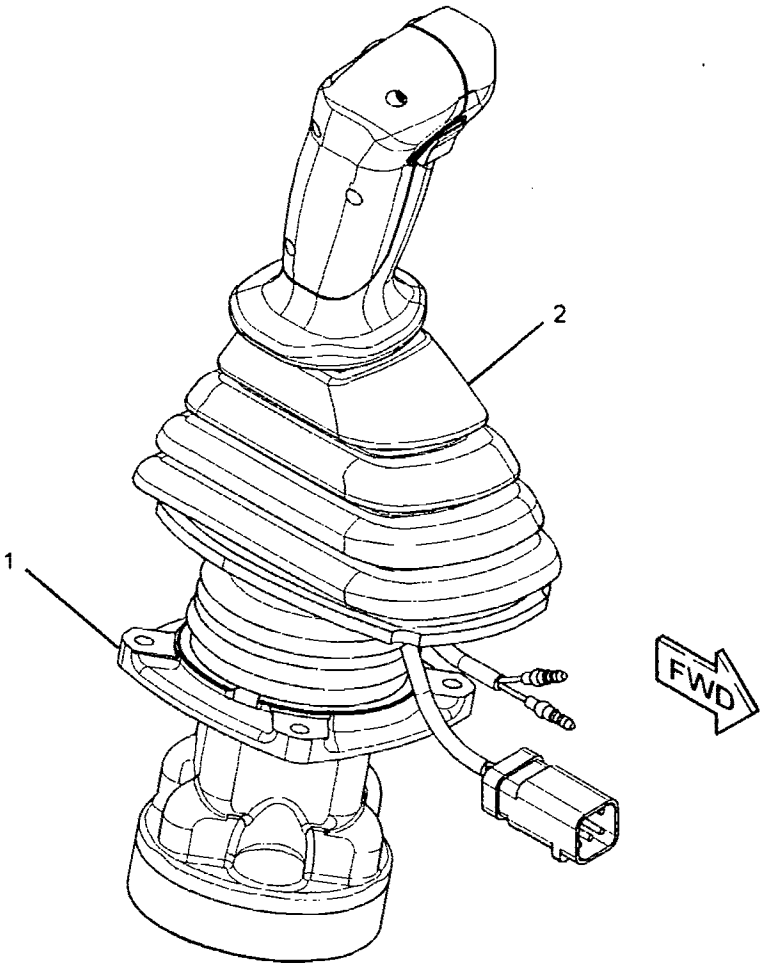

GRAPHIC #1 **<END>** g01310474

OPERATOR STATION

270-5951 CONTROL GP-JOYSTICK-LH

S/N: YEE1-UP
PART OF 259-7707 CONTROL GP-PILOT OPERATED HYD
AN ATTACHMENT

SMCS-5705 **i02635220**

NOTE	REF NO	GRAPHIC REF	PART NUMBER	QTY	PART NAME 1 2 3 4 5 6 (PRODUCT LEVEL)	SEE PAGE
Y	1	1	**235-8969**	1	CONTROL GP-HANDLE (JOYSTICK, LH)	967
M	2	1	**7Y-8463**	1	NUT (M14X2-THD)	
Y	3	1	**285-1327**	1	VALVE GP-PILOT (JOYSTICK)	782

M-METRIC PART
Y-SEPARATE ILLUSTRATION

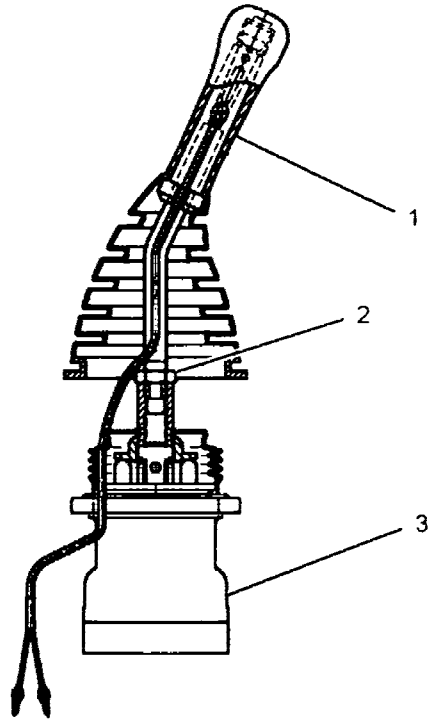

GRAPHIC #1 **<END>** g01136372

OPERATOR STATION

270-5952 CONTROL GP-JOYSTICK-RH

S/N: YEE1-UP

PART OF 259-7707 CONTROL GP-PILOT OPERATED HYD

AN ATTACHMENT

SMCS-5705 **i02635237**

NOTE	REF NO	GRAPHIC REF	PART NUMBER	QTY	PART NAME 1 2 3 4 5 6 (PRODUCT LEVEL)	SEE PAGE
Y	1	1	**235-8970**	1	CONTROL GP-HANDLE (JOYSTICK, RH)	968
M	2	1	**7Y-8463**	1	NUT (M14X2-THD)	
Y	3	1	**285-1327**	1	VALVE GP-PILOT (JOYSTICK)	782

M-METRIC PART
Y-SEPARATE ILLUSTRATION

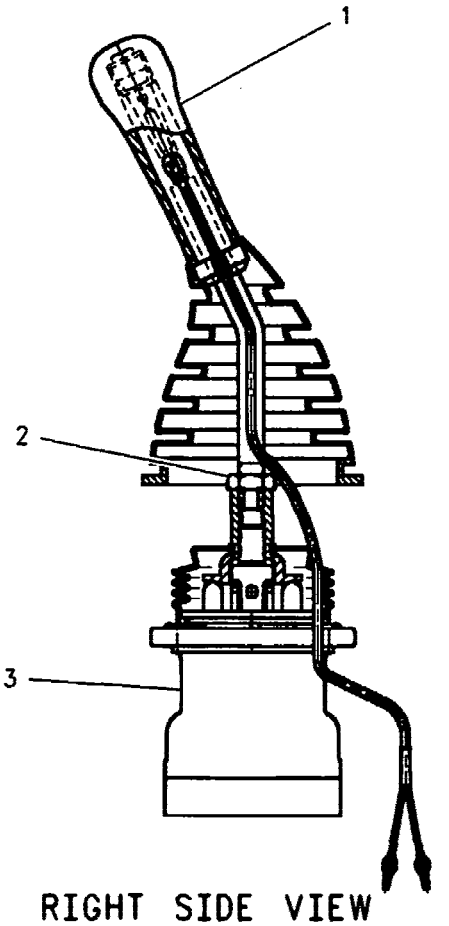

RIGHT SIDE VIEW

GRAPHIC #1 **<END>** g00858428

OPERATOR STATION

309-5808 CONTROL GP-PEDAL

S/N: YEE1-UP

PART OF 221-8884 CONTROL & MTG GP-PEDAL

AN ATTACHMENT

SMCS-1435, 5702 **i02878319**

NOTE	REF NO	GRAPHIC REF	PART NUMBER	QTY	PART NAME 1 2 3 4 5 6 (PRODUCT LEVEL)	SEE PAGE
	1	1	**8T-8737**	1	PLUG-SEAL	
	2	1	**9X-3401**	5	PIN-CONNECTOR (16-GA TO 18-GA)	
					–OR–	
		1	**126-1767**	5	PIN-CONNECTOR (14-GA)	
	3	1	**247-2693**	1	RECEPTACLE AS-CONNECTOR (6-PIN)	
	4	1	**247-5112**	1	BOOT	

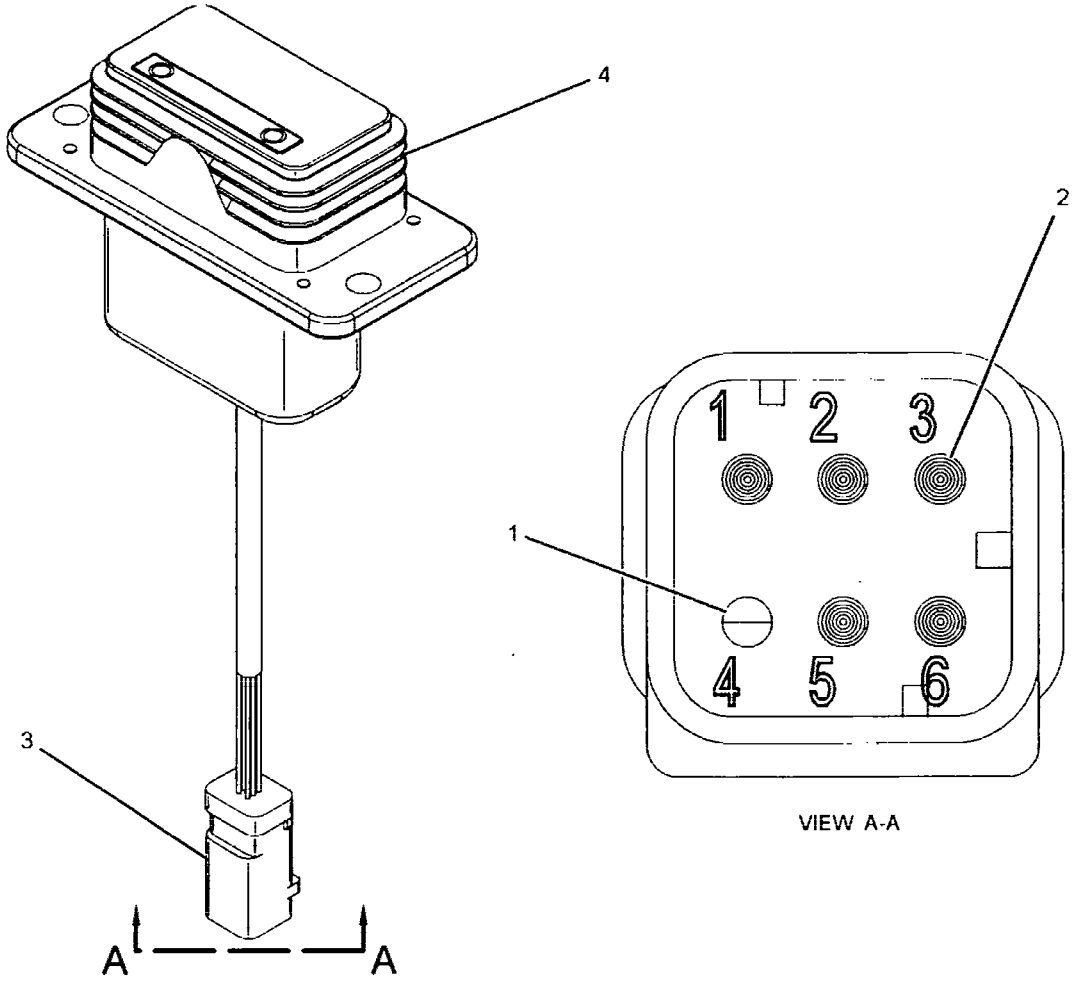

GRAPHIC #1 **<END>** g01219365

OPERATOR STATION

259-7707 CONTROL GP-PILOT OPERATED HYD

S/N: YEE1-UP
AN ATTACHMENT

SMCS-5059 **i02619870**

NOTE	REF NO	GRAPHIC REF	PART NUMBER	QTY	PART NAME 1 2 3 4 5 6 (PRODUCT LEVEL)	SEE PAGE
CY	1	1	**270-5951**	1	CONTROL GP-JOYSTICK (LH)	979
CY	2	1	**270-5952**	1	CONTROL GP-JOYSTICK (RH)	980
M	3	1	**6V-7357**	6	BOLT (M6X1X25-MM)	
	4	1	**9X-8256**	6	WASHER (6.6X12X2-MM THK)	

C-CHANGE FROM PREVIOUS TYPE
M-METRIC PART
Y-SEPARATE ILLUSTRATION

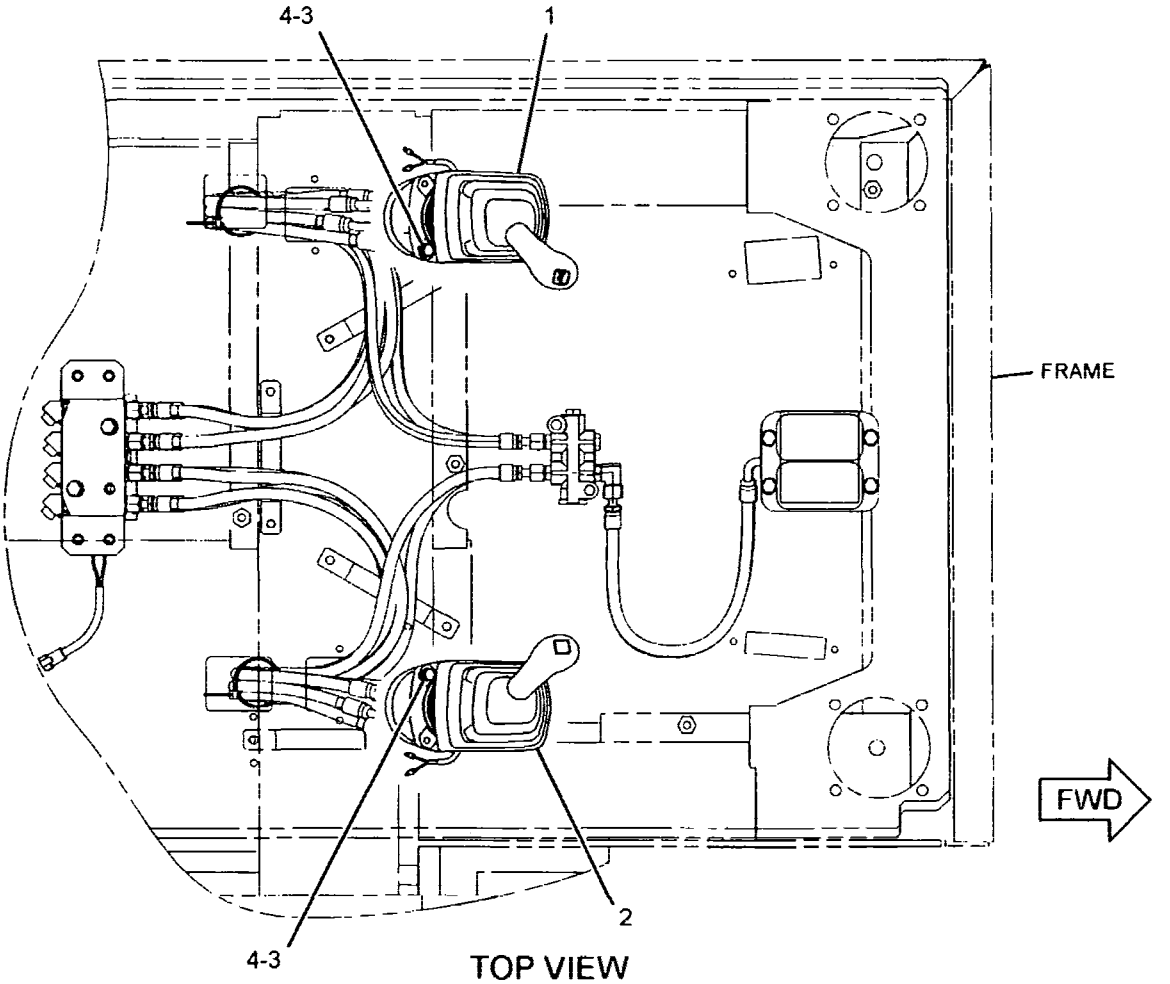

TOP VIEW

GRAPHIC #1

<END>

g01239046

OPERATOR STATION

234-6501 COVER GP-CAB–REAR

S/N: YEE1-UP

PART OF 305-8001 CAB GP

SMCS-7301, 7308 **i02673916**

NOTE	REF NO	GRAPHIC REF	PART NUMBER	QTY	PART NAME 1 2 3 4 5 6 (PRODUCT LEVEL)	SEE PAGE
	1	1	**234-6499**	1	COVER AS	
	2	1	**234-6502**	1	COVER	
	3	1	**234-6593**	2	FASTENER	
					USE WITH COVER WITH A 9-MM DIAMETER UPPER MOUNTING HOLE	
					–OR–	
		1	**245-7929**	2	CLIP	
					USE WITH COVER WITH A 7.6-MM DIAMETER UPPER MOUNTING HOLE	

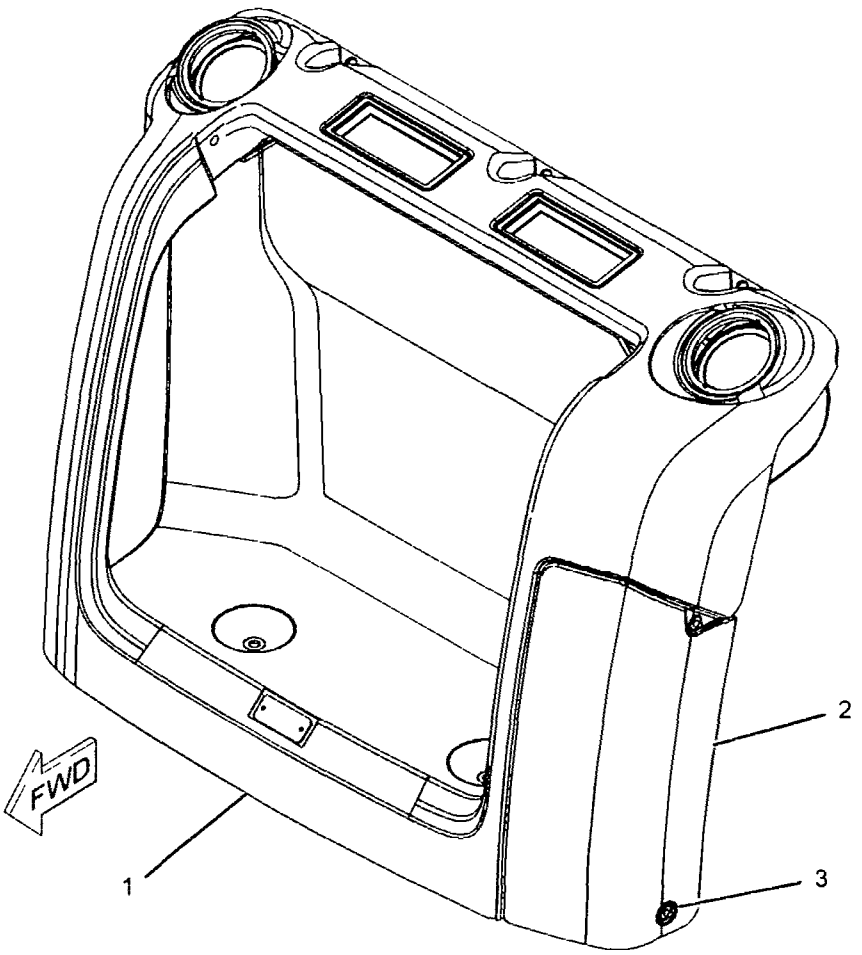

GRAPHIC #1 **<END>** g01109925

OPERATOR STATION

176-1964 DOOR GP-CAB

S/N: YEE1-UP

PART OF 189-2793 DOOR GP-CAB

SMCS-7308 **i01838390**

NOTE	REF NO	GRAPHIC REF	PART NUMBER	QTY	PART NAME 1 2 3 4 5 6 (PRODUCT LEVEL)	SEE PAGE
	1	1	**151-6703**	1	HANDLE-PULL	
	2	1	**151-6704**	2	CAP	
Y	3	1	**225-0326**	1	WINDOW GP-DOOR	1050
	4	1	**156-6598**	1	HOOK	
	5	1	**156-6600**	1	LOCK AS	
		1	**164-0514**	1	CLIP	
		1	**164-0519**	1	CLIP	
	6	1	**156-6643**	1	COVER	
	7	1	**156-6645**	1	HANDLE AS	
		1	**201-4391**	1	CLIP	
	8	1	**161-3639**	1	HANDLE AS	
	9	1	**161-3650**	1	COVER AS	
	10	1	**161-3663**	1	SEAL AS	
	11	1	**161-3665**	1	SEAL	
	12	1	**161-3699**	1	COVER	
	13	1	**164-0515**	1	JOINT	
	14	1	**167-7038**	1	GLASS	
	15	1	**167-7039**	1	GROMMET	
M	16	1	**185-8180**	3	SCREW (M6X1X16-MM)	
	17	1	**8T-4224**	2	WASHER-HARD (8.8X16X2-MM THK)	
M	18	1	**096-2622**	2	SCREW-MACHINE (M4X0.7X8-MM)	
M	19	1	**095-0772**	2	NUT	
M	20	1	**101-8899**	2	SCREW AS	
M	21	1	**101-8900**	2	SCREW AS	
	22	1	**151-9461**	4	SPACER	
	23	1	**156-6644**	1	COVER	
	24	1	**178-5573**	4	SPACER	
	25	1	**178-5574**	3	SPACER	
	26	1	**189-2690**	1	HANDLE AS	
	27	1	**4I-4286**	1	KNOB	
M	28	1	**9X-2042**	10	SCREW-TRUSS HEAD	

M-METRIC PART
Y-SEPARATE ILLUSTRATION

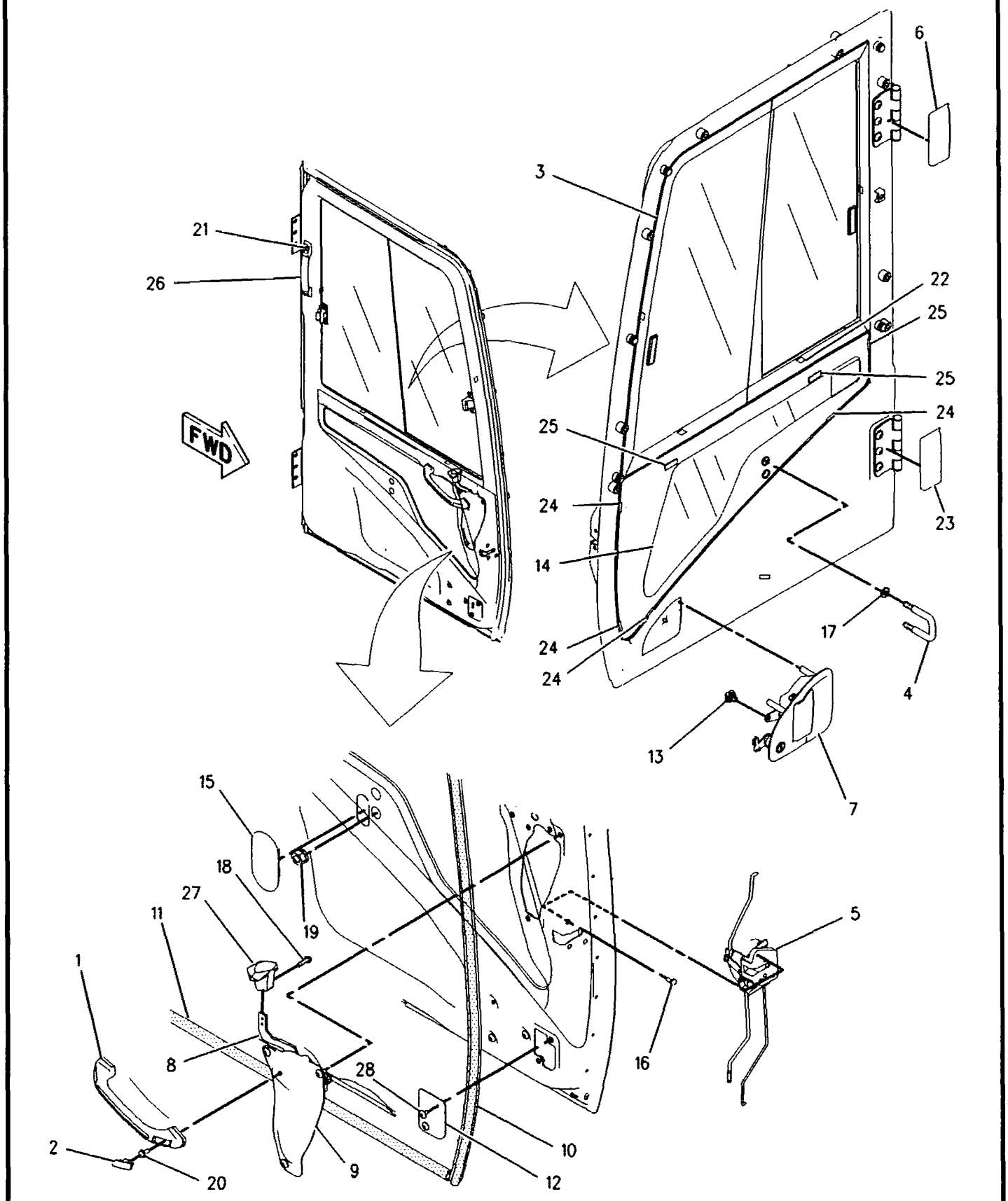

GRAPHIC #1 **<END>** g00761342

OPERATOR STATION

189-2793 DOOR GP-CAB

S/N: YEE1-UP

PART OF 305-8002 CAB GP

SMCS-7308 **i02841138**

NOTE	REF NO	GRAPHIC REF	PART NUMBER	QTY	PART NAME 1 2 3 4 5 6 (PRODUCT LEVEL)	SEE PAGE
Y	1	1	**176-1964**	1	DOOR GP-CAB	985
	2	1	**189-2796**	1	DOOR AS	
	2A	1	**151-6777**	2	HINGE	
M	2B	1	**9X-2041**	6	SCREW-TRUSS HEAD (M10X1.5X20-MM)	

M-METRIC PART
Y-SEPARATE ILLUSTRATION

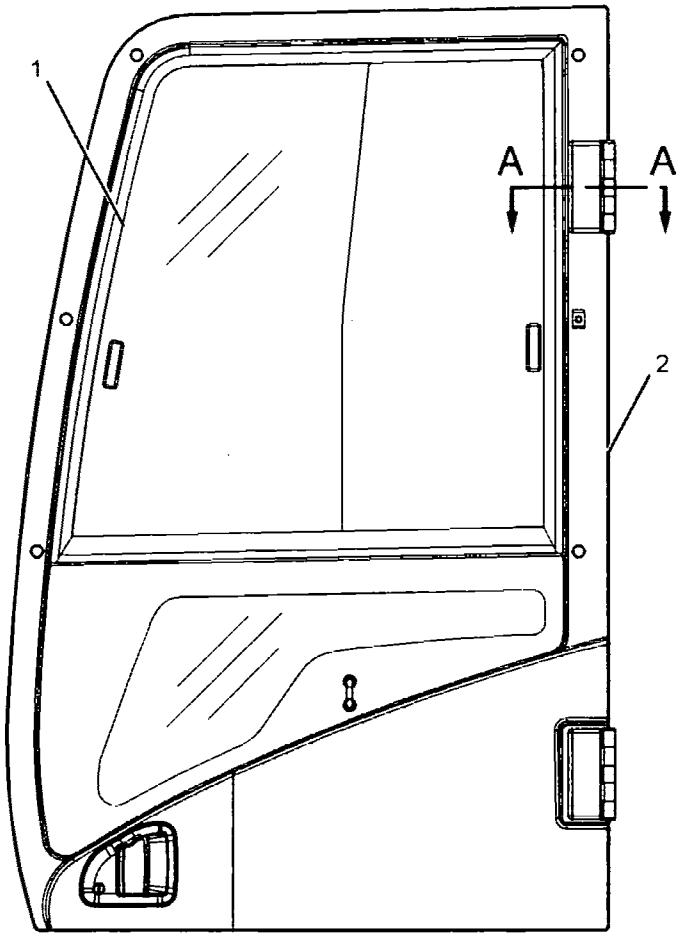

LEFT SIDE VIEW

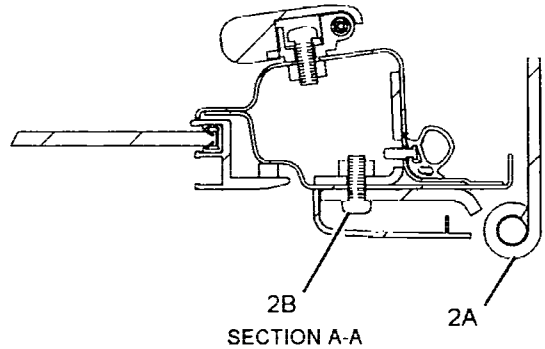

SECTION A-A

GRAPHIC #1 **<END>** g01121662

OPERATOR STATION

229-9082 DUCT GP-CAB AIR

S/N: YEE1-UP

PART OF 229-9079 AIR CONDITIONER AR

SMCS-734D **i02902676**

NOTE	REF NO	GRAPHIC REF	PART NUMBER	QTY	PART NAME 1 2 3 4 5 6 (PRODUCT LEVEL)	SEE PAGE
	1	1	**305-0329**	1	FILTER ELEMENT AS-CAB AIR	
	2	1	**235-8876**	1	DUCT AS (FRESH AIR, UPPER)	
		1	**245-7872**	1	INSULATOR	
	3	1	**235-8877**	1	DUCT AS (VENT, REAR)	
		1	**245-7792**	1	INSULATOR	
	4	1	**235-8878**	1	DUCT AS (VENT, FRONT)	
		1	**245-7793**	1	INSULATOR	
	5	1	**235-8879**	1	DUCT AS (FLOOR)	
		1	**245-7873**	1	INSULATOR	
	6	1	**240-5074**	1	DUCT AS (FRESH AIR, LOWER)	
		1	**245-7791**	1	INSULATOR	
M	7	1	**101-8899**	2	SCREW AS (M6X1X16-MM)	
	8	1	**176-1996**	5	CLIP	

M-METRIC PART

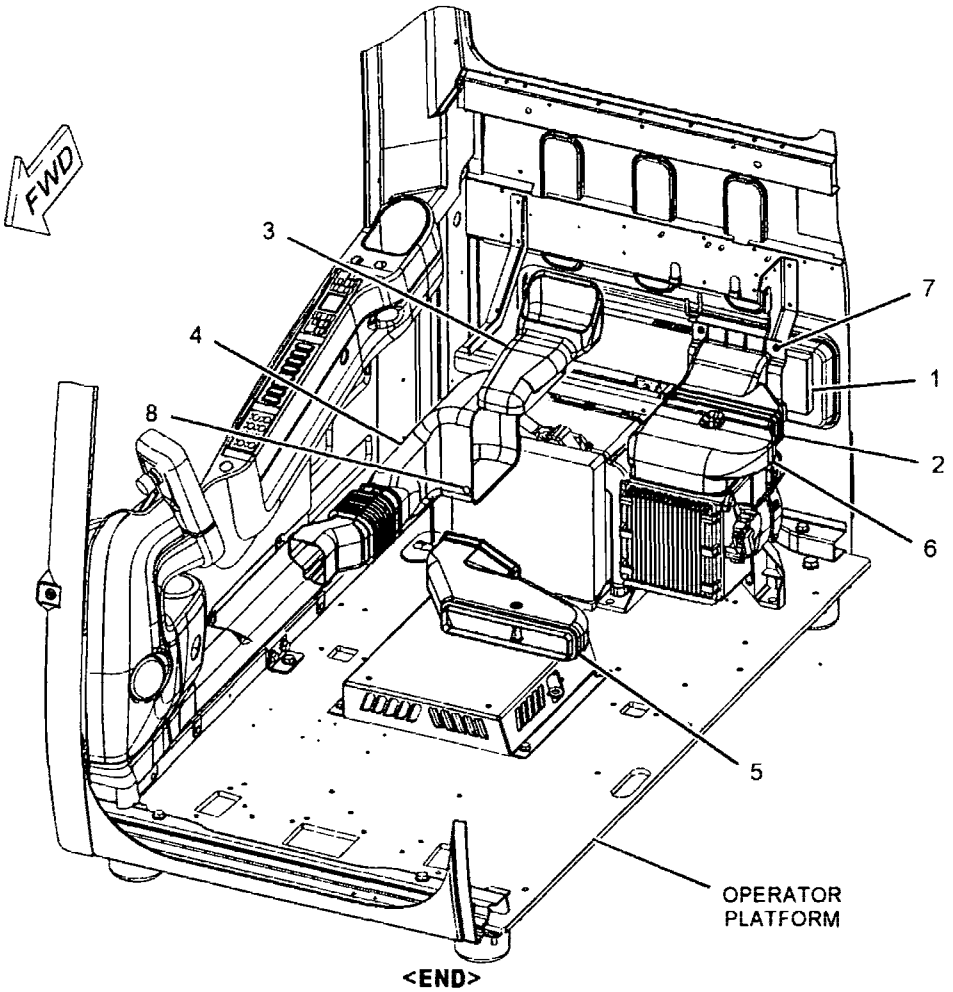

GRAPHIC #1

<END>

g01098322

OPERATOR STATION

273-5358 FLOOR MAT GP

S/N: YEE1-UP
PART OF 324-0190, 324-0191 SPECIAL AR
AN ATTACHMENT

SMCS-7265, 726M **i02589929**

NOTE	REF NO	GRAPHIC REF	PART NUMBER	QTY	PART NAME 1 2 3 4 5 6 (PRODUCT LEVEL)	SEE PAGE
	1	1	**240-5071**	1	FLOOR MAT GP	
	2	1	**273-5359**	1	PLATE-RUBBER	
	3	1	**273-5360**	1	PLATE-RUBBER	

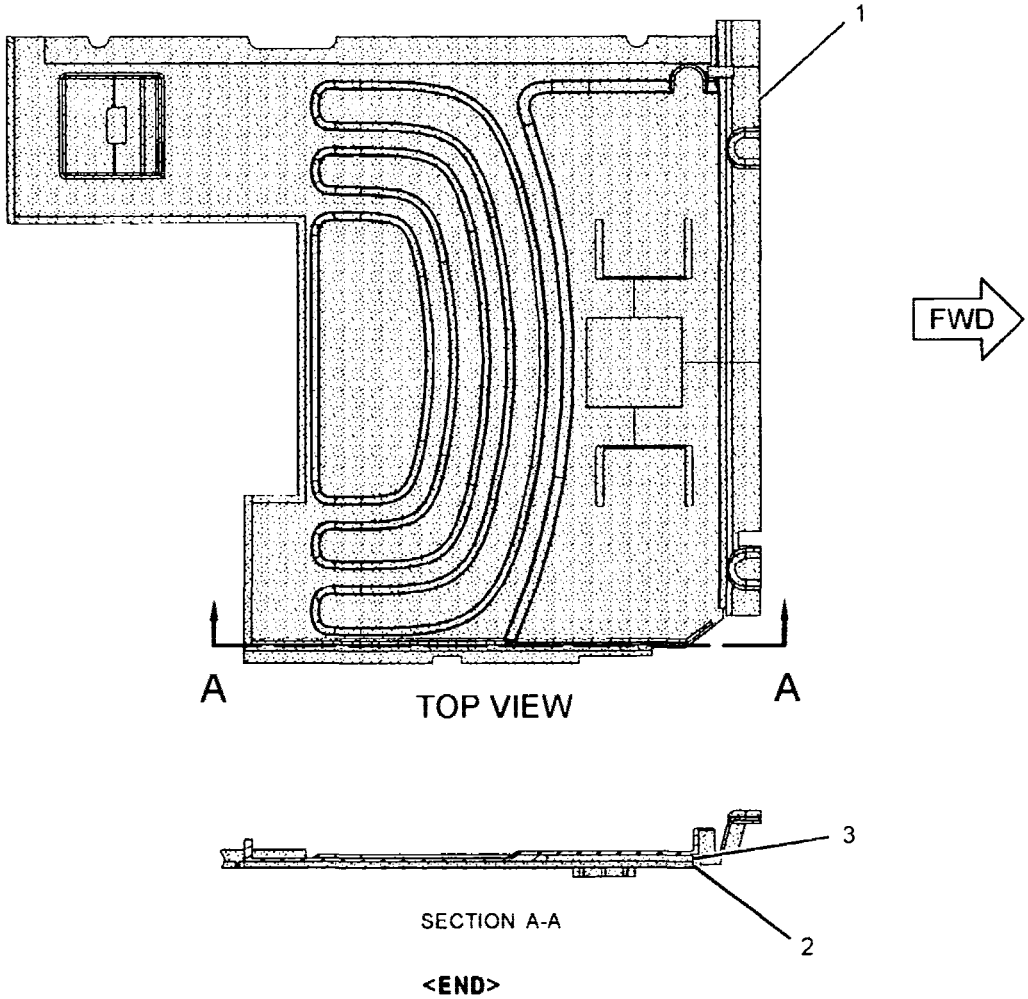

GRAPHIC #1 **<END>** g01235480

OPERATOR STATION

303-2658 GUARD AR-VANDALISM

S/N: YEE1-UP

AN ATTACHMENT

SMCS-7315 **i02849790**

NOTE	PART NUMBER	QTY	PART NAME 1 2 3 4 5 6 (PRODUCT LEVEL)	SEE PAGE
Y	*207-0159*	1	GUARD GP-VANDALISM (CAB)	991
Y	*304-0010*	1	STORAGE GP-VANDALISM GUARD	398

Y-SEPARATE ILLUSTRATION

<END>

OPERATOR STATION

207-0159 GUARD GP-VANDALISM

S/N: YEE1-UP
PART OF 303-2658 GUARD AR-VANDALISM
AN ATTACHMENT

SMCS-7315 **i02155475**

NOTE	REF NO	GRAPHIC REF	PART NUMBER	QTY	PART NAME 1 2 3 4 5 6 (PRODUCT LEVEL)	SEE PAGE
	1	1	7Y-8621	6	PIN	
	2	1	7Y-8622	1	PIN	
	3	1	207-0161	1	GUARD AS	
		1	8H-2282	2	HINGE	
	4	1	207-0164	1	GUARD AS	
		1	8H-2282	2	HINGE	
	5	1	207-0167	1	GUARD AS	
		1	8H-2282	2	HINGE	
	6	1	207-0170	1	GUARD AS	
		1	8H-2282	2	HINGE	
	7	1	207-0173	1	GUARD AS	
		1	8H-2282	2	HINGE	
M	8	1	8T-4200	2	BOLT (M8X1.25X16-MM)	
	9	1	8T-4224	2	WASHER-HARD (8.8X16X2-MM THK)	

M-METRIC PART

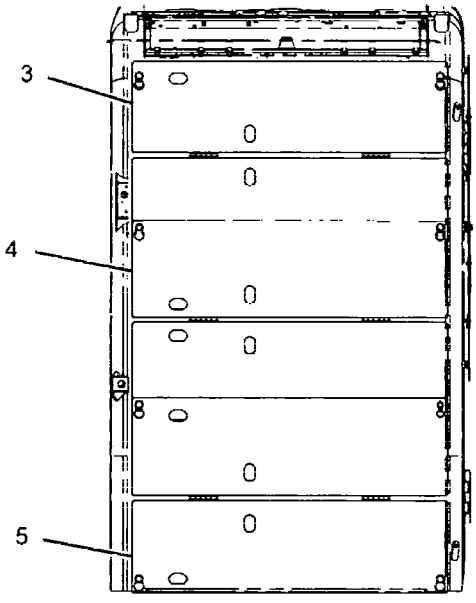

FRONT VIEW

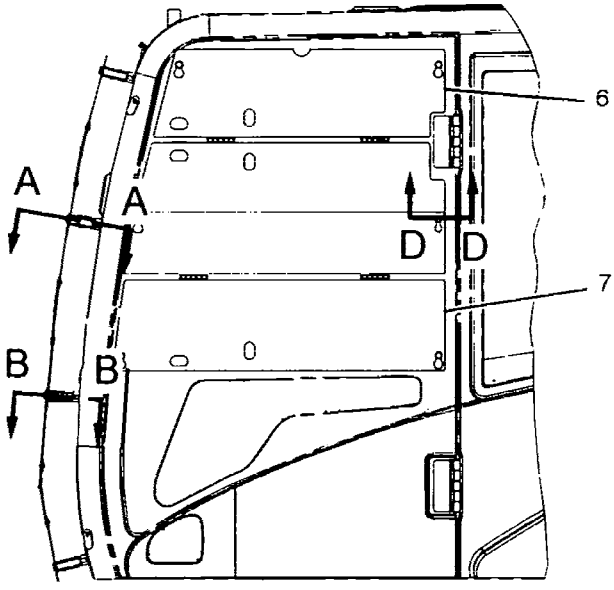

LEFT SIDE VIEW

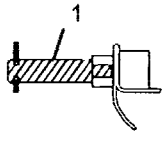

SECTION A-A

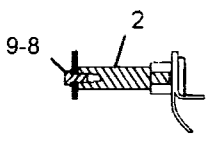

SECTION B-B

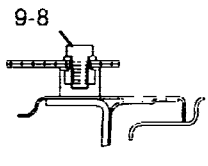

SECTION D-D

GRAPHIC #1

<END>

g01079377

OPERATOR STATION

215-6662 GUARD GP-WINDOW

S/N: YEE1-UP
CANNOT BE USED WITH VANDALISM GUARDS
AN ATTACHMENT

SMCS-7182, 7315 **i02526971**

NOTE	REF NO	GRAPHIC REF	PART NUMBER	QTY	PART NAME 1 2 3 4 5 6 (PRODUCT LEVEL)	SEE PAGE
	1	1	**5D-4822**	4	RING-RETAINING	
	2	1	**6C-8382**	2	SPRING-LATCH	
	3	1	**176-1928**	2	BRACKET AS	
	4	1	**183-1035**	2	LAMP GP-FLOOD	
					(EACH INCLUDES)	
		1	**9X-3463**	1	LAMP-HALOGEN (24-VOLT, 65-WATT)	
	5	1	**196-1569**	1	SUPPORT AS	
	6	1	**196-1571**	1	SUPPORT AS	
	7	1	**196-1572**	2	LATCH AS	
	8	1	**196-1574**	2	BRACKET AS	
	9	1	**196-1599**	1	FRAME AS	
	10	1	**201-4534**	2	PIN	
	11	1	**201-4535**	2	PIN	
	12	1	**207-0216**	2	SPRING AS-GAS	
M	13	1	**096-4882**	2	LOCKNUT (M8X1.25-THD)	
M	14	1	**7X-2553**	2	BOLT (M16X2X40-MM)	
M	15	1	**7Y-0623**	2	LOCKNUT (M16X2-THD)	
	16	1	**8T-4121**	4	WASHER-HARD (11X21X2.5-MM THK)	
M	17	1	**8T-4133**	2	NUT (M10X1.5-THD)	
M	18	1	**8T-4137**	2	BOLT (M10X1.5X20-MM)	
M	19	1	**8T-4139**	6	BOLT (M12X1.75X30-MM)	
M	20	1	**8T-4192**	2	BOLT (M12X1.75X25-MM)	
	21	1	**8T-4223**	8	WASHER-HARD (13.5X25.5X3-MM THK)	
	22	1	**8T-4224**	4	WASHER-HARD (8.8X16X2-MM THK)	
	23	1	**9X-8257**	4	WASHER (17.5X30X3.5-MM THK)	

M-METRIC PART

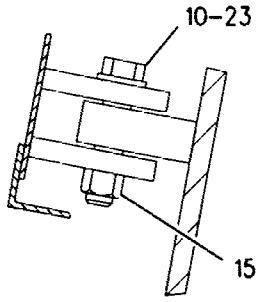

SECTION B-B

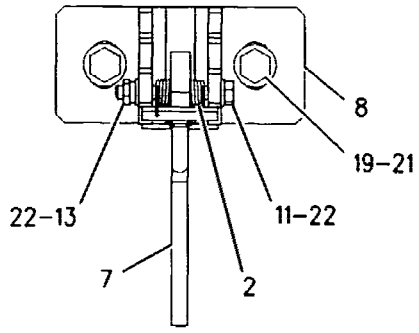

VIEW OF AREA A

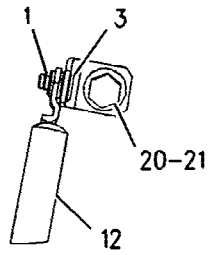

VIEW C-C

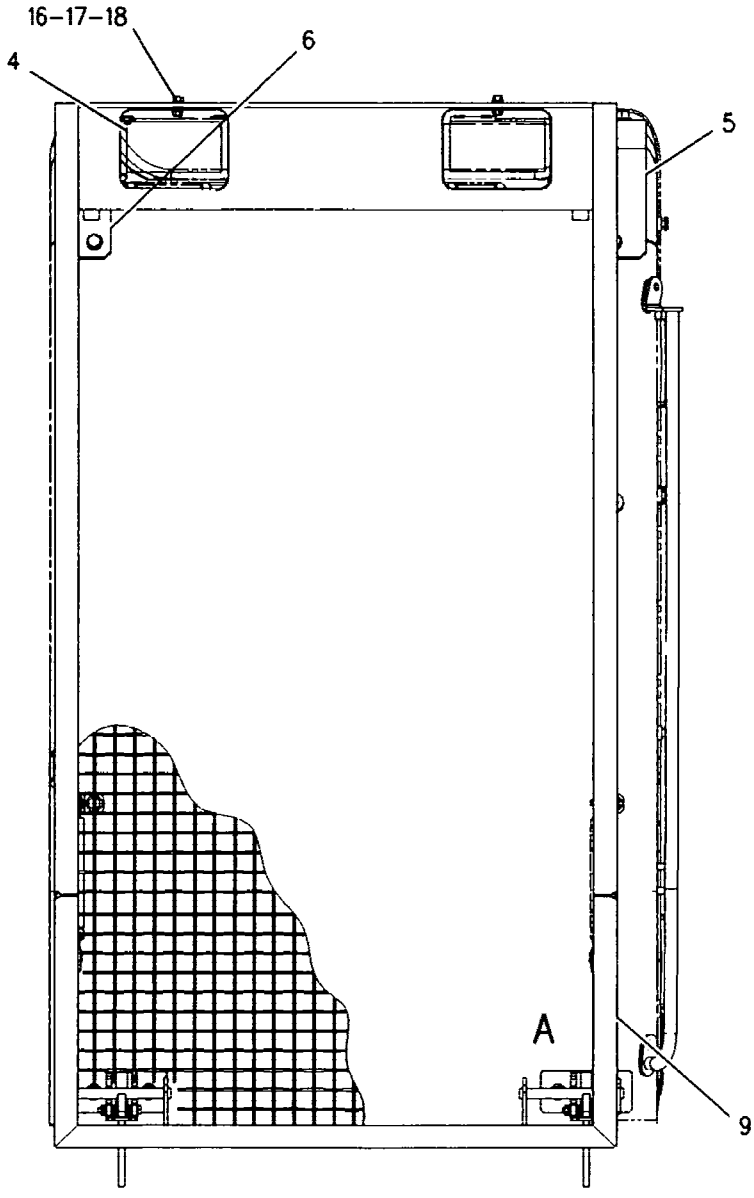

FRONT VIEW

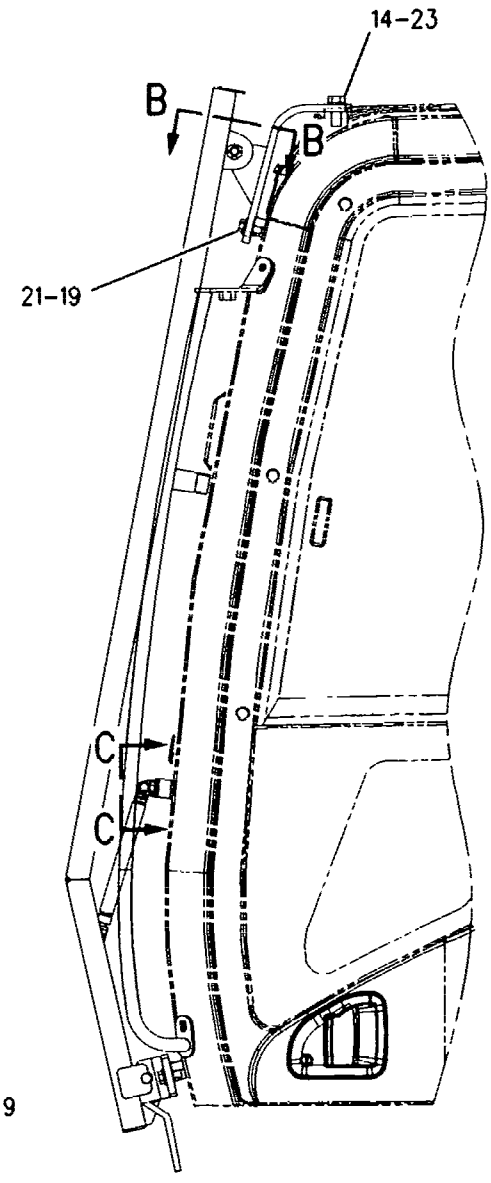

LEFT SIDE VIEW

GRAPHIC #1 **<END>** g00862409

OPERATOR STATION

216-0611 GUARD GP-WINDOW

S/N: YEE1-UP
AN ATTACHMENT

SMCS-7182, 7315 **i02854945**

NOTE	REF NO	GRAPHIC REF	PART NUMBER	QTY	PART NAME 1 2 3 4 5 6 (PRODUCT LEVEL)	SEE PAGE
	1	1	**5D-4822**	4	RING-RETAINING	
	2	1	**4B-4158**	8	SCREW-DRIVE (3/16X0.25-IN)	
	3	1	**6C-8382**	2	SPRING-LATCH	
	4	1	**116-1517**	1	PLATE-WARNING (STRUCTURE MODIFICATION)	
	5	1	**124-8758**	1	PLATE-WARNING (FRONT GUARD)	
	6	1	**167-7141**	1	GUARD AS	
	7	1	**171-7486**	1	GUARD AS	
	8	1	**176-1925**	2	SPRING AS-GAS	
	9	1	**176-1928**	2	BRACKET AS	
	10	1	**183-1035**	2	LAMP GP-FLOOD (CANOPY)	
					(EACH INCLUDES)	
		1	**9X-3463**	1	LAMP-HALOGEN (24-VOLT, 65-WATT)	
	11	1	**196-1569**	1	SUPPORT AS	
	12	1	**196-1571**	1	SUPPORT AS	
	13	1	**196-1572**	2	LATCH AS	
	14	1	**196-1574**	2	BRACKET AS	
	15	1	**201-4534**	2	PIN	
	16	1	**201-4535**	2	PIN	
M	17	1	**096-4882**	2	LOCKNUT (M8X1.25-THD)	
M	18	1	**7X-2559**	2	BOLT (M16X2X160-MM)	
M	19	1	**7Y-0623**	2	LOCKNUT (M16X2-THD)	
	20	1	**8T-4121**	4	WASHER-HARD (11X21X2.5-MM THK)	
M	21	1	**8T-4133**	2	NUT (M10X1.5-THD)	
M	22	1	**8T-4137**	2	BOLT (M10X1.5X20-MM)	
M	23	1	**8T-4139**	6	BOLT (M12X1.75X30-MM)	
M	24	1	**8T-4174**	2	BOLT (M16X2X120-MM)	
M	25	1	**8T-4192**	2	BOLT (M12X1.75X25-MM)	
	26	1	**8T-4223**	8	WASHER-HARD (13.5X25.5X3-MM THK)	
	27	1	**8T-4224**	4	WASHER-HARD (8.8X16X2-MM THK)	
	28	1	**9X-8257**	6	WASHER (17.5X30X3.5-MM THK)	

M-METRIC PART

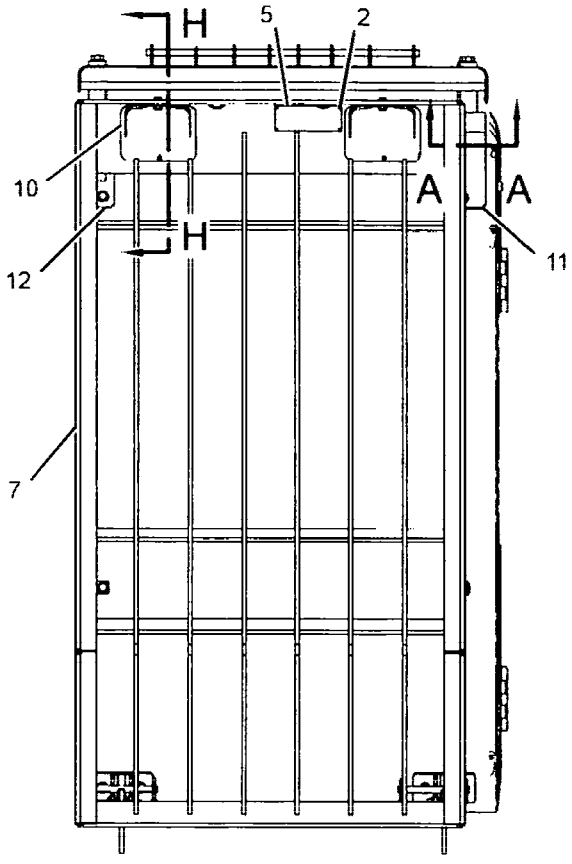

FRONT VIEW

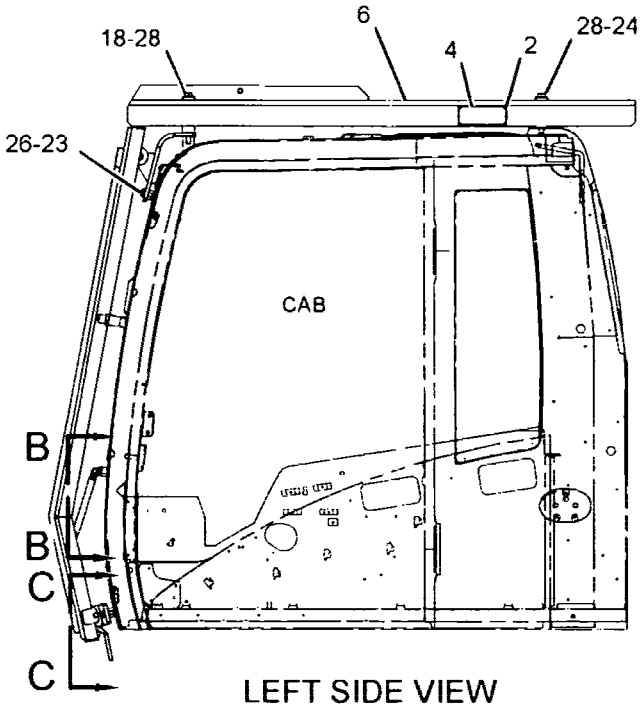

LEFT SIDE VIEW

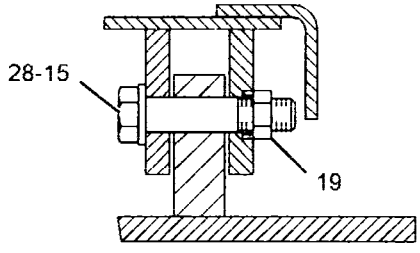

SECTION A-A

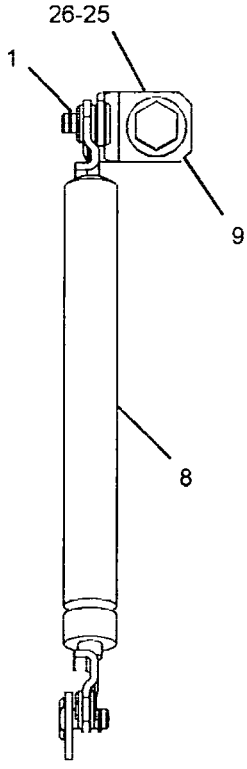

SECTION B-B

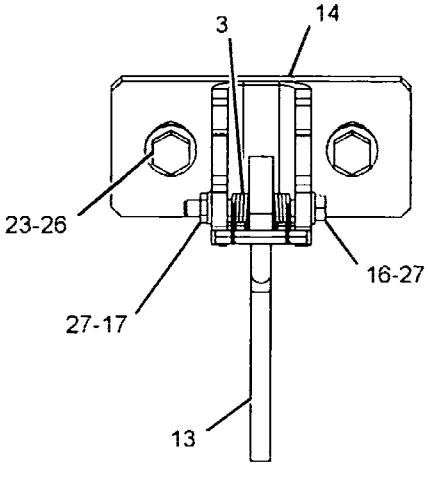

SECTION C-C

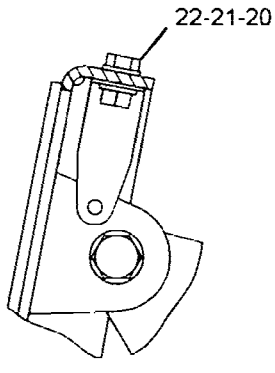

SECTION H-H

GRAPHIC #1

<END>

g01422202

OPERATOR STATION

139-7099 HATCH GP-ROOF

S/N: YEE1-UP

PART OF 305-8002 CAB GP

SMCS-7303 **i02499222**

NOTE	REF NO	GRAPHIC REF	PART NUMBER	QTY	PART NAME 1 2 3 4 5 6 (PRODUCT LEVEL)	SEE PAGE
	1	1	**189-2847**	1	SEAL	
Y	2	1	**189-2849**	1	HATCH GP-ROOF	997
	3	1	**099-3506**	2	SPRING AS-GAS	
M	4	1	**105-2169**	4	BOLT AS (M8X1.25X16-MM)	
	5	1	**2Y-5685**	4	RING-RETAINING	

M-METRIC PART
Y-SEPARATE ILLUSTRATION

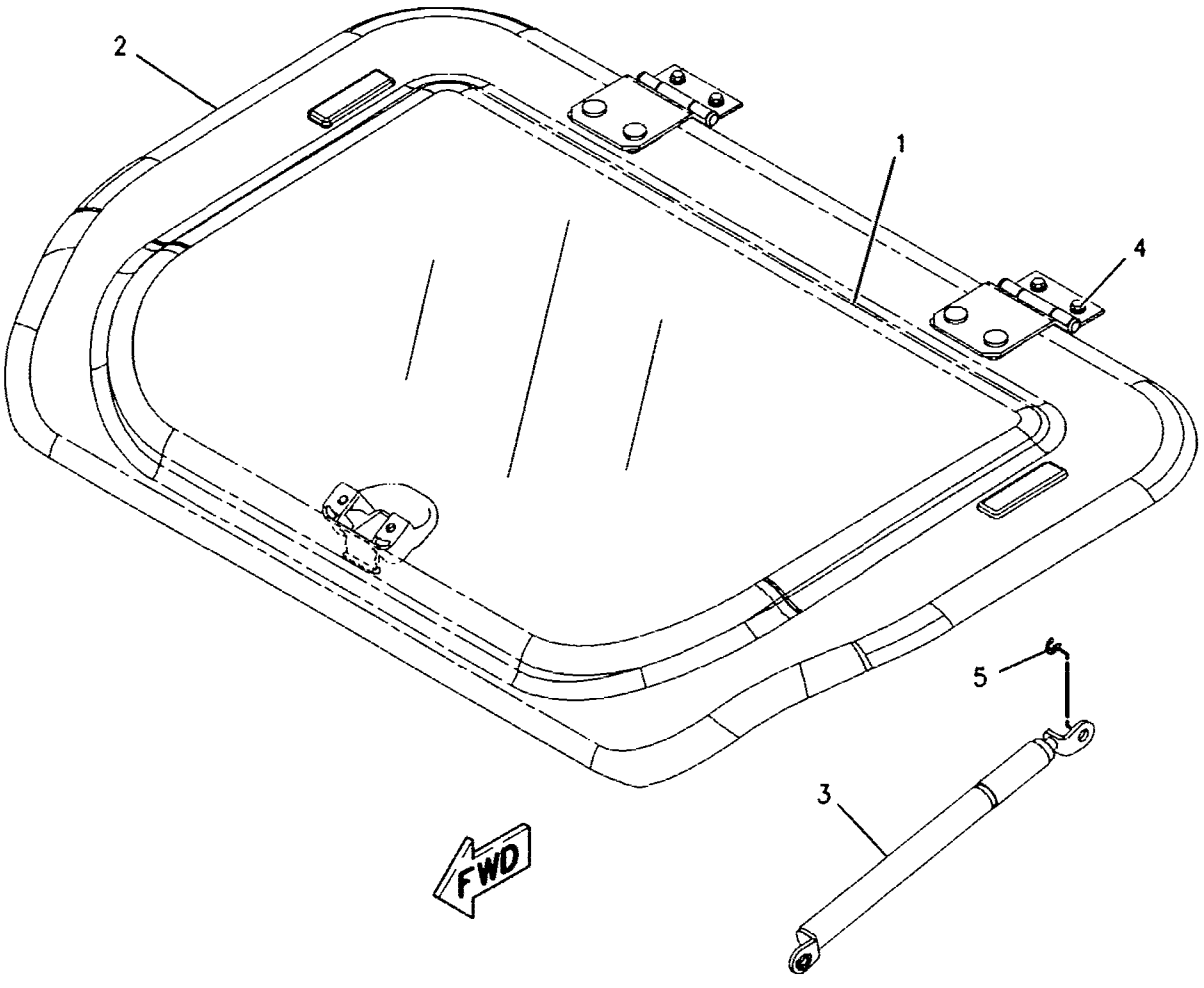

GRAPHIC #1 **<END>** g00844238

OPERATOR STATION

189-2849 HATCH GP-ROOF

S/N: YEE1-UP

PART OF 139-7099 HATCH GP-ROOF

SMCS-7303 **i01895778**

NOTE	REF NO	GRAPHIC REF	PART NUMBER	QTY	PART NAME 1 2 3 4 5 6 (PRODUCT LEVEL)	SEE PAGE
	1	1	**161-3694**	1	CATCH	
	2	1	**189-2693**	1	BRACKET AS (RH)	
	3	1	**189-2694**	1	BRACKET AS (LH)	
	4	1	**189-2716**	2	HINGE AS	
Z	5	1		1	COVER	
	6	1	**085-6449**	2	PACKING	
M	7	1	**100-2881**	4	SCREW-TRUSS HEAD	
	8	1	**171-7477**	2	NUT	
	9	1	**4I-1260**	2	PACKING	
	10	1	**4I-4361**	2	RETAINER	
M	11	1	**6I-5342**	4	NUT (M8X1.25-THD)	
M	12	1	**9X-2045**	2	SCREW-TRUSS HEAD (M6X1X20-MM)	

M-METRIC PART
Z-NOT SERVICED SEPARATELY

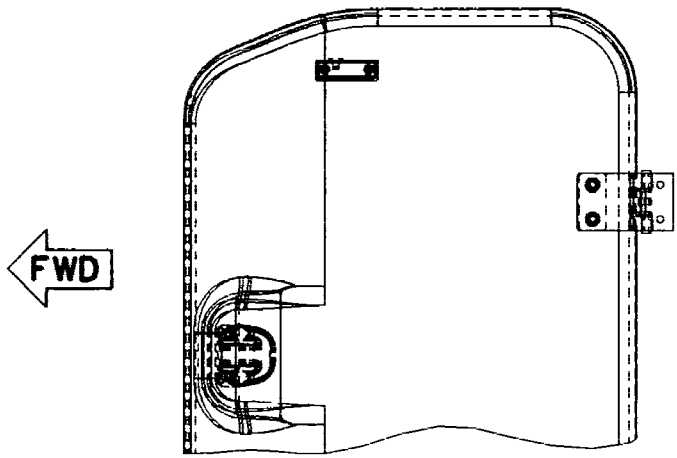

TOP VIEW

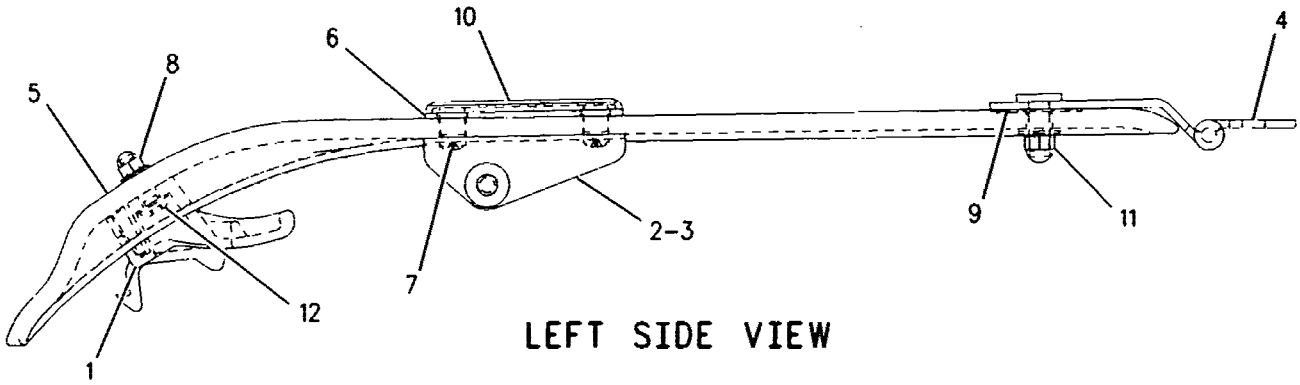

LEFT SIDE VIEW

GRAPHIC #1 **<END>** g00986370

OPERATOR STATION

260-5875 HORN GP-ELECTRIC

S/N: YEE1-UP

PART OF 324-6194 CHASSIS AR

SMCS-7402 **i02286340**

NOTE	REF NO	GRAPHIC REF	PART NUMBER	QTY	PART NAME 1 2 3 4 5 6 (PRODUCT LEVEL)	SEE PAGE
	1	1	**3S-2093**	1	STRAP-CABLE	
	2	1	**8T-4121**	2	WASHER-HARD (11X21X2.5-MM THK)	
M	3	1	**8T-4136**	2	BOLT (M10X1.5X25-MM)	
	4	1	**260-5873**	1	HARNESS AS-FRONT CHASSIS	
		1	**155-2270**	2	KIT-CONNECTING PLUG (2-PIN) (EACH INCLUDES PLUG AS, WEDGE & INTERFACE SEAL)	
		1	**243-4505**	1	RECEPTACLE AS-CONNECTOR (2-PIN)	
	5	1	**174-7875**	1	HORN AS (24-VOLT, HIGH TONE)	
	6	1	**8T-4224**	2	WASHER-HARD (8.8X16X2-MM THK)	
M	7	1	**8T-4200**	2	BOLT (M8X1.25X16-MM)	
	8	1	**260-5872**	1	BRACKET	
	9	1	**174-7876**	1	HORN AS (24-VOLT, LOW TONE)	

M-METRIC PART

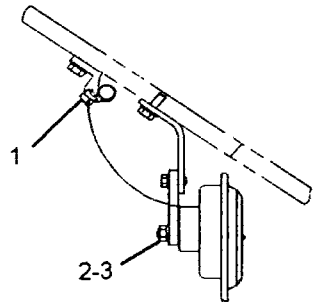

VIEW A-A

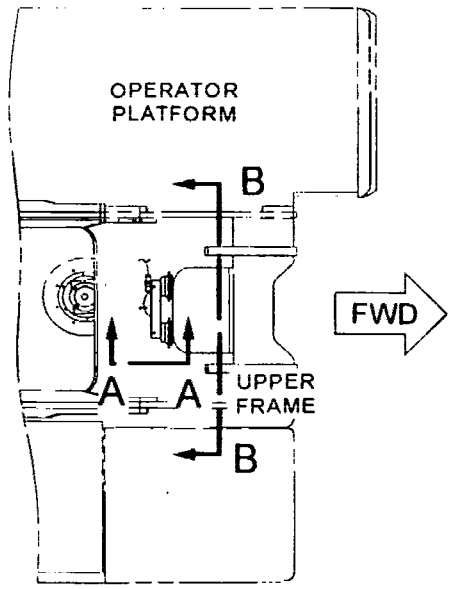

TOP VIEW

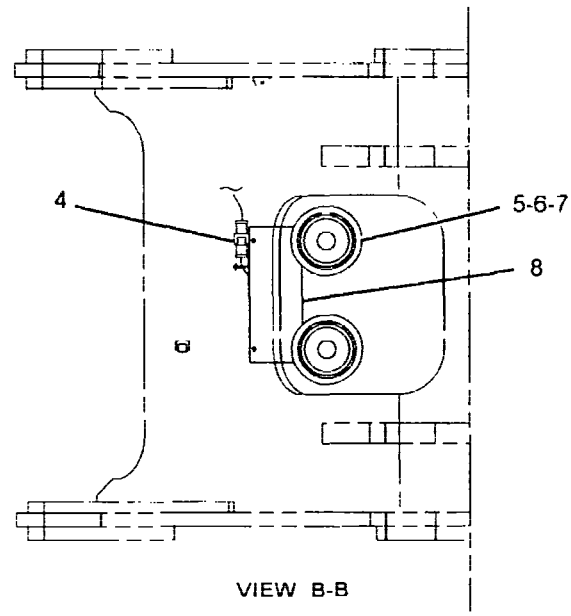

VIEW B-B

GRAPHIC #1 **<END>** g01144589

OPERATOR STATION

245-7812 HOUSING GP-AIR CONDITIONER–INLET AIR

S/N: YEE1-UP

PART OF 229-9081 AIR CONDITIONER GP

SMCS-7320 **i02503824**

NOTE	REF NO	GRAPHIC REF	PART NUMBER	QTY	PART NAME 1 2 3 4 5 6 (PRODUCT LEVEL)	SEE PAGE
	1	1	**185-8300**	6	SCREW-TAPPING	
	2	1	**196-1666**	1	RELAY (COMPRESSOR CLUTCH)	
	2A	1	**196-1666**	1	RELAY (BLOWER)	
	2B	1	**196-1666**	1	RELAY (CONDENSER)	
	2C	1	**196-1666**	1	RELAY (CONDENSER, HIGH)	
	3	1	**245-7813**	1	MOTOR AS	
	4	1	**245-7814**	1	BRACKET	
	5	1	**245-7815**	1	SENSOR AS-TEMPERATURE (AIR)	
	6	1	**245-7816**	1	DAMPER AS	

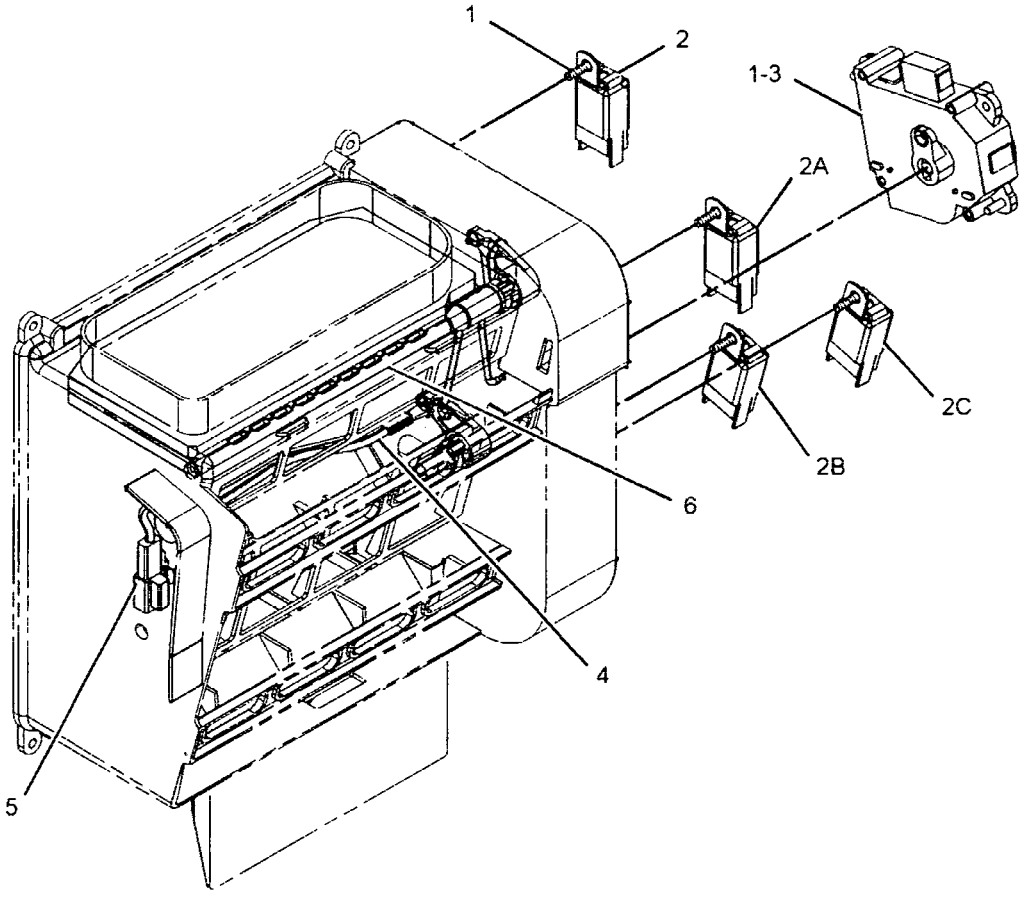

GRAPHIC #1 **<END>** g01253120

OPERATOR STATION

303-2702 INSTALLATION AR-RADIO–COMMUNICATION RADIO

S/N: YEE1-UP

AN ATTACHMENT

SMCS-1408, 7338 **i02848984**

NOTE	PART NUMBER	QTY	PART NAME 1 2 3 4 5 6 (PRODUCT LEVEL)	SEE PAGE
Y	*309-5765*	1	MOUNTING GP-ANTENNA (COMMUNICATION RADIO)	1011
Y	*306-8639*	1	WIRING GP-CHASSIS (COMMUNICATION RADIO)	274
Y	*306-8346*	1	WIRING GP-CONVERTER (COMMUNICATION RADIO)	287

Y-SEPARATE ILLUSTRATION

<END>

OPERATOR STATION

251-0538 INSTALLATION GP-RADIO

S/N: YEE1-UP

PART OF 305-8000 OPERATOR AR

SMCS-7338 **i02636735**

NOTE	REF NO	GRAPHIC REF	PART NUMBER	QTY	PART NAME 1 2 3 4 5 6 (PRODUCT LEVEL)	SEE PAGE
	1	1	3S-2093	2	STRAP-CABLE	
	2	1	106-2704	2	SCREW AS	
	3	1	238-2260	1	CABLE	
	4	1	251-0539	1	RADIO-AM/FM (MULTIPLE AREA)	
	5	1	259-4914	1	BRACKET AS	
	6	1	8K-6211	1	CLIP	
	7	1	119-5026	2	SCREW-PAN HEAD (10-16X0.63-IN)	

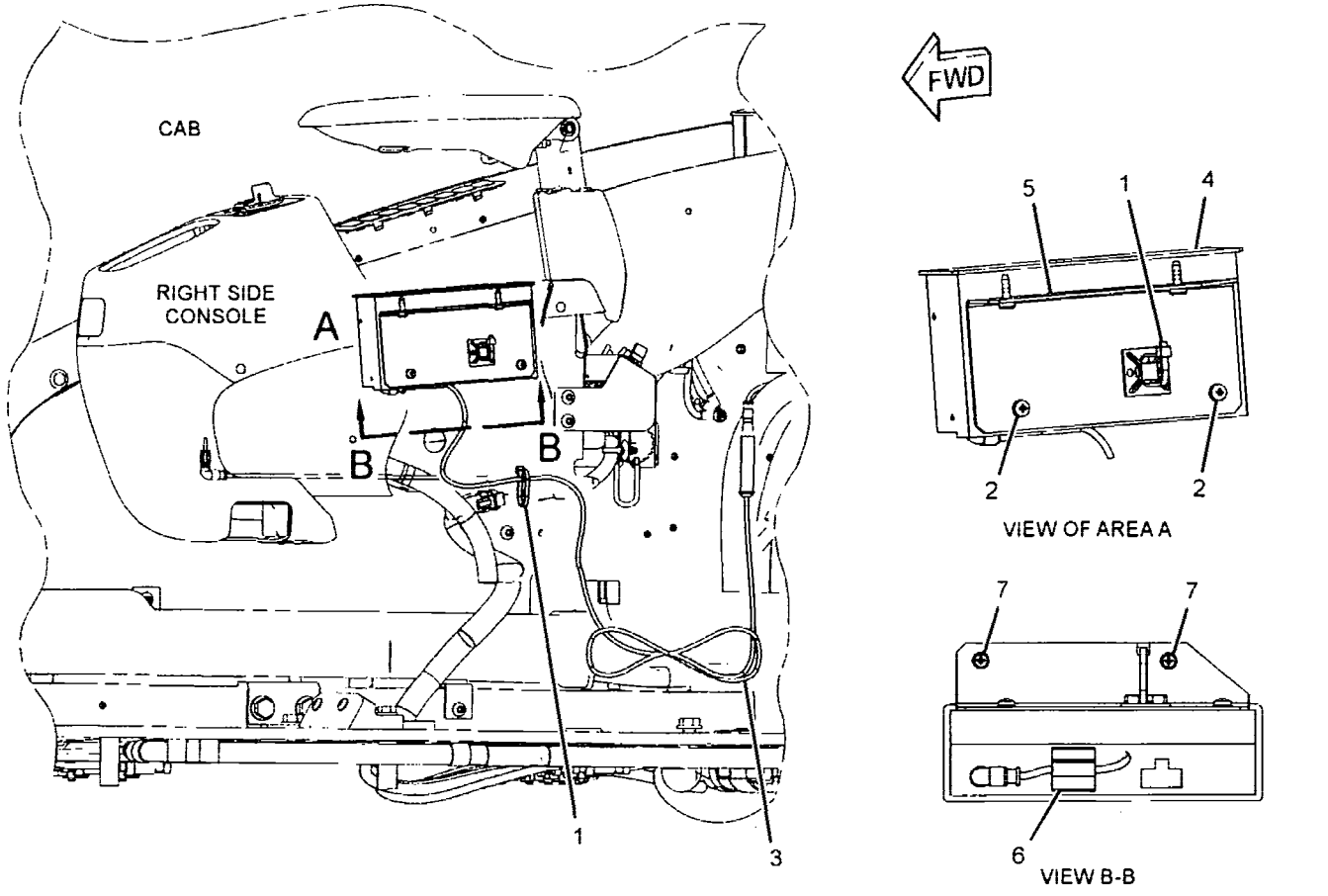

GRAPHIC #1 **<END>** g01322280

OPERATOR STATION

164-0528 LEVER GP-AIR & TEMP CONTROL

S/N: YEE1-UP

PART OF 235-8910 CAB GP

SMCS-7309, 7337 **i02517097**

NOTE	REF NO	GRAPHIC REF	PART NUMBER	QTY	PART NAME 1 2 3 4 5 6 (PRODUCT LEVEL)	SEE PAGE
	1	1	**156-6642**	1	LEVER AS	
	2	1	**164-0664**	1	BRACKET	
	3	1	**176-1941**	1	PIN	
	4	1	**185-8280**	1	WASHER-WAVE (10.5X15X0.3-MM THK)	
	5	1	**185-8281**	1	SPRING	

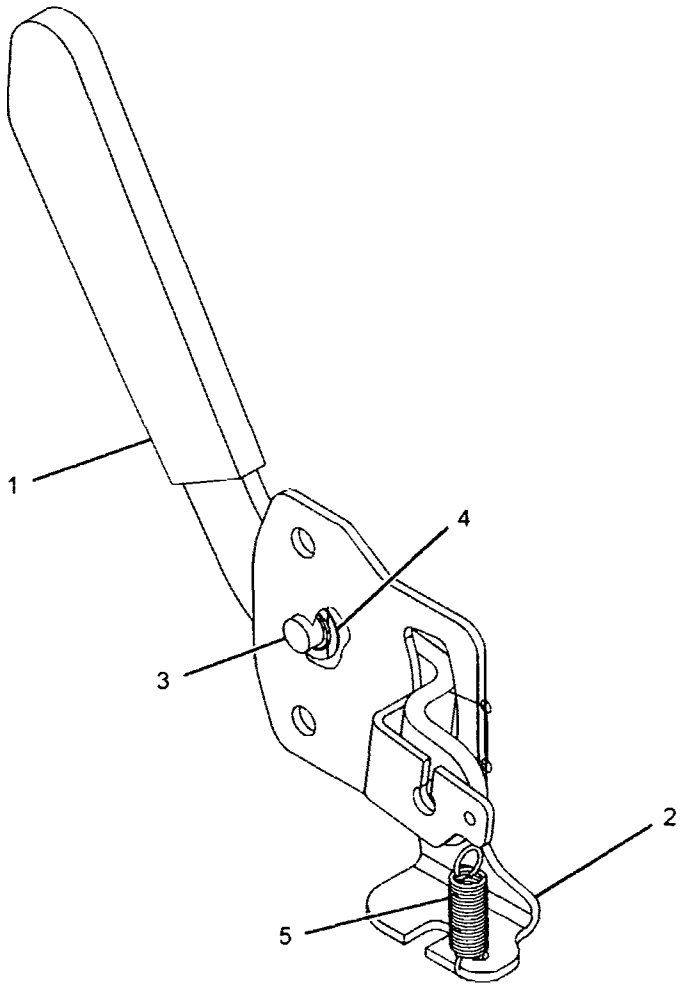

GRAPHIC #1 **<END>** g01217036

OPERATOR STATION

225-5784 LINES GP-AIR CONDITIONER

S/N: YEE1-UP

PART OF 324-6194 CHASSIS AR

SMCS-1808 **i02826055**

NOTE	REF NO	GRAPHIC REF	PART NUMBER	QTY	PART NAME 1 2 3 4 5 6 (PRODUCT LEVEL)	SEE PAGE
B	1	1	122-9605	2	TUBE	
	2	1	122-9657	2	CLAMP	
	3	1	130-0252	2	HOSE-DRAIN	
	4	1	176-1902	1	RECEIVER DRYER AS (REFRIGERANT)	
	5	1	189-3434	1	ELBOW	
	6	1	203-2287	1	CLIP	
	7	1	229-9121	1	HOSE AS	
		1	121-7137	2	SEAL-O-RING	
		1	245-7850	1	PLUG	
	8	1	229-9122	1	HOSE AS	
		1	121-7136	2	SEAL-O-RING	
		1	245-7851	1	PLUG	
	9	1	229-9123	1	HOSE AS	
		1	121-7138	2	SEAL-O-RING	
		1	196-1665	1	SWITCH AS-PRESSURE (REFRIGERANT)	
		1	185-8293	1	SEAL-O-RING	
	10	1	229-9124	1	HOSE AS	
		1	121-7138	2	SEAL-O-RING	
	11	1	229-9129	1	BRACKET AS	
M		1	8T-3612	2	NUT-WELD (M8X1.25-THD)	
	12	1	235-8891	1	PLATE	
B	13	1	235-9014	8	CLAMP-HOSE	
	14	1	235-9015	2	HOSE	
	15	1	240-4995	1	BRACKET AS	
M		1	8T-3490	2	NUT-WELD (M10X1.5-THD)	
	16	1	104-3173	6	CLIP	
	17	1	121-7098	1	BRACKET AS	
M		1	8T-4138	2	BOLT (M6X1X20-MM)	
		1	9X-8256	2	WASHER (6.6X12X2-MM THK)	
	18	1	133-4419	1	GROMMET	
	19	1	1S-0994	1	CLIP	
	20	1	2M-9780	2	SEAL-O-RING	
E	21	1	5P-0767		HOSE (370-CM)	
E	21A	1	5P-0767		HOSE (360-CM)	
	22	1	3K-0360	3	SEAL-O-RING	
	23	1	5K-5338	1	CLIP	
	24	1	5P-7854	1	CLIP	
	25	1	6D-1641	2	CLIP	
	26	1	6D-4246	2	CLIP	
	27	1	245-7918	1	ADAPTER	
	28	1	6V-3265	1	CLIP	
	29	1	6V-7238	2	VALVE-SHUTOFF (ENGINE COOLANT)	
M	30	1	6V-7357	3	BOLT (M6X1X25-MM)	
	31	1	6V-7420	1	ADAPTER	
	32	1	6K-8178	1	CLIP	
	33	1	7Y-8165	1	GROMMET	
	34	1	8M-2773	1	CLIP	
	35	1	8T-4121	17	WASHER-HARD (11X21X2.5-MM THK)	
M	36	1	8T-4137	17	BOLT (M10X1.5X20-MM)	
M	37	1	8T-4200	2	BOLT (M8X1.25X16-MM)	
	38	1	8T-4224	2	WASHER-HARD (8.8X16X2-MM THK)	
M	39	1	8T-4971	2	BOLT (M6X1X30-MM)	
	40	1	9X-8256	5	WASHER (6.6X12X2-MM THK)	
E	41	1	102-1174		GUARD (17-CM)	
	42	1	305-0441	2	BAND-MARKER (HS)	
	43	1	305-0442	2	BAND-MARKER (HR)	

B-USE AS REQUIRED
E-ORDER BY THE CENTIMETER
M-METRIC PART

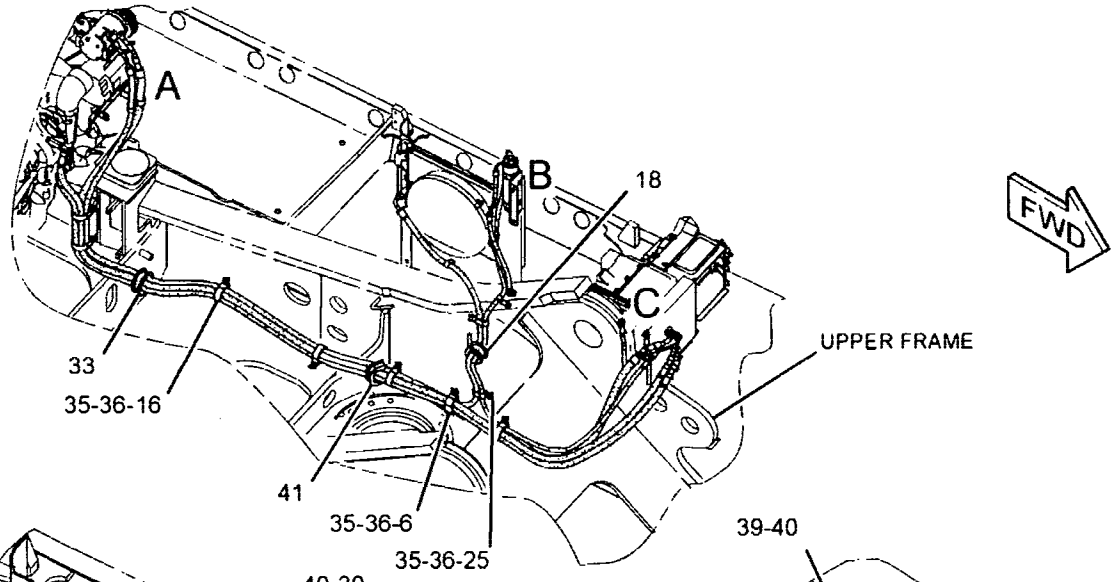

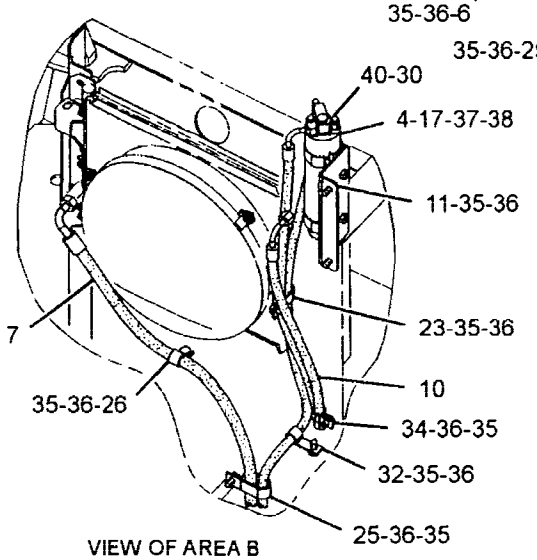

VIEW OF AREA B

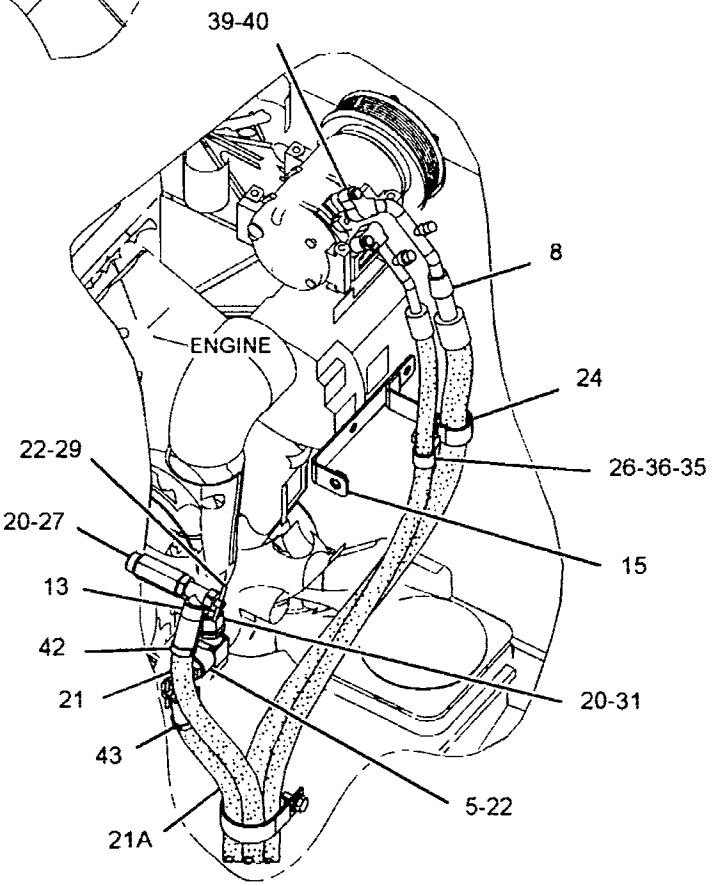

VIEW OF AREA A

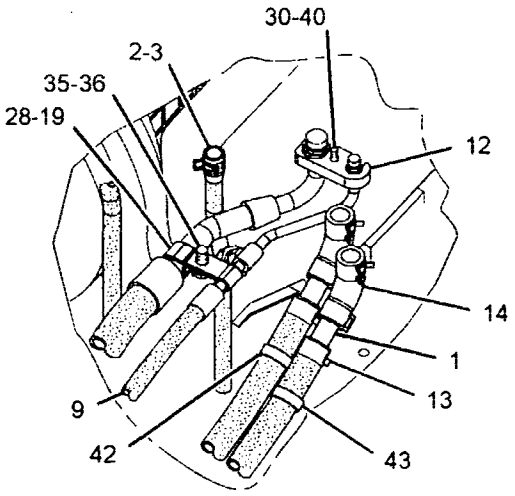

VIEW OF AREA C

GRAPHIC #1 **<END>** g01446089

OPERATOR STATION

7Y-0059 LITERATURE GP

S/N: YEE1-UP

PART OF 324-6194 CHASSIS AR

SMCS-7300 **i02882150**

NOTE	PART NUMBER	QTY	PART NAME 1 2 3 4 5 6 (PRODUCT LEVEL)	SEE PAGE
	099-3645	1	CABLE-LANYARD	
	5P-8500	2	KEY	
	5P-7958	2	SLEEVE-CABLE SPLICE	

<END>

OPERATOR STATION

223-2983 MIRROR GP-REAR VIEW

S/N: YEE1-UP

PART OF 324-6194 CHASSIS AR

SMCS-7319 **i02900158**

NOTE	REF NO	GRAPHIC REF	PART NUMBER	QTY	PART NAME 1 2 3 4 5 6 (PRODUCT LEVEL)	SEE PAGE
C	1	1	**320-5397**	1	BAR AS	
					–OR–	
		1	**114-6294**	1	BAR AS	
M	2	1	**135-8575**	4	BOLT AS-LOCKING (M12X1.75X30-MM)	
	3	1	**137-2270**	1	MIRROR	
C	4	1	**320-5398**	1	SUPPORT AS	
					–OR–	
		1	**236-9246**	1	SUPPORT AS	
	5	1	**8T-4223**	1	WASHER-HARD (13.5X25.5X3-MM THK)	
M	6	1	**8T-4244**	1	NUT (M12X1.75-THD)	

C-CHANGE FROM PREVIOUS TYPE
M-METRIC PART

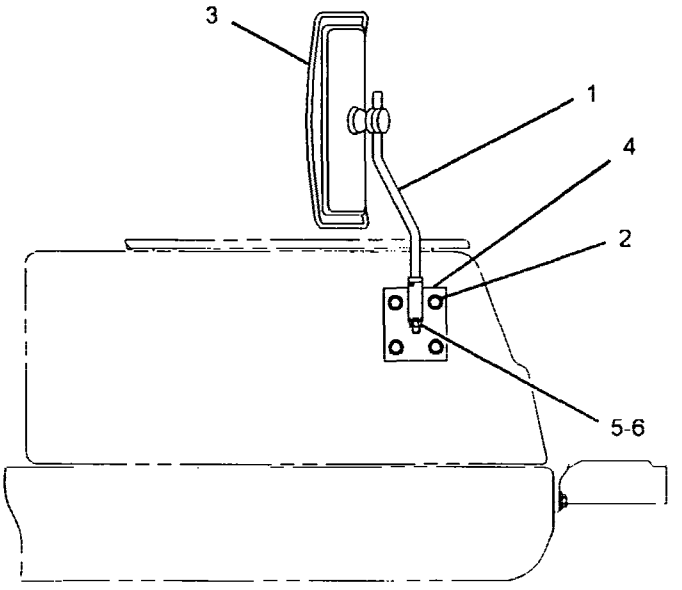

RIGHT SIDE VIEW

GRAPHIC #1 **<END>** g01087952

OPERATOR STATION

221-8813 MONITOR & MTG GP-OPERATOR

S/N: YEE1-UP

PART OF 305-8002 CAB GP

SMCS-7490 **i02927579**

NOTE	REF NO	GRAPHIC REF	PART NUMBER	QTY	PART NAME 1 2 3 4 5 6 (PRODUCT LEVEL)	SEE PAGE
CY	1	1	**309-5793**	1	SERVICE GP-MONITOR	229
M	2	1	**9X-2046**	3	SCREW-TRUSS HEAD (M6X1X35-MM)	

C-CHANGE FROM PREVIOUS TYPE
M-METRIC PART
Y-SEPARATE ILLUSTRATION

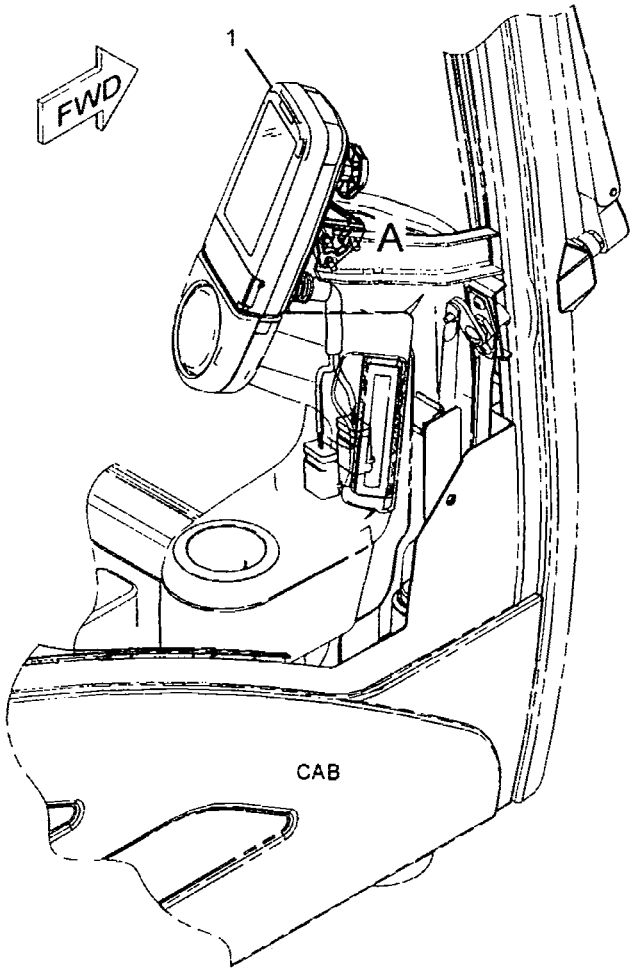

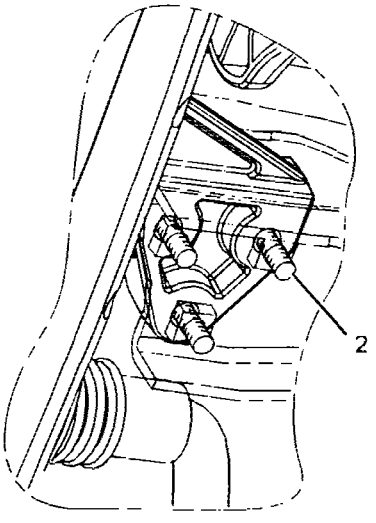

VIEW OF AREA A

GRAPHIC #1 **<END>** g01129076

OPERATOR STATION

260-2193 MONITOR GP-OPERATOR

S/N: YEE1-UP

PART OF 309-5793 SERVICE GP-MONITOR

SMCS-7490 **i02787502**

NOTE	REF NO	GRAPHIC REF	PART NUMBER	QTY	PART NAME 1 2 3 4 5 6 (PRODUCT LEVEL)	SEE PAGE
	1	1	**247-2694**	1	RECEPTACLE AS-CONNECTOR (12-PIN)	
	2	1	**247-2695**	1	RECEPTACLE AS-CONNECTOR (12-PIN)	
	3	1	**9X-3401**	17	PIN-CONNECTOR (16-GA TO 18-GA)	
					–OR–	
		1	**126-1767**	17	PIN-CONNECTOR (14-GA)	
	4	1	**8T-8737**	7	PLUG-SEAL	

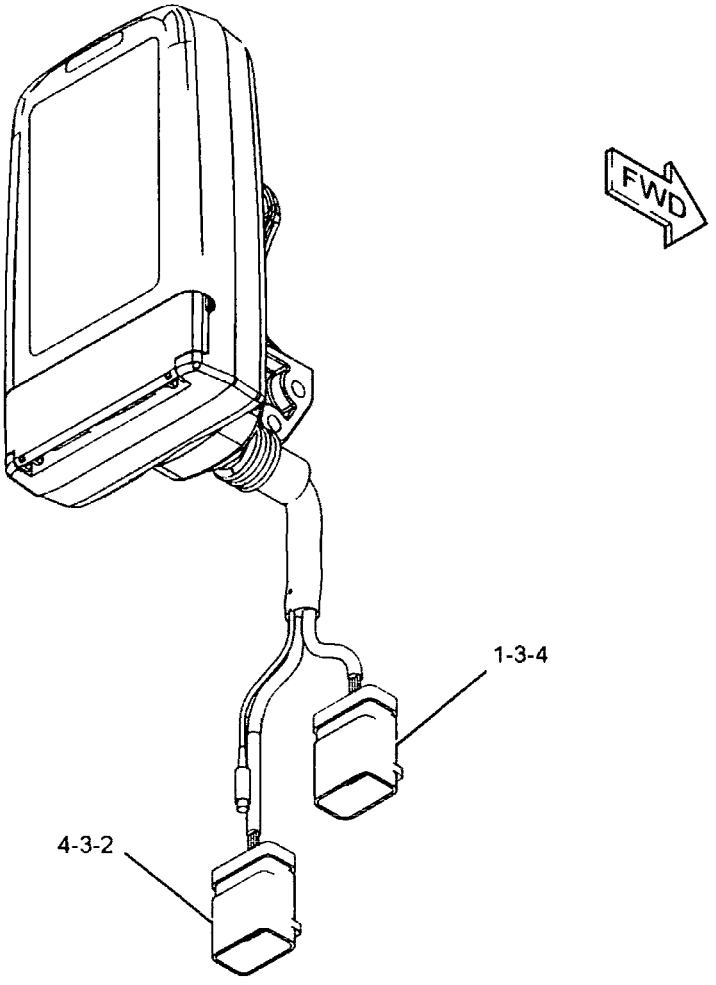

GRAPHIC #1

<END>

g01232266

OPERATOR STATION

270-5603 MOUNTING GP-ANTENNA

S/N: YEE1-UP
PART OF 324-0190, 324-0191 SPECIAL AR
AN ATTACHMENT

SMCS-7338, 7606 **i02878768**

NOTE	REF NO	GRAPHIC REF	PART NUMBER	QTY	PART NAME 1 2 3 4 5 6 (PRODUCT LEVEL)	SEE PAGE
	1	1	**309-5849**	1	BRACKET AS	
M	2	1	**7X-2552**	2	BOLT (M16X2X30-MM)	
	3	1	**9X-8257**	2	WASHER (17.5X30X3.5-MM THK)	

M-METRIC PART

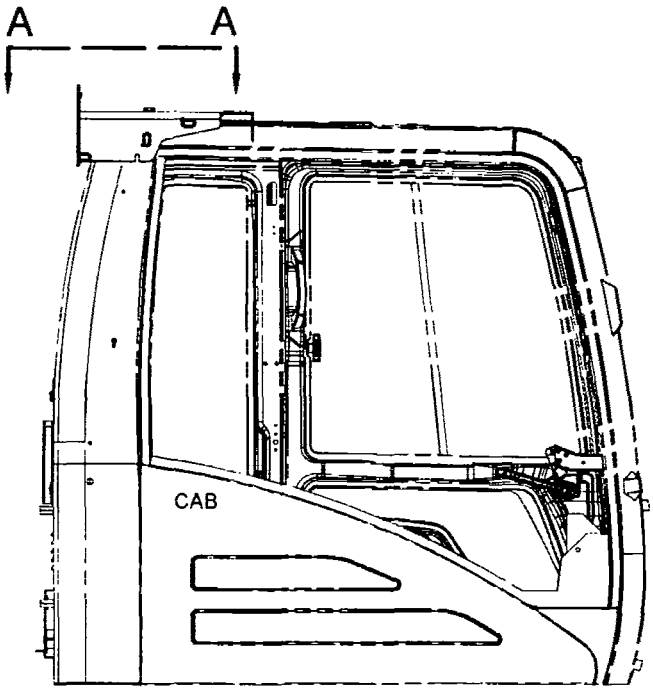

RIGHT SIDE VIEW
(WITHOUT CAB GUARD)

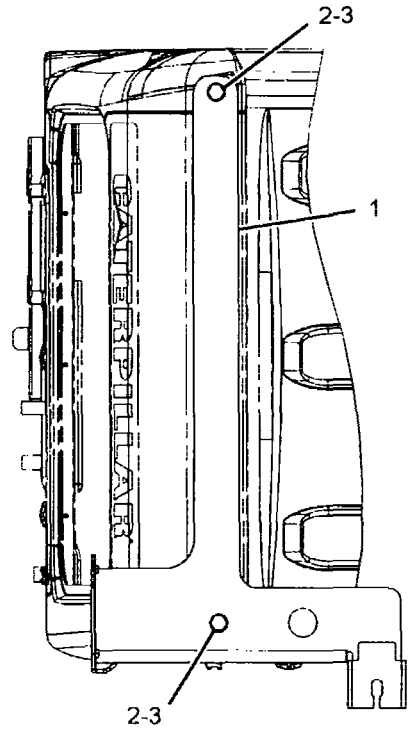

VIEW A-A

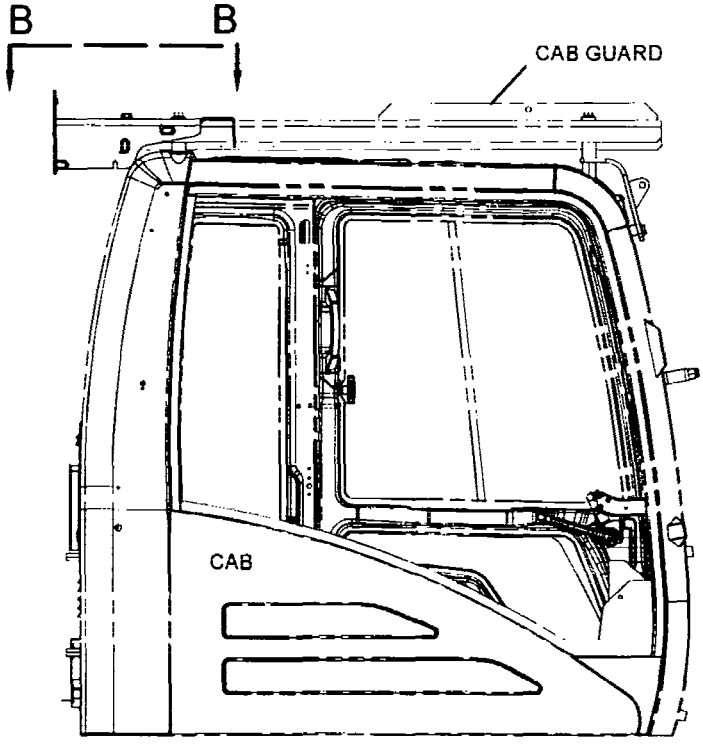

RIGHT SIDE VIEW
(WITH CAB GUARD)

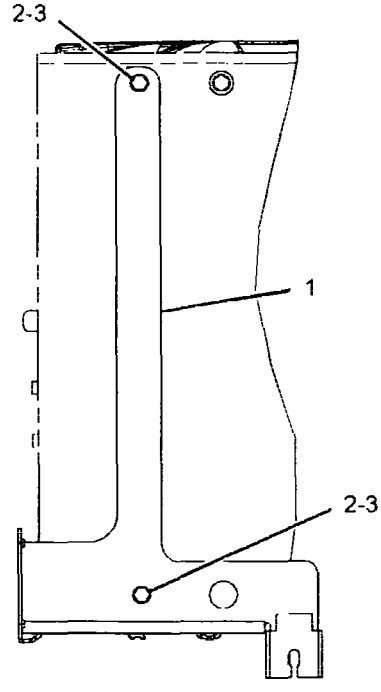

VIEW B-B

GRAPHIC #1 **<END>** g01435822

OPERATOR STATION

309-5765 MOUNTING GP-ANTENNA–COMMUNICATION RADIO

S/N: YEE1-UP

PART OF 303-2702 INSTALLATION AR-RADIO

AN ATTACHMENT

SMCS-7338, 7606 **i02849135**

NOTE	REF NO	GRAPHIC REF	PART NUMBER	QTY	PART NAME 1 2 3 4 5 6 (PRODUCT LEVEL)	SEE PAGE
	1	1	9U-2331	2	ANTENNA AS (COMMUNICATION RADIO)	
	2	1	9U-4431	2	MOUNT-ANTENNA	
	3	1	309-5796	1	PLATE	

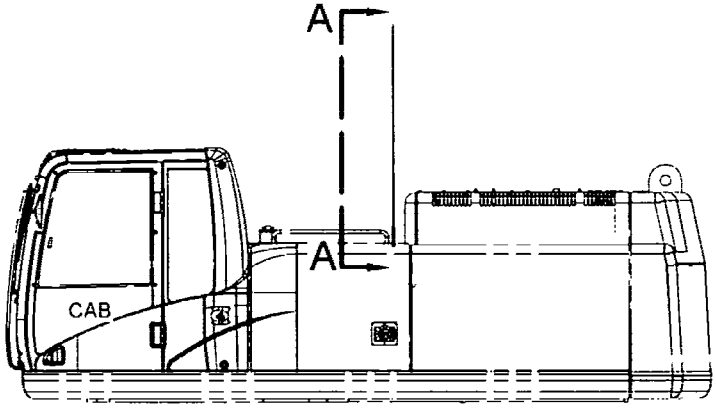

LEFT SIDE VIEW

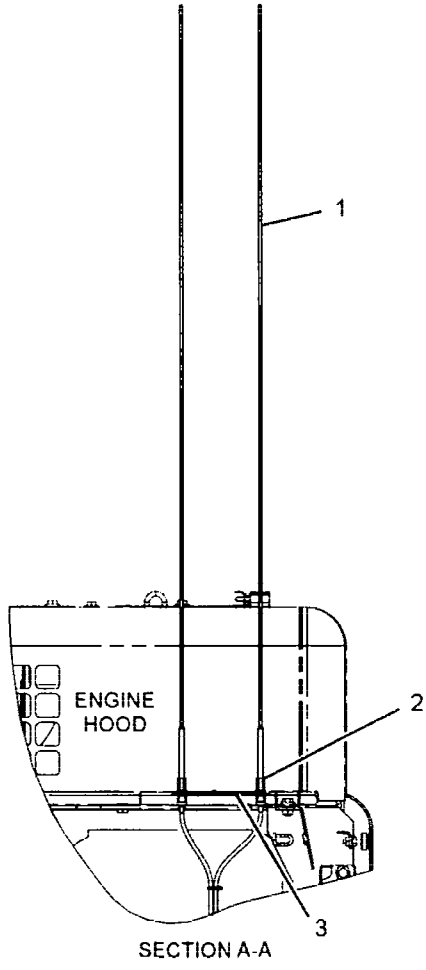

SECTION A-A

GRAPHIC #1 **<END>** g01456327

OPERATOR STATION

309-5771 MOUNTING GP-ANTENNA–PRODUCT LINK

S/N: YEE1-UP

PART OF 303-2781 INSTALLATION AR-COMMUNICATION

AN ATTACHMENT

SMCS-7338, 7606 **i02942376**

NOTE	REF NO	GRAPHIC REF	PART NUMBER	QTY	PART NAME 1 2 3 4 5 6 (PRODUCT LEVEL)	SEE PAGE
	1	1	**3S-2093**	2	STRAP-CABLE	
M	2	1	**143-9397**	3	SCREW-PAN HEAD (M4X0.7X12-MM)	
	3	1	**284-8532**	1	ANTENNA AS (ROOF)	
		1	**301-0589**	1	ANTENNA (WHIP)	
	4	1	**309-5751**	1	BRACKET	
	5	1	**095-0910**	4	CLIP	
	6	1	**161-6987**	3	WASHER-HARD (5.2X16X1.5-MM THK)	
M	7	1	**8T-4190**	1	BOLT (M16X2X25-MM)	
M	8	1	**8T-4970**	1	BOLT (M6X1X14-MM)	
	9	1	**9X-2026**	1	WASHER (6.5X17X1-MM THK)	
	10	1	**9X-6165**	1	WASHER (6.5X22X2.5-MM THK)	
	11	1	**9X-8257**	1	WASHER (17.5X30X3.5-MM THK)	

M-METRIC PART

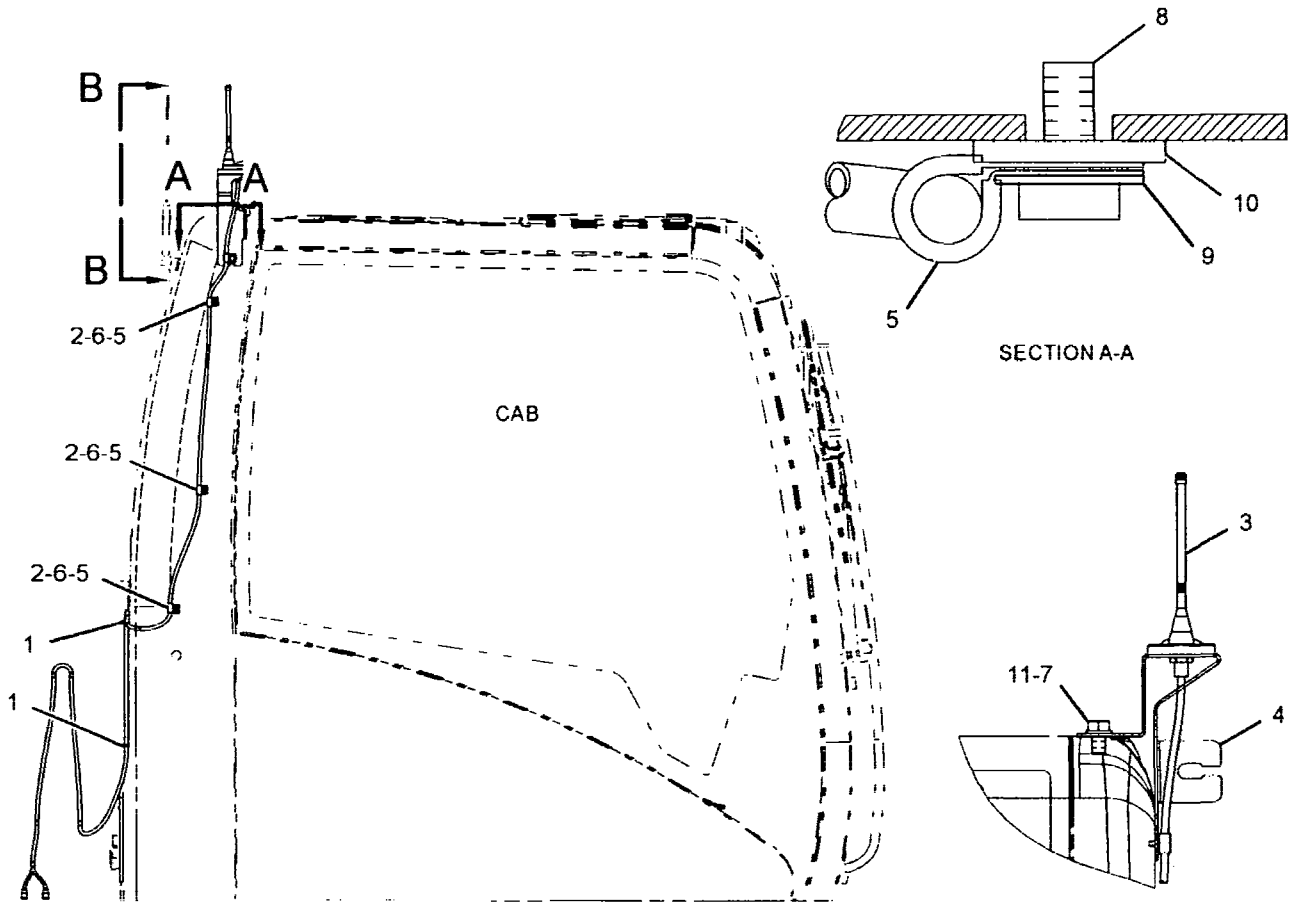

RIGHT SIDE VIEW

GRAPHIC #1 **<END>** g01450118

OPERATOR STATION

309-5840 MOUNTING GP-ANTENNA–PRODUCT LINK

S/N: YEE1-UP

PART OF 303-2723 INSTALLATION AR-COMMUNICATION

AN ATTACHMENT

SMCS-7338, 7606 **i02861604**

NOTE	REF NO	GRAPHIC REF	PART NUMBER	QTY	PART NAME 1 2 3 4 5 6 (PRODUCT LEVEL)	SEE PAGE
	1	1	**3S-2093**	2	STRAP-CABLE	
	2	1	**284-8533**	1	ANTENNA AS	
		1	**301-0589**	1	ANTENNA (WHIP)	
	3	1	**309-5751**	1	BRACKET	
	4	1	**095-0910**	4	CLIP	
	5	1	**161-6987**	3	WASHER-HARD (5.2X16X1.5-MM THK)	
M	6	1	**8T-0337**	3	SCREW-MACHINE (M4X0.7X12-MM)	
M	7	1	**8T-4190**	1	BOLT (M16X2X25-MM)	
M	8	1	**8T-4970**	1	BOLT (M6X1X14-MM)	
	9	1	**9X-2026**	1	WASHER (6.5X17X1-MM THK)	
	10	1	**9X-6165**	1	WASHER (6.5X22X2.5-MM THK)	
	11	1	**9X-8257**	1	WASHER (17.5X30X3.5-MM THK)	

M-METRIC PART

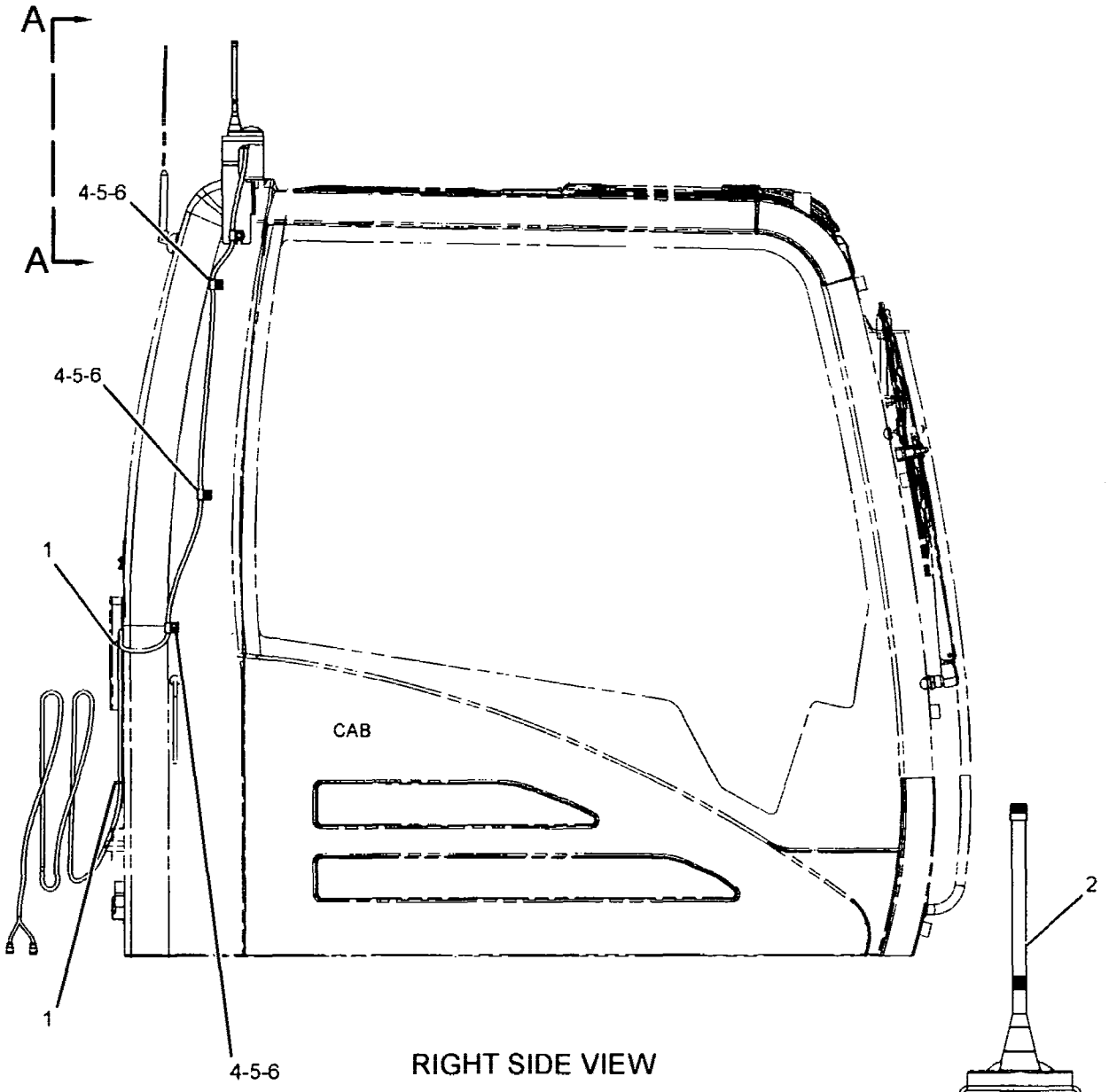

GRAPHIC #1 **<END>** g01476653

OPERATOR STATION

309-5805 MOUNTING GP-DISPLAY—WORK AREA VISUAL SYSTEM

S/N: YEE1-UP
PART OF 303-2711 CAMERA AR
AN ATTACHMENT

SMCS-7347, 7490 **i02965973**

NOTE	REF NO	GRAPHIC REF	PART NUMBER	QTY	PART NAME 1 2 3 4 5 6 (PRODUCT LEVEL)	SEE PAGE
	1	1	**6I-5976**	1	SHIM (1-MM THK)	
	2	1	**309-5806**	1	BRACKET AS	
	3	1	**8T-4121**	5	WASHER-HARD (11X21X2.5-MM THK)	
M	4	1	**8T-4137**	2	BOLT (M10X1.5X20-MM)	
M	5	1	**8T-4176**	1	BOLT (M12X1.75X90-MM)	
	6	1	**8T-4223**	3	WASHER-HARD (13.5X25.5X3-MM THK)	
M	7	1	**8T-4970**	4	BOLT (M6X1X14-MM)	
	8	1	**9X-8256**	4	WASHER (6.6X12X2-MM THK)	

M-METRIC PART

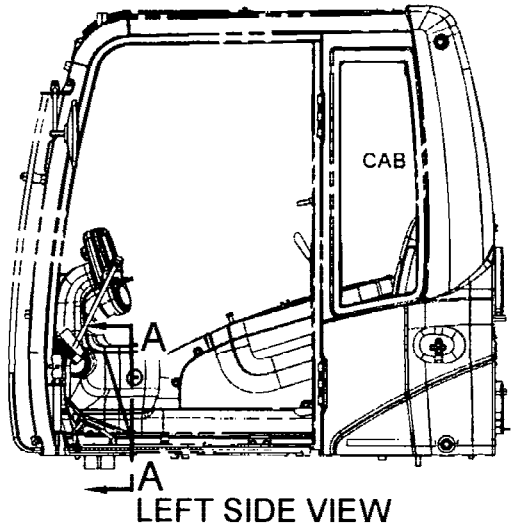

LEFT SIDE VIEW

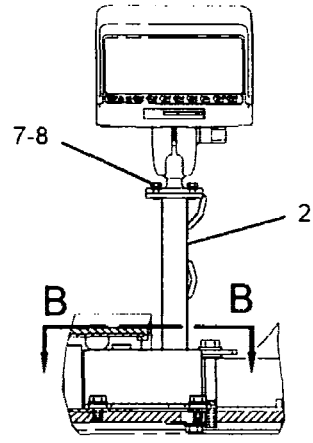

VIEW A-A

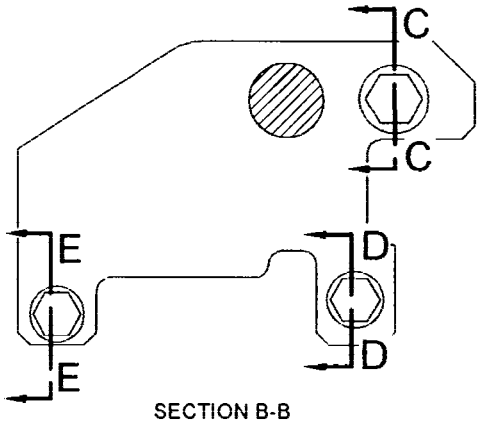

SECTION B-B

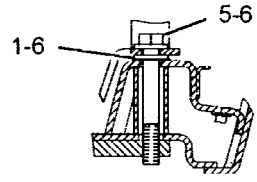

SECTION C-C
(Akashi)

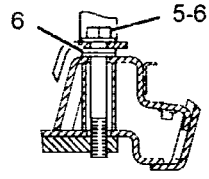

SECTION C-C
(WITH THIRD PEDAL)

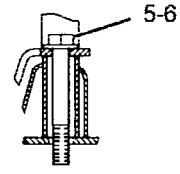

SECTION C-C
(WITH THIRD PEDAL - OPTIONAL DESIGN)

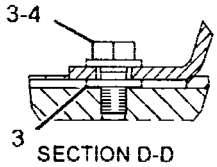

SECTION D-D

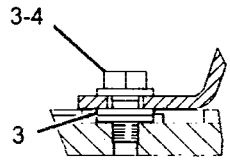

SECTION D-D
(OPTIONAL DESIGN)

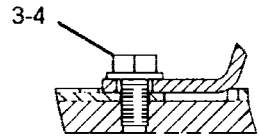

SECTION E-E

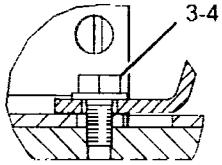

SECTION D-D
(WITH THIRD PEDAL)

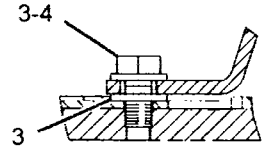

SECTION E-E
(WITH THIRD PEDAL)

GRAPHIC #1 **<END>** g01434943

OPERATOR STATION

245-7811 MOUNTING GP-PLATFORM

S/N: YEE1-UP

PART OF 324-6194 CHASSIS AR

SMCS-7253 **i02843510**

NOTE	REF NO	GRAPHIC REF	PART NUMBER	QTY	PART NAME 1 2 3 4 5 6 (PRODUCT LEVEL)	SEE PAGE
	1	1	**235-8862**	4	MOUNT AS	
	2	1	**8T-4121**	16	WASHER-HARD (11X21X2.5-MM THK)	
M	3	1	**8T-4195**	16	BOLT (M10X1.5X30-MM)	

M-METRIC PART

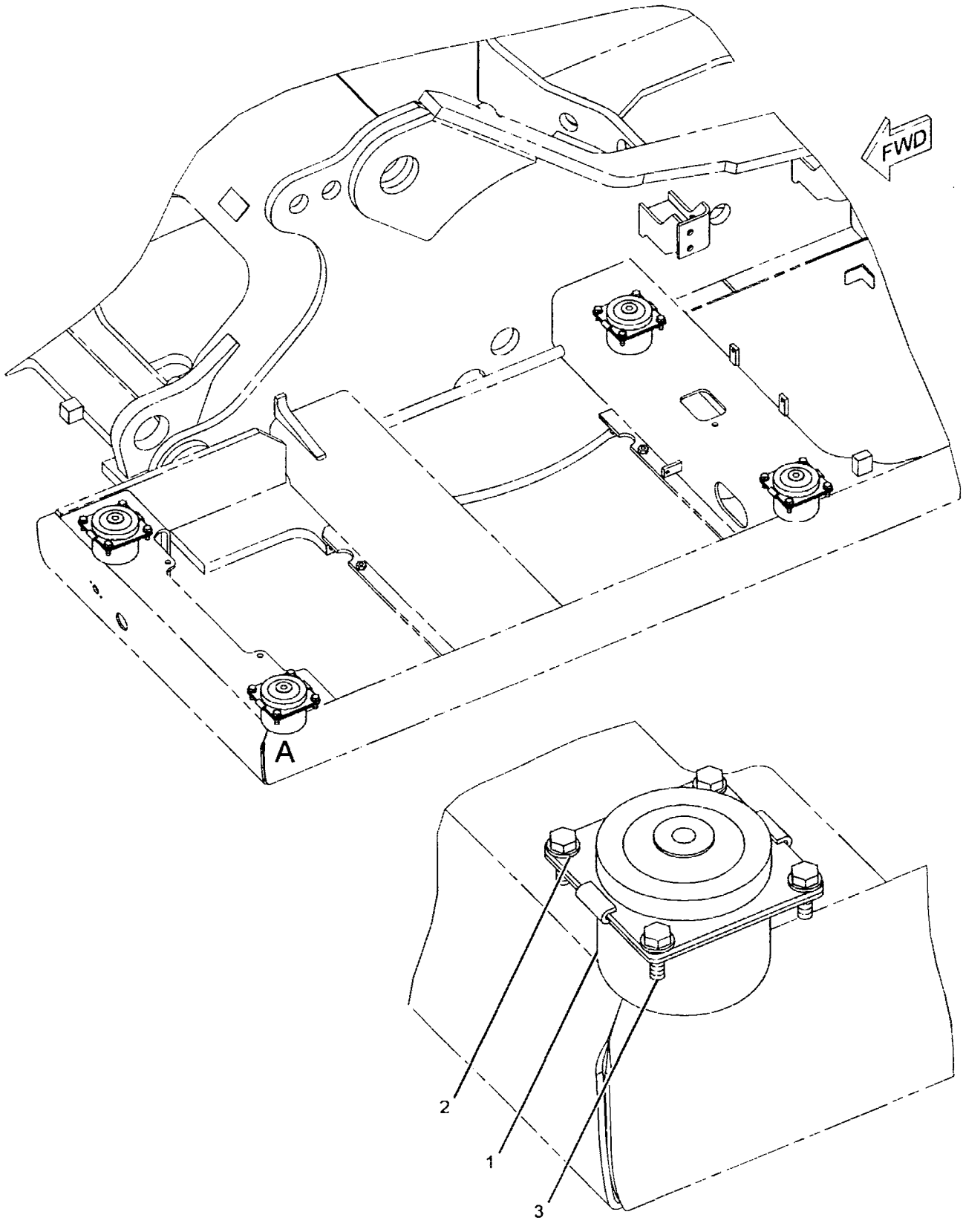

VIEW OF AREA A

GRAPHIC #1 **<END>** g01101486

OPERATOR STATION

305-8000 OPERATOR AR

S/N: YEE1-UP

PART OF 324-6194 CHASSIS AR

SMCS-7301 **i02904198**

NOTE	PART NUMBER	QTY	PART NAME 1 2 3 4 5 6 (PRODUCT LEVEL)	SEE PAGE
Y	*229-9079*	1	AIR CONDITIONER AR	935
Y	*305-8001*	1	CAB GP	946
Y	*245-7922*	1	CONSOLE GP-OPERATOR	955
Y	*221-8872*	1	CONTROL & MTG GP-MACHINE	171
Y	*170-9497*	1	CONTROL GP-HANDLE (TRAVEL)	966
Y	*251-0538*	1	INSTALLATION GP-RADIO (AM, FM)	1001
Y	*251-0542*	1	PANEL GP-SWITCH (ENGINE SPEED, START)	203
Y	*305-8003*	1	PLATFORM GP-OPERATOR	1023
Y	**235-9020**	1	SEAT BELT GP (RETRACTABLE, 3-IN)	1025
Y	*240-5064*	1	SEAT GP-SUSPENSION (AIR SUSP, HIGH BACK, WITH HTR)	1030
Y	*235-8856*	1	SUPPORT GP-SEAT	1035
Y	*251-0433*	1	WIRING GP-CONSOLE	280
Y	*299-2965*	1	PANEL & MTG GP-CIRCUIT BREAKER	200
Y	*291-7768*	1	WIRING GP-PLATFORM	306

Y-SEPARATE ILLUSTRATION

<END>

OPERATOR STATION

290-9378 PANEL-CONTROL

S/N: YEE1-UP

PART OF 324-0190, 324-0191 SPECIAL AR

AN ATTACHMENT

SMCS-7451 **i02920240**

NOTE	REF NO	GRAPHIC REF	PART NUMBER	QTY	PART NAME 1 2 3 4 5 6 (PRODUCT LEVEL)	SEE PAGE
					(NO SERVICED PARTS)	

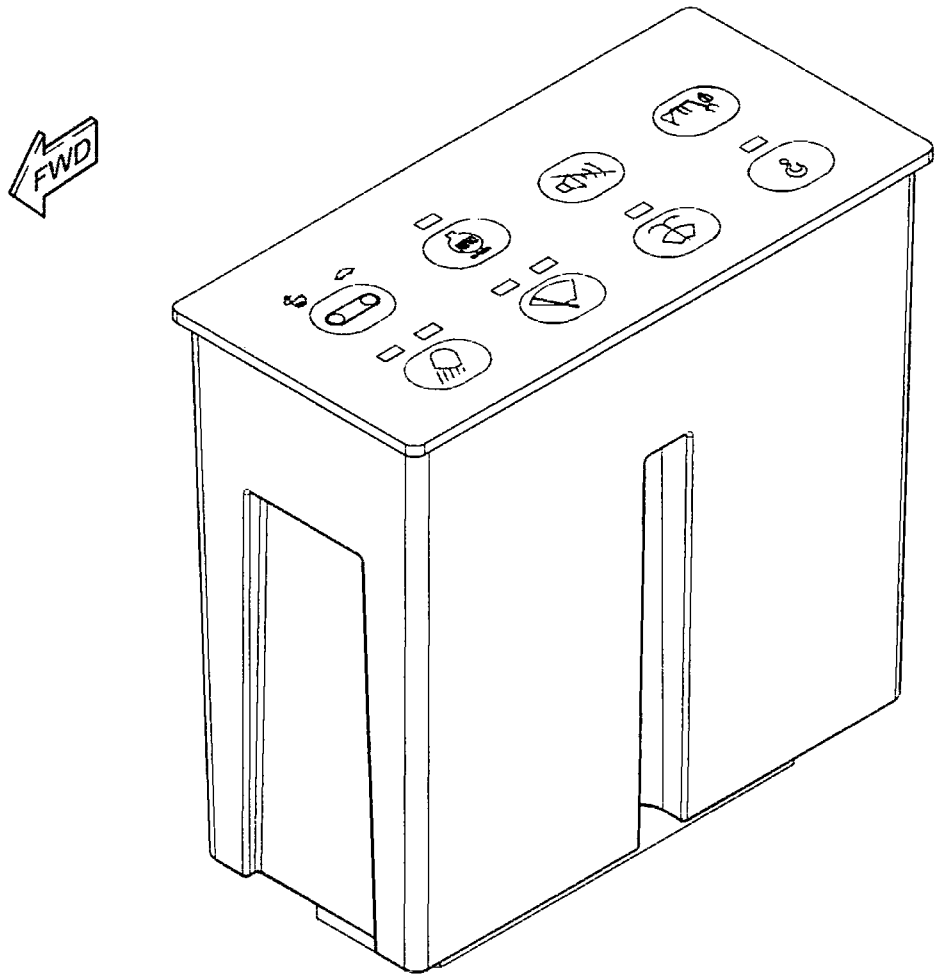

GRAPHIC #1

<END>

g01455056

OPERATOR STATION

225-5729 PEDAL AR-AUXILIARY

S/N: YEE1-UP

AN ATTACHMENT

SMCS-5059 **i02237361**

NOTE	REF NO	GRAPHIC REF	PART NUMBER	QTY	PART NAME 1 2 3 4 5 6 (PRODUCT LEVEL)	SEE PAGE
	1	1	**127-5250**	1	FILM-INSTRUCTION (TRAVEL CONTROLS)	
FY			*225-5730*	1	CONTROL GP-HYDRAULIC PEDAL	974
FY			*227-0619*	1	LINES GP-PILOT	615
FY			*260-8047*	1	LINES GP-PILOT (TRAVEL, STRAIGHT TRAVEL)	618

F-NOT SHOWN
Y-SEPARATE ILLUSTRATION

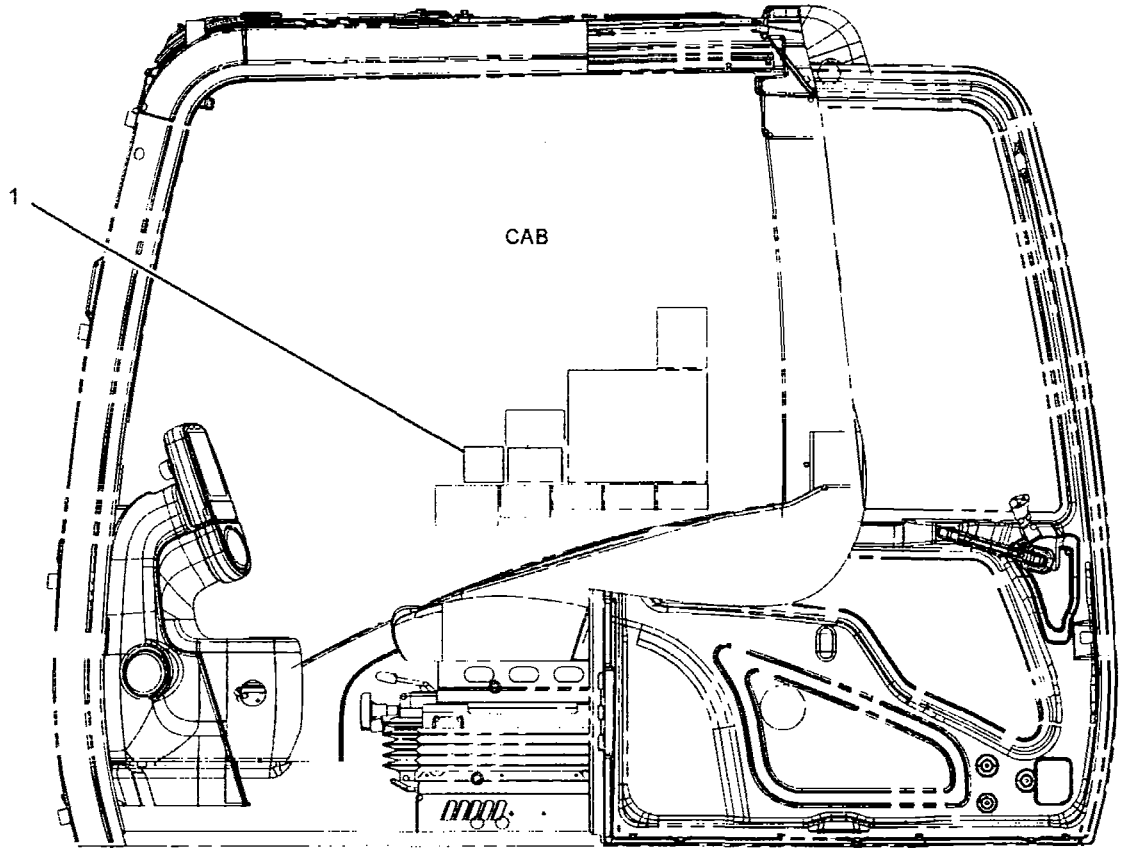

LEFT SIDE VIEW

GRAPHIC #1

<END>

g01094358

OPERATOR STATION

255-5845 PEDAL AR-AUXILIARY–LH

S/N: YEE1-UP

PART OF 310-0014 CONTROL AR-AUXILIARY

AN ATTACHMENT

SMCS-5059 **i02847177**

NOTE	PART NUMBER	QTY	PART NAME 1 2 3 4 5 6 (PRODUCT LEVEL)	SEE PAGE
Y	*221-8884*	1	CONTROL & MTG GP-PEDAL (LH)	963
Y	*259-5293*	1	FASTENER GP-WIRING HARNESS (PEDAL CONTROL)	175
Y	*247-7418*	1	FILM GP (PEDAL, LH)	1064

Y-SEPARATE ILLUSTRATION

<END>

OPERATOR STATION

305-8003 PLATFORM GP-OPERATOR

S/N: YEE1-UP

PART OF 305-8000 OPERATOR AR

SMCS-7253 **i02843950**

NOTE	REF NO	GRAPHIC REF	PART NUMBER	QTY	PART NAME 1 2 3 4 5 6 (PRODUCT LEVEL)	SEE PAGE
	1	1	**4I-3266**	1	STRIP	
	2	1	**135-8965**	1	GROMMET	
	3	1	**135-8966**	1	GROMMET	
	4	1	**161-3717**	1	STRIP	
	5	1	**240-5071**	1	FLOOR MAT GP	
	6	1	**293-1170**	1	PLATFORM AS	
M	7	1	**7X-2553**	4	BOLT (M16X2X40-MM)	
	8	1	**8T-4121**	4	WASHER-HARD (11X21X2.5-MM THK)	
M	9	1	**8T-4191**	4	BOLT (M10X1.5X16-MM)	
	10	1	**9X-8257**	4	WASHER (17.5X30X3.5-MM THK)	

M-METRIC PART

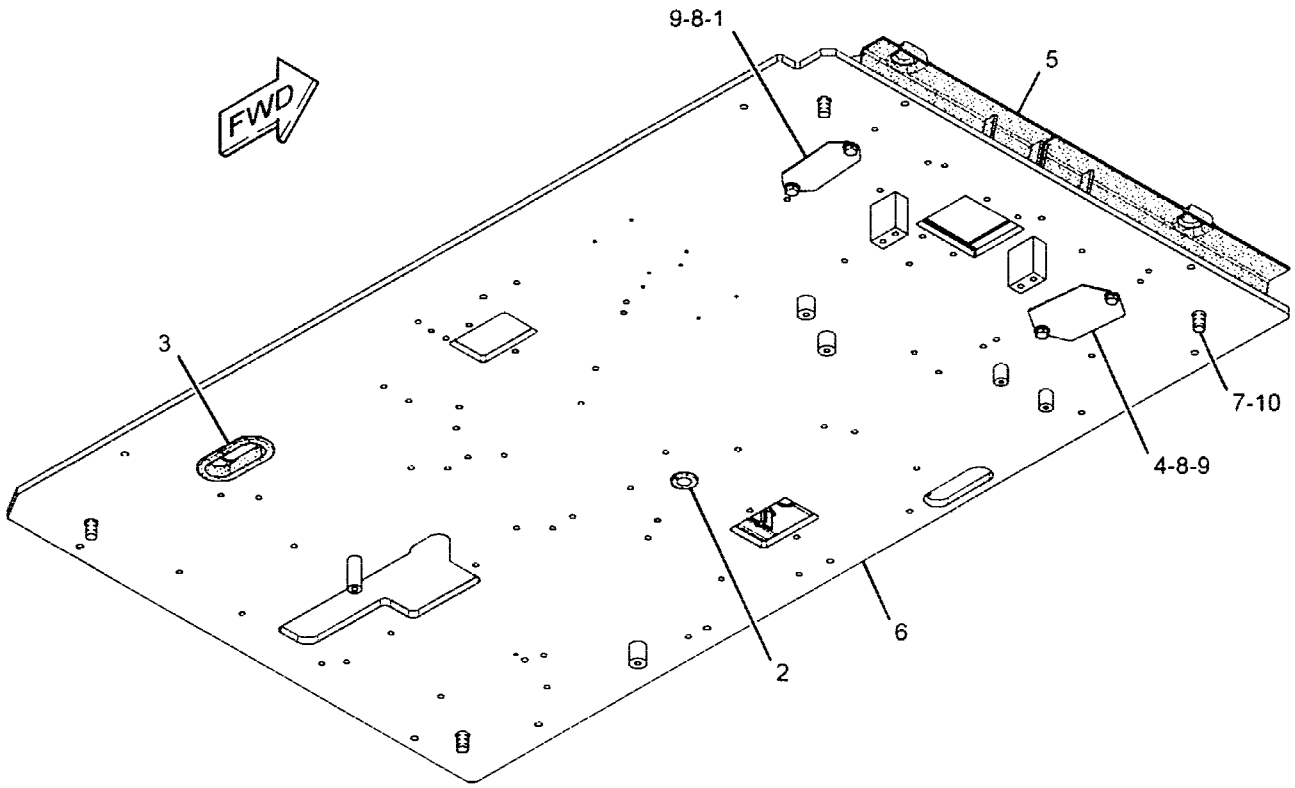

GRAPHIC #1 **<END>** g01475064

OPERATOR STATION

245-7881 SCREEN GP-SUN

S/N: YEE1-UP

AN ATTACHMENT

SMCS-7165 **i02440974**

NOTE	REF NO	GRAPHIC REF	PART NUMBER	QTY	PART NAME 1 2 3 4 5 6 (PRODUCT LEVEL)	SEE PAGE
	1	1	**255-4410**	1	SCREEN AS (CAB)	
	2	1	**259-7214**	3	HOOK-RETAINER	
	3	1	**259-7215**	3	HOOK-RETAINER	
M	4	1	**099-0822**	6	BOLT-SOCKET HEAD (M5X0.8X10-MM)	

M-METRIC PART

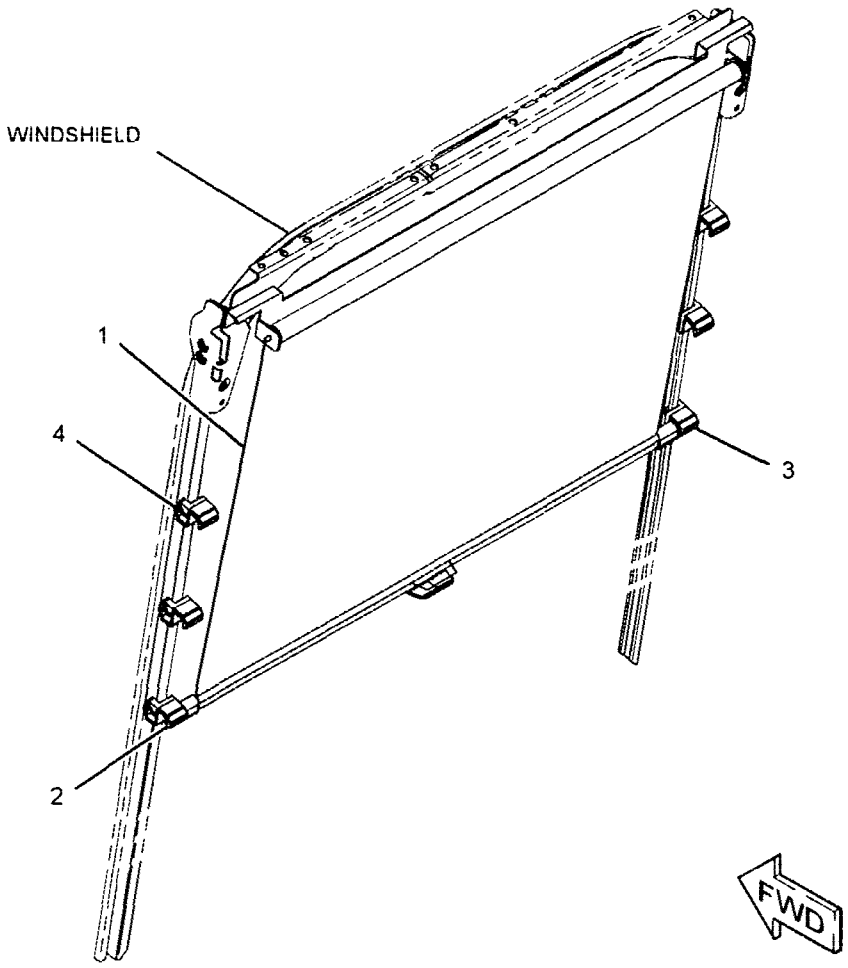

GRAPHIC #1 **<END>** g01177458

OPERATOR STATION

235-9020 SEAT BELT GP–RETRACTABLE, 3-IN

S/N: YEE1-UP

PART OF 305-8000 OPERATOR AR

SMCS-7327 **i02908501**

NOTE	REF NO	GRAPHIC REF	PART NUMBER	QTY	PART NAME 1 2 3 4 5 6 (PRODUCT LEVEL)	SEE PAGE
	1	1	**8S-4724**	1	BOLT (7/16-20X2.25-IN)	
	2	1	**8S-4723**	1	BOLT (7/16-20X1.5-IN)	
	3	1	**8S-0934**	1	LOCKNUT-FLANGE (7/16-20-THD)	

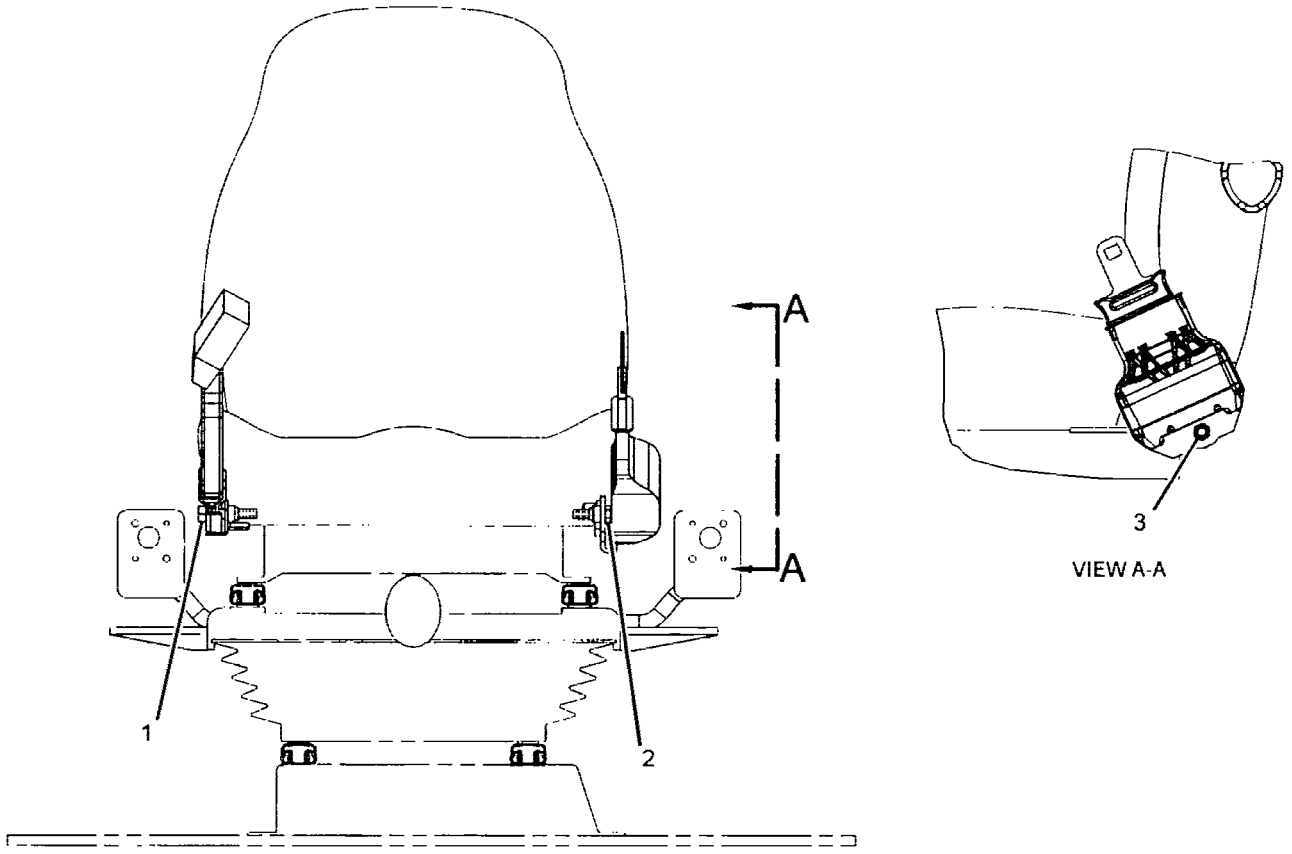

FRONT VIEW

GRAPHIC #1 **<END>** g01455005

OPERATOR STATION

229-9090 SEAT GP–HIGH BACK, TILT

S/N: YEE1-UP

PART OF 229-9089 SEAT GP-SUSPENSION

AN ATTACHMENT

SMCS-7312 **i02855044**

NOTE	REF NO	GRAPHIC REF	PART NUMBER	QTY	PART NAME 1 2 3 4 5 6 (PRODUCT LEVEL)	SEE PAGE
	1	1	**245-7884**	1	KIT-SEAT	
M	1A	1	**245-7898**	4	SCREW-BUTTON HEAD (M8X1.25X25-MM)	
	1B	1	**8T-4224**	4	WASHER-HARD (8.8X16X2-MM THK)	
	1C	1	**178-5659**	1	HANDLE (LUMBAR SUPPORT ADJUSTER)	
	1D	1	**229-9094**	1	HEADREST AS-SEAT	
	1E	1	**245-7887**	1	LEVER-CONTROL	
	2	1	**245-7888**	1	KIT-SEAT SUPPORT	
M	2A	1	**245-7898**	4	SCREW-BUTTON HEAD (M8X1.25X25-MM)	
	2B	1	**8T-4224**	8	WASHER-HARD (8.8X16X2-MM THK)	
M	2C	1	**5C-7261**	4	NUT (M8X1.25-THD)	

J-PARTS INCLUDED IN BOTH SEAT KIT AND SEAT SUPPORT KIT

M-METRIC PART

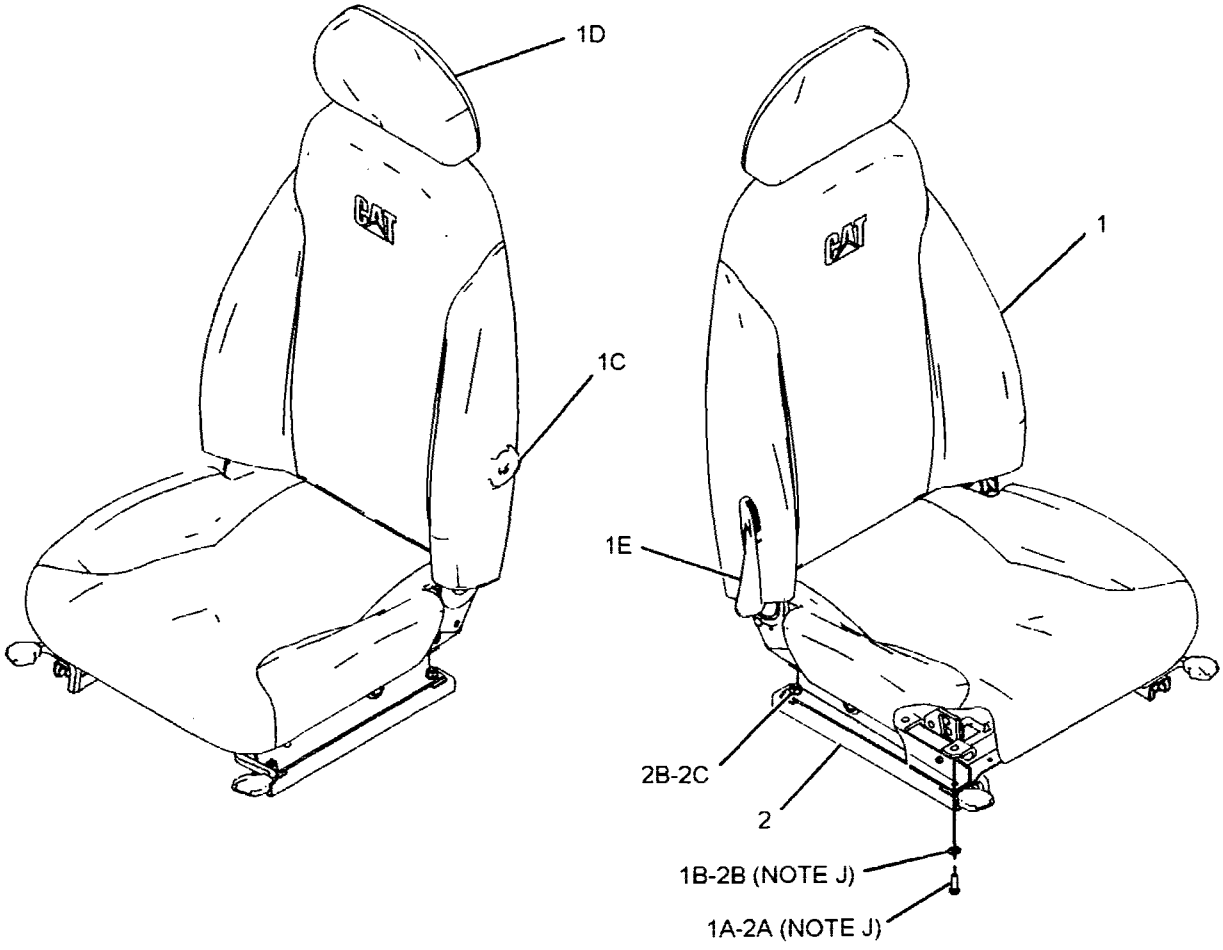

GRAPHIC #1 **<END>** g01118558

OPERATOR STATION

229-9093 SEAT GP–HIGH BACK, WITH HEATER

S/N: YEE1-UP

PART OF 240-5065 SEAT GP-SUSPENSION

ALSO AN ATTACHMENT

SMCS-7312 **i02304708**

NOTE	REF NO	GRAPHIC REF	PART NUMBER	QTY	PART NAME 1 2 3 4 5 6 (PRODUCT LEVEL)	SEE PAGE
	1	1	245-7885	1	SEAT GP	
		1	8T-4224	4	WASHER-HARD (8.8X16X2-MM THK)	
		1	178-5659	1	HANDLE (LUMBAR SUPPORT ADJUSTER)	
		1	229-9094	1	HEADREST AS-SEAT	
		1	245-7887	1	LEVER-CONTROL	
M		1	245-7898	4	SCREW-BUTTON HEAD (M8X1.25X25-MM)	
	2	1	245-7888	1	KIT-SEAT SUPPORT	
M		1	5C-7261	4	NUT (M8X1.25-THD)	
		1	8T-4224	8	WASHER-HARD (8.8X16X2-MM THK)	
M		1	245-7898	4	SCREW-BUTTON HEAD (M8X1.25X25-MM)	

M-METRIC PART

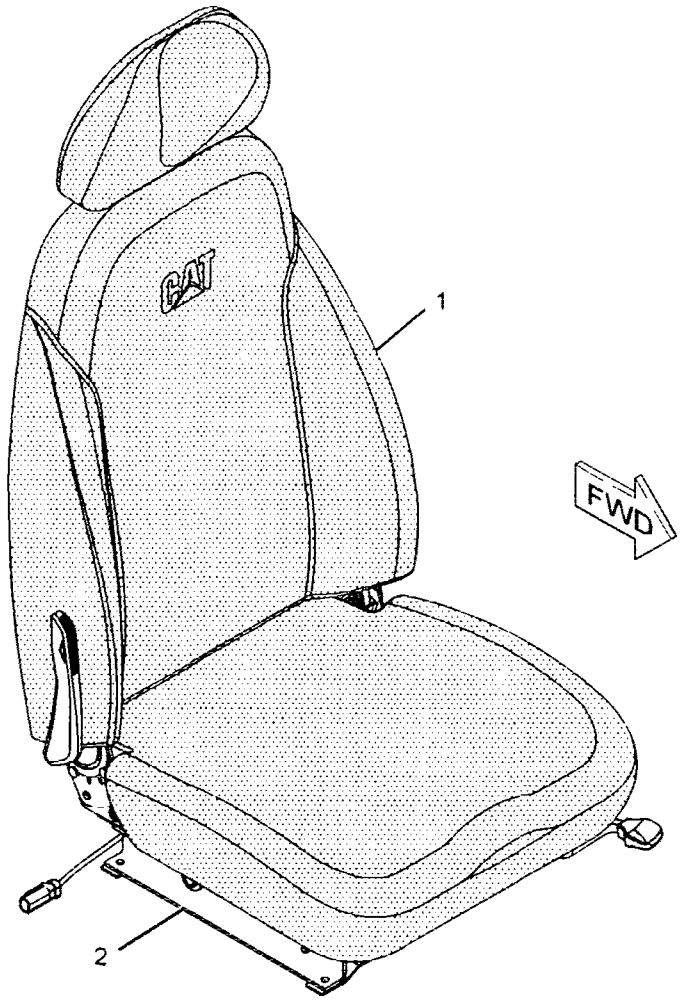

GRAPHIC #1

<END>

g01086049

OPERATOR STATION

325-7667 SEAT GP–HIGH BACK, MANUAL

S/N: YEE1-UP

AN ATTACHMENT

SMCS-7312 **i02944789**

NOTE	PART NUMBER	QTY	PART NAME 1 2 3 4 5 6 (PRODUCT LEVEL)	SEE PAGE
Y	*229-9089*	1	SEAT GP-SUSPENSION (HIGH BACK, TILT)	1029
M	**6V-8202**	4	BOLT-SOCKET HEAD (M8X1.25X16-MM)	

M-METRIC PART
Y-SEPARATE ILLUSTRATION

<END>

OPERATOR STATION

229-9089 SEAT GP-SUSPENSION–HIGH BACK, TILT

S/N: YEE1-UP
PART OF 325-7667 SEAT GP
AN ATTACHMENT

SMCS-7324, 7336 **i02854981**

NOTE	REF NO	GRAPHIC REF	PART NUMBER	QTY	PART NAME 1 2 3 4 5 6 (PRODUCT LEVEL)	SEE PAGE
Y	1	1	**229-9077**	1	SUSPENSION GP-SEAT	1036
Y	2	1	**229-9090**	1	SEAT GP (HIGH BACK, TILT)	1026
M	3	1	**5C-7261**	4	NUT (M8X1.25-THD)	
	4	1	**8T-4224**	4	WASHER-HARD (8.8X16X2-MM THK)	

M-METRIC PART
Y-SEPARATE ILLUSTRATION

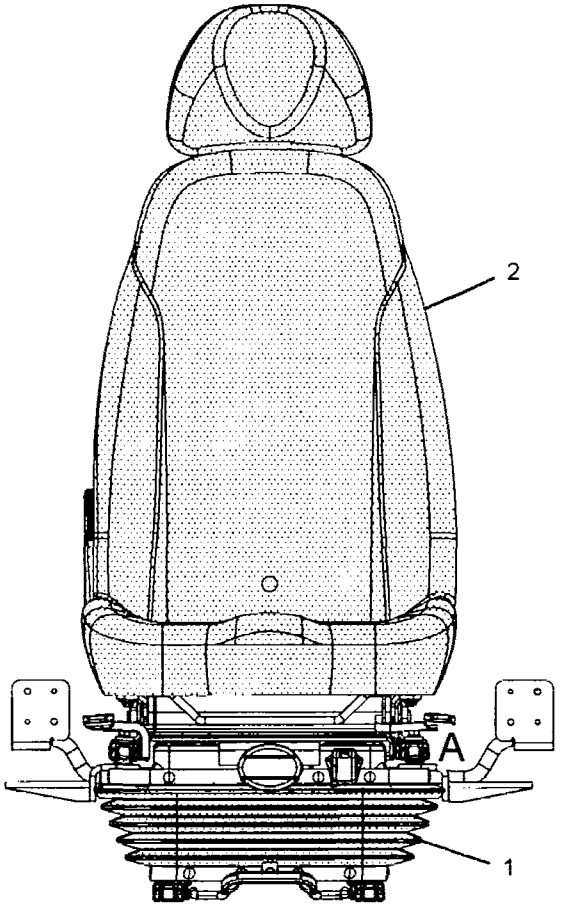

FRONT VIEW

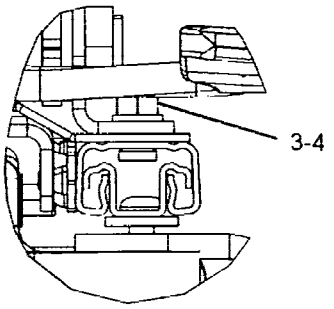

VIEW OF AREA A

GRAPHIC #1 **<END>** g01172597

OPERATOR STATION

240-5064 SEAT GP-SUSPENSION–AIR SUSP, HIGH BACK, WITH HTR

S/N: YEE1-UP
PART OF 305-8000 OPERATOR AR
ALSO AN ATTACHMENT

SMCS-7324, 7336 **i02303974**

NOTE	REF NO	GRAPHIC REF	PART NUMBER	QTY	PART NAME 1 2 3 4 5 6 (PRODUCT LEVEL)	SEE PAGE
	1	1	**3S-2093**	2	STRAP-CABLE	
	2	1	**7I-2673**	1	STRAP-CABLE	
	3	1	**238-2211**	1	SWITCH AS-ROCKER (HEATED SEAT)	
		1	**167-3542**	1	CONNECTOR-RECEPTACLE	
		1	**167-3543**	1	TERMINAL	
Y	4	1	*240-5065*	1	SEAT GP-SUSPENSION (AIR SUSP, HIGH BACK, WITH HTR)	1032
M	5	1	**6V-8202**	4	BOLT-SOCKET HEAD (M8X1.25X16-MM)	

M-METRIC PART
Y-SEPARATE ILLUSTRATION

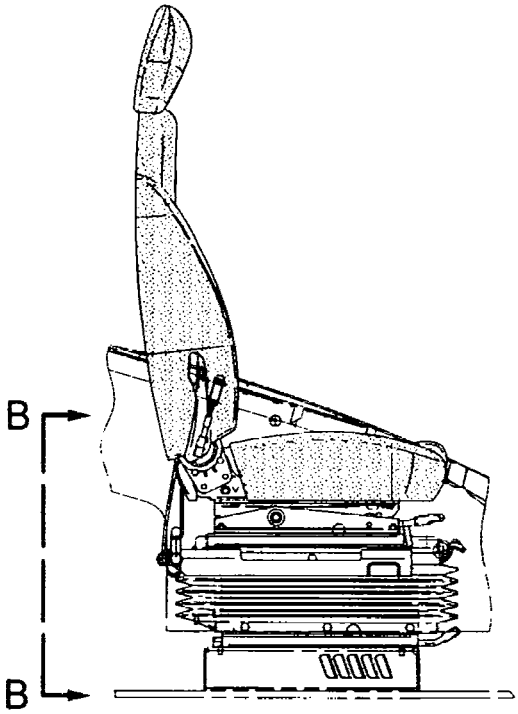

RIGHT SIDE VIEW

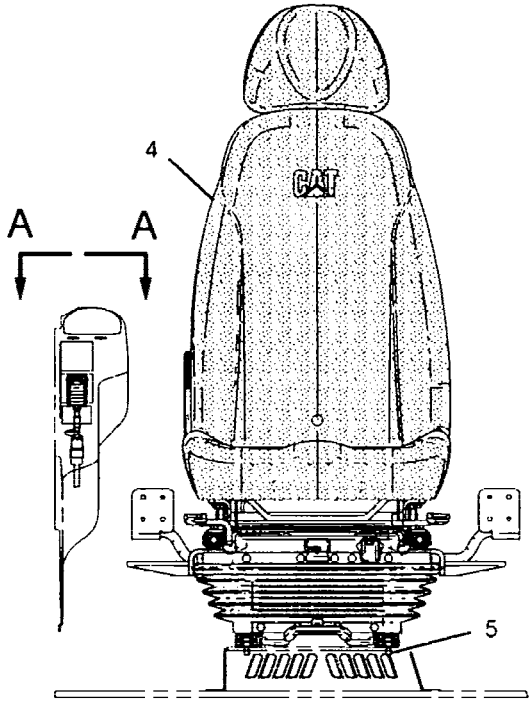

FRONT VIEW

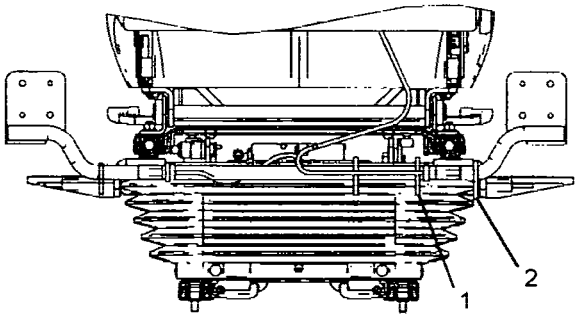

VIEW B-B

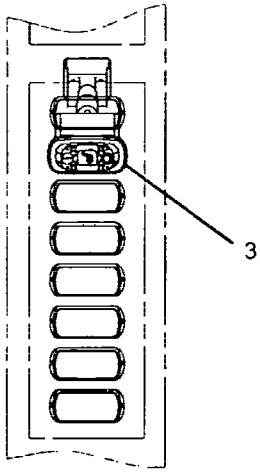

VIEW A-A

GRAPHIC #1 **<END>** g01167175

OPERATOR STATION

240-5065 SEAT GP-SUSPENSION

S/N: YEE1-UP

PART OF 240-5064 SEAT GP-SUSPENSION

ALSO AN ATTACHMENT

SMCS-7324, 7336 **i02304706**

NOTE	REF NO	GRAPHIC REF	PART NUMBER	QTY	PART NAME 1 2 3 4 5 6 (PRODUCT LEVEL)	SEE PAGE
Y	1	1	**229-9093**	1	SEAT GP (HIGH BACK, WITH HEATER)	1027
Y	2	1	**240-5063**	1	SUSPENSION GP-SEAT (AIR)	1037
M	3	1	**5C-7261**	4	NUT (M8X1.25-THD)	
	4	1	**8T-4224**	4	WASHER-HARD (8.8X16X2-MM THK)	

M-METRIC PART
Y-SEPARATE ILLUSTRATION

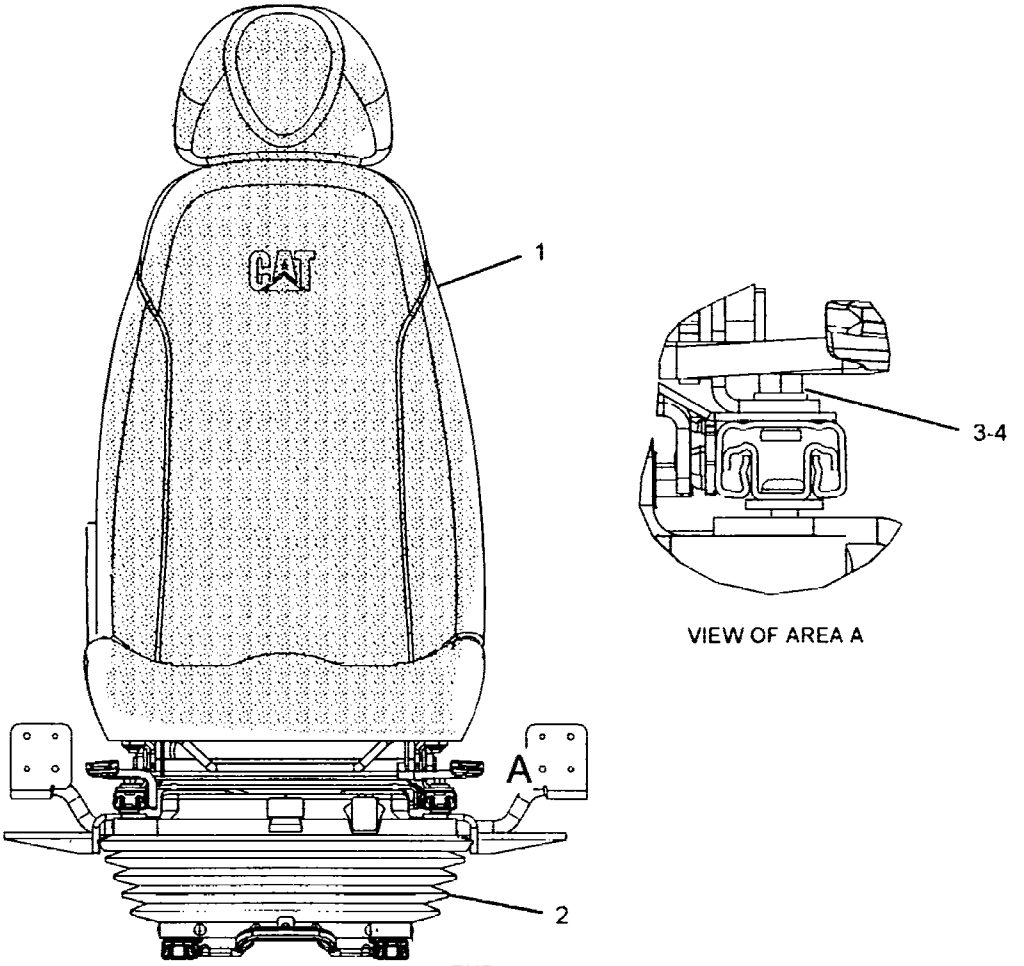

VIEW OF AREA A

GRAPHIC #1 **<END>** g01117827

OPERATOR STATION

305-0340 SEAT GP-SUSPENSION

S/N: YEE1-UP
AN ATTACHMENT

SMCS-7324, 7336 **i02843758**

NOTE	REF NO	GRAPHIC REF	PART NUMBER	QTY	PART NAME 1 2 3 4 5 6 (PRODUCT LEVEL)	SEE PAGE
Y	1	1	**305-0341**	1	SEAT GP-SUSPENSION (HIGH BACK, TILT)	1034
M	2	1	**6V-8202**	4	BOLT-SOCKET HEAD (M8X1.25X16-MM)	

M-METRIC PART
Y-SEPARATE ILLUSTRATION

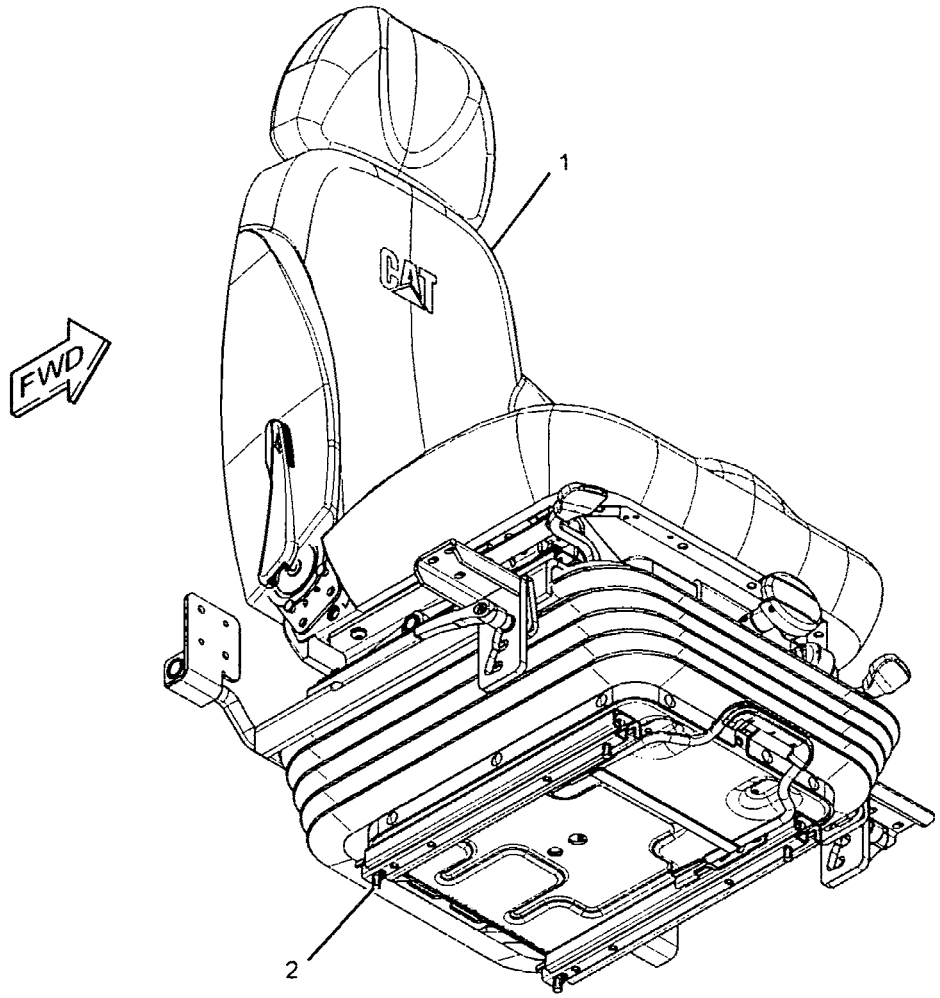

GRAPHIC #1 **<END>** g01476017

OPERATOR STATION

305-0341 SEAT GP-SUSPENSION

S/N: YEE1-UP
PART OF 305-0340 SEAT GP-SUSPENSION
AN ATTACHMENT

SMCS-7324, 7336 **i02972522**

NOTE	REF NO	GRAPHIC REF	PART NUMBER	QTY	PART NAME 1 2 3 4 5 6 (PRODUCT LEVEL)	SEE PAGE
	1	1	**229-9090**	2	SEAT GP (HIGH BACK, TILT)	
		1	**245-7884**	1	KIT-SEAT (HANDLE, HEADREST, LEVER) (INCLUDES WASHERS, HANDLE KIT, HEADREST AS-SEAT, LEVER KIT & SCREWS)	
		1	**245-7888**	1	KIT-SEAT SUPPORT (FASTENER) (INCLUDES SCREWS, NUTS & WASHERS)	
Y	2	1	**305-0339**	1	SUSPENSION GP-SEAT	1040
	3	1	**305-0351**	2	LEVER	
M	4	1	**305-0352**	2	NUT (M10X1.5-THD)	
	5	1	**305-0353**	1	SUPPORT AS	
	6	1	**305-0356**	1	SUPPORT AS	
	7	1	**096-4415**	2	LOCKWASHER	
M	8	1	**5C-7261**	4	NUT (M8X1.25-THD)	
	9	1	**8T-4224**	4	WASHER-HARD (8.8X16X2-MM THK)	

M-METRIC PART
Y-SEPARATE ILLUSTRATION

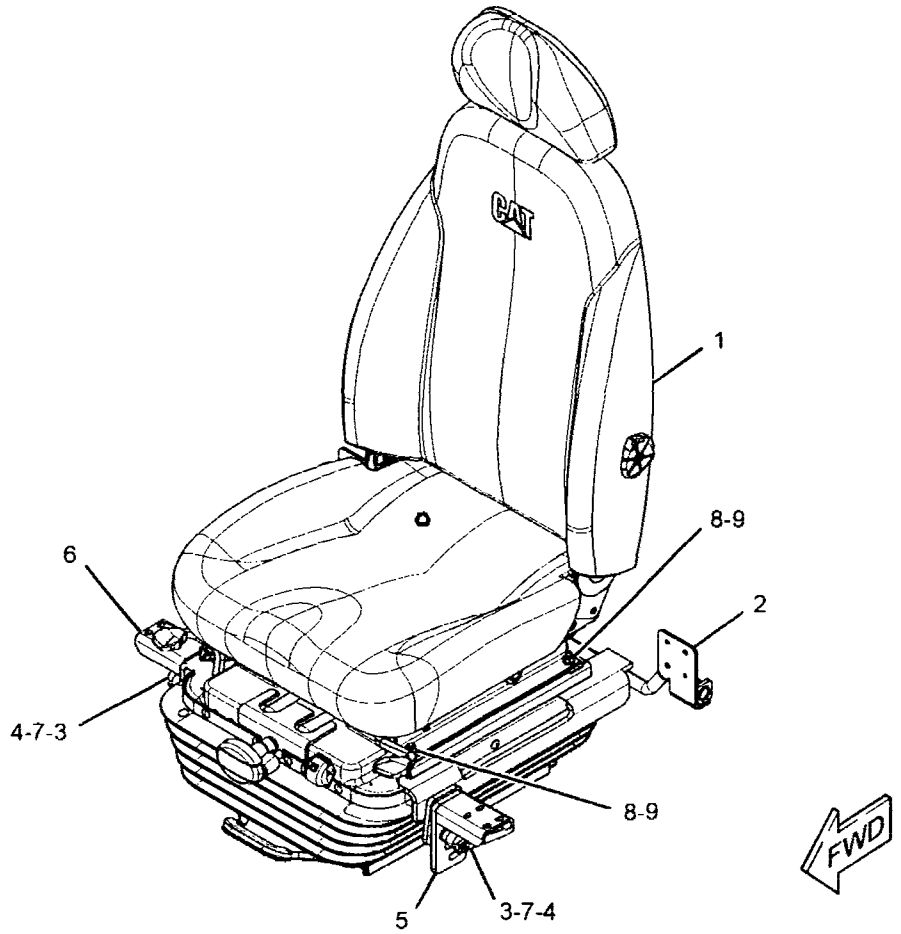

GRAPHIC #1 **<END>** g01460894

OPERATOR STATION

235-8856 SUPPORT GP-SEAT

S/N: YEE1-UP

PART OF 305-8000 OPERATOR AR

SMCS-7321 **i02346869**

NOTE	REF NO	GRAPHIC REF	PART NUMBER	QTY	PART NAME 1 2 3 4 5 6 (PRODUCT LEVEL)	SEE PAGE
	1	1	**235-8857**	1	SUPPORT AS	
	2	1	**7X-7729**	4	WASHER (11X25X3-MM THK)	
M	3	1	**8T-4136**	4	BOLT (M10X1.5X25-MM)	

M-METRIC PART

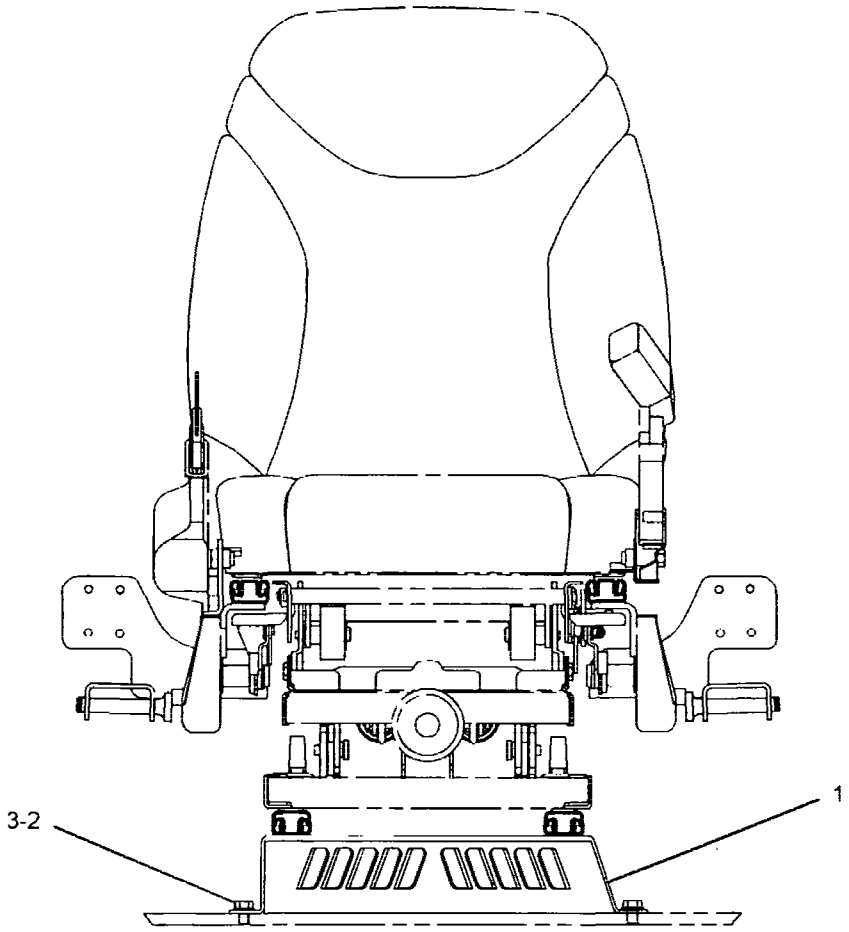

FRONT VIEW

GRAPHIC #1 **<END>** g01172582

OPERATOR STATION

229-9077 SUSPENSION GP-SEAT

S/N: YEE1-UP

PART OF 229-9089 SEAT GP-SUSPENSION

AN ATTACHMENT

SMCS-7324 **i02622849**

NOTE	REF NO	GRAPHIC REF	PART NUMBER	QTY	PART NAME 1 2 3 4 5 6 (PRODUCT LEVEL)	SEE PAGE
	1	1	**242-8768**	1	COVER AS	
		1	**147-4921**	1	KIT-CLIP (SEAT)	
	2	1	**245-7889**	1	ADJUSTER GP-SEAT (UPPER SLIDE)	
M		1	**5C-7261**	8	NUT (M8X1.25-THD)	
		1	**8T-4224**	8	WASHER-HARD (8.8X16X2-MM THK)	
		1	**245-7897**	4	PLATE	
M		1	**245-7899**	4	SCREW-BUTTON HEAD (M8X1.25X30-MM)	
	3	1	**245-7890**	1	BRACKET GP-MOUNTING	
M		1	**5C-7261**	4	NUT (M8X1.25-THD)	
		1	**8T-4224**	4	WASHER-HARD (8.8X16X2-MM THK)	
		1	**245-7897**	4	PLATE	
M		1	**245-7899**	4	SCREW-BUTTON HEAD (M8X1.25X30-MM)	
Y	4	1	**245-7892**	1	SUSPENSION GP-SEAT	1038
	5	1	**245-7895**	1	KIT-CLIP (SUSPENSION SEAT)	
Y	6	1	**245-7896**	1	ADJUSTER GP-SEAT (LOWER SLIDE)	932

M-METRIC PART
Y-SEPARATE ILLUSTRATION

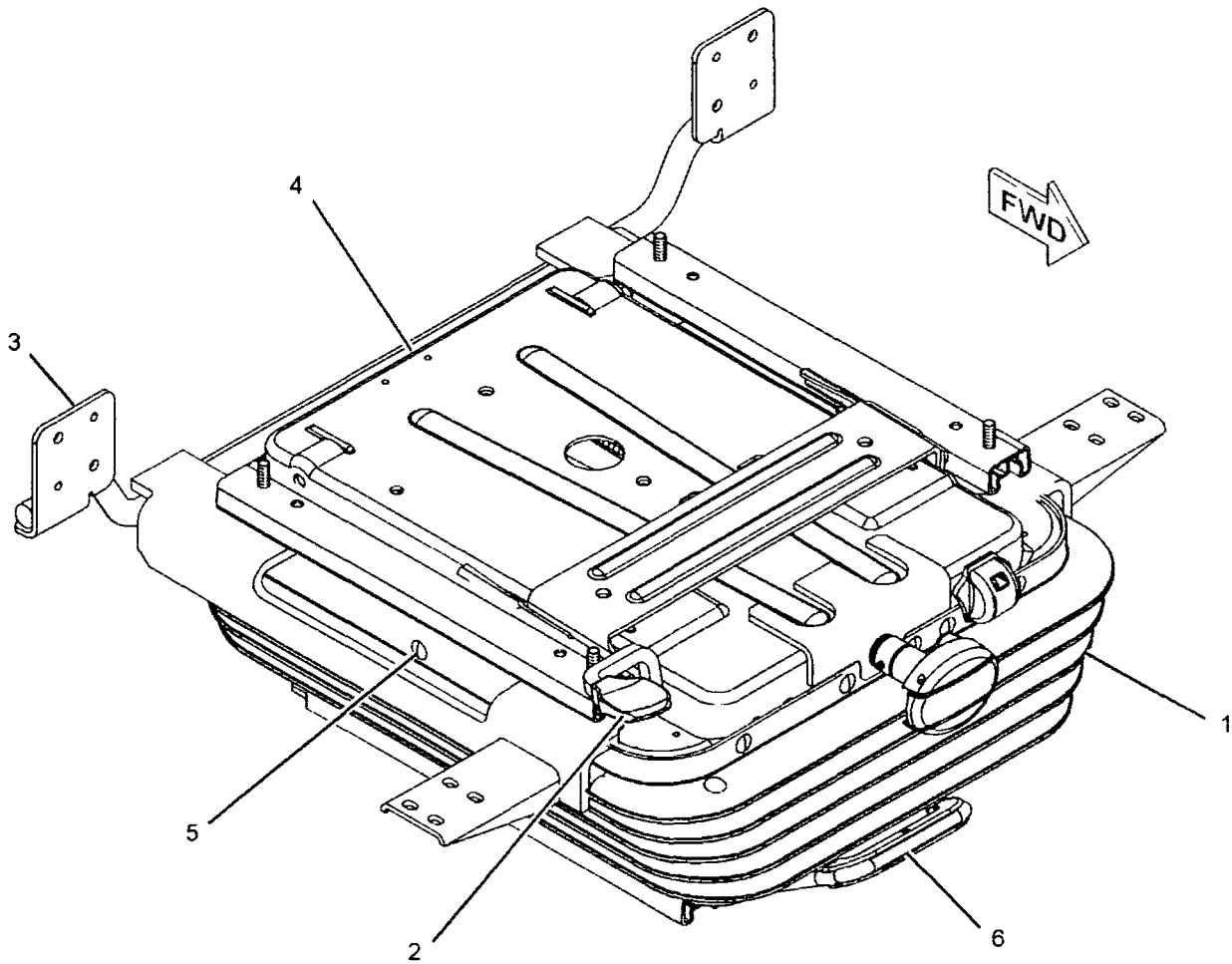

GRAPHIC #1 **<END>** g01087842

OPERATOR STATION

240-5063 SUSPENSION GP-SEAT-AIR

S/N: YEE1-UP
PART OF 240-5065 SEAT GP-SUSPENSION
ALSO AN ATTACHMENT

SMCS-7324 **i02536349**

NOTE	REF NO	GRAPHIC REF	PART NUMBER	QTY	PART NAME 1 2 3 4 5 6 (PRODUCT LEVEL)	SEE PAGE
	1	1	**7I-2673**	1	STRAP-CABLE	
	2	1	**242-8768**	1	COVER AS	
	3	1	**245-7889**	1	ADJUSTER GP-SEAT	
M		1	**5C-7261**	8	NUT (M8X1.25-THD)	
		1	**8T-4224**	8	WASHER-HARD (8.8X16X2-MM THK)	
		1	**245-7897**	4	PLATE	
M		1	**245-7899**	4	SCREW-BUTTON HEAD (M8X1.25X30-MM)	
	4	1	**245-7890**	1	BRACKET GP-MOUNTING	
M		1	**5C-7261**	4	NUT (M8X1.25-THD)	
		1	**8T-4224**	4	WASHER-HARD (8.8X16X2-MM THK)	
		1	**245-7897**	4	PLATE	
M		1	**245-7899**	4	SCREW-BUTTON HEAD (M8X1.25X30-MM)	
CY	5	1	**273-5384**	1	SUSPENSION GP-SEAT	1039
	6	1	**245-7895**	1	KIT-CLIP (SUSPENSION SEAT)	
Y	7	1	**245-7896**	1	ADJUSTER GP-SEAT	932

C-CHANGE FROM PREVIOUS TYPE
M-METRIC PART
Y-SEPARATE ILLUSTRATION

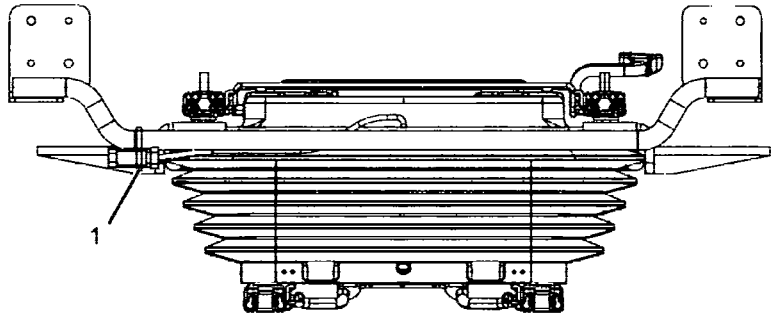

FRONT VIEW

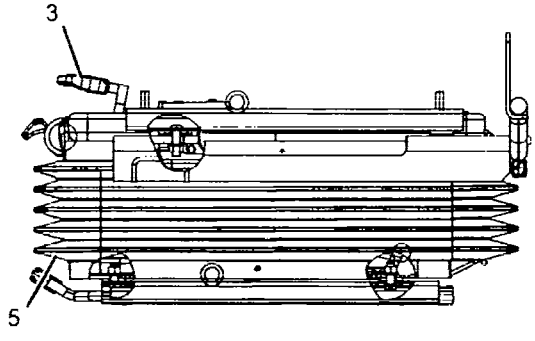

LEFT SIDE VIEW

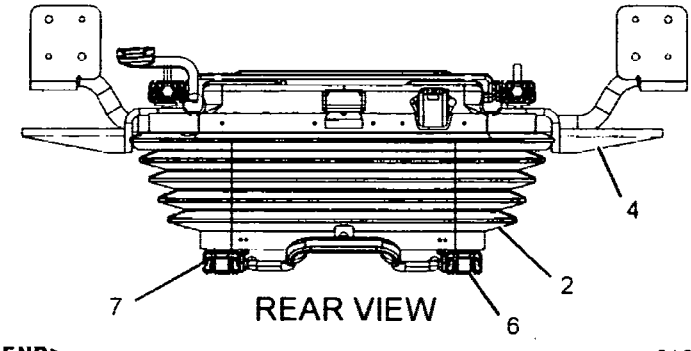

REAR VIEW

GRAPHIC #1 **<END>** g01098464

OPERATOR STATION

245-7892 SUSPENSION GP-SEAT

S/N: YEE1-UP

PART OF 229-9077, 305-0339 SUSPENSION GP-SEAT

AN ATTACHMENT

SMCS-7324 **102346862**

NOTE	REF NO	GRAPHIC REF	PART NUMBER	QTY	PART NAME 1 2 3 4 5 6 (PRODUCT LEVEL)	SEE PAGE
M	1	1	**198-3899**	2	SCREW-BUTTON HEAD (M8X1.25X20-MM)	
	2	1	**209-4280**	1	CYLINDER-DAMPER	
	3	1	**245-7897**	8	PLATE	
M	4	1	**245-7898**	2	SCREW-BUTTON HEAD (M8X1.25X25-MM)	
M	5	1	**245-7899**	4	SCREW-BUTTON HEAD (M8X1.25X30-MM)	
M	6	1	**5C-7261**	8	NUT (M8X1.25-THD)	
	7	1	**8T-4224**	8	WASHER-HARD (8.8X16X2-MM THK)	

M-METRIC PART

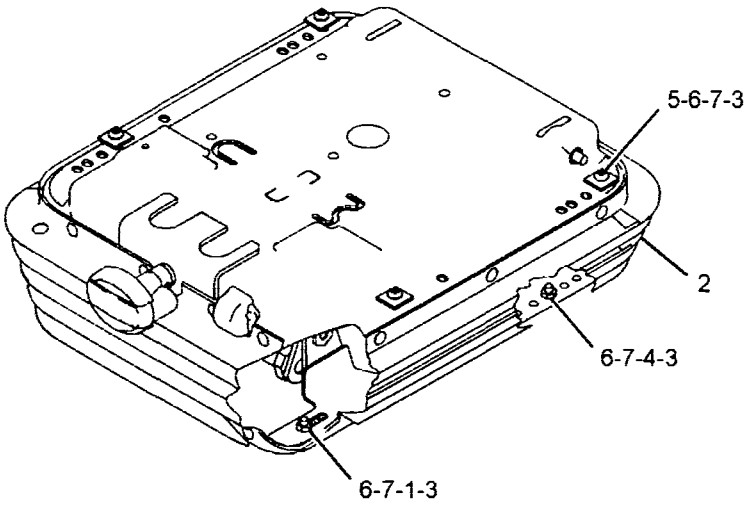

VIEW OF AREA A

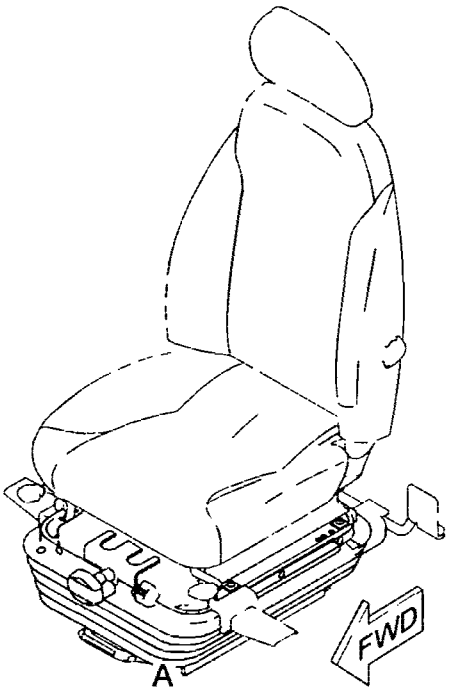

GRAPHIC #1 **<END>** g01172575

OPERATOR STATION

273-5384 SUSPENSION GP-SEAT–AIR

S/N: YEE1-UP

PART OF 240-5063 SUSPENSION GP-SEAT

ALSO AN ATTACHMENT

SMCS-7324 **i02536391**

NOTE	REF NO	GRAPHIC REF	PART NUMBER	QTY	PART NAME 1 2 3 4 5 6 (PRODUCT LEVEL)	SEE PAGE
M	1	1	**198-3899**	2	SCREW-BUTTON HEAD (M8X1.25X20-MM)	
	2	1	**209-0348**	1	DAMPER	
	3	1	**245-7897**	8	PLATE	
M	4	1	**245-7898**	2	SCREW-BUTTON HEAD (M8X1.25X25-MM)	
M	5	1	**245-7899**	4	SCREW-BUTTON HEAD (M8X1.25X30-MM)	
M	6	1	**5C-7261**	8	NUT (M8X1.25-THD)	
	7	1	**8T-4224**	8	WASHER-HARD (8.8X16X2-MM THK)	
	8	1	**273-5386**	1	VALVE AS-AIR (SEAT)	

M-METRIC PART

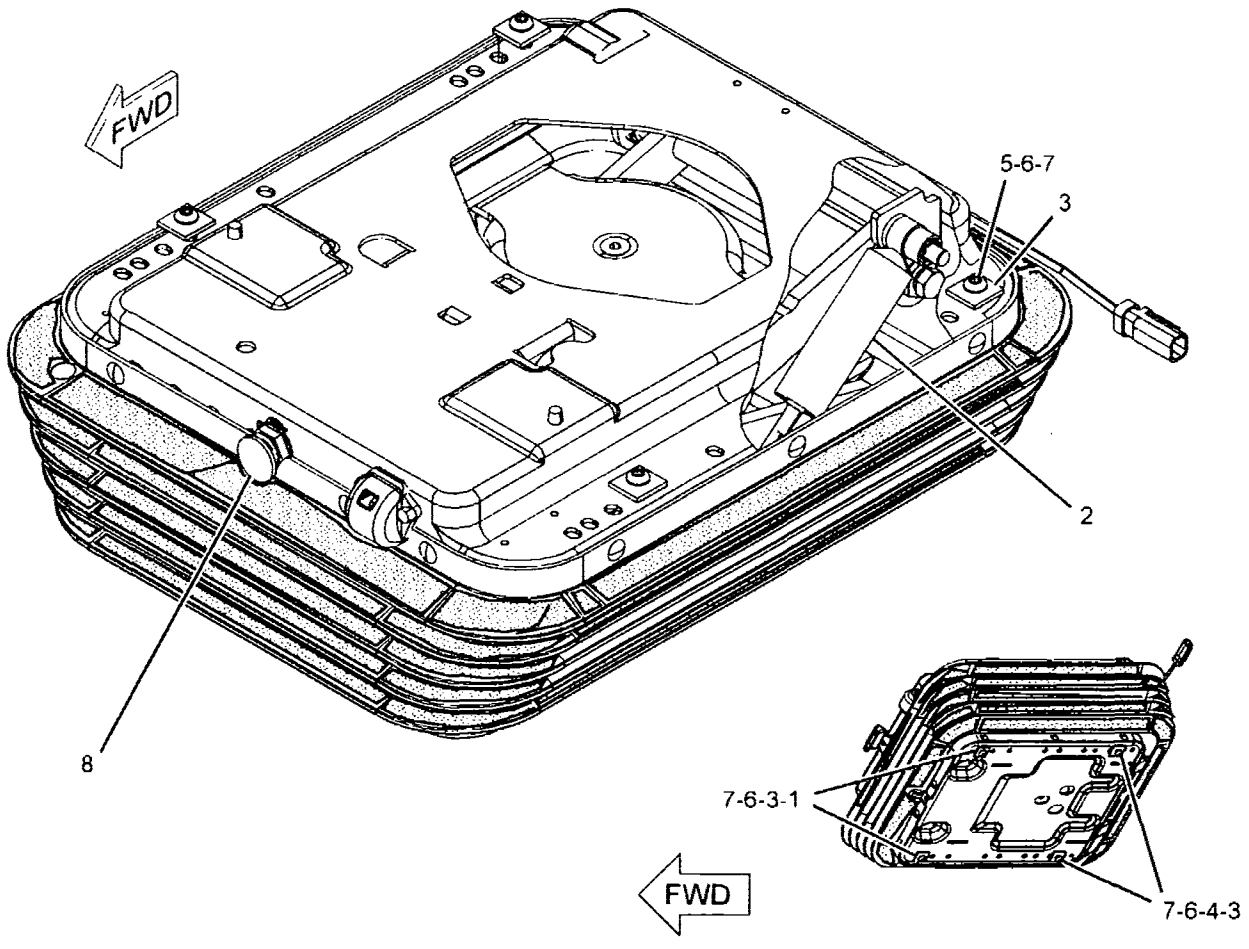

GRAPHIC #1 **<END>** g01254074

OPERATOR STATION

305-0339 SUSPENSION GP-SEAT

S/N: YEE1-UP
PART OF 305-0341 SEAT GP-SUSPENSION
AN ATTACHMENT

SMCS-7324 **i02843776**

NOTE	REF NO	GRAPHIC REF	PART NUMBER	QTY	PART NAME 1 2 3 4 5 6 (PRODUCT LEVEL)	SEE PAGE
J	1	1	**242-8768**	1	COVER AS (SUSPENSION SEAT)	
	2	1	**245-7889**	1	ADJUSTER GP-SEAT	
					(INCLUDES NUTS,WASHERS, PLATES & SCREWS)	
	3	1	**305-0350**	1	KIT-CONSOLE ADJUSTMENT (CONSOLE)	
					(INCLUDES NUTS,WASHERS, PLATES, SCREWS, LEVERS & SUPPORT ASSEMBLIES)	
Y	4	1	**245-7892**	1	SUSPENSION GP-SEAT	1038
J	5	1	**245-7895**	1	KIT-CLIP (SUSPENSION SEAT)	
					(INCLUDES CLIPS)	
Y	6	1	**245-7896**	1	ADJUSTER GP-SEAT	932

J-KIT MARKED J SERVICES PART MARKED J
Y-SEPARATE ILLUSTRATION

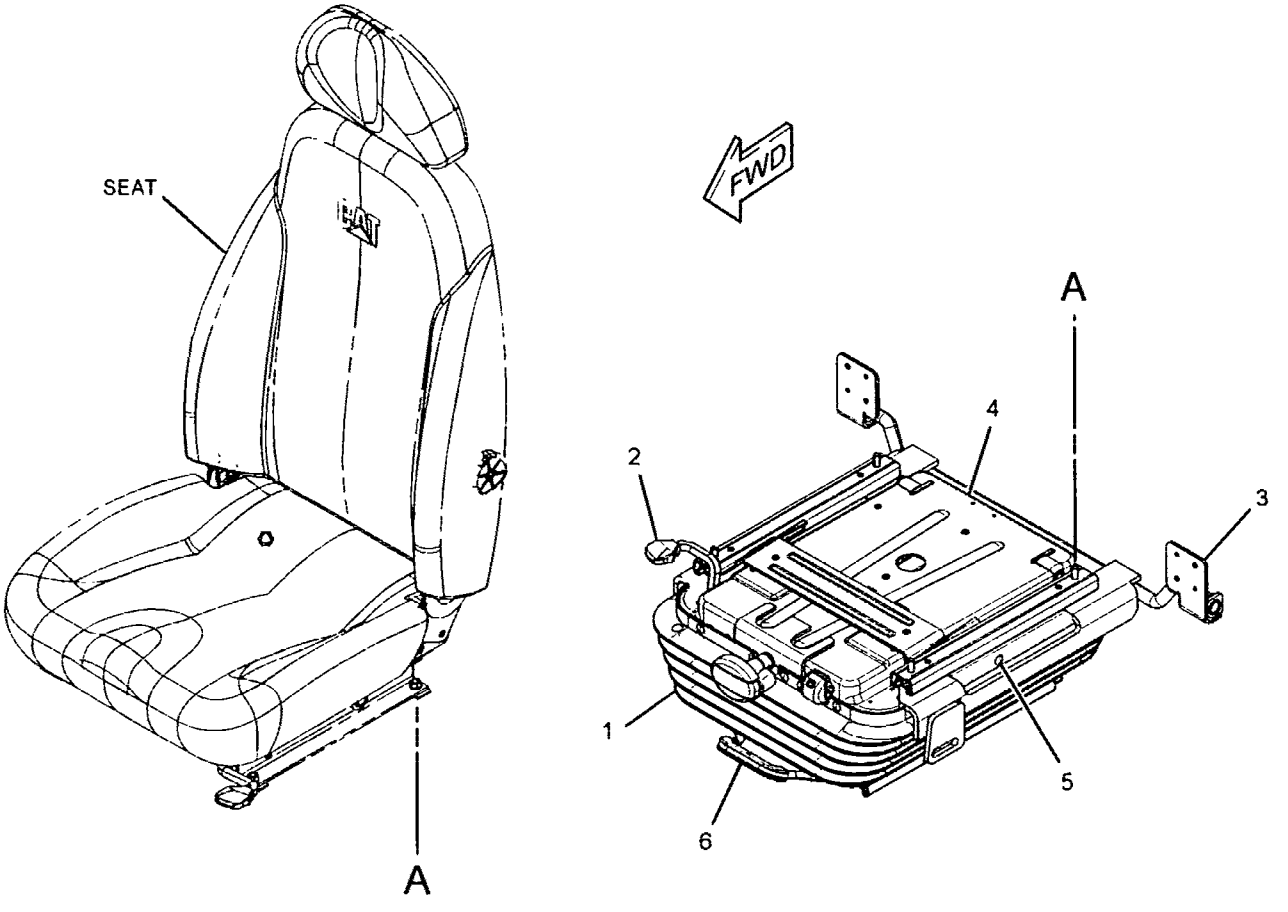

GRAPHIC #1 **<END>** g01460895

OPERATOR STATION

229-9088 WASHER GP-WINDOW–LOWER

S/N: YEE1-UP

PART OF 324-6194 CHASSIS AR

SMCS-7306 **i02704013**

NOTE	REF NO	GRAPHIC REF	PART NUMBER	QTY	PART NAME 1 2 3 4 5 6 (PRODUCT LEVEL)	SEE PAGE
	1	1	3S-2093	2	STRAP-CABLE	
	2	1	293-1256	2	VALVE AS-CHECK	
	3	1	163-6795	2	STRAP-CABLE	
	4	1	170-9492	1	PLATE	
E	5	1	144-0195		HOSE (290-CM)	
E	5A	1	144-0195		HOSE (30-CM)	
E	5B	1	144-0195		HOSE (13-CM)	
	6	1	235-9012	1	SUPPORT AS	
	7	1	176-1932	1	TANK AS-WINDOW WASHER	
	8	1	178-5500	1	NOZZLE AS	
		1	085-8037	1	NOZZLE	
		1	105-9526	1	ADAPTER	
		1	105-9527	1	GASKET	
M	9	1	3E-9872	2	SCREW AS (M4X0.7X12-MM)	
	10	1	6V-3265	10	CLIP	
	11	1	8T-4121	10	WASHER-HARD (11X21X2.5-MM THK)	
M	12	1	8T-4191	10	BOLT (M10X1.5X16-MM)	
M	13	1	8T-4970	2	BOLT (M6X1X14-MM)	
	14	1	9X-8256	2	WASHER (6.6X12X2-MM THK)	

E-ORDER BY THE CENTIMETER
M-METRIC PART

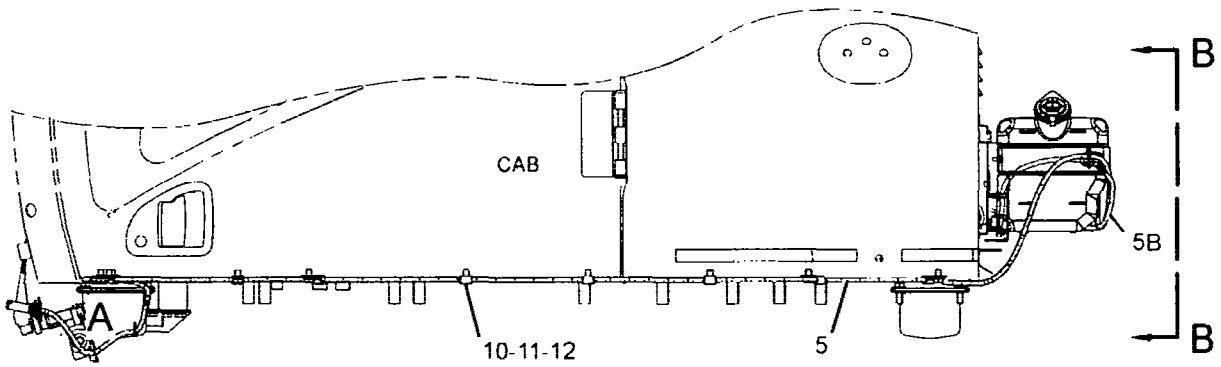

LEFT SIDE VIEW

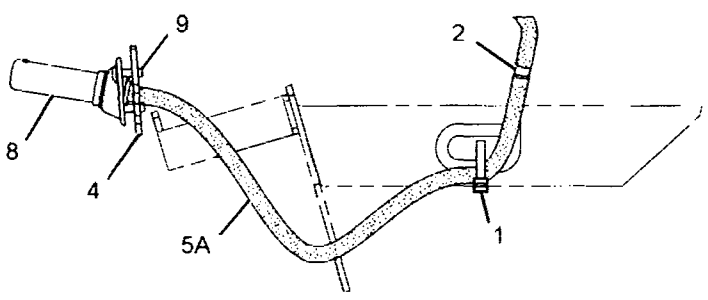

VIEW OF AREA A

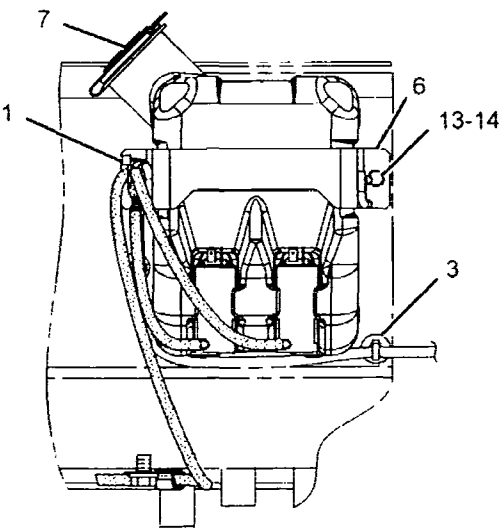

VIEW B-B

GRAPHIC #1 **<END>** g01292034

OPERATOR STATION

139-7101 WINDOW GP-CAB–FRONT, UPPER

S/N: YEE1-UP

PART OF 305-8002 CAB GP

SMCS-7310 **i02887706**

NOTE	REF NO	GRAPHIC REF	PART NUMBER	QTY	PART NAME 1 2 3 4 5 6 (PRODUCT LEVEL)	SEE PAGE
	1	2	170-9722	1	CUSHION	
	2	2	151-6703	1	HANDLE-PULL	
	3	2	151-6704	2	CAP (HANDLE)	
	4	2	151-6778	1	FRAME AS	
	5	2	151-6785	1	BRACKET AS	
	6	2	151-6813	1	BRACKET AS	
	7	2	151-6815	1	BRACKET AS	
	8	2	151-6818	1	LINK AS	
	9	2	151-6819	1	LINK AS	
	10	2	151-6831	1	LOCK AS	
	11	2	151-6832	1	LEVER AS	
	12	3	151-6844	1	COVER	
	13	1	151-9557	2	STOP-RUBBER	
	14	2	156-6472	1	GLASS	
	15	1	156-6554	1	CABLE AS	
	16	2	156-6555	1	STRIKER AS	
	17	1	156-6562	1	BRACKET	
	18	1	156-6563	1	CATCH AS	
	19	1	156-6579	1	STOP	
	20	2	156-6601	1	SEAL AS	
	21	3	156-6627	1	STOP AS	
	22	1	161-3684	2	STOP	
	23	1	161-3698	1	SEAL	
	24	1	164-0648	1	BRACKET AS	
	25	1	178-5576	1	STOP	
M	26	3	185-8181	2	SCREW (M4X0.7X10-MM)	
M	27	1	185-8182	4	BOLT (M10X1.5X20-MM)	
M	28	3	5C-8312	1	NUT (M4X0.7-THD)	
	29	1	185-8187	4	WASHER (10.2X22X3.2-MM THK)	
M	30	1	185-8197	1	NUT (M10X1.15-THD)	
	31	1	185-8221	1	STOP	
M	32	1	099-0823	2	SCREW-MACHINE (M6X1X6-MM)	
M	33	2	101-8900	2	SCREW AS (M6X1X20-MM)	
	34	2	117-6306	1	SWITCH (WINDOW POSITION)	
	35	2	151-9576	4	ROLLER	
	36	1	4I-0420	1	STRIP	
	37	1	7X-0578	1	WASHER-HARD (10.2X32X2.5-MM THK)	
M	38	3	9X-2042	20	SCREW-TRUSS HEAD (M6X1X12-MM)	
M	39	2,3	9X-2044	5	SCREW-TRUSS HEAD (M6X1X16-MM)	
M	40	1	9X-2045	4	SCREW-TRUSS HEAD (M6X1X20-MM)	
	41	3	9X-8256	2	WASHER (6.6X12X2-MM THK)	

M-METRIC PART

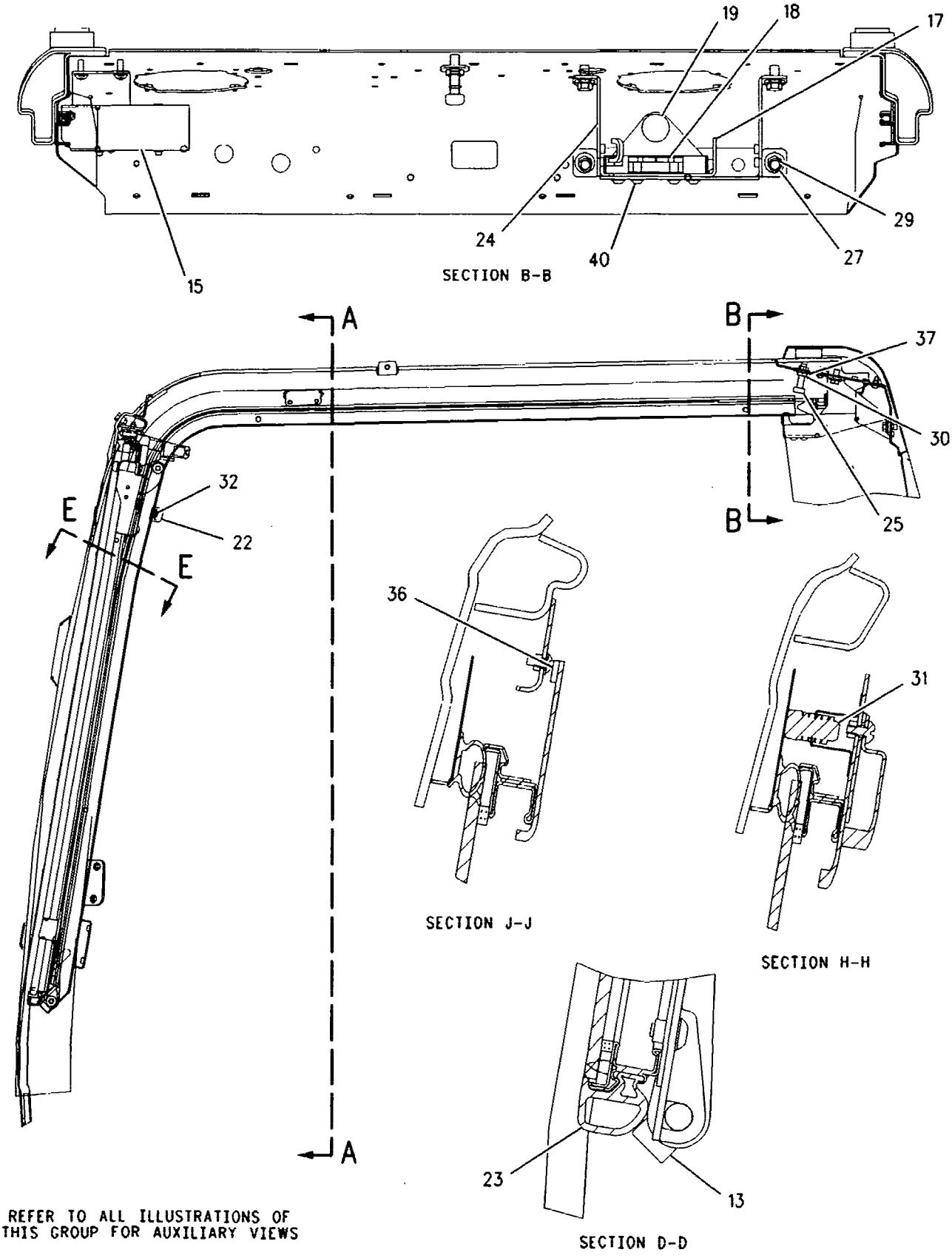

GRAPHIC #1 g00776460

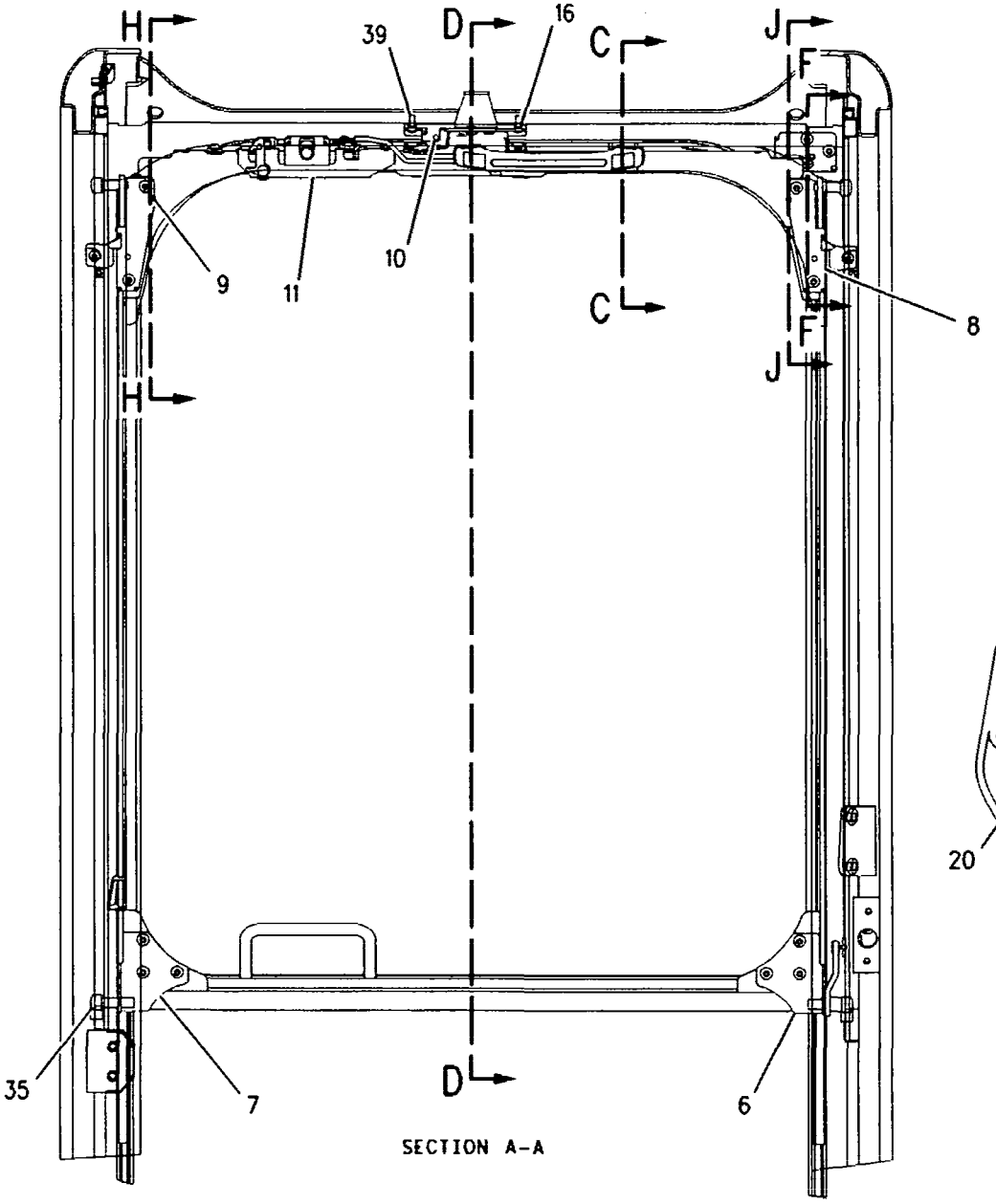

SECTION A-A

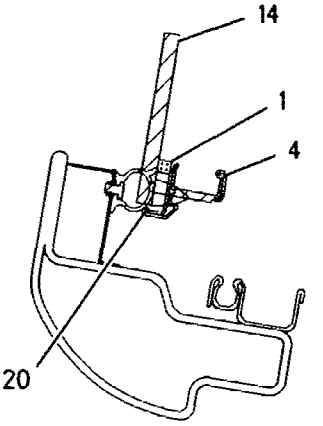

SECTION E-E

REFER TO ALL ILLUSTRATIONS OF THIS GROUP FOR AUXILIARY VIEWS

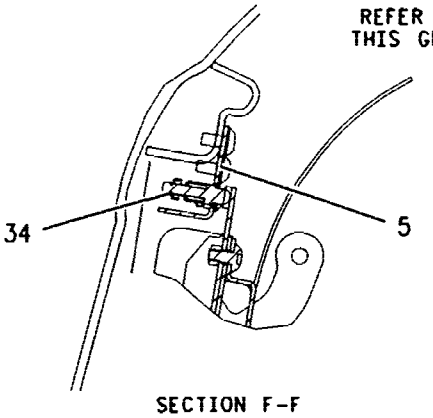

SECTION F-F

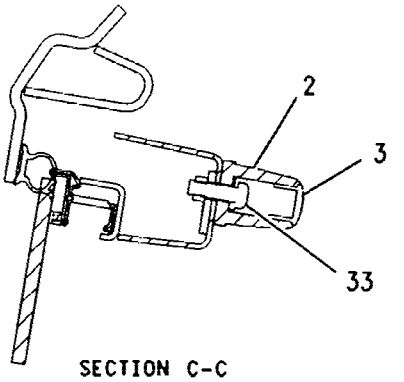

SECTION C-C

GRAPHIC #2

g00852356

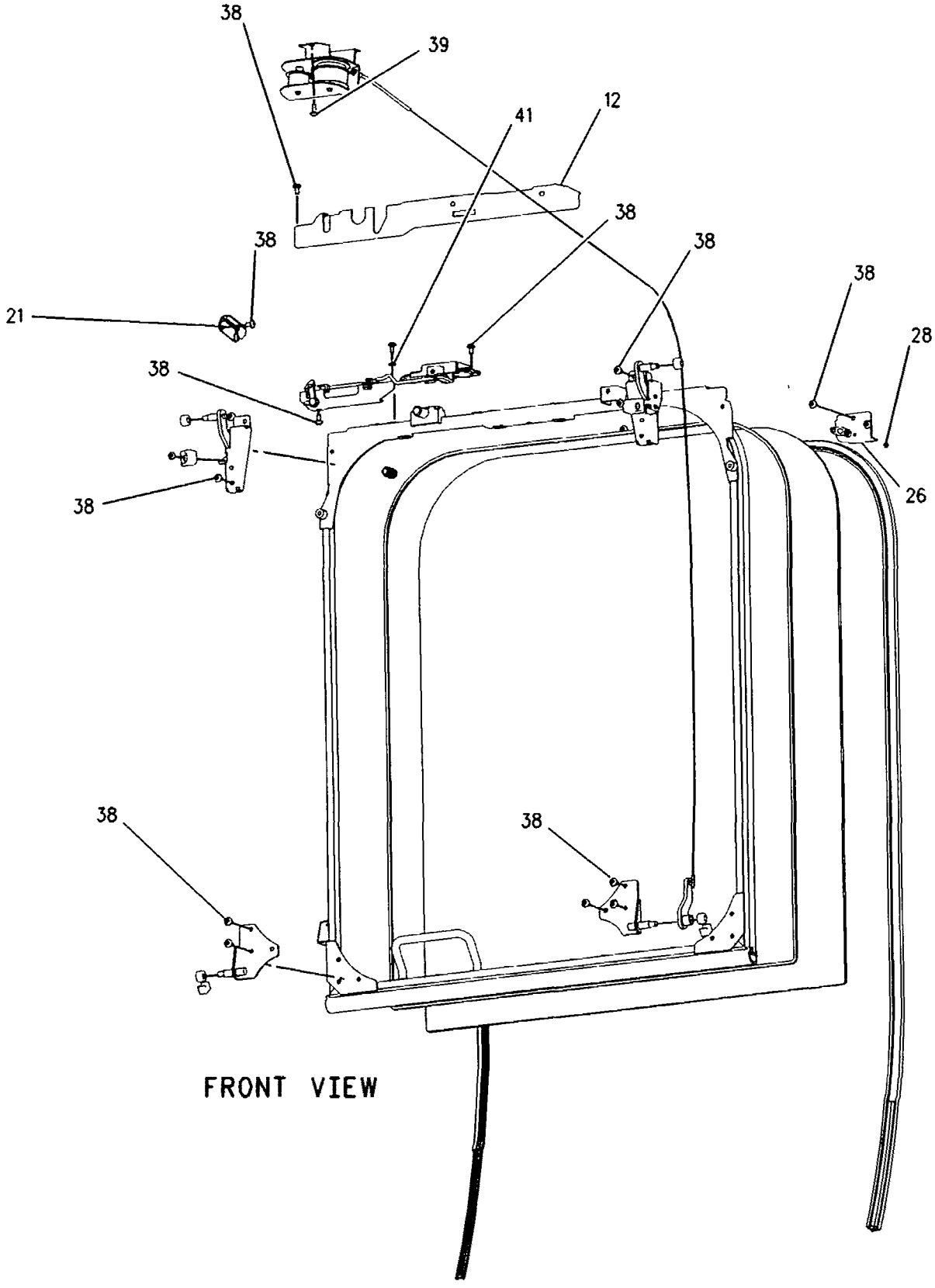

FRONT VIEW

GRAPHIC #3 **<END>** g00852371

OPERATOR STATION

156-6647 WINDOW GP-CAB–FRONT, LOWER

S/N: YEE1-UP

PART OF 227-5343 WINDOW GP-CAB

SMCS-7310 **i02443481**

NOTE	REF NO	GRAPHIC REF	PART NUMBER	QTY	PART NAME 1 2 3 4 5 6 (PRODUCT LEVEL)	SEE PAGE
	1	1	*156-6648*	1	GLASS	
M	2	1	**9X-2042**	2	SCREW-TRUSS HEAD (M6X1X12-MM)	
	3	1	**151-6705**	1	PACKING	
	4	1	**124-3966**	1	STOP	
	5	1	**144-9692**	2	RETAINER	
	6	1	**144-9691**	2	PACKING	

M-METRIC PART

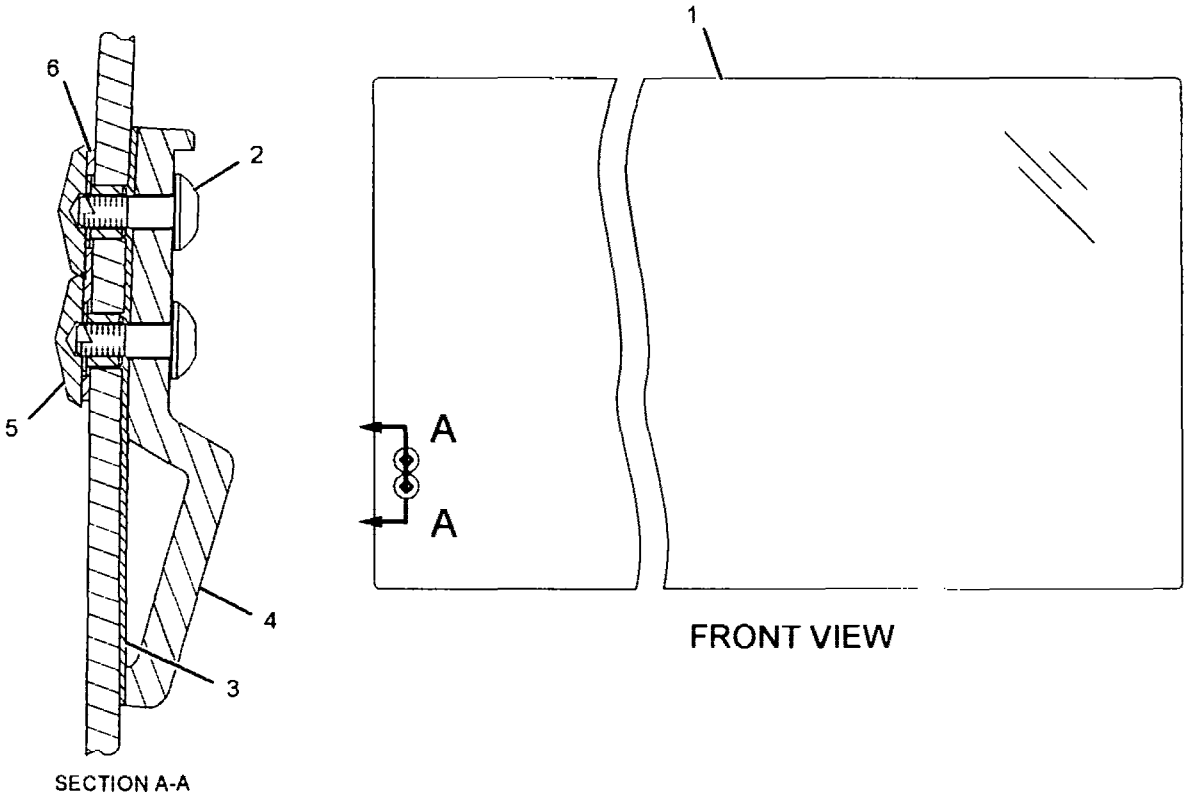

SECTION A-A

FRONT VIEW

GRAPHIC #1 **<END>** g01131367

OPERATOR STATION

227-5343 WINDOW GP-CAB–FRONT, LOWER

S/N: YEE1-UP

PART OF 305-8002 CAB GP

SMCS-7310 **i02882199**

NOTE	REF NO	GRAPHIC REF	PART NUMBER	QTY	PART NAME 1 2 3 4 5 6 (PRODUCT LEVEL)	SEE PAGE
M	1	1	**3E-9871**	2	BOLT AS (M6X1X16-MM)	
	2	1	**4I-1163**	1	BRACKET	
	3	1	**129-6466**	1	SWITCH AS-ROLLER (WIPER, LOWER)	
		1	**2H-3922**	1	LOCKWASHER	
		1	**6V-8363**	2	SCREW (10-32X0.312-IN)	
		1	**6V-8370**	1	NUT-HEX (3/4-32-THD)	
		1	**8F-1434**	2	LOCKWASHER	
		1	**9X-0199**	1	BOOT-SWITCH	
	4	1	**156-6631**	2	STOP	
	5	1	**156-6646**	1	BRACKET	
Y	6	1	**156-6647**	1	WINDOW GP-CAB (FRONT, LOWER)	1046
	7	1	**305-0361**	1	SEAL	
	8	1	**178-5569**	2	SEAL	
	9	1	**189-2702**	2	SEAL	
M	10	1	**9X-2044**	2	SCREW-TRUSS HEAD (M6X1X16-MM)	

M-METRIC PART
Y-SEPARATE ILLUSTRATION

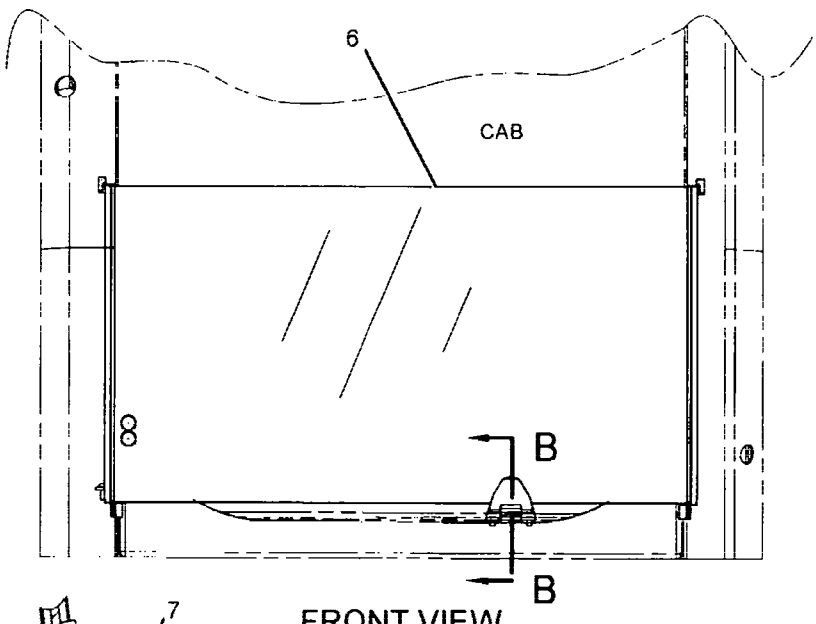

FRONT VIEW

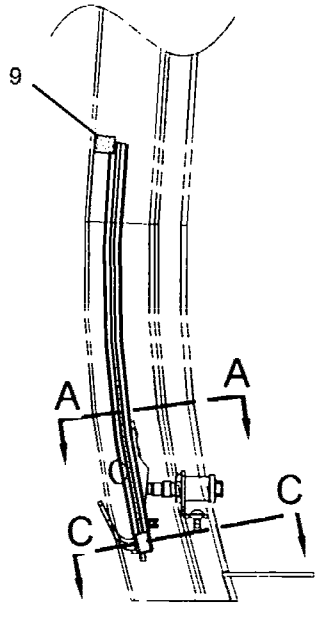

LEFT SIDE VIEW

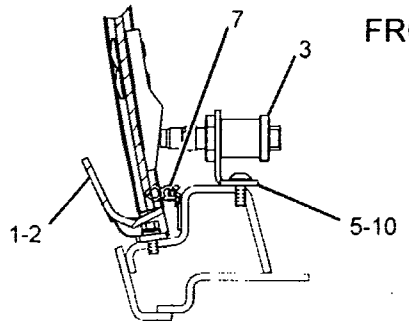

SECTION B-B

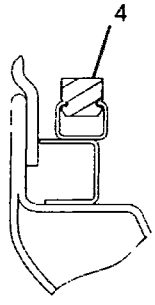

SECTION C-C

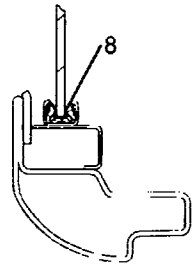

SECTION A-A

GRAPHIC #1 **<END>** g01401966

OPERATOR STATION

235-8915 WINDOW GP-CAB–SIDE, REAR

S/N: YEE1-UP

PART OF 305-8002 CAB GP

SMCS-7310 i02379543

NOTE	REF NO	GRAPHIC REF	PART NUMBER	QTY	PART NAME 1 2 3 4 5 6 (PRODUCT LEVEL)	SEE PAGE
	1	1	164-0666	1	SEAL	
	2	1	167-7037	1	GLASS (REAR)	
	3	1	178-5572	5	SPACER	
	4	1	235-8911	1	GLASS (RH)	
	5	1	099-3629	1	RING-KEY	
	6	1	167-7036	1	GLASS (LH)	
	7	1	178-5573	4	SPACER	
	8	1	178-5574	9	SPACER	

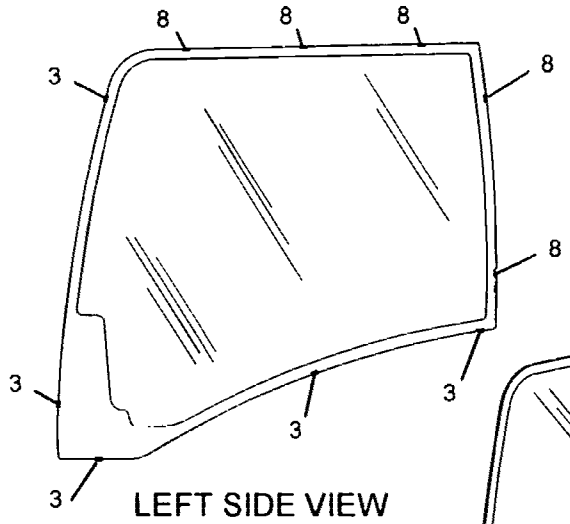

LEFT SIDE VIEW

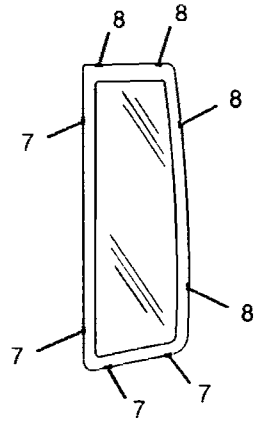

LEFT SIDE VIEW

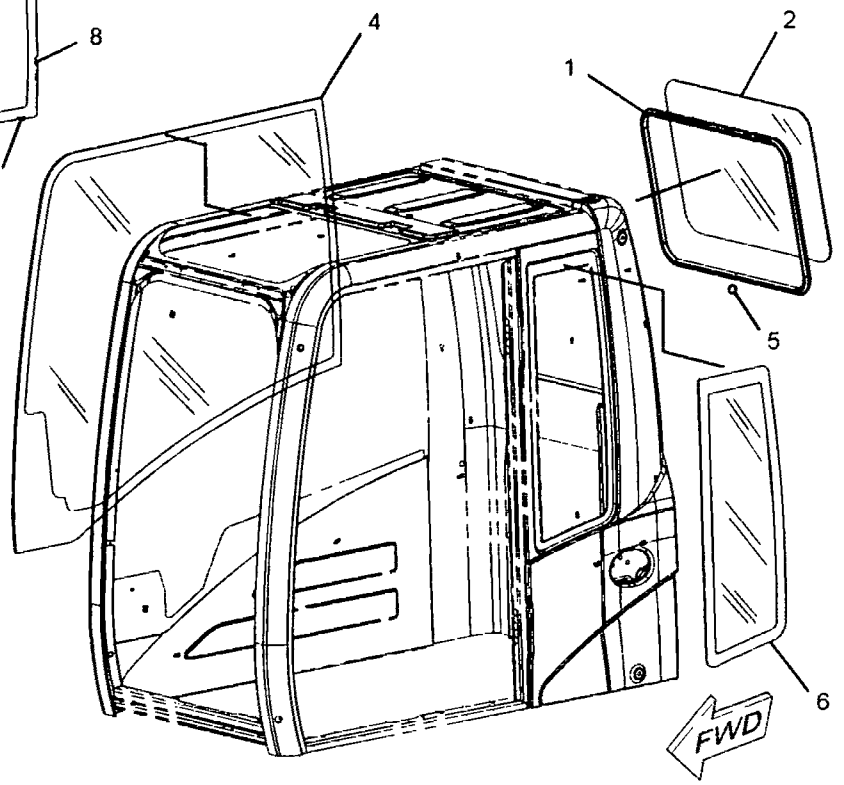

GRAPHIC #1 <END> g01098415

OPERATOR STATION

245-5468 WINDOW GP-CAB–REAR

S/N: YEE1-UP

AN ATTACHMENT

SMCS-7310 **i02158507**

NOTE	PART NUMBER	QTY	PART NAME 1 2 3 4 5 6 (PRODUCT LEVEL)	SEE PAGE
Y	*245-5469*	1	FILM GP (ALTERNATE EXIT)	1061
Y	*189-2759*	1	WINDOW GP-REAR	1054

Y-SEPARATE ILLUSTRATION

<END>

OPERATOR STATION

225-0326 WINDOW GP-DOOR

S/N: YEE1-UP

PART OF 176-1964 DOOR GP-CAB

SMCS-7308, 7310 **i02286556**

NOTE	REF NO	GRAPHIC REF	PART NUMBER	QTY	PART NAME 1 2 3 4 5 6 (PRODUCT LEVEL)	SEE PAGE
	1	1	**153-2849**	2	BLOCK	
	2	1	**225-0327**	1	LATCH AS	
	3	1	**225-0328**	1	FRAME AS	
	4	1	**225-0329**	1	GLASS	
	5	1	**225-0330**	1	GLASS	
	6	1	**268-1901**	1	SEAL	
	7	1	**225-0332**	1	SEAL	
	8	1	**225-0333**	1	SEAL	
	9	1	**225-0334**	1	SPACER	
	10	1	**225-0335**	2	SPACER	
BD	11	1	**9X-2533**		STOP	

B-USE AS REQUIRED
D-ORDER BY THE METER

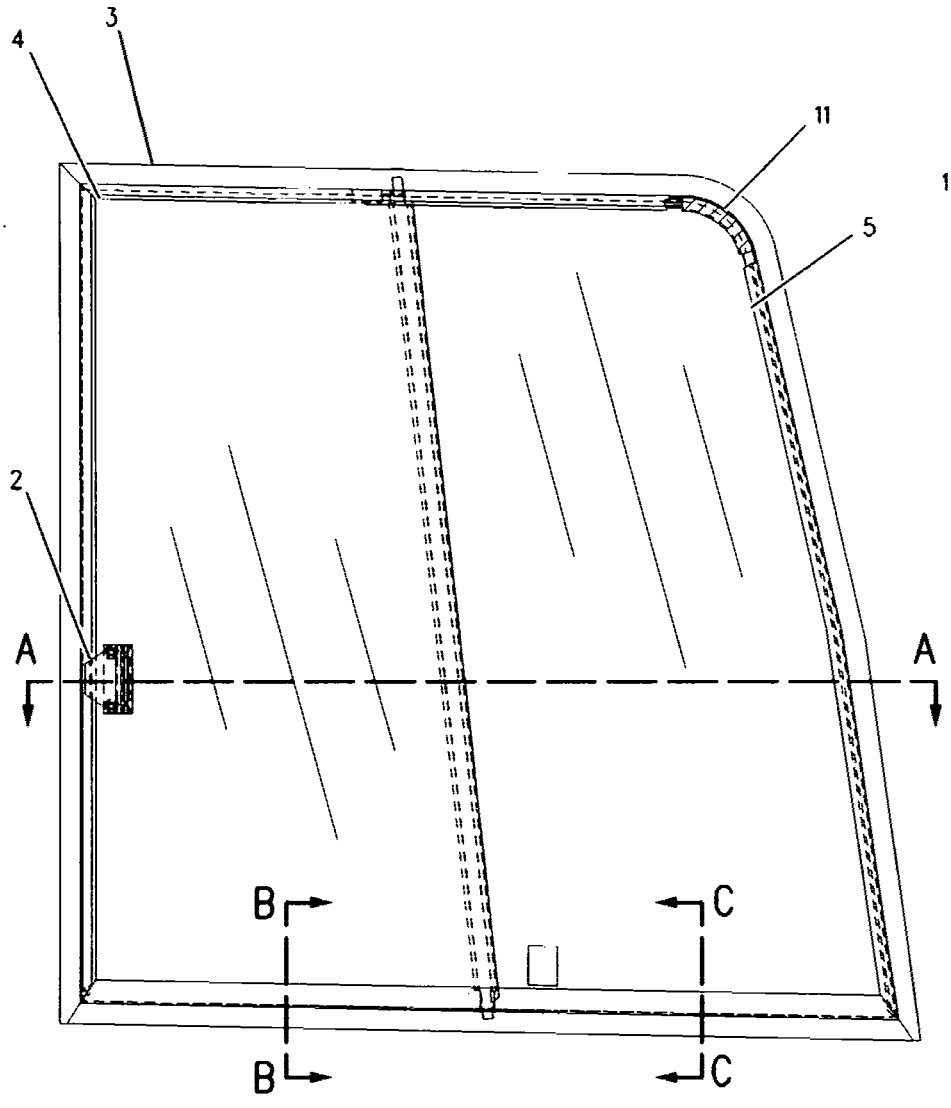

RIGHT SIDE VIEW

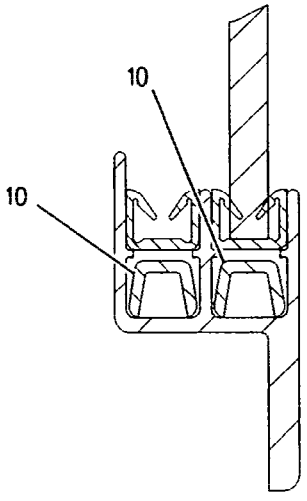

SECTION C-C

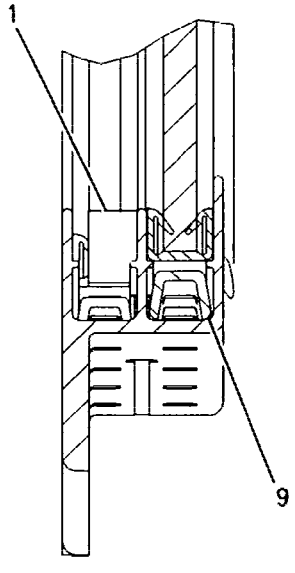

SECTION B-B

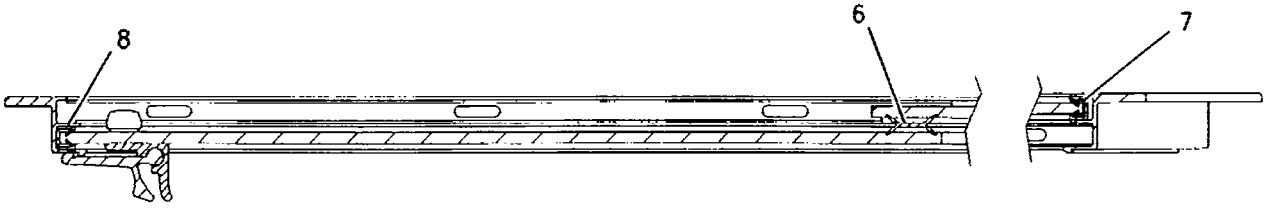

SECTION A-A

GRAPHIC #1 **<END>** g00942082

OPERATOR STATION

185-8203 WINDOW GP-REAR

S/N: YEE1-UP
PART OF 189-2759 WINDOW GP-REAR
AN ATTACHMENT

SMCS-7310, 7340 **i01566066**

NOTE	REF NO	GRAPHIC REF	PART NUMBER	QTY	PART NAME 1 2 3 4 5 6 (PRODUCT LEVEL)	SEE PAGE
	1	1	178-5574	6	SPACER	
	2	1	184-3971	1	HANDLE	
	3	1	184-3979	1	PIN	
	4	1	185-8200	1	GLASS	
	5	1	185-8201	1	FRAME AS	
	6	1	185-8204	1	BRACKET	
	7	1	185-8209	1	LEVER	
	8	1	189-2712	1	COVER	
	9	1	184-3978	1	SPRING	
	10	1	184-3980	1	LEVER	
M	11	1	9X-2044	3	SCREW-TRUSS HEAD	

M-METRIC PART

185-8203 WINDOW GP-REAR *(contd.)*

i01566066

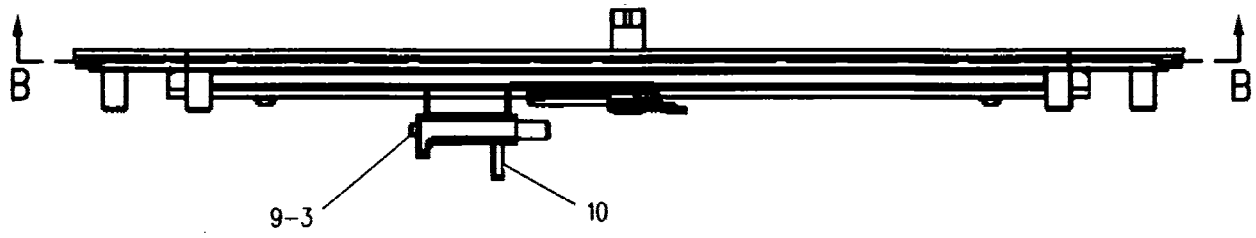

SECTION C-C

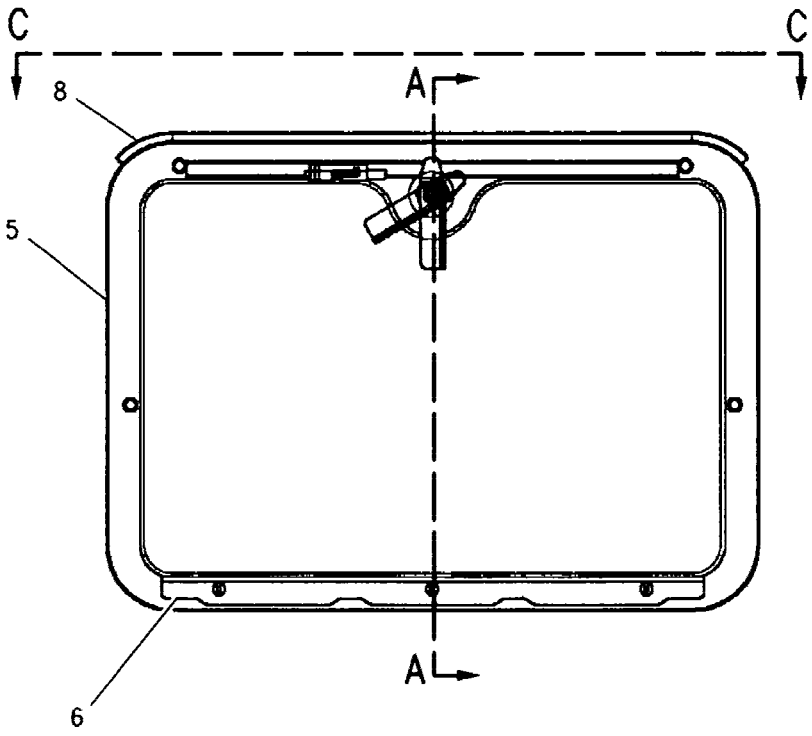

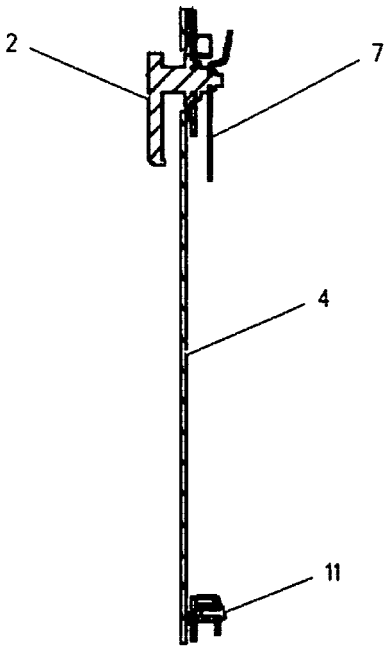

SECTION A-A

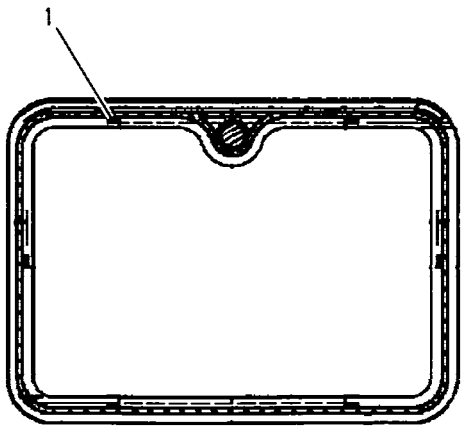

SECTION B-B

GRAPHIC #1

<END>

g00748763

OPERATOR STATION

189-2759 WINDOW GP-REAR

S/N: YEE1-UP
PART OF 245-5468 WINDOW GP-CAB
AN ATTACHMENT

SMCS-7310, 7340 **i01564266**

NOTE	REF NO	GRAPHIC REF	PART NUMBER	QTY	PART NAME 1 2 3 4 5 6 (PRODUCT LEVEL)	SEE PAGE
Y	1	1	**185-8203**	1	WINDOW GP-REAR	1052
	2	1	**166-3215**	1	SEAL	
	3	1	**189-2705**	1	BRACKET AS	
	4	1	**185-8206**	1	BRACKET	
M	5	1	**9X-2044**	4	SCREW-TRUSS HEAD	

M-METRIC PART
Y-SEPARATE ILLUSTRATION

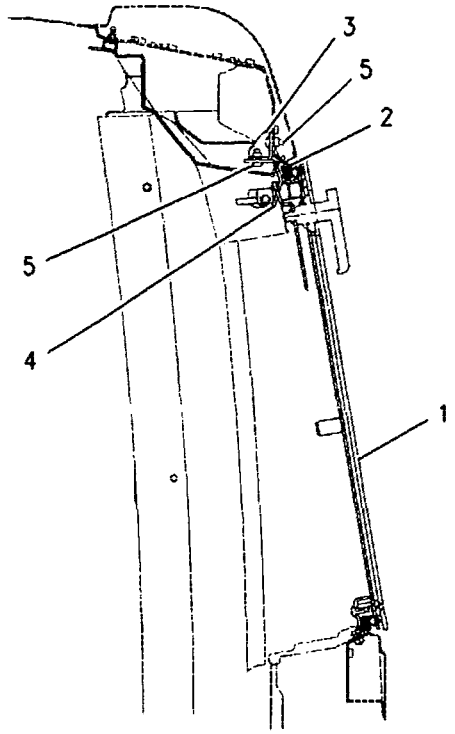

SECTION A-A

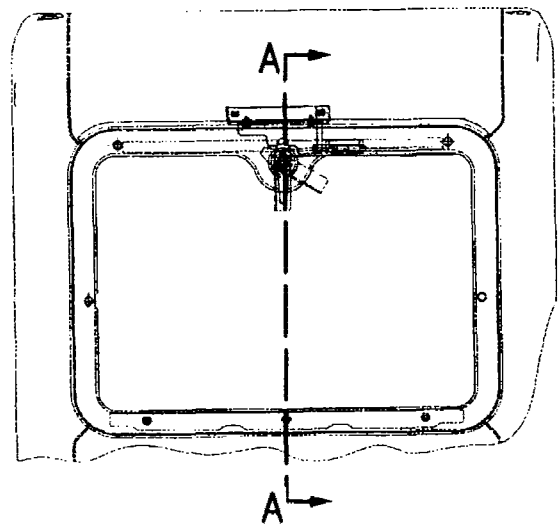

REAR VIEW

GRAPHIC #1 **<END>** g00748799

OPERATOR STATION

234-6594 WIPER GP-WINDOW–FRONT, UPPER

S/N: YEE1-UP

PART OF 305-8002 CAB GP

SMCS-7305 **i02894716**

NOTE	REF NO	GRAPHIC REF	PART NUMBER	QTY	PART NAME 1 2 3 4 5 6 (PRODUCT LEVEL)	SEE PAGE
	1	1	**161-3677**	1	HOLDER	
	2	1	**189-3424**	1	MOTOR AS-WINDOW WIPER (UPPER)	
M		1	**6V-8231**	1	NUT (M10X1.25-THD)	
M		1	**7Y-3470**	1	NUT (M20X1-THD)	
		1	**7Y-3472**	1	CAP	
		1	**124-3953**	1	WASHER (20.5X30X2-MM THK)	
	3	1	**235-8932**	1	NOZZLE AS	
	4	1	**155-7042**	1	RELAY AS (WIPER)	
	5	1	**161-3668**	1	ARM AS	
		1	**161-3669**	1	GUIDE	
		1	**161-3670**	1	BLADE AS-WIPER (600-MM) (FRONT, UPPER)	
		1	**185-8290**	1	SCREW AS (M35X0.06X9-MM)	
	6	1	**163-6795**	1	STRAP-CABLE	
M	7	1	**3E-9872**	2	SCREW AS (M4X0.7X12-MM)	
	8	1	**4I-3090**	1	SEAL	
	9	1	**7Y-7364**	1	GROMMET	
M	10	1	**8T-4134**	4	NUT (M6X1-THD)	
M	11	1	**9X-2042**	2	SCREW-TRUSS HEAD (M6X1X12-MM)	
M	12	1	**9X-2044**	3	SCREW-TRUSS HEAD (M6X1X16-MM)	

M-METRIC PART

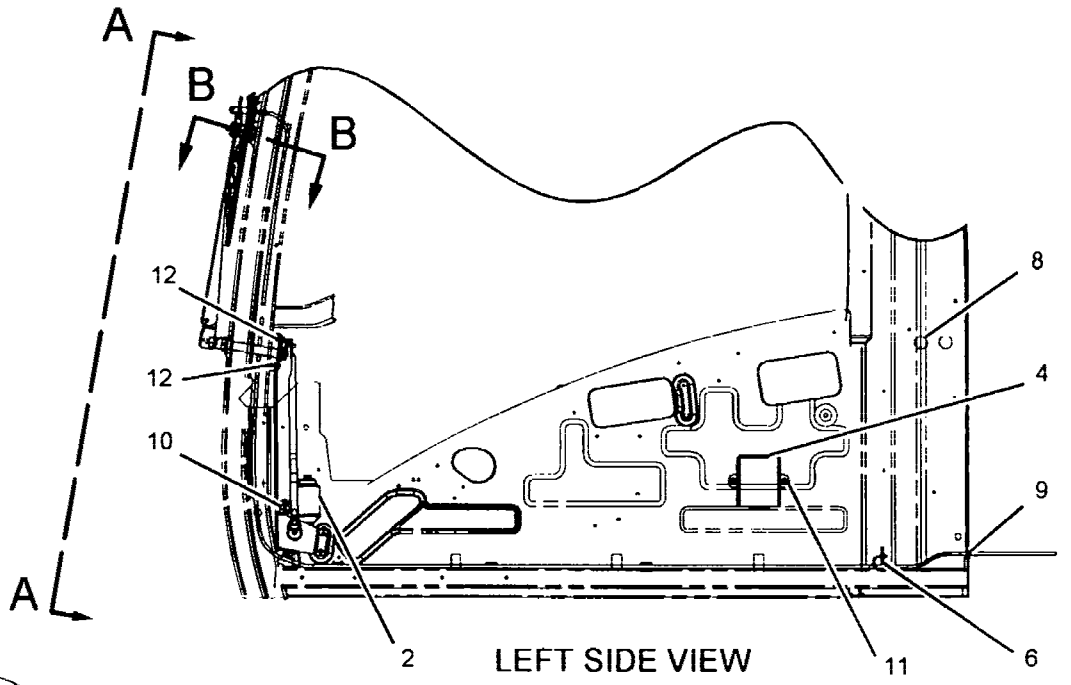

LEFT SIDE VIEW

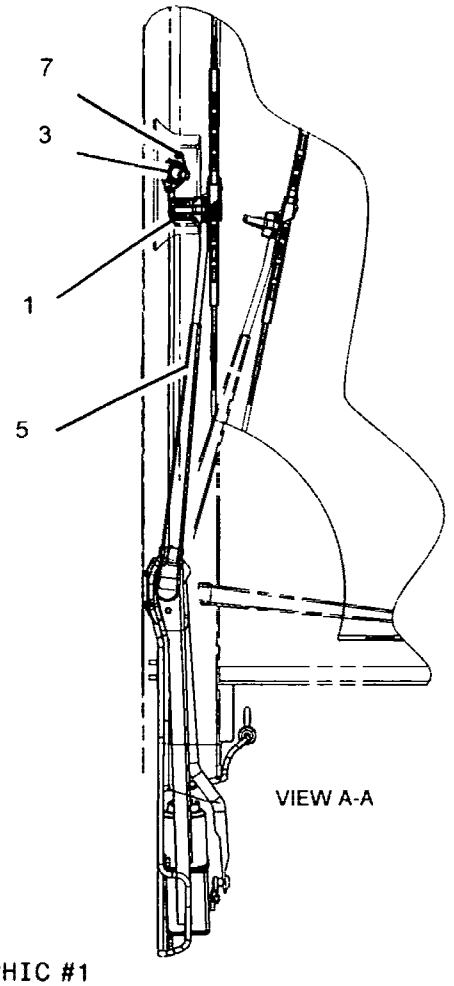

VIEW A-A

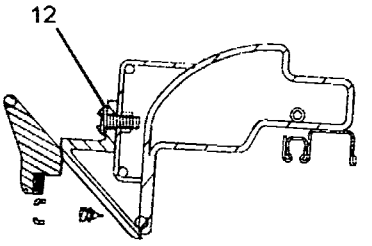

SECTION B-B

GRAPHIC #1

<END>

g01098021

OPERATOR STATION

244-2118 WIPER GP-WINDOW–FRONT, LOWER

S/N: YEE1-UP

PART OF 324-6194 CHASSIS AR

SMCS-7305 **i02894720**

NOTE	REF NO	GRAPHIC REF	PART NUMBER	QTY	PART NAME 1 2 3 4 5 6 (PRODUCT LEVEL)	SEE PAGE
	1	1	**235-8974**	1	BRACKET AS	
	2	1	**293-1140**	1	MOTOR AS-WINDOW WIPER (LOWER)	
	3	1	**4I-5020**	1	ARM AS-WIPER	
	4	1	**4I-5021**	1	BLADE AS-WIPER (275-MM) (FRONT, LOWER)	
	5	1	**8T-4121**	4	WASHER-HARD (11X21X2.5-MM THK)	
M	6	1	**8T-4134**	3	NUT (M6X1-THD)	
M	7	1	**8T-4191**	4	BOLT (M10X1.5X16-MM)	
	8	1	**9X-8256**	3	WASHER (6.6X12X2-MM THK)	

M-METRIC PART

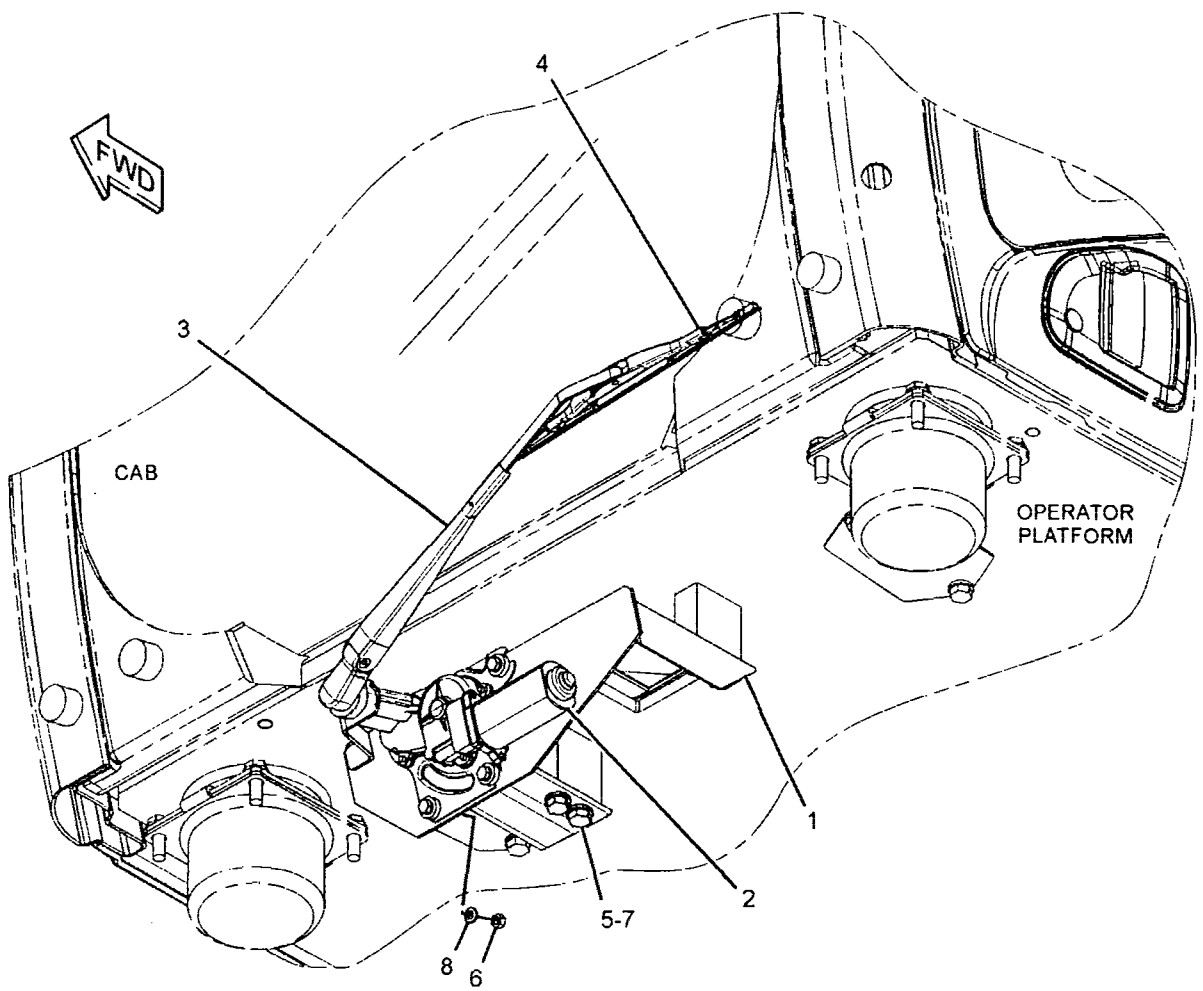

GRAPHIC #1 **<END>** g01365766

SERVICE EQUIPMENT AND SUPPLIES

220-2530 FILM GP

S/N: YEE1-UP

PART OF 309-0166, 309-0167 COUNTERWEIGHT AR

AN ATTACHMENT

SMCS-7405, 7557 **i02861069**

NOTE	REF NO	GRAPHIC REF	PART NUMBER	QTY	PART NAME 1 2 3 4 5 6 (PRODUCT LEVEL)	SEE PAGE
	1	1	**250-6094**	1	FILM-WARNING (CRUSH HAZARD, READ OMM, ANSI)	
	2	1	**251-1105**	1	FILM-WARNING (CRUSH HAZARD, READ OMM, U.S.)	
	3	1	**318-8835**	1	FILM-INFORMATION (NO SERVICE-READ OMM)	

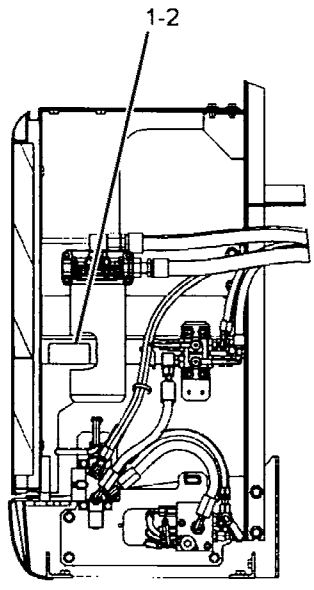

SECTION A-A

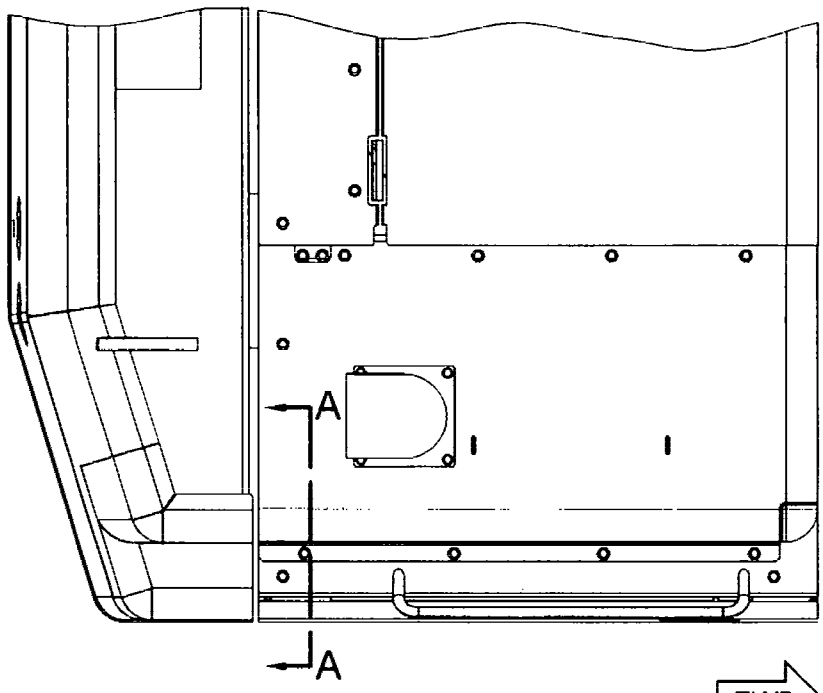

TOP VIEW

FWD

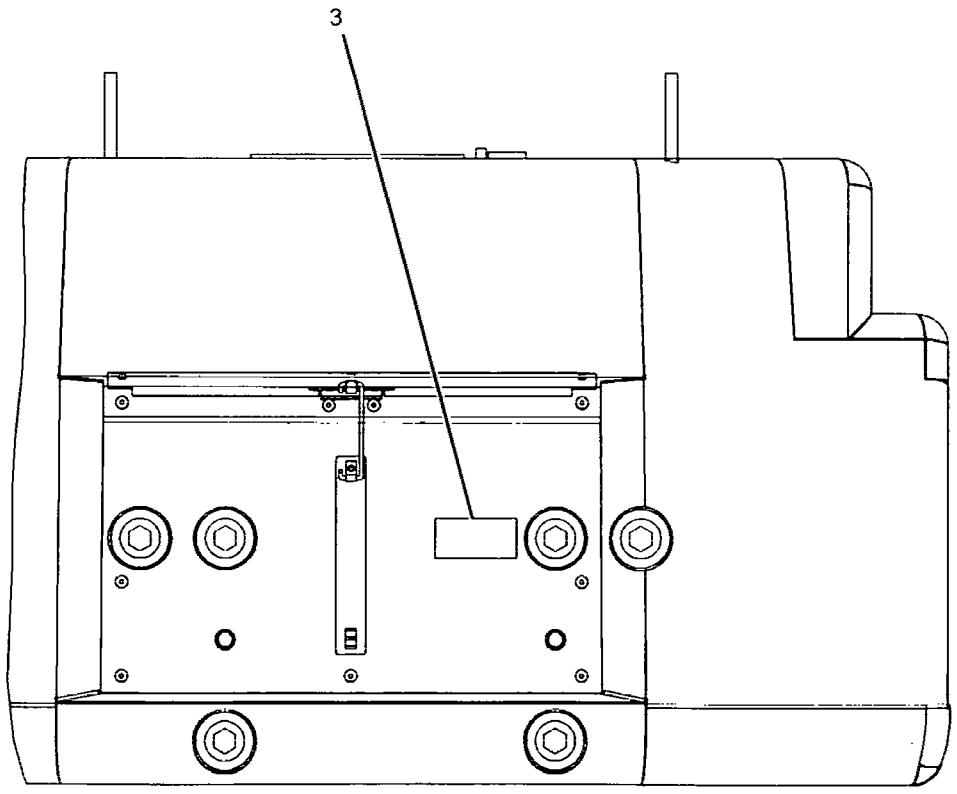

REAR VIEW
(PANEL OPEN)

GRAPHIC #1

<END>

g01434241

SERVICE EQUIPMENT AND SUPPLIES

228-8267 FILM GP–BOOM FLOAT

S/N: YEE1-UP

PART OF 294-1277 CONTROL AR-AUXILIARY

AN ATTACHMENT

SMCS-7405, 7557 **i02878243**

NOTE	REF NO	GRAPHIC REF	PART NUMBER	QTY	PART NAME 1 2 3 4 5 6 (PRODUCT LEVEL)	SEE PAGE
	1	1	**186-1253**	1	FILM-CONTROLS	

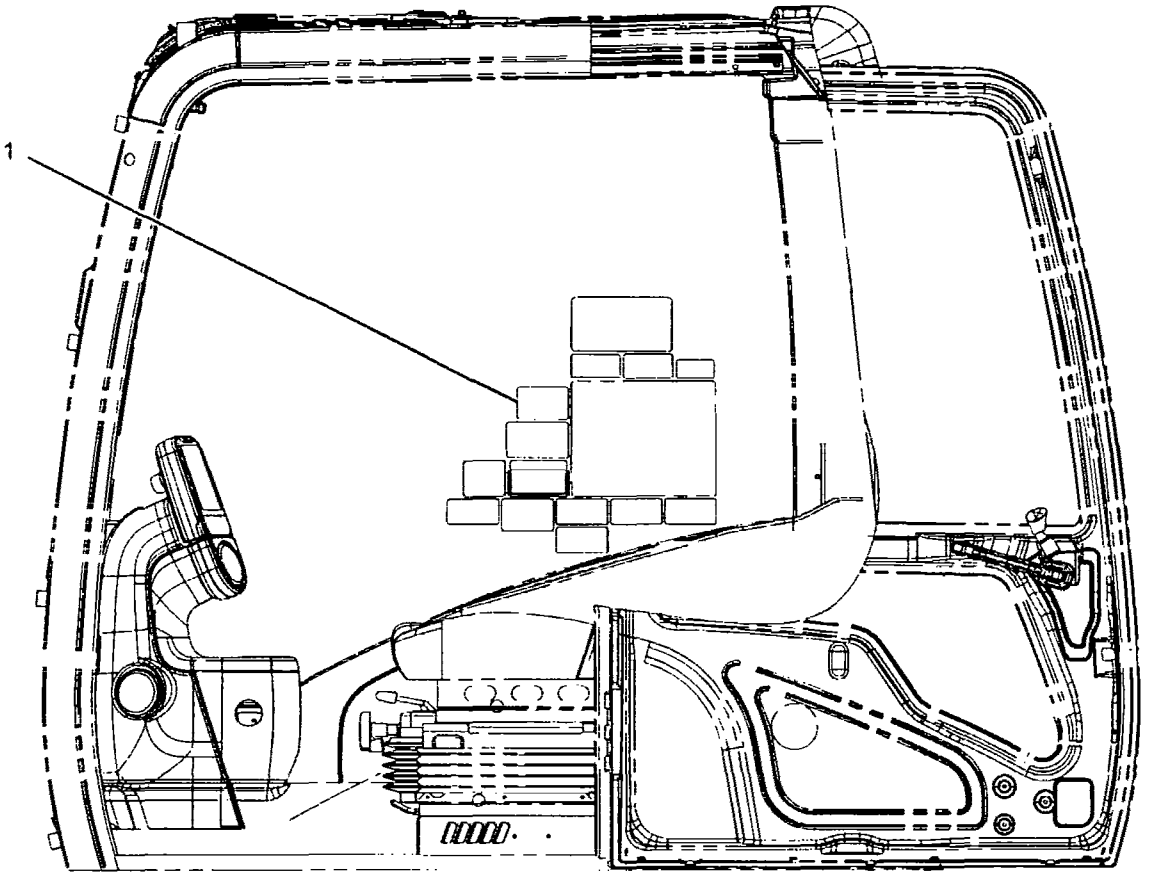

LEFT SIDE VIEW

GRAPHIC #1 **<END>** g01446420

SERVICE EQUIPMENT AND SUPPLIES

245-5469 FILM GP–ALTERNATE EXIT

S/N: YEE1-UP
PART OF 245-5468 WINDOW GP-CAB
AN ATTACHMENT

SMCS-7405, 7557 **i02593655**

NOTE	REF NO	GRAPHIC REF	PART NUMBER	QTY	PART NAME 1 2 3 4 5 6 (PRODUCT LEVEL)	SEE PAGE
	1	1	**224-1943**	1	FILM-INSTRUCTION (ALTERNATE EXIT, REMOVE WINDOW)	

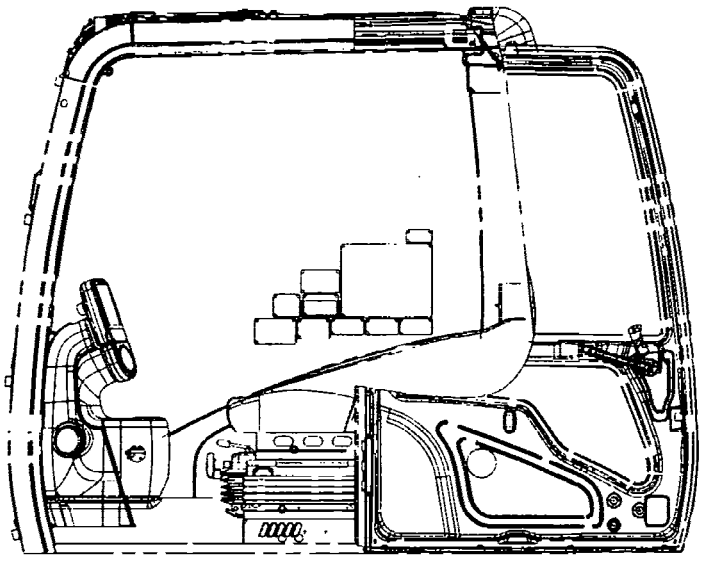

LEFT SIDE VIEW

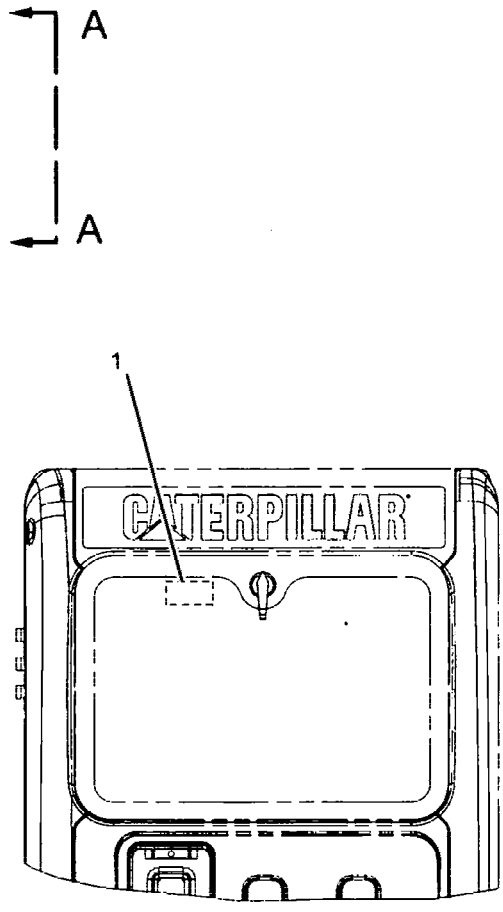

VIEW A-A

GRAPHIC #1 **<END>** g01297979

SERVICE EQUIPMENT AND SUPPLIES

247-7410 FILM GP–OPERATOR CONTROLS, NOTICE

S/N: YEE1-UP

PART OF 255-5843 CONTROL AR-AUXILIARY

AN ATTACHMENT

SMCS-7405, 7557 **i02472464**

NOTE	REF NO	GRAPHIC REF	PART NUMBER	QTY	PART NAME 1 2 3 4 5 6 (PRODUCT LEVEL)	SEE PAGE
	1	1	**250-8054**	1	FILM-NOTICE (HAMMER, READ OMM)	
	2	1	**260-6941**	1	FILM-INFORMATION (OPERATOR CONTROLS, READ OMM) (JOYSTICK W/ SLIDE CONTROL)	

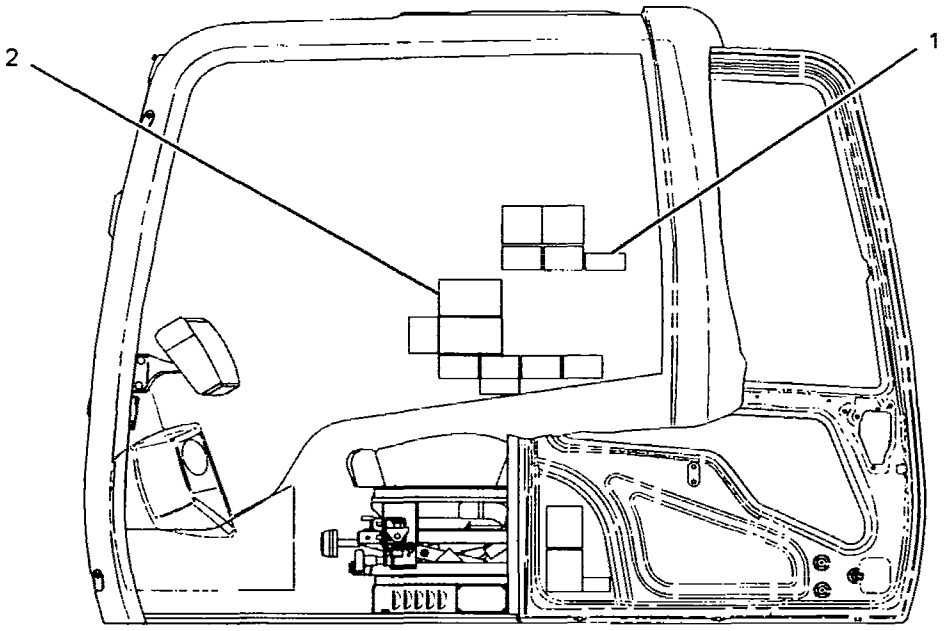

LEFT SIDE VIEW

GRAPHIC #1 **<END>** g01213282

SERVICE EQUIPMENT AND SUPPLIES

247-7411 FILM GP–OPERATOR CONTROLS, NOTICE

S/N: YEE1-UP

PART OF 255-5844 CONTROL AR-AUXILIARY

AN ATTACHMENT

SMCS-7405, 7557 **i02862445**

NOTE	REF NO	GRAPHIC REF	PART NUMBER	QTY	PART NAME 1 2 3 4 5 6 (PRODUCT LEVEL)	SEE PAGE
	1	1	**260-6942**	1	FILM-INFORMATION (OPERATOR CONTROLS, READ OMM)	
	2	1	**250-8054**	1	FILM-NOTICE (HAMMER, READ OMM)	

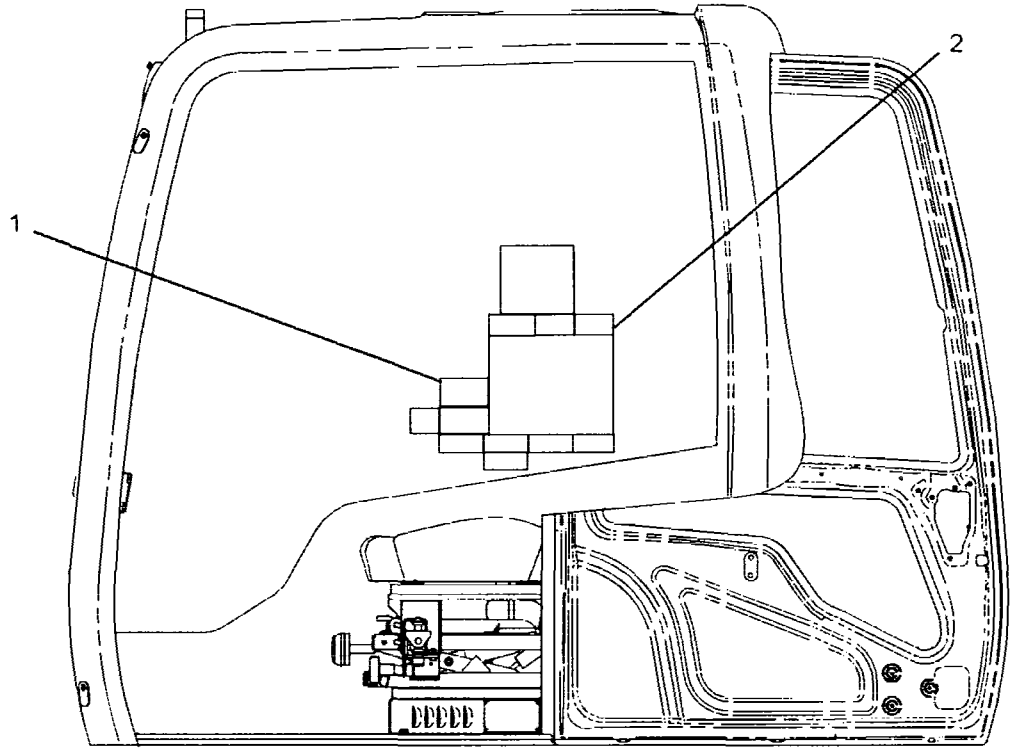

LEFT SIDE VIEW

GRAPHIC #1 **<END>** g01212938

SERVICE EQUIPMENT AND SUPPLIES

247-7418 FILM GP–PEDAL, LH

S/N: YEE1-UP

PART OF 255-5845 PEDAL AR-AUXILIARY

AN ATTACHMENT

SMCS-7405, 7557 **i02471725**

NOTE	REF NO	GRAPHIC REF	PART NUMBER	QTY	PART NAME 1 2 3 4 5 6 (PRODUCT LEVEL)	SEE PAGE
	1	1	**250-8054**	1	FILM-NOTICE (HAMMER, READ OMM)	
	2	1	**260-6948**	1	FILM-INSTRUCTION (OPERATOR CONTROLS, READ OMM)	

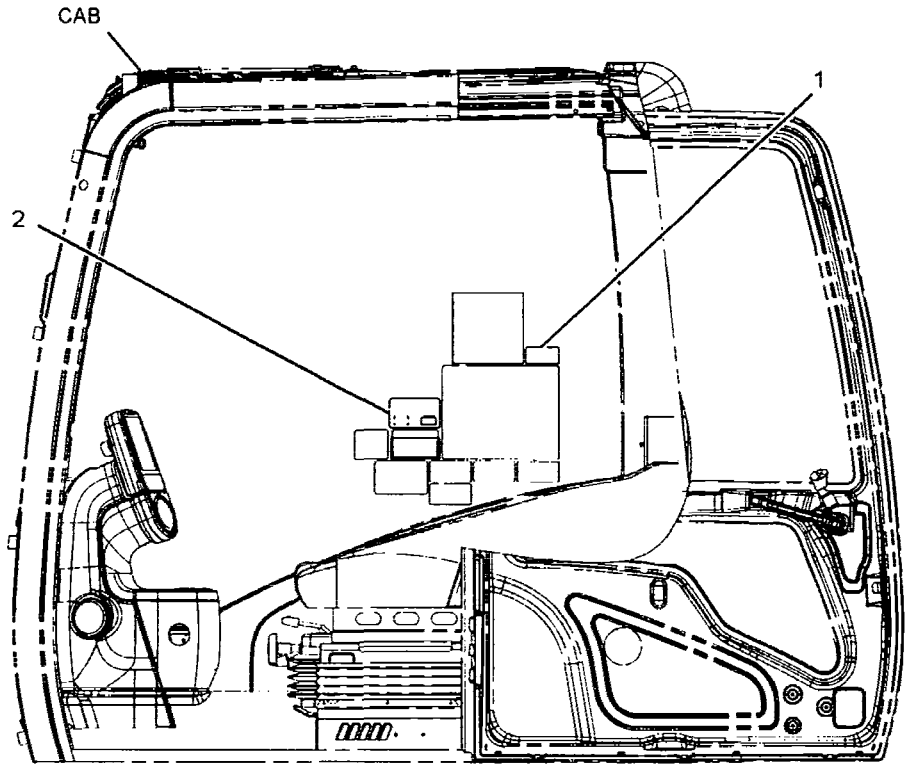

LEFT SIDE VIEW

GRAPHIC #1 **<END>** g01203264

SERVICE EQUIPMENT AND SUPPLIES

247-7465 FILM GP–HAMMER CONTROL, FOOT SWITCH

S/N: YEE1-UP

PART OF 270-6106 CONTROL AR-AUXILIARY

AN ATTACHMENT

SMCS-7405, 7557 **i02472491**

NOTE	REF NO	GRAPHIC REF	PART NUMBER	QTY	PART NAME 1 2 3 4 5 6 (PRODUCT LEVEL)	SEE PAGE
	1	1	176-2815	1	FILM-INSTRUCTION (HAMMER CONTROL)	
	2	1	250-8054	1	FILM-NOTICE (HAMMER, READ OMM)	

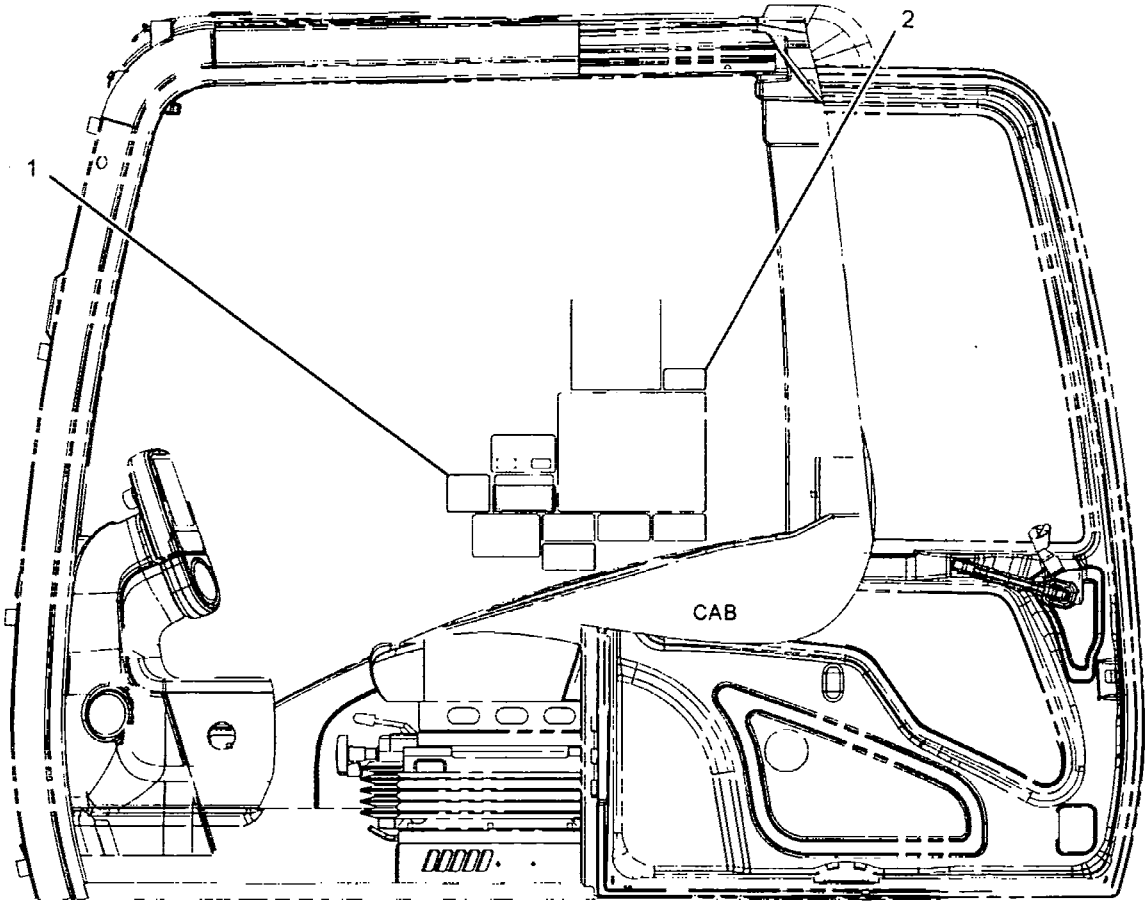

LEFT SIDE VIEW

GRAPHIC #1 **<END>** g01157047

SERVICE EQUIPMENT AND SUPPLIES

257-4596 FILM GP–REVERSING FAN

S/N: YEE1-UP

PART OF 294-1275 CONTROL AR-VARIABLE-SPEED FAN

AN ATTACHMENT

SMCS-7405, 7557 **i02712639**

NOTE	REF NO	GRAPHIC REF	PART NUMBER	QTY	PART NAME 1 2 3 4 5 6 (PRODUCT LEVEL)	SEE PAGE
	1	1	225-4130	1	FILM-WARNING (FLYING DEBRIS, STAY BACK, U.S.)	
					–OR–	
		1	225-4131	1	FILM-WARNING (FLYING DEBRIS, STAY BACK, ANSI)	

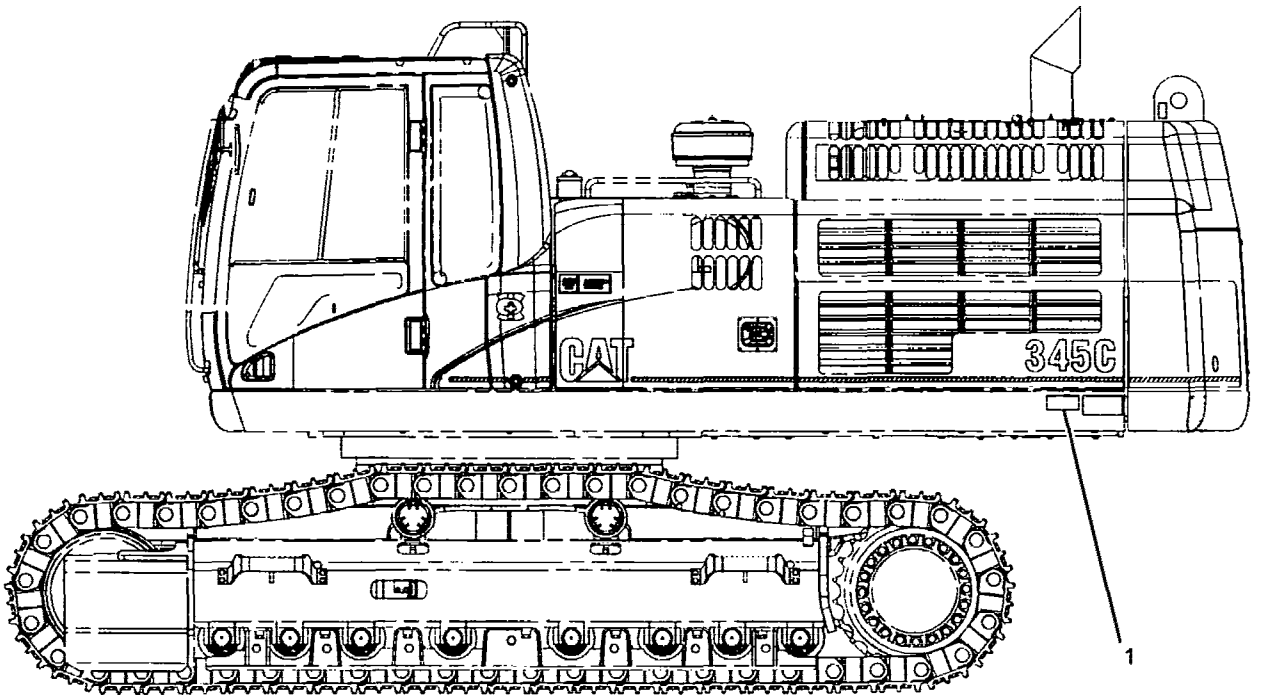

LEFT SIDE VIEW

GRAPHIC #1 **<END>** g01335088

SERVICE EQUIPMENT AND SUPPLIES

268-6816 FILM GP–QUICK COUPLER

S/N: YEE1-UP

PART OF 302-9403 CONTROL AR-COUPLER

AN ATTACHMENT

SMCS-7405, 7557 **i02473775**

NOTE	REF NO	GRAPHIC REF	PART NUMBER	QTY	PART NAME 1 2 3 4 5 6 (PRODUCT LEVEL)	SEE PAGE
	1	1	**268-6817**	1	FILM-IDENTIFICATION (QUICK COUPLER)	

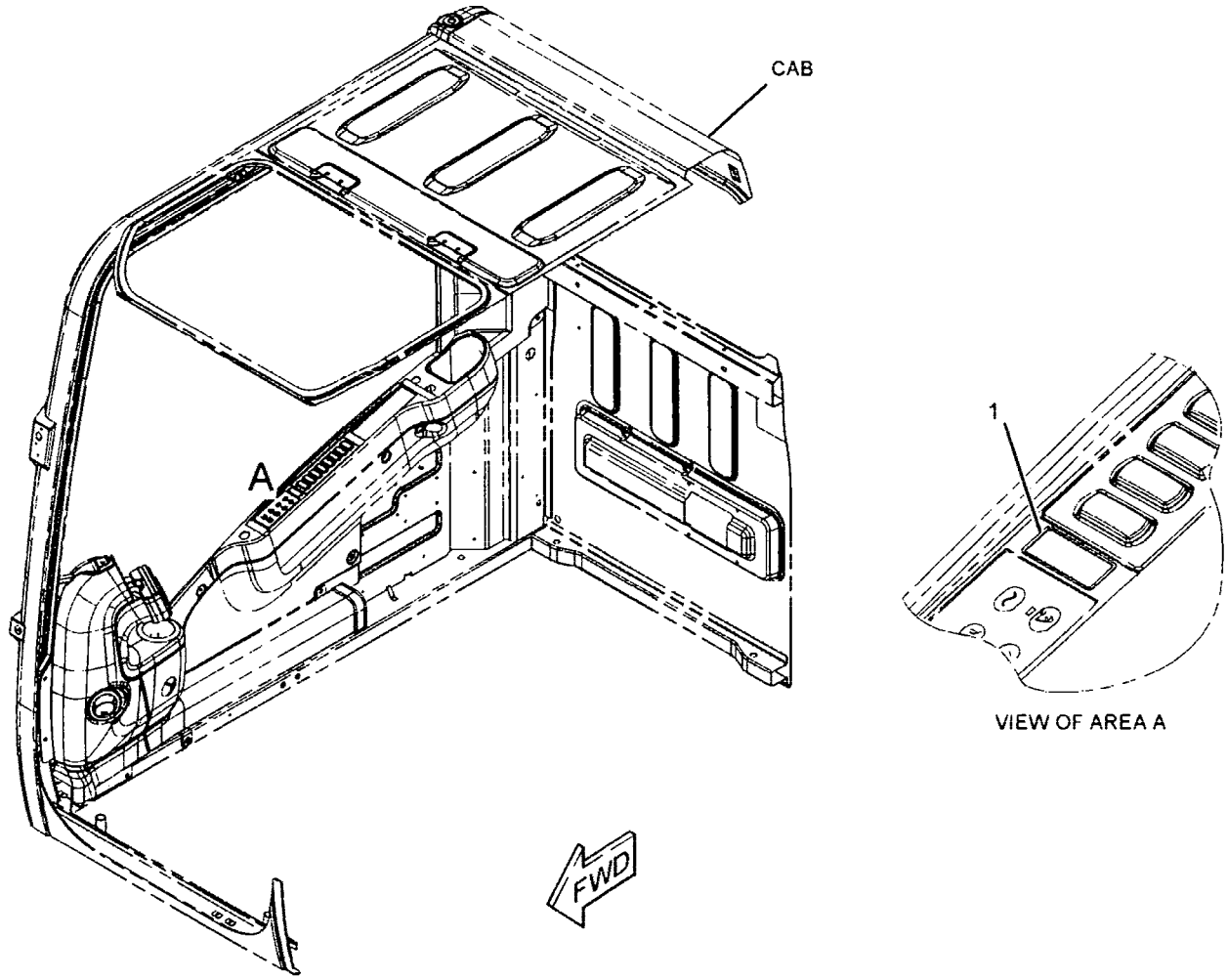

VIEW OF AREA A

GRAPHIC #1

<END>

g01199575

SERVICE EQUIPMENT AND SUPPLIES

282-5705 FILM GP–QUICK COUPLER

S/N: YEE1-UP

PART OF 306-1528 CONTROL AR-COUPLER

AN ATTACHMENT

SMCS-7405, 7557 **i02888331**

NOTE	REF NO	GRAPHIC REF	PART NUMBER	QTY	PART NAME 1 2 3 4 5 6 (PRODUCT LEVEL)	SEE PAGE
	1	1	**268-4530**	1	FILM-WARNING (CRUSH HAZARD, READ OMM, U.S.)	
					–OR–	
		1	**269-0120**	1	FILM-WARNING (CRUSH HAZARD, READ OMM, INTL)	
	2	1	**268-4531**	1	FILM-INSTRUCTION (COUPLER OPERATION)	
	3	1	**268-8872**	1	FILM-WARNING (CRUSH HAZARD, READ OMM, U.S.)	
					–OR–	
		1	**269-0121**	1	FILM-WARNING (CRUSH HAZARD, READ OMM, INTL)	

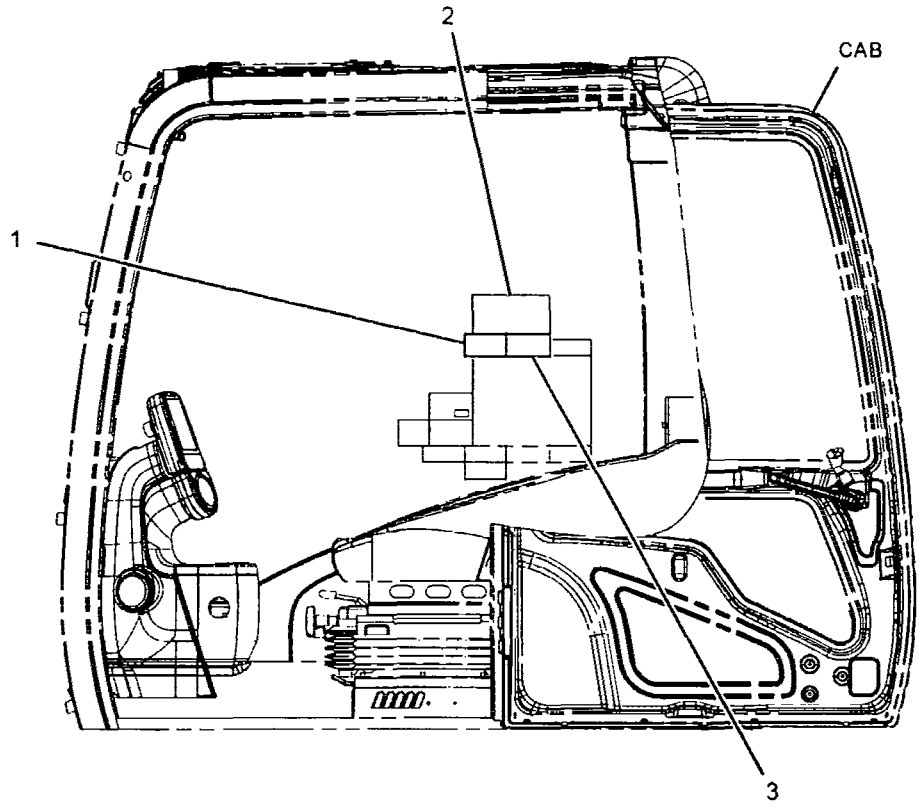

LEFT SIDE VIEW

GRAPHIC #1 **<END>** g01238116

SERVICE EQUIPMENT AND SUPPLIES

228-8110 PLATE & FILM GP–CONTROL PATTERN, QUICK CHANGE

S/N: YEE1-UP

PART OF 310-0387 VALVE AR-ALT PATTERN CONTROL

AN ATTACHMENT

SMCS-7405, 7557 **i02863611**

NOTE	REF NO	GRAPHIC REF	PART NUMBER	QTY	PART NAME 1 2 3 4 5 6 (PRODUCT LEVEL)	SEE PAGE
	1	1	**4I-2885**	1	CASE	
C	2	1	**255-3173**	1	FILM-WARNING (CRUSH HAZARD, READ OMM, INTL)	
C	3	1	**255-3171**	1	PLATE-INSTRUCTION (CONTROL PATTERN CHANGE)	
C	4	1	**257-5015**	1	FILM-WARNING (CRUSH HAZARD, READ OMM, U.S.)	
C	5	1	**257-4546**	1	FILM-INSTRUCTION (OPERATOR CONTROLS, READ OMM)	

C-CHANGE FROM PREVIOUS TYPE

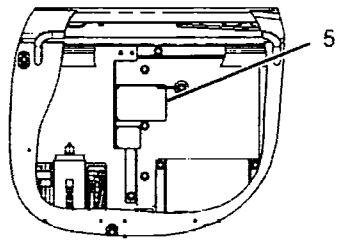

VIEW OF AREA A

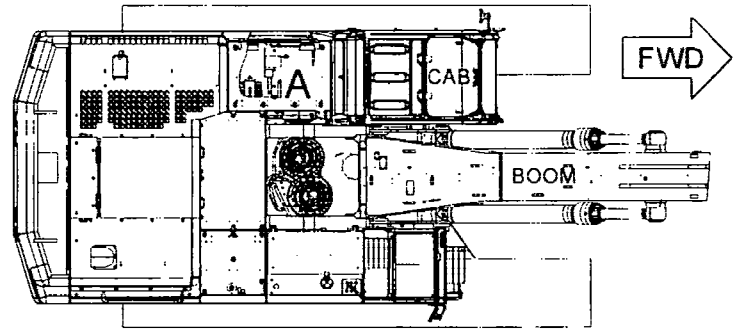

TOP VIEW

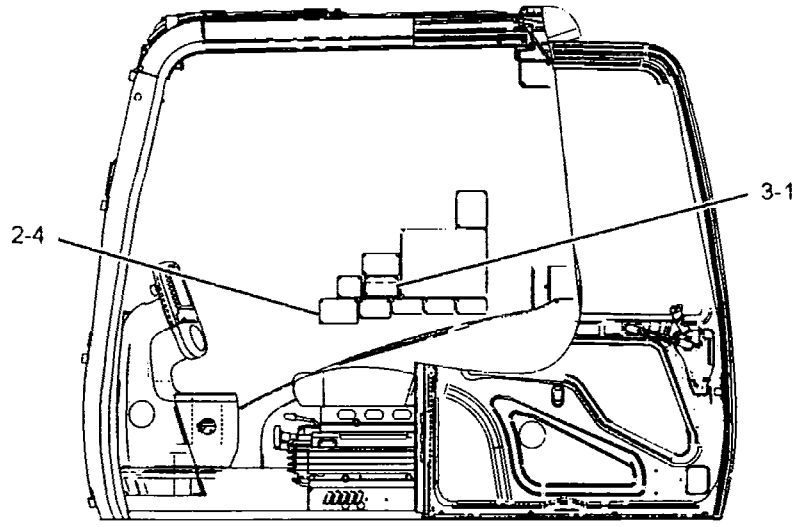

LEFT SIDE VIEW

GRAPHIC #1

<END>

g01147490

SERVICE EQUIPMENT AND SUPPLIES

254-5458 PLATE & FILM GP–UNIVERSAL

S/N: YEE1-UP

AN ATTACHMENT

SMCS-7405, 7557 **i02933008**

NOTE	REF NO	GRAPHIC REF	PART NUMBER	QTY	PART NAME 1 2 3 4 5 6 (PRODUCT LEVEL)	SEE PAGE
	1	1	**224-8946**	1	FILM-WARNING (NO ETHER SPRAY/AIR INTK, INTL)	
	2	2	**225-0312**	1	FILM-WARNING (JUMP START, READ OMM, INTL)	
	3	1	**225-4257**	2	FILM-WARNING (HOT FLUID UNDER PRESS, INTL)	
	4	1,2	**228-2781**	2	FILM-WARNING (MACHINE SWING, CRUSHING, INTL)	
	5	2	**221-8045**	1	FILM-WARNING (SEAT BELT, INTERNATIONAL)	
	6	2	**224-0554**	1	FILM-WARNING (UNIVERSAL, READ OMM, INTL)	
	7	2	**228-9254**	1	FILM-WARNING (ELEC HAZARD, READ OMM, INTL)	
	8	2	**242-1588**	1	FILM-WARNING (FRONT WINDOW, READ OMM, INTL)	
	9	2	**266-5431**	1	FILM-WARNING (CRUSH HAZARD, READ OMM, INTL)	
	10	1	**228-7316**	1	FILM-WARNING (HOT SURFACE, HANDS CLEAR, INTL)	
AF			**3N-3790**	1	PLATE-SERIAL NUMBER (ENGINE) (ON RH SIDE OF CYLINDER BLOCK)	

A-NOT PART OF THIS GROUP
F-NOT SHOWN

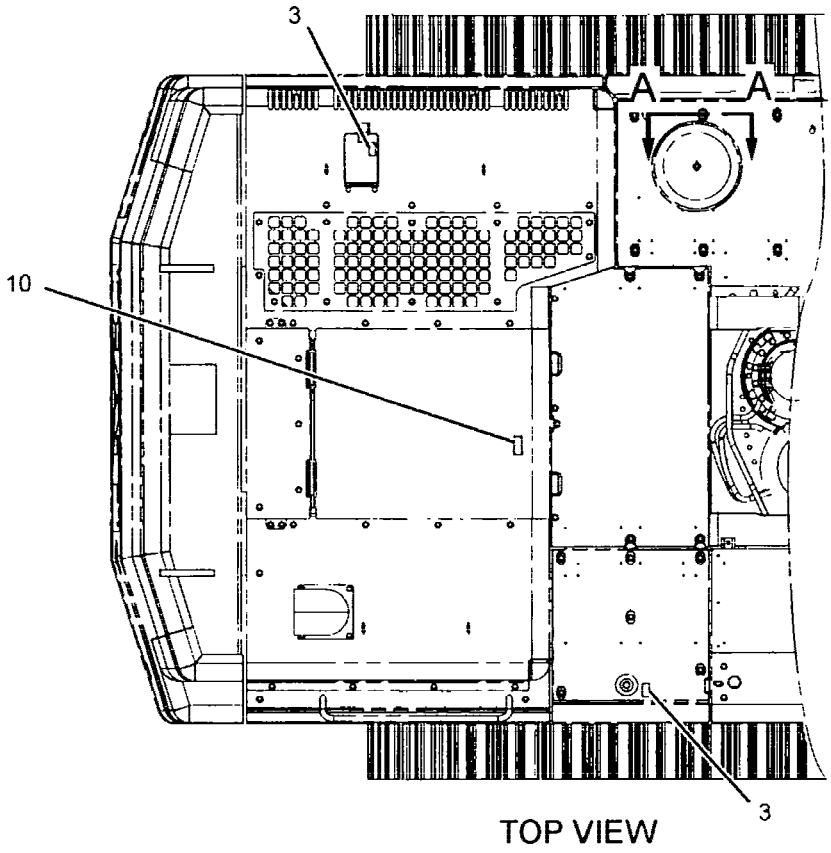

TOP VIEW

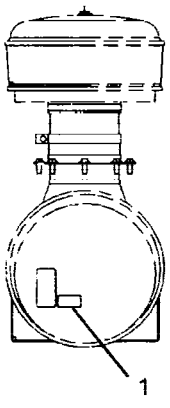

SECTION A-A

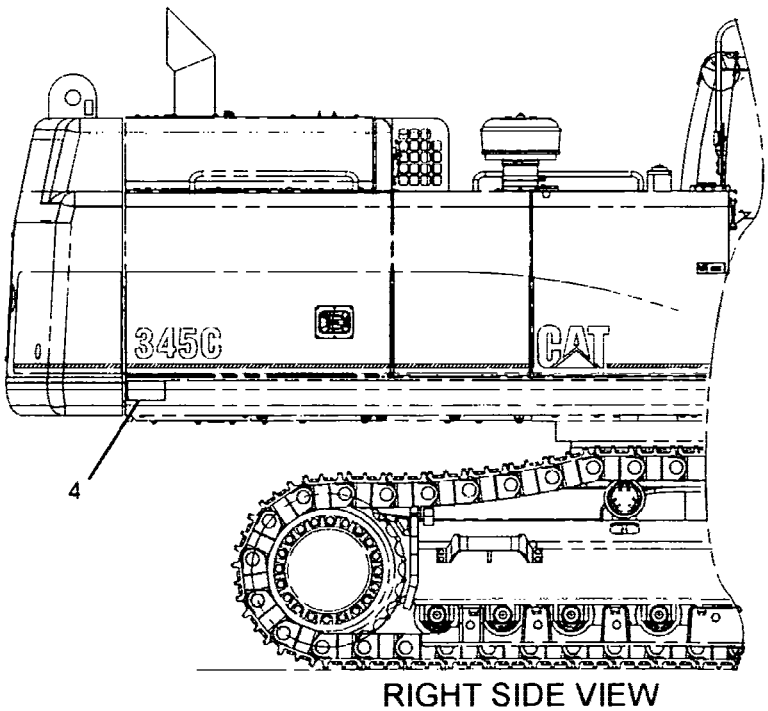

RIGHT SIDE VIEW

GRAPHIC #1 g01454569

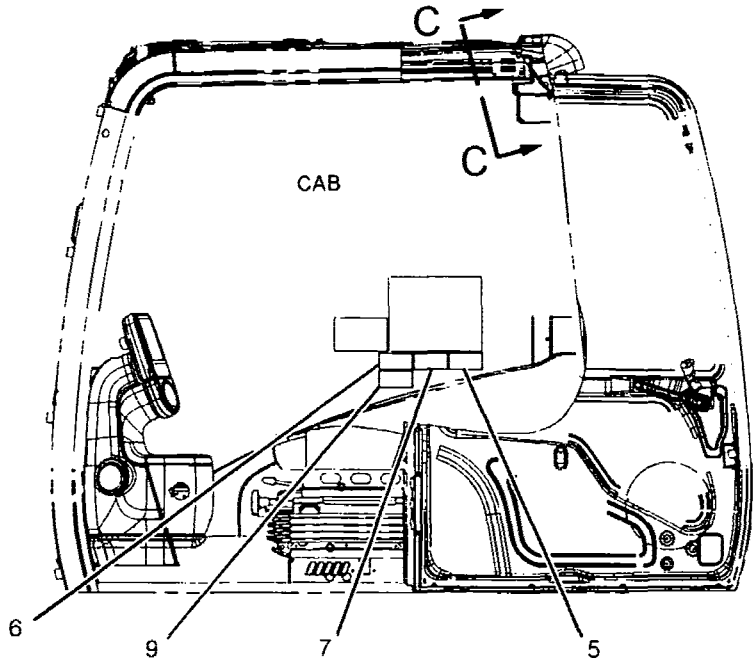

LEFT SIDE VIEW

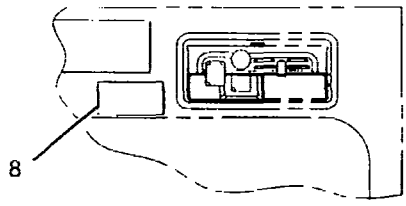

SECTION C-C

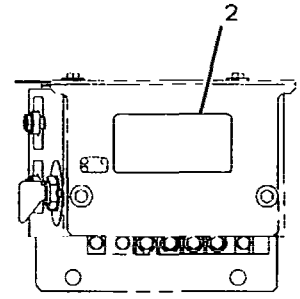

SECTION B-B

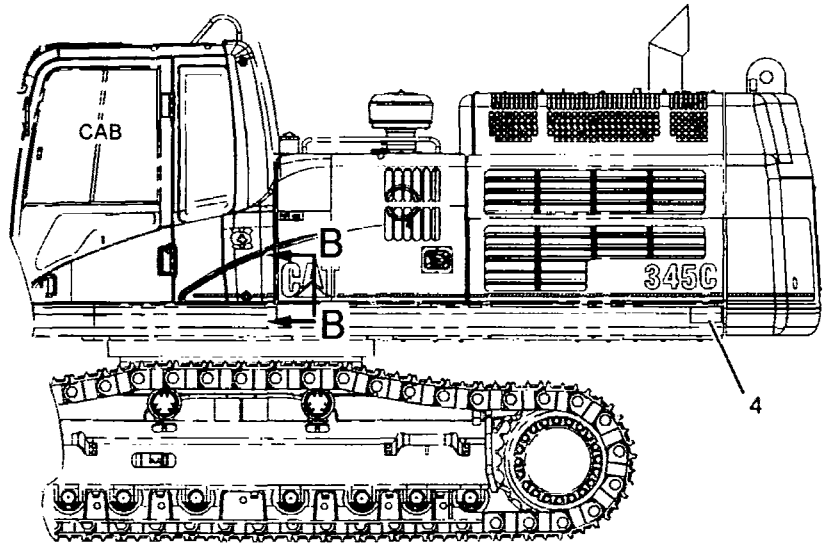

LEFT SIDE VIEW

GRAPHIC #2 **<END>** g01454570

SERVICE EQUIPMENT AND SUPPLIES

320-8734 PLATE & FILM GP

S/N: YEE1-UP

PART OF 324-6194 CHASSIS AR

SMCS-7405, 7557 **i02913629**

NOTE	REF NO	GRAPHIC REF	PART NUMBER	QTY	PART NAME 1 2 3 4 5 6 (PRODUCT LEVEL)	SEE PAGE
	1	3	221-8045	1	FILM-WARNING (SEAT BELT, INTERNATIONAL)	
	2	1	225-4257	2	FILM-WARNING (HOT FLUID UNDER PRESS, INTL)	
	3	1	228-7316	1	FILM-WARNING (HOT SURFACE, HANDS CLEAR, INTL)	
	4	1	242-1510	1	FILM-INSTRUCTION (HYDRAULIC OIL CHECK)	
	5	1,2	1P-2807	4	FILM-INFORMATION (LIFT EYE LOCATION)	
E	6	1,2	294-1307		FILM-STRIPE (46.5-CM EACH)	
	7	1,2	102-6046	2	FILM-IDENTIFICATION (CAT)	
	8	1,2	253-0861	2	FILM-INFORMATION (CAT POWER, ACERT TECHNOLOGY)	
	9	1	290-1727	1	FILM-IDENTIFICATION (CAT BOOM, RH)	
	10	1	239-6986	1	PLATE-IDENTIFICATION (MACHINE)	
	11	1,2	228-2781	2	FILM-WARNING (MACHINE SWING, CRUSHING, INTL)	
	12	1,2	294-1331	2	FILM-IDENTIFICATION (345DL)	
	13	2	190-5386	2	FILM-STRIPE (ROUND RED REFLECTIVE)	
	14	2	290-1728	1	FILM-IDENTIFICATION (CAT BOOM, LH)	
	15	1,2	7X-7644	4	FILM-INFORMATION (TIE-DOWN)	
	16	2	143-9536	1	FILM-IDENTIFICATION (MIN-MAX)	
	17	2	134-7258	1	FILM-INFORMATION (EXTENDED LIFE COOLANT,READ OMM)	
	18	2	229-0887	1	FILM-INFORMATION (AIR CLEANER)	
	19	2	137-6606	1	FILM-IDENTIFICATION	
	20	2	224-8946	1	FILM-WARNING (NO ETHER SPRAY/AIR INTK, INTL)	
	21	2	176-0480	1	PLATE-WARNING (HOT SURFACE)	
	22	2	225-0312	1	FILM-WARNING (JUMP START, READ OMM, INTL)	
	23	2	146-6747	1	FILM-INFORMATION (24-VOLT)	
	24	2	247-7437	1	FILM-IDENTIFICATION (BATTERY CIRCUIT BREAKER)	
	25	2	247-7438	1	FILM-IDENTIFICATION (ELECTRICAL CIRCUIT BREAKER)	
	26	3	223-9818	1	FILM-INSTRUCTION (WINDOW CLEANING, READ OMM)	
	27	3	224-0554	1	FILM-WARNING (UNIVERSAL, READ OMM, INTL)	
	28	3	266-5431	1	FILM-WARNING (CRUSH HAZARD, READ OMM, INTL)	
	29	3	228-9254	1	FILM-WARNING (ELEC HAZARD, READ OMM, INTL)	
	30	3	110-6393	1	PLATE-INSTRUCTION (AIR CONDITIONER)	
	31	3	214-7915	1	FILM-INSTRUCTION (ENGINE SHUTOFF)	
	32	3	242-1588	1	FILM-WARNING (FRONT WINDOW, READ OMM, INTL)	
	33	3	245-5457	1	FILM-INSTRUCTION (BACKUP CONTROL)	
	34	3	245-5489	1	FILM-IDENTIFICATION (FUSE PANEL)	
	35	3	187-0661	1	FILM-INSTRUCTION (ALTERNATE EXIT)	
	36	3	294-1335	1	FILM-INFORMATION (LIFTING CAPACITIES, READ OMM)	
	37	2	245-5495	1	FILM-IDENTIFICATION (CAT REAR MACHINE)	
	38	3	4I-8472	1	FILM-INSTRUCTION (OPERATOR CONTROLS, READ OMM)	
F			245-5462	1	FILM-IDENTIFICATION (CIRCUIT BREAKER)	

E-ORDER BY THE CENTIMETER
F-NOT SHOWN

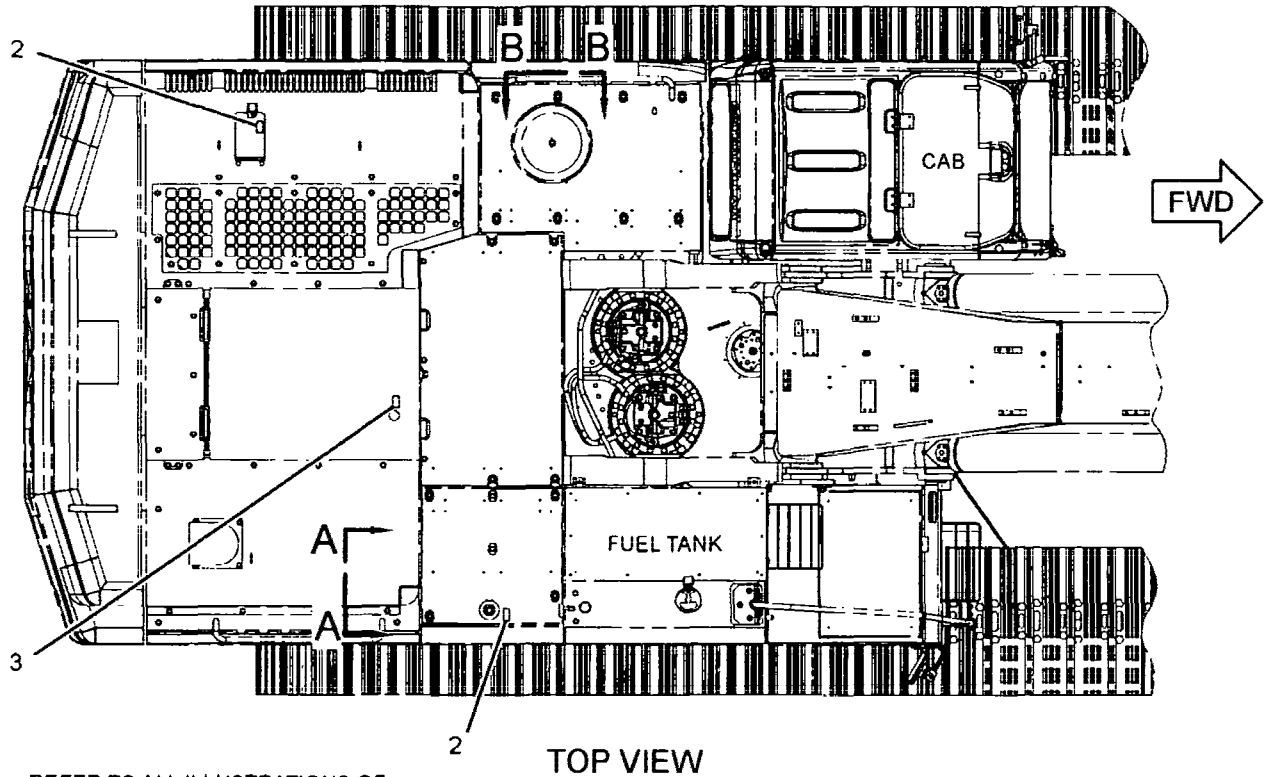

TOP VIEW

REFER TO ALL ILLUSTRATIONS OF THIS GROUP FOR AUXILIARY VIEWS

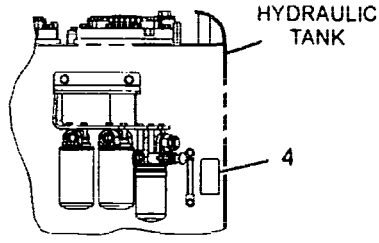

VIEW A-A

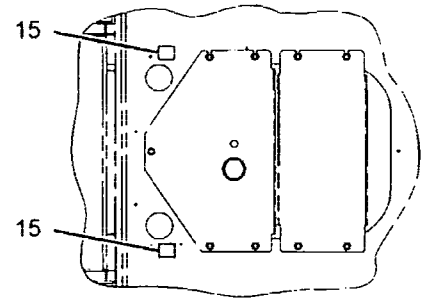

VIEW C-C

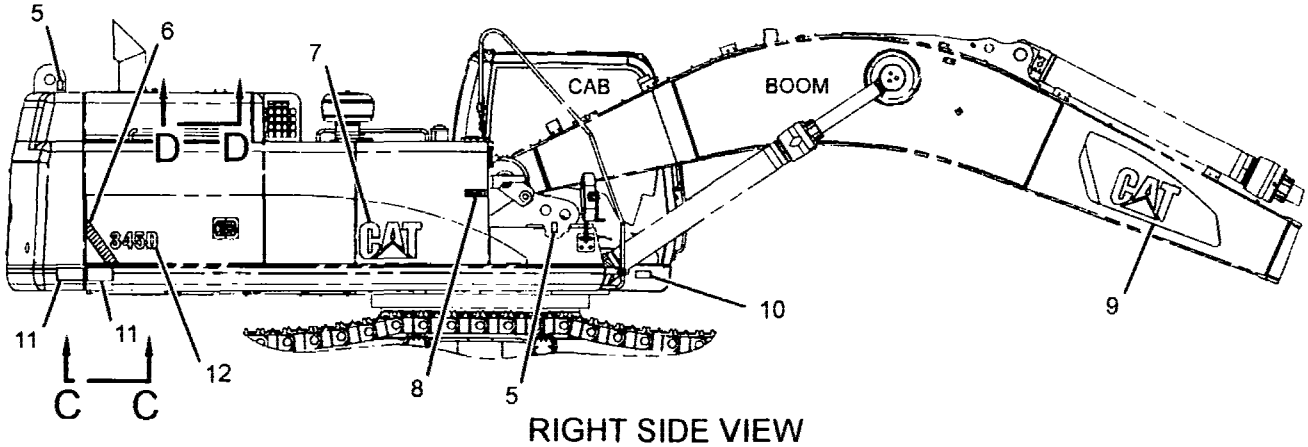

RIGHT SIDE VIEW

GRAPHIC #1 g01480792

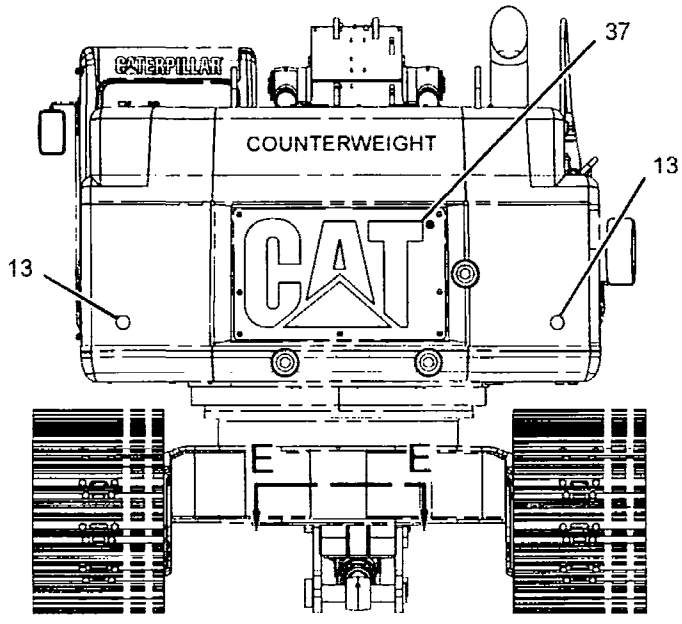

REAR VIEW

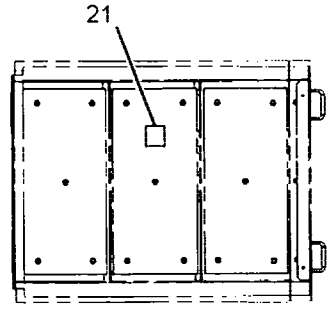

VIEW D-D

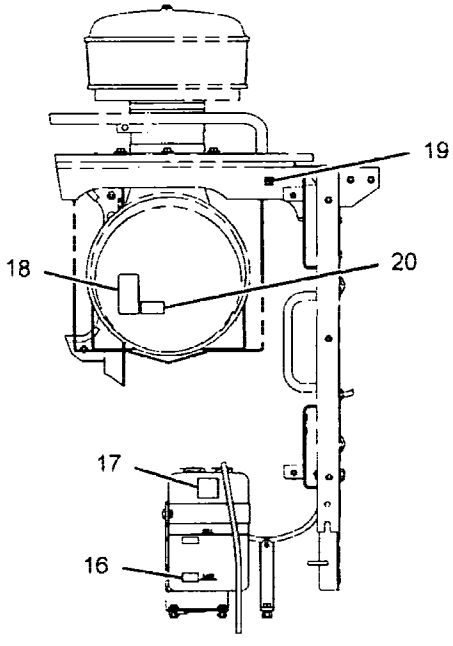

VIEW B-B

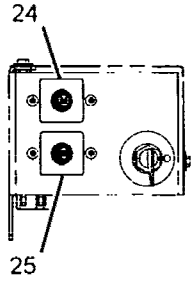

VIEW G-G

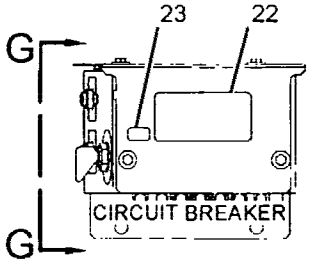

VIEW F-F

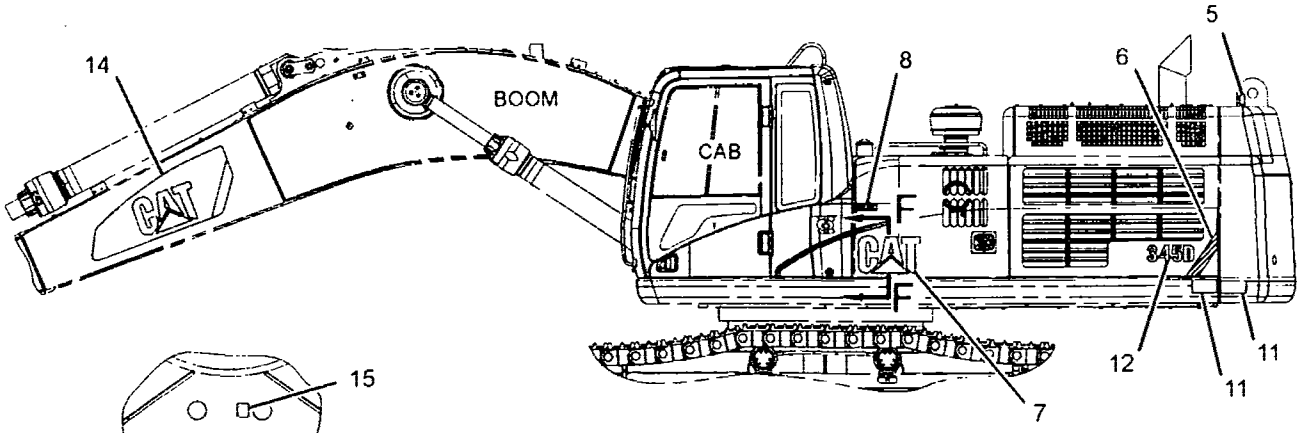

VIEW E-E

LEFT SIDE VIEW

GRAPHIC #2

g01480813

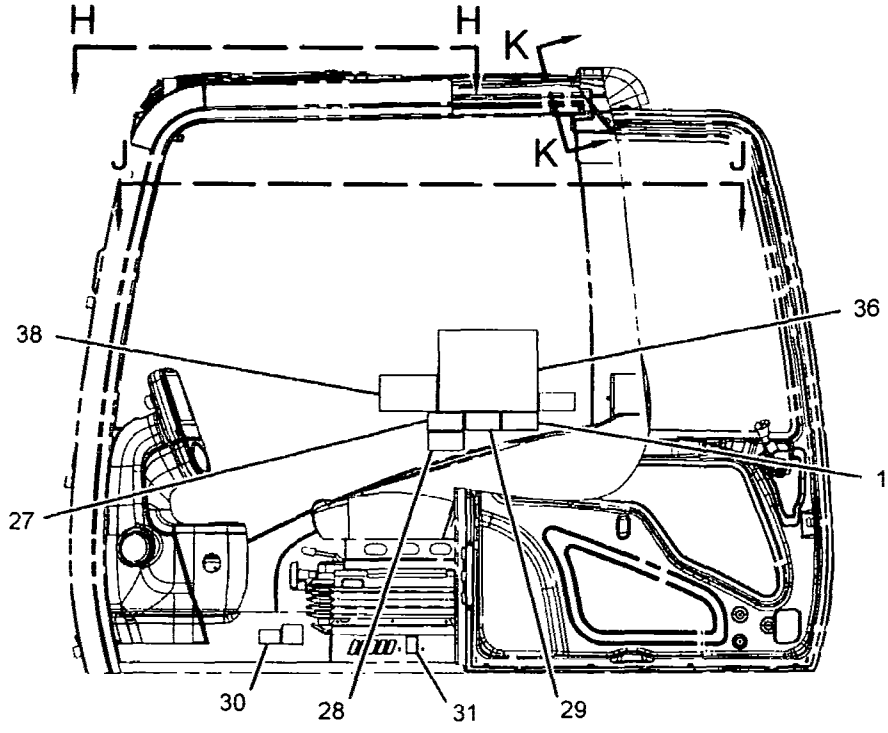

LEFT SIDE VIEW
(CAB)

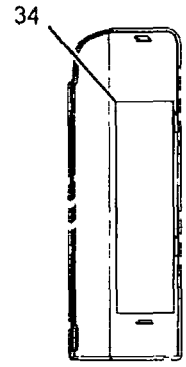

VIEW N-N

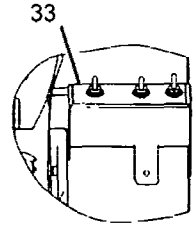

VIEW M-M

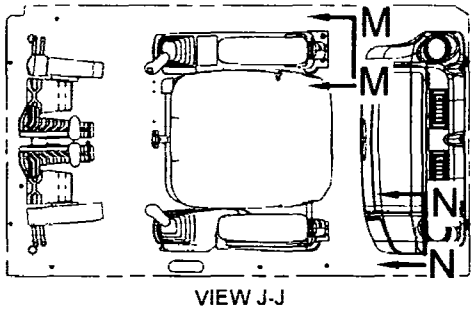

VIEW J-J

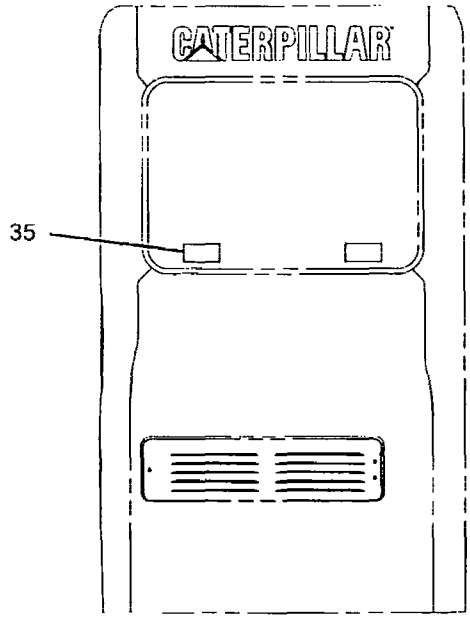

REAR VIEW
(CAB)

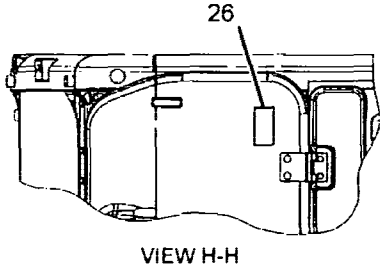

VIEW H-H

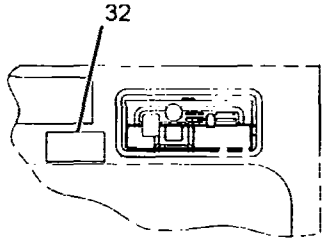

VIEW K-K

GRAPHIC #3 **<END>** g01480812

PART NUMBER INDEX

Part	Page
0	
0L-1026	40
0S-1589	12
1	
1A-2170	64
1B-3581	230
1B-3867	99
1B-8705	11
1D-4637	921
	922
1H-1023	233
1H-2629	233
1H-3244	150
1H-3338	238
1H-8278	724
1J-9671	663
	785
1K-8850	367
	368
	369
1M-6119	153
	154
	160
	246
1M-6120	153
	154
	160
	246
1M-9968	234
1M-9971	233
1P-2807	1073
1P-3702	89
	663
1P-3703	89
	540
	542
	545
	547
	554
	572
	575
	580
	588
	663
	673
	677
	678
	679
	680
	681
	687
	768
	769
1P-3704	506
	508
	510
	520
	522
	526
	530
	532
	534
	540
	542
	545
	547
	549
	550
	552
	554
	557
	558
	559
	572
	575
	578
	580
	584
	588
	599
	668
	673
	679
	680
	681
	682
	687
	759
1P-3705	506
	508
	510
	520
	522
	526
	530
	532
	534
	540
	542
	545
	547
	549
	550
	572
	575
	580
	584
	588
	668
	673
	683
1P-3706	522
	530
	532
	572
1P-4578	89
	575
	580
	584
	588
	663
1P-4579	660
1P-5767	506
	508
	510
	520
	522
	526
	530
	532
	534
	540
	542
	545
	547
	549
	550
	552
	554
	557
	558
	559
	572
	575
	578
	580
	584
	588
	599
	668
	679
	680
	681
	687
1R-0755	125
	136
1R-0771	129
1R-1808	70
1R-5998	942
1R-6072	136
	266
	267
1R-6484	754
1S-0994	1003
1S-7251	153
	160
	236
	246
1S-7252	153
	160
	236
1S-7446	233
1S-9593	831
1T-0132	694
1T-0936	695
1U-8846	35
	36
	312
	345
	480
	484
	487
	687
2	
2A-1162	36
2A-4429	26
2B-2404	230
2B-7561	316
	487
2C-9259	879
	880
	882
	883
	884
	885
	886
	887
	888
	889
	890
	891
	892
	893
	894
	895
	896
	897
	898
	899
	900
	901
	902
	906
	907
	908
	909
	910
	911
	912
	913
	914
	920
2D-6392	233
2D-6642	55
	695
	763
	765
	772
	787
	790
	810
2F-6678	234
2G-1830	246
2G-8767	153
2H-3429	233
2H-3922	237
	1047
2H-3934	417
	419
	597
	724
2J-1826	745
	751
2J-3507	921
	922
2J-3961	471
2J-8163	233
2K-4821	150
2L-6679	233
2M-9780	91
	136
	554
	596
	597
	603
	605
	639
	663

► PRIMARY REFERENCE

PART NUMBER INDEX

Part	Page
	667
	695
	699
	701
	724
	735
	795
	1003
2N-5243	83
2N-6005	64
2P-2975	802
	803
	805
2P-4304	64
	70
2Q-4703	964
2R-0524	312
2R-0525	312
2R-1236	695
2S-1647	272
2S-2053	72
2S-2493	121
2S-2596	759
	763
2S-4078	89
	145
	584
	588
	599
	660
	667
	668
	746
	751
	799
	800
2S-5658	30
2S-5926	408
2S-6708	121
2T-2695	802
	803
	805
2U-5338	472
2V-3216	310
2W-1145	477
2Y-5685	996
2Y-5829	57
	58
	68
	72
	73
	132
	293
3	
3B-0551	145
3B-0623	21
	23
	49
	64
3B-4501	181
	182
3B-4510	942
3B-4618	356
	362
	401
3B-8485	320
3B-8489	345
	347
	349
	457
	458
	459
	460
	461
	462
	838
	840
	842
	844
	847
	848
	849
	852
	855
	857
	859
	863
	865
	867
	869
	870
	872
	874
3D-2824	46
	52
	551
	575
	596
	603
	639
	660
	663
	673
	683
	685
	687
	695
	724
	743
	746
	751
	809
3D-4245	794
	804
	807
3D-5102	230
3D-9143	318
3D-9428	323
	324
	325
	326
	327
3E-2310	624
	639
	647
3E-2338	312
3E-3368	215
3E-3371	213
	218
	243
	554
	580
	656
	676
3E-3377	469
3E-3383	241
3E-4297	493
3E-4352	48
	73
3E-4353	152
3E-4356	682
	683
3E-5169	306
3E-6788	80
3E-6910	835
3E-7410	633
3E-7424	112
3E-7427	46
3E-7445	73
3E-7771	234
3E-8016	46
3E-8017	116
	123
3E-8020	942
3E-8025	501
3E-8048	213
3E-8320	201
3E-9411	415
3E-9871	1047
3E-9872	1041
	1055
3F-6156	68
3F-9556	150
3G-8054	624
	647
3G-8057	624
	647
3H-0442	763
	765
	772
	787
	790
3H-7654	425
3J-1907	117
	136
	145
	211
	551
	552
	554
	560
	592
	593
	596
	605
	607
	610
	612
	616
	618
	620
	623
3J-5390	109
3J-7354	70
	93
	551
	560
	593
	667
	724
	745
	750
	759
	763
	765
	787
	790
3K-0360	91
	93
	130
	136
	444
	480
	484

► PRIMARY REFERENCE

PART NUMBER INDEX

Part	Page
	516
	518
	528
	551
	554
	575
	580
	584
	588
	592
	596
	599
	605
	620
	623
	624
	627
	634
	642
	643
	647
	650
	654
	660
	666
	667
	668
	676
	685
	690
	691
	695
	724
	737
	739
	745
	750
	765
	774
	787
	790
	1003
3K-5234	921
	922
3K-8460	35
	36
3L-3380	233
3L-8187	252
	289
3N-3763	234
3N-3790	1070
3P-0623	422
	423
3P-0647	73
3P-0650	63
3P-1896	64
3P-1932	93
3P-2001	136
3R-8797	233
3R-8801	234
3S-2093	46
	91
	100
	125
	132
	153
	166
	169
	177
	187
	189
	190
	192
	194
	195
	203
	205
	209
	239
	248
	252
	254
	259
	264
	266
	267
	268
	270
	272
	274
	275
	279
	281
	283
	287
	289
	291
	293
	295
	297
	298
	300
	301
	303
	304
	306
	308
	310
	933
	973
	998
	1001
	1012
	1013
	1030
	1041
3S-6049	153
	160
	246
3S-6050	153
	160
3S-6605	56
3S-9643	93
3T-3418	233
3T-3422	233
3T-3423	233
	234
3T-3424	233
	234
3T-3434	233
3T-4709	233
3T-4710	233
3T-5760	153
	160
3T-7528	493
3T-9494	233
	234
3T-9524	234
3T-9525	233
3V-0046	560
3V-2431	469
	4
4B-0418	73
4B-2049	234
4B-3665	29
4B-4158	408
	695
	994
4B-4278	942
4B-9783	811
	812
	814
4B-9880	813
4D-1836	306
4D-3704	12
4D-7388	136
4D-7956	480
	484
4D-9986	794
4E-1384	356
	401
4F-5695	20
4H-6112	480
	484
	710
4H-9105	425
4I-0117	356
	401
4I-0118	356
	401
4I-0378	145
4I-0379	136
4I-0420	1042
4I-0575	336
	338
	339
	342
4I-0577	336
	338
	339
	342
4I-0754	724
4I-0797	623
	646
4I-0800	633
4I-0821	633
	646
4I-0833	607
	646
4I-1034	643
4I-1037	607
4I-1129	336
4I-1163	1047
4I-1205	124
	404
	942
4I-1206	942
4I-1260	997
4I-1520	467
4I-1536	▶439
	442
4I-1539	439
	445
4I-1694	643
4I-1704	618
	633
4I-1760	650
4I-1780	633
4I-1783	612
4I-2187	318
4I-2509	336
	342
4I-2599	404
4I-2885	1069
4I-3038	239
4I-3063	942
4I-3090	942
	1055
4I-3144	942
4I-3266	1023
4I-3503	154
4I-3510	804
	807
4I-3511	615
	629
4I-3514	538
	629
4I-3569	746
	751
4I-3573	633
4I-3941	633
4I-3981	627
	646
4I-3988	607
4I-3994	607
	656
4I-4039	876
4I-4043	876
4I-4070	▶876
	878
	881
	885
	886
	887
	888
	889
	890
	891
	892
	893
	894
	895
	896
	897

▶ PRIMARY REFERENCE

PART NUMBER INDEX

Part	Page
	898
	899
	900
	901
	902
	903
	904
4I-4270	942
4I-4286	985
4I-4361	997
4I-4392	942
4I-4978	838
	840
	842
	844
4I-4996	336
	338
	339
	342
4I-5005	838
	840
	842
	844
4I-5020	1057
4I-5021	1057
4I-5106	136
4I-5394	724
4I-5409	1
	▶184
4I-5426	154
4I-5490	724
4I-5795	623
	633
4I-5849	703
4I-5862	439
	445
4I-5906	656
4I-5933	656
4I-6003	629
4I-6027	652
4I-6039	153
4I-6046	679
	680
	681
4I-6107	761
4I-6130	681
4I-6188	666
4I-6236	654
4I-6248	656
4I-6327	623
	646
4I-6365	778
	782
4I-6626	876
	877
4I-6718	855
4I-6897	863
	865
	867
	869
	870
	872
	874
4I-7464	480
	484
4I-7466	480
	484
4I-7467	480
	484
4I-7576	312
4I-7822	572
	575
	584
4I-7836	623
	646
	▶757
4I-7889	136
	275
	277
	308
	618
4I-7924	328
	330
	356
	362
	365
	372
	374
	377
	383
	385
	386
	387
	388
	399
	401
4I-8267	440
4I-8472	1073
4I-8799	643
4I-8965	761
4I-9521	593
	607
	615
	620
	623
	627
	629
	633
	646
	656
	666
4I-9522	593
	607
	610
	615
	620
	629
	633
	666
4I-9523	593
	607
	610
	620
	623
	629
	633
	646
	652
	656
	666
4I-9524	607
	610
	620
	623
	627
	629
	633
	646
	666
4I-9525	593
	607
	615
	620
	623
	629
	633
	646
	656
	666
4I-9526	607
	615
	620
	629
	650
	652
	656
	666
4I-9527	593
	607
	620
	629
	633
	639
	643
	650
	656
	666
4I-9528	607
	620
	623
	629
	646
	656
	666
4J-0520	761
4J-0522	89
	575
	578
	580
	584
	588
	652
	660
	663
4J-0523	654
	739
	751
	761
4J-0524	660
4J-0525	739
	746
	751
4J-0526	739
	746
	751
4J-0527	89
	599
	603
	663
	724
4J-0528	597
	785
4J-5267	605
	755
4J-5309	739
	746
	751
4J-5477	560
	564
	567
	568
	569
	570
	592
	683
	771
4J-6806	799
	800
4J-7533	493
	690
	739
	745
	750
	759
	761
	763
	772
	795
	826
	829
4J-8998	768
	769
4K-1388	737
4K-2039	817
	825
4K-8302	605
4K-8864	572
	668
4L-2729	234
4M-0189	85
4M-1827	233
4M-1828	233
4M-1831	233
4M-1853	233
4M-1854	233
4M-1896	234
4N-1114	12
4N-8150	64
4N-9170	345
4P-4369	116
4P-5820	36
	▶220
4P-5918	293
4P-7428	270
	291
	304
4P-7581	125
	154
	170
	248

▶ PRIMARY REFERENCE

PART NUMBER INDEX

Part	Page
	254
	259
	272
	283
	293
	298
	300
	301
	304
4P-7582	668
4P-8134	125
4P-8525	310
4S-1962	298
4T-0987	763
4T-4501	920
4T-4707	920
4T-7791	804
	807
4T-8588	471
4W-9160	119
5	
5A-3604	339
	342
	844
5B-0651	855
	857
	859
5B-9318	695
5C-2889	181
	182
5C-2890	238
	250
	254
	259
	264
5C-7261	154
	160
	165
	356
	401
	501
	796
	932
	1026
	1027
	1029
	1032
	1034
	1036
	1037
	1038
	1039
5C-7793	942
5C-7883	154
5C-8312	1042
5C-9553	201
	246
	285
	287
	318
	643
	724
	933
5D-1026	487
5D-4822	992
	994
5D-9344	35
	36
5F-0304	36
5H-5672	722
5H-8624	660
5H-8936	852
5I-4000	785
5I-4002	785
5I-4076	607
	633
	656
	666
5I-4376	592
	612
	629
	643
5I-4396	623
	627
	633
	646
5I-7090	963
	974
5I-8270	153
	160
5I-8307	136
5I-8416	▶440
	442
5I-8510	534
5I-8511	761
5I-8670	492
5I-8754	477
5I-8790	501
5I-8791	501
5I-8799	501
5I-8800	501
5I-8802	501
5I-8805	501
5I-8809	501
5I-8810	501
5I-8811	501
5I-8812	501
5I-8813	501
5I-8815	501
5I-8820	501
5I-8825	629
	633
	643
5J-2383	703
5J-2974	708
	768
	769
5J-3488	471
5J-5314	233
5K-0430	230
	266
	267
5K-5338	1003
5K-8451	668
5K-9090	89
	551
	575
	580
	584
	588
	596
	599
	633
	634
	639
	654
	660
	667
	668
	672
	673
	685
	687
	736
5K-9242	852
5K-9243	345
	847
	848
	849
5L-4758	447
	817
	825
5L-4763	40
5M-2894	142
5M-3034	233
5M-9624	759
	799
	800
5P-0047	540
	542
	545
	547
5P-0048	540
	542
	545
	547
5P-0537	59
	310
5P-0600	121
5P-0743	75
5P-0747	153
	160
	236
	246
5P-0761	153
	160
	246
5P-0767	487
	1003
5P-1075	318
5P-1076	85
	112
	113
	115
	118
	119
	124
	317
	323
	324
	325
	326
5P-1318	663
5P-1442	137
5P-2235	480
	484
5P-2369	668
5P-2568	739
	746
	751
5P-3108	761
5P-4115	154
	201
	246
	404
5P-4116	102
	149
	318
	356
	401
5P-4889	142
5P-4924	145
5P-5148	666
5P-5528	230
5P-5598	26
5P-5649	100
	102
5P-5998	239
5P-6027	328
5P-6298	233
5P-6312	230
5P-6313	230
5P-6314	230
5P-6727	38
5P-6944	125
5P-7460	668
5P-7461	668
5P-7462	612
	639
5P-7463	612
	639
5P-7464	660
	668
5P-7465	660
	668
5P-7468	89
	572
	575
	580
	584
	588
	639
	663
5P-7469	89
	572
	575
	580
	584
	588

▶ PRIMARY REFERENCE

PART NUMBER INDEX

Part	Page
	639
	663
5P-7470	89
	584
	588
	663
5P-7471	89
	584
	588
	663
5P-7684	695
5P-7701	36
	46
	64
	70
5P-7814	35
	36
5P-7854	68
	1003
5P-7958	1005
5P-8068	80
	724
5P-8077	506
	508
	510
	520
	522
	526
	530
	532
	534
	540
	542
	545
	547
5P-8182	89
	584
	588
	663
5P-8211	46
5P-8215	804
	807
5P-8245	10
	41
	44
	46
	60
5P-8246	35
	36
5P-8247	32
	150
5P-8248	36
5P-8309	367
	368
	369
	374
	377
	381
	382
	386
	387
	388
	391
	393
	395
	399
	404
5P-8347	183
5P-8500	144
	361
	1005
5P-8522	266
	267
5P-9085	293
5P-9436	93
5Q-4212	536
	538
	562
	564
	565
	567
	568
	569
	570
5R-5927	705
5S-7349	150
5S-9134	67
5V-3854	367
	368
	369
6A-5591	46
6C-6760	516
	518
	528
6C-8382	992
	994
6C-9149	85
	707
6D-1641	635
	1003
6D-2834	593
6D-4244	136
6D-4246	603
	612
	635
	1003
6D-4247	136
6D-5801	136
6D-7146	79
6D-9157	724
6E-2313	755
6E-2790	795
6E-3653	745
	750
6E-4280	795
6E-5431	755
6E-5434	755
6E-5436	755
6E-5438	755
6E-5439	755
6F-4855	498
6F-7045	237
6G-2256	154
6G-2263	153
	295
6I-0723	724
6I-0724	724
6I-1418	170
6I-5298	967
	968
	997
6I-5342	942
6I-5470	1015
6I-5976	345
6I-6441	408
6I-6550	575
6I-6721	580
	588
	785
6I-6758	807
6I-6777	757
6I-6904	758
	757
6I-6905	758
	757
6I-6907	758
	804
6J-2419	807
	575
6J-2680	580
	584
	588
	593
	597
	599
	652
6J-4834	584
	588
	599
6J-6855	759
6K-3607	136
6K-6307	695
6K-8178	635
	1003
6L-3616	847
	848
	849
	852
6M-5062	817
	825
6N-1127	125
6N-3279	233
6N-3826	233
6N-8863	46
6P-2216	328
	330
	356
	362
	365
	372
	374
	377
	383
	385
	386
	387
	388
	399
	401
6T-0363	233
6T-0371	233
6T-0372	233
6T-3631	243
	252
	289
	308
6T-3632	243
	252
	289
	308
6T-3633	243
	252
	289
	308
6V-0357	635
6V-0400	540
	542
	545
	547
	554
	572
	673
	677
	678
	679
	680
	681
	687
6V-0545	572
6V-0683	612
	639
6V-0852	125
	593
	612
	624
	627
	639
	646
	652
	656
	663
	724
6V-0974	624
	647
6V-1250	746
	751
6V-1322	233
6V-1324	554
6V-1572	599
6V-1573	599
6V-1722	93
6V-1819	152
6V-1820	68
6V-1874	89
	663
6V-1875	599
6V-2317	10
	38
	79
	80
	83
6V-2722	160
	162
	246
6V-3250	96
6V-3251	52

6

► PRIMARY REFERENCE

PART NUMBER INDEX

Part	Page
	83
	95
	98
6V-3265	190
	192
	1003
	1041
6V-3342	852
6V-3382	695
6V-3535	38
6V-3536	16
6V-3538	21
6V-3668	41
6V-3822	117
	125
	132
	134
6V-3834	80
6V-3908	70
6V-3918	8
	293
6V-3922	807
6V-3938	785
6V-3940	68
	95
6V-3964	165
6V-3965	125
	593
	612
	624
	627
	639
	647
	652
	656
	663
	724
6V-4248	73
	125
	132
	134
6V-4249	46
6V-4589	143
	240
6V-5043	710
6V-5048	21
	50
	64
	114
	209
	217
	219
	230
6V-5049	23
	51
	64
	76
	125
	132
	134
	209
	212
	216
6V-5050	35
	36
6V-5063	23
	26
	83
	93
	95
6V-5064	83
6V-5134	80
6V-5192	38
	761
6V-5200	693
6V-5210	181
	182
	254
	259
6V-5215	73
	209
6V-5217	11
	68
6V-5219	35
	36
	38
	83
6V-5221	80
	83
6V-5326	746
	751
	759
	763
6V-5386	100
6V-5556	801
6V-5590	29
6V-5597	765
	787
	790
6V-5645	201
6V-5696	60
6V-5782	663
6V-5839	10
	13
	63
	68
	72
	73
	91
	97
	116
	125
	132
	134
	293
6V-5842	10
	13
	99
6V-5843	40
6V-6317	68
	91
6V-6353	117
6V-6609	52
	93
	228
6V-6707	89
	663
	724
6V-6788	768
	769
6V-6793	654
	739
	751
	761
6V-6923	147
6V-7238	46
	480
	484
	1003
6V-7350	97
6V-7357	961
	962
	982
	1003
6V-7420	136
	1003
6V-7636	942
6V-7646	964
6V-7658	493
6V-7723	721
6V-7728	310
6V-8133	312
6V-8149	10
6V-8187	114
	201
6V-8188	234
6V-8189	150
6V-8197	14
6V-8200	716
6V-8202	1028
	1030
	1033
6V-8212	125
	293
6V-8213	501
6V-8214	310
	916
6V-8223	469
6V-8225	38
6V-8231	1055
6V-8337	778
	782
6V-8359	64
6V-8362	242
6V-8363	1047
6V-8370	1047
6V-8374	252
	289
6V-8397	536
	538
	551
	552
	554
	560
	564
	567
	568
	569
	570
	592
	593
	596
	605
	607
	610
6V-8398	512
	514
	516
	518
	524
	528
	536
	538
	562
	564
	565
	567
	568
	569
	570
	592
	596
	597
	603
	605
	620
	634
	635
	639
	643
	654
	660
	663
	667
	668
	683
	815
	818
	820

► PRIMARY REFERENCE

PART NUMBER INDEX

Part	Page
	832
6V-8400	584
	776
6V-8553	633
6V-8625	596
	620
	660
	667
6V-8626	605
6V-8627	683
6V-8633	683
6V-8634	624
	642
	654
6V-8635	70
	599
	634
	672
	673
6V-8636	551
	554
	592
	605
	610
	612
	616
	618
	620
	623
	627
	629
	634
	646
	650
	652
	667
	685
	687
6V-8637	551
	663
6V-8638	596
	639
	667
6V-8639	592
	596
	634
	643
	667
6V-8640	554
6V-8641	592
6V-8642	605
6V-8713	603
	660
6V-8714	551
6V-8716	596
	634
6V-8721	603
	667
6V-8723	623
	627
	647
	667
6V-8724	551
	593
	596
	605
	607
	610
	612
	618
	620
	623
	627
	629
	635
	639
	643
	647
	650
	652
	656
	687
6V-8754	757
	758
6V-8777	687
6V-8781	552
	593
	624
	630
	635
	643
	647
	650
	668
	685
6V-8782	605
	667
6V-8785	685
6V-8836	293
	310
6V-8932	495
6V-8935	564
	567
	568
	569
	570
6V-8936	564
	567
	568
	569
	570
	605
	612
	667
6V-8942	596
6V-8943	635
6V-8944	667
6V-8946	89
	685
6V-8978	807
6V-8987	620
6V-8994	536
	538
6V-9001	554
	592
	610
	616
	618
	623
	627
6V-9002	667
6V-9007	551
	596
	663
	673
	685
	687
6V-9008	575
	580
	584
	588
	654
6V-9009	584
6V-9027	83
	93
6V-9168	536
	538
	620
6V-9182	596
6V-9189	183
6V-9200	551
	593
	667
6V-9491	203
	205
6V-9512	660
6V-9632	125
	134
6V-9666	99
6V-9672	254
	259
6V-9673	289
6V-9746	89
	551
	552
	554
	596
	634
	663
	673
	685
	687
6V-9829	635
	650
6V-9836	593
	605
	630
	635
	643
	647
	654
	656
	668
6V-9837	668
6V-9839	685
6V-9840	672
	673
6V-9847	672
	673
6V-9850	593
	623
	627
	629
	634
	646
	656
	673
6V-9852	635
6V-9853	687
6V-9873	643
	654
6V-9874	685
6V-9877	685
6W-2464	560
6W-6005	153
	160
6Y-0454	422
6Y-0473	422
6Y-3909	920
6Y-8134	419
6Y-8171	425
6Y-8172	425
6Y-8176	425
6Y-9339	425
7	
7C-1445	35
	36
	68
7C-1583	59
7C-1728	59
7C-1821	80
7C-1822	80
7C-3081	64
7C-3082	64
7C-3083	64
7C-3954	64
7C-7851	34
7C-7852	34
7C-9542	67
7D-5363	91
7D-7233	77
7E-4846	799
	800
7E-6508	310
7E-7977	26
7E-7978	26
7E-8630	115
7F-0560	162
7F-3488	233
7F-3491	233
7F-3525	233
7F-9090	125
7G-1060	306
7G-3413	554
7G-3414	554
7G-4332	422
7G-4498	230
7H-3171	417
	419
	425
7H-7055	132
	134

► PRIMARY REFERENCE

PART NUMBER INDEX

Part	Page
7I-0134	754
7I-0135	754
7I-0966	801
7I-0970	666
7I-0972	666
7I-0986	821
	823
7I-2272	690
	691
	755
	765
	787
	790
	826
7I-2673	100
	108
	153
	266
	267
	291
	304
	1030
	1037
7I-2789	775
7I-6677	575
	580
7I-7131	723
7I-7403	821
	823
7I-7439	551
	654
7I-7586	835
7I-7728	480
	484
7I-8084	501
	716
	771
	797
	813
	822
	824
7I-8102	821
7I-8164	716
7I-8166	716
7I-8171	716
7I-8172	716
7I-8252	643
	650
7I-9001	775
7J-6285	14
7J-8611	852
7J-9108	512
	514
	524
	603
	605
	633
	635
	660
	832
7J-9933	801
7K-1181	153
	166
	169
	248
	250
	252
	264
	266
	267
	268
	270
	272
	274
	275
	277
	279
	281
	283
	287
	291
	295
	298
	300
	301
	302
	303
	304
	306
	308
	536
	538
	551
	592
	597
	605
	607
	610
	612
	615
	620
	623
	629
	633
	642
	643
	646
	650
	654
	657
	666
	672
	673
	687
	955
7K-4129	132
	134
7L-2894	233
7L-6580	93
7L-9061	240
7M-0324	233
7M-0325	234
7M-0326	233
7M-0327	233
7M-7410	691
7M-8485	89
	95
	312
	575
	578
	580
	584
	588
	596
	599
	634
	654
	663
	672
	673
	674
	685
	708
	734
	759
	802
	803
	804
	805
	807
	829
7M-8651	233
7N-0140	230
7N-0296	230
7N-0719	201
	▶237
7N-2059	230
7N-2353	290
7N-5274	153
	160
7N-5683	21
7N-9801	245
7T-1099	324
7T-3974	233
7T-6799	242
7T-9123	234
7W-6390	64
7W-9094	132
	134
7X-0310	119
7X-0345	42
7X-0562	234
7X-0578	942
	1042
7X-0579	137
7X-0595	85
7X-0618	104
7X-0623	117
7X-0818	635
7X-0870	80
7X-0871	592
7X-2475	654
	746
7X-2489	473
7X-2533	179
7X-2536	963
	974
7X-2537	76
7X-2539	137
7X-2549	536
	538
7X-2550	562
	565
	575
	580
7X-2552	1009
7X-2553	85
	739
	751
	855
	857
	859
	992
	1023
7X-2554	540
	542
	545
	547
7X-2555	530
	532
7X-2557	506
	508
	510
	520
	526
	534
7X-2559	994
7X-2562	705
	855
7X-2563	100
	876
	877
7X-2567	42
7X-2569	694
7X-2573	336
	338
	339
	342
	838
	840
	842
7X-2574	844
7X-2575	316
7X-2576	412
	413
	414
	487
	705
7X-2583	424
7X-2619	264
7X-2621	175
	176
	300
	306
	635
	746
	751
7X-3164	516
	518
	528
7X-3342	711
7X-3373	233
7X-4803	458

▶ PRIMARY REFERENCE

PART NUMBER INDEX

Part	Page
	460
7X-7644	1073
7X-7700	145
7X-7729	85
	100
	107
	124
	324
	325
	326
	327
	668
	933
	1035
7Y-0059	1
	▶1005
7Y-0336	412
	413
	414
7Y-0468	778
	782
7Y-0595	480
	484
7Y-0597	480
	484
7Y-0623	992
	994
7Y-0656	312
7Y-0661	312
7Y-0662	312
7Y-0808	312
7Y-1095	345
7Y-1221	427
7Y-1238	480
	484
7Y-1434	480
	484
7Y-1459	427
7Y-1460	427
7Y-1469	312
7Y-1470	312
7Y-1472	312
7Y-1473	312
7Y-1474	312
7Y-1475	312
7Y-1476	312
7Y-1477	312
7Y-1478	312
7Y-1479	312
7Y-1480	312
7Y-1482	312
7Y-1483	312
7Y-1484	312
7Y-1485	312
7Y-1487	312
7Y-1488	312
7Y-1491	312
7Y-1492	312
7Y-1493	312
7Y-1495	312
7Y-1498	312
7Y-1499	312
7Y-1504	312
7Y-1507	345
7Y-1537	320
7Y-1647	345
7Y-1648	345
7Y-1650	345
7Y-1866	408
7Y-1884	408
7Y-1976	100
	102
7Y-2397	857
	859
7Y-2496	705
7Y-2670	852
7Y-2853	359
	362
7Y-2854	359
7Y-3283	89
	664
7Y-3470	1055
7Y-3472	1055
7Y-3732	557
	558
	559
7Y-3951	254
	259
7Y-3954	254
	259
7Y-4193	607
7Y-4294	703
7Y-4529	136
7Y-4868	551
7Y-4932	467
7Y-4941	463
	465
	467
	469
7Y-4944	463
	465
	467
	469
7Y-4945	467
7Y-4956	467
7Y-5010	737
7Y-5011	737
7Y-5074	572
7Y-5219	695
	746
	751
	768
	769
	785
7Y-5221	703
7Y-5226	763
	765
	772
	787
	791
7Y-5233	320
7Y-5235	312
7Y-5239	463
	465
	467
	469
7Y-5247	599
	603
7Y-5250	729
7Y-5267	699
	701
7Y-5272	785
7Y-5431	153
7Y-5458	241
7Y-5464	241
7Y-5497	136
7Y-5505	254
	259
7Y-7364	1055
7Y-8165	666
	1003
7Y-8309	642
7Y-8379	639
7Y-8463	969
	970
	971
	972
	979
	980
7Y-8621	991
7Y-8622	991
7Y-8876	367
	368
	369
7Y-8990	362
	8
8B-6561	668
8C-0564	592
8C-0597	552
	635
8C-0620	596
8C-3089	111
	233
8C-3100	99
8C-3101	734
8C-3102	734
8C-3445	70
8C-3446	70
	724
8C-3451	724
8C-5064	132
	134
8C-5240	312
8C-5607	179
8C-5608	168
	179
8C-5918	153
	160
8C-6358	162
8C-6561	560
8C-7563	660
8C-8451	168
	207
	208
8C-8580	964
8C-8988	554
8C-8992	353
8C-9161	471
8C-9660	233
8D-5054	838
	840
	842
	844
8E-4272	422
8E-8439	40
8F-0212	755
8F-1434	234
	1047
8H-2282	991
8H-5303	237
8H-5306	237
8H-5352	477
8H-9789	38
8J-2559	695
8J-4351	80
8K-6211	1001
8L-2777	55
8L-2786	35
	36
	46
	51
	125
	132
	134
	137
	226
	227
8M-0505	125
	134
	137
8M-0506	137
8M-0547	137
8M-0755	145
8M-2770	197
8M-2772	847
	848
	849
	852
8M-2773	132
	197
	266
	267
	1003
8N-0869	153
	246
8N-1725	153
	160
	246
8P-9770	879
	880
	882
	883
	884
	885
	886
	887
	888
	889
	890
	891
	892
	893
	894
	895
	896
	897
	898

▶ PRIMARY REFERENCE

PART NUMBER INDEX

Part	Page
	899
	900
	901
	902
	905
	906
	907
	908
	909
	910
	912
	913
	914
8S-0934	1025
8S-2332	236
8S-2634	246
8S-4723	1025
8S-4724	1025
8T-0075	634
	639
	652
	667
	687
8T-0076	624
	627
	647
	668
8T-0100	48
8T-0114	963
	974
8T-0226	35
	36
8T-0266	949
8T-0267	724
8T-0269	501
	964
8T-0273	425
8T-0275	66
	125
	134
8T-0281	31
	34
8T-0288	771
	797
	822
	824
	827
	828
	833
	834
8T-0292	93
8T-0328	145
	201
	234
	254
	259
	289
	933
	973
8T-0337	306
	1013
8T-0338	11
8T-0343	716
	776
8T-0360	34
8T-0363	424
8T-0404	603
8T-0640	59
8T-0642	293
8T-0643	97
8T-0644	141
8T-0646	10
8T-0788	593
8T-1158	776
8T-1159	785
8T-1160	208
8T-1482	42
8T-1687	668
8T-1715	136
8T-1779	618
8T-1905	607
	618
	624
	630
	635
	650
	668
8T-2335	624
	647
	657
8T-2525	575
	580
	584
	588
	640
8T-2920	354
	661
	668
8T-2922	824
8T-3008	829
8T-3490	125
	1003
8T-3518	162
8T-3519	162
8T-3597	332
	353
8T-3612	627
	1003
8T-3647	624
	627
	647
	952
8T-3957	312
8T-4001	499
	705
8T-4121	10
	77
	85
	89
	100
	102
	137
	154
	166
	175
	176
	183
	187
	189
	190
	192
	196
	197
	200
	207
	208
	212
	230
	246
	248
	266
	267
	268
	270
	272
	275
	277
	289
	291
	295
	297
	298
	300
	304
	306
	320
	329
	345
	356
	362
	367
	368
	369
	371
	401
	404
	506
	508
	510
	516
	518
	520
	526
	528
	534
	549
	550
	552
	557
	558
	559
	572
	575
	578
	580
	584
	588
	593
	599
	603
	605
	610
	612
	616
	620
8T-4122	42
8T-4123	85
	100
	694
	705
	707
	768
	769
	838
	840
	842
	844
	855
	863
	865
	867
	869
	870
	872
	874
	876
	877
8T-4127	254
	259

► **PRIMARY REFERENCE**

PART NUMBER INDEX

Part	Page
8T-4131	85
	716
8T-4132	85
	512
	514
	524
	536
	538
	562
	565
8T-4133	77
	85
	124
	137
	154
	160
	187
	189
	190
	192
	208
	268
	298
	318
	367
	368
	369
	404
	722
	776
	785
	847
	848
	849
	852
	992
	994
8T-4134	1055
	1057
8T-4136	77
	89
	100
	107
	137
	154
	246
	266
	267
	275
	277
	297
	324
	325
	326
	327
	345
	554
	572
	593
	603
	610
	612
	616
	620
	635
	652
	661
	664
	668
	687
	723
	725
	933
	963
	966
	974
	998
	1035
8T-4137	77
	85
	100
	124
	137
	154
	196
	197
	200
	207
	212
	230
	248
	272
	291
	295
	297
	304
	306
	329
	345
	371
	605
	612
	616
	620
	624
	635
	640
	647
	657
	725
	933
	942
	953
	964
	992
	994
	1003
	1015
8T-4138	166
	169
	404
	610
	647
	668
	1003
8T-4139	89
	102
	110
	112
	113
	118
	199
	323
	324
	325
	326
	327
	499
	512
	514
	516
	518
	524
	528
	538
	540
	542
	545
	547
	549
	550
	554
	557
	558
	559
	562
	565
	572
	575
	578
	580
	584
	588
	599
	612
	624
	627
	640
	647
	652
	657
	661
	664
	668
	674
	728
	730
	763
	992
	994
8T-4140	85
	339
	342
	506
	508
	510
	512
	514
	520
	522
	524
	526
	530
	532
	534
	540
	542
	545
	547
	562
	565
	682
	683
	844
8T-4141	418
	421
8T-4167	42
	312
	336
	338
	339
	342
	413
	414
	424
	487
	499
	705
	838
	840
	842
	844
	857
	859
	884
	912
	917
8T-4171	154
	201
	308
	318
8T-4172	635
	668
8T-4173	512
	514
	524
	536
	538
8T-4174	522
	530
	532
	536
	538
	746
	994
8T-4175	512
	514
	522
	524
	530
	532
	562
	565
8T-4176	552
	597
	1015
8T-4177	640
8T-4178	10
	89
	618

► PRIMARY REFERENCE

PART NUMBER INDEX

Part	Page
	664
	685
8T-4179	124
	169
	230
	364
	668
	846
	946
8T-4182	89
	154
	635
	664
8T-4183	85
	119
	317
	336
	342
	359
	362
	480
	484
	506
	508
	510
	512
	514
	520
	522
	524
	526
	530
	532
	534
	572
	584
	603
	661
	765
	788
	790
8T-4184	89
	356
	401
	404
	495
	540
	542
	545
	547
	554
	562
	565
	572
	575
	578
	580
	584
	588
	593
	612
	635
	661
	664
	668

Part	Page
	674
	677
	678
	679
	680
	681
	687
8T-4185	154
	275
	295
	552
	624
	647
	765
	788
	790
8T-4186	588
	593
	599
	612
	683
8T-4187	144
	695
	727
8T-4189	102
	149
	154
	230
	356
	401
	495
	635
	640
8T-4190	187
	189
	190
	192
	1012
	1013
8T-4191	154
	166
	230
	270
	275
	277
	289
	298
	304
	408
	620
	635
	668
	847
	848
	849
	963
	966
	974
	1023
	1041
	1057
8T-4192	89
	100
	154
	230

Part	Page
	246
	599
	607
	661
	664
	668
	992
	994
8T-4193	506
	508
	510
	520
	522
	526
	530
	532
	534
	572
	942
8T-4194	85
	506
	508
	510
	520
	522
	526
	530
	532
	534
	540
	542
	545
	547
	554
	572
	575
	578
	580
	584
	589
	599
	661
	664
	687
	725
8T-4195	77
	85
	100
	102
	137
	154
	160
	208
	246
	268
	298
	650
	657
	661
	705
	755
	955
	1017
8T-4196	85
	89

Part	Page
	137
	154
	304
	320
	549
	550
	557
	558
	559
	576
	578
	580
	584
	589
	593
	664
	668
	682
	683
	765
	787
	790
8T-4198	612
	621
	650
	668
8T-4199	345
8T-4200	185
	194
	318
	356
	401
	991
	998
	1003
8T-4205	150
	201
	233
8T-4222	100
8T-4223	14
	85
	89
	100
	102
	104
	110
	124
	154
	169
	181
	182
	199
	230
	246
	320
	480
	484
	495
	499
	506
	508
	510
	512
	514
	516

► **PRIMARY REFERENCE**

PART NUMBER INDEX

Part	Page	Part	Page	Part	Page	Part	Page
	518		751		516		524
	520		946		518		552
	522		992		524		562
	524		994		538		564
	526		1006		562		565
	528		1015		565		567
	530	8T-4224	15		705		568
	532		76		1006		569
	534		150	8T-4648	102		570
	536		154		404		572
	538		165		512		576
	540		170		524		578
	542		185		549		581
	545		194		550		585
	547		207		552		589
	549		208		555		640
	550		230		565		661
	552		318		576		668
	554		334		581		709
	557		335		589		725
	558		356		682		739
	559		401		746		746
	562		495		751		751
	564		624	8T-4779	85	8T-4970	185
	565		627		536		197
	567		635		538		198
	568		640		838		201
	569		644		840		495
	570		647		842		1012
	572		652		844		1013
	576		664	8T-4780	838		1015
	578		725		840		1041
	581		755		842	8T-4971	1003
	585		932		844	8T-4985	599
	589		952		863	8T-4986	115
	593		963		865		660
	597		974		867	8T-4987	112
	599		985		869		113
	603		991		870	8T-4989	113
	607		992		872	8T-5001	562
	612		994		874		565
	624		998	8T-4834	654	8T-5005	137
	627		1003	8T-4908	644		275
	635		1026		725		277
	640		1027	8T-4910	516		308
	647		1029		518	8T-5041	89
	652		1032		528		576
	657		1034		557		581
	661		1036		558		585
	664		1037		559		589
	668		1038		562		664
	674		1039		674		668
	677	8T-4226	154		946		679
	678		160	8T-4944	477		680
	679	8T-4240	312		693		681
	680	8T-4241	716	8T-4956	320		705
	681	8T-4244	104		356		739
	683		115		359		746
	687		119		362		751
	709		181		401	8T-5050	635
	725		182		404	8T-5092	585
	728		480		480		589
	730		484		484		599
	739		512		512	8T-5093	38
	746		514		514	8T-5360	119

PART NUMBER INDEX

Part	Page
	710
8T-5379	339
	342
	857
	859
	884
	912
	917
8T-5412	89
	597
	664
	677
	678
8T-5460	707
8T-5878	487
8T-6385	320
	480
	484
8T-6404	693
8T-6411	185
8T-6412	185
8T-6430	85
	707
8T-6466	516
	518
	528
8T-6663	624
	647
8T-6684	596
	639
8T-6685	506
	508
	510
	520
	526
	534
8T-6693	254
	259
8T-6757	457
8T-6759	691
	723
	755
	759
	763
	775
	776
	833
	834
8T-6761	725
8T-6764	838
	840
	842
	844
8T-6868	514
	524
	683
	946
8T-6869	137
8T-6870	635
	652
	755
8T-6876	76
8T-6912	15
	635
8T-7338	85
	396
	397
	585
	661
8T-8378	463
8T-8390	471
8T-8442	501
	781
8T-8737	241
	279
	283
	469
	971
	972
	981
	1008
8T-8894	469
8T-8898	673
8T-8899	663
8T-8902	656
8T-8915	124
8T-8916	710
8T-8987	89
	660
	667
8T-9080	427
	477
	717
8T-9403	89
	664
8T-9597	477
	714
8T-9598	99
8T-9655	136
	170
8T-9756	153
	160
8U-7381	804
	807
8Y-6352	940
8Y-6967	946
8Y-9603	236
9	
9B-7233	242
9B-7237	454
9C-5344	132
	134
9D-3769	100
9F-2167	540
	542
	545
	547
	554
	572
9F-5599	233
9F-5644	237
9G-0002	153
	160
9G-0005	153
	160
9G-4101	233
	234
9G-7641	203
	205
	▶242
9G-8909	153
9H-3757	233
9L-6770	150
9M-0853	64
9M-1974	8
	10
	11
	35
	36
	38
	46
	68
	79
	80
	83
	93
	95
	209
	293
9M-2307	386
	387
	388
9M-3695	106
9M-3786	661
9M-5732	386
	387
	388
9M-7609	233
9M-8406	137
9N-0869	170
9R-2060	324
9R-7941	201
9R-7980	201
9S-2437	136
9S-2544	233
9S-4180	493
	772
	795
9S-4181	70
	89
	95
	575
	578
	584
	663
9S-4182	21
	50
	93
9S-4183	95
	575
	596
	695
9S-4185	35
	36
	51
	125
	551
	575
	584
	588
	599
	650
9S-4190	95
	98
9S-4191	51
	96
	593
	620
	624
	635
	639
	647
	650
	654
	660
	724
	739
	755
	765
	773
	787
	790
9S-6130	145
	584
	588
	599
9S-8001	690
	745
	750
	759
	826
9S-8002	21
	64
	83
	111
	114
	136
	759
9S-8003	785
9S-8004	23
	64
	690
	737
	765
	787
	790
9S-8005	52
	93
	137
	690
	691
	739
	745
	750
	765
	787
	790
9S-8006	52
	83
	136
	699

▶ PRIMARY REFERENCE

PART NUMBER INDEX

Part	Page
	701
	795
9S-8008	23
	26
	35
	36
	52
	83
	743
9S-8178	144
	727
9S-9334	36
	46
	64
	83
9T-1614	759
	763
9T-9529	699
	701
9U-2331	1011
9U-4431	1011
9V-3659	367
	368
	369
9W-0335	254
	259
9W-0742	▶162
	246
9W-2146	426
9W-2201	425
9W-3340	472
9W-8365	920
9X-0199	1047
9X-0262	209
9X-1386	220
	221
	469
9X-1813	149
	213
	214
	215
	218
	238
	240
9X-2021	32
9X-2026	1012
	1013
9X-2027	28
9X-2041	942
	957
	959
	987
9X-2042	194
	252
	254
	259
	281
	290
	308
	940
	942
	959
	985
	1042
	1046
	1055
9X-2043	194
	955
9X-2044	254
	259
	940
	942
	1042
	1047
	1052
	1054
	1055
9X-2045	942
	955
	997
	1042
9X-2046	1007
9X-2065	208
9X-2097	165
	293
9X-2098	170
9X-2201	115
9X-2205	145
9X-2235	687
9X-2297	624
	627
	647
9X-2480	171
9X-2533	1050
9X-3401	46
	213
	218
	469
	554
	580
	616
	634
	643
	656
	676
	724
	969
	970
	971
	972
	981
	1008
9X-3402	629
9X-3463	181
	182
	185
	992
	994
9X-3495	275
	277
9X-3604	463
	465
	469
9X-3607	467
9X-4597	458
	459
	460
	462
	857
	859
9X-4598	457
	459
	855
	867
	869
	870
	872
	874
9X-4599	863
	865
	867
	869
	870
	872
	874
9X-4600	838
	840
	842
	844
9X-6032	714
9X-6165	168
	179
	668
	1012
	1013
9X-6451	46
9X-6579	668
9X-6580	597
9X-6582	564
	567
	568
	569
	570
9X-6650	130
9X-7317	131
9X-7378	21
9X-7380	93
9X-7430	23
9X-7680	781
9X-8256	38
	154
	166
	169
	171
	185
	197
	198
	201
	207
	208
	250
	255
	260
	264
	285
	287
	308
	318
	610
	644
	647
	668
	725
	933
	961
	962
	964
	982
	1003
	1015
	1041
	1042
	1057
9X-8257	85
	187
	189
	190
	192
	320
	339
	342
	396
	397
	480
	484
	506
	508
	510
	512
	514
	520
	522
	524
	526
	530
	532
	534
	536
	538
	540
	542
	545
	547
	562
	565
	585
	654
	661
	693
	729
	739
	746
	751
	844
	855
	857
	859
	942
	992
	994
	1009
	1012
	1013
	1023
9X-8267	66
	125
	134
	293
9X-8281	116
9X-8600	145

▶ PRIMARY REFERENCE

PART NUMBER INDEX

Part	Page
9X-8979	699
	701
	714
9X-9896	168
9Y-0810	16
9Y-0821	16
9Y-1758	66
9Y-4357	66
9Y-6089	12
9Y-8075	79
9Y-8076	79
9Y-9236	710
0	
003-7764	136
005-4362	125
	132
	134
005-8593	765
	787
	790
012-0380	238
030-0167	802
	803
	805
030-7935	70
030-7942	132
	134
030-7947	132
	134
030-8188	91
	125
	132
	134
030-8194	91
032-9882	835
033-5853	111
033-6033	76
	147
033-8248	847
	848
	849
034-1432	72
036-9821	233
036-9823	233
045-4065	234
061-8561	80
061-9413	145
061-9455	35
	36
	68
061-9458	46
085-6449	997
085-6452	942
085-7356	623
	627
	639
	646
	652
085-8037	1041
085-8091	745
	750
086-0507	320
087-4402	618
	620
087-4405	643
087-4441	623
	646
087-4454	440
	▶441
087-4456	▶442
	444
087-4503	605
087-4532	633
087-4575	441
087-4576	441
087-4577	441
087-4587	633
087-4683	239
087-4707	776
087-4710	776
087-4786	695
087-4962	666
087-5087	666
	▶733
087-5379	467
087-5390	473
087-5393	473
087-5397	473
087-5533	465
	469
087-5548	465
	469
	857
	859
087-5550	463
	465
	469
087-5551	463
	465
	469
087-5591	629
	654
087-5708	776
087-5759	610
	633
087-5762	618
087-5764	633
087-5765	618
087-5766	618
087-5767	610
	685
087-5771	633
087-5777	623
	646
087-5778	607
087-5782	633
087-5838	852
087-5840	847
	848
087-5891	852
087-6583	656
087-6584	629
087-8906	727
087-8907	727
087-8909	727
091-5928	472
	916
091-9035	275
	304
	612
	666
093-0020	345
093-0074	838
	840
	842
	844
093-0084	867
	869
	870
	872
	874
093-0086	705
093-0090	838
	840
	842
	844
	863
	865
	867
	869
	870
	872
	874
093-0106	838
	840
	842
	844
093-0116	867
	869
	870
	872
	874
093-0118	705
093-0122	838
	840
	842
	844
	863
	865
	867
	869
	870
	872
	874
093-0349	320
	838
	840
	842
	844
	863
	865
	867
	869
	870
	872
	874
093-0364	838
	840
	842
	844
	863
	865
	867
093-0366	869
	870
	872
	874
093-0407	144
093-0408	144
093-1294	683
093-1345	857
	859
093-1347	857
	859
093-1349	855
093-1434	461
093-1509	408
093-1730	480
	484
093-1731	480
	484
093-2064	266
	267
093-2069	964
093-3093	754
093-3094	754
093-3328	754
093-7521	497
094-0584	312
	480
	484
094-0876	778
	782
094-1509	480
	484
094-1528	480
	484
094-3709	417
	419
095-0690	699
	701
095-0723	254
	259
095-0728	966
095-0735	963
	974
095-0736	145
095-0755	942
095-0757	504
095-0772	985
095-0826	724
095-0840	666
095-0843	318
095-0879	469
095-0882	716
095-0886	480
	484
095-0891	312
	480
	484
095-0910	1012
	1013

▶ **PRIMARY REFERENCE**

PART NUMBER INDEX

Part	Page
095-0929	717
095-0930	473
095-0936	776
095-0944	716
095-0965	716
	771
095-0966	716
	737
095-0967	737
095-1207	711
095-1260	776
095-1280	416
	420
	469
095-1310	666
095-1319	356
	401
095-1386	136
095-1388	75
095-1392	298
095-1516	629
	643
095-1519	498
	775
	821
	823
095-1522	757
	758
095-1572	695
095-1575	835
095-1576	761
	833
	834
095-1578	754
	809
	813
	821
	823
095-1579	771
	804
095-1580	796
095-1582	757
	758
	775
	796
	835
095-1584	491
	492
	807
095-1585	829
095-1586	779
	783
	815
	817
	818
	819
	820
	825
	832
	833
	834
095-1590	491
	492
	787
	790
	796
095-1592	765
	787
	790
	835
095-1594	763
095-1596	491
	492
095-1597	736
	739
	745
	750
095-1599	765
	787
	790
095-1600	703
095-1601	829
095-1602	829
095-1608	724
095-1625	723
095-1635	463
	465
	469
095-1657	829
095-1663	495
095-1681	493
095-1682	495
095-1698	801
	833
	834
095-1700	829
095-1701	835
095-1716	723
095-1726	467
095-1730	473
095-1735	724
095-1750	714
	815
	818
	820
	835
095-1751	815
	818
	820
	832
095-1777	639
095-1785	833
	834
095-1788	765
	787
	790
095-1789	763
095-1791	736
	739
	745
	750
095-1793	765
	787
	790
095-1806	480
	484
095-2927	408
095-6636	754
095-6639	722
095-6641	722
095-7424	29
096-0061	212
	629
096-1533	703
096-1598	737
096-1628	778
	782
096-2323	501
096-2617	967
	968
096-2622	985
096-2653	480
	484
096-3201	469
096-3216	312
096-3375	774
096-3376	774
096-3780	318
096-3872	318
096-4035	100
	102
096-4255	425
096-4415	1034
096-4498	778
	782
096-4509	775
096-4514	775
096-4755	487
096-4879	320
096-4882	334
	335
	992
	994
096-4883	599
	603
096-4884	599
	660
096-4885	339
	342
	729
	844
096-5516	716
096-5916	695
096-5919	695
096-5962	254
	259
096-6100	794
096-6166	203
	205
	254
	259
	306
	966
096-9986	540
	542
	545
	547
099-0365	757
	758
099-0367	757
099-0822	775
	821
	823
	1024
099-0823	942
	1042
099-2374	501
	933
	973
099-3506	996
099-3629	1048
099-3645	1005
099-3990	754
099-6137	776
	778
	782
099-6141	776
099-6144	776
099-6145	776
099-7127	254
	259
099-7241	620
099-7857	124
099-8111	703
100-2881	997
100-3866	415
100-4336	592
100-4982	506
	508
	510
	520
	526
	534
101-2846	255
	260
101-7397	554
	572
101-7400	605
101-7402	572
	575
	599
	603
101-8899	985
	988
101-8900	985
	1042
101-9848	362
	377
	383
	386
	400
102-1174	554
	1003
102-2244	469
102-3888	106
102-5713	398
102-5828	70
102-5829	70
102-6046	1073
102-7024	754
102-7685	629
	656
102-8016	254
	259
102-8274	610
102-8802	46

1

► PRIMARY REFERENCE

PART NUMBER INDEX

Part	Page
	145
	148
	149
	194
	203
	205
	220
	221
	238
	245
	616
	634
	643
	673
	724
102-8803	194
	213
	218
	239
	243
	954
102-8804	211
	469
102-8805	241
	308
102-8806	281
103-1361	607
103-1384	633
103-1399	646
103-5246	838
	840
	842
	844
103-8236	491
103-8252	809
103-8253	809
103-8254	809
103-8255	809
103-8353	473
104-3173	1003
104-3560	20
104-8771	607
	656
104-8777	623
	627
	646
	656
104-8783	607
104-8803	633
104-8821	605
	646
105-2169	942
	996
105-3478	660
105-3483	666
105-3487	318
105-3489	554
	575
	580
	652
	673
105-5175	252
105-6324	413
	414
105-9526	1041
105-9527	1041
105-9725	911
106-0107	203
	205
	▶241
106-0210	241
106-2704	1001
106-3969	106
106-3973	106
106-9586	70
107-5769	13
107-6280	59
107-6479	813
107-6540	807
107-6541	807
107-6631	618
	620
	633
107-7640	472
107-8554	911
107-8555	911
107-8556	911
108-1781	476
	580
	588
	713
108-1782	683
108-1784	572
108-3819	673
108-4282	575
	580
	588
108-7118	629
	687
108-7313	605
	607
	656
108-7402	607
108-7516	629
	643
108-7550	549
	550
	551
	554
109-0868	417
	419
109-1294	716
109-1296	716
109-9437	42
110-5499	656
110-5525	703
	716
	824
	835
110-6393	1073
110-7183	349
110-7216	480
	484
110-7217	312
111-0976	592
111-0985	633
111-0988	656
111-4799	239
111-4836	100
	153
111-4837	153
	160
	187
	189
	190
	192
	246
	272
	275
	277
	297
	298
	306
111-4838	153
	298
	306
111-4839	153
	306
111-6752	633
111-9916	771
	797
	▶815
	▶816
	822
	828
111-9973	807
111-9974	807
111-9998	796
112-0083	618
	▶810
112-0085	810
112-1532	345
113-2003	660
113-2004	554
	673
113-2127	867
	869
	870
	872
	874
113-6666	572
113-6738	629
113-6741	687
113-6761	633
113-8490	254
	259
113-8491	254
	259
	264
113-8493	254
	259
113-8987	5
	▶13
114-0421	289
114-0550	833
	834
114-0615	816
	▶817
114-0616	816
	▶818
114-0623	815
	817
	820
	825
	832
114-0648	733
114-0649	733
	▶734
114-0741	652
114-0761	467
114-0762	463
	465
	469
114-0763	473
114-1383	480
	484
114-1398	480
	484
114-1399	480
	484
114-1401	480
	484
114-1403	480
	484
114-1541	312
114-6294	1006
114-8135	471
114-8229	759
	763
115-2972	48
115-2973	48
115-3667	607
	633
115-6370	417
	419
115-6399	315
	▶316
115-7087	122
115-8634	597
115-8694	455
	▶557
115-8954	673
115-8961	557
115-9864	734
115-9865	734
116-0118	153
	175
	176
	187
	189
	190
	192
	268
	270
	272
	275

▶ PRIMARY REFERENCE

PART NUMBER INDEX

Part	Page	Part	Page	Part	Page	Part	Page
	277	119-5398	807	122-7704	804		160
	289	120-4394	714		807	123-1382	426
	298	120-7226	848	122-7708	745	123-2003	495
	300	120-7227	848		750		504
	306	120-9027	183		▶795	123-2112	463
	308		239	122-7712	745		465
116-0210	254	121-0987	285		750	123-2139	703
	259	121-1023	201	122-7714	745	123-2430	633
116-1089	48	121-1491	690		750		656
116-1091	5		691	122-7716	745		▶811
	▶59		755		750	123-2431	811
116-1517	994		797	122-7719	745	123-2505	584
116-3500	835		▶820		750		588
116-3501	835		826	122-7720	739		599
116-3503	835		827		745	123-2511	812
116-3504	835	121-1865	963		750	123-2514	666
116-3510	835	121-1891	705	122-7748	799		▶775
116-3526	▶819	121-1948	522		800	123-2515	666
	833		530	122-7749	799		▶754
116-3715	116		532		800	123-2535	736
117-0067	209	121-5908	117	122-7750	745	123-2537	736
117-0165	5	121-6303	610		750	123-2549	592
	▶49		646		▶799		666
117-0177	5		▶821	122-7751	799		▶812
	▶54	121-6304	821	122-7752	799	123-2552	811
117-0183	5		823		800		812
	▶130	121-7098	1003	122-7753	745	123-3790	471
117-2766	5	121-7136	949		750	123-4750	592
	▶28		1003	122-7756	739	123-8253	122
117-2771	5	121-7137	1003		▶800	124-0909	522
	▶31	121-7138	949	122-7757	800		530
117-2786	5		1003	122-7765	739		532
	▶67	122-4120	362	122-7767	708		682
117-2794	5	122-7663	739	122-7768	▶708	124-0911	549
	▶32		745		739		550
117-6306	1042		750		750		557
117-6349	966	122-7664	795		765		559
117-6350	966	122-7666	739		790	124-1008	629
117-6356	966		745	122-7773	761		646
117-8683	969		750	122-7774	761		673
	970	122-7673	742	122-7785	739	124-1067	660
	971		743	122-7787	739	124-1106	540
	972	122-7674	742		745		542
117-8801	38		743		750		545
118-3936	465	122-7676	745	122-7788	745		547
118-4086	779		750		750	124-1107	540
	783	122-7677	745	122-7789	745		542
118-4087	778		750		750		545
	782	122-7678	745	122-7797	745		547
118-4728	136		750		750	124-1108	540
118-5805	695	122-7682	739		759		542
118-5983	785		745		763		545
119-1353	773		750	122-7848	745		547
119-3662	213	122-7687	735		750	124-1109	540
119-5026	203	122-7689	735	122-9250	794		542
	205	122-7690	▶735	122-9605	1003		545
	1001		745	122-9608	966		547
119-5162	724		750	122-9609	966	124-1216	682
119-5219	623	122-7692	742	122-9610	966		683
	646		743	122-9617	955	124-1253	660
	▶774	122-7693	742	122-9657	1003	124-1266	633
119-5388	776		743	123-0368	916	124-1530	695
119-5389	776	122-7694	742	123-0764	44	124-1536	695
119-5391	776		743	123-0791	54	124-1537	695
119-5392	776	122-7695	743	123-1373	153	124-1541	695

▶ PRIMARY REFERENCE

PART NUMBER INDEX

Part	Page
124-1554	695
124-1555	695
124-1557	695
124-1561	695
124-1683	105
	▶118
124-1699	▶106
	118
124-3296	316
124-3548	254
	259
124-3953	1055
124-3966	1046
124-4009	967
	968
124-4010	967
	968
124-5043	83
124-8758	994
124-9978	417
124-9979	417
	419
125-1286	473
125-1302	201
	▶238
125-6535	234
125-6536	234
125-6537	234
126-0081	5
	▶111
126-1767	554
	580
	616
	643
	656
	676
	969
	970
	971
	972
	981
	1008
126-1774	275
126-1813	491
126-1865	776
126-1866	776
126-1913	89
	663
126-1956	473
126-1971	473
126-1978	473
126-2047	473
126-2084	463
126-2132	685
126-4002	695
126-4003	695
126-4004	695
126-4040	695
126-6290	323
	324
	325
	326
	327
126-6367	336
	342
126-6514	819
	834
126-6515	819
	834
126-6516	819
	834
126-6872	623
	629
	646
126-9992	775
127-0580	942
127-0929	111
127-1343	2
	3
	837
	▶847
127-1347	837
	▶848
127-5250	1021
127-5728	5
	▶12
127-6680	705
127-6690	▶506
127-6738	320
127-6740	320
127-6741	320
127-6742	320
127-6754	705
127-6757	705
127-6758	705
127-7678	323
	324
	325
	326
	327
128-0317	99
128-0382	16
128-0383	16
128-0384	16
128-0385	16
128-0395	48
128-0396	48
128-0400	16
128-0401	16
128-0402	16
128-0403	16
128-2135	940
	946
	957
	959
128-2136	940
128-2173	963
	974
128-4411	145
128-7448	▶677
	861
128-7449	▶678
	861
128-7514	522
	530
	532
128-7591	554
128-7625	597
128-8886	153
128-9266	463
	465
	467
	469
129-0051	411
129-2905	13
129-3181	605
129-5429	124
129-5874	540
	542
	545
	547
129-5947	687
129-5973	456
	▶682
129-6056	558
129-6466	1047
129-7970	501
129-7973	501
129-7974	501
130-0252	1003
130-4360	838
	842
	844
	863
	865
	867
	869
	870
	872
	874
130-4407	847
130-4410	847
130-4499	413
	414
130-5300	293
	952
131-3718	11
131-3983	207
	208
131-5675	745
	750
131-5676	633
131-5818	776
131-5879	85
	102
131-5894	775
131-5915	778
	782
131-5935	745
	750
131-5936	745
	750
131-5937	745
	750
131-5938	743
131-5939	743
131-5942	798
131-5943	798
131-5944	798
131-5945	798
131-6645	83
131-8826	108
131-8829	108
131-8847	119
131-8849	7
	▶110
131-8920	118
131-9482	682
131-9493	633
131-9522	666
131-9524	320
131-9534	633
131-9537	666
131-9750	89
	663
132-0998	918
	919
132-0999	918
	919
132-1596	512
	514
	524
132-1609	320
132-1785	320
132-1805	153
132-1829	▶148
	254
	259
132-1854	289
132-2155	599
132-5789	8
	91
	117
	125
	154
	248
	254
	259
	272
	275
	277
	283
	293
	301
	304
133-0260	222
133-2427	838
	840
	842
	844
	863
	865
	867
	869
	870
	872
	874
133-2428	336
	338
	339
	342
133-4419	154
	1003
133-5733	666
133-5813	551
	620
	633
	643
	652
	666

▶ PRIMARY REFERENCE

PART NUMBER INDEX

Part	Page
133-6788	833
133-8016	942
134-3196	124
134-3284	187
	189
	190
	192
134-5245	63
134-6793	677
134-6844	682
134-6852	125
	136
134-6898	666
134-6904	666
134-6918	633
134-6946	629
134-6963	666
134-6964	666
134-6966	666
134-6967	666
134-7113	666
134-7114	666
134-7115	666
134-7258	1073
134-7515	835
134-8893	350
	▶353
	410
134-8894	353
134-8896	353
134-8944	863
	865
134-8952	876
134-9031	840
134-9137	849
135-2274	974
135-2835	134
135-3859	695
135-3910	▶508
135-3924	705
135-3980	562
	564
	565
	567
	568
	569
	570
135-4069	320
135-4096	▶510
135-4180	705
135-8572	145
	362
135-8573	104
	144
	329
	356
	359
	361
	362
	370
	371
	374
	398
	401
	404
135-8574	351
	359
	362
	404
135-8575	354
	355
	361
	362
	367
	368
	369
	385
	404
	612
	705
	1006
135-8576	351
	352
135-8577	354
	359
	364
135-8578	354
	355
135-8965	1023
135-8966	1023
135-8997	633
135-9044	480
	484
136-2802	480
	484
136-2803	480
	484
136-4182	85
136-4183	28
	142
136-8899	709
	▶711
136-9030	711
136-9032	711
137-2270	1006
137-2781	847
	848
	849
137-2997	397
137-2998	396
137-3001	411
137-3194	847
	848
	849
137-3623	493
137-3624	493
137-3625	493
137-3626	447
	493
137-3628	447
	493
137-3749	29
137-3797	723
137-5646	695
137-6606	1073
137-6645	227
	228
138-5708	540
	542
	545
	547
138-5709	540
	542
	545
	547
139-3326	471
139-7099	948
	▶996
139-7101	948
	▶1042
139-7126	942
139-7127	942
139-8736	42
139-8737	42
139-8794	108
139-8849	115
139-8873	42
139-8877	85
139-8883	108
140-0681	739
	750
140-1493	351
140-1495	352
140-3048	413
	414
140-8407	695
141-1060	124
141-2759	254
	259
141-3538	847
	848
	849
141-3550	867
	869
	870
	872
	874
141-5976	102
141-5978	102
141-6373	345
141-6518	356
	359
	362
	401
	404
142-0038	633
	672
	673
142-1340	108
142-1403	108
142-4294	911
142-5546	966
142-6573	320
142-6583	506
142-6704	534
143-4146	549
	550
143-4203	572
143-4211	542
143-4212	542
143-4237	547
143-4238	547
143-4254	633
143-4262	666
143-4281	668
143-7140	695
143-7319	695
143-9397	1012
143-9536	1073
144-0119	70
144-0195	1041
144-0367	100
	603
144-1636	221
	240
	241
144-6650	70
144-9691	1046
144-9692	1046
145-2237	592
145-2562	911
145-5106	442
	▶443
146-1217	532
146-1220	532
146-1331	320
146-1332	320
146-1415	705
146-6747	1073
147-3957	838
	840
	842
	844
147-4131	776
147-4158	798
147-4221	776
147-4256	758
147-4297	739
	745
	750
147-4298	745
	750
147-4299	739
	745
	750
147-4921	1036
147-6982	42
147-6983	42
147-7109	115
147-7142	115
148-2104	70
148-3307	855
148-3391	838
	840
	842
	844
148-3548	695
148-4573	345
148-4703	345
148-4704	345
148-8311	136
148-8315	605
148-8317	551
148-8318	642
	654
148-8321	592
148-8322	554
148-8324	685
148-8325	592
148-8327	551

▶ PRIMARY REFERENCE

PART NUMBER INDEX

Part	Page	Part	Page	Part	Page	Part	Page
	663		588		624		650
148-8328	683		654		635		668
148-8335	599	148-8359	685		639		685
	634	148-8360	596		647	148-8444	668
	672	148-8361	551		650	148-8445	672
	673		592		654		673
148-8336	551		667		660	148-8449	685
	554	148-8362	596		724	149-1207	695
	592		639		739	149-5050	250
	605	148-8364	596		755		252
	610		620		765		308
	612		660		787	149-5452	536
	616		667		790		538
	618	148-8366	620	148-8408	575	149-6549	153
	620	148-8367	593		596		629
	623		623	148-8409	743	150-1714	118
	627		627	148-8411	551		▶121
	629		642		575	150-3036	607
	634		643		584		618
	646		646		588		624
	650		656		599		630
	652		667		650		635
	666	148-8368	683		660		650
	685	148-8371	554		765		668
	687	148-8372	603		787	150-3073	660
148-8338	634		667		790	150-4027	624
	639	148-8374	623	148-8412	667		639
	652		627	148-8414	635		647
	667		646	148-8415	564	150-4043	643
	687		667		567		654
148-8339	596	148-8378	551		568	150-4044	618
	634		593		569	150-4050	593
148-8340	592		596		570	150-4741	429
	596		605		605		432
	634		607		612		433
	643		610		667		434
	667		612	148-8418	596		435
148-8341	603		618	148-8419	564		436
	660		620		567		437
148-8345	596		623		568	150-4742	429
	639		627		569		432
	667		629		570		433
148-8347	551		634	148-8424	656		434
	596		639	148-8425	654		435
	663		643	148-8428	605		436
	673		647		667		437
	685		650	148-8429	672	150-4766	433
	687		652		673		435
148-8353	554		656	148-8431	685	150-4767	432
	592		687	148-8433	593		437
	610	148-8382	603		605	150-4768	434
	616	148-8390	605		629		436
	618	148-8391	89		635	150-4770	429
	623		660		643	150-5733	835
	627		667		647	150-8896	920
	629	148-8392	687		654	151-6703	985
	634	148-8393	635		656		1042
	646	148-8395	739		667	151-6704	985
	656		745	148-8435	551		1042
	673		750		593	151-6705	1046
148-8354	667		765		624	151-6777	987
148-8356	584		787		630	151-6778	1042
148-8357	575		790		635	151-6785	1042
	580	148-8407	593		643	151-6813	1042
	584		620		647	151-6815	1042

▶ **PRIMARY REFERENCE**

PART NUMBER INDEX

Part	Page	Part	Page	Part	Page	Part	Page
151-6818	1042	156-6599	942	163-6700	145	164-5616	584
151-6819	1042	156-6600	985	163-6704	194		588
151-6831	1042	156-6601	1042	163-6711	281		599
151-6832	1042	156-6617	942	163-6758	254	164-5619	136
151-6844	1042	156-6618	942		259	164-5628	618
151-8754	183	156-6627	1042	163-6772	▶185		620
151-9461	985	156-6631	1047		948		633
151-9557	1042	156-6642	1002	163-6795	185	164-5629	629
151-9576	1042	156-6643	985		254		643
152-2939	710	156-6644	985		259	164-5641	596
152-5441	759	156-6645	985		279	164-5642	633
153-1588	410	156-6646	1047		281	164-5644	633
	▶412	156-6647	▶1046		1041	164-5662	668
153-1624	412		1047		1055	164-6872	597
153-2447	277	156-6648	1046	163-6813	185	164-6874	623
153-2521	▶181	156-6656	940	163-6814	185		627
	187	156-6657	940	163-9361	68		639
	189	157-0670	93	164-0499	954		646
153-2523	▶182	157-0935	759	164-0500	954		652
	184	157-3180	656	164-0514	985	164-6981	▶444
153-2849	1050	157-9338	536	164-0515	985		633
153-4906	716		538	164-0519	985	164-8474	940
	824	158-8186	798	164-0523	942		946
153-5223	776	158-8933	722	164-0527	942	164-9640	592
153-6236	89	158-8987	▶490	164-0528	942	164-9869	624
	685		724		▶1002		627
153-6248	624	159-4700	443	164-0614	974		647
	647	159-7320	695	164-0617	974	165-3010	334
153-6256	660	159-7782	723	164-0646	940	165-3256	724
153-6258	635	159-8036	920	164-0648	1042	165-5085	687
153-6259	687	159-8049	153	164-0655	940	165-5970	153
153-6270	634		160	164-0664	1002		▶243
153-8669	536		246	164-0666	1048	165-9242	835
153-8723	963	160-2323	59	164-4180	89	165-9291	463
153-8800	562	160-7690	275		95		465
154-9023	93	161-3128	254		575		467
155-2027	673		259		578		469
155-2255	275	161-3639	985		584	165-9293	473
155-2260	214	161-3650	985		663	165-9431	778
	215	161-3663	985	164-5546	633		782
	279	161-3665	985	164-5547	643	165-9435	779
155-2265	281	161-3668	1055	164-5550	623		783
155-2270	203	161-3669	1055		646	165-9436	778
	205	161-3670	1055	164-5567	593		782
	211	161-3677	1055		612	165-9438	779
	629	161-3684	1042		624		783
	998	161-3685	942		627	165-9439	778
155-2274	203	161-3694	997		639		782
	205	161-3697	942		647	165-9442	778
155-4897	695	161-3698	1042		652		782
155-7042	1055	161-3699	985		656	165-9443	779
156-0975	759	161-3717	1023		663		783
156-2525	136	161-3732	954		724	165-9444	778
156-5970	831	161-3734	954	164-5586	592		782
156-6175	154	161-6958	122	164-5589	552	165-9448	778
	293	161-6963	122		635		782
156-6472	1042	161-6987	1012	164-5590	724	165-9460	778
156-6554	1042		1013	164-5605	624		782
156-6555	1042	162-0177	765		627	165-9461	778
156-6562	1042		787		647	165-9463	776
156-6563	1042		790		668	165-9464	813
156-6573	940	162-6208	106	164-5608	668	165-9513	763
156-6575	940	162-9527	117	164-5609	624		765
156-6579	1042	163-2478	26		647		772
156-6598	985	163-3493	876		657		787

▶ PRIMARY REFERENCE

PART NUMBER INDEX

Part	Page	Part	Page	Part	Page	Part	Page
	790	168-1969	663	171-0123	796	175-6176	495
165-9514	763	168-2203	699	171-0124	796		597
	765		701	171-0126	796		724
	772	168-3378	721	171-0127	796	175-6177	724
	787	168-3379	721	171-0128	796	175-6178	495
	790	168-3382	721	171-0188	639	175-7887	695
165-9522	620	168-3384	721		▶822	175-7897	426
	▶776	168-3385	721	171-0198	797	175-7903	471
165-9523	974	168-3504	714		822	175-9079	132
165-9551	776	168-7319	699	171-0596	554		134
165-9552	776		701		580	176-0480	1073
165-9553	776	168-9595	572		656	176-1902	1003
165-9554	776	168-9759	620		676	176-1916	955
166-1494	863		650	171-2210	201	176-1925	994
	865	169-0417	207	171-2212	201	176-1928	992
	867		208	171-2637	89		994
	869		▶213		575	176-1932	1041
	870	169-4166	38		580	176-1939	942
	872	169-5534	480		584	176-1941	1002
	874		484		588	176-1942	942
166-1579	849	169-5535	480		663	176-1946	940
166-2877	918		484	171-3370	100	176-1947	940
	919	169-5559	312	171-5349	220	176-1964	▶985
166-2904	23	170-2512	308		221		987
166-3215	1054	170-4743	5	171-6723	663	176-1972	940
166-3511	▶918		▶60	171-7325	938	176-1986	942
167-2208	471	170-6888	254		939	176-1996	988
167-2319	471		259		959	176-2815	1065
167-3437	185	170-6929	153	171-7420	940	176-4774	685
167-3438	185		160	171-7426	942	176-5331	426
167-3441	185	170-6993	181	171-7477	997	176-5333	426
167-3456	185		182	171-7486	994	176-9237	117
167-3542	244	170-8553	554	172-1482	213	177-1061	633
	250		599	172-2872	415		672
	254		724	172-2873	415		673
	259	170-9324	203	172-4432	755	177-2553	493
	1030	170-9417	181	172-8406	472	177-2617	▶447
167-3543	244		182	172-8488	472		495
	250	170-9418	181	173-3510	495	177-2619	447
	254		182	173-3513	493	177-2620	495
	259	170-9419	724	173-3515	493		▶504
	1030	170-9492	1041	173-3516	493	177-2621	504
167-3593	254	170-9497	▶966	173-3517	493	177-2623	495
	259		1019	173-3520	835	177-2625	495
167-3872	695	170-9498	966	173-3522	835	177-2626	835
167-7018	942	170-9499	966	173-3523	835	177-5879	355
167-7036	1048	170-9722	1042	173-3524	835	177-5880	355
167-7037	1048	170-9724	940	173-3527	835	177-8506	568
167-7038	985	170-9850	473	173-3529	493	178-2334	211
167-7039	985	170-9865	463	173-3993	745	178-2335	211
167-7042	942		465		750	178-2345	▶211
167-7141	994		467		759		212
167-8125	28		469	173-4664	575	178-5422	955
167-9887	410	170-9964	477		580	178-5423	955
	▶415	170-9985	703		588	178-5500	1041
168-0713	801	170-9986	703	173-8074	562	178-5569	1047
168-0763	801	170-9996	703		565	178-5570	942
168-0764	801	171-0036	804	174-2250	666	178-5572	1048
168-0765	801	171-0037	804	174-7791	181	178-5573	985
168-0766	801		807		182		1048
168-0794	778	171-0063	804	174-7875	998	178-5574	985
	782		807	174-7876	998		1048
168-1968	623	171-0064	804	175-6173	724		1052
	629	171-0087	778	175-6174	495	178-5576	1042
	646		782	175-6175	495	178-5659	1026

▶ PRIMARY REFERENCE

PART NUMBER INDEX

Part	Page
	1027
178-5870	354
178-5871	354
178-7293	424
	▶426
178-7294	426
178-7296	426
178-7297	426
179-0092	28
179-4182	426
179-5090	512
	514
	524
	565
179-5235	538
	562
	565
179-5260	512
	514
	524
179-7400	136
179-7456	618
179-7616	666
179-7782	615
179-9618	447
179-9806	493
180-1538	8
180-3861	181
	182
180-7459	794
180-7460	794
180-9340	214
183-1035	992
	994
183-3409	111
183-7263	759
183-8068	802
	803
	805
184-3830	702
	▶801
184-3835	703
184-3971	1052
184-3978	1052
184-3979	1052
184-3980	1052
184-6014	695
184-6015	695
184-7497	916
184-7502	916
184-9336	620
185-0230	463
	465
	469
185-0231	463
	465
185-0232	463
	465
185-0277	701
185-0280	699
	701
185-0292	721
185-0295	699
	701
185-0296	699
185-0303	714
185-0383	616
185-0407	797
	822
185-0423	796
185-0462	616
	▶813
185-0463	813
185-0472	643
	▶823
185-0473	823
185-2478	656
185-2638	150
185-2639	150
185-2643	150
185-2644	150
185-2647	150
185-2648	150
185-2650	150
185-2654	150
185-2655	150
185-2658	150
185-8161	955
185-8180	985
185-8181	1042
185-8182	1042
185-8187	1042
185-8196	942
185-8197	1042
185-8200	1052
185-8201	1052
185-8203	▶1052
	1054
185-8204	1052
185-8205	940
185-8206	1054
185-8209	1052
185-8214	940
185-8221	1042
185-8280	1002
185-8281	1002
185-8284	957
185-8286	239
	938
	939
185-8290	1055
185-8293	1003
185-8300	936
	999
185-8302	936
185-9208	203
	205
186-1253	1060
186-3735	145
	148
	149
	194
	205
	211
	220
	238
	239
	243
	245
	308
	673
	724
	831
186-3736	211
186-4574	283
187-0661	1073
187-7171	495
187-8969	19
187-8972	16
187-9862	514
	524
	562
187-9915	510
187-9917	508
188-2084	490
	▶491
188-2199	469
188-4142	▶493
	495
188-4143	493
188-4145	▶495
	724
188-4161	703
188-4162	703
188-4164	703
188-4165	703
188-4166	703
188-4170	703
188-4171	703
188-4172	703
188-4173	703
188-4176	703
188-6299	714
188-9429	222
189-0852	223
189-2678	940
189-2690	985
189-2693	997
189-2694	997
189-2702	1047
189-2704	942
189-2705	1054
189-2712	1052
189-2716	997
189-2759	1049
	▶1054
189-2793	948
	▶987
189-2796	987
189-2847	996
189-2849	996
	▶997
189-2855	940
189-2864	942
189-3396	942
189-3424	1055
189-3434	1003
189-5746	35
	▶221
190-1106	70
190-5386	1073
190-7750	778
	782
190-7751	778
	782
190-8970	136
191-1782	136
191-1783	136
191-2513	480
	484
191-3128	463
191-3201	801
191-5603	467
191-5604	467
191-5605	467
191-5700	▶794
	835
191-7581	714
191-7582	714
191-7583	714
192-6775	623
	646
192-7470	699
	701
193-2301	695
193-6662	512
	514
	524
	562
	565
193-9994	672
	673
194-0289	629
194-0343	672
	673
194-0383	685
194-1207	410
	▶416
194-1238	427
194-1239	427
194-1252	418
	421
	▶427
194-1253	427
194-1254	427
194-3767	915
194-4741	759
194-5226	215
194-6722	▶214
	216
194-6725	▶215
	217
194-9473	714
194-9474	714
194-9479	720
194-9480	720
194-9481	720
195-0090	666
195-4456	695
195-5479	855
	857
	859
195-5480	855
195-7217	▶919
196-0711	85
196-1569	992
	994
196-1571	992
	994

▶ PRIMARY REFERENCE

PART NUMBER INDEX

Part	Page	Part	Page	Part	Page	Part	Page
196-1572	992	201-3146	759		824	212-5326	678
	994	201-3668	916	206-9291	501	212-5419	536
196-1574	992	201-4391	985		717	212-5424	666
	994	201-4417	942	206-9294	501	212-5537	547
196-1599	992	201-4530	942	206-9295	501	212-7728	15
196-1665	1003	201-4534	992	206-9296	501	212-9580	▶129
196-1666	999		994	206-9297	501		136
197-0196	690	201-4535	992	206-9298	477	213-0677	46
	691		994	206-9299	501		724
197-0199	690	201-6615	▶222	206-9300	501	213-0772	254
	691		224	206-9301	501		259
197-0273	690	201-6616	▶223	207-0159	990	213-1585	31
	691		225		▶991	213-3745	592
197-2471	699	201-9299	493	207-0161	991	213-9100	149
197-2472	699	202-1771	656	207-0164	991	214-0586	26
197-2474	699	202-7001	512	207-0167	991	214-1639	469
197-8418	76		514	207-0170	991	214-7915	1073
197-8419	76		516	207-0173	991	214-8310	404
197-9257	48		518	207-0216	992	215-1942	469
197-9326	48		524	207-5546	567	215-4909	491
197-9327	48		528	207-6403	724		492
197-9330	20	202-7021	512	207-6404	724	215-5002	656
197-9642	10		514	207-6418	656		▶771
198-2003	634		524	207-8103	5	215-5032	771
198-2953	408	202-7475	40		▶53	215-5033	771
198-3899	932	202-9002	673	207-8107	53	215-5034	771
	1038	203-0351	114	207-8572	18	215-5035	771
	1039	203-2076	759	208-4156	362	215-5036	771
198-4963	25	203-2287	1003	208-4157	362	215-5037	634
	▶30	203-3470	612	208-9281	98		▶689
198-5647	855	203-3560	512	209-0348	1039	215-6662	▶992
199-1875	540	203-3831	99	209-4280	1038	216-0008	473
	542	204-0920	100	209-4575	596	216-0611	▶994
	545	204-1611	153	209-6001	722	216-5734	▶877
	547		270	209-6063	699		879
199-4582	312		298		701		880
	480		304	209-7309	73		882
	484	204-1673	160	210-1743	46		883
199-4583	312	204-1790	264	210-1744	46	216-5738	877
199-4719	312	204-1882	304	210-4460	30	216-5739	877
199-7447	▶445	204-2281	660	210-5808	942	216-5740	877
199-7891	150	204-2677	703	210-8159	115	216-6485	569
199-8436	150	204-2762	493	210-8163	7	216-6515	536
		204-2844	473		▶115		538
		204-2845	473	210-9907	542		683
2		204-2846	473		547	216-6539	506
		205-0826	205	211-0587	16		510
200-3292	716	205-1339	964	211-0588	16	216-6540	506
200-3489	312	205-1340	964	211-4185	759		510
200-3490	312	205-6295	942	211-7895	10	216-6541	508
200-3501	108	205-7219	▶560	212-0907	469	216-6542	508
200-3620	473		915	212-3086	855	216-6545	522
201-2771	336	205-8257	205	212-3088	855		530
	338	205-9024	312	212-3090	855		532
	339	205-9025	312	212-3092	855	216-6546	522
	342	206-2423	293	212-3094	855		530
	838	206-3305	▶778	212-3095	855		532
	840		975		857	217-3673	46
	842		976		859	217-3674	46
	857		977	212-5148	575	217-4897	904
	859		978	212-5149	615		▶930
	884	206-5162	179	212-5314	572	217-8763	469
	912	206-5165	179	212-5316	572	217-8946	111
	917	206-9290	501	212-5317	572	217-9060	93
201-3145	759		716	212-5325	677	218-0404	179

▶ PRIMARY REFERENCE

PART NUMBER INDEX

Part	Page	Part	Page	Part	Page	Part	Page
218-1200	542	222-4737	772	224-0554	1070	225-4525	456
218-1336	634	222-8357	7		1073		▶462
218-7270	34		▶112	224-0880	5	225-4526	462
218-7272	6	222-8358	7		▶41		▶473
	▶38		▶42	224-1270	23	225-4527	▶455
219-7440	5	222-8360	7	224-1943	1061		854
	▶44		▶75	224-2675	83	225-4528	455
219-7461	293	222-8362	7	224-3028	26		▶458
219-7462	5		▶77	224-3030	26	225-4529	458
	▶293	222-8364	105	224-3125	26		▶465
219-8341	854		▶113	224-3405	64	225-4530	▶455
	▶855	222-8365	▶230	224-3881	6		854
219-8342	855	222-8367	1		▶16	225-4531	455
220-0454	108		▶212	224-4140	41		▶459
220-2498	▶861	223-1615	5	224-4418	56	225-4532	459
220-2500	▶861		▶63	224-4441	26		▶467
220-2502	▶854	223-2970	105	224-4991	141	225-4533	322
220-2530	322		▶370	224-6360	83		▶461
	▶1058	223-2977	1	224-6361	93	225-4547	687
220-3373	38		▶317	224-7662	5		▶723
220-7057	5	223-2978	317		▶96	225-4548	723
	▶91		▶318	224-8170	5	225-4549	723
220-7058	91	223-2982	1		▶76	225-4558	824
220-7082	5		▶354	224-8171	76		▶825
	▶70	223-2983	1	224-8172	76	225-4610	▶722
220-7097	5		▶1006	224-8946	1070		724
	▶73	223-2985	322		1073	225-4617	463
220-7098	73		▶356	225-0312	1070	225-4625	463
220-7099	73	223-3087	1		1073		465
220-7122	5		▶401	225-0326	985		469
	▶35	223-3130	404		▶1050	225-4626	473
220-7133	5	223-3133	404	225-0327	1050	225-4633	473
	▶72	223-3134	404	225-0328	1050	225-4641	473
220-7134	72	223-3135	404	225-0329	1050	225-4642	473
220-8678	129	223-3144	401	225-0330	1050	225-4646	473
220-9110	930	223-3146	362	225-0332	1050	225-4787	763
221-3775	9		▶374	225-0333	1050	225-4789	763
221-5138	759	223-3150	362	225-0334	1050	225-4790	763
221-8045	1070	223-3151	362	225-0335	1050	225-4791	763
	1073		▶375	225-3284	471	225-4792	763
221-8813	948	223-3153	362	225-4130	1066	225-4793	763
	▶1007		▶376	225-4131	1066	225-4796	763
221-8859	554	223-3172	362	225-4257	1070	225-4797	763
	580	223-3181	362		1073	225-4803	763
	676	223-3182	362	225-4504	311	225-4804	739
221-8872	▶171	223-3184	362		▶694		745
	1019		▶377	225-4505	479		750
221-8874	171	223-3186	370		483		761
221-8884	▶963	223-3187	370		▶693		763
	1022	223-3875	6	225-4506	693		829
221-8912	639		▶50		▶702	225-4815	778
221-9357	38	223-6546	18	225-4515	450		782
221-9364	16	223-6873	558		451	225-4816	778
221-9392	25	223-6876	557		▶475		782
222-0225	967		559	225-4517	477	225-4818	739
	968	223-7463	6	225-4518	717		745
222-0298	759		▶11		▶824		750
222-3088	6	223-7468	11	225-4522	455		761
	▶34	223-7471	11		▶457		763
222-3092	5	223-7852	38	225-4523	457	225-4820	745
	▶117	223-8110	930		▶463		750
222-3347	759	223-9143	99	225-4524	2		763
222-3902	34	223-9145	99		3		765
222-3905	34	223-9150	48		▶456		787
222-3907	11	223-9818	1073		837		790

▶ PRIMARY REFERENCE

PART NUMBER INDEX

Part	Page
225-4821	745
	750
	763
	765
	787
	790
225-4824	807
225-4825	807
225-4830	763
225-4831	763
225-4832	763
225-4833	763
225-4842	804
	807
225-5729	▶1021
225-5730	▶974
	1021
225-5784	1
	▶1003
225-6948	76
225-7003	98
226-4755	38
226-5303	410
	▶411
226-6473	696
226-6544	695
227-0292	596
227-0430	505
	▶727
227-0431	▶724
	727
227-0454	▶607
	731
227-0459	322
	▶666
227-0460	505
	▶610
227-0461	453
	▶612
227-0585	450
	▶571
227-0590	724
227-0592	724
227-0616	572
227-0617	572
227-0619	▶615
	1021
227-0620	▶498
	724
227-0727	687
227-2574	5
	▶14
227-3029	422
	423
227-4892	63
227-5075	93
227-5343	948
	▶1047
227-5723	6
	▶142
227-6036	▶345
	410
227-6037	▶347
	348
227-6042	1
	▶315
227-6044	▶311
	315
227-6045	311
	▶312
227-6048	312
227-6050	315
	▶487
227-6052	345
	▶348
227-6053	348
	▶349
227-6054	345
227-6055	345
227-6075	347
227-6105	345
227-6106	345
227-6108	480
	484
227-6215	480
	484
227-6846	954
227-7575	254
	259
227-7581	▶179
227-7616	969
227-7617	970
227-7625	963
227-8313	10
227-8807	▶446
227-9545	5
	▶51
228-2775	136
228-2781	1070
	1073
228-4064	73
228-4947	224
	225
228-5418	837
	▶838
228-5419	838
228-5440	861
	▶863
228-5441	863
228-5447	861
	▶865
228-5448	865
228-5577	411
228-5578	411
228-5618	473
228-5619	867
	869
	870
	872
	874
228-5620	463
228-5621	863
	865
	867
	869
	870
	872
	874
228-5622	838
	840
	842
	844
228-5810	98
228-5812	6
	▶97
228-7316	1070
	1073
228-8110	731
	▶1069
228-8267	451
	▶1060
228-9254	1070
	1073
228-9655	150
228-9656	150
228-9657	150
229-0887	1073
229-2615	5
	▶15
229-2617	15
229-2888	60
229-5331	46
229-5684	11
229-5711	15
229-8084	6
	▶45
229-8810	98
229-9077	1029
	▶1036
229-9079	▶935
	1019
229-9080	▶933
	935
229-9081	933
	▶936
229-9082	935
	▶988
229-9088	1
	▶1041
229-9089	1028
	▶1029
229-9090	▶1026
	1029
	1034
229-9093	▶1027
	1032
229-9094	1026
	1027
229-9121	1003
229-9122	1003
229-9123	1003
229-9124	1003
229-9129	1003
229-9974	183
230-0114	▶512
230-0117	▶514
230-0120	▶516
230-0123	▶518
230-0128	▶520
230-0135	▶562
230-0136	▶564
230-0138	▶536
	731
230-0140	▶538
	732
230-0141	322
	▶705
230-0142	▶320
	322
230-0185	660
230-0236	530
230-0237	530
230-0238	532
230-0239	532
230-0458	516
	518
	528
230-0460	516
	518
	528
230-0483	518
	564
230-0917	230
230-0960	310
230-0961	6
	▶310
230-1340	166
	169
230-1341	166
	169
230-2603	93
230-2770	739
230-2771	739
	745
	750
230-2772	739
	745
	750
230-2773	745
	750
230-2781	100
230-2782	100
230-2783	85
230-2784	85
230-2791	85
230-2792	85
230-2793	100
230-2795	115
230-2797	115
230-2835	100
230-2854	100
230-2966	102
230-2969	102
230-2970	102
230-2971	102
230-2972	102
230-2973	102
230-3207	10
230-3518	117
230-3728	131
230-3775	131
230-4009	281
230-4011	240
	268
	279
	281
230-4518	83
230-4519	83
230-5008	252
	281

▶ PRIMARY REFERENCE

PART NUMBER INDEX

Part	Page
230-5010	275
	279
	281
230-5483	695
230-7149	209
	▶224
230-7215	5
	▶9
230-7216	5
	▶10
230-7899	592
230-8136	5
	▶46
231-1698	153
231-1767	▶285
231-1771	1
	▶149
231-1806	246
231-1836	▶279
	280
231-2294	940
231-2295	281
231-4543	35
231-4707	714
231-6550	695
231-9030	116
232-0114	884
	885
	886
	887
	888
	889
	890
	891
	892
	893
	894
	895
	896
	897
	898
	899
	900
	902
	905
	906
	907
	908
	909
	910
	912
232-0130	879
	880
	882
	883
	901
	913
	914
232-0131	913
	914
232-0132	913
	914
232-3868	695
232-4030	745
	750
232-4102	634
	▶796
232-4113	829
232-4114	829
232-6180	694
	▶695
232-6181	695
232-6654	695
233-0891	170
233-1246	119
233-1257	112
	113
233-1262	112
	113
233-1263	112
233-1265	77
233-1272	230
233-1275	7
	▶107
233-1286	230
233-1311	113
233-5220	▶79
	80
233-5221	6
	▶80
234-1034	201
234-1036	201
234-1037	201
234-1038	201
234-1097	254
	259
234-1122	306
234-1156	203
	205
234-1158	203
234-3942	336
	338
234-4355	209
234-4442	467
234-4448	702
	▶703
234-4449	703
234-4450	703
234-4463	463
234-4492	554
234-4516	467
234-4533	703
234-4539	703
	716
234-4620	475
	▶476
234-4624	605
	▶737
234-5013	125
	136
	▶226
234-6468	940
234-6469	940
234-6470	940
234-6471	940
234-6472	940
234-6473	940
234-6474	940
234-6475	940
234-6476	940
234-6477	940
234-6478	940
234-6480	940
234-6483	940
234-6485	940
234-6490	940
234-6497	940
234-6498	940
234-6499	983
234-6500	946
234-6501	946
	▶983
234-6502	983
234-6521	940
234-6547	940
234-6548	940
234-6550	940
234-6579	940
	957
	959
234-6580	957
	959
234-6593	983
234-6594	948
	▶1055
234-6602	957
234-6603	959
234-6604	957
234-6605	959
234-6608	957
	959
234-6609	957
	959
234-6610	957
	959
234-6611	959
234-6612	959
234-6613	▶239
	959
234-6614	959
234-6615	239
235-0364	5
	▶93
235-0932	5
	▶68
235-0935	68
235-0936	68
235-1448	80
235-1451	80
235-6387	125
	134
	▶143
235-7133	▶150
	152
235-7527	463
235-7567	838
	842
235-7626	857
	859
235-7627	857
235-7628	857
	859
235-7636	857
	859
	917
235-7639	857
	859
235-7642	857
	859
	917
235-7721	837
	▶840
235-7722	840
235-7736	840
235-8856	1019
	▶1035
235-8857	1035
235-8862	1017
235-8873	933
	973
235-8874	933
235-8875	933
235-8876	988
235-8877	988
235-8878	988
235-8879	988
235-8891	1003
235-8893	955
235-8894	955
235-8908	▶940
	948
235-8910	▶942
	948
235-8911	1048
235-8912	942
235-8914	957
	959
235-8915	948
	▶1048
235-8922	940
235-8923	940
235-8928	940
235-8929	940
235-8932	1055
235-8933	942
235-8950	940
235-8951	938
235-8952	939
235-8965	959
235-8966	957
235-8969	▶967
	979
235-8970	▶968
	980
235-8971	967
235-8972	968
235-8974	1057
235-8996	938
	939
235-8997	938
235-8998	939
235-9001	946
235-9006	933
235-9012	1041
235-9014	1003
235-9015	1003
235-9020	1019
	▶1025
236-2660	83
236-2838	620

▶ PRIMARY REFERENCE

PART NUMBER INDEX

Part	Page
236-2839	687
236-2841	666
236-2843	620
236-2844	620
236-2848	620
236-2849	666
236-2850	629
236-2851	666
236-2860	596
236-2862	596
236-2992	603
236-2993	599
236-2996	599
236-3022	666
236-3023	599
236-3024	666
236-3034	660
236-3050	666
236-3051	634
236-3052	634
236-3053	634
236-3054	634
236-3204	634
236-3250	607
236-3251	607
236-3257	498
236-3258	498
236-3259	498
236-3665	318
236-3666	318
236-3668	318
236-3669	318
236-3670	318
236-3671	318
236-3672	318
236-3673	318
236-3715	355
236-3721	354
236-5900	5
	▶95
236-6717	136
236-6919	477
	709
	713
236-8745	83
236-9179	136
236-9206	351
236-9212	351
236-9224	352
236-9232	352
236-9234	352
236-9241	136
236-9246	1006
236-9349	404
236-9465	356
236-9467	356
236-9473	365
	372
236-9474	356
236-9475	356
	401
236-9477	399
236-9478	399
236-9479	400
236-9480	356
236-9481	356
	401
236-9483	359
236-9484	401
236-9485	401
236-9486	374
236-9487	374
236-9489	362
236-9490	375
236-9491	375
236-9492	375
	376
236-9493	376
236-9494	376
236-9496	386
236-9497	383
236-9498	383
236-9499	362
236-9500	387
236-9505	367
	368
	369
236-9507	367
	368
	369
236-9508	367
	368
	369
236-9509	367
	368
	369
236-9510	365
	372
236-9769	461
	▶471
236-9966	471
236-9967	471
237-3016	512
	514
	524
237-3018	562
	565
237-3231	683
237-4376	▶40
	61
237-5586	318
237-7253	61
237-8173	916
237-8174	916
237-8175	916
237-8179	916
237-8411	328
	330
237-8412	328
	330
237-8413	365
237-8414	365
	372
237-8415	365
	372
237-8416	365
	372
237-8417	365
	372
237-8418	365
	372
237-8466	356
237-8467	356
237-8647	332
	333
	335
237-8684	328
	330
237-8728	385
237-8729	385
237-8731	404
237-8734	404
237-8749	400
237-8750	374
237-9307	125
	136
237-9323	125
	136
237-9960	310
238-1485	160
238-1506	201
238-2157	2
	3
	▶187
	837
238-2171	297
238-2188	▶189
	837
238-2208	▶244
	948
238-2209	244
238-2210	244
238-2211	1030
238-2212	254
	259
238-2214	250
238-2215	250
238-2260	1001
238-2280	201
238-2318	254
	259
238-2326	194
238-2351	187
238-2390	254
	259
238-2391	254
	259
238-2392	201
238-2396	189
238-2478	290
238-2479	290
238-2485	▶290
	453
238-2501	153
	160
238-2528	153
	160
238-2535	153
238-2717	48
238-2723	6
	▶48
238-4756	38
238-5084	710
238-6721	93
238-6728	93
238-6730	93
239-1134	230
	▶245
239-1575	551
239-1576	551
239-1577	551
239-1582	551
239-1585	551
239-1603	455
	▶558
239-1604	558
239-1607	451
	▶676
239-1753	646
239-1756	639
239-1760	623
	646
239-1794	575
	580
	652
239-1798	575
	580
	584
	588
239-1808	575
	580
	584
	588
239-1820	▶596
	727
239-1838	89
	663
239-2395	209
	▶216
239-2396	125
	136
	209
	▶217
239-2397	209
	▶225
239-3478	▶218
	219
239-5674	209
	▶219
239-5858	122
239-6533	42
239-6551	108
239-6581	7
	▶124
239-6582	124
239-6585	124
239-6662	230
239-6986	1073
239-7352	279
	281
239-8135	93
239-8697	689
	▶690
239-8983	745
	750
	▶802
239-8984	578
	580
	588
	739

▶ PRIMARY REFERENCE

PART NUMBER INDEX

Part	Page
	▶803
239-8998	689
	▶691
239-9036	575
	580
	584
	588
	▶736
239-9037	736
239-9039	736
239-9040	736
239-9103	▶804
	806
240-2636	40
240-4995	1003
240-5063	1032
	▶1037
240-5064	1019
	▶1030
240-5065	1030
	▶1032
240-5066	969
	971
240-5067	970
	972
240-5071	989
	1023
240-5074	988
240-7271	6
	▶21
240-7272	6
	▶61
240-7679	6
	▶25
241-0847	45
	56
241-2039	362
241-2270	367
	368
	369
241-2274	367
	368
	369
241-2277	398
	404
241-2280	381
	382
241-2282	362
	▶378
241-2283	378
241-2284	378
241-2285	378
241-2289	391
	393
	395
241-2290	393
241-4221	920
241-4761	5
	▶114
241-6168	96
241-7358	837
	▶842
241-7359	842
241-7363	837
	▶849
241-7601	5
	▶165
242-1401	56
242-1510	1073
242-1588	1070
	1073
242-1811	30
242-3360	122
242-3374	699
242-6535	▶565
242-6537	▶567
242-6538	▶568
242-6539	▶569
242-6543	▶522
242-6544	▶524
242-6547	▶526
242-6548	▶528
242-6551	526
242-6805	450
	451
	▶709
242-6844	699
242-6880	605
	▶826
242-6889	737
242-6890	737
242-6891	737
242-6892	737
242-6893	826
242-6914	716
242-6915	716
242-6916	716
242-6918	716
242-6919	716
242-6920	716
242-6925	737
242-7418	56
242-7477	91
242-8768	1036
	1037
	1040
243-1555	5
	▶209
243-1557	10
243-3177	469
243-4505	187
	268
	279
	281
	951
	998
243-4508	275
	279
243-4510	281
243-5489	125
243-5491	125
243-6717	16
244-1420	132
	134
244-2118	1
	▶1057
244-4120	714
	▶781
244-4468	714
244-4884	132
	134
244-4959	132
244-4967	132
244-4970	132
244-7789	362
244-7791	365
	372
244-7792	362
244-7793	▶379
	401
244-7794	356
244-7795	356
	379
244-7799	356
244-7813	381
	382
244-7814	381
	382
244-7816	329
	371
244-7820	362
244-7823	379
244-7908	351
244-8494	778
	782
244-8495	778
	782
244-8496	778
	782
244-8497	779
	783
244-8498	778
	782
244-8499	778
	782
244-8500	778
	782
244-8501	779
	783
245-2325	520
245-2425	516
	570
245-2457	522
245-2458	522
245-4930	▶540
	837
245-4931	▶679
	861
245-5051	687
245-5061	685
245-5079	620
245-5081	629
245-5082	153
	707
245-5096	639
245-5106	679
245-5122	551
245-5130	599
245-5137	596
245-5214	603
245-5219	615
245-5223	610
245-5237	623
	627
	646
245-5240	596
245-5244	612
245-5317	2
	3
	▶542
	▶545
	837
245-5384	542
245-5385	542
245-5457	1073
245-5462	1073
245-5468	▶1049
245-5469	1049
	▶1061
245-5489	1073
245-5495	1073
245-5578	▶105
245-5584	▶854
245-6095	55
245-7329	132
245-7760	254
	259
245-7786	7
	▶953
245-7787	953
	▶954
245-7790	940
	957
	959
245-7791	988
245-7792	988
245-7793	988
245-7811	1
	▶1017
245-7812	936
	▶999
245-7813	999
245-7814	999
245-7815	999
245-7816	999
245-7817	936
245-7818	936
245-7819	936
245-7820	936
245-7821	936
245-7823	936
245-7824	936
245-7825	936
245-7826	936
245-7827	936
245-7828	936
245-7829	936
245-7830	936
245-7831	936
245-7832	936
245-7833	936
245-7834	936
245-7835	936
245-7836	936
	▶949
245-7837	949
245-7838	936
245-7839	936
245-7842	967
245-7844	968

▶ PRIMARY REFERENCE

PART NUMBER INDEX

Part	Page
245-7850	1003
245-7851	1003
245-7856	936
245-7866	954
245-7867	954
245-7868	954
245-7869	954
245-7870	954
245-7871	954
245-7872	988
245-7873	988
245-7876	954
245-7877	954
245-7881	▶1024
245-7884	1026
	1034
245-7885	1027
245-7886	932
245-7887	1026
	1027
245-7888	1026
	1027
	1034
245-7889	1036
	1037
	1040
245-7890	1036
	1037
245-7892	1036
	▶1038
	1040
245-7895	1036
	1037
	1040
245-7896	▶932
	1036
	1037
	1040
245-7897	932
	1036
	1037
	1038
	1039
245-7898	932
	1026
	1027
	1038
	1039
245-7899	1036
	1037
	1038
	1039
245-7900	336
	338
	339
	342
245-7901	336
	338
	339
	342
245-7903	954
245-7904	954
245-7905	949
245-7906	954
245-7918	1003
245-7919	953
245-7922	▶955
	1019
245-7925	959
245-7926	957
245-7929	983
245-7948	957
	959
245-9206	100
245-9242	85
245-9247	102
245-9278	85
245-9303	85
246-2641	144
	361
246-3144	16
246-4786	5
	▶132
246-6563	61
246-8114	▶915
246-8115	915
	▶916
246-8124	▶917
247-2693	279
	281
	969
	970
	971
	972
	981
247-2694	1008
247-2695	1008
247-2833	5
	▶116
247-2834	116
247-5112	981
247-5185	971
	972
247-7410	448
	▶1062
247-7411	448
	▶1063
247-7418	1022
	▶1064
247-7437	1073
247-7438	1073
247-7465	448
	▶1065
247-7587	755
247-8712	716
247-8713	717
247-8715	716
247-8717	717
247-8719	717
247-8720	717
247-8721	716
247-8725	717
247-8726	717
247-8729	716
247-8730	717
247-8732	501
247-8733	501
247-8734	501
247-8735	501
247-8786	716
247-8787	717
247-8841	712
247-8897	467
247-8904	465
247-8928	501
247-8929	501
247-8944	717
247-8985	716
247-9022	569
247-9026	569
247-9082	526
247-9115	526
247-9197	560
247-9302	530
	532
247-9303	522
	530
	532
247-9304	530
	532
247-9305	522
	530
	532
247-9306	▶530
247-9307	▶532
247-9373	518
247-9376	518
247-9379	564
	568
247-9383	564
	568
247-9440	512
	514
	524
	562
	565
247-9442	516
247-9445	516
247-9518	567
247-9522	567
248-1697	849
248-1965	▶413
248-1966	▶414
248-4840	114
248-4841	114
248-5513	93
248-7151	▶417
	418
248-7152	416
	▶418
248-7178	408
248-7255	▶419
	421
248-9370	351
248-9445	▶547
	837
248-9447	547
248-9448	547
248-9461	551
248-9469	634
248-9488	551
248-9553	654
248-9717	542
248-9718	542
	545
248-9719	542
	545
248-9720	542
	547
248-9789	540
248-9790	540
248-9796	572
248-9834	547
248-9835	547
248-9836	547
248-9854	724
248-9910	545
248-9913	545
249-0713	▶131
	141
249-1306	716
249-1307	717
249-1308	716
249-5278	5
	▶170
249-6657	716
249-6658	501
249-6659	501
249-6660	501
249-6661	501
249-6670	477
	717
249-6671	712
249-8125	▶727
250-1440	516
	518
	528
250-3998	422
	423
250-4800	578
250-4997	352
250-5003	352
250-5058	354
	▶355
250-5059	355
250-5150	395
250-5151	▶380
	394
250-5152	380
250-5153	380
	392
250-5154	380
250-5169	▶399
	404
250-5170	404
250-5176	404
250-5179	362
	▶381
250-5189	361
	▶365
250-5191	398
250-5192	▶382
	398
250-5284	351
250-5285	351
250-5286	351
250-5302	352
250-5304	352
250-6094	1058
250-6470	877

▶ PRIMARY REFERENCE

PART NUMBER INDEX

Part	Page
250-8054	1062
	1063
	1064
	1065
251-0299	306
251-0433	▶280
	1019
251-0435	280
	▶281
251-0538	▶1001
	1019
251-0539	1001
251-0542	▶203
	1019
251-0543	203
	205
251-0544	179
	▶205
251-0580	279
251-0602	281
251-0613	▶250
	451
251-0614	250
251-0637	254
	259
251-1005	40
251-1105	1058
251-2473	413
	414
251-2474	413
	414
251-2651	854
	▶857
251-2652	857
	859
251-4162	164
251-4314	38
251-4344	▶921
251-4482	534
251-6668	64
251-6669	63
	▶64
251-6960	▶878
251-6967	878
	▶905
251-7757	422
	423
251-8364	422
	423
251-8368	422
	423
252-2685	95
252-4429	423
252-7132	5
	▶152
252-7920	▶915
253-0812	902
	905
253-0861	1073
253-1346	408
253-1461	6
	▶141
253-2111	201
253-2740	422
253-6276	562
	565
253-6381	522
253-6382	522
253-6383	▶534
253-6432	520
253-6433	520
253-6461	528
253-6464	528
253-6467	528
253-7404	5
	▶83
254-3080	592
	▶755
254-5458	▶1070
255-1644	540
255-1645	540
255-1646	540
255-1665	620
255-1666	620
255-1819	599
255-1929	596
255-1930	596
255-2009	634
255-2891	110
255-2966	108
255-3057	230
255-3171	1069
255-3173	1069
255-4410	1024
255-5588	745
	750
	▶798
255-5589	798
255-5590	798
255-5591	798
255-5594	798
255-5745	643
	▶758
255-5843	▶448
	452
	453
255-5844	▶448
255-5845	452
	▶1022
256-1067	914
256-1730	404
256-1732	404
256-1757	401
256-1758	401
256-1759	356
256-1760	356
256-1761	359
256-1763	359
	▶383
256-1764	359
	▶384
256-2030	913
256-3029	879
256-6453	226
256-6881	230
256-7958	902
256-8690	922
256-8691	922
256-9651	33
257-2015	38
257-3604	423
257-4095	25
	▶26
257-4546	1069
257-4556	▶854
257-4596	82
	▶1066
257-5015	1069
258-4524	122
258-6749	592
	▶827
258-8721	55
258-8966	902
	905
258-8970	902
	905
258-9892	952
259-3866	389
259-4877	281
259-4883	254
	259
259-4884	252
	290
259-4887	275
	277
259-4889	▶268
	453
259-4890	268
259-4914	1001
259-4940	275
	277
259-5257	178
	▶275
259-5258	275
259-5292	270
259-5293	▶175
	1022
259-5294	▶176
	448
259-5295	▶177
	448
259-5507	714
259-6113	323
	324
	325
	326
	327
259-6227	323
	324
	325
	326
	327
259-7180	290
259-7202	959
259-7214	1024
259-7215	1024
259-7220	252
259-7243	▶951
	952
259-7285	951
259-7345	939
259-7346	▶938
	957
259-7347	▶939
	959
259-7348	955
	▶957
259-7349	955
	▶959
259-7353	940
259-7430	623
	627
	646
	652
	▶828
259-7504	673
259-7598	448
	▶961
259-7599	448
	▶962
259-7707	▶982
259-7732	634
	▶814
259-7733	814
259-7762	961
	▶975
259-7763	961
	▶976
259-7764	962
	▶977
259-7765	962
	▶978
259-7788	763
260-0251	▶55
	56
260-0252	▶56
	61
260-0915	55
260-1111	▶913
260-1112	▶914
260-1165	913
260-2042	168
260-2109	▶969
	975
260-2110	▶970
	976
260-2111	969
	970
	971
	972
260-2127	▶971
	977
260-2128	▶972
	978
260-2180	639
260-2191	639
260-2193	229
	▶1008
260-3003	738
260-3876	831
260-3877	612
	▶831
260-3883	831
260-4855	23
260-5872	998
260-5873	998
260-5875	1
	▶998
260-6941	1062
260-6942	1063

▶ PRIMARY REFERENCE

PART NUMBER INDEX

Part	Page	Part	Page	Part	Page	Part	Page
260-6948	1064	264-1140	▶881	265-1313	48	268-7050	522
260-7524	57	264-2115	884	265-3359	879	268-7051	522
	58		885		880	268-7052	522
260-7597	61		886	265-3365	883	268-7083	524
260-7891	449		887	265-3398	879	268-7086	524
	450		888	265-3400	880	268-7089	524
	▶616		889	265-3405	879	268-7092	524
260-8047	▶618		890	265-3406	880	268-8209	831
	1021		891		882	268-8872	915
260-8062	89		892		883		1068
	663		893	265-3407	882	269-0120	1068
260-8063	89		894		883	269-0121	1068
	663		895	265-3409	879	269-0143	916
260-8067	89		896	265-3410	880	269-0144	916
	663		897	265-3411	880	269-2106	▶472
260-8071	596		898	266-1079	572		916
260-8072	596		899	266-1217	634	269-2107	916
260-8079	634		900	266-1282	660	269-2554	916
260-8080	666		906	266-1296	660	269-2757	▶233
260-8786	▶323		907	266-1298	660		236
260-8788	323		909	266-1395	634	269-2860	40
260-9415	902		910	266-2116	266	269-2862	40
	905		912		267	269-2864	40
261-2290	56	264-2116	884	266-5431	1070	269-6164	5
	▶57		885		1073		▶52
261-2291	57		886	266-6191	119	269-9684	685
261-2293	58		887	266-6213	119	270-0012	663
261-2294	56		888	266-6256	4	270-0013	663
	▶58		889		▶119	270-0014	663
261-3223	266		890	266-7843	687	270-0015	663
	267		891		▶835	270-0032	666
262-1421	168		892	267-0007	5	270-2601	881
	▶173		893		▶66		▶911
262-2185	351		894	267-0009	5	270-2602	911
	352		895		▶6	270-5320	129
262-2187	377		896	267-0010	6	270-5603	2
262-2211	356		897		▶8		3
	401		898	267-3839	948		▶1009
262-2212	▶330		899		▶973	270-5691	745
	401		900	267-7642	▶252		787
262-2213	330		906		453		▶805
262-2215	▶328		907	267-7644	252	270-5692	551
	356		909	267-7671	252		▶772
262-2216	328		910	267-7672	252	270-5693	772
262-2603	356		912	267-7676	252	270-5694	584
	401	264-2135	882		308		▶806
	404		883	267-7695	308	270-5695	806
262-2879	170		901	267-7976	203	270-5696	745
262-8502	323	264-2136	882	267-7977	205		▶761
	324		883	268-1901	1050	270-5697	761
	325		901	268-1964	254	270-5698	761
	326	264-4297	227		259	270-5730	745
	327		228	268-2953	23		750
263-1964	551	264-4501	73	268-4530	915		▶807
	▶759	264-7786	223		1068	270-5731	759
263-4909	36	264-7898	879	268-4531	915		763
263-4920	23	264-7899	880		1068		▶809
263-7047	759		882	268-6816	453	270-5951	▶979
263-7321	882		883		▶1067		982
263-9088	166	264-9821	417	268-6817	1067	270-5952	▶980
	169	264-9971	136	268-7027	562		982
	▶172	264-9982	951	268-7030	562	270-5953	782
263-9747	▶879	264-9983	951	268-7036	512	270-6106	▶448
263-9748	▶880	264-9984	951	268-7039	512		451
263-9752	880	265-1113	48	268-7042	522	270-6107	448

▶ PRIMARY REFERENCE

PART NUMBER INDEX

Part	Page
	▶964
271-2898	917
271-6432	714
272-0389	8
272-4137	623
	646
272-4138	639
272-4139	623
	646
272-4608	584
272-4610	575
	578
	580
	584
	588
272-4611	584
272-4616	584
272-4789	230
273-1402	913
	914
273-1409	913
273-1428	914
273-1547	913
273-1548	914
273-1551	913
273-1552	914
273-3382	884
273-3383	886
	891
	897
273-3384	887
	892
	898
	901
	908
273-3385	888
	899
273-5307	954
273-5358	2
	3
	▶989
273-5359	989
273-5360	989
273-5384	1037
	▶1039
273-5386	1039
273-6806	859
273-6887	854
	▶859
274-2483	▶712
	717
274-4490	55
274-6851	123
274-7395	209
	▶227
274-7396	209
	▶228
274-7962	909
275-1253	125
	136
	▶240
275-1380	584
275-1410	678
275-1743	89
	663
275-1819	666
275-5998	921
275-5999	921
276-2403	5
	▶952
276-3101	125
276-5768	890
	895
276-5769	885
	896
276-5770	893
276-5784	895
276-5785	896
276-5786	897
276-5787	898
276-7222	48
277-0762	562
277-0765	562
277-0768	562
277-0771	512
277-0774	512
277-0777	512
277-0871	524
277-0954	506
	508
	510
	520
	526
	534
	▶773
277-1015	514
277-1018	514
277-1021	514
277-1024	514
277-1027	514
277-1030	565
277-1033	565
277-1036	565
277-1039	565
277-1042	565
277-3082	183
277-3967	890
277-5814	▶922
278-3707	351
	352
278-6768	652
278-6796	633
278-7093	38
278-7282	419
279-3161	938
279-3393	714
279-5244	▶882
279-5253	▶883
279-5254	883
279-6060	122
279-7821	7
	▶109
279-9956	884
	912
279-9957	890
	895
279-9958	885
	896
279-9959	886
	891
	897
279-9960	887
	892
	898
	908
279-9961	888
	899
279-9962	893
279-9963	889
	894
	900
279-9973	901
279-9976	882
	883
279-9980	884
	885
	886
	887
	888
	889
	902
	906
280-0351	▶920
280-1918	592
280-2412	592
280-2413	592
281-0786	8
281-1791	▶884
281-1793	▶885
281-1794	▶886
281-1795	▶887
281-1796	▶888
281-1798	▶889
281-1799	884
281-1801	885
281-1802	886
281-1803	887
281-1804	888
281-1806	889
281-1810	▶890
281-1812	▶891
281-1813	▶892
281-1815	▶893
281-1816	▶894
281-1817	▶912
281-1818	▶895
281-1819	▶896
281-1820	▶897
281-1821	▶898
281-1822	▶899
281-1824	▶900
281-1830	890
281-1832	891
281-1833	892
281-1837	912
281-1838	895
281-1839	896
281-1840	897
281-1841	898
281-1842	899
281-1844	900
281-1846	▶901
281-1849	901
281-1890	▶902
	904
281-1898	902
281-1908	▶904
281-2725	143
	▶147
281-2925	117
281-3514	102
281-3554	7
	▶85
281-3560	104
281-3585	7
	▶100
281-3586	100
	▶102
281-3587	102
281-3616	100
281-3619	100
281-3622	100
281-3637	85
281-3638	85
281-3645	85
281-5898	634
282-5705	453
	▶1068
282-8737	592
283-2238	116
283-2783	285
	287
	308
283-2913	▶308
283-2914	308
283-2984	308
283-3074	264
	281
283-4218	884
283-4220	885
283-4221	886
283-4222	887
	901
283-4223	888
283-4225	889
283-4258	884
283-4259	884
283-4264	885
283-4265	885
283-4267	886
283-4268	886
283-4270	887
283-4271	887
283-4273	888
283-4274	888
283-4279	889
283-4280	889
283-7727	889
	894
	900
283-8144	▶183
	190
	192
	194
283-8545	890
	891
	892
	893
	894
	907

▶ PRIMARY REFERENCE

PART NUMBER INDEX

Part	Page
283-8546	912
283-8548	891
283-8549	892
	901
	908
283-8551	893
283-8552	894
283-8553	890
	895
283-8554	896
283-8555	891
	897
283-8556	892
	898
	908
283-8557	899
283-8558	893
283-8559	894
	900
283-8560	912
283-8570	895
	896
	897
	898
	899
	900
	910
	912
283-8599	912
283-8601	895
283-8603	896
283-8605	897
283-8607	898
283-8609	899
283-8610	899
283-8613	900
283-8614	900
284-8532	1012
284-8533	1013
285-0823	14
285-1327	▶782
	979
	980
285-1332	964
285-1333	964
285-1337	964
285-1531	663
	▶738
285-1715	599
285-1764	785
285-1765	607
	▶785
285-1766	785
285-1767	785
285-1768	683
	▶763
285-1777	738
285-1784	▶449
	451
285-1785	▶449
	452
285-1786	▶449
	452
	453
285-1787	▶450
285-1788	▶450
285-1789	▶450
	453
285-1790	▶451
285-2520	687
285-2893	634
285-8166	901
286-2110	923
	924
	925
	926
	927
	928
	929
	931
286-2111	931
286-2112	924
286-2113	927
286-2114	928
286-2115	929
286-2116	923
286-2117	925
286-2118	926
286-4271	▶164
	197
286-6192	612
286-6399	634
286-6565	572
287-0164	124
289-2492	119
289-5657	620
289-5734	455
	▶549
289-5735	455
	▶550
289-5758	▶680
	862
289-5759	▶681
	861
	862
289-5983	884
	912
289-5985	884
	912
289-6591	362
	▶385
289-6592	385
289-6596	404
289-6597	404
289-6771	330
289-7836	490
	▶492
289-7844	2
	3
	▶455
	837
289-7845	2
	3
	▶455
	837
289-8194	▶497
	724
289-8195	497
289-9890	912
290-1727	1073
290-1728	1073
290-8159	183
290-8160	183
290-8996	183
290-9039	322
	▶336
290-9040	336
	342
290-9138	862
	▶867
290-9139	867
290-9378	2
	3
	▶1020
291-5480	▶122
	123
291-6905	99
291-7757	▶304
	449
	450
291-7758	▶301
	450
291-7765	▶270
	451
291-7766	1
	▶153
291-7767	▶254
	▶259
	948
291-7768	▶306
	1019
291-7804	153
291-7806	306
291-7807	254
291-7856	301
291-7860	153
291-9259	4
	▶5
292-1200	99
292-7159	505
	▶599
292-7161	505
	▶572
292-7162	505
	▶685
292-7163	505
	▶660
292-7164	505
	▶603
292-7166	449
	▶575
292-7167	449
	▶578
292-7168	450
	▶663
292-7169	449
	▶580
292-7175	82
	▶605
292-7247	599
292-7249	599
292-7255	599
292-7264	599
292-7268	599
292-7273	572
292-7274	572
292-7279	551
292-7282	572
292-7306	660
292-7309	660
292-7312	660
292-7314	660
292-7320	660
292-7350	584
	588
292-7367	554
292-7370	554
292-7384	572
292-7437	549
292-7438	549
292-7439	550
292-7440	550
292-7510	663
292-7593	680
292-7752	506
	508
	510
	520
	526
	534
292-9252	97
	▶98
293-0818	98
	▶99
293-1136	933
	973
293-1137	936
293-1140	1057
293-1170	1023
293-1256	1041
293-6801	144
293-6835	1
	▶404
293-7678	460
	▶469
293-7688	469
293-7693	469
293-8216	419
293-9397	18
294-1247	▶837
294-1250	▶837
294-1252	▶837
294-1255	▶861
294-1257	▶861
294-1258	▶862
294-1265	▶862
294-1267	▶862
294-1275	▶82
294-1277	▶451
294-1307	1073
294-1331	1073
294-1335	1073
294-1426	▶852
	861
	862
294-1429	852
294-1430	852
294-1431	852
294-1432	852
294-1433	852

▶ PRIMARY REFERENCE

PART NUMBER INDEX

Part	Page	Part	Page	Part	Page	Part	Page
294-1434	852	295-9549	721	296-7134	451		▶797
294-1435	852	295-9550	699		▶551	297-1546	132
294-2963	469		701		731		134
294-4585	5	295-9551	699	296-7136	▶89	297-4483	629
	▶123		701		451		643
294-5018	323	295-9574	501	296-7165	575	297-4510	2
	324	295-9575	501		578		3
	325	295-9576	501		580		▶199
294-6007	59	295-9577	501		584	297-4513	2
294-6467	510	295-9578	501		588		3
294-6485	506	295-9579	501	296-7166	575		▶207
294-6501	508	295-9580	501		578	297-4516	2
294-6502	520	295-9581	501		580		3
294-6503	526	295-9582	501		584		▶208
294-6504	534	295-9583	501		588	297-4525	207
295-9423	685	295-9584	501	296-7167	575	297-4528	208
	▶833	295-9585	501		578	297-4823	940
	▶834	295-9600	2		580	297-7419	861
295-9424	710		3		588		▶869
	▶713		▶499	296-7278	642	297-7420	869
295-9426	713	295-9601	499		643	297-7439	2
	▶714	295-9663	713	297-0243	1		3
295-9429	85		▶716		▶505		▶844
	▶699	295-9680	559	297-0252	▶731	297-7442	862
295-9441	476	295-9682	499	297-0257	▶731		▶870
	▶477	295-9684	499	297-0258	▶732	297-7443	862
295-9442	82	295-9693	716	297-0265	575		▶872
	▶692	295-9694	717		580	297-7547	▶396
295-9497	▶501	295-9695	716		588		430
	717	296-4670	505	297-0266	580		431
295-9498	717		▶710		588	297-7548	▶397
295-9499	716	296-6249	315	297-0346	765		430
295-9500	716		▶479		787		431
295-9501	716	296-6250	479		790	297-7564	1
295-9502	716		▶480	297-0349	787		▶338
295-9503	716	296-6251	480		790	297-7565	338
295-9504	716		484	297-0350	765		339
295-9505	716	296-6252	315		787	297-7686	1
295-9506	716		▶483		790		▶7
295-9507	716	296-6253	483	297-0351	765	297-7704	710
295-9508	716		▶484		787	297-9129	▶420
295-9509	716	296-6939	673		790	297-9130	420
295-9510	716	296-6970	599	297-0354	787		▶421
295-9511	716	296-7020	575	297-0356	765	297-9152	▶408
295-9512	717		580		787		416
295-9513	716		588		790		420
295-9516	716	296-7024	575	297-0370	580	297-9157	408
295-9517	717		580		588	297-9163	410
295-9518	716		588		673		▶424
295-9521	716	296-7025	652		▶829	298-3105	334
295-9535	714	296-7087	650	297-0500	765	298-3108	335
	▶720	296-7088	650		787	298-3120	364
295-9536	720	296-7123	505		790		▶372
295-9537	720		▶620		▶832	298-3121	372
295-9538	720	296-7127	449	297-0604	787	298-3134	372
295-9539	720		450		790	298-3148	▶334
295-9540	720		▶623	297-0605	765		362
295-9541	720	296-7128	449	297-0606	787	298-3153	▶335
295-9542	714		▶627		790		359
295-9544	714	296-7129	450	297-0607	787	298-3201	404
295-9545	714		▶584		790	299-2600	▶248
295-9546	714	296-7131	450	297-0608	787		449
295-9547	699		▶588		790	299-2602	▶283
	701	296-7133	453	297-0641	623		450
	▶721		▶592		646	299-2604	▶291

▶ PRIMARY REFERENCE

PART NUMBER INDEX

Part	Page
	453
299-2605	▶289
	322
299-2606	82
	▶295
299-2643	291
299-2646	295
299-2649	283
299-2697	2
	3
	▶264
299-2701	264
299-2841	264
299-2856	1
	▶297
299-2908	153
299-2910	153
299-2912	153
299-2914	153
299-2952	264
299-2956	153
299-2960	246
299-2965	▶200
	1019
299-2966	200
	▶201
299-2967	201
299-2969	▶246
299-2970	1
	▶160
299-2996	2
	3
	▶272
299-3000	2
	3
	▶298
299-3003	2
	3
	▶300
299-3027	297
299-3035	▶190
299-3036	▶192
299-3067	153
299-9620	5

3

Part	Page
300-1590	2
	3
	▶456
300-1591	456
	▶460
300-4606	425
300-4608	425
300-4610	424
	▶425
301-0091	246
301-0589	1012
	1013
301-2287	▶422
	432
	434
	435
301-2297	▶423
301-2300	▶429
	431
301-7298	83
302-1762	469
302-2880	634
302-2891	612
302-2929	612
302-2971	575
	580
	584
	588
	663
302-2981	575
	578
	584
302-2984	505
	▶629
302-2985	505
	▶633
302-2986	639
302-2990	575
	580
	588
302-3084	505
	▶707
302-3085	707
302-3097	505
	▶639
302-3114	545
302-3115	545
302-3116	545
302-3117	545
302-3119	588
302-3124	89
302-3139	▶672
	731
302-3140	▶642
	731
302-3141	451
	▶673
302-3142	451
	▶643
302-3143	449
	450
	▶646
302-3146	663
302-3147	451
	452
	453
	▶650
302-3148	450
	▶652
302-3150	672
	673
302-3161	643
302-3162	643
302-3185	505
	▶687
302-3283	▶654
	731
	732
302-3286	572
302-3308	634
302-3340	551
302-3341	551
302-3351	456
	▶559
302-3352	559
302-6422	▶1
302-9403	▶453
302-9475	▶570
302-9476	570
302-9479	570
302-9546	▶683
	731
	732
302-9547	683
302-9548	683
302-9550	683
302-9552	683
302-9564	536
	538
302-9565	538
302-9580	538
303-1382	▶18
	19
303-1383	▶19
	20
303-1384	▶20
	21
303-2004	236
303-2589	▶430
303-2591	▶430
303-2597	▶430
303-2633	▶163
303-2634	▶430
303-2638	▶431
303-2639	▶431
303-2640	▶431
303-2658	▶990
303-2669	▶350
303-2702	▶1000
303-2711	▶163
303-2723	▶178
303-2765	▶163
303-2781	▶178
303-2790	▶105
303-3189	33
303-8942	3
	▶339
303-9038	861
	▶874
303-9039	874
303-9875	1
	▶359
303-9877	359
	▶386
303-9881	386
303-9884	386
303-9933	145
303-9937	145
304-0000	388
304-0008	384
	▶387
304-0009	384
	▶388
304-0010	▶398
	990
304-0011	388
304-0047	398
304-3111	▶903
304-3112	903
	▶907
304-3114	906
	907
	910
304-3116	906
	907
	910
304-3117	907
304-3118	907
	910
304-7423	▶903
304-7424	903
	▶906
304-7425	▶903
304-7426	903
	▶910
304-9348	910
304-9349	910
304-9415	906
304-9416	906
304-9417	906
305-0329	988
305-0339	1034
	▶1040
305-0340	▶1033
305-0341	1033
	▶1034
305-0350	1040
305-0351	1034
305-0352	1034
305-0353	1034
305-0356	1034
305-0361	1047
305-0441	1003
305-0442	1003
305-4765	230
305-4935	▶454
	710
305-7638	82
	▶104
305-7639	104
305-7640	104
305-7980	1
	▶4
305-8000	1
	▶1019
305-8001	▶946
	1019
305-8002	946
	▶948
305-8003	1019
	▶1023
305-9361	423
305-9362	423
305-9363	422
305-9364	422
306-1354	506
	508
	510

▶ PRIMARY REFERENCE

PART NUMBER INDEX

Part	Page
	520
	526
	534
306-1355	506
	508
	510
	520
	526
	534
306-1528	▶453
306-3998	233
306-8346	▶287
	1000
306-8372	194
306-8374	194
306-8378	192
306-8384	190
306-8397	194
306-8411	287
306-8457	▶194
306-8521	272
306-8522	298
306-8523	300
306-8544	163
	▶302
306-8553	302
306-8587	163
	▶266
306-8589	163
	▶303
306-8590	303
306-8639	▶274
	1000
306-8640	274
306-8641	287
306-8692	163
	▶195
306-8693	195
306-8808	163
	▶267
307-0683	5
	▶33
307-0684	5
	▶125
307-4584	5
	▶236
307-4833	592
307-4834	592
307-4839	592
307-4841	592
307-4848	505
	▶554
307-4942	673
307-4954	660
	▶727
307-4955	729
307-4958	660
307-4962	660
307-4965	660
307-4992	540
307-4993	540
307-4994	540
307-5003	578
307-5018	540
307-5088	592
307-5089	592
307-5090	592
307-5093	592
307-5116	603
307-5199	592
307-5235	656
307-5257	571
307-5260	571
307-5265	2
	3
	▶656
307-5266	656
307-5270	727
	▶728
307-5271	727
	▶729
307-5272	727
	▶730
307-5274	729
307-5276	728
	730
307-7649	404
307-7655	334
	335
307-7757	163
	▶196
307-7759	1
	▶361
307-7760	361
	▶367
307-7764	1
	▶362
307-7771	351
307-7790	367
307-7791	362
307-7814	136
307-7818	1
	▶351
307-7819	350
	▶352
307-7823	352
307-7847	381
	382
307-7848	382
307-7944	82
	▶373
307-7945	▶331
	373
307-7946	331
	▶332
307-7947	331
	▶333
307-7951	▶368
	373
307-7952	368
307-7997	362
	▶389
307-7998	389
307-8005	1
	▶144
307-8006	144
	▶145
307-8015	359
308-6358	▶23
	26
308-8439	322
	▶324
308-8440	324
308-8772	336
	338
	339
	342
308-8773	336
	338
	339
	342
308-8774	336
	338
	339
	342
308-8886	870
308-8888	872
308-8901	2
	▶342
308-8947	339
	342
308-8952	339
	342
	844
308-8953	339
	342
	844
308-8981	844
308-8995	844
309-0166	▶322
309-0167	▶322
309-1115	908
309-1116	908
309-1121	▶931
309-1122	▶924
309-1123	▶927
309-1124	▶928
309-1125	▶929
309-1126	▶923
309-1127	▶925
309-1128	▶926
309-5694	207
	208
309-5695	208
309-5733	208
309-5734	208
309-5751	1012
	1013
309-5760	199
309-5765	1000
	▶1011
309-5769	616
	634
	643
309-5771	178
	▶1012
309-5779	1
	▶174
309-5780	174
309-5781	174
309-5791	229
309-5793	▶229
	1007
309-5795	629
309-5796	1011
309-5797	2
	3
	▶846
309-5805	163
	▶1015
309-5806	1015
309-5808	963
	▶981
309-5840	178
	▶1013
309-5841	▶166
	178
309-5842	▶168
	178
309-5849	1009
309-9941	738
310-0013	▶451
310-0014	▶452
310-0015	▶452
310-0016	▶452
310-0017	▶453
310-0096	▶739
	768
	769
310-0097	739
	▶742
310-0099	▶743
	745
	750
310-0101	505
	▶768
310-0102	▶745
	768
310-0104	731
	732
	▶769
310-0105	▶750
	769
310-0129	765
	787
	790
310-0137	765
	787
	790
310-0138	765
	787
	790
310-0139	765
	787
	790
310-0140	765
	787
	790
310-0141	765
	787
	790
310-0142	765
	787
	790
310-0143	765
	787
	790
310-0145	787
310-0147	554
	▶787

▶ PRIMARY REFERENCE

PART NUMBER INDEX

Part	Page
310-0149	672
	▶790
310-0150	673
	▶765
310-0151	765
310-0203	765
310-0387	▶731
310-9497	454
310-9670	107
	▶108
310-9691	42
311-1925	430
	▶432
311-1926	431
	▶433
311-4950	▶134
311-4951	134
311-4952	134
311-4953	134
311-6452	430
	▶434
311-6458	430
	▶435
311-8145	430
	▶436
311-8148	431
	▶437
311-8375	173
311-8376	173
311-8377	172
311-9505	717
311-9506	716
311-9540	714
311-9549	721
313-1543	▶903
313-1546	▶904
313-1558	903
	▶908
313-1561	904
	▶909
313-2148	▶36
313-3679	908
	909
313-7811	2
	3
	▶390
313-7812	390
	▶391
313-7813	391
313-7814	390
	▶392
313-7815	392
313-7816	392
313-7830	401
313-7833	196
	▶197
313-7939	198
313-7965	2
	3
	▶364
313-7966	364
	▶369
313-7967	369
313-7971	163
	▶198
313-8115	1
	▶329
313-8169	1
	▶136
313-8223	136
313-8225	136
313-8226	136
313-8228	136
313-8229	136
313-8230	136
313-8231	136
313-8240	367
	368
	369
313-8279	387
	388
314-5663	908
314-5666	909
314-8079	572
314-8080	572
314-8081	572
314-8082	572
314-8140	612
314-8259	612
315-4365	▶29
	85
315-4366	29
315-4367	29
315-4368	29
315-4375	692
	▶701
315-4412	834
315-4413	834
315-6133	560
315-9710	909
315-9713	909
315-9714	909
316-6864	142
318-2082	234
318-5859	530
318-5860	530
318-5861	530
318-8835	1058
319-0873	259
319-0947	153
319-0956	154
319-0962	154
319-0964	154
319-0975	154
319-1024	154
319-1037	266
	267
319-1143	289
319-1152	160
319-1158	246
319-1162	246
319-1166	248
	304
319-1172	270
319-1287	178
	▶277
319-1314	277
319-4289	846
319-4302	169
319-4319	▶169
	178
319-9713	572
319-9716	554
319-9717	554
319-9718	554
319-9719	554
319-9721	554
319-9725	554
319-9726	554
319-9727	554
319-9755	572
319-9775	685
319-9785	551
319-9798	554
319-9800	603
319-9804	660
319-9835	673
319-9865	578
	580
	588
319-9866	575
	580
	588
319-9867	575
	580
319-9874	673
319-9876	673
319-9877	673
319-9880	673
319-9887	642
319-9963	584
319-9969	654
319-9970	654
319-9988	605
320-2677	425
320-2704	322
	▶325
320-2706	325
320-2707	326
320-2709	▶326
320-2710	1
	▶327
320-2712	327
320-5392	197
320-5396	196
320-5397	1006
320-5398	1006
320-5492	▶400
	404
320-5499	362
	▶393
320-5502	105
	▶371
320-5503	371
320-5507	371
320-5511	329
320-5513	329
320-5609	▶394
	731
320-5611	394
	▶395
320-8734	1
	▶1073
320-8834	▶350
320-9259	1
	▶410
321-0529	536
322-8727	639
322-8728	639
323-3898	324
	325
	326
	327
324-0190	▶2
324-0191	▶3
324-6194	▶1
325-7667	▶1028

▶ PRIMARY REFERENCE

MEMORANDA

CATERPILLAR®

© 2008 Caterpillar
All Rights Reserved

Printed in U.S.A.