CATERPILLAR®

SEBP5662
January 2011

RUTHZIL TRATOR COMERCIAL DE PEÇAS LTDA 11 97083-6812 ROLANDO

Parts Manual

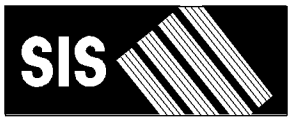

See "General Information" for New Parts Manual Features.

349D L Excavators

JGB1-Up (Machine)
KHS1-Up (Machine)
MHX7634-Up (Engine)
TXF1-Up (Engine)

Powered By C13 Engine

Product and Dealer Information

Note: For product identification plate locations, see the section “Product Identification Information” in the Operation and Maintenance Manual.

Delivery Date: _____

Product Information

Model: _____

Product Identification Number: _____

Engine Serial Number: _____

Transmission Serial Number: _____

Generator Serial Number: _____

Attachment Serial Numbers: _____

Attachment Information: _____

Customer Equipment Number: _____

Dealer Equipment Number: _____

Dealer Information

Name: _____ Branch: _____

Address: _____

_____

_____

	Dealer Contact	Phone Number	Hours
Sales:	_____	_____	_____
Parts:	_____	_____	_____
Service:	_____	_____	_____

MEMORANDA

TABLE OF CONTENTS

Name	Page
GENERAL INFORMATION	A5
REPAIR ALTERNATIVES	A8
SUPPLEMENTAL COOLANT ADDITIVES	A9
MAINTENANCE PARTS	A10
INDEX	A12
MACHINE ARRANGEMENT	1
CHASSIS AR	1
DISTRIBUTION AR	2
GENERAL AR	4
OPTION AR-CAB	5
OPTION AR-COUPLER	5
OPTION AR-GUARD	6
OPTION AR-CONTROL	6
OPTION AR-LINKAGE	6
OPTION AR-MACHINE	8
OPTION AR-CONFIGURATION	8
OPTION AR-UNDERCARRIAGE	9
SPECIAL AR	9
ENGINE ARRANGEMENT	11
ENGINE AR	11
ENGINE AR-COMPLETE	12
ENGINE AR-CORE	14
INSTALLATION AR-ENGINE	17
BASIC ENGINE	18
BASE GP-VALVE COVER	18
BELT GP-SERPENTINE	20
BELT TENSIONER GP	21
CAMSHAFT GP	22
COVER GP-FLYWHEEL HOUSING	23
COVER GP-FRONT HOUSING	24
COVER GP-VALVE MECHANISM	26
CRANKSHAFT GP	27
CYLINDER BLOCK AS	29
CYLINDER BLOCK GP	32
CYLINDER HEAD AS	34
CYLINDER HEAD GP	35
DAMPER GP	37
DRIVE GP-FAN	38
FASTENER GP-CYLINDER HEAD	39
FASTENER GP-DAMPER & PULLEY	40
FASTENER GP-FLYWHEEL	41
FLYWHEEL GP	42
GEAR GP-FRONT	43
HOUSING GP-FLYWHEEL	44
HOUSING GP-FRONT	46
LIFTER GP-VALVE	48
LIFTING GP-ENGINE	49
MOUNTING GP-ENGINE	50
MOUNTING GP-FAN DRIVE	52
MOUNTING GP-VALVE MECHANISM	53
PAN GP-OIL	54
PISTON & ROD GP	56
PLUG GP-CYLINDER BLOCK	58
PLUG GP-ENGINE	61
PULLEY GP-CRANKSHAFT	62
PULLEY GP-FAN & ALT DRIVE	63
ROCKER ARM GP	64
SEAL GP-CRANKSHAFT	68
SUPPORT GP-ENGINE	69
VALVE MECHANISM GP	70
LUBRICATION SYSTEM	72
BASE GP-OIL FILTER	72
BREATHER GP	75
COVER GP-OIL FILTER BASE	76
FILLER GP-ENGINE OIL	77
FILTER GP-ENGINE OIL	79
FUMES DISPOSAL GP	81
GAUGE GP-OIL LEVEL (DIPSTICK)	82
LINES GP-ENGINE OIL DRAIN	84
LINES GP-TURBOCHARGER OIL	85
MOUNTING GP-ENGINE OIL FILTER	86
PUMP GP-ENGINE OIL	88
COOLING SYSTEM	91
CONTROL AR-VARIABLE-SPEED FAN	91
COOLER GP-ENGINE OIL	92
FAN GP-SUCTION	94
LINES GP-COOLING	98
LINES GP-TURBOCHARGER WATER	100
LINES GP-WATER	102
PLUG GP-ENGINE OIL COOLER	105
PUMP GP-WATER	106
RADIATOR & HYD OIL COOLER GP	109
SCREEN GP-RADIATOR	113
AIR INLET AND EXHAUST SYSTEM	114
AIR CLEANER AR	114
AIR CLEANER GP	115
DRAIN GP-MUFFLER	118
EXTENSION GP-EXHAUST	119
LINES GP-AIR	120
MANIFOLD GP-EXHAUST	125
MANIFOLD GP-INLET	126
MOUNTING GP-AIR CLEANER	127
MUFFLER GP	128
PRECLEANER GP	130
TURBOCHARGER GP	131
FUEL SYSTEM	133
COOLER GP-FUEL	133
FILTER GP-WATER SEP & FUEL	134
FITTING GP-FUEL LINES	135

TABLE OF CONTENTS

Name	Page
INJECTOR GP-FUEL	136
LINES GP-FUEL	137
PUMP GP-FUEL INJECTION	144
PUMP GP-FUEL PRM & PRIM FILTER	145
PUMP GP-FUEL TRANSFER	146
REGULATOR GP-FUEL PRESSURE	147
TANK & MTG GP-FUEL	148
TANK GP-FUEL	150
VALVE GP-CHECK	154
ELECTRICAL AND STARTING SYSTEM	155
ALARM GP	155
ALARM GP-TRAVEL	156
ALTERNATOR GP-CHARGING	157
BATTERY & WIRING GP	160
BLOCK GP-JUNCTION	172
CAMERA & MOUNTING GP	173
CAMERA AR	175
CAMERA GP	176
CONNECTION GP-ELECTRICAL	177
CONTROL & MTG GP-COMMUNICATION	178
CONTROL & MTG GP-ENGINE ELEK	180
CONTROL & MTG GP-MACHINE	181
ELECTRONICS GP-COMMUNICATION	182
ELECTRONICS GP-MACHINE	182
FASTENER GP-WIRING HARNESS	183
HEATER GP-JACKET WATER	186
INSTALLATION AR-COMMUNICATION	187
INSTALLATION GP-SECURITY	188
LAMP GP-FLOOD	190
LIGHTING GP-CHASSIS	193
LIGHTING GP-FLOOD	194
MOUNTING GP-CAMERA	199
MOUNTING GP-SENSOR	202
MOUNTING GP-WIRING	203
PANEL & MTG GP-CIRCUIT BREAKER	204
PANEL GP-CIRCUIT BREAKER	205
PANEL GP-SWITCH	207
PLUG GP-CONNECTOR	211
SENSOR & MTG GP-POSITION	212
SENSOR GP-ENGINE	214
SENSOR GP-LIQUID LEVEL	218
SENSOR GP-POSITION	220
SENSOR GP-PRESSURE	221
SENSOR GP-SPEED	230
SENSOR GP-TEMPERATURE	235
STARTING AID GP-ETHER	239
STARTING MOTOR GP-ELECTRIC	242
SWITCH GP-DISCONNECT	246
SWITCH GP-MAGNETIC	247
SWITCH GP-POSITION	248
SWITCH GP-PRESSURE	249
SWITCH GP-ROTARY	250
SWITCH GP-START	251
SWITCH GP-TOGGLE	252
SWITCH GP-WIPER	254
VALVE GP-ETHER STARTING	255
WIRING GP-AUX START RECEPTACLE	256
WIRING GP-AUXILIARY CONTROL	258
WIRING GP-CAB	260
WIRING GP-CAMERA	269
WIRING GP-CHASSIS	271
WIRING GP-COMMUNICATION	278
WIRING GP-CONSOLE	283
WIRING GP-CONTROL	287
WIRING GP-CONVERTER	290
WIRING GP-COUNTERWEIGHT	293
WIRING GP-ELECTRONIC CONTROL	295
WIRING GP-FAN	299
WIRING GP-FINE SWING	301
WIRING GP-GRADE CONTROL	302
WIRING GP-MEDIUM PRESSURE	306
WIRING GP-MONITOR	307
WIRING GP-PLATFORM	309
WIRING GP-QUICK COUPLER	313
WIRING GP-RADIO	315
WIRING GP-UNIT INJECTOR	317
POWER TRAIN	318
FINAL DRIVE GP	318
DRIVE GP-FINAL	319
POWER TRAIN AR	324
SPROCKET GP	325
FRAME AND BODY	326
BOX & MTG GP-STORAGE	326
BOX GP-STORAGE	327
CHAIN GP-COUNTERWEIGHT	329
COUNTERWEIGHT AR	331
COUNTERWEIGHT GP	332
COVER AS-SOUND SUPPRESSION	336
COVER GP-ACCESS	338
COVER GP-HOOD	339
DOOR GP-ACCESS	342
FRAME GP-UPPER	344
GEAR & BEARING GP-SWING	353
GUARD AR-BOTTOM	356
GUARD GP-BOTTOM	357
GUARD GP-SWIVEL	359
HANDRAIL GP	361
HOOD & GUARD GP	363
HOOD AS-ENGINE	370
HOOD GP-ENGINE	373
SHEET AS-SOUND SUPPRESSION	377
STEP GP	398
STORAGE GP-VANDALISM GUARD	400
SUPPORT AS-ENCLOSURE	401

TABLE OF CONTENTS

Name	Page
SUPPORT GP-HOOD	403
UNDERCARRIAGE	409
ADJUSTMENT GP-HYDRAULIC TRACK	409
FRAME AR-UNDERCARRIAGE	411
FRAME AS-UNDERCARRIAGE	412
FRAME GP-UNDERCARRIAGE	413
GUARD GP-TRACK GUIDE	415
GUARD GP-TRAVEL MOTOR	419
GUARD GP-UNDERCARRIAGE	420
IDLER GP-FRONT	421
LINK AS-TRACK	428
ROLLER AR-TRACK & CARRIER	430
ROLLER GP-TRACK & CARRIER	431
ROLLER GP-TRACK CARRIER	432
ROLLER GP-TRACK-SINGLE FLANGE	433
SPRING GP-RECOIL	434
TRACK GP	436
HYDRAULIC SYSTEM	440
ACCUMULATOR GP	440
ACCUMULATOR GP-HYDRAULIC	441
BLOCK GP-HYDRAULIC	452
CONTROL AR-AUXILIARY	453
CONTROL AR-COUPLER	457
COUPLING GP-FLEXIBLE	458
COUPLING GP-PUMP	459
CYLINDER & LINES GP-BOOM	460
CYLINDER & LINES GP-BUCKET	460
CYLINDER & LINES GP-STICK	461
CYLINDER & SEAL GP-BOOM	462
CYLINDER & SEAL GP-BUCKET	463
CYLINDER & SEAL GP-CTWT	466
CYLINDER & SEAL GP-STICK	467
CYLINDER GP-BOOM	468
CYLINDER GP-BUCKET	470
CYLINDER GP-COUNTERWEIGHT	476
CYLINDER GP-COUPLER	477
CYLINDER GP-STICK	478
DRIVE GP-AUXILIARY PUMP	480
DRIVE GP-SWING	484
FASTENER GP-SWING & FINAL DR	492
FILTER & VALVE GP-PILOT	495
FILTER GP-OIL	496
GAUGE GP-SIGHT	501
HEAD GP-PUMP	502
HOUSING GP-FILTER	505
HYDRAULIC AR	506
LINES GP-AUXILIARY HYDRAULIC	507
LINES GP-BOOM	529
LINES GP-BOOM CYLINDER	537
LINES GP-BUCKET CYLINDER	545
LINES GP-COUPLER	548
LINES GP-FRONT	558
LINES GP-HYDRAULIC	578
LINES GP-HYDRAULIC OIL COOLER	585
LINES GP-MOTOR	587
LINES GP-PILOT	589
LINES GP-PUMP	640
LINES GP-REAR ATTACHMENT	647
LINES GP-RETURN	653
LINES GP-STICK	655
LINES GP-STICK CYLINDER	659
LINES GP-SWING MOTOR	662
LINES GP-TRAVEL MOTOR	664
MANIFOLD GP-CONTROL	669
MOTOR & MTG GP-HYDRAULIC FAN	672
MOTOR & MTG GP-SWING	673
MOTOR & MTG GP-TRAVEL	674
MOTOR GP-PISTON	675
MOTOR GP-SWING	682
MOTOR GP-TRAVEL	685
MOUNTING GP-COUNTERWEIGHT CYL	688
MOUNTING GP-MAIN CONTROL VALVE	690
PLUG GP	691
PUMP & MTG GP-AUXILIARY	692
PUMP & MTG GP-MAIN HYDRAULIC	693
PUMP GP-GEAR	694
PUMP GP-PISTON	696
PUMP GP-PISTON & GEAR	698
ROTATING GP-PUMP	703
SCREEN GP-HYDRAULIC	705
SWIVEL GP	706
TANK & FILTER GP-HYDRAULIC	707
TANK & MTG GP-HYDRAULIC	710
TUBE GP-HYDRAULIC	710
VALVE AR-ALT PATTERN CONTROL	714
VALVE AR-CHECK & RELIEF	714
VALVE AR-SWING	715
VALVE GP-CHECK	716
VALVE GP-CONTROL	722
VALVE GP-COUNTERWEIGHT CONTROL	743
VALVE GP-FLOW CONTROL	744
VALVE GP-LOAD CONTROL	745
VALVE GP-MAIN CONTROL	756
VALVE GP-MANUAL	758
VALVE GP-PILOT	760
VALVE GP-PILOT RELIEF	768
VALVE GP-PRESSURE CONTROL	769
VALVE GP-PRESSURE REDUCING	770
VALVE GP-PUMP CONTROL	772
VALVE GP-REGENERATION	773
VALVE GP-RELIEF	774
VALVE GP-SHUTTLE	788
VALVE GP-SOLENOID	793
VALVE GP-SOLENOID & MANIFOLD	803

TABLE OF CONTENTS

Name	Page
VALVE GP-SOLENOID & PRESS REDC	804
VALVE GP-SOLENOID & RELIEF	805
VALVE GP-SWING CUSHION	808
VALVE GP-TRAVEL COUNTERBALANCE	809
IMPLEMENTS	811
BOOM AR	811
BOOM AR-MASS	811
BOOM AR-REACH	812
BOOM GP	813
GUARD GP-CYLINDER	819
GUARD GP-SENSOR	821
LINES GP-GREASE	822
LINKAGE AR-BUCKET	826
LINKAGE AR-FRONT	826
LINKAGE GP-BUCKET	828
STICK AR-HOE	832
STICK GP-HOE	834
WORK TOOLS	845
ADJUSTER GP-BUCKET	845
BUCKET & ADJUSTER GP	846
BUCKET AS-SEVERE SERVICE SPADE	847
COUPLER AR-QUICK	848
LOCK GP-QUICK COUPLER	850
PIN GP-COUPLER	851
YOKE GP-LIFTING	852
OPERATOR STATION	853
ACCESSORY GP-CAB	853
AIR CONDITIONER & MOUNTING GP	856
AIR CONDITIONER AR	858
AIR CONDITIONER GP	859
ARMREST GP	861
BRACKET GP-MIRROR	863
CAB GP	864
COIL GP-EVAPORATOR	869
COMPRESSOR GP-REFRIGERANT	871
CONDENSER & MTG GP-REFRIGERANT	872
CONDENSER GP-REFRIGERANT	873
CONSOLE GP-OPERATOR	875
CONTROL & MTG GP-JOYSTICK	881
CONTROL & MTG GP-PEDAL	884
CONTROL GP-FOOT	885
CONTROL GP-HANDLE	887
CONTROL GP-HEAT & AIR COND	894
CONTROL GP-HYDRAULIC PEDAL	895
CONTROL GP-JOYSTICK	896
CONTROL GP-PEDAL	902
CONTROL GP-PILOT OPERATED HYD	903
COVER GP-CAB	904
DOOR GP-CAB	905
DUCT GP-CAB AIR	908
FAN GP-CONDENSER	909
FLOOR MAT GP	910
GUARD AR-VANDALISM	911
GUARD GP-VANDALISM	911
GUARD GP-WINDOW	913
HATCH GP-ROOF	917
HORN GP-ELECTRIC	919
HOUSING GP-AIR CONDITIONER	920
INSTALLATION AR	921
INSTALLATION AR-RADIO	921
KIT-SEAT SUSPENSION	922
LEVER GP-CAB DOOR	924
LINES GP-AIR CONDITIONER	925
LITERATURE GP	928
MIRROR GP-REAR VIEW	929
MONITOR & MTG GP-OPERATOR	931
MONITOR GP-OPERATOR	932
MOUNTING GP-ANTENNA	934
MOUNTING GP-DISPLAY	938
MOUNTING GP-GUARD	940
MOUNTING GP-PLATFORM	941
OPERATOR AR	943
PARTS AR-CAB	943
PEDAL AR-AUXILIARY	944
PLATFORM GP-OPERATOR	946
RADIO GP	947
SCREEN GP-SUN	948
SEAT & MOUNTING GP	949
SEAT BELT GP	951
SEAT GP	952
SEAT GP-SUSPENSION	954
SUPPORT GP-SEAT	956
SUSPENSION GP-SEAT	957
WASHER GP-WINDOW	959
WINDOW GP-CAB	962
WINDOW GP-DOOR	968
WIPER GP-WINDOW	970
SERVICE EQUIPMENT AND SUPPLIES	973
FILM GP	973
PLATE & FILM GP	985
PART NUMBER INDEX	B1

GENERAL INFORMATION

1. MACHINE IDENTIFICATION

Caterpillar machines are identified by Product Identification Numbers (PIN). Some components included in a machine may be identified by Serial Numbers (S/N). Typical components that will be serialized include engines, transmissions, bulldozers, and rippers. The machine and engine are further identified by arrangement numbers and in some cases modification numbers. These numbers are shown on the product identification plate(s) and on the master plate in the operator's compartment.

Caterpillar dealers need all of these numbers to determine accurate parts identification.

SIS *New Feature*

Effective First Quarter 2001 the Caterpillar Product Identification Number (PIN) changed from 8 to 17 characters. In an effort to provide uniform equipment identification, Caterpillar and other construction equipment manufacturers are moving to comply with the latest version of the product identification numbering standard. Non-road machine PINs are defined by ISO 10261. The new PIN format will apply to all Caterpillar machines and generator sets. The PIN plates and frame marking will display the 17 character PIN. The new format will look like the following:

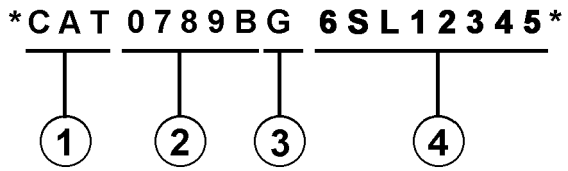

Where:

1. Caterpillar's World Manufacturing Code (characters 1-3)

2. Machine Descriptor (characters 4-8)

3. Check Character (character 9)

4. Machine Indicator Section (MIS) or Product Sequence Number (characters 10-17). These were previously referred to as the Serial Number.

Machines and generator sets produced before First Quarter 2001 will maintain their 8 character PIN format.

Components such as engines, transmissions, axles, etc. and work tools will continue to use an 8 character Serial Number (S/N).

2. ORDERING PARTS

WARNING

When replacement parts are required for this product Caterpillar recommends using Caterpillar replacement parts or parts with equivalent specifications including, but not limited to, physical dimensions, type, strength and material.

Failure to heed this warning can lead to premature failures, product damage, personal injury or death.

Quality Caterpillar replacement parts are available from Caterpillar dealers throughout the world. Their parts inventories are up to date and include all parts normally required to protect your investment in Caterpillar machines. Dealers may offer repair kits or remanufactured parts to allow selection of the most effective repair alternative for a particular situation. When ordering parts, your order should specify the quantity, part number, part name, and the serial number/product identification number of the machine for which the parts are needed.

3. PARTS MANUAL ORGANIZATION

Product information in this manual is presented as "information elements" that represent all of the components for the specific model. Engine Arrangement and Seat Group are examples of information elements. The information elements are organized alphabetically by part name and secondarily by part number within each major section of the manual.

4. TABLE OF CONTENTS

A table of contents (TOC) is found at the beginning of the manual. The TOC lists each section of the manual with a complete list of all information elements organized as they appear in the manual. Page numbers are provided for quick reference to detailed parts identification illustrations and serviceable consist lists.

5. MAINTENANCE PARTS INDEX

The Maintenance Parts Index, located near the beginning of the manual, references most frequently used maintenance part numbers, providing description, quantity, usage and page number. This information is organized alphabetically by part description.

6. INDEX

The index located near the front of the manual is an alphabetical listing of all information elements included in the manual. Page numbers are provided for quick reference to detailed parts identification illustrations and serviceable consist lists.

7. PART NUMBER INDEX

A numerical index listing all part numbers and the corresponding page number(s) appears at the back of the manual.

8. CAPTIONS

Captions located at the beginning of each information element identify the part number and part name along with additional descriptive information. PIN and S/N information found in each caption should be used to select correct information for a specific machine. Field replacement options, identification of optional attachment components, and where used ("part of") information is also provided.

The first line of a caption is shown in larger type font to indicate the beginning of an information element. Captions for additional pages that may be required to illustrate an information element will be shown in standard type font and will include the term *(contd.)* .

9. NON-SERVICED PARTS

In some instances it is necessary to display non-serviced parts that are a link to a lower level serviceable consist lists. These non-serviced part numbers are shown in *italic* type indicating that they are not available.

10. PARTS LIST REFERENCE NUMBERS

Numbers shown in the Ref No column correspond to numbers used in the associated graphic(s). An alphabetic suffix may be added to a reference number to identify lower level consist items. Numbers shown in the Graphic Ref column refer to the graphic number identifier displayed in the lower left corner of each illustration. The Graphic Ref number may be used in combination with the item Ref No to determine the correct part number. There may be intentional omission of a Ref No in a consist list as information is updated to reflect the latest serviceable part numbers.

11. INDENTED PART NAMES

When a part name is indented in a parts list, it is part of (included in) the group or assembly under which it is indented.

12. ILLUSTRATION REFERENCE LETTERS

When necessary, illustrations contain reference letters (A, B, C etc.) that are intended to track lines and harnesses from one point to another. They are also used to show where to reconnect illustrations that have been separated.

13. ABBREVIATIONS AND SYMBOLS

O.D. – Outside Diameter
I.D. – Inside Diameter
A – Not Part Of This Group
B – Use As Required
C – Change From Previous Type
D – Order By The Meter
E – Order By The Centimeter
F – Not Shown
G – Order By The Inch
I – Refer To Hydraulic Information System
M – Metric Part
R – Remfg Part May Be Available
Y – Separate Illustration
Z – Not Serviced Separately

SIS *New Feature*

14. DESCRIPTION OF TYPE CHANGES

Type - A type is defined as any configuration change that requires an additional Information Element for an Arrangement, Group, or Assembly. If serial number breaks for types are not available, a type # (Type 1, Type 2, etc.) will be displayed in the caption. These "type" changes are identified with a "C" note (change from previous type) in the Parts List. Only the "types" that apply to this Parts Manual will be included. Additional types may exist causing "C" notes to appear on an Information Element when no other types are shown.

15.<END>

This symbol indicates the end of an information element.

NOTE:

Continuing improvement and advancement of product design may cause changes to your machine which may not be included in this publication. Whenever a question arises regarding your Caterpillar product or this publication, please consult your Caterpillar dealer for the latest available information.

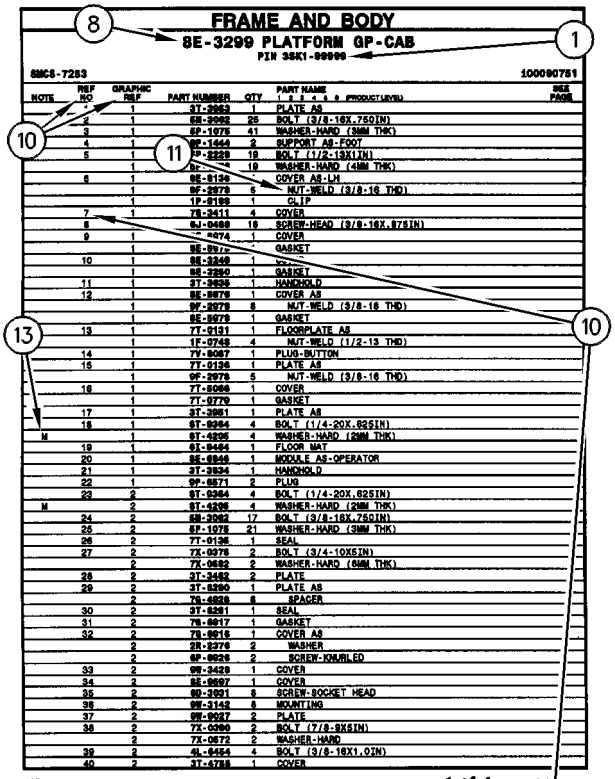

FRAME AND BODY

8E-3299 PLATFORM GP-CAB

PIN 3SK1-99999

SMCS-7253 100090751

NOTE	REF NO	GRAPHIC REF	PART NUMBER	QTY	PART NAME (1 2 3 4 5 6 PRODUCT LEVEL)	SEE PAGE
	*	1	3T-3863	1	PLATE AS	
	2	1	6E-2062	25	BOLT (3/8-16X.750IN)	
	3	1	6F-1076	41	WASHER-HARD (3MM THK)	
	4	1	9F-1444	2	SUPPORT AS-FOOT	
	5	1	7P-2229	18	BOLT (1/2-13X1IN)	
		1	6F-	18	WASHER-HARD (4MM THK)	
	6	1	6E-6136		COVER AS-LH	
		1	9F-2978	6	NUT-WELD (3/8-16 THD)	
		1	1P-0188	1	CLIP	
	7	1	7S-3411	4	COVER	
	8	1	9J-0488	18	SCREW-HEAD (3/8-16X.875IN)	
	9	1	-4474	1	COVER	
		1	6E-897		GASKET	
	10	1	6E-3249	1		
		1	6E-3250	1	GASKET	
	11	1	3T-3638	1	HANDHOLD	
	12	1	6E-9878	1	COVER AS	
		1	9F-2978	8	NUT-WELD (3/8-16 THD)	
		1	6E-6878	1	GASKET	
	13	1	7T-0131	1	FLOORPLATE AS	
		1	1F-0748	4	NUT-WELD (1/2-13 THD)	
	14	1	7V-6067	1	PLUG-BUTTON	
	15	1	7T-0136	1	PLATE AS	
		1	9F-2978	5	NUT-WELD (3/8-16 THD)	
	16	1	7T-6066	1	COVER	
		1	7T-9779	1	GASKET	
	17	1	3T-3861	1	PLATE AS	
	18	1	6T-6264	4	BOLT (1/4-20X.625IN)	
M		1	6T-4205	4	WASHER-HARD (2MM THK)	
	19	1	6L-6494	1	FLOOR MAT	
	20	1	8E-6846	1	MODULE AS-OPERATOR	
	21	1	3T-3834	1	HANDHOLD	
	22	1	9F-6671	2	PLUG	
	23	2	6T-6264	4	BOLT (1/4-20X.625IN)	
M		2	6T-4205	4	WASHER-HARD (2MM THK)	
	24	2	6E-2062	17	BOLT (3/8-16X.750IN)	
	26	2	6F-1076	21	WASHER-HARD (3MM THK)	
	26	2	7T-0135	1	SEAL	
	27	2	7X-0075	2	BOLT (3/4-10X5IN)	
		2	7X-0682	2	WASHER-HARD (6MM THK)	
	28	2	3T-3462	2	PLATE	
	29	2	3T-6290	1	PLATE AS	
		2	7S-6828	8	SPACER	
	30	2	3T-6281	1	SEAL	
	31	2	7S-6817	1	GASKET	
	32	2	7S-6816	1	COVER AS	
		2	2R-2276	2	WASHER	
		2	6F-6626	2	SCREW-KNURLED	
	33	2	9W-3429	1	COVER	
	34	2	6E-6697	1	COVER	
	35	2	6D-3931	8	SCREW-SOCKET HEAD	
	36	2	9W-3142	8	MOUNTING	
	37	2	9W-6027	2	PLATE	
	38	2	7X-0090	2	BOLT (7/8-9X5IN)	
		2	7X-0672	2	WASHER-HARD	
	39	2	4L-6454	4	BOLT (3/8-16X1.0IN)	
	40	2	3T-4788	1	COVER	

12 FRAME AND BODY 1 of 4 SELP4570-01

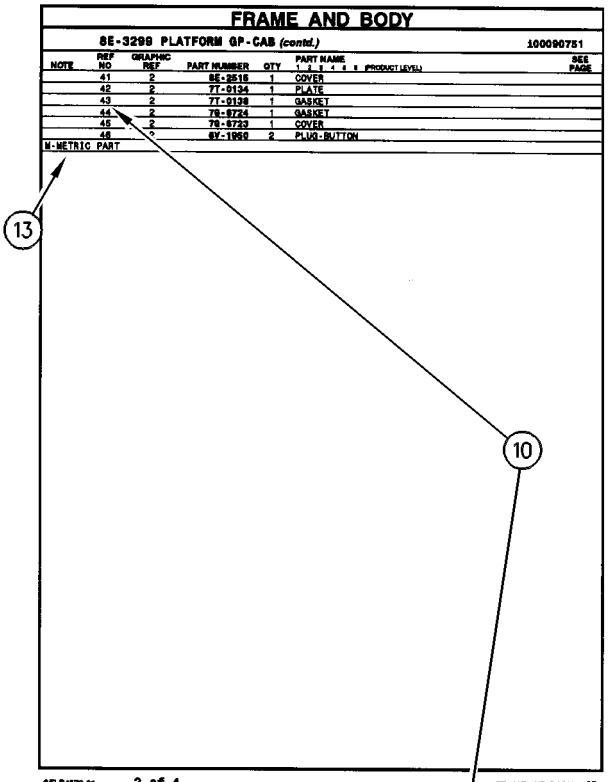

FRAME AND BODY

8E-3299 PLATFORM GP-CAB (contd.) 100090751

NOTE	REF NO	GRAPHIC REF	PART NUMBER	QTY	PART NAME (1 2 3 4 5 6 PRODUCT LEVEL)	SEE PAGE
	41	2	6E-2516	1	COVER	
	42	2	7T-0134	1	PLATE	
	43	2	7T-0138	1	GASKET	
	44	2	7S-9724	1	GASKET	
	45	2	7S-6723	1	COVER	
	46	2	6V-1950	2	PLUG-BUTTON	

M-METRIC PART

SELP4570-01 2 of 4 FRAME AND BODY 13

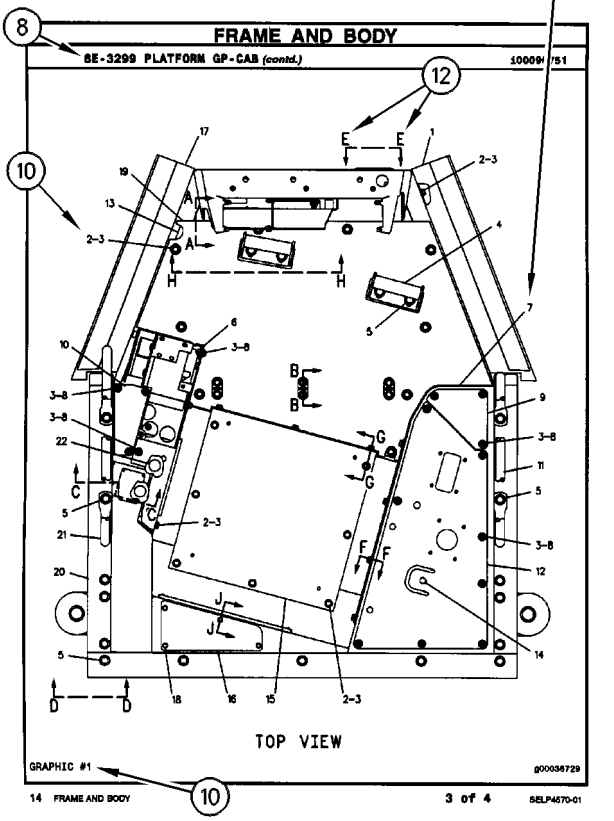

FRAME AND BODY

8E-3299 PLATFORM GP-CAB (contd.) 100090751

TOP VIEW

GRAPHIC #1 g00036729

14 FRAME AND BODY 3 of 4 SELP4570-01

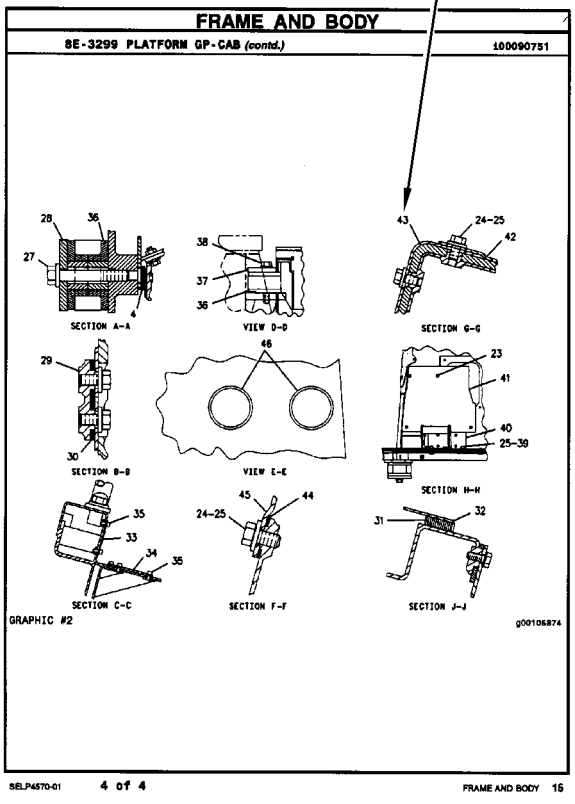

FRAME AND BODY

8E-3299 PLATFORM GP-CAB (contd.) 100090751

SECTION A-A

VIEW D-D

SECTION G-G

SECTION B-B

VIEW E-E

SECTION H-H

SECTION C-C

SECTION F-F

SECTION J-J

GRAPHIC #2 g00105874

SELP4570-01 4 of 4 FRAME AND BODY 16

REPAIR ALTERNATIVES

REMANUFACTURED COMPONENTS

As an option when making repairs consider Caterpillar Remanufactured Components. Components that are available through the Caterpillar Remanufactured Program are identified three ways in the parts book:

- with the letter R in the note field of the parts list
- with an R* at the beginning of the first line of the caption
- with an *R at the end of the first line of the caption

Typical components included in the Remanufacturing Program include:

ALTERNATORS
CONNECTING RODS
CRANKSHAFTS - UNDERSIZE
CRANKSHAFTS - UPGRADE TO NEW
CYLINDER HEADS
ELECTRONIC CONTROL MODULES (ECM)
ELECTRONIC SENSORS
FUEL INJECTORS
FUEL NOZZLES
FUEL PUMPS
GOVERNORS
OIL PUMPS
PISTONS
SHORT BLOCKS
STARTERS
TURBOCHARGERS - COMPLETE
TURBOCHARGER CARTRIDGES
WATER PUMPS

Caterpillar Remanufactured engines for many engine arrangements are also available.

SUPPLEMENTAL COOLANT ADDITIVES

CUSTOMER BENEFITS:

Protects against cavitation, foam, erosion, corrosion, and scale buildup in cooling systems.

- Provides measured coolant conditioner.

DESCRIPTION:

Additives deplete from the coolant with normal operation. For this reason, Supplemental Coolant Additives (SCA) must be added to all heavy duty coolants at regular intervals. In addition, when not using a fully formulated, pre-charged antifreeze, like Caterpillar's DEAC, an initial charge of SCA must be added to the cooling system. The amount of SCA added to the system is dependent on the capacity of the system.

The SCA for initial fill is provided as a liquid. SCA's for maintenance intervals are available in liquid form and as a spin-on element. (No Spin-on available for 3600 Family of Engines)

NOTE:

The amount of SCA added at initial fill is not the same as the amount added at maintenance intervals.

The coolant additive elements can be used with any ethylene or propylene glycol type antifreeze which meets ASTM D4985 or ASTM D5345 Specifications.

NOTE:

For use with standard heavy duty coolant only, not for use with Extended Life Coolant.

PARTS NEEDED:

Cooling System Capacity		Liquid SCA at Initial Fill	Liquid SCA at Maintenance*	Spin-on SCA Maintenance Element*
Liters	Gallons			
22-30	(6-8)	3P-2044 (1)	6V-3542 (1)	111-2370 (1)
30-38	(8-10)	3P-2044 (1) 6V-3542 (1)	111-2372 (1)	111-2369 (1)
38-49	(10-13)	3P-2044 (1) 8T-1589 (1)	111-2372 (1)	111-2369 (1)
49-64	(13-17)	3P-2044 (2)	8T-1589 (1)	9N-3368 (1)
64-83	(17-22)	3P-2044 (2) 8T-1589 (1)	111-2372 (1) 6V-3542 (1)	111-2371 (1)
83-114	(22-30)	3P-2044 (3) 8T-1589 (1)	3P-2044 (1)	9N-3718 (1)
114-163	(30-43)	3P-2044 (5)	3P-2044 (1) 6V-3542 (1)	111-2371 (2)
163-242	(43-64)	3P-2044 (8)	3P-2044 (2)	9N-3718 (2)

** Normal maintenance period is 250 hrs. See your Operation and Maintenance Manual for complete coolant maintenance instructions.*

( ) Indicates quantity required.

MAINTENANCE PARTS

DESCRIPTION	PART NUMBER	QTY	WHERE USED	PAGE
AIR INLET AND EXHAUST SYSTEM				
FILTER ELEMENT AS-AIR (PRIMARY)	106-3969	1	AIR CLEANER GP	117
	142-1340	1	AIR CLEANER GP	116
FILTER ELEMENT AS-AIR (PRIMARY) (HIGH EFFICIENCY)	220-0454	1	AIR CLEANER GP	116
FILTER ELEMENT AS-AIR (PRIMARY) (ULTRA HIGH EFFICIENCY)	132-7168	1	AIR CLEANER GP	117
FILTER ELEMENT AS-AIR (SECONDARY)	106-3973	1	AIR CLEANER GP	117
	142-1403	1	AIR CLEANER GP	116
BASIC ENGINE				
BELT-SERPENTINE	221-3775	1	BELT GP-SERPENTINE	20
PLUG-DRAIN (ENGINE OIL PAN)	9X-6451	1	PAN GP-OIL	54
SEAL-VALVE COVER	229-5711	1	COVER GP-VALVE MECHANISM	26
COOLING SYSTEM				
CAP AS (COOLANT FILL)	204-0920	1	RADIATOR & HYD OIL COOLER GP	109
CAP AS (COOLANT OVERFLOW)	171-3370	1	RADIATOR & HYD OIL COOLER GP	109
CAP AS-RADIATOR	230-2970	1	RADIATOR & HYD OIL COOLER GP	111
HOSE-RADIATOR (LOWER)	230-2782	1	RADIATOR & HYD OIL COOLER GP	109
HOSE-RADIATOR (UPPER)	230-2781	1	RADIATOR & HYD OIL COOLER GP	109
REGULATOR-TEMPERATURE (92-DEG C) (COOLANT)	248-5513	1	LINES GP-WATER	102
SCREEN AS (HYDRAULIC TANK)	131-9750	1	LINES GP-COOLING	98
ELECTRICAL AND STARTING SYSTEM				
BATTERY (12-VOLT, MAINTENANCE FREE, WET)	3T-5760	2	BATTERY & WIRING GP	161
		2	BATTERY & WIRING GP	163
CAP AS-FILLER (BATTERY)	123-1373	6	BATTERY & WIRING GP	161
		6	BATTERY & WIRING GP	163
CIRCUIT BREAKER AS (105-AMPERE) (ALTERNATOR)	171-2212	1	PANEL GP-CIRCUIT BREAKER	205
CIRCUIT BREAKER AS (80-AMPERE) (MAIN)	171-2210	1	PANEL GP-CIRCUIT BREAKER	205
FILTER (ETHER START)	358-4889	1	VALVE GP-ETHER STARTING	255
FUSE (10-AMPERE)	113-8490	25	WIRING GP-CAB	262
FUSE (15-AMPERE)	113-8491	4	WIRING GP-CAB	262
		1	WIRING GP-CAB	267
FUSE (25-AMPERE)	113-8493	2	WIRING GP-CAB	262
FUSE (30-AMPERE)	124-3548	2	WIRING GP-CAB	262
FUSE (5-AMPERE)	141-2759	7	WIRING GP-CAB	262
KEY (BATTERY DISCONNECT)	8H-5306	1	SWITCH GP-DISCONNECT	246
LAMP (24-VOLT, HID)	290-8160	1	LAMP GP-FLOOD	192
LAMP AS (24-VOLT, 3-WATT)	170-9324	1	PANEL GP-SWITCH	207
LAMP-HALOGEN (24-VOLT, 70-WATT)	9X-3463	1	LAMP GP-FLOOD	190
		1	LAMP GP-FLOOD	191
		1	LIGHTING GP-FLOOD	194

MAINTENANCE PARTS

DESCRIPTION	PART NUMBER	QTY	WHERE USED	PAGE
FUEL SYSTEM				
CAP AS-FILLER (FUEL TANK)	7X-7700	1	TANK GP-FUEL	150
		1	TANK GP-FUEL	152
FILTER AS-WATER SEP & FUEL (PRIMARY)	326-1643	1	FILTER GP-WATER SEP & FUEL	134
FILTER-FUEL (ADVANCED EFFICIENCY)	1R-0755	1	LINES GP-FUEL	139
STRAINER AS-FUEL (FLOAT GAUGE)	303-9933	1	TANK GP-FUEL	150
		1	TANK GP-FUEL	152
HYDRAULIC SYSTEM				
BREATHER (HYDRAULIC TANK)	227-0590	1	TANK & FILTER GP-HYDRAULIC	707
BREATHER (MAIN HYDRAULIC PUMP)	4H-6112	1	PUMP & MTG GP-MAIN HYDRAULIC	693
BREATHER (SWING DRIVE)	4H-6112	1	DRIVE GP-SWING	485
		1	DRIVE GP-SWING	489
FILTER ELEMENT AS-OIL (HYDRAULIC RETURN)	179-9806	1	FILTER GP-OIL	496
FILTER-OIL (ADVANCED EFFICIENCY) (HYDRAULIC)	093-7521	1	FILTER GP-OIL	500
	5I-8670	1	FILTER & VALVE GP-PILOT	495
PLUG-OIL DRAIN (HYDRAULIC TANK)	6I-0723	1	TANK & FILTER GP-HYDRAULIC	707
SCREEN	119-5398	1	VALVE GP-RELIEF	786
SCREEN AS (HYDRAULIC TANK)	131-9750	1	LINES GP-PUMP	643
	209-6001	1	SCREEN GP-HYDRAULIC	705
LUBRICATION SYSTEM				
BREATHER AS (CRANKCASE)	9Y-4357	1	BREATHER GP	75
CAP AS-ENGINE OIL FILLER	163-9361	1	FILLER GP-ENGINE OIL	77
FILTER-ENGINE OIL (ADVANCED EFFICIENCY)	1R-1808	1	FILTER GP-ENGINE OIL	79
OPERATOR STATION				
BLADE AS-WIPER (275-MM) (FRONT, LOWER)	4I-5021	1	WIPER GP-WINDOW	972
BLADE AS-WIPER (600-MM) (FRONT, UPPER)	161-3670	1	WIPER GP-WINDOW	970
DRYER-REFRIGERANT (RECEIVER)	176-1902	1	LINES GP-AIR CONDITIONER	925
FILTER ELEMENT AS-CAB AIR	305-0329	1	DUCT GP-CAB AIR	908
FILTER ELEMENT-CAB AIR	245-7823	1	AIR CONDITIONER GP	859
FILTER GP-AIR (AIR CONDITIONER)	293-1137	1	AIR CONDITIONER GP	859
LAMP (24-VOLT, 10-WATT) (DOME LIGHT)	201-4417	1	ACCESSORY GP-CAB	853
LAMP-HALOGEN (24-VOLT, 70-WATT)	9X-3463	1	GUARD GP-WINDOW	913
		1	GUARD GP-WINDOW	915
SEAT BELT GP	327-6540	1	SEAT BELT GP	951

INDEX

Name	Page

A

ACCESSORY GP-CAB 853
ACCUMULATOR GP–UNCHARGED 440
ACCUMULATOR GP-HYDRAULIC (CHARGED) 451
ACCUMULATOR GP-HYDRAULIC–CHARGED 441, 442, 443, 444, 445, 446, 448, 449, 450, 451
ACCUMULATOR GP-HYDRAULIC–UNCHARGED 447
ADJUSTER GP-BUCKET–G/U/V/TB-FAMILY 845
ADJUSTMENT GP-HYDRAULIC TRACK 409
AIR CLEANER AR 114
AIR CLEANER GP 115, 116, 117
AIR CONDITIONER & MOUNTING GP 856
AIR CONDITIONER AR 858
AIR CONDITIONER GP 859
ALARM GP 155
ALARM GP-TRAVEL 156
ALTERNATOR GP-CHARGING 157, 159
ARMREST GP–LH 862
ARMREST GP–RH 861
ATOMIZER GP-ETHER 239

B

BASE GP-OIL FILTER–ENGINE 72, 73
BASE GP-VALVE COVER 19
BASE GP-VALVE COVER–ENGINE 18
BATTERY & WIRING GP 160, 163
BATTERY & WIRING GP–COLD WEATHER 161
BATTERY (12-VOLT, MAINTENANCE FREE, WET) 161, 163
BELT GP-SERPENTINE 20
BELT TENSIONER GP 21
BELT-SERPENTINE 20
BLADE AS-WIPER (275-MM) (FRONT, LOWER) 972
BLADE AS-WIPER (600-MM) (FRONT, UPPER) 970
BLOCK AS-JUNCTION (BATTERY) 172
BLOCK GP-HYDRAULIC 452
BLOCK GP-JUNCTION–BATTERY 172
BOOM AR 811
BOOM AR-MASS–HEAVY-DUTY 811
BOOM AR-REACH–HEAVY-DUTY 812
BOOM GP–ACCUGRADE READY 817
BOOM GP–MASS 815
BOOM GP–REACH 813
BOX & MTG GP-STORAGE 326
BOX GP-STORAGE 327
BRACKET GP-MIRROR 863
BREATHER (HYDRAULIC TANK) 707
BREATHER (MAIN HYDRAULIC PUMP) 693
BREATHER (SWING DRIVE) 485, 489
BREATHER AS (CRANKCASE) 75
BREATHER GP–CRANKCASE 75
BUCKET & ADJUSTER GP–SEVERE SERV SPADE, TB-FAMILY 846
BUCKET AS-SEVERE SERVICE SPADE–TB-FAMILY 847

C

CAB GP 866, 868
CAB GP–INTERIOR 864
CAMERA & MOUNTING GP–WORK AREA VISUAL SYSTEM, REAR 173
CAMERA AR 175
CAMERA AR–WORK AREA VISUAL SYSTEM, BOOM 175
CAMERA AR–WORK AREA VISUAL SYSTEM, REAR 175
CAMERA GP–WORK AREA VISUAL SYSTEM, REAR 176
CAMSHAFT GP 22
CAP AS (COOLANT FILL) 109
CAP AS (COOLANT OVERFLOW) 109
CAP AS-ENGINE OIL FILLER 77
CAP AS-FILLER (BATTERY) 161, 163
CAP AS-FILLER (FUEL TANK) 150, 152
CAP AS-RADIATOR 111
CHAIN GP-COUNTERWEIGHT 329
CHASSIS AR 1, 2
CIRCUIT BREAKER AS (105-AMPERE) (ALTERNATOR) 205
CIRCUIT BREAKER AS (80-AMPERE) (MAIN) . . . 205
COIL GP-EVAPORATOR 869
COMPRESSOR GP-REFRIGERANT 871
CONDENSER & MTG GP-REFRIGERANT 872

INDEX

Name	Page
CONDENSER GP-REFRIGERANT	873
CONNECTION GP-ELECTRICAL	177
CONSOLE GP-OPERATOR	875
CONSOLE GP-OPERATOR–LH	879
CONSOLE GP-OPERATOR–RH	877
CONTROL & MTG GP-COMMUNICATION–PRODUCT LINK 121SR	179
CONTROL & MTG GP-COMMUNICATION–PRODUCT LINK 300	178
CONTROL & MTG GP-ENGINE ELEK	180
CONTROL & MTG GP-JOYSTICK	883
CONTROL & MTG GP-JOYSTICK–3-BUTTON, TRIGGER SWITCH	882
CONTROL & MTG GP-JOYSTICK–WITH SLIDE CONTROL	881
CONTROL & MTG GP-MACHINE	181
CONTROL & MTG GP-PEDAL–LH	884
CONTROL AR-AUXILIARY–COOLING CIRCUIT, HYDRAULIC OIL	455
CONTROL AR-AUXILIARY–JOYSTICK WITH SLIDE CONTROL	453
CONTROL AR-AUXILIARY–JOYSTICK, 3-BUTTON, TRIGGER SWITCH	453
CONTROL AR-AUXILIARY–LEFT FOOT SWITCH	453
CONTROL AR-AUXILIARY–MEDIUM PRESSURE AUXILIARY	455
CONTROL AR-AUXILIARY–SYSTEM 14, COMBINED FUNCTION	454 456
CONTROL AR-AUXILIARY–SYSTEM 16, 1-WAY, 2-PUMP	454
CONTROL AR-AUXILIARY–SYSTEM 17, COMBINED FN, MED PR	455
CONTROL AR-AUXILIARY–SYSTEM 3, 1-WAY, 2-PUMP	454 456
CONTROL AR-COUPLER	457
CONTROL AR-COUPLER–UNIVERSAL	457
CONTROL AR-VARIABLE-SPEED FAN–REVERSE	91
CONTROL GP-FOOT–LEFT ON/OFF SWITCH	885
CONTROL GP-HANDLE (LH)	891
CONTROL GP-HANDLE (RH) (RH)	890
CONTROL GP-HANDLE–JOYSTICK, LH	887 891 893
CONTROL GP-HANDLE–JOYSTICK, RH	889 890 892
CONTROL GP-HEAT & AIR COND	894
CONTROL GP-HYDRAULIC PEDAL	895
CONTROL GP-JOYSTICK–LH	897 899 901
CONTROL GP-JOYSTICK–RH	896 898 900
CONTROL GP-PEDAL–ELECTRIC	902
CONTROL GP-PILOT OPERATED HYD–TRAVEL	903
CONTROL GP-UNPROGRAMMED	180 181
CONVERTER-POWER (24-VOLT TO 12-VOLT)	315
COOLER GP-ENGINE OIL	92
COOLER GP-FUEL	133
CORE AS-FUEL COOLER	133
CORE AS-HEATER	859
CORE AS-HYDRAULIC OIL COOLER	111
CORE AS-OIL COOLER (ENGINE)	92
CORE AS-RADIATOR	111
COUNTERWEIGHT AR	331
COUNTERWEIGHT GP	332 333 334 335
COUPLER AR-QUICK	848
COUPLER AR-QUICK–DEDICATED WEDGE LOCK	849
COUPLING GP-FLEXIBLE	458
COUPLING GP-PUMP	459
COVER AS-SOUND SUPPRESSION	336
COVER GP-ACCESS–AIR CLEANER, BATTERY	338
COVER GP-CAB–REAR	904
COVER GP-FLYWHEEL HOUSING	23
COVER GP-FRONT HOUSING	24 25
COVER GP-HOOD	340
COVER GP-HOOD–PRECLEANER	339
COVER GP-OIL FILTER BASE–ENGINE	76
COVER GP-VALVE MECHANISM	26
CRANKSHAFT GP	27
CYLINDER & LINES GP-BOOM–LH	460
CYLINDER & LINES GP-BOOM–RH	460
CYLINDER & LINES GP-BUCKET	460 461
CYLINDER & LINES GP-STICK	461
CYLINDER & SEAL GP-BOOM	462
CYLINDER & SEAL GP-BUCKET	463 464 465
CYLINDER & SEAL GP-CTWT	466
CYLINDER & SEAL GP-STICK	467
CYLINDER BLOCK AS	29 30 31
CYLINDER BLOCK GP	32
CYLINDER GP-BOOM	468

INDEX

Name	Page
CYLINDER GP-BUCKET	470, 472, 474
CYLINDER GP-COUNTERWEIGHT	476
CYLINDER GP-COUPLER	850
CYLINDER GP-COUPLER–LOCK	477
CYLINDER GP-STICK	478
CYLINDER HEAD AS	34
CYLINDER HEAD GP	35, 36

D

DAMPER GP	37
DISTRIBUTION AR	2, 3, 4
DOOR GP-ACCESS–AIR CLEANER, BATTERY	342
DOOR GP-ACCESS–PUMP COMPARTMENT	343
DOOR GP-CAB	905, 907
DRAIN GP-MUFFLER	17, 118
DRIVE GP-AUXILIARY PUMP	480
DRIVE GP-AUXILIARY PUMP–ACCESSORY DRIVE	481, 482
DRIVE GP-FAN	38
DRIVE GP-FINAL–WITH MOTOR, SPROCKET	323
DRIVE GP-FINAL–WITHOUT MOTOR	319
DRIVE GP-SWING–WITH MOTOR, LH	488
DRIVE GP-SWING–WITH MOTOR, RH	484
DRIVE GP-SWING–WITHOUT MOTOR, LH	489
DRIVE GP-SWING–WITHOUT MOTOR, RH	485
DRYER-REFRIGERANT (RECEIVER)	925
DUCT GP-CAB AIR	908

E

ELECTRONICS GP-COMMUNICATION–PRODUCT LINK 121SR	182
ELECTRONICS GP-COMMUNICATION–PRODUCT LINK 300	182
ELECTRONICS GP-MACHINE–ECM	182
ENGINE AR	11
ENGINE AR-COMPLETE	12
ENGINE AR-CORE	14, 15, 16
EXTENSION GP-EXHAUST	119

F

FAN GP-CONDENSER	909
FAN GP-SUCTION	94
FASTENER GP-CYLINDER HEAD	39
FASTENER GP-DAMPER & PULLEY	40
FASTENER GP-FLYWHEEL	41
FASTENER GP-SWING & FINAL DR	492
FASTENER GP-WIRING HARNESS–FOOT SWITCH	184
FASTENER GP-WIRING HARNESS–JOYSTICK	185
FASTENER GP-WIRING HARNESS–PEDAL CONTROL	183
FILLER GP-ENGINE OIL	77
FILM GP	984
FILM GP–ALT PATTERN CONTROL, WARNING	983
FILM GP–COUNTERWEIGHT REMOVAL	973
FILM GP–HAMMER CONTROL, FOOT SWITCH	978
FILM GP–OPERATOR CONTROLS, NOTICE	975, 976, 977
FILM GP–QUICK COUPLER	980, 981
FILM GP–REVERSING FAN	979
FILM GP–WORK AREA VISUAL SYSTEM, REAR	982
FILM-IDENTIFICATION (FUEL)	985, 989
FILM-INFORMATION (PRODUCT LINK, READ OMM)	179
FILM-INSTRUCTION (COUPLER OPERATION)	981
FILM-INSTRUCTION (HYDRAULIC OIL RETURN FILTER)	496
FILM-INSTRUCTION (MACHINE SECURITY, CONSOLE)	188, 209
FILM-INSTRUCTION (OPERATOR CONTROLS, READ OMM)	944, 977, 983
FILM-INSTRUCTION (PULL RING, ALTERNATE EXIT)	989
FILM-INSTRUCTION (TOP, AIR CLEANER COVER)	116, 117
FILM-NOTICE (LIFT EYE LOCATION)	848
FILM-WARNING (CRUSH HAZARD, READ OMM, INTL)	981, 983
FILM-WARNING (CRUSH HAZARD, READ OMM, U.S.)	981

INDEX

Name	Page
	983
FILM-WARNING (FRONT GUARD, READ OMM)	915
FILM-WARNING (HIGH PRESSURE CYLINDER)	445 448
FILM-WARNING (PRODUCT LINK RADIO, INTL)	179
FILM-WARNING (PRODUCT LINK RADIO, U.S.)	179
FILM-WARNING (READ OMM)	848
FILM-WARNING (TOP GUARD, READ OMM)	915
FILTER & VALVE GP-PILOT–HYDRAULIC OIL	495
FILTER (ETHER START)	255
FILTER AS-WATER SEP & FUEL (PRIMARY)	134
FILTER ELEMENT AS-AIR (PRIMARY)	116 117
FILTER ELEMENT AS-AIR (PRIMARY) (HIGH EFFICIENCY)	116
FILTER ELEMENT AS-AIR (PRIMARY) (ULTRA HIGH EFFICIENCY)	117
FILTER ELEMENT AS-AIR (SECONDARY)	116 117
FILTER ELEMENT AS-CAB AIR	908
FILTER ELEMENT AS-OIL (HYDRAULIC RETURN)	496
FILTER ELEMENT-CAB AIR	859
FILTER GP-AIR (AIR CONDITIONER)	859
FILTER GP-ENGINE OIL	79
FILTER GP-OIL–HYDRAULIC RETURN	496 498
FILTER GP-OIL–HYDRAULIC, CASE DRAIN	500
FILTER GP-WATER SEP & FUEL	134
FILTER-ENGINE OIL (ADVANCED EFFICIENCY)	79
FILTER-FUEL (ADVANCED EFFICIENCY)	139
FILTER-OIL (ADVANCED EFFICIENCY) (HYDRAULIC)	495 500
FINAL DRIVE GP	319 323
FINAL DRIVE GP–WITH MOTOR	318
FITTING GP-FUEL LINES	135
FLOOR MAT	946
FLOOR MAT GP	910
FLYWHEEL GP	42
FRAME AR-UNDERCARRIAGE	411
FRAME AS-UNDERCARRIAGE	412
FRAME GP-UNDERCARRIAGE–ADJ GAUGE, LONG UNDERCARRIAGE	413
FRAME GP-UPPER	344 346
FRAME GP-UPPER–ACCUGRADE READY	347 350
FUMES DISPOSAL GP	81
FUSE (10-AMPERE)	262
FUSE (15-AMPERE)	262 267
FUSE (25-AMPERE)	262
FUSE (30-AMPERE)	262
FUSE (5-AMPERE)	262

G

GAUGE AS-OIL LEVEL (DIPSTICK) (ENGINE)	82
GAUGE GP-OIL LEVEL (DIPSTICK)–ENGINE	82
GAUGE GP-SIGHT–HYDRAULIC OIL LEVEL	501
GAUGE-OIL LEVEL (SWING DRIVE)	485 489
GAUGE-SIGHT (PUMP DRIVE OIL)	693
GEAR & BEARING GP-SWING	353 355
GEAR GP-FRONT	43
GENERAL AR	4 5
GUARD AR-BOTTOM–HEAVY-DUTY	356
GUARD AR-VANDALISM	911
GUARD GP-BOTTOM	357
GUARD GP-BOTTOM–HEAVY DUTY	358
GUARD GP-CYLINDER	819
GUARD GP-SENSOR	821
GUARD GP-SWIVEL	359 360
GUARD GP-TRACK GUIDE–CENTER	415 416
GUARD GP-TRACK GUIDE–FULL LENGTH	417
GUARD GP-TRACK GUIDE–REAR	418
GUARD GP-TRAVEL MOTOR	419
GUARD GP-UNDERCARRIAGE	420
GUARD GP-VANDALISM	912
GUARD GP-VANDALISM–CAB	911
GUARD GP-WINDOW	913 915

H

HANDRAIL GP	361 362
HARNESS AS-CAB	262 267 290
HARNESS AS-CHASSIS	164 271 275
HARNESS AS-CONSOLE	209 285
HARNESS AS-CONSOLE (LH)	283
HARNESS AS-CONSOLE (RH)	207
HARNESS AS-CONTROL (ACCUGRADE, BOOM)	302

INDEX

Name	Page
HARNESS AS-CONTROL (DISPLAY, GPS RADIO)	289
HARNESS AS-CONTROL (GRADE CONTROL)	304
HARNESS AS-CONTROL (PRODUCT LINK)	281
HARNESS AS-CONTROL (PRODUCT LINK, ANTENNA)	279
HARNESS AS-ENGINE	164, 297
HARNESS AS-ENGINE (ELECTRONIC CONTROL MODULE)	295
HARNESS AS-ENGINE (UNIT INJECTOR)	317
HARNESS AS-HEATER & AIR COND	856, 859
HARNESS AS-HEATER & AIR COND (CONTROL PANEL SWITCHES)	856, 894
HARNESS AS-LIGHTING	197
HARNESS AS-LIGHTING (BOOM)	196
HARNESS AS-LIGHTING (CAB FLOODLIGHT)	194
HARNESS AS-OPERATOR CONTROLS	885
HARNESS AS-PLATFORM	311
HARNESS AS-PLATFORM (HORN)	919
HARNESS AS-PUMP	163, 299
HARNESS AS-QUICK COUPLER	260
HARNESS AS-RADIO	315
HARNESS AS-SOLENOID	164, 313
HARNESS AS-SOLENOID (COUNTERWEIGHT REMOVAL SYSTEM)	293
HARNESS AS-SWITCH (SECONDARY SHUTDOWN)	311
HARNESS AS-VALVE	306
HARNESS AS-VALVE (FINE SWING)	301
HARNESS AS-VALVE (ONE PUMP/TWO PUMP)	258, 309
HARNESS AS-VALVE (PUMP CONTROL)	287
HARNESS AS-WIRING	307
HARNESS AS-WIRING (CAB)	260
HARNESS AS-WIRING (CONDENSER FAN MOTOR)	873
HARNESS AS-WIRING (QUICK COUPLER SWITCH)	253
HARNESS AS-WIRING (SERVICE CONNECTOR)	279
HARNESS AS-WIRING (WORK AREA VISUAL SYSTEM, REAR)	308
HATCH GP-ROOF	917, 918
HEAD GP-MOTOR	683
HEAD GP-PUMP	502, 675, 685
HEATER GP-JACKET WATER–REAR	186
HOOD & GUARD GP	365, 368
HOOD & GUARD GP–ACCUGRADE READY	367
HOOD & GUARD GP–PUMP COMPARTMENT	363
HOOD AS-ENGINE	372
HOOD AS-ENGINE–RADIATOR	370, 371
HOOD GP-ENGINE	376
HOOD GP-ENGINE–RADIATOR	375
HOOD GP-ENGINE–REVERSING FAN	374
HOOD GP-ENGINE–RH, ACCUGRADE READY	373
HORN GP-ELECTRIC	919
HOSE-RADIATOR (LOWER)	109
HOSE-RADIATOR (UPPER)	109
HOUSING GP-AIR CONDITIONER–INLET AIR	920
HOUSING GP-FILTER	505
HOUSING GP-FLYWHEEL	44
HOUSING GP-FRONT	46
HYDRAULIC AR	506

I

Name	Page
IDLER GP-FRONT	421, 422, 423, 424
IDLER GP-FRONT–HEAVY-DUTY	427
IDLER GP-FRONT–HEAVY-DUTY, LH	426
IDLER GP-FRONT–HEAVY-DUTY, RH	425
INDICATOR AS-AIR FILTER CHANGE (AIR RESTRICTION)	116, 117
INJECTOR GP-FUEL	136
INSTALLATION AR–ACCUMULATOR	921
INSTALLATION AR-COMMUNICATION–PRODUCT LINK 321SR	187
INSTALLATION AR-ENGINE	17
INSTALLATION AR-RADIO–COMMUNICATION RADIO	921
INSTALLATION GP-SECURITY	188

K

Name	Page
KEY (BATTERY DISCONNECT)	246
KIT-SEAT SUSPENSION–AIR	923
KIT-SEAT SUSPENSION–MECHANICAL	922

L

Name	Page
LAMP (24-VOLT, 10-WATT) (DOME LIGHT)	853
LAMP (24-VOLT, HID)	192
LAMP AS (24-VOLT, 3-WATT)	207

INDEX

Name	Page
LAMP GP-FLOOD	190, 191
LAMP GP-FLOOD (24-VOLT)	913
LAMP GP-FLOOD (24-VOLT) (CANOPY)	915
LAMP GP-FLOOD–24-VOLT, 35-WATT, HID	192
LAMP-HALOGEN (24-VOLT, 70-WATT)	190, 191, 194, 913, 915
LEVER GP-CAB DOOR	924
LIFTER GP-VALVE–MECHANISM	48
LIFTING GP-ENGINE	49
LIGHTING GP-CHASSIS–FRONT, RH	193
LIGHTING GP-FLOOD–BOOM	196, 197
LIGHTING GP-FLOOD–CAB	194
LINES GP-AIR	121
LINES GP-AIR–AIR CLEANER, TURBOCHARGER	122, 123
LINES GP-AIR CONDITIONER	925
LINES GP-AIR–INTAKE	124
LINES GP-AIR–TURBOCHARGER OUTLET	120
LINES GP-AUXILIARY HYDRAULIC–BOOM, HIGH PRESSURE	523
LINES GP-AUXILIARY HYDRAULIC–BOOM, MEDIUM PRESSURE	511
LINES GP-AUXILIARY HYDRAULIC–MASS	521, 522
LINES GP-AUXILIARY HYDRAULIC–MASS BOOM, HIGH PRESSURE	525
LINES GP-AUXILIARY HYDRAULIC–MASS BOOM, MEDIUM PRESSURE	513
LINES GP-AUXILIARY HYDRAULIC–STICK, HIGH PRESSURE	507, 509, 519, 527
LINES GP-AUXILIARY HYDRAULIC–STICK, MEDIUM PRESSURE	515, 517
LINES GP-BOOM	533, 535
LINES GP-BOOM CYLINDER	542
LINES GP-BOOM CYLINDER–LH	537
LINES GP-BOOM CYLINDER–LOWERING CONTROL	539
LINES GP-BOOM CYLINDER–RH	538
LINES GP-BOOM–MASS BOOM, STICK LOAD CONTROL	531
LINES GP-BOOM–REACH BOOM, STICK LOAD CONTROL	529
LINES GP-BUCKET CYLINDER	545, 546, 547
LINES GP-COOLING–HYDRAULIC OIL	98
LINES GP-COUPLER–BOOM	548
LINES GP-COUPLER–MASS BOOM	551
LINES GP-COUPLER–MASS STK, VB-FAMILY	553
LINES GP-COUPLER–STICK, TB-FAMILY	550, 557
LINES GP-COUPLER–STICK, VB FAMILY	554
LINES GP-COUPLER–TB, UB-FAMILY	555
LINES GP-ENGINE OIL DRAIN	84
LINES GP-FRONT–IMPLEMENT, TRAVEL	559
LINES GP-FRONT–MEDIUM PRESSURE	558
LINES GP-FRONT–SYSTEM 14, COMBINED FUNCTION	566
LINES GP-FRONT–SYSTEM 16, 1-WAY, 2-PUMP	570
LINES GP-FRONT–SYSTEM 17, COMBINED FN, MED PR	574
LINES GP-FRONT–SYSTEM 3, 1-WAY, 2-PUMP	562
LINES GP-FUEL	137, 139
LINES GP-GREASE	824
LINES GP-GREASE–BOOM, BOOM CYLS, STICK CYL	822, 823
LINES GP-HYDRAULIC–COOLER, PUMP, TANK, VALVE	581
LINES GP-HYDRAULIC–HYDRAULIC TANK	578
LINES GP-HYDRAULIC OIL COOLER	585
LINES GP-MOTOR–REVERSE FAN	587
LINES GP-PILOT	599, 624
LINES GP-PILOT–BOOM LOWERING CONTROL	623
LINES GP-PILOT–CONTROL PATTERN CHANGE, 2-WAY	637
LINES GP-PILOT–CONTROL VALVE	608, 612
LINES GP-PILOT–HEAVY LIFT	589
LINES GP-PILOT–JOYSTICK	596
LINES GP-PILOT–MEDIUM PRESSURE AUXILIARY	630
LINES GP-PILOT–PRIMARY	628
LINES GP-PILOT–PUMP CONTROL, SHUTTLE VALVE	592
LINES GP-PILOT–PUMP, MOTOR	620
LINES GP-PILOT–QUICK COUPLER	634
LINES GP-PILOT–STICK LOWERING CONTROL	632
LINES GP-PILOT–THIRD PEDAL	591
LINES GP-PILOT–TRAVEL, STRAIGHT TRAVEL	594

INDEX

Name	Page
LINES GP-PILOT–UNIVERSAL QUICK COUPLER	604
LINES GP-PUMP–MEDIUM PRESSURE	643
LINES GP-PUMP–SUPPLY, MAIN PUMP	640
LINES GP-REAR ATTACHMENT	647
LINES GP-RETURN–BOOM LOWERING CONTROL	653
LINES GP-STICK	655, 656, 657, 658
LINES GP-STICK CYLINDER	659
LINES GP-STICK CYLINDER–LOAD CONTROL	660
LINES GP-SWING MOTOR–WITH FINE SWING	662
LINES GP-TRAVEL MOTOR–LONG UNDERCARRIAGE	664
LINES GP-TRAVEL MOTOR–VAR GAUGE, LONG UNDERCARRIAGE	666
LINES GP-TURBOCHARGER OIL	85
LINES GP-TURBOCHARGER WATER	100
LINES GP-WATER–INLET ELBOW	104
LINES GP-WATER–SINGLE TEMPERATURE REGULATOR	102
LINK AS-TRACK	428, 429
LINKAGE AR-BUCKET–TB-FAMILY, WITH LIFTING EYE	826
LINKAGE AR-BUCKET–UB-FAMILY	826
LINKAGE AR-FRONT	826, 827
LINKAGE GP-BUCKET–TB-FAMILY, WITH LIFTING EYE	830
LINKAGE GP-BUCKET–VB-FAMILY	828
LITERATURE GP	928
LOCK GP-QUICK COUPLER–HYDRAULIC	850

M

Name	Page
MANIFOLD GP-CONTROL–PILOT OIL SUPPLY	669, 670, 671
MANIFOLD GP-EXHAUST	125
MANIFOLD GP-INLET	126
MIRROR GP-REAR VIEW	929, 930
MODULE GP-INTERFACE (KEY)	188
MONITOR & MTG GP-OPERATOR	931
MONITOR GP-OPERATOR	932, 933
MOTOR & MTG GP-HYDRAULIC FAN–REVERSING	672
MOTOR & MTG GP-SWING	673
MOTOR & MTG GP-TRAVEL	674
MOTOR GP-PISTON–HYDRAULIC FAN	679
MOTOR GP-PISTON–REVERSING HYDRAULIC FAN	681
MOTOR GP-PISTON–TRAVEL	675
MOTOR GP-SWING	682, 683
MOTOR GP-TRAVEL	685
MOUNTING GP-AIR CLEANER	127
MOUNTING GP-ANTENNA–ACCUGRADE	934
MOUNTING GP-ANTENNA–COMMUNICATION RADIO	936
MOUNTING GP-ANTENNA–PRODUCT LINK	937
MOUNTING GP-CAMERA–BOOM	199
MOUNTING GP-CAMERA–CHASSIS	201
MOUNTING GP-CAMERA–COUNTERWEIGHT	200
MOUNTING GP-COUNTERWEIGHT CYL	688
MOUNTING GP-DISPLAY–WORK AREA VISUAL SYSTEM	938
MOUNTING GP-ENGINE	50
MOUNTING GP-ENGINE OIL FILTER	86
MOUNTING GP-FAN DRIVE	52
MOUNTING GP-GUARD	940
MOUNTING GP-MAIN CONTROL VALVE	690
MOUNTING GP-PLATFORM	941
MOUNTING GP-SENSOR–BODY TILT SENSOR	202
MOUNTING GP-VALVE MECHANISM	53
MOUNTING GP-WIRING	203
MUFFLER GP	128

O

Name	Page
OPERATOR AR	943
OPTION AR-CAB	5
OPTION AR-CONFIGURATION	8, 9
OPTION AR-CONFIGURATION–COLD WEATHER STARTING	8
OPTION AR-CONTROL	6
OPTION AR-COUPLER	5
OPTION AR-GUARD–HEAVY-DUTY	6
OPTION AR-LINKAGE	6, 7, 8
OPTION AR-MACHINE	8
OPTION AR-UNDERCARRIAGE	9

P

Name	Page
PADLOCK GP	148, 149, 376
PAN GP-OIL–ENGINE	54

INDEX

Name	Page
PANEL & MTG GP-CIRCUIT BREAKER	204
PANEL GP-CIRCUIT BREAKER	205
PANEL GP-SWITCH–ENGINE SPEED, START	207 209
PARTS AR-CAB	943
PEDAL AR-AUXILIARY	944
PEDAL AR-AUXILIARY–LH	945
PIN GP-COUPLER	851
PISTON & ROD GP	56
PLATE & FILM GP	985 989
PLATE-INSTRUCTION (BATTERY)	205
PLATE-WARNING (HIGH PRESSURE CYLINDER)	409
PLATE-WARNING (OIL FILL)	675 685
PLATFORM GP-OPERATOR	946
PLUG GP	691
PLUG GP-CONNECTOR– ENGINE HARNESS, PROTECTIVE COVER	211
PLUG GP-CYLINDER BLOCK	59
PLUG GP-CYLINDER BLOCK– OIL GALLERY, END	58
PLUG GP-CYLINDER BLOCK– OIL GALLERY, RH	60
PLUG GP-ENGINE	61
PLUG GP-ENGINE OIL COOLER	105
PLUG-DRAIN (ENGINE OIL PAN)	54
PLUG-OIL DRAIN (HYDRAULIC TANK)	707
POWER TRAIN AR	324
PRECLEANER GP–AIR CLEANER	130
PULLEY GP-CRANKSHAFT	62
PULLEY GP-FAN & ALT DRIVE	63
PUMP & MTG GP-AUXILIARY	692
PUMP & MTG GP-MAIN HYDRAULIC	693
PUMP GP-ENGINE OIL	88 89
PUMP GP-FUEL INJECTION	144
PUMP GP-FUEL PRM & PRIM FILTER	145
PUMP GP-FUEL TRANSFER	146
PUMP GP-GEAR–AUXILIARY	694
PUMP GP-GEAR–PILOT	695
PUMP GP-PISTON	696
PUMP GP-PISTON & GEAR	698
PUMP GP-PISTON & GEAR– WITH PILOT GEAR PUMP	702
PUMP GP-WATER	106 107 108

R

Name	Page
RADIATOR & HYD OIL COOLER GP	109 111
RADIO GP	947
REGULATOR AS-VOLTAGE (24-VOLT) (ALTERNATOR)	157
REGULATOR GP-FUEL PRESSURE	147
REGULATOR-TEMPERATURE (92-DEG C) (COOLANT)	102
RELAY (24-VOLT) (BOOM LIGHTS)	262
RELAY (24-VOLT) (CAB LIGHT)	262
RELAY (24-VOLT) (CHASSIS FLOODLIGHT)	262
RELAY (24-VOLT) (ETHER START)	262
RELAY (24-VOLT) (FUEL TRANSFER PUMP)	262
RELAY (24-VOLT) (HORN)	262
RELAY (24-VOLT) (NEUTRAL START)	262
RELAY (24-VOLT) (QUICK COUPLER LOCK ON)	260
RELAY (24-VOLT) (QUICK COUPLER LOCK PRIORITY)	260
RELAY (24-VOLT) (QUICK COUPLER LOCK)	260
RELAY (24-VOLT) (SPEAKERS LH NEGATIVE)	315
RELAY (24-VOLT) (SPEAKERS LH POSITIVE)	315
RELAY (24-VOLT) (SPEAKERS RH NEGATIVE)	315
RELAY (24-VOLT) (SPEAKERS RH POSITIVE)	315
RELAY (24-VOLT) (TRAVEL ALARM)	262
RELAY (BLOWER)	920
RELAY (COMPRESSOR CLUTCH)	920
RELAY (CONDENSER)	920
RELAY (CONDENSER, HIGH)	920
RELAY AS (UPPER) (WIPER)	970
ROCKER ARM GP	65
ROCKER ARM GP–EXHAUST	67
ROCKER ARM GP–INLET	66
ROCKER ARM GP–UNIT INJECTOR	64
ROLLER AR-TRACK & CARRIER	430
ROLLER GP-TRACK & CARRIER	431
ROLLER GP-TRACK CARRIER	432
ROLLER GP-TRACK-SINGLE FLANGE	433
ROTATING GP-PUMP	703
ROTATING GP-PUMP–HYDRAULIC FAN	704

S

Name	Page
SCREEN	786
SCREEN AS (HYDRAULIC TANK)	98 643 705
SCREEN GP-HYDRAULIC–TANK	705
SCREEN GP-RADIATOR	113
SCREEN GP-SUN	948
SEAL GP-CRANKSHAFT	68
SEAL GP-CRANKSHAFT (FRONT)	46
SEAL GP-DUO-CONE	427 432 433
SEAL GP-DUO-CONE (FRONT IDLER)	422

INDEX

Name	Page
SEAL-VALVE COVER	26
SEAT & MOUNTING GP–HIGH BACK, TILT	949
SEAT & MOUNTING GP–HIGH BACK, WITH HEATER	950
SEAT BELT GP	951
SEAT BELT GP–RETRACTABLE, 76-MM	951
SEAT GP (HIGH BACK, TILT)	954
SEAT GP (HIGH BACK, WITH HEATER)	955
SEAT GP–HIGH BACK, TILT	952
SEAT GP–HIGH BACK, WITH HEATER	953
SEAT GP-SUSPENSION–HIGH BACK, TILT	954
SEAT GP-SUSPENSION–HIGH BACK, WITH HEATER	955
SENDER AS-FUEL LEVEL	150
	152
SENDER AS-TEMPERATURE (HYDRAULIC OIL)	707
SENSOR & MTG GP-POSITION–BOOM	212
SENSOR & MTG GP-POSITION–STICK	213
SENSOR AS-LIQUID LEVEL (WATER SEPARATOR)	218
SENSOR AS-PRESSURE (BOOM CYLINDER)	566
SENSOR AS-PRESSURE (BOOM DOWN)	608
SENSOR AS-PRESSURE (BOOM LOWERING CONTROL)	542
SENSOR AS-PRESSURE (PUMP OUTPUT)	620
SENSOR AS-TEMPERATURE	235
	236
SENSOR AS-TEMPERATURE (AIR)	920
SENSOR AS-TEMPERATURE (AMBIENT AIR)	859
SENSOR AS-TEMPERATURE (COOLANT)	859
SENSOR GP-ENGINE	214
	216
SENSOR GP-ENGINE (TEMPERATURE, PRESSURE)	12
SENSOR GP-LIQUID LEVEL	218
	219
SENSOR GP-LIQUID LEVEL (WATER IN FUEL)	219
SENSOR GP-LIQUID LEVEL (WATER SEPARATOR)	1
	2
SENSOR GP-POSITION	220
SENSOR GP-POSITION (BOOM)	212
SENSOR GP-POSITION (LINEAR) (BUCKET CYLINDER)	474
SENSOR GP-POSITION (STICK)	213
SENSOR GP-PRESSURE	216
	221
	222
	223
	224
	225
	226
	227
	228
	229
SENSOR GP-PRESSURE (AIR INLET MANIFOLD)	214
SENSOR GP-PRESSURE (ATMOSPHERIC AIR)	214
SENSOR GP-PRESSURE (ATMOSPHERIC)	223
SENSOR GP-PRESSURE (FUEL)	139
SENSOR GP-SPEED	216
	230
	231
	232
	233
	234
SENSOR GP-SPEED (CAM GEAR)	234
SENSOR GP-SPEED (CRANKSHAFT)	233
SENSOR GP-SPEED (ENGINE)	44
SENSOR GP-SPEED (TIMING, CAMSHAFT)	214
SENSOR GP-SPEED (TIMING, CRANKSHAFT)	214
SENSOR GP-TEMPERATURE	216
	235
	236
	237
	238
SENSOR GP-TEMPERATURE (FUEL)	139
SENSOR-PRESSURE	228
SENSOR-TEMPERATURE (AMBIENT AIR)	856
SHEET AS-SOUND SUPPRESSION	377
	378
	379
	380
	381
	382
	383
	384
	385
	386
	387
	389
	390
	391
	392
	393
	394
	395
	396
	397
SHEET AS-SOUND SUPPRESSION–ACCUGRADE READY	388
SOFTWARE GP-COMMUNICATION	182
SOFTWARE GP-COMMUNICATION (PRODUCT LINK 121SR)	182
SOFTWARE GP-MACHINE	182
SOFTWARE GP-MONITOR	933

INDEX

Name	Page
SOLENOID AS-STARTING MOTOR (24-VOLT)	243
SPECIAL AR	10
SPECIAL AR–ACCUGRADE	9
SPRING AS-GAS	915
SPRING GP-RECOIL	434
SPROCKET GP	325
STARTING AID GP-ETHER	239
STARTING MOTOR GP-ELECTRIC	242, 245
STEP GP	398, 399
STICK AR-HOE	832
STICK AR-HOE–ACCUGRADE READY	833
STICK AR-HOE–MASS	832
STICK GP-HOE	838, 840
STICK GP-HOE–ACCUGRADE READY	841, 843
STICK GP-HOE–MASS	834, 836
STORAGE GP-VANDALISM GUARD	400
STRAINER AS-FUEL (FLOAT GAUGE)	150, 152
SUPPORT AS-ENCLOSURE	401, 402
SUPPORT GP-ENGINE	69
SUPPORT GP-HOOD	403, 405
SUPPORT GP-SEAT	956
SUSPENSION GP-SEAT (AIR)	955
SUSPENSION GP-SEAT (MECHANICAL)	954
SUSPENSION GP-SEAT–AIR	958
SUSPENSION GP-SEAT–MECHANICAL	957
SWITCH (WINDOW LOWER LIMIT)	962
SWITCH AS-FOOT (WORK TOOL)	885
SWITCH AS-LIMIT (HYD LOCKOUT, NEUTRAL START)	248
SWITCH AS-LIQUID LEVEL (ENGINE OIL)	54
SWITCH AS-LIQUID LEVEL (HYDRAULIC OIL)	707
SWITCH AS-MAGNETIC (24-VOLT) (MAIN RELAY)	262
SWITCH AS-PRESSURE (HYDRAULIC OIL)	707
SWITCH AS-PRESSURE (IMPLEMENT, SWING)	592, 613
SWITCH AS-PRESSURE (PILOT OIL)	608
SWITCH AS-PRESSURE (REFRIGERANT)	925
SWITCH AS-PUSH BUTTON (MANUAL LOW IDLE)	887, 889
SWITCH AS-ROCKER (FINE SWING)	262
SWITCH AS-ROCKER (HEATED SEAT)	950
SWITCH AS-ROCKER (WASHER, LOWER) (WASHER, LOWER)	254
SWITCH AS-ROCKER (WIPER, LOWER)	254
SWITCH AS-ROLLER (WIPER, LOWER)	966
SWITCH AS-TOGGLE (AUTO/MANUAL ENG SPEED CONTROL)	285
SWITCH AS-TOGGLE (COUNTERWEIGHT REMOVAL)	293
SWITCH AS-TOGGLE (MANUAL ENGINE SPEED CONTROL)	285
SWITCH AS-TOGGLE (QUICK COUPLER)	253, 260
SWITCH AS-TOGGLE (SECONDARY SHUTDOWN)	311
SWITCH GP-DISCONNECT–BATTERY	246
SWITCH GP-MAGNETIC	247
SWITCH GP-PEDAL (WORK TOOL)	885
SWITCH GP-POSITION–HYDRAULIC LOCKOUT	248
SWITCH GP-PRESSURE	249
SWITCH GP-PRESSURE (FUEL FILTER)	139
SWITCH GP-ROTARY–THROTTLE POSITION	250
SWITCH GP-START–ENGINE, KEY	251
SWITCH GP-TOGGLE	252
SWITCH GP-TOGGLE (QUICK COUPLER)	260
SWITCH GP-TOGGLE (SPEAKER)	315
SWITCH GP-TOGGLE–QUICK COUPLER LOCK	253
SWITCH GP-WIPER–LOWER	254
SWIVEL GP	706

T

TANK & FILTER GP-HYDRAULIC	707
TANK & MTG GP-FUEL	148, 149
TANK & MTG GP-HYDRAULIC	710
TANK GP-FUEL	150, 152
TRACK GP–2-REQUIRED	436, 437, 438, 439
TRACK GP–2-REQUIRED, HEAVY-DUTY	436, 437, 438
TUBE GP-HYDRAULIC–SUPPLY, MAIN PUMP	710, 711, 712, 713
TURBOCHARGER GP	131, 132

V

VALVE AR-ALT PATTERN CONTROL–2-WAY	714

INDEX

Name	Page
VALVE AR-CHECK & RELIEF–BOOM LOWERING CONTROL VALVE, HEAVY LIFT	714
VALVE AR-CHECK & RELIEF–STICK LOAD CONTROL, HEAVY LIFT	714
	715
VALVE AR-SWING–WITHOUT FINE SWING	715
VALVE GP-CHECK	716
	717
	718
	719
	720
VALVE GP-CHECK–FUEL	154
VALVE GP-CONTROL	751
VALVE GP-CONTROL–HEAVY LIFT, LH	730
VALVE GP-CONTROL–MAIN CONTROL VALVE, LH	735
VALVE GP-CONTROL–MEDIUM PRESSURE	725
VALVE GP-CONTROL–QUICK COUPLER	723
VALVE GP-CONTROL–REVERSE FLOW FAN	722
VALVE GP-CONTROL–RH	726
VALVE GP-CONTROL–WITHOUT COVERS, HOUSINGS	739
	741
VALVE GP-COUNTERWEIGHT CONTROL	743
VALVE GP-ETHER STARTING	255
VALVE GP-FLOW CONTROL	744
	745
VALVE GP-LOAD CONTROL	747
VALVE GP-LOAD CONTROL–BOOM CYLINDER	745
	751
	754
VALVE GP-LOAD CONTROL–STICK CYLINDER	749
VALVE GP-MAIN CONTROL–HEAVY LIFT	756
	757
VALVE GP-MANUAL–AUXILIARY, SHUTOFF	759
VALVE GP-MANUAL–BOOM LOWER	758
VALVE GP-PILOT	760
VALVE GP-PILOT (THIRD PEDAL, STRAIGHT TRAVEL)	895
VALVE GP-PILOT–COUNTERWEIGHT	761
VALVE GP-PILOT–JOYSTICK	763
	765
VALVE GP-PILOT–PRESSURE, FLOW COMPENSATOR	762
VALVE GP-PILOT RELIEF	768
VALVE GP-PILOT RELIEF (HYDRAULIC FILTER)	495
VALVE GP-PILOT–WITHOUT SHUTTLE	766
VALVE GP-PRESSURE CONTROL–BOOM II, SWING	769
VALVE GP-PRESSURE REDUCING (QUICK COUPLER)	723
VALVE GP-PRESSURE REDUCING–BOOM, SWING PRIORITY	770
VALVE GP-PUMP CONTROL–NEGATIVE FLOW CONTROL	772
VALVE GP-REGENERATION	773
VALVE GP-RELIEF	725
	743
	777
	779
	780
	781
	782
	784
	785
	786
VALVE GP-RELIEF (160-BAR (2321-PSI))	725
VALVE GP-RELIEF (230-BAR (3336-PSI))	725
VALVE GP-RELIEF (LINE)	722
	745
	749
VALVE GP-RELIEF (NEGATIVE FLOW CONTROL)	726
VALVE GP-RELIEF–LINE	778
VALVE GP-RELIEF–NEGATIVE FLOW CONTROL	774
	775
VALVE GP-RELIEF–SWING MOTOR	776
VALVE GP-SELECTOR (2-WAY)	637
VALVE GP-SHUTOFF (ENGINE OIL PAN)	54
VALVE GP-SHUTTLE	772
	788
	789
	790
	791
	792
VALVE GP-SOLENOID	793
	794
	795
	796
	797
	798
	799
	800
	801
	802
VALVE GP-SOLENOID & MANIFOLD (QUICK COUPLER)	634
VALVE GP-SOLENOID & MANIFOLD–QUICK COUPLER	803
VALVE GP-SOLENOID & PRESS REDC	751
	754
	804
VALVE GP-SOLENOID & RELIEF	805
	807

INDEX

Name	Page
VALVE GP-SOLENOID & RELIEF (1-WAY, 2-WAY FLOW) (LH)	574
VALVE GP-SOLENOID & RELIEF (1-WAY, 2-WAY FLOW) (WITH BLOCK)	562 566
VALVE GP-SOLENOID & RELIEF (RH)	574
VALVE GP-SOLENOID & RELIEF (TOOL CONTROL)	566
VALVE GP-SOLENOID & RELIEF–WITH BLOCK	806
VALVE GP-SOLENOID (AUXILIARY, 1-PUMP/2-PUMP)	772
VALVE GP-SOLENOID (HEAVY LIFT)	624
VALVE GP-SOLENOID (HYDRAULIC LOCKOUT)	670 671
VALVE GP-SOLENOID (NEG FLOW CONT, PROPN RED VALVE)	620
VALVE GP-SOLENOID (PILOT OIL PRESSURE)	589
VALVE GP-SOLENOID (PRESSURE REDUCING)	599 624 630 772
VALVE GP-SOLENOID (PROPORTIONAL REDUCING)	796
VALVE GP-SOLENOID (PUMP CONTROL)	699
VALVE GP-SOLENOID (QUICK COUPLER PIN)	800
VALVE GP-SOLENOID (QUICK COUPLER)	723
VALVE GP-SOLENOID (REVERSING FAN)	587
VALVE GP-SOLENOID (SWING BRAKE RELEASE)	670 671
VALVE GP-SOLENOID (TRAVEL SPEED)	670 671
VALVE GP-SWING CUSHION	808
VALVE GP-SWING CUSHION (FINE SWING)	662
VALVE GP-TRAVEL COUNTERBALANCE	809
VALVE MECHANISM GP	70

W

Name	Page
WASHER GP-WINDOW	959 960 961
WASHER GP-WINDOW (LOWER)	959
WASHER GP-WINDOW–LOWER	959
WINDOW GP-CAB–FRONT, LOWER	965 966
WINDOW GP-CAB–FRONT, UPPER	962
WINDOW GP-CAB–SIDE, REAR	967
WINDOW GP-DOOR	968
WIPER GP-WINDOW–FRONT, LOWER	972
WIPER GP-WINDOW–FRONT, UPPER	970
WIRING GP-AUX START RECEPTACLE–JUMP START	256
WIRING GP-AUXILIARY CONTROL–PLATFORM	258
WIRING GP-CAB	262
WIRING GP-CAB–ACCUGRADE	267
WIRING GP-CAB–COUPLER	260
WIRING GP-CAMERA–WORK AREA VISUAL SYSTEM, REAR	269
WIRING GP-CHASSIS–ACCUGRADE READY	273 275
WIRING GP-CHASSIS–COMMUNICATION RADIO	274
WIRING GP-CHASSIS–QUICK COUPLER	271
WIRING GP-COMMUNICATION–PRODUCT LINK 321SR	278 279 281
WIRING GP-CONSOLE	284
WIRING GP-CONSOLE–LH	283
WIRING GP-CONSOLE–RH	285
WIRING GP-CONTROL–ACCUGRADE READY	289
WIRING GP-CONTROL–SYSTEM 16, 1-WAY, 2-PUMP	287
WIRING GP-CONVERTER	292
WIRING GP-CONVERTER–COMMUNICATION RADIO	290
WIRING GP-COUNTERWEIGHT–COUNTERWEIGHT REMOVAL	293
WIRING GP-ELECTRONIC CONTROL	295 297
WIRING GP-FAN–REVERSING	299
WIRING GP-FINE SWING	301
WIRING GP-GRADE CONTROL–ACCUGRADE, BOOM	302
WIRING GP-GRADE CONTROL–ACCUGRADE, STICK	304
WIRING GP-MEDIUM PRESSURE	306
WIRING GP-MONITOR–WORK AREA VISUAL SYSTEM	307 308
WIRING GP-PLATFORM	311
WIRING GP-PLATFORM–SYSTEM 14, SYSTEM 17	309
WIRING GP-QUICK COUPLER	313
WIRING GP-RADIO	315
WIRING GP-UNIT INJECTOR	317

Y

Name	Page
YOKE GP-LIFTING	852

MEMORANDA

MACHINE ARRANGEMENT

370-3231 CHASSIS AR

S/N: JGB1-UP

PART OF 370-3230 GENERAL AR

SMCS-7000 **i04155763**

NOTE	PART NUMBER	QTY	PART NAME 1 2 3 4 5 6 (PRODUCT LEVEL)	SEE PAGE
Y	*231-1771*	1	ALARM GP-TRAVEL (BACKUP)	156
Y	*291-7766*	1	BATTERY & WIRING GP	160
Y	*299-2970*	1	BATTERY & WIRING GP (COLD WEATHER)	161
Y	*223-2977*	1	BOX & MTG GP-STORAGE	326
Y	*320-2710*	1	COUNTERWEIGHT GP	335
Y	*313-8115*	1	COVER GP-ACCESS (AIR CLEANER)	338
Y	*297-7564*	1	FRAME GP-UPPER	346
Y	*307-7818*	1	GUARD GP-BOTTOM	357
Y	*223-2982*	1	HANDRAIL GP (FRONT, RH)	361
Y	*303-9875*	1	HOOD & GUARD GP (PUMP COMPARTMENT)	363
Y	*307-7764*	1	HOOD & GUARD GP	365
Y	*358-9694*	1	HOOD GP-ENGINE	376
Y	*319-1145*	1	HORN GP-ELECTRIC	919
Y	*4I-5409*	1	LIGHTING GP-CHASSIS (FRONT, RH)	193
Y	*225-5784*	1	LINES GP-AIR CONDITIONER	925
Y	*313-8169*	1	LINES GP-FUEL	139
Y	*7Y-0059*	1	LITERATURE GP	928
Y	*223-2983*	1	MIRROR GP-REAR VIEW (FRONT, RH)	929
Y	*245-7811*	1	MOUNTING GP-PLATFORM	941
Y	*305-8000*	1	OPERATOR AR	943
Y	*370-3232*	1	PLATE & FILM GP	985
Y	*222-8367*	1	SENSOR GP-LIQUID LEVEL (WATER SEPARATOR)	219
Y	*351-3012*	1	SUPPORT GP-HOOD (INCLUDES COVER)	403
Y	*364-6968*	1	SUPPORT GP-HOOD	405
Y	*307-8002*	1	TANK & MTG GP-FUEL	148
Y	*229-9088*	1	WASHER GP-WINDOW (LOWER)	959
Y	*244-2118*	1	WIPER GP-WINDOW (FRONT, LOWER)	972
Y	*299-2856*	1	WIRING GP-FINE SWING	301

Y-SEPARATE ILLUSTRATION

<END>

MACHINE ARRANGEMENT

370-4189 CHASSIS AR

S/N: KHS1-UP

PART OF 370-4188 GENERAL AR

SMCS-7000 **i04155762**

NOTE	PART NUMBER	QTY	PART NAME 1 2 3 4 5 6 (PRODUCT LEVEL)	SEE PAGE
Y	*231-1771*	1	ALARM GP-TRAVEL (BACKUP)	156
Y	*291-7766*	1	BATTERY & WIRING GP	160
Y	*299-2970*	1	BATTERY & WIRING GP (COLD WEATHER)	161
Y	*223-2977*	1	BOX & MTG GP-STORAGE	326
Y	*320-2710*	1	COUNTERWEIGHT GP	335
Y	*313-8115*	1	COVER GP-ACCESS (AIR CLEANER)	338
Y	*297-7564*	1	FRAME GP-UPPER	346
Y	*307-7819*	1	GUARD GP-BOTTOM (HEAVY-DUTY)	358
Y	*132-7293*	1	GUARD GP-SWIVEL	359
Y	*223-2982*	1	HANDRAIL GP (FRONT, RH)	361
Y	*303-9875*	1	HOOD & GUARD GP (PUMP COMPARTMENT)	363
Y	*307-7764*	1	HOOD & GUARD GP	365
Y	*358-9694*	1	HOOD GP-ENGINE	376
Y	*319-1145*	1	HORN GP-ELECTRIC	919
Y	*4I-5409*	1	LIGHTING GP-CHASSIS (FRONT, RH)	193
Y	*225-5784*	1	LINES GP-AIR CONDITIONER	925
Y	*313-8169*	1	LINES GP-FUEL	139
Y	*7Y-0059*	1	LITERATURE GP	928
Y	*223-2983*	1	MIRROR GP-REAR VIEW (FRONT, RH)	929
Y	*245-7811*	1	MOUNTING GP-PLATFORM	941
Y	*305-8000*	1	OPERATOR AR	943
Y	*370-4190*	1	PLATE & FILM GP	989
Y	*222-8367*	1	SENSOR GP-LIQUID LEVEL (WATER SEPARATOR)	219
Y	*351-3012*	1	SUPPORT GP-HOOD (INCLUDES COVER)	403
Y	*364-6968*	1	SUPPORT GP-HOOD	405
Y	*307-8005*	1	TANK & MTG GP-FUEL	149
Y	*229-9088*	1	WASHER GP-WINDOW (LOWER)	959
Y	*244-2118*	1	WIPER GP-WINDOW (FRONT, LOWER)	972
Y	*299-2856*	1	WIRING GP-FINE SWING	301

Y-SEPARATE ILLUSTRATION

<END>

371-9200 DISTRIBUTION AR

S/N: JGB1-UP

AN ATTACHMENT

SMCS-7000 **i04193549**

NOTE	PART NUMBER	QTY	PART NAME 1 2 3 4 5 6 (PRODUCT LEVEL)	SEE PAGE
Y	*319-9223*	1	AIR CLEANER AR (PRECLEANER)	114
Y	*359-2594*	1	FILM GP (345D LME)	984
Y	*320-8834*	1	GUARD AR-BOTTOM (HEAVY-DUTY)	356
Y	*216-0611*	1	GUARD GP-WINDOW	915
Y	*371-6383*	1	LINKAGE AR-FRONT	826
Y	*341-3130*	1	OPTION AR-CAB	5
Y	*344-5677*	1	OPTION AR-HYDRAULIC	6
Y	*349-3295*	1	OPTION AR-UNDERCARRIAGE (FULL LENGTH)	9
Y	*303-2634*	1	TRACK GP (2-REQUIRED)	437
Y	*333-7665*	1	VALVE AR-SWING (WITHOUT FINE SWING)	715
Y	*283-2913*	1	WIRING GP-RADIO	315

Y-SEPARATE ILLUSTRATION

<END>

MACHINE ARRANGEMENT

371-9201 DISTRIBUTION AR

S/N: JGB1-UP
AN ATTACHMENT

SMCS-7000 **i04193796**

NOTE	PART NUMBER	QTY	PART NAME 1 2 3 4 5 6 (PRODUCT LEVEL)	SEE PAGE
Y	*319-9223*	1	AIR CLEANER AR (PRECLEANER)	114
Y	*320-8834*	1	GUARD AR-BOTTOM (HEAVY-DUTY)	356
Y	*341-3130*	1	OPTION AR-CAB	5
Y	*344-5677*	1	OPTION AR-HYDRAULIC	6
Y	*337-8881*	1	OPTION AR-LINKAGE	7
Y	*303-2638*	1	TRACK GP (2-REQUIRED)	437
Y	*333-7665*	1	VALVE AR-SWING (WITHOUT FINE SWING)	715
Y	*283-2913*	1	WIRING GP-RADIO (12-VOLT)	315

Y-SEPARATE ILLUSTRATION

<END>

371-9202 DISTRIBUTION AR

S/N: JGB1-UP
AN ATTACHMENT

SMCS-7000 **i04193797**

NOTE	PART NUMBER	QTY	PART NAME 1 2 3 4 5 6 (PRODUCT LEVEL)	SEE PAGE
Y	*319-9223*	1	AIR CLEANER AR (PRECLEANER)	114
Y	*310-0078*	1	CONTROL & MTG GP-JOYSTICK	883
Y	*359-2594*	1	FILM GP (345D LME)	984
Y	*320-8834*	1	GUARD AR-BOTTOM (HEAVY-DUTY)	356
Y	*303-2781*	1	INSTALLATION AR-COMMUNICATION (PRODUCT LINK 321SR)	187
Y	*341-3130*	1	OPTION AR-CAB	5
Y	*347-9838*	1	OPTION AR-LINKAGE	7
Y	*349-3295*	1	OPTION AR-UNDERCARRIAGE (FULL LENGTH)	9
Y	*303-2639*	1	TRACK GP (2-REQUIRED)	437

Y-SEPARATE ILLUSTRATION

<END>

371-9204 DISTRIBUTION AR

S/N: JGB1-UP
AN ATTACHMENT

SMCS-7000 **i04193390**

NOTE	PART NUMBER	QTY	PART NAME 1 2 3 4 5 6 (PRODUCT LEVEL)	SEE PAGE
Y	*319-9223*	1	AIR CLEANER AR (PRECLEANER)	114
Y	*310-0078*	1	CONTROL & MTG GP-JOYSTICK	883
Y	*359-2594*	1	FILM GP (345D LME)	984
Y	*320-8834*	1	GUARD AR-BOTTOM (HEAVY-DUTY)	356
Y	*303-2781*	1	INSTALLATION AR-COMMUNICATION (PRODUCT LINK 321SR)	187
Y	*341-3130*	1	OPTION AR-CAB	5
Y	*343-1203*	1	OPTION AR-LINKAGE	7
Y	*349-3295*	1	OPTION AR-UNDERCARRIAGE (FULL LENGTH)	9
Y	*303-2639*	1	TRACK GP (2-REQUIRED)	437

Y-SEPARATE ILLUSTRATION

<END>

MACHINE ARRANGEMENT

371-9205 DISTRIBUTION AR

S/N: KHS1-UP

AN ATTACHMENT

SMCS-7000 **i04190964**

NOTE	PART NUMBER	QTY	PART NAME 1 2 3 4 5 6 (PRODUCT LEVEL)	SEE PAGE
Y	*319-9223*	1	AIR CLEANER AR (PRECLEANER)	114
Y	*359-2594*	1	FILM GP (345D LME)	984
Y	*320-8834*	1	GUARD AR-BOTTOM (HEAVY-DUTY)	356
Y	*216-0611*	1	GUARD GP-WINDOW	915
Y	*303-2781*	1	INSTALLATION AR-COMMUNICATION (PRODUCT LINK 321SR)	187
Y	*371-6383*	1	LINKAGE AR-FRONT	826
Y	*341-3130*	1	OPTION AR-CAB	5
Y	*344-5677*	1	OPTION AR-HYDRAULIC	6
Y	*349-3295*	1	OPTION AR-UNDERCARRIAGE (FULL LENGTH)	9
Y	*303-2634*	1	TRACK GP (2-REQUIRED)	437
Y	*333-7665*	1	VALVE AR-SWING (WITHOUT FINE SWING)	715
Y	*283-2913*	1	WIRING GP-RADIO (12-VOLT)	315

Y-SEPARATE ILLUSTRATION

<END>

371-9206 DISTRIBUTION AR

S/N: KHS1-UP

AN ATTACHMENT

SMCS-7000 **i04190289**

NOTE	PART NUMBER	QTY	PART NAME 1 2 3 4 5 6 (PRODUCT LEVEL)	SEE PAGE
Y	*319-9223*	1	AIR CLEANER AR (PRECLEANER)	114
Y	*320-8834*	1	GUARD AR-BOTTOM (HEAVY-DUTY)	356
Y	*341-3130*	1	OPTION AR-CAB	5
Y	*344-5677*	1	OPTION AR-HYDRAULIC	6
Y	*337-8881*	1	OPTION AR-LINKAGE	7
Y	*301-2300*	1	TRACK GP (2-REQUIRED)	436
Y	*333-7665*	1	VALVE AR-SWING (WITHOUT FINE SWING)	715
Y	*283-2913*	1	WIRING GP-RADIO	315

Y-SEPARATE ILLUSTRATION

<END>

370-3230 GENERAL AR

S/N: JGB1-UP

SMCS-7000 **i04154928**

NOTE	PART NUMBER	QTY	PART NAME 1 2 3 4 5 6 (PRODUCT LEVEL)	SEE PAGE
Y	*370-3231*	1	CHASSIS AR	1
Y	*309-5779*	1	ELECTRONICS GP-MACHINE (ECM)	182
Y	*305-7980*	1	ENGINE AR	11
Y	*294-1316*	1	FRAME AR-UNDERCARRIAGE	411
Y	*297-0243*	1	HYDRAULIC AR	506
Y	*297-7686*	1	INSTALLATION AR-ENGINE	17
Y	*227-6042*	1	POWER TRAIN AR	324

Y-SEPARATE ILLUSTRATION

<END>

MACHINE ARRANGEMENT

370-4188 GENERAL AR

S/N: KHS1-UP

SMCS-7000 **i04154929**

NOTE	PART NUMBER	QTY	PART NAME 1 2 3 4 5 6 (PRODUCT LEVEL)	SEE PAGE
Y	*370-4189*	1	CHASSIS AR	2
Y	*309-5779*	1	ELECTRONICS GP-MACHINE (ECM)	182
Y	*305-7980*	1	ENGINE AR	11
Y	*303-2682*	1	FRAME AR-UNDERCARRIAGE (ADJ GAUGE, LONG UNDERCARRIAGE)	411
Y	*297-0244*	1	HYDRAULIC AR (SYSTEM 24, COMBINED FUNCTION)	506
Y	*297-7686*	1	INSTALLATION AR-ENGINE	17
Y	*227-6043*	1	POWER TRAIN AR	324

Y-SEPARATE ILLUSTRATION

<END>

341-3130 OPTION AR-CAB

S/N: JGB1-UP; KHS1-UP

PART OF 371-9200, 371-9201, 371-9202, 371-9204, 371-9205, 371-9206 DISTRIBUTION AR

CANNOT BE USED WITH 245-7881—PAGE 948, 327-6503—PAGE 950 AN ATTACHMENT

SMCS-7000 **i04093870**

NOTE	PART NUMBER	QTY	PART NAME 1 2 3 4 5 6 (PRODUCT LEVEL)	SEE PAGE
Y	*245-7881*	1	SCREEN GP-SUN	948
Y	*327-6503*	1	SEAT & MOUNTING GP (HIGH BACK, WITH HEATER)	950
Y	*350-8247*	1	WIRING GP-CONVERTER (12-VOLT, 10-AMPERE)	292

Y-SEPARATE ILLUSTRATION

<END>

341-3123 OPTION AR-COUPLER

S/N: JGB1-UP; KHS1-UP

CANNOT BE USED WITH 302-9403—PAGE 457, 242-6535—PAGE 551, 242-6539—PAGE 554 AN ATTACHMENT

SMCS-7000 **i03573307**

NOTE	PART NUMBER	QTY	PART NAME 1 2 3 4 5 6 (PRODUCT LEVEL)	SEE PAGE
Y	*302-9403*	1	CONTROL AR-COUPLER (UNIVERSAL QUICK COUPLER)	457
Y	*242-6535*	1	LINES GP-COUPLER (BOOM)	551
Y	*242-6539*	1	LINES GP-COUPLER (STICK, VB-FAMILY)	554

Y-SEPARATE ILLUSTRATION

<END>

MACHINE ARRANGEMENT

337-8883 OPTION AR-GUARD—HEAVY-DUTY

S/N: JGB1-UP

AN ATTACHMENT

SMCS-7000 **i03612480**

NOTE	PART NUMBER	QTY	PART NAME 1 2 3 4 5 6 (PRODUCT LEVEL)	SEE PAGE
Y	*320-8834*	1	GUARD AR-BOTTOM (HEAVY-DUTY)	356
Y	*303-2658*	1	GUARD AR-VANDALISM	911
Y-SEPARATE ILLUSTRATION				

<END>

344-5677 OPTION AR-CONTROL

S/N: JGB1-UP; KHS1-UP

PART OF 371-9200, 371-9201, 371-9205, 371-9206 DISTRIBUTION AR

CANNOT BE USED WITH 310-0013—PAGE 456, 310-0017—PAGE 456, 310-0016—PAGE 456, 310-0078—PAGE 883

AN ATTACHMENT

SMCS-7000 **i03596562**

NOTE	PART NUMBER	QTY	PART NAME 1 2 3 4 5 6 (PRODUCT LEVEL)	SEE PAGE
Y	*255-5844*	1	CONTROL AR-AUXILIARY (JOYSTICK, 4-BUTTON)	453
Y	*285-1787*	1	CONTROL AR-AUXILIARY (SYSTEM 16, 1-WAY, 2-PUMP)	454
Y	*285-1790*	1	CONTROL AR-AUXILIARY (COOLING CIRCUIT, HYDRAULIC OIL)	455
Y	*302-3147*	1	LINES GP-PILOT (PRIMARY)	628
Y-SEPARATE ILLUSTRATION				

<END>

337-8879 OPTION AR-LINKAGE

S/N: JGB1-UP; KHS1-UP

CANNOT BE USED WITH 337-8881—PAGE 7

AN ATTACHMENT

SMCS-7000 **i03603946**

NOTE	PART NUMBER	QTY	PART NAME 1 2 3 4 5 6 (PRODUCT LEVEL)	SEE PAGE
Y	*294-1250*	1	BOOM AR-REACH (HEAVY-DUTY)	812
Y	*245-5584*	1	LINKAGE AR-BUCKET (TB-FAMILY, WITH LIFTING EYE)	826
Y	*294-1258*	1	STICK AR-HOE (REACH)	832
Y-SEPARATE ILLUSTRATION				

<END>

MACHINE ARRANGEMENT

337-8881 OPTION AR-LINKAGE

S/N: JGB1-UP; KHS1-UP
PART OF 371-9201, 371-9206 DISTRIBUTION AR
CANNOT BE USED WITH ALL BOOM ARR
AN ATTACHMENT

SMCS-7000 **i03603955**

NOTE	PART NUMBER	QTY	PART NAME 1 2 3 4 5 6 (PRODUCT LEVEL)	SEE PAGE
Y	*294-1250*	1	BOOM AR-REACH (HEAVY-DUTY)	812
Y	*127-6690*	1	LINES GP-AUXILIARY HYDRAULIC (STICK, HIGH PRESSURE)	507
Y	*247-9306*	1	LINES GP-AUXILIARY HYDRAULIC (BOOM, HIGH PRESSURE)	523
Y	*245-5584*	1	LINKAGE AR-BUCKET (TB-FAMILY, WITH LIFTING EYE)	826
Y	*294-1258*	1	STICK AR-HOE (REACH)	832

Y-SEPARATE ILLUSTRATION

<END>

343-1203 OPTION AR-LINKAGE

S/N: JGB1-UP; KHS1-UP
PART OF 371-9204 DISTRIBUTION AR
AN ATTACHMENT

SMCS-7000 **i04193252**

NOTE	PART NUMBER	QTY	PART NAME 1 2 3 4 5 6 (PRODUCT LEVEL)	SEE PAGE
Y	*294-1252*	1	BOOM AR-MASS (HEAVY-DUTY)	811
Y	*220-2502*	1	LINKAGE AR-BUCKET (UB-FAMILY)	826
Y	*220-2500*	1	STICK AR-HOE (MASS)	832

Y-SEPARATE ILLUSTRATION

<END>

347-9838 OPTION AR-LINKAGE

S/N: JGB1-UP; KHS1-UP
PART OF 371-9202 DISTRIBUTION AR
AN ATTACHMENT

SMCS-7000 **i04193311**

NOTE	PART NUMBER	QTY	PART NAME 1 2 3 4 5 6 (PRODUCT LEVEL)	SEE PAGE
Y	*294-1252*	1	BOOM AR-MASS (HEAVY-DUTY)	811
Y	*220-2502*	1	LINKAGE AR-BUCKET (UB-FAMILY)	826
Y	*220-2498*	1	STICK AR-HOE (MASS)	832

Y-SEPARATE ILLUSTRATION

<END>

MACHINE ARRANGEMENT

356-3109 OPTION AR-LINKAGE

S/N: JGB1-UP

AN ATTACHMENT

SMCS-7000 **i03877779**

NOTE	PART NUMBER	QTY	PART NAME 1 2 3 4 5 6 (PRODUCT LEVEL)	SEE PAGE
Y	*319-9245*	1	BOOM AR (ACCUGRADE READY)	811
Y	*245-5584*	1	LINKAGE AR-BUCKET (TB-FAMILY, WITH LIFTING EYE)	826
Y	*351-9595*	1	SPECIAL AR	10
Y	*294-1267*	1	STICK AR-HOE (ACCUGRADE READY)	833

Y-SEPARATE ILLUSTRATION

<END>

356-3108 OPTION AR-MACHINE

S/N: JGB1-UP; KHS1-UP

AN ATTACHMENT

SMCS-7000 **i03869336**

NOTE	PART NUMBER	QTY	PART NAME 1 2 3 4 5 6 (PRODUCT LEVEL)	SEE PAGE
Y	*319-9245*	1	BOOM AR (ACCUGRADE READY)	811
Y	*245-5584*	1	LINKAGE AR-BUCKET (TB-FAMILY, WITH LIFTING EYE)	826
Y	*319-9274*	1	SPECIAL AR (ACCUGRADE)	9
Y	*294-1267*	1	STICK AR-HOE (ACCUGRADE READY)	833

Y-SEPARATE ILLUSTRATION

<END>

337-8884 OPTION AR-CONFIGURATION

S/N: JGB1-UP; KHS1-UP

AN ATTACHMENT

SMCS-7000 **i03603762**

NOTE	PART NUMBER	QTY	PART NAME 1 2 3 4 5 6 (PRODUCT LEVEL)	SEE PAGE
Y	*225-5729*	1	PEDAL AR-AUXILIARY	944
Y	*310-0387*	1	VALVE AR-ALT PATTERN CONTROL (2-WAY)	714

Y-SEPARATE ILLUSTRATION

<END>

337-8885 OPTION AR-CONFIGURATION–

COLD WEATHER STARTING

S/N: JGB1-UP; KHS1-UP

CANNOT BE USED WITH 222-8365–PAGE 239, 299-2969–PAGE 256

AN ATTACHMENT

SMCS-7000 **i03572743**

NOTE	PART NUMBER	QTY	PART NAME 1 2 3 4 5 6 (PRODUCT LEVEL)	SEE PAGE
Y	*324-4136*	1	HEATER GP-JACKET WATER (REAR)	186
Y	*222-8365*	1	STARTING AID GP-ETHER	239
Y	*299-2969*	1	WIRING GP-AUX START RECEPTACLE (JUMP START)	256

Y-SEPARATE ILLUSTRATION

<END>

MACHINE ARRANGEMENT

341-4971 OPTION AR-CONFIGURATION

S/N: JGB1-UP; KHS1-UP
WORK AREA VISUAL SYSTEM, REAR, HIGH INTENSITY DISCHARGE
CANNOT BE USED WITH 299-3036—PAGE 197, 319-9155—PAGE 175
AN ATTACHMENT

SMCS-7000 **i03574880**

NOTE	PART NUMBER	QTY	PART NAME 1 2 3 4 5 6 (PRODUCT LEVEL)	SEE PAGE
Y	*319-9155*	1	CAMERA AR (WORK AREA VISUAL SYSTEM, REAR)	175
Y	*299-3036*	1	LIGHTING GP-FLOOD (HIGH INTENSITY DISCHARGE)	197
Y-SEPARATE ILLUSTRATION				

<END>

349-3295 OPTION AR-UNDERCARRIAGE

S/N: JGB1-UP; KHS1-UP
PART OF 371-9200, 371-9202, 371-9204, 371-9205 DISTRIBUTION AR
AN ATTACHMENT

SMCS-7000 **i03807269**

NOTE	PART NUMBER	QTY	PART NAME 1 2 3 4 5 6 (PRODUCT LEVEL)	SEE PAGE
Y	*248-1965*	1	GUARD GP-TRACK GUIDE (FULL LENGTH)	417
Y	*297-9129*	1	IDLER GP-FRONT (HEAVY-DUTY)	424
Y-SEPARATE ILLUSTRATION				

<END>

319-9274 SPECIAL AR—ACCUGRADE

S/N: JGB1-UP; KHS1-UP
PART OF 356-3108 OPTION AR-MACHINE
FOR USE WITH 319-9245—PAGE 811, 294-1265—PAGE 833, 294-1267—PAGE 833. CANNOT BE USED WITH 303-2711—PAGE 175
AN ATTACHMENT

SMCS-7000 **i03818769**

NOTE	PART NUMBER	QTY	PART NAME 1 2 3 4 5 6 (PRODUCT LEVEL)	SEE PAGE
Y	*300-1590*	1	CYLINDER & LINES GP-BUCKET	461
Y	*303-8942*	1	FRAME GP-UPPER (ACCUGRADE READY)	347
Y	*295-9600*	1	GUARD GP-CYLINDER	819
Y	*313-7965*	1	HOOD & GUARD GP (ACCUGRADE READY)	367
Y	*297-4510*	1	MOUNTING GP-SENSOR (BODY TILT SENSOR)	202
Y	*356-4742*	1	PARTS AR-CAB	943
Y	*297-4513*	1	SENSOR & MTG GP-POSITION (BOOM)	212
Y	*313-7811*	1	SHEET AS-SOUND SUPPRESSION (ACCUGRADE READY)	388
Y	*299-2996*	1	WIRING GP-CHASSIS (ACCUGRADE READY)	273
Y	*299-3000*	1	WIRING GP-GRADE CONTROL (ACCUGRADE, BOOM)	302
Y	*299-3003*	1	WIRING GP-GRADE CONTROL (ACCUGRADE, STICK)	304
Y-SEPARATE ILLUSTRATION				

<END>

MACHINE ARRANGEMENT

351-9595 SPECIAL AR

S/N: JGB1-UP

PART OF 356-3109 OPTION AR-LINKAGE

FOR USE WITH 319-9245—PAGE 811, 294-1265—PAGE 833, 294-1267—PAGE 833. CANNOT BE USED WITH 303-2711—PAGE 175, 310-0387—PAGE 714

AN ATTACHMENT

SMCS-7000 **i03877770**

NOTE	PART NUMBER	QTY	PART NAME 1 2 3 4 5 6 (PRODUCT LEVEL)	SEE PAGE
Y	*300-1590*	1	CYLINDER & LINES GP-BUCKET	461
Y	*308-8901*	1	FRAME GP-UPPER (ACCUGRADE READY)	350
Y	*295-9600*	1	GUARD GP-CYLINDER	819
Y	*313-7965*	1	HOOD & GUARD GP (ACCUGRADE READY)	367
Y	*297-4510*	1	MOUNTING GP-SENSOR (BODY TILT SENSOR)	202
Y	*356-4742*	1	PARTS AR-CAB	943
Y	*297-4513*	1	SENSOR & MTG GP-POSITION (BOOM)	212
Y	*313-7811*	1	SHEET AS-SOUND SUPPRESSION (ACCUGRADE READY)	388
Y	*299-2996*	1	WIRING GP-CHASSIS (ACCUGRADE READY)	273
Y	*299-3000*	1	WIRING GP-GRADE CONTROL (ACCUGRADE, BOOM)	302
Y	*299-3003*	1	WIRING GP-GRADE CONTROL (ACCUGRADE, STICK)	304

Y-SEPARATE ILLUSTRATION

<END>

ENGINE ARRANGEMENT

305-7980 ENGINE AR

S/N: JGB1-UP; KHS1-UP

PART OF 370-3230, 370-4188 GENERAL AR

SMCS-1000 **i02844547**

NOTE	PART NUMBER	QTY	PART NAME 1 2 3 4 5 6 (PRODUCT LEVEL)	SEE PAGE
Y	**291-9259**	1	ENGINE AR-COMPLETE	12
Y	*266-6256*	1	MUFFLER GP	128

Y-SEPARATE ILLUSTRATION

ENGINE ARRANGEMENT

291-9259 ENGINE AR-COMPLETE

S/N: TXF1-UP; MHX7634-UP
305 BRAKE KW (409 BHP). LH 24V STARTER, REMOTE OIL & FUEL FILTER
PART OF 305-7980 ENGINE AR

SMCS-1000 **i03463443**

NOTE	PART NUMBER	QTY	PART NAME 1 2 3 4 5 6 (PRODUCT LEVEL)	SEE PAGE
Y	*252-7132*	1	ALTERNATOR GP-CHARGING	159
Y	*223-1615*	1	BASE GP-OIL FILTER (ENGINE)	72
Y	*230-7215*	1	BELT GP-SERPENTINE	20
Y	*230-7216*	1	BELT TENSIONER GP	21
Y	*267-0007*	1	BREATHER GP	75
Y	*276-2403*	1	COMPRESSOR GP-REFRIGERANT	871
Y	*241-7601*	1	CONNECTION GP-ELECTRICAL	177
Y	*249-5278*	1	CONTROL & MTG GP-ENGINE ELEK	180
Y	*253-7404*	1	COOLER GP-ENGINE OIL	92
Y	*127-5728*	1	COVER GP-FLYWHEEL HOUSING	23
Y	*113-8987*	1	COVER GP-FRONT HOUSING	24
Y	*227-2574*	1	COVER GP-FRONT HOUSING	25
Y	*117-2786*	1	COVER GP-OIL FILTER BASE	76
Y	*229-2615*	1	COVER GP-VALVE MECHANISM	26
Y	*117-2766*	1	DAMPER GP	37
Y	*317-9990*	1	ENGINE AR-CORE	14
			S/N: MHX7634-UP	
Y	*117-2771*	1	FASTENER GP-DAMPER & PULLEY	40
Y	*117-2794*	1	FASTENER GP-FLYWHEEL	41
Y	*235-0932*	1	FILLER GP-ENGINE OIL	77
Y	*220-7082*	1	FILTER GP-ENGINE OIL	79
Y	*117-0183*	1	FITTING GP-FUEL LINES (SUPPLY)	135
Y	*307-0683*	1	FLYWHEEL GP	42
Y	*220-7133*	1	FUMES DISPOSAL GP	81
Y	*220-7097*	1	GAUGE GP-OIL LEVEL (DIPSTICK)	82
Y	*313-2148*	1	HOUSING GP-FLYWHEEL	44
			S/N: MHX7634-UP	
Y	*224-0880*	1	LIFTING GP-ENGINE	49
Y	*126-0081*	1	LINES GP-AIR (TURBOCHARGER OUTLET)	120
Y	*241-4761*	1	LINES GP-AIR	124
Y	*311-4950*	1	LINES GP-FUEL	137
			S/N: MHX7634-UP	
Y	*224-8170*	1	LINES GP-TURBOCHARGER OIL	85
Y	*220-7057*	1	LINES GP-TURBOCHARGER WATER	100
Y	*235-0364*	1	LINES GP-WATER (TEMPERATURE REGULATOR)	102
Y	*236-5900*	1	LINES GP-WATER	104
Y	*247-2833*	1	MANIFOLD GP-EXHAUST	125
Y	*222-3092*	1	MANIFOLD GP-INLET (MID)	126
Y	*219-7440*	1	MOUNTING GP-FAN DRIVE	52
Y	*230-8136*	1	PAN GP-OIL	54
Y	*235-8200*	1	PLUG GP-CONNECTOR (ENGINE HARNESS, PROT COVER)	211
			S/N: MHX7634-UP	
Y	*117-0165*	1	PLUG GP-CYLINDER BLOCK (OIL GALLERY, END)	58
Y	*227-9545*	1	PLUG GP-CYLINDER BLOCK (OIL GALLERY, RH)	60
Y	*269-6164*	1	PLUG GP-ENGINE	61
Y	*224-7662*	1	PLUG GP-ENGINE OIL COOLER	105
Y	*207-8103*	1	PULLEY GP-CRANKSHAFT	62
Y	*117-0177*	1	PULLEY GP-FAN & ALT DRIVE	63
Y	*116-1091*	1	SEAL GP-CRANKSHAFT (REAR)	68
Y	*243-1555*	1	SENSOR GP-ENGINE (TEMPERATURE, PRESSURE)	214
Y	*307-4584*	1	STARTING MOTOR GP-ELECTRIC	245
Y	*170-4743*	1	SUPPORT GP-ENGINE	69
Y	*294-4585*	1	TURBOCHARGER GP	132
Y	*219-7462*	1	WIRING GP-ELECTRONIC CONTROL	295

291-9259 ENGINE AR-COMPLETE *(contd.)* i03463443

NOTE	PART NUMBER	QTY	PART NAME 1 2 3 4 5 6 (PRODUCT LEVEL)	SEE PAGE
	299-9620	1	ELECTRONICS GP-ENGINE RATINGS	
			PLEASE USE THE GASKET KIT LINK IN SIS OR CONTACT YOUR LOCAL DEALER FOR THE LATEST GASKET KIT INFORMATION	

Y-SEPARATE ILLUSTRATION

ENGINE ARRANGEMENT

317-9990 ENGINE AR-CORE

S/N: MHX7634-UP

PART OF 291-9259 ENGINE AR-COMPLETE

SMCS-1000 **i03592421**

NOTE	PART NUMBER	QTY	PART NAME 1 2 3 4 5 6 (PRODUCT LEVEL)	SEE PAGE
Y	*267-0010*	1	BASE GP-VALVE COVER	18
Y	*223-7463*	1	CAMSHAFT GP	22
Y	*224-3881*	1	CRANKSHAFT GP	27
YR	*240-7271*	1	CYLINDER BLOCK GP	32
Y	*305-0618*	1	CYLINDER HEAD GP	36
Y	*222-3088*	1	GEAR GP-FRONT	43
Y	*218-7272*	1	HOUSING GP-FRONT	46
Y	*229-8084*	1	MOUNTING GP-VALVE MECHANISM	53
Y	*325-0821*	6	PISTON & ROD GP	56
Y	*223-3875*	1	PLUG GP-CYLINDER BLOCK	59
Y	*233-5221*	1	PUMP GP-ENGINE OIL	89
Y	*253-1461*	6	PUMP GP-FUEL INJECTION	144
Y	*227-5723*	1	PUMP GP-FUEL TRANSFER	146
Y	*228-5812*	1	PUMP GP-WATER	106
Y	*240-7272*	1	VALVE MECHANISM GP	70
Y	*230-0961*	1	WIRING GP-UNIT INJECTOR	317

R-REMFG PART MAY BE AVAILABLE
Y-SEPARATE ILLUSTRATION

ENGINE ARRANGEMENT

356-2433 ENGINE AR-CORE

S/N: TXF1-UP; MHX11913-UP

PART OF 357-6591 ENGINE AR-CORE

SMCS-1000 **i04162630**

NOTE	PART NUMBER	QTY	PART NAME 1 2 3 4 5 6 (PRODUCT LEVEL)	SEE PAGE
Y	*267-0010*	1	BASE GP-VALVE COVER	18
Y	*223-7463*	1	CAMSHAFT GP	22
Y	*224-3881*	1	CRANKSHAFT GP	27
YR	*240-7271*	1	CYLINDER BLOCK GP	32
Y	*305-0618*	1	CYLINDER HEAD GP	36
Y	*222-3088*	1	GEAR GP-FRONT	43
Y	*325-0821*	6	PISTON & ROD GP	56
Y	*233-5221*	1	PUMP GP-ENGINE OIL	89
Y	*253-1461*	6	PUMP GP-FUEL INJECTION	144
Y	*228-5812*	1	PUMP GP-WATER	106
Y	*354-0042*	1	SENSOR GP-ENGINE (TEMPERATURE, PRESSURE)	216
Y	*240-7272*	1	VALVE MECHANISM GP	70
Y	*230-0961*	1	WIRING GP-UNIT INJECTOR	317

R-REMFG PART MAY BE AVAILABLE
Y-SEPARATE ILLUSTRATION

ENGINE ARRANGEMENT

357-6591 ENGINE AR-CORE

S/N: TXF1-UP; MHX11913-UP

PART OF 291-9259 ENGINE AR-COMPLETE

SMCS-1000 **i04165238**

NOTE	PART NUMBER	QTY	PART NAME 1 2 3 4 5 6 (PRODUCT LEVEL)	SEE PAGE
Y	*356-2433*	1	ENGINE AR-CORE	15
	299-9620	1	ELECTRONICS GP-ENGINE RATINGS	

Y-SEPARATE ILLUSTRATION

ENGINE ARRANGEMENT

297-7686 INSTALLATION AR-ENGINE

S/N: JGB1-UP; KHS1-UP

PART OF 370-3230, 370-4188 GENERAL AR

SMCS-1000 **i02842570**

NOTE	PART NUMBER	QTY	PART NAME 1 2 3 4 5 6 (PRODUCT LEVEL)	SEE PAGE
Y	*233-1275*	1	AIR CLEANER GP	115
Y	*245-7786*	1	CONDENSER & MTG GP-REFRIGERANT	872
Y	*239-6581*	1	COOLER GP-FUEL	133
Y	*279-7821*	1	DRAIN GP-MUFFLER	118
Y	*131-8849*	1	EXTENSION GP-EXHAUST	119
Y	*281-3554*	1	FAN GP-SUCTION	94
Y	*222-8357*	1	LINES GP-AIR (AIR CLEANER, TURBOCHARGER)	122
Y	*210-8163*	1	LINES GP-AIR	121
Y	*222-8360*	1	LINES GP-ENGINE OIL DRAIN	84
Y	*222-8358*	1	MOUNTING GP-ENGINE	50
Y	*222-8362*	1	MOUNTING GP-ENGINE OIL FILTER	86
Y	*281-3585*	1	RADIATOR & HYD OIL COOLER GP	109

Y-SEPARATE ILLUSTRATION

267-0010 BASE GP-VALVE COVER—ENGINE

S/N: TXF1-UP; MHX7634-UP

PART OF 317-9990, 356-2433 ENGINE AR-CORE

SMCS-1120 **i03546103**

NOTE	REF NO	GRAPHIC REF	PART NUMBER	QTY	PART NAME 1 2 3 4 5 6 (PRODUCT LEVEL)	SEE PAGE
CY	1	1	**325-4505**	1	BASE GP-VALVE COVER	19
M	2	1	**6V-5221**	6	BOLT (M8X1.25X80-MM)	
	3	1	**132-5789**	1	CLIP	
M	4	1	**6V-3918**	7	BOLT (M8X1.25X50-MM)	
	5	1	**9M-1974**	13	WASHER-HARD (8.8X16X2-MM THK)	
C	6	1	**272-0389**	1	SEAL	

C-CHANGE FROM PREVIOUS TYPE
M-METRIC PART
Y-SEPARATE ILLUSTRATION

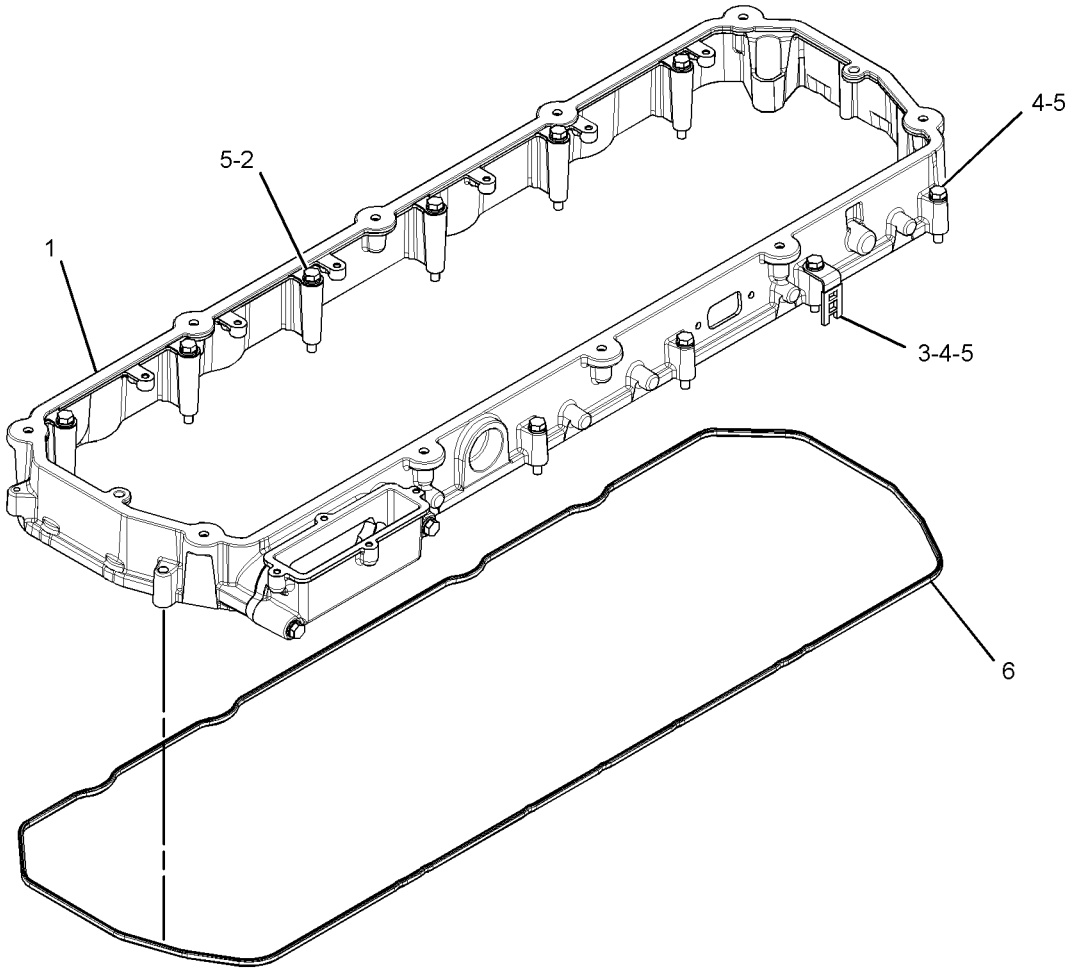

GRAPHIC #1 **<END>** g01881166

325-4505 BASE GP-VALVE COVER

S/N: TXF1-UP; MHX7634-UP

PART OF 267-0010 BASE GP-VALVE COVER

SMCS-1120 **i03460120**

NOTE	REF NO	GRAPHIC REF	PART NUMBER	QTY	PART NAME 1 2 3 4 5 6 (PRODUCT LEVEL)	SEE PAGE
	1	1	**321-5639**	1	SEAL	
	2	1	**332-3707**	1	ADAPTER	
M	3	1	**5P-8347**	2	BOLT (M8X1.25X70-MM)	
	4	1	**9M-1974**	2	WASHER-HARD (8.8X16X2-MM THK)	

M-METRIC PART

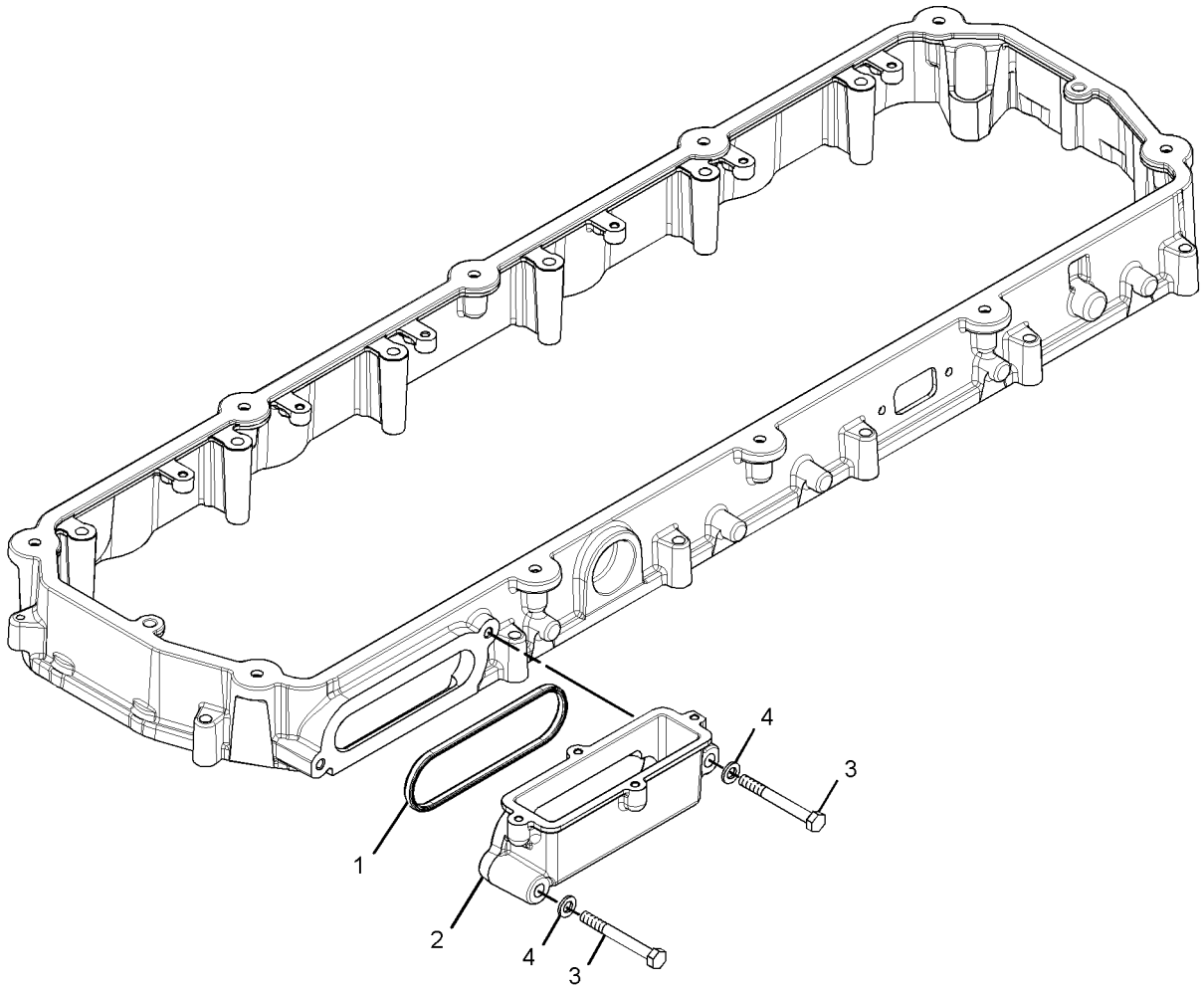

GRAPHIC #1 **<END>** g01880575

BASIC ENGINE

230-7215 BELT GP-SERPENTINE

S/N: TXF1-UP; MHX7634-UP

PART OF 291-9259 ENGINE AR-COMPLETE

SMCS-1397 **i02885635**

NOTE	REF NO	GRAPHIC REF	PART NUMBER	QTY	PART NAME 1 2 3 4 5 6 (PRODUCT LEVEL)	SEE PAGE
	1	1	**221-3775**	1	BELT-SERPENTINE	

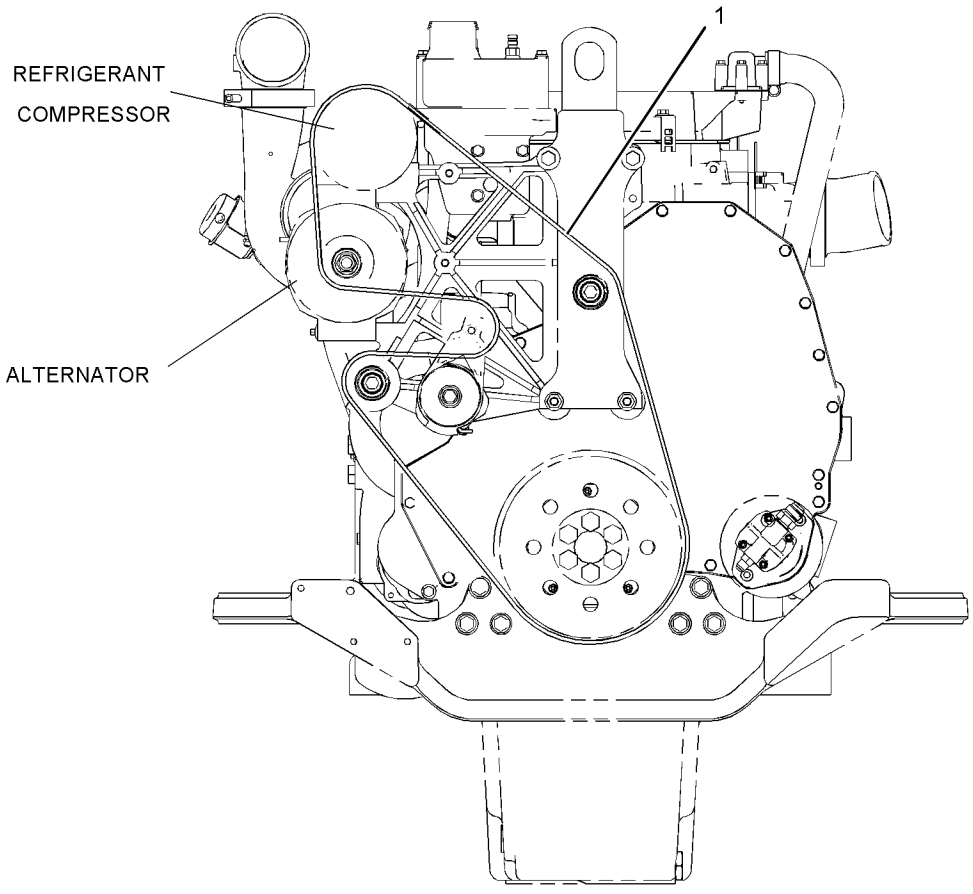

FRONT VIEW

GRAPHIC #1 **<END>** g01076253

BASIC ENGINE

230-7216 BELT TENSIONER GP

S/N: TXF1-UP; MHX7634-UP

PART OF 291-9259 ENGINE AR-COMPLETE

SMCS-1357, 1358, 1397 **i02112331**

NOTE	REF NO	GRAPHIC REF	PART NUMBER	QTY	PART NAME 1 2 3 4 5 6 (PRODUCT LEVEL)	SEE PAGE
	1	1	**197-9642**	1	PULLEY AS-IDLER (8-GROOVE)	
	2	1	**211-7895**	1	BELT TENSIONER	
	3	1	**227-8313**	1	PULLEY AS-IDLER (8-GROOVE)	
	4	1	**230-3207**	1	BRACKET-SUPPORT	
	5	1	**243-1557**	1	BRACKET	
	6	1	**5P-8245**	4	WASHER-HARD (13.5X25.5X3-MM THK)	
M	7	1	**6V-2317**	2	BOLT (M8X1.25X30-MM)	
	8	1	**6V-5839**	3	WASHER (11X21X2.5-MM THK)	
M	9	1	**6V-5842**	3	BOLT (M10X1.5X40-MM)	
M	10	1	**6V-8149**	2	NUT (M12X1.75-THD)	
M	11	1	**8T-0646**	2	BOLT (M12X1.75X110-MM)	
	12	1	**8T-4121**	1	WASHER-HARD (11X21X2.5-MM THK)	
M	13	1	**8T-4178**	1	BOLT (M10X1.5X90-MM)	
	14	1	**9M-1974**	2	WASHER-HARD (8.8X16X2-MM THK)	

M-METRIC PART

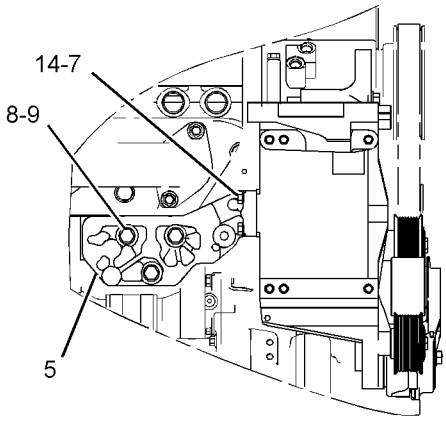

RIGHT SIDE VIEW

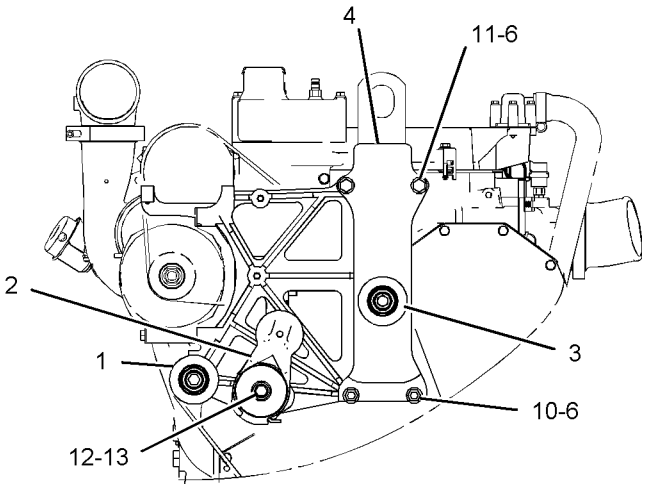

FRONT VIEW

GRAPHIC #1 **<END>** g01076260

BASIC ENGINE

223-7463 CAMSHAFT GP

S/N: TXF1-UP; MHX7634-UP

PART OF 317-9990, 356-2433 ENGINE AR-CORE

SMCS-1210 **i01966584**

NOTE	REF NO	GRAPHIC REF	PART NUMBER	QTY	PART NAME 1 2 3 4 5 6 (PRODUCT LEVEL)	SEE PAGE
R	1	1	**223-7468**	1	CAMSHAFT AS	
	1A	1	**1B-8705**	1	KEY-WOODRUFF	
	1B	1	**222-3907**	1	GEAR (96-TEETH)	
	1C	1	**223-7471**	1	PLATE-THRUST	
	2	1	**229-5684**	1	COVER	
	3	1	**131-3718**	1	SEAL-O-RING	
M	4	1	**6V-5217**	4	BOLT (M8X1.25X20-MM)	
	5	1	**9M-1974**	4	WASHER-HARD (8.8X16X2-MM THK)	
M	6	1	**8T-0338**	4	BOLT-SOCKET HEAD (M8X1.25X45-MM)	

M-METRIC PART
R-REMFG PART MAY BE AVAILABLE

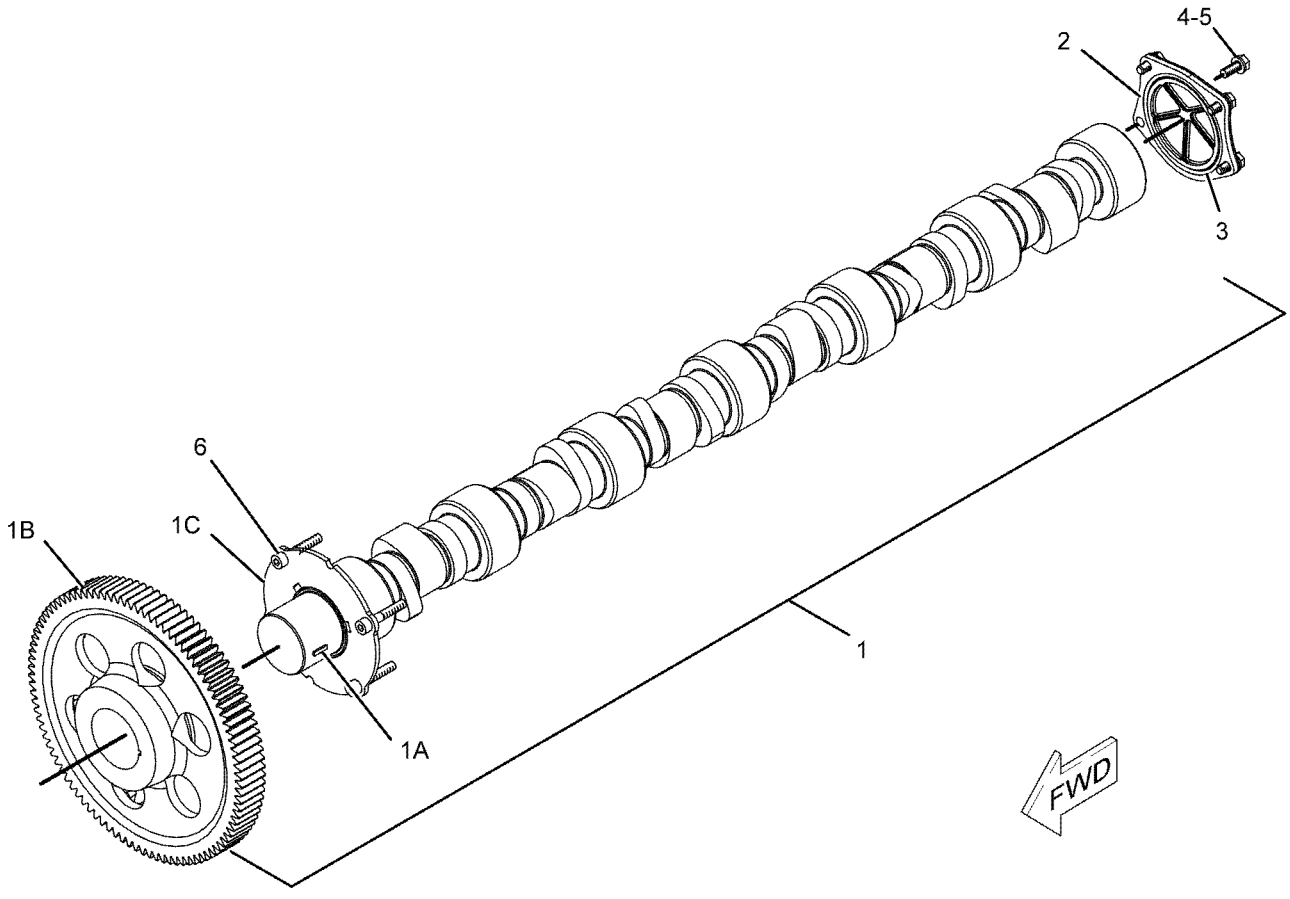

GRAPHIC #1 **<END>** g01043782

127-5728 COVER GP-FLYWHEEL HOUSING

S/N: TXF1-UP; MHX7634-UP
PART OF 291-9259 ENGINE AR-COMPLETE
FOR USE WITH LH MOUNTED STARTER

SMCS-1157 **i02426209**

NOTE	REF NO	GRAPHIC REF	PART NUMBER	QTY	PART NAME 1 2 3 4 5 6 (PRODUCT LEVEL)	SEE PAGE
	1	1	**9Y-6089**	1	GASKET	
	2	1	**0S-1589**	3	BOLT (5/8-11X1.75-IN)	
	3	1	**4D-3704**	3	WASHER-HARD (17X30X5-MM THK)	
	4	1	**4N-1114**	1	COVER	

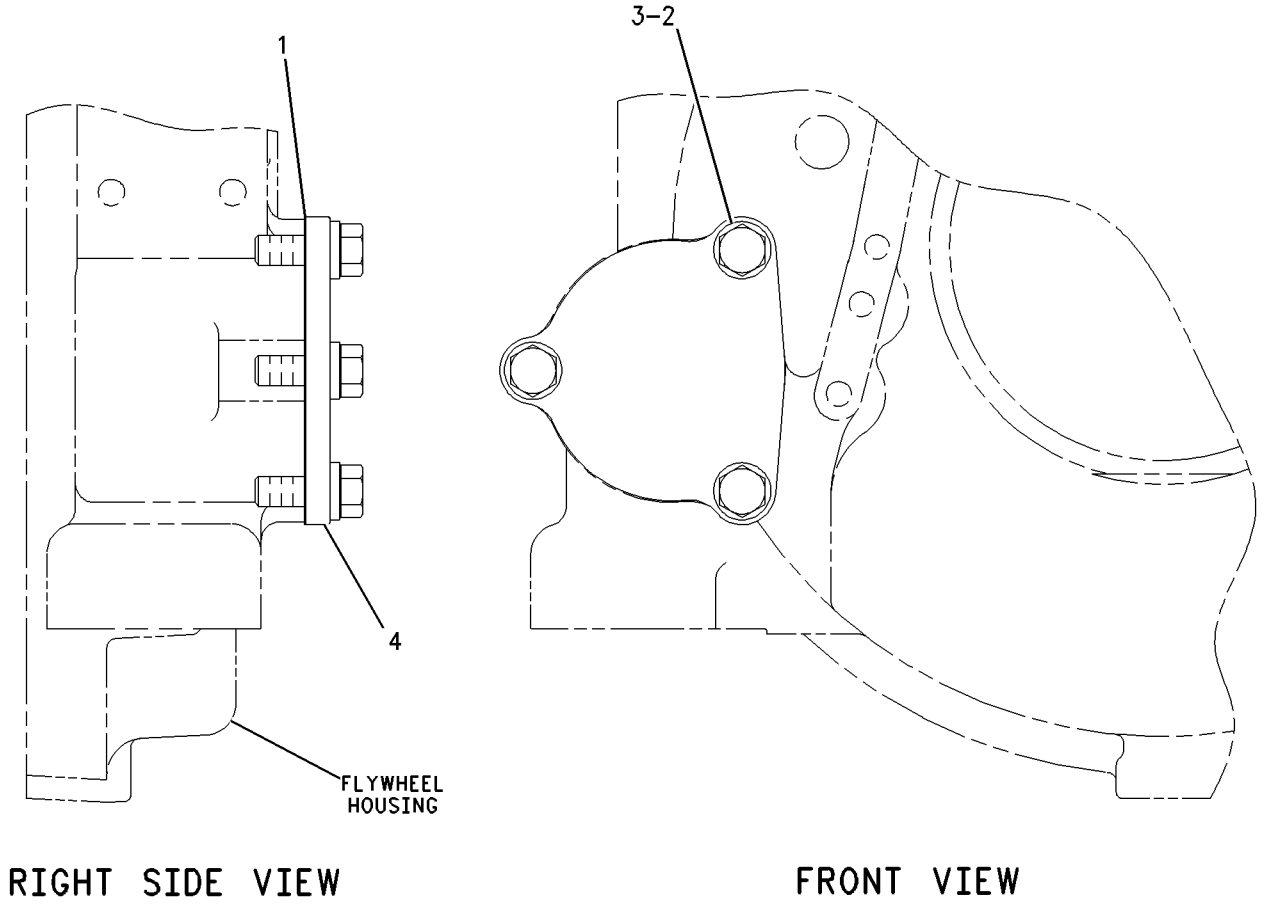

RIGHT SIDE VIEW FRONT VIEW

GRAPHIC #1 **<END>** g00783561

113-8987 COVER GP-FRONT HOUSING

S/N: TXF1-UP; MHX7634-UP
POWER TAKE-OFF
PART OF 291-9259 ENGINE AR-COMPLETE

SMCS-1150 **i01659298**

NOTE	REF NO	GRAPHIC REF	PART NUMBER	QTY	PART NAME 1 2 3 4 5 6 (PRODUCT LEVEL)	SEE PAGE
M	1	1	**6V-5842**	2	BOLT (M10X1.5X40-MM)	
	2	1	**6V-5839**	2	WASHER (11X21X2.5-MM THK)	
	3	1	**129-2905**	1	COVER	
	4	1	**107-5769**	1	SEAL-O-RING	

M-METRIC PART

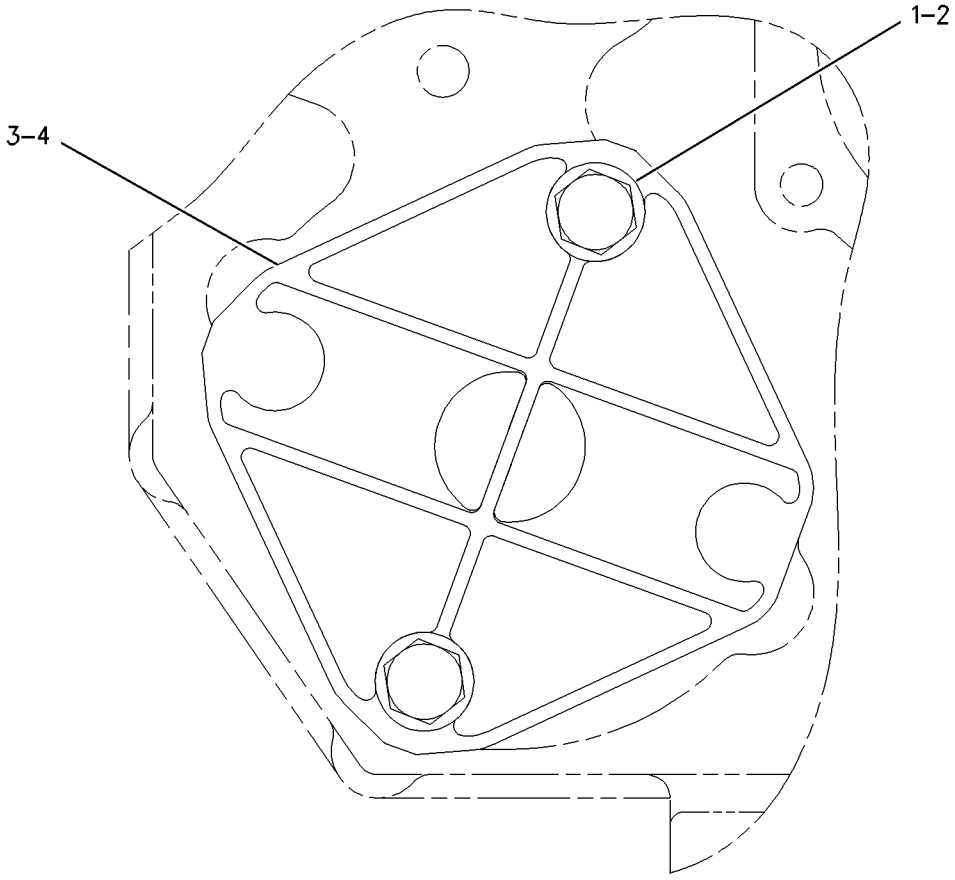

GRAPHIC #1 **<END>** g00856137

227-2574 COVER GP-FRONT HOUSING

S/N: TXF1-UP; MHX7634-UP
PROVIDES COVER WHEN AIR COMPRESSOR IS NOT USED
PART OF 291-9259 ENGINE AR-COMPLETE

SMCS-1150 **i03833937**

NOTE	REF NO	GRAPHIC REF	PART NUMBER	QTY	PART NAME 1 2 3 4 5 6 (PRODUCT LEVEL)	SEE PAGE
	1	1	**285-0823**	1	COVER	
M	2	1	**6V-8197**	3	BOLT (M12X1.75X40-MM)	
	3	1	**117-8801**	1	SEAL-O-RING	
	4	1	**5P-8245**	3	WASHER-HARD (13.5X25.5X3-MM THK)	

M-METRIC PART

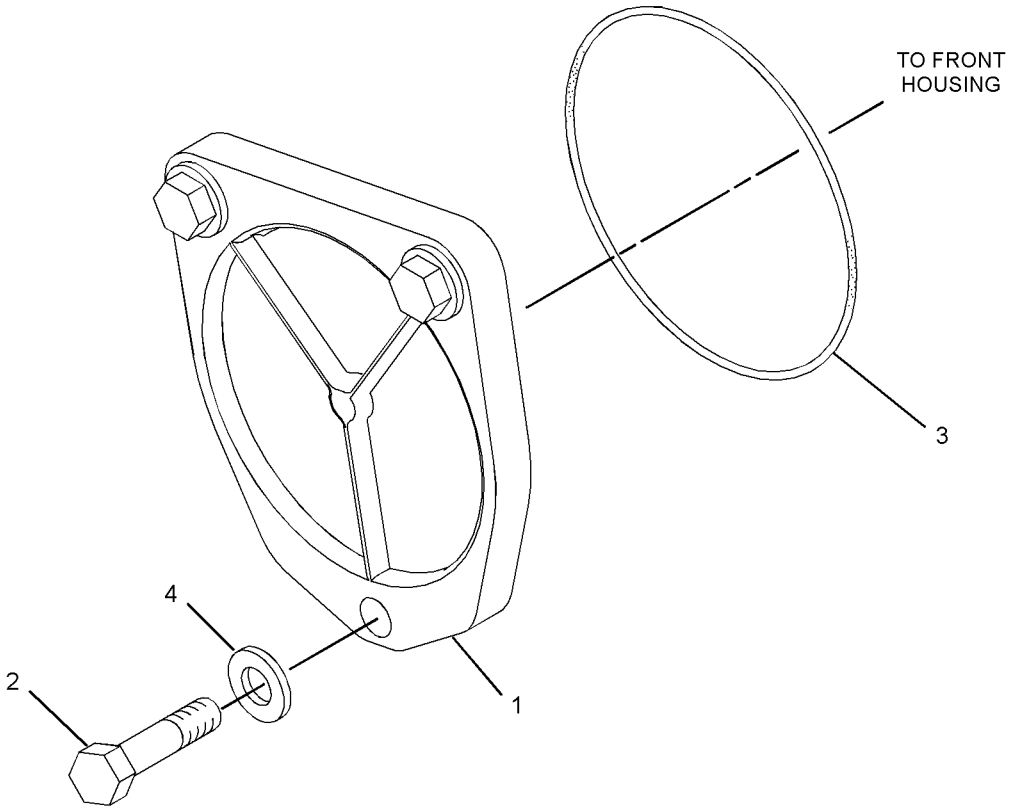

GRAPHIC #1 **<END>** g01345052

229-2615 COVER GP-VALVE MECHANISM

S/N: TXF1-UP; MHX7634-UP

PART OF 291-9259 ENGINE AR-COMPLETE

FOR USE WITH ENGINES THAT DO NOT REQUIRE A VARIABLE VALVE ACTUATOR

SMCS-1107 **i03668320**

NOTE	REF NO	GRAPHIC REF	PART NUMBER	QTY	PART NAME 1 2 3 4 5 6 (PRODUCT LEVEL)	SEE PAGE
	1	1	**212-7728**	10	WASHER-ISOLATOR	
	2	1	**342-7923**	1	COVER	
	3	1	**229-5711**	1	SEAL-VALVE COVER	
M	4	1	**8T-6912**	10	BOLT (M8X1.25X50-MM)	
	5	1	**8T-4224**	10	WASHER-HARD (8.8X16X2-MM THK)	

M-METRIC PART

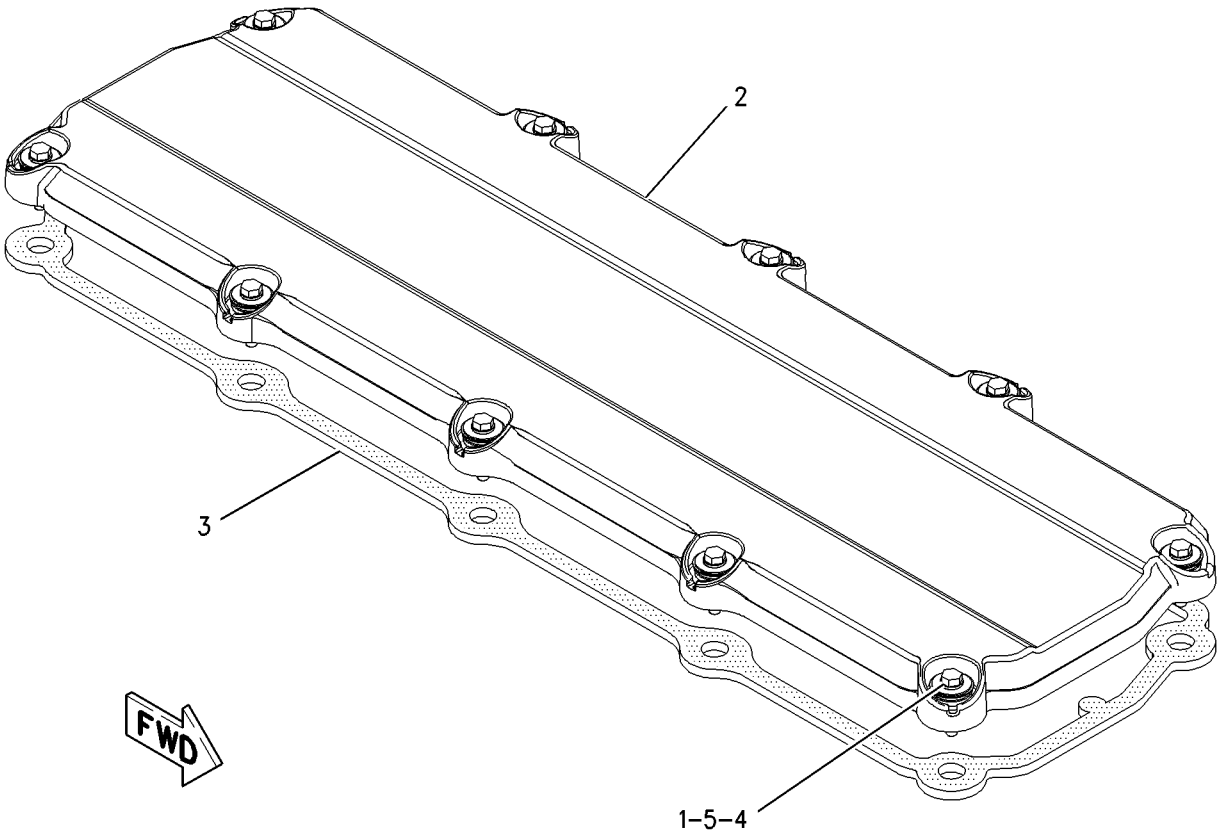

GRAPHIC #1 **<END>** g00951733

BASIC ENGINE

224-3881 CRANKSHAFT GP

S/N: TXF1-UP; MHX7634-UP

PART OF 317-9990, 356-2433 ENGINE AR-CORE

SMCS-1202 **i03575780**

NOTE	REF NO	GRAPHIC REF	PART NUMBER	QTY	PART NAME 1 2 3 4 5 6 (PRODUCT LEVEL)	SEE PAGE
J	1	1	**211-0587**	4	BEARING-MAIN (STANDARD)	
AB		1	**128-0400**		BEARING-MAIN (0.51-MM US)	
AB		1	**128-0401**		BEARING-MAIN (0.76-MM US)	
AB		1	**128-0402**		BEARING-MAIN (0.51-MM OS)	
AB		1	**128-0403**		BEARING-MAIN (0.51-MM OS, 0.51-MM US)	
J	2	1	**211-0588**	3	BEARING-MAIN (STANDARD)	
AB		1	**128-0382**		BEARING-MAIN (0.51-MM US)	
AB		1	**128-0383**		BEARING-MAIN (0.76-MM US)	
AB		1	**128-0384**		BEARING-MAIN (0.51-MM OS)	
AB		1	**128-0385**		BEARING-MAIN (0.51-MM OS, 0.51-MM US)	
R	3	1	**313-3997**	1	CRANKSHAFT AS	
		1	**6V-3536**	1	DOWEL	
		1	**9Y-0810**	1	SLEEVE-WEAR	
		1	**9Y-0821**	1	SLEEVE	
		1	**187-8972**	1	GEAR-CRANKSHAFT (48-TEETH)	
J	4	1	**246-3144**	2	PLATE-THRUST	
					AVAILABLE REPAIR KIT(S):	
J			**243-6717**	1	KIT-CRANKSHAFT BEARING (STANDARD)	
					(INCLUDES MAIN BEARINGS & THRUST PLATES	

A-NOT PART OF THIS GROUP
B-USE AS REQUIRED
J-KIT MARKED J INCLUDES PARTS MARKED J
R-REMFG PART MAY BE AVAILABLE

224-3881 **CRANKSHAFT GP** *(contd.)* **i03575780**

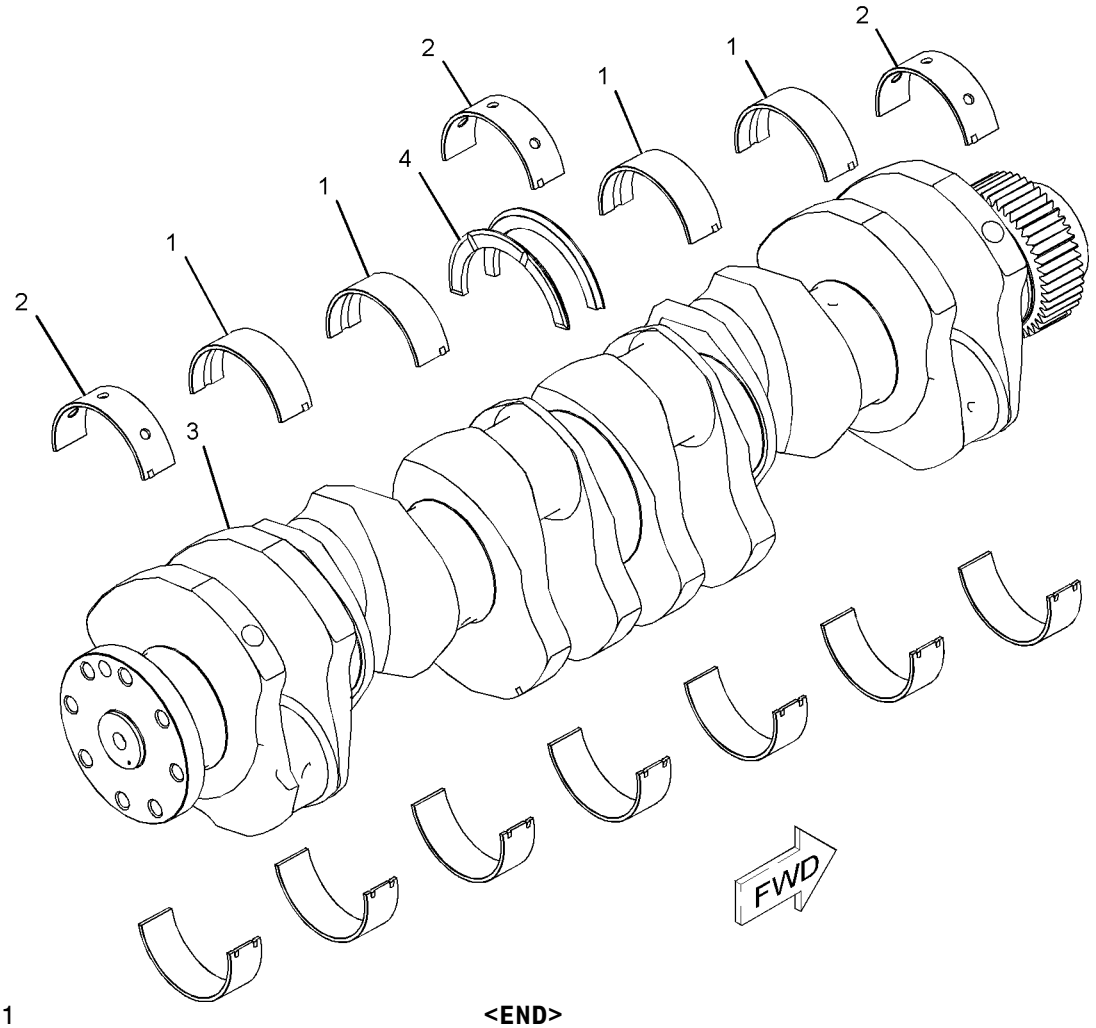

GRAPHIC #1 **<END>** g01101434

303-1382 CYLINDER BLOCK AS

S/N: TXF1-UP; MHX7634-UP

PART OF 303-1383 CYLINDER BLOCK AS

SMCS-1201 **i03562880**

NOTE	REF NO	GRAPHIC REF	PART NUMBER	QTY	PART NAME 1 2 3 4 5 6 (PRODUCT LEVEL)	SEE PAGE
	1	1	**223-6546**	14	BOLT (M18X2.5X170-MM)	
	2	1	**293-9397**	14	WASHER-HARD (19X34X3.5-MM THK)	
	3	1	**207-8572**	7	CAP-BEARING	

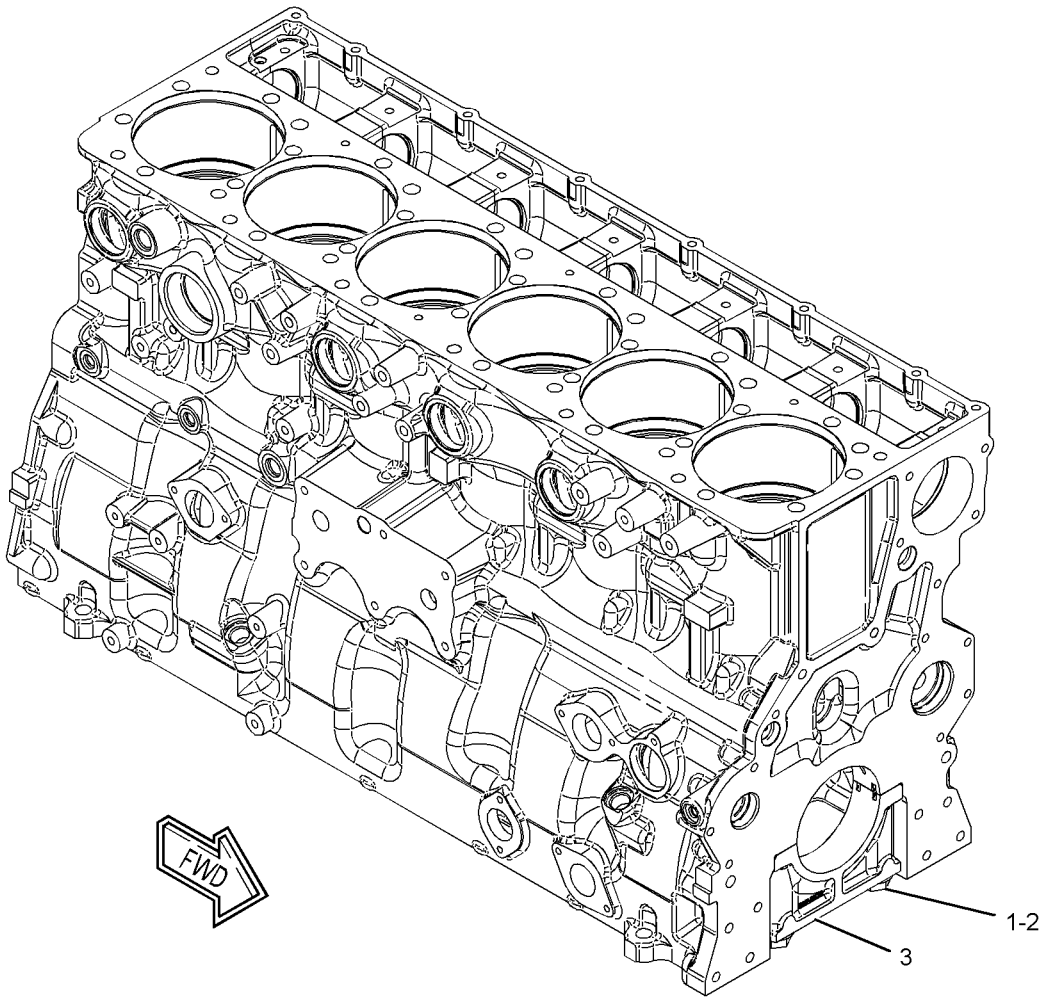

GRAPHIC #1 **<END>** g01338467

BASIC ENGINE

303-1383 CYLINDER BLOCK AS

S/N: TXF1-UP; MHX7634-UP

PART OF 303-1384 CYLINDER BLOCK AS

SMCS-1201 **i02662418**

NOTE	REF NO	GRAPHIC REF	PART NUMBER	QTY	PART NAME 1 2 3 4 5 6 (PRODUCT LEVEL)	SEE PAGE
	1	1	**187-8969**	7	BEARING	
Y	2	1	*303-1382*	1	CYLINDER BLOCK AS	29

Y-SEPARATE ILLUSTRATION

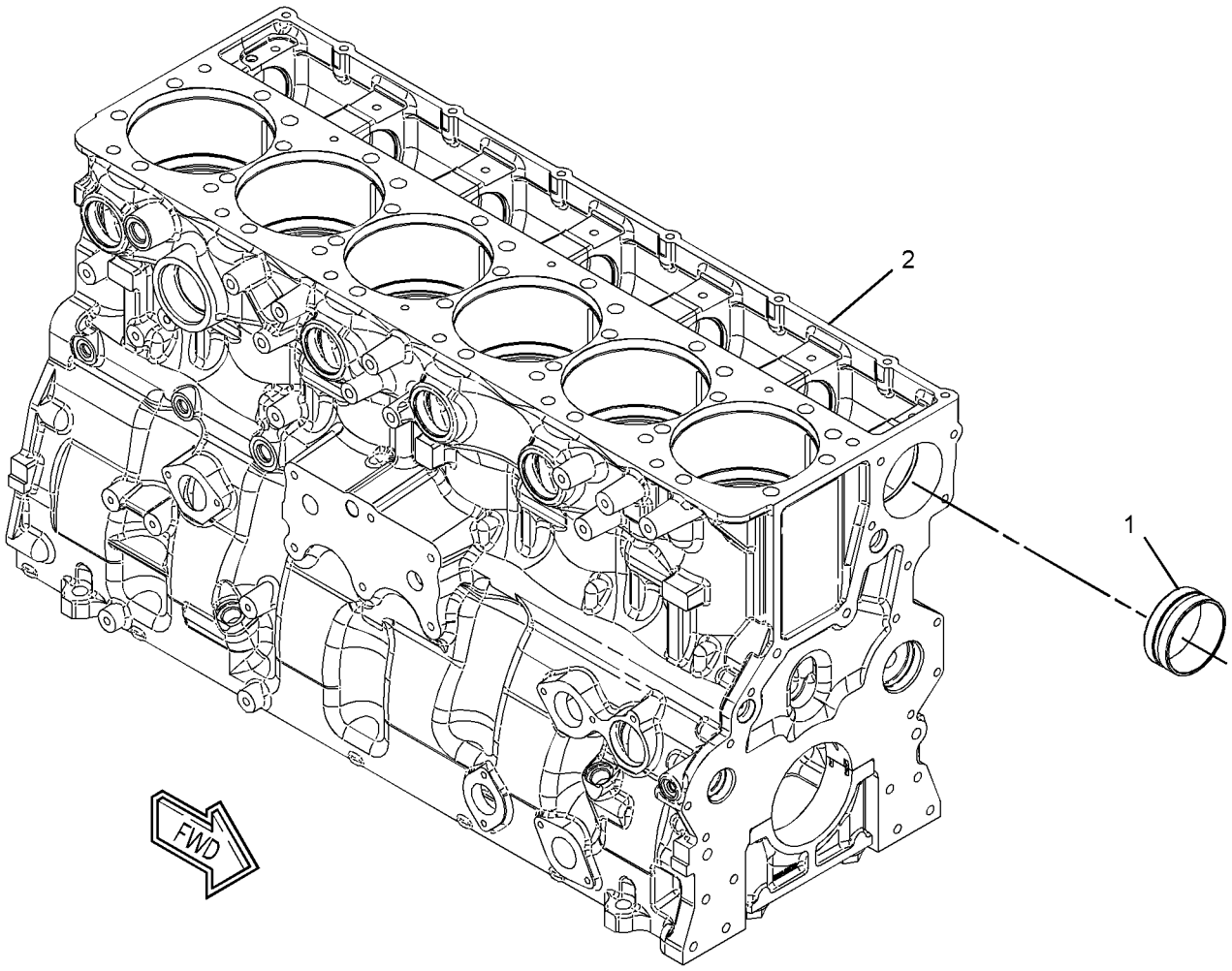

GRAPHIC #1 **<END>** g01338428

303-1384 CYLINDER BLOCK AS

S/N: TXF1-UP; MHX7634-UP

PART OF 240-7271 CYLINDER BLOCK GP

SMCS-1201 **i02662417**

NOTE	REF NO	GRAPHIC REF	PART NUMBER	QTY	PART NAME 1 2 3 4 5 6 (PRODUCT LEVEL)	SEE PAGE
	1	1	**4F-5695**	5	PLUG-CUP	
	2	1	**104-3560**	6	SEAL-LINER	
	3	1	**197-9330**	6	LINER-CYLINDER	
Y	4	1	*303-1383*	1	CYLINDER BLOCK AS	30

Y-SEPARATE ILLUSTRATION

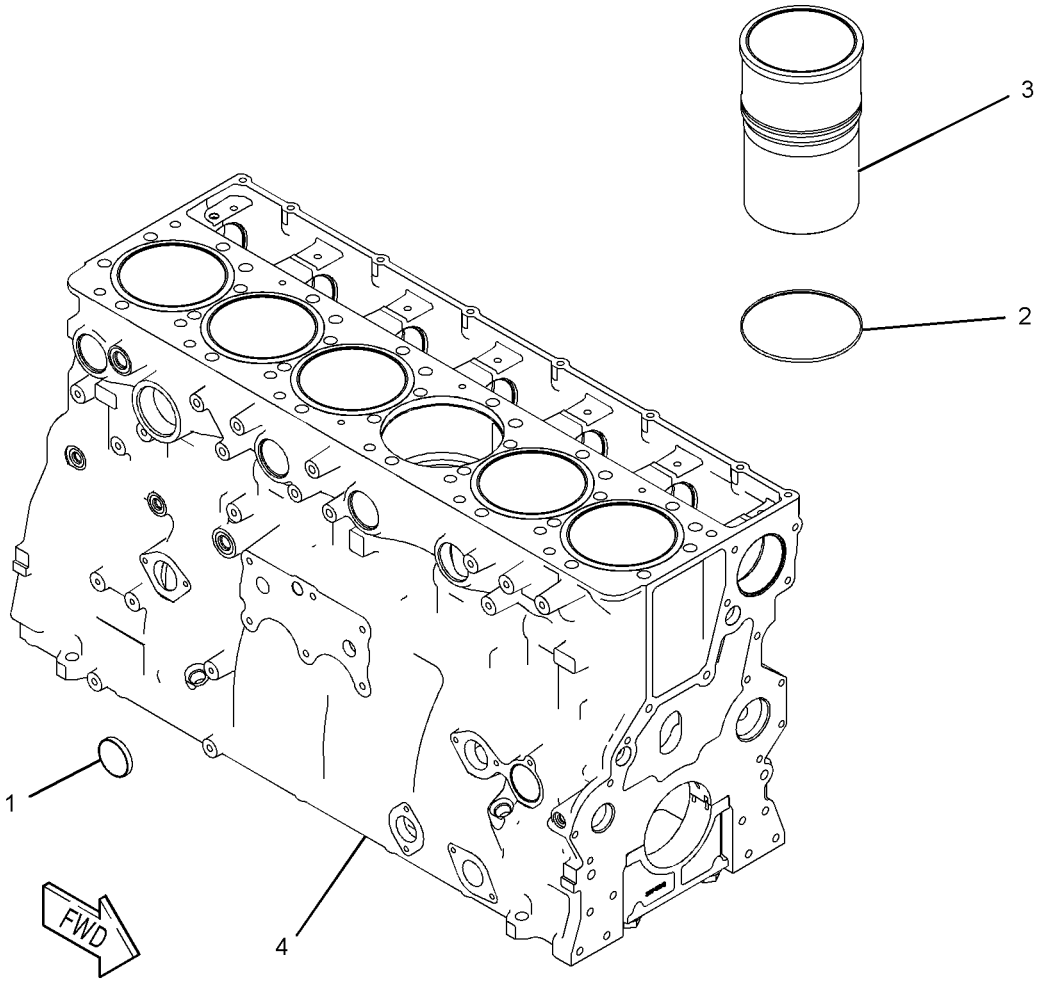

GRAPHIC #1 **<END>** g01009480

BASIC ENGINE

240-7271 CYLINDER BLOCK GP*R

S/N: TXF1-UP; MHX7634-UP

PART OF 317-9990, 356-2433 ENGINE AR-CORE

SMCS-1201 **i03873733**

NOTE	REF NO	GRAPHIC REF	PART NUMBER	QTY	PART NAME 1 2 3 4 5 6 (PRODUCT LEVEL)	SEE PAGE
	1	1	**3B-0623**	3	PLUG-CUP	
CYR	2	1	**303-1384**	1	CYLINDER BLOCK AS	31
	3	1	**9X-7378**	2	SEAL-O-RING	
	4	1	**9S-8002**	2	PLUG-O-RING (7/16-2 THD)	
	5	1	*307-2671*	1	PLUG AS	
		1	**9S-8002**	1	PLUG-O-RING	
	5A	1	**214-7566**	1	SEAL-O-RING	
	6	1	**6V-3538**	2	DOWEL	
	7	1	**7N-5683**	6	DOWEL	

C-CHANGE FROM PREVIOUS TYPE
R-REMFG PART MAY BE AVAILABLE
Y-SEPARATE ILLUSTRATION

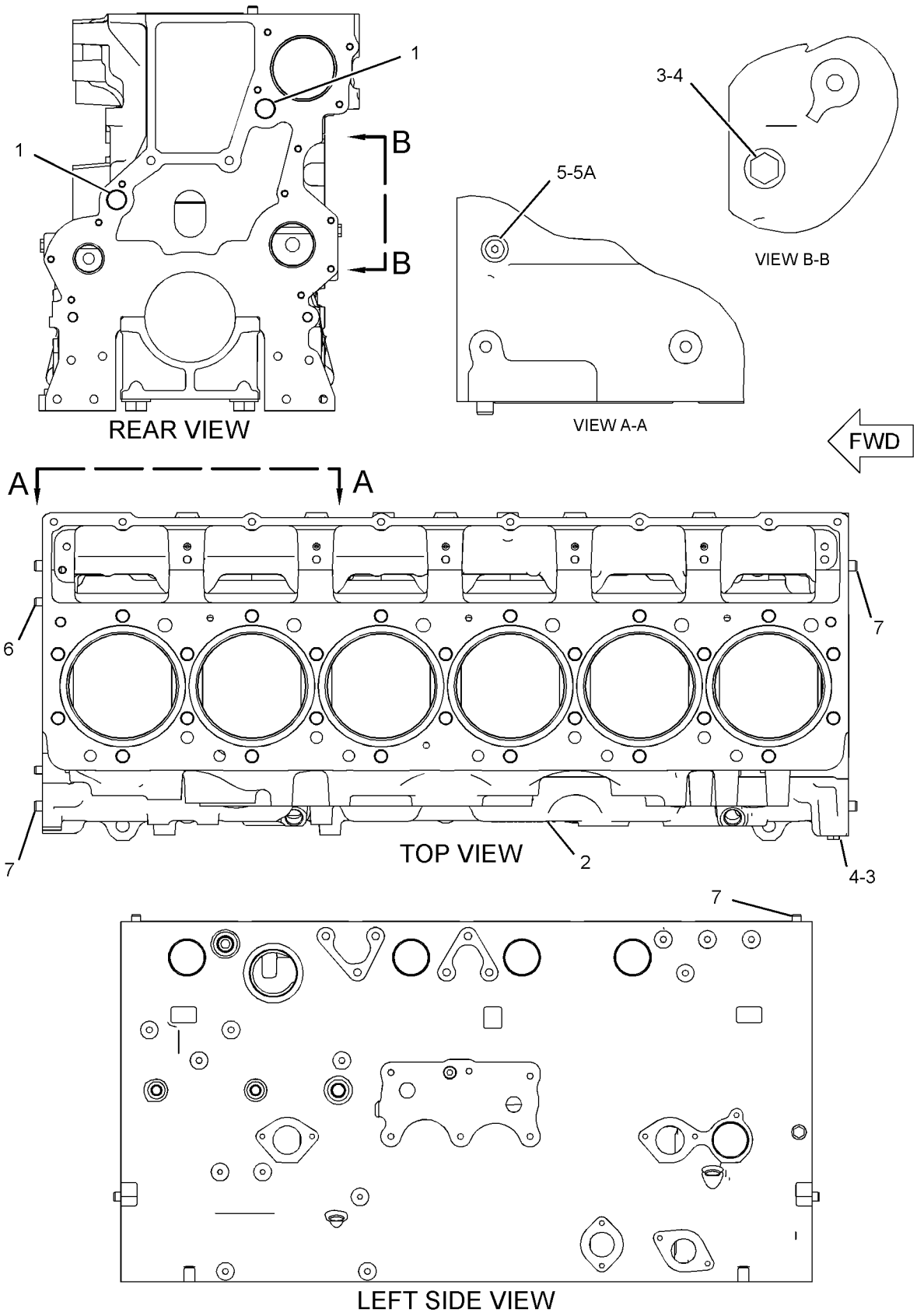

GRAPHIC #1

<END>

g02116214

BASIC ENGINE

345-3752 CYLINDER HEAD AS

S/N: TXF1-UP; MHX7634-UP

PART OF 305-0617 CYLINDER HEAD GP

SMCS-1100 **i03733646**

NOTE	REF NO	GRAPHIC REF	PART NUMBER	QTY	PART NAME 1 2 3 4 5 6 (PRODUCT LEVEL)	SEE PAGE
	1	1	**224-1270**	12	INSERT-VALVE SEAT (EXHAUST) (STANDARD)	
AB		1	**254-3944**		INSERT-VALVE SEAT (0.51-MM OS)	
AB		1	**331-5010**		INSERT-VALVE SEAT (0.13-MM OS)	
AB		1	**331-5011**		INSERT-VALVE SEAT (0.26-MM OS)	
	2	1	**260-4855**	12	INSERT-VALVE SEAT (INLET) (STANDARD)	
AB		1	**331-5007**		INSERT-VALVE SEAT (0.13-MM OS, INLET)	
AB		1	**331-5008**		INSERT-VALVE SEAT (0.26-MM OS, INLET)	
AB		1	**331-5009**		INSERT-VALVE SEAT (0.51-MM OS, INLET)	
	3	1	**263-4920**	6	SLEEVE-INJECTOR (INLET)	
	4	1	**268-2953**	24	GUIDE-VALVE	
	6	1	**166-2904**	12	SEAL-O-RING	
	7	1	**214-7568**	7	SEAL-O-RING	
	8	1	**3B-0623**	35	PLUG-CUP	
	9	1	**6V-5063**	1	SEAL-O-RING	
	10	1	**9S-8004**	7	PLUG-O-RING	
	11	1	**9S-8008**	1	PLUG-O-RING	
	12	1	**9X-7430**	6	SEAL-O-RING	

A-NOT PART OF THIS GROUP
B-USE AS REQUIRED

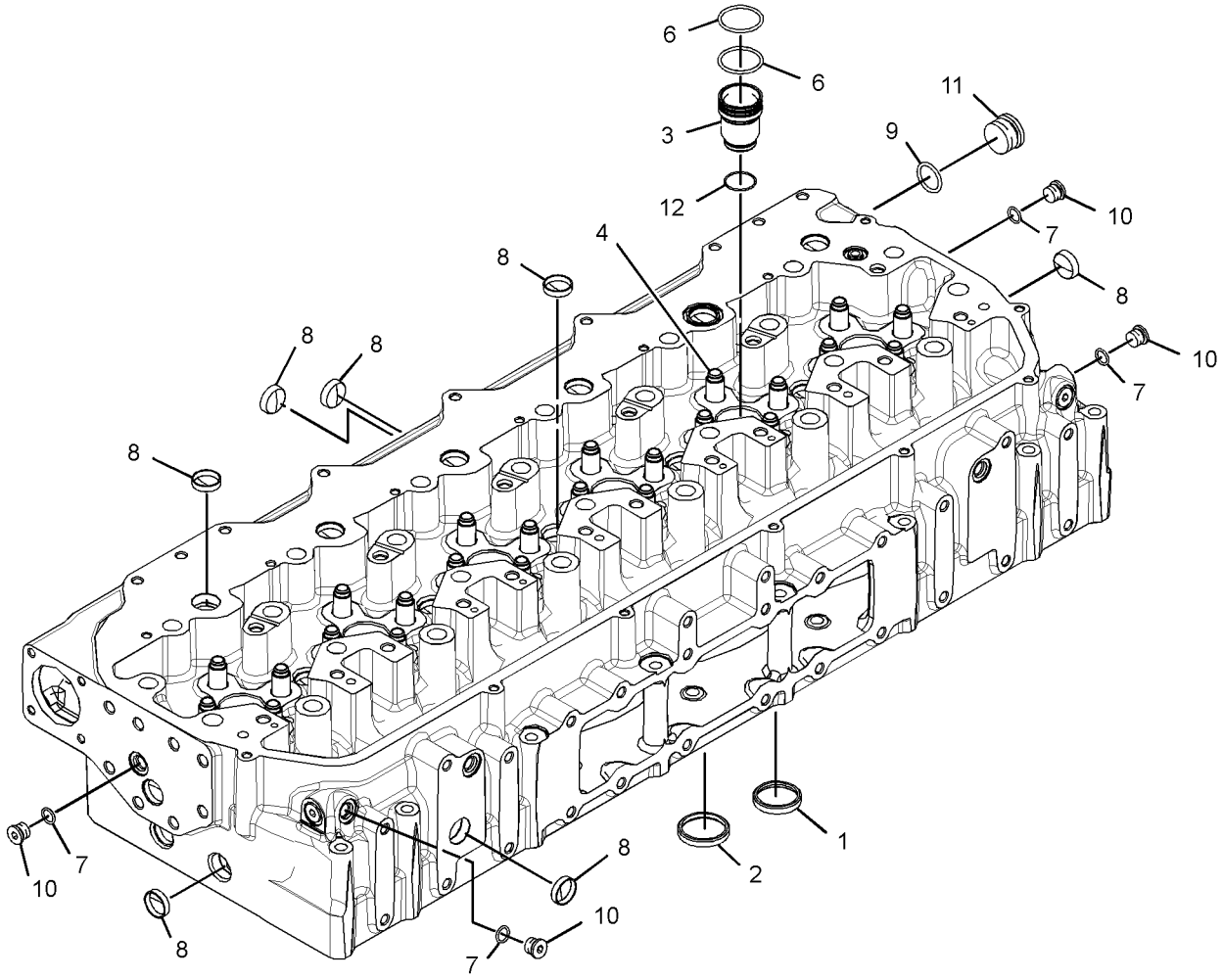

GRAPHIC #1 **<END>** g01994933

305-0617 CYLINDER HEAD GP

S/N: TXF1-UP; MHX7634-UP

PART OF 305-0618 CYLINDER HEAD GP

SMCS-1100 **i03997510**

NOTE	REF NO	GRAPHIC REF	PART NUMBER	QTY	PART NAME 1 2 3 4 5 6 (PRODUCT LEVEL)	SEE PAGE
	1	1	**2A-4429**	48	LOCK-RETAINER	
	2	1	**332-2152**	24	SPRING-VALVE	
	3	1	*353-5140*	2	PLUG AS	
					(EACH INCLUDES)	
	3A	1	**6V-5063**	1	SEAL-O-RING	
		1	**9S-8008**	1	PLUG-O-RING	
	4	1	**224-3030**	12	VALVE-EXHAUST	
	5	1	**163-2478**	24	SEAL-VALVE STEM	
	6	1	**224-3125**	12	BASE	
	7	1	**7E-7977**	24	ROTOCOIL AS	
					(EACH INCLUDES)	
		1	**7E-7978**	1	SHIELD	
	8	1	**224-4441**	24	SPRING	
	9	1	**252-7802**	12	VALVE-INLET	
Y	10	1	**345-3752**	1	CYLINDER HEAD AS	34
	11	1	**5P-5598**	1	SEAL-O-RING	

Y-SEPARATE ILLUSTRATION

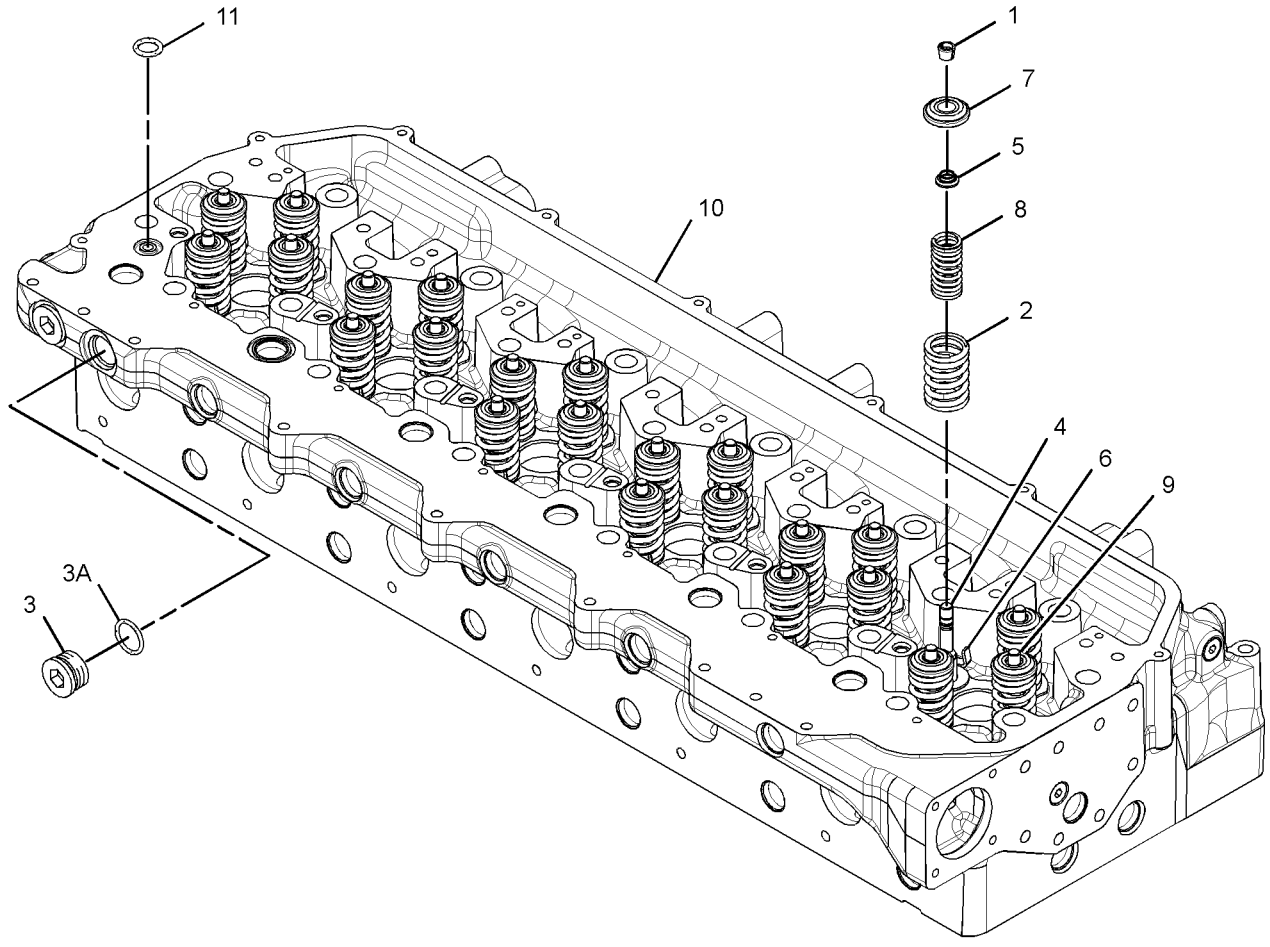

GRAPHIC #1 **<END>** g02176877

BASIC ENGINE

305-0618 CYLINDER HEAD GP

S/N: TXF1-UP; MHX7634-UP

PART OF 317-9990, 356-2433 ENGINE AR-CORE

SMCS-1100 **i02694690**

NOTE	REF NO	GRAPHIC REF	PART NUMBER	QTY	PART NAME 1 2 3 4 5 6 (PRODUCT LEVEL)	SEE PAGE
Y	1	1	*198-4963*	1	FASTENER GP-CYLINDER HEAD	39
	2	1	**221-9392**	1	GASKET (CYLINDER HEAD)	
Y	3	1	**305-0617**	1	CYLINDER HEAD GP	35

Y-SEPARATE ILLUSTRATION

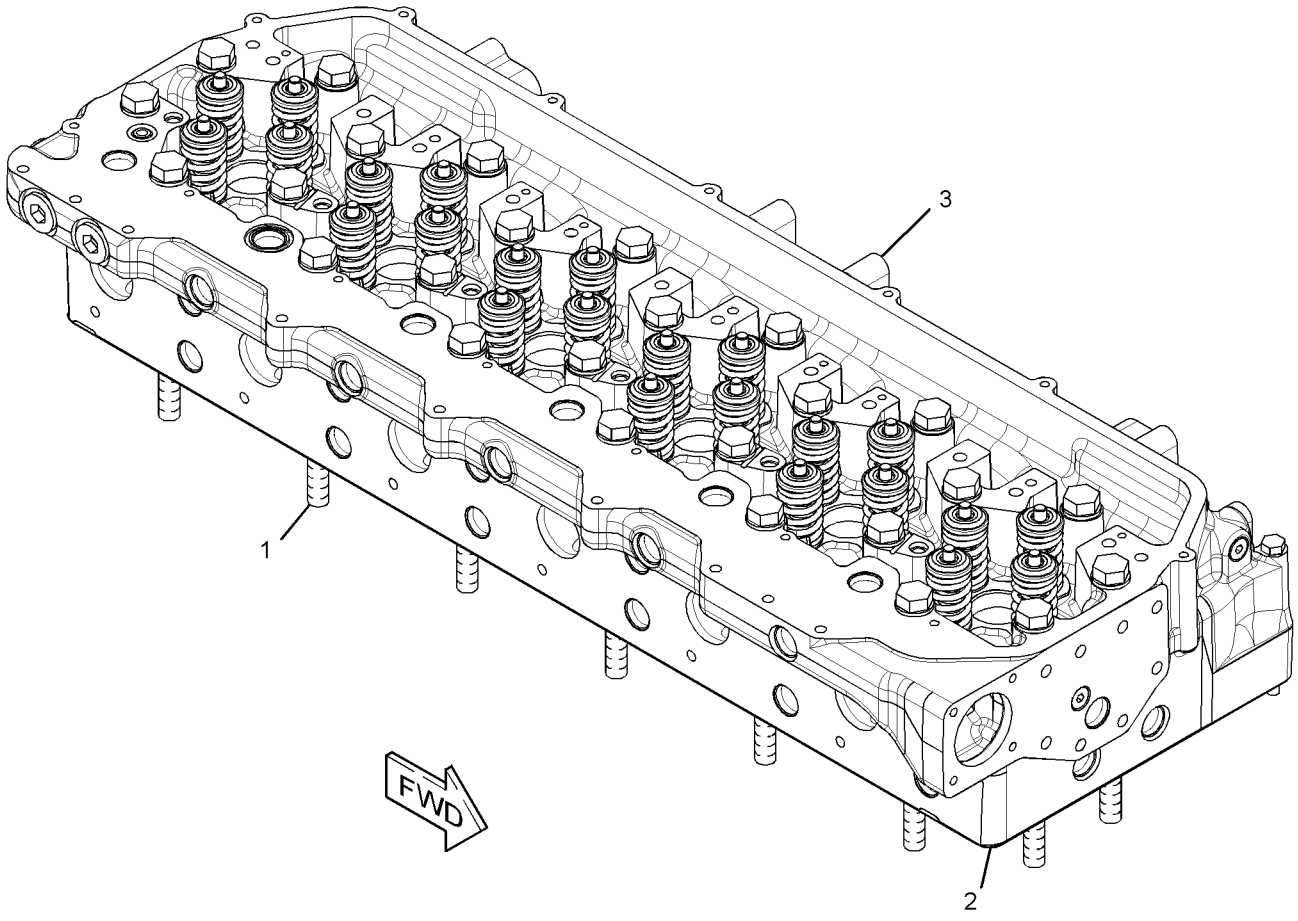

GRAPHIC #1 **<END>** g01364440

117-2766 DAMPER GP

S/N: TXF1-UP; MHX7634-UP

PROVIDES A VISCONIC DAMPER, ADAPTER AND FASTENING HARDWARE TO ATTACH THE DAMPER TO THE ADAPTER.

PART OF 291-9259 ENGINE AR-COMPLETE

SMCS-1205 **i02663349**

NOTE	REF NO	GRAPHIC REF	PART NUMBER	QTY	PART NAME 1 2 3 4 5 6 (PRODUCT LEVEL)	SEE PAGE
	1	1	**179-0092**	1	ADAPTER	
	2	1	**167-8125**	1	DAMPER AS	
M	3	1	**136-4183**	8	BOLT-12 POINT HEAD (M10X1.5X30-MM)	
	4	1	**9X-2027**	8	WASHER (11X18X2-MM THK)	

M-METRIC PART

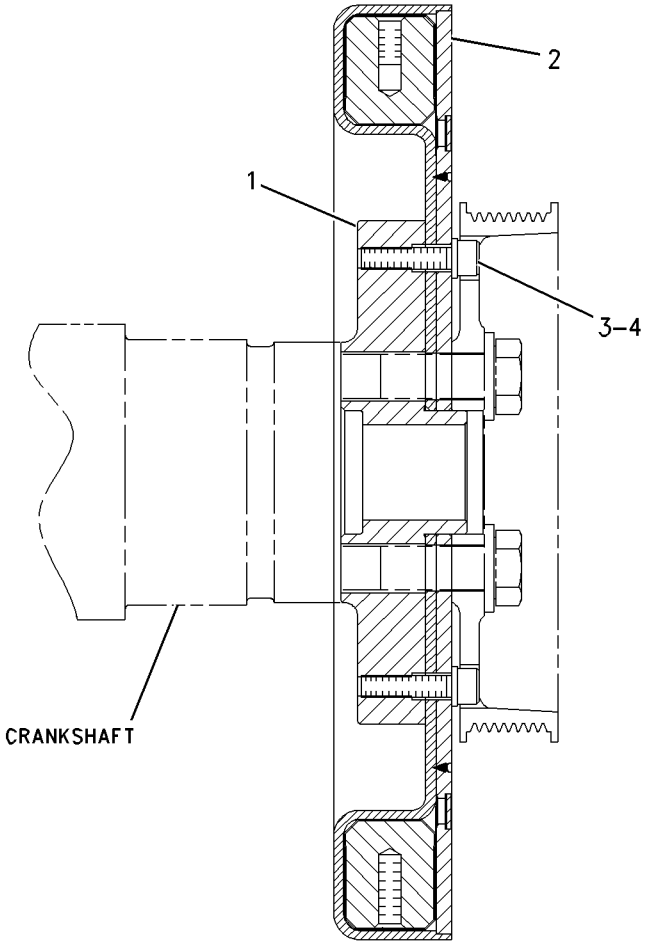

RIGHT SIDE VIEW

GRAPHIC #1 **<END>** g00783687

BASIC ENGINE

315-4365 DRIVE GP-FAN

S/N: JGB1-UP; KHS1-UP

PART OF 281-3554 FAN GP-SUCTION

SMCS-1359 **i02879355**

NOTE	REF NO	GRAPHIC REF	PART NUMBER	QTY	PART NAME 1 2 3 4 5 6 (PRODUCT LEVEL)	SEE PAGE
	1	1	**4B-3665**	2	BALL BEARING	
	2	1	**095-7424**	1	RING-RETAINING	
	3	1	**137-3749**	2	SPACER (45X53X10-MM THK)	
	4	1	**315-4366**	1	SHAFT	
	5	1	**315-4367**	1	SEAL-LIP TYPE	
	6	1	**315-4368**	1	HOUSING	
	7	1	**6V-5590**	2	RING-RETAINING	

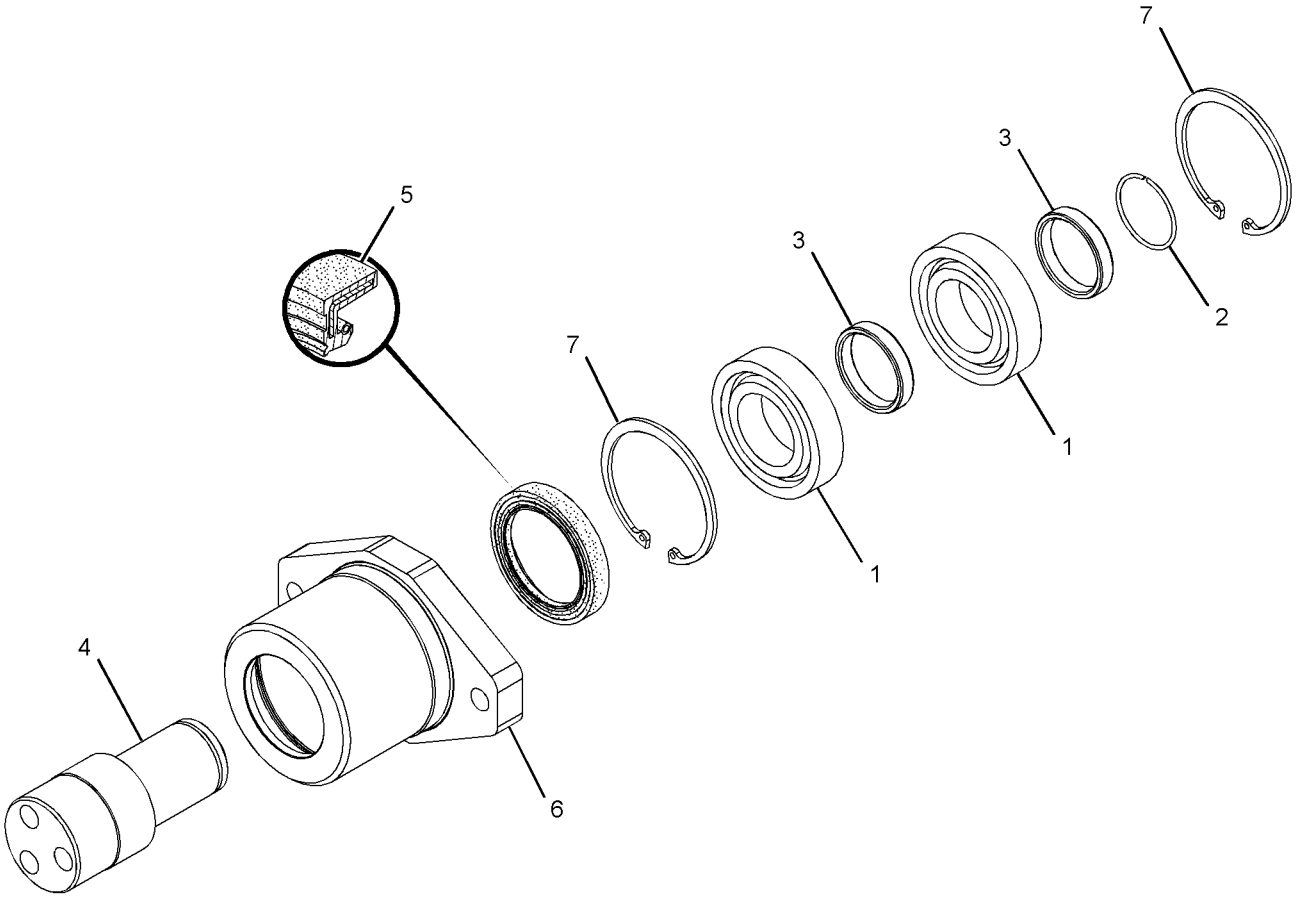

GRAPHIC #1 **<END>** g01435806

198-4963 FASTENER GP-CYLINDER HEAD

S/N: TXF1-UP; MHX7634-UP

PART OF 305-0618 CYLINDER HEAD GP

SMCS-1100 **i02697758**

NOTE	REF NO	GRAPHIC REF	PART NUMBER	QTY	PART NAME 1 2 3 4 5 6 (PRODUCT LEVEL)	SEE PAGE
M	1	1	**242-1811**	26	BOLT-CYLINDER HEAD (M16X2X220-MM)	
	2	1	**210-4460**	8	BOLT (M10X1.5X130-MM)	
	3	1	**2S-5658**	26	WASHER-HARD (17X29X3-MM THK)	

M-METRIC PART

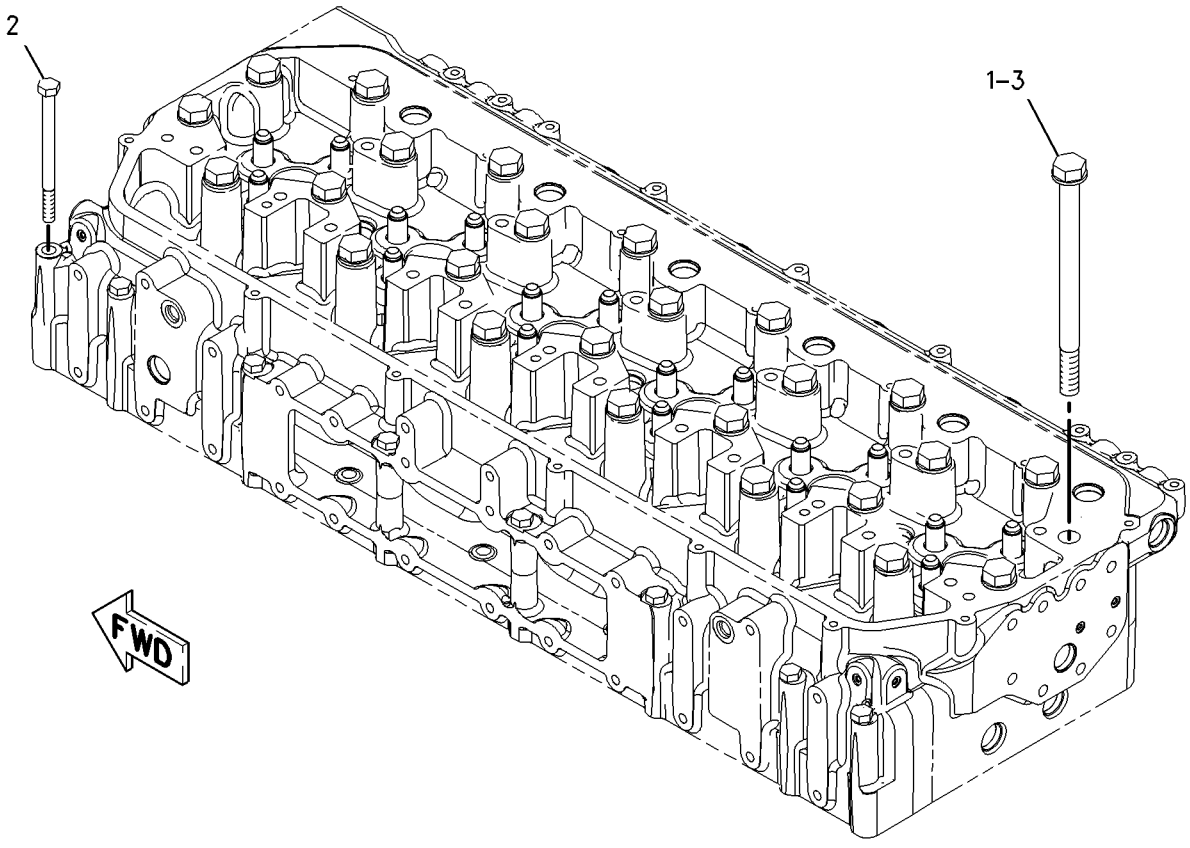

GRAPHIC #1 **<END>** g00949755

BASIC ENGINE

117-2771 FASTENER GP-DAMPER & PULLEY

S/N: TXF1-UP; MHX7634-UP

PART OF 291-9259 ENGINE AR-COMPLETE

SMCS-1205, 7553 **i03317325**

NOTE	REF NO	GRAPHIC REF	PART NUMBER	QTY	PART NAME 1 2 3 4 5 6 (PRODUCT LEVEL)	SEE PAGE
C	1	1	**213-1585**	1	SPACER (10.5-MM THK)	
M	2	1	**8T-0281**	6	BOLT (M16X2X80-MM)	

C-CHANGE FROM PREVIOUS TYPE
M-METRIC PART

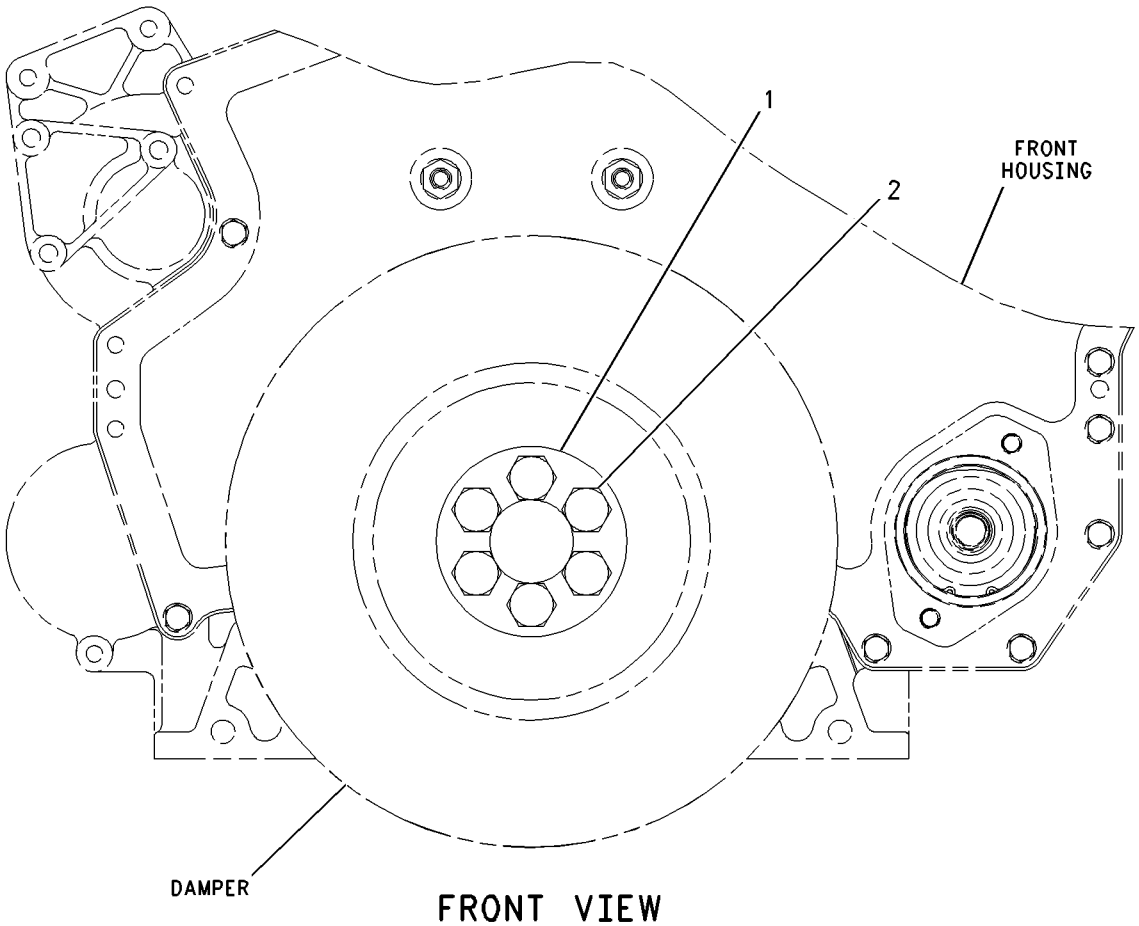

FRONT VIEW

GRAPHIC #1 **<END>** g00783716

117-2794 FASTENER GP-FLYWHEEL

S/N: TXF1-UP; MHX7634-UP
PART OF 291-9259 ENGINE AR-COMPLETE
CANNOT BE USED WITH GEAR GP-REAR (RPTO)

SMCS-1156 **i02202361**

NOTE	REF NO	GRAPHIC REF	PART NUMBER	QTY	PART NAME 1 2 3 4 5 6 (PRODUCT LEVEL)	SEE PAGE
	1	1	**5P-8247**	8	WASHER-HARD (17X32X3.5-MM THK)	
M	2	1	**9X-2021**	8	BOLT-LOCKING (M16X2X45-MM)	

M-METRIC PART

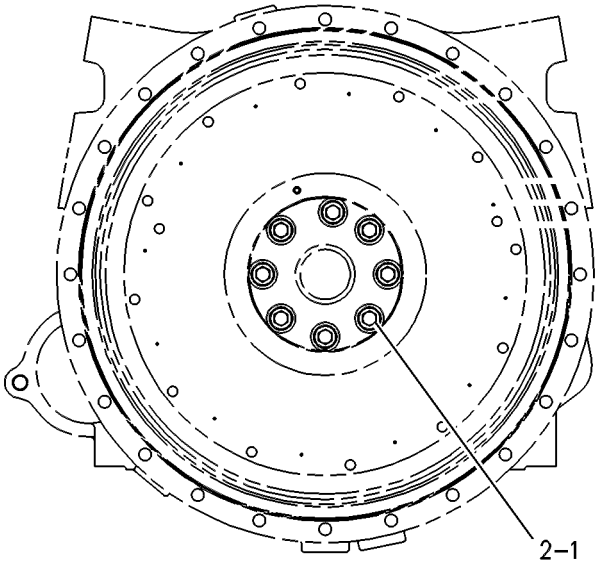

REAR VIEW

GRAPHIC #1 **<END>** g00251372

BASIC ENGINE

307-0683 FLYWHEEL GP

S/N: TXF1-UP; MHX7634-UP

PART OF 291-9259 ENGINE AR-COMPLETE

SMCS-1156 **i02865811**

NOTE	REF NO	GRAPHIC REF	PART NUMBER	QTY	PART NAME 1 2 3 4 5 6 (PRODUCT LEVEL)	SEE PAGE
	1	1	**303-3189**	1	FLYWHEEL AS	
	1A	1	**256-9651**	1	GEAR-FLYWHEEL (113-TEETH)	

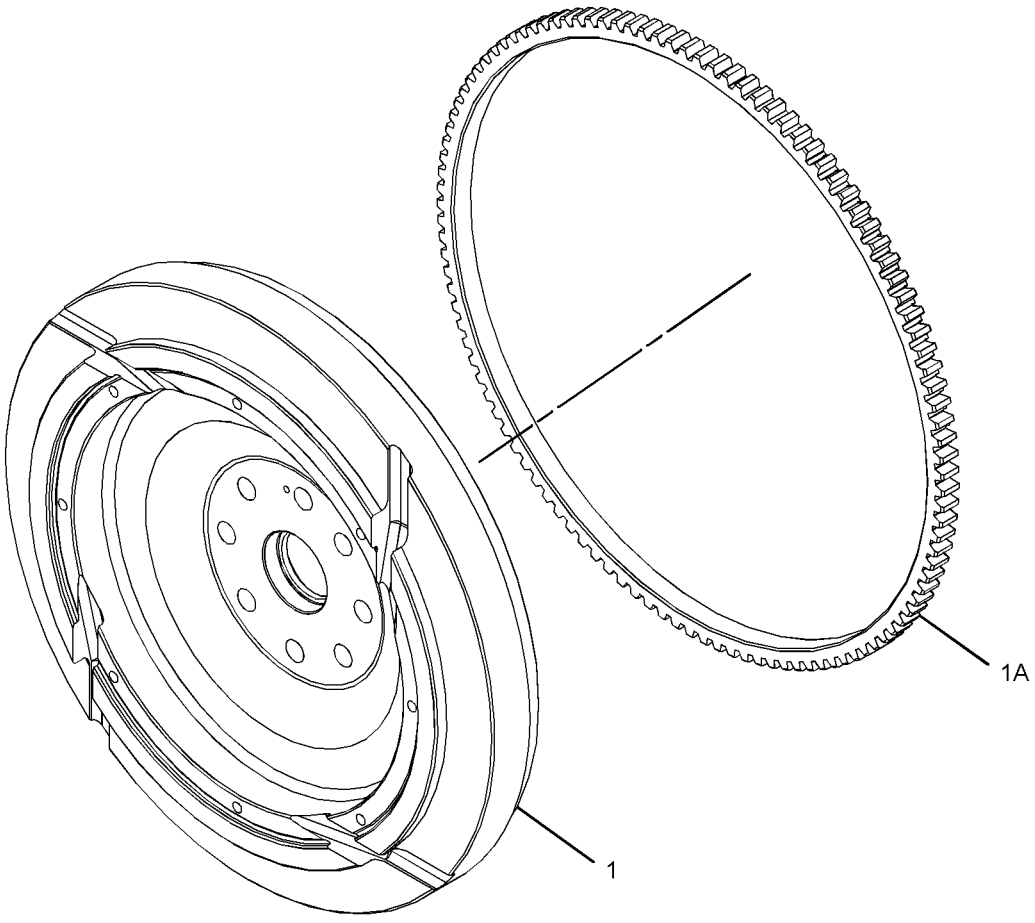

GRAPHIC #1 **<END>** g01408073

222-3088 GEAR GP-FRONT

S/N: TXF1-UP; MHX7634-UP

PART OF 317-9990, 356-2433 ENGINE AR-CORE

SMCS-1151, 1162, 1206 **i02434273**

NOTE	REF NO	GRAPHIC REF	PART NUMBER	QTY	PART NAME 1 2 3 4 5 6 (PRODUCT LEVEL)	SEE PAGE
	1	1	**7C-7851**	1	SHAFT	
	2	1	**218-7270**	1	SHAFT	
	3	1	**222-3902**	1	GEAR AS (64-TEETH)	
		1	**7C-7852**	1	BEARING	
	4	1	**222-3905**	1	GEAR AS (CAMSHAFT IDLER, 71-TEETH)	
M	5	1	**8T-0281**	1	BOLT (M16X2X80-MM)	
M	6	1	**8T-0360**	1	BOLT (M20X2.5X90-MM)	

M-METRIC PART

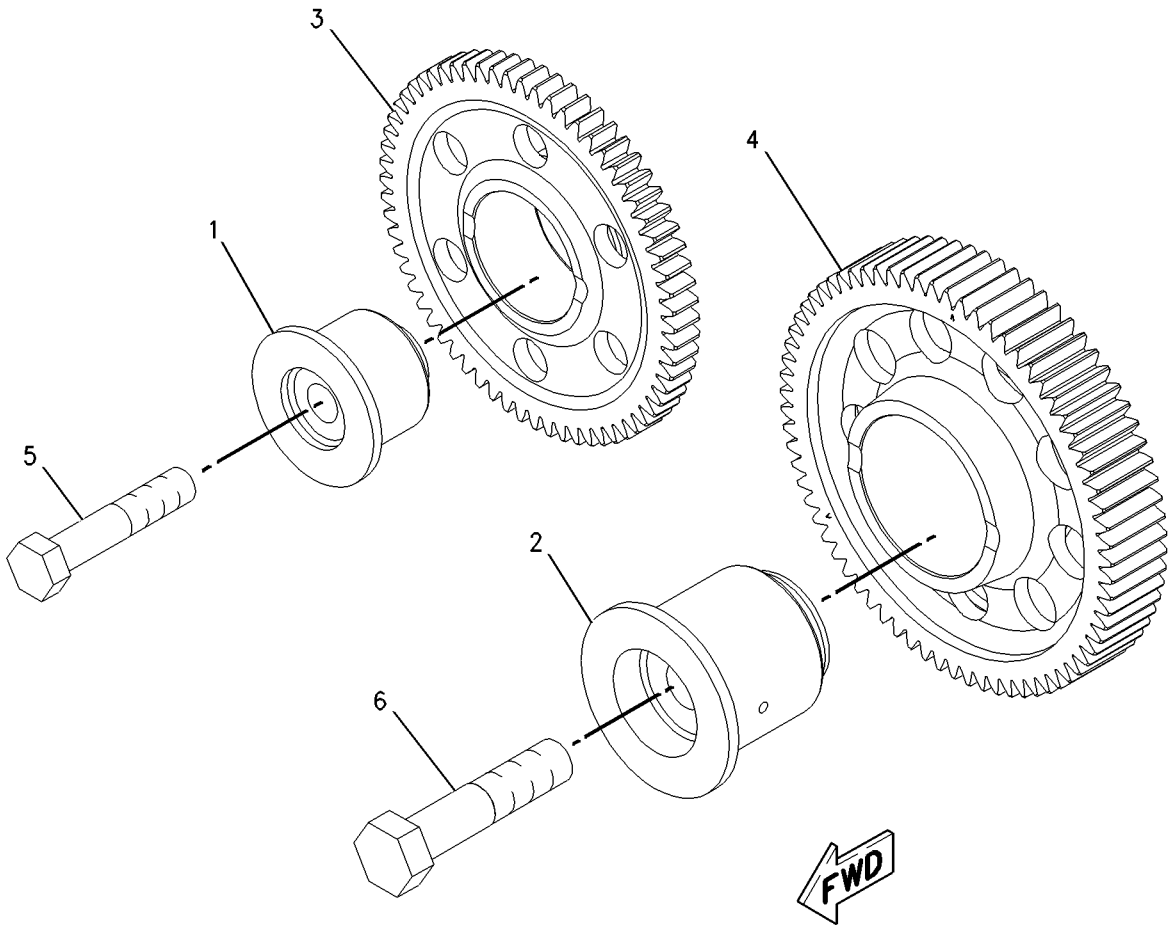

GRAPHIC #1 **<END>** g00939640

BASIC ENGINE

313-2148 HOUSING GP-FLYWHEEL

S/N: TXF1-UP; MHX7634-UP

PART OF 291-9259 ENGINE AR-COMPLETE

SMCS-1157 **i04146544**

NOTE	REF NO	GRAPHIC REF	PART NUMBER	QTY	PART NAME 1 2 3 4 5 6 (PRODUCT LEVEL)	SEE PAGE
Y	1	1	**4P-5820**	1	SENSOR GP-SPEED (ENGINE)	230
	2	1	**7C-1445**	1	COVER	
C	3	1	**335-1651**	1	HOUSING-FLYWHEEL	
	4	1	**061-9455**	1	SEAL-O-RING	
	5	1	**2A-1162**	1	GASKET	
	6	1	*307-2673*	2	PLUG AS	
					(EACH INCLUDES)	
		1	**9S-8005**	1	PLUG-O-RING	
		1	**238-5080**	1	SEAL-O-RING	
C	7	1	*319-6234*	1	PLUG AS	
		1	**9S-9334**	1	PLUG-O-RING	
		1	**238-5084**	1	SEAL-O-RING	
	8	1	*321-8642*	1	PLUG AS	
		1	**9S-8003**	1	PLUG	
		1	**214-7567**	1	SEAL-O-RING	
	9	1	**5D-9344**	1	SEAL-O-RING	
	10	1	**5F-0304**	1	PLUG	
	11	1	**5P-8246**	12	WASHER-HARD (15.5X29X3-MM THK)	
	12	1	**5P-8248**	1	WASHER-HARD (20X36.5X3.5-MM THK)	
M	13	1	**6V-5219**	2	BOLT (M8X1.25X40-MM)	
M	14	1	**8T-0226**	12	BOLT (M14X2X45-MM)	
	15	1	**9M-1974**	2	WASHER-HARD (8.8X16X2-MM THK)	
B	16	1	**1U-8846**		SEALANT-GASKET	

B-USE AS REQUIRED
C-CHANGE FROM PREVIOUS TYPE
M-METRIC PART
Y-SEPARATE ILLUSTRATION

313-2148 **HOUSING GP-FLYWHEEL** *(contd.)* **i04146544**

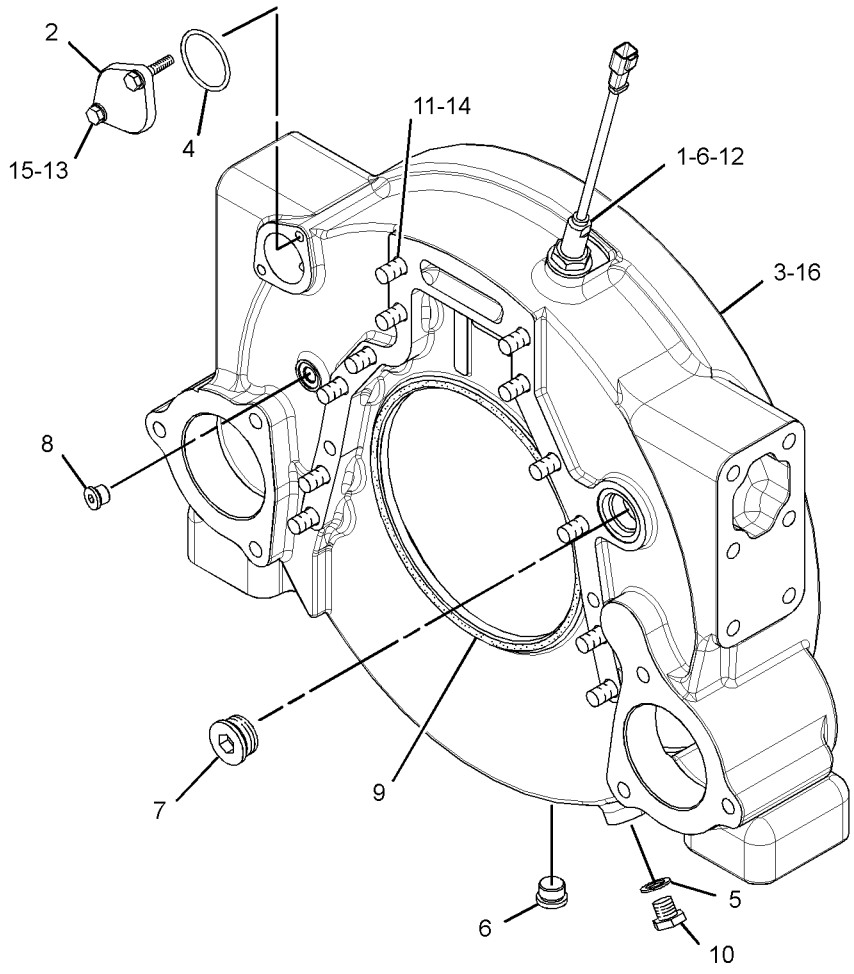

GRAPHIC #1 **<END>** g02345259

BASIC ENGINE

218-7272 HOUSING GP-FRONT

S/N: TXF1-UP; MHX7634-UP

PART OF 291-9259 ENGINE AR-COMPLETE, 317-9990 ENGINE AR-CORE

SMCS-1151, 1162, 1206 **i03997814**

NOTE	REF NO	GRAPHIC REF	PART NUMBER	QTY	PART NAME 1 2 3 4 5 6 (PRODUCT LEVEL)	SEE PAGE
	1	1	*356-0955*	1	GEAR AS-DRIVE	
		1	**5P-6727**	1	BALL BEARING	
		1	**8H-9789**	1	BEARING AS-BALL	
		1	**221-9357**	1	GEAR-AUXILIARY DRIVE (40-TEETH)	
	2	1	**9M-1974**	30	WASHER-HARD (8.8X16X2-MM THK)	
	3	1	**251-4314**	1	ADAPTER	
	4	1	**278-7093**	1	COVER AS	
	5	1	**9X-8256**	5	WASHER (6.6X12X2-MM THK)	
	6	1	**257-2015**	1	GASKET	
	7	1	**223-7852**	1	SEAL-INTEGRAL	
	8	1	**226-4755**	1	SEAL GP-CRANKSHAFT (FRONT)	
		1	**169-4166**	1	SEAL GP-CRANKSHAFT (FRONT)	
		1	**220-3373**	1	SEAL-RING	
	9	1	**329-3061**	1	HOUSING AS-FRONT	
	9A	1	**6V-3535**	2	DOWEL	
	10	1	**117-8801**	1	SEAL-O-RING	
M	11	1	**6V-2317**	17	BOLT (M8X1.25X30-MM)	
M	12	1	**6V-5192**	3	BOLT-SOCKET HEAD (M8X1.25X30-MM)	
M	13	1	**6V-5219**	9	BOLT (M8X1.25X40-MM)	
M	14	1	**6V-8225**	5	NUT (M6X1-THD)	
M	15	1	**3E-8016**	1	BOLT-SELF-LOCKING (M8X1.25X25-MM)	

M-METRIC PART

218-7272 **HOUSING GP-FRONT** *(contd.)* **i03997814**

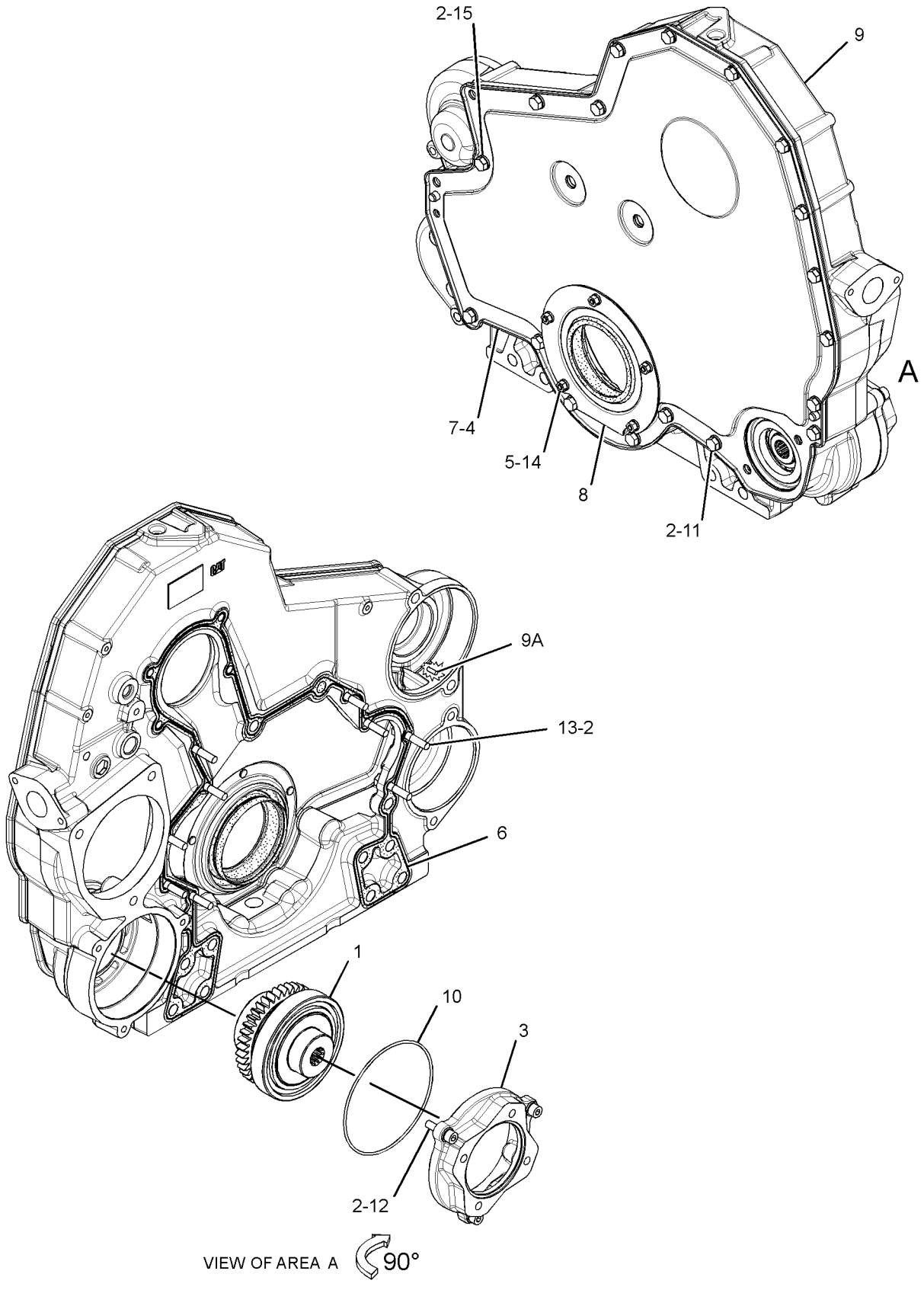

GRAPHIC #1 **<END>** g02218914

237-4376 LIFTER GP-VALVE—MECHANISM

S/N: TXF1-UP; MHX7634-UP

PART OF 240-7272 VALVE MECHANISM GP

SMCS-1209 **i03596460**

NOTE	REF NO	GRAPHIC REF	PART NUMBER	QTY	PART NAME 1 2 3 4 5 6 (PRODUCT LEVEL)	SEE PAGE
	1	1	**202-7475**	6	LIFTER AS-UNIT INJECTOR	
	2	1	**251-1005**	12	LIFTER AS-VALVE	
	3	1	**269-2862**	5	BRACKET AS (INTERMEDIATE)	
					(EACH INCLUDES)	
		1	**129-2893**	1	DOWEL	
	4	1	**269-2860**	1	BRACKET AS (FRONT)	
		1	**129-2893**	1	DOWEL	
	5	1	**240-2636**	1	SHAFT AS	
	5A	1	**0L-1026**	2	PLUG-CUP	
	6	1	**269-2864**	1	BRACKET AS (REAR)	
	6A	1	**5L-4763**	1	PIN-SPRING	
M	7	1	**6V-5843**	7	BOLT (M10X1.5X45-MM)	
	8	1	**8E-8439**	1	DOWEL	

M-METRIC PART

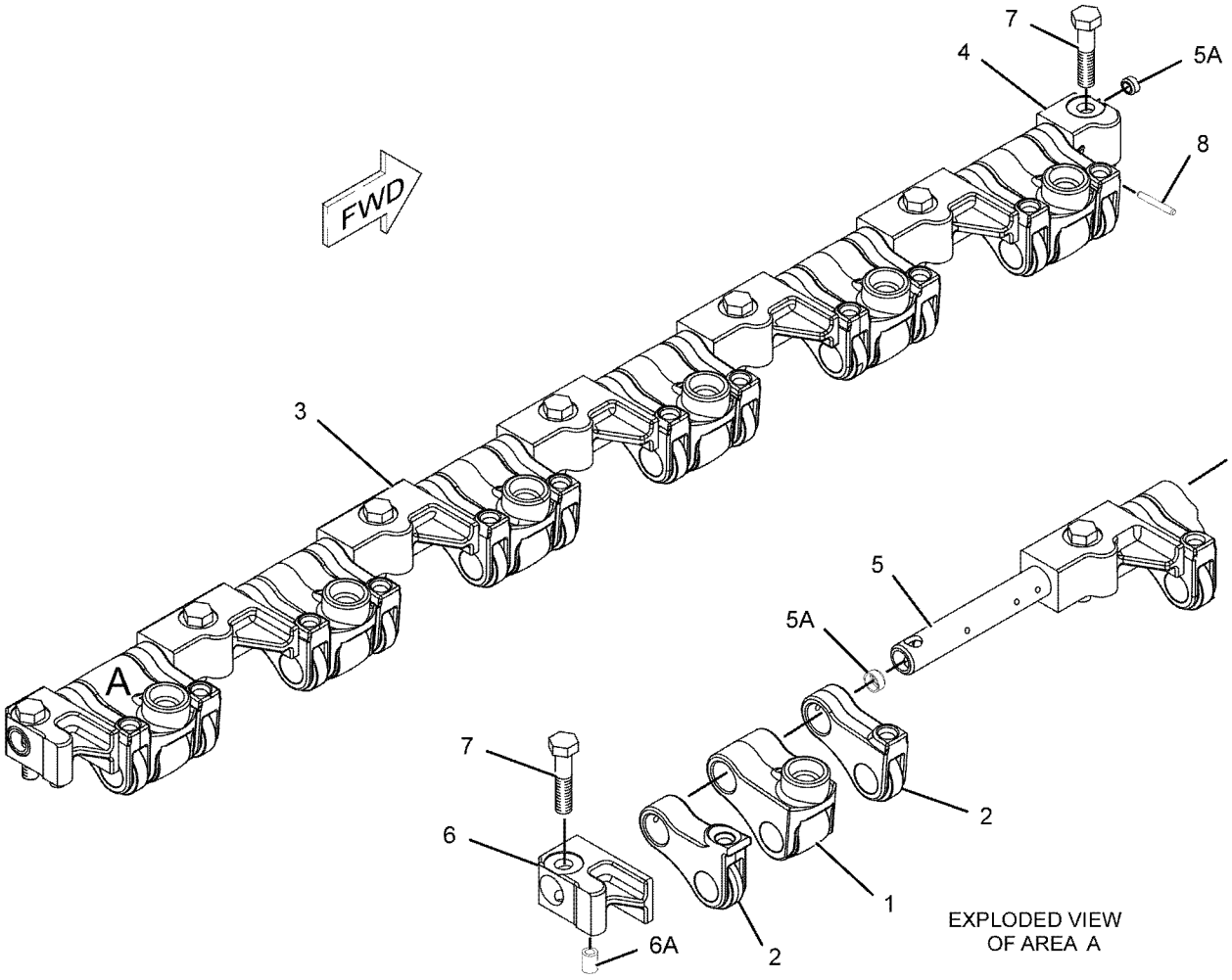

GRAPHIC #1 **<END>** g01119838

224-0880 LIFTING GP-ENGINE

S/N: TXF1-UP; MHX7634-UP
PART OF 291-9259 ENGINE AR-COMPLETE

SMCS-1122 **i01861300**

NOTE	REF NO	GRAPHIC REF	PART NUMBER	QTY	PART NAME 1 2 3 4 5 6 (PRODUCT LEVEL)	SEE PAGE
	1	1	**224-4140**	2	EYE-LIFTING	
	2	1	**5P-8245**	8	WASHER-HARD (13.5X25.5X3-MM THK)	
M	3	1	**6V-3668**	8	BOLT (M12X1.75X30-MM)	

M-METRIC PART

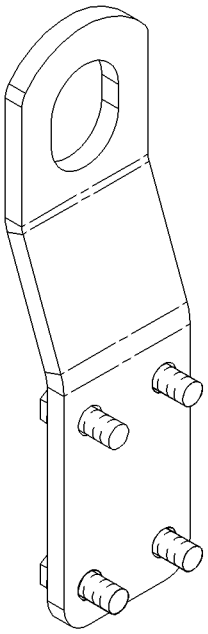

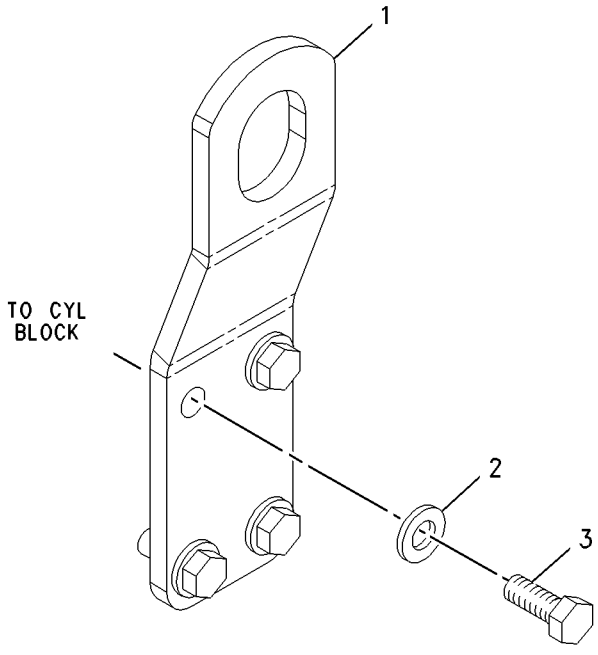

GRAPHIC #1 **<END>** g00950265

BASIC ENGINE

222-8358 MOUNTING GP-ENGINE

S/N: JGB1-UP; KHS1-UP

PART OF 297-7686 INSTALLATION AR-ENGINE

SMCS-1152 **i02900094**

NOTE	REF NO	GRAPHIC REF	PART NUMBER	QTY	PART NAME 1 2 3 4 5 6 (PRODUCT LEVEL)	SEE PAGE
	1	1	**109-9437**	4	WASHER (24.5X135X12-MM THK)	
	2	1	**139-8736**	2	MOUNT-FLEXIBLE	
	3	1	**139-8737**	2	MOUNT-FLEXIBLE	
M	4	1	**139-8873**	4	SUPPORT AS	
	5	1	**147-6982**	2	MOUNT-FLEXIBLE	
	6	1	**147-6983**	2	MOUNT-FLEXIBLE	
	7	1	**310-9691**	1	BRACKET AS	
	8	1	**239-6533**	1	BRACKET AS	
	9	1	**7X-0345**	8	BOLT (5/8-11X1.75-IN)	
M	10	1	**7X-2567**	4	BOLT (M24X3X160-MM)	
	11	1	**8T-1482**	4	WASHER-HARD (26X50X8-MM THK)	
	12	1	**8T-4122**	8	WASHER-HARD (17X32X3.5-MM THK)	
	13	1	**8T-4167**	4	WASHER-HARD (26X44X4-MM THK)	

M-METRIC PART

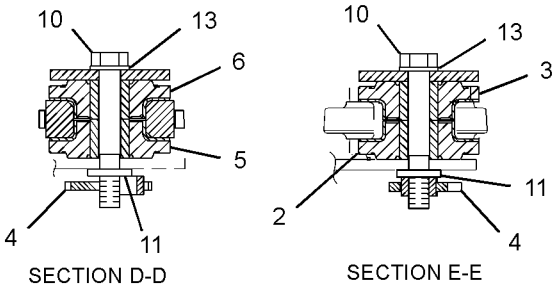

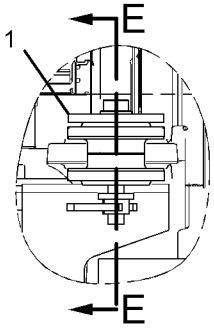

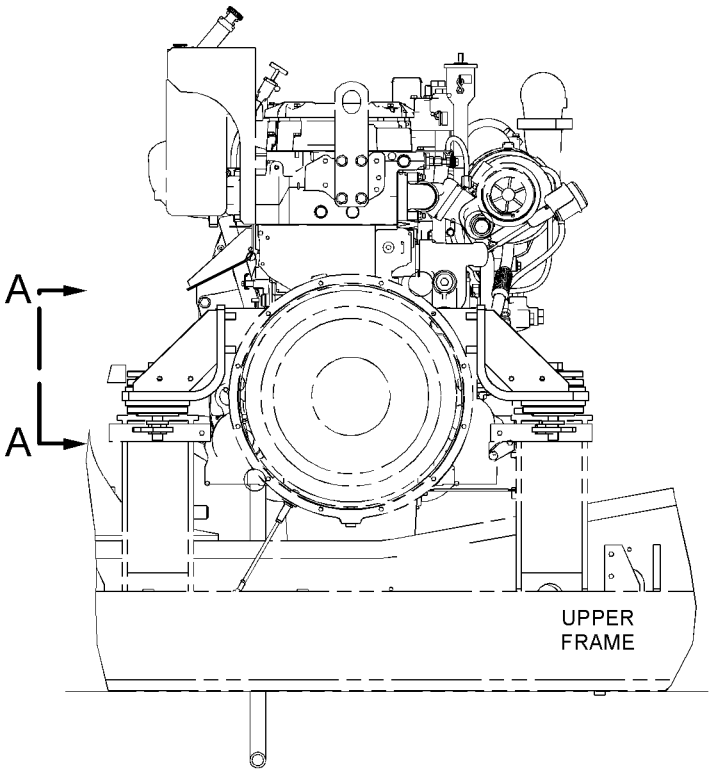

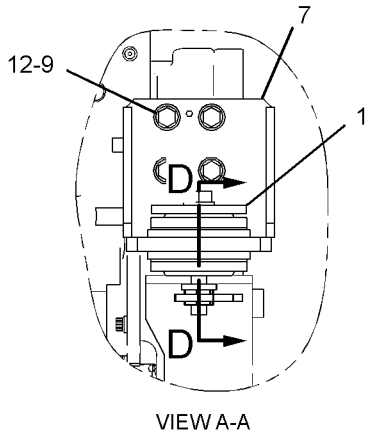

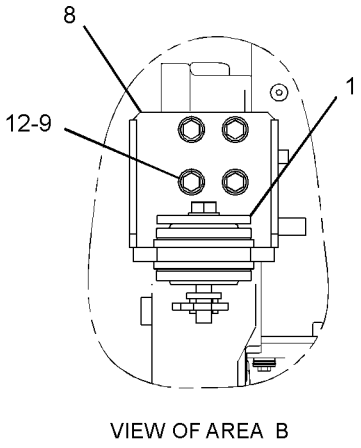

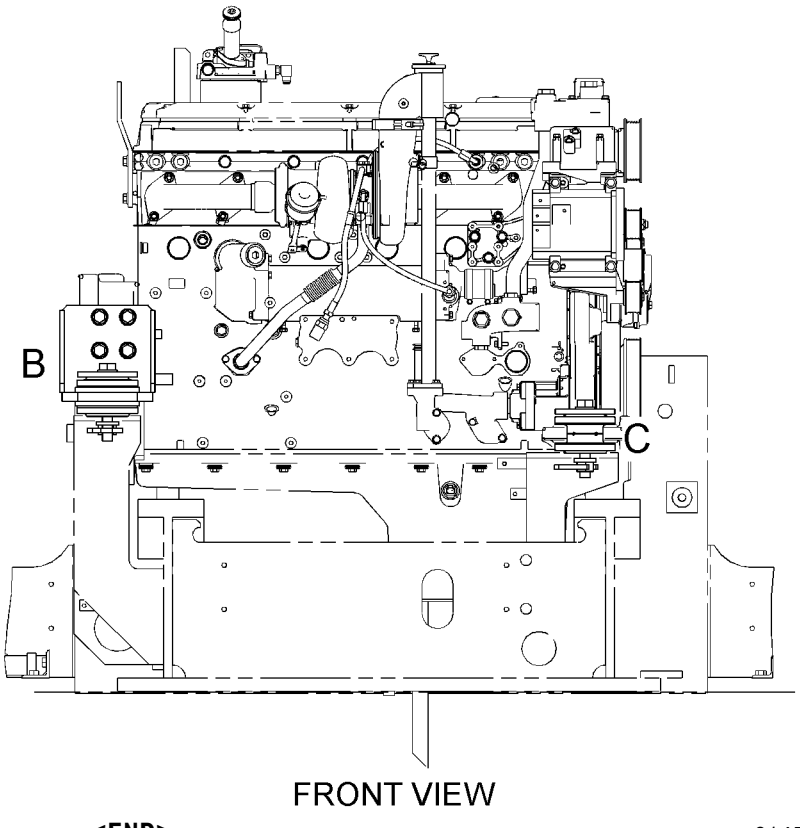

GRAPHIC #1 **<END>** g01457847

BASIC ENGINE

219-7440 MOUNTING GP-FAN DRIVE

S/N: TXF1-UP; MHX7634-UP

52-MM

PART OF 291-9259 ENGINE AR-COMPLETE

SMCS-1359 **i01879231**

NOTE	REF NO	GRAPHIC REF	PART NUMBER	QTY	PART NAME 1 2 3 4 5 6 (PRODUCT LEVEL)	SEE PAGE
M	1	1	**123-0764**	2	STUD-TAPERLOCK (BOLT)	
	2	1	**5P-8245**	2	WASHER-HARD (13.5X25.5X3-MM THK)	

M-METRIC PART

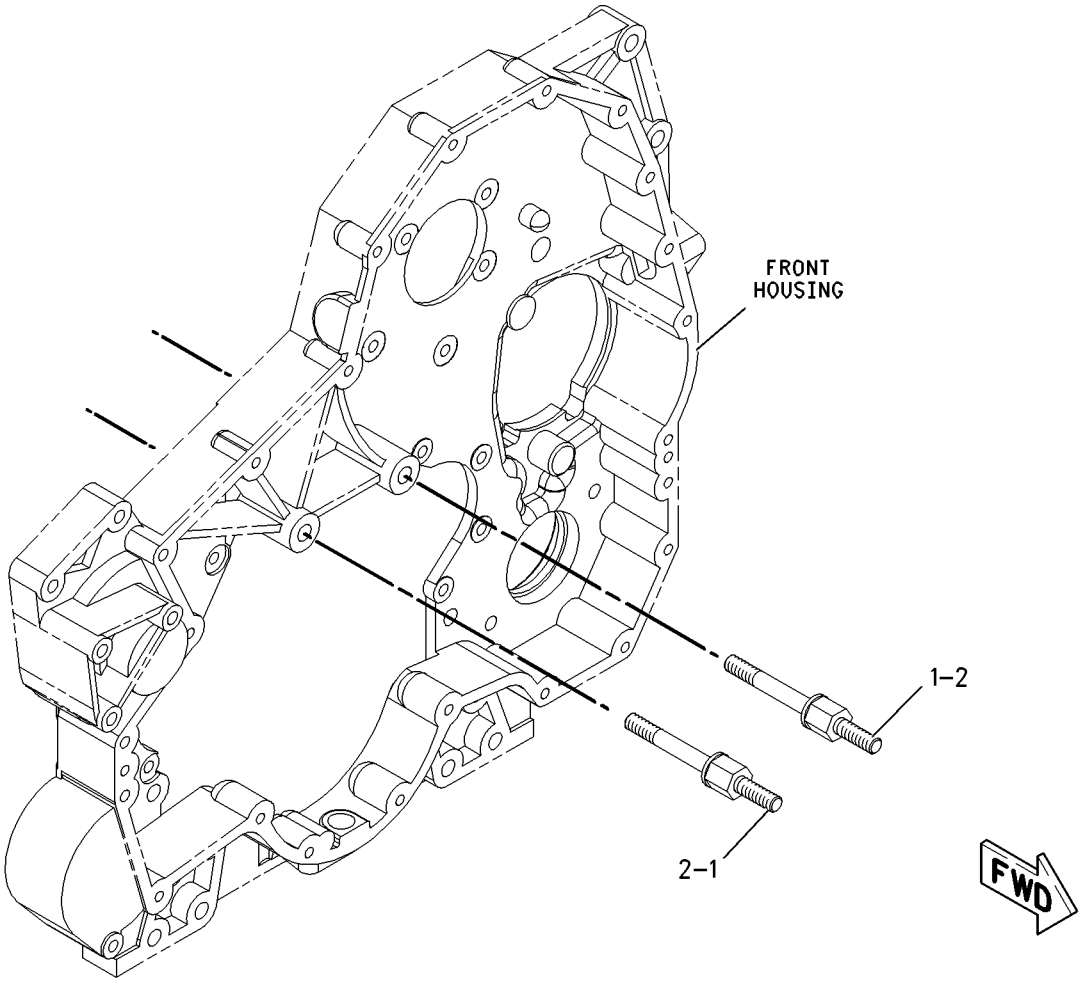

GRAPHIC #1 **<END>** g00948687

229-8084 MOUNTING GP-VALVE MECHANISM

S/N: TXF1-UP; MHX7634-UP
NON-VARIABLE VALVE ACTUATOR
PART OF 291-9259 ENGINE AR-COMPLETE, 317-9990 ENGINE AR-CORE
FOR USE WITH NON-VARIABLE VALVE ACTUATOR ENGINES

SMCS-1102 **i02038719**

NOTE	REF NO	GRAPHIC REF	PART NUMBER	QTY	PART NAME 1 2 3 4 5 6 (PRODUCT LEVEL)	SEE PAGE
	1	1	**241-0847**	6	BOLT (M12-1.75X93-MM THD)	

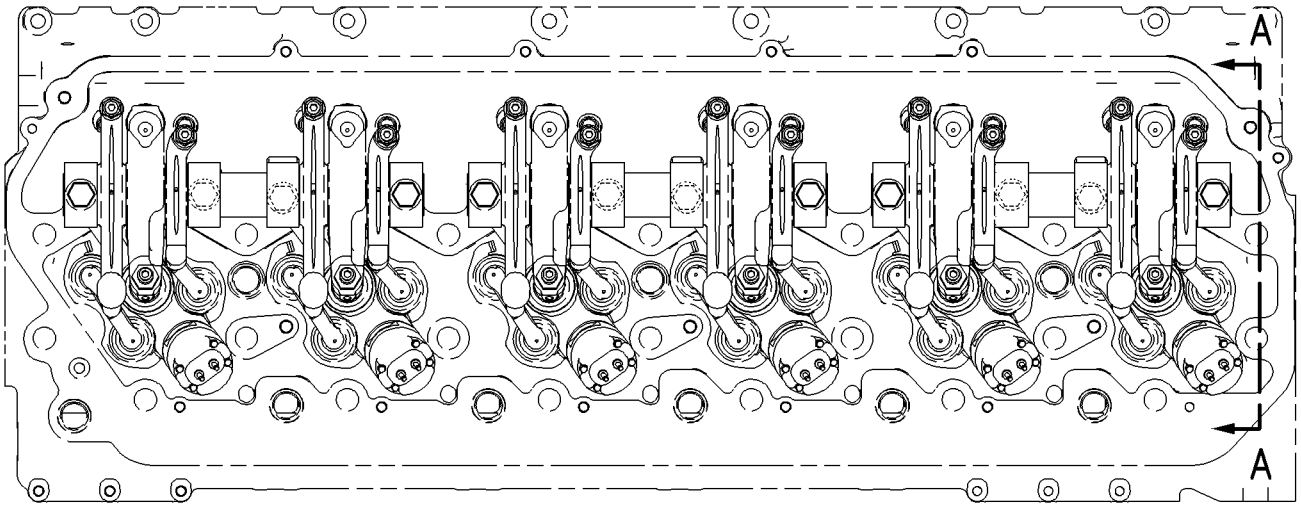

TOP VIEW

FWD

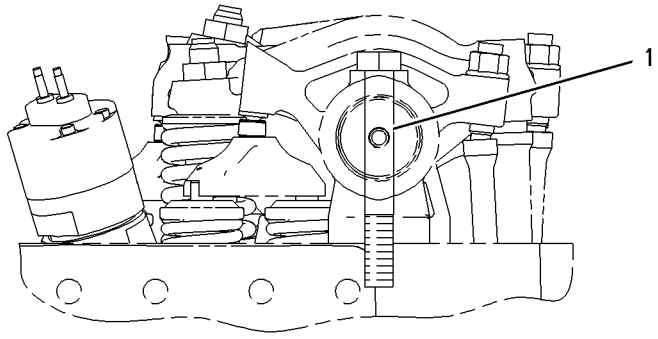

VIEW A-A

GRAPHIC #1 **<END>** g00950829

BASIC ENGINE

230-8136 PAN GP-OIL—ENGINE

S/N: TXF1-UP; MHX7634-UP

PART OF 291-9259 ENGINE AR-COMPLETE

SMCS-1302 **i03975792**

NOTE	REF NO	GRAPHIC REF	PART NUMBER	QTY	PART NAME 1 2 3 4 5 6 (PRODUCT LEVEL)	SEE PAGE
	1	1	**3E-7427**	1	ADAPTER	
	2	1	**130-5300**	1	CLIP	
	3	1	*351-0283*	1	VALVE GP-SHUTOFF (ENGINE OIL PAN)	
		1	**6V-7238**	1	VALVE-SHUTOFF	
	3A	1	**238-5080**	1	SEAL-O-RING	
	4	1	**9X-6451**	1	PLUG-DRAIN (ENGINE OIL PAN)	
	5	1	**210-1744**	1	BELL AS-SUCTION	
	5A	1	**210-1743**	1	ELBOW	
	6	1	**213-0677**	1	SWITCH AS-LIQUID LEVEL (ENGINE OIL)	
		1	**102-8802**	1	KIT-RECEPTACLE (2-PIN)	
					(INCLUDES RECEPTACLE AS & WEDGE)	
		1	**9X-3401**	2	PIN-CONNECTOR (16-GA TO 18-GA)	
					—OR—	
		1	**126-1767**	2	PIN-CONNECTOR (14-GA TO 16-GA)	
	7	1	**217-3673**	1	SEAL-ISOLATION	
	8	1	**217-3674**	14	FASTENER AS	
	9	1	**229-5331**	1	PAN-OIL	
	10	1	**061-9458**	2	SEAL-O-RING	
	11	1	**238-5082**	1	SEAL-O-RING	
M	12	1	**3E-8016**	2	BOLT-SELF-LOCKING (M8X1.25X25-MM)	
	13	1	*319-6234*	2	PLUG AS	
					(EACH INCLUDES)	
		1	**9S-9334**	1	PLUG-O-RING	
	13A	1	**238-5084**	1	SEAL-O-RING	
	14	1	**5P-8211**	1	SEAL-O-RING	
	15	1	**5P-8245**	2	WASHER-HARD (13.5X25.5X3-MM THK)	
M	16	1	**6A-5591**	2	BOLT (M12X1.75X25-MM)	
	17	1	**6N-8863**	14	WASHER (10.2X32X2.5-MM THK)	
M	18	1	**6V-4249**	13	BOLT (M10X1.5X50-MM)	
	19	1	**287-3049**	1	STUD (M10X1.5X50-MM)	
	20	1	**9M-1974**	2	WASHER-HARD (8.8X16X2-MM THK)	

M-METRIC PART

230-8136 **PAN GP-OIL** *(contd.)* **i03975792**

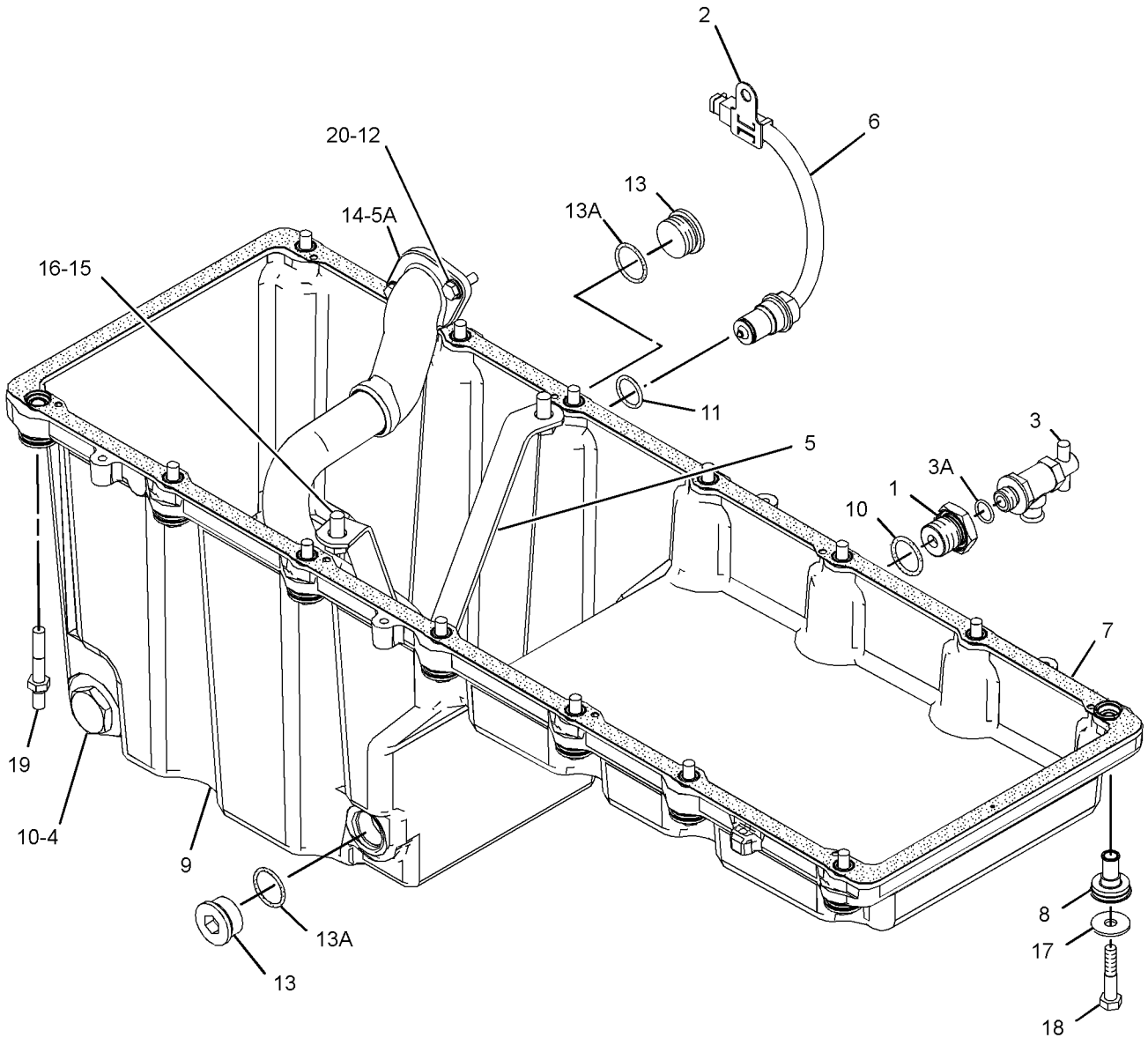

GRAPHIC #1 **<END>** g02164317

BASIC ENGINE

325-0821 PISTON & ROD GP

S/N: TXF1-UP; MHX7634-UP
17:1 COMPRESSION RATIO
PART OF 317-9990, 356-2433 ENGINE AR-CORE

SMCS-1225 **i03910735**

NOTE	REF NO	GRAPHIC REF	PART NUMBER	QTY	PART NAME 1 2 3 4 5 6 (PRODUCT LEVEL)	SEE PAGE
	1	1	**292-0484**	1	BEARING-CONNECTING ROD	
AB		1	**128-0395**		BEARING-CONNECTING ROD (0.51-MM US)	
AB		1	**128-0396**		BEARING-CONNECTING ROD (0.76-MM US)	
	2	1	**331-6025**	1	RING-PISTON (INTERMEDIATE)	
	3	1	**197-9326**	2	RETAINER	
	4	1	**197-9327**	1	PIN-PISTON	
R	5	1	**223-9150**	1	ROD AS-CONNECTING	
	5A	1	**115-2972**	1	BEARING-CONNECTING ROD	
M	5B	1	**115-2973**	2	BOLT-CONNECTING ROD	
	6	1	**276-7222**	1	TUBE AS-OIL JET	
	7	1	**303-3141**	1	RING-PISTON-TOP	
	8	1	**265-1113**	1	RING-PISTON (OIL CONTROL)	
	9	1	**339-8177**	1	BODY AS-PISTON	
	10	1	**3E-4352**	1	WASHER-HARD (8.8X20.5X2.5-MM THK)	
M	11	1	**8T-0100**	1	BOLT (M8X1.25X60-MM)	

A-NOT PART OF THIS GROUP
B-USE AS REQUIRED
M-METRIC PART
R-REMFG PART MAY BE AVAILABLE

325-0821 **PISTON & ROD GP** *(contd.)* **i03910735**

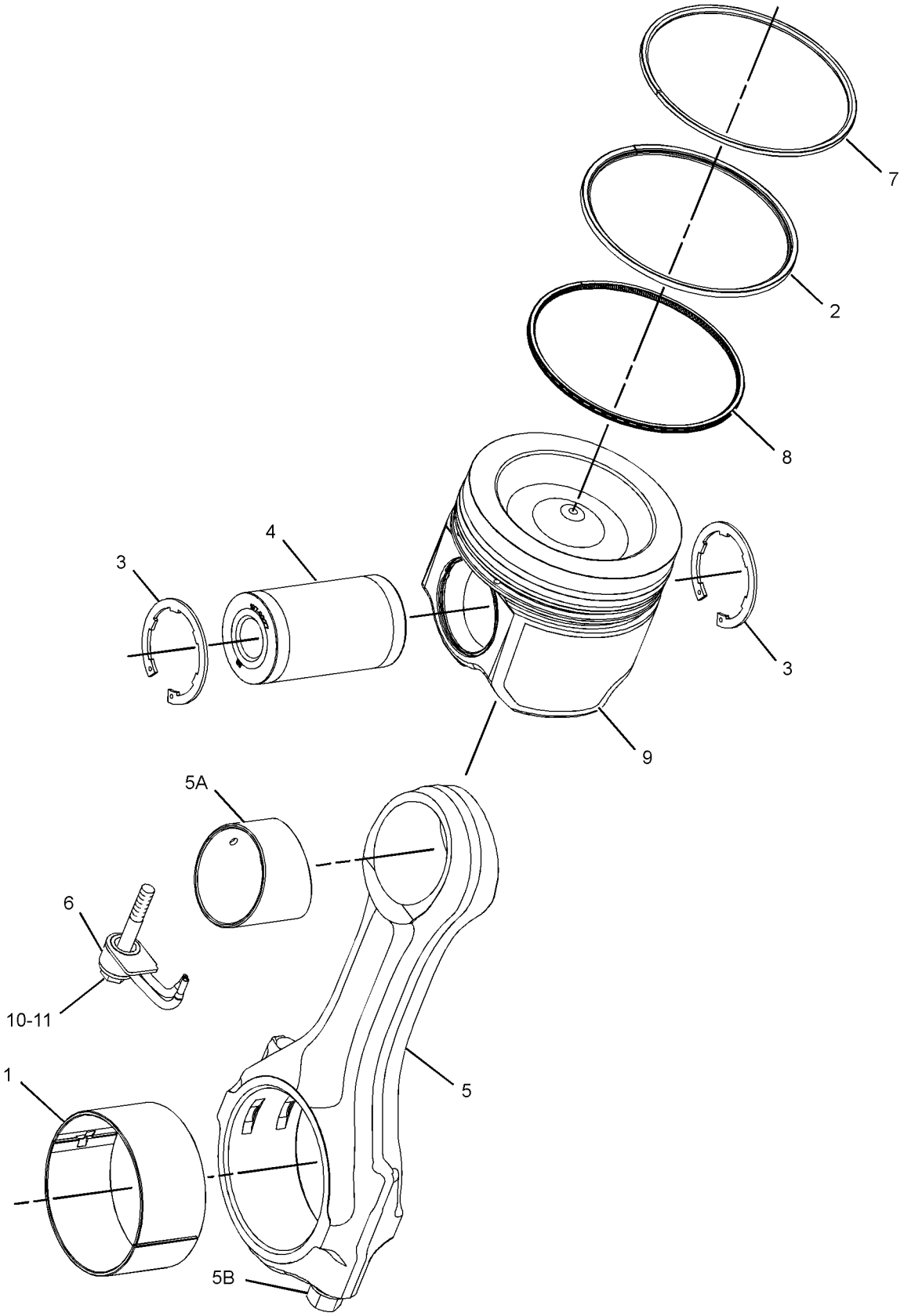

GRAPHIC #1 **<END>** g01172921

117-0165 PLUG GP-CYLINDER BLOCK–OIL GALLERY, END

S/N: TXF1-UP; MHX7634-UP

PART OF 291-9259 ENGINE AR-COMPLETE

SMCS-1201 **i01534512**

NOTE	REF NO	GRAPHIC REF	PART NUMBER	QTY	PART NAME 1 2 3 4 5 6 (PRODUCT LEVEL)	SEE PAGE
	1	1	**3B-0623**	1	PLUG-CUP	

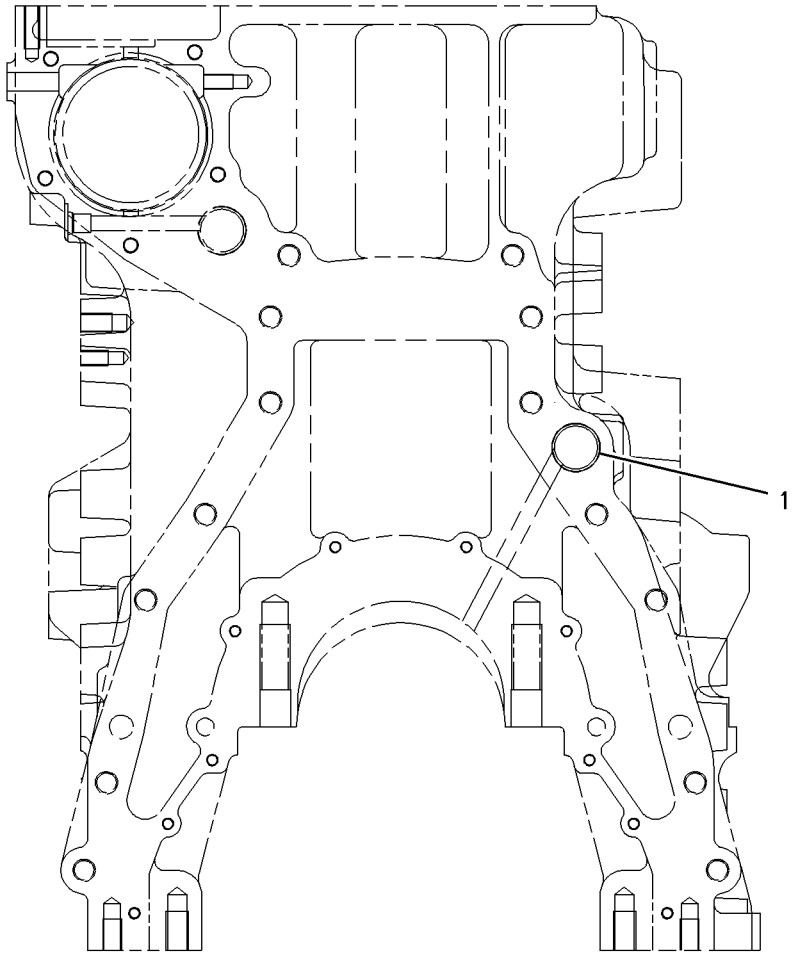

REAR VIEW

GRAPHIC #1 **<END>** g00796766

223-3875 PLUG GP-CYLINDER BLOCK

S/N: TXF1-UP; MHX7634-UP

PART OF 291-9259 ENGINE AR-COMPLETE, 317-9990 ENGINE AR-CORE

SMCS-1201 **i03997500**

NOTE	REF NO	GRAPHIC REF	PART NUMBER	QTY	PART NAME 1 2 3 4 5 6 (PRODUCT LEVEL)	SEE PAGE
	1	1	*307-2671*	1	PLUG AS	
		1	**9S-8002**	1	PLUG-O-RING	
		1	**214-7566**	1	SEAL-O-RING	

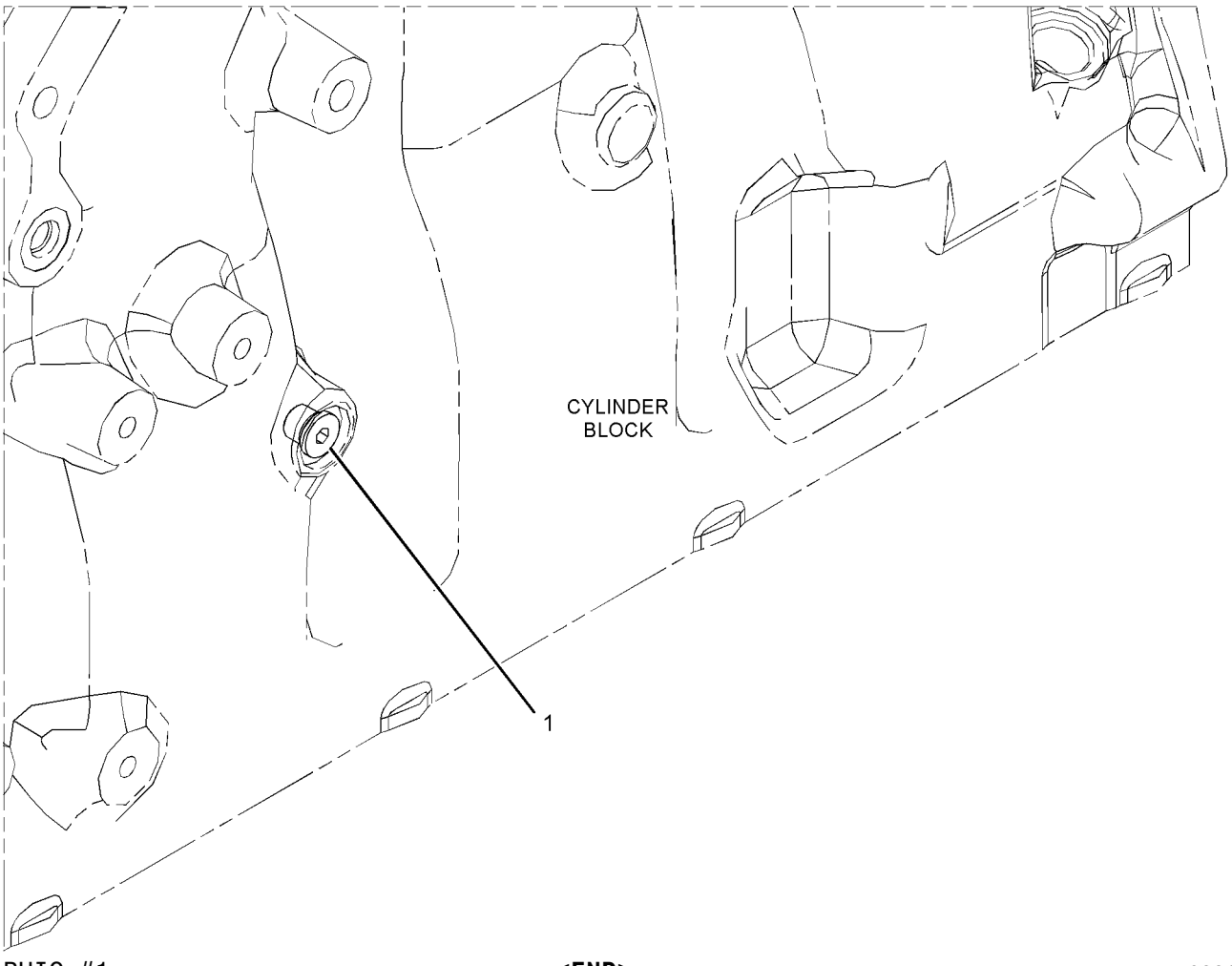

GRAPHIC #1 **<END>** g02218974

BASIC ENGINE

227-9545 PLUG GP-CYLINDER BLOCK–OIL GALLERY, RH

S/N: TXF1-UP; MHX7634-UP

PART OF 291-9259 ENGINE AR-COMPLETE

SMCS-1201 **i03833947**

NOTE	REF NO	GRAPHIC REF	PART NUMBER	QTY	PART NAME 1 2 3 4 5 6 (PRODUCT LEVEL)	SEE PAGE
	1	1	*183-3407*	2	PLUG AS	
					(EACH INCLUDES)	
		1	**9S-8004**	1	PLUG-O-RING	
	1A	1	**214-7568**	1	SEAL-O-RING	
	2	1	*307-2673*	1	PLUG AS	
		1	**9S-8005**	1	PLUG-O-RING	
	2A	1	**238-5080**	1	SEAL-O-RING	

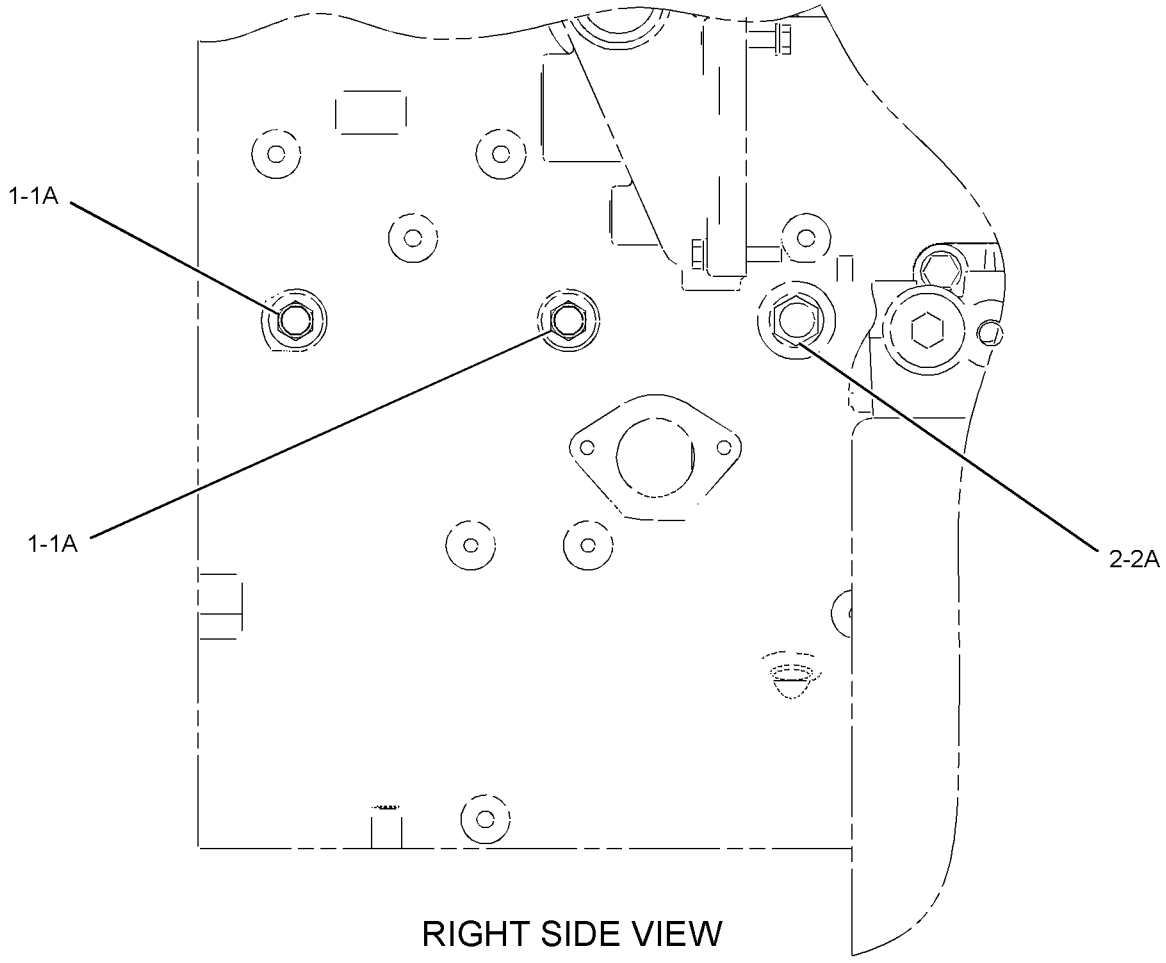

RIGHT SIDE VIEW

GRAPHIC #1 **<END>** g02083373

269-6164 PLUG GP-ENGINE

S/N: TXF1-UP; MHX7634-UP
PART OF 291-9259 ENGINE AR-COMPLETE

SMCS-1000 **i04001386**

NOTE	REF NO	GRAPHIC REF	PART NUMBER	QTY	PART NAME 1 2 3 4 5 6 (PRODUCT LEVEL)	SEE PAGE
	1	1	*315-9859*	1	PLUG AS	
		1	**9S-8008**	1	PLUG-O-RING	
		1	**238-5082**	1	SEAL-O-RING	
	2	1	*353-5125*	1	PLUG AS	
		1	**6V-3251**	1	SEAL-O-RING	
		1	**9S-8006**	1	PLUG-O-RING	
	3	1	*353-5126*	1	PLUG AS	
		1	**6V-6609**	1	SEAL-O-RING	
		1	**9S-8005**	1	PLUG-O-RING	

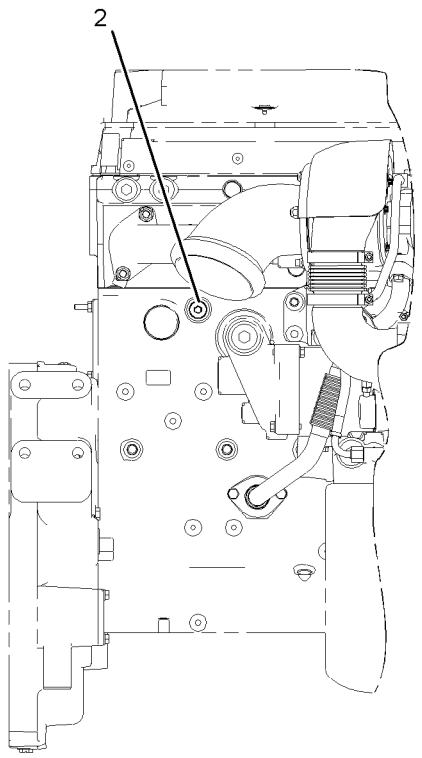

RIGHT SIDE VIEW

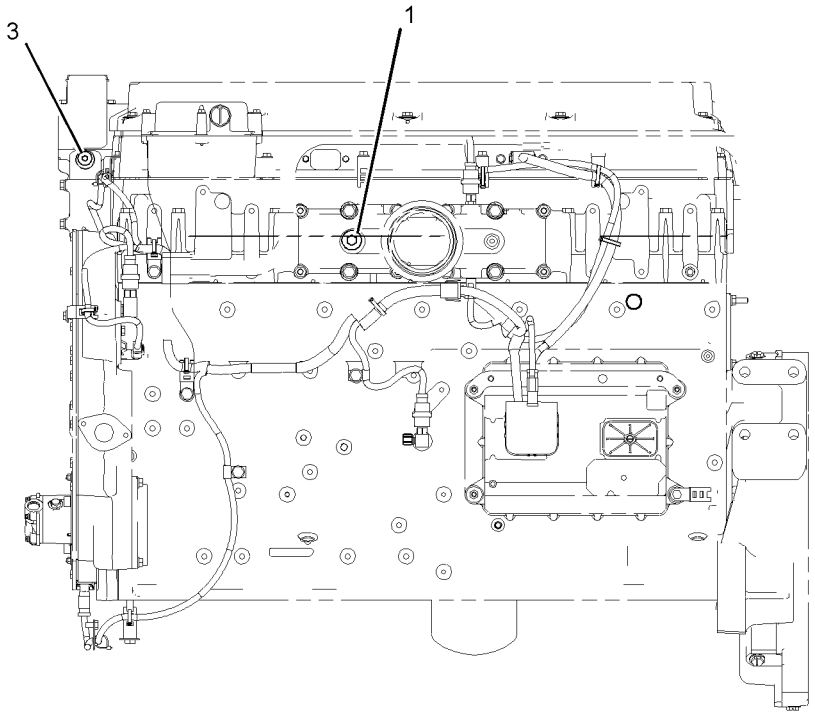

LEFT SIDE VIEW

GRAPHIC #1 **<END>** g02177128

BASIC ENGINE

207-8103 PULLEY GP-CRANKSHAFT

S/N: TXF1-UP; MHX7634-UP
261.2MM DIAMETER, 8 GROOVE "K" SECTION
PART OF 291-9259 ENGINE AR-COMPLETE
FOR USE WITH ADAPTER OR FASTENER

SMCS-1205 **i02144251**

NOTE	REF NO	GRAPHIC REF	PART NUMBER	QTY	PART NAME 1 2 3 4 5 6 (PRODUCT LEVEL)	SEE PAGE
	1	1	**207-8107**	1	PULLEY (8 GROOVE)	

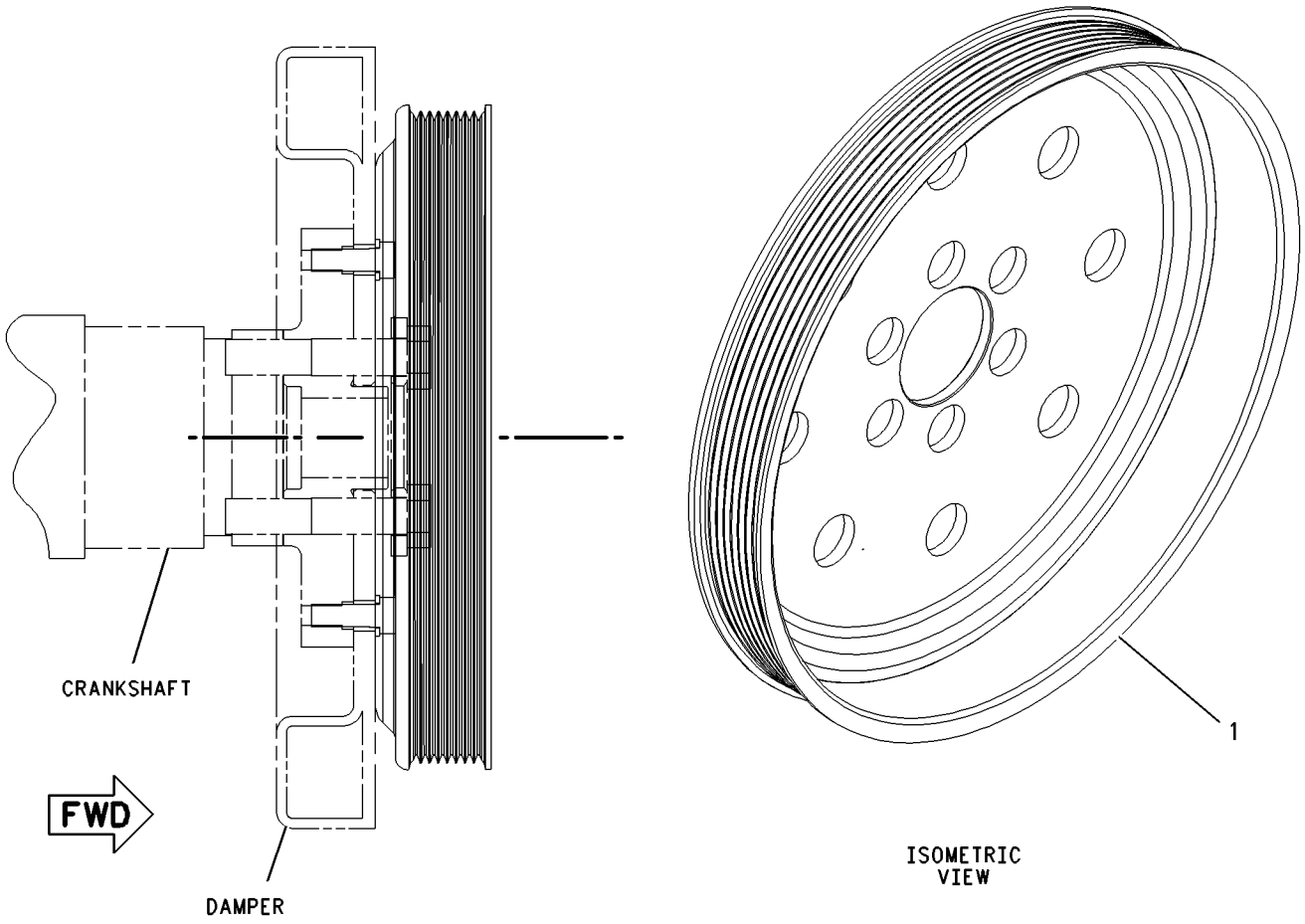

GRAPHIC #1 **<END>** g00951710

117-0177 PULLEY GP-FAN & ALT DRIVE

S/N: TXF1-UP; MHX7634-UP
3.34:1 DRIVE RATIO. 68.5 MM (2.9 IN) DIAMETER, 8 GROOVE
PART OF 291-9259 ENGINE AR-COMPLETE
FOR USE WITH 22.19 MM (0.87 IN) DIAMETER ALTERNATOR SHAFT WITH OR WITHOUT KEY, 228.5 MM (9.0 IN) DIAMETER CRANKSHAFT PULLEY

SMCS-1359 **i02697804**

NOTE	REF NO	GRAPHIC REF	PART NUMBER	QTY	PART NAME 1 2 3 4 5 6 (PRODUCT LEVEL)	SEE PAGE
	1	1	**123-0791**	1	PULLEY (8-GROOVE)	

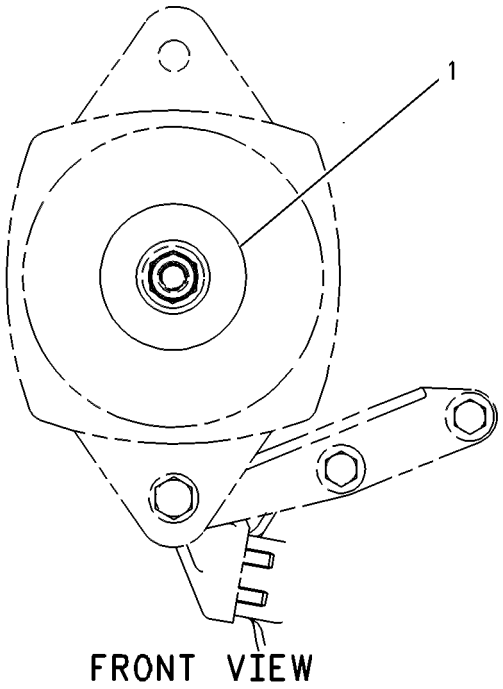

GRAPHIC #1 **<END>** g00251314

260-0251 ROCKER ARM GP–UNIT INJECTOR

S/N: TXF1-UP; MHX7634-UP

PART OF 260-0252 ROCKER ARM GP

SMCS-1123 **i02343172**

NOTE	REF NO	GRAPHIC REF	PART NUMBER	QTY	PART NAME 1 2 3 4 5 6 (PRODUCT LEVEL)	SEE PAGE
	1	1	**258-8721**	1	BUTTON	
	2	1	**274-4490**	1	SCREW-ADJUSTMENT	
R	3	1	**260-0915**	1	ROCKER ARM AS (UNIT INJECTOR)	
		1	**2D-6642**	1	BALL	
	4	1	**8L-2777**	1	SEAL-O-RING	
	5	1	**245-6095**	1	NUT-HEX THIN (M12X1.5-THD)	

R-REMFG PART MAY BE AVAILABLE

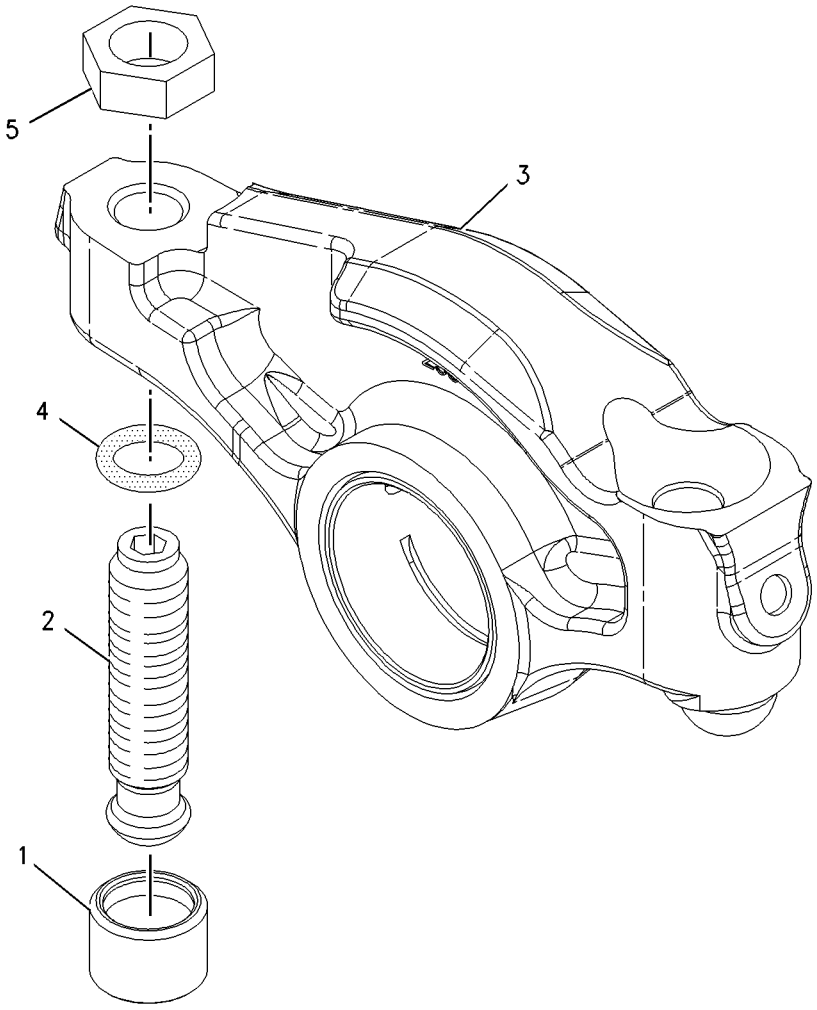

GRAPHIC #1 **<END>** g01007579

260-0252 ROCKER ARM GP

S/N: TXF1-UP; MHX7634-UP

PART OF 240-7272 VALVE MECHANISM GP

SMCS-1123 **i02667392**

NOTE	REF NO	GRAPHIC REF	PART NUMBER	QTY	PART NAME 1 2 3 4 5 6 (PRODUCT LEVEL)	SEE PAGE
	1	1	**224-4418**	1	SHAFT AS	
	1A	1	**3S-6605**	2	PLUG-CUP	
	2	1	**242-1401**	2	BASE AS	
	3	1	**242-7418**	1	BASE	
Y	4	1	*260-0251*	2	ROCKER ARM GP (UNIT INJECTOR)	64
Y	5	1	*261-2290*	2	ROCKER ARM GP (INLET)	66
Y	6	1	*261-2294*	2	ROCKER ARM GP (EXHAUST)	67
	7	1	**241-0847**	2	BOLT (M12X1.75X93-MM)	

Y-SEPARATE ILLUSTRATION

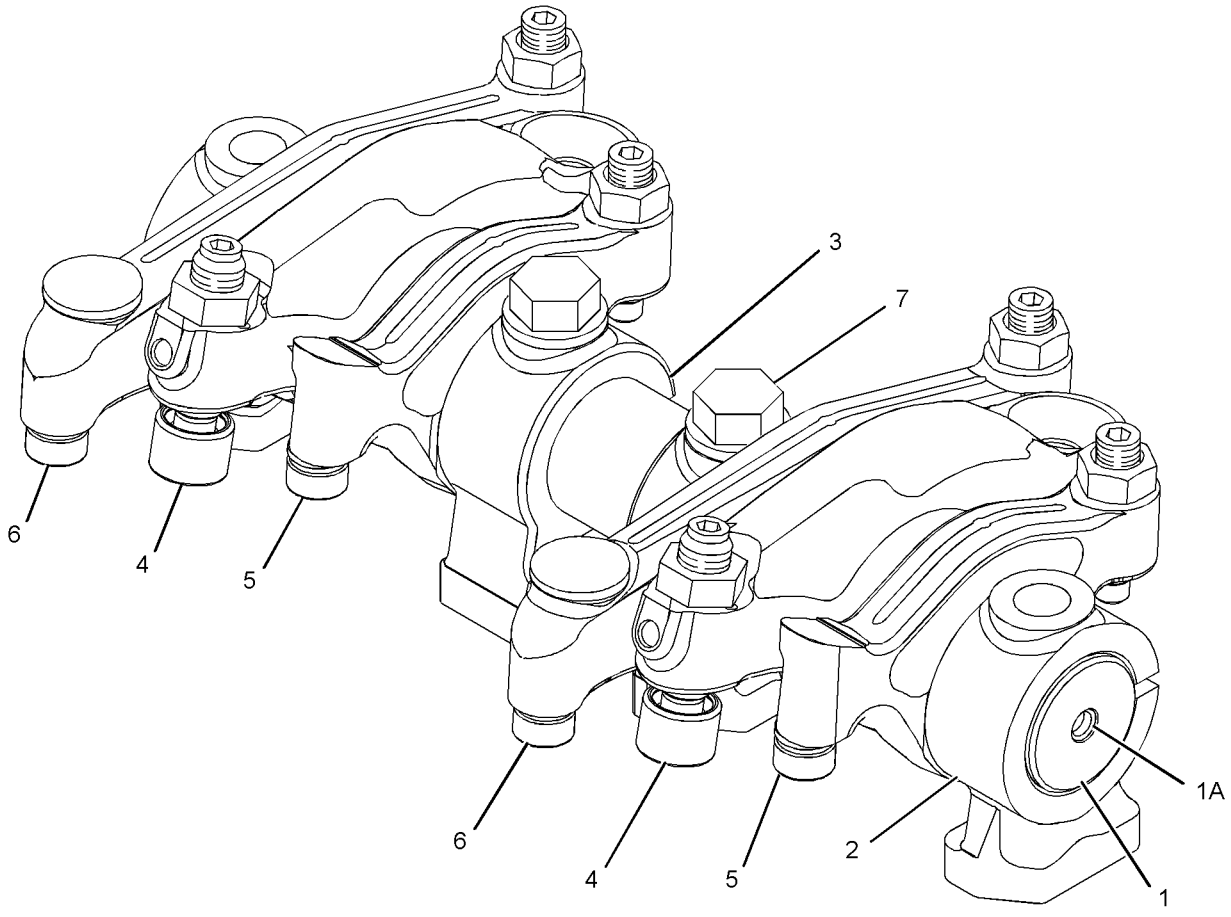

GRAPHIC #1 **<END>** g01207508

BASIC ENGINE

261-2290 ROCKER ARM GP–INLET

S/N: TXF1-UP; MHX7634-UP

PART OF 260-0252 ROCKER ARM GP

SMCS-1123 **i02663355**

NOTE	REF NO	GRAPHIC REF	PART NUMBER	QTY	PART NAME 1 2 3 4 5 6 (PRODUCT LEVEL)	SEE PAGE
M	1	1	**260-7524**	1	SCREW-VALVE ADJUSTMENT (M10X1.5-THD)	
M	2	1	**2Y-5829**	1	NUT (M10X1.5-THD)	
R	3	1	**261-2291**	1	ROCKER ARM AS (INLET)	

M-METRIC PART
R-REMFG PART MAY BE AVAILABLE

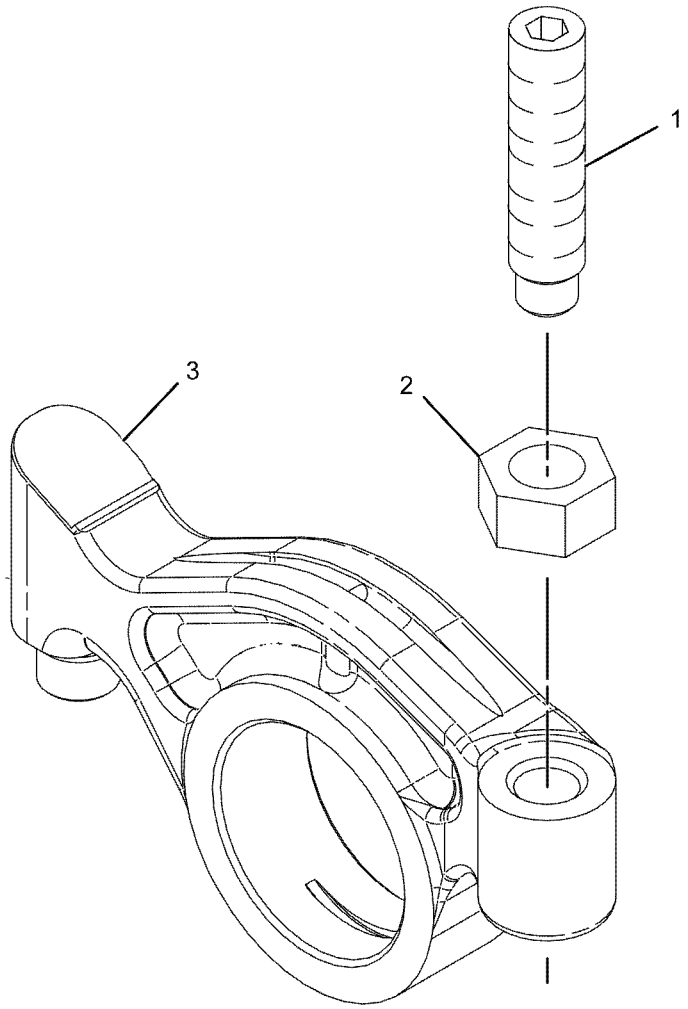

GRAPHIC #1 **<END>** g01030820

261-2294 ROCKER ARM GP–EXHAUST

S/N: TXF1-UP; MHX7634-UP

PART OF 260-0252 ROCKER ARM GP

SMCS-1123 **i02663356**

NOTE	REF NO	GRAPHIC REF	PART NUMBER	QTY	PART NAME 1 2 3 4 5 6 (PRODUCT LEVEL)	SEE PAGE
M	1	1	**260-7524**	1	SCREW-VALVE ADJUSTMENT (M10X1.5-THD)	
R	2	1	**261-2293**	1	ROCKER ARM AS (EXHAUST)	
M	3	1	**2Y-5829**	1	NUT (M10X1.5-THD)	

M-METRIC PART
R-REMFG PART MAY BE AVAILABLE

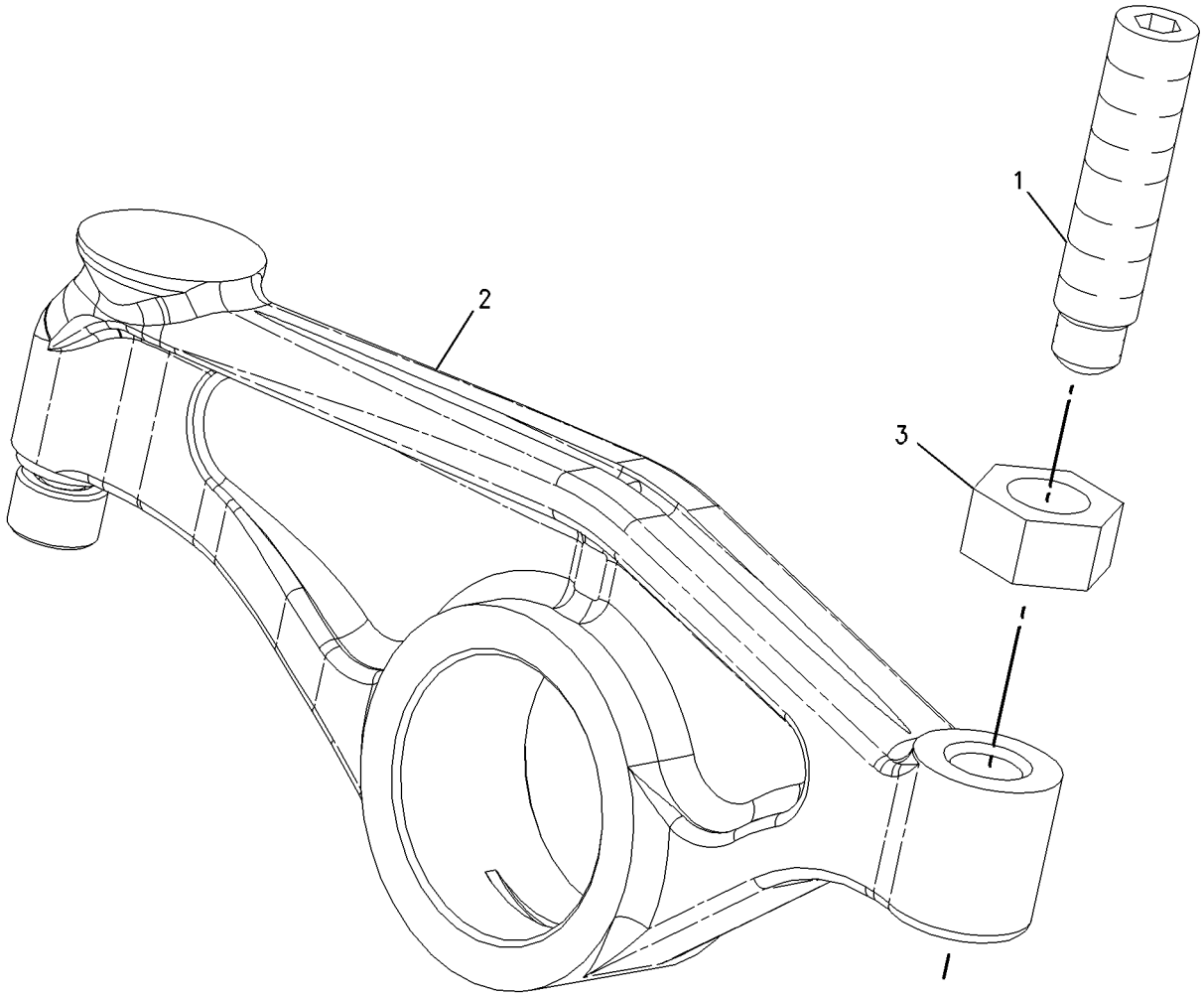

GRAPHIC #1 **<END>** g00956228

116-1091 SEAL GP-CRANKSHAFT

S/N: TXF1-UP; MHX7634-UP
REAR
PART OF 291-9259 ENGINE AR-COMPLETE
FOR USE WITH DRY TRANSMISSIONS

SMCS-1160, 1161 **i02697821**

NOTE	REF NO	GRAPHIC REF	PART NUMBER	QTY	PART NAME 1 2 3 4 5 6 (PRODUCT LEVEL)	SEE PAGE
	1	1	**160-2323**	1	COVER	
M	2	1	**8T-0640**	6	BOLT (M6X1X30-MM)	
	3	1	**5P-0537**	13	WASHER-HARD (7.2X14.5X2-MM THK)	
R	4	1	**294-6007**	7	BOLT-HEAD LOCKING (M6X1X18-MM)	
	5	1	**7C-1583**	1	GASKET	
	6	1	**107-6280**	1	SEAL-O-RING	
	7	1	**7C-1728**	1	SEAL-CRANKSHAFT (REAR)	

M-METRIC PART
R-REMFG PART MAY BE AVAILABLE

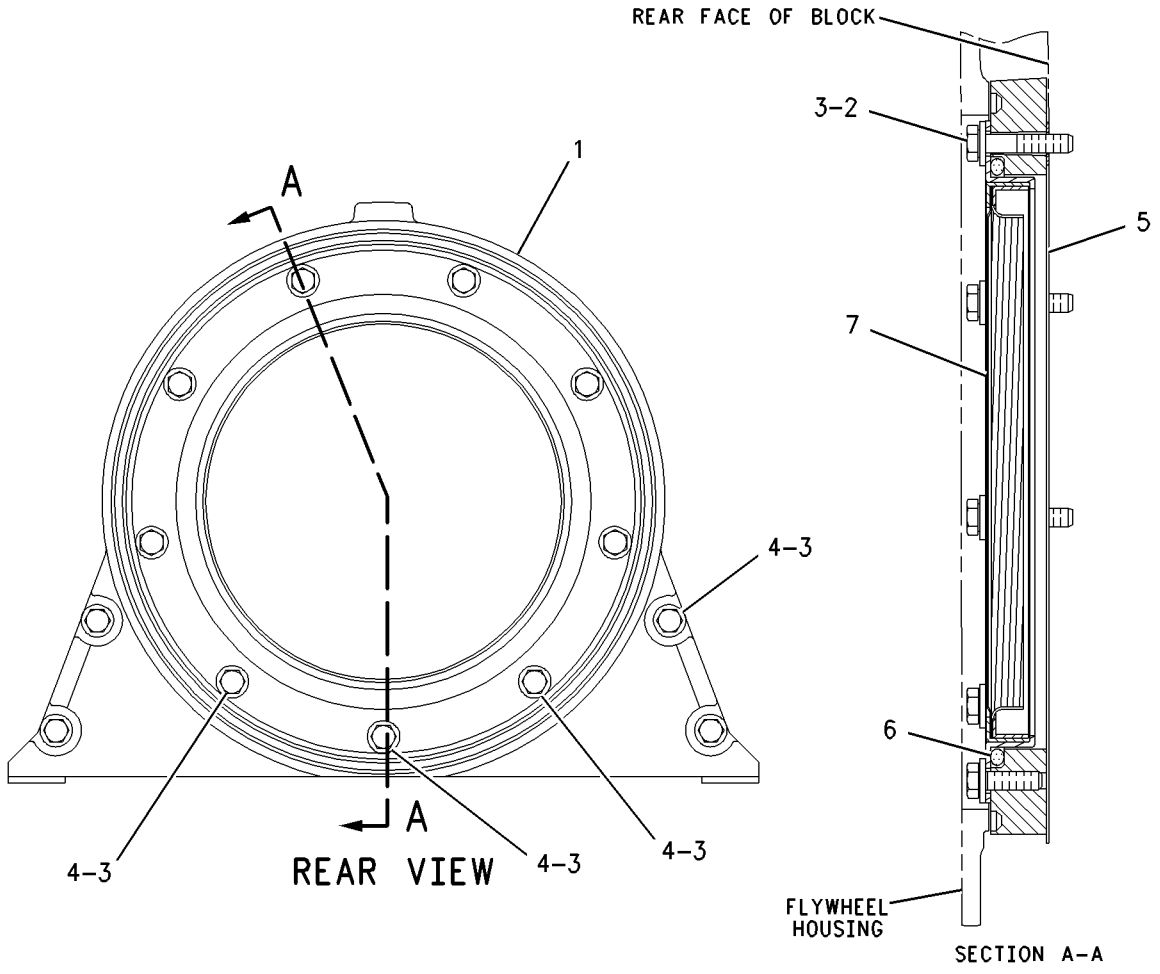

GRAPHIC #1 **<END>** g00785779

170-4743 SUPPORT GP-ENGINE

S/N: TXF1-UP; MHX7634-UP

PART OF 291-9259 ENGINE AR-COMPLETE

SMCS-1152, 1153, 1154 **i02173603**

NOTE	REF NO	GRAPHIC REF	PART NUMBER	QTY	PART NAME 1 2 3 4 5 6 (PRODUCT LEVEL)	SEE PAGE
	1	1	**229-2888**	1	SUPPORT (FRONT)	
	2	1	**5P-8245**	8	WASHER-HARD (13.5X25.5X3-MM THK)	
M	3	1	**6V-5696**	8	BOLT (M12X1.75X80-MM)	

M-METRIC PART

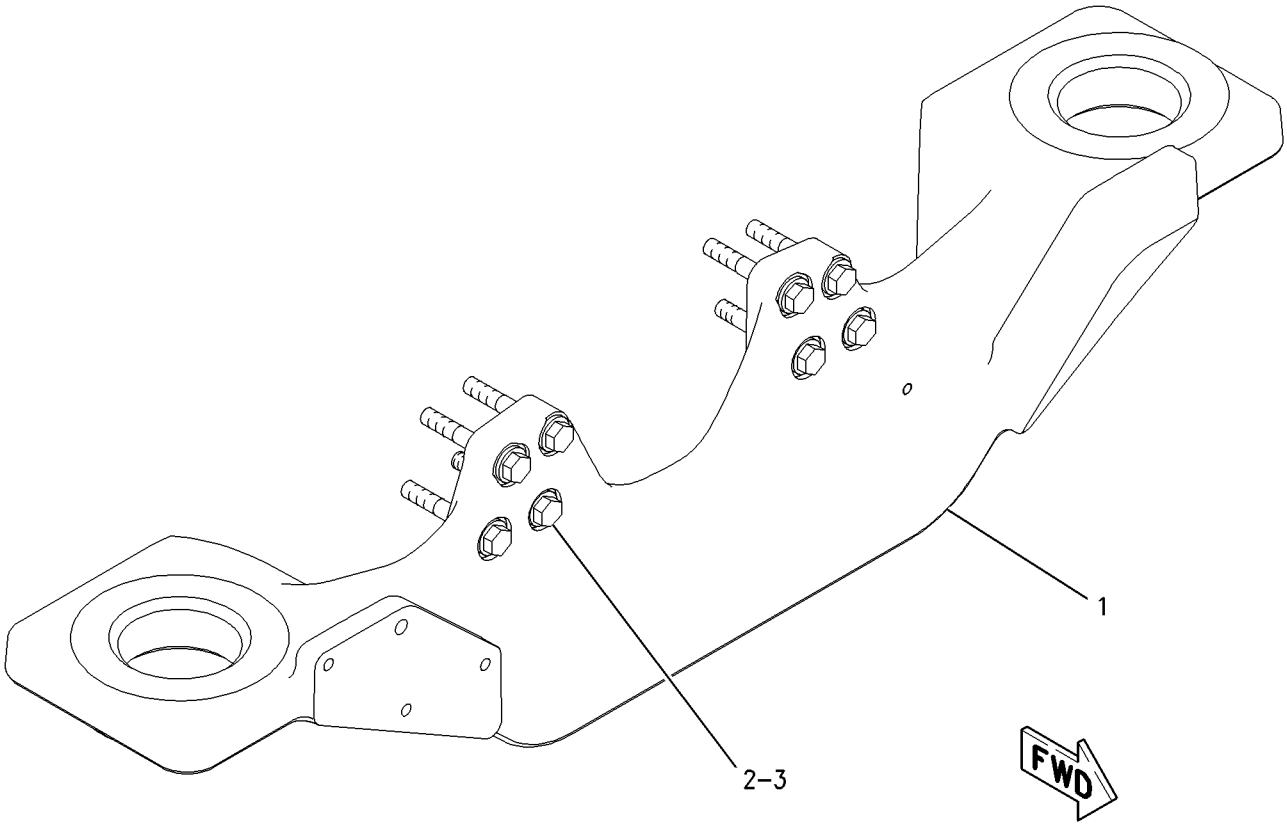

GRAPHIC #1 **<END>** g00764989

BASIC ENGINE

240-7272 VALVE MECHANISM GP

S/N: TXF1-UP; MHX7634-UP

PART OF 317-9990, 356-2433 ENGINE AR-CORE

SMCS-1209 **i03493686**

NOTE	REF NO	GRAPHIC REF	PART NUMBER	QTY	PART NAME 1 2 3 4 5 6 (PRODUCT LEVEL)	SEE PAGE
	1	1	**319-0271**	6	PUSHROD-INJECTOR	
Y	2	1	*237-4376*	1	LIFTER GP-VALVE (MECHANISM)	48
	3	1	**319-0270**	12	PUSHROD-VALVE	
	4	1	**237-7253**	12	BRIDGE-VALVE	
CY	5	1	*260-0252*	3	ROCKER ARM GP	65

C-CHANGE FROM PREVIOUS TYPE
Y-SEPARATE ILLUSTRATION

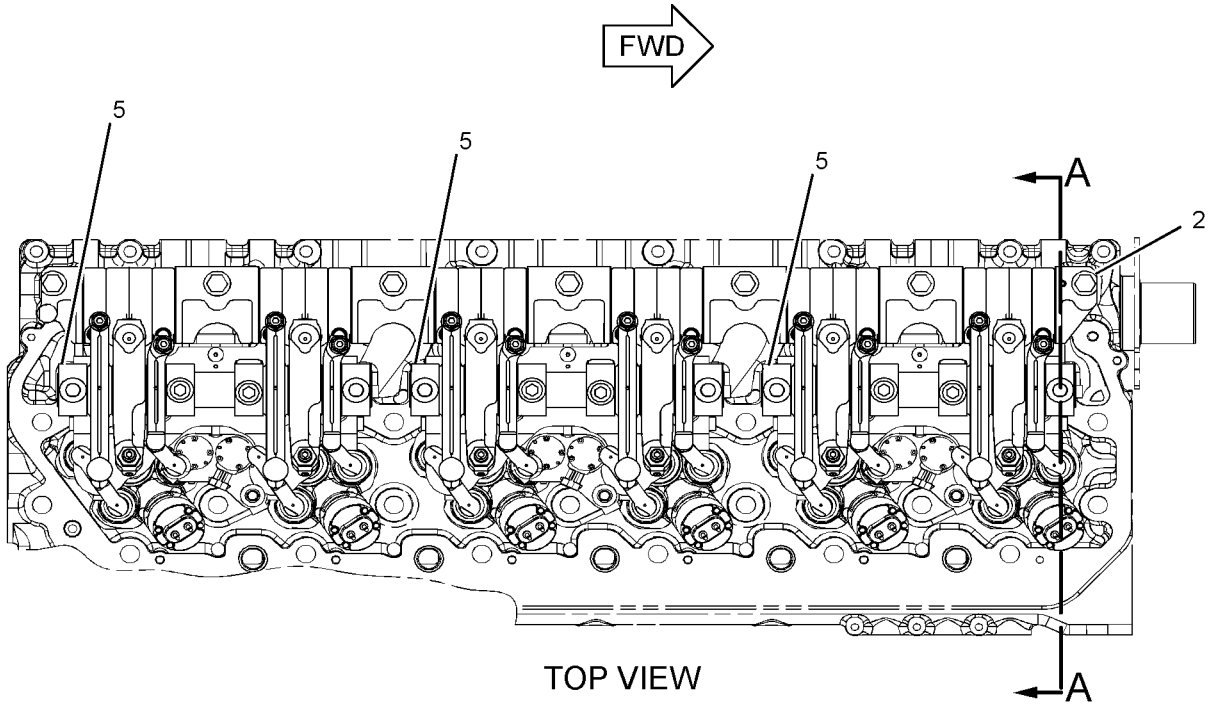

TOP VIEW

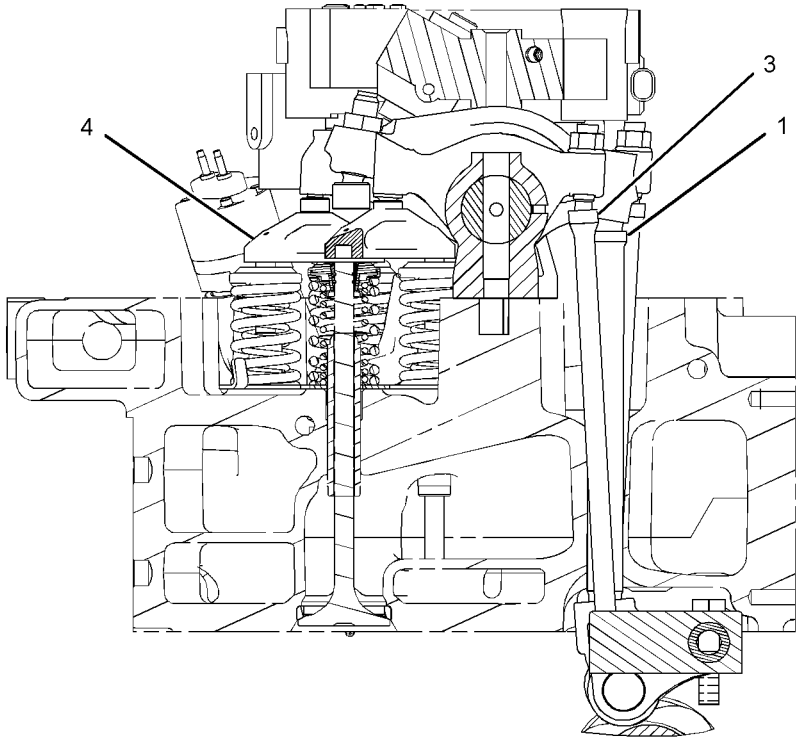

SECTION A-A

GRAPHIC #1 **<END>** g01291144

LUBRICATION SYSTEM

223-1615 BASE GP-OIL FILTER–ENGINE

S/N: TXF1-UP; MHX7634-UP

PART OF 291-9259 ENGINE AR-COMPLETE

SMCS-1306 **i03820871**

NOTE	REF NO	GRAPHIC REF	PART NUMBER	QTY	PART NAME 1 2 3 4 5 6 (PRODUCT LEVEL)	SEE PAGE
M	2	1	**134-5245**	6	BOLT (M10X1.5X30-MM)	
CY	3	1	**251-6669**	1	BASE GP-OIL FILTER (ENGINE)	73
C	4	1	**227-4892**	1	GASKET	
	5	1	**113-5304**	2	SEAL-O-RING	
	6	1	**6V-5839**	6	WASHER (11X21X2.5-MM THK)	

C-CHANGE FROM PREVIOUS TYPE
M-METRIC PART
Y-SEPARATE ILLUSTRATION

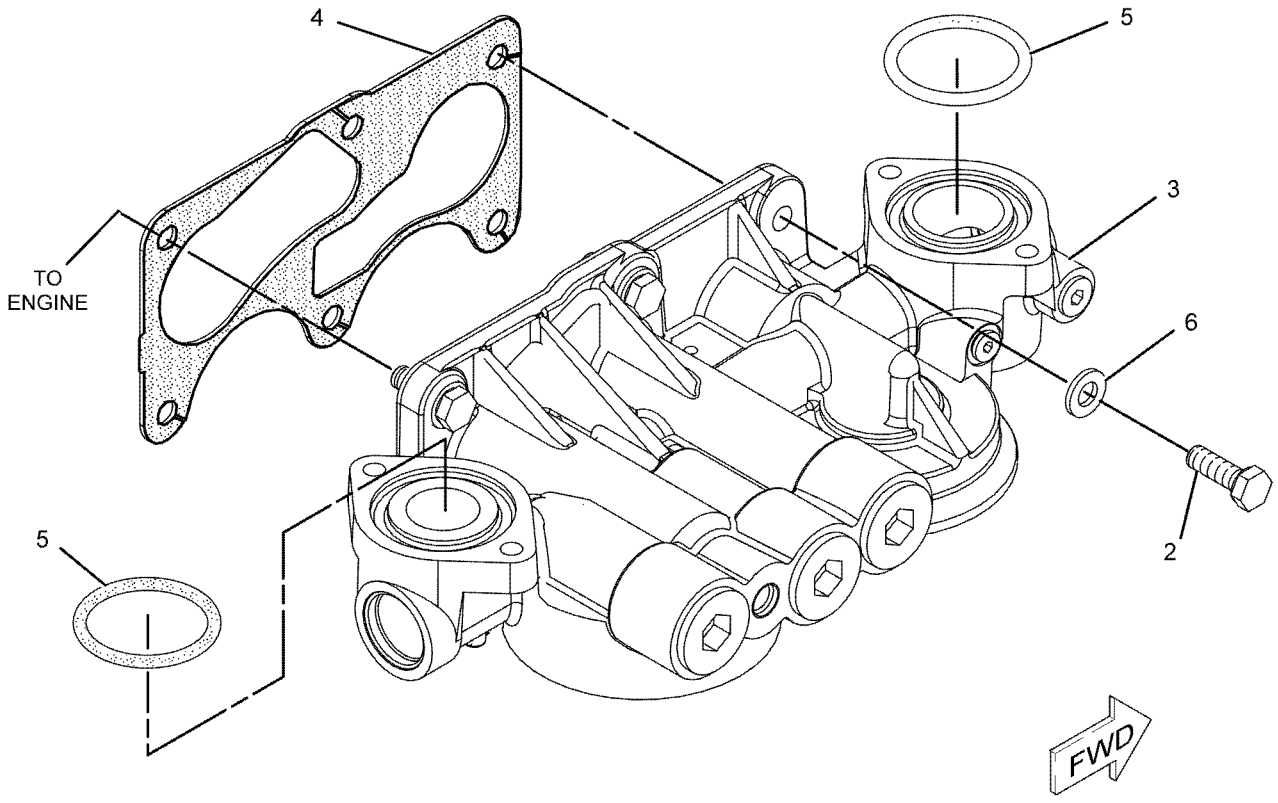

GRAPHIC #1 **<END>** g01103709

251-6669 BASE GP-OIL FILTER—ENGINE

S/N: TXF1-UP; MHX7634-UP

PART OF 223-1615 BASE GP-OIL FILTER

SMCS-1306 **i02174553**

NOTE	REF NO	GRAPHIC REF	PART NUMBER	QTY	PART NAME 1 2 3 4 5 6 (PRODUCT LEVEL)	SEE PAGE
	1	1	**4N-8150**	2	SPRING	
	2	1	**7C-3081**	1	SPACER (6.88X9.53X50-MM THK)	
	3	1	**7C-3082**	1	RETAINER	
	4	1	**7C-3083**	1	SEAT-RELIEF VALVE SPRING	
	5	1	**7C-3954**	1	SPRING AS	
		1	**2N-6005**	1	SPRING	
	6	1	**9M-0853**	2	PLUNGER-VALVE	
	7	1	**224-3405**	1	VALVE AS (OIL PUMP BYPASS)	
	8	1	*251-6668*	1	BASE AS	
		1	**2P-4304**	1	STUD-HOLLOW	
		1	**3B-0623**	1	PLUG-CUP	
		1	**3P-1896**	2	PLUG-CUP	
		1	**7W-6390**	1	STUD-FILTER BASE	
	9	1	**1A-2170**	1	SPRING-RETAINER	
	10	1	**5P-7701**	3	SEAL-O-RING	
	11	1	**6V-5048**	1	SEAL-O-RING	
	12	1	**6V-5049**	1	SEAL-O-RING	
M	13	1	**6V-8359**	1	BOLT (M6X1X70-MM)	
	14	1	**9S-8002**	1	PLUG-O-RING	
	15	1	**9S-8004**	1	PLUG-O-RING	
	16	1	**9S-9334**	3	PLUG-O-RING	

M-METRIC PART

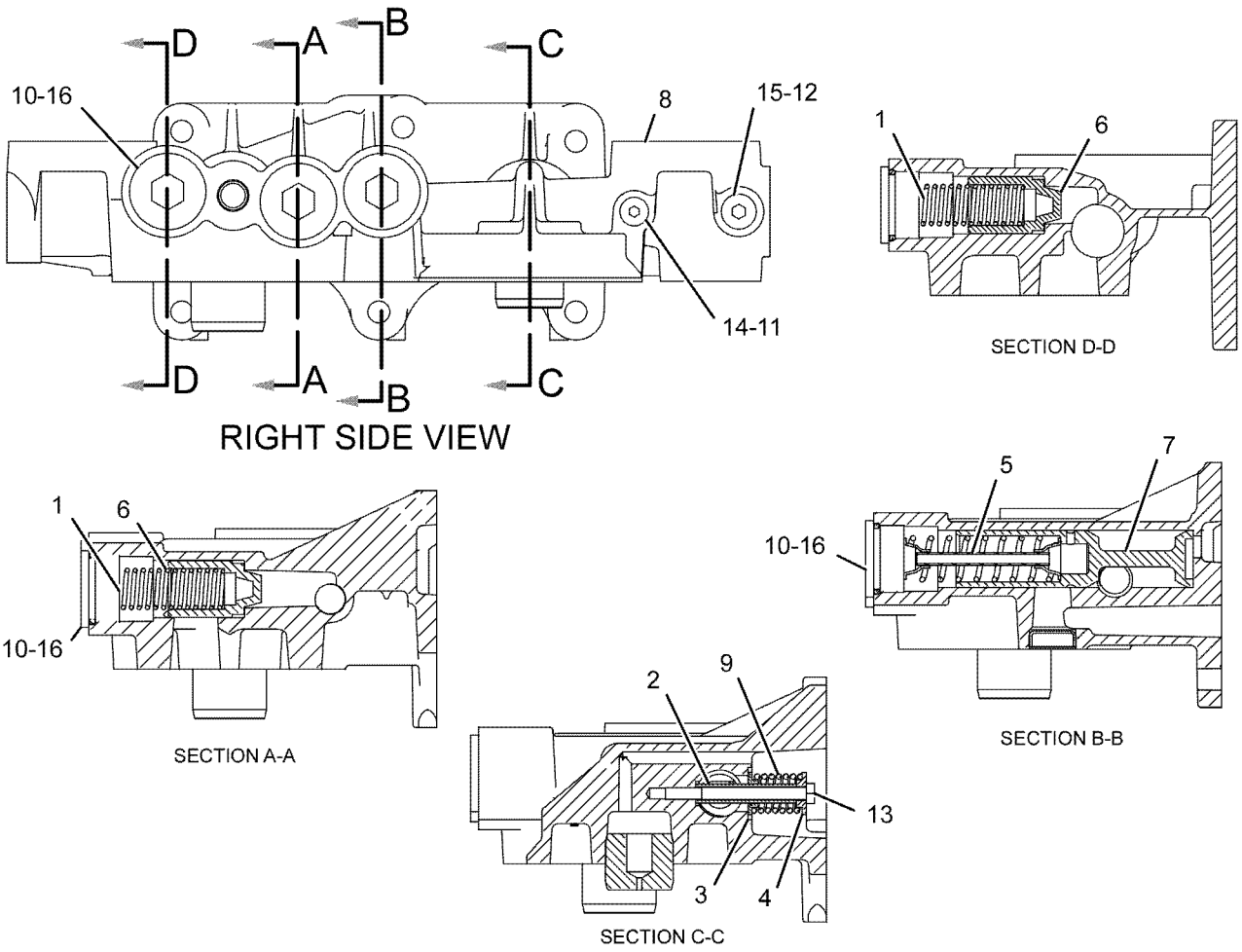

GRAPHIC #1 **<END>** g01104407

LUBRICATION SYSTEM

267-0007 BREATHER GP–CRANKCASE

S/N: TXF1-UP; MHX7634-UP
SHORT
PART OF 291-9259 ENGINE AR-COMPLETE

SMCS-1317 **i02285535**

NOTE	REF NO	GRAPHIC REF	PART NUMBER	QTY	PART NAME 1 2 3 4 5 6 (PRODUCT LEVEL)	SEE PAGE
	1	1	**9Y-1758**	1	GASKET (CRANKCASE BREATHER)	
	2	1	**9Y-4357**	1	BREATHER AS (CRANKCASE)	
M	3	1	**8T-0275**	4	BOLT (M6X1X50-MM)	
	4	1	**9X-8267**	4	WASHER (6.6X12X2-MM THK)	

M-METRIC PART

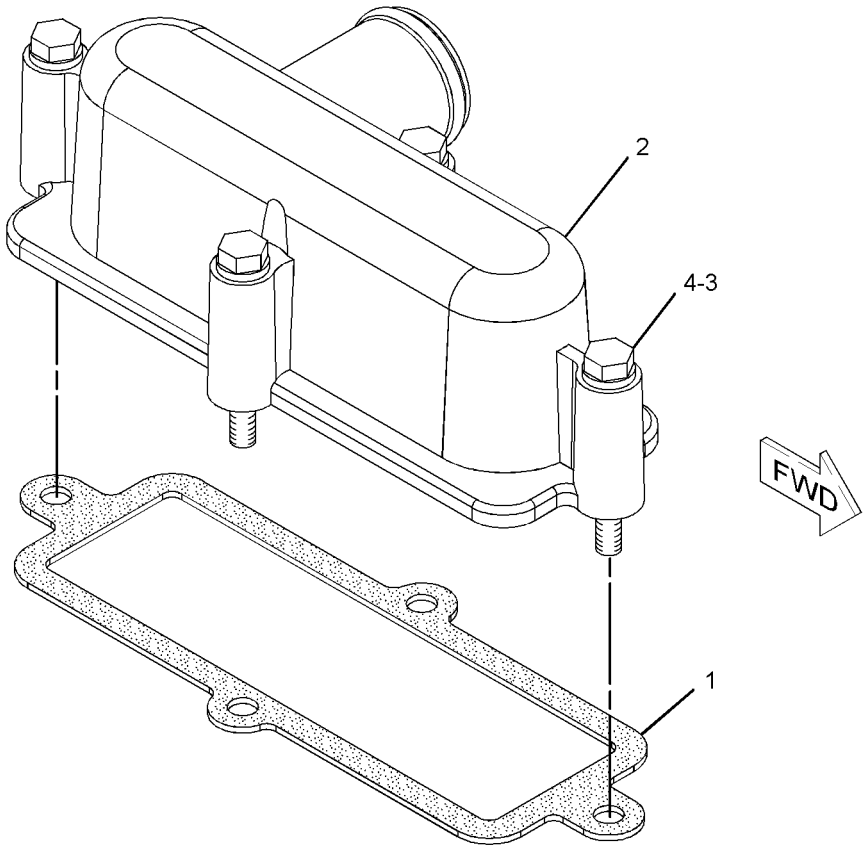

GRAPHIC #1 **<END>** g01145028

117-2786 COVER GP-OIL FILTER BASE–ENGINE

S/N: TXF1-UP; MHX7634-UP
NO BYPASS
PART OF 291-9259 ENGINE AR-COMPLETE

SMCS-1306 **i01008840**

NOTE	REF NO	GRAPHIC REF	PART NUMBER	QTY	PART NAME 1 2 3 4 5 6 (PRODUCT LEVEL)	SEE PAGE
	1	1	**7C-9542**	1	COVER-FILTER BASE	
	2	1	**5S-9134**	1	SEAL-O-RING	

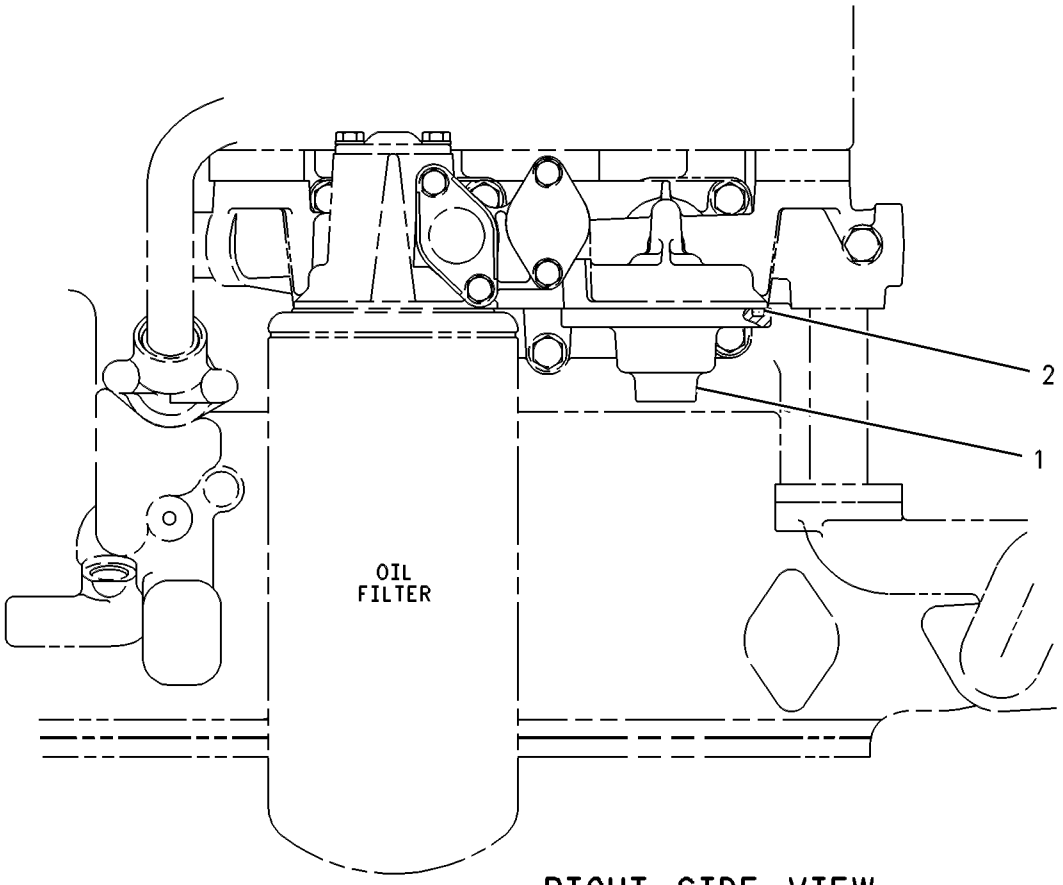

RIGHT SIDE VIEW

GRAPHIC #1 **<END>** g00251382

235-0932 FILLER GP-ENGINE OIL

S/N: TXF1-UP; MHX7634-UP

PART OF 291-9259 ENGINE AR-COMPLETE

SMCS-1316 **i03097167**

NOTE	REF NO	GRAPHIC REF	PART NUMBER	QTY	PART NAME 1 2 3 4 5 6 (PRODUCT LEVEL)	SEE PAGE
	1	1	**3F-6156**	1	HOOK	
	2	1	**7C-1445**	3	COVER	
	3	1	**163-9361**	1	CAP AS-ENGINE OIL FILLER	
	4	1	**235-0935**	1	TUBE AS	
	5	1	**235-0936**	1	BRACKET	
	6	1	**061-9455**	4	SEAL-O-RING	
M	7	1	**2Y-5829**	1	NUT (M10X1.5-THD)	
	8	1	**325-0106**	1	CLIP	
M	9	1	**6V-1820**	1	BOLT (M10X1.5X30-MM)	
M	10	1	**6V-3940**	6	BOLT (M8X1.25X25-MM)	
M	11	1	**6V-5217**	2	BOLT (M8X1.25X20-MM)	
	12	1	**6V-5839**	3	WASHER (11X21X2.5-MM THK)	
M	13	1	**6V-6317**	1	BOLT (M10X1.5X20-MM)	
	14	1	**9M-1974**	8	WASHER-HARD (8.8X16X2-MM THK)	

M-METRIC PART

235-0932 **FILLER GP-ENGINE OIL** *(contd.)* **i03097167**

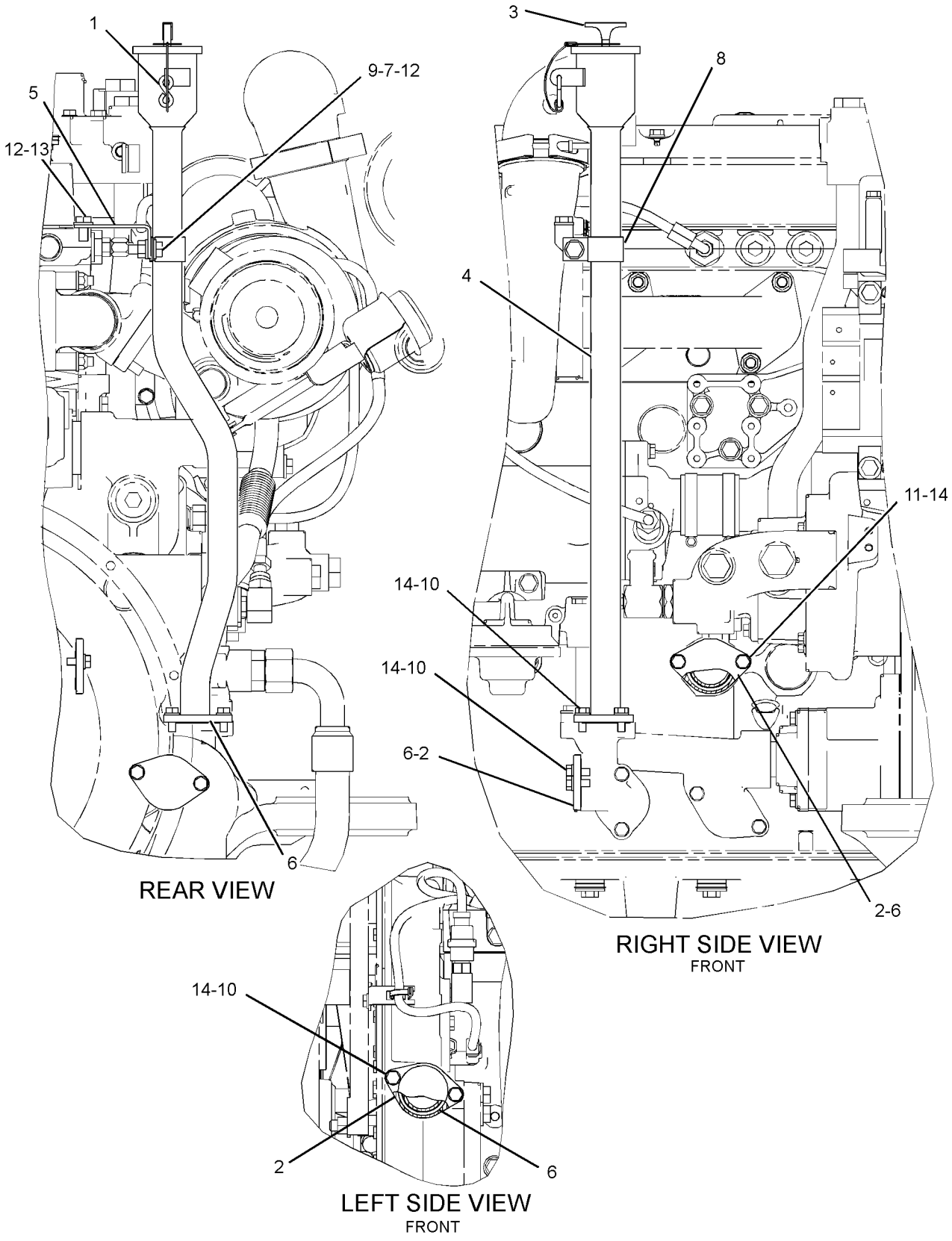

GRAPHIC #1 **<END>** g01351661

LUBRICATION SYSTEM

220-7082 FILTER GP-ENGINE OIL

S/N: TXF1-UP; MHX7634-UP

PART OF 291-9259 ENGINE AR-COMPLETE

SMCS-1308 **i03976319**

NOTE	REF NO	GRAPHIC REF	PART NUMBER	QTY	PART NAME 1 2 3 4 5 6 (PRODUCT LEVEL)	SEE PAGE
	1	1	**1R-1808**	1	FILTER-ENGINE OIL (ADVANCED EFFICIENCY)	
	2	1	**8C-3445**	1	CAP-DUST	
	3	1	**102-5828**	1	COVER	
	4	1	**102-5829**	1	ADAPTER	
I	6	1	**144-0119**	1	HOSE AS	
	7	1	**144-6650**	1	ELBOW	
I	8	1	**148-2104**	1	HOSE AS	
	9	1	**190-1106**	1	BASE AS-OIL FILTER	
		1	**2P-4304**	1	STUD-HOLLOW	
	12	1	**030-7935**	1	CONNECTOR	
	13	1	*309-5137*	2	CONNECTOR AS	
					(EACH INCLUDES)	
		1	**6V-8635**	1	CONNECTOR	
	13A	1	**228-7093**	1	SEAL-O-RING	
	13B	1	**238-5084**	1	SEAL-O-RING	
	14	1	**214-7566**	1	SEAL-O-RING	
	15	1	**238-5084**	2	SEAL-O-RING	
	16	1	**6V-3908**	2	SEAL-O-RING	
	19	1	**8C-3446**	1	VALVE-FLUID SAMPLING (ENGINE OIL)	
	20	1	*319-6234*	1	PLUG AS	
		1	**9S-9334**	1	PLUG-O-RING	
		1	**238-5084**	1	SEAL-O-RING	

I-REFER TO HYDRAULIC INFORMATION SYSTEM

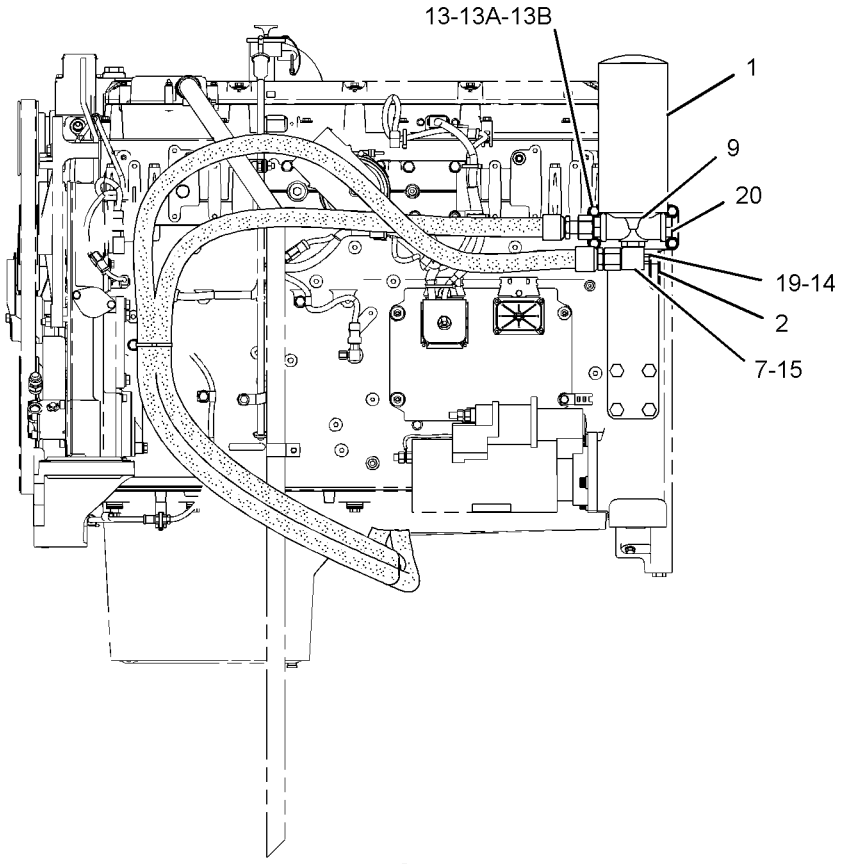

LEFT SIDE VIEW

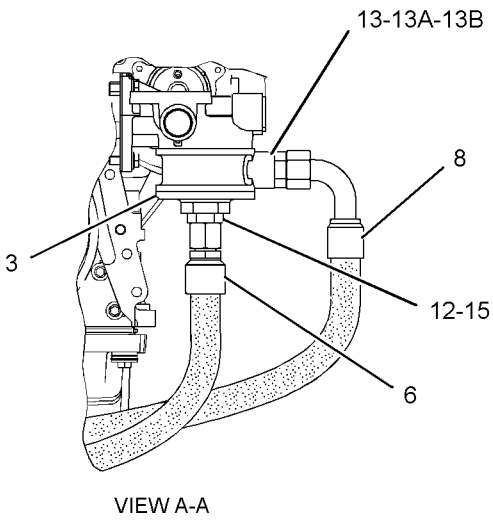

VIEW A-A

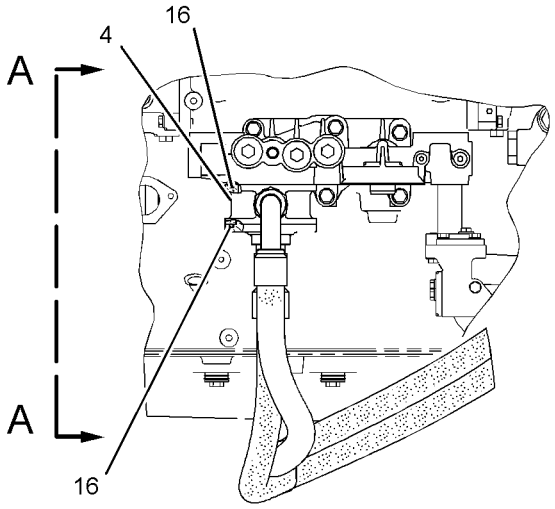

RIGHT SIDE VIEW

GRAPHIC #1 **<END>** g02165756

220-7133 FUMES DISPOSAL GP

S/N: TXF1-UP; MHX7634-UP

PART OF 291-9259 ENGINE AR-COMPLETE

SMCS-1317 **i02907336**

NOTE	REF NO	GRAPHIC REF	PART NUMBER	QTY	PART NAME 1 2 3 4 5 6 (PRODUCT LEVEL)	SEE PAGE
	1	1	**034-1432**	1	STRAP-CABLE	
	2	1	**220-7134**	1	HOSE (FUMES DISPOSAL)	
	3	1	**2S-2053**	1	CLIP	
M	4	1	**2Y-5829**	1	NUT (M10X1.5-THD)	
	5	1	**6V-5839**	1	WASHER (11X21X2.5-MM THK)	

M-METRIC PART

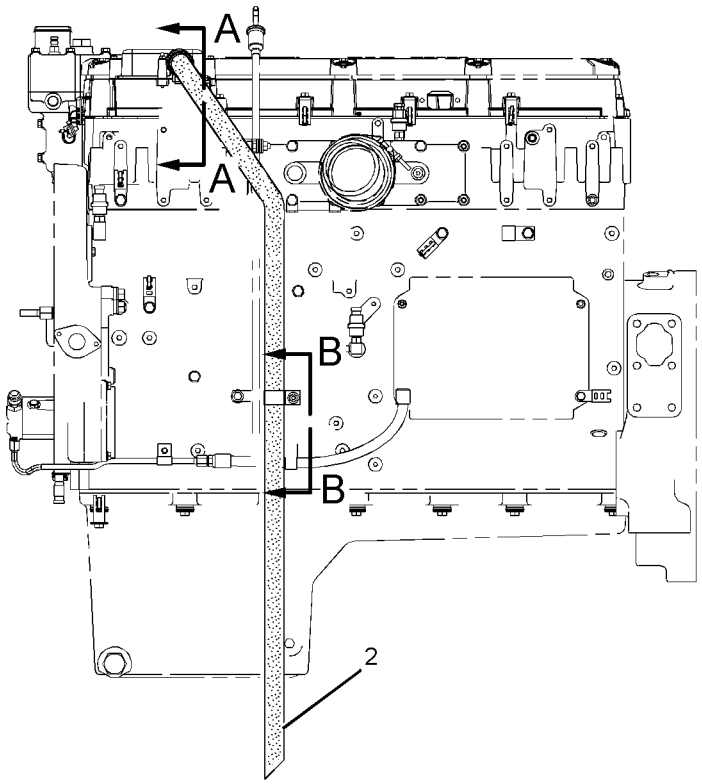

LEFT SIDE VIEW OF ENGINE

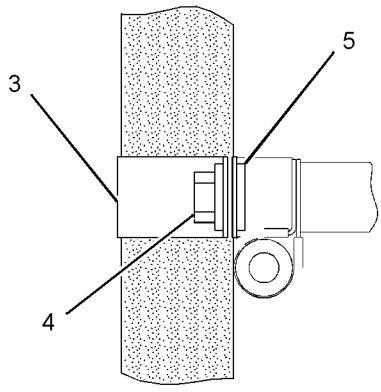

VIEW B-B

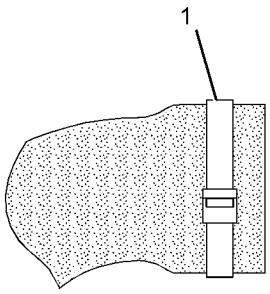

VIEW A-A

GRAPHIC #1 **<END>** g01447086

220-7097 GAUGE GP-OIL LEVEL (DIPSTICK)—ENGINE

S/N: TXF1-UP; MHX7634-UP

PART OF 291-9259 ENGINE AR-COMPLETE

SMCS-1326 **i03977435**

NOTE	REF NO	GRAPHIC REF	PART NUMBER	QTY	PART NAME 1 2 3 4 5 6 (PRODUCT LEVEL)	SEE PAGE
J	1	1	**209-7309**	3	PLUG	
	2	1,2	**220-7098**	1	GAUGE AS-OIL LEVEL (DIPSTICK) (ENGINE)	
	3	1,2	**220-7099**	1	TUBE AS-GUIDE	
	4	1	**228-4064**	1	BRACKET	
M	5	1	**2Y-5829**	1	NUT (M10X1.5-THD)	
	6	1	**3E-4352**	1	WASHER-HARD (8.8X20.5X2.5-MM THK)	
	7	1	**4H-2633**	1	CLIP	
M	8	1	**6V-4248**	1	BOLT (M10X1.5X25-MM)	
M	9	1	**6V-5215**	1	BOLT (M8X1.25X16-MM)	
	10	1	**6V-5839**	3	WASHER (11X21X2.5-MM THK)	
	11	1	**228-4947**	1	SEAL-O-RING	
	12	2	**264-4501**	1	LOCK AS	
	13	2	**3E-7445**	1	CLAMP-HOSE	

J-USE TO PLUG OPTIONAL DIPSTICK LOCATIONS
M-METRIC PART

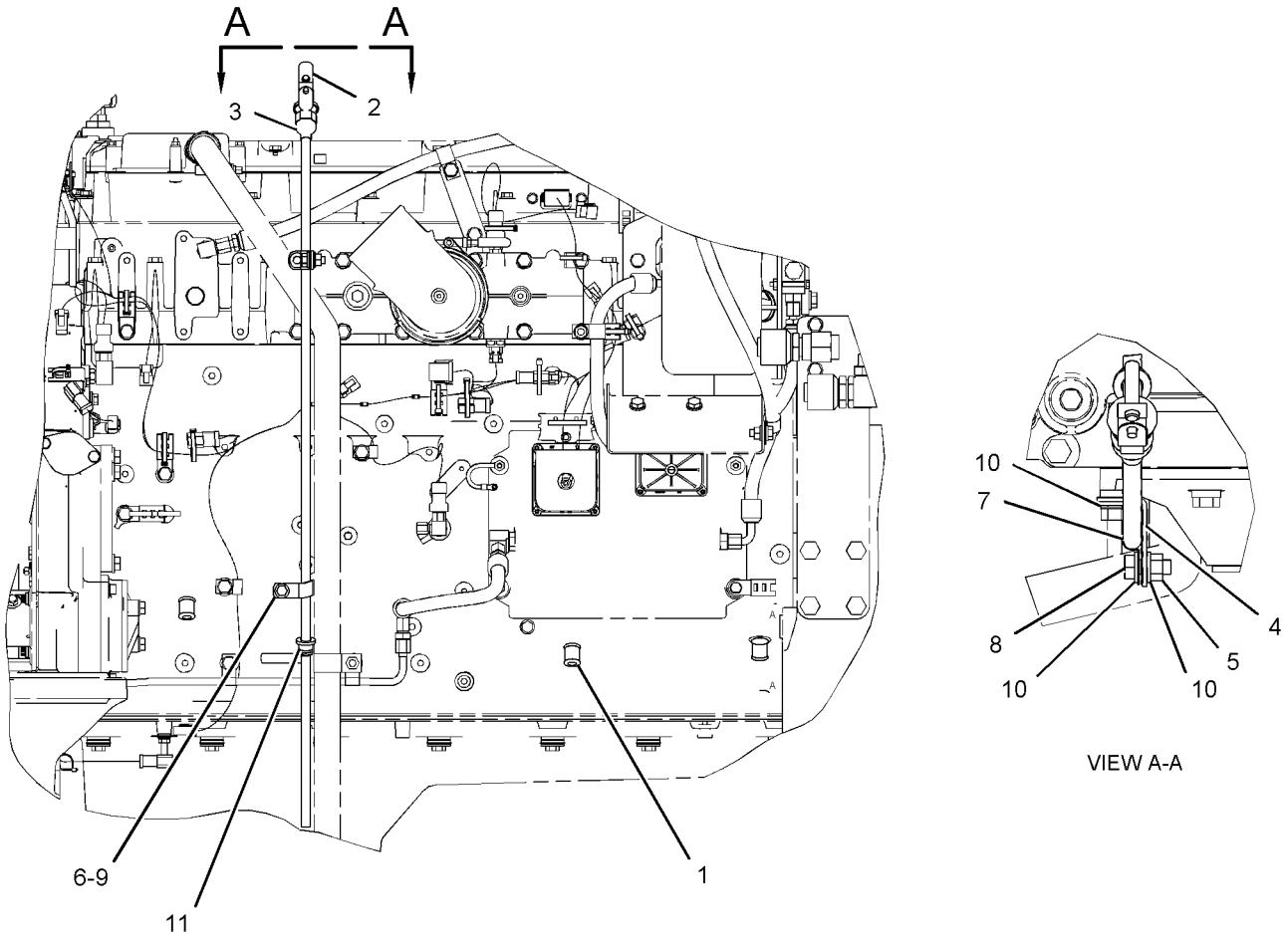

LEFT SIDE VIEW

GRAPHIC #1 g01186075

220-7097 **GAUGE GP-OIL LEVEL (DIPSTICK)** *(contd.)* **i03977435**

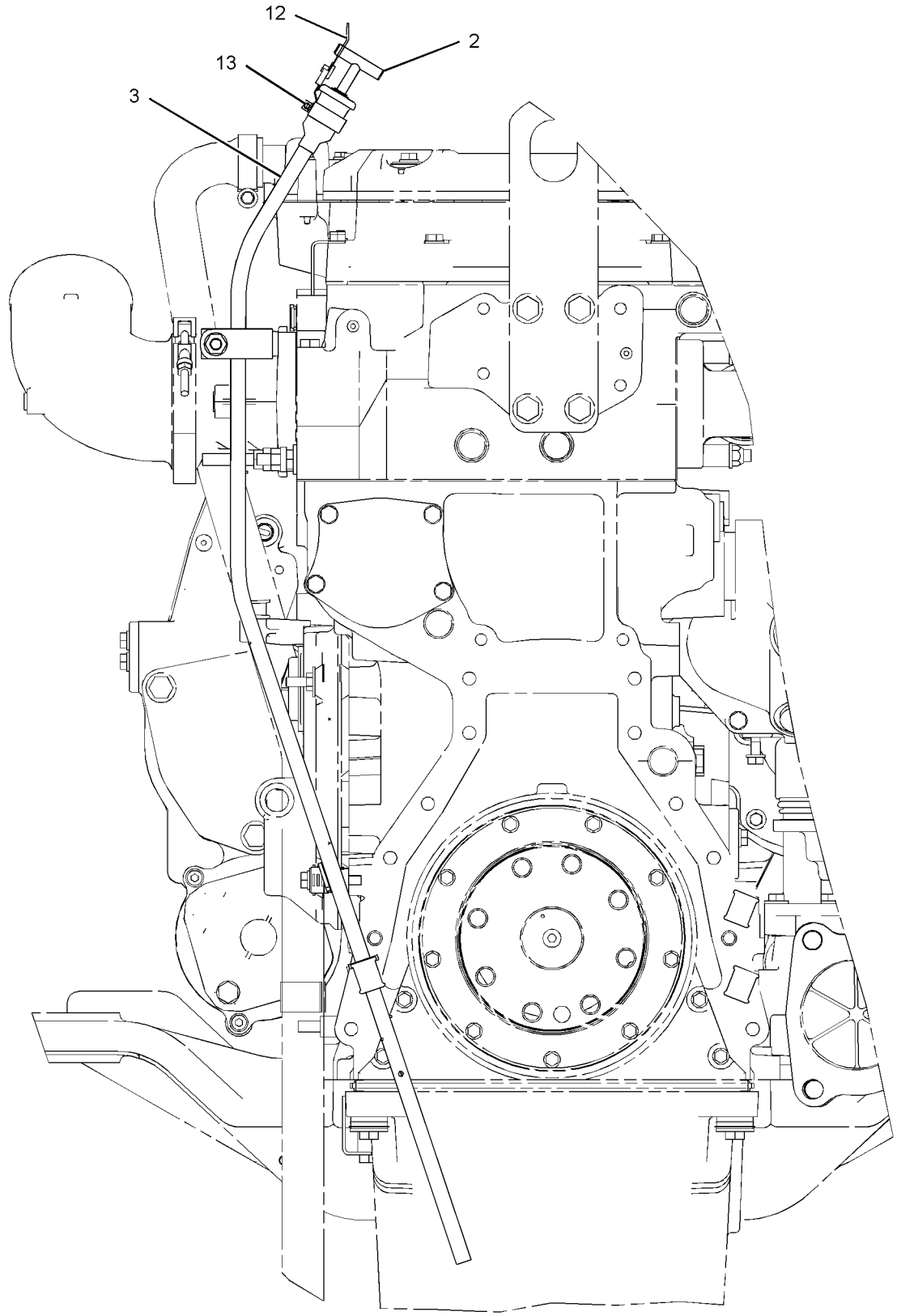

REAR VIEW

GRAPHIC #2 **<END>** g01186076

LUBRICATION SYSTEM

222-8360 LINES GP-ENGINE OIL DRAIN

S/N: JGB1-UP; KHS1-UP

PART OF 297-7686 INSTALLATION AR-ENGINE

SMCS-1307 **i03960890**

NOTE	REF NO	GRAPHIC REF	PART NUMBER	QTY	PART NAME 1 2 3 4 5 6 (PRODUCT LEVEL)	SEE PAGE
	1	1	**095-1388**	1	CLAMP-HOSE	
E	2	1	**5P-0743**		HOSE (29-CM)	

E-ORDER BY THE CENTIMETER

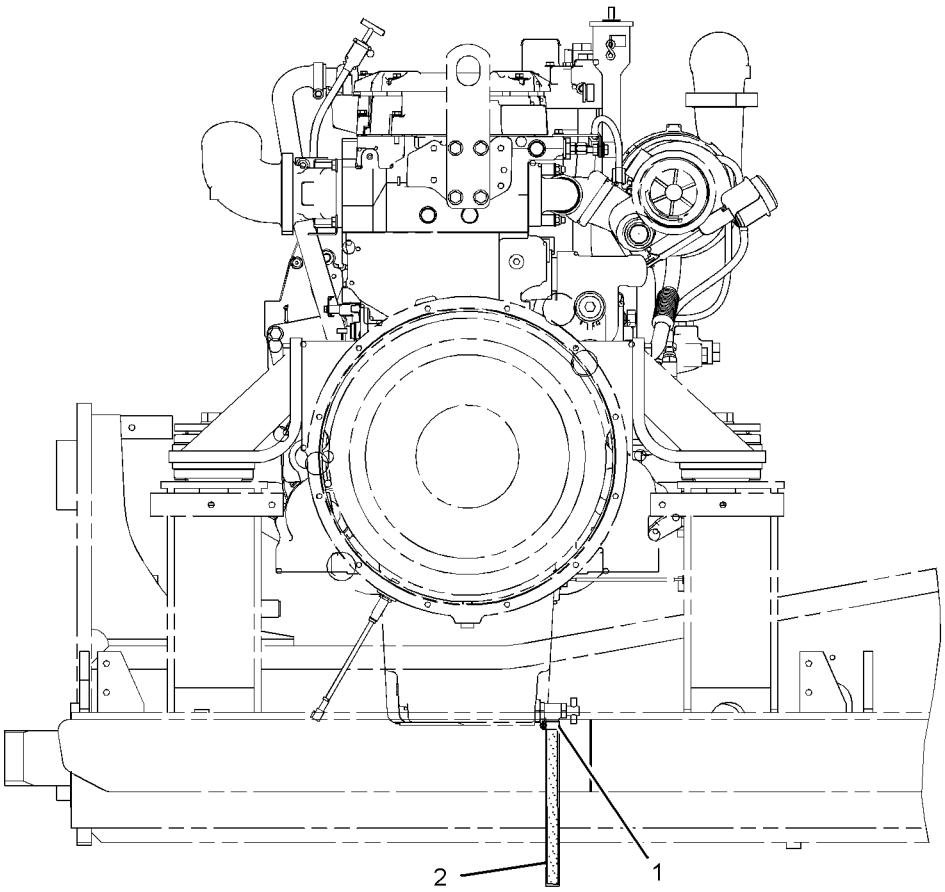

RIGHT SIDE VIEW

GRAPHIC #1 **<END>** g02160261

224-8170 LINES GP-TURBOCHARGER OIL

S/N: TXF1-UP; MHX7634-UP

PART OF 291-9259 ENGINE AR-COMPLETE

SMCS-1052 **i03794634**

NOTE	REF NO	GRAPHIC REF	PART NUMBER	QTY	PART NAME 1 2 3 4 5 6 (PRODUCT LEVEL)	SEE PAGE
	1	1	**197-8418**	1	GASKET	
	2	1	**197-8419**	1	GASKET	
	3	1	**224-8171**	1	HOSE AS (SUPPLY)	
	4	1	**224-8172**	1	TUBE AS (DRAIN)	
	5	1	**228-7090**	1	SEAL-O-RING	
	6	1	**225-6948**	1	SEAL-O-RING	
	7	1	**214-7568**	1	SEAL-O-RING	
M	8	1	**6V-5218**	6	BOLT (M8X1.25X35-MM)	
	9	1	**9M-1974**	6	WASHER-HARD (8.8X16X2-MM THK)	
	10	1	**8T-6876**	1	ELBOW	

M-METRIC PART

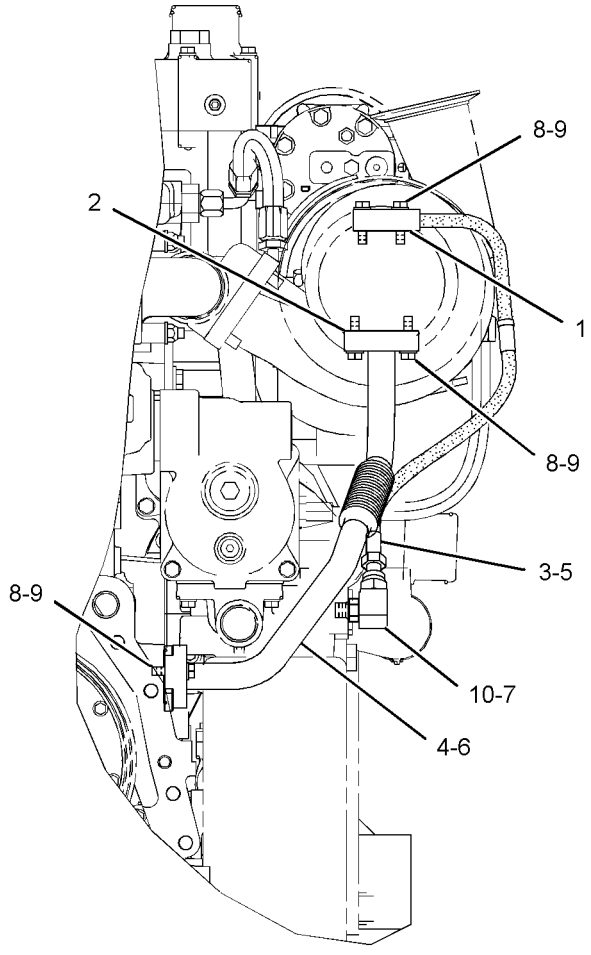

REAR VIEW

GRAPHIC #1

<END>

g01060502

222-8362 MOUNTING GP-ENGINE OIL FILTER

S/N: JGB1-UP; KHS1-UP

PART OF 297-7686 INSTALLATION AR-ENGINE

SMCS-1308 **i04001719**

NOTE	REF NO	GRAPHIC REF	PART NUMBER	QTY	PART NAME 1 2 3 4 5 6 (PRODUCT LEVEL)	SEE PAGE
	1	1	**233-1265**	1	SUPPORT AS	
	2	1	**7D-7233**	4	CLIP	
	3	1	**8T-4121**	9	WASHER-HARD (11X21X2.5-MM THK)	
M	4	1	**8T-4133**	1	NUT (M10X1.5-THD)	
M	5	1	**8T-4136**	1	BOLT (M10X1.5X25-MM)	
M	6	1	**8T-4137**	2	BOLT (M10X1.5X20-MM)	
M	7	1	**8T-4195**	4	BOLT (M10X1.5X30-MM)	
	8	1	**7K-1181**	5	STRAP-CABLE	
M	9	1	**8T-4196**	1	BOLT (M10X1.5X35-MM)	

M-METRIC PART

222-8362 **MOUNTING GP-ENGINE OIL FILTER** *(contd.)* **i04001719**

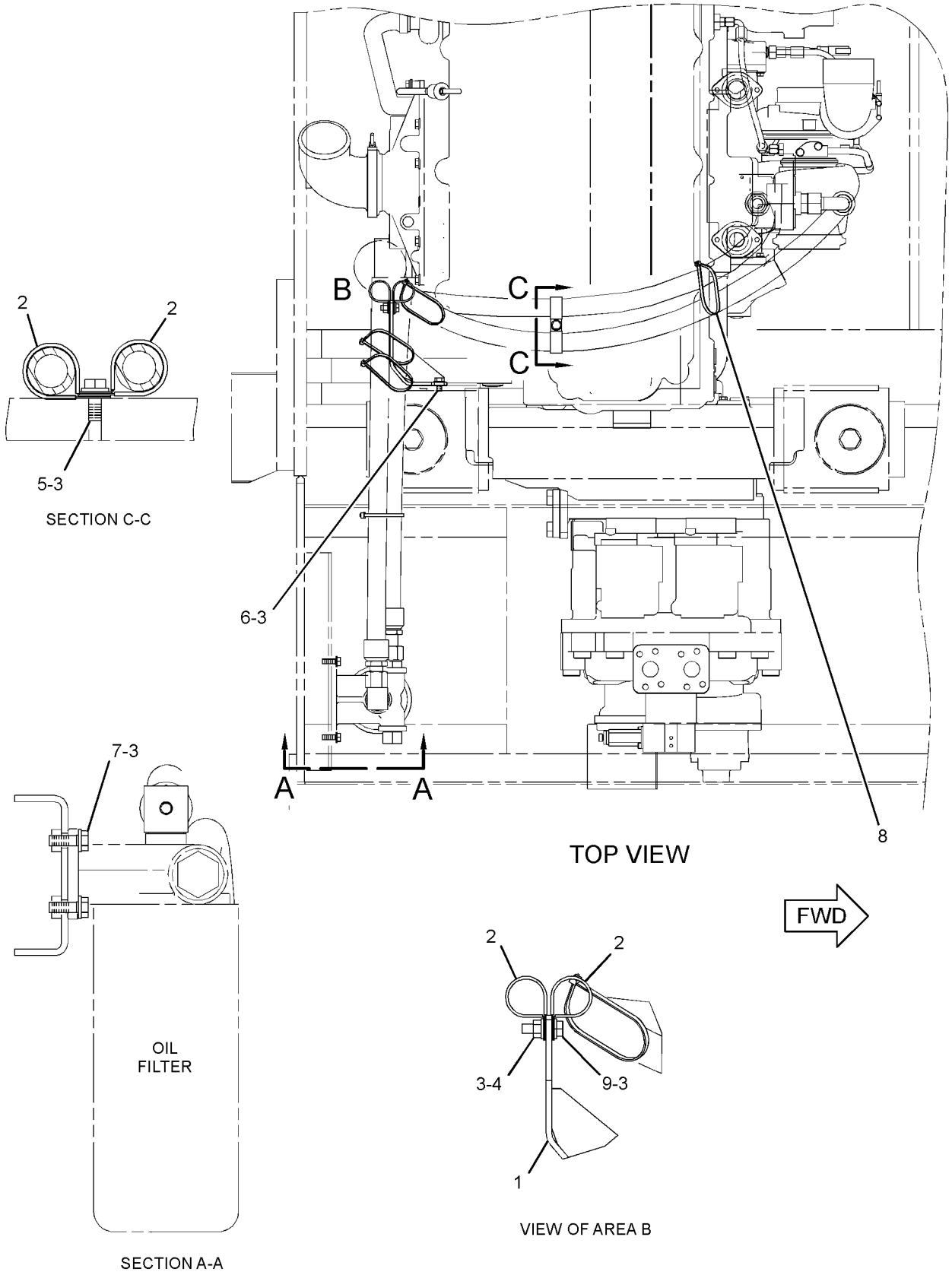

GRAPHIC #1 **<END>** g02350773

LUBRICATION SYSTEM

233-5220 PUMP GP-ENGINE OIL*R

S/N: TXF1-UP; MHX7634-UP

PART OF 233-5221 PUMP GP-ENGINE OIL

SMCS-1304, 1315 **i03681550**

NOTE	REF NO	GRAPHIC REF	PART NUMBER	QTY	PART NAME 1 2 3 4 5 6 (PRODUCT LEVEL)	SEE PAGE
	1	1	**9Y-8076**	1	SHAFT AS-OIL PUMP (8-TEETH) (ENGINE)	
	2	1	**6D-7146**	1	SEAL-O-RING	
M	3	1	**6V-2317**	4	BOLT (M8X1.25X30-MM)	
	4	1	**9M-1974**	4	WASHER-HARD (8.8X16X2-MM THK)	
	5	1	**9Y-8075**	1	SHAFT AS-OIL PUMP (8-TEETH) (ENGINE)	

M-METRIC PART

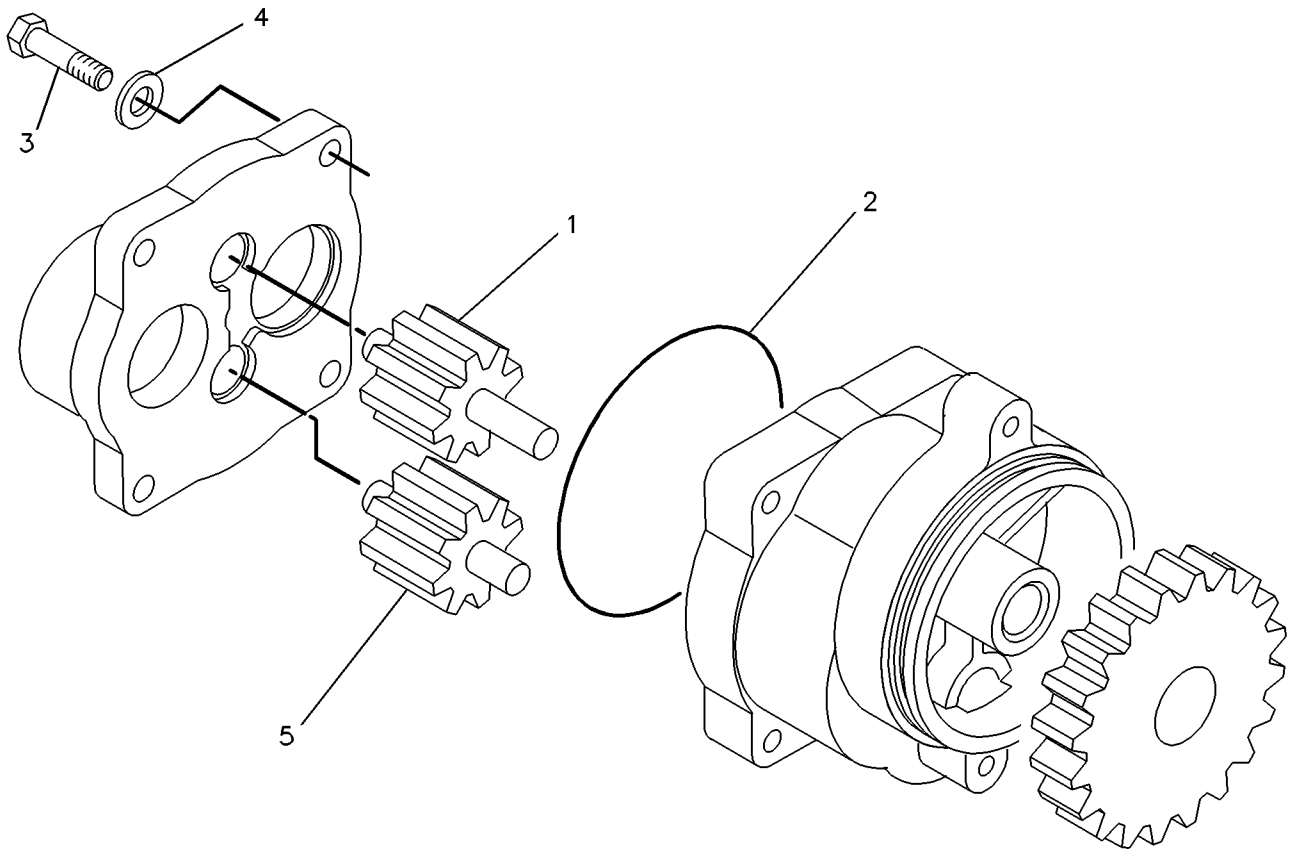

GRAPHIC #1 **<END>** g00228139

233-5221 PUMP GP-ENGINE OIL

S/N: TXF1-UP; MHX7634-UP
CONTAINS ALL LINES AND FASTENERS
PART OF 317-9990, 356-2433 ENGINE AR-CORE

SMCS-1304, 1315 **i03821113**

NOTE	REF NO	GRAPHIC REF	PART NUMBER	QTY	PART NAME 1 2 3 4 5 6 (PRODUCT LEVEL)	SEE PAGE
	1	1	**7C-1821**	1	COUPLING	
	2	1	**7C-1822**	1	COUPLING	
YR	3	1	**233-5220**	1	PUMP GP-ENGINE OIL	88
	4	1	**235-1448**	1	TUBE AS	
	5	1	**235-1451**	1	ELBOW-OIL PUMP	
	6	1	**346-4897**	1	SEAL-O-RING	
	8	1	**3E-6788**	1	SEAL-O-RING	
	9	1	**5P-8068**	2	SEAL-O-RING	
	10	1	**6V-3834**	1	SEAL-O-RING	
	11	1	**6V-5134**	3	SEAL-O-RING	
M	12	1	**6V-2317**	2	BOLT (M8X1.25X30-MM)	
M	13	1	**6V-5221**	5	BOLT (M8X1.25X80-MM)	
M	14	1	**7X-0870**	1	BOLT (M8X1.25X140-MM)	
	15	1	**8J-4351**	1	SEAL-O-RING	
	16	1	**9M-1974**	8	WASHER-HARD (8.8X16X2-MM THK)	

M-METRIC PART
R-REMFG PART MAY BE AVAILABLE
Y-SEPARATE ILLUSTRATION

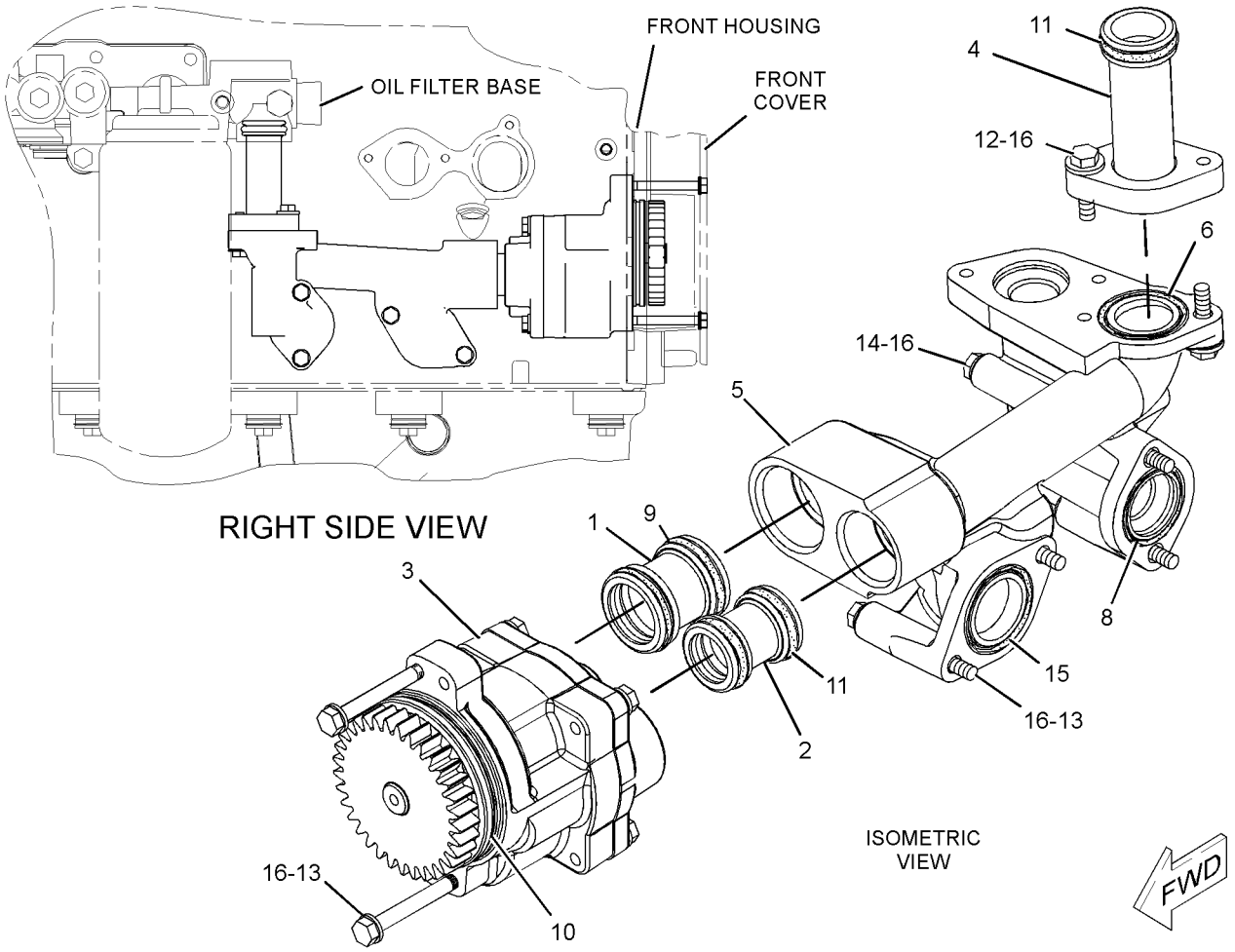

GRAPHIC #1 **<END>** g01246677

COOLING SYSTEM

294-1275 CONTROL AR-VARIABLE-SPEED FAN—REVERSE

S/N: KHS1-UP

AN ATTACHMENT

SMCS-1387, 1900, 5057 **i02991631**

NOTE	PART NUMBER	QTY	PART NAME 1 2 3 4 5 6 (PRODUCT LEVEL)	SEE PAGE
Y	*257-4596*	1	FILM GP (REVERSING FAN)	979
Y	*307-7944*	1	HOOD GP-ENGINE (REVERSING FAN)	374
Y	*292-7175*	1	LINES GP-MOTOR (REVERSING FAN)	587
Y	*295-9442*	1	MOTOR & MTG GP-HYDRAULIC FAN (REVERSING)	672
Y	*305-7638*	1	SCREEN GP-RADIATOR	113
Y	*299-2606*	1	WIRING GP-FAN (REVERSING)	299

Y-SEPARATE ILLUSTRATION

<END>

253-7404 COOLER GP-ENGINE OIL

S/N: TXF1-UP; MHX7634-UP
REAR PORT OPEN FOR REAR TUBBO WATER HOSE
PART OF 291-9259 ENGINE AR-COMPLETE

SMCS-1378 **i03886260**

NOTE	REF NO	GRAPHIC REF	PART NUMBER	QTY	PART NAME 1 2 3 4 5 6 (PRODUCT LEVEL)	SEE PAGE
	1	1	**124-5043**	1	COUPLING	
	2	1	**224-2675**	1	SEAL	
C	3	1	**131-6645**	1	HOSE	
	4	1	**341-1429**	2	SEAL	
C	5	1	**335-9214**	2	CLAMP-BAND	
	6	1	**230-4518**	1	ELBOW	
	7	1	**349-3313**	1	BONNET	
	8	1	**349-3311**	1	BONNET (OIL COOLER)	
R	9	1	**236-8745**	1	CORE AS-OIL COOLER (ENGINE)	
	10	1	**2N-5243**	2	SEAL-O-RING	
M	11	1	**6V-2317**	5	BOLT (M8X1.25X30-MM)	
	12	1	**6V-3251**	1	SEAL-O-RING	
	13	1	**6V-5064**	3	SEAL-O-RING	
	14	1	**9S-8008**	1	PLUG-O-RING	
M	15	1	**6V-5219**	10	BOLT (M8X1.25X40-MM)	
M	16	1	**6V-5221**	1	BOLT (M8X1.25X80-MM)	
	17	1	**6V-9027**	1	SEAL-O-RING	
	18	1	**9M-1974**	16	WASHER-HARD (8.8X16X2-MM THK)	
	19	1	**9S-8002**	1	PLUG-O-RING	
	20	1	**9S-8006**	1	PLUG-O-RING	
	21	1	**9S-9334**	3	PLUG-O-RING	
	22	1	**6V-5063**	1	SEAL-O-RING	

C-CHANGE FROM PREVIOUS TYPE
M-METRIC PART
R-REMFG PART MAY BE AVAILABLE

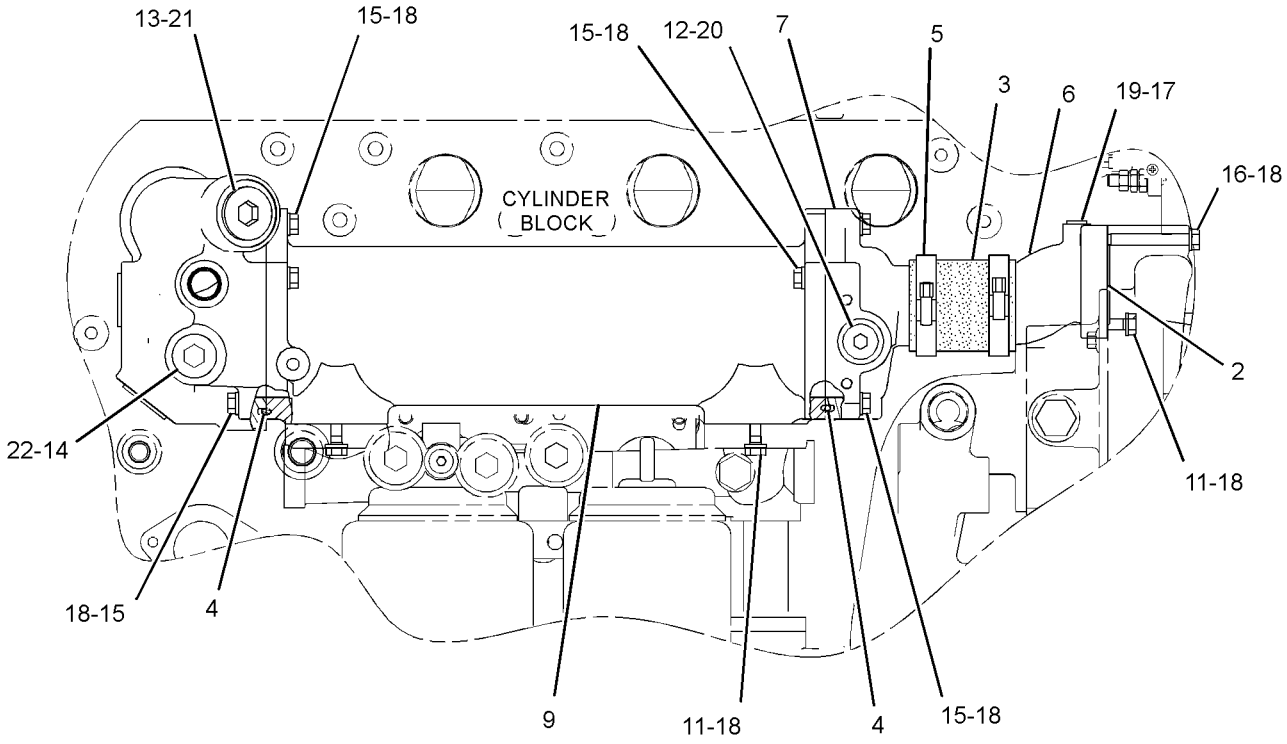

RIGHT SIDE VIEW OF ENGINE

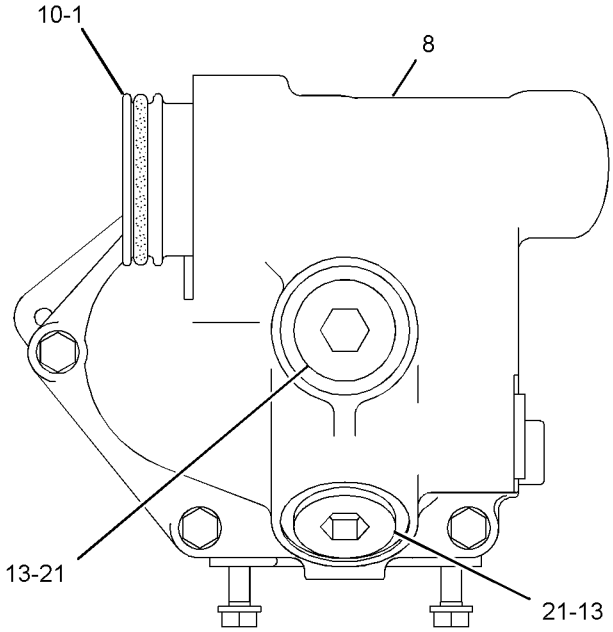

REAR VIEW OF ENGINE

GRAPHIC #1 **<END>** g02148809

COOLING SYSTEM

281-3554 FAN GP-SUCTION

S/N: JGB1-UP; KHS1-UP

PART OF 297-7686 INSTALLATION AR-ENGINE

SMCS-1356 **i02842808**

NOTE	REF NO	GRAPHIC REF	PART NUMBER	QTY	PART NAME 1 2 3 4 5 6 (PRODUCT LEVEL)	SEE PAGE
	1	1	**139-8877**	1	SPIDER AS (8-BLADE)	
	2	3	**196-0711**	8	WASHER (17X40X8-MM THK)	
	3	1	**230-2783**	1	BRACE	
	4	2	**230-2784**	1	BRACE	
	5	3	**230-2791**	1	SUPPORT AS	
	6	3	**230-2792**	1	SUPPORT AS	
	7	3	**245-9242**	2	PLATE	
	8	1	**245-9278**	1	SUPPORT AS-FAN	
	9	1	**245-9303**	2	GUARD AS	
	10	1	**281-3637**	1	SUPPORT AS-FAN (LH)	
	11	1	**281-3638**	1	SUPPORT AS-FAN (RH)	
	12	3	**281-3645**	1	ADAPTER-FAN	
Y	13	1	**295-9429**	1	MOTOR GP-PISTON	679
Y	14	3	*315-4365*	1	DRIVE GP-FAN	38
	15	3	**131-5879**	8	WASHER (11X32X3-MM THK)	
M	16	3	**136-4182**	2	BOLT (M16X2X100-MM)	
	17	3	**4M-0189**	1	SEAL-O-RING	
	18	3	**5P-1076**	6	WASHER-HARD (13.5X30X4-MM THK)	
	19	3	**6C-9149**	2	WASHER (22X50X10-MM THK)	
	20	1	**7X-0595**	10	WASHER-HARD (17X30X8-MM THK)	
M	21	1	**7X-2553**	6	BOLT (M16X2X40-MM)	
	22	2	**7X-7729**	10	WASHER (11X25X3-MM THK)	
	23	3	**8T-4121**	8	WASHER-HARD (11X21X2.5-MM THK)	
	24	3	**8T-4123**	2	WASHER (22X35X3.5-MM THK)	
M	25	3	**8T-4131**	2	NUT (M20X2.5-THD)	
M	26	3	**8T-4132**	6	NUT (M16X2-THD)	
M	27	3	**8T-4133**	2	NUT (M10X1.5-THD)	
M	28	2,3	**8T-4137**	6	BOLT (M10X1.5X20-MM)	
M	29	3	**8T-4140**	4	BOLT (M16X2X60-MM)	
M	30	3	**8T-4183**	6	BOLT (M12X1.75X40-MM)	
M	31	3	**8T-4194**	2	BOLT (M12X1.75X50-MM)	
M	32	2	**8T-4195**	8	BOLT (M10X1.5X30-MM)	
M	33	3	**8T-4196**	10	BOLT (M10X1.5X35-MM)	
	34	3	**8T-4223**	2	WASHER-HARD (13.5X25.5X3-MM THK)	
M	35	3	**8T-4779**	3	BOLT (M16X2X35-MM)	
M	36	3	**8T-6430**	4	BOLT (M20X2.5X50-MM)	
M	37	1	**8T-7338**	4	BOLT (M16X2X45-MM)	
	38	3	**9X-8257**	3	WASHER (17.5X30X3.5-MM THK)	

M-METRIC PART
Y-SEPARATE ILLUSTRATION

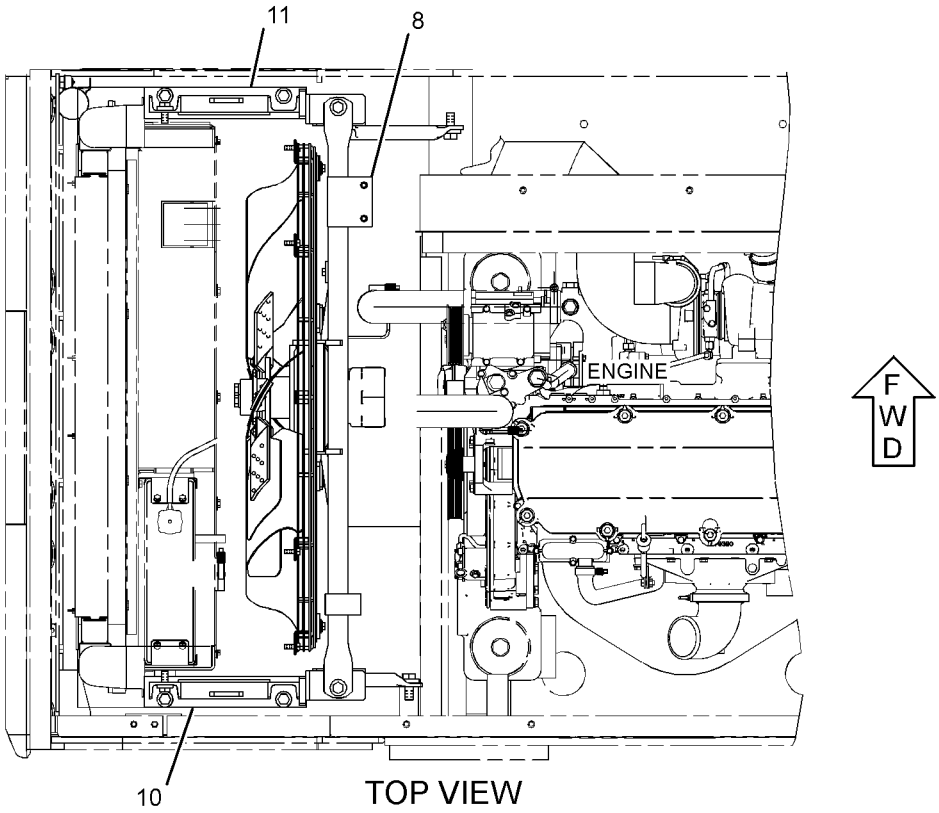

REFER TO ALL ILLUSTRATIONS OF THIS GROUP FOR AUXILIARY VIEWS

GRAPHIC #1

g01458719

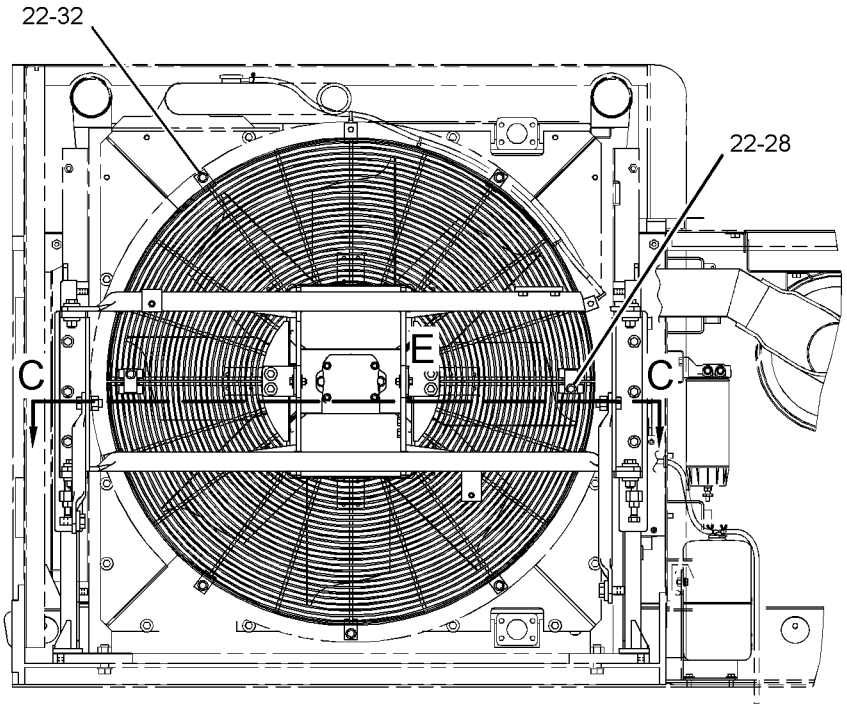

VIEW A-A

REFER TO ALL ILLUSTRATIONS OF
THIS GROUP FOR AUXILIARY VIEWS

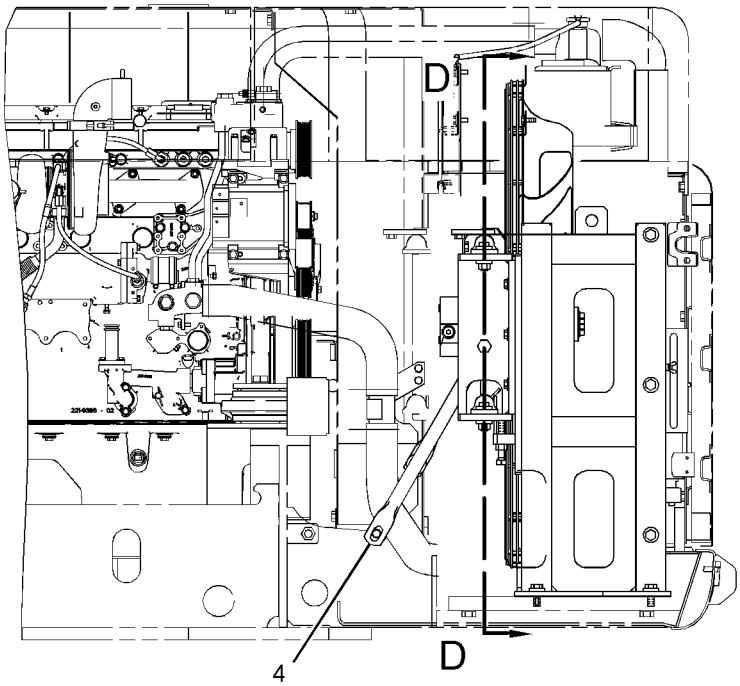

FRONT VIEW

GRAPHIC #2

g01458720

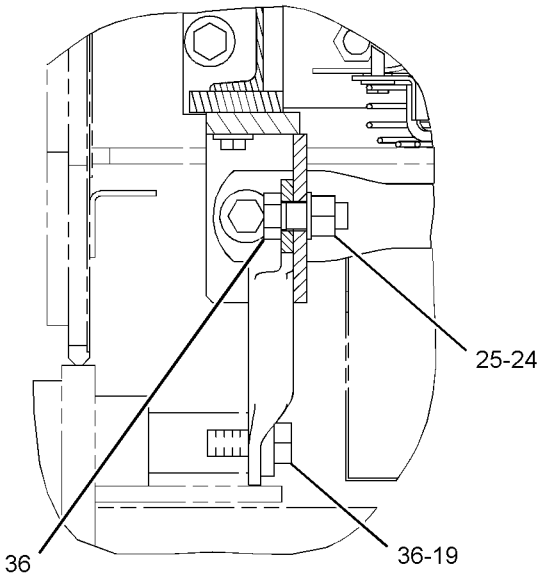

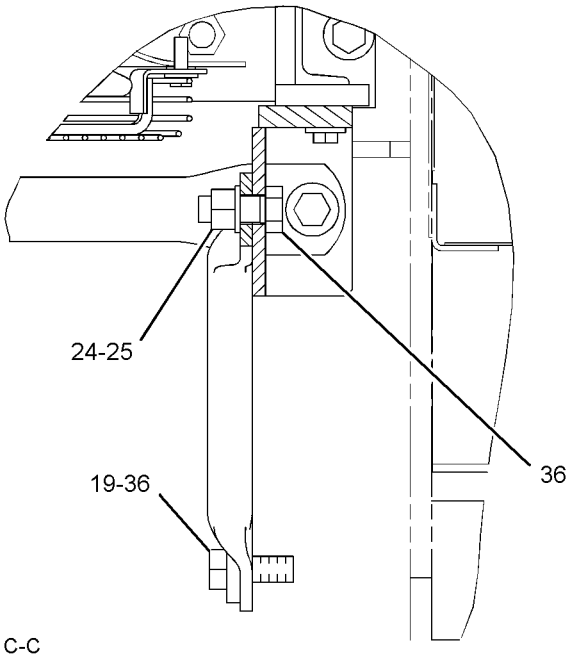

SECTION C-C

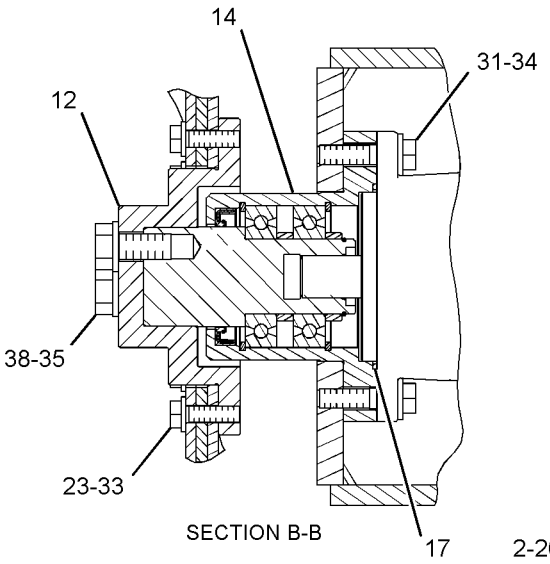

SECTION B-B

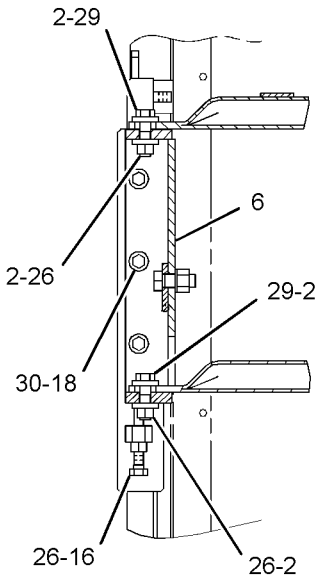

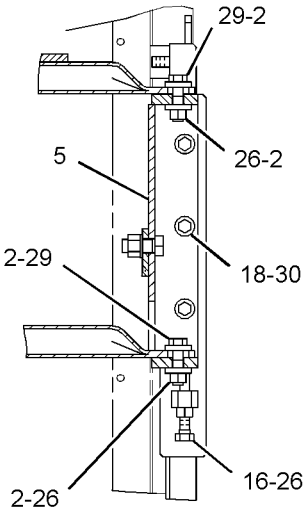

SECTION D-D

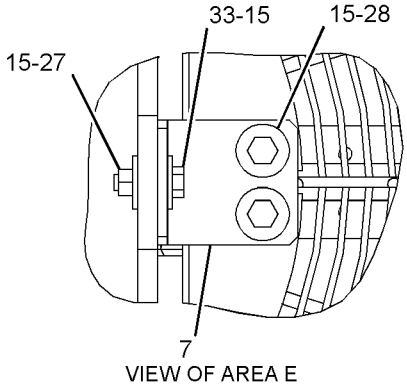

VIEW OF AREA E

GRAPHIC #3 **<END>** g01458721

COOLING SYSTEM

296-7136 LINES GP-COOLING—HYDRAULIC OIL

S/N: JGB1-UP; KHS1-UP
PART OF 285-1790 CONTROL AR-AUXILIARY
AN ATTACHMENT

SMCS-1380, 5057 **i03819611**

NOTE	REF NO	GRAPHIC REF	PART NUMBER	QTY	PART NAME 1 2 3 4 5 6 (PRODUCT LEVEL)	SEE PAGE
	1	1	**8T-9403**	2	FLANGE-HALF	
	2	1	**126-1913**	1	PLATE	
	3	1	**131-9750**	1	SCREEN AS (HYDRAULIC TANK)	
	4	1	**171-2637**	1	BOSS	
	6	1	**239-1838**	1	BLOCK	
	7	1	**260-8062**	1	BLOCK	
	8	1	**260-8063**	1	BLOCK	
I	9	1	**260-8067**	1	HOSE AS	
	10	1	**275-1743**	1	SUPPORT AS	
I	11	1	**330-2371**	1	HOSE AS	
	12	1	**330-2372**	1	BLOCK	
	13	1	**330-2373**	1	SUPPORT AS	
	14	1	*148-8347*	1	ELBOW AS	
		1	**3D-2824**	1	SEAL-O-RING	
		1	**6V-9007**	1	ELBOW	
		1	**6V-9746**	1	SEAL-O-RING	
	15	1	*164-4180*	1	PLUG AS	
		1	**7M-8485**	1	SEAL-O-RING	
		1	**9S-4181**	1	PLUG-O-RING	
	16	1	**1P-3702**	1	SEAL-RECTANGULAR	
	17	1	**1P-3703**	1	SEAL-RECTANGULAR	
	18	1	**1P-4578**	4	FLANGE-HALF	
	19	1	**4J-0522**	3	SEAL-O-RING	
	20	1	**4J-0527**	1	SEAL-O-RING	
	21	1	**5P-7468**	4	CLIP (SLOT)	
	22	1	**5P-7469**	4	CLIP (TAB)	
	23	1	**5P-7470**	1	CLIP (SLOT)	
	24	1	**5P-7471**	1	CLIP (TAB)	
	25	1	**5P-8182**	1	GROMMET	
	26	1	**6J-2680**	1	SEAL-O-RING	
	27	1	**6V-1874**	4	GROMMET	
	28	1	**6V-6707**	1	SEAL-O-RING	
	29	1	**7Y-3283**	1	SPACER (13.88X21.34X95-MM THK)	
	30	1	**8T-4121**	26	WASHER-HARD (11X21X2.5-MM THK)	
M	31	1	**8T-4136**	6	BOLT (M10X1.5X25-MM)	
M	32	1	**8T-4139**	2	BOLT (M12X1.75X30-MM)	
M	33	1	**8T-4176**	4	BOLT (M12X1.75X90-MM)	
M	34	1	**8T-4178**	8	BOLT (M10X1.5X90-MM)	
M	35	1	**8T-4182**	4	BOLT (M10X1.5X45-MM)	
M	36	1	**8T-4184**	1	BOLT (M12X1.75X45-MM)	
M	37	1	**8T-4192**	2	BOLT (M12X1.75X25-MM)	
M	38	1	**8T-4196**	8	BOLT (M10X1.5X35-MM)	
	39	1	**8T-4223**	14	WASHER-HARD (13.5X25.5X3-MM THK)	
M	40	1	**8T-5041**	1	BOLT (M12X1.75X120-MM)	
M	41	1	**8T-5412**	4	BOLT (M12X1.75X140-MM)	

I-REFER TO HYDRAULIC INFORMATION SYSTEM
M-METRIC PART

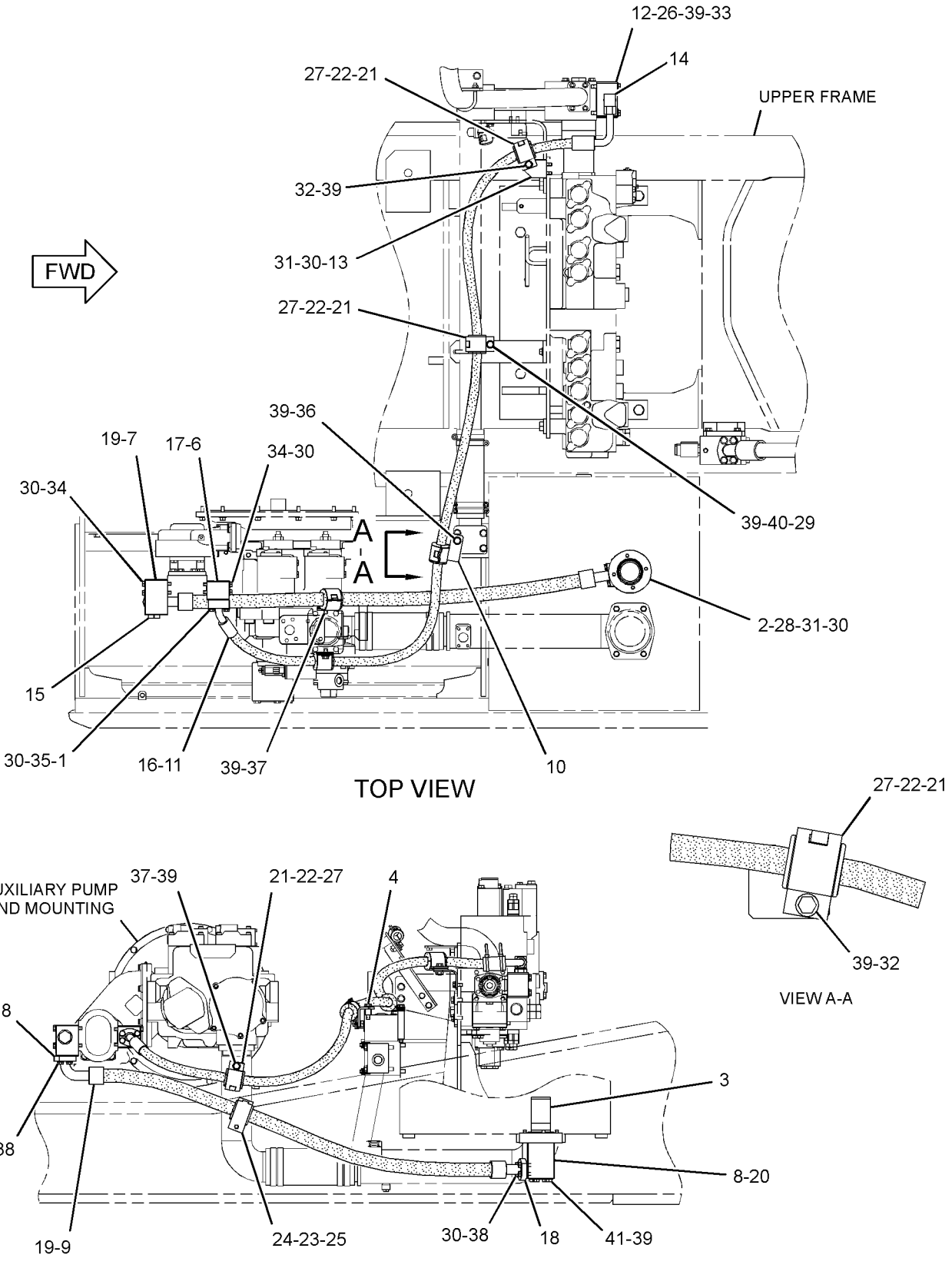

GRAPHIC #1 **<END>** g02022797

COOLING SYSTEM

220-7057 LINES GP-TURBOCHARGER WATER

S/N: TXF1-UP; MHX7634-UP

PART OF 291-9259 ENGINE AR-COMPLETE

SMCS-1052 **i04052283**

NOTE	REF NO	GRAPHIC REF	PART NUMBER	QTY	PART NAME 1 2 3 4 5 6 (PRODUCT LEVEL)	SEE PAGE
	1	1	**3S-2093**	1	STRAP-CABLE	
	2	1	**220-7058**	1	HOSE AS	
	3	1	**242-7477**	1	HOSE AS	
	4	1	**321-8671**	1	CONNECTOR AS	
		1	**030-8188**	1	CONNECTOR	
		1	**238-5080**	1	SEAL-O-RING	
	5	1	**353-5105**	1	ADAPTER AS	
		1	**030-8194**	1	CONNECTOR	
		1	**238-5081**	1	SEAL-O-RING	
	6	1	**132-5789**	1	CLIP	
	7	1	**7D-5363**	2	CONNECTOR	
M	8	1	**6V-6317**	1	BOLT (M10X1.5X20-MM)	
	9	1	**6V-5839**	1	WASHER (11X21X2.5-MM THK)	

M-METRIC PART

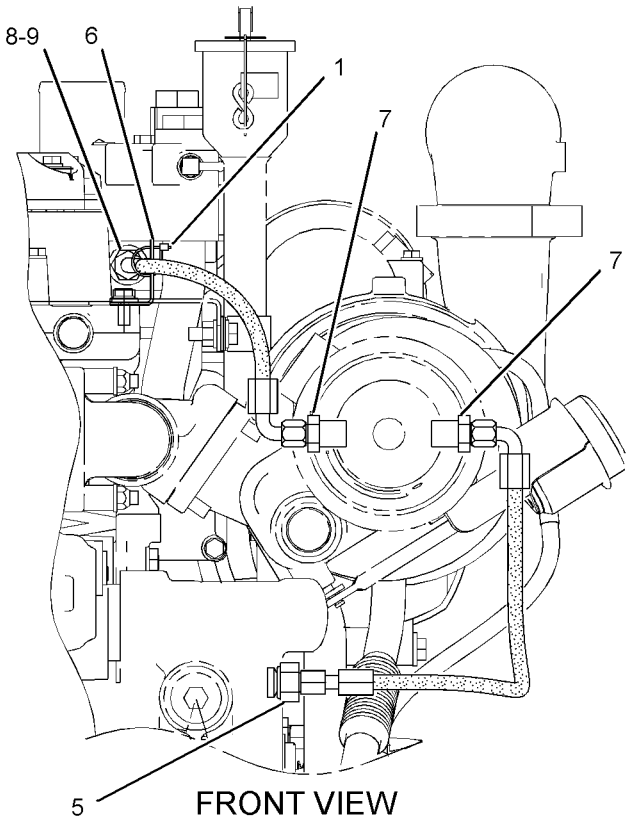

FRONT VIEW

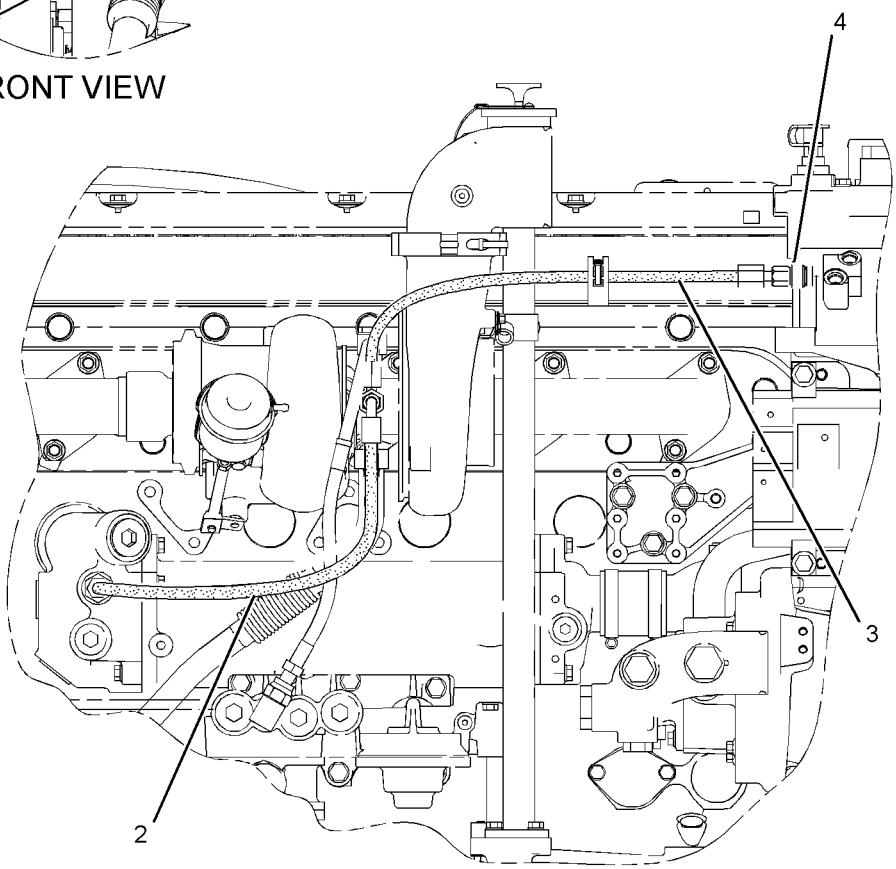

LEFT SIDE VIEW

GRAPHIC #1 **<END>** g02272456

COOLING SYSTEM

235-0364 LINES GP-WATER—SINGLE TEMPERATURE REGULATOR

S/N: TXF1-UP; MHX7634-UP

PART OF 291-9259 ENGINE AR-COMPLETE

SMCS-1355, 1380 **i03998354**

NOTE	REF NO	GRAPHIC REF	PART NUMBER	QTY	PART NAME 1 2 3 4 5 6 (PRODUCT LEVEL)	SEE PAGE
	1	1	**248-5513**	1	REGULATOR-TEMPERATURE (92-DEG C) (COOLANT)	
	2	1	**157-0670**	1	CAP-DUST	
	3	1	**224-6361**	1	SEAL	
	4	1	**227-5075**	1	SEAL (TEMPERATURE REGULATOR HOUSING)	
	5	1	**238-6721**	1	BASE	
	6	1	**238-6728**	1	TUBE-BYPASS	
	7	1	**238-6730**	1	HOUSING AS-REGULATOR	
		1	**3S-9643**	1	SEAL-LIP TYPE (WATER TEMPERATURE REGULATOR)	
	8	1	**239-8135**	1	VALVE AS-VENT (TEMPERATURE REGULATOR) (WATER LINES)	
		1	**9X-7380**	2	SEAL-O-RING	
	9	1	**5P-9436**	1	PLUG	
	10	1	**6V-5063**	2	SEAL-O-RING	
	11	1	*304-8008*	2	PLUG AS	
					(EACH INCLUDES)	
		1	**6V-9027**	1	SEAL-O-RING	
		1	**9S-8002**	1	PLUG-O-RING	
	12	1	**7L-6580**	2	SEAL-O-RING	
M	13	1	**8T-0292**	4	BOLT (M8X1.25X90-MM)	
	14	1	**9M-1974**	4	WASHER-HARD (8.8X16X2-MM THK)	
C	15	1	*217-9060*	1	VALVE AS-FLUID SAMPLING	
		1	**154-9023**	1	VALVE-SAMPLING (COOLANT)	
		1	**3J-7354**	1	SEAL-O-RING	
	16	1	**230-2603**	4	BOLT (M8X1.25X90-MM)	
	17	1	*353-5126*	2	PLUG AS	
					(EACH INCLUDES)	
		1	**6V-6609**	1	SEAL-O-RING	
		1	**9S-8005**	1	PLUG-O-RING	
	18	1	**3P-1932**	1	ADAPTER	
	19	1	**6V-1722**	1	ADAPTER-O-RING	
	20	1	**6V-6609**	1	SEAL-O-RING	

C-CHANGE FROM PREVIOUS TYPE
M-METRIC PART

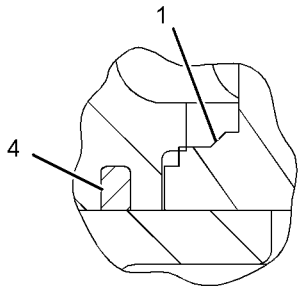

VIEW OF AREA A

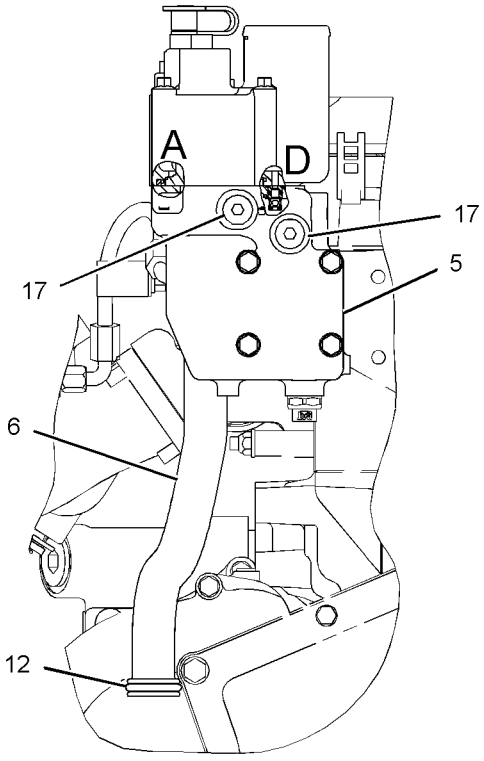

FRONT VIEW

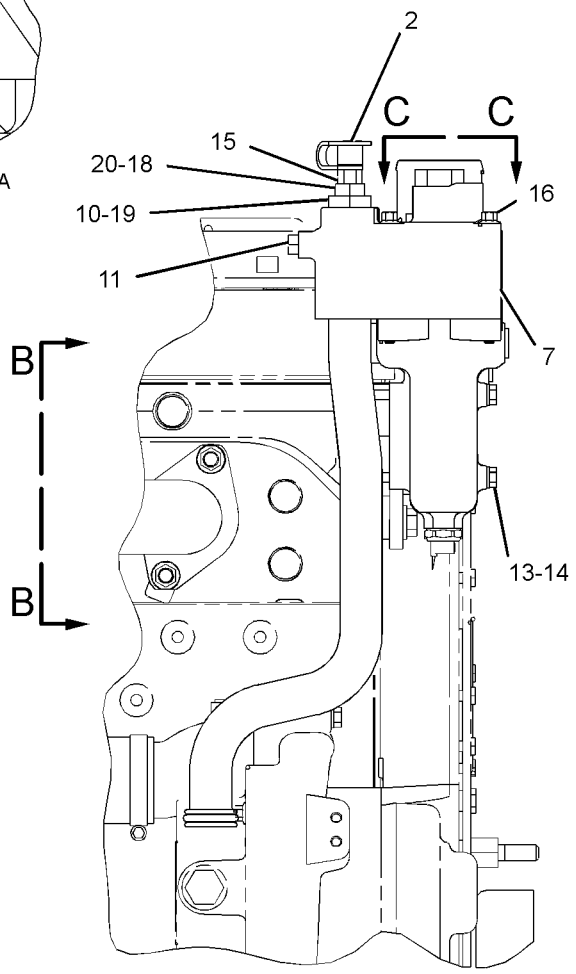

RIGHT SIDE VIEW

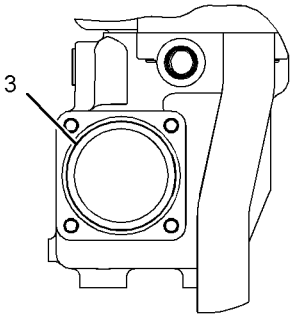

VIEW B-B

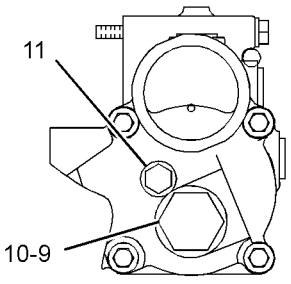

VIEW C-C

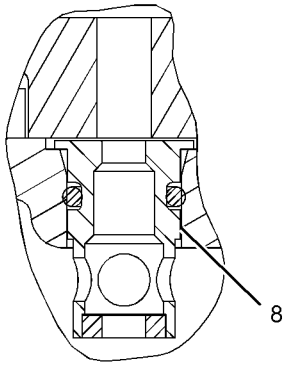

VIEW OF AREA D

GRAPHIC #1 **<END>** g02186993

236-5900 LINES GP-WATER—INLET ELBOW

S/N: TXF1-UP; MHX7634-UP

PART OF 291-9259 ENGINE AR-COMPLETE

SMCS-1355, 1380 **i03883051**

NOTE	REF NO	GRAPHIC REF	PART NUMBER	QTY	PART NAME 1 2 3 4 5 6 (PRODUCT LEVEL)	SEE PAGE
	1	1	**252-2685**	1	ELBOW	
	2	1	*353-5125*	3	PLUG AS	
					(EACH INCLUDES)	
		1	**6V-3251**	1	SEAL-O-RING	
		1	**9S-8006**	1	PLUG-O-RING	
	3	1	*353-5140*	1	PLUG AS	
		1	**6V-5063**	1	SEAL-O-RING	
		1	**9S-8008**	1	PLUG-O-RING	
	4	1	*319-6234*	1	PLUG AS	
		1	**238-5084**	1	SEAL-O-RING	
		1	**9S-9334**	1	PLUG-O-RING	
M	5	1	**6V-3940**	3	BOLT (M8X1.25X25-MM)	
	6	1	**9M-1974**	3	WASHER-HARD (8.8X16X2-MM THK)	

M-METRIC PART

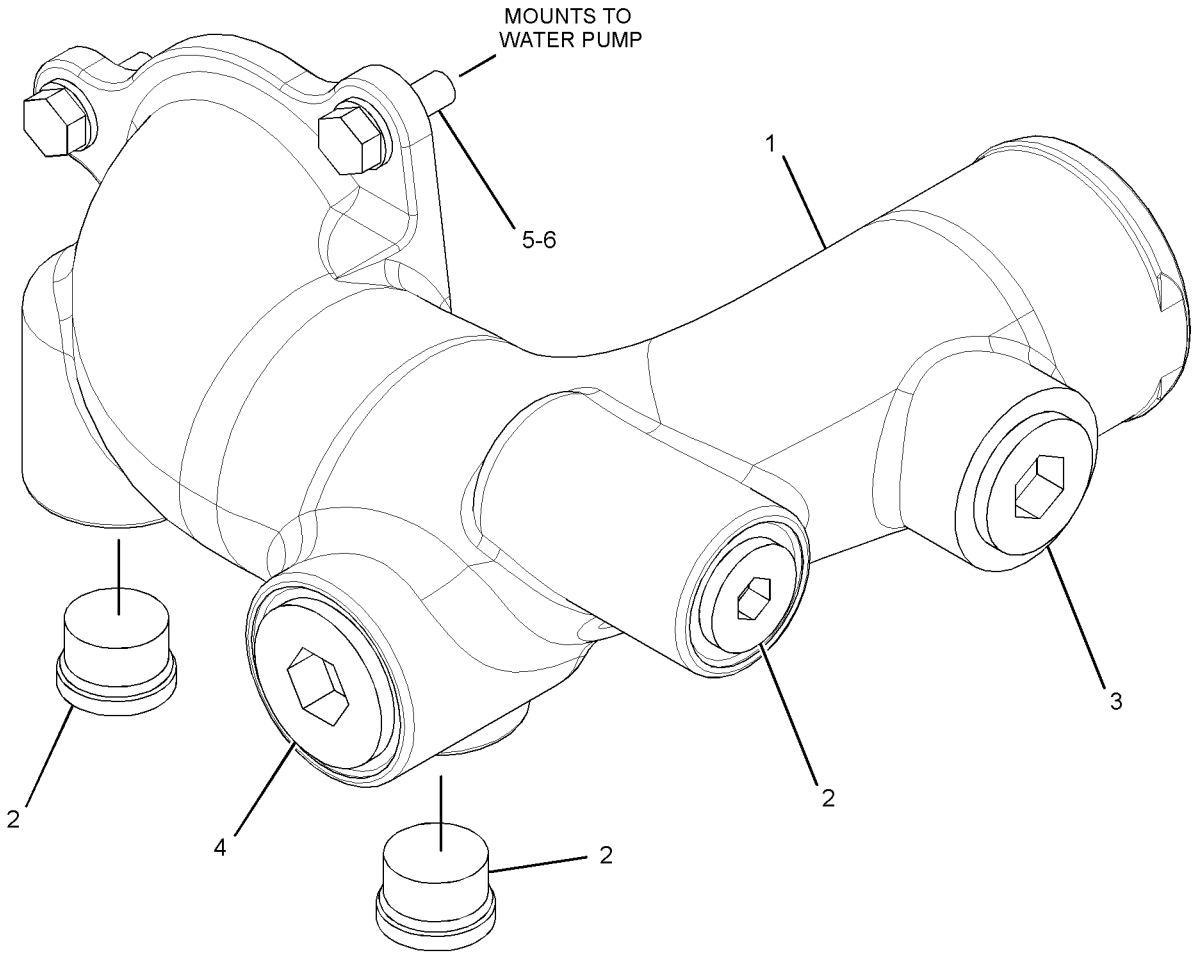

GRAPHIC #1 **<END>** g02128616

224-7662 PLUG GP-ENGINE OIL COOLER

S/N: TXF1-UP; MHX7634-UP
REQUIRED WHEN A COOLANT CONDITIONER IS NOT USED
PART OF 291-9259 ENGINE AR-COMPLETE

SMCS-1378 **i03833935**

NOTE	REF NO	GRAPHIC REF	PART NUMBER	QTY	PART NAME 1 2 3 4 5 6 (PRODUCT LEVEL)	SEE PAGE
	1	1	*353-5124*	2	PLUG AS	
					(EACH INCLUDES)	
		1	**6V-3250**	1	SEAL-O-RING	
		1	**9S-8004**	1	PLUG-O-RING	

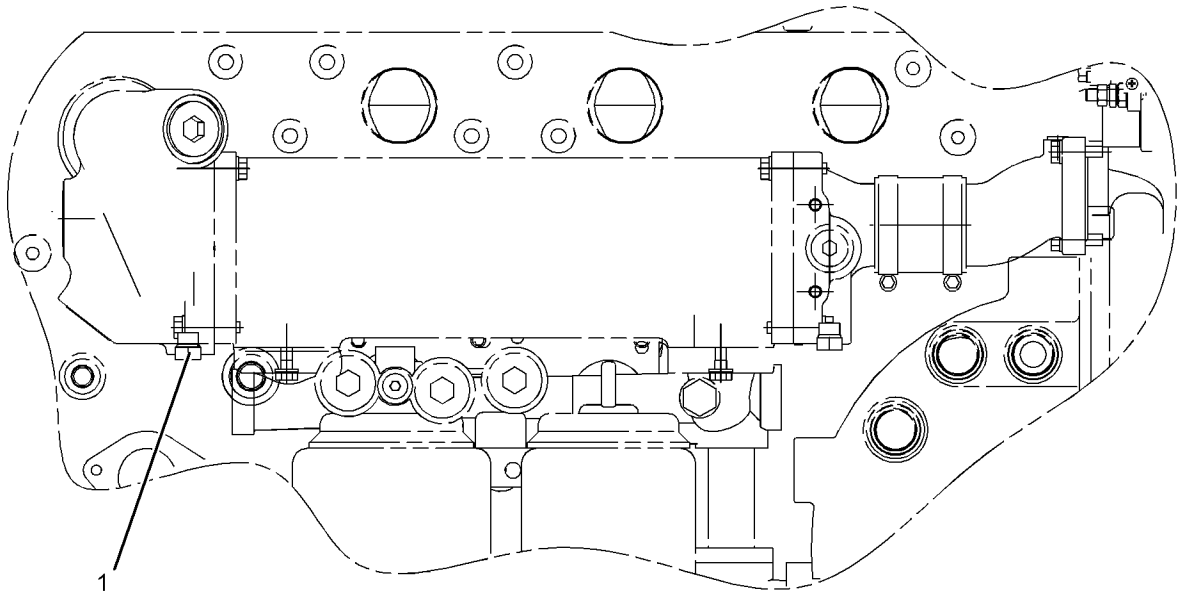

GRAPHIC #1 **<END>** g01030029

COOLING SYSTEM

228-5812 PUMP GP-WATER

S/N: TXF1-UP; MHX7634-UP

PART OF 317-9990, 356-2433 ENGINE AR-CORE

SMCS-1361 **i02663393**

NOTE	REF NO	GRAPHIC REF	PART NUMBER	QTY	PART NAME 1 2 3 4 5 6 (PRODUCT LEVEL)	SEE PAGE
CYR	1	1	**292-9252**	1	PUMP GP-WATER	107
	2	1	**6V-5839**	2	WASHER (11X21X2.5-MM THK)	
	3	1	**6V-7350**	1	SEAL-O-RING	
M	4	1	**8T-0643**	2	BOLT (M10X1.5X80-MM)	

C-CHANGE FROM PREVIOUS TYPE
M-METRIC PART
R-REMFG PART MAY BE AVAILABLE
Y-SEPARATE ILLUSTRATION

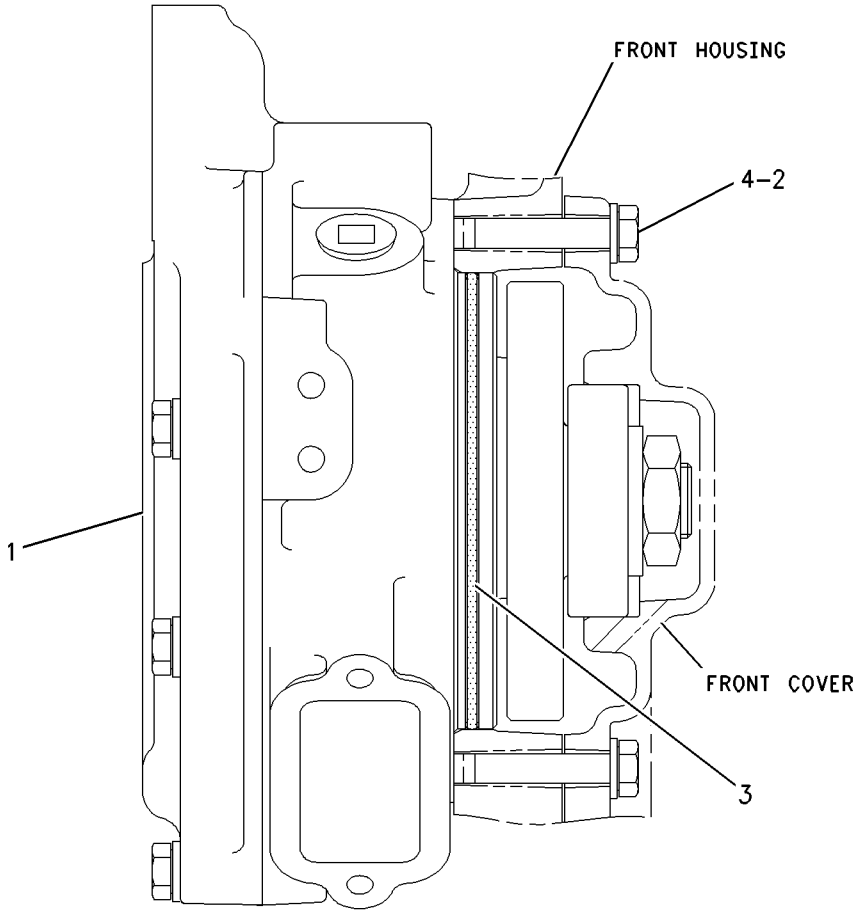

RIGHT SIDE VIEW

GRAPHIC #1 **<END>** g00942142

292-9252 PUMP GP-WATER*R

S/N: TXF1-UP; MHX7634-UP
PART OF 228-5812 PUMP GP-WATER

SMCS-1361 **i03883054**

NOTE	REF NO	GRAPHIC REF	PART NUMBER	QTY	PART NAME 1 2 3 4 5 6 (PRODUCT LEVEL)	SEE PAGE
	1	1	**208-9281**	4	BOLT-FLANGE HEAD (M8X1.25X20-MM)	
Y	2	1	**293-0818**	1	PUMP GP-WATER	108
	3	1	**225-7003**	1	SEAL-O-RING	
	4	1	**228-5810**	1	COVER	
	5	1	**229-8810**	1	SEAL	
	6	1	*353-5125*	1	PLUG AS	
		1	**6V-3251**	1	SEAL-O-RING	
		1	**9S-8006**	1	PLUG-O-RING	

Y-SEPARATE ILLUSTRATION

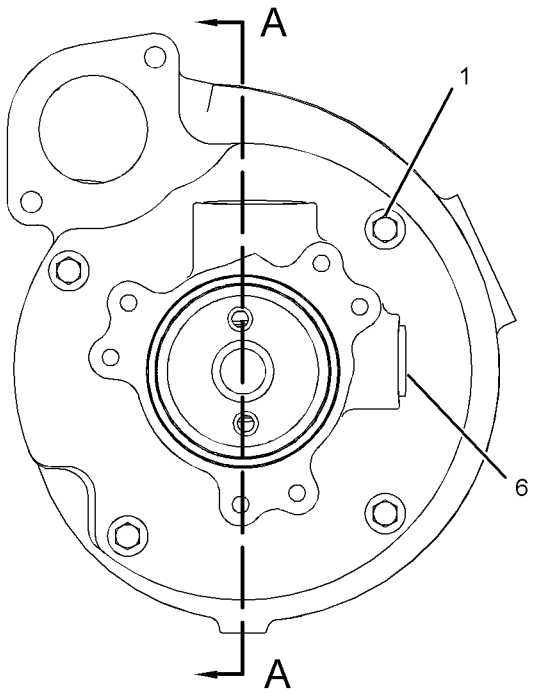

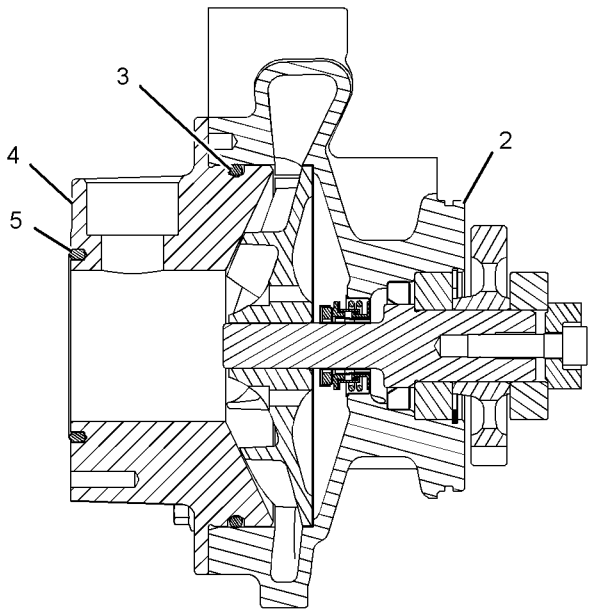

SECTION A-A

GRAPHIC #1 **<END>** g02128624

COOLING SYSTEM

293-0818 PUMP GP-WATER

S/N: TXF1-UP; MHX7634-UP
PART OF 292-9252 PUMP GP-WATER

SMCS-1361 **i03596455**

NOTE	REF NO	GRAPHIC REF	PART NUMBER	QTY	PART NAME 1 2 3 4 5 6 (PRODUCT LEVEL)	SEE PAGE
	1	1	**6V-9666**	1	WASHER-HARD	
	2	1	**128-0317**	1	SEAL GP (WATER PUMP)	
	3	1	**203-3831**	1	PLUG-CUP	
	4	1	**223-9143**	1	IMPELLER	
	5	1	**223-9145**	1	HOUSING-PUMP	
	6	1	**291-6905**	1	SHAFT-WATER PUMP	
	7	1	**292-1200**	1	GEAR-WATER PUMP (35-TEETH)	
	8	1	**1B-3867**	2	BALL BEARING	
M	9	1	**6V-5842**	1	BOLT (M10X1.5X40-MM)	
	10	1	**8C-3100**	1	SEAL-LIP TYPE	
	11	1	**8T-9598**	1	RING-RETAINING	

M-METRIC PART

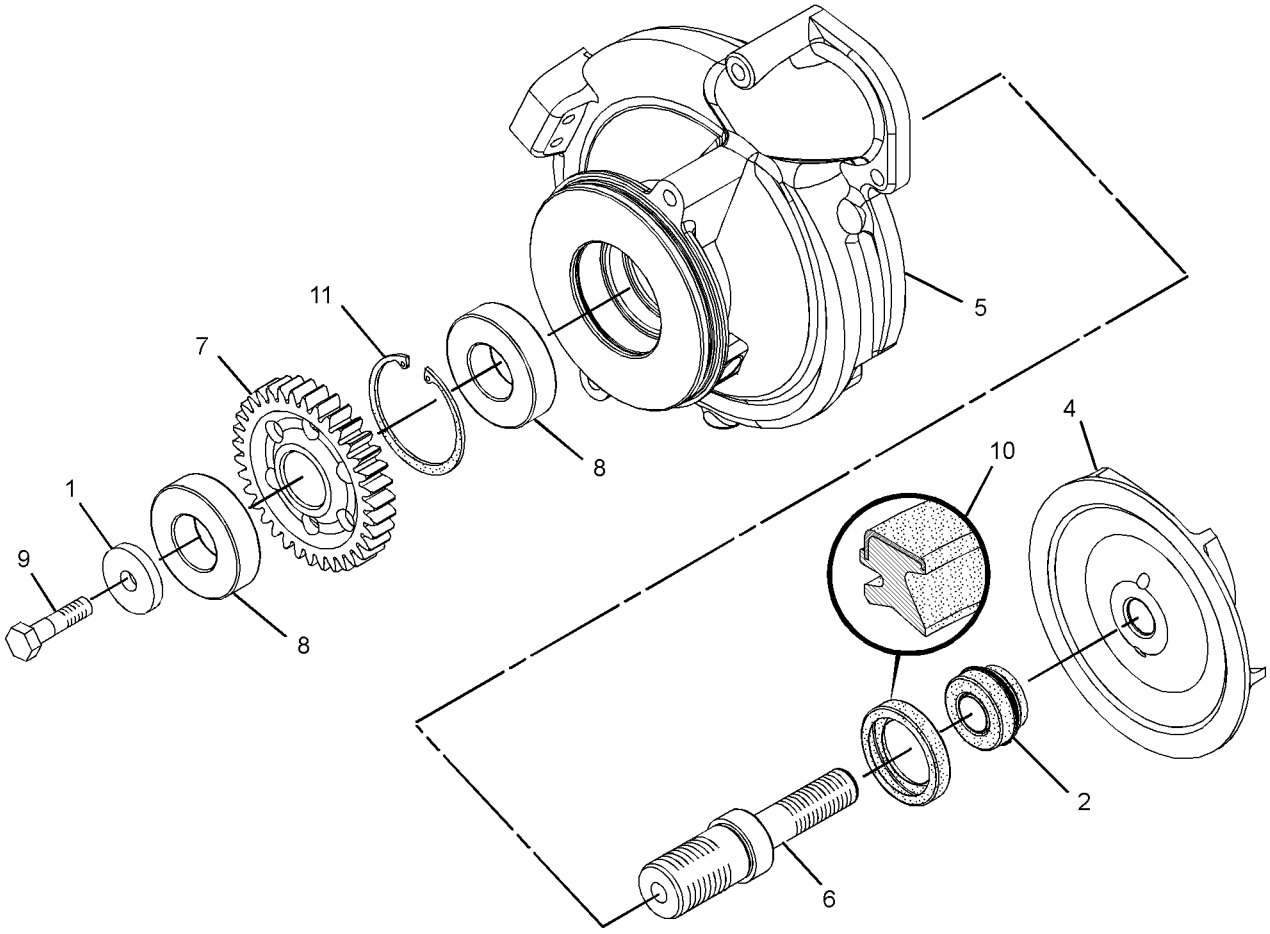

GRAPHIC #1 **<END>** g01324739

281-3585 RADIATOR & HYD OIL COOLER GP

S/N: JGB1-UP; KHS1-UP

PART OF 297-7686 INSTALLATION AR-ENGINE

SMCS-1351 **i03621802**

NOTE	REF NO	GRAPHIC REF	PART NUMBER	QTY	PART NAME 1 2 3 4 5 6 (PRODUCT LEVEL)	SEE PAGE
	1	1	**3S-2093**	3	STRAP-CABLE	
	2	1	**7I-2673**	3	STRAP-CABLE	
	3	1	**096-4035**	1	CLIP	
	4	1	**111-4836**	2	CLIP	
	5	1	**144-0367**	6	CLAMP-HOSE	
	6	1	**230-2781**	1	HOSE-RADIATOR (UPPER)	
	7	1	**230-2782**	1	HOSE-RADIATOR (LOWER)	
	8	1	**230-2793**	1	SHROUD AS	
	9	1	**230-2835**	1	TUBE AS	
	10	1	**230-2854**	1	HOSE	
	11	1	**245-9206**	1	TANK AS-EXPANSION (INCLUDES COOLANT LEVEL SWITCH)	
		1	**171-3370**	1	CAP AS (COOLANT OVERFLOW)	
		1	**204-0920**	1	CAP AS (COOLANT FILL)	
Y	12	1	**281-3586**	1	RADIATOR & HYD OIL COOLER GP	111
	13	1	**281-3616**	1	BAND AS	
	14	1	**281-3619**	1	BRACKET AS	
	15	1	**281-3622**	1	PLATE	
	16	1	**6V-5386**	1	CLIP	
M	17	1	**7X-2563**	4	BOLT (M20X2.5X60-MM)	
	18	1	**7X-7729**	5	WASHER (11X25X3-MM THK)	
	19	1	**8T-4121**	6	WASHER-HARD (11X21X2.5-MM THK)	
	20	1	**8T-4123**	4	WASHER (22X35X3.5-MM THK)	
M	21	1	**8T-4136**	24	BOLT (M10X1.5X25-MM)	
M	22	1	**8T-4137**	2	BOLT (M10X1.5X20-MM)	
M	23	1	**8T-4192**	1	BOLT (M12X1.75X25-MM)	
M	24	1	**8T-4195**	5	BOLT (M10X1.5X30-MM)	
	25	1	**8T-4222**	20	WASHER-PLATED (11X32X2.5-MM THK)	
	26	1	**8T-4223**	1	WASHER-HARD (13.5X25.5X3-MM THK)	
	27	1	**9D-3769**	1	GROMMET	
E	28	1	**7Y-1976**		HOSE-WATER (52-CM)	
D	29	1	**5P-6126**		SEAL (1.1-M)	

D-ORDER BY THE METER
E-ORDER BY THE CENTIMETER
M-METRIC PART
Y-SEPARATE ILLUSTRATION

281-3585 **RADIATOR & HYD OIL COOLER GP** *(contd.)* **i03621802**

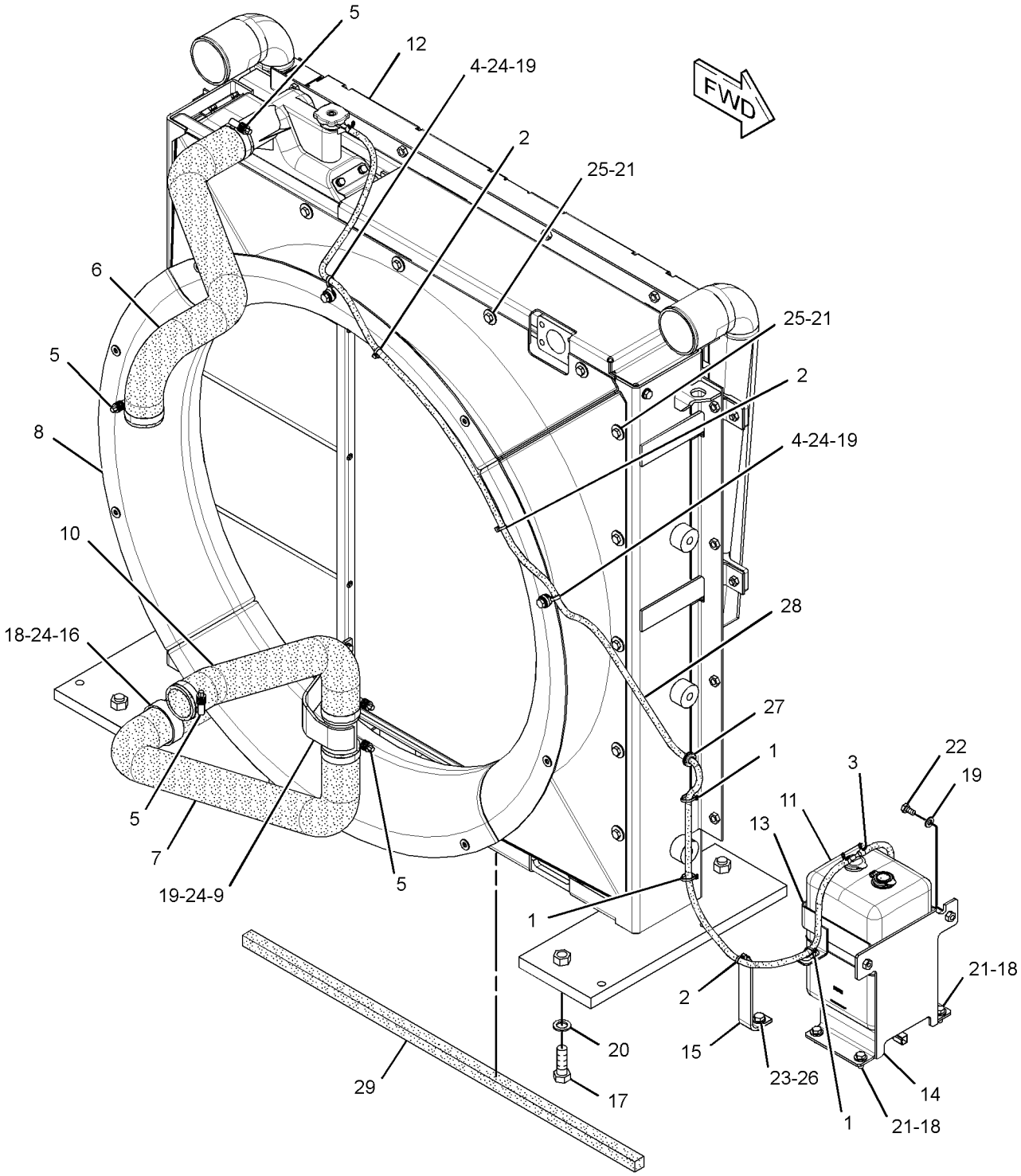

GRAPHIC #1 **<END>** g01468528

281-3586 RADIATOR & HYD OIL COOLER GP

S/N: JGB1-UP; KHS1-UP

PART OF 281-3585 RADIATOR & HYD OIL COOLER GP

SMCS-1351 **i02843041**

NOTE	REF NO	GRAPHIC REF	PART NUMBER	QTY	PART NAME 1 2 3 4 5 6 (PRODUCT LEVEL)	SEE PAGE
	1	1	**096-4035**	3	CLIP	
	2	1	**141-5976**	1	JOINT	
	3	1	**141-5978**	1	CAP	
	4	1	**230-2966**	1	CORE AS-RADIATOR	
	5	1	**230-2969**	1	FRAME AS	
	6	1	**230-2970**	1	CAP AS-RADIATOR	
	7	1	**230-2971**	1	SUPPORT AS	
	8	1	**230-2972**	1	PLATE AS	
	9	1	**230-2973**	1	PLATE	
	10	1	**245-9247**	2	PLATE	
	11	1	**281-3514**	1	CORE AS-HYDRAULIC OIL COOLER	
	12	1	**281-3587**	1	AFTERCOOLER AS	
	13	1	**131-5879**	4	WASHER (11X32X3-MM THK)	
	14	1	**5P-4116**	18	WASHER-HARD (8.8X20.5X2-MM THK)	
	15	1	**8T-4121**	4	WASHER-HARD (11X21X2.5-MM THK)	
M	16	1	**8T-4139**	2	BOLT (M12X1.75X30-MM)	
M	17	1	**8T-4189**	18	BOLT (M8X1.25X20-MM)	
M	18	1	**8T-4195**	8	BOLT (M10X1.5X30-MM)	
	19	1	**8T-4223**	4	WASHER-HARD (13.5X25.5X3-MM THK)	
M	20	1	**8T-4648**	2	BOLT (M12X1.75X70-MM)	
E	21	1	**7Y-1976**		HOSE-WATER (270-CM)	
E	21A	1	**7Y-1976**		HOSE-WATER (20-CM)	
D	22	1	**5P-5649**		SEAL (1.3-M)	
D	22A	1	**5P-5649**		SEAL (0.3-M)	
D	22B	1	**5P-5649**		SEAL (0.45-M EACH)	
D	22C	1	**5P-5649**		SEAL (0.2-M)	
D	22D	1	**5P-5649**		SEAL (1.2-M)	

D-ORDER BY THE METER
E-ORDER BY THE CENTIMETER
M-METRIC PART

281-3586 RADIATOR & HYD OIL COOLER GP *(contd.)* i02843041

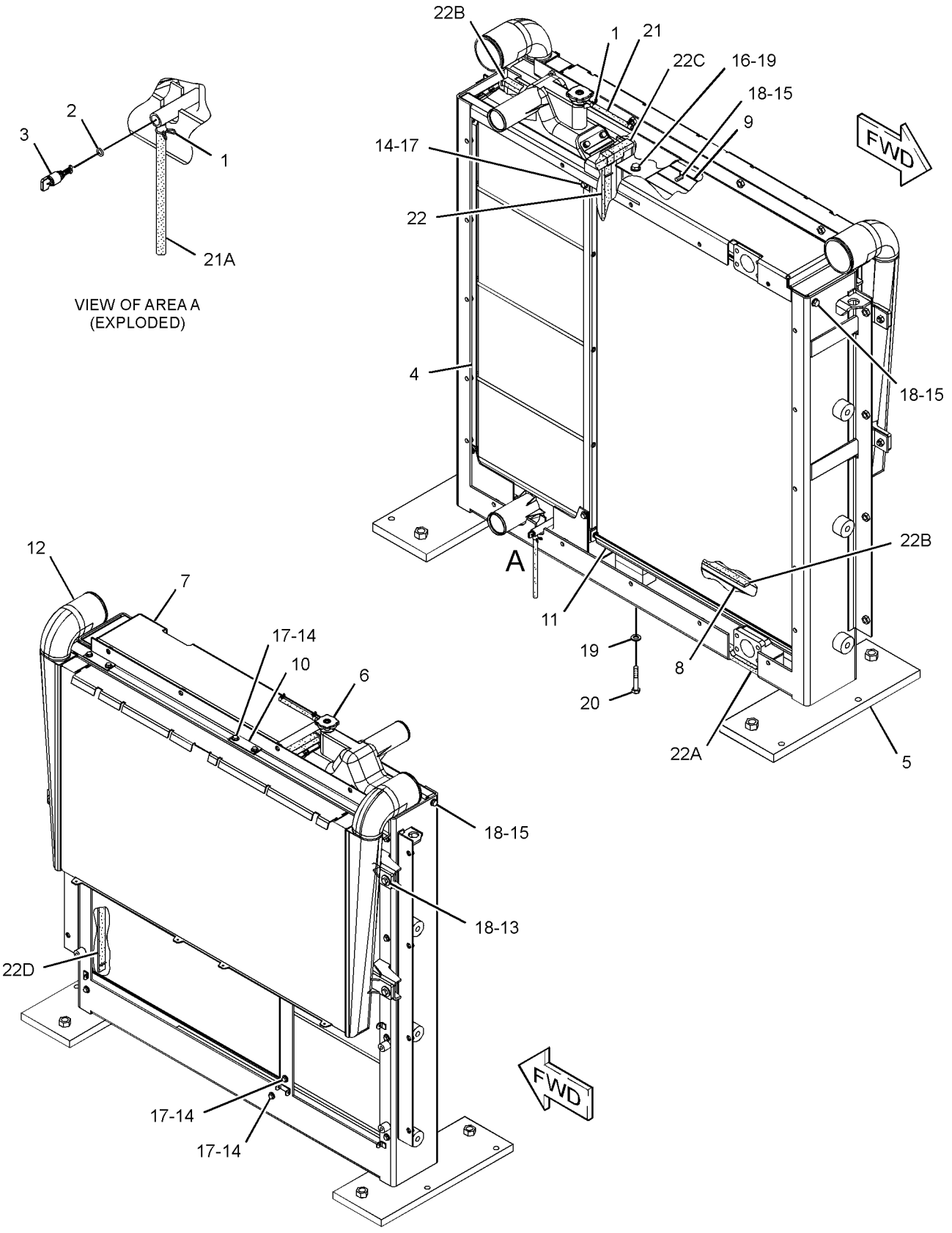

GRAPHIC #1 **<END>** g01435222

305-7638 SCREEN GP-RADIATOR

S/N: KHS1-UP

PART OF 294-1275 CONTROL AR-VARIABLE-SPEED FAN

AN ATTACHMENT

SMCS-7272 **i02940566**

NOTE	REF NO	GRAPHIC REF	PART NUMBER	QTY	PART NAME 1 2 3 4 5 6 (PRODUCT LEVEL)	SEE PAGE
M	1	1	**135-8573**	4	BOLT AS	
	2	1	**281-3560**	1	SCREEN AS-RADIATOR (DOOR, FRONT)	
	3	1	**305-7639**	1	SCREEN AS-RADIATOR (UPPER)	
	4	1	**305-7640**	1	SCREEN AS-RADIATOR (DOOR, REAR)	
	5	1	**7X-0618**	6	WASHER-HARD (13.5X40X5-MM THK)	
	6	1	**8T-4223**	3	WASHER-HARD (13.5X25.5X3-MM THK)	
M	7	1	**8T-4244**	6	NUT (M12X1.75-THD)	

M-METRIC PART

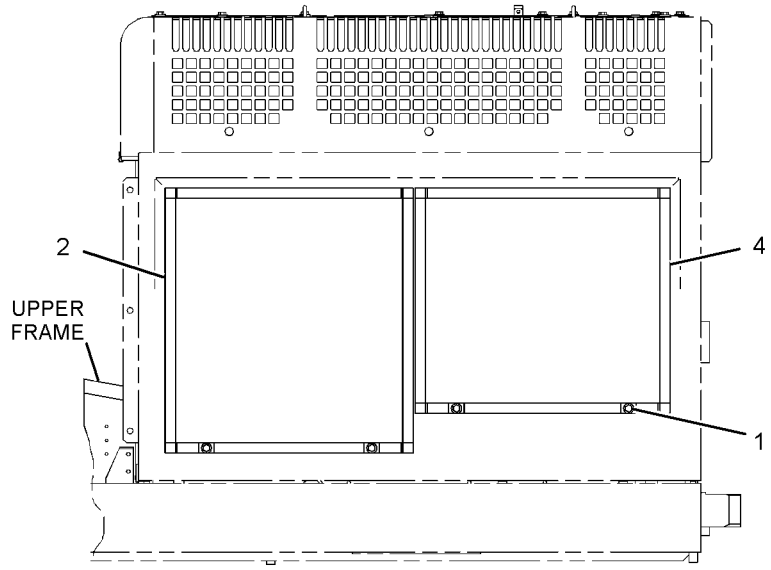

LEFT SIDE VIEW

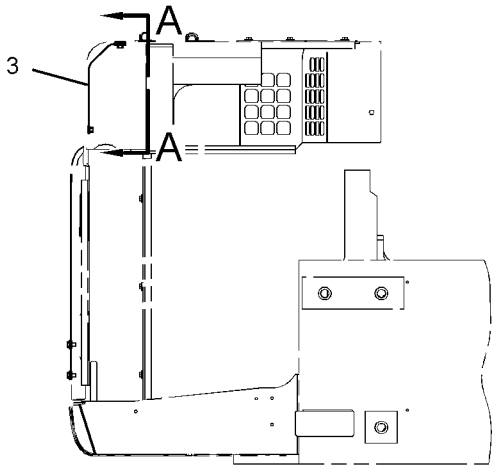

REAR VIEW

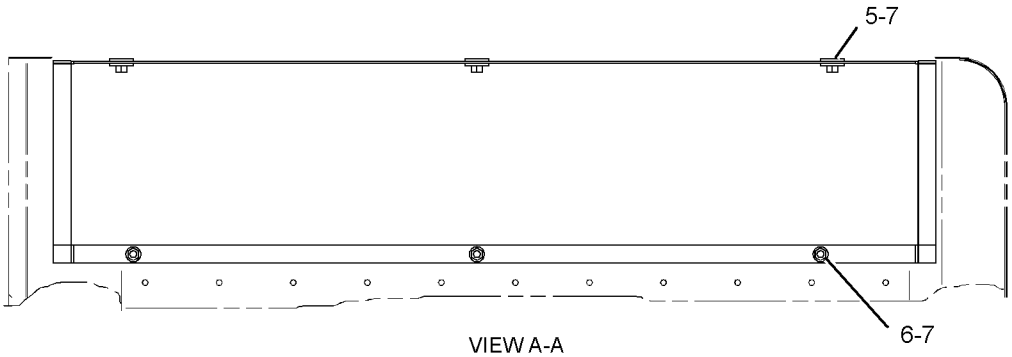

VIEW A-A

GRAPHIC #1 **<END>** g01458552

AIR INLET AND EXHAUST SYSTEM

319-9223 AIR CLEANER AR

S/N: JGB1-UP; KHS1-UP
PART OF 371-9200, 371-9201, 371-9202, 371-9204, 371-9205, 371-9206
DISTRIBUTION AR
AN ATTACHMENT

SMCS-1051 **i03866205**

NOTE	PART NUMBER	QTY	PART NAME 1 2 3 4 5 6 (PRODUCT LEVEL)	SEE PAGE
Y	*330-1434*	1	COVER GP-HOOD (PRECLEANER)	339
Y	*222-8364*	1	LINES GP-AIR (AIR CLEANER, TURBOCHARGER)	123
Y	*324-4111*	1	MOUNTING GP-AIR CLEANER	127

Y-SEPARATE ILLUSTRATION

<END>

AIR INLET AND EXHAUST SYSTEM

233-1275 AIR CLEANER GP

S/N: JGB1-UP; KHS1-UP

PART OF 297-7686 INSTALLATION AR-ENGINE

SMCS-1051, 1054 **i02935069**

NOTE	REF NO	GRAPHIC REF	PART NUMBER	QTY	PART NAME 1 2 3 4 5 6 (PRODUCT LEVEL)	SEE PAGE
CY	1	1	**310-9670**	1	AIR CLEANER GP	116
	2	1	**7X-7729**	4	WASHER (11X25X3-MM THK)	
M	3	1	**8T-4136**	4	BOLT (M10X1.5X25-MM)	

C-CHANGE FROM PREVIOUS TYPE
M-METRIC PART
Y-SEPARATE ILLUSTRATION

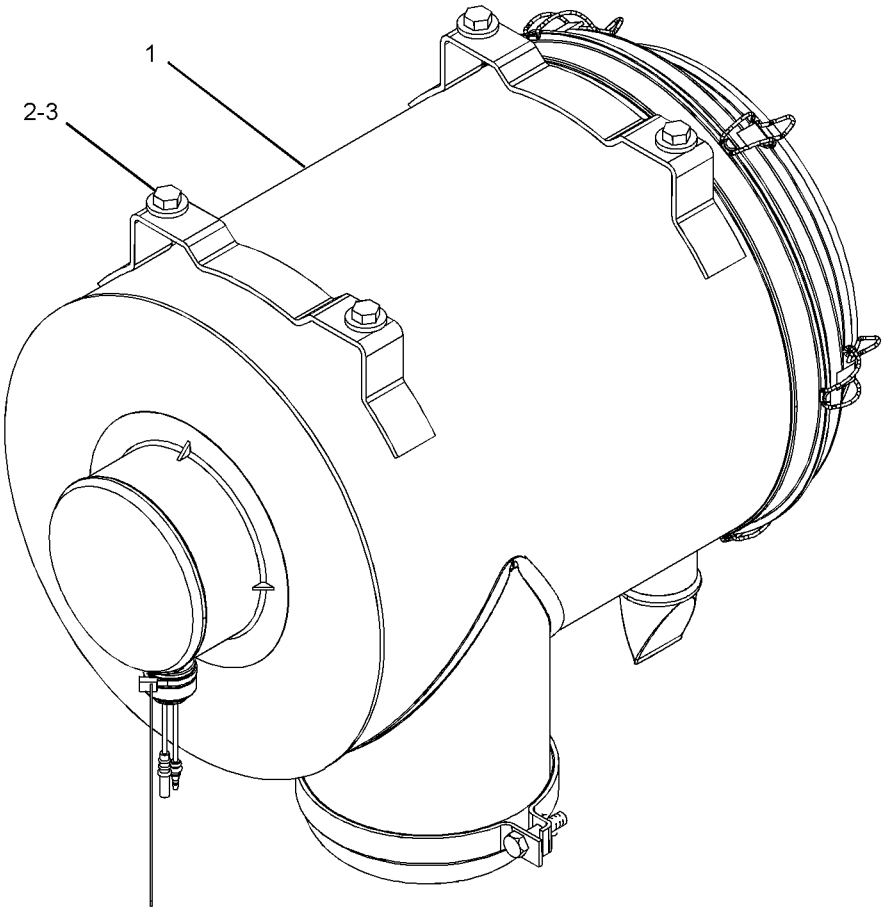

GRAPHIC #1 **<END>** g01474376

AIR INLET AND EXHAUST SYSTEM

310-9670 AIR CLEANER GP

S/N: JGB1-UP; KHS1-UP

PART OF 233-1275 AIR CLEANER GP

SMCS-1051, 1054 **i02975494**

NOTE	REF NO	GRAPHIC REF	PART NUMBER	QTY	PART NAME 1 2 3 4 5 6 (PRODUCT LEVEL)	SEE PAGE
	1	1	**7I-2673**	1	STRAP-CABLE	
	2	1	**131-8826**	1	FILM-INSTRUCTION (TOP, AIR CLEANER COVER)	
	3	1	**131-8829**	1	VALVE-DUST (AIR CLEANER) (AIR CLEANER)	
	4	1	**139-8883**	1	COVER AS	
		1	**139-8794**	6	LATCH	
	5	1	**142-1340**	1	FILTER ELEMENT AS-AIR (PRIMARY)	
					—OR—	
			220-0454	1	FILTER ELEMENT AS-AIR (PRIMARY) (HIGH EFFICIENCY)	
	6	1	**142-1403**	1	FILTER ELEMENT AS-AIR (SECONDARY)	
	7	1	**200-3501**	1	SEAL-O-RING	
	8	1	**239-6551**	1	CAP AS	
	9	1	**255-2966**	1	INDICATOR AS-AIR FILTER CHANGE (AIR RESTRICTION)	

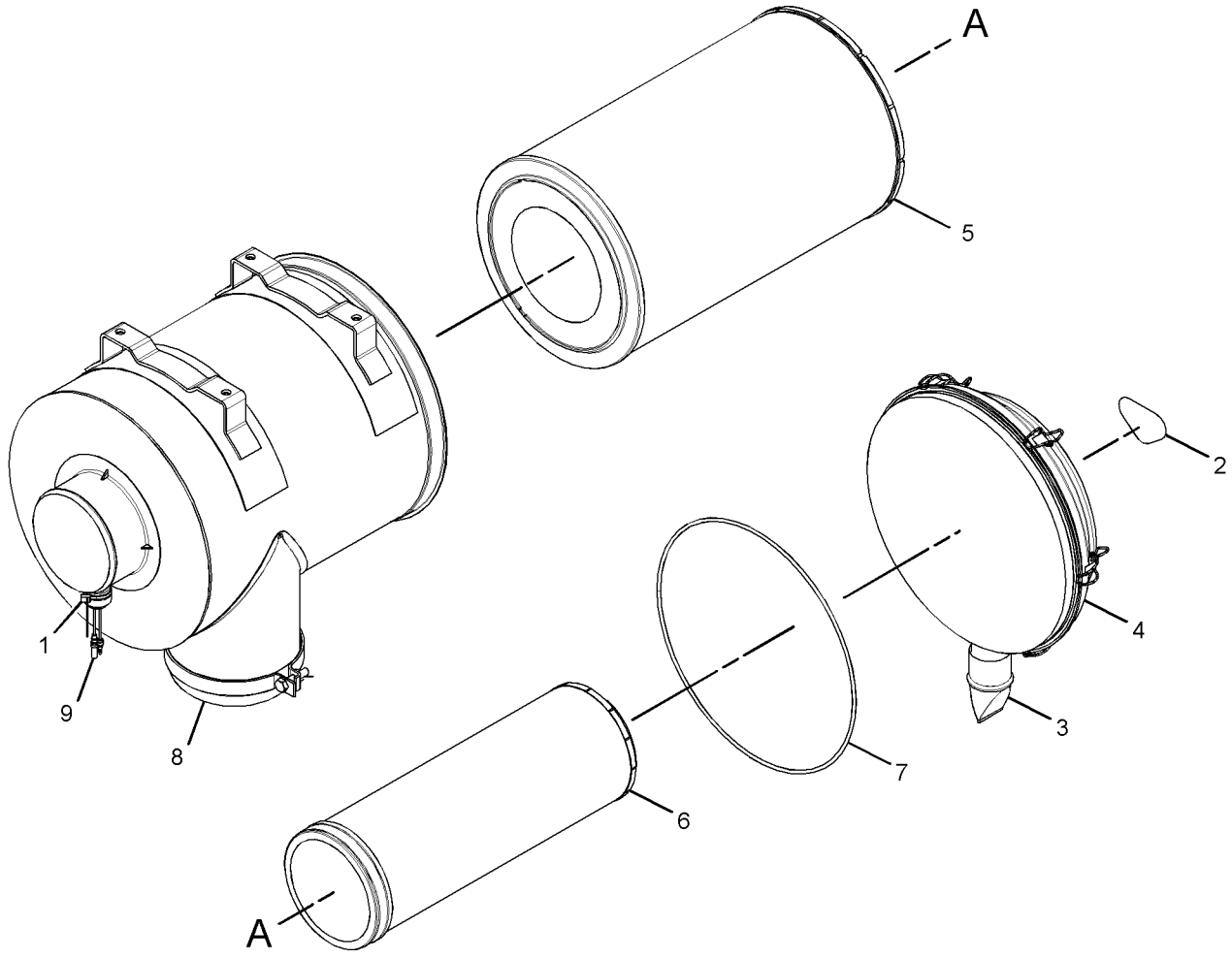

GRAPHIC #1 **<END>** g01482914

AIR INLET AND EXHAUST SYSTEM

324-4044 AIR CLEANER GP

S/N: JGB1-UP; KHS1-UP
PART OF 324-4111 MOUNTING GP-AIR CLEANER
AN ATTACHMENT

SMCS-1051, 1054 **i03866270**

NOTE	REF NO	GRAPHIC REF	PART NUMBER	QTY	PART NAME 1 2 3 4 5 6 (PRODUCT LEVEL)	SEE PAGE
	1	1	**2S-4706**	1	ROD AS	
	2	1	**102-3888**	1	COVER AS	
		1	**131-8826**	1	FILM-INSTRUCTION (TOP, AIR CLEANER COVER)	
	3	1	**106-3969**	1	FILTER ELEMENT AS-AIR (PRIMARY)	
					—OR—	
		1	**132-7168**	1	FILTER ELEMENT AS-AIR (PRIMARY) (ULTRA HIGH EFFICIENCY)	
	4	1	**106-3973**	1	FILTER ELEMENT AS-AIR (SECONDARY)	
	5	1	**162-6208**	1	INDICATOR AS-AIR FILTER CHANGE (AIR RESTRICTION)	

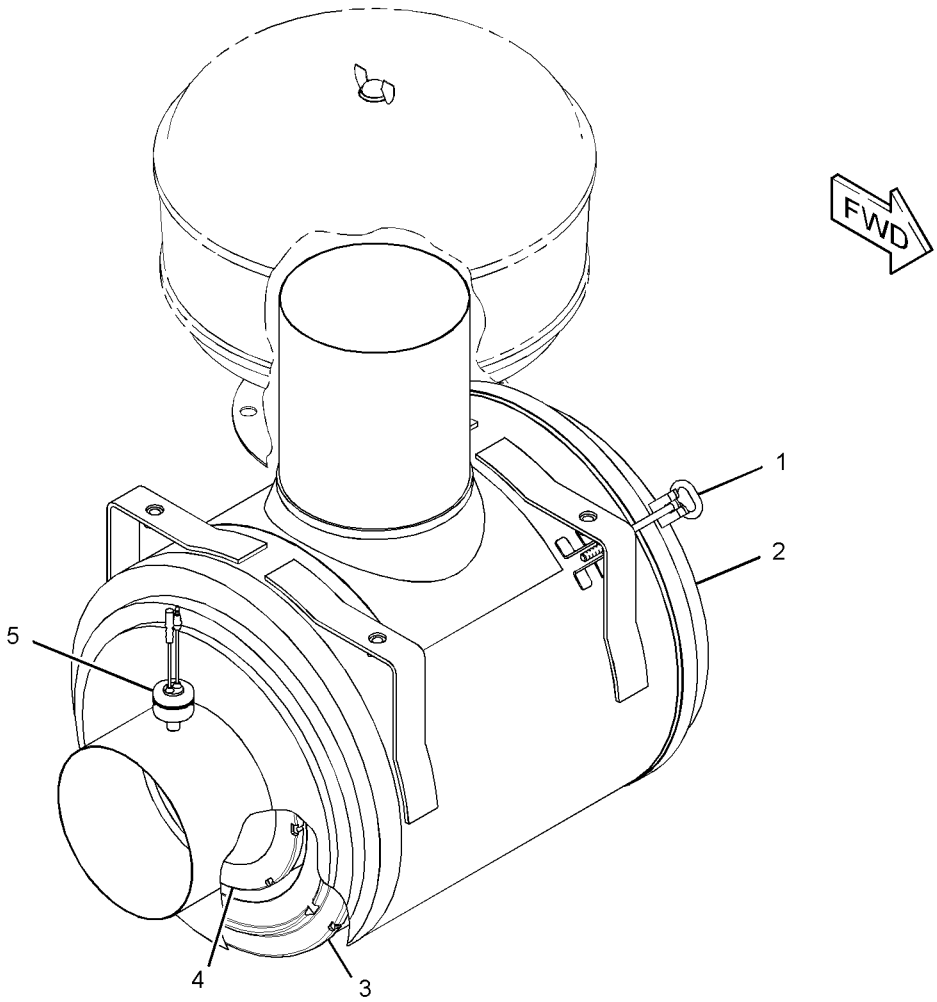

GRAPHIC #1 **<END>** g01802735

AIR INLET AND EXHAUST SYSTEM

279-7821 DRAIN GP-MUFFLER

S/N: JGB1-UP; KHS1-UP

PART OF 297-7686 INSTALLATION AR-ENGINE

SMCS-1062 **i03960910**

NOTE	REF NO	GRAPHIC REF	PART NUMBER	QTY	PART NAME 1 2 3 4 5 6 (PRODUCT LEVEL)	SEE PAGE
	1	1	**3J-5390**	1	PLUG	

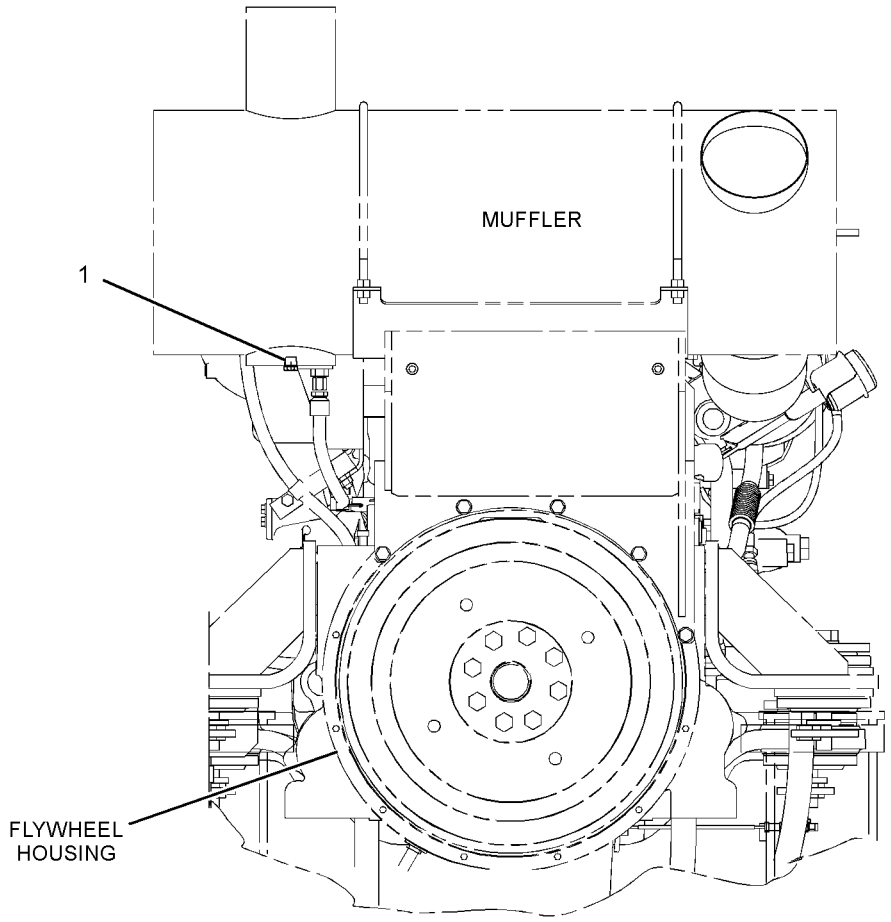

RIGHT SIDE VIEW

GRAPHIC #1 **<END>** g02160267

AIR INLET AND EXHAUST SYSTEM

131-8849 EXTENSION GP-EXHAUST

S/N: JGB1-UP; KHS1-UP

PART OF 297-7686 INSTALLATION AR-ENGINE

SMCS-1061 **i02195619**

NOTE	REF NO	GRAPHIC REF	PART NUMBER	QTY	PART NAME 1 2 3 4 5 6 (PRODUCT LEVEL)	SEE PAGE
	1	1	**255-2891**	1	PIPE AS-EXHAUST	
M	2	1	**8T-4139**	4	BOLT (M12X1.75X30-MM)	
	3	1	**8T-4223**	4	WASHER-HARD (13.5X25.5X3-MM THK)	

M-METRIC PART

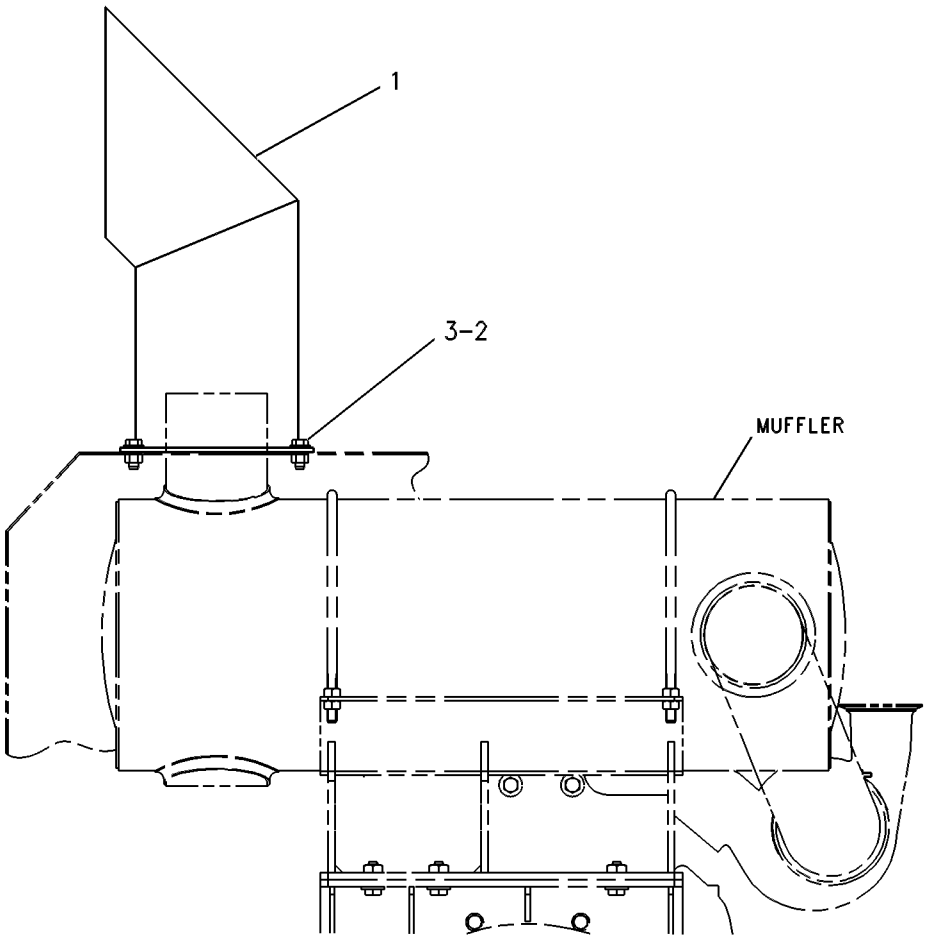

RIGHT SIDE VIEW

GRAPHIC #1 **<END>** g00269315

AIR INLET AND EXHAUST SYSTEM

126-0081 LINES GP-AIR—TURBOCHARGER OUTLET

S/N: TXF1-UP; MHX7634-UP
90 DEGREE OUTLET ELBOW
PART OF 291-9259 ENGINE AR-COMPLETE

SMCS-1071 **i03887110**

NOTE	REF NO	GRAPHIC REF	PART NUMBER	QTY	PART NAME 1 2 3 4 5 6 (PRODUCT LEVEL)	SEE PAGE
	1	1	**127-0929**	1	CLAMP-V BAND	
C	2	1	**217-8946**	1	ELBOW	
C	3	1	*307-2671*	1	PLUG AS	
	3A	1	**214-7566**	1	SEAL-O-RING	
		1	**9S-8002**	1	PLUG-O-RING	
	4	1	**8C-3089**	1	SEAL-O-RING	

C-CHANGE FROM PREVIOUS TYPE

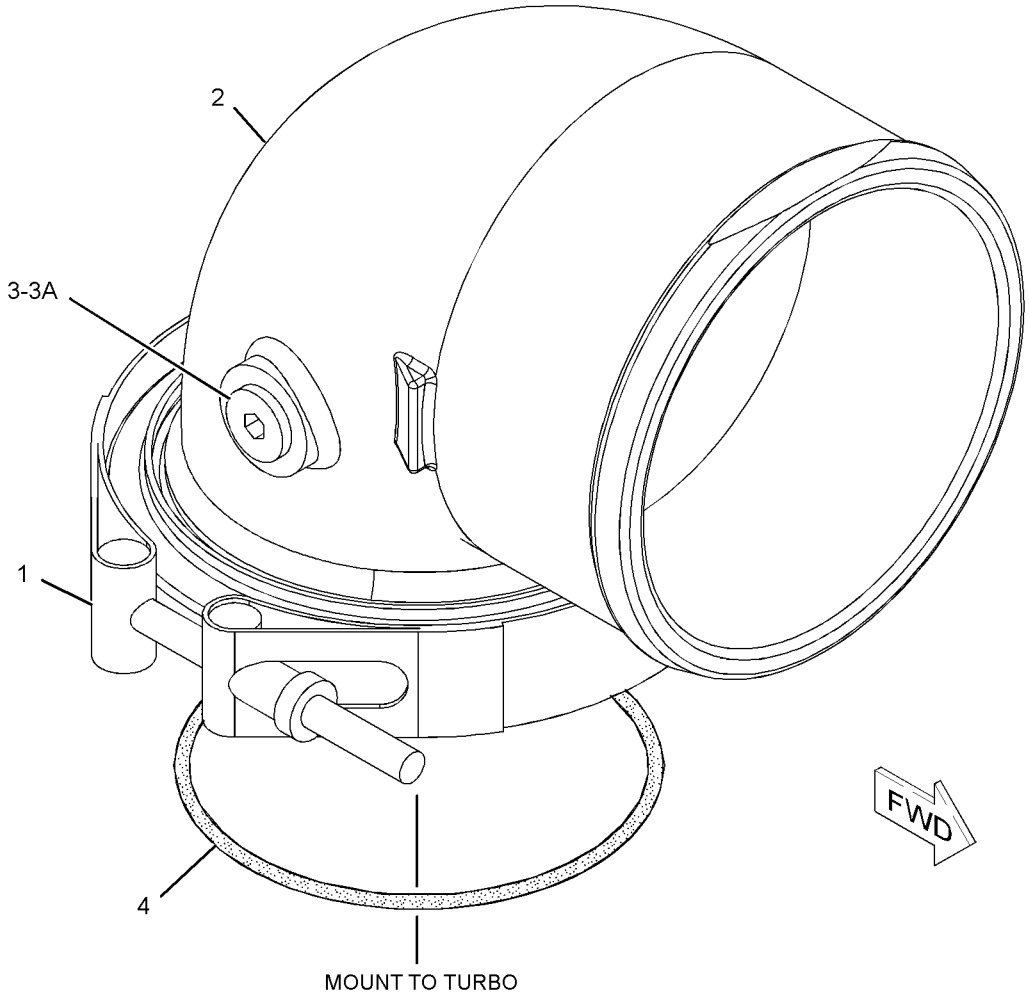

GRAPHIC #1 **<END>** g01154678

AIR INLET AND EXHAUST SYSTEM

210-8163 LINES GP-AIR

S/N: JGB1-UP; KHS1-UP

PART OF 297-7686 INSTALLATION AR-ENGINE

SMCS-1071 **i02229260**

NOTE	REF NO	GRAPHIC REF	PART NUMBER	QTY	PART NAME 1 2 3 4 5 6 (PRODUCT LEVEL)	SEE PAGE
	1	1	**7E-8630**	2	HOSE-AIR INLET	
	2	1	**8T-4986**	4	CLAMP-HOSE	
	3	1	**9X-2201**	12	CLAMP-HOSE	
	4	1	**147-7109**	1	HOSE	
	5	1	**210-8159**	1	HOSE	
	6	1	**230-2795**	1	TUBE	
	7	1	**230-2797**	1	TUBE AS	
	8	1	**139-8849**	2	PLATE	
	9	1	**147-7142**	4	U-BOLT	
	10	1	**5P-1076**	8	WASHER-HARD (13.5X30X4-MM THK)	
M	11	1	**8T-4244**	16	NUT (M12X1.75-THD)	

M-METRIC PART

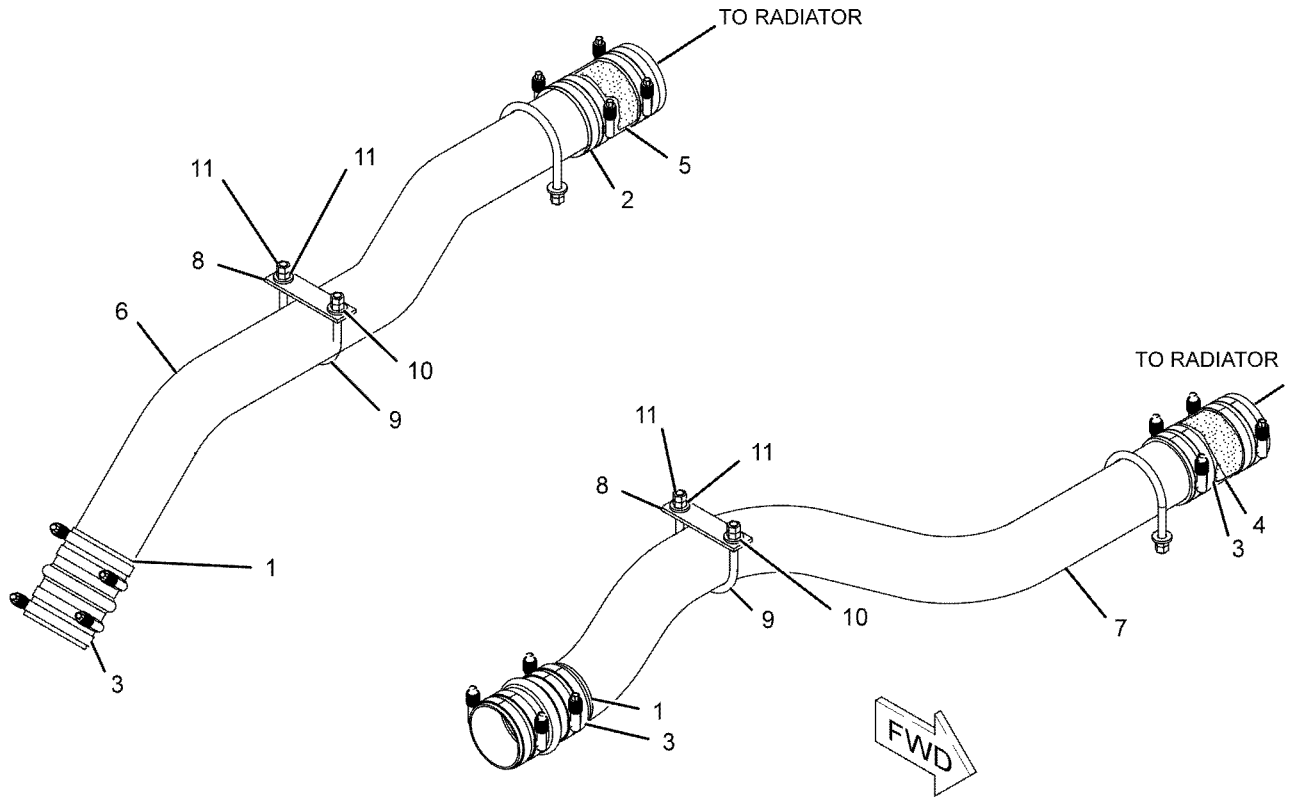

GRAPHIC #1 **<END>** g01099147

AIR INLET AND EXHAUST SYSTEM

222-8357 LINES GP-AIR—AIR CLEANER, TURBOCHARGER

S/N: JGB1-UP; KHS1-UP

PART OF 297-7686 INSTALLATION AR-ENGINE

SMCS-1071 **i02160743**

NOTE	REF NO	GRAPHIC REF	PART NUMBER	QTY	PART NAME 1 2 3 4 5 6 (PRODUCT LEVEL)	SEE PAGE
	1	1	**8T-4987**	3	CLAMP-HOSE	
	2	1	**233-1257**	1	TUBE AS	
	3	1	**233-1262**	1	HOSE	
	4	1	**233-1263**	1	HOSE	
	5	1	**3E-7424**	1	CLAMP-HOSE	
	6	1	**5P-1076**	2	WASHER-HARD (13.5X30X4-MM THK)	
M	7	1	**8T-4139**	2	BOLT (M12X1.75X30-MM)	

M-METRIC PART

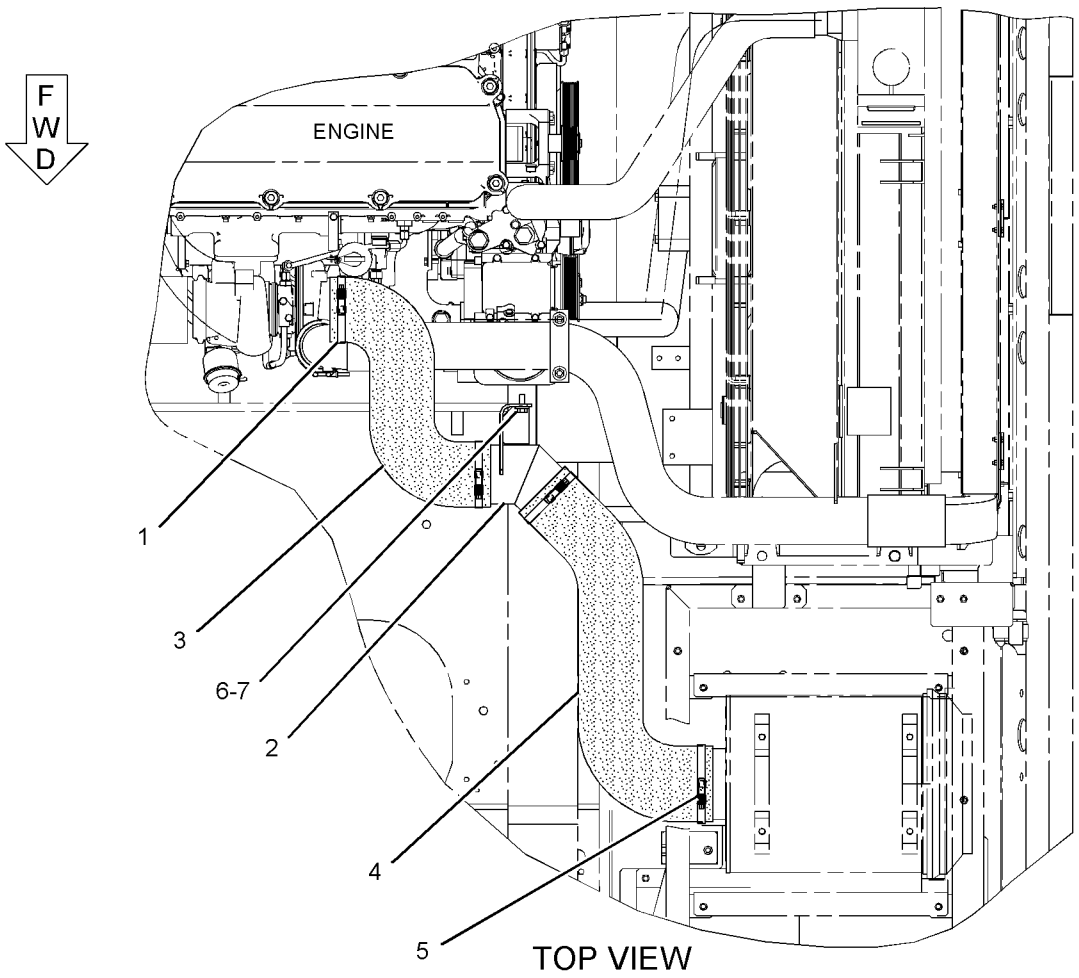

GRAPHIC #1 **<END>** g01098766

AIR INLET AND EXHAUST SYSTEM

222-8364 LINES GP-AIR–AIR CLEANER, TURBOCHARGER

S/N: JGB1-UP; KHS1-UP
PART OF 319-9223 AIR CLEANER AR
AN ATTACHMENT

SMCS-1071 **i02910830**

NOTE	REF NO	GRAPHIC REF	PART NUMBER	QTY	PART NAME 1 2 3 4 5 6 (PRODUCT LEVEL)	SEE PAGE
	1	1	**8T-4987**	3	CLAMP-HOSE	
	2	1	**8T-4989**	1	CLAMP-HOSE	
	3	1	**233-1257**	1	TUBE AS	
	4	1	**233-1262**	1	HOSE	
	5	1	**233-1311**	1	HOSE	
	6	1	**5P-1076**	2	WASHER-HARD (13.5X30X4-MM THK)	
M	7	1	**8T-4139**	2	BOLT (M12X1.75X30-MM)	

M-METRIC PART

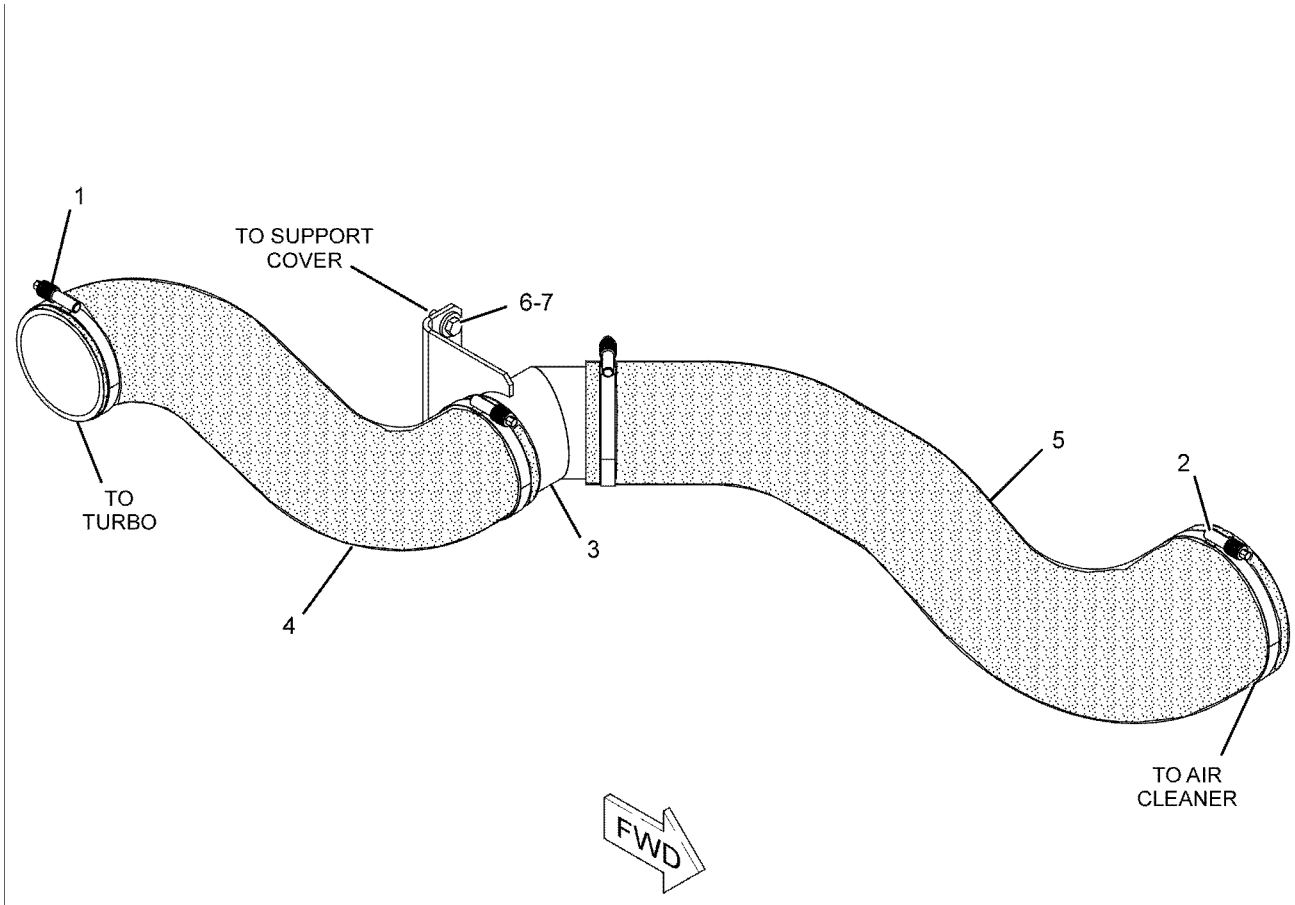

GRAPHIC #1 **<END>** g01131711

AIR INLET AND EXHAUST SYSTEM

241-4761 LINES GP-AIR—INTAKE

S/N: TXF1-UP; MHX7634-UP

PART OF 291-9259 ENGINE AR-COMPLETE

SMCS-1071 **i03861212**

NOTE	REF NO	GRAPHIC REF	PART NUMBER	QTY	PART NAME 1 2 3 4 5 6 (PRODUCT LEVEL)	SEE PAGE
	1	1	**203-0351**	1	ELBOW-AIR	
	2	1	**248-4840**	1	CAP-PROTECTIVE	
	3	1	**248-4841**	1	CLAMP-BAND	
	4	1	**214-7566**	1	SEAL-O-RING	
	5	1	**9S-8002**	1	PLUG-O-RING	

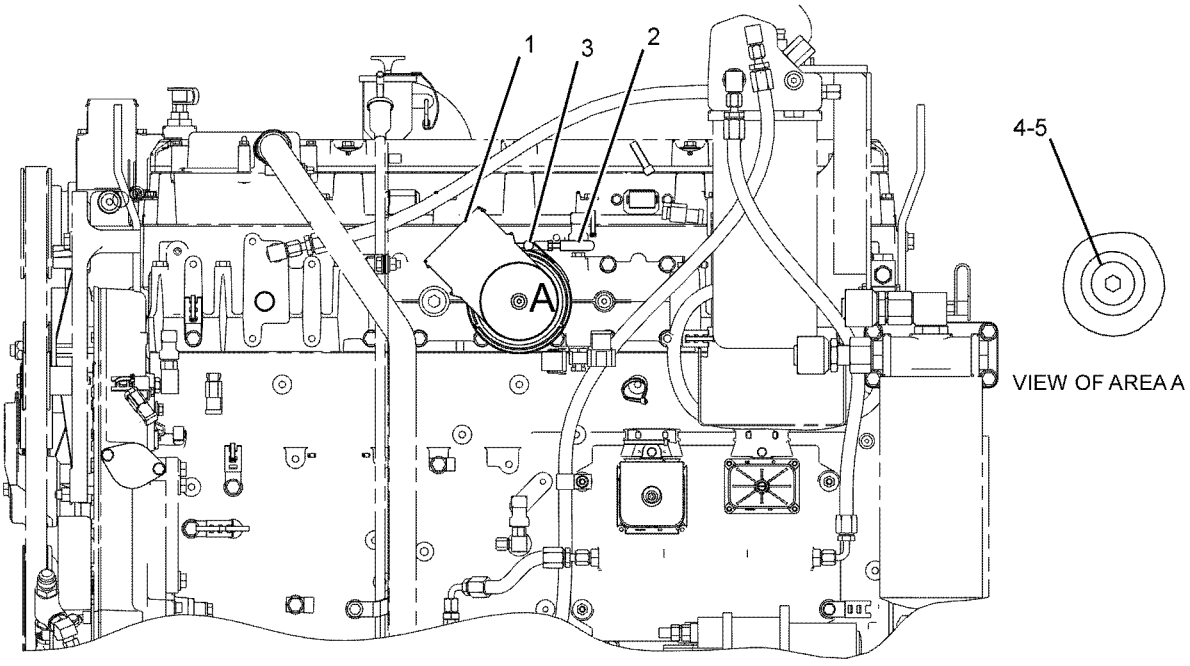

LEFT SIDE VIEW

GRAPHIC #1 **<END>** g01076556

AIR INLET AND EXHAUST SYSTEM

247-2833 MANIFOLD GP-EXHAUST

S/N: TXF1-UP; MHX7634-UP
PROVIDES A LOW STRESS FOOT CENTER SECTION
PART OF 291-9259 ENGINE AR-COMPLETE

SMCS-1059 **i03798766**

NOTE	REF NO	GRAPHIC REF	PART NUMBER	QTY	PART NAME 1 2 3 4 5 6 (PRODUCT LEVEL)	SEE PAGE
	1	1	**4P-4369**	12	SPACER (12X19X23.5-MM THK)	
	2	1	**283-2238**	6	GASKET	
	3	1	**247-2834**	1	MANIFOLD-EXHAUST (CENTER)	
	4	1	**231-9030**	2	MANIFOLD-EXHAUST (END)	
M	5	1	**116-3715**	12	STUD-TAPERLOCK (M10X1.5X85-MM)	
M	6	1	**9X-6620**	12	LOCKNUT (M10X1.5-THD)	
	7	1	**6V-5839**	12	WASHER (11X21X2.5-MM THK)	
M	8	1	**9X-8281**	4	STUD-TAPERLOCK (M10X1.5X45-MM)	

M-METRIC PART

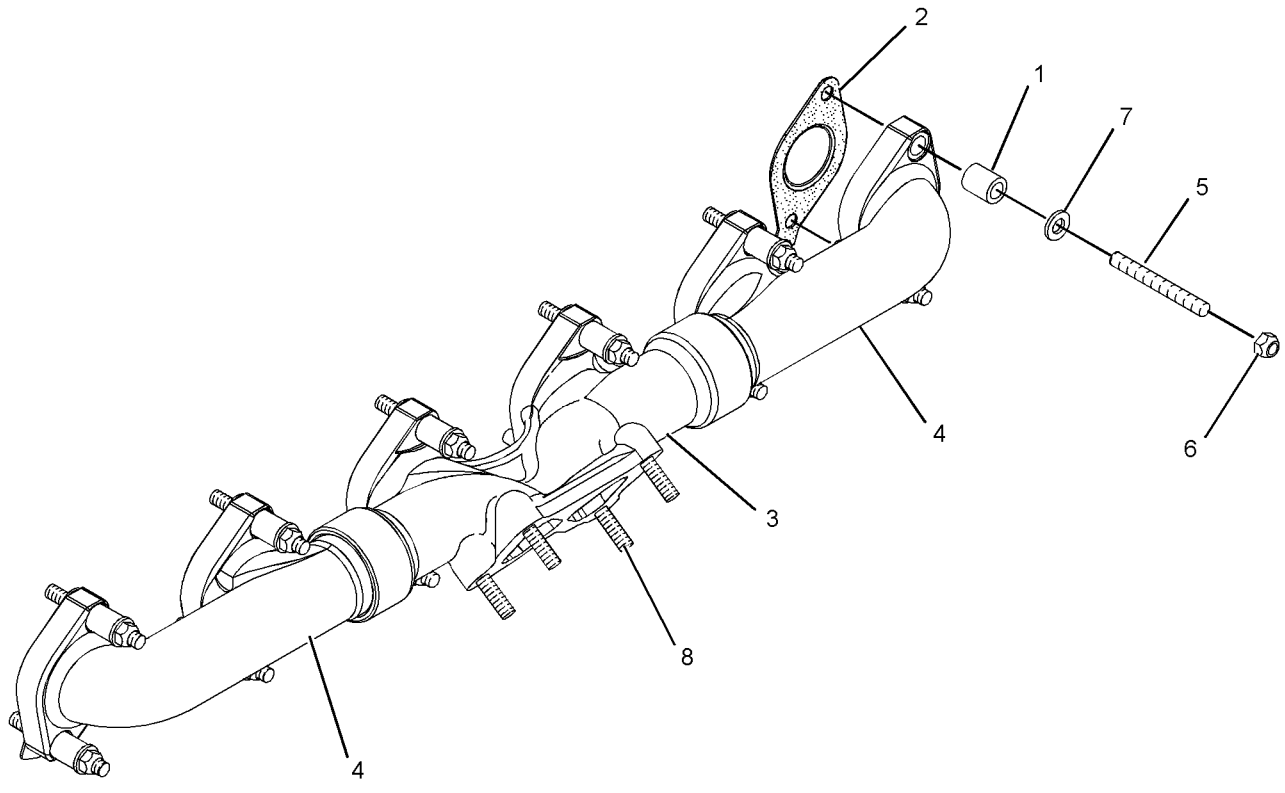

GRAPHIC #1 **<END>** g01256828

AIR INLET AND EXHAUST SYSTEM

222-3092 MANIFOLD GP-INLET

S/N: TXF1-UP; MHX7634-UP

PART OF 291-9259 ENGINE AR-COMPLETE

SMCS-1058, 1090 **i03997494**

NOTE	REF NO	GRAPHIC REF	PART NUMBER	QTY	PART NAME 1 2 3 4 5 6 (PRODUCT LEVEL)	SEE PAGE
	1	1	**121-5908**	1	STUD (M10X1.5X30-MM)	
	2	1	**281-2925**	1	MANIFOLD-INLET	
	3	1	**230-3518**	1	GASKET-MANIFOLD	
	4	1	**132-5789**	1	CLIP	
	5	1	*183-3407*	2	PLUG AS	
					(EACH INCLUDES)	
	5A	1	**214-7568**	1	SEAL-O-RING	
		1	**9S-8004**	1	PLUG-O-RING	
M	6	1	**176-9237**	1	BOLT-SPECIAL	
M	7	1	**6V-3822**	10	BOLT (M10X1.5X35-MM)	
	8	1	**6V-6353**	1	SEAL-O-RING	
	9	1	**6V-5839**	12	WASHER (11X21X2.5-MM THK)	

M-METRIC PART

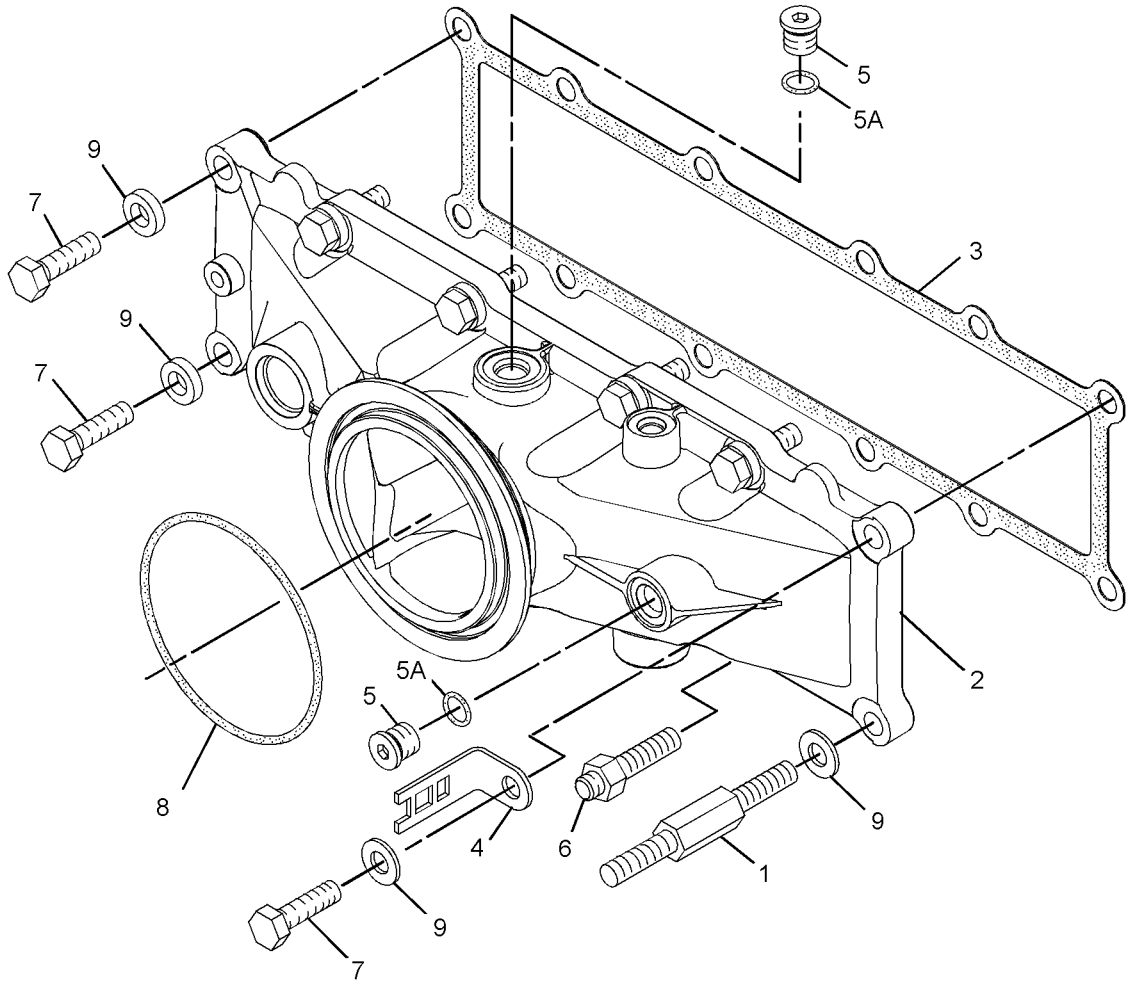

GRAPHIC #1 **<END>** g02176902

AIR INLET AND EXHAUST SYSTEM

324-4111 MOUNTING GP-AIR CLEANER

S/N: JGB1-UP; KHS1-UP
PART OF 319-9223 AIR CLEANER AR
AN ATTACHMENT

SMCS-1051 **i03866252**

NOTE	REF NO	GRAPHIC REF	PART NUMBER	QTY	PART NAME 1 2 3 4 5 6 (PRODUCT LEVEL)	SEE PAGE
	1	1	**131-8920**	1	ADAPTER AS	
Y	2	1	**150-1714**	1	PRECLEANER GP (AIR CLEANER)	130
Y	3	1	**324-4044**	1	AIR CLEANER GP	117
	4	1	**5P-1076**	8	WASHER-HARD (13.5X30X4-MM THK)	
M	5	1	**8T-4192**	8	BOLT (M12X1.75X25-MM)	

M-METRIC PART
Y-SEPARATE ILLUSTRATION

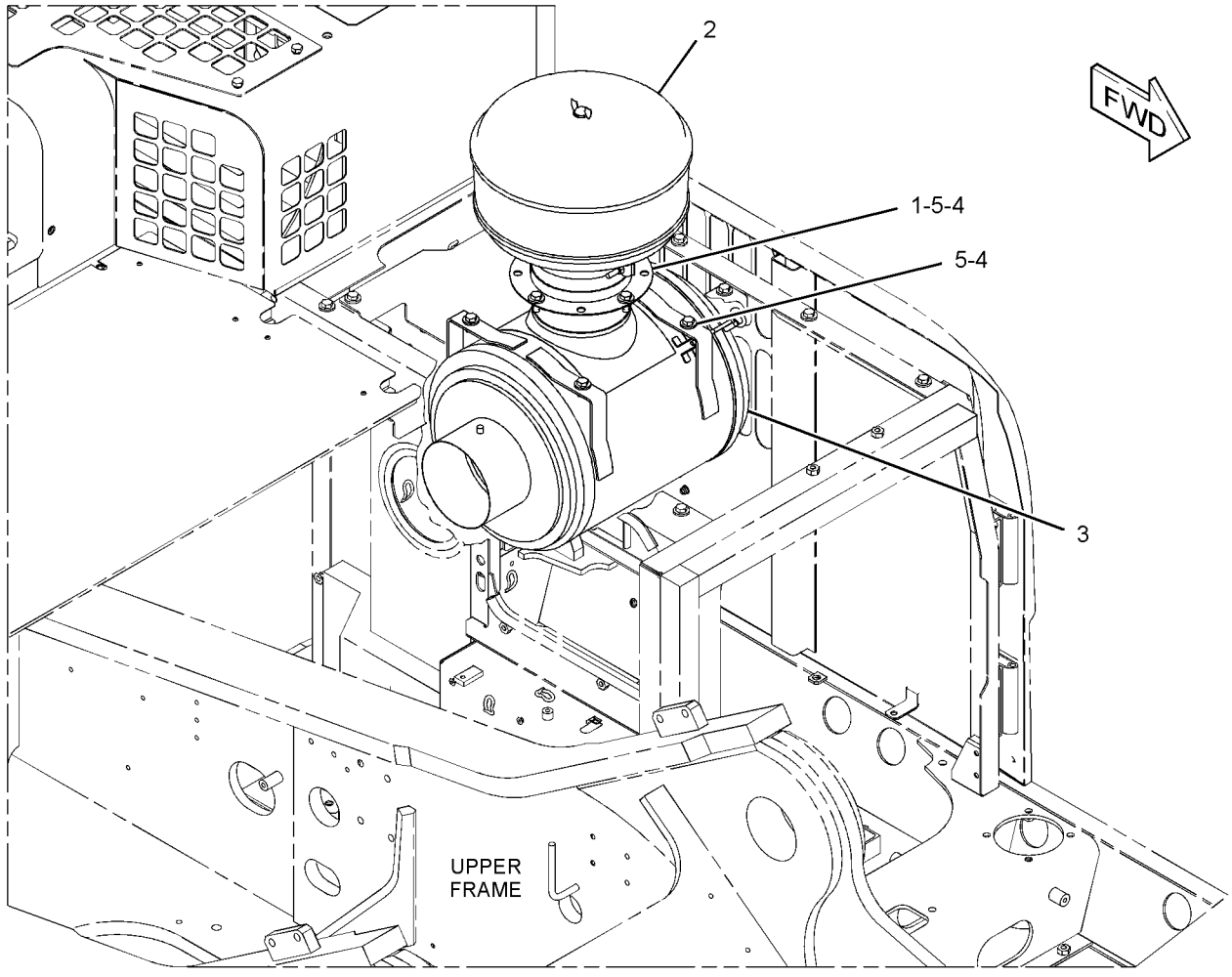

GRAPHIC #1 **<END>** g01802733

AIR INLET AND EXHAUST SYSTEM

266-6256 MUFFLER GP

S/N: JGB1-UP; KHS1-UP
PART OF 305-7980 ENGINE AR

SMCS-1062 **i02891072**

NOTE	REF NO	GRAPHIC REF	PART NUMBER	QTY	PART NAME 1 2 3 4 5 6 (PRODUCT LEVEL)	SEE PAGE
	1	1	**4W-9160**	1	CLAMP-V BAND	
C	3	1	**289-2492**	1	CLAMP-MUFFLER	
	4	1	**233-1246**	1	TUBE AS	
	5	1	**266-6191**	1	BRACKET AS	
	6	1	**266-6213**	1	MUFFLER AS	
	7	1	**131-8847**	2	U-BOLT	
	8	1	**5P-1076**	2	WASHER-HARD (13.5X30X4-MM THK)	
	9	1	**7X-0310**	5	BOLT (7/16-14X2-IN)	
M	10	1	**8T-4183**	2	BOLT (M12X1.75X40-MM)	
M	11	1	**8T-4244**	8	NUT (M12X1.75-THD)	
	12	1	**8T-5360**	5	WASHER (12X22.5X2.5-MM THK)	

C-CHANGE FROM PREVIOUS TYPE
M-METRIC PART

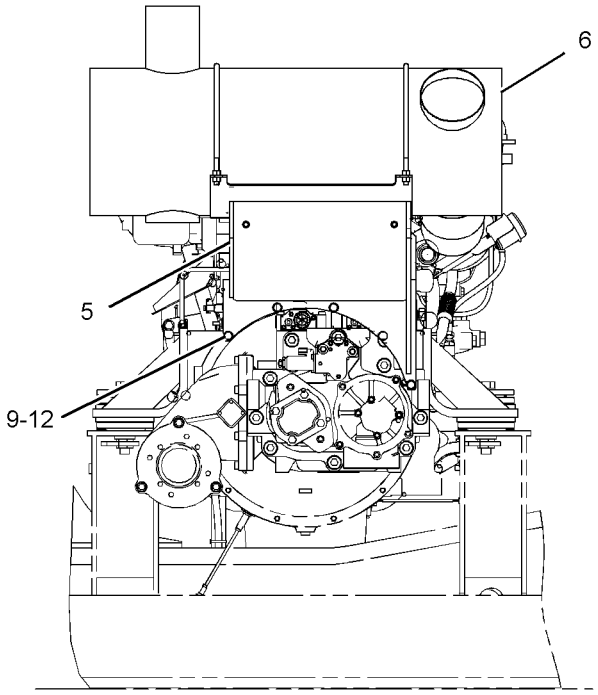

RIGHT SIDE VIEW

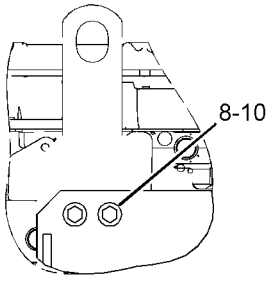

VIEW A-A

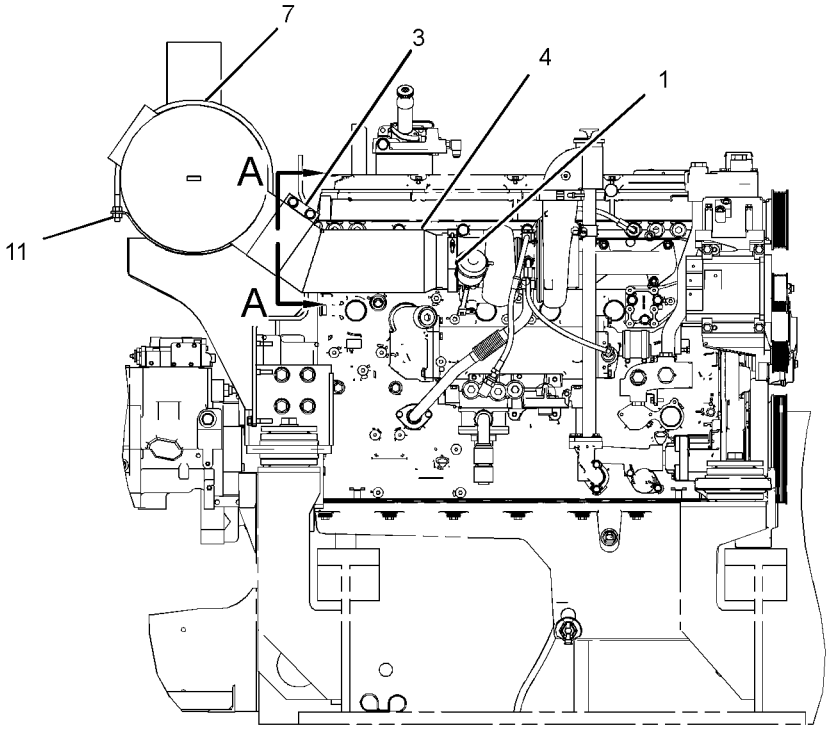

REAR VIEW

GRAPHIC #1 **<END>** g01439490

AIR INLET AND EXHAUST SYSTEM

150-1714 PRECLEANER GP–AIR CLEANER

S/N: JGB1-UP; KHS1-UP
FITS OVER 177.8-MM (7-INCH) DIA INLET TUBE
PART OF 324-4111 MOUNTING GP-AIR CLEANER
FOR USE WITH DUAL ELEMENT AIR CLEANER
AN ATTACHMENT

SMCS-1055 **i02469004**

NOTE	REF NO	GRAPHIC REF	PART NUMBER	QTY	PART NAME 1 2 3 4 5 6 (PRODUCT LEVEL)	SEE PAGE
	1	1	**2S-6708**	1	COLLECTOR-DUST (AIR PRECLEANER)	
	2	1	**2S-2493**	1	COVER AS-PRECLEANER	
	3	1	**5P-0600**	1	CLAMP-HOSE	

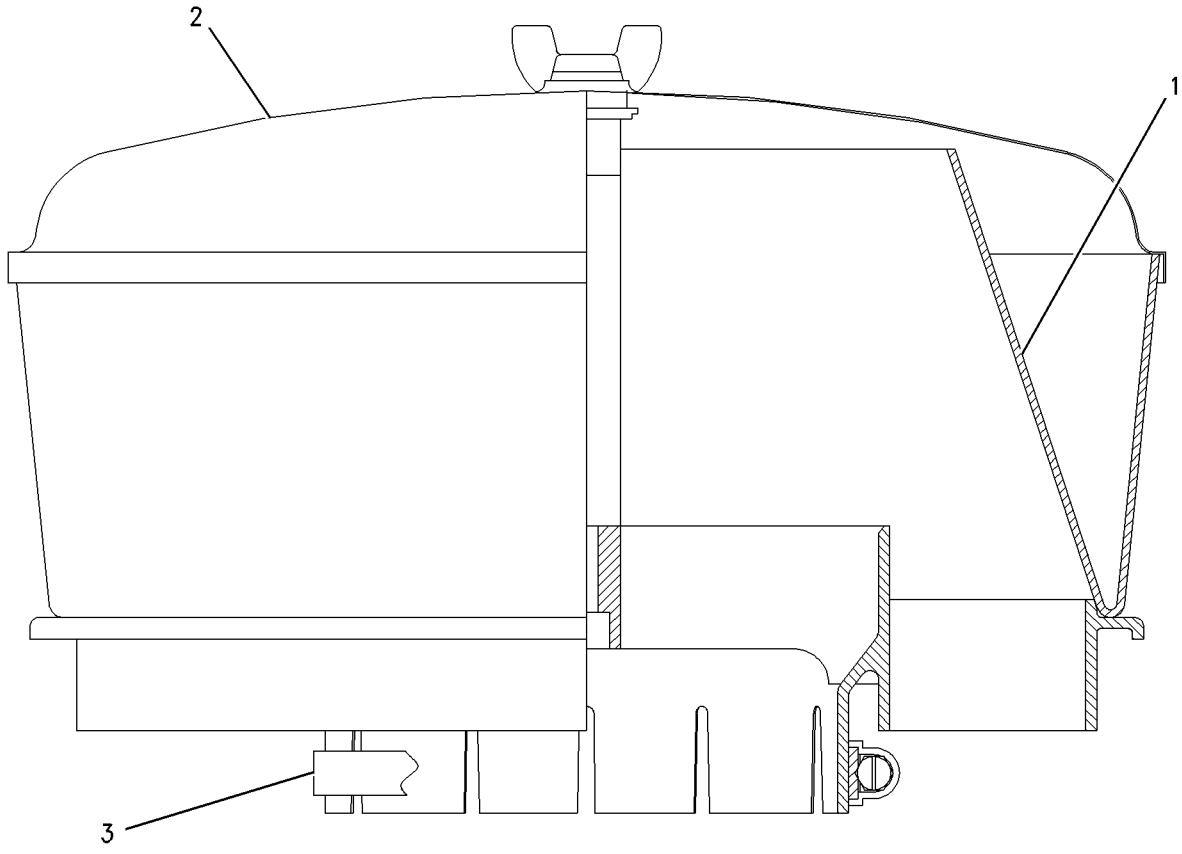

GRAPHIC #1 **<END>** g00769430

AIR INLET AND EXHAUST SYSTEM

291-5480 TURBOCHARGER GP*R

S/N: TXF1-UP; MHX7634-UP

PART OF 294-4585 TURBOCHARGER GP

SMCS-1052, 1053 **i04004050**

NOTE	REF NO	GRAPHIC REF	PART NUMBER	QTY	PART NAME 1 2 3 4 5 6 (PRODUCT LEVEL)	SEE PAGE
	1	1	**1W-9311**	1	CLAMP AS-TURBINE	
	2	1	**161-6958**	1	CLIP-HOSE	
	3	1	**161-6963**	2	CLAMP	
	4	1	**239-5858**	1	CLAMP AS-COMPRESSOR	
	5	1	**279-6060**	1	CARTRIDGE GP-TURBOCHARGER	
	6	1	**115-7087**	1	BOLT (M6X0.04X10.4-MM)	
E	7	1	**242-3360**		HOSE (44-CM)	
E	8	1	**258-4524**		SLEEVE (31-CM)	

E-ORDER BY THE CENTIMETER

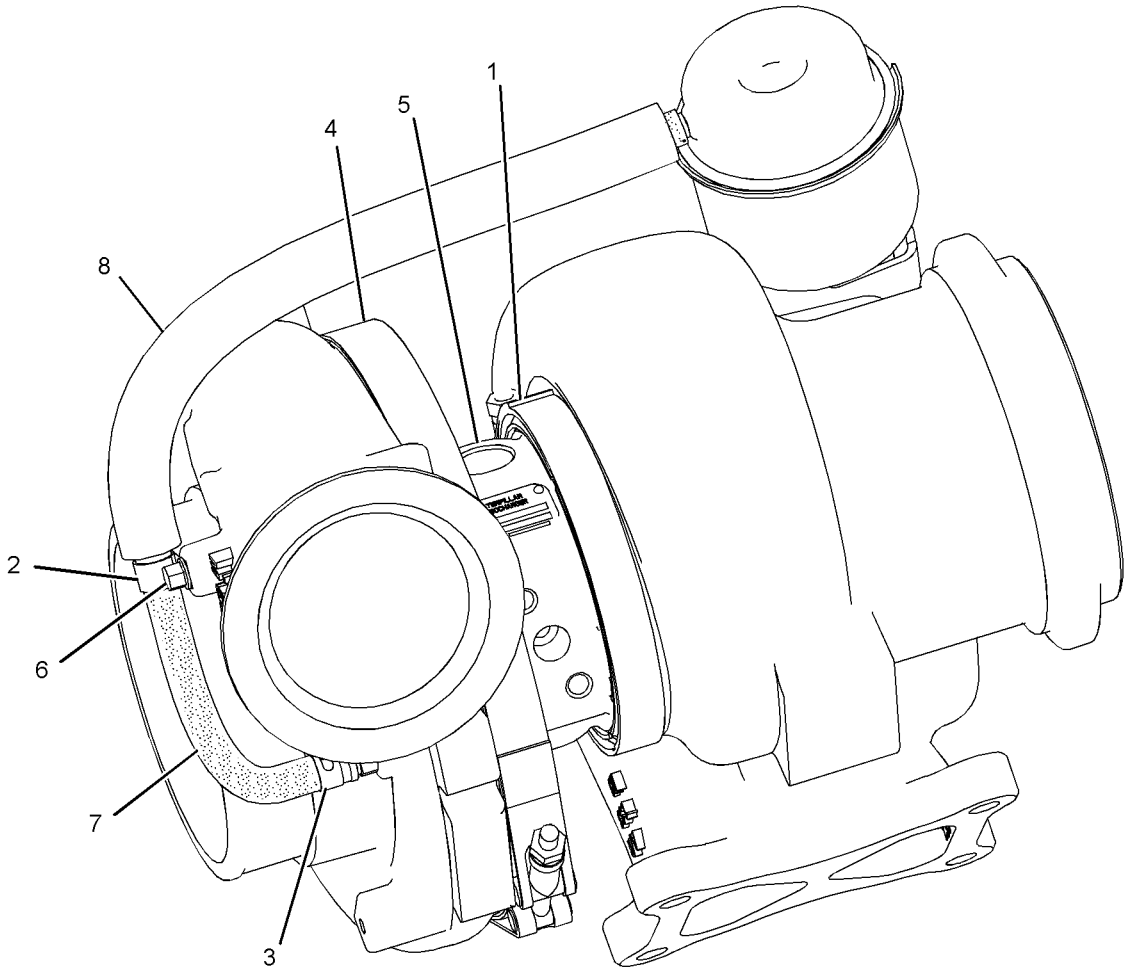

GRAPHIC #1 **<END>** g01408129

AIR INLET AND EXHAUST SYSTEM

294-4585 TURBOCHARGER GP

S/N: TXF1-UP; MHX7634-UP
TIER III EMISSIONS, WET CENTER SECTION, EXHAUST REAR
PART OF 291-9259 ENGINE AR-COMPLETE

SMCS-1052, 1053 **i03834349**

NOTE	REF NO	GRAPHIC REF	PART NUMBER	QTY	PART NAME 1 2 3 4 5 6 (PRODUCT LEVEL)	SEE PAGE
	1	1	**274-6851**	1	GASKET-TURBOCHARGER	
M	2	1	**9X-6620**	4	LOCKNUT (M10X1.5-THD)	
YR	3	1	**291-5480**	1	TURBOCHARGER GP	131

M-METRIC PART
R-REMFG PART MAY BE AVAILABLE
Y-SEPARATE ILLUSTRATION

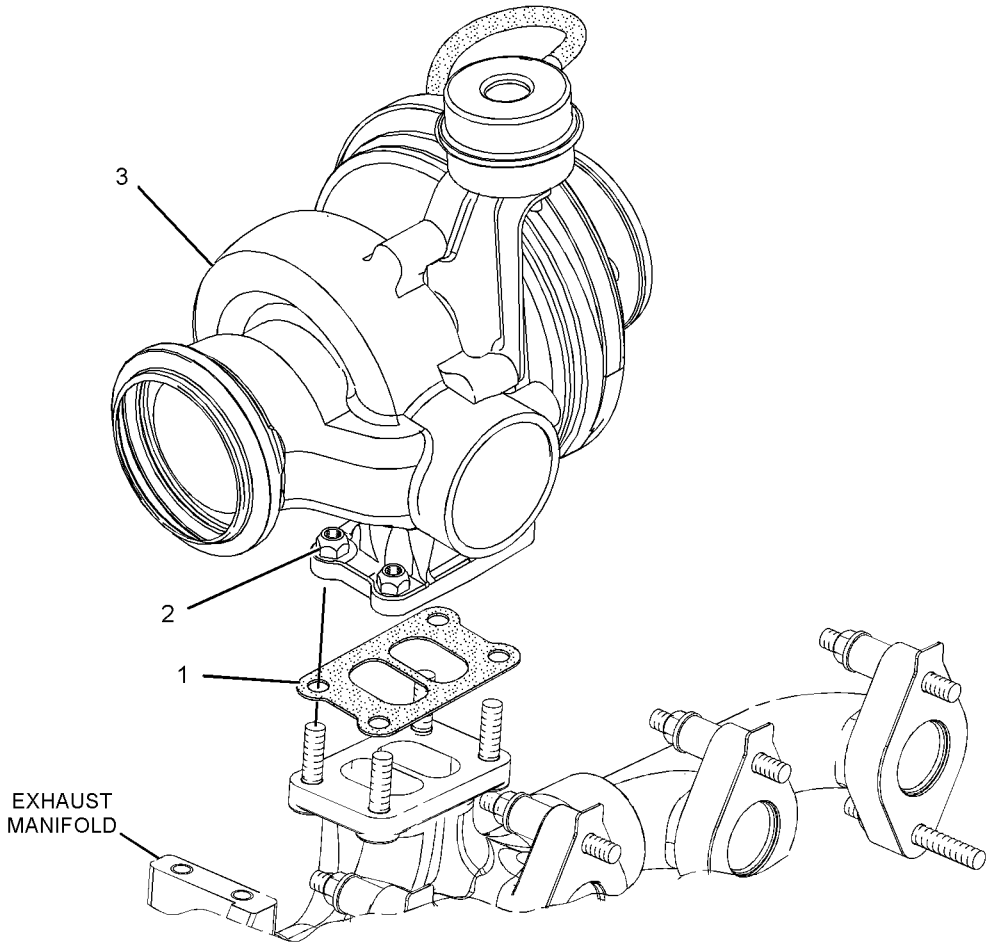

GRAPHIC #1 **<END>** g01277224

FUEL SYSTEM

239-6581 COOLER GP-FUEL

S/N: JGB1-UP; KHS1-UP

PART OF 297-7686 INSTALLATION AR-ENGINE

SMCS-1712 **i02555436**

NOTE	REF NO	GRAPHIC REF	PART NUMBER	QTY	PART NAME 1 2 3 4 5 6 (PRODUCT LEVEL)	SEE PAGE
	1	1	**134-3196**	4	WASHER (10.2X39.6X2.3-MM THK)	
C	2	1	**4I-1205**	1	BUMPER	
	3	1	**129-5429**	1	CORE AS-FUEL COOLER	
	4	1	**141-1060**	8	MOUNT-ISOLATION	
	5	1	**239-6582**	1	DOOR AS-ACCESS	
		1	**099-7857**	2	HINGE	
	6	1	**239-6585**	1	SUPPORT AS	
C	7	1	**287-0164**	1	SUPPORT AS	
	8	1	**5P-1076**	2	WASHER-HARD (13.5X30X4-MM THK)	
	9	1	**7X-7729**	5	WASHER (11X25X3-MM THK)	
M	10	1	**8T-4133**	1	NUT (M10X1.5-THD)	
M	11	1	**8T-4137**	4	BOLT (M10X1.5X20-MM)	
M	12	1	**8T-4179**	6	BOLT (M12X1.75X20-MM)	
	13	1	**8T-4223**	4	WASHER-HARD (13.5X25.5X3-MM THK)	
	14	1	**8T-8915**	4	BOLT (3/8-16X3.25-IN)	

C-CHANGE FROM PREVIOUS TYPE
M-METRIC PART

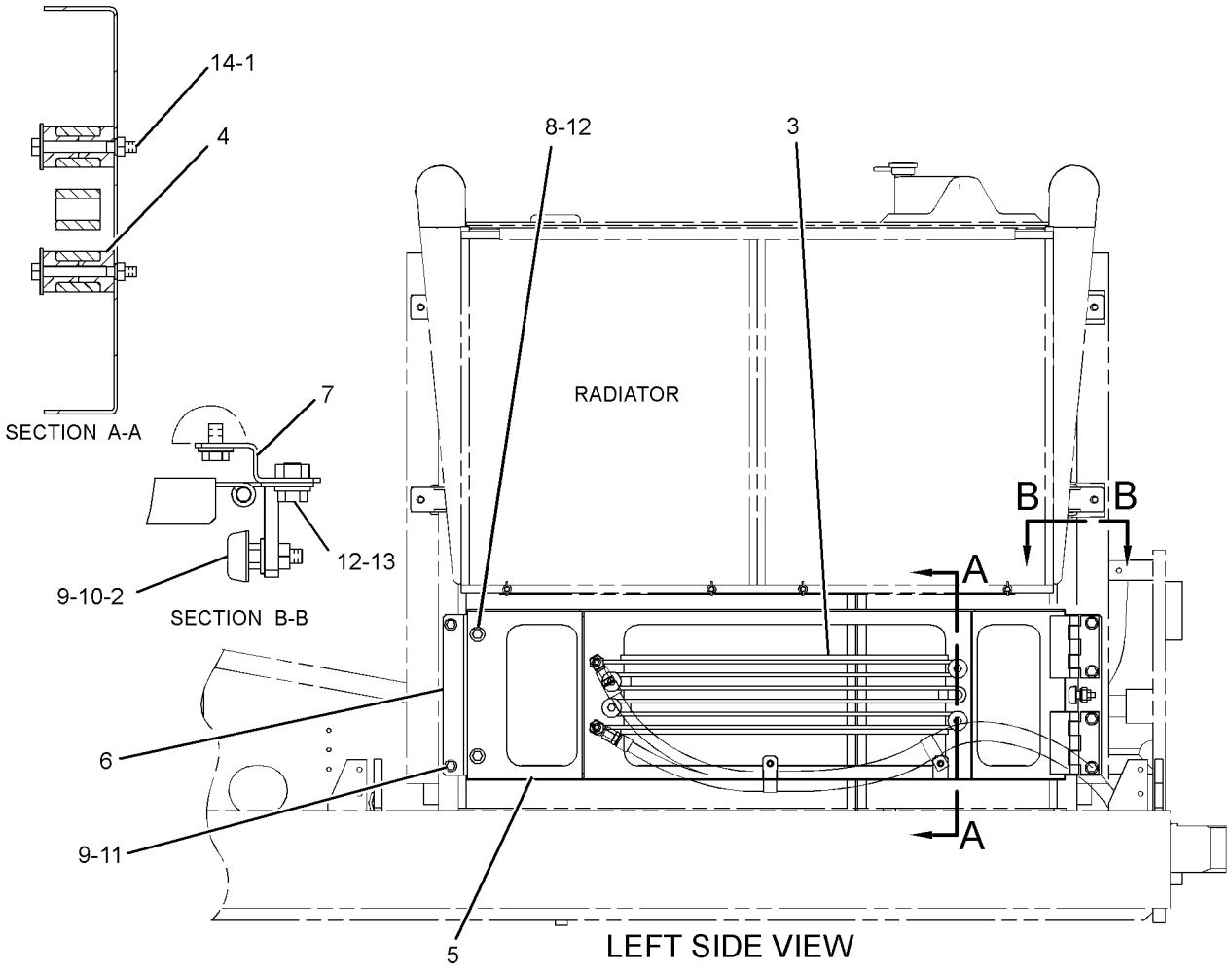

GRAPHIC #1 **<END>** g01280693

212-9580 FILTER GP-WATER SEP & FUEL

S/N: JGB1-UP; KHS1-UP

PART OF 312-2617 PUMP GP-FUEL PRM & PRIM FILTER

SMCS-1261, 1263 **i03684401**

NOTE	REF NO	GRAPHIC REF	PART NUMBER	QTY	PART NAME 1 2 3 4 5 6 (PRODUCT LEVEL)	SEE PAGE
	1	1	**326-1643**	1	FILTER AS-WATER SEP & FUEL (PRIMARY)	
	1A	1	**220-8678**	1	SEAL-RING (FUEL FILTER)	
	2	1	**343-5527**	1	BOWL AS	
	2A	1	**3J-1907**	1	SEAL-O-RING	
	2B	1	**5F-9144**	1	SEAL-O-RING	
	2C	1	**8F-7219**	1	SEAL-O-RING	
	2D	1	**9S-8004**	1	PLUG-O-RING	

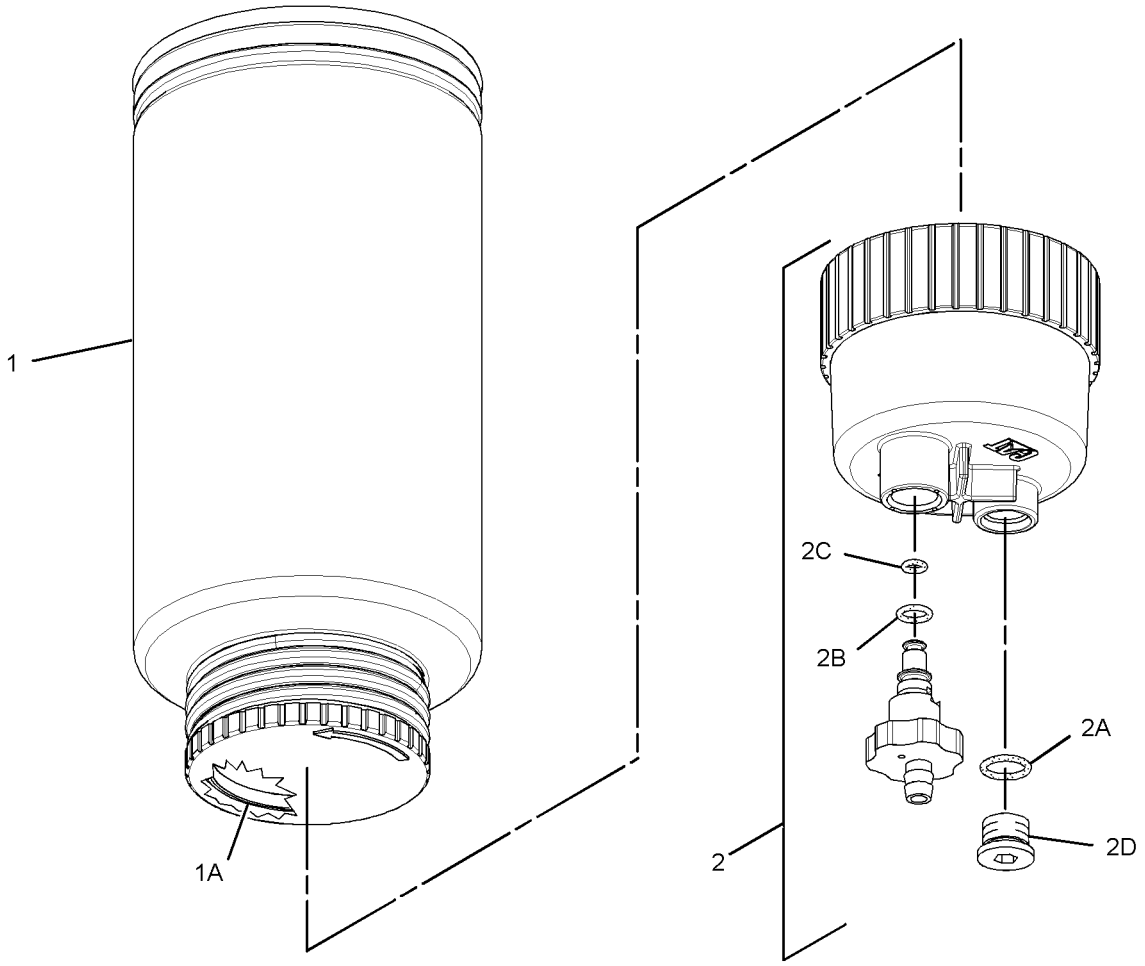

GRAPHIC #1 **<END>** g01944750

117-0183 FITTING GP-FUEL LINES

S/N: TXF1-UP; MHX7634-UP
NUMBER 10 STRAIGHT FUEL INLET FITTING WITHOUT BLEED AND HAS 7/8-14X45-DEG FLARE
PART OF 291-9259 ENGINE AR-COMPLETE

SMCS-1274 **i03974771**

NOTE	REF NO	GRAPHIC REF	PART NUMBER	QTY	PART NAME 1 2 3 4 5 6 (PRODUCT LEVEL)	SEE PAGE
	1	1	**135-2836**	1	CAP AS	
	2	1	**238-5080**	1	SEAL-O-RING	
	3	1	**9X-6650**	1	CONNECTOR-O-RING	

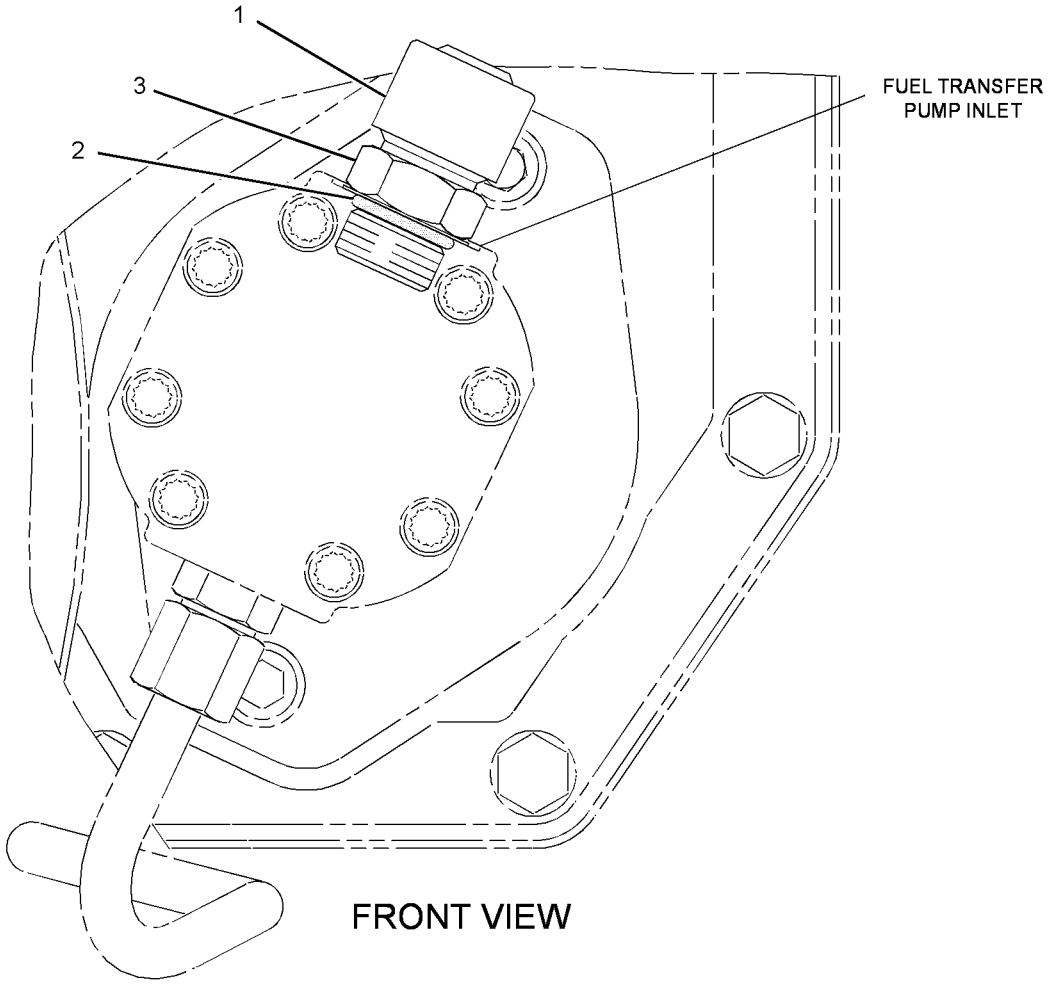

GRAPHIC #1 **<END>** g02270214

249-0713 INJECTOR GP-FUEL*R

S/N: TXF1-UP; MHX7634-UP

PART OF 253-1461 PUMP GP-FUEL INJECTION

SMCS-1251, 1254, 1290, 1713 **i02144582**

NOTE	REF NO	GRAPHIC REF	PART NUMBER	QTY	PART NAME 1 2 3 4 5 6 (PRODUCT LEVEL)	SEE PAGE
	1	1	**9X-7317**	1	SEAL-O-RING	
	2	1	**230-3728**	1	SEAL-O-RING	
	3	1	**230-3775**	1	SEAL-O-RING	

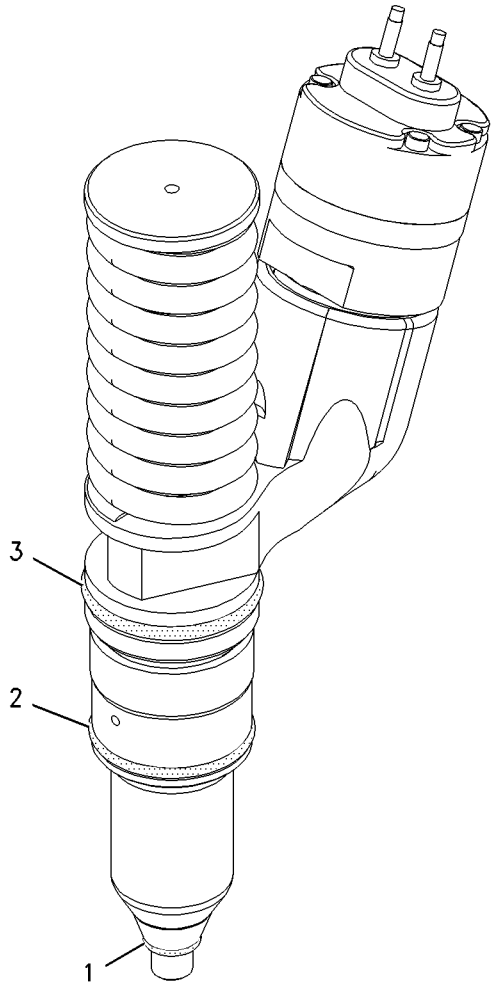

GRAPHIC #1 **<END>** g00914176

FUEL SYSTEM

311-4950 LINES GP-FUEL

S/N: TXF1-UP; MHX7634-UP

PART OF 291-9259 ENGINE AR-COMPLETE

SMCS-1274 **i03652346**

NOTE	REF NO	GRAPHIC REF	PART NUMBER	QTY	PART NAME 1 2 3 4 5 6 (PRODUCT LEVEL)	SEE PAGE
	1	1	**7W-9094**	1	SPACER (10.5X20X9-MM THK)	
	2	1	**9C-5344**	2	SPACER (10.5X20X18-MM THK)	
	3	1	**135-2835**	1	CAP AS	
Y	4	1	*235-6387*	1	REGULATOR GP-FUEL PRESSURE	147
	5	1	**244-1420**	1	TUBE AS	
I	6	1	**244-4884**	1	HOSE AS	
	7	1	**301-6343**	1	STUD	
I	8	1	**311-4952**	1	HOSE AS	
	9	1	**311-4953**	1	BRACKET AS	
	10	1	**005-4362**	1	ELBOW	
	11	1	**030-7942**	1	ELBOW	
	12	1	**030-7947**	1	ELBOW	
	13	1	**030-8188**	1	CONNECTOR	
	14	1	**214-7568**	2	SEAL-O-RING	
M	15	1	**6V-3822**	1	BOLT (M10X1.5X35-MM)	
M	16	1	**6V-6317**	1	BOLT (M10X1.5X20-MM)	
	17	1	**6V-5839**	3	WASHER (11X21X2.5-MM THK)	
	18	1	**7H-7055**	2	CLIP	
	19	1	**7K-4129**	1	UNION-FLARED	
	20	1	**8L-2786**	3	SEAL-O-RING	
	21	1	**8M-0505**	1	CONNECTOR	
M	22	1	**8T-0275**	2	BOLT (M6X1X50-MM)	
	23	1	**9X-8267**	2	WASHER (6.6X12X2-MM THK)	
E	24	1	**8C-5064**		CONDUIT-FLEXIBLE (17.75-MM ID, SPLIT) (29-CM)	

E-ORDER BY THE CENTIMETER
I-REFER TO HYDRAULIC INFORMATION SYSTEM
M-METRIC PART
Y-SEPARATE ILLUSTRATION

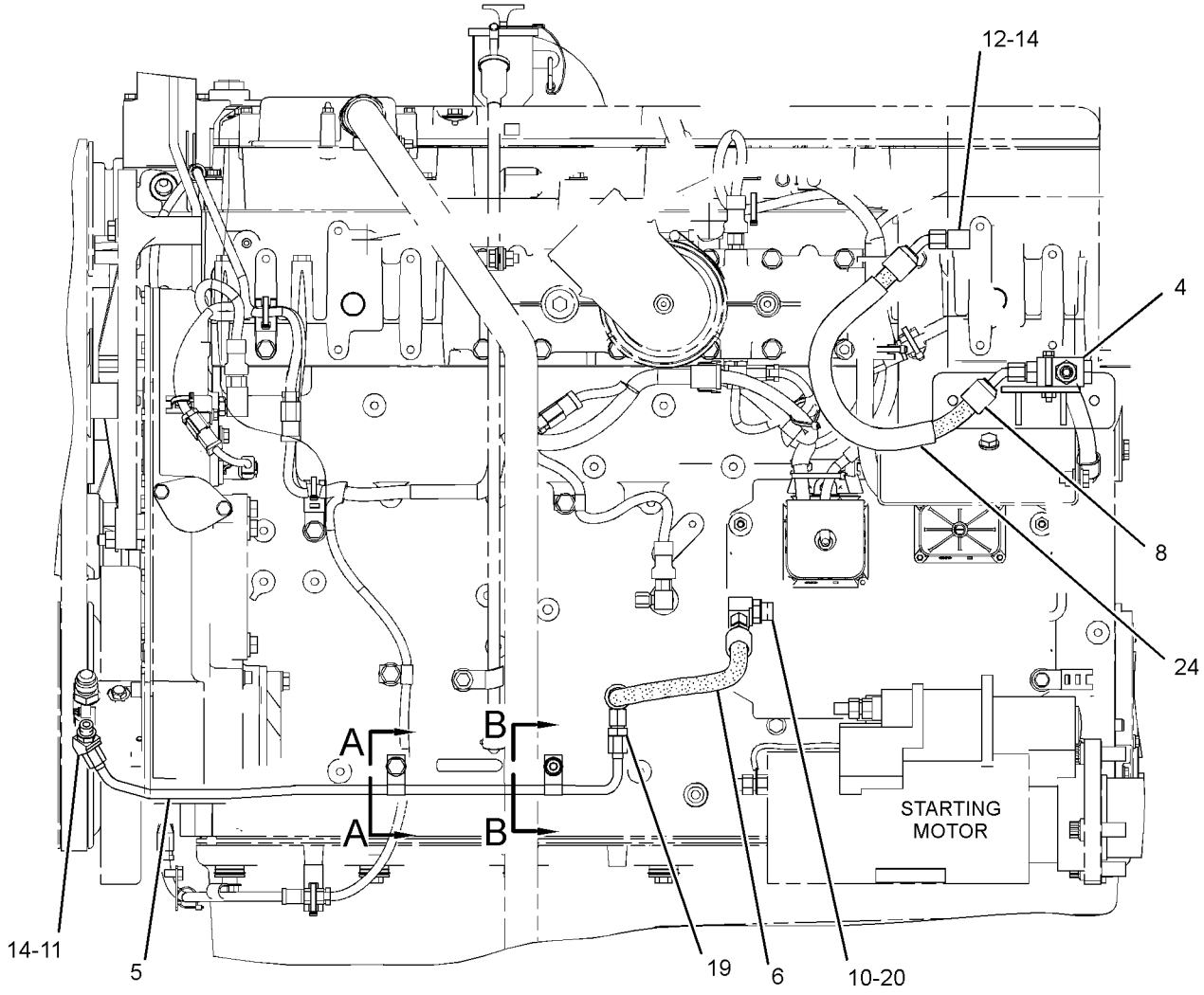

LEFT SIDE VIEW OF ENGINE

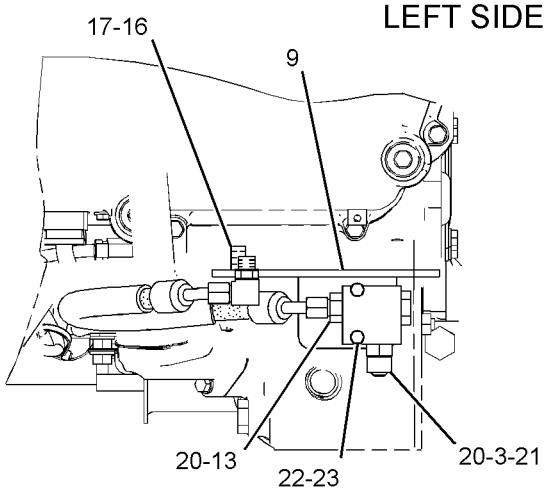

TOP VIEW OF ENGINE

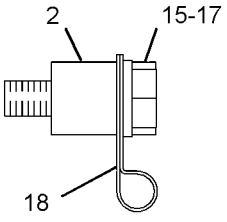

SECTION A-A

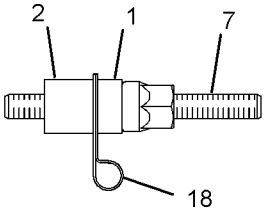

SECTION B-B

GRAPHIC #1 **<END>** g01944947

FUEL SYSTEM

313-8169 LINES GP-FUEL

S/N: JGB1-UP; KHS1-UP

PART OF 370-3231, 370-4189 CHASSIS AR

SMCS-1274 **i04002825**

NOTE	REF NO	GRAPHIC REF	PART NUMBER	QTY	PART NAME 1 2 3 4 5 6 (PRODUCT LEVEL)	SEE PAGE
	1	1	**4I-0379**	1	VALVE-MANUAL (DRAIN, FUEL TANK)	
	2	2	**4I-5106**	2	GROMMET	
	3	3	**4I-7889**	1	SPACER (11X25X45-MM THK)	
	4	2	**7Y-4529**	1	GROMMET	
	5	2	**7Y-5497**	1	GROMMET	
	6	3	**8T-9655**	6	MOUNT-ISOLATION	
	7	1	**003-7764**	2	END-HOSE	
	8	1	**095-1386**	3	CLAMP-HOSE	
	9	3	**134-6852**	1	CONNECTOR	
	10	3	**156-2525**	1	VALVE-SHUTOFF (FUEL)	
	12	3	**191-1782**	1	SPACER (8.5X12.7X38.2-MM THK)	
	13	3	**191-1783**	2	SPACER (8.5X12.7X87.3-MM THK)	
CY	14	3	*312-2617*	1	PUMP GP-FUEL PRM & PRIM FILTER (PRIMARY)	145
Y	15	3	*234-5013*	1	SENSOR GP-TEMPERATURE (FUEL)	236
	16	2	**236-9179**	2	SUPPORT AS	
	17	3	**236-9241**	2	GROMMET	
	18	3	**237-9307**	1	BASE AS-FUEL FILTER	
		3	**237-9323**	1	STUD	
Y	19	3	*239-2396*	1	SENSOR GP-PRESSURE (FUEL)	224
	20	3	**264-9971**	1	HOSE	
Y	21	3	**275-1253**	1	SWITCH GP-PRESSURE (FUEL FILTER)	249
	22	3	**307-7814**	1	ANGLE AS	
	23	2	**330-1378**	1	SUPPORT AS	
I	24	2	**330-1384**	1	HOSE AS	
I	25	2	**330-1383**	1	HOSE AS	
I	26	2	**330-1382**	1	HOSE AS	
I	27	2	**330-1381**	1	HOSE AS	
I	28	2	**351-3023**	1	HOSE AS	
I	29	1	**351-3024**	1	HOSE AS	
	30	2	**118-4728**	1	ELBOW	
	31	3	*148-8311*	1	ADAPTER AS	
		3	**3K-0360**	1	SEAL-O-RING	
		3	**8T-1715**	1	ADAPTER	
	32	3	*164-5619*	2	PLUG AS	
					(EACH INCLUDES)	
		3	**2M-9780**	1	SEAL-O-RING	
		3	**9S-8006**	1	PLUG-O-RING	
	33	3	**1R-0755**	1	FILTER-FUEL (ADVANCED EFFICIENCY)	
	34	1	**1R-6072**	1	GROMMET	
	35	2,3	**228-2775**	6	CLIP	
	36	3	**2M-9780**	2	SEAL-O-RING	
	37	2	**3J-1907**	1	SEAL-O-RING	
	38	2,3	**3K-0360**	7	SEAL-O-RING	
	39	3	**3P-2001**	1	ELBOW	
	40	2	**4D-7388**	6	CLIP	
	41	1	**5I-8307**	3	GROMMET	
	42	1,3	**6D-4244**	4	CLIP	
	43	1,2	**6D-4247**	8	CLIP	
	44	3	**6K-3607**	1	CONNECTOR	
	45	3	**6V-7420**	1	ADAPTER	
	46	3	**7X-0579**	3	WASHER-HARD (8.8X25.5X2-MM THK)	
M	47	3	**7X-2539**	2	BOLT (M8X1.25X110-MM)	
	48	3	**8L-2786**	1	SEAL-O-RING	
	49	2,3	**8M-0505**	2	CONNECTOR	
	50	2	**8M-0506**	1	ADAPTER-O-RING	
	51	3	**8M-0547**	1	ELBOW-FLARED (SWIVEL)	

313-8169 **LINES GP-FUEL** ***(contd.)*** **i04002825**

NOTE	REF NO	GRAPHIC REF	PART NUMBER	QTY	PART NAME 1 2 3 4 5 6 (PRODUCT LEVEL)	SEE PAGE
	52	1,2,3	**8T-4121**	40	WASHER-HARD (11X21X2.5-MM THK)	
M	53	1	**8T-4133**	1	NUT (M10X1.5-THD)	
M	54	1,2,3	**8T-4136**	6	BOLT (M10X1.5X25-MM)	
M	55	1,2,3	**8T-4137**	30	BOLT (M10X1.5X20-MM)	
	56	1	**7K-1181**	1	STRAP-CABLE	
M	57	3	**8T-4196**	2	BOLT (M10X1.5X35-MM)	
M	58	3	**8T-5005**	1	BOLT (M10X1.5X70-MM)	
M	59	3	**8T-6869**	1	BOLT (M8X1.25X60-MM)	
	60	1	**9M-8406**	5	CLIP	
	61	3	**9S-8005**	2	PLUG-O-RING	
E	62	1	**5P-1442**		HOSE (151-CM)	
E	62A	1	**5P-1442**		HOSE (35-CM)	
	63	3	**148-8354**	1	ELBOW AS	
		3	**3K-0360**	1	SEAL-O-RING	
		3	**6V-8398**	1	SEAL-O-RING	
		3	**6V-9002**	1	ELBOW	
	64	1,2,3	**7D-7735**	8	CLIP	
	65	1	*339-7151*	2	ELBOW AS	
					(EACH INCLUDES)	
		1	**6V-8398**	1	SEAL-O-RING	
		1	**339-7152**	1	ELBOW	

C-CHANGE FROM PREVIOUS TYPE
E-ORDER BY THE CENTIMETER
I-REFER TO HYDRAULIC INFORMATION SYSTEM
M-METRIC PART
Y-SEPARATE ILLUSTRATION

313-8169 **LINES GP-FUEL** *(contd.)* **i04002825**

REFER TO ALL ILLUSTRATIONS OF
THIS GROUP FOR AUXILIARY VIEWS

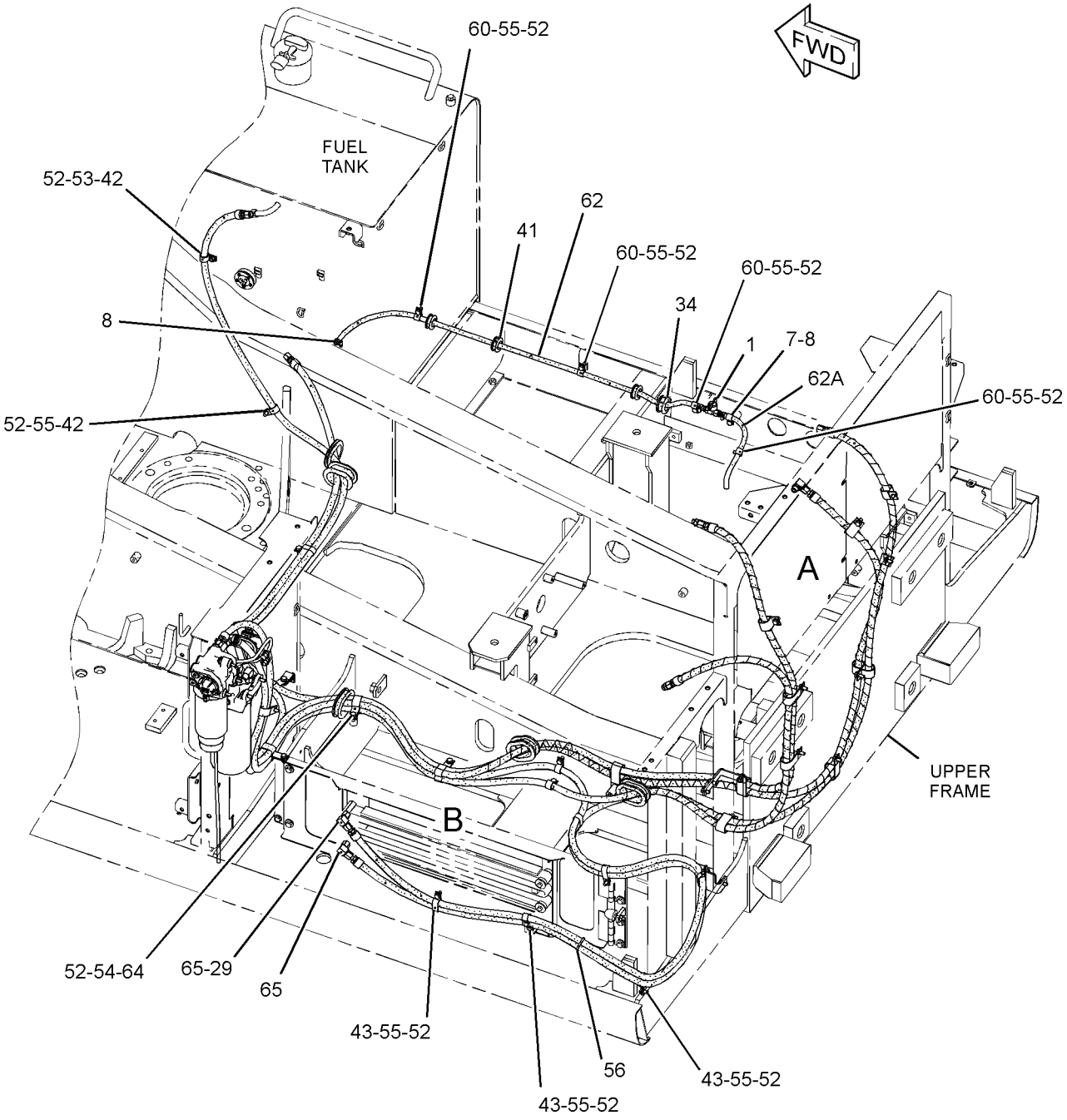

GRAPHIC #1 g02140542

REFER TO ALL ILLUSTRATIONS OF THIS GROUP FOR AUXILIARY VIEWS

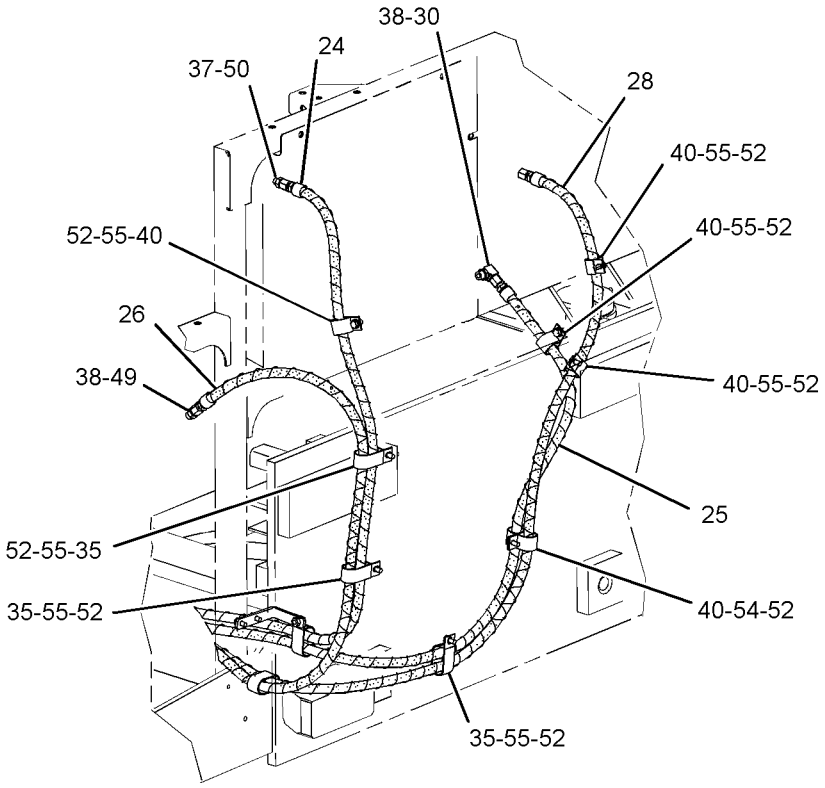

VIEW OF AREA A

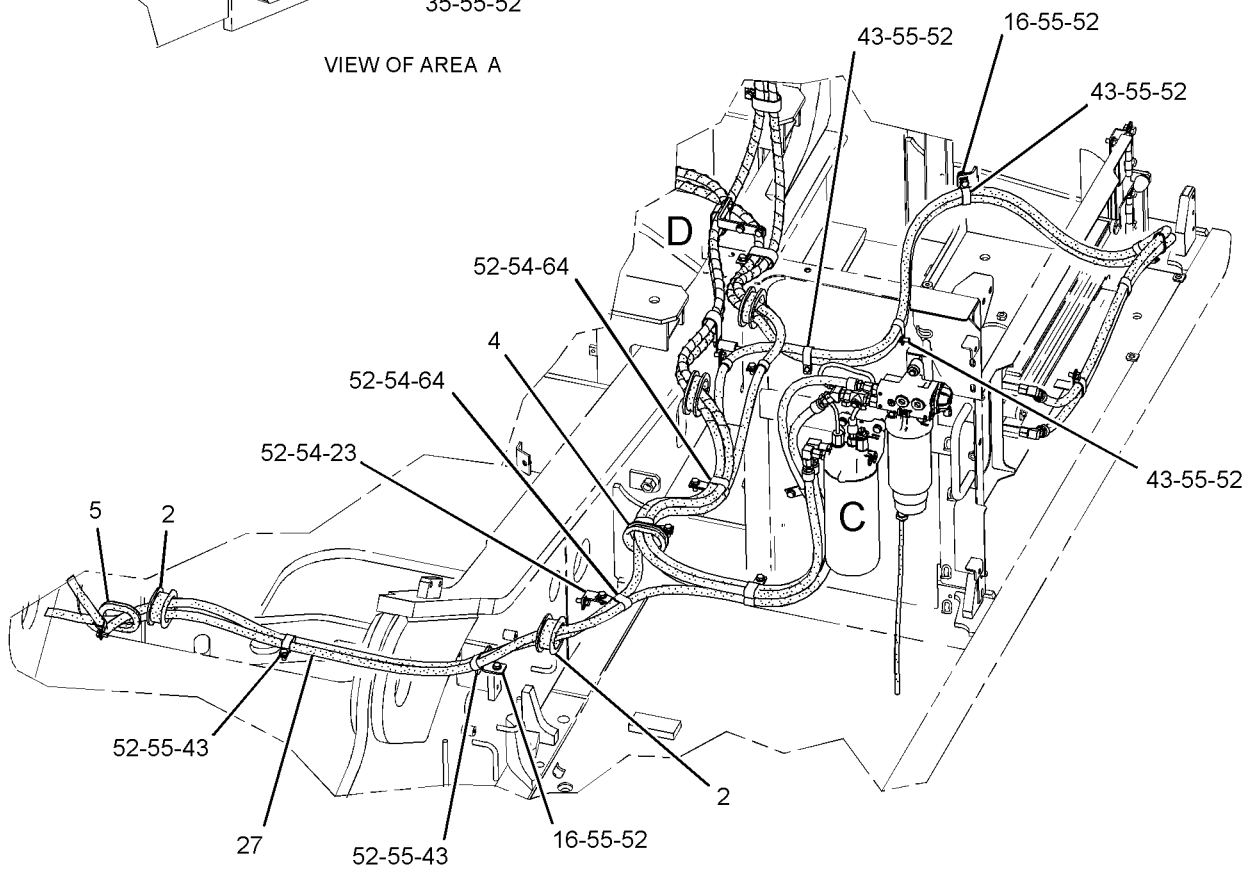

VIEW OF AREA B 90°

GRAPHIC #2

g02140540

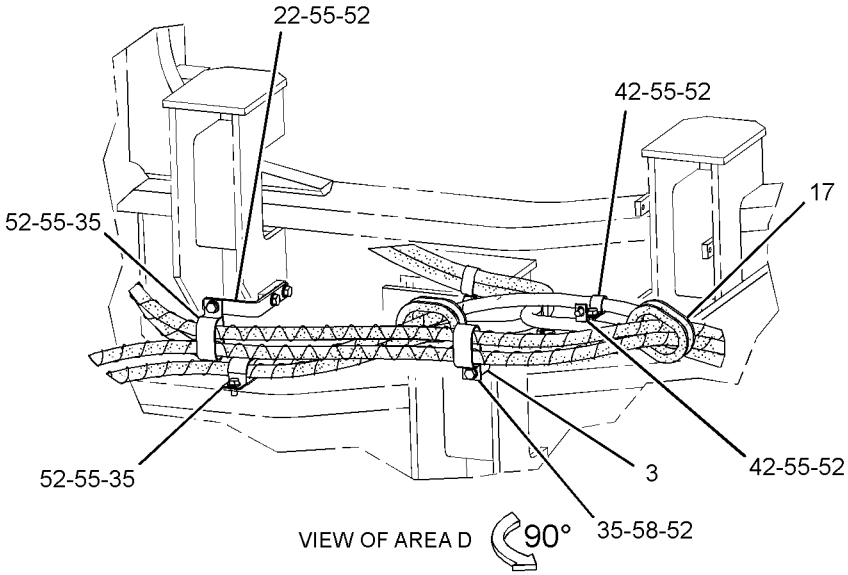

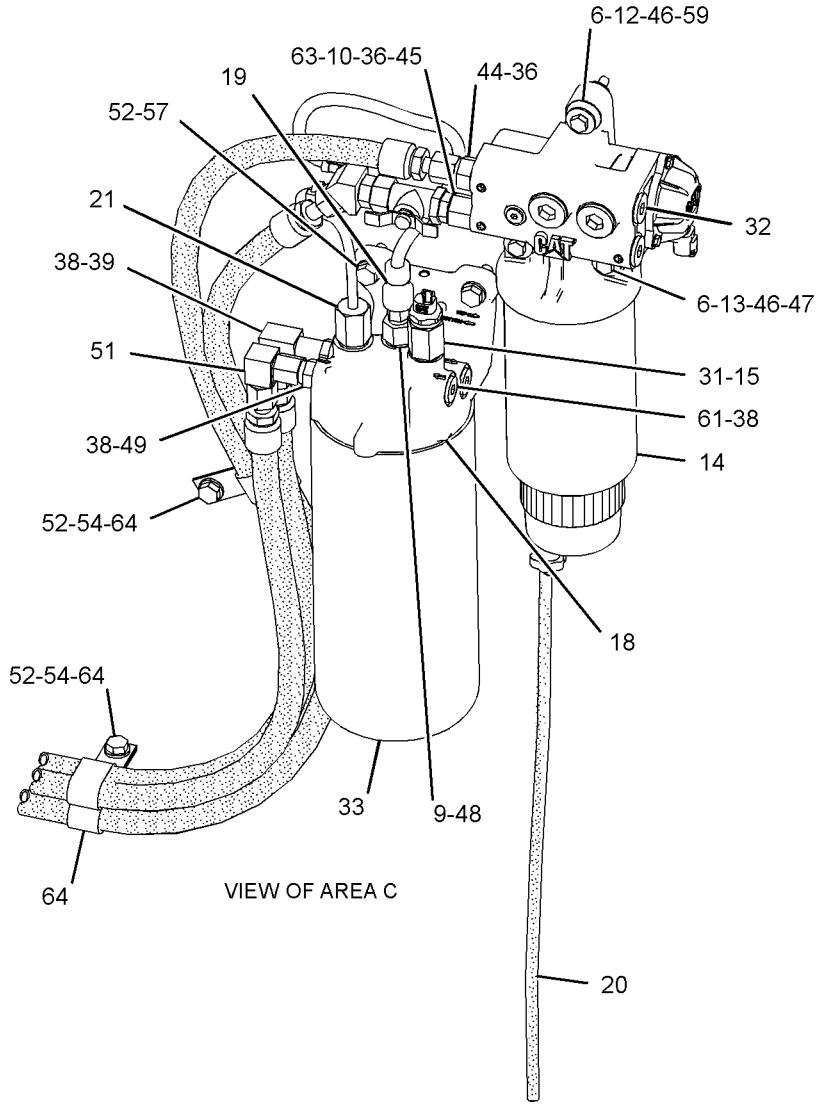

GRAPHIC #3 **<END>** g02140539

253-1461 PUMP GP-FUEL INJECTION

S/N: TXF1-UP; MHX7634-UP

PART OF 317-9990, 356-2433 ENGINE AR-CORE

SMCS-1251, 1290 **i02099142**

NOTE	REF NO	GRAPHIC REF	PART NUMBER	QTY	PART NAME 1 2 3 4 5 6 (PRODUCT LEVEL)	SEE PAGE
	1	1	**224-4991**	1	CLAMP-INJECTOR	
Y	2	1	**249-0713**	1	INJECTOR GP-FUEL	136
M	3	1	**8T-0644**	1	BOLT (M10X1.50X90-MM)	

M-METRIC PART
Y-SEPARATE ILLUSTRATION

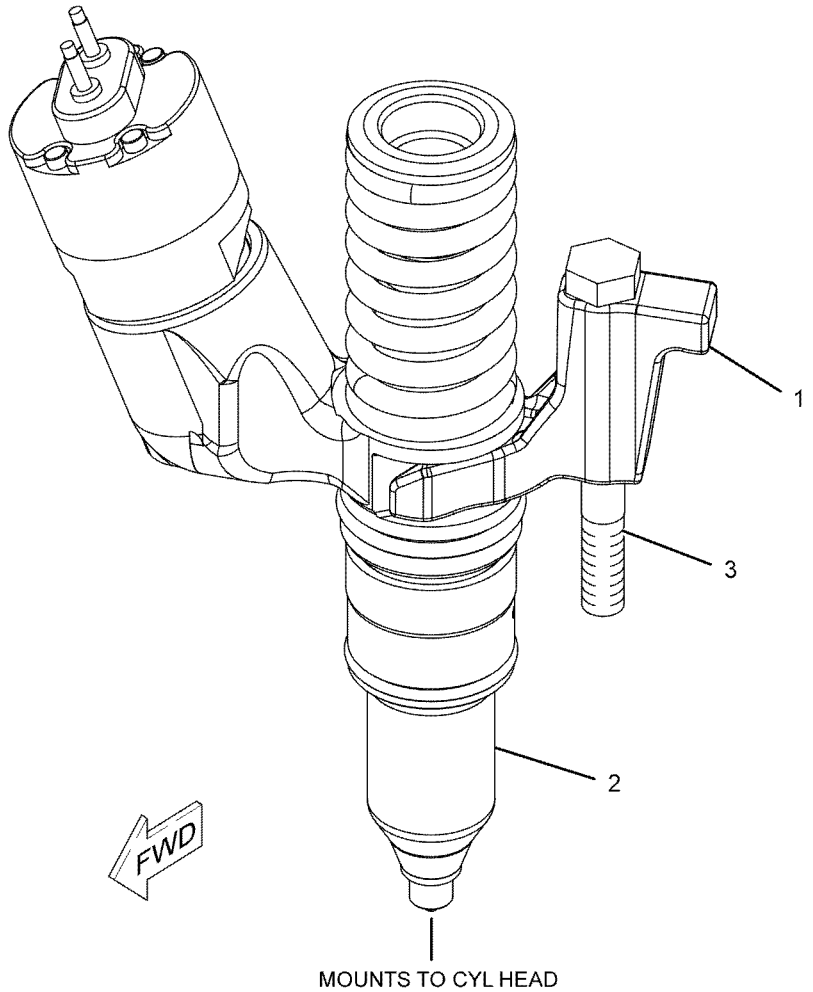

GRAPHIC #1 **<END>** g01065170

312-2617 PUMP GP-FUEL PRM & PRIM FILTER

S/N: JGB1-UP; KHS1-UP

PART OF 313-8169 LINES GP-FUEL

SMCS-1258 **i04039371**

NOTE	REF NO	GRAPHIC REF	PART NUMBER	QTY	PART NAME 1 2 3 4 5 6 (PRODUCT LEVEL)	SEE PAGE
	1	1	**190-8970**	1	PUMP AS-FUEL PRIMING	
Y	2	1	*212-9580*	1	FILTER GP-WATER SEP & FUEL	134

Y-SEPARATE ILLUSTRATION

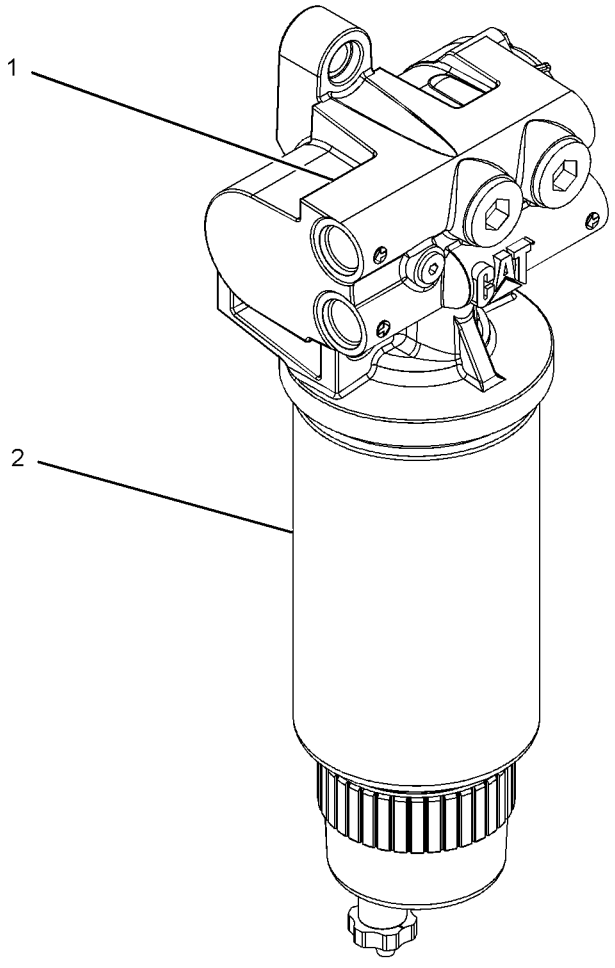

GRAPHIC #1 **<END>** g02017233

227-5723 PUMP GP-FUEL TRANSFER

S/N: TXF1-UP; MHX7634-UP

PART OF 291-9259 ENGINE AR-COMPLETE, 317-9990 ENGINE AR-CORE

SMCS-1256 **i02891299**

NOTE	REF NO	GRAPHIC REF	PART NUMBER	QTY	PART NAME 1 2 3 4 5 6 (PRODUCT LEVEL)	SEE PAGE
CR	1	1	**316-6864**	1	PUMP GP-FUEL TRANSFER	
M	2	1	**136-4183**	2	BOLT-12 POINT HEAD (M10X1.5X30-MM)	
	3	1	**5M-2894**	2	WASHER-HARD (10.2X18.5X2.5-MM THK)	
	4	1	**5P-4889**	1	SEAL-O-RING	

C-CHANGE FROM PREVIOUS TYPE
M-METRIC PART
R-REMFG PART MAY BE AVAILABLE

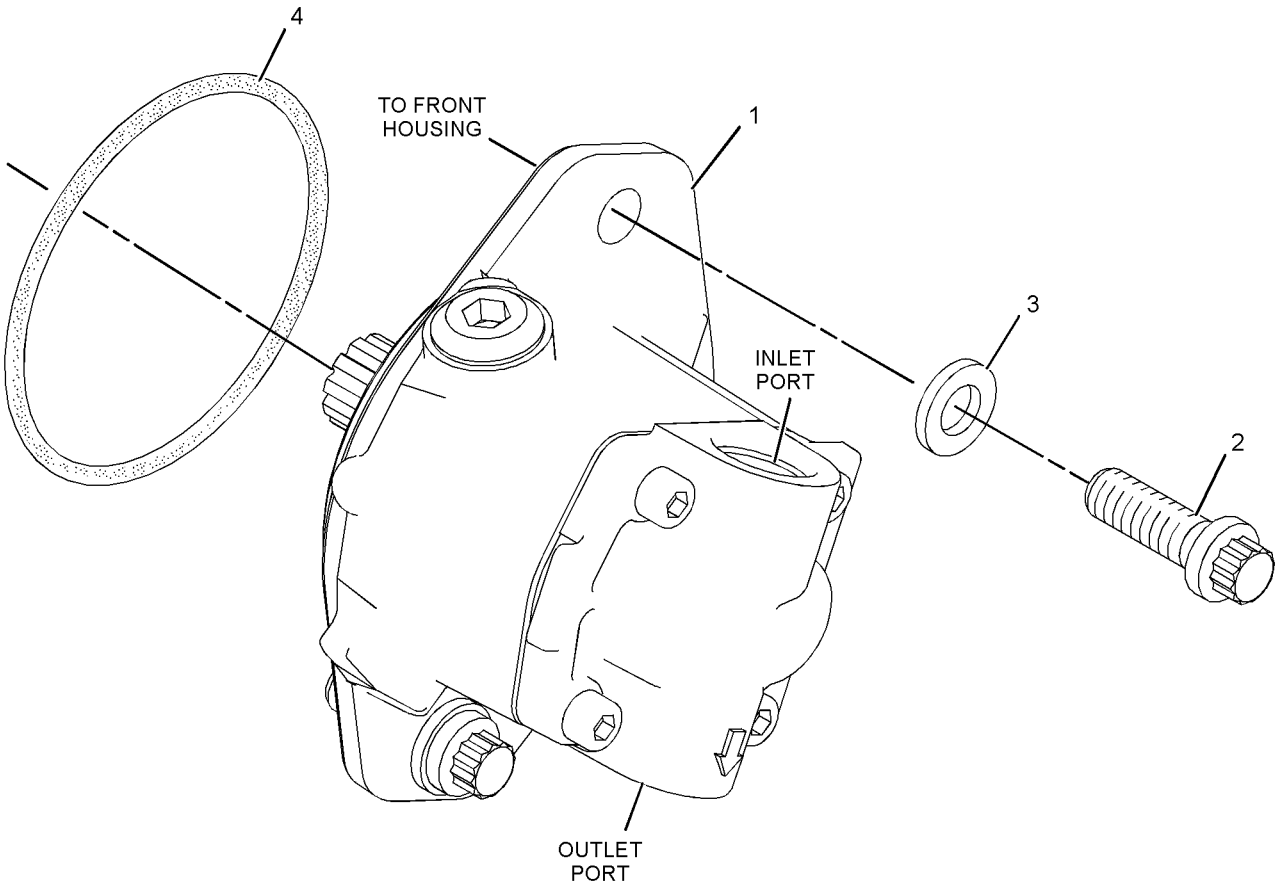

GRAPHIC #1 **<END>** g01366656

235-6387 REGULATOR GP-FUEL PRESSURE

S/N: TXF1-UP; MHX7634-UP
PART OF 311-4950 LINES GP-FUEL

SMCS-1715 **i04047574**

NOTE	REF NO	GRAPHIC REF	PART NUMBER	QTY	PART NAME 1 2 3 4 5 6 (PRODUCT LEVEL)	SEE PAGE
Y	1	1	**281-2725**	1	VALVE GP-CHECK (FUEL)	154
	2	1	**238-5081**	1	SEAL-O-RING	

Y-SEPARATE ILLUSTRATION

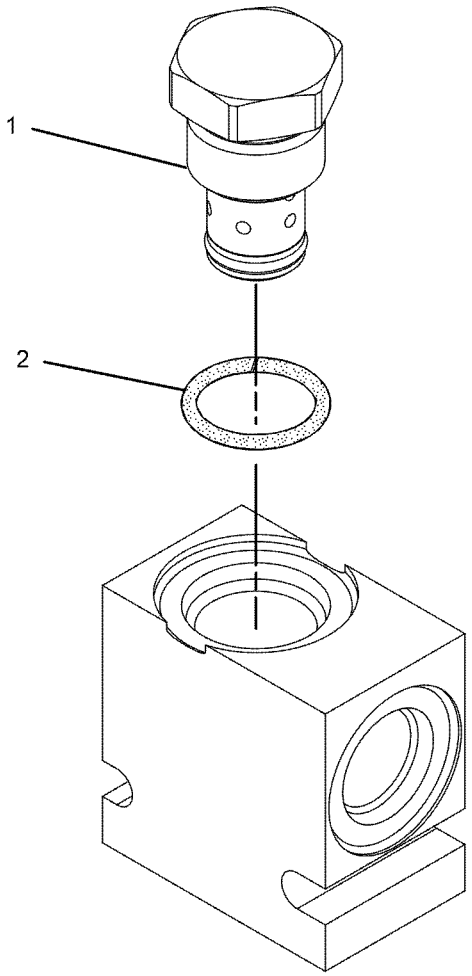

GRAPHIC #1 **<END>** g01126512

FUEL SYSTEM

307-8002 TANK & MTG GP-FUEL

S/N: JGB1-UP

PART OF 370-3231 CHASSIS AR

SMCS-1273 **i02844444**

NOTE	REF NO	GRAPHIC REF	PART NUMBER	QTY	PART NAME 1 2 3 4 5 6 (PRODUCT LEVEL)	SEE PAGE
	1	1	**246-2641**	1	PADLOCK GP	
		1	**5P-8500**	1	KEY	
	2	1	**9S-8178**	4	SPACER (0.891X1.625X1.5-IN THK)	
B	3	1	**093-0407**	4	SHIM (0.4-MM THK)	
B	4	1	**093-0408**	4	SHIM (1-MM THK)	
M	5	1	**135-8573**	2	BOLT AS	
	6	1	**293-6801**	1	STEP AS	
Y	7	1	**307-8003**	1	TANK GP-FUEL	150
M	8	1	**8T-4187**	4	BOLT (M20X2.5X80-MM)	

B-USE AS REQUIRED
M-METRIC PART
Y-SEPARATE ILLUSTRATION

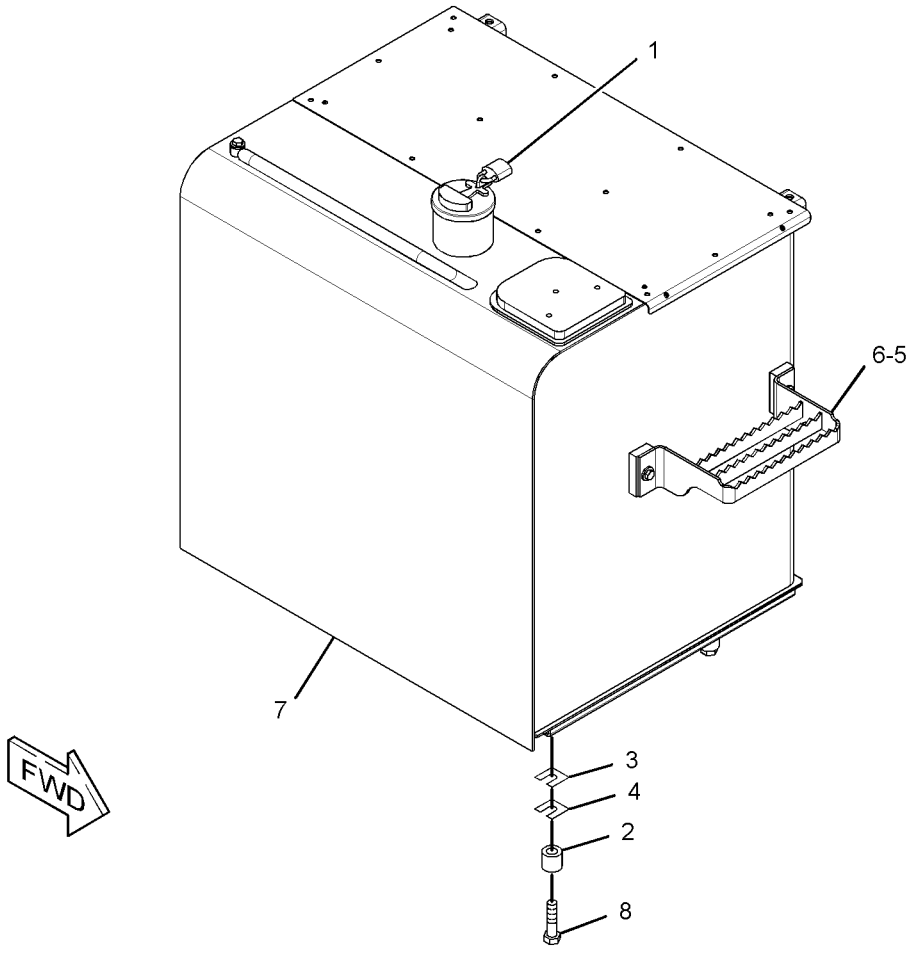

GRAPHIC #1 **<END>** g01460896

307-8005 TANK & MTG GP-FUEL

S/N: KHS1-UP

PART OF 370-4189 CHASSIS AR

SMCS-1273 **i02968002**

NOTE	REF NO	GRAPHIC REF	PART NUMBER	QTY	PART NAME 1 2 3 4 5 6 (PRODUCT LEVEL)	SEE PAGE
	1	1	**246-2641**	1	PADLOCK GP	
		1	**5P-8500**	1	KEY	
	2	1	**9S-8178**	4	SPACER (0.891X1.625X1.5-IN THK)	
B	3	1	**093-0407**	4	SHIM (0.4-MM THK)	
B	4	1	**093-0408**	4	SHIM (1-MM THK)	
M	5	1	**135-8573**	2	BOLT AS	
	6	1	**293-6801**	1	STEP AS	
Y	7	1	**307-8006**	1	TANK GP-FUEL	152
M	8	1	**8T-4187**	4	BOLT (M20X2.5X80-MM)	

B-USE AS REQUIRED
M-METRIC PART
Y-SEPARATE ILLUSTRATION

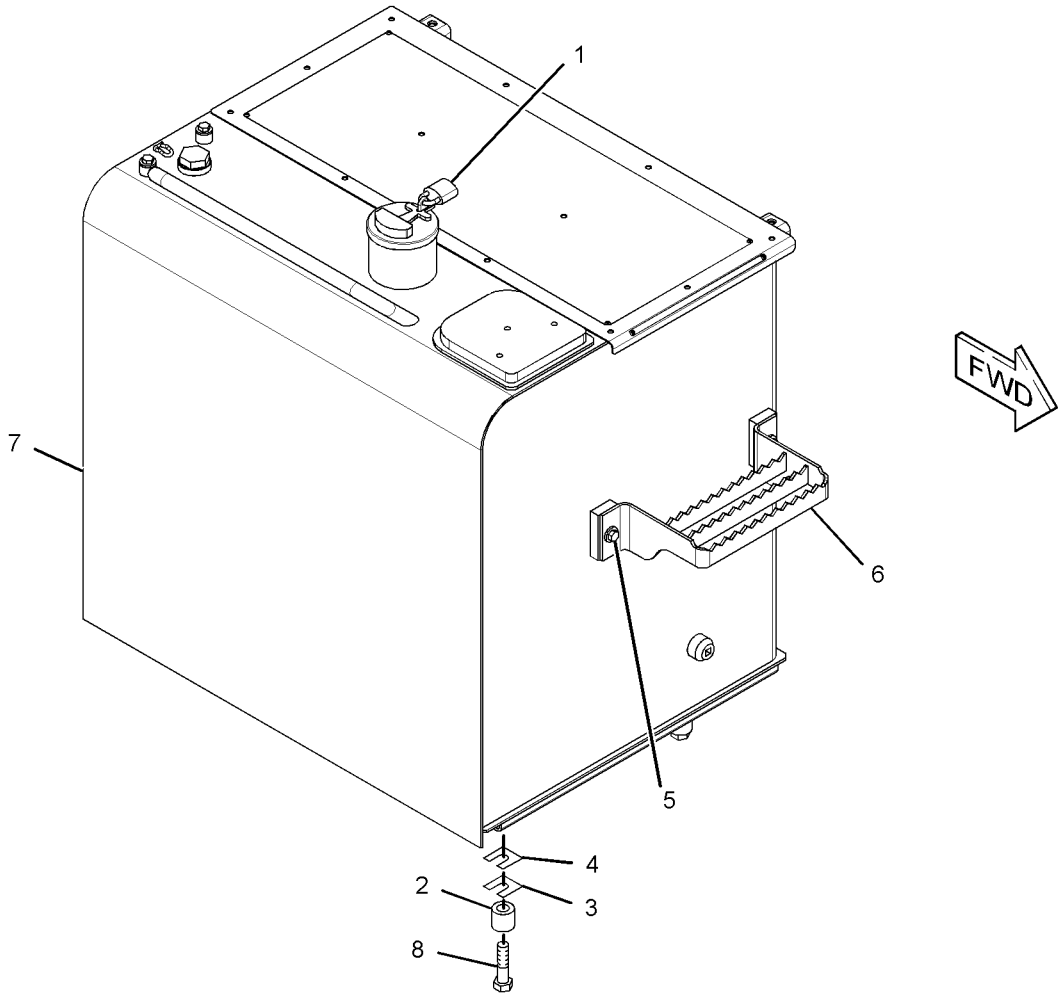

GRAPHIC #1 **<END>** g01478238

307-8003 TANK GP-FUEL

S/N: JGB1-UP
720-L (190-US GAL)
PART OF 307-8002 TANK & MTG GP-FUEL

SMCS-1273 **i03972753**

NOTE	REF NO	GRAPHIC REF	PART NUMBER	QTY	PART NAME 1 2 3 4 5 6 (PRODUCT LEVEL)	SEE PAGE
	1	1	**4I-0378**	1	GASKET-RUBBER	
	2	1	**5P-4924**	1	ELBOW	
	3	1	**7X-7700**	1	CAP AS-FILLER (FUEL TANK)	
		1	**9X-2205**	1	KIT-CAP FILTER (FUEL TANK)	
					(INCLUDES FILTER AS,SCREWS,VALVE & GASKETS)	
		1	**9X-8600**	1	SEAL-O-RING	
	4	1	**128-4411**	1	VALVE AS (FUEL SHUTOFF)	
M	5	1	**135-8572**	1	BOLT AS	
	6	1	**341-1842**	1	SENDER AS-FUEL LEVEL	
		1	**186-3735**	2	PIN-CONNECTOR (16-GA TO 18-GA)	
		1	**102-8802**	1	KIT-RECEPTACLE (2-PIN)	
					(INCLUDES RECEPTACLE AS & WEDGE)	
J	7	1	**303-9933**	1	STRAINER AS-FUEL (FLOAT GAUGE)	
					(INCLUDES STRAINER, STOPPER & GAUGE)	
	9	1	**061-9413**	1	CONNECTOR	
M	10	1	**095-0736**	5	SCREW-MACHINE (M5X0.8X10-MM)	
	11	1	**3J-1907**	1	SEAL-O-RING	
	12	1	**8M-0755**	1	ADAPTER	
	13	1	**8T-0328**	5	WASHER-HARD (5.5X10X1-MM THK)	
					AVAILABLE REPAIR KIT(S):	
J			**303-9937**	1	KIT-GAUGE (FUEL STRAINER)	
					(INCLUDES STOPPER & GAUGE)	

J-KIT MARKED J SERVICES PART(S) MARKED J
M-METRIC PART

307-8003 TANK GP-FUEL *(contd.)* **i03972753**

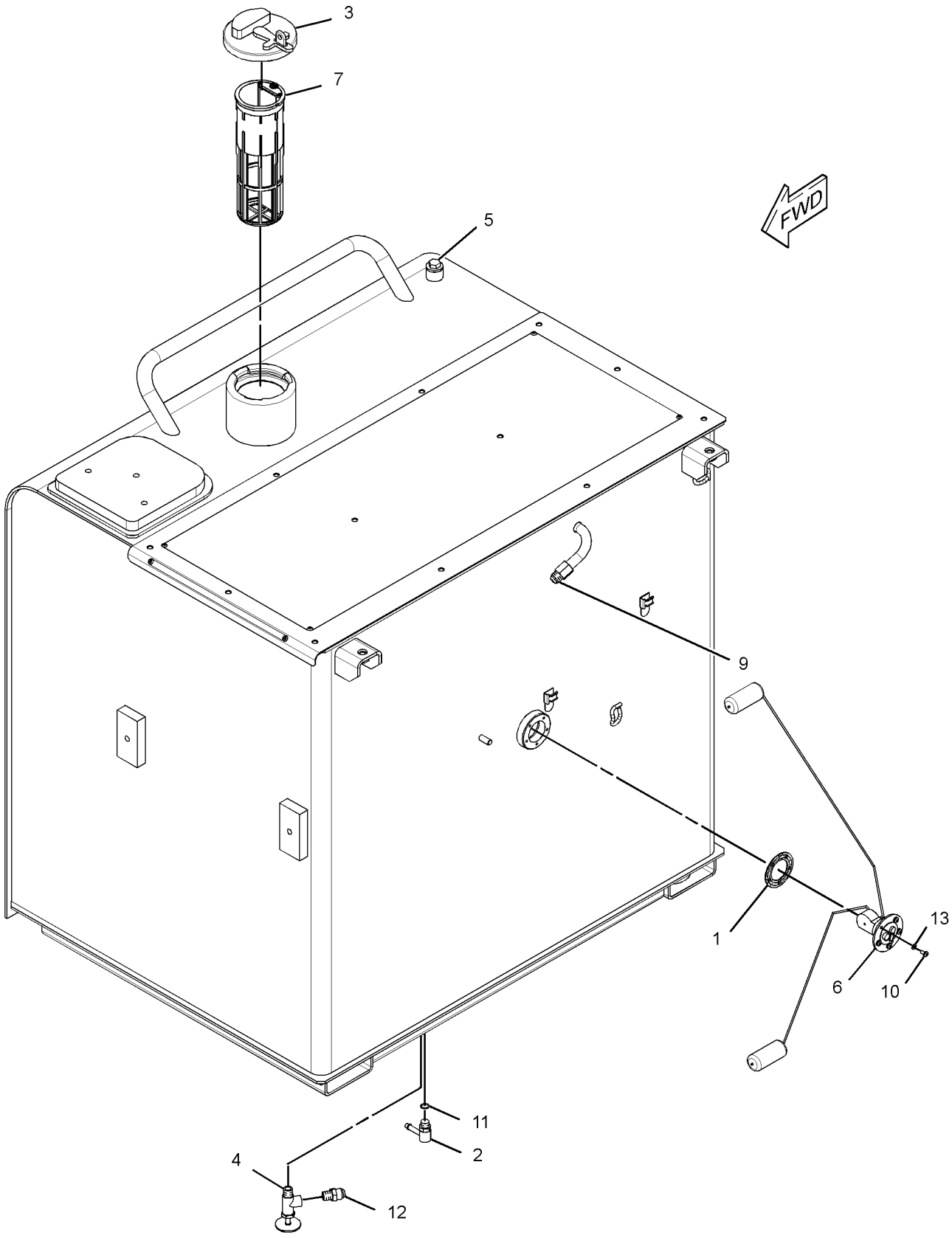

GRAPHIC #1 **<END>** g01460893

FUEL SYSTEM

307-8006 TANK GP-FUEL

S/N: KHS1-UP
720-L (190-US GAL)
PART OF 307-8005 TANK & MTG GP-FUEL

SMCS-1273 **i03972790**

NOTE	REF NO	GRAPHIC REF	PART NUMBER	QTY	PART NAME 1 2 3 4 5 6 (PRODUCT LEVEL)	SEE PAGE
	1	1	**4I-0378**	1	GASKET-RUBBER	
	2	1	**5P-4924**	1	ELBOW	
	3	1	**7X-7700**	1	CAP AS-FILLER (FUEL TANK)	
		1	**9X-2205**	1	KIT-CAP FILTER (FUEL TANK)	
					(INCLUDES FILTER AS,SCREWS,GASKETS & VALVE)	
		1	**9X-8600**	1	SEAL-O-RING	
	4	1	**128-4411**	1	VALVE AS (FUEL SHUTOFF)	
M	5	1	**135-8572**	2	BOLT AS	
	6	1	**341-1842**	1	SENDER AS-FUEL LEVEL	
		1	**186-3735**	2	PIN-CONNECTOR (16-GA TO 18-GA)	
		1	**102-8802**	1	KIT-RECEPTACLE (2-PIN)	
					(INCLUDES RECEPTACLE AS & WEDGE)	
J	7	1	**303-9933**	1	STRAINER AS-FUEL (FLOAT GAUGE)	
					(INCLUDES STRAINER, STOPPER & GAUGE)	
	9	1	**061-9413**	1	CONNECTOR	
M	10	1	**095-0736**	5	SCREW-MACHINE (M5X0.8X10-MM)	
	11	1	**2S-4078**	1	SEAL-O-RING	
	12	1	**3B-0551**	1	PLUG-PIPE	
	13	1	**3J-1907**	1	SEAL-O-RING	
	14	1	**8M-0755**	1	ADAPTER	
	15	1	**8T-0328**	5	WASHER-HARD (5.5X10X1-MM THK)	
	16	1	**9S-6130**	1	PLUG	
					AVAILABLE REPAIR KIT(S):	
J			**303-9937**		KIT-GAUGE (FUEL STRAINER)	
					(INCLUDES STOPPER & GAUGE)	

J-KIT MARKED J SERVICES PART(S) MARKED J
M-METRIC PART

307-8006 **TANK GP-FUEL** *(contd.)* **i03972790**

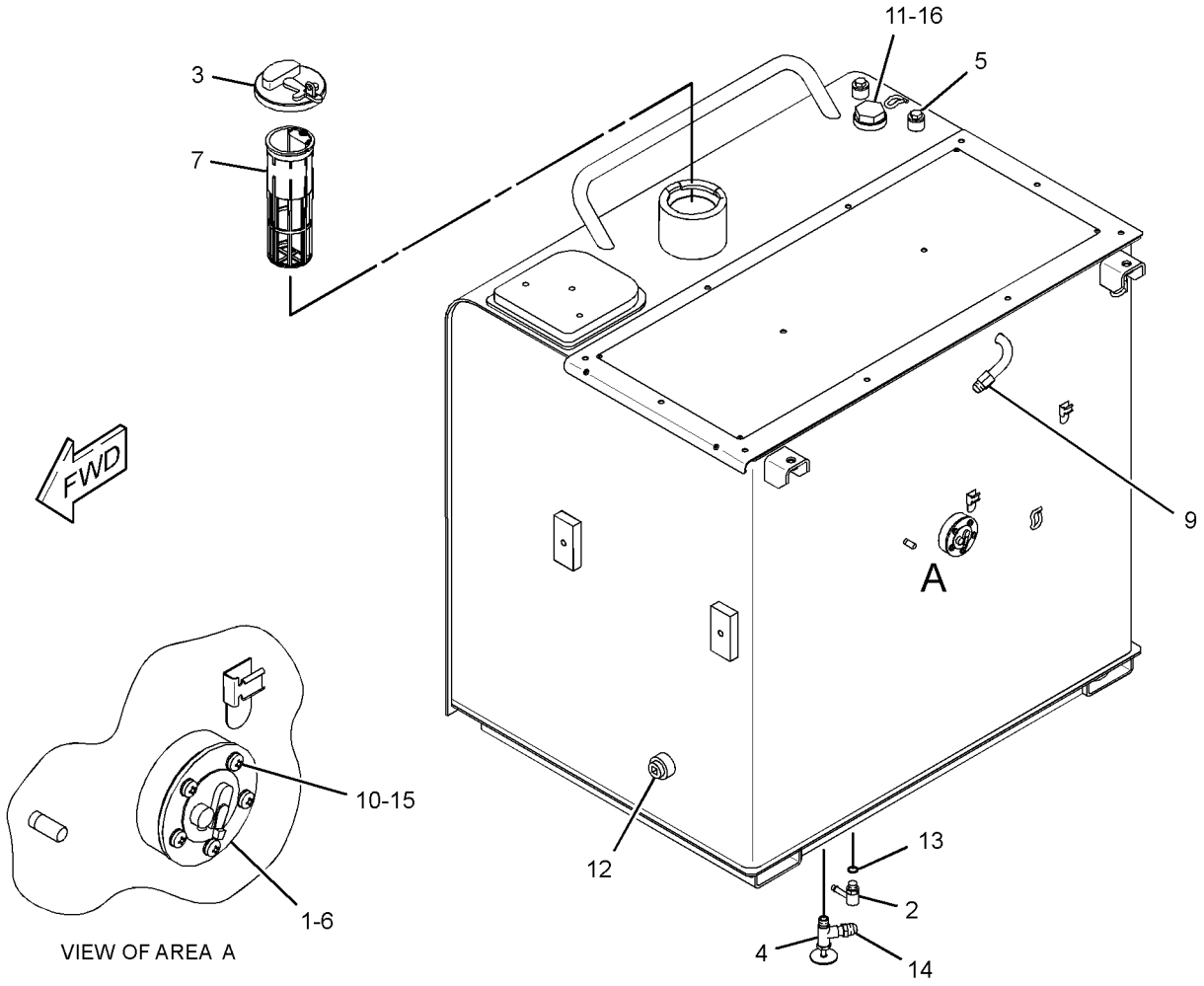

GRAPHIC #1 **<END>** g01478313

281-2725 VALVE GP-CHECK–FUEL

S/N: TXF1-UP; MHX7634-UP

PART OF 235-6387 REGULATOR GP-FUEL PRESSURE

SMCS-1251 **i02444582**

NOTE	REF NO	GRAPHIC REF	PART NUMBER	QTY	PART NAME 1 2 3 4 5 6 (PRODUCT LEVEL)	SEE PAGE
	1	1	**6V-6923**	1	RING-BACKUP	
	2	1	**033-6033**	1	SEAL-O-RING	

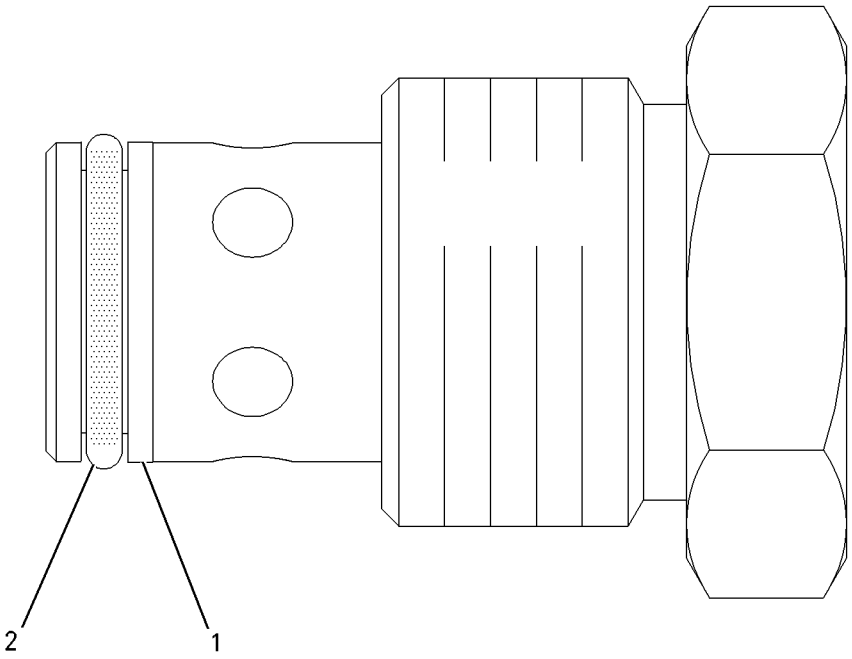

GRAPHIC #1 **<END>** g00864141

132-1829 ALARM GP

S/N: JGB1-UP; KHS1-UP
24-VOLT
PART OF 291-7767 WIRING GP-CAB

SMCS-7400, 7402, 7407 **i02408908**

NOTE	REF NO	GRAPHIC REF	PART NUMBER	QTY	PART NAME 1 2 3 4 5 6 (PRODUCT LEVEL)	SEE PAGE
	1	1	**102-8802**	2	KIT-RECEPTACLE (2-PIN)	
					(EACH INCLUDES RECEPTACLE AS & WEDGE)	
	2	1	**186-3735**	2	PIN-CONNECTOR (16-GA TO 18-GA)	

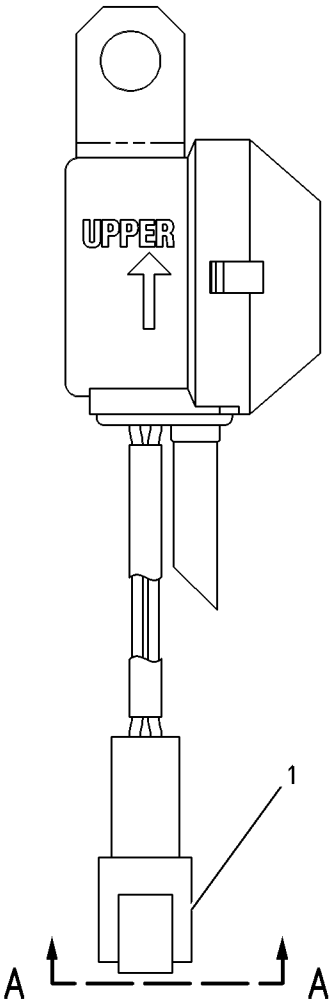

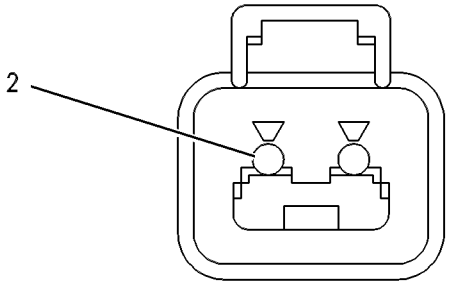

VIEW A-A

GRAPHIC #1 **<END>** g00272185

231-1771 ALARM GP-TRAVEL

S/N: JGB1-UP; KHS1-UP

PART OF 370-3231, 370-4189 CHASSIS AR

SMCS-7429 **i03314966**

NOTE	REF NO	GRAPHIC REF	PART NUMBER	QTY	PART NAME 1 2 3 4 5 6 (PRODUCT LEVEL)	SEE PAGE
	1	1	**213-9100**	1	ALARM GP (BACKUP)	
		1	**102-8802**	1	KIT-RECEPTACLE (2-PIN)	
					(INCLUDES RECEPTACLE AS & WEDGE)	
		1	**186-3735**	1	PIN-CONNECTOR (16-GA TO 18-GA)	
E		1	**9X-1813**		SLEEVE (29-CM)	
M	2	1	**8T-4189**	2	BOLT (M8X1.25X20-MM)	
	3	1	**5P-4116**	2	WASHER-HARD (8.8X20.5X2-MM THK)	

E-ORDER BY THE CENTIMETER
M-METRIC PART

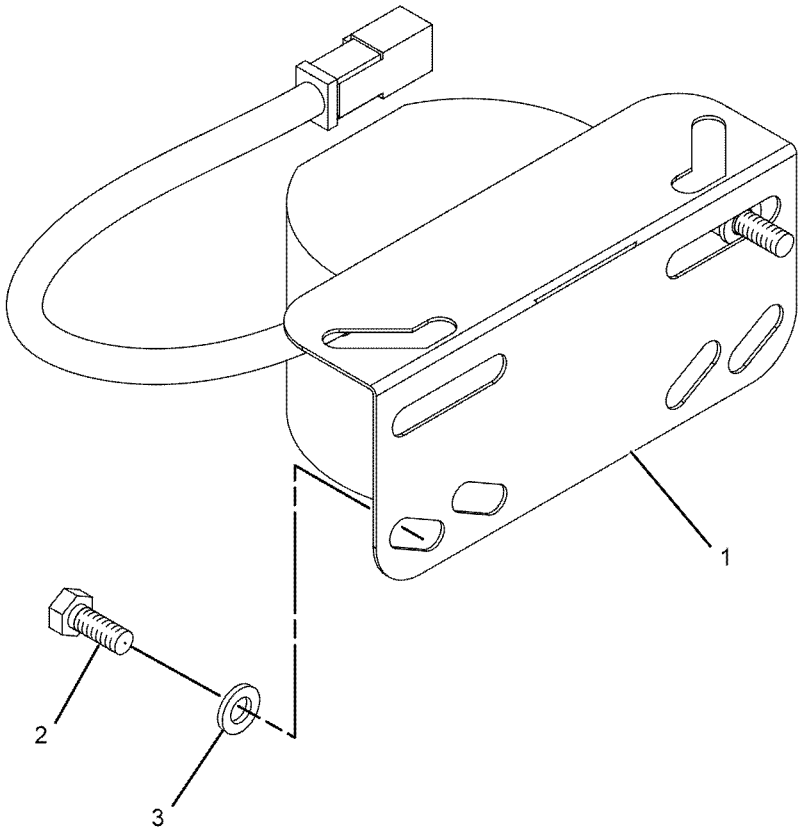

GRAPHIC #1 **<END>** g01071794

235-7133 ALTERNATOR GP-CHARGING*R

S/N: TXF1-UP; MHX7634-UP
24-VOLT, 80-AMPERE
PART OF 252-7132 ALTERNATOR GP-CHARGING

SMCS-1405 **i02730929**

NOTE	REF NO	GRAPHIC REF	PART NUMBER	QTY	PART NAME 1 2 3 4 5 6 (PRODUCT LEVEL)	SEE PAGE
	1	1	**228-9656**	1	FRAME AS-DRIVE END	
	2	1	**5S-7349**	1	BOLT (1/4-20X0.5-IN)	
	3	1	**185-2639**	1	FAN AS	
	4	1	**1H-3244**	1	LOCKWASHER	
	5	1	**228-9655**	1	FRAME AS-ALTERNATOR	
	6	1	**2K-4821**	1	LOCKNUT (5/8-18-THD)	
	7	1	**5P-8247**	1	WASHER-HARD (17X32X3.5-MM THK)	
	8	1	**228-9657**	1	COVER AS	
	9	1	**8T-4205**	1	WASHER-HARD (7.2X14.5X2-MM THK)	
	10	1	**185-2647**	1	GROMMET	
	11	1	**9L-6770**	1	CAP-DUST	
	12	1	**185-2643**	1	STATOR AS	
	13	1	**185-2638**	2	COLLAR	
	14	1	**185-2654**	1	PLATE	
	15	1	**185-2650**	1	ROTOR AS	
	16	1	**185-2644**	1	COIL AS	
	17	1	**185-2648**	1	REGULATOR AS-VOLTAGE (24-VOLT) (ALTERNATOR)	
	18	1	**6V-8189**	1	NUT (5/16-18-THD)	
	19	1	**8T-4224**	1	WASHER-HARD (8.8X16X2-MM THK)	
	20	1	**3F-9556**	1	LOCKWASHER	
					AVAILABLE REPAIR KIT(S):	
			185-2655	1	KIT-BEARING	
					(INCLUDES 3 BEARINGS)	
			185-2658	1	KIT-HARDWARE (ALTERNATOR)	
					(INCLUDES BOLTS)	
			199-7891	1	KIT-TERMINAL (ALTERNATOR)	
					(INCLUDES INSULATORS, WASHERS, NUT & STEP NUT)	
			199-8436	1	KIT-TERMINAL (ALTERNATOR)	
					(INCLUDES HOLDER AS, PLATE, INSULATOR, PIN, BOLT, GROMMET, & NUT)	

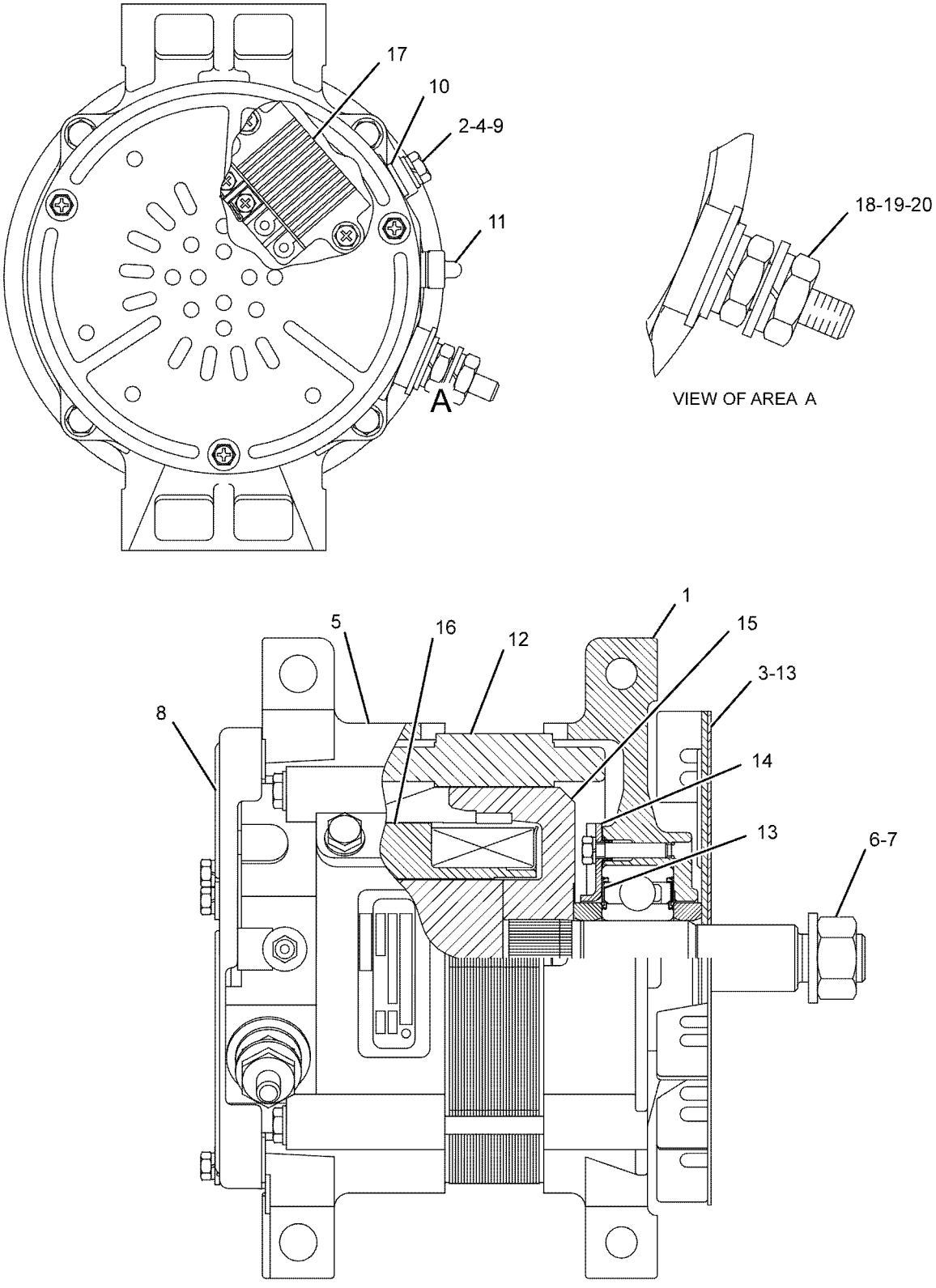

GRAPHIC #1 **<END>** g01102532

252-7132 ALTERNATOR GP-CHARGING

S/N: TXF1-UP; MHX7634-UP
80-AMPERE
PART OF 291-9259 ENGINE AR-COMPLETE

SMCS-1405 **i02180822**

NOTE	REF NO	GRAPHIC REF	PART NUMBER	QTY	PART NAME 1 2 3 4 5 6 (PRODUCT LEVEL)	SEE PAGE
Y	1	1	**235-7133**	1	ALTERNATOR GP-CHARGING (24-VOLT, 80-AMPERE)	157
	2	1	**3E-4353**	4	WASHER-HARD (11X25X3-MM THK)	
M	3	1	**6V-1819**	4	BOLT (M10X1.5X100-MM)	

M-METRIC PART
Y-SEPARATE ILLUSTRATION

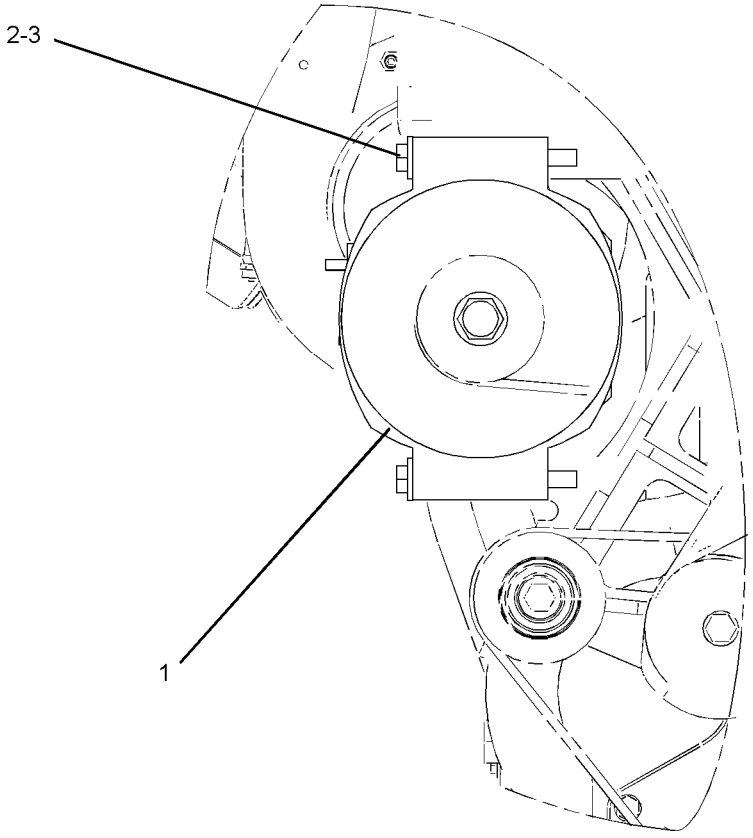

FRONT VIEW

GRAPHIC #1 **<END>** g01058383

ELECTRICAL AND STARTING SYSTEM

291-7766 BATTERY & WIRING GP

S/N: JGB1-UP; KHS1-UP

PART OF 370-3231, 370-4189 CHASSIS AR

SMCS-1401, 1402, 1408 **i03880511**

NOTE	PART NUMBER	QTY	PART NAME 1 2 3 4 5 6 (PRODUCT LEVEL)	SEE PAGE
Y	*354-0022*	1	BATTERY & WIRING GP	163
Y	*354-0023*	1	MOUNTING GP-WIRING	203

Y-SEPARATE ILLUSTRATION

<END>

299-2970 BATTERY & WIRING GP–COLD WEATHER

S/N: JGB1-UP; KHS1-UP

PART OF 370-3231, 370-4189 CHASSIS AR

SMCS-1401, 1402, 1408 **i03126312**

NOTE	REF NO	GRAPHIC REF	PART NUMBER	QTY	PART NAME 1 2 3 4 5 6 (PRODUCT LEVEL)	SEE PAGE
	1	1	**3T-5760**	2	BATTERY (12-VOLT, MAINTENANCE FREE, WET)	
					(EACH INCLUDES)	
		1	**123-1373**	6	CAP AS-FILLER (BATTERY)	
	2	1	**5I-8270**	1	COVER-BATTERY	
	3	1	**6W-6005**	1	HOLD-DOWN-BATTERY	
	4	1	**111-4837**	1	CLIP	
	5	1	**170-6929**	1	CABLE AS	
E		1	**5P-0761**		CABLE (00-GA, RED) (31-CM)	
		1	**9G-0002**	1	COVER AS-TERMINAL (RED)	
		1	**8L-8413**	1	STRAP-CABLE	
		1	**9G-0005**	1	COVER AS-TERMINAL (BLACK)	
		1	**8L-8413**	1	STRAP-CABLE	
		1	**8C-5918**	1	TERMINAL AS (NEGATIVE)	
		1	**8T-9756**	1	TERMINAL AS (POSITIVE)	
	6	1	**204-1673**	2	STRAP-CABLE	
	7	1	**238-1485**	1	CABLE AS	
		1	**1S-7252**	1	TERMINAL-CABLE (00-GA, 3/8-IN SCREW)	
E		1	**5P-0747**		CABLE (00-GA, BLACK) (54-CM)	
		1	**7N-5274**	1	COVER-TERMINAL (BLACK)	
		1	**8L-8413**	1	STRAP-CABLE	
		1	**3S-6050**	1	TERMINAL AS-BATTERY (NEGATIVE)	
		1	**1M-6119**	1	BOLT (5/16-18X1.375-IN)	
		1	**1M-6120**	1	NUT (5/16-18-THD)	
	8	1	**238-2501**	1	KNOB	
	9	1	**238-2528**	1	ROD	
	10	1	**319-1152**	1	CABLE AS	
		1	**1S-7251**	1	TERMINAL-CABLE (00-GA, 1/2-IN SCREW)	
E		1	**159-8049**		CABLE (00-GA, RED) (356-CM)	
D		1	**6V-2722**		TUBE-HEAT SHRINK (1-M)	
		1	**8N-1725**	1	COVER AS-TERMINAL (RED)	
		1	**8L-8413**	1	STRAP-CABLE	
		1	**3S-6049**	1	TERMINAL AS-BATTERY (POSITIVE)	
		1	**1M-6119**	1	BOLT (5/16-18X1.375-IN)	
		1	**1M-6120**	1	NUT (5/16-18-THD)	
M	11	1	**5C-7261**	1	NUT (M8X1.25-THD)	
M	12	1	**8T-4133**	1	NUT (M10X1.5-THD)	
	13	1	**8T-4226**	1	WASHER-PLATED (10.5X45X3-MM THK)	

D-ORDER BY THE METER
E-ORDER BY THE CENTIMETER
M-METRIC PART

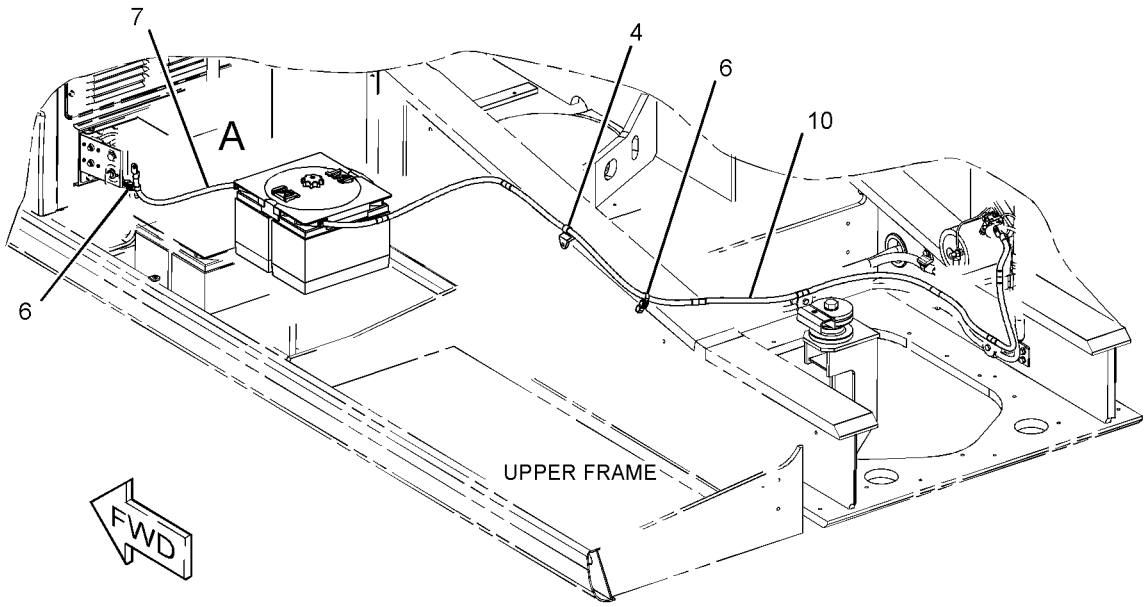

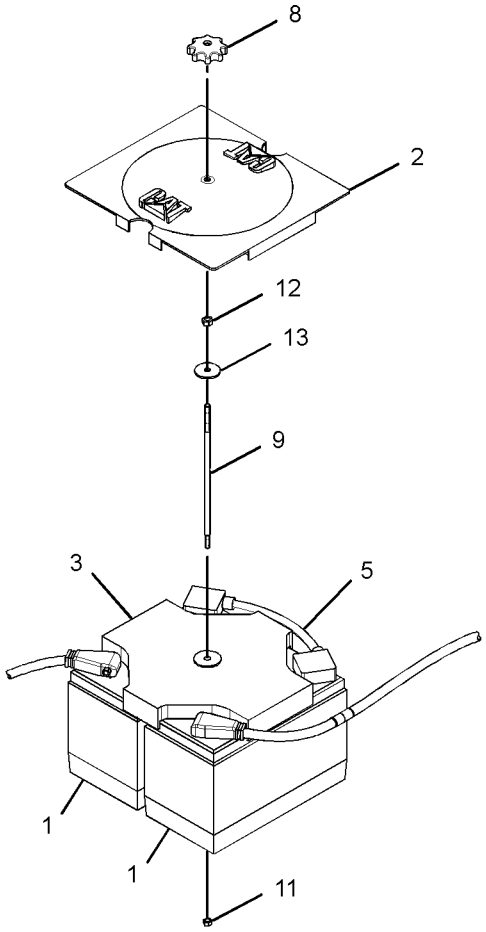

VIEW OF AREA A
(EXPLODED)

GRAPHIC #1 **<END>** g01624608

ELECTRICAL AND STARTING SYSTEM

354-0022 BATTERY & WIRING GP

S/N: JGB1-UP; KHS1-UP

PART OF 291-7766 BATTERY & WIRING GP

SMCS-1401, 1402, 1408 **i04081571**

NOTE	REF NO	GRAPHIC REF	PART NUMBER	QTY	PART NAME 1 2 3 4 5 6 (PRODUCT LEVEL)	SEE PAGE
	1	2,3,4	**2G-8767**	13	WASHER (10.5X60X3-MM THK)	
	2	1,2,3, 4,5	**3S-2093**	58	STRAP-CABLE	
	3	3	**3T-5760**	2	BATTERY (12-VOLT, MAINTENANCE FREE, WET)	
					(EACH INCLUDES)	
		3	**123-1373**	6	CAP AS-FILLER (BATTERY)	
	4	2	**4I-6039**	1	GROMMET	
	6	3	**5I-8270**	1	COVER-BATTERY	
	7	2,3,4	**6G-2263**	7	SPACER (10.5X19X28.5-MM THK)	
	8	3	**6W-6005**	1	HOLD-DOWN-BATTERY	
	9	3	**7I-2673**	3	STRAP-CABLE	
C	10	2,3,4, 5	**7K-1181**	13	STRAP-CABLE	
	11	1,2	**7Y-5456**	2	GROMMET	
C	12	2,4,5	**111-4836**	10	CLIP	
	13	1,2,3, 4	**111-4837**	23	CLIP	
	14	2,3,4	**111-4838**	9	CLIP	
	15	2,3,4	**111-4839**	12	STRAP	
	16	1,2,3, 4,5	**116-0118**	7	CLIP	
	17	4	**128-8886**	1	STRAP AS-GROUND	
	18	3	**132-1805**	1	STRAP AS-GROUND	
	19	2,3	**149-6549**	2	GROMMET	
Y	20	2	**165-5970**	1	SWITCH GP-TOGGLE (FUEL PRIMING PUMP)	252
	21	3	**170-6929**	1	CABLE AS	
E		3	**5P-0761**		CABLE (00-GA, RED) (31-CM)	
		3	**9G-0002**	1	COVER AS-TERMINAL (RED) (BATTERY POSITIVE)	
		3	**8L-8413**	1	STRAP-CABLE	
		3	**9G-0005**	1	COVER AS-TERMINAL (BLACK) (BATTERY NEGATIVE)	
		3	**8L-8413**	1	STRAP-CABLE	
		3	**8C-5918**	1	TERMINAL AS (NEGATIVE)	
		3	**8T-9756**	1	TERMINAL AS (POSITIVE)	
					(EACH TERMINAL AS INCLUDES)	
		3	**1M-6119**	1	BOLT (5/16-18X1.375-IN)	
		3	**1M-6120**	1	NUT (5/16-18-THD)	
	22	2	**204-1611**	1	STRAP-CABLE	
	23	3	**231-1698**	1	CABLE AS	
		3	**1S-7252**	1	TERMINAL-CABLE (00-GA, 3/8-IN SCREW)	
E		3	**5P-0747**		CABLE (00-GA, BLACK) (25-CM)	
		3	**7N-5274**	1	COVER-TERMINAL (BLACK) (BATTERY NEGATIVE)	
		3	**8L-8413**	1	STRAP-CABLE	
		3	**9G-8909**	1	COVER-TERMINAL (BLACK) (DISCONNECT SWITCH)	
		3	**3S-6050**	1	TERMINAL AS-BATTERY (NEGATIVE)	
		3	**1M-6119**	1	BOLT (5/16-18X1.375-IN)	
		3	**1M-6120**	1	NUT (5/16-18-THD)	
	24	3	**238-2501**	1	KNOB	
	25	3	**238-2528**	1	ROD	
	26	3	**238-2535**	1	BRACKET AS	
	27	3	**291-7804**	1	HARNESS AS-PUMP	
		3	**102-8802**	3	KIT-RECEPTACLE (2-PIN)	
					(EACH INCLUDES RECEPTACLE AS & WEDGE)	
		3	**8T-8729**	2	PIN-CONNECTOR (16-GA TO 18-GA)	
		3	**8T-8730**	2	SOCKET-CONNECTOR (16-GA TO 18-GA)	
		3	**8T-8737**	4	PLUG-SEAL	
E		3	**125-7875**		TUBE-HEAT SHRINK (7.44-MM DIA) (10-CM)	

354-0022 **BATTERY & WIRING GP** *(contd.)* **i04081571**

NOTE	REF NO	GRAPHIC REF	PART NUMBER	QTY	PART NAME 1 2 3 4 5 6 (PRODUCT LEVEL)	SEE PAGE
		3	**9X-3402**	13	SOCKET-CONNECTOR (16-GA TO 18-GA)	
		3	**9X-3401**	15	PIN-CONNECTOR (16-GA TO 18-GA)	
		3	**155-2270**	12	KIT-CONNECTING PLUG (2-PIN)	
					(EACH INCLUDES PLUG AS, WEDGE & INTERFACE SEAL)	
		3	**230-4013**	1	PLUG AS-CONNECTOR (3-PIN)	
		3	**264-7030**	1	SEAL-CONNECTOR	
		3	**243-4506**	1	RECEPTACLE AS-CONNECTOR (3-PIN)	
		3	**243-4510**	1	RECEPTACLE AS-CONNECTOR (12-PIN)	
	28	2	**291-7860**	1	BRACKET AS	
	29	4	**299-2908**	1	BRACKET AS	
	30	4	**299-2910**	1	BRACKET AS	
	31	4	**299-2912**	1	BRACKET AS	
	32	4	**299-2914**	1	BRACKET AS	
	33	2	**299-2956**	1	BRACKET AS	
	34	2	**319-0947**	1	CABLE AS	
		2	**1S-7251**	1	TERMINAL-CABLE (00-GA, 1/2-IN SCREW)	
E		2	**159-8049**		CABLE (00-GA, RED) (400-CM)	
		2	**8N-0869**	1	COVER-TERMINAL (RED) (STARTING MOTOR)	
		2	**8N-1725**	1	COVER AS-TERMINAL (RED) (BATTERY POSITIVE)	
		2	**8L-8413**	1	STRAP-CABLE	
		2	**3S-6049**	1	TERMINAL AS-BATTERY (POSITIVE)	
		2	**1M-6119**	1	BOLT (5/16-18X1.375-IN)	
		2	**1M-6120**	1	NUT (5/16-18-THD)	
	35	5	**319-0956**	1	HARNESS AS-SOLENOID	
		5	**8T-8729**	2	PIN-CONNECTOR (16-GA TO 18-GA)	
		5	**8T-8737**	2	PLUG-SEAL	
		5	**9W-0852**	2	PIN-CONNECTOR (14-GA TO 16-GA)	
		5	**243-4508**	1	RECEPTACLE AS-CONNECTOR (6-PIN)	
	36	4	**319-0962**	1	BRACKET AS	
	37	4	**319-0964**	1	HARNESS AS-ENGINE	
		4	**102-8806**	1	KIT-RECEPTACLE (8-PIN)	
					(INCLUDES RECEPTACLE AS & WEDGE)	
		4	**3S-2093**	2	STRAP-CABLE	
		4	**8N-1545**	1	SOCKET-CONNECTOR (8-GA)	
		4	**8N-1549**	1	SOCKET-CONNECTOR (4-GA)	
		4	**8T-8737**	58	PLUG-SEAL	
		4	**9W-0852**	2	PIN-CONNECTOR (14-GA TO 16-GA)	
E		4	**119-3662**		TUBE-HEAT SHRINK (10.85-MM DIA) (26-CM)	
		4	**9X-3402**	24	SOCKET-CONNECTOR (16-GA TO 18-GA)	
		4	**126-1768**	6	SOCKET-CONNECTOR (14-GA TO 16-GA)	
		4	**127-5483**	1	PLUG AS-CONNECTOR (1-PIN)	
		4	**127-5485**	1	PLUG AS-CONNECTOR (1-PIN)	
		4	**9G-4344**	1	TERMINAL-RING (4-GA, 1/2-IN SCREW)	
		4	**2L-8057**	1	TERMINAL-RING (8-GA, NO. 10 SCREW)	
		4	**9X-3401**	14	PIN-CONNECTOR (16-GA TO 18-GA)	
		4	**155-2270**	1	KIT-CONNECTING PLUG (2-PIN)	
					(INCLUDES PLUG AS, WEDGE & INTERFACE SEAL)	
		4	**160-7689**	1	PLUG AS-CONNECTOR (70-PIN)	
		4	**159-9322**	1	SEAL-O-RING	
		4	**230-4009**	1	PLUG AS-CONNECTOR (12-PIN)	
		4	**264-7034**	1	SEAL-CONNECTOR	
		4	**243-4510**	1	RECEPTACLE AS-CONNECTOR (12-PIN)	
	38	5	**319-1024**	1	BRACKET AS	
C	39	4	**350-8448**	1	BRACKET AS	
	40	2	**328-0047**	1	HARNESS AS-CHASSIS	
		2	**102-8802**	4	KIT-RECEPTACLE (2-PIN)	
		2	**102-8803**	3	KIT-RECEPTACLE (3-PIN)	

354-0022 **BATTERY & WIRING GP** *(contd.)* **i04081571**

NOTE	REF NO	GRAPHIC REF	PART NUMBER	QTY	PART NAME 1 2 3 4 5 6 (PRODUCT LEVEL)	SEE PAGE
		2	**102-8804**	1	KIT-RECEPTACLE (4-PIN)	
					(EACH RECEPTACLE KIT INCLUDES RECEPTACLE AS & WEDGE)	
		2	**8T-8729**	8	PIN-CONNECTOR (16-GA TO 18-GA)	
		2	**8T-8730**	41	SOCKET-CONNECTOR (16-GA TO 18-GA)	
		2	**3S-2093**	16	STRAP-CABLE	
		2	**3T-4688**	1	TERMINAL-RING (4-GA, 7/16-IN SCREW)	
		2	**9X-0196**	2	WIRE AS	
		2	**7Y-3962**	1	TERMINAL-BULLET (MALE)	
		2	**7Y-3963**	1	TERMINAL-BULLET (FEMALE)	
		2	**8N-1544**	1	PIN-CONNECTOR (8-GA)	
		2	**8N-1548**	1	PIN-CONNECTOR (4-GA)	
		2	**8T-8737**	135	PLUG-SEAL	
		2	**8T-8827**	1	BOOT (RED)	
		2	**110-8769**	1	WIRE AS	
E		2	**103-2529**		HOSE (90-CM)	
		2	**9W-0852**	17	PIN-CONNECTOR (14-GA TO 16-GA)	
		2	**9W-0844**	25	SOCKET-CONNECTOR (14-GA TO 16-GA)	
		2	**116-0126**	1	HOUSING-PLUG	
		2	**116-0128**	2	SEAL	
		2	**116-0255**	2	TERMINAL-BLADE (10-GA TO 20-GA) (FEMALE)	
E		2	**119-3662**		TUBE-HEAT SHRINK (10.85-MM DIA) (33-CM)	
		2	**121-1038**	1	HOUSING-RECEPTACLE	
		2	**121-1039**	1	TERMINAL (MALE)	
E		2	**125-7874**		TUBE-HEAT SHRINK (5.72-MM DIA) (65-CM)	
E		2	**125-7875**		TUBE-HEAT SHRINK (7.44-MM DIA) (40-CM)	
		2	**9X-3402**	150	SOCKET-CONNECTOR (16-GA TO 18-GA)	
		2	**126-1768**	4	SOCKET-CONNECTOR (14-GA TO 16-GA)	
		2	**127-5484**	1	RECEPTACLE AS-CONNECTOR (1-PIN)	
		2	**127-5486**	1	RECEPTACLE AS-CONNECTOR (1-PIN)	
		2	**9G-4343**	3	TERMINAL-RING (4-GA, 1/4-IN SCREW)	
		2	**9G-4336**	1	TERMINAL-RING (4-GA)	
		2	**2L-8050**	1	TERMINAL-RING (6-GA, 1/4-IN SCREW)	
					—OR—	
		2	**2L-8058**	1	TERMINAL-RING (8-GA, 1/4-IN SCREW)	
		2	**2L-8069**	9	TERMINAL-RING (2-GA TO 10-GA, 3/8-IN SCREW)	
		2	**2L-8075**	4	TERMINAL-RING (14-GA TO 16-GA, NO. 8 SCREW)	
		2	**2L-8079**	1	TERMINAL-RING (14-GA TO 16-GA, 3/8-IN SCREW)	
		2	**176-9299**	2	KIT-RECEPTACLE (3-PIN)	
					(EACH INCLUDES RECEPTACLE AS & WEDGE)	
		2	**134-3297**	1	SEAL	
		2	**9X-3401**	61	PIN-CONNECTOR (16-GA TO 18-GA)	
		2	**153-2620**	1	PLUG AS-CONNECTOR (54-PIN, BLACK)	
		2	**163-6759**	1	SEAL	
		2	**153-2630**	1	PLUG AS-CONNECTOR (54-PIN, BROWN)	
		2	**163-6759**	1	SEAL	
		2	**155-2260**	3	KIT-CONNECTING PLUG (3-PIN)	
		2	**155-2270**	14	KIT-CONNECTING PLUG (2-PIN)	
		2	**155-2271**	1	KIT-CONNECTING PLUG (4-PIN)	
					(EACH PLUG KIT INCLUDES PLUG AS, WEDGE & INTERFACE SEAL)	
		2	**163-6637**	1	RECEPTACLE AS-CONNECTOR (54-PIN, BLACK)	
		2	**163-6773**	2	PLUG-SEAL	
		2	**174-3016**	2	PLUG AS-CONNECTOR (3-PIN)	
		2	**230-4009**	5	PLUG AS-CONNECTOR (12-PIN)	
					(EACH INCLUDES)	
		2	**264-7034**	1	SEAL-CONNECTOR	
		2	**230-4011**	10	PLUG AS-CONNECTOR (2-PIN)	
					(EACH INCLUDES)	

354-0022 **BATTERY & WIRING GP** *(contd.)* **i04081571**

NOTE	REF NO	GRAPHIC REF	PART NUMBER	QTY	PART NAME 1 2 3 4 5 6 (PRODUCT LEVEL)	SEE PAGE
		2	**264-7029**	1	SEAL-CONNECTOR	
		2	**230-4013**	3	PLUG AS-CONNECTOR (3-PIN)	
					(EACH INCLUDES)	
		2	**264-7030**	1	SEAL-CONNECTOR	
		2	**230-5008**	1	PLUG AS-CONNECTOR (4-PIN)	
		2	**264-7031**	1	SEAL-CONNECTOR	
		2	**230-5010**	4	PLUG AS-CONNECTOR (6-PIN)	
					(EACH INCLUDES)	
		2	**264-7032**	1	SEAL-CONNECTOR	
		2	**231-2295**	1	PLUG AS-CONNECTOR (8-PIN)	
		2	**264-7033**	1	SEAL-CONNECTOR	
		2	**243-4505**	7	RECEPTACLE AS-CONNECTOR (2-PIN)	
		2	**243-4507**	1	RECEPTACLE AS-CONNECTOR (4-PIN)	
		2	**243-4508**	3	RECEPTACLE AS-CONNECTOR (6-PIN)	
		2	**243-4509**	1	RECEPTACLE AS-CONNECTOR (8-PIN)	
		2	**243-4510**	4	RECEPTACLE AS-CONNECTOR (12-PIN)	
C	41	4,5	**132-5789**	4	CLIP	
	42	5	**133-4419**	1	GROMMET	
	43	5	**156-6175**	1	CLIP	
	44	1	**4I-3503**	1	GROMMET	
	45	3	**4I-5426**	1	GROMMET	
	46	4,5	**4P-7581**	4	CLIP	
M	47	3	**5C-7261**	1	NUT (M8X1.25-THD)	
M	48	3	**5C-7883**	4	BOLT-SOCKET HEAD (M6X1X16-MM)	
	49	5	**5P-4115**	1	WASHER-HARD (7.2X19X2-MM THK)	
	50	2,3,4	**6G-2256**	7	CLAMP	
	52	1,2,3, 4,5	**8T-4121**	73	WASHER-HARD (11X21X2.5-MM THK)	
M	53	3	**8T-4133**	1	NUT (M10X1.5-THD)	
M	54	1,2,3, 4	**8T-4136**	9	BOLT (M10X1.5X25-MM)	
M	55	1,2,3, 4,5	**8T-4137**	46	BOLT (M10X1.5X20-MM)	
M	56	5	**8T-4171**	1	BOLT (M6X1X12-MM)	
M	57	2,4	**8T-4182**	2	BOLT (M10X1.5X45-MM)	
M	58	3,4	**8T-4185**	5	BOLT (M10X1.5X50-MM)	
CM	59	4	**8T-4189**	2	BOLT (M8X1.25X20-MM)	
M	60	1,2,3, 4,5	**8T-4191**	13	BOLT (M10X1.5X16-MM)	
M	61	2	**8T-4192**	2	BOLT (M12X1.75X25-MM)	
M	62	3,4	**8T-4195**	4	BOLT (M10X1.5X30-MM)	
M	63	3	**8T-4196**	1	BOLT (M10X1.5X35-MM)	
	64	2	**8T-4223**	2	WASHER-HARD (13.5X25.5X3-MM THK)	
	65	4	**8T-4224**	2	WASHER-HARD (8.8X16X2-MM THK)	
	66	3	**8T-4226**	1	WASHER-PLATED (10.5X45X3-MM THK)	
	67	3	**9X-8256**	4	WASHER (6.6X12X2-MM THK)	
E	68	2	**107-1678**		GUARD (4-CM)	
E	69	3	**102-1173**		GUARD (27-CM)	

C-CHANGE FROM PREVIOUS TYPE
E-ORDER BY THE CENTIMETER
M-METRIC PART
Y-SEPARATE ILLUSTRATION

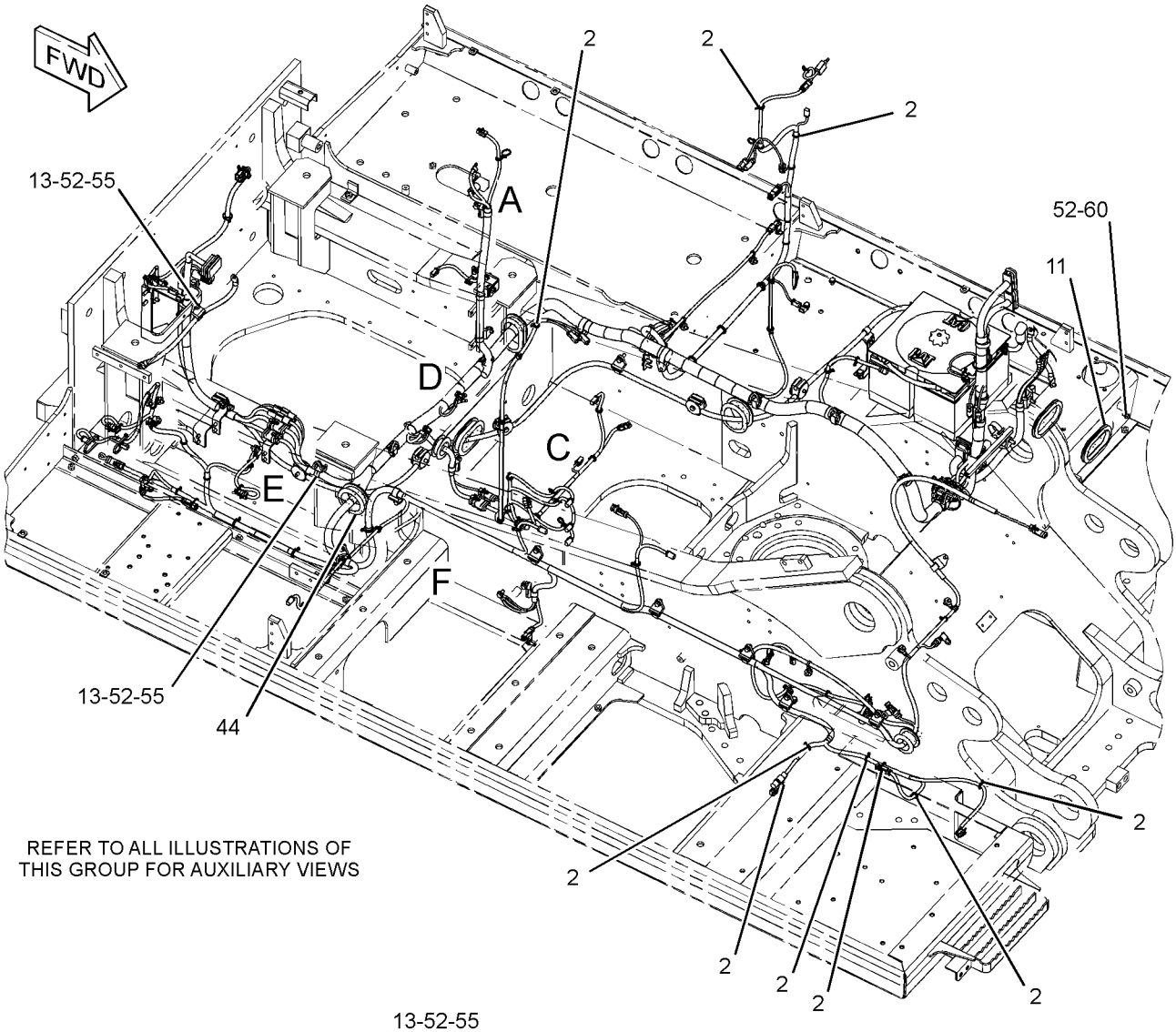

REFER TO ALL ILLUSTRATIONS OF
THIS GROUP FOR AUXILIARY VIEWS

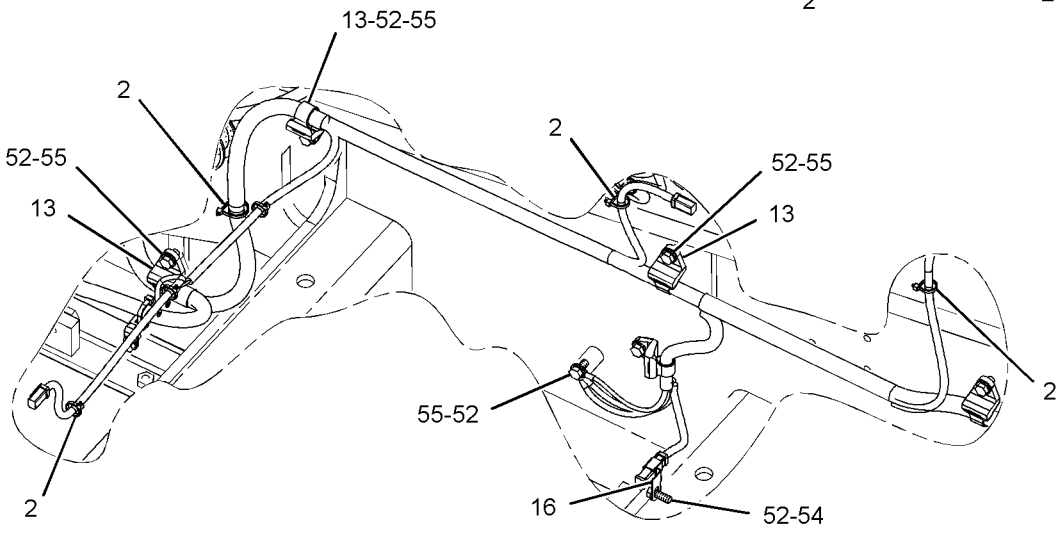

VIEW OF AREA F

GRAPHIC #1

g02414019

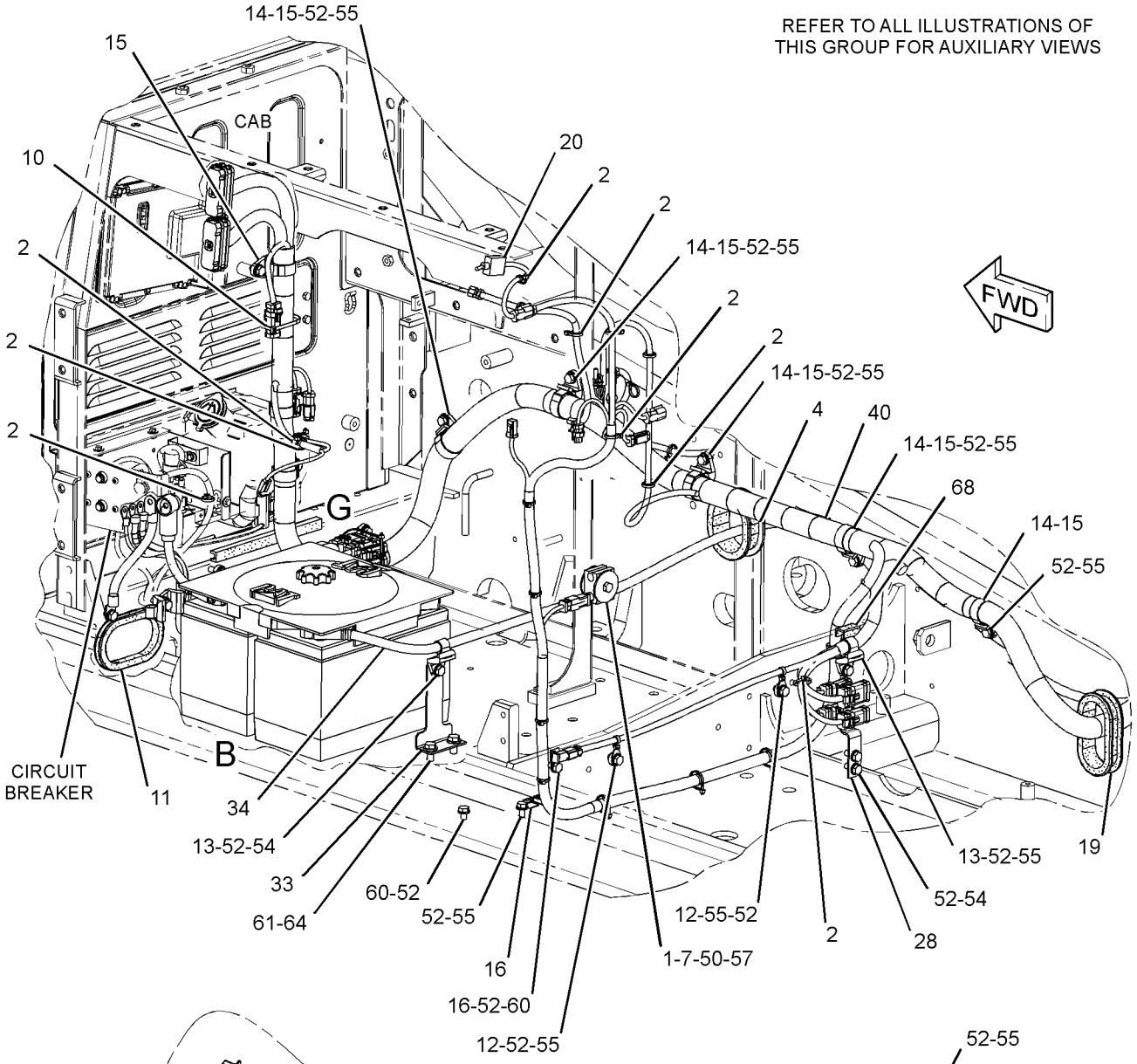

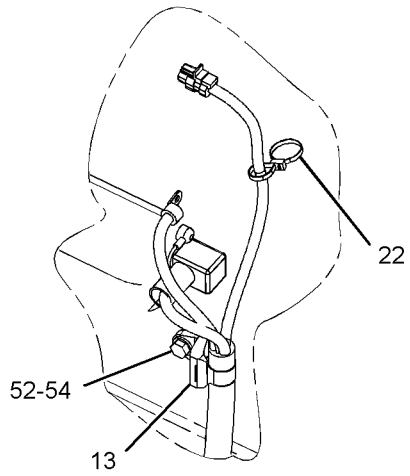

VIEW OF AREA A

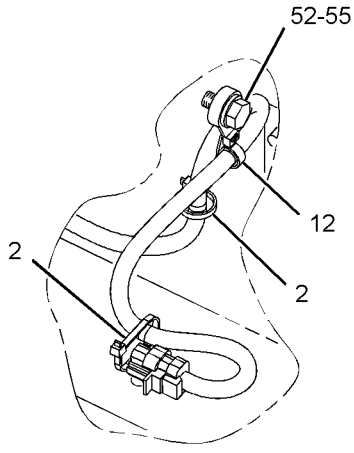

VIEW OF AREA E

GRAPHIC #2

g02402581

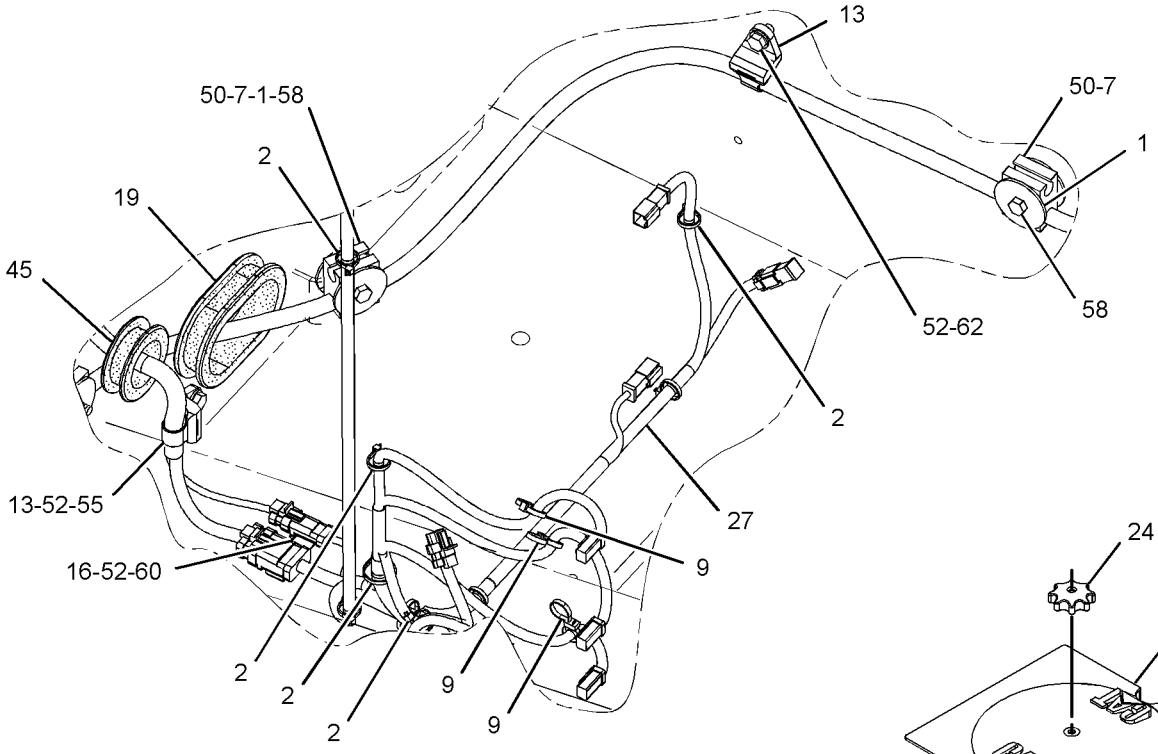

VIEW OF AREA C

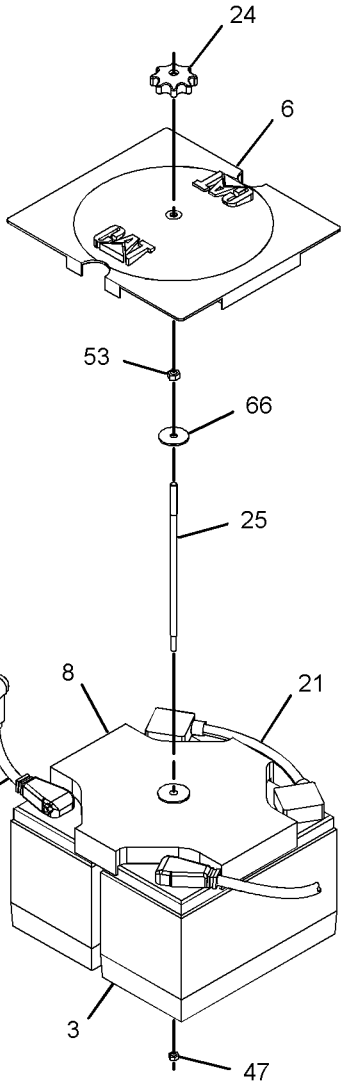

VIEW OF AREA B
(EXPLODED)

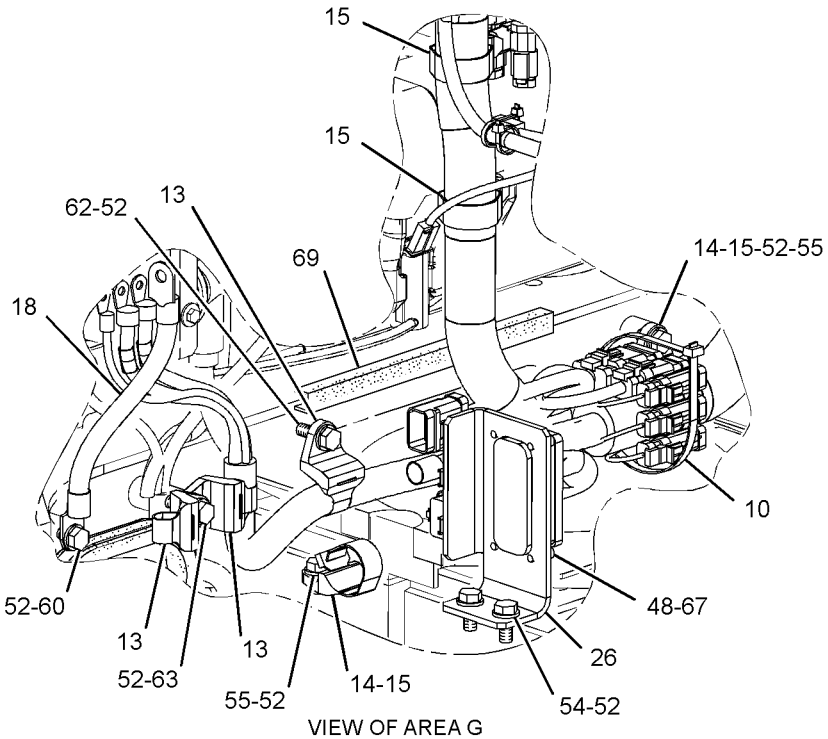

VIEW OF AREA G
(BATTERY REMOVED FOR CLARITY)

GRAPHIC #3

g02412916

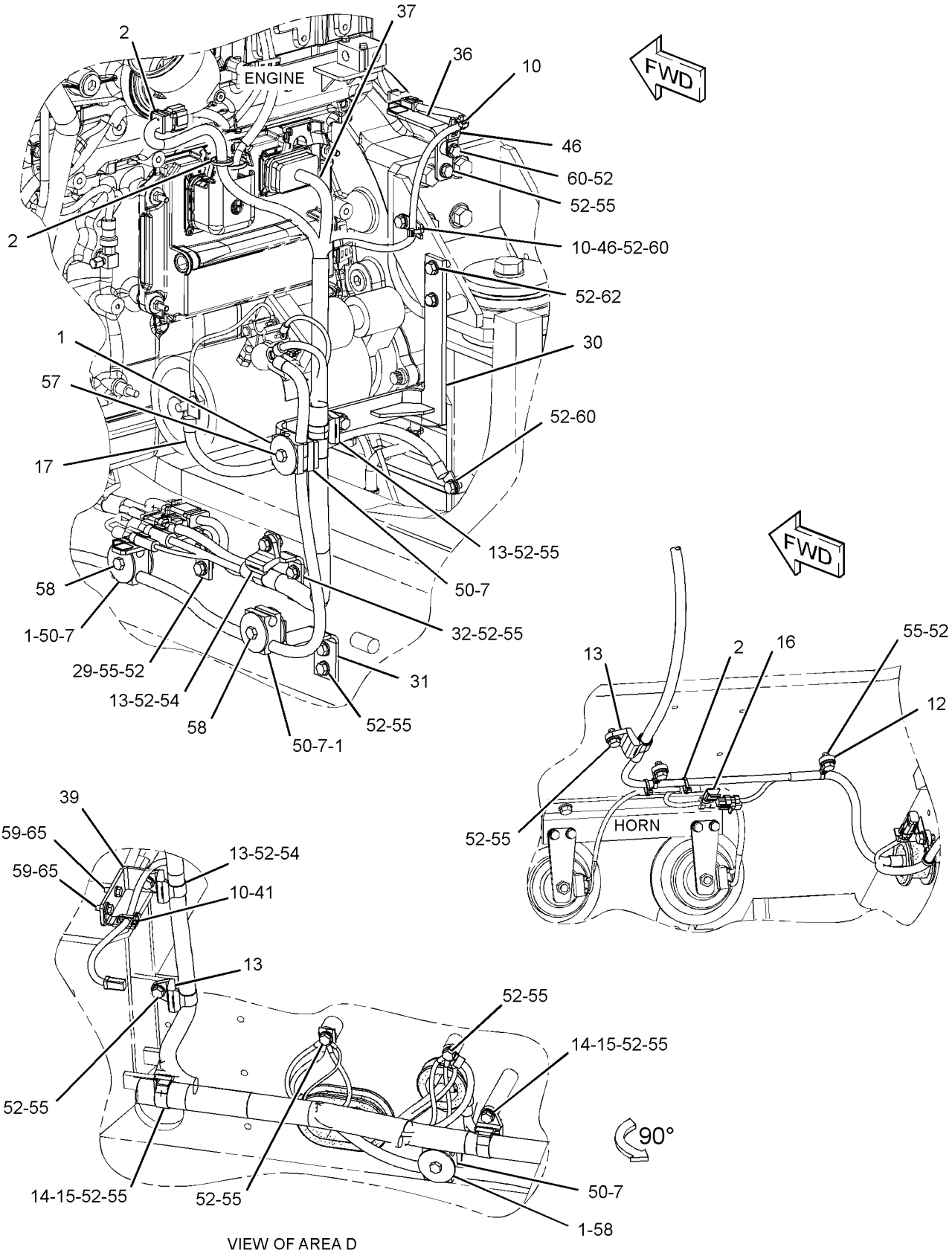

VIEW OF AREA D

GRAPHIC #4

g02414020

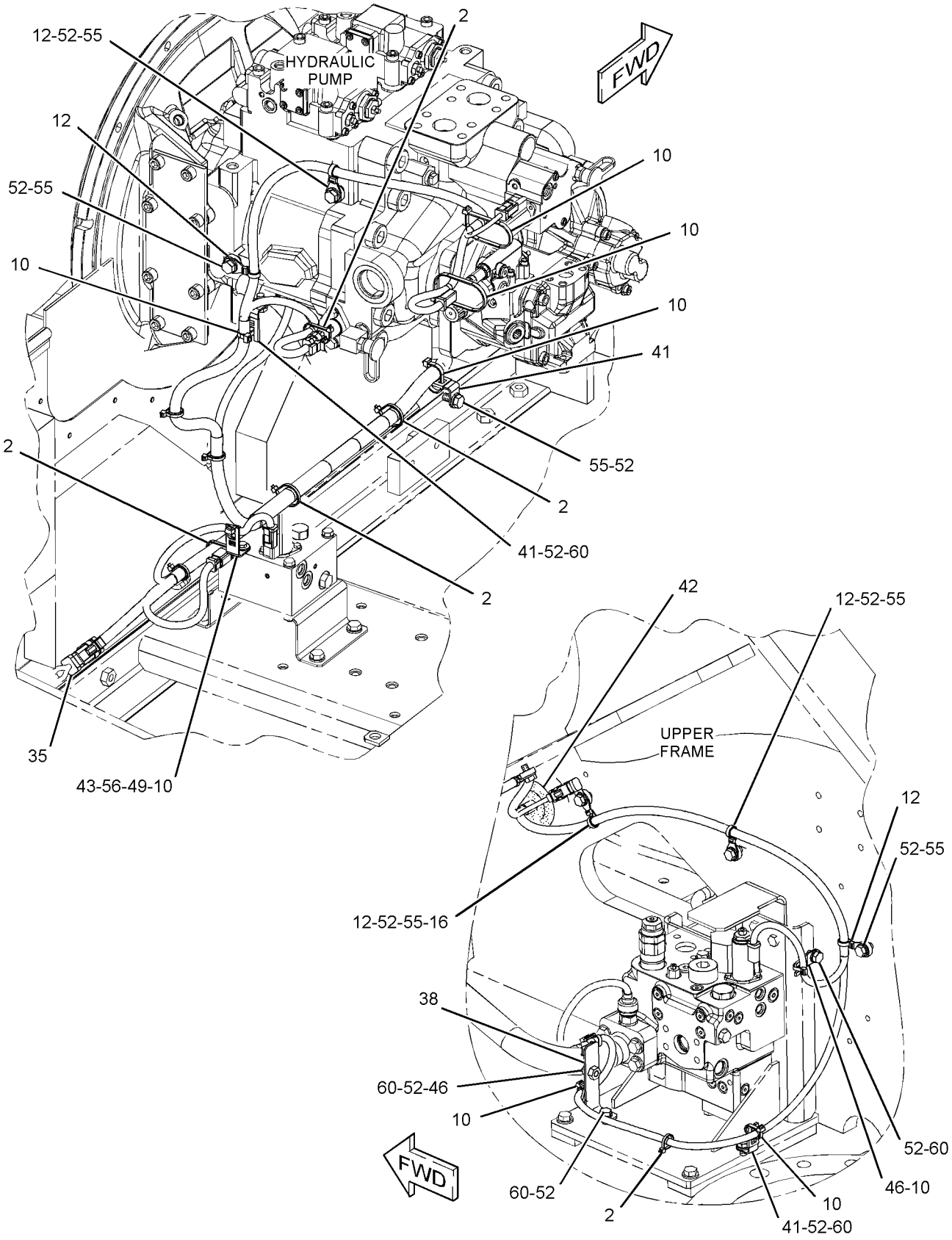

GRAPHIC #5 **<END>** g02402584

9W-0742 BLOCK GP-JUNCTION–BATTERY

S/N: JGB1-UP; KHS1-UP
PART OF 299-2969 WIRING GP-AUX START RECEPTACLE
AN ATTACHMENT

SMCS-7426 **i04166370**

NOTE	REF NO	GRAPHIC REF	PART NUMBER	QTY	PART NAME 1 2 3 4 5 6 (PRODUCT LEVEL)	SEE PAGE
	1	1	**8C-6358**	1	BLOCK AS-JUNCTION (BATTERY)	
		1	**1D-5117**	3	NUT-JAM (1/2-13-THD)	
	1A	1	**8T-3519**	3	BOLT-BRONZE (1/2-13X2-IN)	
D	2	1	**6V-2722**		TUBE-HEAT SHRINK (0.01-M)	
	3	1	**7F-0560**	6	WASHER (0.516X0.938X0.101-IN THK)	
	4	1	**8T-3518**	6	NUT-FULL (1/2-13-THD)	

D-ORDER BY THE METER

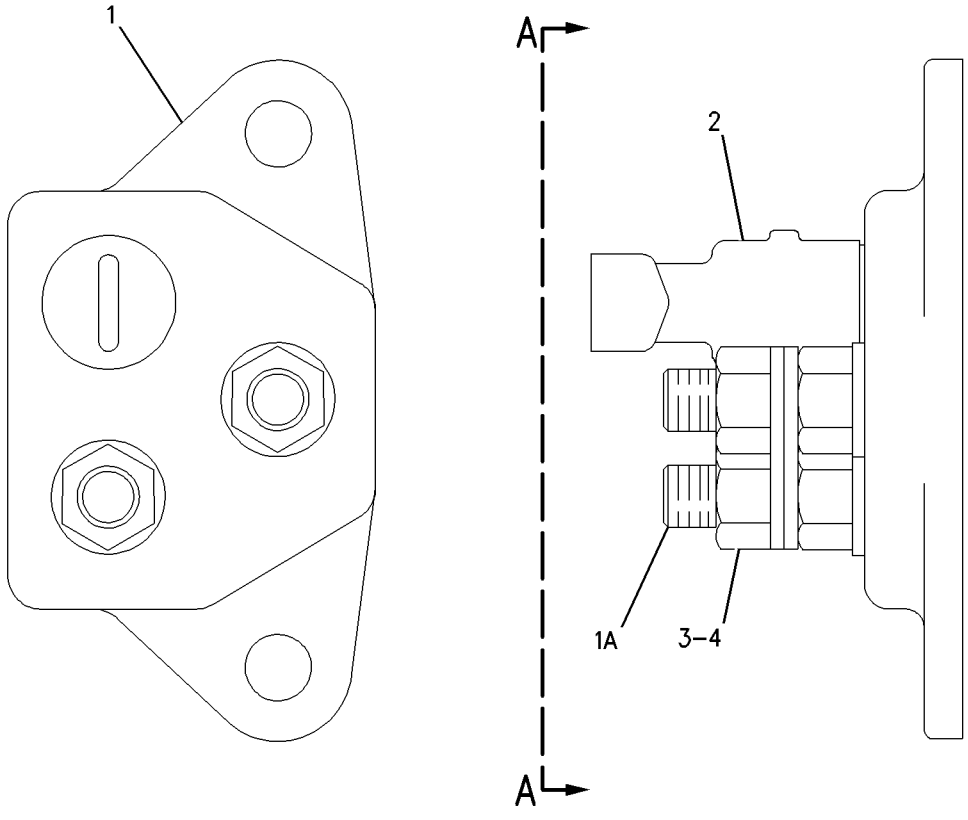

VIEW A-A

GRAPHIC #1 **<END>** g00650721

313-7833 CAMERA & MOUNTING GP–

WORK AREA VISUAL SYSTEM, REAR

S/N: JGB1-UP; KHS1-UP

PART OF 307-7757 MOUNTING GP-CAMERA

AN ATTACHMENT

SMCS-7348 **i03756403**

NOTE	REF NO	GRAPHIC REF	PART NUMBER	QTY	PART NAME 1 2 3 4 5 6 (PRODUCT LEVEL)	SEE PAGE
	1	1	**3S-2093**	1	STRAP-CABLE	
Y	2	1	**336-6684**	1	CAMERA GP (12-VOLT, 24-VOLT)	176
	3	1	**320-5392**	1	BRACKET AS	
M	4	1	**5C-9553**	2	BOLT (M6X1X16-MM)	
	5	1	**9X-8256**	2	WASHER (6.6X12X2-MM THK)	

M-METRIC PART
Y-SEPARATE ILLUSTRATION

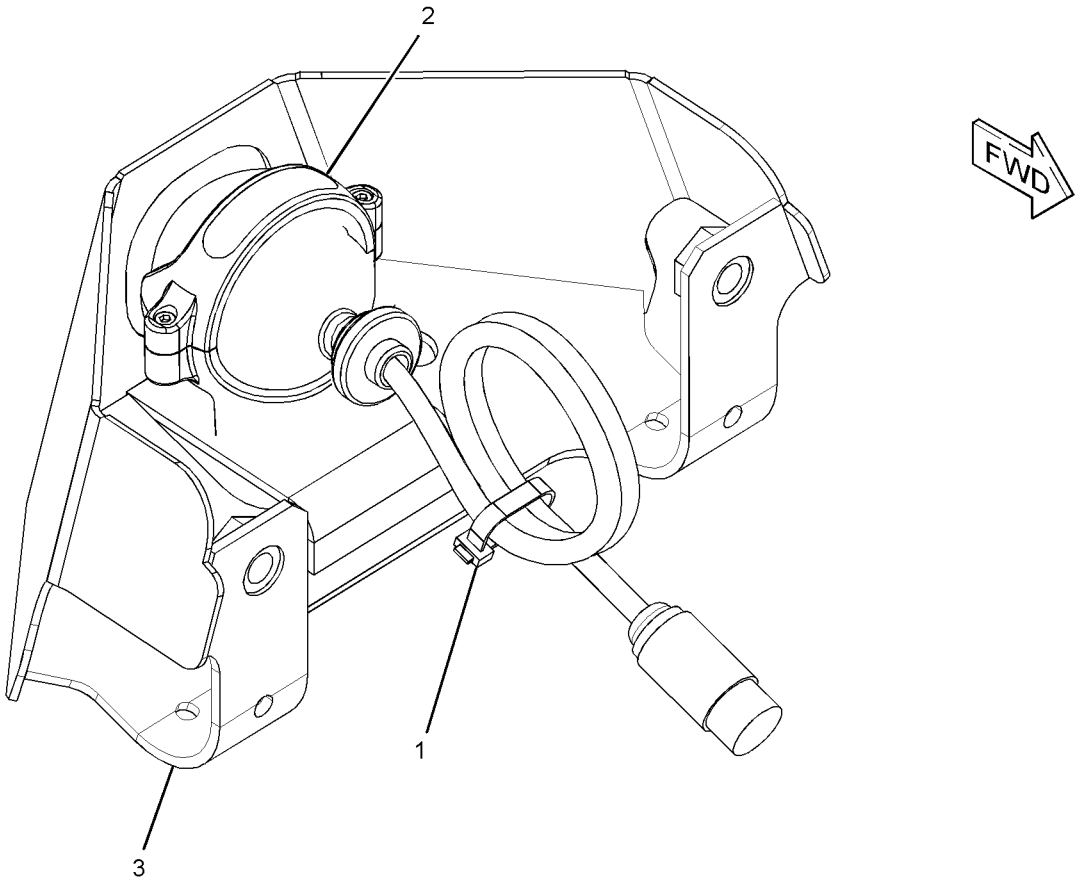

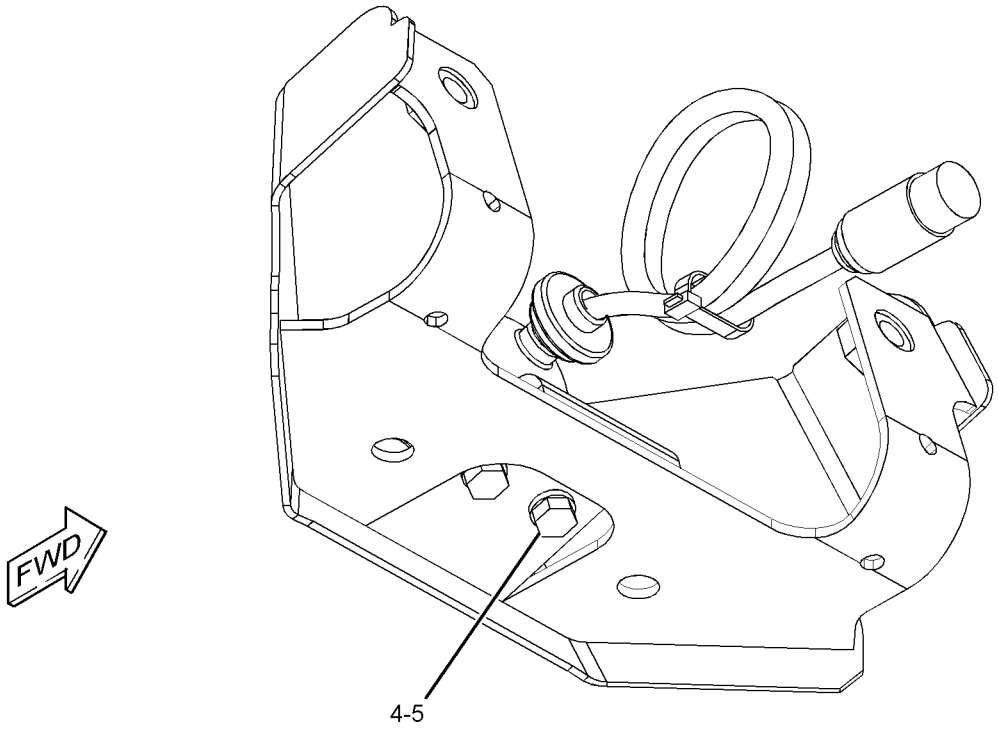

GRAPHIC #1 **<END>** g02034396

303-2711 CAMERA AR—WORK AREA VISUAL SYSTEM, BOOM

S/N: JGB1-UP; KHS1-UP
AN ATTACHMENT

SMCS-7348 **i03875078**

NOTE	PART NUMBER	QTY	PART NAME 1 2 3 4 5 6 (PRODUCT LEVEL)	SEE PAGE
Y	*357-7974*	1	CAMERA AR	175
Y	*306-8692*	1	MOUNTING GP-CAMERA (BOOM)	199
Y	*313-7971*	1	MOUNTING GP-CAMERA (CHASSIS)	201
Y-SEPARATE ILLUSTRATION				

<END>

319-9155 CAMERA AR—WORK AREA VISUAL SYSTEM, REAR

S/N: JGB1-UP; KHS1-UP
PART OF 341-4971 OPTION AR-REGIONAL
AN ATTACHMENT

SMCS-7348 **i02998217**

NOTE	PART NUMBER	QTY	PART NAME 1 2 3 4 5 6 (PRODUCT LEVEL)	SEE PAGE
Y	*303-2787*	1	FILM GP (WORK AREA VISUAL SYSTEM, REAR)	982
Y	*307-7757*	1	MOUNTING GP-CAMERA (COUNTERWEIGHT)	200
Y	*306-8587*	1	WIRING GP-CAMERA (WORK AREA VISUAL SYSTEM, REAR)	269
Y	*306-8589*	1	WIRING GP-MONITOR (WORK AREA VISUAL SYSTEM)	308
Y-SEPARATE ILLUSTRATION				

<END>

357-7974 CAMERA AR

S/N: JGB1-UP; KHS1-UP
PART OF 303-2711 CAMERA AR
AN ATTACHMENT

SMCS-7348 **i03875079**

NOTE	PART NUMBER	QTY	PART NAME 1 2 3 4 5 6 (PRODUCT LEVEL)	SEE PAGE
Y	*273-5358*	1	FLOOR MAT GP (ACCUGRADE READY)	910
Y	*309-5805*	1	MOUNTING GP-DISPLAY	938
Y	*306-8544*	1	WIRING GP-MONITOR (WORK AREA VISUAL SYSTEM)	307
Y-SEPARATE ILLUSTRATION				

<END>

336-6684 CAMERA GP—WORK AREA VISUAL SYSTEM, REAR

S/N: JGB1-UP; KHS1-UP
12-VOLT/24-VOLT
PART OF 313-7833 CAMERA & MOUNTING GP
AN ATTACHMENT

SMCS-7348 **i03756452**

NOTE	REF NO	GRAPHIC REF	PART NUMBER	QTY	PART NAME 1 2 3 4 5 6 (PRODUCT LEVEL)	SEE PAGE
					AVAILABLE REPAIR KIT(S):	
			251-4162	1	KIT-BRACKET (CAMERA)	
					(INCLUDES BRACKET, BOLTS, LOCK NUTS, GASKET & ALLEN KEY)	

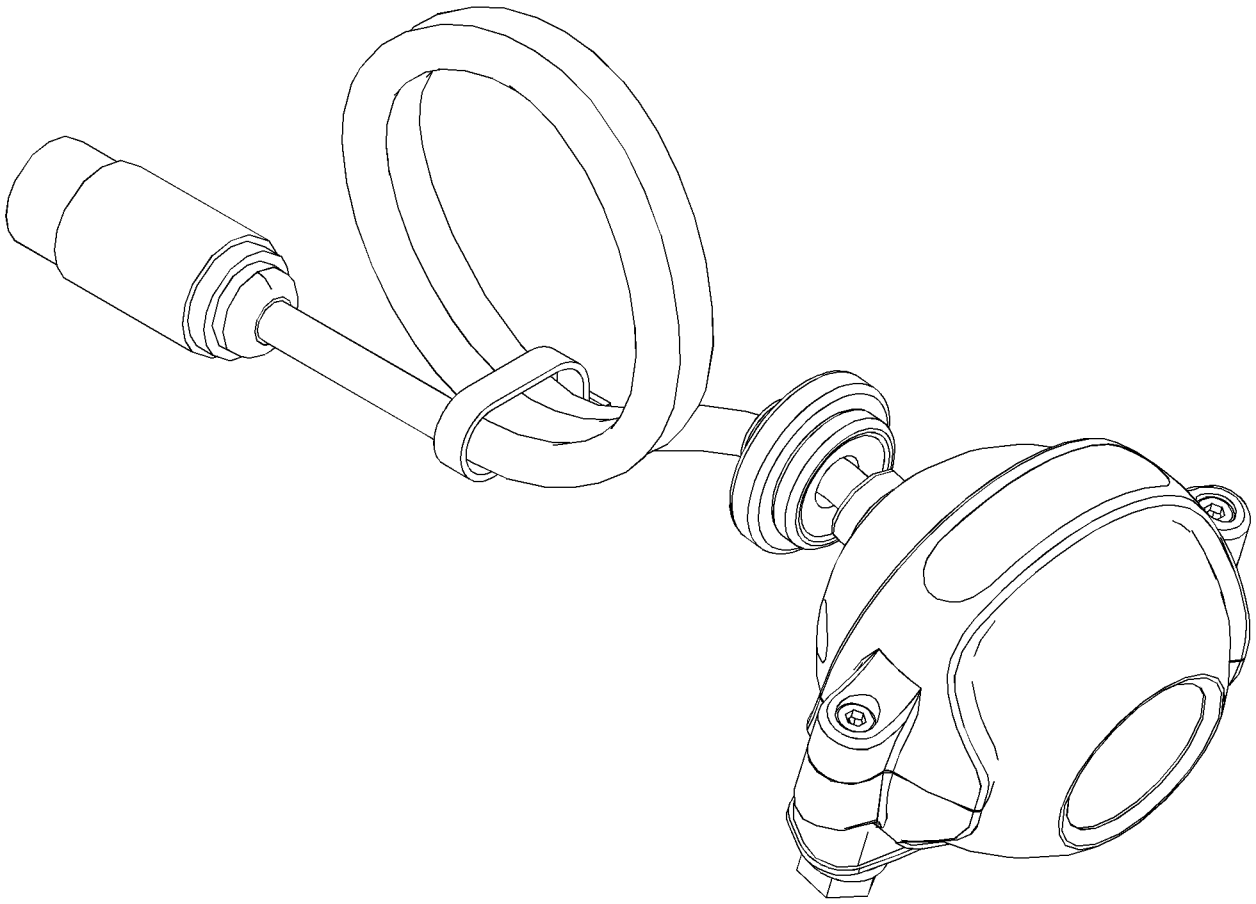

GRAPHIC #1 **<END>** g02034339

241-7601 CONNECTION GP-ELECTRICAL

S/N: TXF1-UP; MHX7634-UP
PROVIDES ADDITIONAL 8-MM GROUND STUD BELOW ECM
PART OF 291-9259 ENGINE AR-COMPLETE

SMCS-1408, 7553 **i01986748**

NOTE	REF NO	GRAPHIC REF	PART NUMBER	QTY	PART NAME 1 2 3 4 5 6 (PRODUCT LEVEL)	SEE PAGE
M	1	1	**9X-2097**	1	STUD (M8X1.25-THD)	
M	2	1	**5C-7261**	1	NUT (M8X1.25-THD)	
	3	1	**6V-3964**	1	WASHER-HARD (8.8X25.5X5-MM THK)	
	4	1	**8T-4224**	2	WASHER-HARD (8.8X16X2-MM THK)	

M-METRIC PART

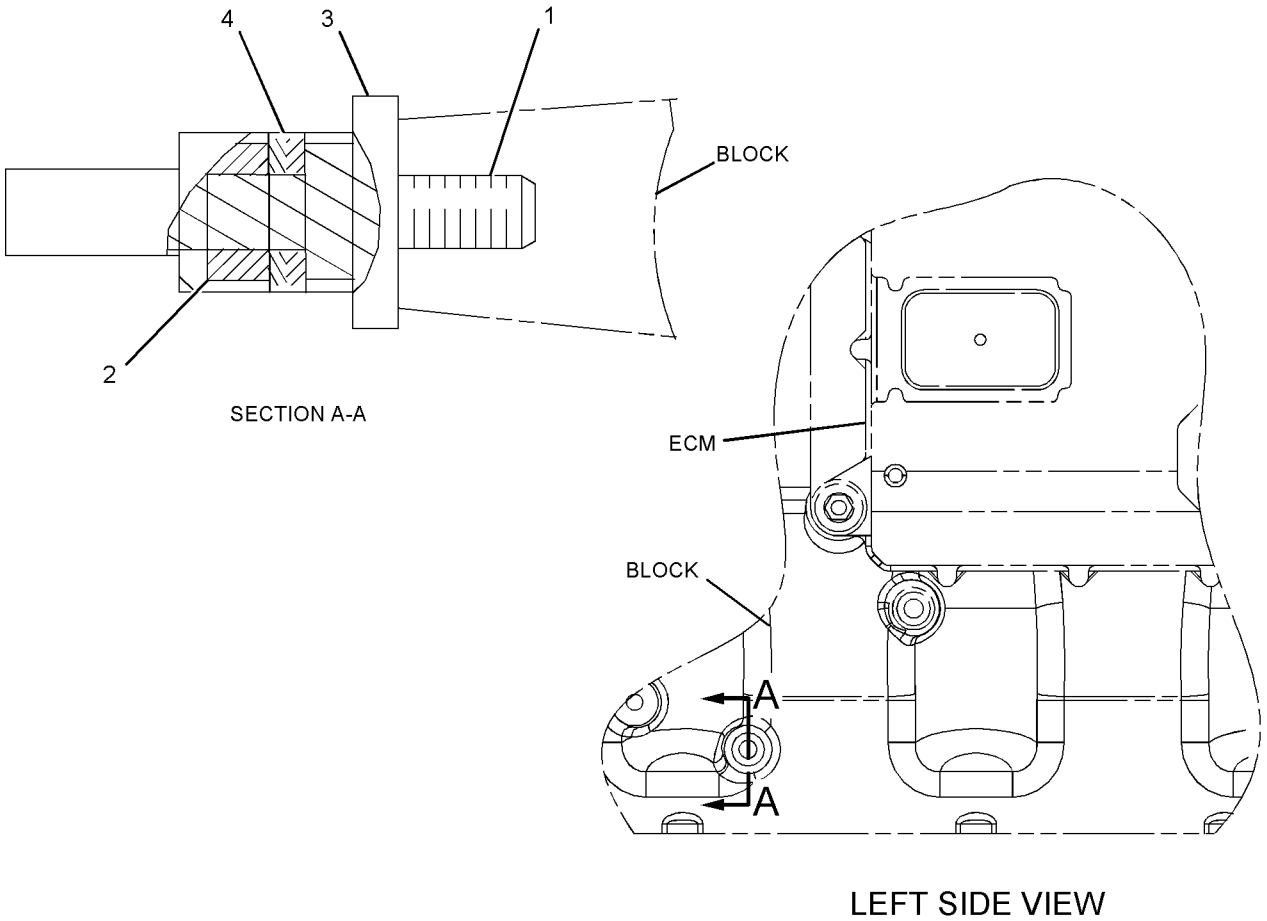

GRAPHIC #1 **<END>** g01015601

309-5842 CONTROL & MTG GP-COMMUNICATION–

PRODUCT LINK 300

S/N: JGB1-UP; KHS1-UP

PART OF 303-2781 INSTALLATION AR-COMMUNICATION

AN ATTACHMENT

SMCS-7606 **i03025065**

NOTE	REF NO	GRAPHIC REF	PART NUMBER	QTY	PART NAME 1 2 3 4 5 6 (PRODUCT LEVEL)	SEE PAGE
	1	1	**8C-5608**	4	SPACER (6.5X9.5X25.4-MM THK)	
	2	1	**9X-9896**	8	MOUNT (ISOLATION)	
	3	1	**260-2042**	1	BRACKET AS	
Y	4	1	*262-1421*	1	ELECTRONICS GP-COMMUNICATION (PRODUCT LINK 300)	182
M	5	1	**8C-8451**	4	BOLT (M6X1X40-MM)	
	6	1	**9X-6165**	4	WASHER (6.5X22X2.5-MM THK)	

M-METRIC PART
Y-SEPARATE ILLUSTRATION

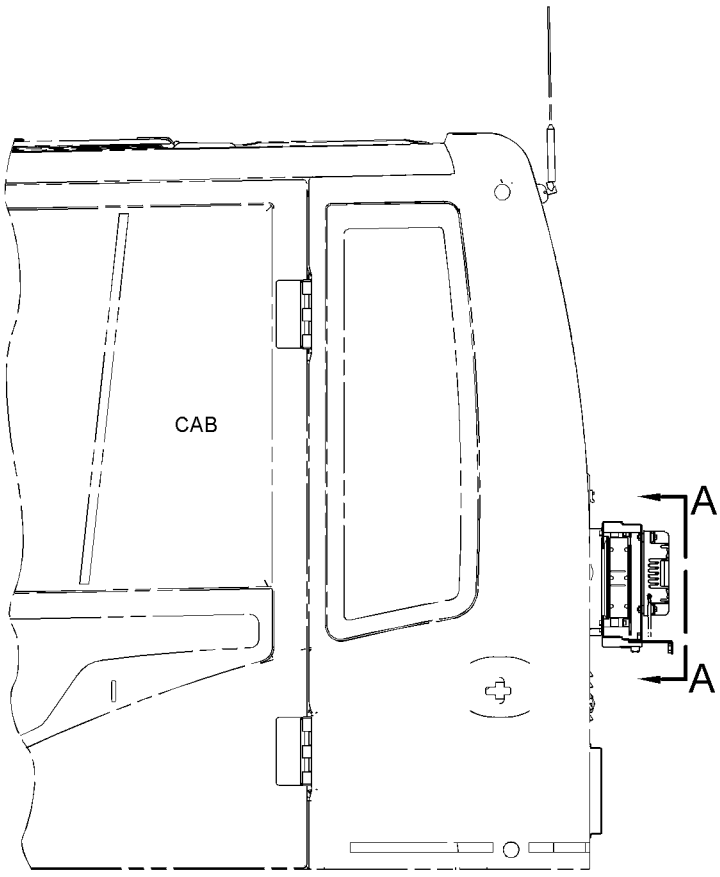

LEFT SIDE VIEW

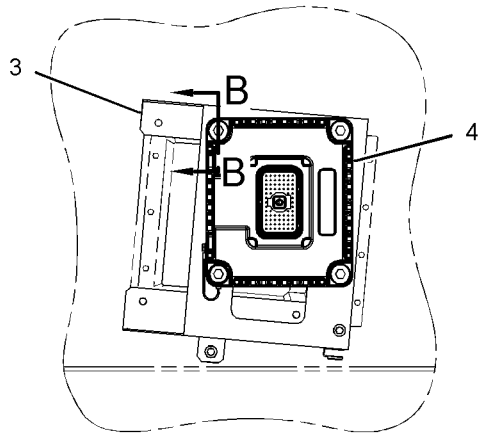

VIEW A-A

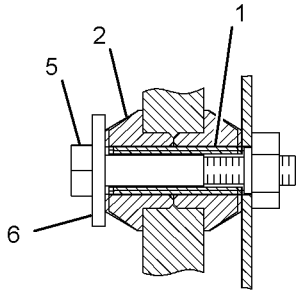

SECTION B-B

GRAPHIC #1 **<END>** g01481311

319-4319 CONTROL & MTG GP-COMMUNICATION–
PRODUCT LINK 121SR
S/N: JGB1-UP; KHS1-UP
PART OF 303-2781 INSTALLATION AR-COMMUNICATION
AN ATTACHMENT

SMCS-7606 **i03857796**

NOTE	REF NO	GRAPHIC REF	PART NUMBER	QTY	PART NAME 1 2 3 4 5 6 (PRODUCT LEVEL)	SEE PAGE
	1	1	**3S-2093**	1	STRAP-CABLE	
	2	1	**7K-1181**	5	STRAP-CABLE	
CY	3	1	**336-3545**	1	ELECTRONICS GP-COMMUNICATION (PRODUCT LINK 121SR)	182
	4	1	**319-4302**	1	SHEET AS	
M	5	1	**8T-4138**	4	BOLT (M6X1X20-MM)	
M	6	1	**8T-4179**	4	BOLT (M12X1.75X20-MM)	
	7	1	**8T-4223**	4	WASHER-HARD (13.5X25.5X3-MM THK)	
	8	1	**9X-8256**	4	WASHER (6.6X12X2-MM THK)	
	9	1	**230-1340**	1	FILM-WARNING (PRODUCT LINK RADIO, U.S.)	
					–OR–	
		1	**230-1341**	1	FILM-WARNING (PRODUCT LINK RADIO, INTL)	
	10	1	**307-0047**	1	FILM-INFORMATION (PRODUCT LINK, READ OMM)	

C-CHANGE FROM PREVIOUS TYPE
M-METRIC PART
Y-SEPARATE ILLUSTRATION

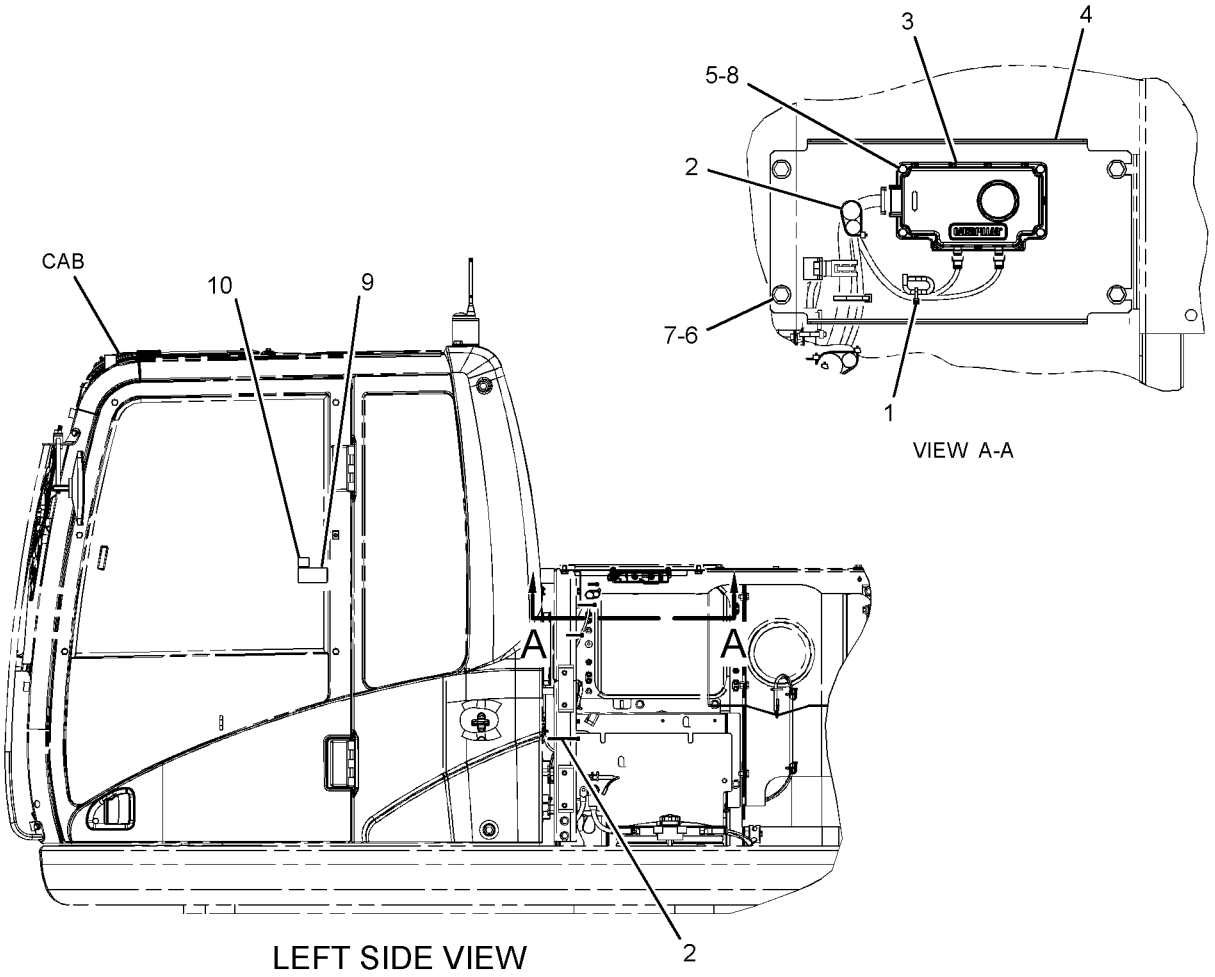

GRAPHIC #1 **<END>** g01749153

249-5278 CONTROL & MTG GP-ENGINE ELEK

S/N: TXF1-UP; MHX7634-UP

PART OF 291-9259 ENGINE AR-COMPLETE

SMCS-1901 **i02646479**

NOTE	REF NO	GRAPHIC REF	PART NUMBER	QTY	PART NAME 1 2 3 4 5 6 (PRODUCT LEVEL)	SEE PAGE
	1	1	**8T-9655**	8	MOUNT-ISOLATION	
M	2	1	**9X-2098**	4	STUD-TAPERLOCK (BOLT)	
R	4	1	**262-2879**	1	CONTROL GP-UNPROGRAMMED	
	5	1	**233-0891**	1	BRACKET AS	
	6	1	**4P-7581**	1	CLIP	
	7	1	**6I-1418**	4	SPACER (8.2X12.7X28.7-MM THK)	
	9	1	**8T-4224**	1	WASHER-HARD (8.8X16X2-MM THK)	
	10	1	**9N-0869**	4	WASHER-HARD (8.8X25.5X2-MM THK)	

M-METRIC PART
R-REMFG PART MAY BE AVAILABLE

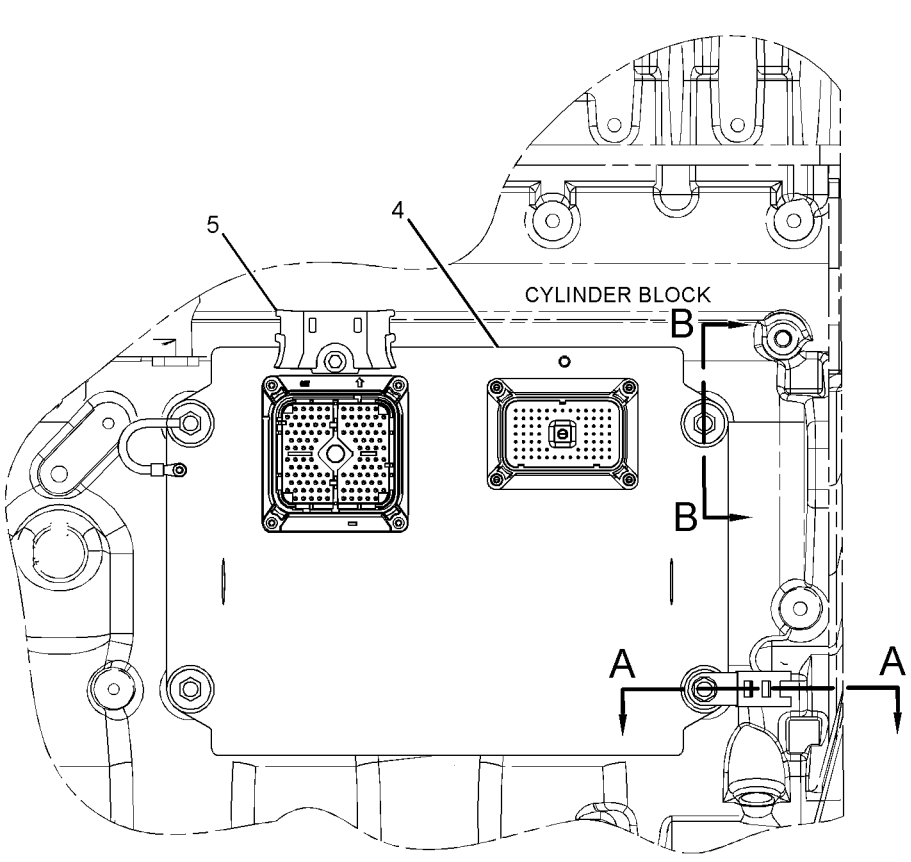

LEFT SIDE VIEW OF ENGINE

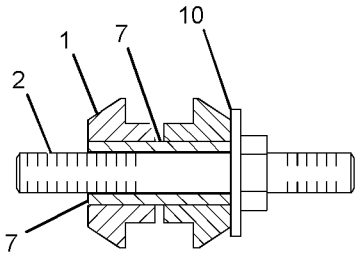

SECTION B-B

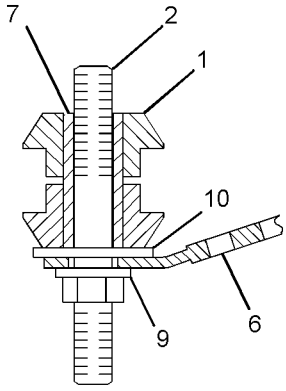

SECTION A-A

GRAPHIC #1 **<END>** g01329831

ELECTRICAL AND STARTING SYSTEM

221-8872 CONTROL & MTG GP-MACHINE

S/N: JGB1-UP; KHS1-UP
PART OF 305-8000 OPERATOR AR

SMCS-1931, 7600 **i02474933**

NOTE	REF NO	GRAPHIC REF	PART NUMBER	QTY	PART NAME 1 2 3 4 5 6 (PRODUCT LEVEL)	SEE PAGE
	1	1	**221-8874**	1	CONTROL GP-UNPROGRAMMED	
M	2	1	**9X-2480**	4	BOLT (M6X1X45-MM)	
	3	1	**9X-8256**	4	WASHER (6.6X12X2-MM THK)	

M-METRIC PART

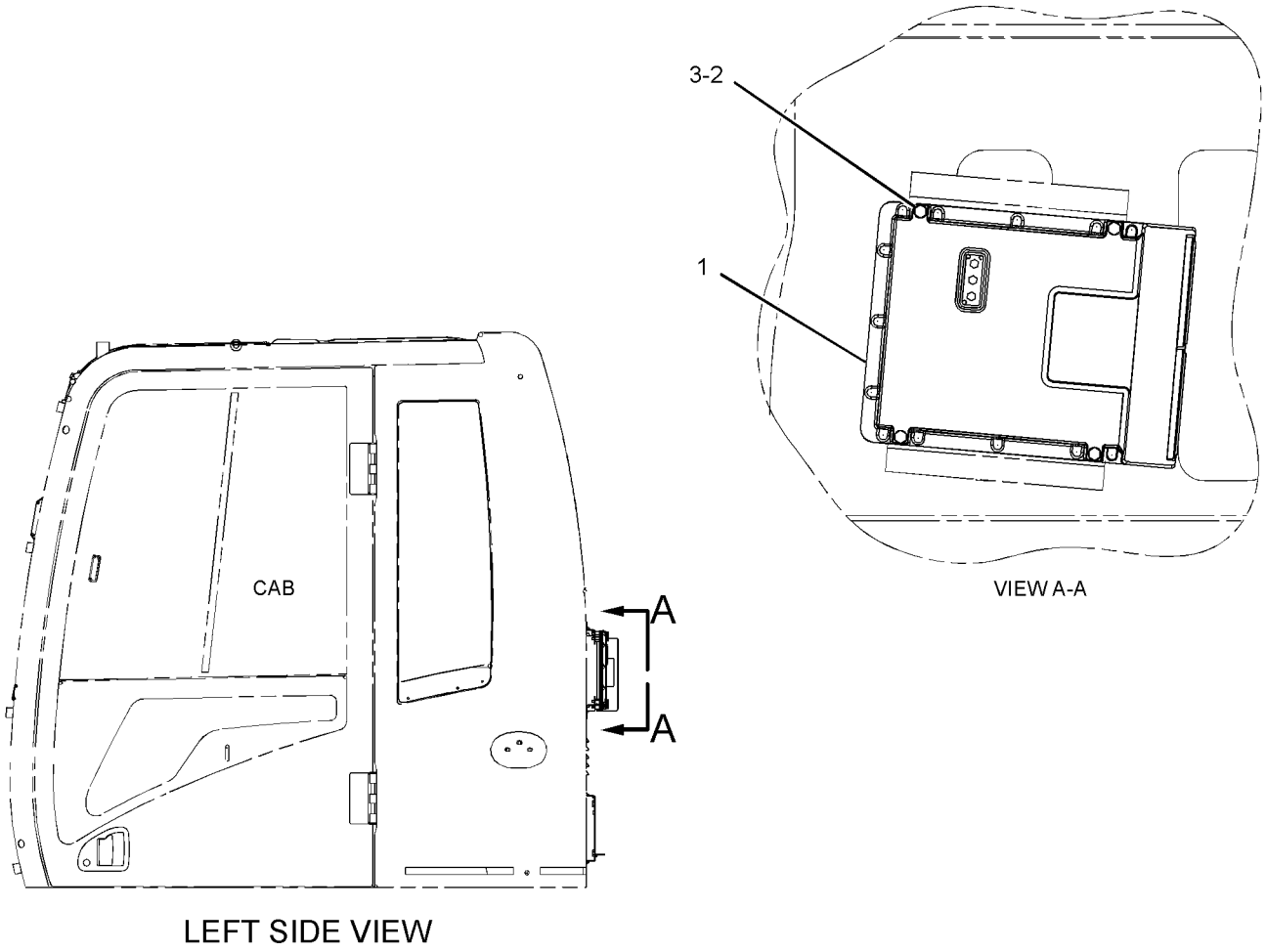

VIEW A-A

LEFT SIDE VIEW

GRAPHIC #1 **<END>** g01150750

262-1421 ELECTRONICS GP-COMMUNICATION–
PRODUCT LINK 300
S/N: JGB1-UP; KHS1-UP
PART OF 309-5842 CONTROL & MTG GP-COMMUNICATION
AN ATTACHMENT

SMCS-7606, 7610, 7620 **i03915092**

NOTE	PART NUMBER	QTY	PART NAME 1 2 3 4 5 6 (PRODUCT LEVEL)	SEE PAGE
	355-5105	1	SOFTWARE GP-COMMUNICATION	
			-OR-	
	355-9764	1	SERVICE GP-COMMUNICATION	
			(OPTIONAL SERVICE REPLACEMENT)(INCLUDES CONTROL GP & SOFTWARE)	
	7X-6315	1	STRAP AS-GROUND	
	126-7574	1	SCREW-PAN HEAD (8-32X9.52-MM)	
	134-4126	1	WASHER (4.52X8.28X0.76-MM THK)	

<END>

336-3545 ELECTRONICS GP-COMMUNICATION–
PRODUCT LINK 121SR
S/N: JGB1-UP; KHS1-UP
PART OF 319-4319 CONTROL & MTG GP-COMMUNICATION
AN ATTACHMENT

SMCS-7606, 7610, 7620 **i03729461**

NOTE	PART NUMBER	QTY	PART NAME 1 2 3 4 5 6 (PRODUCT LEVEL)	SEE PAGE
	336-3566	1	SOFTWARE GP-COMMUNICATION (PRODUCT LINK 121SR)	

<END>

309-5779 ELECTRONICS GP-MACHINE–ECM
S/N: JGB1-UP; KHS1-UP
PART OF 370-3230, 370-4188 GENERAL AR

SMCS-7610, 7620 **i03596370**

NOTE	PART NUMBER	QTY	PART NAME 1 2 3 4 5 6 (PRODUCT LEVEL)	SEE PAGE
	338-6865	1	SOFTWARE GP-MACHINE	
			-OR-	
	338-6866	1	SERVICE GP-MACHINE	
			(OPTIONAL SERVICE REPLACEMENT)(INCLUDES CONTROL GP & SOFTWARE)	

<END>

259-5293 FASTENER GP-WIRING HARNESS–PEDAL CONTROL

S/N: KHS1-UP

PART OF 255-5845 PEDAL AR-AUXILIARY

AN ATTACHMENT

SMCS-1408, 7553 **i02527275**

NOTE	REF NO	GRAPHIC REF	PART NUMBER	QTY	PART NAME 1 2 3 4 5 6 (PRODUCT LEVEL)	SEE PAGE
	1	1	**116-0118**	1	CLIP	
M	2	1	**7X-2621**	1	BOLT (M10X1.5X12-MM)	
	3	1	**8T-4121**	1	WASHER-HARD (11X21X2.5-MM THK)	

M-METRIC PART

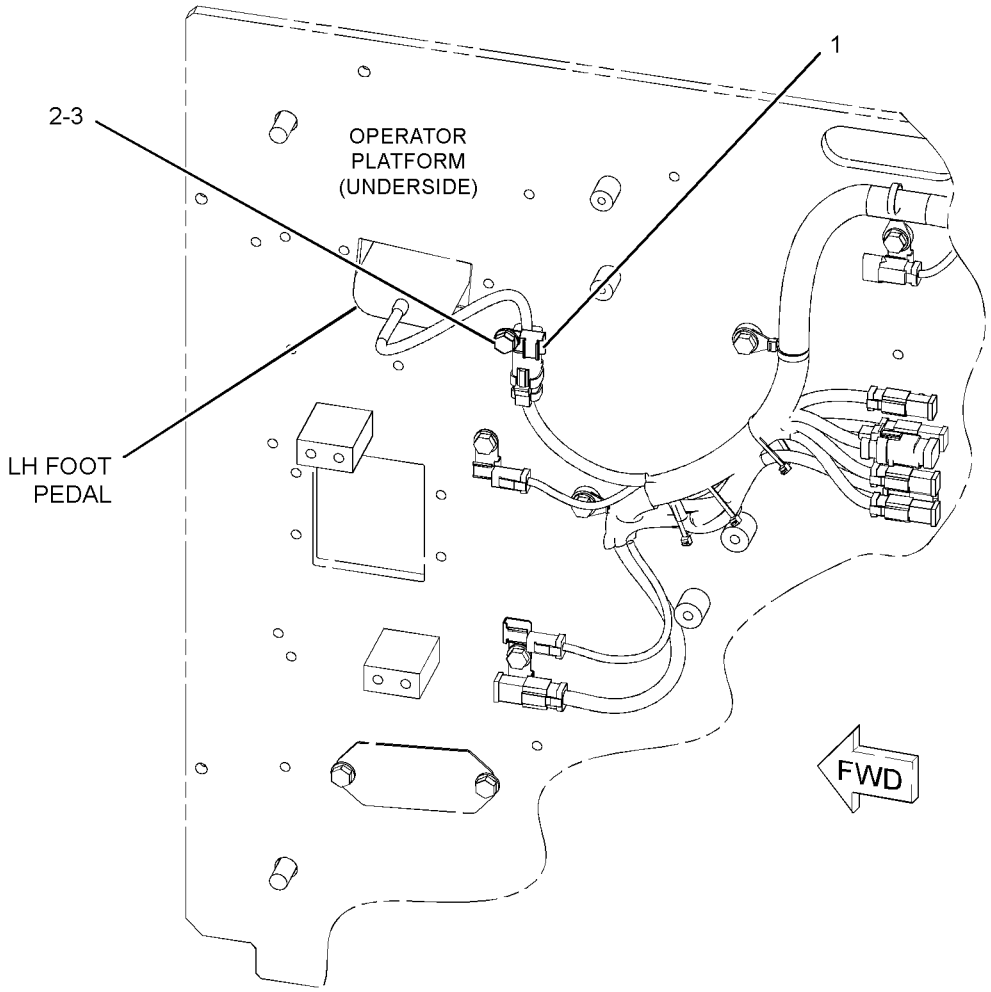

GRAPHIC #1 **<END>** g01264273

259-5294 FASTENER GP-WIRING HARNESS–FOOT SWITCH

S/N: JGB1-UP
PART OF 270-6106 CONTROL AR-AUXILIARY
AN ATTACHMENT

SMCS-1408, 7553 **i02472538**

NOTE	REF NO	GRAPHIC REF	PART NUMBER	QTY	PART NAME 1 2 3 4 5 6 (PRODUCT LEVEL)	SEE PAGE
	1	1	**116-0118**	1	CLIP	
M	2	1	**7X-2621**	1	BOLT (M10X1.5X12-MM)	
	3	1	**8T-4121**	1	WASHER-HARD (11X21X2.5-MM THK)	

M-METRIC PART

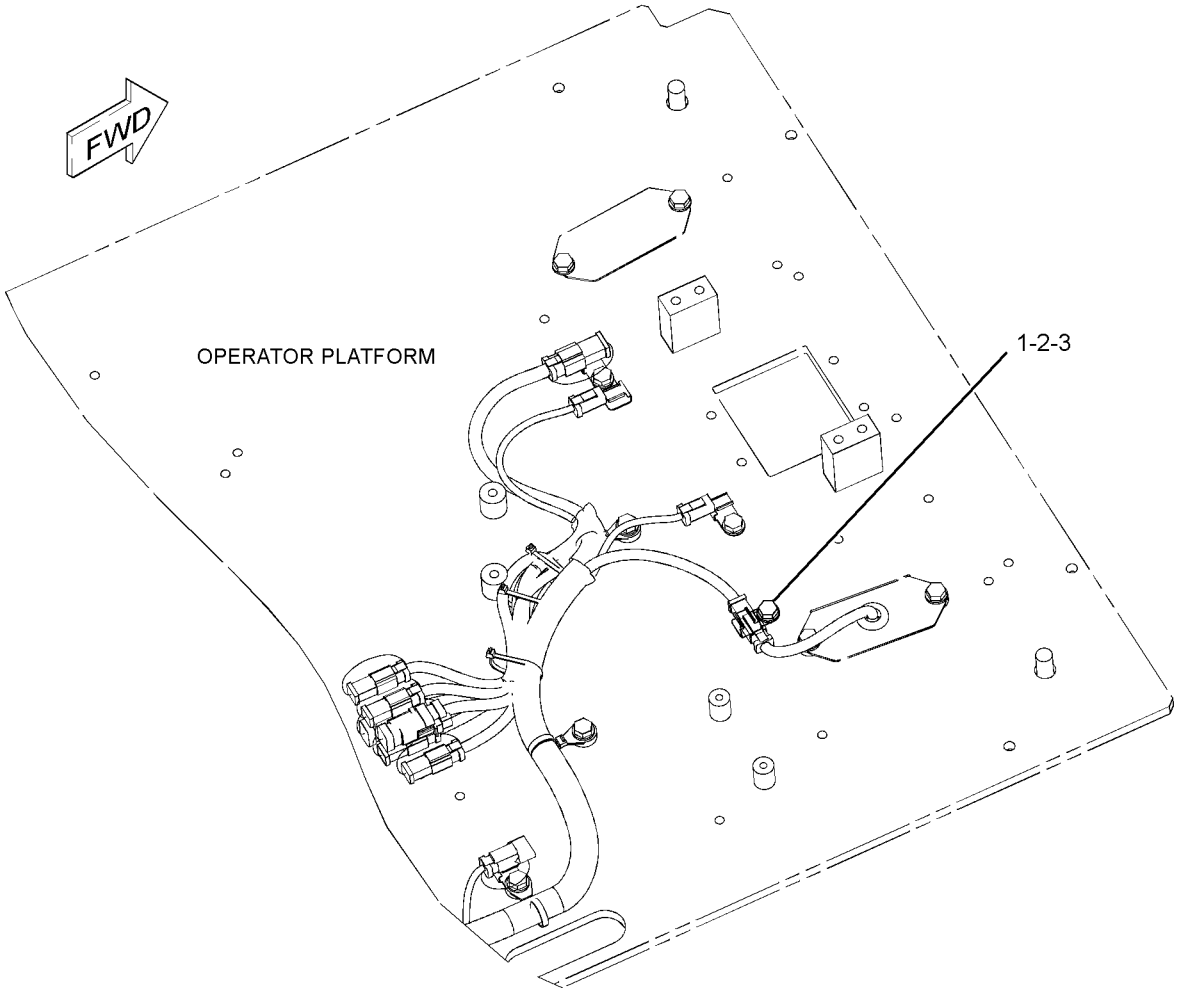

GRAPHIC #1 **<END>** g01156526

259-5295 FASTENER GP-WIRING HARNESS–JOYSTICK

S/N: JGB1-UP; KHS1-UP
PART OF 255-5843, 255-5844 CONTROL AR-AUXILIARY
AN ATTACHMENT

SMCS-1408, 7553 **i04007682**

NOTE	REF NO	GRAPHIC REF	PART NUMBER	QTY	PART NAME 1 2 3 4 5 6 (PRODUCT LEVEL)	SEE PAGE
	1	1	**3S-2093**	2	STRAP - CABLE	

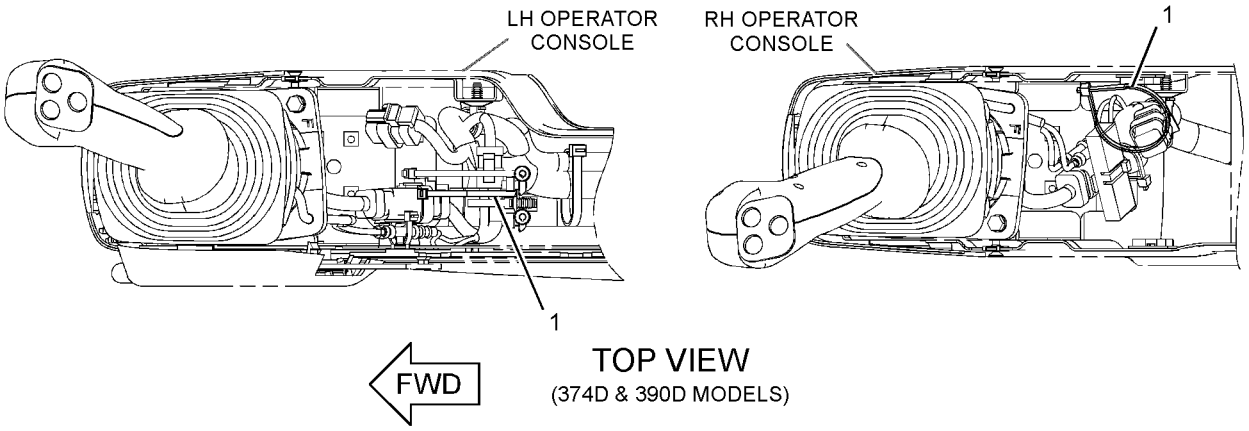

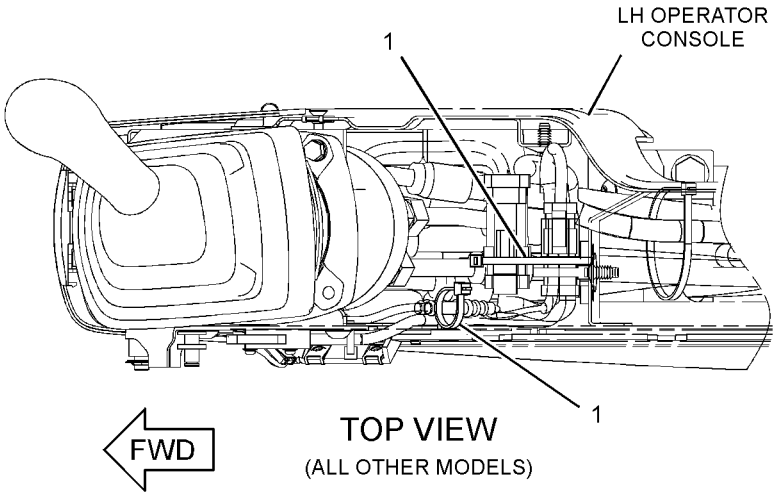

GRAPHIC #1 **<END>** g02181157

324-4136 HEATER GP-JACKET WATER–REAR

S/N: JGB1-UP; KHS1-UP
120-VOLT
PART OF 337-8885 OPTION AR-REGIONAL
AN ATTACHMENT

SMCS-1383 **i03572781**

NOTE	REF NO	GRAPHIC REF	PART NUMBER	QTY	PART NAME 1 2 3 4 5 6 (PRODUCT LEVEL)	SEE PAGE
	1	1	**7X-6312**	1	CORD AS-HEATER ELEMENT (120-VOLT, 15-AMPERE)	
	2	1	**246-2686**	1	ELEMENT AS-JACKET WATER HEATER (120-VOLT, 1500-WATT)	
		1	**7M-8485**	1	SEAL-O-RING	
		1	**133-6517**	1	CAP AS-DUST	

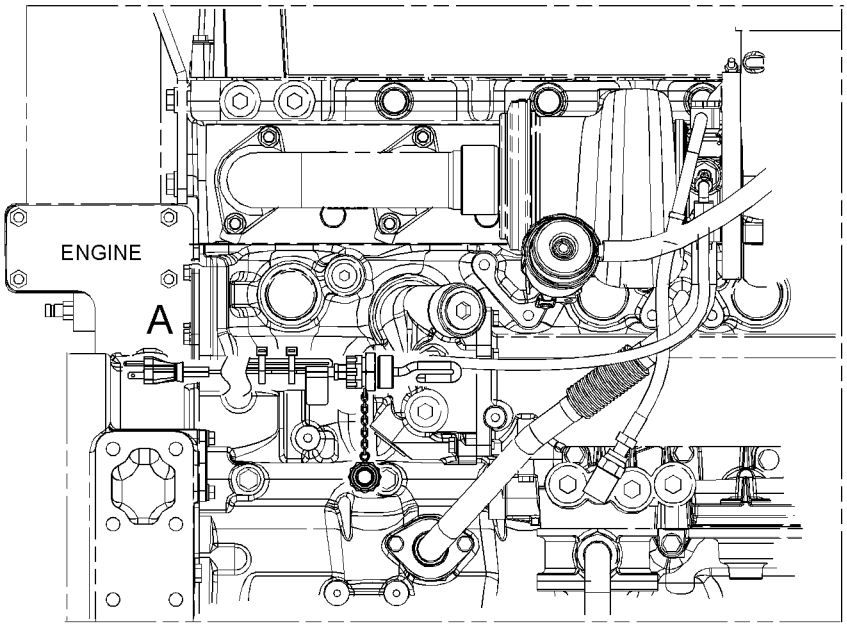

LEFT SIDE VIEW OF ENGINE

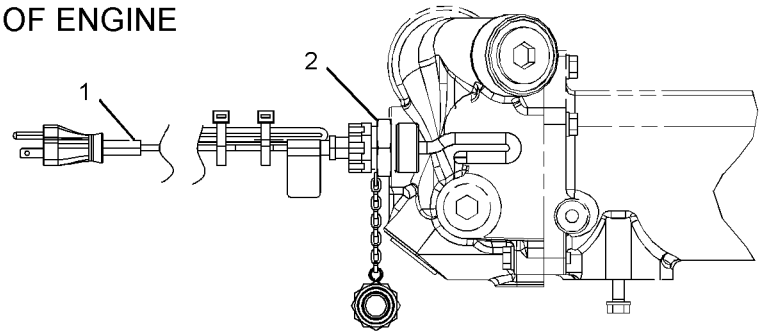

VIEW OF AREA A

GRAPHIC #1 **<END>** g01920853

303-2781 INSTALLATION AR-COMMUNICATION–
PRODUCT LINK 321SR
S/N: JGB1-UP; KHS1-UP
PART OF 371-9202, 371-9204, 371-9205 DISTRIBUTION AR
AN ATTACHMENT

SMCS-7606 **i02919754**

NOTE	PART NUMBER	QTY	PART NAME 1 2 3 4 5 6 (PRODUCT LEVEL)	SEE PAGE
Y	*309-5842*	1	CONTROL & MTG GP-COMMUNICATION (PRODUCT LINK 321SR)	178
Y	*319-4319*	1	CONTROL & MTG GP-COMMUNICATION (PRODUCT LINK 121SR)	179
Y	*309-5771*	1	MOUNTING GP-ANTENNA (PRODUCT LINK)	937
Y	*319-1287*	1	WIRING GP-COMMUNICATION (PRODUCT LINK 321SR)	278

Y-SEPARATE ILLUSTRATION

<END>

227-7581 INSTALLATION GP-SECURITY

S/N: JGB1-UP; KHS1-UP
AN ATTACHMENT

SMCS-7631 **i03945529**

NOTE	REF NO	GRAPHIC REF	PART NUMBER	QTY	PART NAME 1 2 3 4 5 6 (PRODUCT LEVEL)	SEE PAGE
	1	1	**8C-5607**	4	MOUNT-ISOLATION	
	2	1	**8C-5608**	2	SPACER (6.5X9.5X25.4-MM THK)	
	3	1	**285-3231**	2	KEY AS-ELECTRONIC (SECURITY) (YELLOW)	
					—OR—	
		1	**285-3232**	2	KEY AS-ELECTRONIC (SECURITY) (GREY)	
	4	1	**218-0404**	1	MODULE GP-INTERFACE (KEY)	
	4A	1	**6V-6715**	1	SCREW-PAN HEAD (4-20X0.25-IN)	
	4B	1	**8C-3095**	1	SEAL-O-RING	
	5	1	**219-6314**	2	KEY RING (IDENTIFICATION)	
Y	6	1	*251-0544*	1	PANEL GP-SWITCH (ENGINE SPEED, START)	209
M	7	1	**7X-2533**	2	BOLT (M6X1X35-MM)	
	8	1	**9X-6165**	2	WASHER (6.5X22X2.5-MM THK)	
	9	1	**205-0826**	1	FILM-INSTRUCTION (MACHINE SECURITY, CONSOLE)	

M-METRIC PART
Y-SEPARATE ILLUSTRATION

227-7581 **INSTALLATION GP-SECURITY** *(contd.)* **i03945529**

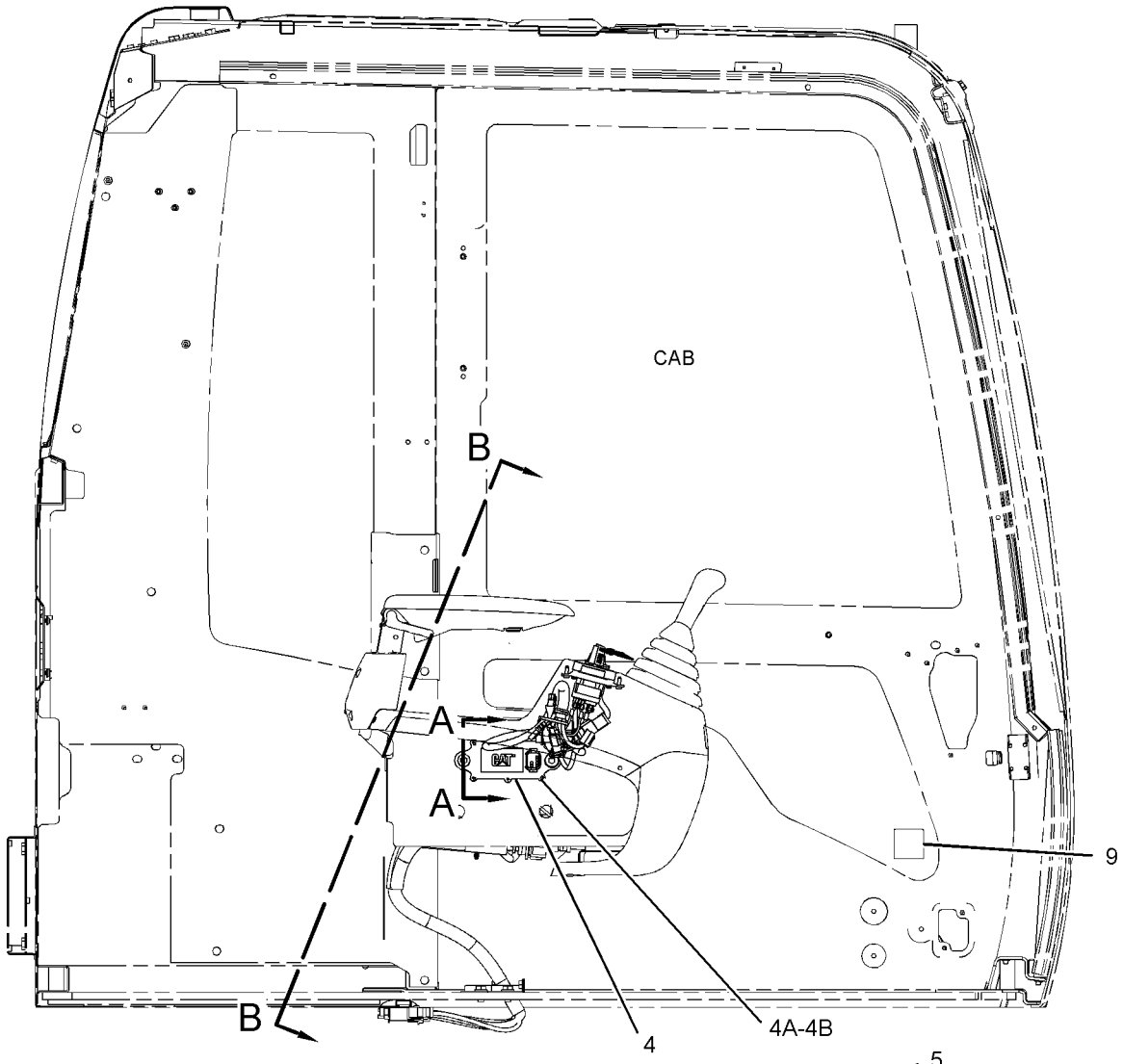

RIGHT SIDE VIEW

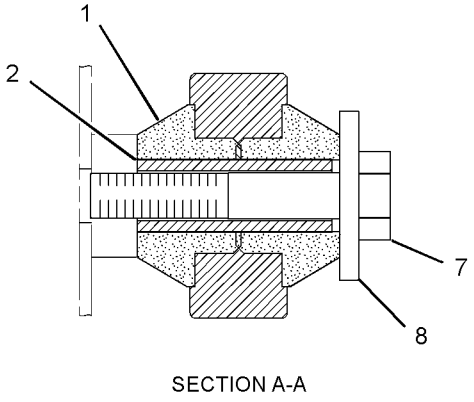

SECTION A-A

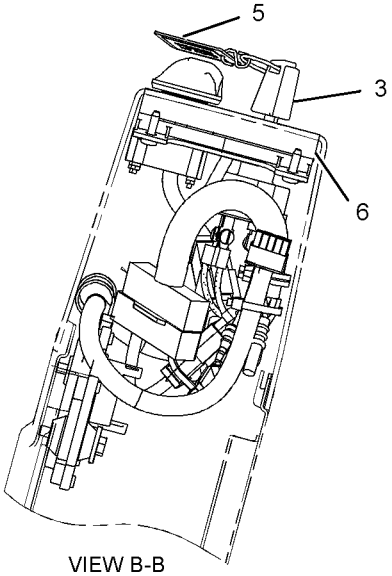

VIEW B-B

GRAPHIC #1 **<END>** g02156940

153-2521 LAMP GP-FLOOD

S/N: JGB1-UP; KHS1-UP
65-WATT, 24-VOLT
PART OF 238-2157 LIGHTING GP-FLOOD
AN ATTACHMENT

SMCS-1434 **i02613225**

NOTE	REF NO	GRAPHIC REF	PART NUMBER	QTY	PART NAME 1 2 3 4 5 6 (PRODUCT LEVEL)	SEE PAGE
M	1	1	**6V-5210**	2	SCREW-MACHINE (M4X0.7X10-MM)	
	2	1	**3B-4501**	2	LOCKWASHER	
	3	1	**9X-3463**	1	LAMP-HALOGEN (24-VOLT, 70-WATT)	
	4	1	**8T-4223**	1	WASHER-HARD (13.5X25.5X3-MM THK)	
M	5	1	**8T-4244**	1	NUT (M12X1.75-THD)	
M	6	1	**174-7791**	1	SCREW-TAPPING	
	7	1	**5C-2889**	1	LOCKWASHER	
	8	1	**170-6993**	1	COVER	
M	9	1	**180-3861**	4	SCREW-TAPPING	
	10	1	**170-9417**	1	LENS AS (FLOODLIGHT)	
	11	1	**170-9418**	1	BAND	

M-METRIC PART

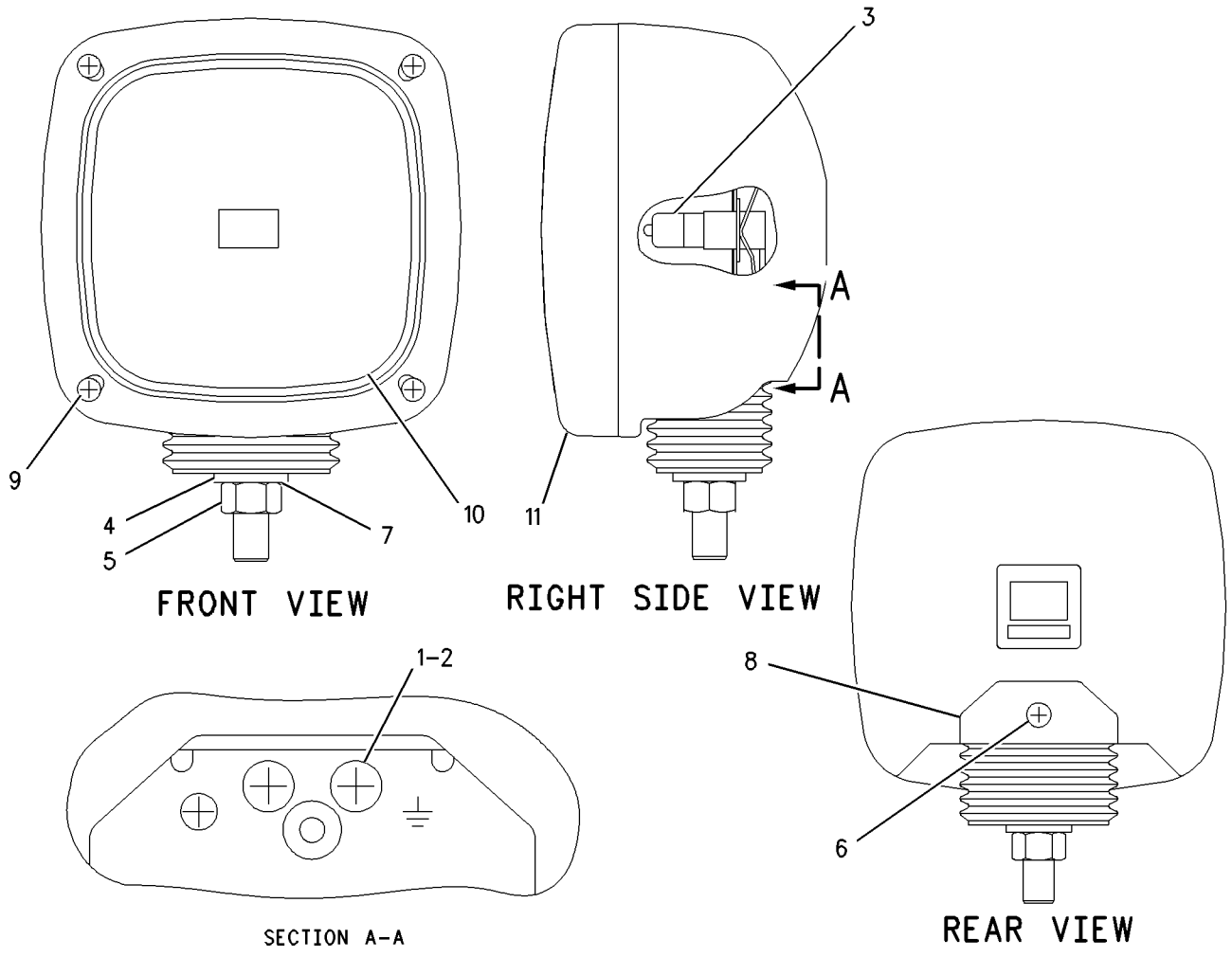

GRAPHIC #1 **<END>** g00924025

153-2523 LAMP GP-FLOOD

S/N: JGB1-UP; KHS1-UP
65-WATT, 24-VOLT
PART OF 4I-5409 LIGHTING GP-CHASSIS

SMCS-1434 **i02613226**

NOTE	REF NO	GRAPHIC REF	PART NUMBER	QTY	PART NAME 1 2 3 4 5 6 (PRODUCT LEVEL)	SEE PAGE
M	1	1	**6V-5210**	2	SCREW-MACHINE (M4X0.7X10-MM)	
	2	1	**3B-4501**	2	LOCKWASHER	
	3	1	**9X-3463**	1	LAMP-HALOGEN (24-VOLT, 70-WATT)	
	4	1	**8T-4223**	1	WASHER-HARD (13.5X25.5X3-MM THK)	
M	5	1	**8T-4244**	1	NUT (M12X1.75-THD)	
M	6	1	**174-7791**	1	SCREW-TAPPING	
	7	1	**5C-2889**	1	LOCKWASHER	
	8	1	**170-6993**	1	COVER	
	9	1	**170-9417**	1	LENS AS (FLOODLIGHT)	
M	10	1	**180-3861**	4	SCREW-TAPPING	
	11	1	**170-9418**	1	BAND	

M-METRIC PART

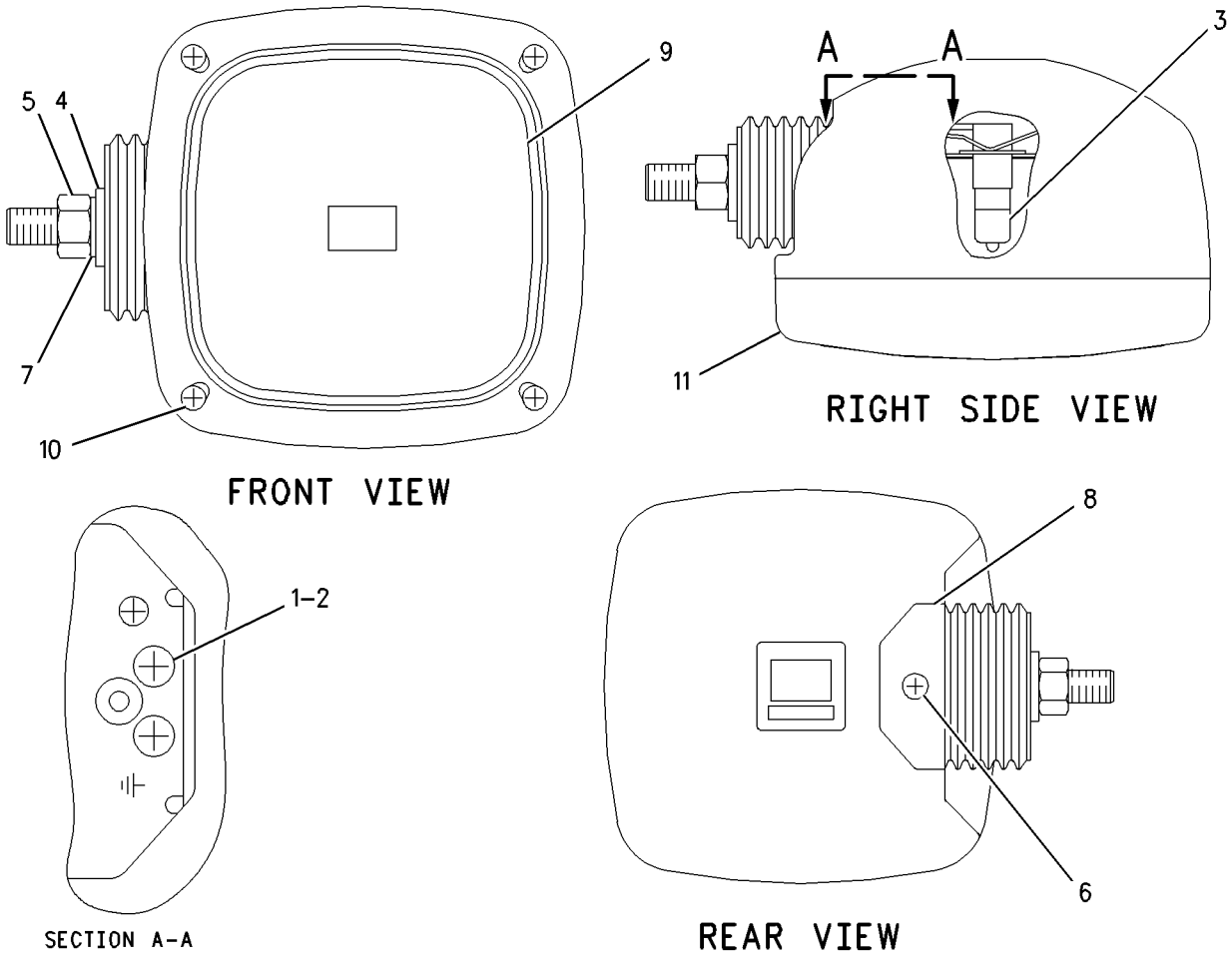

GRAPHIC #1 **<END>** g00790263

347-9427 LAMP GP-FLOOD–24-VOLT, 35-WATT, HID

S/N: JGB1-UP; KHS1-UP
PART OF 299-3036 LIGHTING GP-FLOOD
AN ATTACHMENT

SMCS-1434 **i03789474**

NOTE	REF NO	GRAPHIC REF	PART NUMBER	QTY	PART NAME 1 2 3 4 5 6 (PRODUCT LEVEL)	SEE PAGE
	1	1	**277-3082**	1	LENS AS	
	2	1	**290-8160**	1	LAMP (24-VOLT, HID)	
M	3	1	**8T-4186**	1	BOLT (M10X1.5X40-MM)	
	4	1	**8T-4121**	1	WASHER-HARD (11X21X2.5-MM THK)	
M	5	1	**120-9027**	4	SCREW-PAN HEAD (M3X0.5X16-MM)	
M	6	1	**5P-8347**	2	BOLT (M8X1.25X70-MM)	
M	7	1	**6V-9189**	2	LOCKNUT (M8X1.25-THD)	
	8	1	**290-8996**	1	BRACKET	
	9	1	**229-9974**	1	BEZEL	
	10	1	**319-7384**	1	BALLAST AS (24-VOLT, 35-WATT, HID)	

M-METRIC PART

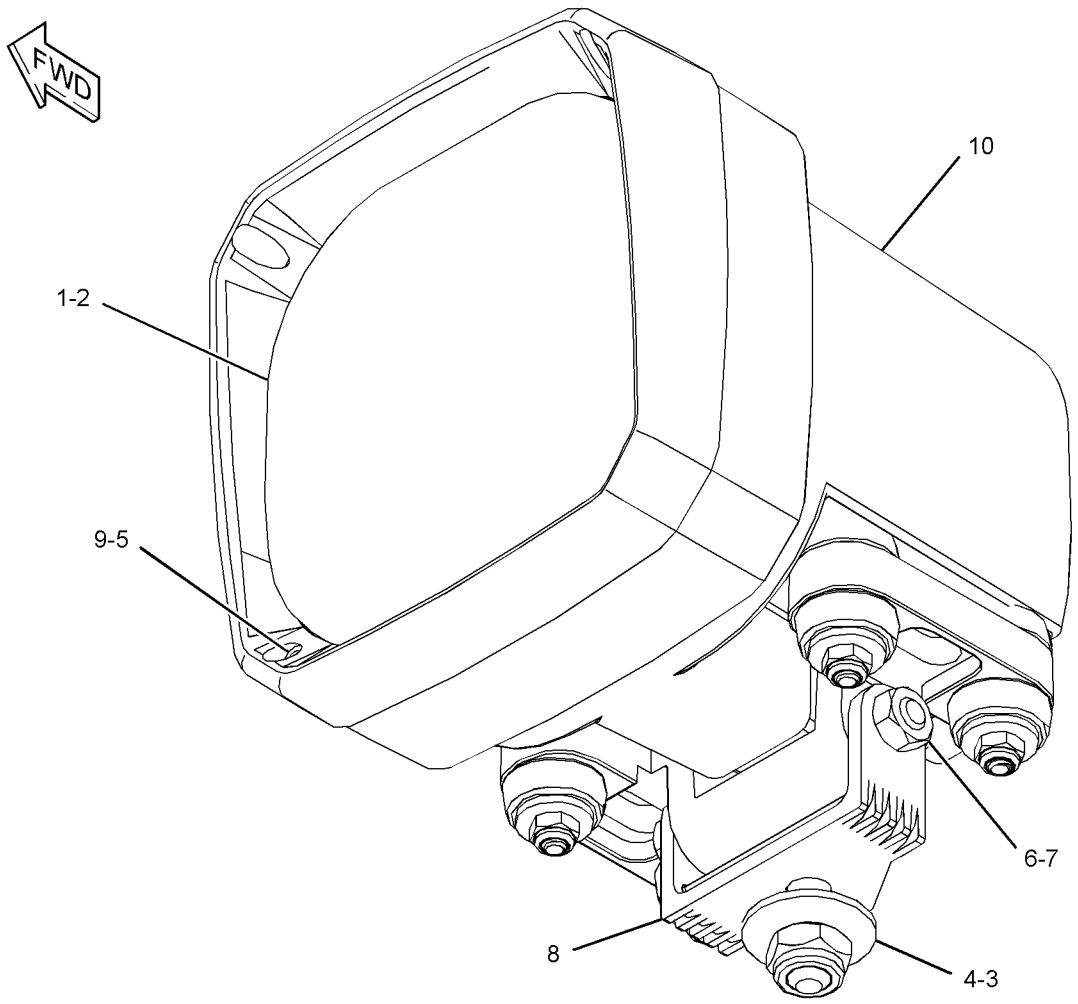

GRAPHIC #1 **<END>** g02059593

4I-5409 LIGHTING GP-CHASSIS–FRONT, RH

S/N: JGB1-UP; KHS1-UP

PART OF 370-3231, 370-4189 CHASSIS AR

SMCS-1429 **i01798347**

NOTE	REF NO	GRAPHIC REF	PART NUMBER	QTY	PART NAME 1 2 3 4 5 6 (PRODUCT LEVEL)	SEE PAGE
CY	1	1	**153-2523**	1	LAMP GP-FLOOD (24 VOLT) (HORIZONTAL RH)	191

C-CHANGE FROM PREVIOUS TYPE
Y-SEPARATE ILLUSTRATION

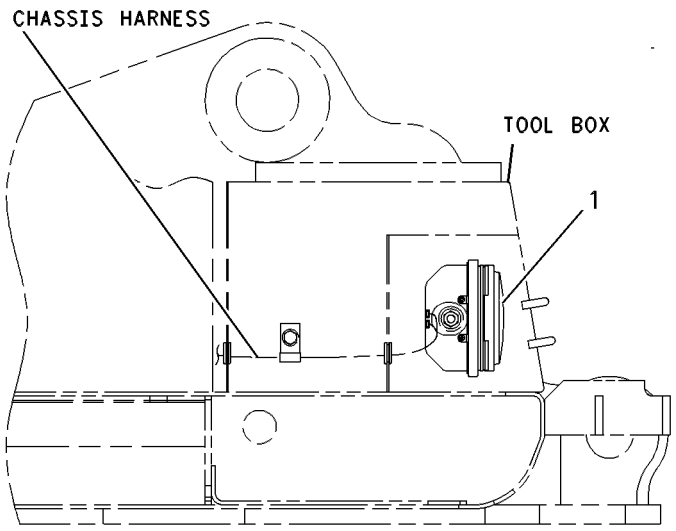

RIGHT SIDE VIEW

GRAPHIC #1 **<END>** g00529086

ELECTRICAL AND STARTING SYSTEM

163-6772 LIGHTING GP-FLOOD–CAB

S/N: JGB1-UP; KHS1-UP
PART OF 356-6716 CAB GP

SMCS-1434 **i03260756**

NOTE	REF NO	GRAPHIC REF	PART NUMBER	QTY	PART NAME 1 2 3 4 5 6 (PRODUCT LEVEL)	SEE PAGE
	1	1	**163-6795**	2	STRAP-CABLE	
	2	1	**163-6813**	1	COVER (LH)	
	3	1	**163-6814**	1	COVER (RH)	
	4	1	**167-3437**	1	BRACKET AS (LH)	
	5	1	**167-3438**	1	BRACKET AS (RH)	
	6	1	**167-3441**	2	LAMP GP-FLOOD (24-VOLT) (CAB)	
					(EACH INCLUDES)	
		1	**9X-3463**	1	LAMP-HALOGEN (24-VOLT, 70-WATT)	
	7	1	**167-3456**	2	HARNESS AS-LIGHTING (CAB FLOODLIGHT)	
M	8	1	**8T-4200**	2	BOLT (M8X1.25X16-MM)	
	9	1	**8T-4224**	2	WASHER-HARD (8.8X16X2-MM THK)	
M	10	1	**8T-4970**	4	BOLT (M6X1X14-MM)	
M	11	1	**8T-6411**	6	SCREW-MACHINE (M6X1X12-MM)	
M	12	1	**8T-6412**	2	SCREW-MACHINE (M6X1X20-MM)	
	13	1	**9X-8256**	12	WASHER (6.6X12X2-MM THK)	
B	14	1	**9X-8256**	4	WASHER (6.6X12X2-MM THK)	

B-USE AS REQUIRED
M-METRIC PART

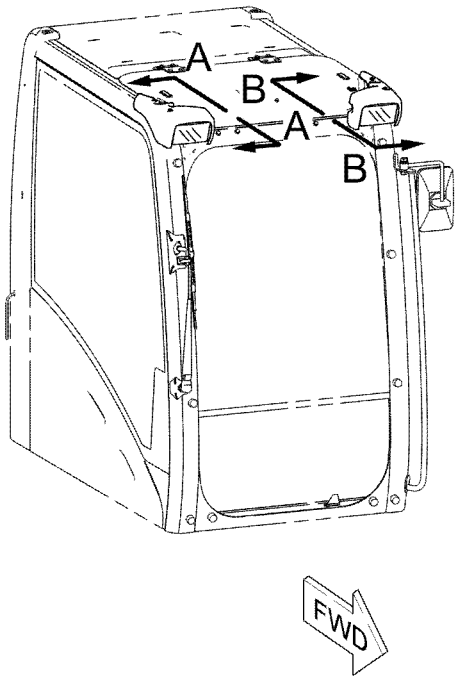

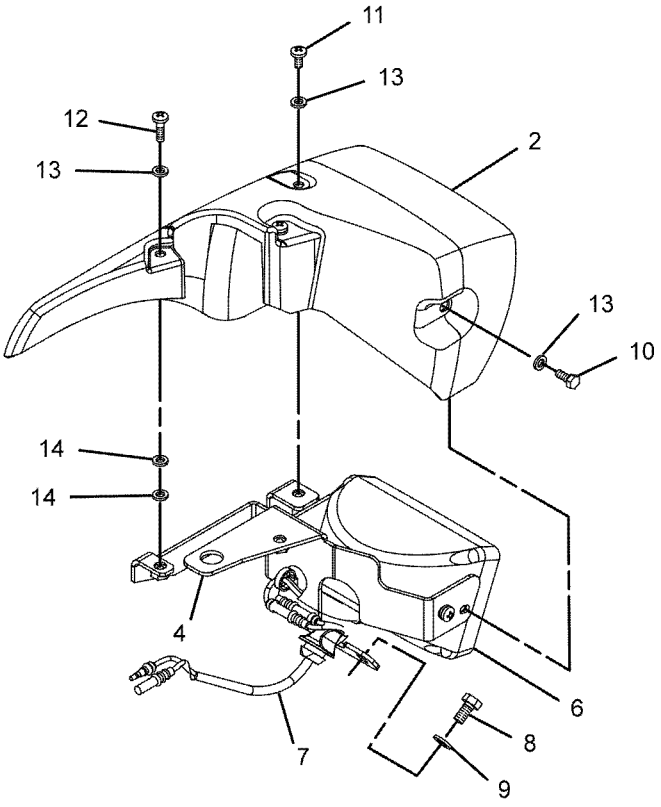

VIEW B-B
(EXPLODED)

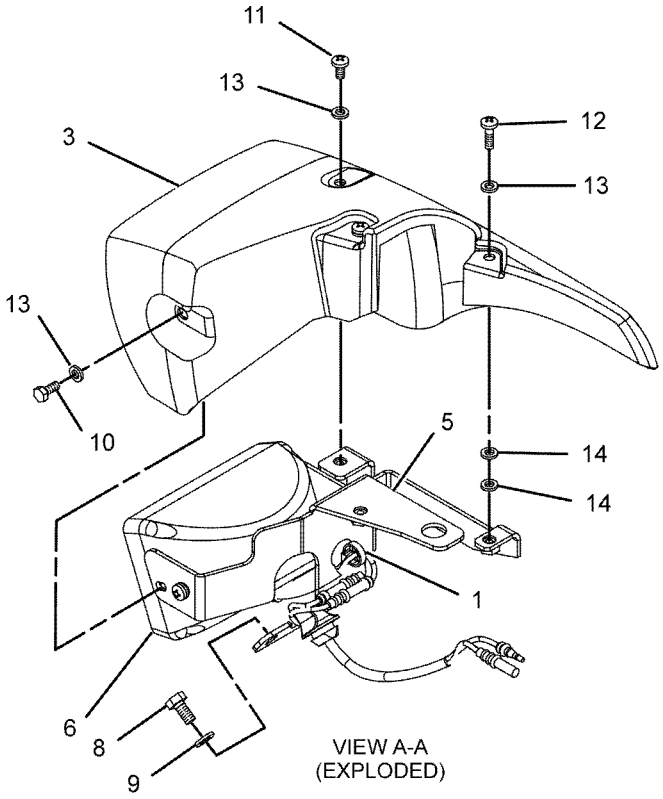

VIEW A-A
(EXPLODED)

GRAPHIC #1 **<END>** g01095568

238-2157 LIGHTING GP-FLOOD–BOOM

S/N: JGB1-UP; KHS1-UP

PART OF 319-9245 BOOM AR, 294-1252 BOOM AR-MASS, 294-1250 BOOM AR-REACH AN ATTACHMENT

SMCS-1434 **i02978565**

NOTE	REF NO	GRAPHIC REF	PART NUMBER	QTY	PART NAME 1 2 3 4 5 6 (PRODUCT LEVEL)	SEE PAGE
	1	1	**238-2351**	1	HARNESS AS-LIGHTING (BOOM)	
M	2	1	**8T-4133**	11	NUT (M10X1.5-THD)	
	3	1	**8T-4121**	11	WASHER-HARD (11X21X2.5-MM THK)	
	4	1	**111-4836**	12	CLIP	
	5	1	**3S-2093**	6	STRAP-CABLE	
	6	1	**134-3284**	2	BRACKET	
	7	1	**9X-8257**	2	WASHER (17.5X30X3.5-MM THK)	
M	8	1	**8T-4190**	2	BOLT (M16X2X25-MM)	
	9	1	**111-4837**	1	CLIP	
	10	1	**116-0118**	1	CLIP	
Y	11	1	**153-2521**	2	LAMP GP-FLOOD (24-VOLT)	190

M-METRIC PART
Y-SEPARATE ILLUSTRATION

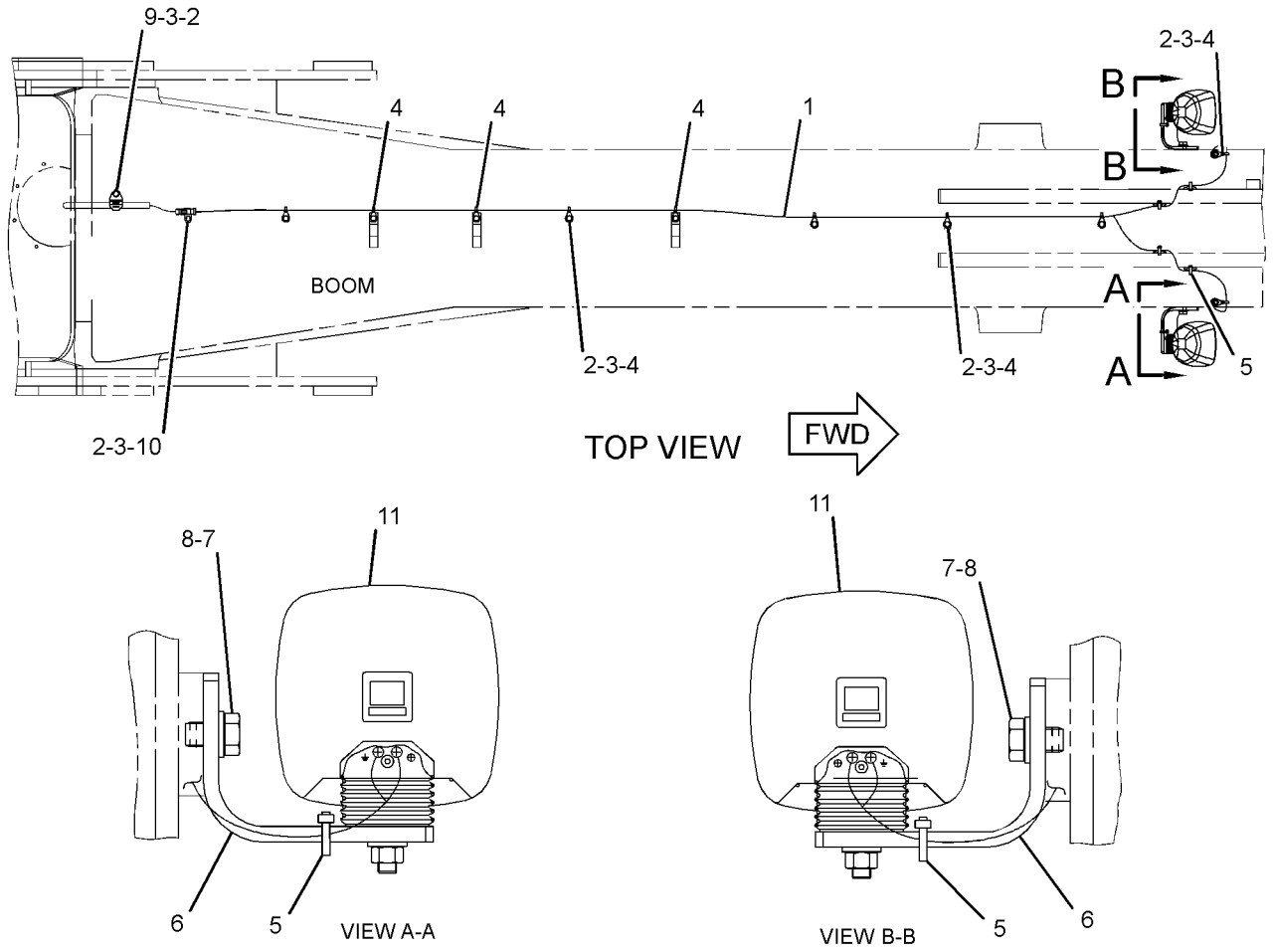

GRAPHIC #1 **<END>** g01508454

299-3036 LIGHTING GP-FLOOD—BOOM

S/N: JGB1-UP; KHS1-UP
HIGH INTENSITY DISCHARGE
PART OF 341-4971 OPTION AR-REGIONAL
CANNOT BE USED WITH 238-2157—PAGE 196
AN ATTACHMENT

SMCS-1434 **i03956214**

NOTE	REF NO	GRAPHIC REF	PART NUMBER	QTY	PART NAME 1 2 3 4 5 6 (PRODUCT LEVEL)	SEE PAGE
C	1	1	**3S-2093**	4	STRAP-CABLE	
	2	1	**111-4836**	11	CLIP	
	3	1	**111-4837**	1	CLIP	
C	4	1	**116-0118**	1	CLIP	
	5	1	**134-3284**	2	BRACKET	
CY	6	1	**347-9427**	2	LAMP GP-FLOOD (24-VOLT, 35-WATT, HID)	192
	7	1	**306-8378**	1	HARNESS AS-LIGHTING	
		1	**9W-0852**	2	PIN-CONNECTOR (14-GA TO 16-GA)	
		1	**9W-0844**	4	SOCKET-CONNECTOR (14-GA TO 16-GA)	
BE		1	**125-7875**		TUBE-HEAT SHRINK (7.44-MM DIA)	
		1	**155-2270**	2	KIT-CONNECTING PLUG (2-PIN)	
					(EACH PLUG KIT INCLUDES PLUG AS, WEDGE & INTERFACE SEAL)	
		1	**243-4505**	1	RECEPTACLE AS-CONNECTOR (2-PIN)	
	8	1	**6V-3265**	2	CLIP	
	9	1	**8T-4121**	12	WASHER-HARD (11X21X2.5-MM THK)	
M	10	1	**8T-4133**	12	NUT (M10X1.5-THD)	
M	11	1	**8T-4190**	2	BOLT (M16X2X25-MM)	
	12	1	**9X-8257**	2	WASHER (17.5X30X3.5-MM THK)	
C	13	1	**7I-2673**	2	STRAP-CABLE	

B-USE AS REQUIRED
C-CHANGE FROM PREVIOUS TYPE
E-ORDER BY THE CENTIMETER
M-METRIC PART
Y-SEPARATE ILLUSTRATION

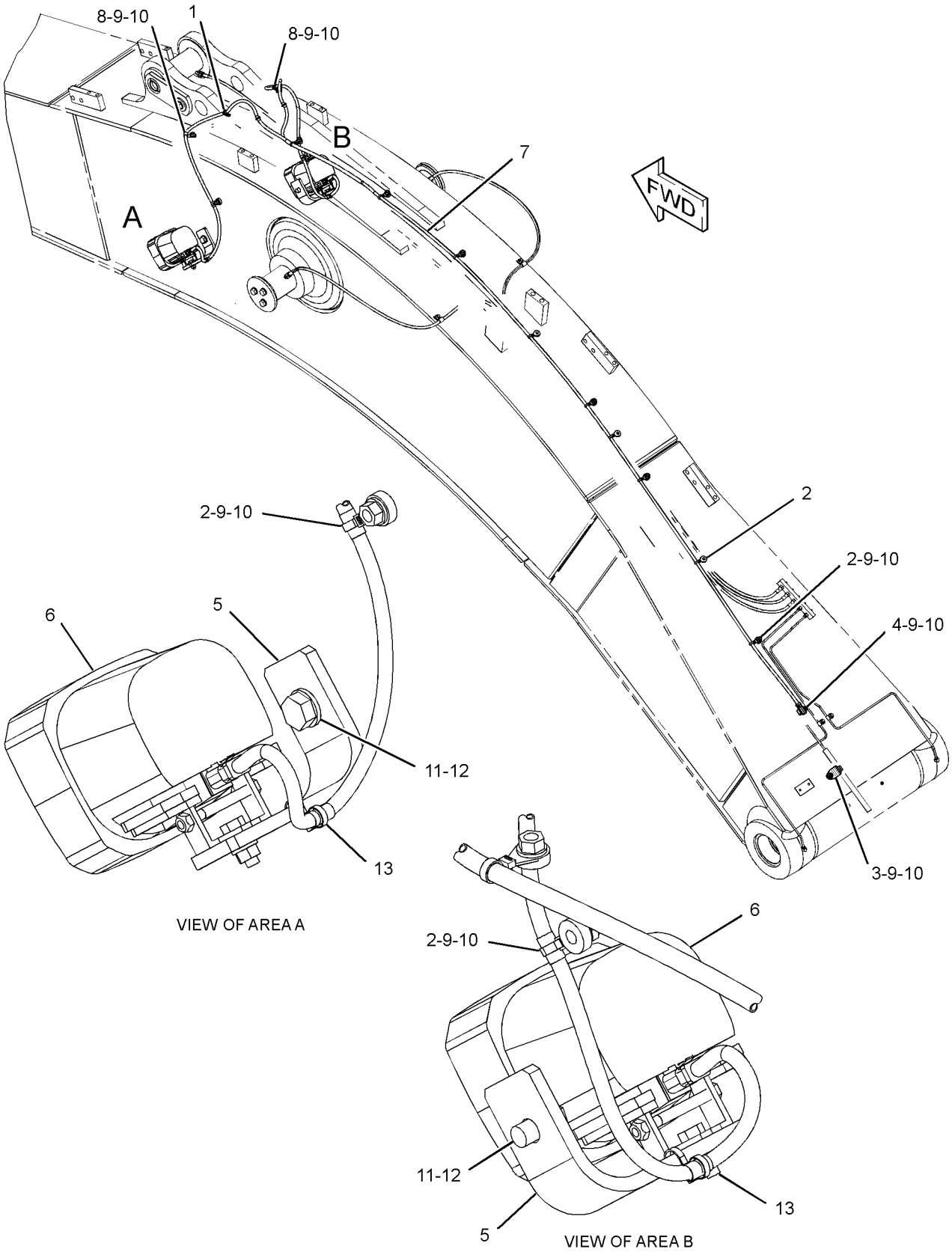

GRAPHIC #1 **<END>** g02157424

306-8692 MOUNTING GP-CAMERA–BOOM

S/N: JGB1-UP; KHS1-UP
PART OF 303-2711 CAMERA AR
AN ATTACHMENT

SMCS-7348 **i02848909**

NOTE	REF NO	GRAPHIC REF	PART NUMBER	QTY	PART NAME 1 2 3 4 5 6 (PRODUCT LEVEL)	SEE PAGE
	1	1	**3S-2093**	1	STRAP - CABLE	
	2	1	**306-8693**	1	BRACKET	

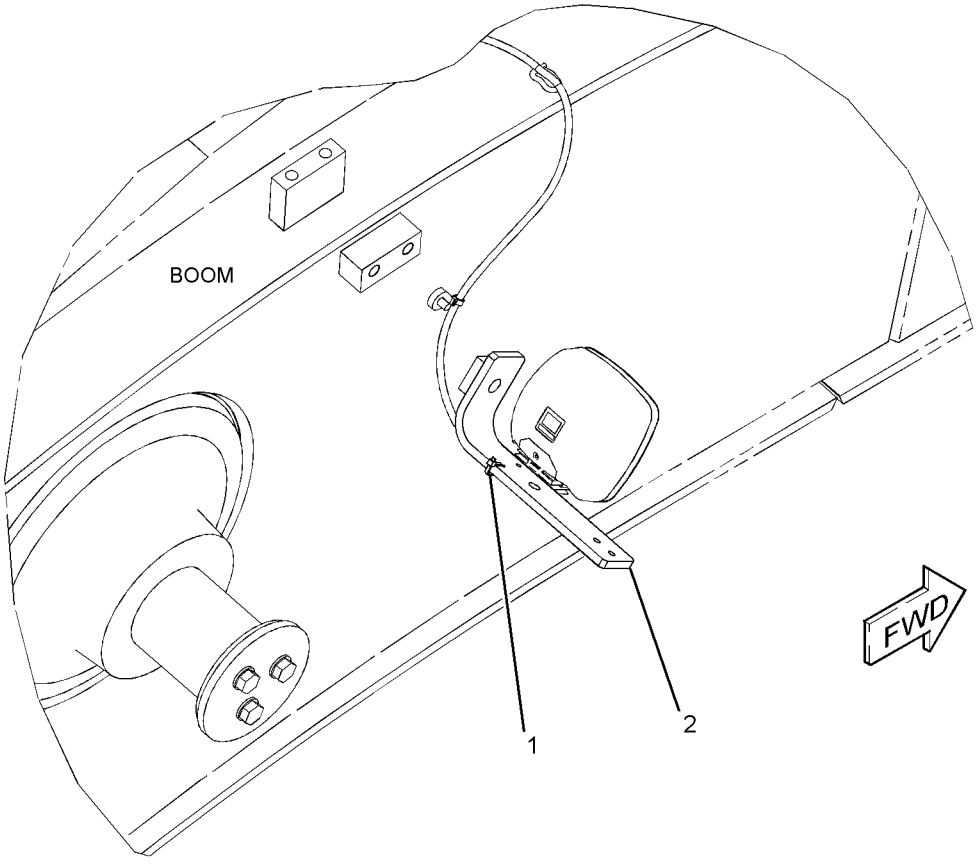

GRAPHIC #1 **<END>** g01462807

307-7757 MOUNTING GP-CAMERA–COUNTERWEIGHT

S/N: JGB1-UP; KHS1-UP
PART OF 319-9155 CAMERA AR
AN ATTACHMENT

SMCS-7348 **i02851914**

NOTE	REF NO	GRAPHIC REF	PART NUMBER	QTY	PART NAME 1 2 3 4 5 6 (PRODUCT LEVEL)	SEE PAGE
Y	1	1	*313-7833*	1	CAMERA & MOUNTING GP (WORK AREA VISUAL SYSTEM, REAR)	173
	2	1	**320-5396**	1	COVER	
	3	1	**8T-4121**	4	WASHER-HARD (11X21X2.5-MM THK)	
M	4	1	**8T-4137**	4	BOLT (M10X1.5X20-MM)	

M-METRIC PART
Y-SEPARATE ILLUSTRATION

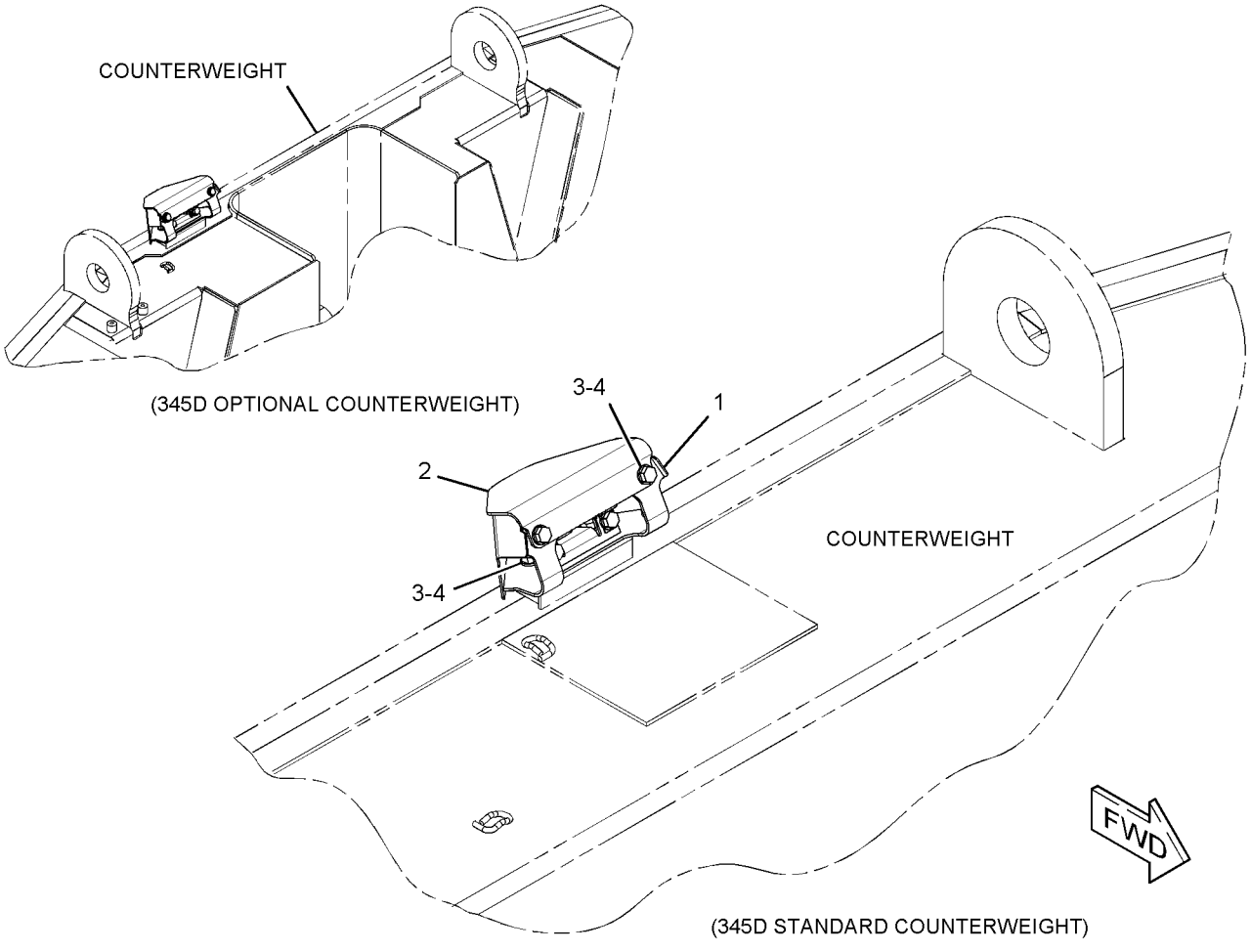

GRAPHIC #1 **<END>** g01461067

313-7971 MOUNTING GP-CAMERA–CHASSIS

S/N: JGB1-UP; KHS1-UP
PART OF 303-2711 CAMERA AR
AN ATTACHMENT

SMCS-7348 **i03597923**

NOTE	REF NO	GRAPHIC REF	PART NUMBER	QTY	PART NAME 1 2 3 4 5 6 (PRODUCT LEVEL)	SEE PAGE
	1	1	**313-7939**	1	BRACKET	

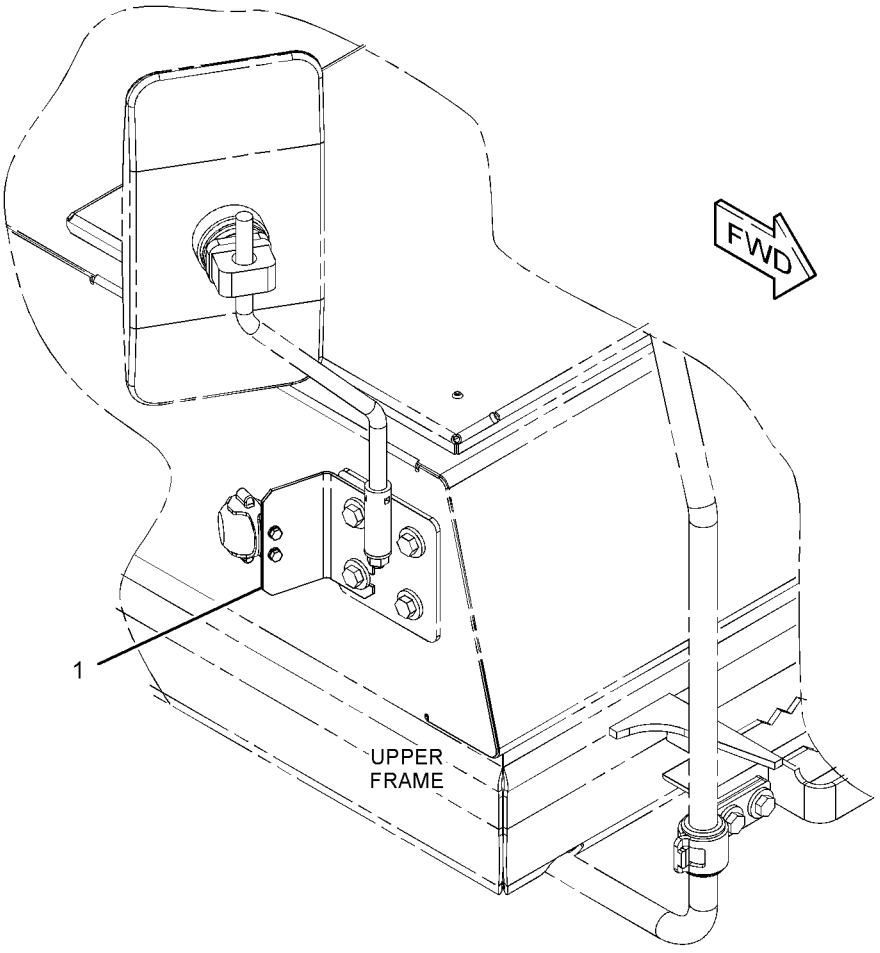

GRAPHIC #1 **<END>** g01936575

297-4510 MOUNTING GP-SENSOR—BODY TILT SENSOR

S/N: JGB1-UP; KHS1-UP
PART OF 319-9274, 351-9595 SPECIAL AR
AN ATTACHMENT

SMCS-1439, 1923, 1924 **i02920268**

NOTE	REF NO	GRAPHIC REF	PART NUMBER	QTY	PART NAME 1 2 3 4 5 6 (PRODUCT LEVEL)	SEE PAGE
	1	1	**309-5760**	1	BRACKET AS	
M	2	1	**8T-4139**	3	BOLT (M12X1.75X30-MM)	
	3	1	**8T-4223**	3	WASHER-HARD (13.5X25.5X3-MM THK)	

M-METRIC PART

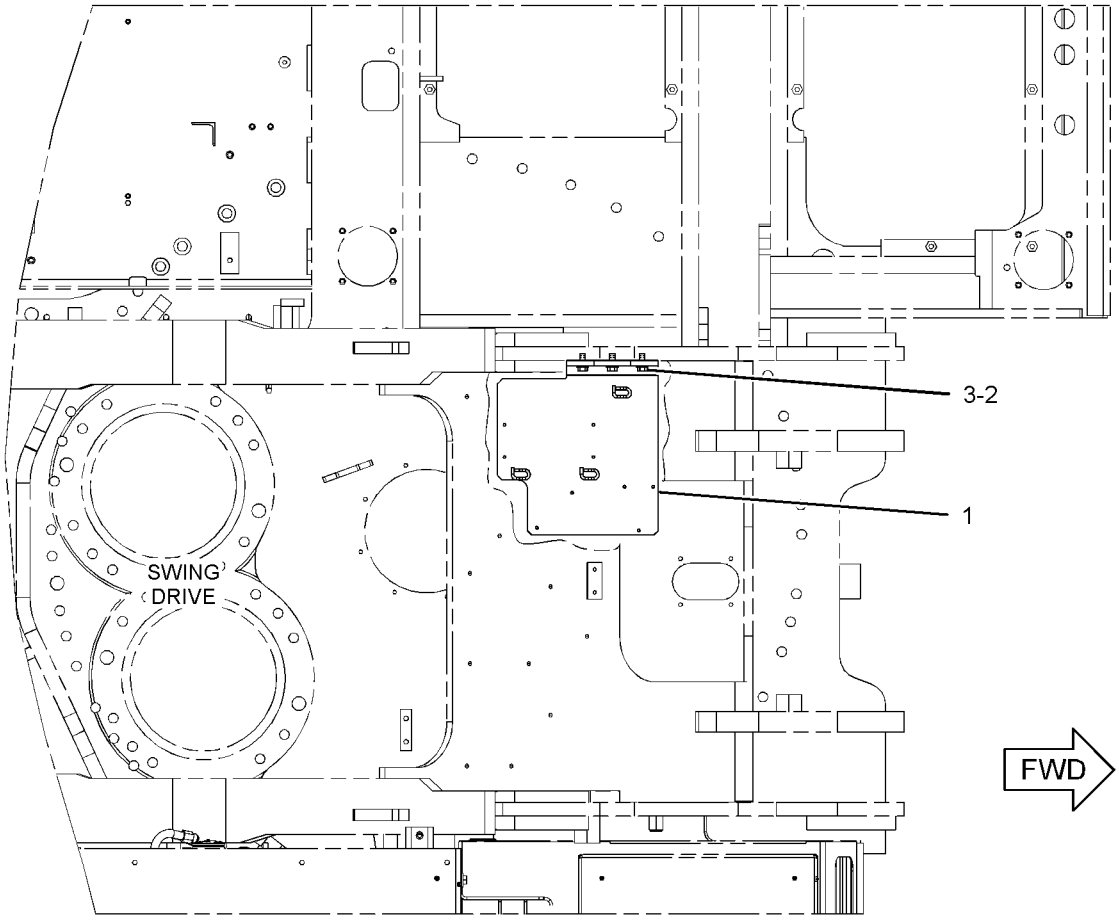

TOP VIEW

GRAPHIC #1 **<END>** g01458400

354-0023 MOUNTING GP-WIRING

S/N: JGB1-UP; KHS1-UP

PART OF 291-7766 BATTERY & WIRING GP

SMCS-1408 **i03880522**

NOTE	REF NO	GRAPHIC REF	PART NUMBER	QTY	PART NAME 1 2 3 4 5 6 (PRODUCT LEVEL)	SEE PAGE
	1	1	**6G-2263**	1	SPACER (10.5X19X28.5-MM THK)	
	2	1	**111-4838**	3	CLIP	
	3	1	**116-0118**	2	CLIP	
	4	1	**8T-4121**	3	WASHER-HARD (11X21X2.5-MM THK)	
M	5	1	**8T-4137**	2	BOLT (M10X1.5X20-MM)	
M	6	1	**8T-4185**	1	BOLT (M10X1.5X50-MM)	

M-METRIC PART

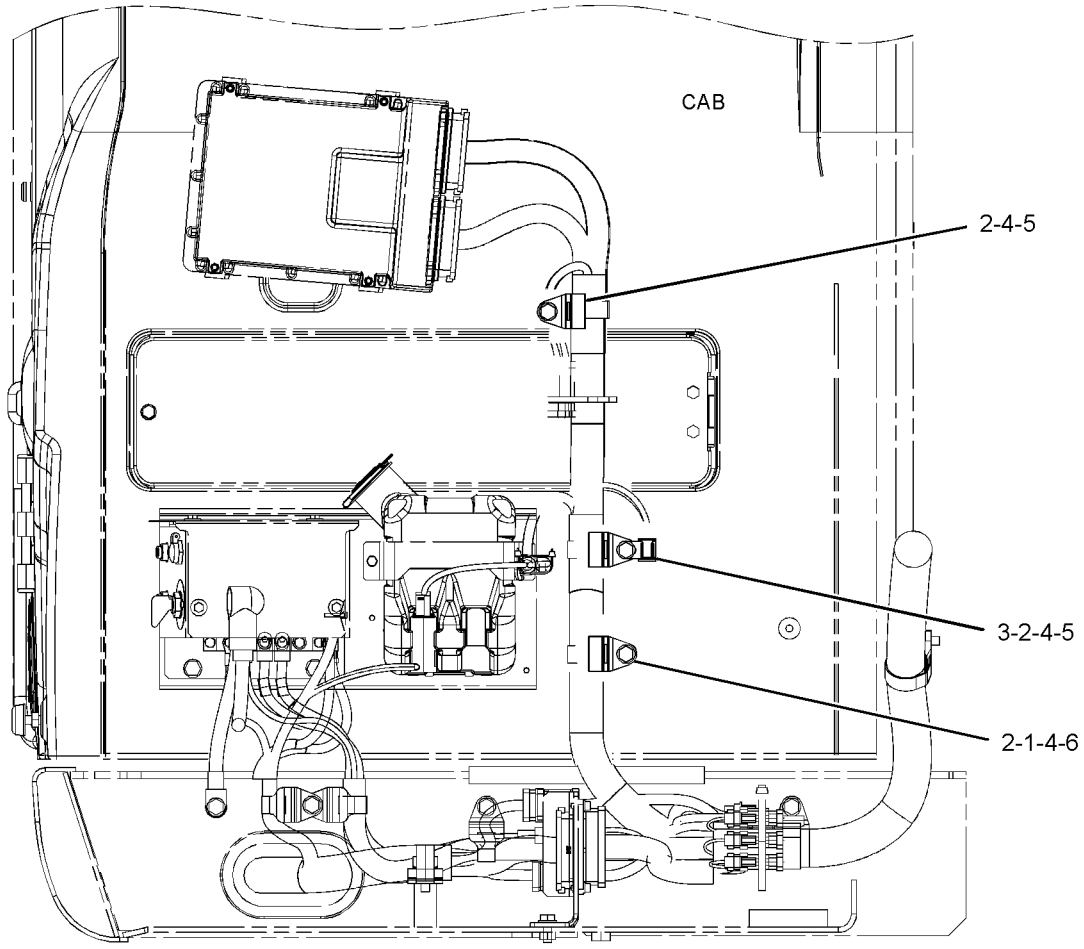

REAR VIEW

GRAPHIC #1 **<END>** g02150328

299-2965 PANEL & MTG GP-CIRCUIT BREAKER

S/N: JGB1-UP; KHS1-UP
PART OF 305-8000 OPERATOR AR

SMCS-1417, 1420 **i02843696**

NOTE	REF NO	GRAPHIC REF	PART NUMBER	QTY	PART NAME 1 2 3 4 5 6 (PRODUCT LEVEL)	SEE PAGE
Y	1	1	*299-2966*	1	PANEL GP-CIRCUIT BREAKER	205
	2	1	**8T-4121**	4	WASHER-HARD (11X21X2.5-MM THK)	
M	3	1	**8T-4137**	4	BOLT (M10X1.5X20-MM)	

M-METRIC PART
Y-SEPARATE ILLUSTRATION

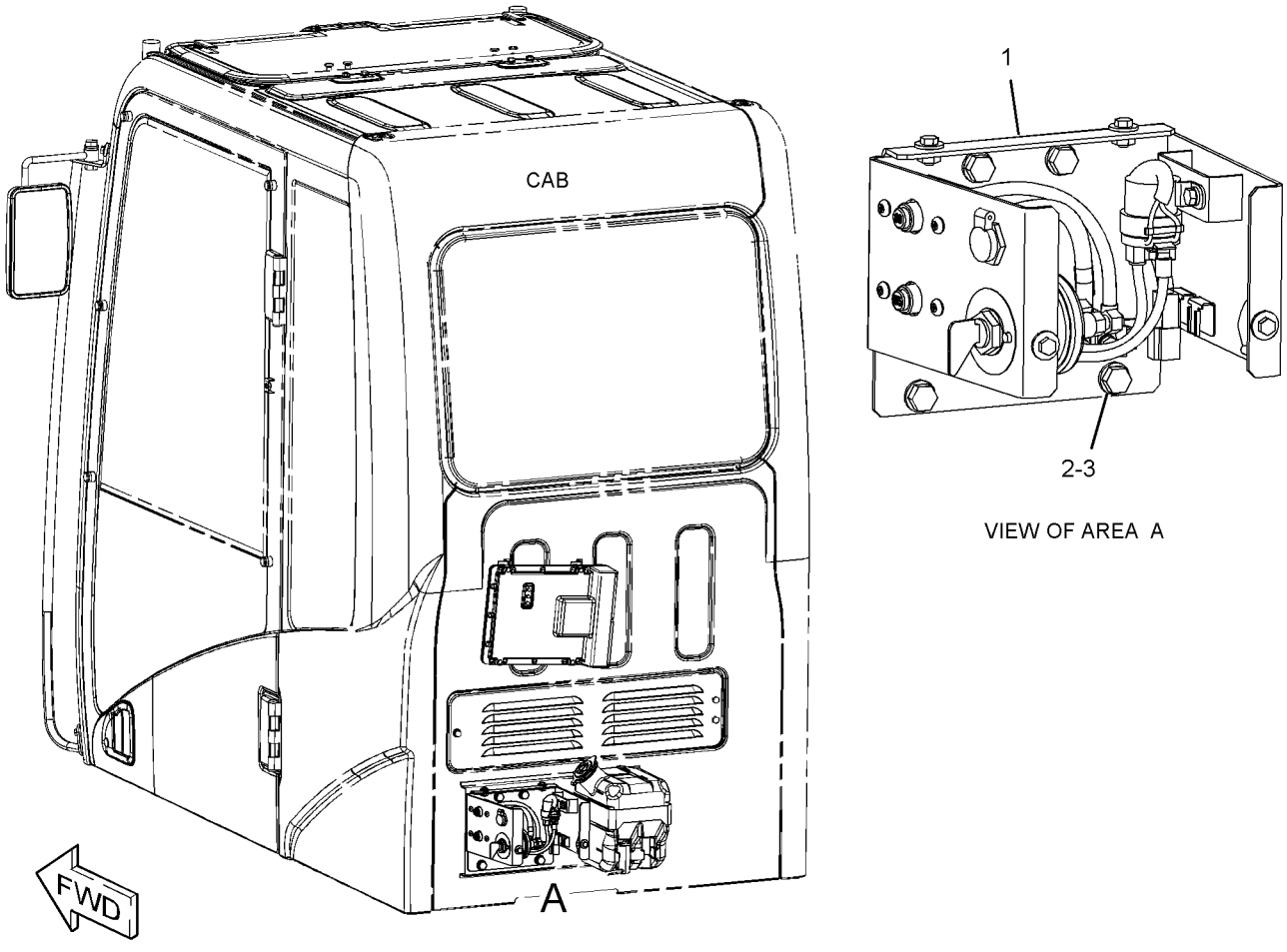

GRAPHIC #1 **<END>** g01433289

299-2966 PANEL GP-CIRCUIT BREAKER

S/N: JGB1-UP; KHS1-UP

PART OF 299-2965 PANEL & MTG GP-CIRCUIT BREAKER

SMCS-1417 **i02973021**

NOTE	REF NO	GRAPHIC REF	PART NUMBER	QTY	PART NAME 1 2 3 4 5 6 (PRODUCT LEVEL)	SEE PAGE
	1	1	**3E-8320**	1	PLATE-INSTRUCTION (BATTERY)	
Y	2	1	**7N-0719**	1	SWITCH GP-DISCONNECT (BATTERY)	246
	3	1	**9R-7941**	1	SOCKET AS	
		1	**9R-7980**	1	COVER	
	4	1	**121-1023**	1	BLOCK-TERMINAL	
Y	5	1	**125-1302**	1	SWITCH GP-MAGNETIC (24-VOLT) (START RELAY)	247
	6	1	**171-2212**	1	CIRCUIT BREAKER AS (105-AMPERE) (ALTERNATOR)	
		1	**6V-8187**	2	NUT (1/4-28-THD)	
		1	**8T-4205**	2	WASHER-HARD (7.2X14.5X2-MM THK)	
		1	**253-2111**	2	LOCKWASHER	
	7	1	**234-1034**	1	CABLE AS	
	8	1	**234-1036**	1	CABLE AS	
	9	1	**234-1037**	1	WIRE AS	
	10	1	**234-1038**	1	WIRE AS	
	11	1	**238-1506**	1	COVER	
	12	1	**238-2280**	1	WIRE AS	
	13	1	**238-2392**	1	BAR-BUS	
	14	1	**299-2967**	1	BRACKET AS	
	15	1	**171-2210**	1	CIRCUIT BREAKER AS (80-AMPERE) (MAIN)	
		1	**6V-8187**	2	NUT (1/4-28-THD)	
		1	**8T-4205**	2	WASHER-HARD (7.2X14.5X2-MM THK)	
		1	**253-2111**	2	LOCKWASHER	
M	16	1	**5C-9553**	5	BOLT (M6X1X16-MM)	
	17	1	**5P-4115**	4	WASHER-HARD (7.2X19X2-MM THK)	
	18	1	**6V-5645**	4	SCREW-MACHINE (10-32X0.87-IN)	
	19	1	**8T-0328**	4	WASHER-HARD (5.5X10X1-MM THK)	
M	20	1	**8T-4171**	4	BOLT (M6X1X12-MM)	
M	21	1	**8T-4970**	4	BOLT (M6X1X14-MM)	
	22	1	**9X-8256**	9	WASHER (6.6X12X2-MM THK)	

M-METRIC PART
Y-SEPARATE ILLUSTRATION

299-2966 **PANEL GP-CIRCUIT BREAKER** *(contd.)* **i02973021**

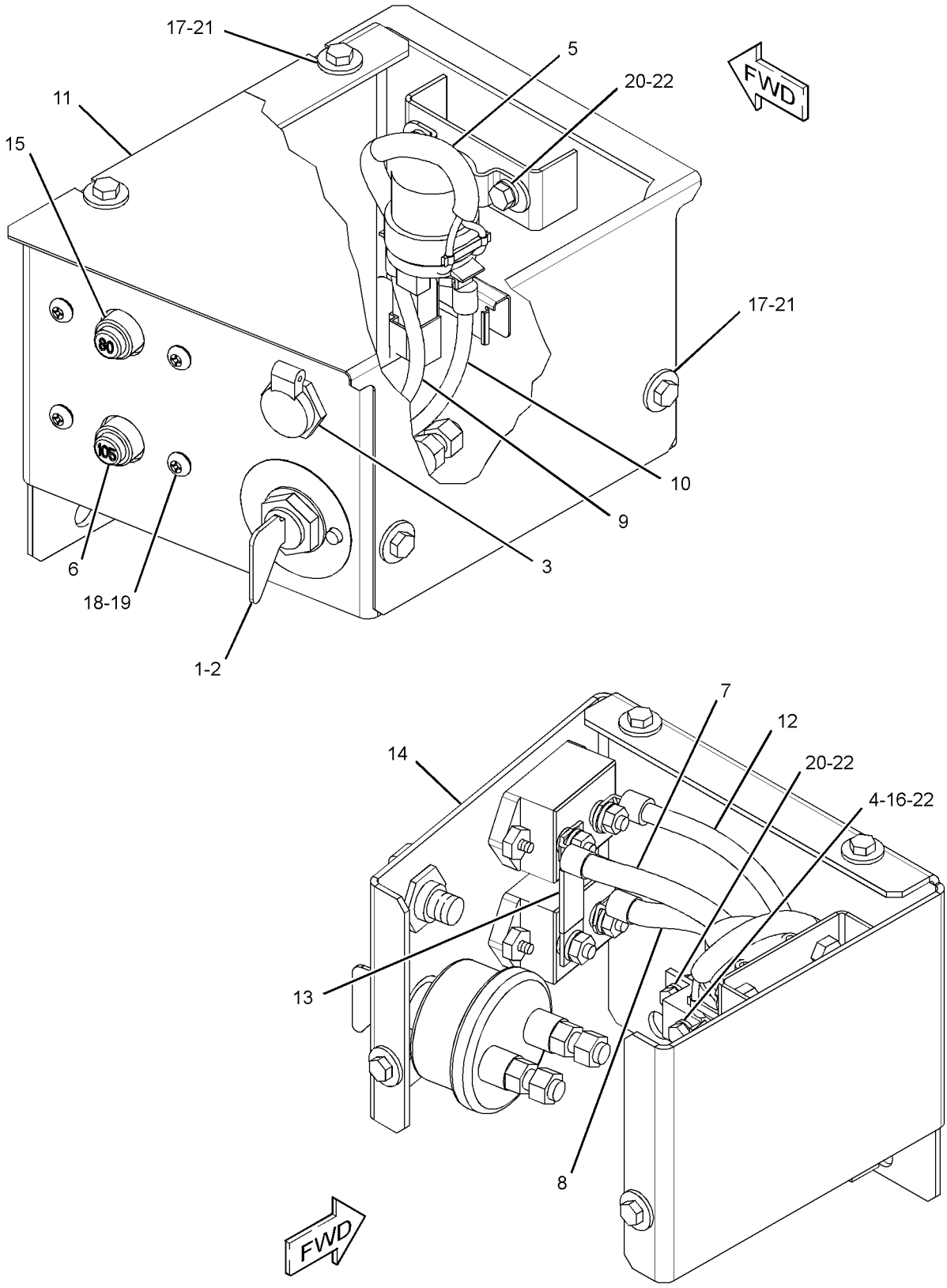

(COVER REMOVED FOR CLARITY)

GRAPHIC #1 **<END>** g01431779

251-0542 PANEL GP-SWITCH–ENGINE SPEED, START

S/N: JGB1-UP; KHS1-UP

PART OF 305-8000 OPERATOR AR

SMCS-1408, 1429, 7332, 7451 **i03142752**

NOTE	REF NO	GRAPHIC REF	PART NUMBER	QTY	PART NAME 1 2 3 4 5 6 (PRODUCT LEVEL)	SEE PAGE
	1	1	**3S-2093**	4	STRAP-CABLE	
Y	2	1	**9G-7641**	1	SWITCH GP-START (ENGINE, KEY)	251
CY	3	1	**319-4420**	1	SWITCH GP-ROTARY (THROTTLE POSITION)	250
	4	1	**170-9324**	1	LAMP AS (24-VOLT, 3-WATT)	
	5	1	**185-9208**	1	KNOB AS (THROTTLE POSITION)	
	6	1	**234-1156**	1	COVER	
	7	1	**234-1158**	1	COVER	
	8	1	**267-7976**	1	PANEL	
C	9	1	**328-0021**	1	HARNESS AS-CONSOLE (RH)	
	10	1	**096-6166**	4	WASHER-HARD (4.5X9X1-MM THK)	
	11	1	**119-5026**	4	SCREW-PAN HEAD (10-16X0.63-IN)	
M	12	1	**6V-9491**	4	SCREW-MACHINE (M4X0.7X20-MM)	

C-CHANGE FROM PREVIOUS TYPE
M-METRIC PART
Y-SEPARATE ILLUSTRATION

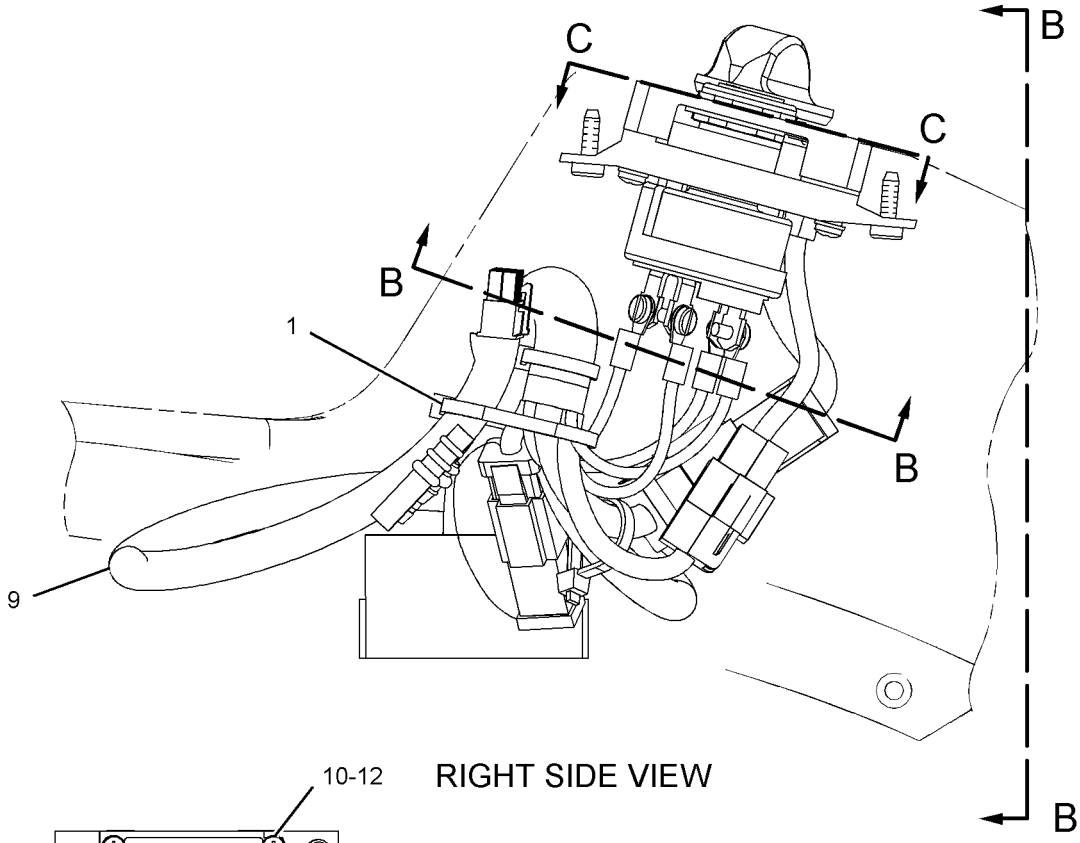

RIGHT SIDE VIEW

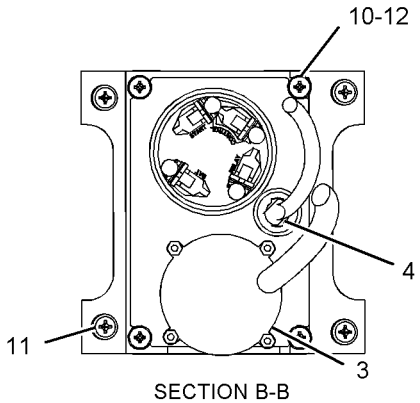

SECTION B-B

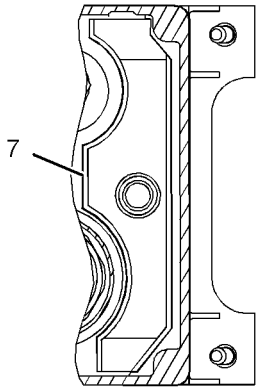

VIEW C-C

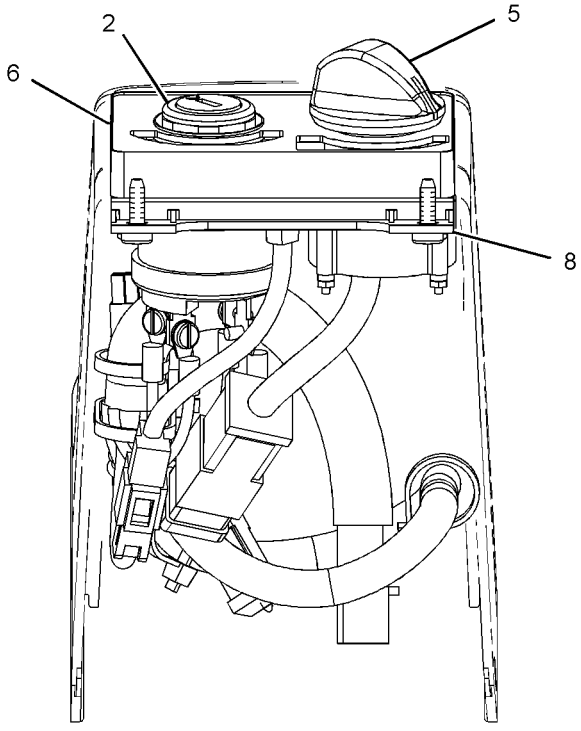

VIEW B-B

GRAPHIC #1 **<END>** g01112022

251-0544 PANEL GP-SWITCH–ENGINE SPEED, START

S/N: JGB1-UP; KHS1-UP
PART OF 227-7581 INSTALLATION GP-SECURITY
AN ATTACHMENT

SMCS-1408, 1429, 7332, 7451 **i03751884**

NOTE	REF NO	GRAPHIC REF	PART NUMBER	QTY	PART NAME 1 2 3 4 5 6 (PRODUCT LEVEL)	SEE PAGE
	1	1	**3S-2093**	5	STRAP-CABLE	
Y	2	1	**9G-7641**	1	SWITCH GP-START (ENGINE, KEY)	251
CY	3	1	**319-4420**	1	SWITCH GP-ROTARY (THROTTLE POSITION)	250
	4	1	**185-9208**	1	KNOB AS	
	5	1	**205-0826**	1	FILM-INSTRUCTION (MACHINE SECURITY, CONSOLE)	
	6	1	**206-5208**	1	COIL AS (EXCITER)	
	7	1	**234-1156**	1	COVER	
	8	1	**267-7977**	1	PANEL	
C	9	1	**328-0021**	1	HARNESS AS-CONSOLE	
		1	**102-8802**	1	KIT-RECEPTACLE (2-PIN)	
					(INCLUDES RECEPTACLE AS & WEDGE)	
		1	**3S-2093**	3	STRAP-CABLE	
		1	**7Y-3951**	2	TERMINAL-BLADE (14-GA)	
		1	**7Y-3952**	1	PLUG-CONNECTOR (2-PIN)	
		1	**7Y-3962**	1	TERMINAL-BULLET (MALE)	
		1	**7Y-3963**	1	TERMINAL-BULLET (FEMALE)	
		1	**8T-8737**	3	PLUG-SEAL	
		1	**121-1168**	1	CONNECTOR-RECEPTACLE	
		1	**121-1173**	14	TERMINAL (MALE)	
		1	**9X-3402**	7	SOCKET-CONNECTOR (16-GA TO 18-GA)	
		1	**2L-8075**	4	TERMINAL-RING (14-GA TO 16-GA, NO. 8 SCREW)	
		1	**153-2540**	10	TERMINAL (FEMALE)	
		1	**153-2541**	1	PLUG-CONNECTOR (10-PIN)	
		1	**155-2270**	1	KIT-CONNECTING PLUG (2-PIN)	
					(INCLUDES PLUG AS, WEDGE & INTERFACE SEAL)	
		1	**230-5010**	1	PLUG AS-CONNECTOR (6-PIN)	
		1	**264-7032**	1	SEAL-CONNECTOR	
		1	**238-2366**	7	TERMINAL (MALE)	
	10	1	**096-6166**	4	WASHER-HARD (4.5X9X1-MM THK)	
	11	1	**119-5026**	4	SCREW-PAN HEAD (10-16X0.63-IN)	
M	12	1	**6V-9491**	4	SCREW-MACHINE (M4X0.7X20-MM)	

C-CHANGE FROM PREVIOUS TYPE
M-METRIC PART
Y-SEPARATE ILLUSTRATION

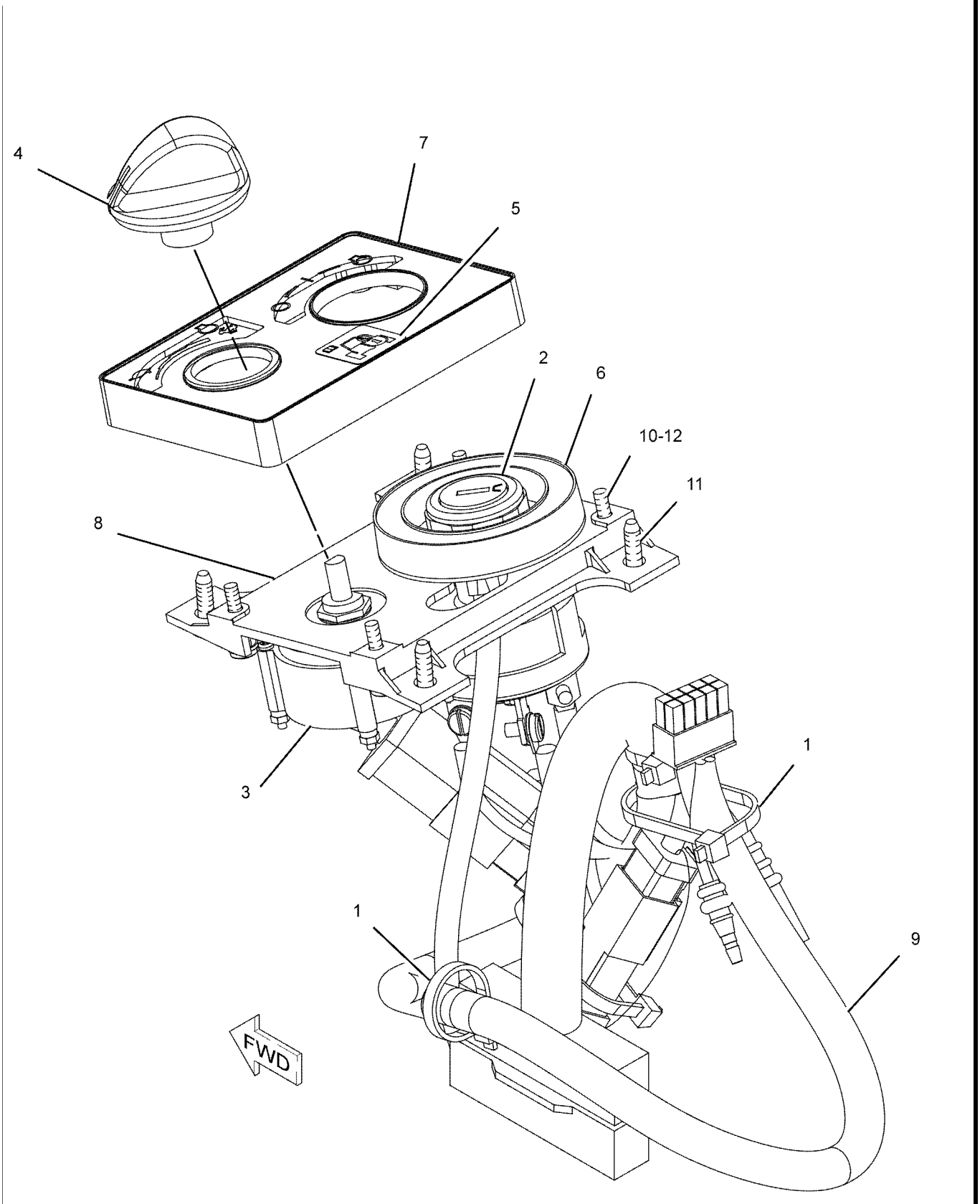

GRAPHIC #1 **<END>** g01123869

235-8200 PLUG GP-CONNECTOR–
ENGINE HARNESS, PROTECTIVE COVER
S/N: TXF1-UP; MHX7634-UP
PART OF 291-9259 ENGINE AR-COMPLETE

SMCS-1403, 1408 **i02951922**

NOTE	REF NO	GRAPHIC REF	PART NUMBER	QTY	PART NAME 1 2 3 4 5 6 (PRODUCT LEVEL)	SEE PAGE
	1	1	**246-9353**	1	PLUG AS	
	1A	1	**8T-8737**	8	PLUG-SEAL	
	1B	1	**102-8806**	1	KIT-RECEPTACLE (8-PIN)	
					(INCLUDES RECEPTACLE AS & WEDGE)	
	2	1	**3S-2093**	1	STRAP-CABLE	

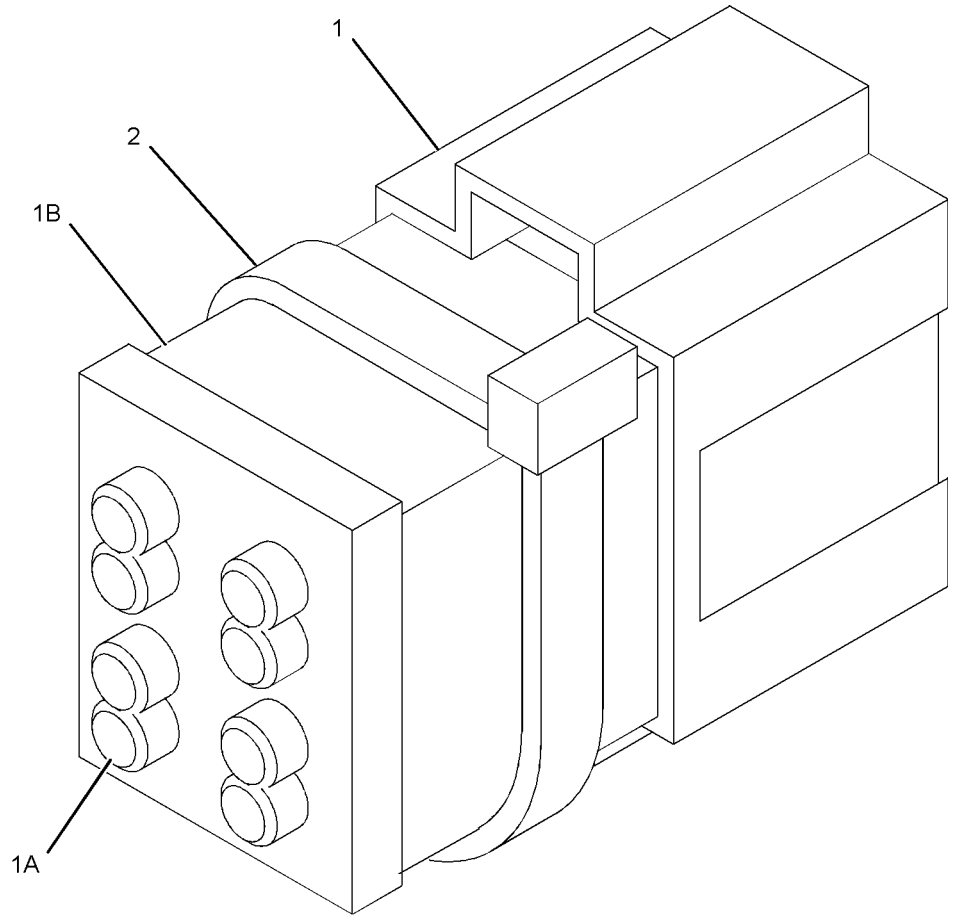

GRAPHIC #1 **<END>** g01105455

297-4513 SENSOR & MTG GP-POSITION–BOOM

S/N: JGB1-UP; KHS1-UP
PART OF 319-9274, 351-9595 SPECIAL AR
AN ATTACHMENT

SMCS-5736 **i04165081**

NOTE	REF NO	GRAPHIC REF	PART NUMBER	QTY	PART NAME 1 2 3 4 5 6 (PRODUCT LEVEL)	SEE PAGE
CY	1	1	**361-4360**	1	SENSOR GP-POSITION (BOOM)	220
	2	1	**297-4525**	1	LEVER AS	
	3	1	**309-5694**	1	PLATE	
M	4	1	**131-3983**	4	BOLT-SOCKET HEAD (M8X1.25X35-MM)	
M	5	1	**8C-8451**	2	BOLT (M6X1X40-MM)	
	6	1	**8T-4121**	1	WASHER-HARD (11X21X2.5-MM THK)	
M	7	1	**8T-4137**	1	BOLT (M10X1.5X20-MM)	
	8	1	**8T-4224**	4	WASHER-HARD (8.8X16X2-MM THK)	
	9	1	**9X-8256**	2	WASHER (6.6X12X2-MM THK)	

C-CHANGE FROM PREVIOUS TYPE
M-METRIC PART
Y-SEPARATE ILLUSTRATION

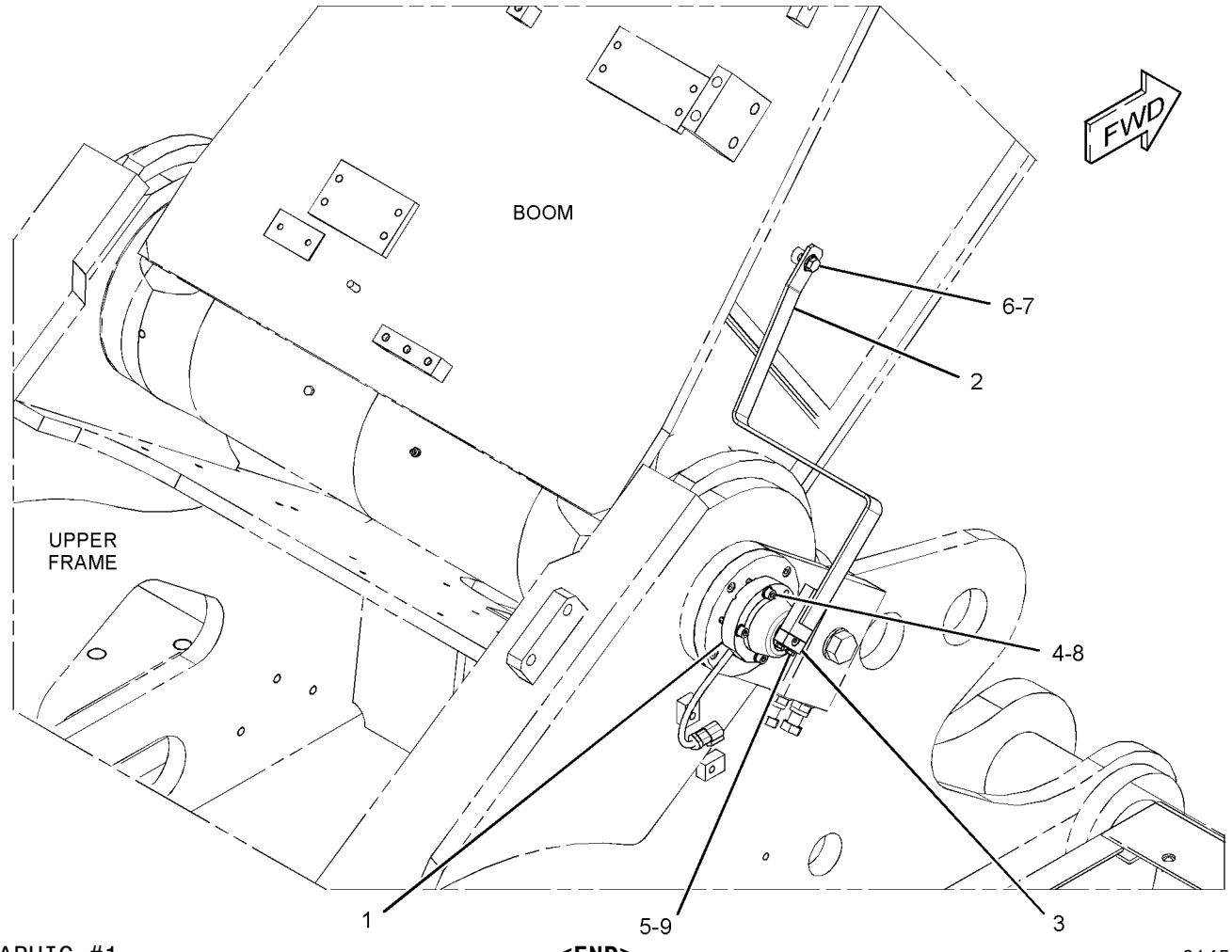

GRAPHIC #1 **<END>** g01458500

297-4516 SENSOR & MTG GP-POSITION–STICK

S/N: JGB1-UP; KHS1-UP
PART OF 319-9245 BOOM AR
AN ATTACHMENT

SMCS-5736 **i04165020**

NOTE	REF NO	GRAPHIC REF	PART NUMBER	QTY	PART NAME 1 2 3 4 5 6 (PRODUCT LEVEL)	SEE PAGE
CY	1	1	**361-4360**	1	SENSOR GP-POSITION (STICK)	220
	2	1	**297-4528**	1	LEVER AS	
	3	1	**309-5694**	1	PLATE	
	4	1	**309-5695**	1	ROD AS	
M		1	**8T-4133**	1	NUT (M10X1.5-THD)	
M		1	**9X-2065**	1	NUT (M10X1.5-THD, LH)	
	5	1	**309-5733**	1	ROLLER	
	6	1	**309-5734**	1	SPACER (10.8X17.3X12-MM THK)	
M	7	1	**131-3983**	4	BOLT-SOCKET HEAD (M8X1.25X35-MM)	
M	8	1	**8C-8451**	2	BOLT (M6X1X40-MM)	
M	9	1	**8T-1160**	1	BOLT-SOCKET HEAD (M10X1.5X50-MM)	
	10	1	**8T-4121**	3	WASHER-HARD (11X21X2.5-MM THK)	
M	11	1	**8T-4195**	1	BOLT (M10X1.5X30-MM)	
	12	1	**8T-4224**	4	WASHER-HARD (8.8X16X2-MM THK)	
	13	1	**9X-8256**	2	WASHER (6.6X12X2-MM THK)	

C-CHANGE FROM PREVIOUS TYPE
M-METRIC PART
Y-SEPARATE ILLUSTRATION

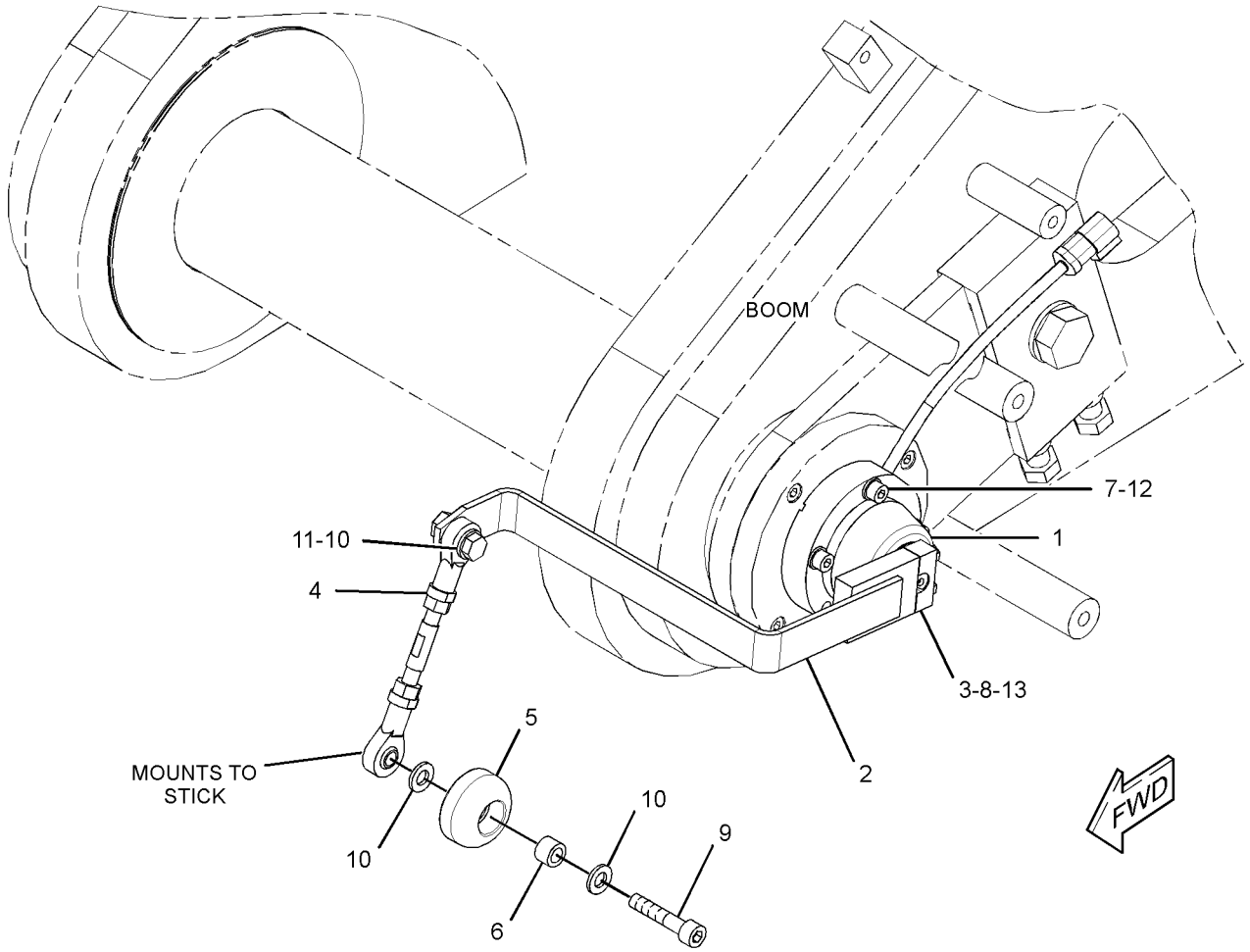

GRAPHIC #1 **<END>** g01460849

243-1555 SENSOR GP-ENGINE

S/N: MHX7634-UP

PART OF 291-9259 ENGINE AR-COMPLETE

SMCS-1000, 1906, 1907, 1924, 7422 **i03531842**

NOTE	REF NO	GRAPHIC REF	PART NUMBER	QTY	PART NAME 1 2 3 4 5 6 (PRODUCT LEVEL)	SEE PAGE
	1	1	**3S-2093**	2	STRAP-CABLE	
	2	1	**9X-0262**	1	ADAPTER	
	3	1	**117-0067**	1	ELBOW	
Y	4	1	**230-7149**	1	SENSOR GP-SPEED (TIMING, CRANKSHAFT)	231
	5	1	**234-4355**	1	ADAPTER-O-RING	
Y	6	1	*239-2395*	1	SENSOR GP-PRESSURE (ATMOSPHERIC AIR)	223
Y	7	1	*239-2396*	1	SENSOR GP-PRESSURE (FUEL)	224
Y	8	1	*239-2397*	1	SENSOR GP-SPEED (TIMING, CAMSHAFT)	232
Y	9	1	*274-7395*	1	SENSOR GP-TEMPERATURE (FUEL)	237
Y	10	1	*274-7396*	1	SENSOR GP-TEMPERATURE (COOLANT, WATER)	238
Y	11	1	*239-5674*	1	SENSOR GP-PRESSURE (AIR INLET MANIFOLD)	226
	12	1	**6V-5048**	2	SEAL-O-RING	
	13	1	**6V-5049**	1	SEAL-O-RING	
M	14	1	**6V-5215**	2	BOLT (M8X1.25X16-MM)	
	15	1	**9M-1974**	2	WASHER-HARD (8.8X16X2-MM THK)	
	16	1	**332-0194**	1	STRAP-CABLE	

M-METRIC PART
Y-SEPARATE ILLUSTRATION

243-1555 **SENSOR GP-ENGINE** *(contd.)* **i03531842**

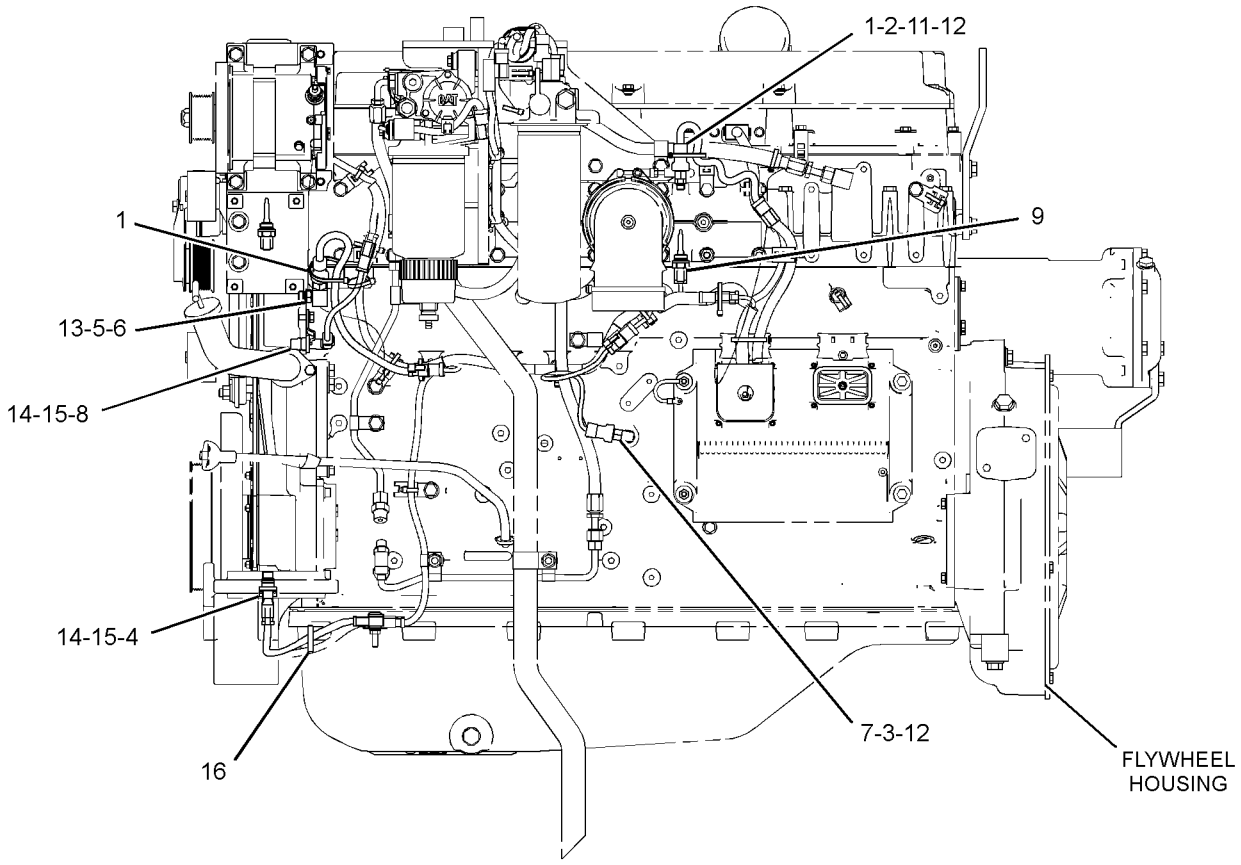

LEFT SIDE VIEW OF ENGINE

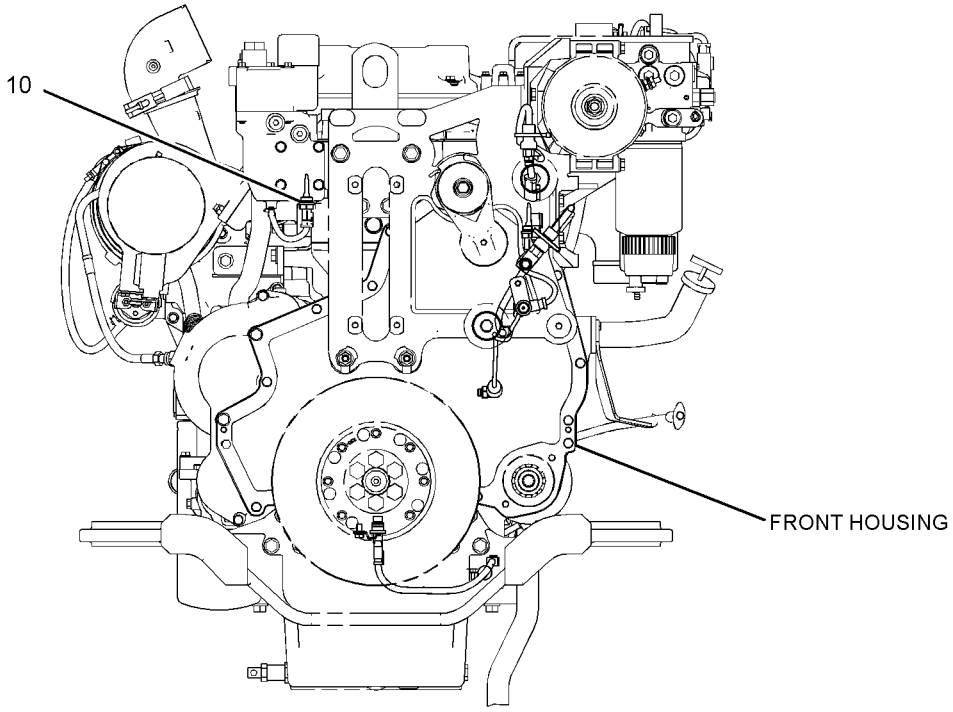

FRONT VIEW OF ENGINE

GRAPHIC #1 **<END>** g01861016

354-0042 SENSOR GP-ENGINE

S/N: TXF1-UP; MHX10094-UP

PART OF 291-9259 ENGINE AR-COMPLETE, 356-2433 ENGINE AR-CORE

SMCS-1000, 1906, 1907, 1924, 7422 **i03958069**

NOTE	REF NO	GRAPHIC REF	PART NUMBER	QTY	PART NAME 1 2 3 4 5 6 (PRODUCT LEVEL)	SEE PAGE
	1	1	**234-4355**	1	ADAPTER-O-RING	
Y	2	1	*234-5012*	1	SENSOR GP-TEMPERATURE	235
Y	3	1	*234-5013*	1	SENSOR GP-TEMPERATURE	236
Y	4	1	*249-0096*	1	SENSOR GP-PRESSURE	227
Y	5	1	*276-8548*	1	SENSOR GP-PRESSURE	228
Y	6	1	*276-9067*	1	SENSOR GP-PRESSURE	229
Y	7	1	*300-9805*	1	SENSOR GP-SPEED	233
Y	8	1	*300-9806*	1	SENSOR GP-SPEED	234
	9	1	**117-0067**	1	ELBOW	
	10	1	**214-7566**	1	SEAL-O-RING	
	11	1	**214-7568**	1	SEAL-O-RING	
	12	1	**332-0194**	1	STRAP-CABLE	
M	13	1	**6V-5215**	2	BOLT (M8X1.25X16-MM)	
	14	1	**9M-1974**	2	WASHER-HARD (8.8X16X2-MM THK)	

M-METRIC PART
Y-SEPARATE ILLUSTRATION

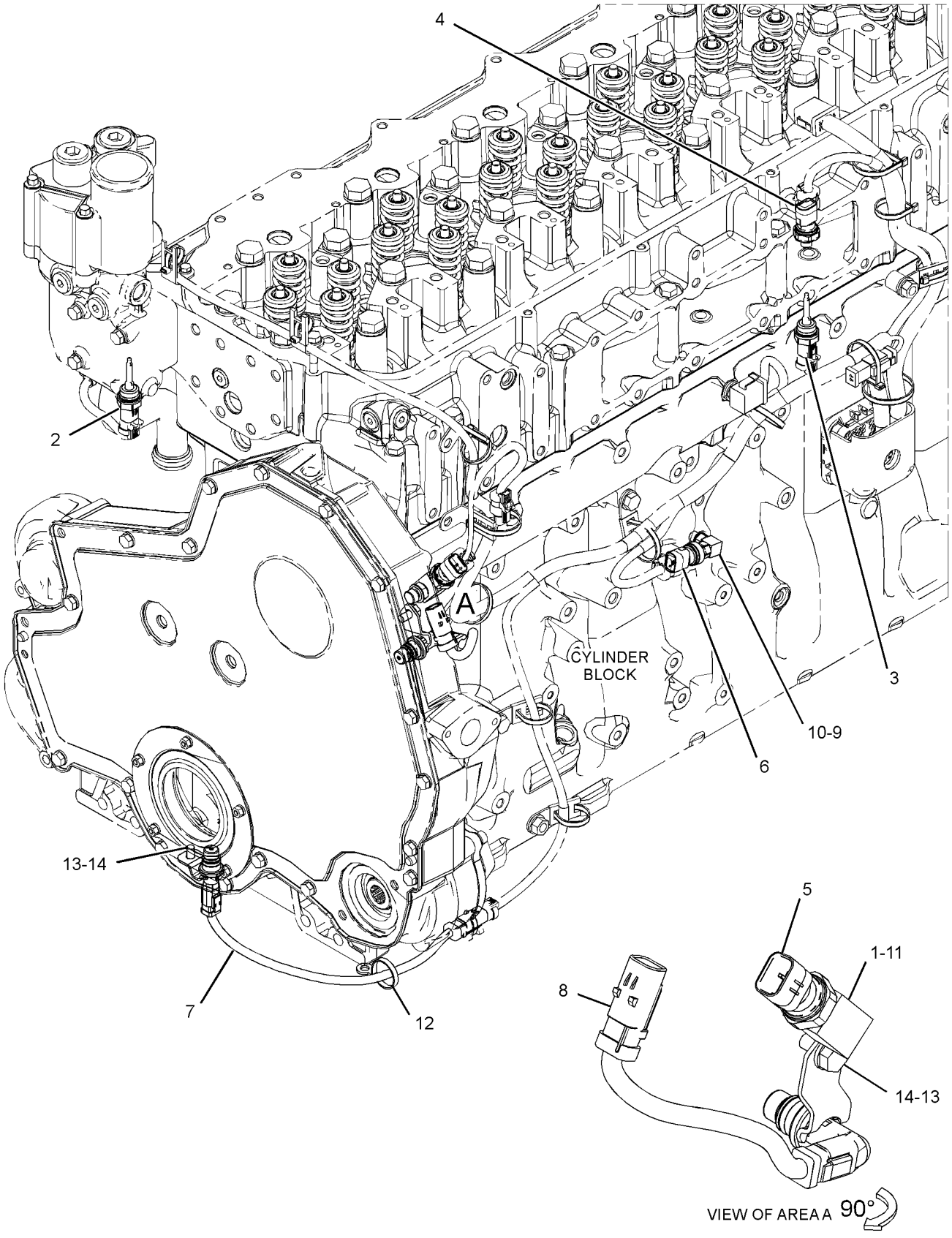

GRAPHIC #1 **<END>** g02345258

178-2345 SENSOR GP-LIQUID LEVEL

S/N: JGB1-UP; KHS1-UP

PART OF 222-8367 SENSOR GP-LIQUID LEVEL

SMCS-7422 **i03323081**

NOTE	REF NO	GRAPHIC REF	PART NUMBER	QTY	PART NAME 1 2 3 4 5 6 (PRODUCT LEVEL)	SEE PAGE
	1	1	**178-2334**	1	PROBE AS-LIQUID LEVEL (WATER SEPARATOR)	
		1	**3J-1907**	1	SEAL-O-RING	
	2	1	**178-2335**	1	SENSOR AS-LIQUID LEVEL (WATER SEPARATOR)	
		1	**102-8804**	1	KIT-RECEPTACLE (4-PIN)	
					(INCLUDES RECEPTACLE AS & WEDGE)	
		1	**155-2270**	1	KIT-CONNECTING PLUG (2-PIN)	
					(INCLUDES PLUG AS, WEDGE & INTERFACE SEAL)	
		1	**186-3735**	4	PIN-CONNECTOR (16-GA TO 18-GA)	
		1	**186-3736**	2	SOCKET-CONNECTOR (16-GA TO 18-GA)	

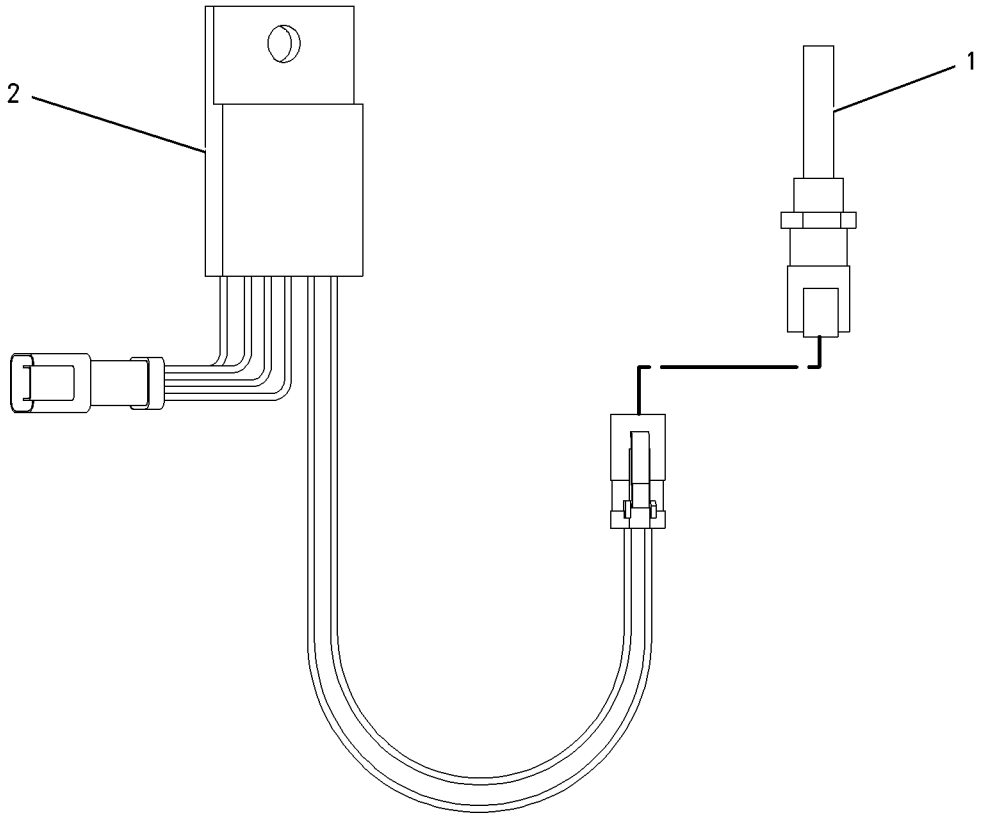

GRAPHIC #1 **<END>** g00816289

222-8367 SENSOR GP-LIQUID LEVEL

S/N: JGB1-UP; KHS1-UP

PART OF 370-3231, 370-4189 CHASSIS AR

SMCS-7422 **i03002215**

NOTE	REF NO	GRAPHIC REF	PART NUMBER	QTY	PART NAME 1 2 3 4 5 6 (PRODUCT LEVEL)	SEE PAGE
	1	1	**096-0061**	2	STRAP-CABLE	
Y	2	1	**178-2345**	1	SENSOR GP-LIQUID LEVEL (WATER IN FUEL)	218
	3	1	**6V-5049**	1	SEAL-O-RING	
	4	1	**8T-4121**	1	WASHER-HARD (11X21X2.5-MM THK)	
M	5	1	**8T-4137**	1	BOLT (M10X1.5X20-MM)	

M-METRIC PART
Y-SEPARATE ILLUSTRATION

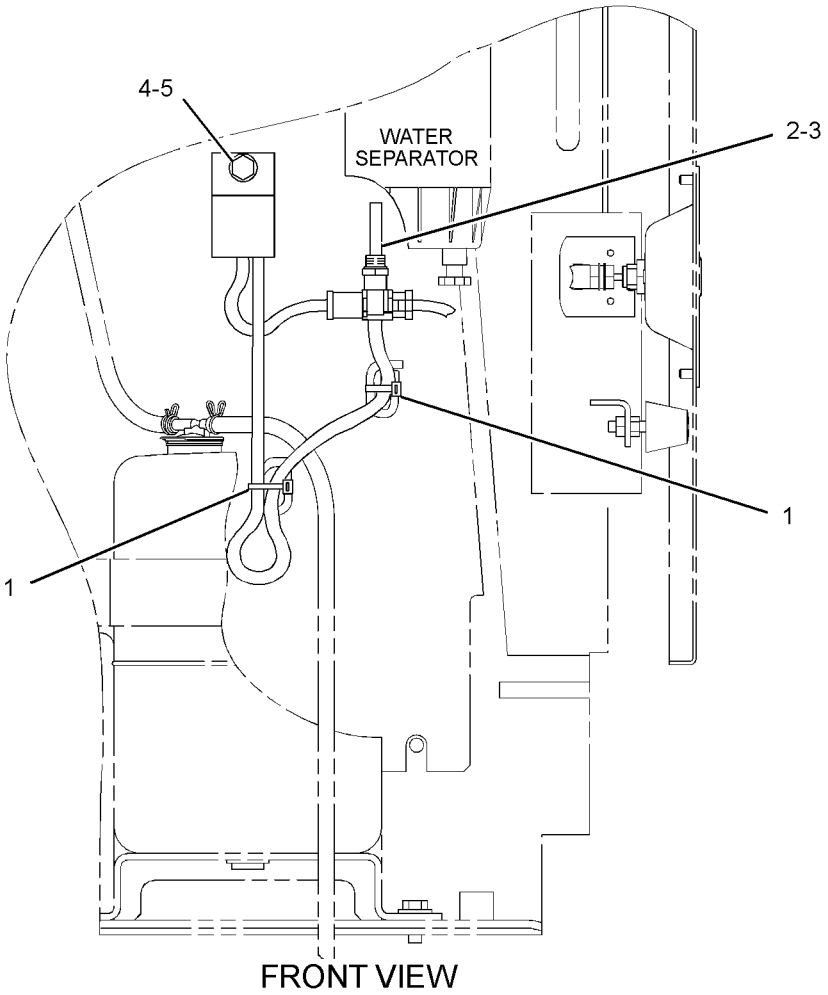

GRAPHIC #1

<END>

g01525281

361-4360 SENSOR GP-POSITION

S/N: JGB1-UP; KHS1-UP
PART OF 297-4513, 297-4516 SENSOR & MTG GP-POSITION
AN ATTACHMENT

SMCS-5737 **i04165078**

NOTE	REF NO	GRAPHIC REF	PART NUMBER	QTY	PART NAME 1 2 3 4 5 6 (PRODUCT LEVEL)	SEE PAGE
	1	1	**102-8803**	1	KIT-RECEPTACLE (3-PIN)	
					(INCLUDES RECEPTACLE AS AND WEDGE)	
	2	1	**9X-3401**	1	PIN-CONNECTOR (16-GA TO 18-GA)	
					—OR—	
			126-1767	1	PIN-CONNECTOR (14-GA TO 16-GA)	
	3	1	**3E-3371**	1	WEDGE-RECEPTACLE LOCK (3-PIN)	
E	4	1	**9X-1813**		SLEEVE (17-CM)	

E-ORDER BY THE CENTIMETER

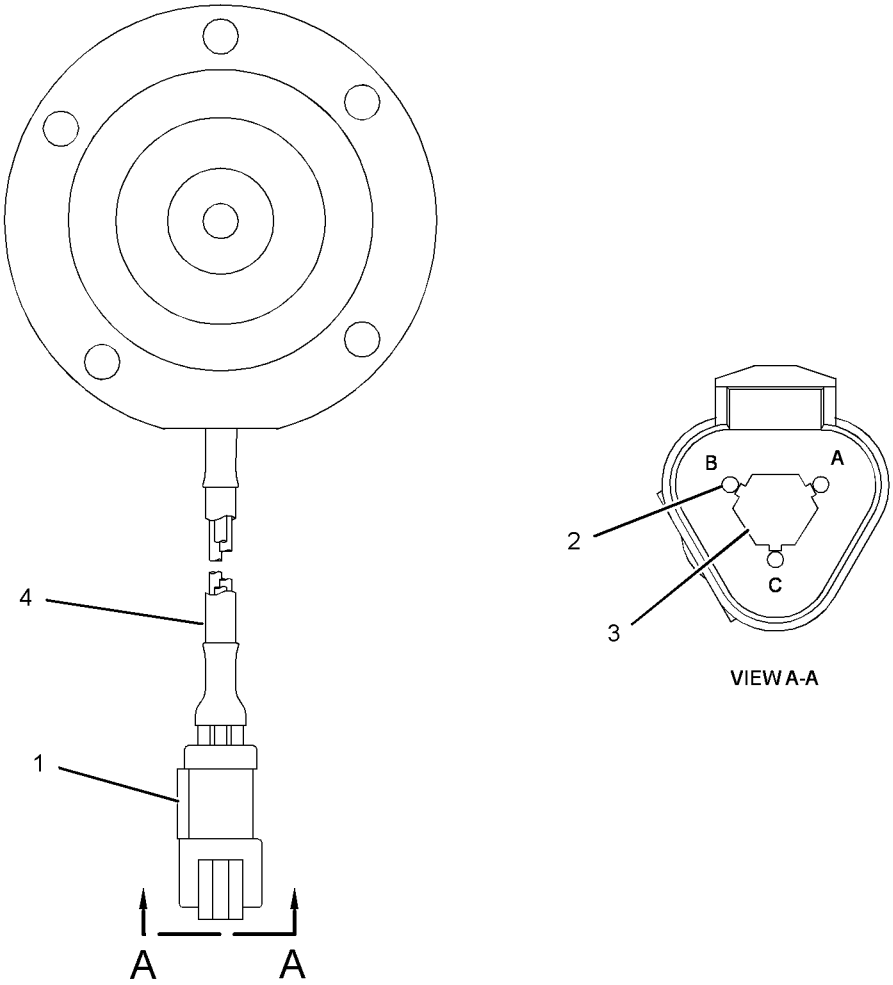

GRAPHIC #1 **<END>** g02263213

194-6722 SENSOR GP-PRESSURE

S/N: MHX7634-UP

PART OF 239-2395 SENSOR GP-PRESSURE

SMCS-1439, 1916, 1917, 1923, 1924 **i03698115**

NOTE	REF NO	GRAPHIC REF	PART NUMBER	QTY	PART NAME 1 2 3 4 5 6 (PRODUCT LEVEL)	SEE PAGE
E	1	1	**9X-1813**		SLEEVE (34-CM)	
	2	1	**155-2260**	1	KIT-CONNECTING PLUG (3-PIN)	
					(INCLUDES PLUG AS, WEDGE & INTERFACE SEAL)	
	3	1	**180-9340**	3	SOCKET-CONNECTOR (14-GA TO 18-GA)	

E-ORDER BY THE CENTIMETER

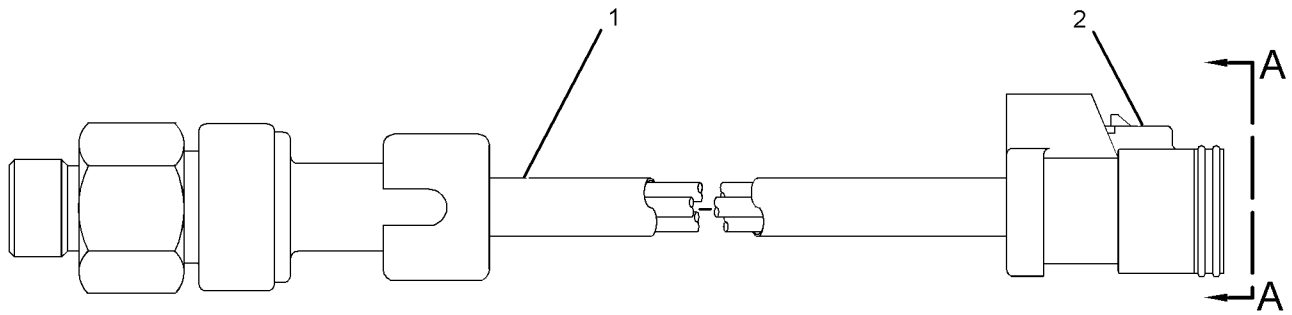

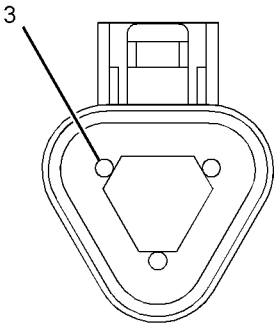

VIEW A-A

GRAPHIC #1 **<END>** g01991395

194-6725 SENSOR GP-PRESSURE

S/N: JGB1-UP; KHS1-UP; MHX7634-UP
PART OF 239-2396 SENSOR GP-PRESSURE

SMCS-1439, 1916, 1917, 1923, 1924 **i03642385**

NOTE	REF NO	GRAPHIC REF	PART NUMBER	QTY	PART NAME 1 2 3 4 5 6 (PRODUCT LEVEL)	SEE PAGE
E	1	1	**9X-1813**		SLEEVE (34-CM)	
	2	1	**155-2260**	1	KIT-CONNECTING PLUG (3-PIN)	
					(INCLUDES PLUG AS, INTERFACE SEAL & WEDGE)	
	3	1	**180-9340**	3	SOCKET-CONNECTOR (14-GA TO 18-GA)	

E-ORDER BY THE CENTIMETER

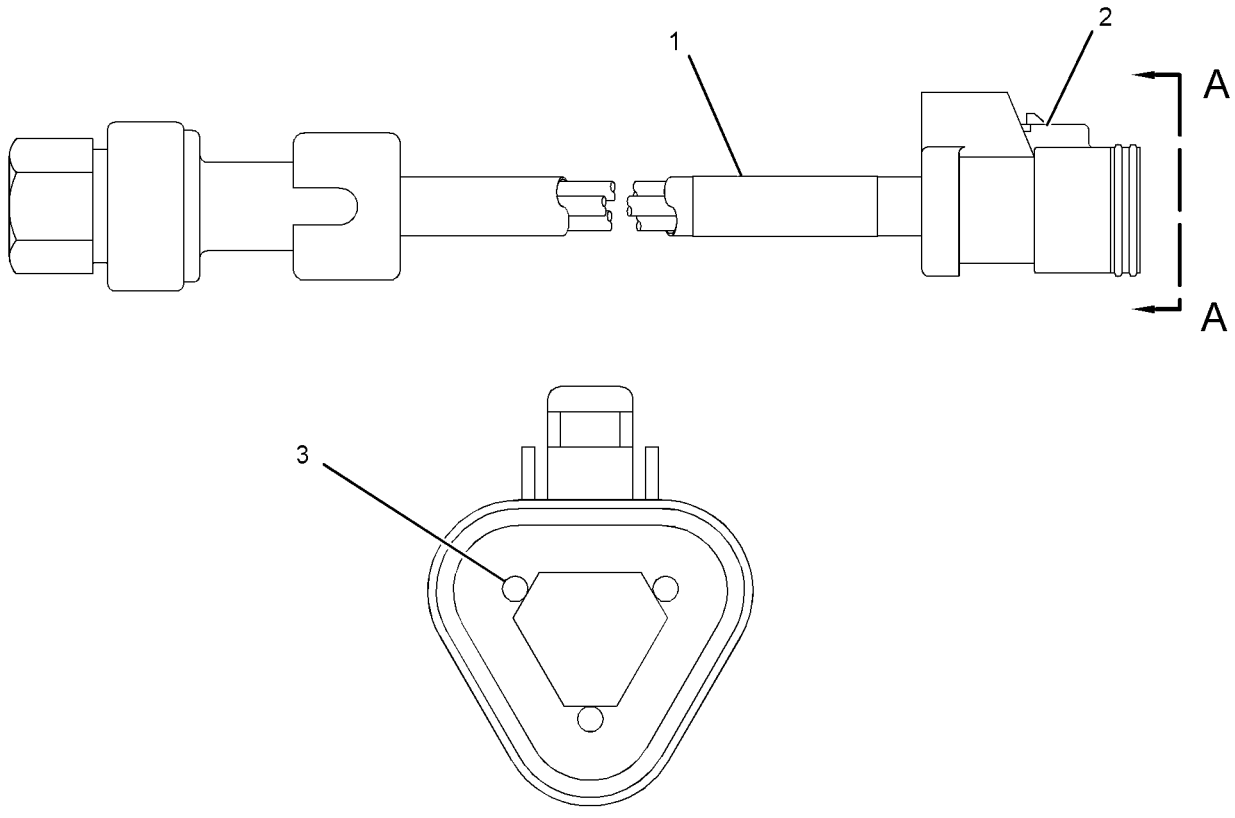

VIEW A-A

GRAPHIC #1 **<END>** g01662003

239-2395 SENSOR GP-PRESSURE

S/N: MHX7634-UP

PART OF 243-1555 SENSOR GP-ENGINE

SMCS-1439, 1916, 1917, 1923, 1924 **i03993925**

NOTE	REF NO	GRAPHIC REF	PART NUMBER	QTY	PART NAME 1 2 3 4 5 6 (PRODUCT LEVEL)	SEE PAGE
Y	1	1	**194-6722**	1	SENSOR GP-PRESSURE (ATMOSPHERIC)	221
	2	1	**214-7568**	1	SEAL-O-RING	

Y-SEPARATE ILLUSTRATION

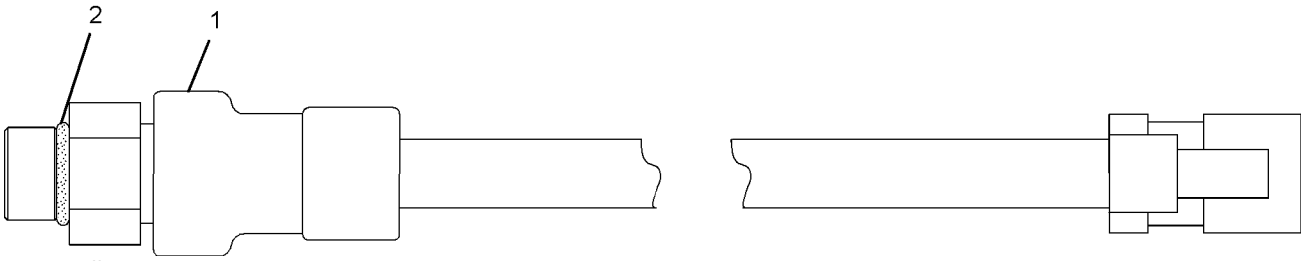

GRAPHIC #1 **<END>** g01019702

239-2396 SENSOR GP-PRESSURE

S/N: JGB1-UP; KHS1-UP; MHX7634-UP

PART OF 313-8169 LINES GP-FUEL, 243-1555 SENSOR GP-ENGINE

SMCS-1439, 1916, 1917, 1923, 1924 **i03821338**

NOTE	REF NO	GRAPHIC REF	PART NUMBER	QTY	PART NAME 1 2 3 4 5 6 (PRODUCT LEVEL)	SEE PAGE
Y	1	1	**194-6725**	1	SENSOR GP-PRESSURE	222
	2	1	**214-7566**	1	SEAL-O-RING	

Y-SEPARATE ILLUSTRATION

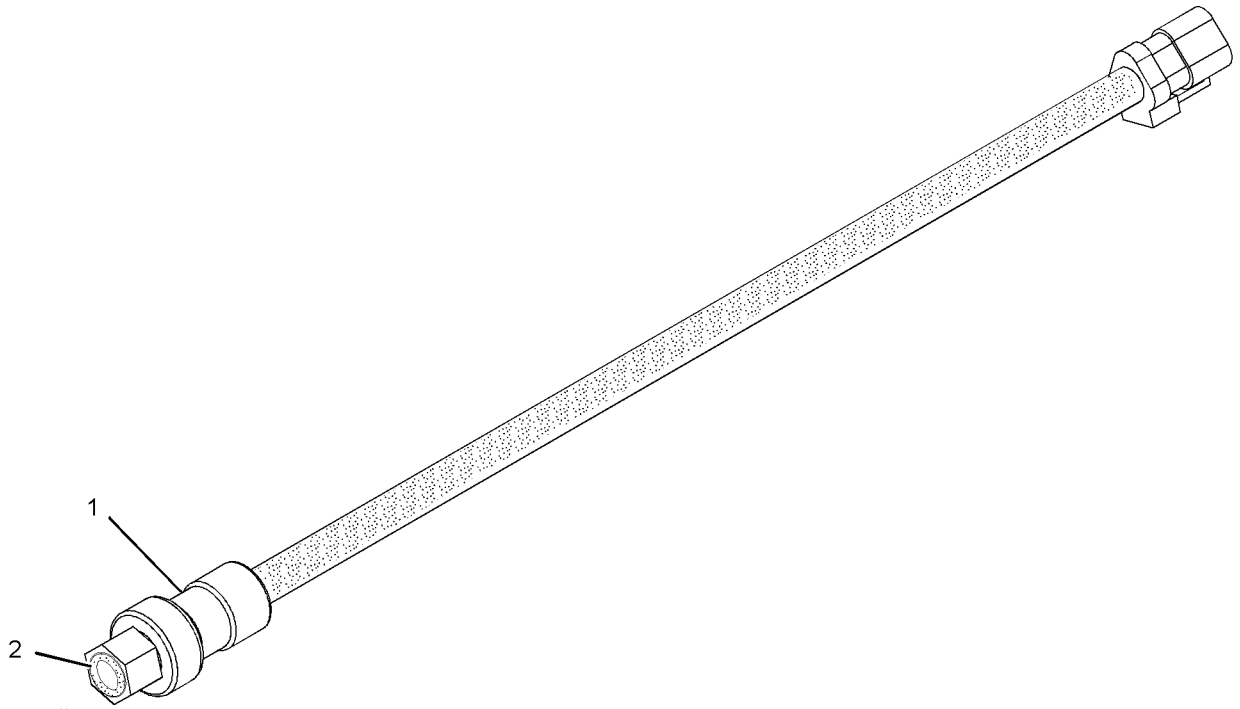

GRAPHIC #1 **<END>** g01019323

239-3478 SENSOR GP-PRESSURE

S/N: MHX7634-UP

PART OF 239-5674 SENSOR GP-PRESSURE

SMCS-1439, 1916, 1917, 1923, 1924 **i03570562**

NOTE	REF NO	GRAPHIC REF	PART NUMBER	QTY	PART NAME 1 2 3 4 5 6 (PRODUCT LEVEL)	SEE PAGE
	1	1	**102-8803**	1	KIT-RECEPTACLE (3-PIN)	
					(INCLUDES RECEPTACLE AS & WEDGE)	
	2	1	**180-9339**	3	PIN-CONNECTOR (14-GA TO 18-GA)	
E	3	1	**9X-1813**		SLEEVE (34-CM)	

E-ORDER BY THE CENTIMETER

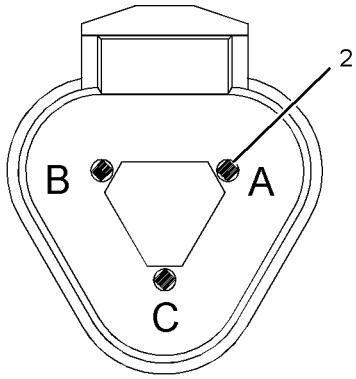

VIEW A-A

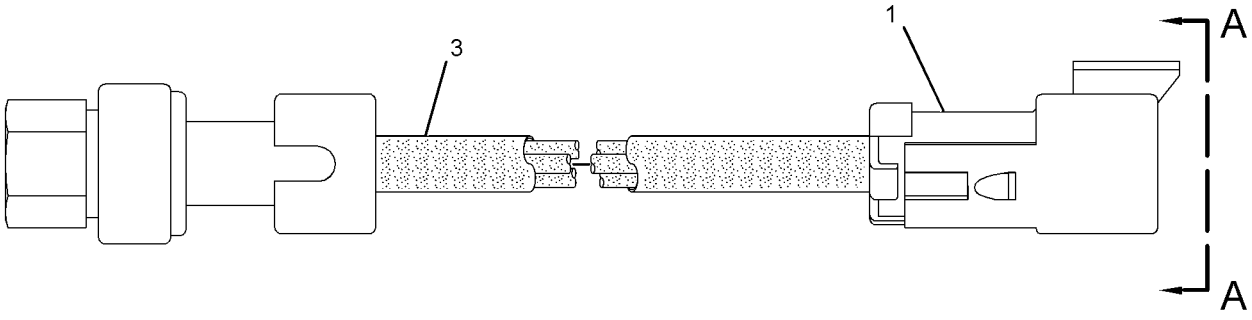

GRAPHIC #1 **<END>** g01896473

239-5674 SENSOR GP-PRESSURE

S/N: MHX7634-UP

PART OF 243-1555 SENSOR GP-ENGINE

SMCS-1439, 1916, 1917, 1923, 1924 **i03821202**

NOTE	REF NO	GRAPHIC REF	PART NUMBER	QTY	PART NAME 1 2 3 4 5 6 (PRODUCT LEVEL)	SEE PAGE
Y	1	1	**239-3478**	1	SENSOR GP-PRESSURE	225
	2	1	**214-7566**	1	SEAL-O-RING	

Y-SEPARATE ILLUSTRATION

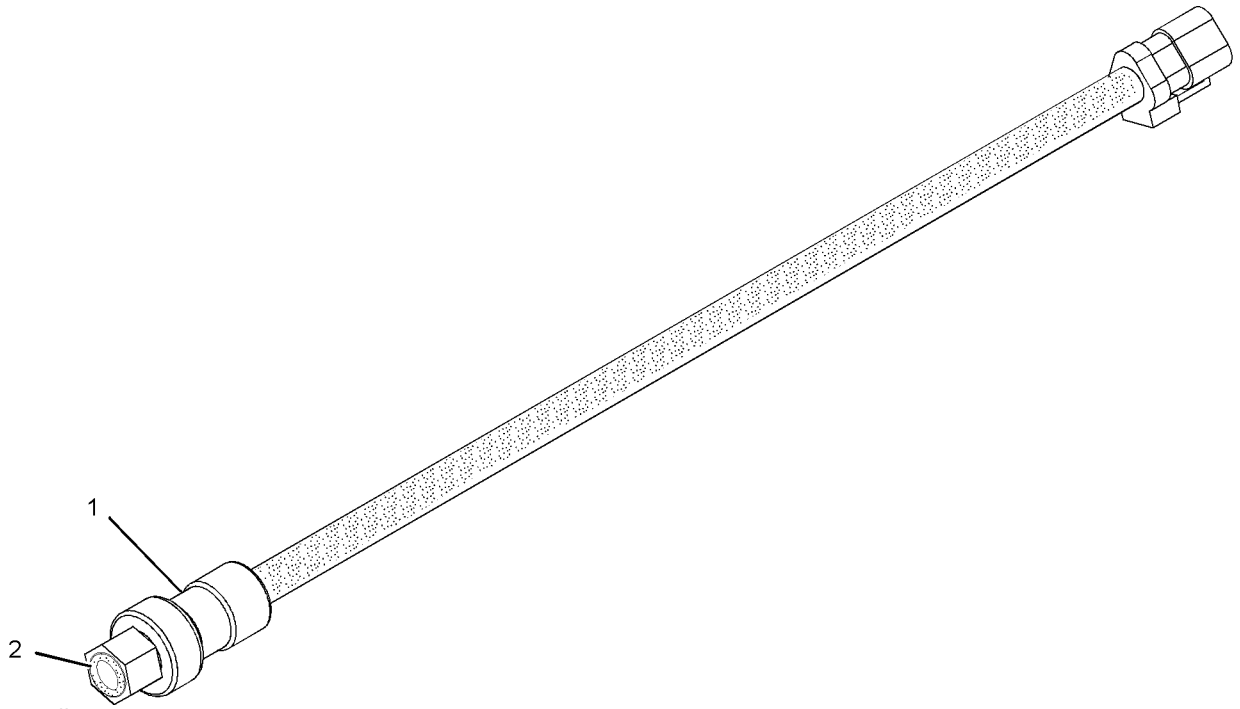

GRAPHIC #1 **<END>** g01019323

249-0096 SENSOR GP-PRESSURE

S/N: TXF1-UP; MHX10094-UP

PART OF 354-0042 SENSOR GP-ENGINE

SMCS-1439, 1916, 1917, 1923, 1924 **i03821357**

NOTE	REF NO	GRAPHIC REF	PART NUMBER	QTY	PART NAME 1 2 3 4 5 6 (PRODUCT LEVEL)	SEE PAGE
	1	1	**274-6718**	1	SENSOR GP-PRESSURE	
	2	1	**214-7566**	1	SEAL-O-RING	

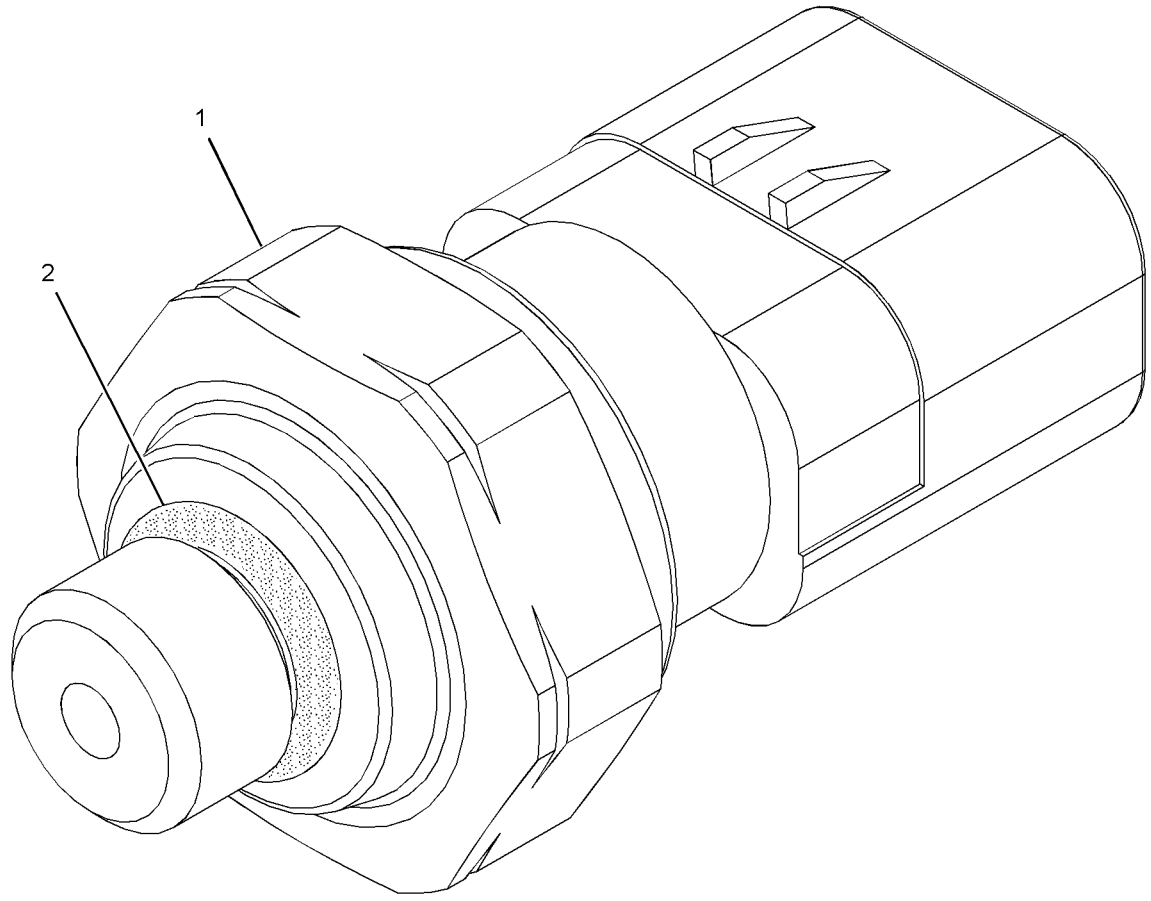

GRAPHIC #1 **<END>** g01224445

276-8548 SENSOR GP-PRESSURE

S/N: TXF1-UP; MHX10094-UP
AMPSEAL CONNECTOR
PART OF 354-0042 SENSOR GP-ENGINE

SMCS-1439, 1916, 1917, 1923, 1924 **i03784732**

NOTE	REF NO	GRAPHIC REF	PART NUMBER	QTY	PART NAME 1 2 3 4 5 6 (PRODUCT LEVEL)	SEE PAGE
	1	1	**274-6717**	1	SENSOR-PRESSURE	
	2	1	**214-7568**	1	SEAL-O-RING	

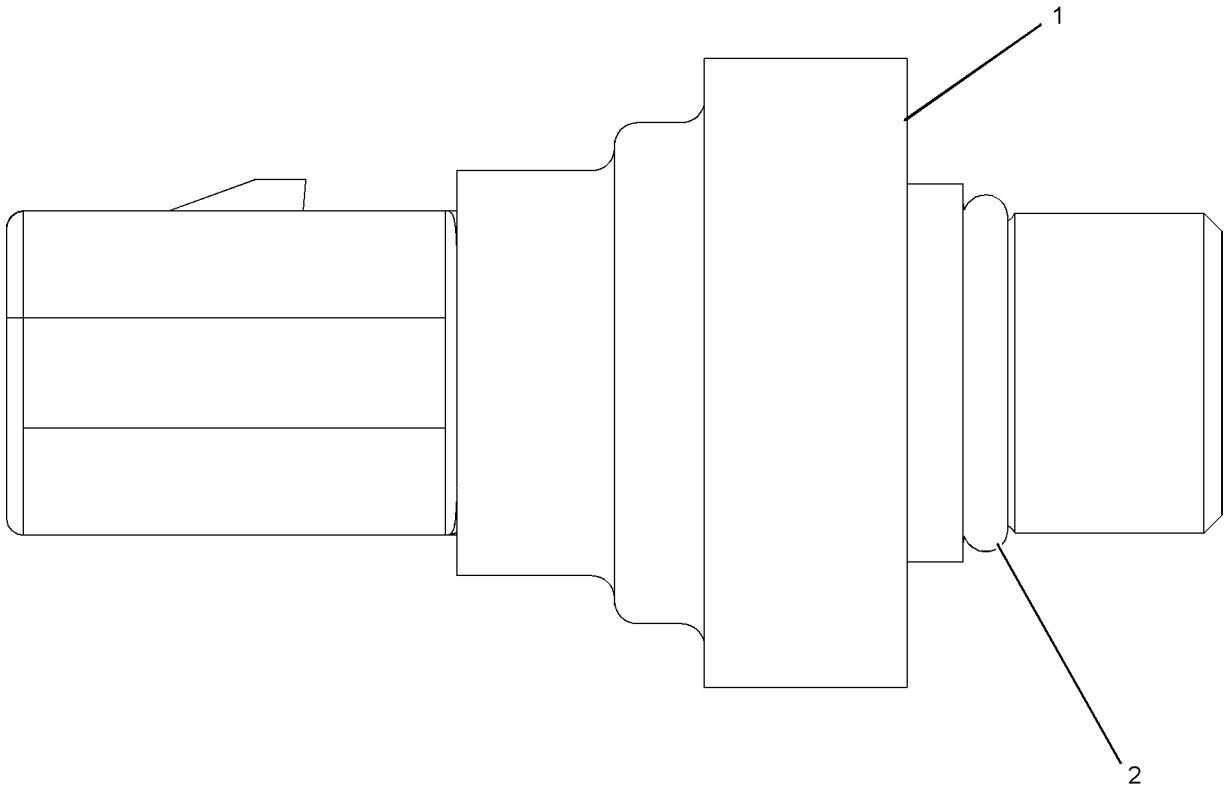

GRAPHIC #1 **<END>** g01064278

276-9067 SENSOR GP-PRESSURE

S/N: TXF1-UP; MHX10094-UP
AMPSEAL CONNECTOR
PART OF 354-0042 SENSOR GP-ENGINE

SMCS-1439, 1916, 1917, 1923, 1924 **i03920338**

NOTE	REF NO	GRAPHIC REF	PART NUMBER	QTY	PART NAME 1 2 3 4 5 6 (PRODUCT LEVEL)	SEE PAGE
	1	1	**274-6719**	1	SENSOR GP-PRESSURE	
		1	**3J-7354**	1	SEAL-O-RING	
		1	**237-0227**	1	PLUG AS-CONNECTOR (3-PIN)	
	2	1	**214-7566**	1	SEAL-O-RING	

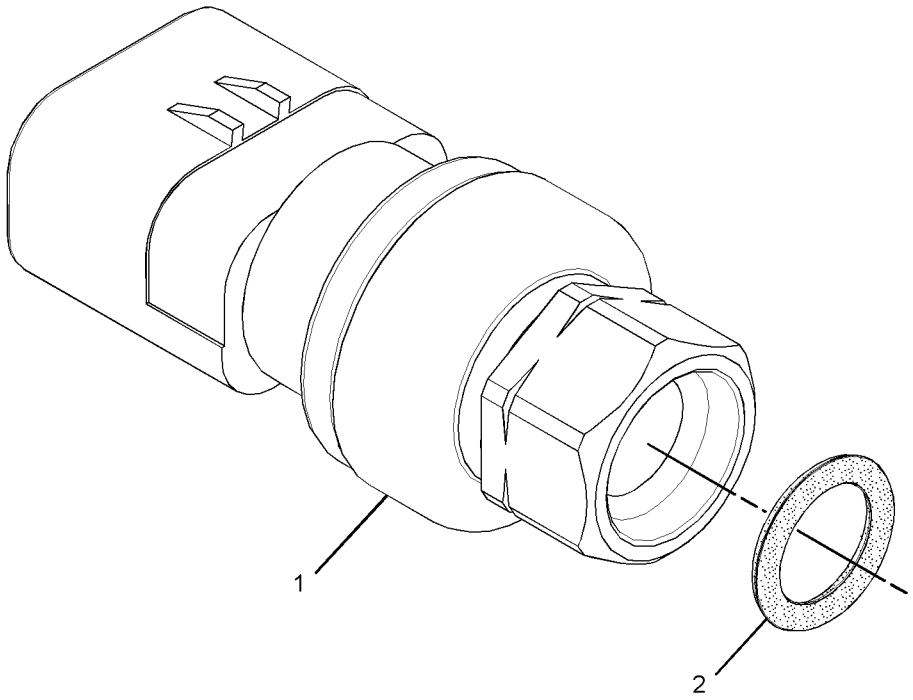

GRAPHIC #1 **<END>** g01994176

4P-5820 SENSOR GP-SPEED

S/N: TXF1-UP; MHX7634-UP

PART OF 313-2148 HOUSING GP-FLYWHEEL

SMCS-1907, 1912, 4803, 7493 **i03315080**

NOTE	REF NO	GRAPHIC REF	PART NUMBER	QTY	PART NAME 1 2 3 4 5 6 (PRODUCT LEVEL)	SEE PAGE
	1	1	**171-5349**	1	STRAP-MARKER	
	2	1	**102-8802**	2	KIT-RECEPTACLE (2-PIN)	
					(EACH INCLUDES RECEPTACLE AS & WEDGE)	
	3	1	**186-3735**	2	PIN-CONNECTOR (16-GA TO 18-GA)	
E	4	1	**9X-1386**		SLEEVE (14-CM)	

E-ORDER BY THE CENTIMETER

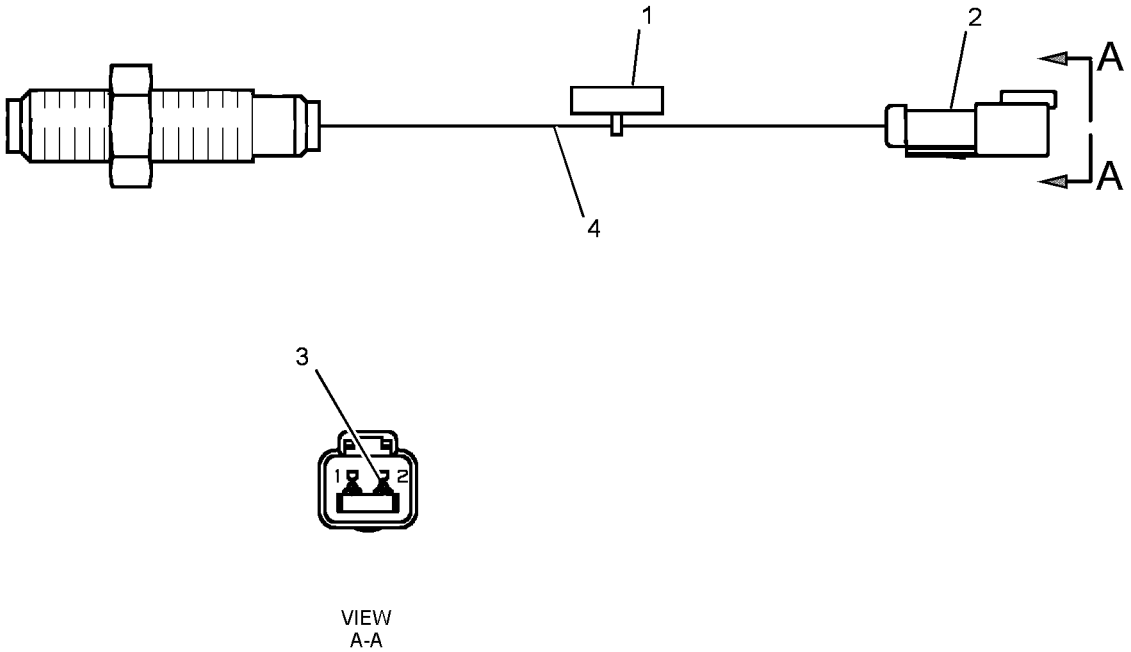

GRAPHIC #1 **<END>** g01242242

230-7149 SENSOR GP-SPEED

S/N: MHX7634-UP

PART OF 243-1555 SENSOR GP-ENGINE

SMCS-1907, 1912, 4803, 7493 **i03574642**

NOTE	REF NO	GRAPHIC REF	PART NUMBER	QTY	PART NAME 1 2 3 4 5 6 (PRODUCT LEVEL)	SEE PAGE
	1	1	**201-6615**	1	SENSOR GP-SPEED	
	2	1	**228-4947**	1	SEAL-O-RING	

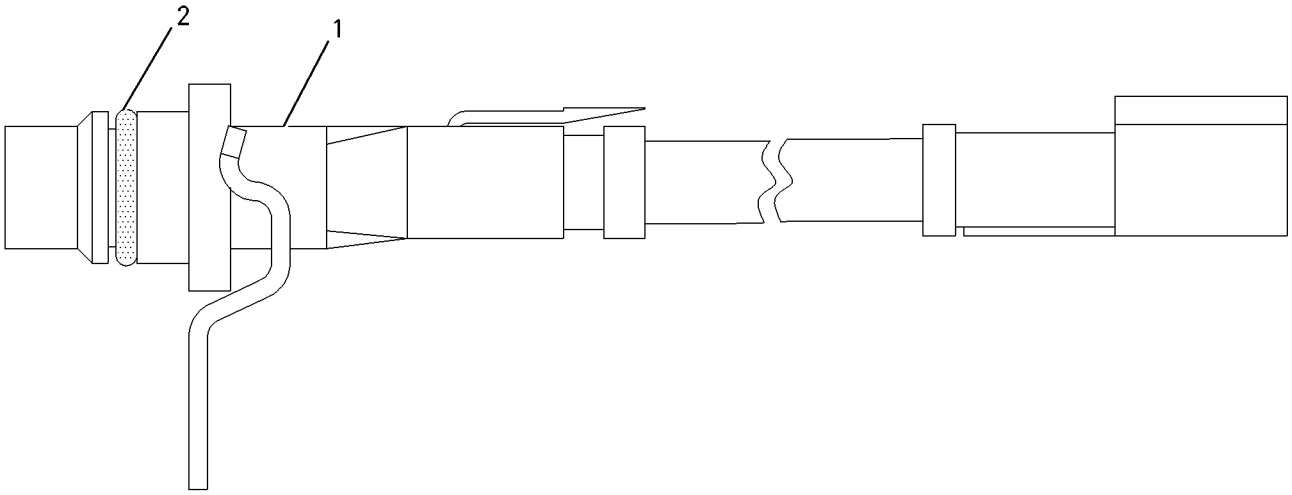

GRAPHIC #1 **<END>** g01007584

239-2397 SENSOR GP-SPEED

S/N: MHX7634-UP

PART OF 243-1555 SENSOR GP-ENGINE

SMCS-1907, 1912, 4803, 7493 **i03574654**

NOTE	REF NO	GRAPHIC REF	PART NUMBER	QTY	PART NAME 1 2 3 4 5 6 (PRODUCT LEVEL)	SEE PAGE
	1	1	**228-4947**	1	SEAL-O-RING	
	2	1	**201-6616**	1	SENSOR GP-SPEED	

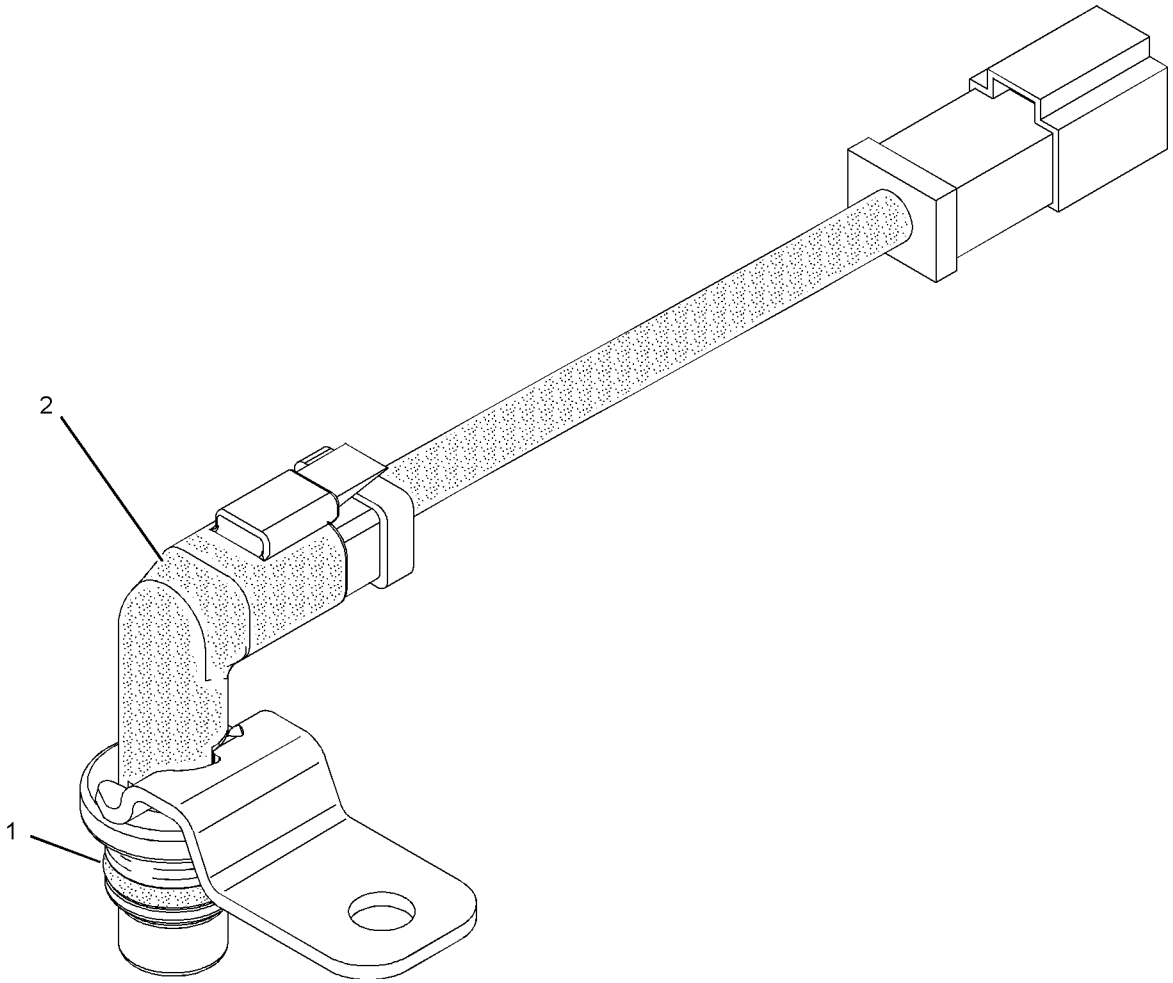

GRAPHIC #1 **<END>** g01019337

300-9805 SENSOR GP-SPEED

S/N: TXF1-UP; MHX10094-UP

PART OF 354-0042 SENSOR GP-ENGINE

SMCS-1907, 1912, 4803, 7493 **i03953716**

NOTE	REF NO	GRAPHIC REF	PART NUMBER	QTY	PART NAME 1 2 3 4 5 6 (PRODUCT LEVEL)	SEE PAGE
	1	1	**228-4947**	1	SEAL-O-RING	
	2	1	**279-9828**	1	SENSOR GP-SPEED (CRANKSHAFT)	

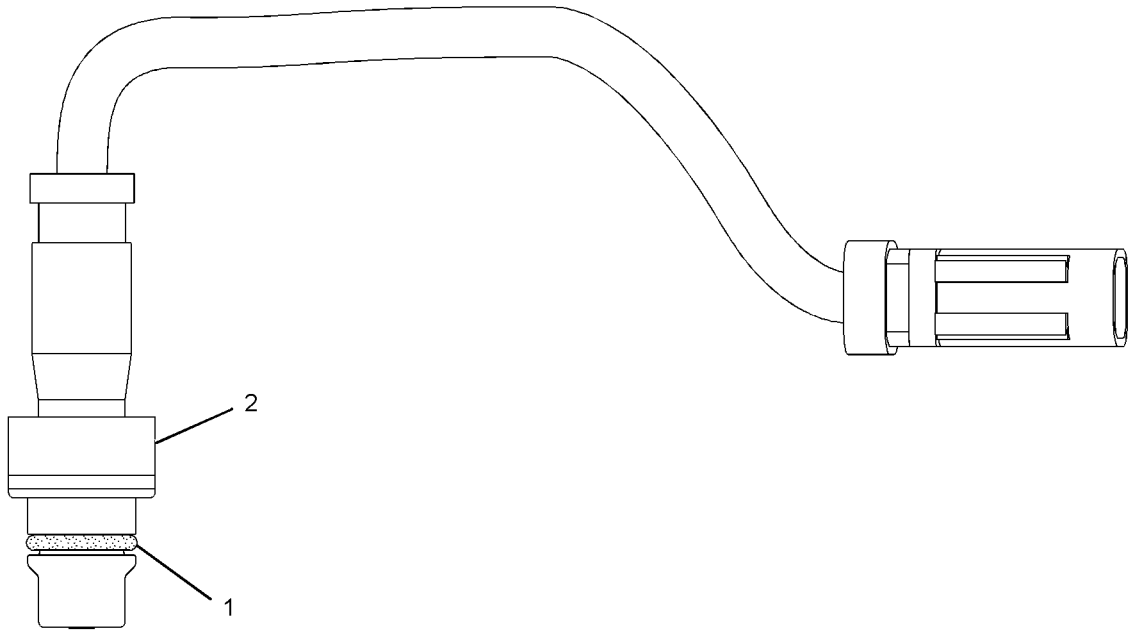

GRAPHIC #1 **<END>** g02168513

300-9806 SENSOR GP-SPEED

S/N: TXF1-UP; MHX10094-UP

PART OF 354-0042 SENSOR GP-ENGINE

SMCS-1907, 1912, 4803, 7493 **i03354549**

NOTE	REF NO	GRAPHIC REF	PART NUMBER	QTY	PART NAME 1 2 3 4 5 6 (PRODUCT LEVEL)	SEE PAGE
	1	1	**228-4947**	1	SEAL-O-RING	
	2	1	**279-9829**	1	SENSOR GP-SPEED (CAM GEAR)	

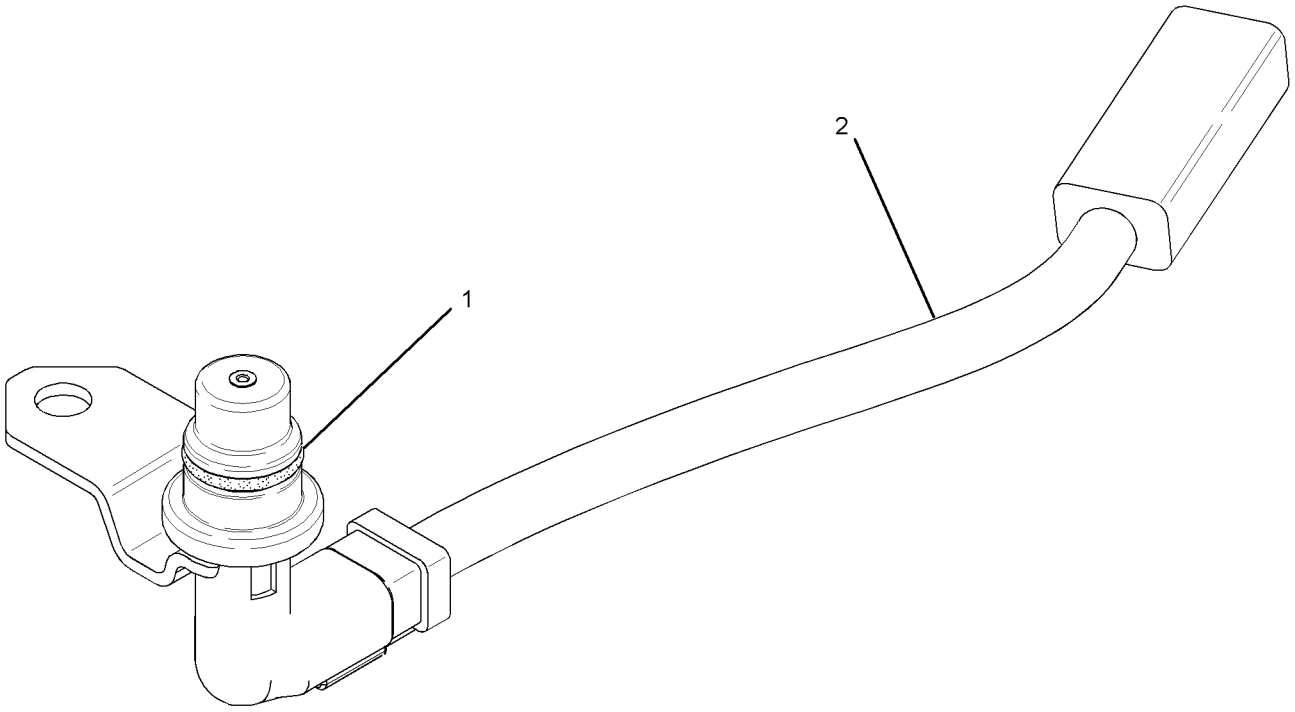

GRAPHIC #1 **<END>** g01333640

234-5012 SENSOR GP-TEMPERATURE

S/N: TXF1-UP; MHX10094-UP

PART OF 354-0042 SENSOR GP-ENGINE

SMCS-1906, 1921, 1922, 1928, 1929, 3290, 7344 **i02660829**

NOTE	REF NO	GRAPHIC REF	PART NUMBER	QTY	PART NAME 1 2 3 4 5 6 (PRODUCT LEVEL)	SEE PAGE
	1	1	**256-6453**	1	SENSOR AS-TEMPERATURE	
	2	1	**6V-6609**	1	SEAL-O-RING	

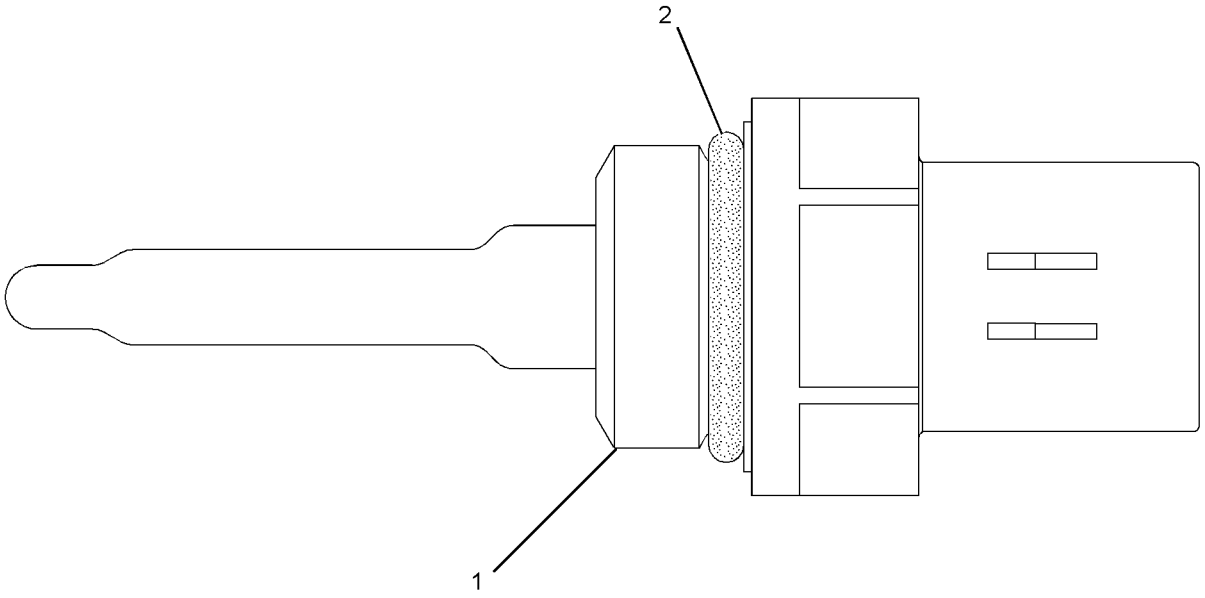

GRAPHIC #1 **<END>** g01164284

234-5013 SENSOR GP-TEMPERATURE

S/N: JGB1-UP; TXF1-UP; KHS1-UP; MHX10094-UP

PART OF 313-8169 LINES GP-FUEL, 354-0042 SENSOR GP-ENGINE

SMCS-1906, 1921, 1922, 1928, 1929, 3290, 7344 **i03603728**

NOTE	REF NO	GRAPHIC REF	PART NUMBER	QTY	PART NAME 1 2 3 4 5 6 (PRODUCT LEVEL)	SEE PAGE
	1	1	**256-6453**	1	SENSOR AS-TEMPERATURE	
	2	1	**238-5080**	1	SEAL-O-RING	

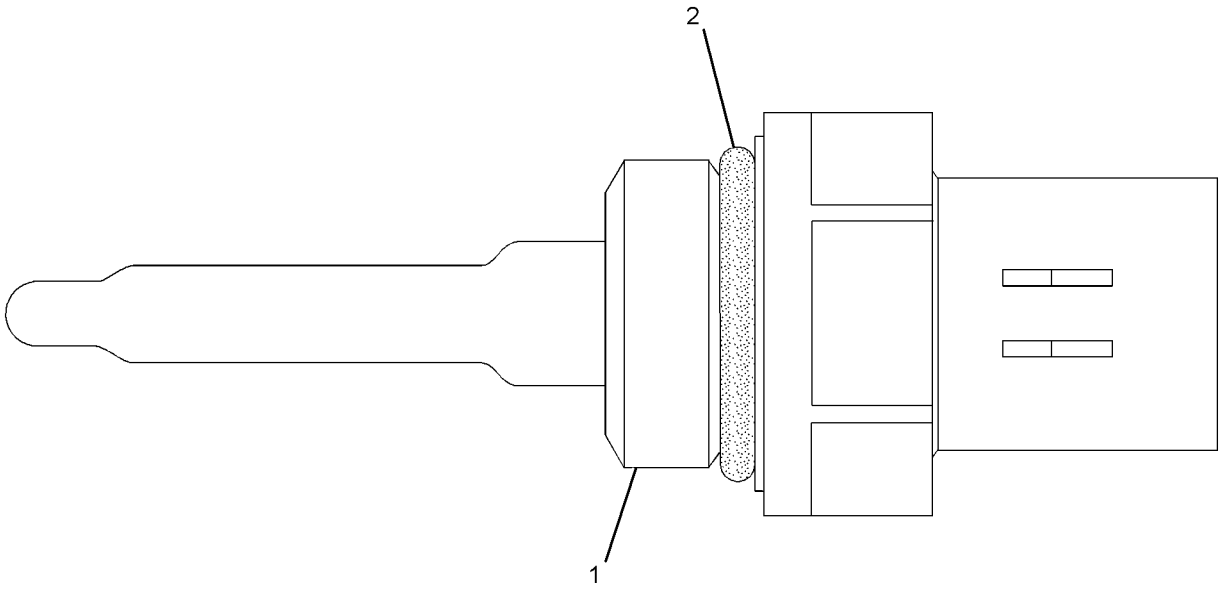

GRAPHIC #1 **<END>** g01164268

274-7395 SENSOR GP-TEMPERATURE

S/N: MHX7634-UP

PART OF 243-1555 SENSOR GP-ENGINE

SMCS-1906, 1921, 1922, 1928, 1929, 3290, 7344 **i03886183**

NOTE	REF NO	GRAPHIC REF	PART NUMBER	QTY	PART NAME 1 2 3 4 5 6 (PRODUCT LEVEL)	SEE PAGE
	1	1	**264-4297**	1	SENSOR GP-TEMPERATURE	
		1	**137-6645**	1	PAD-CONNECTOR	
	2	1	**238-5080**	1	SEAL-O-RING	

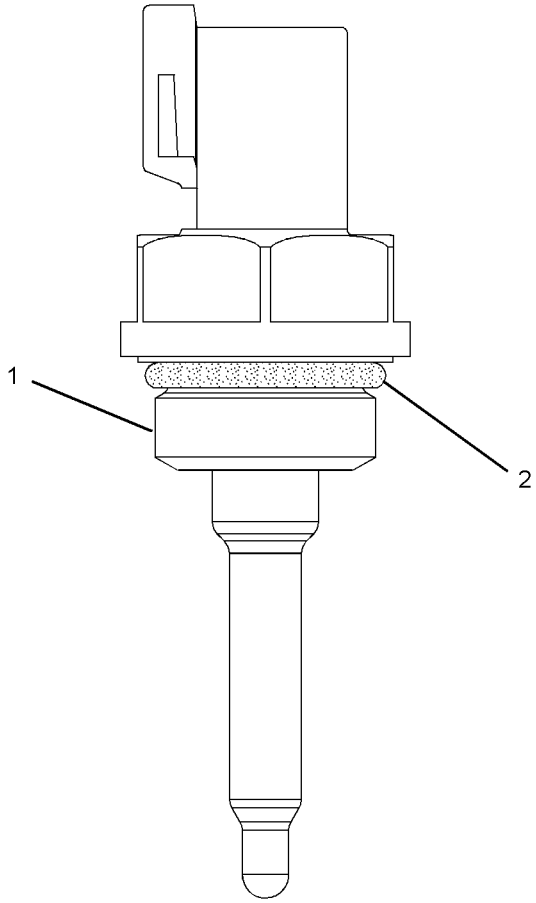

GRAPHIC #1 **<END>** g01353734

274-7396 SENSOR GP-TEMPERATURE

S/N: MHX7634-UP

PART OF 243-1555 SENSOR GP-ENGINE

SMCS-1906, 1921, 1922, 1928, 1929, 3290, 7344 **i03442340**

NOTE	REF NO	GRAPHIC REF	PART NUMBER	QTY	PART NAME 1 2 3 4 5 6 (PRODUCT LEVEL)	SEE PAGE
	1	1	**264-4297**	1	SENSOR GP-TEMPERATURE	
		1	**137-6645**	1	PAD-CONNECTOR	
	2	1	**6V-6609**	1	SEAL-O-RING	

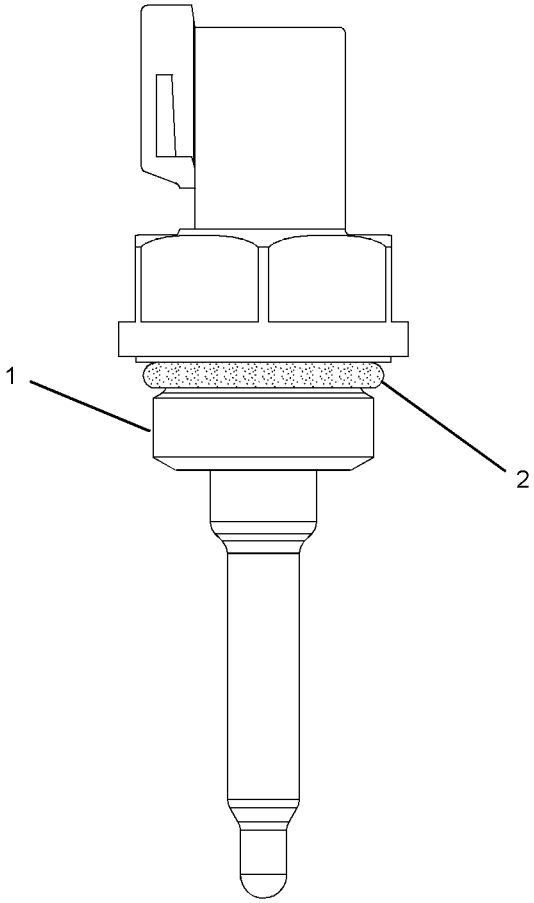

GRAPHIC #1 **<END>** g01353734

ELECTRICAL AND STARTING SYSTEM

222-8365 STARTING AID GP-ETHER

S/N: JGB1-UP; KHS1-UP
PART OF 337-8885 OPTION AR-REGIONAL
AN ATTACHMENT

SMCS-1456 **i04074031**

NOTE	REF NO	GRAPHIC REF	PART NUMBER	QTY	PART NAME 1 2 3 4 5 6 (PRODUCT LEVEL)	SEE PAGE
C	1	1	**5P-5528**	1	BUSHING-REDUCING	
	2	1	**5P-6312**	1	UNION	
	3	1	**5P-6313**	3	NUT (5/16-24-THD)	
	4	1	**5P-6314**	3	SLEEVE	
C	5	1	**256-6881**	1	ATOMIZER GP-ETHER	
		1	**236-4545**	1	NUT-SLEEVE (5/16-24-THD)	
	6	2	**7N-0140**	2	TUBE AS-COIL	
	7	2	**7N-2059**	1	CLAMP AS	
	8	1	**230-0917**	1	FITTING AS	
		1	**236-4545**	1	NUT-SLEEVE (5/16-24-THD)	
	9	2	**233-1272**	1	PLATE AS	
	10	2	**233-1286**	1	PLATE AS	
Y	11	1	**239-1134**	1	VALVE GP-ETHER STARTING (24-VOLT)	255
	12	1	**255-3057**	1	TUBE	
	13	1	**272-4789**	1	TUBE	
E	14	1	**5P-2929**		TUBE (50-CM)	
	15	2	**239-6662**	1	TUBE	
	16	2	**1B-3581**	1	CLIP	
	17	2	**2B-2404**	5	CLIP	
	18	2	**3D-5102**	7	GROMMET	
C	19	1	**6V-5048**	1	SEAL-O-RING	
	20	2	**5K-0430**	1	CLIP	
	21	1	**7G-4498**	1	GROMMET	
	22	2	**8T-4121**	4	WASHER-HARD (11X21X2.5-MM THK)	
M	23	2	**8T-4137**	2	BOLT (M10X1.5X20-MM)	
M	24	2	**8T-4179**	1	BOLT (M12X1.75X20-MM)	
M	25	1,2	**8T-4189**	4	BOLT (M8X1.25X20-MM)	
M	26	2	**8T-4191**	2	BOLT (M10X1.5X16-MM)	
M	27	2	**8T-4192**	2	BOLT (M12X1.75X25-MM)	
	28	2	**8T-4223**	3	WASHER-HARD (13.5X25.5X3-MM THK)	
	29	1,2	**8T-4224**	4	WASHER-HARD (8.8X16X2-MM THK)	
	30	2	**6G-2263**	1	SPACER (10.5X19X28.5-MM THK)	
M	31	2	**8T-4182**	1	BOLT (M10X1.5X45-MM)	
A		1	**7N-0296**	1	CYLINDER AS-ETHER	
					(MUST BE PROCURED LOCALLY FROM YOUR CATERPILLAR DEALER)	

A-NOT PART OF THIS GROUP
C-CHANGE FROM PREVIOUS TYPE
E-ORDER BY THE CENTIMETER
M-METRIC PART
Y-SEPARATE ILLUSTRATION

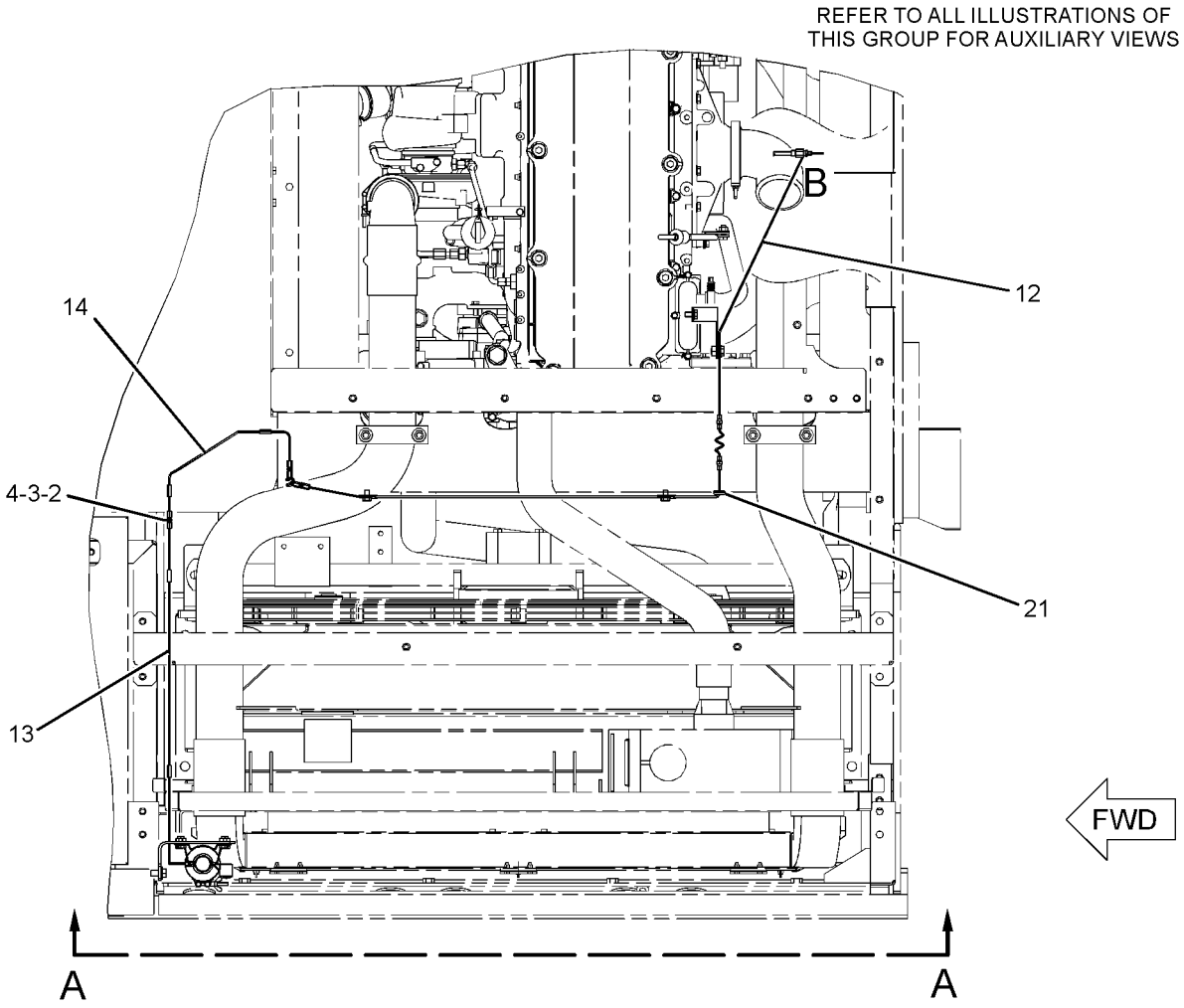

TOP VIEW

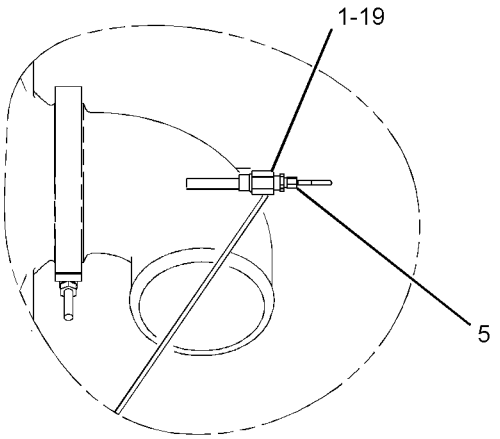

VIEW OF AREA B

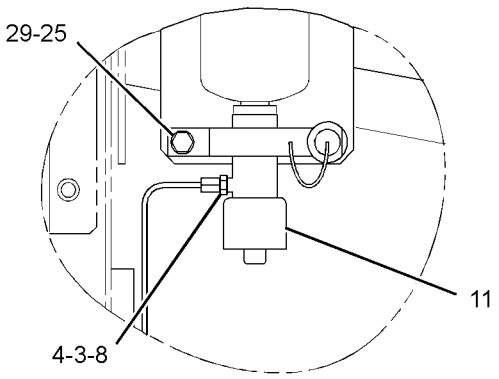

VIEW OF AREA C

GRAPHIC #1 g01452747

222-8365 **STARTING AID GP-ETHER** *(contd.)* **i04074031**

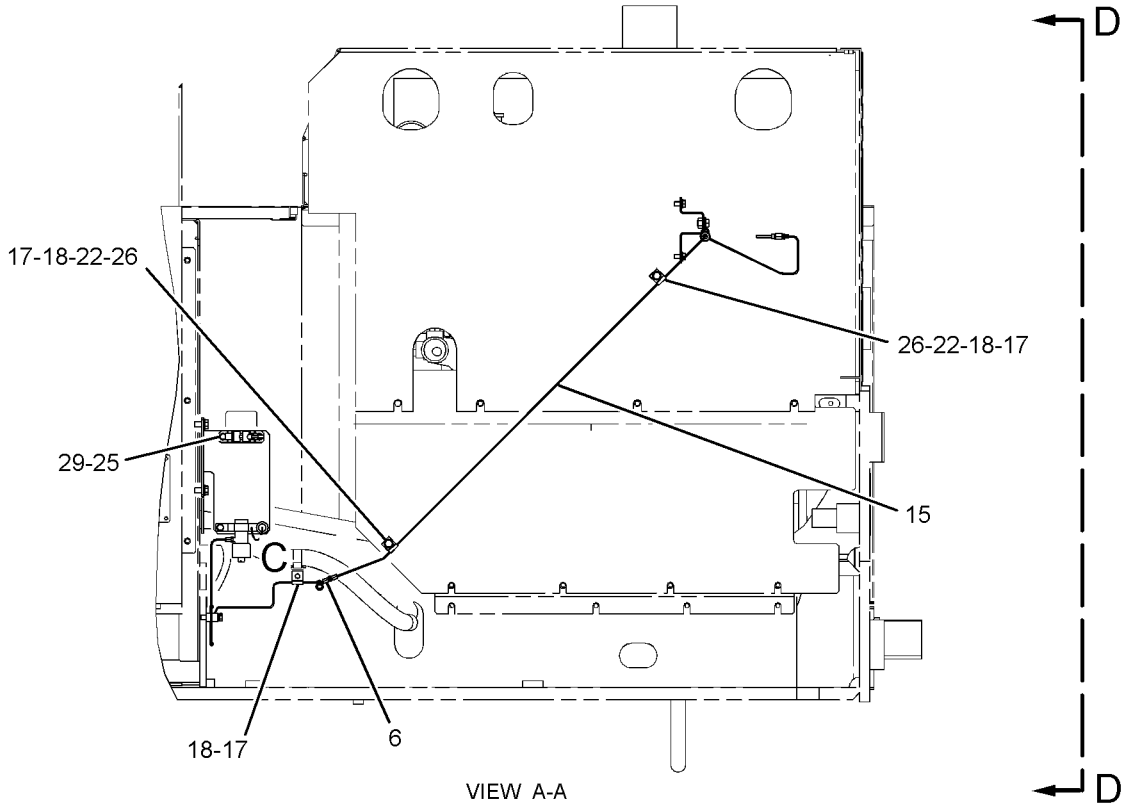

VIEW A-A

REFER TO ALL ILLUSTRATIONS OF
THIS GROUP FOR AUXILIARY VIEWS

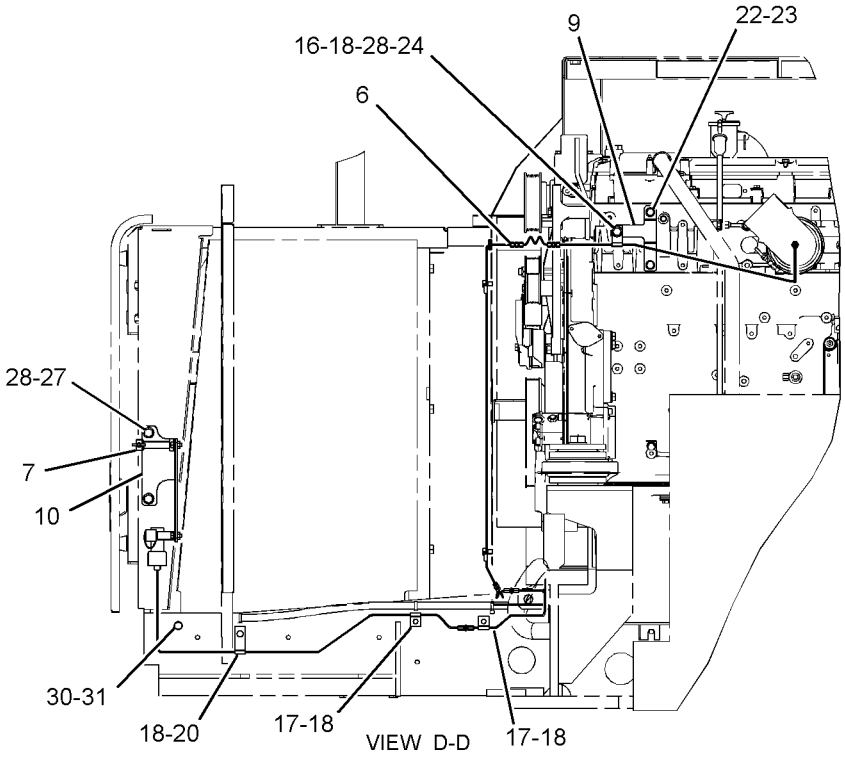

VIEW D-D

GRAPHIC #2 **<END>** g02358458

ELECTRICAL AND STARTING SYSTEM

269-2757 STARTING MOTOR GP-ELECTRIC

S/N: TXF1-UP; MHX7634-UP

24-VOLT

PART OF 307-4584 STARTING MOTOR GP-ELECTRIC

SMCS-1453 **i04229998**

NOTE	REF NO	GRAPHIC REF	PART NUMBER	QTY	PART NAME 1 2 3 4 5 6 (PRODUCT LEVEL)	SEE PAGE
	1	1	**7M-0326**	1	CONNECTOR	
	2	1	**9H-3757**	2	WASHER (0.516X1X0.094-IN THK)	
	3	1	**1S-7446**	3	SCREW-MACHINE (8-32X0.437-IN)	
	4	1	**8C-9660**	3	WASHER (4.6X7.9X0.8-MM THK)	
	5	1	**9S-2544**	9	SCREW-HEX HEAD (8-32X11.13-MM)	
	6	1	**7M-0327**	1	WASHER-THRUST (17.4X25.4X1.6-MM THK)	
	7	1	**3T-3418**	1	FRAME AS-END	
		1	**3T-3423**	1	CUP	
		1	**9G-4101**	1	BUSHING-END	
		1	**3T-3424**	1	PLUG-FELT	
	8	1	**3T-9525**	1	PLATE AS-BRUSH	
	8A	1	**6T-0371**	1	INSULATOR	
	8B	1	**5P-6298**	12	SCREW-MACHINE (10-32X0.5-IN)	
		1	**9F-5599**	12	LOCKWASHER	
	8C	1	**7F-3525**	6	WASHER-BUSHING (0.207X0.39X0.09-IN THK)	
	8D	1	**6T-0372**	1	PLATE	
	8E	1	**3T-4709**	3	PLATE	
	8F	1	**2L-6679**	3	PLATE-INSULATOR	
	8G	1	**3T-4710**	3	PLATE	
	8H	1	**6T-0363**	6	HOLDER AS-BRUSH	
					(EACH INCLUDES)	
	8J	1	**3T-9494**	1	SPRING	
	9	1	**1T-0808**	2	WASHER (0.516X0.812X0.09-IN THK)	
	10	1	**3T-3422**	1	WIRE AS	
	11	1	**2J-8163**	2	SEAL-O-RING	
	12	1	**7X-3373**	1	BOLT (5/16-18X0.88-IN)	
B	13	1	**3T-3434**	6	PLUG	
	14	1	**5J-5314**	5	BOLT (5/16-18X1.5-IN)	
	15	1	**3L-3380**	1	BUSHING-TERMINAL	
	16	1	**036-9821**	1	WASHER	
	17	1	**4M-1828**	1	RETAINER-SPRING	
	18	1	**306-3998**	1	BOOT-RUBBER	
	19	1	**9M-7609**	1	SPRING (SHIFT LEVER)	
	20	1	**4M-1827**	1	RETAINER-SPRING	
	21	1	**8C-3089**	1	SEAL-O-RING	
	22	1	**4M-1853**	1	LEVER AS-SHIFT	
	23	1	**5M-3034**	1	LOCKNUT (5/16-24-THD)	
	24	1	**7L-2894**	4	GASKET	
	25	1	**4M-1831**	4	PLUG-LEVER HOUSING	
	26	1	**4M-1854**	1	SHAFT-LEVER	
	27	1	**1H-1023**	1	SEAL-O-RING	
	28	1	**2D-6392**	1	SEAL-O-RING	
	29	1	**7T-3974**	1	HOUSING AS-DRIVE	
	30	1	**6N-3826**	1	DRIVE AS-MOTOR	
	31	1	**2H-3429**	2	RING-RETAINING (EXTERNAL)	
	32	1	**6V-1322**	4	BOLT (1/4-20X0.375-IN)	
	33	1	**8T-4205**	4	WASHER-HARD (7.2X14.5X2-MM THK)	
	34	1	**6N-3279**	1	INSULATOR	
	35	1	**0S-1597**	13	BOLT (1/4-28X1-IN)	
	36	1	**1M-9971**	1	SPACER (0.835X1.72X0.188-IN THK)	
	37	1	**1H-2629**	3	STRIP-INSULATION	
	38	1	**7M-0324**	1	COIL AS-FIELD	
	39	1	**3R-8797**	12	SCREW & WASHER AS (3/8-24X0.72-IN)	
	40	1	**7F-3488**	6	SHOE-POLE	
	41	1	**7M-8651**	1	ARMATURE AS	

269-2757 **STARTING MOTOR GP-ELECTRIC** *(contd.)* **i04229998**

NOTE	REF NO	GRAPHIC REF	PART NUMBER	QTY	PART NAME 1 2 3 4 5 6 (PRODUCT LEVEL)	SEE PAGE
	42	1	**7M-0325**	1	INSULATOR	
	43	1	**3T-9524**	6	BRUSH AS	
	44	1	**3N-3763**	1	KIT-TERMINAL (STARTING MOTOR)	
					(INCLUDES INSULATOR, BUSHINGS AND WASHER)	
	45	1	**125-6537**	1	INSULATOR	
	46	1	**3R-8801**	1	CLAMP	
	47	1	**8F-1434**	2	LOCKWASHER	
	48	1	**6V-8188**	6	NUT (1/2-13-THD)	
	49	1	**7X-0562**	6	WASHER-HARD (13.5X19X0.8-MM THK)	
	50	1	**4B-2049**	6	NUT (10-32-THD)	
	51	1	**8T-0328**	10	WASHER-HARD (5.5X10X1-MM THK)	
	52	1	**3T-9494**	6	SPRING	
	53	1	**3E-7771**	1	HOUSING AS (STARTING MOTOR)	
	54	1	**9G-4101**	1	BUSHING-END	
	55	1	**3T-3424**	3	PLUG-FELT	
	56	1	**3T-3423**	3	CUP	
	57	1	**1M-9968**	1	BUSHING	
	58	1	**2F-6678**	1	SEAL-LIP TYPE	
	59	1	**4L-2729**	1	WASHER (0.844X1.9X0.188-IN THK)	
	60	1	**4M-1896**	1	BUSHING-TERMINAL	
	61	1	**045-4065**	4	SCREW-MACHINE (10-32X0.75-IN)	
	62	1	**125-6535**	1	COVER-STARTING MOTOR	
	63	1	**7T-9123**	1	GASKET-PLATE	
	64	1	**318-2082**	1	SOLENOID AS-STARTING MOTOR (24-VOLT)	
		1	**3R-8801**	1	CLAMP	
	65	1	**125-6536**	1	TERMINAL AS	

B-USE AS REQUIRED

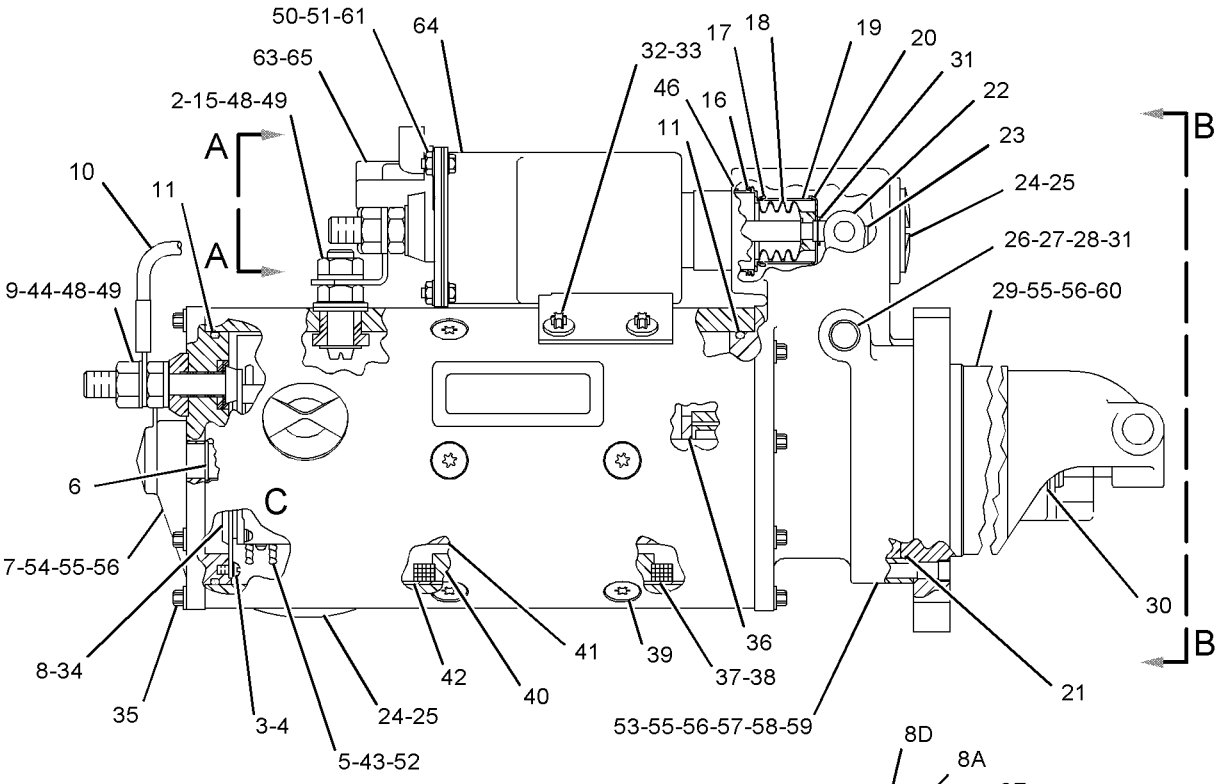

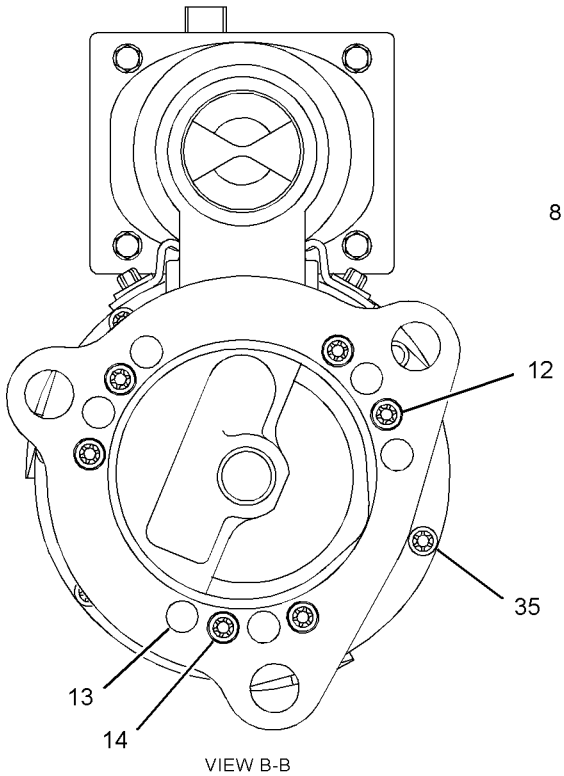

VIEW B-B

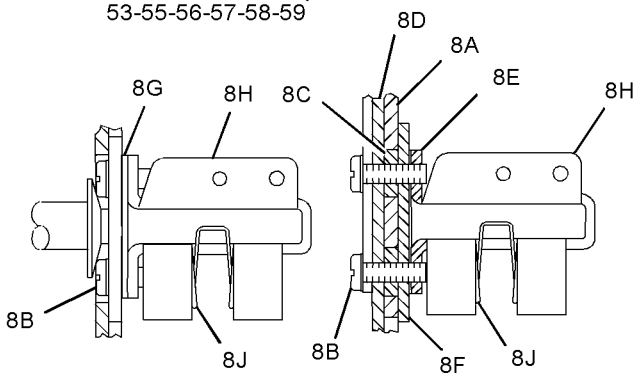

VIEW OF AREA C

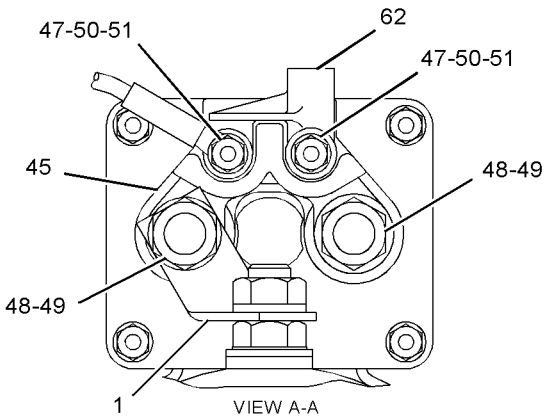

VIEW A-A

GRAPHIC #1 **<END>** g01146195

307-4584 STARTING MOTOR GP-ELECTRIC

S/N: TXF1-UP; MHX7634-UP
24-VOLT
PART OF 291-9259 ENGINE AR-COMPLETE

SMCS-1453 **i02865796**

NOTE	REF NO	GRAPHIC REF	PART NUMBER	QTY	PART NAME 1 2 3 4 5 6 (PRODUCT LEVEL)	SEE PAGE
	1	1	**8Y-9603**	1	CABLE AS-STARTING MOTOR	
		1	**1S-7251**	1	TERMINAL-CABLE (00-GA, 1/2-IN BOLT)	
		1	**1S-7252**	1	TERMINAL-CABLE (00-GA, 3/8-IN BOLT)	
E		1	**5P-0747**		CABLE (00-GA, BLACK) (28-CM)	
Y	2	1	**269-2757**	1	STARTING MOTOR GP-ELECTRIC (24-VOLT)	242
	3	1	**303-2004**	1	GASKET	
	4	1	**8S-2332**	3	BOLT-12 POINT HEAD (5/8-11X1.75-IN)	

E-ORDER BY THE CENTIMETER
Y-SEPARATE ILLUSTRATION

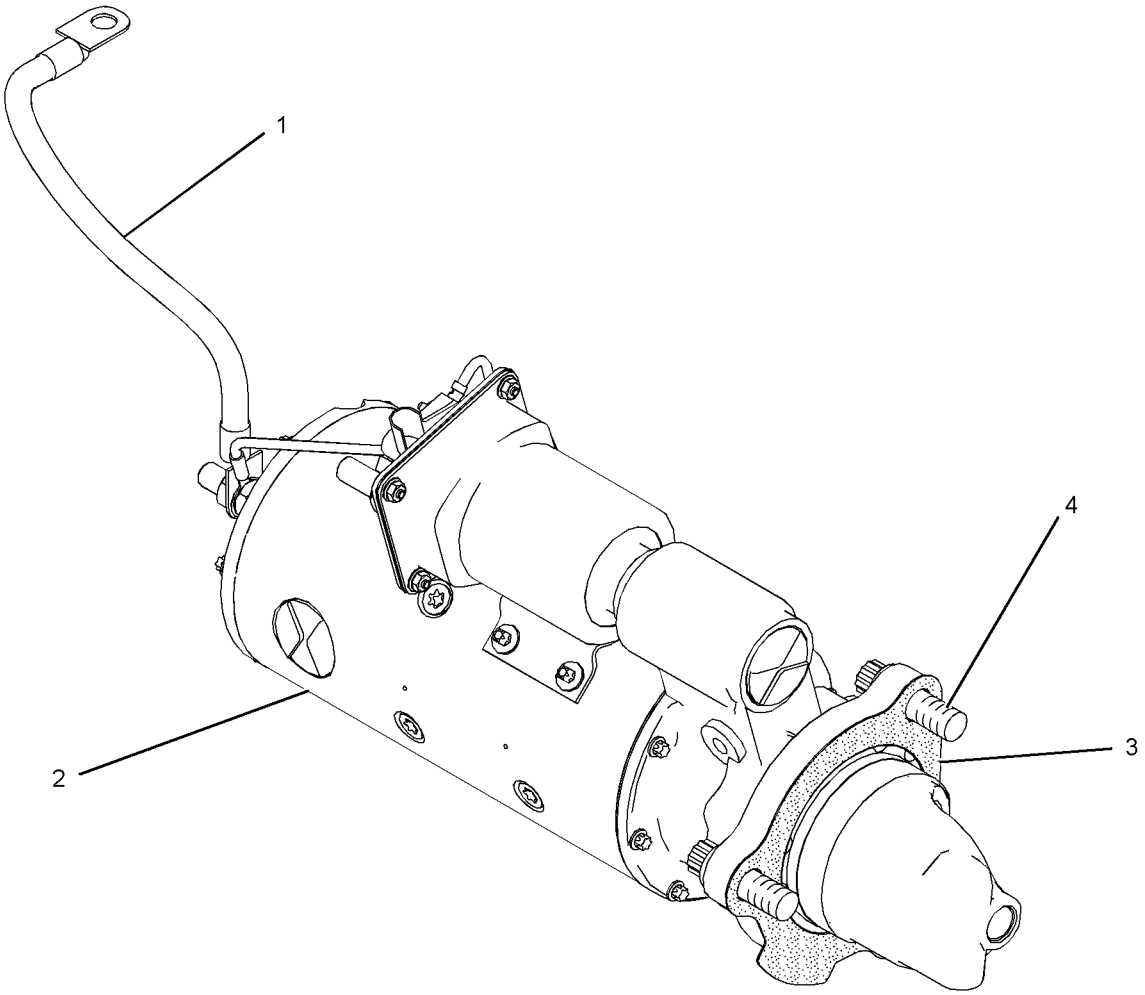

GRAPHIC #1 **<END>** g01407808

7N-0719 SWITCH GP-DISCONNECT–BATTERY

S/N: JGB1-UP; KHS1-UP

PART OF 299-2966 PANEL GP-CIRCUIT BREAKER

SMCS-1411 **i02499147**

NOTE	REF NO	GRAPHIC REF	PART NUMBER	QTY	PART NAME 1 2 3 4 5 6 (PRODUCT LEVEL)	SEE PAGE
	1	1	**8H-5306**	1	KEY (BATTERY DISCONNECT)	
	2	1	**8H-5303**	1	NUT (3/4-16-THD)	
	3	1	**2H-3922**	2	LOCKWASHER	
	4	1	**9F-5644**	2	LOCKWASHER	
	5	1	**6F-7045**	2	NUT-FULL (3/8-24-THD)	

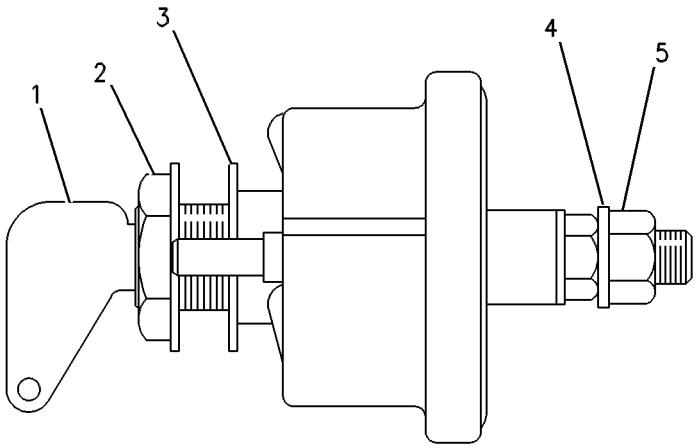

GRAPHIC #1 **<END>** g00117885

125-1302 SWITCH GP-MAGNETIC

S/N: JGB1-UP; KHS1-UP
24-VOLT
PART OF 299-2966 PANEL GP-CIRCUIT BREAKER

SMCS-7499 **i03260001**

NOTE	REF NO	GRAPHIC REF	PART NUMBER	QTY	PART NAME 1 2 3 4 5 6 (PRODUCT LEVEL)	SEE PAGE
	1	1	**102-8802**	1	KIT-RECEPTACLE (2-PIN)	
					(INCLUDES RECEPTACLE AS & WEDGE)	
	2	1	**186-3735**	2	PIN-CONNECTOR (16-GA TO 18-GA)	
	3	1	**1H-3338**	2	LOCKWASHER (EXTERNAL TOOTH)	
	4	1	**012-0380**	2	LOCKWASHER	
M	5	1	**5C-2890**	2	NUT (M6X1-THD)	
E	6	1	**9X-1813**		SLEEVE (16-CM)	

E-ORDER BY THE CENTIMETER
M-METRIC PART

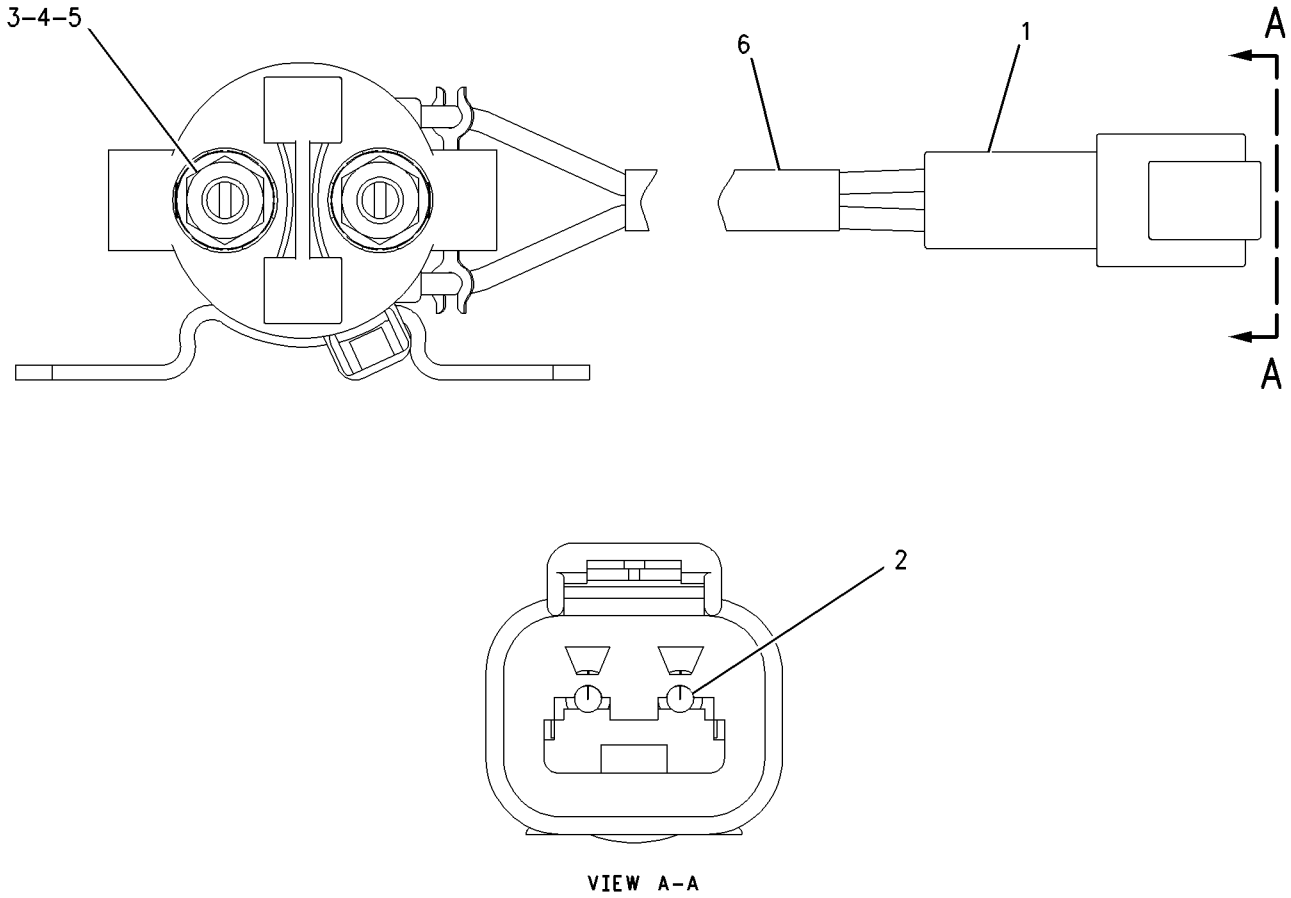

GRAPHIC #1 **<END>** g00988001

234-6613 SWITCH GP-POSITION—HYDRAULIC LOCKOUT

S/N: JGB1-UP; KHS1-UP

PART OF 259-7349 CONSOLE GP-OPERATOR

SMCS-1408, 1435 **i03346001**

NOTE	REF NO	GRAPHIC REF	PART NUMBER	QTY	PART NAME 1 2 3 4 5 6 (PRODUCT LEVEL)	SEE PAGE
	1	1	**3S-2093**	1	STRAP-CABLE	
	2	1	**4I-3038**	2	WASHER (3.3X8X0.5-MM THK)	
	3	1	**111-4799**	1	SWITCH AS-LIMIT (HYD LOCKOUT, NEUTRAL START)	
		1	**102-8803**	1	KIT-RECEPTACLE (3-PIN)	
					(INCLUDES RECEPTACLE AS & WEDGE)	
		1	**186-3735**	3	PIN-CONNECTOR (16-GA TO 18-GA)	
D		1	**5P-5998**		TUBE (0.3-M)	
M	4	1	**185-8286**	2	SCREW-MACHINE (M4X0.7X8-MM)	
	5	1	**234-6615**	1	KNOB	
	6	1	**087-4683**	2	LOCKWASHER	
M	7	1	**120-9027**	2	SCREW-PAN HEAD (M3X0.5X16-MM)	

D-ORDER BY THE METER
M-METRIC PART

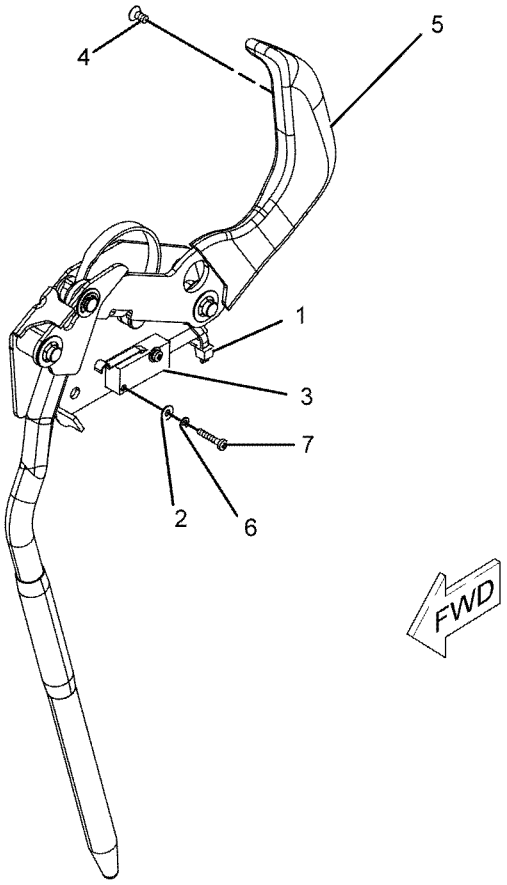

GRAPHIC #1 **<END>** g01096293

275-1253 SWITCH GP-PRESSURE

S/N: JGB1-UP; KHS1-UP
AMPSEAL CONNECTOR
PART OF 313-8169 LINES GP-FUEL

SMCS-1435 **i03524880**

NOTE	REF NO	GRAPHIC REF	PART NUMBER	QTY	PART NAME 1 2 3 4 5 6 (PRODUCT LEVEL)	SEE PAGE
	1	1	**230-4011**	1	PLUG AS-CONNECTOR (2-PIN)	
			264-7029	1	SEAL-CONNECTOR	
E	2	1	**9X-1813**		SLEEVE (14-CM)	
	3	1	**6V-4589**	1	SEAL-O-RING	
	4	1	**9X-7737**	1	SEAL-O-RING	
	5	1	**144-1636**	2	PIN-CONNECTOR (14-GA TO 18-GA)	

E-ORDER BY THE CENTIMETER

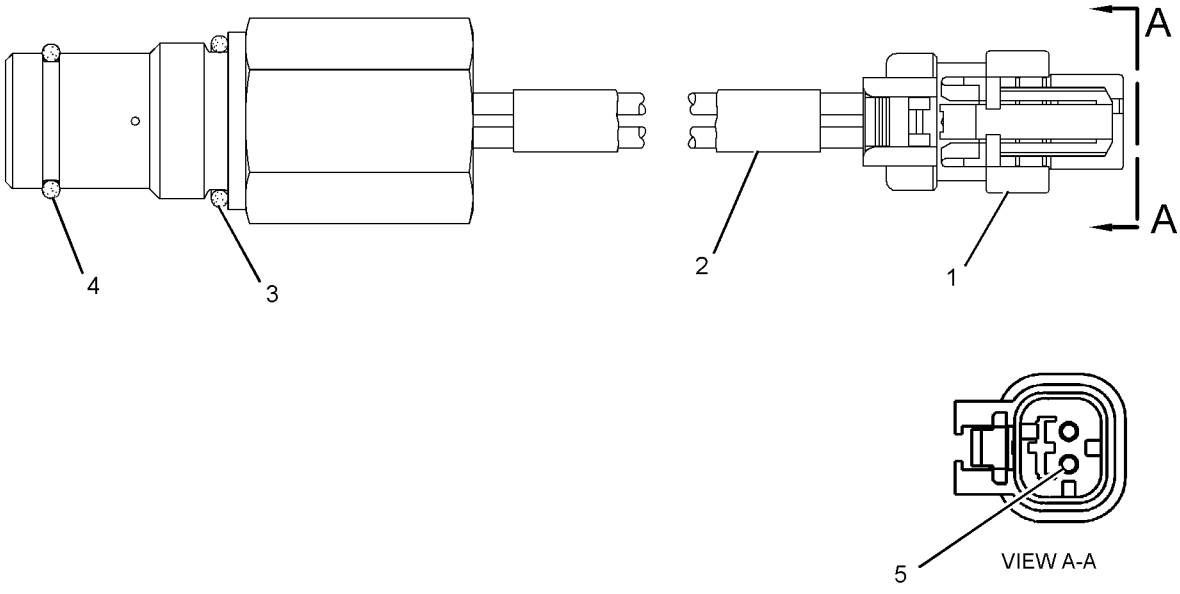

GRAPHIC #1 **<END>** g01238534

319-4420 SWITCH GP-ROTARY–THROTTLE POSITION

S/N: JGB1-UP; KHS1-UP
PART OF 251-0542, 251-0544 PANEL GP-SWITCH
ALSO AN ATTACHMENT

SMCS-7332 **i03148041**

NOTE	REF NO	GRAPHIC REF	PART NUMBER	QTY	PART NAME 1 2 3 4 5 6 (PRODUCT LEVEL)	SEE PAGE
	1	1	**243-4508**	1	RECEPTACLE AS-CONNECTOR (6-PIN)	
	2	1	**9X-3401**	5	PIN-CONNECTOR (16-GA TO 18-GA)	
					–OR–	
		1	**126-1767**	5	PIN-CONNECTOR (14-GA TO 16-GA)	
	3	1	**8T-8737**	1	PLUG-SEAL	
M	4	1	**7Y-5458**	1	NUT (M12X1-THD)	
	5	1	**7Y-5464**	1	WASHER (12.2X15.4X0.5-MM THK)	
	6	1	**106-0210**	1	SEAL	

M-METRIC PART

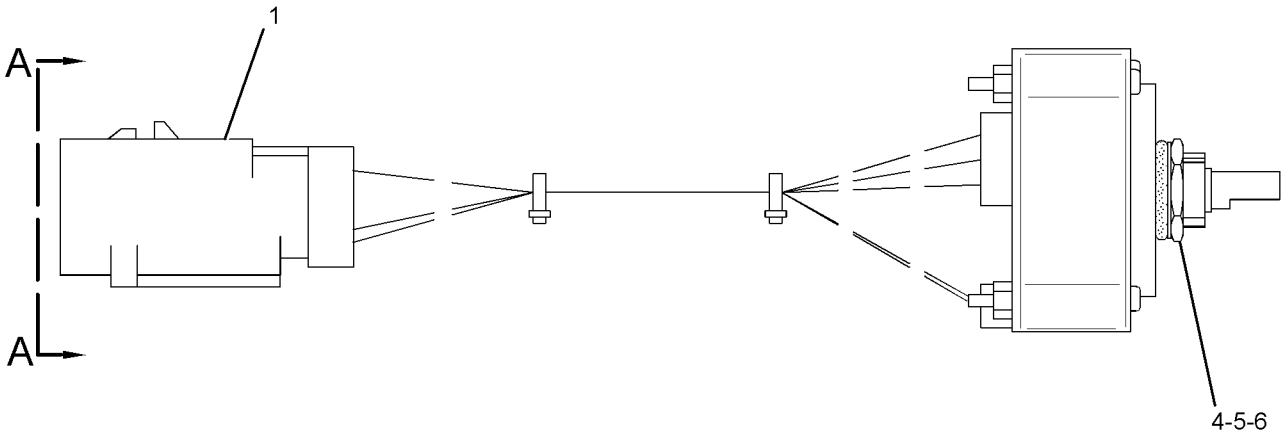

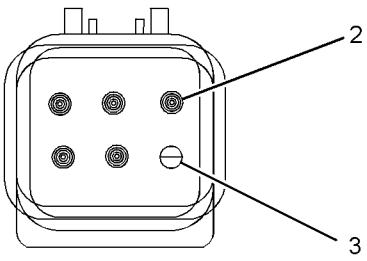

VIEW A-A

GRAPHIC #1 **<END>** g01588034

9G-7641 SWITCH GP-START–ENGINE, KEY

S/N: JGB1-UP; KHS1-UP
PART OF 251-0542, 251-0544 PANEL GP-SWITCH
ALSO AN ATTACHMENT

SMCS-1416 **i03568136**

NOTE	REF NO	GRAPHIC REF	PART NUMBER	QTY	PART NAME 1 2 3 4 5 6 (PRODUCT LEVEL)	SEE PAGE
	1	1	**6V-8362**	4	SCREW-MACHINE (8-32X0.31-IN)	
	2	1	**9B-7233**	4	LOCKWASHER	
	3	1	**7T-6799**	1	NUT-MOUNTING (1-32-THD)	

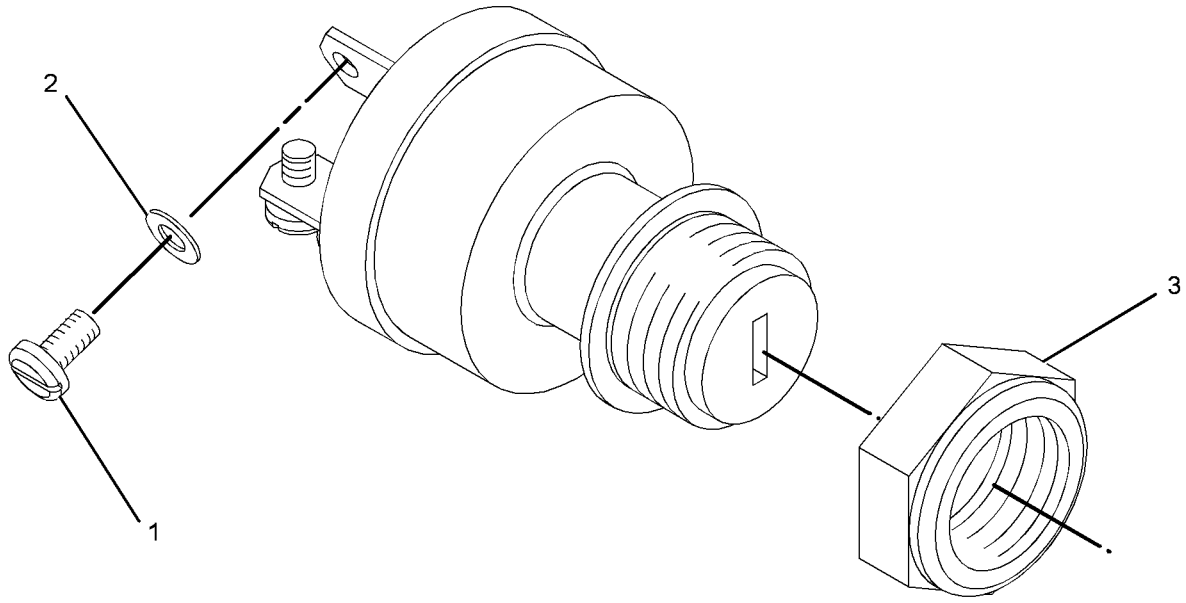

GRAPHIC #1 **<END>** g01890881

165-5970 SWITCH GP-TOGGLE

S/N: JGB1-UP; KHS1-UP

PART OF 354-0022 BATTERY & WIRING GP

SMCS-7332 **i04182792**

NOTE	REF NO	GRAPHIC REF	PART NUMBER	QTY	PART NAME 1 2 3 4 5 6 (PRODUCT LEVEL)	SEE PAGE
	1	1	**6T-3631**	2	NUT-HEX (15/32-32-THD)	
	2	1	**6T-3632**	1	LOCKWASHER	
	3	1	**6T-3633**	1	RING-LOCKING	
	4	1	**102-8803**	1	KIT-RECEPTACLE (3-PIN)	
					(INCLUDES RECEPTACLE AS & WEDGE)	
	5	1	**8T-8729**	3	PIN-CONNECTOR (16-GA TO 18-GA)	

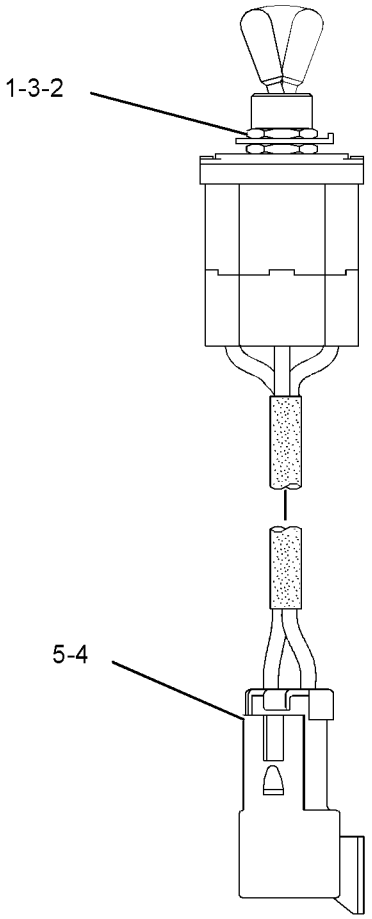

GRAPHIC #1 **<END>** g01874792

238-2485 SWITCH GP-TOGGLE–QUICK COUPLER LOCK

S/N: JGB1-UP
PART OF 344-4211 CONTROL AR-COUPLER
AN ATTACHMENT

SMCS-7332 **i03247920**

NOTE	REF NO	GRAPHIC REF	PART NUMBER	QTY	PART NAME 1 2 3 4 5 6 (PRODUCT LEVEL)	SEE PAGE
	1	1	*238-2478*	1	SWITCH GP-TOGGLE (QUICK COUPLER)	
	1A	1	**238-2479**	1	HARNESS AS-WIRING (QUICK COUPLER SWITCH)	
		1	**7N-2353**	1	SWITCH AS-TOGGLE (QUICK COUPLER)	
C	2	1	**259-4884**	1	BRACKET AS (QUICK COUPLER)	
C	3	1	**259-7180**	1	COVER	
CM	4	1	**9X-2042**	3	SCREW-TRUSS HEAD (M6X1X12-MM)	

C-CHANGE FROM PREVIOUS TYPE
M-METRIC PART

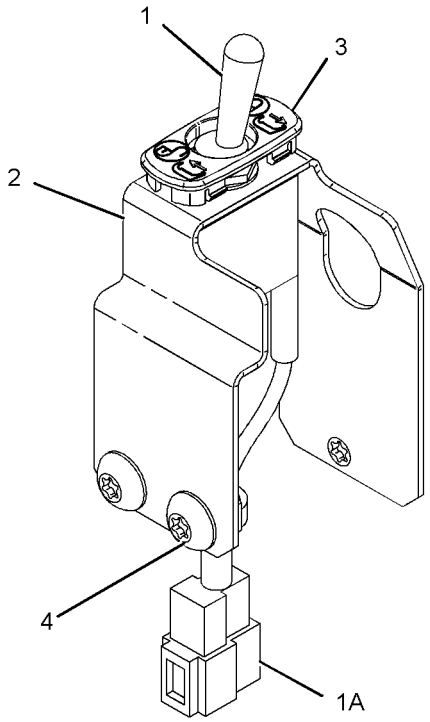

GRAPHIC #1 **<END>** g01147477

238-2208 SWITCH GP-WIPER–LOWER

S/N: JGB1-UP; KHS1-UP
PART OF 356-6716 CAB GP

SMCS-7305 **i02969303**

NOTE	REF NO	GRAPHIC REF	PART NUMBER	QTY	PART NAME 1 2 3 4 5 6 (PRODUCT LEVEL)	SEE PAGE
	1	1	**238-2209**	1	SWITCH AS-ROCKER (WIPER, LOWER)	
		1	**167-3542**	1	RECEPTACLE-CONNECTOR (5-PIN)	
		1	**167-3543**	5	TERMINAL (MALE)	
	2	1	**238-2210**	1	SWITCH AS-ROCKER (WASHER, LOWER) (WASHER, LOWER)	
		1	**167-3542**	1	RECEPTACLE-CONNECTOR (5-PIN)	
		1	**167-3543**	4	TERMINAL (MALE)	

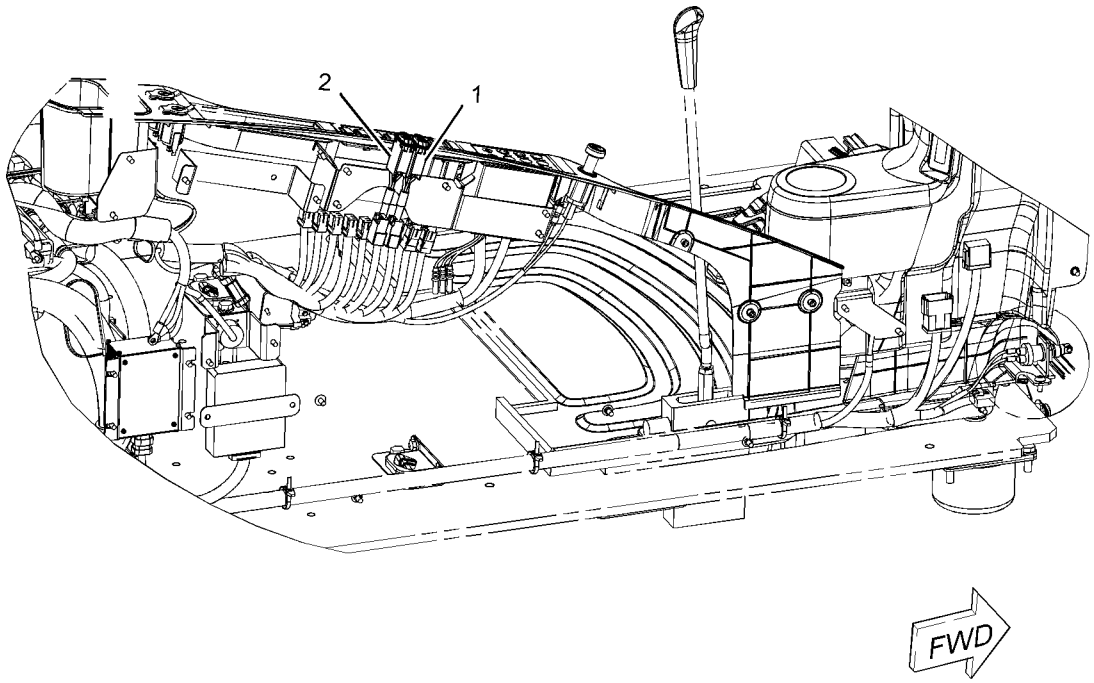

GRAPHIC #1 **<END>** g01098895

239-1134 VALVE GP-ETHER STARTING

S/N: JGB1-UP; KHS1-UP
24-VOLT
PART OF 222-8365 STARTING AID GP-ETHER
AN ATTACHMENT

SMCS-1456 **i03894416**

NOTE	REF NO	GRAPHIC REF	PART NUMBER	QTY	PART NAME 1 2 3 4 5 6 (PRODUCT LEVEL)	SEE PAGE
	1	1	**7N-9801**	1	GASKET	
	2	1	**102-8802**	1	KIT-RECEPTACLE (2-PIN)	
					(INCLUDES RECEPTACLE AS & WEDGE)	
	3	1	**8T-8729**	2	PIN-CONNECTOR (16-GA TO 18-GA)	
	4	1	**358-4889**	1	FILTER (ETHER START)	

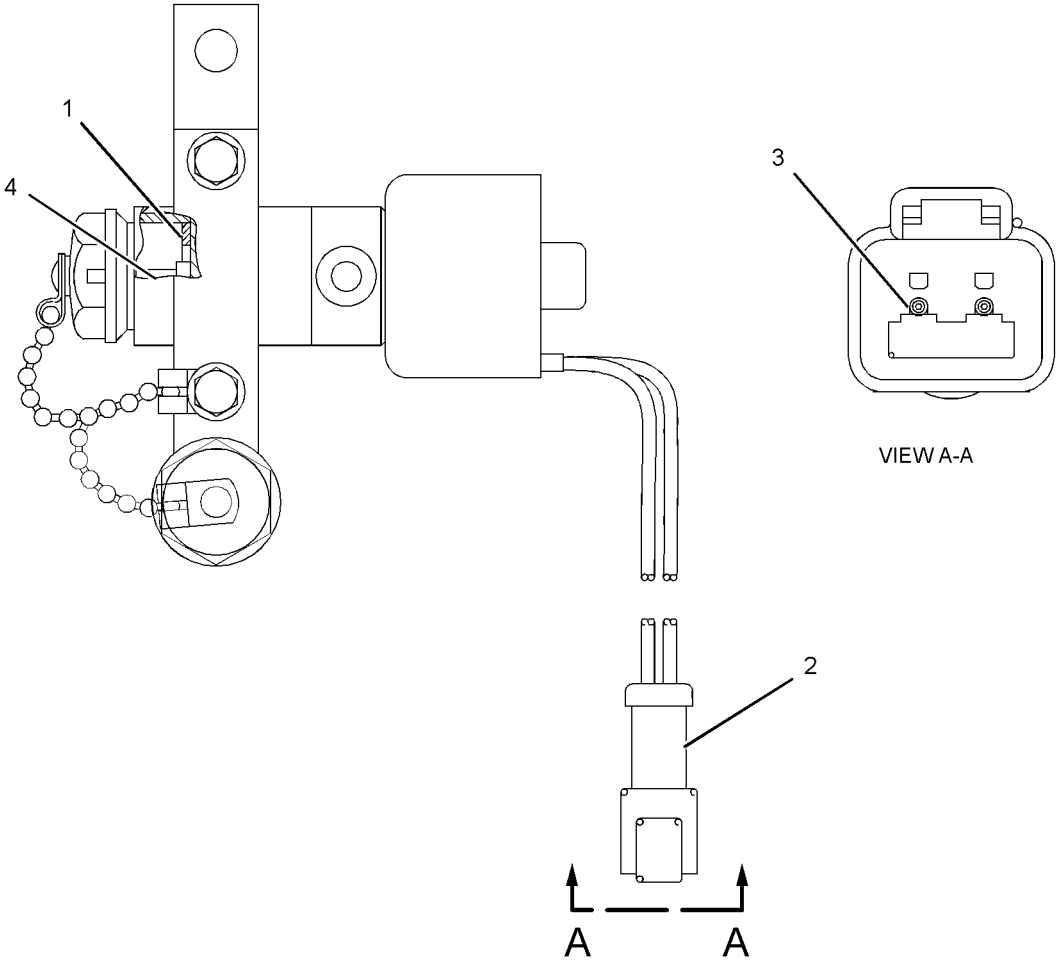

GRAPHIC #1 **<END>** g02138138

299-2969 WIRING GP-AUX START RECEPTACLE–JUMP START

S/N: JGB1-UP; KHS1-UP
PART OF 337-8885 OPTION AR-REGIONAL
AN ATTACHMENT

SMCS-1408, 1463 **i03292583**

NOTE	REF NO	GRAPHIC REF	PART NUMBER	QTY	PART NAME 1 2 3 4 5 6 (PRODUCT LEVEL)	SEE PAGE
	1	1	**2G-1830**	1	RECEPTACLE AS (AUXILIARY START)	
		1	**1S-7251**	2	TERMINAL-CABLE (00-GA, 1/2-IN SCREW)	
E		1	**5P-0747**		CABLE (00-GA, BLACK) (49-CM)	
E		1	**5P-0761**		CABLE (00-GA, RED) (56-CM)	
D		1	**6V-2722**		TUBE-HEAT SHRINK (0.1-M)	
	2	1	**301-0091**	1	COVER-TERMINAL (RED)	
	3	1	**8S-2634**	1	COVER AS	
Y	4	1	**9W-0742**	1	BLOCK GP-JUNCTION (BATTERY)	172
	5	1	**328-0363**	1	CABLE AS	
		1	**1S-7251**	1	TERMINAL-CABLE (00-GA, 1/2-IN SCREW)	
E		1	**5P-0761**		CABLE (00-GA, RED) (44-CM)	
		1	**301-0091**	1	COVER-TERMINAL (RED)	
		1	**8N-1725**	1	COVER AS-TERMINAL (RED)	
		1	**3S-6049**	1	TERMINAL AS-BATTERY (POSITIVE)	
		1	**1M-6119**	1	BOLT (5/16-18X1.375-IN)	
		1	**1M-6120**	1	NUT (5/16-18-THD)	
	6	1	**231-1806**	1	BRACKET	
	7	1	**299-2960**	1	BRACKET AS	
	8	1	**319-1158**	1	CABLE AS	
		1	**1S-7251**	2	TERMINAL-CABLE (00-GA, 1/2-IN SCREW)	
E		1	**159-8049**		CABLE (00-GA, RED) (360-CM)	
		1	**8N-0869**	1	COVER-TERMINAL (RED)	
		1	**301-0091**	1	COVER-TERMINAL (RED)	
M	9	1	**5C-9553**	4	BOLT (M6X1X16-MM)	
	10	1	**5P-4115**	4	WASHER-HARD (7.2X19X2-MM THK)	
	11	1	**111-4837**	1	CLIP	
	12	1	**8T-4121**	4	WASHER-HARD (11X21X2.5-MM THK)	
M	13	1	**8T-4136**	4	BOLT (M10X1.5X25-MM)	
M	14	1	**8T-4192**	2	BOLT (M12X1.75X25-MM)	
	15	1	**8T-4223**	2	WASHER-HARD (13.5X25.5X3-MM THK)	
M	16	1	**8T-4195**	1	BOLT (M10X1.5X30-MM)	

D-ORDER BY THE METER
E-ORDER BY THE CENTIMETER
M-METRIC PART
Y-SEPARATE ILLUSTRATION

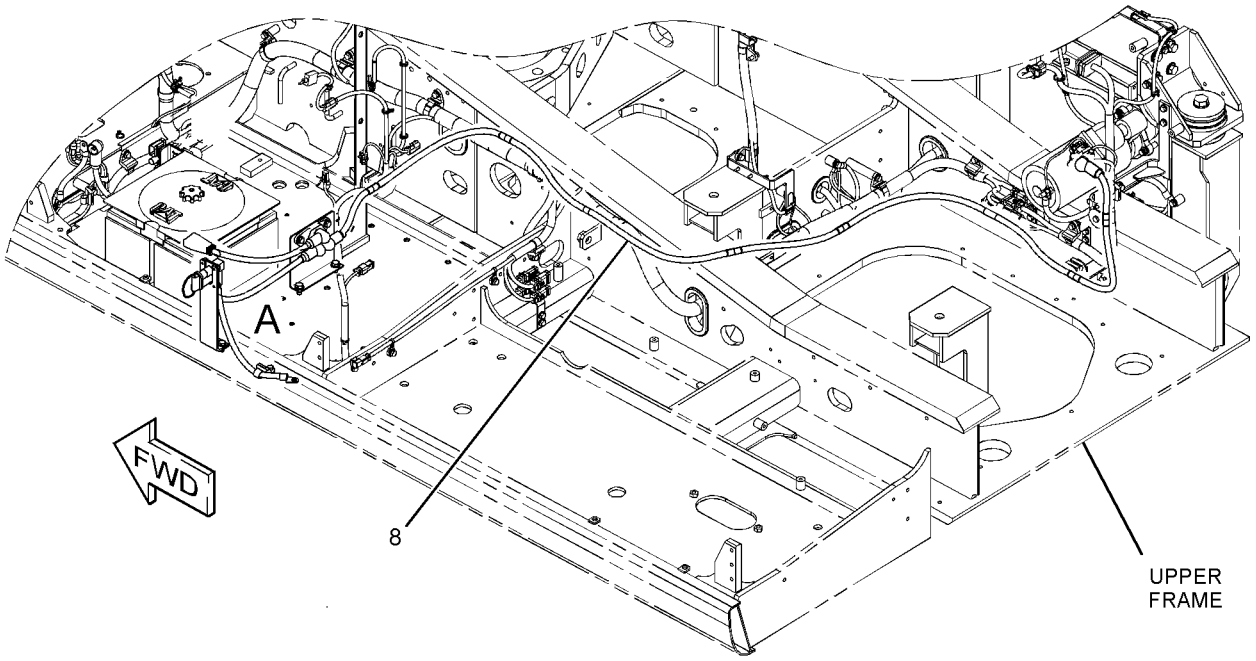

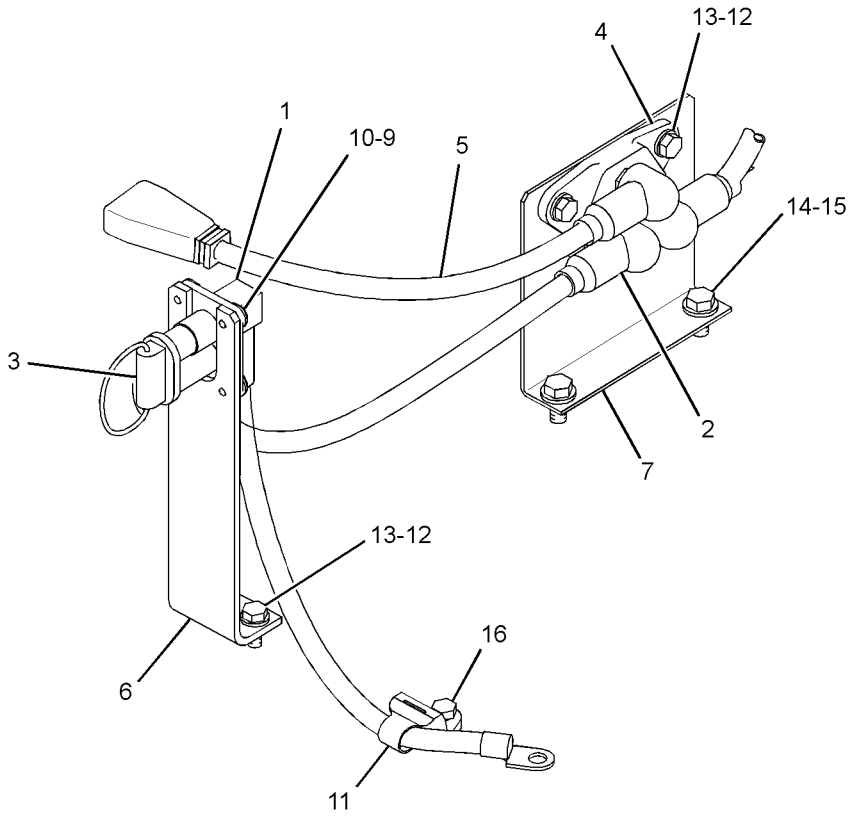

VIEW OF AREA A

GRAPHIC #1 **<END>** g01704895

299-2600 WIRING GP-AUXILIARY CONTROL—PLATFORM

S/N: JGB1-UP
PART OF 285-1784 CONTROL AR-AUXILIARY
AN ATTACHMENT

SMCS-1408 **i04158154**

NOTE	REF NO	GRAPHIC REF	PART NUMBER	QTY	PART NAME 1 2 3 4 5 6 (PRODUCT LEVEL)	SEE PAGE
	1	1	**3S-2093**	12	STRAP-CABLE	
C	2	1	**7K-1181**	21	STRAP-CABLE	
	3	1	**111-4836**	2	CLIP	
	4	1	**319-1166**	1	HARNESS AS-VALVE (ONE PUMP/TWO PUMP)	
		1	**102-8802**	3	KIT-RECEPTACLE (2-PIN)	
		1	**102-8803**	1	KIT-RECEPTACLE (3-PIN)	
					(EACH RECEPTACLE KIT INCLUDES RECEPTACLE AS & WEDGE)	
		1	**8T-8729**	7	PIN-CONNECTOR (16-GA TO 18-GA)	
		1	**8T-8730**	12	SOCKET-CONNECTOR (16-GA TO 18-GA)	
		1	**8T-8737**	23	PLUG-SEAL	
E		1	**125-7874**		TUBE-HEAT SHRINK (5.72-MM DIA) (15-CM)	
		1	**9X-3402**	3	SOCKET-CONNECTOR (16-GA TO 18-GA)	
		1	**2L-8079**	1	TERMINAL-RING (14-GA TO 16-GA, 3/8-IN SCREW)	
		1	**9X-3401**	3	PIN-CONNECTOR (16-GA TO 18-GA)	
		1	**155-2270**	4	KIT-CONNECTING PLUG (2-PIN)	
		1	**155-2260**	1	KIT-CONNECTING PLUG (3-PIN)	
					(EACH PLUG KIT INCLUDES PLUG AS, WEDGE & INTERFACE SEAL)	
		1	**230-4011**	2	PLUG AS-CONNECTOR (2-PIN)	
		1	**264-7029**	1	SEAL-CONNECTOR	
		1	**243-4505**	2	RECEPTACLE AS-CONNECTOR (2-PIN)	
		1	**243-4509**	1	RECEPTACLE AS-CONNECTOR (8-PIN)	
		1	**243-4510**	1	RECEPTACLE AS-CONNECTOR (12-PIN)	
C	5	1	**132-5789**	3	CLIP	
C	6	1	**4P-7581**	3	CLIP	
C	7	1	**8T-4121**	6	WASHER-HARD (11X21X2.5-MM THK)	
M	8	1	**8T-4137**	4	BOLT (M10X1.5X20-MM)	
BC	9	1	**3S-2093**	2	STRAP-CABLE	
BC	10	1	**7K-1181**	1	STRAP-CABLE	
C	11	1	**186-4574**	1	PLUG AS	
		1	**8T-8737**	2	PLUG-SEAL	
		1	**155-2270**	1	KIT-CONNECTING PLUG (2-PIN)	
					(INCLUDES PLUG AS, WEDGE & INTERFACE SEAL)	
CM	12	1	**8T-4185**	2	BOLT (M10X1.5X50-MM)	
C	13	1	**6G-2263**	2	SPACER (10.5X19X28.5-MM THK)	

B-USE AS REQUIRED
C-CHANGE FROM PREVIOUS TYPE
E-ORDER BY THE CENTIMETER
M-METRIC PART

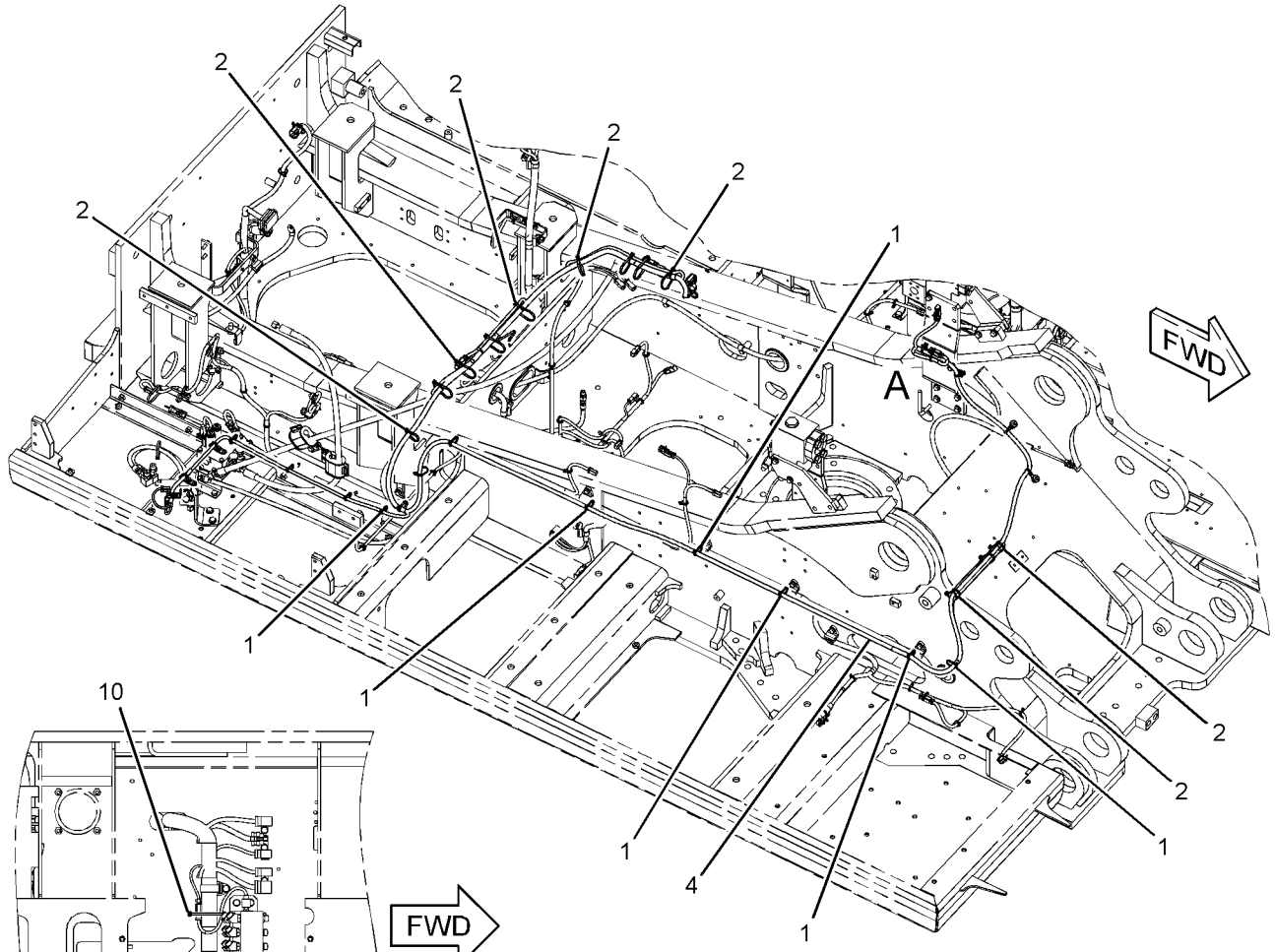

BOTTOM VIEW
(OPERATOR PLATFORM)

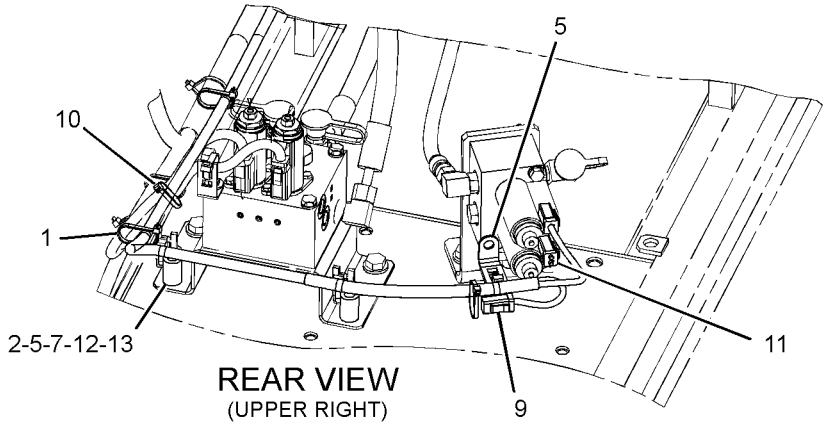

REAR VIEW
(UPPER RIGHT)

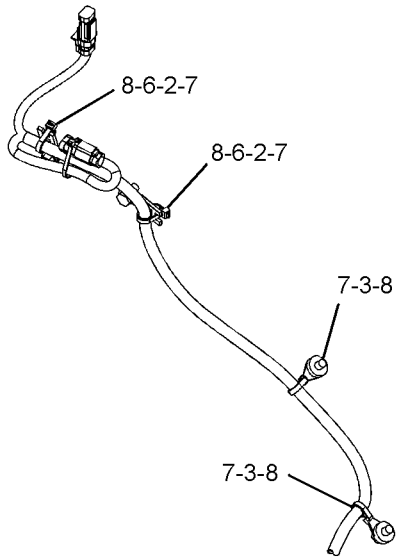

VIEW OF AREA A

GRAPHIC #1 **<END>** g02355738

267-7642 WIRING GP-CAB–COUPLER

S/N: JGB1-UP; KHS1-UP
PART OF 302-9403 CONTROL AR-COUPLER
AN ATTACHMENT

SMCS-1408, 7301 **i02473764**

NOTE	REF NO	GRAPHIC REF	PART NUMBER	QTY	PART NAME 1 2 3 4 5 6 (PRODUCT LEVEL)	SEE PAGE
	1	1	**7K-1181**	13	STRAP-CABLE	
	2	1	**149-5050**	1	RELAY (24-VOLT) (QUICK COUPLER LOCK PRIORITY)	
	2A	1	**149-5050**	1	RELAY (24-VOLT) (QUICK COUPLER LOCK ON)	
	2B	1	**149-5050**	1	RELAY (24-VOLT) (QUICK COUPLER LOCK)	
	2C	1	**149-5050**	1	RELAY (24-VOLT) (QUICK COUPLER LOCK)	
	3	1	**259-4884**	1	BRACKET AS	
	4	1	**259-7220**	1	COVER	
	5	1	**267-7644**	1	HARNESS AS-QUICK COUPLER	
		1	**3S-2093**	15	STRAP-CABLE	
		1	**230-5008**	1	PLUG AS-CONNECTOR (4-PIN)	
	6	1	*267-7671*	1	SWITCH GP-TOGGLE (QUICK COUPLER)	
		1	**105-5175**	1	SWITCH AS-TOGGLE (QUICK COUPLER)	
		1	**3L-8187**	6	LOCKWASHER	
		1	**6T-3631**	2	NUT-HEX (15/32-32-THD)	
		1	**6T-3632**	1	LOCKWASHER	
		1	**6T-3633**	1	RING-LOCKING	
		1	**6V-8374**	6	SCREW-MACHINE (6-32X0.25-IN)	
		1	**267-7672**	1	HARNESS AS-WIRING (CAB)	
		1	**3S-2093**	1	STRAP-CABLE	
	7	1	**267-7676**	1	BRACKET AS	
M	8	1	**9X-2042**	7	SCREW-TRUSS HEAD (M6X1X12-MM)	

M-METRIC PART

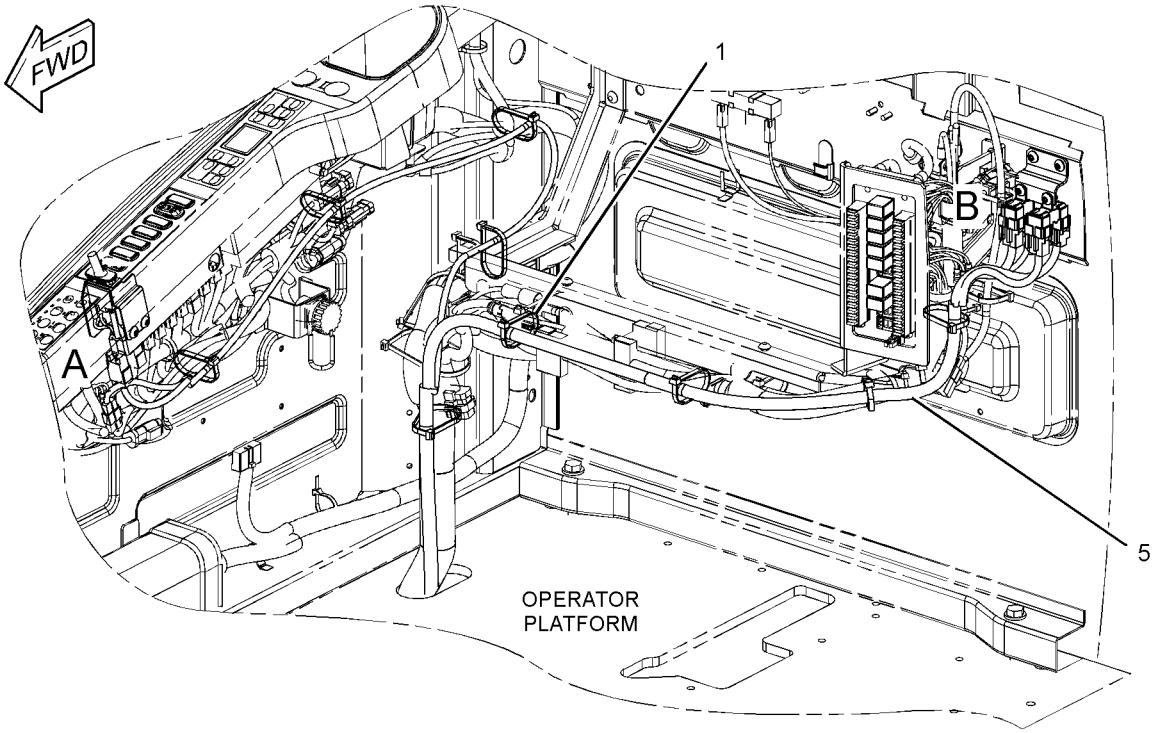

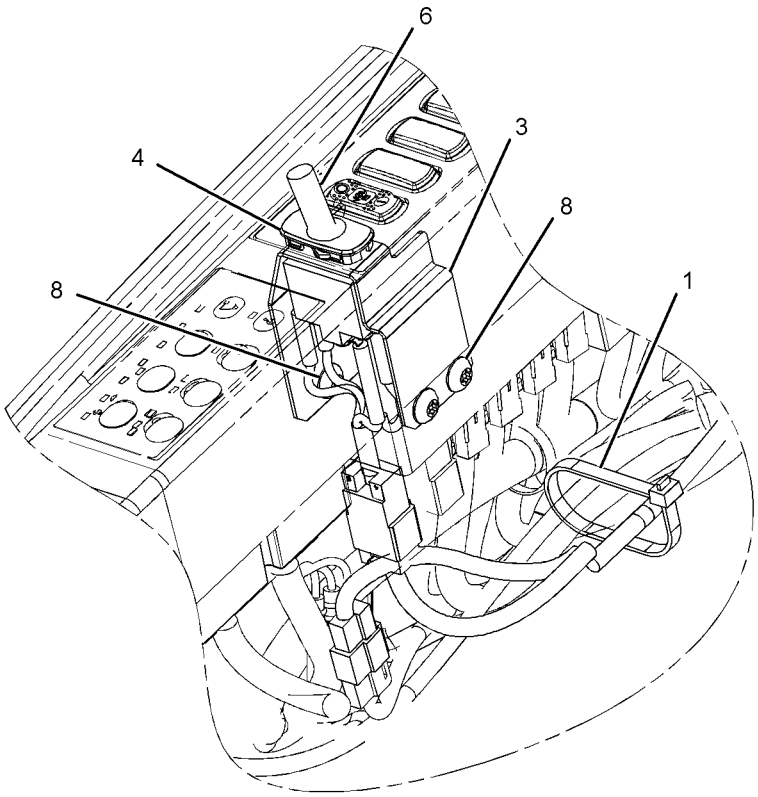

VIEW OF AREA A

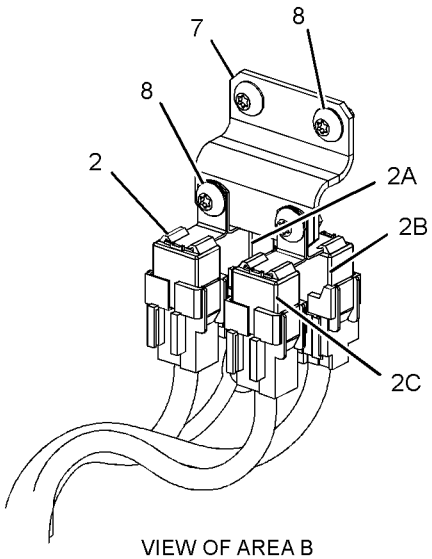

VIEW OF AREA B

GRAPHIC #1 **<END>** g01235651

ELECTRICAL AND STARTING SYSTEM

291-7767 WIRING GP-CAB

S/N: JGB1-UP; KHS1-UP
PART OF 356-6716 CAB GP

SMCS-1408, 7301 **i02969321**

NOTE	REF NO	GRAPHIC REF	PART NUMBER	QTY	PART NAME 1 2 3 4 5 6 (PRODUCT LEVEL)	SEE PAGE
	1	1,2	**3S-2093**	10	STRAP-CABLE	
	2	1,3	**7Y-5505**	2	SPEAKER AS	
					(EACH INCLUDES)	
		1,3	**7Y-3951**	2	TERMINAL-BLADE (14-GA)	
		1,3	**7Y-3954**	1	CONNECTOR-PLUG (3-PIN)	
B	3	3	**9W-0335**	1	LIGHTER AS-CIGAR (24-VOLT)	
					—OR—	
B		3	**238-2318**	1	LIGHTER AS-CIGAR (24-VOLT)	
M	4	1,3	**099-7127**	8	SCREW-MACHINE (M4X0.7X12-MM)	
	5	2	**102-8016**	1	RESISTOR AS	
	6	2	**113-8490**	25	FUSE (10-AMPERE)	
C	7	2	**113-8491**	4	FUSE (15-AMPERE)	
	8	2	**113-8493**	2	FUSE (25-AMPERE)	
	9	1,3	**116-0210**	4	BRACKET AS	
	10	2	**124-3548**	2	FUSE (30-AMPERE)	
Y	11	1	**132-1829**	1	ALARM GP (24-VOLT)	155
C	12	2	**141-2759**	7	FUSE (5-AMPERE)	
	13	2	**161-3128**	1	RELAY (24-VOLT) (FUEL TRANSFER PUMP)	
	13A	2	**161-3128**	1	RELAY (24-VOLT) (HORN)	
	13B	2	**161-3128**	1	RELAY (24-VOLT) (CHASSIS FLOODLIGHT)	
	13C	2	**161-3128**	1	RELAY (24-VOLT) (ETHER START)	
	13D	2	**161-3128**	1	RELAY (24-VOLT) (BOOM LIGHTS)	
	13E	2	**161-3128**	1	RELAY (24-VOLT) (CAB LIGHT)	
	13F	2	**161-3128**	1	RELAY (24-VOLT) (NEUTRAL START)	
	13G	2	**161-3128**	1	RELAY (24-VOLT) (TRAVEL ALARM)	
	14	1	**268-1964**	1	KIT-SERVICE METER	
					(INCLUDES SERVICE METER & SERVICE METER FILM)	
	15	2	**163-6758**	1	WIRE AS	
	16	1,3	**163-6795**	14	STRAP-CABLE	
	17	3	**167-3593**	1	STRAP	
	18	2	**170-6888**	1	PULLER-FUSE	
	19	2	**213-0772**	1	SWITCH AS-MAGNETIC (24-VOLT) (MAIN RELAY)	
	20	3	**227-7575**	1	PANEL-CONTROL (SWITCH)	
	21	3	**234-1097**	1	BRACKET	
	22	3	**238-2212**	1	SWITCH AS-ROCKER (FINE SWING)	
		3	**167-3542**	1	RECEPTACLE-CONNECTOR (5-PIN)	
		3	**167-3543**	5	TERMINAL (MALE)	
	24	2	**238-2390**	1	CABLE AS	
	25	2	**238-2391**	1	CABLE AS	
	26	1,3	**245-7760**	8	INSULATION	
	27	3	**251-0637**	1	INSULATION	
	28	3	**259-4883**	1	ANTENNA AS	
C	29	1	**319-0873**	1	HARNESS AS-CAB	
M	30	3	**095-0723**	3	SCREW-SPECIAL	
	31	3	**096-5962**	3	WASHER-HARD (3.4X7X0.8-MM THK)	
	32	3	**096-6166**	2	WASHER-HARD (4.5X9X1-MM THK)	
	33	1,2	**132-5789**	8	CLIP	
	34	2	**4P-7581**	1	CLIP	
M	35	3	**5C-2890**	3	NUT (M6X1-THD)	
M	36	3	**6V-5210**	8	SCREW-MACHINE (M4X0.7X10-MM)	
M	37	3	**6V-9672**	2	SCREW-MACHINE (M4X0.7X16-MM)	
	38	1,2	**8T-0328**	3	WASHER-HARD (5.5X10X1-MM THK)	
M	39	2	**8T-4127**	2	SCREW-MACHINE (M5X0.8X20-MM)	
M	40	1	**8T-6693**	1	SCREW-MACHINE (M5X0.8X16-MM)	
M	41	1,2	**9X-2042**	12	SCREW-TRUSS HEAD (M6X1X12-MM)	
M	42	2,3	**9X-2044**	5	SCREW-TRUSS HEAD (M6X1X16-MM)	

291-7767 **WIRING GP-CAB** ***(contd.)*** **i02969321**

NOTE	REF NO	GRAPHIC REF	PART NUMBER	QTY	PART NAME 1 2 3 4 5 6 (PRODUCT LEVEL)	SEE PAGE
	43	3	**9X-8256**	3	WASHER (6.6X12X2-MM THK)	
E	44	3	**101-2846**		GUARD (9-CM EACH)	
E	44A	1	**101-2846**		GUARD (9.5-CM)	

B-USE AS REQUIRED
C-CHANGE FROM PREVIOUS TYPE
E-ORDER BY THE CENTIMETER
M-METRIC PART
Y-SEPARATE ILLUSTRATION

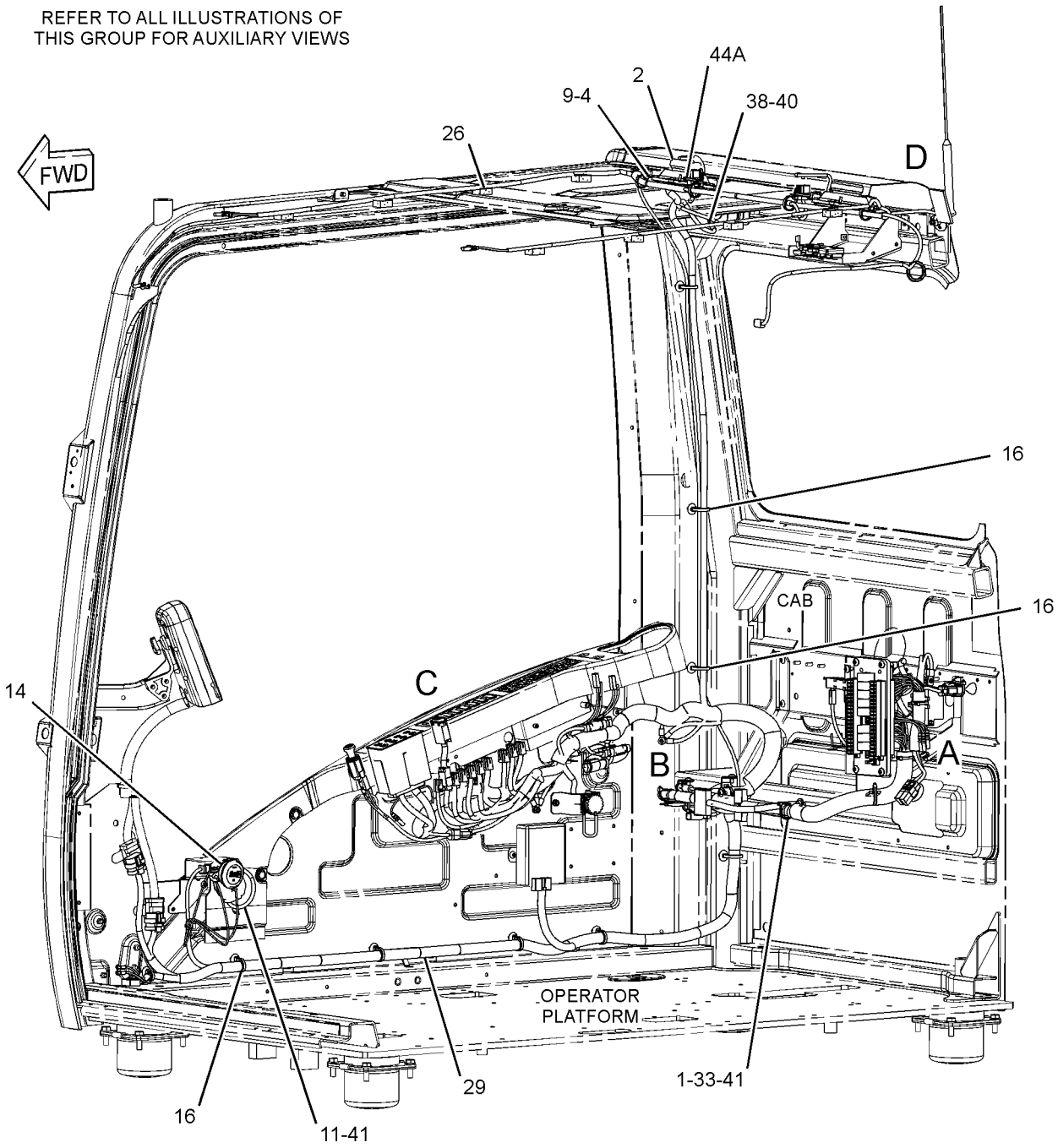

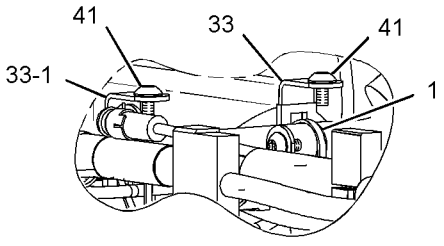

VIEW OF AREA B

GRAPHIC #1

g01443640

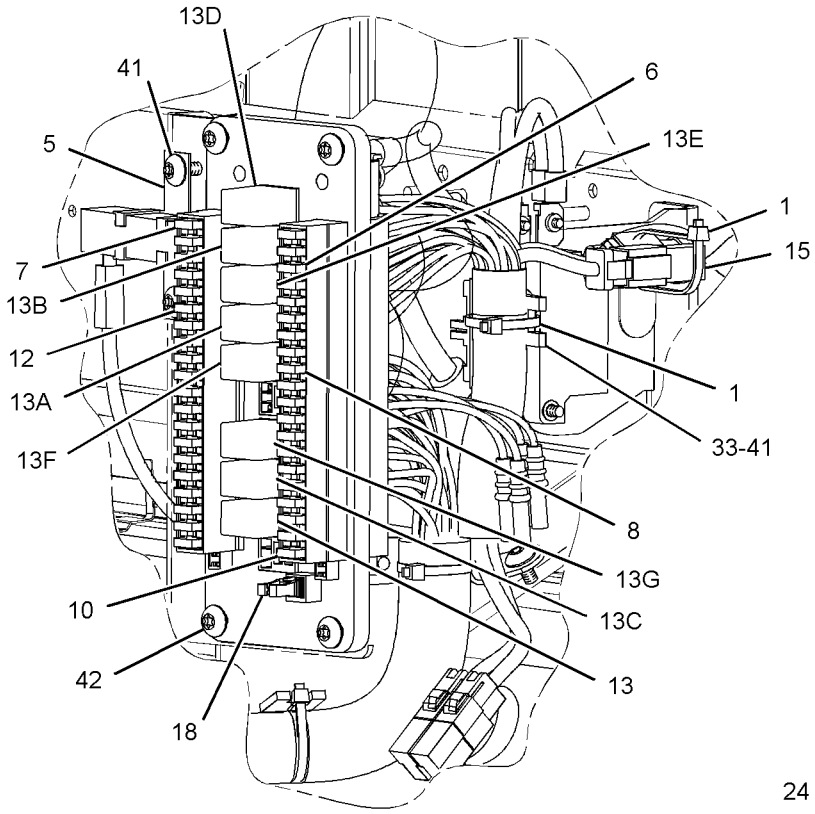

VIEW OF AREA A

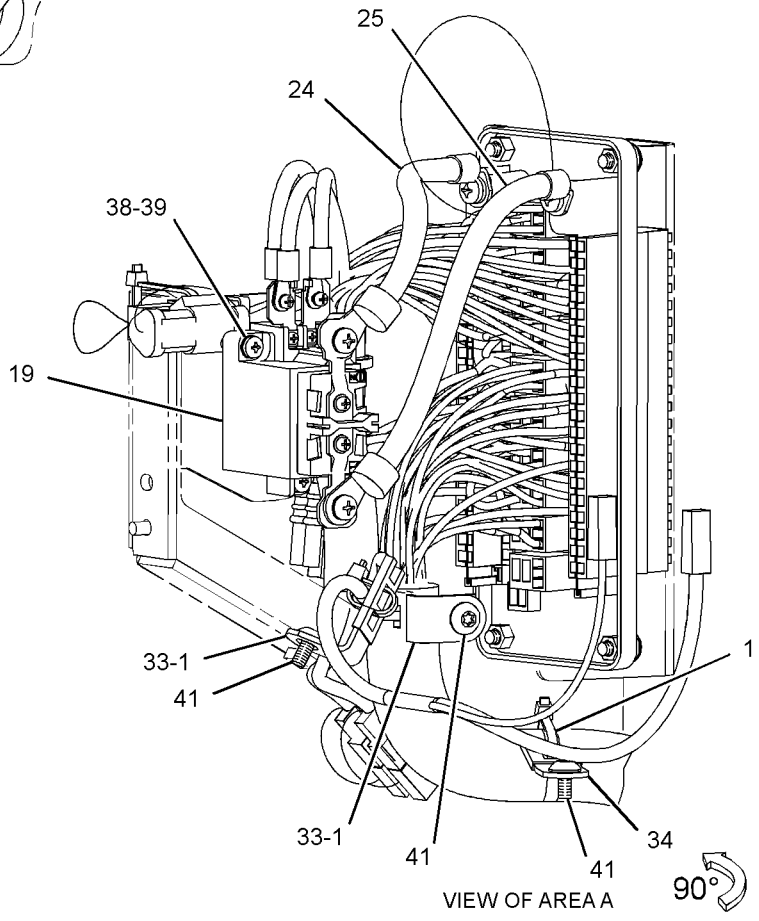

VIEW OF AREA A

GRAPHIC #2

g01443768

291-7767 **WIRING GP-CAB** *(contd.)* **i02969321**

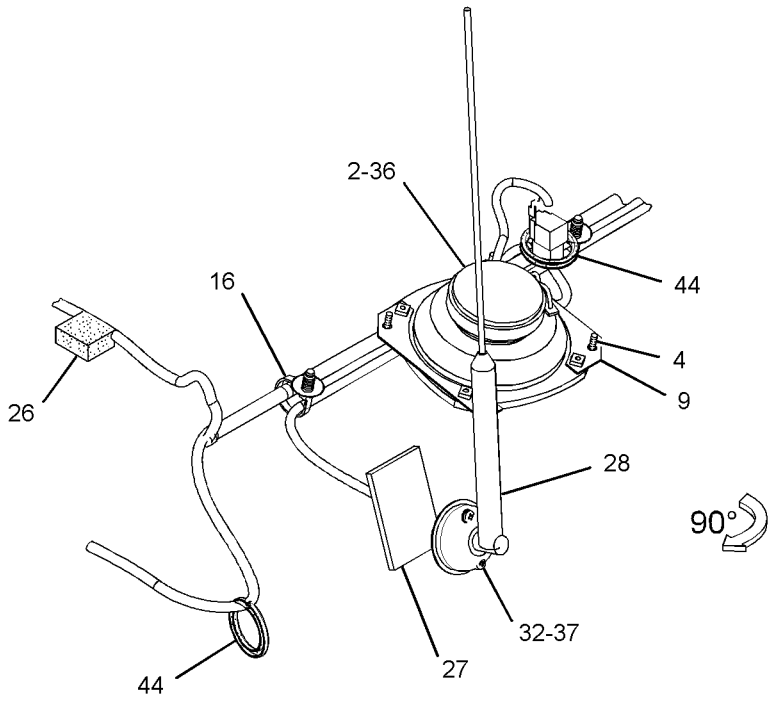

VIEW OF AREA D

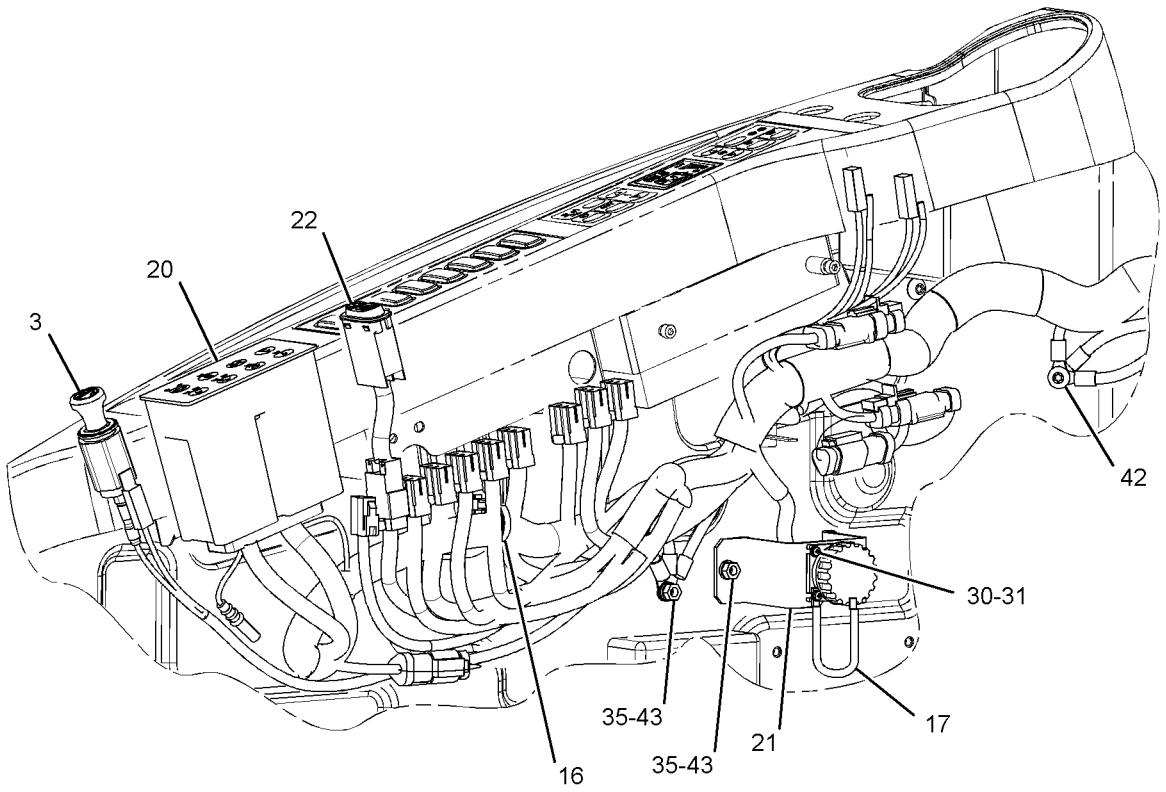

VIEW OF AREA C

GRAPHIC #3 **<END>** g01443638

336-6334 WIRING GP-CAB–ACCUGRADE

S/N: JGB1-UP; KHS1-UP
PART OF 356-4742 PARTS AR-CAB
AN ATTACHMENT

SMCS-1408, 7301 **i03818970**

NOTE	REF NO	GRAPHIC REF	PART NUMBER	QTY	PART NAME 1 2 3 4 5 6 (PRODUCT LEVEL)	SEE PAGE
	1	1	**3S-2093**	6	STRAP-CABLE	
	2	1	**7K-1181**	20	STRAP-CABLE	
	3	1	**113-8491**	1	FUSE (15-AMPERE)	
	4	1	**204-1790**	3	RESISTOR AS	
	5	1	**259-4939**	1	RECEPTACLE AS	
		1	**8T-8737**	6	PLUG-SEAL	
		1	**243-4508**	1	RECEPTACLE AS-CONNECTOR (6-PIN)	
	6	1	**299-2701**	1	HARNESS AS-CAB	
		1	**102-8803**	2	KIT-RECEPTACLE (3-PIN)	
		1	**176-9299**	2	KIT-RECEPTACLE (3-PIN)	
					(EACH RECEPTACLE KIT INCLUDES RECEPTACLE AS & WEDGE)	
		1	**8T-8730**	5	SOCKET-CONNECTOR (16-GA TO 18-GA)	
		1	**3S-2093**	1	STRAP-CABLE	
		1	**8L-8413**	2	STRAP-CABLE	
		1	**8T-8737**	19	PLUG-SEAL	
		1	**9W-0844**	9	SOCKET-CONNECTOR (14-GA TO 16-GA)	
BE		1	**119-3662**		TUBE-HEAT SHRINK (10.85-MM DIA)	
BE		1	**125-7874**		TUBE-HEAT SHRINK (5.72-MM DIA)	
BE		1	**125-7875**		TUBE-HEAT SHRINK (7.44-MM DIA)	
		1	**9X-3402**	20	SOCKET-CONNECTOR (16-GA TO 18-GA)	
		1	**2L-8069**	1	TERMINAL-RING (2-GA TO 10-GA, 3/8-IN SCREW)	
		1	**9X-3401**	4	PIN-CONNECTOR (16-GA TO 18-GA)	
		1	**153-2602**	6	RECEPTACLE-CONNECTOR (1-PIN)	
		1	**153-2631**	6	TERMINAL (FEMALE)	
		1	**174-0503**	1	KIT-CONNECTING PLUG (3-PIN)	
		1	**155-2260**	1	KIT-CONNECTING PLUG (3-PIN)	
					(EACH PLUG KIT INCLUDES PLUG AS, WEDGE & INTERFACE SEAL)	
		1	**170-6890**	2	TERMINAL-BLADE (14-GA)	
		1	**174-3016**	2	PLUG AS-CONNECTOR (3-PIN)	
		1	**230-4009**	1	PLUG AS-CONNECTOR (12-PIN)	
		1	**230-5008**	3	PLUG AS-CONNECTOR (4-PIN)	
		1	**230-5010**	2	PLUG AS-CONNECTOR (6-PIN)	
		1	**243-4507**	3	RECEPTACLE AS-CONNECTOR (4-PIN)	
		1	**243-5362**	1	CAP-DUST	
		1	**248-5358**	1	PLUG AS-CONNECTOR (39-PIN)	
		1	**253-2695**	1	PLUG AS-CONNECTOR	
		1	**287-8404**	1	CAP AS-DUST	
	7	1	**299-2952**	1	SHEET AS	
M	8	1	**5C-2890**	3	NUT (M6X1-THD)	
M	9	1	**7X-2619**	6	BOLT (M6X1X10-MM)	
	10	1	**9X-8256**	9	WASHER (6.6X12X2-MM THK)	

B-USE AS REQUIRED
E-ORDER BY THE CENTIMETER
M-METRIC PART

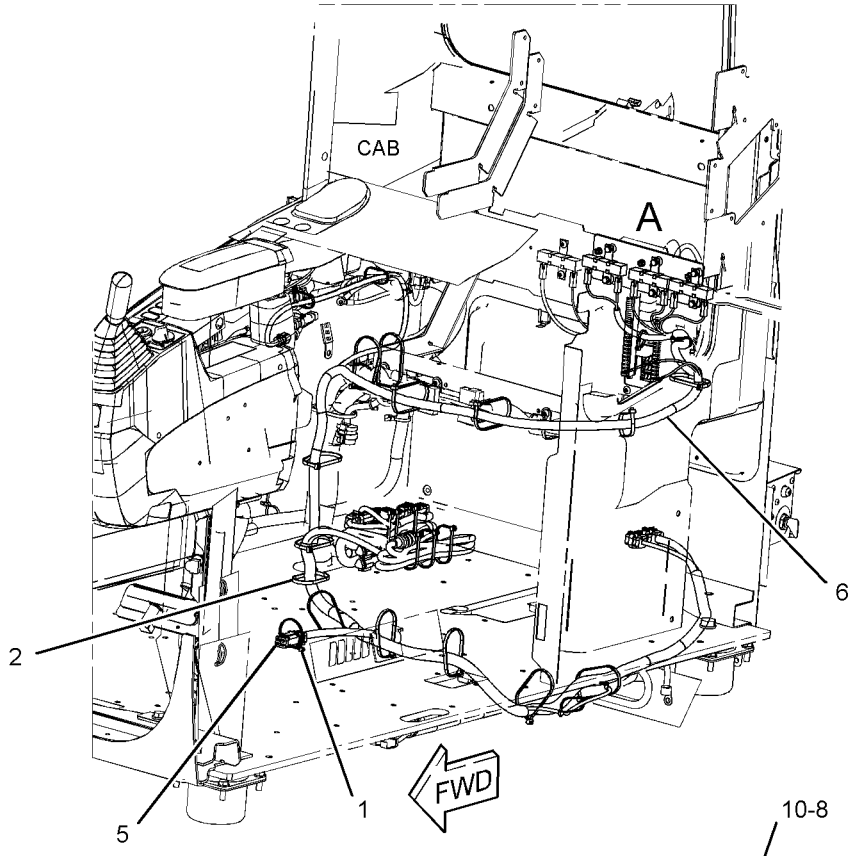

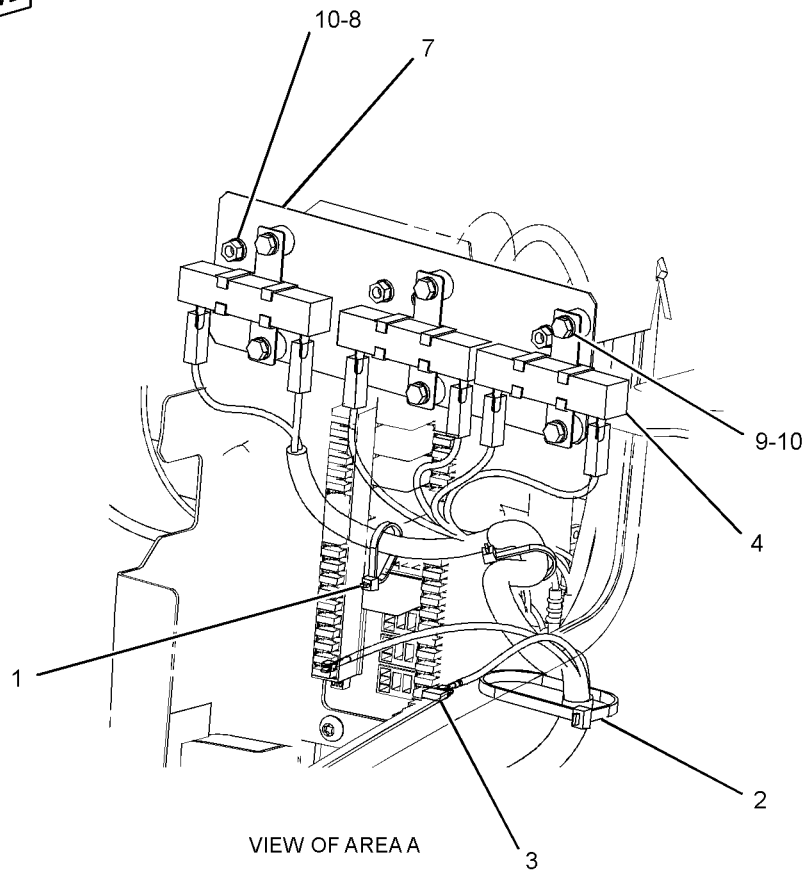

VIEW OF AREA A

GRAPHIC #1 **<END>** g01948044

306-8587 WIRING GP-CAMERA–WORK AREA VISUAL SYSTEM, REAR

S/N: JGB1-UP; KHS1-UP
PART OF 319-9155 CAMERA AR
AN ATTACHMENT

SMCS-1408, 7348 **i03874989**

NOTE	REF NO	GRAPHIC REF	PART NUMBER	QTY	PART NAME 1 2 3 4 5 6 (PRODUCT LEVEL)	SEE PAGE
C	1	1	**3S-2093**	11	STRAP-CABLE	
	2	1	**7I-2673**	1	STRAP-CABLE	
C	3	1	**7K-1181**	21	STRAP-CABLE	
	4	1	**111-4836**	2	CLIP	
C	5	1	**251-4169**	1	CABLE AS-COAXIAL	
	6	1	**261-3223**	1	CABLE AS-COMMUNICATION (3-M)	
	7	1	**319-1037**	1	BRACKET AS	
C	8	1	**350-8040**	1	SUPPORT AS	
C	9	1	**002-9372**	1	CLIP	
	10	1	**093-2064**	1	GROMMET	
C	11	1	**101-3625**	1	CLIP	
	12	1	**1R-6072**	1	GROMMET	
C	13	1	**4P-7581**	3	CLIP	
	14	1	**5K-0430**	1	CLIP	
	15	1	**5P-8522**	1	GROMMET	
C	16	1	**8T-4121**	9	WASHER-HARD (11X21X2.5-MM THK)	
CM	17	1	**8T-4136**	1	BOLT (M10X1.5X25-MM)	
CM	18	1	**8T-4137**	4	BOLT (M10X1.5X20-MM)	
CM	19	1	**8T-4179**	2	BOLT (M12X1.75X20-MM)	
CM	20	1	**8T-4191**	4	BOLT (M10X1.5X16-MM)	
C	21	1	**8T-4223**	2	WASHER-HARD (13.5X25.5X3-MM THK)	

C-CHANGE FROM PREVIOUS TYPE
M-METRIC PART

306-8587 **WIRING GP-CAMERA** *(contd.)* **i03874989**

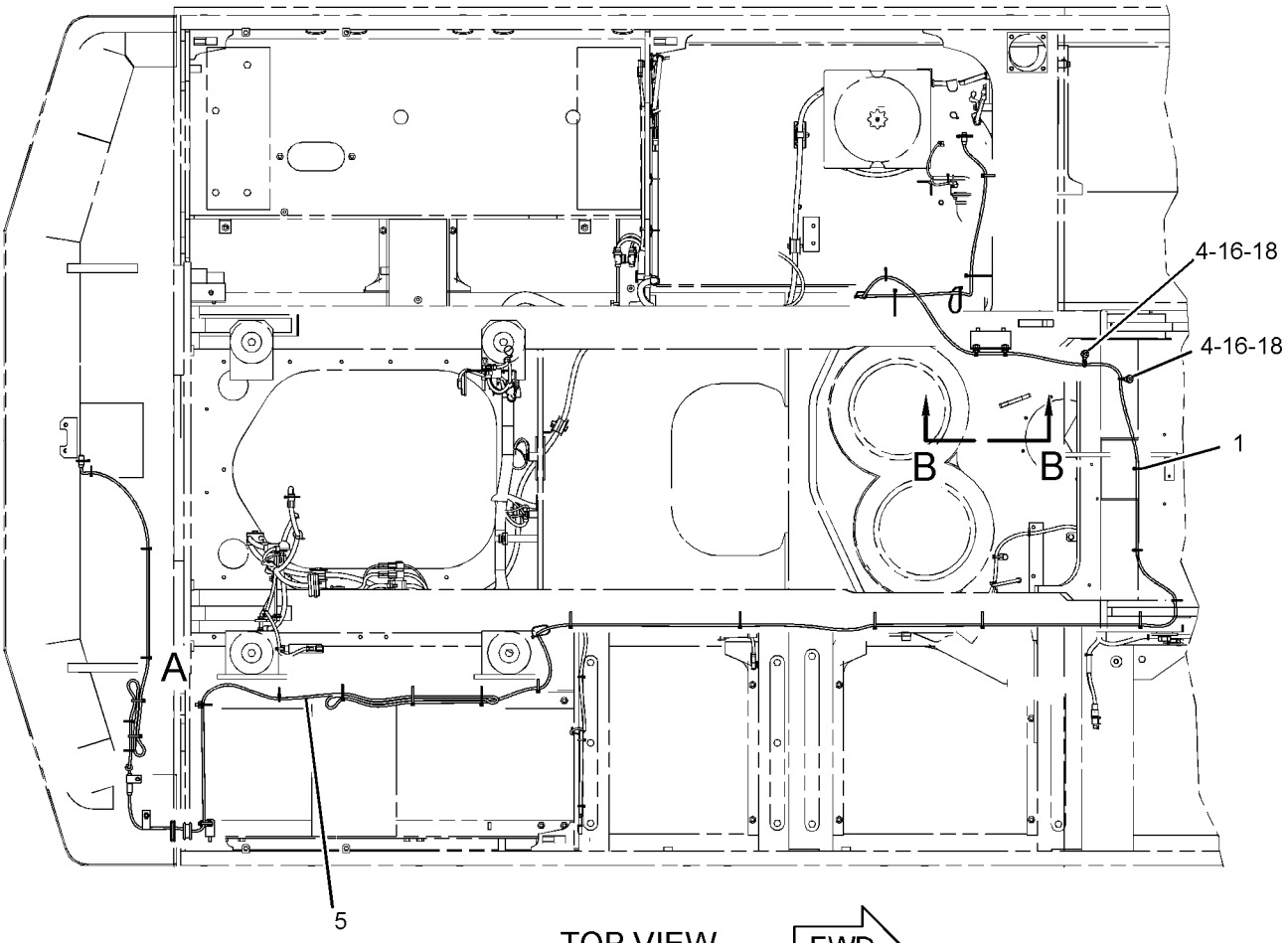

TOP VIEW FWD

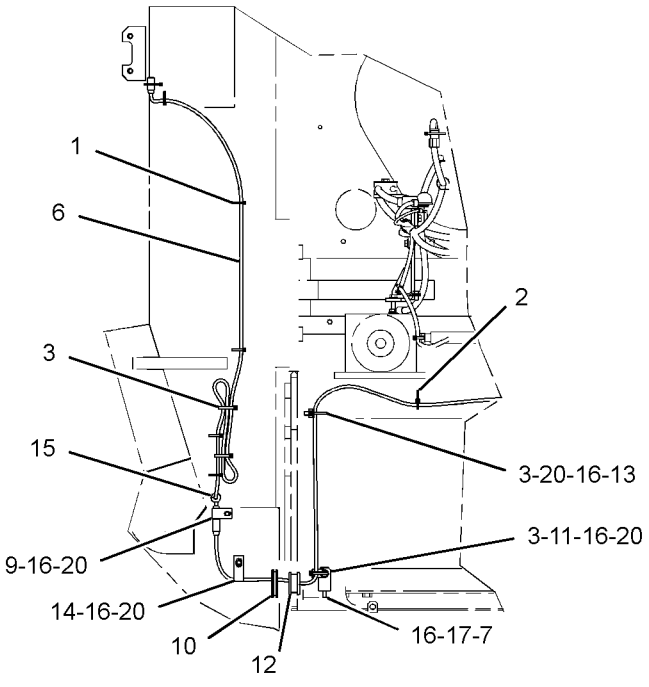

VIEW OF AREA A

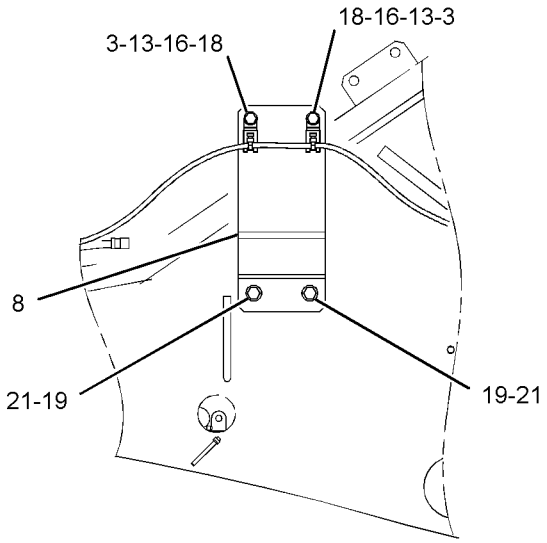

VIEW B-B

GRAPHIC #1 **<END>** g02128494

259-4889 WIRING GP-CHASSIS–QUICK COUPLER

S/N: JGB1-UP
PART OF 344-4211 CONTROL AR-COUPLER
AN ATTACHMENT

SMCS-1408 **i03348090**

NOTE	REF NO	GRAPHIC REF	PART NUMBER	QTY	PART NAME 1 2 3 4 5 6 (PRODUCT LEVEL)	SEE PAGE
	1	1	**3S-2093**	8	STRAP-CABLE	
	2	1	**6G-2263**	1	SPACER (10.5X19X28.5-MM THK)	
	3	1	**7K-1181**	10	STRAP-CABLE	
	4	1	**116-0118**	1	CLIP	
	5	1	**259-4890**	1	HARNESS AS-CHASSIS	
		1	**230-4011**	1	PLUG AS-CONNECTOR (2-PIN)	
		1	**243-4505**	1	RECEPTACLE AS-CONNECTOR (2-PIN)	
	6	1	**8T-4121**	2	WASHER-HARD (11X21X2.5-MM THK)	
M	7	1	**8T-4133**	1	NUT (M10X1.5-THD)	
M	8	1	**8T-6466**	1	BOLT (M10X1.5X60-MM)	

M-METRIC PART

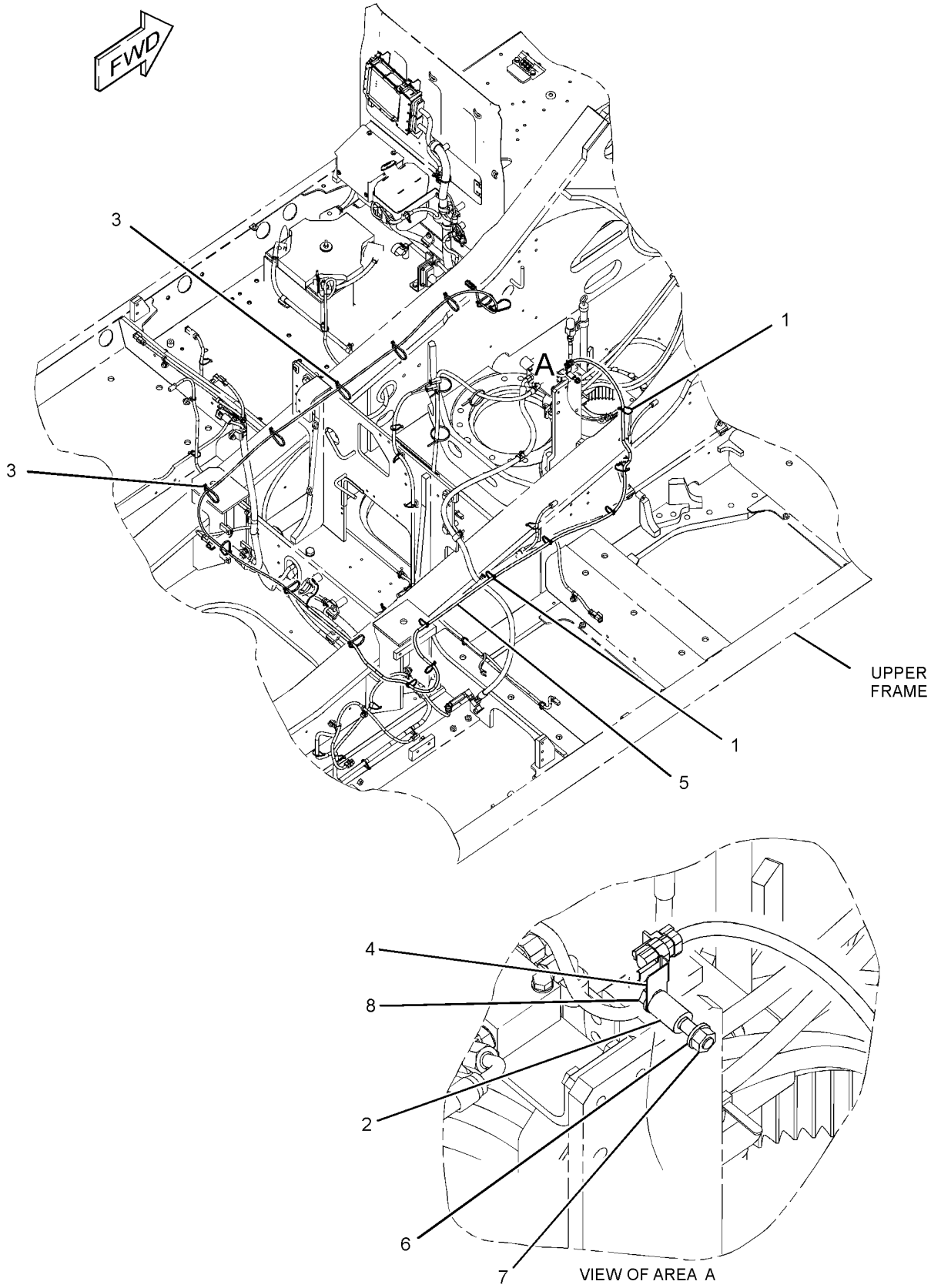

GRAPHIC #1 **<END>** g01645753

ELECTRICAL AND STARTING SYSTEM

299-2996 WIRING GP-CHASSIS–ACCUGRADE READY

S/N: JGB1-UP; KHS1-UP
PART OF 319-9274, 351-9595 SPECIAL AR
AN ATTACHMENT

SMCS-1408 **i03880746**

NOTE	PART NUMBER	QTY	PART NAME 1 2 3 4 5 6 (PRODUCT LEVEL)	SEE PAGE
Y	*354-0016*	1	WIRING GP-CHASSIS	275
Y	*354-0015*	1	WIRING GP-CONTROL	289

Y-SEPARATE ILLUSTRATION

<END>

306-8639 WIRING GP-CHASSIS–COMMUNICATION RADIO

S/N: JGB1-UP; KHS1-UP
PART OF 303-2702 INSTALLATION AR-RADIO
AN ATTACHMENT

SMCS-1408 **i02849106**

NOTE	REF NO	GRAPHIC REF	PART NUMBER	QTY	PART NAME 1 2 3 4 5 6 (PRODUCT LEVEL)	SEE PAGE
	1	1	**3S-2093**	10	STRAP-CABLE	
	2	1	**7K-1181**	9	STRAP-CABLE	
	3	1	**306-8640**	2	CABLE AS	

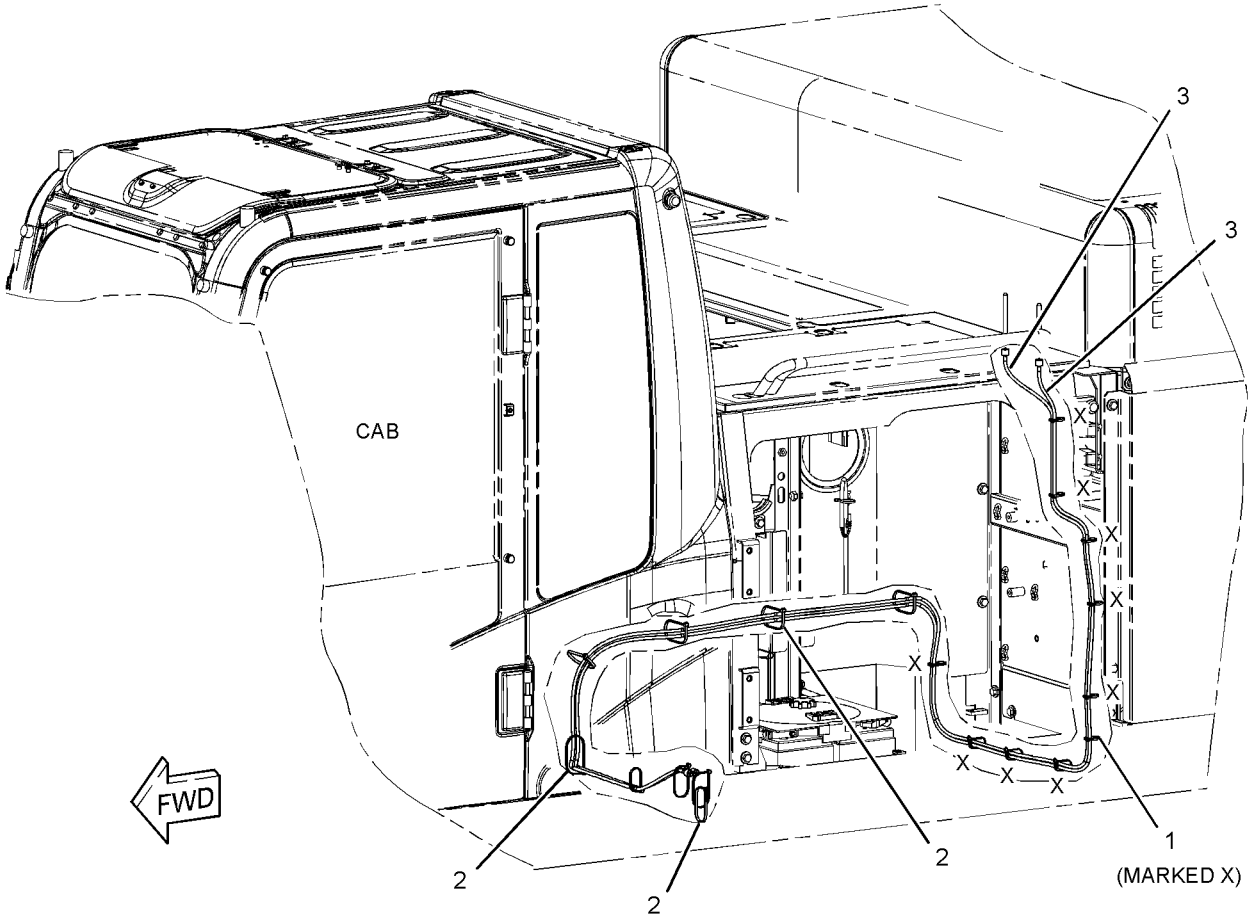

GRAPHIC #1 **<END>** g01458731

354-0016 WIRING GP-CHASSIS–ACCUGRADE READY

S/N: JGB1-UP; KHS1-UP

PART OF 299-2996 WIRING GP-CHASSIS

AN ATTACHMENT

SMCS-1408 **i03881143**

NOTE	REF NO	GRAPHIC REF	PART NUMBER	QTY	PART NAME 1 2 3 4 5 6 (PRODUCT LEVEL)	SEE PAGE
	1	2	**3S-2093**	28	STRAP-CABLE	
	2	1,2	**7K-1181**	34	STRAP-CABLE	
	3	1	**111-4837**	3	CLIP	
	4	1,2	**116-0118**	2	CLIP	
	5	1	**336-6280**	1	HARNESS AS-CHASSIS	
		1	**102-8802**	7	KIT-RECEPTACLE (2-PIN)	
		1	**102-8803**	3	KIT-RECEPTACLE (3-PIN)	
					(EACH RECEPTACLE KIT INCLUDES RECEPTACLE AS & WEDGE)	
		1	**8T-8729**	3	PIN-CONNECTOR (16-GA TO 18-GA)	
		1	**8T-8730**	8	SOCKET-CONNECTOR (16-GA TO 18-GA)	
		1	**3R-9965**	1	PLUG AS-CONNECTOR (8-PIN)	
		1	**3S-2093**	17	STRAP-CABLE	
		1	**6D-5257**	1	PLUG AS-CONNECTOR (8-PIN)	
		1	**8L-8413**	4	STRAP-CABLE	
		1	**8T-8737**	70	PLUG-SEAL	
		1	**9X-4385**	1	PLUG AS-CONNECTOR (6-PIN)	
		1	**104-6871**	2	CAP-DUST	
		1	**9W-0852**	1	PIN-CONNECTOR (14-GA TO 16-GA)	
		1	**9W-0844**	18	SOCKET-CONNECTOR (14-GA TO 16-GA)	
E		1	**119-3662**		TUBE-HEAT SHRINK (10.85-MM DIA) (20-CM)	
E		1	**125-7874**		TUBE-HEAT SHRINK (5.72-MM DIA) (100-CM)	
E		1	**125-7875**		TUBE-HEAT SHRINK (7.44-MM DIA) (95-CM)	
		1	**9X-3402**	30	SOCKET-CONNECTOR (16-GA TO 18-GA)	
		1	**2L-8079**	2	TERMINAL-RING (14-GA TO 16-GA, 3/8-IN SCREW)	
		1	**176-9299**	2	KIT-RECEPTACLE (3-PIN)	
					(EACH INCLUDES RECEPTACLE AS & WEDGE)	
		1	**9X-3401**	38	PIN-CONNECTOR (16-GA TO 18-GA)	
		1	**155-2270**	13	KIT-CONNECTING PLUG (2-PIN)	
		1	**174-0503**	1	KIT-CONNECTING PLUG (3-PIN)	
		1	**155-2260**	3	KIT-CONNECTING PLUG (3-PIN)	
					(EACH PLUG KIT INCLUDES PLUG AS, WEDGE & INTERFACE SEAL)	
		1	**174-3016**	2	PLUG AS-CONNECTOR (3-PIN)	
		1	**197-4385**	6	DIODE	
		1	**230-4009**	4	PLUG AS-CONNECTOR (12-PIN)	
		1	**264-7034**	1	SEAL-CONNECTOR	
		1	**243-4508**	2	RECEPTACLE AS-CONNECTOR (6-PIN)	
		1	**243-4510**	5	RECEPTACLE AS-CONNECTOR (12-PIN)	
		1	**243-5362**	2	CAP-DUST	
		1	**253-2695**	1	PLUG AS-CONNECTOR	
E		1	**262-8088**		HOSE (90-CM)	
	6	1,2	**132-5789**	3	CLIP	
	7	2	**2S-1647**	2	GROMMET	
	8	1	**4P-7581**	4	CLIP	
	9	1,2	**8T-4121**	10	WASHER-HARD (11X21X2.5-MM THK)	
M	10	1	**8T-4137**	8	BOLT (M10X1.5X20-MM)	
M	11	2	**8T-4191**	2	BOLT (M10X1.5X16-MM)	

E-ORDER BY THE CENTIMETER
M-METRIC PART

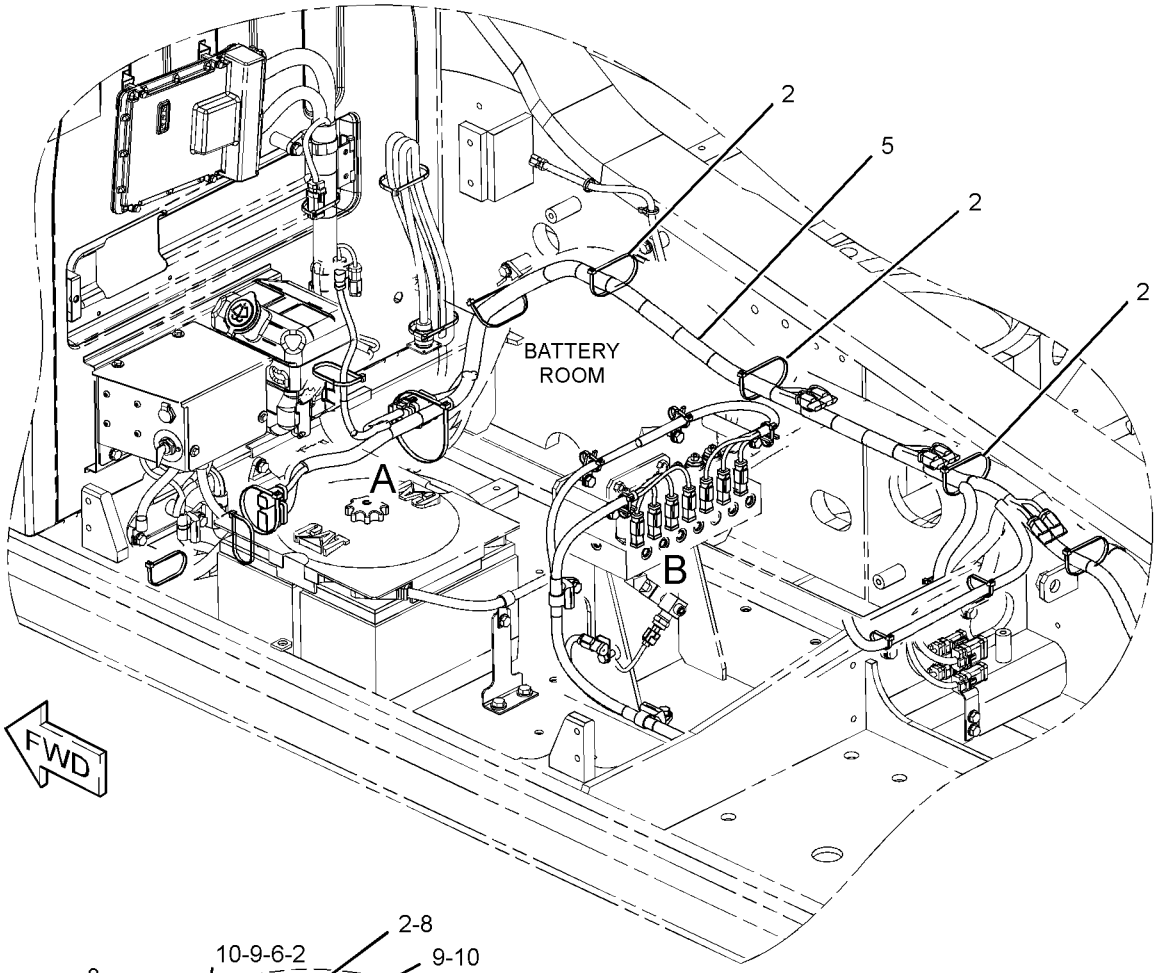

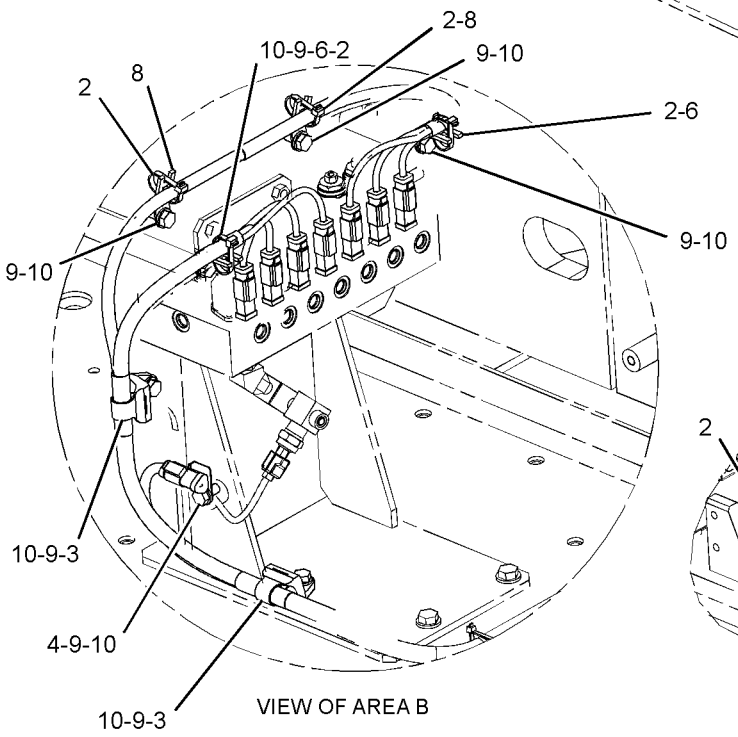

VIEW OF AREA B

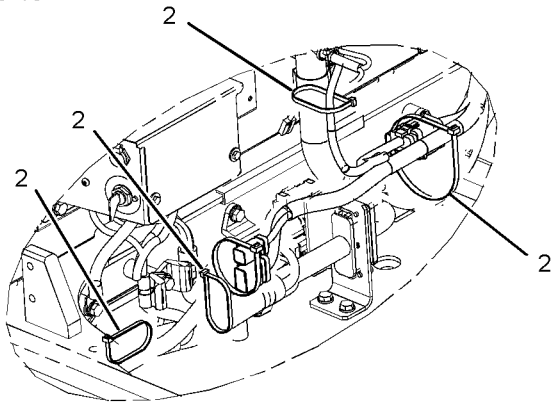

VIEW OF AREA A

GRAPHIC #1 g02352809

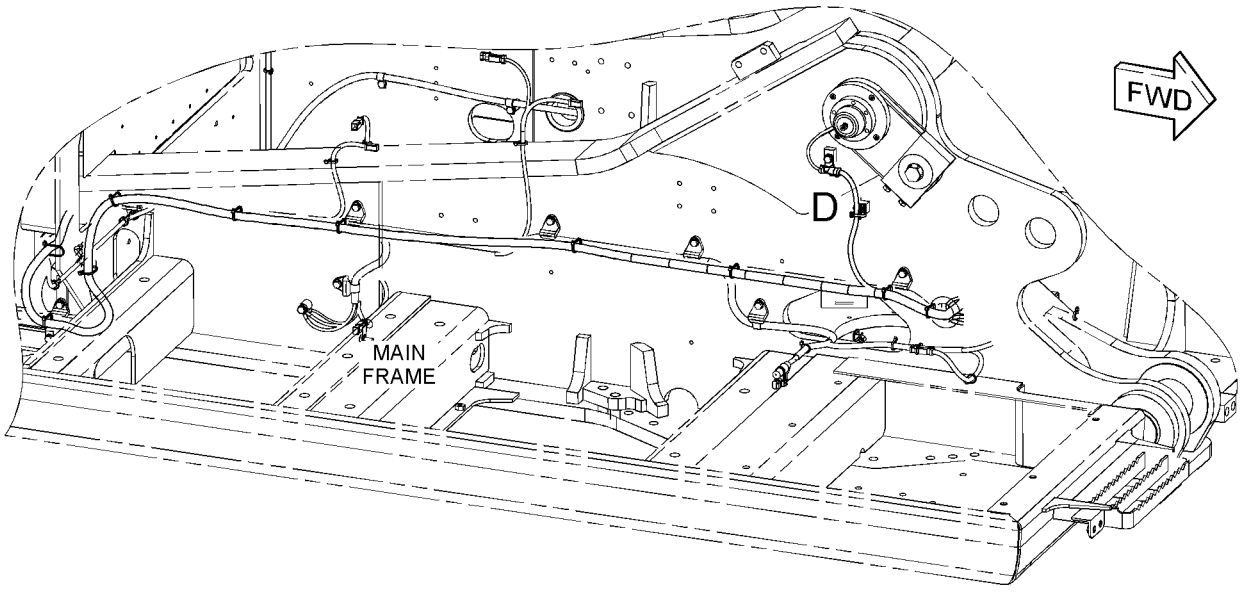

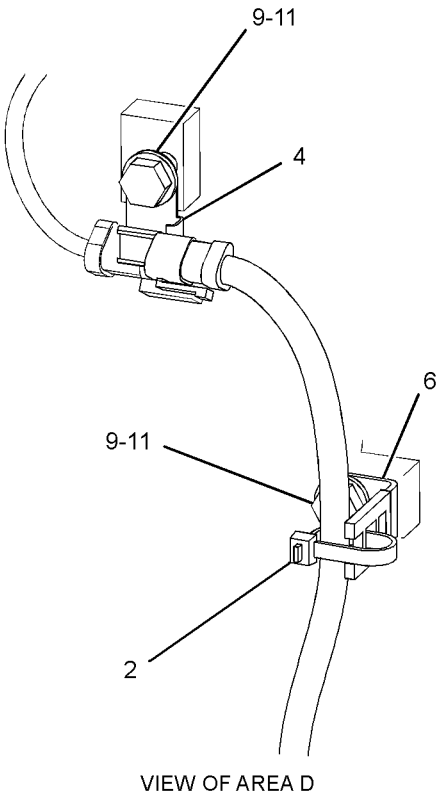

VIEW OF AREA D

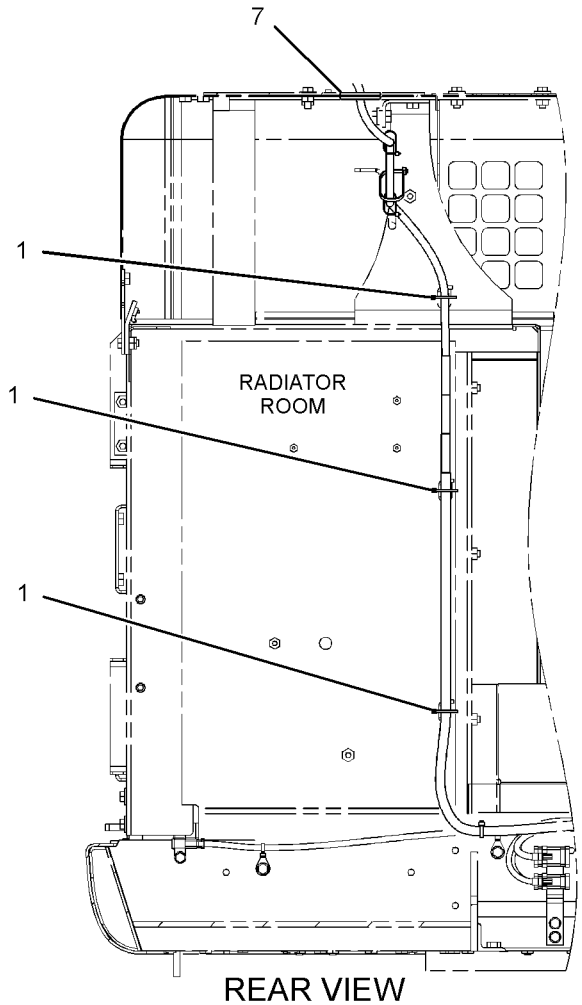

REAR VIEW

GRAPHIC #2 **<END>** g02353013

ELECTRICAL AND STARTING SYSTEM

319-1287 WIRING GP-COMMUNICATION–PRODUCT LINK 321SR

S/N: JGB1-UP; KHS1-UP

PART OF 303-2781 INSTALLATION AR-COMMUNICATION

AN ATTACHMENT

SMCS-1408 **i03877789**

NOTE	PART NUMBER	QTY	PART NAME 1 2 3 4 5 6 (PRODUCT LEVEL)	SEE PAGE
Y	*354-0039*	1	WIRING GP-COMMUNICATION (PRODUCT LINK-321SR)	279
Y	*354-0040*	1	WIRING GP-COMMUNICATION (PRODUCT LINK-321SR)	281

Y-SEPARATE ILLUSTRATION

<END>

354-0039 WIRING GP-COMMUNICATION–PRODUCT LINK 321SR

S/N: JGB1-UP; KHS1-UP

PART OF 319-1287 WIRING GP-COMMUNICATION

AN ATTACHMENT

SMCS-1408 **i03877797**

NOTE	REF NO	GRAPHIC REF	PART NUMBER	QTY	PART NAME 1 2 3 4 5 6 (PRODUCT LEVEL)	SEE PAGE
	1	1	**7K-1181**	5	STRAP-CABLE	
	2	1	**9X-3495**	1	CLIP AS	
	3	1	**153-2447**	1	BRACKET AS	
	4	1	**259-4940**	1	HARNESS AS-WIRING (SERVICE CONNECTOR)	
		1	**8T-8731**	1	PLUG-CONNECTOR (3-PIN)	
		1	**8T-8732**	1	RECEPTACLE-CONNECTOR (3-PIN)	
		1	**8T-8737**	6	PLUG-SEAL	
		1	**9X-3401**	6	PIN-CONNECTOR (16-GA TO 18-GA)	
		1	**243-4508**	1	RECEPTACLE AS-CONNECTOR (6-PIN)	
	5	1	**319-1314**	1	HARNESS AS-CONTROL (PRODUCT LINK, ANTENNA)	
		1	**8T-8729**	1	PIN-CONNECTOR (16-GA TO 18-GA)	
		1	**8T-8737**	6	PLUG-SEAL	
		1	**9W-0852**	1	PIN-CONNECTOR (14-GA TO 16-GA)	
		1	**9X-3402**	14	SOCKET-CONNECTOR (16-GA TO 18-GA)	
		1	**9X-3401**	2	PIN-CONNECTOR (16-GA TO 18-GA)	
		1	**155-2255**	1	KIT-CONNECTING PLUG (12-PIN)	
					(INCLUDES PLUG AS, WEDGE & INTERFACE SEAL)	
		1	**230-5010**	1	PLUG AS-CONNECTOR (6-PIN)	
		1	**264-7032**	1	SEAL-CONNECTOR	
		1	**243-4508**	1	RECEPTACLE AS-CONNECTOR (6-PIN)	
	6	1	**132-5789**	1	CLIP	
	7	1	**8T-4121**	2	WASHER-HARD (11X21X2.5-MM THK)	
M	8	1	**8T-4191**	2	BOLT (M10X1.5X16-MM)	

M-METRIC PART

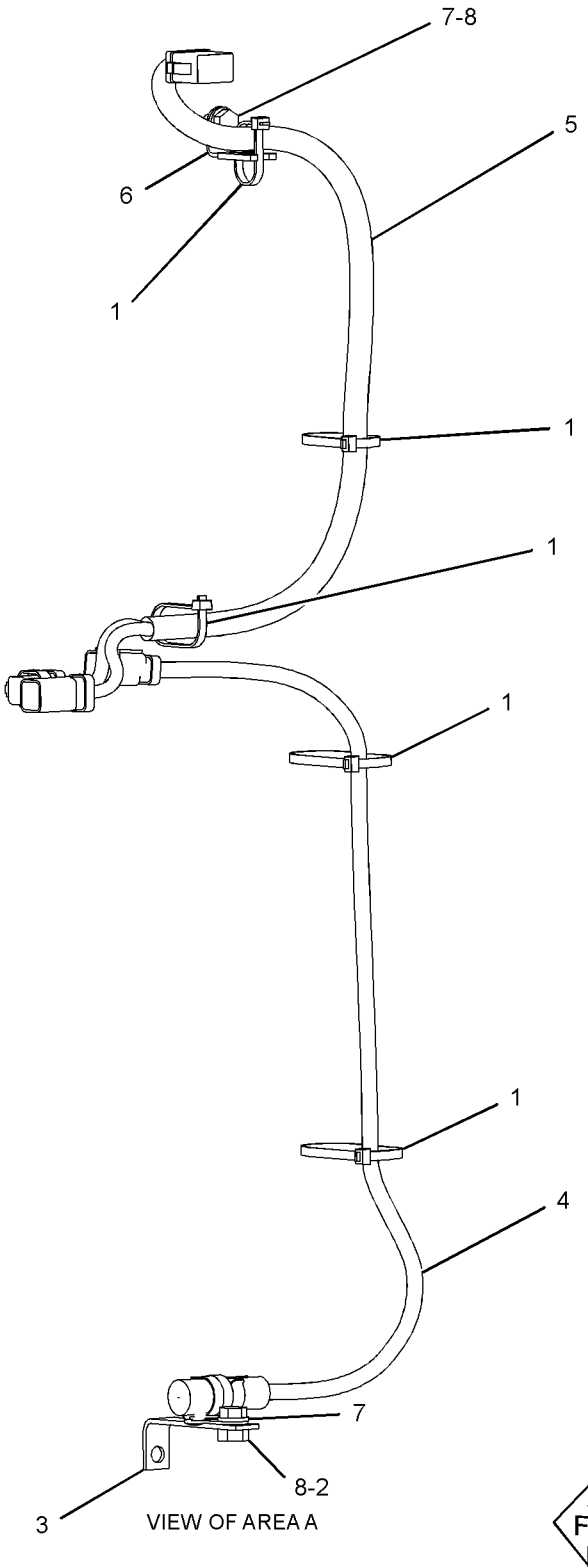

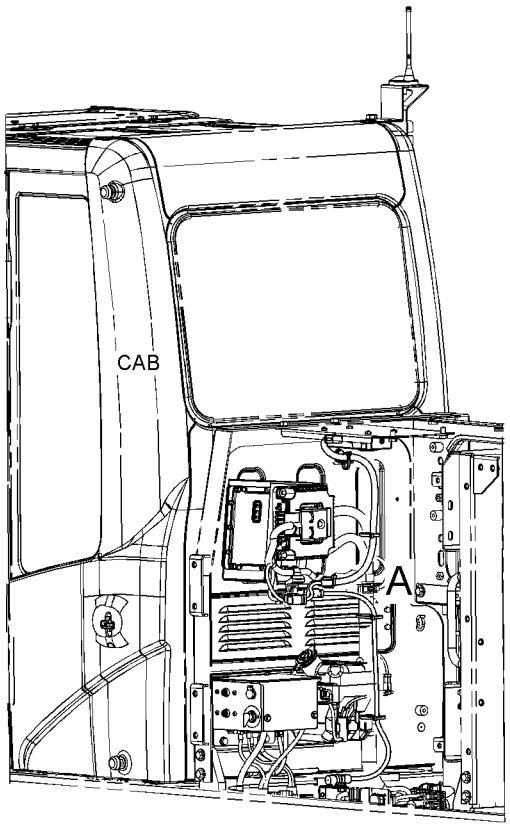

FWD

GRAPHIC #1 **<END>** g02347316

354-0040 WIRING GP-COMMUNICATION—PRODUCT LINK 321SR

S/N: JGB1-UP; KHS1-UP
PART OF 319-1287 WIRING GP-COMMUNICATION
AN ATTACHMENT

SMCS-1408 **i03877809**

NOTE	REF NO	GRAPHIC REF	PART NUMBER	QTY	PART NAME 1 2 3 4 5 6 (PRODUCT LEVEL)	SEE PAGE
	1	1	**4I-7889**	1	SPACER (11X25X45-MM THK)	
	2	1	**111-4837**	1	CLIP	
	3	1	**116-0118**	3	CLIP	
	4	1	**259-4887**	1	HARNESS AS-CONTROL (PRODUCT LINK)	
		1	**8T-8729**	1	PIN-CONNECTOR (16-GA TO 18-GA)	
		1	**8T-8730**	1	SOCKET-CONNECTOR (16-GA TO 18-GA)	
		1	**3S-2093**	2	STRAP-CABLE	
		1	**8T-8737**	62	PLUG-SEAL	
		1	**9W-0852**	1	PIN-CONNECTOR (14-GA TO 16-GA)	
		1	**9W-0844**	1	SOCKET-CONNECTOR (14-GA TO 16-GA)	
E		1	**125-7874**		TUBE-HEAT SHRINK (5.72-MM DIA) (15-CM)	
E		1	**125-7875**		TUBE-HEAT SHRINK (7.44-MM DIA) (5-CM)	
		1	**9X-3402**	19	SOCKET-CONNECTOR (16-GA TO 18-GA)	
		1	**126-1774**	1	COVER-CONNECTOR	
		1	**2L-8077**	1	TERMINAL-RING (14-GA TO 16-GA, 1/4-IN SCREW)	
		1	**9X-3401**	9	PIN-CONNECTOR (16-GA TO 18-GA)	
		1	**160-7690**	1	PLUG AS-CONNECTOR (70-PIN)	
		1	**159-9322**	1	SEAL-O-RING	
		1	**230-5010**	2	PLUG AS-CONNECTOR (6-PIN)	
					(EACH INCLUDES)	
		1	**264-7032**	1	SEAL-CONNECTOR	
		1	**243-4508**	2	RECEPTACLE AS-CONNECTOR (6-PIN)	
	5	1	**132-5789**	1	CLIP	
	6	1	**8T-4121**	2	WASHER-HARD (11X21X2.5-MM THK)	
M	7	1	**8T-4136**	1	BOLT (M10X1.5X25-MM)	
M	8	1	**8T-4191**	1	BOLT (M10X1.5X16-MM)	
M	9	1	**8T-5005**	1	BOLT (M10X1.5X70-MM)	

E-ORDER BY THE CENTIMETER
M-METRIC PART

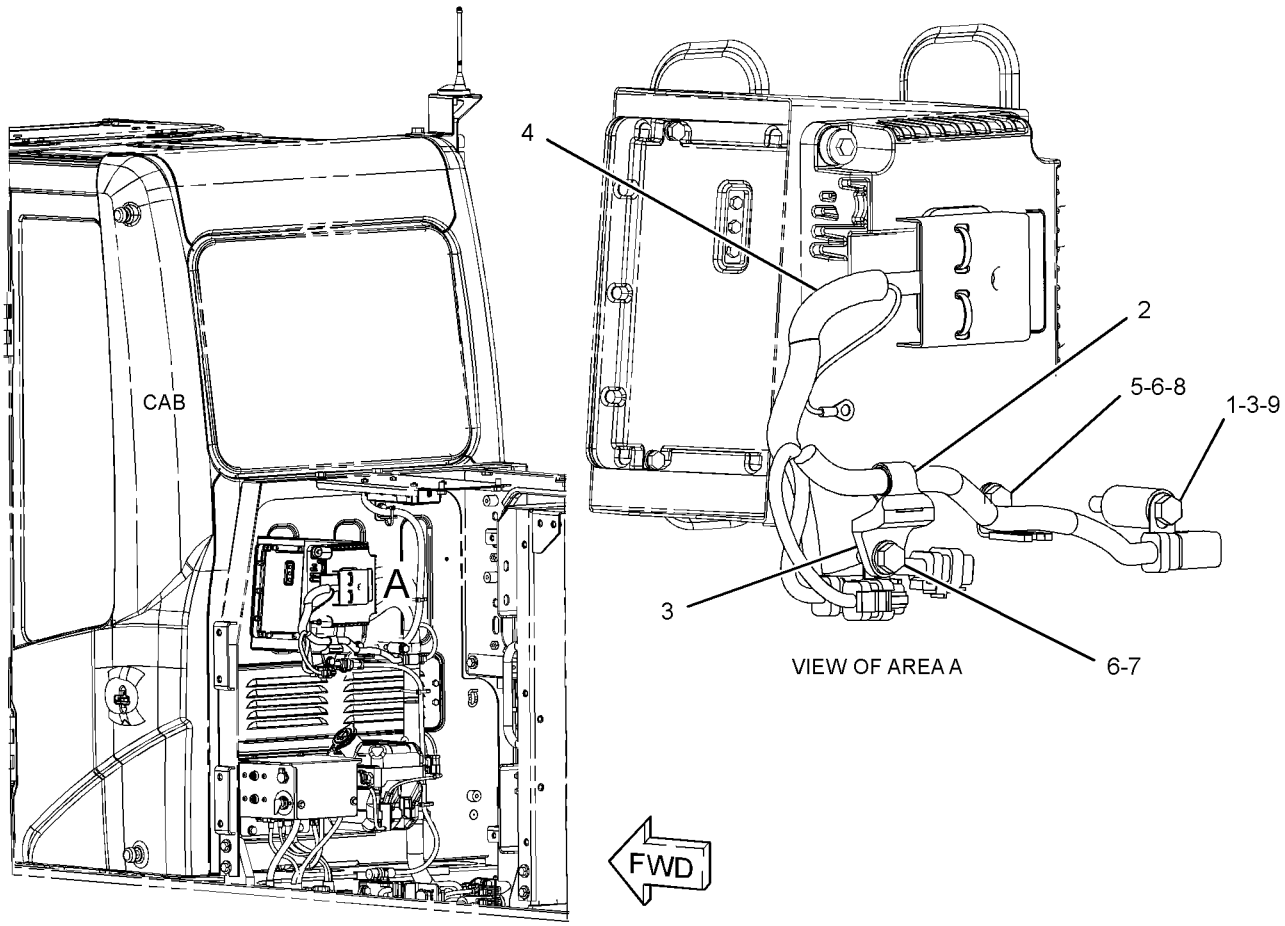

GRAPHIC #1 **<END>** g02347076

231-1836 WIRING GP-CONSOLE–LH

S/N: JGB1-UP; KHS1-UP

PART OF 251-0433 WIRING GP-CONSOLE

SMCS-1408 **i02294634**

NOTE	REF NO	GRAPHIC REF	PART NUMBER	QTY	PART NAME 1 2 3 4 5 6 (PRODUCT LEVEL)	SEE PAGE
	1	1	**3S-2093**	2	STRAP-CABLE	
	2	1	**7K-1181**	1	STRAP-CABLE	
	3	1	**163-6795**	2	STRAP-CABLE	
	4	1	**251-0580**	1	HARNESS AS-CONSOLE (LH)	
		1	**3S-2093**	9	STRAP-CABLE	
		1	**8T-8737**	9	PLUG-SEAL	
		1	**155-2260**	1	KIT-CONNECTING PLUG (3-PIN)	
					(INCLUDES PLUG AS, WEDGE & INTERFACE SEAL)	
		1	**230-4011**	1	PLUG AS-CONNECTOR (2-PIN)	
		1	**230-5010**	1	PLUG AS-CONNECTOR (6-PIN)	
		1	**239-7352**	1	PLUG AS-CONNECTOR (6-PIN)	
		1	**243-4505**	1	RECEPTACLE AS-CONNECTOR (2-PIN)	
		1	**243-4508**	2	RECEPTACLE AS-CONNECTOR (6-PIN)	
		1	**247-2693**	1	RECEPTACLE AS-CONNECTOR (6-PIN)	

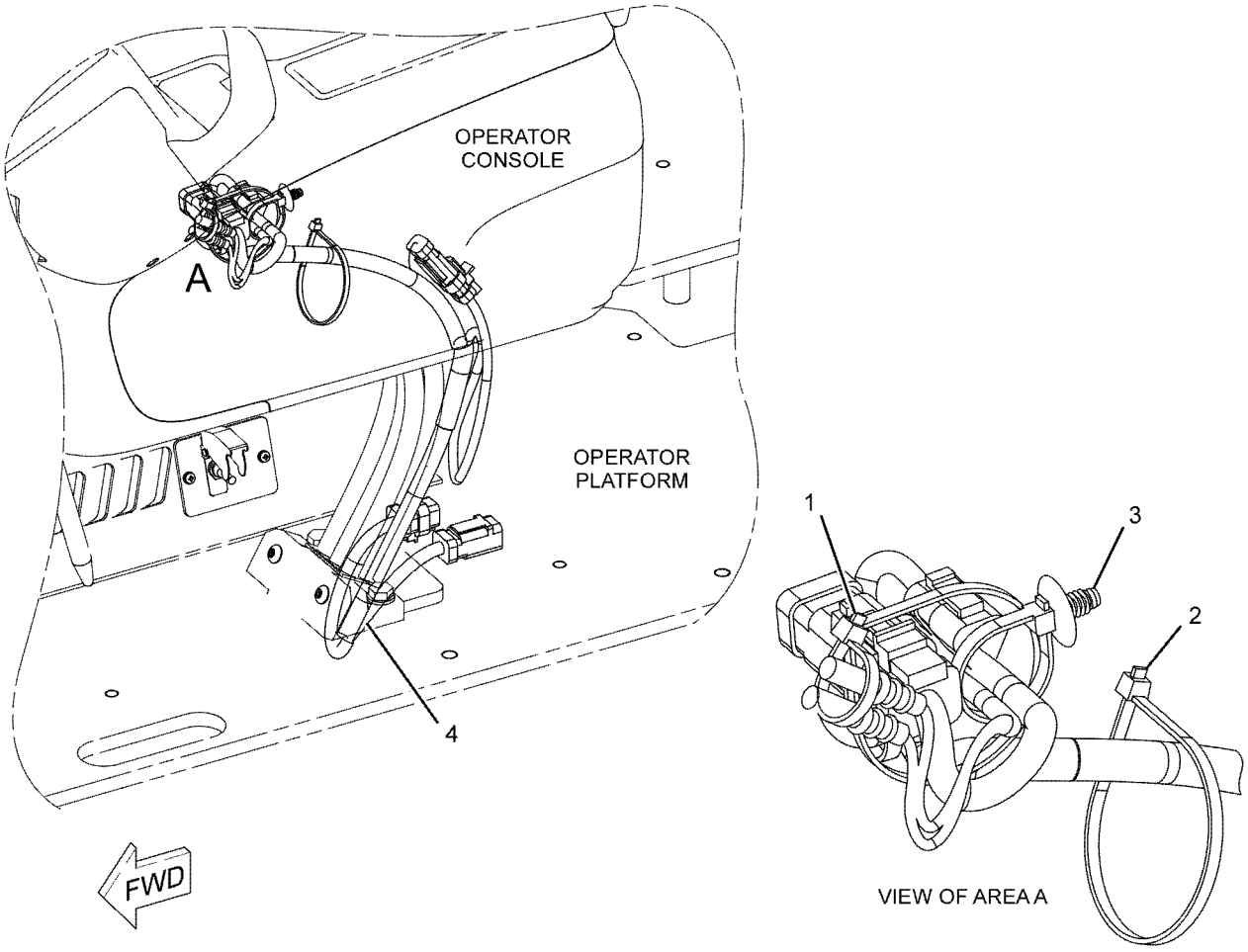

GRAPHIC #1 **<END>** g01149848

251-0433 WIRING GP-CONSOLE

S/N: JGB1-UP; KHS1-UP
PART OF 305-8000 OPERATOR AR

SMCS-1408 **i02475106**

NOTE	PART NUMBER	QTY	PART NAME 1 2 3 4 5 6 (PRODUCT LEVEL)	SEE PAGE
Y	*231-1836*	1	WIRING GP-CONSOLE (LH)	283
Y	*251-0435*	1	WIRING GP-CONSOLE (RH)	285

Y-SEPARATE ILLUSTRATION

<END>

251-0435 WIRING GP-CONSOLE—RH

S/N: JGB1-UP; KHS1-UP

PART OF 251-0433 WIRING GP-CONSOLE

SMCS-1408 **i03996715**

NOTE	REF NO	GRAPHIC REF	PART NUMBER	QTY	PART NAME 1 2 3 4 5 6 (PRODUCT LEVEL)	SEE PAGE
	1	1	**3S-2093**	5	STRAP-CABLE	
	2	1	**7K-1181**	2	STRAP-CABLE	
	3	1	**283-3074**	1	SWITCH AS-TOGGLE (AUTO/MANUAL ENG SPEED CONTROL)	
	4	1	**163-6711**	1	SWITCH AS-TOGGLE (MANUAL ENGINE SPEED CONTROL)	
	5	1	**163-6795**	2	STRAP-CABLE	
	6	1	**251-0602**	1	BRACKET	
	7	1	**259-4877**	1	HARNESS AS-CONSOLE	
		1	**102-8806**	1	KIT-RECEPTACLE (8-PIN)	
					(INCLUDES RECEPTACLE AS & WEDGE)	
		1	**3S-2093**	10	STRAP-CABLE	
		1	**7Y-3967**	2	TERMINAL AS	
					(EACH INCLUDES)	
		1	**7Y-3963**	1	TERMINAL-BULLET (FEMALE)	
		1	**7Y-3965**	1	TUBE (RECEPTACLE TERMINAL)	
		1	**102-7964**	1	PLUG-CONNECTOR (16-PIN)	
		1	**102-7965**	14	TERMINAL (FEMALE)	
E		1	**125-7874**		TUBE-HEAT SHRINK (5.72-MM DIA) (10-CM)	
E		1	**125-7875**		TUBE-HEAT SHRINK (7.44-MM DIA) (10-CM)	
		1	**155-2265**	1	KIT-CONNECTING PLUG (8-PIN)	
					(INCLUDES PLUG AS, WEDGE & INTERFACE SEAL)	
		1	**9X-3401**	2	PIN-CONNECTOR (16-GA TO 18-GA)	
					—OR—	
		1	**126-1767**	2	PIN-CONNECTOR (14-GA TO 16-GA)	
		1	**230-4009**	1	PLUG AS-CONNECTOR (12-PIN)	
		1	**264-7034**	1	SEAL-CONNECTOR	
		1	**230-4011**	1	PLUG AS-CONNECTOR (2-PIN)	
		1	**264-7029**	1	SEAL-CONNECTOR	
		1	**230-5008**	1	PLUG AS-CONNECTOR (4-PIN)	
		1	**264-7031**	1	SEAL-CONNECTOR	
		1	**230-5010**	1	PLUG AS-CONNECTOR (6-PIN)	
		1	**264-7032**	1	SEAL-CONNECTOR	
		1	**231-2295**	1	PLUG AS-CONNECTOR (8-PIN)	
		1	**264-7033**	1	SEAL-CONNECTOR	
		1	**239-7352**	1	PLUG AS-CONNECTOR (6-PIN)	
		1	**264-7032**	1	SEAL-CONNECTOR	
		1	**243-4505**	1	RECEPTACLE AS-CONNECTOR (2-PIN)	
		1	**243-4510**	1	RECEPTACLE AS-CONNECTOR (12-PIN)	
		1	**247-2693**	1	RECEPTACLE AS-CONNECTOR (6-PIN)	
M	8	1	**9X-2042**	3	SCREW-TRUSS HEAD (M6X1X12-MM)	
E	9	1	**8C-5063**		CONDUIT-FLEXIBLE (15.49-MM ID, SPLIT) (10-CM)	

E-ORDER BY THE CENTIMETER
M-METRIC PART

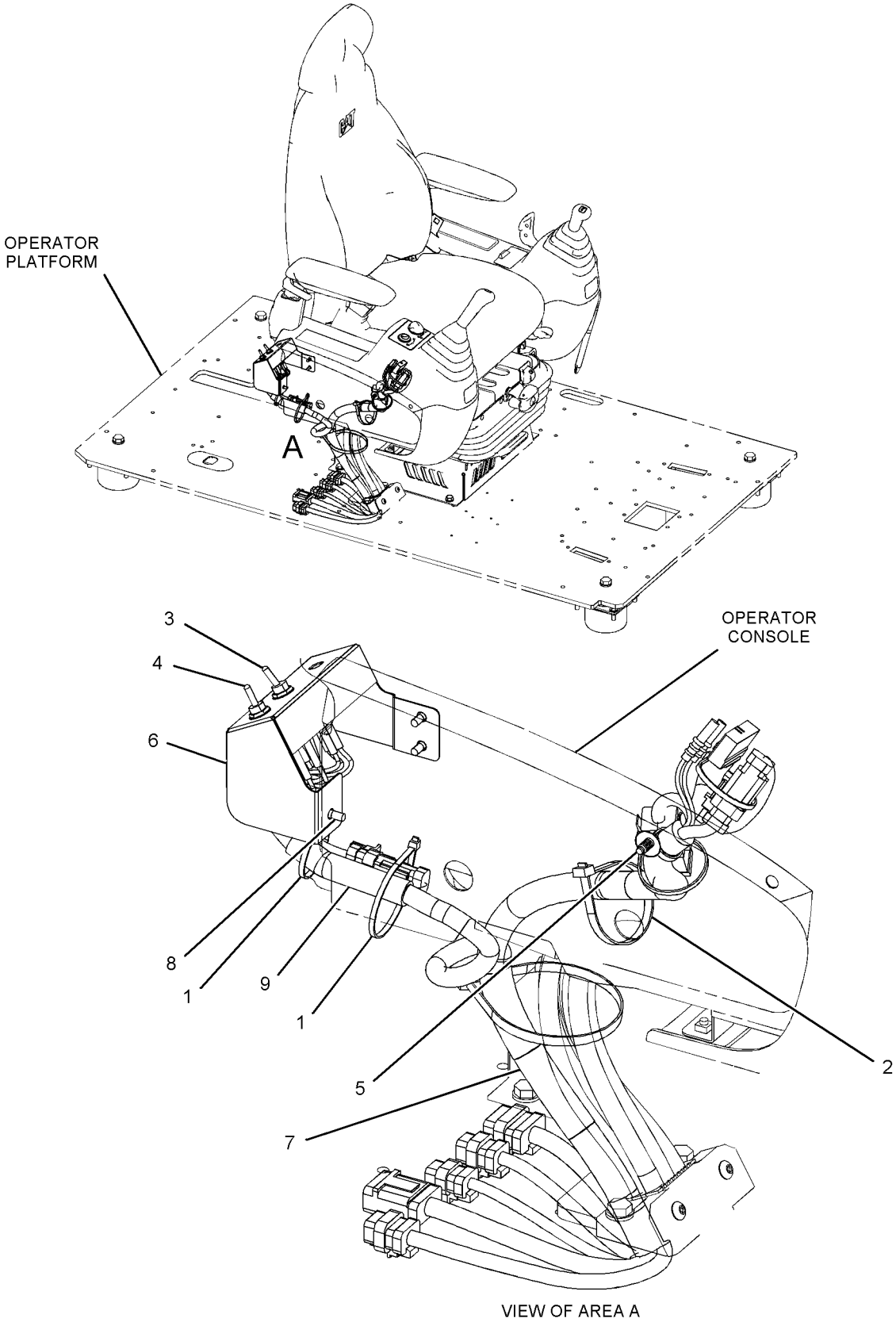

VIEW OF AREA A

GRAPHIC #1 **<END>** g02160266

299-2602 WIRING GP-CONTROL–SYSTEM 16, 1-WAY, 2-PUMP

S/N: JGB1-UP; KHS1-UP

PART OF 285-1787 CONTROL AR-AUXILIARY

AN ATTACHMENT

SMCS-1408 **i04191051**

NOTE	REF NO	GRAPHIC REF	PART NUMBER	QTY	PART NAME 1 2 3 4 5 6 (PRODUCT LEVEL)	SEE PAGE
C	1	2	**3S-2093**	5	STRAP-CABLE	
C	2	2	**6G-2263**	2	SPACER (10.5X19X28.5-MM THK)	
C	3	2	**7K-1181**	15	STRAP-CABLE	
	4	2	**186-4574**	1	PLUG AS	
		2	**8T-8737**	2	PLUG-SEAL	
	5	2	**299-2649**	1	HARNESS AS-VALVE (PUMP CONTROL)	
		2	**8T-8737**	6	PLUG-SEAL	
		2	**9X-3402**	2	SOCKET-CONNECTOR (16-GA TO 18-GA)	
		2	**9X-3401**	2	PIN-CONNECTOR (16-GA TO 18-GA)	
		2	**155-2270**	1	KIT-CONNECTING PLUG (2-PIN)	
					(INCLUDES PLUG AS, WEDGE & INTERFACE SEAL)	
		2	**243-4509**	1	RECEPTACLE AS-CONNECTOR (8-PIN)	
C	6	2	**132-5789**	3	CLIP	
	7	2	**4P-7581**	2	CLIP	
C	8	2	**8T-4121**	4	WASHER-HARD (11X21X2.5-MM THK)	
CM	9	2	**8T-4137**	2	BOLT (M10X1.5X20-MM)	
CM	10	2	**8T-4185**	2	BOLT (M10X1.5X50-MM)	

C-CHANGE FROM PREVIOUS TYPE
M-METRIC PART

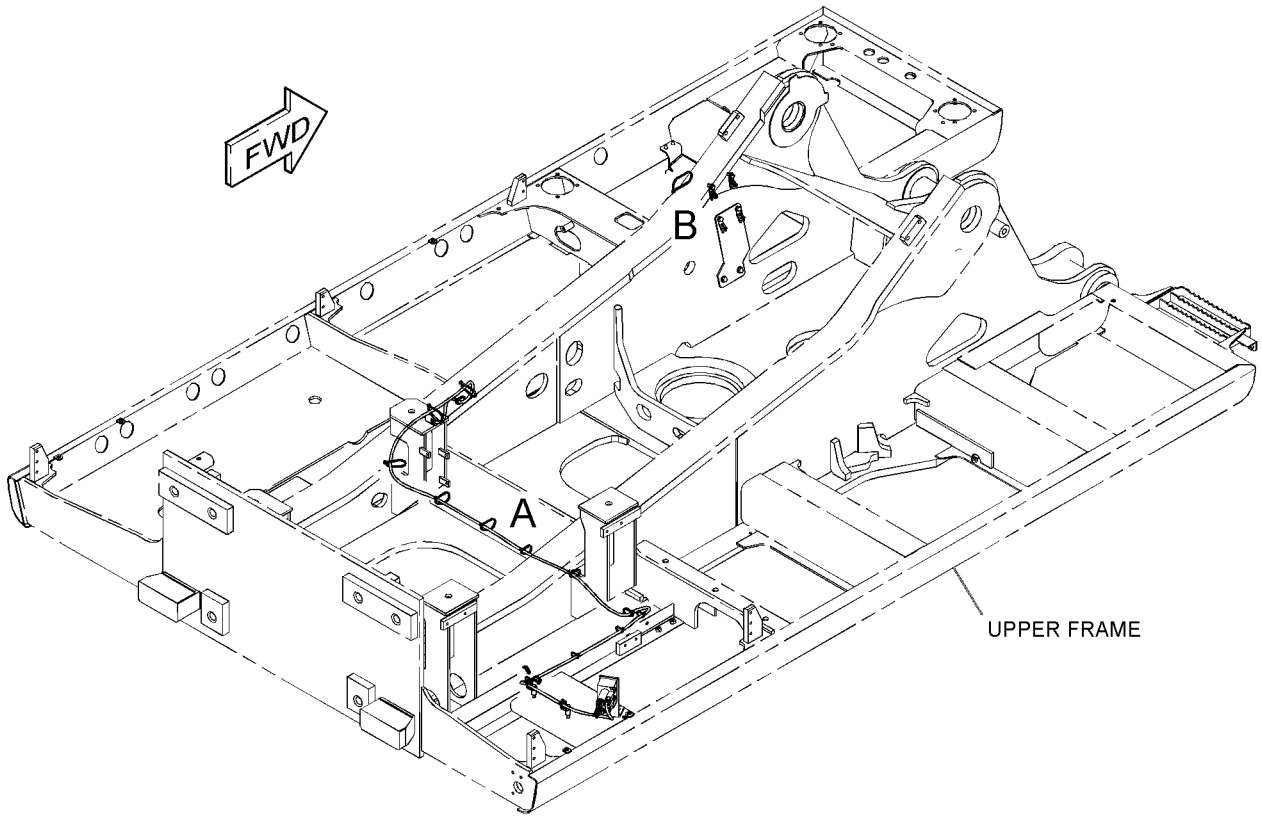

REFER TO ALL ILLUSTRATIONS OF THIS GROUP FOR AUXILIARY VIEWS

GRAPHIC #1 g02389000

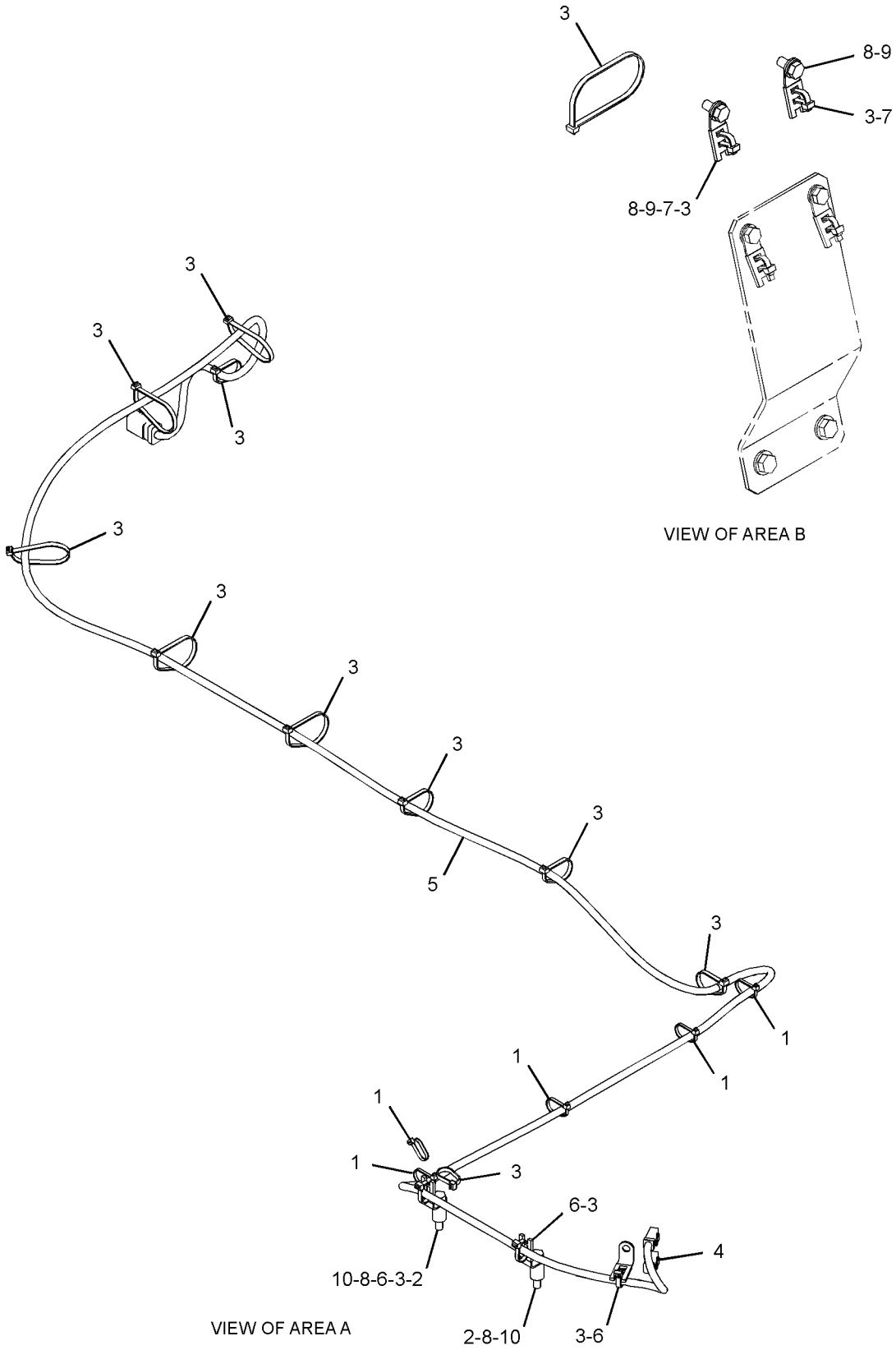

GRAPHIC #2

<END>

g02388999

354-0015 WIRING GP-CONTROL–ACCUGRADE READY

S/N: JGB1-UP; KHS1-UP
PART OF 299-2996 WIRING GP-CHASSIS
AN ATTACHMENT

SMCS-1408 **i03881117**

NOTE	REF NO	GRAPHIC REF	PART NUMBER	QTY	PART NAME 1 2 3 4 5 6 (PRODUCT LEVEL)	SEE PAGE
	1	1	**7K-1181**	4	STRAP-CABLE	
	2	1	**091-9035**	1	SPACER (11X25X20-MM THK)	
	3	1	**275-6842**	1	HARNESS AS-CONTROL (DISPLAY, GPS RADIO)	
		1	**8T-8737**	6	PLUG-SEAL	
		1	**9X-3401**	6	PIN-CONNECTOR (16-GA TO 18-GA)	
		1	**167-8987**	1	PLUG AS-CONNECTOR (8-PIN)	
		1	**243-4510**	1	RECEPTACLE AS-CONNECTOR (12-PIN)	
	4	1	**132-5789**	1	CLIP	
	5	1	**8T-4121**	1	WASHER-HARD (11X21X2.5-MM THK)	
M	6	1	**8T-4196**	1	BOLT (M10X1.5X35-MM)	

M-METRIC PART

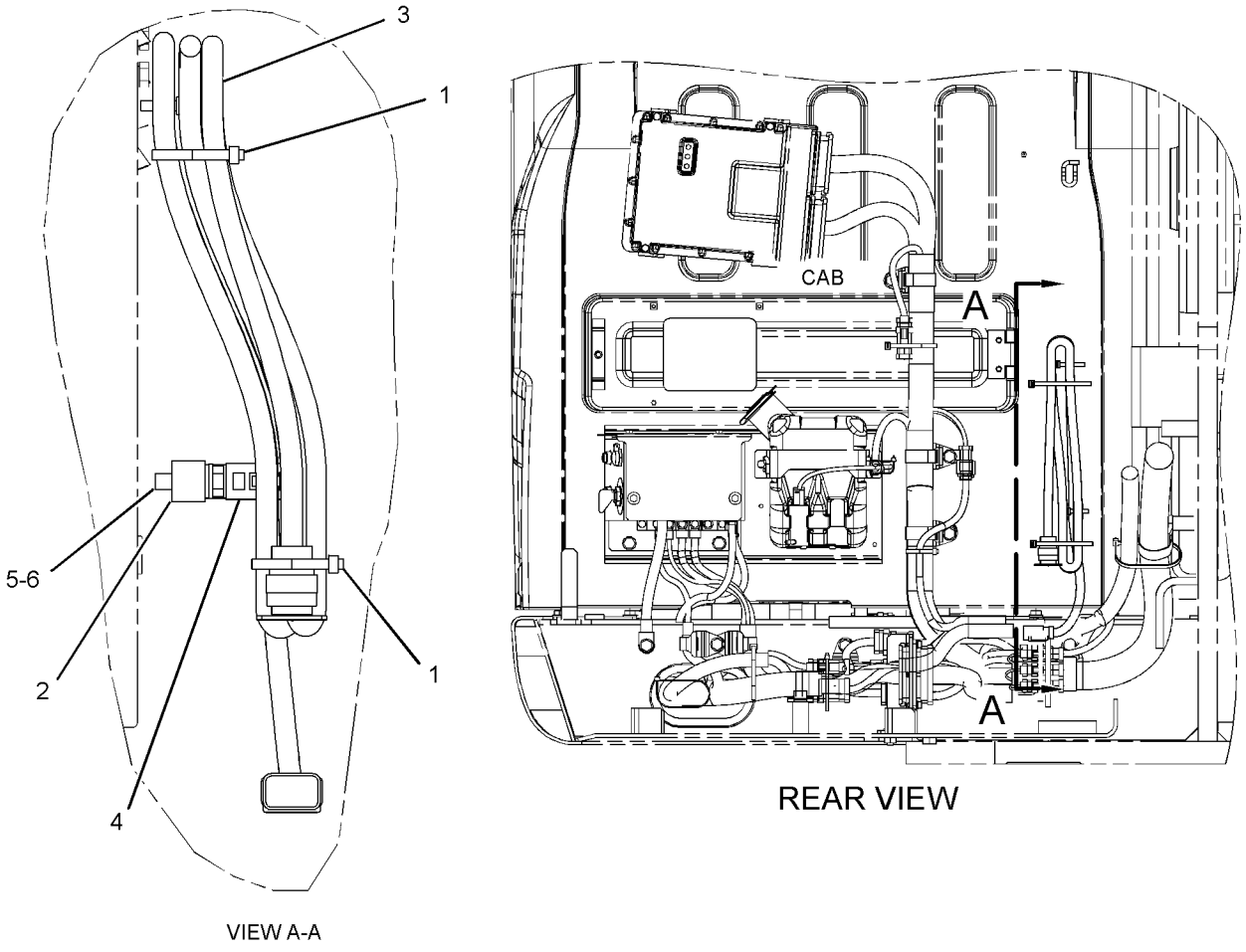

GRAPHIC #1 **<END>** g02353060

306-8346 WIRING GP-CONVERTER—COMMUNICATION RADIO

S/N: JGB1-UP; KHS1-UP
PART OF 303-2702 INSTALLATION AR-RADIO
AN ATTACHMENT

SMCS-1421 **i04159230**

NOTE	REF NO	GRAPHIC REF	PART NUMBER	QTY	PART NAME 1 2 3 4 5 6 (PRODUCT LEVEL)	SEE PAGE
	1	1	**3S-2093**	7	STRAP-CABLE	
	2	1	**7K-1181**	14	STRAP-CABLE	
	3	1	**306-8411**	1	HARNESS AS-CAB	
		1	**155-2271**	2	KIT-CONNECTING PLUG (4-PIN)	
					(EACH INCLUDES PLUG AS, WEDGE & INTERFACE SEAL)	
		1	**230-5010**	1	PLUG AS-CONNECTOR (6-PIN)	
		1	**264-7032**	1	SEAL-CONNECTOR	
		1	**8T-8737**	12	PLUG-SEAL	
		1	**102-8804**	2	KIT-RECEPTACLE (4-PIN)	
					(EACH INCLUDES RECEPTACLE AS & WEDGE)	
		1	**8T-8730**	4	SOCKET-CONNECTOR (16-GA TO 18-GA)	
		1	**9W-0844**	6	SOCKET-CONNECTOR (14-GA TO 16-GA)	
		1	**3S-2093**	16	STRAP-CABLE	
		1	*7Y-3966*	2	TERMINAL AS	
					(EACH INCLUDES)	
		1	**7Y-3962**	1	TERMINAL-BULLET (MALE)	
		1	**7Y-3964**	1	TUBE (CONNECTOR TERMINAL)	
		1	**2L-8077**	1	TERMINAL-RING (14-GA TO 16-GA, 1/4-IN SCREW)	
E		1	**125-7875**		TUBE-HEAT SHRINK (7.44-MM DIA) (15-CM)	
	4	1	**306-8641**	2	CABLE AS	
	5	1	**324-5770**	1	CONVERTER-POWER (24-VOLT TO 12-VOLT)	
M	6	1	**5C-9553**	4	BOLT (M6X1X16-MM)	
	7	1	**9X-8256**	4	WASHER (6.6X12X2-MM THK)	

E-ORDER BY THE CENTIMETER
M-METRIC PART

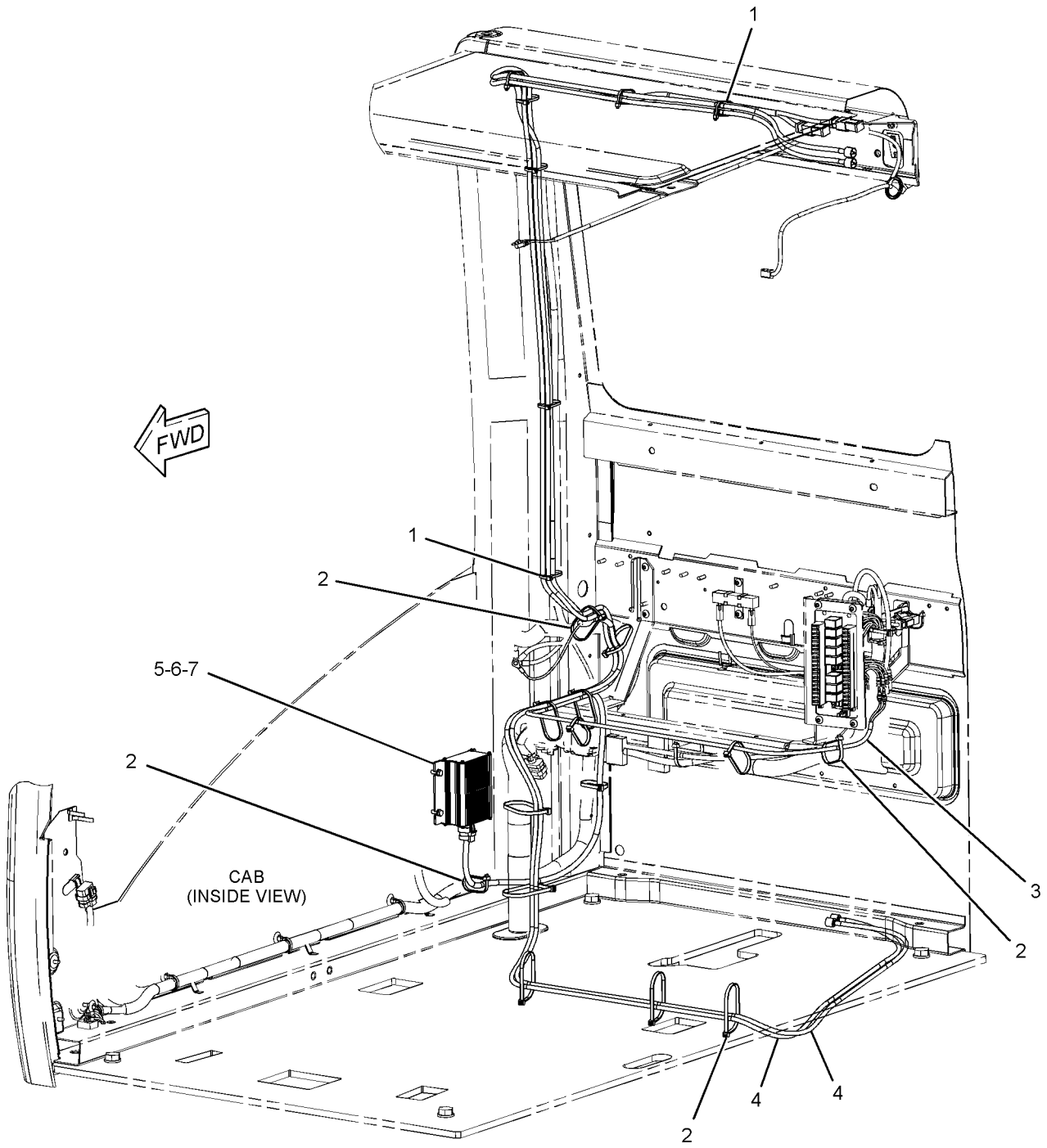

GRAPHIC #1 **<END>** g01430449

350-8247 WIRING GP-CONVERTER

S/N: JGB1-UP; KHS1-UP
12-VOLT, 10-AMP POWER SUPPLY
PART OF 341-3130 OPTION AR-CAB
CANNOT BE USED WITH 303-2702—PAGE 921
AN ATTACHMENT

SMCS-1421 **i04039396**

NOTE	REF NO	GRAPHIC REF	PART NUMBER	QTY	PART NAME 1 2 3 4 5 6 (PRODUCT LEVEL)	SEE PAGE
	1	1	**324-5770**	1	CONVERTER-POWER (24-VOLT TO 12-VOLT)	
	2	1	**324-5771**	2	SOCKET-AUXILIARY POWER (12-VOLT)	
M	3	1	**5C-9553**	4	BOLT (M6X1X16-MM)	
	4	1	**9X-8256**	4	WASHER (6.6X12X2-MM THK)	

M-METRIC PART

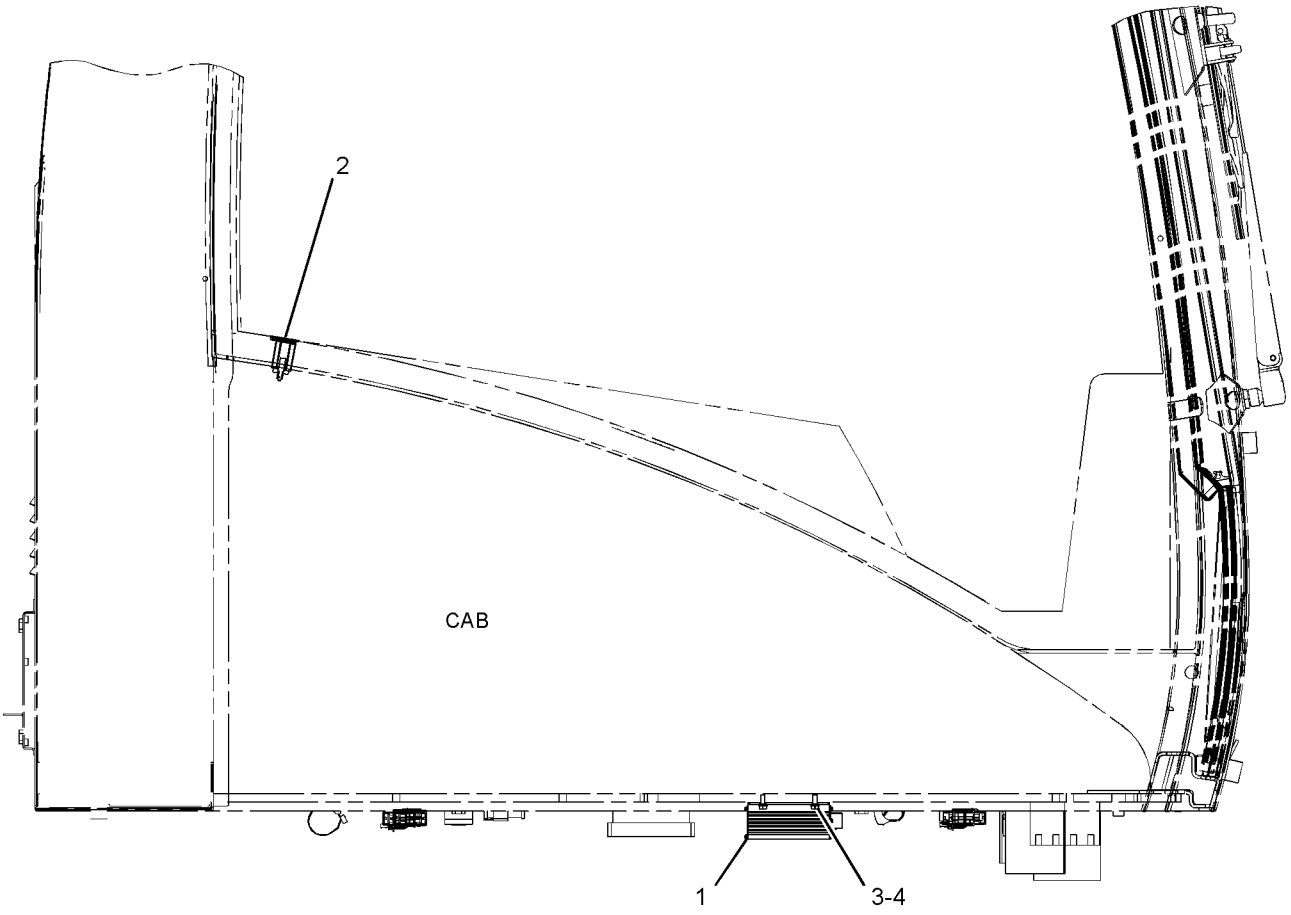

RIGHT SIDE VIEW

GRAPHIC #1 **<END>** g02132883

299-2605 WIRING GP-COUNTERWEIGHT–

COUNTERWEIGHT REMOVAL

S/N: JGB1-UP

PART OF 309-0166, 309-0167 COUNTERWEIGHT AR

AN ATTACHMENT

SMCS-7056 **i03838583**

NOTE	REF NO	GRAPHIC REF	PART NUMBER	QTY	PART NAME 1 2 3 4 5 6 (PRODUCT LEVEL)	SEE PAGE
	1	1	**3S-2093**	3	STRAP-CABLE	
C	2	1	**7K-1181**	1	STRAP-CABLE	
	3	1	**132-1854**	1	BRACKET	
C	4	1	**350-8070**	1	HARNESS AS-SOLENOID (COUNTERWEIGHT REMOVAL SYSTEM)	
		1	**8T-8729**	2	PIN-CONNECTOR (16-GA TO 18-GA)	
		1	**8T-8737**	1	PLUG-SEAL	
		1	**9W-0852**	3	PIN-CONNECTOR (14-GA TO 16-GA)	
		1	**9W-0844**	2	SOCKET-CONNECTOR (14-GA TO 16-GA)	
		1	**5P-2321**	3	TERMINAL-FORK (14-GA TO 16-GA, NO. 6 SCREW)	
		1	**155-2270**	1	KIT-CONNECTING PLUG (2-PIN)	
					(INCLUDES PLUG AS, WEDGE & INTERFACE SEAL)	
		1	**243-4508**	1	RECEPTACLE AS-CONNECTOR (6-PIN)	
		1	**5P-3059**	2	TERMINAL-FORK (18-GA TO 22-GA, NO. 6 SCREW)	
	5	1	**114-0421**	1	SWITCH AS-TOGGLE (COUNTERWEIGHT REMOVAL)	
		1	**3L-8187**	12	LOCKWASHER	
		1	**6T-3631**	2	NUT-HEX (15/32-32-THD)	
		1	**6T-3632**	1	LOCKWASHER	
		1	**6T-3633**	1	RING-LOCKING	
		1	**6V-8374**	12	SCREW-MACHINE (6-32X0.25-IN)	
M	6	1	**6V-9673**	2	SCREW-MACHINE (M5X0.8X12-MM)	
	7	1	**8T-0328**	2	WASHER-HARD (5.5X10X1-MM THK)	

C-CHANGE FROM PREVIOUS TYPE
M-METRIC PART

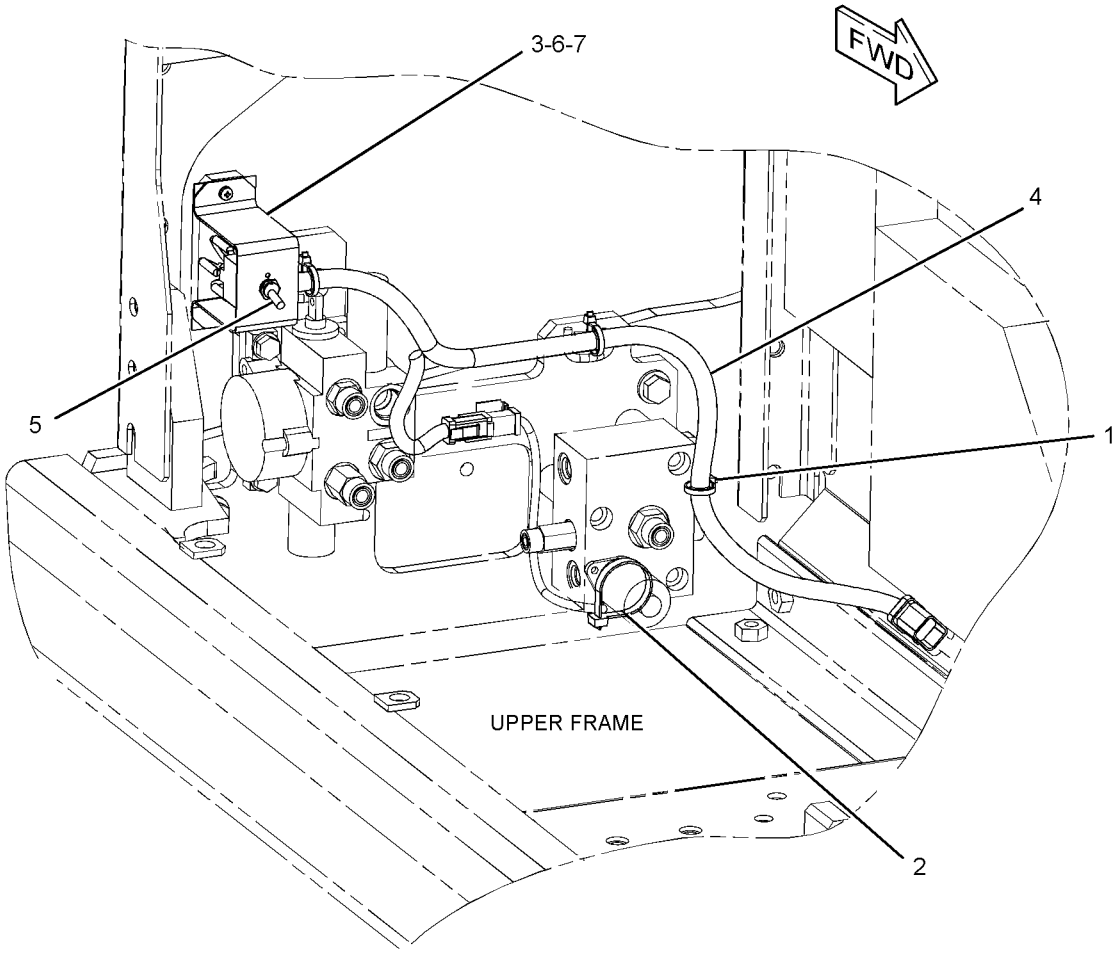

GRAPHIC #1 **<END>** g02054953

ELECTRICAL AND STARTING SYSTEM

219-7462 WIRING GP-ELECTRONIC CONTROL

S/N: MHX7634-UP

PART OF 291-9259 ENGINE AR-COMPLETE

SMCS-1408 **i03873447**

NOTE	REF NO	GRAPHIC REF	PART NUMBER	QTY	PART NAME 1 2 3 4 5 6 (PRODUCT LEVEL)	SEE PAGE
	1	1	**3S-2093**	16	STRAP-CABLE	
	2	1	**4P-5918**	1	CLIP	
M	3	1	**9X-2097**	1	STUD (M8X1.25-THD)	
	4	1	**206-2423**	1	SADDLE	
	5	1	**219-7461**	1	HARNESS AS-ENGINE (ELECTRONIC CONTROL MODULE)	
		1	**102-8802**	1	KIT-RECEPTACLE (2-PIN)	
		1	**102-8803**	2	KIT-RECEPTACLE (3-PIN)	
					(EACH KIT INCLUDES RECEPTACLE AS & WEDGE)	
		1	**3S-2093**	2	STRAP-CABLE	
		1	**8T-8737**	81	PLUG-SEAL	
		1	**105-1797**	1	MOUNT	
		1	**155-2255**	1	KIT-CONNECTING PLUG (12-PIN)	
		1	**155-2265**	1	KIT-CONNECTING PLUG (8-PIN)	
		1	**155-2260**	1	KIT-CONNECTING PLUG (3-PIN)	
		1	**155-2270**	5	KIT-CONNECTING PLUG (2-PIN)	
					(EACH KIT INCLUDES PLUG AS, WEDGE & INTERFACE SEAL)	
		1	**180-9340**	62	SOCKET-CONNECTOR (14-GA TO 18-GA)	
		1	**180-9339**	6	PIN-CONNECTOR (14-GA TO 18-GA)	
		1	**211-6807**	1	COVER (CONNECTOR)	
		1	**264-5732**	1	PLUG AS-CONNECTOR (120-PIN)	
		1	**288-7324**	1	SEAL-CONNECTOR	
E		1	**125-7874**		TUBE-HEAT SHRINK (5.72-MM DIA) (5-CM)	
E		1	**125-7875**		TUBE-HEAT SHRINK (7.44-MM DIA) (15-CM)	
	6	1	**303-5952**	1	STRAP-CABLE	
	7	1	**132-5789**	2	CLIP	
	8	1	**156-6175**	2	CLIP	
M	10	1	**2Y-5829**	1	NUT (M10X1.5-THD)	
	11	1	**4P-7581**	3	CLIP	
	12	1	**5P-9085**	1	CLIP	
M	13	1	**6V-3918**	1	BOLT (M8X1.25X50-MM)	
	14	1	**6V-5839**	5	WASHER (11X21X2.5-MM THK)	
M	15	1	**6V-8212**	4	BOLT (M10X1.5X16-MM)	
M	16	1	**6V-8836**	2	BOLT (M6X1X14-MM)	
M	18	1	**8T-0642**	1	BOLT (M8X1.25X14-MM)	
	19	1	**9M-1974**	1	WASHER-HARD (8.8X16X2-MM THK)	
	20	1	**9X-8267**	2	WASHER (6.6X12X2-MM THK)	

E-ORDER BY THE CENTIMETER
M-METRIC PART

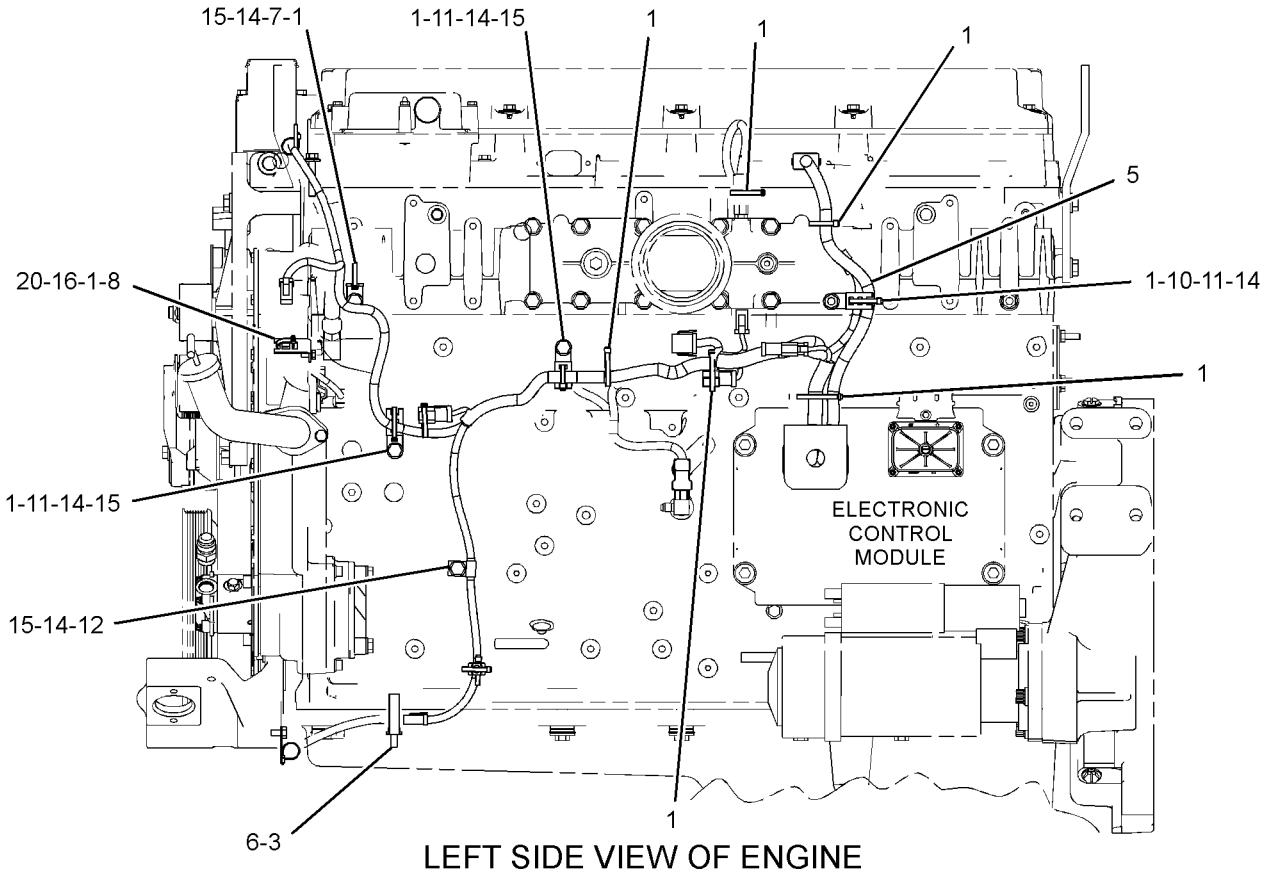

LEFT SIDE VIEW OF ENGINE

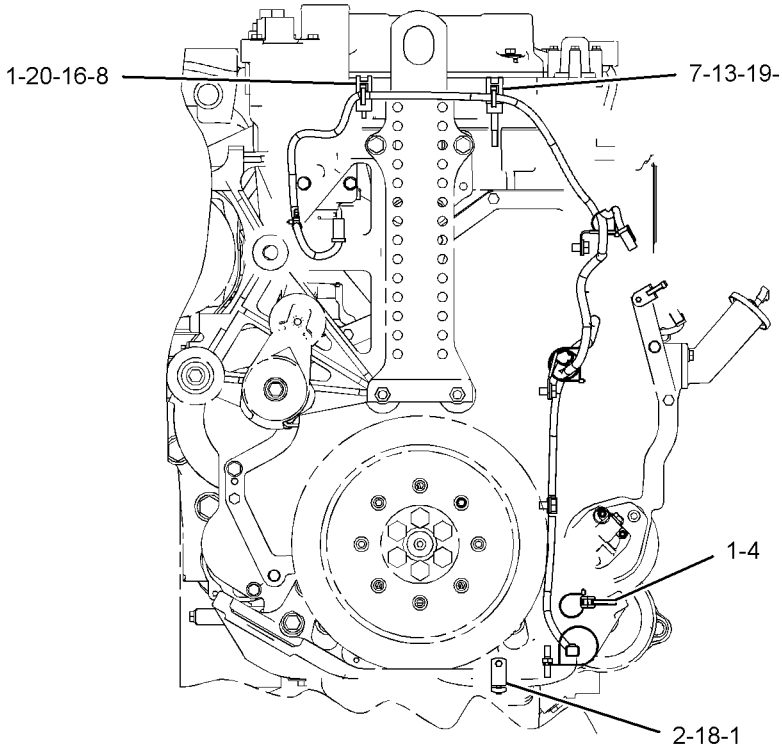

FRONT VIEW OF ENGINE

GRAPHIC #1 **<END>** g02118073

354-0045 WIRING GP-ELECTRONIC CONTROL

S/N: TXF1-UP; MHX10094-UP
PART OF 291-9259 ENGINE AR-COMPLETE
FOR USE WITH 354-0042—PAGE 216

SMCS-1408 **i03957677**

NOTE	REF NO	GRAPHIC REF	PART NUMBER	QTY	PART NAME 1 2 3 4 5 6 (PRODUCT LEVEL)	SEE PAGE
	1	1	**3S-2093**	15	STRAP-CABLE	
	2	1	**4P-5918**	1	CLIP	
	3	1	**354-0048**	1	HARNESS AS-ENGINE	
		1	**102-8802**	1	KIT-RECEPTACLE (2-PIN)	
					(INCLUDES RECEPTACLE AS & WEDGE)	
		1	**3S-2093**	2	STRAP-CABLE	
		1	**211-6807**	1	COVER (CONNECTOR)	
		1	**8T-8737**	93	PLUG-SEAL	
		1	**105-1797**	1	MOUNT	
E		1	**125-7875**		TUBE-HEAT SHRINK (7.44-MM DIA) (15-CM)	
		1	**126-1766**	68	SOCKET-CONNECTOR (14-GA TO 18-GA)	
		1	**155-2255**	1	KIT-CONNECTING PLUG (12-PIN)	
		1	**155-2270**	1	KIT-CONNECTING PLUG (2-PIN)	
		1	**155-2270**	1	KIT-CONNECTING PLUG (2-PIN)	
		1	**155-2265**	1	KIT-CONNECTING PLUG (8-PIN)	
		1	**155-2270**	1	KIT-CONNECTING PLUG (2-PIN)	
					(EACH PLUG KIT NCLUDES PLUG AS, WEDGE, & INTERFACE SEAL)	
		1	**211-6807**	1	COVER (CONNECTOR)	
		1	**230-4011**	4	PLUG AS-CONNECTOR (2-PIN)	
		1	**264-7029**	1	SEAL-CONNECTOR	
		1	**230-4013**	1	PLUG AS-CONNECTOR (3-PIN)	
		1	**264-7030**	1	SEAL-CONNECTOR	
		1	**237-0227**	2	PLUG AS-CONNECTOR (3-PIN)	
					(EACH INCLUDES)	
		1	**264-7030**	1	SEAL-CONNECTOR	
		1	**264-5732**	1	PLUG AS-CONNECTOR (120-PIN)	
		1	**288-7324**	1	SEAL-CONNECTOR	
	4	1	**132-5789**	2	CLIP	
	5	1	**156-6175**	2	CLIP	
M	6	1	**2Y-5829**	2	NUT (M10X1.5-THD)	
	7	1	**4P-7581**	6	CLIP	
M	8	1	**6V-3918**	1	BOLT (M8X1.25X50-MM)	
	9	1	**6V-5839**	6	WASHER (11X21X2.5-MM THK)	
M	10	1	**6V-8212**	4	BOLT (M10X1.5X16-MM)	
M	11	1	**6V-8836**	2	BOLT (M6X1X14-MM)	
M	12	1	**8T-0642**	1	BOLT (M8X1.25X14-MM)	
	13	1	**9M-1974**	2	WASHER-HARD (8.8X16X2-MM THK)	
M	14	1	**9X-2097**	1	STUD (M8X1.25-THD)	
	15	1	**9X-8267**	2	WASHER (6.6X12X2-MM THK)	

E-ORDER BY THE CENTIMETER
M-METRIC PART

354-0045 **WIRING GP-ELECTRONIC CONTROL** *(contd.)* **i03957677**

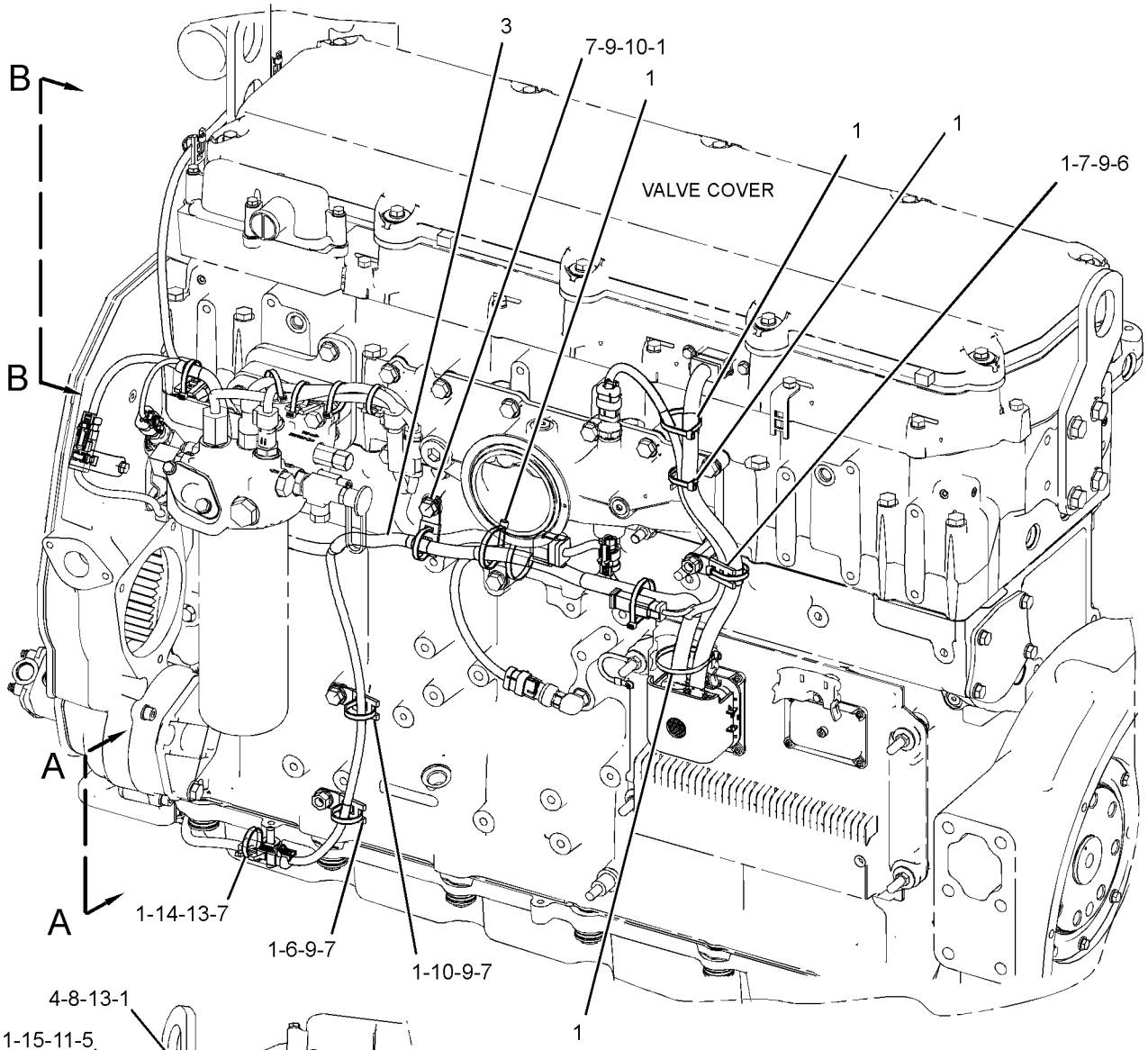

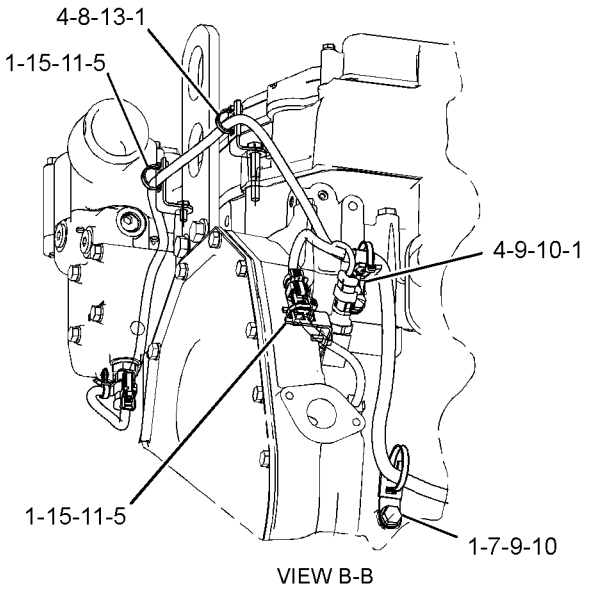

VIEW B-B

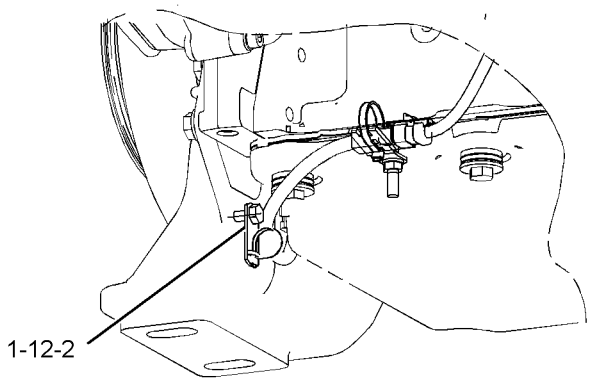

VIEW A-A

GRAPHIC #1 **<END>** g02173542

299-2606 WIRING GP-FAN–REVERSING

S/N: KHS1-UP

PART OF 294-1275 CONTROL AR-VARIABLE-SPEED FAN

AN ATTACHMENT

SMCS-1408 **i02853866**

NOTE	REF NO	GRAPHIC REF	PART NUMBER	QTY	PART NAME 1 2 3 4 5 6 (PRODUCT LEVEL)	SEE PAGE
	1	1	**3S-2093**	3	STRAP-CABLE	
	2	1	**7K-1181**	10	STRAP-CABLE	
	3	1	**111-4836**	2	CLIP	
	4	1	**299-2646**	1	HARNESS AS-PUMP	
	5	1	**6G-2263**	1	SPACER (10.5X19X28.5-MM THK)	
	6	1	**8T-4121**	2	WASHER-HARD (11X21X2.5-MM THK)	
M	7	1	**8T-4137**	1	BOLT (M10X1.5X20-MM)	
M	8	1	**8T-4185**	1	BOLT (M10X1.5X50-MM)	

M-METRIC PART

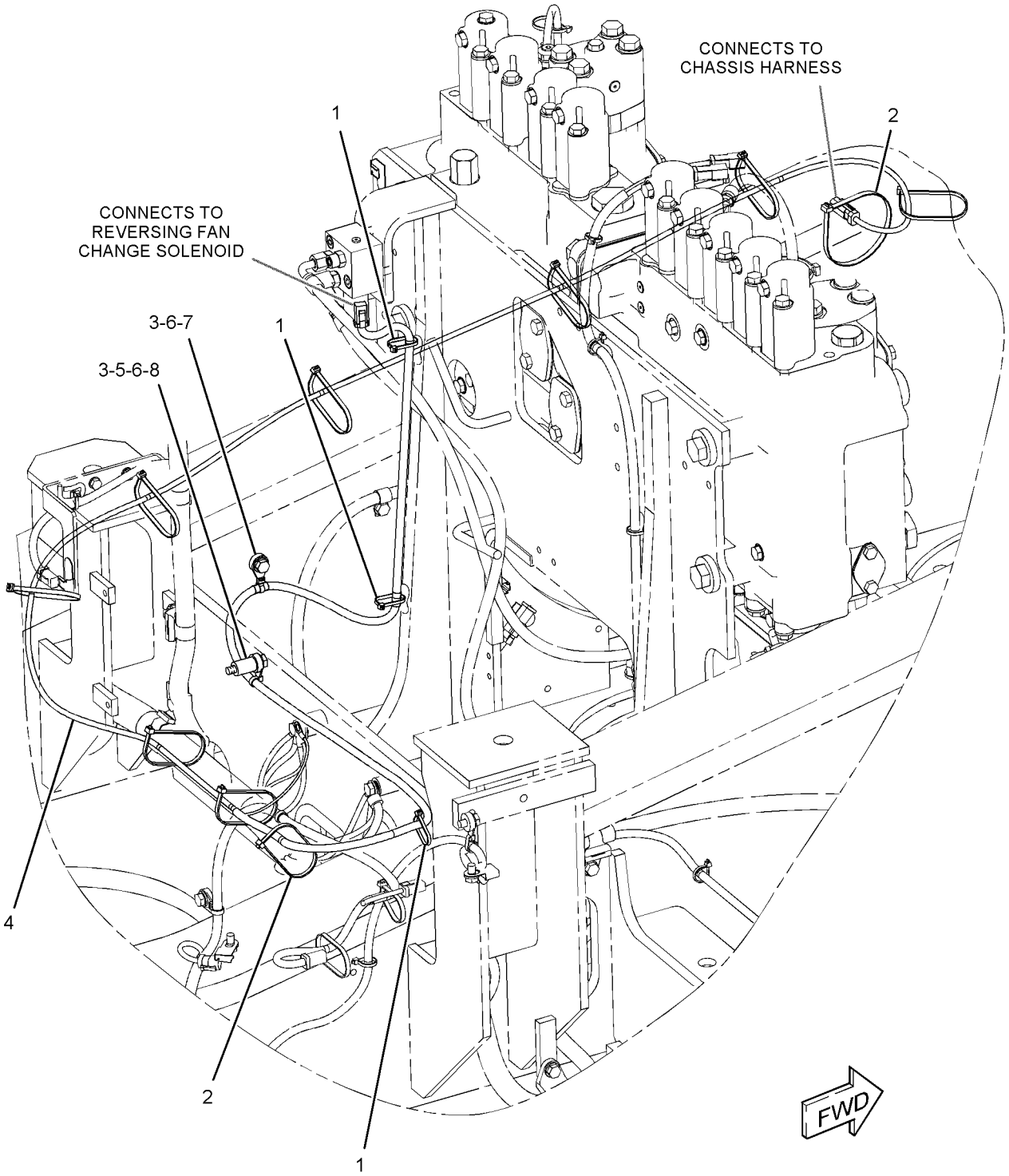

GRAPHIC #1 **<END>** g01429009

299-2856 WIRING GP-FINE SWING

S/N: JGB1-UP; KHS1-UP

PART OF 370-3231, 370-4189 CHASSIS AR

SMCS-1408 **i03387243**

NOTE	REF NO	GRAPHIC REF	PART NUMBER	QTY	PART NAME 1 2 3 4 5 6 (PRODUCT LEVEL)	SEE PAGE
	1	1	**3S-2093**	3	STRAP-CABLE	
	2	1	**111-4836**	1	CLIP	
	3	1	**111-4837**	2	CLIP	
	4	1	**238-2171**	1	BRACKET AS	
	5	1	**299-3027**	1	HARNESS AS-VALVE (FINE SWING)	
	6	1	**8T-4121**	3	WASHER-HARD (11X21X2.5-MM THK)	
M	7	1	**8T-4136**	1	BOLT (M10X1.5X25-MM)	
M	8	1	**8T-4137**	2	BOLT (M10X1.5X20-MM)	

M-METRIC PART

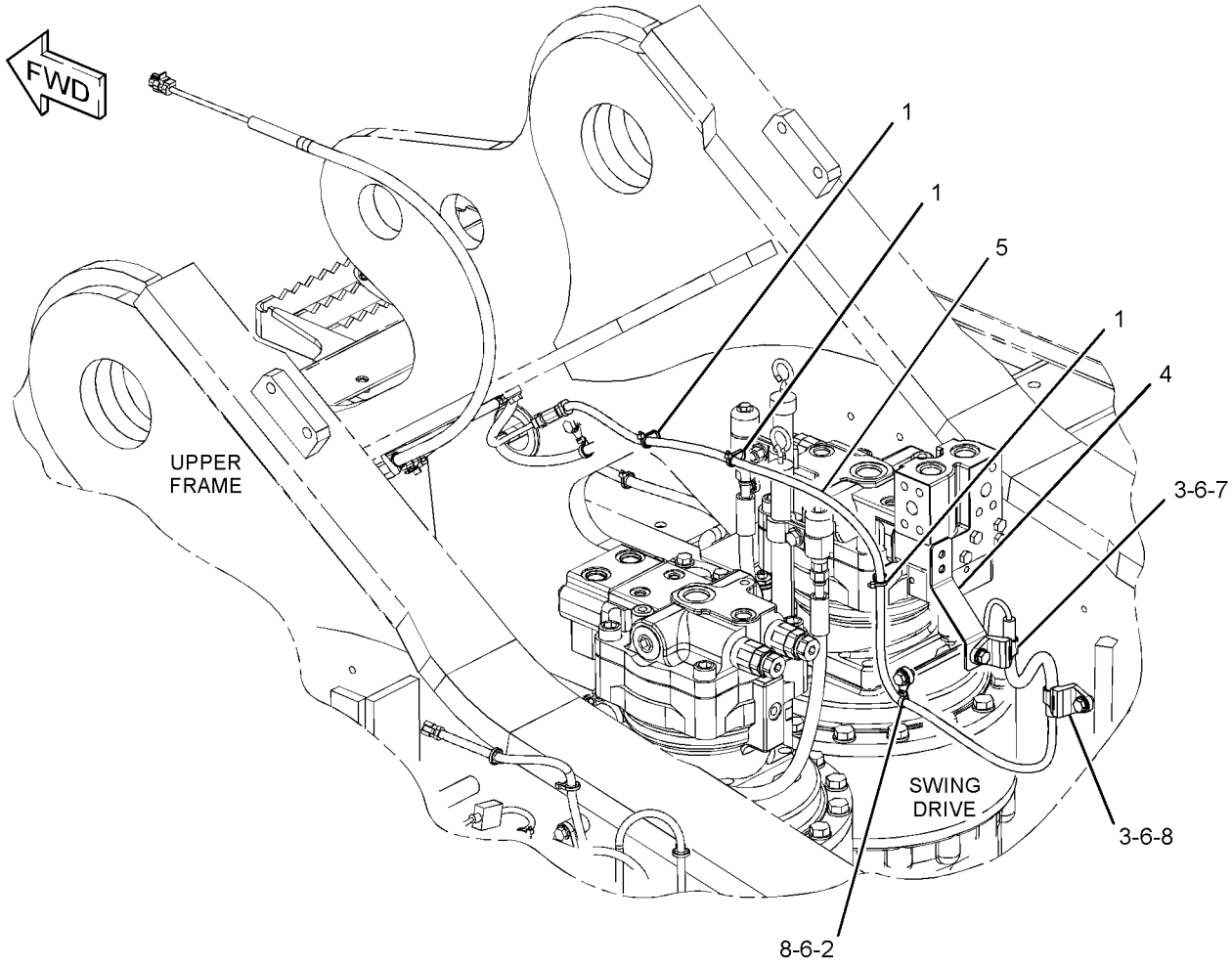

GRAPHIC #1 **<END>** g01637121

299-3000 WIRING GP-GRADE CONTROL–ACCUGRADE, BOOM

S/N: JGB1-UP; KHS1-UP
PART OF 319-9274, 351-9595 SPECIAL AR
AN ATTACHMENT

SMCS-1408, 7220 **i03045240**

NOTE	REF NO	GRAPHIC REF	PART NUMBER	QTY	PART NAME 1 2 3 4 5 6 (PRODUCT LEVEL)	SEE PAGE
	1	1	**3S-2093**	22	STRAP-CABLE	
	2	1	**7K-1181**	3	STRAP-CABLE	
	3	1	**095-1392**	2	CLAMP-HOSE	
	4	1	**111-4836**	8	CLIP	
	5	1	**111-4837**	1	CLIP	
	6	1	**111-4838**	2	CLIP	
	7	1	**116-0118**	1	CLIP	
	8	1	**204-1611**	7	STRAP-CABLE	
	9	1	**306-8522**	1	HARNESS AS-CONTROL (ACCUGRADE, BOOM)	
	10	1	**4P-7581**	2	CLIP	
	11	1	**4S-1962**	2	CLIP	
	12	1	**8T-4121**	5	WASHER-HARD (11X21X2.5-MM THK)	
M	13	1	**8T-4133**	2	NUT (M10X1.5-THD)	
M	14	1	**8T-4191**	3	BOLT (M10X1.5X16-MM)	
M	15	1	**8T-4195**	2	BOLT (M10X1.5X30-MM)	

M-METRIC PART

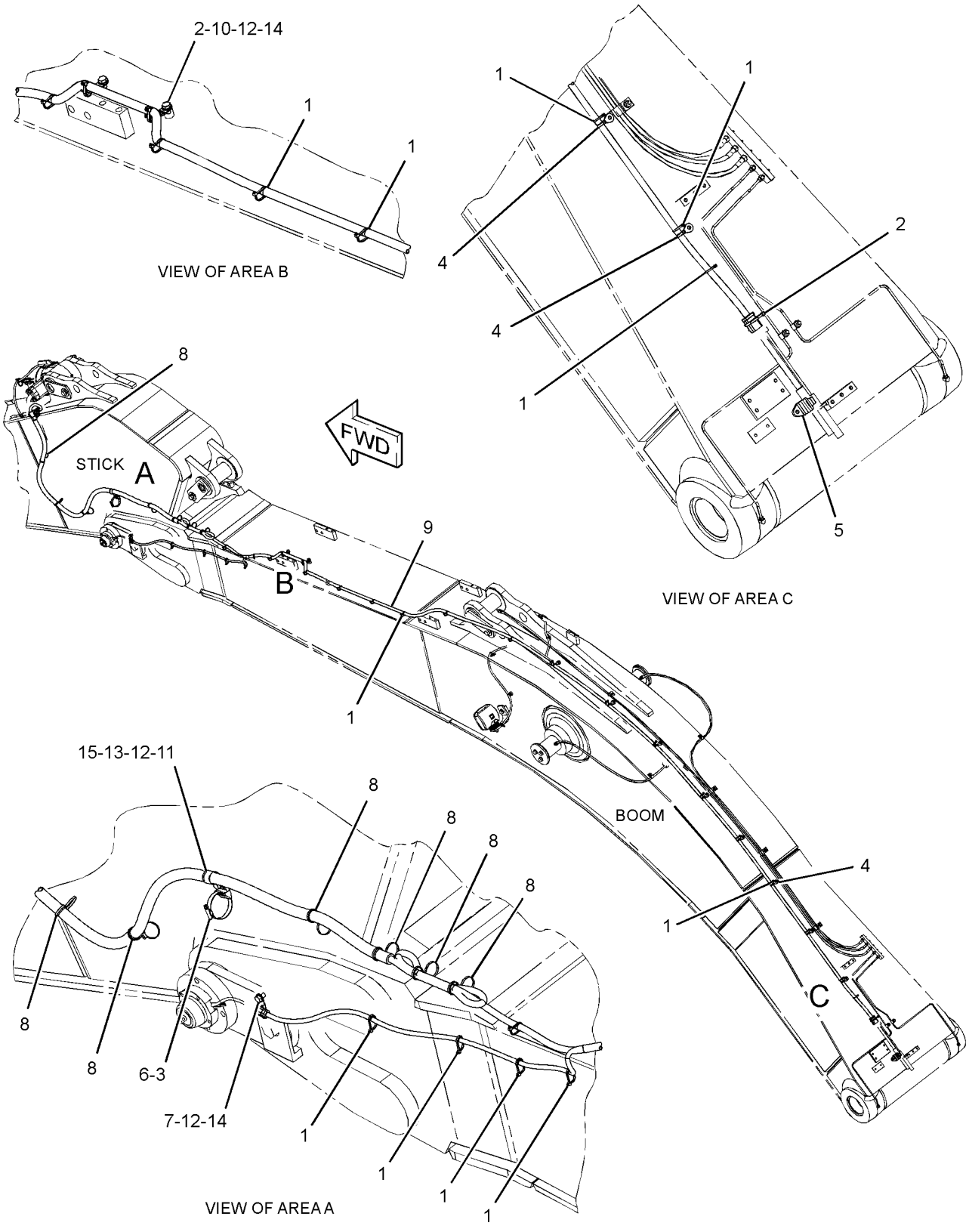

GRAPHIC #1 **<END>** g01558933

299-3003 WIRING GP-GRADE CONTROL–ACCUGRADE, STICK

S/N: JGB1-UP; KHS1-UP
PART OF 319-9274, 351-9595 SPECIAL AR
AN ATTACHMENT

SMCS-1408, 7220 **i03999033**

NOTE	REF NO	GRAPHIC REF	PART NUMBER	QTY	PART NAME 1 2 3 4 5 6 (PRODUCT LEVEL)	SEE PAGE
C	1	1	**3S-2093**	8	STRAP-CABLE	
C	2	1	**7K-1181**	6	STRAP-CABLE	
	3	1	**116-0118**	1	CLIP	
C	4	1	**350-8447**	1	HARNESS AS-CONTROL (GRADE CONTROL)	
		1	**243-5362**	1	CAP-DUST	
		1	**3E-5165**	1	CAP AS-PROTECTION	
		1	**9X-3401**	9	PIN-CONNECTOR (16-GA TO 18-GA)	
		1	**155-2271**	1	KIT-CONNECTING PLUG (4-PIN)	
					(INCLUDES PLUG AS, WEDGE & INTERFACE SEAL)	
		1	**253-2695**	1	PLUG AS-CONNECTOR	
		1	**8T-8737**	4	PLUG-SEAL	
		1	**243-4510**	1	RECEPTACLE AS-CONNECTOR (12-PIN)	
		1	**303-4244**	1	RECEPTACLE AS-CONNECTOR	
		1	**9X-3402**	3	SOCKET-CONNECTOR (16-GA TO 18-GA)	
		1	**8L-8413**	2	STRAP-CABLE	
E		1	**125-7874**		TUBE-HEAT SHRINK (5.72-MM DIA) (10-CM)	
E		1	**125-7875**		TUBE-HEAT SHRINK (7.44-MM DIA) (10-CM)	
	5	1	**4P-7581**	1	CLIP	
M	6	1	**7X-2621**	1	BOLT (M10X1.5X12-MM)	
	7	1	**8T-4121**	1	WASHER-HARD (11X21X2.5-MM THK)	

C-CHANGE FROM PREVIOUS TYPE
E-ORDER BY THE CENTIMETER
M-METRIC PART

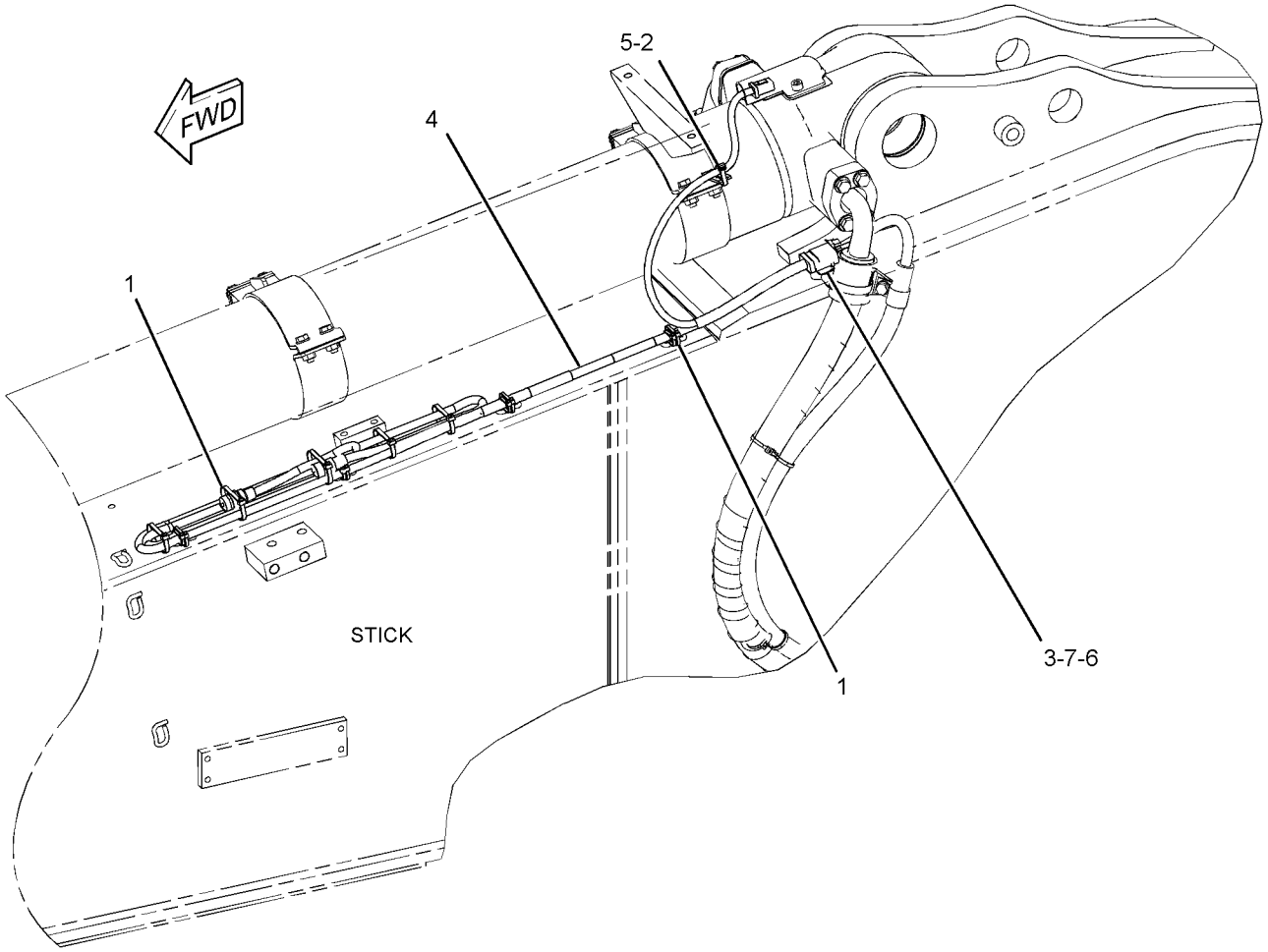

GRAPHIC #1 **<END>** g02351975

ELECTRICAL AND STARTING SYSTEM

291-7758 WIRING GP-MEDIUM PRESSURE

S/N: JGB1-UP; KHS1-UP
PART OF 285-1789 CONTROL AR-AUXILIARY
AN ATTACHMENT

SMCS-1408 **i03838489**

NOTE	REF NO	GRAPHIC REF	PART NUMBER	QTY	PART NAME 1 2 3 4 5 6 (PRODUCT LEVEL)	SEE PAGE
	1	1	**3S-2093**	4	STRAP-CABLE	
	2	1	**7K-1181**	12	STRAP-CABLE	
	3	1	**291-7856**	1	HARNESS AS-VALVE	
		1	**8T-8729**	3	PIN-CONNECTOR (16-GA TO 18-GA)	
		1	**8T-8730**	4	SOCKET-CONNECTOR (16-GA TO 18-GA)	
		1	**8T-8737**	1	PLUG-SEAL	
BE		1	**125-7874**		TUBE-HEAT SHRINK (5.72-MM DIA)	
		1	**155-2270**	2	KIT-CONNECTING PLUG (2-PIN)	
					(EACH PLUG KIT INCLUDES PLUG AS, WEDGE & INTERFACE SEAL)	
		1	**243-4507**	1	RECEPTACLE AS-CONNECTOR (4-PIN)	
C	4	1	**132-5789**	3	CLIP	
C	5	1	**6G-2263**	2	SPACER (10.5X19X28.5-MM THK)	
B	6	1	**3S-2093**	2	STRAP-CABLE	
CM	7	1	**8T-4185**	2	BOLT (M10X1.5X50-MM)	
C	8	1	**8T-4121**	2	WASHER-HARD (11X21X2.5-MM THK)	

B-USE AS REQUIRED
C-CHANGE FROM PREVIOUS TYPE
E-ORDER BY THE CENTIMETER
M-METRIC PART

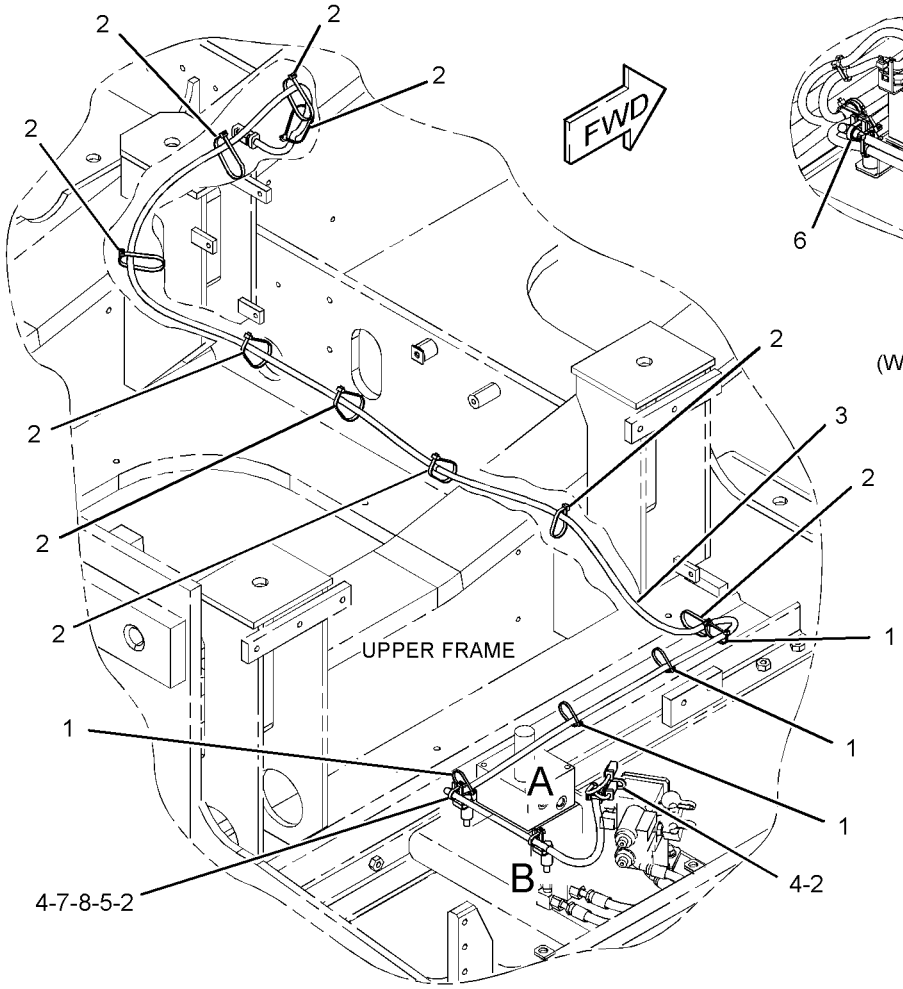

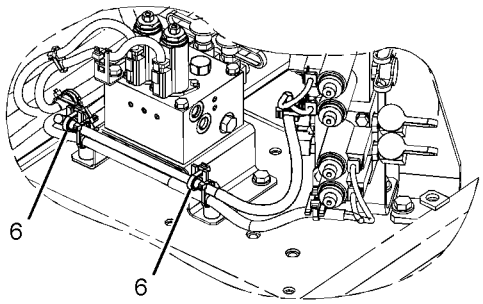

VIEW OF AREA A
(WITH SYSTEM 3, 5, 14, 16, AND 17)

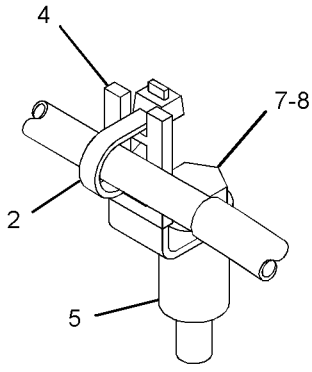

VIEW OF AREA B

GRAPHIC #1 **<END>** g02055734

306-8544 WIRING GP-MONITOR–WORK AREA VISUAL SYSTEM

S/N: JGB1-UP; KHS1-UP
PART OF 357-7974 CAMERA AR
AN ATTACHMENT

SMCS-1408 **i02848886**

NOTE	REF NO	GRAPHIC REF	PART NUMBER	QTY	PART NAME 1 2 3 4 5 6 (PRODUCT LEVEL)	SEE PAGE
	1	1	**7K-1181**	10	STRAP-CABLE	
	2	1	**306-8553**	1	HARNESS AS-WIRING	

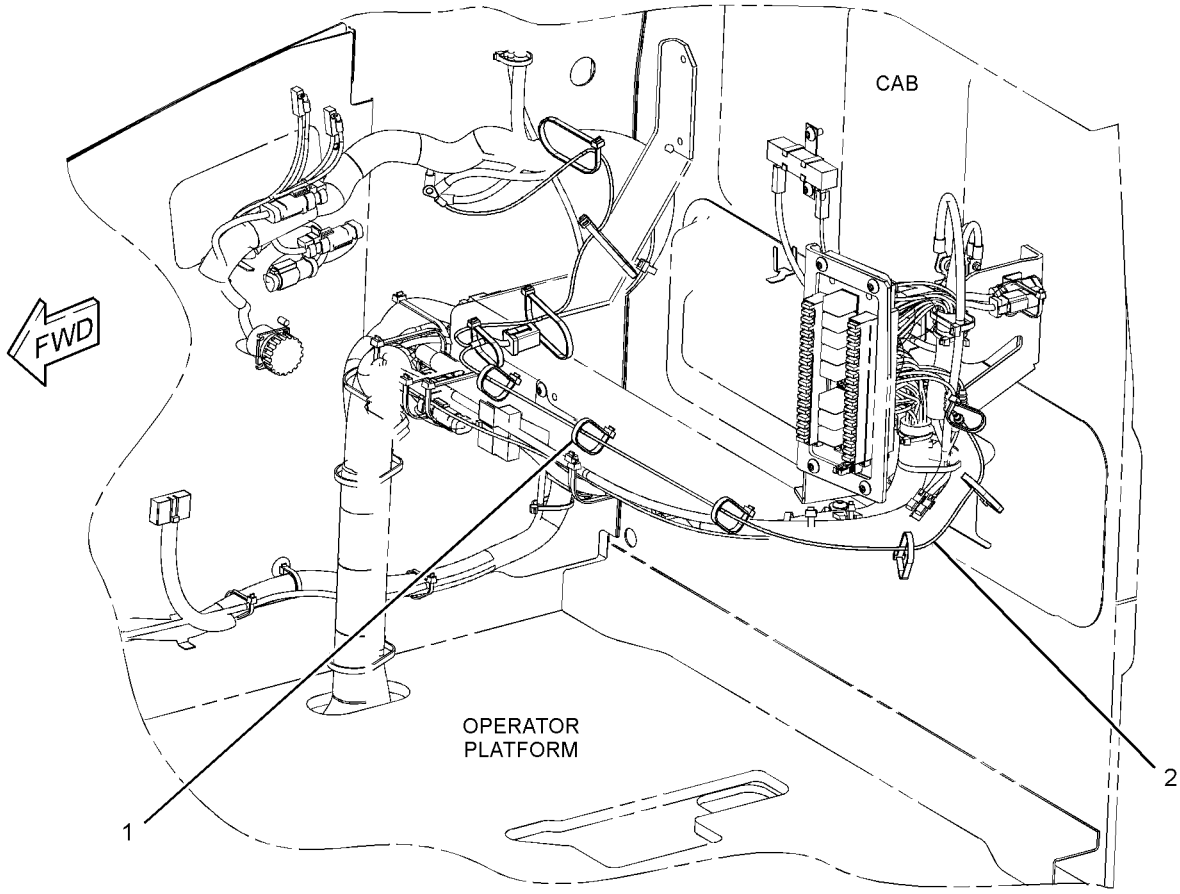

GRAPHIC #1 **<END>** g01468367

306-8589 WIRING GP-MONITOR—WORK AREA VISUAL SYSTEM

S/N: JGB1-UP; KHS1-UP
PART OF 319-9155 CAMERA AR
AN ATTACHMENT

SMCS-1408 **i02852060**

NOTE	REF NO	GRAPHIC REF	PART NUMBER	QTY	PART NAME 1 2 3 4 5 6 (PRODUCT LEVEL)	SEE PAGE
	1	1	**3S-2093**	12	STRAP-CABLE	
	2	1	**7K-1181**	15	STRAP-CABLE	
	3	1	**306-8590**	1	HARNESS AS-WIRING (WORK AREA VISUAL SYSTEM, REAR)	

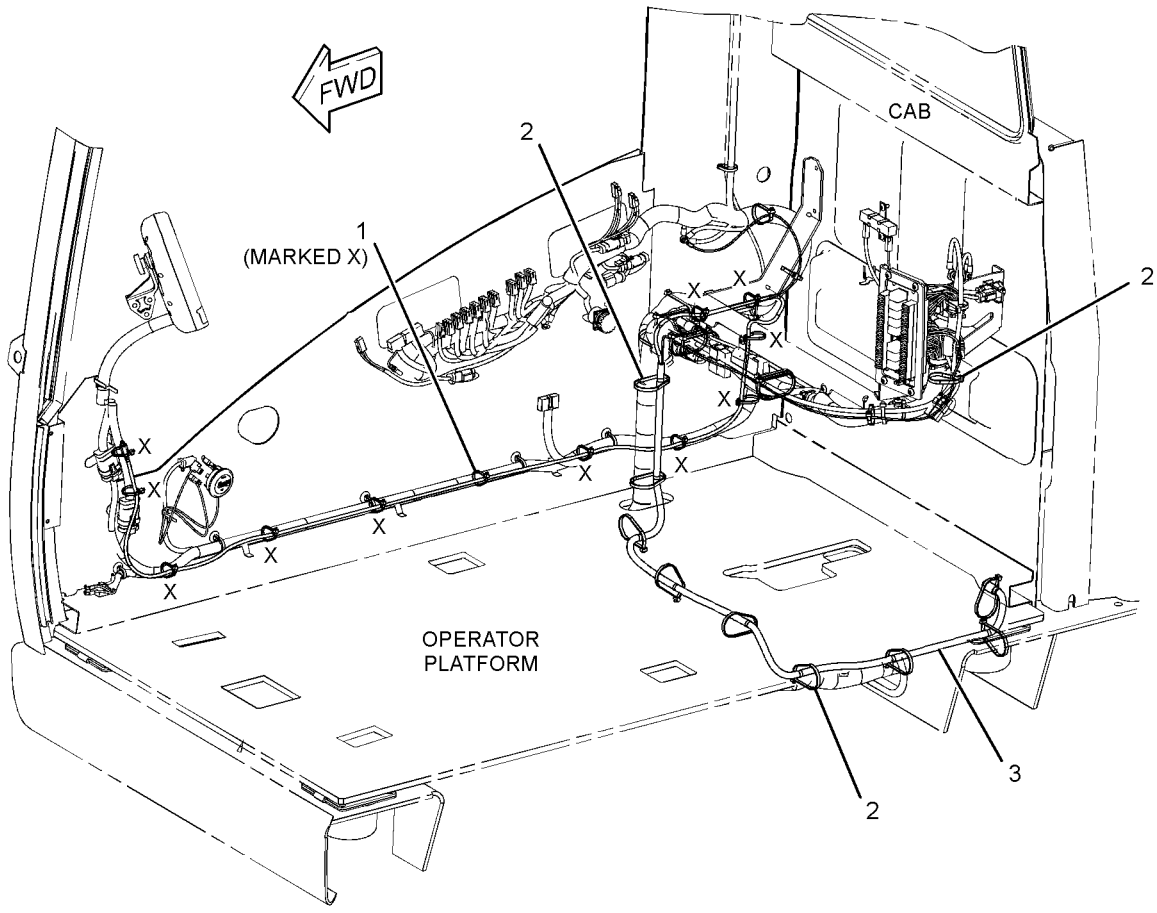

GRAPHIC #1 **<END>** g01461108

291-7757 WIRING GP-PLATFORM–SYSTEM 14, SYSTEM 17

S/N: JGB1-UP; KHS1-UP

PART OF 285-1786, 285-1788 CONTROL AR-AUXILIARY

AN ATTACHMENT

SMCS-1408 **i03874982**

NOTE	REF NO	GRAPHIC REF	PART NUMBER	QTY	PART NAME 1 2 3 4 5 6 (PRODUCT LEVEL)	SEE PAGE
C	1	1	**3S-2093**	18	STRAP-CABLE	
	2	1	**7I-2673**	3	STRAP-CABLE	
	3	1	**7K-1181**	26	STRAP-CABLE	
	4	1	**091-9035**	2	SPACER (11X25X20-MM THK)	
	5	1	**111-4836**	4	CLIP	
	6	1	**204-1611**	2	STRAP-CABLE	
	7	1	**204-1882**	1	BRACKET AS	
	8	1	**319-1166**	1	HARNESS AS-VALVE (ONE PUMP/TWO PUMP)	
		1	**102-8802**	3	KIT-RECEPTACLE (2-PIN)	
		1	**102-8803**	1	KIT-RECEPTACLE (3-PIN)	
					(EACH RECEPTACLE KIT INCLUDES RECEPTACLE AS & WEDGE)	
		1	**8T-8729**	7	PIN-CONNECTOR (16-GA TO 18-GA)	
		1	**8T-8730**	12	SOCKET-CONNECTOR (16-GA TO 18-GA)	
		1	**3S-2093**	2	STRAP-CABLE	
		1	**8T-8737**	23	PLUG-SEAL	
BE		1	**125-7874**		TUBE-HEAT SHRINK (5.72-MM DIA)	
		1	**9X-3402**	3	SOCKET-CONNECTOR (16-GA TO 18-GA)	
		1	**2L-8079**	1	TERMINAL-RING (14-GA TO 16-GA, 3/8-IN SCREW)	
		1	**9X-3401**	3	PIN-CONNECTOR (16-GA TO 18-GA)	
		1	**155-2270**	4	KIT-CONNECTING PLUG (2-PIN)	
		1	**155-2260**	1	KIT-CONNECTING PLUG (3-PIN)	
					(EACH PLUG KIT INCLUDES PLUG AS, WEDGE & INTERFACE SEAL)	
		1	**230-4011**	2	PLUG AS-CONNECTOR (2-PIN)	
					(EACH INCLUDES)	
		1	**264-7029**	1	SEAL-CONNECTOR	
		1	**243-4505**	2	RECEPTACLE AS-CONNECTOR (2-PIN)	
		1	**243-4509**	1	RECEPTACLE AS-CONNECTOR (8-PIN)	
		1	**243-4510**	1	RECEPTACLE AS-CONNECTOR (12-PIN)	
C	9	1	**132-5789**	3	CLIP	
	10	1	**4P-7428**	2	CLIP	
C	11	1	**4P-7581**	7	CLIP	
C	12	1	**8T-4121**	14	WASHER-HARD (11X21X2.5-MM THK)	
M	13	1	**8T-4137**	8	BOLT (M10X1.5X20-MM)	
M	14	1	**8T-4191**	2	BOLT (M10X1.5X16-MM)	
M	15	1	**8T-4196**	2	BOLT (M10X1.5X35-MM)	
CM	16	1	**8T-4185**	2	BOLT (M10X1.5X50-MM)	
C	17	1	**6G-2263**	2	SPACER (10.5X19X28.5-MM THK)	

B-USE AS REQUIRED
C-CHANGE FROM PREVIOUS TYPE
E-ORDER BY THE CENTIMETER
M-METRIC PART

291-7757 **WIRING GP-PLATFORM** *(contd.)* **i03874982**

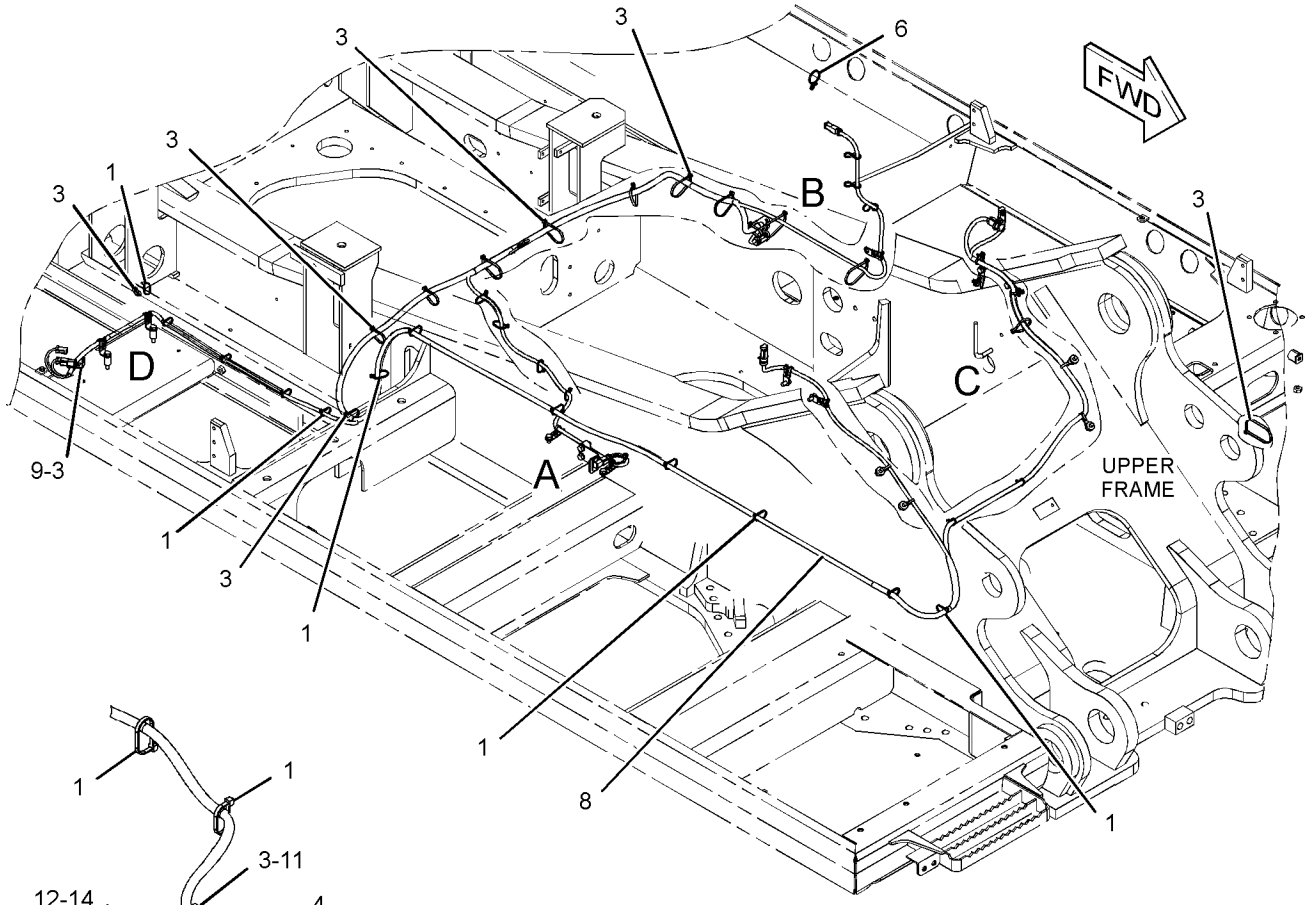

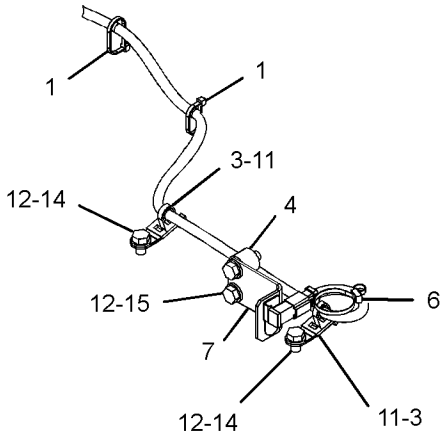

VIEW OF AREA A

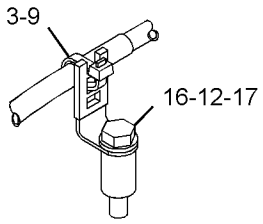

VIEW OF AREA D

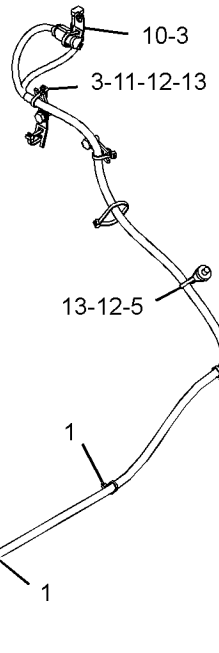

VIEW OF AREA C

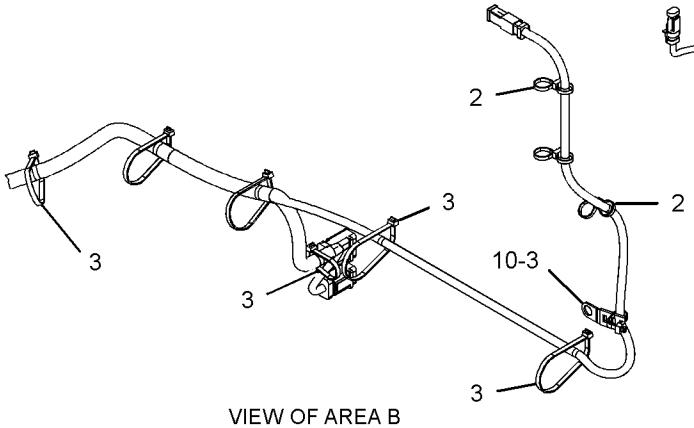

VIEW OF AREA B

GRAPHIC #1 **<END>** g02056336

291-7768 WIRING GP-PLATFORM

S/N: JGB1-UP; KHS1-UP

PART OF 305-8000 OPERATOR AR

SMCS-1408 **i02843858**

NOTE	REF NO	GRAPHIC REF	PART NUMBER	QTY	PART NAME 1 2 3 4 5 6 (PRODUCT LEVEL)	SEE PAGE
	1	1	**3E-5169**	1	GUARD-SWITCH	
	2	1	**3S-2093**	2	STRAP-CABLE	
	3	1	**7G-1060**	1	STRAP AS-GROUND	
	4	1	**7K-1181**	11	STRAP-CABLE	
	5	1	**111-4837**	4	CLIP	
	6	1	**111-4838**	2	CLIP	
	7	1	**111-4839**	2	STRAP	
	8	1	**116-0118**	11	CLIP	
	9	1	**234-1122**	1	COVER	
	10	1	**251-0299**	1	HARNESS AS-SWITCH (SECONDARY SHUTDOWN)	
	11	1	**291-7806**	1	HARNESS AS-PLATFORM	
	12	1	**096-6166**	2	WASHER-HARD (4.5X9X1-MM THK)	
	13	1	**4D-1836**	1	SWITCH AS-TOGGLE (SECONDARY SHUTDOWN)	
M	14	1	**7X-2621**	6	BOLT (M10X1.5X12-MM)	
M	15	1	**8T-0337**	2	SCREW-MACHINE (M4X0.7X12-MM)	
	16	1	**8T-4121**	13	WASHER-HARD (11X21X2.5-MM THK)	
M	17	1	**8T-4137**	7	BOLT (M10X1.5X20-MM)	

M-METRIC PART

291-7768 **WIRING GP-PLATFORM** *(contd.)* **i02843858**

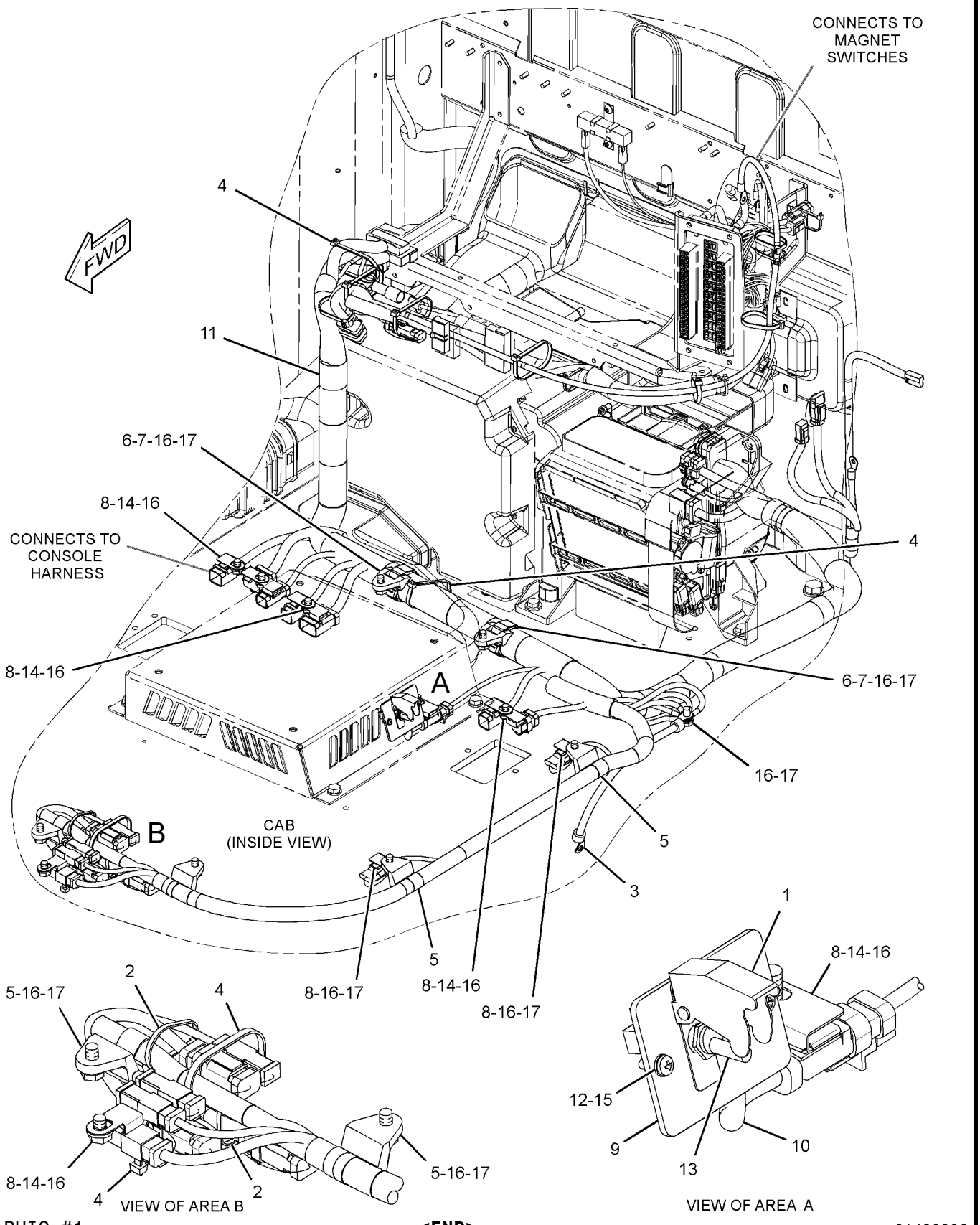

GRAPHIC #1 **<END>** g01430806

299-2604 WIRING GP-QUICK COUPLER

S/N: JGB1-UP; KHS1-UP
PART OF 302-9403 CONTROL AR-COUPLER
AN ATTACHMENT

SMCS-1408, 6129 **i02969463**

NOTE	REF NO	GRAPHIC REF	PART NUMBER	QTY	PART NAME 1 2 3 4 5 6 (PRODUCT LEVEL)	SEE PAGE
	1	1	**3S-2093**	6	STRAP-CABLE	
	2	1	**7I-2673**	1	STRAP-CABLE	
	3	1	**7K-1181**	23	STRAP-CABLE	
	4	1	**299-2643**	1	HARNESS AS-SOLENOID	
	5	1	**4P-7428**	1	CLIP	
	6	1	**8T-4121**	1	WASHER-HARD (11X21X2.5-MM THK)	
M	7	1	**8T-4137**	1	BOLT (M10X1.5X20-MM)	

M-METRIC PART

299-2604 **WIRING GP-QUICK COUPLER** *(contd.)* **i02969463**

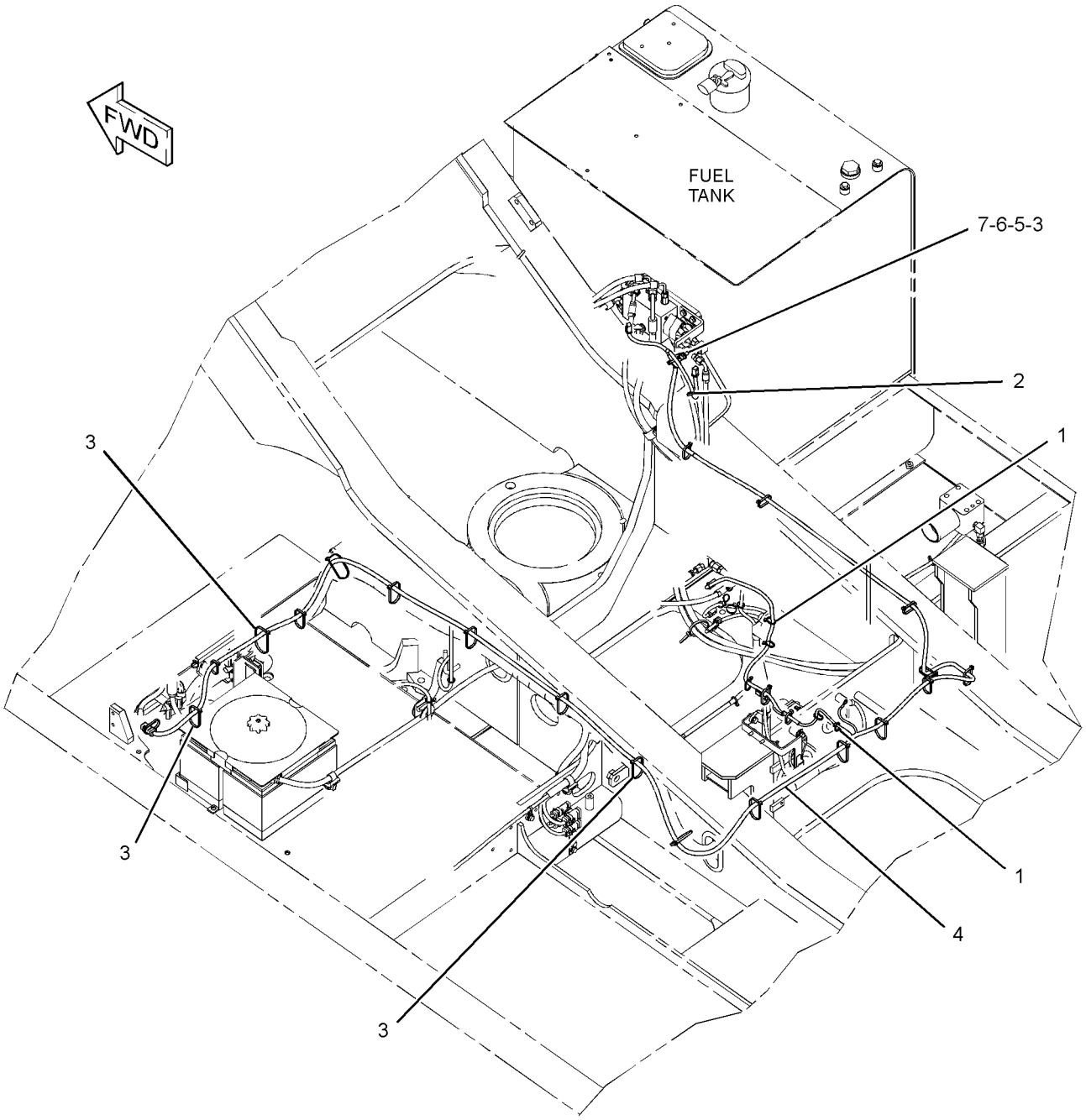

GRAPHIC #1 **<END>** g01452404

283-2913 WIRING GP-RADIO

S/N: JGB1-UP; KHS1-UP
12-VOLT
PART OF 371-9200, 371-9201, 371-9205, 371-9206 DISTRIBUTION AR
CANNOT BE USED WITH 251-0538—PAGE 947, 303-2702—PAGE 921, 302-9403—PAGE 457
AN ATTACHMENT

SMCS-1408, 7338 **i03247924**

NOTE	REF NO	GRAPHIC REF	PART NUMBER	QTY	PART NAME 1 2 3 4 5 6 (PRODUCT LEVEL)	SEE PAGE
	1	1	**3S-2093**	11	STRAP-CABLE	
	2	1	**4I-7889**	1	SPACER (11X25X45-MM THK)	
	3	1	**7K-1181**	10	STRAP-CABLE	
	4	1	**116-0118**	1	CLIP	
	5	1	**149-5050**	1	RELAY (24-VOLT) (SPEAKERS LH NEGATIVE)	
	5A	1	**149-5050**	1	RELAY (24-VOLT) (SPEAKERS LH POSITIVE)	
	5B	1	**149-5050**	1	RELAY (24-VOLT) (SPEAKERS RH POSITIVE)	
	5C	1	**149-5050**	1	RELAY (24-VOLT) (SPEAKERS RH NEGATIVE)	
	6	1	**170-2512**	1	SWITCH GP-TOGGLE (SPEAKER)	
		1	**102-8805**	1	KIT-RECEPTACLE (6-PIN)	
					(INCLUDES RECEPTACLE AS & WEDGE)	
		1	**6T-3631**	2	NUT-HEX (15/32-32-THD)	
		1	**6T-3632**	1	LOCKWASHER	
		1	**6T-3633**	1	RING-LOCKING	
		1	**186-3735**	6	PIN-CONNECTOR (16-GA TO 18-GA)	
	7	1	**267-7676**	1	BRACKET AS	
	8	1	**267-7695**	1	BRACKET AS	
	9	1	**283-2914**	1	HARNESS AS-RADIO	
	10	1	**283-2984**	1	COVER	
	11	1	**283-2783**	1	CONVERTER-POWER (24-VOLT TO 12-VOLT)	
M	12	1	**8T-4171**	4	BOLT (M6X1X12-MM)	
M	13	1	**8T-5005**	1	BOLT (M10X1.5X70-MM)	
M	14	1	**9X-2042**	7	SCREW-TRUSS HEAD (M6X1X12-MM)	
	15	1	**9X-8256**	4	WASHER (6.6X12X2-MM THK)	

M-METRIC PART

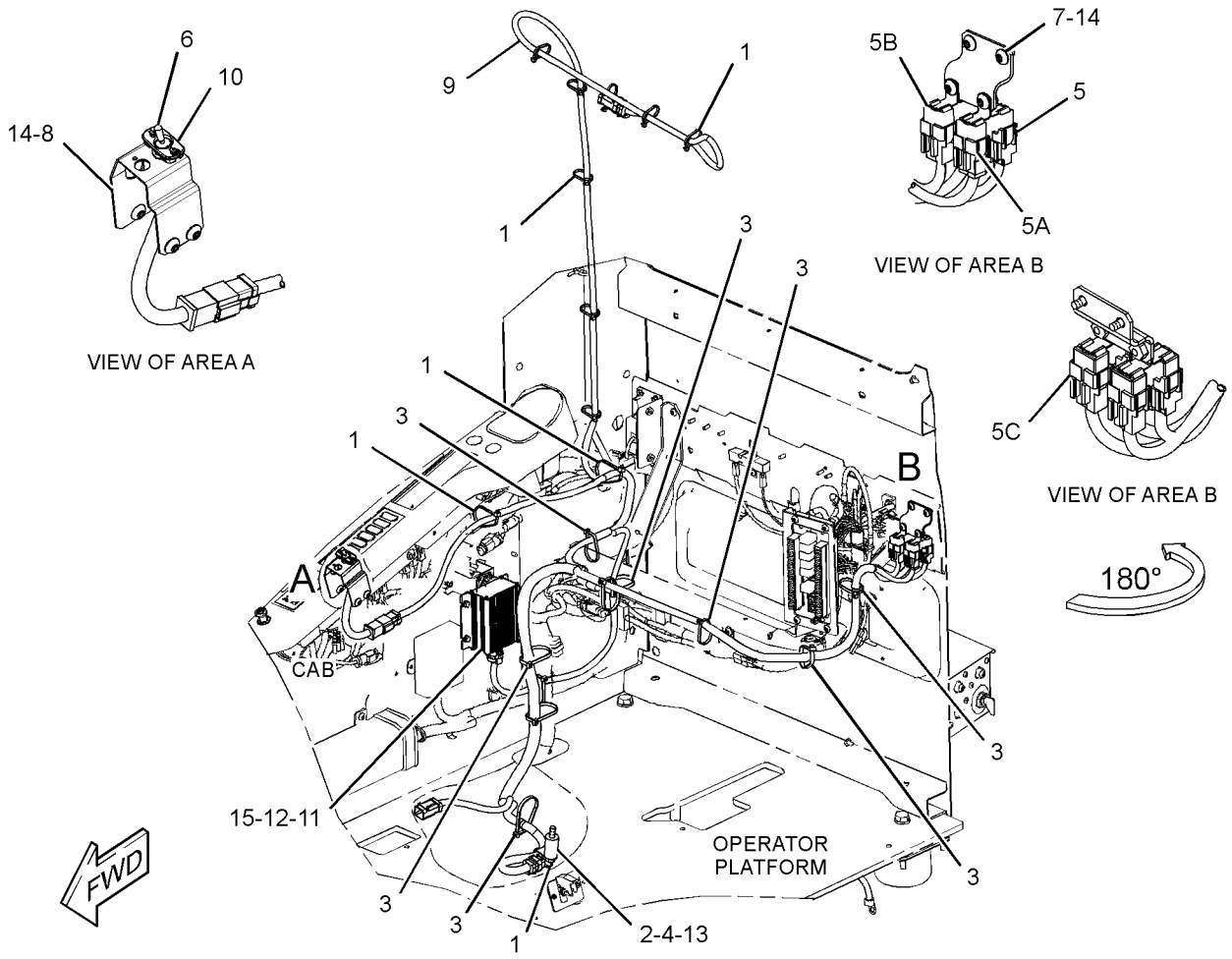

GRAPHIC #1 **<END>** g01502358

230-0961 WIRING GP-UNIT INJECTOR

S/N: TXF1-UP; MHX7634-UP

PART OF 317-9990, 356-2433 ENGINE AR-CORE

SMCS-1290, 1408 **i04124371**

NOTE	REF NO	GRAPHIC REF	PART NUMBER	QTY	PART NAME 1 2 3 4 5 6 (PRODUCT LEVEL)	SEE PAGE
	1	1	**3S-2093**	1	STRAP-CABLE	
	2	1	**7E-6508**	6	CAP AS	
	3	1	**230-0960**	1	HARNESS AS-ENGINE (UNIT INJECTOR)	
		1	**172-6063**	1	RECEPTACLE AS	
		1	**3S-2093**	2	STRAP-CABLE	
		1	**103-8133**	1	KIT-RECEPTACLE (12-PIN)	
					(INCLUDES A RECEPTACLE AS & WEDGE)	
	4	1	**237-9960**	1	CLIP	
	5	1	**4P-8525**	4	SPACER (9X16X30-MM THK)	
	6	1	**2V-3216**	4	CLIP	
	7	1	**9X-8267**	7	WASHER (6.6X12X2-MM THK)	
M	8	1	**6V-7728**	4	BOLT (M6X1X45-MM)	
M	10	1	**6V-8836**	3	BOLT (M6X1X14-MM)	

M-METRIC PART

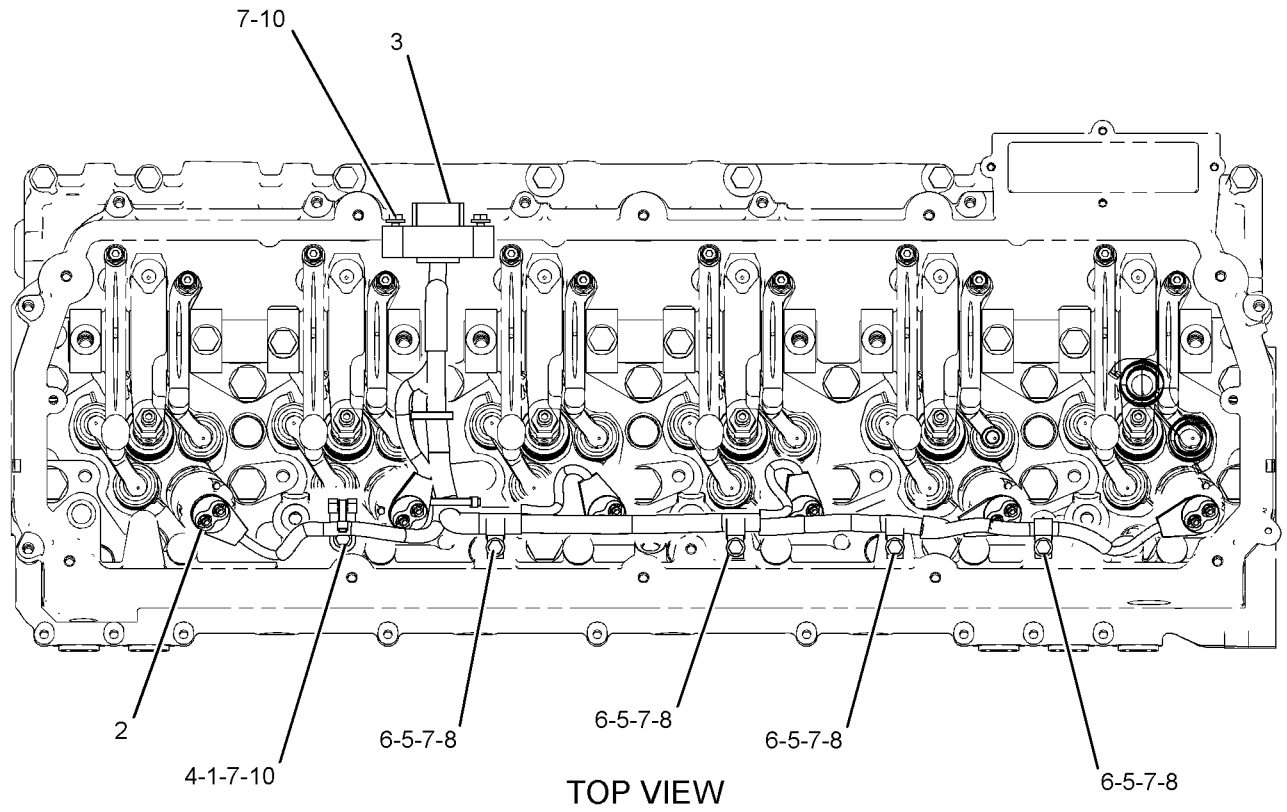

GRAPHIC #1 **<END>** g02321913

227-6044 FINAL DRIVE GP—WITH MOTOR

S/N: JGB1-UP; KHS1-UP

PART OF 353-0500 DRIVE GP-FINAL

SMCS-4050 **i02488618**

NOTE	REF NO	GRAPHIC REF	PART NUMBER	QTY	PART NAME 1 2 3 4 5 6 (PRODUCT LEVEL)	SEE PAGE
CY	1	1	*225-4504*	1	MOTOR & MTG GP-TRAVEL	674
Y	2	1	**227-6045**	1	FINAL DRIVE GP (WITHOUT MOTOR)	319

C-CHANGE FROM PREVIOUS TYPE
Y-SEPARATE ILLUSTRATION

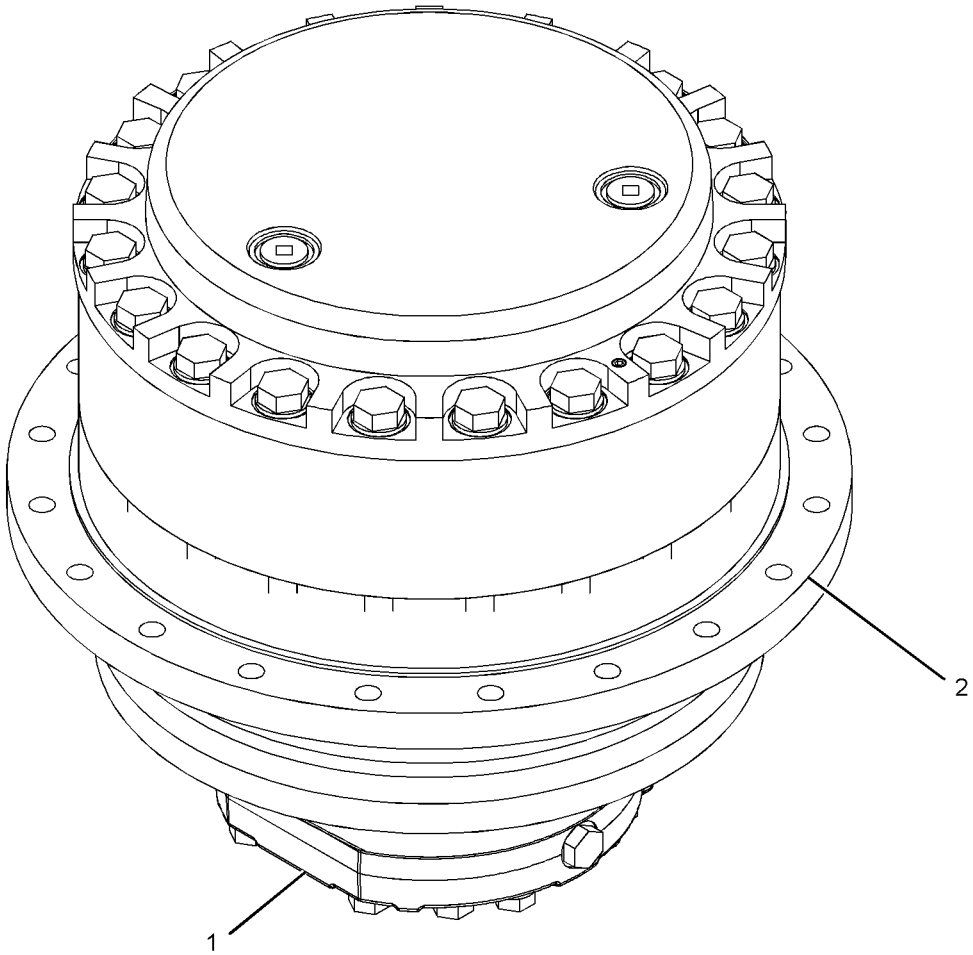

GRAPHIC #1 **<END>** g01278894

POWER TRAIN

227-6045 DRIVE GP-FINAL—WITHOUT MOTOR

S/N: JGB1-UP; KHS1-UP

PART OF 227-6044 DRIVE GP-FINAL

SMCS-4050 **i02180042**

NOTE	REF NO	GRAPHIC REF	PART NUMBER	QTY	PART NAME 1 2 3 4 5 6 (PRODUCT LEVEL)	SEE PAGE
	1	1	**2R-0524**	2	CONE-BEARING	
	2	1	**2R-0525**	2	CUP-BEARING	
	3	2	**4I-7576**	14	WASHER (66.3X104X3-MM THK)	
	4	2	**7M-8485**	2	SEAL-O-RING	
	5	2	**7Y-0661**	3	SHAFT-PLANETARY	
	6	2	**7Y-0662**	4	SHAFT-PLANETARY	
	7	2	**199-4583**	11	BEARING AS	
B	8	2	**7Y-0808**	1	SHIM (1.6-MM THK)	
	9	2	**7Y-1469**	1	COUPLING	
	10	2	**7Y-1470**	1	GEAR-SUN (21-TEETH)	
B	11	1	**7Y-1472**	1	SHIM (0.15-MM THK)	
B	12	1	**7Y-1473**	1	SHIM (0.3-MM THK)	
B	13	1	**7Y-1474**	1	SHIM (0.4-MM THK)	
B	14	1	**7Y-1475**	1	SHIM (0.5-MM THK)	
B	15	1	**7Y-1476**	1	SHIM (0.6-MM THK)	
B	16	1	**7Y-1477**	1	SHIM (0.7-MM THK)	
B	17	1	**7Y-1478**	1	SHIM (0.8-MM THK)	
B	18	1	**7Y-1479**	1	SHIM (1-MM THK)	
B	19	1	**7Y-1480**	1	SHIM (1.6-MM THK)	
	20	2	**7Y-1482**	1	CARRIER-PLANETARY	
	21	2	**7Y-1483**	1	GEAR-RING (63-TEETH)	
	22	2	**7Y-1485**	1	CARRIER-PLANETARY	
	23	2	**7Y-1487**	1	GEAR-RING (85-TEETH)	
	24	2	**7Y-1488**	1	CARRIER AS	
		2	**7Y-0656**	3	SHAFT-PLANETARY	
	25	2	**7Y-1491**	1	GEAR-SUN (21-TEETH)	
	26	2	**7Y-1493**	1	SPACER (8.7X50X14-MM THK)	
	27	2	**7Y-1495**	3	GEAR-PLANETARY (29-TEETH)	
	28	2	**7Y-1498**	1	COVER	
	29	2	**7Y-1499**	3	GEAR-PLANETARY (20-TEETH)	
	30	2	**7Y-1504**	4	GEAR-PLANETARY (20-TEETH)	
M	31	2	**7Y-5235**	20	BOLT (M24X3X190-MM)	
	32	2	**110-7217**	2	RING-RETAINING	
	33	1	**114-1541**	6	PIN-DOWEL	
	34	2	**169-5559**	1	GEAR-SUN (26-TEETH)	
	35	1	**199-4719**	1	GEAR-COUPLING	
	36	1	**200-3489**	1	HOUSING-MOTOR	
	37	1	**200-3490**	1	HOUSING-GEAR	
	38	1	**205-9025**	1	SEAL GP-DUO-CONE	
		1	**205-9024**	2	RING-TORIC	
	39	1	**227-6048**	12	WASHER (26X40X4-MM THK)	
	40	2	**094-0584**	6	WASHER (40.3X72X1-MM THK)	
	41	2	**199-4582**	3	BEARING AS	
	42	2	**095-0891**	7	PIN-SPRING	
M	43	2	**096-3216**	2	SETSCREW-SOCKET (M12X1.75X12-MM)	
	44	2	**3E-2338**	2	PLUG-PIPE	
M	45	1	**6V-8133**	12	BOLT (M24X3X80-MM)	
	46	2	**7Y-1484**	1	SPACER (191X221X8.5-MM THK)	
	47	2	**7Y-1492**	2	SPACER (67X101.1X10-MM THK)	
	48	1	**8C-5240**	1	SEAL-O-RING	
M	49	2	**8T-3957**	10	BOLT-SOCKET HEAD (M12X1.75X30-MM)	
	50	2	**8T-4167**	20	WASHER-HARD (26X44X4-MM THK)	
	51	2	**8T-4240**	3	RING-RETAINING	
BF			**1U-8846**		SEALANT-GASKET	

227-6045 DRIVE GP-FINAL *(contd.)* i02180042

B-USE AS REQUIRED
F-NOT SHOWN
M-METRIC PART

227-6045 DRIVE GP-FINAL *(contd.)* **i02180042**

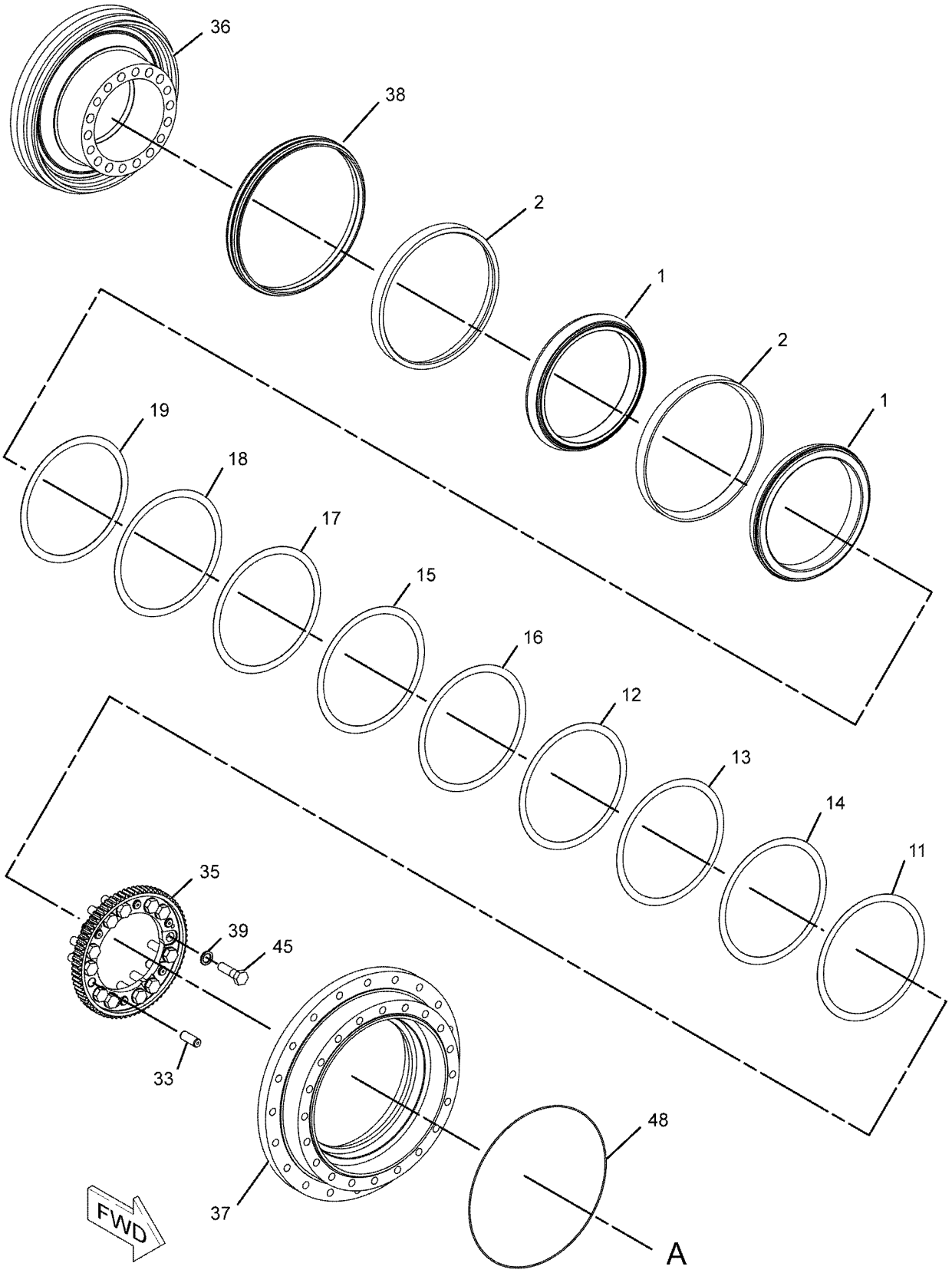

GRAPHIC #1 g01099918

227-6045 DRIVE GP-FINAL *(contd.)* i02180042

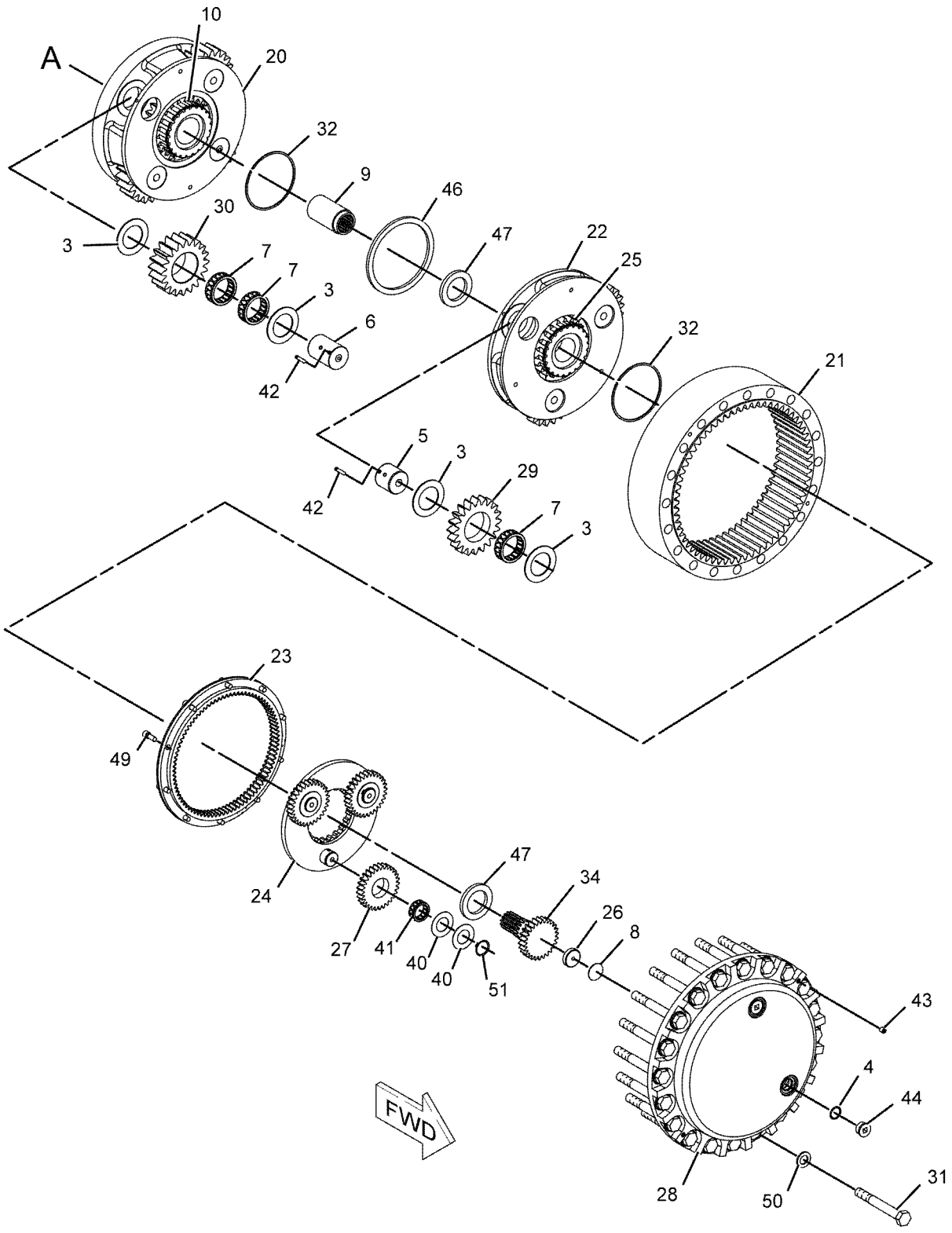

GRAPHIC #2 **<END>** g01099919

353-0500 DRIVE GP-FINAL–WITH MOTOR, SPROCKET

S/N: JGB1-UP; KHS1-UP

PART OF 227-6042, 227-6043 POWER TRAIN AR

SMCS-4050 **i03933189**

NOTE	REF NO	GRAPHIC REF	PART NUMBER	QTY	PART NAME 1 2 3 4 5 6 (PRODUCT LEVEL)	SEE PAGE
Y	1	1	*115-6399*	1	SPROCKET GP	325
Y	2	1	*227-6044*	1	DRIVE GP-FINAL (WITH MOTOR)	318

Y-SEPARATE ILLUSTRATION

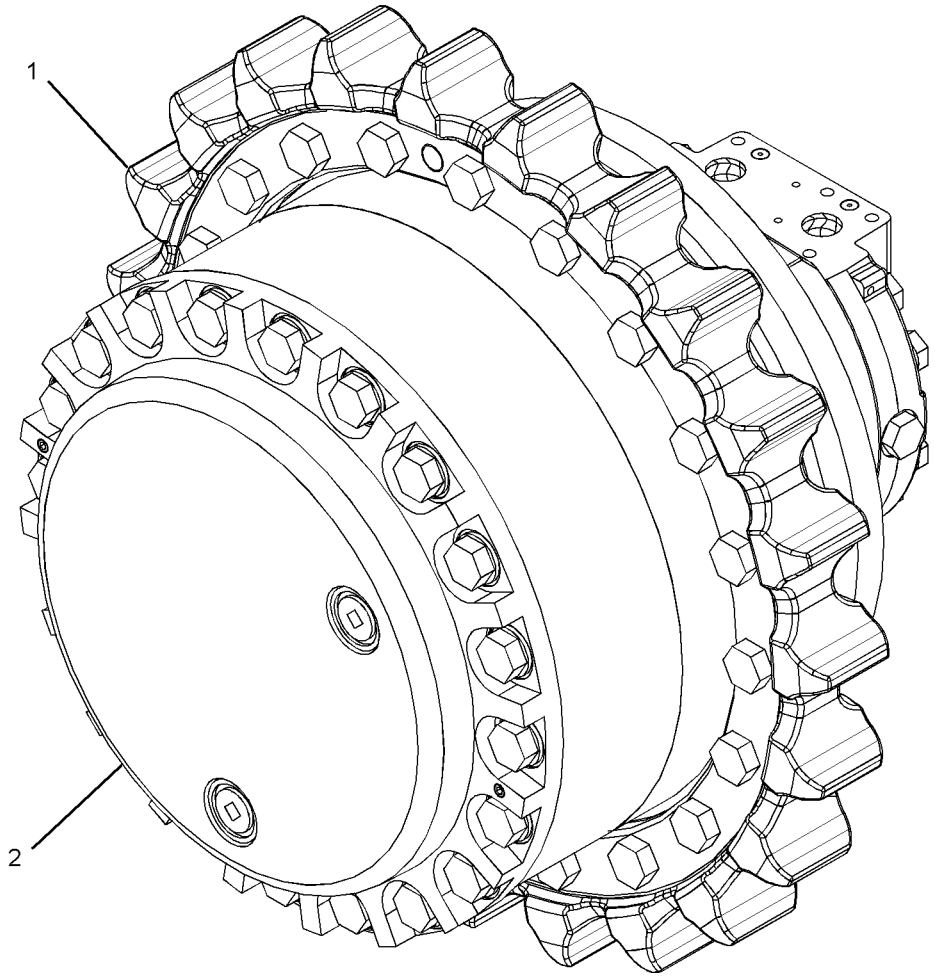

GRAPHIC #1 **<END>** g02148702

227-6042 POWER TRAIN AR

S/N: JGB1-UP

PART OF 370-3230 GENERAL AR

SMCS-3000, 4000 **i03933150**

NOTE	PART NUMBER	QTY	PART NAME 1 2 3 4 5 6 (PRODUCT LEVEL)	SEE PAGE
Y	*296-6252*	1	DRIVE GP-SWING (WITH MOTOR, LH)	488
Y	*296-6249*	1	DRIVE GP-SWING (WITH MOTOR, RH)	484
Y	*227-6050*	1	FASTENER GP-SWING & FINAL DR	492
Y	*353-0500*	2	DRIVE GP-FINAL (WITH MOTOR, SPROCKET)	323

Y-SEPARATE ILLUSTRATION

<END>

227-6043 POWER TRAIN AR

S/N: KHS1-UP

PART OF 370-4188 GENERAL AR

SMCS-3000, 4000 **i03933294**

NOTE	PART NUMBER	QTY	PART NAME 1 2 3 4 5 6 (PRODUCT LEVEL)	SEE PAGE
Y	*353-0500*	2	DRIVE GP-FINAL (WITH MOTOR, SPROCKET)	323

Y-SEPARATE ILLUSTRATION

<END>

115-6399 SPROCKET GP

S/N: JGB1-UP; KHS1-UP

PART OF 353-0500 DRIVE GP-FINAL

SMCS-4164 **i02886314**

NOTE	REF NO	GRAPHIC REF	PART NUMBER	QTY	PART NAME 1 2 3 4 5 6 (PRODUCT LEVEL)	SEE PAGE
	1	1	**124-3296**	1	SPROCKET-TRACK	
M	2	1	**7X-2575**	20	BOLT (M24X3X60-MM)	
	3	1	**2B-7561**	2	CORK	

M-METRIC PART

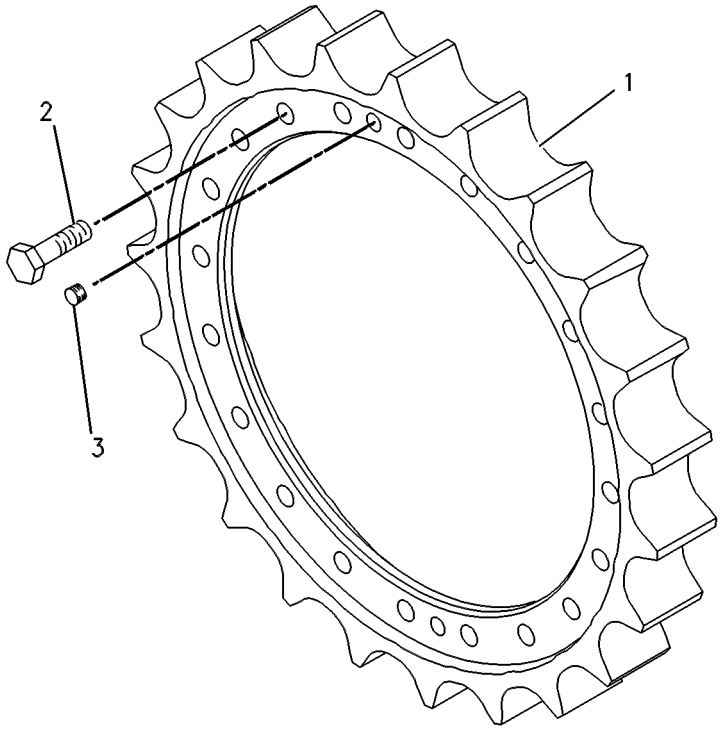

GRAPHIC #1 **<END>** g00267897

223-2977 BOX & MTG GP-STORAGE

S/N: JGB1-UP; KHS1-UP

PART OF 370-3231, 370-4189 CHASSIS AR

SMCS-7268 **i02226578**

NOTE	REF NO	GRAPHIC REF	PART NUMBER	QTY	PART NAME 1 2 3 4 5 6 (PRODUCT LEVEL)	SEE PAGE
M	1	1	**8T-4183**	6	BOLT (M12X1.75X40-MM)	
		1	**5P-1076**	6	WASHER-HARD (13.5X30X4-MM THK)	
Y	2	1	**223-2978**	1	BOX GP-STORAGE	327

M-METRIC PART
Y-SEPARATE ILLUSTRATION

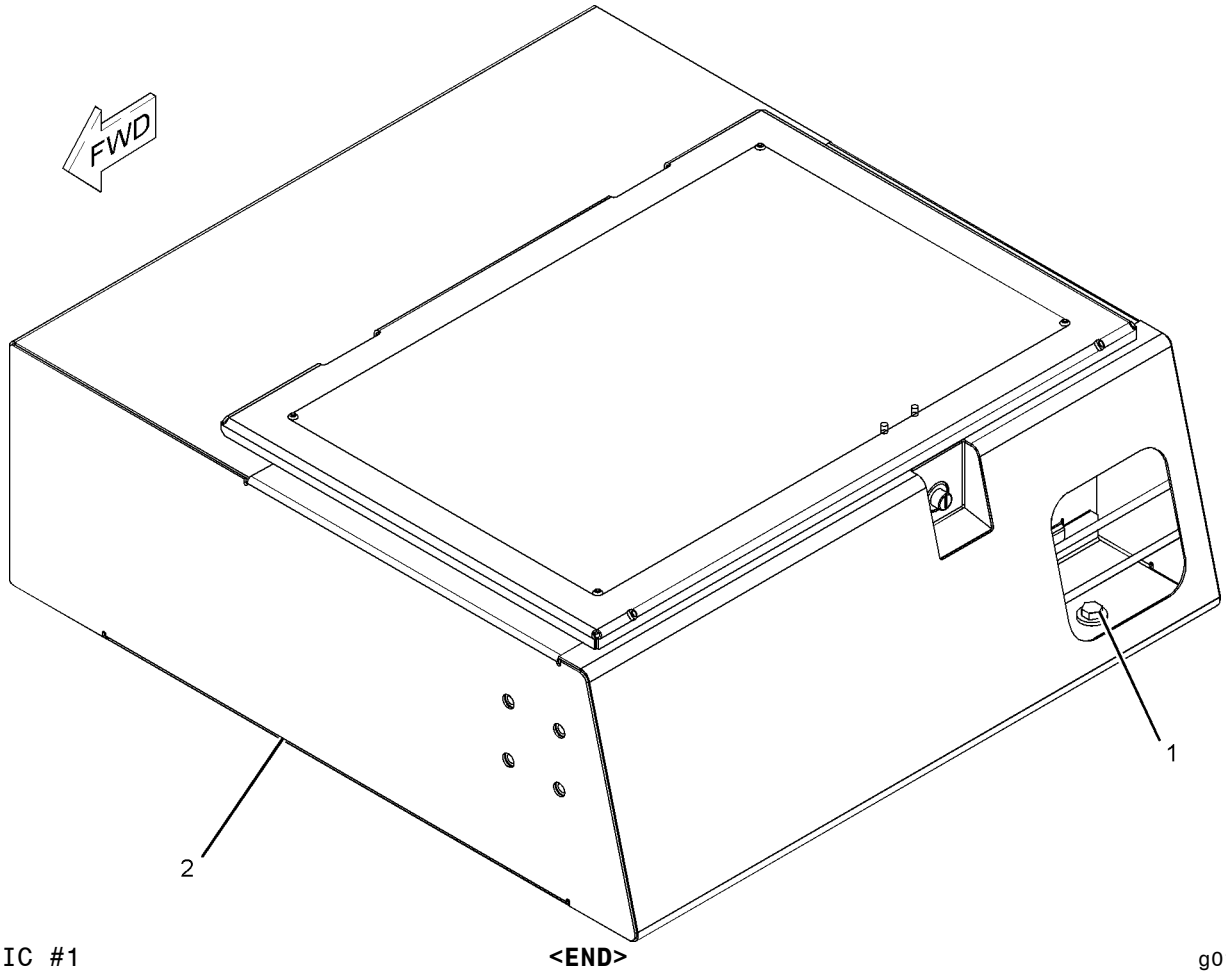

GRAPHIC #1 **<END>** g01084433

223-2978 BOX GP-STORAGE

S/N: JGB1-UP; KHS1-UP

PART OF 223-2977 BOX & MTG GP-STORAGE

SMCS-7268 **i03821207**

NOTE	REF NO	GRAPHIC REF	PART NUMBER	QTY	PART NAME 1 2 3 4 5 6 (PRODUCT LEVEL)	SEE PAGE
	1	1	**4I-2187**	1	SUPPORT AS	
	2	1	**236-3665**	1	BOX AS	
	3	1	**236-3666**	1	COVER AS	
E		1	**237-5586**		SEAL (228-CM)	
	3A	1	**3D-9143**	2	HINGE-BUTT	
	4	1	**236-3668**	1	PLUNGER AS	
J	5	1	**342-1110**	1	LOCK AS	
	6	1	**236-3670**	1	STRIKER AS	
	7	1	**236-3671**	1	SEAL	
B	8	1	**236-3672**	1	SHIM (0.5-MM THK)	
	9	1	**236-3673**	1	SHEET	
	10	1	**095-0843**	1	PIN-COTTER	
	11	1	**096-3780**	1	PIN-CLEVIS	
	12	1	**096-3872**	1	GROMMET	
M	13	1	**5C-9553**	1	BOLT (M6X1X16-MM)	
	14	1	**5P-1075**	4	WASHER-HARD (10.2X22.5X3-MM THK)	
	15	1	**5P-4116**	1	WASHER-HARD (8.8X20.5X2-MM THK)	
M	16	1	**8T-4133**	4	NUT (M10X1.5-THD)	
M	17	1	**8T-4171**	2	BOLT (M6X1X12-MM)	
M	18	1	**8T-4200**	2	BOLT (M8X1.25X16-MM)	
	19	1	**8T-4224**	2	WASHER-HARD (8.8X16X2-MM THK)	
	20	1	**9X-8256**	7	WASHER (6.6X12X2-MM THK)	
M	21	1	**105-3487**	4	BOLT-SOCKET HEAD (M6X1X20-MM)	

B-USE AS REQUIRED
E-ORDER BY THE CENTIMETER
J-REQUIRES CORPORATE KEY
M-METRIC PART

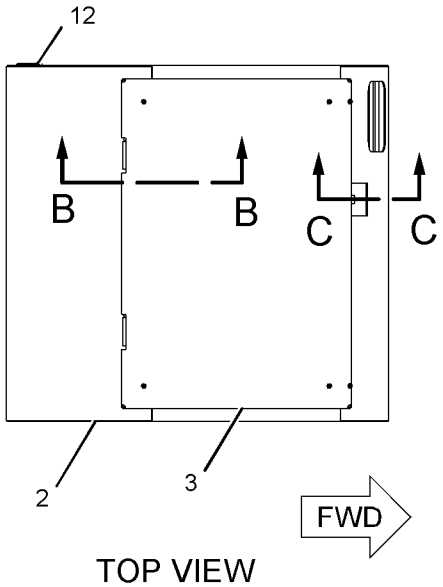

TOP VIEW

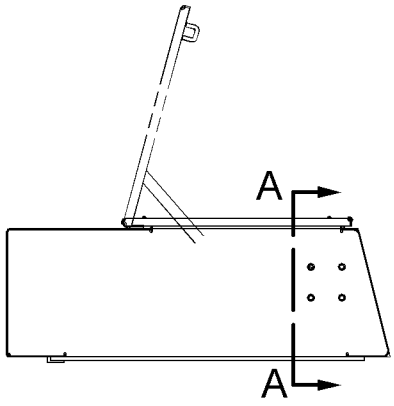

RIGHT SIDE VIEW

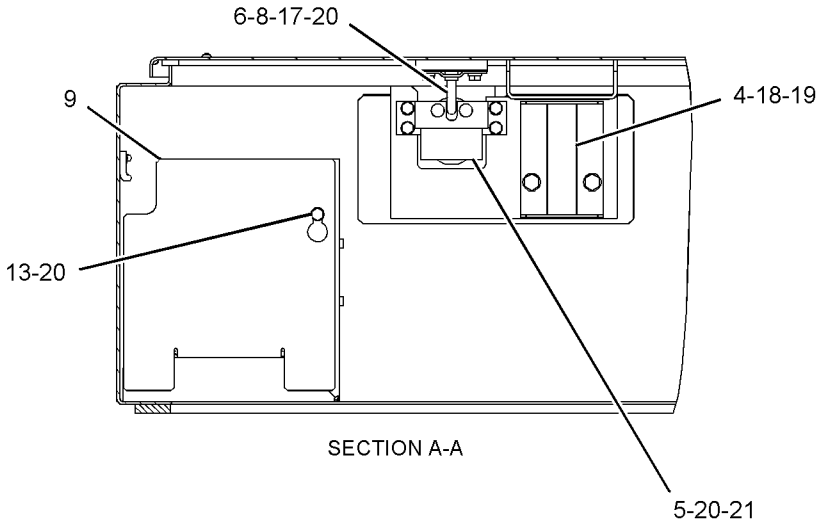

SECTION A-A

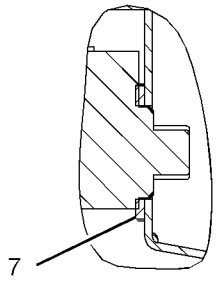

SECTION C-C

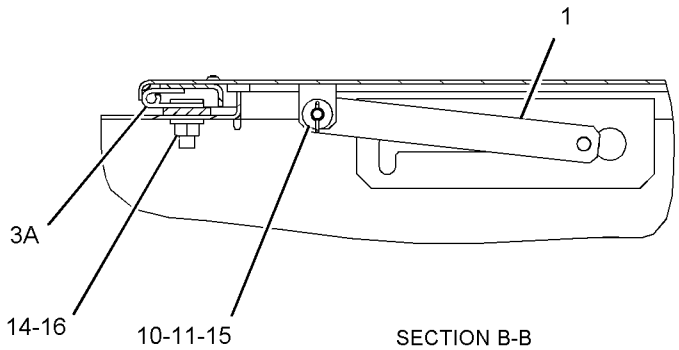

SECTION B-B

GRAPHIC #1

<END>

g01133867

326-2547 CHAIN GP-COUNTERWEIGHT

S/N: JGB1-UP

PART OF 309-0166, 309-0167 COUNTERWEIGHT AR

AN ATTACHMENT

SMCS-6404, 7056 **i03129901**

NOTE	REF NO	GRAPHIC REF	PART NUMBER	QTY	PART NAME 1 2 3 4 5 6 (PRODUCT LEVEL)	SEE PAGE
	1	1	**086-0507**	1	PIN	
	2	1	**093-0349**	2	WASHER (22X60X6-MM THK)	
	3	1	**131-9524**	1	SUPPORT	
	4	1	**326-2467**	4	SPROCKET AS	
					(EACH INCLUDES)	
	4A	1	**127-6740**	1	BUSHING	
	4B	1	**8T-6757**	1	PLUG-PIPE	
	5	1	**326-2468**	2	PIN	
	6	1	**326-2469**	1	PIN	
	7	1	**326-2470**	1	CHAIN GP-COUNTERWEIGHT	
M		1	**7Y-1537**	1	LOCKNUT (M20X2.5-THD)	
	8	1	**326-2478**	1	CASE AS-CHAIN	
	9	1	**326-2482**	2	SPACER-SPECIAL	
	10	1	**326-2537**	1	GUIDE AS	
	11	1	**327-4669**	1	PIN	
M	12	1	**096-4879**	1	NUT (M36X4-THD)	
	13	1	**146-1332**	1	PLATE	
M	14	1	**7Y-1537**	2	LOCKNUT (M20X2.5-THD)	
	15	1	**8T-4121**	2	WASHER-HARD (11X21X2.5-MM THK)	
M	16	1	**8T-4196**	2	BOLT (M10X1.5X35-MM)	
	17	1	**8T-4223**	2	WASHER-HARD (13.5X25.5X3-MM THK)	
M	18	1	**8T-4956**	2	BOLT (M12X1.75X35-MM)	
M	19	1	**8T-6382**	2	BOLT (M16X2X260-MM)	
	20	1	**9X-8257**	2	WASHER (17.5X30X3.5-MM THK)	

M-METRIC PART

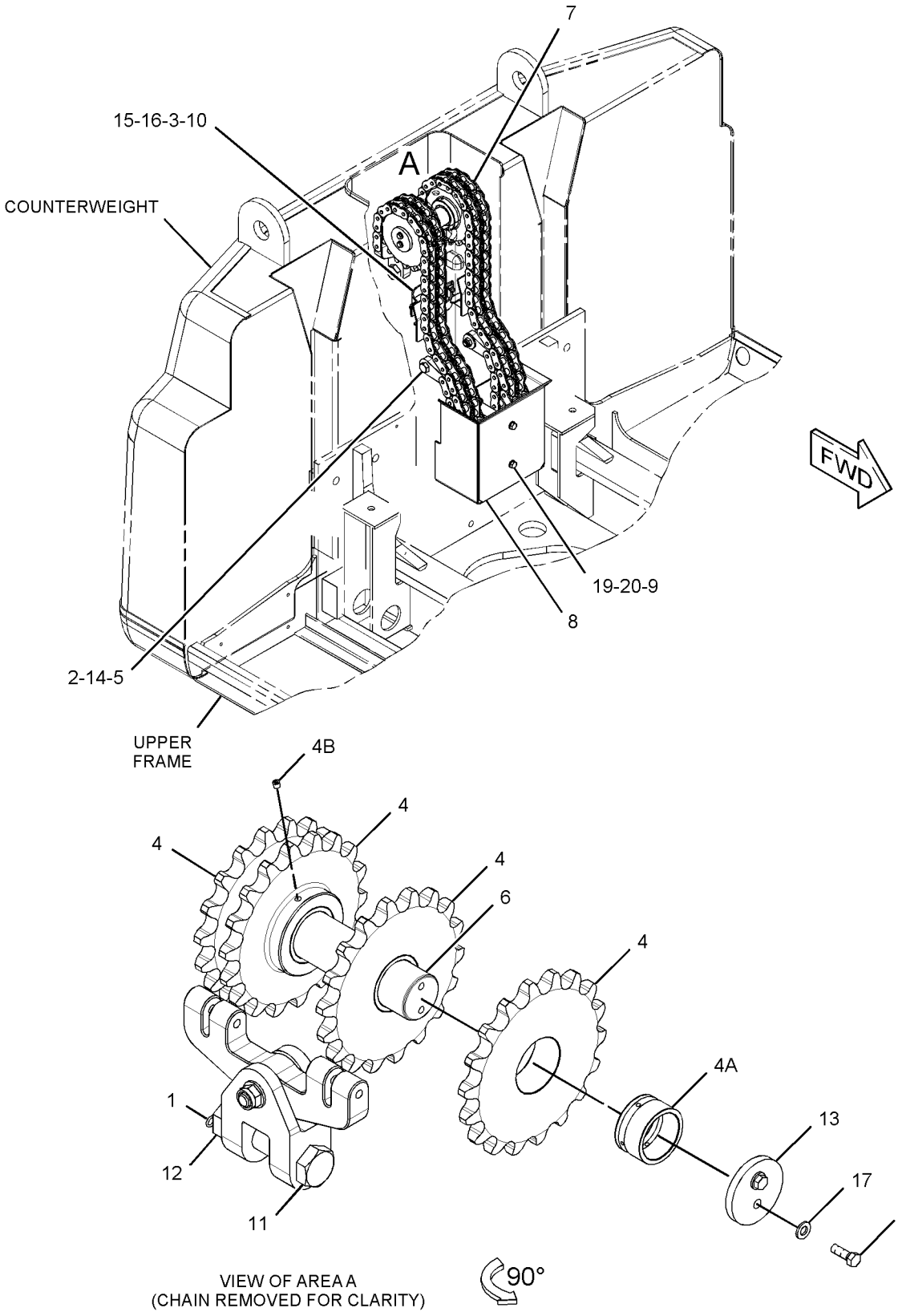

GRAPHIC #1 **<END>** g01619343

309-0166 COUNTERWEIGHT AR

S/N: JGB1-UP
7600-KG (16,755-LB)
AN ATTACHMENT

SMCS-7056 **i04184399**

NOTE	PART NUMBER	QTY	PART NAME 1 2 3 4 5 6 (PRODUCT LEVEL)	SEE PAGE
Y	*326-2547*	1	CHAIN GP-COUNTERWEIGHT (LIFTING)	329
Y	*320-2704*	1	COUNTERWEIGHT GP	333
Y	*225-4533*	1	CYLINDER & SEAL GP-CTWT	466
Y	*220-2530*	1	FILM GP (COUNTERWEIGHT REMOVAL)	973
Y	*290-9039*	1	FRAME GP-UPPER	344
Y	*358-9695*	1	HOOD & GUARD GP (COUNTERWEIGHT REMOVAL)	368
Y	*227-0459*	1	LINES GP-REAR ATTACHMENT	647
Y	*326-2548*	1	MOUNTING GP-COUNTERWEIGHT CYL (COUNTERWEIGHT REMOVAL)	688
Y	*299-2605*	1	WIRING GP-COUNTERWEIGHT (COUNTERWEIGHT REMOVAL)	293

Y-SEPARATE ILLUSTRATION

<END>

309-0167 COUNTERWEIGHT AR

S/N: JGB1-UP
8700-KG (19,180-LB)
AN ATTACHMENT

SMCS-7056 **i04184431**

NOTE	PART NUMBER	QTY	PART NAME 1 2 3 4 5 6 (PRODUCT LEVEL)	SEE PAGE
Y	*326-2547*	1	CHAIN GP-COUNTERWEIGHT (LIFTING)	329
Y	*308-8439*	1	COUNTERWEIGHT GP	332
Y	*225-4533*	1	CYLINDER & SEAL GP-CTWT	466
Y	*220-2530*	1	FILM GP (COUNTERWEIGHT REMOVAL)	973
Y	*290-9039*	1	FRAME GP-UPPER	344
Y	*358-9695*	1	HOOD & GUARD GP (COUNTERWEIGHT REMOVAL)	368
Y	*227-0459*	1	LINES GP-REAR ATTACHMENT	647
Y	*326-2548*	1	MOUNTING GP-COUNTERWEIGHT CYL (COUNTERWEIGHT REMOVAL)	688
Y	*299-2605*	1	WIRING GP-COUNTERWEIGHT (COUNTERWEIGHT REMOVAL)	293

Y-SEPARATE ILLUSTRATION

<END>

308-8439 COUNTERWEIGHT GP

S/N: JGB1-UP
8700-KG (19,180-LB)
PART OF 309-0167 COUNTERWEIGHT AR
AN ATTACHMENT

SMCS-7056 **i02848180**

NOTE	REF NO	GRAPHIC REF	PART NUMBER	QTY	PART NAME 1 2 3 4 5 6 (PRODUCT LEVEL)	SEE PAGE
	1	1	**126-6290**	6	SPACER (40X100X30-MM THK)	
	2	1	**259-6113**	1	PLATE AS	
	2A	1	**294-5018**	1	HINGE	
	3	1	**259-6227**	1	ROD	
	4	1	**262-8502**	1	PLATE	
	5	1	**308-8440**	1	COUNTERWEIGHT AS	
		1	**7T-1099**	3	LINK	
		1	**9R-2060**	2	BOSS (M10X1.5X21-MM)	
	6	1	**323-3898**	1	SHEET	
M	7	1	**127-7678**	6	BOLT (M36X4X603-MM)	
	8	1	**3D-9428**	1	CLIP	
	9	1	**5P-1076**	9	WASHER-HARD (13.5X30X4-MM THK)	
	10	1	**7X-7729**	4	WASHER (11X25X3-MM THK)	
M	11	1	**8T-4136**	4	BOLT (M10X1.5X25-MM)	
M	12	1	**8T-4139**	9	BOLT (M12X1.75X30-MM)	

M-METRIC PART

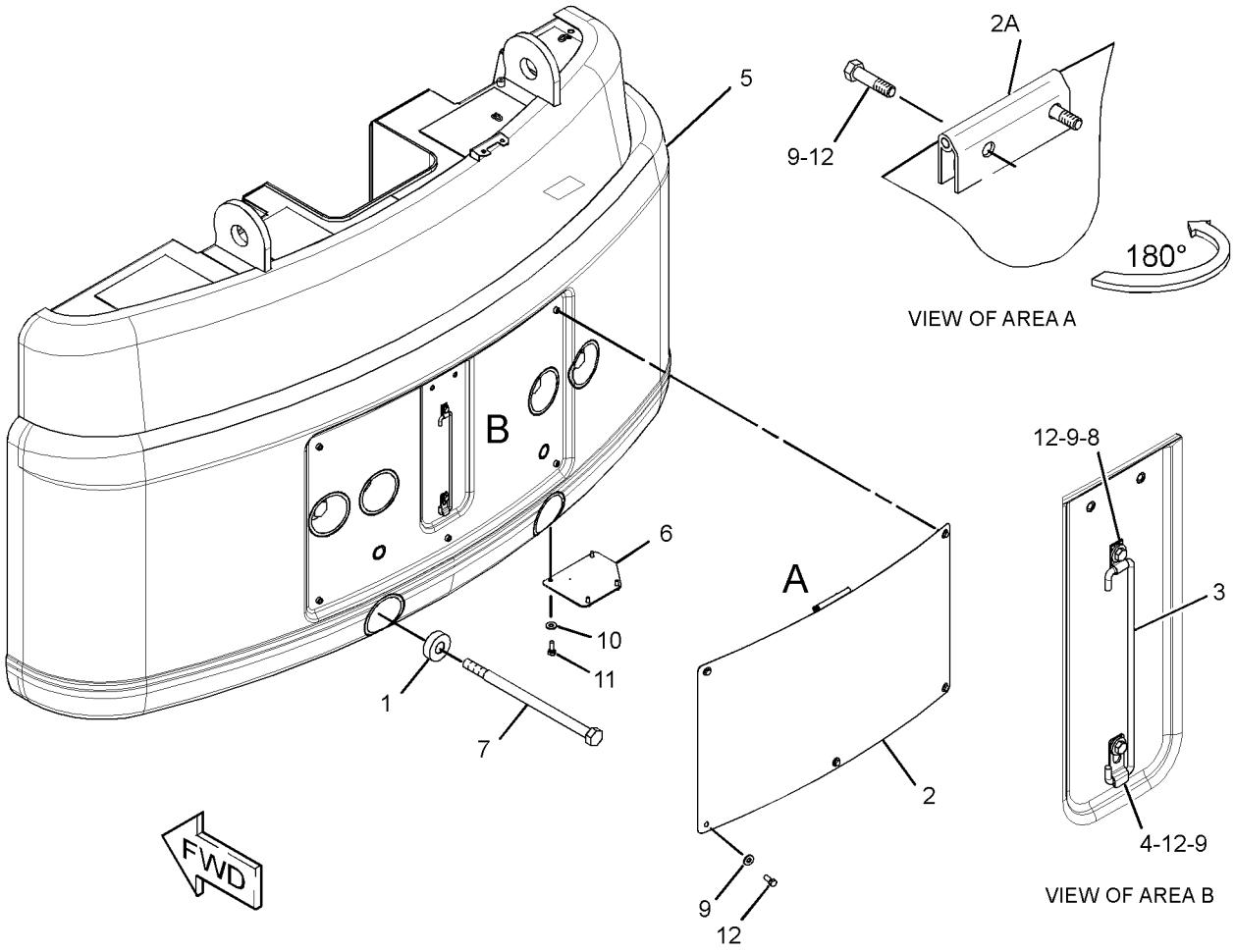

GRAPHIC #1 **<END>** g01475752

320-2704 COUNTERWEIGHT GP

S/N: JGB1-UP
7600-KG (16,755-LB)
PART OF 309-0166 COUNTERWEIGHT AR
AN ATTACHMENT

SMCS-7056 **i02906090**

NOTE	REF NO	GRAPHIC REF	PART NUMBER	QTY	PART NAME 1 2 3 4 5 6 (PRODUCT LEVEL)	SEE PAGE
	1	1	**126-6290**	6	SPACER (40X100X30-MM THK)	
	2	1	**259-6113**	1	PLATE AS	
	2A	1	**294-5018**	1	HINGE	
	3	1	**259-6227**	1	ROD	
	4	1	**262-8502**	1	PLATE	
	5	1	**320-2706**	1	COUNTERWEIGHT AS	
	6	1	**323-3898**	1	SHEET	
M	7	1	**127-7678**	6	BOLT (M36X4X603-MM)	
	8	1	**3D-9428**	1	CLIP	
	9	1	**5P-1076**	9	WASHER-HARD (13.5X30X4-MM THK)	
	10	1	**7X-7729**	4	WASHER (11X25X3-MM THK)	
M	11	1	**8T-4136**	4	BOLT (M10X1.5X25-MM)	
M	12	1	**8T-4139**	9	BOLT (M12X1.75X30-MM)	

M-METRIC PART

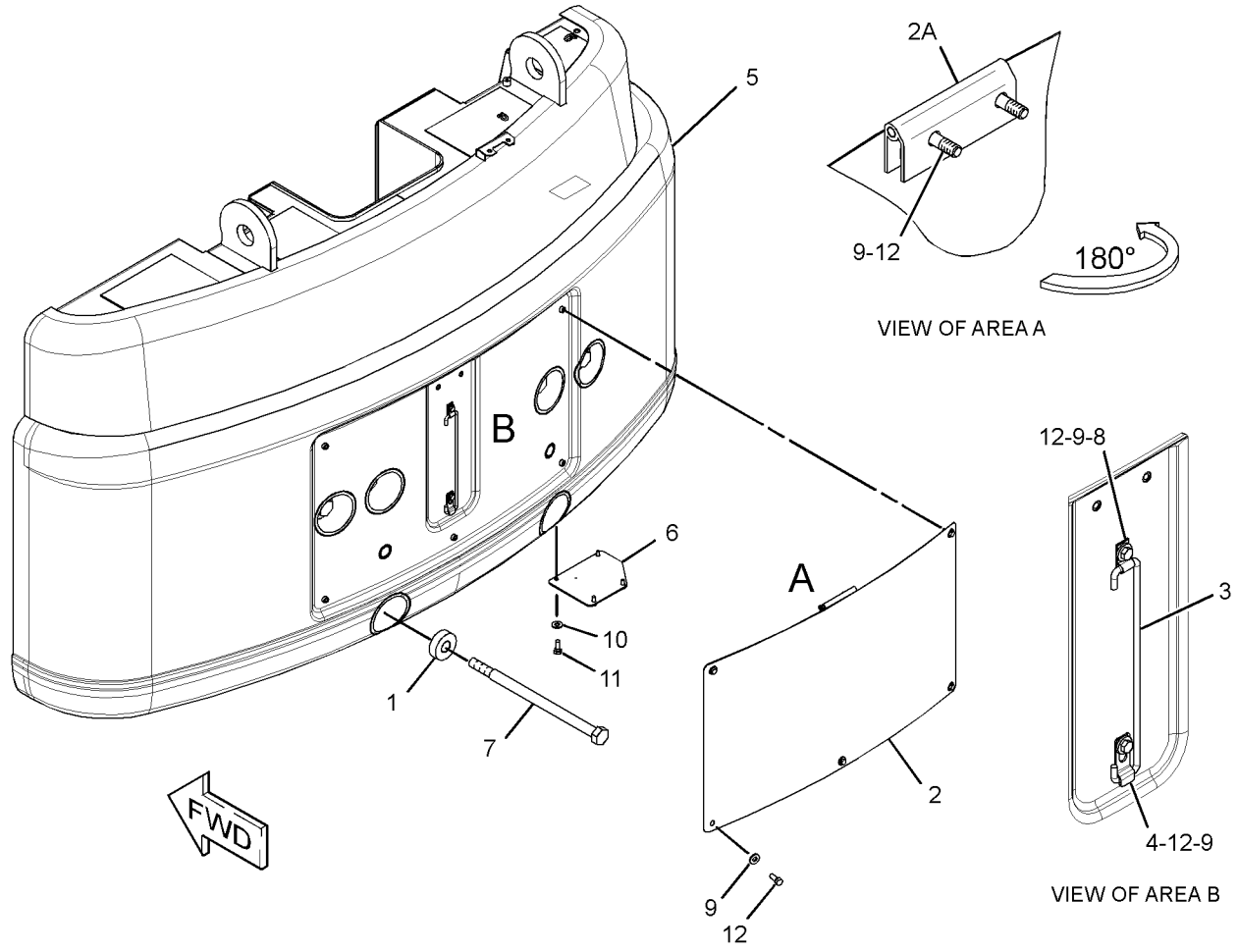

GRAPHIC #1 **<END>** g01474072

FRAME AND BODY

320-2709 COUNTERWEIGHT GP

S/N: JGB1-UP
7600-KG (16,755-LB)
AN ATTACHMENT

SMCS-7056 **i02934043**

NOTE	REF NO	GRAPHIC REF	PART NUMBER	QTY	PART NAME 1 2 3 4 5 6 (PRODUCT LEVEL)	SEE PAGE
	1	1	**126-6290**	6	SPACER (40X100X30-MM THK)	
	2	1	**259-6113**	1	PLATE AS	
	3	1	**259-6227**	1	ROD	
	4	1	**262-8502**	1	PLATE	
	5	1	**320-2707**	1	COUNTERWEIGHT AS	
M	6	1	**127-7678**	6	BOLT (M36X4X603-MM)	
	7	1	**3D-9428**	1	CLIP	
	8	1	**5P-1076**	9	WASHER-HARD (13.5X30X4-MM THK)	
M	9	1	**8T-4139**	9	BOLT (M12X1.75X30-MM)	
	10	1	**7X-7729**	4	WASHER (11X25X3-MM THK)	
M	11	1	**8T-4136**	4	BOLT (M10X1.5X25-MM)	
	12	1	**323-3898**	1	SHEET	

M-METRIC PART

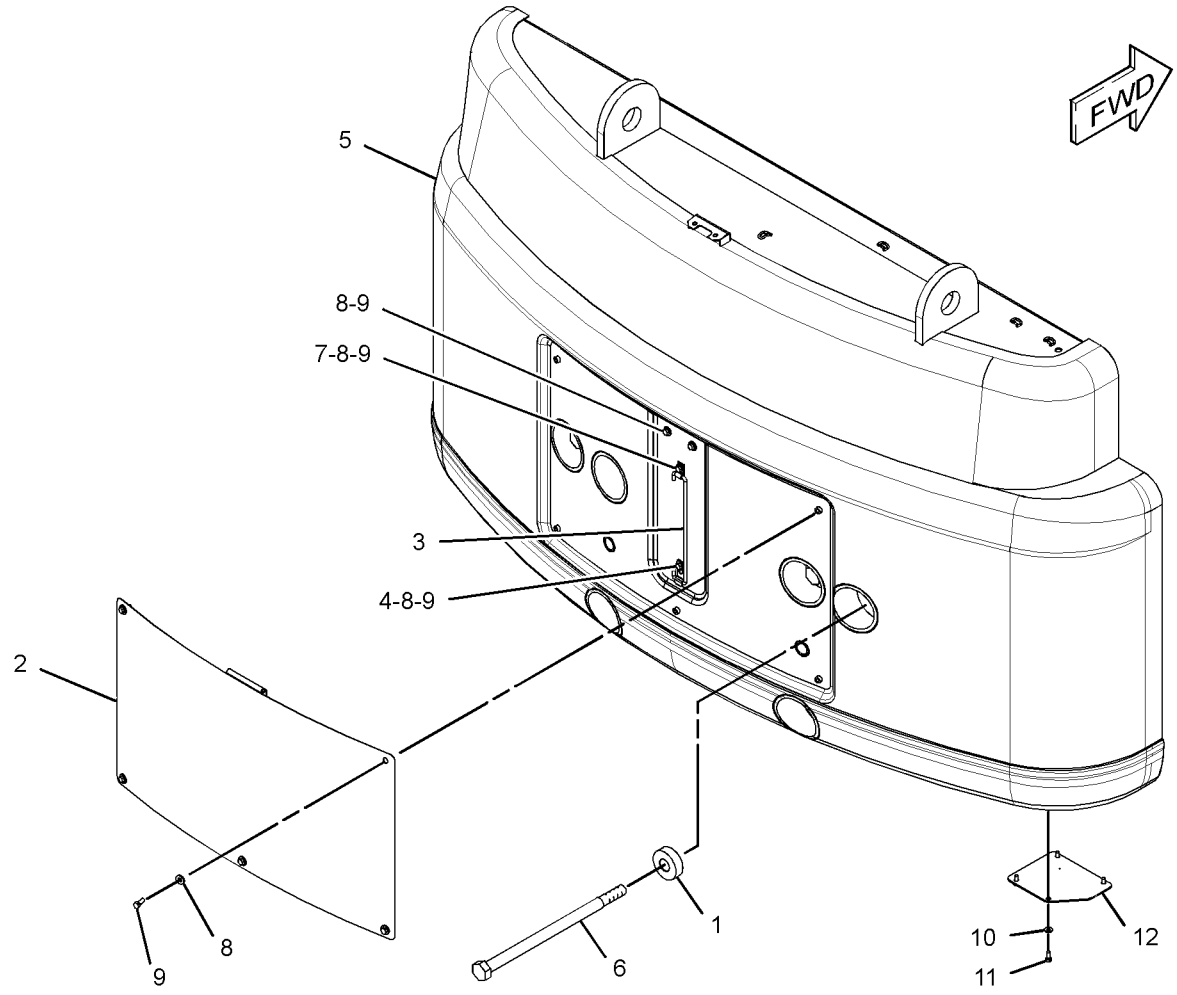

GRAPHIC #1 **<END>** g01457015

320-2710 COUNTERWEIGHT GP

S/N: JGB1-UP; KHS1-UP
9000-KG (19800-LB)
PART OF 370-3231, 370-4189 CHASSIS AR

SMCS-7056 **i02934063**

NOTE	REF NO	GRAPHIC REF	PART NUMBER	QTY	PART NAME 1 2 3 4 5 6 (PRODUCT LEVEL)	SEE PAGE
	1	1	**126-6290**	6	SPACER (40X100X30-MM THK)	
	2	1	**259-6113**	1	PLATE AS	
	3	1	**259-6227**	1	ROD	
	4	1	**262-8502**	1	PLATE	
	5	1	**320-2712**	1	COUNTERWEIGHT AS	
M	6	1	**127-7678**	6	BOLT (M36X4X603-MM)	
	7	1	**3D-9428**	1	CLIP	
	8	1	**5P-1076**	9	WASHER-HARD (13.5X30X4-MM THK)	
M	9	1	**8T-4139**	9	BOLT (M12X1.75X30-MM)	
	10	1	**7X-7729**	4	WASHER (11X25X3-MM THK)	
M	11	1	**8T-4136**	4	BOLT (M10X1.5X25-MM)	
	12	1	**323-3898**	1	SHEET	

M-METRIC PART

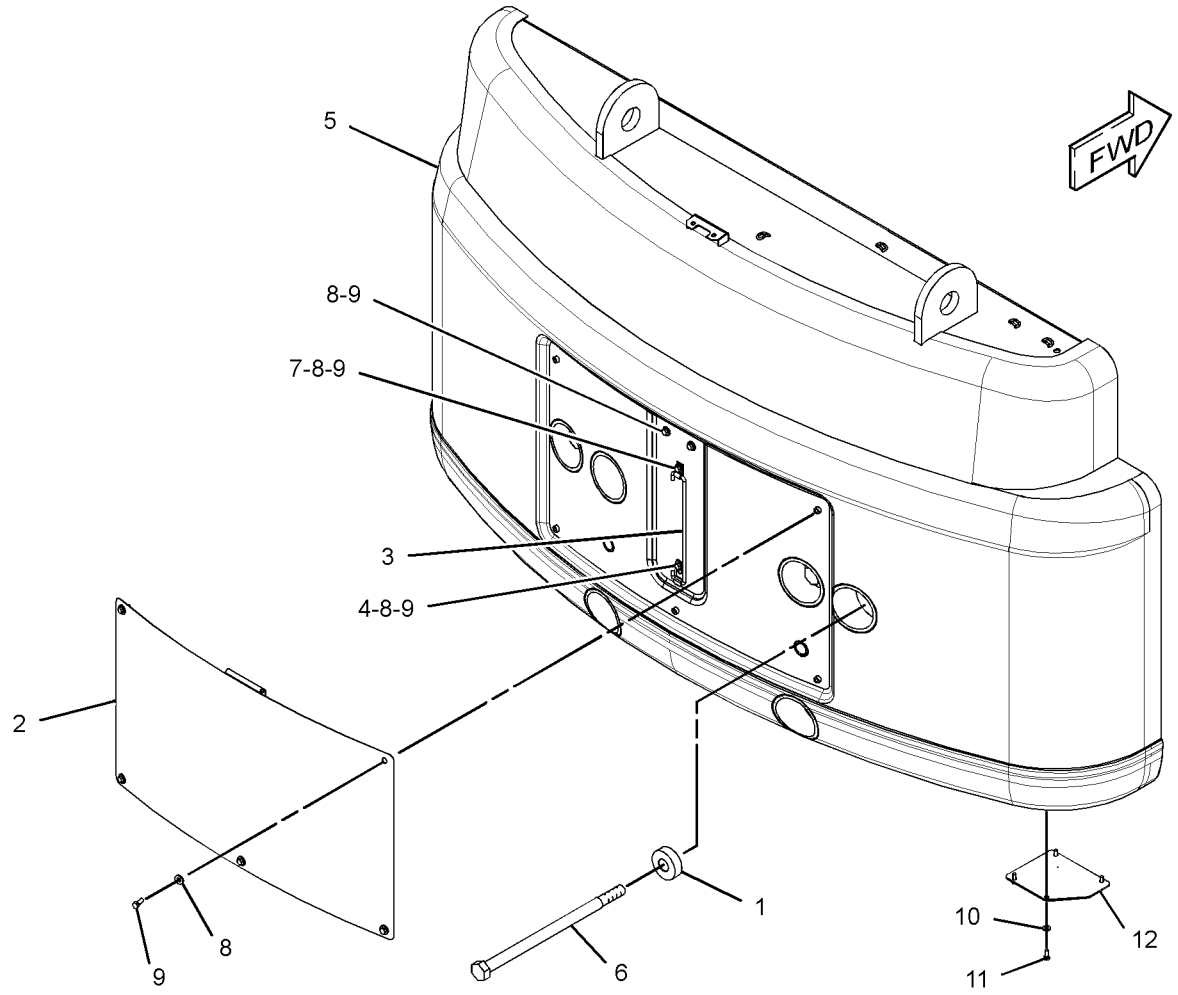

GRAPHIC #1 **<END>** g01457016

358-9696 COVER AS-SOUND SUPPRESSION

S/N: JGB1-UP
PART OF 358-9695 HOOD & GUARD GP
AN ATTACHMENT

SMCS-7253, 7263, 7276, 795C **i04184429**

NOTE	REF NO	GRAPHIC REF	PART NUMBER	QTY	PART NAME 1 2 3 4 5 6 (PRODUCT LEVEL)	SEE PAGE
	1	1	**4I-7924**	17	WASHER (4.5X40X1.2-MM THK)	
	2	1	**6P-2216**	17	CAP (PUSH ON)	
	3	1	**237-8411**	1	INSULATION	
	4	1	**237-8412**	2	INSULATION	
	5	1	**351-3076**	1	INSULATION	
	6	1	*358-9697*	1	COVER AS	
	6A	1	**237-8684**	2	HINGE	
		1	**6Y-9625**	17	PIN-WELD	
M		1	**8T-3612**	4	NUT-WELD (M8X1.25-THD)	
		1	**146-4936**	2	HANDLE AS	
D	7	1	**5P-6027**		LOCKWIRE (0.4-M EACH)	

D-ORDER BY THE METER
M-METRIC PART

358-9696 COVER AS-SOUND SUPPRESSION *(contd.)* **i04184429**

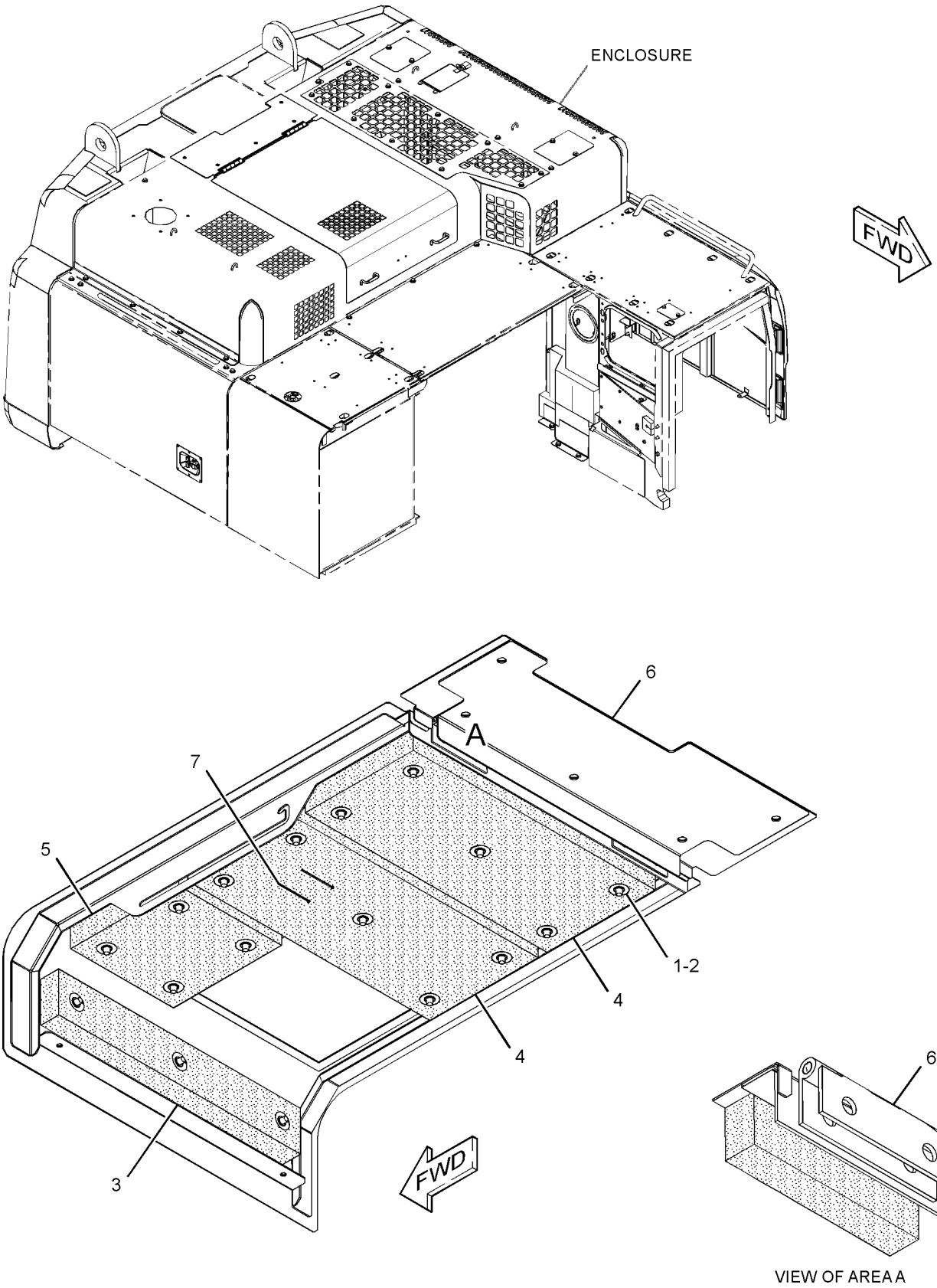

GRAPHIC #1 **<END>** g02391799

FRAME AND BODY

313-8115 COVER GP-ACCESS—AIR CLEANER, BATTERY

S/N: JGB1-UP; KHS1-UP

PART OF 370-3231, 370-4189 CHASSIS AR

SMCS-726A **i03558800**

NOTE	REF NO	GRAPHIC REF	PART NUMBER	QTY	PART NAME 1 2 3 4 5 6 (PRODUCT LEVEL)	SEE PAGE
M	1	1	**135-8573**	12	BOLT AS	
	2	1	**320-5511**	1	SUPPORT AS	
	3	1	**320-5513**	1	SHEET AS	
		1	**244-7816**	1	SHEET	
		1	**8T-4121**	2	WASHER-HARD (11X21X2.5-MM THK)	
M		1	**8T-4137**	2	BOLT (M10X1.5X20-MM)	

M-METRIC PART

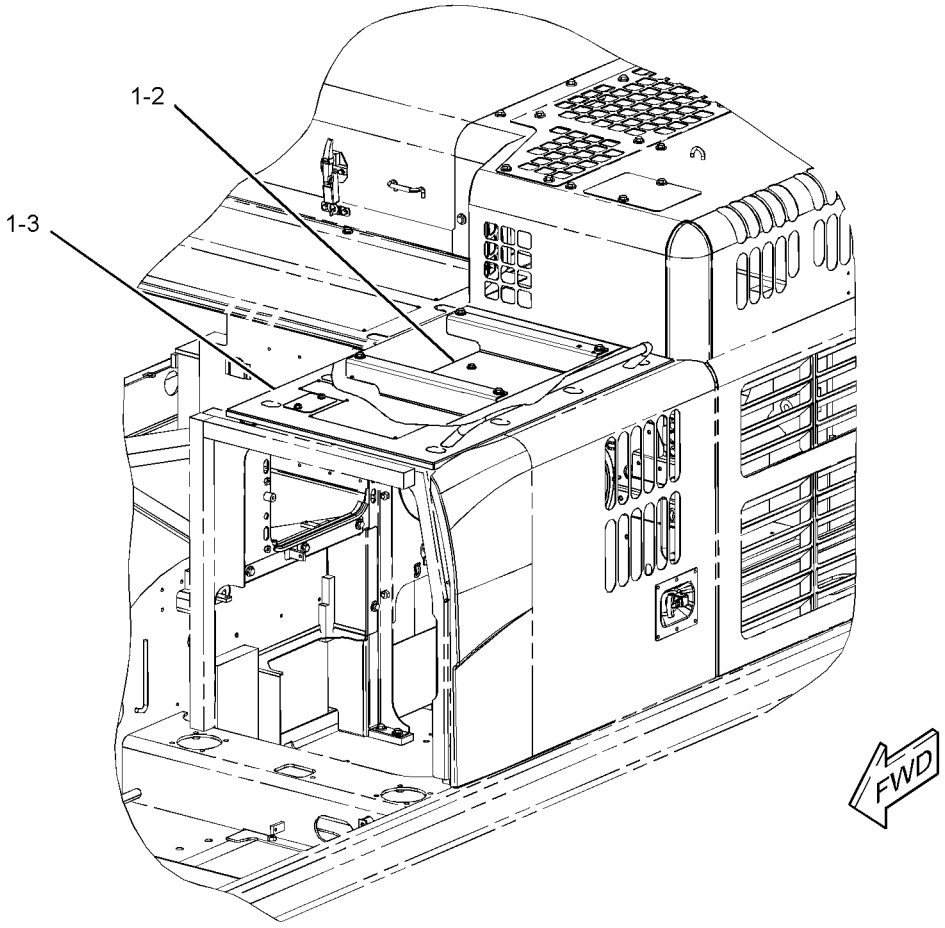

GRAPHIC #1 **<END>** g01458760

330-1434 COVER GP-HOOD–PRECLEANER

S/N: JGB1-UP; KHS1-UP
PART OF 319-9223 AIR CLEANER AR
AN ATTACHMENT

SMCS-7251 **i03866256**

NOTE	REF NO	GRAPHIC REF	PART NUMBER	QTY	PART NAME 1 2 3 4 5 6 (PRODUCT LEVEL)	SEE PAGE
M	1	1	**135-8573**	12	BOLT AS	
	2	1	**327-3142**	1	SHEET AS	
		1	**8T-4121**	2	WASHER-HARD (11X21X2.5-MM THK)	
M		1	**8T-4137**	2	BOLT (M10X1.5X20-MM)	
		1	**244-7816**	1	SHEET	
	3	1	**330-1435**	1	SUPPORT AS	

M-METRIC PART

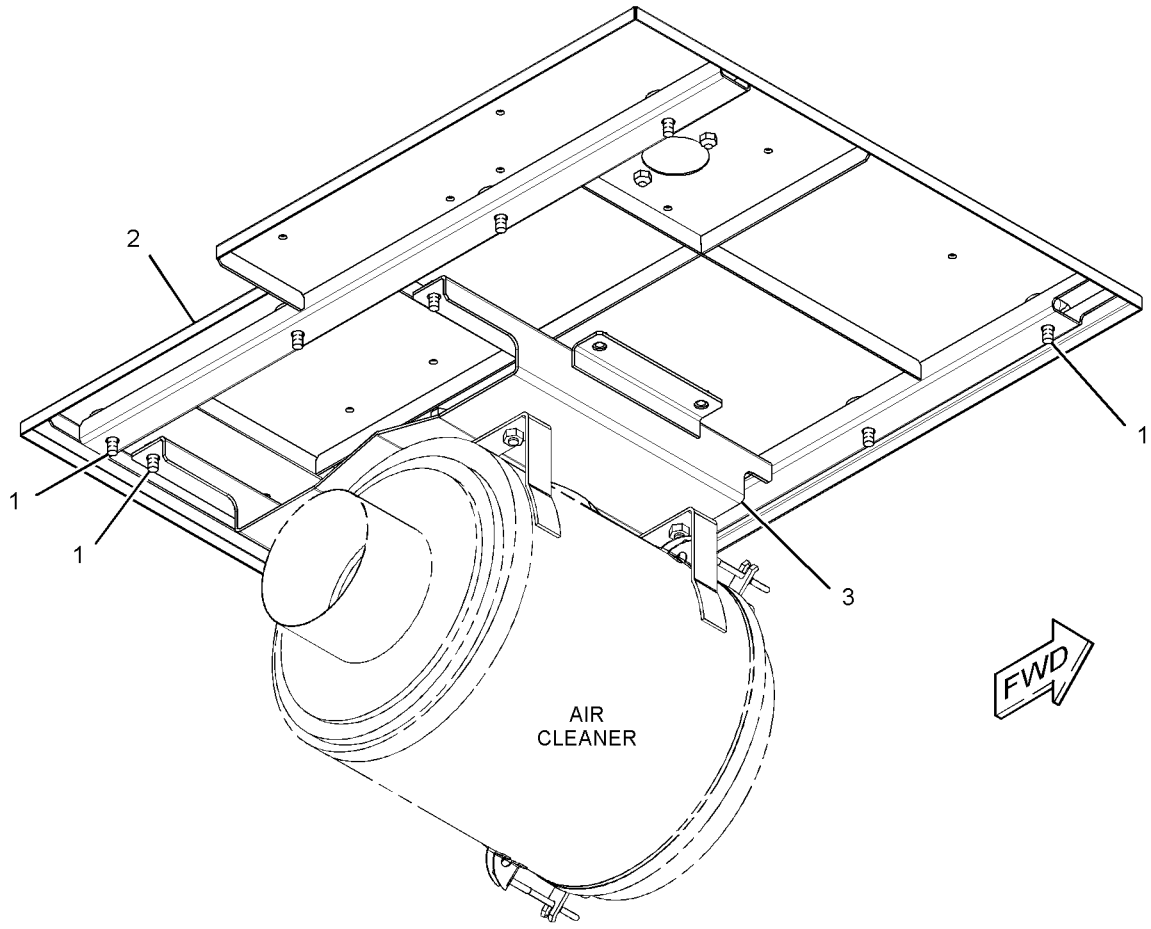

GRAPHIC #1 **<END>** g01798953

351-3013 COVER GP-HOOD

S/N: JGB1-UP; KHS1-UP

PART OF 351-3012 SUPPORT GP-HOOD

SMCS-7251 **i04156077**

NOTE	REF NO	GRAPHIC REF	PART NUMBER	QTY	PART NAME 1 2 3 4 5 6 (PRODUCT LEVEL)	SEE PAGE
	1	1	**4I-7924**	20	WASHER (4.5X40X1.2-MM THK)	
	2	1	**6P-2216**	20	CAP	
	3	1	**237-8411**	1	INSULATION	
	4	1	**237-8412**	2	INSULATION	
	5	1	**289-6771**	1	INSULATION	
	6	1	*351-3014*	1	COVER AS-ACCESS	
		1	**6Y-9625**	20	PIN-WELD	
M		1	**8T-3612**	4	NUT-WELD (M8X1.25-THD)	
	6A	1	**146-4936**	2	HANDLE AS	
	6B	1	**237-8684**	2	HINGE	
	7	1	**351-3076**	1	INSULATION	
D	8	1	**5P-6027**		LOCKWIRE (0.35-M EACH)	

D-ORDER BY THE METER
M-METRIC PART

351-3013 COVER GP-HOOD *(contd.)* **i04156077**

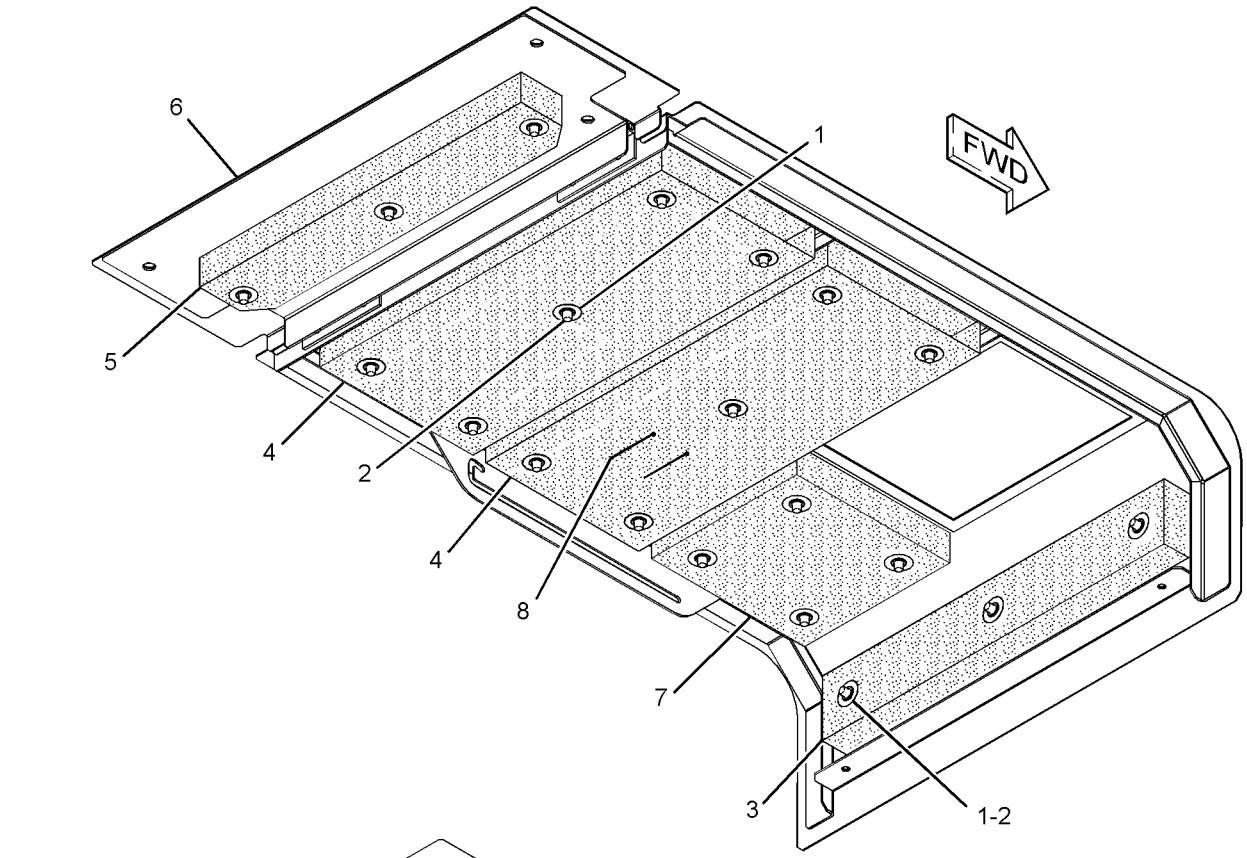

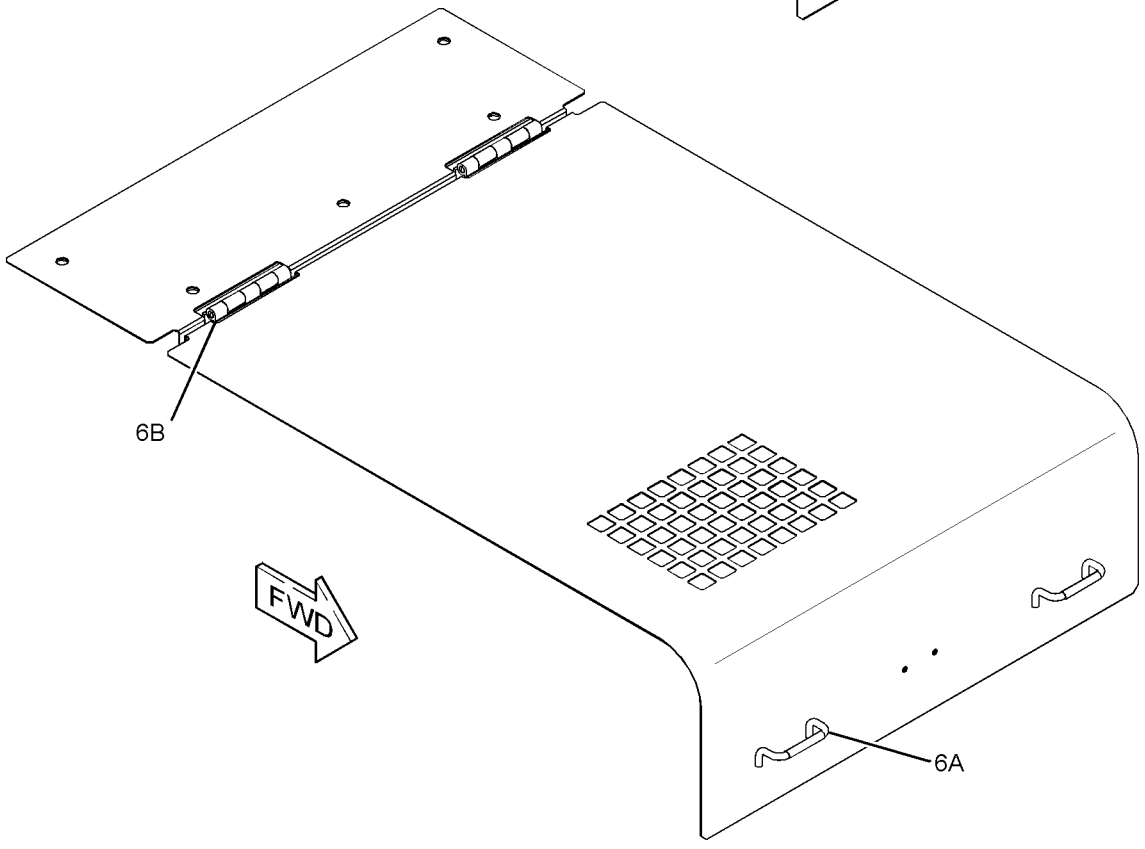

GRAPHIC #1 **<END>** g02353005

298-3148 DOOR GP-ACCESS—AIR CLEANER, BATTERY

S/N: JGB1-UP; KHS1-UP

PART OF 307-7764 HOOD & GUARD GP

SMCS-7273 **i02767453**

NOTE	REF NO	GRAPHIC REF	PART NUMBER	QTY	PART NAME 1 2 3 4 5 6 (PRODUCT LEVEL)	SEE PAGE
J	1	1	**307-7655**	1	LOCK AS	
	2	1	*298-3105*	1	DOOR AS	
	2A	1	**165-3010**	2	HINGE	
M	3	1	**096-4882**	6	LOCKNUT (M8X1.25-THD)	
	4	1	**8T-4224**	6	WASHER-HARD (8.8X16X2-MM THK)	

J-REQUIRES CORPORATE KEY
M-METRIC PART

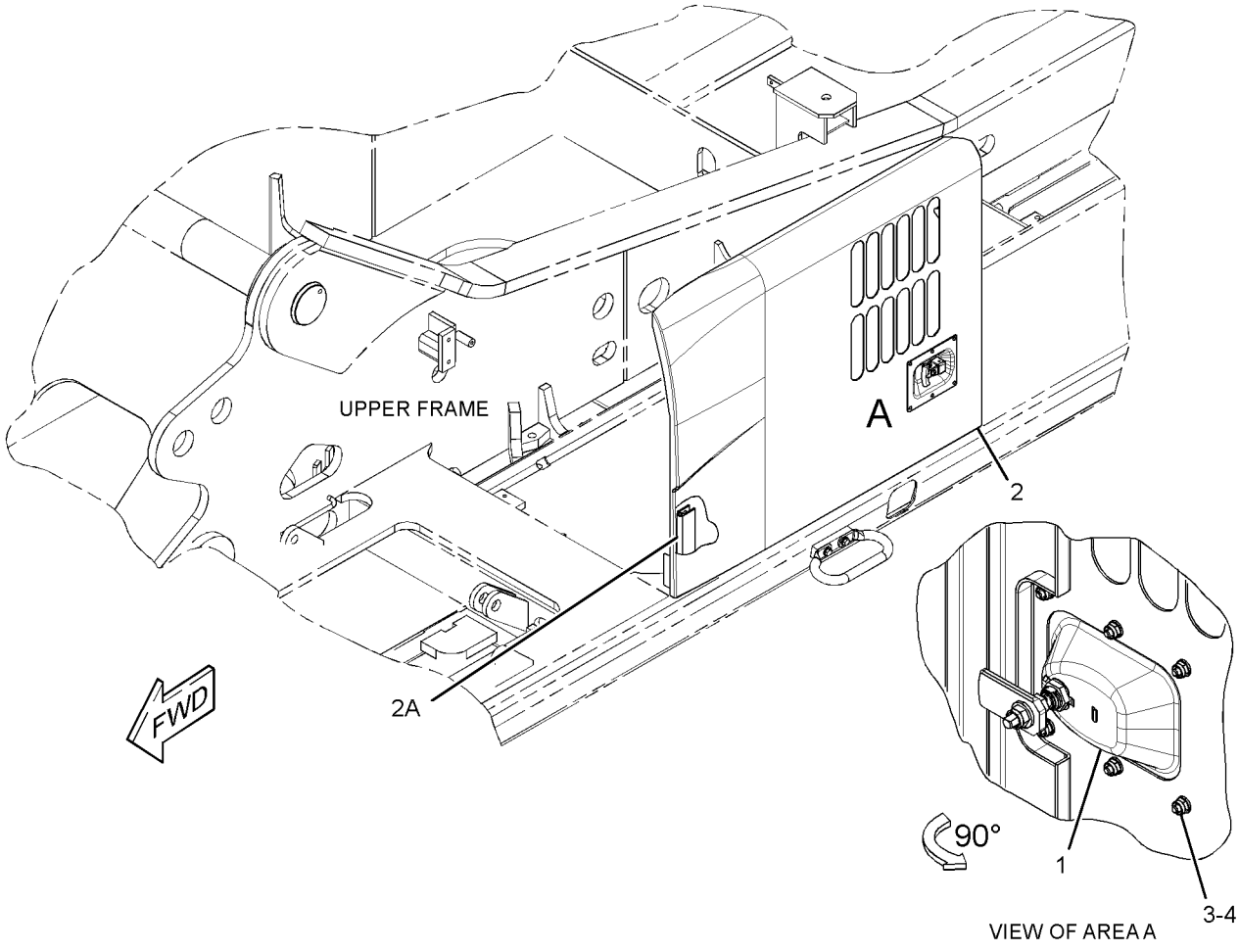

GRAPHIC #1 **<END>** g01386313

298-3153 DOOR GP-ACCESS—PUMP COMPARTMENT

S/N: JGB1-UP; KHS1-UP

PART OF 303-9875 HOOD & GUARD GP

SMCS-7273 **i04166492**

NOTE	REF NO	GRAPHIC REF	PART NUMBER	QTY	PART NAME 1 2 3 4 5 6 (PRODUCT LEVEL)	SEE PAGE
J	1	1	**307-7655**	1	LOCK AS	
	2	1	*298-3108*	1	DOOR AS-ACCESS	
		1	**237-8647**	2	HINGE	
M	3	1	**096-4882**	6	LOCKNUT (M8X1.25-THD)	
	4	1	**8T-4224**	6	WASHER-HARD (8.8X16X2-MM THK)	

J-REQUIRES CORPORATE KEY
M-METRIC PART

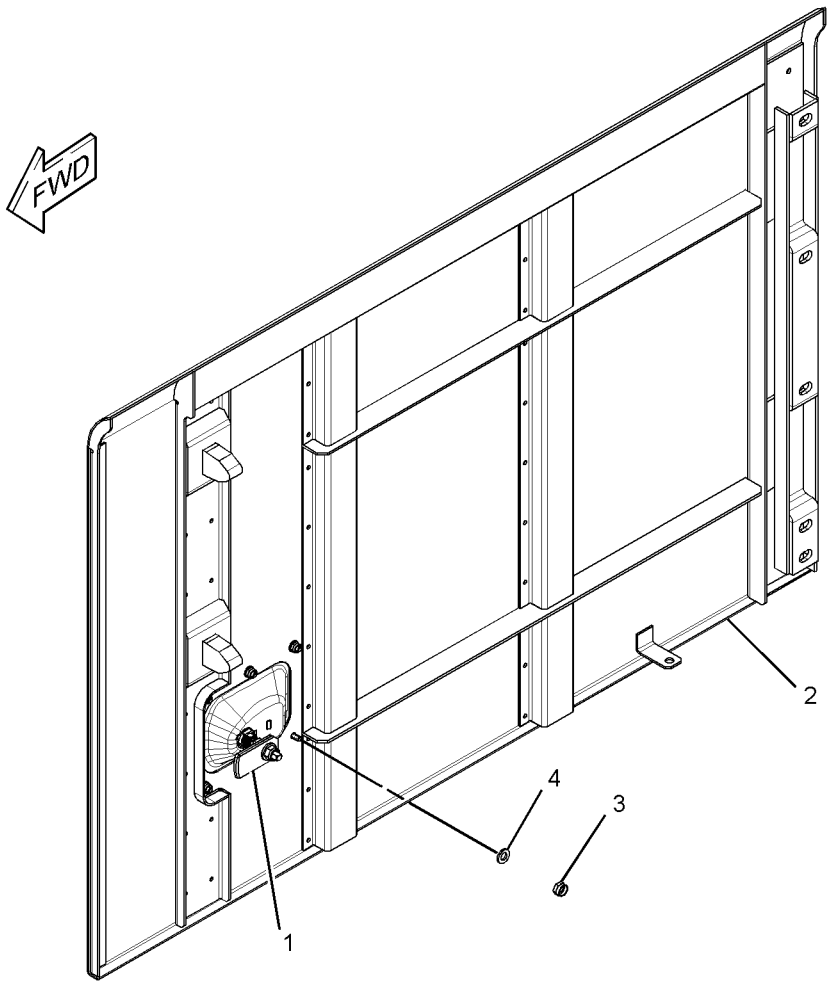

GRAPHIC #1 **<END>** g01378522

FRAME AND BODY

290-9039 FRAME GP-UPPER

S/N: JGB1-UP
PART OF 309-0166, 309-0167 COUNTERWEIGHT AR
AN ATTACHMENT

SMCS-7051 **i02847602**

NOTE	REF NO	GRAPHIC REF	PART NUMBER	QTY	PART NAME 1 2 3 4 5 6 (PRODUCT LEVEL)	SEE PAGE
B	1	1	**4I-0575**	4	SHIM (1-MM THK)	
B	2	1	**4I-0577**	2	SHIM (2-MM THK)	
	3	1	**4I-2509**	2	PLATE-END	
	4	1	**4I-4996**	2	PIN AS	
	5	1	**126-6367**	2	SUPPORT	
B	6	1	**133-2428**	2	SHIM (0.5-MM THK)	
	7	1	**201-2771**	3	WASHER (26X90X8-MM THK)	
	8	1	**234-3942**	1	PIN AS	
J	9	1	**245-7900**	1	CAP	
J	10	1	**245-7901**	1	CAP	
	11	1	**290-9040**	1	FRAME AS-UPPER	
B	12	1	**308-8772**	1	SHIM (0.5-MM THK)	
B	13	1	**308-8773**	2	SHIM (1-MM THK)	
B	14	1	**308-8774**	1	SHIM (2-MM THK)	
	15	1	**4I-1129**	2	SPACER (113X150X14-MM THK)	
	16	1	**5P-1076**	8	WASHER-HARD (13.5X30X4-MM THK)	
M	17	1	**7X-2573**	3	BOLT (M24X3X40-MM)	
	18	1	**8T-4167**	3	WASHER-HARD (26X44X4-MM THK)	
M	19	1	**8T-4183**	8	BOLT (M12X1.75X40-MM)	

B-USE AS REQUIRED
J-USE ONLY ON MACHINE WITHOUT LOWER WIPER
M-METRIC PART

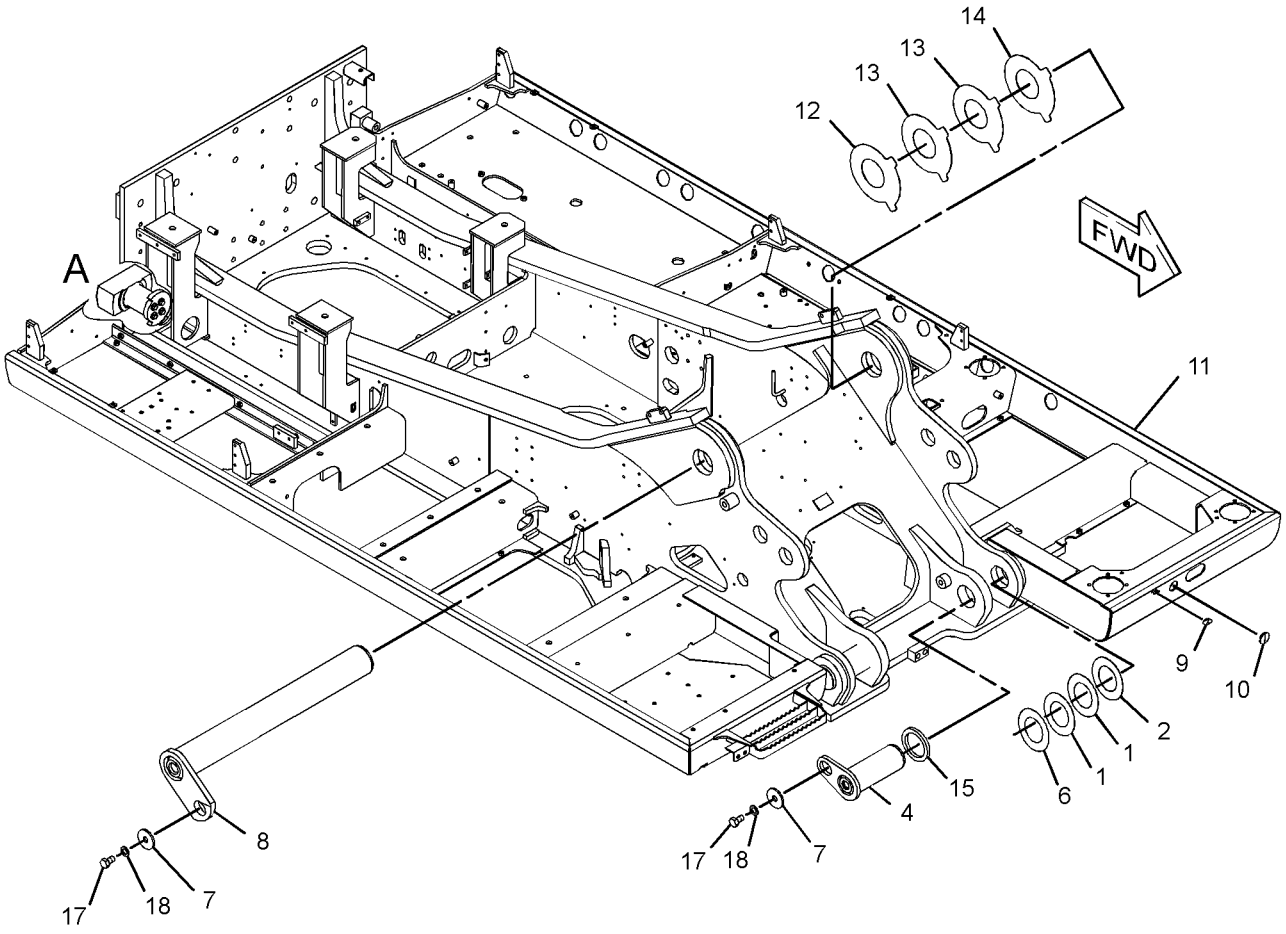

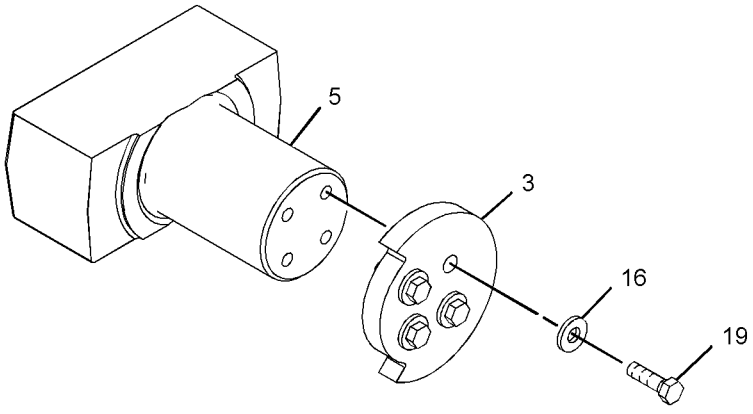

VIEW OF AREA A
(EXPLODED)

GRAPHIC #1 **<END>** g01435930

FRAME AND BODY

297-7564 FRAME GP-UPPER

S/N: JGB1-UP; KHS1-UP

PART OF 370-3231, 370-4189 CHASSIS AR

SMCS-7051 **i02992179**

NOTE	REF NO	GRAPHIC REF	PART NUMBER	QTY	PART NAME 1 2 3 4 5 6 (PRODUCT LEVEL)	SEE PAGE
B	1	1	**4I-0575**	4	SHIM (1-MM THK)	
B	2	1	**4I-0577**	2	SHIM (2-MM THK)	
	3	1	**4I-4996**	2	PIN AS	
B	4	1	**133-2428**	2	SHIM (0.5-MM THK)	
	5	1	**201-2771**	3	WASHER (26X90X8-MM THK)	
	6	1	**234-3942**	1	PIN AS	
J	7	1	**245-7900**	1	CAP	
J	8	1	**245-7901**	1	CAP	
	9	1	**297-7565**	1	FRAME AS-UPPER	
	9A	1	**7Y-1113**	1	BOSS	
	9B	1	**248-1768**	1	STEP AS	
B	10	1	**308-8772**	1	SHIM (0.5-MM THK)	
B	11	1	**308-8773**	2	SHIM (1-MM THK)	
B	12	1	**308-8774**	1	SHIM (2-MM THK)	
	13	1	**4I-1129**	2	SPACER (113X150X14-MM THK)	
M	14	1	**7X-2573**	3	BOLT (M24X3X40-MM)	
	15	1	**8T-4167**	3	WASHER-HARD (26X44X4-MM THK)	

B-USE AS REQUIRED
J-USE ON MACHINE WITHOUT LOWER WIPER
M-METRIC PART

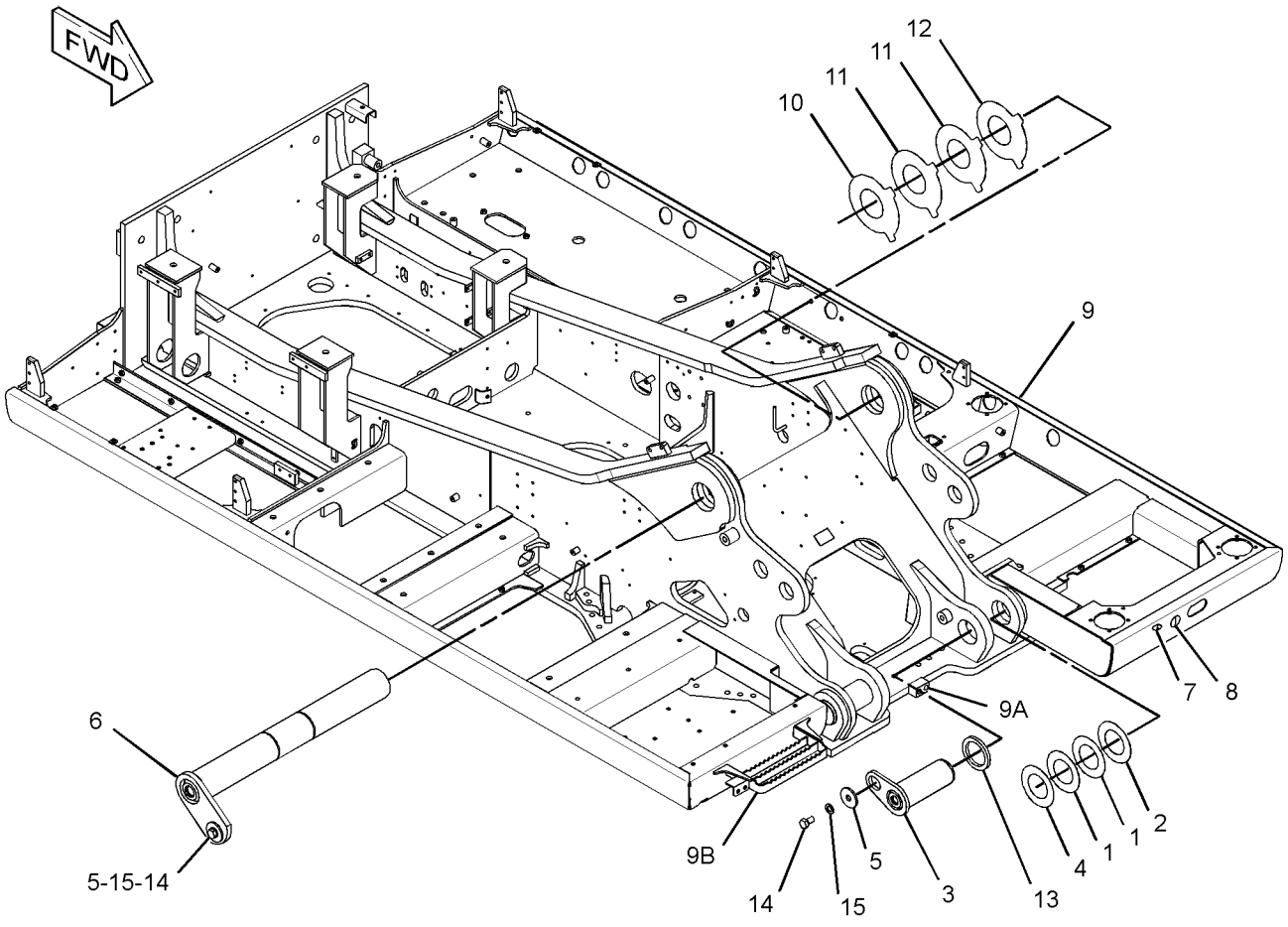

GRAPHIC #1 **<END>** g01516587

303-8942 FRAME GP-UPPER–ACCUGRADE READY

S/N: JGB1-UP; KHS1-UP
PART OF 319-9274 SPECIAL AR
AN ATTACHMENT

SMCS-7051 **i04019714**

NOTE	REF NO	GRAPHIC REF	PART NUMBER	QTY	PART NAME 1 2 3 4 5 6 (PRODUCT LEVEL)	SEE PAGE
B	1	2	**4I-0575**	4	SHIM (1-MM THK)	
B	2	2	**4I-0577**	2	SHIM (2-MM THK)	
	3	2	**4I-4996**	2	PIN AS	
B	4	2	**133-2428**	2	SHIM (0.5-MM THK)	
	5	2	**201-2771**	2	WASHER (26X90X8-MM THK)	
J	6	1	**245-7900**	1	CAP	
J	7	1	**245-7901**	1	CAP	
	8	1	**297-7565**	1	FRAME AS-UPPER	
	8A	1	**248-1768**	1	STEP AS	
	8B	1	**7Y-1113**	1	BOSS	
B	9	1	**308-8772**	1	SHIM (0.5-MM THK)	
B	10	1	**308-8773**	2	SHIM (1-MM THK)	
B	11	1	**308-8774**	1	SHIM (2-MM THK)	
	12	1	**308-8947**	1	PIN AS	
	13	1	**350-6445**	1	PLATE	
	14	1	**308-8953**	1	PLATE	
M	15	1	**096-4885**	2	LOCKNUT (M16X2-THD)	
	16	2	**4I-1129**	2	SPACER (113X150X14-MM THK)	
M	17	1	**5A-3604**	4	BOLT-SOCKET HEAD (M8X1.25X25-MM)	
M	18	2	**7X-2573**	2	BOLT (M24X3X40-MM)	
M	19	1	**8T-4140**	2	BOLT (M16X2X60-MM)	
	20	1,2	**8T-4167**	3	WASHER-HARD (26X44X4-MM THK)	
M	21	1	**7X-2575**	1	BOLT (M24X3X60-MM)	
	22	1	**9X-8257**	2	WASHER (17.5X30X3.5-MM THK)	

B-USE AS REQUIRED
J-USE ON MACHINE WITHOUT LOWER WIPER
M-METRIC PART

303-8942 **FRAME GP-UPPER** *(contd.)* **i04019714**

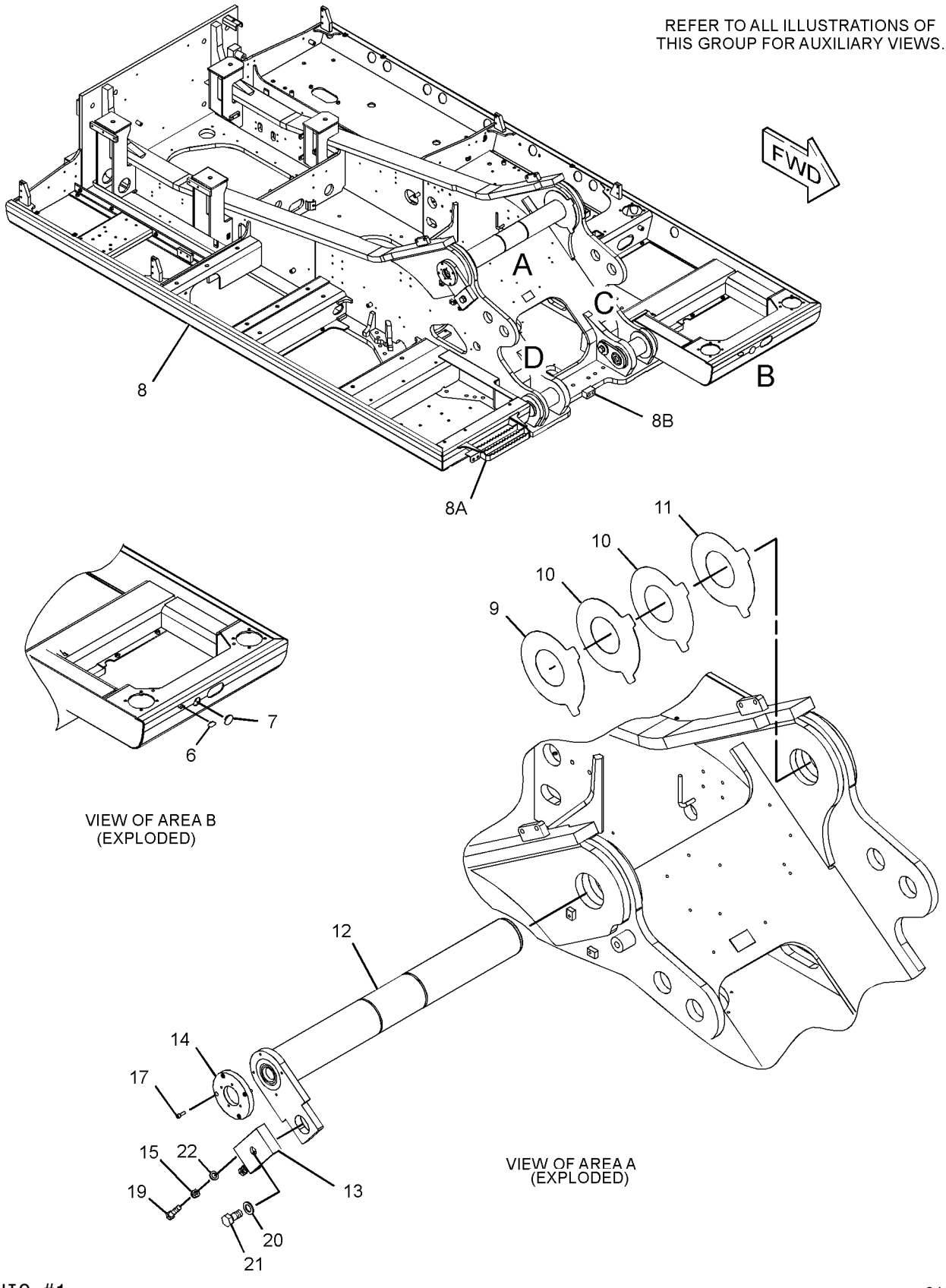

GRAPHIC #1 g01518825

303-8942 **FRAME GP-UPPER** *(contd.)* **i04019714**

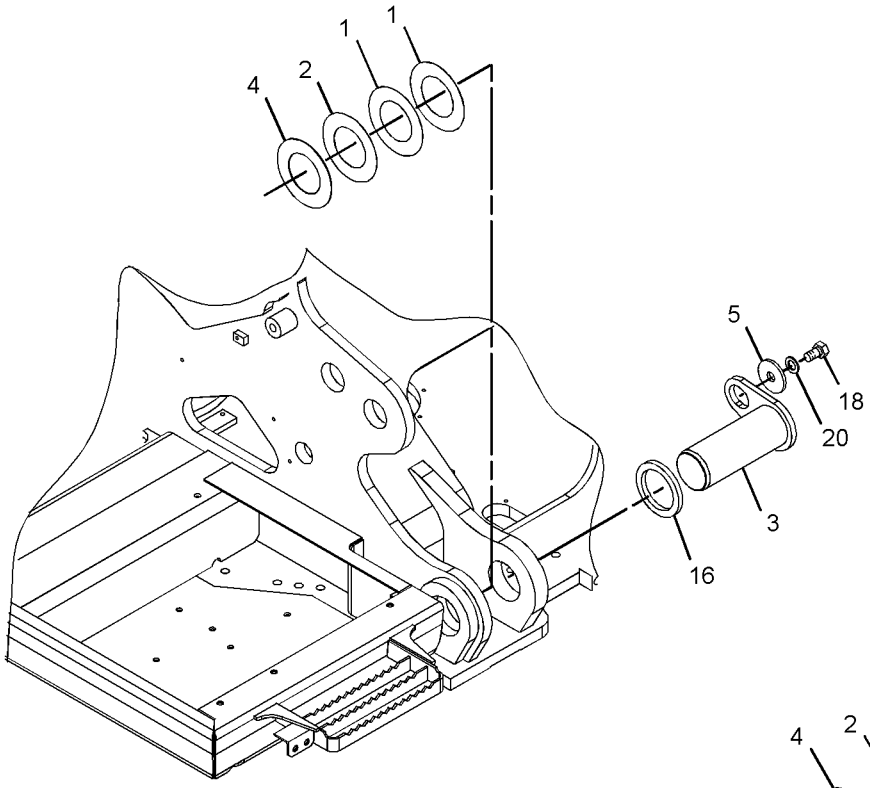

VIEW OF AREA D
(EXPLODED)

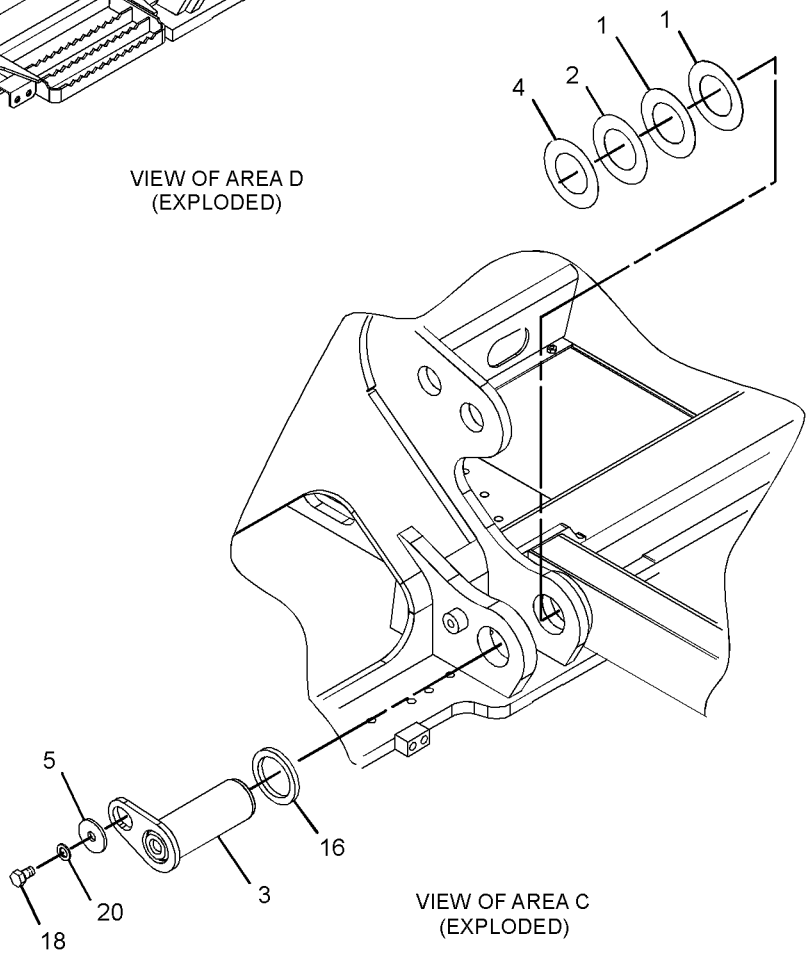

VIEW OF AREA C
(EXPLODED)

GRAPHIC #2 **<END>** g01468814

308-8901 FRAME GP-UPPER–ACCUGRADE READY

S/N: JGB1-UP
PART OF 351-9595 SPECIAL AR
AN ATTACHMENT

SMCS-7051 **i04019760**

NOTE	REF NO	GRAPHIC REF	PART NUMBER	QTY	PART NAME 1 2 3 4 5 6 (PRODUCT LEVEL)	SEE PAGE
B	1	1,2	**4I-0575**	4	SHIM (1-MM THK)	
B	2	1,2	**4I-0577**	2	SHIM (2-MM THK)	
	3	2	**4I-2509**	2	PLATE-END	
	4	1,2	**4I-4996**	2	PIN AS	
	5	2	**126-6367**	2	SUPPORT	
B	6	1,2	**133-2428**	2	SHIM (0.5-MM THK)	
	7	1,2	**201-2771**	2	WASHER (26X90X8-MM THK)	
J	8	1	**245-7900**	1	CAP	
J	9	1	**245-7901**	1	CAP	
	10	1	**290-9040**	1	FRAME AS-UPPER	
	10A	1	**7Y-1113**	1	BOSS	
	10B	1	**248-1768**	1	STEP AS	
B	11	2	**308-8772**	1	SHIM (0.5-MM THK)	
B	12	2	**308-8773**	2	SHIM (1-MM THK)	
B	13	2	**308-8774**	1	SHIM (2-MM THK)	
	14	1	**308-8947**	1	PIN AS	
	15	1	**350-6445**	1	PLATE	
	16	1	**308-8953**	1	PLATE	
M	17	1	**096-4885**	2	LOCKNUT (M16X2-THD)	
	18	1,2	**4I-1129**	2	SPACER (113X150X14-MM THK)	
M	19	1	**5A-3604**	4	BOLT-SOCKET HEAD (M8X1.25X25-MM)	
	20	2	**5P-1076**	8	WASHER-HARD (13.5X30X4-MM THK)	
M	21	1,2	**7X-2573**	2	BOLT (M24X3X40-MM)	
M	22	1	**8T-4140**	2	BOLT (M16X2X60-MM)	
	23	1,2	**8T-4167**	3	WASHER-HARD (26X44X4-MM THK)	
M	24	2	**8T-4183**	8	BOLT (M12X1.75X40-MM)	
M	25	1	**7X-2575**	1	BOLT (M24X3X60-MM)	
	26	1	**9X-8257**	2	WASHER (17.5X30X3.5-MM THK)	

B-USE AS REQUIRED
J-USE ON MACHINE WITHOUT LOWER WIPER
M-METRIC PART

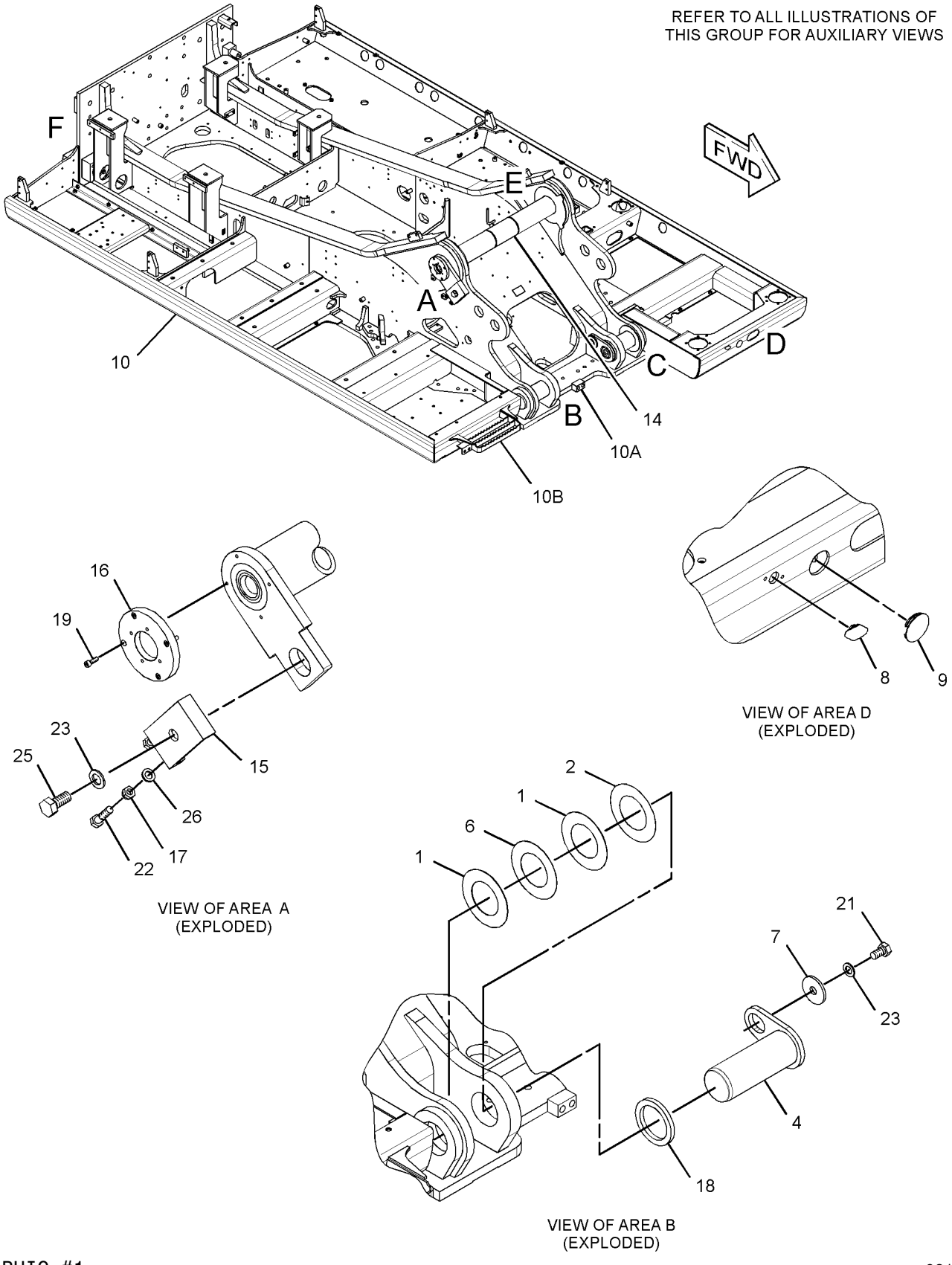

GRAPHIC #1 g02105193

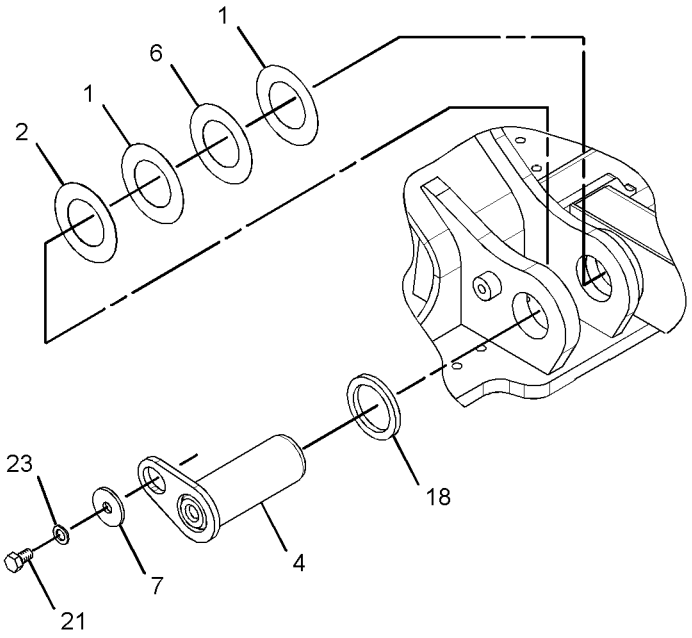

VIEW OF AREA C
(EXPLODED)

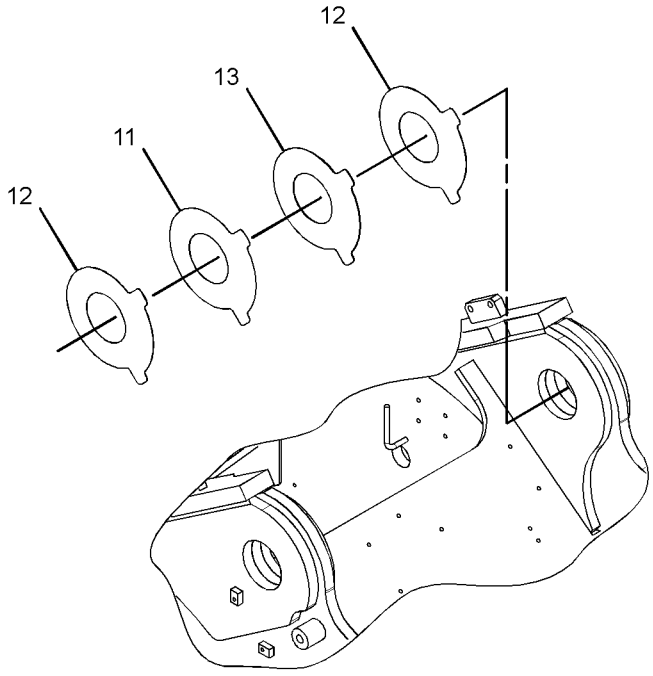

VIEW OF AREA E
(EXPLODED)

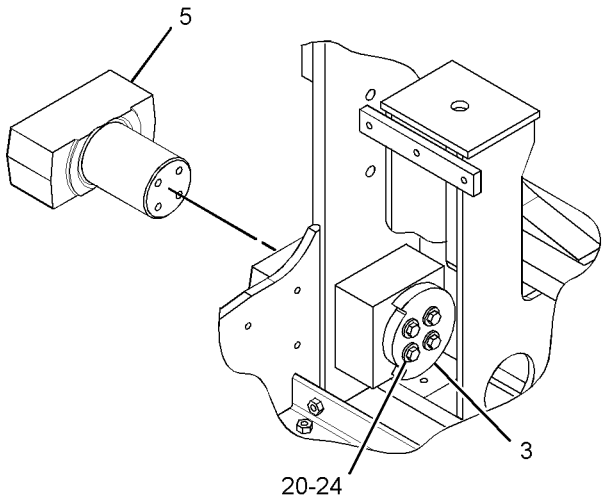

VIEW OF AREA F
(EXPLODED)

GRAPHIC #2 **<END>** g01457868

227-6036 GEAR & BEARING GP-SWING

S/N: JGB1-UP; KHS1-UP

PART OF 294-1316, 303-2682 FRAME AR-UNDERCARRIAGE

SMCS-7063 **i04148530**

NOTE	REF NO	GRAPHIC REF	PART NUMBER	QTY	PART NAME 1 2 3 4 5 6 (PRODUCT LEVEL)	SEE PAGE
	1	1	**5K-9243**	4	ELBOW-FLARED	
	2	1	**6I-6441**	13	CORK	
	3	1	**7Y-1647**	1	GASKET	
	4	1	**7Y-1650**	1	CLAMP-HOSE	
	5	1	**148-4573**	1	PLUG	
CY	6	1	**353-0490**	1	GEAR & BEARING GP-SWING	355
C	7	1	**333-3084**	1	TUBE AS (RH)	
C	8	1	**333-3081**	1	TUBE AS (LH)	
	9	1	**227-6105**	1	BOOT	
	10	1	**227-6106**	1	RETAINER	
C	11	1	**353-0518**	54	SPACER	
M	12	1	**112-1532**	70	BOLT (M24X3X140-MM)	
CM	13	1	**112-1533**	54	BOLT (M24X3X160-MM)	
	14	1	**148-4703**	1	COVER	
	15	1	**148-4704**	1	GASKET	
	16	1	**3B-8489**	2	FITTING-GREASE	
	17	1	**4N-9170**	4	CLIP	
	18	1	**7Y-1095**	1	DOWEL	
	19	1	**7Y-1507**	70	SPACER (24.5X44X43-MM THK)	
	20	1	**7Y-1648**	1	STRIP	
	21	1	**8T-4121**	14	WASHER-HARD (11X21X2.5-MM THK)	
M	22	1	**8T-4136**	12	BOLT (M10X1.5X25-MM)	
M	23	1	**8T-4137**	2	BOLT (M10X1.5X20-MM)	
M	24	1	**8T-4199**	4	BOLT (M8X1.25X12-MM)	
B	25	1	**1U-8846**		SEALANT-GASKET	

B-USE AS REQUIRED
C-CHANGE FROM PREVIOUS TYPE
M-METRIC PART
Y-SEPARATE ILLUSTRATION

227-6036 **GEAR & BEARING GP-SWING** *(contd.)* **i04148530**

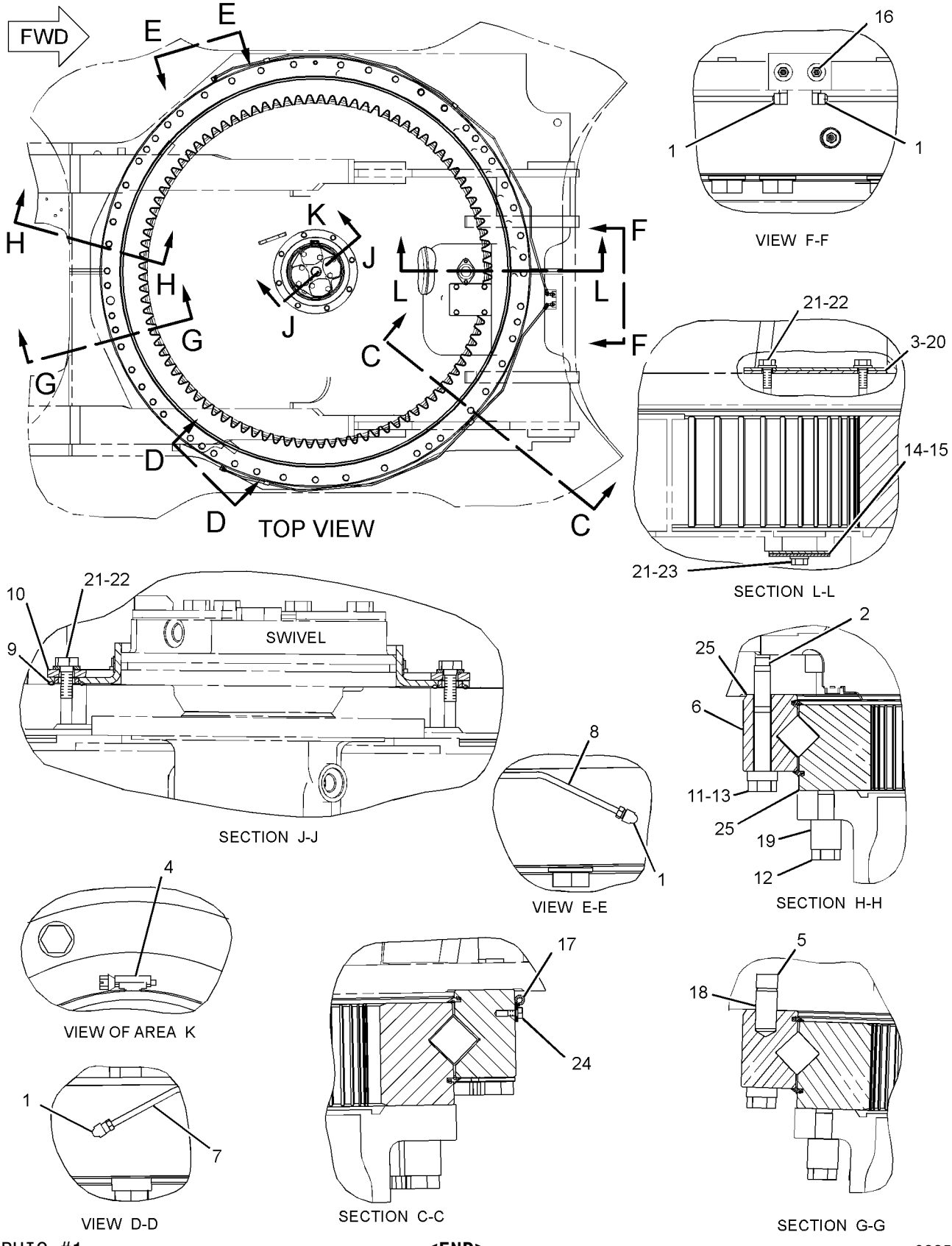

GRAPHIC #1 **<END>** g02351691

353-0490 GEAR & BEARING GP-SWING

S/N: JGB1-UP; KHS1-UP

PART OF 227-6036 GEAR & BEARING GP-SWING

SMCS-7063 **i04148592**

NOTE	REF NO	GRAPHIC REF	PART NUMBER	QTY	PART NAME 1 2 3 4 5 6 (PRODUCT LEVEL)	SEE PAGE
	1	1	**3B-8489**	1	FITTING-GREASE	
	2	1	**227-6075**	1	SEAL-DUST	
E	3	1	**148-4685**		SEAL (469-CM)	

E-ORDER BY THE CENTIMETER

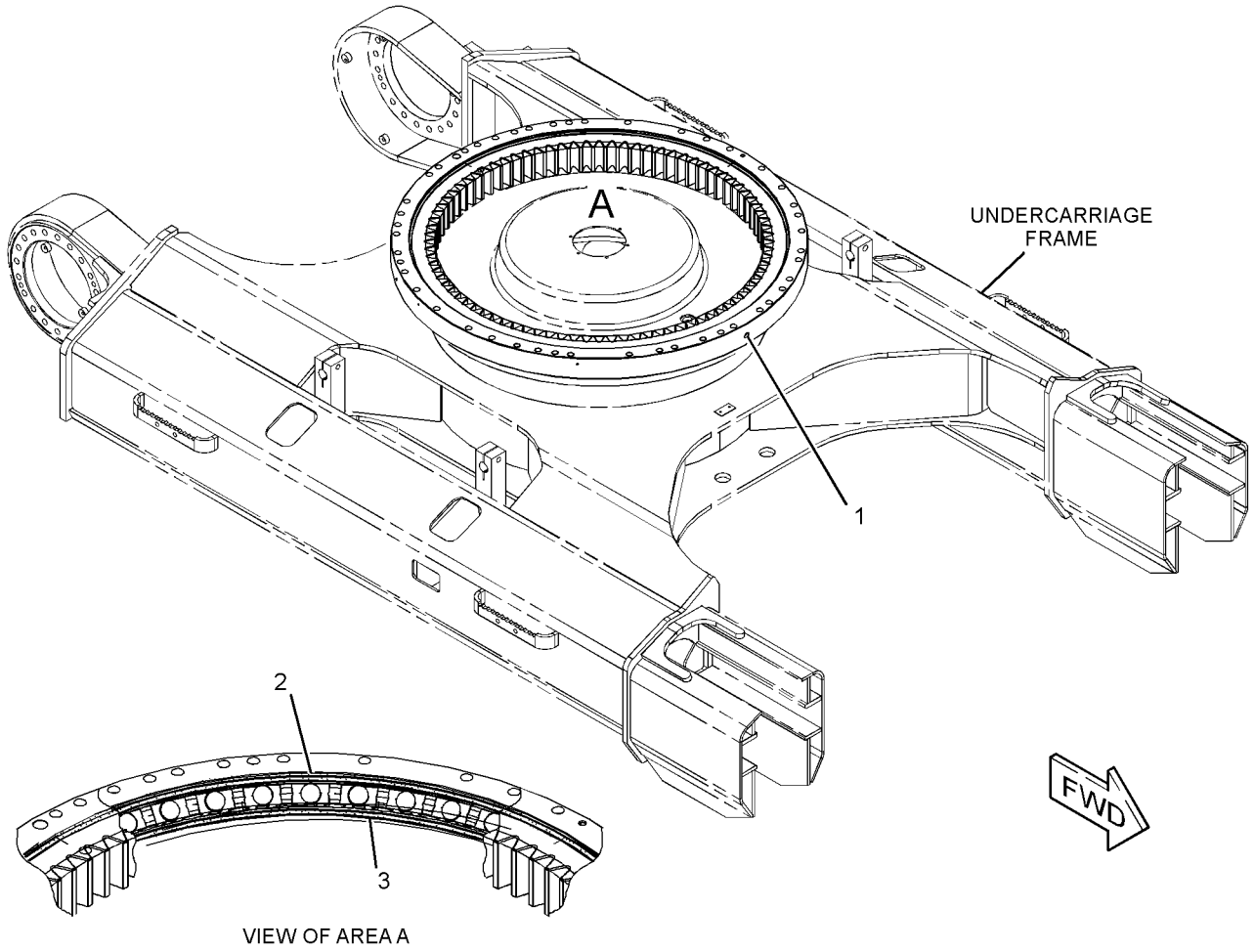

GRAPHIC #1 **<END>** g01671618

320-8834 GUARD AR-BOTTOM—HEAVY-DUTY

S/N: JGB1-UP; KHS1-UP
PART OF 371-9200, 371-9201, 371-9202, 371-9204, 371-9205, 371-9206
DISTRIBUTION AR, 337-8883 OPTION AR-GUARD
AN ATTACHMENT

SMCS-7153 **i02865874**

NOTE	PART NUMBER	QTY	PART NAME 1 2 3 4 5 6 (PRODUCT LEVEL)	SEE PAGE
Y	*307-7819*	1	GUARD GP-BOTTOM	358
Y-SEPARATE ILLUSTRATION				

<END>

307-7818 GUARD GP-BOTTOM

S/N: JGB1-UP

PART OF 370-3231 CHASSIS AR

SMCS-7153 **i02996172**

NOTE	REF NO	GRAPHIC REF	PART NUMBER	QTY	PART NAME 1 2 3 4 5 6 (PRODUCT LEVEL)	SEE PAGE
M	1	1	**135-8574**	40	BOLT AS	
M	2	1	**135-8576**	16	BOLT AS-LOCKING (M12X1.75X30-MM)	
	3	1	**140-1493**	1	SHEET	
	4	1	**236-9206**	1	SHEET	
	5	1	**236-9212**	1	SHEET	
	6	1	**244-7908**	1	SHEET AS	
	7	1	**248-9370**	1	SHEET	
	8	1	**250-5284**	1	SHEET	
	9	1	**250-5285**	1	SHEET	
	10	1	**250-5286**	1	SHEET AS	
	11	1	**262-2185**	1	SHEET AS	
	12	1	**278-3707**	1	SHEET AS	
	13	1	**307-7771**	1	SHEET AS	
B	14	1	**320-5477**	1	SHEET	
B	15	1	**5P-1075**	4	WASHER-HARD (10.2X22.5X3-MM THK)	
BM	16	1	**8T-4136**	4	BOLT (M10X1.5X25-MM)	

B-USE AS REQUIRED
M-METRIC PART

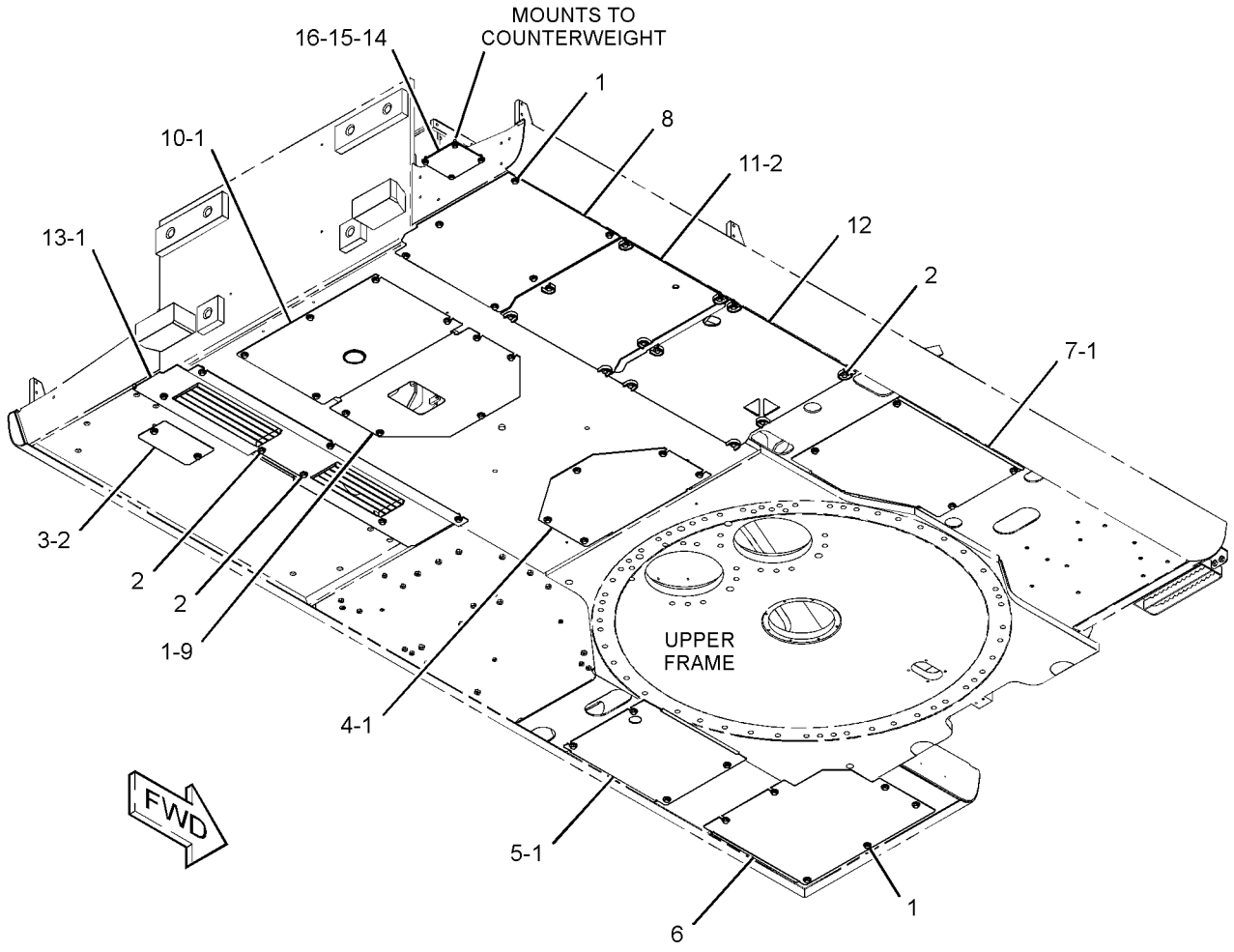

GRAPHIC #1 **<END>** g01554095

FRAME AND BODY

307-7819 GUARD GP-BOTTOM—HEAVY DUTY

S/N: JGB1-UP; KHS1-UP
PART OF 370-4189 CHASSIS AR, 320-8834 GUARD AR-BOTTOM
ALSO AN ATTACHMENT

SMCS-7153 **i03974426**

NOTE	REF NO	GRAPHIC REF	PART NUMBER	QTY	PART NAME 1 2 3 4 5 6 (PRODUCT LEVEL)	SEE PAGE
M	1	1	**135-8576**	56	BOLT AS-LOCKING (M12X1.75X30-MM)	
	2	1	**351-3017**	1	PLATE AS	
	3	1	**236-9224**	1	SHEET AS	
	4	1	**236-9232**	1	SHEET AS	
	5	1	**236-9234**	1	SHEET AS	
	6	1	**250-4997**	1	SHEET AS	
	7	1	**250-5003**	1	SHEET AS	
	8	1	**250-5302**	1	SHEET AS	
	9	1	**250-5304**	1	SHEET AS	
	10	1	**262-2185**	1	SHEET AS	
	11	1	**278-3707**	1	SHEET AS	
	12	1	**307-7823**	1	SHEET AS	
B	13	1	**320-5477**	1	SHEET	
B	14	1	**5P-1075**	4	WASHER-HARD (10.2X22.5X3-MM THK)	
BM	15	1	**8T-4136**	4	BOLT (M10X1.5X25-MM)	

B-USE AS REQUIRED
M-METRIC PART

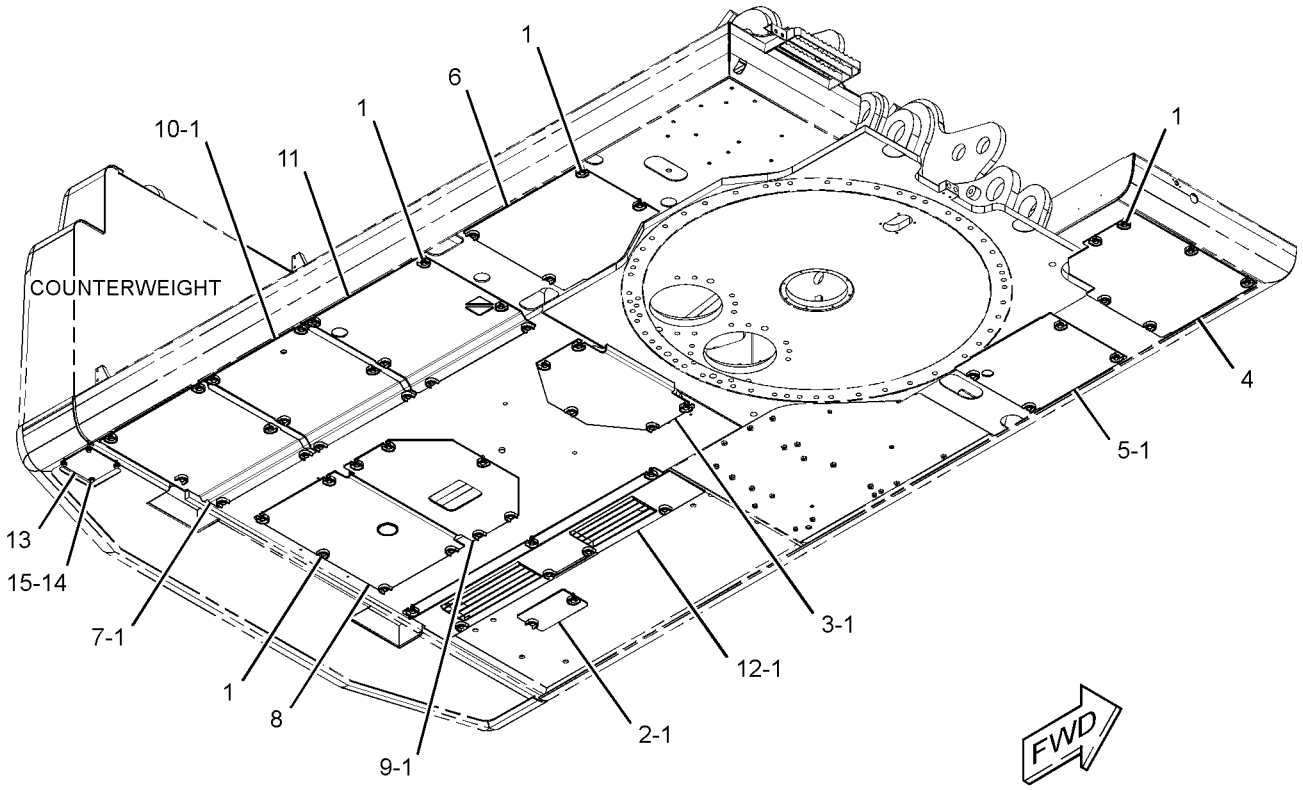

GRAPHIC #1 **<END>** g01478615

132-7293 GUARD GP-SWIVEL

S/N: KHS1-UP

PART OF 370-4189 CHASSIS AR

SMCS-7183 **i04155833**

NOTE	REF NO	GRAPHIC REF	PART NUMBER	QTY	PART NAME 1 2 3 4 5 6 (PRODUCT LEVEL)	SEE PAGE
	1	1	**132-7295**	1	PLATE AS	
	2	1	**132-7297**	4	PLATE	
M	3	1	**7X-2555**	8	BOLT (M16X2X80-MM)	
	4	1	**3E-9411**	8	WASHER-HARD (17.5X38X6-MM THK)	

M-METRIC PART

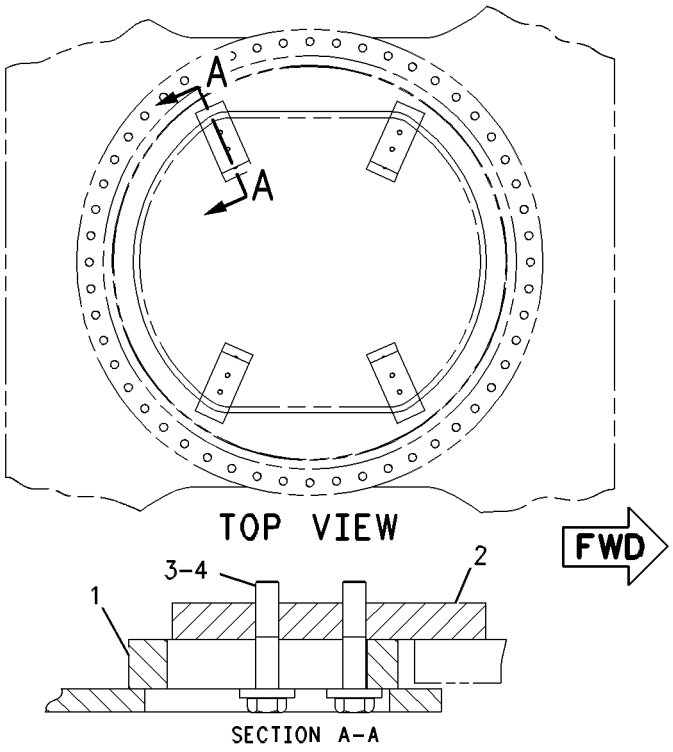

GRAPHIC #1 **<END>** g00294037

134-8893 GUARD GP-SWIVEL

S/N: JGB1-UP; KHS1-UP

AN ATTACHMENT

SMCS-7183 **i00755081**

NOTE	REF NO	GRAPHIC REF	PART NUMBER	QTY	PART NAME 1 2 3 4 5 6 (PRODUCT LEVEL)	SEE PAGE
	1	1	**134-8894**	1	PLATE AS	
M	2	1	**8T-3597**	6	NUT-WELD (M12X1.75 THD)	
M	3	1	**8C-8992**	6	BOLT-LOCKING (M12X1.75X30MM)	
	4	1	**5P-1076**	6	WASHER-HARD (4MM THK)	
	5	1	**134-8896**	1	PLATE AS	

M-METRIC PART

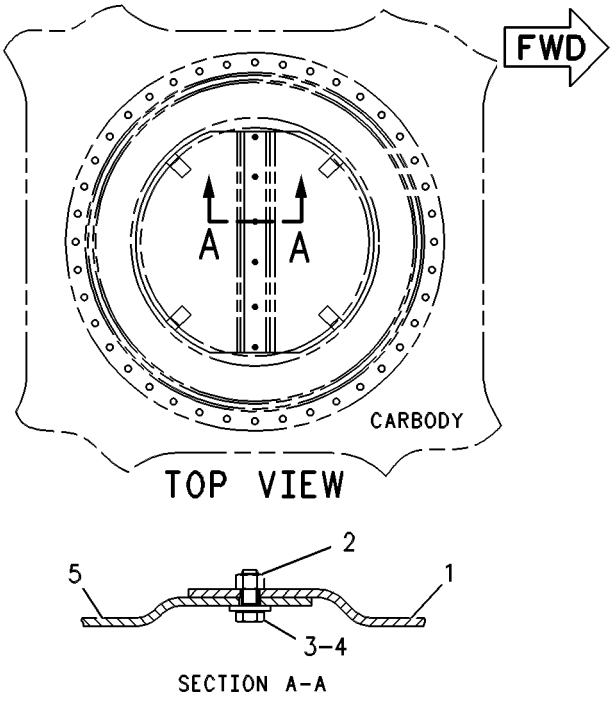

GRAPHIC #1 **<END>** g00268666

223-2982 HANDRAIL GP

S/N: JGB1-UP; KHS1-UP

PART OF 370-3231, 370-4189 CHASSIS AR

SMCS-7256 **i02126645**

NOTE	REF NO	GRAPHIC REF	PART NUMBER	QTY	PART NAME 1 2 3 4 5 6 (PRODUCT LEVEL)	SEE PAGE
M	1	1	**135-8575**	5	BOLT AS	
M	2	1	**135-8577**	2	BOLT AS	
M	3	1	**135-8578**	2	BOLT AS	
	4	1	**178-5870**	1	CLIP (TAB)	
	5	1	**178-5871**	1	CLIP (SLOT)	
	6	1	**236-3721**	1	HANDRAIL AS	
Y	7	1	*250-5058*	1	HANDRAIL GP	362
	8	1	**8T-2920**	1	GROMMET	

M-METRIC PART
Y-SEPARATE ILLUSTRATION

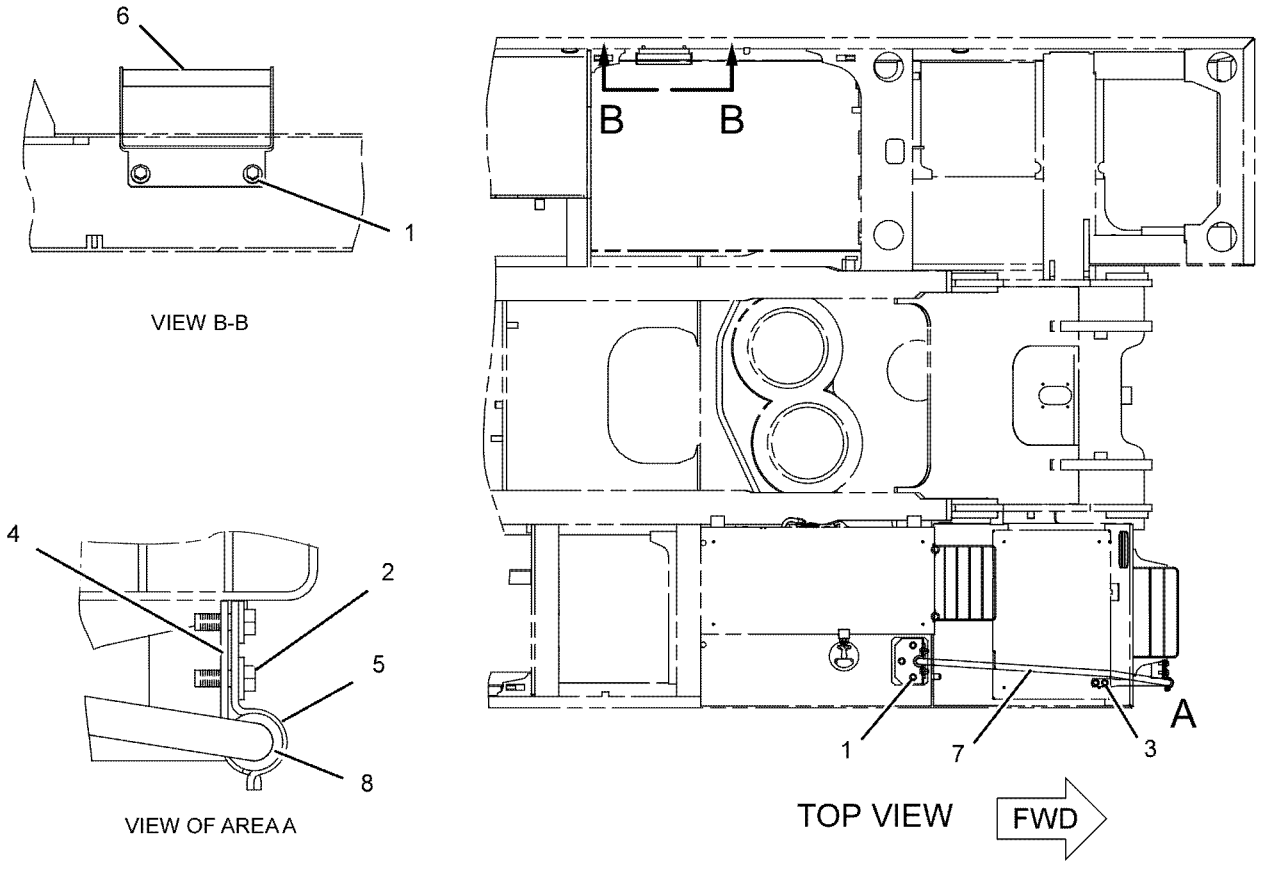

GRAPHIC #1 **<END>** g01088758

250-5058 HANDRAIL GP

S/N: JGB1-UP; KHS1-UP

PART OF 223-2982 HANDRAIL GP

SMCS-7256 **i02969962**

NOTE	REF NO	GRAPHIC REF	PART NUMBER	QTY	PART NAME 1 2 3 4 5 6 (PRODUCT LEVEL)	SEE PAGE
M	1	1	**135-8575**	2	BOLT AS	
M	2	1	**135-8578**	2	BOLT AS	
	3	1	**177-5879**	1	CLAMP	
	4	1	**177-5880**	2	SLEEVE	
	5	1	**236-3715**	1	HANDRAIL AS	
	6	1	**250-5059**	1	SUPPORT AS	

M-METRIC PART

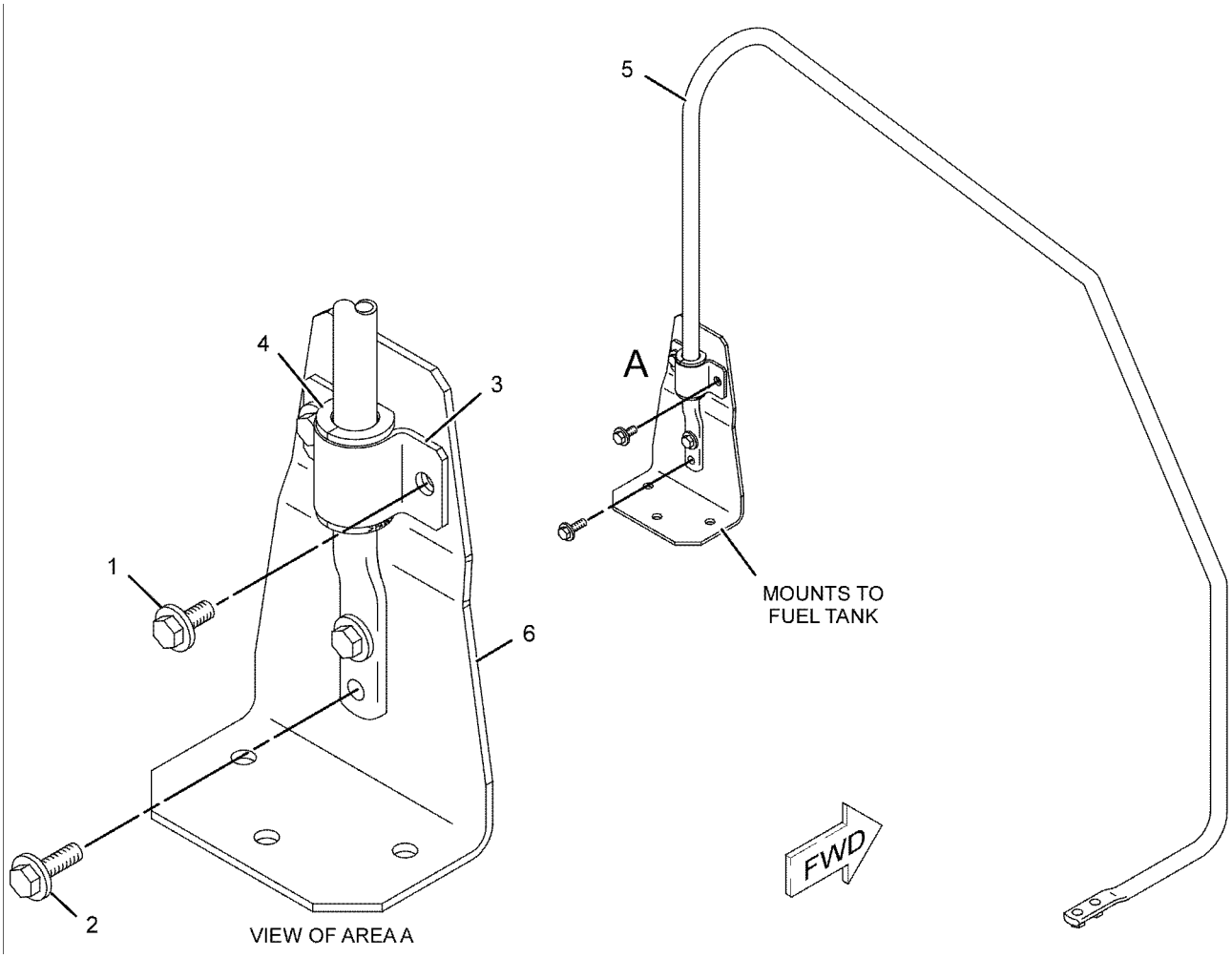

GRAPHIC #1 **<END>** g01089572

303-9875 HOOD & GUARD GP–PUMP COMPARTMENT

S/N: JGB1-UP; KHS1-UP

PART OF 370-3231, 370-4189 CHASSIS AR

SMCS-7251, 7276 **i03045220**

NOTE	REF NO	GRAPHIC REF	PART NUMBER	QTY	PART NAME 1 2 3 4 5 6 (PRODUCT LEVEL)	SEE PAGE
	1	1	**7Y-2853**	4	SPACER (13X38X5-MM THK)	
M	2	1	**135-8573**	18	BOLT AS	
M	3	1	**135-8574**	8	BOLT AS	
M	4	1	**135-8577**	4	BOLT AS	
	5	1	**141-6518**	5	SPACER (13.5X30X10-MM THK)	
	6	1	**256-1761**	1	SHEET AS	
		1	**236-9483**	1	LINER	
Y	7	1	**256-1763**	1	SHEET AS-SOUND SUPPRESSION	382
Y	8	1	**256-1764**	1	SHEET AS-SOUND SUPPRESSION	383
Y	9	1	**298-3153**	1	DOOR GP-ACCESS (PUMP COMPARTMENT)	343
Y	10	1	**303-9877**	1	SHEET AS-SOUND SUPPRESSION	385
	11	1	**320-5690**	1	SHEET AS	
	12	1	**7Y-2854**	4	SPACER (24X38X3-MM THK)	
M	13	1	**8T-4183**	2	BOLT (M12X1.75X40-MM)	
M	14	1	**8T-4956**	3	BOLT (M12X1.75X35-MM)	

M-METRIC PART
Y-SEPARATE ILLUSTRATION

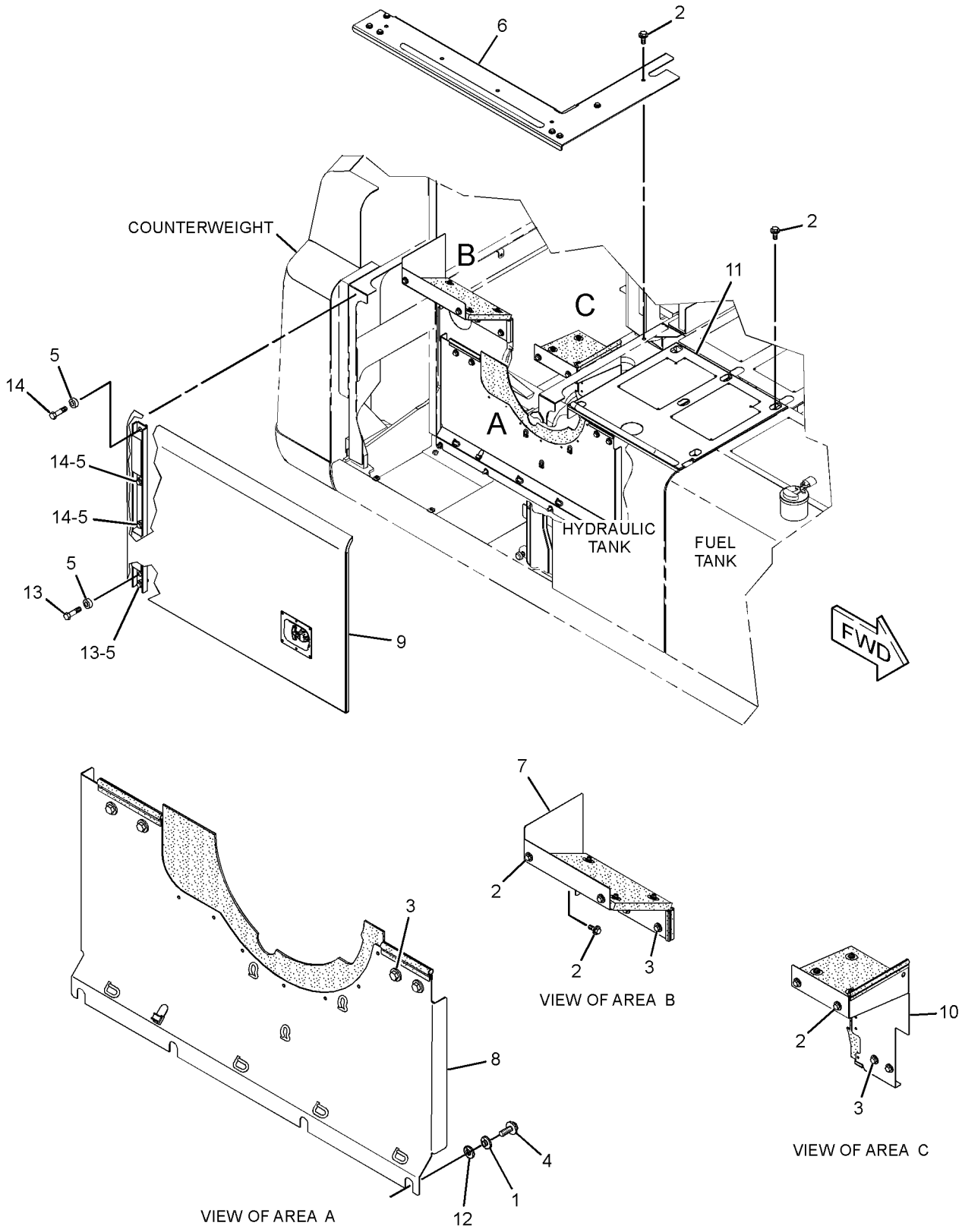

GRAPHIC #1 **<END>** g01452588

FRAME AND BODY

307-7764 HOOD & GUARD GP

S/N: JGB1-UP; KHS1-UP

PART OF 370-3231, 370-4189 CHASSIS AR

SMCS-7251, 7276 **i03864186**

NOTE	REF NO	GRAPHIC REF	PART NUMBER	QTY	PART NAME 1 2 3 4 5 6 (PRODUCT LEVEL)	SEE PAGE
	1	1	**7Y-2853**	1	SPACER (13X38X5-MM THK)	
	2	1	**122-4120**	3	ROD	
M	3	1	**135-8572**	8	BOLT AS	
CM	4	1	**135-8573**	43	BOLT AS	
M	5	1	**135-8574**	2	BOLT AS	
M	6	1	**135-8575**	8	BOLT AS	
	7	1	**141-6518**	5	SPACER (13.5X30X10-MM THK)	
B	8	1	**208-4156**	4	SHIM (1-MM THK)	
B	9	1	**208-4157**	4	SHIM (0.5-MM THK)	
Y	10	1	**320-5774**	1	SHEET AS-SOUND SUPPRESSION	392
	11	1	**223-3150**	1	SHEET AS	
		1	**236-9489**	2	LINER	
Y	12	1	**223-3151**	1	SHEET AS-SOUND SUPPRESSION	377
Y	13	1	**223-3153**	1	SHEET AS-SOUND SUPPRESSION	378
CY	14	1	**327-3339**	1	SHEET AS-SOUND SUPPRESSION	393
	15	1	**223-3172**	1	SHEET AS	
	16	1	**223-3181**	1	SHEET AS	
		1	**236-9499**	1	LINER	
D		1	**101-9848**		SEAL (0.4-M)	
	17	1	**346-2748**	1	COVER AS	
		1	**4I-7924**	2	WASHER (4.5X40X1.2-MM THK)	
		1	**6P-2216**	2	CAP	
		1	**244-7792**	1	INSULATION	
Y	18	1	**223-3184**	1	SHEET AS-SOUND SUPPRESSION	379
	19	1	**241-2039**	2	ANGLE	
Y	20	1	**241-2282**	1	SHEET AS-SOUND SUPPRESSION	380
	21	1	**244-7789**	8	SPACER (19X38X3-MM THK)	
	22	1	**244-7820**	1	LINER	
Y	23	1	**330-1312**	1	SHEET AS-SOUND SUPPRESSION	396
Y	24	1	**289-6591**	1	SHEET AS-SOUND SUPPRESSION	384
Y	25	1	**298-3148**	1	DOOR GP-ACCESS (AIR CLEANER, BATTERY)	342
	26	1	**307-7791**	1	DOOR AS-ACCESS (RADIATOR)	
		1	**237-8647**	2	HINGE	
CY	27	1	**327-3341**	1	SHEET AS-SOUND SUPPRESSION	394
	28	1	**3B-4618**	3	PIN-COTTER	
	29	1	**7Y-8990**	1	SPACER (24X38X1.5-MM THK)	
	30	1	**8T-4121**	3	WASHER-HARD (11X21X2.5-MM THK)	
M	31	1	**8T-4183**	2	BOLT (M12X1.75X40-MM)	
M	32	1	**8T-4956**	3	BOLT (M12X1.75X35-MM)	
CM	33	1	**135-8577**	1	BOLT AS	

B-USE AS REQUIRED
C-CHANGE FROM PREVIOUS TYPE
D-ORDER BY THE METER
M-METRIC PART
Y-SEPARATE ILLUSTRATION

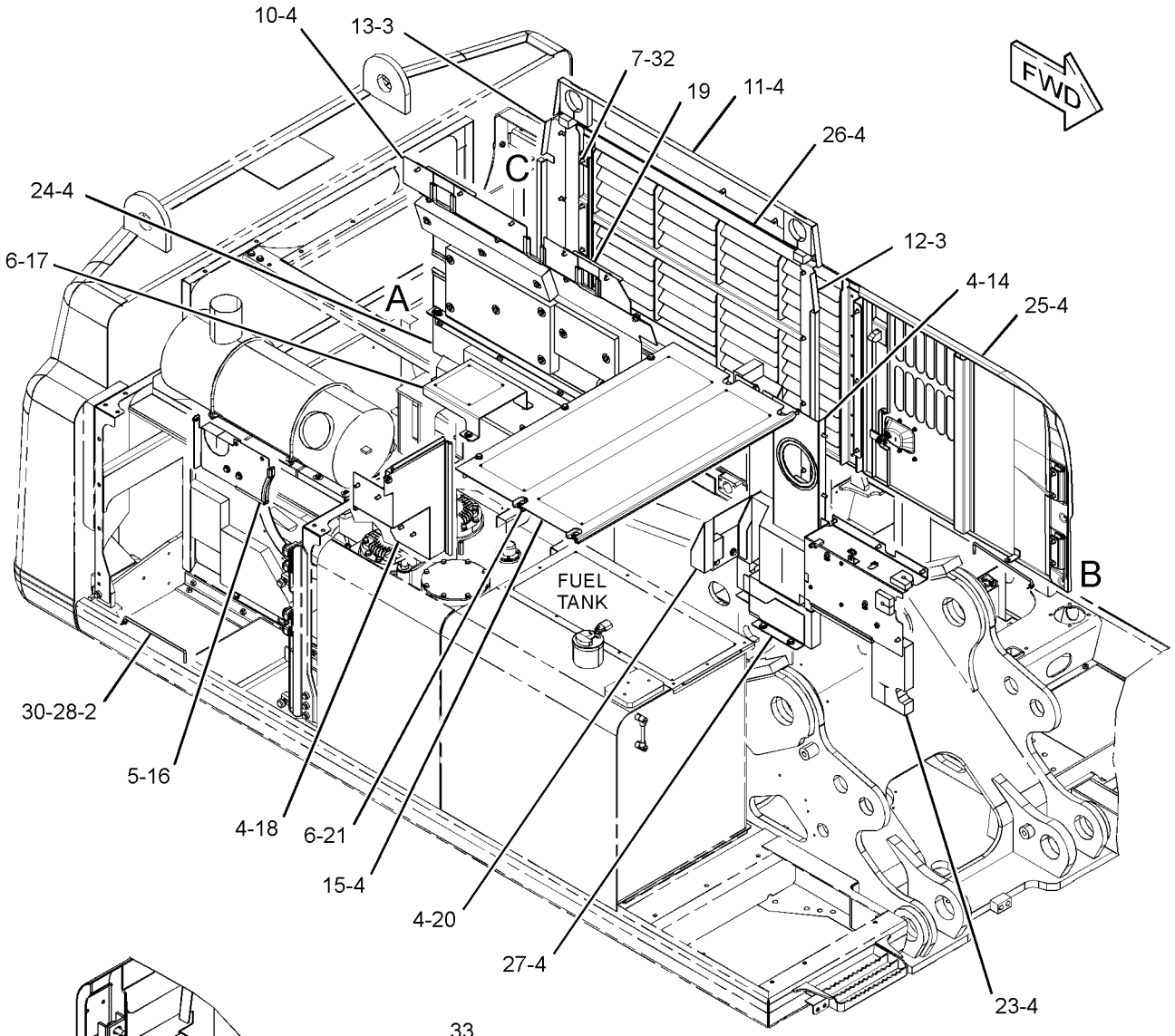

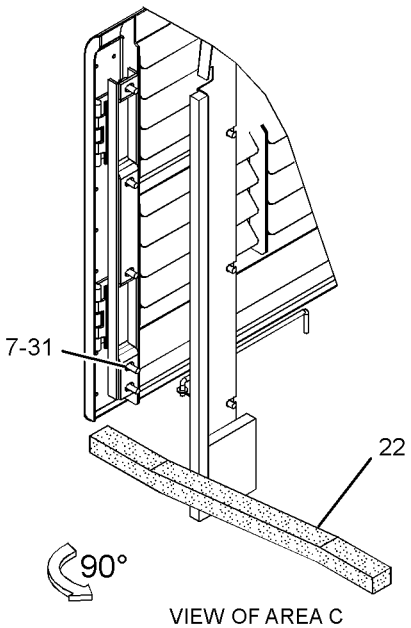

VIEW OF AREA C

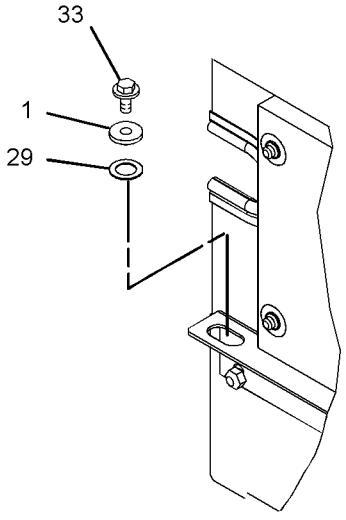

VIEW OF AREA A

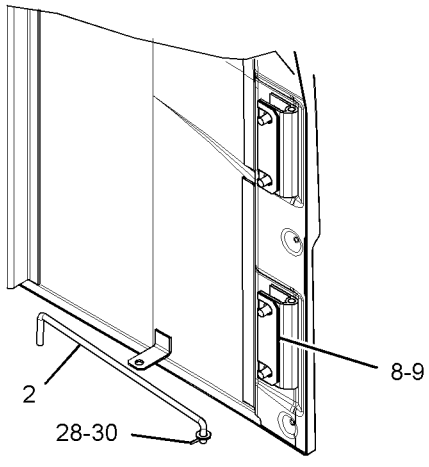

VIEW OF AREA B

GRAPHIC #1

<END>

g01951015

313-7965 HOOD & GUARD GP–ACCUGRADE READY

S/N: JGB1-UP; KHS1-UP
PART OF 319-9274, 351-9595 SPECIAL AR
AN ATTACHMENT

SMCS-7251, 7276 **i02921632**

NOTE	REF NO	GRAPHIC REF	PART NUMBER	QTY	PART NAME 1 2 3 4 5 6 (PRODUCT LEVEL)	SEE PAGE
M	1	1	**135-8577**	1	BOLT AS	
Y	2	1	**298-3120**	1	HOOD GP-ENGINE	373
Y	3	1	**313-7966**	1	HOOD GP-ENGINE (RADIATOR)	375
M	4	1	**8T-4179**	8	BOLT (M12X1.75X20-MM)	

M-METRIC PART
Y-SEPARATE ILLUSTRATION

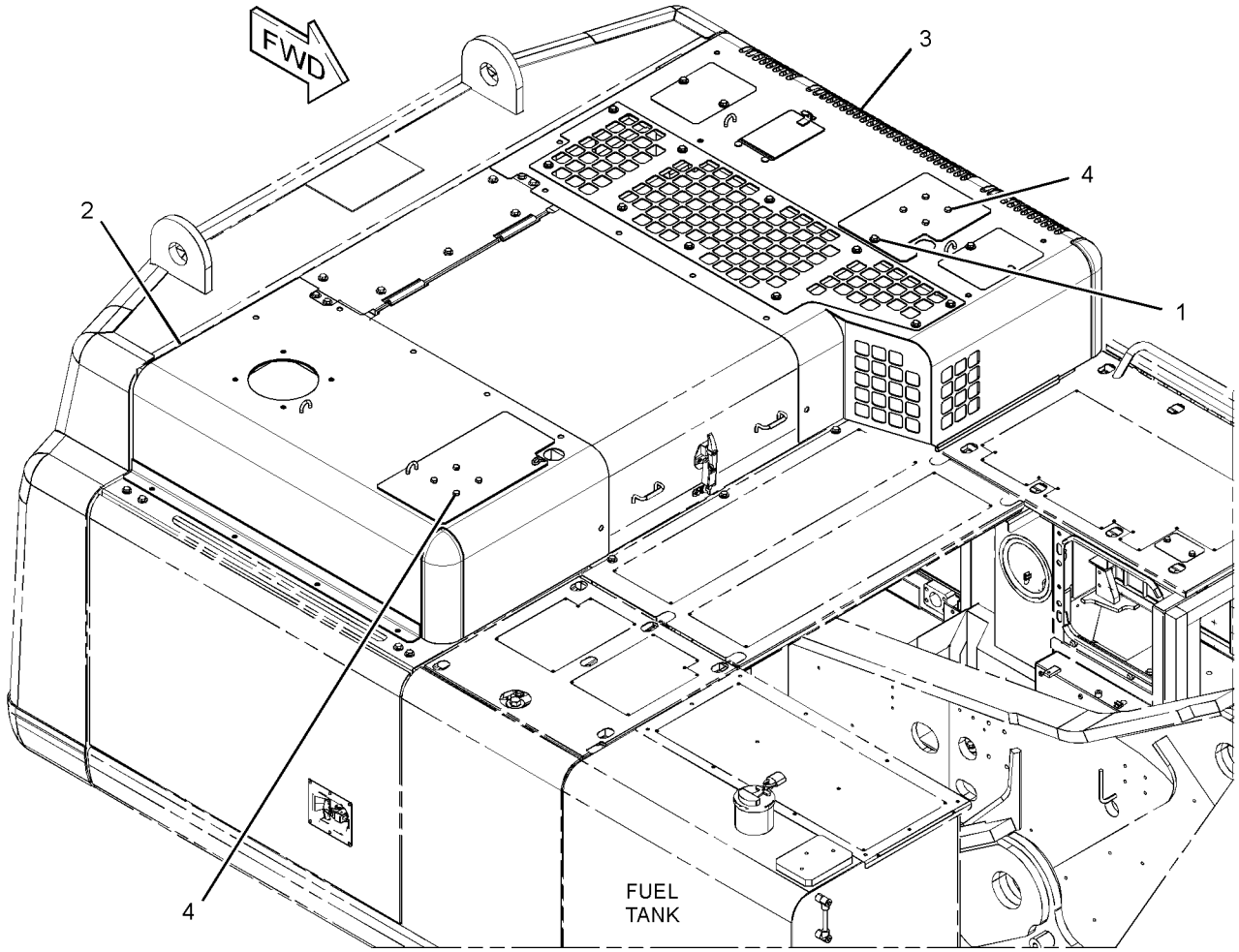

GRAPHIC #1 **<END>** g01456744

FRAME AND BODY

358-9695 HOOD & GUARD GP

S/N: JGB1-UP
PART OF 309-0166, 309-0167 COUNTERWEIGHT AR
AN ATTACHMENT

SMCS-7251, 7276 **i04184416**

NOTE	REF NO	GRAPHIC REF	PART NUMBER	QTY	PART NAME 1 2 3 4 5 6 (PRODUCT LEVEL)	SEE PAGE
	1	1	**4E-1384**	2	BUMPER-CONICAL	
	2	1	**4I-0117**	1	FASTENER	
	3	1	**4I-0118**	1	HOOK AS	
M	4	1	**135-8573**	25	BOLT AS	
	5	1	**141-6518**	1	SPACER (13.5X30X10-MM THK)	
	6	1	**244-7799**	1	SHEET AS	
		1	**244-7795**	1	LINER	
	7	1	**256-1760**	1	SUPPORT AS	
		1	**236-9480**	1	LINER AS	
		1	**236-9481**	1	LINER	
	8	1	**262-2211**	1	SUPPORT	
	9	1	**262-2603**	2	SPACER (13.5X30X16-MM THK)	
	10	1	**320-5704**	1	SUPPORT AS	
		1	**236-9474**	1	LINER AS	
		1	**236-9475**	1	LINER	
	11	1	**320-5712**	1	SHEET AS	
		1	**4I-7924**	3	WASHER (4.5X40X1.2-MM THK)	
		1	**6P-2216**	3	CAP (PUSH ON)	
		1	**320-5715**	1	INSULATION	
	12	1	**320-5716**	1	SHEET AS	
		1	**4I-7924**	5	WASHER (4.5X40X1.2-MM THK)	
		1	**6P-2216**	5	CAP (PUSH ON)	
		1	**320-5719**	1	INSULATION	
Y	13	1	**358-9696**	1	COVER AS-SOUND SUPPRESSION	336
	14	1	**095-1319**	2	PIN-CLEVIS	
	15	1	**3B-4618**	2	PIN-COTTER	
M	16	1	**5C-7261**	2	NUT (M8X1.25-THD)	
	17	1	**5P-4116**	2	WASHER-HARD (8.8X20.5X2-MM THK)	
	18	1	**8T-4121**	6	WASHER-HARD (11X21X2.5-MM THK)	
M	19	1	**8T-4184**	2	BOLT (M12X1.75X45-MM)	
M	20	1	**8T-4189**	2	BOLT (M8X1.25X20-MM)	
M	21	1	**8T-4200**	2	BOLT (M8X1.25X16-MM)	
	22	1	**8T-4224**	4	WASHER-HARD (8.8X16X2-MM THK)	
M	23	1	**8T-4956**	1	BOLT (M12X1.75X35-MM)	

M-METRIC PART
Y-SEPARATE ILLUSTRATION

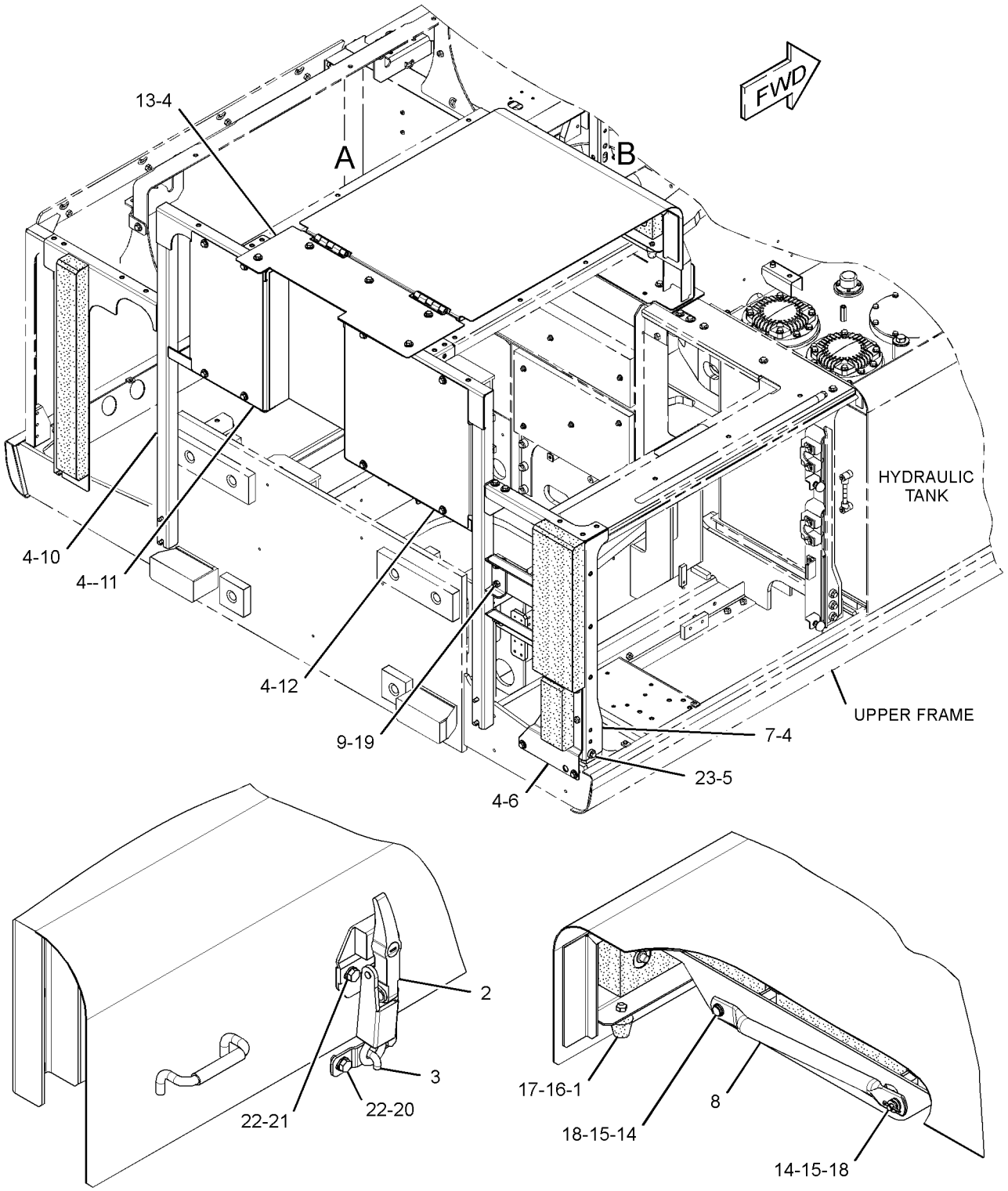

GRAPHIC #1 **<END>** g01592995

FRAME AND BODY

307-7760 HOOD AS-ENGINE–RADIATOR

S/N: JGB1-UP; KHS1-UP

PART OF 358-9694 HOOD GP-ENGINE

SMCS-7251 **i02843963**

NOTE	REF NO	GRAPHIC REF	PART NUMBER	QTY	PART NAME 1 2 3 4 5 6 (PRODUCT LEVEL)	SEE PAGE
	1	1	**1K-8850**	1	SPRING	
	2	1	**5V-3854**	1	BUMPER	
	3	1	**7Y-8876**	1	DOOR AS	
		1	**9V-3659**	1	HINGE	
M	4	1	**135-8575**	14	BOLT AS	
	5	1	**236-9505**	1	LINER	
	6	1	**236-9507**	1	LINER	
	7	1	**236-9508**	1	LINER	
	8	1	**236-9509**	1	LINER	
	9	1	**241-2270**	1	LINER	
	10	1	**241-2274**	2	SHEET	
	11	1	**307-7790**	1	HOOD AS	
	12	1	**313-8240**	1	SHEET AS	
	13	1	**8T-4121**	2	WASHER-HARD (11X21X2.5-MM THK)	
M	14	1	**8T-4133**	2	NUT (M10X1.5-THD)	
D	15	1	**5P-8309**		SEAL (0.6-M)	

D-ORDER BY THE METER
M-METRIC PART

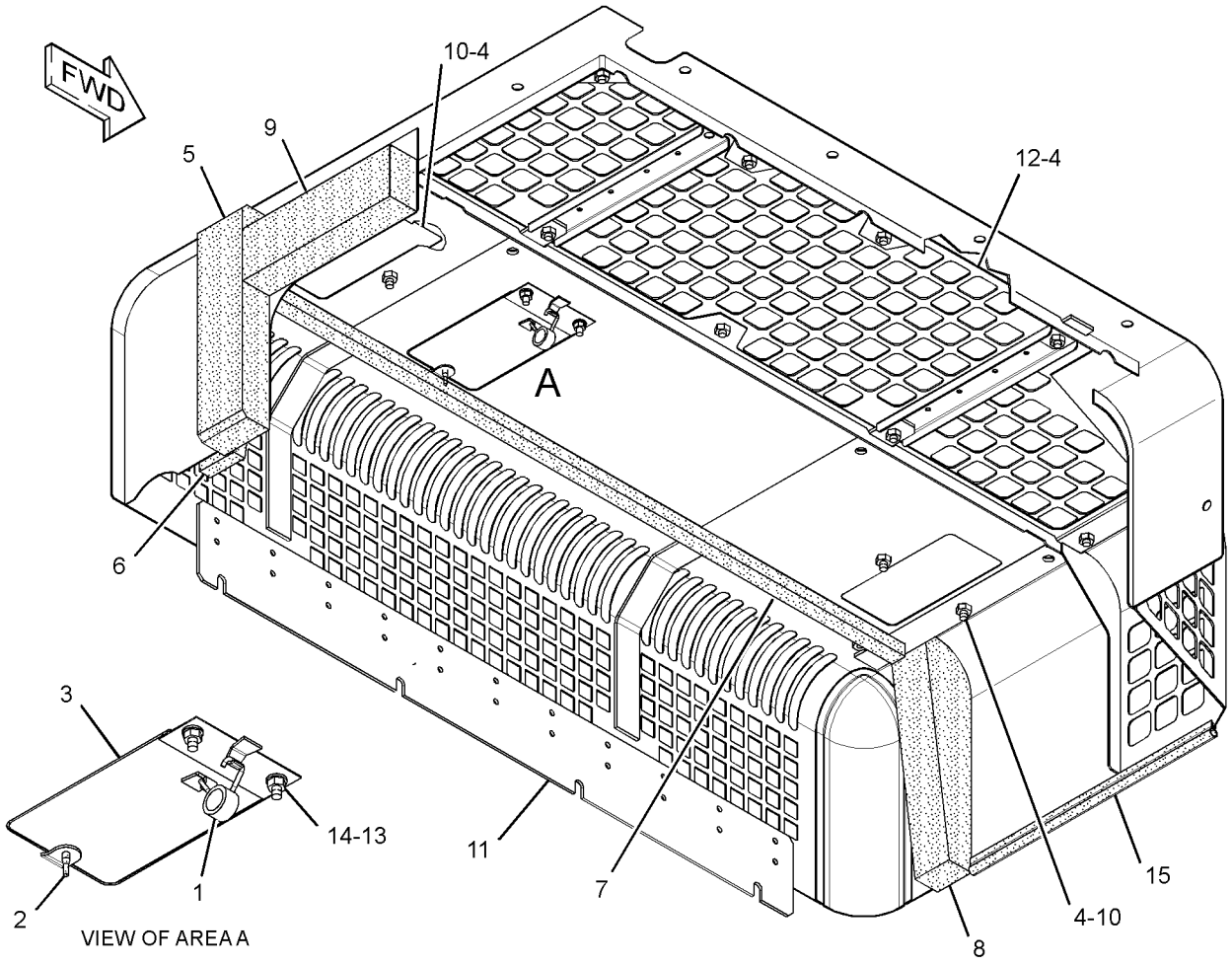

GRAPHIC #1 **<END>** g01460032

307-7951 HOOD AS-ENGINE–RADIATOR

S/N: KHS1-UP
PART OF 307-7944 HOOD GP-ENGINE
AN ATTACHMENT

SMCS-7251 **i02940635**

NOTE	REF NO	GRAPHIC REF	PART NUMBER	QTY	PART NAME 1 2 3 4 5 6 (PRODUCT LEVEL)	SEE PAGE
	1	1	**1K-8850**	1	SPRING	
	2	1	**5V-3854**	1	BUMPER	
	3	1	**7Y-8876**	1	DOOR AS	
		1	**9V-3659**	1	HINGE	
M	4	1	**135-8575**	14	BOLT AS	
	5	1	**236-9505**	1	LINER	
	6	1	**236-9507**	1	LINER	
	7	1	**236-9508**	1	LINER	
	8	1	**236-9509**	1	LINER	
	9	1	**241-2270**	1	LINER	
	10	1	**241-2274**	2	SHEET	
	11	1	**307-7952**	1	HOOD AS	
	12	1	**313-8240**	1	SHEET AS	
	13	1	**8T-4121**	2	WASHER-HARD (11X21X2.5-MM THK)	
M	14	1	**8T-4133**	2	NUT (M10X1.5-THD)	
D	15	1	**5P-8309**		SEAL (0.6-M)	

D-ORDER BY THE METER
M-METRIC PART

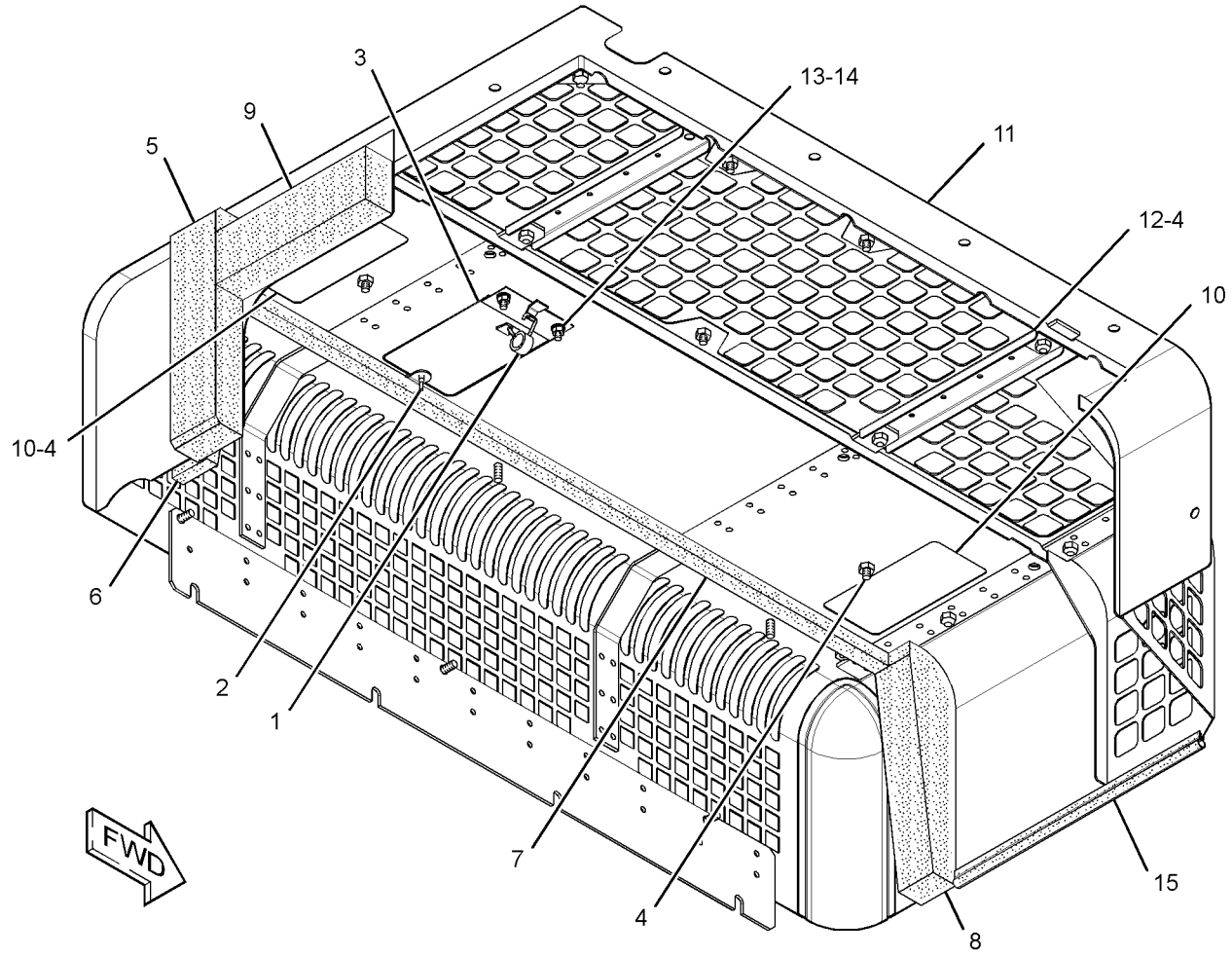

GRAPHIC #1 **<END>** g01458867

FRAME AND BODY

346-2776 HOOD AS-ENGINE

S/N: JGB1-UP; KHS1-UP

PART OF 358-9694 HOOD GP-ENGINE

SMCS-7251 **i04159416**

NOTE	REF NO	GRAPHIC REF	PART NUMBER	QTY	PART NAME 1 2 3 4 5 6 (PRODUCT LEVEL)	SEE PAGE
	1	1	**4I-7924**	28	WASHER (4.5X40X1.2-MM THK)	
	2	1	**6P-2216**	28	CAP	
	3	1	**236-9473**	1	INSULATION	
	4	1	**236-9510**	1	LINER	
	5	1	**237-8415**	1	INSULATION	
	6	1	**237-8416**	2	INSULATION	
	7	1	**237-8417**	1	INSULATION	
	8	1	**244-7791**	1	LINER	
	9	1	**351-3075**	1	INSULATION	
	10	1	**351-3073**	1	INSULATION	
	11	1	**351-3074**	1	INSULATION	

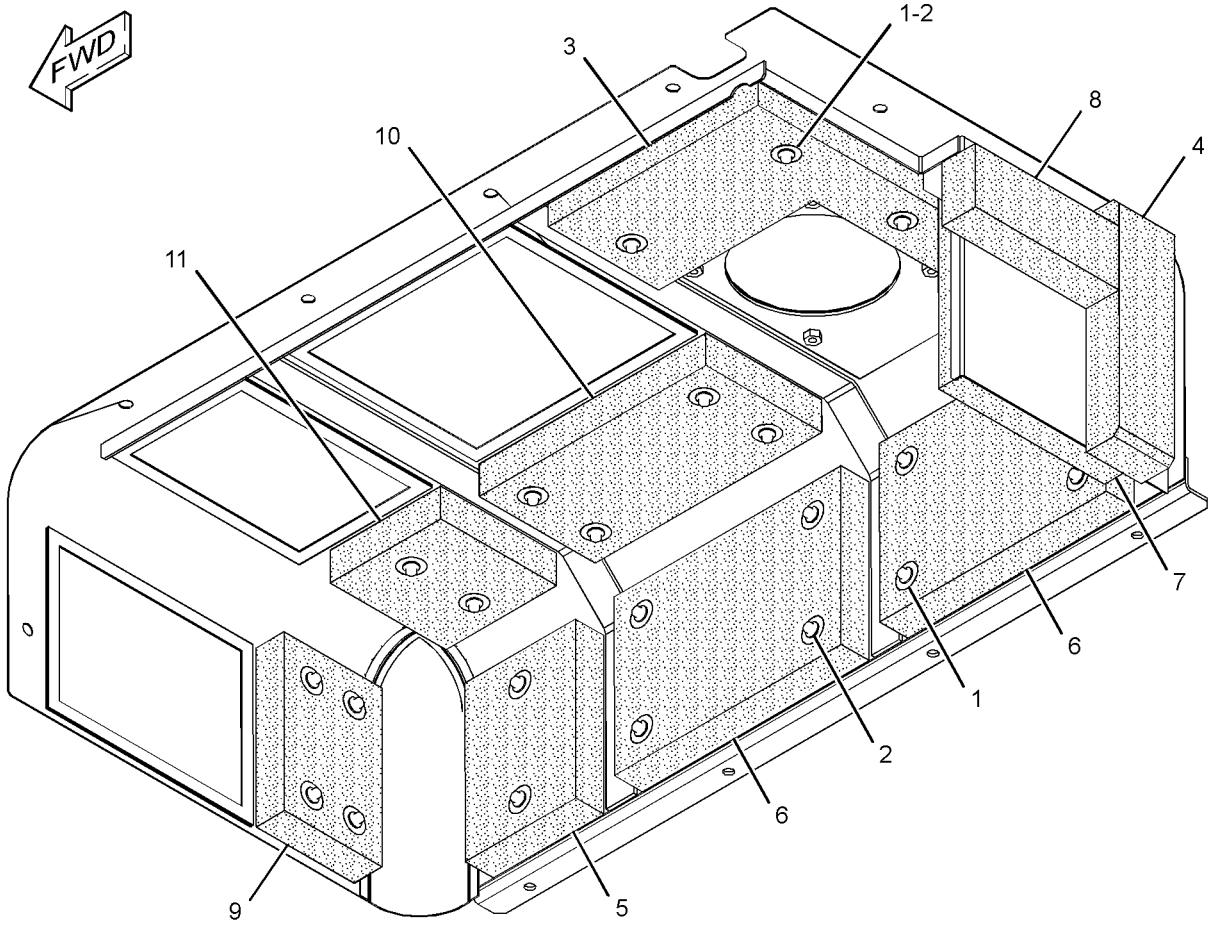

GRAPHIC #1 **<END>** g02352500

298-3120 HOOD GP-ENGINE–RH, ACCUGRADE READY

S/N: JGB1-UP; KHS1-UP
PART OF 313-7965 HOOD & GUARD GP
AN ATTACHMENT

SMCS-7251 **i02809203**

NOTE	REF NO	GRAPHIC REF	PART NUMBER	QTY	PART NAME 1 2 3 4 5 6 (PRODUCT LEVEL)	SEE PAGE
	1	1	**4I-7924**	31	WASHER (4.5X40X1.2-MM THK)	
	2	1	**6P-2216**	31	CAP	
	3	1	**236-9473**	1	INSULATION	
	4	1	**236-9510**	1	LINER	
	5	1	**237-8414**	1	INSULATION	
	6	1	**237-8415**	1	INSULATION	
	7	1	**237-8416**	2	INSULATION	
	8	1	**237-8417**	1	INSULATION	
	9	1	**237-8418**	1	INSULATION	
	10	1	**244-7791**	1	LINER	
	11	1	**298-3121**	1	HOOD AS-ENGINE (ACCUGRADE READY)	
	12	1	**298-3134**	1	INSULATION	

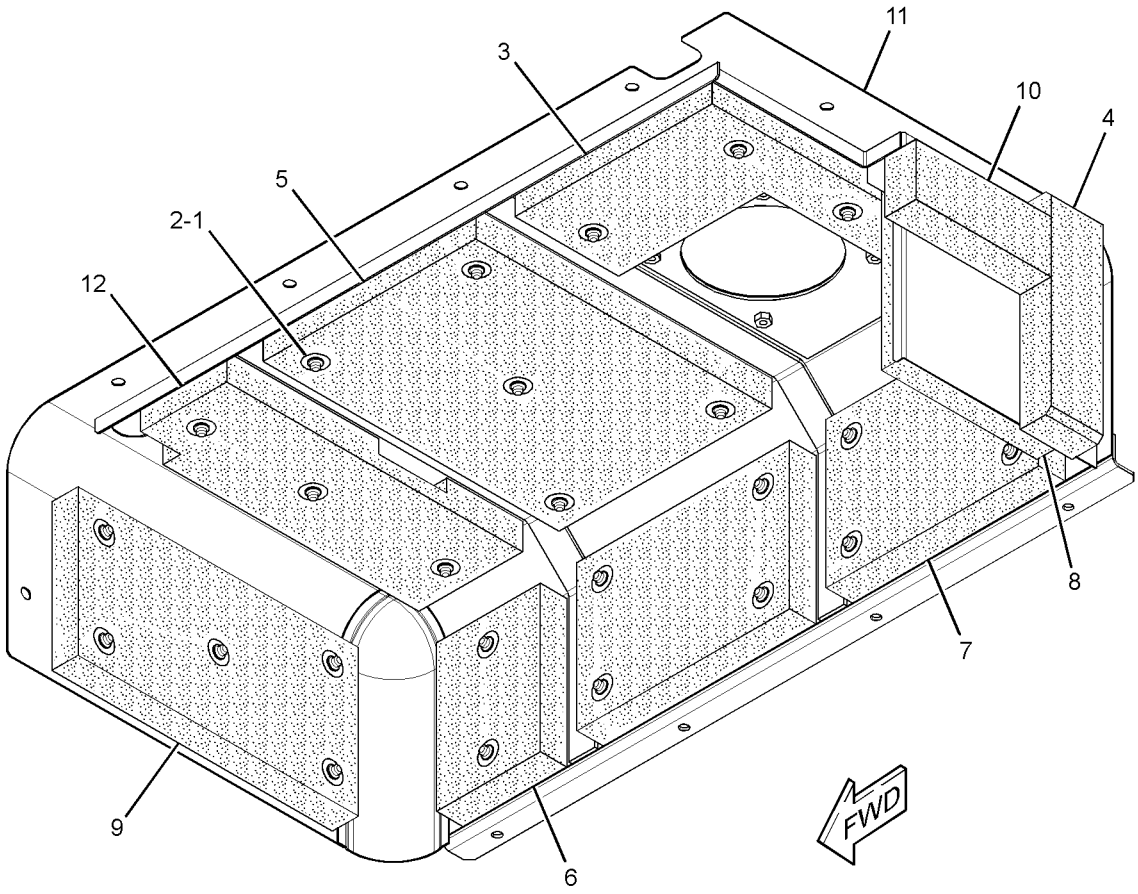

GRAPHIC #1 **<END>** g01401568

307-7944 HOOD GP-ENGINE—REVERSING FAN

S/N: KHS1-UP
PART OF 294-1275 CONTROL AR-VARIABLE-SPEED FAN
AN ATTACHMENT

SMCS-7251 **i03097904**

NOTE	REF NO	GRAPHIC REF	PART NUMBER	QTY	PART NAME 1 2 3 4 5 6 (PRODUCT LEVEL)	SEE PAGE
	1	1	**307-7945**	1	DOOR AS-ACCESS (RADIATOR)	
		1	**237-8647**	2	HINGE	
M		1	**8T-3597**	4	NUT-WELD (M12X1.75-THD)	
Y	2	1	**307-7951**	1	HOOD AS-ENGINE	371

M-METRIC PART
Y-SEPARATE ILLUSTRATION

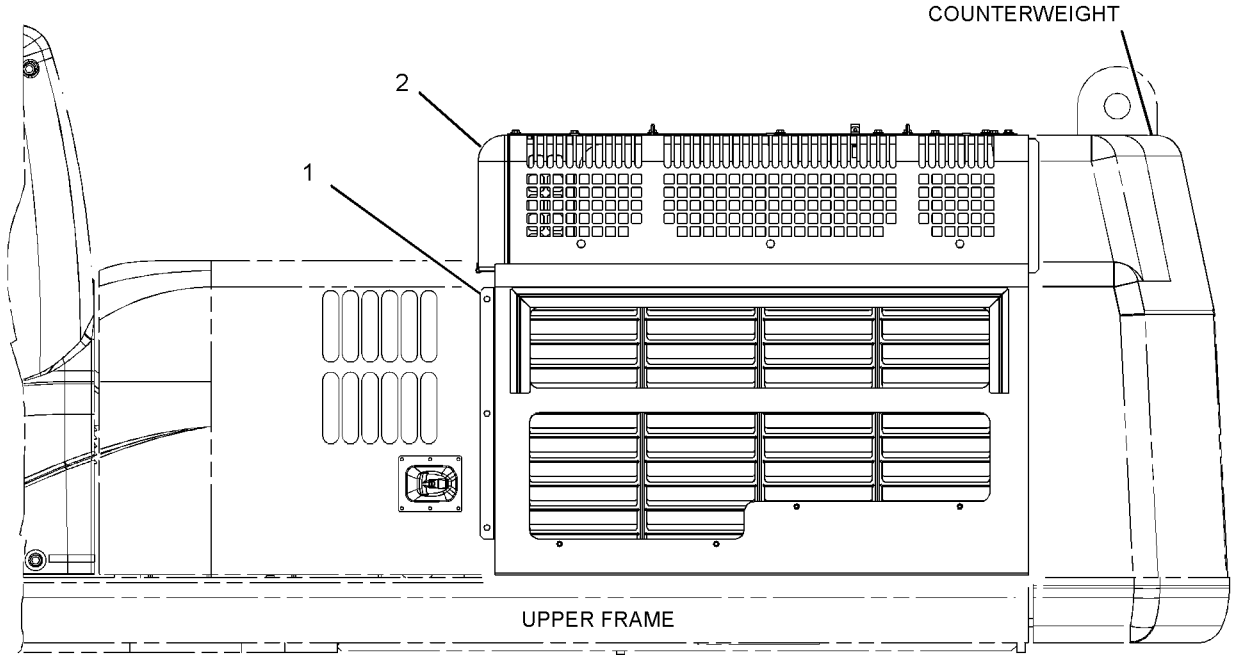

LEFT SIDE VIEW

GRAPHIC #1 **<END>** g01458490

313-7966 HOOD GP-ENGINE–RADIATOR

S/N: JGB1-UP; KHS1-UP
PART OF 313-7965 HOOD & GUARD GP
AN ATTACHMENT

SMCS-7251 **i02921654**

NOTE	REF NO	GRAPHIC REF	PART NUMBER	QTY	PART NAME 1 2 3 4 5 6 (PRODUCT LEVEL)	SEE PAGE
	1	1	**1K-8850**	1	SPRING	
	2	1	**5V-3854**	1	BUMPER	
	3	1	**7Y-8876**	1	DOOR AS	
	3A	1	**9V-3659**	1	HINGE	
M	4	1	**135-8575**	14	BOLT AS	
	5	1	**236-9505**	1	LINER	
	6	1	**236-9507**	1	LINER	
	7	1	**236-9508**	1	LINER	
	8	1	**236-9509**	1	LINER	
	9	1	**241-2270**	1	LINER	
	10	1	**241-2274**	2	SHEET	
	11	1	**313-7967**	1	HOOD AS	
	12	1	**313-8240**	1	SHEET AS	
	13	1	**8T-4121**	2	WASHER-HARD (11X21X2.5-MM THK)	
M	14	1	**8T-4133**	2	NUT (M10X1.5-THD)	
D	15	1	**5P-8309**	6	SEAL (0.6-M)	

D-ORDER BY THE METER
M-METRIC PART

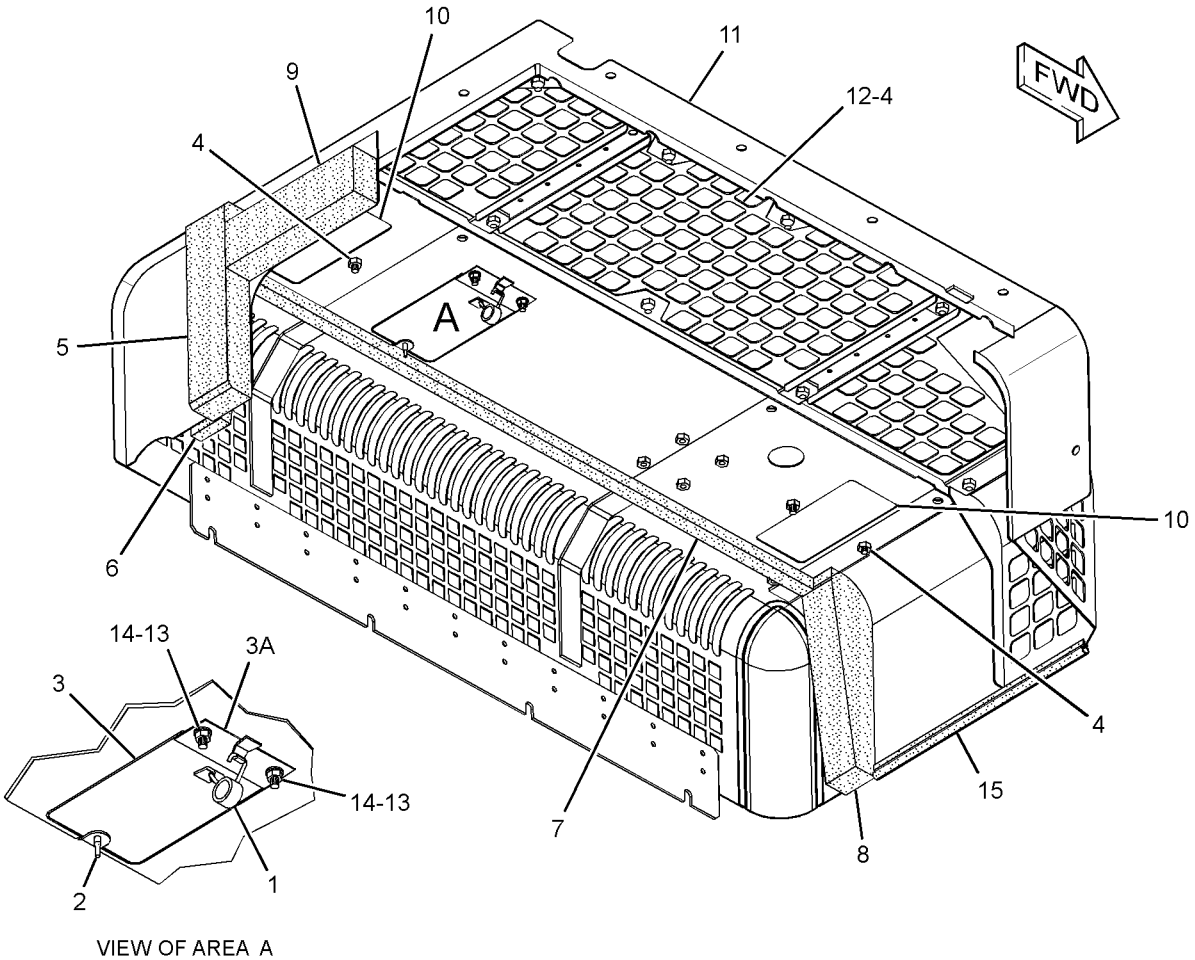

VIEW OF AREA A

GRAPHIC #1 **<END>** g01456678

FRAME AND BODY

358-9694 HOOD GP-ENGINE

S/N: JGB1-UP; KHS1-UP

PART OF 370-3231, 370-4189 CHASSIS AR

SMCS-7251 **i04156094**

NOTE	REF NO	GRAPHIC REF	PART NUMBER	QTY	PART NAME 1 2 3 4 5 6 (PRODUCT LEVEL)	SEE PAGE
	1	1	**246-2641**	1	PADLOCK GP	
		1	**5P-8500**	1	KEY	
M	2	1	**135-8573**	14	BOLT AS	
M	3	1	**135-8575**	9	BOLT AS	
Y	4	1	**346-2776**	1	HOOD AS-ENGINE (RH)	372
Y	5	1	**307-7760**	1	HOOD AS-ENGINE (LH)	370

M-METRIC PART
Y-SEPARATE ILLUSTRATION

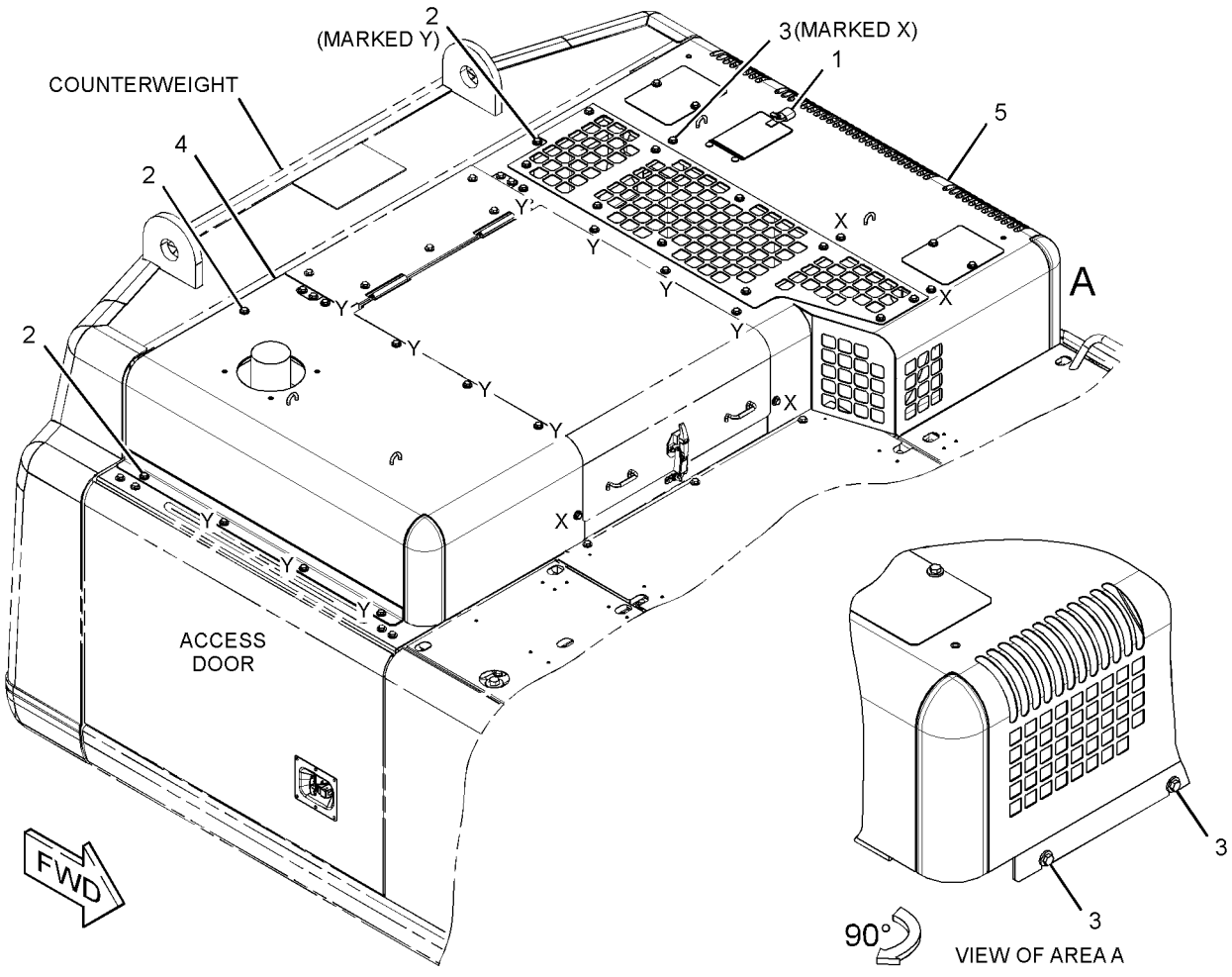

GRAPHIC #1 **<END>** g01460017

223-3151 SHEET AS-SOUND SUPPRESSION

S/N: JGB1-UP; KHS1-UP

PART OF 307-7764 HOOD & GUARD GP

SMCS-1801, 7076, 7251, 7267 **i02549489**

NOTE	REF NO	GRAPHIC REF	PART NUMBER	QTY	PART NAME 1 2 3 4 5 6 (PRODUCT LEVEL)	SEE PAGE
Z	1	1		1	SHEET AS	
	2	1	**236-9490**	1	LINER	
	3	1	**236-9491**	1	LINER	
	4	1	**236-9492**	1	LINER	

Z-NOT SERVICED SEPARATELY

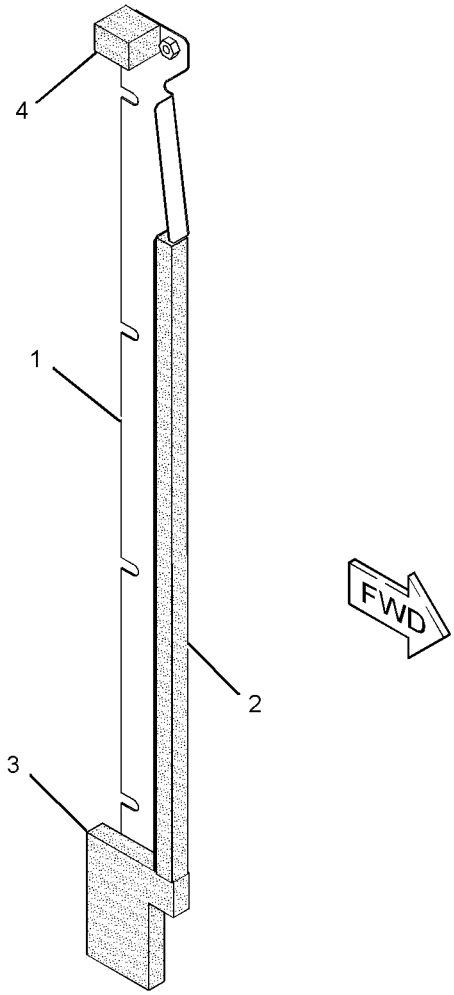

GRAPHIC #1 **<END>** g01289282

223-3153 SHEET AS-SOUND SUPPRESSION

S/N: JGB1-UP; KHS1-UP

PART OF 307-7764 HOOD & GUARD GP

SMCS-1801, 7076, 7251, 7267 **i02549490**

NOTE	REF NO	GRAPHIC REF	PART NUMBER	QTY	PART NAME 1 2 3 4 5 6 (PRODUCT LEVEL)	SEE PAGE
Z	1	1		1	SHEET AS	
	2	1	**236-9492**	1	LINER	
	3	1	**236-9493**	1	LINER	
	4	1	**236-9494**	1	LINER	

Z-NOT SERVICED SEPARATELY

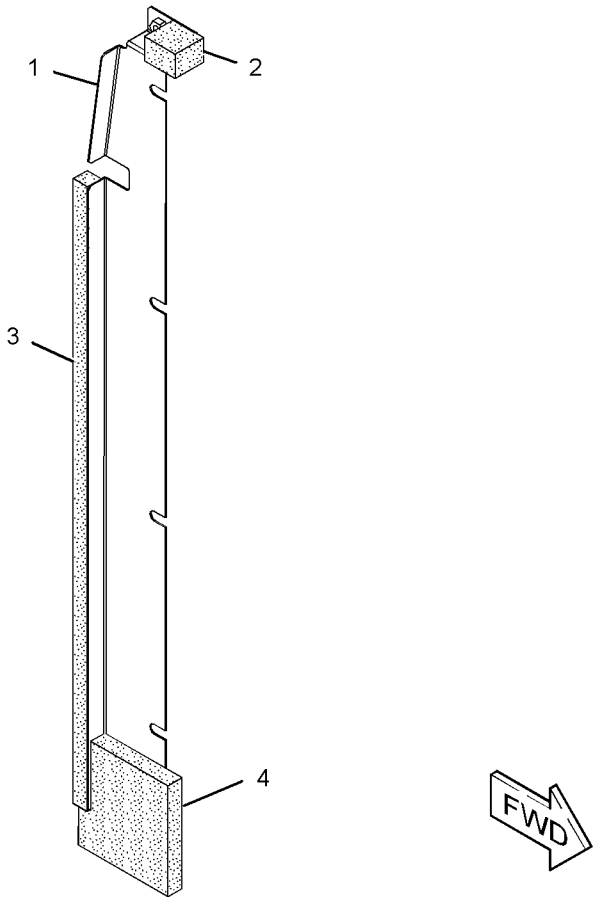

GRAPHIC #1 **<END>** g01289463

FRAME AND BODY

223-3184 SHEET AS-SOUND SUPPRESSION

S/N: JGB1-UP; KHS1-UP

PART OF 307-7764 HOOD & GUARD GP

SMCS-1801, 7076, 7251, 7267 **i02549494**

NOTE	REF NO	GRAPHIC REF	PART NUMBER	QTY	PART NAME 1 2 3 4 5 6 (PRODUCT LEVEL)	SEE PAGE
	1	1	**4I-7924**	2	WASHER (4.5X40X1.2-MM THK)	
	2	1	**6P-2216**	2	CAP	
Z	3	1		1	SHEET AS	
	4	1	**262-2187**	1	INSULATION	
D	5	1	**5P-8309**		SEAL (0.9-M)	
D	6	1	**101-9848**		SEAL (0.3-M)	

D-ORDER BY THE METER
Z-NOT SERVICED SEPARATELY

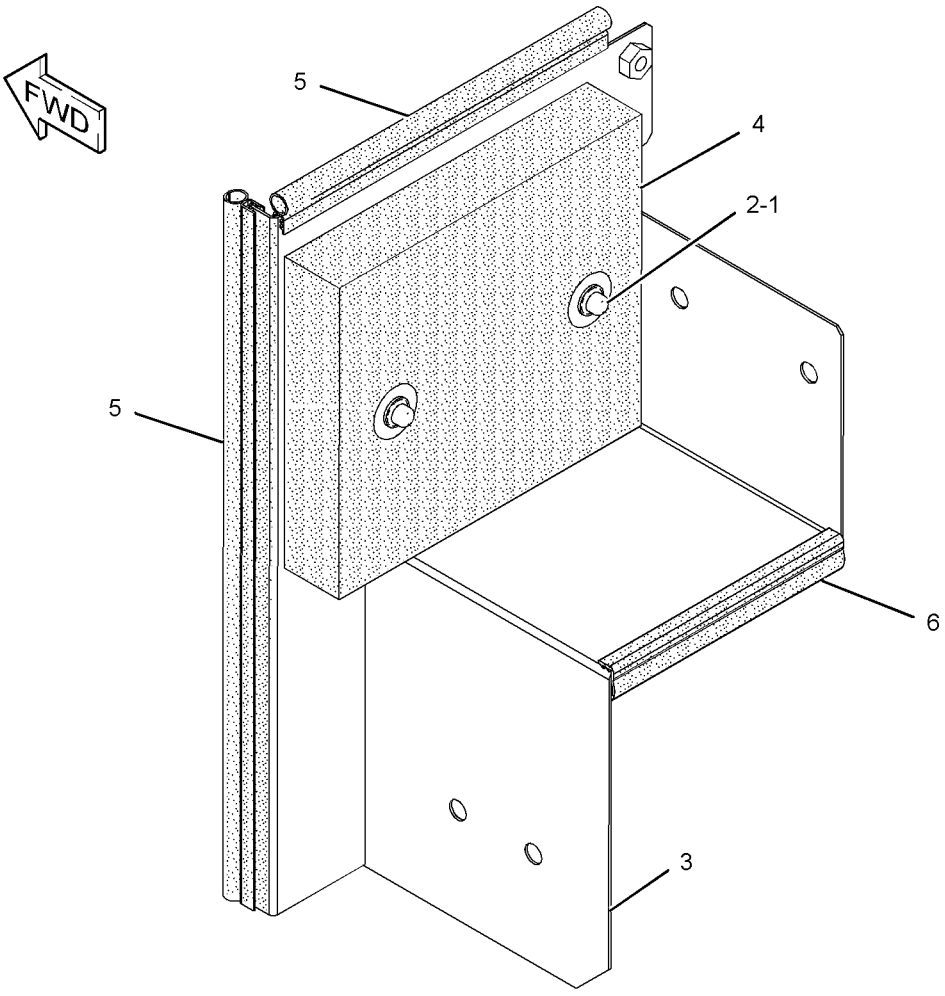

GRAPHIC #1 **<END>** g01289385

FRAME AND BODY

241-2282 SHEET AS-SOUND SUPPRESSION

S/N: JGB1-UP; KHS1-UP

PART OF 307-7764 HOOD & GUARD GP

SMCS-1801, 7076, 7251, 7267 **i03874979**

NOTE	REF NO	GRAPHIC REF	PART NUMBER	QTY	PART NAME 1 2 3 4 5 6 (PRODUCT LEVEL)	SEE PAGE
	1	1	**241-2283**	1	LINER	
	2	1	**241-2284**	1	LINER	
	3	1	**241-2285**	1	LINER	
D	4	1	**5P-9205**		SEAL (0.2-M)	

D-ORDER BY THE METER

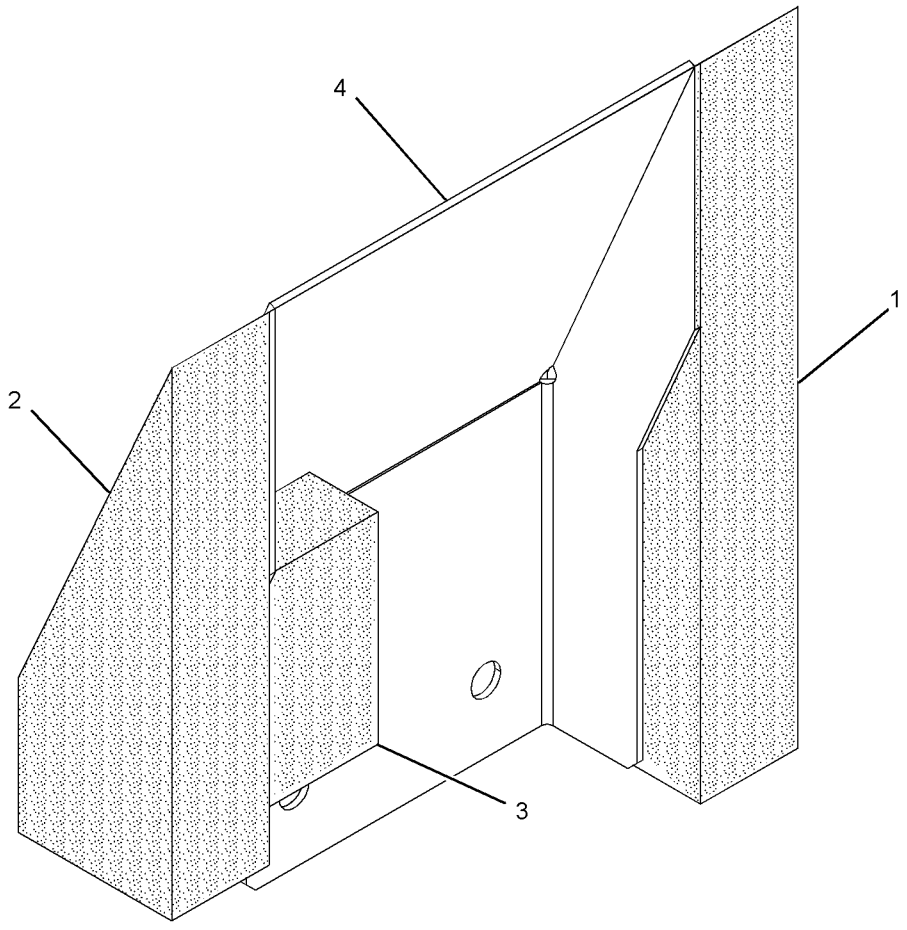

GRAPHIC #1 **<END>** g01289462

FRAME AND BODY

244-7793 SHEET AS-SOUND SUPPRESSION

S/N: JGB1-UP; KHS1-UP

PART OF 351-3012 SUPPORT GP-HOOD

SMCS-1801, 7076, 7251, 7267 **i02499525**

NOTE	REF NO	GRAPHIC REF	PART NUMBER	QTY	PART NAME 1 2 3 4 5 6 (PRODUCT LEVEL)	SEE PAGE
	1	1	**244-7795**	1	LINER	
Z	2	1		1	SHEET AS	
	3	1	**244-7823**	1	LINER	

Z-NOT SERVICED SEPARATELY

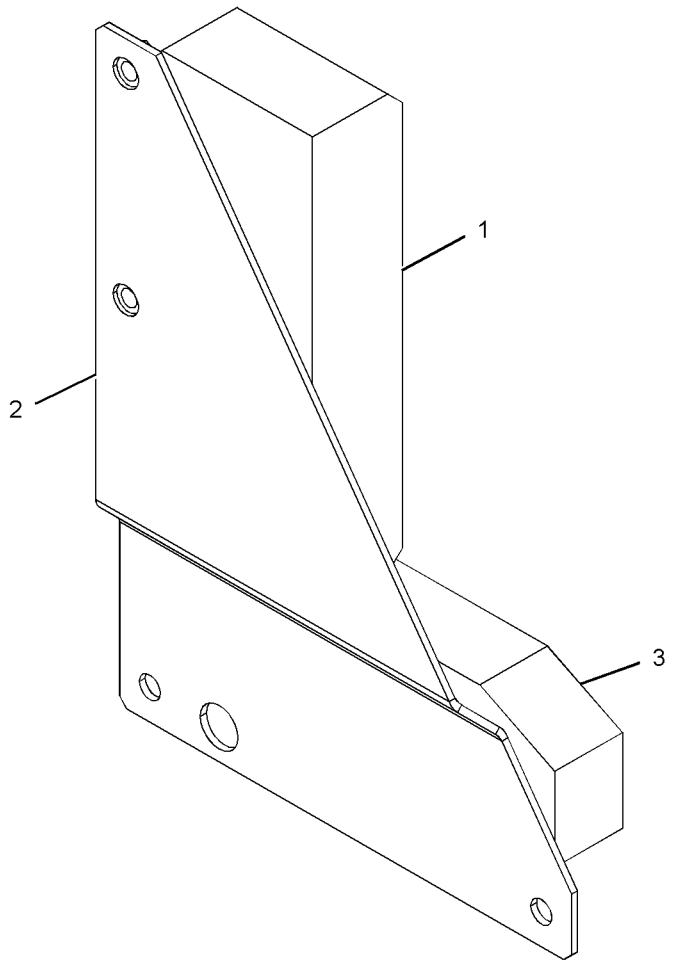

GRAPHIC #1 **<END>** g01249919

FRAME AND BODY

256-1763 SHEET AS-SOUND SUPPRESSION

S/N: JGB1-UP; KHS1-UP

PART OF 303-9875 HOOD & GUARD GP

SMCS-1801, 7076, 7251, 7267 **i02284279**

NOTE	REF NO	GRAPHIC REF	PART NUMBER	QTY	PART NAME 1 2 3 4 5 6 (PRODUCT LEVEL)	SEE PAGE
	1	1	**4I-7924**	4	WASHER (4.5X40X1.2-MM THK)	
	2	1	**6P-2216**	4	CAP	
Z	3	1		1	SHEET AS	
	4	1	**236-9497**	1	INSULATION	
	5	1	**236-9498**	1	LINER	
BD	6	1	**101-9848**		SEAL	

B-USE AS REQUIRED
D-ORDER BY THE METER
Z-NOT SERVICED SEPARATELY

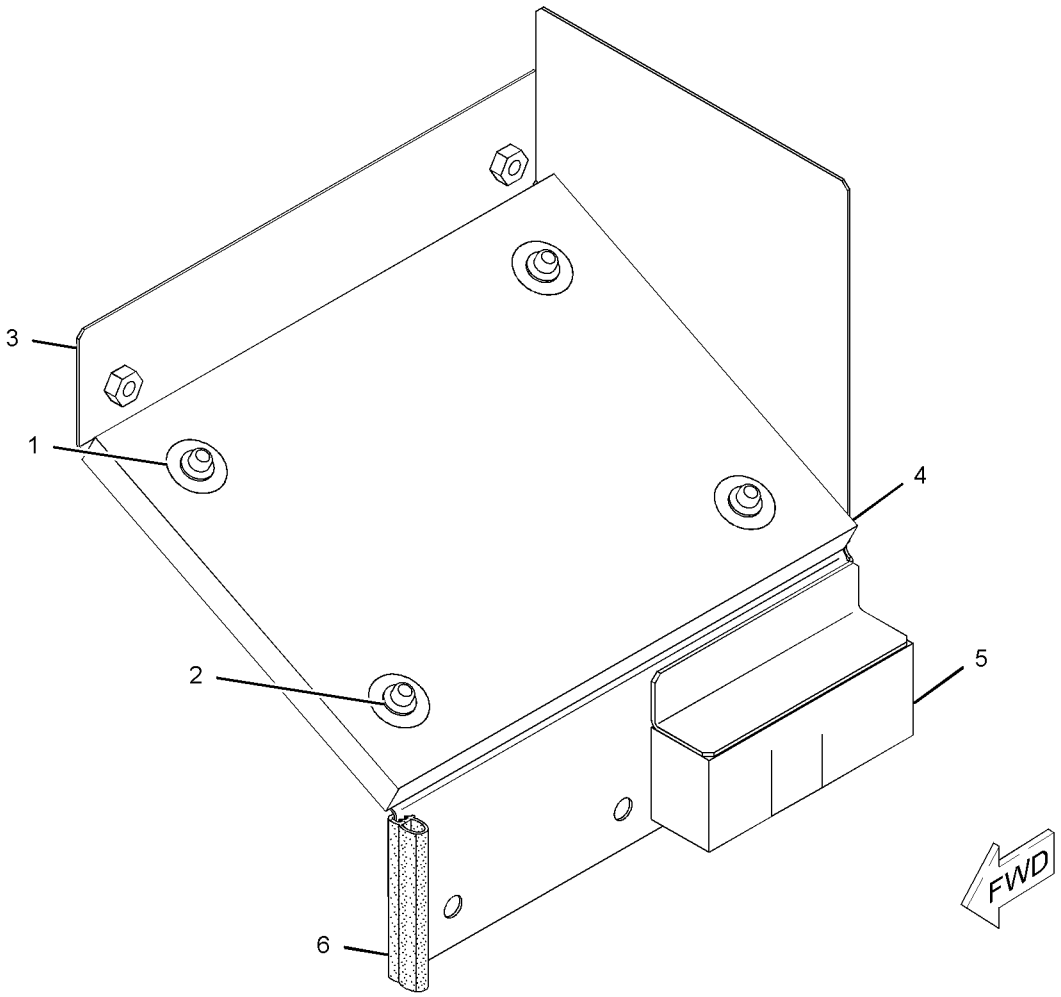

GRAPHIC #1 **<END>** g01126835

256-1764 SHEET AS-SOUND SUPPRESSION

S/N: JGB1-UP; KHS1-UP

PART OF 303-9875 HOOD & GUARD GP

SMCS-1801, 7076, 7251, 7267 **i02940653**

NOTE	PART NUMBER	QTY	PART NAME 1 2 3 4 5 6 (PRODUCT LEVEL)	SEE PAGE
Y	*304-0008*	1	SHEET AS-SOUND SUPPRESSION	386
			—OR—	
Y	*304-0009*	1	SHEET AS-SOUND SUPPRESSION	387

Y-SEPARATE ILLUSTRATION

<END>

FRAME AND BODY

289-6591 SHEET AS-SOUND SUPPRESSION

S/N: JGB1-UP; KHS1-UP

PART OF 307-7764 HOOD & GUARD GP

SMCS-1801, 7076, 7251, 7267 **i02554834**

NOTE	REF NO	GRAPHIC REF	PART NUMBER	QTY	PART NAME 1 2 3 4 5 6 (PRODUCT LEVEL)	SEE PAGE
	1	1	**4I-7924**	8	WASHER (4.5X40X1.2-MM THK)	
	2	1	**6P-2216**	8	CAP	
M	3	1	**135-8575**	4	BOLT AS	
	4	1	**237-8728**	1	SHEET-RUBBER	
	5	1	**237-8729**	1	SHEET	
	6	1	**289-6592**	1	INSULATION	
Z	7	1		1	SHEET AS	

M-METRIC PART
Z-NOT SERVICED SEPARATELY

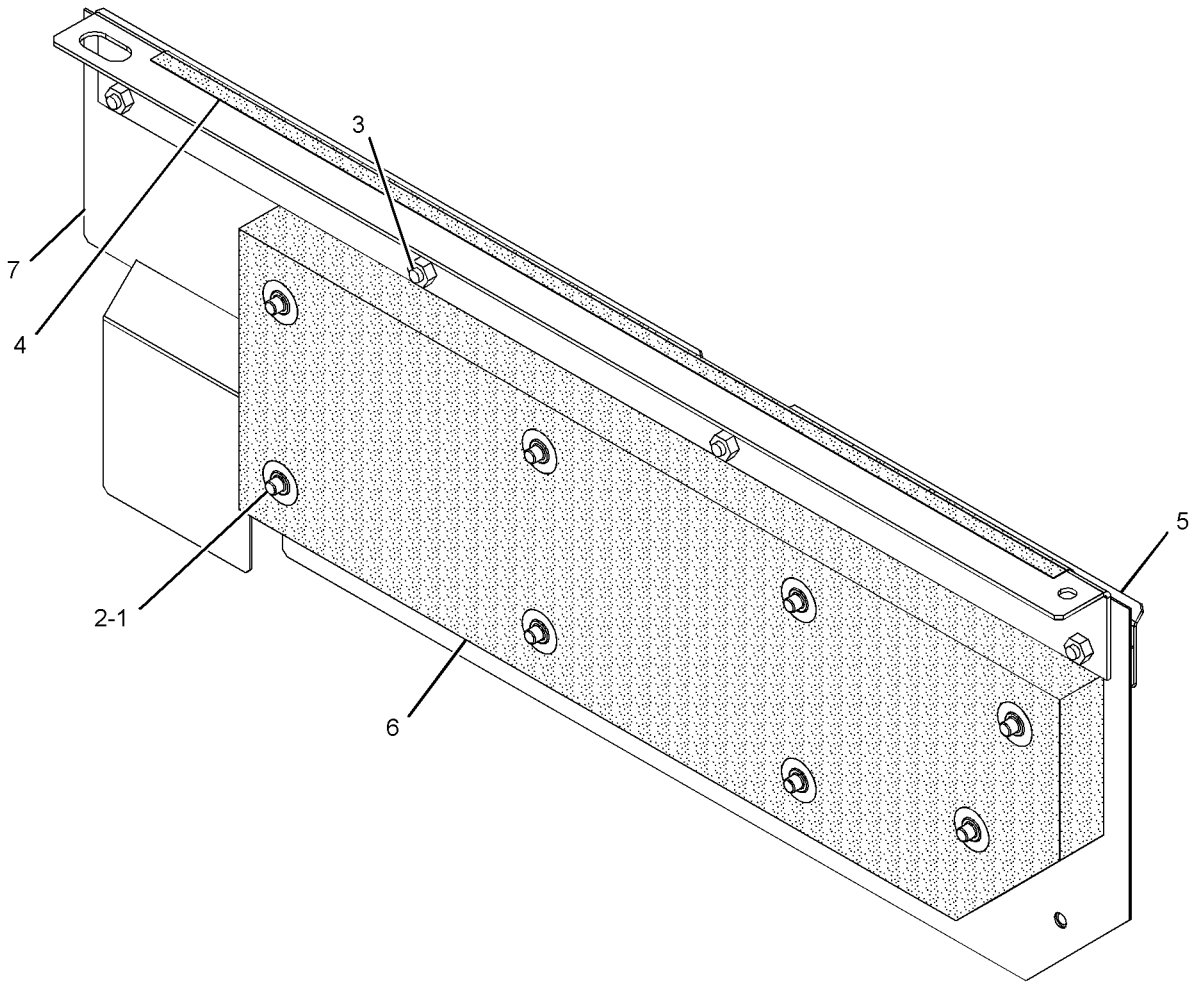

GRAPHIC #1 **<END>** g01279169

FRAME AND BODY

303-9877 SHEET AS-SOUND SUPPRESSION

S/N: JGB1-UP; KHS1-UP

PART OF 303-9875 HOOD & GUARD GP

SMCS-1801, 7076, 7251, 7267 **i02854103**

NOTE	REF NO	GRAPHIC REF	PART NUMBER	QTY	PART NAME 1 2 3 4 5 6 (PRODUCT LEVEL)	SEE PAGE
	1	1	**4I-7924**	4	WASHER (4.5X40X1.2-MM THK)	
	2	1	**6P-2216**	4	CAP	
	3	1	**9M-5732**	5	RIVET-POP	
	4	1	**236-9496**	1	INSULATION	
D	5	1	**101-9848**		SEAL (0.04-M)	
	6	1	**303-9881**	1	SHEET-RUBBER	
	7	1	**303-9884**	1	SHEET-RUBBER	
	8	1	**9M-2307**	5	WASHER (5.2X19X2-MM THK)	
D	9	1	**5P-8309**		SEAL (0.28-M)	

D-ORDER BY THE METER

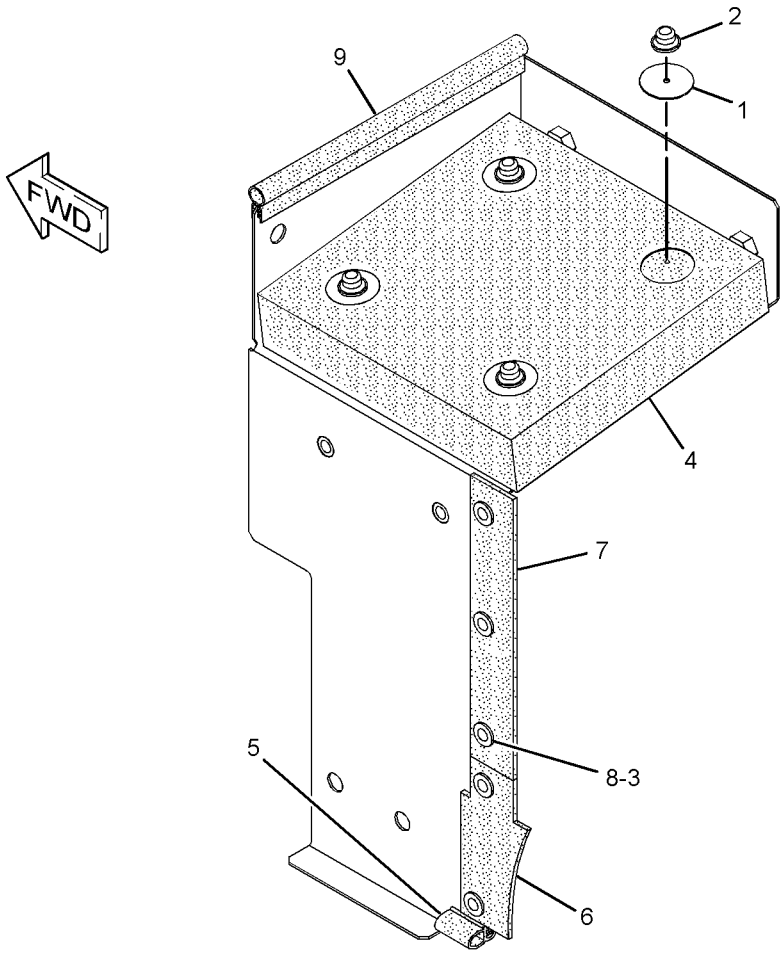

GRAPHIC #1 **<END>** g01429765

304-0008 SHEET AS-SOUND SUPPRESSION

S/N: JGB1-UP; KHS1-UP

PART OF 256-1764 SHEET AS-SOUND SUPPRESSION

SMCS-1801, 7076, 7251, 7267 **i02940664**

NOTE	REF NO	GRAPHIC REF	PART NUMBER	QTY	PART NAME 1 2 3 4 5 6 (PRODUCT LEVEL)	SEE PAGE
	1	1	**4I-7924**	4	WASHER (4.5X40X1.2-MM THK)	
	2	1	**6P-2216**	4	CAP	
	3	1	**9M-5732**	8	RIVET-POP	
D	4	1	**5P-8309**		SEAL (0.4-M)	
	5	1	**236-9500**	1	SHEET-RUBBER	
	6	1	**313-8279**	2	INSULATION	
	7	1	**9M-2307**	8	WASHER (5.2X19X2-MM THK)	

D-ORDER BY THE METER

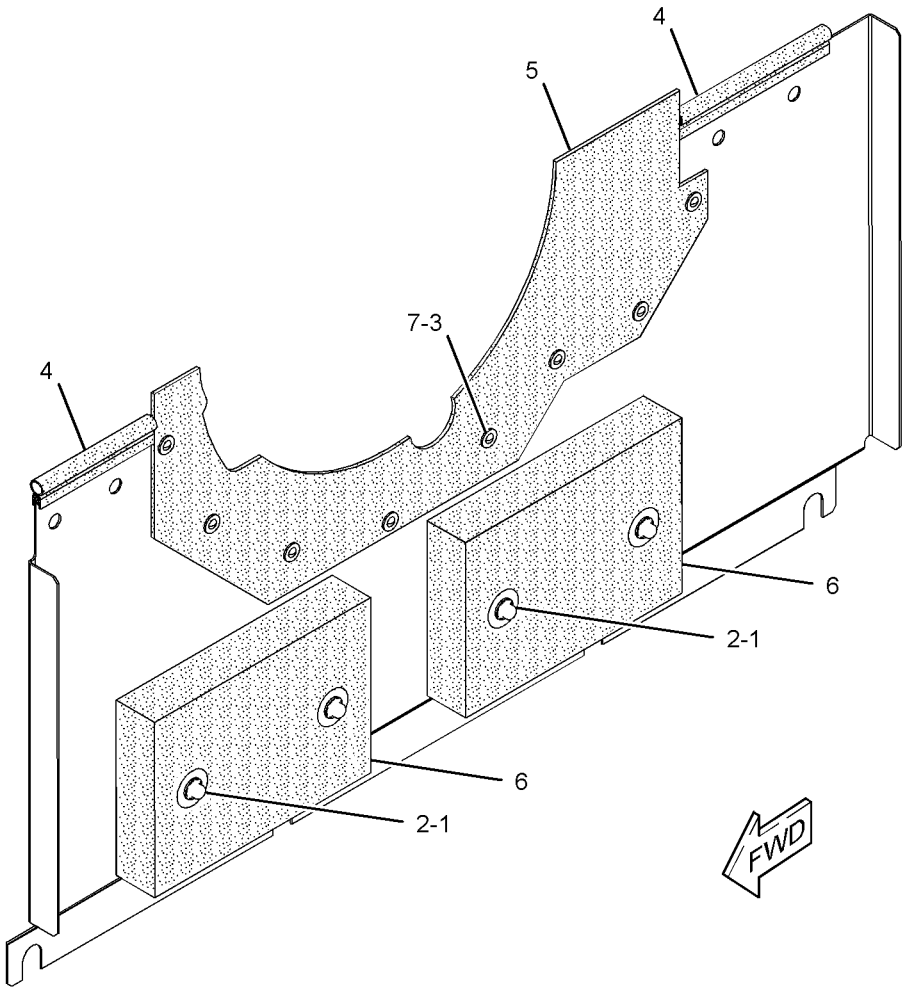

GRAPHIC #1 **<END>** g01458576

FRAME AND BODY

304-0009 SHEET AS-SOUND SUPPRESSION

S/N: JGB1-UP; KHS1-UP

PART OF 256-1764 SHEET AS-SOUND SUPPRESSION

SMCS-1801, 7076, 7251, 7267 **i02940665**

NOTE	REF NO	GRAPHIC REF	PART NUMBER	QTY	PART NAME 1 2 3 4 5 6 (PRODUCT LEVEL)	SEE PAGE
	1	1	**4I-7924**	4	WASHER (4.5X40X1.2-MM THK)	
	2	1	**6P-2216**	4	CAP	
	3	1	**9M-5732**	8	RIVET-POP	
	4	1	**304-0000**	1	INSULATION	
D	5	1	**5P-8309**		SEAL (0.2-M)	
D	5A	1	**5P-8309**		SEAL (0.15-M)	
	6	1	**304-0011**	1	SHEET-RUBBER	
	7	1	**313-8279**	2	INSULATION	
	8	1	**9M-2307**	8	WASHER (5.2X19X2-MM THK)	

D-ORDER BY THE METER

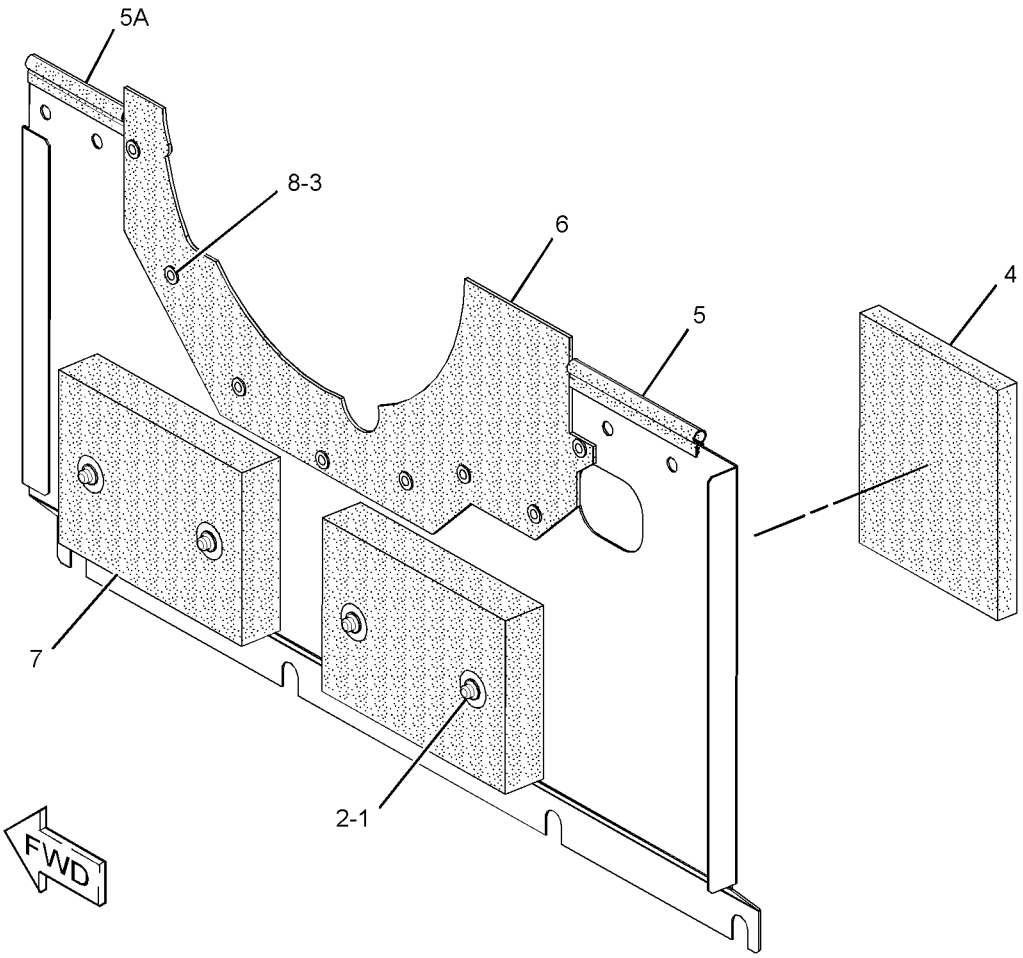

GRAPHIC #1 **<END>** g01458622

313-7811 SHEET AS-SOUND SUPPRESSION–ACCUGRADE READY

S/N: JGB1-UP; KHS1-UP
PART OF 319-9274, 351-9595 SPECIAL AR
AN ATTACHMENT

SMCS-1801, 7076, 7251, 7267 **i02921316**

NOTE	REF NO	GRAPHIC REF	PART NUMBER	QTY	PART NAME 1 2 3 4 5 6 (PRODUCT LEVEL)	SEE PAGE
Y	1	1	**313-7812**	1	SHEET AS-SOUND SUPPRESSION	389
Y	2	1	**313-7814**	1	SHEET AS-SOUND SUPPRESSION	390

Y-SEPARATE ILLUSTRATION

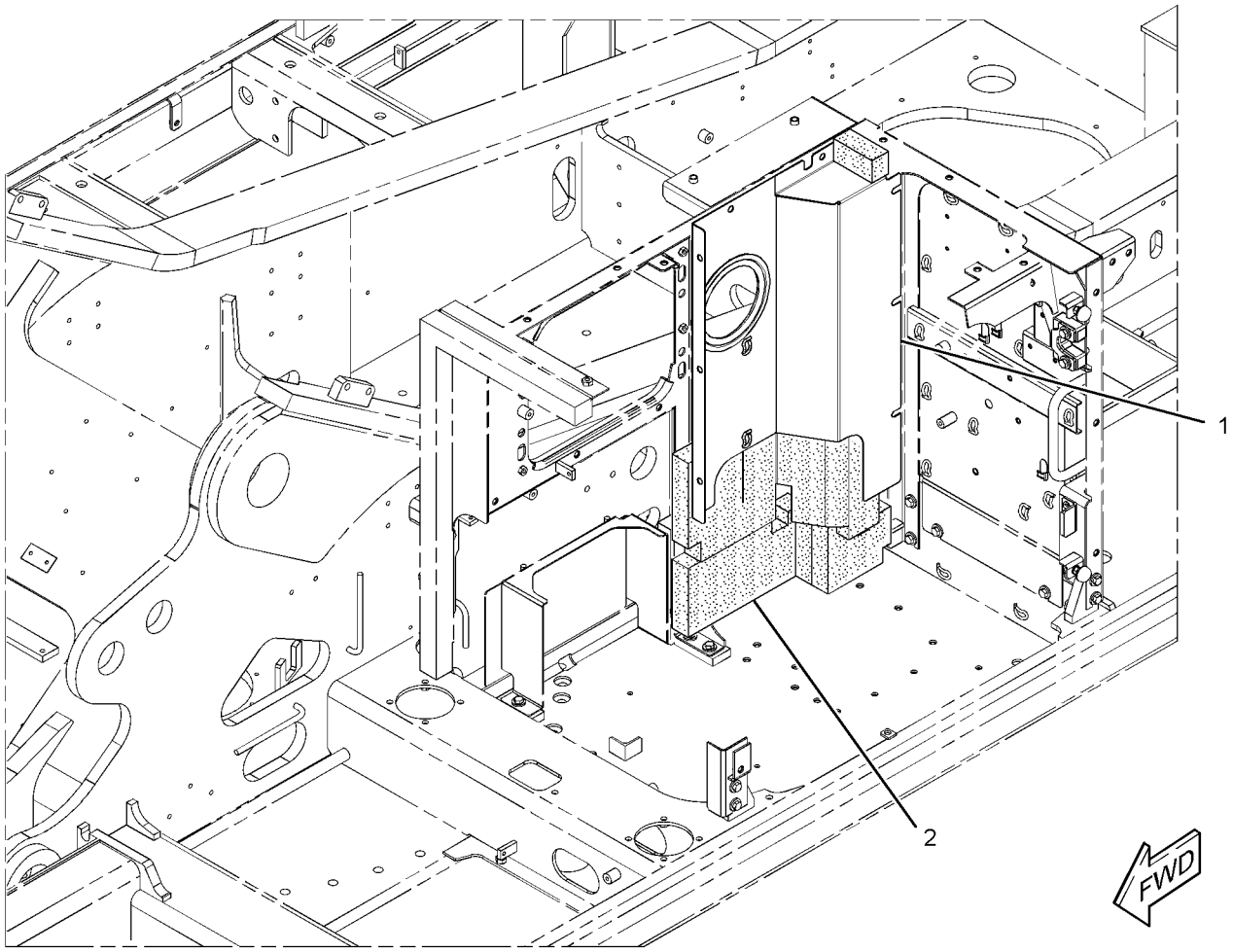

GRAPHIC #1 **<END>** g01456762

313-7812 SHEET AS-SOUND SUPPRESSION

S/N: JGB1-UP; KHS1-UP
PART OF 313-7811 SHEET AS-SOUND SUPPRESSION
AN ATTACHMENT

SMCS-1801, 7076, 7251, 7267 **i02921447**

NOTE	REF NO	GRAPHIC REF	PART NUMBER	QTY	PART NAME 1 2 3 4 5 6 (PRODUCT LEVEL)	SEE PAGE
	1	1	**241-2289**	1	LINER	
	2	1	**313-7813**	1	LINER	
D	3	1	**5P-8309**		SEAL (0.7-M)	

D-ORDER BY THE METER

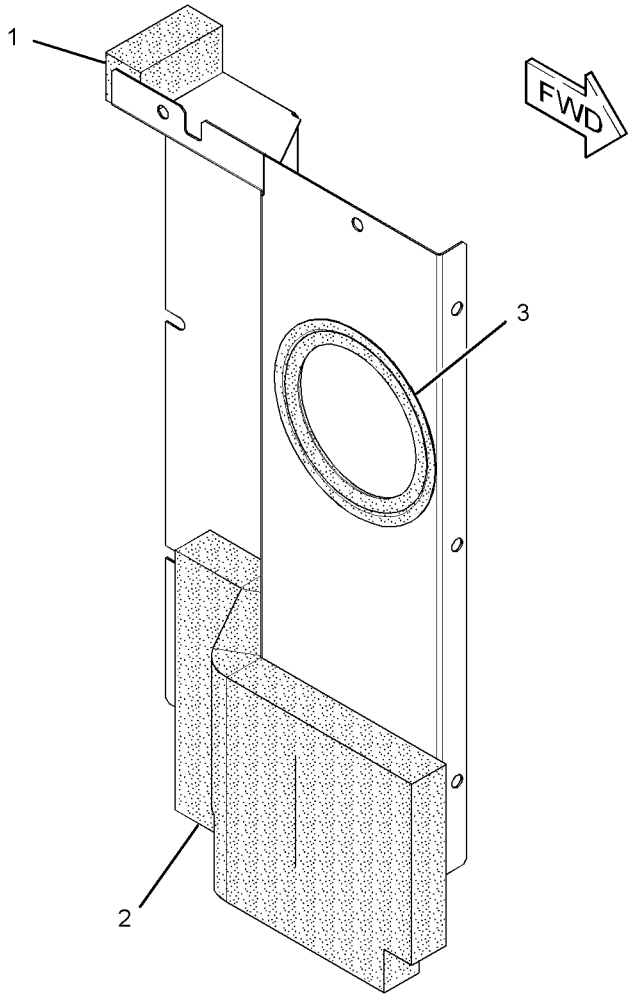

GRAPHIC #1 **<END>** g01456758

FRAME AND BODY

313-7814 SHEET AS-SOUND SUPPRESSION

S/N: JGB1-UP; KHS1-UP
PART OF 313-7811 SHEET AS-SOUND SUPPRESSION
AN ATTACHMENT

SMCS-1801, 7076, 7251, 7267 **i03894131**

NOTE	REF NO	GRAPHIC REF	PART NUMBER	QTY	PART NAME 1 2 3 4 5 6 (PRODUCT LEVEL)	SEE PAGE
C	1	1	**330-1172**	1	LINER	
	2	1	**313-7815**	1	LINER	
	3	1	**313-7816**	1	LINER	

C-CHANGE FROM PREVIOUS TYPE

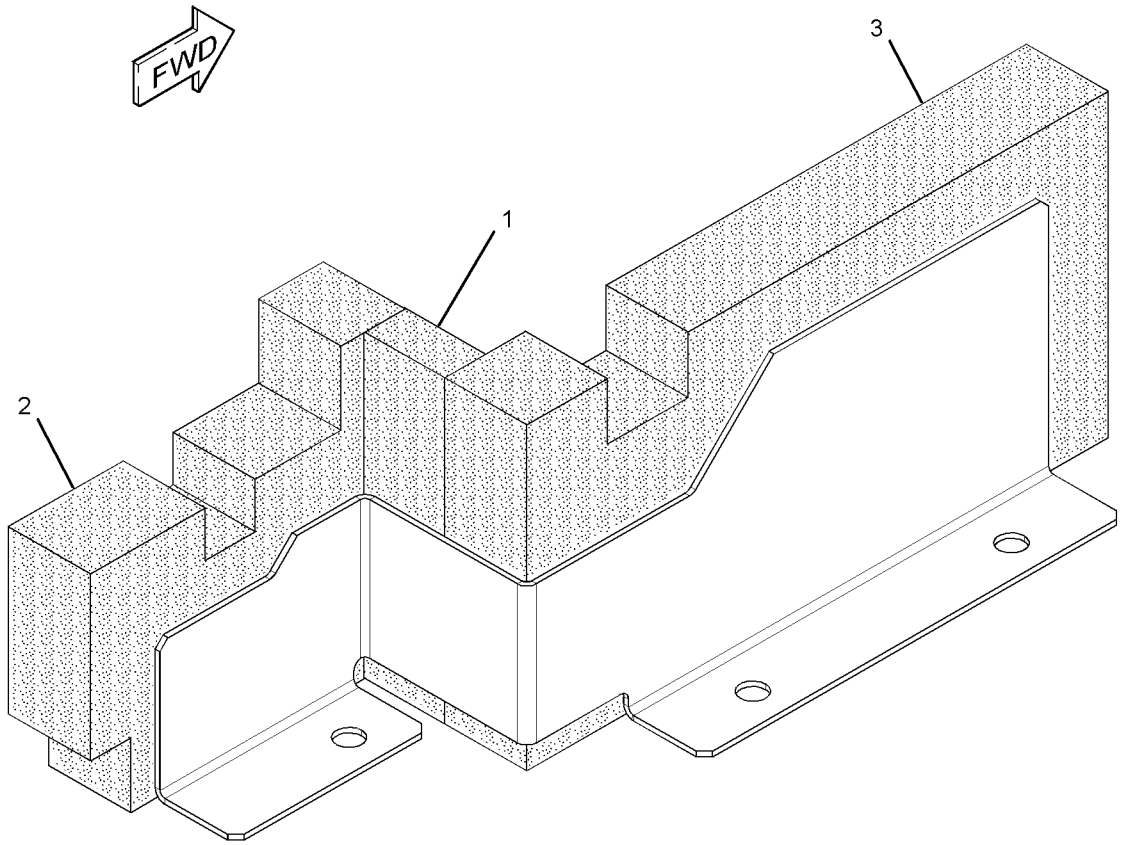

GRAPHIC #1 **<END>** g01456739

320-5609 SHEET AS-SOUND SUPPRESSION

S/N: JGB1-UP; KHS1-UP
PART OF 310-0387 VALVE AR-ALT PATTERN CONTROL
AN ATTACHMENT

SMCS-1801, 7076, 7251, 7267 **i03894094**

NOTE	REF NO	GRAPHIC REF	PART NUMBER	QTY	PART NAME 1 2 3 4 5 6 (PRODUCT LEVEL)	SEE PAGE
CY	1	1	**330-1156**	1	SHEET AS-SOUND SUPPRESSION	395

C-CHANGE FROM PREVIOUS TYPE
Y-SEPARATE ILLUSTRATION

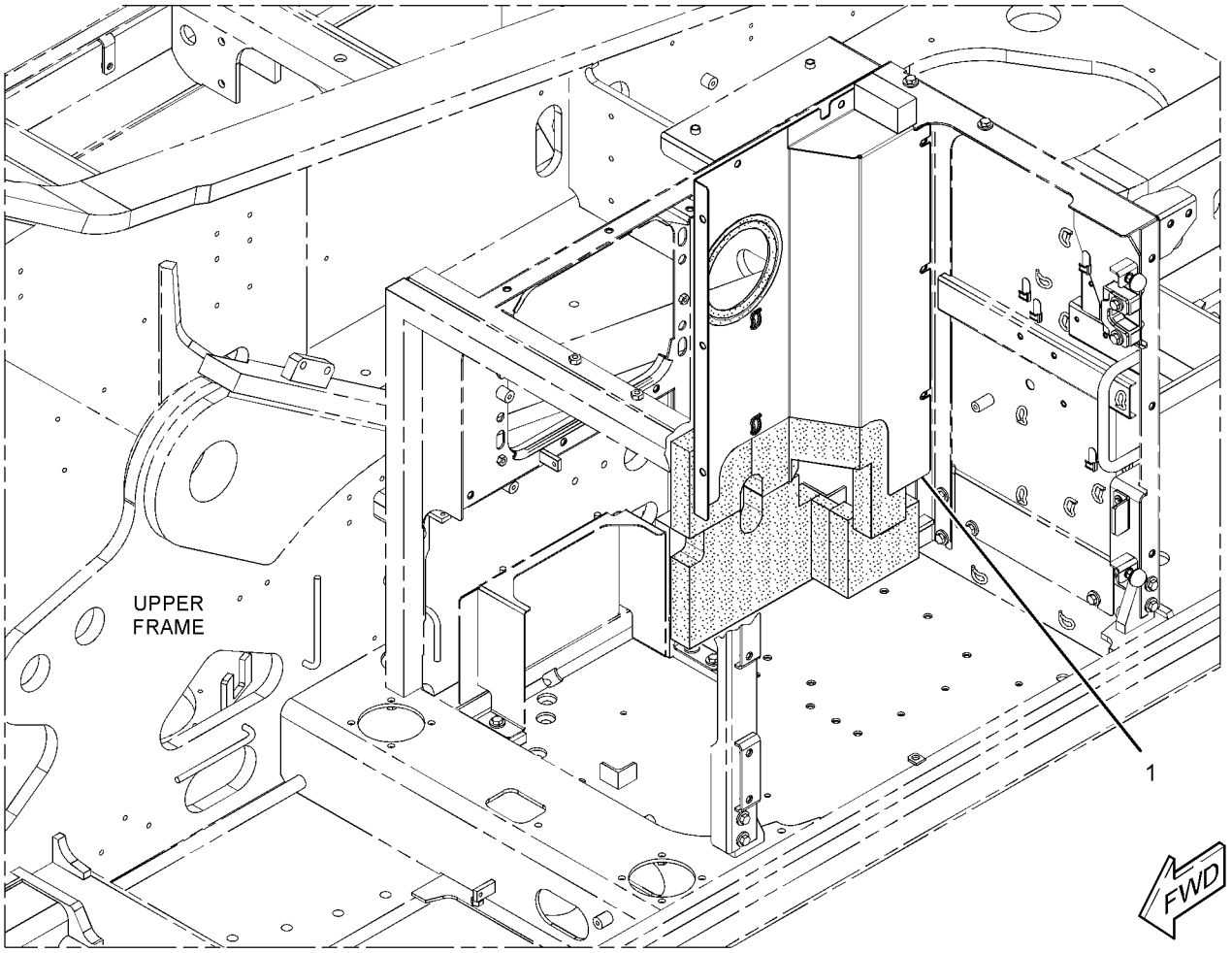

GRAPHIC #1 **<END>** g02137793

320-5774 SHEET AS-SOUND SUPPRESSION

S/N: JGB1-UP; KHS1-UP

PART OF 307-7764 HOOD & GUARD GP

SMCS-1801, 7076, 7251, 7267 **i03042822**

NOTE	REF NO	GRAPHIC REF	PART NUMBER	QTY	PART NAME 1 2 3 4 5 6 (PRODUCT LEVEL)	SEE PAGE
	1	1	**4I-7924**	10	WASHER (4.5X40X1.2-MM THK)	
	2	1	**6P-2216**	10	CAP	
M	3	1	**135-8573**	4	BOLT AS	
	4	1	**236-9486**	1	INSULATION	
	5	1	**236-9487**	1	INSULATION	
	6	1	**237-8750**	1	INSULATION	
D	7	1	**5P-8309**		SEAL (0.4-M EACH)	
D	7A	1	**5P-8309**		SEAL (0.3-M EACH)	

D-ORDER BY THE METER
M-METRIC PART

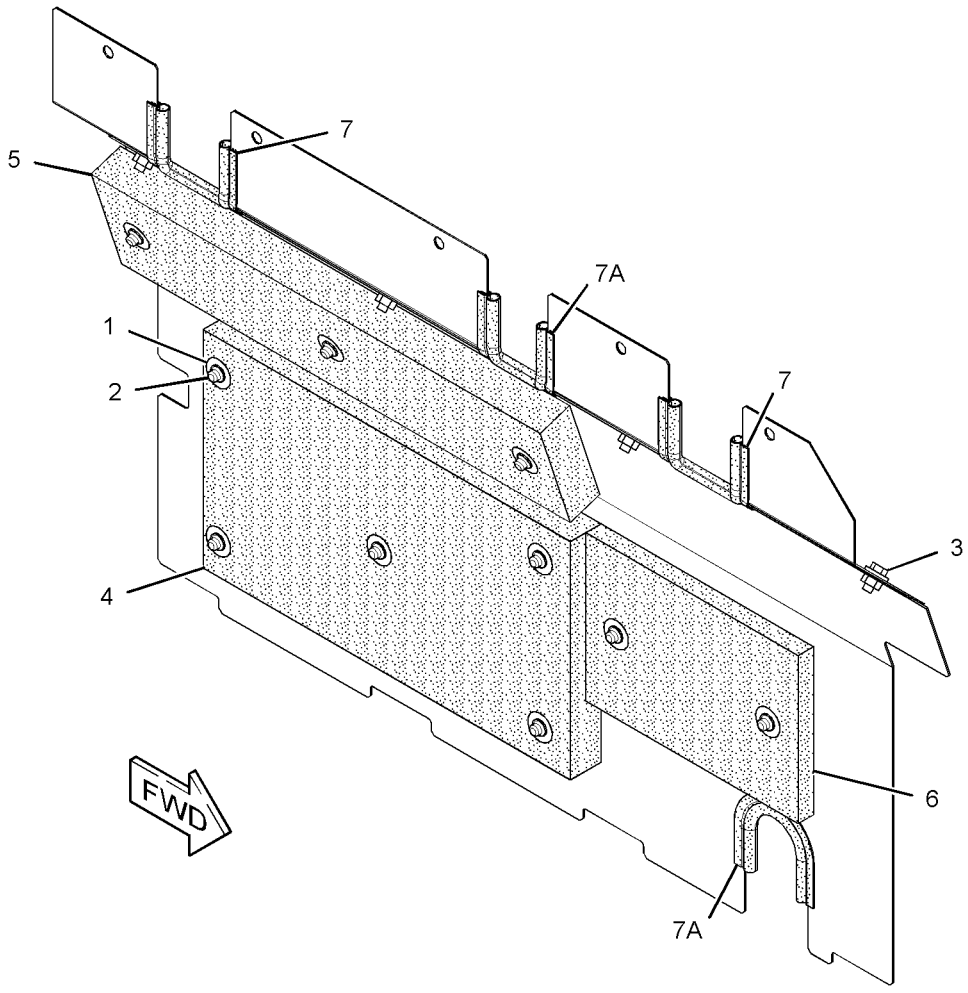

GRAPHIC #1 **<END>** g01561833

FRAME AND BODY

327-3339 SHEET AS-SOUND SUPPRESSION

S/N: JGB1-UP; KHS1-UP

PART OF 307-7764 HOOD & GUARD GP

SMCS-1801, 7076, 7251, 7267 **i03633069**

NOTE	REF NO	GRAPHIC REF	PART NUMBER	QTY	PART NAME 1 2 3 4 5 6 (PRODUCT LEVEL)	SEE PAGE
	1	1	**241-2289**	1	LINER	
D	2	1	**5P-8309**		SEAL (0.7-M)	
	3	1	**327-3340**	1	LINER	

D-ORDER BY THE METER

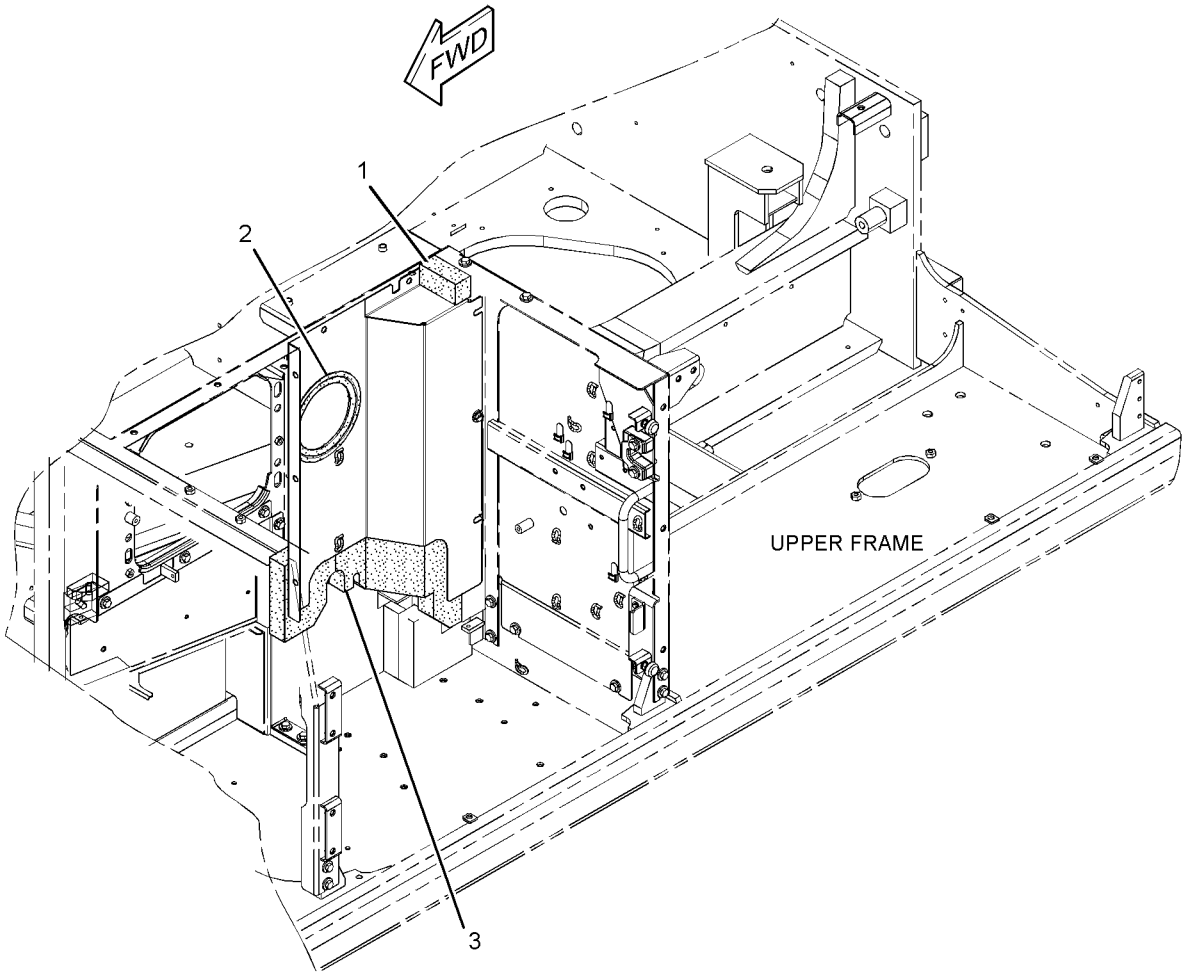

GRAPHIC #1 **<END>** g01784957

FRAME AND BODY

327-3341 SHEET AS-SOUND SUPPRESSION

S/N: JGB1-UP; KHS1-UP

PART OF 307-7764 HOOD & GUARD GP

SMCS-1801, 7076, 7251, 7267 **i03633072**

NOTE	REF NO	GRAPHIC REF	PART NUMBER	QTY	PART NAME 1 2 3 4 5 6 (PRODUCT LEVEL)	SEE PAGE
	1	1	**330-1172**	1	LINER	
	2	1	**330-1154**	1	LINER	
	3	1	**330-1155**	1	LINER	

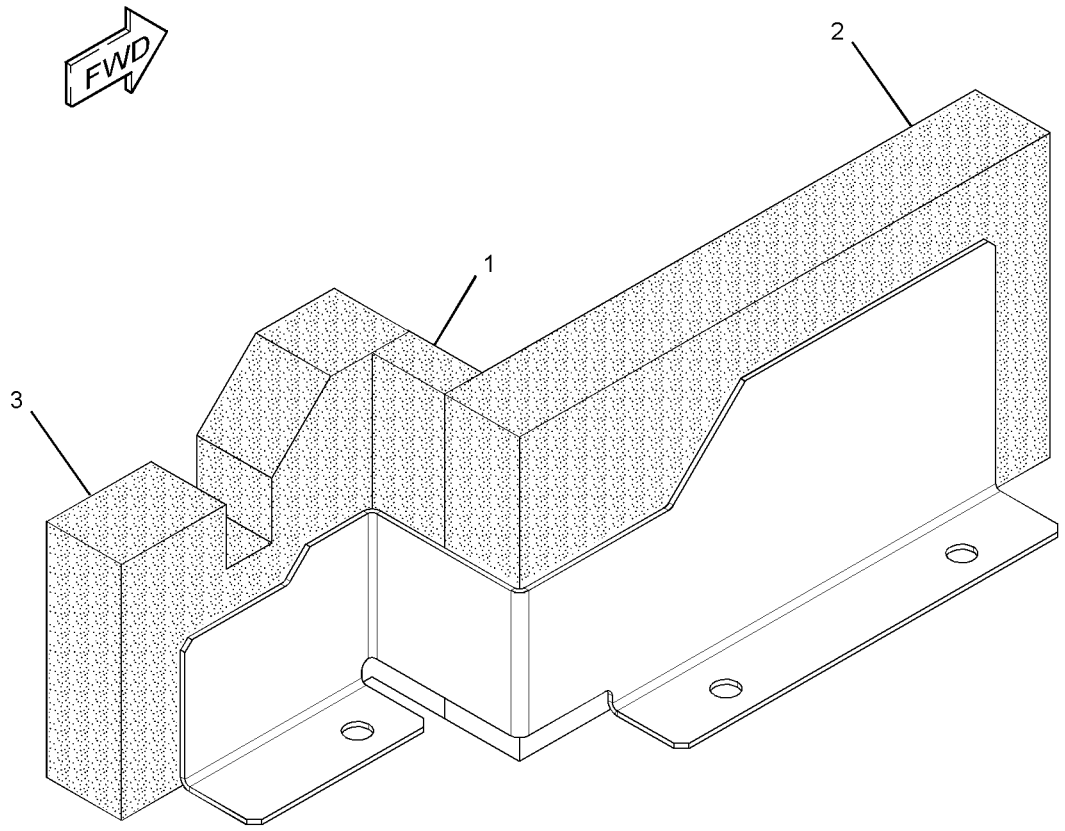

GRAPHIC #1 **<END>** g01743120

330-1156 SHEET AS-SOUND SUPPRESSION

S/N: JGB1-UP; KHS1-UP
PART OF 320-5609 SHEET AS-SOUND SUPPRESSION
AN ATTACHMENT

SMCS-1801, 7076, 7251, 7267 **i03894110**

NOTE	REF NO	GRAPHIC REF	PART NUMBER	QTY	PART NAME 1 2 3 4 5 6 (PRODUCT LEVEL)	SEE PAGE
	1	1	**241-2289**	1	LINER	
	2	1	**5P-8309**		SEAL (0.7-M)	
	3	1	**330-1157**	1	LINER	

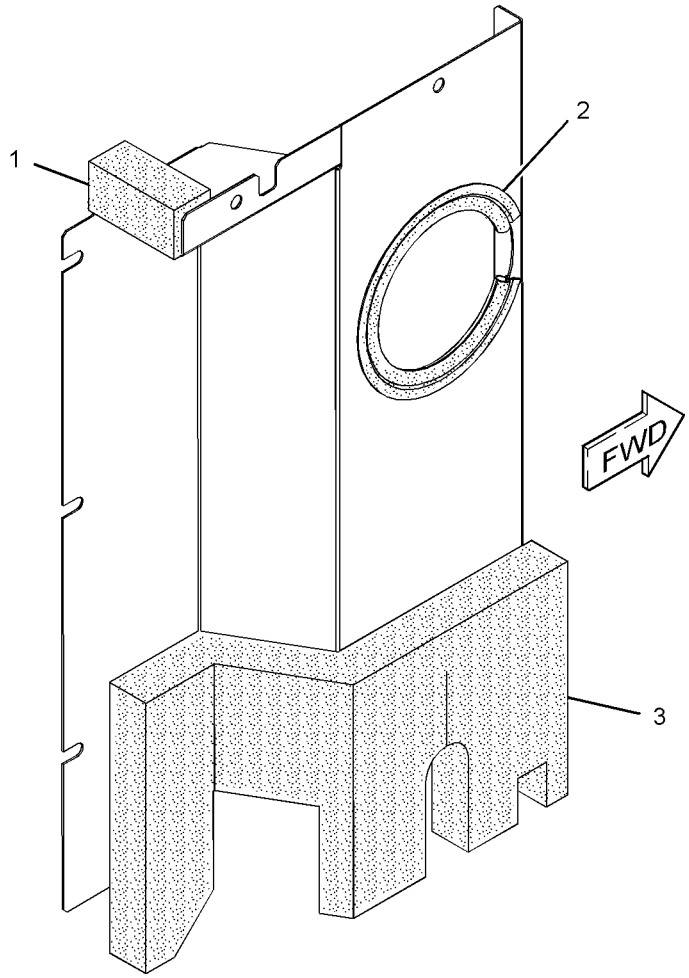

GRAPHIC #1 **<END>** g01659033

330-1312 SHEET AS-SOUND SUPPRESSION

S/N: JGB1-UP; KHS1-UP

PART OF 307-7764 HOOD & GUARD GP

SMCS-1801, 7076, 7251, 7267 **i03629737**

NOTE	REF NO	GRAPHIC REF	PART NUMBER	QTY	PART NAME 1 2 3 4 5 6 (PRODUCT LEVEL)	SEE PAGE
D	1	1	**5P-8309**		SEAL (0.4-M)	
D	1A	1	**5P-8309**		SEAL (0.2-M)	
	2	1	**244-7813**	1	LINER	
	3	1	**244-7814**	1	LINER	
	4	1	**307-7847**	1	LINER	
	5	1	**330-1314**	1	LINER	

D-ORDER BY THE METER

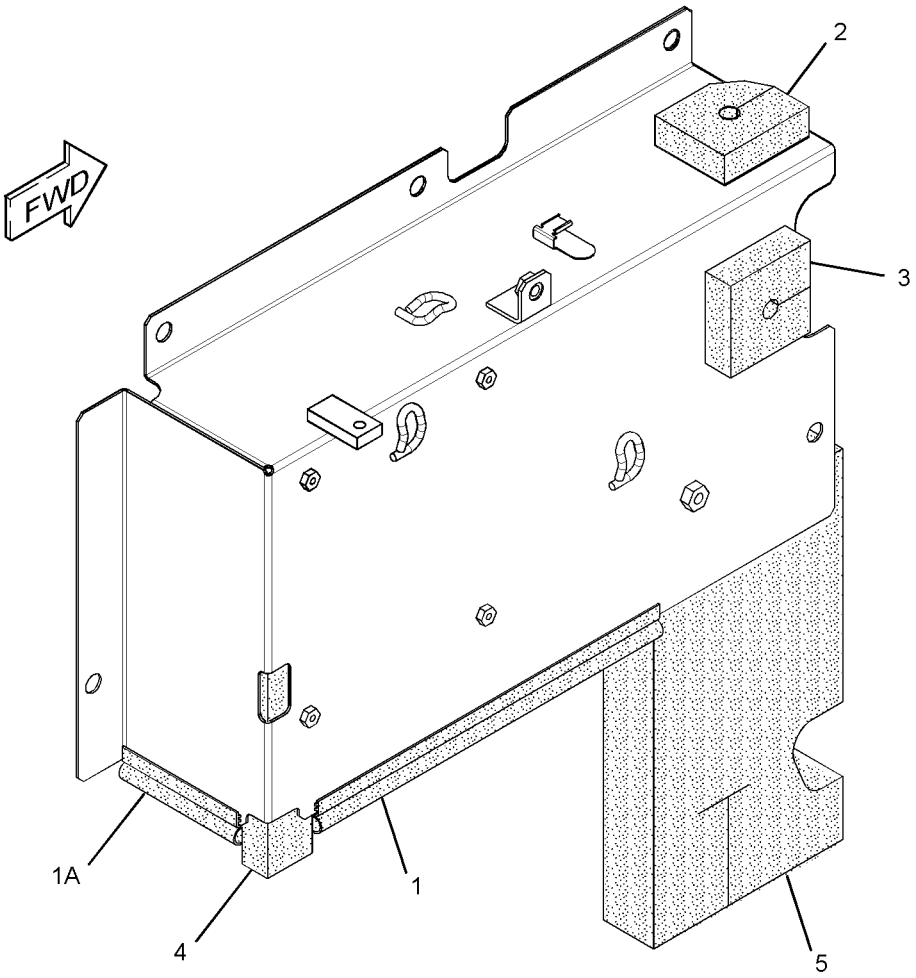

GRAPHIC #1 **<END>** g01734641

330-1313 SHEET AS-SOUND SUPPRESSION

S/N: JGB1-UP
PART OF 304-0010 STORAGE GP-VANDALISM GUARD
AN ATTACHMENT

SMCS-1801, 7076, 7251, 7267 **i03533146**

NOTE	REF NO	GRAPHIC REF	PART NUMBER	QTY	PART NAME 1 2 3 4 5 6 (PRODUCT LEVEL)	SEE PAGE
D	1	1	**5P-8309**		SEAL (0.1-M)	
	3	1	**244-7813**	1	LINER	
	4	1	**244-7814**	1	LINER	
	5	1	**307-7847**	1	LINER	
	6	1	**307-7848**	1	LINER	
	7	1	**330-1314**	1	LINER	

D-ORDER BY THE METER

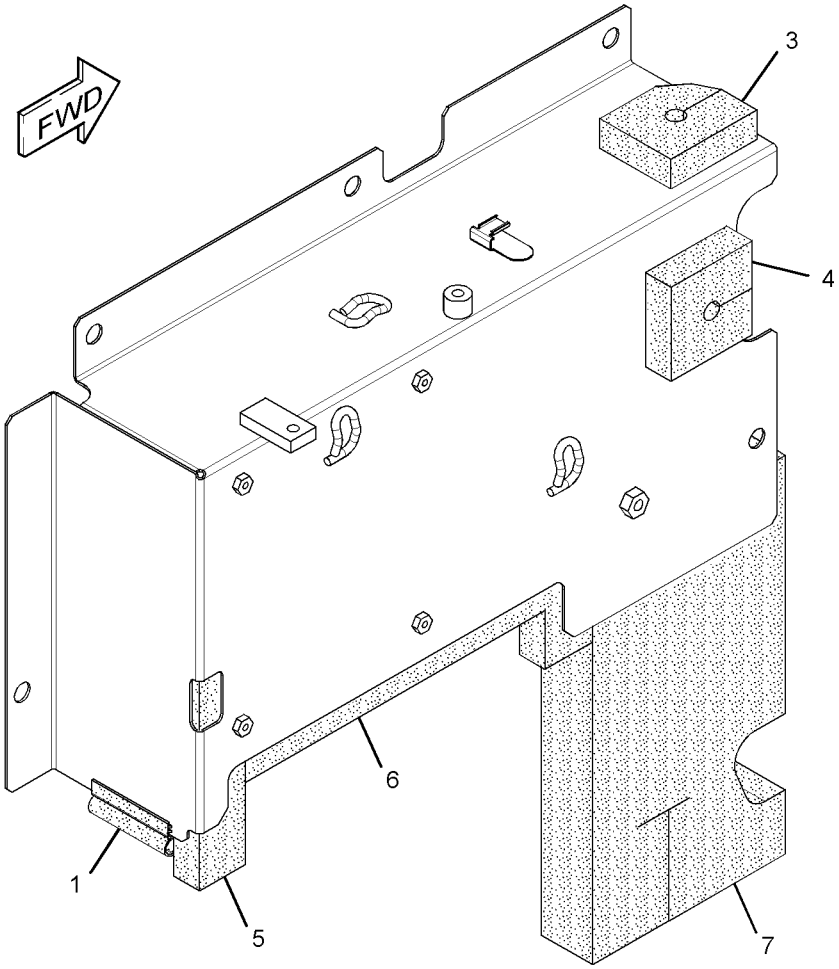

GRAPHIC #1 **<END>** g01620376

297-7547 STEP GP

S/N: JGB1-UP; KHS1-UP
PART OF 303-2589, 303-2591, 303-2634, 303-2638, 303-2639 TRACK GP
AN ATTACHMENT

SMCS-7254 **i02851880**

NOTE	REF NO	GRAPHIC REF	PART NUMBER	QTY	PART NAME 1 2 3 4 5 6 (PRODUCT LEVEL)	SEE PAGE
	1	1	**137-2998**	2	STEP AS	
M	2	1	**8T-7338**	8	BOLT (M16X2X45-MM)	
	3	1	**9X-8257**	8	WASHER (17.5X30X3.5-MM THK)	

M-METRIC PART

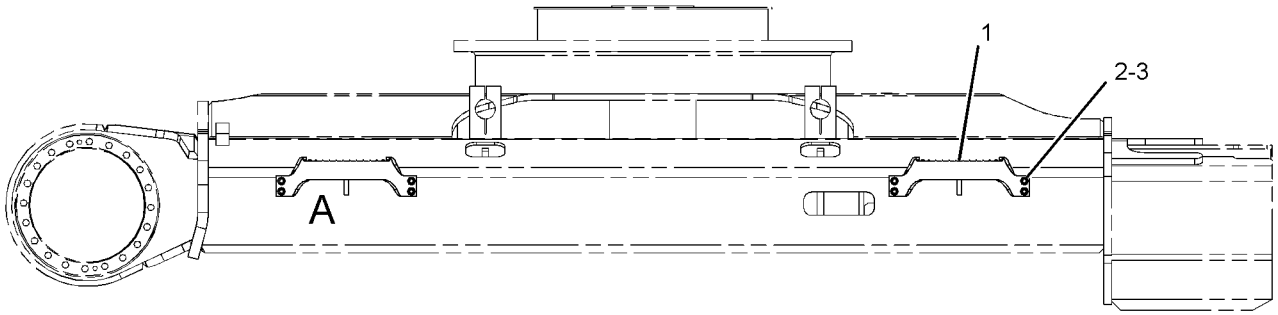

RIGHT SIDE VIEW

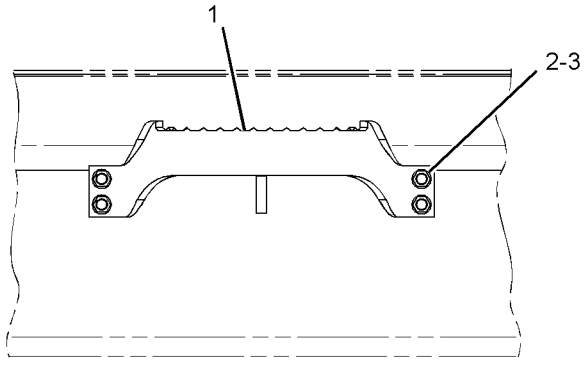

VIEW OF AREA A

GRAPHIC #1 **<END>** g01454395

297-7548 STEP GP

S/N: JGB1-UP
FUW 900-MM (35-IN) SHOES
PART OF 303-2640 TRACK GP
AN ATTACHMENT

SMCS-7254 **i02970021**

NOTE	REF NO	GRAPHIC REF	PART NUMBER	QTY	PART NAME 1 2 3 4 5 6 (PRODUCT LEVEL)	SEE PAGE
	1	1	**137-2997**	2	STEP AS	
M	2	1	**8T-7338**	8	BOLT (M16X2X45-MM)	
	3	1	**9X-8257**	8	WASHER (17.5X30X3.5-MM THK)	

M-METRIC PART

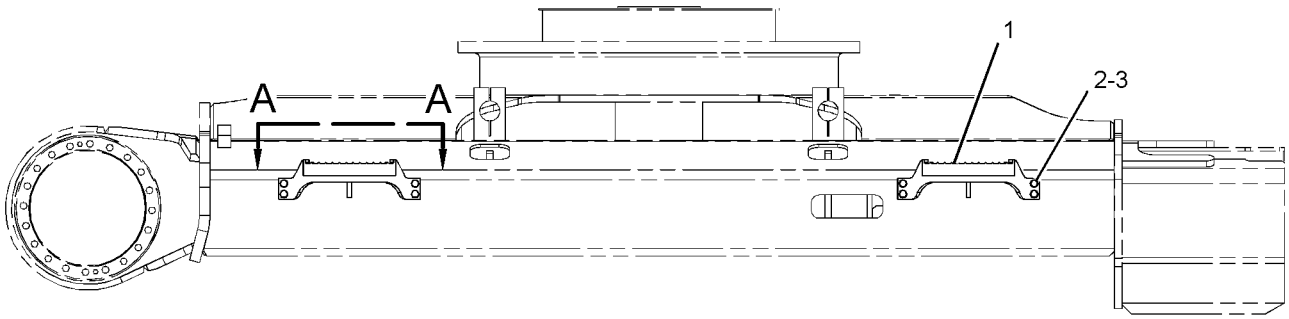

RIGHT SIDE VIEW

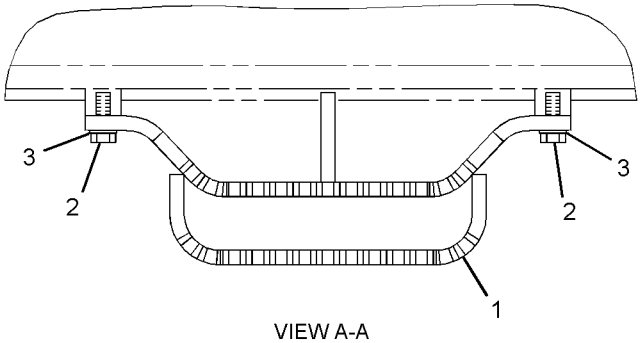

VIEW A-A

GRAPHIC #1 **<END>** g01458534

FRAME AND BODY

304-0010 STORAGE GP-VANDALISM GUARD

S/N: JGB1-UP
PART OF 303-2658 GUARD AR-VANDALISM
AN ATTACHMENT

SMCS-7315 **i03533142**

NOTE	REF NO	GRAPHIC REF	PART NUMBER	QTY	PART NAME 1 2 3 4 5 6 (PRODUCT LEVEL)	SEE PAGE
	1	1	**102-5713**	1	BOLT AS-SPECIAL	
M	2	1	**135-8573**	12	BOLT AS	
	3	1	**330-1367**	1	SHEET AS	
CY	4	1	**330-1313**	1	SHEET AS-SOUND SUPPRESSION	397
C	5	1	**330-1362**	1	SHEET AS	
	6	1	**223-3131**	1	SUPPORT AS	

C-CHANGE FROM PREVIOUS TYPE
M-METRIC PART
Y-SEPARATE ILLUSTRATION

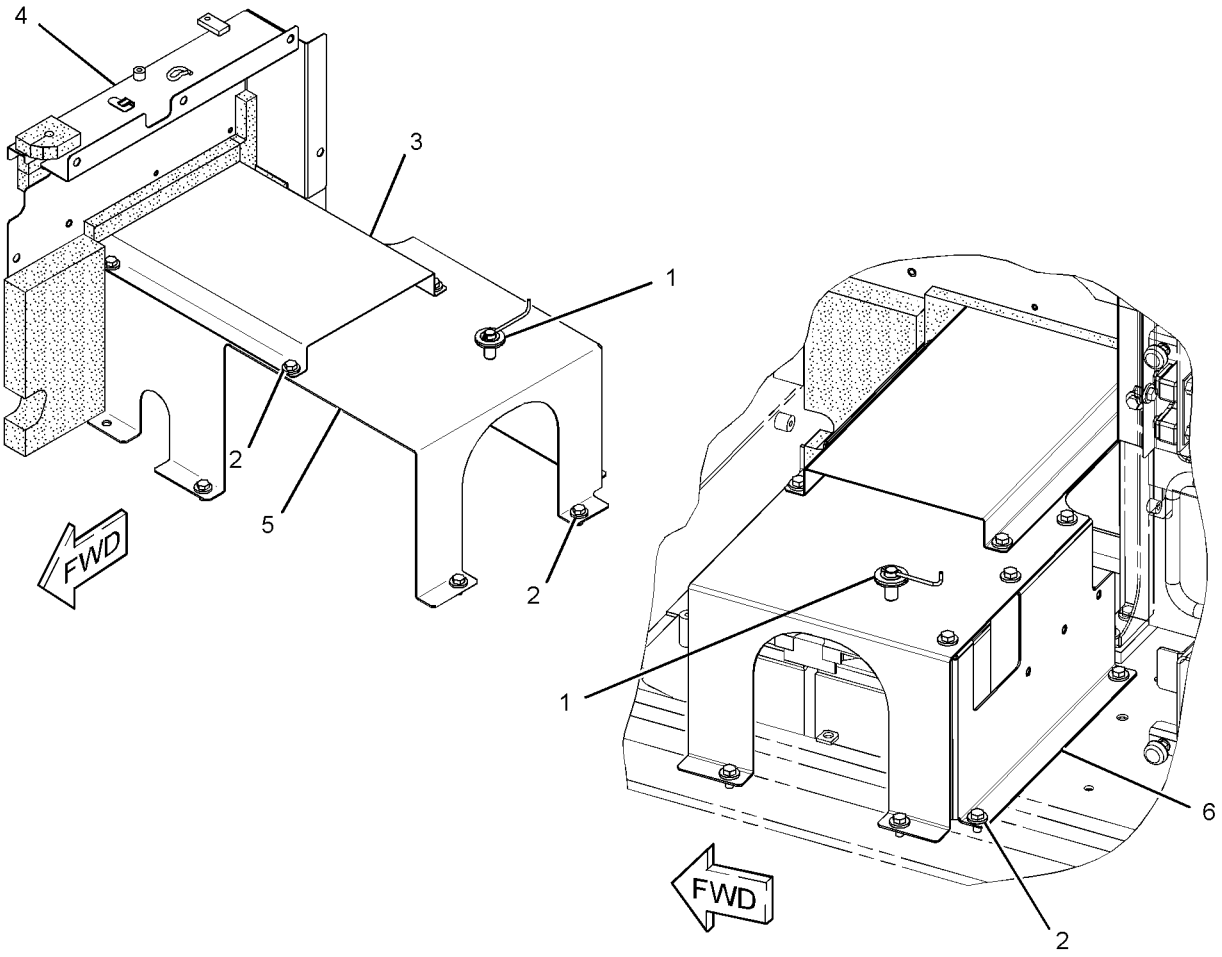

GRAPHIC #1 **<END>** g01895897

250-5169 SUPPORT AS-ENCLOSURE

S/N: JGB1-UP; KHS1-UP

PART OF 364-6968 SUPPORT GP-HOOD

SMCS-0635, 1801, 7076, 7251, 7263, 7267, 7272, 7276 **i02499520**

NOTE	REF NO	GRAPHIC REF	PART NUMBER	QTY	PART NAME 1 2 3 4 5 6 (PRODUCT LEVEL)	SEE PAGE
	1	1	**4I-7924**	8	WASHER (4.5X40X1.2-MM THK)	
	2	1	**6P-2216**	8	CAP	
Z	3	1		1	SUPPORT AS	
	4	1	**236-9477**	1	INSULATION	
	5	1	**236-9478**	1	INSULATION	
D	6	1	**5P-8309**		SEAL (0.6-M)	

D-ORDER BY THE METER
Z-NOT SERVICED SEPARATELY

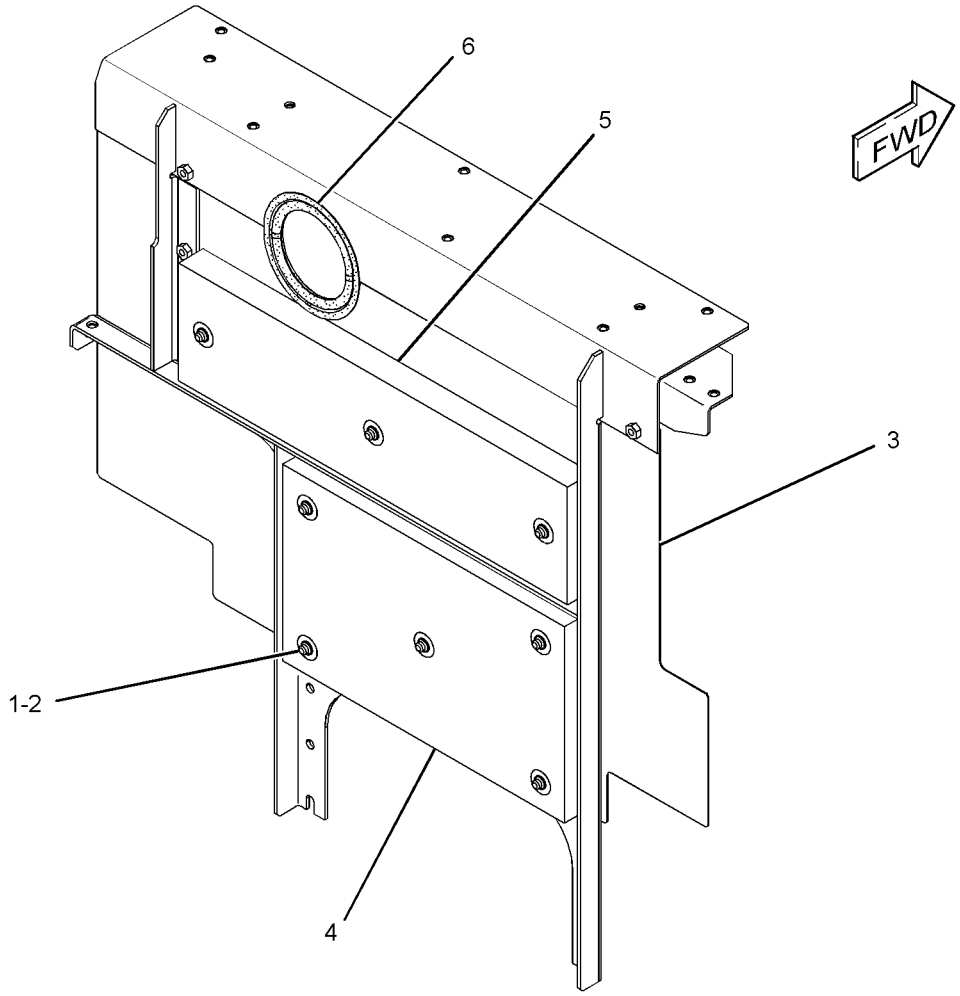

GRAPHIC #1 **<END>** g01250927

FRAME AND BODY

320-5492 SUPPORT AS-ENCLOSURE

S/N: JGB1-UP; KHS1-UP

PART OF 364-6968 SUPPORT GP-HOOD

SMCS-0635, 1801, 7076, 7251, 7263, 7267, 7272, 7276 **i04156133**

NOTE	REF NO	GRAPHIC REF	PART NUMBER	QTY	PART NAME 1 2 3 4 5 6 (PRODUCT LEVEL)	SEE PAGE
	1	1	**236-9479**	1	LINER	
	2	1	**237-8749**	1	LINER	
D	3	1	**101-9848**		SEAL (0.44-M)	
D	3A	1	**101-9848**		SEAL (0.41-M)	

D-ORDER BY THE METER

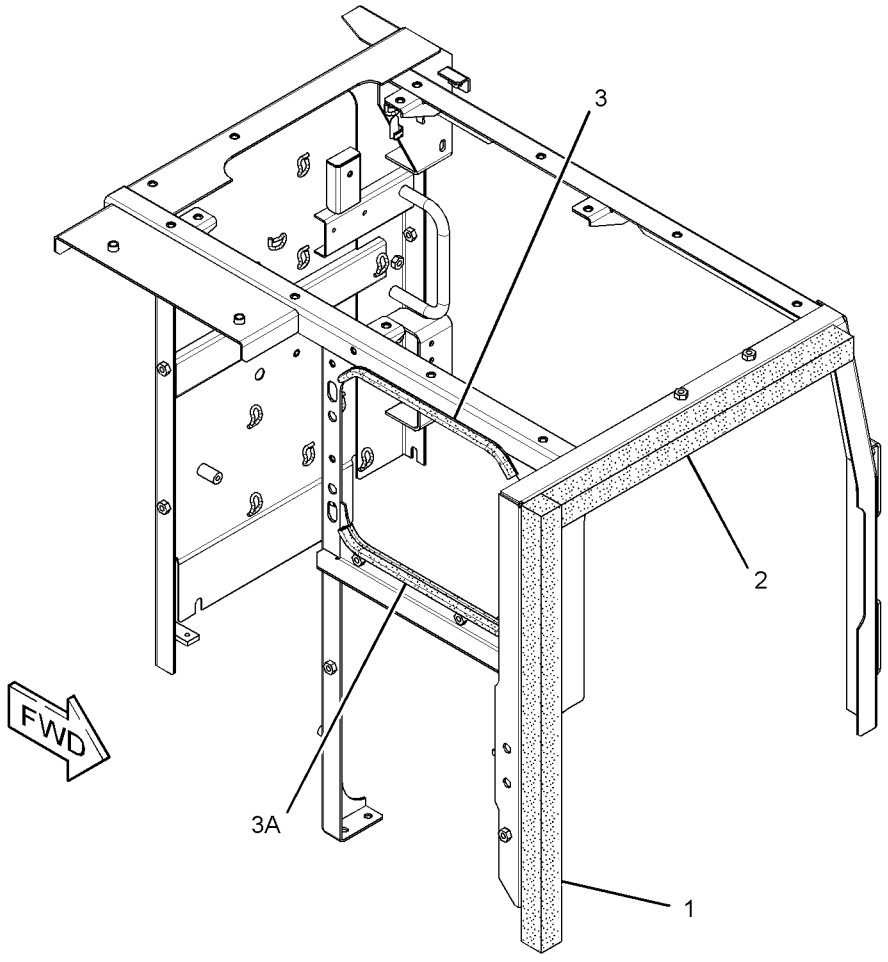

GRAPHIC #1 **<END>** g01707199

351-3012 SUPPORT GP-HOOD

S/N: JGB1-UP; KHS1-UP

PART OF 370-3231, 370-4189 CHASSIS AR

SMCS-7251 **i04156048**

NOTE	REF NO	GRAPHIC REF	PART NUMBER	QTY	PART NAME 1 2 3 4 5 6 (PRODUCT LEVEL)	SEE PAGE
	1	1	**4E-1384**	2	BUMPER-CONICAL	
	2	1	**4I-0117**	1	FASTENER	
	3	1	**4I-0118**	1	HOOK AS	
M	4	1	**135-8573**	26	BOLT AS	
	5	1	**141-6518**	1	SPACER (13.5X30X10-MM THK)	
	6	1	**223-3144**	1	SHEET AS	
		1	**4I-7924**	8	WASHER (4.5X40X1.2-MM THK)	
		1	**6P-2216**	8	CAP	
		1	**236-9485**	1	INSULATION	
Y	7	1	**244-7793**	1	SHEET AS-SOUND SUPPRESSION	381
	8	1	**256-1758**	1	SUPPORT AS	
		1	**236-9481**	1	LINER	
	9	1	**262-2211**	1	SUPPORT	
Y	10	1	**351-3013**	1	COVER GP-HOOD	340
	11	1	**262-2603**	2	SPACER (13.5X30X16-MM THK)	
	12	1	**313-7830**	1	SHEET AS	
		1	**4I-7924**	5	WASHER (4.5X40X1.2-MM THK)	
		1	**6P-2216**	5	CAP	
		1	**236-9484**	1	INSULATION	
	13	1	**327-3010**	1	SUPPORT AS	
		1	**236-9475**	1	LINER	
	14	1	**095-1319**	2	PIN-CLEVIS	
	15	1	**3B-4618**	2	PIN-COTTER	
M	16	1	**5C-7261**	2	NUT (M8X1.25-THD)	
	17	1	**5P-4116**	2	WASHER-HARD (8.8X20.5X2-MM THK)	
	18	1	**8T-4121**	6	WASHER-HARD (11X21X2.5-MM THK)	
M	19	1	**8T-4184**	2	BOLT (M12X1.75X45-MM)	
M	20	1	**8T-4189**	2	BOLT (M8X1.25X20-MM)	
M	21	1	**8T-4200**	2	BOLT (M8X1.25X16-MM)	
	22	1	**8T-4224**	4	WASHER-HARD (8.8X16X2-MM THK)	
M	23	1	**8T-4956**	1	BOLT (M12X1.75X35-MM)	

M-METRIC PART
Y-SEPARATE ILLUSTRATION

351-3012 **SUPPORT GP-HOOD** *(contd.)* **i04156048**

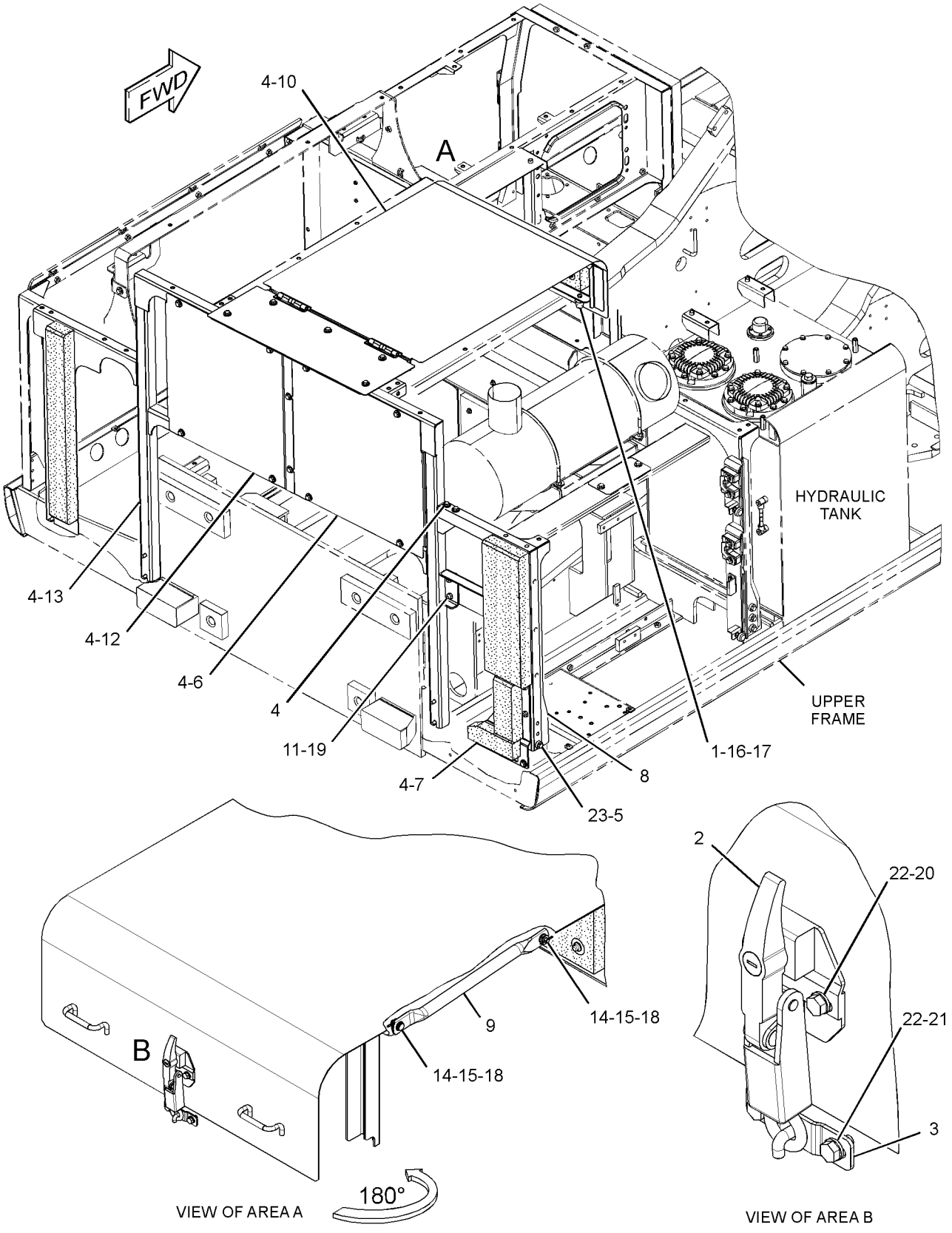

GRAPHIC #1 **<END>** g01619369

364-6968 SUPPORT GP-HOOD

S/N: JGB1-UP; KHS1-UP

PART OF 370-3231, 370-4189 CHASSIS AR

SMCS-7251 **i04156113**

NOTE	REF NO	GRAPHIC REF	PART NUMBER	QTY	PART NAME 1 2 3 4 5 6 (PRODUCT LEVEL)	SEE PAGE
	1	1,2	**4I-1205**	4	BUMPER	
	2	1,2	**4I-2599**	3	SOCKET	
M	3	1,2,3	**135-8573**	33	BOLT AS	
M	4	3	**135-8574**	2	BOLT AS	
M	5	2,3	**135-8575**	12	BOLT AS	
	6	1,2	**141-6518**	4	SPACER (13.5X30X10-MM THK)	
	7	1,2	**214-8310**	3	PLATE	
	8	2	**223-3130**	1	SUPPORT AS	
	9	3	**223-3133**	1	SUPPORT	
	10	2	**223-3134**	1	SUPPORT AS	
	11	2	**223-3135**	1	SUPPORT AS	
	12	1,2	**236-9349**	3	SHEET AS	
	13	2	**237-8731**	1	SUPPORT	
	14	3	**237-8734**	1	SHEET	
Y	15	1	**250-5169**	1	SUPPORT AS-ENCLOSURE	401
	16	1	**250-5170**	1	SUPPORT AS	
D		1	**5P-8309**		SEAL (0.1-M)	
	17	1	**250-5176**	1	SUPPORT AS	
	18	1,2	**256-1730**	2	SHEET AS	
	19	1	**262-2603**	6	SPACER (13.5X30X16-MM THK)	
	20	1	**358-9691**	1	SUPPORT AS	
		1	**289-6597**	1	SHEET-RUBBER	
	21	2	**298-3201**	1	SUPPORT AS	
	22	2	**330-1364**	1	SHEET AS	
		2	**241-2277**	1	LINER	
Y	23	3	**320-5492**	1	SUPPORT AS-ENCLOSURE	402
	24	1,2	**5P-1076**	6	WASHER-HARD (13.5X30X4-MM THK)	
	25	1,2	**5P-4115**	4	WASHER-HARD (7.2X19X2-MM THK)	
	26	1,2	**8T-4121**	4	WASHER-HARD (11X21X2.5-MM THK)	
M	27	1,2	**8T-4133**	4	NUT (M10X1.5-THD)	
M	28	1,2	**8T-4138**	4	BOLT (M6X1X20-MM)	
M	29	1	**8T-4184**	6	BOLT (M12X1.75X45-MM)	
M	30	1,2	**8T-4648**	6	BOLT (M12X1.75X70-MM)	
M	31	1,2	**8T-4956**	4	BOLT (M12X1.75X35-MM)	

D-ORDER BY THE METER
M-METRIC PART
Y-SEPARATE ILLUSTRATION

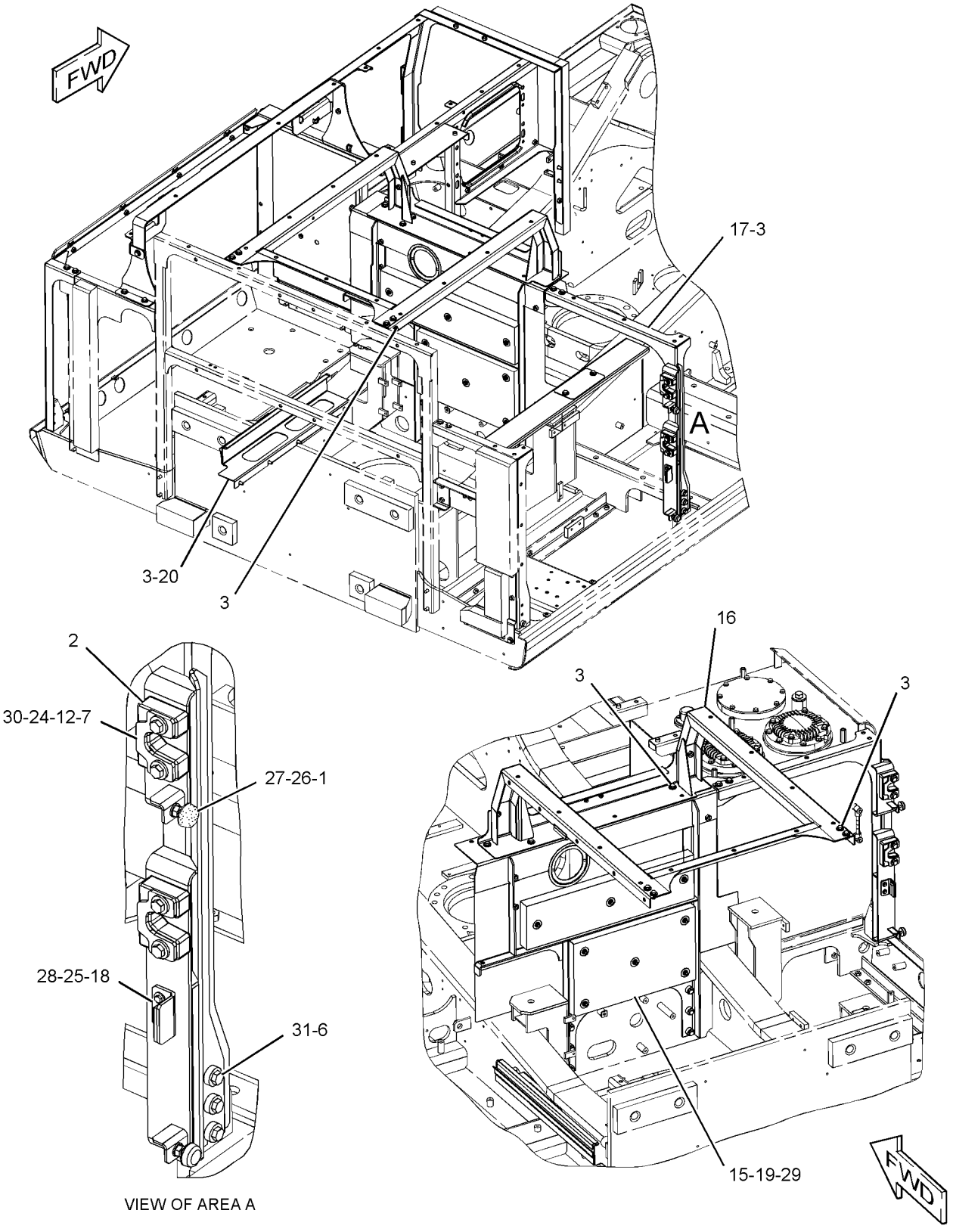

GRAPHIC #1 g02352778

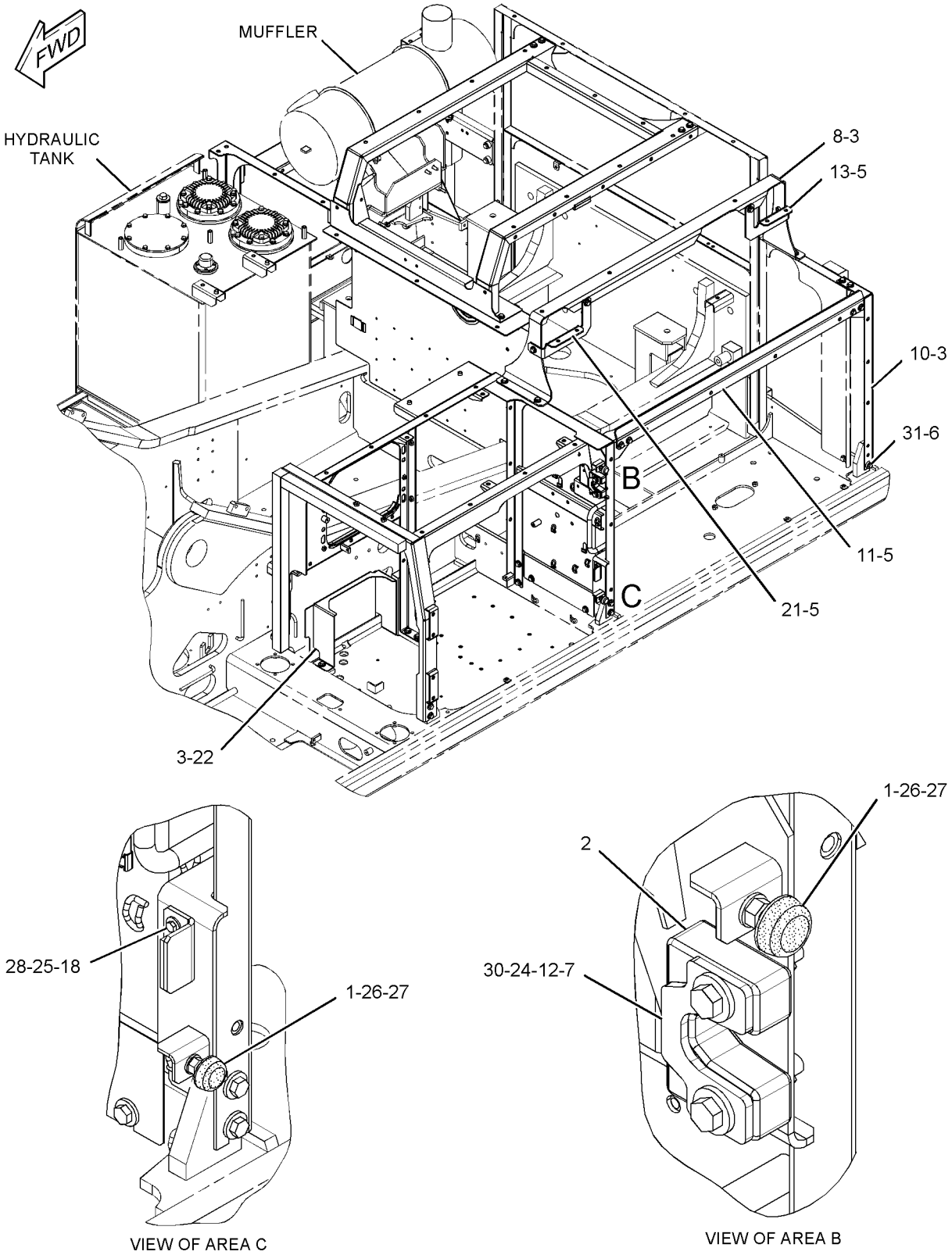

GRAPHIC #2

g01637157

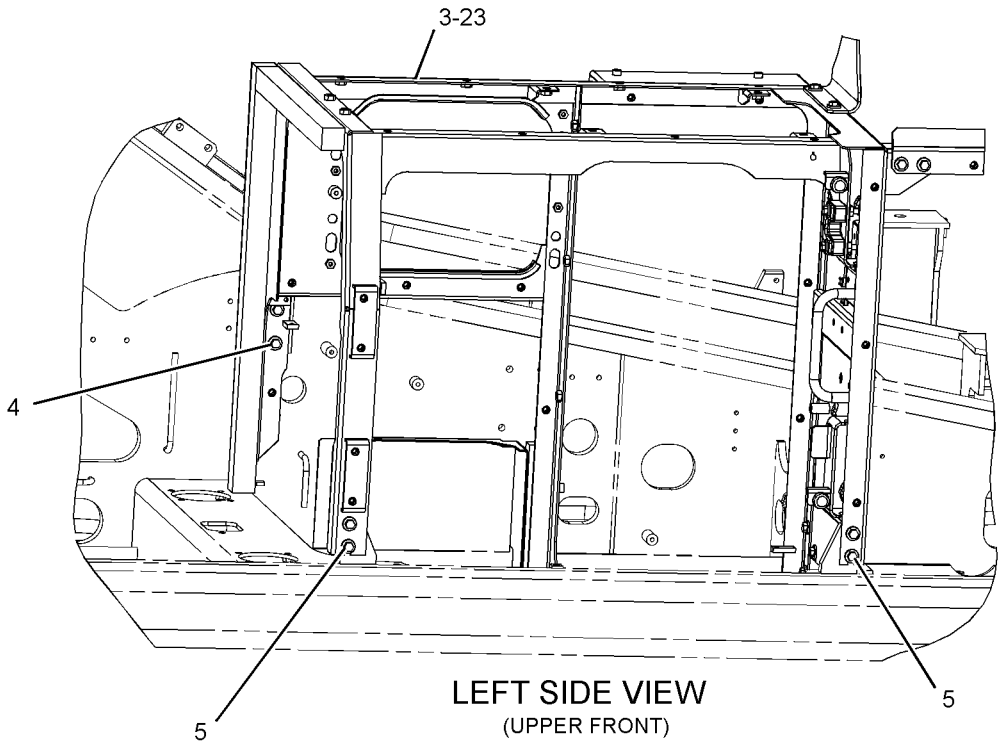

LEFT SIDE VIEW
(UPPER FRONT)

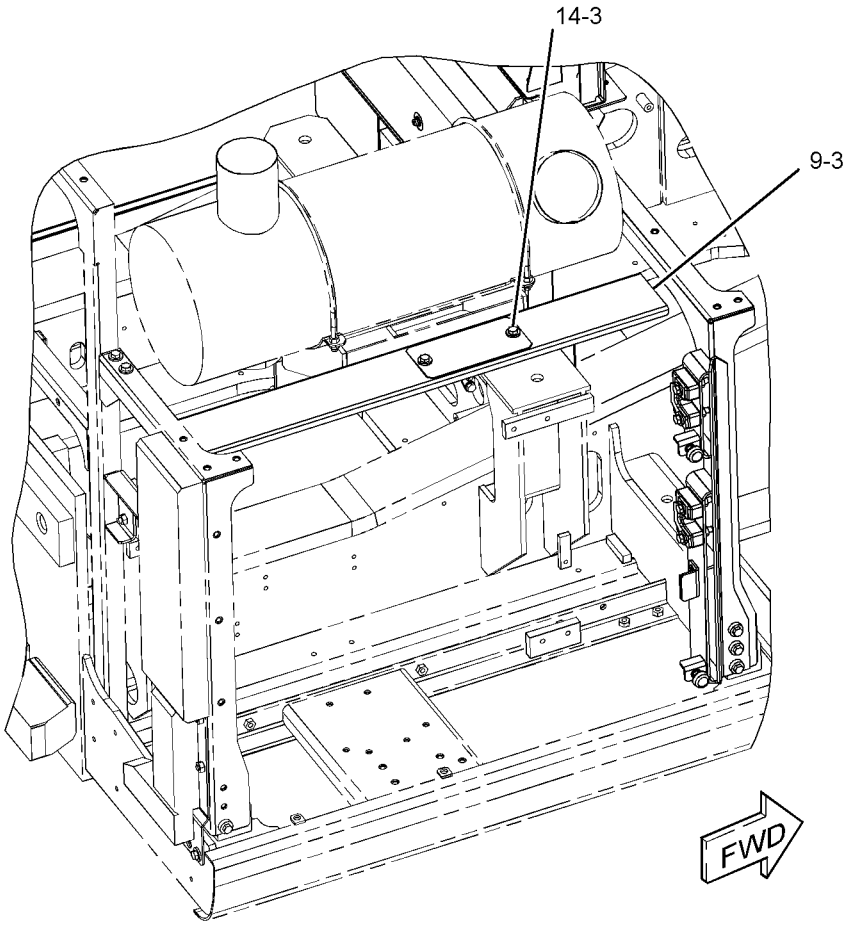

GRAPHIC #3 **<END>** g01455753

297-9152 ADJUSTMENT GP-HYDRAULIC TRACK

S/N: JGB1-UP; KHS1-UP
PART OF 194-1207, 297-9129 IDLER GP-FRONT
ALSO AN ATTACHMENT

SMCS-4157 **i03138001**

NOTE	REF NO	GRAPHIC REF	PART NUMBER	QTY	PART NAME 1 2 3 4 5 6 (PRODUCT LEVEL)	SEE PAGE
	1	1	**2S-5926**	1	VALVE-RELIEF (TRACK TENSION CYLINDER)	
	2	1	**6I-6550**	1	PLATE AS	
		1	**4B-4158**	4	SCREW-DRIVE (NO 4X0.25-IN)	
		1	**253-1346**	1	PLATE-WARNING (HIGH PRESSURE CYLINDER)	
R	3	1	**7Y-1866**	1	CYLINDER	
	4	1	**198-2953**	1	SEAL-WIPER	
	5	1	**095-2927**	1	VALVE-FILL (TRACK TENSION CYLINDER)	
	6	1	**248-7178**	2	SEAL-O-RING	
	7	1	**297-9157**	1	PISTON	
	8	1	**093-1509**	2	RING-BACKUP	
	9	1	**7Y-1884**	2	RING-BACKUP	
M	10	1	**8T-4191**	2	BOLT (M10X1.5X16-MM)	

M-METRIC PART
R-REMFG PART MAY BE AVAILABLE

297-9152 ADJUSTMENT GP-HYDRAULIC TRACK *(contd.)* i03138001

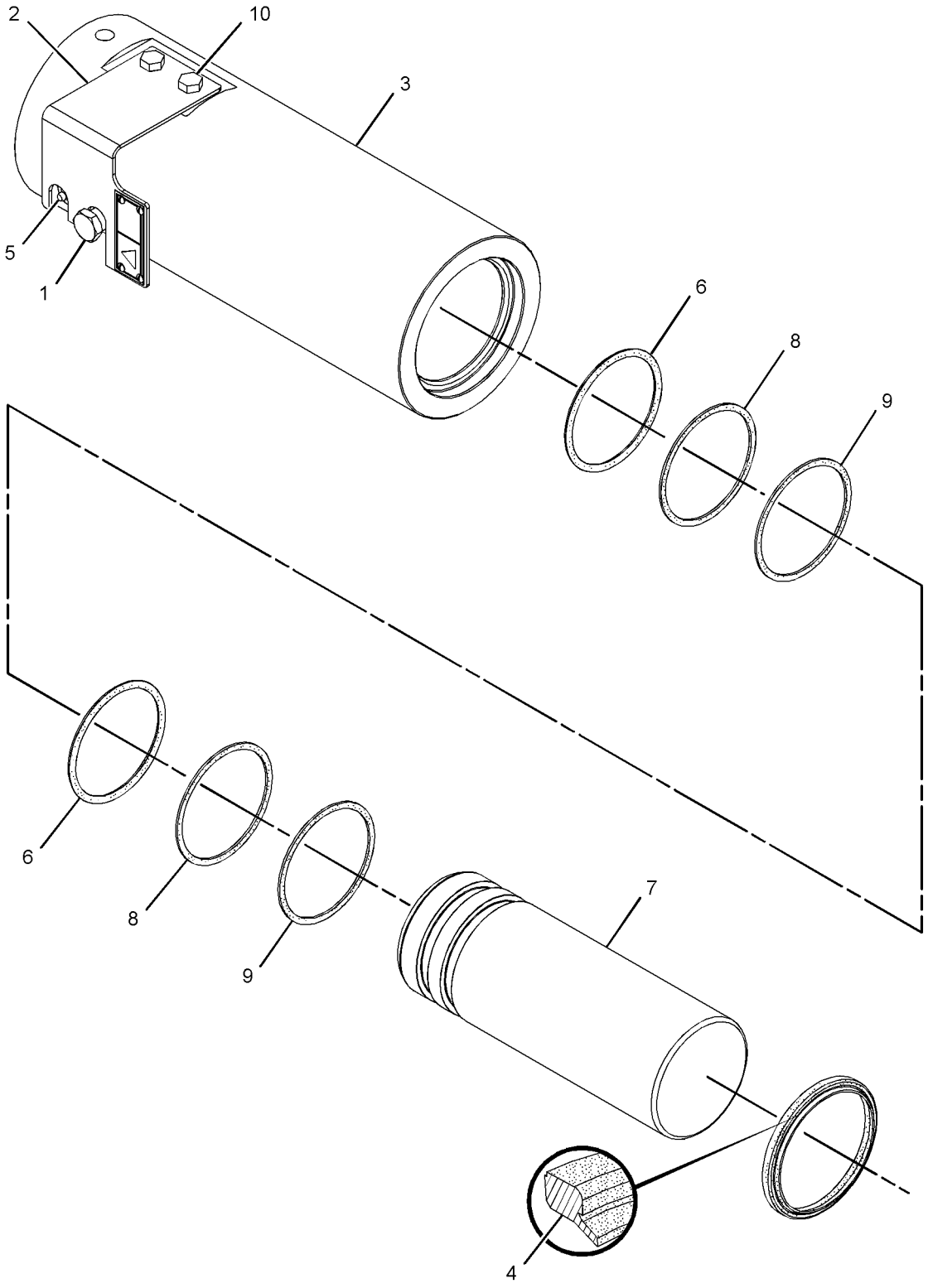

GRAPHIC #1 **<END>** g01387369

UNDERCARRIAGE

294-1316 FRAME AR-UNDERCARRIAGE

S/N: JGB1-UP

PART OF 370-3230 GENERAL AR

SMCS-4151 **i02839365**

NOTE	PART NUMBER	QTY	PART NAME 1 2 3 4 5 6 (PRODUCT LEVEL)	SEE PAGE
Y	**226-5303**	1	FRAME AS-UNDERCARRIAGE	412
Y	*227-6036*	1	GEAR & BEARING GP-SWING	353
Y	*153-1588*	1	GUARD GP-TRACK GUIDE	416
Y	*167-9887*	1	GUARD GP-TRAVEL MOTOR	419
Y	*194-1207*	1	IDLER GP-FRONT	421
Y	*297-9163*	1	ROLLER GP-TRACK & CARRIER	431

Y-SEPARATE ILLUSTRATION

<END>

303-2682 FRAME AR-UNDERCARRIAGE

S/N: KHS1-UP

PART OF 370-4188 GENERAL AR

SMCS-4151 **i04154290**

NOTE	PART NUMBER	QTY	PART NAME 1 2 3 4 5 6 (PRODUCT LEVEL)	SEE PAGE
Y	*344-6885*	1	FRAME GP-UNDERCARRIAGE (ADJ GAUGE, LONG UNDERCARRIAGE)	413
Y	*227-6036*	1	GEAR & BEARING GP-SWING	353
Y	*152-6996*	1	GUARD GP-TRACK GUIDE (CENTER)	415
Y	*167-9899*	1	GUARD GP-UNDERCARRIAGE	420
Y	*194-1207*	1	IDLER GP-FRONT	421
Y	*297-9164*	1	ROLLER AR-TRACK & CARRIER (SINGLE FLANGE)	430

Y-SEPARATE ILLUSTRATION

<END>

UNDERCARRIAGE

226-5303 FRAME AS-UNDERCARRIAGE

S/N: JGB1-UP

PART OF 294-1316 FRAME AR-UNDERCARRIAGE

SMCS-4150, 7062 **i02839380**

NOTE	REF NO	GRAPHIC REF	PART NUMBER	QTY	PART NAME 1 2 3 4 5 6 (PRODUCT LEVEL)	SEE PAGE
	1	1	*228-5577*	1	FRAME AS-TRACK ROLLER (RH)	
	1A	1	**137-3001**	4	BLOCK	
	1B	1	**129-0051**	2	BRACKET	
	2	1	*228-5578*	1	FRAME AS-TRACK ROLLER (LH)	
	2A	1	**137-3001**	4	BLOCK	
	2B	1	**129-0051**	2	BRACKET	

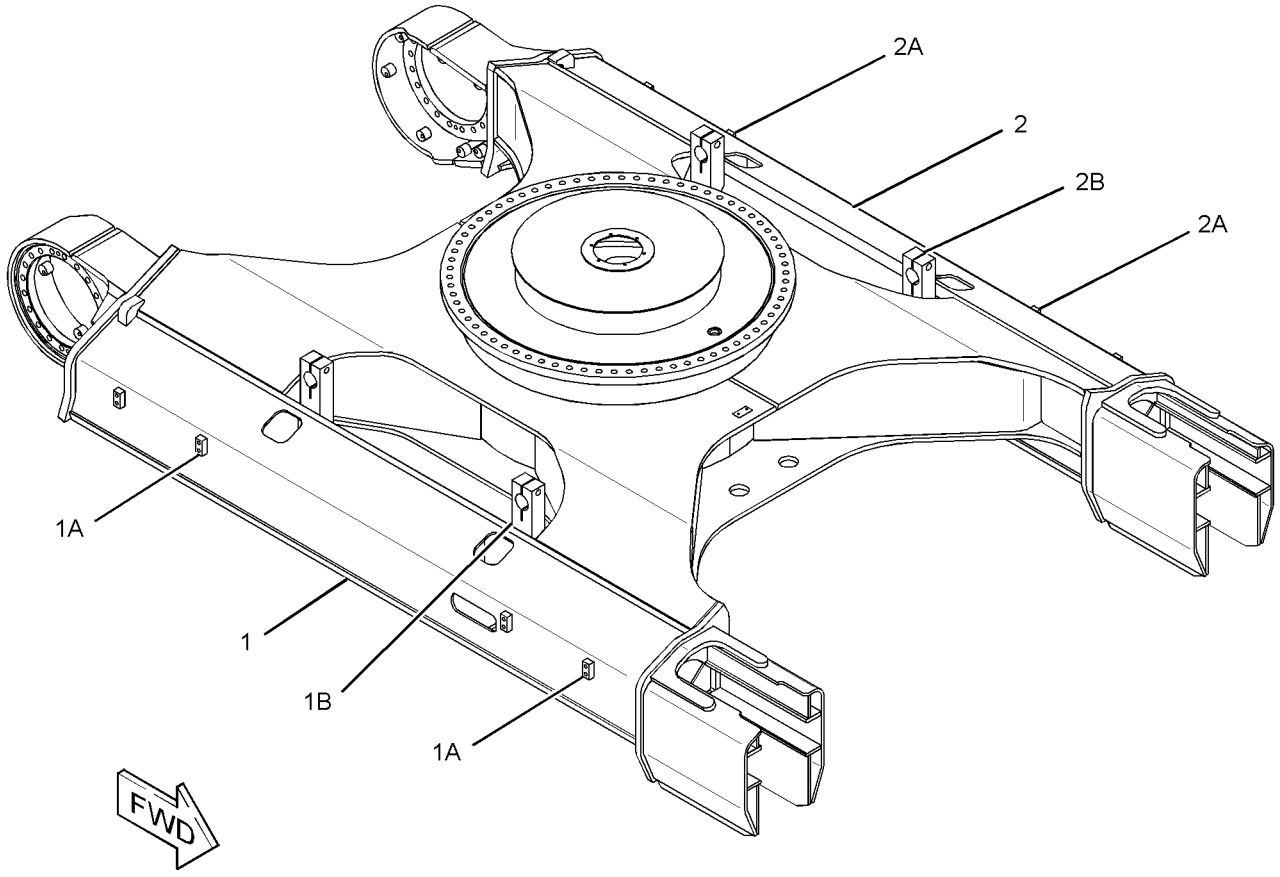

GRAPHIC #1 **<END>** g01424063

344-6885 FRAME GP-UNDERCARRIAGE–
ADJ GAUGE, LONG UNDERCARRIAGE
S/N: KHS1-UP
PART OF 303-2682 FRAME AR-UNDERCARRIAGE

SMCS-4150 **i04154451**

NOTE	REF NO	GRAPHIC REF	PART NUMBER	QTY	PART NAME 1 2 3 4 5 6 (PRODUCT LEVEL)	SEE PAGE
H	1	1	**104-8147**	10	PLUG	
	2	1	**132-7298**	4	PLATE	
	3	1	**132-7299**	4	SPACER (31X70X51.5-MM THK)	
	4	1	**234-3901**	1	FRAME AS-CARBODY	
	5	1	**344-6849**	4	STEP	
	6	1	**344-6850**	4	STEP	
	7	1	**344-6886**	1	FRAME AS-TRACK ROLLER (RH)	
	8	1	**344-6887**	1	FRAME AS-TRACK ROLLER (LH)	
	9	1	**4I-1130**	8	SPACER (37X70X55-MM THK)	
J	10	1	**4I-5006**	38	SPACER (37X70X45-MM THK)	
M	11	1	**7Y-5264**	8	BOLT (M36X4X130-MM)	
JM	12	1	**7Y-5265**	38	BOLT (M36X4X140-MM)	
M	13	1	**8C-8723**	4	BOLT (M30X3.5X80-MM)	
M	14	1	**8T-7338**	32	BOLT (M16X2X45-MM)	
	15	1	**9X-8257**	32	WASHER (17.5X30X3.5-MM THK)	

H-USE TO PLUG UNUSED BOLT HOLES WHEN IN TRANSPORTATION STYLE
J-TOTAL QUANTITIES REQUIRED FOR USE WITH WORKING STYLE
M-METRIC PART

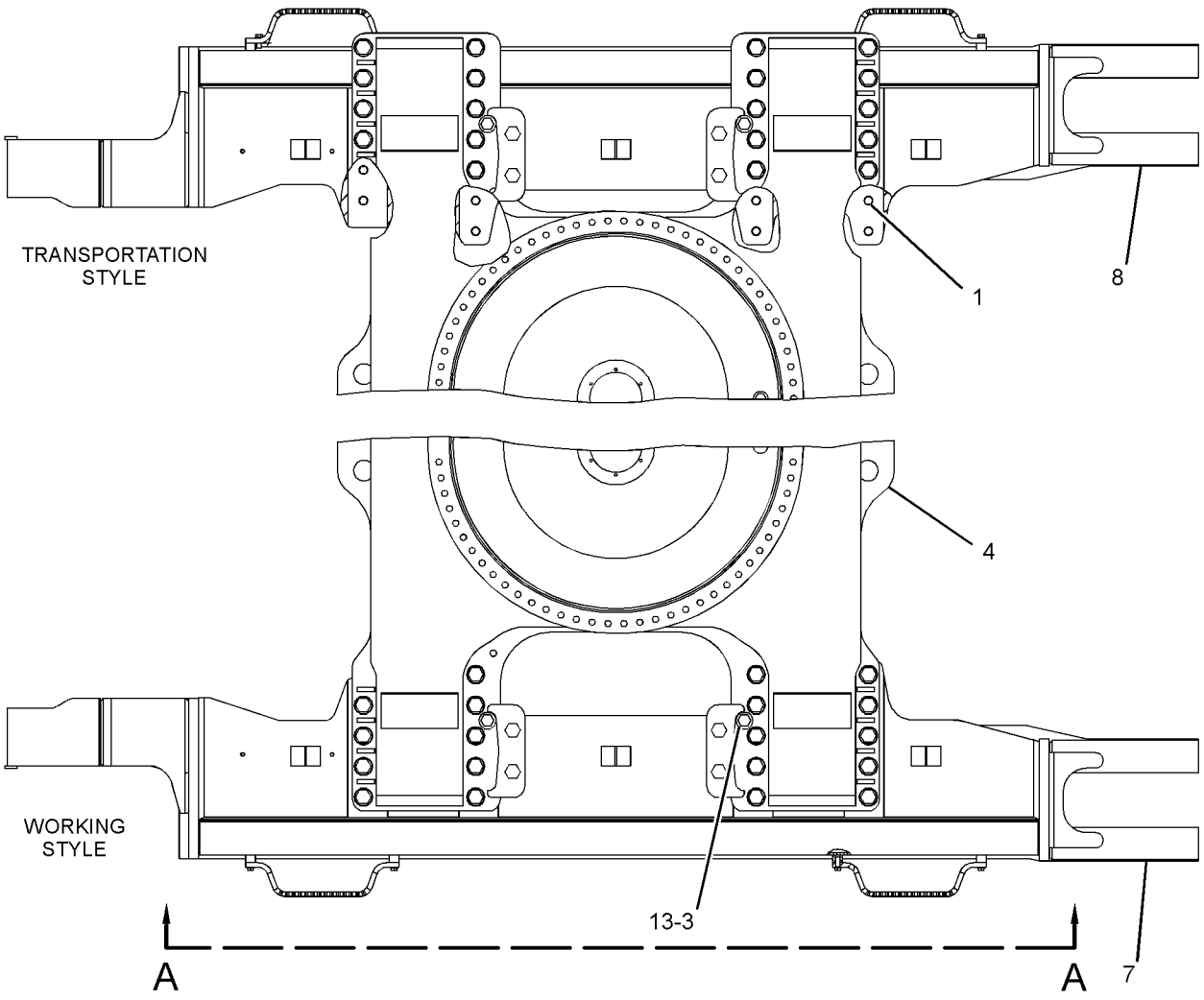

TOP VIEW FWD

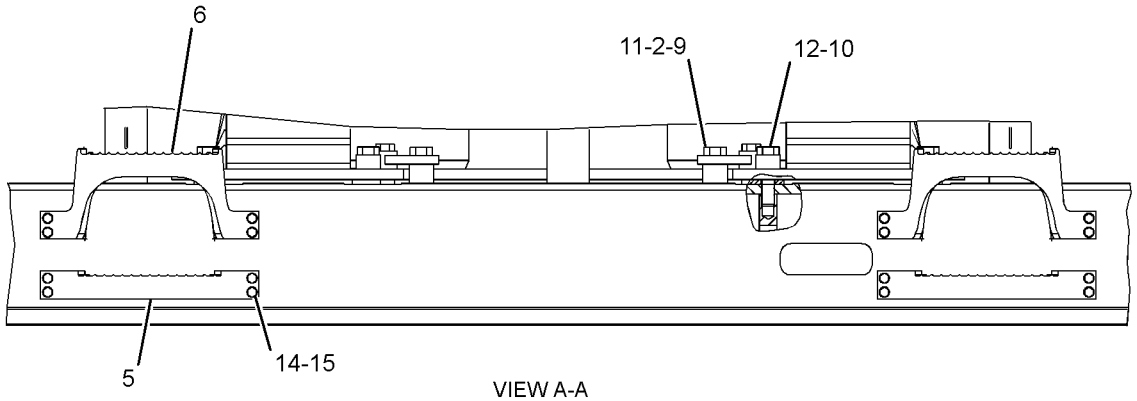

VIEW A-A

GRAPHIC #1 **<END>** g02151068

152-6996 GUARD GP-TRACK GUIDE–CENTER

S/N: KHS1-UP

PART OF 303-2682 FRAME AR-UNDERCARRIAGE

SMCS-4177 **i02886315**

NOTE	REF NO	GRAPHIC REF	PART NUMBER	QTY	PART NAME 1 2 3 4 5 6 (PRODUCT LEVEL)	SEE PAGE
	1	1	**157-1606**	2	GUARD AS-TRACK GUIDE	
M	2	1	**7X-2575**	8	BOLT (M24X3X60-MM)	
	3	1	**8T-4167**	8	WASHER-HARD (26X44X4-MM THK)	

M-METRIC PART

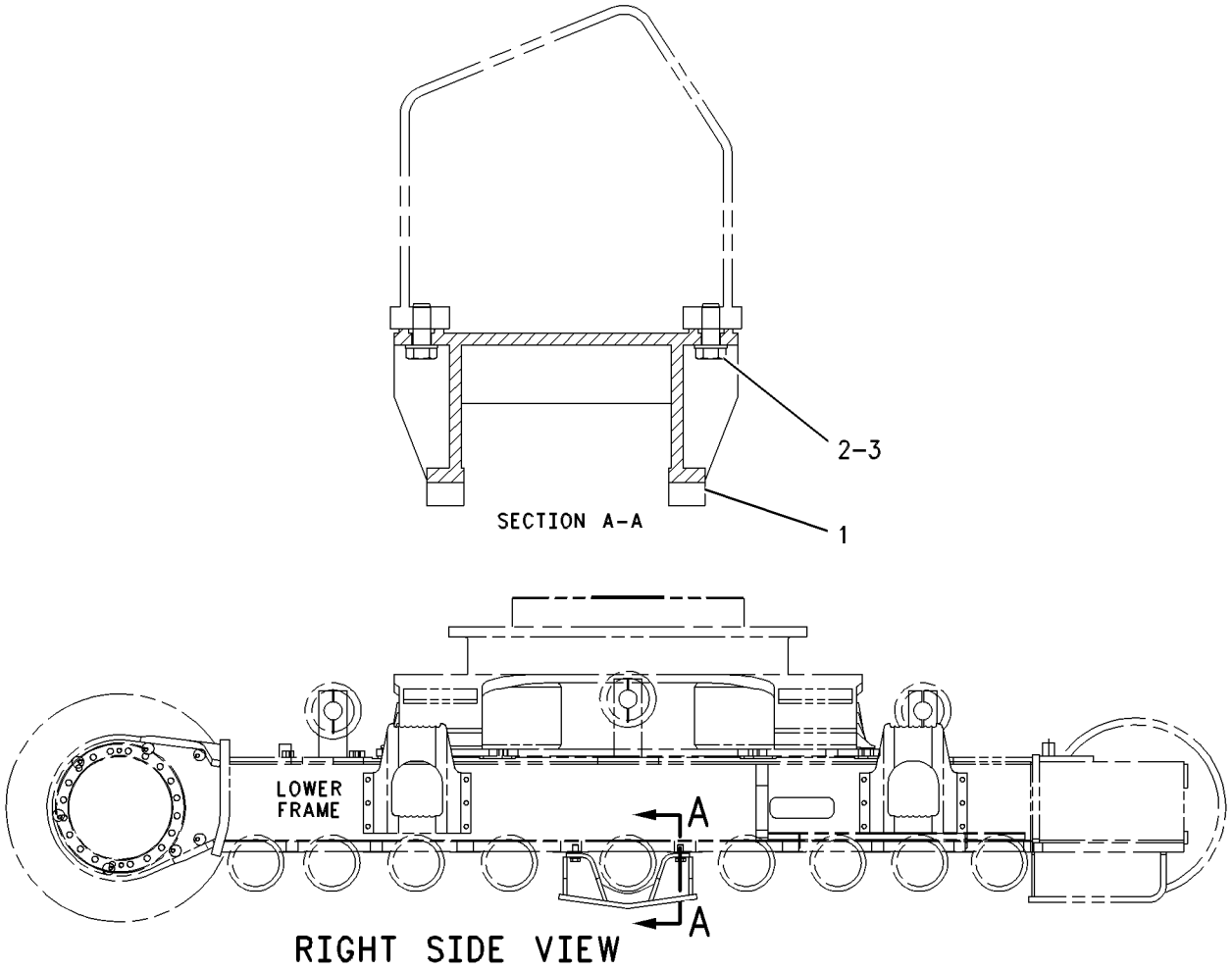

GRAPHIC #1 **<END>** g00456174

UNDERCARRIAGE

153-1588 GUARD GP-TRACK GUIDE–CENTER

S/N: JGB1-UP

PART OF 294-1316 FRAME AR-UNDERCARRIAGE

SMCS-4177 **i00862783**

NOTE	REF NO	GRAPHIC REF	PART NUMBER	QTY	PART NAME 1 2 3 4 5 6 (PRODUCT LEVEL)	SEE PAGE
	1	1	**153-1624**	2	GUARD AS-TRACK GUIDE	
M	2	1	**7X-2576**	16	BOLT (M24X3X70MM)	
	3	1	**7Y-0336**	16	SPACER	

M-METRIC PART

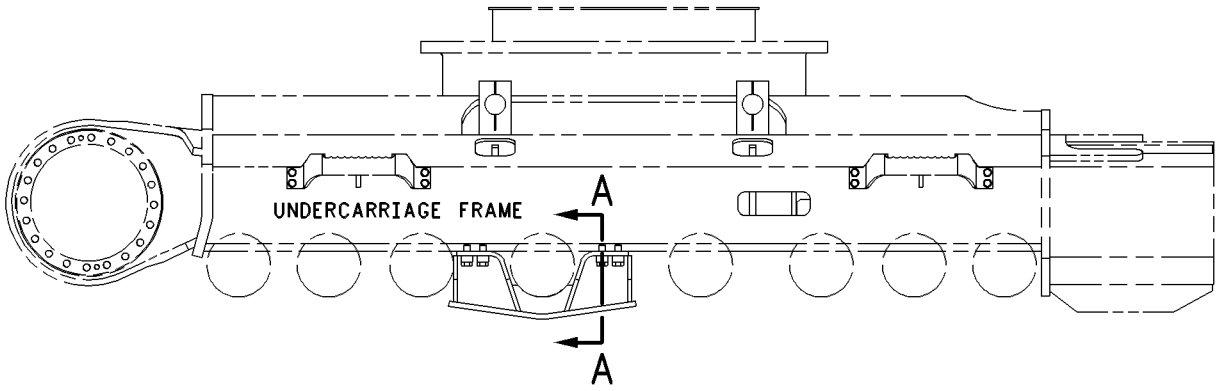

RIGHT SIDE VIEW

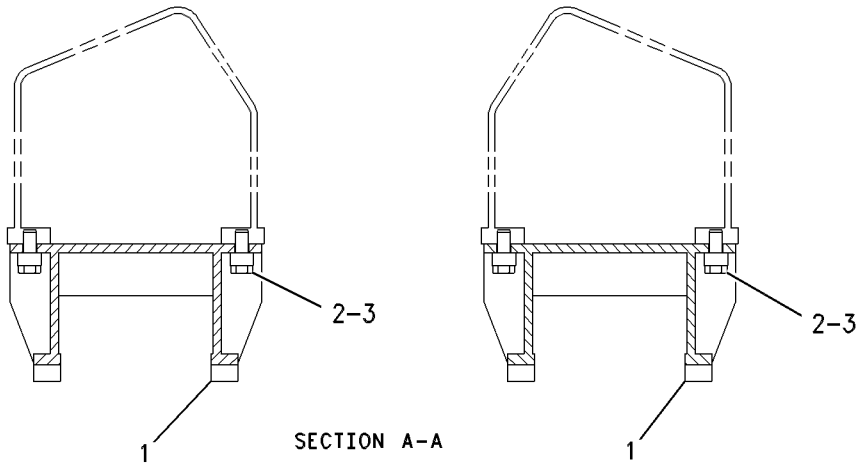

GRAPHIC #1 **<END>** g00493320

248-1965 GUARD GP-TRACK GUIDE–FULL LENGTH

S/N: JGB1-UP; KHS1-UP
PART OF 349-3295 OPTION AR-UNDERCARRIAGE
AN ATTACHMENT

SMCS-4177 **i02218064**

NOTE	REF NO	GRAPHIC REF	PART NUMBER	QTY	PART NAME 1 2 3 4 5 6 (PRODUCT LEVEL)	SEE PAGE
	1	1	**105-6324**	16	SUPPORT AS	
	2	1	**130-4499**	16	PIPE	
	3	1	**251-2473**	4	GUARD AS-TRACK GUIDE	
	4	1	**251-2474**	4	GUARD AS-TRACK GUIDE	
M	5	1	**140-3048**	16	BOLT (M24X3X350-MM)	
M	6	1	**7X-2576**	32	BOLT (M24X3X70-MM)	
	7	1	**7Y-0336**	32	SPACER (24.5X44X24-MM THK)	
	8	1	**8T-4167**	32	WASHER-HARD (26X44X4-MM THK)	

QUANTITIES SHOWN ARE THOSE REQUIRED FOR BOTH LH AND RH SIDES
M-METRIC PART

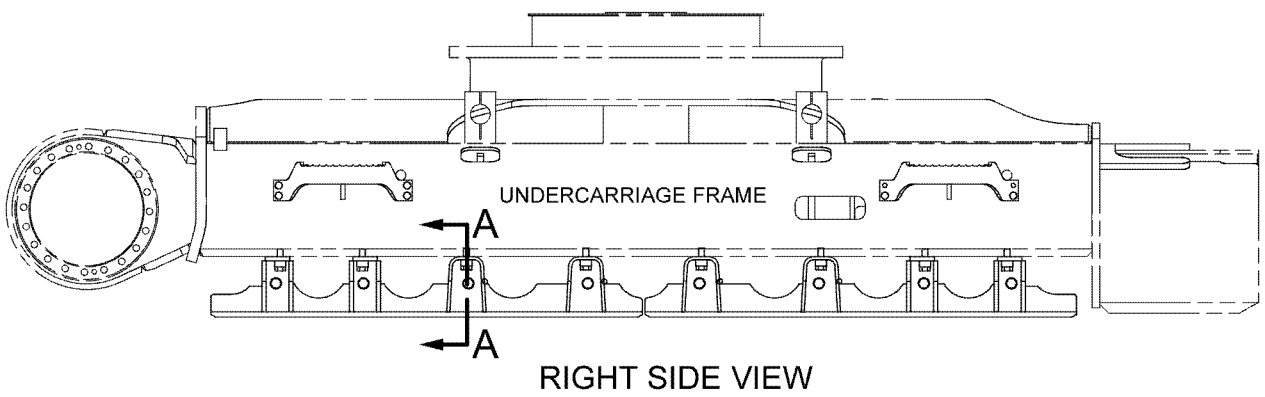

RIGHT SIDE VIEW

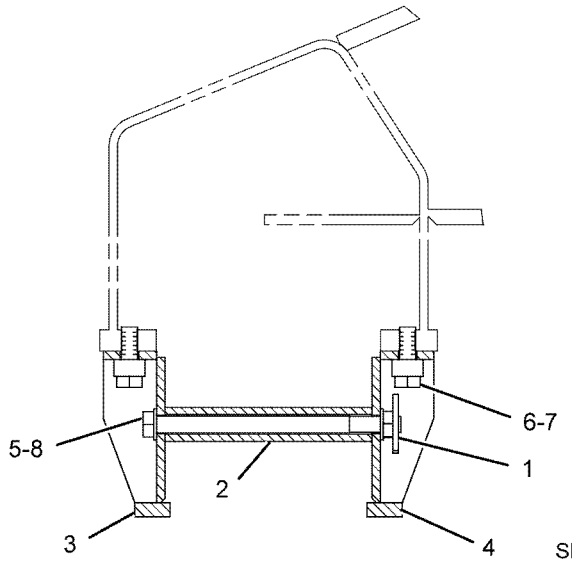

SECTION A-A

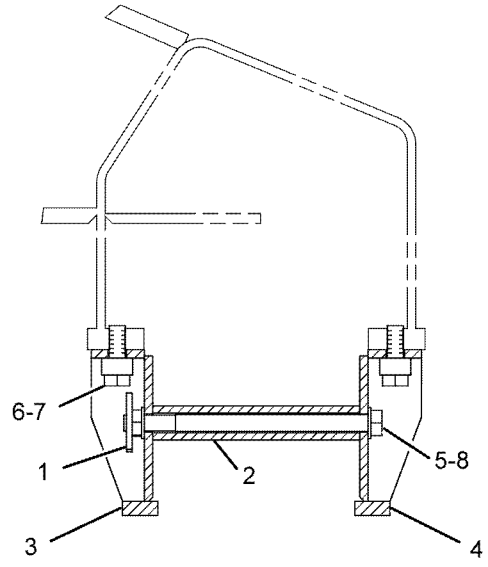

GRAPHIC #1

<END>

g01121157

248-1966 GUARD GP-TRACK GUIDE–REAR

S/N: JGB1-UP
AN ATTACHMENT

SMCS-4177 **i02218066**

NOTE	REF NO	GRAPHIC REF	PART NUMBER	QTY	PART NAME 1 2 3 4 5 6 (PRODUCT LEVEL)	SEE PAGE
	1	1	**105-6324**	8	SUPPORT AS	
	2	1	**130-4499**	8	PIPE	
	3	1	**251-2473**	2	GUARD AS-TRACK GUIDE	
	4	1	**251-2474**	2	GUARD AS-TRACK GUIDE	
M	5	1	**140-3048**	8	BOLT (M24X3X350-MM)	
M	6	1	**7X-2576**	16	BOLT (M24X3X70-MM)	
	7	1	**7Y-0336**	16	SPACER (24.5X44X24-MM THK)	
	8	1	**8T-4167**	16	WASHER-HARD (26X44X4-MM THK)	

QUANTITIES SHOWN ARE THOSE REQUIRED FOR BOTH LH AND RH SIDES
M-METRIC PART

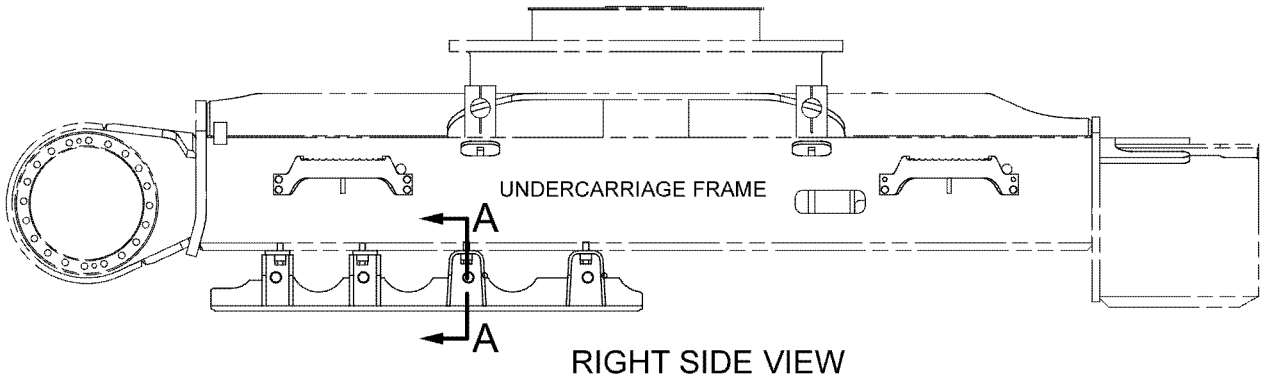

RIGHT SIDE VIEW

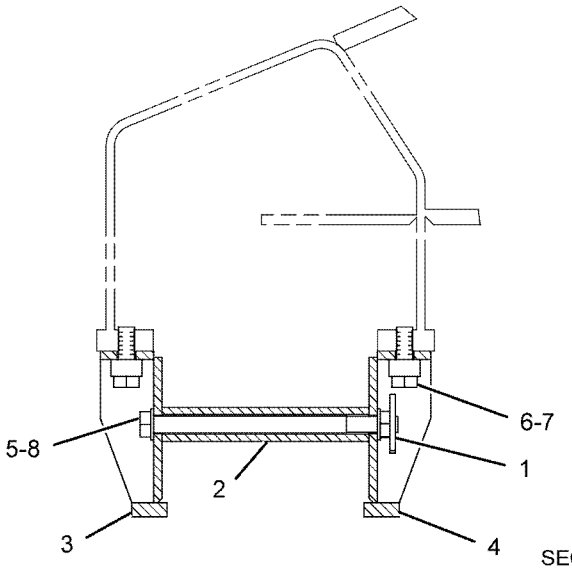

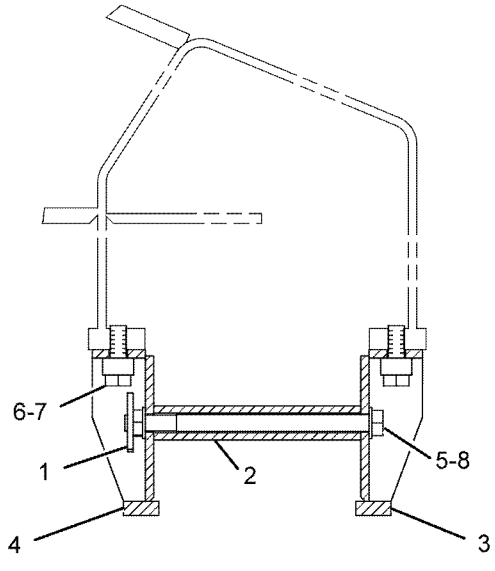

SECTION A-A

GRAPHIC #1

<END>

g01121176

167-9887 GUARD GP-TRAVEL MOTOR

S/N: JGB1-UP

PART OF 294-1316 FRAME AR-UNDERCARRIAGE

SMCS-7163 **i01147321**

NOTE	REF NO	GRAPHIC REF	PART NUMBER	QTY	PART NAME 1 2 3 4 5 6 (PRODUCT LEVEL)	SEE PAGE
M	1	1	**100-3866**	14	BOLT-SELF LOCKING (M16X2X40MM)	
	2	1	**3E-9411**	14	WASHER-HARD (6MM THK)	
	3	1	**172-2873**	1	COVER	
	4	1	**172-2872**	1	COVER	

M-METRIC PART

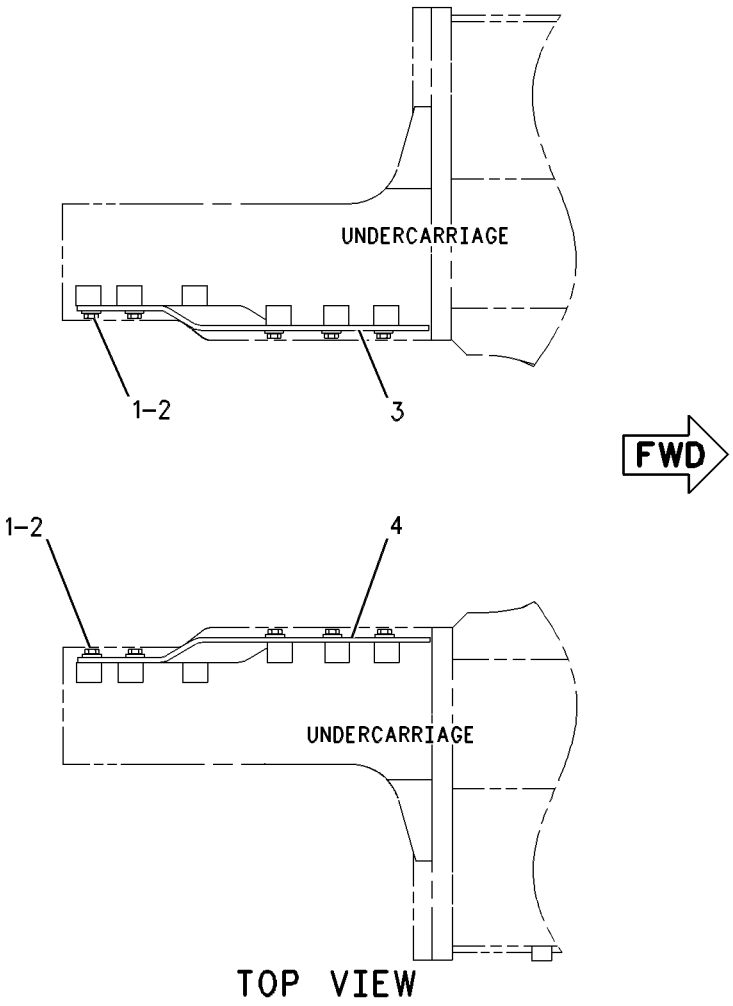

TOP VIEW

GRAPHIC #1 **<END>** g00611340

UNDERCARRIAGE

167-9899 GUARD GP-UNDERCARRIAGE

S/N: KHS1-UP

PART OF 303-2682 FRAME AR-UNDERCARRIAGE

SMCS-7062 **i01330451**

NOTE	REF NO	GRAPHIC REF	PART NUMBER	QTY	PART NAME 1 2 3 4 5 6 (PRODUCT LEVEL)	SEE PAGE
	1	1	**176-2386**	1	COVER AS	
M		1	**8T-3490**	3	NUT-WELD (M10X1.5-THD)	
M		1	**8T-4132**	2	NUT (M16X2-THD)	
	2	1	**176-2391**	1	COVER AS	
M		1	**8T-3490**	3	NUT-WELD (M10X1.5-THD)	
M		1	**8T-4132**	2	NUT (M16X2-THD)	
	3	1	**176-2394**	1	COVER AS	
	4	1	**176-2397**	1	COVER AS	
	5	1	**186-5583**	1	COVER AS	
	6	1	**176-2407**	1	COVER	
	7	1	**178-0704**	1	COVER	
M	8	1	**100-3866**	32	BOLT-SELF-LOCKING (M16X2X40-MM)	
	9	1	**3E-9411**	28	WASHER-HARD (17.5X38X6-MM THK)	
	10	1	**3V-9244**	4	WASHER (16.5X50X5-MM THK)	
M	11	1	**8T-4196**	6	BOLT (M10X1.5X35-MM)	
	12	1	**8T-4121**	6	WASHER-HARD (11X21X2.5-MM THK)	
	13	1	**186-5584**	1	COVER AS	

M-METRIC PART

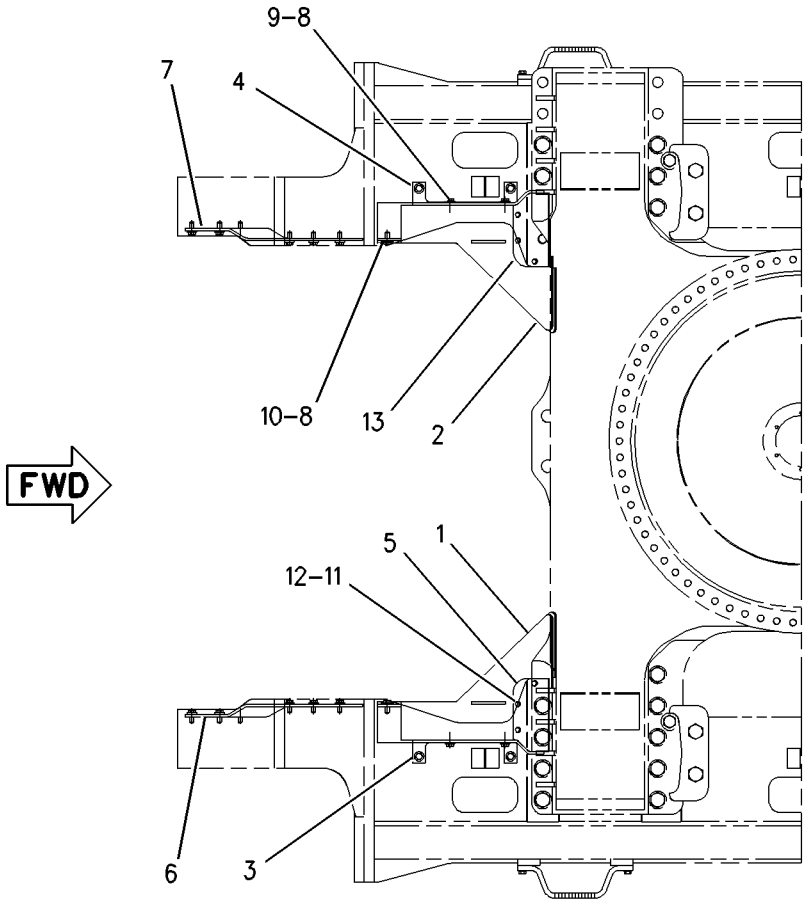

TOP VIEW

GRAPHIC #1 **<END>** g00704036

194-1207 IDLER GP-FRONT

S/N: JGB1-UP; KHS1-UP

PART OF 294-1316, 303-2682 FRAME AR-UNDERCARRIAGE

SMCS-4159 **i03865153**

NOTE	REF NO	GRAPHIC REF	PART NUMBER	QTY	PART NAME 1 2 3 4 5 6 (PRODUCT LEVEL)	SEE PAGE
CY	1	1	**297-9152**	2	ADJUSTMENT GP-HYDRAULIC TRACK	409
Y	2	1	*248-7152*	2	IDLER GP-FRONT	423
M	3	1	**095-1280**	4	SETSCREW-SOCKET (M16X2X20-MM)	

QUANTITIES SHOWN ARE THOSE REQUIRED FOR BOTH LH AND RH SIDES
C-CHANGE FROM PREVIOUS TYPE
M-METRIC PART
Y-SEPARATE ILLUSTRATION

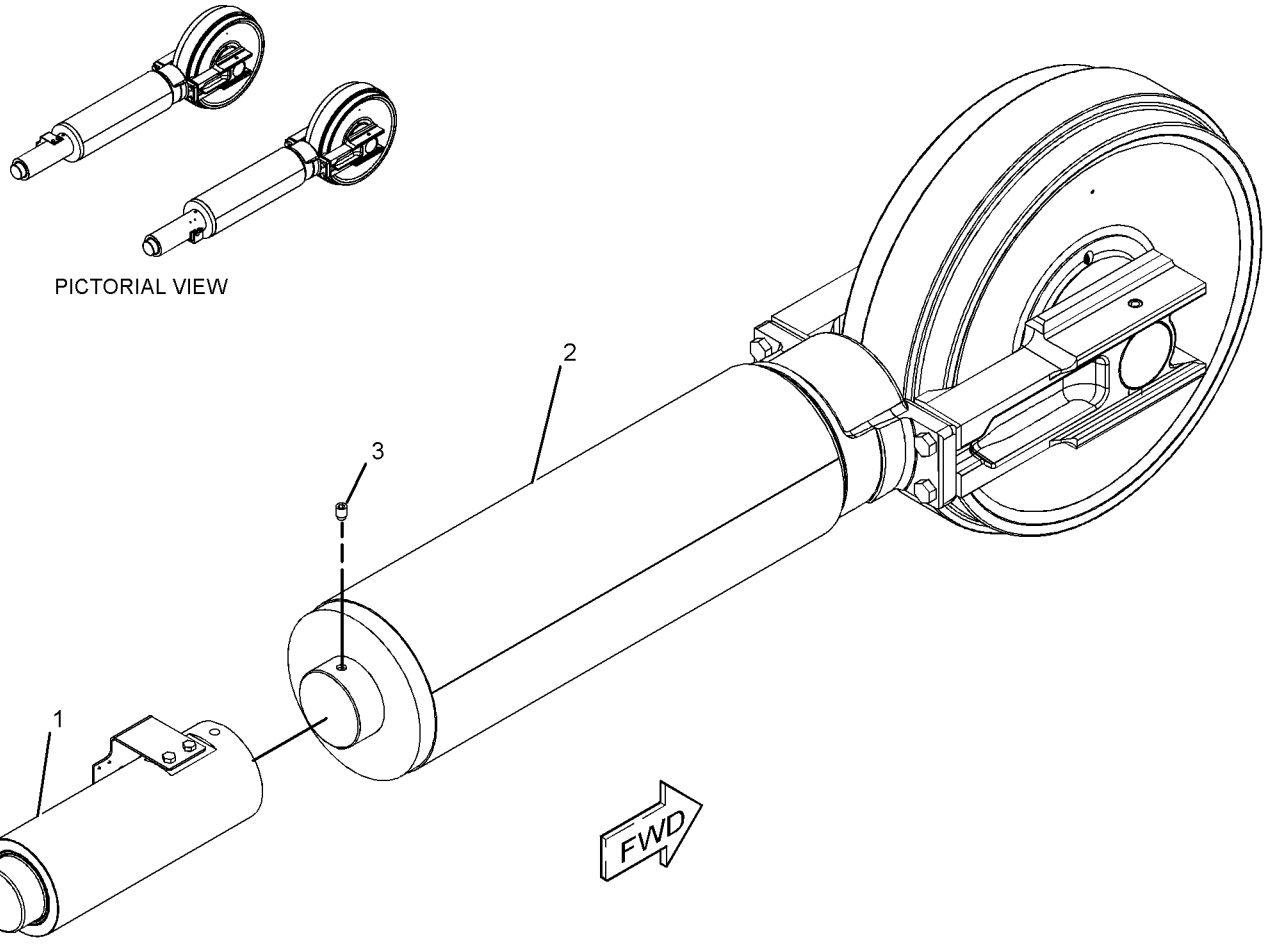

GRAPHIC #1 **<END>** g01434681

UNDERCARRIAGE

248-7151 IDLER GP-FRONT

S/N: JGB1-UP; KHS1-UP

PART OF 248-7152 IDLER GP-FRONT

SMCS-4159 **i04038530**

NOTE	REF NO	GRAPHIC REF	PART NUMBER	QTY	PART NAME 1 2 3 4 5 6 (PRODUCT LEVEL)	SEE PAGE
	1	1	**109-0868**	2	SEAL GP-DUO-CONE (FRONT IDLER)	
					(EACH INCLUDES)	
		1	**6Y-8134**	2	RING-SEALING	
	2	1	**115-6370**	2	BEARING-FRONT IDLER	
	3	1	**124-9978**	1	SHAFT-IDLER	
	4	1	**264-9821**	1	IDLER & BEARING AS	
	4A	1	**124-9979**	2	BEARING-IDLER	
	5	1	**094-3709**	2	PIN	
	6	1	**2H-3934**	2	SEAL-O-RING	
	7	1	**7H-3171**	1	PLUG-PIPE	

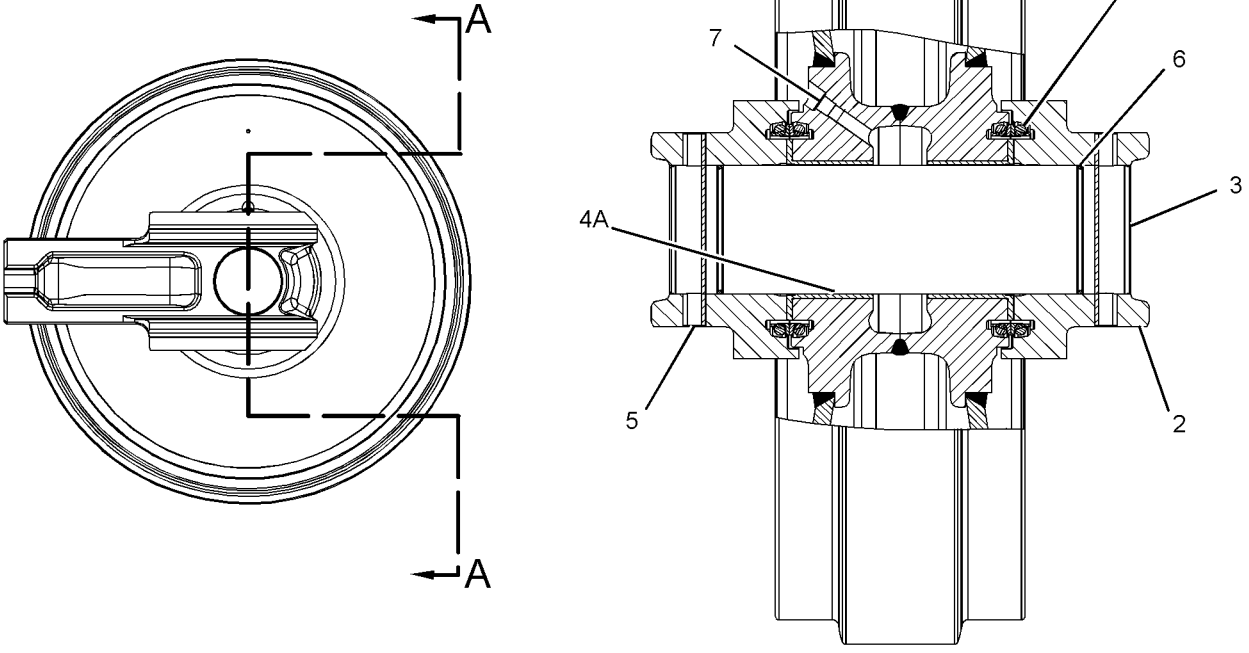

SECTION A-A

GRAPHIC #1 **<END>** g02331915

248-7152 IDLER GP-FRONT

S/N: JGB1-UP; KHS1-UP

PART OF 194-1207 IDLER GP-FRONT

SMCS-4159 **i02730295**

NOTE	REF NO	GRAPHIC REF	PART NUMBER	QTY	PART NAME 1 2 3 4 5 6 (PRODUCT LEVEL)	SEE PAGE
Y	1	1	*194-1252*	1	SPRING GP-RECOIL	434
Y	2	1	**248-7151**	1	IDLER GP-FRONT	422
M	3	1	**8T-4141**	4	BOLT (M20X2.5X70-MM)	

M-METRIC PART
Y-SEPARATE ILLUSTRATION

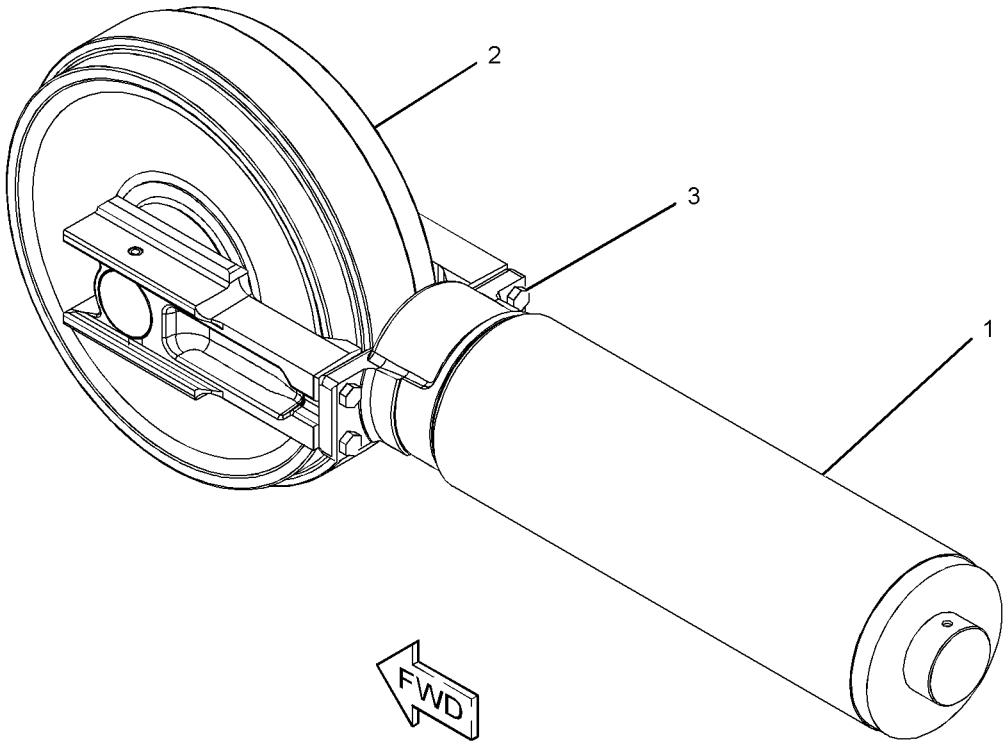

GRAPHIC #1 **<END>** g01249143

UNDERCARRIAGE

297-9129 IDLER GP-FRONT

S/N: JGB1-UP; KHS1-UP
PART OF 349-3295 OPTION AR-UNDERCARRIAGE
AN ATTACHMENT

SMCS-4159 **i04150635**

NOTE	REF NO	GRAPHIC REF	PART NUMBER	QTY	PART NAME 1 2 3 4 5 6 (PRODUCT LEVEL)	SEE PAGE
Y	1	1	**297-9152**	2	ADJUSTMENT GP-HYDRAULIC TRACK	409
CY	2	1	*297-9262*	1	IDLER GP-FRONT (HEAVY-DUTY, RH)	425
M	3	1	**095-1280**	4	SETSCREW-SOCKET (M16X2X20-MM)	
CY	4	1	*297-9263*	1	IDLER GP-FRONT (HEAVY-DUTY, LH)	426

C-CHANGE FROM PREVIOUS TYPE
M-METRIC PART
Y-SEPARATE ILLUSTRATION

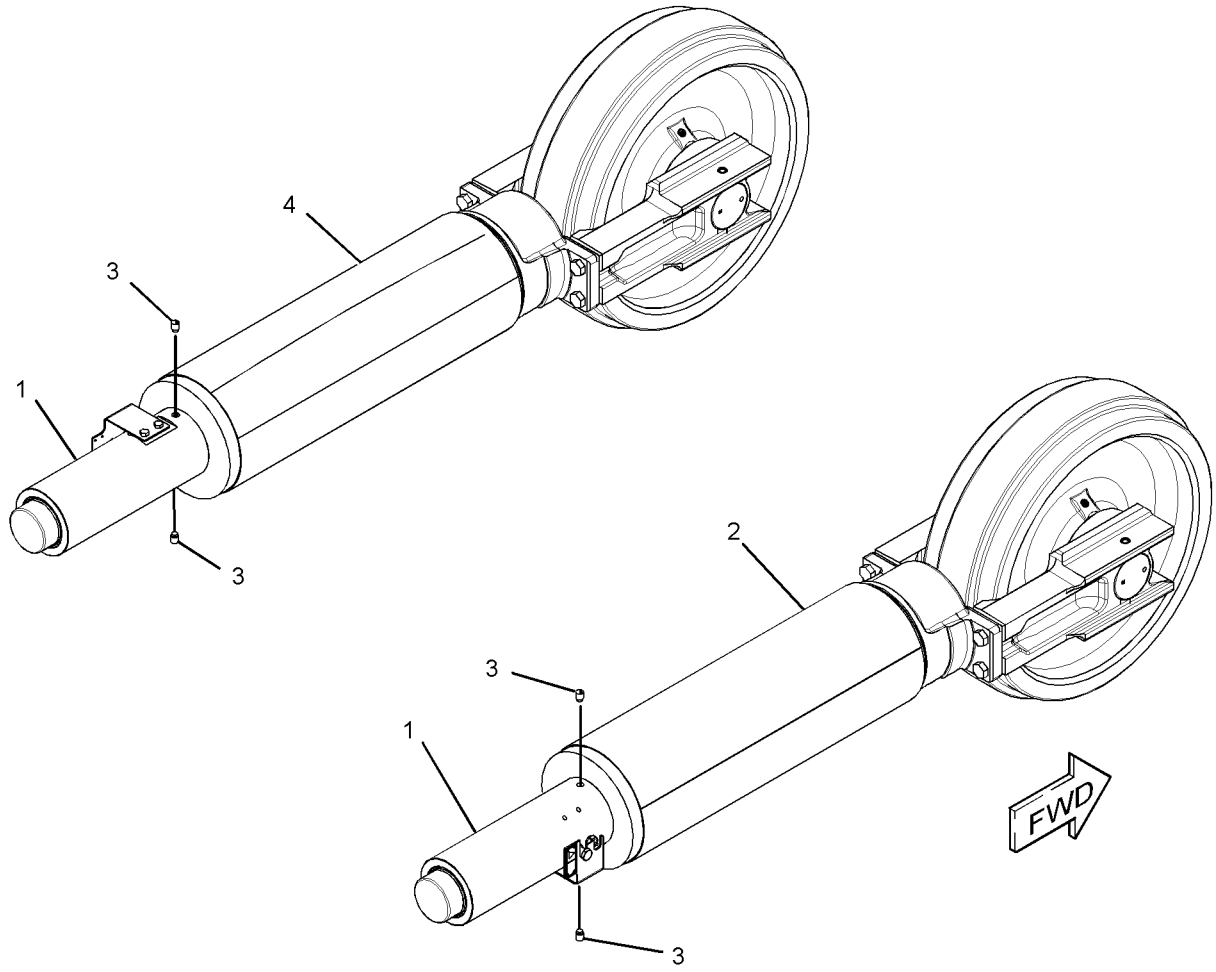

GRAPHIC #1 **<END>** g02362656

297-9262 IDLER GP-FRONT—HEAVY-DUTY, RH

S/N: JGB1-UP; KHS1-UP
PART OF 297-9129 IDLER GP-FRONT
AN ATTACHMENT

SMCS-4159 **i04150855**

NOTE	REF NO	GRAPHIC REF	PART NUMBER	QTY	PART NAME 1 2 3 4 5 6 (PRODUCT LEVEL)	SEE PAGE
Y	1	1	*194-1252*	1	SPRING GP-RECOIL	434
Y	2	1	**297-9264**	1	IDLER GP-FRONT (HEAVY-DUTY)	427
M	3	1	**8T-4141**	4	BOLT (M20X2.5X70-MM)	

M-METRIC PART
Y-SEPARATE ILLUSTRATION

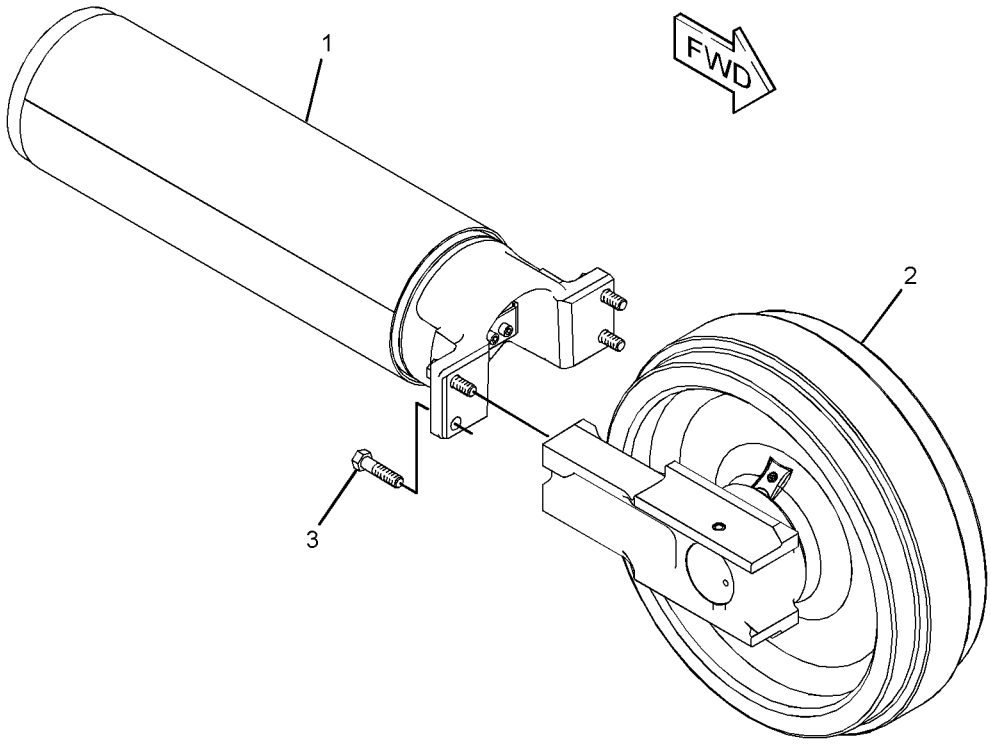

GRAPHIC #1 **<END>** g01429199

297-9263 IDLER GP-FRONT—HEAVY-DUTY, LH

S/N: JGB1-UP; KHS1-UP
PART OF 297-9129 IDLER GP-FRONT
AN ATTACHMENT

SMCS-4159 **i04150829**

NOTE	REF NO	GRAPHIC REF	PART NUMBER	QTY	PART NAME 1 2 3 4 5 6 (PRODUCT LEVEL)	SEE PAGE
Y	1	1	*194-1252*	1	SPRING GP-RECOIL	434
Y	2	1	**297-9264**	1	IDLER GP-FRONT (HEAVY-DUTY)	427
M	3	1	**8T-4141**	4	BOLT (M20X2.5X70-MM)	

M-METRIC PART
Y-SEPARATE ILLUSTRATION

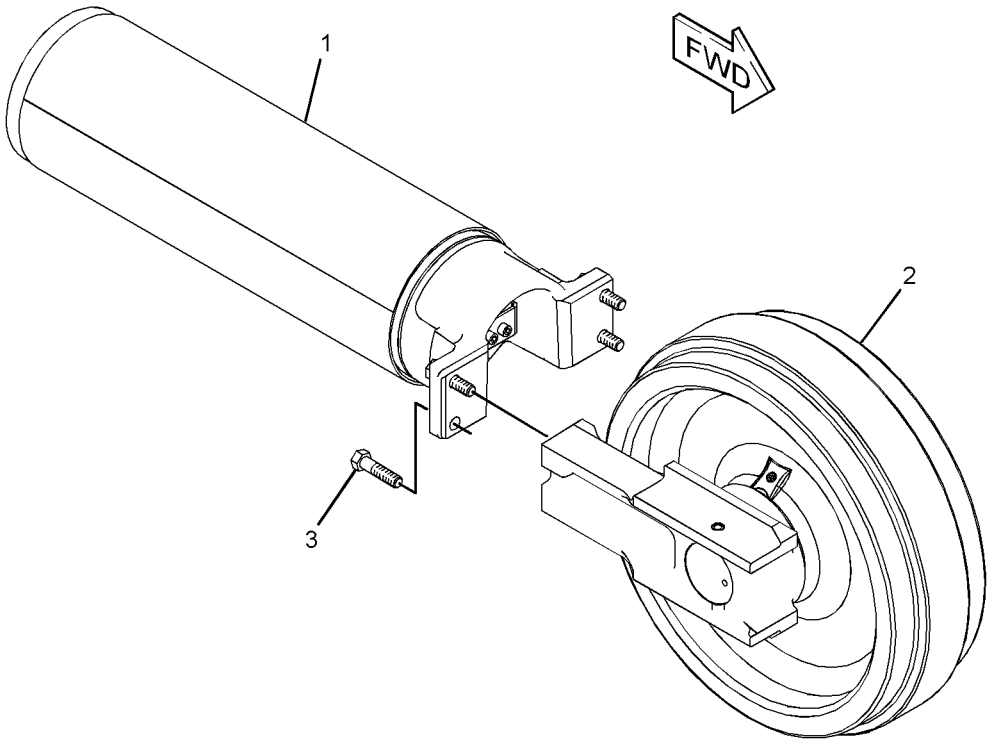

GRAPHIC #1 **<END>** g01429199

297-9264 IDLER GP-FRONT–HEAVY-DUTY

S/N: JGB1-UP; KHS1-UP
PART OF 297-9262, 297-9263 IDLER GP-FRONT
AN ATTACHMENT

SMCS-4159 **i04154579**

NOTE	REF NO	GRAPHIC REF	PART NUMBER	QTY	PART NAME 1 2 3 4 5 6 (PRODUCT LEVEL)	SEE PAGE
	1	1	**109-0868**	2	SEAL GP-DUO-CONE	
					(EACH INCLUDES)	
		1	**6Y-8134**	2	RING-SEALING	
	2	1	**115-6370**	2	BEARING-FRONT IDLER	
	3	1	**293-8216**	1	SHAFT-IDLER	
	4	1	**337-6894**	1	IDLER & BEARING AS	
	4A	1	**124-9979**	2	BEARING-IDLER	
	5	1	**094-3709**	2	PIN	
	6	1	**2H-3934**	2	SEAL-O-RING	
	7	1	**7H-3171**	1	PLUG-PIPE	

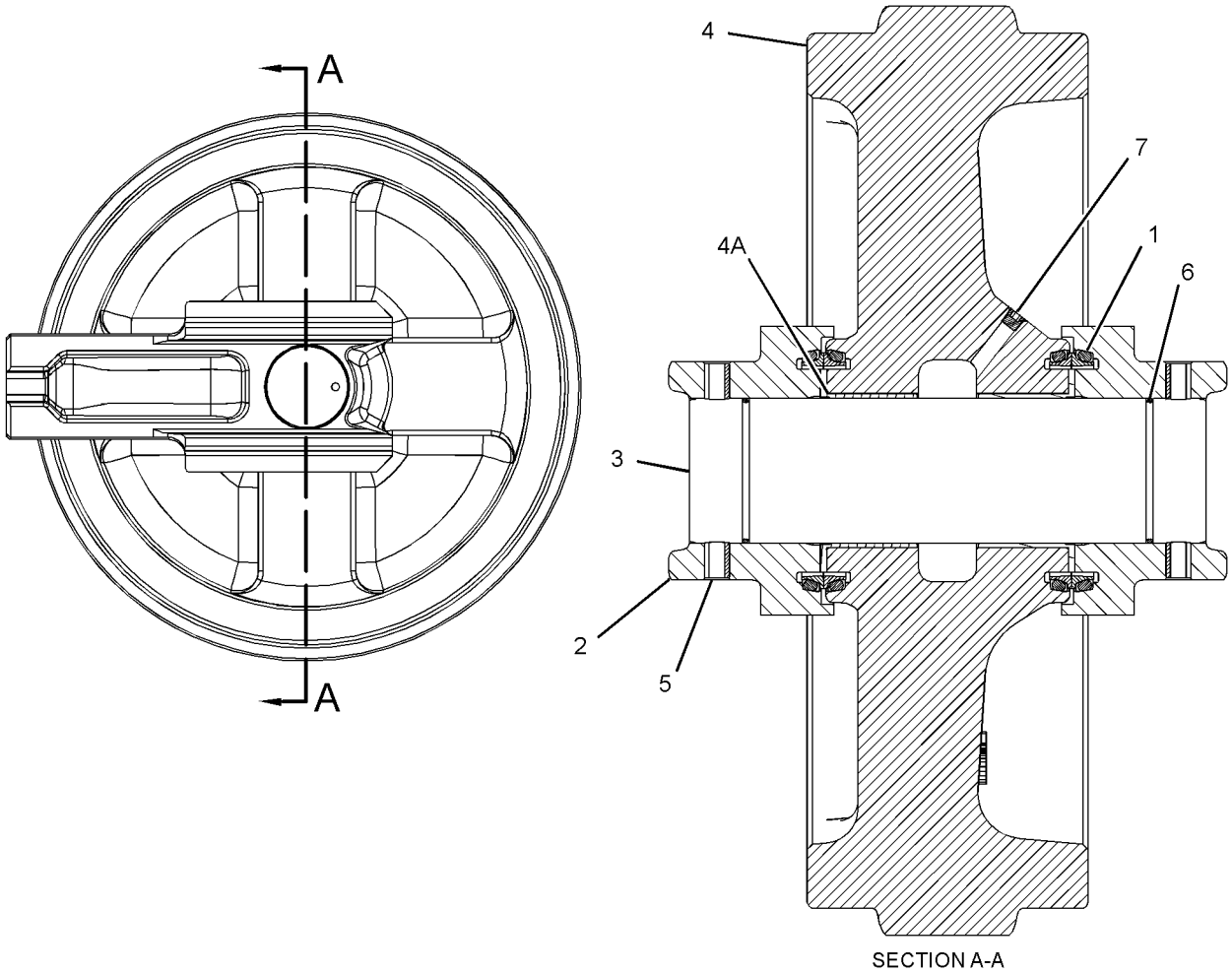

SECTION A-A

GRAPHIC #1 **<END>** g02341296

301-2287 LINK AS-TRACK

S/N: JGB1-UP; KHS1-UP
GREASE LUBRICATED TRACK
PART OF 311-6452, 311-6458 TRACK GP
AN ATTACHMENT

SMCS-4169, 4171 **i03915711**

NOTE	REF NO	GRAPHIC REF	PART NUMBER	QTY	PART NAME 1 2 3 4 5 6 (PRODUCT LEVEL)	SEE PAGE
	1	1	**251-8368**	1	BUSHING-TRACK MASTER	
	2	1	**227-3029**	51	BUSHING-TRACK	
	3	1	**305-9363**	52	LINK-TRACK (RH)	
	4	1	**305-9364**	52	LINK-TRACK (LH)	
	5	1	**8E-4272**	51	PIN-TRACK	
	6	1	**3P-0623**	102	RING-THRUST	
	7	1	**250-3998**	102	SEAL AS	
	8	1	**251-7757**	2	SEAL AS (MASTER)	
	9	1	**251-8364**	2	RING-THRUST (MASTER)	
	10	1	**253-2740**	1	PIN-TRACK MASTER	
	11	1	*6Y-0454*	1	STOPPER AS	
		1	**6Y-0473**	1	PLUG-CLEAR	
		1	**7G-4332**	1	STOPPER	

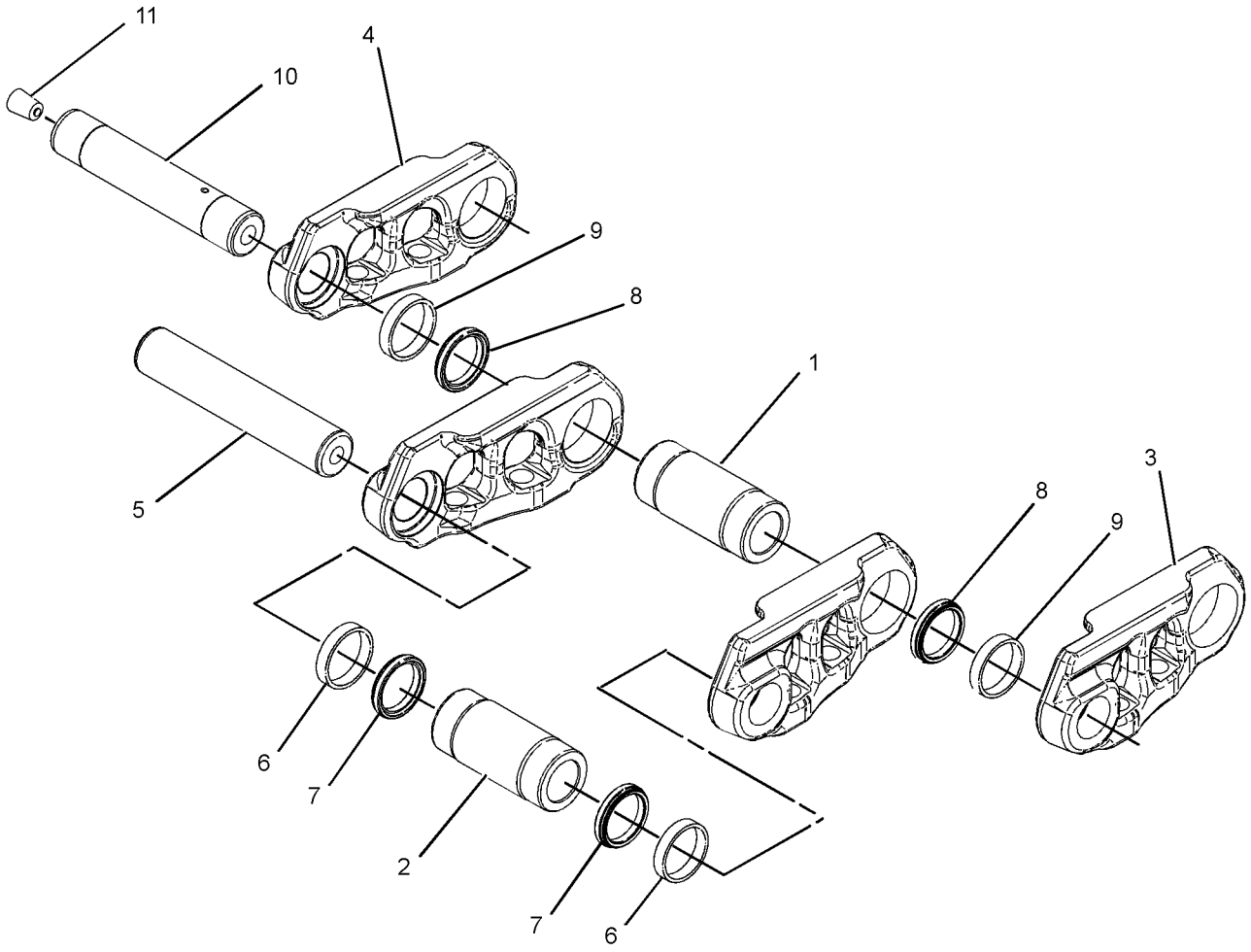

GRAPHIC #1 **<END>** g02150947

301-2297 LINK AS-TRACK

S/N: JGB1-UP; KHS1-UP
GREASE LUBRICATED TRACK, POSITIVE PIN RETENTION 2
PART OF 301-2300, 311-1926, 311-8145, 311-8148 TRACK GP
AN ATTACHMENT

SMCS-4169, 4171 **i03915715**

NOTE	REF NO	GRAPHIC REF	PART NUMBER	QTY	PART NAME 1 2 3 4 5 6 (PRODUCT LEVEL)	SEE PAGE
	1	1	**3P-0623**	102	RING-THRUST (TRACK)	
	2	1	**250-3998**	102	SEAL AS (TRACK)	
	3	1	**227-3029**	51	BUSHING-TRACK	
	4	1	**251-7757**	2	SEAL AS (MASTER)	
	5	1	**251-8364**	2	RING-THRUST (MASTER)	
	6	1	**251-8368**	1	BUSHING-TRACK MASTER	
	7	1	**252-4429**	51	PIN-TRACK	
	8	1	**305-9362**	52	LINK-TRACK (LH)	
	9	1	**305-9361**	52	LINK-TRACK (RH)	
	10	1	**257-3604**	1	PIN-TRACK MASTER	

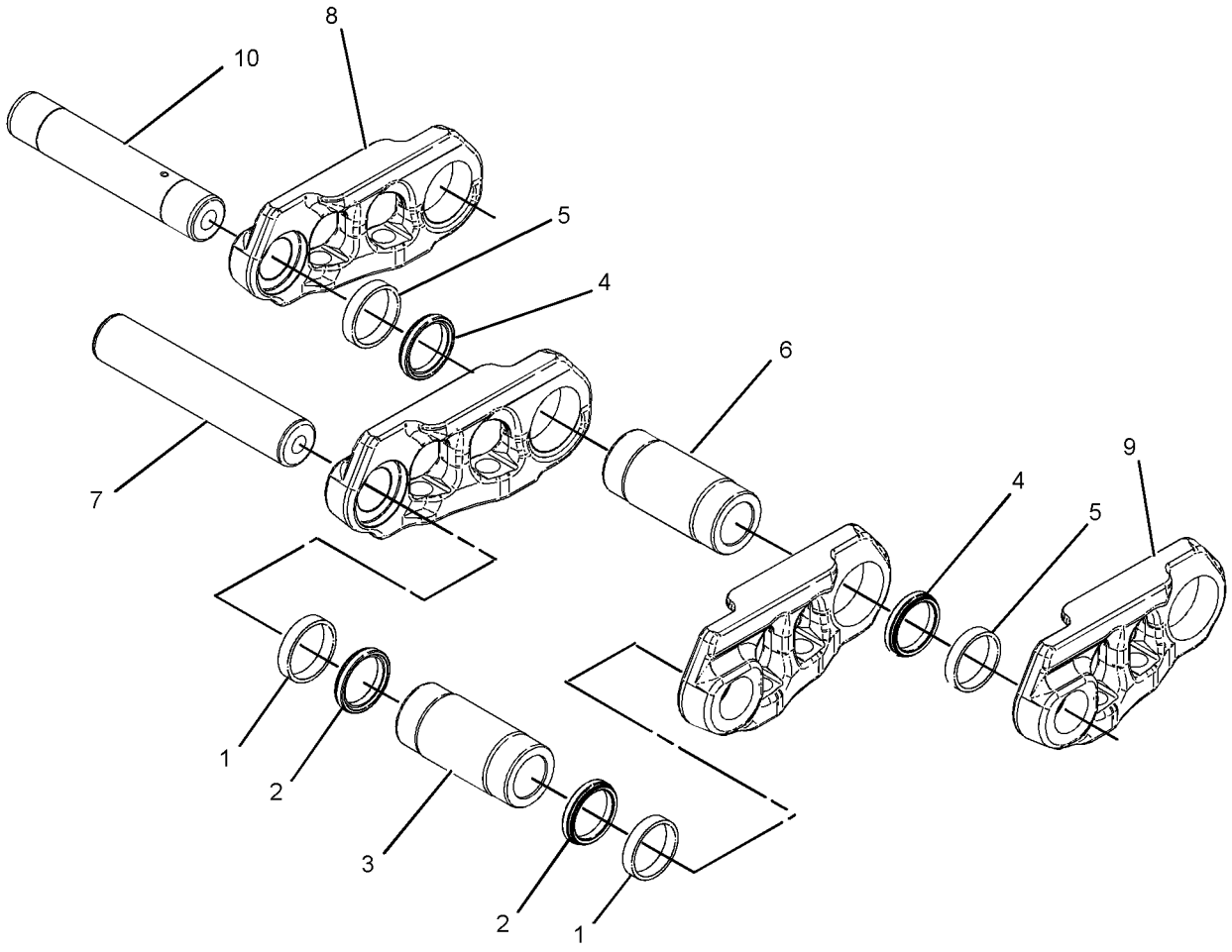

GRAPHIC #1 **<END>** g02150957

UNDERCARRIAGE

297-9164 ROLLER AR-TRACK & CARRIER

S/N: KHS1-UP

PART OF 303-2682 FRAME AR-UNDERCARRIAGE

SMCS-4154, 4180 **i02864299**

NOTE	REF NO	GRAPHIC REF	PART NUMBER	QTY	PART NAME 1 2 3 4 5 6 (PRODUCT LEVEL)	SEE PAGE
Y	1	1	**178-7293**	18	ROLLER GP-TRACK-SINGLE FLANGE	433
Y	2	1	**300-4610**	6	ROLLER GP-TRACK CARRIER	432
M	3	1	**7X-2583**	6	BOLT (M30X3.5X120-MM)	
M	4	1	**8T-0363**	72	BOLT (M24X3X120-MM)	
	5	1	**8T-4167**	72	WASHER-HARD (26X44X4-MM THK)	

QUANTITIES SHOWN ARE THOSE REQUIRED FOR BOTH LH AND RH SIDES
M-METRIC PART
Y-SEPARATE ILLUSTRATION

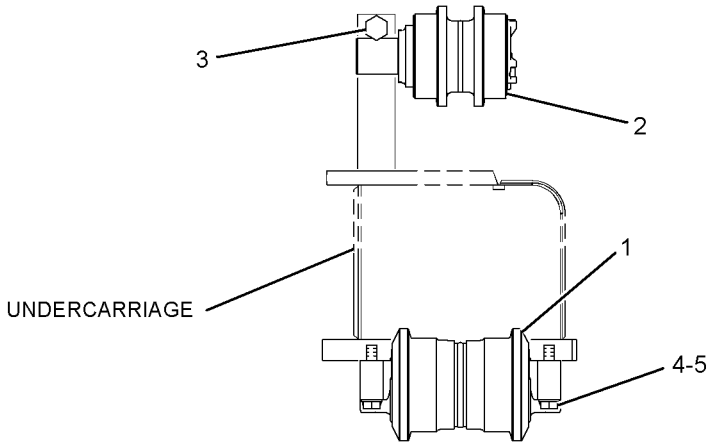

REAR VIEW

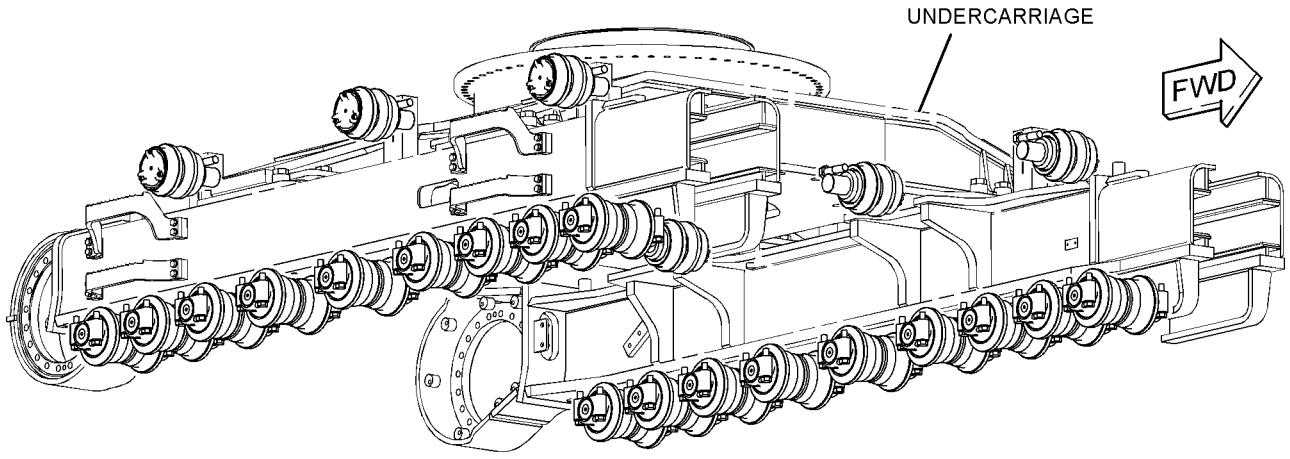

GRAPHIC #1 **<END>** g01427739

UNDERCARRIAGE

297-9163 ROLLER GP-TRACK & CARRIER

S/N: JGB1-UP

PART OF 294-1316 FRAME AR-UNDERCARRIAGE

SMCS-4154, 4180 **i02839390**

NOTE	REF NO	GRAPHIC REF	PART NUMBER	QTY	PART NAME 1 2 3 4 5 6 (PRODUCT LEVEL)	SEE PAGE
Y	1	1	**178-7293**	18	ROLLER GP-TRACK-SINGLE FLANGE	433
Y	2	1	**300-4610**	4	ROLLER GP-TRACK CARRIER	432
M	3	1	**7X-2583**	4	BOLT (M30X3.5X120-MM)	
M	4	1	**8T-0363**	72	BOLT (M24X3X120-MM)	
	5	1	**8T-4167**	72	WASHER-HARD (26X44X4-MM THK)	

QUANTITIES SHOWN ARE THOSE REQUIRED FOR BOTH LH AND RH SIDES
M-METRIC PART
Y-SEPARATE ILLUSTRATION

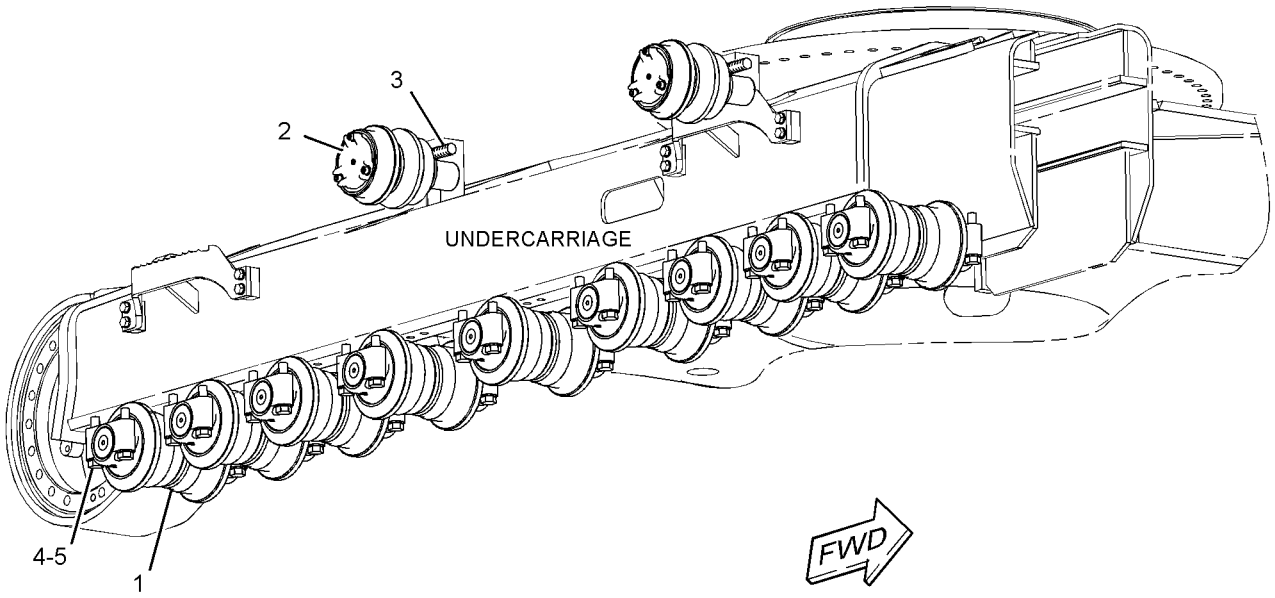

GRAPHIC #1 **<END>** g01417642

300-4610 ROLLER GP-TRACK CARRIER

S/N: JGB1-UP; KHS1-UP

PART OF 297-9164 ROLLER AR-TRACK & CARRIER, 297-9163 ROLLER GP-TRACK & CARRIER

FIELD REPLACEMENT FOR 124-7280 ROLLER GP-TRACK CARRIER

SMCS-4154 **i02958659**

NOTE	REF NO	GRAPHIC REF	PART NUMBER	QTY	PART NAME 1 2 3 4 5 6 (PRODUCT LEVEL)	SEE PAGE
	1	1	**4H-9105**	1	SEAL-O-RING	
	2	1	**6Y-8176**	1	WASHER-THRUST (78X116X4.5-MM THK)	
	3	1	**320-2677**	1	COVER	
	4	1	**6Y-9339**	1	RETAINER	
	5	1	**9W-2201**	1	SEAL GP-DUO-CONE	
		1	**096-4255**	2	RING	
	6	1	**300-4606**	1	ROLLER & BEARING AS	
	6A	1	**6Y-8171**	1	BEARING-CARRIER ROLLER	
	6B	1	**6Y-8172**	1	BEARING-CARRIER ROLLER	
	7	1	**300-4608**	1	SHAFT AS-ROLLER	
	8	1	**3H-7654**	3	WASHER-HARD (13.5X22.5X3.0-MM THK)	
	9	1	**7H-3171**	1	PLUG-PIPE	
M	10	1	**8T-0273**	5	BOLT-SOCKET HEAD (M12X1.75X40-MM)	

M-METRIC PART

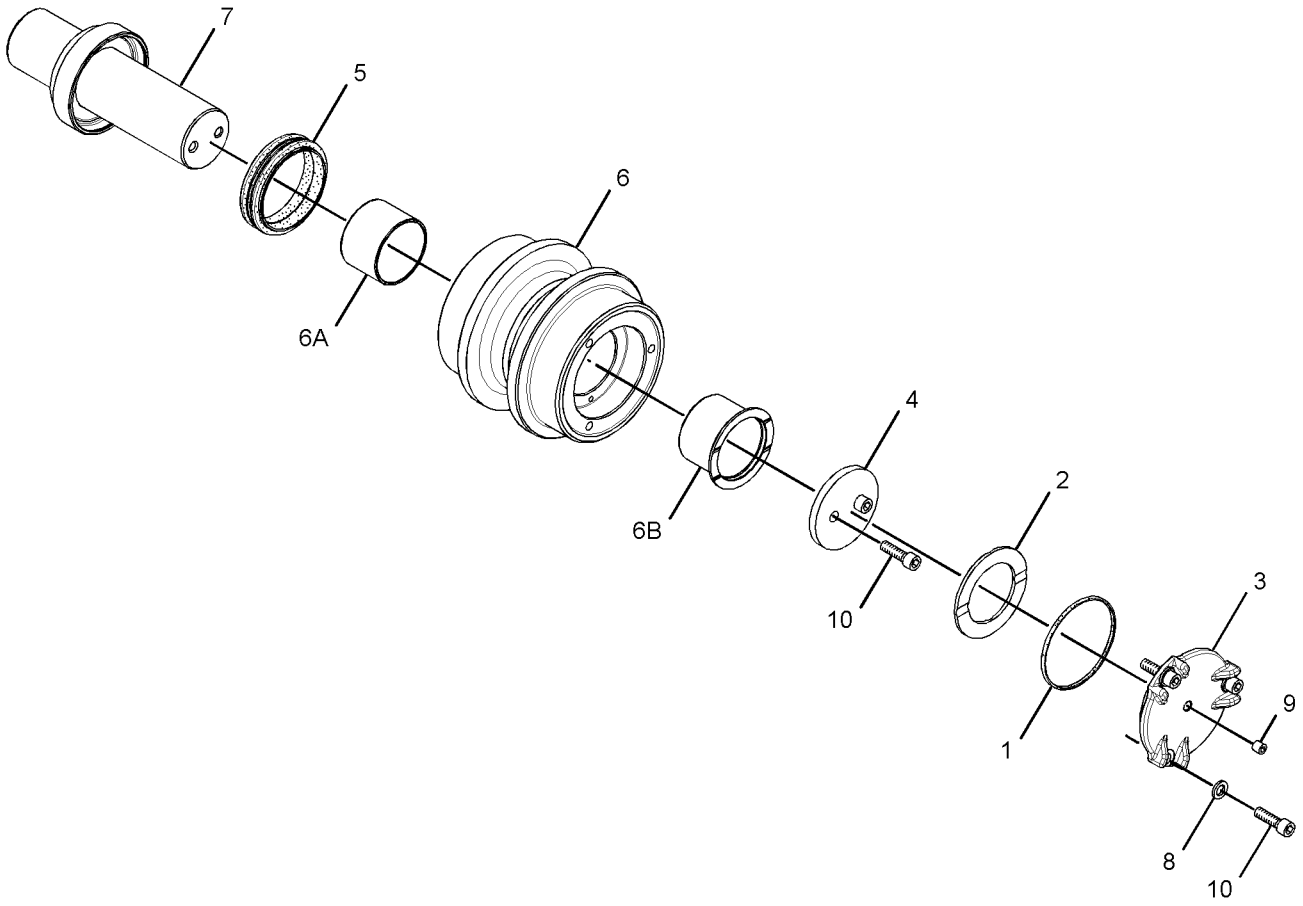

GRAPHIC #1 **<END>** g01469997

178-7293 ROLLER GP-TRACK-SINGLE FLANGE

S/N: JGB1-UP; KHS1-UP

PART OF 297-9164 ROLLER AR-TRACK & CARRIER, 297-9163 ROLLER GP-TRACK & CARRIER

SMCS-4180 **i03323400**

NOTE	REF NO	GRAPHIC REF	PART NUMBER	QTY	PART NAME 1 2 3 4 5 6 (PRODUCT LEVEL)	SEE PAGE
	1	1	**175-7897**	2	SEAL-O-RING	
	2	1	**9W-2146**	1	PLUG	
	3	1	**176-5331**	2	SEAL GP-DUO-CONE	
					(EACH INCLUDES)	
		1	**176-5333**	2	RING-TORIC	
	4	1	**178-7294**	1	ROLLER & BEARING AS	
	4A	1	**123-1382**	2	BEARING-TRACK ROLLER	
	5	1	**178-7296**	2	COLLAR-TRACK ROLLER	
	6	1	**178-7297**	1	SHAFT-TRACK ROLLER	
	7	1	**179-4182**	2	DOWEL	

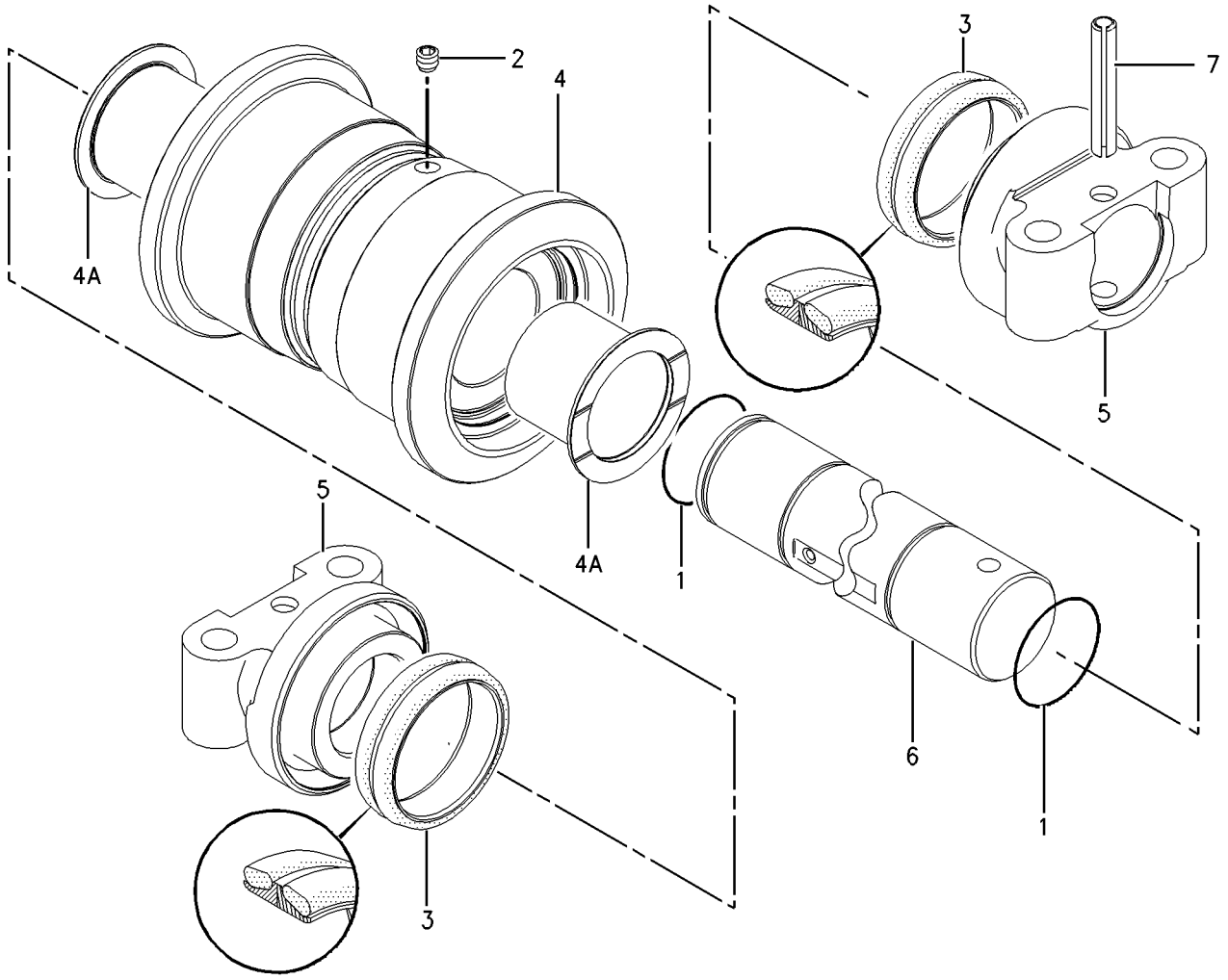

GRAPHIC #1 **<END>** g00668732

194-1252 SPRING GP-RECOIL

S/N: JGB1-UP; KHS1-UP
PART OF 248-7152, 297-9262, 297-9263 IDLER GP-FRONT
ALSO AN ATTACHMENT

SMCS-4158 **i02159933**

NOTE	REF NO	GRAPHIC REF	PART NUMBER	QTY	PART NAME 1 2 3 4 5 6 (PRODUCT LEVEL)	SEE PAGE
	1	1	**7Y-1221**	1	STRIP	
	2	1	**7Y-1459**	1	WASHER (66X115X9-MM THK)	
	3	1	**194-1238**	1	ROD	
	4	1	**194-1239**	1	SUPPORT	
	5	1	**194-1253**	1	SPRING	
	6	1	**194-1254**	1	SUPPORT AS	
M	7	1	**7Y-1460**	1	NUT (M64X6-THD)	
M	8	1	**8T-9080**	2	BOLT-SOCKET HEAD (M12X1.75X20-MM)	

M-METRIC PART

194-1252 **SPRING GP-RECOIL** *(contd.)* **i02159933**

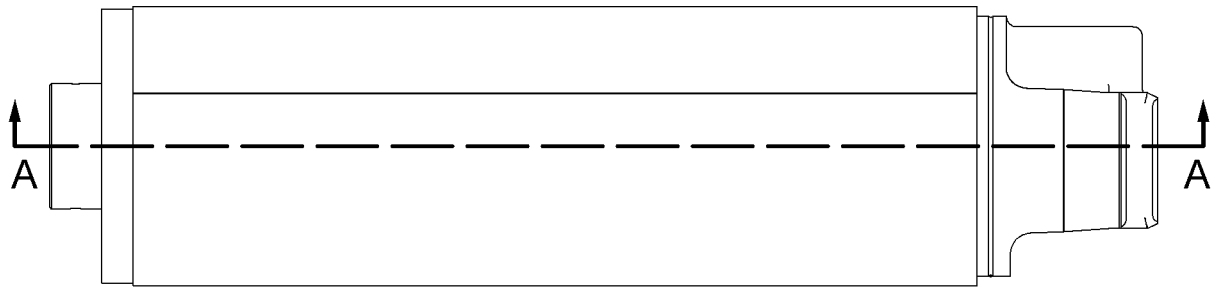

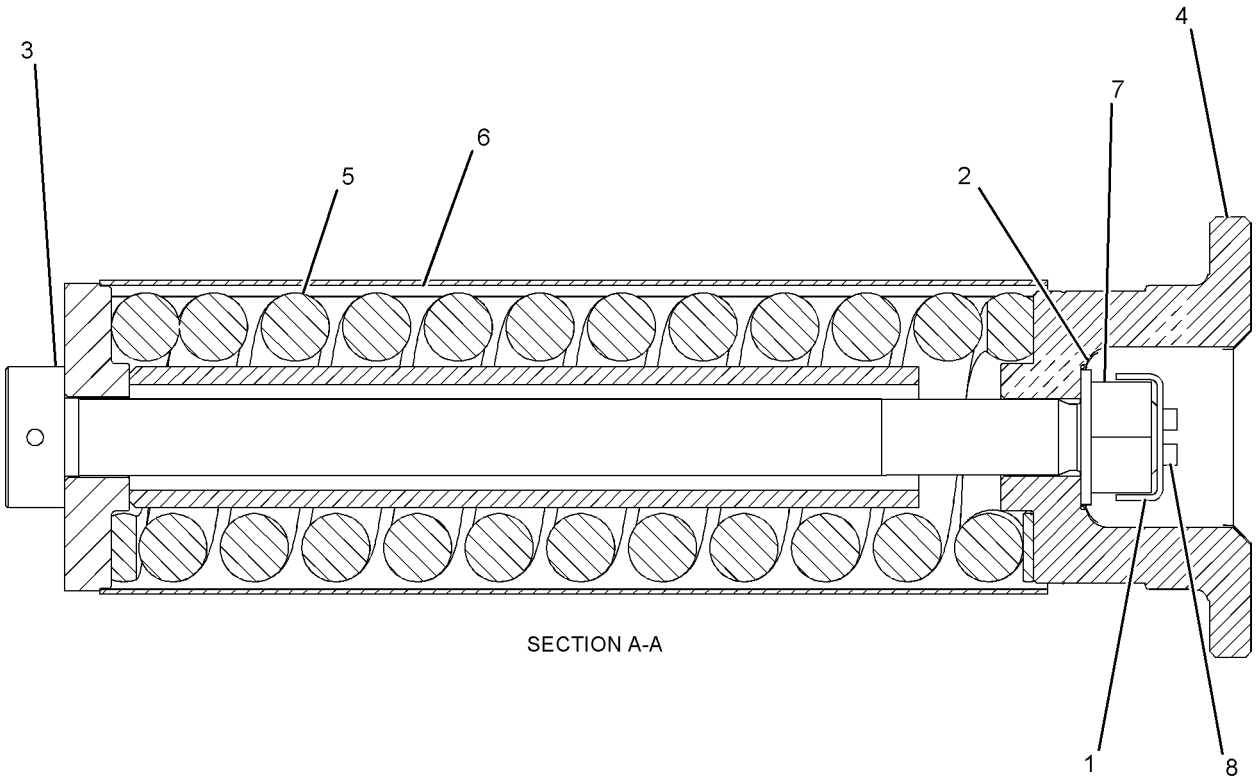

SECTION A-A

GRAPHIC #1 **<END>** g01096242

301-2300 TRACK GP—2-REQUIRED

S/N: JGB1-UP; KHS1-UP
600-MM (23.6-IN) TRIPLE GROUSER SHOE. GREASE LUBRICATED TRACK, POSITIVE PIN RETENTION
PART OF 371-9206 DISTRIBUTION AR, 303-2638 TRACK GP
AN ATTACHMENT

SMCS-4170 **i03970207**

NOTE	PART NUMBER	QTY	PART NAME 1 2 3 4 5 6 (PRODUCT LEVEL)	SEE PAGE
Y	**301-2297**	1	LINK AS-TRACK	429
M	**301-2299**	208	BOLT-TRACK (M24X1.5X71-MM)	
M	**150-4742**	208	NUT-TRACK (M24X1.5-THD)	
	150-4770	52	SHOE-TRACK	

M-METRIC PART
Y-SEPARATE ILLUSTRATION

<END>

303-2589 TRACK GP—2-REQUIRED, HEAVY-DUTY

S/N: JGB1-UP
750-MM (29.5-IN) TRIPLE GROUSER SHOE. GREASE LUBRICATED TRACK
AN ATTACHMENT

SMCS-4170 **i02852708**

NOTE	PART NUMBER	QTY	PART NAME 1 2 3 4 5 6 (PRODUCT LEVEL)	SEE PAGE
Y	*297-7547*	1	STEP GP	398
Y	*311-6458*	1	TRACK GP	439

Y-SEPARATE ILLUSTRATION

<END>

303-2591 TRACK GP—2-REQUIRED, HEAVY-DUTY

S/N: JGB1-UP
600-MM (23.6-IN) DOUBLE GROUSER SHOE. GREASE LUBRICATED TRACK
AN ATTACHMENT

SMCS-4170 **i02899146**

NOTE	PART NUMBER	QTY	PART NAME 1 2 3 4 5 6 (PRODUCT LEVEL)	SEE PAGE
Y	*297-7547*	1	STEP GP	398
Y	*311-6452*	1	TRACK GP (HEAVY-DUTY)	438

Y-SEPARATE ILLUSTRATION

<END>

303-2634 TRACK GP–2-REQUIRED

S/N: JGB1-UP; KHS1-UP
600-MM (23.6-IN) DOUBLE GROUSER SHOE. GREASE LUBRICATED TRACK, POSITIVE PIN RETENTION
PART OF 371-9200, 371-9205 DISTRIBUTION AR
AN ATTACHMENT

SMCS-4170 **i02898756**

NOTE	PART NUMBER	QTY	PART NAME 1 2 3 4 5 6 (PRODUCT LEVEL)	SEE PAGE
Y	*297-7547*	1	STEP GP	398
Y	*311-8145*	1	TRACK GP (HEAVY-DUTY)	439
Y-SEPARATE ILLUSTRATION				

<END>

303-2638 TRACK GP–2-REQUIRED

S/N: JGB1-UP
600-MM (23.6-IN) TRIPLE GROUSER SHOE. GREASE LUBRICATED TRACK, POSITIVE PIN RETENTION
PART OF 371-9201 DISTRIBUTION AR
AN ATTACHMENT

SMCS-4170 **i02936300**

NOTE	PART NUMBER	QTY	PART NAME 1 2 3 4 5 6 (PRODUCT LEVEL)	SEE PAGE
Y	*297-7547*	1	STEP GP	398
Y	*301-2300*	1	TRACK GP	436
Y-SEPARATE ILLUSTRATION				

<END>

303-2639 TRACK GP–2-REQUIRED, HEAVY-DUTY

S/N: JGB1-UP
750-MM (29.5-IN) TRIPLE GROUSER SHOE. GREASE LUBRICATED TRACK, POSITIVE PIN RETENTION
PART OF 371-9202, 371-9204 DISTRIBUTION AR
AN ATTACHMENT

SMCS-4170 **i02851874**

NOTE	PART NUMBER	QTY	PART NAME 1 2 3 4 5 6 (PRODUCT LEVEL)	SEE PAGE
Y	*297-7547*	1	STEP GP	398
Y	*311-1926*	1	TRACK GP	438
Y-SEPARATE ILLUSTRATION				

<END>

303-2640 TRACK GP—2-REQUIRED, HEAVY-DUTY

S/N: JGB1-UP
900-MM (35-IN) TRIPLE GROUSER SHOE.
GREASE LUBRICATED TRACK, POSITIVE PIN RETENTION
AN ATTACHMENT

SMCS-4170 **i02851817**

NOTE	PART NUMBER	QTY	PART NAME 1 2 3 4 5 6 (PRODUCT LEVEL)	SEE PAGE
Y	*297-7548*	1	STEP GP	399
Y	*311-8148*	1	TRACK GP	439

Y-SEPARATE ILLUSTRATION

<END>

311-1926 TRACK GP—2-REQUIRED, HEAVY-DUTY

S/N: JGB1-UP; KHS1-UP
750-MM (29.5-IN) TRIPLE GROUSER SHOE.
GREASE LUBRICATED TRACK, POSITIVE PIN RETENTION
PART OF 303-2639 TRACK GP
AN ATTACHMENT

SMCS-4170 **i03970208**

NOTE	PART NUMBER	QTY	PART NAME 1 2 3 4 5 6 (PRODUCT LEVEL)	SEE PAGE
Y	**301-2297**	1	LINK AS-TRACK	429
M	**301-2299**	208	BOLT-TRACK (M24X1.5X71-MM)	
M	**150-4742**	208	NUT-TRACK (M24X1.5-THD)	
	150-4766	52	SHOE-TRACK	

M-METRIC PART
Y-SEPARATE ILLUSTRATION

<END>

311-6452 TRACK GP—2-REQUIRED

S/N: JGB1-UP; KHS1-UP
600-MM (23.6-IN) DOUBLE GROUSER SHOE. GREASE LUBRICATED TRACK, HEAVY-DUTY
PART OF 303-2591 TRACK GP
AN ATTACHMENT

SMCS-4170 **i03970352**

NOTE	PART NUMBER	QTY	PART NAME 1 2 3 4 5 6 (PRODUCT LEVEL)	SEE PAGE
Y	**301-2287**	1	LINK AS-TRACK	428
M	**301-2299**	208	BOLT-TRACK (M24X1.5X71-MM)	
M	**150-4742**	208	NUT-TRACK (M24X1.5-THD)	
	150-4768	52	SHOE-TRACK	

M-METRIC PART
Y-SEPARATE ILLUSTRATION

<END>

311-6458 TRACK GP–2-REQUIRED

S/N: JGB1-UP; KHS1-UP
750-MM (29.5-IN) TRIPLE GROUSER SHOE, GREASE LUBRICATED TRACK. HEAVY-DUTY
PART OF 303-2589 TRACK GP
AN ATTACHMENT

SMCS-4170 **i03970350**

NOTE	PART NUMBER	QTY	PART NAME 1 2 3 4 5 6 (PRODUCT LEVEL)	SEE PAGE
Y	**301-2287**	1	LINK AS-TRACK	428
M	**301-2299**	208	BOLT-TRACK (M24X1.5X71-MM)	
M	**150-4742**	208	NUT-TRACK (M24X1.5-THD)	
	150-4766	52	SHOE-TRACK	

M-METRIC PART
Y-SEPARATE ILLUSTRATION

<END>

311-8145 TRACK GP–2-REQUIRED

S/N: JGB1-UP; KHS1-UP
600-MM (23.6-IN) DOUBLE GROUSER SHOE. GREASE LUBRICATED TRACK,
POSITIVE PIN RETENTION
PART OF 303-2634 TRACK GP
AN ATTACHMENT

SMCS-4170 **i03970335**

NOTE	PART NUMBER	QTY	PART NAME 1 2 3 4 5 6 (PRODUCT LEVEL)	SEE PAGE
Y	**301-2297**	1	LINK AS-TRACK	429
M	**301-2299**	208	BOLT-TRACK (M24X1.5X71-MM)	
M	**150-4742**	208	NUT-TRACK (M24X1.5-THD)	
	150-4768	52	SHOE-TRACK	

M-METRIC PART
Y-SEPARATE ILLUSTRATION

<END>

311-8148 TRACK GP–2-REQUIRED

S/N: JGB1-UP
900-MM (35-IN) TRIPLE GROUSER SHOE. GREASE LUBRICATED TRACK, HEAVY-DUTY,
POSITIVE PIN RETENTION
PART OF 303-2640 TRACK GP
AN ATTACHMENT

SMCS-4170 **i03970337**

NOTE	PART NUMBER	QTY	PART NAME 1 2 3 4 5 6 (PRODUCT LEVEL)	SEE PAGE
Y	**301-2297**	1	LINK AS-TRACK	429
M	**301-2299**	208	BOLT-TRACK (M24X1.5X71-MM)	
M	**150-4742**	208	NUT-TRACK (M24X1.5-THD)	
	150-4767	52	SHOE-TRACK	

M-METRIC PART
Y-SEPARATE ILLUSTRATION

<END>

HYDRAULIC SYSTEM

352-6990 ACCUMULATOR GP—UNCHARGED

S/N: JGB1-UP; KHS1-UP

FIELD REPLACEMENT FOR 351-9674—PAGE 449

SMCS-5077 **i04179509**

NOTE	REF NO	GRAPHIC REF	PART NUMBER	QTY	PART NAME 1 2 3 4 5 6 (PRODUCT LEVEL)	SEE PAGE
					NO SERVICED PARTS	

NO GRAPHIC AVAILABLE AT TIME OF PUBLICATION

GRAPHIC #1 **<END>** g01269539

4I-1536 ACCUMULATOR GP-HYDRAULIC—CHARGED

S/N: JGB1-UP; KHS1-UP

PART OF 087-4456 ACCUMULATOR GP-HYDRAULIC

SMCS-5077 **i00613049**

NOTE	REF NO	GRAPHIC REF	PART NUMBER	QTY	PART NAME 1 2 3 4 5 6 (PRODUCT LEVEL)	SEE PAGE
	1	1	**4I-5862**	1	CAP	
	2	1	**4I-1539**	1	CORE	

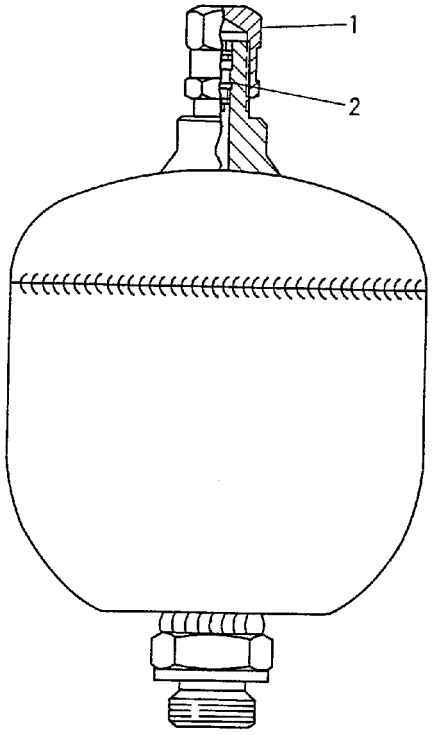

GRAPHIC #1 **<END>** g00222004

HYDRAULIC SYSTEM

5I-8416 ACCUMULATOR GP-HYDRAULIC–CHARGED

S/N: JGB1-UP; KHS1-UP

PART OF 087-4456 ACCUMULATOR GP-HYDRAULIC

SMCS-5077 **i00781802**

NOTE	REF NO	GRAPHIC REF	PART NUMBER	QTY	PART NAME 1 2 3 4 5 6 (PRODUCT LEVEL)	SEE PAGE
	1	1	**4I-8267**	1	CAP	
Y	2	1	*087-4454*	1	ACCUMULATOR GP-HYDRAULIC (CHARGED)	443

Y-SEPARATE ILLUSTRATION

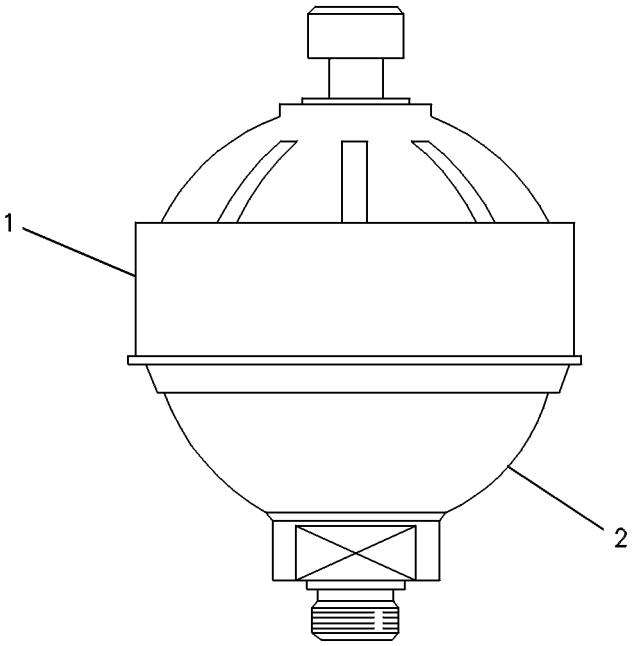

GRAPHIC #1 **<END>** g00237219

087-4454 ACCUMULATOR GP-HYDRAULIC—CHARGED

S/N: JGB1-UP; KHS1-UP

PART OF 5I-8416 ACCUMULATOR GP-HYDRAULIC

SMCS-5077 **i02613223**

NOTE	REF NO	GRAPHIC REF	PART NUMBER	QTY	PART NAME 1 2 3 4 5 6 (PRODUCT LEVEL)	SEE PAGE
	1	1	**087-4577**	1	SEAL	
	2	1	**087-4576**	1	CAP	
	3	1	**087-4575**	1	CORE	

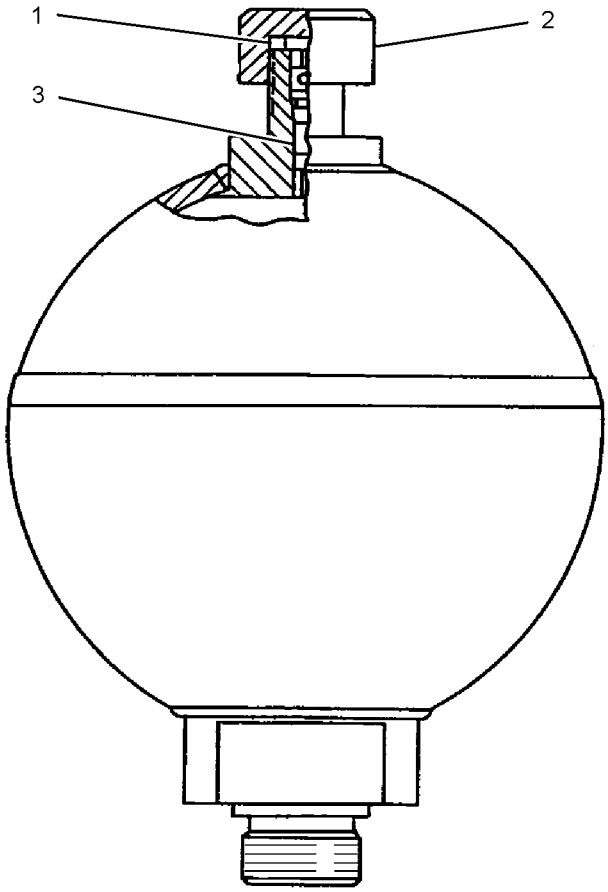

GRAPHIC #1 **<END>** g01308115

HYDRAULIC SYSTEM

087-4456 ACCUMULATOR GP-HYDRAULIC—CHARGED

S/N: JGB1-UP; KHS1-UP
PART OF 164-6981 ACCUMULATOR GP-HYDRAULIC
FIELD REPLACEMENT ORDER 227-8807—PAGE 447

SMCS-5077 **i02299052**

NOTE	PART NUMBER	QTY	PART NAME 1 2 3 4 5 6 (PRODUCT LEVEL)	SEE PAGE
Y	*4I-1536*	1	ACCUMULATOR GP-HYDRAULIC (CHARGED)	441
			—OR—	
Y	*5I-8416*	1	ACCUMULATOR GP-HYDRAULIC (CHARGED)	442
			—OR—	
Y	*145-5106*	1	ACCUMULATOR GP-HYDRAULIC (CHARGED)	445
Y-SEPARATE ILLUSTRATION				

<END>

145-5106 ACCUMULATOR GP-HYDRAULIC–CHARGED

S/N: JGB1-UP; KHS1-UP

PART OF 087-4456 ACCUMULATOR GP-HYDRAULIC

SMCS-5077 **i02299074**

NOTE	REF NO	GRAPHIC REF	PART NUMBER	QTY	PART NAME 1 2 3 4 5 6 (PRODUCT LEVEL)	SEE PAGE
	1	1	**159-4700**	1	FILM-WARNING (HIGH PRESSURE CYLINDER)	

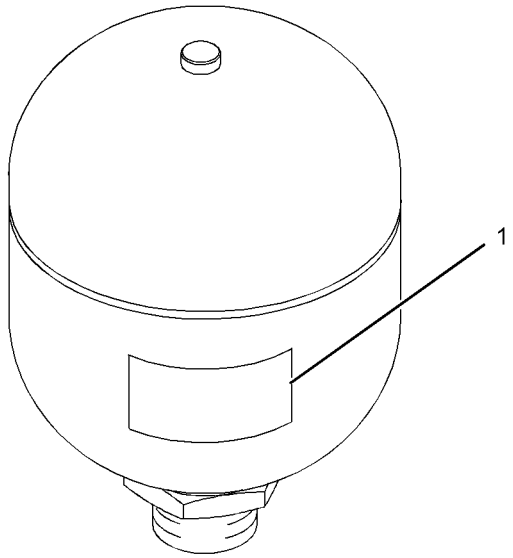

GRAPHIC #1 **<END>** g01135721

HYDRAULIC SYSTEM

164-6981 ACCUMULATOR GP-HYDRAULIC—CHARGED

S/N: JGB1-UP; KHS1-UP

PART OF 302-2985 LINES GP-PILOT

SMCS-5077 **i02841690**

NOTE	PART NUMBER	QTY	PART NAME 1 2 3 4 5 6 (PRODUCT LEVEL)	SEE PAGE
Y	*087-4456*	1	ACCUMULATOR GP-HYDRAULIC (CHARGED)	444
	3K-0360	1	SEAL-O-RING	

Y-SEPARATE ILLUSTRATION

<END>

227-8807 ACCUMULATOR GP-HYDRAULIC—UNCHARGED

S/N: JGB1-UP; KHS1-UP

FIELD REPLACEMENT FOR 087-4456—PAGE 444: FOR 145-5106—PAGE 445

SMCS-5077 **i03971213**

NOTE	REF NO	GRAPHIC REF	PART NUMBER	QTY	PART NAME 1 2 3 4 5 6 (PRODUCT LEVEL)	SEE PAGE
					(NO SERVICED PARTS)	

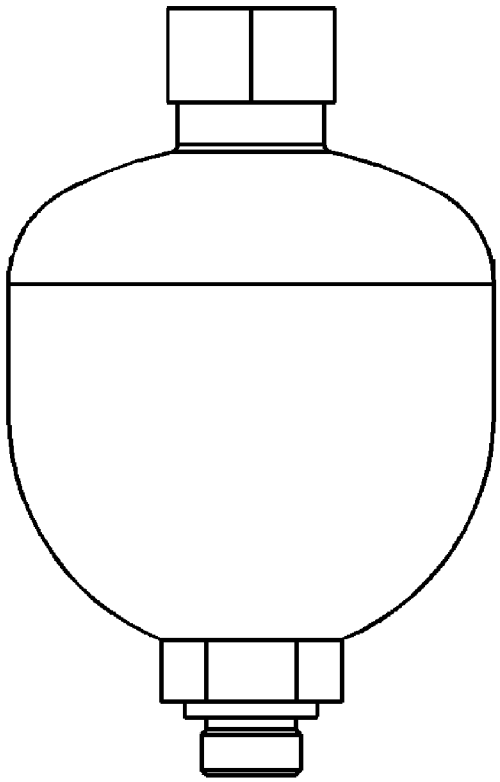

GRAPHIC #1 **<END>** g02162620

HYDRAULIC SYSTEM

335-0517 ACCUMULATOR GP-HYDRAULIC—CHARGED

S/N: JGB1-UP; KHS1-UP
PART OF 351-9674 ACCUMULATOR GP-HYDRAULIC
AN ATTACHMENT

SMCS-5077 **i03897188**

NOTE	REF NO	GRAPHIC REF	PART NUMBER	QTY	PART NAME 1 2 3 4 5 6 (PRODUCT LEVEL)	SEE PAGE
	1	1	**159-4700**	1	FILM-WARNING (HIGH PRESSURE CYLINDER)	

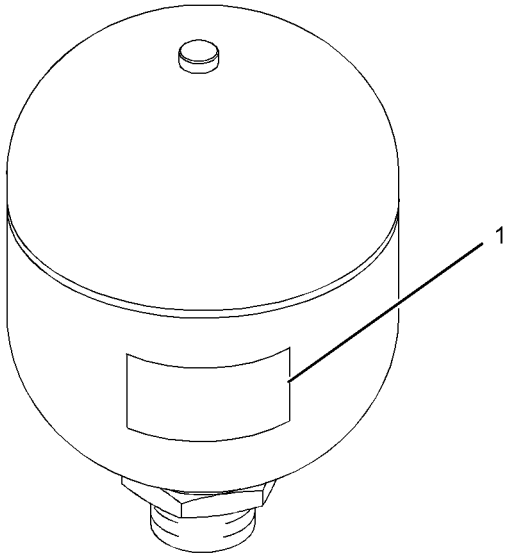

GRAPHIC #1 **<END>** g01135721

351-9674 ACCUMULATOR GP-HYDRAULIC—CHARGED

S/N: JGB1-UP; KHS1-UP
PART OF 352-6860 ACCUMULATOR GP-HYDRAULIC
FIELD REPLACEMENT ORDER 352-6990—PAGE 440
AN ATTACHMENT

SMCS-5077 **i03897186**

NOTE	PART NUMBER	QTY	PART NAME 1 2 3 4 5 6 (PRODUCT LEVEL)	SEE PAGE
Y	*335-0517*	1	ACCUMULATOR GP-HYDRAULIC (CHARGED)	448
			—OR—	
Y	*352-6830*	1	ACCUMULATOR GP-HYDRAULIC (CHARGED)	450

Y-SEPARATE ILLUSTRATION

<END>

HYDRAULIC SYSTEM

352-6830 ACCUMULATOR GP-HYDRAULIC—CHARGED

S/N: JGB1-UP; KHS1-UP
PART OF 351-9674 ACCUMULATOR GP-HYDRAULIC
AN ATTACHMENT

SMCS-5077 **i03897189**

NOTE	REF NO	GRAPHIC REF	PART NUMBER	QTY	PART NAME 1 2 3 4 5 6 (PRODUCT LEVEL)	SEE PAGE
					(NO SERVICED PARTS)	

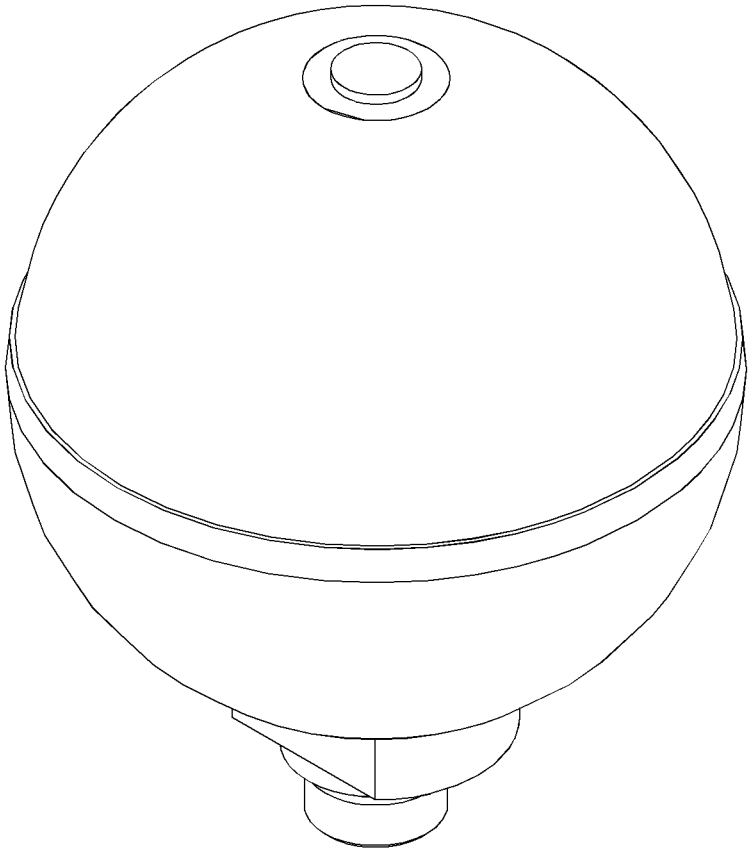

GRAPHIC #1 **<END>** g02124833

HYDRAULIC SYSTEM

352-6860 ACCUMULATOR GP-HYDRAULIC—CHARGED

S/N: JGB1-UP; KHS1-UP
PART OF 351-9652 INSTALLATION AR
AN ATTACHMENT

SMCS-5077 **i03897173**

NOTE	PART NUMBER	QTY	PART NAME 1 2 3 4 5 6 (PRODUCT LEVEL)	SEE PAGE
Y	**351-9674**	1	ACCUMULATOR GP-HYDRAULIC (CHARGED)	449
	3K-0360	1	SEAL-O-RING	

Y-SEPARATE ILLUSTRATION

<END>

HYDRAULIC SYSTEM

177-2617 BLOCK GP-HYDRAULIC

S/N: JGB1-UP; KHS1-UP

PART OF 188-4145 FILTER GP-OIL

SMCS-5264 **i02160182**

NOTE	REF NO	GRAPHIC REF	PART NUMBER	QTY	PART NAME 1 2 3 4 5 6 (PRODUCT LEVEL)	SEE PAGE
Z	1	1		1	BLOCK	
	2	1	**177-2619**	2	PACKING	
	3	1	**179-9618**	1	PLATE-SLIDE	
	4	1	**5L-4758**	1	SEAL-O-RING	
M	5	1	**137-3626**	1	BOLT-SHOULDER (M6X1X28.75-MM)	
	6	1	**137-3628**	1	SHIM (0.1-MM THK)	

M-METRIC PART
Z-NOT SERVICED SEPARATELY

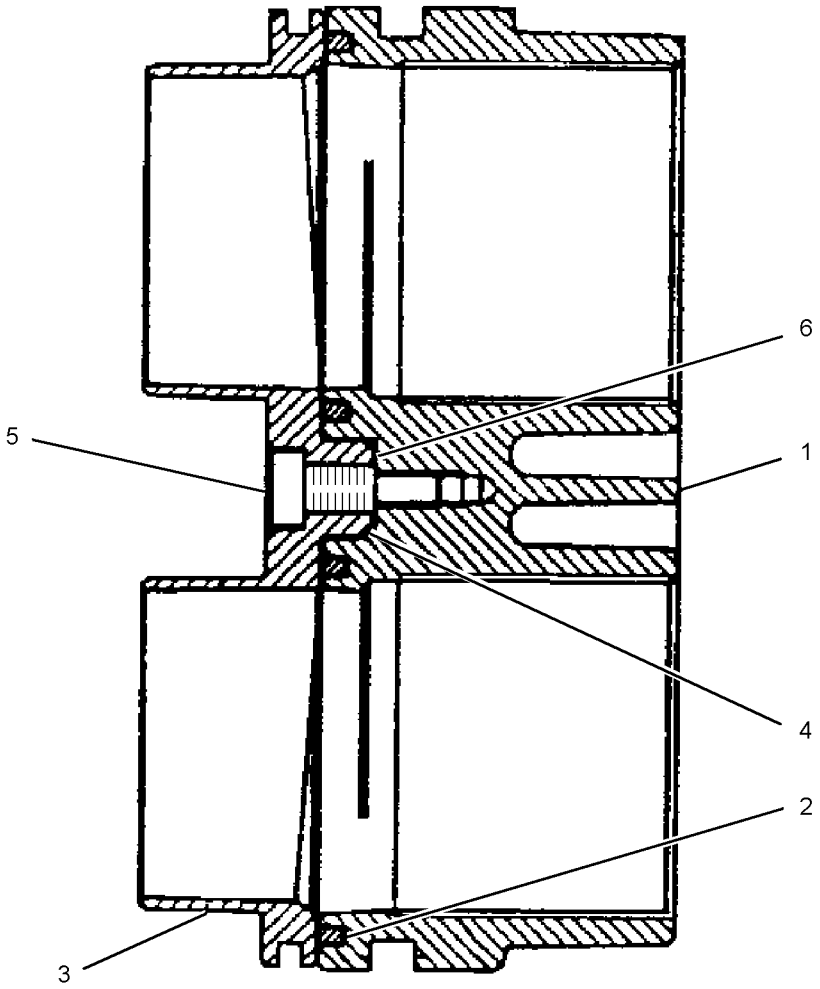

GRAPHIC #1 **<END>** g01096481

255-5843 CONTROL AR-AUXILIARY–
JOYSTICK WITH SLIDE CONTROL
S/N: JGB1-UP; KHS1-UP
PART OF 310-0016, 310-0017 CONTROL AR-AUXILIARY
AN ATTACHMENT

SMCS-5051 **i02844790**

NOTE	PART NUMBER	QTY	PART NAME 1 2 3 4 5 6 (PRODUCT LEVEL)	SEE PAGE
Y	*259-7598*	1	CONTROL & MTG GP-JOYSTICK (WITH MODULATION SWITCH)	881
Y	*259-5295*	1	FASTENER GP-WIRING HARNESS (JOYSTICK)	185
Y	*247-7410*	1	FILM GP (OPERATOR CONTROLS, NOTICE)	975

Y-SEPARATE ILLUSTRATION

<END>

255-5844 CONTROL AR-AUXILIARY–
JOYSTICK, 3-BUTTON, TRIGGER SWITCH
S/N: JGB1-UP; KHS1-UP
PART OF 344-5677 OPTION AR-HYDRAULIC
FOR USE WITH 310-0013–PAGE 456. CANNOT BE USED WITH 310-0017–PAGE 456, 310-0016–PAGE 456, 310-0013–PAGE 456
AN ATTACHMENT

SMCS-5051 **i02862257**

NOTE	PART NUMBER	QTY	PART NAME 1 2 3 4 5 6 (PRODUCT LEVEL)	SEE PAGE
Y	*259-7599*	1	CONTROL & MTG GP-JOYSTICK	882
Y	*259-5295*	1	FASTENER GP-WIRING HARNESS (JOYSTICK)	185
Y	*247-7411*	1	FILM GP (OPERATOR CONTROLS, NOTICE)	976

Y-SEPARATE ILLUSTRATION

<END>

270-6106 CONTROL AR-AUXILIARY–LEFT FOOT SWITCH
S/N: JGB1-UP
PART OF 310-0013 CONTROL AR-AUXILIARY
AN ATTACHMENT

SMCS-5051 **i02845490**

NOTE	PART NUMBER	QTY	PART NAME 1 2 3 4 5 6 (PRODUCT LEVEL)	SEE PAGE
Y	*270-6107*	1	CONTROL GP-FOOT (LEFT ON/OFF SWITCH)	885
Y	*259-5294*	1	FASTENER GP-WIRING HARNESS (FOOT SWITCH)	184
Y	*247-7465*	1	FILM GP (HAMMER CONTROL, FOOT SWITCH)	978

Y-SEPARATE ILLUSTRATION

<END>

285-1784 CONTROL AR-AUXILIARY—SYSTEM 3, 1-WAY, 2-PUMP

S/N: JGB1-UP
PART OF 310-0013 CONTROL AR-AUXILIARY
AN ATTACHMENT

SMCS-5051 **i02845510**

NOTE	PART NUMBER	QTY	PART NAME 1 2 3 4 5 6 (PRODUCT LEVEL)	SEE PAGE
Y	*292-7166*	1	LINES GP-FRONT	562
Y	*260-7891*	1	LINES GP-PILOT (PUMP CONTROL, SHUTTLE VALVE)	592
Y	*296-7127*	1	LINES GP-PILOT (SYSTEMS 3, 16)	599
Y	*299-2600*	1	WIRING GP-AUXILIARY CONTROL (PLATFORM)	258

Y-SEPARATE ILLUSTRATION

<END>

285-1786 CONTROL AR-AUXILIARY—SYSTEM 14, COMBINED FUNCTION

S/N: JGB1-UP
PART OF 310-0016, 310-0017 CONTROL AR-AUXILIARY
AN ATTACHMENT

SMCS-5051 **i02844913**

NOTE	PART NUMBER	QTY	PART NAME 1 2 3 4 5 6 (PRODUCT LEVEL)	SEE PAGE
Y	*292-7169*	1	LINES GP-FRONT	566
Y	*260-7891*	1	LINES GP-PILOT (PUMP CONTROL, SHUTTLE VALVE)	592
Y	*302-3143*	1	LINES GP-PILOT (SYSTEM 14, SYSTEM 17)	624
Y	*291-7757*	1	WIRING GP-PLATFORM (SYSTEM 14, SYSTEM 17)	309

Y-SEPARATE ILLUSTRATION

<END>

285-1787 CONTROL AR-AUXILIARY—SYSTEM 16, 1-WAY, 2-PUMP

S/N: JGB1-UP; KHS1-UP
PART OF 344-5677 OPTION AR-HYDRAULIC
AN ATTACHMENT

SMCS-5051 **i02915608**

NOTE	PART NUMBER	QTY	PART NAME 1 2 3 4 5 6 (PRODUCT LEVEL)	SEE PAGE
Y	*296-7129*	1	LINES GP-FRONT (SYSTEM 16, 1-WAY, 2-PUMP)	570
Y	*260-7891*	1	LINES GP-PILOT (PUMP CONTROL, SHUTTLE VALVE)	592
Y	*296-7127*	1	LINES GP-PILOT (SYSTEMS 3, 16)	599
Y	*299-2602*	1	WIRING GP-CONTROL (SYSTEM 16, 1-WAY, 2-PUMP)	287

Y-SEPARATE ILLUSTRATION

<END>

285-1788 CONTROL AR-AUXILIARY–
SYSTEM 17, COMBINED FN, MED PR
S/N: KHS1-UP
AN ATTACHMENT

SMCS-5051 **i02915682**

NOTE	PART NUMBER	QTY	PART NAME 1 2 3 4 5 6 (PRODUCT LEVEL)	SEE PAGE
Y	*296-7131*	1	LINES GP-FRONT (SYSTEM 17, COMBINED FN, MED PR)	574
Y	*260-7891*	1	LINES GP-PILOT (PUMP CONTROL, SHUTTLE VALVE)	592
Y	*302-3143*	1	LINES GP-PILOT (SYSTEM 14, SYSTEM 17)	624
Y	*291-7757*	1	WIRING GP-PLATFORM (SYSTEM 14, SYSTEM 17)	309
Y-SEPARATE ILLUSTRATION				

<END>

285-1789 CONTROL AR-AUXILIARY–
MEDIUM PRESSURE AUXILIARY
S/N: JGB1-UP; KHS1-UP
PART OF 310-0017 CONTROL AR-AUXILIARY
AN ATTACHMENT

SMCS-5051 **i02845001**

NOTE	PART NUMBER	QTY	PART NAME 1 2 3 4 5 6 (PRODUCT LEVEL)	SEE PAGE
Y	*225-4515*	1	DRIVE GP-AUXILIARY PUMP	480
Y	*227-0585*	1	LINES GP-FRONT (MEDIUM PRESSURE)	558
Y	*302-3148*	1	LINES GP-PILOT (MEDIUM PRESSURE AUXILIARY)	630
Y	*292-7168*	1	LINES GP-PUMP (MEDIUM PRESSURE)	643
Y	*242-6805*	1	PUMP & MTG GP-AUXILIARY	692
Y	*291-7758*	1	WIRING GP-MEDIUM PRESSURE	306
Y-SEPARATE ILLUSTRATION				

<END>

285-1790 CONTROL AR-AUXILIARY–
COOLING CIRCUIT, HYDRAULIC OIL
S/N: JGB1-UP; KHS1-UP
PART OF 344-5677 OPTION AR-HYDRAULIC
AN ATTACHMENT

SMCS-5051 **i02915721**

NOTE	PART NUMBER	QTY	PART NAME 1 2 3 4 5 6 (PRODUCT LEVEL)	SEE PAGE
Y	*225-4515*	1	DRIVE GP-AUXILIARY PUMP	480
Y	*296-7136*	1	LINES GP-COOLING	98
Y	*242-6805*	1	PUMP & MTG GP-AUXILIARY	692
Y-SEPARATE ILLUSTRATION				

<END>

310-0013 CONTROL AR-AUXILIARY—SYSTEM 3, 1-WAY, 2-PUMP

S/N: JGB1-UP

AN ATTACHMENT

SMCS-5051 **i02856352**

NOTE	PART NUMBER	QTY	PART NAME 1 2 3 4 5 6 (PRODUCT LEVEL)	SEE PAGE
Y	*285-1784*	1	CONTROL AR-AUXILIARY (SYSTEM 3, 1-WAY, 2-PUMP)	454
Y	*302-3147*	1	LINES GP-PILOT (PRIMARY)	628
Y	*270-6106*	1	CONTROL AR-AUXILIARY (FOOT SWITCH, LH)	453
Y-SEPARATE ILLUSTRATION				

<END>

310-0016 CONTROL AR-AUXILIARY—SYSTEM 14, COMBINED FUNCTION

S/N: JGB1-UP

AN ATTACHMENT

SMCS-5051 **i02847381**

NOTE	PART NUMBER	QTY	PART NAME 1 2 3 4 5 6 (PRODUCT LEVEL)	SEE PAGE
Y	*255-5843*	1	CONTROL AR-AUXILIARY (JOYSTICK, MODULATION SWITCH)	453
Y	*285-1786*	1	CONTROL AR-AUXILIARY (SYSTEM 14, COMBINED FUNCTION)	454
Y	*302-3147*	1	LINES GP-PILOT (PRIMARY)	628
Y-SEPARATE ILLUSTRATION				

<END>

310-0017 CONTROL AR-AUXILIARY—SYSTEM 14, COMBINED FUNCTION

S/N: JGB1-UP

AN ATTACHMENT

SMCS-5051 **i02844664**

NOTE	PART NUMBER	QTY	PART NAME 1 2 3 4 5 6 (PRODUCT LEVEL)	SEE PAGE
Y	*255-5843*	1	CONTROL AR-AUXILIARY (JOYSTICK, MODULATION SWITCH)	453
Y	*285-1786*	1	CONTROL AR-AUXILIARY (SYSTEM 14, COMBINED FUNCTION)	454
Y	*285-1789*	1	CONTROL AR-AUXILIARY (MEDIUM PRESSURE AUXILIARY)	455
Y	*302-3147*	1	LINES GP-PILOT (PRIMARY)	628
Y-SEPARATE ILLUSTRATION				

<END>

302-9403 CONTROL AR-COUPLER—UNIVERSAL

S/N: JGB1-UP; KHS1-UP
PART OF 341-3123 OPTION AR-COUPLER
AN ATTACHMENT

SMCS-6129 **i02903166**

NOTE	PART NUMBER	QTY	PART NAME 1 2 3 4 5 6 (PRODUCT LEVEL)	SEE PAGE
Y	*268-6816*	1	FILM GP (QUICK COUPLER)	980
Y	*296-7133*	1	LINES GP-PILOT (UNIVERSAL QUICK COUPLER)	604
Y	*267-7642*	1	WIRING GP-CAB (COUPLER)	260
Y	*299-2604*	1	WIRING GP-QUICK COUPLER	313
Y-SEPARATE ILLUSTRATION				

<END>

344-4211 CONTROL AR-COUPLER

S/N: JGB1-UP
AN ATTACHMENT

SMCS-6129 **i03706866**

NOTE	PART NUMBER	QTY	PART NAME 1 2 3 4 5 6 (PRODUCT LEVEL)	SEE PAGE
Y	*282-5705*	1	FILM GP (QUICK COUPLER)	981
Y	*337-1219*	1	LINES GP-PILOT	634
Y	*238-2485*	1	SWITCH GP-TOGGLE (QUICK COUPLER LOCK)	253
Y	*259-4889*	1	WIRING GP-CHASSIS (QUICK COUPLER)	271
Y-SEPARATE ILLUSTRATION				

<END>

HYDRAULIC SYSTEM

310-9497 COUPLING GP-FLEXIBLE

S/N: JGB1-UP; KHS1-UP

PART OF 305-4935 COUPLING GP-PUMP

SMCS-3252 **i04183537**

NOTE	REF NO	GRAPHIC REF	PART NUMBER	QTY	PART NAME 1 2 3 4 5 6 (PRODUCT LEVEL)	SEE PAGE
	1	1	**327-7242**	1	PLATE	
	2	1	**327-7243**	1	HUB	
	3	1	**327-7244**	1	CAGE-SPRING	
	4	1	**327-7245**	1	CAGE-SPRING	
	5	1	**327-7246**	1	SPACER	
	6	1	**327-7252**	8	SPRING AS	
	7	1	**7X-0345**	6	BOLT (5/8-11X1.75-IN)	

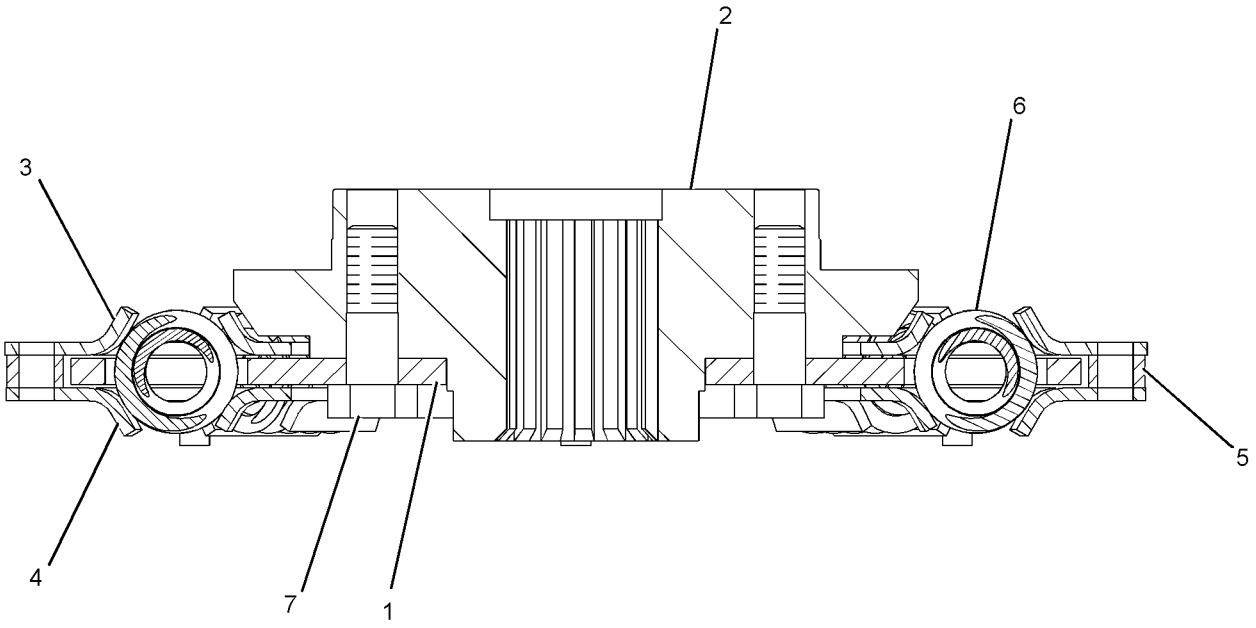

GRAPHIC #1 **<END>** g02391622

305-4935 COUPLING GP-PUMP

S/N: JGB1-UP; KHS1-UP

PART OF 296-4670 PUMP & MTG GP-MAIN HYDRAULIC

SMCS-5062 **i04191694**

NOTE	REF NO	GRAPHIC REF	PART NUMBER	QTY	PART NAME 1 2 3 4 5 6 (PRODUCT LEVEL)	SEE PAGE
Y	1	1	**310-9497**	1	COUPLING GP-FLEXIBLE	458
	2	1	**5S-7382**	8	BOLT (3/8-16X1.375-IN)	
	3	1	**8T-4121**	8	WASHER-HARD (11X21X2.5-MM THK)	

Y-SEPARATE ILLUSTRATION

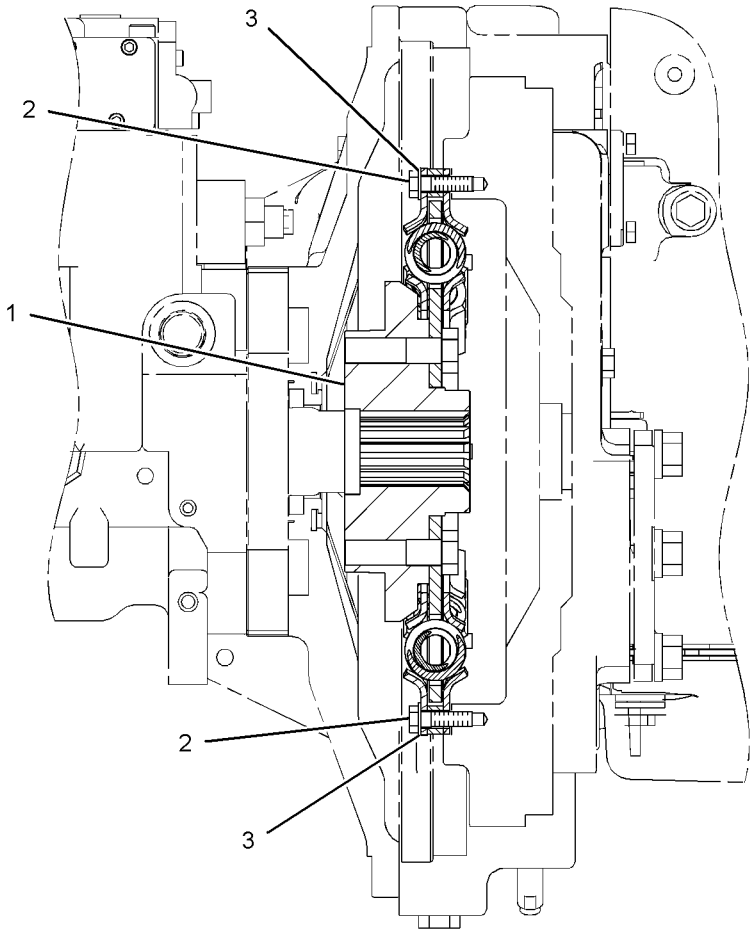

FRONT VIEW

GRAPHIC #1 **<END>** g02127435

HYDRAULIC SYSTEM

289-7844 CYLINDER & LINES GP-BOOM–LH

S/N: JGB1-UP; KHS1-UP
PART OF 319-9245 BOOM AR, 294-1252 BOOM AR-MASS, 294-1250 BOOM AR-REACH
AN ATTACHMENT

SMCS-5456, 7562 **i02861063**

NOTE	PART NUMBER	QTY	PART NAME 1 2 3 4 5 6 (PRODUCT LEVEL)	SEE PAGE
Y	*225-4522*	1	CYLINDER & SEAL GP-BOOM	462
Y	*289-5734*	1	LINES GP-BOOM CYLINDER	537
Y-SEPARATE ILLUSTRATION				

<END>

289-7845 CYLINDER & LINES GP-BOOM–RH

S/N: JGB1-UP; KHS1-UP
PART OF 319-9245 BOOM AR, 294-1252 BOOM AR-MASS, 294-1250 BOOM AR-REACH
AN ATTACHMENT

SMCS-5456, 7562 **i02861065**

NOTE	PART NUMBER	QTY	PART NAME 1 2 3 4 5 6 (PRODUCT LEVEL)	SEE PAGE
Y	*225-4522*	1	CYLINDER & SEAL GP-BOOM	462
Y	*289-5735*	1	LINES GP-BOOM CYLINDER	538
Y-SEPARATE ILLUSTRATION				

<END>

225-4527 CYLINDER & LINES GP-BUCKET

S/N: JGB1-UP; KHS1-UP
PART OF 245-5584 LINKAGE AR-BUCKET
AN ATTACHMENT

SMCS-5457 **i02155502**

NOTE	PART NUMBER	QTY	PART NAME 1 2 3 4 5 6 (PRODUCT LEVEL)	SEE PAGE
Y	*225-4528*	1	CYLINDER & SEAL GP-BUCKET	463
Y	*115-8694*	1	LINES GP-BUCKET CYLINDER	545
Y-SEPARATE ILLUSTRATION				

<END>

225-4530 CYLINDER & LINES GP-BUCKET

S/N: JGB1-UP; KHS1-UP
PART OF 220-2502 LINKAGE AR-BUCKET
AN ATTACHMENT

SMCS-5457 **i02155231**

NOTE	PART NUMBER	QTY	PART NAME 1 2 3 4 5 6 (PRODUCT LEVEL)	SEE PAGE
Y	*225-4531*	1	CYLINDER & SEAL GP-BUCKET	464
Y	*239-1603*	1	LINES GP-BUCKET CYLINDER	546
Y-SEPARATE ILLUSTRATION				

<END>

HYDRAULIC SYSTEM

300-1590 CYLINDER & LINES GP-BUCKET

S/N: JGB1-UP; KHS1-UP
PART OF 319-9274, 351-9595 SPECIAL AR
AN ATTACHMENT

SMCS-5457 **i02944970**

NOTE	PART NUMBER	QTY	PART NAME 1 2 3 4 5 6 (PRODUCT LEVEL)	SEE PAGE
Y	*300-1591*	1	CYLINDER & SEAL GP-BUCKET	465
Y	*302-3351*	1	LINES GP-BUCKET CYLINDER	547

Y-SEPARATE ILLUSTRATION

<END>

225-4524 CYLINDER & LINES GP-STICK

S/N: JGB1-UP; KHS1-UP
PART OF 319-9245 BOOM AR, 294-1252 BOOM AR-MASS, 294-1250 BOOM AR-REACH
AN ATTACHMENT

SMCS-5458 **i02155086**

NOTE	PART NUMBER	QTY	PART NAME 1 2 3 4 5 6 (PRODUCT LEVEL)	SEE PAGE
Y	*225-4525*	1	CYLINDER & SEAL GP-STICK	467
Y	*129-5973*	1	LINES GP-STICK CYLINDER	659

Y-SEPARATE ILLUSTRATION

<END>

225-4522 CYLINDER & SEAL GP-BOOM

S/N: JGB1-UP; KHS1-UP
PART OF 289-7844, 289-7845 CYLINDER & LINES GP-BOOM
AN ATTACHMENT

SMCS-5456 **i02155071**

NOTE	REF NO	GRAPHIC REF	PART NUMBER	QTY	PART NAME 1 2 3 4 5 6 (PRODUCT LEVEL)	SEE PAGE
	1	1	**3B-8489**	1	FITTING-GREASE	
	2	1	**9X-4598**	4	SEAL-LIP TYPE	
Y	3	1	**225-4523**	1	CYLINDER GP-BOOM	468
	4	1	**8T-6757**	1	PLUG-PIPE	

Y-SEPARATE ILLUSTRATION

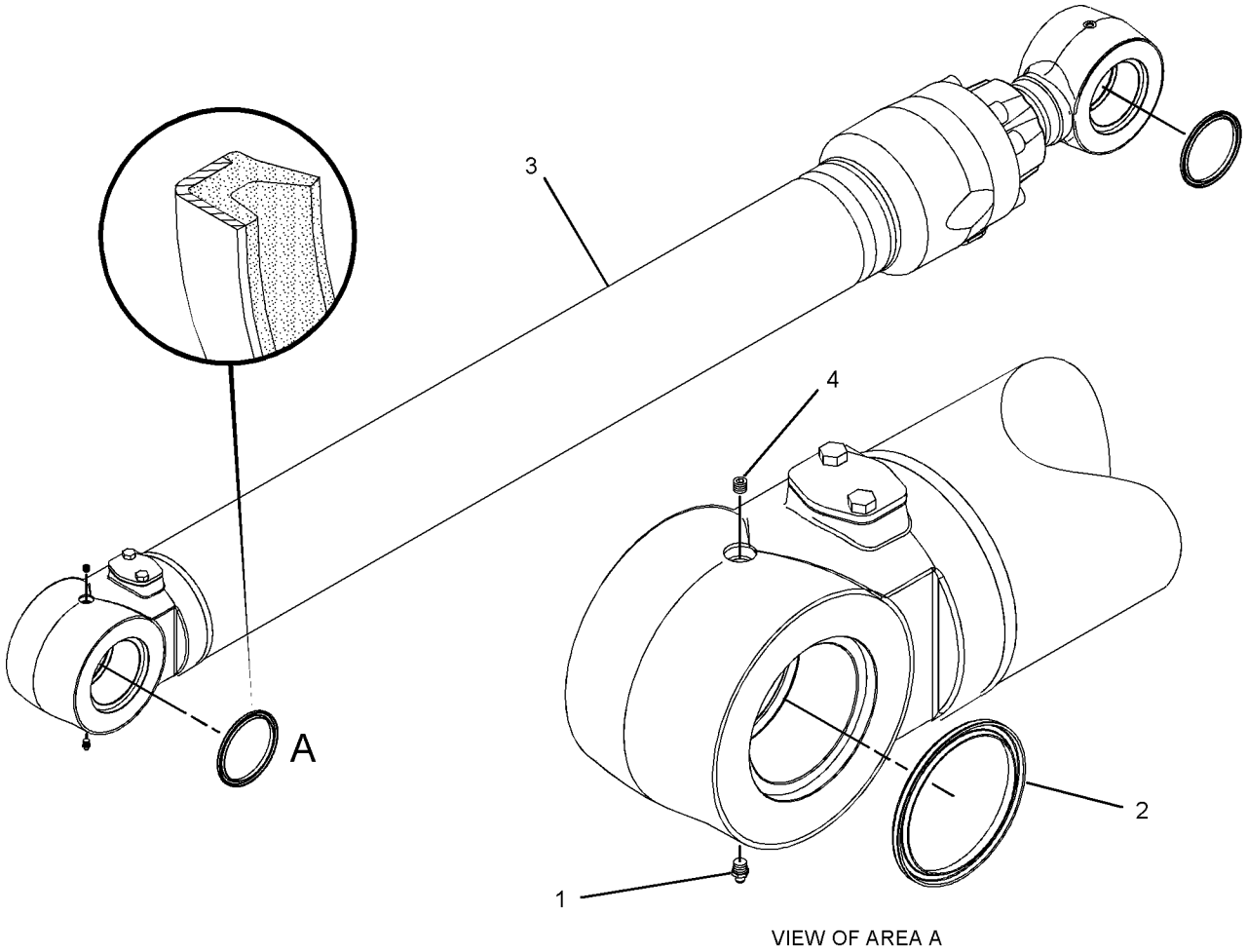

VIEW OF AREA A

GRAPHIC #1 **<END>** g01095756

225-4528 CYLINDER & SEAL GP-BUCKET

S/N: JGB1-UP; KHS1-UP
PART OF 225-4527 CYLINDER & LINES GP-BUCKET
AN ATTACHMENT

SMCS-5457 **i02155508**

NOTE	REF NO	GRAPHIC REF	PART NUMBER	QTY	PART NAME 1 2 3 4 5 6 (PRODUCT LEVEL)	SEE PAGE
	1	1	**3B-8489**	2	FITTING-GREASE	
	2	1	**7X-4803**	2	SEAL-LIP TYPE	
Y	3	1	**225-4529**	1	CYLINDER GP-BUCKET	470
	4	1	**9X-4597**	2	SEAL-LIP TYPE	

Y-SEPARATE ILLUSTRATION

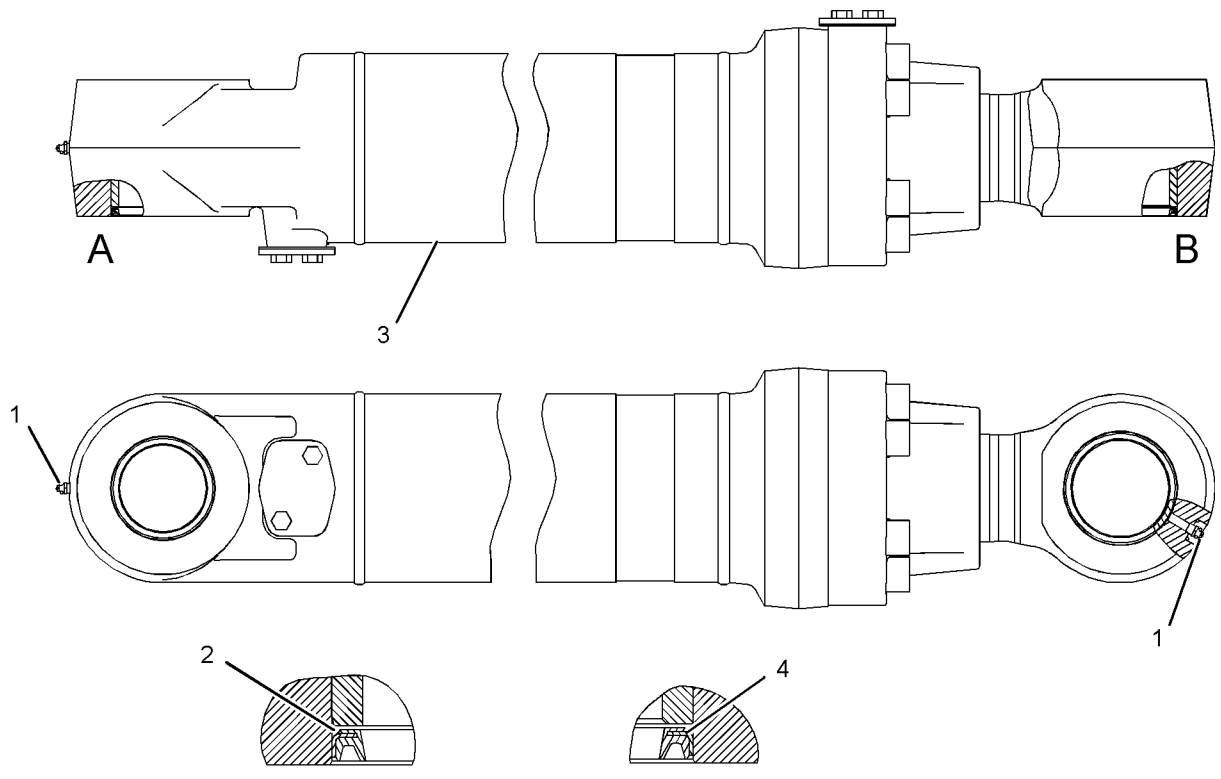

GRAPHIC #1

<END>

g01095108

225-4531 CYLINDER & SEAL GP-BUCKET

S/N: JGB1-UP; KHS1-UP
PART OF 225-4530 CYLINDER & LINES GP-BUCKET
AN ATTACHMENT

SMCS-5457 **i02155274**

NOTE	REF NO	GRAPHIC REF	PART NUMBER	QTY	PART NAME 1 2 3 4 5 6 (PRODUCT LEVEL)	SEE PAGE
	1	1	**3B-8489**	2	FITTING-GREASE	
	2	1	**9X-4598**	2	SEAL-LIP TYPE	
Y	3	1	**225-4532**	1	CYLINDER GP-BUCKET	472
	4	1	**9X-4597**	2	SEAL-LIP TYPE	

Y-SEPARATE ILLUSTRATION

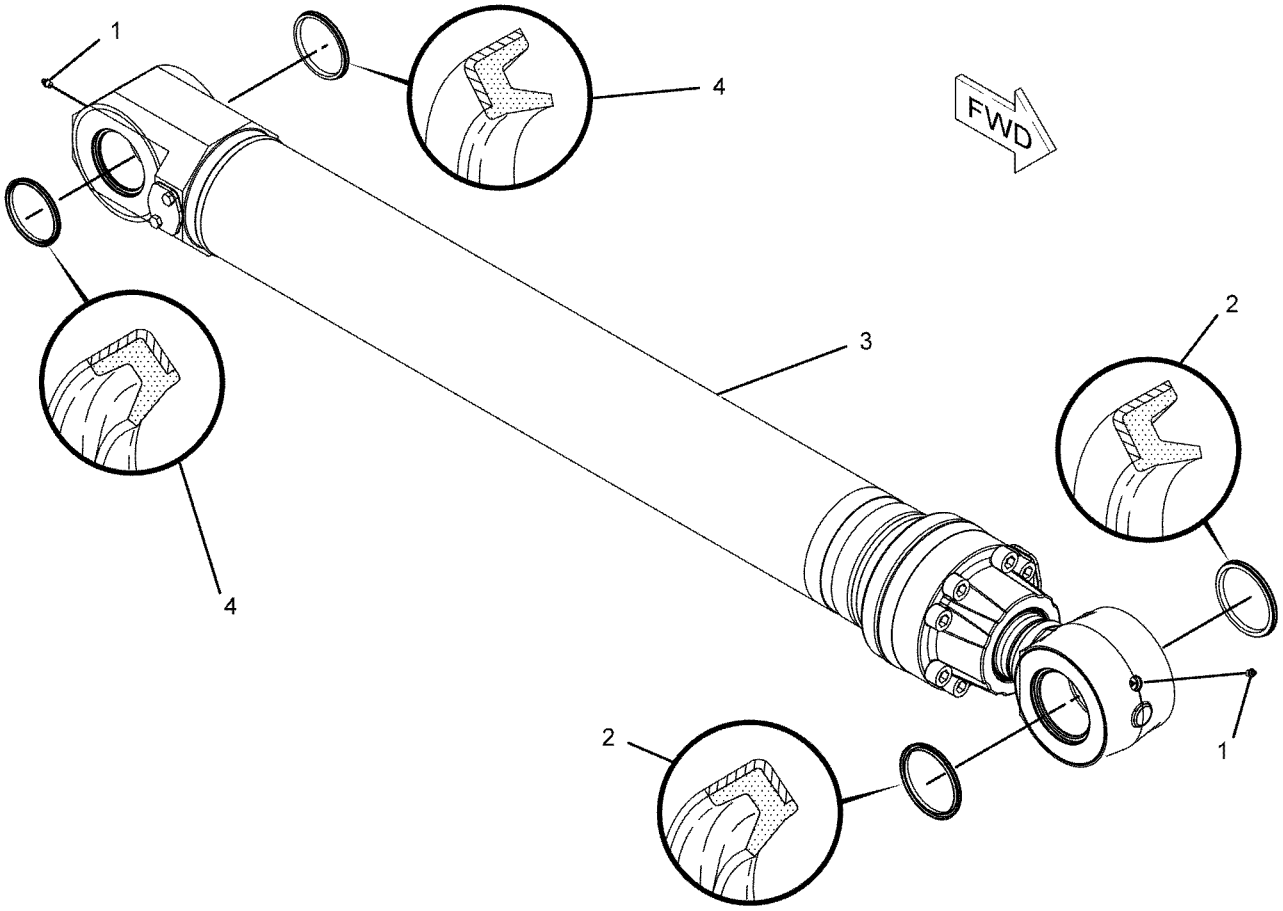

GRAPHIC #1 **<END>** g01093826

HYDRAULIC SYSTEM

300-1591 CYLINDER & SEAL GP-BUCKET

S/N: JGB1-UP; KHS1-UP
PART OF 300-1590 CYLINDER & LINES GP-BUCKET
AN ATTACHMENT

SMCS-5457 **i02944996**

NOTE	REF NO	GRAPHIC REF	PART NUMBER	QTY	PART NAME 1 2 3 4 5 6 (PRODUCT LEVEL)	SEE PAGE
	1	1	**3B-8489**	2	FITTING-GREASE	
	2	1	**7X-4803**	2	SEAL-LIP TYPE	
Y	3	1	*293-7678*	1	CYLINDER GP-BUCKET	474
	4	1	**9X-4597**	2	SEAL-LIP TYPE	

Y-SEPARATE ILLUSTRATION

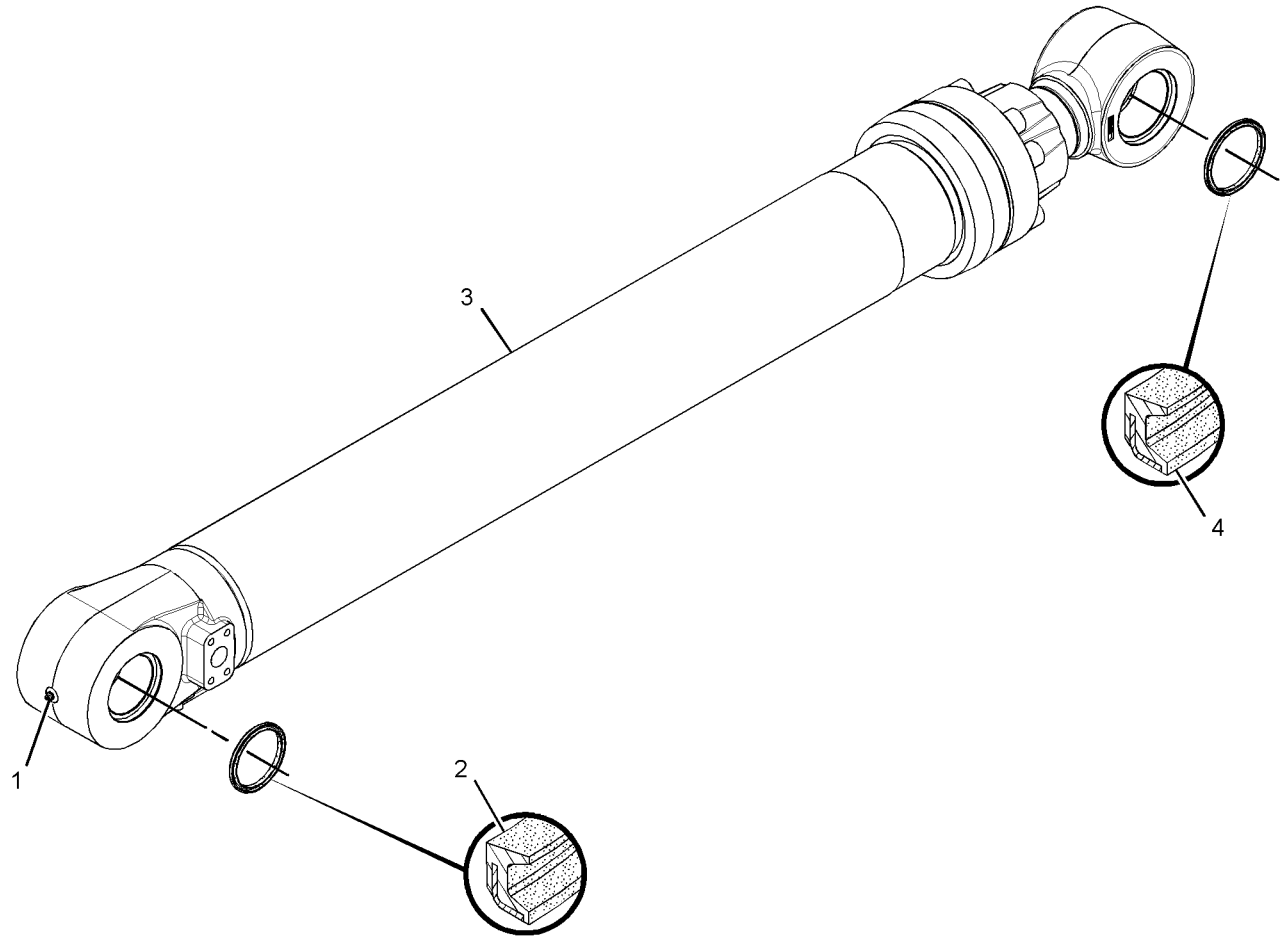

GRAPHIC #1 **<END>** g01471993

HYDRAULIC SYSTEM

225-4533 CYLINDER & SEAL GP-CTWT

S/N: JGB1-UP
PART OF 309-0166, 309-0167 COUNTERWEIGHT AR
AN ATTACHMENT

SMCS-5409 **i02158557**

NOTE	REF NO	GRAPHIC REF	PART NUMBER	QTY	PART NAME 1 2 3 4 5 6 (PRODUCT LEVEL)	SEE PAGE
	1	1	**093-1434**	4	SEAL-LIP TYPE	
Y	2	1	**236-9769**	1	CYLINDER GP-COUNTERWEIGHT	476
	3	1	**3B-8489**	2	FITTING-GREASE	

Y-SEPARATE ILLUSTRATION

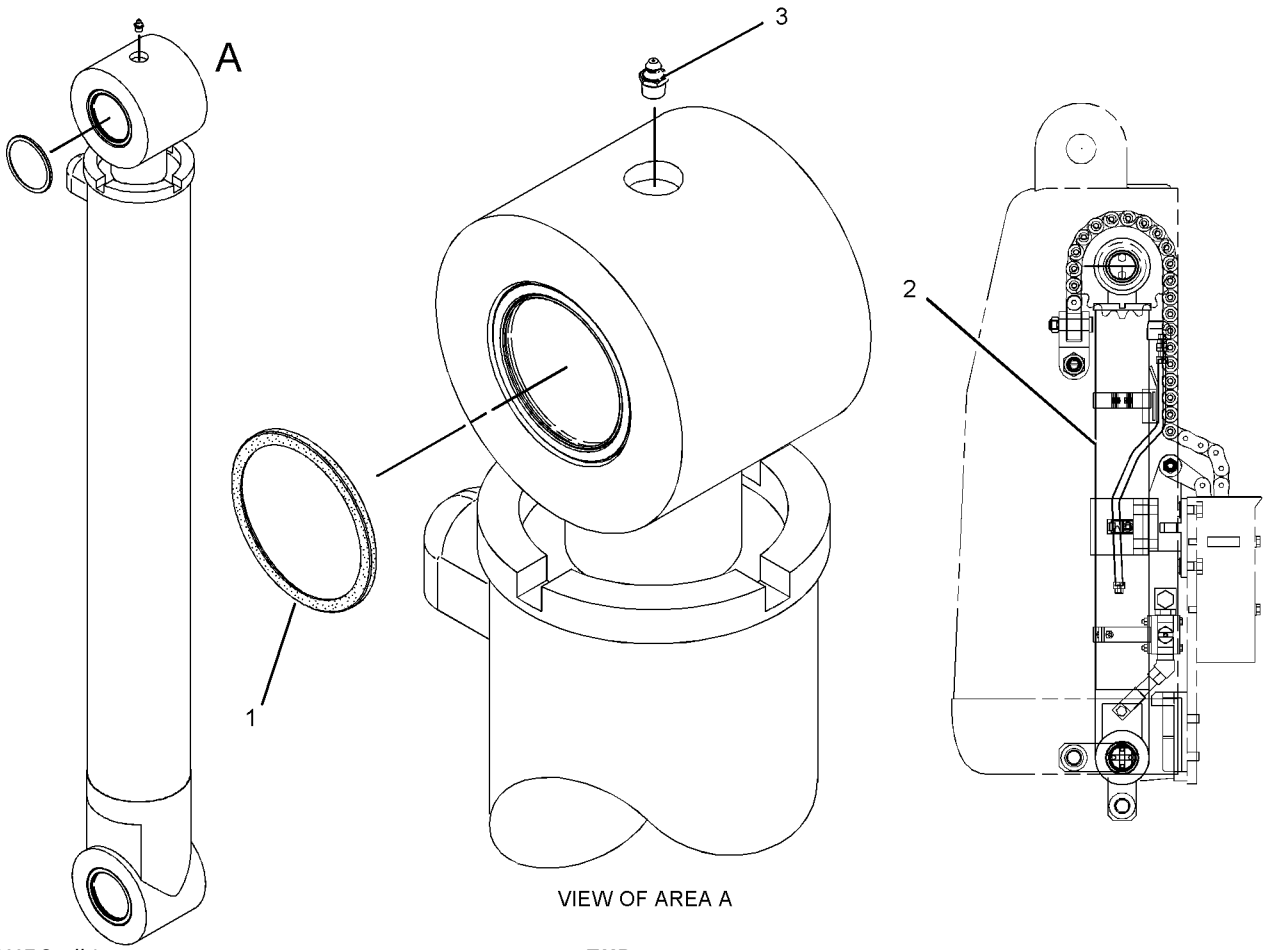

VIEW OF AREA A

GRAPHIC #1 **<END>** g01098026

225-4525 CYLINDER & SEAL GP-STICK

S/N: JGB1-UP; KHS1-UP
PART OF 225-4524 CYLINDER & LINES GP-STICK
AN ATTACHMENT

SMCS-5458 **i02155087**

NOTE	REF NO	GRAPHIC REF	PART NUMBER	QTY	PART NAME 1 2 3 4 5 6 (PRODUCT LEVEL)	SEE PAGE
Y	1	1	**225-4526**	1	CYLINDER GP-STICK	478
	2	1	**9X-4597**	4	SEAL-LIP TYPE	
	3	1	**3B-8489**	1	FITTING-GREASE	

Y-SEPARATE ILLUSTRATION

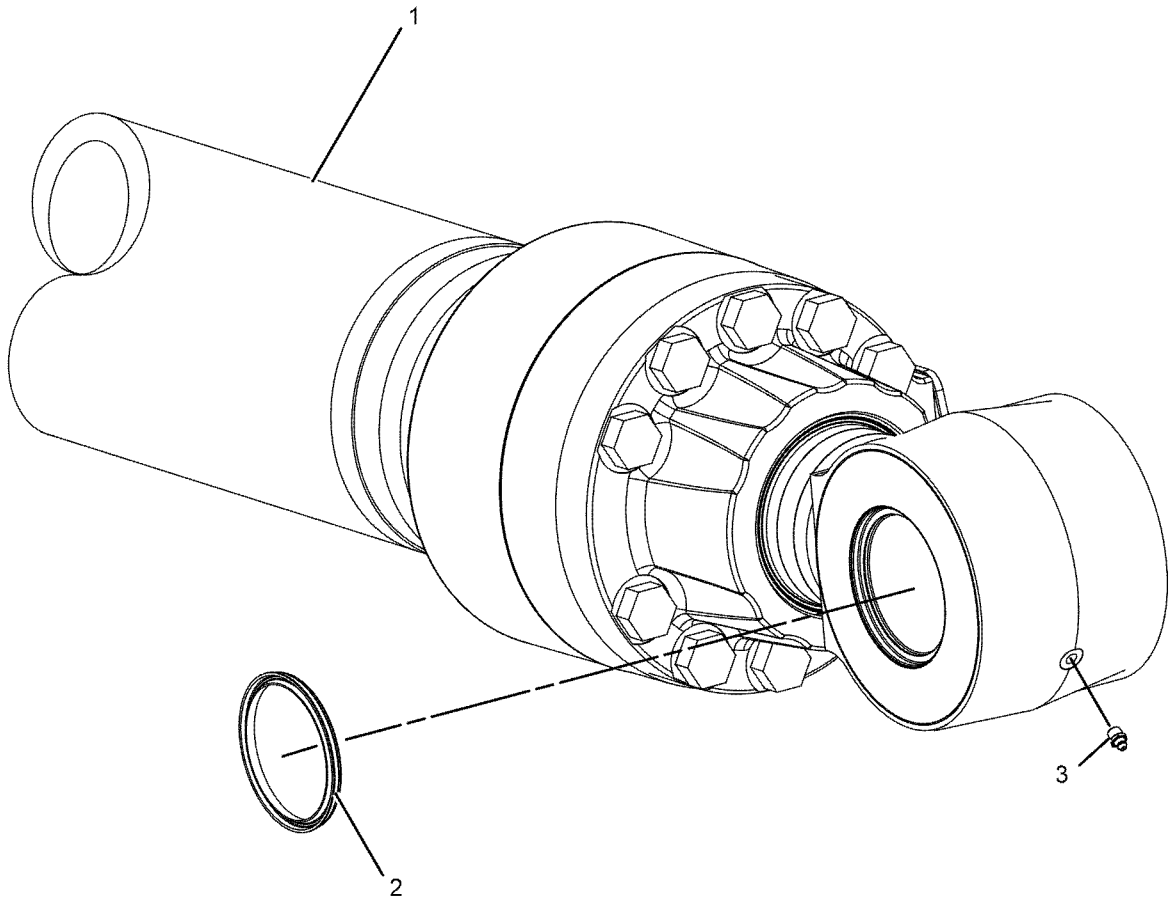

GRAPHIC #1 **<END>** g01095762

HYDRAULIC SYSTEM

225-4523 CYLINDER GP-BOOM

S/N: JGB1-UP; KHS1-UP
160-MM (6.3-IN) BORE X 1575-MM (62-IN) STROKE
PART OF 225-4522 CYLINDER & SEAL GP-BOOM
AN ATTACHMENT

SMCS-5456 **i02970048**

NOTE	REF NO	GRAPHIC REF	PART NUMBER	QTY	PART NAME 1 2 3 4 5 6 (PRODUCT LEVEL)	SEE PAGE
J	1	1	**9X-3604**	1	SEAL AS	
M	2	1	**123-2112**	1	LOCKNUT-SPECIAL (M90X2-THD)	
	3	1	**126-2084**	1	STOP	
J	4	1	**191-3128**	1	RING-SEAL	
R	5	1	**225-4617**	1	CYLINDER AS	
	5A	1	**228-5620**	1	BEARING-SLEEVE	
R	6	1	**234-4463**	1	ROD AS	
	6A	1	**235-7527**	1	BEARING-SLEEVE	
J	7	1	**7Y-4941**	1	RING-BACKUP	
	8	1	**7Y-4944**	1	RING-RETAINING	
	9	1	**087-5551**	1	HEAD	
J	10	1	**128-9266**	1	SEAL-BUFFER	
J	11	1	**165-9291**	1	SEAL-LIP TYPE	
J	12	1	**185-0230**	2	RING	
J	13	1	**185-0231**	1	RING	
	14	1	**185-0232**	1	PISTON	
J	15	1	**087-5550**	1	RING-BACKUP	
J	16	1	**095-1635**	1	SEAL-O-RING	
	17	1	**114-0762**	1	BEARING-SLEEVE	
J	18	1	**170-9865**	1	SEAL-U-CUP	
M	19	1	**7Y-5239**	8	BOLT-SOCKET HEAD (M24X3X100-MM)	
	20	1	**8T-8378**	1	SEAL-HEAD	
					AVAILABLE REPAIR KIT(S):	
J			**225-4625**	1	KIT-SEAL (BOOM CYLINDER)	

J-KIT MARKED J SERVICES PARTS MARKED J
M-METRIC PART
R-REMFG PART MAY BE AVAILABLE

225-4523 CYLINDER GP-BOOM *(contd.)* **i02970048**

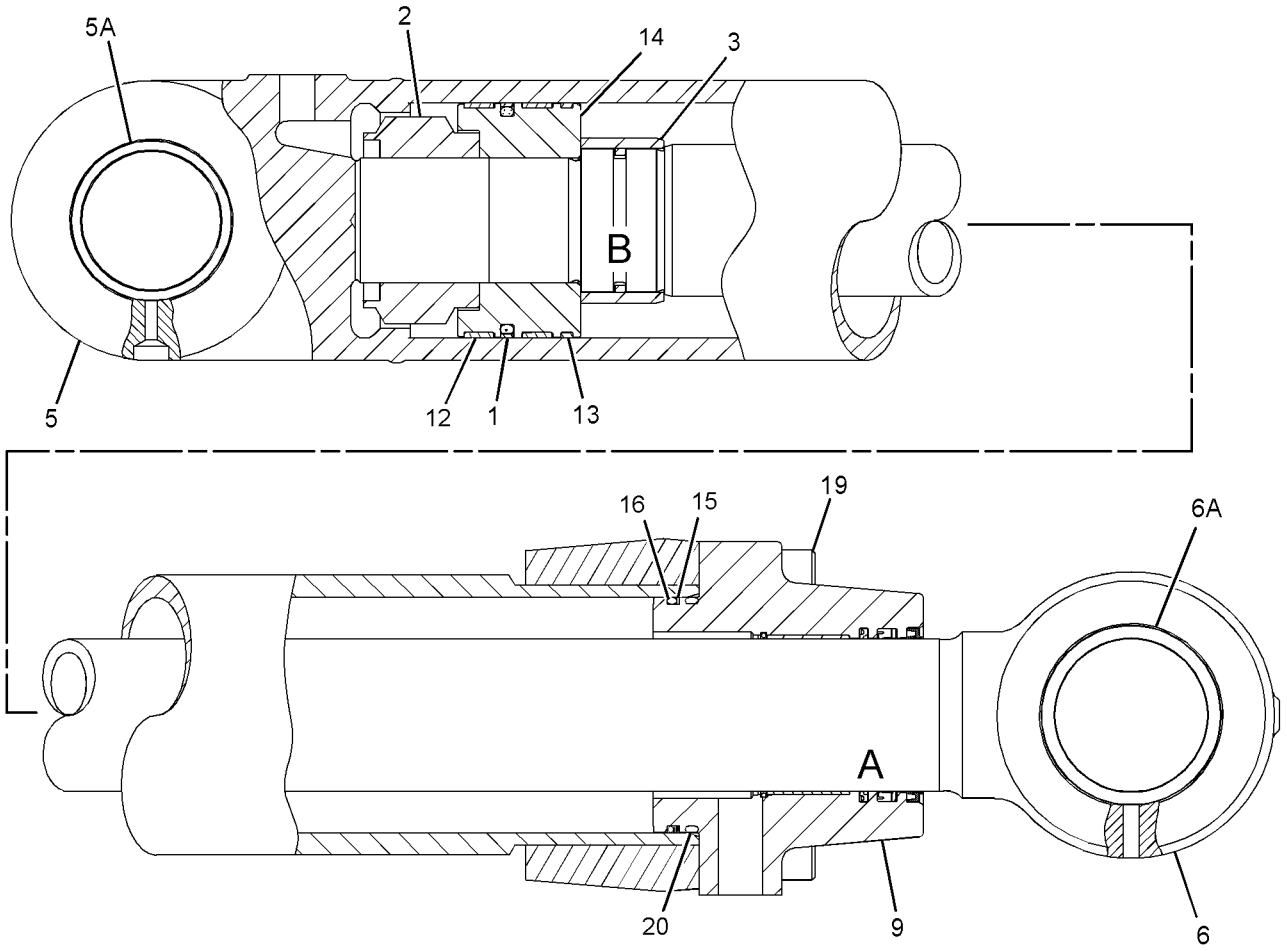

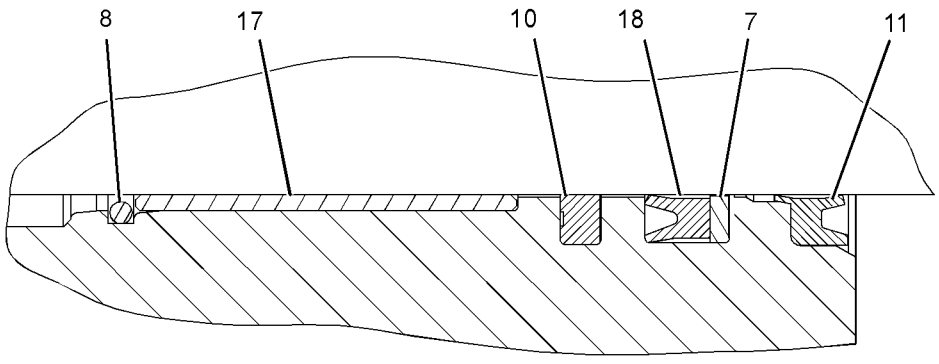

VIEW OF AREA A

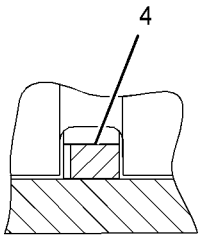

VIEW OF AREA B

GRAPHIC #1 **<END>** g01375970

HYDRAULIC SYSTEM

225-4529 CYLINDER GP-BUCKET

S/N: JGB1-UP; KHS1-UP
160-MM (6.30-IN) BORE X 1356-MM (53.39-IN) STROKE
PART OF 225-4528 CYLINDER & SEAL GP-BUCKET
AN ATTACHMENT

SMCS-5457 **i02970049**

NOTE	REF NO	GRAPHIC REF	PART NUMBER	QTY	PART NAME 1 2 3 4 5 6 (PRODUCT LEVEL)	SEE PAGE
J	1	1	**9X-3604**	1	SEAL AS	
R	2	1	**118-3936**	1	CYLINDER AS	
	2A	1	**087-5533**	1	BEARING-SLEEVE	
	3	1	**7Y-4944**	1	RING-RETAINING	
	4	1	**087-5551**	1	HEAD	
CR	5	1	**247-8904**	1	ROD AS	
	5A	1	**087-5548**	1	BEARING-SLEEVE	
M	6	1	**123-2112**	1	LOCKNUT-SPECIAL (M90X2-THD)	
J	7	1	**128-9266**	1	SEAL-BUFFER	
J	8	1	**165-9291**	1	SEAL-LIP TYPE	
J	9	1	**185-0230**	2	RING	
J	10	1	**185-0231**	1	RING	
	11	1	**185-0232**	1	PISTON	
J	12	1	**087-5550**	1	RING-BACKUP	
J	13	1	**095-1635**	1	SEAL-O-RING	
	14	1	**114-0762**	1	BEARING-SLEEVE	
J	15	1	**170-9865**	1	SEAL-U-CUP	
J	16	1	**7Y-4941**	1	RING-BACKUP	
M	17	1	**7Y-5239**	8	BOLT-SOCKET HEAD (M24X3X100-MM)	
					AVAILABLE REPAIR KIT(S):	
J			**225-4625**	1	KIT-SEAL (BUCKET CYLINDER)	

C-CHANGE FROM PREVIOUS TYPE
J-KIT MARKED J SERVICES PART(S) MARKED J
M-METRIC PART
R-REMFG PART MAY BE AVAILABLE

225-4529 CYLINDER GP-BUCKET *(contd.)* **i02970049**

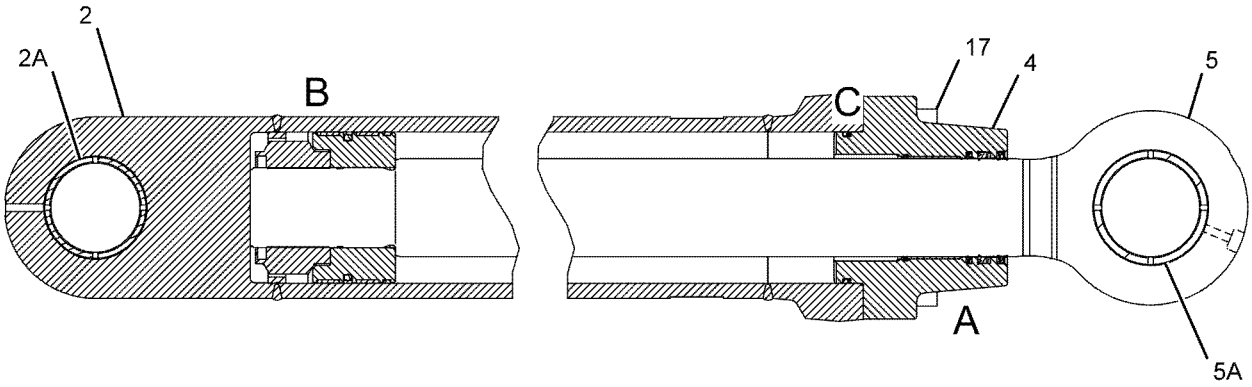

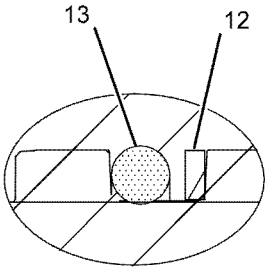

VIEW OF AREA C

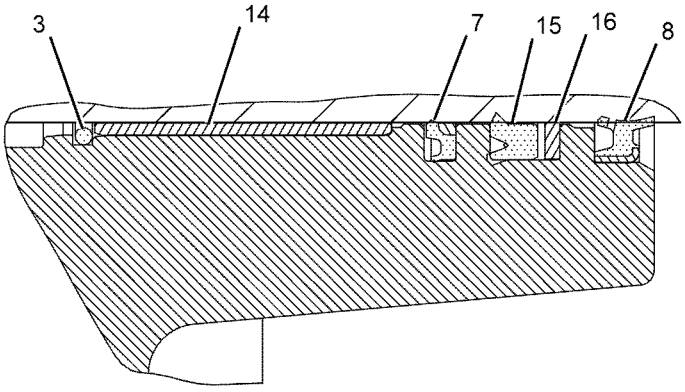

VIEW OF AREA A

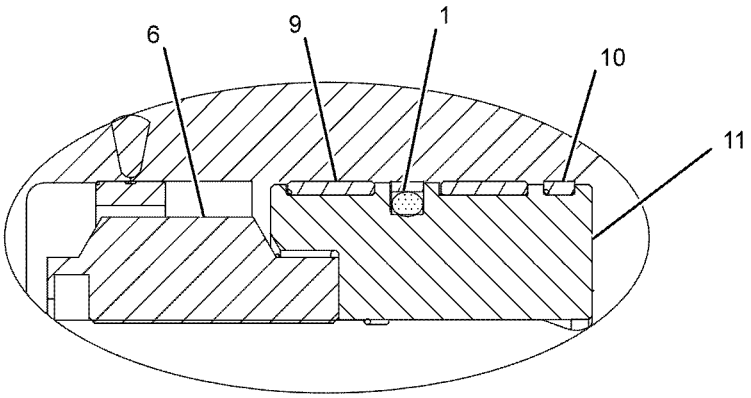

VIEW OF AREA B

GRAPHIC #1 **<END>** g01094228

HYDRAULIC SYSTEM

225-4532 CYLINDER GP-BUCKET

S/N: JGB1-UP; KHS1-UP
170-MM (6.69-IN) BORE X 1396-MM (54.96-IN) STROKE
PART OF 225-4531 CYLINDER & SEAL GP-BUCKET
AN ATTACHMENT

SMCS-5457 **i02730928**

NOTE	REF NO	GRAPHIC REF	PART NUMBER	QTY	PART NAME 1 2 3 4 5 6 (PRODUCT LEVEL)	SEE PAGE
	1	1	**7Y-4932**	1	HEAD	
M	2	1	**7Y-4956**	1	LOCKNUT (M90X2-THD)	
J	3	1	**9X-3607**	1	SEAL AS	
R	4	1	**247-8897**	1	ROD AS	
	4A	1	**4I-1520**	1	BEARING-SLEEVE	
	5	1	**234-4516**	1	CYLINDER AS	
	5A	1	**087-5379**	1	BEARING-SLEEVE	
J	6	1	**7Y-4941**	1	RING-BACKUP	
	7	1	**7Y-4944**	1	RING-RETAINING	
J	8	1	**128-9266**	1	SEAL-BUFFER	
J	9	1	**165-9291**	1	SEAL-LIP TYPE	
	10	1	**191-5603**	1	PISTON	
J	11	1	**191-5604**	2	RING	
J	12	1	**191-5605**	1	RING	
J	13	1	**095-1726**	1	SEAL-O-RING	
	14	1	**114-0761**	1	BEARING-SLEEVE	
J	15	1	**170-9865**	1	SEAL-U-CUP	
J	16	1	**7Y-4945**	1	RING-BACKUP	
M	17	1	**7Y-5239**	8	BOLT-SOCKET HEAD (M24X3X100-MM)	
					AVAILABLE REPAIR KIT(S):	
J			**234-4442**		KIT-SEAL (BUCKET CYLINDER)	

J-KIT MARKED J SERVICES PART(S) MARKED J
M-METRIC PART
R-REMFG PART MAY BE AVAILABLE

225-4532 CYLINDER GP-BUCKET *(contd.)* i02730928

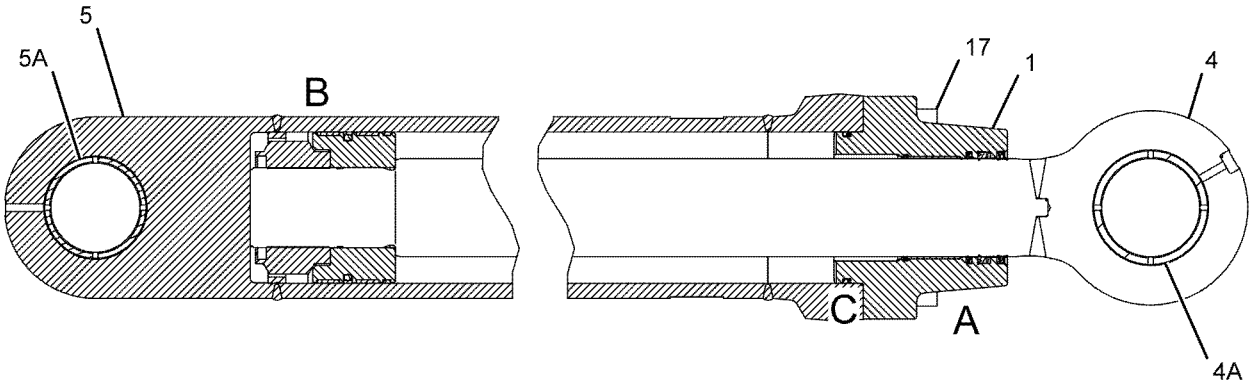

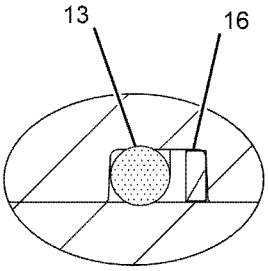

VIEW OF AREA C

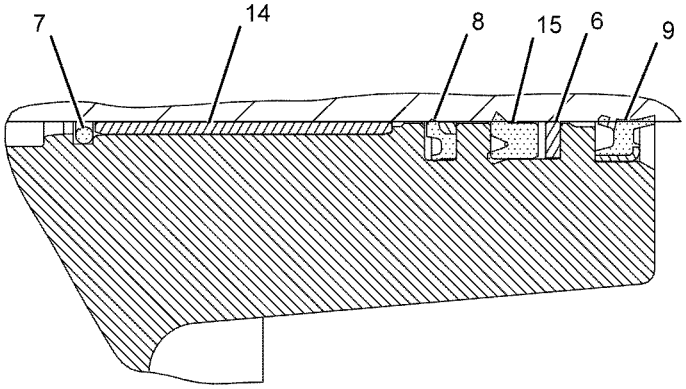

VIEW OF AREA A

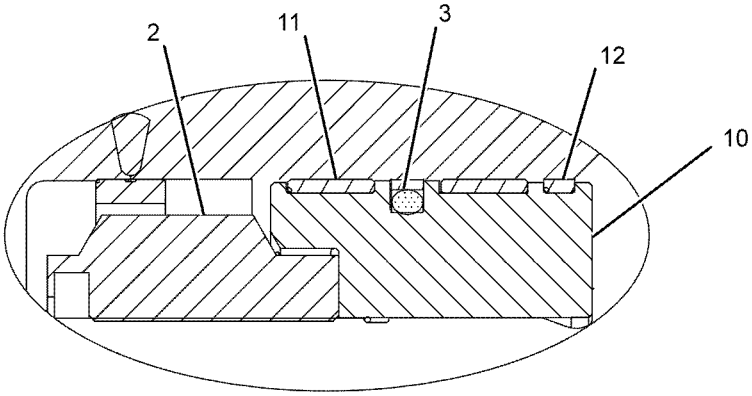

VIEW OF AREA B

GRAPHIC #1 **<END>** g01131580

HYDRAULIC SYSTEM

293-7678 CYLINDER GP-BUCKET

S/N: JGB1-UP; KHS1-UP
160-MM (6.3-IN) BORE X 1356-MM (53.4-IN) STROKE
PART OF 300-1591 CYLINDER & SEAL GP-BUCKET
AN ATTACHMENT

SMCS-5457 **i03604061**

NOTE	REF NO	GRAPHIC REF	PART NUMBER	QTY	PART NAME 1 2 3 4 5 6 (PRODUCT LEVEL)	SEE PAGE
	1	1	**3E-3377**	1	WEDGE-RECEPTACLE LOCK (4-PIN)	
	2	1	**087-5551**	1	HEAD	
	3	1	**102-2244**	1	GROMMET	
J	4	1	**165-9291**	1	SEAL-LIP TYPE	
	5	1	**212-0907**	1	PLATE-CONNECTOR	
	6	1	**214-1639**	1	MAGNET	
	7	1	**217-8763**	1	COVER-PROTECTION	
	8	1	**243-3177**	1	RETAINER	
	9	1	**293-7688**	1	ROD AS	
	9A	1	**087-5548**	1	BUSHING	
	10	1	**293-7693**	1	PISTON	
	11	1	**294-2963**	1	SENSOR GP-POSITION (LINEAR) (BUCKET CYLINDER)	
		1	**9X-3401**	3	PIN-CONNECTOR (16-GA TO 18-GA)	
	12	1	**302-1762**	1	CYLINDER AS	
	12A	1	**087-5533**	1	BUSHING	
	12B	1	**095-0879**	1	PIN-SPRING	
J	13	1	**185-0230**	2	RING	
J	14	1	**087-5550**	1	RING-BACKUP	
M	15	1	**095-1280**	2	SETSCREW-SOCKET (M16X2X20-MM)	
J	16	1	**095-1635**	1	SEAL-O-RING	
	17	1	**185-0231**	1	RING	
	18	1	**114-0762**	1	BUSHING	
J	19	1	**128-9266**	1	SEAL-BUFFER	
J	20	1	**170-9865**	1	SEAL-U-CUP	
	21	1	**188-2199**	1	SEAL-O-RING	
	22	1	**215-1942**	1	RING-BACKUP	
	23	1	**102-8804**	1	KIT-RECEPTACLE (4-PIN)	
					(INCLUDES RECEPTACLE AS & WEDGE)	
	24	1	**3V-2431**	2	WASHER (10.2X16X2-MM THK)	
M	25	1	**6V-8223**	1	SETSCREW-SOCKET (M10X1.5X16-MM)	
J	26	1	**7Y-4941**	1	RING-BACKUP	
	27	1	**7Y-4944**	1	RING-RETAINING	
M	28	1	**7Y-5239**	8	BOLT-SOCKET HEAD (M24X3X100-MM)	
	29	1	**8T-8737**	1	PLUG-SEAL	
M	30	1	**8T-8894**	2	BOLT-SOCKET HEAD (M10X1.5X20-MM)	
J	31	1	**9X-3604**	1	SEAL AS	
E	32	1	**9X-1386**		SLEEVE (18-CM)	
					AVAILABLE REPAIR KIT(S):	
J			**225-4625**	1	KIT-SEAL (BUCKET CYLINDER)	
					(ALSO INCLUDES RING & SEAL RING)	

E-ORDER BY THE CENTIMETER
J-KIT MARKED J SERVICES PART(S) MARKED J
M-METRIC PART

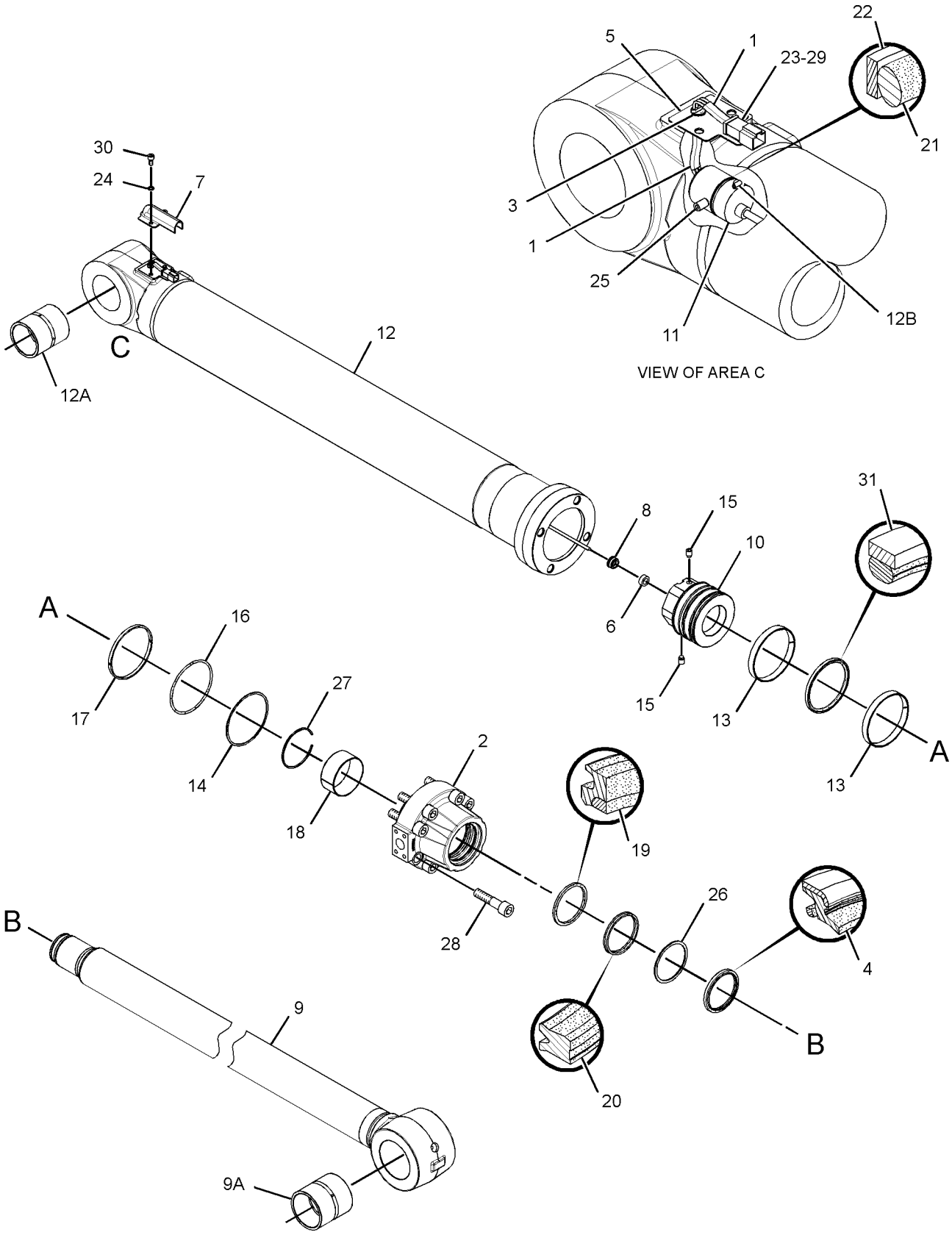

GRAPHIC #1 **<END>** g01475494

236-9769 CYLINDER GP-COUNTERWEIGHT

S/N: JGB1-UP
120.6-MM (4.7-IN) BORE X 845-MM (33.2-IN) STROKE
PART OF 225-4533 CYLINDER & SEAL GP-CTWT
AN ATTACHMENT

SMCS-5409 **i02158559**

NOTE	REF NO	GRAPHIC REF	PART NUMBER	QTY	PART NAME 1 2 3 4 5 6 (PRODUCT LEVEL)	SEE PAGE
	1	1	**236-9966**	1	CYLINDER AS	
	1A	1	**123-3790**	1	BEARING-SLEEVE	
	2	1	**5J-3488**	1	LOCKNUT (2-1/4-12-2B-THD)	
	3	1	**4T-8588**	1	SEAL AS	
	4	1	**8T-8390**	1	RING-WEAR	
	5	1	**139-3326**	1	PISTON	
	6	1	**2J-3961**	1	RING-BACKUP	
	7	1	**175-7903**	1	SEAL-O-RING	
	8	1	**114-8135**	1	HEAD	
		1	**225-3284**	1	SEAL-WIPER	
	9	1	**236-9967**	1	ROD AS	
	9A	1	**123-3790**	1	BEARING-SLEEVE	
	10	1	**225-3284**	1	SEAL-WIPER	
	11	1	**167-2319**	1	SEAL-U-CUP	
	12	1	**167-2208**	1	SEAL AS-BUFFER	
	13	1	**8C-9161**	1	RING-WEAR	

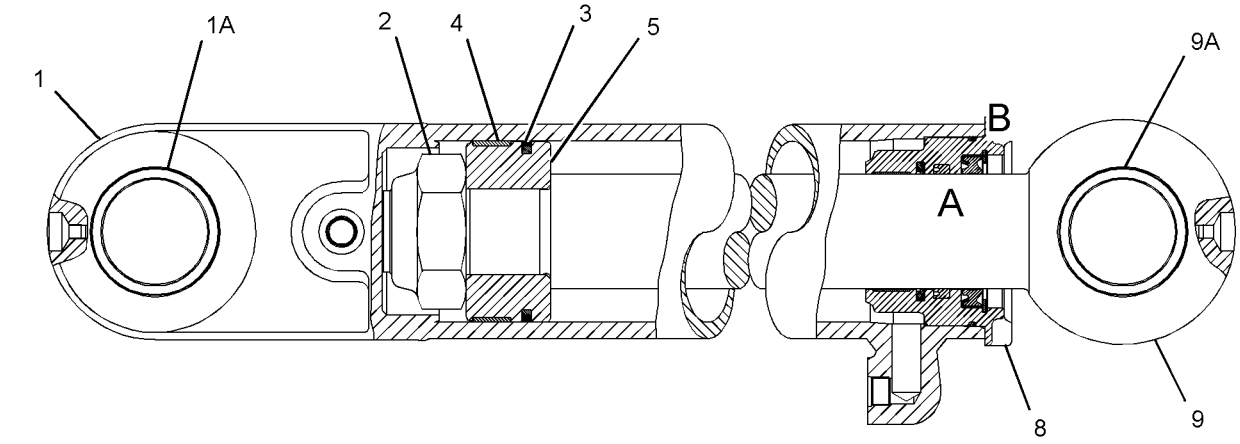

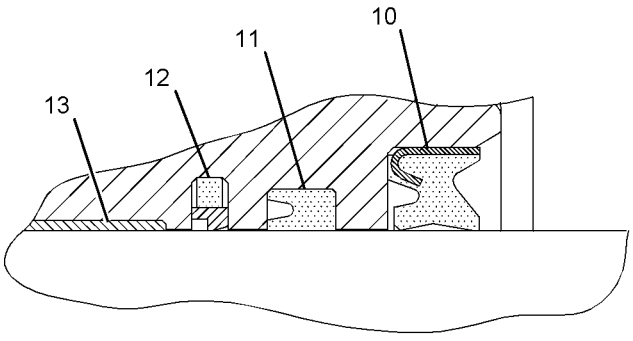

VIEW OF AREA A

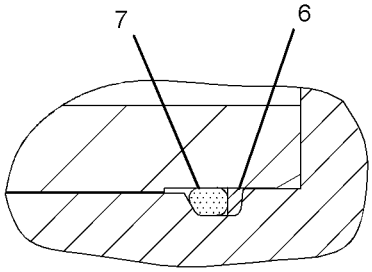

VIEW OF AREA B

GRAPHIC #1 **<END>** g01097792

169-0753 CYLINDER GP-COUPLER–LOCK

S/N: JGB1-UP; KHS1-UP
70-MM (2.8-IN) BORE X 130-MM (5.1-IN) STROKE
PART OF 169-0761 LOCK GP-QUICK COUPLER
AN ATTACHMENT

SMCS-5133 **i02984742**

NOTE	REF NO	GRAPHIC REF	PART NUMBER	QTY	PART NAME 1 2 3 4 5 6 (PRODUCT LEVEL)	SEE PAGE
	1	1	**169-3923**	1	KIT-VALVE (QUICK COUPLER)	
					AVAILABLE REPAIR KIT(S):	
			219-1322	1	KIT-SEAL (QUICK COUPLER LOCK)	

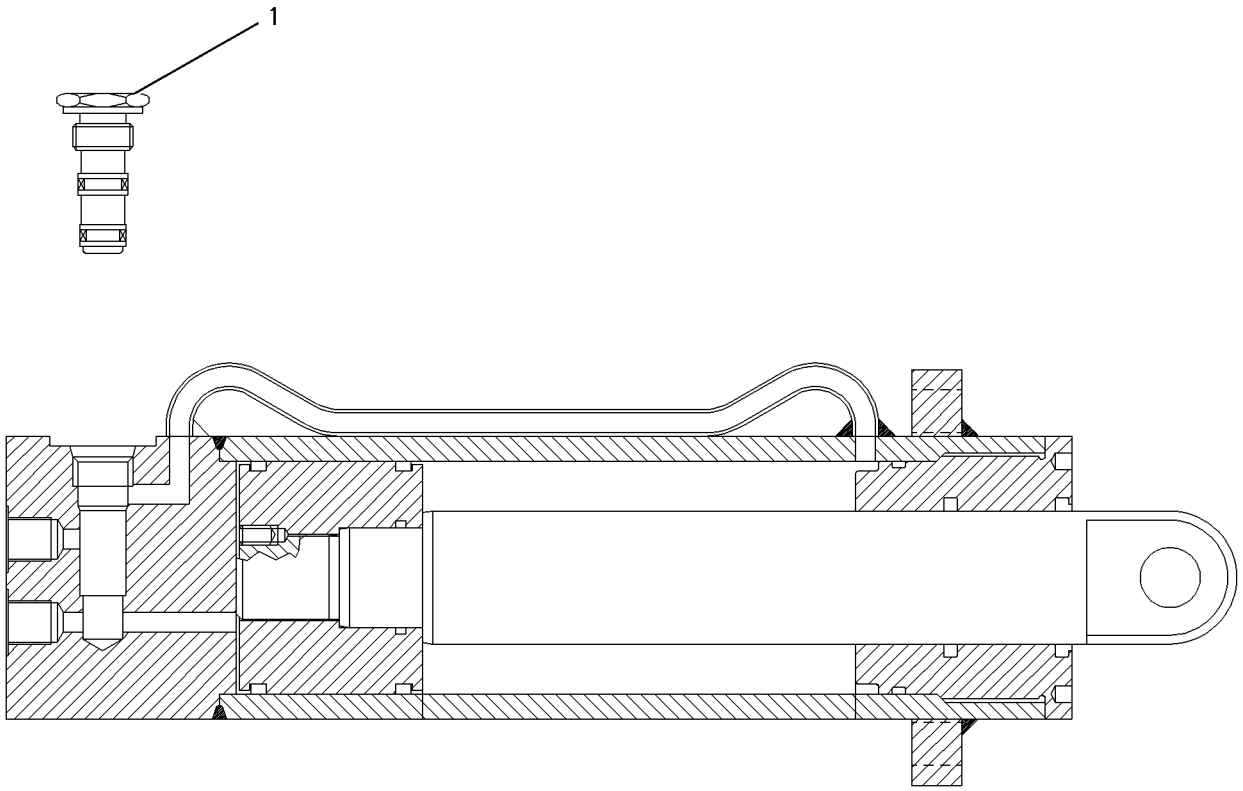

GRAPHIC #1 **<END>** g00562763

HYDRAULIC SYSTEM

225-4526 CYLINDER GP-STICK

S/N: JGB1-UP; KHS1-UP
190-MM (7.5-IN) BORE X 1758-MM (69.2-IN) STROKE
PART OF 225-4525 CYLINDER & SEAL GP-STICK
AN ATTACHMENT

SMCS-5458 **i02970050**

NOTE	REF NO	GRAPHIC REF	PART NUMBER	QTY	PART NAME 1 2 3 4 5 6 (PRODUCT LEVEL)	SEE PAGE
	1	1	**103-8353**	1	STOP	
J	2	1	**125-1286**	1	SEAL AS	
	3	1	**126-2047**	1	HEAD	
J	4	1	**200-3620**	1	RING-SEAL	
J	5	1	**216-0008**	1	SEAL-U-CUP	
R	6	1	**225-4626**	1	CYLINDER AS	
	6A	1	**126-1956**	1	BEARING-SLEEVE	
	7	1	**225-4633**	1	ROD AS	
	7A	1	**228-5618**	1	BEARING-SLEEVE	
	8	1	**225-4641**	1	RING-RETAINING	
	9	1	**225-4642**	1	RING	
	10	1	**087-5390**	1	STOP	
	11	1	**087-5393**	1	RING-RETAINING	
J	12	1	**087-5397**	1	RING-BACKUP	
	13	1	**114-0763**	1	BEARING-SLEEVE	
M	14	1	**126-1971**	1	LOCKNUT-SPECIAL	
J	15	1	**165-9293**	1	SEAL-LIP TYPE	
J	16	1	**170-9850**	1	SEAL-BUFFER	
	17	1	**204-2844**	1	PISTON	
J	18	1	**204-2845**	2	RING	
J	19	1	**204-2846**	1	RING	
	20	1	**095-0930**	2	RING-RETAINING (EXTERNAL)	
J	21	1	**095-1730**	1	SEAL-O-RING	
J	22	1	**126-1978**	1	RING-BACKUP	
M	23	1	**7X-2489**	10	BOLT (M24X3X100-MM)	
					AVAILABLE REPAIR KIT(S):	
J			**225-4646**	1	KIT-SEAL (STICK CYLINDER)	

J-KIT MARKED J SERVICES PART(S) MARKED J
M-METRIC PART
R-REMFG PART MAY BE AVAILABLE

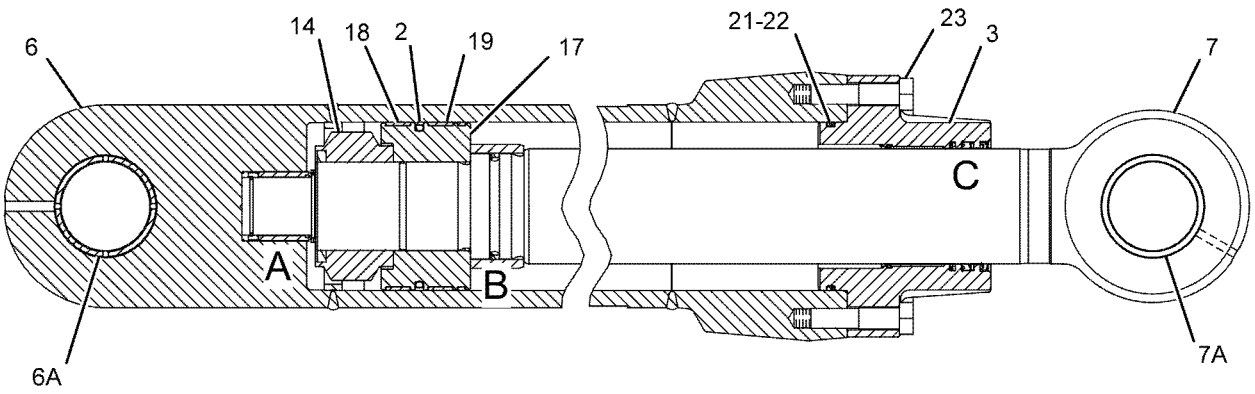

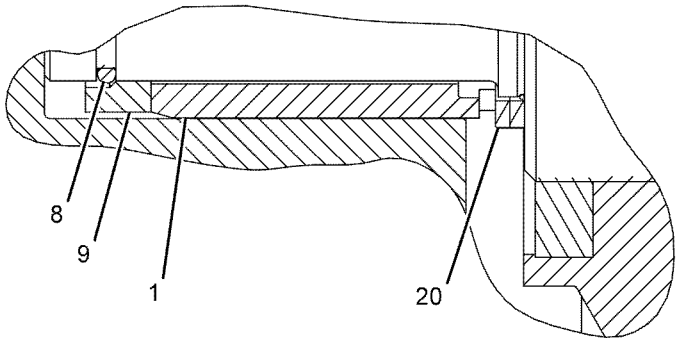

VIEW OF AREA A

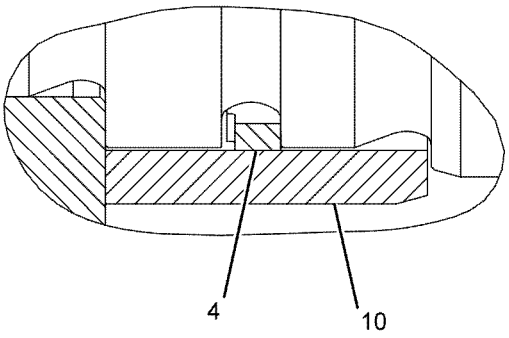

VIEW OF AREA B

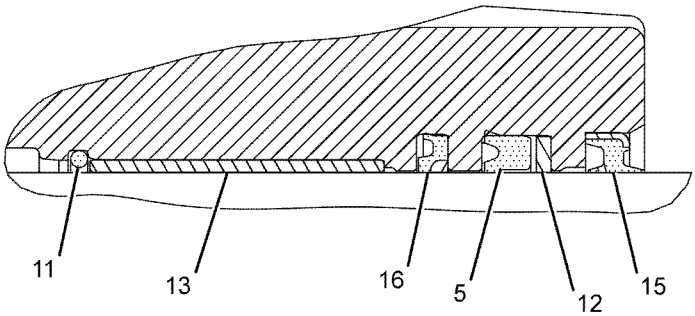

VIEW OF AREA C

GRAPHIC #1 **<END>** g01093964

HYDRAULIC SYSTEM

225-4515 DRIVE GP-AUXILIARY PUMP

S/N: JGB1-UP; KHS1-UP
PART OF 285-1789, 285-1790 CONTROL AR-AUXILIARY
AN ATTACHMENT

SMCS-3108 **i02158838**

NOTE	REF NO	GRAPHIC REF	PART NUMBER	QTY	PART NAME 1 2 3 4 5 6 (PRODUCT LEVEL)	SEE PAGE
Y	1	1	**234-4620**	1	DRIVE GP-AUXILIARY PUMP	481

Y-SEPARATE ILLUSTRATION

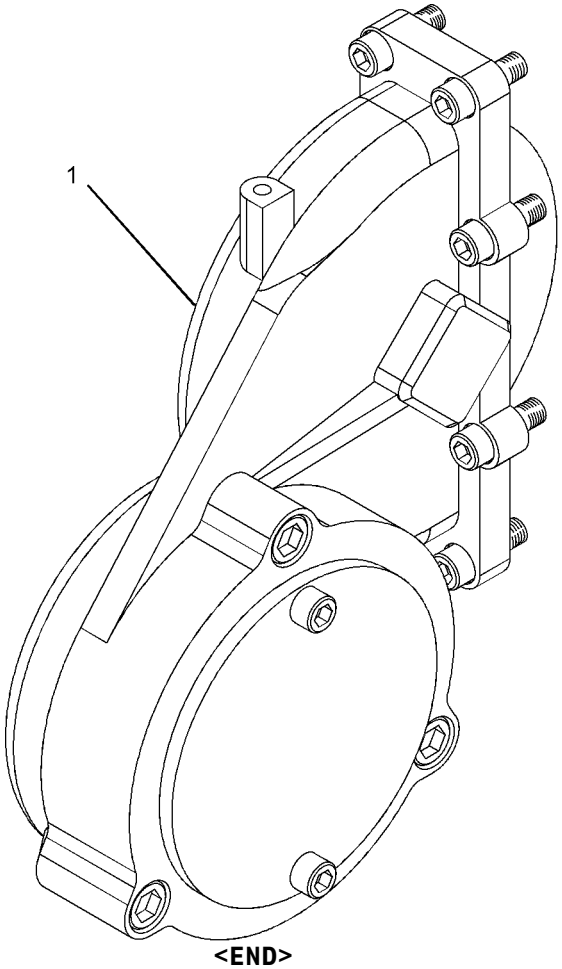

GRAPHIC #1 **<END>** g01098392

234-4620 DRIVE GP-AUXILIARY PUMP—ACCESSORY DRIVE

S/N: JGB1-UP; KHS1-UP
PART OF 225-4515 DRIVE GP-AUXILIARY PUMP
AN ATTACHMENT

SMCS-3108 **i03344160**

NOTE	REF NO	GRAPHIC REF	PART NUMBER	QTY	PART NAME 1 2 3 4 5 6 (PRODUCT LEVEL)	SEE PAGE
Y	1	1	**295-9441**	1	DRIVE GP-AUXILIARY PUMP (ACCESSORY DRIVE)	482
M	2	1	**108-1781**	8	BOLT-SOCKET HEAD (M12X1.75X35-MM)	

M-METRIC PART
Y-SEPARATE ILLUSTRATION

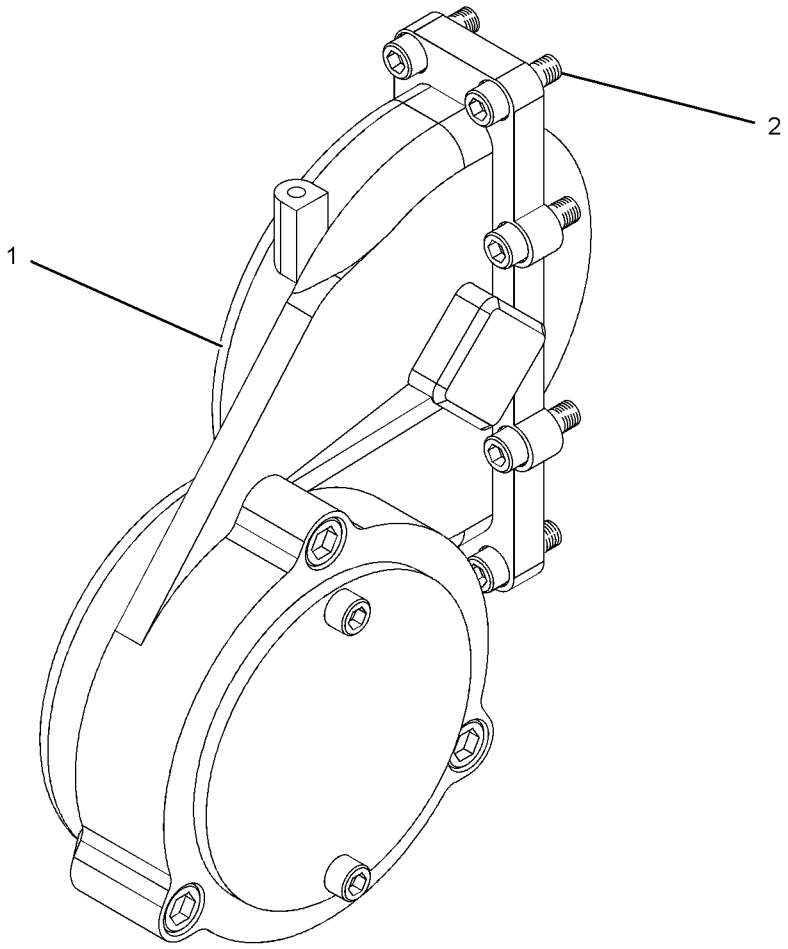

GRAPHIC #1 **<END>** g01369295

HYDRAULIC SYSTEM

295-9441 DRIVE GP-AUXILIARY PUMP—ACCESSORY DRIVE

S/N: JGB1-UP; KHS1-UP

PART OF 234-4620 DRIVE GP-AUXILIARY PUMP

AN ATTACHMENT

SMCS-3108 **i02683871**

NOTE	REF NO	GRAPHIC REF	PART NUMBER	QTY	PART NAME 1 2 3 4 5 6 (PRODUCT LEVEL)	SEE PAGE
	1	1	**5I-8754**	3	SPACER-BEARING	
	2	1	**170-9964**	1	BEARING	
	3	1	**2W-1145**	1	RING-RETAINING	
	4	1	**206-9298**	1	SEAL-O-RING	
	5	1	**8T-9597**	1	RING-RETAINING	
	6	1	**236-6919**	1	SEAL-O-RING	
	7	1	**8H-5352**	2	BALL BEARING	
M	8	1	**8T-9080**	2	BOLT-SOCKET HEAD (M12X1.75X20-MM)	
	9	1	**249-6670**	1	SEAL-O-RING	
	10	1	**225-4517**	1	PLATE	
M	11	1	**8T-4944**	3	BOLT-SOCKET HEAD (M16X2X40-MM)	

M-METRIC PART

295-9441 DRIVE GP-AUXILIARY PUMP *(contd.)* **i02683871**

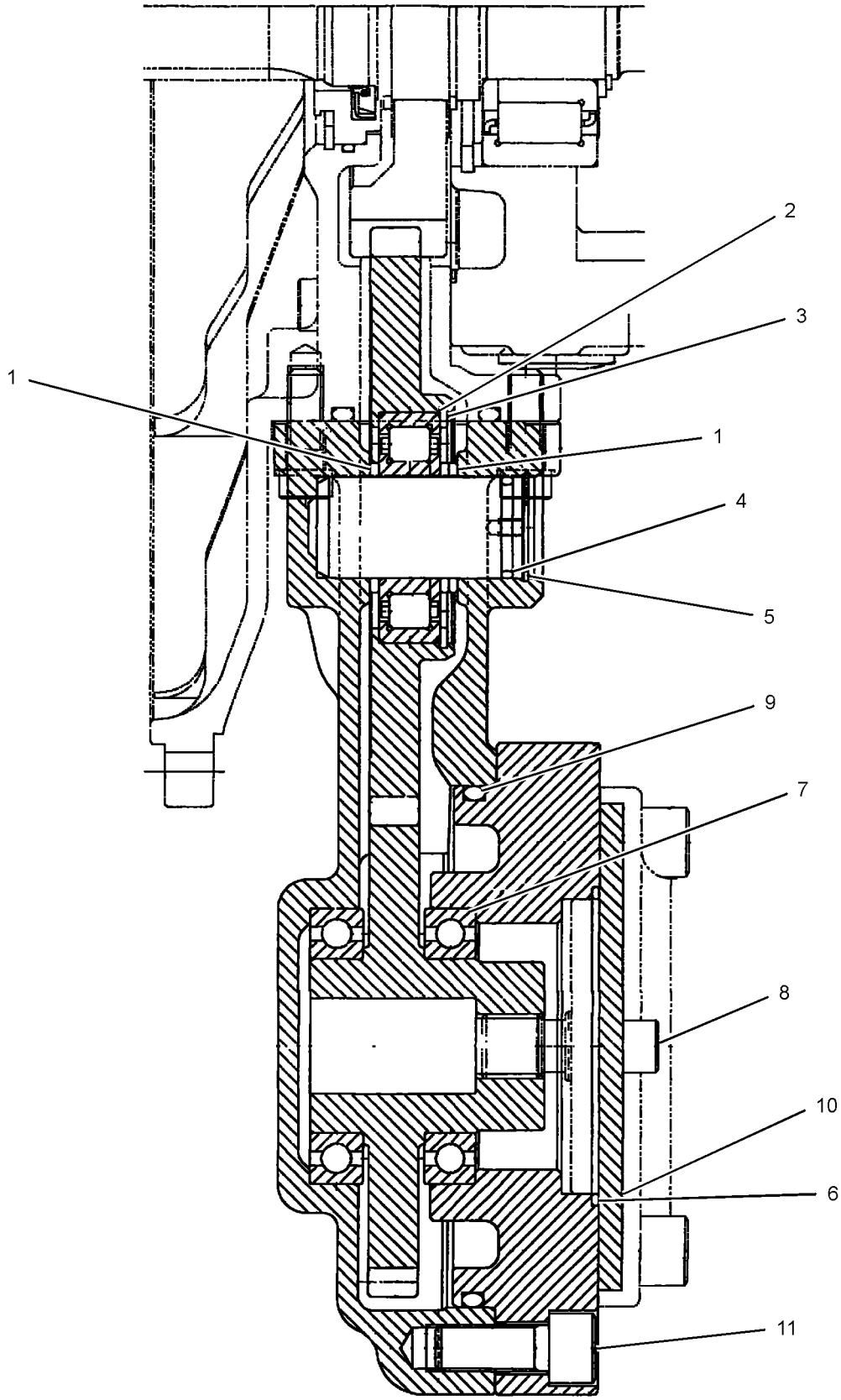

GRAPHIC #1 **<END>** g01348494

HYDRAULIC SYSTEM

296-6249 DRIVE GP-SWING—WITH MOTOR, RH

S/N: JGB1-UP

PART OF 227-6042 POWER TRAIN AR

SMCS-5459 **i03368520**

NOTE	REF NO	GRAPHIC REF	PART NUMBER	QTY	PART NAME 1 2 3 4 5 6 (PRODUCT LEVEL)	SEE PAGE
Y	1	1	*225-4505*	1	MOTOR & MTG GP-SWING	673
Y	2	1	*296-6250*	1	DRIVE GP-SWING (WITHOUT MOTOR, RH)	485

Y-SEPARATE ILLUSTRATION

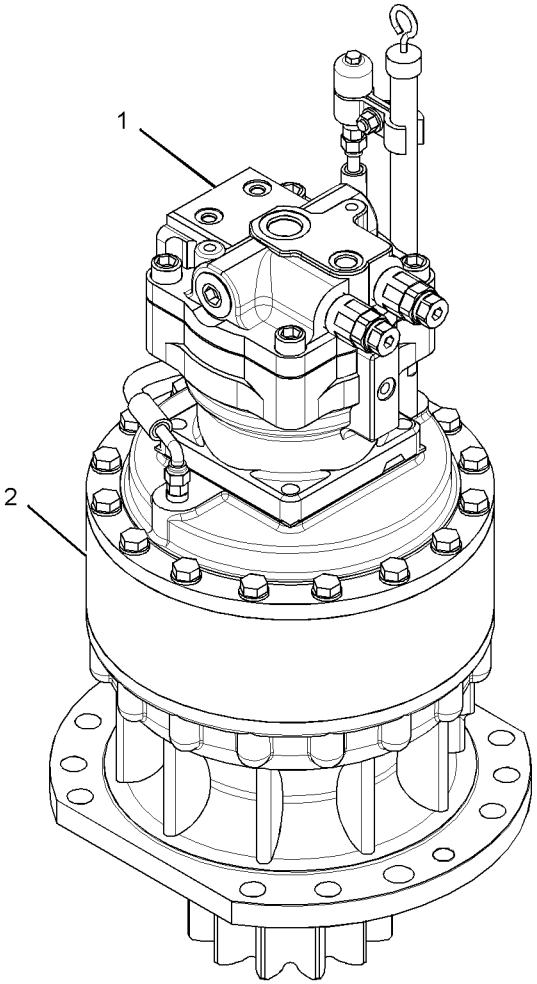

GRAPHIC #1 **<END>** g01434213

296-6250 DRIVE GP-SWING—WITHOUT MOTOR, RH

S/N: JGB1-UP

PART OF 296-6249 DRIVE GP-SWING

SMCS-5459 **i03472421**

NOTE	REF NO	GRAPHIC REF	PART NUMBER	QTY	PART NAME 1 2 3 4 5 6 (PRODUCT LEVEL)	SEE PAGE
	1	1	**4H-6112**	1	BREATHER (SWING DRIVE)	
	2	2	**4I-7464**	4	GEAR-PLANETARY (25-TEETH)	
	3	2	**4I-7466**	4	GEAR-PLANETARY (23-TEETH)	
	4	1	**4I-7467**	1	GEAR-RING (72-TEETH)	
	5	1	**6V-7238**	1	VALVE-SHUTOFF	
	6	2	**7I-7728**	1	CARRIER-PLANETARY	
	7	2	**7Y-0597**	1	SPACER-SPECIAL	
	8	2	**7Y-1238**	1	CARRIER	
	9	2	**093-1730**	2	RING-RETAINING	
	10	2	**094-1509**	4	SHAFT-PLANETARY	
M	11	2	**094-1528**	8	WASHER (53X84X1-MM THK)	
	12	2	**095-1806**	1	BEARING-ROLLER	
	13	2	**096-2653**	1	RING-RETAINING	
	14	2	**4D-7956**	1	RACE-ROLLER BEARING	
		2	**4L-0734**	1	RACE & ROLLER AS	
	15	2	**110-7216**	1	GEAR-SUN (24-TEETH)	
	16	2	**114-1383**	4	SHAFT-PLANETARY	
	17	1	**114-1398**	1	GAUGE-OIL LEVEL (SWING DRIVE)	
	18	1	**114-1399**	1	PIPE-GAUGE	
	19	1	**114-1401**	1	COVER-HOUSING	
	20	1	**114-1403**	1	CAGE	
	21	1	**136-2802**	2	CONNECTOR	
	22	1	**136-2803**	2	CLIP	
	23	1	**169-5534**	1	HOUSING	
	24	2	**169-5535**	1	GEAR-SUN (20-TEETH)	
	25	1	**227-6108**	1	SHAFT-PINION	
	26	1	**227-6215**	1	BOSS (1/4-18-THD)	
I	27	1	**296-6251**	1	HOSE AS	
	28	2	**093-1731**	1	RING-RETAINING	
	29	2	**094-0584**	8	WASHER (40.3X72X1-MM THK)	
	30	2	**199-4582**	4	BEARING AS	
	31	2	**095-0886**	4	PIN-SPRING	
	32	2	**095-0891**	4	PIN-SPRING	
	33	2	**135-9044**	2	SEAL-LIP TYPE	
	34	1	**3K-0360**	1	SEAL-O-RING	
	35	2	**5P-2235**	1	SEAL-O-RING	
	36	2	**191-2513**	8	BEARING AS-ROLLER	
	37	2	**7Y-0595**	1	SPACER (58X79.6X6-MM THK)	
	38	2	**7Y-1434**	1	SPACER (40X69.5X6-MM THK)	
M	39	1	**8T-4183**	8	BOLT (M12X1.75X40-MM)	
	40	1	**8T-4223**	10	WASHER-HARD (13.5X25.5X3-MM THK)	
M	41	1	**8T-4244**	1	NUT (M12X1.75-THD)	
M	42	1	**8T-4956**	1	BOLT (M12X1.75X35-MM)	
M	43	1	**8T-6385**	16	BOLT (M16X2X180-MM)	
	44	1	**9X-8257**	16	WASHER (17.5X30X3.5-MM THK)	
B	45	2	**1U-8846**		SEALANT-GASKET	

B-USE AS REQUIRED
I-REFER TO HYDRAULIC INFORMATION SYSTEM
M-METRIC PART

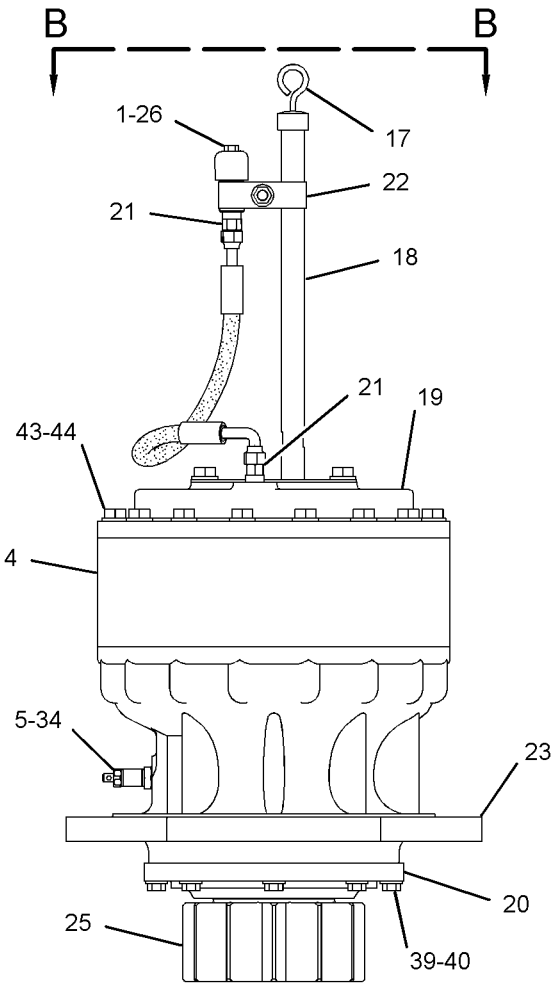

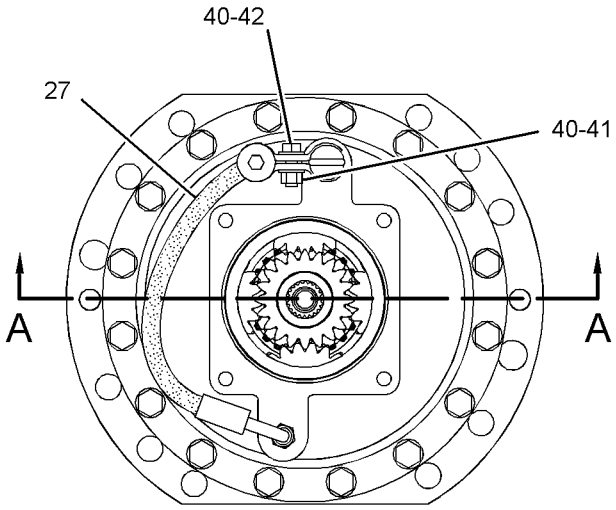

VIEW B-B

REFER TO ALL ILLUSTRATIONS OF
THIS GROUP FOR AUXILIARY VIEWS

GRAPHIC #1

g01446675

296-6250 DRIVE GP-SWING *(contd.)* **i03472421**

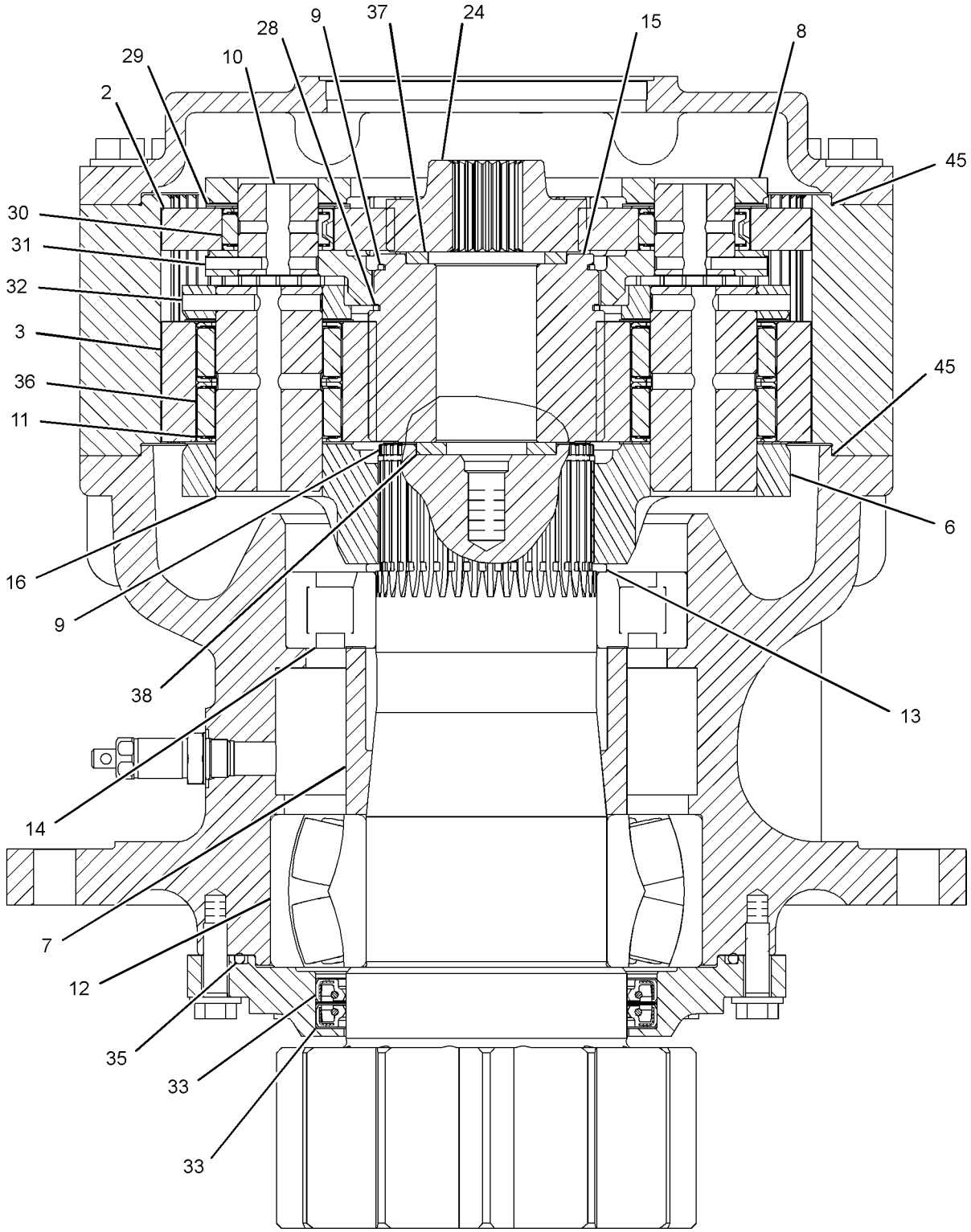

SECTION A-A

GRAPHIC #2 **<END>** g01446825

296-6252 DRIVE GP-SWING—WITH MOTOR, LH

S/N: JGB1-UP

PART OF 227-6042 POWER TRAIN AR

SMCS-5459 **i03385515**

NOTE	REF NO	GRAPHIC REF	PART NUMBER	QTY	PART NAME 1 2 3 4 5 6 (PRODUCT LEVEL)	SEE PAGE
Y	1	1	*225-4505*	1	MOTOR & MTG GP-SWING (WITHOUT MOTOR, LH)	673
Y	2	1	**296-6253**	1	DRIVE GP-SWING (WITHOUT MOTOR, LH)	489

Y-SEPARATE ILLUSTRATION

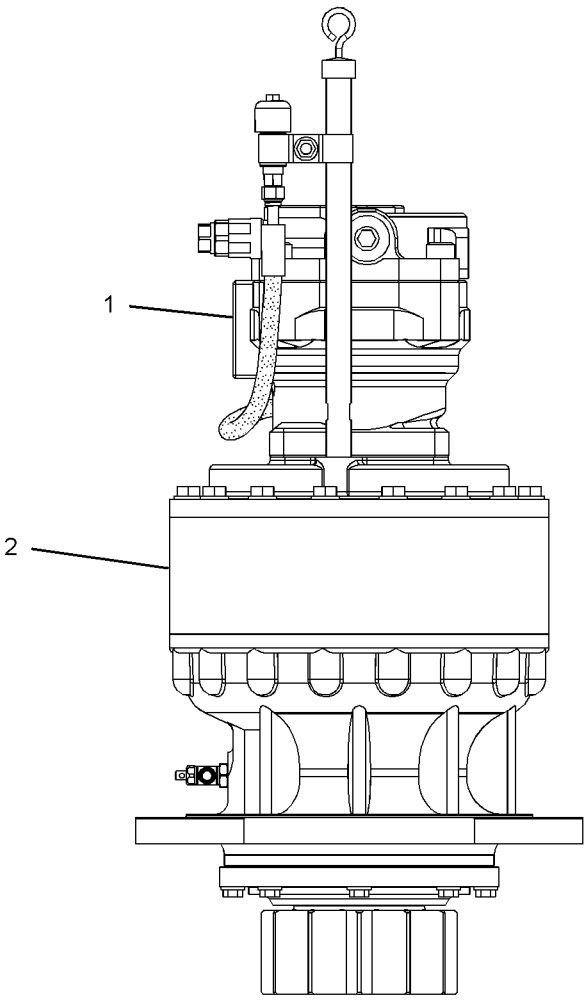

GRAPHIC #1

<END>

g01446707

296-6253 DRIVE GP-SWING—WITHOUT MOTOR, LH

S/N: JGB1-UP

PART OF 296-6252 DRIVE GP-SWING

SMCS-5459 **i03706755**

NOTE	REF NO	GRAPHIC REF	PART NUMBER	QTY	PART NAME 1 2 3 4 5 6 (PRODUCT LEVEL)	SEE PAGE
	1	1	**4H-6112**	1	BREATHER (SWING DRIVE)	
	2	2	**4I-7464**	4	GEAR-PLANETARY (25-TEETH)	
	3	2	**4I-7466**	4	GEAR-PLANETARY (23-TEETH)	
	4	1	**4I-7467**	1	GEAR-RING (72-TEETH)	
	5	1	**6V-7238**	1	VALVE-SHUTOFF	
	6	2	**7I-7728**	1	CARRIER-PLANETARY	
	7	2	**7Y-0597**	1	SPACER-SPECIAL	
	8	2	**7Y-1238**	1	CARRIER	
	9	2	**093-1730**	2	RING-RETAINING	
	10	2	**094-1509**	4	SHAFT-PLANETARY	
M	11	2	**094-1528**	8	WASHER (53X84X1-MM THK)	
	12	2	**095-1806**	1	BEARING-ROLLER	
	13	2	**096-2653**	1	RING-RETAINING	
	14	2	**4D-7956**	1	RACE-ROLLER BEARING	
		2	**4L-0734**	1	RACE & ROLLER AS	
	15	2	**110-7216**	1	GEAR-SUN (24-TEETH)	
	16	2	**114-1383**	4	SHAFT-PLANETARY	
	17	1	**114-1398**	1	GAUGE-OIL LEVEL (SWING DRIVE)	
	18	1	**114-1399**	1	PIPE-GAUGE	
	19	1	**114-1401**	1	COVER-HOUSING	
	20	1	**114-1403**	1	CAGE	
	21	1	**136-2802**	2	CONNECTOR	
	22	1	**136-2803**	2	CLIP	
	23	1	**169-5534**	1	HOUSING	
	24	2	**169-5535**	1	GEAR-SUN (20-TEETH)	
	25	1	**227-6108**	1	SHAFT-PINION	
	26	1	**227-6215**	1	BOSS (1/4-18-THD)	
I	27	1	**296-6251**	1	HOSE AS	
	28	2	**093-1731**	1	RING-RETAINING	
	29	2	**094-0584**	8	WASHER (40.3X72X1-MM THK)	
	30	2	**199-4582**	4	BEARING AS	
	31	2	**095-0886**	4	PIN-SPRING	
	32	2	**095-0891**	4	PIN-SPRING	
	33	2	**135-9044**	2	SEAL-LIP TYPE	
	34	1	**3K-0360**	1	SEAL-O-RING	
	35	2	**5P-2235**	1	SEAL-O-RING	
	36	2	**191-2513**	8	BEARING AS-ROLLER	
	37	2	**7Y-0595**	1	SPACER (58X79.6X6-MM THK)	
	38	2	**7Y-1434**	1	SPACER (40X69.5X6-MM THK)	
M	39	1	**8T-4183**	8	BOLT (M12X1.75X40-MM)	
	40	1	**8T-4223**	10	WASHER-HARD (13.5X25.5X3-MM THK)	
M	41	1	**8T-4244**	1	NUT (M12X1.75-THD)	
M	42	1	**8T-4956**	1	BOLT (M12X1.75X35-MM)	
M	43	1	**8T-6385**	16	BOLT (M16X2X180-MM)	
	44	1	**9X-8257**	16	WASHER (17.5X30X3.5-MM THK)	
B	45	2	**1U-8846**		SEALANT-GASKET	

B-USE AS REQUIRED
I-REFER TO HYDRAULIC INFORMATION SYSTEM
M-METRIC PART

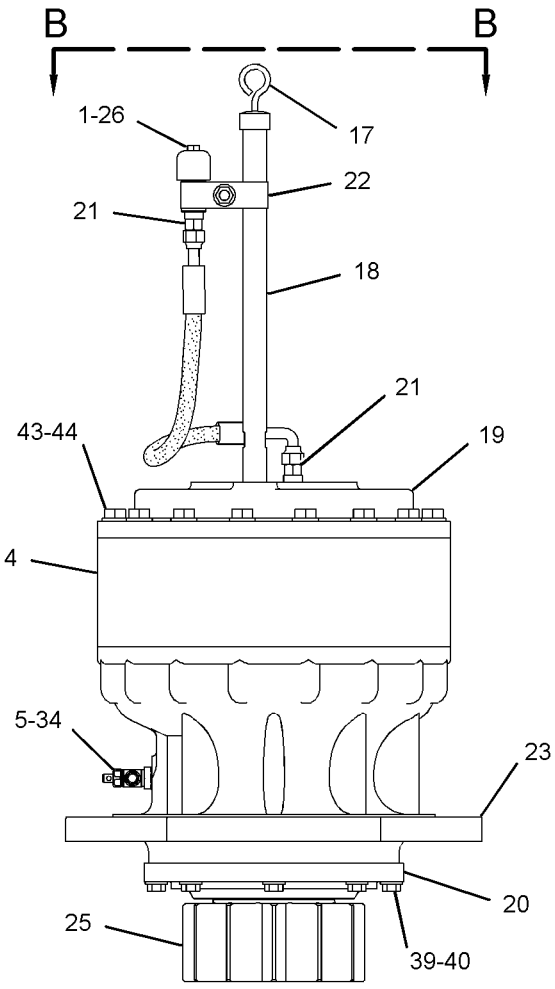

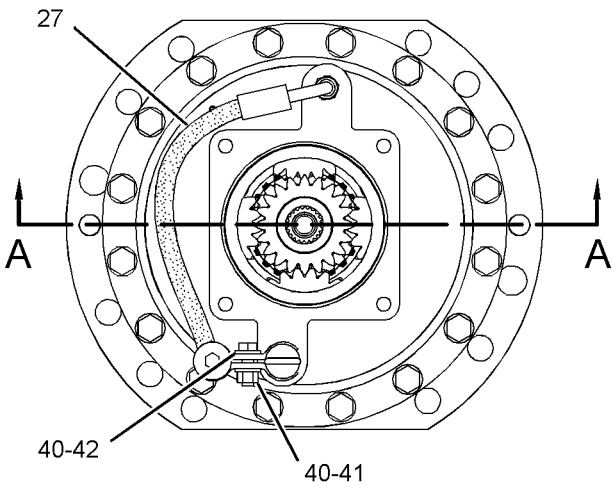

VIEW B-B

REFER TO ALL ILLUSTRATIONS OF THIS GROUP FOR AUXILIARY VIEWS

GRAPHIC #1

g01446769

296-6253 DRIVE GP-SWING *(contd.)* **i03706755**

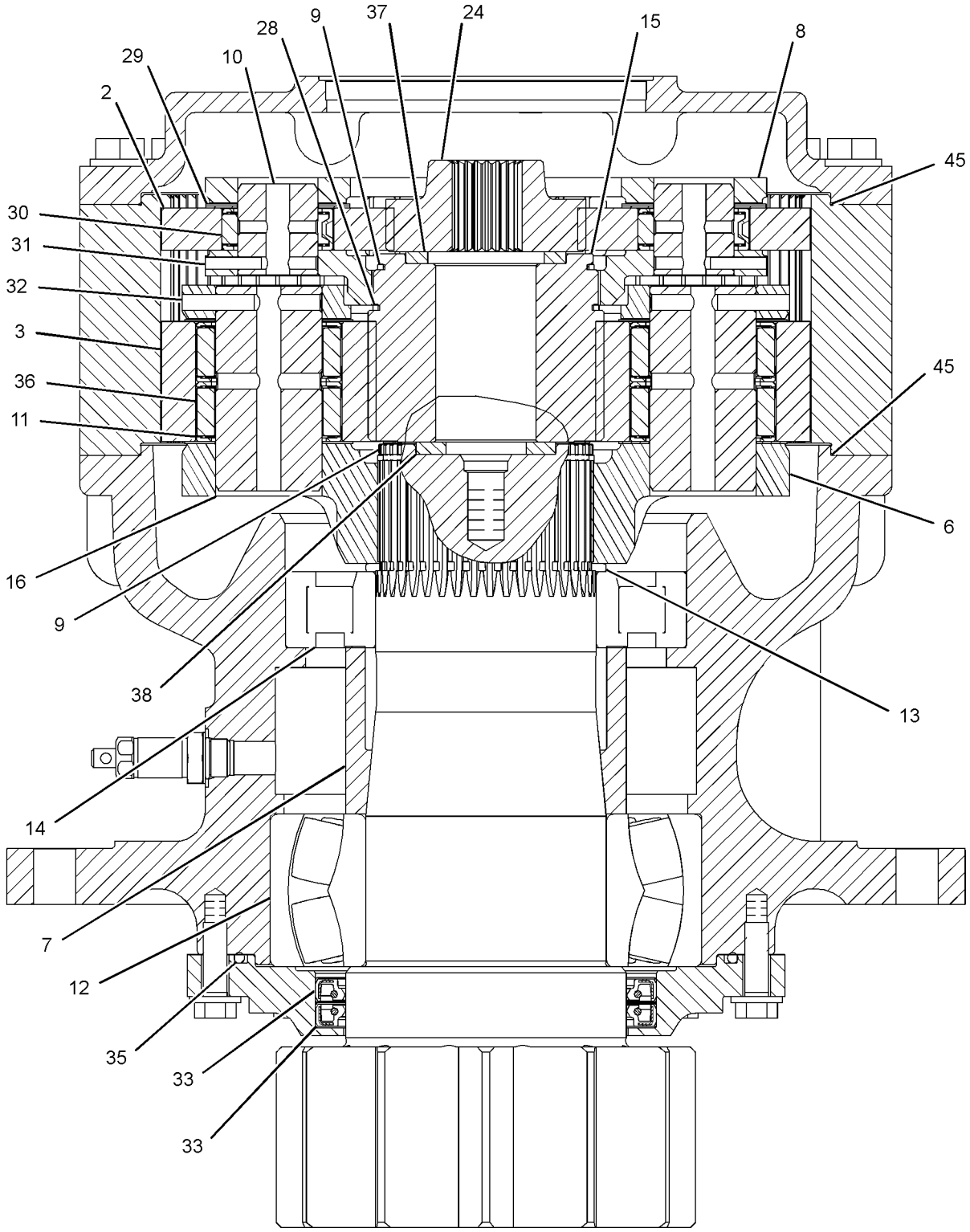

SECTION A-A

GRAPHIC #2 **<END>** g01446770

HYDRAULIC SYSTEM

227-6050 FASTENER GP-SWING & FINAL DR

S/N: JGB1-UP

PART OF 227-6042 POWER TRAIN AR

SMCS-4050, 5459 **i02992489**

NOTE	REF NO	GRAPHIC REF	PART NUMBER	QTY	PART NAME 1 2 3 4 5 6 (PRODUCT LEVEL)	SEE PAGE
	1	2	**2B-7561**	4	CORK	
	2	2	**5D-1026**	2	CLAMP-BAND	
	3	2	**096-4755**	4	PIN	
M	4	2	**7X-2576**	20	BOLT (M24X3X70-MM)	
	5	1,2	**8T-4167**	60	WASHER-HARD (26X44X4-MM THK)	
M	6	1	**8T-5878**	40	BOLT (M24X3X80-MM)	
E	7	2	**5P-0767**		HOSE (130-CM EACH)	
B	8	2	**1U-8846**		SEALANT-GASKET	

B-USE AS REQUIRED
E-ORDER BY THE CENTIMETER
M-METRIC PART

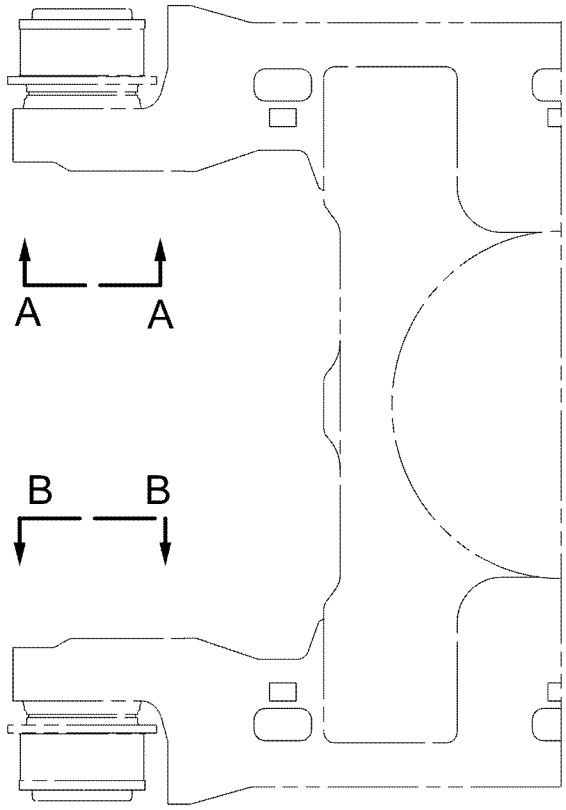

TOP VIEW

FWD

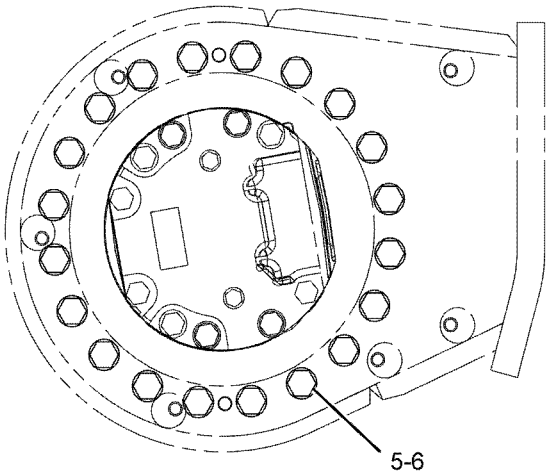

SECTION A-A

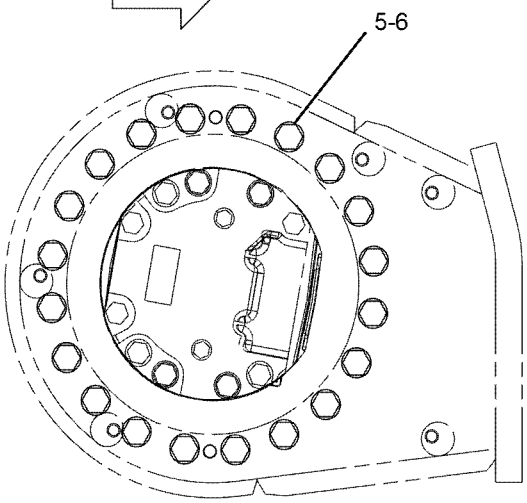

SECTION B-B

GRAPHIC #1

g01098496

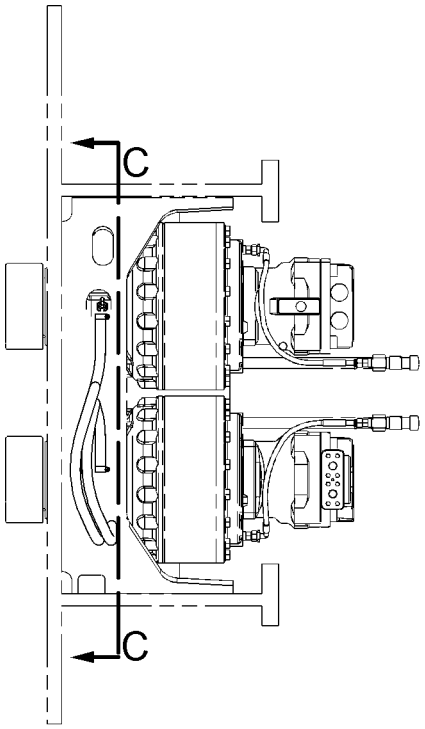

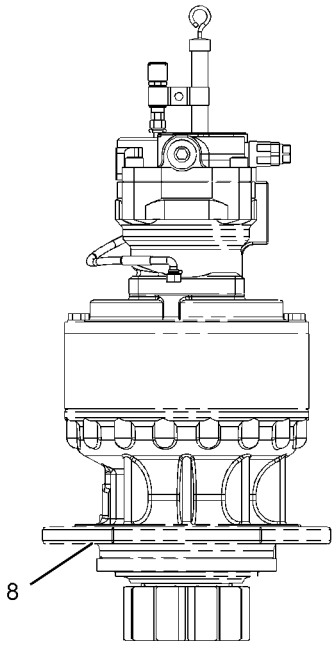

SECTION D-D

REAR VIEW

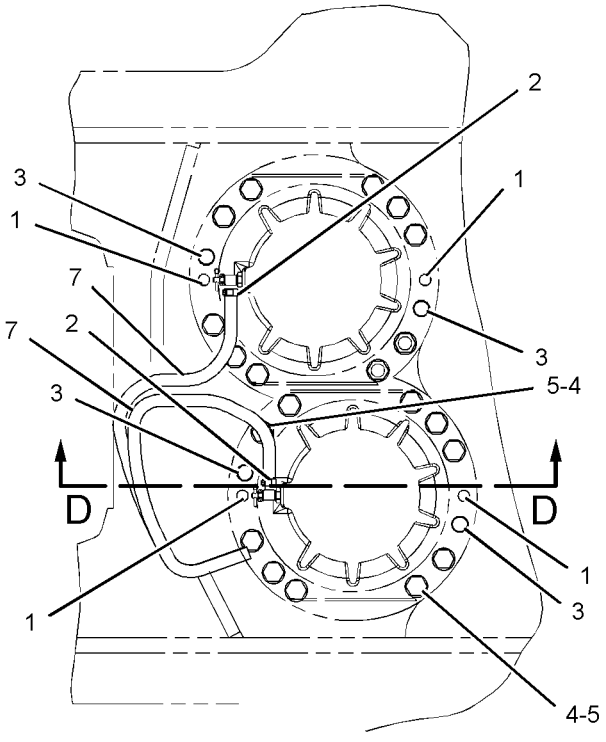

SECTION C-C

GRAPHIC #2 **<END>** g01098510

158-8987 FILTER & VALVE GP-PILOT–HYDRAULIC OIL

S/N: JGB1-UP; KHS1-UP

PART OF 227-0431 TANK & FILTER GP-HYDRAULIC

SMCS-5072, 5092 **i03254638**

NOTE	REF NO	GRAPHIC REF	PART NUMBER	QTY	PART NAME 1 2 3 4 5 6 (PRODUCT LEVEL)	SEE PAGE
C	1	1	**5I-8670**	1	FILTER-OIL (ADVANCED EFFICIENCY) (HYDRAULIC)	
C	2	1	**215-4909**	1	VALVE GP-PILOT RELIEF (HYDRAULIC FILTER)	
	2A	1	**095-1584**	1	SEAL-O-RING	
	2B	1	**095-1590**	1	SEAL-O-RING	
	2C	1	**095-1596**	1	SEAL-O-RING	

C-CHANGE FROM PREVIOUS TYPE

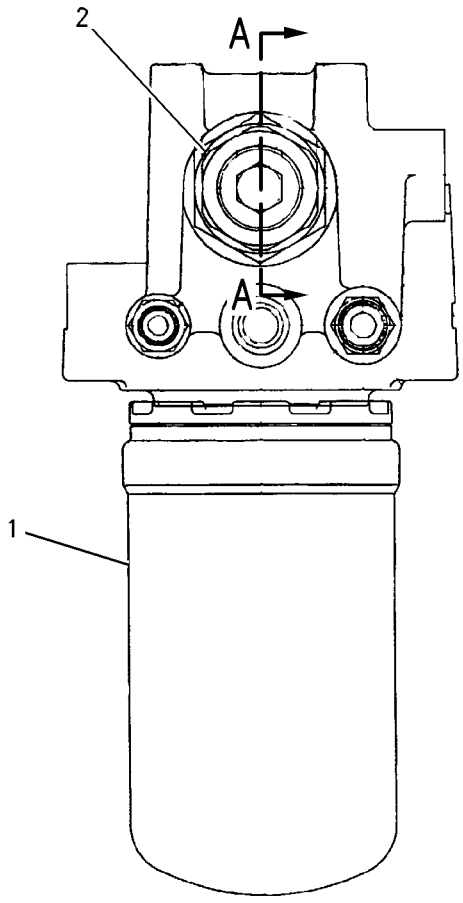

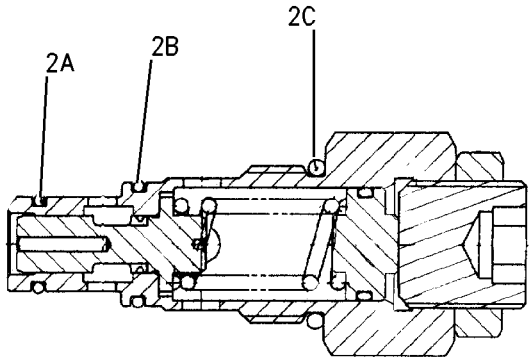

SECTION A–A

GRAPHIC #1 **<END>** g00842119

HYDRAULIC SYSTEM

188-4142 FILTER GP-OIL—HYDRAULIC RETURN

S/N: JGB1-UP; KHS1-UP

PART OF 188-4145 FILTER GP-OIL

SMCS-3004, 4295, 431F, 5068, 5091, 5092 **i02992519**

NOTE	REF NO	GRAPHIC REF	PART NUMBER	QTY	PART NAME 1 2 3 4 5 6 (PRODUCT LEVEL)	SEE PAGE
	1	1	**204-2762**	1	PLATE	
JM	2	1	**173-3529**	6	BOLT (M6X1X15-MM)	
J	3	1	**3T-7528**	6	SEAL-O-RING	
	4	1	**173-3513**	1	BASE	
J	5	1	**3E-4297**	2	SEAL-O-RING	
M	6	1	**137-3626**	1	BOLT-SHOULDER (M6X1X28.75-MM)	
Z	7	1		1	SHELL AS	
	8	1	**179-9806**	1	FILTER ELEMENT AS-OIL (HYDRAULIC RETURN)	
J	9	1	**137-3623**	4	SEAL-O-RING	
J	10	1	**6V-7658**	2	SEAL-O-RING	
J	11	1	**177-2553**	1	SEAL	
J	12	1	**095-1681**	1	SEAL-O-RING	
	13	1	**173-3515**	1	RING-RETAINING	
	14	1	**173-3516**	1	HANDLE	
J	15	1	**4J-7533**	1	SEAL-O-RING	
J	16	1	**9S-4180**	1	PLUG	
JM	17	1	**137-3624**	8	SCREW (M3X0.5X5-MM)	
J	18	1	**137-3625**	2	PAD	
	19	1	**173-3517**	1	PLATE	
J	20	1	**137-3628**	1	SHIM (0.1-MM THK)	
	21	1	**188-4143**	1	FILM-INSTRUCTION (HYDRAULIC OIL RETURN FILTER)	
					AVAILABLE REPAIR KIT(S):	
J			**201-9299**	1	KIT-SERVICE (HYDRAULIC FILTER)	
					(INCLUDES SEALS, BLOTTING PAD, SHIM, BOLT & SCREW)	

J-KIT MARKED J SERVICES PARTS MARKED J
M-METRIC PART
Z-NOT SERVICED SEPARATELY

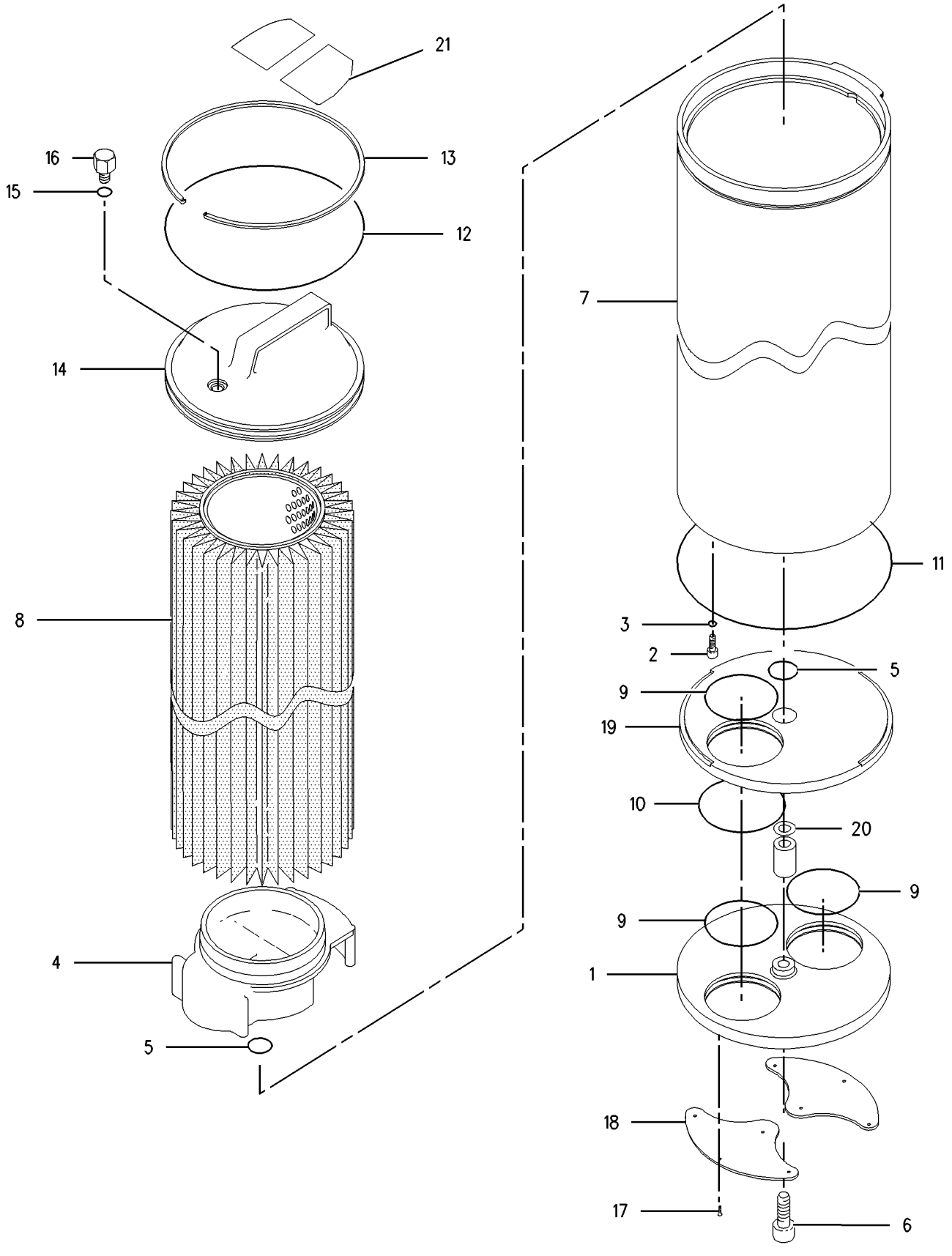

GRAPHIC #1 **<END>** g00923879

HYDRAULIC SYSTEM

188-4145 FILTER GP-OIL—HYDRAULIC RETURN

S/N: JGB1-UP; KHS1-UP

PART OF 227-0431 TANK & FILTER GP-HYDRAULIC

SMCS-3004, 4295, 431F, 5068, 5091, 5092 **i02495385**

NOTE	REF NO	GRAPHIC REF	PART NUMBER	QTY	PART NAME 1 2 3 4 5 6 (PRODUCT LEVEL)	SEE PAGE
Y	1	1	**177-2620**	1	HOUSING GP-FILTER	505
Y	2	1	**177-2617**	1	BLOCK GP-HYDRAULIC	452
	3	1	**177-2625**	1	PACKING	
	4	1	**095-1682**	1	SEAL-O-RING	
M	5	1	**8T-4189**	4	BOLT (M8X1.25X20-MM)	
	6	1	**8T-4224**	4	WASHER-HARD (8.8X16X2-MM THK)	
Y	7	1	**188-4142**	1	FILTER GP-OIL (HYDRAULIC RETURN)	496
	8	1	**173-3510**	1	COVER	
	9	1	**123-2003**	1	SEAL-O-RING	
M	10	1	**8T-4184**	4	BOLT (M12X1.75X45-MM)	
	11	1	**8T-4223**	4	WASHER-HARD (13.5X25.5X3-MM THK)	
	12	1	**175-6178**	1	HOUSING	
	13	1	**177-2623**	1	VALVE AS (BYPASS)	
	14	1	**175-6174**	1	PIPE	
M	15	1	**8T-4970**	2	BOLT (M6X1X14-MM)	
	16	1	**175-6176**	1	SEAL-O-RING	
M	17	1	**6V-8932**	1	SETSCREW-SOCKET (M6X1X10-MM)	
	18	1	**095-1663**	2	SEAL-O-RING	
	19	1	**187-7171**	2	BOLT (M8X1.25X14-MM)	
	20	1	**175-6175**	1	PIPE	

M-METRIC PART
Y-SEPARATE ILLUSTRATION

188-4145 **FILTER GP-OIL** *(contd.)* **i02495385**

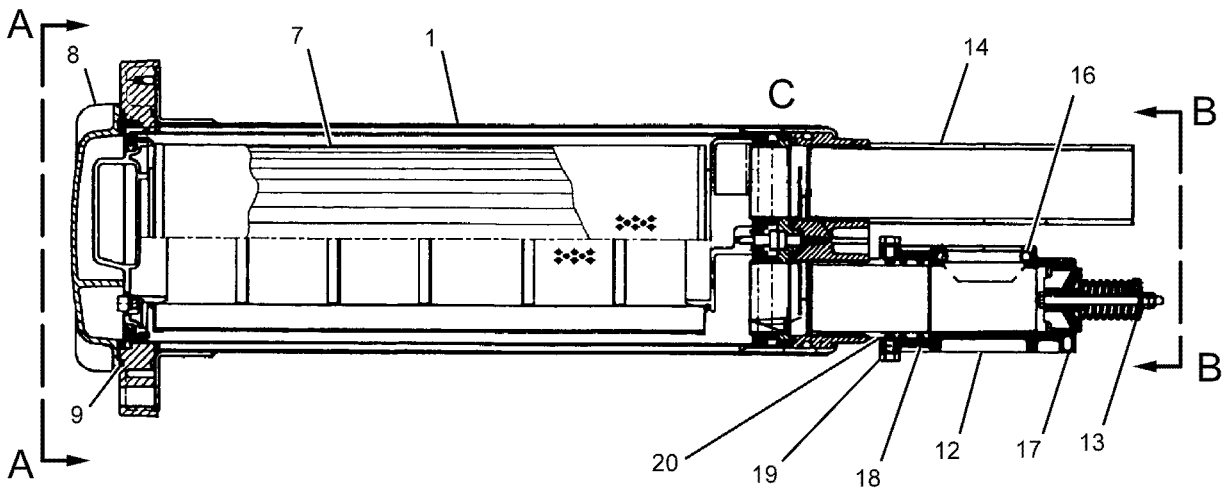

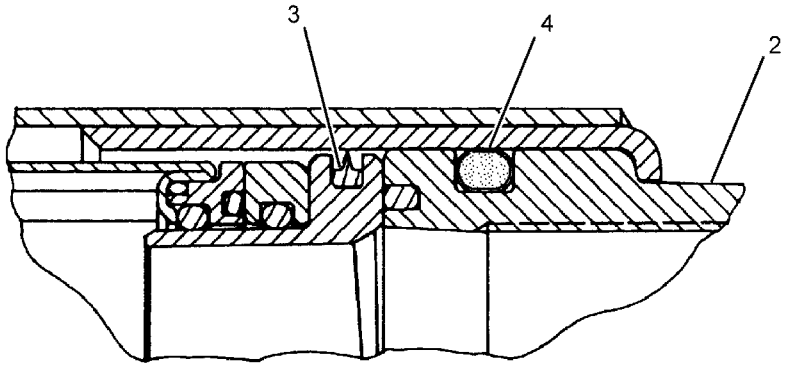

VIEW OF AREA C

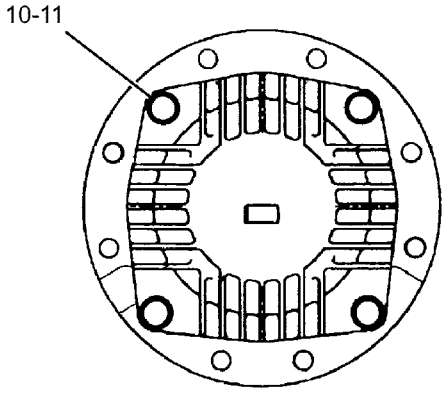

VIEW A-A

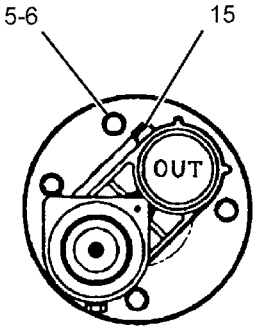

VIEW B-B

GRAPHIC #1 **<END>** g01123506

HYDRAULIC SYSTEM

289-8194 FILTER GP-OIL–HYDRAULIC, CASE DRAIN

S/N: JGB1-UP; KHS1-UP

PART OF 227-0431 TANK & FILTER GP-HYDRAULIC

SMCS-3004, 4295, 431F, 5068, 5091, 5092 **i02881848**

NOTE	REF NO	GRAPHIC REF	PART NUMBER	QTY	PART NAME 1 2 3 4 5 6 (PRODUCT LEVEL)	SEE PAGE
	1	1	**093-7521**	1	FILTER-OIL (ADVANCED EFFICIENCY) (HYDRAULIC)	
	2	1	**289-8195**	1	HEAD AS-FILTER	

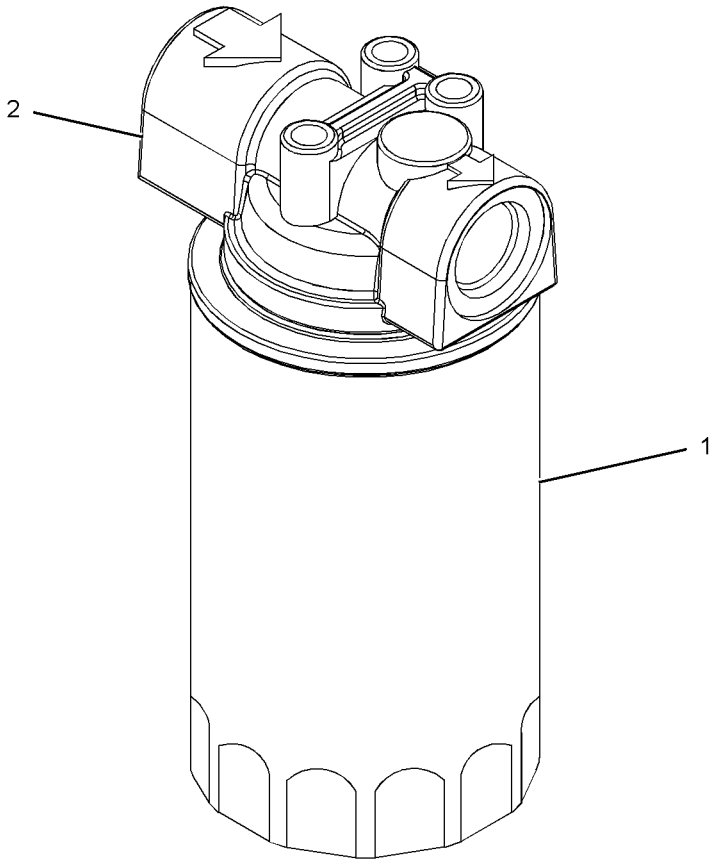

GRAPHIC #1 **<END>** g01388302

227-0620 GAUGE GP-SIGHT—HYDRAULIC OIL LEVEL

S/N: JGB1-UP; KHS1-UP

PART OF 227-0431 TANK & FILTER GP-HYDRAULIC

SMCS-7479 **i02461221**

NOTE	REF NO	GRAPHIC REF	PART NUMBER	QTY	PART NAME 1 2 3 4 5 6 (PRODUCT LEVEL)	SEE PAGE
	1	1	**236-3258**	2	BLOCK	
M	2	1	**236-3259**	2	BOLT-SPECIAL	
	3	1	**236-3257**	1	PIPE	
	4	1	**095-1519**	4	SEAL-O-RING	
	5	1	**6F-4855**	4	SEAL-O-RING	

M-METRIC PART

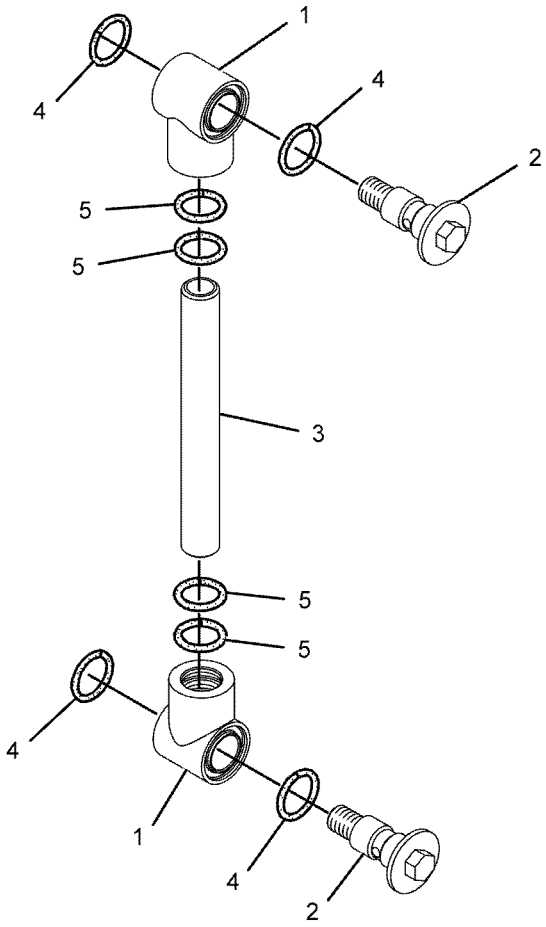

GRAPHIC #1 **<END>** g01091508

HYDRAULIC SYSTEM

295-9497 HEAD GP-PUMP

S/N: JGB1-UP; KHS1-UP

PART OF 295-9663 PUMP GP-PISTON & GEAR

SMCS-3222, 5070, 5086 **i02841424**

NOTE	REF NO	GRAPHIC REF	PART NUMBER	QTY	PART NAME 1 2 3 4 5 6 (PRODUCT LEVEL)	SEE PAGE
	1	2	**247-8929**	1	BODY AS	
	2	2	**295-9585**	1	SLEEVE AS	
	3	1	**247-8733**	1	LEVER AS	
	4	1	**247-8734**	1	LEVER AS	
	5	1	**247-8735**	1	PIN AS	
	6	1	**247-8732**	1	LEVER AS	
M	7	1	**3E-8025**	2	BOLT-SOCKET HEAD (M8X1.25X50-MM)	
M	8	1	**6V-8213**	2	BOLT-SOCKET HEAD (M8X1.25X70-MM)	
M	9	1	**8T-8442**	2	BOLT-SOCKET HEAD (M6X1X30-MM)	
M	10	1,2	**8T-0269**	10	BOLT-SOCKET HEAD (M6X1X20-MM)	
M	11	1	**099-2374**	4	BOLT-SOCKET HEAD (M5X0.8X12-MM)	
	12	1	**7I-8084**	5	PLUG	
	13	1	**5I-8790**	1	PLUG	
	14	2	**5I-8791**	1	PISTON-COMPENSATOR	
	15	2	**129-7970**	1	SLEEVE	
	16	2	**295-9584**	1	ROD	
	17	2	**295-9583**	1	SEAT	
	18	2	**295-9582**	1	SPRING	
	19	2	**295-9581**	1	SPRING	
	20	2	**295-9580**	1	SCREW	
	21	2	**295-9579**	1	SETSCREW	
	22	2	**5I-8799**	1	COVER	
	23	2	**5I-8800**	1	LOCKNUT (M30X1.5-THD)	
	24	2	**129-7973**	1	SLEEVE	
	25	2	**5I-8802**	1	COVER-PILOT	
	26	2	**295-9578**	1	PISTON	
	27	2	**295-9577**	1	SEAT	
	28	2	**5I-8805**	1	RETAINER	
	29	2	**295-9576**	1	SPRING	
	30	2	**5I-8809**	1	SEAT-SPRING	
	31	2	**5I-8810**	1	SPRING-RETURN	
	32	2	**5I-8811**	1	SPRING	
	33	1	**5I-8812**	1	COVER-BLOCK	
	34	1	**247-8928**	1	COVER	
	35	2	**206-9300**	1	SEAL-O-RING	
	36	1	**249-6658**	3	SEAL-O-RING	
	37	1	**206-9290**	9	SEAL-O-RING	
	38	1	**206-9291**	1	SEAL-O-RING	
	39	2	**206-9295**	1	SEAL-O-RING	
	40	2	**206-9297**	1	SEAL-O-RING	
	41	2	**206-9294**	1	SEAL-O-RING	
	42	2	**206-9296**	1	SEAL-O-RING	
	43	2	**249-6659**	1	SEAL-O-RING	
	44	1	**249-6660**	1	SEAL-O-RING	
	45	2	**295-9575**	1	SEAL-O-RING	
	46	1	**249-6661**	2	SEAL-O-RING	
	47	2	**206-9301**	1	SEAL-O-RING	
	48	2	**206-9299**	1	SEAL-O-RING	
M	49	2	**5C-7261**	1	NUT (M8X1.25-THD)	
	50	2	**295-9574**	1	NUT (M10X1.5-THD)	
	51	2	**096-2323**	1	RING-RETAINING (EXTERNAL)	
	52	2	**5I-8813**	1	RING-RETAINING	
	53	1	**5I-8815**	1	PIN	
M	54	2	**5I-8820**	1	SETSCREW (M8X20-MM)	
	55	2	**129-7974**	1	PIN	

M-METRIC PART

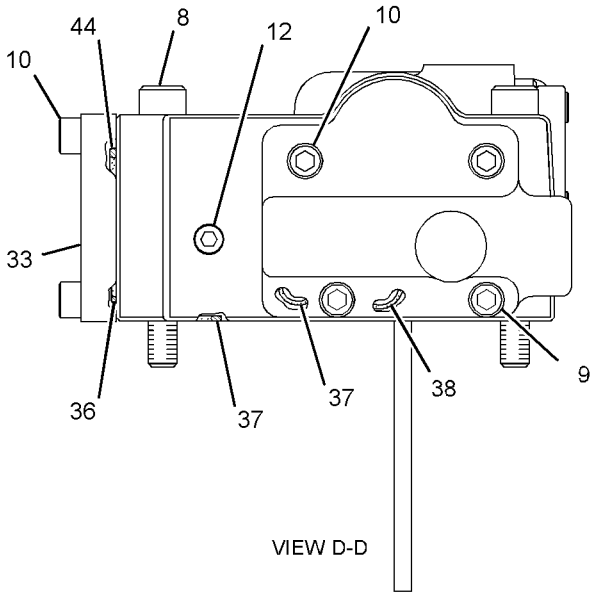

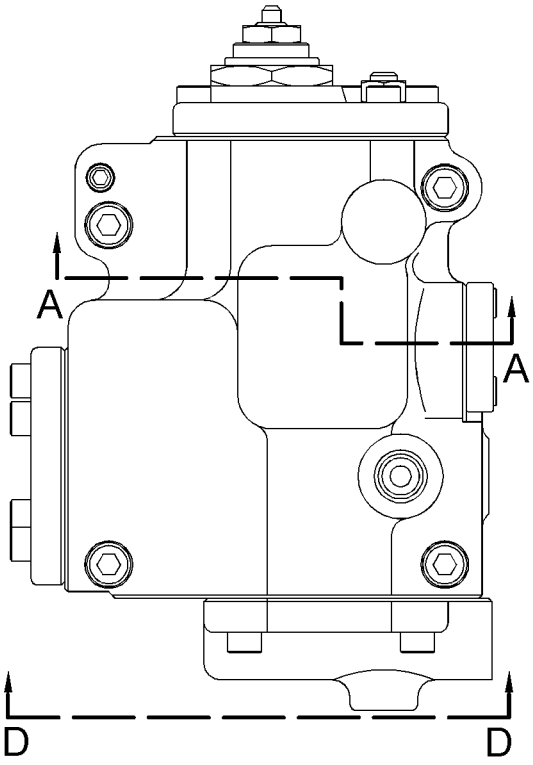

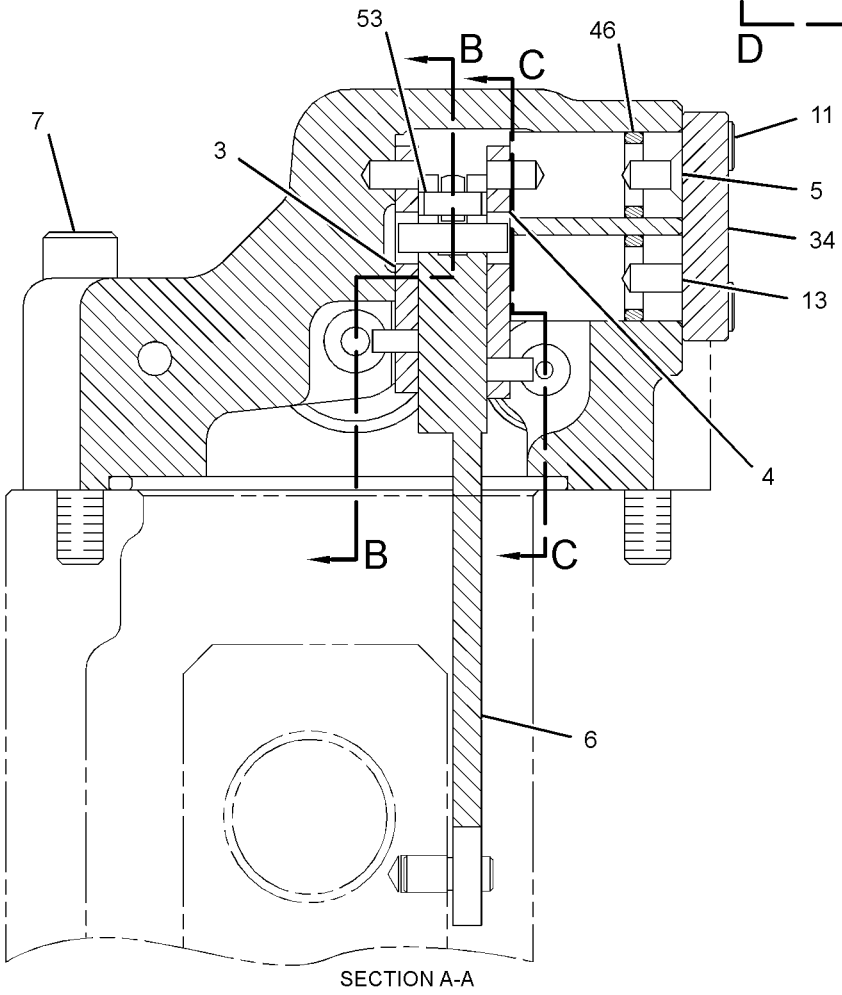

REFER TO ALL ILLUSTRATIONS OF
THIS GROUP FOR AUXILIARY VIEWS

GRAPHIC #1

g01454642

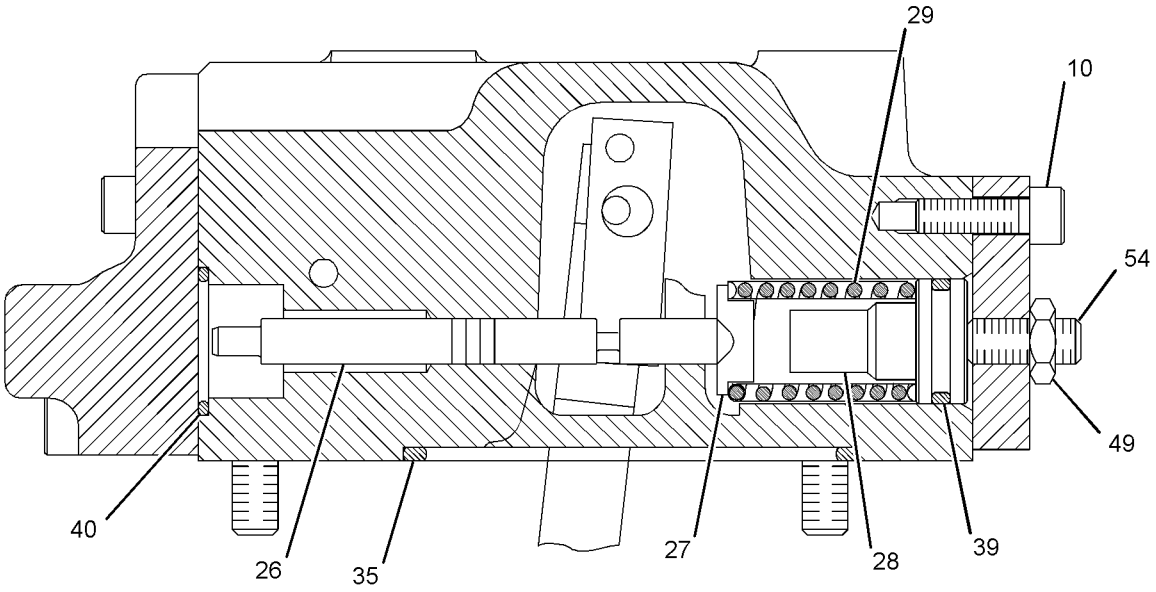

SECTION C-C

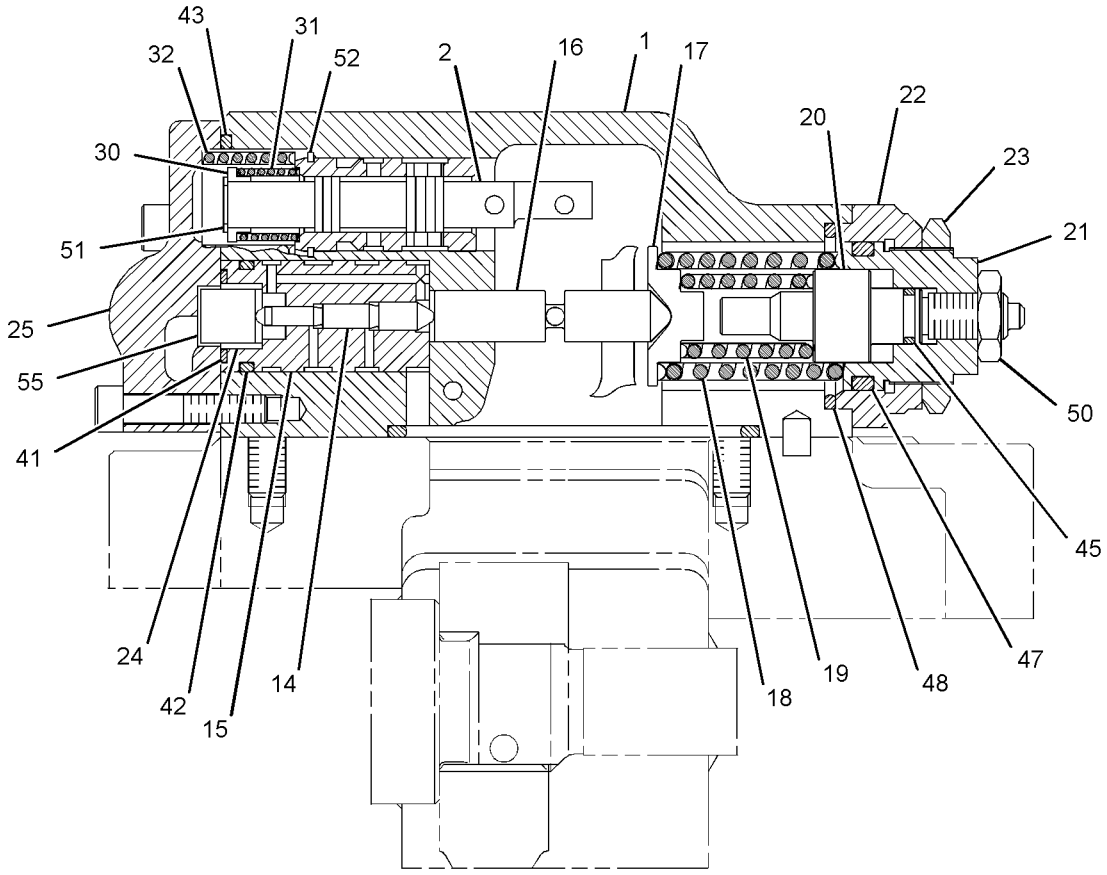

SECTION B-B

GRAPHIC #2 **<END>** g01455431

HYDRAULIC SYSTEM

177-2620 HOUSING GP-FILTER

S/N: JGB1-UP; KHS1-UP

PART OF 188-4145 FILTER GP-OIL

SMCS-5068 **i03358546**

NOTE	REF NO	GRAPHIC REF	PART NUMBER	QTY	PART NAME 1 2 3 4 5 6 (PRODUCT LEVEL)	SEE PAGE
	1	1	**177-2621**	1	FLANGE AS	
	2	1	**123-2003**	1	SEAL-O-RING	
M	3	1	**095-0757**	4	SCREW-MACHINE (M6X1X8.6-MM)	

M-METRIC PART

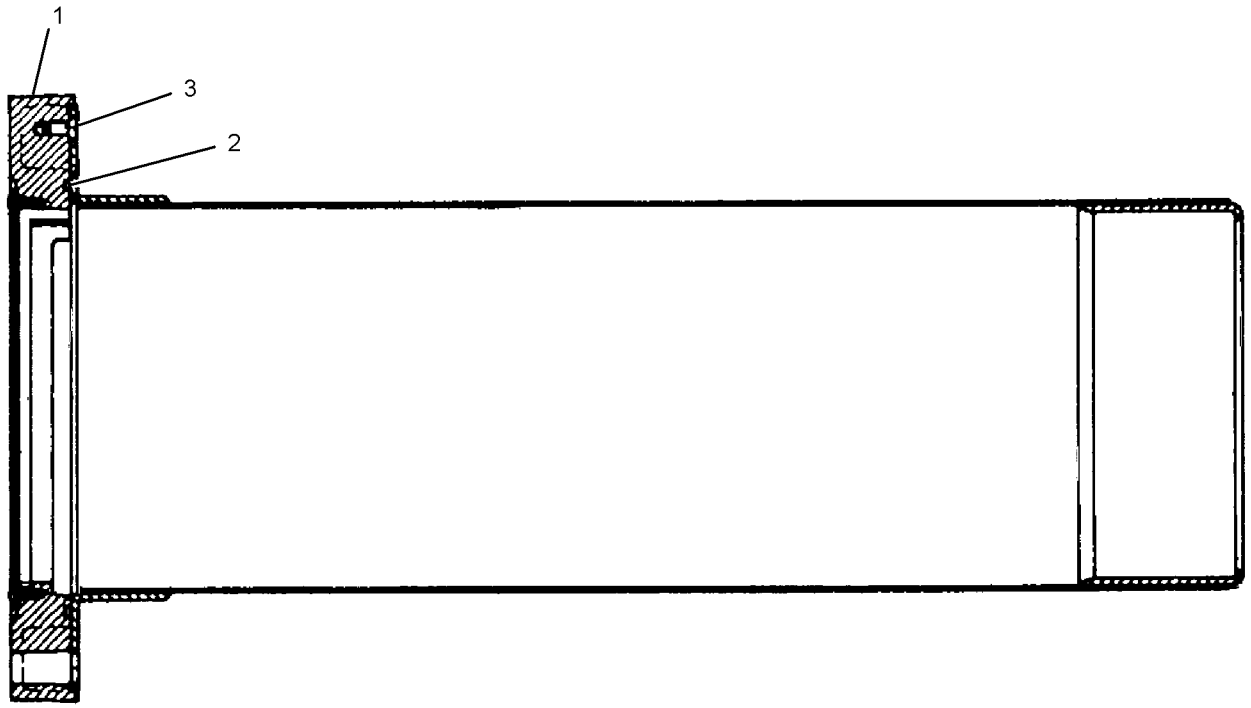

GRAPHIC #1 **<END>** g01733534

HYDRAULIC SYSTEM

297-0243 HYDRAULIC AR

S/N: JGB1-UP

PART OF 370-3230 GENERAL AR

SMCS-5050 **i03299480**

NOTE	PART NUMBER	QTY	PART NAME 1 2 3 4 5 6 (PRODUCT LEVEL)	SEE PAGE
Y	*307-4848*	1	LINES GP-BOOM CYLINDER	542
Y	*292-7161*	1	LINES GP-FRONT (IMPLEMENT, TRAVEL)	559
Y	*292-7159*	1	LINES GP-HYDRAULIC (COOLER, PUMP, TANK, VALVE)	581
Y	*292-7164*	1	LINES GP-HYDRAULIC OIL COOLER	585
Y	*302-2984*	1	LINES GP-PILOT (CONTROL VALVE)	608
Y	*302-2985*	1	LINES GP-PILOT (CONTROL VALVE)	612
Y	*302-3097*	1	LINES GP-PILOT (PUMP, MOTOR)	620
Y	*227-0460*	1	LINES GP-PILOT (HEAVY LIFT)	589
Y	*296-7123*	1	LINES GP-PILOT (JOYSTICK)	596
Y	*292-7163*	1	LINES GP-PUMP (SUPPLY)	640
Y	*292-7162*	1	LINES GP-SWING MOTOR (FINE SWING)	662
Y	*302-3185*	1	LINES GP-TRAVEL MOTOR	664
Y	*302-3084*	1	MOUNTING GP-MAIN CONTROL VALVE	690
Y	*296-4670*	1	PUMP & MTG GP-MAIN HYDRAULIC	693
Y	*227-0430*	1	TANK & MTG GP-HYDRAULIC	710
Y	**323-7681**	1	VALVE GP-MAIN CONTROL	756

Y-SEPARATE ILLUSTRATION

<END>

297-0244 HYDRAULIC AR

S/N: KHS1-UP

PART OF 370-4188 GENERAL AR

SMCS-5050 **i03299785**

NOTE	PART NUMBER	QTY	PART NAME 1 2 3 4 5 6 (PRODUCT LEVEL)	SEE PAGE
Y	*307-4848*	1	LINES GP-BOOM CYLINDER	542
Y	*292-7159*	1	LINES GP-HYDRAULIC (COOLER, PUMP, TANK, VALVE)	581
Y	*292-7161*	1	LINES GP-FRONT (IMPLEMENT, TRAVEL)	559
Y	*292-7164*	1	LINES GP-HYDRAULIC OIL COOLER	585
Y	*227-0460*	1	LINES GP-PILOT (HEAVY LIFT)	589
Y	*296-7123*	1	LINES GP-PILOT (JOYSTICK)	596
Y	*302-2984*	1	LINES GP-PILOT (CONTROL VALVE)	608
Y	*302-2985*	1	LINES GP-PILOT (CONTROL VALVE)	612
Y	*302-3097*	1	LINES GP-PILOT (PUMP, MOTOR)	620
Y	*292-7163*	1	LINES GP-PUMP (SUPPLY)	640
Y	*292-7162*	1	LINES GP-SWING MOTOR (FINE SWING)	662
Y	*302-3186*	1	LINES GP-TRAVEL MOTOR (ADJ GAUGE, LONG UNDERCARRIAGE)	666
Y	*302-3084*	1	MOUNTING GP-MAIN CONTROL VALVE	690
Y	*296-4670*	1	PUMP & MTG GP-MAIN HYDRAULIC	693
Y	*227-0430*	1	TANK & MTG GP-HYDRAULIC	710
Y	**323-7681**	1	VALVE GP-MAIN CONTROL	756

Y-SEPARATE ILLUSTRATION

<END>

HYDRAULIC SYSTEM

127-6690 LINES GP-AUXILIARY HYDRAULIC–STICK, HIGH PRESSURE

S/N: JGB1-UP; KHS1-UP
T-FAMILY, TB-FAMILY
PART OF 337-8881 OPTION AR-LINKAGE
FOR USE WITH 3.4-M (11.2-FT) STICK
AN ATTACHMENT

SMCS-5057 **i03958814**

NOTE	REF NO	GRAPHIC REF	PART NUMBER	QTY	PART NAME 1 2 3 4 5 6 (PRODUCT LEVEL)	SEE PAGE
	1	1	**142-6583**	1	TUBE AS	
C	2	1	**294-6485**	1	TUBE AS	
I	3	1	**216-6540**	1	HOSE AS	
I	4	1	**216-6539**	1	HOSE AS	
C	5	1	**292-7752**	1	VALVE AS-MANUAL (AUXILIARY, SHUTOFF)	
Y	6	1	**277-0954**	1	VALVE GP-MANUAL (AUXILIARY, SHUTOFF)	759
	7	1	**306-1354**	4	CLAMP-HALF	
	8	1	**306-1355**	4	CLAMP-HALF	
	9	1	**1P-5767**	4	FLANGE-HALF	
	10	1	**5P-8077**	4	FLANGE-HALF	
M	11	1	**8T-4140**	8	BOLT (M16X2X60-MM)	
M	12	1	**8T-4183**	4	BOLT (M12X1.75X40-MM)	
M	13	1	**8T-4193**	4	BOLT (M16X2X50-MM)	
M	14	1	**8T-4194**	8	BOLT (M12X1.75X50-MM)	
M	15	1	**8T-6685**	2	BOLT (M10X1.5X110-MM)	
M	16	1	**100-4982**	8	BOLT-SELF-LOCKING (M16X2X45-MM)	
	17	1	**8T-4121**	2	WASHER-HARD (11X21X2.5-MM THK)	
	18	1	**8T-4223**	8	WASHER-HARD (13.5X25.5X3-MM THK)	
	19	1	**9X-8257**	18	WASHER (17.5X30X3.5-MM THK)	
	20	1	**1P-3704**	3	SEAL-RECTANGULAR	
C	21	1	**1P-3705**	3	SEAL-RECTANGULAR	
M	23	1	**7X-2557**	2	BOLT (M16X2X140-MM)	

C-CHANGE FROM PREVIOUS TYPE
I-REFER TO HYDRAULIC INFORMATION SYSTEM
M-METRIC PART
Y-SEPARATE ILLUSTRATION

127-6690 **LINES GP-AUXILIARY HYDRAULIC** *(contd.)* **i03958814**

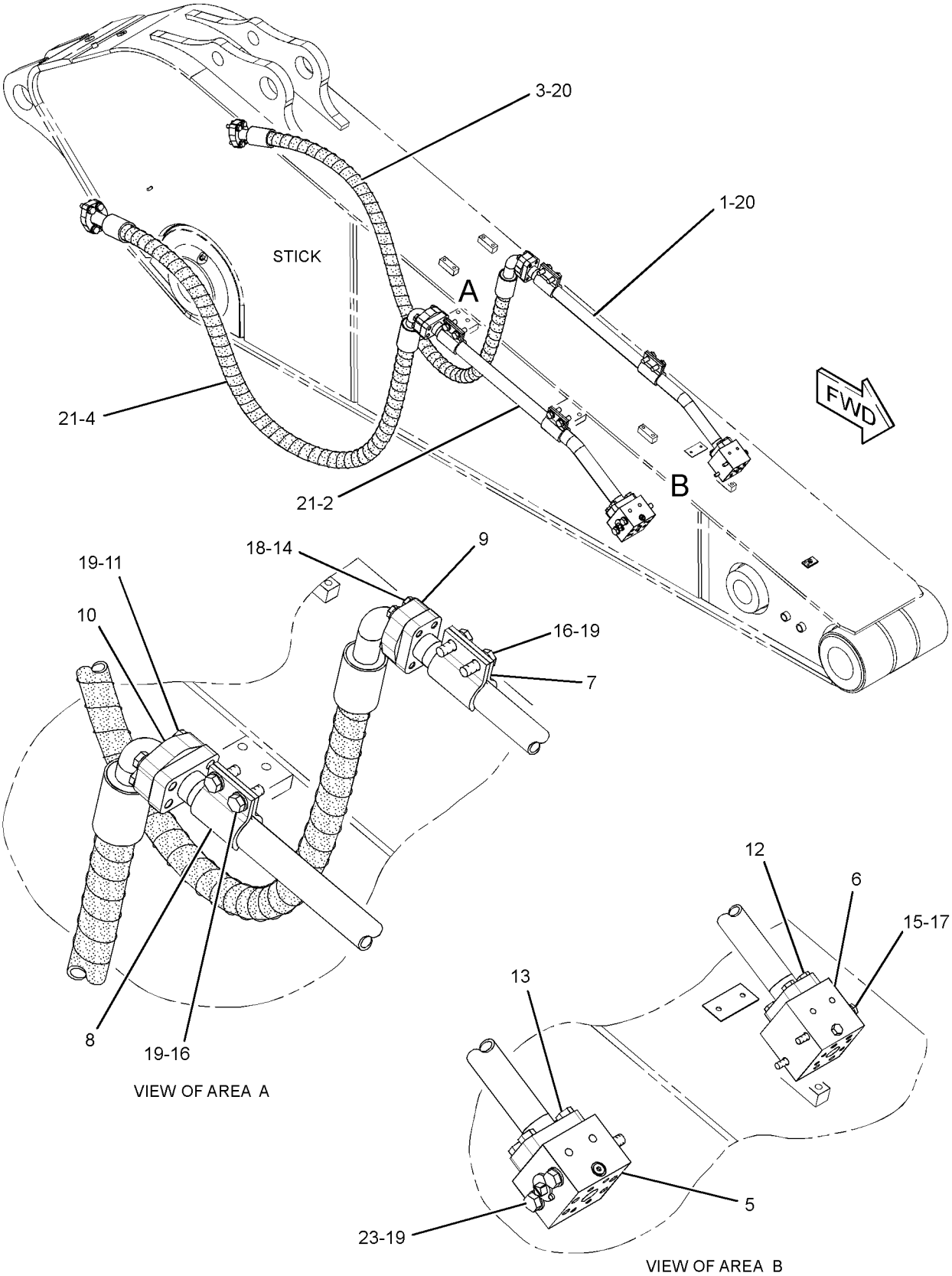

GRAPHIC #1 **<END>** g01356702

HYDRAULIC SYSTEM

135-4096 LINES GP-AUXILIARY HYDRAULIC–

STICK, HIGH PRESSURE
S/N: JGB1-UP; KHS1-UP
TB-FAMILY
FOR USE WITH 3.9-M (12.8-FT) STICK
AN ATTACHMENT

SMCS-5057 **i03958825**

NOTE	REF NO	GRAPHIC REF	PART NUMBER	QTY	PART NAME 1 2 3 4 5 6 (PRODUCT LEVEL)	SEE PAGE
Y	1	1	**277-0954**	1	VALVE GP-MANUAL (AUXILIARY, SHUTOFF)	759
	2	1	**187-9915**	1	TUBE AS	
I	3	1	**216-6539**	1	HOSE AS	
I	4	1	**216-6540**	1	HOSE AS	
C	5	1	**292-7752**	1	VALVE AS-MANUAL (AUXILIARY, SHUTOFF)	
C	6	1	**294-6467**	1	TUBE AS	
	7	1	**306-1354**	4	CLAMP-HALF	
	8	1	**306-1355**	4	CLAMP-HALF	
	9	1	**1P-3704**	3	SEAL-RECTANGULAR	
C	10	1	**1P-3705**	3	SEAL-RECTANGULAR	
	12	1	**1P-5767**	4	FLANGE-HALF	
	13	1	**5P-8077**	4	FLANGE-HALF	
M	14	1	**7X-2557**	2	BOLT (M16X2X140-MM)	
	15	1	**8T-4121**	2	WASHER-HARD (11X21X2.5-MM THK)	
M	16	1	**8T-4140**	8	BOLT (M16X2X60-MM)	
M	17	1	**8T-4183**	4	BOLT (M12X1.75X40-MM)	
M	18	1	**8T-4193**	4	BOLT (M16X2X50-MM)	
M	19	1	**8T-4194**	8	BOLT (M12X1.75X50-MM)	
	20	1	**8T-4223**	8	WASHER-HARD (13.5X25.5X3-MM THK)	
M	21	1	**8T-6685**	2	BOLT (M10X1.5X110-MM)	
M	22	1	**100-4982**	8	BOLT-SELF-LOCKING (M16X2X45-MM)	
	23	1	**9X-8257**	18	WASHER (17.5X30X3.5-MM THK)	

C-CHANGE FROM PREVIOUS TYPE
I-REFER TO HYDRAULIC INFORMATION SYSTEM
M-METRIC PART
Y-SEPARATE ILLUSTRATION

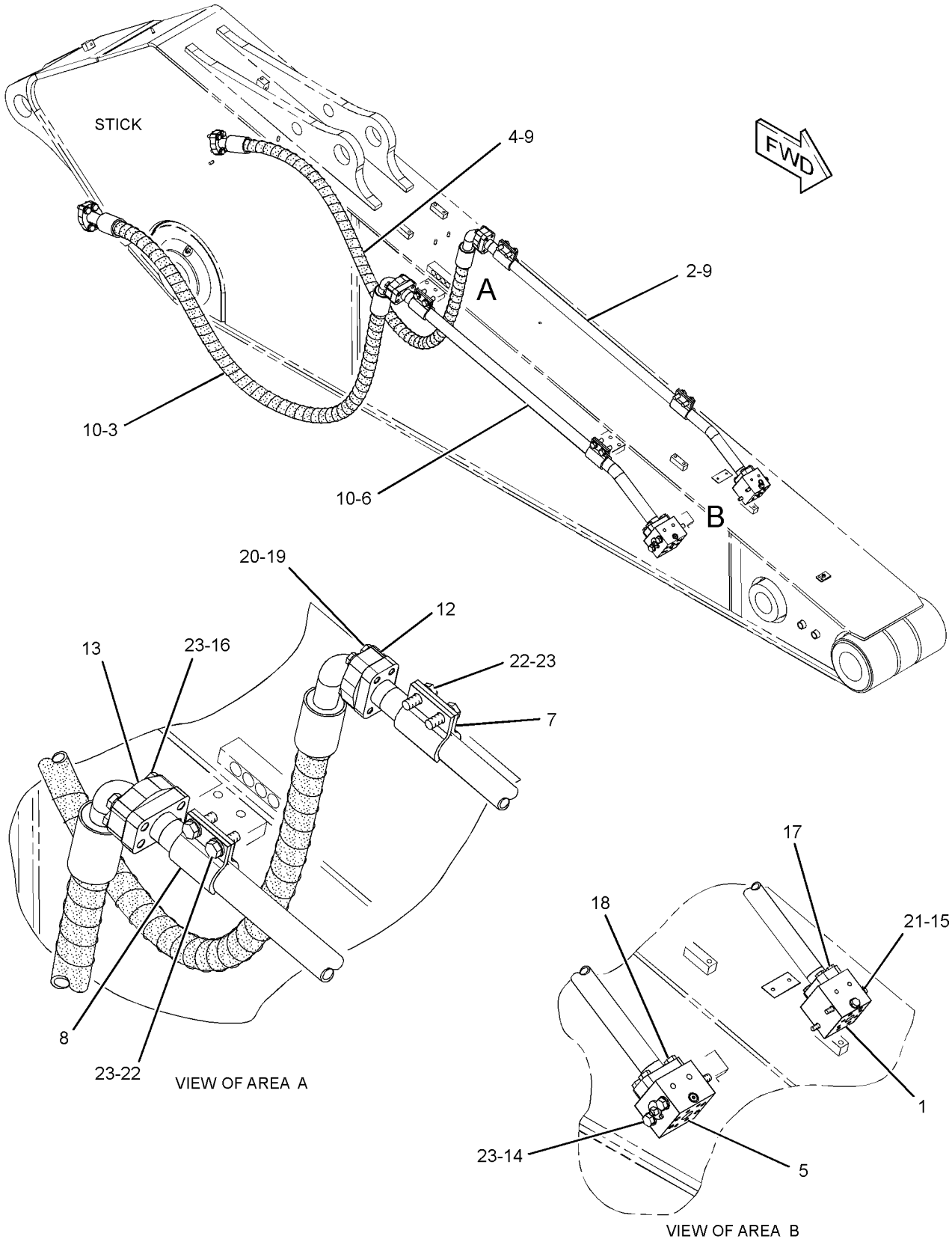

GRAPHIC #1 **<END>** g01356700

HYDRAULIC SYSTEM

230-0114 LINES GP-AUXILIARY HYDRAULIC–BOOM, MEDIUM PRESSURE

S/N: JGB1-UP; KHS1-UP

AN ATTACHMENT

SMCS-5057 **i03176581**

NOTE	REF NO	GRAPHIC REF	PART NUMBER	QTY	PART NAME 1 2 3 4 5 6 (PRODUCT LEVEL)	SEE PAGE
M	1	1	**8T-4139**	12	BOLT (M12X1.75X30-MM)	
M	2	1	**8T-4140**	4	BOLT (M16X2X60-MM)	
M	3	1	**8T-4173**	2	BOLT (M16X2X110-MM)	
M	4	1	**8T-4175**	4	BOLT (M16X2X90-MM)	
M	5	1	**8T-4183**	2	BOLT (M12X1.75X40-MM)	
CM	6	1	**8T-4648**	4	BOLT (M12X1.75X70-MM)	
M	7	1	**8T-4956**	4	BOLT (M12X1.75X35-MM)	
C	8	1	**179-5260**	12	CLIP	
	9	1	**202-7001**	4	CLIP	
	10	1	**202-7021**	6	CLIP	
M	11	1	**8T-4132**	4	NUT (M16X2-THD)	
M	12	1	**8T-4244**	12	NUT (M12X1.75-THD)	
	13	1	**132-1596**	1	PLATE	
	14	1	**187-9833**	1	PLATE	
	15	1	**193-6662**	2	PLATE	
C	16	1	**203-3560**	1	PLATE	
	17	1	**6V-8398**	4	SEAL-O-RING	
	18	1	**7J-9108**	4	SEAL-O-RING	
	19	1	**237-3016**	1	SUPPORT AS	
	20	1	**247-9440**	2	SUPPORT AS	
C	21	1	**268-7036**	1	TUBE AS	
C	22	1	**268-7039**	1	TUBE AS	
C	23	1	**277-0771**	2	TUBE AS	
C	24	1	**277-0774**	1	TUBE AS	
C	25	1	**277-0777**	1	TUBE AS	
	26	1	**9X-8257**	10	WASHER (17.5X30X3.5-MM THK)	
	27	1	**8T-4223**	22	WASHER-HARD (13.5X25.5X3-MM THK)	

C-CHANGE FROM PREVIOUS TYPE
M-METRIC PART

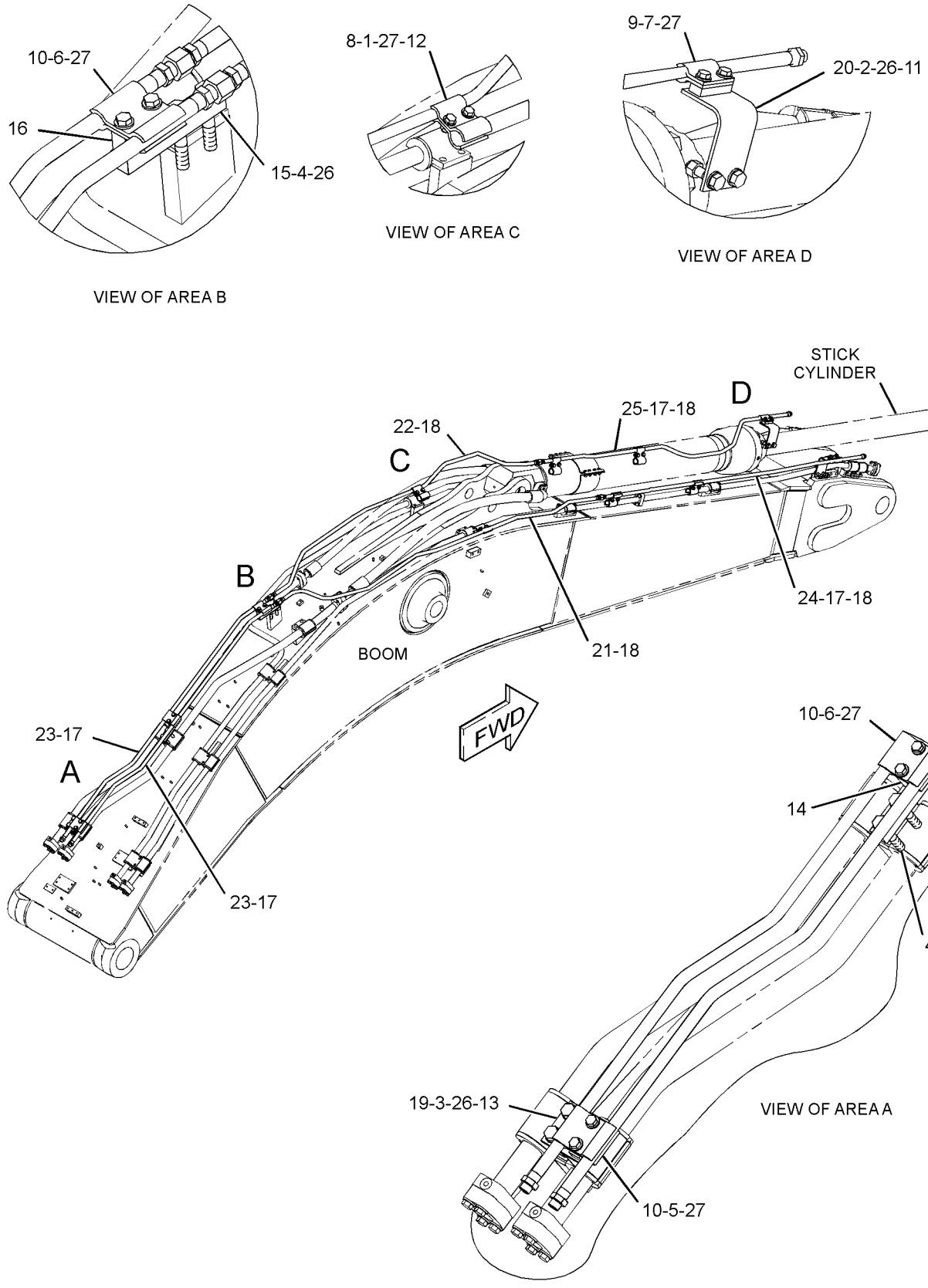

GRAPHIC #1 **<END>** g01285307

230-0117 LINES GP-AUXILIARY HYDRAULIC–
MASS BOOM, MEDIUM PRESSURE
S/N: JGB1-UP; KHS1-UP
AN ATTACHMENT

SMCS-5057 **i03176582**

NOTE	REF NO	GRAPHIC REF	PART NUMBER	QTY	PART NAME 1 2 3 4 5 6 (PRODUCT LEVEL)	SEE PAGE
M	1	1	**8T-4139**	12	BOLT (M12X1.75X30-MM)	
M	2	1	**8T-4140**	4	BOLT (M16X2X60-MM)	
M	3	1	**8T-4173**	2	BOLT (M16X2X110-MM)	
M	4	1	**8T-4175**	4	BOLT (M16X2X90-MM)	
M	5	1	**8T-4183**	2	BOLT (M12X1.75X40-MM)	
C	6	1	**277-1024**	1	TUBE AS	
M	7	1	**8T-6868**	4	BOLT (M12X1.75X80-MM)	
M	8	1	**8T-4956**	4	BOLT (M12X1.75X35-MM)	
C	9	1	**277-1027**	1	TUBE AS	
	10	1	**202-7001**	4	CLIP	
	11	1	**202-7021**	6	CLIP	
	12	1	**179-5260**	12	CLIP	
	13	1	**9X-8257**	10	WASHER (17.5X30X3.5-MM THK)	
M	14	1	**8T-4132**	4	NUT (M16X2-THD)	
	15	1	**8T-4223**	22	WASHER-HARD (13.5X25.5X3-MM THK)	
M	16	1	**8T-4244**	12	NUT (M12X1.75-THD)	
	17	1	**132-1596**	1	PLATE	
	18	1	**187-9833**	1	PLATE	
	19	1	**187-9862**	1	PLATE	
	20	1	**193-6662**	2	PLATE	
	21	1	**6V-8398**	4	SEAL-O-RING	
	22	1	**7J-9108**	4	SEAL-O-RING	
	23	1	**237-3016**	1	SUPPORT AS	
	24	1	**247-9440**	2	SUPPORT AS	
C	25	1	**277-1015**	1	TUBE AS	
C	26	1	**277-1018**	1	TUBE AS	
C	27	1	**277-1021**	1	TUBE AS	

C-CHANGE FROM PREVIOUS TYPE
M-METRIC PART

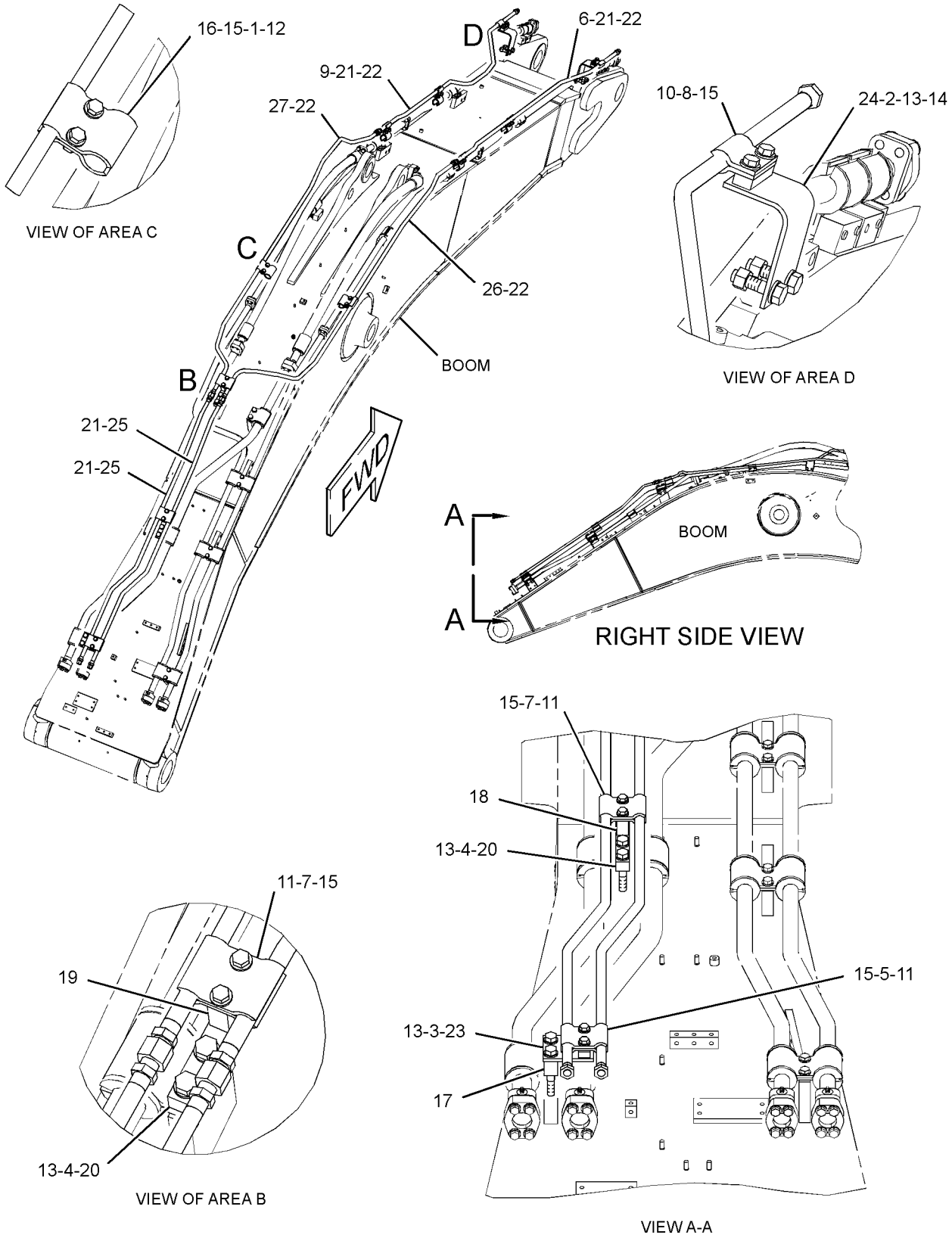

GRAPHIC #1 **<END>** g01293573

230-0120 LINES GP-AUXILIARY HYDRAULIC–STICK, MEDIUM PRESSURE

S/N: JGB1-UP
TB-FAMILY
FOR USE WITH 3.9-M (12.8-FT) STICK
AN ATTACHMENT

SMCS-5057 **i03884589**

NOTE	REF NO	GRAPHIC REF	PART NUMBER	QTY	PART NAME 1 2 3 4 5 6 (PRODUCT LEVEL)	SEE PAGE
	1	1	**6C-6760**	2	MANIFOLD	
	2	1	*250-1440*	2	ADAPTER AS	
					(EACH INCLUDES)	
		1	**3K-0360**	1	SEAL-O-RING	
		1	**7X-3164**	1	ADAPTER-SWIVEL	
	3	1	**202-7001**	8	CLIP	
	4	1	**230-0458**	2	SUPPORT AS	
	5	1	**230-0460**	2	SUPPORT AS	
I	6	1	**230-0479**	2	HOSE AS	
	7	1	**247-9442**	1	TUBE AS	
	8	1	**247-9445**	1	TUBE AS	
	9	1	**204-2281**	4	STRAP-CABLE	
	10	1	**6V-8398**	4	SEAL-O-RING	
	11	1	**8T-4121**	4	WASHER-HARD (11X21X2.5-MM THK)	
M	12	1	**8T-4139**	8	BOLT (M12X1.75X30-MM)	
	13	1	**8T-4223**	16	WASHER-HARD (13.5X25.5X3-MM THK)	
M	14	1	**8T-4910**	8	BOLT (M12X1.75X60-MM)	
M	15	1	**8T-6466**	4	BOLT (M10X1.5X60-MM)	
	16	1	**4I-3503**	4	GROMMET	

I-REFER TO HYDRAULIC INFORMATION SYSTEM
M-METRIC PART

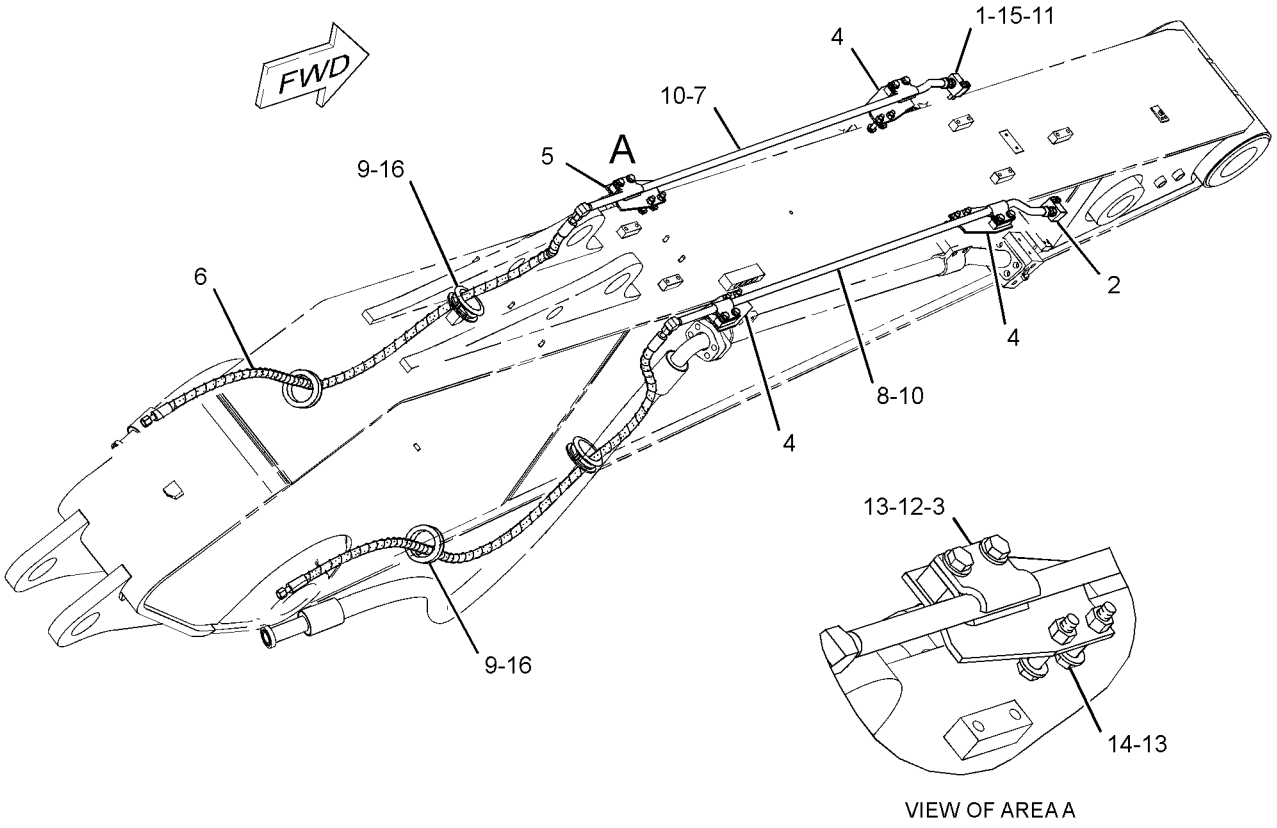

GRAPHIC #1 **<END>** g02133077

230-0123 LINES GP-AUXILIARY HYDRAULIC–STICK, MEDIUM PRESSURE

S/N: JGB1-UP; KHS1-UP
TB-FAMILY
FOR USE WITH 3.35-M (11-FT) STICK
AN ATTACHMENT

SMCS-5057 **i04139050**

NOTE	REF NO	GRAPHIC REF	PART NUMBER	QTY	PART NAME 1 2 3 4 5 6 (PRODUCT LEVEL)	SEE PAGE
	1	1	**6C-6760**	2	MANIFOLD	
	2	1	*250-1440*	2	ADAPTER AS	
					(EACH INCLUDES)	
		1	**3K-0360**	1	SEAL-O-RING	
		1	**7X-3164**	1	ADAPTER-SWIVEL	
	3	1	**202-7001**	8	CLIP	
	4	1	**230-0458**	2	SUPPORT AS	
	5	1	**230-0460**	2	SUPPORT AS	
I	6	1	**253-6566**	2	HOSE AS	
	7	1	**247-9373**	1	TUBE AS	
	8	1	**247-9376**	1	TUBE AS	
B	9	1	**8T-7971**	8	WASHER-HARD (13.5X25.5X5-MM THK)	
	10	1	**6V-8398**	4	SEAL-O-RING	
	11	1	**8T-4121**	4	WASHER-HARD (11X21X2.5-MM THK)	
M	12	1	**8T-4139**	8	BOLT (M12X1.75X30-MM)	
	13	1	**8T-4223**	16	WASHER-HARD (13.5X25.5X3-MM THK)	
M	14	1	**8T-4910**	8	BOLT (M12X1.75X60-MM)	
M	15	1	**8T-6466**	4	BOLT (M10X1.5X60-MM)	
	16	1	**4I-3503**	4	GROMMET	
	17	1	**204-2281**	4	STRAP-CABLE	

B-USE AS REQUIRED
I-REFER TO HYDRAULIC INFORMATION SYSTEM
M-METRIC PART

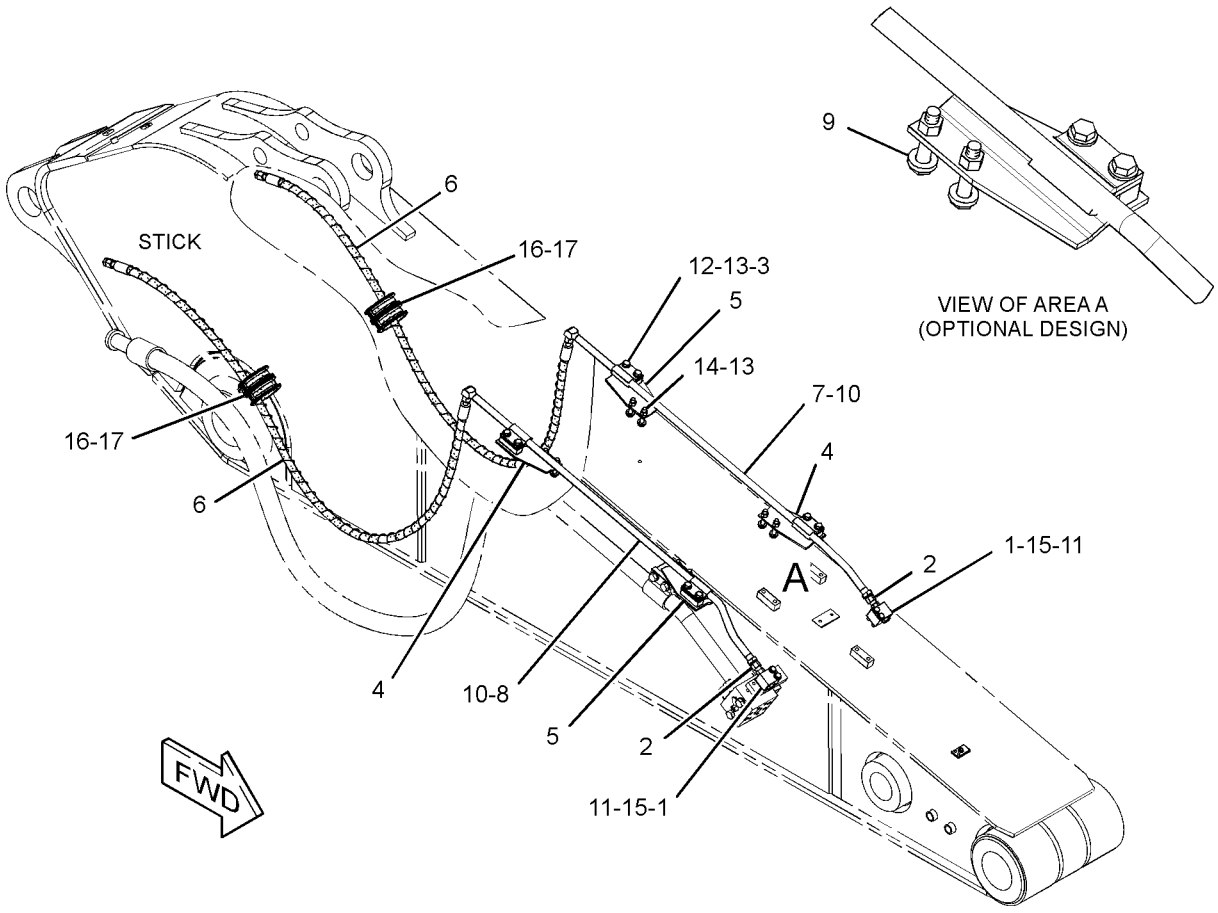

GRAPHIC #1 **<END>** g02352048

HYDRAULIC SYSTEM

230-0128 LINES GP-AUXILIARY HYDRAULIC–STICK, HIGH PRESSURE

S/N: JGB1-UP; KHS1-UP
VB-FAMILY
PART OF 372-4831 LINKAGE AR-FRONT
FOR USE WITH 3-M (9.8-FT) STICK
AN ATTACHMENT

SMCS-5057 **i03958819**

NOTE	REF NO	GRAPHIC REF	PART NUMBER	QTY	PART NAME 1 2 3 4 5 6 (PRODUCT LEVEL)	SEE PAGE
M	1	1	**7X-2557**	2	BOLT (M16X2X140-MM)	
M	2	1	**8T-4140**	8	BOLT (M16X2X60-MM)	
M	3	1	**8T-4183**	4	BOLT (M12X1.75X40-MM)	
M	4	1	**8T-4193**	4	BOLT (M16X2X50-MM)	
M	5	1	**8T-4194**	8	BOLT (M12X1.75X50-MM)	
M	6	1	**8T-6685**	2	BOLT (M10X1.5X110-MM)	
M	7	1	**100-4982**	4	BOLT-SELF-LOCKING (M16X2X45-MM)	
	8	1	**306-1354**	2	CLAMP-HALF	
	9	1	**306-1355**	2	CLAMP-HALF	
	10	1	**1P-5767**	4	FLANGE-HALF	
	11	1	**5P-8077**	4	FLANGE-HALF	
I	12	1	**253-6432**	1	HOSE AS	
I	13	1	**253-6433**	1	HOSE AS	
	14	1	**1P-3704**	3	SEAL-RECTANGULAR	
	15	1	**1P-3705**	3	SEAL-RECTANGULAR	
	16	1	**245-2325**	1	TUBE AS	
	17	1	**294-6502**	1	TUBE AS	
Y	18	1	**277-0954**	1	VALVE GP-MANUAL (AUXILIARY, SHUTOFF)	759
	19	1	**292-7752**	1	VALVE AS-MANUAL (AUXILIARY, SHUTOFF)	
	20	1	**9X-8257**	14	WASHER (17.5X30X3.5-MM THK)	
	21	1	**8T-4121**	2	WASHER-HARD (11X21X2.5-MM THK)	
	22	1	**8T-4223**	8	WASHER-HARD (13.5X25.5X3-MM THK)	

I-REFER TO HYDRAULIC INFORMATION SYSTEM
M-METRIC PART
Y-SEPARATE ILLUSTRATION

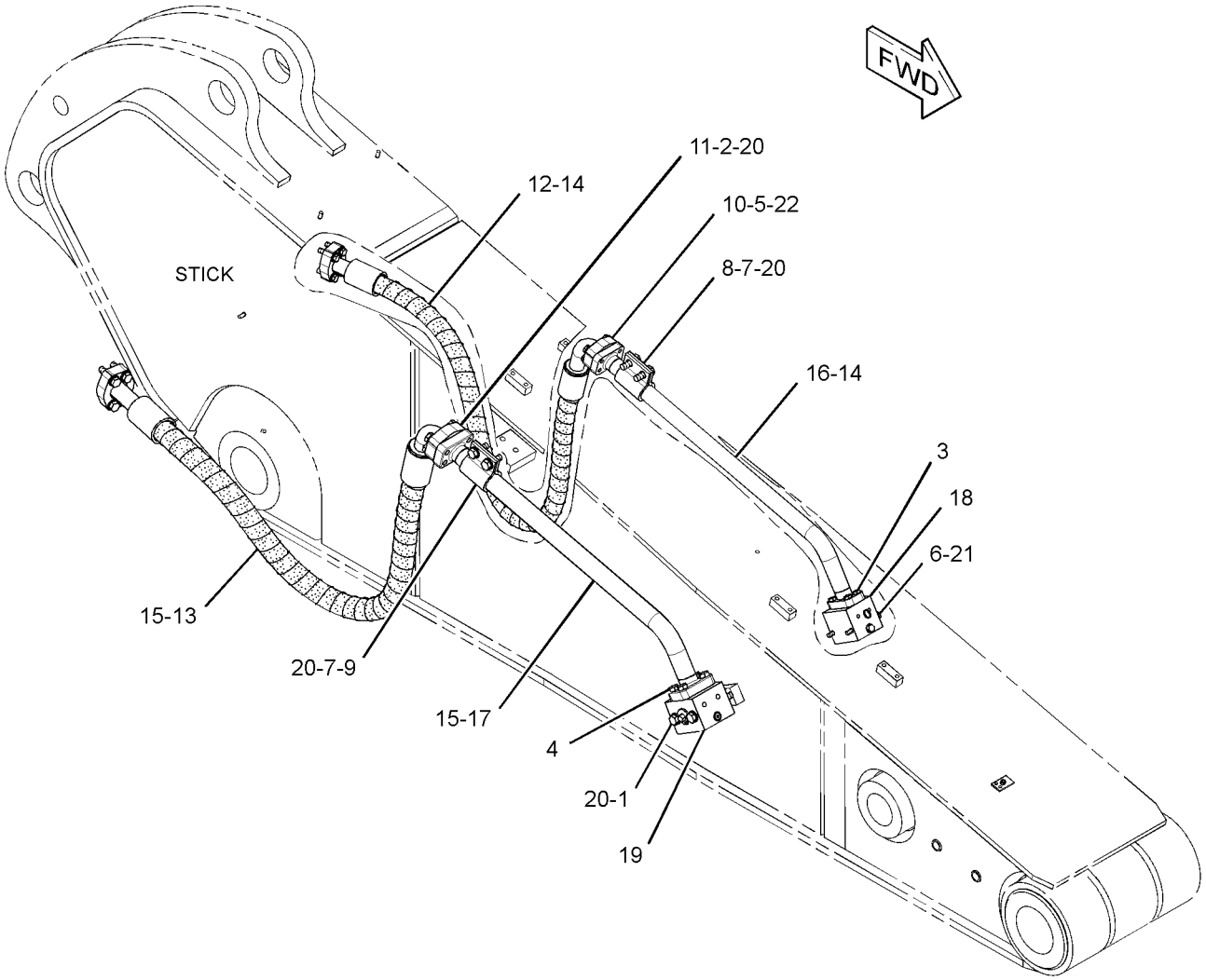

GRAPHIC #1 **<END>** g01417426

HYDRAULIC SYSTEM

230-0129 LINES GP-AUXILIARY HYDRAULIC–MASS

S/N: KHS1-UP
3-M (9.8-FT). VB-FAMILY, MEDIUM PRESSURE
AN ATTACHMENT

SMCS-5057 **i02765790**

NOTE	REF NO	GRAPHIC REF	PART NUMBER	QTY	PART NAME 1 2 3 4 5 6 (PRODUCT LEVEL)	SEE PAGE
	1	1	**6C-6760**	2	MANIFOLD	
	2	1	*250-1440*	2	ADAPTER AS	
					(EACH INCLUDES)	
		1	**3K-0360**	1	SEAL-O-RING	
		1	**7X-3164**	1	ADAPTER-SWIVEL	
	3	1	**202-7001**	4	CLIP	
	4	1	**230-0458**	1	SUPPORT AS	
	5	1	**230-0460**	1	SUPPORT AS	
I	6	1	**177-8506**	2	HOSE AS	
	7	1	**247-9498**	1	TUBE AS	
	8	1	**247-9501**	1	TUBE AS	
	10	1	**6V-8398**	4	SEAL-O-RING	
	11	1	**8T-4121**	4	WASHER-HARD (11X21X2.5-MM THK)	
M	12	1	**8T-4139**	4	BOLT (M12X1.75X30-MM)	
	13	1	**8T-4223**	8	WASHER-HARD (13.5X25.5X3-MM THK)	
M	14	1	**8T-4910**	4	BOLT (M12X1.75X60-MM)	
M	15	1	**8T-6466**	4	BOLT (M10X1.5X60-MM)	

I-REFER TO HYDRAULIC INFORMATION SYSTEM
M-METRIC PART

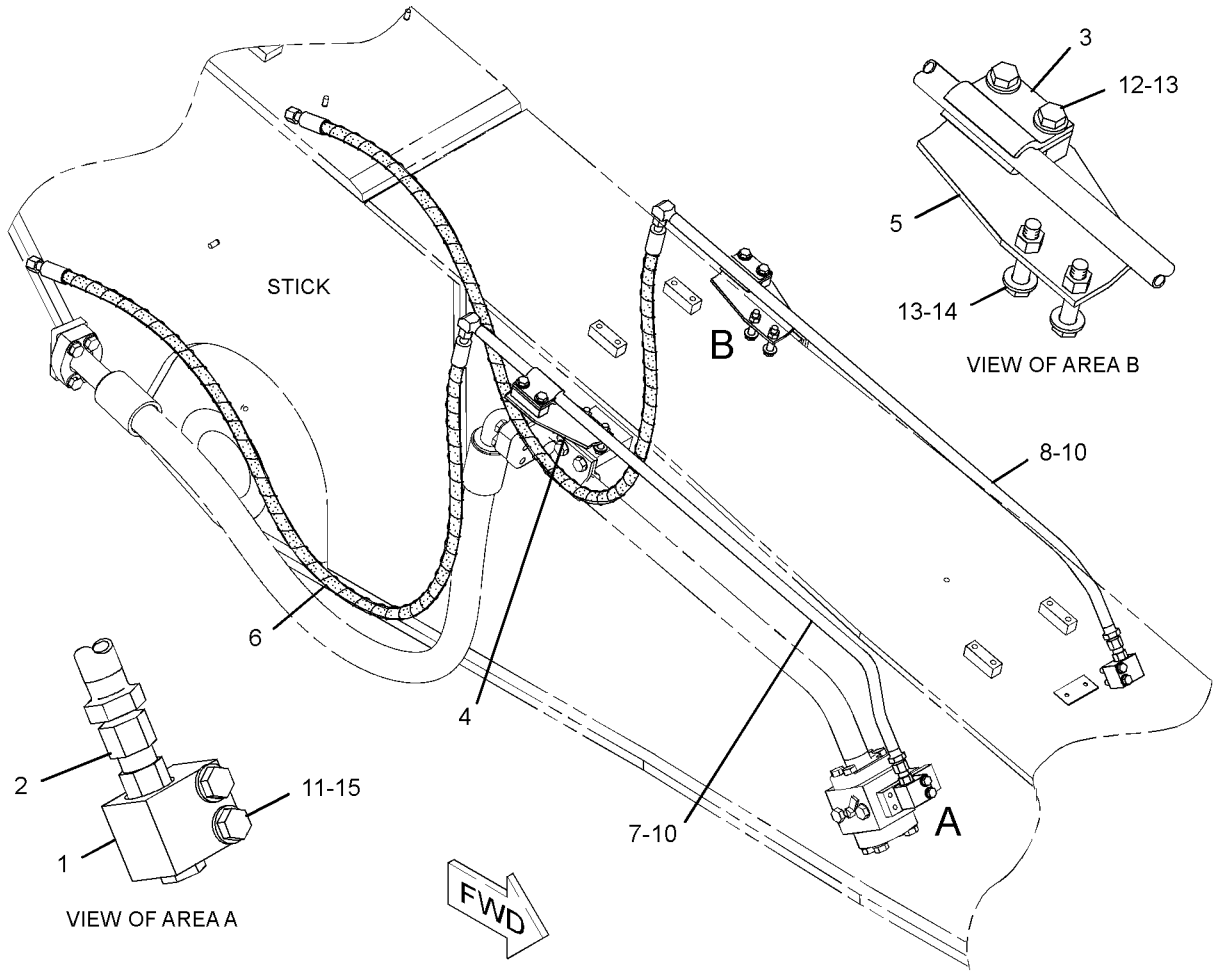

GRAPHIC #1 **<END>** g01388434

230-0132 LINES GP-AUXILIARY HYDRAULIC–MASS

S/N: KHS1-UP
2.5-M (8.2-FT). VB-FAMILY, MEDIUM PRESSURE
AN ATTACHMENT

SMCS-5057 **i02765787**

NOTE	REF NO	GRAPHIC REF	PART NUMBER	QTY	PART NAME 1 2 3 4 5 6 (PRODUCT LEVEL)	SEE PAGE
	1	1	**6C-6760**	2	MANIFOLD	
	2	1	*250-1440*	2	ADAPTER AS	
					(EACH INCLUDES)	
		1	**7X-3164**	1	ADAPTER-SWIVEL	
		1	**3K-0360**	1	SEAL-O-RING	
	3	1	**202-7001**	4	CLIP	
I	4	1	**210-9966**	2	HOSE AS	
	5	1	**245-2432**	2	SUPPORT AS	
	6	1	**247-9388**	1	TUBE AS	
	7	1	**247-9391**	1	TUBE AS	
	9	1	**6V-8398**	4	SEAL-O-RING	
	10	1	**8T-4121**	4	WASHER-HARD (11X21X2.5-MM THK)	
M	11	1	**8T-4139**	4	BOLT (M12X1.75X30-MM)	
	12	1	**8T-4223**	8	WASHER-HARD (13.5X25.5X3-MM THK)	
M	13	1	**8T-4910**	4	BOLT (M12X1.75X60-MM)	
M	14	1	**8T-6466**	4	BOLT (M10X1.5X60-MM)	

I-REFER TO HYDRAULIC INFORMATION SYSTEM
M-METRIC PART

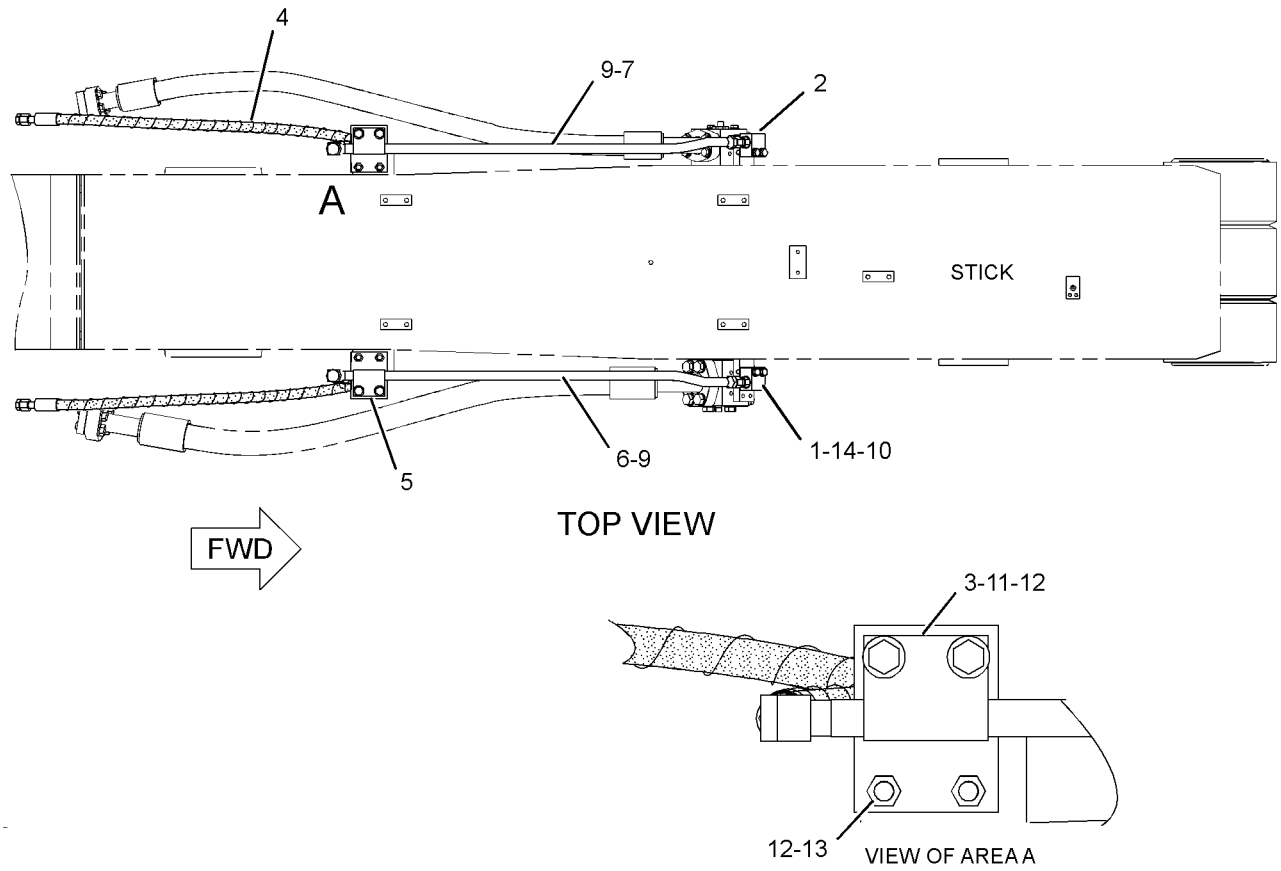

GRAPHIC #1 **<END>** g01387352

247-9306 LINES GP-AUXILIARY HYDRAULIC–BOOM, HIGH PRESSURE

S/N: JGB1-UP; KHS1-UP

PART OF 337-8881 OPTION AR-LINKAGE AN ATTACHMENT

SMCS-5057 **i02902481**

NOTE	REF NO	GRAPHIC REF	PART NUMBER	QTY	PART NAME 1 2 3 4 5 6 (PRODUCT LEVEL)	SEE PAGE
	1	1	**121-1948**	1	PLATE	
C	2	1	**318-5859**	1	TUBE AS	
C	3	1	**318-5860**	1	TUBE AS	
I	4	1	**216-6545**	1	HOSE AS	
I	5	1	**216-6546**	1	HOSE AS	
	6	1	**230-0236**	1	TUBE AS	
	7	1	**230-0237**	1	TUBE AS	
	8	1	**247-9302**	1	PLATE	
C	9	1	**247-9303**	4	PLATE	
	10	1	**247-9304**	2	PLATE	
	11	1	**247-9305**	4	PLATE	
	12	1	**124-0909**	12	CLIP	
	13	1	**128-7514**	14	CLIP	
	14	1	**1P-3704**	2	SEAL-RECTANGULAR	
	15	1	**1P-3705**	3	SEAL-RECTANGULAR	
	16	1	**1P-3706**	1	SEAL-RECTANGULAR	
	17	1	**1P-5767**	4	FLANGE-HALF	
	18	1	**5P-8077**	4	FLANGE-HALF	
M	19	1	**7X-2555**	4	BOLT (M16X2X80-MM)	
M	20	1	**8T-4140**	28	BOLT (M16X2X60-MM)	
M	21	1	**8T-4174**	2	BOLT (M16X2X120-MM)	
M	22	1	**8T-4175**	2	BOLT (M16X2X90-MM)	
M	23	1	**8T-4183**	4	BOLT (M12X1.75X40-MM)	
M	24	1	**8T-4193**	24	BOLT (M16X2X50-MM)	
M	25	1	**8T-4194**	8	BOLT (M12X1.75X50-MM)	
	26	1	**8T-4223**	8	WASHER-HARD (13.5X25.5X3.0-MM THK)	
	27	1	**9X-8257**	56	WASHER (17.5X30.0X3.5-MM THK)	
C	28	1	**318-5861**	2	PLATE	

C-CHANGE FROM PREVIOUS TYPE
I-REFER TO HYDRAULIC INFORMATION SYSTEM
M-METRIC PART

247-9306 **LINES GP-AUXILIARY HYDRAULIC** *(contd.)* **i02902481**

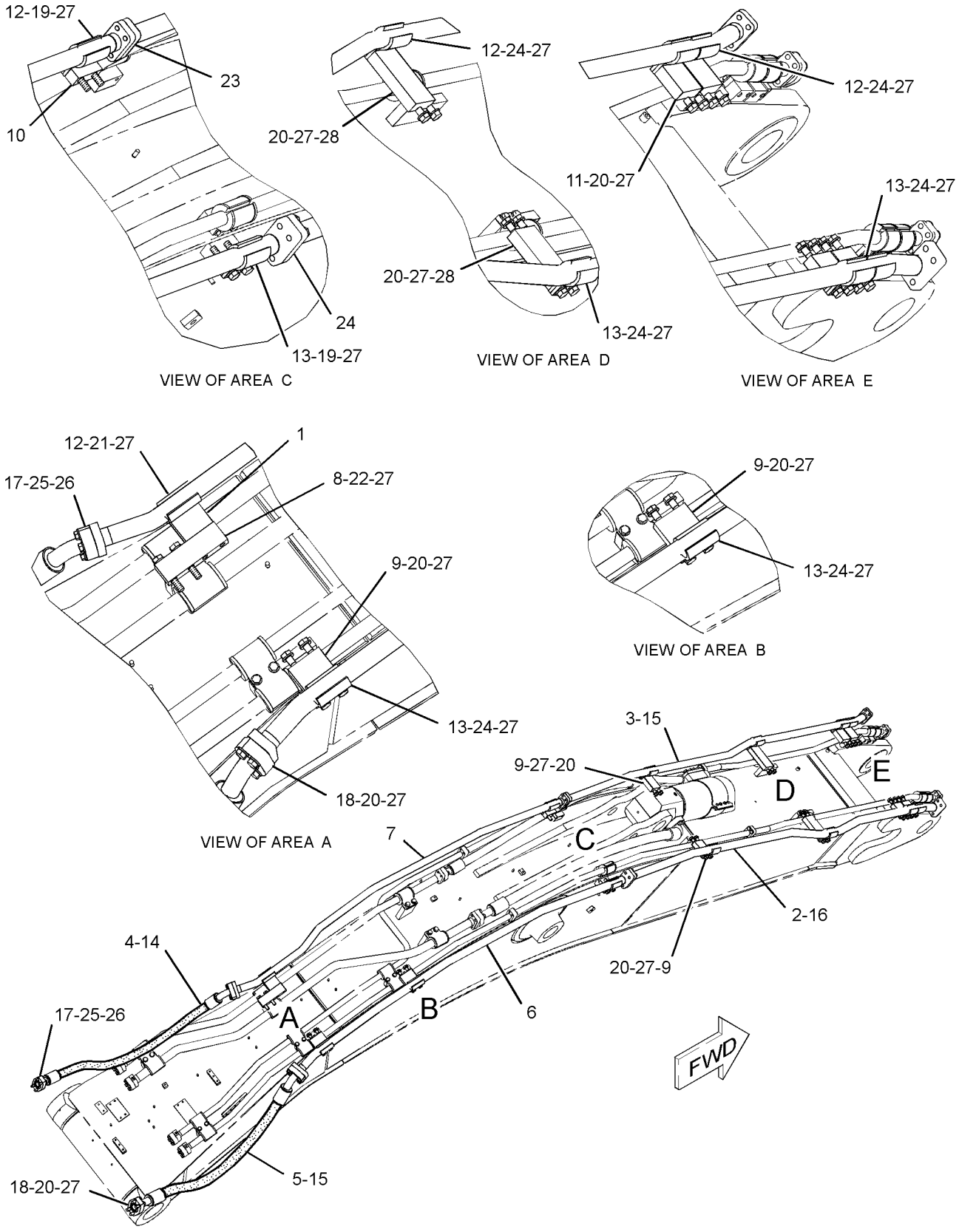

GRAPHIC #1 **<END>** g01446617

HYDRAULIC SYSTEM

247-9307 LINES GP-AUXILIARY HYDRAULIC–

MASS BOOM, HIGH PRESSURE

S/N: JGB1-UP; KHS1-UP

PART OF 371-6383, 372-4831 LINKAGE AR-FRONT

AN ATTACHMENT

SMCS-5057 **i02704564**

NOTE	REF NO	GRAPHIC REF	PART NUMBER	QTY	PART NAME 1 2 3 4 5 6 (PRODUCT LEVEL)	SEE PAGE
	1	1	**121-1948**	1	PLATE	
	2	1	**124-0909**	12	CLIP	
	3	1	**128-7514**	12	CLIP	
	4	1	**146-1217**	1	TUBE AS	
	5	1	**146-1220**	1	TUBE AS	
I	6	1	**216-6545**	1	HOSE AS	
I	7	1	**216-6546**	1	HOSE AS	
	8	1	**230-0238**	1	TUBE AS	
	9	1	**230-0239**	1	TUBE AS	
	10	1	**247-9302**	1	PLATE	
	11	1	**247-9303**	5	PLATE	
	12	1	**247-9304**	2	PLATE	
	13	1	**247-9305**	4	PLATE	
	14	1	**1P-3704**	2	SEAL-RECTANGULAR	
	15	1	**1P-3705**	3	SEAL-RECTANGULAR	
	16	1	**1P-3706**	1	SEAL-RECTANGULAR	
	17	1	**1P-5767**	4	FLANGE-HALF	
	18	1	**5P-8077**	4	FLANGE-HALF	
M	19	1	**7X-2555**	4	BOLT (M16X2X80-MM)	
M	20	1	**8T-4140**	26	BOLT (M16X2X60-MM)	
M	21	1	**8T-4174**	2	BOLT (M16X2X120-MM)	
M	22	1	**8T-4175**	2	BOLT (M16X2X90-MM)	
M	23	1	**8T-4183**	4	BOLT (M12X1.75X40-MM)	
M	24	1	**8T-4193**	22	BOLT (M16X2X50-MM)	
M	25	1	**8T-4194**	8	BOLT (M12X1.75X50-MM)	
	26	1	**8T-4223**	8	WASHER-HARD (13.5X25.5X3.0-MM THK)	
	27	1	**9X-8257**	52	WASHER (17.5X30.0X3.5-MM THK)	

I-REFER TO HYDRAULIC INFORMATION SYSTEM
M-METRIC PART

247-9307 **LINES GP-AUXILIARY HYDRAULIC** *(contd.)* **i02704564**

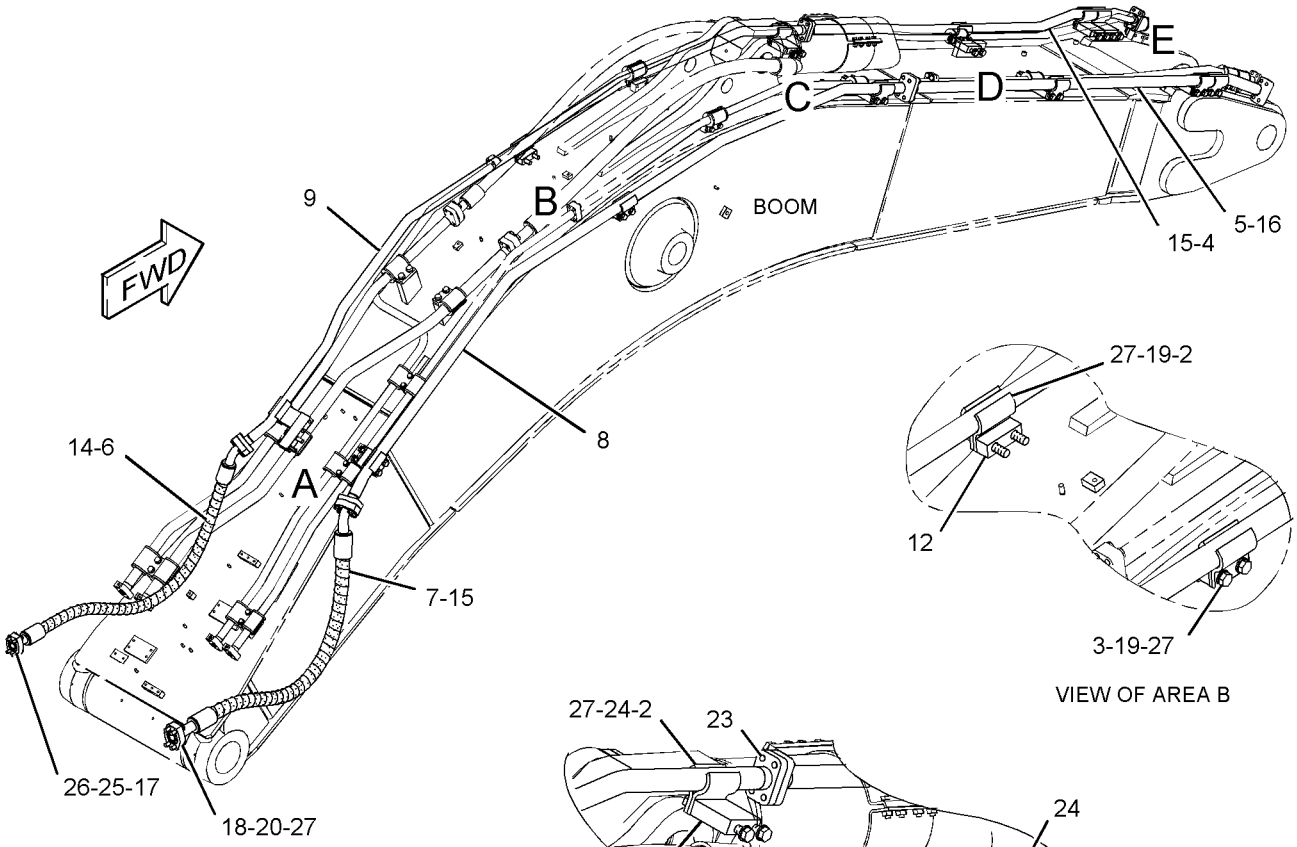

VIEW OF AREA B

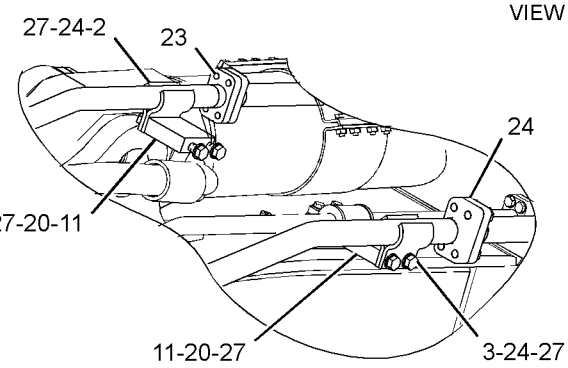

VIEW OF AREA C

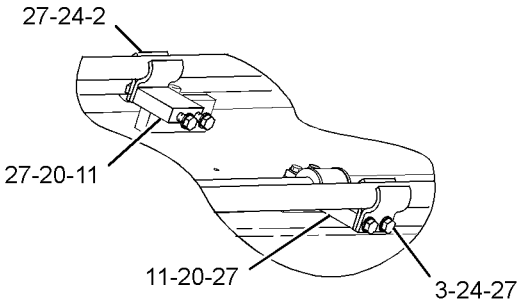

VIEW OF AREA D

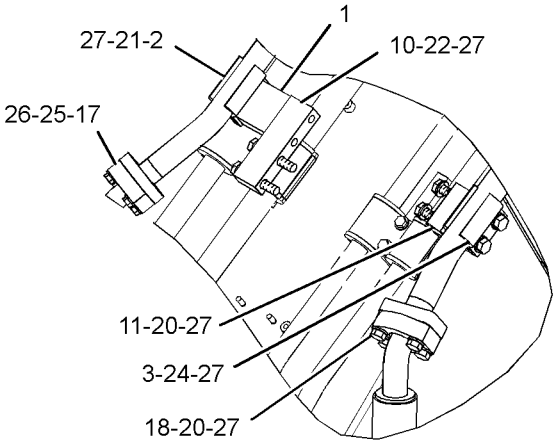

VIEW OF AREA A

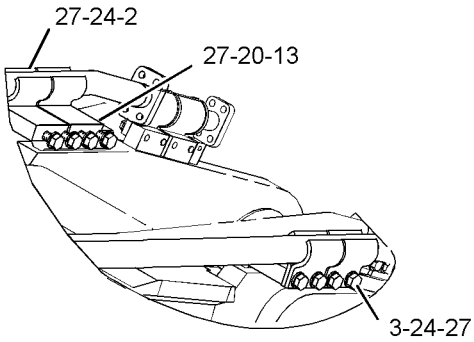

VIEW OF AREA E

GRAPHIC #1 **<END>** g01362380

HYDRAULIC SYSTEM

253-6383 LINES GP-AUXILIARY HYDRAULIC–STICK, HIGH PRESSURE

S/N: JGB1-UP; KHS1-UP
VB-FAMILY
PART OF 371-6383 LINKAGE AR-FRONT
FOR USE WITH 2.5-M (8.2-FT) STICK
AN ATTACHMENT

SMCS-5057 **i03958824**

NOTE	REF NO	GRAPHIC REF	PART NUMBER	QTY	PART NAME 1 2 3 4 5 6 (PRODUCT LEVEL)	SEE PAGE
I	1	1	**5I-8510**	1	HOSE AS	
	2	1	**142-6704**	1	TUBE AS	
I	3	1	**251-4482**	1	HOSE AS	
Y	4	1	**277-0954**	1	VALVE GP-MANUAL (AUXILIARY, SHUTOFF)	759
	5	1	**292-7752**	1	VALVE AS-MANUAL (AUXILIARY, SHUTOFF)	
	6	1	**294-6504**	1	TUBE AS	
	7	1	**306-1354**	2	CLAMP-HALF	
	8	1	**306-1355**	2	CLAMP-HALF	
M	9	1	**100-4982**	4	BOLT-SELF-LOCKING (M16X2X45-MM)	
	10	1	**1P-3704**	3	SEAL-RECTANGULAR	
	11	1	**1P-3705**	3	SEAL-RECTANGULAR	
	12	1	**1P-5767**	4	FLANGE-HALF	
	13	1	**5P-8077**	4	FLANGE-HALF	
M	14	1	**7X-2557**	2	BOLT (M16X2X140-MM)	
	15	1	**8T-4121**	2	WASHER-HARD (11X21X2.5-MM THK)	
M	16	1	**8T-4140**	8	BOLT (M16X2X60-MM)	
M	17	1	**8T-4183**	4	BOLT (M12X1.75X40-MM)	
M	18	1	**8T-4193**	4	BOLT (M16X2X50-MM)	
M	19	1	**8T-4194**	8	BOLT (M12X1.75X50-MM)	
	20	1	**8T-4223**	8	WASHER-HARD (13.5X25.5X3-MM THK)	
M	21	1	**8T-6685**	2	BOLT (M10X1.5X110-MM)	
	22	1	**9X-8257**	14	WASHER (17.5X30X3.5-MM THK)	

I-REFER TO HYDRAULIC INFORMATION SYSTEM
M-METRIC PART
Y-SEPARATE ILLUSTRATION

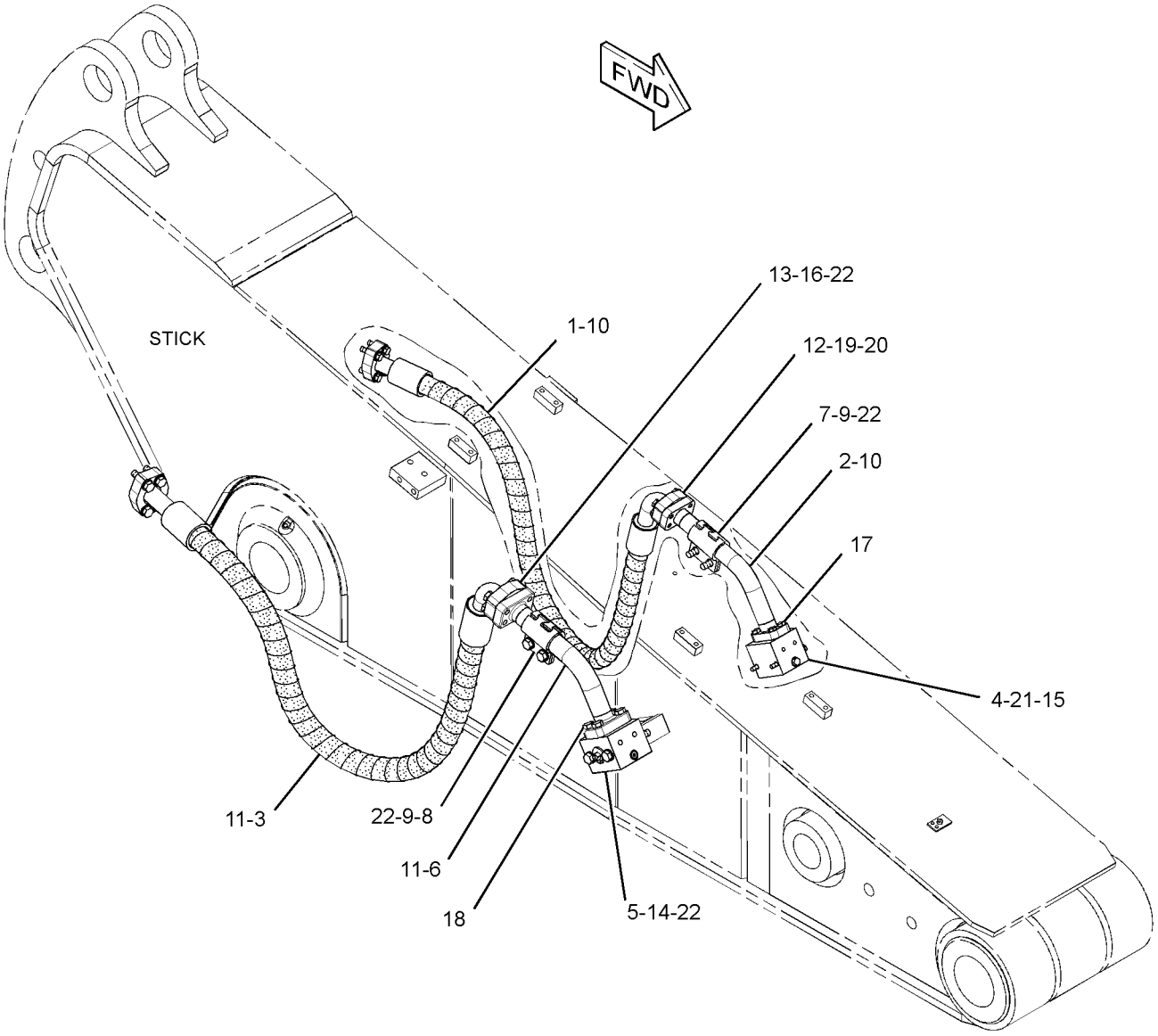

GRAPHIC #1 **<END>** g01417418

230-0138 LINES GP-BOOM—REACH BOOM, STICK LOAD CONTROL

S/N: JGB1-UP; KHS1-UP

PART OF 297-0257 VALVE AR-CHECK & RELIEF

AN ATTACHMENT

SMCS-5057 **i02933541**

NOTE	REF NO	GRAPHIC REF	PART NUMBER	QTY	PART NAME 1 2 3 4 5 6 (PRODUCT LEVEL)	SEE PAGE
CM	1	1	**7X-2549**	2	BOLT (M12X1.75X100-MM)	
CM	2	1	**8T-4173**	2	BOLT (M16X2X110-MM)	
					—OR—	
M		1	**8T-4174**	2	BOLT (M16X2X120-MM)	
					(LONGER BOLTS REQUIRED IF MACHINE EQUIPPED WITH MEDIUM PRESSURE AUXILIARY HYD LINES)	
CM	3	1	**8T-4779**	6	BOLT (M16X2X35-MM)	
C	4	1	**216-6515**	6	CLIP	
C	5	1	**5Q-4212**	2	CLIP	
CI	6	1	**153-8669**	1	HOSE AS	
I	7	1	**212-5419**	2	HOSE AS	
CM	8	1	**8T-4132**	6	NUT (M16X2-THD)	
	9	1	**6V-9168**	2	NUT (11/16-16-THD)	
C	10	1	**321-0529**	1	TUBE AS	
C	11	1	**157-9338**	1	PLATE	
C	13	1	**302-9564**	1	PLATE	
C	14	1	**6V-8398**	2	SEAL-O-RING	
C	15	1	**7K-1181**	7	STRAP-CABLE	
	16	1	*149-5452*	2	UNION AS	
					(EACH INCLUDES)	
		1	**6V-8397**	2	SEAL-O-RING	
		1	**6V-8994**	1	UNION	
BC	17	1	**9X-8257**	10	WASHER (17.5X30.0X3.5-MM THK)	
C	18	1	**8T-4223**	2	WASHER-HARD (13.5X25.5X3.0-MM THK)	

B-USE AS REQUIRED
C-CHANGE FROM PREVIOUS TYPE
I-REFER TO HYDRAULIC INFORMATION SYSTEM
M-METRIC PART

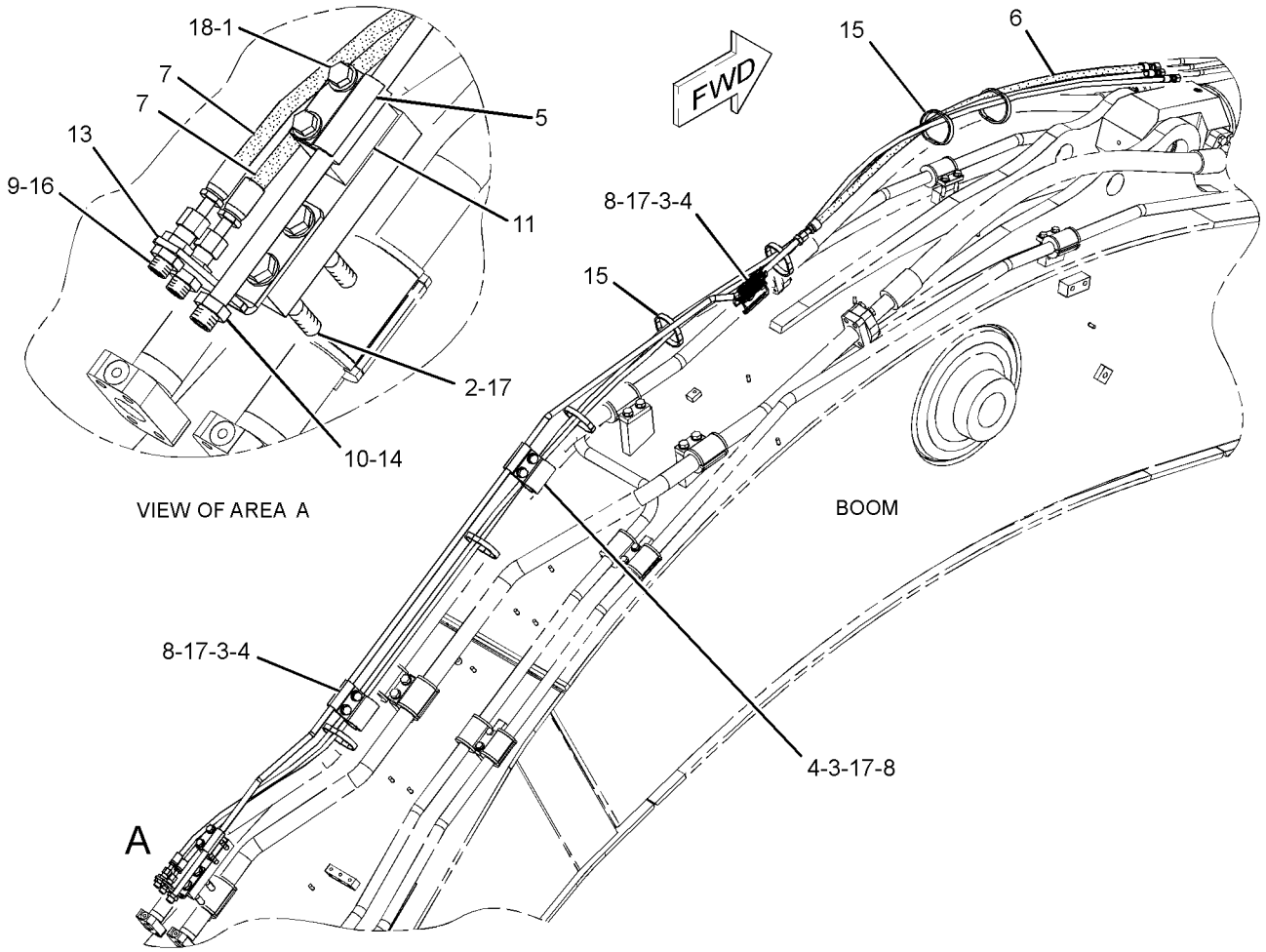

GRAPHIC #1 **<END>** g01469818

230-0140 LINES GP-BOOM—MASS BOOM, STICK LOAD CONTROL

S/N: JGB1-UP; KHS1-UP

PART OF 297-0258 VALVE AR-CHECK & RELIEF

AN ATTACHMENT

SMCS-5057 **i02927437**

NOTE	REF NO	GRAPHIC REF	PART NUMBER	QTY	PART NAME 1 2 3 4 5 6 (PRODUCT LEVEL)	SEE PAGE
CM	1	1	**7X-2549**	2	BOLT (M12X1.75X100-MM)	
CM	2	1	**8T-4139**	2	BOLT (M12X1.75X30-MM)	
CM	3	1	**8T-4173**	2	BOLT (M16X2X110-MM)	
					—OR—	
M		1	**8T-4174**	2	BOLT (M16X2X120-MM)	
					(LONGER BOLTS REQUIRED IF MACHINE EQUIPPED WITH MEDIUM PRESSURE AUXILIARY HYD LINES)	
CM	4	1	**8T-4779**	4	BOLT (M16X2X35-MM)	
C	5	1	**179-5235**	2	CLIP	
C	6	1	**216-6515**	4	CLIP	
C	7	1	**5Q-4212**	2	CLIP	
I	8	1	**4I-3514**	2	HOSE AS	
CI	9	1	**302-9565**	1	HOSE AS	
CM	10	1	**8T-4132**	4	NUT (M16X2-THD)	
CM	11	1	**8T-4244**	2	NUT (M12X1.75-THD)	
	12	1	**6V-9168**	2	NUT (11/16-16-THD)	
C	13	1	**302-9580**	1	TUBE AS	
C	14	1	**157-9338**	1	PLATE	
C	16	1	**302-9564**	1	PLATE	
C	17	1	**6V-8398**	2	SEAL-O-RING	
C	18	1	**7K-1181**	6	STRAP-CABLE	
	19	1	*149-5452*	2	UNION AS	
					(EACH INCLUDES)	
		1	**6V-8397**	2	SEAL-O-RING	
		1	**6V-8994**	1	UNION	
BC	20	1	**9X-8257**	8	WASHER (17.5X30.0X3.5-MM THK)	
C	21	1	**8T-4223**	4	WASHER-HARD (13.5X25.5X3.0-MM THK)	

B-USE AS REQUIRED
C-CHANGE FROM PREVIOUS TYPE
I-REFER TO HYDRAULIC INFORMATION SYSTEM
M-METRIC PART

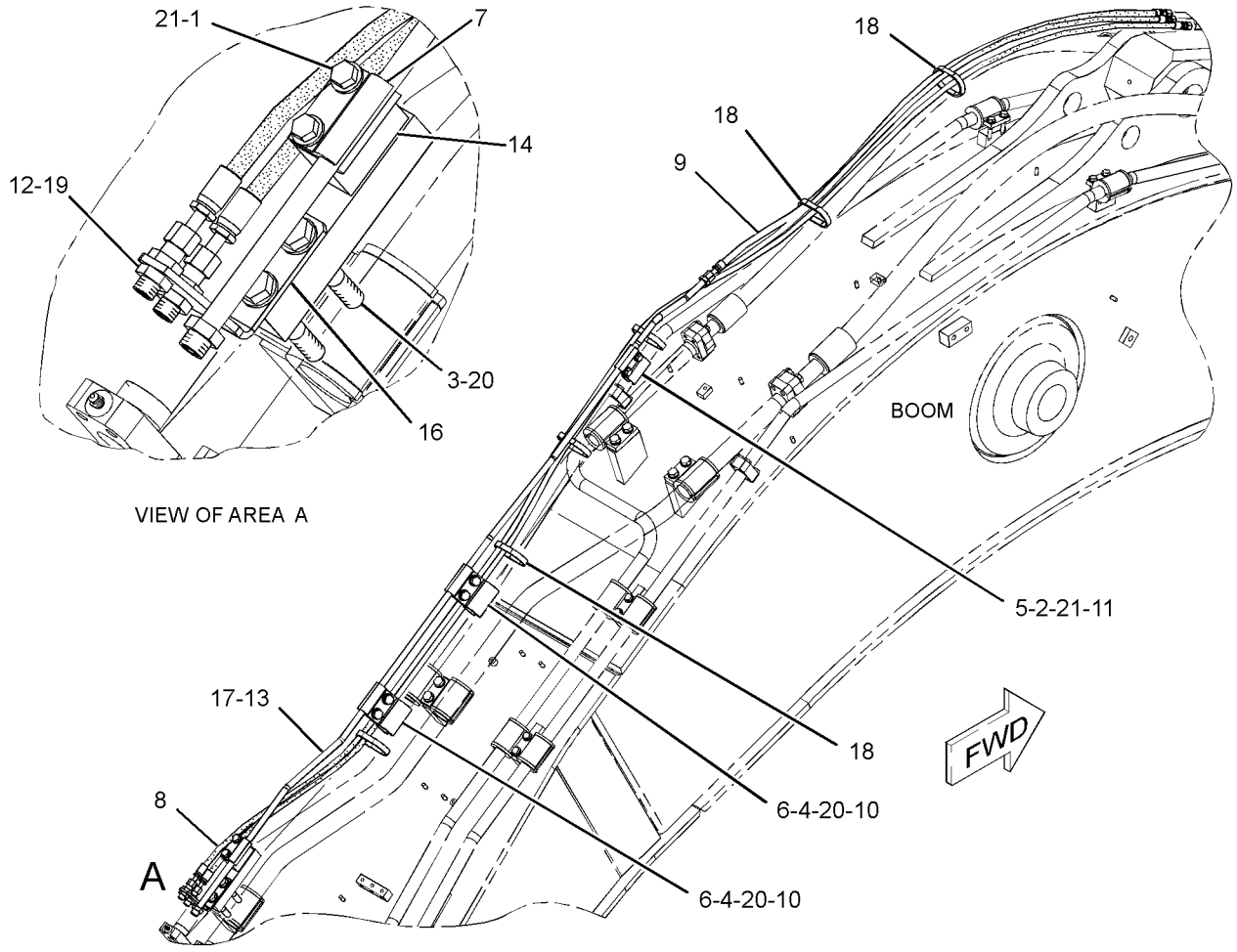

GRAPHIC #1 **<END>** g01467227

HYDRAULIC SYSTEM

245-5317 LINES GP-BOOM

S/N: JGB1-UP; KHS1-UP
PART OF 319-9245 BOOM AR, 294-1250 BOOM AR-REACH
FOR USE WITH 6.9-M (22.6-FT) BOOM
AN ATTACHMENT

SMCS-5057 **i04162336**

NOTE	REF NO	GRAPHIC REF	PART NUMBER	QTY	PART NAME 1 2 3 4 5 6 (PRODUCT LEVEL)	SEE PAGE
	1	1	**9F-2167**	4	SCREW-PURGE (3/8-24X1.164-IN)	
	2	1	**124-1107**	3	GROMMET	
	3	1	**129-5874**	14	GROMMET	
	4	1	**138-5708**	4	CLIP-HALF	
	5	1	**138-5709**	3	GROMMET	
C	6	1	**302-3114**	1	TUBE AS	
C	7	1	**302-3115**	1	TUBE AS	
	8	1	**199-1875**	2	GROMMET	
CI	9	1	**354-3812**	1	HOSE AS	
	10	1	**248-9718**	1	TUBE AS	
	11	1	**248-9719**	1	TUBE AS	
CI	12	1	**354-3811**	1	HOSE AS	
J	13	1	**248-9910**	1	TUBE GP	
J	14	1	**248-9913**	1	TUBE GP	
					(EACH TUBE GP INCLUDES)	
L		1	**1P-3703**	1	SEAL-RECTANGULAR	
LM		1	**8T-4139**	4	BOLT (M12X1.75X30-MM)	
M	15	1	**096-9986**	18	BOLT (M12X1.75X55-MM)	
	16	1	**124-1106**	4	CLIP	
	17	1	**124-1108**	20	CLIP	
	18	1	**124-1109**	6	CLIP	
	19	1	**1P-3703**	6	SEAL-RECTANGULAR	
	20	1	**1P-3704**	4	SEAL-RECTANGULAR	
	21	1	**1P-3705**	2	SEAL-RECTANGULAR	
	22	1	**1P-5767**	8	FLANGE-HALF	
	23	1	**5P-0047**	4	COVER	
	24	1	**5P-0048**	2	COVER	
	25	1	**5P-8077**	4	FLANGE-HALF	
	26	1	**6V-0400**	8	FLANGE-HALF	
M	27	1	**7X-2554**	8	BOLT (M16X2X70-MM)	
M	28	1	**8T-4139**	8	BOLT (M12X1.75X30-MM)	
M	29	1	**8T-4140**	8	BOLT (M16X2X60-MM)	
M	30	1	**8T-4184**	8	BOLT (M12X1.75X45-MM)	
M	31	1	**8T-4194**	32	BOLT (M12X1.75X50-MM)	
	32	1	**8T-4223**	58	WASHER-HARD (13.5X25.5X3-MM THK)	
	33	1	**9X-8257**	16	WASHER (17.5X30X3.5-MM THK)	

C-CHANGE FROM PREVIOUS TYPE
I-REFER TO HYDRAULIC INFORMATION SYSTEM
J-TUBE MAY BE 1-PIECE OR 2-PIECE DESIGN (1-PIECE SHOWN)
L-PARTS REQUIRED ONLY WITH 2-PIECE TUBE DESIGN
M-METRIC PART

245-5317 **LINES GP-BOOM** *(contd.)* **i04162336**

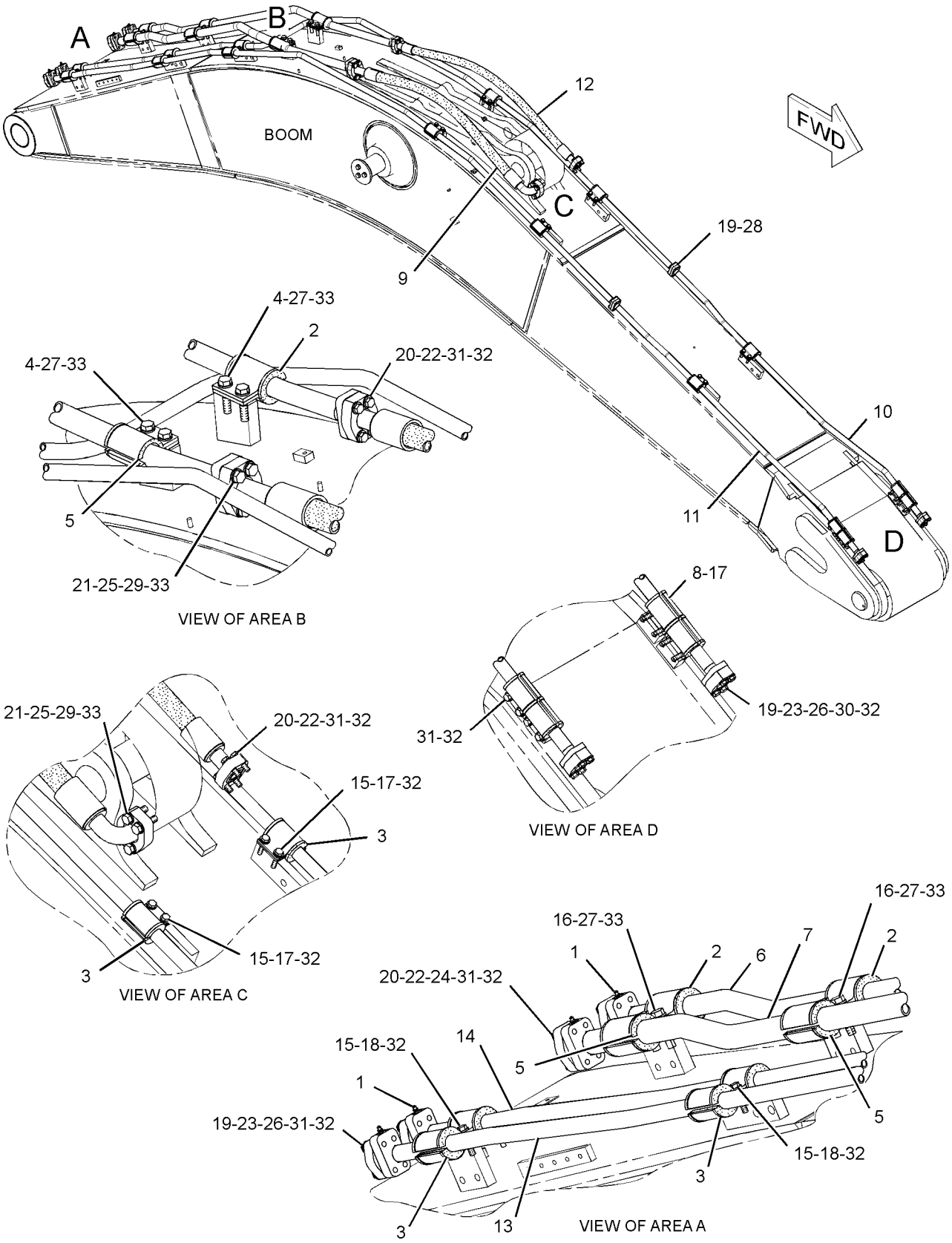

GRAPHIC #1 **<END>** g01436012

HYDRAULIC SYSTEM

248-9445 LINES GP-BOOM

S/N: JGB1-UP; KHS1-UP
PART OF 294-1252 BOOM AR-MASS
FOR USE WITH 6.6-M (21.6-FT) BOOM
AN ATTACHMENT

SMCS-5057 **i04157588**

NOTE	REF NO	GRAPHIC REF	PART NUMBER	QTY	PART NAME 1 2 3 4 5 6 (PRODUCT LEVEL)	SEE PAGE
	1	1	**9F-2167**	4	SCREW-PURGE (3/8-24X1.164-IN)	
	2	1	**124-1107**	3	GROMMET	
	3	1	**129-5874**	14	GROMMET	
	4	1	**138-5708**	4	CLIP-HALF	
	5	1	**138-5709**	3	GROMMET	
	6	1	**143-4237**	1	TUBE AS	
	7	1	**143-4238**	1	TUBE AS	
	8	1	**199-1875**	2	GROMMET	
I	10	1	**354-3803**	1	HOSE AS	
	11	1	**289-5676**	1	TUBE AS	
	12	1	**289-5677**	1	TUBE AS	
I	13	1	**354-3809**	1	HOSE AS	
	14	1	**289-5678**	2	TUBE AS	
	15	1	**248-9835**	1	TUBE AS	
	16	1	**248-9836**	1	TUBE AS	
M	17	1	**096-9986**	18	BOLT (M12X1.75X55-MM)	
	18	1	**124-1106**	4	CLIP	
	19	1	**124-1108**	20	CLIP	
	20	1	**124-1109**	6	CLIP	
	21	1	**1P-3703**	8	SEAL-RECTANGULAR	
	22	1	**1P-3704**	4	SEAL-RECTANGULAR	
	23	1	**1P-3705**	2	SEAL-RECTANGULAR	
	24	1	**1P-5767**	8	FLANGE-HALF	
	25	1	**5P-0047**	4	COVER	
	26	1	**5P-0048**	2	COVER	
	27	1	**5P-8077**	4	FLANGE-HALF	
	28	1	**6V-0400**	8	FLANGE-HALF	
M	29	1	**7X-2554**	8	BOLT (M16X2X70-MM)	
M	30	1	**8T-4139**	16	BOLT (M12X1.75X30-MM)	
M	31	1	**8T-4140**	8	BOLT (M16X2X60-MM)	
M	32	1	**8T-4184**	8	BOLT (M12X1.75X45-MM)	
M	33	1	**8T-4194**	32	BOLT (M12X1.75X50-MM)	
	34	1	**8T-4223**	58	WASHER-HARD (13.5X25.5X3-MM THK)	
	35	1	**9X-8257**	16	WASHER (17.5X30X3.5-MM THK)	

I-REFER TO HYDRAULIC INFORMATION SYSTEM
M-METRIC PART

248-9445 **LINES GP-BOOM** *(contd.)* **i04157588**

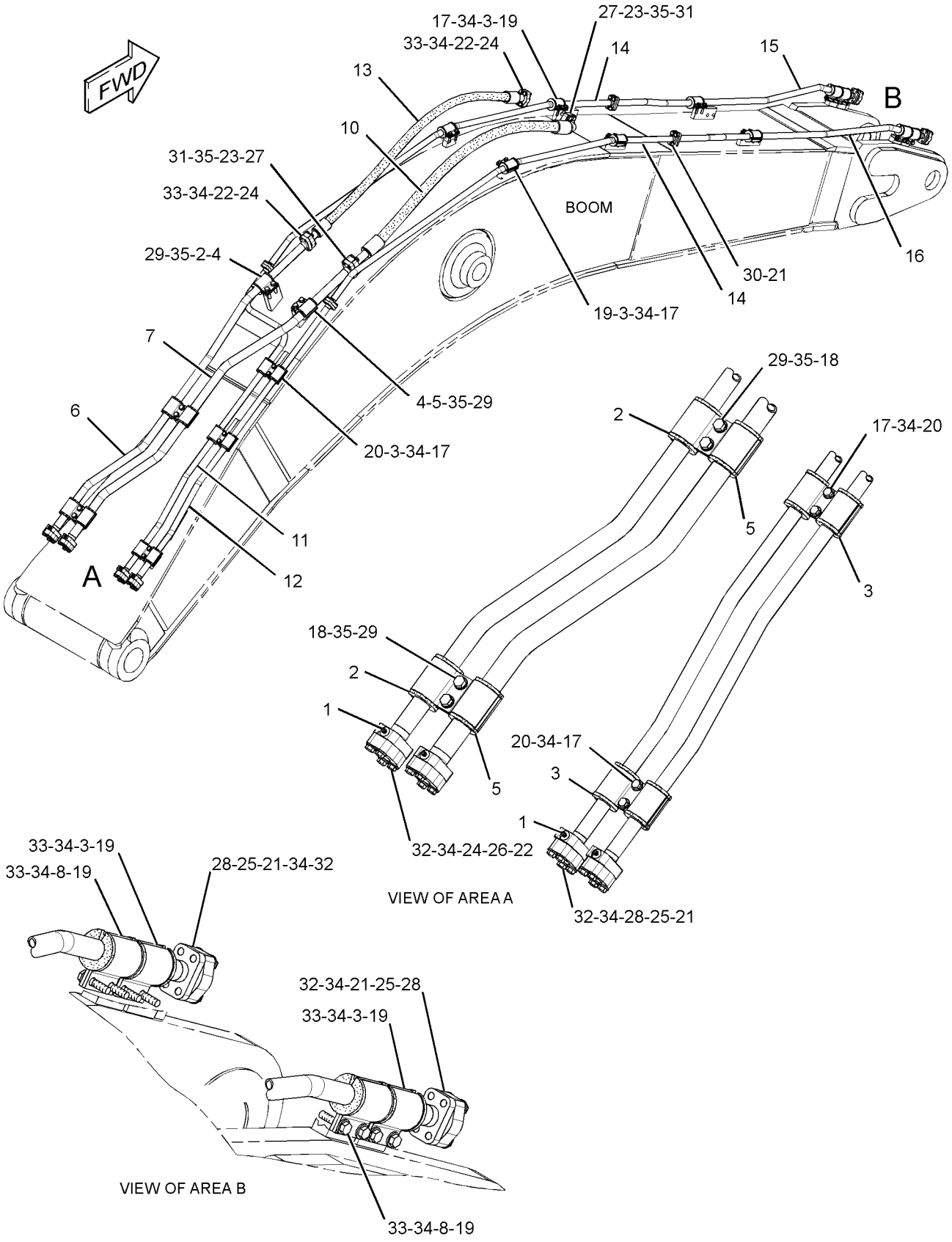

GRAPHIC #1 **<END>** g01437808

289-5734 LINES GP-BOOM CYLINDER–LH

S/N: JGB1-UP; KHS1-UP
PART OF 289-7844 CYLINDER & LINES GP-BOOM
AN ATTACHMENT

SMCS-5057, 5456 **i02861064**

NOTE	REF NO	GRAPHIC REF	PART NUMBER	QTY	PART NAME 1 2 3 4 5 6 (PRODUCT LEVEL)	SEE PAGE
	1	1	**108-7550**	2	CLIP	
	2	1	**124-0911**	1	SUPPORT AS	
	3	1	**143-4146**	1	SUPPORT AS	
	4	1	**292-7437**	1	TUBE AS	
	5	1	**292-7438**	1	TUBE AS	
	6	1	**1P-3704**	1	SEAL-RECTANGULAR	
	7	1	**1P-3705**	1	SEAL-RECTANGULAR	
	8	1	**8T-4121**	4	WASHER-HARD (11X21X2.5-MM THK)	
M	9	1	**8T-4139**	2	BOLT (M12X1.75X30-MM)	
M	10	1	**8T-4196**	4	BOLT (M10X1.5X35-MM)	
	11	1	**8T-4223**	10	WASHER-HARD (13.5X25.5X3-MM THK)	
M	12	1	**8T-4648**	8	BOLT (M12X1.75X70-MM)	

M-METRIC PART

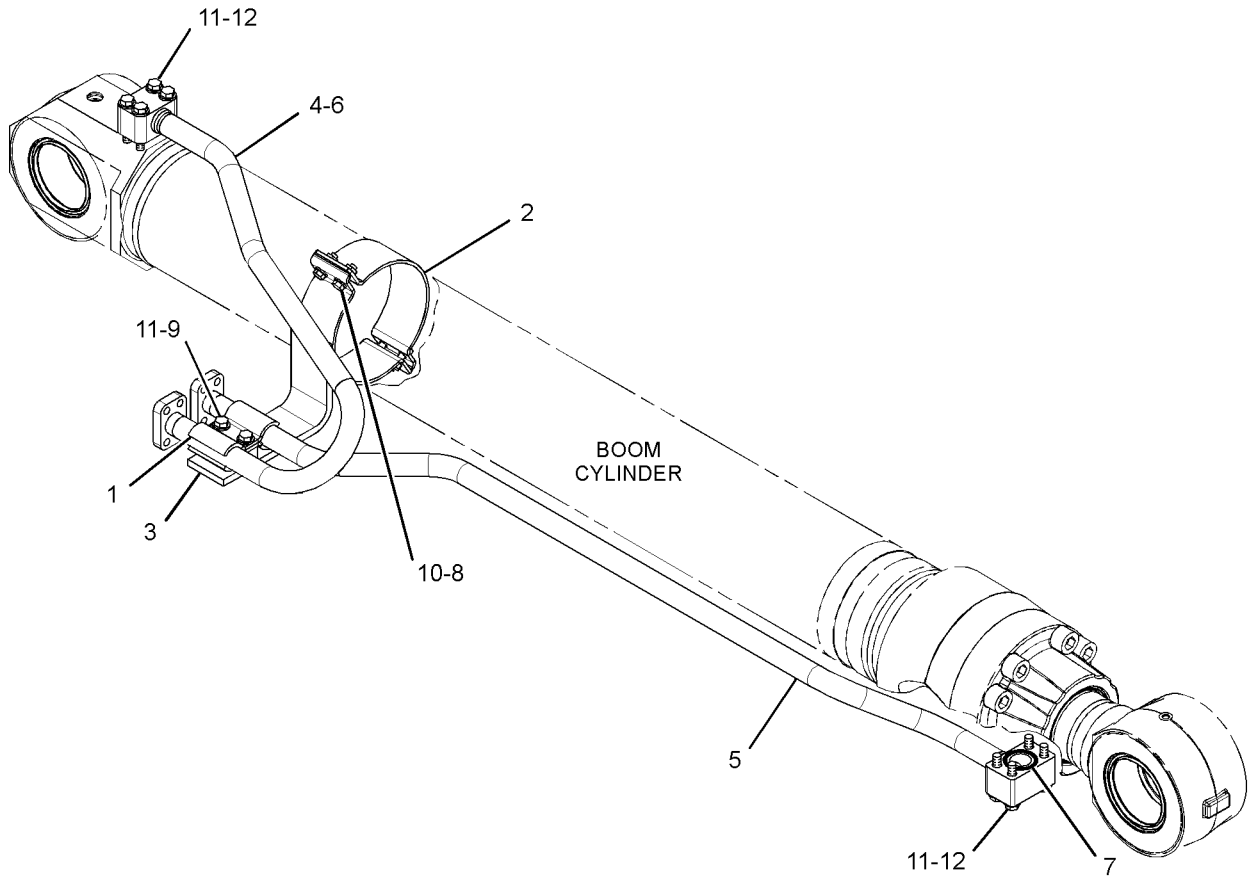

GRAPHIC #1 **<END>** g01429018

HYDRAULIC SYSTEM

289-5735 LINES GP-BOOM CYLINDER—RH

S/N: JGB1-UP; KHS1-UP
PART OF 289-7845 CYLINDER & LINES GP-BOOM
AN ATTACHMENT

SMCS-5057, 5456 **i02861066**

NOTE	REF NO	GRAPHIC REF	PART NUMBER	QTY	PART NAME 1 2 3 4 5 6 (PRODUCT LEVEL)	SEE PAGE
	1	1	**108-7550**	2	CLIP	
	2	1	**124-0911**	1	SUPPORT AS	
	3	1	**143-4146**	1	SUPPORT AS	
	4	1	**292-7439**	1	TUBE AS	
	5	1	**292-7440**	1	TUBE AS	
	6	1	**1P-3704**	1	SEAL-RECTANGULAR	
	7	1	**1P-3705**	1	SEAL-RECTANGULAR	
	8	1	**8T-4121**	4	WASHER-HARD (11X21X2.5-MM THK)	
M	9	1	**8T-4139**	2	BOLT (M12X1.75X30-MM)	
M	10	1	**8T-4196**	4	BOLT (M10X1.5X35-MM)	
	11	1	**8T-4223**	10	WASHER-HARD (13.5X25.5X3-MM THK)	
M	12	1	**8T-4648**	8	BOLT (M12X1.75X70-MM)	

M-METRIC PART

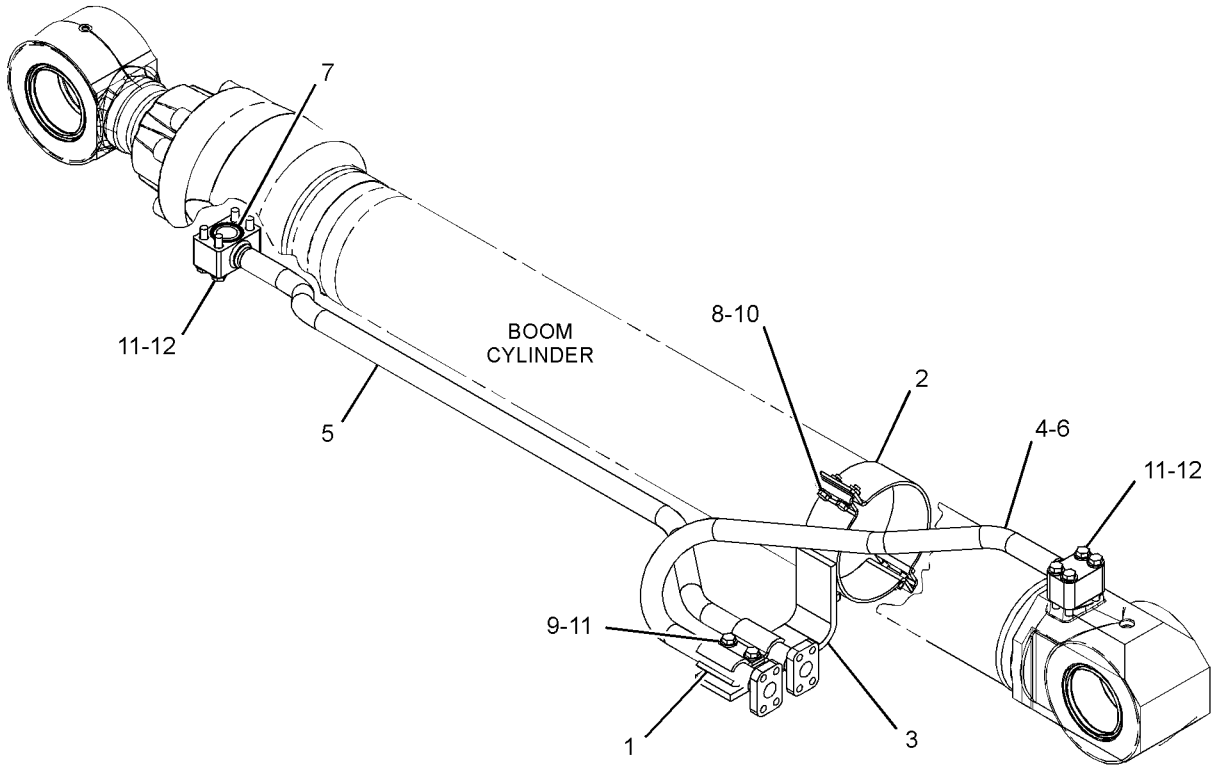

GRAPHIC #1 **<END>** g01428981

HYDRAULIC SYSTEM

296-7134 LINES GP-BOOM CYLINDER—LOWERING CONTROL

S/N: JGB1-UP; KHS1-UP

PART OF 297-0252 VALVE AR-CHECK & RELIEF

AN ATTACHMENT

SMCS-5057, 5456 **i03045251**

NOTE	REF NO	GRAPHIC REF	PART NUMBER	QTY	PART NAME 1 2 3 4 5 6 (PRODUCT LEVEL)	SEE PAGE
	1	1	**7K-1181**	18	STRAP-CABLE	
	2	1	**7Y-4868**	4	CLIP	
	3	1	**108-7550**	4	CLIP	
	4	1	**133-5813**	4	BAND-MARKER (GRAY)	
	5	1	**239-1575**	1	TUBE AS	
	6	1	**239-1576**	1	TUBE AS	
	7	1	**239-1577**	2	SUPPORT AS	
	8	1	**239-1582**	1	HOSE AS	
E		1	**7I-7439**		GUARD (232-CM)	
	9	1	**245-5122**	1	BLOCK	
	10	1	**248-9461**	1	SUPPORT AS	
I	11	1	**248-9488**	2	HOSE AS	
Y	12	1	**263-1964**	2	VALVE GP-LOAD CONTROL (BOOM CYLINDER)	745
Y	13	1	**270-5692**	1	VALVE GP-MANUAL (BOOM LOWER)	758
	14	1	**292-7279**	1	HOSE AS	
E		1	**7I-7439**		GUARD (209-CM)	
	15	1	**302-3340**	1	TUBE AS	
	16	1	**302-3341**	1	TUBE AS	
	17	1	**319-9785**	2	HOSE AS	
					(EACH INCLUDES)	
E		1	**7I-7439**		GUARD (193-CM)	
I	18	1	**320-0151**	2	HOSE AS	
	19	1	*148-8317*	1	CONNECTOR AS	
		1	**3D-2824**	1	SEAL-O-RING	
		1	**5K-9090**	1	SEAL-O-RING	
		1	**6V-8714**	1	CONNECTOR	
	20	1	*148-8327*	2	CONNECTOR AS	
					(EACH INCLUDES)	
		1	**3D-2824**	1	SEAL-O-RING	
		1	**6V-8637**	1	CONNECTOR	
		1	**6V-9746**	1	SEAL-O-RING	
	21	1	*148-8336*	6	CONNECTOR AS	
					(EACH INCLUDES)	
		1	**3J-1907**	1	SEAL-O-RING	
		1	**6V-8397**	1	SEAL-O-RING	
		1	**6V-8636**	1	CONNECTOR	
	22	1	*148-8347*	2	ELBOW AS	
					(EACH INCLUDES)	
		1	**3D-2824**	1	SEAL-O-RING	
		1	**6V-9007**	1	ELBOW	
		1	**6V-9746**	1	SEAL-O-RING	
	23	1	*148-8361*	2	ELBOW AS	
					(EACH INCLUDES)	
		1	**3J-7354**	1	SEAL-O-RING	
		1	**6V-8397**	1	SEAL-O-RING	
		1	**6V-9200**	1	ELBOW	
	24	1	*148-8378*	4	ELBOW AS	
					(EACH INCLUDES)	
		1	**3J-1907**	1	SEAL-O-RING	
		1	**6V-8397**	1	SEAL-O-RING	
		1	**6V-8724**	1	ELBOW	
B	25	1	*148-8411*	1	PLUG AS	
		1	**3K-0360**	1	SEAL-O-RING	
		1	**9S-4185**	1	PLUG-O-RING	
	26	1	*148-8435*	1	TEE AS	

296-7134 **LINES GP-BOOM CYLINDER** *(contd.)* **i03045251**

NOTE	REF NO	GRAPHIC REF	PART NUMBER	QTY	PART NAME 1 2 3 4 5 6 (PRODUCT LEVEL)	SEE PAGE
		1	**3J-1907**	1	SEAL-O-RING	
		1	**6V-8397**	2	SEAL-O-RING	
		1	**6V-8781**	1	TEE-FACE SEAL	
	27	1	*164-5589*	1	CONNECTOR AS	
		1	**3J-1907**	1	SEAL-O-RING	
		1	**6V-8397**	1	SEAL-O-RING	
		1	**8C-0597**	1	CONNECTOR	
	28	1	**1P-3704**	4	SEAL-RECTANGULAR	
	29	1	**6V-9746**	2	SEAL-O-RING	
	30	1	**8T-4121**	2	WASHER-HARD (11X21X2.5-MM THK)	
M	31	1	**8T-4176**	2	BOLT (M12X1.75X90-MM)	
M	32	1	**8T-4185**	2	BOLT (M10X1.5X50-MM)	
	33	1	**8T-4223**	18	WASHER-HARD (13.5X25.5X3-MM THK)	
M	34	1	**8T-4648**	16	BOLT (M12X1.75X70-MM)	
M	35	1	**8T-4956**	8	BOLT (M12X1.75X35-MM)	

B-USE AS REQUIRED
E-ORDER BY THE CENTIMETER
I-REFER TO HYDRAULIC INFORMATION SYSTEM
M-METRIC PART
Y-SEPARATE ILLUSTRATION

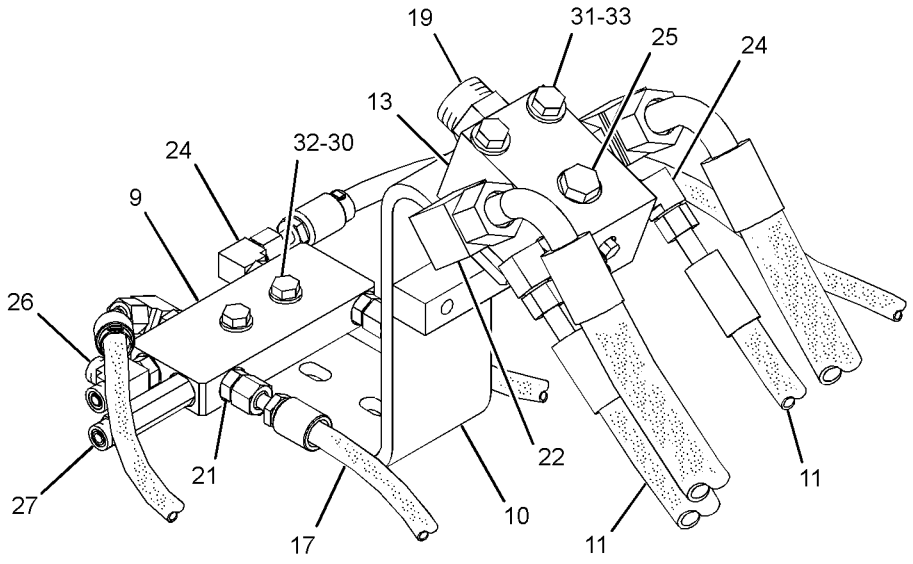

VIEW OF AREA A

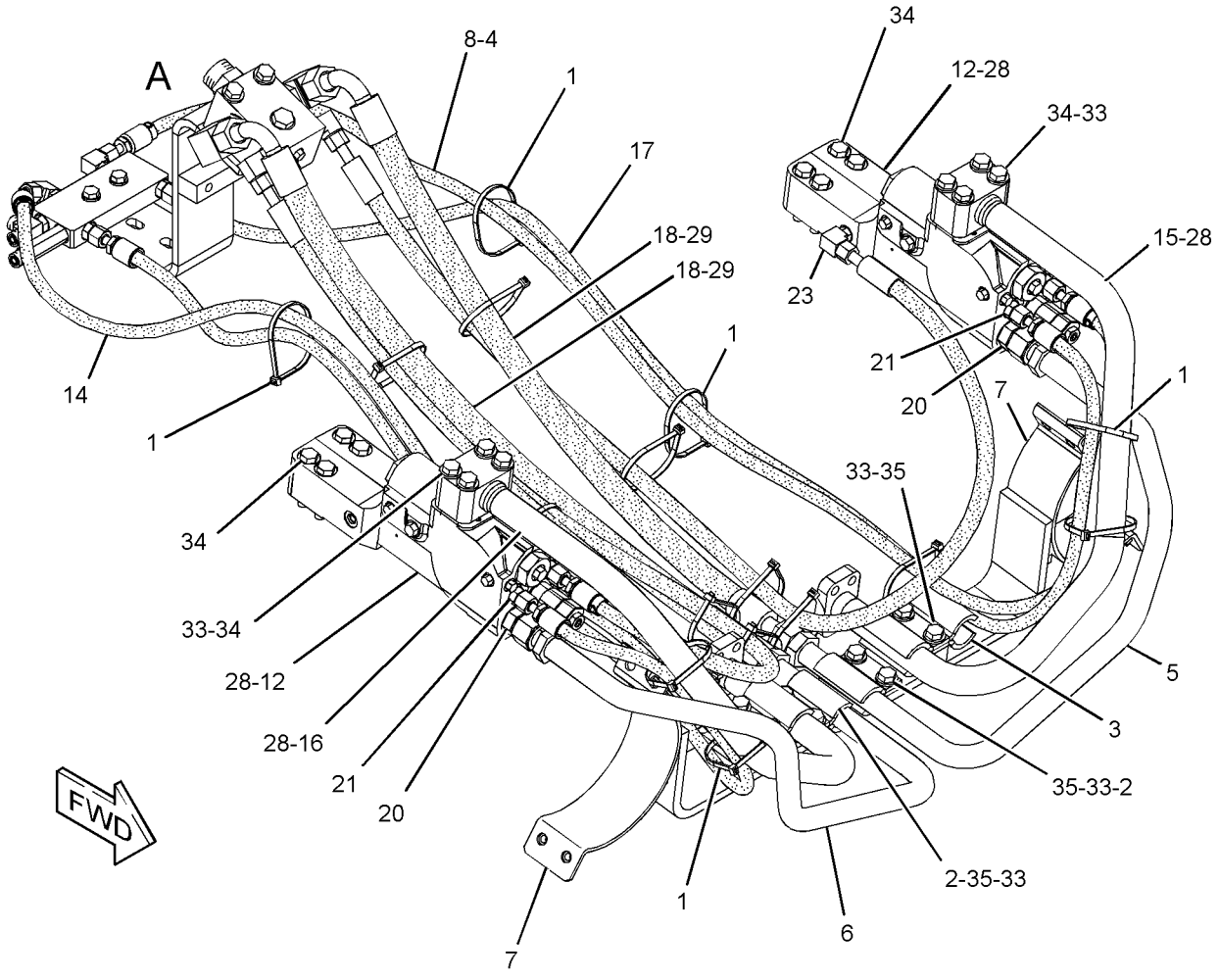

GRAPHIC #1 **<END>** g01519673

HYDRAULIC SYSTEM

307-4848 LINES GP-BOOM CYLINDER

S/N: JGB1-UP; KHS1-UP

PART OF 297-0243, 297-0244 HYDRAULIC AR

SMCS-5057, 5456 **i04118289**

NOTE	REF NO	GRAPHIC REF	PART NUMBER	QTY	PART NAME 1 2 3 4 5 6 (PRODUCT LEVEL)	SEE PAGE
	1	1	**9F-2167**	1	SCREW-PURGE (3/8-24X1.164-IN)	
M	2	1	**113-2004**	4	BOLT-SOCKET HEAD (M12X1.75X45-MM)	
E	3	1	**102-1174**		GUARD (10-CM EACH)	
	4	1	**128-7591**	1	SUPPORT AS	
M	5	1	**170-8553**	4	BOLT-SOCKET HEAD (M12X1.75X40-MM)	
	6	1	**221-8859**	1	SENSOR AS-PRESSURE (BOOM LOWERING CONTROL)	
		1	**171-0596**	1	RECEPTACLE AS	
		1	**3E-3371**	1	WEDGE-RECEPTACLE LOCK (3-PIN)	
		1	**3K-0360**	1	SEAL-O-RING	
		1	**9X-3401**	3	PIN-CONNECTOR (16-GA TO 18-GA)	
					—OR—	
		1	**126-1767**	3	PIN-CONNECTOR (14-GA TO 16-GA)	
	7	1	**234-4492**	1	SUPPORT	
	8	1	**292-7367**	1	FLANGE	
I	9	1	**325-8858**	4	HOSE AS	
Y	10	1	**310-0147**	1	VALVE GP-LOAD CONTROL	751
	11	1	**330-2314**	1	TUBE AS	
	12	1	**319-9717**	1	TUBE AS	
	13	1	**325-8787**	1	TUBE AS	
	14	1	**319-9719**	1	SUPPORT AS	
	15	1	**319-9721**	1	SUPPORT AS	
	16	1	**354-3819**	1	HOSE AS	
I	17	1	**354-3813**	1	HOSE AS	
I	18	1	**319-9727**	1	HOSE AS	
	19	1	**319-9798**	1	SUPPORT AS	
M	20	1	**101-7397**	4	BOLT-SOCKET HEAD (M12X1.75X50-MM)	
M	21	1	**108-3819**	4	BOLT-SOCKET HEAD (M12X1.75X70-MM)	
	22	1	**108-7550**	2	CLIP	
	23	1	*148-8322*	1	CONNECTOR AS	
		1	**2M-9780**	1	SEAL-O-RING	
		1	**6V-8640**	1	CONNECTOR	
		1	**6V-9746**	1	SEAL-O-RING	
	24	1	*148-8336*	1	CONNECTOR AS	
		1	**3J-1907**	1	SEAL-O-RING	
		1	**6V-8397**	1	SEAL-O-RING	
		1	**6V-8636**	1	CONNECTOR	
	25	1	*148-8353*	1	ELBOW AS	
		1	**3J-1907**	1	SEAL-O-RING	
		1	**6V-8397**	1	SEAL-O-RING	
		1	**6V-9001**	1	ELBOW	
M	26	1	**8T-4648**	2	BOLT (M12X1.75X70-MM)	
	27	1	**1P-3703**	10	SEAL-RECTANGULAR	
	28	1	**1P-3704**	6	SEAL-RECTANGULAR	
	29	1	**1P-5767**	8	FLANGE-HALF	
	30	1	**5P-1076**	2	WASHER-HARD (13.5X30X4-MM THK)	
	31	1	**6V-0400**	16	FLANGE-HALF	
	32	1	**6V-1324**	1	GROMMET	
	33	1	**7G-3413**	1	CLIP (SLOT)	
	34	1	**7G-3414**	1	CLIP (TAB)	
M	35	1	**8T-4136**	2	BOLT (M10X1.5X25-MM)	
M	36	1	**8T-4139**	14	BOLT (M12X1.75X30-MM)	
M	37	1	**8T-4184**	18	BOLT (M12X1.75X45-MM)	
M	38	1	**8T-4194**	32	BOLT (M12X1.75X50-MM)	
	39	1	**8T-4223**	64	WASHER-HARD (13.5X25.5X3-MM THK)	
	40	1	**8T-4121**	2	WASHER-HARD (11X21X2.5-MM THK)	
E	41	1	**109-2013**		GUARD (8-CM)	

E-ORDER BY THE CENTIMETER
I-REFER TO HYDRAULIC INFORMATION SYSTEM
M-METRIC PART
Y-SEPARATE ILLUSTRATION

307-4848 **LINES GP-BOOM CYLINDER** *(contd.)* **i04118289**

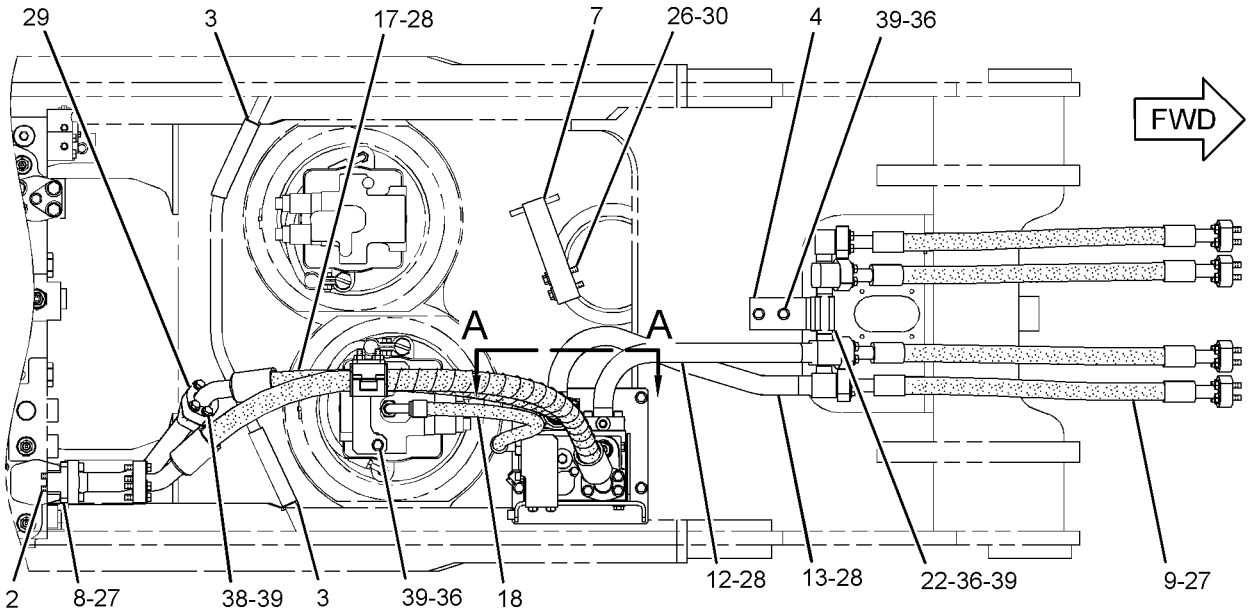

TOP VIEW

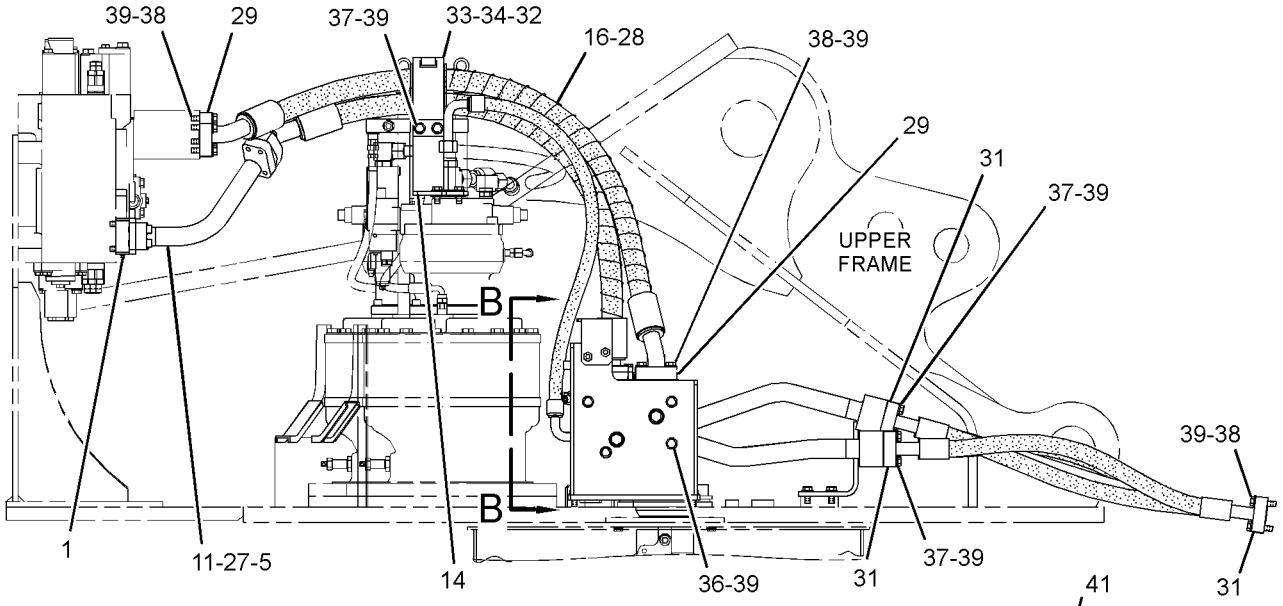

RIGHT SIDE VIEW

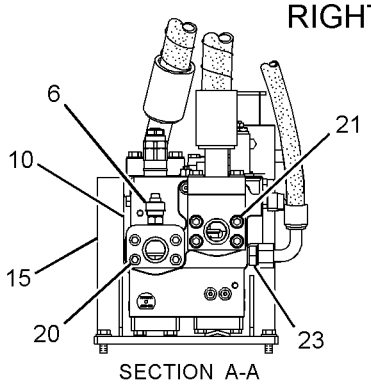

SECTION A-A

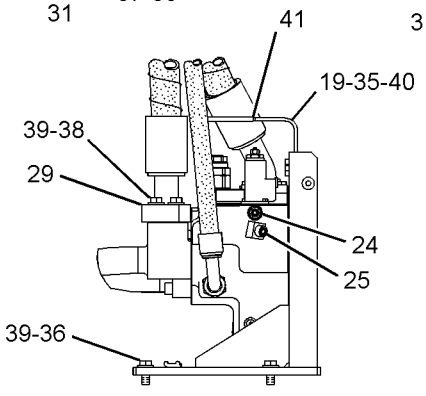

VIEW B-B

GRAPHIC #1 **<END>** g01774415

115-8694 LINES GP-BUCKET CYLINDER

S/N: JGB1-UP; KHS1-UP
PART OF 225-4527 CYLINDER & LINES GP-BUCKET
AN ATTACHMENT

SMCS-5457 **i02155503**

NOTE	REF NO	GRAPHIC REF	PART NUMBER	QTY	PART NAME 1 2 3 4 5 6 (PRODUCT LEVEL)	SEE PAGE
	1	1	**115-8961**	1	TUBE AS	
	2	1	**1P-3704**	1	SEAL-RECTANGULAR	
M	3	1	**8T-4910**	4	BOLT (M12X1.75X60-MM)	
M	4	1	**8T-4139**	4	BOLT (M12X1.75X30-MM)	
	5	1	**8T-4223**	4	WASHER-HARD (13.5X25.5X3-MM THK)	
	6	1	**7Y-3732**	4	CLIP	
	7	1	**223-6876**	2	SUPPORT AS	
	8	1	**8T-4121**	8	WASHER-HARD (11X21X2.5-MM THK)	
M	9	1	**8T-4196**	8	BOLT (M10X1.5X35-MM)	
	10	1	**124-0911**	2	SUPPORT AS	

M-METRIC PART

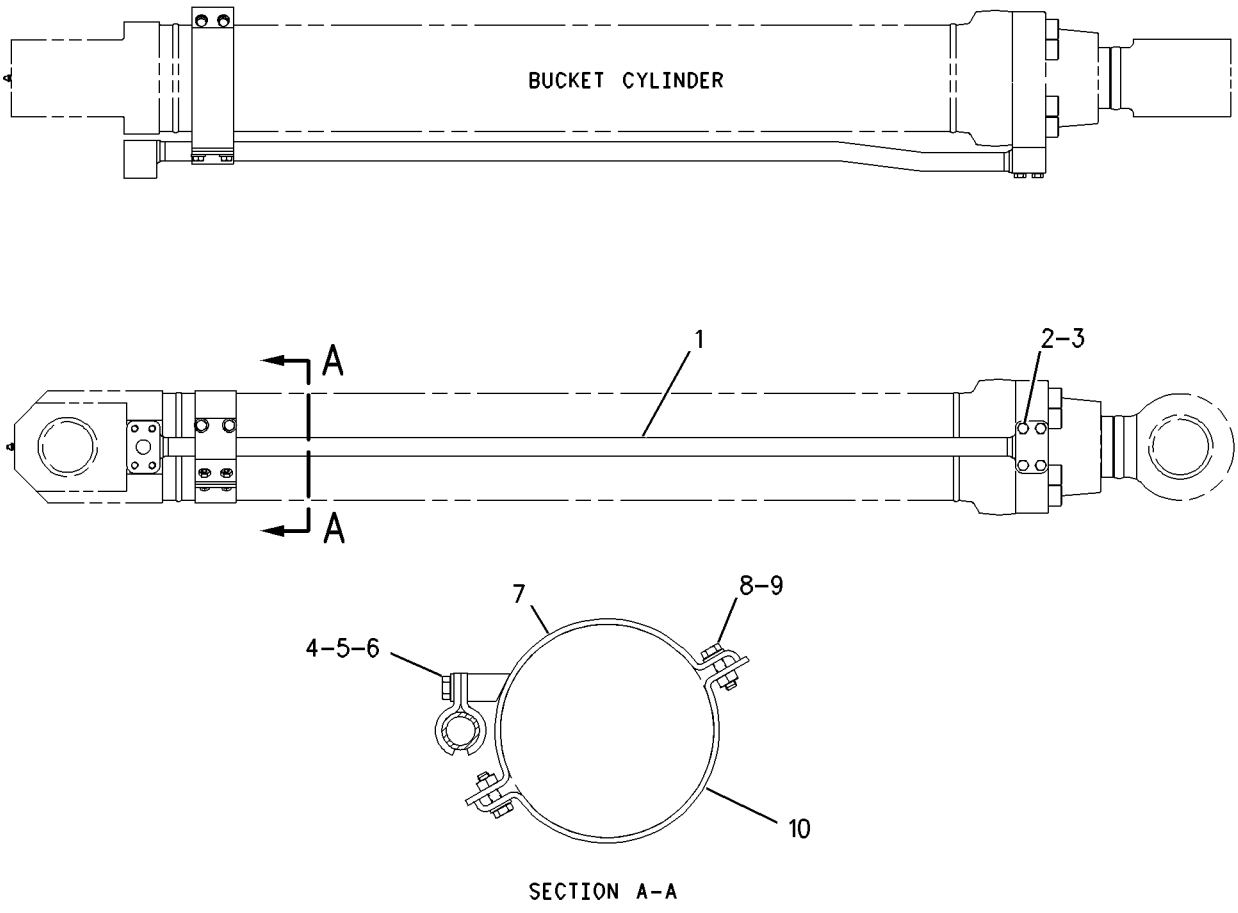

GRAPHIC #1 **<END>** g00850187

239-1603 LINES GP-BUCKET CYLINDER

S/N: JGB1-UP; KHS1-UP
PART OF 225-4530 CYLINDER & LINES GP-BUCKET
AN ATTACHMENT

SMCS-5457 **i02155266**

NOTE	REF NO	GRAPHIC REF	PART NUMBER	QTY	PART NAME 1 2 3 4 5 6 (PRODUCT LEVEL)	SEE PAGE
	1	1	**7Y-3732**	2	CLIP	
	2	1	**129-6056**	1	SUPPORT AS	
	3	1	**223-6873**	1	SUPPORT AS	
	4	1	**239-1604**	1	TUBE AS	
	5	1	**1P-3704**	1	SEAL-RECTANGULAR	
	6	1	**8T-4121**	4	WASHER-HARD (11X21X2.5-MM THK)	
M	7	1	**8T-4139**	2	BOLT (M12X1.75X30-MM)	
M	8	1	**8T-4196**	4	BOLT (M10X1.5X35-MM)	
	9	1	**8T-4223**	2	WASHER-HARD (13.5X25.5X3-MM THK)	
M	10	1	**8T-4910**	4	BOLT (M12X1.75X60-MM)	

M-METRIC PART

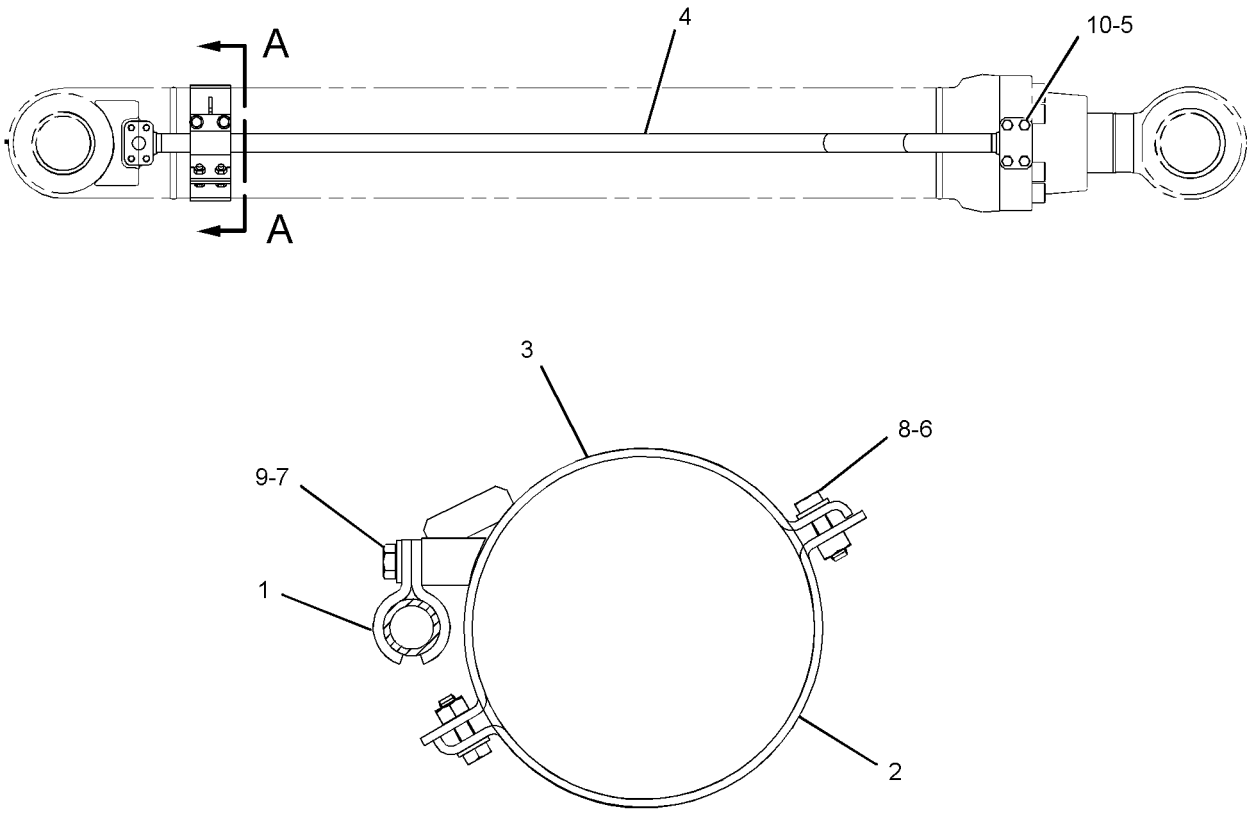

SECTION A-A

GRAPHIC #1 **<END>** g01097707

HYDRAULIC SYSTEM

302-3351 LINES GP-BUCKET CYLINDER

S/N: JGB1-UP; KHS1-UP
PART OF 300-1590 CYLINDER & LINES GP-BUCKET
AN ATTACHMENT

SMCS-5457 **i02945089**

NOTE	REF NO	GRAPHIC REF	PART NUMBER	QTY	PART NAME 1 2 3 4 5 6 (PRODUCT LEVEL)	SEE PAGE
	1	1	**7Y-3732**	4	CLIP	
	2	1	**124-0911**	2	SUPPORT AS	
	3	1	**223-6876**	1	SUPPORT AS	
	4	1	**295-9680**	1	SUPPORT AS	
	5	1	**302-3352**	1	TUBE AS	
	6	1	**1P-3704**	1	SEAL-RECTANGULAR	
	7	1	**8T-4121**	8	WASHER-HARD (11X21X2.5-MM THK)	
M	8	1	**8T-4139**	4	BOLT (M12X1.75X30-MM)	
M	9	1	**8T-4196**	8	BOLT (M10X1.5X35-MM)	
	10	1	**8T-4223**	4	WASHER-HARD (13.5X25.5X3-MM THK)	
M	11	1	**8T-4910**	4	BOLT (M12X1.75X60-MM)	

M-METRIC PART

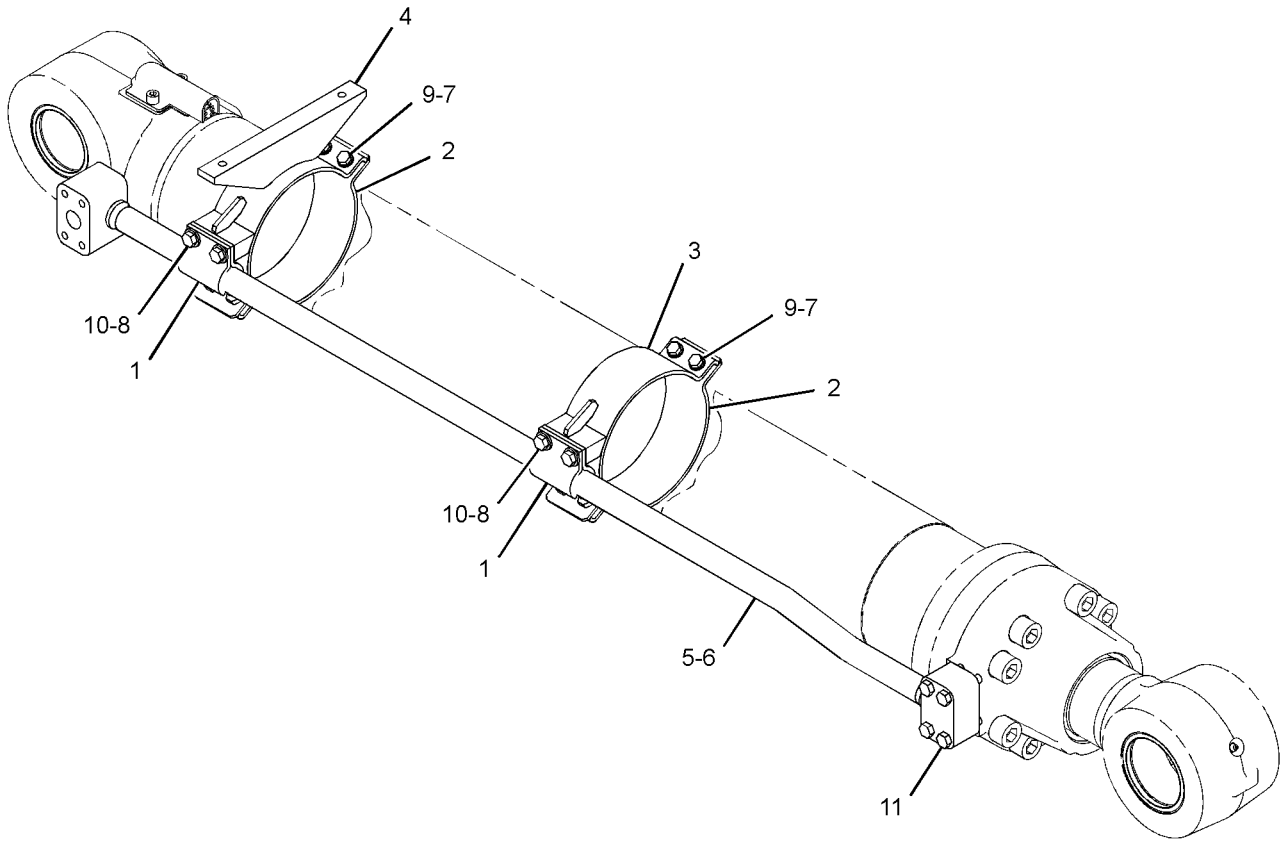

GRAPHIC #1 **<END>** g01473135

HYDRAULIC SYSTEM

230-0135 LINES GP-COUPLER–BOOM

S/N: JGB1-UP; KHS1-UP

AN ATTACHMENT

SMCS-5057, 5133 **i02945440**

NOTE	REF NO	GRAPHIC REF	PART NUMBER	QTY	PART NAME 1 2 3 4 5 6 (PRODUCT LEVEL)	SEE PAGE
M	1	1	**8T-4139**	12	BOLT (M12X1.75X30-MM)	
M	2	1	**8T-4140**	4	BOLT (M16X2X60-MM)	
M	3	1	**8T-4175**	2	BOLT (M16X2X90-MM)	
M	4	1	**8T-4184**	2	BOLT (M12X1.75X45-MM)	
CM	5	1	**8T-4910**	2	BOLT (M12X1.75X60-MM)	
M	6	1	**8T-4956**	4	BOLT (M12X1.75X35-MM)	
M	7	1	**8T-5001**	2	BOLT (M12X1.75X130-MM)	
M	8	1	**7X-2550**	2	BOLT (M12X1.75X110-MM)	
C	9	1	**179-5235**	12	CLIP	
	10	1	**135-3980**	5	CLIP	
	11	1	**5Q-4212**	4	CLIP	
	12	1	**173-8074**	1	CLIP AS	
M	13	1	**8T-4132**	4	NUT (M16X2-THD)	
M	14	1	**8T-4244**	12	NUT (M12X1.75-THD)	
C	15	1	**153-8800**	1	PLATE	
C	16	1	**187-9862**	1	PLATE	
	17	1	**193-6662**	1	PLATE	
	18	1	**253-6276**	1	PLATE	
	19	1	**6V-8398**	8	SEAL-O-RING	
	20	1	**237-3018**	1	SUPPORT AS	
	21	1	**247-9440**	2	SUPPORT AS	
C	22	1	**268-7027**	1	TUBE AS	
C	23	1	**268-7030**	1	TUBE AS	
C	24	1	**277-0762**	2	TUBE AS	
C	25	1	**277-0765**	1	TUBE AS	
C	26	1	**277-0768**	1	TUBE AS	
	27	1	**9X-8257**	6	WASHER (17.5X30X3.5-MM THK)	
	28	1	**8T-4223**	24	WASHER-HARD (13.5X25.5X3-MM THK)	

C-CHANGE FROM PREVIOUS TYPE
M-METRIC PART

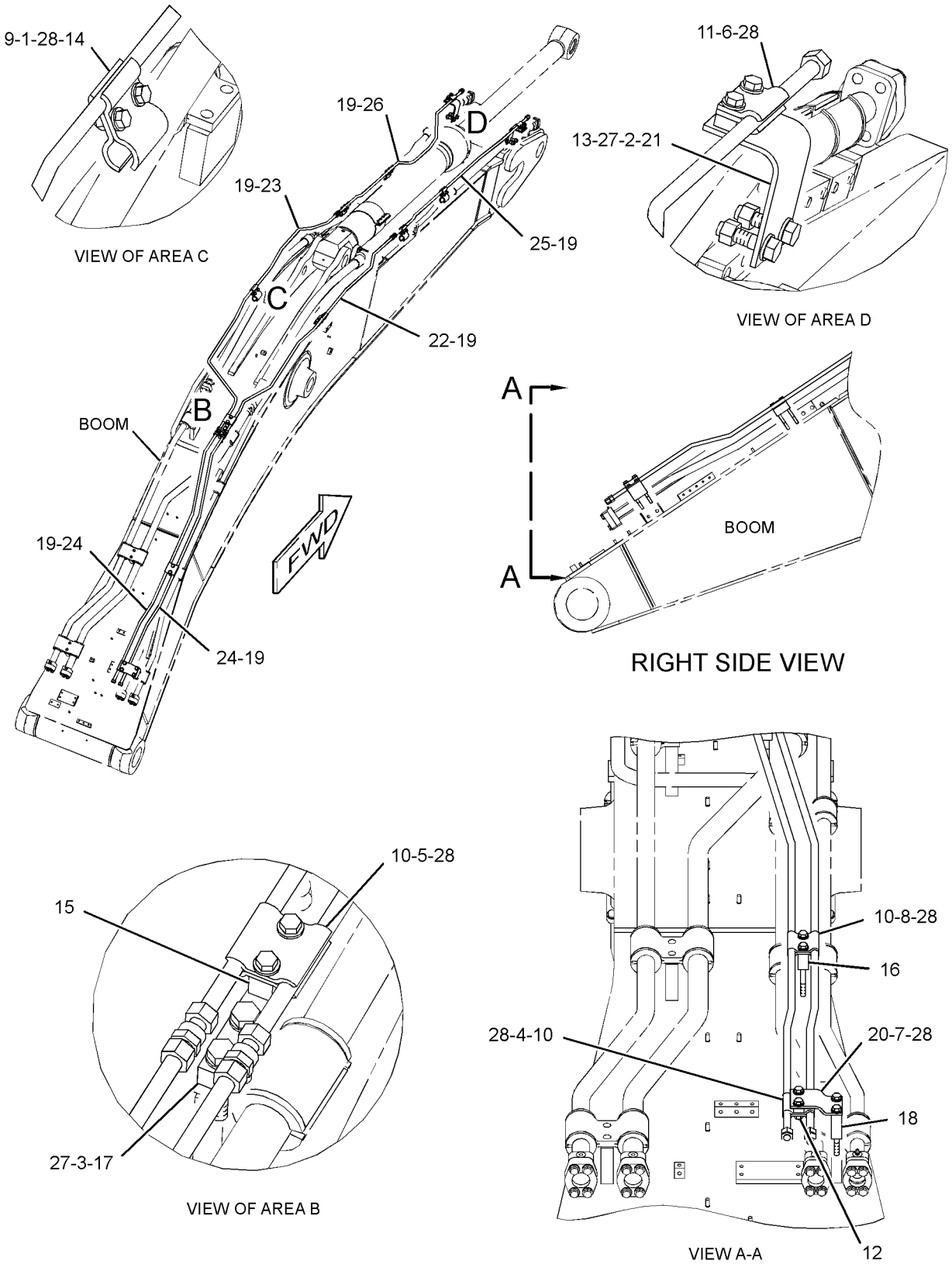

GRAPHIC #1 **<END>** g01293710

HYDRAULIC SYSTEM

230-0136 LINES GP-COUPLER—STICK, TB-FAMILY

S/N: JGB1-UP; KHS1-UP
FOR USE WITH 3.35-M (11-FT) STICK
AN ATTACHMENT

SMCS-5057, 5133 **i02158145**

NOTE	REF NO	GRAPHIC REF	PART NUMBER	QTY	PART NAME 1 2 3 4 5 6 (PRODUCT LEVEL)	SEE PAGE
	1	1	**9X-6582**	1	NUT (13/16-16-THD)	
I	2	1	**230-0483**	2	HOSE AS	
	3	1	**247-9379**	1	TUBE AS	
	4	1	**247-9383**	1	TUBE AS	
	5	1	**135-3980**	2	CLIP	
	6	1	*148-8415*	1	REDUCER AS	
		1	**6V-8397**	1	SEAL-O-RING	
		1	**6V-8936**	1	REDUCER	
	7	1	*148-8419*	1	REDUCER AS	
		1	**4J-5477**	1	SEAL-O-RING	
		1	**6V-8935**	1	REDUCER-O-RING	
	8	1	**5Q-4212**	8	CLIP	
	9	1	**6V-8398**	4	SEAL-O-RING	
	10	1	**8T-4223**	10	WASHER-HARD (13.5X25.5X3-MM THK)	
M	11	1	**8T-4956**	10	BOLT (M12X1.75X35-MM)	

I-REFER TO HYDRAULIC INFORMATION SYSTEM
M-METRIC PART

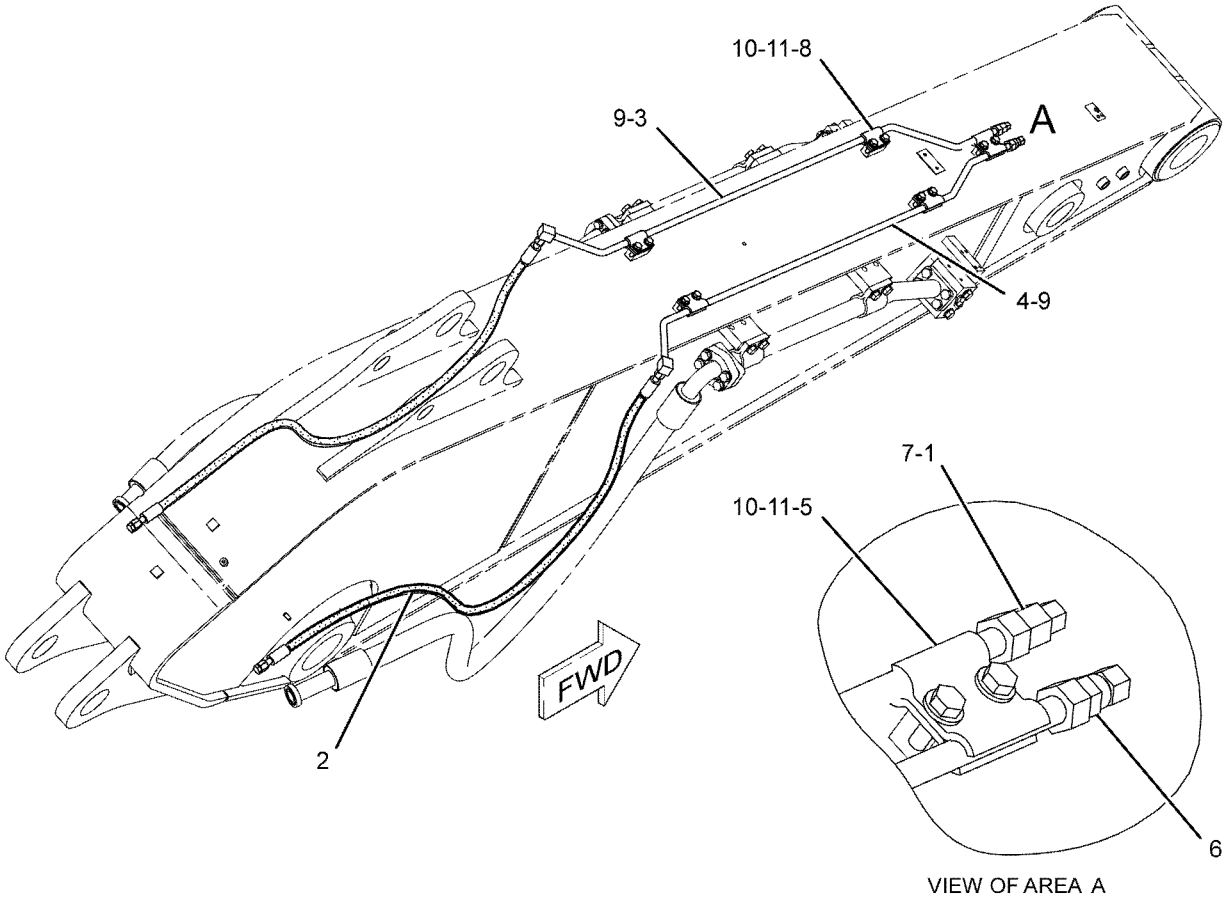

VIEW OF AREA A

GRAPHIC #1 **<END>** g01098780

HYDRAULIC SYSTEM

242-6535 LINES GP-COUPLER—MASS BOOM

S/N: JGB1-UP; KHS1-UP

PART OF 341-3123 OPTION AR-COUPLER

AN ATTACHMENT

SMCS-5057, 5133 **i03176583**

NOTE	REF NO	GRAPHIC REF	PART NUMBER	QTY	PART NAME 1 2 3 4 5 6 (PRODUCT LEVEL)	SEE PAGE
M	1	1	**7X-2549**	2	BOLT (M12X1.75X100-MM)	
M	2	1	**8T-4139**	12	BOLT (M12X1.75X30-MM)	
M	3	1	**8T-4140**	4	BOLT (M16X2X60-MM)	
M	4	1	**8T-4175**	2	BOLT (M16X2X90-MM)	
M	5	1	**8T-4184**	2	BOLT (M12X1.75X45-MM)	
	6	1	**8T-4223**	24	WASHER-HARD (13.5X25.5X3-MM THK)	
M	7	1	**8T-4648**	2	BOLT (M12X1.75X70-MM)	
M	8	1	**8T-4956**	4	BOLT (M12X1.75X35-MM)	
M	9	1	**8T-5001**	2	BOLT (M12X1.75X130-MM)	
	10	1	**9X-8257**	6	WASHER (17.5X30X3.5-MM THK)	
	11	1	**179-5235**	12	CLIP	
	12	1	**135-3980**	5	CLIP	
	13	1	**5Q-4212**	4	CLIP	
	14	1	**277-1042**	1	TUBE AS	
	15	1	**173-8074**	1	CLIP AS	
M	16	1	**8T-4132**	4	NUT (M16X2-THD)	
	17	1	**277-1039**	1	TUBE AS	
M	18	1	**8T-4244**	12	NUT (M12X1.75-THD)	
	19	1	**187-9833**	2	PLATE	
	20	1	**193-6662**	1	PLATE	
	21	1	**253-6276**	1	PLATE	
	22	1	**6V-8398**	8	SEAL-O-RING	
	23	1	**237-3018**	1	SUPPORT AS	
	24	1	**247-9440**	2	SUPPORT AS	
	25	1	**277-1030**	2	TUBE AS	
	26	1	**277-1033**	1	TUBE AS	
	27	1	**277-1036**	1	TUBE AS	

M-METRIC PART

242-6535 **LINES GP-COUPLER** *(contd.)* **i03176583**

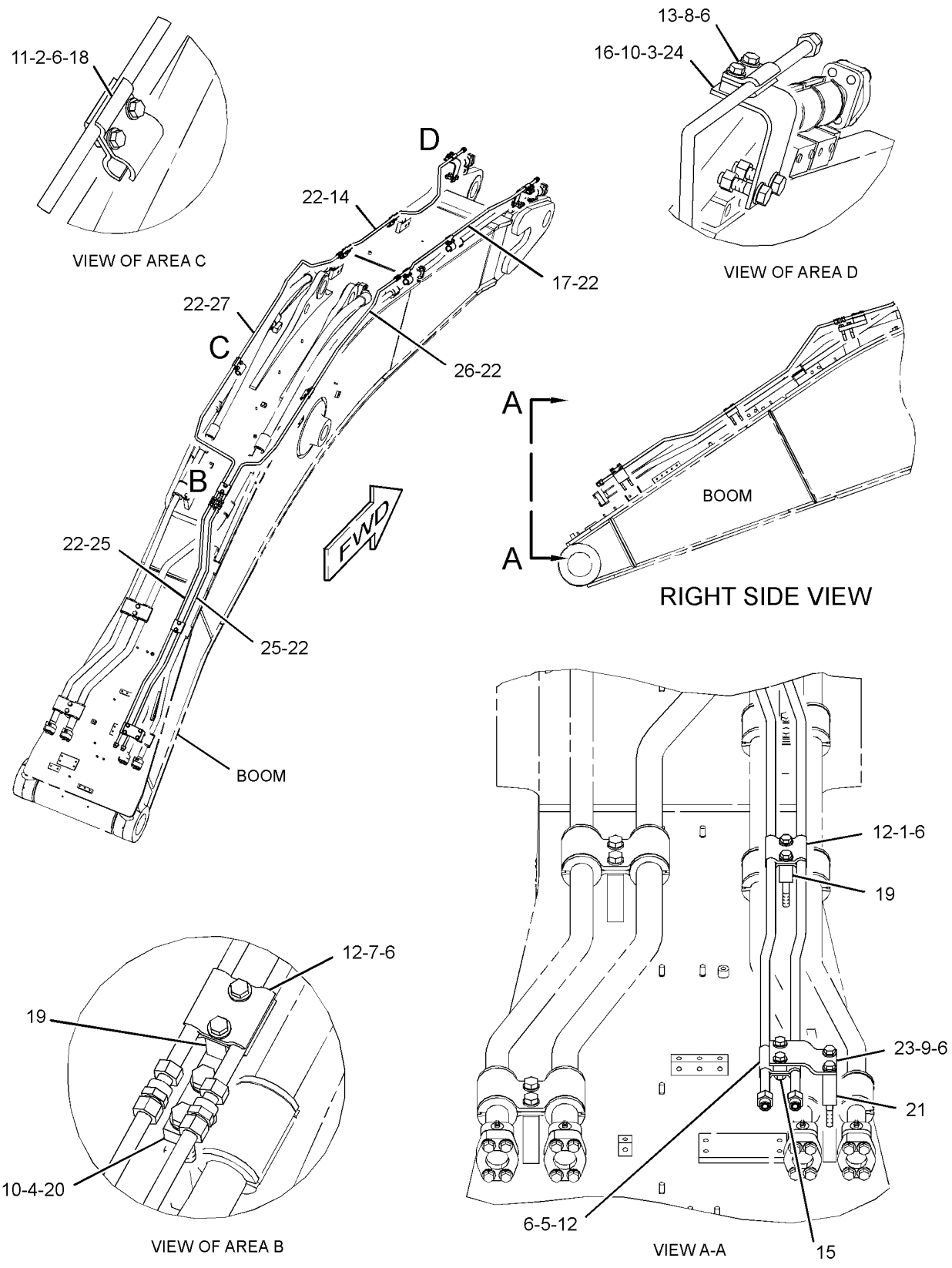

GRAPHIC #1 **<END>** g01294841

242-6538 LINES GP-COUPLER—MASS STK, VB-FAMILY

S/N: JGB1-UP; KHS1-UP
FOR USE WITH 3-M (9.8-FT) STICK
AN ATTACHMENT

SMCS-5057, 5133 **i02712630**

NOTE	REF NO	GRAPHIC REF	PART NUMBER	QTY	PART NAME 1 2 3 4 5 6 (PRODUCT LEVEL)	SEE PAGE
M	1	1	**8T-4956**	10	BOLT (M12X1.75X35-MM)	
	2	1	**135-3980**	2	CLIP	
	3	1	**5Q-4212**	8	CLIP	
I	4	1	**177-8506**	2	HOSE AS	
	5	1	**9X-6582**	1	NUT (13/16-16-THD)	
	6	1	*148-8415*	1	REDUCER AS	
		1	**6V-8397**	1	SEAL-O-RING	
		1	**6V-8936**	1	REDUCER	
	7	1	*148-8419*	1	REDUCER AS	
		1	**4J-5477**	1	SEAL-O-RING	
		1	**6V-8935**	1	REDUCER-O-RING	
	8	1	**6V-8398**	4	SEAL-O-RING	
	9	1	**247-9379**	1	TUBE AS	
	10	1	**247-9383**	1	TUBE AS	
	11	1	**8T-4223**	10	WASHER-HARD (13.5X25.5X3-MM THK)	

I-REFER TO HYDRAULIC INFORMATION SYSTEM
M-METRIC PART

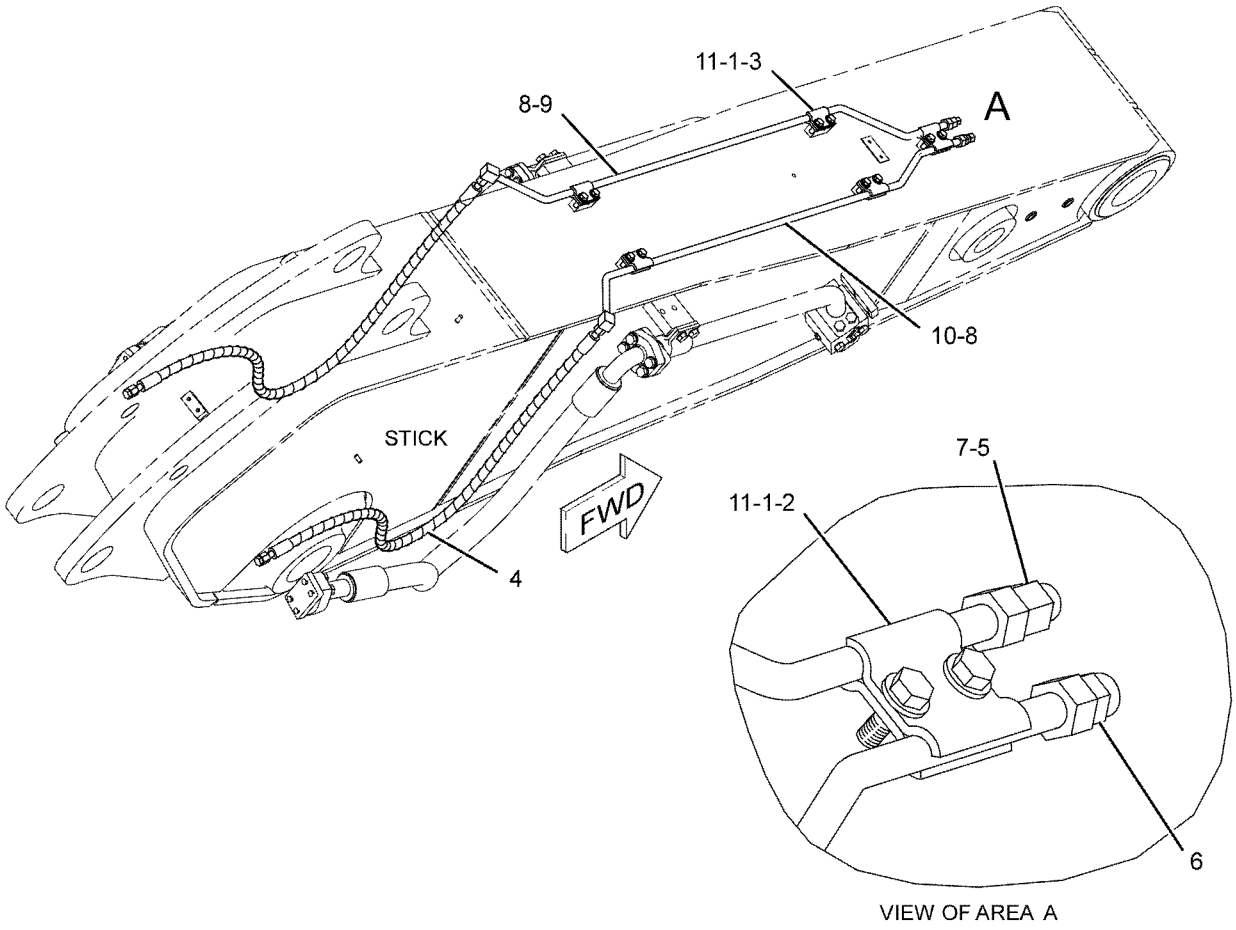

GRAPHIC #1 **<END>** g01110806

HYDRAULIC SYSTEM

242-6539 LINES GP-COUPLER—STICK, VB FAMILY

S/N: JGB1-UP; KHS1-UP
PART OF 341-3123 OPTION AR-COUPLER
FOR USE WITH 2.5-M (8.2-FT) STICK
AN ATTACHMENT

SMCS-5057, 5133 **i02712635**

NOTE	REF NO	GRAPHIC REF	PART NUMBER	QTY	PART NAME 1 2 3 4 5 6 (PRODUCT LEVEL)	SEE PAGE
	1	1	**9X-6582**	1	NUT (13/16-16-THD)	
I	2	1	**216-6485**	2	HOSE AS	
	3	1	**247-9022**	1	TUBE AS	
	4	1	**247-9026**	1	TUBE AS	
	5	1	**135-3980**	2	CLIP	
	6	1	*148-8415*	1	REDUCER AS	
		1	**6V-8397**	1	SEAL-O-RING	
		1	**6V-8936**	1	REDUCER	
	7	1	*148-8419*	1	REDUCER AS	
		1	**4J-5477**	1	SEAL-O-RING	
		1	**6V-8935**	1	REDUCER-O-RING	
	8	1	**5Q-4212**	8	CLIP	
	9	1	**6V-8398**	4	SEAL-O-RING	
	10	1	**8T-4223**	10	WASHER-HARD (13.5X25.5X3-MM THK)	
M	11	1	**8T-4956**	10	BOLT (M12X1.75X35-MM)	

I-REFER TO HYDRAULIC INFORMATION SYSTEM
M-METRIC PART

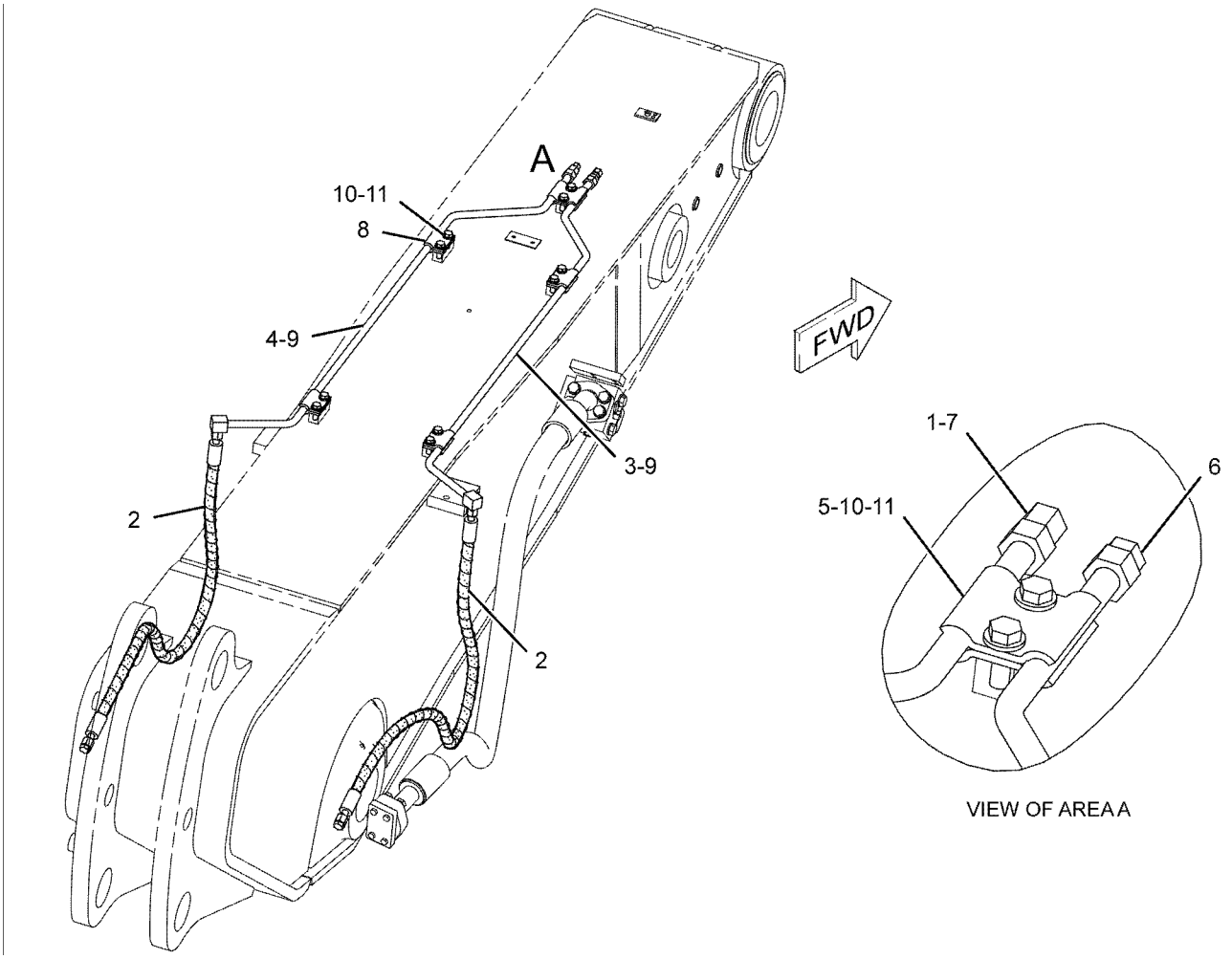

GRAPHIC #1 **<END>** g01127055

HYDRAULIC SYSTEM

277-4424 LINES GP-COUPLER–TB, UB-FAMILY

S/N: JGB1-UP; KHS1-UP

PART OF 311-3969 COUPLER AR-QUICK

AN ATTACHMENT

SMCS-5057, 5133 **i02984641**

NOTE	REF NO	GRAPHIC REF	PART NUMBER	QTY	PART NAME 1 2 3 4 5 6 (PRODUCT LEVEL)	SEE PAGE
	1	1	*148-8419*	1	REDUCER AS	
		1	**4J-5477**	1	SEAL-O-RING	
		1	**6V-8935**	1	REDUCER-O-RING	
	2	1	**6V-8554**	1	NUT (13/16-16-THD)	
	3	1	**7K-1181**	2	STRAP-CABLE	
	4	1	**6V-0405**	2	SEAL-BONDED	
	5	1	**8T-7910**	2	ADAPTER	
	6	1	**6V-8636**	2	CONNECTOR	
	7	1	**3J-1907**	2	SEAL-O-RING	
	8	1	**177-5025**	2	TUBE AS	
	9	1	**6V-8397**	4	SEAL-O-RING	
	10	1	**6W-2464**	2	CLAMP	
	11	1	**3V-0046**	1	PLATE	
	12	1	**8C-6561**	1	BOLT (5/16-18X1.375-IN)	
I	13	1	**283-4815**	2	HOSE AS	

I-REFER TO HYDRAULIC INFORMATION SYSTEM

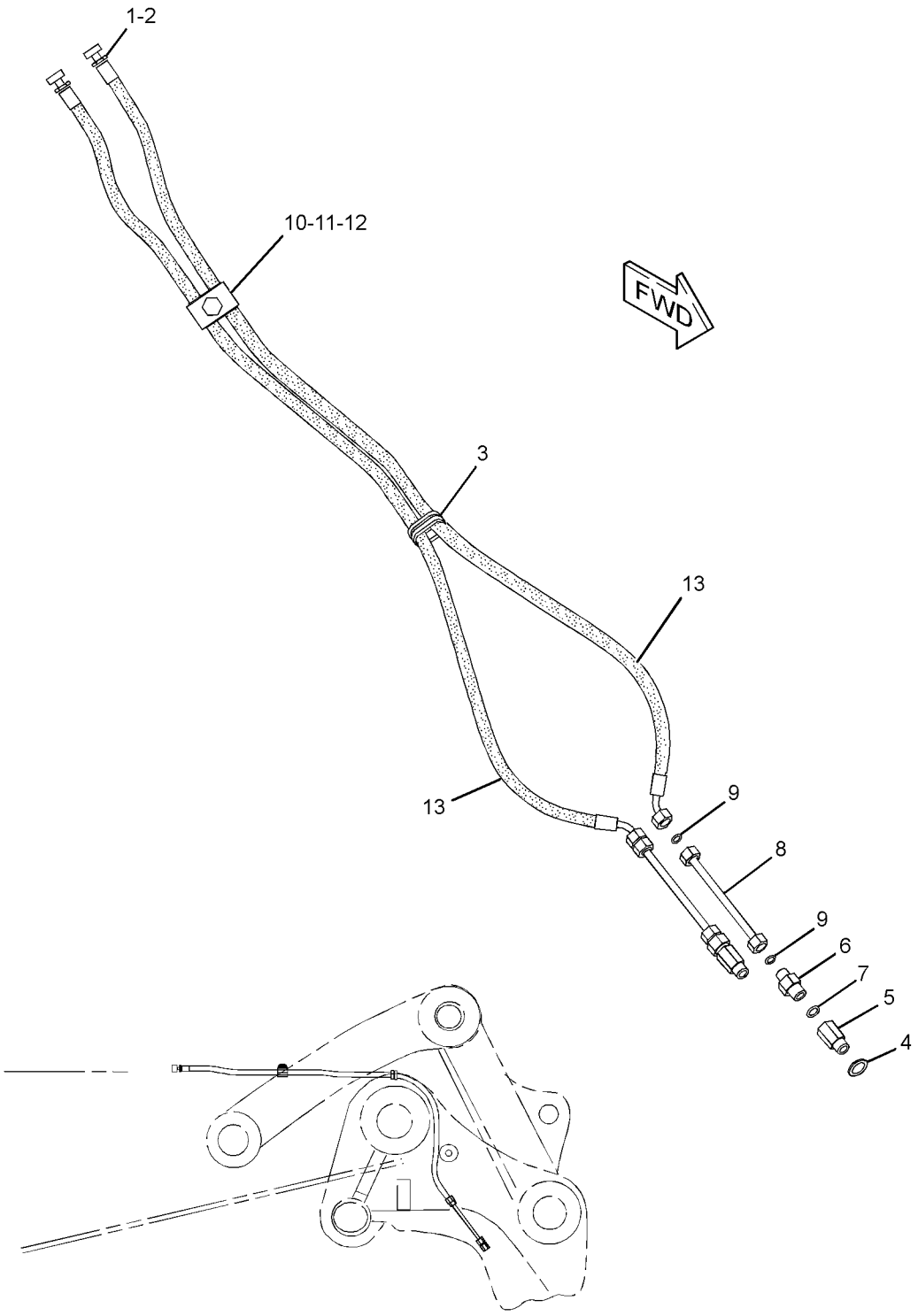

RIGHT SIDE VIEW

GRAPHIC #1 **<END>** g01233311

HYDRAULIC SYSTEM

302-9475 LINES GP-COUPLER—STICK, TB-FAMILY

S/N: JGB1-UP
FOR USE WITH 3.9-M (12.8-FT) STICK
AN ATTACHMENT

SMCS-5057, 5133 **i02852779**

NOTE	REF NO	GRAPHIC REF	PART NUMBER	QTY	PART NAME 1 2 3 4 5 6 (PRODUCT LEVEL)	SEE PAGE
M	1	1	**8T-4956**	10	BOLT (M12X1.75X35-MM)	
	2	1	**135-3980**	2	CLIP	
	3	1	**5Q-4212**	8	CLIP	
I	4	1	**245-2425**	2	HOSE AS	
	5	1	**9X-6582**	1	NUT (13/16-16-THD)	
	6	1	*148-8415*	1	REDUCER AS	
		1	**6V-8397**	1	SEAL-O-RING	
		1	**6V-8936**	1	REDUCER	
	7	1	*148-8419*	1	REDUCER AS	
		1	**4J-5477**	1	SEAL-O-RING	
		1	**6V-8935**	1	REDUCER-O-RING	
	8	1	**6V-8398**	4	SEAL-O-RING	
	9	1	**302-9479**	1	TUBE AS	
	10	1	**302-9476**	1	TUBE AS	
	11	1	**8T-4223**	10	WASHER-HARD (13.5X25.5X3-MM THK)	

I-REFER TO HYDRAULIC INFORMATION SYSTEM
M-METRIC PART

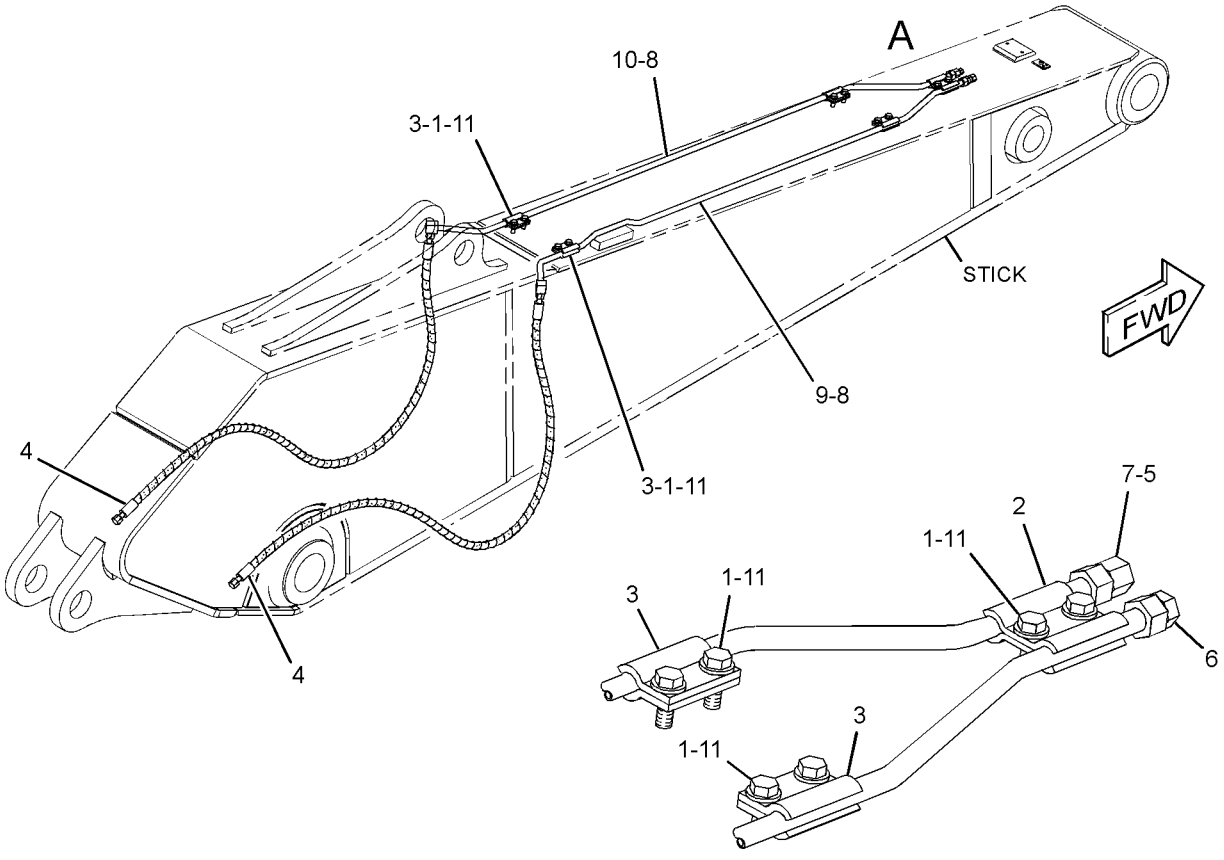

VIEW OF AREA A

GRAPHIC #1 **<END>** g01429290

HYDRAULIC SYSTEM

227-0585 LINES GP-FRONT—MEDIUM PRESSURE

S/N: JGB1-UP; KHS1-UP
PART OF 285-1789 CONTROL AR-AUXILIARY
AN ATTACHMENT

SMCS-5057 **i02900436**

NOTE	REF NO	GRAPHIC REF	PART NUMBER	QTY	PART NAME 1 2 3 4 5 6 (PRODUCT LEVEL)	SEE PAGE
CI	1	1	**307-5257**	1	HOSE AS	
CI	2	1	**307-5260**	1	HOSE AS	

C-CHANGE FROM PREVIOUS TYPE
I-REFER TO HYDRAULIC INFORMATION SYSTEM

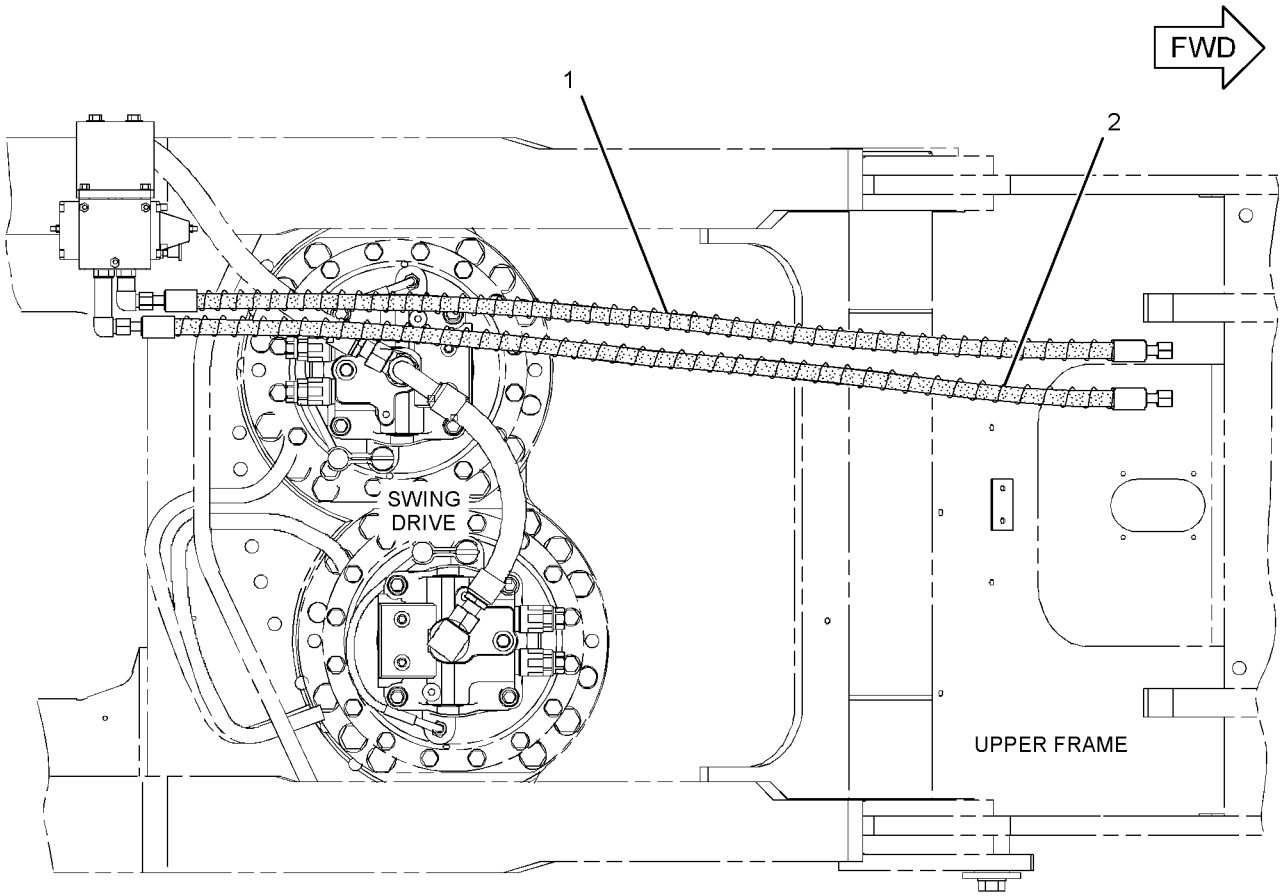

TOP VIEW

GRAPHIC #1 **<END>** g01457259

HYDRAULIC SYSTEM

292-7161 LINES GP-FRONT—IMPLEMENT, TRAVEL

S/N: JGB1-UP; KHS1-UP

PART OF 297-0243, 297-0244 HYDRAULIC AR

SMCS-5057 **i04118062**

NOTE	REF NO	GRAPHIC REF	PART NUMBER	QTY	PART NAME 1 2 3 4 5 6 (PRODUCT LEVEL)	SEE PAGE
	1	2	**4I-7822**	2	COVER	
	2	1	**9F-2167**	1	SCREW-PURGE (3/8-24X1.164-IN)	
I	3	2	**330-2318**	1	HOSE AS	
	4	2	**143-4203**	1	TUBE AS	
	5	2	**168-9595**	1	TUBE AS	
I	6	1	**325-8854**	1	HOSE AS	
I	7	1	**354-3799**	1	HOSE AS	
I	8	1	**354-3800**	1	HOSE AS	
	9	2	**227-0616**	1	TUBE AS	
	10	2	**227-0617**	1	FLANGE	
I	11	2	**325-8855**	1	HOSE AS	
I	12	1	**333-4615**	1	HOSE AS	
	13	2	**286-6565**	1	TUBE AS	
	14	2	**292-7273**	1	FLANGE	
I	15	2	**320-0136**	1	HOSE AS	
I	16	2	**325-8856**	1	HOSE AS	
I	17	2	**325-8857**	1	HOSE AS	
	18	1	**302-3286**	1	SUPPORT AS	
	19	1	**314-8079**	1	HOSE AS	
E		1	**7Y-5074**		GUARD-HOSE (204-CM)	
I	20	1	**314-8080**	1	HOSE AS	
I	21	1	**314-8081**	1	HOSE AS	
I	22	1	**314-8082**	1	HOSE AS	
	23	2	**319-9713**	1	BLOCK	
	24	1	**319-9755**	1	FLANGE	
M	25	2	**101-7397**	4	BOLT-SOCKET HEAD (M12X1.75X50-MM)	
M	26	1,2	**101-7402**	8	BOLT-SOCKET HEAD (M12X1.75X30-MM)	
M	27	2	**108-1784**	4	BOLT-SOCKET HEAD (M12X1.75X120-MM)	
	28	1,2	**1P-3703**	24	SEAL-RECTANGULAR	
	29	1,2	**1P-3704**	5	SEAL-RECTANGULAR	
	30	2	**1P-3705**	4	SEAL-RECTANGULAR	
	31	2	**1P-3706**	1	SEAL-RECTANGULAR	
	32	1	**1P-5767**	8	FLANGE-HALF	
	33	2	**4K-8864**	1	CLIP	
	34	2	**5P-7468**	2	CLIP (SLOT)	
	35	2	**5P-7469**	2	CLIP (TAB)	
	36	1,2	**6V-0400**	32	FLANGE-HALF	
	37	2	**6V-0545**	2	GROMMET	
	38	2	**8T-4121**	1	WASHER-HARD (11X21X2.5-MM THK)	
M	39	2	**8T-4136**	1	BOLT (M10X1.5X25-MM)	
M	40	2	**8T-4139**	16	BOLT (M12X1.75X30-MM)	
M	41	1	**8T-4183**	2	BOLT (M12X1.75X40-MM)	
M	42	1,2	**8T-4184**	36	BOLT (M12X1.75X45-MM)	
M	43	2	**8T-4193**	8	BOLT (M16X2X50-MM)	
M	44	1,2	**8T-4194**	44	BOLT (M12X1.75X50-MM)	
	45	1,2	**8T-4223**	84	WASHER-HARD (13.5X25.5X3-MM THK)	
M	46	2	**8T-4956**	2	BOLT (M12X1.75X35-MM)	

E-ORDER BY THE CENTIMETER
I-REFER TO HYDRAULIC INFORMATION SYSTEM
M-METRIC PART

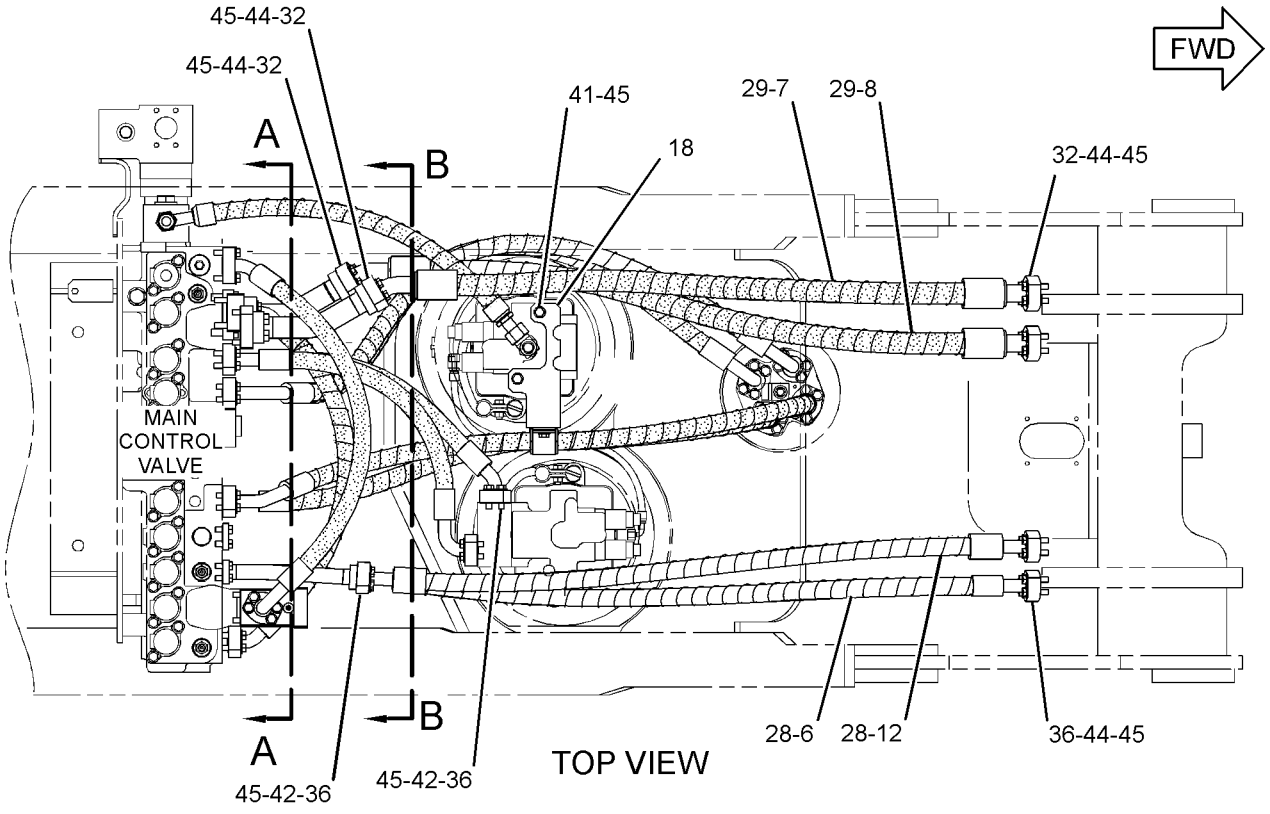

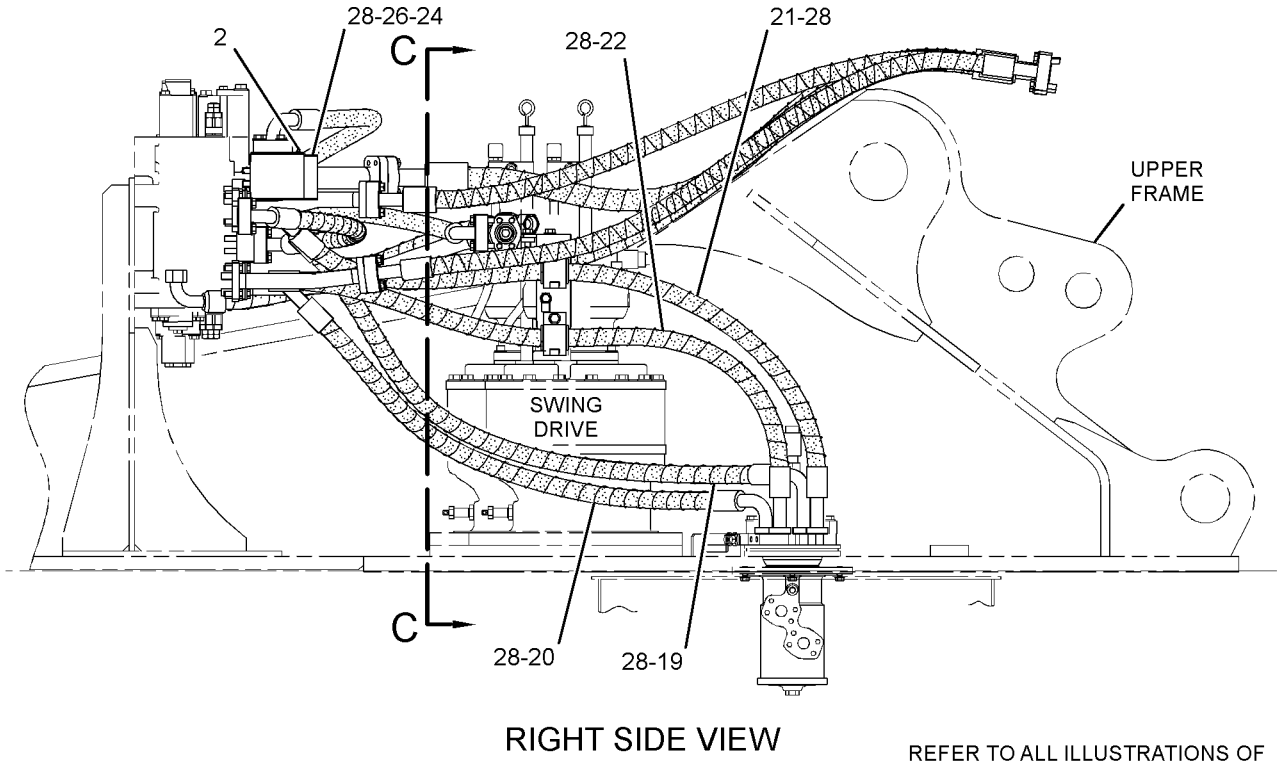

REFER TO ALL ILLUSTRATIONS OF THIS GROUP FOR AUXILIARY VIEWS.

GRAPHIC #1

g01933894

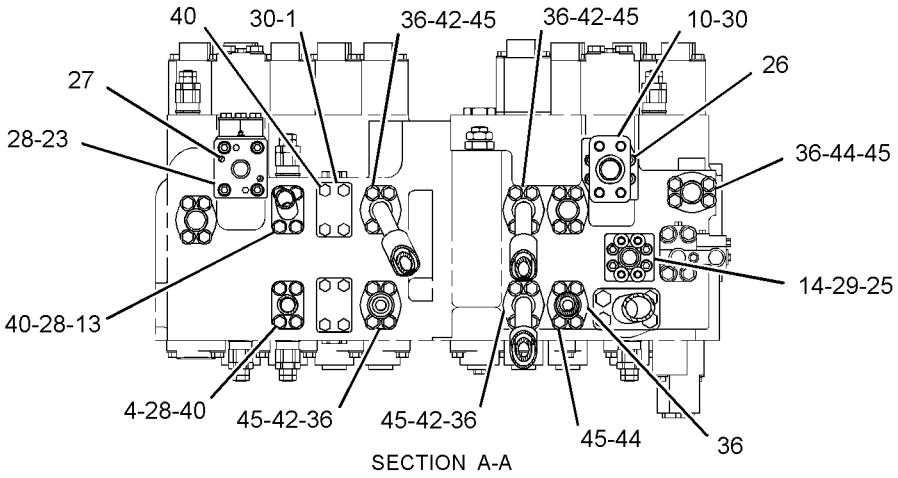

SECTION A-A

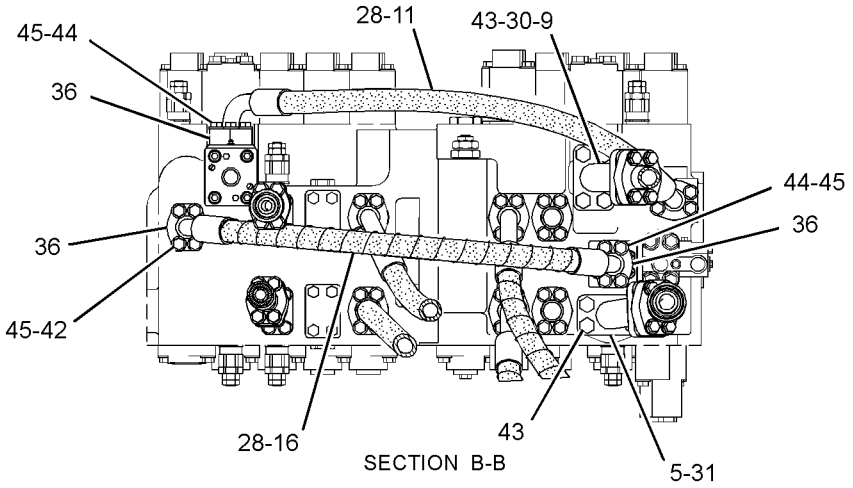

SECTION B-B

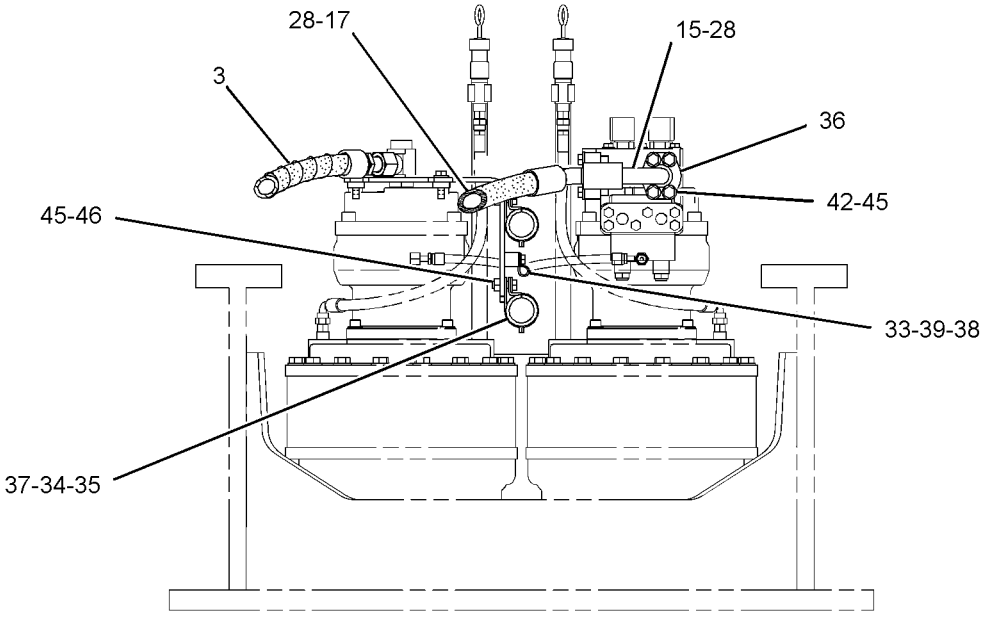

SECTION C-C

GRAPHIC #2 **<END>** g01637135

HYDRAULIC SYSTEM

292-7166 LINES GP-FRONT—SYSTEM 3, 1-WAY, 2-PUMP

S/N: JGB1-UP

PART OF 285-1784 CONTROL AR-AUXILIARY

AN ATTACHMENT

SMCS-5057 **i04193970**

NOTE	REF NO	GRAPHIC REF	PART NUMBER	QTY	PART NAME 1 2 3 4 5 6 (PRODUCT LEVEL)	SEE PAGE
	1	2	**4I-7822**	1	COVER	
	2	2	**4I-3556**	1	ELBOW	
	3	1	**171-2637**	1	BOSS	
	4	2	**173-4664**	1	FLANGE	
	5	1	**212-5148**	1	BLOCK	
	6	2	**239-1794**	1	BLOCK	
	7	1	**239-1798**	1	BLOCK	
	8	1	**354-3806**	1	HOSE AS	
Y	9	1	**239-9036**	1	VALVE GP-CHECK (AUXILIARY CIRCUIT)	719
I	10	1	**296-7020**	1	HOSE AS	
	11	2	**296-7024**	1	BLOCK	
	12	1,2	**296-7165**	2	SUPPORT	
	13	1	**296-7166**	1	SUPPORT AS	
		1	**7I-6677**	1	PLATE	
	14	1	**296-7167**	1	SUPPORT AS	
		1	**7I-6677**	1	PLATE	
Y	15	2	**297-0265**	1	VALVE GP-SOLENOID & RELIEF (1-WAY, 2-WAY FLOW) (WITH BLOCK)	805
	16	2	**302-2971**	1	SUPPORT AS	
	17	2	**302-2981**	1	BLOCK	
I	18	1	**325-8871**	1	HOSE AS	
I	19	1	**319-9866**	1	HOSE AS	
	20	1	**319-9867**	1	HOSE AS	
I	21	1	**354-3817**	1	HOSE AS	
M	22	2	**101-7402**	4	BOLT-SOCKET HEAD (M12X1.75X30-MM)	
M	23	2	**105-3489**	4	BOLT-SOCKET HEAD (M12X1.75X80-MM)	
M	24	2	**108-4282**	4	BOLT-SOCKET HEAD (M10X1.5X100-MM)	
	25	1	*148-8357*	1	ELBOW AS	
		1	**5K-9090**	1	SEAL-O-RING	
		1	**6V-9008**	1	ELBOW (90-DEG)	
		1	**7M-8485**	1	SEAL-O-RING	
	26	2	*148-8408*	1	PLUG AS	
		2	**3D-2824**	1	SEAL-O-RING	
		2	**9S-4183**	1	PLUG-O-RING	
	27	2	*148-8411*	1	PLUG AS	
		2	**3K-0360**	1	SEAL-O-RING	
		2	**9S-4185**	1	PLUG-O-RING	
	28	1	*164-4180*	1	PLUG AS	
		1	**7M-8485**	1	SEAL-O-RING	
		1	**9S-4181**	1	PLUG-O-RING	
	29	2	**1P-3703**	1	SEAL-RECTANGULAR	
	30	1,2	**1P-3704**	5	SEAL-RECTANGULAR	
	31	1,2	**1P-3705**	2	SEAL-RECTANGULAR	
	32	2	**1P-4578**	8	FLANGE-HALF	
	33	1,2	**1P-5767**	6	FLANGE-HALF	
	34	1,2	**4J-0522**	5	SEAL-O-RING	
	35	2	**5K-9090**	2	SEAL-O-RING	
	36	1	**5P-7468**	1	CLIP (SLOT)	
	37	1	**5P-7469**	1	CLIP (TAB)	
	38	2	**6J-2680**	1	SEAL-O-RING	
M	39	2	**7X-2550**	2	BOLT (M12X1.75X110-MM)	
	40	1	**8T-2525**	1	GROMMET	
	41	2	**8T-4121**	16	WASHER-HARD (11X21X2.5-MM THK)	
M	42	1,2	**8T-4139**	8	BOLT (M12X1.75X30-MM)	
M	43	1,2	**8T-4184**	12	BOLT (M12X1.75X45-MM)	

292-7166 **LINES GP-FRONT** *(contd.)* **i04193970**

NOTE	REF NO	GRAPHIC REF	PART NUMBER	QTY	PART NAME 1 2 3 4 5 6 (PRODUCT LEVEL)	SEE PAGE
M	44	1,2	**8T-4194**	9	BOLT (M12X1.75X50-MM)	
M	45	2	**8T-4196**	16	BOLT (M10X1.5X35-MM)	
	46	1,2	**8T-4223**	41	WASHER-HARD (13.5X25.5X3-MM THK)	
M	47	1	**8T-4648**	4	BOLT (M12X1.75X70-MM)	
M	48	1,2	**8T-4956**	6	BOLT (M12X1.75X35-MM)	
M	49	1	**8T-5041**	4	BOLT (M12X1.75X120-MM)	
C	50	2	**7K-1181**	6	STRAP-CABLE	
	52	2	**337-2709**	3	GROMMET	

C-CHANGE FROM PREVIOUS TYPE
I-REFER TO HYDRAULIC INFORMATION SYSTEM
M-METRIC PART
Y-SEPARATE ILLUSTRATION

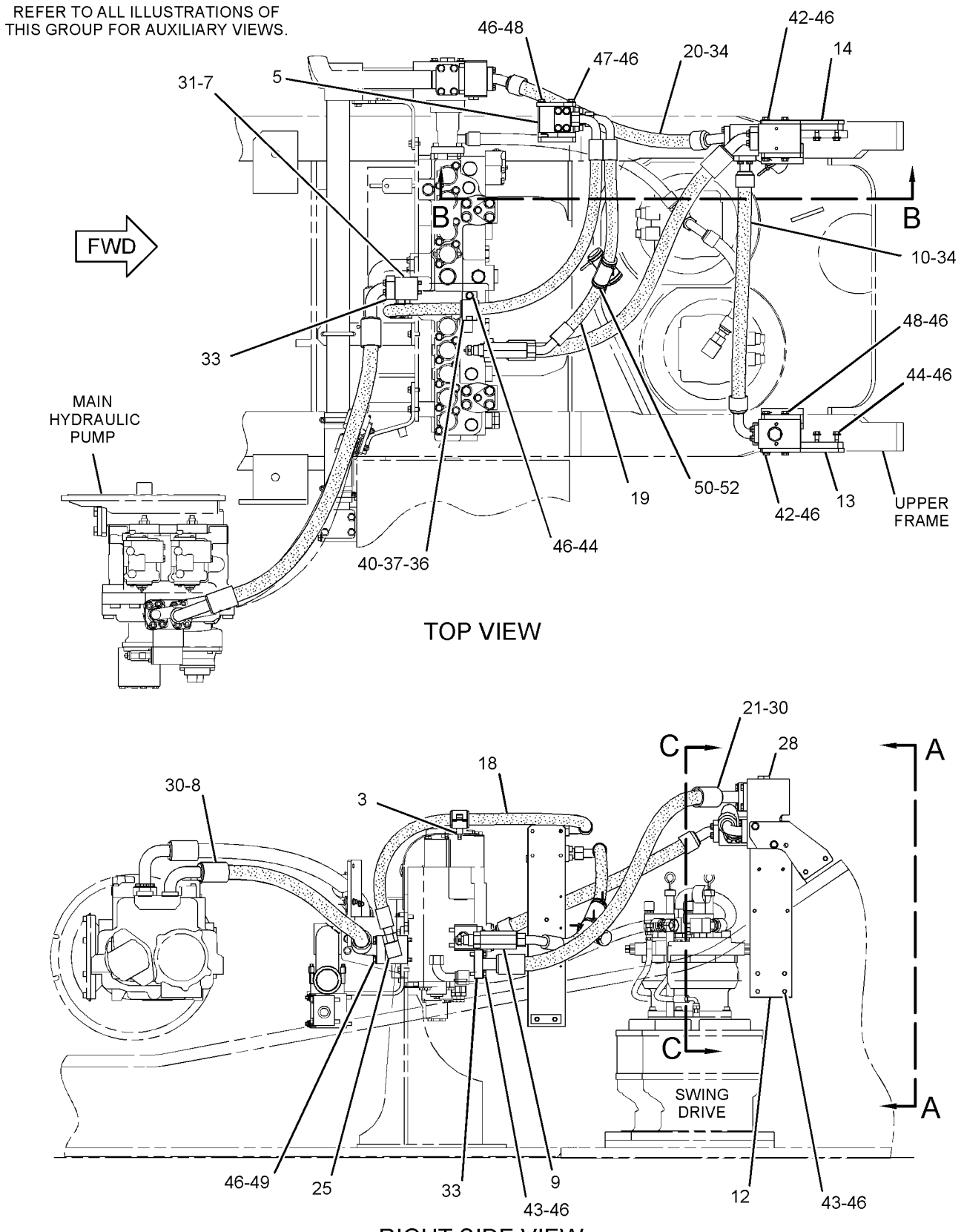

GRAPHIC #1

g02388596

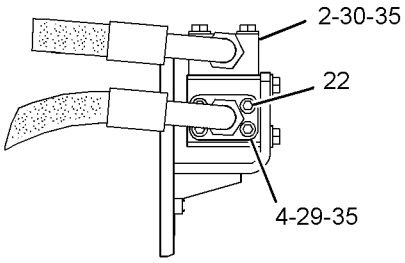

VIEW D-D

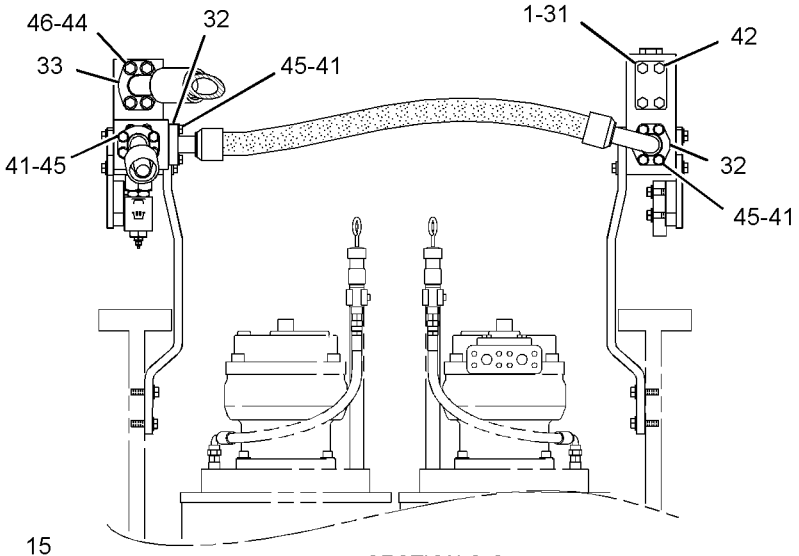

SECTION C-C

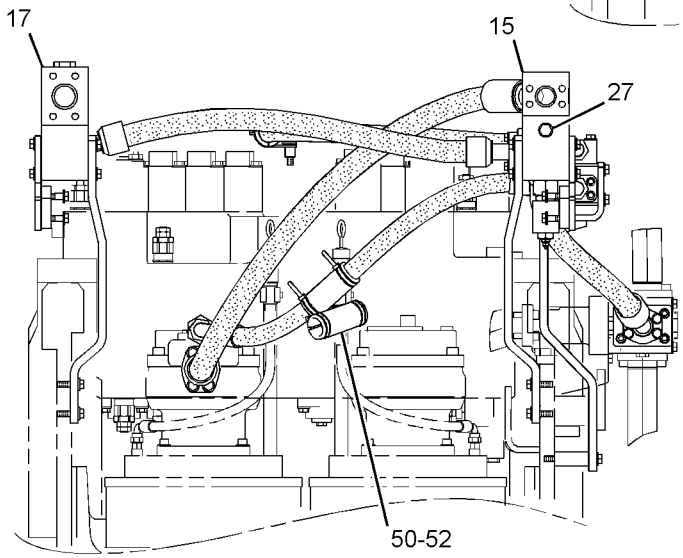

VIEW A-A

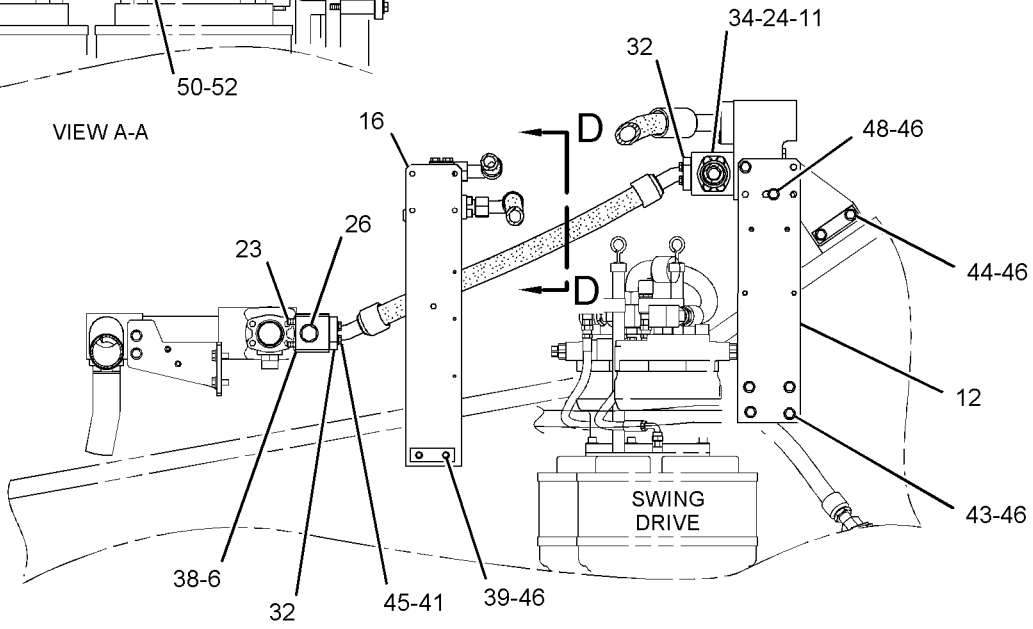

SECTION B-B

GRAPHIC #2 **<END>** g02388576

HYDRAULIC SYSTEM

292-7169 LINES GP-FRONT—SYSTEM 14, COMBINED FUNCTION

S/N: JGB1-UP
PART OF 285-1786 CONTROL AR-AUXILIARY
AN ATTACHMENT

SMCS-5057 **i04189074**

NOTE	REF NO	GRAPHIC REF	PART NUMBER	QTY	PART NAME 1 2 3 4 5 6 (PRODUCT LEVEL)	SEE PAGE
	1	1	*164-5566*	1	ELBOW AS	
		1	**5K-9090**	1	SEAL-O-RING	
		1	**6I-6721**	1	ELBOW	
	2	1	**171-2637**	1	BOSS	
	3	2	**173-4664**	1	FLANGE	
	4	1	**221-8859**	1	SENSOR AS-PRESSURE (BOOM CYLINDER)	
		1	**9X-3401**	3	PIN-CONNECTOR (16-GA TO 18-GA)	
					—OR—	
		1	**126-1767**	3	PIN-CONNECTOR (14-GA TO 16-GA)	
		1	**3K-0360**	1	SEAL-O-RING	
		1	**3E-3371**	1	WEDGE-RECEPTACLE LOCK (3-PIN)	
		1	**171-0596**	1	RECEPTACLE AS	
	5	2	**239-1794**	1	BLOCK	
	6	1	**239-1798**	1	BLOCK	
	7	1	**354-3806**	1	HOSE AS	
Y	8	1	**239-8984**	2	VALVE GP-RELIEF (AUX LINE RELIEF, HEAVY LIFT)	778
Y	9	1	**239-9036**	1	VALVE GP-CHECK (AUXILIARY CIRCUIT)	719
I	10	2	**296-7020**	1	HOSE AS	
	11	2	**296-7024**	1	BLOCK	
	12	2	**296-7165**	2	SUPPORT	
	13	1	**296-7166**	1	SUPPORT AS	
	14	2	**296-7167**	1	SUPPORT AS	
Y	15	2	**297-0265**	1	VALVE GP-SOLENOID & RELIEF (1-WAY, 2-WAY FLOW) (WITH BLOCK)	805
Y	16	2	**297-0266**	1	VALVE GP-SOLENOID & RELIEF (TOOL CONTROL)	806
Y	17	2	**297-0370**	1	VALVE GP-CHECK (1-WAY/2-WAY, CHECK)	720
	18	2	**302-2971**	1	SUPPORT AS	
I	19	1	**325-8871**	1	HOSE AS	
I	20	1	**354-3814**	1	HOSE AS	
I	21	1	**319-9866**	1	HOSE AS	
	22	1	**319-9867**	1	HOSE AS	
I	23	1	**354-3817**	1	HOSE AS	
M	24	1	**105-3489**	4	BOLT-SOCKET HEAD (M12X1.75X80-MM)	
M	25	2	**108-1781**	4	BOLT-SOCKET HEAD (M12X1.75X35-MM)	
M	26	2	**108-4282**	4	BOLT-SOCKET HEAD (M10X1.5X100-MM)	
	27	1	*148-8357*	1	ELBOW AS	
		1	**5K-9090**	1	SEAL-O-RING	
		1	**6V-9008**	1	ELBOW	
		1	**7M-8485**	1	SEAL-O-RING	
	28	2	*148-8408*	1	PLUG AS	
		2	**3D-2824**	1	SEAL-O-RING	
		2	**9S-4183**	1	PLUG-O-RING	
	29	2	**1P-3703**	1	SEAL-RECTANGULAR	
	30	1	**1P-3704**	7	SEAL-RECTANGULAR	
	31	1	**1P-3705**	1	SEAL-RECTANGULAR	
	32	2	**1P-4578**	8	FLANGE-HALF	
	33	1,2	**1P-5767**	10	FLANGE-HALF	
	34	1,2	**4J-0522**	5	SEAL-O-RING	
	35	1	**5K-9090**	1	SEAL-O-RING	
	36	1	**5P-7468**	1	CLIP (SLOT)	
	37	1	**5P-7469**	1	CLIP (TAB)	
	38	2	**6J-2680**	1	SEAL-O-RING	
M	39	2	**7X-2550**	2	BOLT (M12X1.75X110-MM)	
	40	1	**8T-2525**	1	GROMMET	
	41	2	**8T-4121**	16	WASHER-HARD (11X21X2.5-MM THK)	

292-7169 **LINES GP-FRONT** *(contd.)* **i04189074**

NOTE	REF NO	GRAPHIC REF	PART NUMBER	QTY	PART NAME 1 2 3 4 5 6 (PRODUCT LEVEL)	SEE PAGE
M	42	1	**8T-4139**	4	BOLT (M12X1.75X30-MM)	
M	43	1,2	**8T-4184**	16	BOLT (M12X1.75X45-MM)	
M	44	1,2	**8T-4194**	13	BOLT (M12X1.75X50-MM)	
M	45	2	**8T-4196**	16	BOLT (M10X1.5X35-MM)	
	46	1,2	**8T-4223**	49	WASHER-HARD (13.5X25.5X3-MM THK)	
M	47	1	**8T-4648**	4	BOLT (M12X1.75X70-MM)	
M	48	1,2	**8T-4956**	6	BOLT (M12X1.75X35-MM)	
M	49	1	**8T-5041**	4	BOLT (M12X1.75X120-MM)	
C	50	1,2	**7K-1181**	4	STRAP-CABLE	
	52	1	**337-2709**	2	GROMMET	

C-CHANGE FROM PREVIOUS TYPE
I-REFER TO HYDRAULIC INFORMATION SYSTEM
M-METRIC PART
Y-SEPARATE ILLUSTRATION

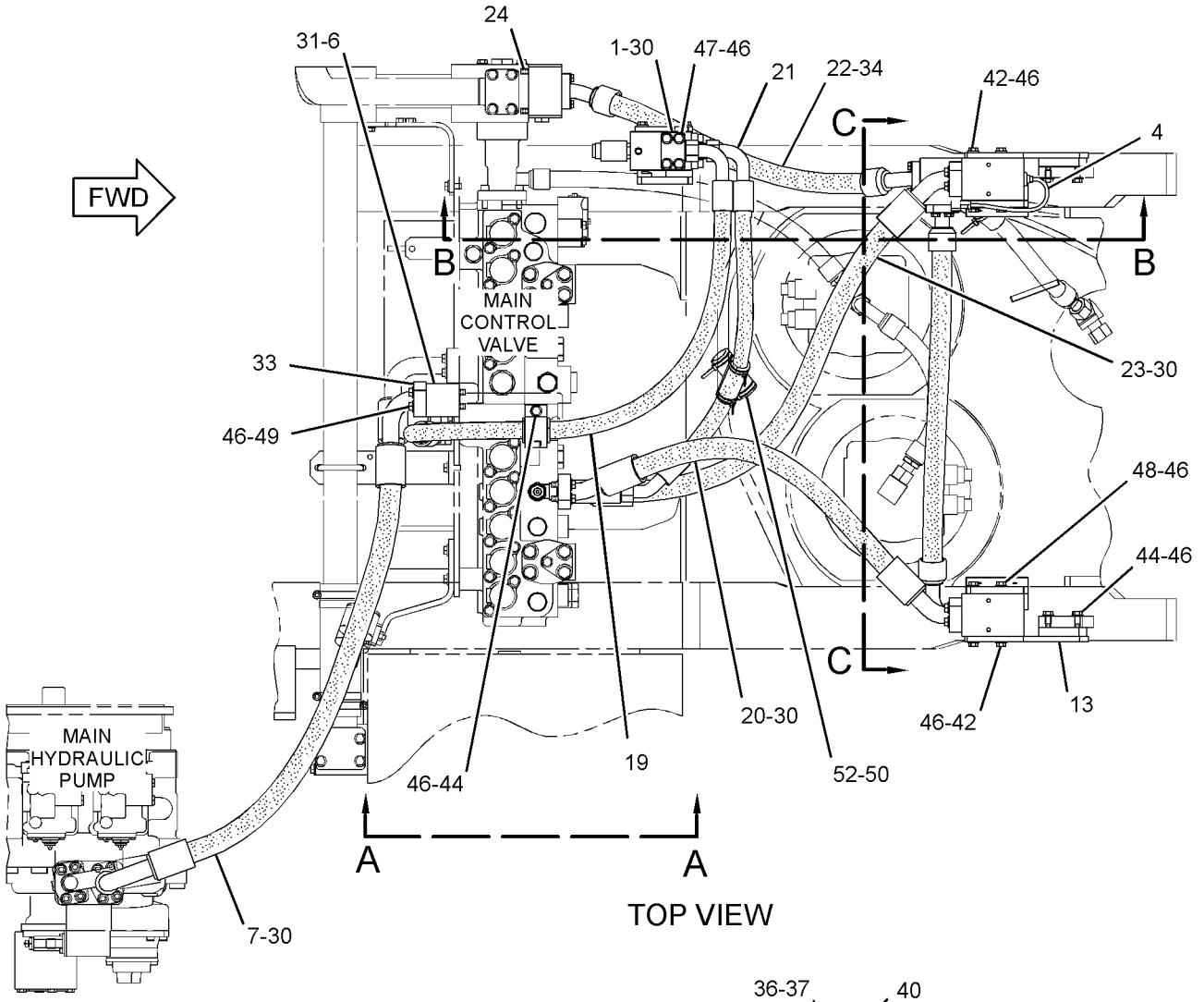

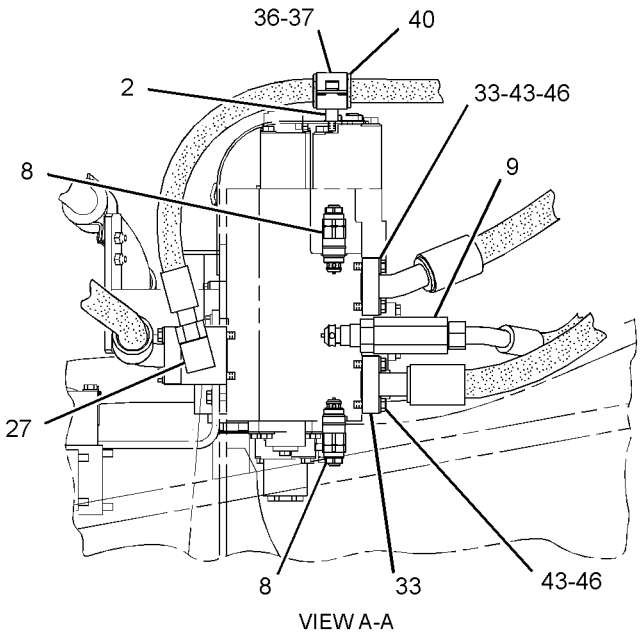

REFER TO ALL ILLUSTRATIONS OF
THIS GROUP FOR AUXILIARY VIEWS

GRAPHIC #1

g02060654

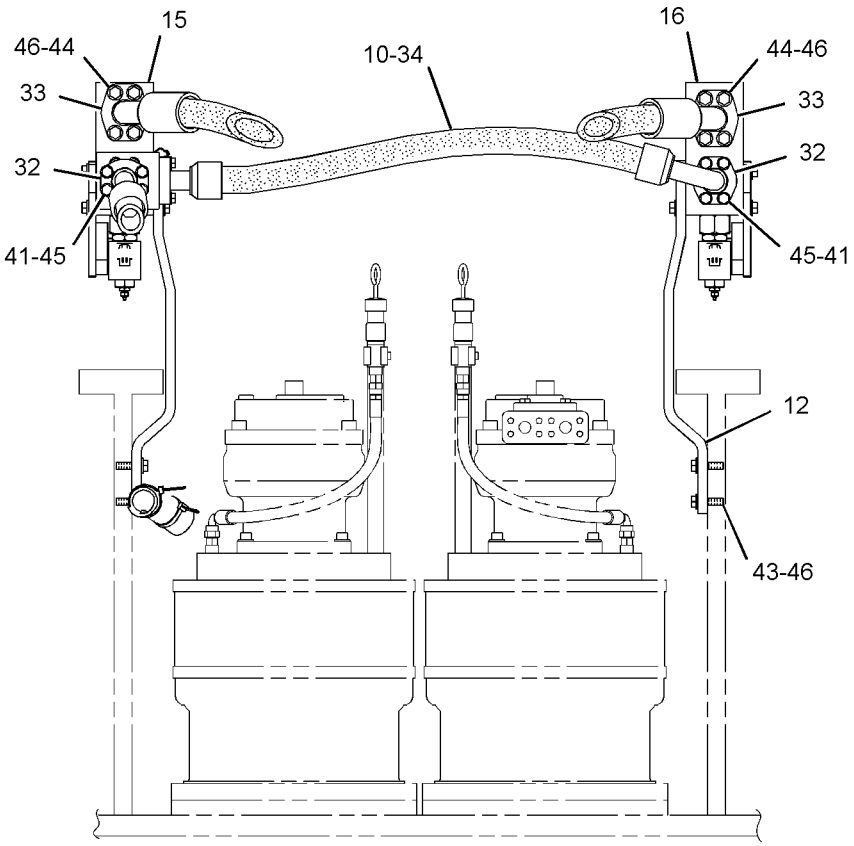

SECTION C-C

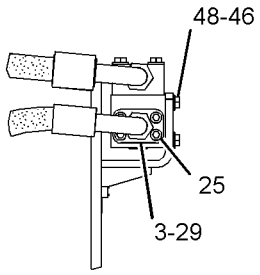

VIEW D-D

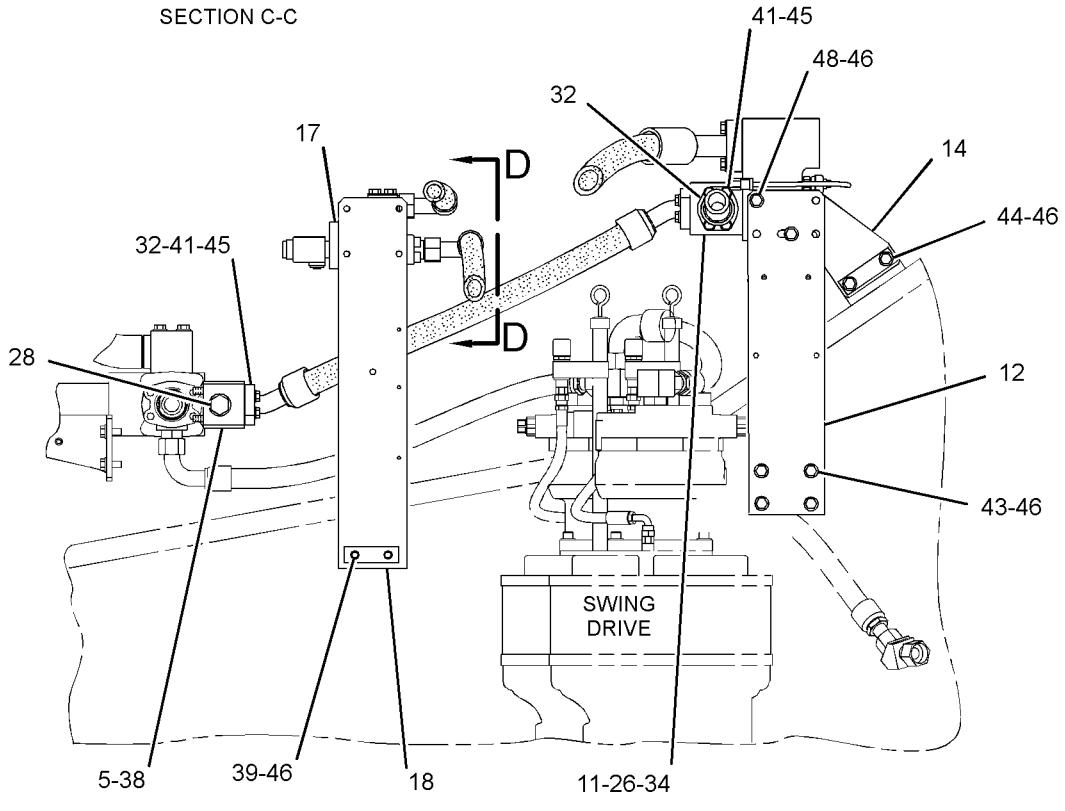

SECTION B-B

GRAPHIC #2 **<END>** g02374257

HYDRAULIC SYSTEM

296-7129 LINES GP-FRONT—SYSTEM 16, 1-WAY, 2-PUMP

S/N: JGB1-UP; KHS1-UP
PART OF 285-1787 CONTROL AR-AUXILIARY
AN ATTACHMENT

SMCS-5057 **i04188390**

NOTE	REF NO	GRAPHIC REF	PART NUMBER	QTY	PART NAME 1 2 3 4 5 6 (PRODUCT LEVEL)	SEE PAGE
	1	2	**4I-7822**	1	COVER	
	2	2	**123-2505**	1	VALVE AS-CHECK (COOLER BYPASS)	
	3	1	**171-2637**	1	BOSS	
	4	1	**239-1798**	1	BLOCK	
	5	1	**354-3806**	1	HOSE AS	
Y	6	1	**239-9036**	1	VALVE GP-CHECK	719
Y	7	2	**270-5694**	1	VALVE GP-RELIEF	781
	8	2	**272-4608**	1	SUPPORT	
	9	2	**272-4616**	1	SUPPORT AS	
I	10	2	**275-1380**	1	HOSE AS	
	11	2	**292-7350**	1	TUBE AS	
	12	1	**296-7165**	1	SUPPORT	
	13	1	**296-7166**	1	SUPPORT AS	
	14	2	**302-2971**	1	SUPPORT AS	
	15	1	**302-2981**	1	BLOCK	
I	16	2	**319-9963**	1	HOSE AS	
I	17	1	**354-3817**	1	HOSE AS	
I	18	1	**330-2346**	1	HOSE AS	
	19	2	*148-8356*	1	ELBOW AS	
		2	**6V-9009**	1	ELBOW	
		2	**2S-4078**	1	SEAL-O-RING	
		2	**6V-8400**	1	SEAL-O-RING	
	20	1	*148-8357*	1	ELBOW AS	
		1	**5K-9090**	1	SEAL-O-RING	
		1	**6V-9008**	1	ELBOW	
		1	**7M-8485**	1	SEAL-O-RING	
	21	2	*148-8411*	1	PLUG AS	
		2	**3K-0360**	1	SEAL-O-RING	
		2	**9S-4185**	1	PLUG-O-RING	
	22	1	*164-4180*	1	PLUG AS	
		1	**7M-8485**	1	SEAL-O-RING	
		1	**9S-4181**	1	PLUG-O-RING	
	23	2	*164-5616*	1	PLUG AS	
		2	**2S-4078**	1	SEAL-O-RING	
		2	**9S-6130**	1	PLUG	
	24	1	**1P-3704**	4	SEAL-RECTANGULAR	
	25	1,2	**1P-3705**	2	SEAL-RECTANGULAR	
	26	2	**1P-4578**	6	FLANGE-HALF	
	27	1,2	**1P-5767**	6	FLANGE-HALF	
	28	2	**4J-0522**	3	SEAL-O-RING	
	29	1	**5P-7468**	1	CLIP (SLOT)	
	30	1	**5P-7469**	1	CLIP (TAB)	
	31	2	**5P-7470**	1	CLIP (SLOT)	
	32	2	**5P-7471**	1	CLIP (TAB)	
	33	2	**5P-7703**	1	GROMMET	
	34	1	**6J-2680**	1	SEAL-O-RING	
	35	1	**6J-4834**	1	COVER	
M	36	2	**7X-2550**	2	BOLT (M12X1.75X110-MM)	
	37	1	**8T-2525**	1	GROMMET	
	38	2	**8T-4121**	12	WASHER-HARD (11X21X2.5-MM THK)	
M	39	1,2	**8T-4139**	12	BOLT (M12X1.75X30-MM)	
M	40	2	**8T-4183**	1	BOLT (M12X1.75X40-MM)	
M	41	1,2	**8T-4184**	12	BOLT (M12X1.75X45-MM)	
M	42	1,2	**8T-4194**	9	BOLT (M12X1.75X50-MM)	
M	43	2	**8T-4196**	12	BOLT (M10X1.5X35-MM)	

296-7129 **LINES GP-FRONT** *(contd.)* **i04188390**

NOTE	REF NO	GRAPHIC REF	PART NUMBER	QTY	PART NAME 1 2 3 4 5 6 (PRODUCT LEVEL)	SEE PAGE
	44	1,2	**8T-4223**	42	WASHER-HARD (13.5X25.5X3-MM THK)	
M	45	1	**8T-4956**	2	BOLT (M12X1.75X35-MM)	
M	46	1	**8T-5041**	4	BOLT (M12X1.75X120-MM)	
M	47	2	**8T-5092**	4	BOLT (M12X1.75X150-MM)	
M	48	2	**8T-7338**	2	BOLT (M16X2X45-MM)	
	49	2	**9X-8257**	2	WASHER (17.5X30X3.5-MM THK)	

I-REFER TO HYDRAULIC INFORMATION SYSTEM
M-METRIC PART
Y-SEPARATE ILLUSTRATION

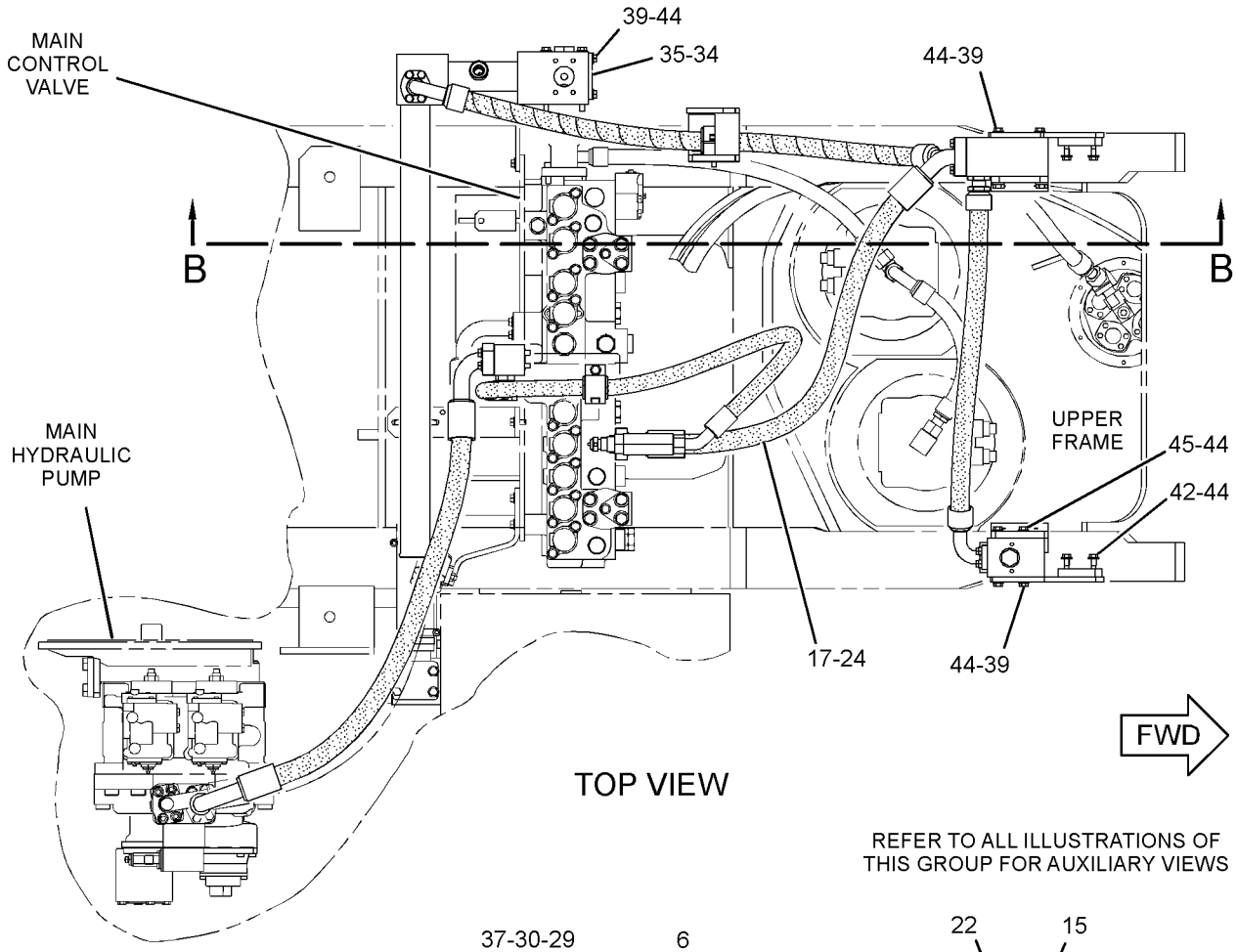

TOP VIEW

REFER TO ALL ILLUSTRATIONS OF THIS GROUP FOR AUXILIARY VIEWS

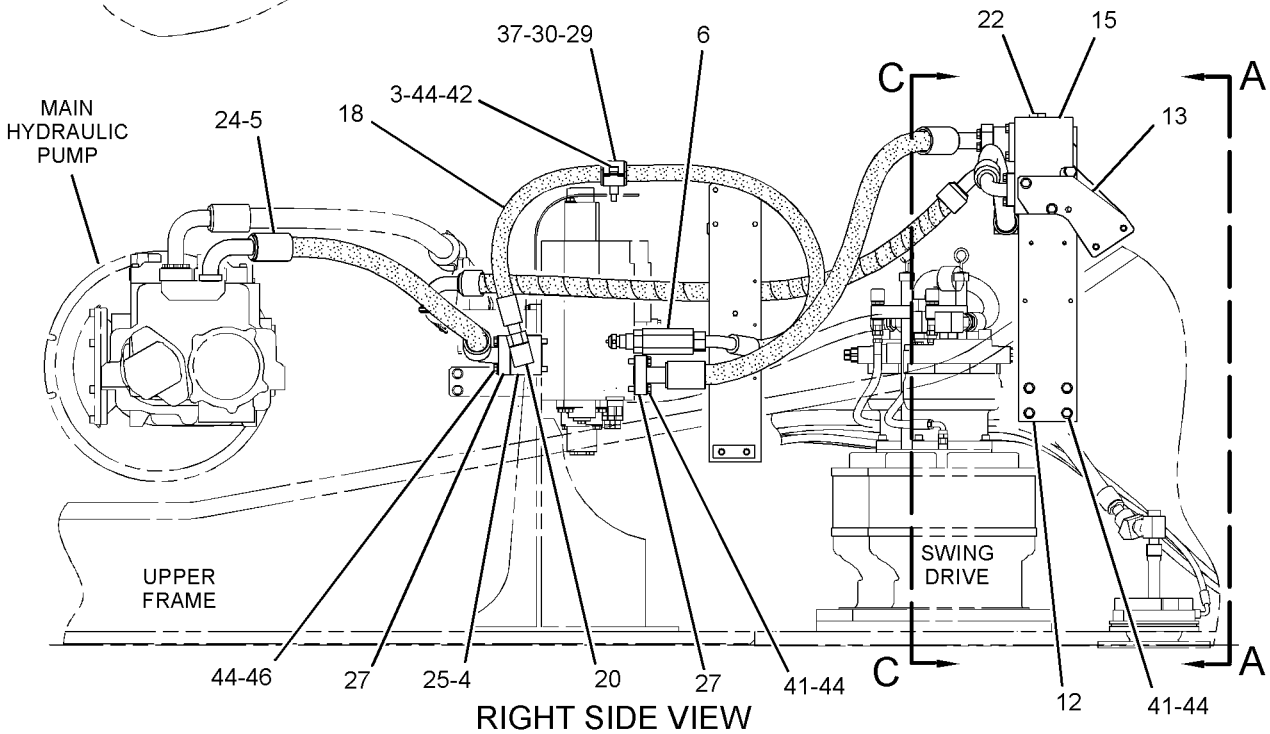

RIGHT SIDE VIEW

GRAPHIC #1

g02352017

296-7129 **LINES GP-FRONT** ***(contd.)*** **i04188390**

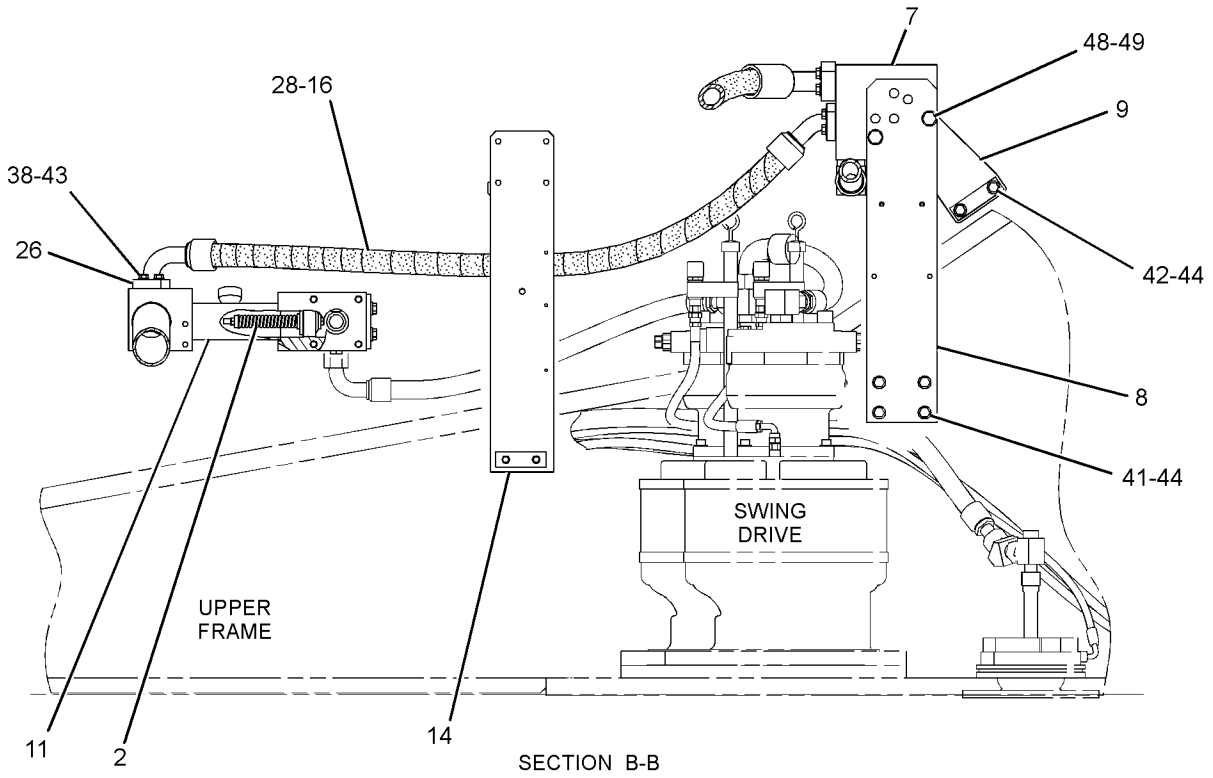

SECTION B-B

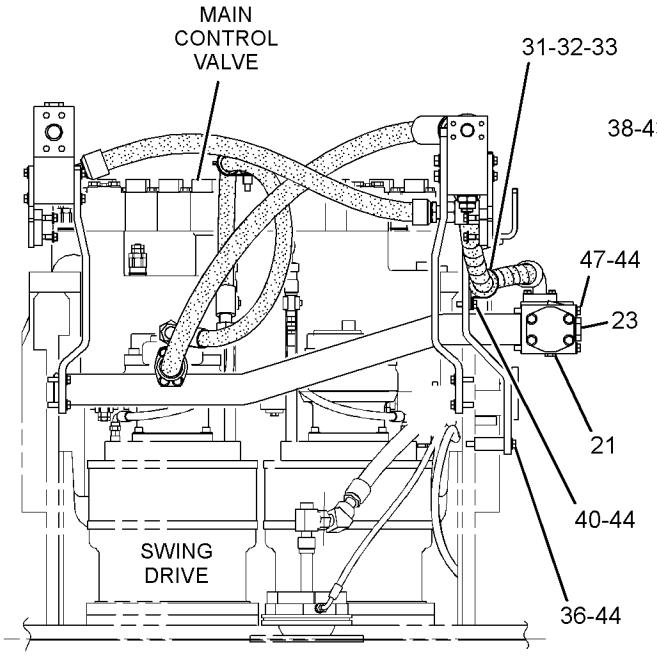

VIEW A-A

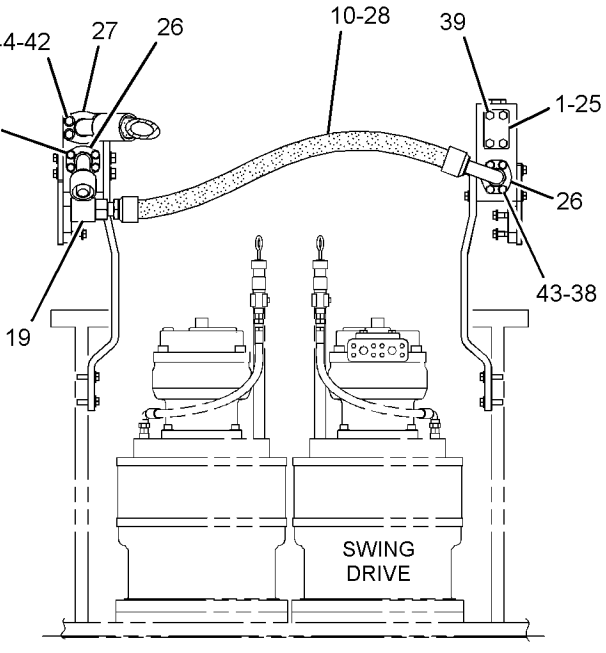

SECTION C-C

GRAPHIC #2 **<END>** g02352015

HYDRAULIC SYSTEM

296-7131 LINES GP-FRONT—SYSTEM 17, COMBINED FN, MED PR

S/N: KHS1-UP

PART OF 285-1788 CONTROL AR-AUXILIARY

AN ATTACHMENT

SMCS-5057 **i04188409**

NOTE	REF NO	GRAPHIC REF	PART NUMBER	QTY	PART NAME 1 2 3 4 5 6 (PRODUCT LEVEL)	SEE PAGE
	1	3	*164-5566*	1	ELBOW AS	
		3	**5K-9090**	1	SEAL-O-RING	
		3	**6I-6721**	1	ELBOW	
	2	3	**123-2505**	1	VALVE AS-CHECK (COOLER BYPASS)	
	3	3	**171-2637**	2	BOSS	
	4	3	**173-4664**	1	FLANGE	
	5	3	**239-1798**	1	BLOCK	
	6	3	**354-3806**	1	HOSE AS	
Y	7	2	**239-8984**	2	VALVE GP-RELIEF (LINE, AUXILIARY)	778
Y	8	2	**239-9036**	1	VALVE GP-CHECK (AUXILIARY CIRCUIT)	719
	9	3	**292-7350**	1	TUBE AS	
I	10	2	**296-7020**	1	HOSE AS	
	11	2	**296-7024**	1	BLOCK	
	12	2	**296-7165**	2	SUPPORT	
	13	2	**296-7166**	1	SUPPORT AS	
	14	2	**296-7167**	1	SUPPORT AS	
Y	15	2	**297-0265**	1	VALVE GP-SOLENOID & RELIEF (1-WAY, 2-WAY FLOW) (LH)	805
Y	16	2	**297-0266**	1	VALVE GP-SOLENOID & RELIEF (RH)	806
Y	17	3	**297-0370**	1	VALVE GP-CHECK (1-WAY/2-WAY, CHECK)	720
	18	3	**302-2971**	1	SUPPORT AS	
I	19	3	**302-3119**	1	HOSE AS	
I	20	3	**319-9866**	1	HOSE AS	
I	21	2	**354-3816**	1	HOSE AS	
I	22	2	**354-3817**	1	HOSE AS	
I	23	3	**325-8871**	1	HOSE AS	
M	24	3	**108-1781**	4	BOLT-SOCKET HEAD (M12X1.75X35-MM)	
M	25	2	**108-4282**	4	BOLT-SOCKET HEAD (M10X1.5X100-MM)	
	26	3	*148-8357*	1	ELBOW AS	
		3	**5K-9090**	1	SEAL-O-RING	
		3	**6V-9008**	1	ELBOW	
		3	**7M-8485**	1	SEAL-O-RING	
	27	2	*148-8411*	1	PLUG AS	
		2	**3K-0360**	1	SEAL-O-RING	
		2	**9S-4185**	1	PLUG-O-RING	
	28	3	*164-5616*	1	PLUG AS	
		3	**2S-4078**	1	SEAL-O-RING	
		3	**9S-6130**	1	PLUG	
	29	3	**1P-3703**	1	SEAL-RECTANGULAR	
	30	2,3	**1P-3704**	7	SEAL-RECTANGULAR	
	31	3	**1P-3705**	1	SEAL-RECTANGULAR	
	32	2,3	**1P-4578**	8	FLANGE-HALF	
	33	2,3	**1P-5767**	10	FLANGE-HALF	
	34	2,3	**4J-0522**	5	SEAL-O-RING	
	35	3	**5K-9090**	1	SEAL-O-RING	
	36	3	**5P-7468**	1	CLIP (SLOT)	
	37	3	**5P-7469**	1	CLIP (TAB)	
	38	3	**5P-7470**	1	CLIP (SLOT)	
	39	3	**5P-7471**	1	CLIP (TAB)	
	40	3	**5P-7703**	1	GROMMET	
	41	3	**6J-2680**	1	SEAL-O-RING	
	42	3	**6J-4834**	1	COVER	
M	43	3	**7X-2550**	2	BOLT (M12X1.75X110-MM)	
	44	3	**8T-2525**	1	GROMMET	
	45	2,3	**8T-4121**	16	WASHER-HARD (11X21X2.5-MM THK)	

296-7131 **LINES GP-FRONT** *(contd.)* **i04188409**

NOTE	REF NO	GRAPHIC REF	PART NUMBER	QTY	PART NAME 1 2 3 4 5 6 (PRODUCT LEVEL)	SEE PAGE
M	46	2,3	**8T-4139**	10	BOLT (M12X1.75X30-MM)	
M	47	2	**8T-4184**	16	BOLT (M12X1.75X45-MM)	
M	48	2	**8T-4186**	4	BOLT (M10X1.5X40-MM)	
M	49	2,3	**8T-4194**	14	BOLT (M12X1.75X50-MM)	
M	50	2,3	**8T-4196**	12	BOLT (M10X1.5X35-MM)	
	51	2,3	**8T-4223**	58	WASHER-HARD (13.5X25.5X3-MM THK)	
M	52	3	**8T-4648**	4	BOLT (M12X1.75X70-MM)	
M	53	2	**8T-4956**	4	BOLT (M12X1.75X35-MM)	
M	54	3	**8T-5041**	4	BOLT (M12X1.75X120-MM)	
M	55	3	**8T-5092**	4	BOLT (M12X1.75X150-MM)	
C	56	2	**7K-1181**	4	STRAP-CABLE	
	57	2	**337-2709**	2	GROMMET	

C-CHANGE FROM PREVIOUS TYPE
I-REFER TO HYDRAULIC INFORMATION SYSTEM
M-METRIC PART
Y-SEPARATE ILLUSTRATION

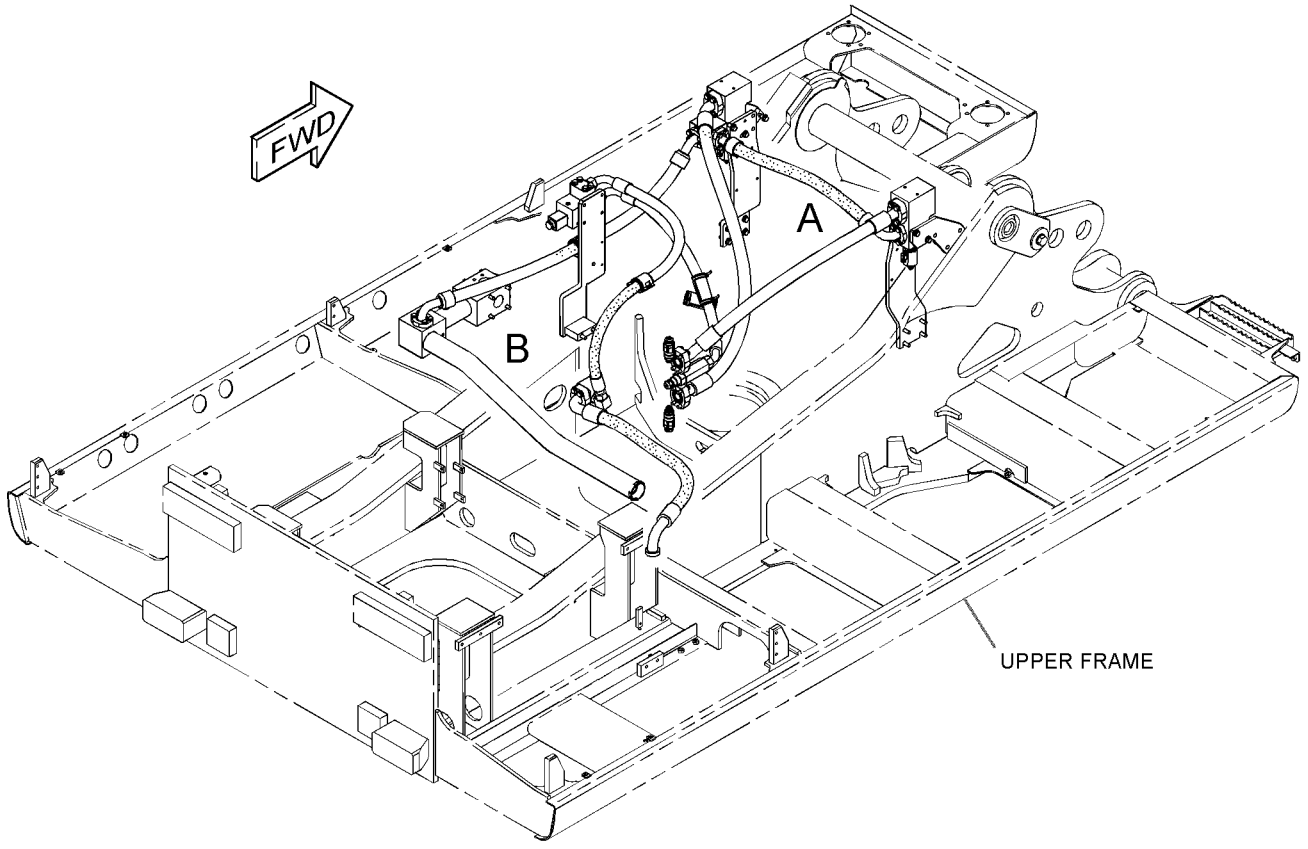

REFER TO ALL ILLUSTRATIONS OF THIS GROUP FOR AUXILIARY VIEWS

GRAPHIC #1

g02367117

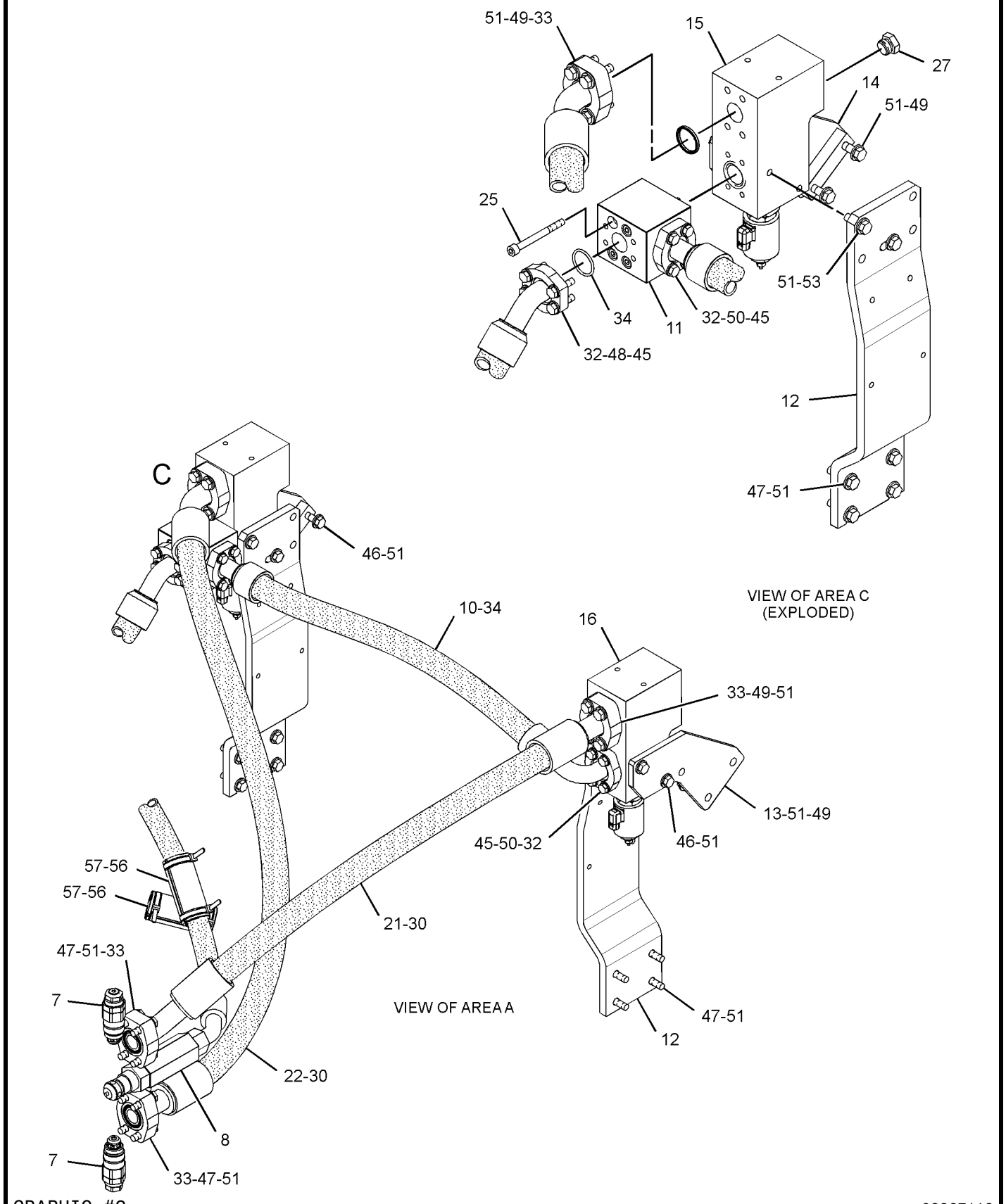

GRAPHIC #2

g02367118

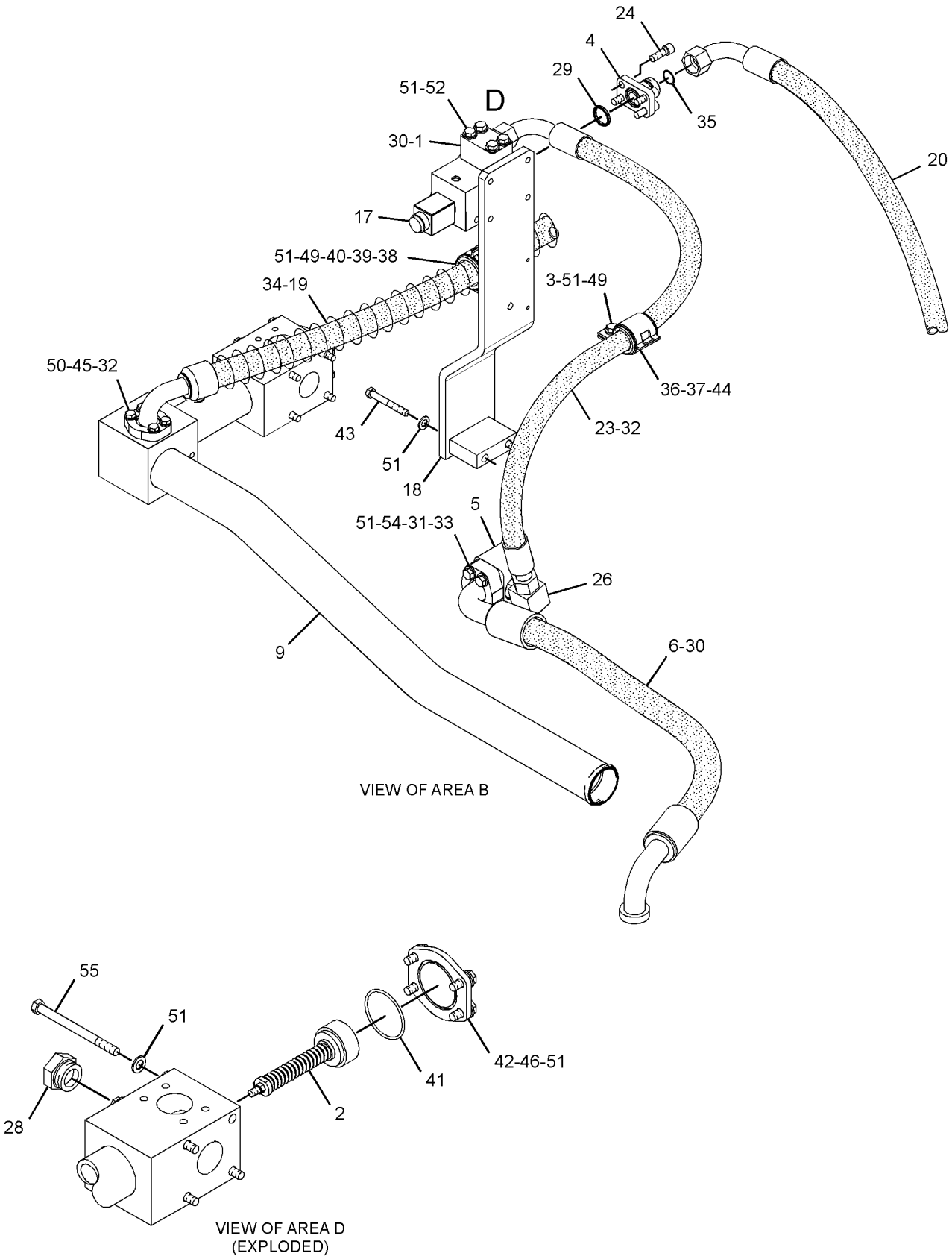

GRAPHIC #3 **<END>** g02092974

HYDRAULIC SYSTEM

239-1820 LINES GP-HYDRAULIC—HYDRAULIC TANK

S/N: JGB1-UP; KHS1-UP

PART OF 326-2864 TANK & MTG GP-HYDRAULIC

SMCS-5057 **i03893954**

NOTE	REF NO	GRAPHIC REF	PART NUMBER	QTY	PART NAME 1 2 3 4 5 6 (PRODUCT LEVEL)	SEE PAGE
	1	1	**8C-0620**	2	PROTECTOR-THREAD	
	2	1	**209-4575**	2	CLAMP	
I	3	1	**227-0292**	1	HOSE AS	
	4	1	**333-4610**	1	TUBE AS	
	5	1	**236-2862**	1	TUBE AS	
	6	1	**245-5137**	1	TUBE AS	
	7	1	**227-0581**	1	HOSE	
	8	1	**255-1929**	1	HOSE AS	
I	9	1	**255-1930**	1	HOSE AS	
	10	1	**260-8071**	1	HOSE AS	
	11	1	**320-0147**	1	HOSE AS	
	12	1	*148-8339*	1	CONNECTOR AS	
		1	**6V-8716**	1	CONNECTOR	
		1	**6V-9746**	1	SEAL-O-RING	
		1	**7M-8485**	1	SEAL-O-RING	
	13	1	*148-8340*	1	CONNECTOR AS	
		1	**3K-0360**	1	SEAL-O-RING	
		1	**6V-8398**	1	SEAL-O-RING	
		1	**6V-8639**	1	CONNECTOR	
	14	1	*148-8345*	1	CONNECTOR AS	
		1	**2M-9780**	1	SEAL-O-RING	
		1	**6V-8398**	1	SEAL-O-RING	
		1	**6V-8638**	1	CONNECTOR	
	15	1	*148-8347*	2	ELBOW AS	
					(EACH INCLUDES)	
		1	**3D-2824**	1	SEAL-O-RING	
		1	**6V-9007**	1	ELBOW	
		1	**6V-9746**	1	SEAL-O-RING	
	16	1	*148-8360*	1	ELBOW AS	
		1	**6V-9182**	1	ELBOW	
		1	**6V-9746**	1	SEAL-O-RING	
		1	**7M-8485**	1	SEAL-O-RING	
	17	1	*148-8362*	1	ELBOW AS	
		1	**3D-2824**	1	SEAL-O-RING	
		1	**5K-9090**	1	SEAL-O-RING	
		1	**8T-6684**	1	ELBOW	
	18	1	*148-8364*	3	ELBOW AS	
					(EACH INCLUDES)	
		1	**3K-0360**	1	SEAL-O-RING	
		1	**6V-8398**	1	SEAL-O-RING	
		1	**6V-8625**	1	ELBOW	
	19	1	*148-8378*	1	ELBOW AS	
		1	**3J-1907**	1	SEAL-O-RING	
		1	**6V-8397**	1	SEAL-O-RING	
		1	**6V-8724**	1	ELBOW	
C	23	1	*164-5645*	1	TEE AS	
		1	**5K-9090**	1	SEAL-O-RING	
		1	**6V-8398**	1	SEAL-O-RING	
		1	**3D-2824**	1	SEAL-O-RING	
		1	**134-6953**	1	TEE	
	24	1	*164-6872*	1	TEE AS	
		1	**2M-9780**	1	SEAL-O-RING	
		1	**6V-8398**	2	SEAL-O-RING	
		1	**115-8634**	1	TEE-O-RING	
	25	1	**175-6176**	1	SEAL-O-RING	
	26	1	**2H-3934**	1	SEAL-O-RING	

239-1820 **LINES GP-HYDRAULIC** *(contd.)* **i03893954**

NOTE	REF NO	GRAPHIC REF	PART NUMBER	QTY	PART NAME 1 2 3 4 5 6 (PRODUCT LEVEL)	SEE PAGE
	27	1	**4J-0528**	1	SEAL-O-RING	
	28	1	**6J-2680**	1	SEAL-O-RING	
	29	1	**7K-1181**	1	STRAP-CABLE	
M	30	1	**7X-2550**	4	BOLT (M12X1.75X110-MM)	
M	31	1	**8T-4176**	4	BOLT (M12X1.75X90-MM)	
	32	1	**8T-4223**	12	WASHER-HARD (13.5X25.5X3-MM THK)	
M	33	1	**8T-5412**	4	BOLT (M12X1.75X140-MM)	

C-CHANGE FROM PREVIOUS TYPE
I-REFER TO HYDRAULIC INFORMATION SYSTEM
M-METRIC PART

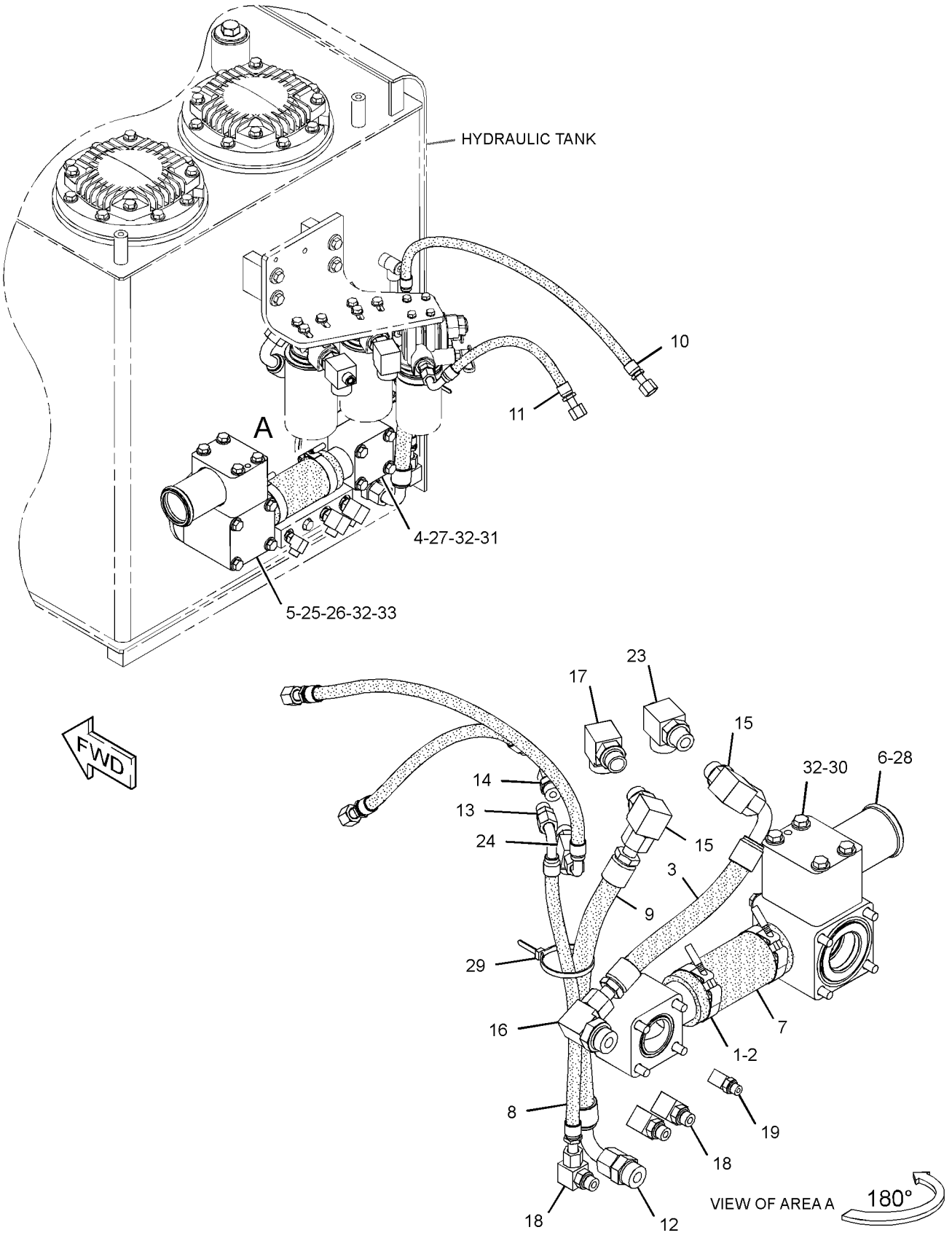

GRAPHIC #1 **<END>** g02141238

HYDRAULIC SYSTEM

292-7159 LINES GP-HYDRAULIC—COOLER, PUMP, TANK, VALVE

S/N: JGB1-UP; KHS1-UP

PART OF 297-0243, 297-0244 HYDRAULIC AR

SMCS-5057 **i04118019**

NOTE	REF NO	GRAPHIC REF	PART NUMBER	QTY	PART NAME 1 2 3 4 5 6 (PRODUCT LEVEL)	SEE PAGE
	1	2	**6J-4834**	1	COVER	
	2	1	**209-4582**	2	CLAMP	
	3	2	**123-2505**	1	VALVE AS-CHECK (COOLER BYPASS)	
M	4	2	**170-8553**	4	BOLT-SOCKET HEAD (M12X1.75X40-MM)	
	5	2	**236-2993**	1	SUPPORT	
	6	3	**236-2996**	1	SUPPORT	
	7	2	**354-3805**	1	HOSE AS	
	8	2	**354-3808**	1	HOSE AS	
	9	1	**255-1819**	1	HOSE	
	10	2	**335-0374**	1	VALVE GP-CHECK (HYDRAULIC OIL COOLER LINES)	
		2	**6V-2483**	1	SEAL-O-RING	
	11	3	**330-2342**	1	SUPPORT AS	
	12	1	**292-7249**	1	SUPPORT AS	
	13	1	**292-7255**	1	SUPPORT AS	
	14	3	**292-7264**	1	TUBE AS	
	15	1	**292-7268**	1	TUBE AS	
	16	3	**296-6970**	1	TUBE AS	
M	17	3	**096-4883**	2	LOCKNUT (M10X1.5-THD)	
M	18	2	**096-4884**	2	LOCKNUT (M12X1.75-THD)	
M	19	3	**101-7402**	8	BOLT-SOCKET HEAD (M12X1.75X30-MM)	
	20	2	**132-2155**	1	U-BOLT	
	21	2	*148-8335*	1	CONNECTOR AS	
		2	**6V-8635**	1	CONNECTOR	
		2	**5K-9090**	1	SEAL-O-RING	
		2	**7M-8485**	1	SEAL-O-RING	
	22	2	*148-8411*	1	PLUG AS	
		2	**9S-4185**	1	PLUG-O-RING	
		2	**3K-0360**	1	SEAL-O-RING	
	23	2	*164-5616*	1	PLUG AS	
		2	**9S-6130**	1	PLUG	
		2	**2S-4078**	1	SEAL-O-RING	
	24	2	**1P-3704**	4	SEAL-RECTANGULAR	
	25	1	**1P-5767**	4	FLANGE-HALF	
	26	2,3	**4J-0527**	3	SEAL-O-RING	
	27	2	**6J-2680**	2	SEAL-O-RING	
	28	3	**6V-1572**	2	CLIP (SLOT)	
	29	3	**6V-1573**	2	CLIP (TAB)	
	30	3	**6V-1875**	2	GROMMET	
M	31	3	**7Y-5247**	1	U-BOLT	
	32	3	**8T-4121**	4	WASHER-HARD (11X21X2.5-MM THK)	
M	33	1,2,3	**8T-4139**	14	BOLT (M12X1.75X30-MM)	
M	34	3	**8T-4186**	2	BOLT (M10X1.5X40-MM)	
M	35	1	**8T-4192**	2	BOLT (M12X1.75X25-MM)	
M	36	1	**8T-4194**	8	BOLT (M12X1.75X50-MM)	
	37	1,2,3	**8T-4223**	30	WASHER-HARD (13.5X25.5X3-MM THK)	
M	38	2	**8T-5092**	4	BOLT (M12X1.75X150-MM)	
	39	1	**8C-0620**	2	PROTECTOR-THREAD	
	40	2	**7X-0599**	4	WASHER-HARD (13X20X2-MM THK)	

M-METRIC PART

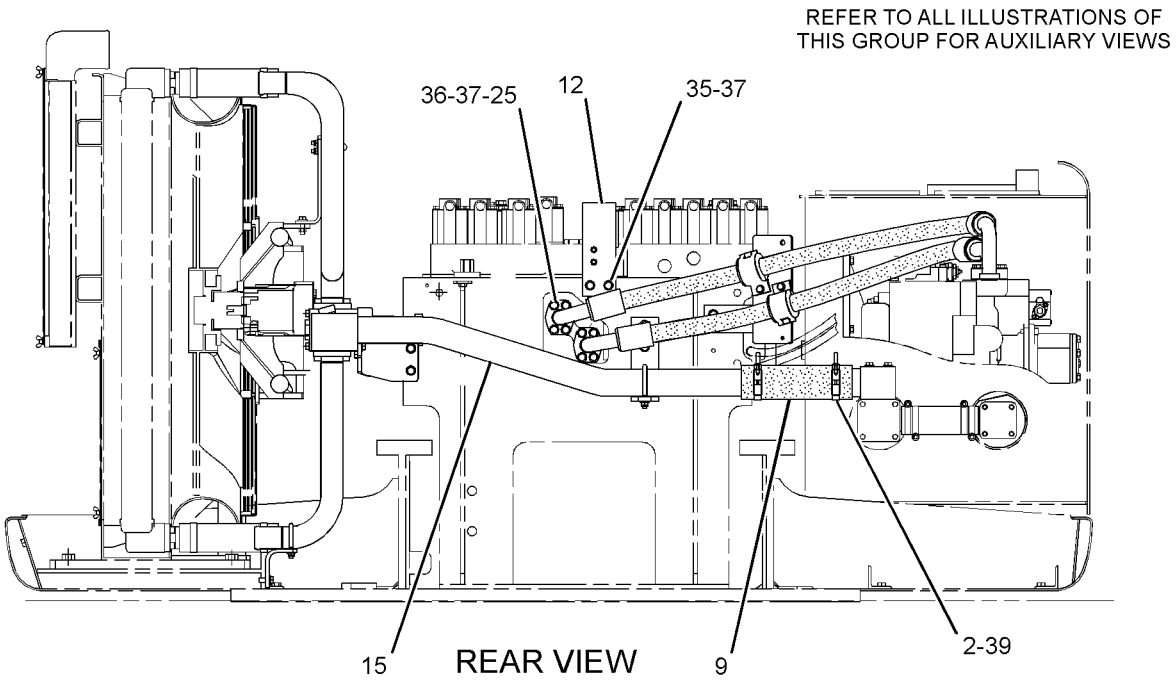

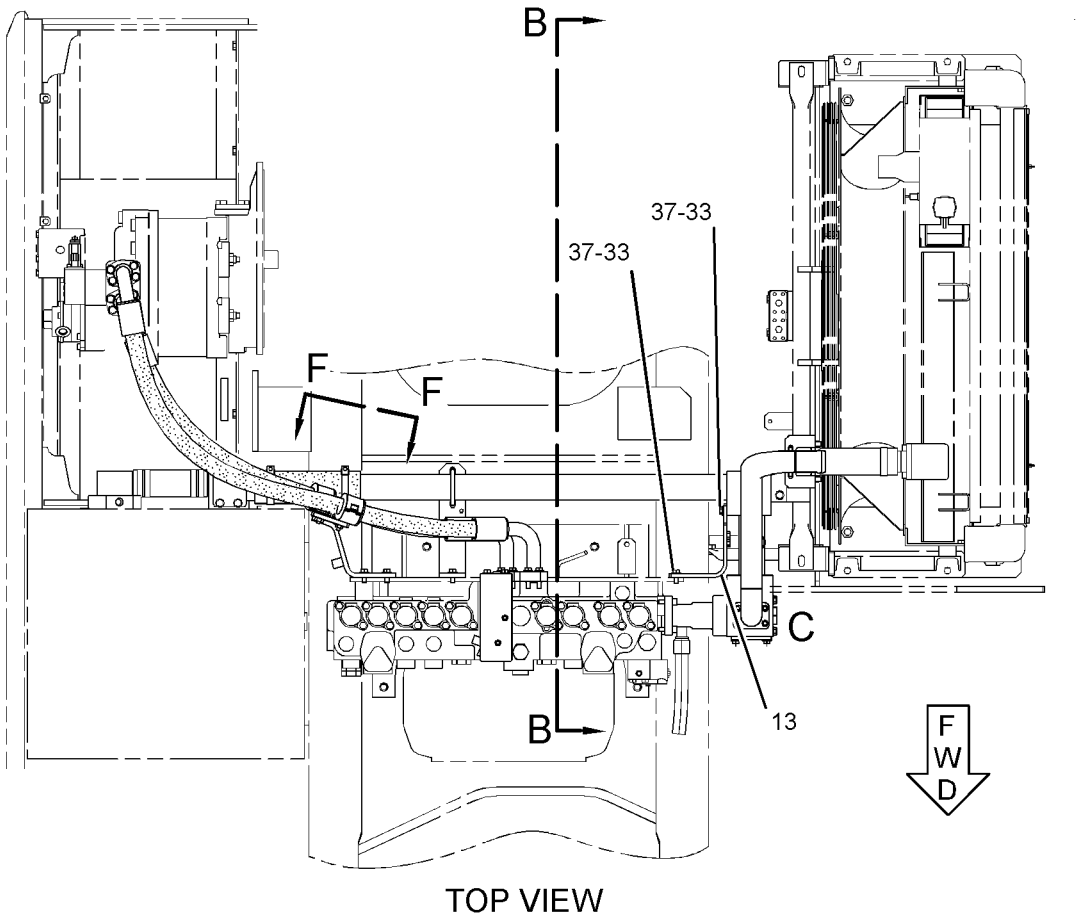

GRAPHIC #1

g01955245

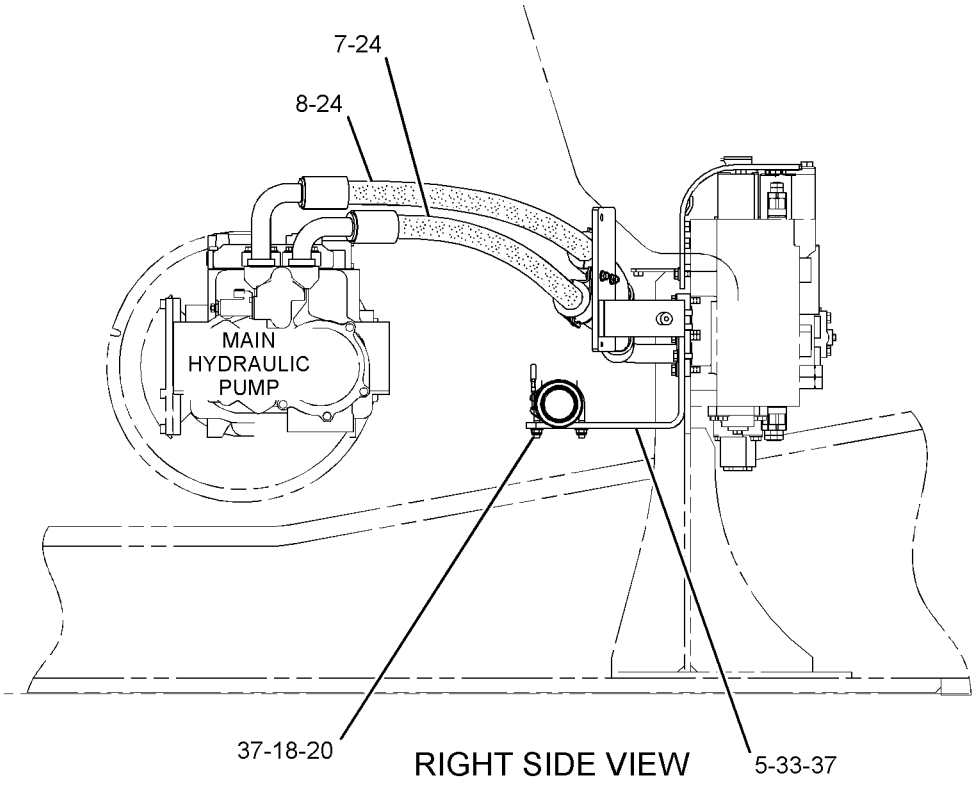

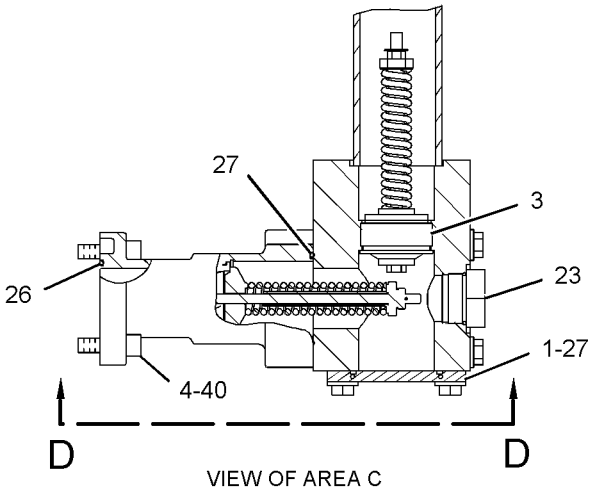

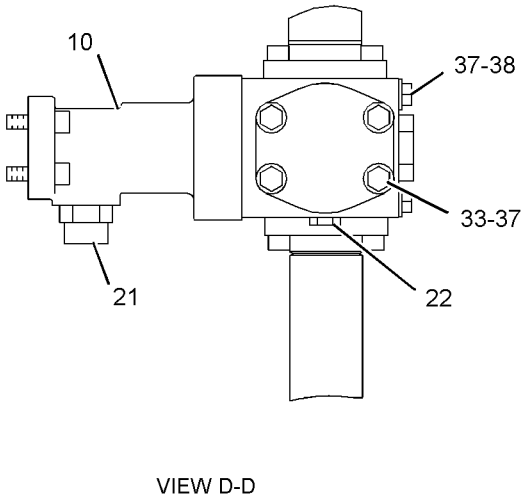

GRAPHIC #2

g02000634

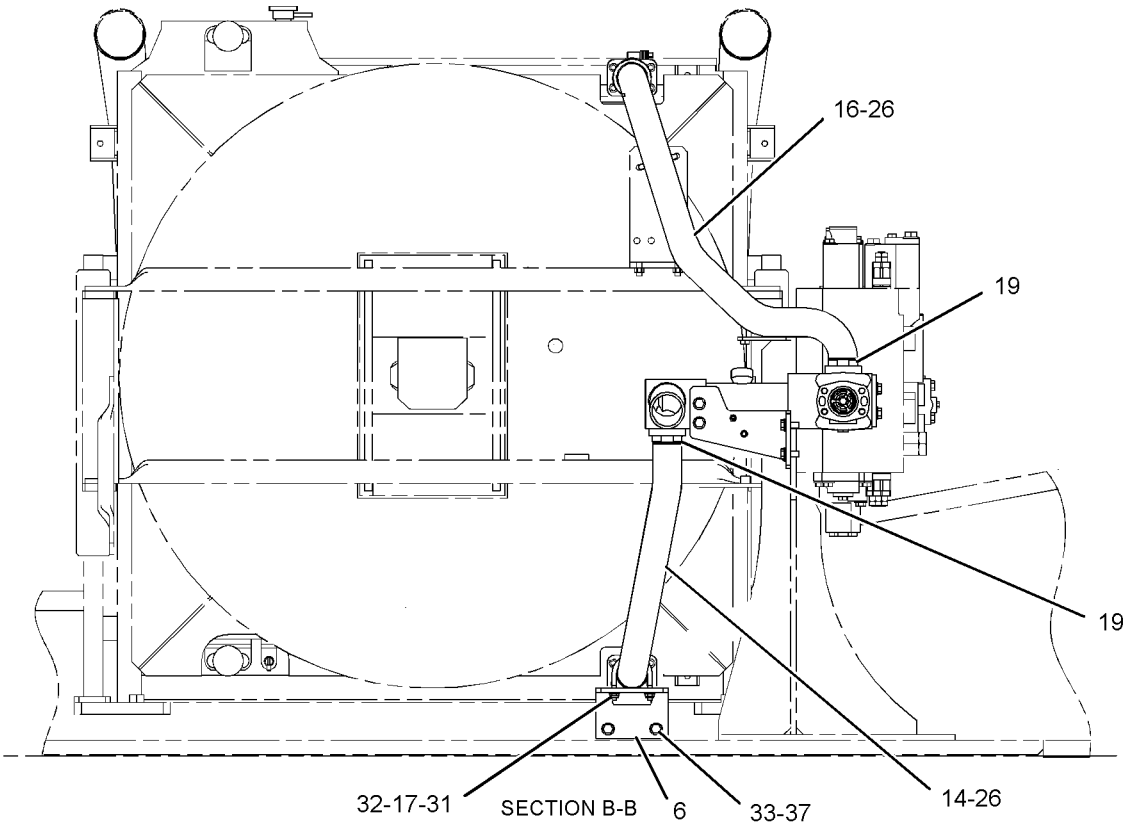

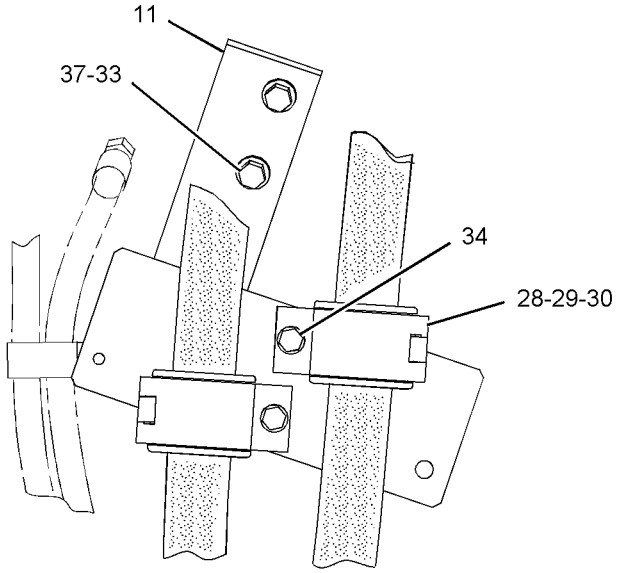

VIEW F-F

GRAPHIC #3 **<END>** g01779574

HYDRAULIC SYSTEM

292-7164 LINES GP-HYDRAULIC OIL COOLER

S/N: JGB1-UP; KHS1-UP

PART OF 297-0243, 297-0244 HYDRAULIC AR

SMCS-1374 **i03045262**

NOTE	REF NO	GRAPHIC REF	PART NUMBER	QTY	PART NAME 1 2 3 4 5 6 (PRODUCT LEVEL)	SEE PAGE
	1	1	**144-0367**	8	CLAMP-HOSE	
	2	1	**236-2992**	2	HOSE	
	3	1	**245-5214**	2	TUBE AS	
I	4	1	**108-7322**	1	HOSE AS	
	5	1	**307-5116**	1	SUPPORT	
M	6	1	**096-4883**	2	LOCKNUT (M10X1.5-THD)	
M	7	1	**101-7402**	8	BOLT-SOCKET HEAD (M12X1.75X30-MM)	
	8	1	*148-8341*	1	CONNECTOR AS	
		1	**3D-2824**	1	SEAL-O-RING	
		1	**6V-8713**	1	CONNECTOR	
		1	**7J-9108**	1	SEAL-O-RING	
	9	1	*148-8372*	1	ELBOW AS	
		1	**2M-9780**	1	SEAL-O-RING	
		1	**6V-8398**	1	SEAL-O-RING	
		1	**6V-8721**	1	ELBOW	
	10	1	*148-8382*	2	ELBOW AS	
					(EACH INCLUDES)	
		1	**3D-2824**	1	SEAL-O-RING	
		1	**7J-9108**	1	SEAL-O-RING	
		1	**8T-0404**	1	ELBOW	
	11	1	**4J-0527**	2	SEAL-O-RING	
	12	1	**6D-4246**	1	CLIP	
M	13	1	**7Y-5247**	1	U-BOLT	
	14	1	**8T-4121**	3	WASHER-HARD (11X21X2.5-MM THK)	
M	15	1	**8T-4136**	1	BOLT (M10X1.5X25-MM)	
M	16	1	**8T-4183**	2	BOLT (M12X1.75X40-MM)	
	17	1	**8T-4223**	2	WASHER-HARD (13.5X25.5X3-MM THK)	

I-REFER TO HYDRAULIC INFORMATION SYSTEM
M-METRIC PART

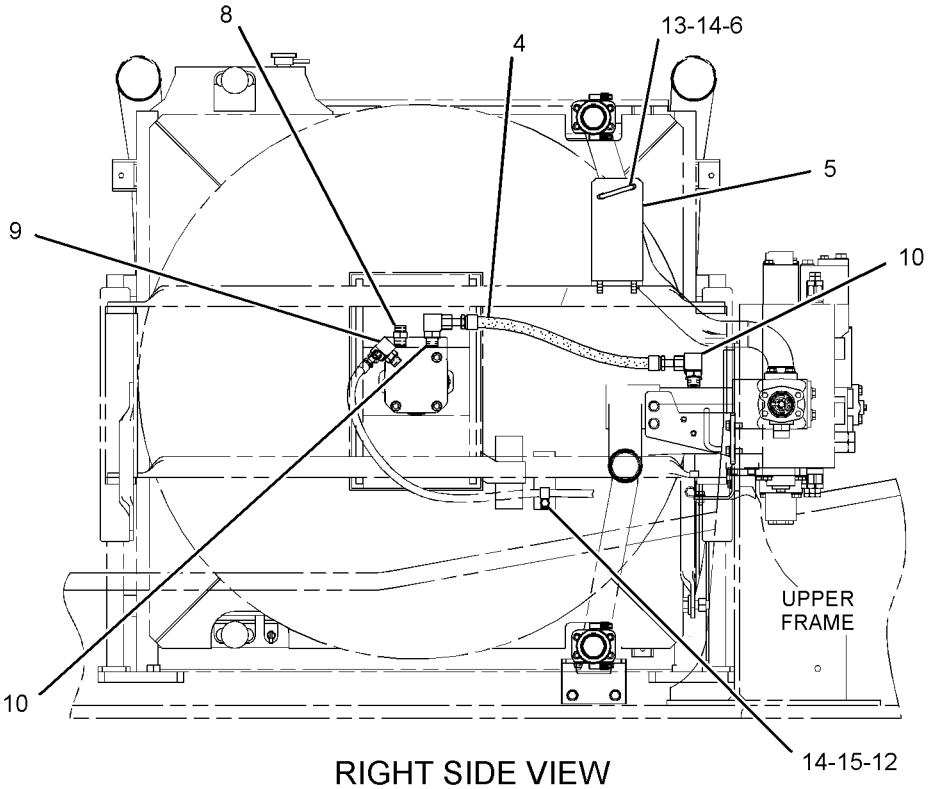

RIGHT SIDE VIEW

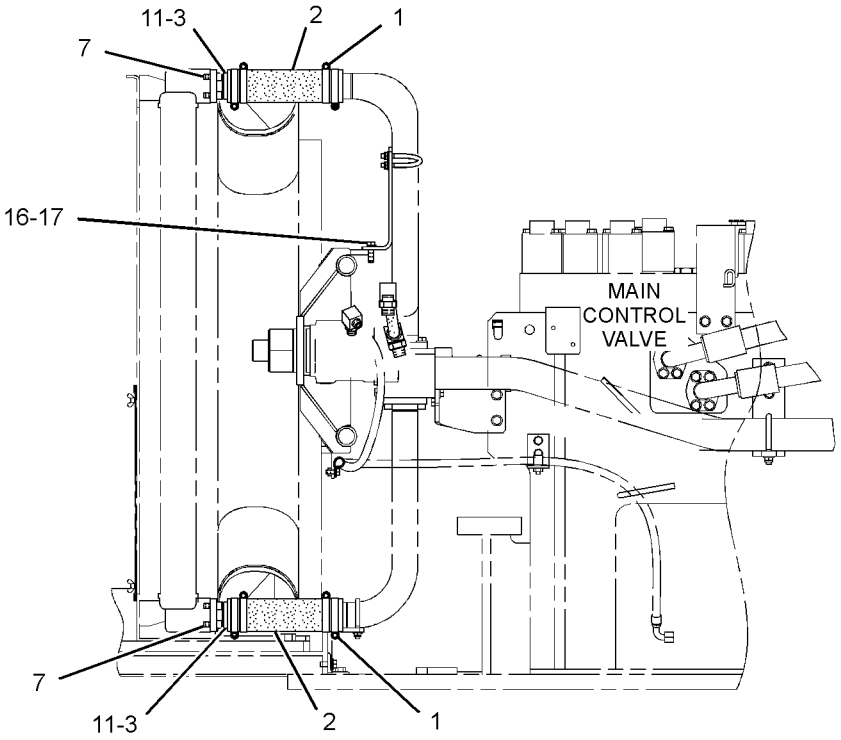

REAR VIEW

GRAPHIC #1 **<END>** g01457347

HYDRAULIC SYSTEM

292-7175 LINES GP-MOTOR—REVERSE FAN

S/N: KHS1-UP

PART OF 294-1275 CONTROL AR-VARIABLE-SPEED FAN

AN ATTACHMENT

SMCS-5057, 5058 **i04003004**

NOTE	REF NO	GRAPHIC REF	PART NUMBER	QTY	PART NAME 1 2 3 4 5 6 (PRODUCT LEVEL)	SEE PAGE
	1	1	**7K-1181**	3	STRAP-CABLE	
I	2	1	**087-4503**	1	HOSE AS	
M	3	1	**101-7400**	6	BOLT-SOCKET HEAD (M10X1.5X110-MM)	
I	4	1	**104-8821**	1	HOSE AS	
I	5	1	**108-7313**	1	HOSE AS	
Y	6	1	**234-4624**	1	VALVE GP-CONTROL (REVERSE FLOW FAN)	722
Y	7	1	**242-6880**	1	VALVE GP-SOLENOID (REVERSING FAN)	799
I	8	1	**330-2364**	1	HOSE AS	
M	9	1	**129-3181**	2	BOLT-SOCKET HEAD (M10X1.5X55-MM)	
	10	1	*148-8315*	1	CONNECTOR AS	
		1	**2M-9780**	1	SEAL-O-RING	
		1	**6V-8642**	1	CONNECTOR	
		1	**7J-9108**	1	SEAL-O-RING	
	11	1	*148-8336*	3	CONNECTOR AS	
					(EACH INCLUDES)	
		1	**3J-1907**	1	SEAL-O-RING	
		1	**6V-8397**	1	SEAL-O-RING	
		1	**6V-8636**	1	CONNECTOR	
	12	1	*148-8378*	1	ELBOW AS	
		1	**3J-1907**	1	SEAL-O-RING	
		1	**6V-8397**	1	SEAL-O-RING	
		1	**6V-8724**	1	ELBOW	
	13	1	*148-8390*	1	ELBOW AS	
		1	**2M-9780**	1	SEAL-O-RING	
		1	**6V-8626**	1	ELBOW	
		1	**7J-9108**	1	SEAL-O-RING	
	14	1	*148-8415*	1	REDUCER AS	
		1	**6V-8397**	1	SEAL-O-RING	
		1	**6V-8936**	1	REDUCER	
	15	1	*148-8428*	1	TEE AS	
		1	**3K-0360**	1	SEAL-O-RING	
		1	**6V-8398**	2	SEAL-O-RING	
		1	**6V-8782**	1	TEE	
	16	1	*148-8433*	1	TEE AS	
		1	**6V-8397**	2	SEAL-O-RING	
		1	**6V-9836**	1	TEE-SWIVEL	
	17	1	**4J-5267**	2	SEAL-O-RING	
	18	1	**4K-8302**	1	CLIP	
	19	1	**8T-4121**	1	WASHER-HARD (11X21X2.5-MM THK)	
M	20	1	**8T-4136**	1	BOLT (M10X1.5X25-MM)	

I-REFER TO HYDRAULIC INFORMATION SYSTEM
M-METRIC PART
Y-SEPARATE ILLUSTRATION

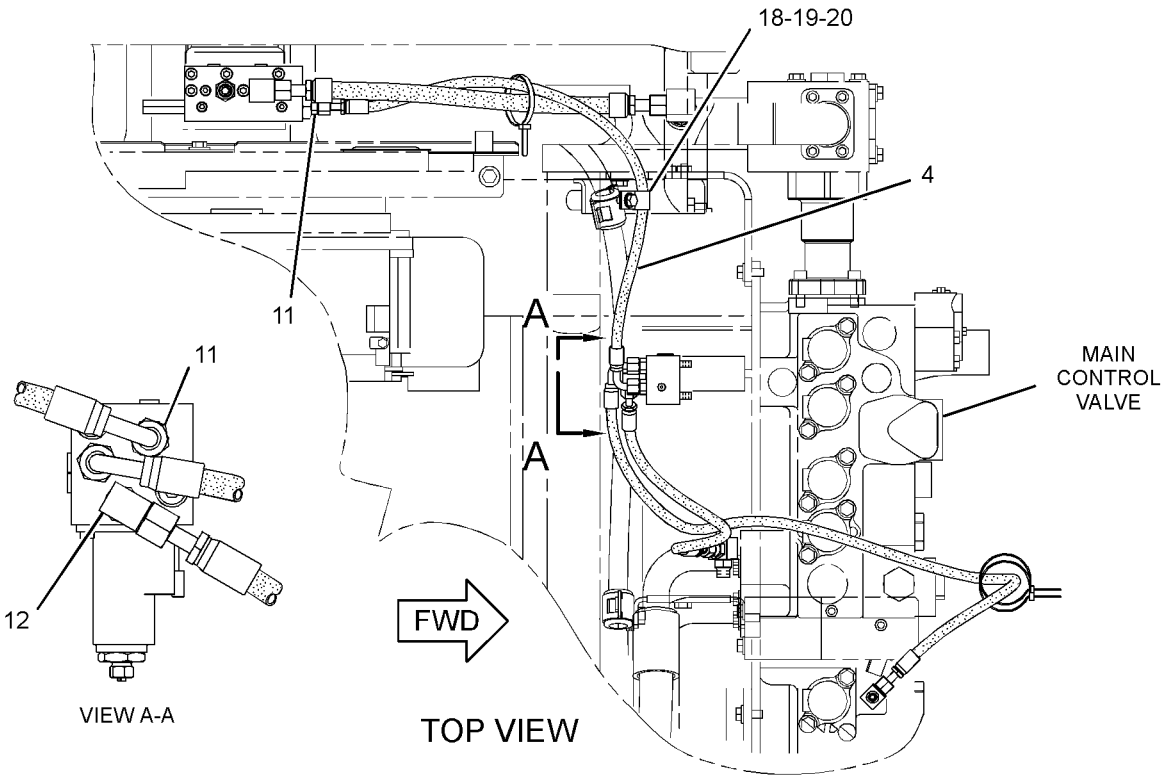

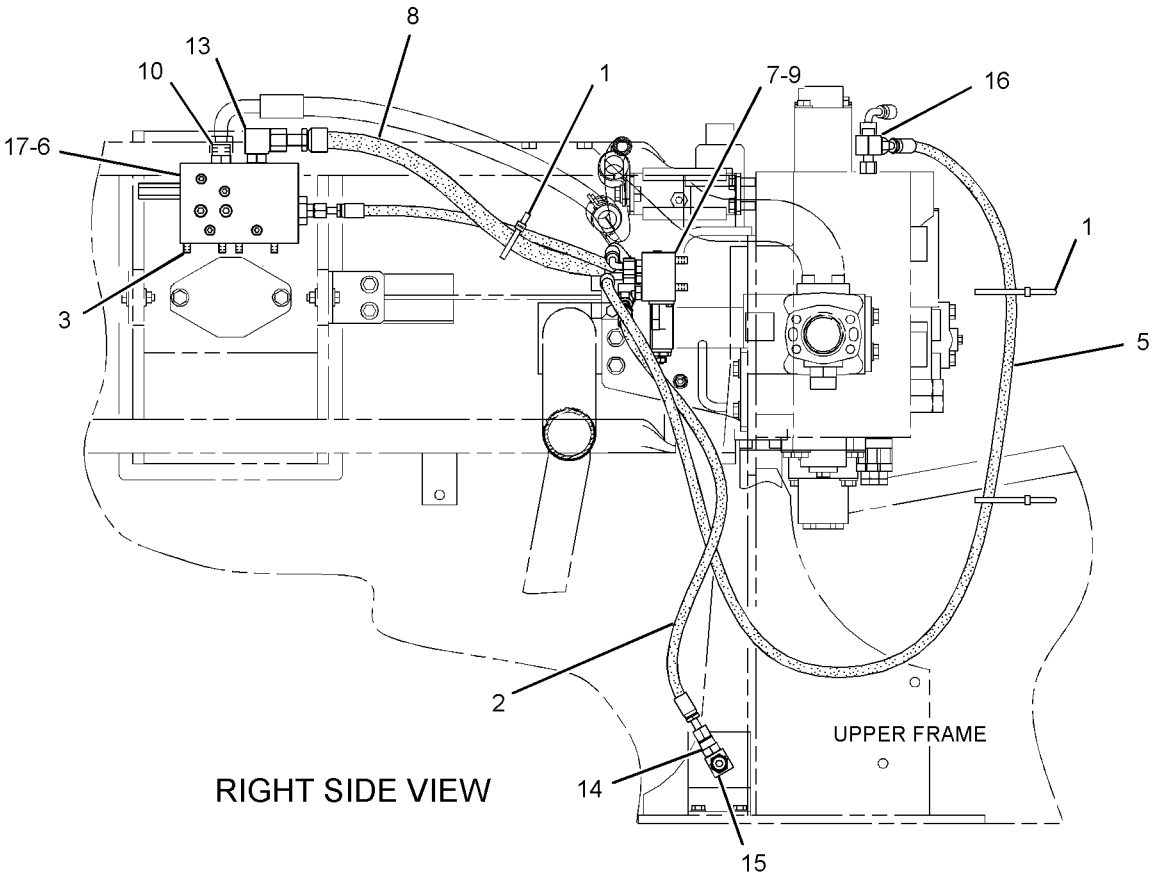

GRAPHIC #1 **<END>** g01462705

227-0460 LINES GP-PILOT–HEAVY LIFT

S/N: JGB1-UP; KHS1-UP

PART OF 297-0243, 297-0244 HYDRAULIC AR

SMCS-5057, 5059 **i02234098**

NOTE	REF NO	GRAPHIC REF	PART NUMBER	QTY	PART NAME 1 2 3 4 5 6 (PRODUCT LEVEL)	SEE PAGE
	1	1	**4I-9522**	2	BAND-MARKER (YELLOW, L2)	
	2	1	**4I-9523**	2	BAND-MARKER (BLUE, L3)	
	3	1	**4I-9524**	2	BAND-MARKER (BROWN, L4)	
	4	1	**7K-1181**	3	STRAP-CABLE	
I	5	1	**087-5759**	1	HOSE AS	
I	6	1	**087-5767**	1	HOSE AS	
I	7	1	**102-8274**	1	HOSE AS	
Y	8	1	**121-6303**	1	VALVE GP-SOLENOID (PILOT OIL PRESSURE)	795
	10	1	**245-5223**	1	PLATE	
	11	1	*148-8336*	2	CONNECTOR AS	
					(EACH INCLUDES)	
		1	**3J-1907**	1	SEAL-O-RING	
		1	**6V-8397**	1	SEAL-O-RING	
		1	**6V-8636**	1	CONNECTOR	
	12	1	*148-8353*	1	ELBOW AS	
		1	**3J-1907**	1	SEAL-O-RING	
		1	**6V-8397**	1	SEAL-O-RING	
		1	**6V-9001**	1	ELBOW	
	13	1	*148-8378*	3	ELBOW AS	
					(EACH INCLUDES)	
		1	**3J-1907**	1	SEAL-O-RING	
		1	**6V-8397**	1	SEAL-O-RING	
		1	**6V-8724**	1	ELBOW	
	14	1	**8T-4121**	2	WASHER-HARD (11X21X2.5-MM THK)	
M	15	1	**8T-4136**	2	BOLT (M10X1.5X25-MM)	
M	16	1	**8T-4138**	2	BOLT (M6X1X20-MM)	
	17	1	**9X-8256**	2	WASHER (6.6X12X2-MM THK)	

I-REFER TO HYDRAULIC INFORMATION SYSTEM
M-METRIC PART
Y-SEPARATE ILLUSTRATION

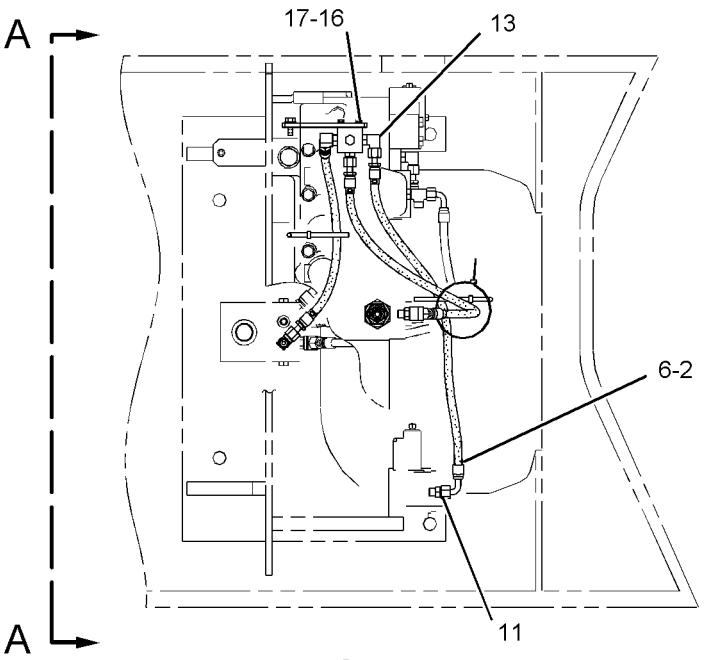

TOP VIEW

FWD

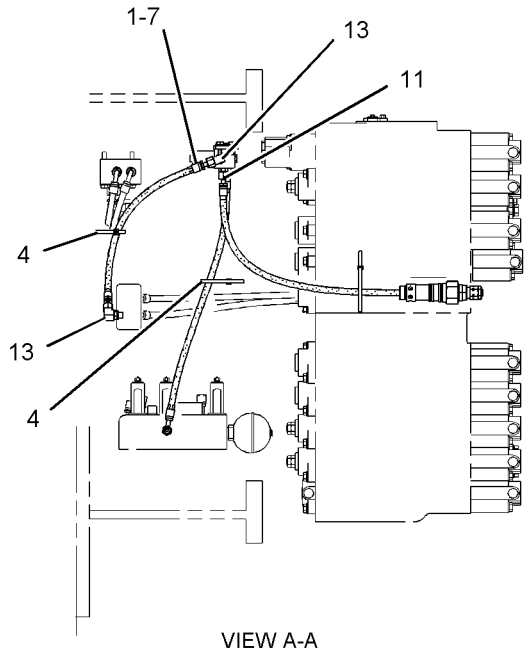

VIEW A-A

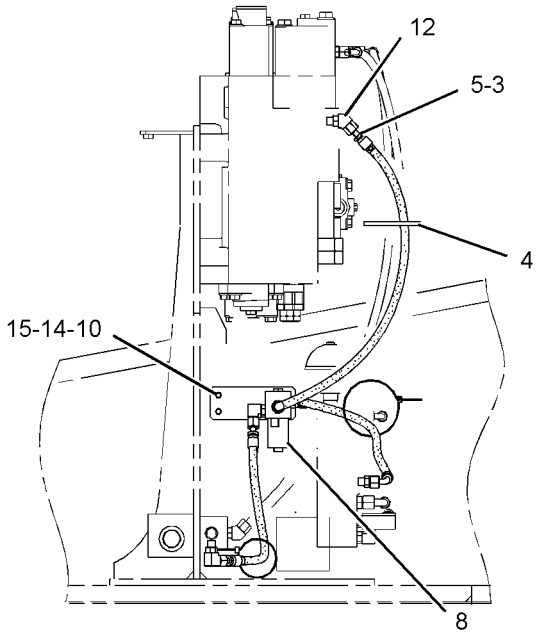

RIGHT SIDE VIEW

GRAPHIC #1 **<END>** g01126589

227-0619 LINES GP-PILOT–THIRD PEDAL

S/N: JGB1-UP; KHS1-UP

PART OF 225-5729 PEDAL AR-AUXILIARY

AN ATTACHMENT

SMCS-5057, 5059 **i02237406**

NOTE	REF NO	GRAPHIC REF	PART NUMBER	QTY	PART NAME 1 2 3 4 5 6 (PRODUCT LEVEL)	SEE PAGE
I	1	1	**4I-3511**	1	HOSE AS	
	2	1	**4I-9521**	4	BAND-MARKER (RED, L1)	
	3	1	**4I-9522**	4	BAND-MARKER (YELLOW, L2)	
	4	1	**4I-9525**	4	BAND-MARKER (ORANGE, R1)	
	5	1	**4I-9526**	4	BAND-MARKER (WHITE, R2)	
	6	1	**7K-1181**	11	STRAP-CABLE	
I	7	1	**179-7782**	1	HOSE AS	
I	8	1	**212-5149**	1	HOSE AS	
	9	1	**245-5219**	1	HOSE AS	

I-REFER TO HYDRAULIC INFORMATION SYSTEM

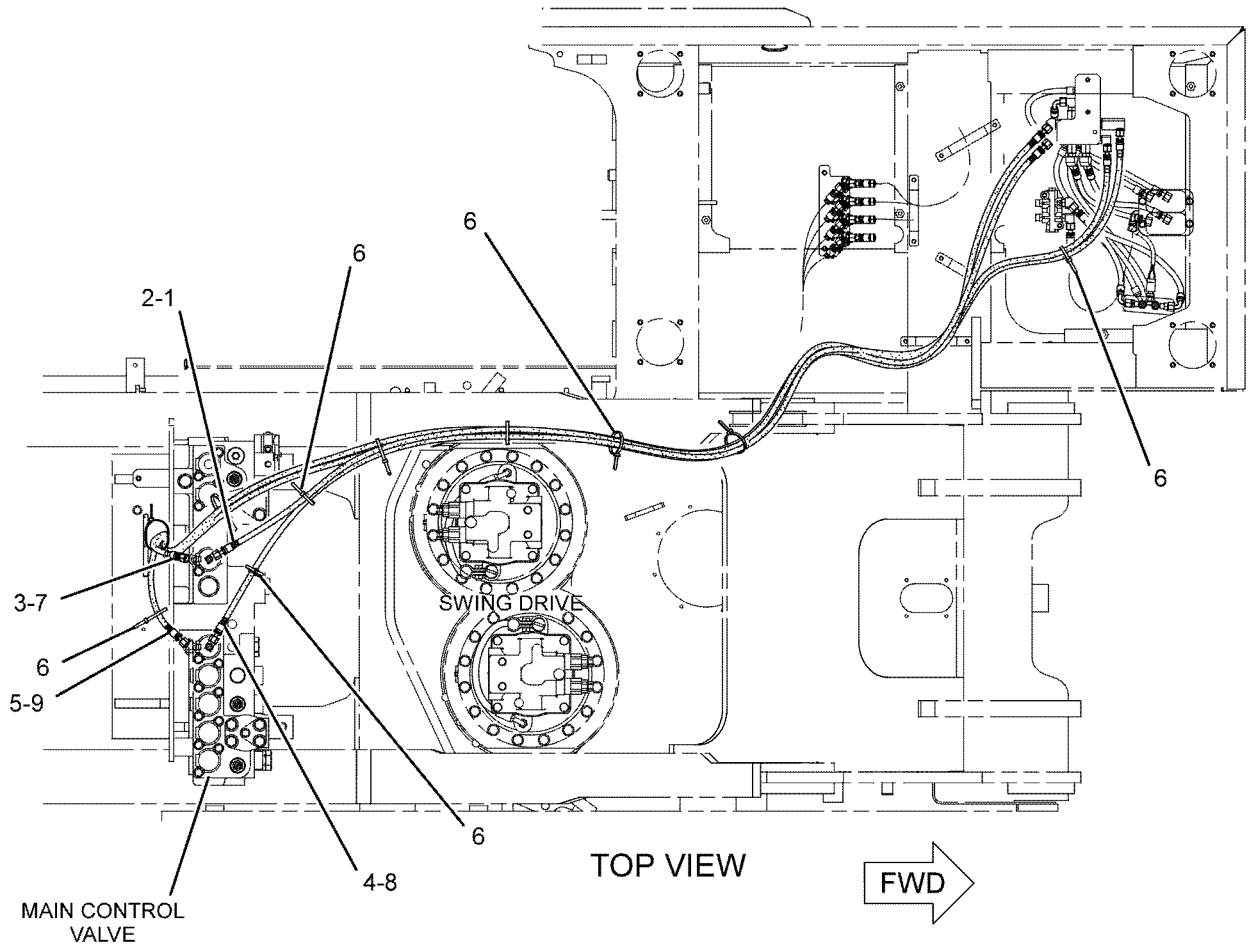

GRAPHIC #1 **<END>** g01131938

HYDRAULIC SYSTEM

260-7891 LINES GP-PILOT—PUMP CONTROL, SHUTTLE VALVE

S/N: JGB1-UP; KHS1-UP

PART OF 285-1784, 285-1786, 285-1787, 285-1788 CONTROL AR-AUXILIARY

AN ATTACHMENT

SMCS-5057, 5059 **i02934299**

NOTE	REF NO	GRAPHIC REF	PART NUMBER	QTY	PART NAME 1 2 3 4 5 6 (PRODUCT LEVEL)	SEE PAGE
	1	1	**309-5769**	1	SWITCH AS-PRESSURE (IMPLEMENT, SWING)	
		1	**102-8802**	1	KIT-RECEPTACLE (2-PIN)	
					(INCLUDES RECEPTACLE AS & WEDGE)	
		1	**9X-3401**	2	PIN-CONNECTOR (16-GA TO 18-GA)	
					—OR—	
		1	**126-1767**	2	PIN-CONNECTOR (14-GA TO 16-GA)	
	2	1	**185-0383**	1	BRACKET	
Y	3	1	**185-0462**	1	VALVE GP-SHUTTLE (PILOT)	792
	4	1	*148-8336*	8	CONNECTOR AS	
					(EACH INCLUDES)	
		1	**3J-1907**	1	SEAL-O-RING	
		1	**6V-8397**	1	SEAL-O-RING	
		1	**6V-8636**	1	CONNECTOR	
	5	1	*148-8353*	8	ELBOW AS	
					(EACH INCLUDES)	
		1	**3J-1907**	1	SEAL-O-RING	
		1	**6V-8397**	1	SEAL-O-RING	
		1	**6V-9001**	1	ELBOW	
	6	1	**8T-4121**	7	WASHER-HARD (11X21X2.5-MM THK)	
M	7	1	**8T-4136**	3	BOLT (M10X1.5X25-MM)	
M	8	1	**8T-4137**	4	BOLT (M10X1.5X20-MM)	

M-METRIC PART
Y-SEPARATE ILLUSTRATION

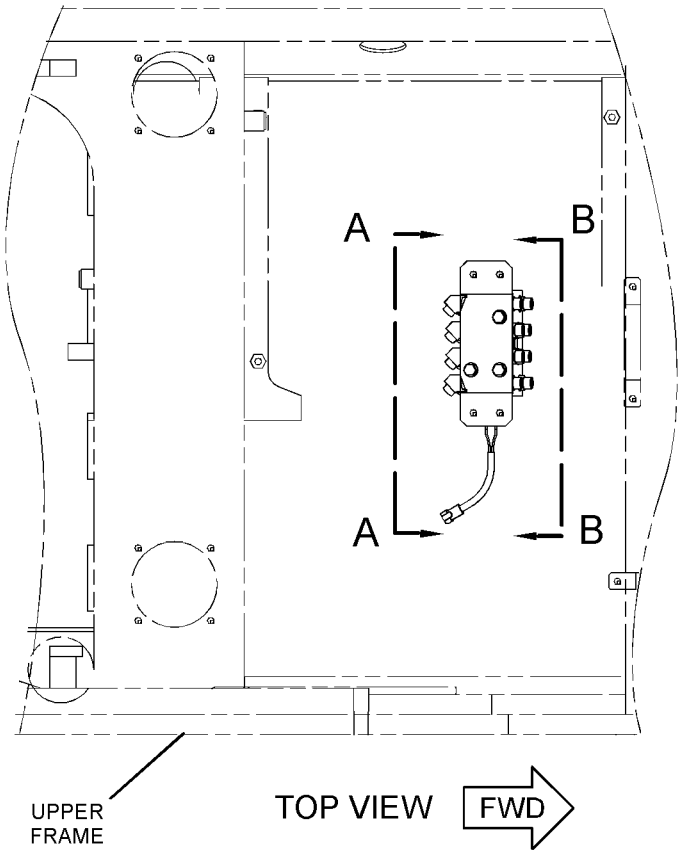

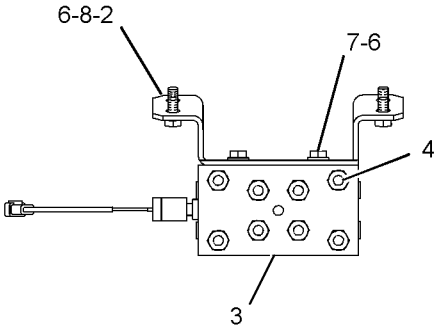

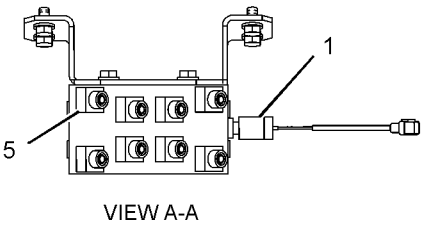

GRAPHIC #1 **<END>** g01151832

HYDRAULIC SYSTEM

260-8047 LINES GP-PILOT—TRAVEL, STRAIGHT TRAVEL

S/N: JGB1-UP; KHS1-UP
PART OF 225-5729 PEDAL AR-AUXILIARY
AN ATTACHMENT

SMCS-5057, 5059 **i02881481**

NOTE	REF NO	GRAPHIC REF	PART NUMBER	QTY	PART NAME 1 2 3 4 5 6 (PRODUCT LEVEL)	SEE PAGE
I	1	1	**4I-1704**	1	HOSE AS	
CI	2	1	**087-4402**	1	HOSE AS	
I	3	1	**087-5762**	1	HOSE AS	
I	4	1	**087-5765**	2	HOSE AS	
I	5	1	**087-5766**	1	HOSE AS	
I	6	1	**179-7456**	2	HOSE AS	
Y	7	1	**112-0083**	1	VALVE GP-SHUTTLE (THIRD PEDAL, STRAIGHT TRAVEL)	788
	8	1	*148-8336*	3	CONNECTOR AS	
					(EACH INCLUDES)	
		1	**3J-1907**	1	SEAL-O-RING	
		1	**6V-8397**	1	SEAL-O-RING	
		1	**6V-8636**	1	CONNECTOR	
	9	1	*148-8353*	6	ELBOW AS	
					(EACH INCLUDES)	
		1	**3J-1907**	1	SEAL-O-RING	
		1	**6V-8397**	1	SEAL-O-RING	
		1	**6V-9001**	1	ELBOW	
	10	1	*148-8378*	4	ELBOW AS	
					(EACH INCLUDES)	
		1	**3J-1907**	1	SEAL-O-RING	
		1	**6V-8397**	1	SEAL-O-RING	
		1	**6V-8724**	1	ELBOW	
	11	1	*150-3036*	1	ELBOW AS	
		1	**3J-1907**	1	SEAL-O-RING	
		1	**6V-8397**	1	SEAL-O-RING	
		1	**8T-1905**	1	ELBOW	
	12	1	*150-4044*	1	CONNECTOR AS	
		1	**3J-1907**	1	SEAL-O-RING	
		1	**6V-8397**	1	SEAL-O-RING	
		1	**8T-1779**	1	CONNECTOR	
	13	1	*164-5628*	1	CONNECTOR AS	
		1	**3J-1907**	1	SEAL-O-RING	
		1	**6V-8397**	1	SEAL-O-RING	
		1	**107-6631**	1	CONNECTOR-FILTER	
C	14	1	**4I-7889**	2	SPACER (11X25X45-MM THK)	
CM	15	1	**8T-4178**	2	BOLT (M10X1.5X90-MM)	

C-CHANGE FROM PREVIOUS TYPE
I-REFER TO HYDRAULIC INFORMATION SYSTEM
M-METRIC PART
Y-SEPARATE ILLUSTRATION

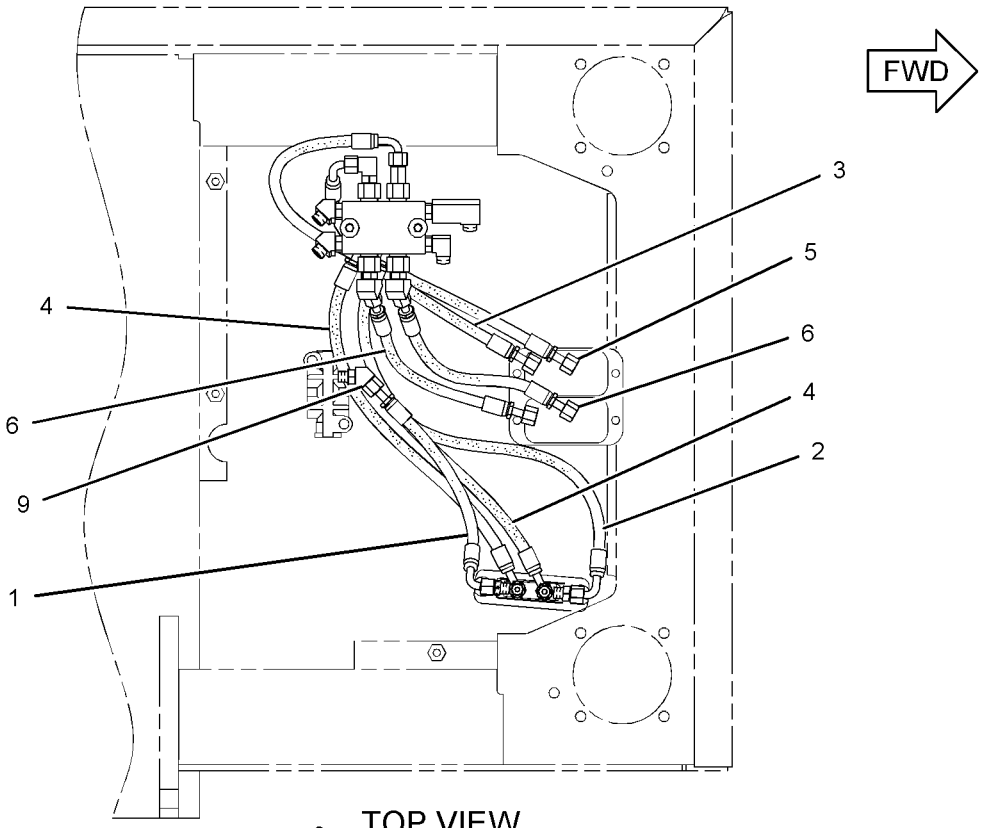

TOP VIEW

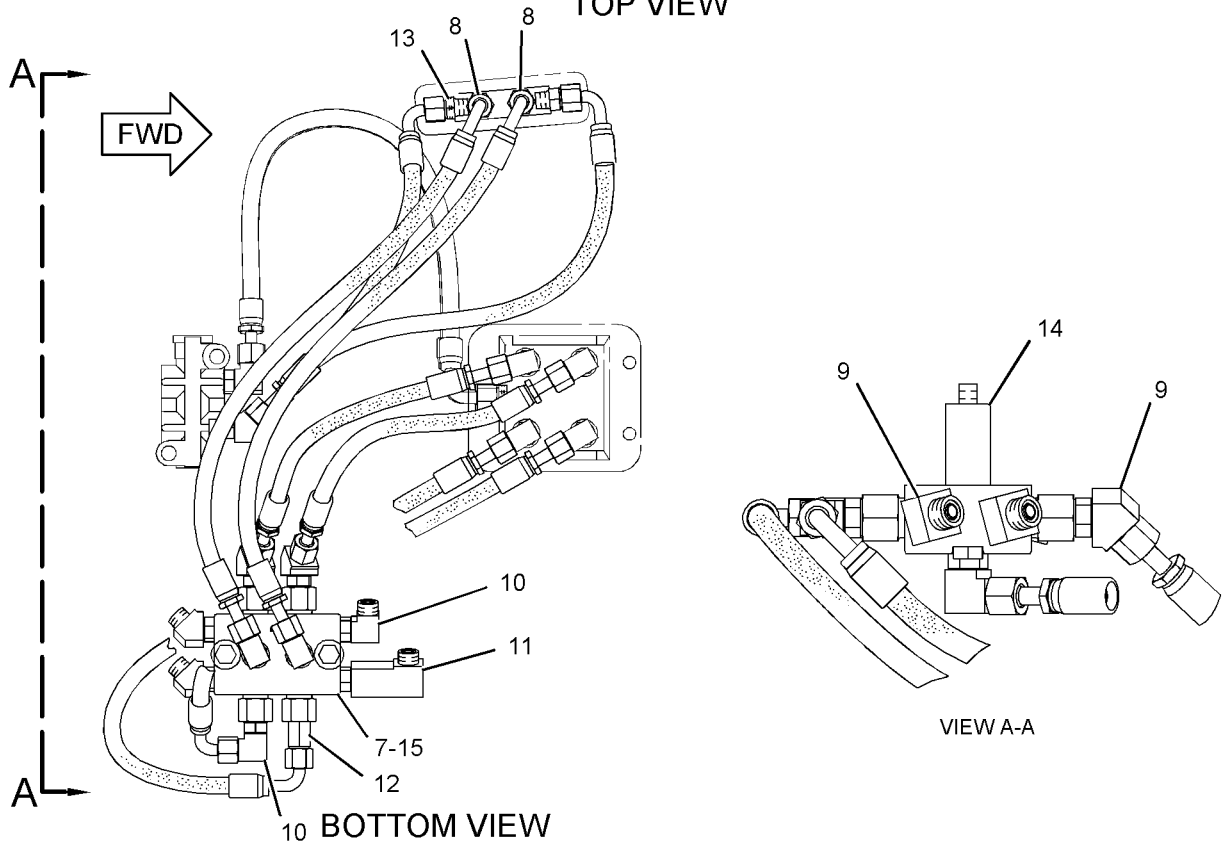

VIEW A-A

BOTTOM VIEW

GRAPHIC #1 **<END>** g01436139

HYDRAULIC SYSTEM

296-7123 LINES GP-PILOT–JOYSTICK

S/N: JGB1-UP; KHS1-UP

PART OF 297-0243, 297-0244 HYDRAULIC AR

SMCS-5057, 5059 **i03894237**

NOTE	REF NO	GRAPHIC REF	PART NUMBER	QTY	PART NAME 1 2 3 4 5 6 (PRODUCT LEVEL)	SEE PAGE
	1	2	**4I-9521**	2	BAND-MARKER (RED, L1)	
	2	2	**4I-9522**	2	BAND-MARKER (YELLOW, L2)	
	3	2	**4I-9523**	2	BAND-MARKER (BLUE, L3)	
	4	2	**4I-9524**	2	BAND-MARKER (BROWN, L4)	
	5	2	**4I-9525**	2	BAND-MARKER (ORANGE, R1)	
	6	2	**4I-9526**	2	BAND-MARKER (WHITE, R2)	
	7	2	**4I-9527**	2	BAND-MARKER (GREEN, R3)	
	8	2	**4I-9528**	2	BAND-MARKER (PURPLE, R4)	
	9	1,2	**7K-1181**	5	STRAP-CABLE	
I	10	1	**087-4402**	2	HOSE AS	
	11	2	**133-5813**	4	BAND-MARKER (GRAY)	
	12	2	*148-8366*	8	ELBOW AS	
					(EACH INCLUDES)	
		2	**6V-8397**	2	SEAL-O-RING	
		2	**6V-8987**	1	ELBOW	
	13	1,2	*164-5628*	3	CONNECTOR AS	
					(EACH INCLUDES)	
		1,2	**3J-1907**	1	SEAL-O-RING	
		1,2	**6V-8397**	1	SEAL-O-RING	
		1,2	**107-6631**	1	CONNECTOR-FILTER	
CY	14	1	**310-0415**	1	VALVE GP-PILOT (WITHOUT SHUTTLE)	766
	15	2	**168-9759**	1	BLOCK	
	16	1	**184-9336**	3	SUPPORT	
	17	2	**236-2838**	1	PLATE	
	18	2	**236-2843**	4	HOSE AS	
	19	2	**236-2844**	3	HOSE AS	
	20	2	**236-2848**	1	HOSE AS	
	21	2	**245-5079**	1	HOSE AS	
	22	2	**255-1665**	1	HOSE AS	
	23	2	**255-1666**	1	HOSE AS	
	24	2	**289-5657**	1	HOSE AS	
	25	2	**099-7241**	8	WASHER-HARD (19X34X3-MM THK)	
	26	1,2	*148-8336*	15	CONNECTOR AS	
					(EACH INCLUDES)	
		1,2	**3J-1907**	1	SEAL-O-RING	
		1,2	**6V-8397**	1	SEAL-O-RING	
		1,2	**6V-8636**	1	CONNECTOR	
	27	2	*148-8364*	2	ELBOW AS	
					(EACH INCLUDES)	
		2	**3K-0360**	1	SEAL-O-RING	
		2	**6V-8398**	1	SEAL-O-RING	
		2	**6V-8625**	1	ELBOW	
	28	1,2	*148-8378*	6	ELBOW AS	
					(EACH INCLUDES)	
		1,2	**3J-1907**	1	SEAL-O-RING	
		1,2	**6V-8397**	1	SEAL-O-RING	
		1,2	**6V-8724**	1	ELBOW	
	29	2	*148-8407*	4	PLUG AS	
					(EACH INCLUDES)	
		2	**3J-1907**	1	SEAL-O-RING	
		2	**9S-4191**	1	PLUG-O-RING	
	30	2	**6V-9168**	8	NUT (11/16-16-THD)	
	31	1,2	**8T-4121**	14	WASHER-HARD (11X21X2.5-MM THK)	
M	32	1	**8T-4136**	4	BOLT (M10X1.5X25-MM)	
M	33	1	**8T-4137**	6	BOLT (M10X1.5X20-MM)	
M	34	2	**8T-4191**	2	BOLT (M10X1.5X16-MM)	

296-7123 **LINES GP-PILOT** *(contd.)* **i03894237**

NOTE	REF NO	GRAPHIC REF	PART NUMBER	QTY	PART NAME 1 2 3 4 5 6 (PRODUCT LEVEL)	SEE PAGE
M	35	2	**8T-4198**	2	BOLT (M10X1.5X100-MM)	

C-CHANGE FROM PREVIOUS TYPE
I-REFER TO HYDRAULIC INFORMATION SYSTEM
M-METRIC PART
Y-SEPARATE ILLUSTRATION

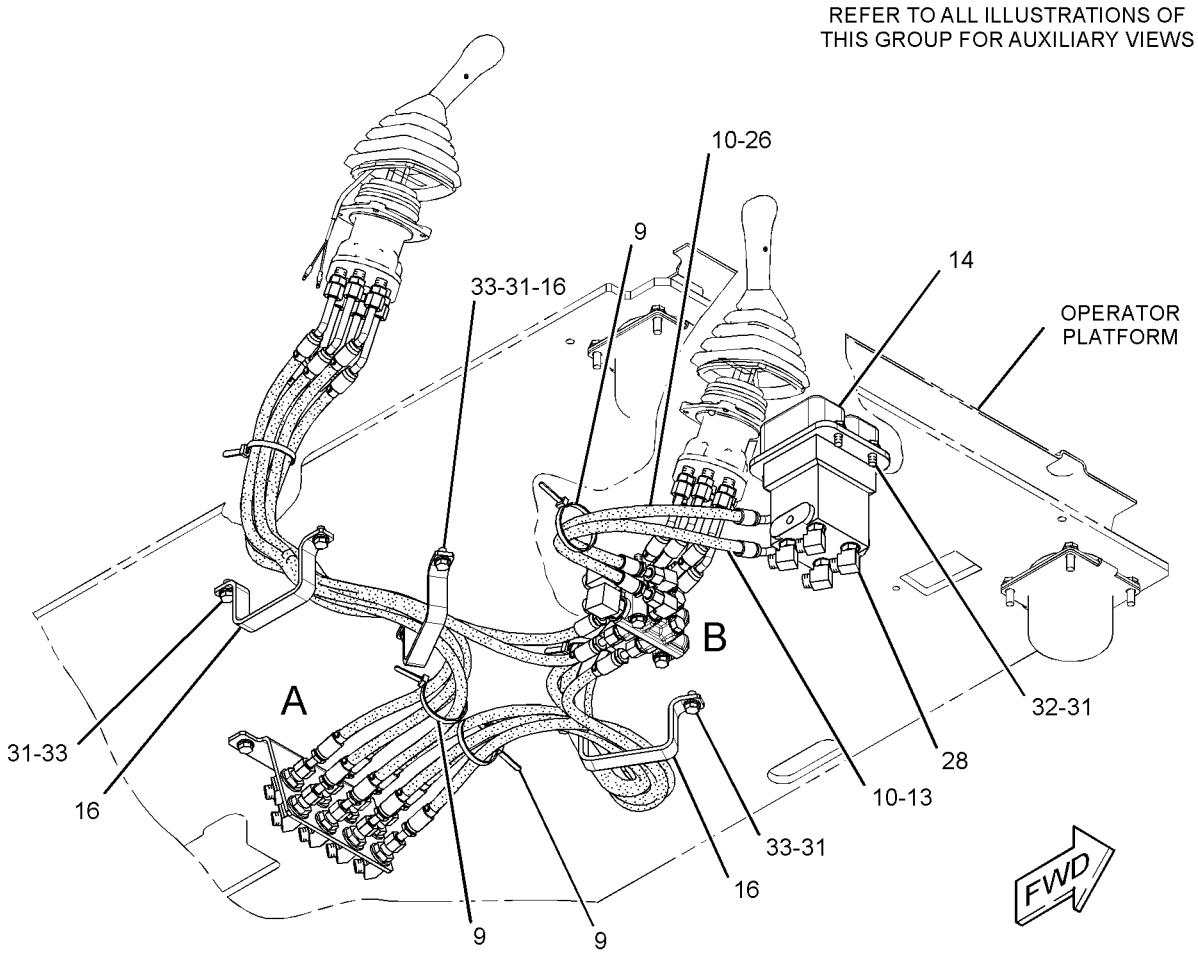

GRAPHIC #1 g02140383

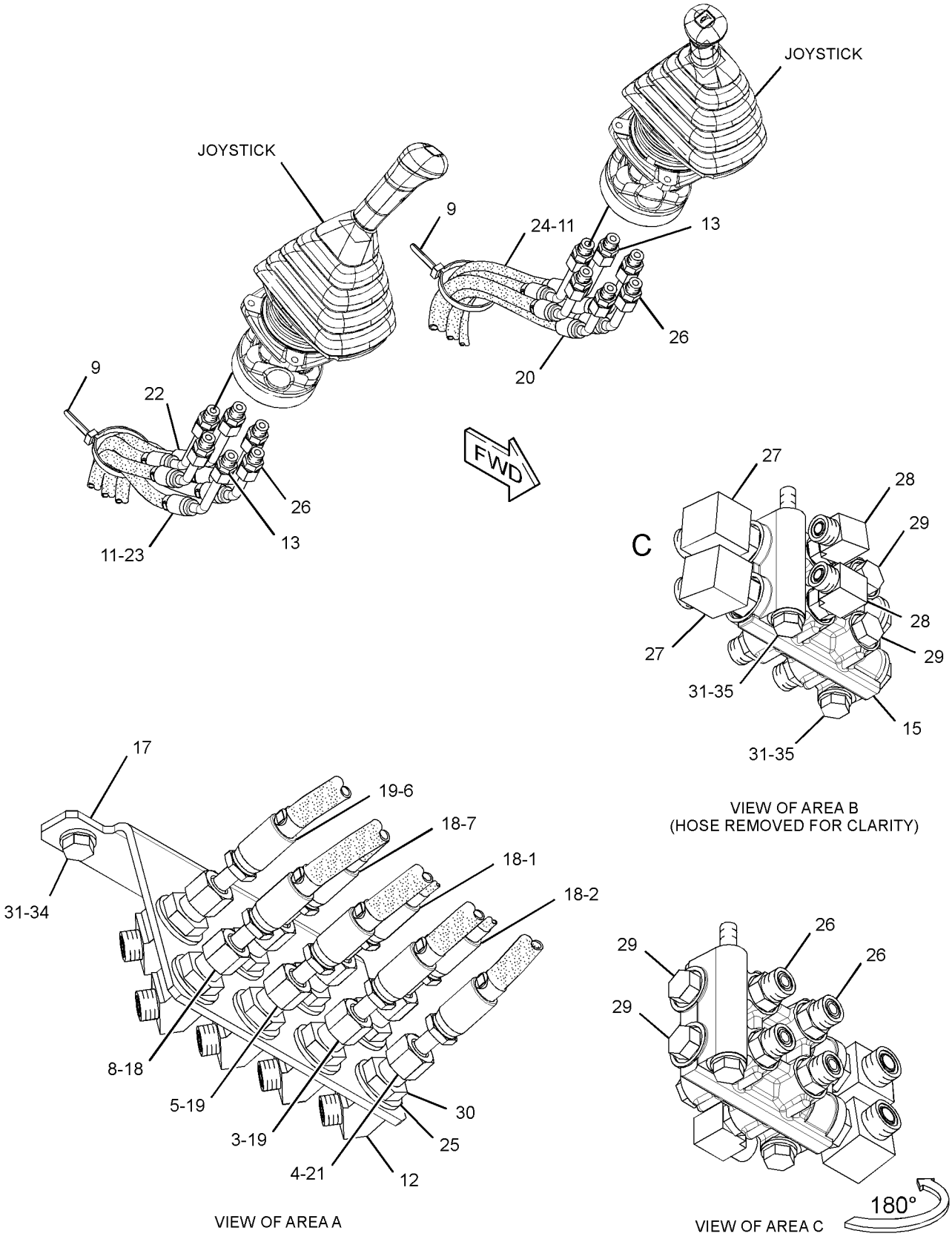

VIEW OF AREA B
(HOSE REMOVED FOR CLARITY)

VIEW OF AREA A

VIEW OF AREA C

GRAPHIC #2 **<END>** g01466050

HYDRAULIC SYSTEM

296-7127 LINES GP-PILOT

S/N: JGB1-UP; KHS1-UP
PART OF 285-1784, 285-1787 CONTROL AR-AUXILIARY
AN ATTACHMENT

SMCS-5057, 5059 **i04143101**

NOTE	REF NO	GRAPHIC REF	PART NUMBER	QTY	PART NAME 1 2 3 4 5 6 (PRODUCT LEVEL)	SEE PAGE
I	1	1	**4I-0797**	1	HOSE AS	
I	2	1	**4I-5795**	1	HOSE AS	
Y	3	2	**4I-7836**	1	VALVE GP-FLOW CONTROL	744
	4	1	**4I-9521**	2	BAND-MARKER (RED, L1)	
	5	3	**4I-9523**	6	BAND-MARKER (BLUE, L3)	
	6	2	**4I-9524**	2	BAND-MARKER (BROWN, L4)	
	7	3	**4I-9525**	2	BAND-MARKER (ORANGE, R1)	
	8	3	**4I-9528**	2	BAND-MARKER (PURPLE, R4)	
I	9	3	**5I-4396**	2	HOSE AS	
	10	3	**7K-1181**	3	STRAP-CABLE	
CI	11	2	**087-5762**	1	HOSE AS	
I	12	3	**087-5777**	1	HOSE AS	
I	13	1	**104-8777**	1	HOSE AS	
Y	14	2	**119-5219**	1	VALVE GP-PILOT	760
	15	3	*164-5550*	1	TEE AS	
		3	**3J-1907**	1	SEAL-O-RING	
		3	**4I-6327**	1	TEE-ORIFICE	
		3	**6V-8397**	1	SEAL-O-RING	
	16	2,3	*164-6874*	2	FITTING AS-ELBOW	
					(EACH INCLUDES)	
		2,3	**3J-1907**	1	SEAL-O-RING	
		2,3	**085-7356**	1	FITTING	
	17	1	*168-1968*	1	TEE AS	
		1	**3J-1907**	1	SEAL-O-RING	
		1	**6V-8397**	1	SEAL-O-RING	
		1	**126-6872**	1	TEE	
I	18	3	**4I-1783**	1	HOSE AS	
	19	2	**239-1760**	1	SUPPORT AS	
	20	1	**245-5237**	1	SUPPORT AS	
Y	21	1	**259-7430**	1	VALVE GP-SOLENOID (PRESSURE REDUCING)	801
I	22	1	**272-4137**	1	HOSE AS	
I	23	3	**272-4139**	1	HOSE AS	
Y	24	2	**297-0641**	1	VALVE GP-PUMP CONTROL (NEGATIVE FLOW CONTROL)	772
	25	1,2	*148-8336*	4	CONNECTOR AS	
					(EACH INCLUDES)	
		1,2	**3J-1907**	1	SEAL-O-RING	
		1,2	**6V-8397**	1	SEAL-O-RING	
		1,2	**6V-8636**	1	CONNECTOR	
	26	1,2	*148-8353*	2	ELBOW AS	
					(EACH INCLUDES)	
		1,2	**3J-1907**	1	SEAL-O-RING	
		1,2	**6V-8397**	1	SEAL-O-RING	
		1,2	**6V-9001**	1	ELBOW	
	27	1,2	*148-8367*	2	ELBOW AS	
					(EACH INCLUDES)	
		1,2	**6V-8397**	1	SEAL-O-RING	
		1,2	**6V-9850**	1	ELBOW	
	28	1	*148-8374*	1	ELBOW AS	
		1	**3K-0360**	1	SEAL-O-RING	
		1	**6V-8397**	1	SEAL-O-RING	
		1	**6V-8723**	1	ELBOW	
	29	1,2	*148-8378*	3	ELBOW AS	
					(EACH INCLUDES)	
		1,2	**3J-1907**	1	SEAL-O-RING	
		1,2	**6V-8397**	1	SEAL-O-RING	

296-7127 **LINES GP-PILOT** *(contd.)* **i04143101**

NOTE	REF NO	GRAPHIC REF	PART NUMBER	QTY	PART NAME 1 2 3 4 5 6 (PRODUCT LEVEL)	SEE PAGE
		1,2	**6V-8724**	1	ELBOW	
	30	1,3	*148-8407*	3	PLUG AS	
					(EACH INCLUDES)	
		1,3	**3J-1907**	1	SEAL-O-RING	
		1,3	**9S-4191**	1	PLUG-O-RING	
	31	1,2	*148-8435*	3	TEE AS	
					(EACH INCLUDES)	
		1,2	**3J-1907**	1	SEAL-O-RING	
		1,2	**6V-8397**	2	SEAL-O-RING	
		1,2	**6V-8781**	1	TEE-FACE SEAL	
	32	2	*150-3036*	1	ELBOW AS	
		2	**3J-1907**	1	SEAL-O-RING	
		2	**6V-8397**	1	SEAL-O-RING	
		2	**8T-1905**	1	ELBOW	
	33	2	*150-4027*	1	TEE AS	
		2	**3E-2310**	1	TEE	
		2	**3J-1907**	1	SEAL-O-RING	
		2	**6V-8397**	1	SEAL-O-RING	
	34	2	*153-6248*	1	ADAPTER AS	
		2	**6V-8397**	1	SEAL-O-RING	
		2	**8T-6663**	1	ADAPTER-PORT	
	35	2	*164-5549*	1	COUPLING AS	
		2	**3J-1907**	1	SEAL-O-RING	
		2	**4I-6287**	1	COUPLING	
	36	2,3	*164-5567*	2	COUPLER AS-QUICK DISCONNECT (MALE)	
					(EACH INCLUDES)	
		2,3	**3J-1907**	1	SEAL-O-RING	
		2,3	**6V-3965**	1	FITTING (QUICK DISCONNECT)	
	37	1	*164-5605*	1	CONNECTOR AS	
		1	**3K-0360**	1	SEAL-O-RING	
		1	**6V-8397**	1	SEAL-O-RING	
		1	**6V-8634**	1	CONNECTOR	
	38	1	*330-2417*	1	CONNECTOR AS	
		1	**3J-1907**	1	SEAL-O-RING	
		1	**6V-8397**	1	SEAL-O-RING	
		1	**142-1585**	1	ADAPTER-CONNECTOR	
	39	3	**3G-8054**	2	CLIP (TAB)	
	40	3	**3G-8057**	2	CLIP (SLOT)	
	41	2	**3J-1907**	1	SEAL-O-RING	
	42	2,3	**6V-0852**	2	CAP-DUST	
	43	3	**6V-0974**	2	GROMMET	
	44	2	**6V-8397**	1	SEAL-O-RING	
M	45	1	**8T-3647**	2	BOLT (M8X1.25X80-MM)	
	46	2,3	**8T-4121**	8	WASHER-HARD (11X21X2.5-MM THK)	
M	47	2	**8T-4137**	2	BOLT (M10X1.5X20-MM)	
M	48	1	**8T-4139**	2	BOLT (M12X1.75X30-MM)	
M	49	2	**8T-4185**	2	BOLT (M10X1.5X50-MM)	
	50	1	**8T-4223**	2	WASHER-HARD (13.5X25.5X3-MM THK)	
	51	1	**8T-4224**	2	WASHER-HARD (8.8X16X2-MM THK)	
I	52	3	**192-6775**	1	HOSE AS	
M	53	3	**8T-4136**	4	BOLT (M10X1.5X25-MM)	

C-CHANGE FROM PREVIOUS TYPE
I-REFER TO HYDRAULIC INFORMATION SYSTEM
M-METRIC PART
Y-SEPARATE ILLUSTRATION

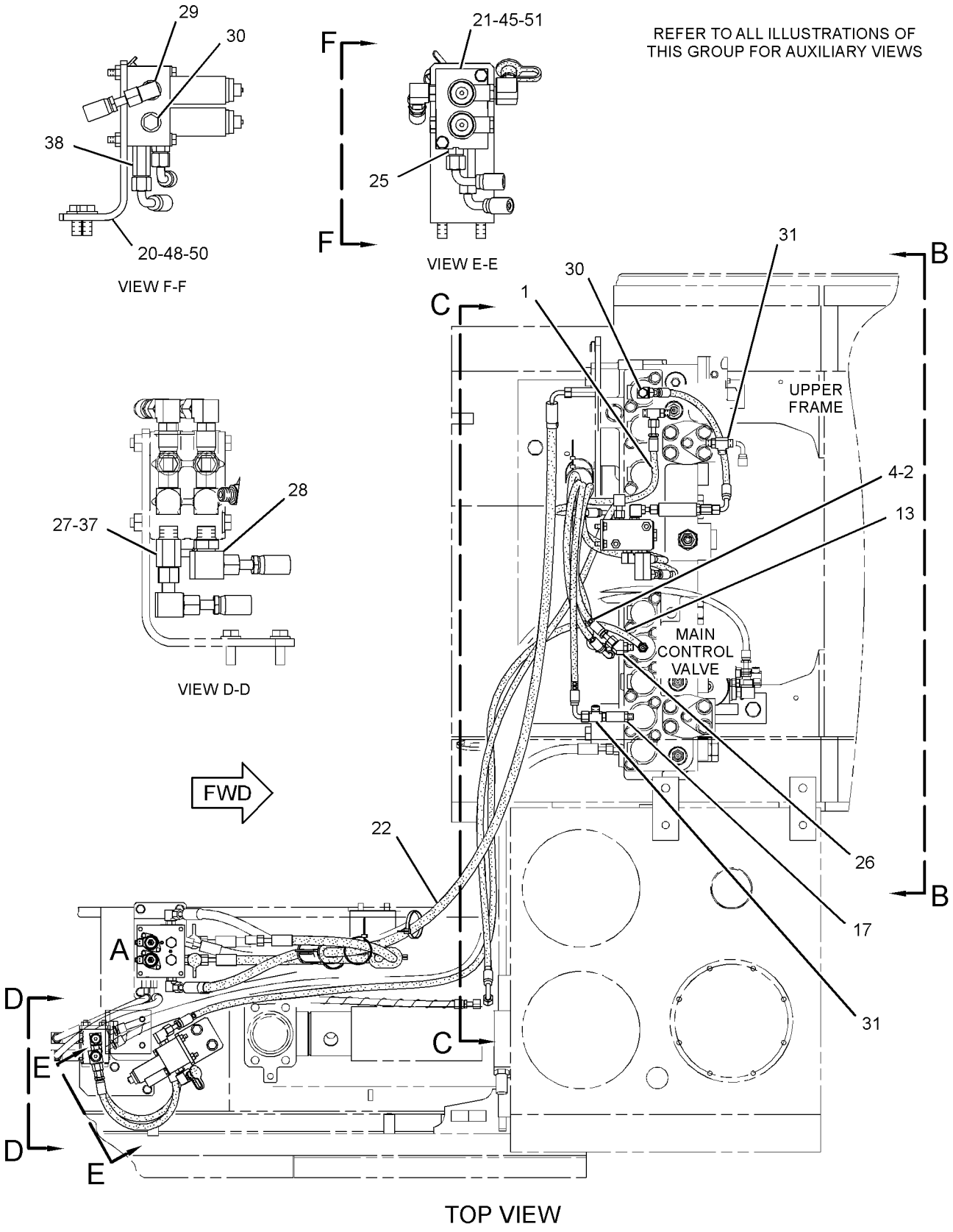

GRAPHIC #1

g01637228

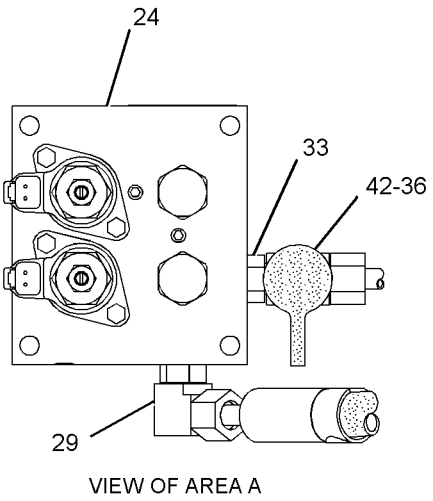

VIEW OF AREA A

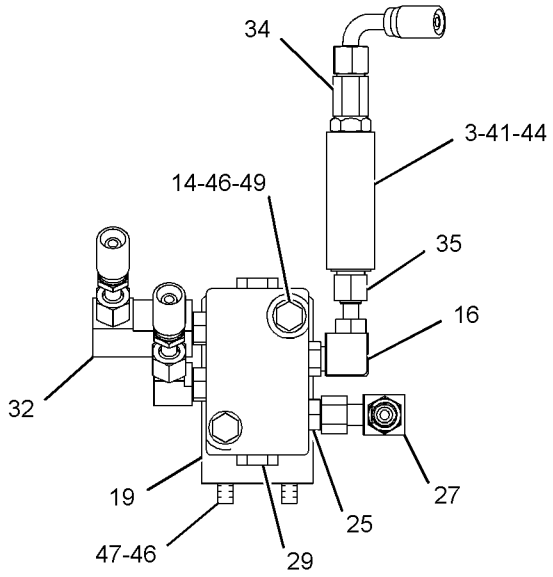

SECTION G-G

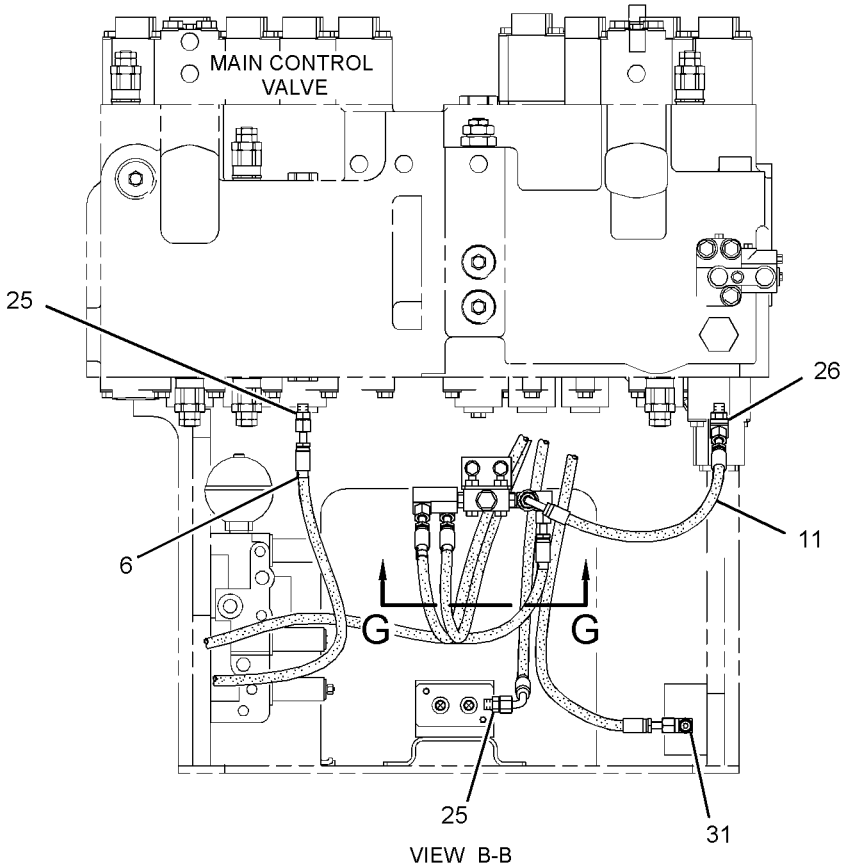

VIEW B-B

GRAPHIC #2

g01637229

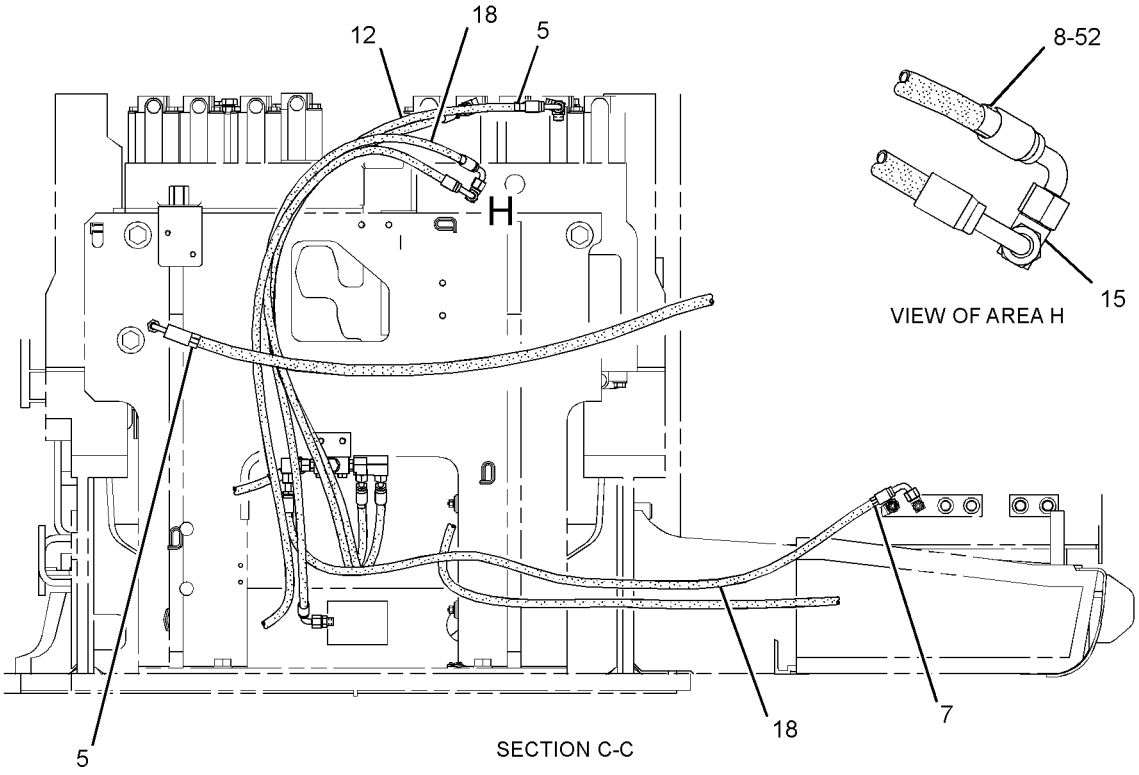

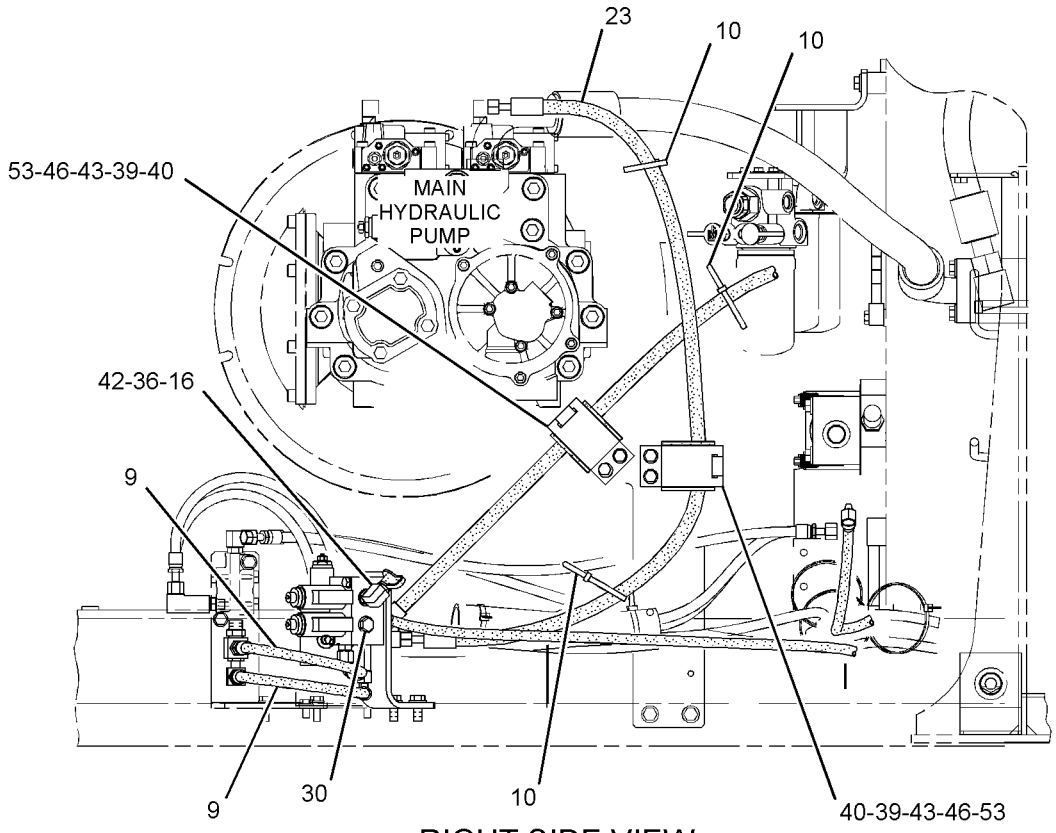

GRAPHIC #3

<END>

g01929033

HYDRAULIC SYSTEM

296-7133 LINES GP-PILOT—UNIVERSAL QUICK COUPLER

S/N: JGB1-UP; KHS1-UP
PART OF 302-9403 CONTROL AR-COUPLER
AN ATTACHMENT

SMCS-5057, 5059 **i03810991**

NOTE	REF NO	GRAPHIC REF	PART NUMBER	QTY	PART NAME 1 2 3 4 5 6 (PRODUCT LEVEL)	SEE PAGE
	1	2	**5I-4376**	1	FITTING	
	2	1	**7K-1181**	7	STRAP-CABLE	
JY	3	1	**123-2549**	1	VALVE GP-SHUTTLE (1-PUMP/2-PUMP)	789
	4	2	**123-4750**	1	VALVE-CHECK	
C	5	2	*148-8439*	1	TEE AS	
		2	**3J-1907**	1	SEAL-O-RING	
		2	**6V-8397**	2	SEAL-O-RING	
		2	**6V-8774**	1	TEE	
	6	2	*164-5586*	1	TEE AS	
		2	**6V-8398**	1	SEAL-O-RING	
		2	**7X-0871**	1	TEE	
	7	2	*164-9640*	2	CONNECTOR AS	
					(EACH INCLUDES)	
		2	**3J-1907**	1	SEAL-O-RING	
		2	**4J-5477**	1	SEAL-O-RING	
		2	**145-2237**	1	CONNECTOR	
	8	2	**213-3745**	2	ELBOW	
	9	2	**230-7899**	1	HOSE AS	
Y	10	2	**254-3080**	1	VALVE GP-CONTROL (QUICK COUPLER)	723
Y	11	2	**258-6749**	1	VALVE GP-SOLENOID (QUICK COUPLER)	800
	12	2	**280-1918**	1	SUPPORT	
I	13	1	**280-2412**	1	HOSE AS	
I	14	1	**280-2413**	1	HOSE AS	
	15	2	**282-8737**	1	HOSE AS	
	16	1	**307-4833**	1	SUPPORT	
	17	2	**307-4834**	1	BOSS	
	18	2	**307-4839**	1	PLATE AS	
I	19	1	**307-4841**	1	HOSE AS	
I	20	1	**111-0976**	1	HOSE AS	
	21	2	**307-5088**	1	BOSS	
I	22	1	**307-5089**	1	HOSE AS	
I	23	1	**307-5090**	1	HOSE AS	
I	24	1	**307-5093**	1	HOSE AS	
	25	1	**307-5199**	1	TUBE AS	
	26	2	**100-4336**	2	CLIP	
	27	2	*148-8321*	1	CONNECTOR AS	
		2	**3J-1907**	1	SEAL-O-RING	
		2	**6V-8397**	1	SEAL-O-RING	
		2	**8C-0564**	1	CONNECTOR	
	28	2	*148-8325*	2	CONNECTOR AS	
					(EACH INCLUDES)	
		2	**3J-1907**	1	SEAL-O-RING	
		2	**4J-5477**	1	SEAL-O-RING	
		2	**6V-8641**	1	CONNECTOR	
C	29	2	*148-8336*	3	CONNECTOR AS	
					(EACH INCLUDES)	
		2	**3J-1907**	1	SEAL-O-RING	
		2	**6V-8397**	1	SEAL-O-RING	
		2	**6V-8636**	1	CONNECTOR	
C	31	2	*148-8364*	1	ELBOW AS	
		2	**3K-0360**	1	SEAL-O-RING	
		2	**6V-8398**	1	SEAL-O-RING	
		2	**6V-8625**	1	ELBOW	
	32	1,2	*148-8353*	2	ELBOW AS	
					(EACH INCLUDES)	

296-7133 **LINES GP-PILOT** *(contd.)* **i03810991**

NOTE	REF NO	GRAPHIC REF	PART NUMBER	QTY	PART NAME 1 2 3 4 5 6 (PRODUCT LEVEL)	SEE PAGE
		1,2	**3J-1907**	1	SEAL-O-RING	
		1,2	**6V-8397**	1	SEAL-O-RING	
		1,2	**6V-9001**	1	ELBOW	
	33	2	*148-8361*	1	ELBOW AS	
		2	**3J-7354**	1	SEAL-O-RING	
		2	**6V-8397**	1	SEAL-O-RING	
		2	**6V-9200**	1	ELBOW	
C	34	2	*148-8367*	1	ELBOW AS	
		2	**6V-8397**	1	SEAL-O-RING	
		2	**6V-9850**	1	ELBOW	
C	35	2	*148-8378*	3	ELBOW AS	
					(EACH INCLUDES)	
		2	**3J-1907**	1	SEAL-O-RING	
		2	**6V-8397**	1	SEAL-O-RING	
		2	**6V-8724**	1	ELBOW	
	36	1	*148-8407*	1	PLUG AS	
		1	**3J-1907**	1	SEAL-O-RING	
		1	**9S-4191**	1	PLUG-O-RING	
	37	2	*148-8433*	1	TEE AS	
		2	**6V-8397**	2	SEAL-O-RING	
		2	**6V-9836**	1	TEE-SWIVEL	
C	38	1,2	*148-8435*	1	TEE AS	
		1,2	**3J-1907**	1	SEAL-O-RING	
		1,2	**6V-8397**	2	SEAL-O-RING	
		1,2	**6V-8781**	1	TEE-FACE SEAL	
	39	2	*150-4050*	1	ELBOW AS	
		2	**3J-1907**	1	SEAL-O-RING	
		2	**8T-0788**	1	ELBOW	
	40	2	*164-5567*	3	COUPLER AS-QUICK DISCONNECT (MALE)	
					(EACH INCLUDES)	
		2	**3J-1907**	1	SEAL-O-RING	
		2	**6V-3965**	1	FITTING (QUICK DISCONNECT)	
	41	1	**4I-9521**	6	BAND-MARKER (RED, L1)	
	42	1	**4I-9522**	6	BAND-MARKER (YELLOW, L2)	
	43	1	**4I-9523**	2	BAND-MARKER (BLUE, L3)	
	44	1	**4I-9525**	2	BAND-MARKER (ORANGE, R1)	
	45	1	**4I-9527**	2	BAND-MARKER (GREEN, R3)	
	46	2	**6D-2834**	2	CLIP	
	47	1	**6J-2680**	1	SEAL-O-RING	
	48	2	**6V-0852**	3	CAP-DUST	
J	49	1	**6V-8397**	2	SEAL-O-RING	
	50	1,2	**8T-4121**	12	WASHER-HARD (11X21X2.5-MM THK)	
M	51	2	**8T-4136**	7	BOLT (M10X1.5X25-MM)	
M	52	2	**8T-4184**	4	BOLT (M12X1.75X45-MM)	
M	53	1,2	**8T-4186**	3	BOLT (M10X1.5X40-MM)	
M	54	2	**8T-4196**	2	BOLT (M10X1.5X35-MM)	
	55	2	**8T-4223**	4	WASHER-HARD (13.5X25.5X3-MM THK)	
CJ	56	1	*148-8367*	2	ELBOW AS	
					(EACH INCLUDES)	
		1	**6V-8397**	1	SEAL-O-RING	
		1	**6V-9850**	1	ELBOW	

C-CHANGE FROM PREVIOUS TYPE
I-REFER TO HYDRAULIC INFORMATION SYSTEM
J-FOR USE WITH LINES GP-PILOT (C) (SYSTEM.3/ 14/ 16/ 17)
M-METRIC PART
Y-SEPARATE ILLUSTRATION

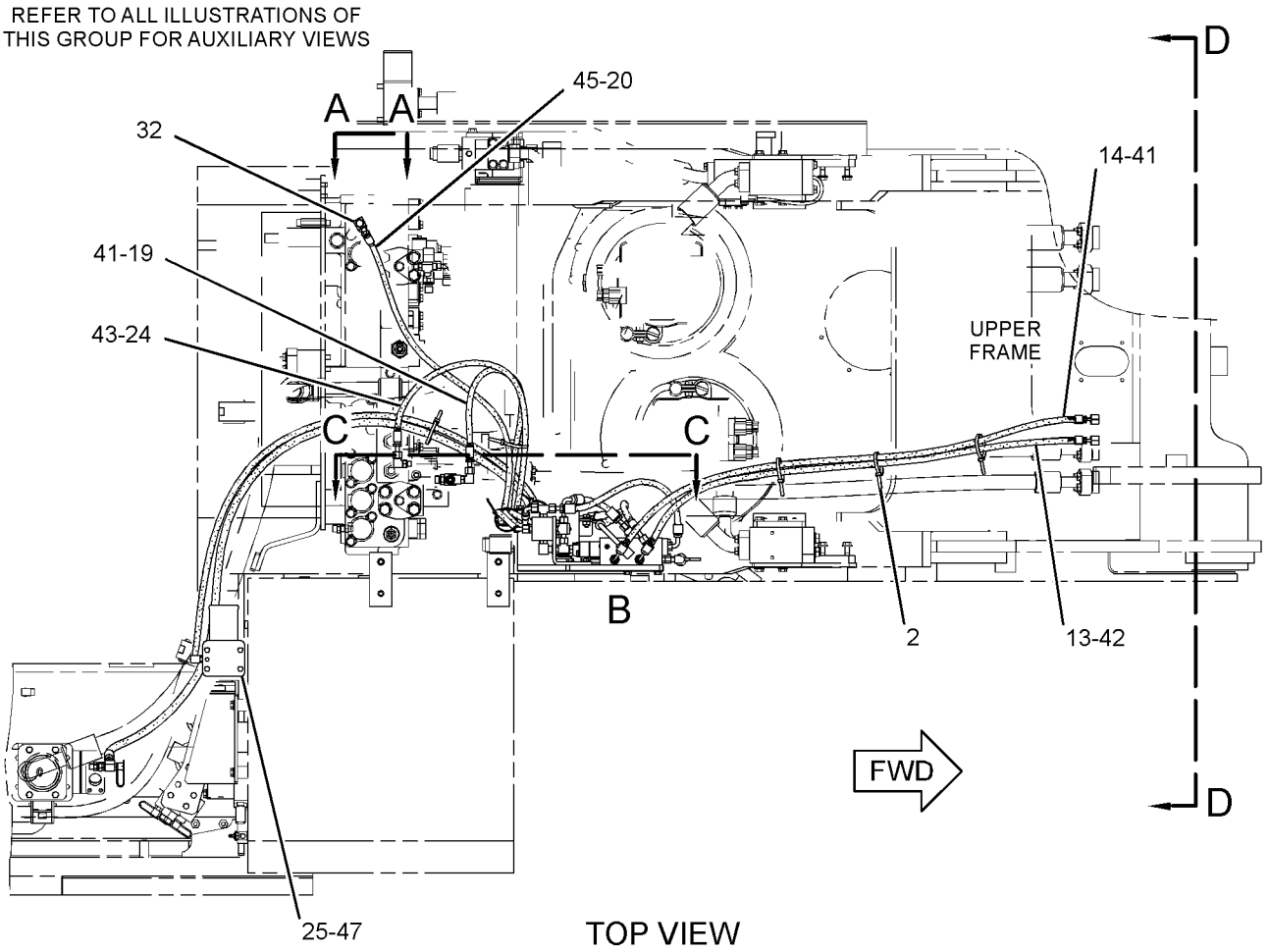

TOP VIEW

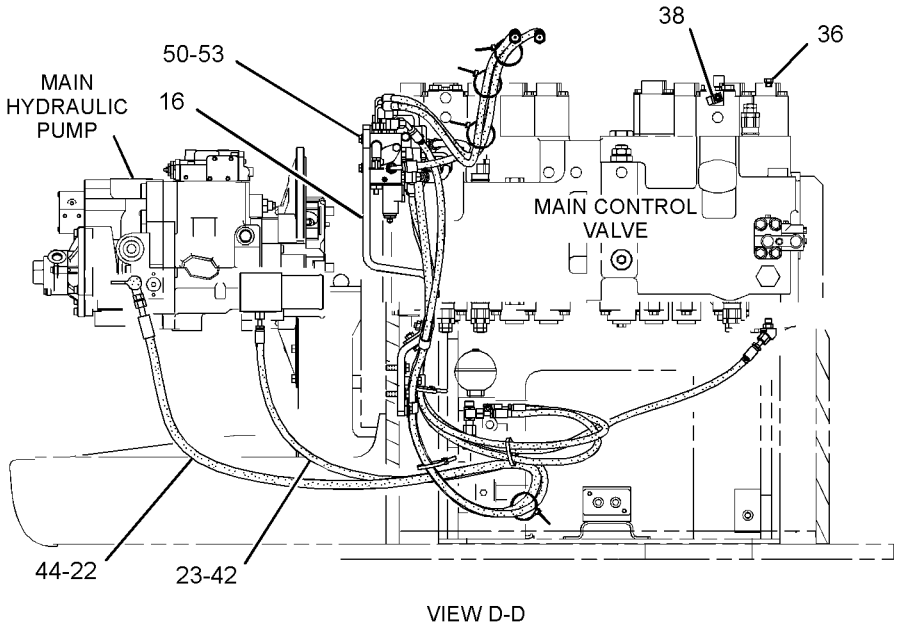

VIEW D-D

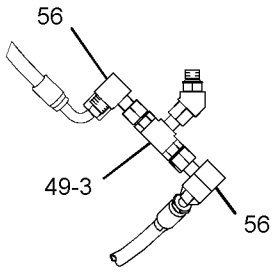

VIEW A-A
(OPTIONAL DESIGN)

GRAPHIC #1

g02069475

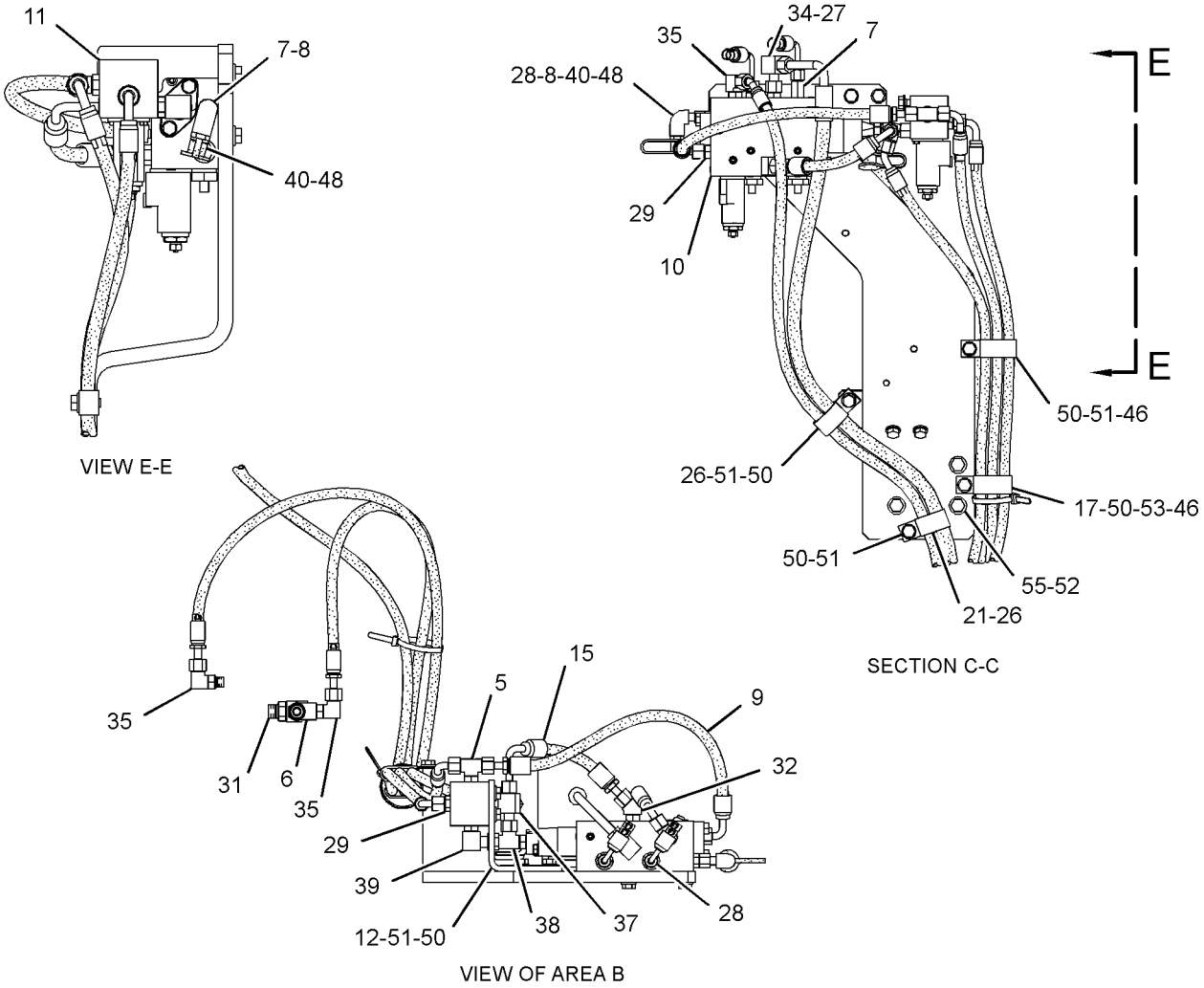

GRAPHIC #2 **<END>** g02069476

HYDRAULIC SYSTEM

302-2984 LINES GP-PILOT—CONTROL VALVE

S/N: JGB1-UP; KHS1-UP

PART OF 297-0243, 297-0244 HYDRAULIC AR

SMCS-5057, 5059 **i04157595**

NOTE	REF NO	GRAPHIC REF	PART NUMBER	QTY	PART NAME 1 2 3 4 5 6 (PRODUCT LEVEL)	SEE PAGE
I	1	2	**4I-3511**	1	HOSE AS	
I	2	2	**4I-3514**	1	HOSE AS	
I	3	2	**4I-6003**	1	HOSE AS	
	4	2	**4I-9521**	6	BAND-MARKER (RED, L1)	
	5	2	**4I-9522**	6	BAND-MARKER (YELLOW, L2)	
	6	2	**4I-9523**	2	BAND-MARKER (BLUE, L3)	
	7	2	**4I-9524**	2	BAND-MARKER (BROWN, L4)	
	8	2	**4I-9525**	6	BAND-MARKER (ORANGE, R1)	
	9	2	**4I-9526**	6	BAND-MARKER (WHITE, R2)	
	10	2	**4I-9527**	2	BAND-MARKER (GREEN, R3)	
	11	2	**4I-9528**	2	BAND-MARKER (PURPLE, R4)	
	12	2	**5I-4376**	1	FITTING	
I	13	2	**285-2715**	1	HOSE AS	
	14	1,2	**7K-1181**	16	STRAP-CABLE	
I	15	2	**087-5591**	1	HOSE AS	
I	16	2	**087-6584**	1	HOSE AS	
I	17	2	**102-7685**	1	HOSE AS	
	18	1	**108-7118**	1	GROMMET	
I	19	2	**113-6738**	1	HOSE AS	
	20	1	**124-1008**	1	GUARD	
I	21	2	**134-6946**	3	HOSE AS	
	22	1	**149-6549**	1	GROMMET	
	23	2	*164-5629*	2	FITTING AS	
					(EACH INCLUDES)	
		2	**3J-1907**	1	SEAL-O-RING	
		2	**108-7516**	1	FITTING	
	24	2	*168-1968*	1	TEE AS	
		2	**3J-1907**	1	SEAL-O-RING	
		2	**6V-8397**	1	SEAL-O-RING	
		2	**126-6872**	1	TEE	
I	25	2	**194-0289**	1	HOSE AS	
I	26	2	**236-2850**	1	HOSE AS	
	27	1	**245-5081**	1	GROMMET	
	28	2	**297-4483**	1	SENSOR AS-PRESSURE (BOOM DOWN)	
		2	**3J-1907**	1	SEAL-O-RING	
	29	2	**309-5795**	2	SWITCH AS-PRESSURE (PILOT OIL)	
					(EACH INCLUDES)	
		2	**9X-3402**	2	SOCKET-CONNECTOR (16-GA TO 18-GA)	
					—OR—	
		2	**126-1768**	2	SOCKET-CONNECTOR (14-GA TO 16-GA)	
		2	**155-2270**	1	KIT-CONNECTING PLUG (2-PIN)	
		2	**331-4226**	1	KIT-CONNECTING PLUG (2-PIN)	
					(EACH PLUG KIT INCLUDES PLUG AS, WEDGE & INTERFACE SEAL)	
	30	2	**096-0061**	2	STRAP-CABLE	
	31	2	*148-8336*	1	CONNECTOR AS	
		2	**3J-1907**	1	SEAL-O-RING	
		2	**6V-8397**	1	SEAL-O-RING	
		2	**6V-8636**	1	CONNECTOR	
	32	2	*148-8353*	4	ELBOW AS	
					(EACH INCLUDES)	
		2	**3J-1907**	1	SEAL-O-RING	
		2	**6V-8397**	1	SEAL-O-RING	
		2	**6V-9001**	1	ELBOW	
	33	2	*148-8378*	2	ELBOW AS	
					(EACH INCLUDES)	

302-2984 **LINES GP-PILOT** *(contd.)* **i04157595**

NOTE	REF NO	GRAPHIC REF	PART NUMBER	QTY	PART NAME 1 2 3 4 5 6 (PRODUCT LEVEL)	SEE PAGE
		2	**3J-1907**	1	SEAL-O-RING	
		2	**6V-8397**	1	SEAL-O-RING	
		2	**6V-8724**	1	ELBOW	
	34	2	*148-8433*	1	TEE AS	
		2	**6V-8397**	2	SEAL-O-RING	
		2	**6V-9836**	1	TEE-SWIVEL	
	35	2	*148-8435*	6	TEE AS	
					(EACH INCLUDES)	
		2	**3J-1907**	1	SEAL-O-RING	
		2	**6V-8397**	2	SEAL-O-RING	
		2	**6V-8781**	1	TEE-FACE SEAL	
	36	2	*150-3036*	1	ELBOW AS	
		2	**3J-1907**	1	SEAL-O-RING	
		2	**6V-8397**	1	SEAL-O-RING	
		2	**8T-1905**	1	ELBOW	
BJ	37	1	**7K-1181**	2	STRAP-CABLE	
BJ	38	1	**115-8645**	1	GUARD	

B-USE AS REQUIRED
I-REFER TO HYDRAULIC INFORMATION SYSTEM
J-USED ONLY ON MACHINE EQUIPPED WITH ROPS CAB

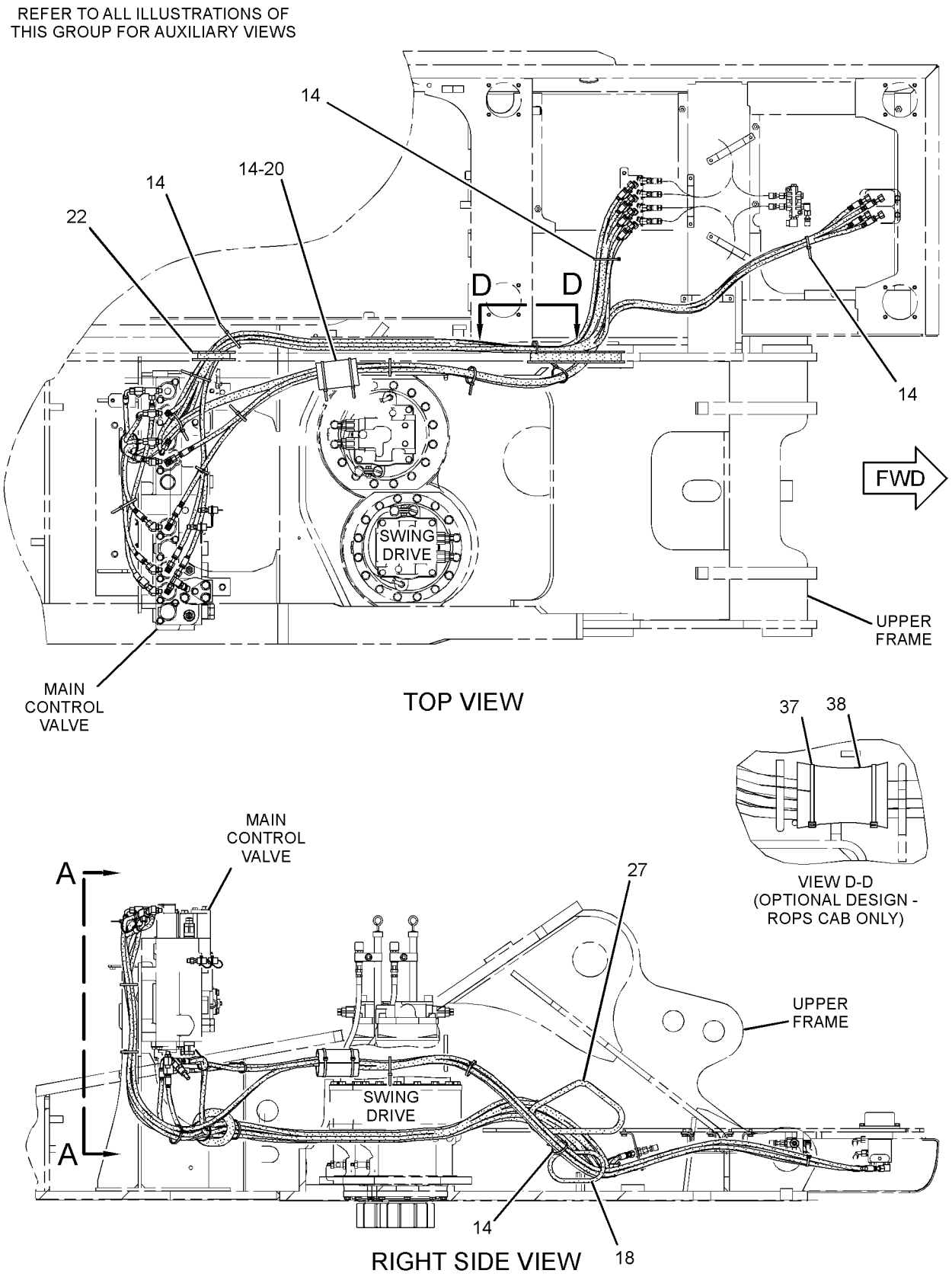

GRAPHIC #1 g01965574

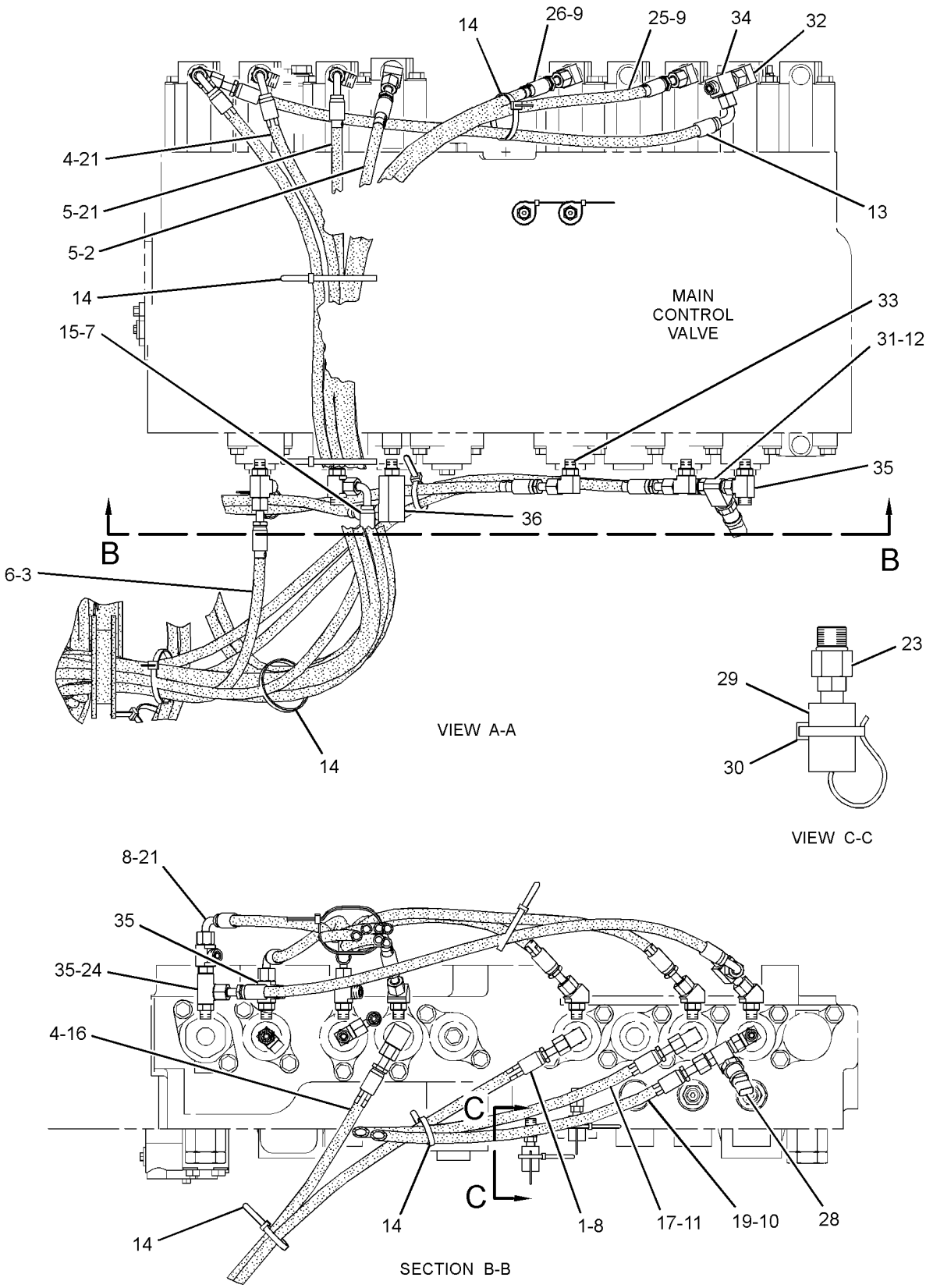

GRAPHIC #2 **<END>** g01429156

HYDRAULIC SYSTEM

302-2985 LINES GP-PILOT—CONTROL VALVE

S/N: JGB1-UP; KHS1-UP

PART OF 297-0243, 297-0244 HYDRAULIC AR

SMCS-5057, 5059 **i04143103**

NOTE	REF NO	GRAPHIC REF	PART NUMBER	QTY	PART NAME 1 2 3 4 5 6 (PRODUCT LEVEL)	SEE PAGE
I	1	3	**4I-0800**	1	HOSE AS	
I	2	2	**4I-0821**	1	HOSE AS	
I	3	3	**4I-1704**	1	HOSE AS	
I	4	2	**4I-1780**	1	HOSE AS	
I	5	1	**4I-3573**	1	HOSE AS	
	6	3	**4I-3941**	2	FITTING AS	
I	7	3	**4I-5795**	1	HOSE AS	
	8	2,4	**4I-9521**	5	BAND-MARKER (RED, L1)	
	9	1,2	**4I-9522**	8	BAND-MARKER (YELLOW, L2)	
	10	1,2,3	**4I-9523**	14	BAND-MARKER (BLUE, L3)	
	11	1,3,4	**4I-9524**	6	BAND-MARKER (BROWN, L4)	
	12	1,2	**4I-9525**	4	BAND-MARKER (ORANGE, R1)	
	13	1,2	**4I-9527**	3	BAND-MARKER (GREEN, R3)	
I	14	2	**5I-4076**	2	HOSE AS	
I	15	4	**5I-4396**	1	HOSE AS	
I	16	2	**5I-8825**	1	HOSE AS	
	17	1,2,3	**7K-1181**	22	STRAP-CABLE	
I	18	2	**087-4532**	1	HOSE AS	
	19	1	**087-4587**	1	GROMMET	
I	20	2	**087-5759**	1	HOSE AS	
I	21	2	**087-5764**	1	HOSE AS	
I	22	2,3	**087-5771**	2	HOSE AS	
I	23	3	**087-5782**	1	HOSE AS	
	24	1	**103-1384**	1	GUARD	
I	25	2	**104-8803**	1	HOSE AS	
I	26	4	**4I-1671**	1	HOSE AS	
I	27	1	**111-6752**	1	HOSE AS	
I	28	2	**113-6761**	1	HOSE AS	
I	29	2	**115-3667**	1	HOSE AS	
Y	30	3	**164-6979**	2	VALVE GP-SHUTTLE	790
I	31	2	**124-1266**	1	HOSE AS	
CI	32	2	**340-2861**	1	HOSE AS	
	33	1,2	**133-5813**	10	BAND-MARKER (GRAY)	
I	34	2	**134-6918**	1	HOSE AS	
I	35	2	**325-8792**	1	HOSE AS	
I	36	1	**143-4254**	1	HOSE AS	
	37	4	*164-5546*	1	TEE AS	
		4	**3E-7410**	1	TEE-O-RING	
		4	**3J-1907**	1	SEAL-O-RING	
	38	2	*164-5628*	1	CONNECTOR AS	
		2	**3J-1907**	1	SEAL-O-RING	
		2	**6V-8397**	1	SEAL-O-RING	
		2	**107-6631**	1	CONNECTOR-FILTER	
	39	2	*164-5642*	1	STOPPER AS	
		2	**3J-1907**	1	SEAL-O-RING	
		2	**131-5676**	1	STOPPER	
	40	2	*164-5644*	1	ELBOW AS	
		2	**7J-9108**	1	SEAL-O-RING	
		2	**131-9534**	1	ELBOW	
Y	41	2	*164-6981*	1	ACCUMULATOR GP-HYDRAULIC (CHARGED)	446
	42	1	*177-1061*	1	ELBOW AS	
		1	**5K-9090**	1	SEAL-O-RING	
		1	**142-0038**	1	ELBOW	
	43	4	*164-9869*	2	CONNECTOR AS	
					(EACH INCLUDES)	
		4	**3J-1907**	1	SEAL-O-RING	

302-2985 **LINES GP-PILOT** *(contd.)* **i04143103**

NOTE	REF NO	GRAPHIC REF	PART NUMBER	QTY	PART NAME 1 2 3 4 5 6 (PRODUCT LEVEL)	SEE PAGE
		4	**6V-8397**	1	SEAL-O-RING	
		4	**9X-2297**	1	CONNECTOR	
Y	44	2	**215-5037**	1	MANIFOLD GP-CONTROL (PILOT OIL SUPPLY)	669
I	45	1	**104-8774**	1	HOSE AS	
Y	46	3	**310-0210**	1	VALVE GP-PRESSURE REDUCING (BOOM, SWING PRIORITY)	770
	47	3	**236-3051**	1	PLATE	
	48	4	**236-3052**	1	BLOCK	
	49	3	**236-3053**	1	BLOCK	
	50	3	**236-3054**	1	PLATE	
I	51	1	**236-3204**	2	HOSE AS	
I	52	3	**248-9469**	1	HOSE AS	
	53	2	**255-2009**	1	SUPPORT AS	
	54	1	**275-1442**	1	CLIP (TAB)	
I	55	2	**260-8079**	1	HOSE AS	
I	56	2	**266-1217**	1	HOSE AS	
I	57	2	**330-2418**	1	HOSE AS	
I	58	2	**278-6796**	1	HOSE AS	
	59	3	*281-5898*	1	TEE AS	
		3	**3J-1907**	1	SEAL-O-RING	
		3	**6V-8398**	2	SEAL-O-RING	
		3	**153-6270**	1	TEE	
	60	3	**285-2893**	1	SUPPORT AS	
	61	4	**286-6399**	1	HOSE AS	
	62	3	**302-2880**	1	SUPPORT AS	
I	63	1	**302-3308**	1	HOSE AS	
	64	3	**309-5769**	2	SWITCH AS-PRESSURE (IMPLEMENT, SWING)	
					(EACH INCLUDES)	
		3	**9X-3401**	2	PIN-CONNECTOR (16-GA TO 18-GA)	
					—OR—	
		3	**126-1767**	2	PIN-CONNECTOR (14-GA TO 16-GA)	
		3	**102-8802**	1	KIT-RECEPTACLE (2-PIN)	
					(INCLUDES RECEPTACLE AS & WEDGE)	
	65	3	*148-8335*	2	CONNECTOR AS	
					(EACH INCLUDES)	
		3	**5K-9090**	1	SEAL-O-RING	
		3	**6V-8635**	1	CONNECTOR	
		3	**7M-8485**	1	SEAL-O-RING	
	66	2,3,4	*148-8336*	10	CONNECTOR AS	
					(EACH INCLUDES)	
		2,3,4	**3J-1907**	1	SEAL-O-RING	
		2,3,4	**6V-8397**	1	SEAL-O-RING	
		2,3,4	**6V-8636**	1	CONNECTOR	
	67	3	*148-8338*	3	CONNECTOR AS	
					(EACH INCLUDES)	
		3	**3J-1907**	1	SEAL-O-RING	
		3	**6V-8397**	1	SEAL-O-RING	
		3	**8T-0075**	1	CONNECTOR	
C	68	2	*148-8360*	1	ELBOW AS	
		2	**6V-9182**	1	ELBOW	
		2	**6V-9746**	1	SEAL-O-RING	
		2	**7M-8485**	1	SEAL-O-RING	
	69	2,3	*148-8340*	4	CONNECTOR AS	
					(EACH INCLUDES)	
		2,3	**3K-0360**	1	SEAL-O-RING	
		2,3	**6V-8398**	1	SEAL-O-RING	
		2,3	**6V-8639**	1	CONNECTOR	
	70	2,4	*148-8353*	8	ELBOW AS	
					(EACH INCLUDES)	
		2,4	**3J-1907**	1	SEAL-O-RING	

302-2985 **LINES GP-PILOT** *(contd.)* **i04143103**

NOTE	REF NO	GRAPHIC REF	PART NUMBER	QTY	PART NAME 1 2 3 4 5 6 (PRODUCT LEVEL)	SEE PAGE
		2,4	**6V-8397**	1	SEAL-O-RING	
		2,4	**6V-9001**	1	ELBOW	
	71	2,4	*148-8378*	5	ELBOW AS	
					(EACH INCLUDES)	
		2,4	**3J-1907**	1	SEAL-O-RING	
		2,4	**6V-8397**	1	SEAL-O-RING	
		2,4	**6V-8724**	1	ELBOW	
	72	2	*148-8393*	1	ELBOW AS	
		2	**6V-9852**	1	ELBOW	
		2	**7J-9108**	1	SEAL-O-RING	
	73	2,3,4	*148-8407*	11	PLUG AS	
					(EACH INCLUDES)	
		2,3,4	**3J-1907**	1	SEAL-O-RING	
		2,3,4	**9S-4191**	1	PLUG-O-RING	
	74	2	*148-8414*	1	REDUCER AS	
		2	**6V-8943**	1	REDUCER	
		2	**7J-9108**	1	SEAL-O-RING	
	75	4	*148-8433*	1	TEE AS	
		4	**6V-8397**	2	SEAL-O-RING	
		4	**6V-9836**	1	TEE-SWIVEL	
	76	2,3,4	*148-8435*	3	TEE AS	
					(EACH INCLUDES)	
		2,3,4	**3J-1907**	1	SEAL-O-RING	
		2,3,4	**6V-8397**	2	SEAL-O-RING	
		2,3,4	**6V-8781**	1	TEE-FACE SEAL	
	77	2,3	*150-3036*	2	ELBOW AS	
					(EACH INCLUDES)	
		2,3	**3J-1907**	1	SEAL-O-RING	
		2,3	**6V-8397**	1	SEAL-O-RING	
		2,3	**8T-1905**	1	ELBOW	
	78	3	*153-6258*	1	CONNECTOR AS	
		3	**3J-1907**	1	SEAL-O-RING	
		3	**6V-8398**	1	SEAL-O-RING	
		3	**8T-5050**	1	CONNECTOR	
	79	4	*164-5589*	1	CONNECTOR AS	
		4	**3J-1907**	1	SEAL-O-RING	
		4	**6V-8397**	1	SEAL-O-RING	
		4	**8C-0597**	1	CONNECTOR	
	80	1	**266-0982**	1	GUARD	
	81	1	**275-1443**	1	CLIP (SLOT)	
	82	2	**6D-4246**	1	CLIP	
	83	1,4	**6K-8178**	2	CLIP	
	84	2	**6V-0357**	1	SEAL-O-RING	
	85	2	*164-6869*	1	CONNECTOR AS	
		2	**3K-0360**	1	SEAL-O-RING	
		2	**6V-8398**	1	SEAL-O-RING	
		2	**128-9001**	1	CONNECTOR-FILTER	
	86	2	**6V-9829**	1	CAP AS	
M	87	3	**7X-0818**	2	BOLT (M8X1.25X45-MM)	
M	88	4	**7X-2621**	1	BOLT (M10X1.5X12-MM)	
	89	1,2,3, 4	**8T-4121**	13	WASHER-HARD (11X21X2.5-MM THK)	
M	90	1,2	**8T-4136**	2	BOLT (M10X1.5X25-MM)	
M	91	1,2,4	**8T-4137**	4	BOLT (M10X1.5X20-MM)	
M	92	3	**8T-4172**	2	BOLT (M10X1.5X80-MM)	
M	93	2	**8T-4182**	2	BOLT (M10X1.5X45-MM)	
M	94	2	**8T-4184**	2	BOLT (M12X1.75X45-MM)	
M	95	3	**8T-4189**	4	BOLT (M8X1.25X20-MM)	
M	96	3	**8T-4191**	4	BOLT (M10X1.5X16-MM)	
	97	2	**8T-4223**	2	WASHER-HARD (13.5X25.5X3-MM THK)	

302-2985 **LINES GP-PILOT** *(contd.)* **i04143103**

NOTE	REF NO	GRAPHIC REF	PART NUMBER	QTY	PART NAME 1 2 3 4 5 6 (PRODUCT LEVEL)	SEE PAGE
	98	3	**8T-4224**	4	WASHER-HARD (8.8X16X2-MM THK)	
M	99	4	**8T-6870**	2	BOLT (M8X1.25X70-MM)	
M	100	3	**8T-6912**	2	BOLT (M8X1.25X50-MM)	
	101	1	**275-1444**	1	GROMMET	
I	102	1	**318-5748**	1	HOSE AS	
I	103	4	**329-2793**	1	HOSE AS	
	104	3	**282-7106**	1	GROMMET	
	105	3	*351-0286*	1	CONNECTOR AS	
		3	**3J-1907**	1	SEAL-O-RING	
		3	**6V-8397**	1	SEAL-O-RING	
		3	**259-7733**	1	CONNECTOR	

C-CHANGE FROM PREVIOUS TYPE
I-REFER TO HYDRAULIC INFORMATION SYSTEM
M-METRIC PART
Y-SEPARATE ILLUSTRATION

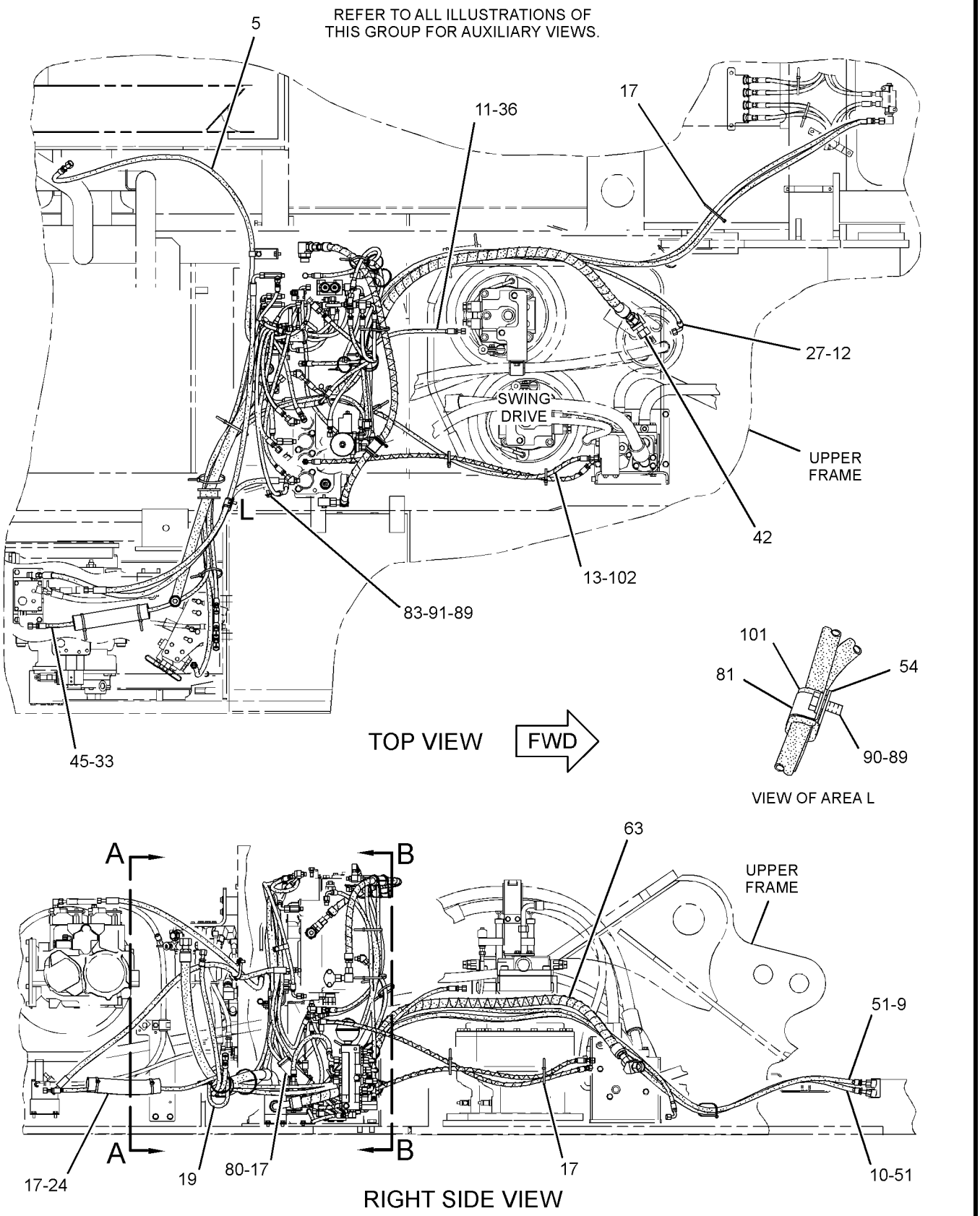

GRAPHIC #1 g02342836

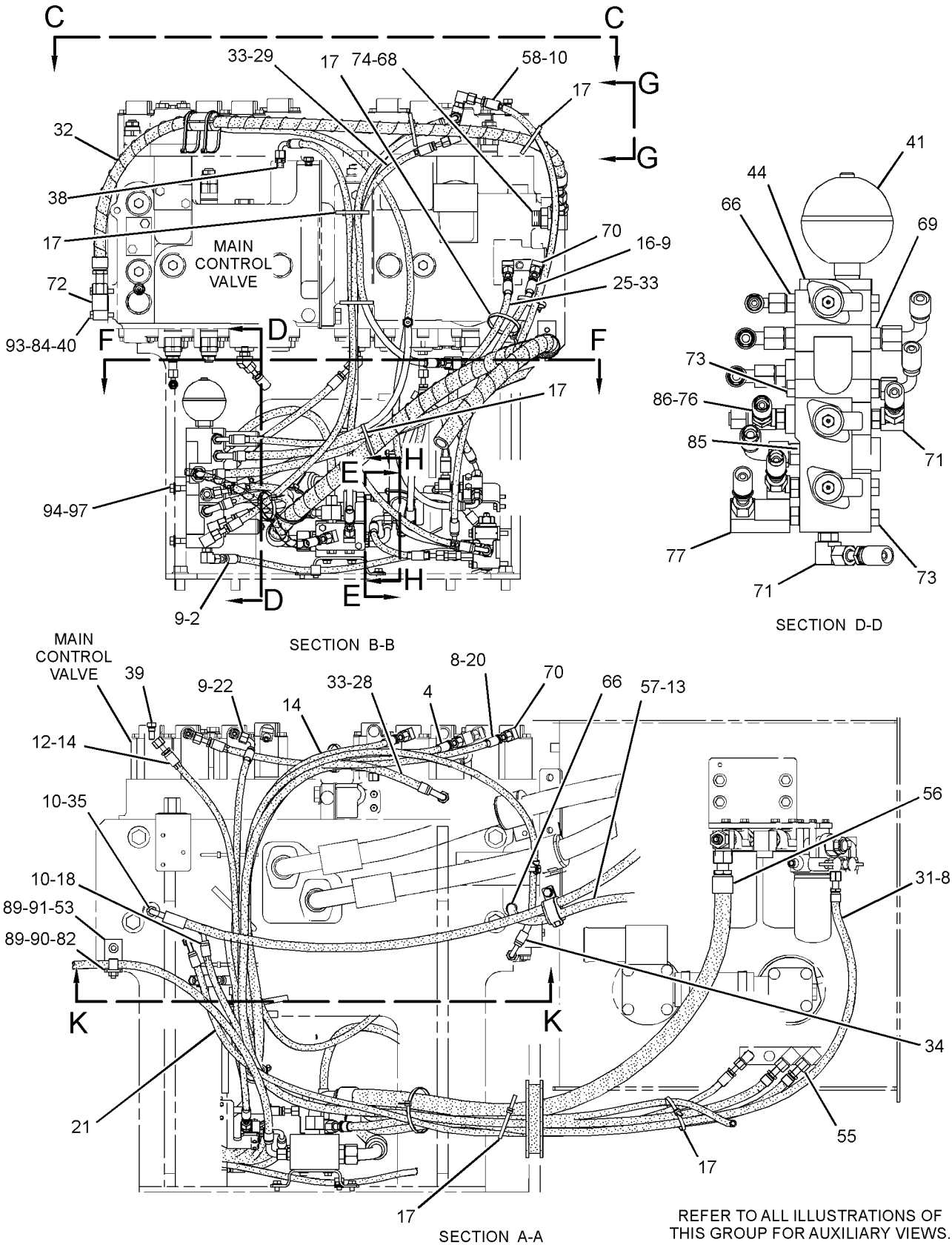

REFER TO ALL ILLUSTRATIONS OF THIS GROUP FOR AUXILIARY VIEWS.

GRAPHIC #2

g02342837

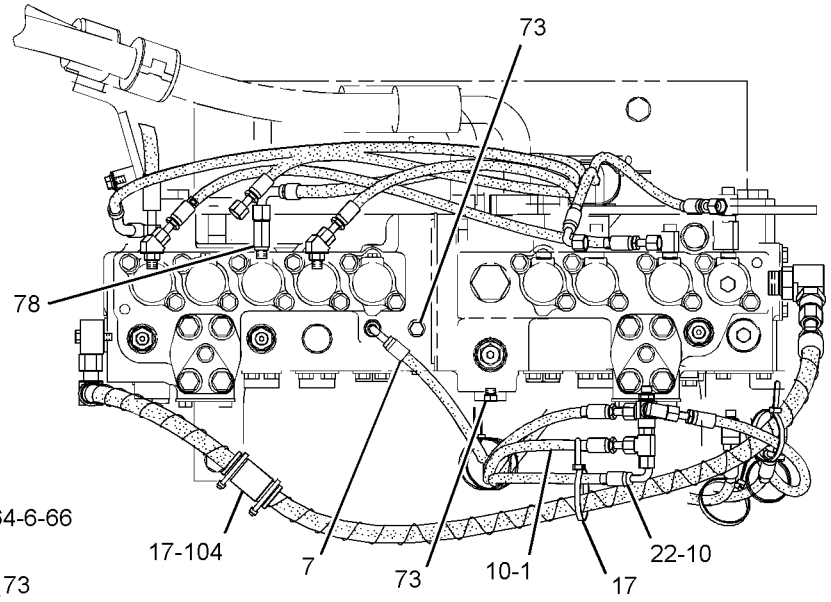

VIEW C-C

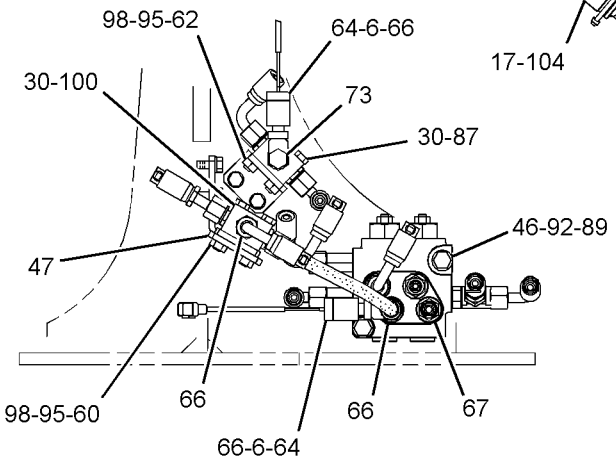

SECTION E-E

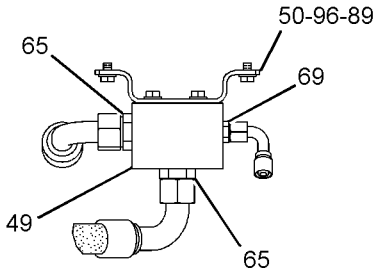

VIEW L-L

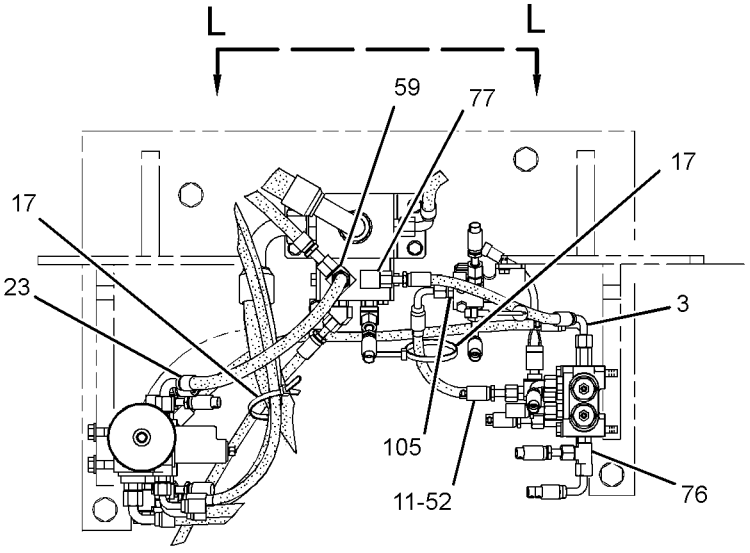

SECTION F-F

GRAPHIC #3

g02154656

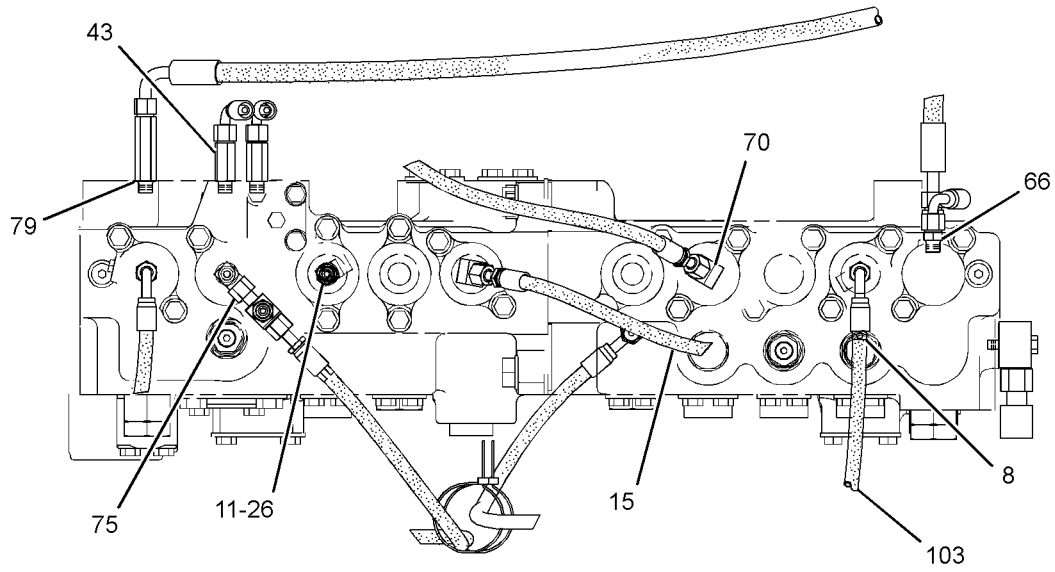

SECTION K-K

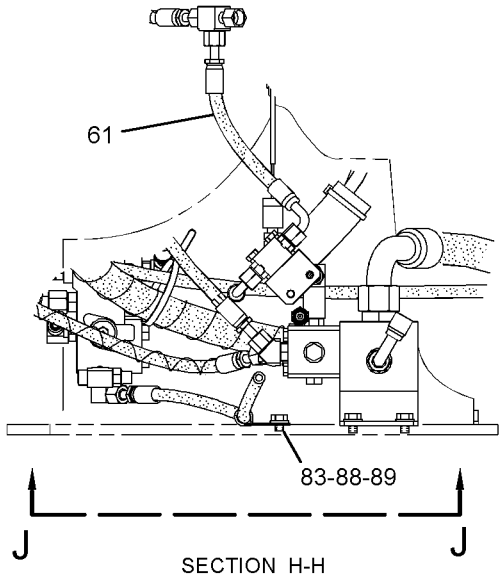

SECTION H-H

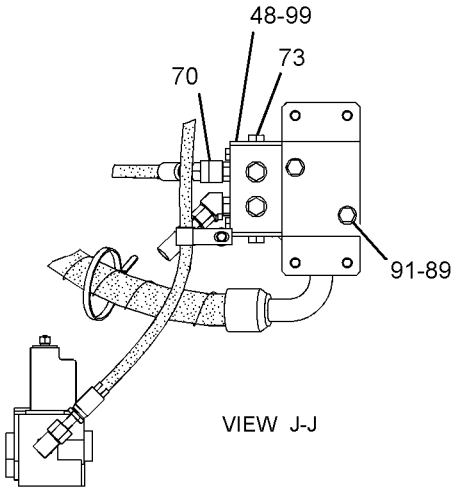

VIEW J-J

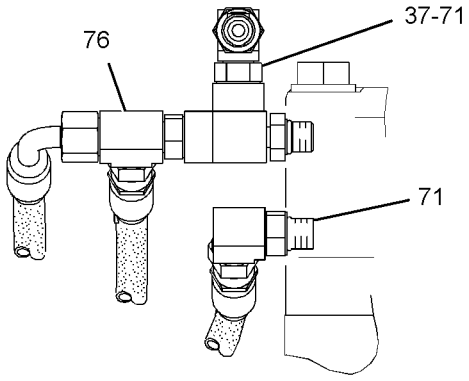

VIEW G-G

GRAPHIC #4 **<END>** g02154658

HYDRAULIC SYSTEM

302-3097 LINES GP-PILOT—PUMP, MOTOR

S/N: JGB1-UP; KHS1-UP

PART OF 297-0243, 297-0244 HYDRAULIC AR

SMCS-5057, 5059 **i04136696**

NOTE	REF NO	GRAPHIC REF	PART NUMBER	QTY	PART NAME 1 2 3 4 5 6 (PRODUCT LEVEL)	SEE PAGE
	1	1	**4I-9527**	2	BAND-MARKER (GREEN, R3)	
	2	1	**6V-0852**	5	CAP-DUST	
I	3	1	**7Y-8379**	1	HOSE AS	
	4	1	*164-6874*	1	FITTING AS-ELBOW	
		1	**3J-1907**	1	SEAL-O-RING	
		1	**085-7356**	1	FITTING	
Y	5	1	**171-0188**	1	VALVE GP-SOLENOID (NEG FLOW CONT, PROPN RED VALVE)	796
	6	1	**221-8912**	2	FLANGE	
	7	1	**239-1756**	1	SUPPORT AS	
M		1	**8T-3612**	4	NUT-WELD (M8X1.25-THD)	
I	8	1	**245-5096**	1	HOSE AS	
	9	1	**260-2180**	2	SENSOR AS-PRESSURE (PUMP OUTPUT)	
					(EACH INCLUDES)	
		1	**095-1777**	1	RING-BACKUP	
		1	**260-2191**	1	SEAL-O-RING	
I	10	1	**272-4138**	1	HOSE AS	
	11	1	**302-2986**	1	SUPPORT AS	
	12	1	*322-8727*	1	ELBOW AS	
		1	**3J-1907**	1	SEAL-O-RING	
		1	**6V-8398**	1	SEAL-O-RING	
		1	**322-8728**	1	ELBOW (WITH SCREEN)	
C	13	1	*148-8338*	2	CONNECTOR AS	
					(EACH INCLUDES)	
		1	**3J-1907**	1	SEAL-O-RING	
		1	**6V-8397**	1	SEAL-O-RING	
		1	**8T-0075**	1	CONNECTOR	
	14	1	*148-8345*	1	CONNECTOR AS	
		1	**2M-9780**	1	SEAL-O-RING	
		1	**6V-8398**	1	SEAL-O-RING	
		1	**6V-8638**	1	CONNECTOR	
	15	1	*148-8362*	1	ELBOW AS	
		1	**3D-2824**	1	SEAL-O-RING	
		1	**5K-9090**	1	SEAL-O-RING	
		1	**8T-6684**	1	ELBOW	
	16	1	*148-8378*	3	ELBOW AS	
					(EACH INCLUDES)	
		1	**3J-1907**	1	SEAL-O-RING	
		1	**6V-8397**	1	SEAL-O-RING	
		1	**6V-8724**	1	ELBOW	
	17	1	*148-8407*	2	PLUG AS	
					(EACH INCLUDES)	
		1	**3J-1907**	1	SEAL-O-RING	
		1	**9S-4191**	1	PLUG-O-RING	
	18	1	*150-4027*	1	TEE AS	
		1	**3E-2310**	1	TEE	
		1	**3J-1907**	1	SEAL-O-RING	
		1	**6V-8397**	1	SEAL-O-RING	
	19	1	*164-5567*	5	COUPLER AS-QUICK DISCONNECT (MALE)	
					(EACH INCLUDES)	
		1	**214-7568**	1	SEAL-O-RING	
		1	**6V-3965**	1	FITTING (QUICK DISCONNECT)	
	20	1	**5P-7462**	2	CLIP (SLOT)	
	21	1	**5P-7463**	2	CLIP (TAB)	
	22	1	**5P-7468**	1	CLIP (SLOT)	
	23	1	**5P-7469**	1	CLIP (TAB)	

302-3097 **LINES GP-PILOT** *(contd.)* **i04136696**

NOTE	REF NO	GRAPHIC REF	PART NUMBER	QTY	PART NAME 1 2 3 4 5 6 (PRODUCT LEVEL)	SEE PAGE
	24	1	**6V-0683**	2	GROMMET	
	25	1	**8T-2525**	1	GROMMET	
	26	1	**8T-4121**	6	WASHER-HARD (11X21X2.5-MM THK)	
M	27	1	**8T-4137**	4	BOLT (M10X1.5X20-MM)	
M	28	1	**8T-4139**	2	BOLT (M12X1.75X30-MM)	
M	29	1	**8T-4177**	4	BOLT (M8X1.25X90-MM)	
M	30	1	**8T-4189**	4	BOLT (M8X1.25X20-MM)	
	31	1	**8T-4223**	3	WASHER-HARD (13.5X25.5X3-MM THK)	
	32	1	**8T-4224**	8	WASHER-HARD (8.8X16X2-MM THK)	
M	33	1	**8T-4192**	1	BOLT (M12X1.75X25-MM)	
C	34	1	*363-6134*	1	ADAPTER AS	
		1	**3J-1907**	1	SEAL-O-RING	
		1	**6V-8397**	1	SEAL-O-RING	
		1	**354-3864**	1	ADAPTER-FILTER	
M	35	1	**8T-4136**	2	BOLT (M10X1.5X25-MM)	

C-CHANGE FROM PREVIOUS TYPE
I-REFER TO HYDRAULIC INFORMATION SYSTEM
M-METRIC PART
Y-SEPARATE ILLUSTRATION

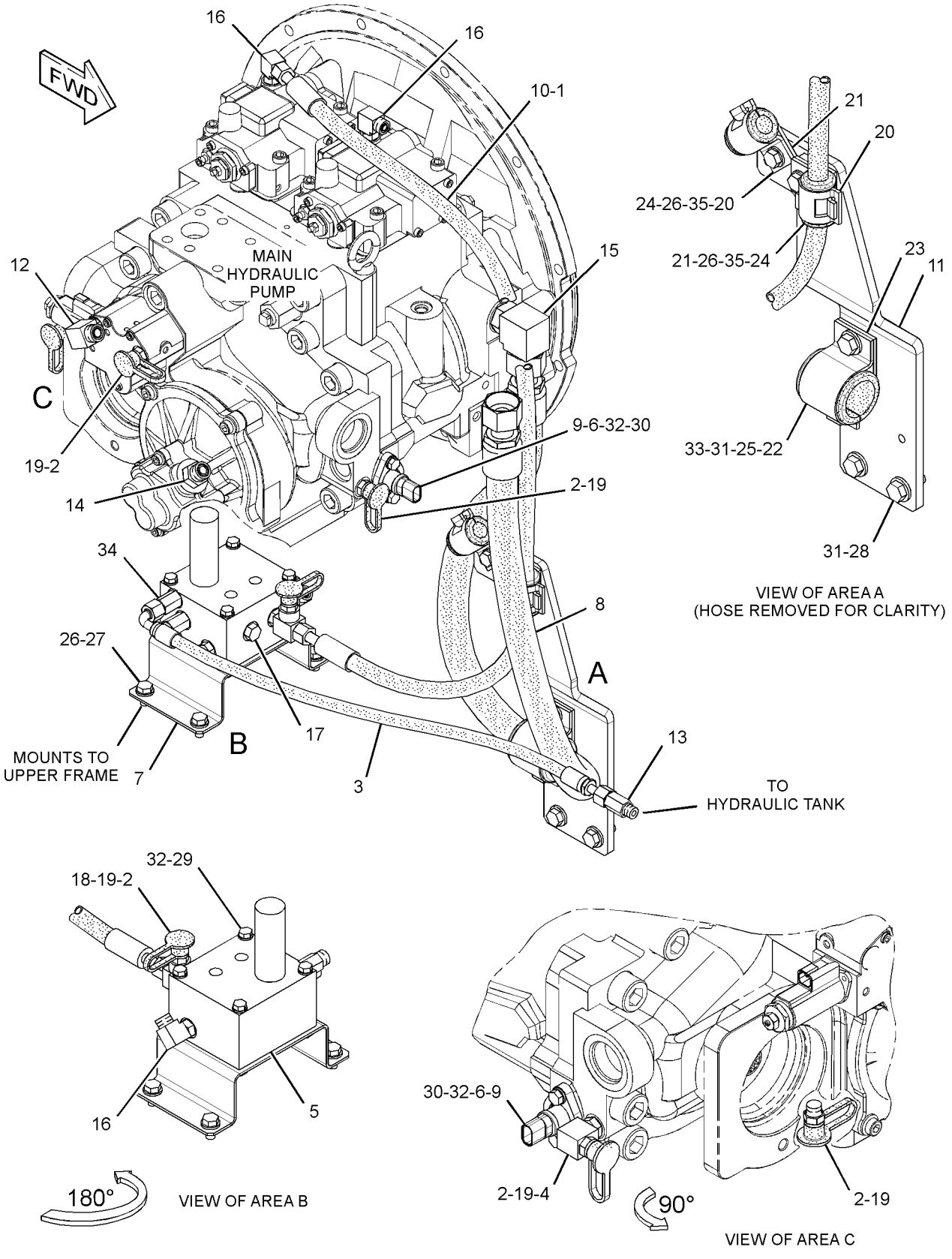

GRAPHIC #1 **<END>** g02138220

HYDRAULIC SYSTEM

302-3140 LINES GP-PILOT–BOOM LOWERING CONTROL

S/N: JGB1-UP; KHS1-UP
PART OF 297-0252 VALVE AR-CHECK & RELIEF
AN ATTACHMENT

SMCS-5057, 5059 **i03617285**

NOTE	REF NO	GRAPHIC REF	PART NUMBER	QTY	PART NAME 1 2 3 4 5 6 (PRODUCT LEVEL)	SEE PAGE
C	1	1	**7K-1181**	6	STRAP-CABLE	
I	2	1	**134-6921**	1	HOSE AS	
CI	3	1	**285-2715**	1	HOSE AS	
I	4	1	**7Y-4387**	1	HOSE AS	
	5	1	*148-8318*	1	CONNECTOR AS	
		1	**3K-0360**	1	SEAL-O-RING	
		1	**6V-8397**	1	SEAL-O-RING	
		1	**6V-8634**	1	CONNECTOR	
C	6	1	*148-8367*	1	ELBOW AS	
		1	**6V-8397**	1	SEAL-O-RING	
		1	**6V-9850**	1	ELBOW	
C	7	1	*148-8378*	1	ELBOW AS	
		1	**3J-1907**	1	SEAL-O-RING	
		1	**6V-8397**	1	SEAL-O-RING	
		1	**6V-8724**	1	ELBOW	
	8	1	*148-8371*	1	ELBOW AS	
		1	**6V-8397**	1	SEAL-O-RING	
		1	**8C-8988**	1	ELBOW	

C-CHANGE FROM PREVIOUS TYPE
I-REFER TO HYDRAULIC INFORMATION SYSTEM

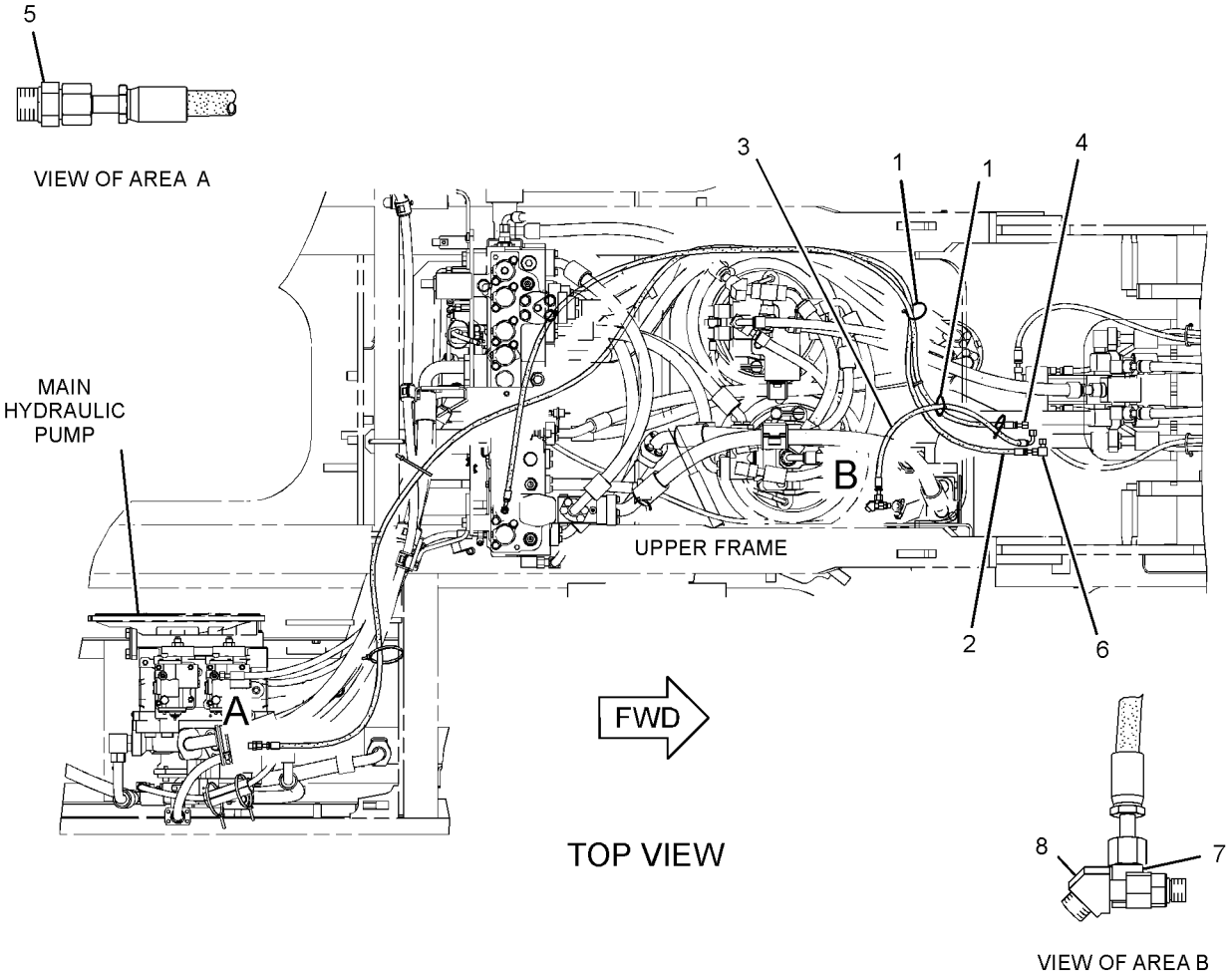

GRAPHIC #1 **<END>** g01883293

HYDRAULIC SYSTEM

302-3143 LINES GP-PILOT

S/N: JGB1-UP; KHS1-UP
PART OF 285-1786, 285-1788 CONTROL AR-AUXILIARY
AN ATTACHMENT

SMCS-5057, 5059 **i04143102**

NOTE	REF NO	GRAPHIC REF	PART NUMBER	QTY	PART NAME 1 2 3 4 5 6 (PRODUCT LEVEL)	SEE PAGE
I	1	2	**4I-0797**	1	HOSE AS	
I	2	1	**4I-0821**	1	HOSE AS	
I	3	1	**4I-0833**	1	HOSE AS	
I	4	1	**4I-3981**	1	HOSE AS	
Y	5	2	**4I-7836**	1	VALVE GP-FLOW CONTROL (DRAIN, BOOM II)	744
	6	1	**4I-9521**	2	BAND-MARKER (RED, L1)	
	7	1,2	**4I-9523**	8	BAND-MARKER (BLUE, L3)	
	8	2	**4I-9524**	2	BAND-MARKER (BROWN, L4)	
	9	1	**4I-9525**	2	BAND-MARKER (ORANGE, R1)	
	10	1	**4I-9528**	2	BAND-MARKER (PURPLE, R4)	
I	11	2	**5I-4396**	1	HOSE AS	
	12	1	**6V-0852**	3	CAP-DUST	
	13	1,2	**7K-1181**	13	STRAP-CABLE	
CI	14	2	**087-5762**	1	HOSE AS	
I	15	1	**087-5777**	1	HOSE AS	
I	16	1	**103-1399**	1	HOSE AS	
I	17	2	**104-8777**	1	HOSE AS	
I	18	1	**104-8821**	1	HOSE AS	
Y	19	2	**119-5219**	1	VALVE GP-PILOT (1-PUMP/2-PUMP, BOOM PRIORITY)	760
Y	20	1	**121-6303**	1	VALVE GP-SOLENOID (HEAVY LIFT)	795
	21	1	**124-1008**	1	GUARD	
	22	2	*164-5550*	1	TEE AS	
		2	**6V-8397**	1	SEAL-O-RING	
		2	**3J-1907**	1	SEAL-O-RING	
		2	**4I-6327**	1	TEE-ORIFICE	
	23	1	*164-6874*	3	FITTING AS-ELBOW	
					(EACH INCLUDES)	
		1	**3J-1907**	1	SEAL-O-RING	
		1	**085-7356**	1	FITTING	
	24	1	*168-1968*	1	TEE AS	
		1	**3J-1907**	1	SEAL-O-RING	
		1	**6V-8397**	1	SEAL-O-RING	
		1	**126-6872**	1	TEE	
I	25	1	**4I-1783**	1	HOSE AS	
	26	1	**239-1753**	1	PLATE	
	27	2	**239-1760**	1	SUPPORT AS	
	28	1	**245-5237**	1	SUPPORT AS	
Y	29	1	**259-7430**	1	VALVE GP-SOLENOID (PRESSURE REDUCING)	801
I	30	1	**272-4137**	1	HOSE AS	
I	31	2	**272-4139**	1	HOSE AS	
Y	32	1	**297-0641**	1	VALVE GP-PUMP CONTROL (NEGATIVE FLOW CONTROL)	772
	33	1,2	*148-8336*	5	CONNECTOR AS	
					(EACH INCLUDES)	
		1,2	**3J-1907**	1	SEAL-O-RING	
		1,2	**6V-8397**	1	SEAL-O-RING	
		1,2	**6V-8636**	1	CONNECTOR	
	34	1,2	*148-8353*	2	ELBOW AS	
					(EACH INCLUDES)	
		1,2	**3J-1907**	1	SEAL-O-RING	
		1,2	**6V-8397**	1	SEAL-O-RING	
		1,2	**6V-9001**	1	ELBOW	
	35	1	*148-8367*	1	ELBOW AS	
		1	**6V-8397**	1	SEAL-O-RING	
		1	**6V-9850**	1	ELBOW	
	36	1	*148-8374*	1	ELBOW AS	

302-3143 **LINES GP-PILOT** *(contd.)* **i04143102**

NOTE	REF NO	GRAPHIC REF	PART NUMBER	QTY	PART NAME 1 2 3 4 5 6 (PRODUCT LEVEL)	SEE PAGE
		1	**3K-0360**	1	SEAL-O-RING	
		1	**6V-8397**	1	SEAL-O-RING	
		1	**6V-8723**	1	ELBOW	
	37	1,2	*148-8378*	8	ELBOW AS	
					(EACH INCLUDES)	
		1,2	**3J-1907**	1	SEAL-O-RING	
		1,2	**6V-8397**	1	SEAL-O-RING	
		1,2	**6V-8724**	1	ELBOW	
	38	2	*148-8407*	1	PLUG AS	
		2	**3J-1907**	1	SEAL-O-RING	
		2	**9S-4191**	1	PLUG-O-RING	
	39	1	*148-8433*	1	TEE AS	
		1	**6V-8397**	2	SEAL-O-RING	
		1	**6V-9836**	1	TEE-SWIVEL	
	40	1,2	*148-8435*	3	TEE AS	
					(EACH INCLUDES)	
		1,2	**3J-1907**	1	SEAL-O-RING	
		1,2	**6V-8397**	2	SEAL-O-RING	
		1,2	**6V-8781**	1	TEE-FACE SEAL	
	41	1	*150-4027*	1	TEE AS	
		1	**3E-2310**	1	TEE	
		1	**3J-1907**	1	SEAL-O-RING	
		1	**6V-8397**	1	SEAL-O-RING	
	42	2	*153-6248*	1	ADAPTER AS	
		2	**6V-8397**	1	SEAL-O-RING	
		2	**8T-6663**	1	ADAPTER-PORT	
	43	1	*164-5549*	1	COUPLING AS	
		1	**3J-1907**	1	SEAL-O-RING	
		1	**4I-6287**	1	COUPLING	
	44	1	*164-5567*	3	COUPLER AS-QUICK DISCONNECT (MALE)	
					(EACH INCLUDES)	
		1	**3J-1907**	1	SEAL-O-RING	
		1	**6V-3965**	1	FITTING (QUICK DISCONNECT)	
	45	1	*164-5605*	1	CONNECTOR AS	
		1	**3K-0360**	1	SEAL-O-RING	
		1	**6V-8397**	1	SEAL-O-RING	
		1	**8T-0076**	1	CONNECTOR	
	46	1	*330-2417*	1	CONNECTOR AS	
		1	**3J-1907**	1	SEAL-O-RING	
		1	**6V-8397**	1	SEAL-O-RING	
		1	**142-1585**	1	ADAPTER-CONNECTOR	
	47	2	**3G-8054**	2	CLIP (TAB)	
	48	2	**3G-8057**	2	CLIP (SLOT)	
	49	2	**3J-1907**	1	SEAL-O-RING	
	50	2	**6V-0974**	2	GROMMET	
	51	2	**6V-8397**	1	SEAL-O-RING	
M	52	1	**8T-3647**	2	BOLT (M8X1.25X80-MM)	
	53	2	**8T-4121**	8	WASHER-HARD (11X21X2.5-MM THK)	
M	54	2	**8T-4137**	2	BOLT (M10X1.5X20-MM)	
M	55	1	**8T-4138**	2	BOLT (M6X1X20-MM)	
M	56	1	**8T-4139**	4	BOLT (M12X1.75X30-MM)	
M	57	2	**8T-4185**	2	BOLT (M10X1.5X50-MM)	
	58	1	**8T-4223**	4	WASHER-HARD (13.5X25.5X3-MM THK)	
	59	1	**8T-4224**	2	WASHER-HARD (8.8X16X2-MM THK)	
	60	1	**9X-8256**	2	WASHER (6.6X12X2-MM THK)	
M	61	2	**8T-4136**	4	BOLT (M10X1.5X25-MM)	

C-CHANGE FROM PREVIOUS TYPE
I-REFER TO HYDRAULIC INFORMATION SYSTEM
M-METRIC PART
Y-SEPARATE ILLUSTRATION

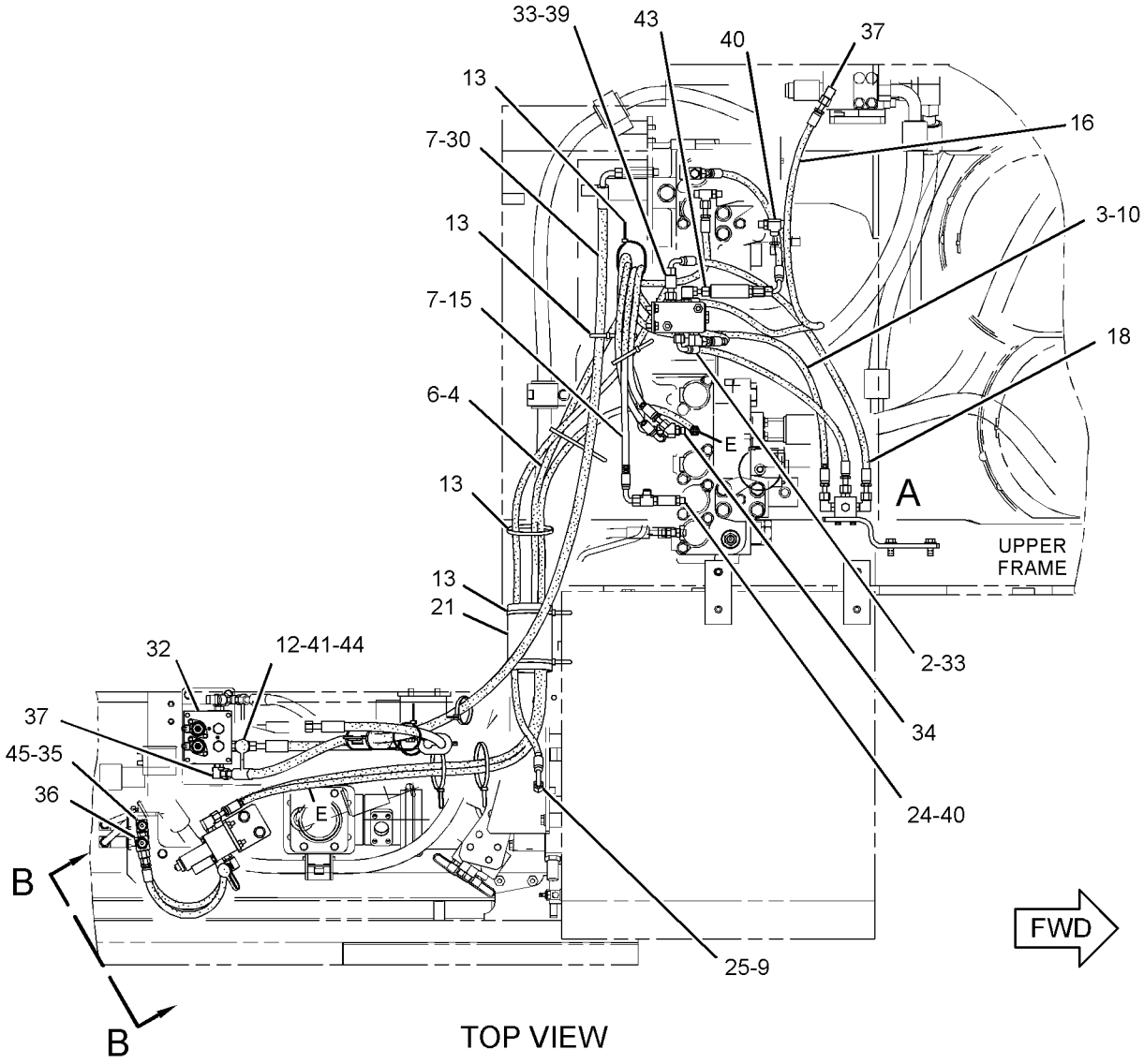

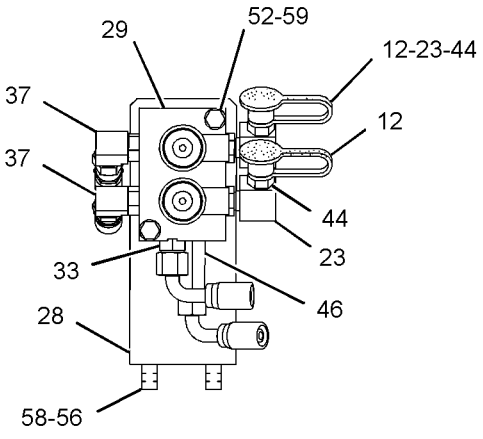

VIEW B-B

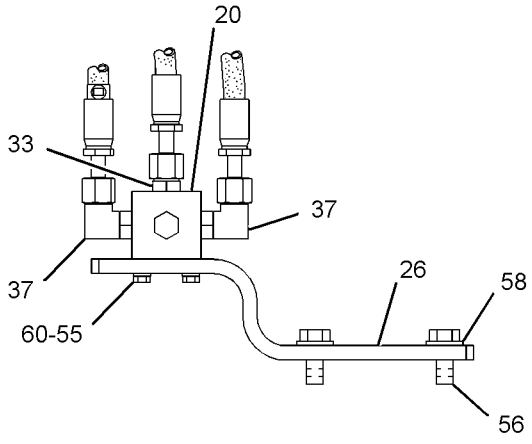

VIEW OF AREA A

GRAPHIC #1

g01918354

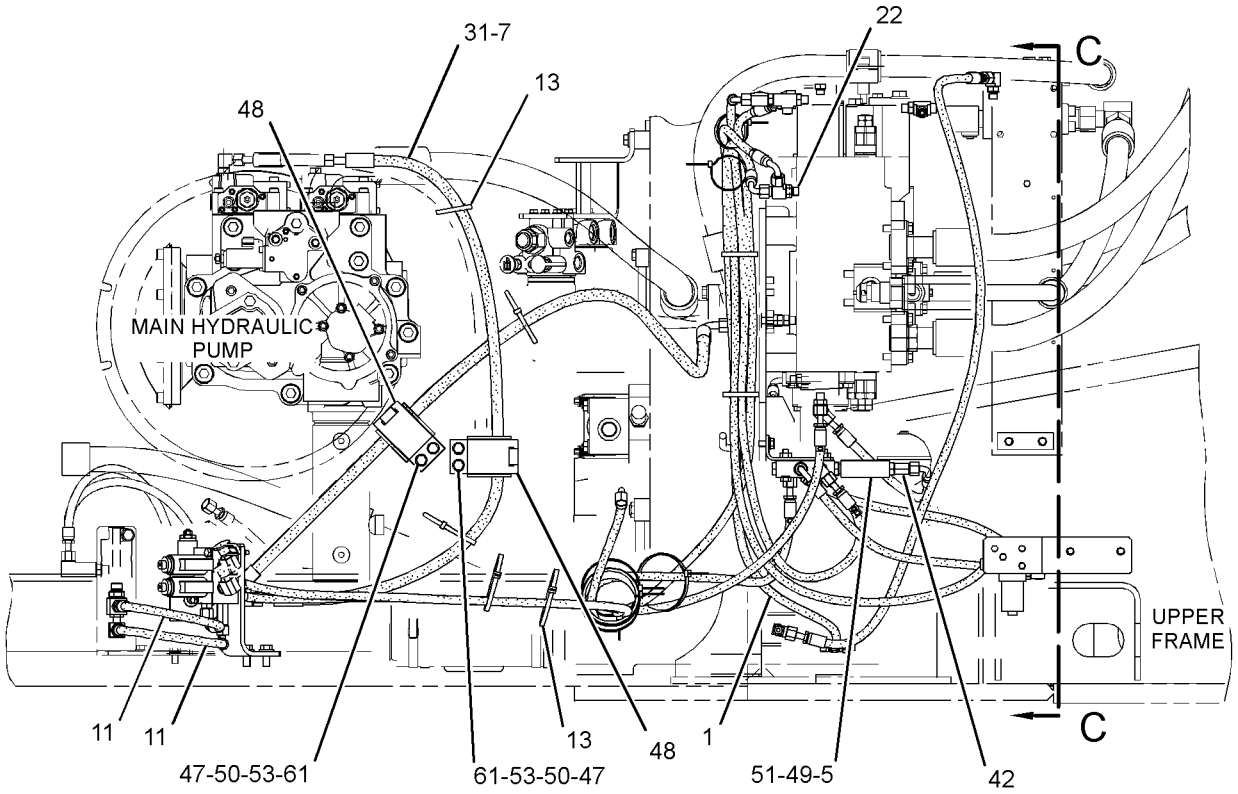

RIGHT SIDE VIEW

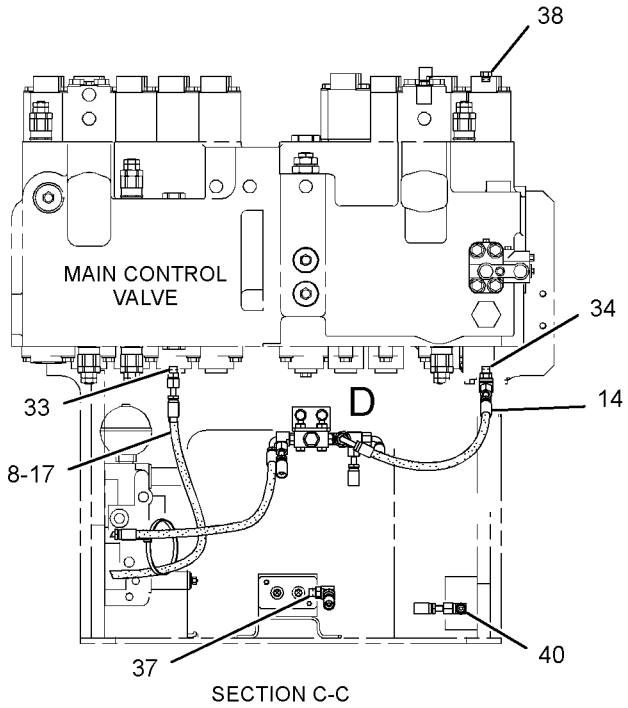

SECTION C-C

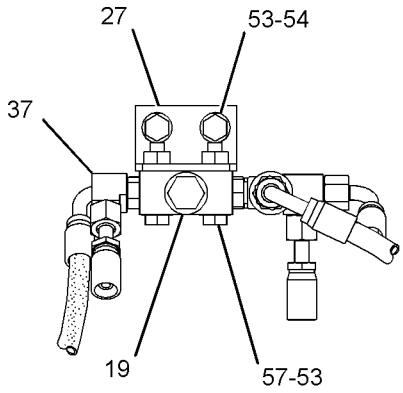

VIEW OF AREA D

GRAPHIC #2 **<END>** g01928378

HYDRAULIC SYSTEM

302-3147 LINES GP-PILOT–PRIMARY

S/N: JGB1-UP; KHS1-UP
PART OF 310-0013, 310-0016, 310-0017 CONTROL AR-AUXILIARY, 344-5677 OPTION AR-HYDRAULIC
AN ATTACHMENT

SMCS-5057, 5059 **i03081384**

NOTE	REF NO	GRAPHIC REF	PART NUMBER	QTY	PART NAME 1 2 3 4 5 6 (PRODUCT LEVEL)	SEE PAGE
	1	1	**325-8845**	2	HOSE AS	
	2	1	**4I-9526**	2	BAND-MARKER (WHITE, R2)	
	3	1	**4I-9527**	2	BAND-MARKER (GREEN, R3)	
I	4	1	**7I-8252**	1	HOSE AS	
	5	1	**7K-1181**	1	STRAP-CABLE	
	6	1	**168-9759**	1	BLOCK	
I	7	1	**296-7087**	1	HOSE AS	
	8	1	**296-7088**	1	PLATE AS	
	9	1	*148-8336*	2	CONNECTOR AS	
					(EACH INCLUDES)	
		1	**3J-1907**	1	SEAL-O-RING	
		1	**6V-8397**	1	SEAL-O-RING	
		1	**6V-8636**	1	CONNECTOR	
	10	1	*148-8378*	2	ELBOW AS	
					(EACH INCLUDES)	
		1	**3J-1907**	1	SEAL-O-RING	
		1	**6V-8397**	1	SEAL-O-RING	
		1	**6V-8724**	1	ELBOW	
	11	1	*148-8407*	6	PLUG AS	
					(EACH INCLUDES)	
		1	**3J-1907**	1	SEAL-O-RING	
		1	**9S-4191**	1	PLUG-O-RING	
	12	1	*148-8411*	2	PLUG AS	
					(EACH INCLUDES)	
		1	**3K-0360**	1	SEAL-O-RING	
		1	**9S-4185**	1	PLUG-O-RING	
	13	1	*148-8435*	1	TEE AS	
		1	**3J-1907**	1	SEAL-O-RING	
		1	**6V-8397**	2	SEAL-O-RING	
		1	**6V-8781**	1	TEE-FACE SEAL	
	14	1	*150-3036*	2	ELBOW AS	
					(EACH INCLUDES)	
		1	**3J-1907**	1	SEAL-O-RING	
		1	**6V-8397**	1	SEAL-O-RING	
		1	**8T-1905**	1	ELBOW	
	15	1	**6V-9829**	1	CAP AS	
	16	1	**8T-4121**	4	WASHER-HARD (11X21X2.5-MM THK)	
M	17	1	**8T-4195**	2	BOLT (M10X1.5X30-MM)	
M	18	1	**8T-4198**	2	BOLT (M10X1.5X100-MM)	

I-REFER TO HYDRAULIC INFORMATION SYSTEM
M-METRIC PART

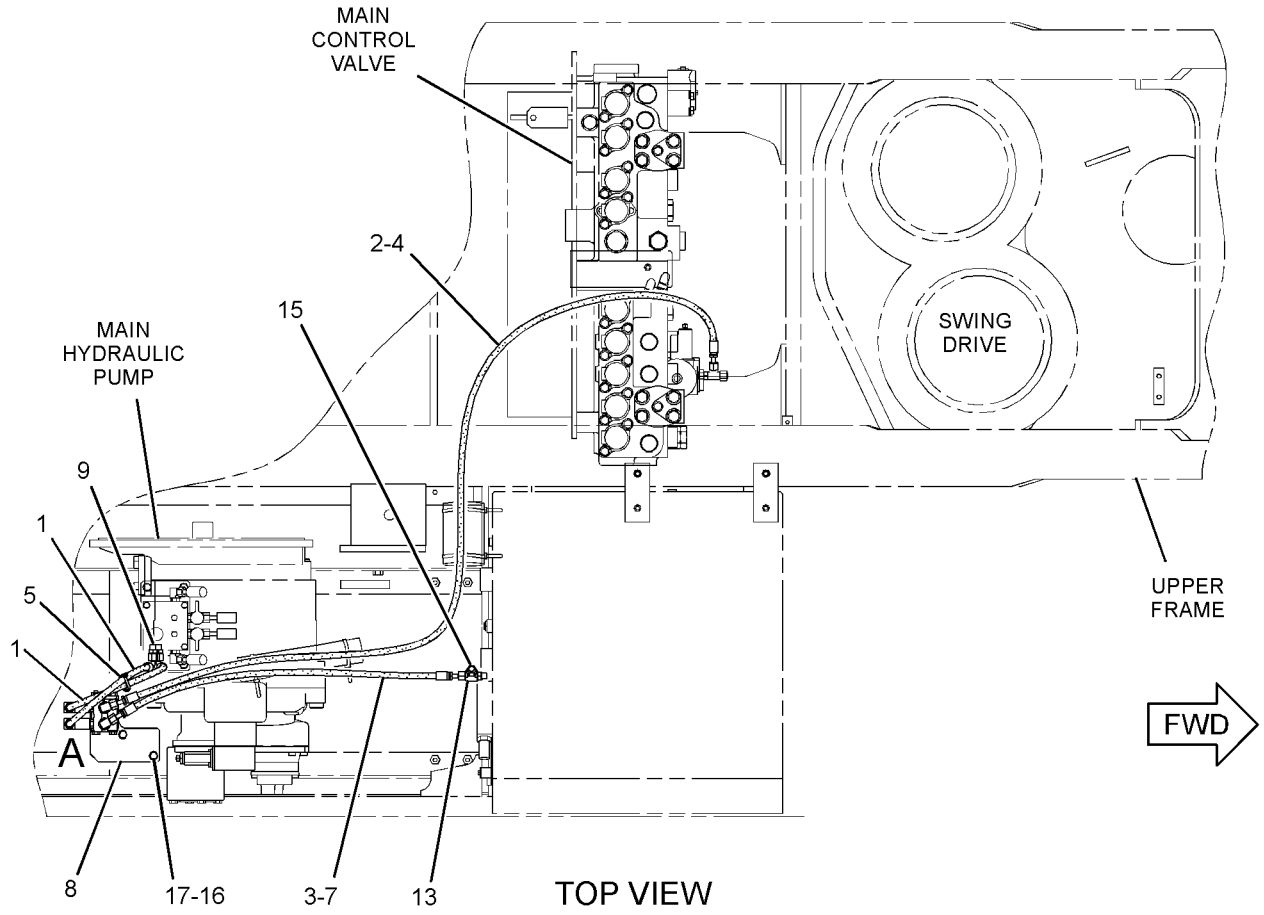

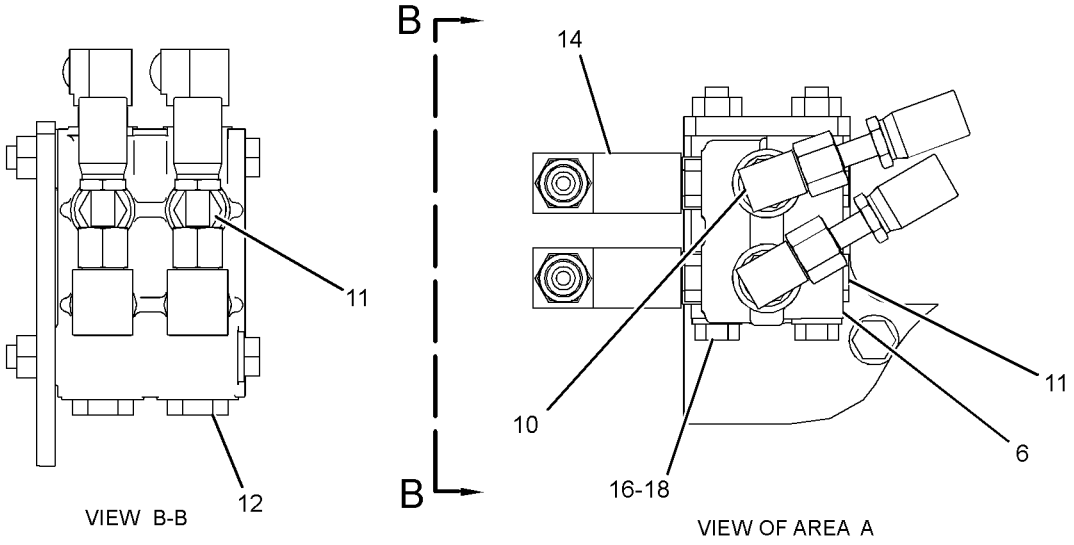

GRAPHIC #1 **<END>** g01429560

HYDRAULIC SYSTEM

302-3148 LINES GP-PILOT—MEDIUM PRESSURE AUXILIARY

S/N: JGB1-UP; KHS1-UP
PART OF 285-1789 CONTROL AR-AUXILIARY
AN ATTACHMENT

SMCS-5057, 5059 **i04136697**

NOTE	REF NO	GRAPHIC REF	PART NUMBER	QTY	PART NAME 1 2 3 4 5 6 (PRODUCT LEVEL)	SEE PAGE
I	1	1	**4I-5575**	2	HOSE AS	
	2	1	**4I-9523**	2	BAND-MARKER (BLUE, L3)	
	3	1	**4I-9526**	2	BAND-MARKER (WHITE, R2)	
	4	1	**6V-0852**	2	CAP-DUST	
M	5	1	**105-3489**	4	BOLT-SOCKET HEAD (M12X1.75X80-MM)	
	6	1	**114-0741**	1	COVER	
	7	1	**133-5813**	2	BAND-MARKER (GRAY)	
	8	1	*164-6874*	1	FITTING AS-ELBOW	
		1	**3J-1907**	1	SEAL-O-RING	
		1	**085-7356**	1	FITTING	
	9	1	**239-1794**	1	BLOCK	
Y	10	1	**259-7430**	1	VALVE GP-SOLENOID (PRESSURE REDUCING)	801
I	11	1	**307-5153**	1	HOSE AS	
	12	1	**296-7025**	1	SUPPORT AS	
	13	1	*148-8336*	2	CONNECTOR AS	
					(EACH INCLUDES)	
		1	**3J-1907**	1	SEAL-O-RING	
		1	**6V-8397**	1	SEAL-O-RING	
		1	**6V-8636**	1	CONNECTOR	
	14	1	*148-8338*	1	CONNECTOR AS	
		1	**3J-1907**	1	SEAL-O-RING	
		1	**6V-8397**	1	SEAL-O-RING	
		1	**8T-0075**	1	CONNECTOR	
	15	1	*148-8378*	4	ELBOW AS	
					(EACH INCLUDES)	
		1	**3J-1907**	1	SEAL-O-RING	
		1	**6V-8397**	1	SEAL-O-RING	
		1	**6V-8724**	1	ELBOW	
	16	1	*164-5567*	2	COUPLER AS-QUICK DISCONNECT (MALE)	
					(EACH INCLUDES)	
		1	**3J-1907**	1	SEAL-O-RING	
		1	**6V-3965**	1	FITTING (QUICK DISCONNECT)	
	17	1	**4J-0522**	1	SEAL-O-RING	
	18	1	**6J-2680**	1	SEAL-O-RING	
M	19	1	**8T-4136**	4	BOLT (M10X1.5X25-MM)	
M	20	1	**8T-4139**	2	BOLT (M12X1.75X30-MM)	
	21	1	**8T-4223**	2	WASHER-HARD (13.5X25.5X3-MM THK)	
	22	1	**8T-4224**	2	WASHER-HARD (8.8X16X2-MM THK)	
M	23	1	**8T-6870**	2	BOLT (M8X1.25X70-MM)	
	24	1	**325-8842**	1	HOSE AS	
	25	1	*164-5628*	1	CONNECTOR AS	
		1	**3J-1907**	1	SEAL-O-RING	
		1	**6V-8397**	1	SEAL-O-RING	
		1	**107-6631**	1	CONNECTOR-FILTER	

I-REFER TO HYDRAULIC INFORMATION SYSTEM
M-METRIC PART
Y-SEPARATE ILLUSTRATION

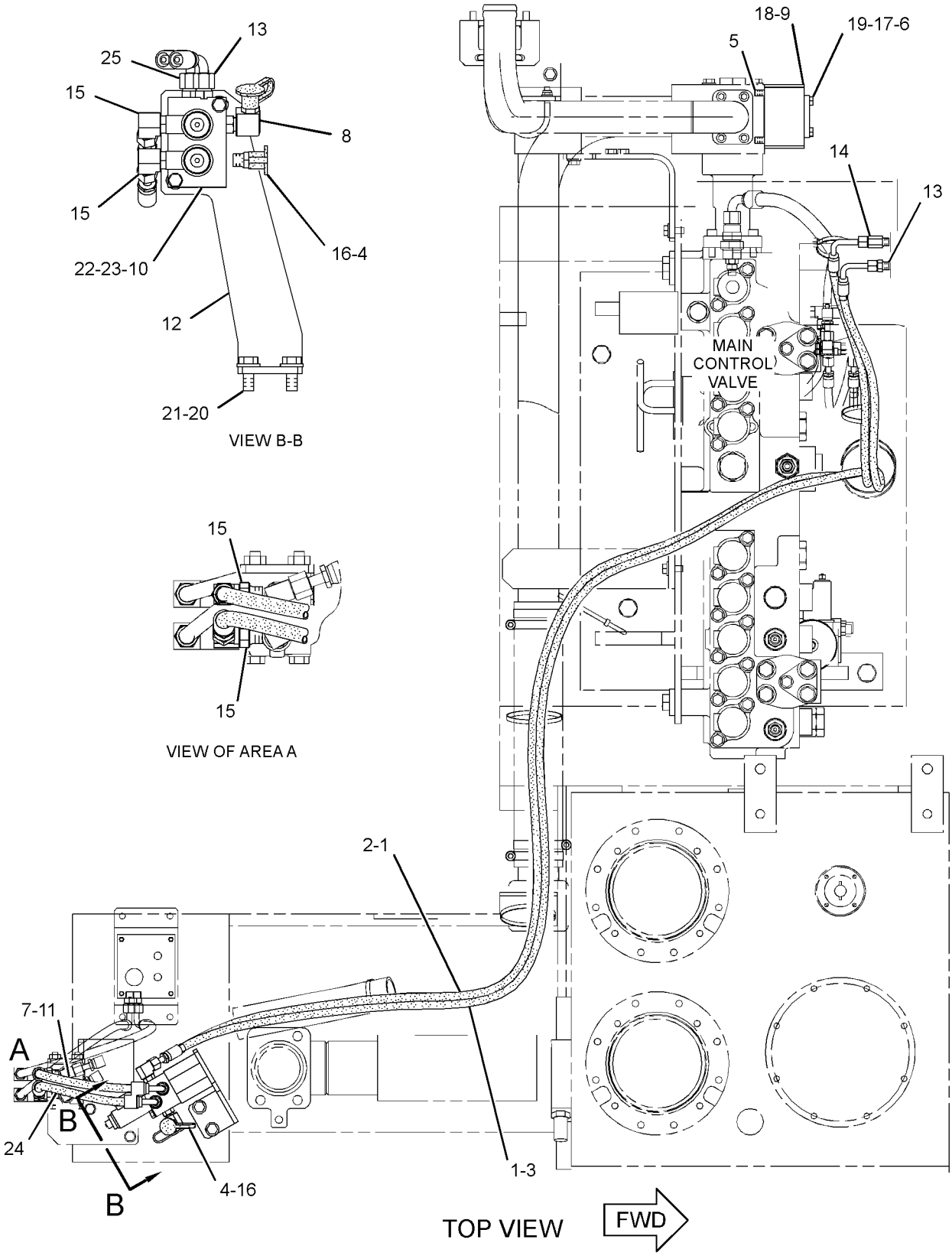

GRAPHIC #1

<END>

g02320816

HYDRAULIC SYSTEM

302-3283 LINES GP-PILOT—STICK LOWERING CONTROL

S/N: JGB1-UP; KHS1-UP

PART OF 297-0257, 297-0258 VALVE AR-CHECK & RELIEF

AN ATTACHMENT

SMCS-5057, 5059 **i04150109**

NOTE	REF NO	GRAPHIC REF	PART NUMBER	QTY	PART NAME 1 2 3 4 5 6 (PRODUCT LEVEL)	SEE PAGE
I	1	1	**4I-6236**	1	HOSE AS	
	2	1	**7K-1181**	10	STRAP-CABLE	
I	3	1	**087-5591**	1	HOSE AS	
	4	1	**248-9553**	1	BLOCK	
	5	1	*347-4413*	1	UNION AS-CROSS	
		1	**5K-9090**	2	SEAL-O-RING	
		1	**325-8908**	1	TEE	
I	6	1	**325-8909**	1	HOSE AS	
	7	1	*148-8318*	1	CONNECTOR AS	
		1	**3K-0360**	1	SEAL-O-RING	
		1	**6V-8397**	1	SEAL-O-RING	
		1	**6V-8634**	1	CONNECTOR	
	8	1	*148-8340*	1	CONNECTOR AS	
		1	**3K-0360**	1	SEAL-O-RING	
		1	**6V-8398**	1	SEAL-O-RING	
		1	**6V-8639**	1	CONNECTOR	
	9	1	*148-8407*	1	PLUG AS	
		1	**3J-1907**	1	SEAL-O-RING	
		1	**9S-4191**	1	PLUG-O-RING	
	10	1	*148-8433*	1	TEE AS	
		1	**6V-8397**	2	SEAL-O-RING	
		1	**6V-9836**	1	TEE-SWIVEL	
	11	1	**4J-0523**	1	SEAL-O-RING	
	13	1	**6V-6793**	1	RING-BACKUP	
M	14	1	**7X-2475**	4	BOLT (M16X2X130-MM)	
	15	1	**9X-8257**	4	WASHER (17.5X30X3.5-MM THK)	
	16	1	**4I-9523**	4	BAND-MARKER (BLUE, L3)	
	17	1	**133-5813**	2	BAND-MARKER (GRAY)	

I-REFER TO HYDRAULIC INFORMATION SYSTEM
M-METRIC PART

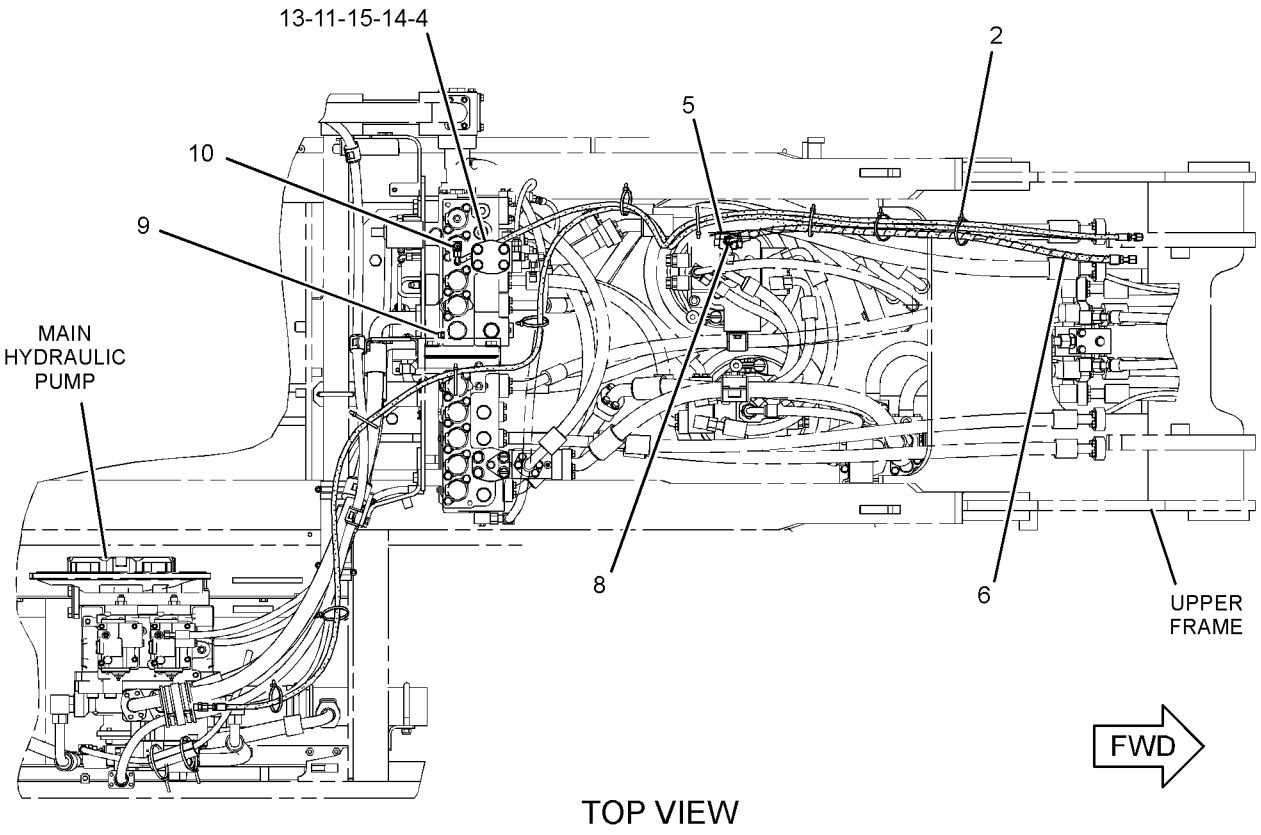

TOP VIEW

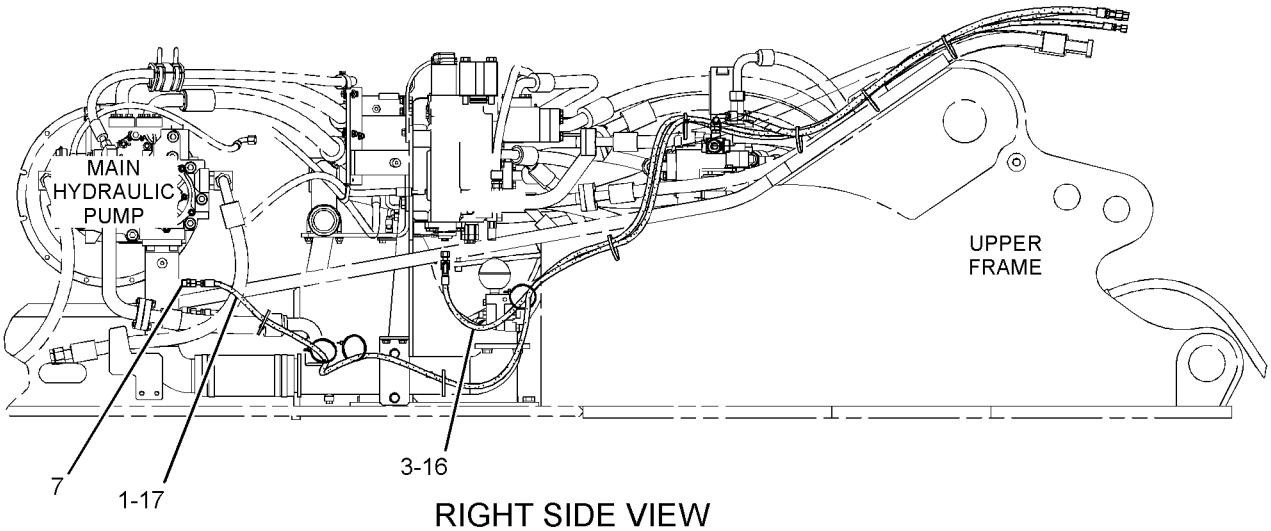

RIGHT SIDE VIEW

GRAPHIC #1 **<END>** g02346943

HYDRAULIC SYSTEM

337-1219 LINES GP-PILOT—QUICK COUPLER

S/N: JGB1-UP
PART OF 344-4211 CONTROL AR-COUPLER
AN ATTACHMENT

SMCS-5057, 5059 **i03792609**

NOTE	REF NO	GRAPHIC REF	PART NUMBER	QTY	PART NAME 1 2 3 4 5 6 (PRODUCT LEVEL)	SEE PAGE
I	1	1	**4I-1780**	1	HOSE AS	
	2	1	**7K-1181**	7	STRAP-CABLE	
I	3	2	**302-2891**	2	HOSE AS	
	4	2	**320-0121**	1	SUPPORT	
	5	2	**320-0122**	1	SUPPORT AS	
Y	6	2	**328-2035**	1	VALVE GP-SOLENOID & MANIFOLD (QUICK COUPLER)	803
	7	1	**337-1220**	1	BLOCK	
I	8	1	**337-1257**	1	HOSE AS	
	9	2	*148-8336*	2	CONNECTOR AS	
					(EACH INCLUDES)	
		2	**3J-1907**	1	SEAL-O-RING	
		2	**6V-8397**	1	SEAL-O-RING	
		2	**6V-8636**	1	CONNECTOR	
	10	1,2	*148-8378*	3	ELBOW AS	
					(EACH INCLUDES)	
		1,2	**3J-1907**	1	SEAL-O-RING	
		1,2	**6V-8397**	1	SEAL-O-RING	
		1,2	**6V-8724**	1	ELBOW	
	11	2	*148-8415*	2	REDUCER AS	
					(EACH INCLUDES)	
		2	**6V-8397**	1	SEAL-O-RING	
		2	**6V-8936**	1	REDUCER	
	12	1	**1P-3703**	1	SEAL-RECTANGULAR	
	13	2	**8T-4121**	4	WASHER-HARD (11X21X2.5-MM THK)	
M	14	2	**8T-4136**	2	BOLT (M10X1.5X25-MM)	
M	15	2	**8T-4184**	2	BOLT (M12X1.75X45-MM)	
	16	1,2	**8T-4223**	6	WASHER-HARD (13.5X25.5X3-MM THK)	
M	17	2	**8T-6466**	2	BOLT (M10X1.5X60-MM)	
M	18	1	**8T-6868**	4	BOLT (M12X1.75X80-MM)	
	19	2	*150-3036*	1	ELBOW AS	
		2	**3J-1907**	1	SEAL-O-RING	
		2	**6V-8397**	1	SEAL-O-RING	
		2	**8T-1905**	1	ELBOW	

I-REFER TO HYDRAULIC INFORMATION SYSTEM
M-METRIC PART
Y-SEPARATE ILLUSTRATION

REFER TO ALL ILLUSTRATIONS OF
THIS GROUP FOR AUXILIARY VIEWS

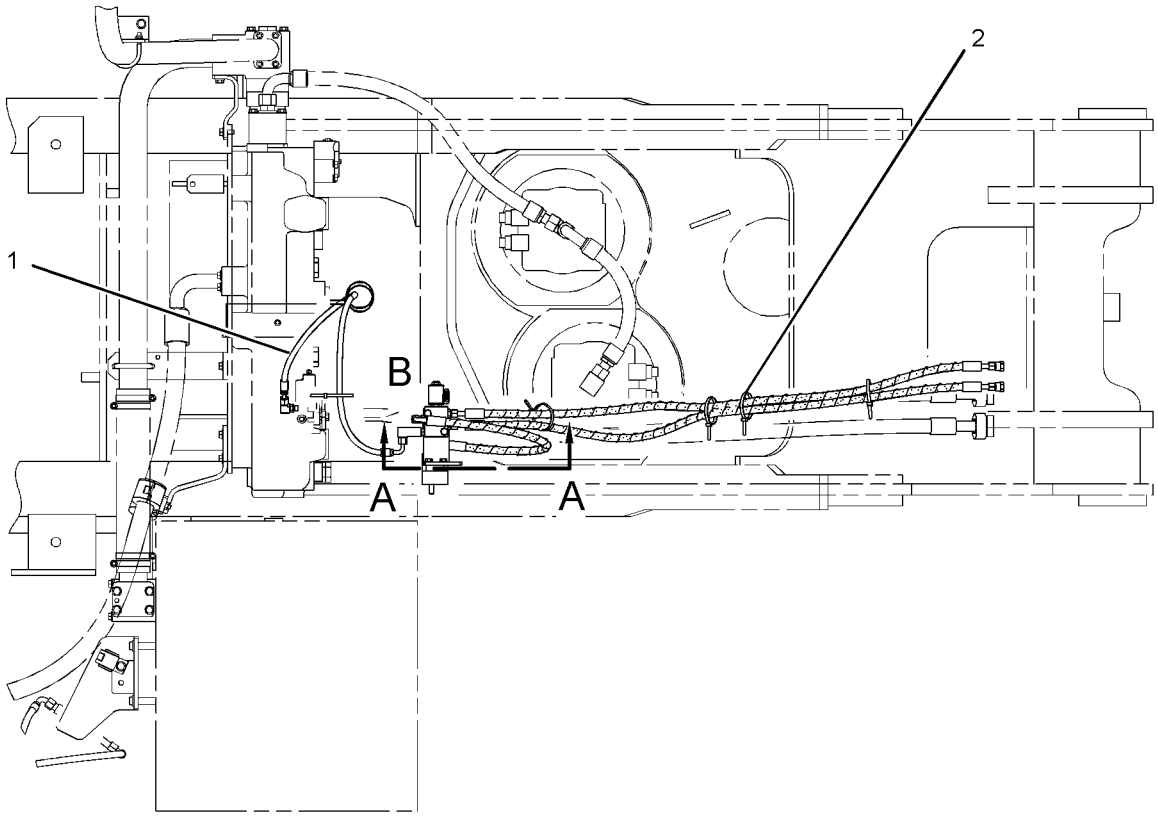

TOP VIEW FWD

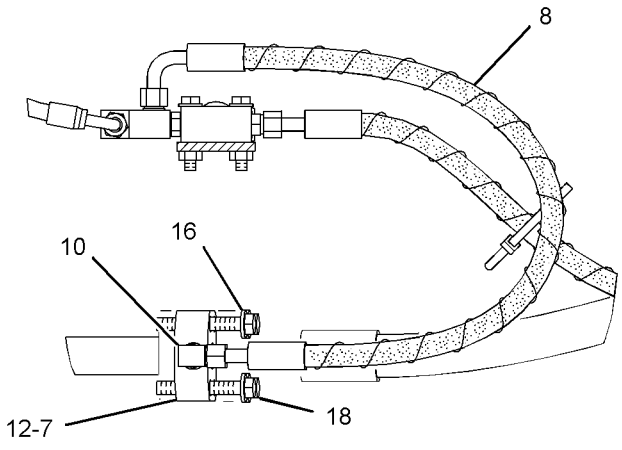

SECTION A-A

GRAPHIC #1 g02151358

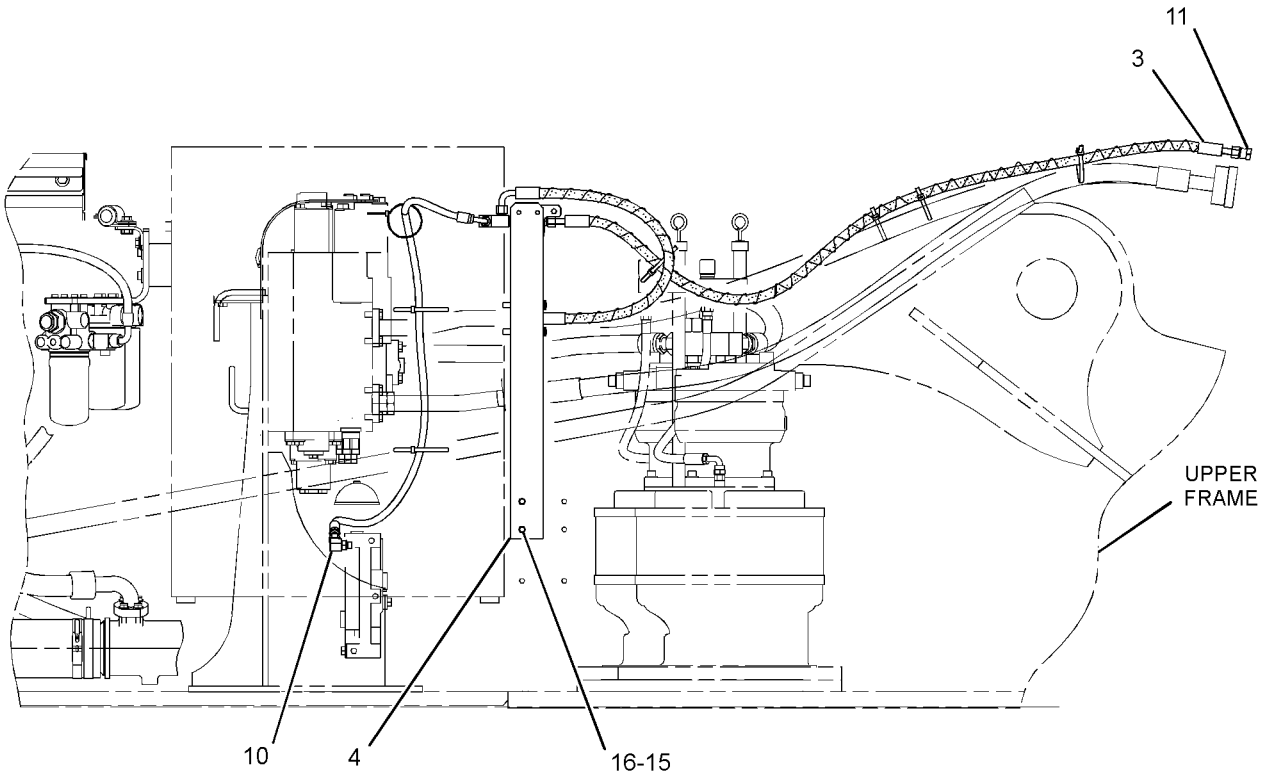

RIGHT SIDE VIEW

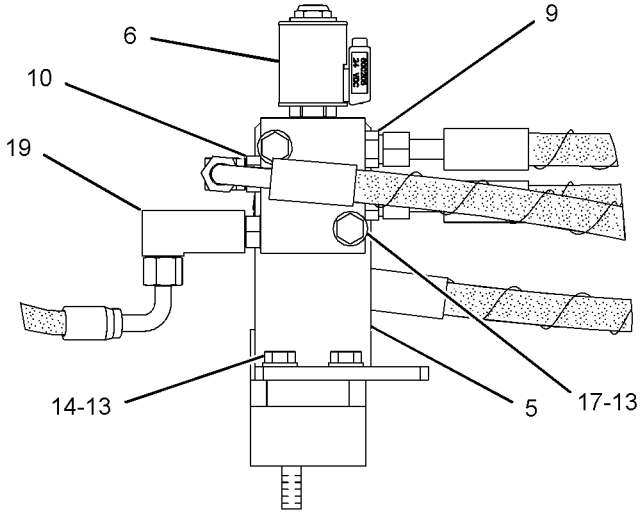

VIEW OF AREA B

GRAPHIC #2 **<END>** g02151359

HYDRAULIC SYSTEM

354-3715 LINES GP-PILOT—CONTROL PATTERN CHANGE, 2-WAY

S/N: JGB1-UP; KHS1-UP

PART OF 310-0387 VALVE AR-ALT PATTERN CONTROL

AN ATTACHMENT

SMCS-5057, 5059 **i04012934**

NOTE	REF NO	GRAPHIC REF	PART NUMBER	QTY	PART NAME 1 2 3 4 5 6 (PRODUCT LEVEL)	SEE PAGE
	1	1,2	**4I-9521**	4	BAND-MARKER (RED, L1)	
	2	1,2	**4I-9523**	4	BAND-MARKER (BLUE, L3)	
	3	1,2	**4I-9525**	4	BAND-MARKER (ORANGE, R1)	
	4	2	**4I-9527**	4	BAND-MARKER (GREEN, R3)	
	5	1,2	**7K-1181**	9	STRAP-CABLE	
I	6	2	**7Y-4193**	2	HOSE AS	
I	7	1	**087-5760**	1	HOSE AS	
I	8	1	**087-5778**	1	HOSE AS	
I	9	2	**103-1361**	1	HOSE AS	
I	10	2	**104-8771**	1	HOSE AS	
I	11	2	**110-5499**	1	HOSE AS	
I	12	1	**208-3112**	1	HOSE AS	
	13	2	**335-0545**	1	VALVE GP-SELECTOR (2-WAY)	
	14	2	**354-3700**	1	PLATE AS	
M	15	2	**101-7400**	2	BOLT-SOCKET HEAD (M10X1.5X110-MM)	
	16	2	*148-8353*	4	ELBOW AS	
					(EACH INCLUDES)	
		2	**3J-1907**	1	SEAL-O-RING	
		2	**6V-8397**	1	SEAL-O-RING	
		2	**6V-9001**	1	ELBOW	
	17	2	*148-8378*	4	ELBOW AS	
					(EACH INCLUDES)	
		2	**3J-1907**	1	SEAL-O-RING	
		2	**6V-8397**	1	SEAL-O-RING	
		2	**6V-8724**	1	ELBOW	
	18	2	**8T-4223**	2	WASHER-HARD (13.5X25.5X3-MM THK)	
M	19	2	**8T-4956**	2	BOLT (M12X1.75X35-MM)	

I-REFER TO HYDRAULIC INFORMATION SYSTEM
M-METRIC PART

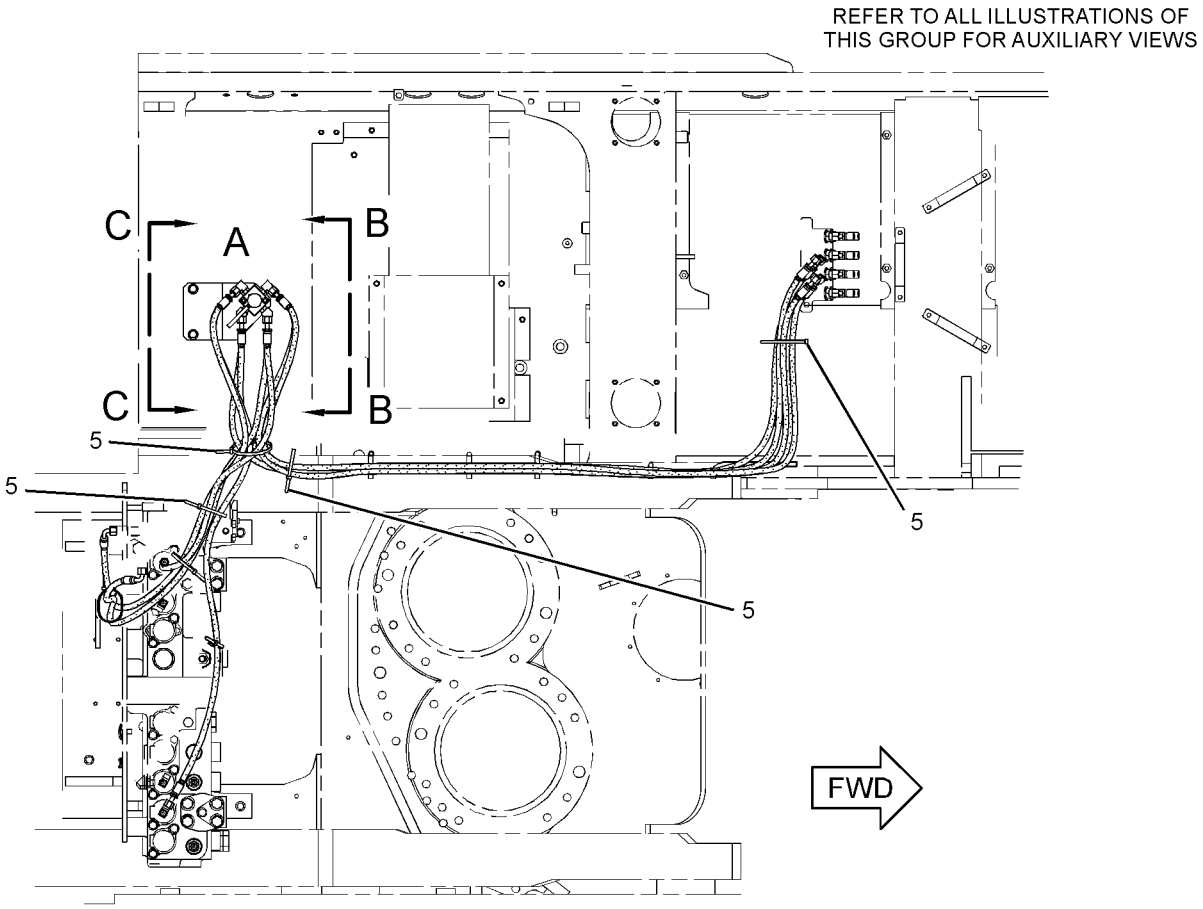

TOP VIEW

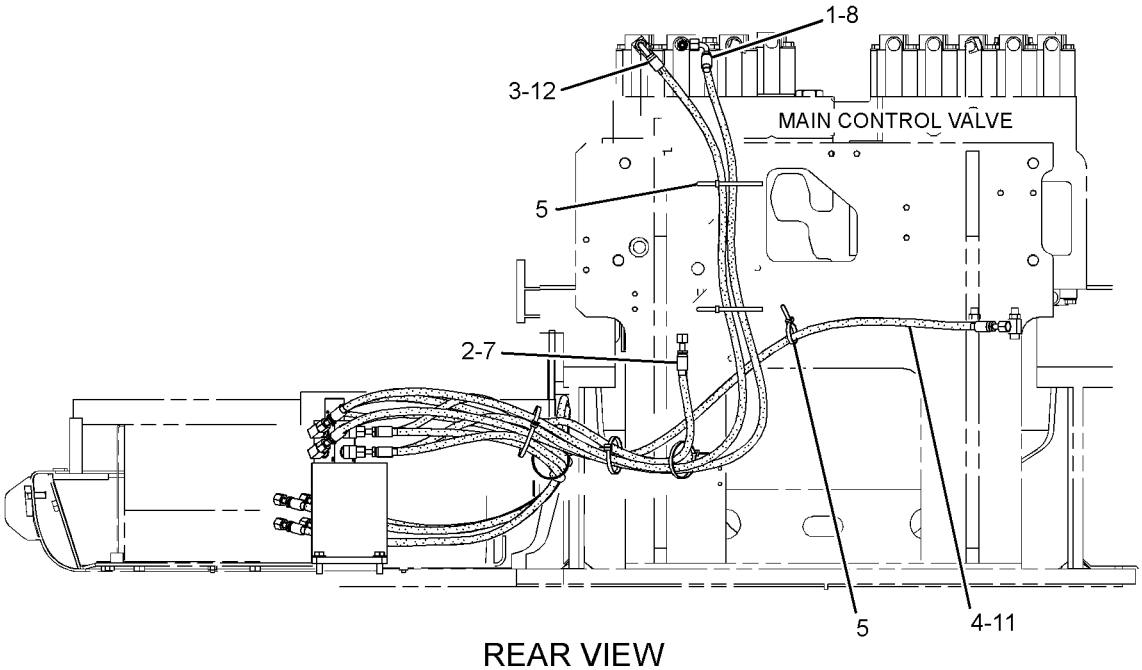

REAR VIEW

GRAPHIC #1 g02352406

354-3715 **LINES GP-PILOT** *(contd.)* **i04012934**

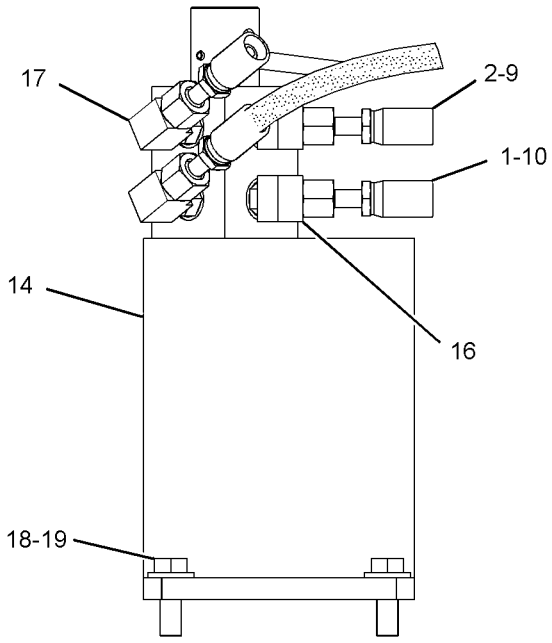

VIEW C-C

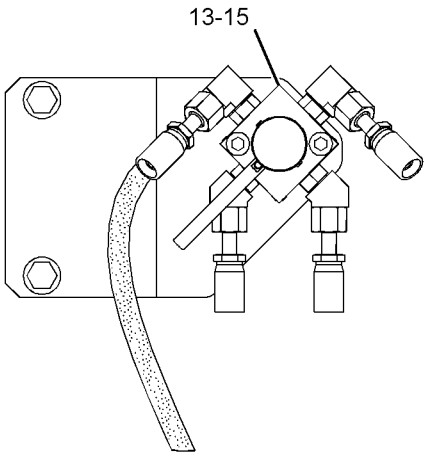

VIEW OF AREA A

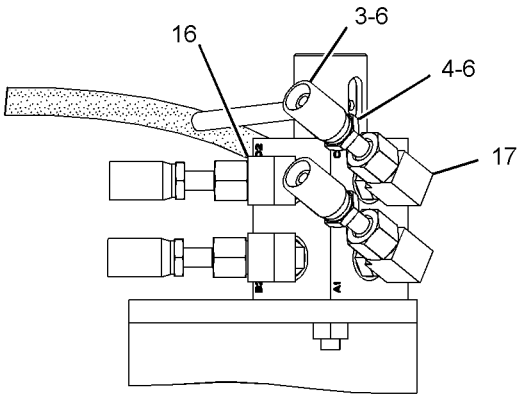

VIEW B-B

GRAPHIC #2 **<END>** g02352503

HYDRAULIC SYSTEM

292-7163 LINES GP-PUMP–SUPPLY, MAIN PUMP

S/N: JGB1-UP; KHS1-UP

PART OF 297-0243, 297-0244 HYDRAULIC AR

SMCS-5057 **i03994912**

NOTE	REF NO	GRAPHIC REF	PART NUMBER	QTY	PART NAME 1 2 3 4 5 6 (PRODUCT LEVEL)	SEE PAGE
	1	1	**8T-4986**	4	CLAMP-HOSE	
M	2	1	**113-2003**	4	BOLT-SOCKET HEAD (M16X2X40-MM)	
	3	1	**124-1067**	2	PLATE	
	4	1	**124-1253**	4	GROMMET	
	5	1	**5P-5148**	2	STRAP-CABLE	
I	6	1	**230-0185**	1	HOSE AS	
	7	1	**236-3034**	1	HOSE	
I	8	1	**325-8853**	1	HOSE AS	
	9	1	**266-1296**	1	SUPPORT AS	
	10	1	**266-1298**	1	SUPPORT AS	
I	11	1	**292-7306**	1	HOSE AS	
I	12	1	**325-9015**	1	HOSE AS	
	13	1	**292-7312**	1	SUPPORT AS	
	14	1	**292-7314**	1	SUPPORT AS	
	15	1	**292-7320**	1	GROMMET	
Y	16	1	**307-4954**	1	TUBE GP-HYDRAULIC	710
	17	1	**307-4958**	1	TUBE AS	
I	18	1	**307-4962**	1	HOSE AS	
	19	1	**330-2340**	1	TUBE AS	
C	20	1	**129-3400**	1	GUARD	
	21	1	**171-2637**	1	BOSS	
M	22	1	**105-3478**	4	BOLT-SOCKET HEAD (M10X1.5X35-MM)	
	23	1	*148-8341*	1	CONNECTOR AS	
		1	**6V-8713**	1	CONNECTOR	
		1	**3D-2824**	1	SEAL-O-RING	
		1	**7J-9108**	1	SEAL-O-RING	
	24	1	*148-8364*	1	ELBOW AS	
		1	**3K-0360**	1	SEAL-O-RING	
		1	**6V-8398**	1	SEAL-O-RING	
		1	**6V-8625**	1	ELBOW	
	25	1	*148-8391*	2	ELBOW AS	
					(EACH INCLUDES)	
		1	**2S-4078**	1	SEAL-O-RING	
		1	**5K-9090**	1	SEAL-O-RING	
		1	**8T-8987**	1	ELBOW	
	26	1	*148-8407*	1	PLUG AS	
		1	**3J-1907**	1	SEAL-O-RING	
		1	**9S-4191**	1	PLUG-O-RING	
	27	1	*148-8411*	2	PLUG AS	
					(EACH INCLUDES)	
		1	**3K-0360**	1	SEAL-O-RING	
		1	**9S-4185**	1	PLUG-O-RING	
	28	1	*150-3073*	2	PLUG AS	
					(EACH INCLUDES)	
		1	**5K-9090**	1	SEAL-O-RING	
		1	**6V-9512**	1	PLUG (1-7/16-12-THD)	
	29	1	*153-6256*	1	ELBOW AS	
		1	**8C-7563**	1	ELBOW	
		1	**7J-9108**	1	SEAL-O-RING	
	30	1	**1P-4579**	4	FLANGE-HALF	
	31	1	**1P-5767**	4	FLANGE-HALF	
	32	1	**4J-0522**	1	SEAL-O-RING	
	33	1	**4J-0524**	2	SEAL-O-RING	
	34	1	**5H-8624**	1	SEAL-O-RING	
	35	1	**5P-7464**	4	CLIP (SLOT)	
	36	1	**5P-7465**	4	CLIP (TAB)	

292-7163 **LINES GP-PUMP** *(contd.)* **i03994912**

NOTE	REF NO	GRAPHIC REF	PART NUMBER	QTY	PART NAME 1 2 3 4 5 6 (PRODUCT LEVEL)	SEE PAGE
	37	1	**8T-2920**	4	GROMMET	
	38	1	**8T-4121**	6	WASHER-HARD (11X21X2.5-MM THK)	
M	39	1	**8T-4136**	4	BOLT (M10X1.5X25-MM)	
M	40	1	**8T-4139**	3	BOLT (M12X1.75X30-MM)	
M	41	1	**8T-4183**	5	BOLT (M12X1.75X40-MM)	
M	42	1	**8T-4184**	4	BOLT (M12X1.75X45-MM)	
M	43	1	**8T-4192**	4	BOLT (M12X1.75X25-MM)	
M	44	1	**8T-4194**	8	BOLT (M12X1.75X50-MM)	
M	45	1	**8T-4195**	2	BOLT (M10X1.5X30-MM)	
	46	1	**8T-4223**	30	WASHER-HARD (13.5X25.5X3-MM THK)	
M	47	1	**8T-4956**	5	BOLT (M12X1.75X35-MM)	
M	48	1	**8T-7338**	4	BOLT (M16X2X45-MM)	
	49	1	**9M-3786**	1	SEAL-O-RING	
	50	1	**9X-8257**	4	WASHER (17.5X30X3.5-MM THK)	
	51	1	**325-9234**	1	SUPPORT AS	
M	52	1	**8T-4910**	1	BOLT (M12X1.75X60-MM)	

C-CHANGE FROM PREVIOUS TYPE
I-REFER TO HYDRAULIC INFORMATION SYSTEM
M-METRIC PART
Y-SEPARATE ILLUSTRATION

292-7163 **LINES GP-PUMP** *(contd.)* **i03994912**

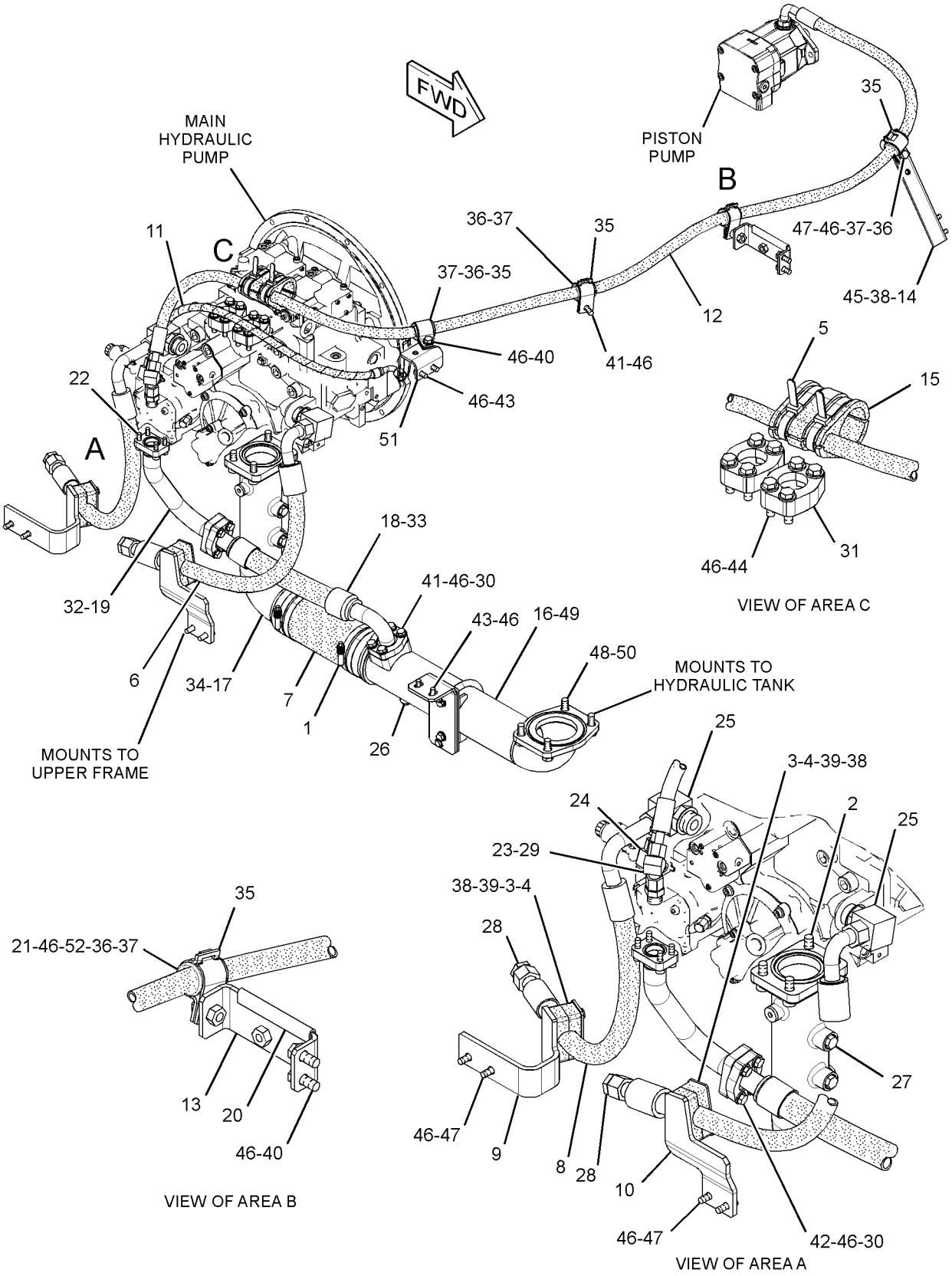

GRAPHIC #1 **<END>** g02173375

HYDRAULIC SYSTEM

292-7168 LINES GP-PUMP—MEDIUM PRESSURE

S/N: JGB1-UP; KHS1-UP
PART OF 285-1789 CONTROL AR-AUXILIARY
AN ATTACHMENT

SMCS-5057 **i03823885**

NOTE	REF NO	GRAPHIC REF	PART NUMBER	QTY	PART NAME 1 2 3 4 5 6 (PRODUCT LEVEL)	SEE PAGE
	1	2	**6V-0852**	1	CAP-DUST	
	2	2	**126-1913**	1	PLATE	
	3	1	**131-9750**	1	SCREEN AS (HYDRAULIC TANK)	
	4	1	*171-6723*	1	ELBOW AS	
		1	**6V-9746**	1	SEAL-O-RING	
		1	**8T-8899**	1	ELBOW	
	5	2	**239-1838**	1	BLOCK	
	6	2	**260-8062**	1	BLOCK	
	7	1	**260-8063**	1	BLOCK	
I	8	1	**260-8067**	1	HOSE AS	
	9	2	*270-0012*	1	ELBOW AS	
		2	**2M-9780**	1	SEAL-O-RING	
		2	**6V-8398**	1	SEAL-O-RING	
		2	**270-0013**	1	ELBOW	
	10	2	*270-0014*	1	ELBOW AS	
		2	**2M-9780**	1	SEAL-O-RING	
		2	**6V-8398**	1	SEAL-O-RING	
		2	**270-0015**	1	ELBOW	
	11	2	**275-1743**	1	SUPPORT AS	
Y	12	1	**285-1531**	1	VALVE GP-CONTROL (MEDIUM PRESSURE)	725
I	13	2	**292-7510**	1	HOSE AS	
	14	1	**302-2971**	1	SUPPORT AS	
I	15	2	**325-8874**	1	HOSE AS	
	16	1	*148-8327*	1	CONNECTOR AS	
		1	**3D-2824**	1	SEAL-O-RING	
		1	**6V-8637**	1	CONNECTOR	
		1	**6V-9746**	1	SEAL-O-RING	
	17	2	*148-8344*	1	CONNECTOR AS	
		2	**3D-2824**	1	SEAL-O-RING	
		2	**6V-9162**	1	CONNECTOR	
		2	**6V-9746**	1	SEAL-O-RING	
	18	2	*148-8347*	1	ELBOW AS	
		2	**3D-2824**	1	SEAL-O-RING	
		2	**6V-9007**	1	ELBOW	
		2	**6V-9746**	1	SEAL-O-RING	
	19	2	*164-4180*	1	PLUG AS	
		2	**7M-8485**	1	SEAL-O-RING	
		2	**9S-4181**	1	PLUG-O-RING	
	20	2	*164-5567*	1	COUPLER AS-QUICK DISCONNECT (MALE)	
		2	**3J-1907**	1	SEAL-O-RING	
		2	**6V-3965**	1	FITTING (QUICK DISCONNECT)	
	21	2	*168-1969*	1	ADAPTER AS	
		2	**1J-9671**	1	SEAL-O-RING	
		2	**5P-1318**	1	ADAPTER	
	22	2	*171-2637*	2	BOSS	
	23	2	**1P-3702**	1	SEAL-RECTANGULAR	
	24	2	**1P-3703**	1	SEAL-RECTANGULAR	
	25	1	**1P-4578**	4	FLANGE-HALF	
	26	1,2	**4J-0522**	3	SEAL-O-RING	
	27	1	**4J-0527**	1	SEAL-O-RING	
	28	1,2	**5P-7468**	5	CLIP (SLOT)	
	29	1,2	**5P-7469**	5	CLIP (TAB)	
	30	1	**5P-7470**	1	CLIP (SLOT)	
	31	1	**5P-7471**	1	CLIP (TAB)	
	32	1	**5P-8182**	1	GROMMET	

292-7168 **LINES GP-PUMP** *(contd.)* **i03823885**

NOTE	REF NO	GRAPHIC REF	PART NUMBER	QTY	PART NAME 1 2 3 4 5 6 (PRODUCT LEVEL)	SEE PAGE
	33	1,2	**6V-1874**	5	GROMMET	
	34	1	**6V-5782**	4	BOLT (5/16-18X1.125-IN)	
	35	2	**6V-6707**	1	SEAL-O-RING	
M	36	1	**7X-2550**	2	BOLT (M12X1.75X110-MM)	
	37	1	**7Y-3283**	1	SPACER (13.88X21.34X95-MM THK)	
	38	1,2	**8T-4121**	24	WASHER-HARD (11X21X2.5-MM THK)	
M	39	2	**8T-4136**	4	BOLT (M10X1.5X25-MM)	
M	40	1	**8T-4139**	2	BOLT (M12X1.75X30-MM)	
M	41	2	**8T-4178**	8	BOLT (M10X1.5X90-MM)	
M	42	2	**8T-4182**	4	BOLT (M10X1.5X45-MM)	
M	43	2	**8T-4184**	1	BOLT (M12X1.75X45-MM)	
M	44	1,2	**8T-4192**	2	BOLT (M12X1.75X25-MM)	
M	45	2	**8T-4194**	1	BOLT (M12X1.75X50-MM)	
M	46	1	**8T-4196**	8	BOLT (M10X1.5X35-MM)	
	47	1,2	**8T-4223**	13	WASHER-HARD (13.5X25.5X3-MM THK)	
	48	1	**8T-4224**	4	WASHER-HARD (8.8X16X2-MM THK)	
M	49	2	**8T-5041**	1	BOLT (M12X1.75X120-MM)	
M	50	1	**8T-5412**	4	BOLT (M12X1.75X140-MM)	
	51	2	**8T-9403**	2	FLANGE-HALF	
	52	2	*164-6874*	1	FITTING AS-ELBOW	
		2	**085-7356**	1	FITTING	
		2	**3J-1907**	1	SEAL-O-RING	

I-REFER TO HYDRAULIC INFORMATION SYSTEM
M-METRIC PART
Y-SEPARATE ILLUSTRATION

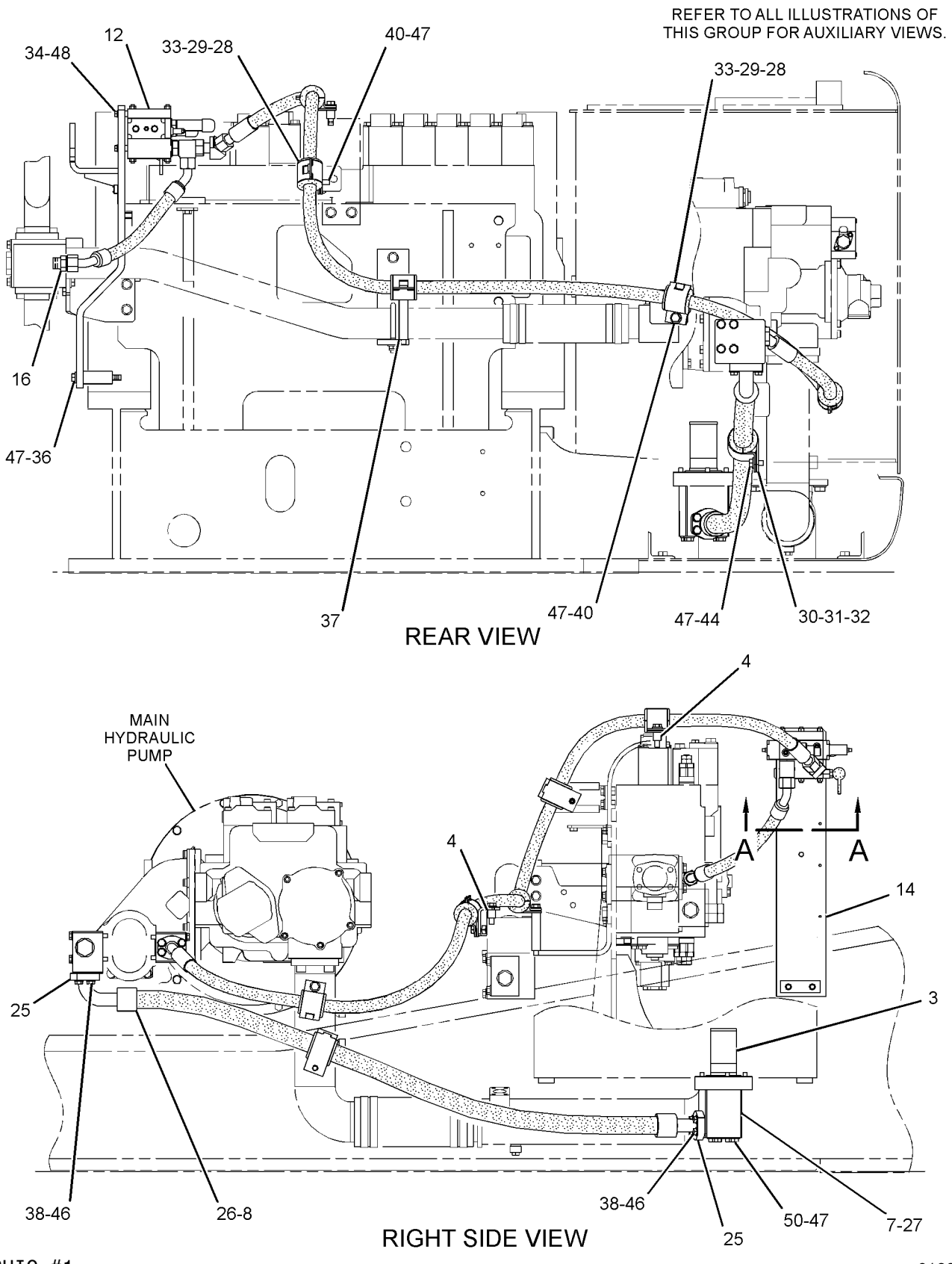

GRAPHIC #1

g01993017

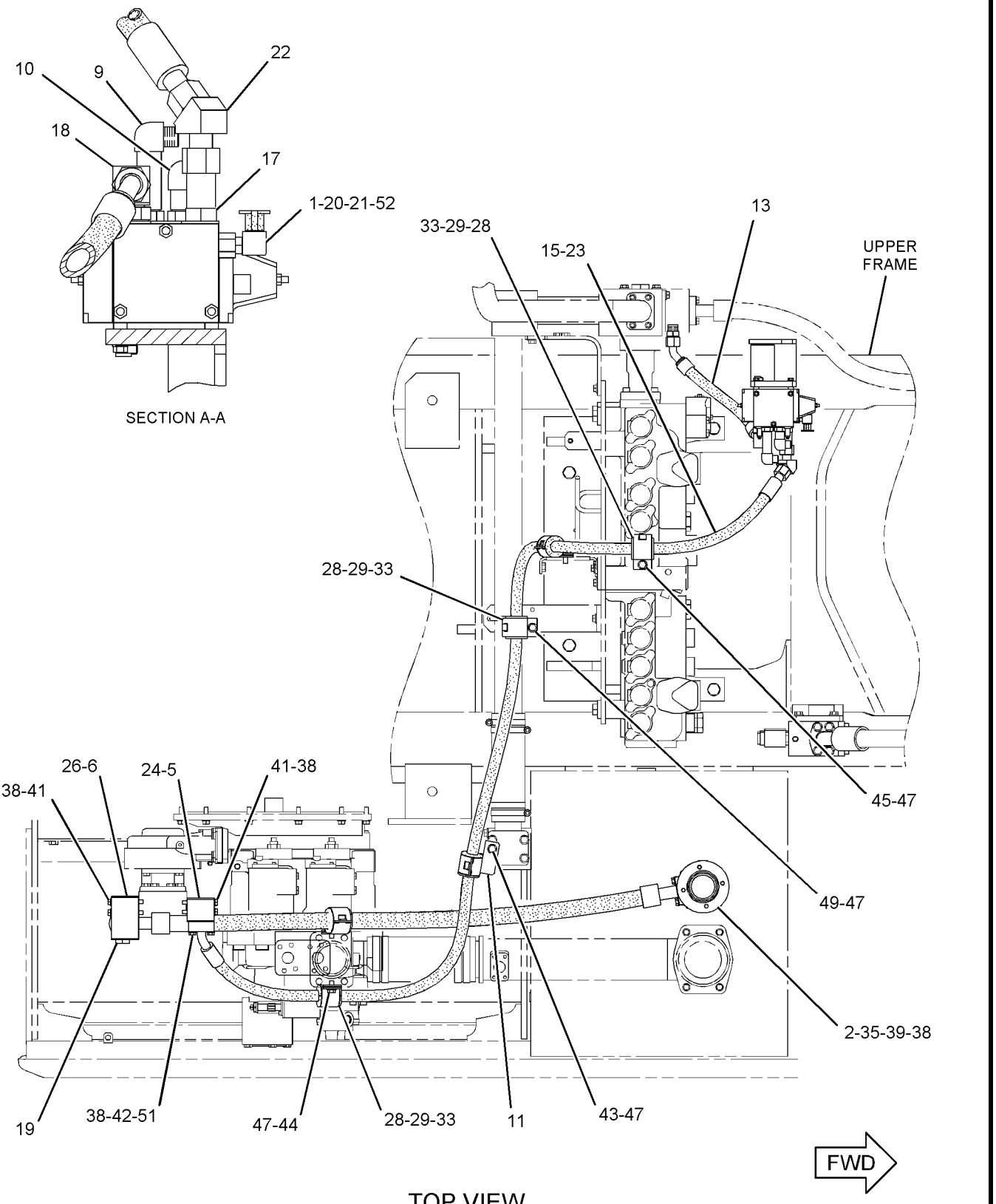

TOP VIEW

GRAPHIC #2 **<END>** g01993018

HYDRAULIC SYSTEM

227-0459 LINES GP-REAR ATTACHMENT

S/N: JGB1-UP
PART OF 309-0166, 309-0167 COUNTERWEIGHT AR
AN ATTACHMENT

SMCS-5409 **i04177450**

NOTE	REF NO	GRAPHIC REF	PART NUMBER	QTY	PART NAME 1 2 3 4 5 6 (PRODUCT LEVEL)	SEE PAGE
	1	2	**4I-6188**	2	VALVE AS-MANUAL (COUNTERWEIGHT)	
					(EACH INCLUDES)	
		2	**134-7113**	1	HANDLE	
M		2	**134-7114**	1	BOLT-SPECIAL	
		2	**134-7115**	1	PLATE	
		2	**195-0090**	1	PLATE-DETENT	
	2	1,2	**4I-9521**	2	BAND-MARKER (RED, L1)	
	3	1	**4I-9522**	2	BAND-MARKER (YELLOW, L2)	
	4	2	**4I-9523**	2	BAND-MARKER (BLUE, L3)	
	5	1	**4I-9524**	2	BAND-MARKER (BROWN, L4)	
	6	1	**4I-9525**	2	BAND-MARKER (ORANGE, R1)	
	7	1	**4I-9526**	2	BAND-MARKER (WHITE, R2)	
	8	2	**4I-9527**	2	BAND-MARKER (GREEN, R3)	
	9	1	**4I-9528**	2	BAND-MARKER (PURPLE, R4)	
I	10	1	**5I-4076**	1	HOSE AS	
	11	2	**5P-5148**	3	STRAP-CABLE	
	12	2	**7I-0970**	2	SUPPORT	
	13	2	**7I-0972**	2	BAR	
	14	1,2	**7K-1181**	10	STRAP-CABLE	
	15	2	**7Y-8165**	1	GROMMET	
	16	2	**087-4962**	1	LINK	
Y	17	1	**087-5087**	1	VALVE GP-CHECK (PILOT OPERATED)	716
M	18	2	**105-3483**	3	BOLT-SOCKET HEAD (M10X1.5X70-MM)	
Y	19	2	**123-2514**	1	VALVE GP-PILOT (COUNTERWEIGHT)	761
Y	20	2	**123-2515**	1	VALVE GP-COUNTERWEIGHT CONTROL	743
Y	21	1	**123-2549**	2	VALVE GP-SHUTTLE (PUMP)	789
	22	1	**131-9522**	1	SUPPORT AS	
	23	2	**131-9537**	1	HANDLE	
C	24	2	**292-7591**	1	HOSE AS	
	25	1	**133-5813**	2	BAND-MARKER (GRAY)	
CI	26	2	**317-4709**	1	HOSE AS	
I	27	1	**134-6904**	1	HOSE AS	
	28	2	**134-6963**	1	HOSE AS	
	29	2	**134-6964**	1	HOSE AS	
	30	1	**134-6966**	1	SUPPORT AS	
	31	2	**134-6967**	1	HOSE AS	
	32	1	*174-2250*	1	COUPLING AS	
		1	**143-4262**	1	COUPLING	
		1	**3K-0360**	1	SEAL-O-RING	
I	33	1	**179-7616**	1	HOSE AS	
I	34	1	**4I-6033**	1	HOSE AS	
I	35	1	**302-2877**	1	HOSE AS	
CI	36	2	**317-4710**	1	HOSE AS	
	37	1	**236-2851**	1	HOSE AS	
I	38	1	**354-3804**	1	HOSE AS	
	39	1	**236-3024**	1	BLOCK	
C	40	2	**319-9885**	1	SUPPORT AS	
I	41	1	**236-2852**	1	HOSE AS	
	42	1	**270-0032**	1	PLATE	
	43	2	**275-1819**	1	TUBE AS	
	44	1	**091-9035**	1	SPACER (11X25X20-MM THK)	
	45	2	**095-0840**	3	PIN-COTTER	
	46	2	**095-1310**	3	PIN-CLEVIS	
	47	1	*148-8336*	2	CONNECTOR AS	
					(EACH INCLUDES)	

227-0459 LINES GP-REAR ATTACHMENT *(contd.)* i04177450

NOTE	REF NO	GRAPHIC REF	PART NUMBER	QTY	PART NAME 1 2 3 4 5 6 (PRODUCT LEVEL)	SEE PAGE
		1	**6V-8636**	1	CONNECTOR	
		1	**3J-1907**	1	SEAL-O-RING	
		1	**6V-8397**	1	SEAL-O-RING	
	48	2	*148-8338*	1	CONNECTOR AS	
		2	**8T-0075**	1	CONNECTOR	
		2	**3J-1907**	1	SEAL-O-RING	
		2	**6V-8397**	1	SEAL-O-RING	
	49	2	*148-8340*	2	CONNECTOR AS	
					(EACH INCLUDES)	
		2	**6V-8639**	1	CONNECTOR	
		2	**3K-0360**	1	SEAL-O-RING	
		2	**6V-8398**	1	SEAL-O-RING	
	50	2	*148-8345*	3	CONNECTOR AS	
					(EACH INCLUDES)	
		2	**6V-8638**	1	CONNECTOR	
		2	**2M-9780**	1	SEAL-O-RING	
		2	**6V-8398**	1	SEAL-O-RING	
	51	1	*148-8354*	1	ELBOW AS	
		1	**6V-9002**	1	ELBOW	
		1	**3K-0360**	1	SEAL-O-RING	
		1	**6V-8398**	1	SEAL-O-RING	
	52	1	*148-8361*	1	ELBOW AS	
		1	**6V-9200**	1	ELBOW	
		1	**3J-7354**	1	SEAL-O-RING	
		1	**6V-8397**	1	SEAL-O-RING	
	53	2	*148-8364*	1	ELBOW AS	
		2	**6V-8625**	1	ELBOW	
		2	**3K-0360**	1	SEAL-O-RING	
		2	**6V-8398**	1	SEAL-O-RING	
	54	2	*148-8372*	2	ELBOW AS	
					(EACH INCLUDES)	
		2	**6V-8721**	1	ELBOW	
		2	**2M-9780**	1	SEAL-O-RING	
		2	**6V-8398**	1	SEAL-O-RING	
	55	2	*148-8374*	1	ELBOW AS	
		2	**6V-8723**	1	ELBOW	
		2	**3K-0360**	1	SEAL-O-RING	
		2	**6V-8397**	1	SEAL-O-RING	
	56	2	*148-8391*	1	ELBOW AS	
		2	**8T-8987**	1	ELBOW	
		2	**2S-4078**	1	SEAL-O-RING	
		2	**5K-9090**	1	SEAL-O-RING	
	57	1	*148-8367*	2	ELBOW AS	
					(EACH INCLUDES)	
		1	**6V-8397**	1	SEAL-O-RING	
		1	**6V-9850**	1	ELBOW	
	58	2	*148-8412*	1	REDUCER AS	
		2	**6V-8944**	1	REDUCER-O-RING	
		2	**6V-8398**	1	SEAL-O-RING	
	59	1,2	*148-8415*	2	REDUCER AS	
					(EACH INCLUDES)	
		1,2	**6V-8936**	1	REDUCER	
		1,2	**6V-8397**	1	SEAL-O-RING	
	60	1	*148-8428*	2	TEE AS	
					(EACH INCLUDES)	
		1	**6V-8782**	1	TEE	
		1	**3K-0360**	1	SEAL-O-RING	
		1	**6V-8398**	2	SEAL-O-RING	
	61	1	*148-8433*	1	TEE AS	

227-0459 LINES GP-REAR ATTACHMENT *(contd.)* i04177450

NOTE	REF NO	GRAPHIC REF	PART NUMBER	QTY	PART NAME 1 2 3 4 5 6 (PRODUCT LEVEL)	SEE PAGE
		1	**6V-9836**	1	TEE-SWIVEL	
		1	**6V-8397**	2	SEAL-O-RING	
	62	2	*148-8435*	1	TEE AS	
		2	**6V-8781**	1	TEE-FACE SEAL	
		2	**3J-1907**	1	SEAL-O-RING	
		2	**6V-8397**	2	SEAL-O-RING	
	63	2	*148-8444*	2	TEE AS-SWIVEL	
					(EACH INCLUDES)	
		2	**6V-9837**	1	TEE-SWIVEL	
		2	**6V-8398**	2	SEAL-O-RING	
	64	2	*150-3036*	1	ELBOW AS	
		2	**8T-1905**	1	ELBOW	
		2	**3J-1907**	1	SEAL-O-RING	
		2	**6V-8397**	1	SEAL-O-RING	
	65	2	*164-5605*	1	CONNECTOR AS	
		2	**8T-0076**	1	CONNECTOR	
		2	**3K-0360**	1	SEAL-O-RING	
		2	**6V-8397**	1	SEAL-O-RING	
C	66	2	*164-5608*	1	CONNECTOR AS	
		2	**8T-1687**	1	CONNECTOR	
		2	**3K-0360**	1	SEAL-O-RING	
		2	**6V-8398**	1	SEAL-O-RING	
	67	1	*164-5662*	1	ELBOW AS	
		1	**143-4281**	1	ELBOW	
		1	**2S-4078**	1	SEAL-O-RING	
		1	**5K-9090**	1	SEAL-O-RING	
	68	1	**1P-3704**	2	SEAL-RECTANGULAR	
	69	1	**1P-3705**	1	SEAL-RECTANGULAR	
	70	1	**1P-5767**	4	FLANGE-HALF	
	71	1	**4K-8864**	1	CLIP	
	72	2	**4P-7582**	3	CLIP	
	73	1	**5K-8451**	1	CLIP	
	74	1	**5P-2369**	2	CLIP	
	75	2	**5P-7460**	1	CLIP (SLOT)	
	76	2	**5P-7461**	1	CLIP (TAB)	
	77	1	**5P-7464**	1	CLIP (SLOT)	
	78	1	**5P-7465**	1	CLIP (TAB)	
	79	1	**6V-8397**	4	SEAL-O-RING	
	80	2	**6V-8398**	1	SEAL-O-RING	
	81	2	**7X-7729**	3	WASHER (11X25X3-MM THK)	
	82	2	**8B-6561**	3	SPACER (5.56X22.22X55.58-MM THK)	
	83	1	**8T-2920**	1	GROMMET	
	84	1,2	**8T-4121**	9	WASHER-HARD (11X21X2.5-MM THK)	
M	85	1,2	**8T-4136**	5	BOLT (M10X1.5X25-MM)	
M	86	2	**8T-4138**	4	BOLT (M6X1X20-MM)	
M	87	1	**8T-4139**	2	BOLT (M12X1.75X30-MM)	
M	88	2	**8T-4172**	3	BOLT (M10X1.5X80-MM)	
M	89	1	**8T-4179**	1	BOLT (M12X1.75X20-MM)	
M	90	1	**8T-4184**	4	BOLT (M12X1.75X45-MM)	
M	91	1	**8T-4191**	1	BOLT (M10X1.5X16-MM)	
M	92	2	**8T-4192**	1	BOLT (M12X1.75X25-MM)	
M	93	1	**8T-4196**	3	BOLT (M10X1.5X35-MM)	
M	94	1	**8T-4198**	2	BOLT (M10X1.5X100-MM)	
	95	1,2	**8T-4223**	16	WASHER-HARD (13.5X25.5X3-MM THK)	
M	96	2	**8T-4956**	4	BOLT (M12X1.75X35-MM)	
M	97	1	**8T-5041**	4	BOLT (M12X1.75X120-MM)	
	98	2	**9X-6165**	4	WASHER (6.5X22X2.5-MM THK)	
	99	2	**9X-6579**	1	NUT-ORIFICE (7/16-12-THD)	
	100	2	**9X-8256**	3	WASHER (6.6X12X2-MM THK)	

227-0459 **LINES GP-REAR ATTACHMENT** *(contd.)* **i04177450**

NOTE	REF NO	GRAPHIC REF	PART NUMBER	QTY	PART NAME 1 2 3 4 5 6 (PRODUCT LEVEL)	SEE PAGE
C	101	2	*297-7927*	1	CONNECTOR AS	
		2	**3K-0360**	1	SEAL-O-RING	
		2	**6V-8398**	1	SEAL-O-RING	
		2	**123-1904**	1	CONNECTOR	

C-CHANGE FROM PREVIOUS TYPE
I-REFER TO HYDRAULIC INFORMATION SYSTEM
M-METRIC PART
Y-SEPARATE ILLUSTRATION

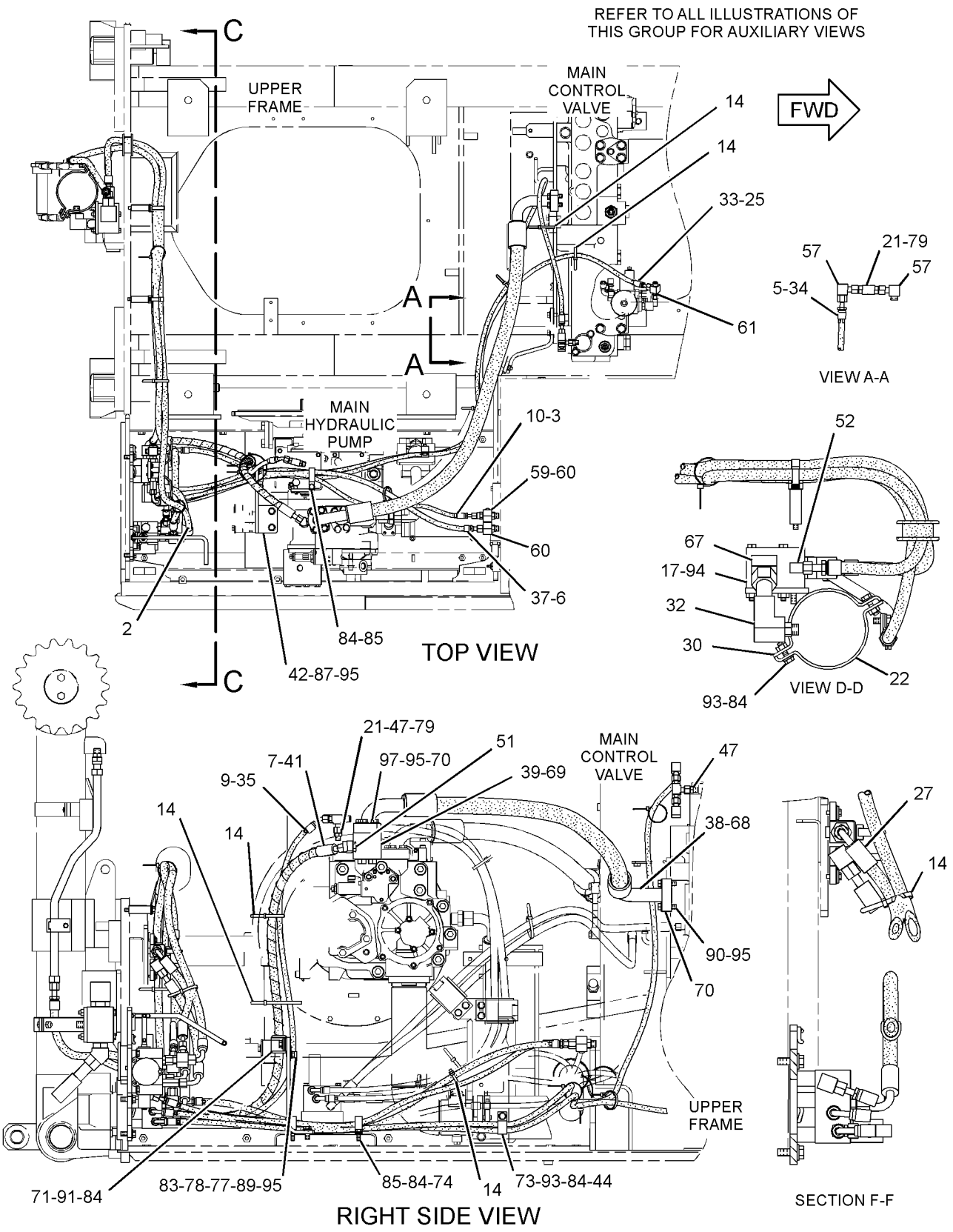

GRAPHIC #1 g02393041

REFER TO ALL ILLUSTRATIONS OF THIS GROUP FOR AUXILIARY VIEWS

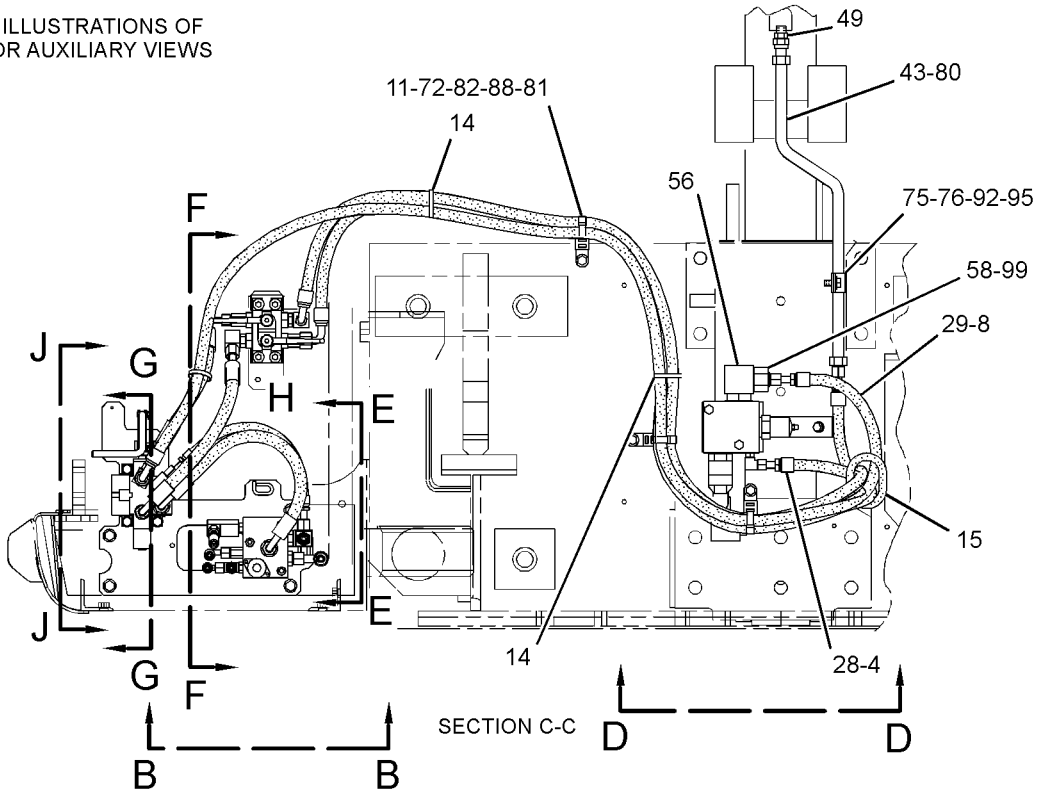

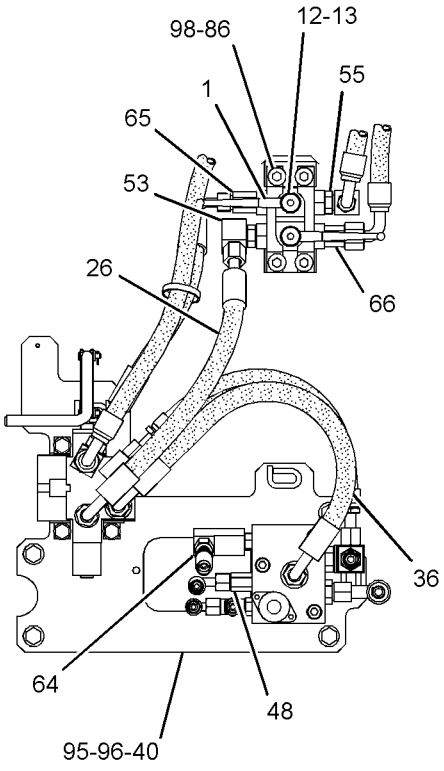

VIEW OF AREA H

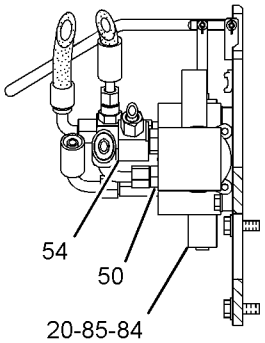

SECTION G-G

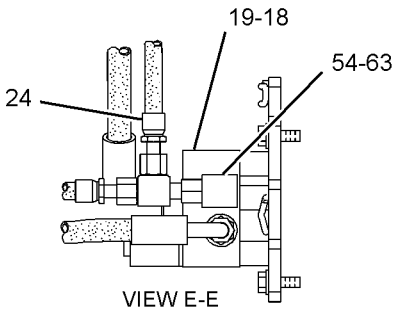

VIEW E-E

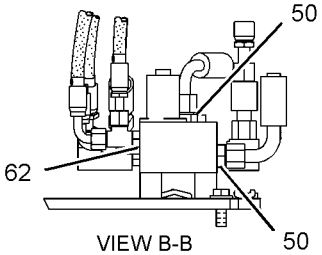

VIEW B-B

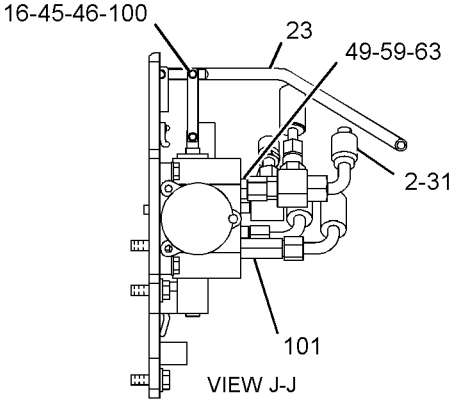

VIEW J-J

GRAPHIC #2 **<END>** g02393129

302-3139 LINES GP-RETURN—BOOM LOWERING CONTROL

S/N: JGB1-UP; KHS1-UP
PART OF 297-0252 VALVE AR-CHECK & RELIEF
AN ATTACHMENT

SMCS-5057 **i03308465**

NOTE	REF NO	GRAPHIC REF	PART NUMBER	QTY	PART NAME 1 2 3 4 5 6 (PRODUCT LEVEL)	SEE PAGE
	1	1	**7K-1181**	2	STRAP-CABLE	
	2	1	*177-1061*	1	ELBOW AS	
		1	**5K-9090**	1	SEAL-O-RING	
		1	**142-0038**	1	ELBOW	
I	3	1	**168-9641**	1	HOSE AS	
I	4	1	**194-0343**	1	HOSE AS	
I	5	1	**302-3150**	1	HOSE AS	
Y	6	1	**310-0149**	1	VALVE GP-LOAD CONTROL	754
	7	1	*148-8335*	1	CONNECTOR AS	
		1	**5K-9090**	1	SEAL-O-RING	
		1	**6V-8635**	1	CONNECTOR	
		1	**7M-8485**	1	SEAL-O-RING	
	8	1	*148-8429*	1	TEE AS	
		1	**5K-9090**	2	SEAL-O-RING	
		1	**6V-9840**	1	TEE-SWIVEL	
	9	1	*148-8445*	1	TEE AS	
		1	**5K-9090**	2	SEAL-O-RING	
		1	**6V-9847**	1	TEE-SWIVEL	
	10	1	*148-8431*	1	TEE AS	
		1	**5K-9090**	2	SEAL-O-RING	
		1	**6V-8785**	1	TEE	
		1	**7M-8485**	1	SEAL-O-RING	

I-REFER TO HYDRAULIC INFORMATION SYSTEM
Y-SEPARATE ILLUSTRATION

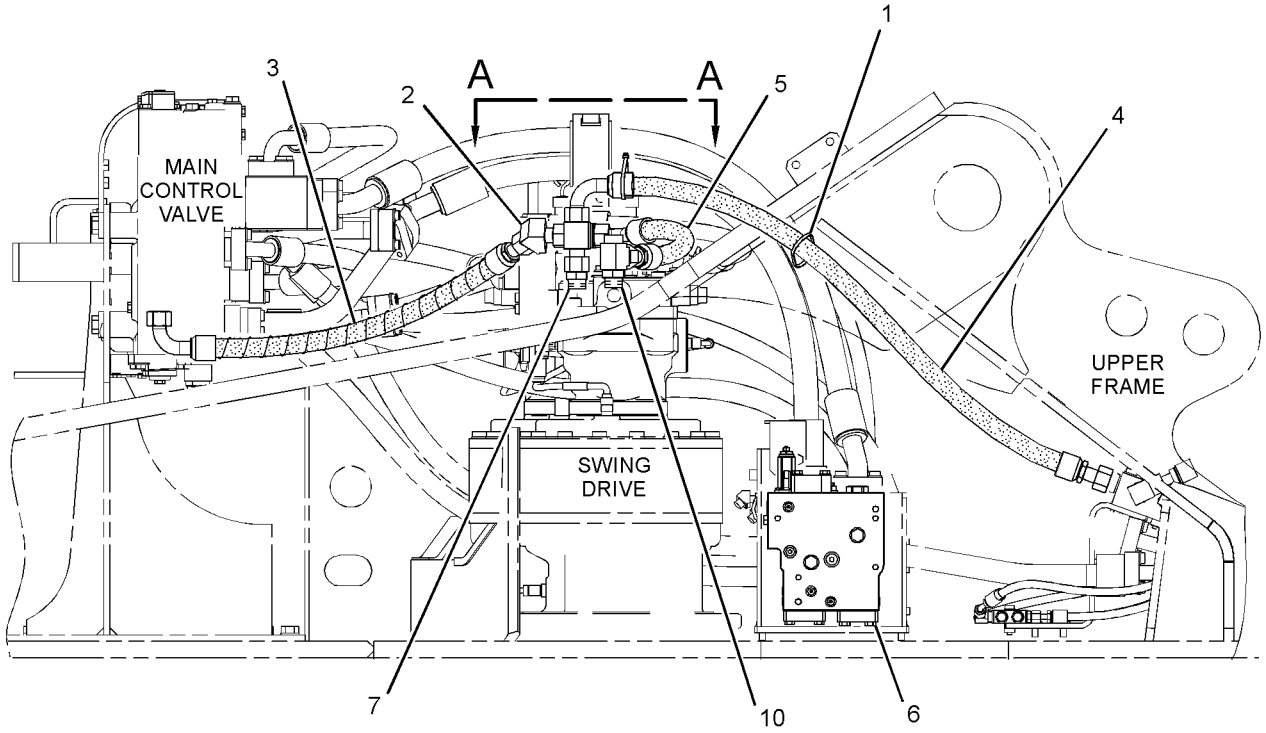

RIGHT SIDE VIEW

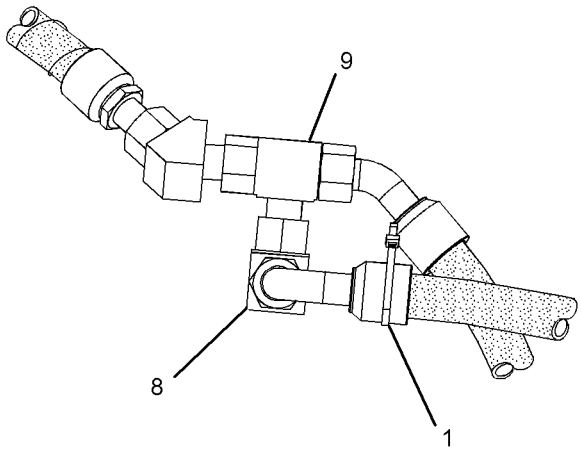

VIEW A-A

GRAPHIC #1 **<END>** g01637137

128-7448 LINES GP-STICK

S/N: JGB1-UP; KHS1-UP
PART OF 220-2498 STICK AR-HOE
FOR USE WITH 3-M (9.8-FT) STICK
AN ATTACHMENT

SMCS-5057, 5458 **i04009472**

NOTE	REF NO	GRAPHIC REF	PART NUMBER	QTY	PART NAME 1 2 3 4 5 6 (PRODUCT LEVEL)	SEE PAGE
I	1	1	**354-3802**	2	HOSE AS	
	2	1	**8T-4223**	16	WASHER-HARD (13.5X25.5X3-MM THK)	
M	3	1	**8T-4184**	12	BOLT (M12X1.75X45-MM)	
	4	1	**1P-3703**	5	SEAL-RECTANGULAR	
	5	1	**6V-0400**	8	FLANGE-HALF	
	6	1	**134-6793**	1	BLOCK	
M	7	1	**8T-5412**	4	BOLT (M12X1.75X140-MM)	

I-REFER TO HYDRAULIC INFORMATION SYSTEM
M-METRIC PART

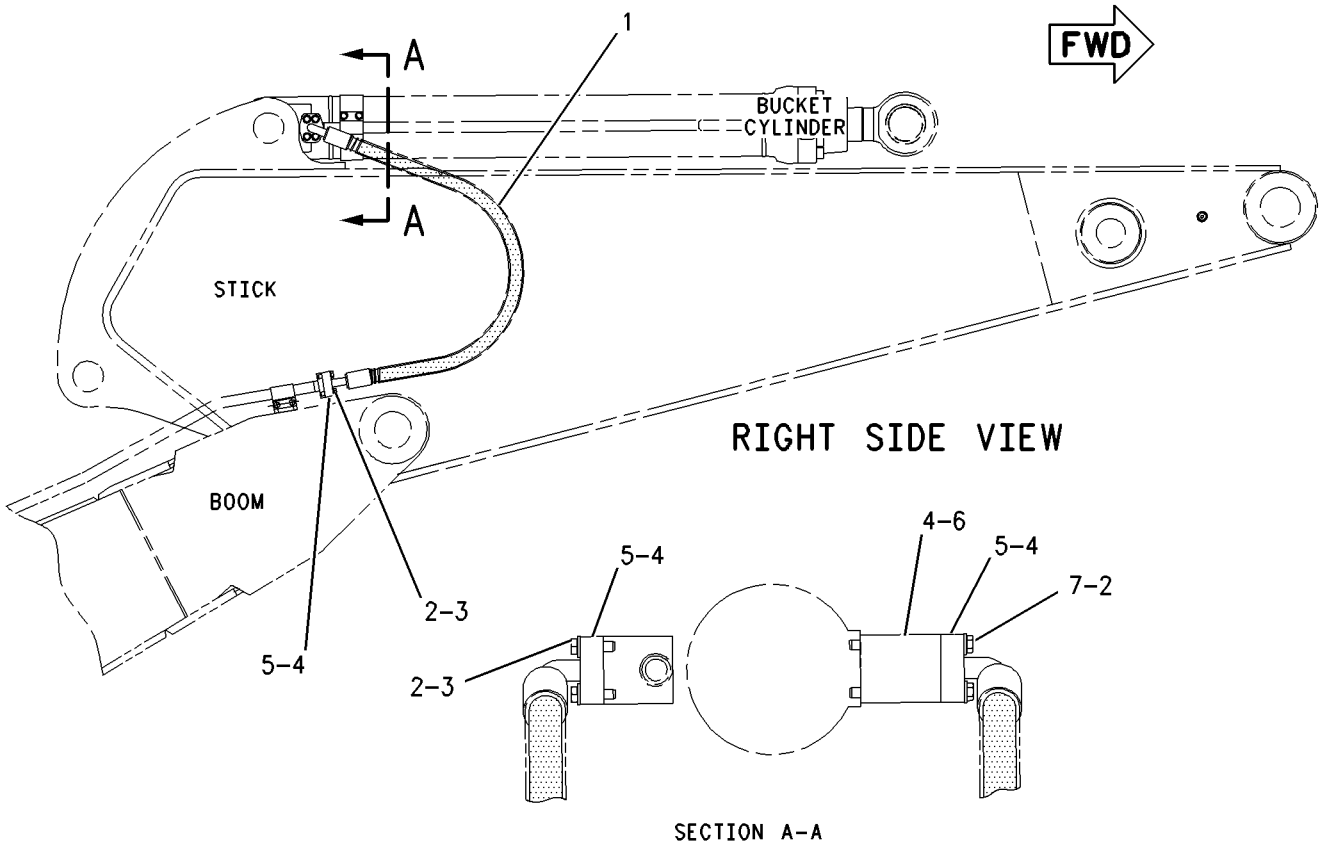

GRAPHIC #1 **<END>** g00924778

HYDRAULIC SYSTEM

128-7449 LINES GP-STICK

S/N: JGB1-UP; KHS1-UP
PART OF 220-2500 STICK AR-HOE
FOR USE WITH 2.5-M (8.2-FT) STICK
AN ATTACHMENT

SMCS-5057, 5458 **i02538466**

NOTE	REF NO	GRAPHIC REF	PART NUMBER	QTY	PART NAME 1 2 3 4 5 6 (PRODUCT LEVEL)	SEE PAGE
I	1	1	**212-5326**	2	HOSE AS	
	2	1	**8T-4223**	16	WASHER-HARD (13.5X25.5X3-MM THK)	
M	3	1	**8T-4184**	12	BOLT (M12X1.75X45-MM)	
	4	1	**1P-3703**	5	SEAL-RECTANGULAR	
	5	1	**6V-0400**	8	FLANGE-HALF	
	6	1	**275-1410**	1	BLOCK	
M	7	1	**8T-5412**	4	BOLT (M12X1.75X140-MM)	

I-REFER TO HYDRAULIC INFORMATION SYSTEM
M-METRIC PART

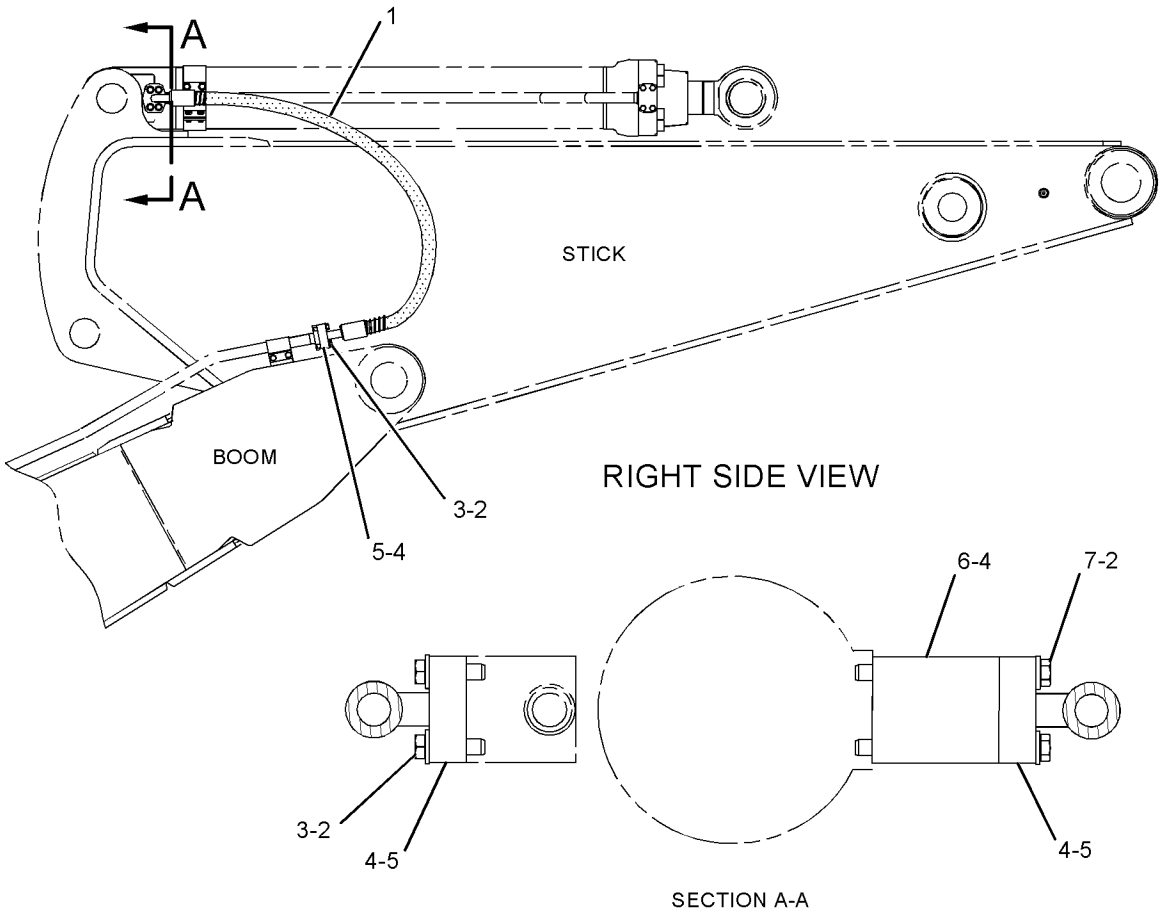

GRAPHIC #1 **<END>** g01039975

289-5758 LINES GP-STICK

S/N: JGB1-UP; KHS1-UP
PART OF 294-1258, 294-1267 STICK AR-HOE
FOR USE WITH 3.4-M (11.2-FT) STICK
AN ATTACHMENT

SMCS-5057, 5458 **i04000355**

NOTE	REF NO	GRAPHIC REF	PART NUMBER	QTY	PART NAME 1 2 3 4 5 6 (PRODUCT LEVEL)	SEE PAGE
	1	1	**4I-6046**	1	BLOCK	
I	2	1	**354-3810**	2	HOSE AS	
	3	1	**1P-3703**	2	SEAL-RECTANGULAR	
	4	1	**1P-3704**	3	SEAL-RECTANGULAR	
	5	1	**1P-5767**	4	FLANGE-HALF	
	6	1	**6V-0400**	4	FLANGE-HALF	
M	7	1	**8T-4184**	12	BOLT (M12X1.75X45-MM)	
	8	1	**8T-4223**	16	WASHER-HARD (13.5X25.5X3-MM THK)	
M	9	1	**8T-5041**	4	BOLT (M12X1.75X120-MM)	

I-REFER TO HYDRAULIC INFORMATION SYSTEM
M-METRIC PART

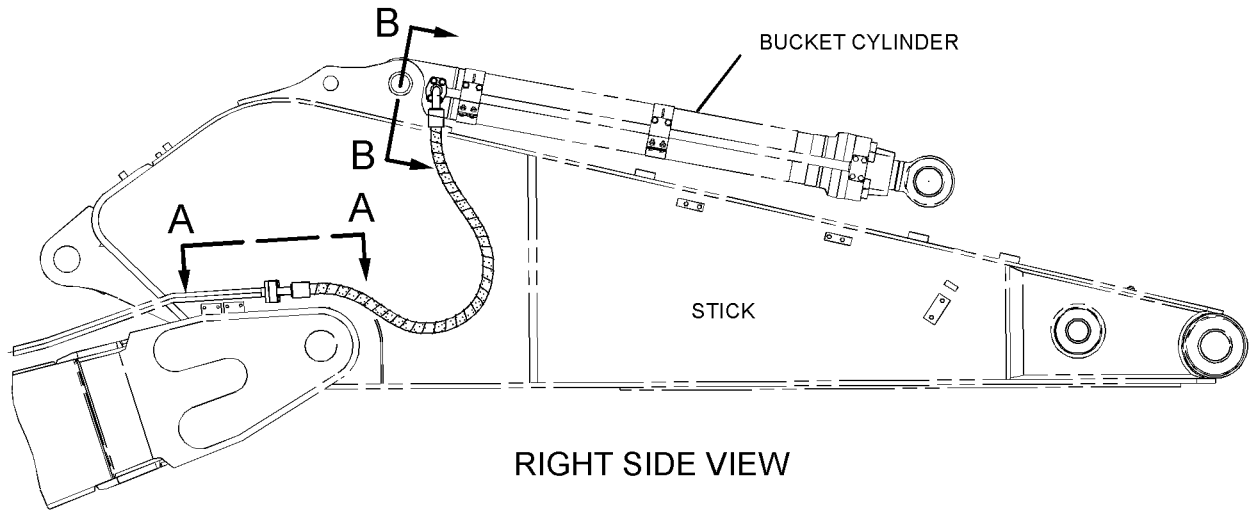

RIGHT SIDE VIEW

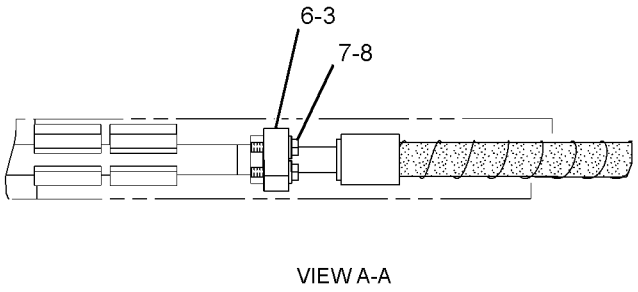

VIEW A-A

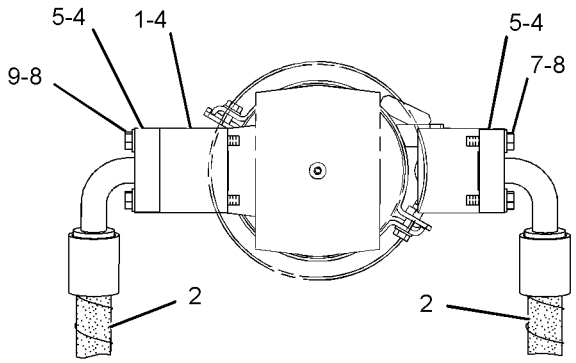

VIEW B-B

GRAPHIC #1 **<END>** g01369304

HYDRAULIC SYSTEM

289-5759 LINES GP-STICK

S/N: JGB1-UP; KHS1-UP
PART OF 294-1257, 294-1265 STICK AR-HOE
FOR USE WITH 3.9-M (12.8-FT) STICK
AN ATTACHMENT

SMCS-5057, 5458 **i02861055**

NOTE	REF NO	GRAPHIC REF	PART NUMBER	QTY	PART NAME 1 2 3 4 5 6 (PRODUCT LEVEL)	SEE PAGE
	1	1	**6V-0400**	4	FLANGE-HALF	
	2	1	**1P-3703**	2	SEAL-RECTANGULAR	
	3	1	**8T-4223**	16	WASHER-HARD (13.5X25.5X3-MM THK)	
M	4	1	**8T-4184**	12	BOLT (M12X1.75X45-MM)	
I	5	1	**4I-6130**	2	HOSE AS	
	6	1	**1P-5767**	4	FLANGE-HALF	
	7	1	**1P-3704**	3	SEAL-RECTANGULAR	
	8	1	**4I-6046**	1	BLOCK	
M	9	1	**8T-5041**	4	BOLT (M12X1.75X120-MM)	

I-REFER TO HYDRAULIC INFORMATION SYSTEM
M-METRIC PART

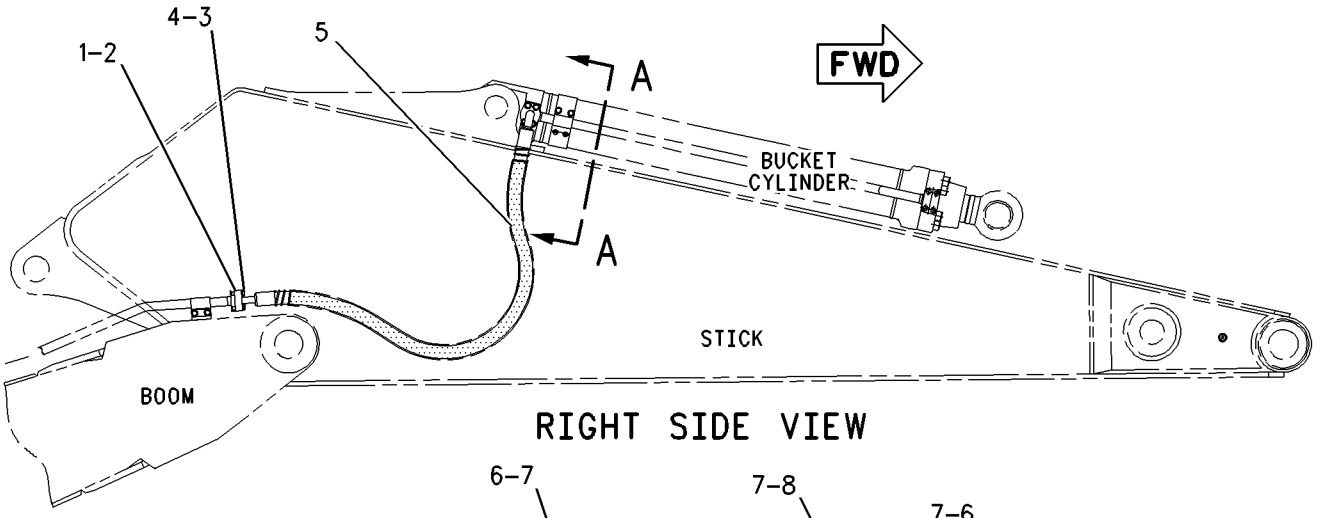

RIGHT SIDE VIEW

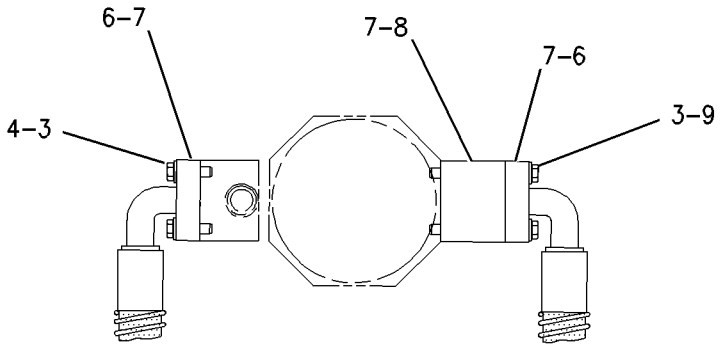

SECTION A-A

GRAPHIC #1 **<END>** g00924773

HYDRAULIC SYSTEM

129-5973 LINES GP-STICK CYLINDER

S/N: JGB1-UP; KHS1-UP
PART OF 225-4524 CYLINDER & LINES GP-STICK
AN ATTACHMENT

SMCS-5458 **i00812708**

NOTE	REF NO	GRAPHIC REF	PART NUMBER	QTY	PART NAME 1 2 3 4 5 6 (PRODUCT LEVEL)	SEE PAGE
	1	1	**134-6844**	1	TUBE AS	
	2	1	**1P-3704**	1	SEAL-RECTANGULAR	
M	3	1	**8T-4648**	4	BOLT (M12X1.75X70-MM)	
	4	1	**131-9482**	2	SUPPORT AS	
	5	1	**124-0909**	4	CLIP	
	6	1	**3E-4356**	4	WASHER-HARD (17.5X30X6-MM THK)	
M	7	1	**8T-4140**	4	BOLT (M16X2X60-MM)	
	8	1	**8T-4121**	8	WASHER-HARD (11X21X2.5-MM THK)	
M	9	1	**8T-4196**	8	BOLT (M10X1.5X35-MM)	
	10	1	**124-1216**	2	SUPPORT AS	

M-METRIC PART

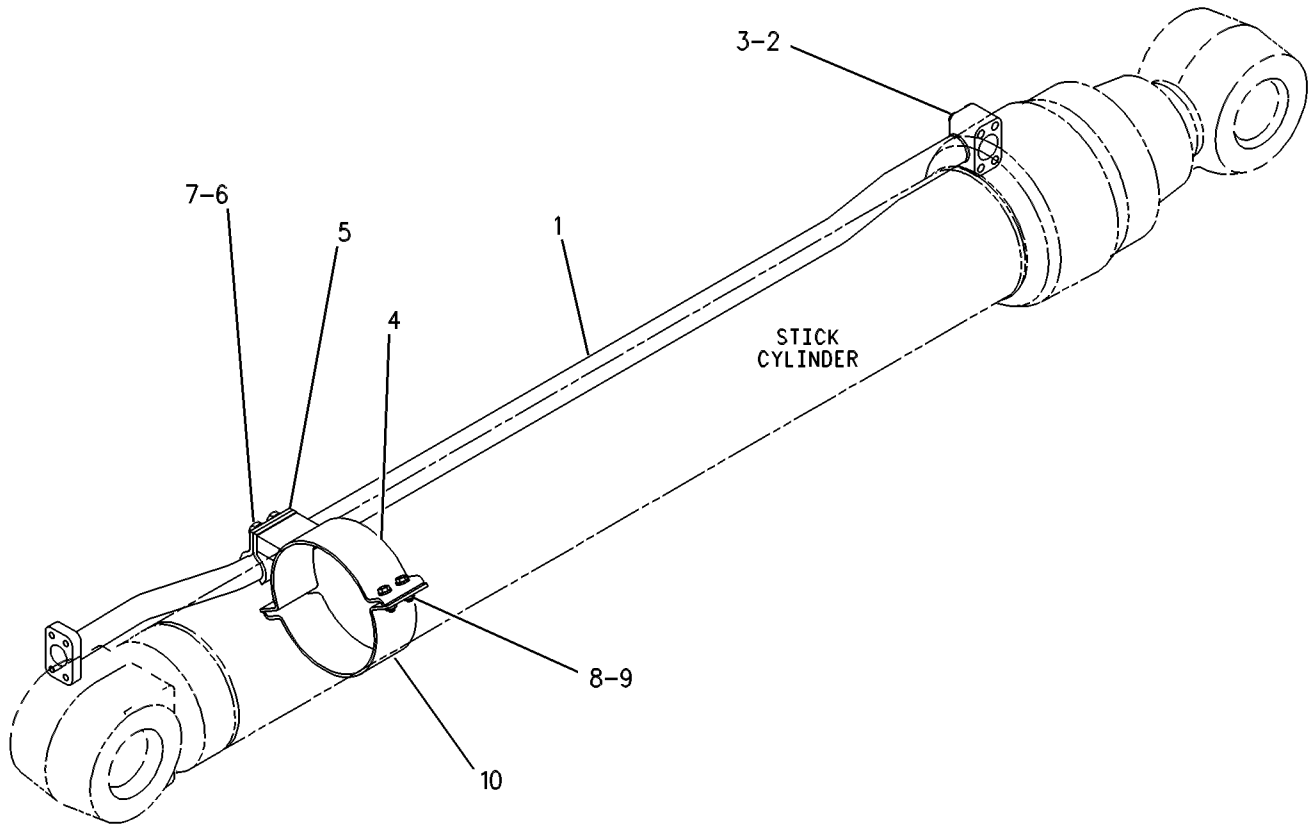

GRAPHIC #1 **<END>** g00268541

HYDRAULIC SYSTEM

302-9546 LINES GP-STICK CYLINDER—LOAD CONTROL

S/N: JGB1-UP; KHS1-UP

PART OF 297-0257, 297-0258 VALVE AR-CHECK & RELIEF

AN ATTACHMENT

SMCS-5458 **i02997540**

NOTE	REF NO	GRAPHIC REF	PART NUMBER	QTY	PART NAME 1 2 3 4 5 6 (PRODUCT LEVEL)	SEE PAGE
M	1	1	**8T-4140**	6	BOLT (M16X2X60-MM)	
M	2	1	**8T-4186**	2	BOLT (M10X1.5X40-MM)	
M	3	1	**8T-4196**	8	BOLT (M10X1.5X35-MM)	
M	4	1	**8T-6868**	4	BOLT (M12X1.75X80-MM)	
M	5	1	**108-1782**	4	BOLT-SOCKET HEAD (M12X1.75X90-MM)	
	6	1	**093-1294**	2	CLAMP	
	7	1	**216-6515**	4	CLIP	
	8	1	*148-8328*	1	CONNECTOR AS	
		1	**3D-2824**	1	SEAL-O-RING	
		1	**6V-8398**	1	SEAL-O-RING	
		1	**6V-8633**	1	CONNECTOR	
	9	1	*148-8368*	2	ELBOW AS	
					(EACH INCLUDES)	
		1	**3J-1907**	1	SEAL-O-RING	
		1	**4J-5477**	1	SEAL-O-RING	
		1	**6V-8627**	1	ELBOW	
	10	1	**302-9548**	1	TUBE AS	
	11	1	**302-9550**	1	TUBE AS	
	12	1	**302-9552**	1	TUBE AS	
	13	1	**6V-8397**	2	SEAL-O-RING	
	14	1	**6V-8398**	1	SEAL-O-RING	
	15	1	**1P-3705**	2	SEAL-RECTANGULAR	
	16	1	**124-1216**	2	SUPPORT AS	
	17	1	**237-3231**	2	SUPPORT AS	
	18	1	**302-9547**	1	TUBE AS	
Y	19	1	**285-1768**	1	VALVE GP-LOAD CONTROL (STICK CYLINDER)	749
	20	1	**3E-4356**	6	WASHER-HARD (17.5X30X6-MM THK)	
	21	1	**8T-4121**	10	WASHER-HARD (11X21X2.5-MM THK)	
	22	1	**8T-4223**	4	WASHER-HARD (13.5X25.5X3-MM THK)	

M-METRIC PART
Y-SEPARATE ILLUSTRATION

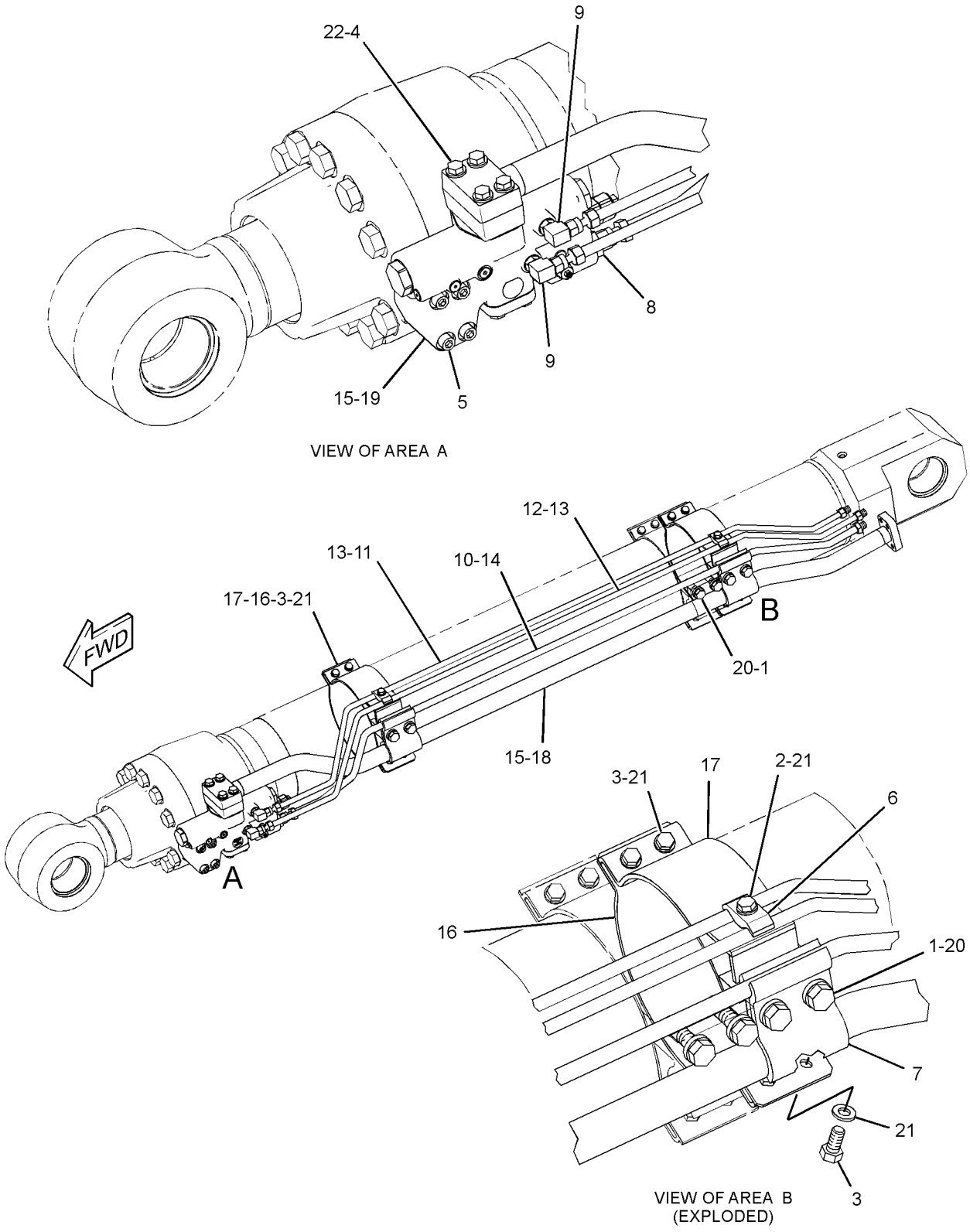

GRAPHIC #1 **<END>** g01457649

HYDRAULIC SYSTEM

292-7162 LINES GP-SWING MOTOR—WITH FINE SWING

S/N: JGB1-UP; KHS1-UP

PART OF 297-0243, 297-0244 HYDRAULIC AR

SMCS-5057 **i03821016**

NOTE	REF NO	GRAPHIC REF	PART NUMBER	QTY	PART NAME 1 2 3 4 5 6 (PRODUCT LEVEL)	SEE PAGE
	1	1	**087-5767**	1	HOSE AS	
	2	1	**126-2132**	1	BLOCK AS	
I	3	1	**176-4774**	1	HOSE AS	
I	4	1	**194-0383**	1	HOSE AS	
I	5	1	**245-5061**	1	HOSE AS	
I	6	1	**269-9684**	1	HOSE AS	
Y	7	1	**295-9423**	1	VALVE GP-SWING CUSHION (FINE SWING)	808
I	8	1	**319-9775**	1	HOSE AS	
	9	1	*148-8324*	1	CONNECTOR AS	
		1	**3K-0360**	1	SEAL-O-RING	
		1	**6V-9746**	1	SEAL-O-RING	
		1	**6V-9874**	1	CONNECTOR	
	10	1	*148-8336*	1	CONNECTOR AS	
		1	**3J-1907**	1	SEAL-O-RING	
		1	**6V-8397**	1	SEAL-O-RING	
		1	**6V-8636**	1	CONNECTOR	
	11	1	*148-8347*	3	ELBOW AS	
					(EACH INCLUDES)	
		1	**3D-2824**	1	SEAL-O-RING	
		1	**6V-9007**	1	ELBOW	
		1	**6V-9746**	1	SEAL-O-RING	
	12	1	*148-8359*	1	ELBOW AS	
		1	**3K-0360**	1	SEAL-O-RING	
		1	**6V-9746**	1	SEAL-O-RING	
		1	**6V-9877**	1	ELBOW	
	13	1	*148-8431*	2	TEE AS	
					(EACH INCLUDES)	
		1	**5K-9090**	2	SEAL-O-RING	
		1	**6V-8785**	1	TEE	
		1	**7M-8485**	1	SEAL-O-RING	
	14	1	*148-8435*	1	TEE AS	
		1	**3J-1907**	1	SEAL-O-RING	
		1	**6V-8397**	2	SEAL-O-RING	
		1	**6V-8781**	1	TEE-FACE SEAL	
	15	1	*148-8449*	1	TEE AS-SWIVEL	
		1	**6V-9746**	2	SEAL-O-RING	
		1	**6V-9839**	1	TEE-SWIVEL	
	16	1	*153-6236*	1	REDUCER AS	
		1	**6V-8946**	1	REDUCER	
		1	**6V-9746**	1	SEAL-O-RING	
M	17	1	**8T-4178**	12	BOLT (M10X1.5X90-MM)	
	18	1	*148-8327*	1	CONNECTOR AS	
		1	**3D-2824**	1	SEAL-O-RING	
		1	**6V-8637**	1	CONNECTOR	
		1	**6V-9746**	1	SEAL-O-RING	

I-REFER TO HYDRAULIC INFORMATION SYSTEM
M-METRIC PART
Y-SEPARATE ILLUSTRATION

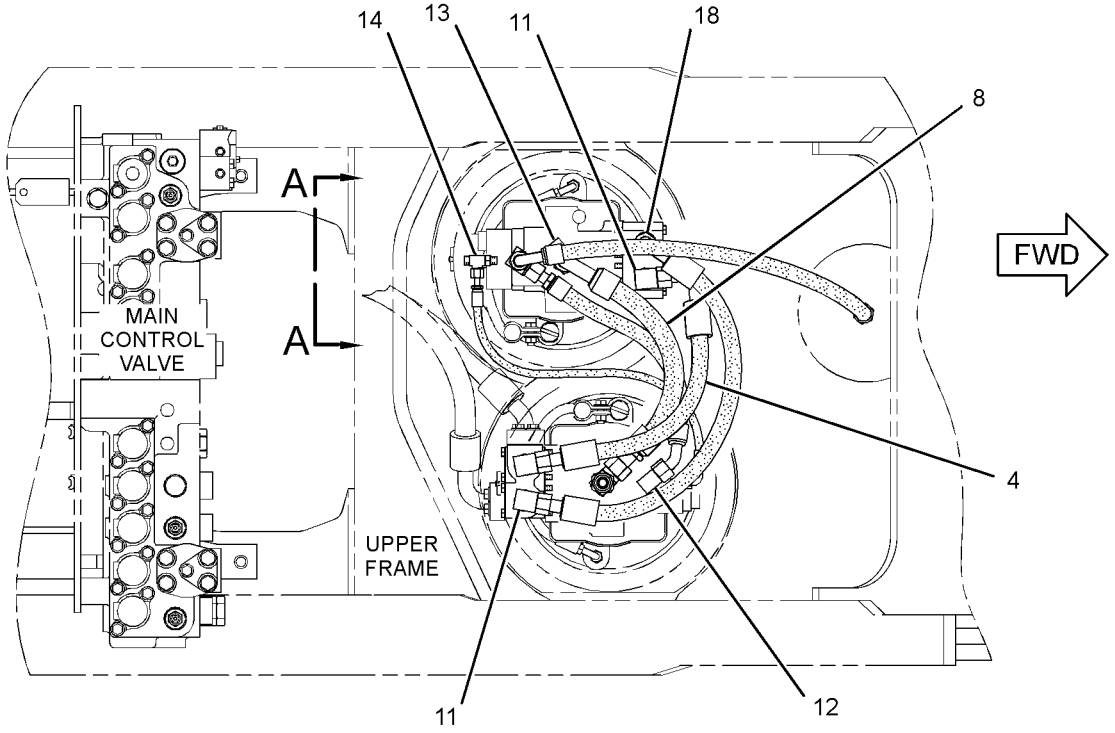

TOP VIEW

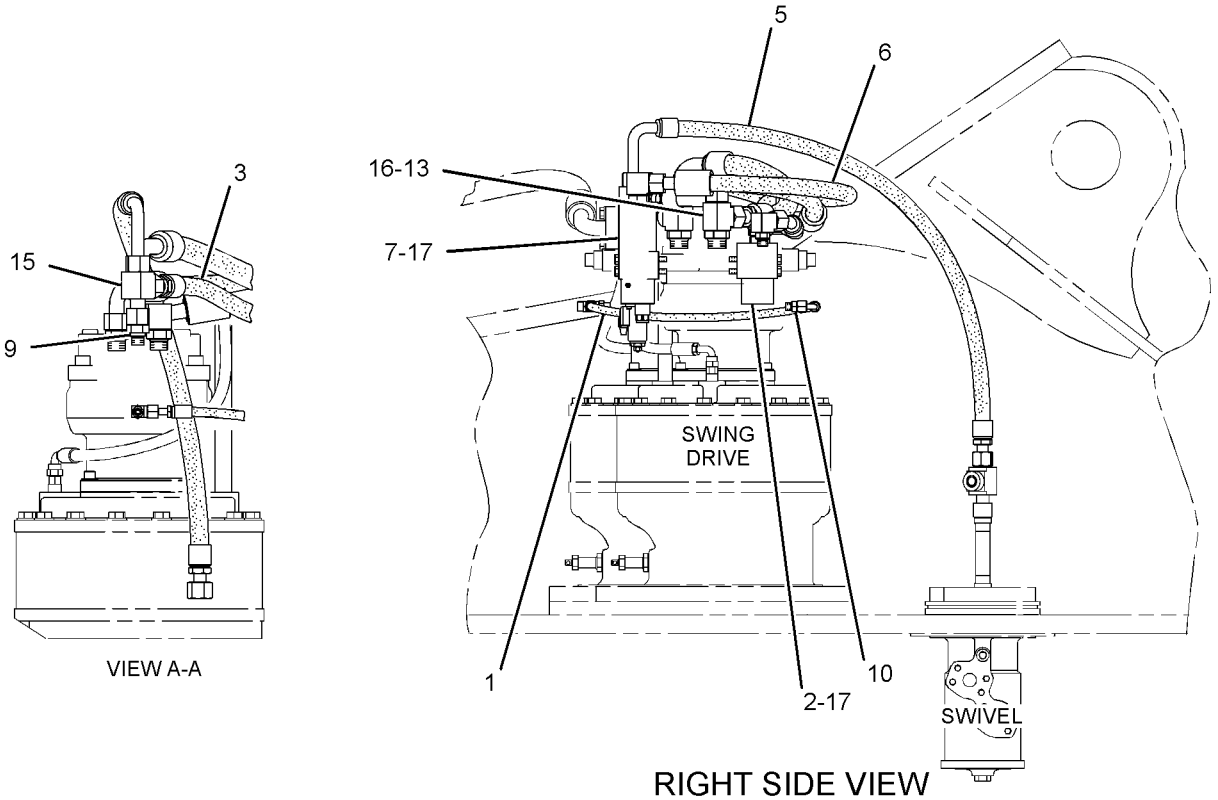

VIEW A-A

RIGHT SIDE VIEW

GRAPHIC #1 **<END>** g02000653

HYDRAULIC SYSTEM

302-3185 LINES GP-TRAVEL MOTOR—LONG UNDERCARRIAGE

S/N: JGB1-UP

PART OF 297-0243 HYDRAULIC AR

SMCS-5057, 5058 **i03978292**

NOTE	REF NO	GRAPHIC REF	PART NUMBER	QTY	PART NAME 1 2 3 4 5 6 (PRODUCT LEVEL)	SEE PAGE
	1	1	**7K-1181**	6	STRAP-CABLE	
	2	1	**108-7118**	2	GROMMET	
CI	3	1	**7Y-4173**	2	HOSE AS	
	4	1	**129-5947**	2	GROMMET	
	5	1	*148-8347*	2	ELBOW AS	
					(EACH INCLUDES)	
		1	**3D-2824**	1	SEAL-O-RING	
		1	**6V-9007**	1	ELBOW	
		1	**6V-9746**	1	SEAL-O-RING	
M	6	1	**165-5085**	12	BOLT-SOCKET HEAD (M12X1.75X160-MM)	
Y	7	1	**225-4547**	1	SWIVEL GP	706
I	8	1	**227-0727**	2	HOSE AS	
I	9	1	**325-8851**	4	HOSE AS	
Y	10	1	**266-7843**	2	VALVE GP-TRAVEL COUNTERBALANCE	809
	11	1	*285-2520*	1	CONNECTOR AS	
		1	**3D-2824**	1	SEAL-O-RING	
		1	**6V-9746**	1	SEAL-O-RING	
		1	**236-2839**	1	TUBE AS	
	12	1	*148-8336*	1	CONNECTOR AS	
		1	**3J-1907**	1	SEAL-O-RING	
		1	**6V-8397**	1	SEAL-O-RING	
		1	**6V-8636**	1	CONNECTOR	
	13	1	*148-8338*	2	CONNECTOR AS	
					(EACH INCLUDES)	
		1	**3J-1907**	1	SEAL-O-RING	
		1	**6V-8397**	1	SEAL-O-RING	
		1	**8T-0075**	1	CONNECTOR	
	14	1	*148-8378*	2	ELBOW AS	
					(EACH INCLUDES)	
		1	**3J-1907**	1	SEAL-O-RING	
		1	**6V-8397**	1	SEAL-O-RING	
		1	**6V-8724**	1	ELBOW	
	15	1	*148-8392*	1	ELBOW AS	
		1	**6V-9746**	1	SEAL-O-RING	
		1	**6V-9853**	1	ELBOW	
	16	1	*153-6259*	1	TEE AS	
		1	**3D-2824**	1	SEAL-O-RING	
		1	**6V-8777**	1	TEE-FACE SEAL	
		1	**6V-9746**	2	SEAL-O-RING	
	17	1	**1P-3703**	4	SEAL-RECTANGULAR	
	18	1	**1P-3704**	4	SEAL-RECTANGULAR	
	19	1	**1P-5767**	8	FLANGE-HALF	
	21	1	**6V-0400**	16	FLANGE-HALF	
	23	1	**8T-4121**	6	WASHER-HARD (11X21X2.5-MM THK)	
M	24	1	**8T-4136**	6	BOLT (M10X1.5X25-MM)	
M	25	1	**8T-4184**	48	BOLT (M12X1.75X45-MM)	
	27	1	**8T-4223**	48	WASHER-HARD (13.5X25.5X3-MM THK)	
	28	1	*297-7926*	1	TEE AS	
		1	**9X-2235**	1	TEE-SWIVEL	
		1	**5K-9090**	1	SEAL-O-RING	
		1	**6V-9746**	1	SEAL-O-RING	
B	29	1	**1U-8846**		SEALANT-GASKET	

B-USE AS REQUIRED
C-CHANGE FROM PREVIOUS TYPE
I-REFER TO HYDRAULIC INFORMATION SYSTEM
M-METRIC PART
Y-SEPARATE ILLUSTRATION

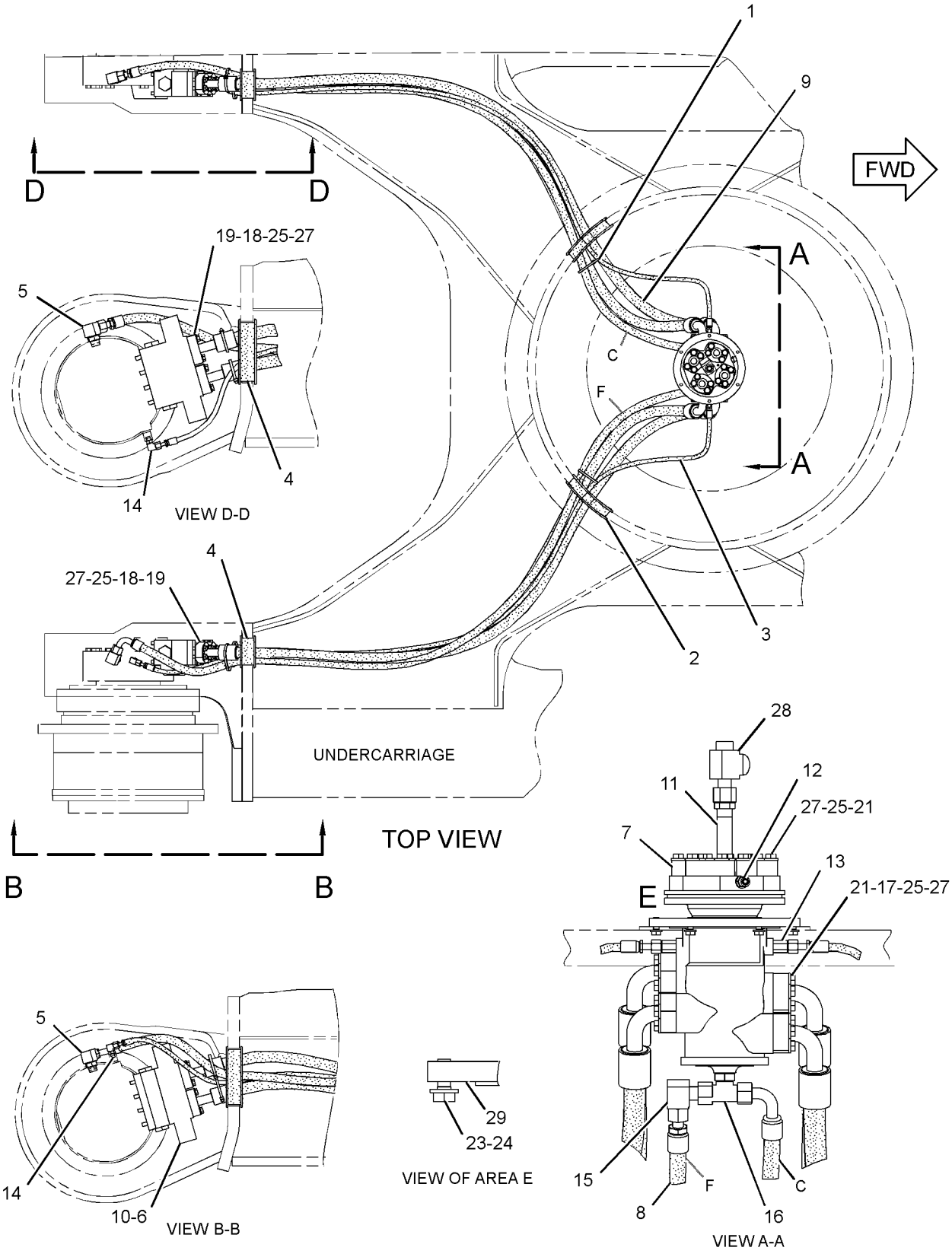

GRAPHIC #1 **<END>** g02082414

HYDRAULIC SYSTEM

302-3186 LINES GP-TRAVEL MOTOR–
VAR GAUGE, LONG UNDERCARRIAGE
S/N: KHS1-UP
PART OF 297-0244 HYDRAULIC AR

SMCS-5057, 5058 **i04135169**

NOTE	REF NO	GRAPHIC REF	PART NUMBER	QTY	PART NAME 1 2 3 4 5 6 (PRODUCT LEVEL)	SEE PAGE
	1	1	**7K-1181**	6	STRAP-CABLE	
	2	1	**108-7118**	2	GROMMET	
I	3	1	**113-6741**	2	HOSE AS	
	4	1	**129-5947**	2	GROMMET	
	5	1	**134-6835**	2	GROMMET	
	6	1	**134-6955**	2	GROMMET	
M	7	1	**165-5085**	12	BOLT-SOCKET HEAD (M12X1.75X160-MM)	
Y	8	1	**225-4547**	1	SWIVEL GP	706
I	9	1	**325-8852**	4	HOSE AS	
I	10	1	**236-2909**	2	HOSE AS	
Y	11	1	**266-7843**	2	VALVE GP-TRAVEL COUNTERBALANCE (TRACTION CONTROL)	809
	12	1	**278-6469**	2	GROMMET	
	13	1	*285-2520*	1	CONNECTOR AS	
		1	**3D-2824**	1	SEAL-O-RING	
		1	**6V-9746**	1	SEAL-O-RING	
		1	**236-2839**	1	TUBE AS	
	14	1	*148-8336*	1	CONNECTOR AS	
		1	**3J-1907**	1	SEAL-O-RING	
		1	**6V-8397**	1	SEAL-O-RING	
		1	**6V-8636**	1	CONNECTOR	
	15	1	*148-8338*	2	CONNECTOR AS	
					(EACH INCLUDES)	
		1	**3J-1907**	1	SEAL-O-RING	
		1	**6V-8397**	1	SEAL-O-RING	
		1	**8T-0075**	1	CONNECTOR	
	16	1	*148-8347*	2	ELBOW AS	
					(EACH INCLUDES)	
		1	**3D-2824**	1	SEAL-O-RING	
		1	**6V-9007**	1	ELBOW	
		1	**6V-9746**	1	SEAL-O-RING	
	17	1	*148-8378*	2	ELBOW AS	
					(EACH INCLUDES)	
		1	**3J-1907**	1	SEAL-O-RING	
		1	**6V-8397**	1	SEAL-O-RING	
		1	**6V-8724**	1	ELBOW	
	18	1	*148-8392*	1	ELBOW AS	
		1	**6V-9746**	1	SEAL-O-RING	
		1	**6V-9853**	1	ELBOW	
	19	1	*153-6259*	1	TEE AS	
		1	**3D-2824**	1	SEAL-O-RING	
		1	**6V-8777**	1	TEE-FACE SEAL	
		1	**6V-9746**	2	SEAL-O-RING	
	20	1	**1P-3703**	4	SEAL-RECTANGULAR	
	21	1	**1P-3704**	4	SEAL-RECTANGULAR	
	22	1	**1P-5767**	8	FLANGE-HALF	
	24	1	**6V-0400**	16	FLANGE-HALF	
	26	1	**7G-5984**	2	CLIP (TAB)	
	27	1	**7G-5985**	2	CLIP (SLOT)	
	28	1	**8T-4121**	6	WASHER-HARD (11X21X2.5-MM THK)	
M	29	1	**8T-4136**	6	BOLT (M10X1.5X25-MM)	
M	30	1	**8T-4184**	48	BOLT (M12X1.75X45-MM)	
M	31	1	**8T-4139**	4	BOLT (M12X1.75X30-MM)	
	33	1	**8T-4223**	52	WASHER-HARD (13.5X25.5X3-MM THK)	
	34	1	*297-7926*	1	TEE AS	

302-3186 **LINES GP-TRAVEL MOTOR** *(contd.)* **i04135169**

NOTE	REF NO	GRAPHIC REF	PART NUMBER	QTY	PART NAME 1 2 3 4 5 6 (PRODUCT LEVEL)	SEE PAGE
		1	**9X-2235**	1	TEE-SWIVEL	
		1	**5K-9090**	1	SEAL-O-RING	
		1	**6V-9746**	1	SEAL-O-RING	
B	35	1	**1U-8846**		SEALANT-GASKET	

B-USE AS REQUIRED
I-REFER TO HYDRAULIC INFORMATION SYSTEM
M-METRIC PART
Y-SEPARATE ILLUSTRATION

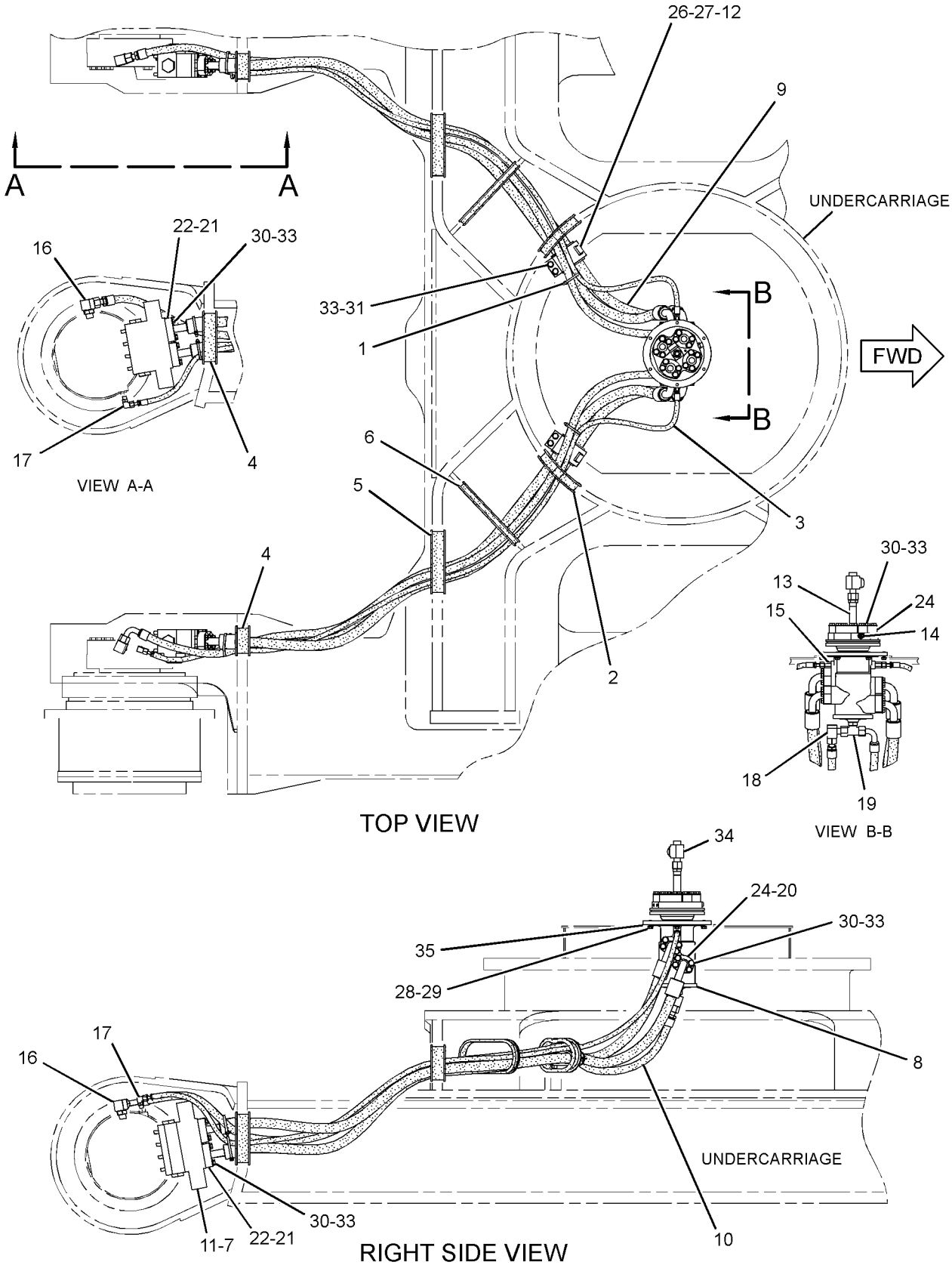

GRAPHIC #1

<END>

g02150722

215-5037 MANIFOLD GP-CONTROL—PILOT OIL SUPPLY

S/N: JGB1-UP; KHS1-UP

PART OF 302-2985 LINES GP-PILOT

SMCS-5264 **i02841130**

NOTE	PART NUMBER	QTY	PART NAME 1 2 3 4 5 6 (PRODUCT LEVEL)	SEE PAGE
Y	*239-8697*	1	MANIFOLD GP-CONTROL (PILOT OIL SUPPLY) (ALUMINUM BODY)	670
			—OR—	
Y	*239-8998*	1	MANIFOLD GP-CONTROL (PILOT OIL SUPPLY) (STEEL BODY)	671

Y-SEPARATE ILLUSTRATION

<END>

HYDRAULIC SYSTEM

239-8697 MANIFOLD GP-CONTROL—PILOT OIL SUPPLY

S/N: JGB1-UP; KHS1-UP
ALUMINUM BODY
PART OF 215-5037 MANIFOLD GP-CONTROL

SMCS-5264 **i04195329**

NOTE	REF NO	GRAPHIC REF	PART NUMBER	QTY	PART NAME 1 2 3 4 5 6 (PRODUCT LEVEL)	SEE PAGE
Y	1	1	**121-1491**	1	VALVE GP-SOLENOID (SWING BRAKE RELEASE)	794
Y	2	1	**121-1491**	1	VALVE GP-SOLENOID (HYDRAULIC LOCKOUT)	794
Y	3	1	**121-1491**	1	VALVE GP-SOLENOID (TRAVEL SPEED)	794
	4	1	**197-0196**	1	VALVE-CHECK	
	5	1	**197-0199**	1	SPRING	
	6	1	**197-0273**	1	SPRING	
	8	1	**3J-1907**	1	SEAL-O-RING	
	9	1	**3K-0360**	4	SEAL-O-RING	
	10	1	*225-4818*	6	PLUG AS	
		1	**4J-7533**	1	SEAL-O-RING	
		1	**225-4804**	1	PLUG	
M	11	1	**7I-2272**	6	BOLT (M5X0.8X12-MM)	
	13	1	**9S-8004**	1	PLUG-O-RING	
	14	1	**9S-8005**	4	PLUG-O-RING	

M-METRIC PART
Y-SEPARATE ILLUSTRATION

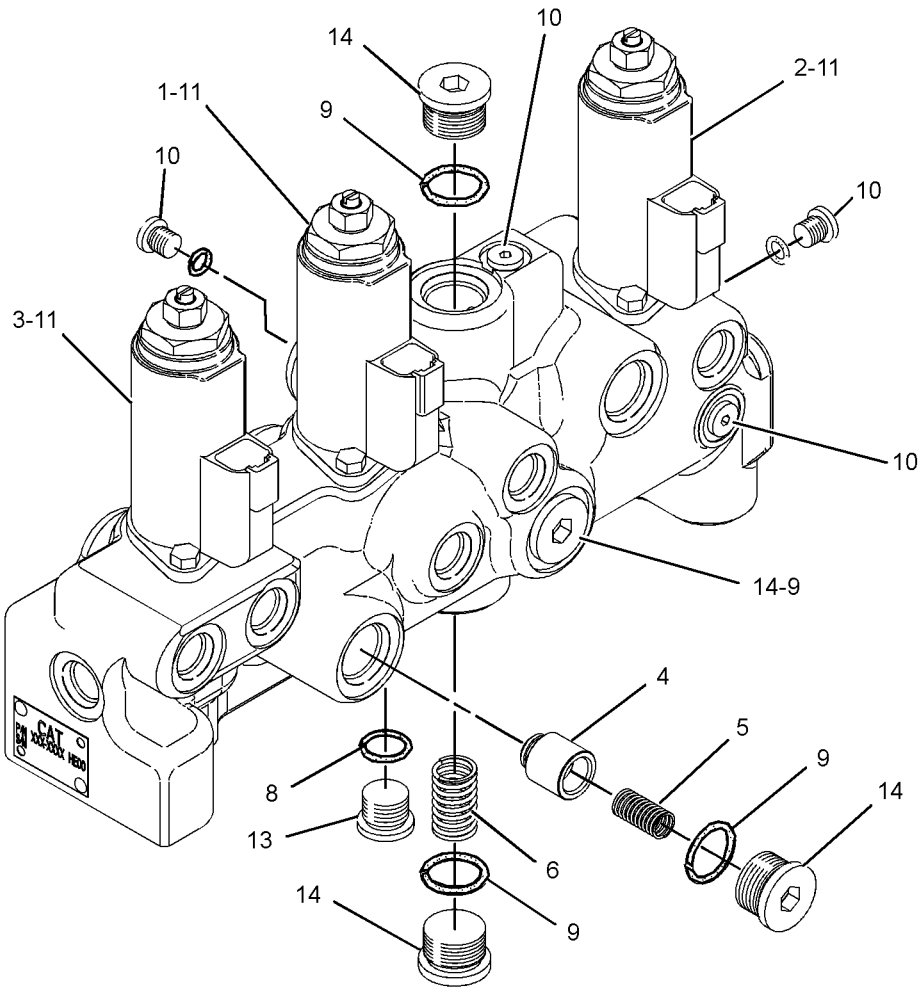

GRAPHIC #1 **<END>** g02399057

239-8998 MANIFOLD GP-CONTROL—PILOT OIL SUPPLY

S/N: JGB1-UP; KHS1-UP
STEEL BODY
PART OF 215-5037 MANIFOLD GP-CONTROL

SMCS-5264 **i04191770**

NOTE	REF NO	GRAPHIC REF	PART NUMBER	QTY	PART NAME 1 2 3 4 5 6 (PRODUCT LEVEL)	SEE PAGE
Y	1	1	**121-1491**	1	VALVE GP-SOLENOID (SWING BRAKE RELEASE)	794
Y	2	1	**121-1491**	1	VALVE GP-SOLENOID (HYDRAULIC LOCKOUT)	794
Y	3	1	**121-1491**	1	VALVE GP-SOLENOID (TRAVEL SPEED)	794
	4	1	**197-0196**	1	VALVE-CHECK	
Z	5	1		1	MANIFOLD GP-CONTROL	
	6	1	**197-0199**	1	SPRING	
	7	1	**197-0273**	1	SPRING	
	8	1	**3K-0360**	3	SEAL-O-RING	
M	9	1	**7I-2272**	6	BOLT (M5X0.8X12-MM)	
	10	1	**7M-7410**	2	PLUG-PIPE	
	11	1	**8T-6759**	6	PLUG-PIPE	
	12	1	**9S-8005**	3	PLUG-O-RING	

M-METRIC PART
Y-SEPARATE ILLUSTRATION
Z-NOT SERVICED SEPARATELY

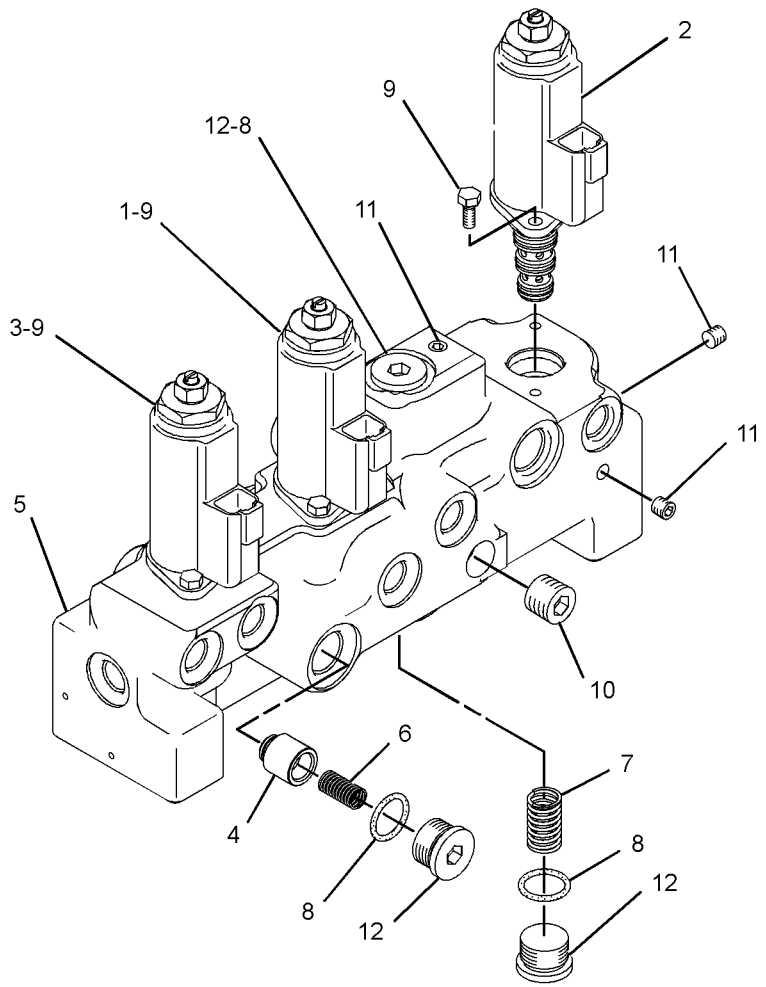

GRAPHIC #1 **<END>** g02383736

HYDRAULIC SYSTEM

295-9442 MOTOR & MTG GP-HYDRAULIC FAN—REVERSING

S/N: KHS1-UP
PART OF 294-1275 CONTROL AR-VARIABLE-SPEED FAN
AN ATTACHMENT

SMCS-1386 **i02853798**

NOTE	REF NO	GRAPHIC REF	PART NUMBER	QTY	PART NAME 1 2 3 4 5 6 (PRODUCT LEVEL)	SEE PAGE
Y	1	1	**315-4375**	1	MOTOR GP-PISTON	681

Y-SEPARATE ILLUSTRATION

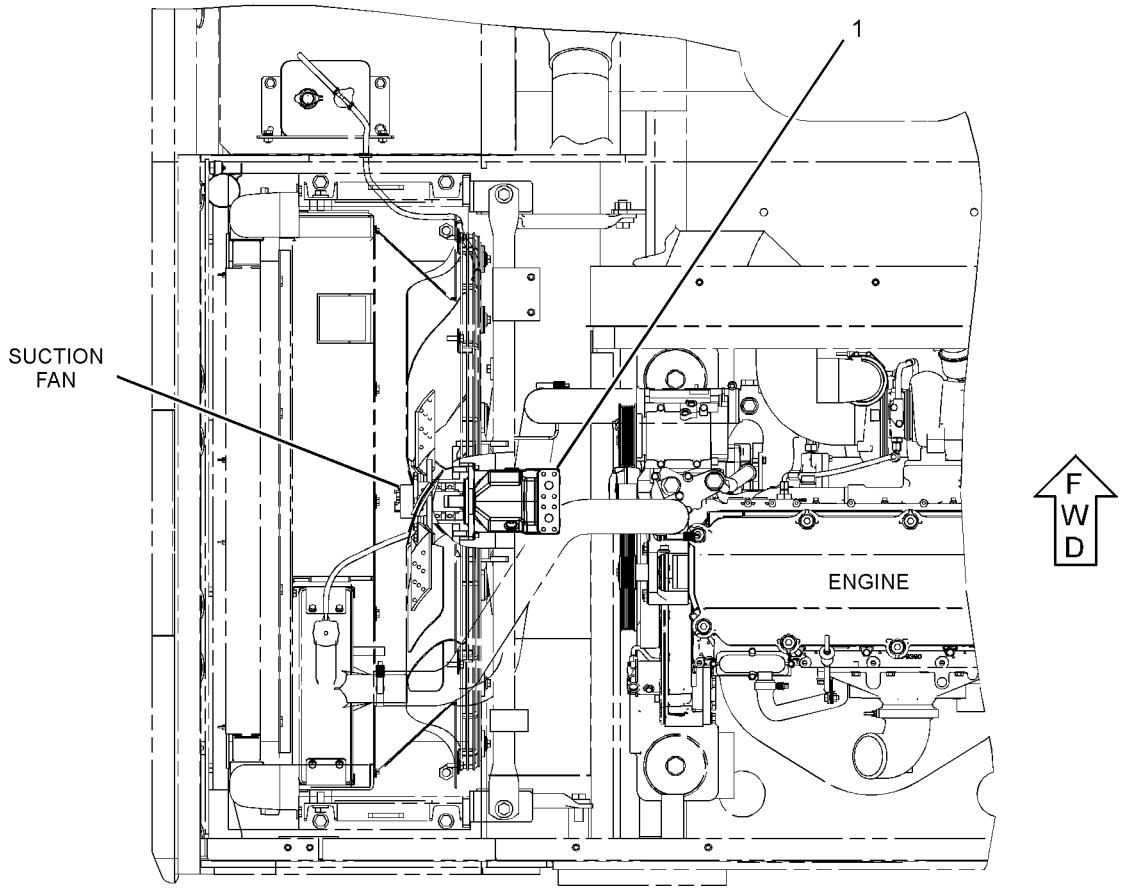

TOP VIEW

GRAPHIC #1 **<END>** g01429447

HYDRAULIC SYSTEM

225-4505 MOTOR & MTG GP-SWING

S/N: JGB1-UP

PART OF 296-6249, 296-6252 DRIVE GP-SWING

SMCS-5058 **i04154578**

NOTE	REF NO	GRAPHIC REF	PART NUMBER	QTY	PART NAME 1 2 3 4 5 6 (PRODUCT LEVEL)	SEE PAGE
CYR	1	1	**334-9975**	1	MOTOR GP-SWING	682
	2	1	**6V-5200**	1	RING-RETAINING	
M	3	1	**8T-4944**	4	BOLT-SOCKET HEAD (M16X2X40-MM)	
	4	1	**8T-6404**	1	SEAL-O-RING	
	5	1	**9X-8257**	4	WASHER (17.5X30X3.5-MM THK)	
	6	1	**352-7064**	2	CAP	

C-CHANGE FROM PREVIOUS TYPE
M-METRIC PART
R-REMFG PART MAY BE AVAILABLE
Y-SEPARATE ILLUSTRATION

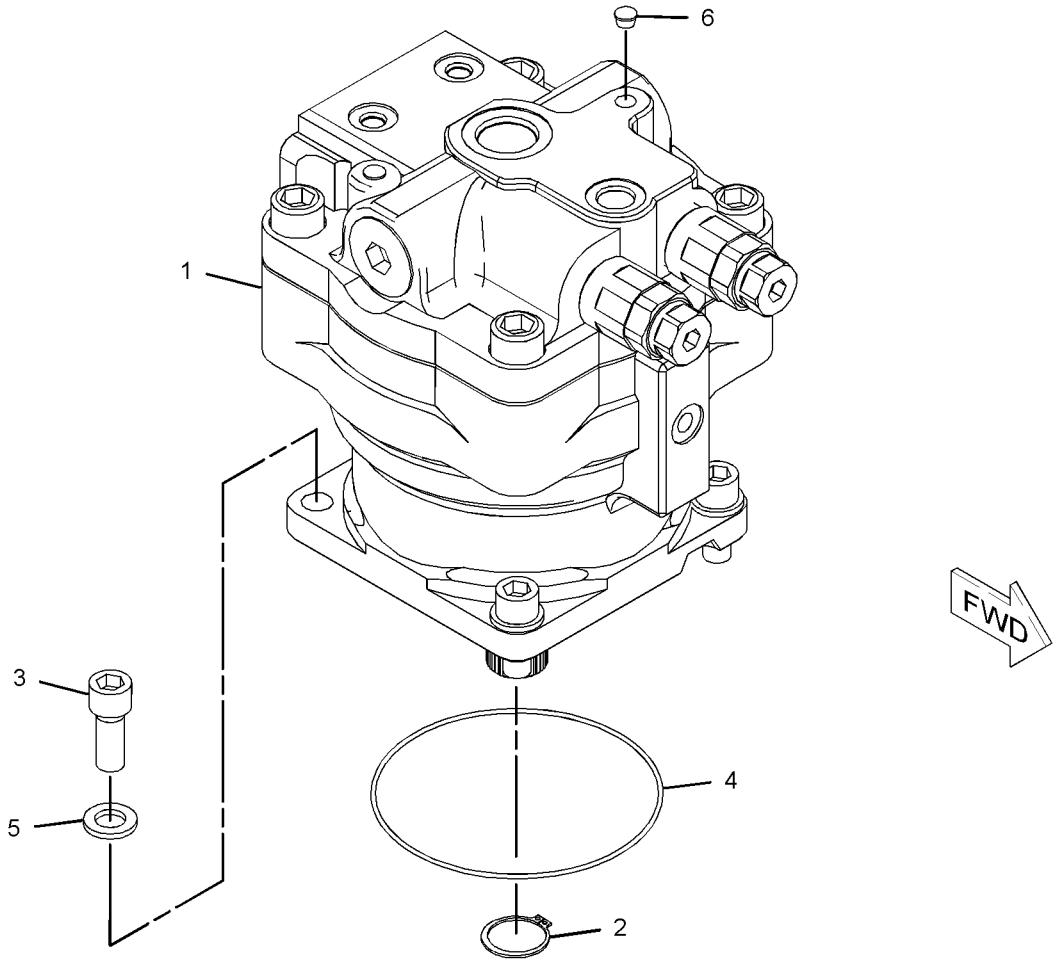

GRAPHIC #1 **<END>** g02351757

HYDRAULIC SYSTEM

225-4504 MOTOR & MTG GP-TRAVEL

S/N: JGB1-UP; KHS1-UP

PART OF 227-6044 DRIVE GP-FINAL

SMCS-4351 **i02293398**

NOTE	REF NO	GRAPHIC REF	PART NUMBER	QTY	PART NAME 1 2 3 4 5 6 (PRODUCT LEVEL)	SEE PAGE
Y	1	1	**232-6180**	1	MOTOR GP-PISTON (TRAVEL)	675
	2	1	**1T-0132**	1	SEAL-O-RING	
M	3	1	**7X-2569**	4	BOLT (M20X2.5X200-MM)	
	4	1	**8T-4123**	4	WASHER (22X35X3.5-MM THK)	

M-METRIC PART
Y-SEPARATE ILLUSTRATION

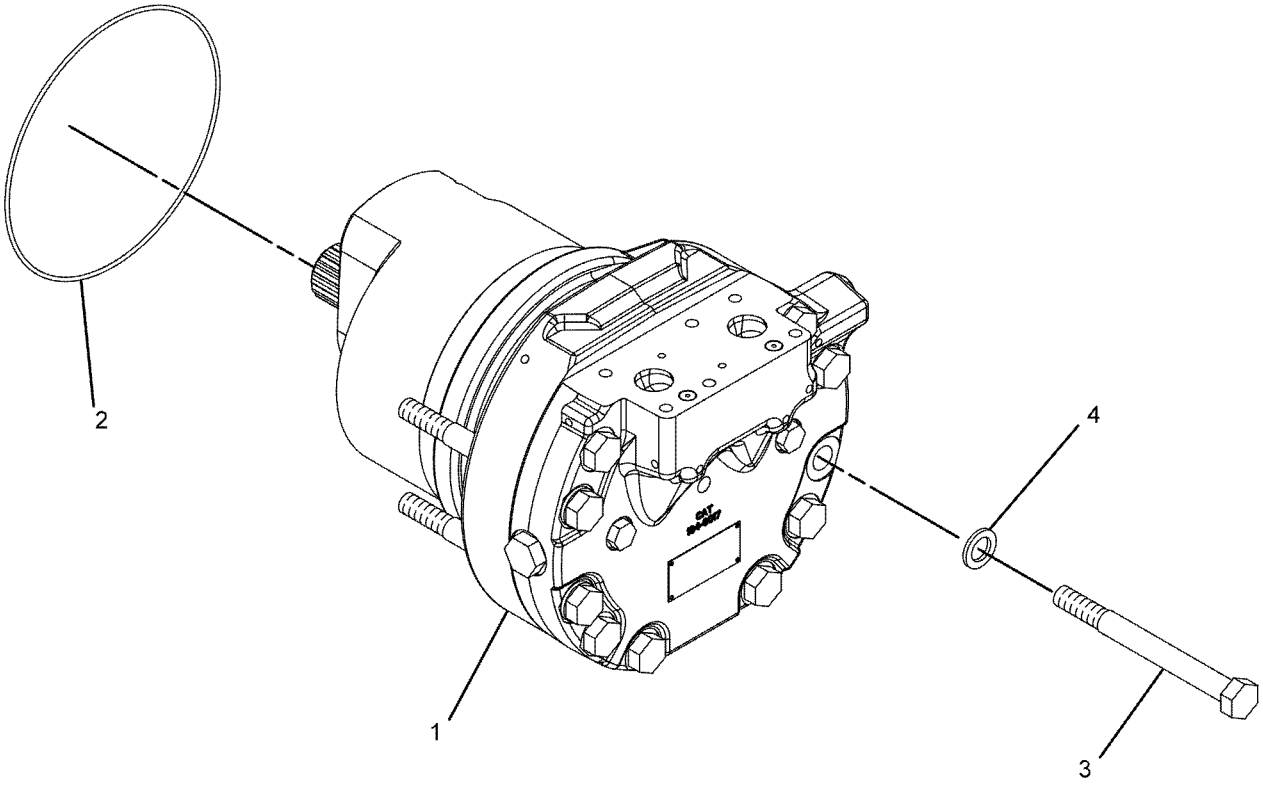

GRAPHIC #1 **<END>** g01096170

HYDRAULIC SYSTEM

232-6180 MOTOR GP-PISTON–TRAVEL*R

S/N: JGB1-UP; KHS1-UP
PART OF 225-4504 MOTOR & MTG GP-TRAVEL
FIELD REPLACEMENT ORDER 355-5669–PAGE 685

SMCS-5058 **i04191772**

NOTE	REF NO	GRAPHIC REF	PART NUMBER	QTY	PART NAME 1 2 3 4 5 6 (PRODUCT LEVEL)	SEE PAGE
	1	2	**1T-0936**	2	PLUG-PIPE	
J	2	1	**4B-4158**	4	SCREW-DRIVE (NO 4X0.25-IN)	
	3	1	**6V-3382**	1	SEAL-LIP TYPE	
	4	1	**8J-2559**	1	PLATE-WARNING (OIL FILL)	
	5	2	**087-4786**	1	ADAPTER	
	6	1	**118-5805**	1	BEARING-SPECIAL RACE	
	7	1	**124-1530**	1	BARREL AS	
		1	**140-8407**	9	BUSHING	
	8	2	**124-1536**	5	DISC-FRICTION	
	9	2	**124-1537**	6	PLATE-SEPARATOR	
	10	1	**124-1541**	2	PIN	
	11	2	**124-1554**	1	SPRING	
	12	2	**124-1557**	2	RETAINER	
	13	1	**124-1561**	20	SPRING-BRAKE	
J	14	2	**126-4002**	2	SEAL-O-RING	
J	15	2	**126-4003**	1	SEAL-O-RING	
J	16	2	**126-4004**	1	RING-BACKUP	
	17	2	**126-4040**	1	RING-BACKUP	
	18	2	**135-3859**	1	SPACER (70.4X80X1.57-MM THK)	
	19	2	**137-5646**	1	SPACER (70.4X87.5X7.6-MM THK)	
	20	1	**143-7140**	2	KEY	
	21	1	**148-3548**	1	BEARING-SPECIAL RACE	
	22	1	**149-1207**	1	PLATE	
	23	1	**155-4897**	9	PISTON AS	
	24	1	**159-7320**	1	PLATE-RETAINER	
	25	2	**167-3872**	1	SPOOL	
	26	1	**175-7887**	2	DOWEL	
	27	1	**184-6014**	1	BODY AS	
		1	**124-1555**	4	PLUG	
	28	1	**184-6015**	1	HEAD GP-PUMP	
		1	**096-5916**	2	SEAT	
		1	**124-1555**	8	PLUG	
	29	1	**193-2301**	1	SHAFT	
	30	2	**195-4456**	1	PLUG-ORIFICE	
	31	1	**226-6544**	1	PISTON-BRAKE	
	32	2	**230-5483**	1	SPRING	
	33	1	**231-6550**	1	HOLD-DOWN	
	34	2	**232-3868**	4	WASHER-BELLEVILLE	
	35	1	**232-6181**	1	PISTON-ACTUATOR	
	36	1	**232-6654**	1	PLATE-CAM	
J	37	2	**095-1572**	2	SEAL-O-RING	
J	38	2	**096-5919**	2	RING-BACKUP	
	39	1	**143-7319**	1	RACE-ROLLER BEARING	
	40	2	**2D-6642**	2	BALL	
J	41	2	**2M-9780**	1	SEAL-O-RING	
	42	1	**2R-1236**	1	RING-RETAINING (LOCK, INTERNAL)	
J	43	1	**3D-2824**	2	SEAL-O-RING	
J	44	1	**3K-0360**	2	SEAL-O-RING	
	45	2	**5B-9318**	1	BALL	
	46	1	**5P-7684**	1	PLUG	
J	47	1	**6K-6307**	1	SEAL-O-RING	
J	48	2	**7Y-5219**	2	SEAL-O-RING	
M	49	1	**8T-4187**	6	BOLT (M20X2.5X80-MM)	
	50	1	**9S-4183**	2	PLUG-O-RING	
	51	1	**9S-4185**	2	PLUG-O-RING	

232-6180 MOTOR GP-PISTON *(contd.)* i04191772

NOTE	REF NO	GRAPHIC REF	PART NUMBER	QTY	PART NAME 1 2 3 4 5 6 (PRODUCT LEVEL)	SEE PAGE
					AVAILABLE REPAIR KIT(S):	
J			**226-6473**	1	KIT-SEAL (TRAVEL MOTOR)	

J-(KIT MARKED J SERVICES PARTS MARKED J)
M-METRIC PART

232-6180 MOTOR GP-PISTON *(contd.)* **i04191772**

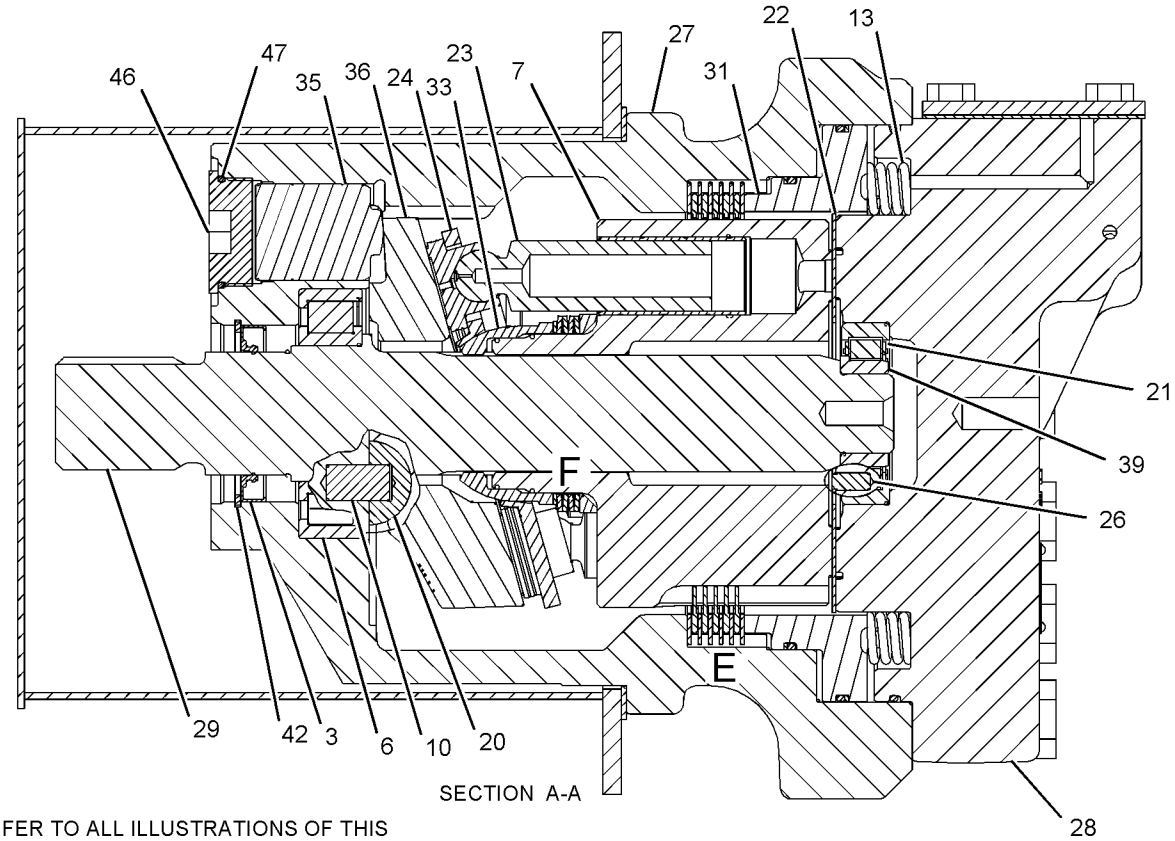

REFER TO ALL ILLUSTRATIONS OF THIS GROUP FOR AUXILIARY VIEWS

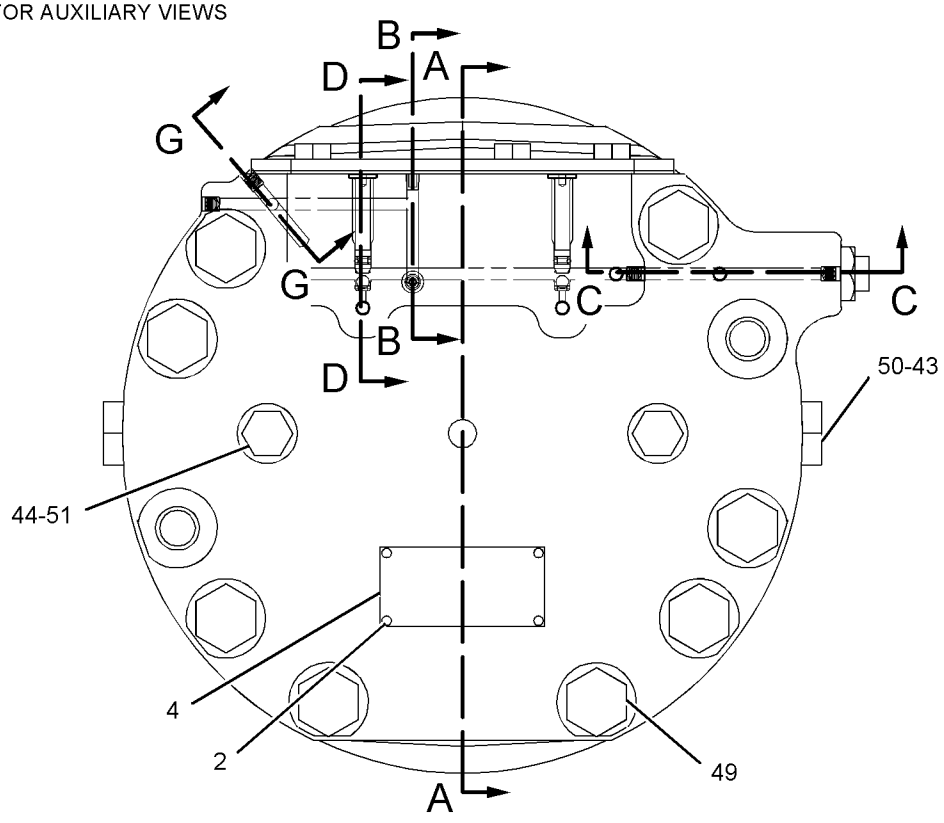

GRAPHIC #1

g01099008

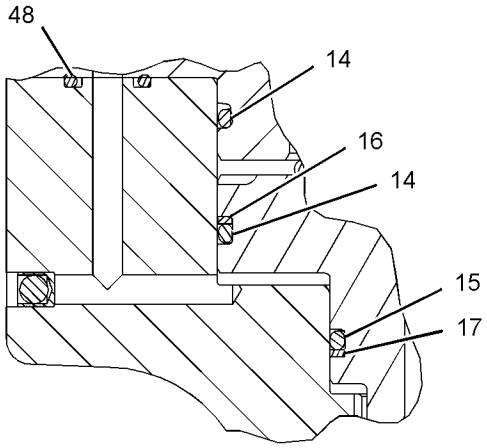

SECTION G-G

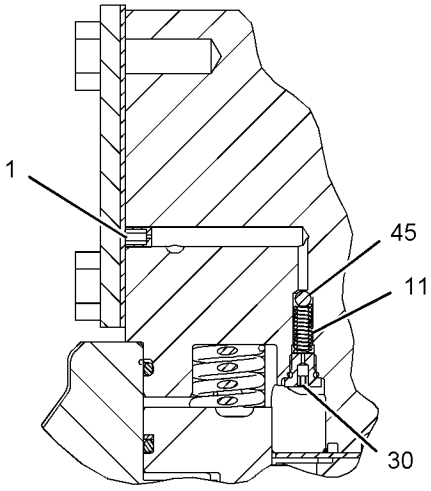

SECTION B-B

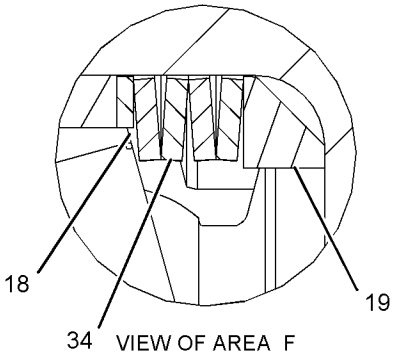

VIEW OF AREA F

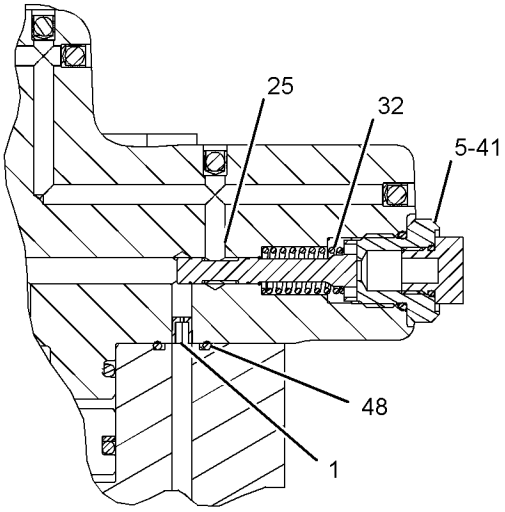

SECTION C-C

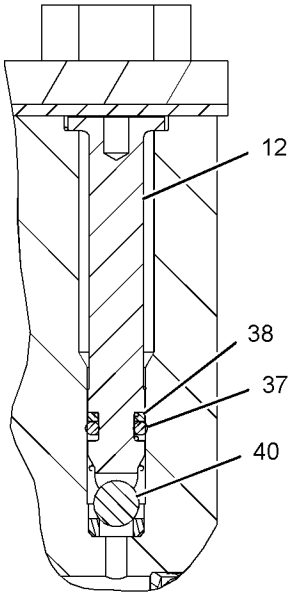

SECTION D-D

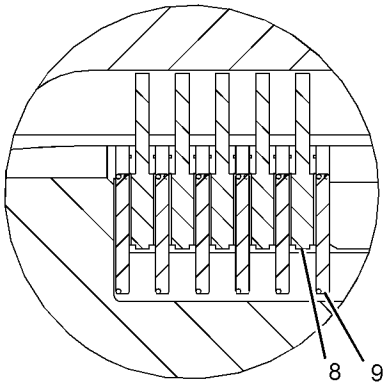

VIEW OF AREA E

GRAPHIC #2 **<END>** g01099014

295-9429 MOTOR GP-PISTON—HYDRAULIC FAN*R

S/N: JGB1-UP; KHS1-UP

PART OF 281-3554 FAN GP-SUCTION

SMCS-5058 **i02842859**

NOTE	REF NO	GRAPHIC REF	PART NUMBER	QTY	PART NAME 1 2 3 4 5 6 (PRODUCT LEVEL)	SEE PAGE
	1	1	**209-6063**	1	SHAFT	
	2	1	**7Y-5267**	1	RING-RETAINING	
	3	1	**168-7319**	1	SEAL-SHAFT	
	4	1	**9T-9529**	2	PIN	
	5	1	**295-9551**	1	SWASHPLATE	
Y	6	1	**295-9547**	1	ROTATING GP-PUMP	704
	7	1	**192-7470**	1	SEAL-O-RING	
M	8	1	**095-0690**	4	BOLT-SOCKET HEAD (M14X2X60-MM)	
	9	1	**242-6844**	1	COVER	
	10	1	**185-0296**	1	BEARING	
	11	1	**9X-8979**	1	DOWEL	
	12	1	**168-2203**	1	SHIM-SHAFT	
	13	1	**295-9550**	1	HOUSING	
	14	1	**185-0295**	1	BEARING	
	15	1	**185-0280**	1	PLATE	
	16	1	**197-2471**	1	PLUG AS	
		1	**197-2472**	1	SEAL	
	17	1	**9S-8006**	1	PLUG-O-RING	
	18	1	**2M-9780**	1	SEAL-O-RING	
	19	1	**242-3374**	1	SLEEVE	
	20	1	**197-2474**	1	VALVE AS	

M-METRIC PART
Y-SEPARATE ILLUSTRATION

295-9429 MOTOR GP-PISTON *(contd.)* **i02842859**

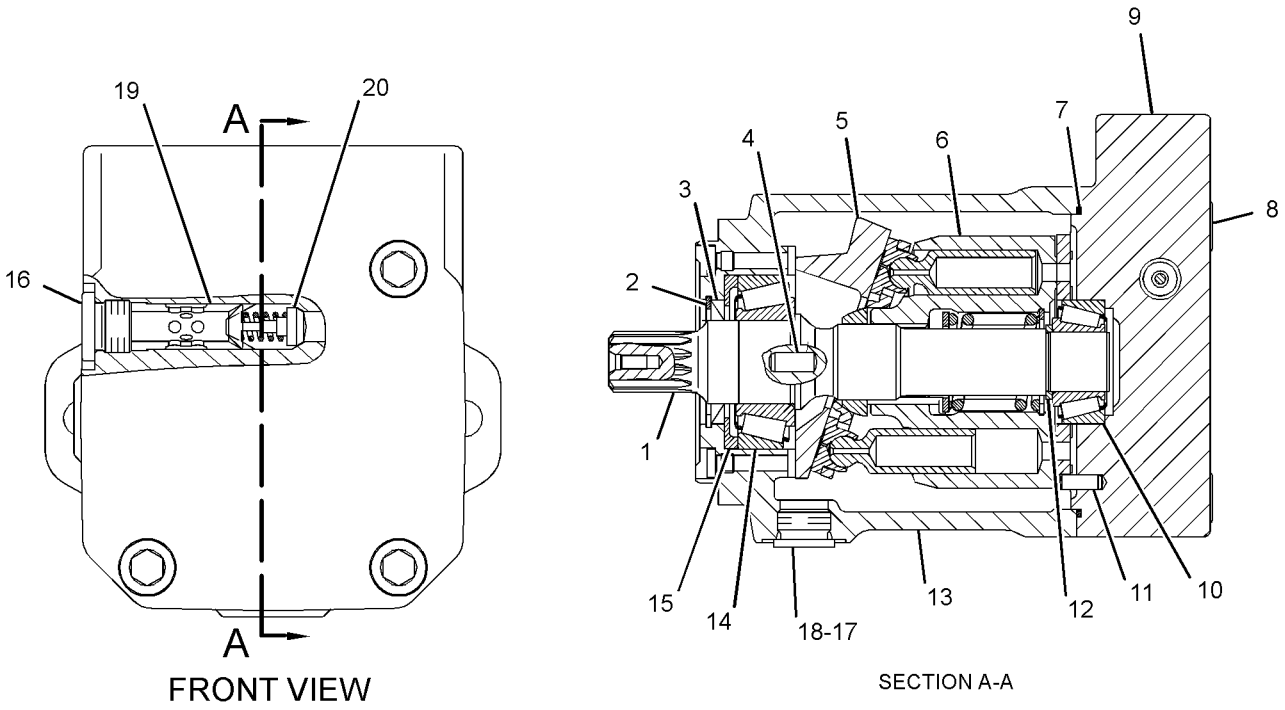

GRAPHIC #1 **<END>** g01457912

315-4375 MOTOR GP-PISTON—REVERSING HYDRAULIC FAN*R

S/N: KHS1-UP

PART OF 295-9442 MOTOR & MTG GP-HYDRAULIC FAN

AN ATTACHMENT

SMCS-5058 **i02853818**

NOTE	REF NO	GRAPHIC REF	PART NUMBER	QTY	PART NAME 1 2 3 4 5 6 (PRODUCT LEVEL)	SEE PAGE
	1	1	**209-6063**	1	SHAFT	
	2	1	**7Y-5267**	1	RING-RETAINING	
	3	1	**168-7319**	1	SEAL-SHAFT	
	4	1	**9T-9529**	2	PIN	
	5	1	**295-9551**	1	SWASHPLATE	
Y	6	1	**295-9547**	1	ROTATING GP-PUMP	704
	7	1	**192-7470**	1	SEAL-O-RING	
M	8	1	**095-0690**	4	BOLT-SOCKET HEAD (M14X2X60-MM)	
	9	1	**185-0277**	1	COVER	
	10	1	**185-0296**	1	BEARING	
	11	1	**9X-8979**	1	DOWEL	
	12	1	**168-2203**	1	SHIM-SHAFT	
	13	1	**295-9550**	1	HOUSING	
	14	1	**185-0295**	1	BEARING	
	15	1	**185-0280**	1	PLATE	
	16	1	**9S-8006**	1	PLUG-O-RING	
	17	1	**2M-9780**	1	SEAL-O-RING	

M-METRIC PART
Y-SEPARATE ILLUSTRATION

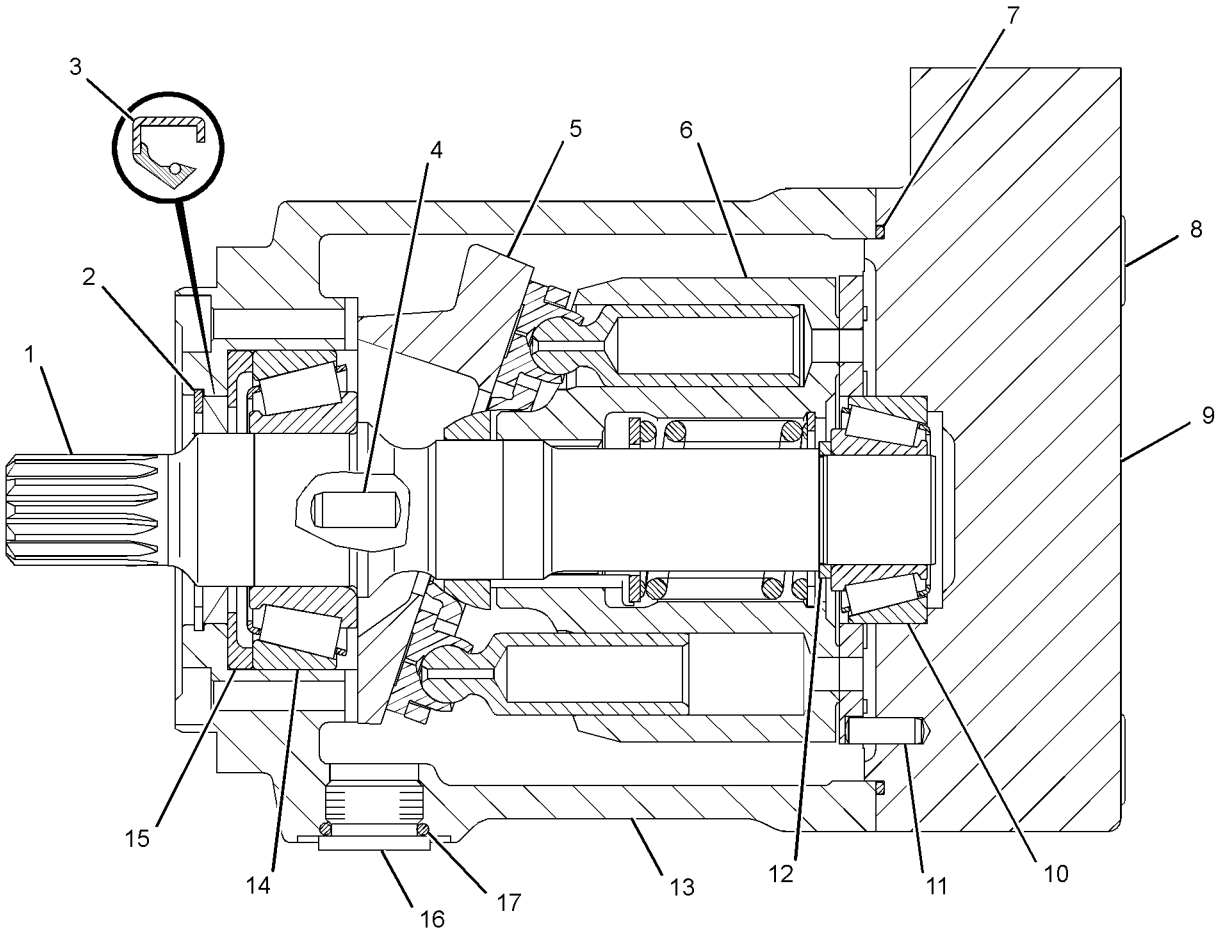

GRAPHIC #1 **<END>** g01458710

HYDRAULIC SYSTEM

334-9975 MOTOR GP-SWING

S/N: JGB1-UP

PART OF 225-4505 MOTOR & MTG GP-SWING

SMCS-5058 **i03872220**

NOTE	REF NO	GRAPHIC REF	PART NUMBER	QTY	PART NAME 1 2 3 4 5 6 (PRODUCT LEVEL)	SEE PAGE
Y	1	1	**184-3830**	2	VALVE GP-RELIEF (SWING MOTOR)	776
Y	2	1	**334-9980**	1	MOTOR GP-SWING	683

Y-SEPARATE ILLUSTRATION

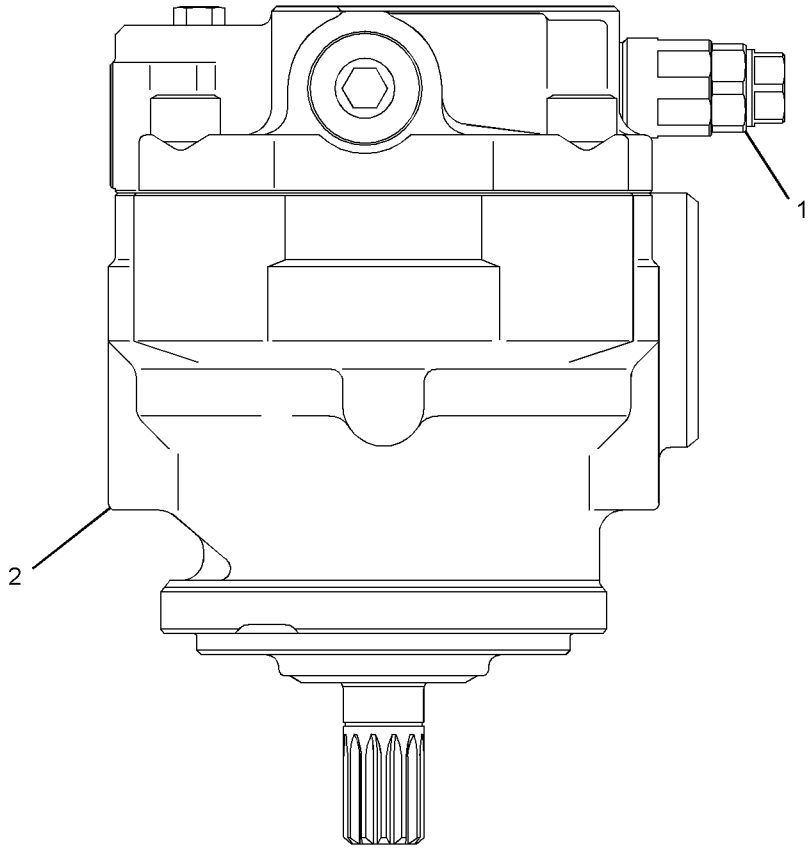

GRAPHIC #1 **<END>** g01766733

HYDRAULIC SYSTEM

334-9980 MOTOR GP-SWING

S/N: JGB1-UP

PART OF 334-9975 MOTOR GP-SWING

SMCS-5058 **i03872449**

NOTE	REF NO	GRAPHIC REF	PART NUMBER	QTY	PART NAME 1 2 3 4 5 6 (PRODUCT LEVEL)	SEE PAGE
	1	1	**234-4450**	1	SHAFT	
J	2	1	**096-1533**	1	SEAL-LIP TYPE	
	3	1	**188-4170**	1	BEARING	
	4	1	**234-4449**	1	BODY	
	5	1	**188-4165**	1	PLATE	
	6	1	**234-4533**	1	PLATE	
	7	1	**234-4539**	1	DOWEL	
	8	1	**334-9982**	1	PISTON AS	
	9	1	**188-4166**	1	PLATE	
	10	1	**188-4164**	1	BARREL	
	11	1	**188-4172**	3	PLATE-FRICTION	
	12	1	**188-4173**	4	PLATE-SEPARATOR	
	13	1	**184-3835**	1	PISTON	
J	14	1	**5J-2383**	1	SEAL-O-RING	
J	15	1	**7Y-4294**	1	SEAL-O-RING	
J	16	1	**4I-5849**	1	SEAL-O-RING	
	17	1	**123-2139**	20	SPRING	
	18	1	**188-4162**	1	HEAD GP-MOTOR	
		1	**099-8111**	2	PIN-SPRING	
J	19	1	**3J-1907**	2	SEAL-O-RING	
	20	1	**110-5525**	2	PLUG	
	21	1	**204-2677**	1	PLATE-VALVE	
	22	1	**188-4171**	1	BEARING	
	23	1	**170-9996**	2	PLUG	
J	24	1	**095-1600**	2	SEAL-O-RING	
	25	1	**170-9986**	2	SPRING	
M	26	1	**7Y-5221**	4	BOLT-SOCKET HEAD (M20X2.5X45-MM)	
	27	1	**170-9985**	2	VALVE	
					AVAILABLE REPAIR KIT(S):	
J			**188-4176**	1	KIT-SEAL (SWING MOTOR)	

J-KIT MARKED J INCLUDES PART(S) MARKED J
M-METRIC PART

334-9980 MOTOR GP-SWING *(contd.)* **i03872449**

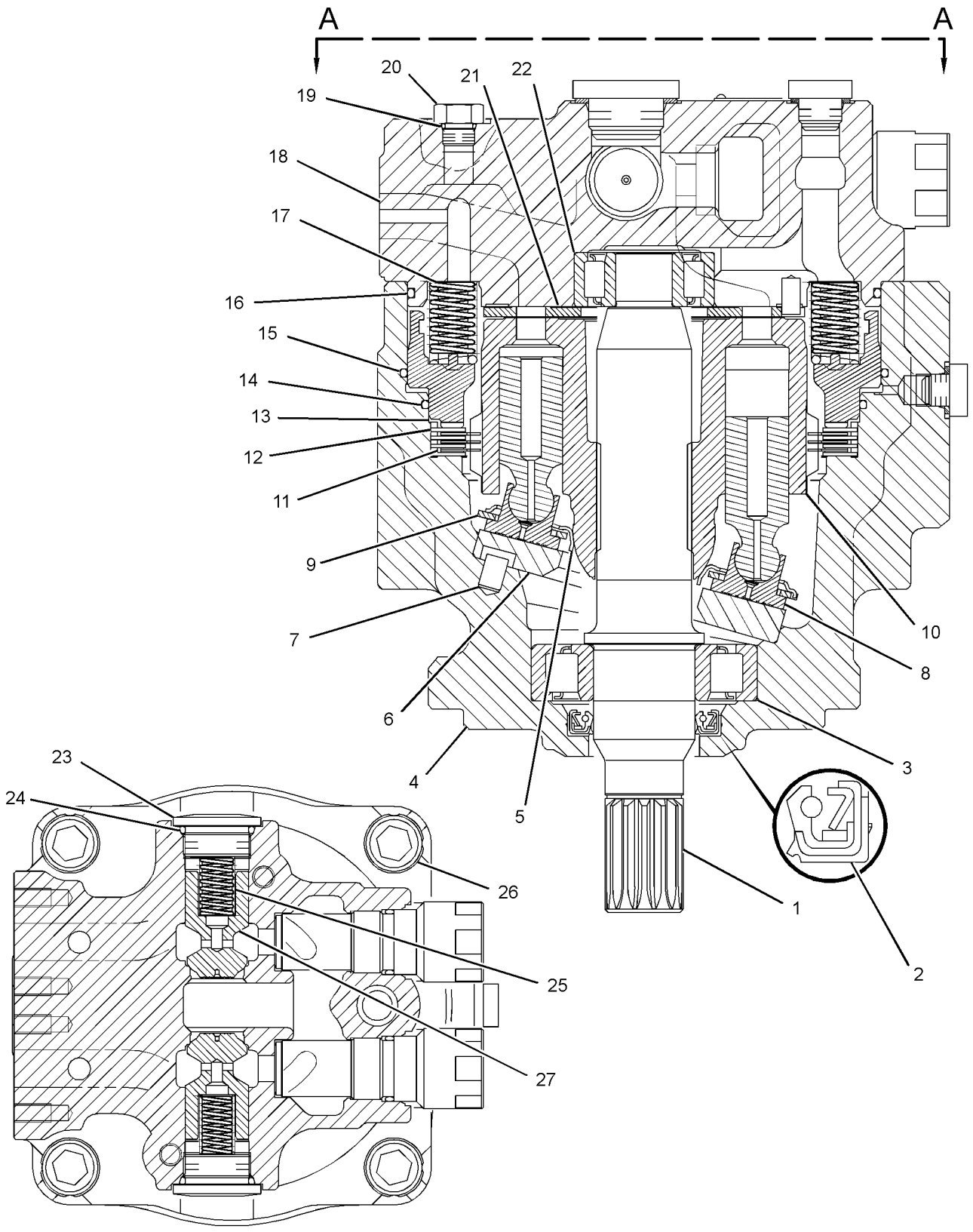

GRAPHIC #1 **<END>** g01955082

HYDRAULIC SYSTEM

355-5669 MOTOR GP-TRAVEL*R

S/N: JGB1-UP; KHS1-UP

FIELD REPLACEMENT FOR 232-6180—PAGE 675

SMCS-4351, 5058 **i04191792**

NOTE	REF NO	GRAPHIC REF	PART NUMBER	QTY	PART NAME 1 2 3 4 5 6 (PRODUCT LEVEL)	SEE PAGE
	1	2	**1T-0936**	2	PLUG-PIPE	
J	2	1	**4B-4158**	4	SCREW-DRIVE (NO 4X0.25-IN)	
	3	1	**6V-3382**	1	SEAL-LIP TYPE	
	4	1	**8J-2559**	1	PLATE-WARNING (OIL FILL)	
	5	2	**087-4786**	1	ADAPTER	
	6	1	**118-5805**	1	BEARING-SPECIAL RACE	
	7	1	**124-1530**	1	BARREL AS	
		1	**140-8407**	9	BUSHING	
	8	2	**124-1536**	5	DISC-FRICTION	
	9	2	**124-1537**	6	PLATE-SEPARATOR	
	10	1	**124-1541**	2	PIN	
	11	2	**124-1554**	1	SPRING	
	12	2	**124-1557**	2	RETAINER	
	13	1	**124-1561**	20	SPRING-BRAKE	
J	14	2	**126-4002**	2	SEAL-O-RING	
J	15	2	**126-4003**	1	SEAL-O-RING	
J	16	2	**126-4004**	1	RING-BACKUP	
	17	2	**126-4040**	1	RING-BACKUP	
	18	2	**135-3859**	1	SPACER (70.4X80X1.57-MM THK)	
	19	2	**137-5646**	1	SPACER (70.4X87.5X7.6-MM THK)	
	20	1	**143-7140**	2	KEY	
	21	1	**148-3548**	1	BEARING-SPECIAL RACE	
	22	1	**149-1207**	1	PLATE	
	23	1	**155-4897**	9	PISTON AS	
	24	1	**159-7320**	1	PLATE-RETAINER	
	25	2	**167-3872**	1	SPOOL	
	26	1	**175-7887**	2	DOWEL	
	27	1	**184-6014**	1	BODY AS	
	28	1	**184-6015**	1	HEAD GP-PUMP	
	29	1	**193-2301**	1	SHAFT	
	30	2	**195-4456**	1	PLUG-ORIFICE	
	31	1	**226-6544**	1	PISTON-BRAKE	
	32	2	**230-5483**	1	SPRING	
	33	1	**231-6550**	1	HOLD-DOWN	
	34	2	**232-3868**	4	WASHER-BELLEVILLE	
	35	1	**356-5227**	1	PISTON-ACTUATOR	
	36	1	**232-6654**	1	PLATE-CAM	
J	37	2	**095-1572**	2	SEAL-O-RING	
J	38	2	**096-5919**	2	RING-BACKUP	
	39	1	**143-7319**	1	RACE-ROLLER BEARING	
	40	2	**2D-6642**	2	BALL	
J	41	2	**2M-9780**	1	SEAL-O-RING	
	42	1	**2R-1236**	1	RING-RETAINING (LOCK, INTERNAL)	
J	43	1	**3D-2824**	2	SEAL-O-RING	
J	44	1	**3K-0360**	2	SEAL-O-RING	
	45	2	**5B-9318**	1	BALL	
	46	1	**5P-7684**	1	PLUG	
J	47	1	**6K-6307**	1	SEAL-O-RING	
J	48	2	**7Y-5219**	2	SEAL-O-RING	
M	49	1	**8T-4187**	6	BOLT (M20X2.5X80-MM)	
	50	1	**9S-4183**	2	PLUG-O-RING	
	51	1	**9S-4185**	2	PLUG-O-RING	
					AVAILABLE REPAIR KIT(S):	
J			**226-6473**	1	KIT-SEAL (TRAVEL MOTOR)	

J-(KIT MARKED J SERVICES PARTS MARKED J)
M-METRIC PART

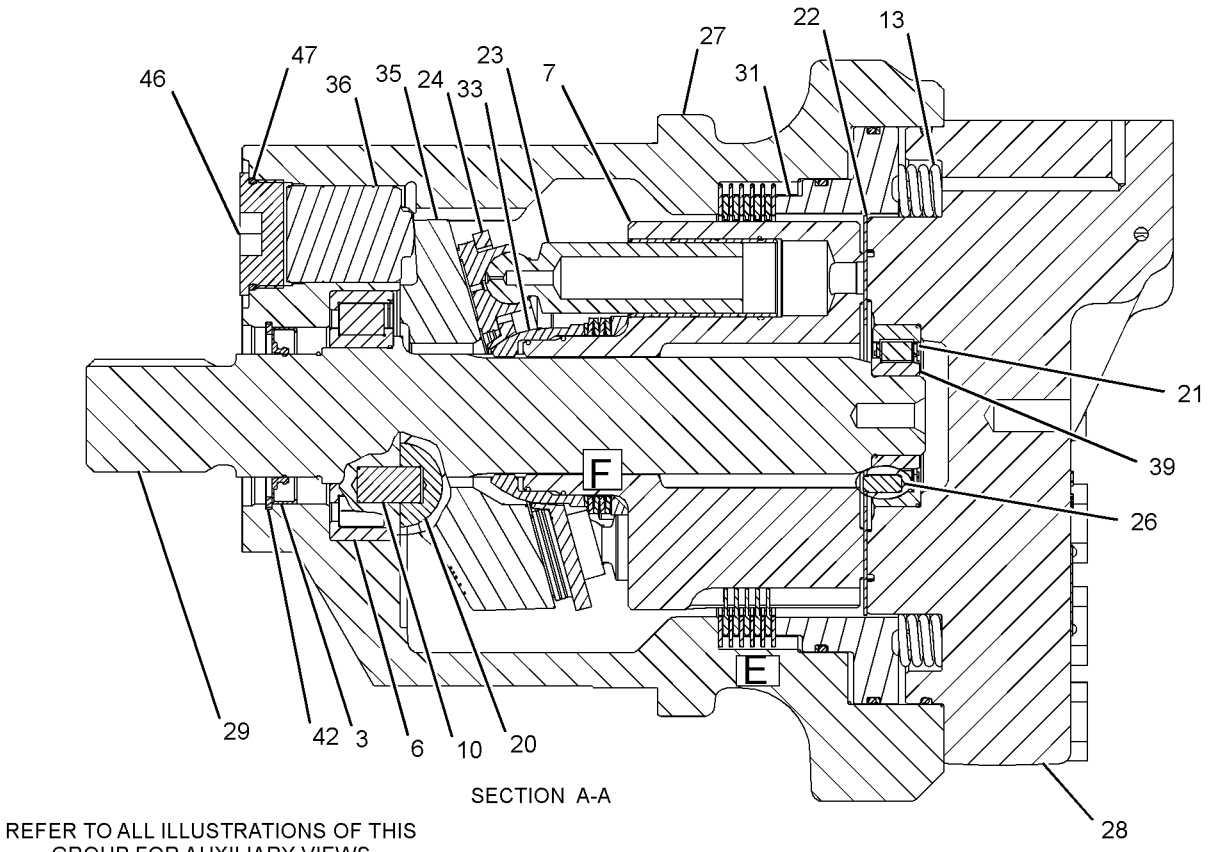

SECTION A-A

REFER TO ALL ILLUSTRATIONS OF THIS GROUP FOR AUXILIARY VIEWS

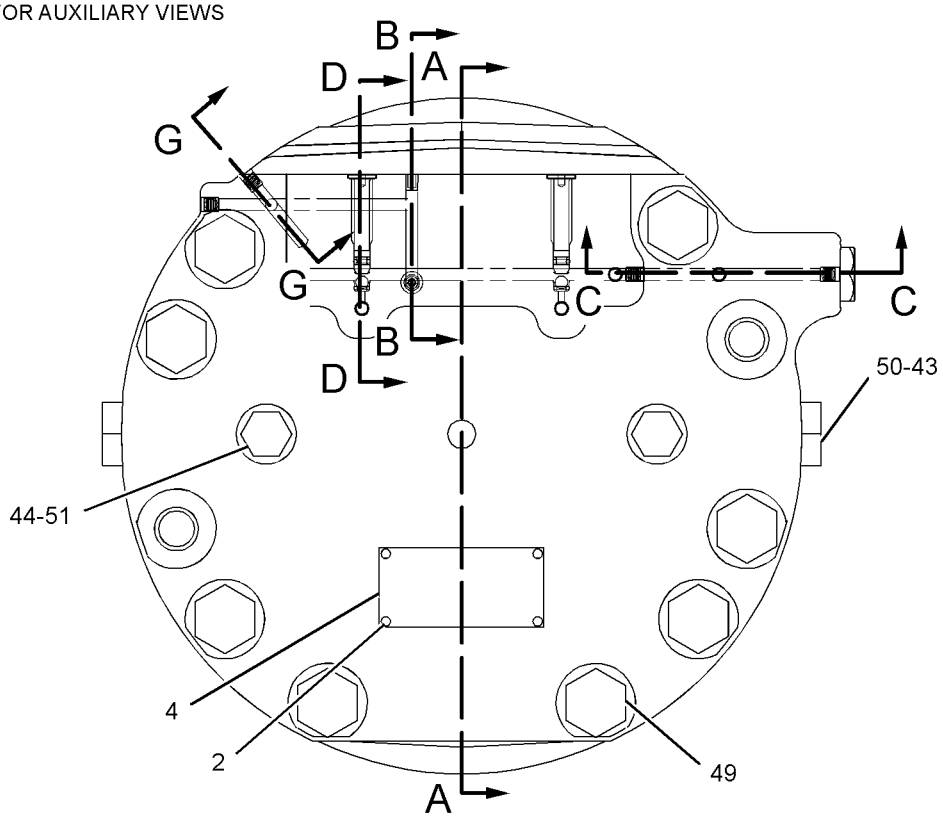

GRAPHIC #1

g02352979

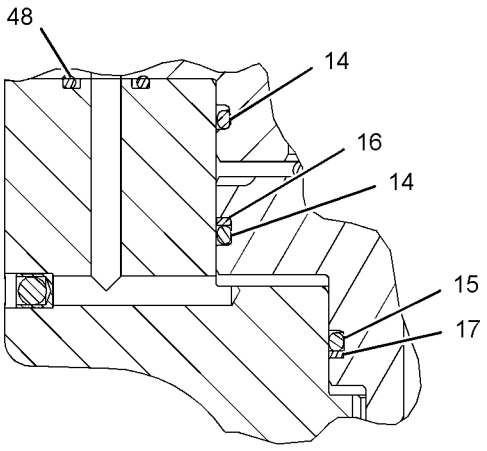

SECTION G-G

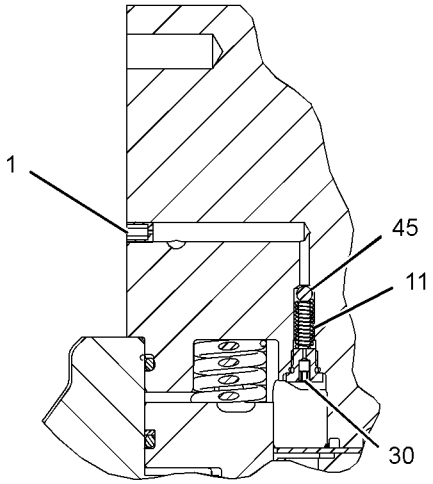

SECTION B-B

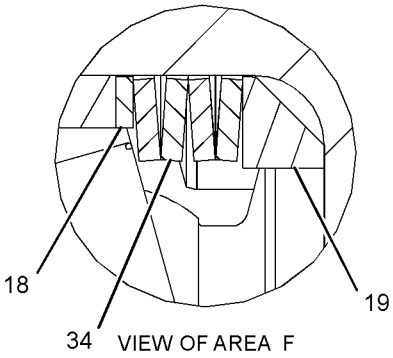

VIEW OF AREA F

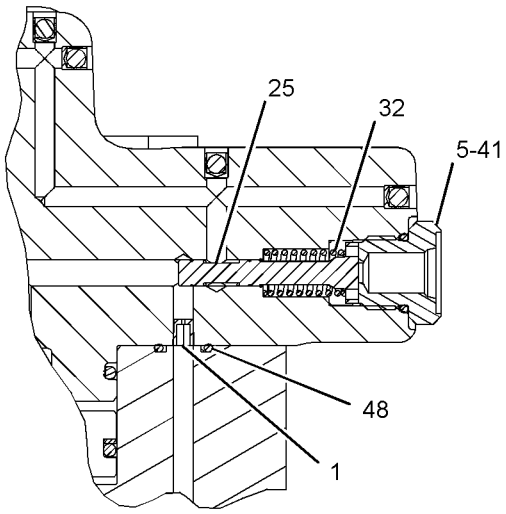

SECTION C-C

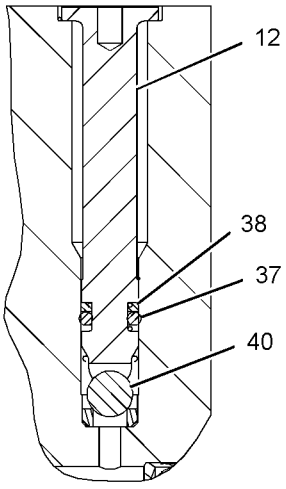

SECTION D-D

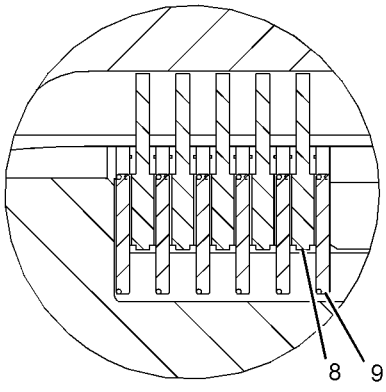

VIEW OF AREA E

GRAPHIC #2 **<END>** g02352978

HYDRAULIC SYSTEM

326-2548 MOUNTING GP-COUNTERWEIGHT CYL

S/N: JGB1-UP
PART OF 309-0166, 309-0167 COUNTERWEIGHT AR
AN ATTACHMENT

SMCS-5409 **i03129903**

NOTE	REF NO	GRAPHIC REF	PART NUMBER	QTY	PART NAME 1 2 3 4 5 6 (PRODUCT LEVEL)	SEE PAGE
	1	1	**5R-5927**	1	WASHER (14X65X6-MM THK)	
	2	1	**7Y-2496**	1	SHIM (1.6-MM THK)	
B	3	1	**093-0086**	2	SHIM (1-MM THK)	
B	4	1	**093-0118**	1	SHIM (2-MM THK)	
	5	1	**127-6754**	1	BAND AS	
	6	1	**127-6757**	1	PIN	
	7	1	**127-6758**	1	PIN AS	
	8	1	**135-3924**	2	GUIDE AS	
M	9	1	**135-8575**	1	BOLT AS	
	10	1	**146-1415**	1	BRACKET AS	
	11	1	**326-2483**	1	BRACKET AS	
M	12	1	**7X-2562**	4	BOLT (M20X2.5X45-MM)	
M	13	1	**7X-2575**	4	BOLT (M24X3X60-MM)	
M	14	1	**7X-2576**	10	BOLT (M24X3X70-MM)	
	15	1	**8T-4121**	2	WASHER-HARD (11X21X2.5-MM THK)	
	16	1	**8T-4123**	4	WASHER (22X35X3.5-MM THK)	
	17	1	**8T-4167**	14	WASHER-HARD (26X44X4-MM THK)	
M	18	1	**8T-4195**	2	BOLT (M10X1.5X30-MM)	
M	19	1	**8T-4244**	2	NUT (M12X1.75-THD)	
M	20	1	**8T-5041**	1	BOLT (M12X1.75X120-MM)	
B	21	1	**121-1891**	2	SHIM (1-MM THK)	
B	22	1	**127-6680**	4	SHIM (0.5-MM THK)	

B-USE AS REQUIRED
M-METRIC PART

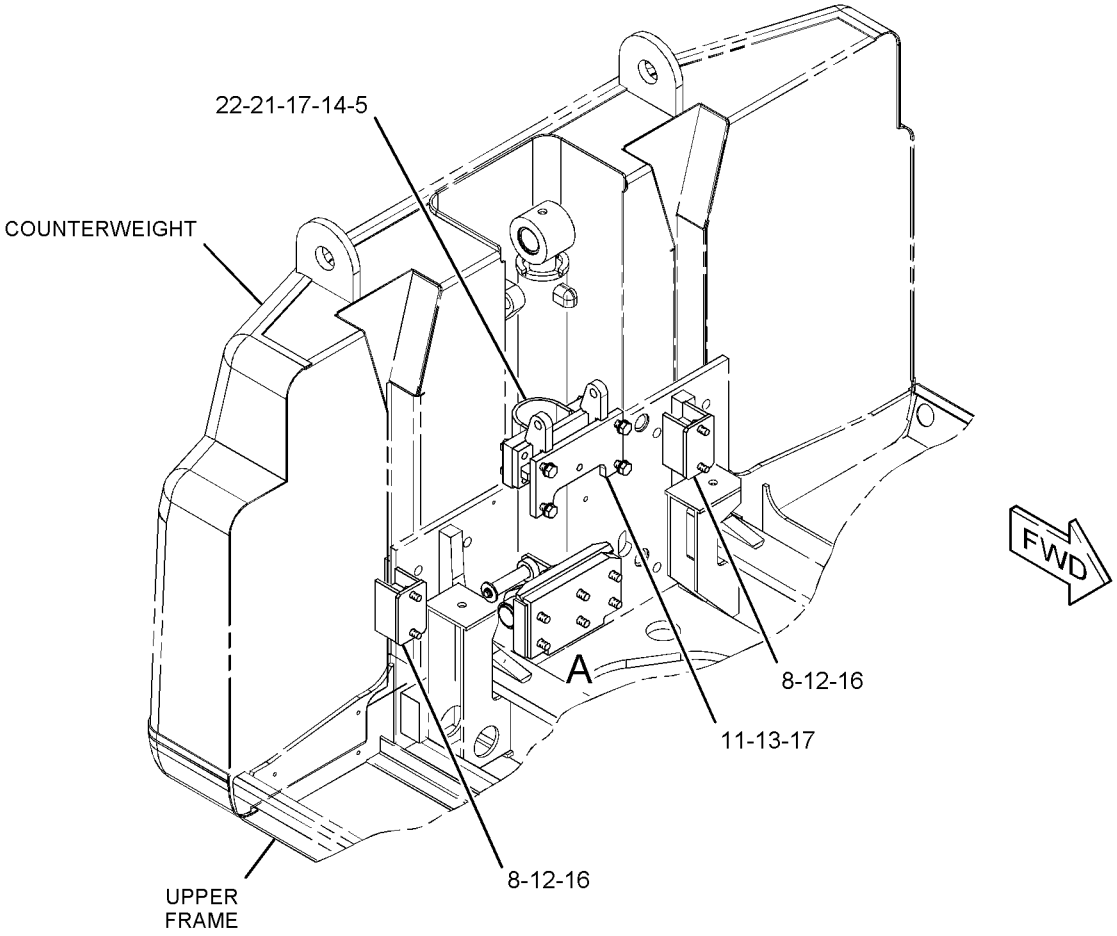

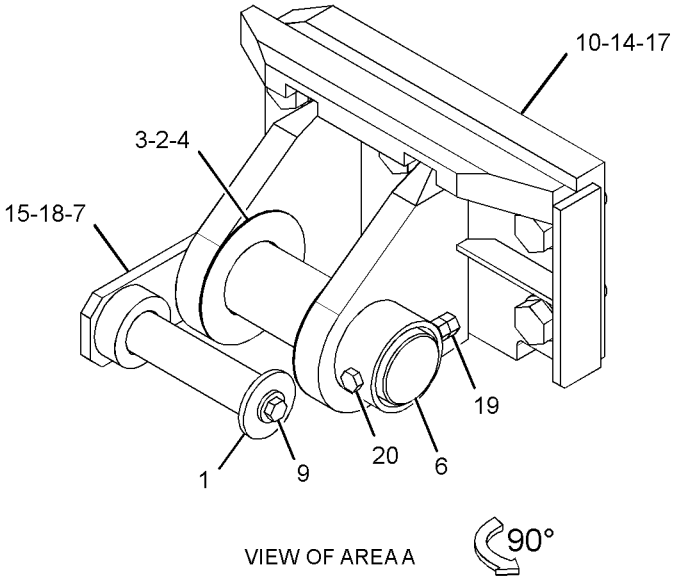

GRAPHIC #1 **<END>** g01618904

HYDRAULIC SYSTEM

302-3084 MOUNTING GP-MAIN CONTROL VALVE

S/N: JGB1-UP; KHS1-UP

PART OF 297-0243, 297-0244 HYDRAULIC AR

SMCS-5051 **i02841546**

NOTE	REF NO	GRAPHIC REF	PART NUMBER	QTY	PART NAME 1 2 3 4 5 6 (PRODUCT LEVEL)	SEE PAGE
	1	1	**302-3085**	1	BRACKET AS	
	2	1	**245-5082**	1	GUARD	
	3	1	**6C-9149**	4	WASHER (22X50X10-MM THK)	
	4	1	**8T-4123**	4	WASHER (22X35X3.5-MM THK)	
M	5	1	**8T-5460**	4	BOLT (M20X2.5X40-MM)	
M	6	1	**8T-6430**	4	BOLT (M20X2.5X50-MM)	

M-METRIC PART

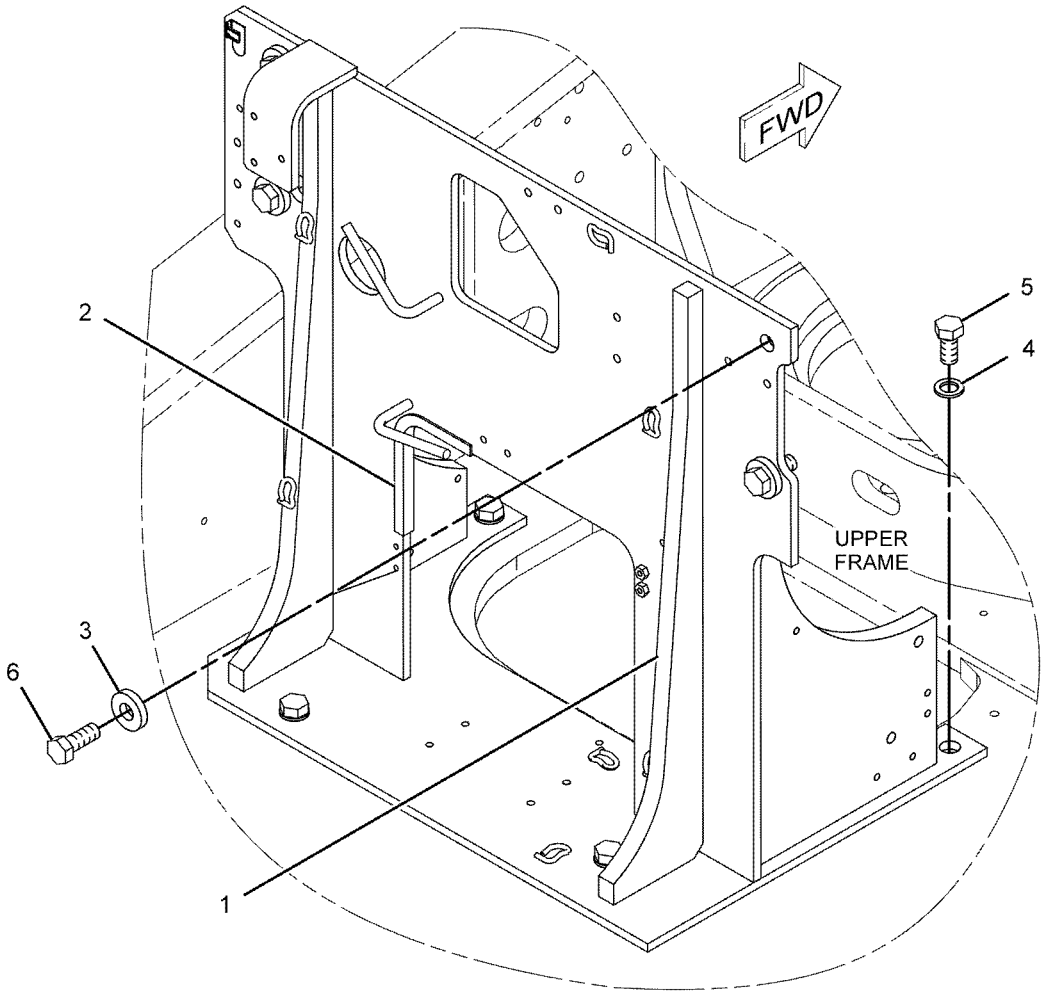

GRAPHIC #1 **<END>** g01125479

122-7768 PLUG GP

S/N: JGB1-UP; KHS1-UP
PART OF 323-7700, 323-7703 VALVE GP-CONTROL, 310-0149 VALVE GP-LOAD CONTROL
ALSO AN ATTACHMENT

SMCS-5051, 5057 **i00612882**

NOTE	REF NO	GRAPHIC REF	PART NUMBER	QTY	PART NAME 1 2 3 4 5 6 (PRODUCT LEVEL)	SEE PAGE
	1	1	**122-7767**	1	RING	
	2	1	**5J-2974**	1	SEAL-O-RING	
	3	1	**7M-8485**	1	SEAL-O-RING	

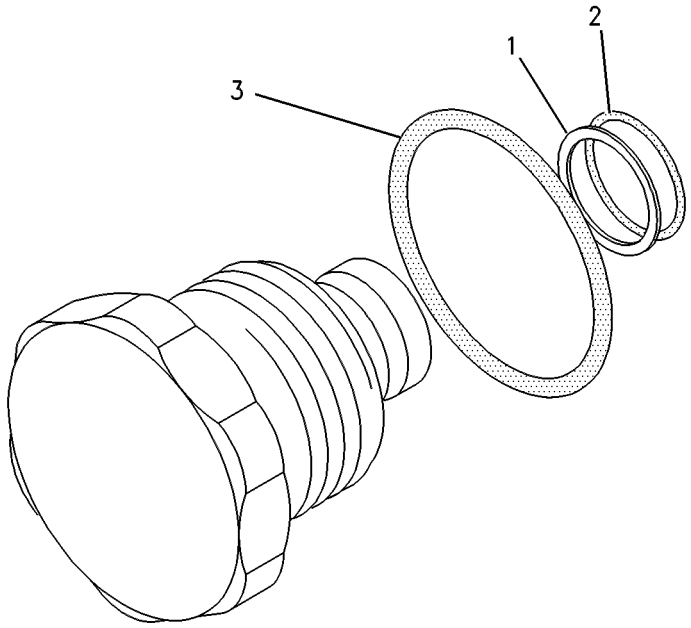

GRAPHIC #1 **<END>** g00267814

HYDRAULIC SYSTEM

242-6805 PUMP & MTG GP-AUXILIARY

S/N: JGB1-UP; KHS1-UP
PART OF 285-1789, 285-1790 CONTROL AR-AUXILIARY
AN ATTACHMENT

SMCS-5070, 5073 **i02290020**

NOTE	REF NO	GRAPHIC REF	PART NUMBER	QTY	PART NAME 1 2 3 4 5 6 (PRODUCT LEVEL)	SEE PAGE
Y	1	1	**136-8899**	1	PUMP GP-GEAR (AUXILIARY)	694
	2	1	**236-6919**	1	SEAL-O-RING	
	3	1	**8T-4223**	2	WASHER-HARD (13.5X25.5X3-MM THK)	
M	4	1	**8T-4956**	2	BOLT (M12X1.75X35-MM)	

M-METRIC PART
Y-SEPARATE ILLUSTRATION

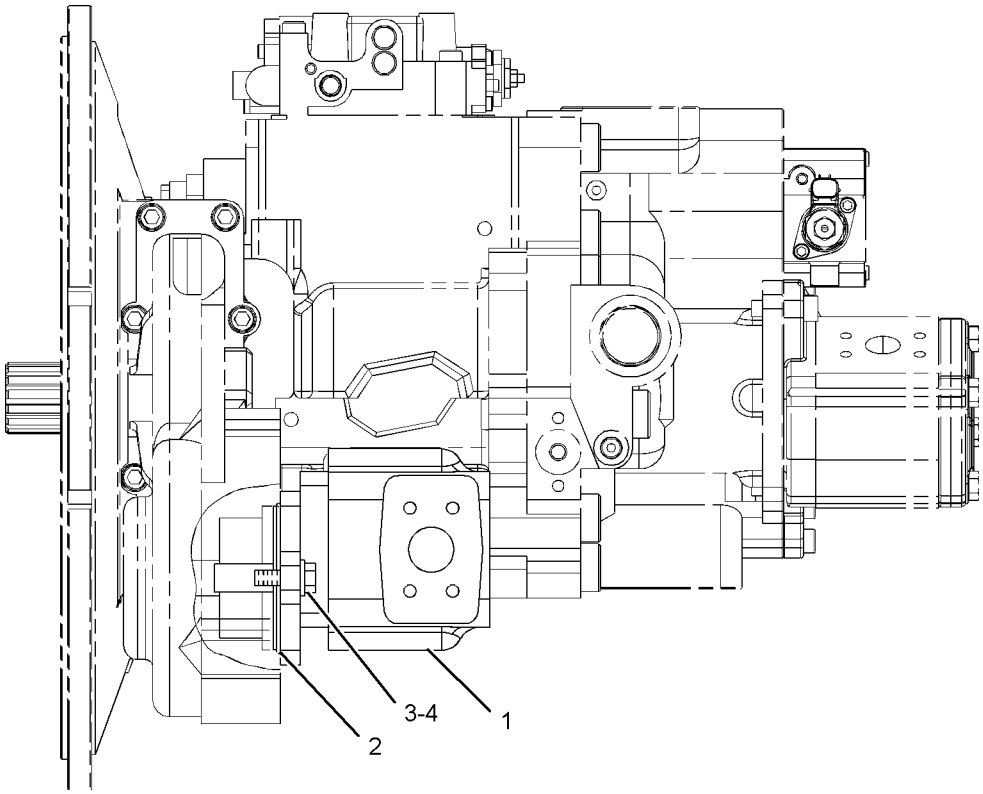

GRAPHIC #1 **<END>** g01098752

296-4670 PUMP & MTG GP-MAIN HYDRAULIC

S/N: JGB1-UP; KHS1-UP

PART OF 297-0243, 297-0244 HYDRAULIC AR

SMCS-5070 **i03136322**

NOTE	REF NO	GRAPHIC REF	PART NUMBER	QTY	PART NAME 1 2 3 4 5 6 (PRODUCT LEVEL)	SEE PAGE
	1	1	**4H-6112**	1	BREATHER (MAIN HYDRAULIC PUMP)	
	2	1	**6V-5043**	1	SEAL-O-RING	
	3	1	**9Y-9236**	1	GAUGE-SIGHT (PUMP DRIVE OIL)	
	4	1	**152-2939**	1	SEAL-O-RING	
	5	1	**238-5084**	1	SEAL-O-RING	
Y	6	1	*326-4424*	1	PUMP GP-PISTON & GEAR (WITH PILOT GEAR PUMP)	702
	7	1	**297-7704**	1	ADAPTER	
Y	8	1	*305-4935*	1	COUPLING GP-PUMP	459
	9	1	**8T-5360**	7	WASHER (12X22.5X2.5-MM THK)	
	10	1	**8T-8916**	7	BOLT (7/16-14X1.5-IN)	

Y-SEPARATE ILLUSTRATION

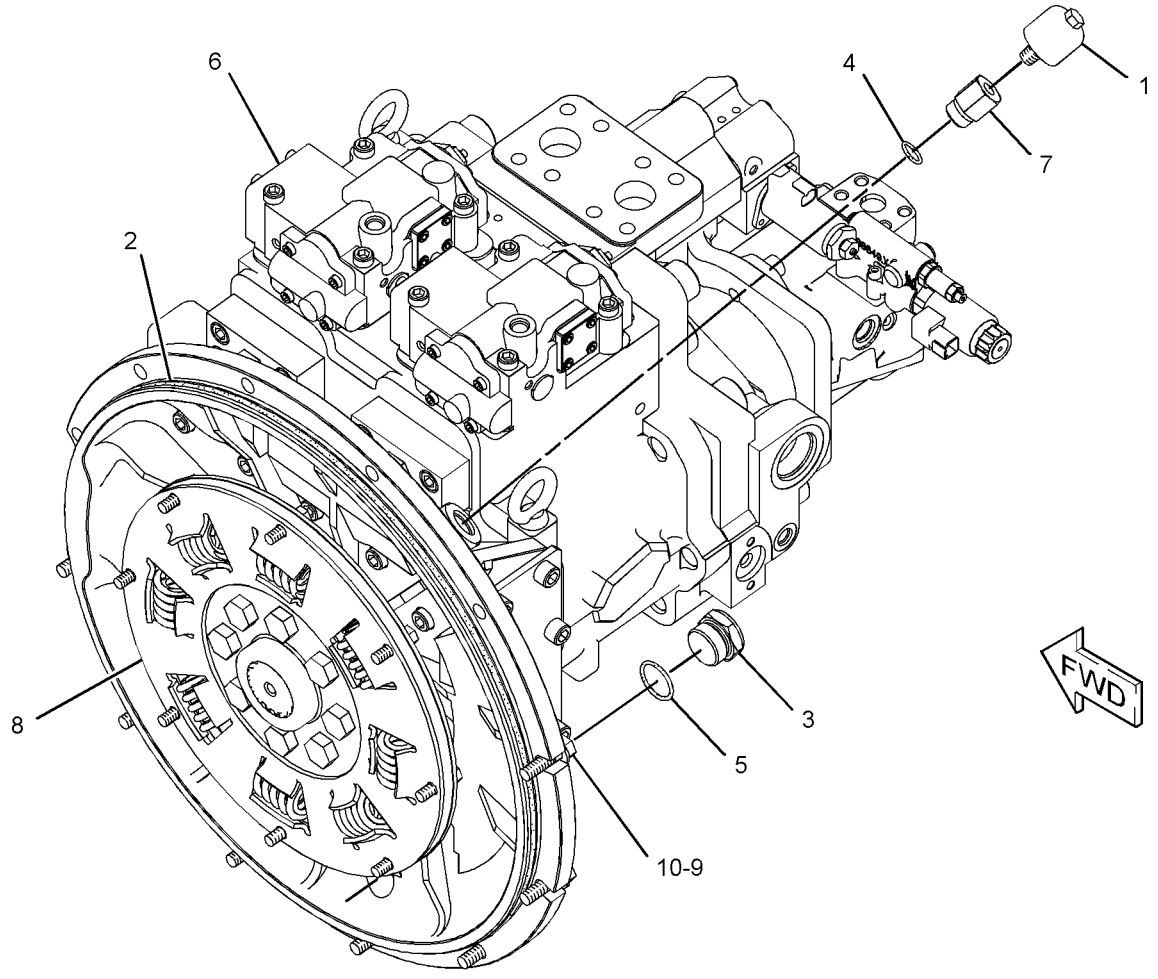

GRAPHIC #1 **<END>** g01454447

HYDRAULIC SYSTEM

136-8899 PUMP GP-GEAR–AUXILIARY

S/N: JGB1-UP; KHS1-UP
PART OF 242-6805 PUMP & MTG GP-AUXILIARY
AN ATTACHMENT

SMCS-5073 **i02730927**

NOTE	REF NO	GRAPHIC REF	PART NUMBER	QTY	PART NAME 1 2 3 4 5 6 (PRODUCT LEVEL)	SEE PAGE
M	1	1	**7X-3342**	4	STUD-LOCKING (M12X1.75X60-MM)	
M	2	1	**095-1207**	4	NUT (M12X1.75-THD)	
	3	1	**136-9030**	4	WASHER (12.5X18X1.5-MM THK)	
					AVAILABLE REPAIR KIT(S):	
			136-9032	1	KIT-SEAL (GEAR PUMP)	
					(INCLUDES 2 ELEMENT SEALS, 2 ENERGISER SEALS, O-RING SEAL, SHAFT SEAL & RETAINING RING)	

M-METRIC PART

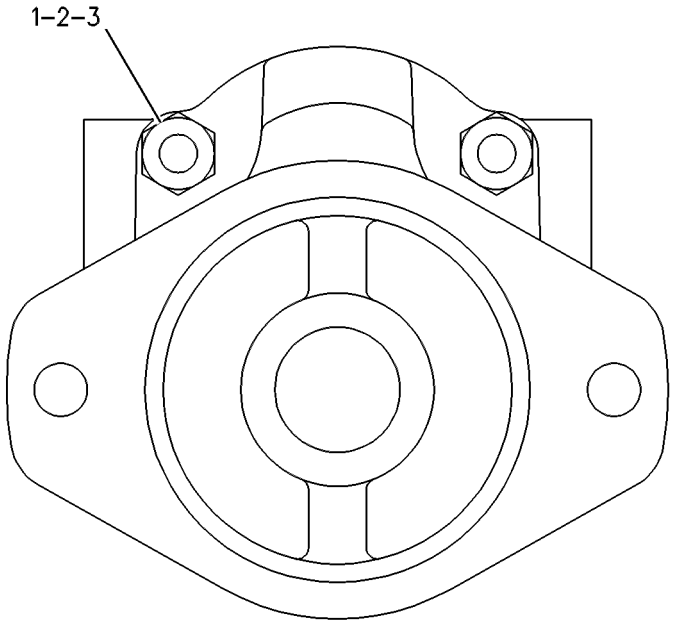

GRAPHIC #1 **<END>** g00274065

HYDRAULIC SYSTEM

289-7912 PUMP GP-GEAR–PILOT

S/N: JGB1-UP; KHS1-UP

PART OF 295-9663 PUMP GP-PISTON & GEAR

SMCS-5073 **i03499742**

NOTE	REF NO	GRAPHIC REF	PART NUMBER	QTY	PART NAME 1 2 3 4 5 6 (PRODUCT LEVEL)	SEE PAGE
M	1	1	**247-8841**	5	BOLT (M10X1.5X30-MM)	
	2	1	**249-6671**	1	SEAL-O-RING	

M-METRIC PART

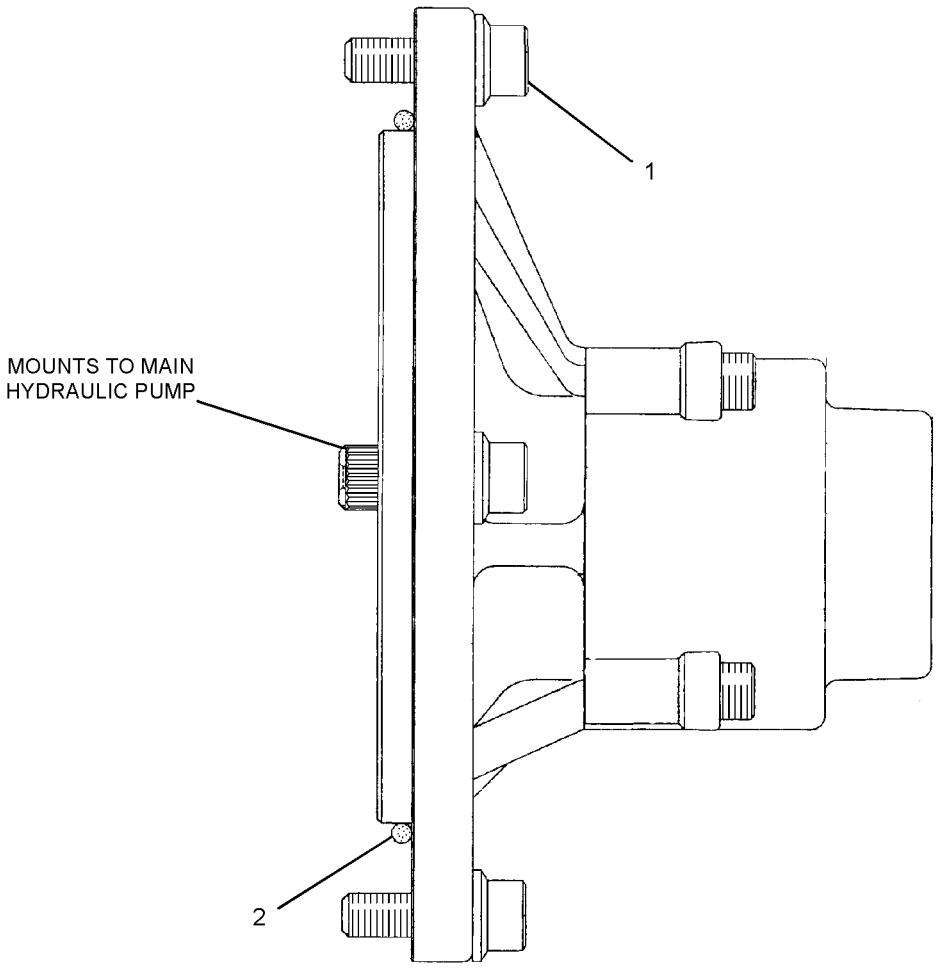

GRAPHIC #1 **<END>** g01213238

HYDRAULIC SYSTEM

295-9426 PUMP GP-PISTON

S/N: JGB1-UP; KHS1-UP

PART OF 326-4424 PUMP GP-PISTON & GEAR

SMCS-5070 **i02841411**

NOTE	REF NO	GRAPHIC REF	PART NUMBER	QTY	PART NAME 1 2 3 4 5 6 (PRODUCT LEVEL)	SEE PAGE
	1	1	**8T-9597**	1	RING-RETAINING	
	2	1	**185-0303**	1	SEAL-OIL	
	3	1	**271-6432**	1	BEARING AS-TAPERED ROLLER	
	4	1	**279-3393**	1	SWASHPLATE	
	5	1	**259-5507**	1	ROD-PISTON	
	6	1	**188-6299**	1	PISTON	
	7	1	**295-9544**	1	PLUG AS	
	8	1	**191-7582**	1	SHIM (2.5-MM THK)	
	9	1	**9X-8979**	1	DOWEL	
	10	1	**191-7583**	1	BEARING AS-ROLLER	
M	11	1	**9X-6032**	4	BOLT-SOCKET HEAD (M10X1.5X30-MM)	
	12	1	**311-9540**	1	COVER	
	13	1	**231-4707**	1	SEAL-O-RING	
	14	1	**295-9546**	1	NUT	
	15	1	**095-1750**	2	SEAL-O-RING	
	16	1	**244-4468**	1	NUT (M10X1-THD)	
Y	17	1	**295-9535**	1	ROTATING GP-PUMP	703
	18	1	**295-9545**	1	ROD	
	19	1	**194-9474**	2	BEARING-CRADLE	
	20	1	**194-9473**	1	RING	
	21	1	**295-9542**	1	HOUSING	
	22	1	**191-7581**	1	SHAFT	
	23	1	**168-3504**	1	SEAL	
Y	24	1	**244-4120**	1	VALVE GP-PILOT (PRESSURE, FLOW COMPENSATOR)	762
	25	1	**120-4394**	1	PLUG-BREAK OFF	

M-METRIC PART
Y-SEPARATE ILLUSTRATION

295-9426 PUMP GP-PISTON *(contd.)* **i02841411**

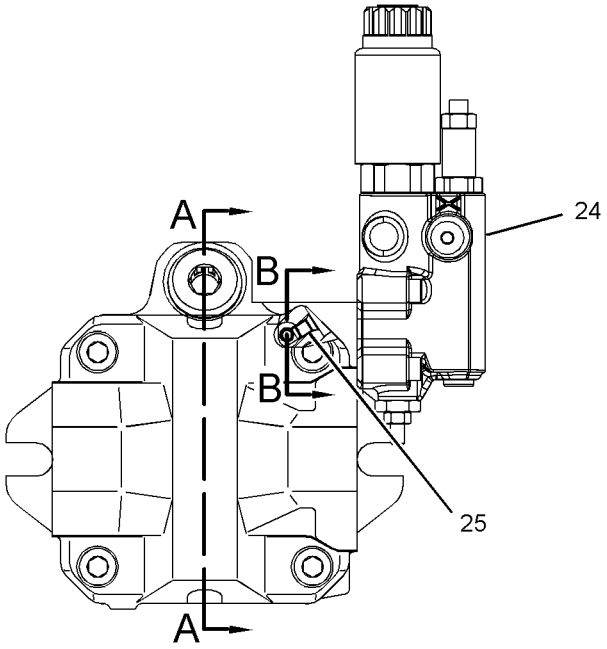

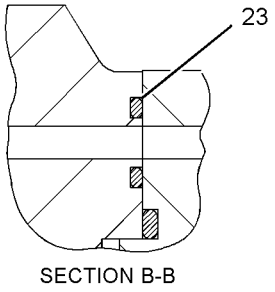

SECTION B-B

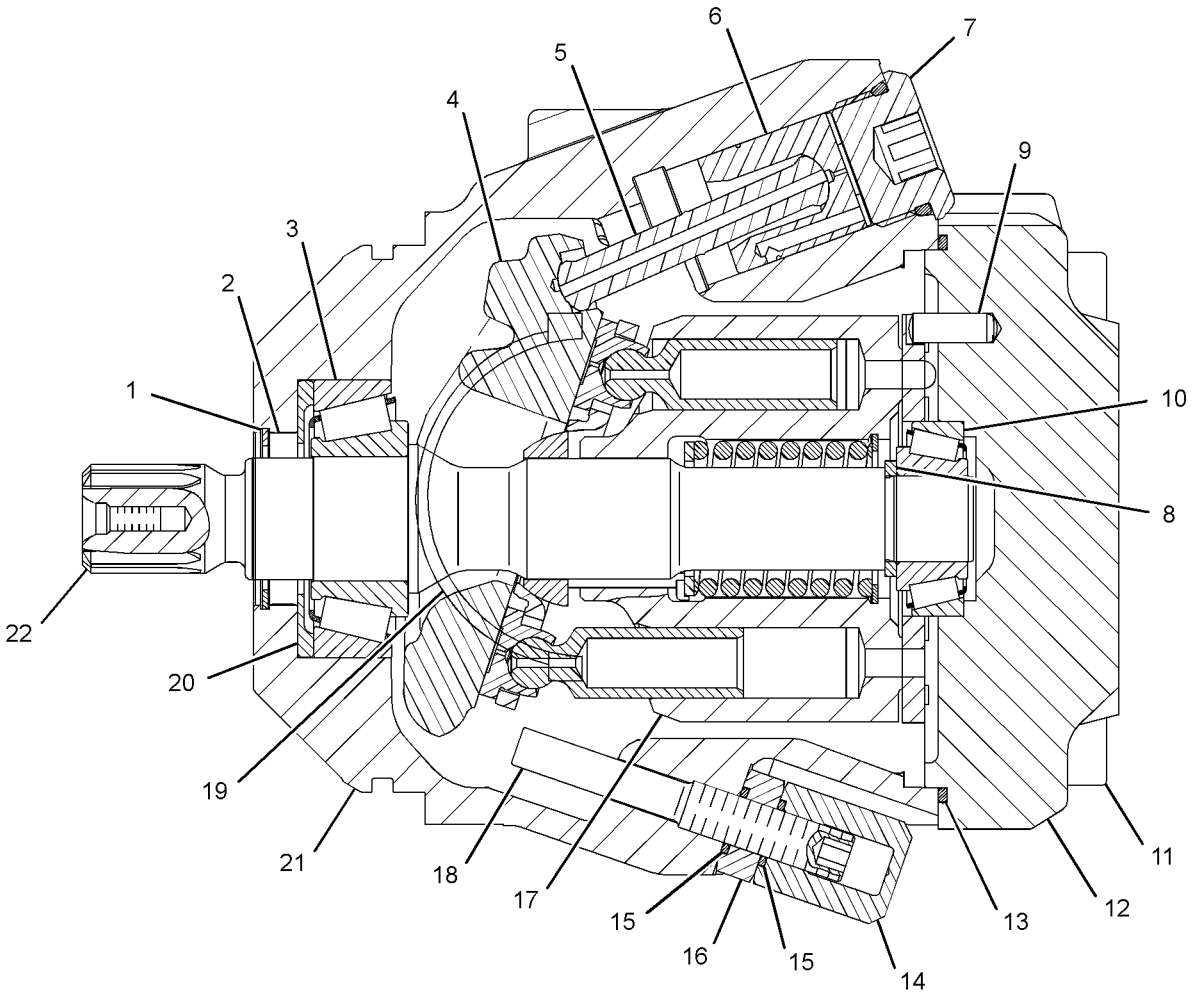

SECTION A-A

GRAPHIC #1 **<END>** g01454586

HYDRAULIC SYSTEM

295-9663 PUMP GP-PISTON & GEAR*R

S/N: JGB1-UP; KHS1-UP

PART OF 326-4424 PUMP GP-PISTON & GEAR

SMCS-507G, 5084 **i03930393**

NOTE	REF NO	GRAPHIC REF	PART NUMBER	QTY	PART NAME 1 2 3 4 5 6 (PRODUCT LEVEL)	SEE PAGE
	1	3	**295-9693**	1	BEARING-NEEDLE	
M	2	2	**242-6920**	8	BOLT (M8X30-MM)	
	3	2,3	**247-8985**	4	DOWEL	
	4	2	**247-8729**	2	COVER	
M	5	2	**242-6919**	2	SETSCREW (M20X2.5X56-MM)	
M	6	2	**8T-4131**	2	NUT (M20X2.5-THD)	
M	7	2	**6V-8200**	8	BOLT-SOCKET HEAD (M12X1.75X35-MM)	
	8	2	**7I-8166**	2	STOPPER	
	9	2	**109-1296**	2	SEAL-O-RING	
	10	2	**7I-8172**	2	RING-BACKUP	
	11	2	**242-6914**	2	PISTON-SERVO	
	12	2	**247-8712**	2	PIN AS	
	13	2	**295-9506**	18	SPRING	
	14	2	**109-1294**	2	SEAL-O-RING	
	15	2	**7I-8171**	2	RING-BACKUP	
	16	2	**242-6915**	2	STOPPER	
	17	2	**095-0965**	12	PLUG	
	18	2	**095-0966**	2	PLUG	
M	19	2	**242-6918**	2	NUT (M20X2.5-THD)	
M	20	2	**200-3292**	2	SETSCREW (M20X2.5X90-MM)	
M	21	2	**249-1308**	1	BOLT-SOCKET HEAD (M22X2.5X180-MM)	
	22	2	**234-4539**	2	DOWEL	
M	23	2	**249-1306**	9	BOLT-SOCKET HEAD (M22X2.5X60-MM)	
	24	2,3	**242-6916**	2	GASKET	
	25	2	**295-9518**	2	PISTON AS	
	26	1,2,3	**110-5525**	4	PLUG	
	27	1,2,3	**214-7568**	4	SEAL-O-RING	
	28	2	**295-9510**	2	PLATE	
	29	2	**295-9504**	2	PLATE	
	30	2	**295-9505**	2	RETAINER-BALL	
	31	2	**295-9521**	2	SWASHPLATE AS	
	32	2,3	**7I-8084**	21	PLUG	
	33	2	**7I-8164**	4	ORIFICE	
	34	2	**095-0882**	4	PIN-SPRING	
	35	2	**247-8786**	2	DOWEL	
	36	2	**206-9290**	9	SEAL-O-RING	
	37	3	**295-9695**	1	SEAL-LIP TYPE	
	38	3	**095-0944**	1	RING-RETAINING	
	39	3	**249-6657**	1	SEAL-O-RING	
	40	3	**295-9508**	1	GEAR-DRIVE (31-TEETH)	
	41	3	**295-9509**	1	GEAR-DRIVEN (31-TEETH)	
	42	3	**8T-4241**	2	RING-RETAINING	
	43	3	**295-9501**	1	SPACER (49.5X73X3-MM THK)	
	44	3	**295-9507**	1	FLANGE	
	45	3	**096-5516**	2	RING-RETAINING	
M	46	3	**8T-0343**	11	BOLT-SOCKET HEAD (M12X1.75X55-MM)	
	47	3	**295-9502**	2	SPACER (55X69X3-MM THK)	
	48	3	**295-9516**	1	RING	
	49	3	**295-9503**	1	SPACER (104X120X3.2-MM THK)	
	50	3	**295-9500**	1	BEARING-ROLLER	
	51	3	**295-9511**	1	PLATE	
	52	3	**295-9499**	1	SHAFT-DRIVEN	
	53	3	**322-8736**	1	BODY	
	54	3	**311-9506**	1	BARREL AS-PUMP	
	55	3	**247-8715**	1	BEARING-NEEDLE	
	56	3	**247-8721**	1	IMPELLER	

295-9663 PUMP GP-PISTON & GEAR *(contd.)* i03930393

NOTE	REF NO	GRAPHIC REF	PART NUMBER	QTY	PART NAME 1 2 3 4 5 6 (PRODUCT LEVEL)	SEE PAGE
	57	3	**247-8730**	1	RING-RETAINING	
	58	3	**247-8944**	1	BUSHING	
	59	3	**295-9694**	1	BLOCK-PORT	
M	60	3	**249-1307**	2	BOLT-SOCKET HEAD (M22X2.5X95-MM)	
	61	3	**311-9505**	1	BARREL AS-PUMP	
	62	3	**247-8719**	1	SPACER (50X64X3-MM THK)	
	63	3	**247-8725**	1	PLATE	
	64	3	**247-8713**	1	BEARING-ROLLER	
M	65	3	**8T-9080**	8	BOLT-SOCKET HEAD (M12X1.75X20-MM)	
	66	3	**249-6670**	1	SEAL-O-RING	
	67	3	**295-9512**	1	COVER	
	68	3	**247-8720**	1	SPACER (95X110X3.2-MM THK)	
	69	3	**247-8787**	1	RING-RETAINING	
	70	3	**247-8717**	2	SPACER (65X90X1-MM THK)	
	71	3	**095-0929**	2	RING-RETAINING	
	72	3	**247-8726**	1	COVER	
	73	3	**295-9498**	1	SHAFT-DRIVE	
	74	2	**206-9291**	2	SEAL-O-RING	
	75	3	**295-9517**	1	DOWEL	
Y	76	1	**295-9497**	2	HEAD GP-PUMP	502
Y	77	1	**289-7912**	1	PUMP GP-GEAR (PILOT)	695
Y	78	1	**225-4518**	1	VALVE GP-SOLENOID (PUMP CONTROL)	797

M-METRIC PART
Y-SEPARATE ILLUSTRATION

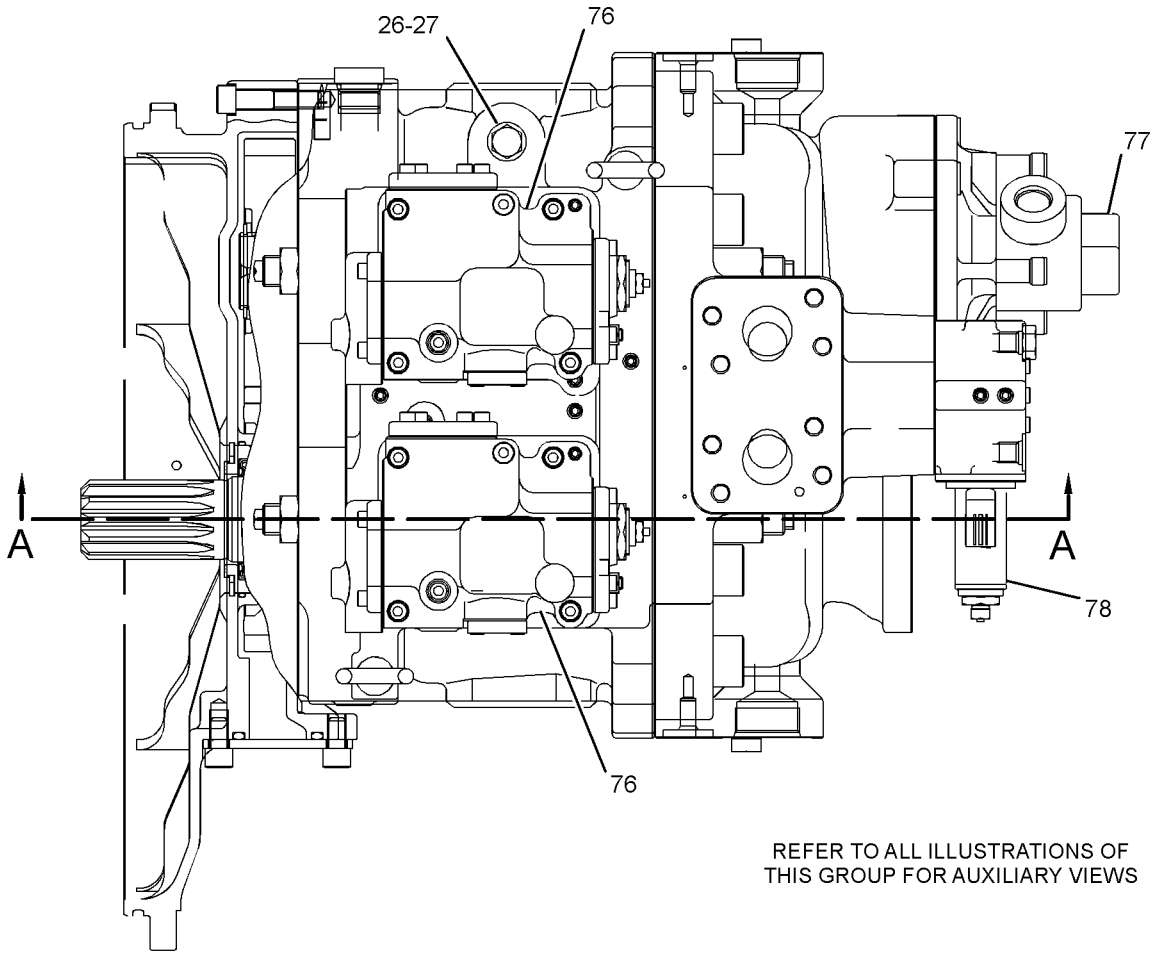

GRAPHIC #1 g01457546

295-9663 PUMP GP-PISTON & GEAR *(contd.)* i03930393

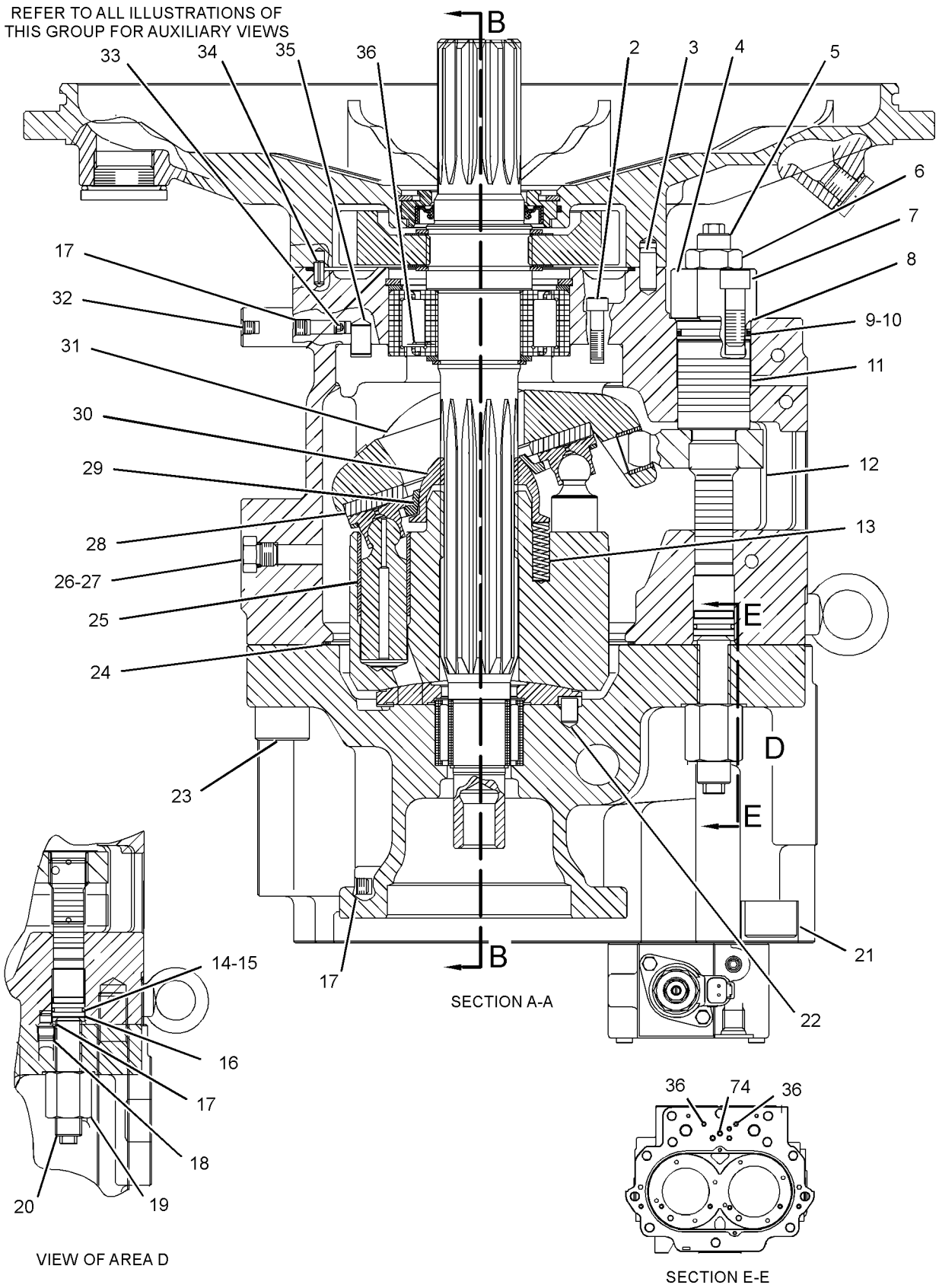

GRAPHIC #2 g01457548

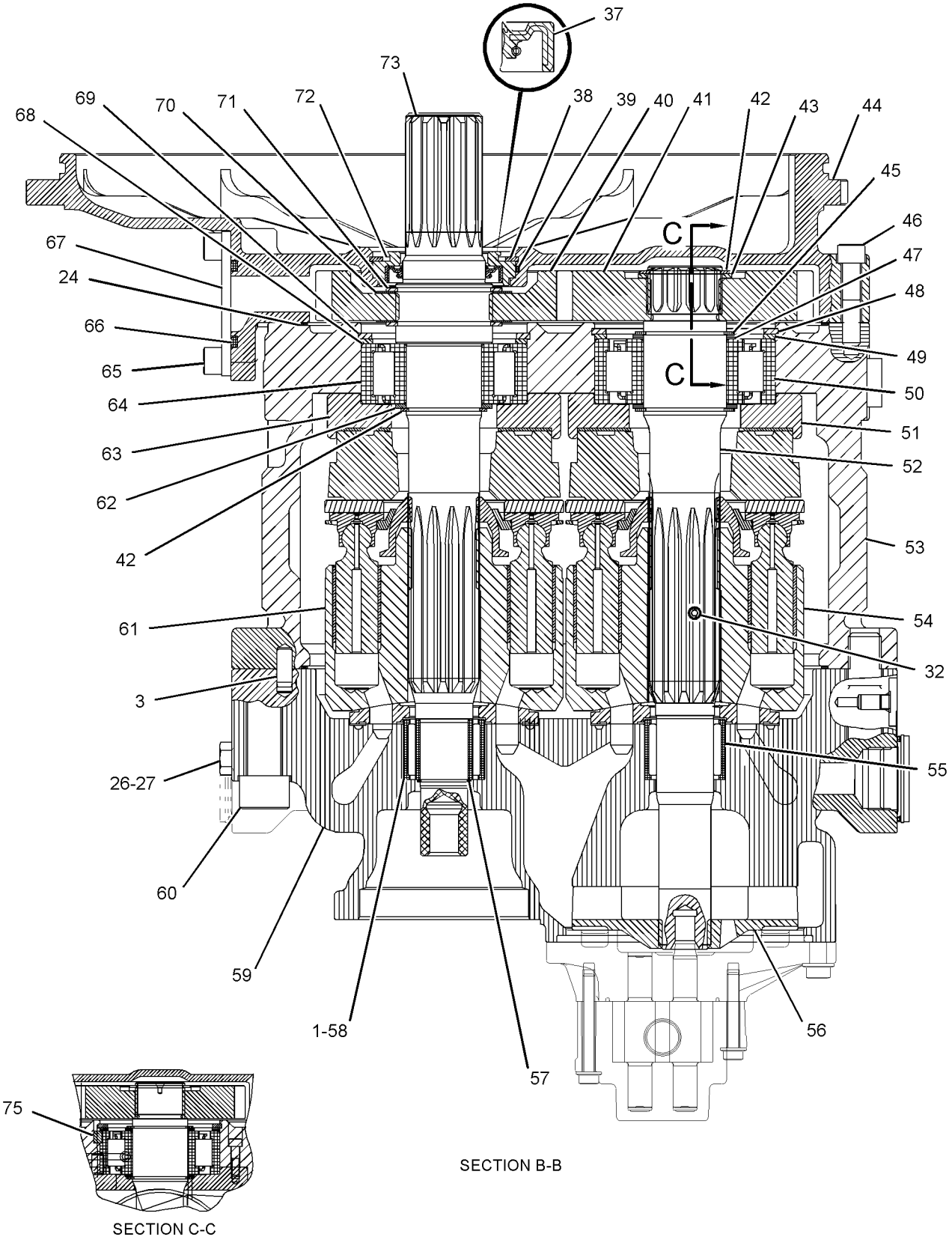

GRAPHIC #3 **<END>** g01457549

HYDRAULIC SYSTEM

326-4424 PUMP GP-PISTON & GEAR—WITH PILOT GEAR PUMP

S/N: JGB1-UP; KHS1-UP

PART OF 296-4670 PUMP & MTG GP-MAIN HYDRAULIC

SMCS-507G, 5084 **i03136360**

NOTE	REF NO	GRAPHIC REF	PART NUMBER	QTY	PART NAME 1 2 3 4 5 6 (PRODUCT LEVEL)	SEE PAGE
	1	1	**4M-0189**	1	SEAL-O-RING	
Y	2	1	**295-9426**	1	PUMP GP-PISTON	696
Y	3	1	**295-9663**	1	PUMP GP-PISTON & GEAR	698
M	4	1	**108-1781**	2	BOLT-SOCKET HEAD (M12X1.75X35-MM)	

M-METRIC PART
Y-SEPARATE ILLUSTRATION

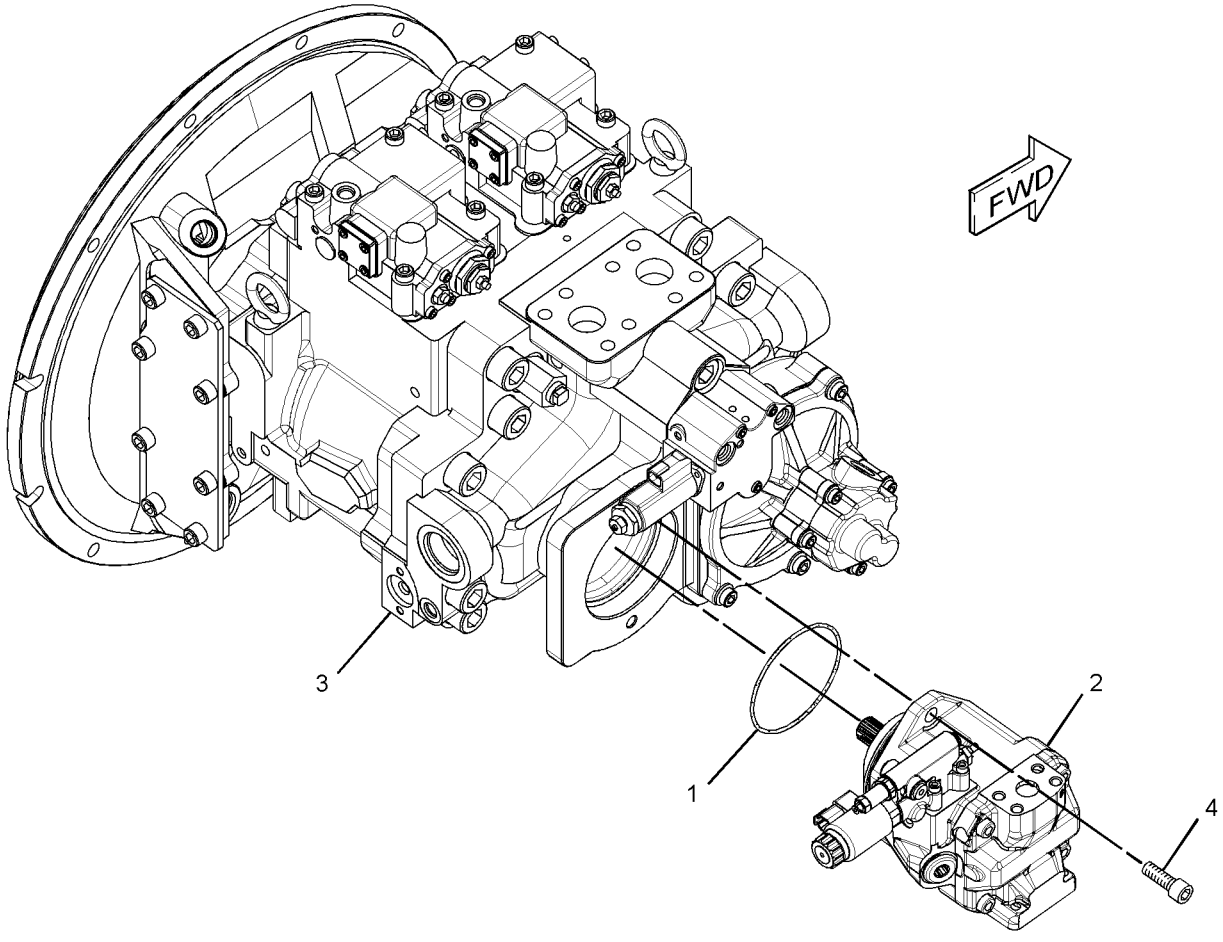

GRAPHIC #1 **<END>** g01454523

295-9535 ROTATING GP-PUMP

S/N: JGB1-UP; KHS1-UP

PART OF 295-9426 PUMP GP-PISTON

SMCS-5070 **i02841412**

NOTE	REF NO	GRAPHIC REF	PART NUMBER	QTY	PART NAME 1 2 3 4 5 6 (PRODUCT LEVEL)	SEE PAGE
	1	1	**295-9540**	1	RETAINER-BALL	
	2	1	**194-9479**	3	PIN	
	3	1	**194-9481**	1	DISC-THRUST	
	4	1	**295-9536**	1	PLATE-VALVE	
	5	1	**194-9480**	1	RING-RETAINING	
	6	1	**295-9538**	1	BARREL	
	7	1	**295-9541**	1	SPRING	
	8	1	**295-9537**	9	PISTON AS	
	9	1	**295-9539**	1	RETAINER	

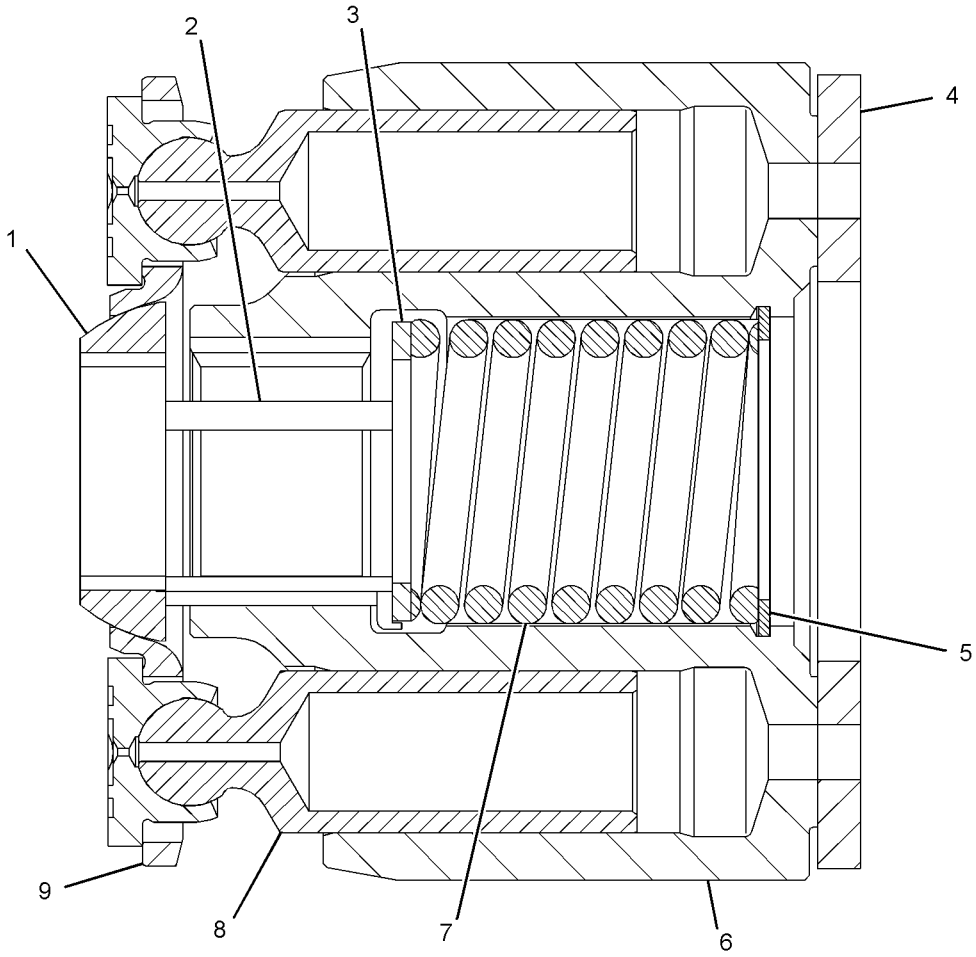

GRAPHIC #1 **<END>** g01454516

HYDRAULIC SYSTEM

295-9547 ROTATING GP-PUMP–HYDRAULIC FAN

S/N: JGB1-UP; KHS1-UP
PART OF 295-9429, 315-4375 MOTOR GP-PISTON
ALSO AN ATTACHMENT

SMCS-5070 **i02842907**

NOTE	REF NO	GRAPHIC REF	PART NUMBER	QTY	PART NAME 1 2 3 4 5 6 (PRODUCT LEVEL)	SEE PAGE
	1	1	**168-3378**	1	BEARING-SPHERICAL	
	2	1	**168-3379**	3	PIN	
	3	1	**168-3382**	1	WASHER (42-MM ODX2.7-MM THK)	
	4	1	**311-9549**	1	PLATE-VALVE	
	5	1	**6V-7723**	1	RING-RETAINING	
	6	1	**295-9549**	1	BARREL	
	7	1	**185-0292**	1	SPRING	
	8	1	**168-3384**	9	PISTON AS-PUMP	
	9	1	**168-3385**	1	PLATE-RETRACTION	

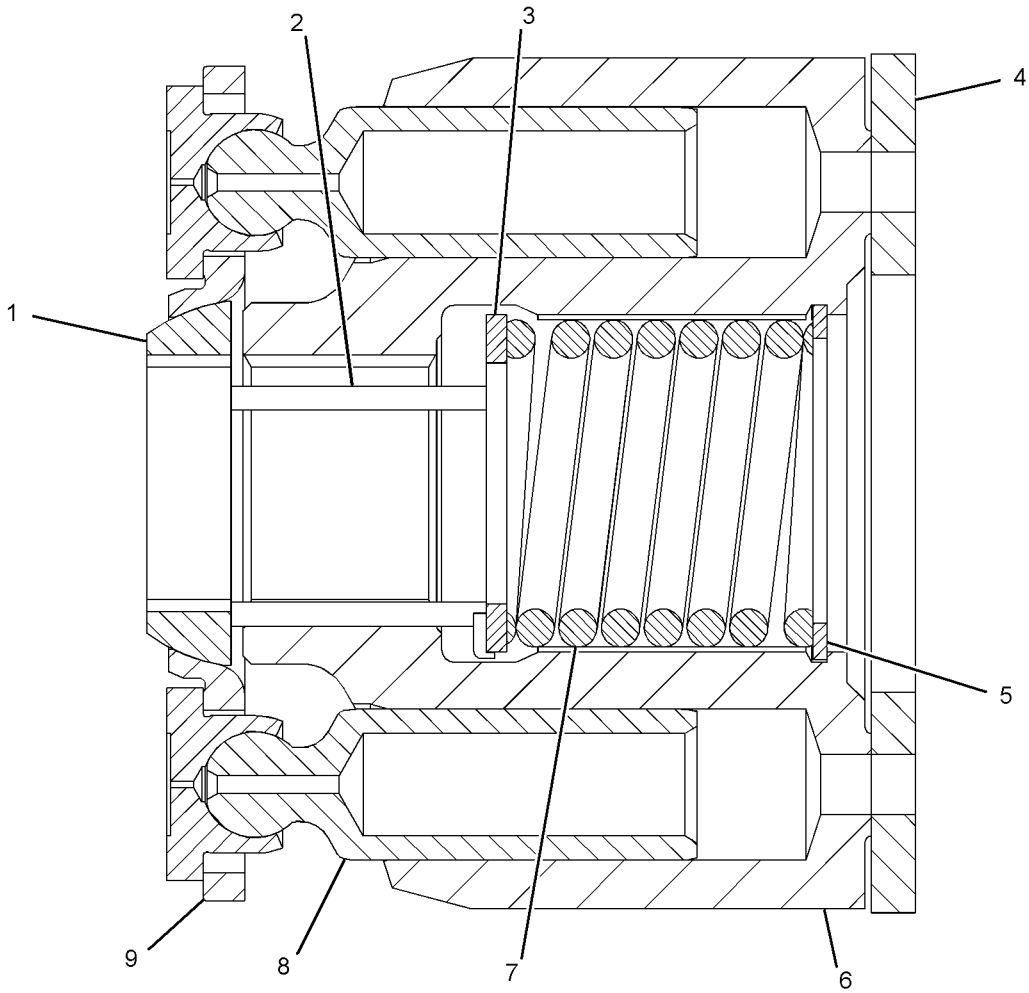

GRAPHIC #1 **<END>** g01454449

225-4610 SCREEN GP-HYDRAULIC–TANK

S/N: JGB1-UP; KHS1-UP

PART OF 227-0431 TANK & FILTER GP-HYDRAULIC

SMCS-5068 **i02894574**

NOTE	REF NO	GRAPHIC REF	PART NUMBER	QTY	PART NAME 1 2 3 4 5 6 (PRODUCT LEVEL)	SEE PAGE
	1	1	**095-6641**	1	GUIDE	
	2	1	**095-6639**	1	SPRING	
M	3	1	**8T-4133**	2	NUT (M10X1.5-THD)	
	4	1	**158-8933**	1	ROD	
	5	1	**209-6001**	1	SCREEN AS (HYDRAULIC TANK)	
	6	1	**5H-5672**	1	SEAL-O-RING	

M-METRIC PART

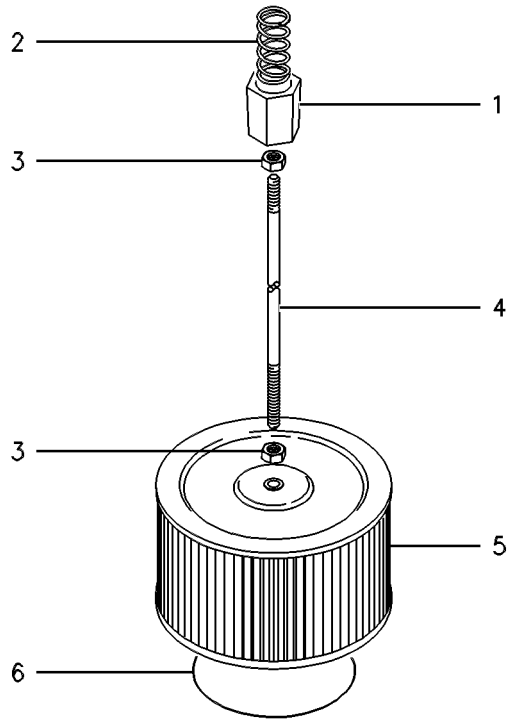

GRAPHIC #1 **<END>** g00267878

HYDRAULIC SYSTEM

225-4547 SWIVEL GP

S/N: JGB1-UP; KHS1-UP

PART OF 302-3185, 302-3186 LINES GP-TRAVEL MOTOR

SMCS-5060 **i02781842**

NOTE	REF NO	GRAPHIC REF	PART NUMBER	QTY	PART NAME 1 2 3 4 5 6 (PRODUCT LEVEL)	SEE PAGE
M	1	1	**8T-4136**	6	BOLT (M10X1.5X25-MM)	
	2	1	**8T-4121**	2	WASHER-HARD (11X21X2.5-MM THK)	
	3	1	**137-3797**	1	COVER	
	4	1	**095-1716**	1	SEAL-O-RING	
	5	1	**7I-7131**	1	RETAINER	
	6	1	**225-4548**	1	HOUSING	
	7	1	**159-7782**	5	SEAL	
	8	1	**095-1625**	3	SEAL-O-RING	
	9	1	**225-4549**	1	ROTOR	
	10	1	**8T-6759**	1	PLUG-PIPE	

M-METRIC PART

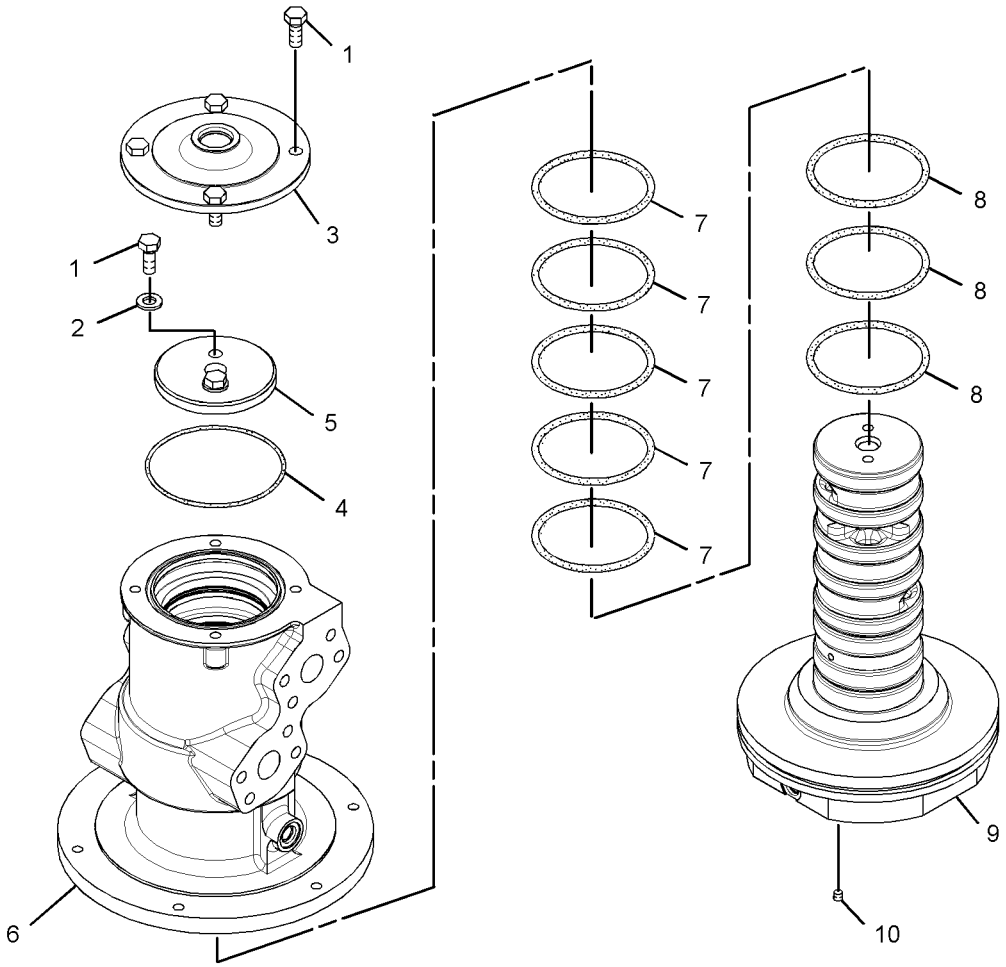

GRAPHIC #1 **<END>** g01393541

HYDRAULIC SYSTEM

227-0431 TANK & FILTER GP-HYDRAULIC

S/N: JGB1-UP; KHS1-UP
430-L (114-US GAL)
PART OF 326-2864 TANK & MTG GP-HYDRAULIC

SMCS-5056, 5068 **i03578260**

NOTE	REF NO	GRAPHIC REF	PART NUMBER	QTY	PART NAME 1 2 3 4 5 6 (PRODUCT LEVEL)	SEE PAGE
	1	1	**342-2924**	1	SENDER AS-TEMPERATURE (HYDRAULIC OIL)	
M		1	**095-7930**	2	SCREW-MACHINE (M4X0.7X6-MM)	
		1	**095-0826**	2	LOCKWASHER	
	2	1	**119-5162**	1	COVER	
	3	1	**170-9419**	1	SWITCH AS-PRESSURE (HYDRAULIC OIL)	
		1	**2M-9780**	1	SEAL-O-RING	
		1	**4I-0754**	1	SEAL-O-RING	
		1	**186-3735**	2	PIN-CONNECTOR (16-GA TO 18-GA)	
		1	**102-8802**	1	KIT-RECEPTACLE (2-PIN)	
					(INCLUDES RECEPTACLE AS & WEDGE)	
Y	4	1	*188-4145*	2	FILTER GP-OIL (HYDRAULIC RETURN)	498
	5	1	**175-6173**	2	PIPE	
	6	1	**175-6177**	1	FLANGE AS	
		1	**175-6176**	1	SEAL-O-RING	
Y	7	1	**158-8987**	1	FILTER & VALVE GP-PILOT (HYDRAULIC OIL)	495
	8	1	**213-0677**	1	SWITCH AS-LIQUID LEVEL (HYDRAULIC OIL)	
		1	**102-8802**	1	KIT-RECEPTACLE (2-PIN)	
					(INCLUDES RECEPTACLE AS & WEDGE)	
		1	**9X-3401**	2	PIN-CONNECTOR (16-GA TO 18-GA)	
					—OR—	
		1	**126-1767**	2	PIN-CONNECTOR (14-GA TO 16-GA)	
Y	9	1	*225-4610*	1	SCREEN GP-HYDRAULIC	705
	10	1	**227-0590**	1	BREATHER (HYDRAULIC TANK)	
	12	1	**227-0592**	1	COVER AS	
Y	13	1	**227-0620**	1	GAUGE GP-SIGHT (HYDRAULIC OIL LEVEL)	501
	14	1	**320-0118**	1	SUPPORT	
	15	1	**207-6403**	1	PLUG	
	16	1	**207-6404**	1	WASHER (49.5X60.5X1.5-MM THK)	
	17	1	**095-1608**	1	SEAL-O-RING	
	18	1	**095-1735**	1	SEAL-O-RING	
Y	19	1	*289-8194*	2	FILTER GP-OIL (HYDRAULIC, CASE DRAIN)	500
	20	1	*148-8407*	1	PLUG AS	
		1	**3J-1907**	1	SEAL-O-RING	
		1	**9S-4191**	1	PLUG-O-RING	
	21	1	*164-5567*	1	COUPLER AS-QUICK DISCONNECT (MALE)	
		1	**3J-1907**	1	SEAL-O-RING	
		1	**6V-3965**	1	FITTING (QUICK DISCONNECT)	
	22	1	*164-5590*	1	VALVE AS-FLUID SAMPLING (HYDRAULIC OIL)	
		1	**3J-7354**	1	SEAL-O-RING	
		1	**8C-3446**	1	VALVE-FLUID SAMPLING (HYDRAULIC OIL)	
	23	1	**165-3256**	1	PIPE AS	
	24	1	**1H-8278**	2	SEAL-O-RING	
	25	1	**2H-3934**	1	SEAL-O-RING	
	26	1	**3D-2824**	1	SEAL-O-RING	
	27	1	**3K-0360**	1	SEAL-O-RING	
	28	1	**4J-0527**	1	SEAL-O-RING	
M	29	1	**5C-9553**	4	BOLT (M6X1X16-MM)	
	30	1	**5P-1076**	4	WASHER-HARD (13.5X30X4-MM THK)	
	31	1	**5P-8068**	1	SEAL-O-RING	
	32	1	**6D-9157**	1	SEAL-O-RING	
	33	1	**6I-0723**	1	PLUG-OIL DRAIN (HYDRAULIC TANK)	
	34	1	**6I-0724**	1	ADAPTER-PLUG	
	35	1	**6V-0852**	1	CAP-DUST	
	36	1	**6V-6707**	1	SEAL-O-RING	
	37	1	**8C-3451**	1	CAP-DUST	

227-0431 TANK & FILTER GP-HYDRAULIC *(contd.)* i03578260

NOTE	REF NO	GRAPHIC REF	PART NUMBER	QTY	PART NAME 1 2 3 4 5 6 (PRODUCT LEVEL)	SEE PAGE
M	38	1	**8T-0267**	2	BOLT-SOCKET HEAD (M6X1X12-MM)	
M	39	1	**170-8553**	4	BOLT-SOCKET HEAD (M12X1.75X40-MM)	
	40	1	**8T-4121**	18	WASHER-HARD (11X21X2.5-MM THK)	
M	41	1	**8T-4136**	6	BOLT (M10X1.5X25-MM)	
M	42	1	**8T-4137**	12	BOLT (M10X1.5X20-MM)	
M	43	1	**8T-4194**	16	BOLT (M12X1.75X50-MM)	
	44	1	**8T-4223**	18	WASHER-HARD (13.5X25.5X3-MM THK)	
	45	1	**8T-4224**	4	WASHER-HARD (8.8X16X2-MM THK)	
M	46	1	**8T-4908**	4	BOLT (M8X1.25X25-MM)	
M	47	1	**8T-4956**	6	BOLT (M12X1.75X35-MM)	
	48	1	**8T-6761**	1	PLUG-PIPE	
	49	1	**9X-8256**	4	WASHER (6.6X12X2-MM THK)	

M-METRIC PART
Y-SEPARATE ILLUSTRATION

227-0431 TANK & FILTER GP-HYDRAULIC *(contd.)* i03578260

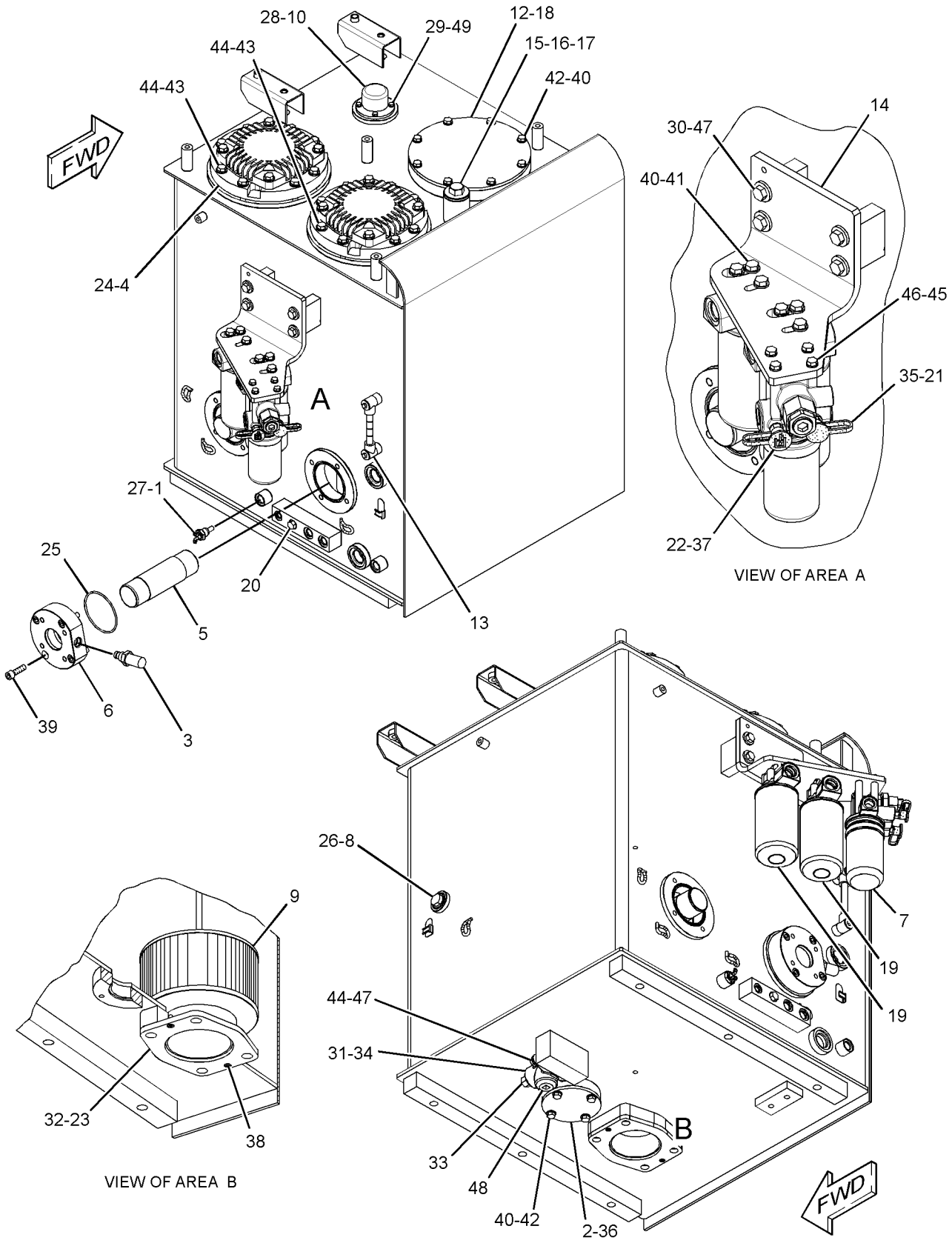

GRAPHIC #1 **<END>** g01423349

HYDRAULIC SYSTEM

227-0430 TANK & MTG GP-HYDRAULIC

S/N: JGB1-UP; KHS1-UP

PART OF 297-0243, 297-0244 HYDRAULIC AR

SMCS-5056 **i03349420**

NOTE	PART NUMBER	QTY	PART NAME 1 2 3 4 5 6 (PRODUCT LEVEL)	SEE PAGE
Y	*326-2864*	1	TANK & MTG GP-HYDRAULIC	710
M	**8T-4187**	6	BOLT (M20X2.5X80-MM)	
B	**087-8906**	6	SHIM (2-MM THK)	
B	**087-8907**	6	SHIM (1-MM THK)	
B	**087-8909**	6	SHIM (0.4-MM THK)	
	9S-8178	6	SPACER (0.891X1.625X1.5-IN THK)	

B-USE AS REQUIRED
M-METRIC PART
Y-SEPARATE ILLUSTRATION

<END>

326-2864 TANK & MTG GP-HYDRAULIC

S/N: JGB1-UP; KHS1-UP

PART OF 227-0430 TANK & MTG GP-HYDRAULIC

SMCS-5056 **i03350520**

NOTE	PART NUMBER	QTY	PART NAME 1 2 3 4 5 6 (PRODUCT LEVEL)	SEE PAGE
Y	*239-1820*	1	LINES GP-HYDRAULIC (HYDRAULIC TANK)	578
Y	**227-0431**	1	TANK & FILTER GP-HYDRAULIC	707

Y-SEPARATE ILLUSTRATION

<END>

307-4954 TUBE GP-HYDRAULIC—SUPPLY, MAIN PUMP

S/N: JGB1-UP; KHS1-UP

PART OF 292-7163 LINES GP-PUMP

SMCS-5057 **i02842183**

NOTE	PART NUMBER	QTY	PART NAME 1 2 3 4 5 6 (PRODUCT LEVEL)	SEE PAGE
Y	*307-5270*	1	TUBE GP-HYDRAULIC (SUPPLY, MAIN PUMP)	711
			—OR—	
Y	*307-5271*	1	TUBE GP-HYDRAULIC (SUPPLY, MAIN PUMP)	712
			—OR—	
Y	*307-5272*	1	TUBE GP-HYDRAULIC (SUPPLY, MAIN PUMP)	713

Y-SEPARATE ILLUSTRATION

<END>

HYDRAULIC SYSTEM

307-5270 TUBE GP-HYDRAULIC—SUPPLY, MAIN PUMP

S/N: JGB1-UP; KHS1-UP

PART OF 307-4954 TUBE GP-HYDRAULIC

SMCS-5057 **i02842208**

NOTE	REF NO	GRAPHIC REF	PART NUMBER	QTY	PART NAME 1 2 3 4 5 6 (PRODUCT LEVEL)	SEE PAGE
	1	1	**8T-4223**	2	WASHER-HARD (13.5X25.5X3-MM THK)	
	2	1	**307-5276**	1	SUPPORT	
M	3	1	**8T-4139**	2	BOLT (M12X1.75X30-MM)	

M-METRIC PART

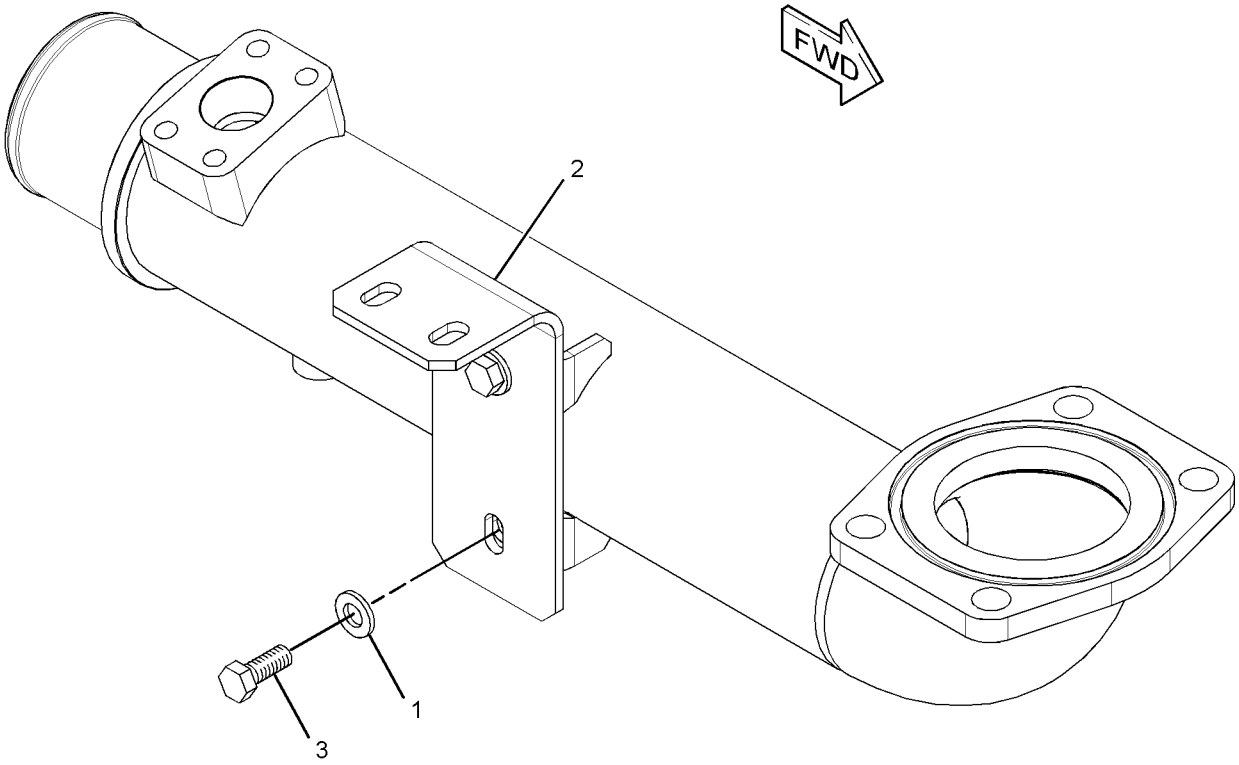

GRAPHIC #1 **<END>** g01457500

HYDRAULIC SYSTEM

307-5271 TUBE GP-HYDRAULIC—SUPPLY, MAIN PUMP

S/N: JGB1-UP; KHS1-UP

PART OF 307-4954 TUBE GP-HYDRAULIC

SMCS-5057 **i04152311**

NOTE	REF NO	GRAPHIC REF	PART NUMBER	QTY	PART NAME 1 2 3 4 5 6 (PRODUCT LEVEL)	SEE PAGE
	1	1	**307-4955**	1	TUBE AS	
	2	1	**307-5274**	1	SUPPORT	
M	3	1	**096-4885**	2	LOCKNUT (M16X2-THD)	
	4	1	**7Y-5289**	1	U-BOLT	
	5	1	**9X-8257**	2	WASHER (17.5X30X3.5-MM THK)	

M-METRIC PART

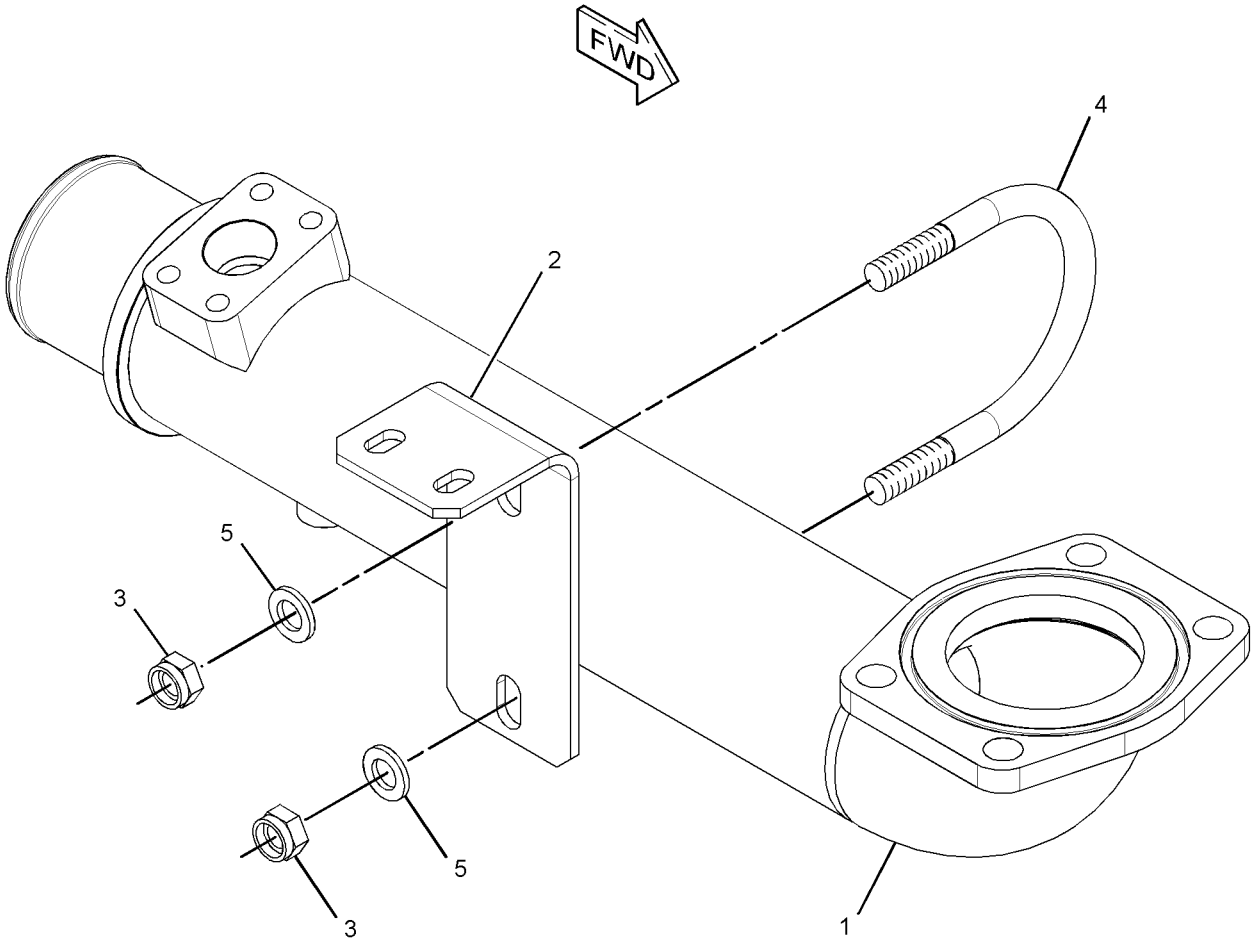

GRAPHIC #1 **<END>** g01456823

HYDRAULIC SYSTEM

307-5272 TUBE GP-HYDRAULIC—SUPPLY, MAIN PUMP

S/N: JGB1-UP; KHS1-UP

PART OF 307-4954 TUBE GP-HYDRAULIC

SMCS-5057 **i02971841**

NOTE	REF NO	GRAPHIC REF	PART NUMBER	QTY	PART NAME 1 2 3 4 5 6 (PRODUCT LEVEL)	SEE PAGE
	1	1	**8T-4223**	2	WASHER-HARD (13.5X25.5X3-MM THK)	
	2	1	**307-5276**	1	SUPPORT	
M	3	1	**8T-4139**	2	BOLT (M12X1.75X30-MM)	

M-METRIC PART

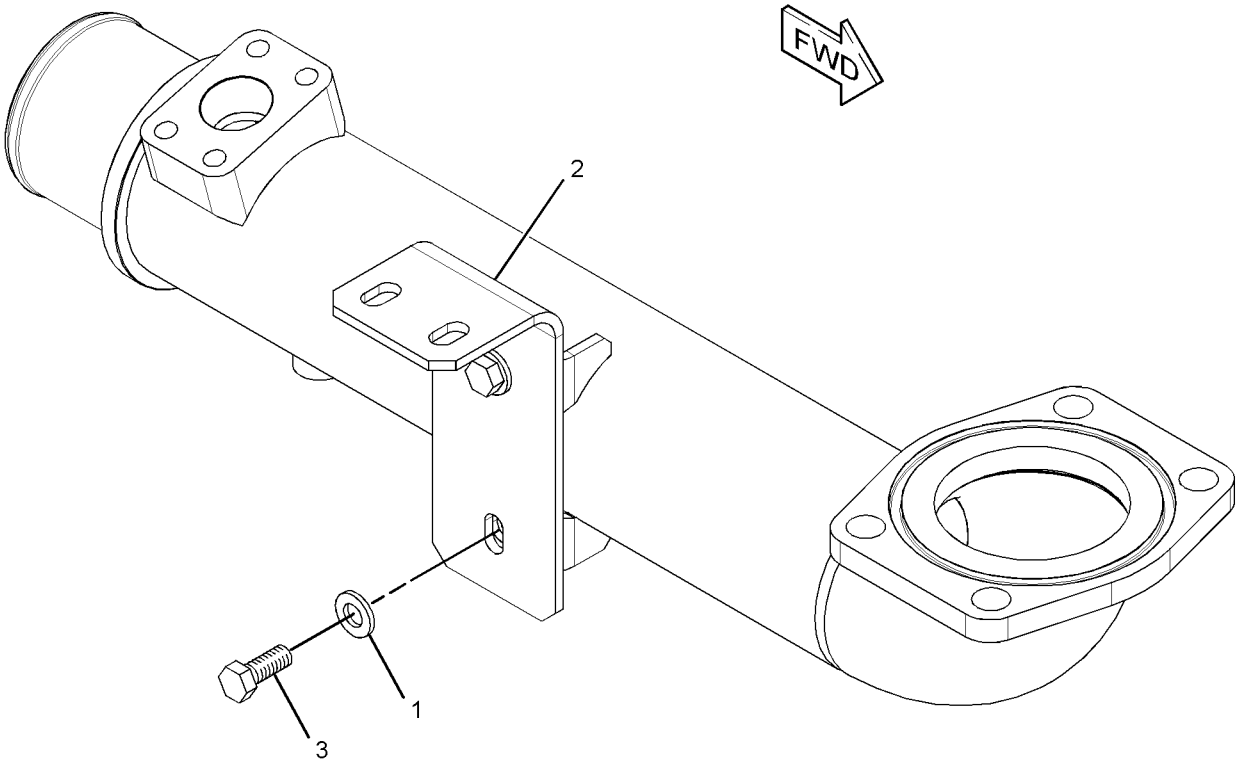

GRAPHIC #1 **<END>** g01457500

310-0387 VALVE AR-ALT PATTERN CONTROL–2-WAY

S/N: JGB1-UP; KHS1-UP
PART OF 337-8884 OPTION AR-REGIONAL
AN ATTACHMENT

SMCS-5065 **i04012929**

NOTE	PART NUMBER	QTY	PART NAME 1 2 3 4 5 6 (PRODUCT LEVEL)	SEE PAGE
Y	*320-5609*	1	SHEET AS-SOUND SUPPRESSION	391
Y	*354-3715*	1	LINES GP-PILOT (CONTROL PATTERN CHANGE, 2-WAY)	637
Y	*354-1028*	1	FILM GP (ALT PATTERN CONTROL, WARNING)	983

Y-SEPARATE ILLUSTRATION

<END>

297-0252 VALVE AR-CHECK & RELIEF–BOOM LOWERING CONTROL VALVE, HEAVY LIFT

S/N: JGB1-UP; KHS1-UP
FOR USE WITH 294-1250–PAGE 812, 294-1252–PAGE 811
AN ATTACHMENT

SMCS-5117, 5453 **i02863158**

NOTE	PART NUMBER	QTY	PART NAME 1 2 3 4 5 6 (PRODUCT LEVEL)	SEE PAGE
Y	*296-7134*	1	LINES GP-BOOM CYLINDER (LOWERING CONTROL)	539
Y	*302-3140*	1	LINES GP-PILOT (BOOM LOWERING CONTROL)	623
Y	*302-3139*	1	LINES GP-RETURN (BOOM LOWERING CONTROL)	653

Y-SEPARATE ILLUSTRATION

<END>

297-0257 VALVE AR-CHECK & RELIEF–STICK LOAD CONTROL, HEAVY LIFT

S/N: JGB1-UP; KHS1-UP
FOR USE WITH 294-1250–PAGE 812, 297-0252–PAGE 714
AN ATTACHMENT

SMCS-5117, 5453 **i03173183**

NOTE	PART NUMBER	QTY	PART NAME 1 2 3 4 5 6 (PRODUCT LEVEL)	SEE PAGE
Y	*230-0138*	1	LINES GP-BOOM (REACH BOOM, STICK LOAD CONTROL)	529
Y	*302-3283*	1	LINES GP-PILOT (STICK LOWERING CONTROL)	632
Y	*302-9546*	1	LINES GP-STICK CYLINDER (LOAD CONTROL)	660
Y	**323-7682**	1	VALVE GP-MAIN CONTROL	757

Y-SEPARATE ILLUSTRATION

<END>

297-0258 VALVE AR-CHECK & RELIEF–STICK LOAD CONTROL, HEAVY LIFT

S/N: JGB1-UP; KHS1-UP
FOR USE WITH 294-1252–PAGE 811, 297-0252–PAGE 714
AN ATTACHMENT

SMCS-5117, 5453 **i03173184**

NOTE	PART NUMBER	QTY	PART NAME 1 2 3 4 5 6 (PRODUCT LEVEL)	SEE PAGE
Y	*230-0140*	1	LINES GP-BOOM (MASS BOOM, STICK LOAD CONTROL)	531
Y	*302-3283*	1	LINES GP-PILOT (STICK LOWERING CONTROL)	632
Y	*302-9546*	1	LINES GP-STICK CYLINDER (LOAD CONTROL)	660
Y	**323-7681**	1	VALVE GP-MAIN CONTROL	756
Y-SEPARATE ILLUSTRATION				

<END>

333-7665 VALVE AR-SWING–WITHOUT FINE SWING

S/N: JGB1-UP; KHS1-UP
PART OF 371-9200, 371-9201, 371-9205, 371-9206 DISTRIBUTION AR
AN ATTACHMENT

SMCS-5480 **i03596022**

NOTE	PART NUMBER	QTY	PART NAME 1 2 3 4 5 6 (PRODUCT LEVEL)	SEE PAGE
	164-0655	1	PANEL-SWITCH (OPERATOR CONSOLE)	
	188-2128	1	PLUG AS	
	8T-8737	2	PLUG-SEAL	
	155-2270	1	KIT-CONNECTING PLUG (2-PIN)	
			(INCLUDES PLUG AS, WEDGE & INTERFACE SEAL)	

<END>

HYDRAULIC SYSTEM

087-5087 VALVE GP-CHECK

S/N: JGB1-UP
PART OF 227-0459 LINES GP-REAR ATTACHMENT
AN ATTACHMENT

SMCS-5067 **i01066006**

NOTE	REF NO	GRAPHIC REF	PART NUMBER	QTY	PART NAME 1 2 3 4 5 6 (PRODUCT LEVEL)	SEE PAGE
Y	1	1	**114-0649**	1	VALVE GP-CHECK	717
	2	1	**114-0648**	1	BODY	

Y-SEPARATE ILLUSTRATION

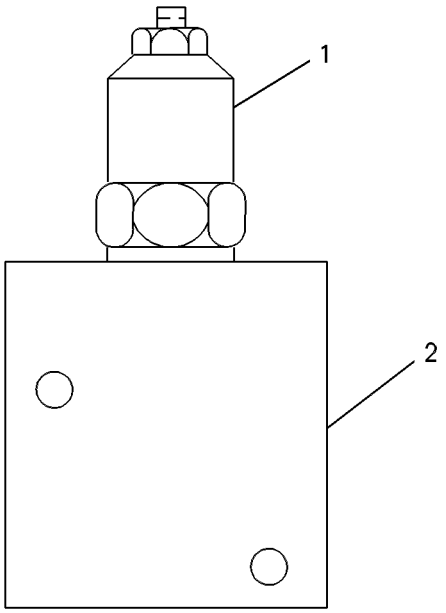

GRAPHIC #1 **<END>** g00250127

114-0649 VALVE GP-CHECK

S/N: JGB1-UP
PART OF 087-5087 VALVE GP-CHECK
AN ATTACHMENT

SMCS-5067 **i00613227**

NOTE	REF NO	GRAPHIC REF	PART NUMBER	QTY	PART NAME 1 2 3 4 5 6 (PRODUCT LEVEL)	SEE PAGE
	1	1	**7M-8485**	1	SEAL-O-RING	
	2	1	**115-9865**	2	RING-BACKUP	
	3	1	**8C-3101**	1	SEAL-O-RING	
	4	1	**8C-3102**	1	SEAL-O-RING	
	5	1	**115-9864**	1	RING-BACKUP	

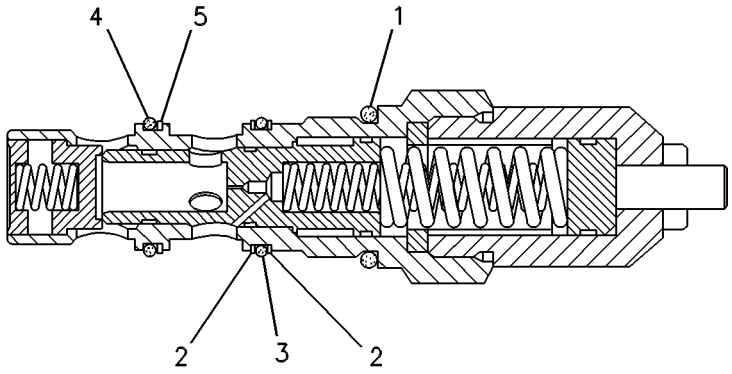

GRAPHIC #1 **<END>** g00250128

HYDRAULIC SYSTEM

122-7690 VALVE GP-CHECK

S/N: JGB1-UP; KHS1-UP
PART OF 323-7702, 323-7703 VALVE GP-CONTROL
ALSO AN ATTACHMENT

SMCS-5067 **i01739131**

NOTE	REF NO	GRAPHIC REF	PART NUMBER	QTY	PART NAME 1 2 3 4 5 6 (PRODUCT LEVEL)	SEE PAGE
	1	1	**122-7687**	1	PLUG	
	2	1	**2M-9780**	1	SEAL-O-RING	
	3	1	**122-7689**	1	SPRING	
Z	4	1		1	VALVE-CHECK	
Z	5	1		1	VALVE	

Z-NOT SERVICED SEPARATELY

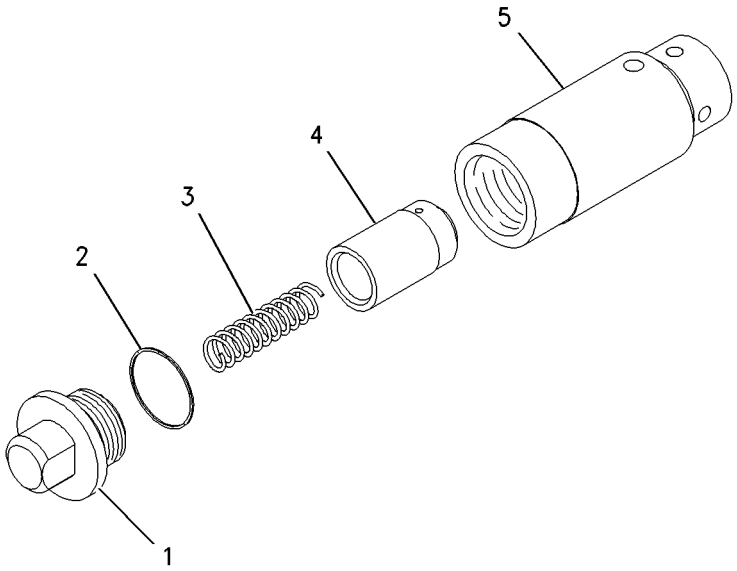

GRAPHIC #1 **<END>** g00890777

HYDRAULIC SYSTEM

239-9036 VALVE GP-CHECK

S/N: JGB1-UP; KHS1-UP
PART OF 292-7166, 292-7169, 296-7129, 296-7131 LINES GP-FRONT
AN ATTACHMENT

SMCS-5067 **i02243720**

NOTE	REF NO	GRAPHIC REF	PART NUMBER	QTY	PART NAME 1 2 3 4 5 6 (PRODUCT LEVEL)	SEE PAGE
	1	1	**123-2535**	1	VALVE	
	2	1	**123-2537**	1	SPRING	
	3	1	**239-9037**	1	FITTING	
Z	4	1		1	BODY	
	5	1	**239-9039**	1	VALVE	
	6	1	**239-9040**	1	SPRING	
	7	1	**095-1597**	2	SEAL-O-RING	
	8	1	**095-1791**	2	RING-BACKUP	
	9	1	**5K-9090**	1	SEAL-O-RING	

Z-NOT SERVICED SEPARATELY

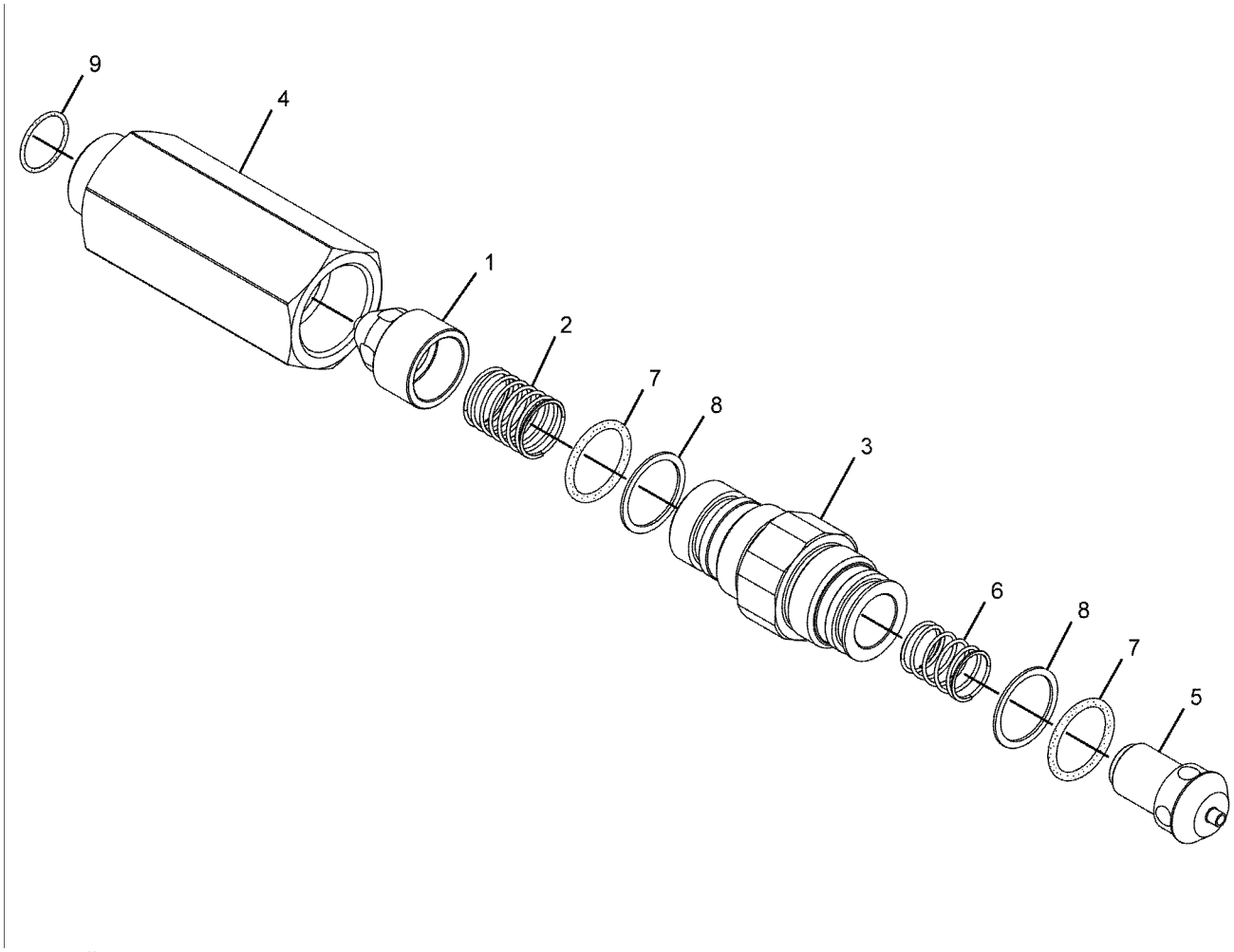

GRAPHIC #1 **<END>** g01130758

HYDRAULIC SYSTEM

297-0370 VALVE GP-CHECK

S/N: JGB1-UP; KHS1-UP
PART OF 292-7169, 296-7131 LINES GP-FRONT
AN ATTACHMENT

SMCS-5067 **i02862729**

NOTE	REF NO	GRAPHIC REF	PART NUMBER	QTY	PART NAME 1 2 3 4 5 6 (PRODUCT LEVEL)	SEE PAGE
	1	1	**095-1585**	1	SEAL-O-RING	
	2	1	**225-4804**	3	PLUG	
	3	1	**4J-7533**	3	SEAL-O-RING	
	4	1	**095-1602**	1	SEAL-O-RING	
	5	1	**232-4113**	1	RING	
	6	1	**095-1601**	1	SEAL-O-RING	
	7	1	**8T-3008**	1	RING-BACKUP	
	8	1	**095-1700**	1	SEAL-O-RING	
	9	1	**7M-8485**	1	SEAL-O-RING	
	10	1	**095-1657**	1	SEAL-O-RING	
	11	1	**232-4114**	2	RING	

297-0370 VALVE GP-CHECK *(contd.)* **i02862729**

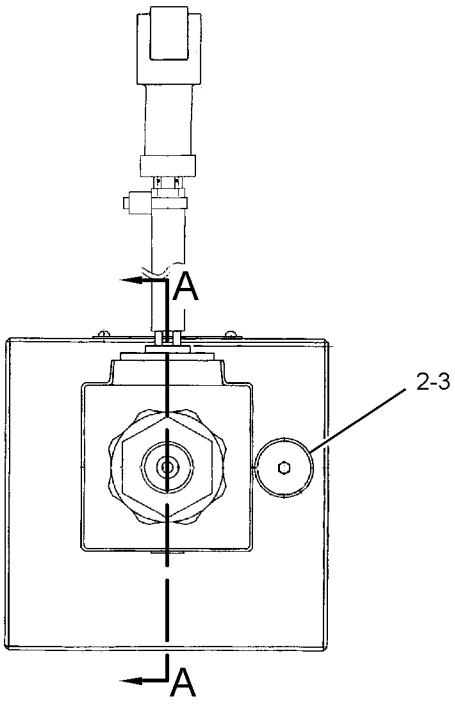

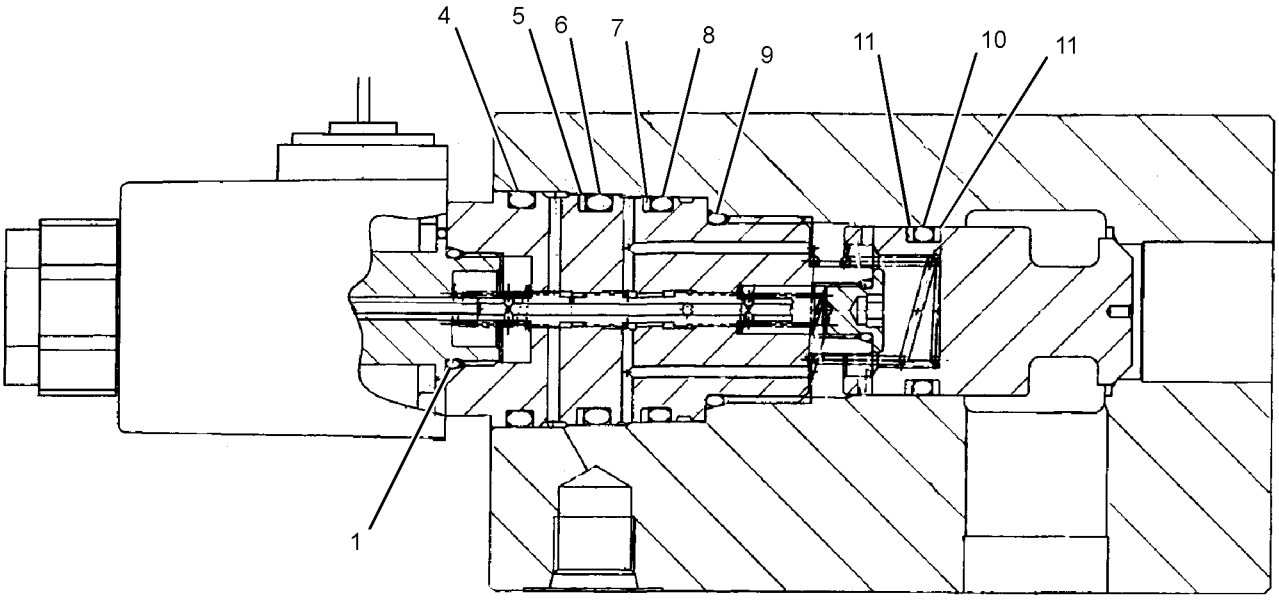

SECTION A-A

GRAPHIC #1 **<END>** g01382946

HYDRAULIC SYSTEM

234-4624 VALVE GP-CONTROL–REVERSE FLOW FAN

S/N: KHS1-UP
PART OF 292-7175 LINES GP-MOTOR
AN ATTACHMENT

SMCS-5051 **i03368904**

NOTE	REF NO	GRAPHIC REF	PART NUMBER	QTY	PART NAME 1 2 3 4 5 6 (PRODUCT LEVEL)	SEE PAGE
	1	1	**7Y-5010**	2	PLUG	
	2	1	**283-5990**	1	BODY AS-VALVE	
	3	1	**9S-8004**	2	PLUG-O-RING	
	4	1	**242-6890**	1	SPRING	
	5	1	**242-6891**	1	PLUG	
	6	1	**242-6892**	1	VALVE GP-RELIEF (LINE)	
		1	**242-6925**	1	KIT-SEAL (LINE RELIEF VALVE) (INCLUDES SEALS & RINGS)	
	7	1	**107-7068**	11	PLUG-PIPE	
	8	1	**111-9959**	3	PLUG-PIPE	
	9	1	**096-1598**	1	SPRING	
	10	1	**3J-1907**	2	SEAL-O-RING	
	11	1	**3K-0360**	1	SEAL-O-RING	
	12	1	**4K-1388**	1	SEAL-O-RING	
	13	1	**7Y-5011**	1	VALVE	

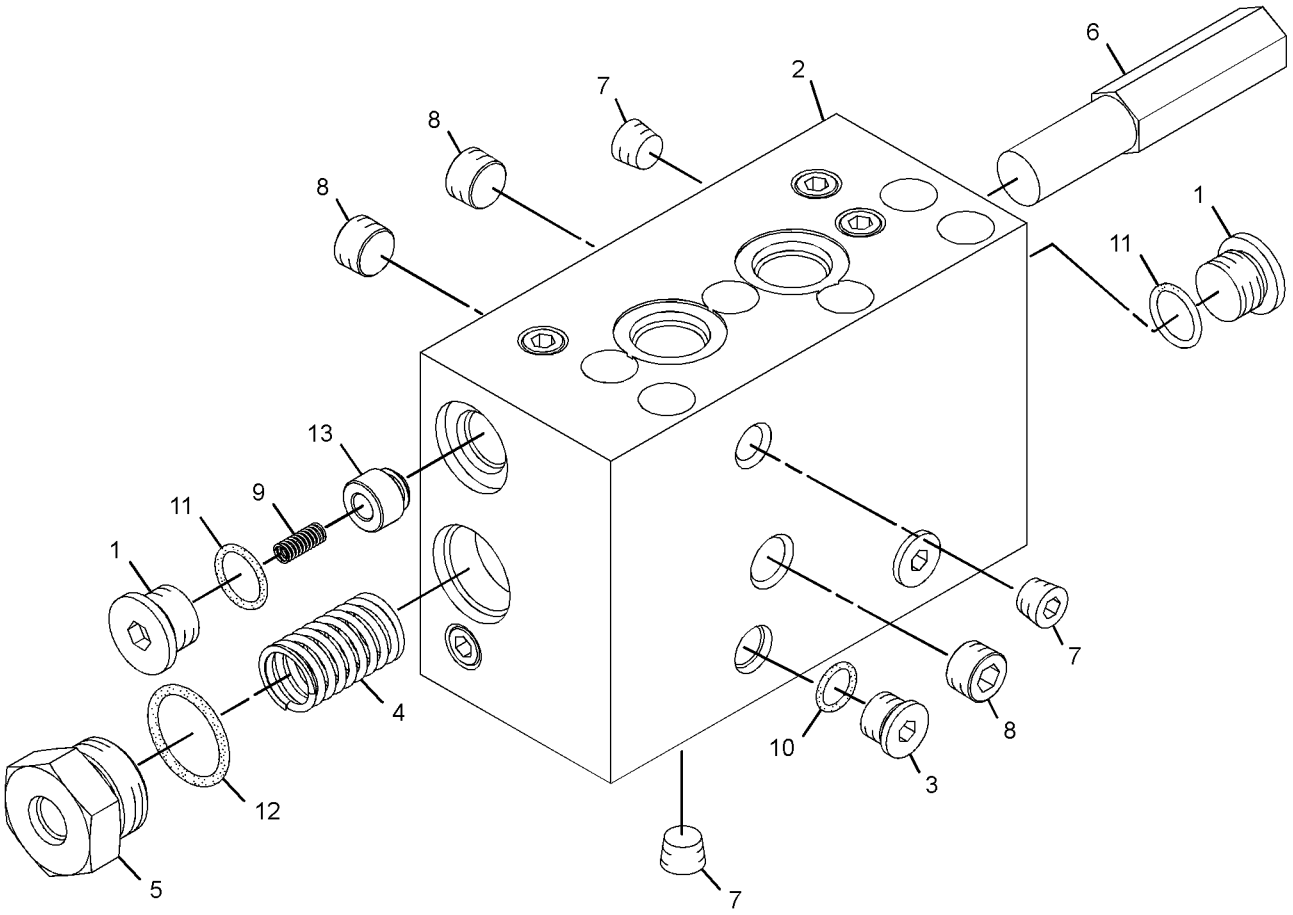

GRAPHIC #1 **<END>** g01619302

HYDRAULIC SYSTEM

254-3080 VALVE GP-CONTROL—QUICK COUPLER

S/N: JGB1-UP; KHS1-UP
PART OF 296-7133 LINES GP-PILOT
AN ATTACHMENT

SMCS-5051 **i04188499**

NOTE	REF NO	GRAPHIC REF	PART NUMBER	QTY	PART NAME 1 2 3 4 5 6 (PRODUCT LEVEL)	SEE PAGE
	1	1	**287-2352**	1	RETAINER-SPRING	
	2	1	**6E-5438**	1	SPRING	
	3	1	**6E-5439**	1	SPRING	
Y	4	1	**121-1491**	1	VALVE GP-SOLENOID (QUICK COUPLER)	794
J	5	1	**247-7587**	2	VALVE GP-PRESSURE REDUCING (QUICK COUPLER)	
Z	6	1		1	BODY-VALVE	
Z	7	1		1	STEM	
	8	1	*148-8407*	2	PLUG AS	
					(EACH INCLUDES)	
		1	**3J-1907**	1	SEAL-O-RING	
		1	**9S-4191**	1	PLUG-O-RING	
	9	1	**4J-5267**	1	SEAL-O-RING	
	10	1	**6E-2313**	1	COVER	
	11	1	**6E-5431**	5	SHIM (0.5-MM THK)	
	12	1	**6E-5434**	1	HOUSING-PILOT	
M	13	1	**7I-2272**	2	BOLT (M5X0.8X12-MM)	
	14	1	**8F-0212**	1	SEAL-O-RING	
M	15	1	**8T-4195**	2	BOLT (M10X1.5X30-MM)	
	16	1	**8T-4224**	2	WASHER-HARD (8.8X16X2-MM THK)	
	17	1	**8T-6759**	12	PLUG-PIPE	
M	18	1	**8T-6870**	2	BOLT (M8X1.25X70-MM)	
					AVAILABLE REPAIR KIT(S):	
J			**172-4432**	1	KIT-SEAL (QUICK COUPLER VALVE)	

J-KIT MARKED J SERVICES PART(S) MARKED J
M-METRIC PART
Y-SEPARATE ILLUSTRATION
Z-NOT SERVICED SEPARATELY

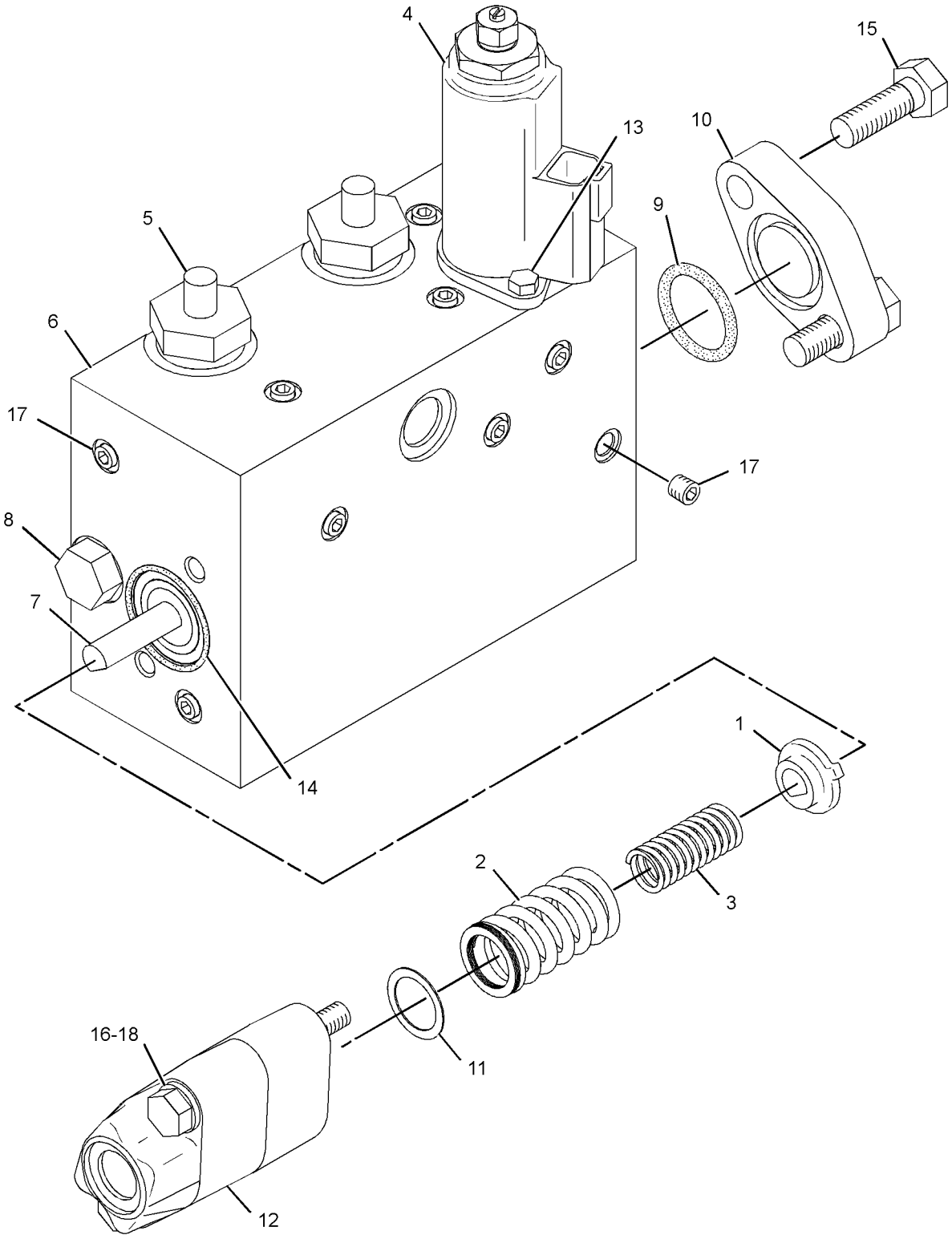

GRAPHIC #1 **<END>** g01203204

285-1531 VALVE GP-CONTROL–MEDIUM PRESSURE

S/N: JGB1-UP; KHS1-UP
PART OF 292-7168 LINES GP-PUMP
AN ATTACHMENT

SMCS-5051 **i03251364**

NOTE	REF NO	GRAPHIC REF	PART NUMBER	QTY	PART NAME 1 2 3 4 5 6 (PRODUCT LEVEL)	SEE PAGE
	1	1	**285-1777**	2	VALVE GP-RELIEF (230-BAR (3336-PSI))	
					–OR–	
A			**260-3003**	2	VALVE GP-RELIEF (160-BAR (2321-PSI))	
					(OPTIONAL SERVICE REPLACEMENT)	
					–OR–	
A			**309-9941**	2	VALVE GP-RELIEF	
					(OPTIONAL SERVICE REPLACEMENT)	

A-NOT PART OF THIS GROUP

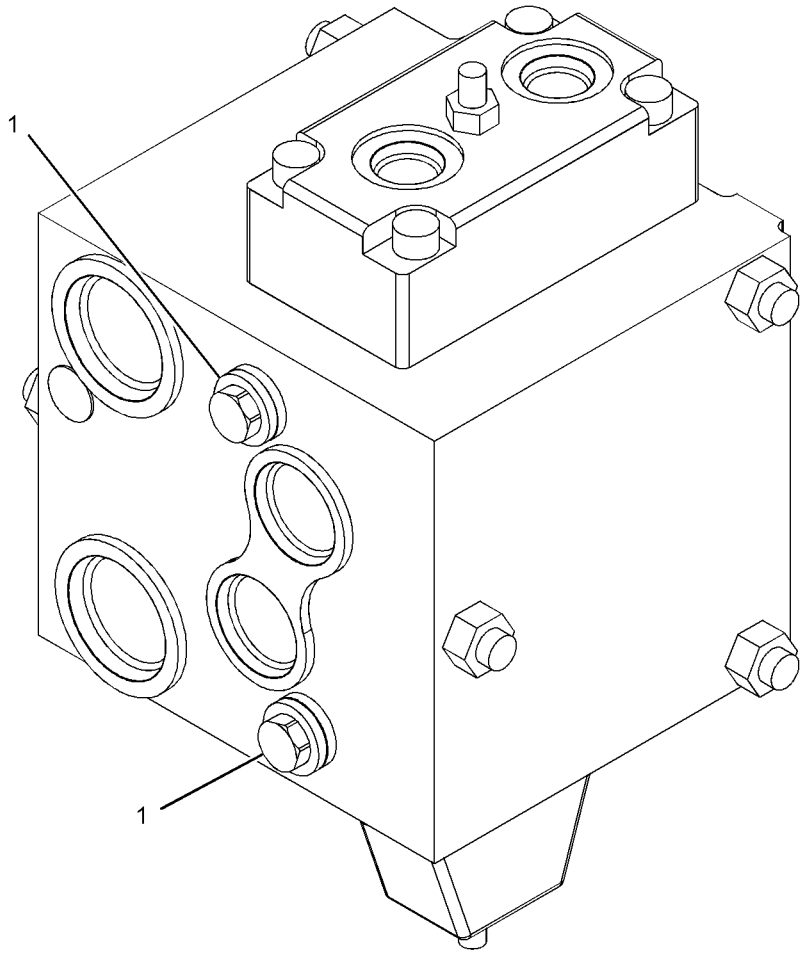

GRAPHIC #1 **<END>** g01384393

HYDRAULIC SYSTEM

323-7700 VALVE GP-CONTROL—RH

S/N: JGB1-UP; KHS1-UP
PART OF 323-7681, 323-7682 VALVE GP-MAIN CONTROL
ALSO AN ATTACHMENT

SMCS-5051 **i03128080**

NOTE	REF NO	GRAPHIC REF	PART NUMBER	QTY	PART NAME 1 2 3 4 5 6 (PRODUCT LEVEL)	SEE PAGE
	1	1	**122-7663**	4	COVER	
	2	2,3	**122-7666**	3	SPRING	
	3	2,3	**122-7682**	3	VALVE	
	4	2	**122-7720**	1	ADAPTER	
Y	5	3	**122-7756**	1	VALVE GP-RELIEF (NEGATIVE FLOW CONTROL)	775
	6	3	**122-7765**	2	PLUG-PIPE	
Y	7	2,3	**122-7768**	3	PLUG GP	691
	8	1	**122-7785**	1	COVER	
	9	1	**122-7787**	5	COVER	
	10	1	**140-0681**	1	COVER	
	11	3	**147-4297**	2	VALVE	
	12	3	**147-4299**	2	SPRING	
	13	2	*225-4818*	2	PLUG AS	
					(EACH INCLUDES)	
		2	**4J-7533**	1	SEAL-O-RING	
		2	**225-4804**	1	PLUG	
	14	3	**230-2770**	2	PLUG	
	15	2	**230-2771**	1	PLUG	
	16	2,3	**230-2772**	3	PLUG	
Y	17	2	**239-8984**	2	VALVE GP-RELIEF (BUCKET)	778
Y	17A	3	**239-8984**	1	VALVE GP-RELIEF (BOOM)	778
Y	18	1	*323-7704*	1	VALVE GP-CONTROL (WITHOUT COVERS, HOUSINGS)	739
	19	2,3	**095-1597**	6	SEAL-O-RING	
	20	2,3	**095-1791**	6	RING-BACKUP	
	21	1	*148-8395*	1	PLUG AS	
		1	**3K-0360**	1	SEAL-O-RING	
		1	**9S-8005**	1	PLUG-O-RING	
	22	2	*148-8407*	1	PLUG AS	
		2	**3J-1907**	1	SEAL-O-RING	
		2	**9S-4191**	1	PLUG-O-RING	
	23	3	**4J-0523**	1	SEAL-O-RING	
	24	2,3	**4J-0525**	5	SEAL-O-RING	
	25	2,3	**4J-0526**	5	SEAL-O-RING	
	26	2	**4J-5309**	2	SEAL-O-RING	
	27	2	**5P-2568**	1	SEAL-O-RING	
	28	3	**6V-6793**	1	RING-BACKUP	
M	29	1	**7X-2550**	8	BOLT (M12X1.75X110-MM)	
M	30	1	**7X-2553**	4	BOLT (M16X2X40-MM)	
	31	1	**8T-4223**	20	WASHER-HARD (13.5X25.5X3-MM THK)	
M	32	1	**8T-4956**	10	BOLT (M12X1.75X35-MM)	
M	33	1	**8T-5041**	2	BOLT (M12X1.75X120-MM)	
	34	1	**9X-8257**	4	WASHER (17.5X30X3.5-MM THK)	

M-METRIC PART
Y-SEPARATE ILLUSTRATION

323-7700 VALVE GP-CONTROL *(contd.)* **i03128080**

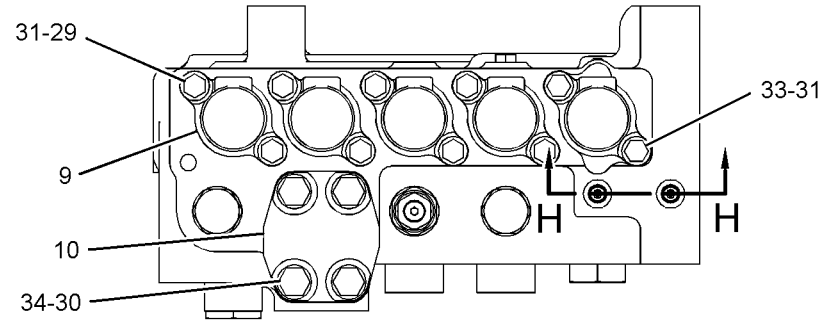

VIEW A-A

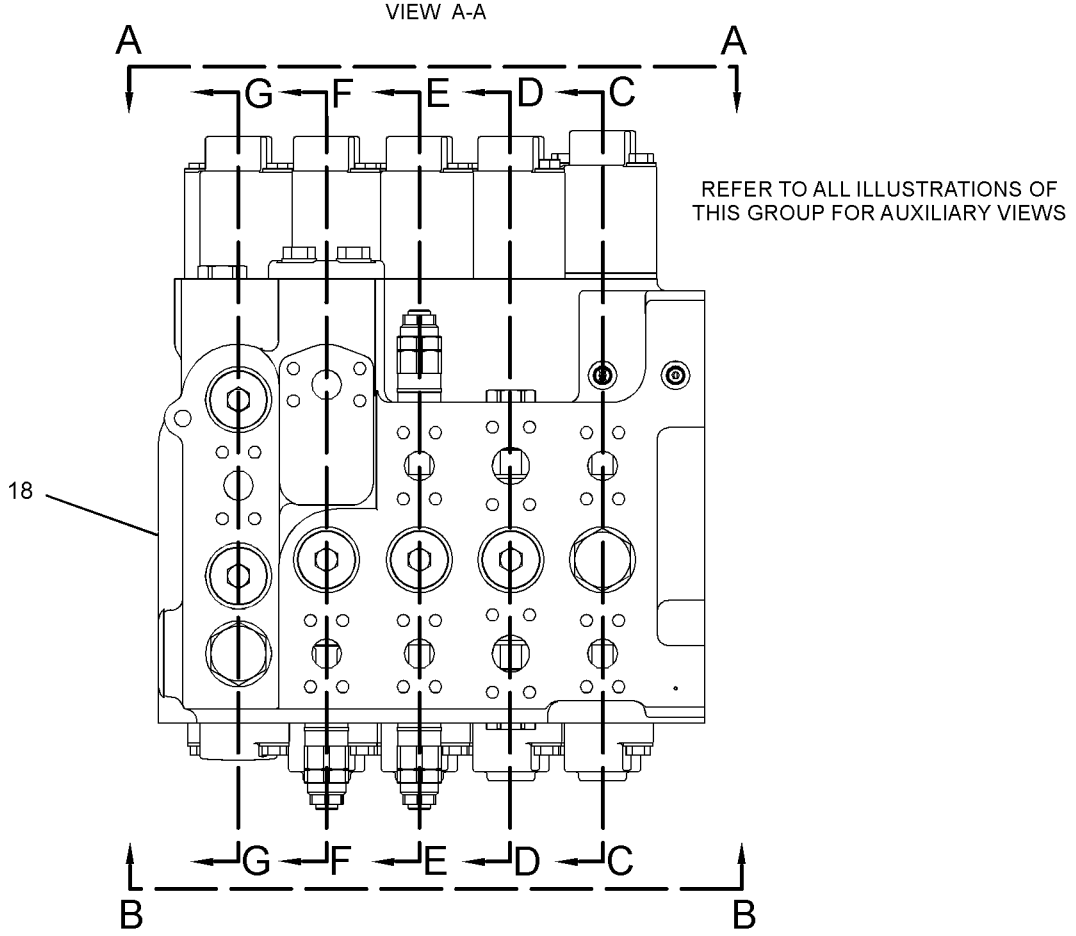

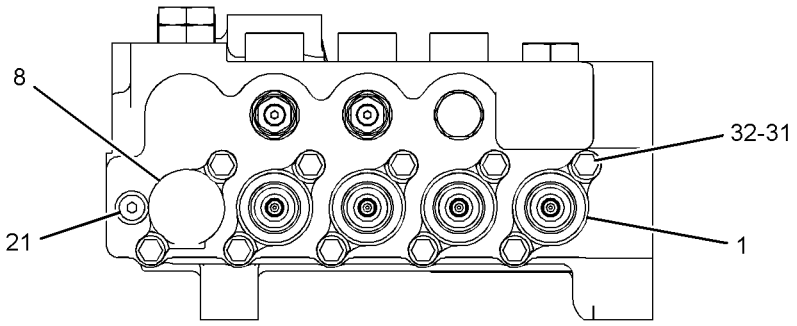

VIEW B-B

GRAPHIC #1

g01482315

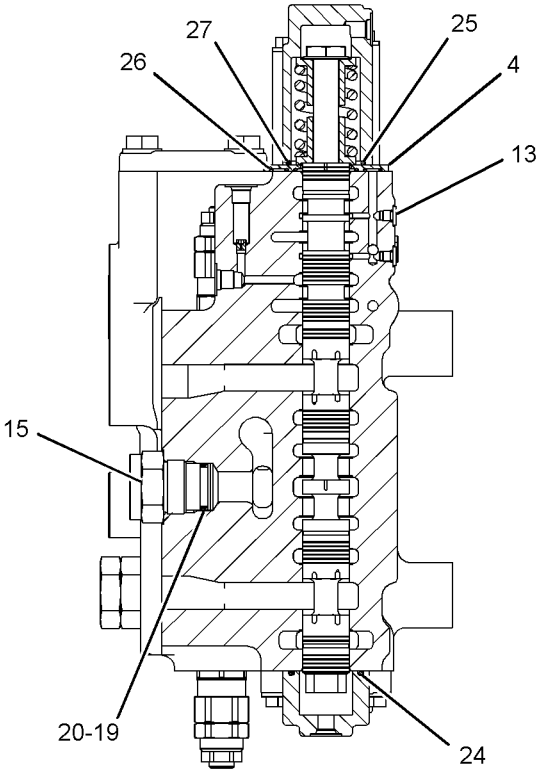

SECTION C-C

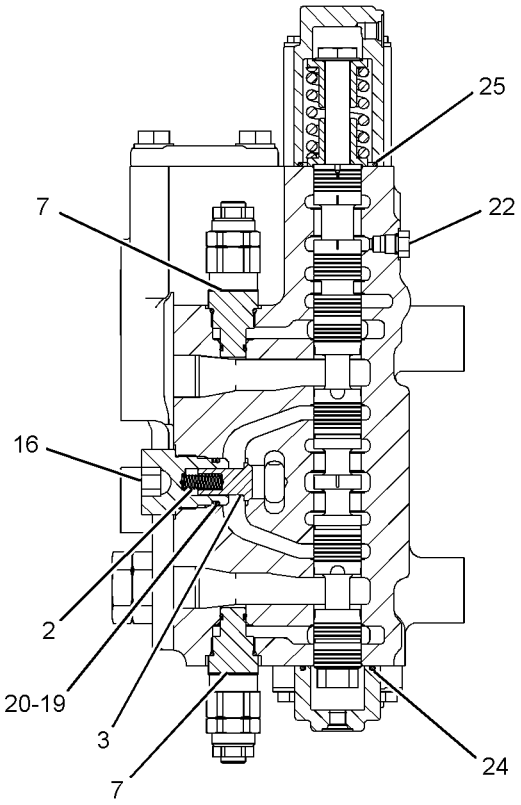

SECTION D-D

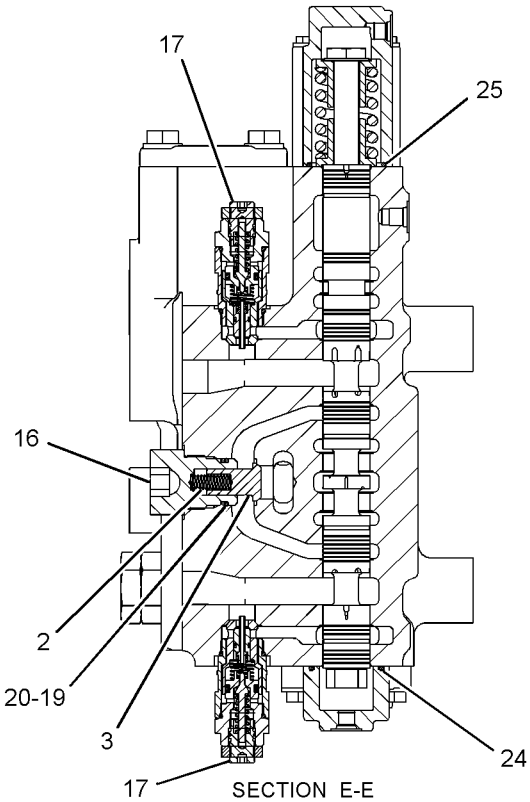

SECTION E-E

GRAPHIC #2

g01482316

323-7700 VALVE GP-CONTROL *(contd.)* **i03128080**

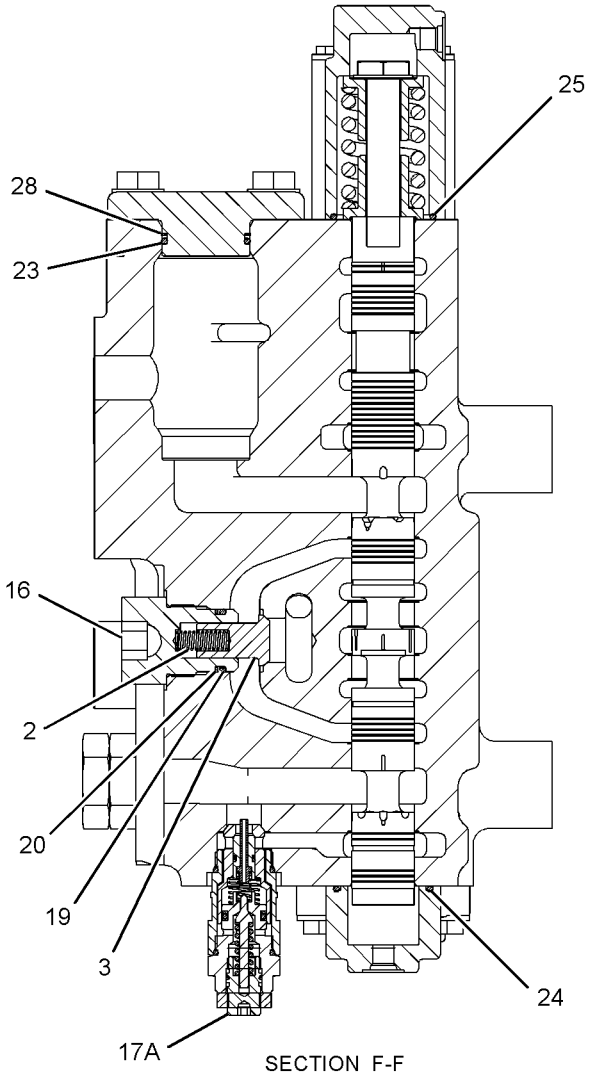

SECTION F-F

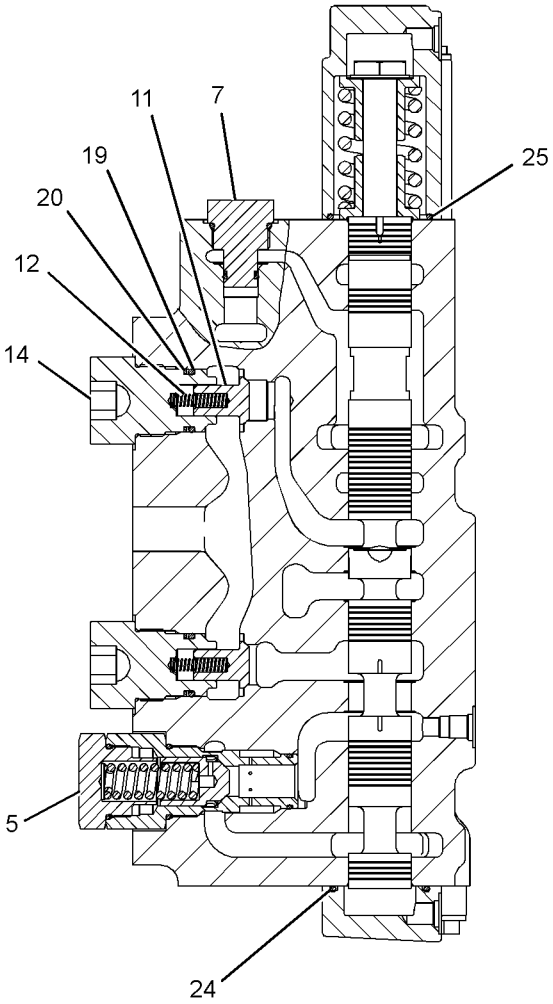

SECTION G-G

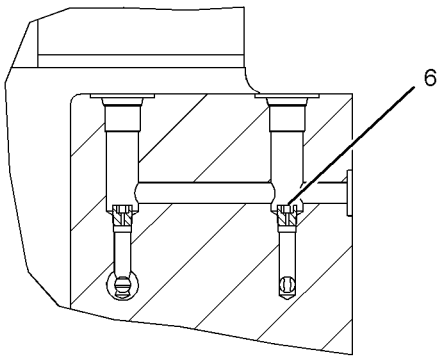

SECTION H-H

GRAPHIC #3 **<END>** g01609079

HYDRAULIC SYSTEM

323-7702 VALVE GP-CONTROL—HEAVY LIFT, LH

S/N: JGB1-UP; KHS1-UP
PART OF 323-7681 VALVE GP-MAIN CONTROL
ALSO AN ATTACHMENT

SMCS-5051 **i03498063**

NOTE	REF NO	GRAPHIC REF	PART NUMBER	QTY	PART NAME 1 2 3 4 5 6 (PRODUCT LEVEL)	SEE PAGE
	1	1	**6E-3653**	1	PLUG	
	2	1	**122-7663**	5	COVER	
	3	2	**122-7666**	1	SPRING	
	4	2	**122-7676**	1	PILOT	
	5	2	**122-7677**	1	VALVE	
	6	2	**122-7678**	1	SLEEVE	
	7	2	**122-7682**	1	VALVE	
Y	8	3	**122-7690**	1	VALVE GP-CHECK	718
Y	9	1	**122-7708**	1	VALVE GP-PRESSURE CONTROL (BOOM II, SWING)	769
	10	3	**122-7712**	1	PLUG	
	11	3	**122-7714**	1	SPRING	
	12	3	**122-7716**	1	SLEEVE	
	13	2	**122-7719**	1	SPRING	
	14	2	**122-7720**	1	ADAPTER	
Y	15	3	**122-7750**	1	VALVE GP-RELIEF (NEGATIVE FLOW CONTROL)	774
	16	3	**122-7753**	1	SPRING	
	17	2	**323-7714**	1	STOP	
	18	1	**122-7787**	3	COVER	
	19	2	**122-7788**	1	FLANGE	
	20	3	**122-7789**	1	COVER	
	21	3	**122-7848**	1	PLUG	
	22	1	**131-5675**	1	COVER	
	23	2	**131-5935**	1	SPRING	
	24	2	**131-5936**	1	PLUG	
	25	2	**131-5937**	1	PISTON	
	26	1,2	**147-4297**	3	VALVE	
	27	2	**147-4298**	2	PLUG	
	28	1,2	**147-4299**	3	SPRING	
	29	1,2,3	*225-4818*	5	PLUG AS	
					(EACH INCLUDES)	
		1,2,3	**4J-7533**	1	SEAL-O-RING	
		1,2,3	**225-4804**	1	PLUG	
	30	1	*225-4820*	1	PLUG AS	
		1	**3J-7354**	1	SEAL-O-RING	
		1	**225-4821**	1	PLUG	
	31	2	**230-2771**	1	PLUG	
	32	2	**230-2772**	1	PLUG	
	33	1	**230-2773**	1	PLUG	
	34	2	**232-4030**	1	SLEEVE	
Y	35	2	**239-8983**	1	VALVE GP-RELIEF	777
Y	36	3	**255-5588**	1	VALVE GP-REGENERATION	773
Y	37	3	**270-5691**	1	VALVE GP-RELIEF (LINE)	780
Y	38	1	**270-5696**	1	VALVE GP-LOAD CONTROL	747
Y	39	2	**270-5730**	1	VALVE GP-RELIEF (MAIN)	782
Y	40	1	*323-7705*	1	VALVE GP-CONTROL (WITHOUT COVERS, HOUSINGS)	741
M	41	1	**085-8091**	4	BOLT (M10X1.5X55-MM)	
	42	2	**095-1597**	2	SEAL-O-RING	
	43	2	**095-1791**	2	RING-BACKUP	
	44	1,2	**122-7797**	3	RING	
	45	1	*148-8395*	1	PLUG AS	
		1	**3K-0360**	1	SEAL-O-RING	
		1	**9S-8005**	1	PLUG-O-RING	
	47	3	**2J-1826**	1	SEAL-O-RING	
	48	2	**2S-4078**	1	SEAL-O-RING	
	49	3	**3D-2824**	1	SEAL-O-RING	

323-7702 **VALVE GP-CONTROL** *(contd.)* **i03498063**

NOTE	REF NO	GRAPHIC REF	PART NUMBER	QTY	PART NAME 1 2 3 4 5 6 (PRODUCT LEVEL)	SEE PAGE
	50	1	**4I-3569**	1	RING-BACKUP	
	51	2,3	**4J-0525**	5	SEAL-O-RING	
	52	2,3	**4J-0526**	4	SEAL-O-RING	
	53	2,3	**4J-5309**	4	SEAL-O-RING	
	54	2	**5P-2568**	1	SEAL-O-RING	
	55	2	**6V-1250**	1	SEAL-O-RING	
	56	1,2	**6V-5326**	3	SEAL-O-RING	
M	57	1	**7X-2475**	2	BOLT (M16X2X130-MM)	
M	58	1	**7X-2550**	6	BOLT (M12X1.75X110-MM)	
M	59	3	**7X-2621**	1	BOLT (M10X1.5X12-MM)	
	60	1	**7Y-5219**	1	SEAL-O-RING	
	61	1	**8T-4121**	4	WASHER-HARD (11X21X2.5-MM THK)	
M	62	1	**8T-4174**	2	BOLT (M16X2X120-MM)	
	63	1	**8T-4223**	22	WASHER-HARD (13.5X25.5X3.0-MM THK)	
M	64	1	**8T-4648**	4	BOLT (M12X1.75X70-MM)	
M	65	1	**8T-4956**	10	BOLT (M12X1.75X35-MM)	
M	66	1	**8T-5041**	2	BOLT (M12X1.75X120-MM)	
	67	1	**9X-8257**	4	WASHER (17.5X30.0X3.5-MM THK)	

M-METRIC PART
Y-SEPARATE ILLUSTRATION

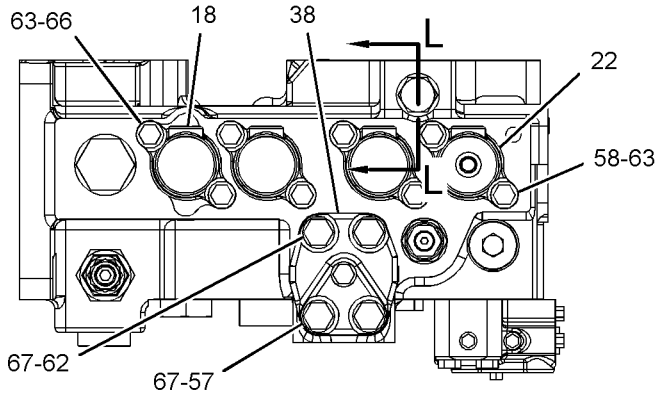

VIEW C-C

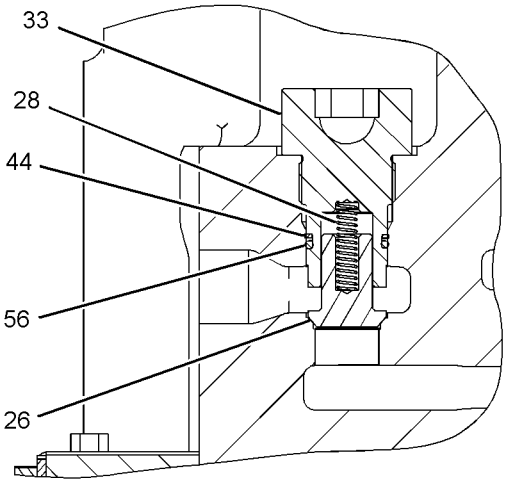

SECTION K-K

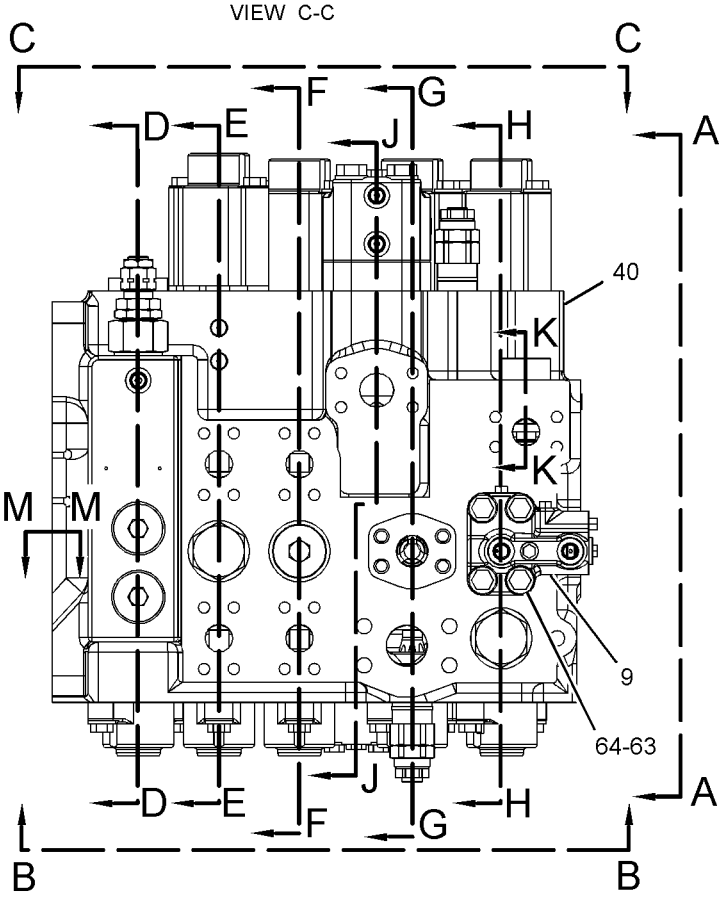

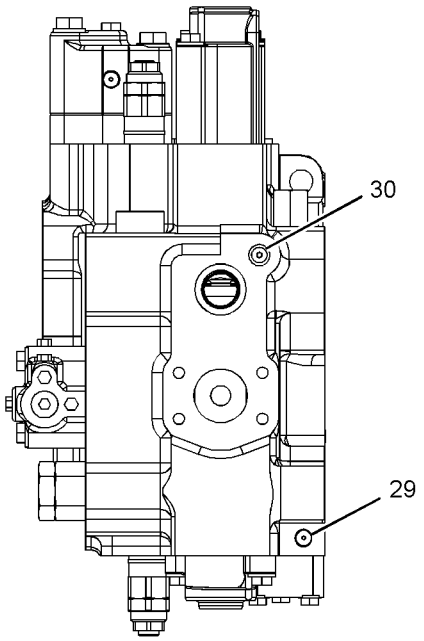

VIEW A-A

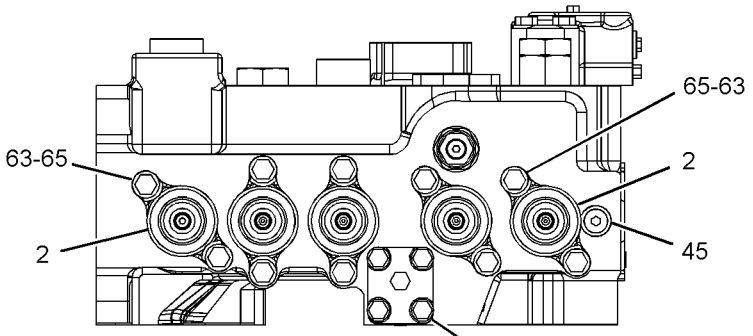

VIEW B-B

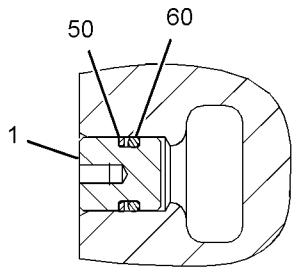

SECTION M-M

REFER TO ALL ILLUSTRATIONS OF THIS GROUP FOR AUXILIARY VIEWS

GRAPHIC #1

g01835833

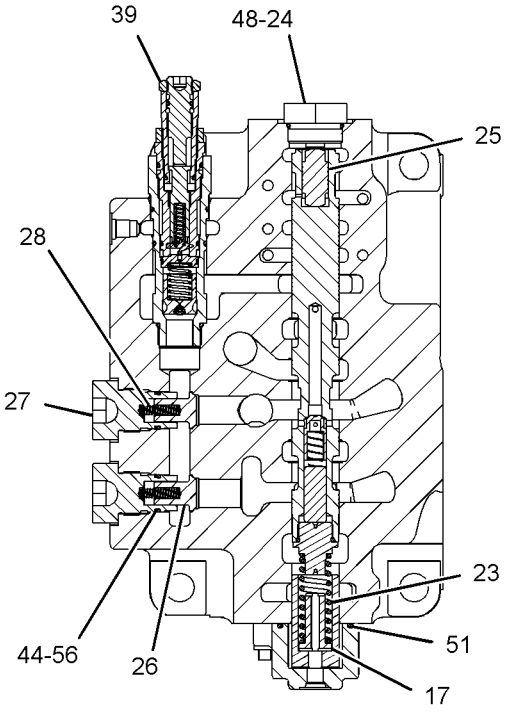

SECTION D-D

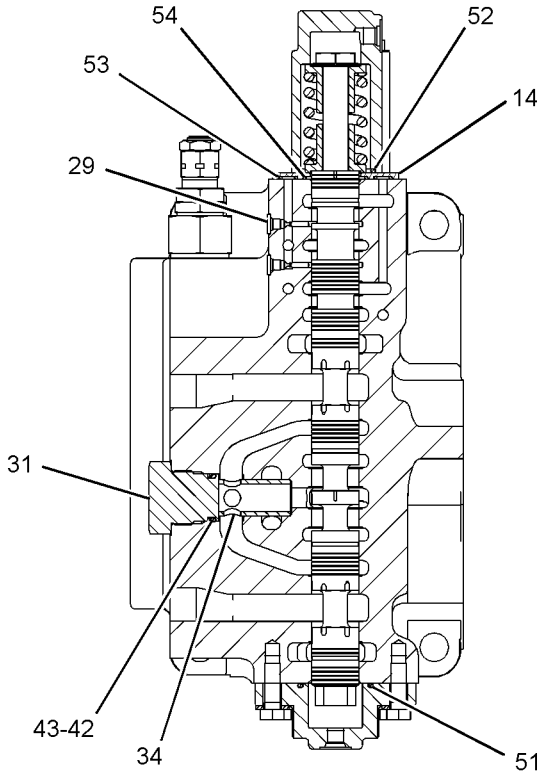

SECTION E-E

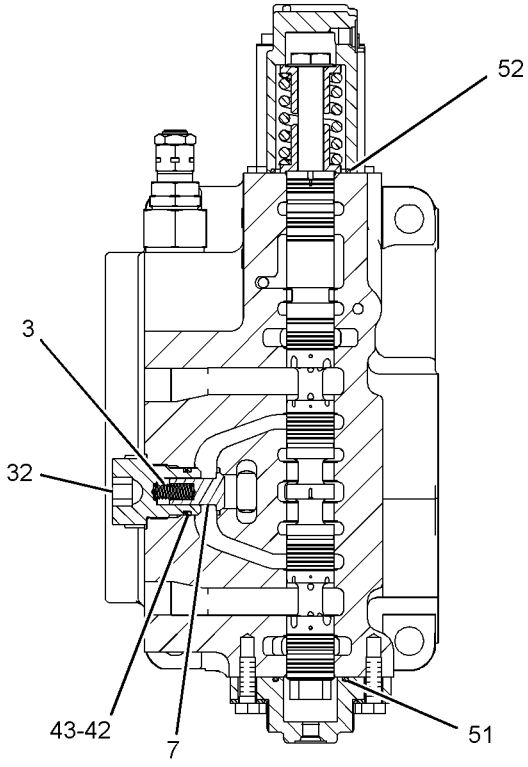

SECTION F-F

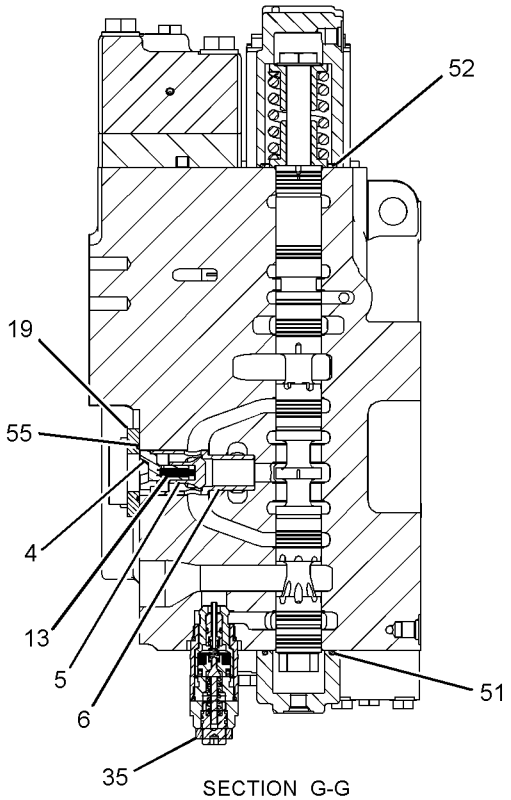

SECTION G-G

GRAPHIC #2

g01835834

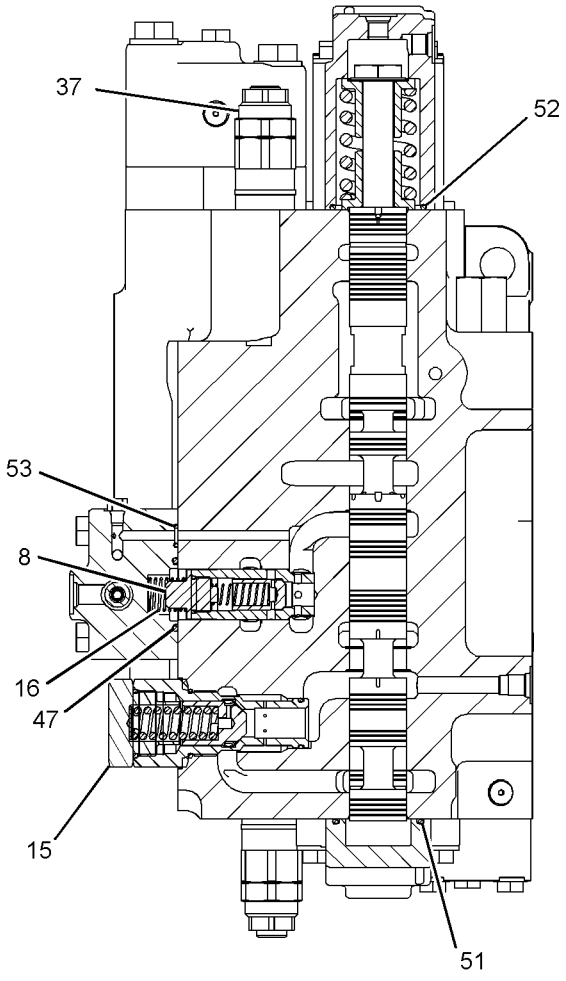

SECTION H-H

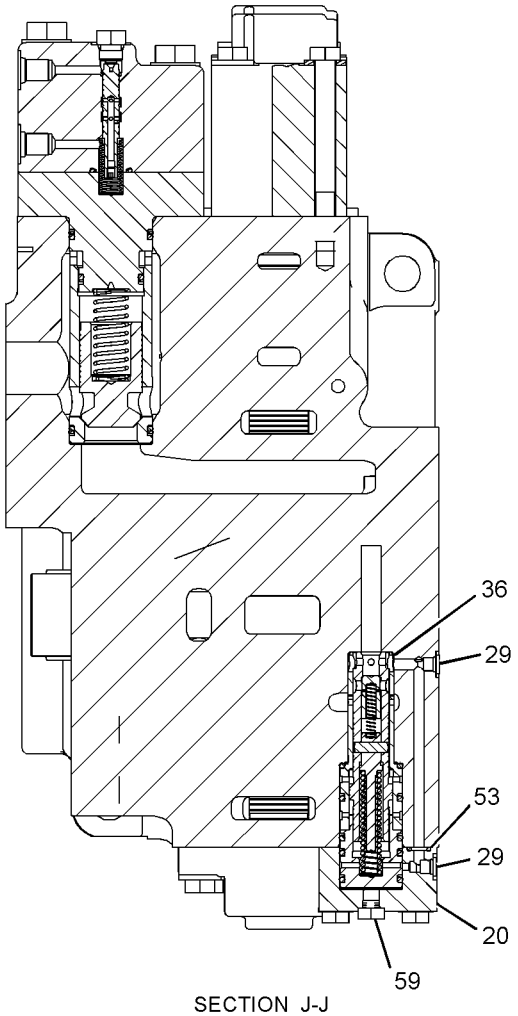

SECTION J-J

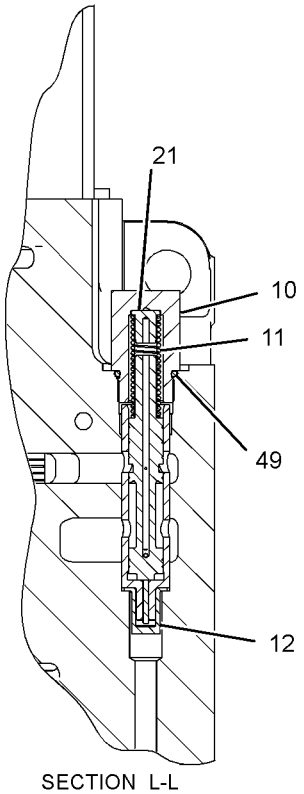

SECTION L-L

GRAPHIC #3 **<END>** g01740797

323-7703 VALVE GP-CONTROL—MAIN CONTROL VALVE, LH

S/N: JGB1-UP; KHS1-UP
STICK LOAD CONTROL, HEAVY LIFT
PART OF 323-7682 VALVE GP-MAIN CONTROL
AN ATTACHMENT

SMCS-5051 **i04176629**

NOTE	REF NO	GRAPHIC REF	PART NUMBER	QTY	PART NAME 1 2 3 4 5 6 (PRODUCT LEVEL)	SEE PAGE
	1	1	**6E-3653**	1	PLUG	
	2	1,2	**122-7663**	5	COVER	
	3	1	**122-7666**	1	SPRING	
	4	1	**122-7676**	1	PILOT	
	5	1	**122-7677**	1	VALVE	
	6	1	**122-7678**	1	SLEEVE	
	7	1	**122-7682**	1	VALVE	
Y	8	1	**122-7690**	1	VALVE GP-CHECK (BOOM II)	718
Y	9	1	**122-7708**	1	VALVE GP-PRESSURE CONTROL (BOOM II, SWING)	769
	10	2	**122-7712**	1	PLUG	
	11	2	**122-7714**	1	SPRING	
	12	2	**122-7716**	1	SLEEVE	
	13	1	**122-7719**	1	SPRING	
	14	2	**122-7720**	1	ADAPTER	
Y	15	1	**122-7750**	1	VALVE GP-RELIEF (NEGATIVE FLOW CONTROL)	774
	16	1	**122-7753**	1	SPRING	
Y	17	1	**122-7768**	1	PLUG GP	691
	18	2	**122-7787**	3	COVER	
	19	1	**122-7788**	1	FLANGE	
	20	2	**122-7789**	1	COVER	
	21	2	**122-7848**	1	PLUG	
	22	2	**131-5675**	1	COVER	
	23	2	**131-5935**	1	SPRING	
	24	2	**131-5936**	1	PLUG	
	25	2	**131-5937**	1	PISTON	
	26	1	**140-0681**	1	COVER	
	27	1	**147-4297**	3	VALVE	
	28	1	**147-4298**	2	PLUG	
	29	1	**147-4299**	3	SPRING	
	30	1,2	*225-4818*	5	PLUG AS	
					(EACH INCLUDES)	
		1,2	**4J-7533**	1	SEAL-O-RING	
		1,2	**225-4804**	1	PLUG	
	31	1	*225-4820*	1	PLUG AS	
		1	**3J-7354**	1	SEAL-O-RING	
		1	**225-4821**	1	PLUG	
	32	1	**230-2771**	1	PLUG	
	33	1	**230-2772**	1	PLUG	
	34	1	**230-2773**	1	PLUG	
	35	1	**232-4030**	1	SLEEVE	
Y	36	1	**239-8983**	1	VALVE GP-RELIEF (STICK)	777
Y	37	2	**255-5588**	1	VALVE GP-REGENERATION (STICK)	773
CY	38	1	**352-7231**	1	VALVE GP-RELIEF (PILOT OPERATED)	786
Y	39	2	*323-7705*	1	VALVE GP-CONTROL (WITHOUT COVERS, HOUSINGS)	741
M	40	2	**085-8091**	4	BOLT (M10X1.5X55-MM)	
	41	1	**095-1597**	2	SEAL-O-RING	
	42	1	**095-1791**	2	RING-BACKUP	
	43	1	**122-7797**	3	RING	
	44	1	*148-8395*	1	PLUG AS	
		1	**3K-0360**	1	SEAL-O-RING	
		1	**9S-8005**	1	PLUG-O-RING	
	45	2	**323-7714**	1	STOP	
	46	1	**2J-1826**	1	SEAL-O-RING	
	47	2	**2S-4078**	1	SEAL-O-RING	

323-7703 VALVE GP-CONTROL *(contd.)* i04176629

NOTE	REF NO	GRAPHIC REF	PART NUMBER	QTY	PART NAME 1 2 3 4 5 6 (PRODUCT LEVEL)	SEE PAGE
	48	2	**3D-2824**	1	SEAL-O-RING	
	49	1	**4I-3569**	1	RING-BACKUP	
	50	1	**4J-0523**	1	SEAL-O-RING	
	51	1,2	**4J-0525**	5	SEAL-O-RING	
	52	2	**4J-0526**	4	SEAL-O-RING	
	53	2	**4J-5309**	4	SEAL-O-RING	
	54	2	**5P-2568**	1	SEAL-O-RING	
	55	1	**6V-1250**	1	SEAL-O-RING	
	56	1	**6V-5326**	3	SEAL-O-RING	
	57	1	**6V-6793**	1	RING-BACKUP	
M	58	2	**7X-2550**	6	BOLT (M12X1.75X110-MM)	
M	59	1	**7X-2553**	4	BOLT (M16X2X40-MM)	
M	60	2	**7X-2621**	1	BOLT (M10X1.5X12-MM)	
	61	1	**7Y-5219**	1	SEAL-O-RING	
	62	2	**8T-4121**	4	WASHER-HARD (11X21X2.5-MM THK)	
	63	1,2	**8T-4223**	22	WASHER-HARD (13.5X25.5X3-MM THK)	
M	64	1	**8T-4648**	4	BOLT (M12X1.75X70-MM)	
M	65	1,2	**8T-4956**	10	BOLT (M12X1.75X35-MM)	
M	66	2	**8T-5041**	2	BOLT (M12X1.75X120-MM)	
	67	1	**9X-8257**	4	WASHER (17.5X30X3.5-MM THK)	

C-CHANGE FROM PREVIOUS TYPE
M-METRIC PART
Y-SEPARATE ILLUSTRATION

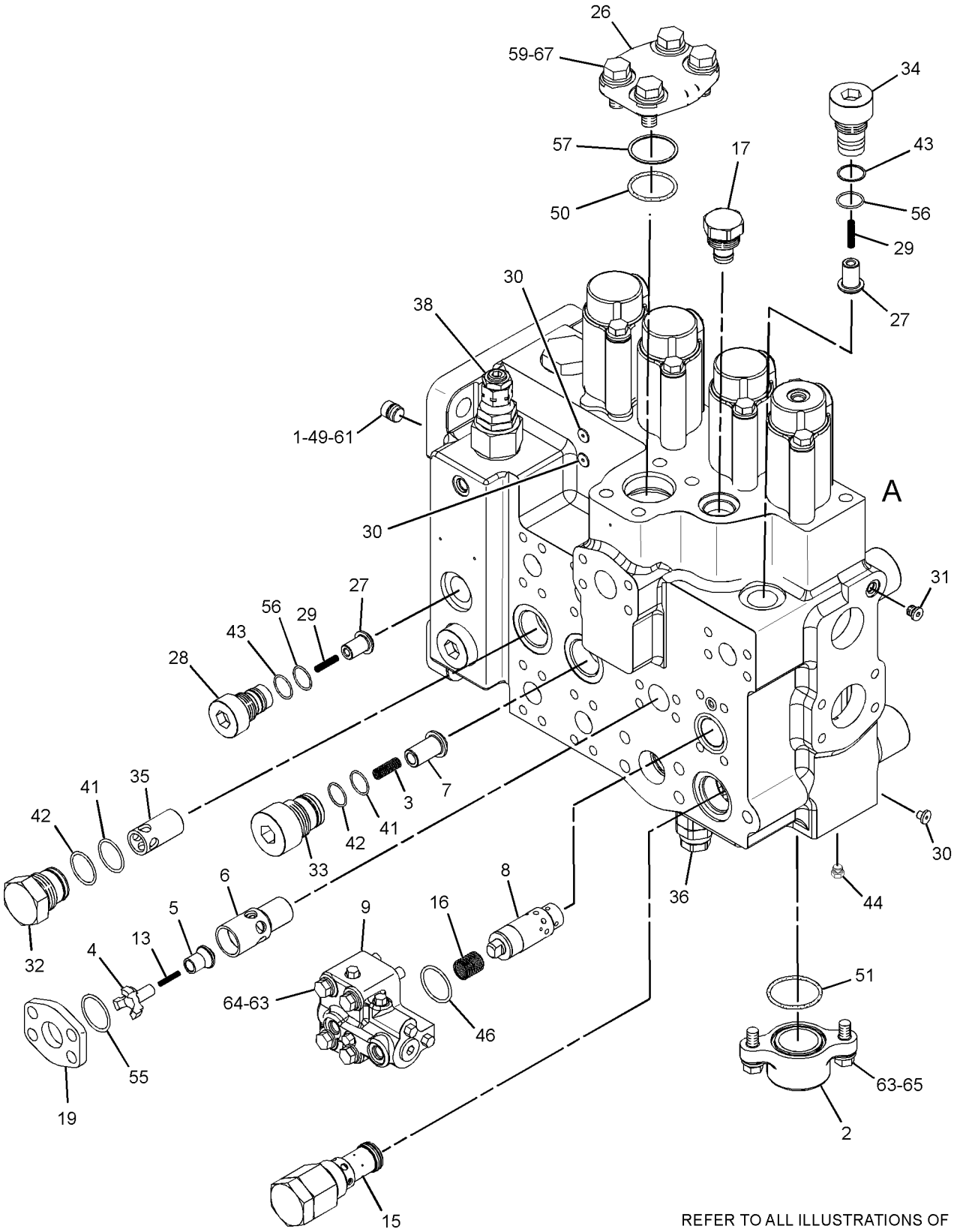

REFER TO ALL ILLUSTRATIONS OF THIS GROUP FOR AUXILIARY VIEWS

GRAPHIC #1

g01458212

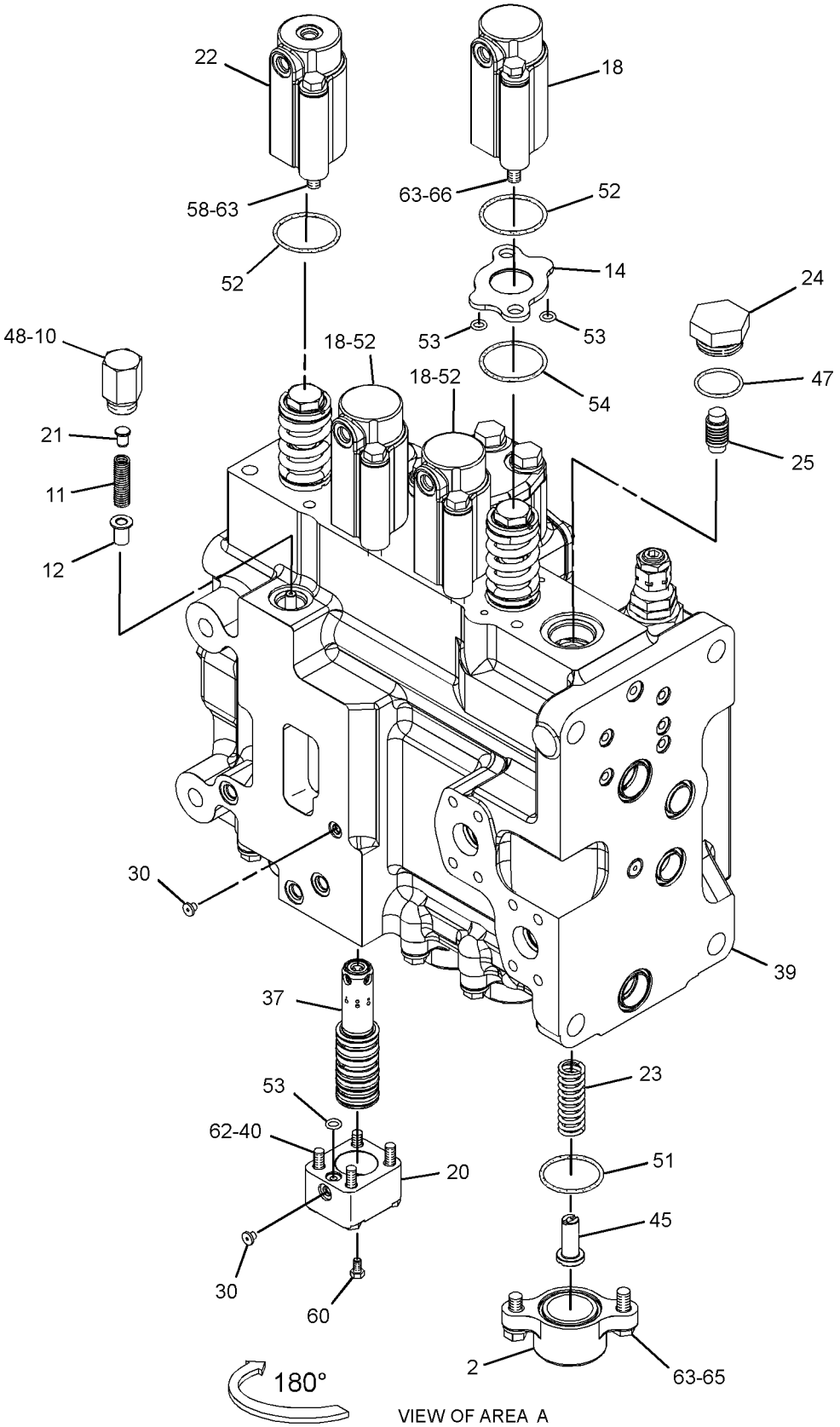

GRAPHIC #2

<END>

g01685102

323-7704 VALVE GP-CONTROL—WITHOUT COVERS, HOUSINGS

S/N: JGB1-UP; KHS1-UP
PART OF 323-7700 VALVE GP-CONTROL
ALSO AN ATTACHMENT

SMCS-5051 **i03128101**

NOTE	REF NO	GRAPHIC REF	PART NUMBER	QTY	PART NAME 1 2 3 4 5 6 (PRODUCT LEVEL)	SEE PAGE
M	1	1	**122-7673**	5	BOLT-SHOULDER (M12X1.75X10-MM)	
	2	1	**122-7674**	10	RETAINER	
	3	1	**122-7692**	1	SPRING	
	4	1	**122-7693**	1	SPRING	
	5	1	**122-7694**	3	SPRING	

M-METRIC PART

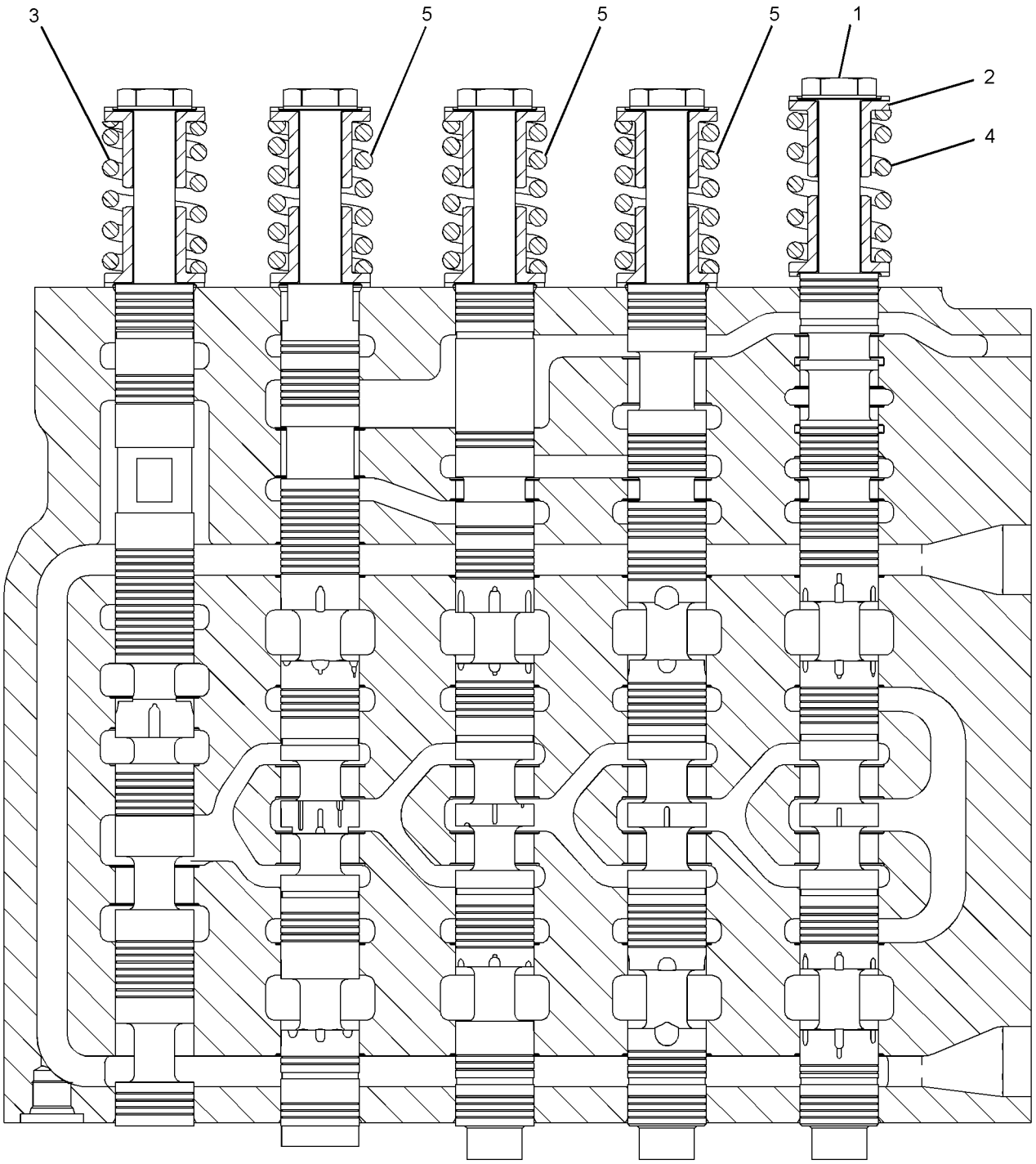

GRAPHIC #1 **<END>** g01469933

HYDRAULIC SYSTEM

323-7705 VALVE GP-CONTROL—WITHOUT COVERS, HOUSINGS

S/N: JGB1-UP; KHS1-UP
PART OF 323-7702, 323-7703 VALVE GP-CONTROL
ALSO AN ATTACHMENT

SMCS-5051 **i03498062**

NOTE	REF NO	GRAPHIC REF	PART NUMBER	QTY	PART NAME 1 2 3 4 5 6 (PRODUCT LEVEL)	SEE PAGE
	1	1	**131-5939**	1	DOWEL	
M	2	1	**122-7673**	4	BOLT-SHOULDER (M12X1.75X10-MM)	
	3	1	**122-7674**	8	RETAINER	
	4	1	**122-7692**	1	SPRING	
	5	1	**122-7693**	1	SPRING	
	6	1	**122-7694**	2	SPRING	
	7	1	**122-7695**	1	SPRING	
	8	1	**131-5938**	1	VALVE	
	9	1	**3D-2824**	1	SEAL-O-RING	
					PARTS SHOWN IN GRAPHIC(S) WITHOUT A REFERENCE NUMBER ARE NOT SERVICED SEPARATELY	

M-METRIC PART

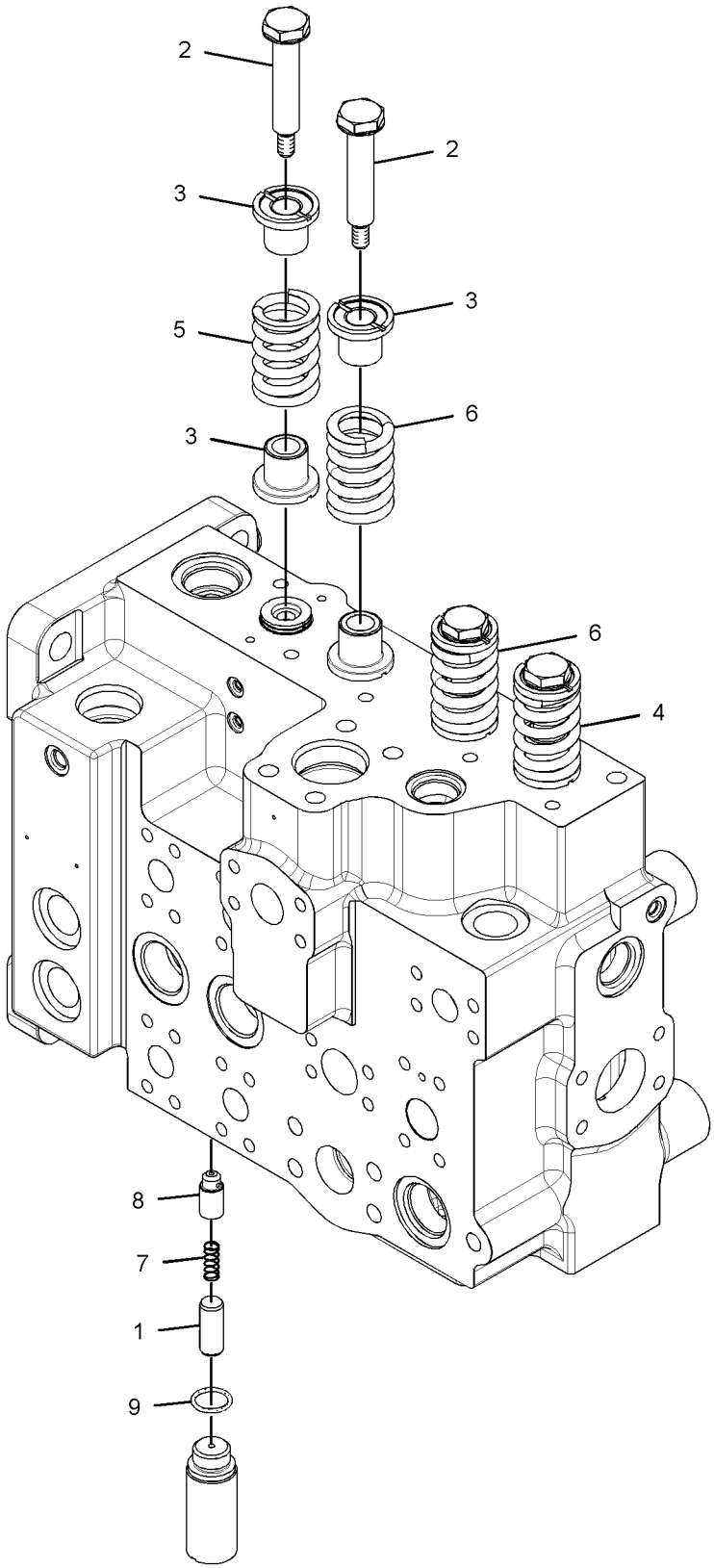

GRAPHIC #1 **<END>** g01680913

123-2515 VALVE GP-COUNTERWEIGHT CONTROL

S/N: JGB1-UP
PART OF 227-0459 LINES GP-REAR ATTACHMENT
AN ATTACHMENT

SMCS-5408 **i01233936**

NOTE	REF NO	GRAPHIC REF	PART NUMBER	QTY	PART NAME 1 2 3 4 5 6 (PRODUCT LEVEL)	SEE PAGE
	1	1	**7I-0135**	2	PLUG	
	2	1	**099-3990**	1	BODY	
	3	1	**093-3093**	1	ROD	
M	4	1	**1R-6484**	2	NUT (M10X1.25-THD)	
	5	1	**093-3094**	2	ROD	
M	6	1	**095-6636**	4	NUT (M8X1.25-THD)	
	7	1	**102-7024**	1	VALVE GP-RELIEF	
		1	**093-3328**	1	SEAL-O-RING	
		1	**095-1578**	1	SEAL-O-RING	
	8	1	**7I-0134**	2	PLUG	

M-METRIC PART

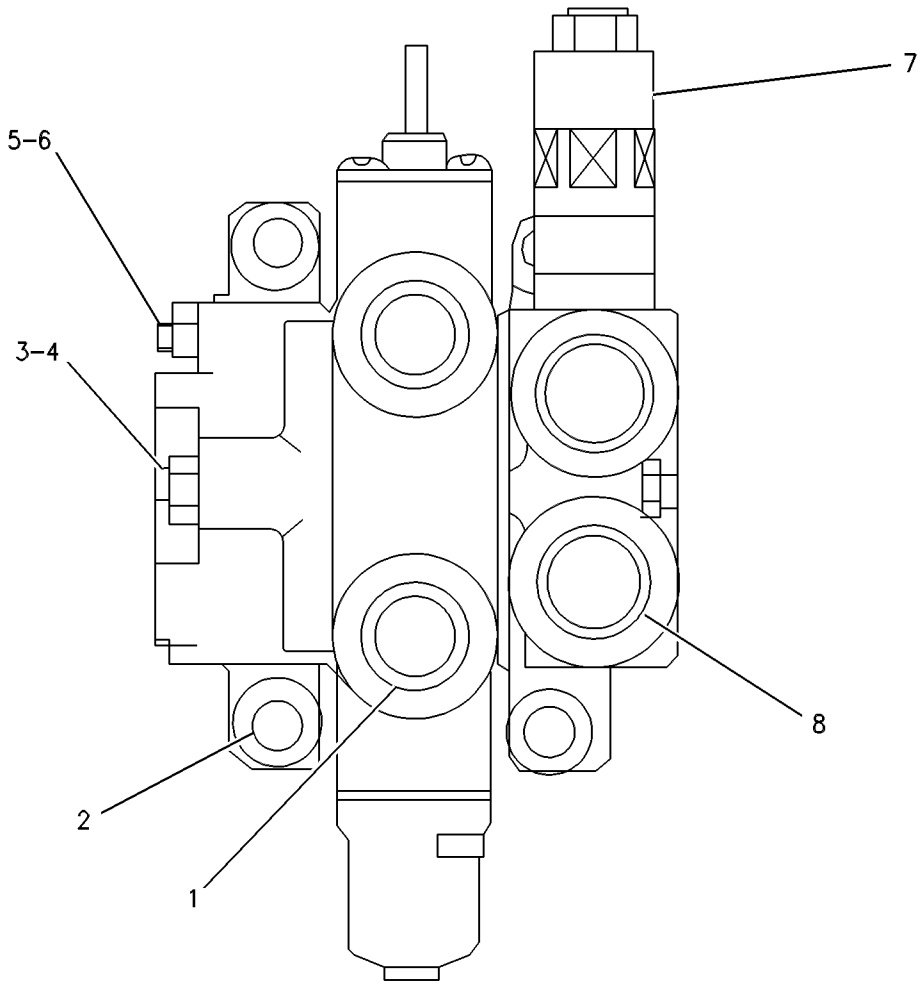

GRAPHIC #1 **<END>** g00268644

HYDRAULIC SYSTEM

4I-7836 VALVE GP-FLOW CONTROL

S/N: JGB1-UP; KHS1-UP
PART OF 296-7127, 302-3143 LINES GP-PILOT
AN ATTACHMENT

SMCS-5137 **i00619511**

NOTE	REF NO	GRAPHIC REF	PART NUMBER	QTY	PART NAME 1 2 3 4 5 6 (PRODUCT LEVEL)	SEE PAGE
	1	1	**6I-6904**	1	CONNECTOR	
	2	1	**095-1582**	1	SEAL-O-RING	
	3	1	**6I-6905**	1	BODY	
	4	1	**099-0365**	2	SPRING	
	5	1	**099-0367**	1	PLUNGER AS	
	6	1	**6I-6907**	1	SLEEVE	
	7	1	**095-1522**	2	SEAL-O-RING	
	8	1	**6V-8754**	1	RING-RETAINING	

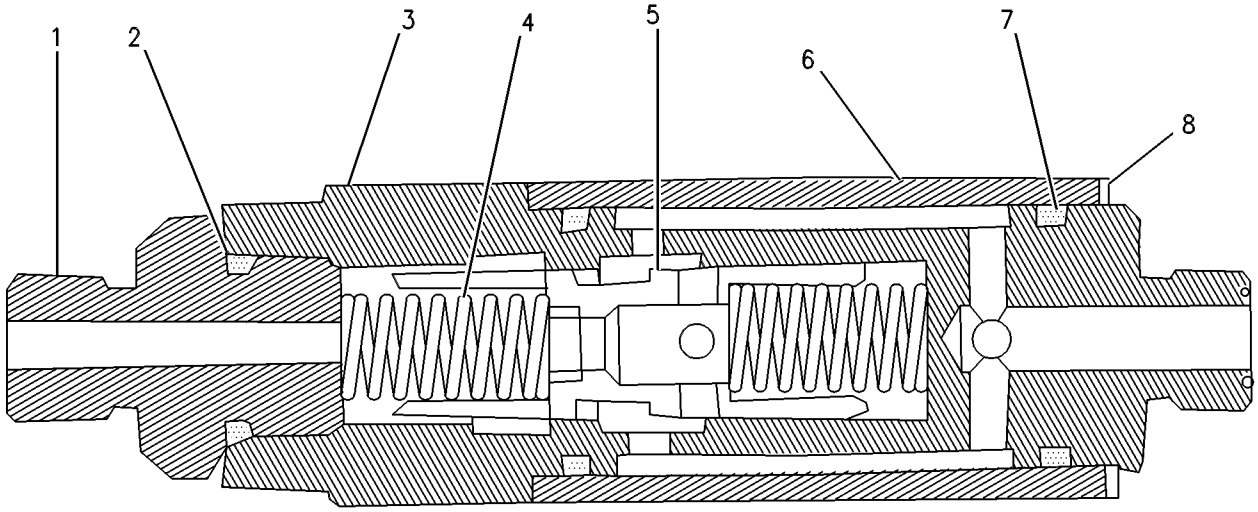

GRAPHIC #1 **<END>** g00259248

263-1964 VALVE GP-LOAD CONTROL—BOOM CYLINDER

S/N: JGB1-UP; KHS1-UP
PART OF 296-7134 LINES GP-BOOM CYLINDER
AN ATTACHMENT

SMCS-5067, 5117, 5147, 5811 **i03499381**

NOTE	REF NO	GRAPHIC REF	PART NUMBER	QTY	PART NAME 1 2 3 4 5 6 (PRODUCT LEVEL)	SEE PAGE
	1	1	**2S-2596**	1	SPRING	
	2	1	**9T-1614**	1	VALVE	
	3	1	**8J-6815**	3	PLUG-ORIFICE	
	4	1	**293-0653**	1	GUIDE AS	
	5	1	**157-0935**	3	SHIM (0.1-MM THK)	
	6	1	**194-4741**	1	PLUG AS	
	6A	1	**4T-0987**	1	BUSHING	
		1	**9T-1615**	1	PLUG	
	8	1	**201-3145**	1	PLUG	
	9	1	**201-3146**	1	PISTON	
	10	1	**203-2076**	1	SPRING	
	11	1	**8T-6759**	1	PLUG-PIPE	
	12	1	**211-4185**	1	POPPET	
CY	13	1	**270-5731**	1	VALVE GP-RELIEF (LINE)	784
	14	1	**221-5138**	1	RETAINER	
	15	1	**263-7047**	1	POPPET	
	16	1	**222-0298**	1	GUIDE	
	17	1	**222-3347**	1	VALVE GP-FLOW CONTROL	
		1	**152-5441**	1	PLUG	
	18	1	**122-7797**	1	RING	
	19	1	*225-4818*	4	PLUG AS	
					(EACH INCLUDES)	
		1	**4J-7533**	1	SEAL-O-RING	
		1	**225-4804**	1	PLUG	
	20	1	*225-4820*	4	PLUG AS	
					(EACH INCLUDES)	
		1	**225-4821**	1	PLUG	
		1	**3J-7354**	1	SEAL-O-RING	
	21	1	**1P-3704**	1	SEAL-RECTANGULAR	
	22	1	**3J-1907**	1	SEAL-O-RING	
B	23	1	**5M-9624**	9	SHIM (0.25-MM THK)	
B	24	1	**6J-6855**	9	SHIM (0.12-MM THK)	
	25	1	**6V-5326**	1	SEAL-O-RING	
	26	1	**7M-8485**	3	SEAL-O-RING	

B-USE AS REQUIRED
C-CHANGE FROM PREVIOUS TYPE
Y-SEPARATE ILLUSTRATION

263-1964 VALVE GP-LOAD CONTROL *(contd.)* i03499381

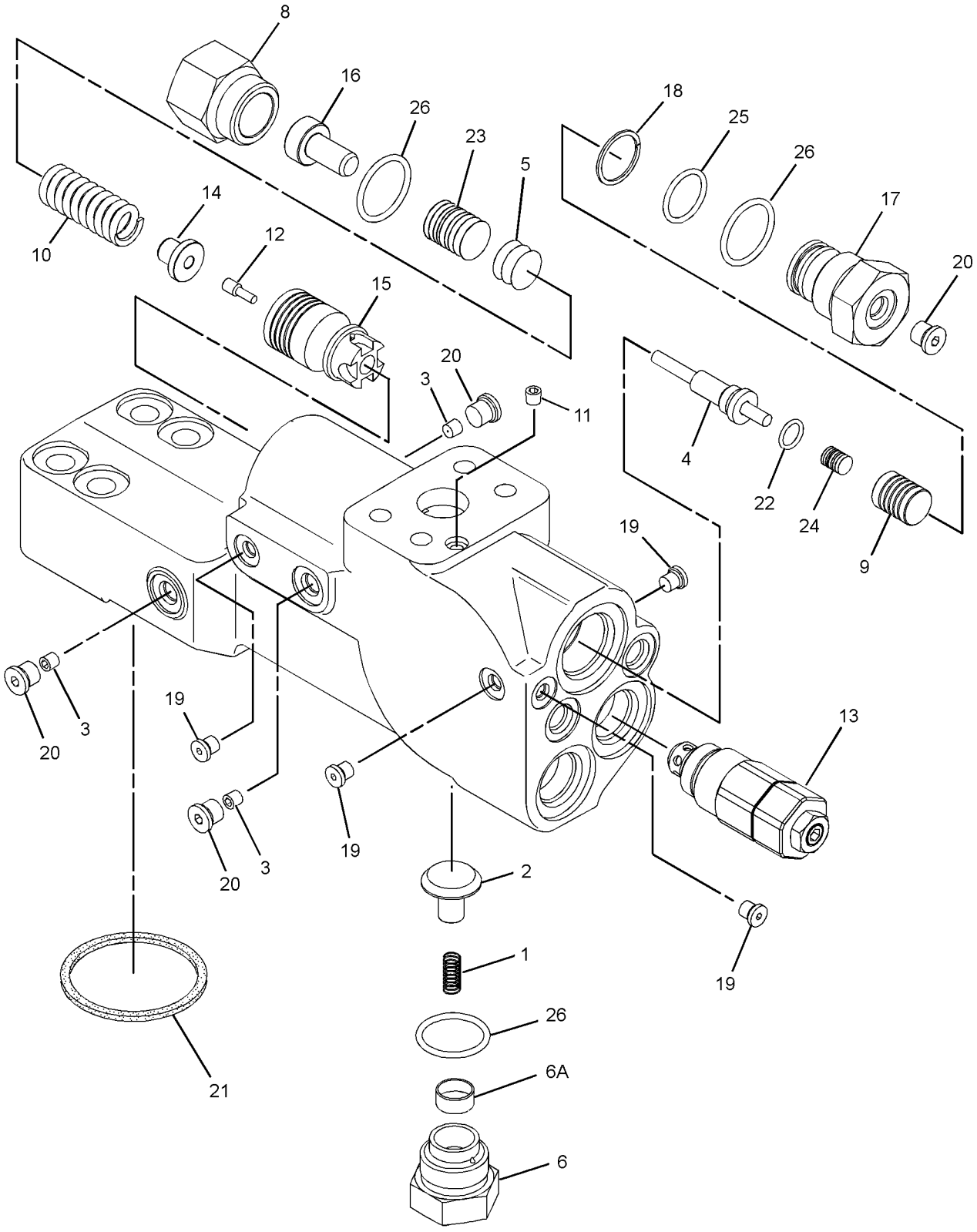

GRAPHIC #1 **<END>** g01384083

270-5696 VALVE GP-LOAD CONTROL

S/N: JGB1-UP; KHS1-UP
PART OF 323-7702 VALVE GP-CONTROL
FIELD REPLACEMENT FOR 153-5233 VALVE GP-LOAD CONTROL
ALSO AN ATTACHMENT

SMCS-5067, 5117, 5147, 5811 **i03348278**

NOTE	REF NO	GRAPHIC REF	PART NUMBER	QTY	PART NAME 1 2 3 4 5 6 (PRODUCT LEVEL)	SEE PAGE
	1	1	**4I-6107**	1	PLUG	
	2	1	**4I-8965**	1	GUIDE	
	3	1	**5I-8511**	1	SPRING	
	4	1	**122-7774**	1	SPRING	
Z	5	1		1	VALVE GP	
	6	1	*225-4818*	2	PLUG AS	
					(EACH INCLUDES)	
		1	**4J-7533**	1	SEAL-O-RING	
		1	**225-4804**	1	PLUG	
	7	1	**270-5697**	1	ADAPTER	
	8	1	**310-0380**	1	VALVE GP-PILOT (LOAD CONTROL, BOOM CYLINDER)	
M		1	**096-3001**	1	SETSCREW-SOCKET (M5X0.8X6-MM)	
	9	1	**095-1576**	2	SEAL-O-RING	
	10	1	**122-7773**	1	RING	
	11	1	**3J-1907**	1	SEAL-O-RING	
	12	1	**4J-0520**	1	SEAL-O-RING	
	13	1	**4J-0523**	2	SEAL-O-RING	
	14	1	**5P-3108**	1	SEAL-O-RING	
M	15	1	**6V-5192**	2	BOLT-SOCKET HEAD (M8X1.25X30-MM)	
	16	1	**6V-6793**	2	RING-BACKUP	

M-METRIC PART
Z-NOT SERVICED SEPARATELY

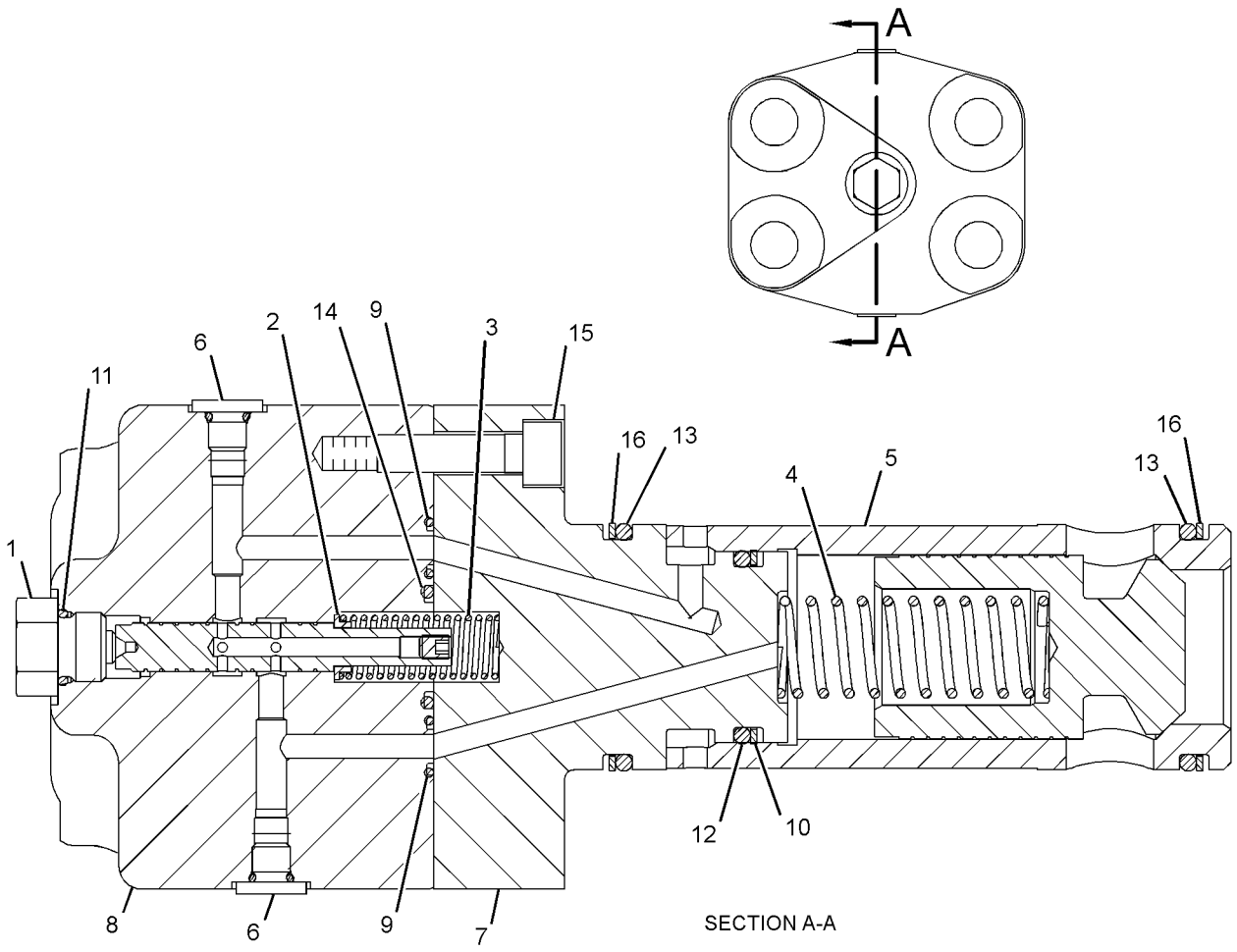

SECTION A-A

GRAPHIC #1 **<END>** g01265893

HYDRAULIC SYSTEM

285-1768 VALVE GP-LOAD CONTROL—STICK CYLINDER

S/N: JGB1-UP; KHS1-UP

PART OF 302-9546 LINES GP-STICK CYLINDER

AN ATTACHMENT

SMCS-5067, 5117, 5147, 5811 **i03596728**

NOTE	REF NO	GRAPHIC REF	PART NUMBER	QTY	PART NAME 1 2 3 4 5 6 (PRODUCT LEVEL)	SEE PAGE
	1	1	**2S-2596**	1	SPRING	
	3	1	**9T-1614**	1	VALVE	
	4	1	**8J-6815**	1	PLUG-ORIFICE	
	5	1	**165-9513**	1	SEAT	
	6	1	**165-9514**	1	PLUG	
	7	1	**225-4787**	1	VALVE	
	8	1	**225-4789**	1	VALVE	
	9	1	**225-4790**	1	SPRING	
	10	1	**225-4791**	1	GUIDE	
	11	1	**225-4792**	1	PLUG	
	12	1	**225-4793**	1	VALVE AS	
	13	1	**225-4796**	1	PISTON	
	14	1	**225-4797**	1	VALVE AS	
	15	1	**225-4803**	1	COVER	
	16	1	*225-4818*	6	PLUG AS	
					(EACH INCLUDES)	
		1	**4J-7533**	1	SEAL-O-RING	
		1	**225-4804**	1	PLUG	
	17	1	*225-4820*	2	PLUG AS	
					(EACH INCLUDES)	
		1	**3J-7354**	1	SEAL-O-RING	
		1	**225-4821**	1	PLUG	
B	18	1	**225-4830**	1	SHIM (1.0-MM THK)	
B	19	1	**225-4831**	2	SHIM (0.5-MM THK)	
B	20	1	**225-4832**	2	SHIM (0.2-MM THK)	
B	21	1	**225-4833**	1	SHIM (0.1-MM THK)	
	23	1	**259-7788**	1	GUIDE AS	
		1	**4T-0987**	1	BEARING-SLEEVE	
Y	24	1	**270-5731**	1	VALVE GP-RELIEF (LINE)	784
	26	1	**095-1594**	2	SEAL-O-RING	
	27	1	**095-1789**	2	RING	
	28	1	**122-7797**	2	RING	
	29	1	**2D-6642**	1	BALL	
	30	1	**3H-0442**	1	SEAL-O-RING	
	31	1	**3J-1907**	2	SEAL-O-RING	
	32	1	**6V-5326**	2	SEAL-O-RING	
M	33	1	**7Y-5226**	1	NUT (M5X0.8-THD)	
M	34	1	**8T-4139**	4	BOLT (M12X1.75X30-MM)	
	35	1	**8T-6759**	1	PLUG-PIPE	

B-USE AS REQUIRED
M-METRIC PART
Y-SEPARATE ILLUSTRATION

285-1768 VALVE GP-LOAD CONTROL *(contd.)* i03596728

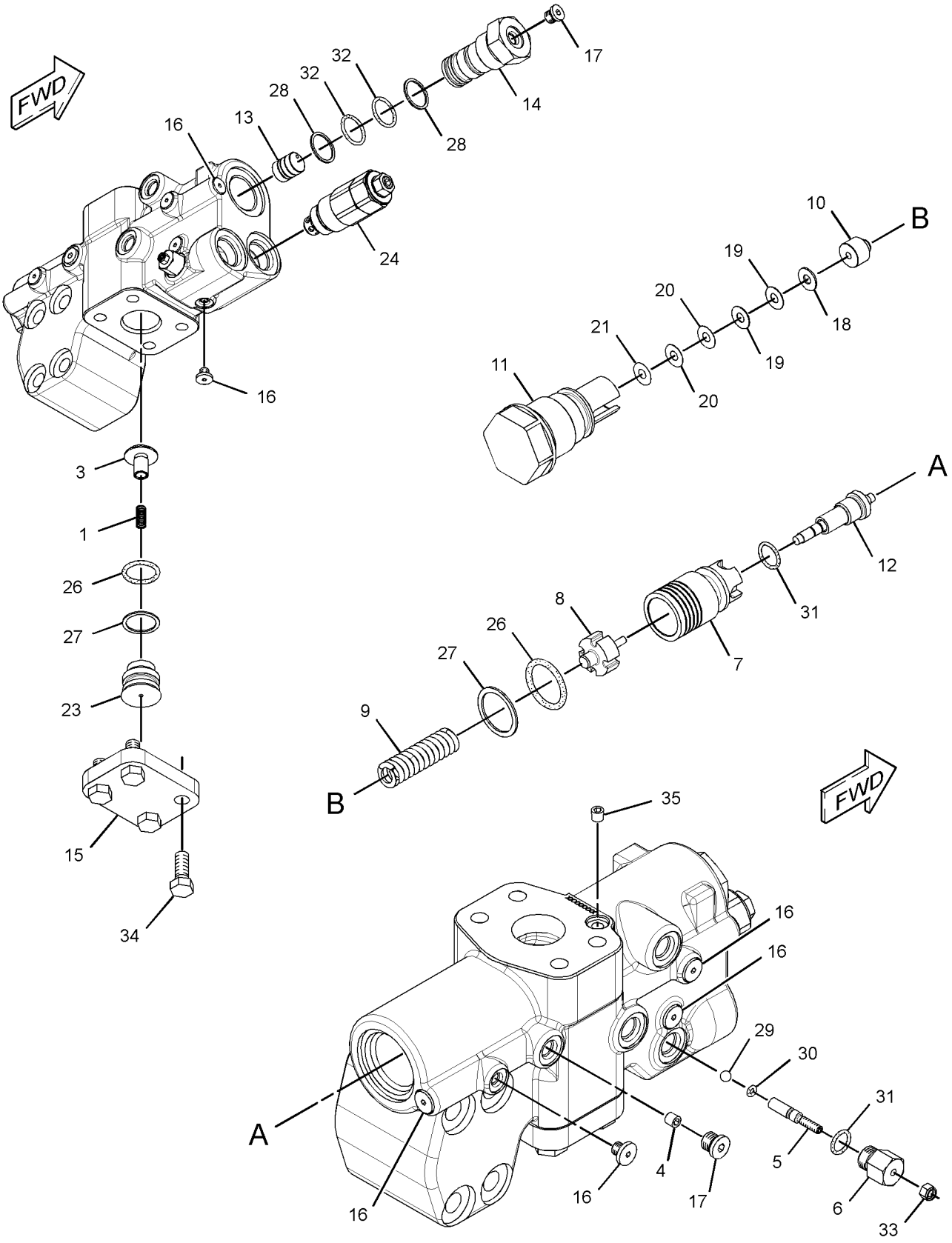

GRAPHIC #1 **<END>** g01465787

310-0147 VALVE GP-LOAD CONTROL—BOOM CYLINDER

S/N: JGB1-UP; KHS1-UP

PART OF 307-4848 LINES GP-BOOM CYLINDER

SMCS-5067, 5117, 5147, 5811 **i03139164**

NOTE	REF NO	GRAPHIC REF	PART NUMBER	QTY	PART NAME 1 2 3 4 5 6 (PRODUCT LEVEL)	SEE PAGE
M	1	2	**8T-4196**	4	BOLT (M10X1.5X35-MM)	
	2	2	**005-8593**	1	SEAL-O-RING	
	3	2	**165-9513**	1	SEAT	
	4	2	**165-9514**	1	PLUG	
	5	1,2	*225-4820*	12	PLUG AS	
					(EACH INCLUDES)	
		1,2	**3J-7354**	1	SEAL-O-RING	
		1,2	**225-4821**	1	PLUG	
Y	6	1	**270-5691**	1	VALVE GP-RELIEF (LINE)	780
	7	2	**297-0346**	1	COVER	
	8	2	**297-0349**	1	VALVE	
	9	2	**297-0350**	1	SPRING	
	10	2	**297-0351**	1	PLUG	
	11	2	**297-0354**	1	SPRING	
	12	2	**297-0356**	1	COVER	
Y	13	1	**297-0500**	1	VALVE GP-SOLENOID & PRESS REDC	804
	14	2	**310-0129**	1	PLUG	
	15	2	**310-0138**	1	GUIDE	
	16	2	**310-0139**	1	WASHER (24X36.5X3-MM THK)	
	17	2	**310-0140**	1	SPRING	
B	18	2	**310-0141**	1	SHIM (1-MM THK)	
B	19	2	**310-0142**	1	SHIM (0.5-MM THK)	
B	20	2	**310-0143**	2	SHIM (0.25-MM THK)	
	21	2	**310-0145**	1	VALVE	
	23	2	**310-0231**	1	COVER	
	24	1	**310-0398**	1	VALVE GP-CONTROL	
	25	2	**095-1592**	1	SEAL-O-RING	
	26	2	**095-1599**	1	SEAL-O-RING	
	27	2	**095-1788**	1	RING-BACKUP	
	28	2	**095-1793**	1	RING-BACKUP	
	29	1,2	*148-8395*	3	PLUG AS	
					(EACH INCLUDES)	
		1,2	**3K-0360**	1	SEAL-O-RING	
		1,2	**9S-8005**	1	PLUG-O-RING	
	30	1	*148-8407*	1	PLUG AS	
		1	**3J-1907**	1	SEAL-O-RING	
		1	**9S-4191**	1	PLUG-O-RING	
	31	2	*148-8411*	2	PLUG AS	
					(EACH INCLUDES)	
		2	**3K-0360**	1	SEAL-O-RING	
		2	**9S-4185**	1	PLUG-O-RING	
	32	1,2	*162-0177*	2	PLUG AS	
					(EACH INCLUDES)	
		1,2	**3J-1907**	1	SEAL-O-RING	
		1,2	**9S-8004**	1	PLUG-O-RING	
	33	2	**2D-6642**	1	BALL	
	34	2	**3H-0442**	1	SEAL-O-RING	
	35	2	**3J-1907**	1	SEAL-O-RING	
	36	2	**6V-5597**	1	SEAL-O-RING	
M	37	1	**7I-2272**	2	BOLT (M5X0.8X12-MM)	
M	38	2	**7Y-5226**	1	NUT (M5X0.8-THD)	
M	39	2	**8T-4182**	2	BOLT (M10X1.5X45-MM)	
M	40	2	**8T-4183**	4	BOLT (M12X1.75X40-MM)	

B-USE AS REQUIRED
M-METRIC PART
Y-SEPARATE ILLUSTRATION

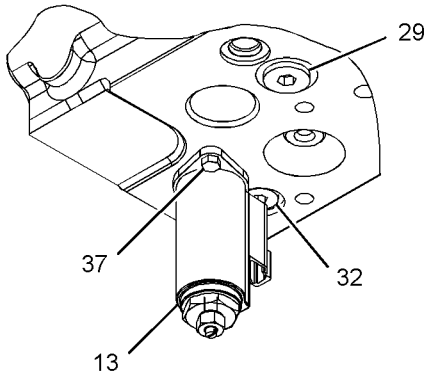

VIEW OF AREA A

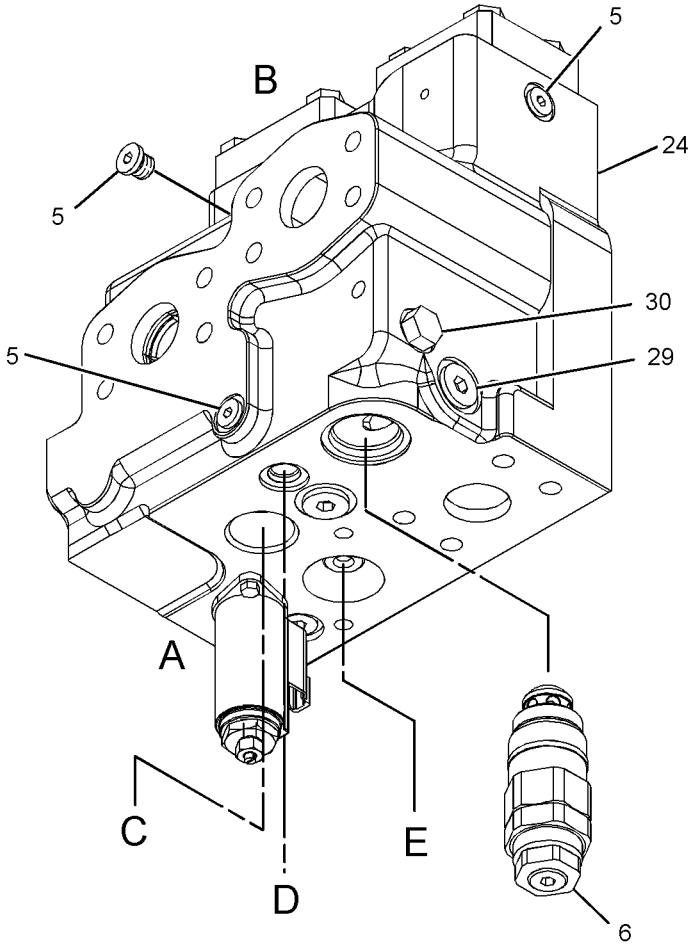

REFER TO ALL ILLUSTRATIONS OF
THIS GROUP FOR AUXILIARY VIEWS

GRAPHIC #1 g01536813

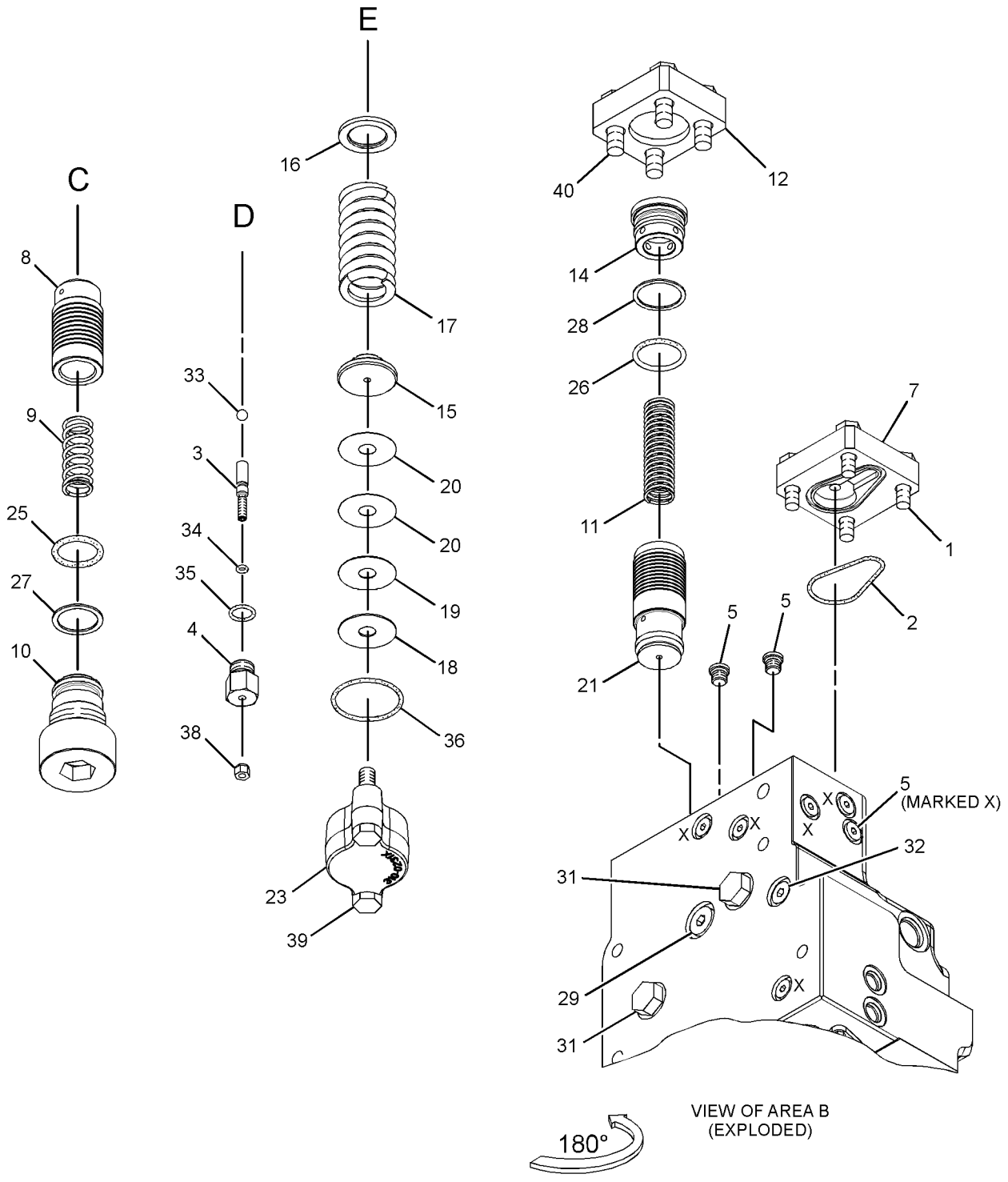

GRAPHIC #2 **<END>** g01536814

HYDRAULIC SYSTEM

310-0149 VALVE GP-LOAD CONTROL—BOOM CYLINDER

S/N: JGB1-UP; KHS1-UP
PART OF 302-3139 LINES GP-RETURN
AN ATTACHMENT

SMCS-5067, 5117, 5147, 5811 **i03045210**

NOTE	REF NO	GRAPHIC REF	PART NUMBER	QTY	PART NAME 1 2 3 4 5 6 (PRODUCT LEVEL)	SEE PAGE
M	1	1	**8T-4196**	4	BOLT (M10X1.5X35-MM)	
	2	1	**005-8593**	1	SEAL-O-RING	
Y	3	1	**122-7768**	1	PLUG GP	691
	4	1	**165-9513**	1	SEAT	
	5	1	**165-9514**	1	PLUG	
	6	1	*225-4820*	12	PLUG AS	
					(EACH INCLUDES)	
		1	**3J-7354**	1	SEAL-O-RING	
		1	**225-4821**	1	PLUG	
	7	1	**297-0346**	1	COVER	
	8	1	**297-0349**	1	VALVE	
	9	1	**297-0350**	1	SPRING	
	10	1	**297-0351**	1	PLUG	
	11	1	**297-0356**	1	COVER	
Y	12	1	**297-0500**	1	VALVE GP-SOLENOID & PRESS REDC	804
	14	1	**310-0129**	1	PLUG	
	15	1	**310-0231**	1	COVER	
	16	1	**310-0138**	1	GUIDE	
	17	1	**310-0139**	1	WASHER (24X36.5X3-MM THK)	
	18	1	**310-0140**	1	SPRING	
B	19	1	**310-0141**	1	SHIM (1-MM THK)	
B	20	1	**310-0142**	1	SHIM (0.5-MM THK)	
B	21	1	**310-0143**	2	SHIM (0.25-MM THK)	
	24	1	**095-1592**	1	SEAL-O-RING	
	25	1	**095-1599**	1	SEAL-O-RING	
	26	1	**095-1788**	1	RING-BACKUP	
	27	1	**095-1793**	1	RING-BACKUP	
	28	1	*148-8395*	3	PLUG AS	
					(EACH INCLUDES)	
		1	**3K-0360**	1	SEAL-O-RING	
		1	**9S-8005**	1	PLUG-O-RING	
	29	1	*148-8407*	1	PLUG AS	
		1	**3J-1907**	1	SEAL-O-RING	
		1	**9S-4191**	1	PLUG-O-RING	
	30	1	*148-8411*	2	PLUG AS	
					(EACH INCLUDES)	
		1	**3K-0360**	1	SEAL-O-RING	
		1	**9S-4185**	1	PLUG-O-RING	
	31	1	*162-0177*	2	PLUG AS	
					(EACH INCLUDES)	
		1	**3J-1907**	1	SEAL-O-RING	
		1	**9S-8004**	1	PLUG-O-RING	
	32	1	**2D-6642**	1	BALL	
	33	1	**3H-0442**	1	SEAL-O-RING	
	34	1	**3J-1907**	1	SEAL-O-RING	
	35	1	**6V-5597**	1	SEAL-O-RING	
M	36	1	**7I-2272**	2	BOLT (M5X0.8X12-MM)	
M	37	1	**7Y-5226**	1	NUT (M5X0.8-THD)	
M	38	1	**8T-4182**	2	BOLT (M10X1.5X45-MM)	
M	39	1	**8T-4183**	4	BOLT (M12X1.75X40-MM)	

B-USE AS REQUIRED
M-METRIC PART
Y-SEPARATE ILLUSTRATION

310-0149 VALVE GP-LOAD CONTROL *(contd.)* i03045210

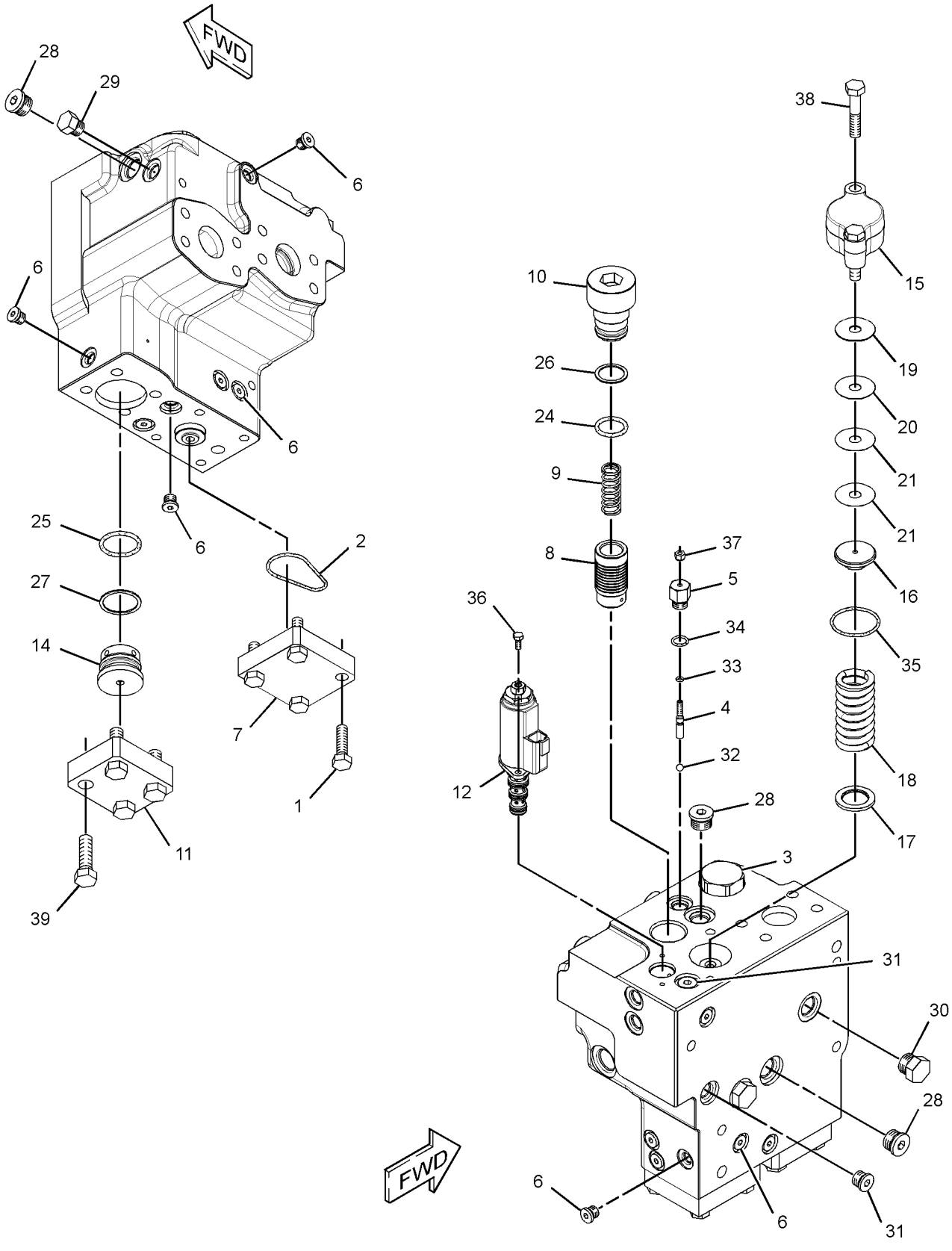

GRAPHIC #1 **<END>** g01636696

HYDRAULIC SYSTEM

323-7681 VALVE GP-MAIN CONTROL–HEAVY LIFT

S/N: JGB1-UP; KHS1-UP

PART OF 297-0243, 297-0244 HYDRAULIC AR, 297-0258 VALVE AR-CHECK & RELIEF

ALSO AN ATTACHMENT

SMCS-5051 **i03128065**

NOTE	REF NO	GRAPHIC REF	PART NUMBER	QTY	PART NAME 1 2 3 4 5 6 (PRODUCT LEVEL)	SEE PAGE
M	1	1	**6V-6788**	4	BOLT (M20X2.5X65-MM)	
Y	2	1	**323-7700**	1	VALVE GP-CONTROL (RH)	726
Y	3	1	**323-7702**	1	VALVE GP-CONTROL (LH)	730
	4	1	**4J-8998**	2	SEAL-O-RING	
	5	1	**1P-3703**	2	SEAL-RECTANGULAR	
	6	1	**5J-2974**	1	SEAL-O-RING	
	7	1	**7Y-5219**	6	SEAL-O-RING	
	8	1	**8T-4123**	4	WASHER (22X35X3.5-MM THK)	

M-METRIC PART
Y-SEPARATE ILLUSTRATION

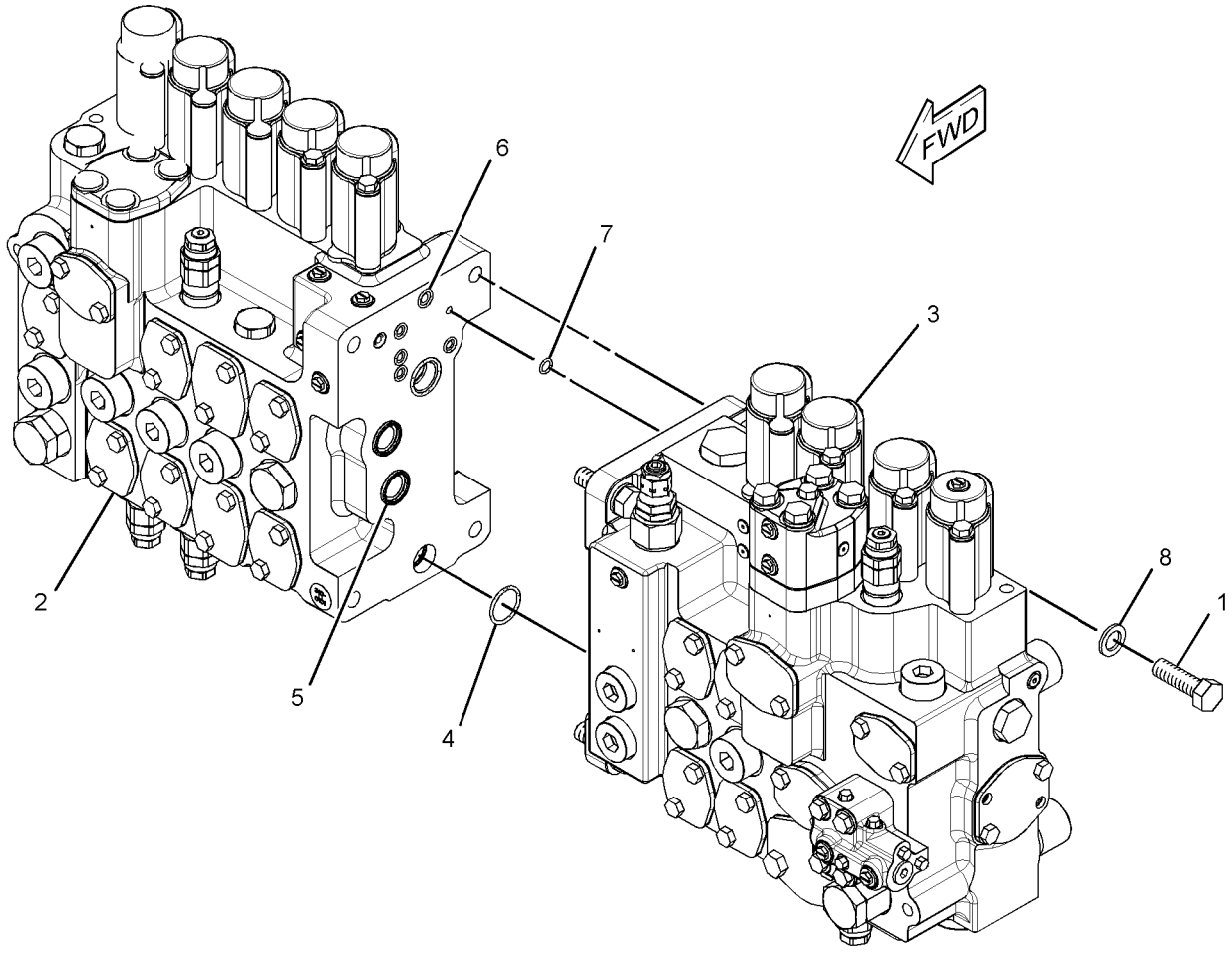

GRAPHIC #1 **<END>** g01561297

323-7682 VALVE GP-MAIN CONTROL–HEAVY LIFT

S/N: JGB1-UP; KHS1-UP
PART OF 297-0257 VALVE AR-CHECK & RELIEF
AN ATTACHMENT

SMCS-5051 **i03128141**

NOTE	REF NO	GRAPHIC REF	PART NUMBER	QTY	PART NAME 1 2 3 4 5 6 (PRODUCT LEVEL)	SEE PAGE
	1	1	**8T-4123**	4	WASHER (22X35X3.5-MM THK)	
M	2	1	**6V-6788**	4	BOLT (M20X2.5X65-MM)	
Y	3	1	**323-7700**	1	VALVE GP-CONTROL (RH)	726
Y	4	1	**323-7703**	1	VALVE GP-CONTROL (LH)	735
	5	1	**7Y-5219**	6	SEAL-O-RING	
	6	1	**1P-3703**	2	SEAL-RECTANGULAR	
	7	1	**4J-8998**	2	SEAL-O-RING	
	8	1	**5J-2974**	1	SEAL-O-RING	

M-METRIC PART
Y-SEPARATE ILLUSTRATION

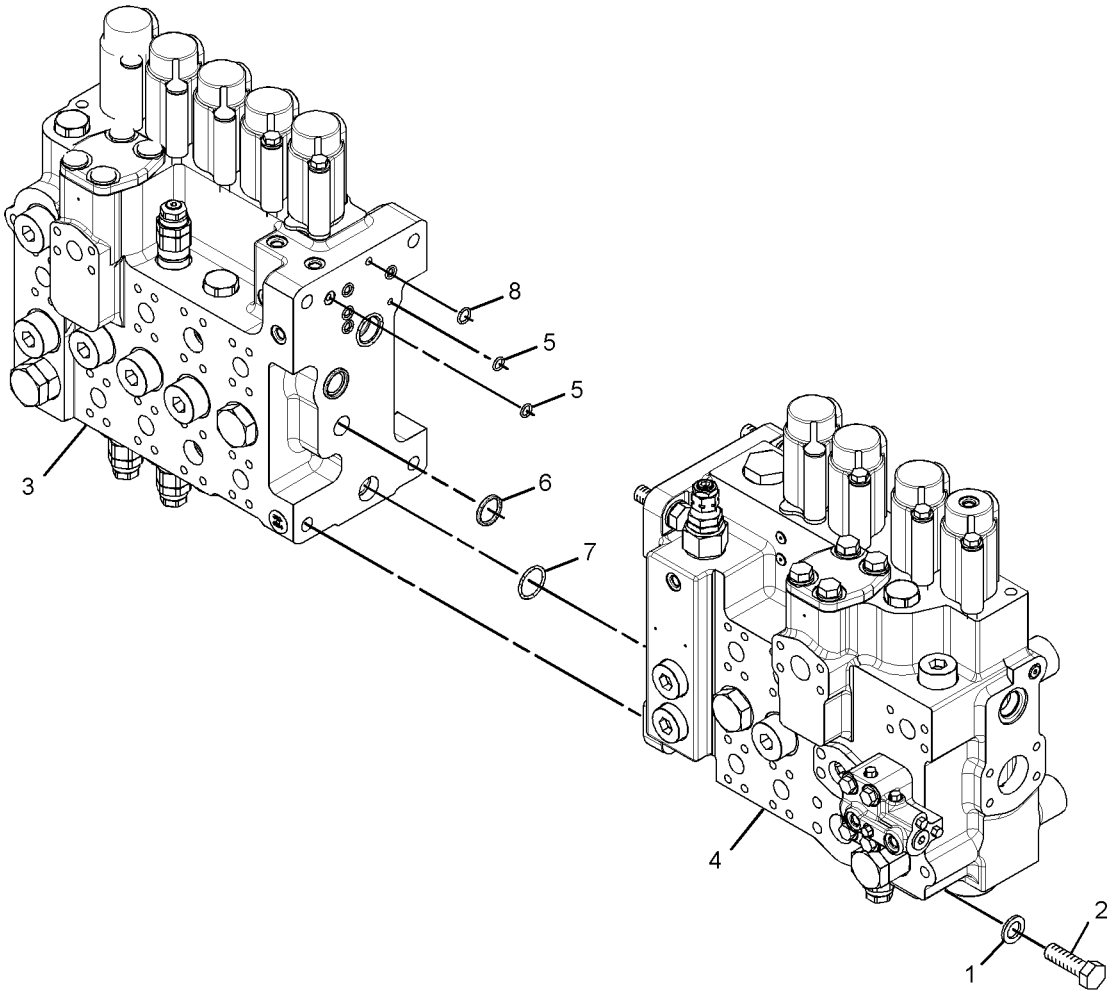

GRAPHIC #1 **<END>** g01462393

270-5692 VALVE GP-MANUAL–BOOM LOWER

S/N: JGB1-UP; KHS1-UP
PART OF 296-7134 LINES GP-BOOM CYLINDER
AN ATTACHMENT

SMCS-1329, 5001, 5130 **i02461703**

NOTE	REF NO	GRAPHIC REF	PART NUMBER	QTY	PART NAME 1 2 3 4 5 6 (PRODUCT LEVEL)	SEE PAGE
	1	1	**165-9513**	1	SEAT	
	2	1	**165-9514**	1	PLUG	
	3	1	*222-4737*	3	PLUG AS	
					(EACH INCLUDES)	
		1	**4J-7533**	1	SEAL-O-RING	
		1	**9S-4180**	1	PLUG	
	4	1	**270-5693**	1	BLOCK	
	5	1	**2D-6642**	1	BALL	
	6	1	**3H-0442**	1	SEAL-O-RING	
	7	1	**3J-1907**	1	SEAL-O-RING	
M	8	1	**7Y-5226**	1	NUT (M5X0.8-THD)	

M-METRIC PART

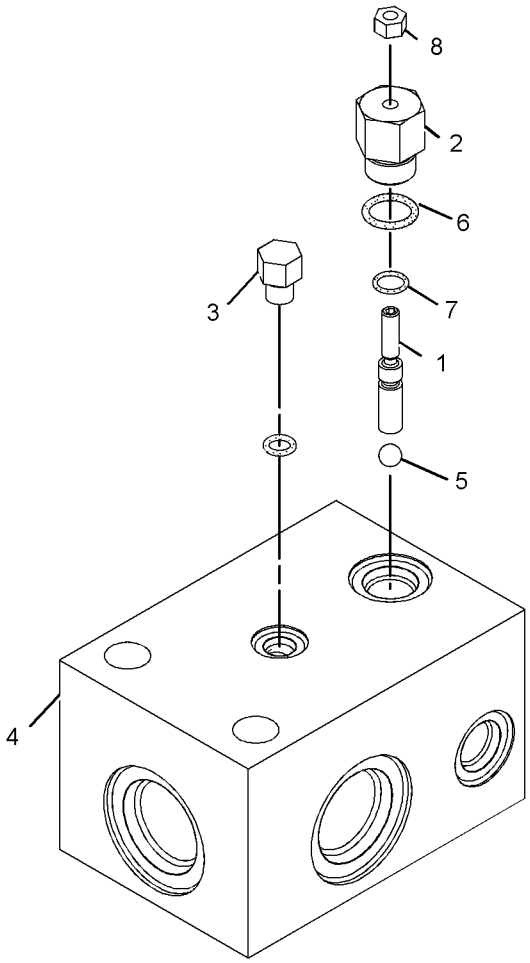

GRAPHIC #1

<END>

g01193347

277-0954 VALVE GP-MANUAL–AUXILIARY, SHUTOFF

S/N: JGB1-UP; KHS1-UP

PART OF 127-6690, 135-4096, 230-0128, 253-6383 LINES GP-AUXILIARY HYDRAULIC AN ATTACHMENT

SMCS-1329, 5001, 5130 **i03474524**

NOTE	REF NO	GRAPHIC REF	PART NUMBER	QTY	PART NAME 1 2 3 4 5 6 (PRODUCT LEVEL)	SEE PAGE
	1	1	**302-9466**	1	HANDLE	
	2	1	**3J-1907**	1	SEAL-O-RING	
	3	1	**9S-4191**	1	PLUG-O-RING	

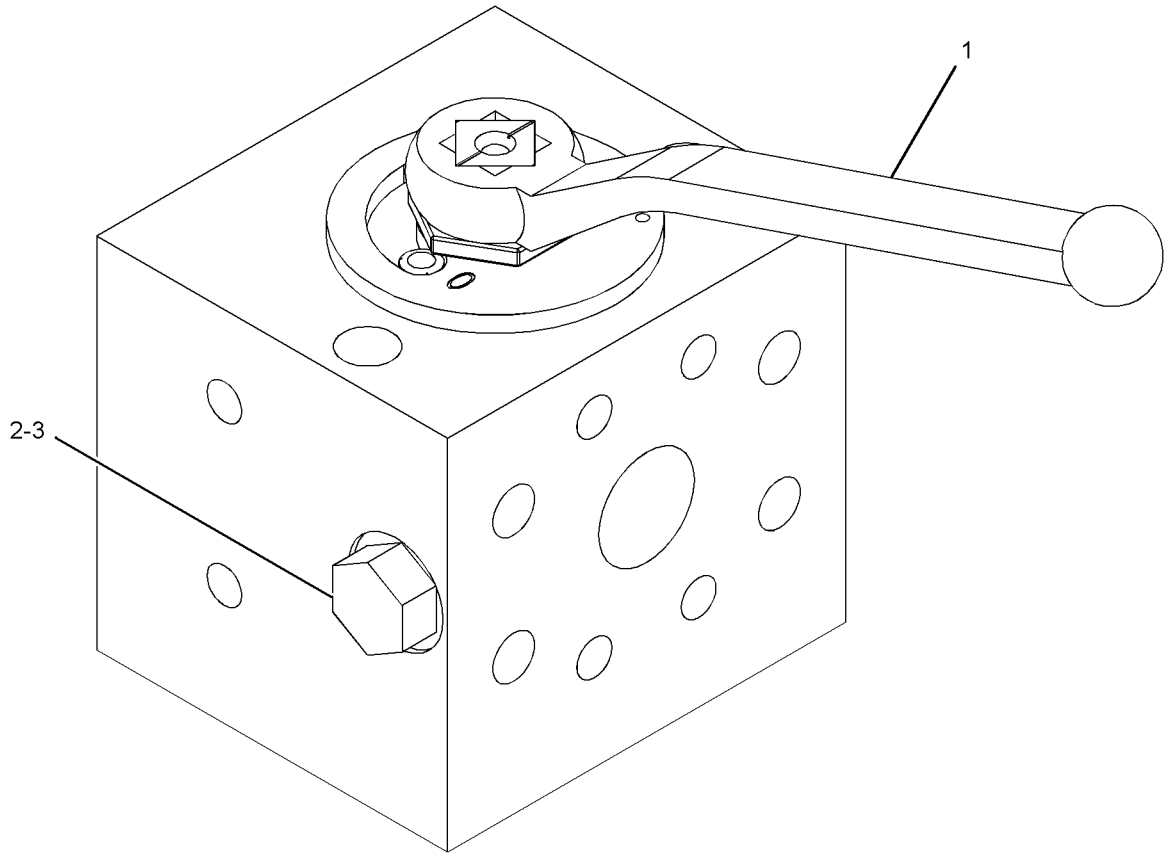

GRAPHIC #1 **<END>** g01236800

HYDRAULIC SYSTEM

119-5219 VALVE GP-PILOT

S/N: JGB1-UP; KHS1-UP
PART OF 296-7127, 302-3143 LINES GP-PILOT
AN ATTACHMENT

SMCS-5059 **i02158931**

NOTE	REF NO	GRAPHIC REF	PART NUMBER	QTY	PART NAME 1 2 3 4 5 6 (PRODUCT LEVEL)	SEE PAGE
Z	1	1		1	VALVE GP-PILOT	
	2	1	**096-3376**	1	SPRING-GUIDE	
	3	1	**3K-0360**	2	SEAL-O-RING	
	4	1	**9S-4185**	2	PLUG-O-RING	
	5	1	**096-3375**	1	SPRING	

Z-NOT SERVICED SEPARATELY

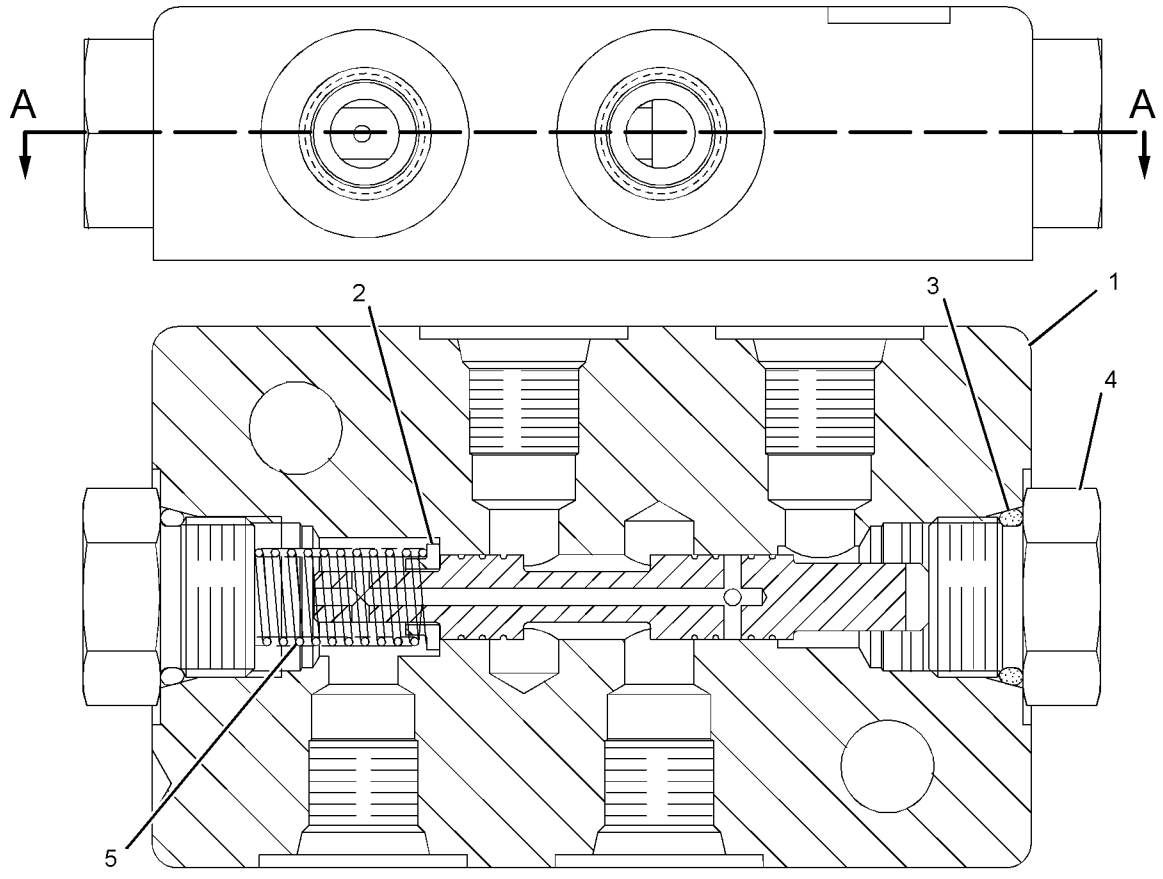

SECTION A-A

GRAPHIC #1 **<END>** g01097450

HYDRAULIC SYSTEM

123-2514 VALVE GP-PILOT–COUNTERWEIGHT

S/N: JGB1-UP

PART OF 227-0459 LINES GP-REAR ATTACHMENT

AN ATTACHMENT

SMCS-5059 **i00612951**

NOTE	REF NO	GRAPHIC REF	PART NUMBER	QTY	PART NAME 1 2 3 4 5 6 (PRODUCT LEVEL)	SEE PAGE
M	1	1	**099-0822**	2	BOLT-SOCKET HEAD (M5X0.8X10-MM)	
	2	1	**7I-9001**	1	STOP	
	3	1	**096-4509**	1	SPRING	
	4	1	**7I-2789**	1	WASHER (4.3X9X0.8-MM THK)	
	5	1	**095-1519**	1	SEAL-O-RING	
	6	1	**8T-6759**	1	PLUG-PIPE	
	7	1	**126-9992**	1	SOLENOID AS	
	8	1	**131-5894**	1	SPRING	
	9	1	**096-4514**	2	PLUG	
	10	1	**095-1582**	2	SEAL-O-RING	

M-METRIC PART

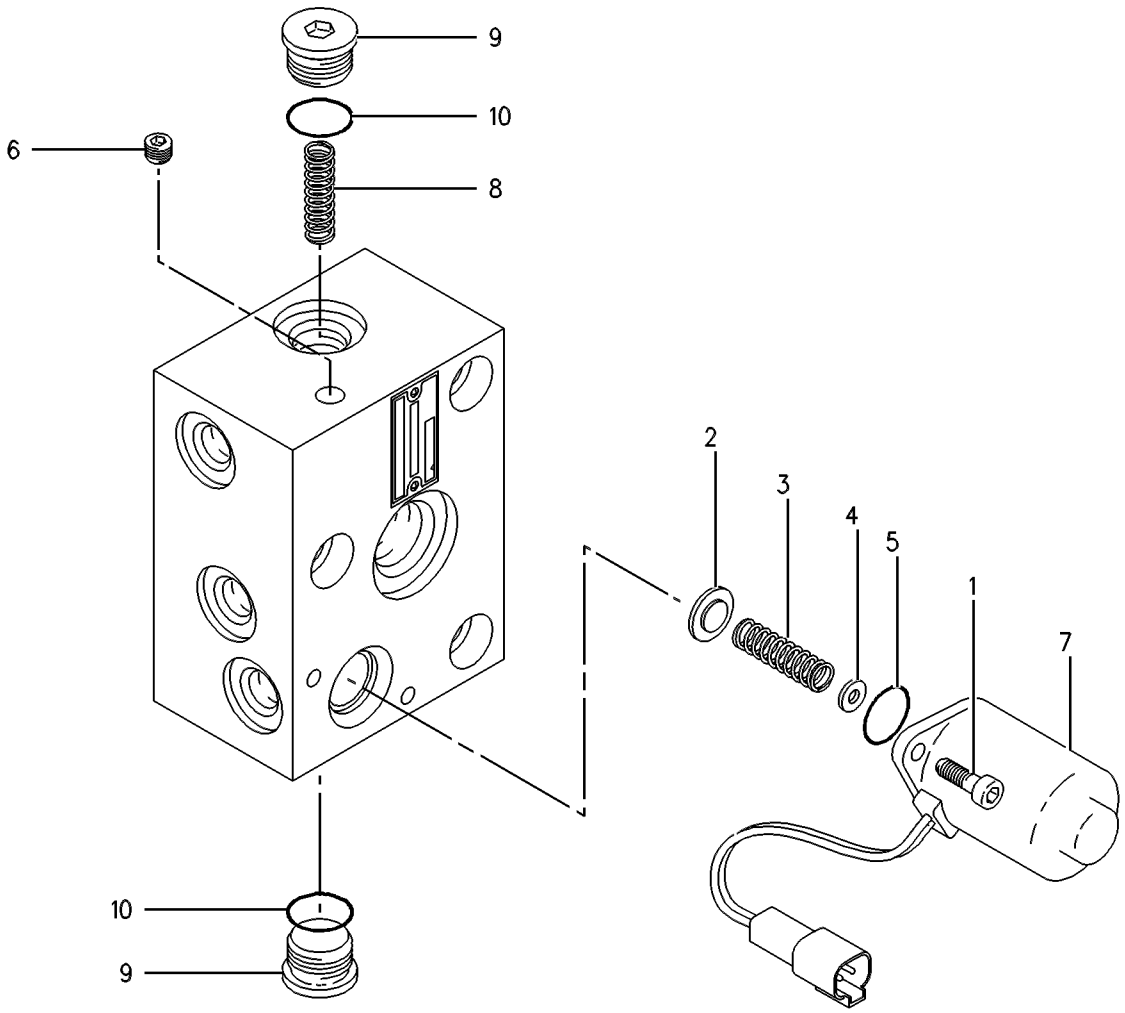

GRAPHIC #1 **<END>** g00268646

244-4120 VALVE GP-PILOT–PRESSURE, FLOW COMPENSATOR

S/N: JGB1-UP; KHS1-UP

PART OF 295-9426 PUMP GP-PISTON

SMCS-5059 **i02252980**

NOTE	REF NO	GRAPHIC REF	PART NUMBER	QTY	PART NAME 1 2 3 4 5 6 (PRODUCT LEVEL)	SEE PAGE
	1	1	**9X-7680**	3	SEAL-O-RING	
M	2	1	**8T-8442**	4	BOLT-SOCKET HEAD (M6X1X30-MM)	

M-METRIC PART

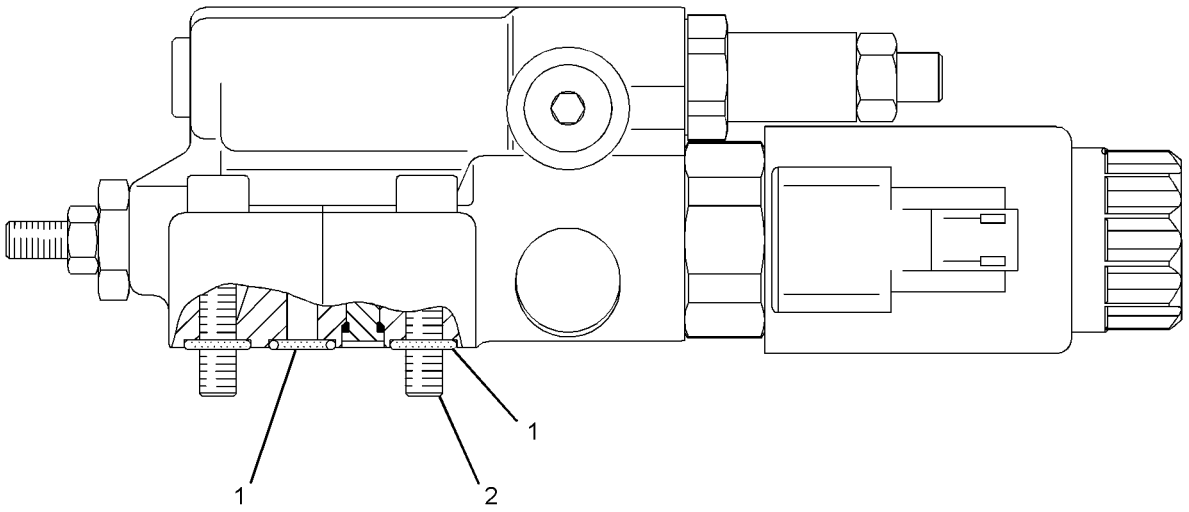

GRAPHIC #1 **<END>** g01135515

297-0529 VALVE GP-PILOT–JOYSTICK

S/N: JGB1-UP; KHS1-UP
PART OF 297-0532, 297-0533 CONTROL GP-JOYSTICK
AN ATTACHMENT

SMCS-5059 **i03027902**

NOTE	REF NO	GRAPHIC REF	PART NUMBER	QTY	PART NAME 1 2 3 4 5 6 (PRODUCT LEVEL)	SEE PAGE
	1	1	**270-5953**	4	SPRING	
	2	1	**095-1586**	4	SEAL-O-RING	
	3	1	**4I-6365**	1	JOINT	
	4	1	**094-0876**	4	SEAL	
	5	1	**096-1628**	4	PLUG	
B	6	1	**099-6137**	4	WASHER (6.1X9X0.2-MM THK)	
	7	1	**118-4086**	4	ROD	
	8	1	**118-4087**	4	SPRING	
M	9	1	**131-5915**	1	NUT-SPECIAL	
	10	1	**165-9431**	1	PLATE	
	11	1	**165-9435**	2	SEAT	
	12	1	**165-9436**	2	SEAT	
	13	1	**165-9438**	1	PLATE	
	14	1	**165-9442**	2	SPRING	
	15	1	**165-9443**	2	SEAT-SPRING	
	16	1	**165-9444**	2	SEAT-SPRING	
	17	1	**165-9460**	2	SPRING	
	18	1	**171-0087**	1	BELLOWS	

PARTS SHOWN IN GRAPHIC(S) WITHOUT A REFERENCE NUMBER ARE NOT SERVICED SEPARATELY

B-USE AS REQUIRED
M-METRIC PART

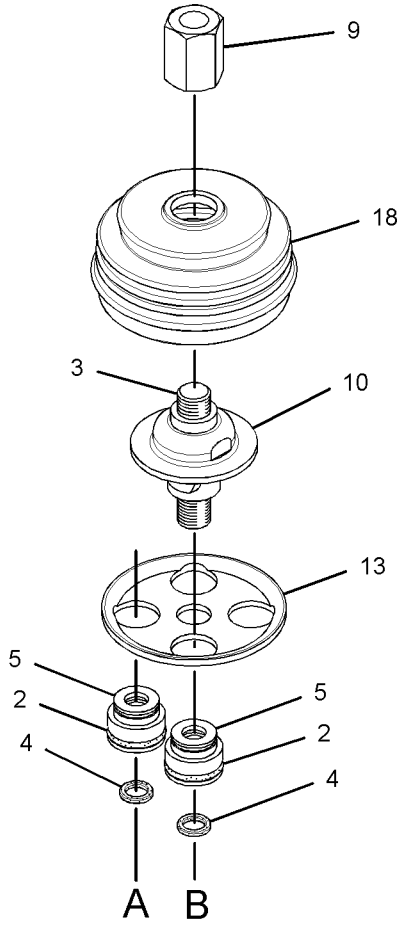

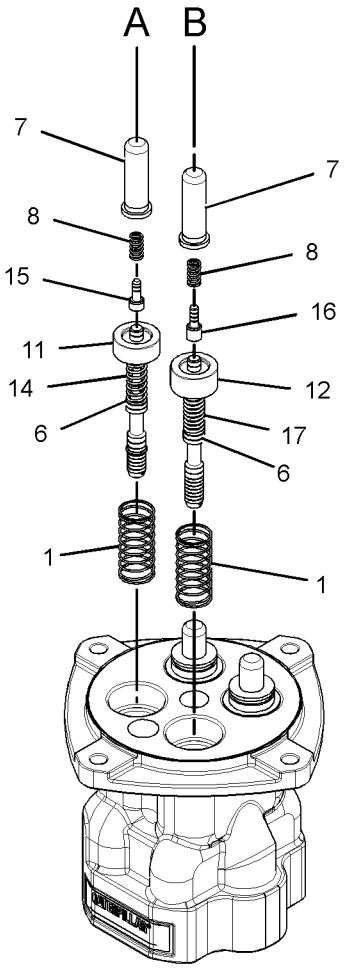

GRAPHIC #1 **<END>** g01528724

HYDRAULIC SYSTEM

297-0589 VALVE GP-PILOT–JOYSTICK

S/N: JGB1-UP; KHS1-UP

PART OF 297-0534, 297-0535, 297-0536, 297-0537 CONTROL GP-JOYSTICK

AN ATTACHMENT

SMCS-5059 **i03314404**

NOTE	REF NO	GRAPHIC REF	PART NUMBER	QTY	PART NAME 1 2 3 4 5 6 (PRODUCT LEVEL)	SEE PAGE
	1	1	**095-1586**	4	SEAL-O-RING	
	2	1	**4I-6365**	1	JOINT	
	3	1	**094-0876**	4	SEAL	
	4	1	**096-1628**	4	PLUG	
B	5	1	**099-6137**	4	WASHER (6.1X9X0.2-MM THK)	
	6	1	**118-4086**	4	ROD	
	7	1	**118-4087**	4	SPRING	
M	8	1	**131-5915**	1	NUT-SPECIAL	
	9	1	**165-9431**	1	PLATE	
	10	1	**165-9435**	2	SEAT	
	11	1	**165-9436**	2	SEAT	
	12	1	**165-9438**	1	PLATE	
	13	1	**165-9442**	2	SPRING	
	14	1	**165-9443**	2	SEAT-SPRING	
	15	1	**165-9444**	2	SEAT-SPRING	
	16	1	**165-9460**	2	SPRING	
	17	1	**165-9461**	4	SPRING	
	18	1	**171-0087**	1	BELLOWS	

B-USE AS REQUIRED
M-METRIC PART

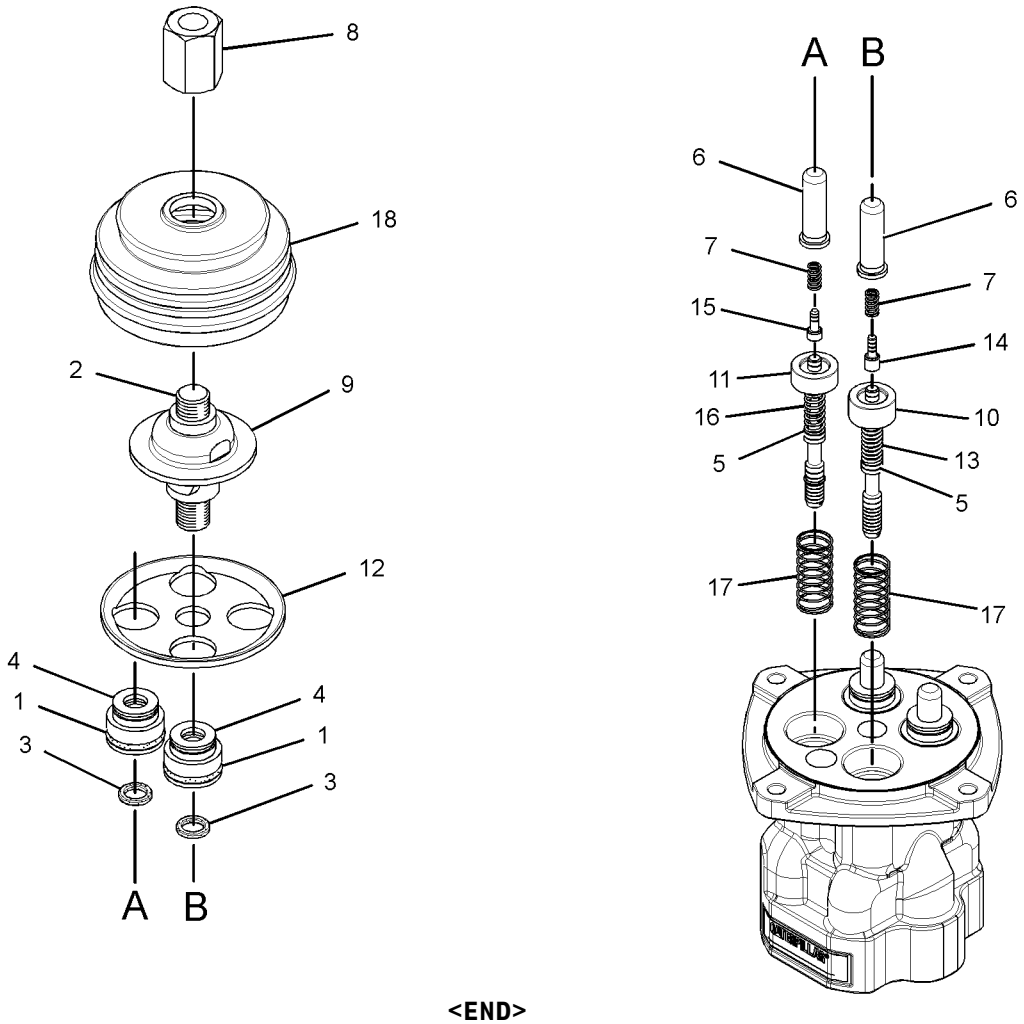

GRAPHIC #1 **<END>** g01528741

HYDRAULIC SYSTEM

310-0415 VALVE GP-PILOT—WITHOUT SHUTTLE

S/N: JGB1-UP; KHS1-UP

PART OF 296-7123 LINES GP-PILOT

SMCS-5059 **i03536494**

NOTE	REF NO	GRAPHIC REF	PART NUMBER	QTY	PART NAME 1 2 3 4 5 6 (PRODUCT LEVEL)	SEE PAGE
	1	1	**087-5708**	2	PEDAL	
M	2	1	**095-0673**	2	BOLT-SOCKET HEAD (M12X1.75X60-MM)	
	3	1	**099-6137**	4	WASHER (6.1X9X0.2-MM THK)	
	4	1	**099-6141**	4	WASHER (6.1X11X1.5-MM THK)	
	5	1	**099-6144**	4	BUSHING-TERMINAL	
	6	1	**099-6145**	2	CAMSHAFT	
	7	1	**119-5388**	4	CAP	
	8	1	**119-5389**	4	PACKING	
	9	1	**119-5391**	4	SEAT	
	10	1	**126-1865**	4	SPRING	
	11	1	**126-1866**	4	SPRING	
	12	1	**131-5818**	4	SPRING	
	13	1	**147-4131**	2	BOOT-PROTECTION	
	14	1	**153-5223**	12	BALL	
	15	1	**165-9463**	2	COVER	
	16	1	**165-9552**	4	PUSHROD	
	17	1	**165-9553**	1	COVER	
	18	1	**165-9554**	4	PLUG	
	19	1	**270-5949**	4	PISTON	
	20	1	**270-5950**	4	SPRING	
	21	1	**310-0419**	4	SEAT	
	22	1	**310-0420**	4	SEAL-O-RING	
M	23	1	**087-4710**	4	SETSCREW (M10X21-MM)	
M	24	1	**095-1260**	2	SETSCREW-SOCKET (M6X1X6-MM)	
	25	1	**095-1575**	2	SEAL-O-RING	
	26	1	**6V-8400**	4	SEAL-O-RING	
M	27	1	**8C-6965**	2	BOLT-SOCKET HEAD (M6X1X45-MM)	
M	28	1	**8T-1158**	2	BOLT-SOCKET HEAD (M8X1.25X20-MM)	
M	29	1	**8T-4133**	4	NUT (M10X1.5-THD)	

M-METRIC PART

310-0415 VALVE GP-PILOT *(contd.)* **i03536494**

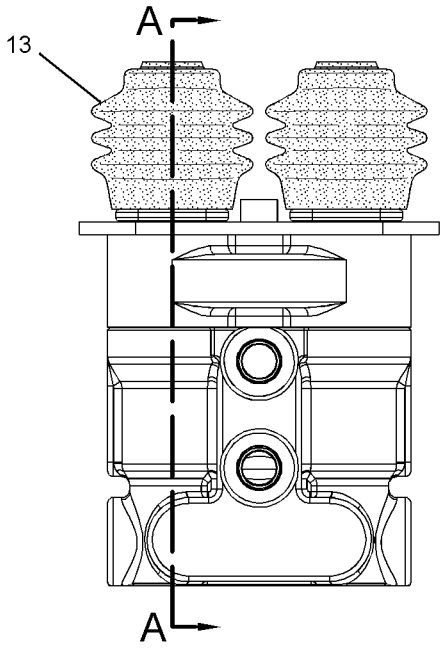

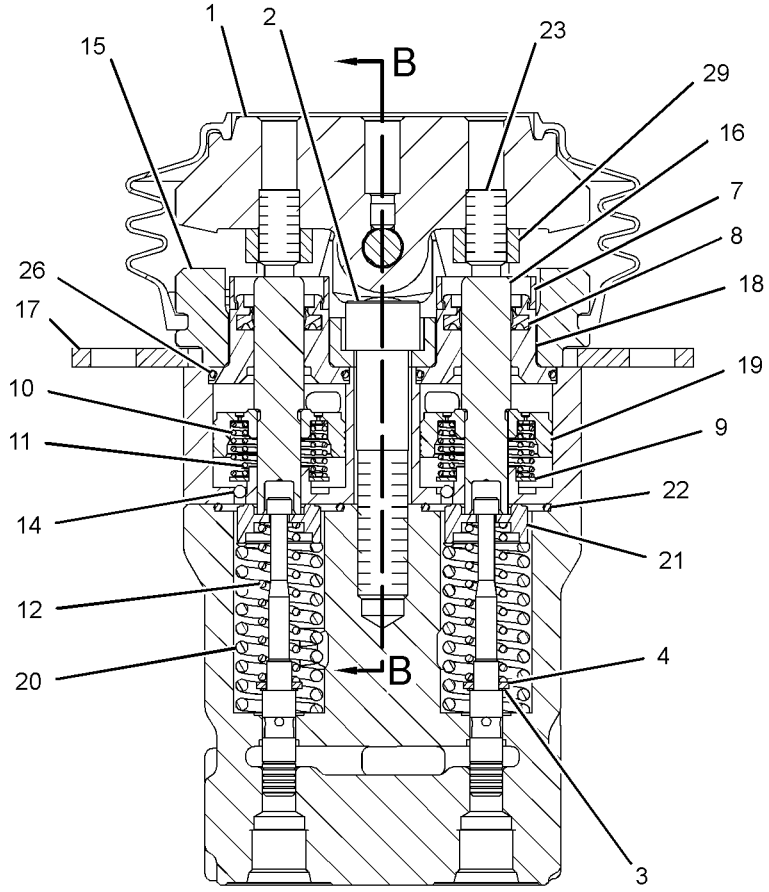

SECTION A-A

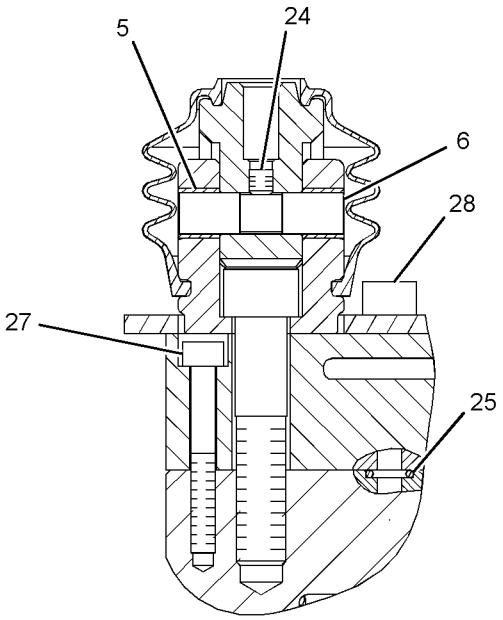

SECTION B-B

GRAPHIC #1 **<END>** g01620929

HYDRAULIC SYSTEM

191-5700 VALVE GP-PILOT RELIEF

S/N: JGB1-UP; KHS1-UP

PART OF 266-7843 VALVE GP-TRAVEL COUNTERBALANCE

SMCS-5072 **i01494953**

NOTE	REF NO	GRAPHIC REF	PART NUMBER	QTY	PART NAME 1 2 3 4 5 6 (PRODUCT LEVEL)	SEE PAGE
	1	1	**180-7460**	2	RING-BACKUP	
	2	1	**180-7459**	2	RING-BACKUP	
	3	1	**3D-4245**	1	SEAL-O-RING	
	4	1	**096-6100**	1	SEAL-O-RING	
	5	1	**122-9250**	1	SEAL-O-RING	
	6	1	**4D-9986**	1	SEAL-O-RING	

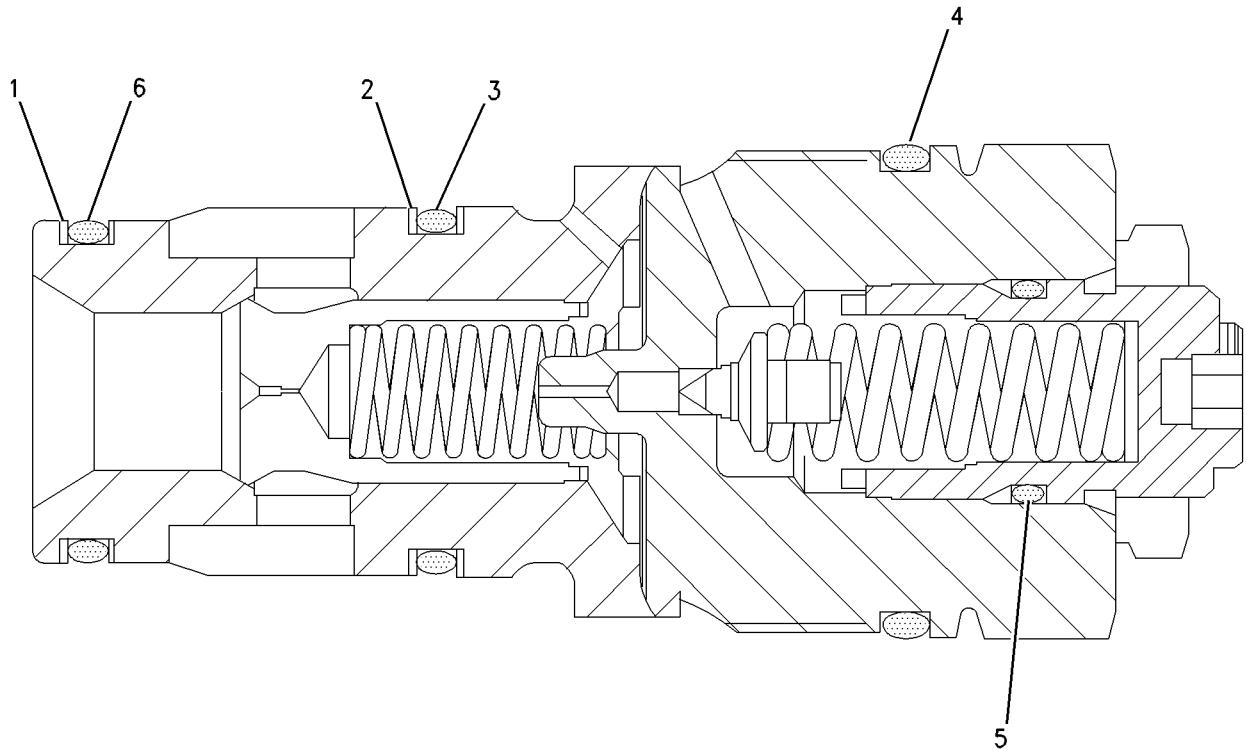

GRAPHIC #1 **<END>** g00668200

122-7708 VALVE GP-PRESSURE CONTROL–BOOM II, SWING

S/N: JGB1-UP; KHS1-UP
PART OF 323-7702, 323-7703 VALVE GP-CONTROL
ALSO AN ATTACHMENT

SMCS-5117 **i01269282**

NOTE	REF NO	GRAPHIC REF	PART NUMBER	QTY	PART NAME 1 2 3 4 5 6 (PRODUCT LEVEL)	SEE PAGE
	1	1	**9S-8006**	2	PLUG-O-RING	
	2	1	**2M-9780**	2	SEAL-O-RING	
	3	1	**122-7664**	1	BODY	
	4	1	**6E-2790**	1	SPRING	
	5	1	**6E-4280**	1	VALVE GP	
	6	1	**9S-4180**	5	PLUG	
	7	1	**4J-7533**	5	SEAL-O-RING	

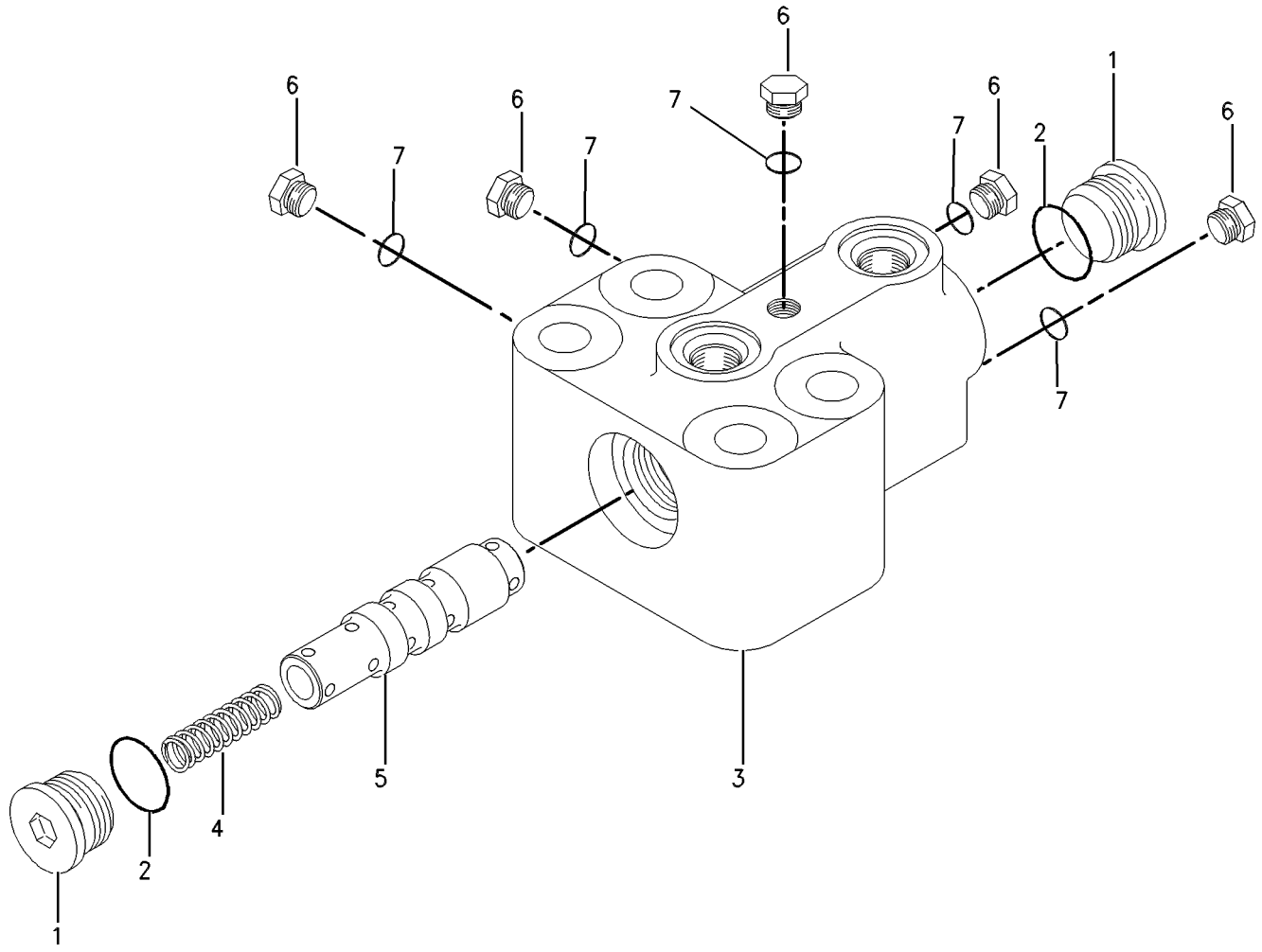

GRAPHIC #1 **<END>** g00285867

310-0210 VALVE GP-PRESSURE REDUCING–
BOOM, SWING PRIORITY
S/N: JGB1-UP; KHS1-UP
PART OF 302-2985 LINES GP-PILOT

SMCS-5117 **i02971663**

NOTE	REF NO	GRAPHIC REF	PART NUMBER	QTY	PART NAME 1 2 3 4 5 6 (PRODUCT LEVEL)	SEE PAGE
	1	1	**111-9998**	2	PLUG	
	2	1	**171-0123**	2	PLUG	
M	3	1	**171-0124**	2	SETSCREW (M8X1.25X18-MM)	
	4	1	**171-0126**	2	SEAT-SPRING	
	5	1	**171-0127**	2	SEAT-SPRING	
	6	1	**171-0128**	2	SPRING	
	7	1	**185-0423**	2	STOP	
	8	1	**095-1580**	2	SEAL-O-RING	
	9	1	**095-1582**	2	SEAL-O-RING	
	10	1	**095-1590**	2	SEAL-O-RING	
M	11	1	**5C-7261**	2	NUT (M8X1.25-THD)	

M-METRIC PART

310-0210 VALVE GP-PRESSURE REDUCING *(contd.)* **i02971663**

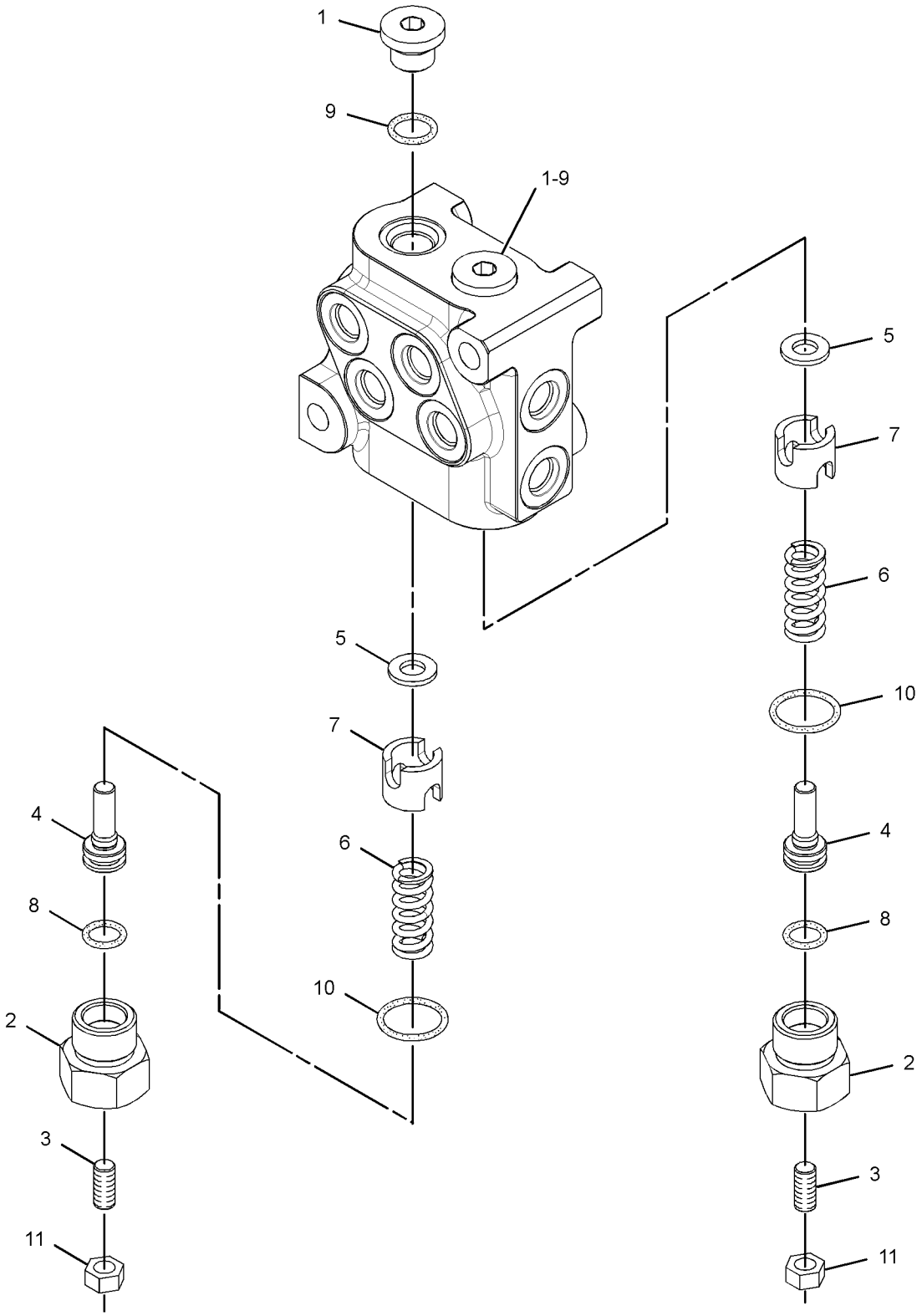

GRAPHIC #1 **<END>** g01506435

HYDRAULIC SYSTEM

297-0641 VALVE GP-PUMP CONTROL–NEGATIVE FLOW CONTROL

S/N: JGB1-UP; KHS1-UP
PART OF 296-7127, 302-3143 LINES GP-PILOT
AN ATTACHMENT

SMCS-5455 **i02844999**

NOTE	REF NO	GRAPHIC REF	PART NUMBER	QTY	PART NAME 1 2 3 4 5 6 (PRODUCT LEVEL)	SEE PAGE
M	1	1	**8T-0288**	4	BOLT (M5X0.8X12-MM)	
	2	1	**7I-8084**	11	PLUG	
Y	3	1	**111-9916**	1	VALVE GP-SOLENOID (PRESSURE REDUCING)	793
Y	4	1	**121-1491**	1	VALVE GP-SOLENOID (AUXILIARY, 1-PUMP/2-PUMP)	794
J	5	1	**171-0198**	2	VALVE GP-SHUTTLE	
					AVAILABLE REPAIR KIT(S):	
J			**185-0407**	1	KIT-SEAL (SHUTTLE VALVE)	
					(INCLUDES O-RING SEALS & BACKUP RINGS)	

J-KIT MARKED J SERVICES PART(S) MARKED J
M-METRIC PART
Y-SEPARATE ILLUSTRATION

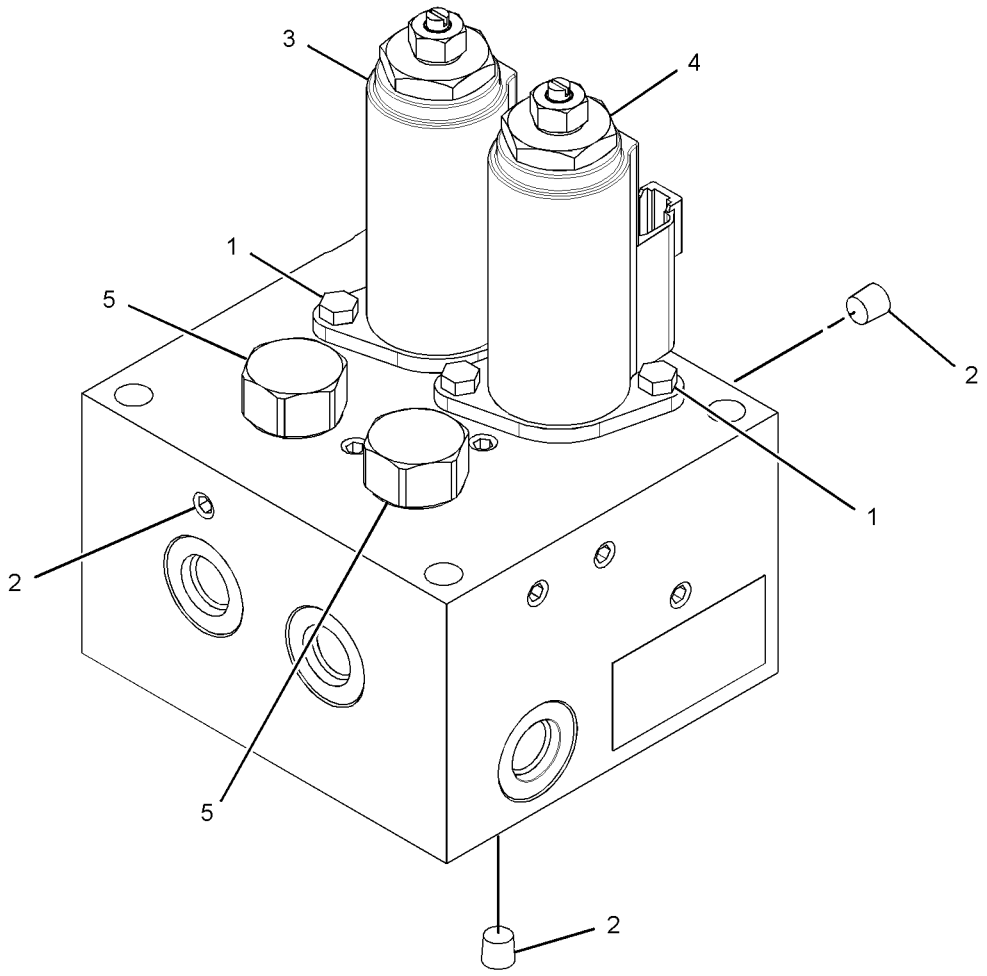

GRAPHIC #1 **<END>** g01454349

255-5588 VALVE GP-REGENERATION

S/N: JGB1-UP; KHS1-UP
PART OF 323-7702, 323-7703 VALVE GP-CONTROL
ALSO AN ATTACHMENT

SMCS-5051 **i02189634**

NOTE	REF NO	GRAPHIC REF	PART NUMBER	QTY	PART NAME 1 2 3 4 5 6 (PRODUCT LEVEL)	SEE PAGE
B	1	1	**131-5945**	1	SHIM (0.1-MM THK)	
	2	1	**147-4158**	1	SPRING	
	3	1	**255-5589**	1	VALVE AS	
		1	**158-8186**	1	SPRING	
	4	1	**255-5590**	1	SLEEVE	
	5	1	**255-5591**	1	SLEEVE	
	6	1	**255-5594**	5	SEAL-O-RING	
B	7	1	**131-5942**	1	SHIM (1-MM THK)	
B	8	1	**131-5943**	1	SHIM (0.5-MM THK)	
B	9	1	**131-5944**	1	SHIM (0.2-MM THK)	

B-USE AS REQUIRED

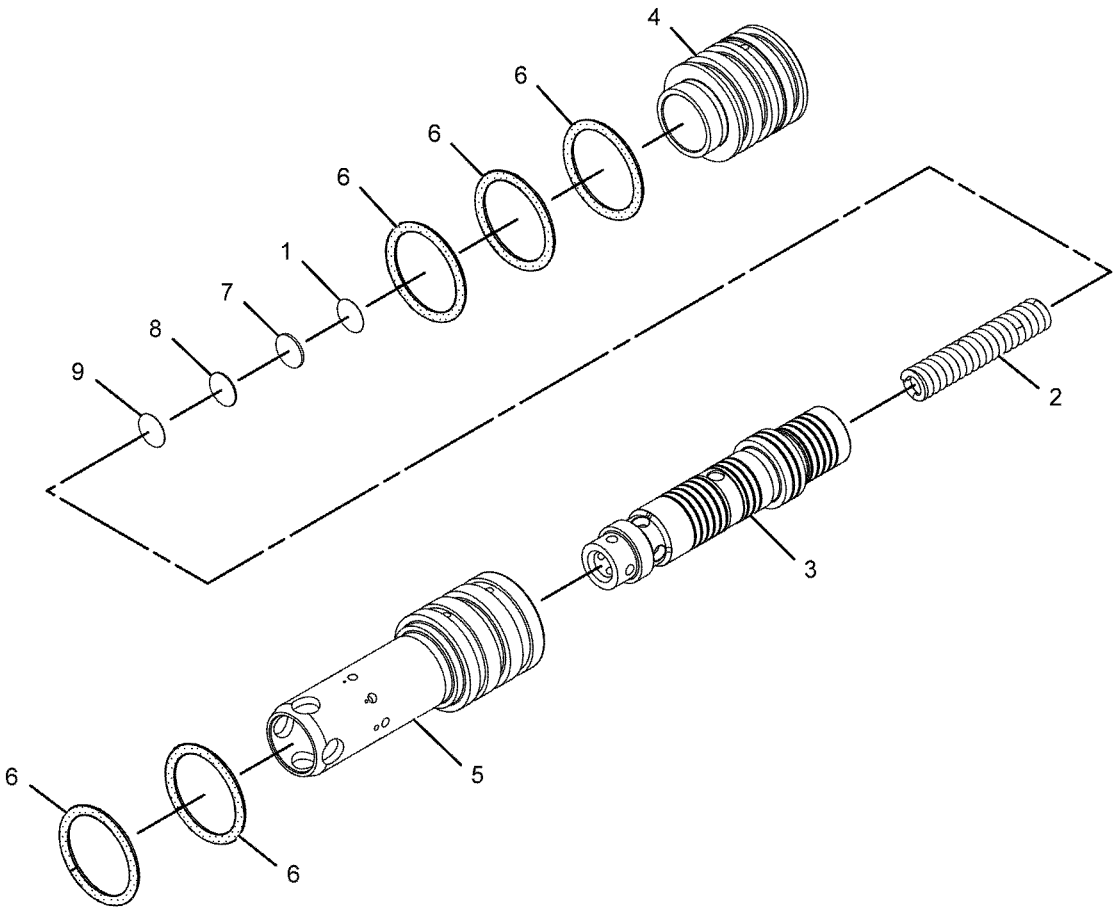

GRAPHIC #1 **<END>** g01112263

122-7750 VALVE GP-RELIEF—NEGATIVE FLOW CONTROL

S/N: JGB1-UP; KHS1-UP
PART OF 323-7702, 323-7703 VALVE GP-CONTROL
ALSO AN ATTACHMENT

SMCS-5069, 5117 **i00611669**

NOTE	REF NO	GRAPHIC REF	PART NUMBER	QTY	PART NAME 1 2 3 4 5 6 (PRODUCT LEVEL)	SEE PAGE
	1	1	**122-7752**	1	PLUG	
	2	1	**122-7751**	1	BODY-VALVE	
	3	1	**122-7748**	1	SPRING	
	4	1	**122-7749**	1	VALVE	
	5	1	**7E-4846**	1	SEAL-O-RING	
	6	1	**2S-4078**	2	SEAL-O-RING	
B	7	1	**4J-6806**	1	SHIM (1.2-MM THK)	
B	8	1	**5M-9624**	2	SHIM (0.25-MM THK)	

B-USE AS REQUIRED

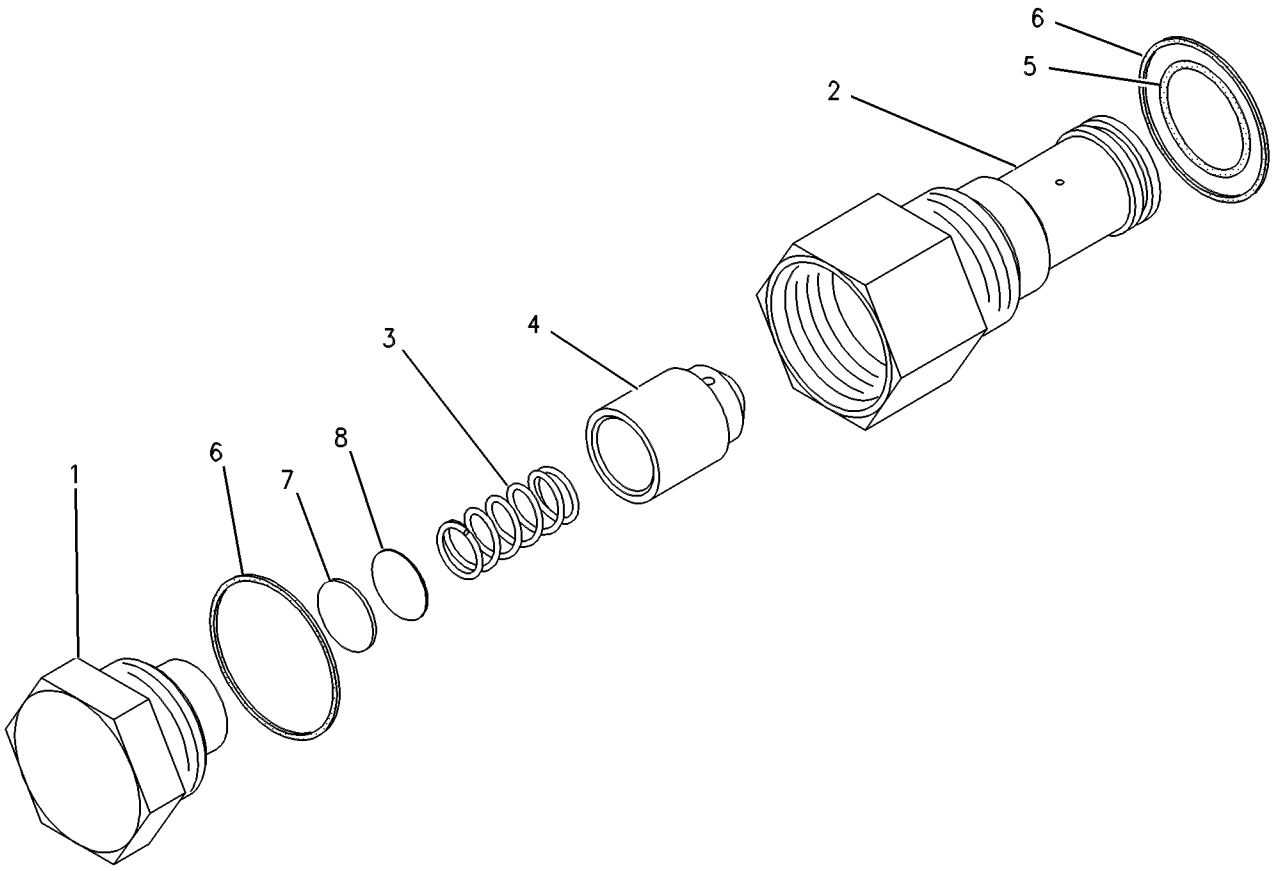

GRAPHIC #1 **<END>** g00267794

122-7756 VALVE GP-RELIEF—NEGATIVE FLOW CONTROL

S/N: JGB1-UP; KHS1-UP
PART OF 323-7700 VALVE GP-CONTROL
ALSO AN ATTACHMENT

SMCS-5069, 5117 **i00611673**

NOTE	REF NO	GRAPHIC REF	PART NUMBER	QTY	PART NAME 1 2 3 4 5 6 (PRODUCT LEVEL)	SEE PAGE
	1	1	**122-7752**	1	PLUG	
	2	1	**122-7757**	1	BODY-VALVE	
	3	1	**122-7748**	1	SPRING	
	4	1	**122-7749**	1	VALVE	
	5	1	**7E-4846**	1	SEAL-O-RING	
	6	1	**2S-4078**	2	SEAL-O-RING	
B	7	1	**4J-6806**	1	SHIM (1.2-MM THK)	
B	8	1	**5M-9624**	2	SHIM (0.25-MM THK)	

B-USE AS REQUIRED

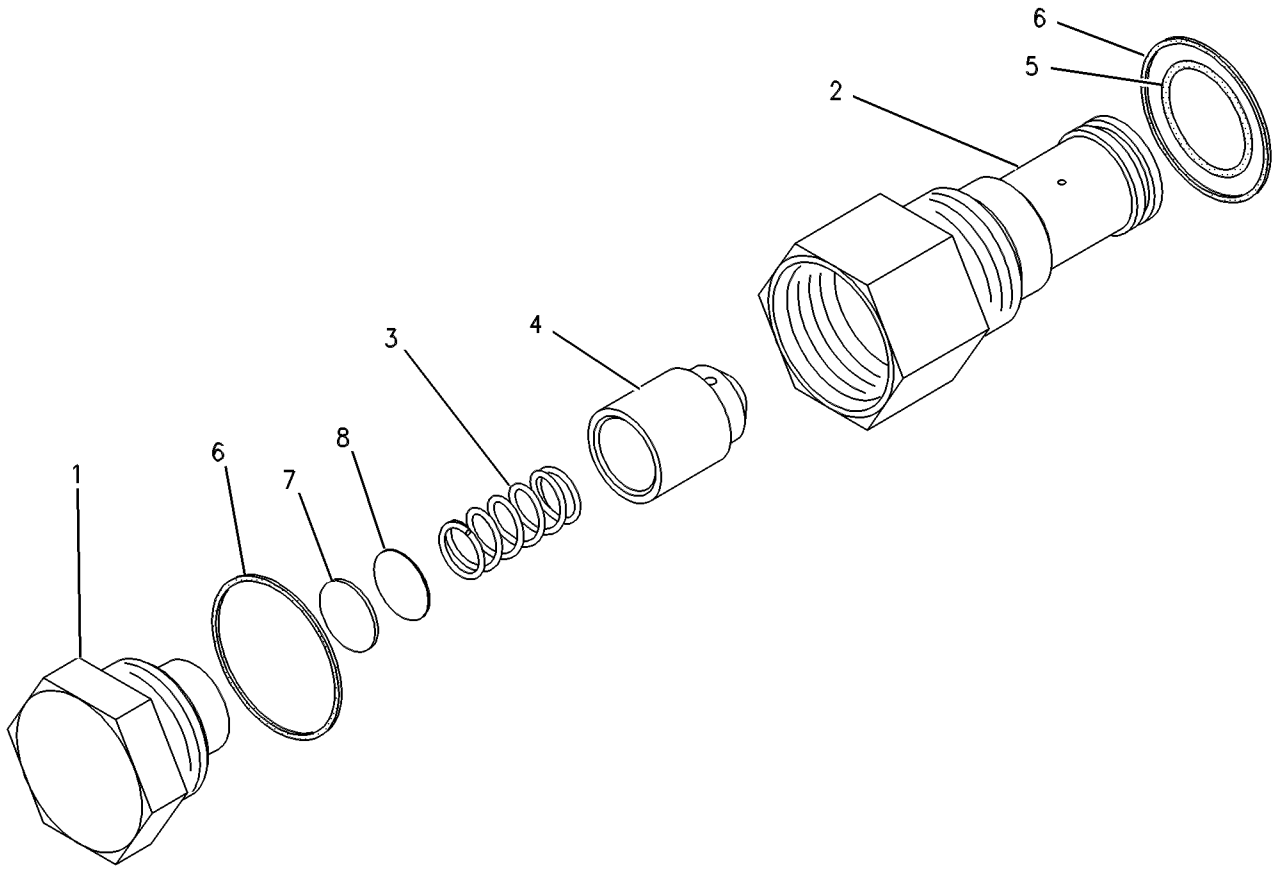

GRAPHIC #1 **<END>** g00267794

HYDRAULIC SYSTEM

184-3830 VALVE GP-RELIEF—SWING MOTOR

S/N: JGB1-UP

PART OF 334-9975 MOTOR GP-SWING

SMCS-5069, 5117 **i01819078**

NOTE	REF NO	GRAPHIC REF	PART NUMBER	QTY	PART NAME 1 2 3 4 5 6 (PRODUCT LEVEL)	SEE PAGE
	1	1	**168-0766**	1	PLUG	
	2	1	**168-0765**	1	RING-BACKUP	
	3	1	**7J-9933**	1	SEAL-O-RING	
M	4	1	**168-0764**	1	LOCKNUT (M33X1.5-THD)	
	5	1	**7I-0966**	1	RING-BACKUP	
	6	1	**6V-5556**	1	SEAL-O-RING	
	7	1	**168-0763**	1	RETAINER	
	8	1	**095-1698**	1	SEAL-O-RING	
	9	1	**168-0713**	1	BODY AS	
	10	1	**191-3201**	1	SPRING	

M-METRIC PART

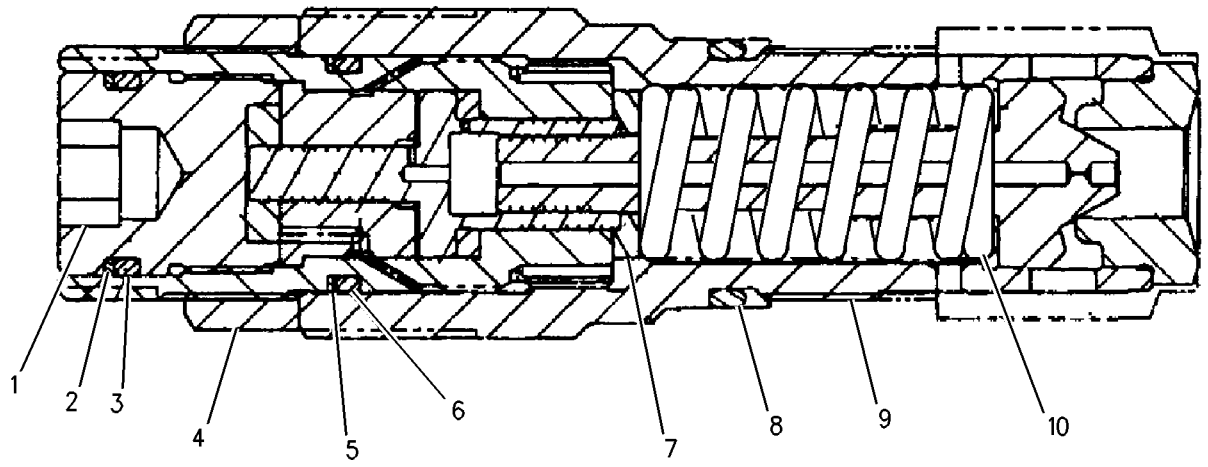

GRAPHIC #1 **<END>** g00928673

239-8983 VALVE GP-RELIEF

S/N: JGB1-UP; KHS1-UP
PART OF 323-7702, 323-7703 VALVE GP-CONTROL
ALSO AN ATTACHMENT

SMCS-5069, 5117 **i02482031**

NOTE	REF NO	GRAPHIC REF	PART NUMBER	QTY	PART NAME 1 2 3 4 5 6 (PRODUCT LEVEL)	SEE PAGE
	1	1	**030-0167**	1	RING-BACKUP	
	2	1	**183-8068**	2	RING-BACKUP	
	3	1	**2P-2975**	1	SEAL-O-RING	
	4	1	**2T-2695**	1	SEAL	
	5	1	**6V-8397**	1	SEAL-O-RING	
	6	1	**7M-8485**	2	SEAL-O-RING	

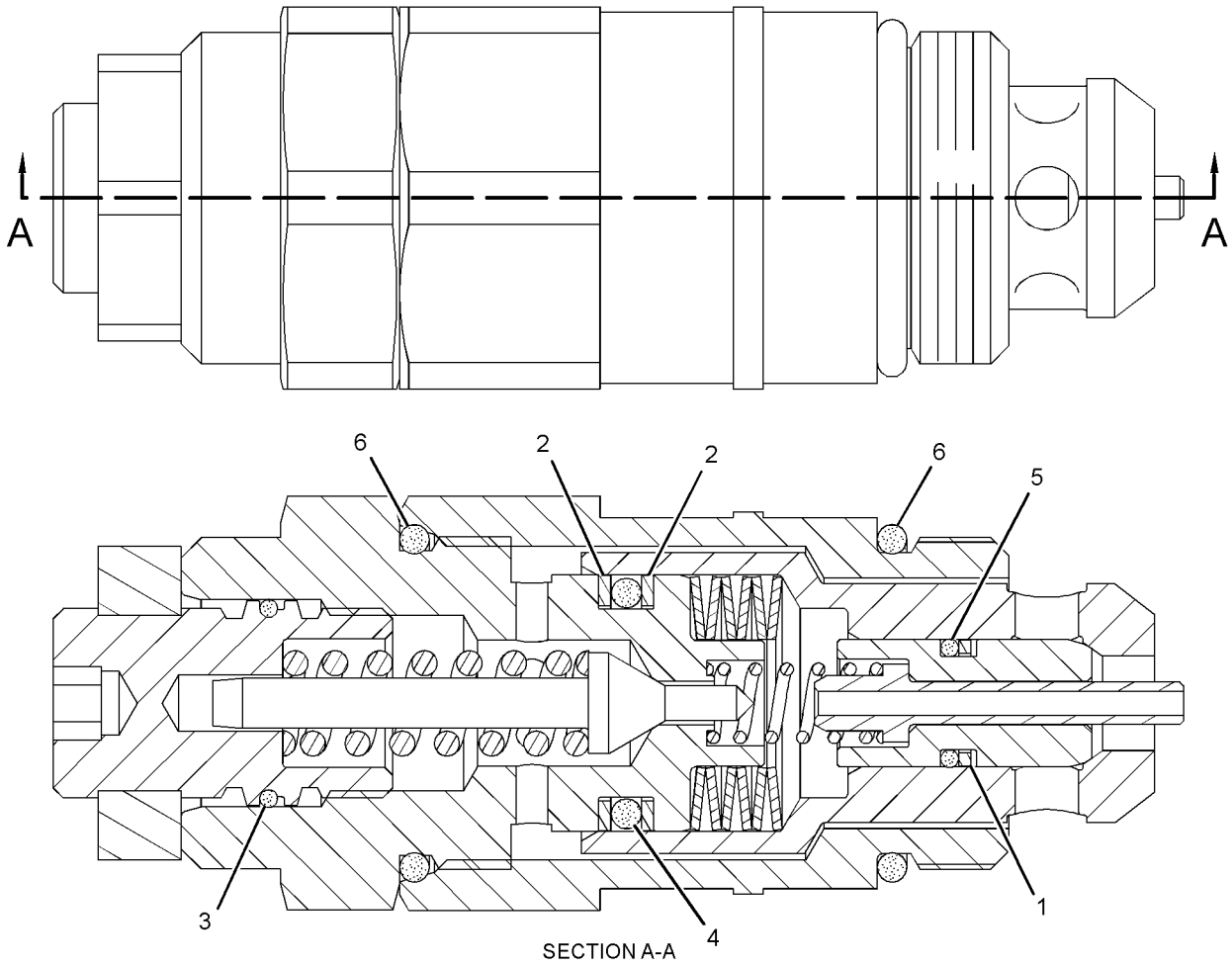

SECTION A-A

GRAPHIC #1 **<END>** g01217845

HYDRAULIC SYSTEM

239-8984 VALVE GP-RELIEF–LINE

S/N: JGB1-UP; KHS1-UP

PART OF 292-7169, 296-7131 LINES GP-FRONT, 323-7700 VALVE GP-CONTROL

ALSO AN ATTACHMENT

SMCS-5069, 5117 **i02495427**

NOTE	REF NO	GRAPHIC REF	PART NUMBER	QTY	PART NAME 1 2 3 4 5 6 (PRODUCT LEVEL)	SEE PAGE
	1	1	**030-0167**	1	RING-BACKUP	
	2	1	**183-8068**	2	RING-BACKUP	
	3	1	**2P-2975**	1	SEAL-O-RING	
	4	1	**2T-2695**	1	SEAL	
	5	1	**6V-8397**	1	SEAL-O-RING	
	6	1	**7M-8485**	2	SEAL-O-RING	

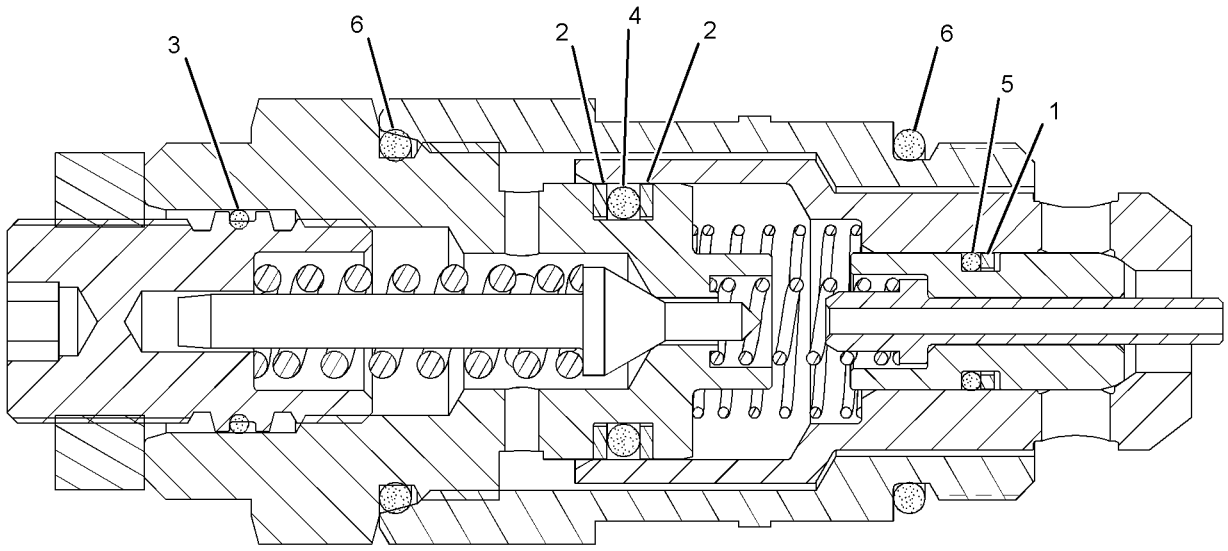

GRAPHIC #1 **<END>** g01250943

239-9103 VALVE GP-RELIEF

S/N: JGB1-UP; KHS1-UP
PART OF 270-5694 VALVE GP-RELIEF
FIELD REPLACEMENT ORDER 352-7229—PAGE 785
AN ATTACHMENT

SMCS-5069, 5117 **i02221716**

NOTE	REF NO	GRAPHIC REF	PART NUMBER	QTY	PART NAME 1 2 3 4 5 6 (PRODUCT LEVEL)	SEE PAGE
	1	1	**4I-3510**	1	SPRING	
	2	1	**8U-7381**	1	SEAL-O-RING	
	3	1	**122-7704**	1	SPRING	
	4	1	**171-0036**	1	ADJUSTER	
	5	1	**171-0037**	1	VALVE	
Z	6	1		1	VALVE GP-CONTROL	
	7	1	**171-0063**	1	SEAT	
	8	1	**171-0064**	1	ADAPTER	
	9	1	**225-4842**	1	NUT (3/4-16-THD)	
	10	1	**095-1579**	1	SEAL-O-RING	
	11	1	**3D-4245**	1	SEAL-O-RING	
	12	1	**4T-7791**	1	RING-BACKUP	
	13	1	**5P-8215**	1	SEAL-O-RING	
	14	1	**6J-2419**	1	SEAL-O-RING	
	15	1	**7M-8485**	1	SEAL-O-RING	

Z-NOT SERVICED SEPARATELY

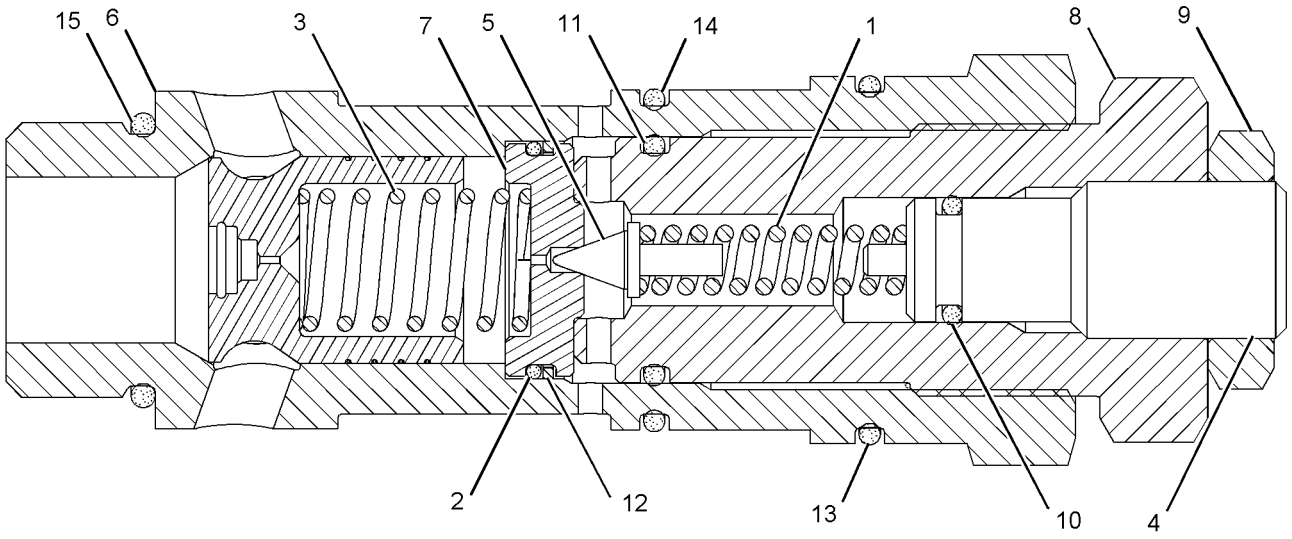

GRAPHIC #1 **<END>** g01121636

HYDRAULIC SYSTEM

270-5691 VALVE GP-RELIEF

S/N: JGB1-UP; KHS1-UP
PART OF 323-7702 VALVE GP-CONTROL, 310-0147 VALVE GP-LOAD CONTROL
ALSO AN ATTACHMENT

SMCS-5069, 5117 **i02496696**

NOTE	REF NO	GRAPHIC REF	PART NUMBER	QTY	PART NAME 1 2 3 4 5 6 (PRODUCT LEVEL)	SEE PAGE
	1	1	**030-0167**	1	RING-BACKUP	
	2	1	**183-8068**	2	RING-BACKUP	
	3	1	**2P-2975**	1	SEAL-O-RING	
	4	1	**6V-8397**	1	SEAL-O-RING	
	5	1	**7M-8485**	2	SEAL-O-RING	
	6	1	**2T-2695**	1	SEAL	

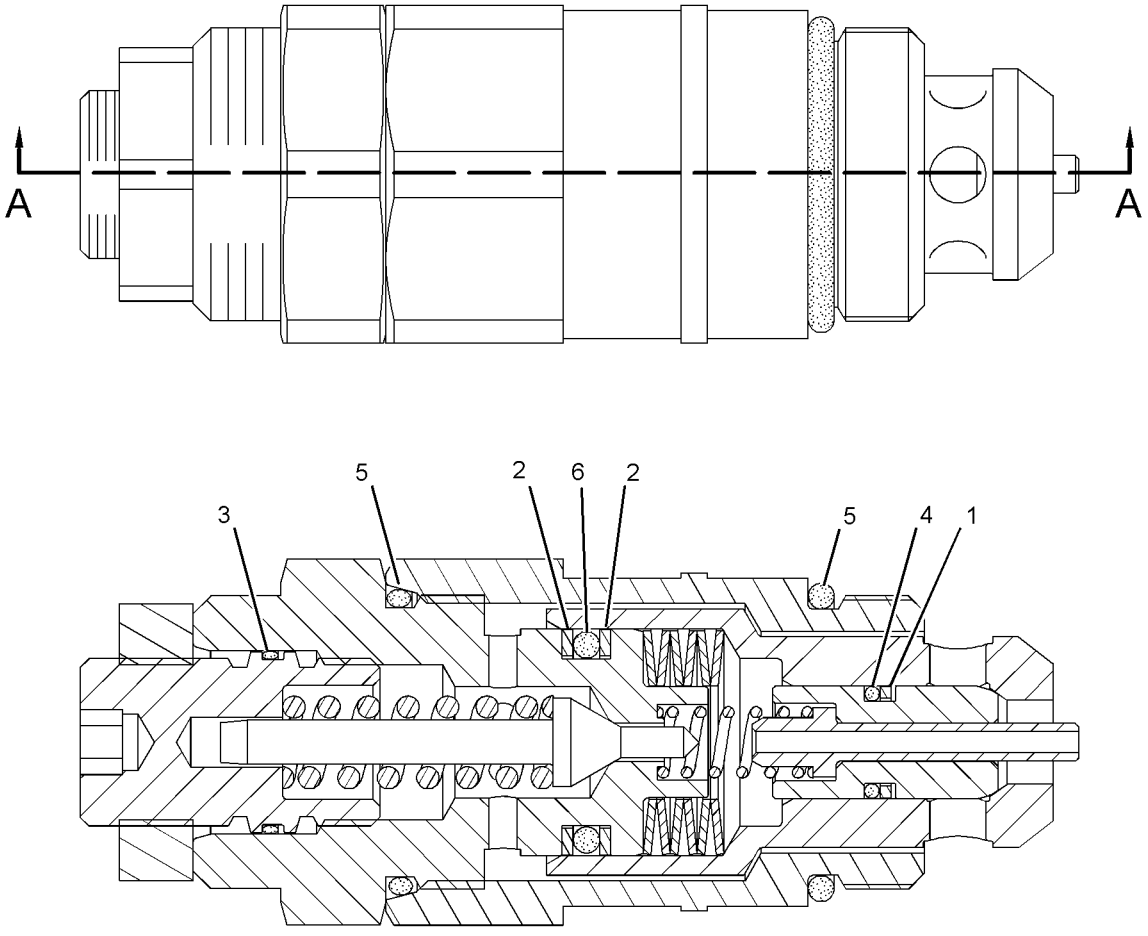

SECTION A-A

GRAPHIC #1 **<END>** g01225039

HYDRAULIC SYSTEM

270-5694 VALVE GP-RELIEF

S/N: JGB1-UP; KHS1-UP
PART OF 296-7129 LINES GP-FRONT
AN ATTACHMENT

SMCS-5069, 5117 **i02993280**

NOTE	REF NO	GRAPHIC REF	PART NUMBER	QTY	PART NAME 1 2 3 4 5 6 (PRODUCT LEVEL)	SEE PAGE
Y	1	1	**239-9103**	1	VALVE GP-RELIEF	779
	2	1	**270-5695**	1	BLOCK	

Y-SEPARATE ILLUSTRATION

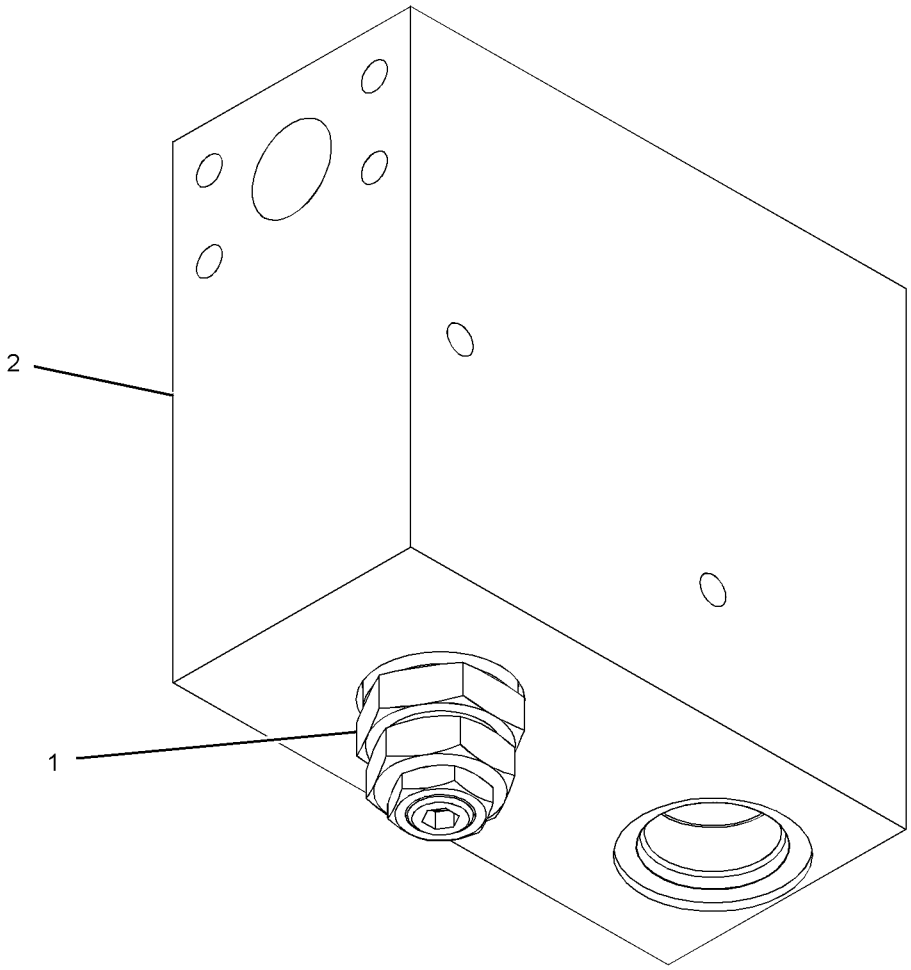

GRAPHIC #1 **<END>** g01478103

HYDRAULIC SYSTEM

270-5730 VALVE GP-RELIEF

S/N: JGB1-UP; KHS1-UP
PART OF 323-7702 VALVE GP-CONTROL
ALSO AN ATTACHMENT

SMCS-5069, 5117 **i02541207**

NOTE	REF NO	GRAPHIC REF	PART NUMBER	QTY	PART NAME 1 2 3 4 5 6 (PRODUCT LEVEL)	SEE PAGE
	1	1	**4I-3510**	1	SPRING	
	2	1	**6I-6777**	1	RETAINER	
	3	1	**8U-7381**	1	SEAL-O-RING	
	4	1	**107-6540**	1	COLLAR	
	5	1	**107-6541**	1	RING-RETAINING	
	6	1	**111-9973**	1	ADJUSTER	
	7	1	**111-9974**	1	ADJUSTER	
	8	1	**119-5398**	1	SCREEN	
	9	1	**122-7704**	1	SPRING	
	10	1	**171-0037**	1	VALVE	
	11	1	**171-0063**	1	SEAT	
	12	1	**225-4824**	1	VALVE AS	
	13	1	**225-4825**	1	VALVE AS	
	14	1	**225-4842**	1	NUT (3/4-16-THD)	
	15	1	**095-1584**	1	SEAL-O-RING	
	16	1	**3D-4245**	1	SEAL-O-RING	
	17	1	**4T-7791**	1	RING-BACKUP	
	18	1	**5P-8215**	1	SEAL-O-RING	
	19	1	**6J-2419**	1	SEAL-O-RING	
	20	1	**6V-3922**	1	SEAL-O-RING	
	21	1	**6V-8978**	1	SEAL-O-RING	
	22	1	**7M-8485**	1	SEAL-O-RING	

270-5730 VALVE GP-RELIEF *(contd.)* **i02541207**

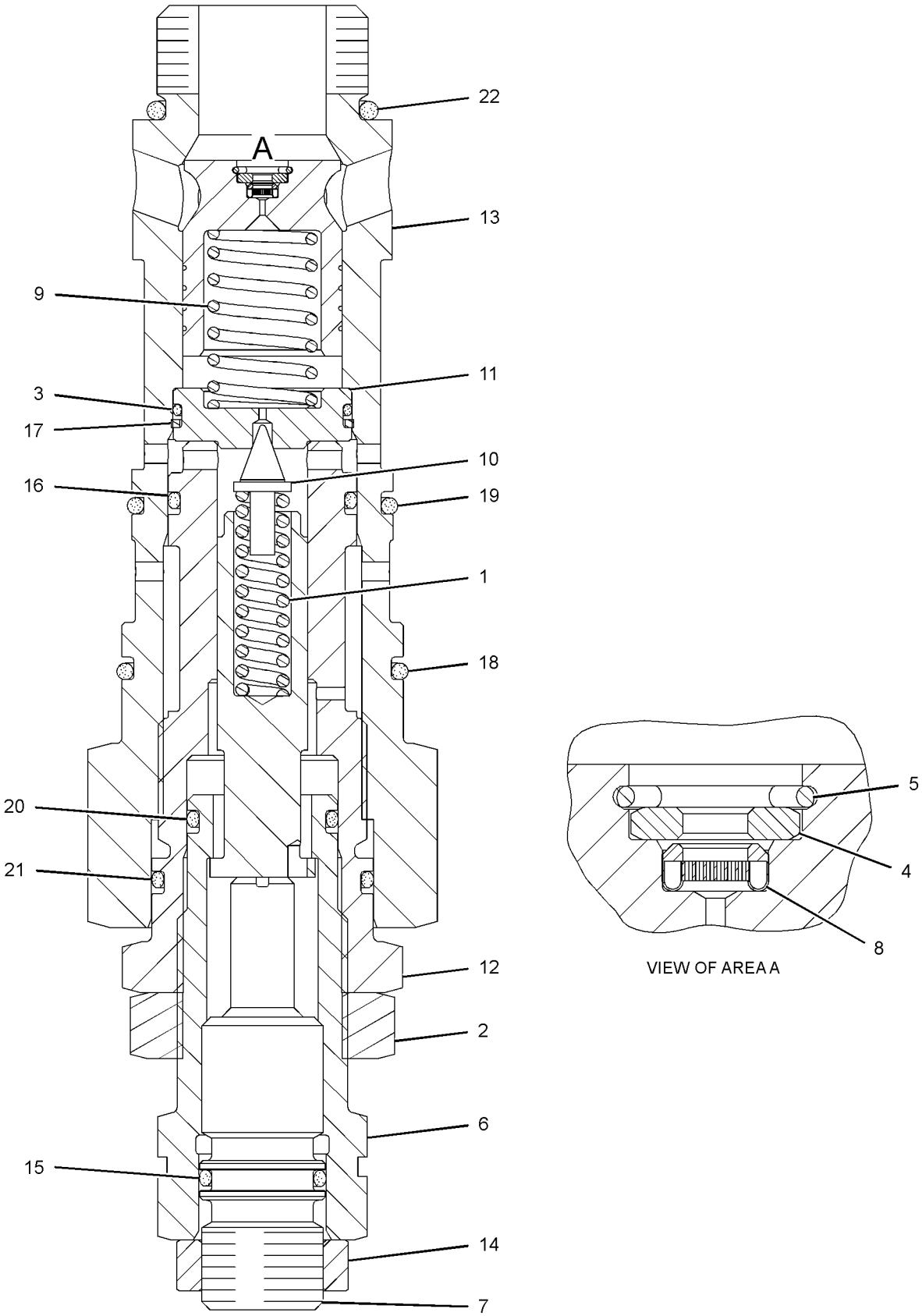

GRAPHIC #1 **<END>** g01232688

HYDRAULIC SYSTEM

270-5731 VALVE GP-RELIEF

S/N: JGB1-UP; KHS1-UP
PART OF 263-1964, 285-1768 VALVE GP-LOAD CONTROL
AN ATTACHMENT

SMCS-5069, 5117 **i02660388**

NOTE	REF NO	GRAPHIC REF	PART NUMBER	QTY	PART NAME 1 2 3 4 5 6 (PRODUCT LEVEL)	SEE PAGE
	1	1	**095-1578**	1	SEAL-O-RING	
	2	1	**103-8252**	2	RING	
	3	1	**103-8253**	2	RING	
	4	1	**103-8254**	1	SEAL-O-RING	
	5	1	**103-8255**	1	SEAL-O-RING	
	6	1	**3D-2824**	2	SEAL-O-RING	

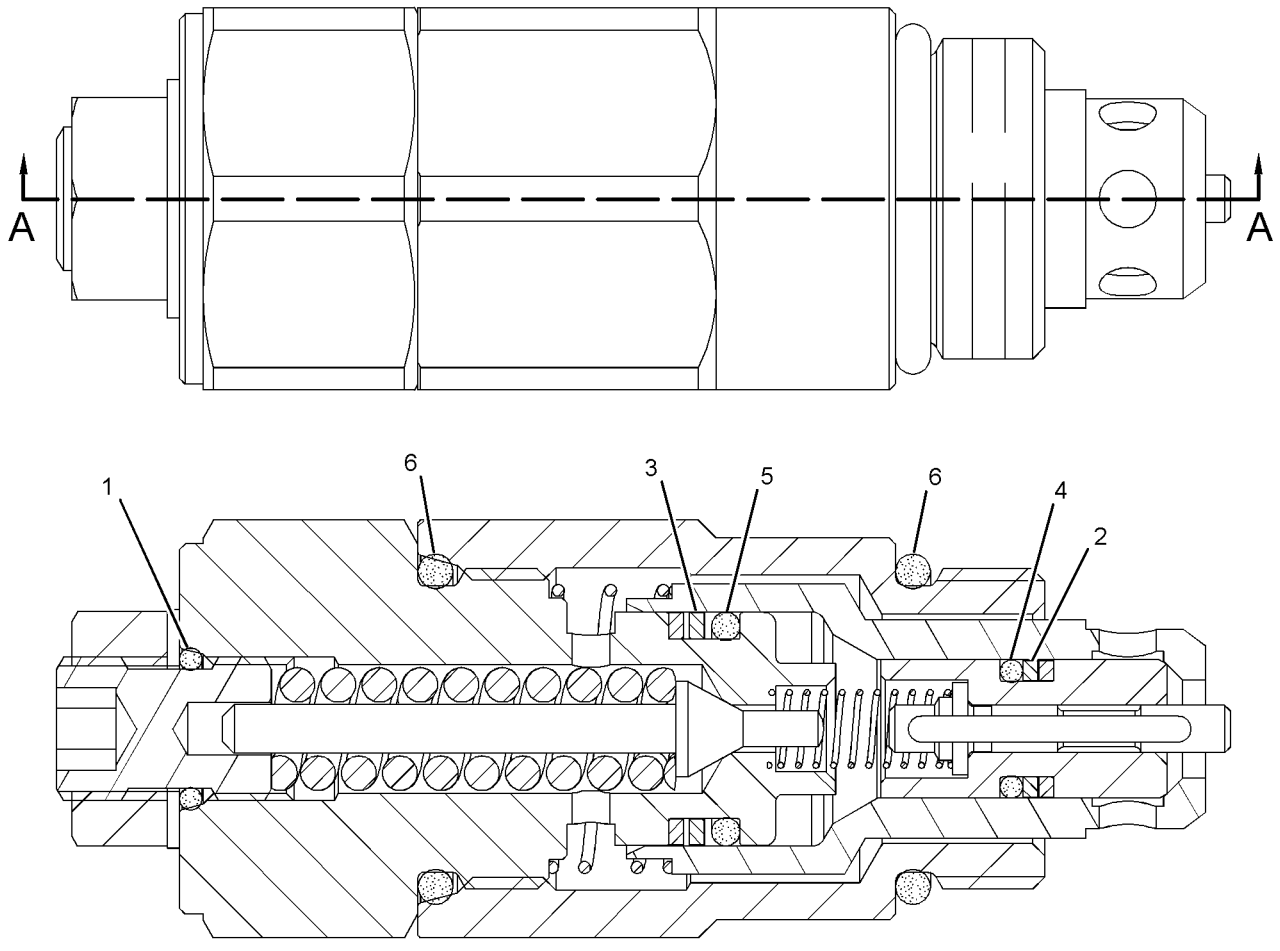

SECTION A-A

GRAPHIC #1 **<END>** g01234398

352-7229 VALVE GP-RELIEF

S/N: JGB1-UP; KHS1-UP

FIELD REPLACEMENT FOR 239-9103—PAGE 779

SMCS-5069, 5117 **i04188049**

NOTE	REF NO	GRAPHIC REF	PART NUMBER	QTY	PART NAME 1 2 3 4 5 6 (PRODUCT LEVEL)	SEE PAGE
	1	1	**8U-7381**	1	SEAL-O-RING	
	2	1	**122-7704**	1	SPRING	
	3	1	**171-0037**	1	VALVE	
	4	1	**225-4842**	1	NUT (3/4-16-THD)	
	5	1	**352-7232**	1	SEAT-VALVE	
	6	1	**352-7233**	1	SPRING	
	7	1	**352-7234**	1	ADJUSTER	
	9	1	**352-7237**	1	SLEEVE	
	10	1	**095-1579**	1	SEAL-O-RING	
	11	1	**3D-4245**	1	SEAL-O-RING	
	12	1	**4T-7791**	1	RING-BACKUP	
	13	1	**5P-8215**	1	SEAL-O-RING	
	14	1	**6J-2419**	1	SEAL-O-RING	
	15	1	**7M-8485**	1	SEAL-O-RING	

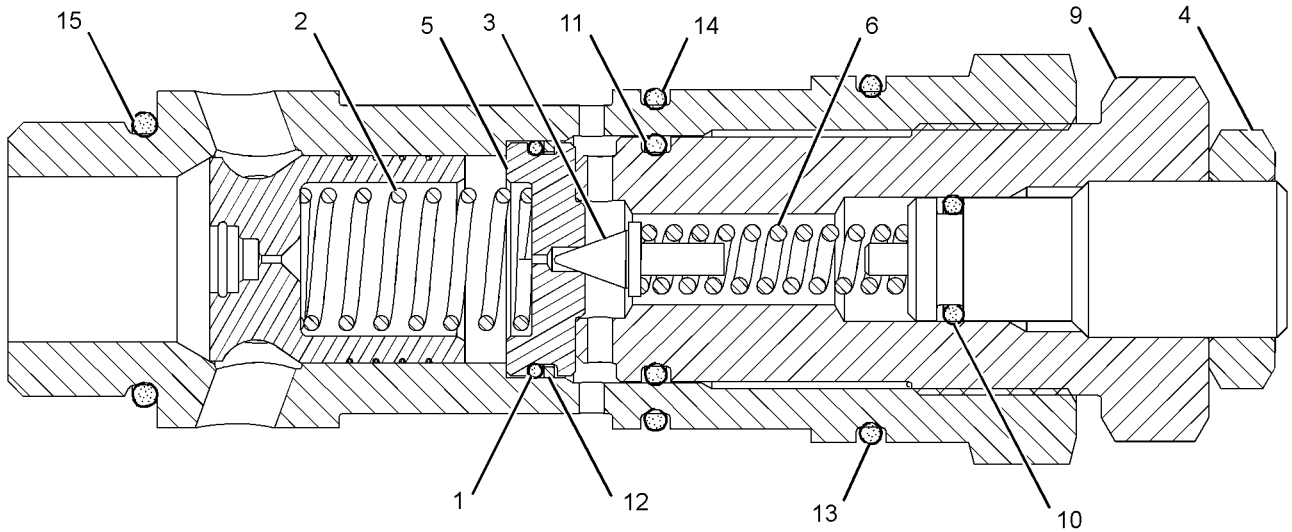

GRAPHIC #1 **<END>** g02382316

HYDRAULIC SYSTEM

352-7231 VALVE GP-RELIEF

S/N: JGB1-UP; KHS1-UP
PART OF 323-7703 VALVE GP-CONTROL
AN ATTACHMENT

SMCS-5069, 5117 **i04176669**

NOTE	REF NO	GRAPHIC REF	PART NUMBER	QTY	PART NAME 1 2 3 4 5 6 (PRODUCT LEVEL)	SEE PAGE
	1	1	**6I-6777**	1	RETAINER	
	2	1	**8U-7381**	1	SEAL-O-RING	
	3	1	**107-6540**	1	COLLAR	
	4	1	**107-6541**	1	RING-RETAINING	
	5	1	**111-9973**	1	ADJUSTER	
	6	1	**111-9974**	1	ADJUSTER	
	7	1	**119-5398**	1	SCREEN	
	8	1	**122-7704**	1	SPRING	
	9	1	**171-0037**	1	VALVE	
	10	1	**225-4842**	1	NUT (3/4-16-THD)	
	11	1	**352-7232**	1	SEAT-VALVE	
	12	1	**352-7233**	1	SPRING	
	13	1	**352-7238**	1	VALVE AS	
	14	1	**352-7241**	1	VALVE AS	
	15	1	**095-1584**	1	SEAL-O-RING	
	16	1	**3D-4245**	1	SEAL-O-RING	
	17	1	**4T-7791**	1	RING-BACKUP	
	18	1	**5P-8215**	1	SEAL-O-RING	
	19	1	**6J-2419**	1	SEAL-O-RING	
	20	1	**6V-3922**	1	SEAL-O-RING	
	21	1	**6V-8978**	1	SEAL-O-RING	
	22	1	**7M-8485**	1	SEAL-O-RING	

352-7231 VALVE GP-RELIEF *(contd.)* **i04176669**

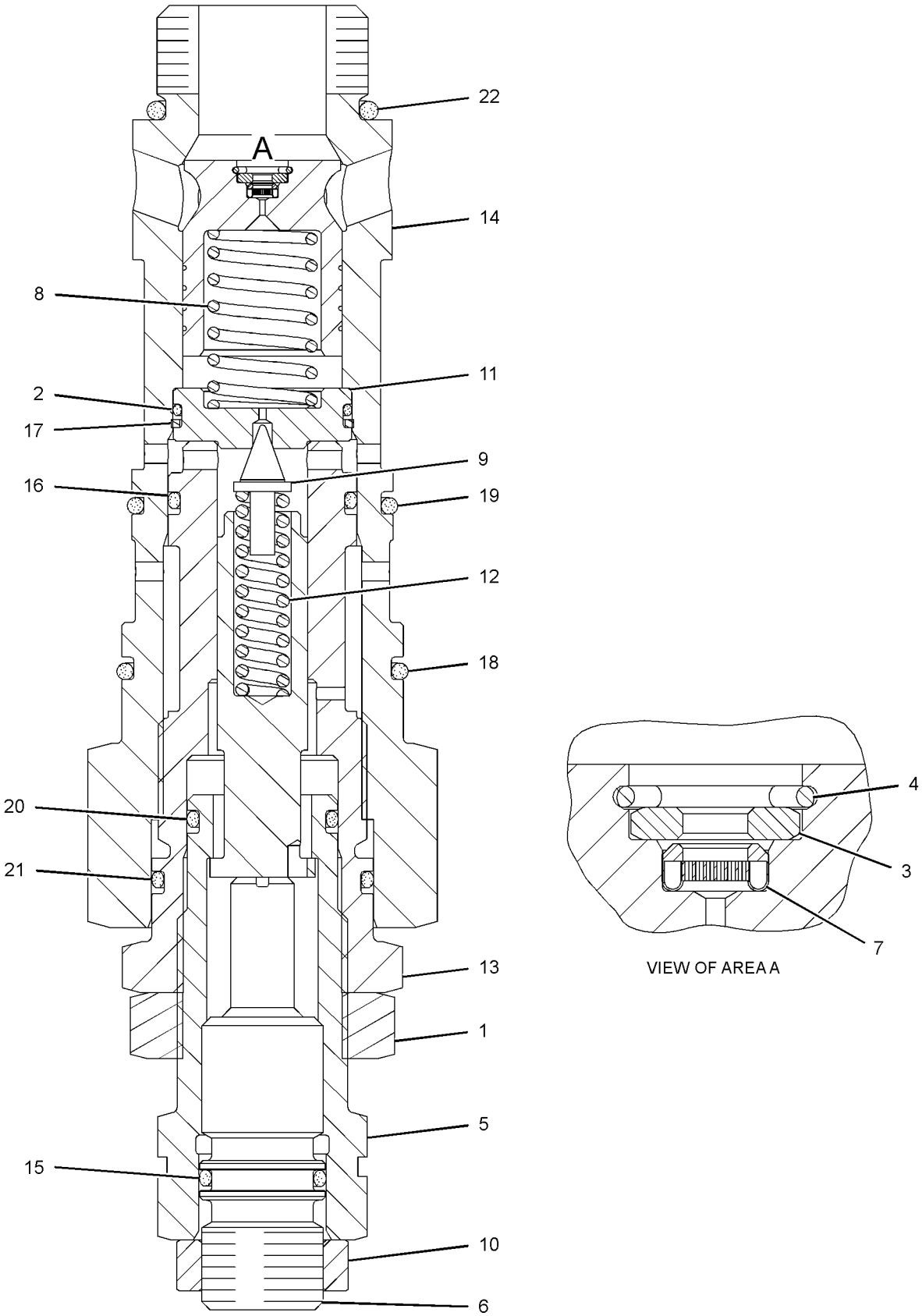

GRAPHIC #1 **<END>** g02387877

HYDRAULIC SYSTEM

112-0083 VALVE GP-SHUTTLE

S/N: JGB1-UP; KHS1-UP
PART OF 260-8047 LINES GP-PILOT
AN ATTACHMENT

SMCS-5079 **i01882781**

NOTE	REF NO	GRAPHIC REF	PART NUMBER	QTY	PART NAME 1 2 3 4 5 6 (PRODUCT LEVEL)	SEE PAGE
	1	1	**2D-6642**	4	BALL	
	2	1	**112-0085**	4	PLUG	
	3	1	**3J-1907**	4	SEAL-O-RING	

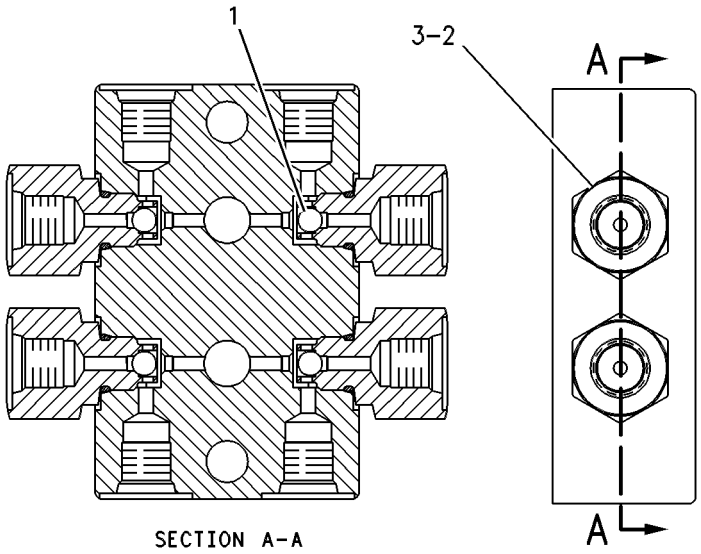

GRAPHIC #1 **<END>** g00258739

HYDRAULIC SYSTEM

123-2549 VALVE GP-SHUTTLE

S/N: JGB1-UP; KHS1-UP

PART OF 296-7133 LINES GP-PILOT, 227-0459 LINES GP-REAR ATTACHMENT

AN ATTACHMENT

SMCS-5079 **i01152380**

NOTE	REF NO	GRAPHIC REF	PART NUMBER	QTY	PART NAME 1 2 3 4 5 6 (PRODUCT LEVEL)	SEE PAGE
	1	1	**123-2511**	1	TEE	
	2	1	**4B-9783**	1	BALL	
	3	1	**123-2552**	2	CONNECTOR	
	4	1	**3J-1907**	2	SEAL-O-RING	

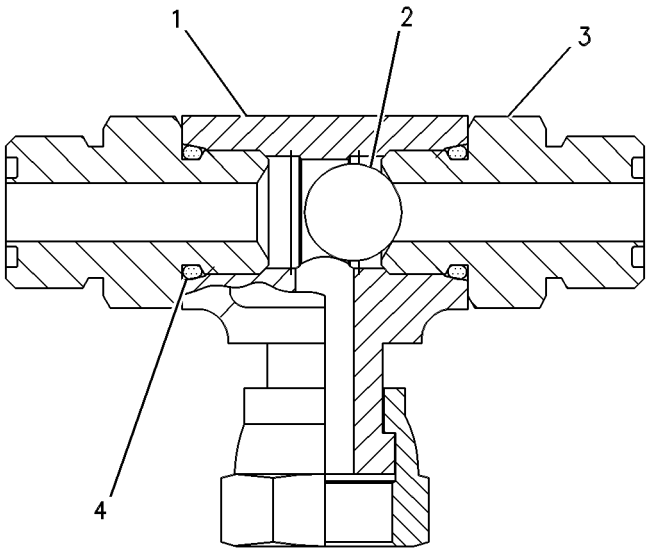

GRAPHIC #1 **<END>** g00274258

HYDRAULIC SYSTEM

164-6979 VALVE GP-SHUTTLE

S/N: JGB1-UP; KHS1-UP

PART OF 302-2985 LINES GP-PILOT

SMCS-5079 **i03820974**

NOTE	REF NO	GRAPHIC REF	PART NUMBER	QTY	PART NAME 1 2 3 4 5 6 (PRODUCT LEVEL)	SEE PAGE
	1	1	**123-2431**	1	BODY-VALVE	
	2	1	**4B-9783**	1	BALL	
	3	1	*175-4430*	2	CONNECTOR AS	
					(EACH INCLUDES)	
		1	**3J-1907**	1	SEAL-O-RING	
		1	**6V-8397**	1	SEAL-O-RING	
		1	**123-2552**	1	CONNECTOR	

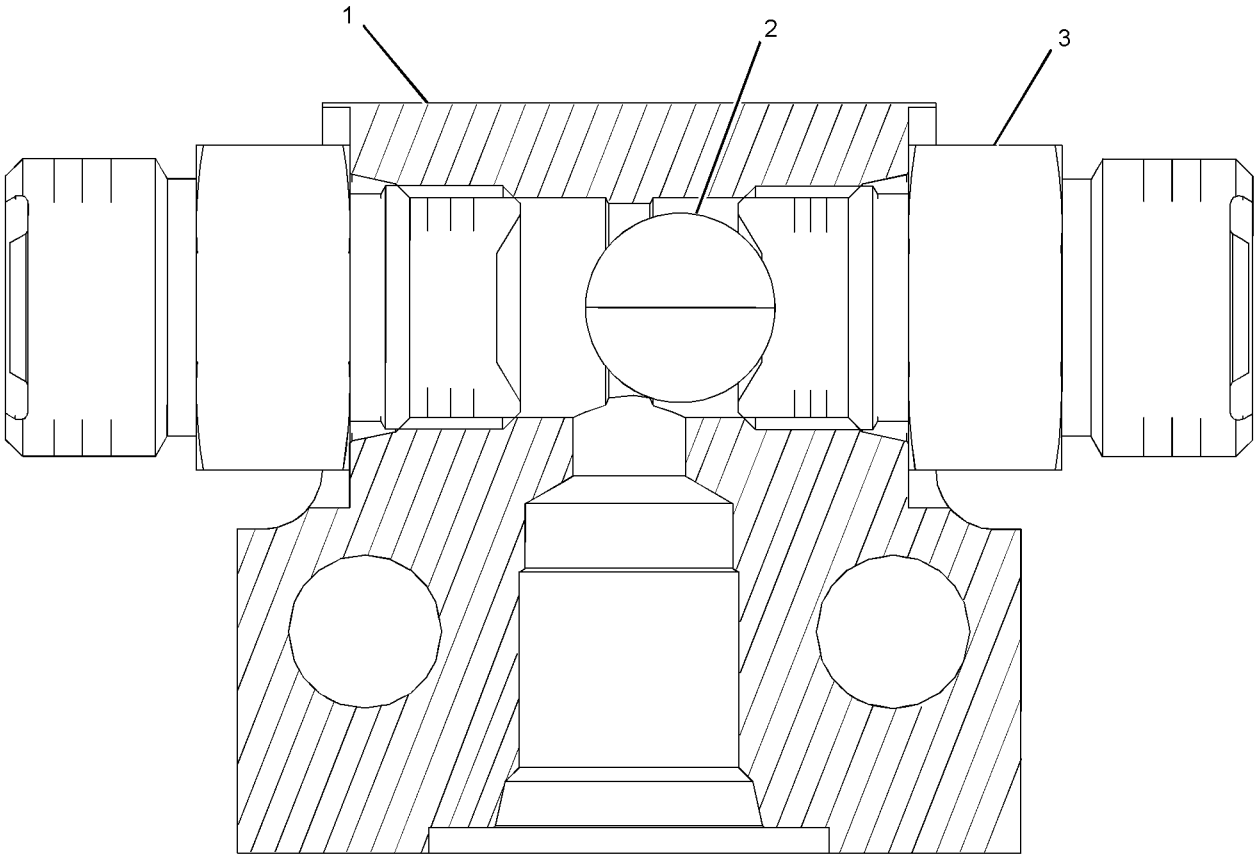

GRAPHIC #1 **<END>** g01955237

HYDRAULIC SYSTEM

171-0198 VALVE GP-SHUTTLE

S/N: JGB1-UP; KHS1-UP

PART OF 171-0188 VALVE GP-SOLENOID

SMCS-5079 **i04056689**

NOTE	REF NO	GRAPHIC REF	PART NUMBER	QTY	PART NAME 1 2 3 4 5 6 (PRODUCT LEVEL)	SEE PAGE
J	1	1	**095-1751**	1	SEAL-O-RING	
J	2	1	**6V-8399**	2	SEAL-O-RING	
					AVAILABLE REPAIR KIT(S):	
J			**185-0407**	1	KIT-SEAL (SHUTTLE VALVE)	
					(INCLUDES BACK-UP RINGS)	

J-KIT MARKED J INCLUDES PART(S) MARKED J

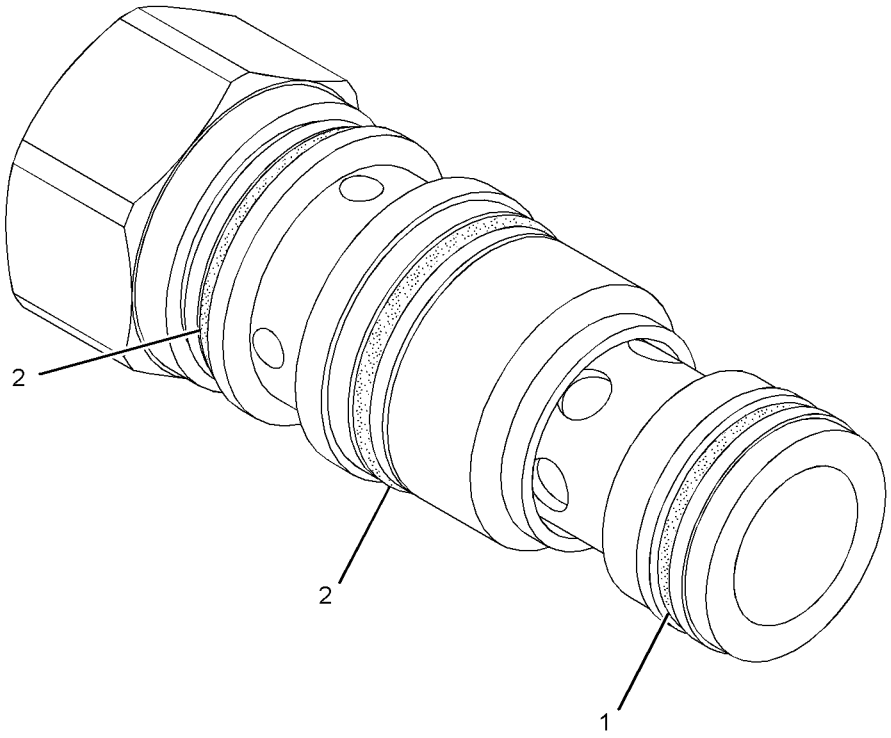

GRAPHIC #1 **<END>** g01951532

HYDRAULIC SYSTEM

185-0462 VALVE GP-SHUTTLE

S/N: JGB1-UP; KHS1-UP
PART OF 260-7891 LINES GP-PILOT
AN ATTACHMENT

SMCS-5079 **i01819099**

NOTE	REF NO	GRAPHIC REF	PART NUMBER	QTY	PART NAME 1 2 3 4 5 6 (PRODUCT LEVEL)	SEE PAGE
	1	1	**7I-8084**	4	PLUG	
	2	1	**185-0463**	1	SEAT	
	3	1	**4B-9880**	7	BALL	
	4	1	**165-9464**	6	SEAT	
	5	1	**095-1578**	7	SEAL-O-RING	
	6	1	**107-6479**	7	PLUG	

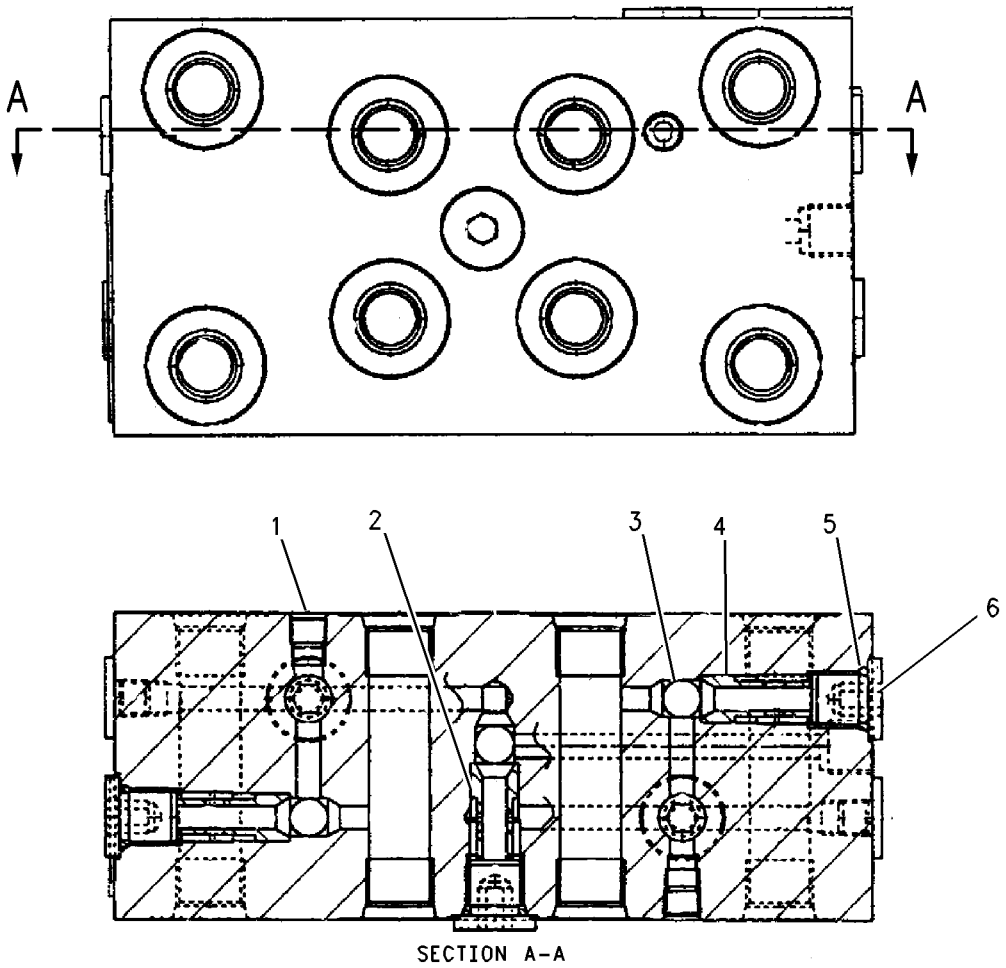

SECTION A-A

GRAPHIC #1 **<END>** g00683437

HYDRAULIC SYSTEM

111-9916 VALVE GP-SOLENOID

S/N: JGB1-UP; KHS1-UP

PART OF 297-0641 VALVE GP-PUMP CONTROL, 171-0188, 259-7430 VALVE GP-SOLENOID ALSO AN ATTACHMENT

SMCS-5479 **i02701506**

NOTE	REF NO	GRAPHIC REF	PART NUMBER	QTY	PART NAME 1 2 3 4 5 6 (PRODUCT LEVEL)	SEE PAGE
	1	1	**095-1750**	1	SEAL-O-RING	
	2	1	**6V-8398**	1	SEAL-O-RING	
	3	1	**095-1751**	1	SEAL-O-RING	
	4	1	**095-1586**	1	SEAL-O-RING	
M	5	1	**114-0623**	1	NUT AS (M6X1-THD)	

M-METRIC PART

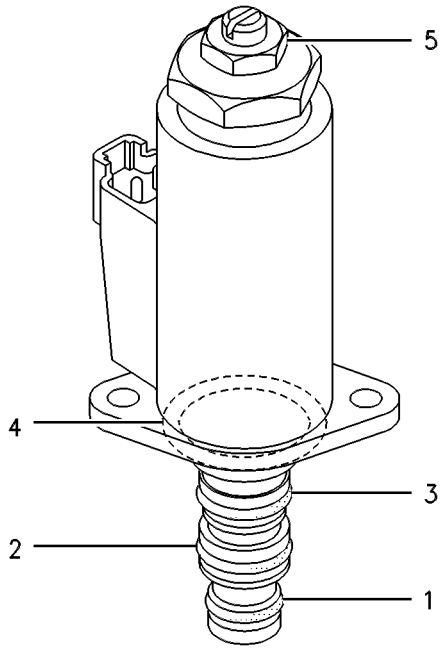

GRAPHIC #1 **<END>** g00258219

HYDRAULIC SYSTEM

121-1491 VALVE GP-SOLENOID

S/N: JGB1-UP; KHS1-UP

PART OF 239-8697, 239-8998 MANIFOLD GP-CONTROL, 254-3080 VALVE GP-CONTROL, 297-0641 VALVE GP-PUMP CONTROL, 242-6880, 258-6749 VALVE GP-SOLENOID

ALSO AN ATTACHMENT

SMCS-5479 **i01819115**

NOTE	REF NO	GRAPHIC REF	PART NUMBER	QTY	PART NAME 1 2 3 4 5 6 (PRODUCT LEVEL)	SEE PAGE
	1	1	**095-1750**	1	SEAL-O-RING	
	2	1	**6V-8398**	1	SEAL-O-RING	
	3	1	**095-1751**	1	SEAL-O-RING	
	4	1	**095-1586**	1	SEAL-O-RING	
M	5	1	**114-0623**	1	NUT AS (M6X1-THD)	

M-METRIC PART

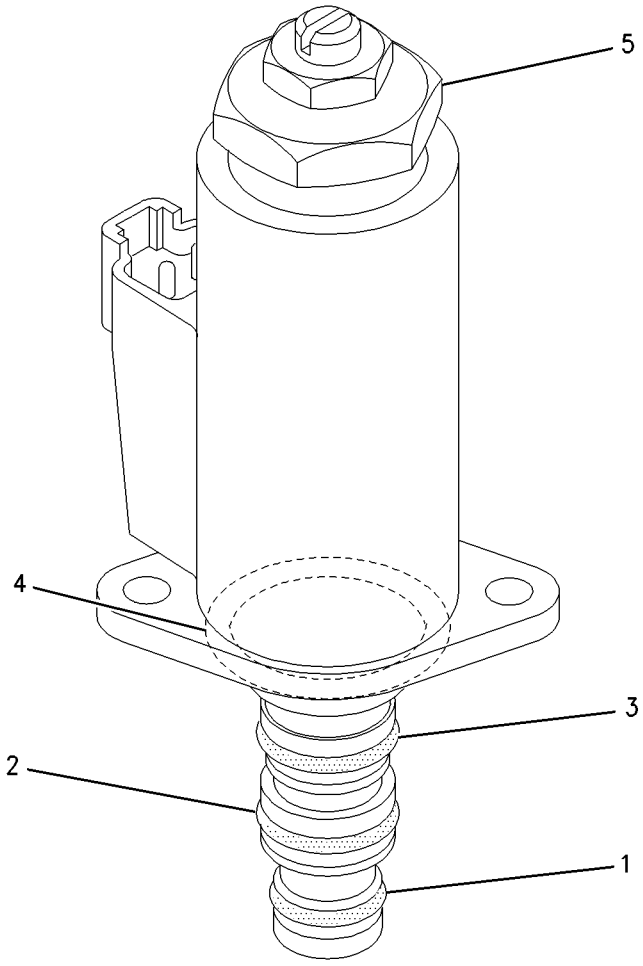

GRAPHIC #1 **<END>** g00928680

HYDRAULIC SYSTEM

121-6303 VALVE GP-SOLENOID

S/N: JGB1-UP; KHS1-UP
PART OF 227-0460, 302-3143 LINES GP-PILOT
ALSO AN ATTACHMENT

SMCS-5479 **i03254892**

NOTE	REF NO	GRAPHIC REF	PART NUMBER	QTY	PART NAME 1 2 3 4 5 6 (PRODUCT LEVEL)	SEE PAGE
	1	1	**7I-8102**	1	VALVE AS	
	2	1	**121-6304**	1	COIL GP	
M	3	1	**099-0822**	2	BOLT-SOCKET HEAD (M5X0.8X10-MM)	
	4	1	**095-1519**	1	SEAL-O-RING	
	5	1	**7I-0986**	1	PLUG	
	6	1	**7I-7403**	1	SPRING	
	7	1	**095-1578**	1	SEAL-O-RING	

M-METRIC PART

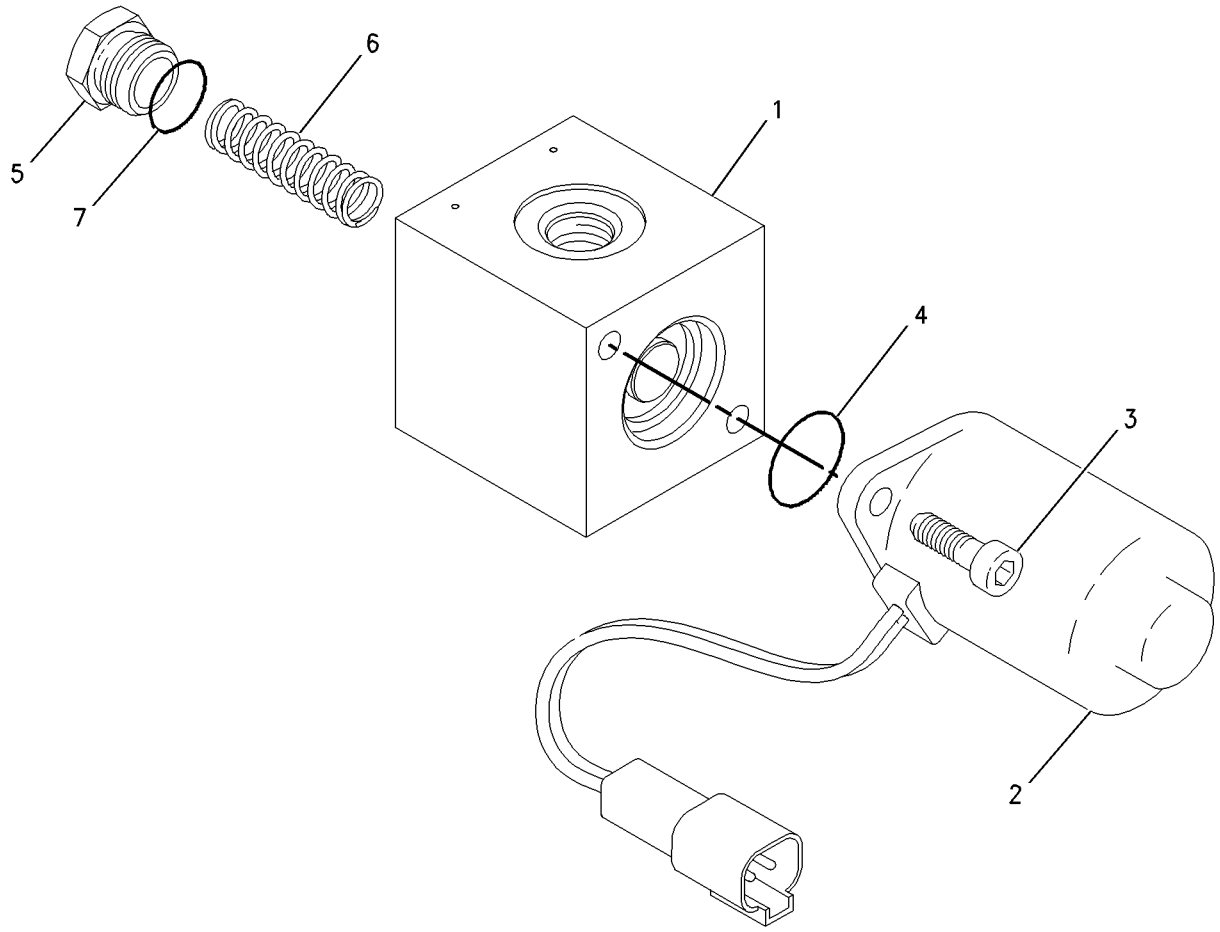

GRAPHIC #1 **<END>** g00685554

HYDRAULIC SYSTEM

171-0188 VALVE GP-SOLENOID

S/N: JGB1-UP; KHS1-UP
PART OF 302-3097 LINES GP-PILOT

SMCS-5479 **i04056409**

NOTE	REF NO	GRAPHIC REF	PART NUMBER	QTY	PART NAME 1 2 3 4 5 6 (PRODUCT LEVEL)	SEE PAGE
Y	1	1	**111-9916**	1	VALVE GP-SOLENOID (PROPORTIONAL REDUCING)	793
M	2	1	**8T-0288**	2	BOLT (M5X0.8X12-MM)	
JY	3	1	**171-0198**	2	VALVE GP-SHUTTLE	791
	4	1	**7I-8084**	6	PLUG	
					AVAILABLE REPAIR KIT(S):	
J			**185-0407**	1	KIT-SEAL (SHUTTLE VALVE)	
					(INCLUDES O-RING SEALS & BACK UP RINGS)	

J-KIT MARKED J SERVICES PART(S) MARKED J
M-METRIC PART
Y-SEPARATE ILLUSTRATION

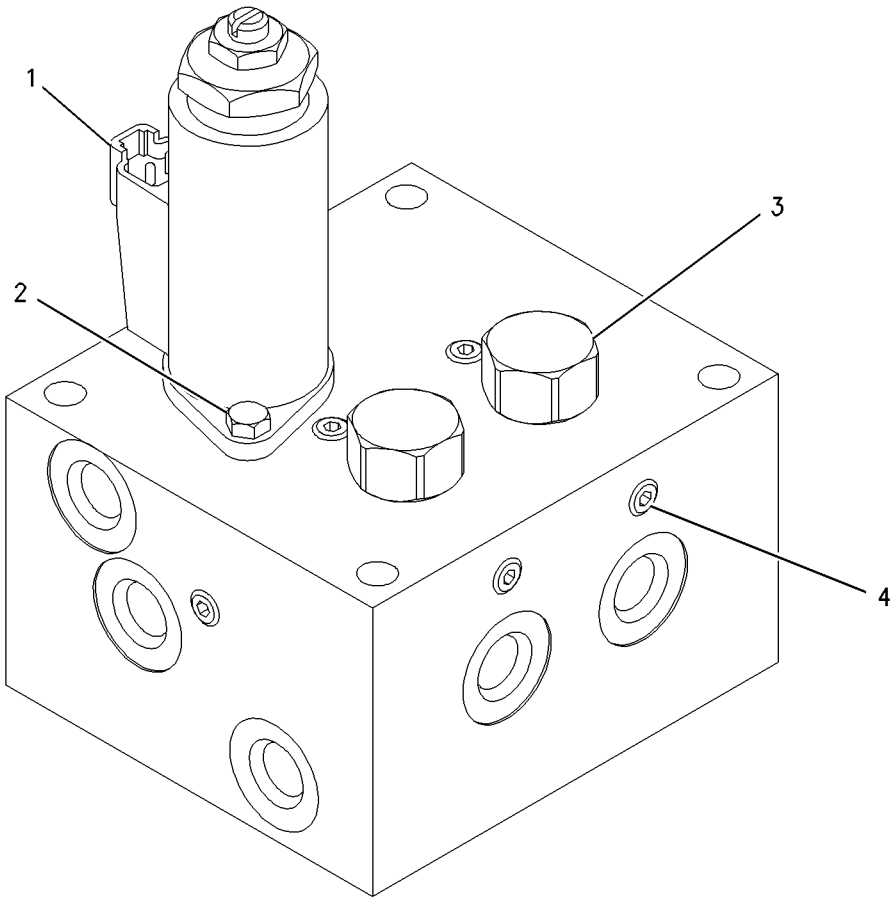

GRAPHIC #1 **<END>** g00681111

225-4518 VALVE GP-SOLENOID

S/N: JGB1-UP; KHS1-UP

PART OF 295-9663 PUMP GP-PISTON & GEAR

SMCS-5479 **i02854627**

NOTE	REF NO	GRAPHIC REF	PART NUMBER	QTY	PART NAME 1 2 3 4 5 6 (PRODUCT LEVEL)	SEE PAGE
Z	1	1		1	BODY	
M	2	1	**8T-2922**	3	BOLT-SOCKET HEAD (M6X1X65-MM)	
M	3	1	**8T-0288**	2	BOLT (M5X0.8X12-MM)	
	4	1	**110-5525**	1	PLUG	
	5	1	**7I-8084**	11	PLUG	
	6	1	**206-9290**	4	SEAL-O-RING	
	7	1	**153-4906**	1	SEAL-O-RING	
Y	8	1	**225-4558**	1	VALVE GP-SOLENOID	798

M-METRIC PART
Y-SEPARATE ILLUSTRATION
Z-NOT SERVICED SEPARATELY

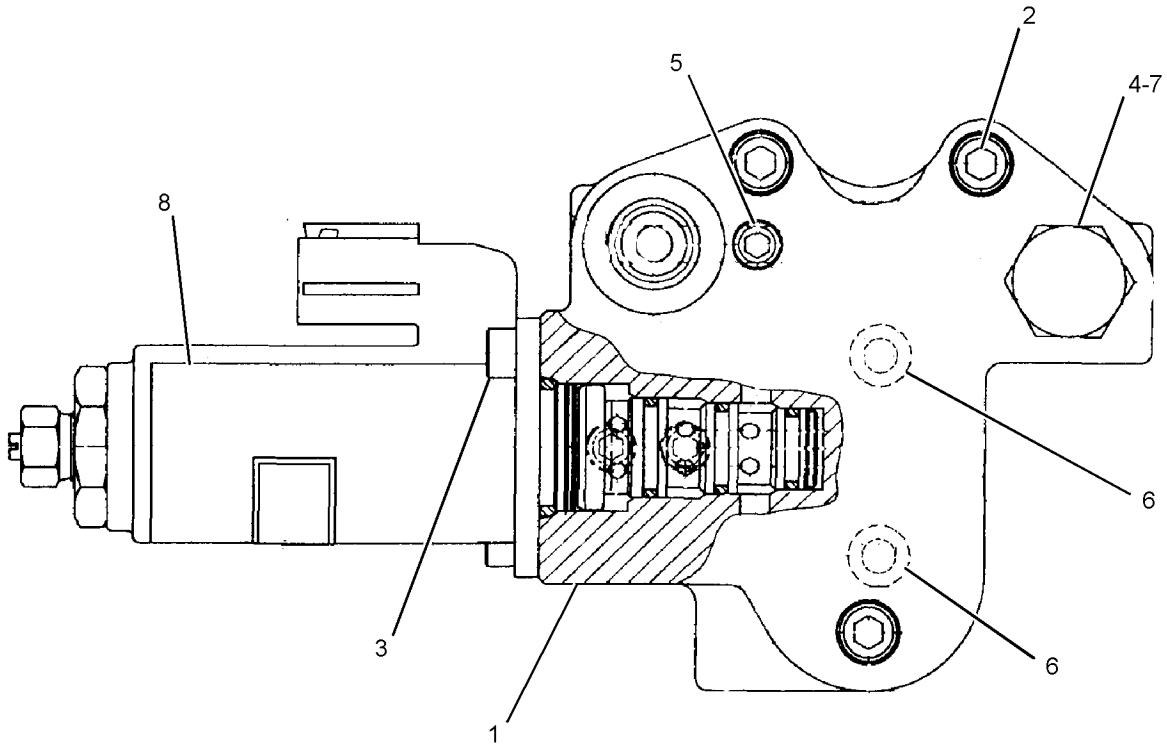

GRAPHIC #1 **<END>** g01098210

HYDRAULIC SYSTEM

225-4558 VALVE GP-SOLENOID

S/N: JGB1-UP; KHS1-UP

PART OF 225-4518 VALVE GP-SOLENOID

SMCS-5479 **i02159997**

NOTE	REF NO	GRAPHIC REF	PART NUMBER	QTY	PART NAME 1 2 3 4 5 6 (PRODUCT LEVEL)	SEE PAGE
	1	1	**4K-2039**	1	SEAL-O-RING	
	2	1	**5L-4758**	1	SEAL-O-RING	
	3	1	**6M-5062**	1	SEAL-O-RING	
	4	1	**095-1586**	1	SEAL-O-RING	
M	5	1	**114-0623**	1	NUT AS (M6X1-THD)	

M-METRIC PART

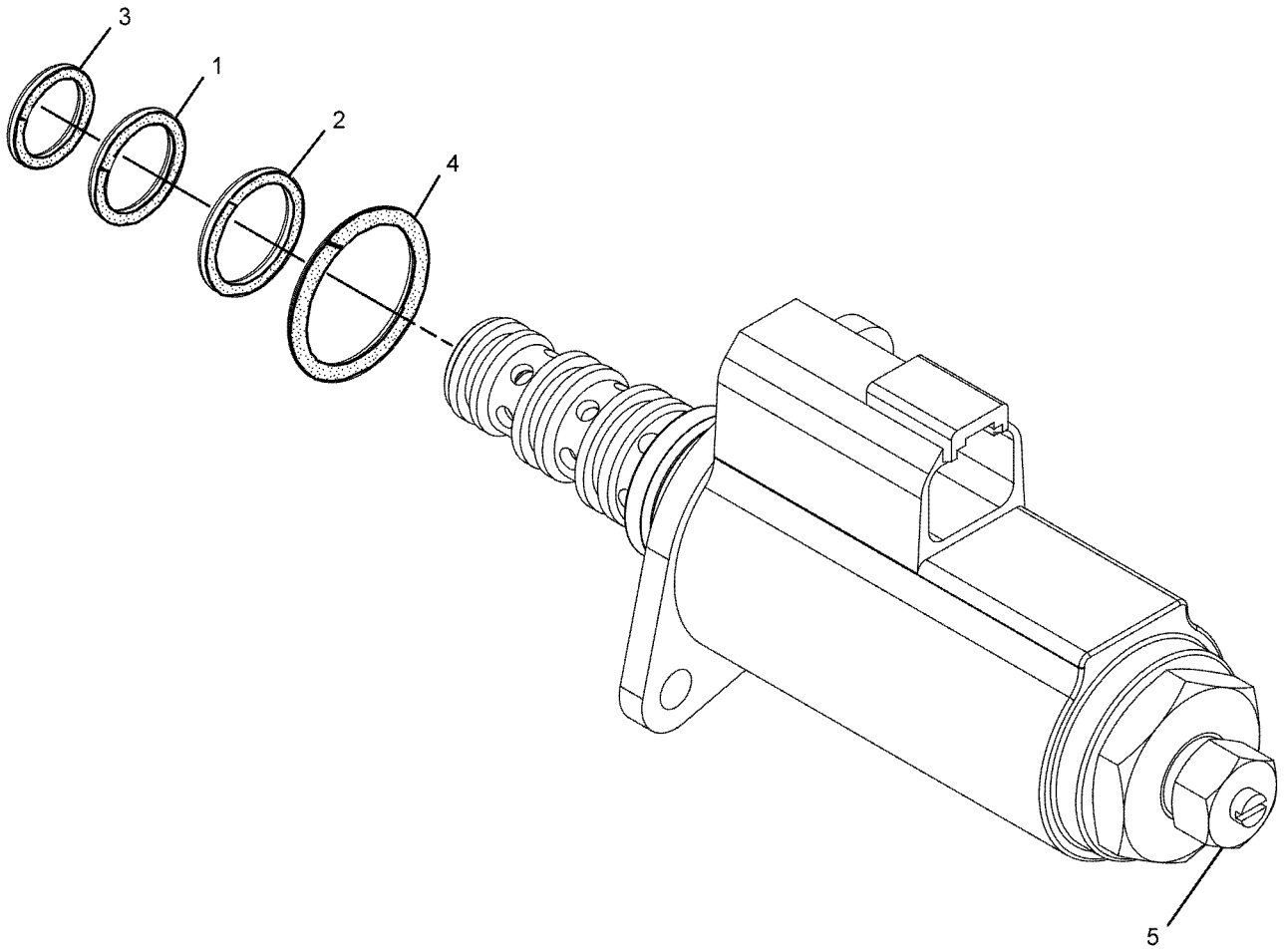

GRAPHIC #1 **<END>** g01098138

HYDRAULIC SYSTEM

242-6880 VALVE GP-SOLENOID

S/N: KHS1-UP
PART OF 292-7175 LINES GP-MOTOR
AN ATTACHMENT

SMCS-5479 **i02854667**

NOTE	REF NO	GRAPHIC REF	PART NUMBER	QTY	PART NAME 1 2 3 4 5 6 (PRODUCT LEVEL)	SEE PAGE
Y	1	1	**121-1491**	1	VALVE GP-SOLENOID	794
	2	1	**242-6893**	1	BLOCK	
	3	1	**4J-7533**	3	SEAL-O-RING	
M	4	1	**7I-2272**	2	BOLT (M5X0.8X12-MM)	
	5	1	**9S-8001**	3	PLUG-O-RING	

M-METRIC PART
Y-SEPARATE ILLUSTRATION

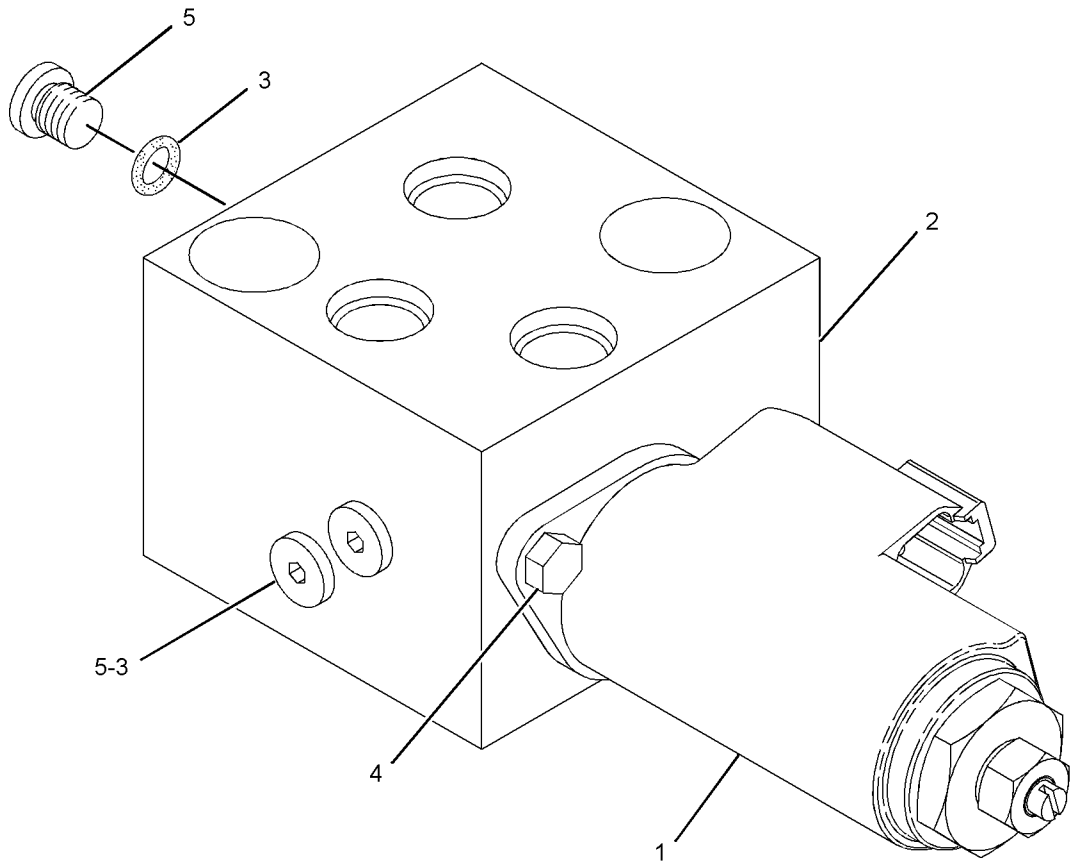

GRAPHIC #1 **<END>** g01084421

HYDRAULIC SYSTEM

258-6749 VALVE GP-SOLENOID

S/N: JGB1-UP; KHS1-UP
PART OF 296-7133 LINES GP-PILOT
AN ATTACHMENT

SMCS-5479 **i02477396**

NOTE	REF NO	GRAPHIC REF	PART NUMBER	QTY	PART NAME 1 2 3 4 5 6 (PRODUCT LEVEL)	SEE PAGE
Y	1	1	**121-1491**	1	VALVE GP-SOLENOID (QUICK COUPLER PIN)	794
Z	2	1		1	BODY-VALVE	
M	3	1	**8T-0288**	2	BOLT (M5X0.8X12-MM)	

M-METRIC PART
Y-SEPARATE ILLUSTRATION
Z-NOT SERVICED SEPARATELY

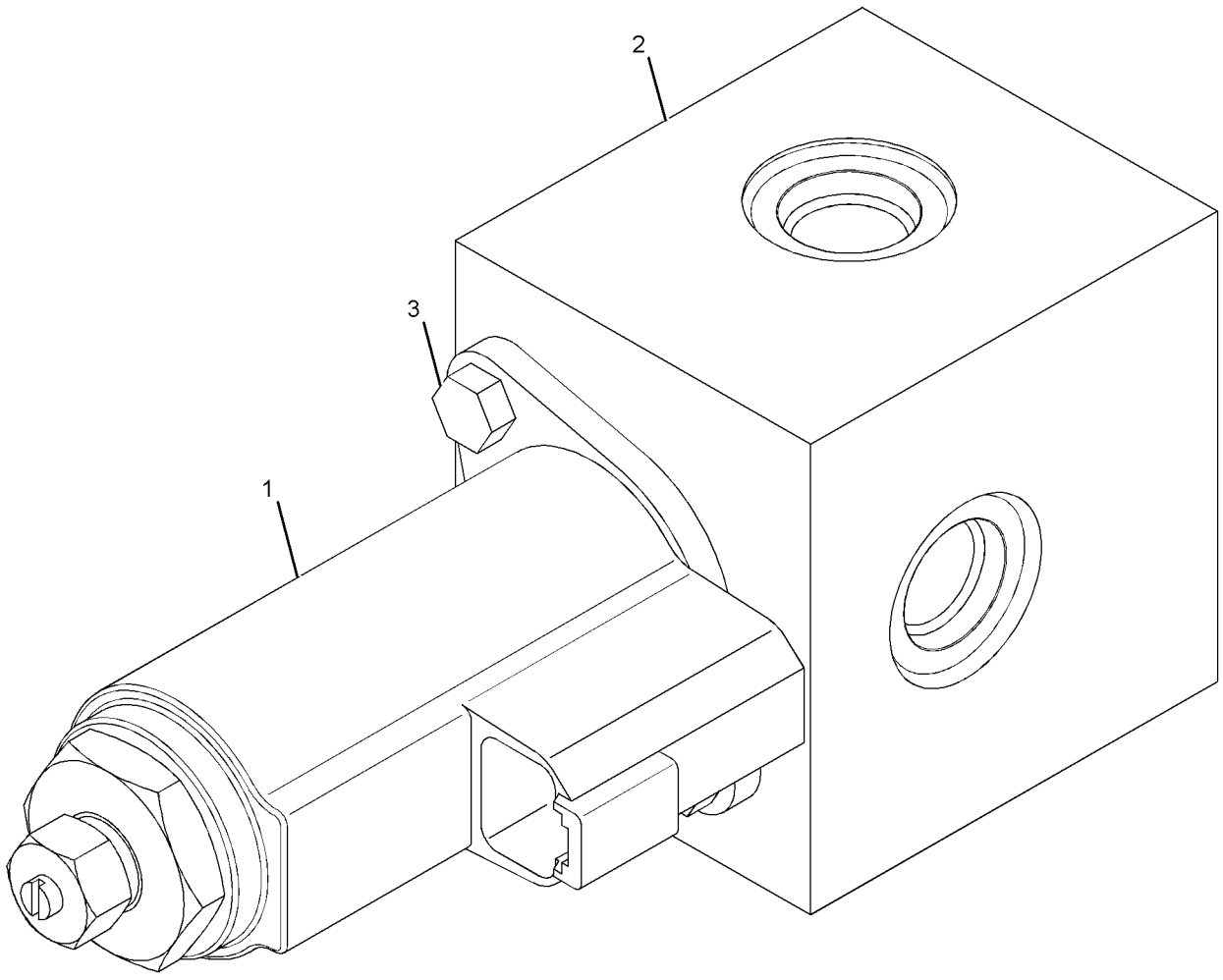

GRAPHIC #1 **<END>** g01137453

HYDRAULIC SYSTEM

259-7430 VALVE GP-SOLENOID

S/N: JGB1-UP; KHS1-UP
PART OF 296-7127, 302-3143, 302-3148 LINES GP-PILOT
AN ATTACHMENT

SMCS-5479 **i02784408**

NOTE	REF NO	GRAPHIC REF	PART NUMBER	QTY	PART NAME 1 2 3 4 5 6 (PRODUCT LEVEL)	SEE PAGE
M	1	1	**8T-0288**	4	BOLT (M5X0.8X12-MM)	
Y	2	1	**111-9916**	2	VALVE GP-SOLENOID	793

M-METRIC PART
Y-SEPARATE ILLUSTRATION

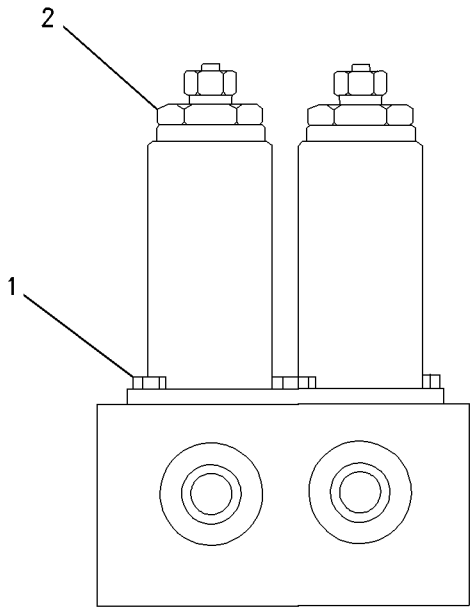

GRAPHIC #1 **<END>** g00785417

HYDRAULIC SYSTEM

315-4412 VALVE GP-SOLENOID

S/N: JGB1-UP; KHS1-UP

PART OF 295-9423 VALVE GP-SWING CUSHION

SMCS-5479 **i02935369**

NOTE	REF NO	GRAPHIC REF	PART NUMBER	QTY	PART NAME 1 2 3 4 5 6 (PRODUCT LEVEL)	SEE PAGE
	1	1	**126-6514**	1	SEAL-O-RING	
	2	1	**126-6515**	1	SEAL-O-RING	
	3	1	**126-6516**	1	SEAL-O-RING	
	4	1	**095-1586**	1	SEAL-O-RING	

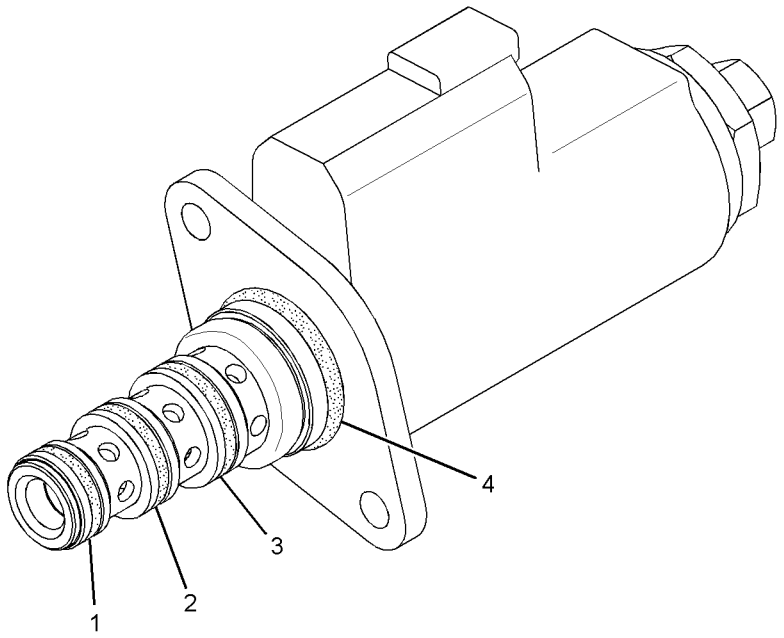

GRAPHIC #1 **<END>** g01456627

HYDRAULIC SYSTEM

328-2035 VALVE GP-SOLENOID & MANIFOLD—QUICK COUPLER

S/N: JGB1-UP
24-VOLT
PART OF 337-1219 LINES GP-PILOT
AN ATTACHMENT

SMCS-5264, 5479 **i04139349**

NOTE	REF NO	GRAPHIC REF	PART NUMBER	QTY	PART NAME 1 2 3 4 5 6 (PRODUCT LEVEL)	SEE PAGE
	1	1	**260-3883**	1	COIL AS-SOLENOID	
		1	**1S-9593**	2	STRAP-CABLE	
		1	**8T-8729**	2	PIN-CONNECTOR (16-GA TO 18-GA)	
		1	**230-4012**	1	RECEPTACLE AS-CONNECTOR (2-PIN)	

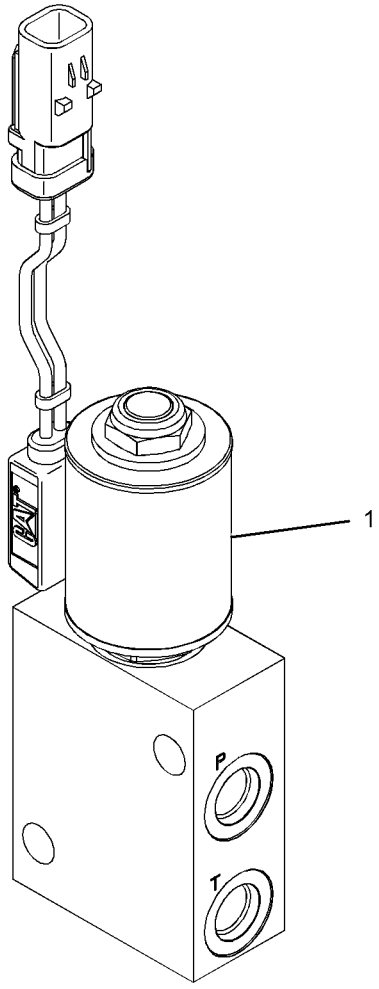

GRAPHIC #1 **<END>** g02351755

HYDRAULIC SYSTEM

297-0500 VALVE GP-SOLENOID & PRESS REDC

S/N: JGB1-UP; KHS1-UP
PART OF 310-0147, 310-0149 VALVE GP-LOAD CONTROL
ALSO AN ATTACHMENT

SMCS-5467, 5479 **i02842051**

NOTE	REF NO	GRAPHIC REF	PART NUMBER	QTY	PART NAME 1 2 3 4 5 6 (PRODUCT LEVEL)	SEE PAGE
M	1	1	**114-0623**	1	NUT AS (M6X1-THD)	
	2	1	**095-1586**	1	SEAL-O-RING	
	3	1	**095-1751**	1	SEAL-O-RING	
	4	1	**6V-8398**	1	SEAL-O-RING	
	5	1	**7J-9108**	1	SEAL-O-RING	

M-METRIC PART

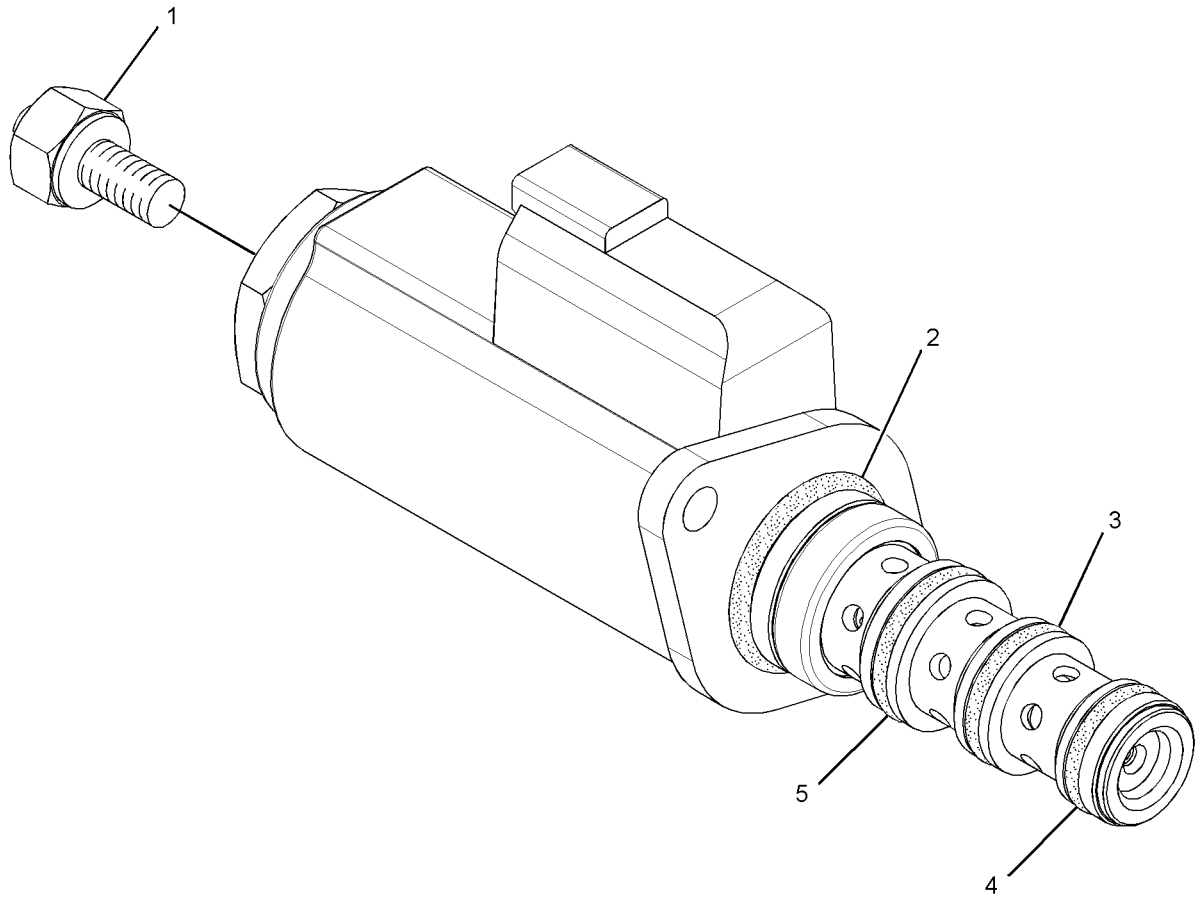

GRAPHIC #1 **<END>** g01458593

297-0265 VALVE GP-SOLENOID & RELIEF

S/N: JGB1-UP; KHS1-UP
PART OF 292-7166, 292-7169, 296-7131 LINES GP-FRONT
AN ATTACHMENT

SMCS-5571 **i03754251**

NOTE	REF NO	GRAPHIC REF	PART NUMBER	QTY	PART NAME 1 2 3 4 5 6 (PRODUCT LEVEL)	SEE PAGE
Y	1	1	**335-0084**	1	VALVE GP-SOLENOID & RELIEF	807

Y-SEPARATE ILLUSTRATION

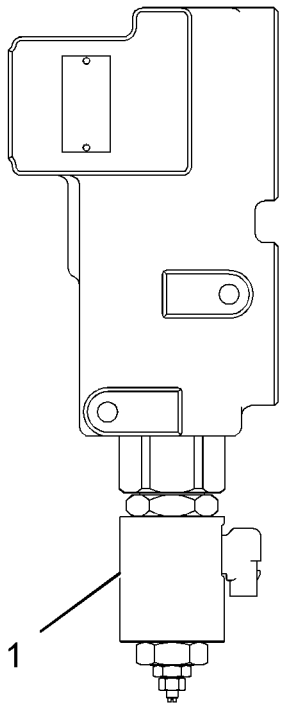

GRAPHIC #1 **<END>** g02022925

HYDRAULIC SYSTEM

297-0266 VALVE GP-SOLENOID & RELIEF—WITH BLOCK

S/N: JGB1-UP; KHS1-UP
PART OF 292-7169, 296-7131 LINES GP-FRONT
AN ATTACHMENT

SMCS-5571 **i03805569**

NOTE	REF NO	GRAPHIC REF	PART NUMBER	QTY	PART NAME 1 2 3 4 5 6 (PRODUCT LEVEL)	SEE PAGE
Y	1	1	**335-0084**	1	VALVE GP-SOLENOID & RELIEF	807

Y-SEPARATE ILLUSTRATION

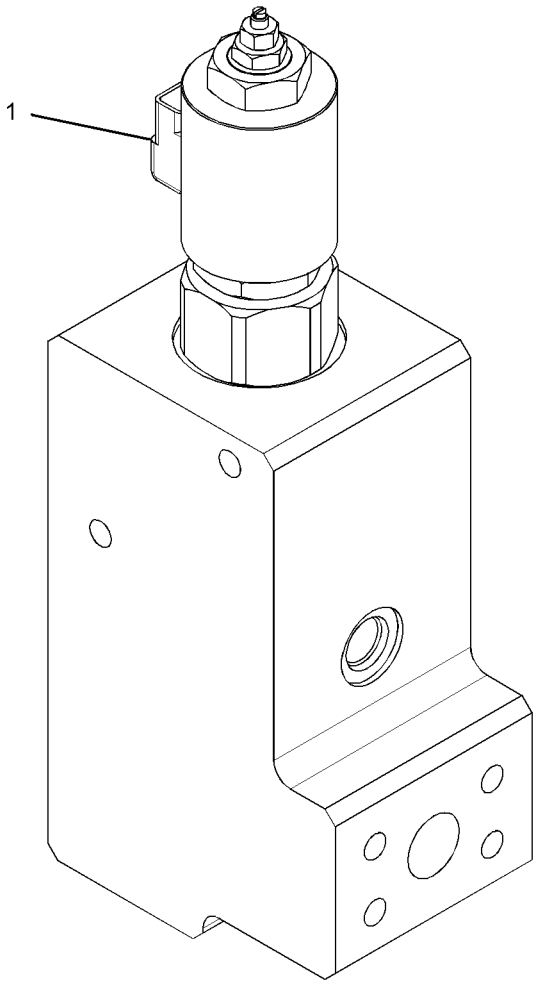

GRAPHIC #1 **<END>** g02039394

335-0084 VALVE GP-SOLENOID & RELIEF

S/N: JGB1-UP; KHS1-UP
PART OF 297-0265, 297-0266 VALVE GP-SOLENOID & RELIEF
AN ATTACHMENT

SMCS-5571 **i03754259**

NOTE	REF NO	GRAPHIC REF	PART NUMBER	QTY	PART NAME 1 2 3 4 5 6 (PRODUCT LEVEL)	SEE PAGE
	1	1	**095-1597**	1	SEAL-O-RING	
	2	1	**095-1604**	1	SEAL-O-RING	
	3	1	**095-1791**	1	RING-BACKUP	

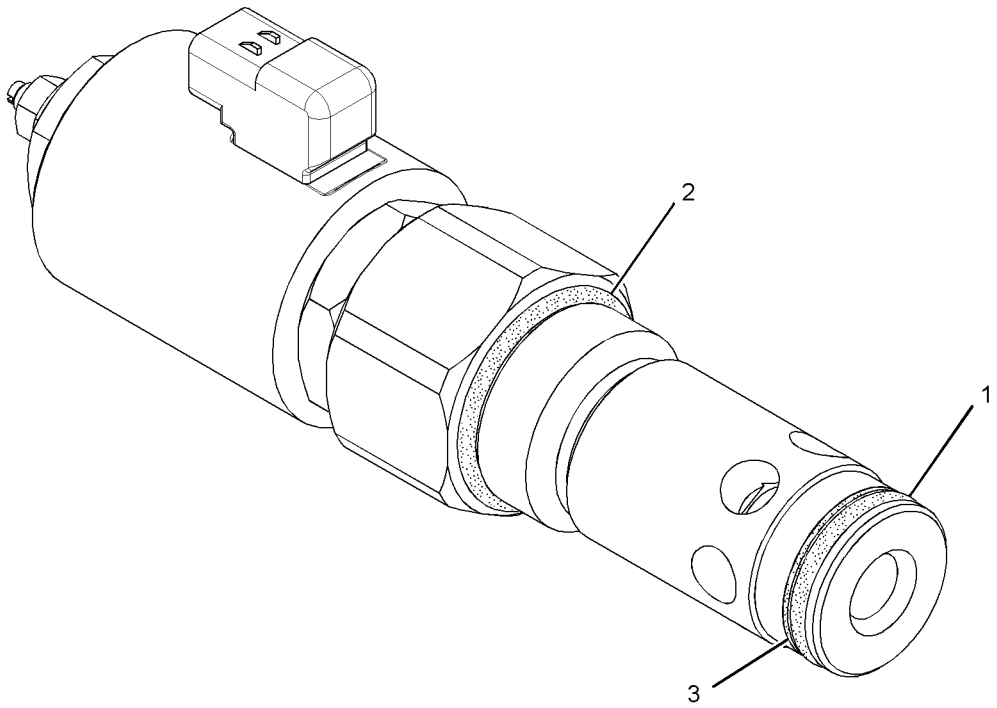

GRAPHIC #1 **<END>** g02022940

HYDRAULIC SYSTEM

295-9423 VALVE GP-SWING CUSHION

S/N: JGB1-UP; KHS1-UP

PART OF 292-7162 LINES GP-SWING MOTOR

SMCS-5480 **i03578561**

NOTE	REF NO	GRAPHIC REF	PART NUMBER	QTY	PART NAME 1 2 3 4 5 6 (PRODUCT LEVEL)	SEE PAGE
	1	1	**114-0550**	2	VALVE GP-RELIEF (CUSHION CROSSOVER)	
	2	1	**095-1785**	2	RING-BACKUP	
	3	1	**095-1576**	1	SEAL-O-RING	
C	4	1	**315-4413**	2	ORIFICE	
	5	1	**8T-6759**	6	PLUG-PIPE	
M	6	1	**8T-0288**	2	BOLT (M5X0.8X12-MM)	
CY	7	1	**315-4412**	1	VALVE GP-SOLENOID (FINE SWING)	802
	8	1	**095-1698**	2	SEAL-O-RING	
	9	1	**095-1586**	2	SEAL-O-RING	

C-CHANGE FROM PREVIOUS TYPE
M-METRIC PART
Y-SEPARATE ILLUSTRATION

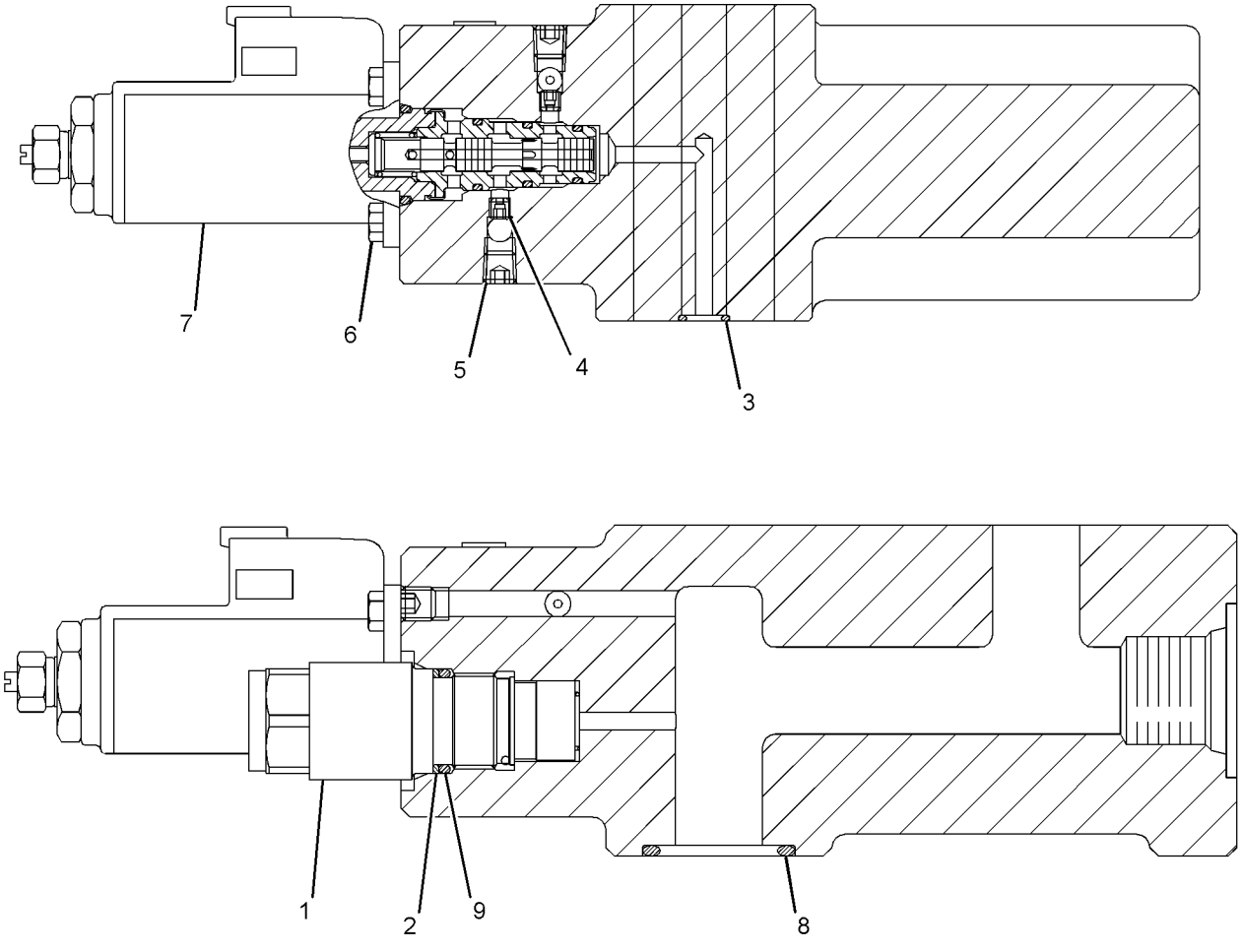

GRAPHIC #1 **<END>** g01436788

HYDRAULIC SYSTEM

266-7843 VALVE GP-TRAVEL COUNTERBALANCE

S/N: JGB1-UP; KHS1-UP

PART OF 302-3185, 302-3186 LINES GP-TRAVEL MOTOR

SMCS-5811 **i03964930**

NOTE	REF NO	GRAPHIC REF	PART NUMBER	QTY	PART NAME 1 2 3 4 5 6 (PRODUCT LEVEL)	SEE PAGE
	1	1	**116-3510**	2	PLUG	
J	2	1	**095-1592**	2	SEAL-O-RING	
	3	1	**173-3524**	2	SPRING	
	4	1	**173-3527**	2	SEAT	
	5	1	**150-5733**	2	PLUG	
	6	1	**116-3504**	2	ORIFICE	
Y	7	1	**191-5700**	2	VALVE GP-PILOT RELIEF	768
	8	1	**110-5525**	2	PLUG	
J	9	1	**3J-1907**	2	SEAL-O-RING	
M	10	1	**101-7402**	8	BOLT-SOCKET HEAD (M12X1.75X30-MM)	
J	11	1	**095-1582**	1	SEAL-O-RING	
	12	1	**116-3500**	1	PLUG	
	13	1	**116-3501**	1	SLEEVE	
	14	1	**116-3503**	1	SPRING	
	15	1	**173-3520**	1	VALVE AS	
	16	1	**095-1575**	2	SEAL-O-RING	
	17	1	**173-3522**	2	VALVE	
J	18	1	**095-1750**	2	SEAL-O-RING	
	19	1	**134-7515**	4	PLUG	
	20	1	**7I-7586**	2	SEAT-SPRING	
J	21	1	**032-9882**	2	SEAL-O-RING	
	22	1	**173-3523**	2	SPRING	
	23	1	**342-1814**	2	COVER	
J	24	1	**095-1701**	2	SEAL-O-RING	
					AVAILABLE REPAIR KIT(S):	
J			**326-4414**	1	KIT-SEAL (COUNTERBALANCE VALVE)	
					(ALSO INCLUDES SEAL-O-RINGS & BACKUP RINGS)	

J-KIT MARKED J SERVICES PARTS MARKED J
M-METRIC PART
Y-SEPARATE ILLUSTRATION

266-7843 VALVE GP-TRAVEL COUNTERBALANCE *(contd.)* i03964930

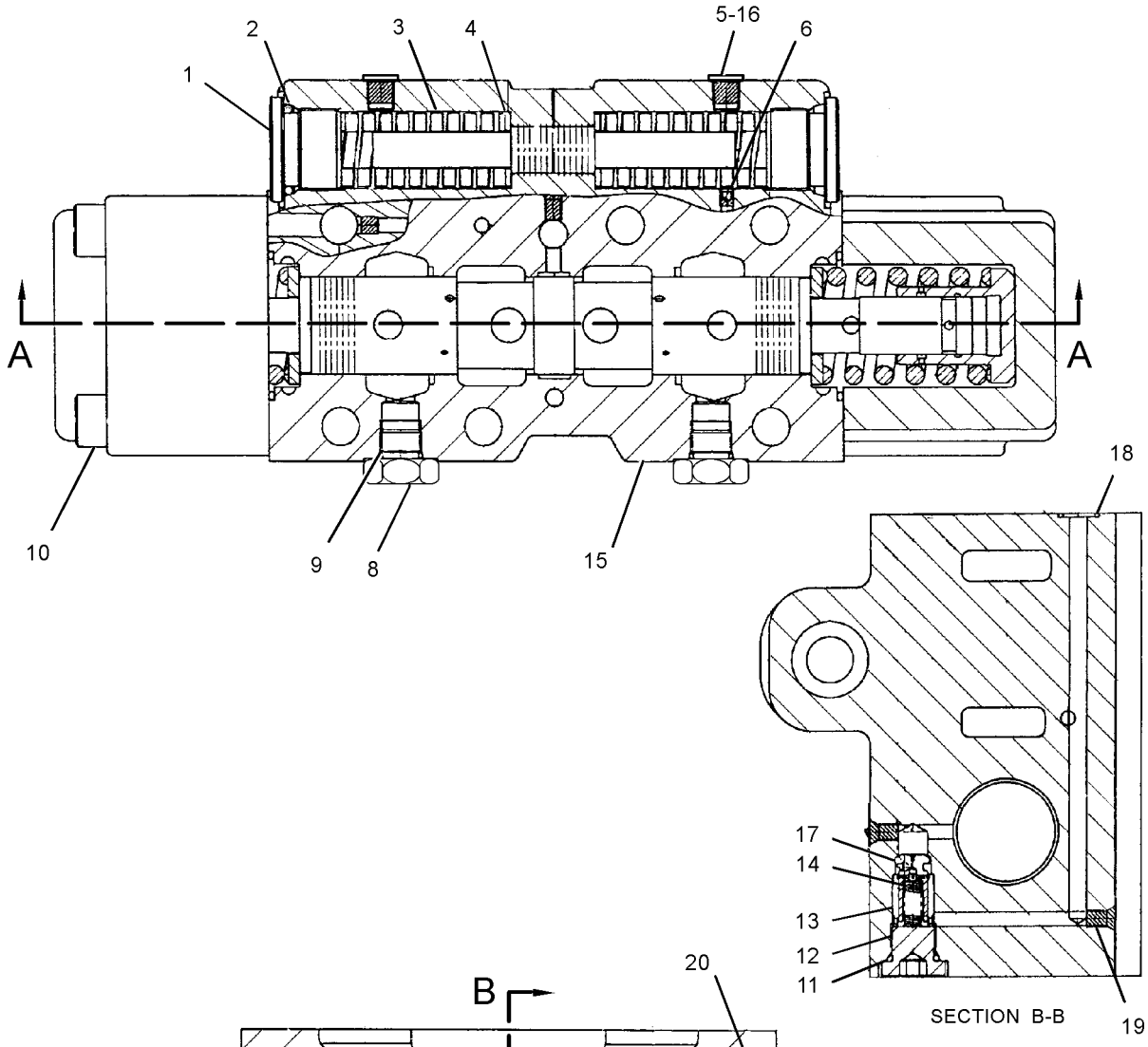

GRAPHIC #1 **<END>** g01176904

319-9245 BOOM AR

S/N: JGB1-UP; KHS1-UP
PART OF 356-3109 OPTION AR-LINKAGE, 356-3108 OPTION AR-MACHINE
FOR USE WITH 294-1265—PAGE 833, 294-1267—PAGE 833
AN ATTACHMENT

SMCS-6000 **i03612027**

NOTE	PART NUMBER	QTY	PART NAME 1 2 3 4 5 6 (PRODUCT LEVEL)	SEE PAGE
Y	*297-7439*	1	BOOM GP	817
Y	*289-7844*	1	CYLINDER & LINES GP-BOOM (LH)	460
Y	*289-7845*	1	CYLINDER & LINES GP-BOOM (RH)	460
Y	*225-4524*	1	CYLINDER & LINES GP-STICK	461
Y	*309-5797*	1	GUARD GP-SENSOR	821
Y	*238-2157*	1	LIGHTING GP-FLOOD (BOOM)	196
Y	*245-5317*	1	LINES GP-BOOM	533
Y	*127-1343*	1	LINES GP-GREASE	822
Y	*297-4516*	1	SENSOR & MTG GP-POSITION (STICK)	213

Y-SEPARATE ILLUSTRATION

<END>

294-1252 BOOM AR-MASS—HEAVY-DUTY

S/N: JGB1-UP; KHS1-UP
6.6-M (21.6-FT). AUTOMATIC LUBRICATION READY
PART OF 371-6383, 372-4831 LINKAGE AR-FRONT, 343-1203, 347-9838 OPTION AR-LINKAGE
AN ATTACHMENT

SMCS-6501, 7000 **i02861068**

NOTE	PART NUMBER	QTY	PART NAME 1 2 3 4 5 6 (PRODUCT LEVEL)	SEE PAGE
Y	*235-7721*	1	BOOM GP	815
Y	*289-7844*	1	CYLINDER & LINES GP-BOOM (LH)	460
Y	*289-7845*	1	CYLINDER & LINES GP-BOOM (RH)	460
Y	*225-4524*	1	CYLINDER & LINES GP-STICK	461
Y	*238-2157*	1	LIGHTING GP-FLOOD (BOOM)	196
Y	*248-9445*	1	LINES GP-BOOM	535
Y	*127-1347*	1	LINES GP-GREASE	823

Y-SEPARATE ILLUSTRATION

<END>

294-1250 BOOM AR-REACH—HEAVY-DUTY

S/N: JGB1-UP; KHS1-UP
6.9-M (22.6-FT). AUTOMATIC LUBRICATION READY
PART OF 337-8879, 337-8881 OPTION AR-LINKAGE
FOR USE WITH 294-1258—PAGE 832
AN ATTACHMENT

SMCS-7000 **i02861067**

NOTE	PART NUMBER	QTY	PART NAME 1 2 3 4 5 6 (PRODUCT LEVEL)	SEE PAGE
Y	*228-5418*	1	BOOM GP	813
Y	*289-7844*	1	CYLINDER & LINES GP-BOOM (LH)	460
Y	*289-7845*	1	CYLINDER & LINES GP-BOOM (RH)	460
Y	*225-4524*	1	CYLINDER & LINES GP-STICK	461
Y	*238-2157*	1	LIGHTING GP-FLOOD (BOOM)	196
Y	*245-5317*	1	LINES GP-BOOM	533
Y	*127-1343*	1	LINES GP-GREASE	822

Y-SEPARATE ILLUSTRATION

<END>

228-5418 BOOM GP–REACH

S/N: JGB1-UP; KHS1-UP
6.9-M (22.6-FT)
PART OF 294-1250 BOOM AR-REACH
AN ATTACHMENT

SMCS-6301, 6302, 6460, 6501, 6516, 6521, 6535, 6536 **i02155156**

NOTE	REF NO	GRAPHIC REF	PART NUMBER	QTY	PART NAME 1 2 3 4 5 6 (PRODUCT LEVEL)	SEE PAGE
	1	1	**3B-8489**	1	FITTING-GREASE	
	2	1	**9X-4600**	2	SEAL-LIP TYPE	
B	3	1	**093-0090**	2	SHIM (1-MM THK)	
B	4	1	**093-0122**	1	SHIM (2-MM THK)	
	5	1	**093-0349**	1	WASHER (22X60X6-MM THK)	
	6	1	**093-0364**	1	SPACER (103X140X12-MM THK)	
	7	1	**130-4360**	1	PIN AS	
B	8	1	**133-2427**	1	SHIM (0.5-MM THK)	
	9	1	**148-3391**	1	PIN	
	10	1	**201-2771**	1	WASHER (26X90X8-MM THK)	
	11	1	**228-5419**	1	BOOM & BEARING AS	
	11A	1	**228-5622**	2	BUSHING	
	12	1	**235-7567**	1	PIN AS	
B	13	1	**093-0074**	2	SHIM (1-MM THK)	
B	14	1	**093-0106**	1	SHIM (2-MM THK)	
	15	1	**103-5246**	1	SPACER (123X150X14-MM THK)	
B	16	1	**147-3957**	1	SHIM (0.5-MM THK)	
	17	1	**4I-4978**	2	SPACER (113X150X8-MM THK)	
	18	1	**4I-5005**	2	PLATE	
M	19	1	**7X-2573**	1	BOLT (M24X3X40-MM)	
	20	1	**8D-5054**	6	WASHER-HARD (17X30X3-MM THK)	
	21	1	**8T-4123**	1	WASHER (22X35X3.5-MM THK)	
	22	1	**8T-4167**	1	WASHER-HARD (26X44X4-MM THK)	
M	23	1	**8T-4779**	6	BOLT (M16X2X35-MM)	
M	24	1	**8T-4780**	1	BOLT (M20X2.5X30-MM)	
	25	1	**8T-6764**	1	PLUG-PIPE (1/8-27-THD)	

B-USE AS REQUIRED
M-METRIC PART

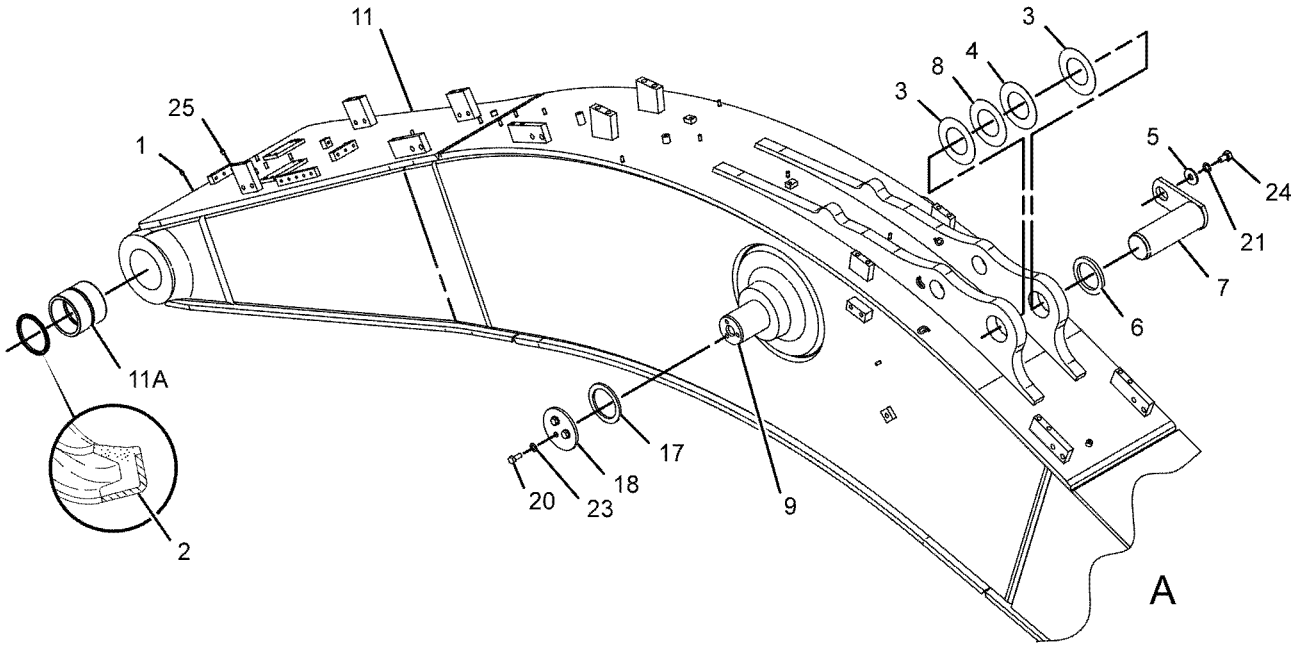

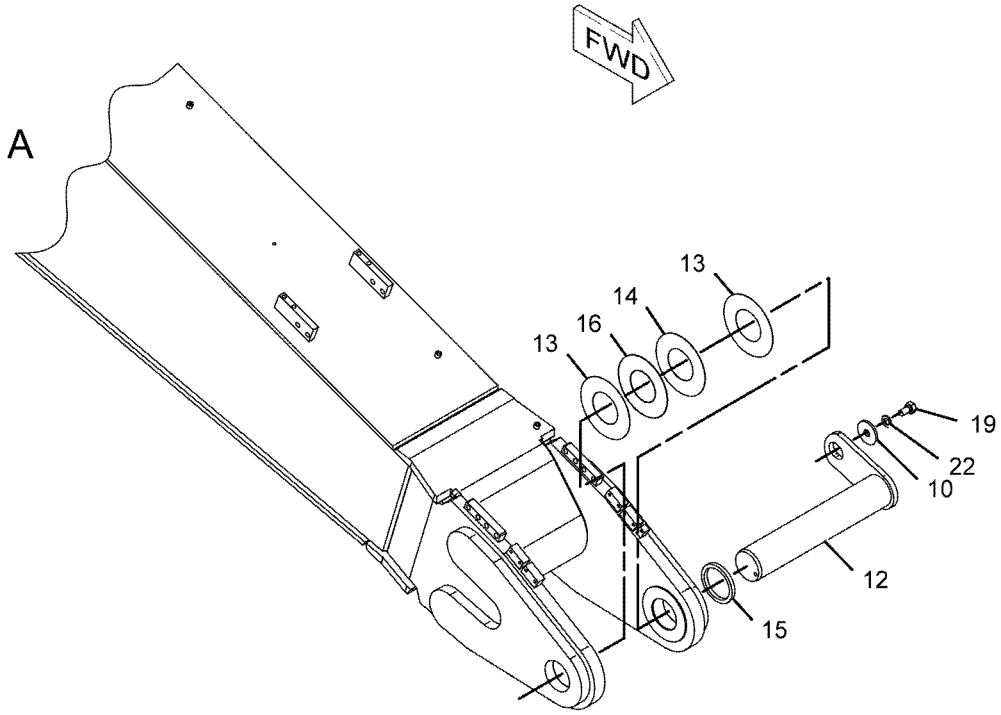

GRAPHIC #1 **<END>** g01095849

235-7721 BOOM GP–MASS

S/N: JGB1-UP; KHS1-UP
6.6-M (21.6-FT)
PART OF 294-1252 BOOM AR-MASS
AN ATTACHMENT

SMCS-6301, 6302, 6460, 6501, 6516, 6521, 6535, 6536 **i02155164**

NOTE	REF NO	GRAPHIC REF	PART NUMBER	QTY	PART NAME 1 2 3 4 5 6 (PRODUCT LEVEL)	SEE PAGE
	1	1	**3B-8489**	1	FITTING-GREASE	
	2	1	**9X-4600**	2	SEAL-LIP TYPE	
B	3	1	**093-0090**	2	SHIM (1-MM THK)	
B	4	1	**093-0122**	1	SHIM (2-MM THK)	
	5	1	**093-0349**	1	WASHER (22X60X6-MM THK)	
	6	1	**093-0364**	1	SPACER (103X140X12-MM THK)	
B	7	1	**133-2427**	1	SHIM (0.5-MM THK)	
	8	1	**134-9031**	1	PIN AS	
	9	1	**148-3391**	1	PIN	
	10	1	**201-2771**	1	WASHER (26X90X8-MM THK)	
	11	1	**235-7722**	1	BOOM & BEARING AS	
		1	**228-5622**	2	BUSHING	
	12	1	**235-7736**	1	PIN AS	
B	13	1	**093-0074**	2	SHIM (1-MM THK)	
B	14	1	**093-0106**	1	SHIM (2-MM THK)	
	15	1	**103-5246**	1	SPACER (123X150X14-MM THK)	
B	16	1	**147-3957**	1	SHIM (0.5-MM THK)	
	17	1	**4I-4978**	2	SPACER (113X150X8-MM THK)	
	18	1	**4I-5005**	2	PLATE	
M	19	1	**7X-2573**	1	BOLT (M24X3X40-MM)	
	20	1	**8D-5054**	6	WASHER-HARD (17X30X3-MM THK)	
	21	1	**8T-4123**	1	WASHER (22X35X3.5-MM THK)	
	22	1	**8T-4167**	1	WASHER-HARD (26X44X4-MM THK)	
M	23	1	**8T-4779**	6	BOLT (M16X2X35-MM)	
M	24	1	**8T-4780**	1	BOLT (M20X2.5X30-MM)	
	25	1	**8T-6764**	1	PLUG-PIPE (1/8-27-THD)	

B-USE AS REQUIRED
M-METRIC PART

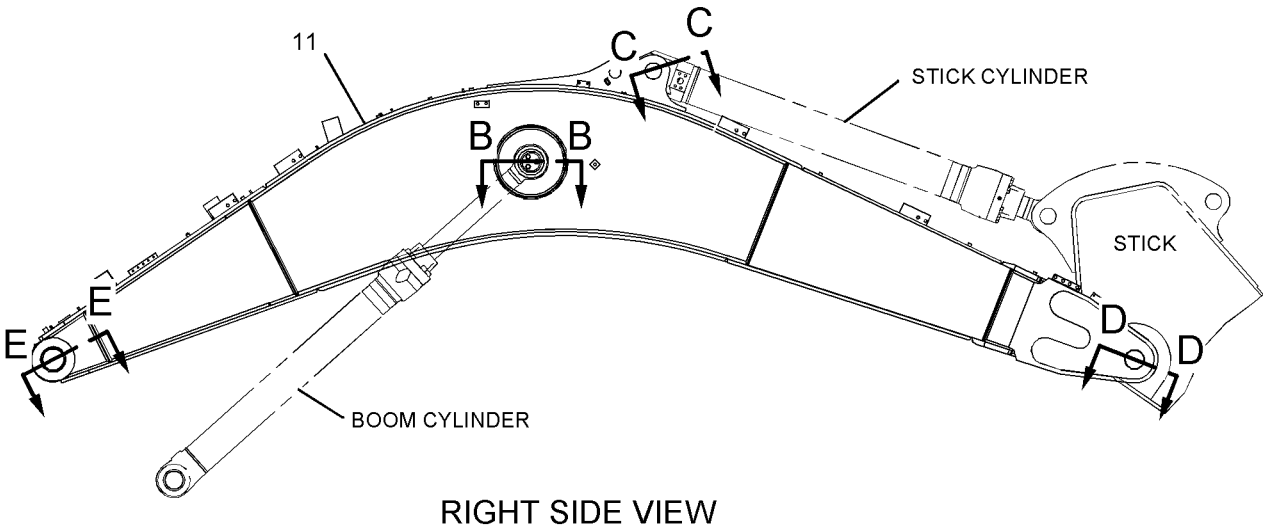

RIGHT SIDE VIEW

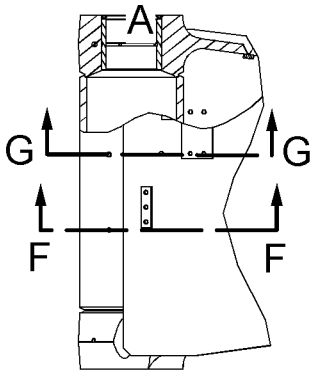

SECTION E-E

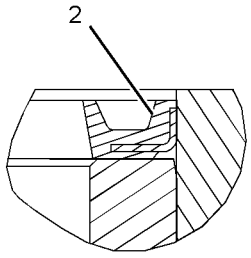

VIEW OF AREA A

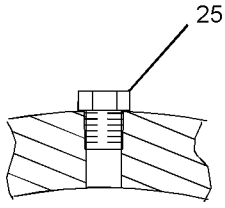

SECTION G-G

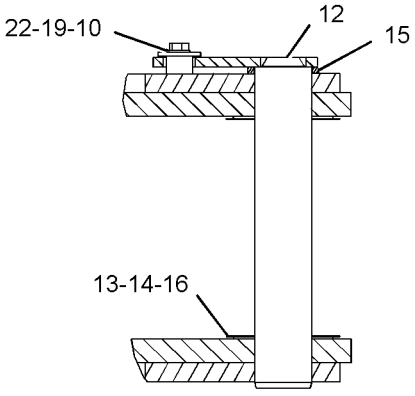

SECTION D-D

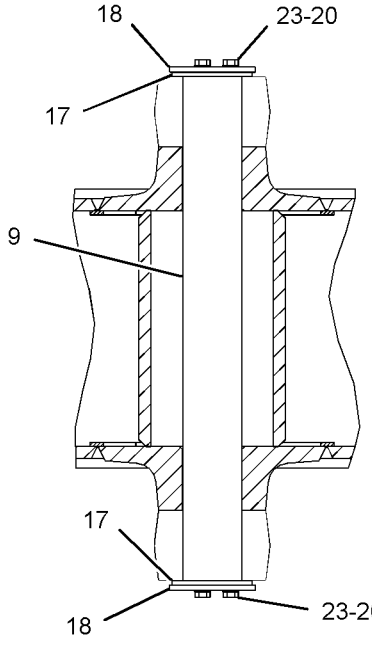

SECTION B-B

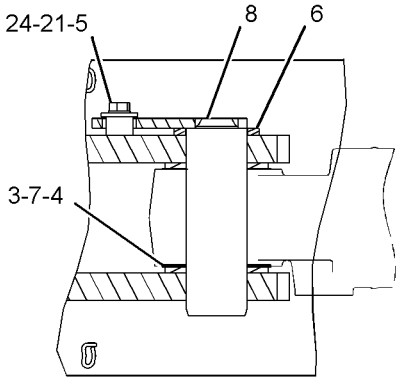

SECTION C-C

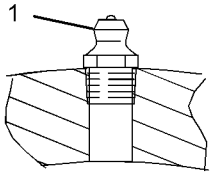

SECTION F-F

GRAPHIC #1

<END>

g01099285

297-7439 BOOM GP—ACCUGRADE READY

S/N: JGB1-UP; KHS1-UP
6.9-M (22.6-FT)
PART OF 319-9245 BOOM AR
AN ATTACHMENT

SMCS-6301, 6302, 6460, 6501, 6516, 6521, 6535, 6536 **i04012970**

NOTE	REF NO	GRAPHIC REF	PART NUMBER	QTY	PART NAME 1 2 3 4 5 6 (PRODUCT LEVEL)	SEE PAGE
	1	1	**3B-8489**	1	FITTING-GREASE	
	2	1	**9X-4600**	2	SEAL-LIP TYPE	
B	3	1	**093-0090**	2	SHIM (1-MM THK)	
B	4	1	**093-0122**	1	SHIM (2-MM THK)	
	5	1	**093-0349**	1	WASHER (22X60X6-MM THK)	
	6	1	**093-0364**	1	SPACER (103X140X12-MM THK)	
	7	1	**130-4360**	1	PIN AS	
B	8	1	**133-2427**	1	SHIM (0.5-MM THK)	
	9	1	**148-3391**	1	PIN	
C	10	1	**350-6445**	1	PLATE	
	11	1	**308-8953**	1	PLATE	
	12	1	**308-8981**	1	PIN AS	
	13	1	**308-8995**	1	BOOM & BEARING AS	
	13A	1	**228-5622**	2	BUSHING	
B	14	1	**093-0074**	2	SHIM (1-MM THK)	
B	15	1	**093-0106**	1	SHIM (2-MM THK)	
M	16	1	**096-4885**	2	LOCKNUT (M16X2-THD)	
	17	1	**103-5246**	1	SPACER (123X150X14-MM THK)	
B	18	1	**147-3957**	1	SHIM (0.5-MM THK)	
	19	1	**4I-4978**	2	SPACER (113X150X8-MM THK)	
	20	1	**4I-5005**	2	PLATE	
M	21	1	**5A-3604**	4	BOLT-SOCKET HEAD (M8X1.25X25-MM)	
CM	22	1	**8T-5379**	1	BOLT (M24X3X50-MM)	
	24	1	**8T-4123**	1	WASHER (22X35X3.5-MM THK)	
M	25	1	**8T-4140**	2	BOLT (M16X2X60-MM)	
	26	1	**8T-4167**	1	WASHER-HARD (26X44X4-MM THK)	
M	27	1	**8T-4779**	6	BOLT (M16X2X35-MM)	
M	28	1	**8T-4780**	1	BOLT (M20X2.5X30-MM)	
	29	1	**8T-6764**	1	PLUG-PIPE (1/8-27-THD)	
	30	1	**9X-8257**	8	WASHER (17.5X30X3.5-MM THK)	

B-USE AS REQUIRED
C-CHANGE FROM PREVIOUS TYPE
M-METRIC PART

297-7439 **BOOM GP** *(contd.)* **i04012970**

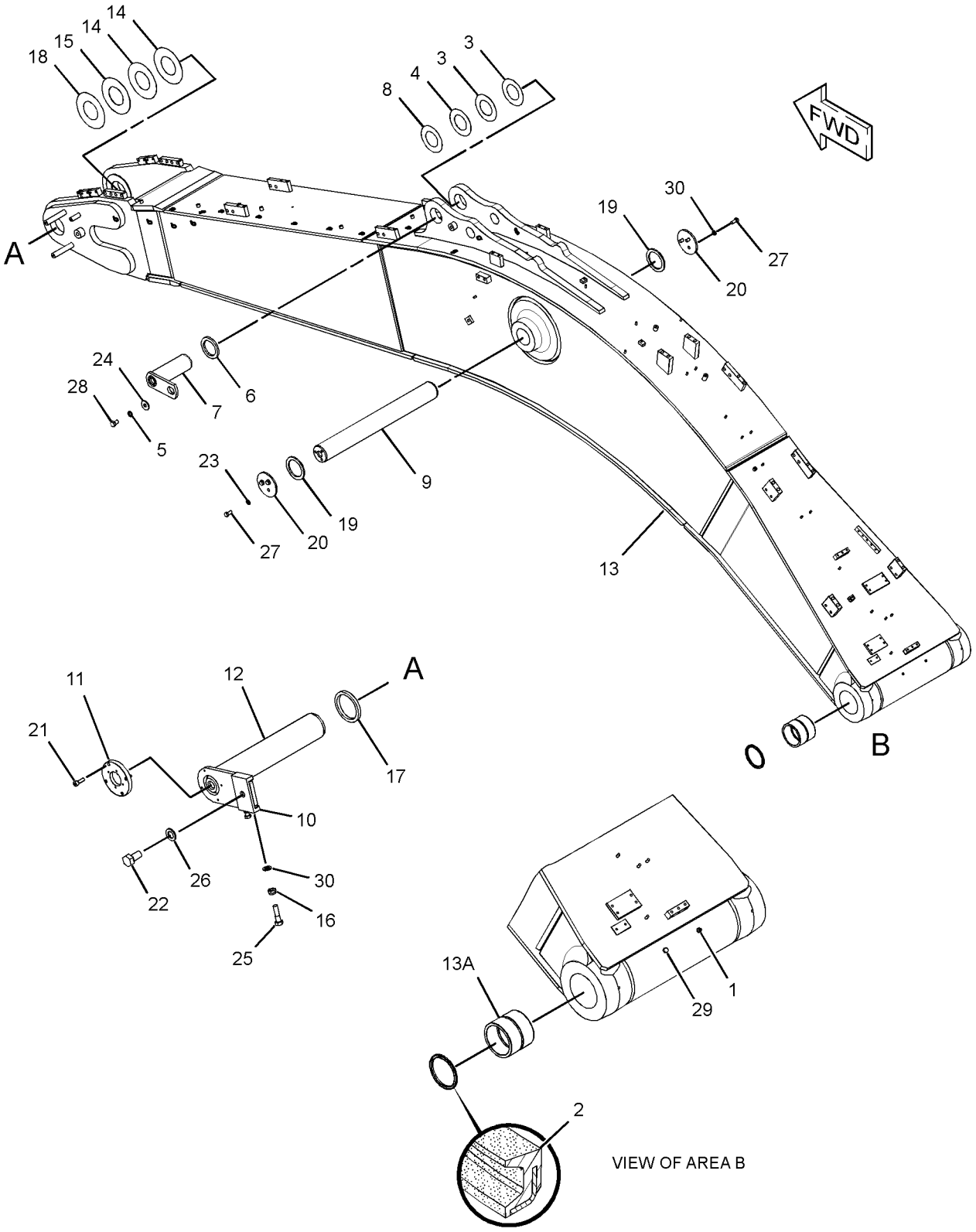

GRAPHIC #1 **<END>** g01716345

295-9600 GUARD GP-CYLINDER

S/N: JGB1-UP; KHS1-UP
PART OF 319-9274, 351-9595 SPECIAL AR
AN ATTACHMENT

SMCS-7164 **i03045258**

NOTE	REF NO	GRAPHIC REF	PART NUMBER	QTY	PART NAME 1 2 3 4 5 6 (PRODUCT LEVEL)	SEE PAGE
	1	1	**295-9601**	1	GUARD AS-CYLINDER	
	2	1	**295-9682**	1	SUPPORT AS	
	3	1	**295-9684**	1	SUPPORT	
M	4	1	**8T-4001**	2	NUT (M24X3-THD)	
M	5	1	**8T-4139**	4	BOLT (M12X1.75X30-MM)	
	6	1	**8T-4167**	2	WASHER-HARD (26X44X4-MM THK)	
	7	1	**8T-4223**	4	WASHER-HARD (13.5X25.5X3-MM THK)	

M-METRIC PART

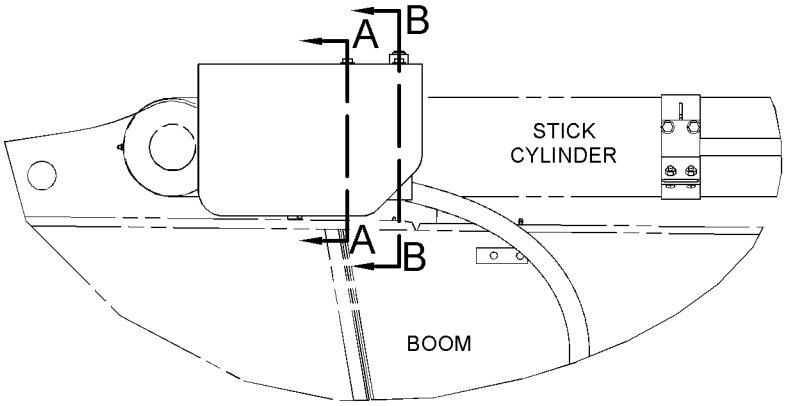

RIGHT SIDE VIEW

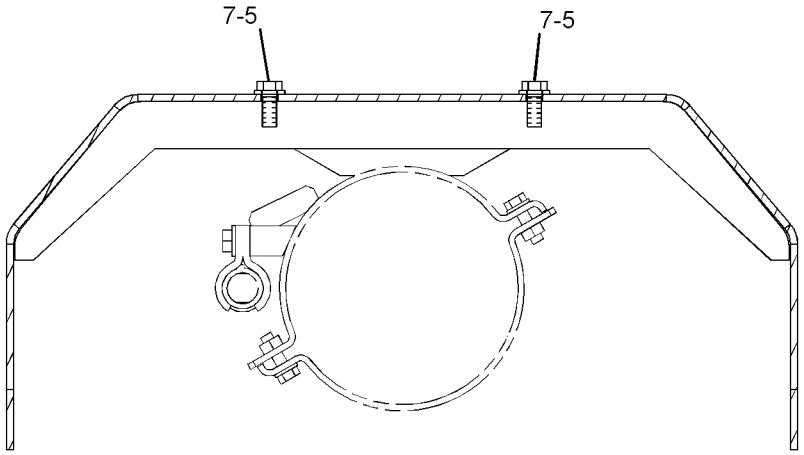

SECTION A-A

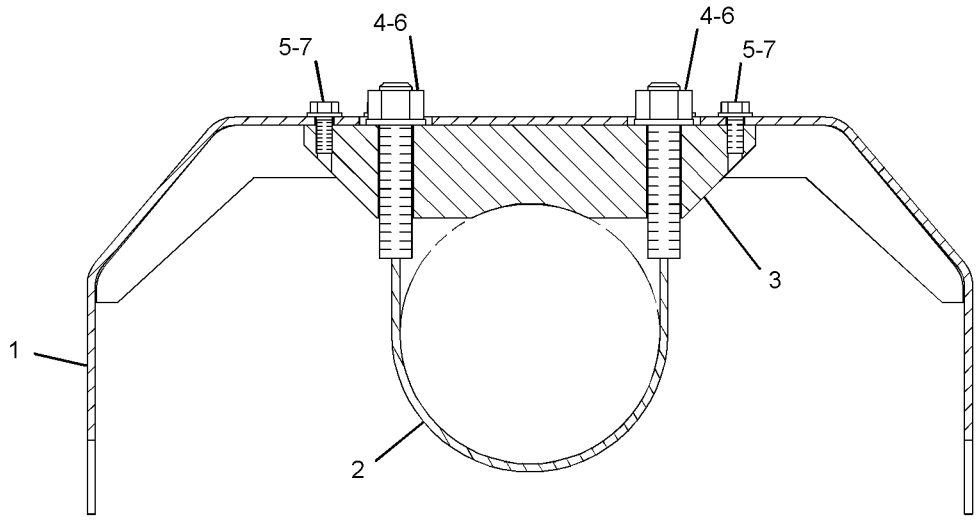

SECTION B-B

GRAPHIC #1 **<END>** g01560324

IMPLEMENTS

309-5797 GUARD GP-SENSOR

S/N: JGB1-UP; KHS1-UP
PART OF 319-9245 BOOM AR
AN ATTACHMENT

SMCS-5736, 7150 **i02921234**

NOTE	REF NO	GRAPHIC REF	PART NUMBER	QTY	PART NAME 1 2 3 4 5 6 (PRODUCT LEVEL)	SEE PAGE
	1	1	**319-4289**	1	GUARD AS	
	2	1	**5P-1076**	2	WASHER-HARD (13.5X30X4-MM THK)	
M	3	1	**8T-4179**	2	BOLT (M12X1.75X20-MM)	

M-METRIC PART

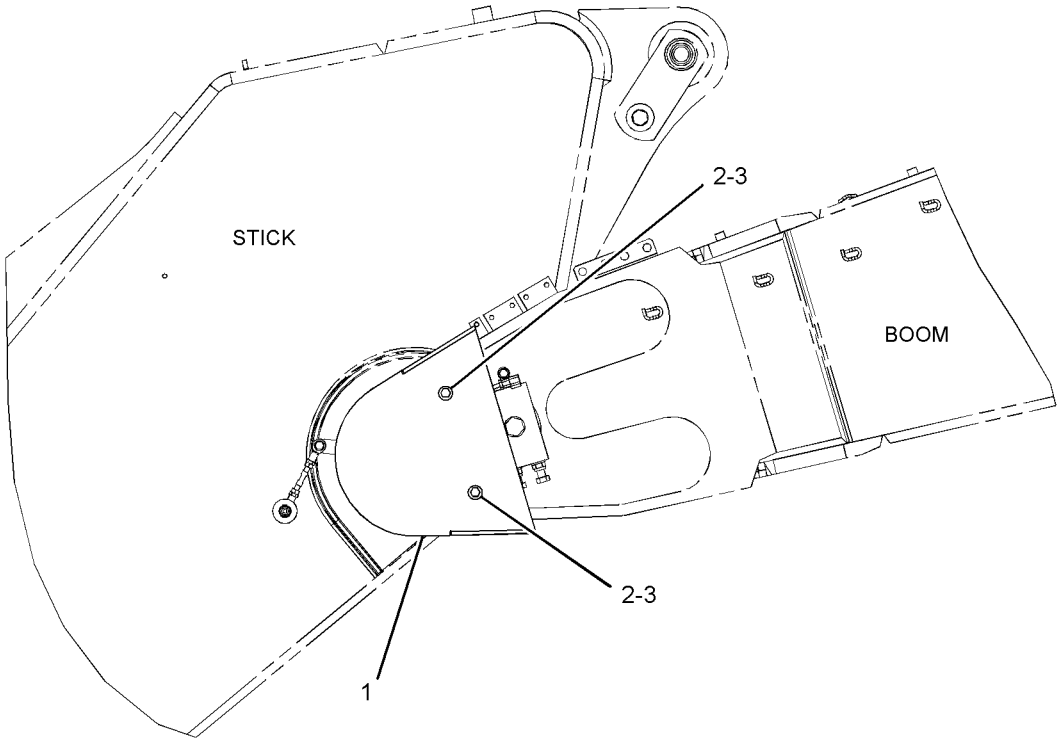

LEFT SIDE VIEW

GRAPHIC #1 **<END>** g01456773

127-1343 LINES GP-GREASE–BOOM, BOOM CYLS, STICK CYL

S/N: JGB1-UP; KHS1-UP
PART OF 319-9245 BOOM AR, 294-1250 BOOM AR-REACH
FOR USE WITH 6.9-M (22.6-FT) BOOM
AN ATTACHMENT

SMCS-7510 **i03931135**

NOTE	REF NO	GRAPHIC REF	PART NUMBER	QTY	PART NAME 1 2 3 4 5 6 (PRODUCT LEVEL)	SEE PAGE
	1	1	**141-3538**	1	HOSE AS	
	2	1	**130-4407**	1	HOSE AS	
	3	1	**134-9137**	1	HOSE AS	
	4	1	**137-2781**	1	TUBE AS	
	5	1	**137-3194**	1	TUBE AS	
	6	1	**8M-2772**	2	CLIP	
M	7	1	**8T-4133**	10	NUT (M10X1.5-THD)	
	8	1	**8T-4121**	12	WASHER-HARD (11X21X2.5-MM THK)	
	9	1	**3B-8489**	5	FITTING-GREASE	
	10	1	**6L-3616**	2	CONNECTOR	
	11	1	**087-5840**	3	PLATE	
	12	1	**5K-9243**	2	ELBOW-FLARED	
	13	1	**033-8248**	4	CLIP	
M	14	1	**8T-4191**	2	BOLT (M10X1.5X16-MM)	

M-METRIC PART

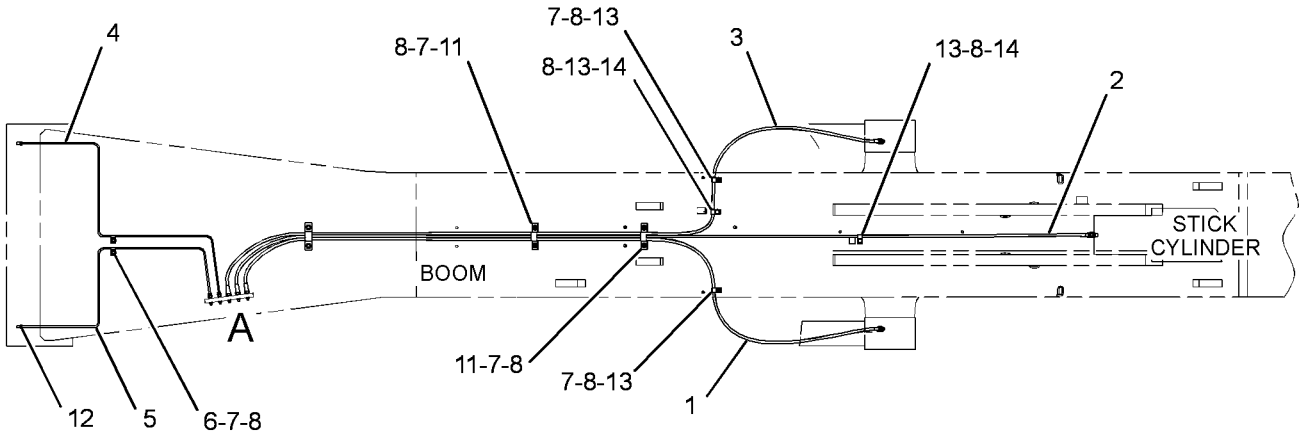

TOP VIEW FWD

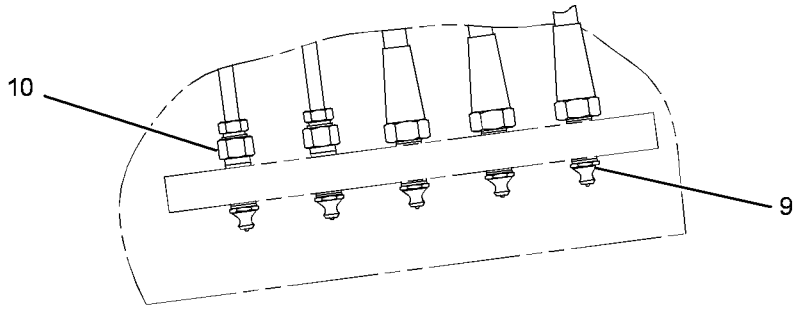

VIEW OF AREA A

GRAPHIC #1 **<END>** g02119854

127-1347 LINES GP-GREASE–BOOM, BOOM CYLS, STICK CYL

S/N: JGB1-UP; KHS1-UP
PART OF 294-1252 BOOM AR-MASS
FOR USE WITH 6.6-M (21.6-FT) BOOM
AN ATTACHMENT

SMCS-7510 **i01025891**

NOTE	REF NO	GRAPHIC REF	PART NUMBER	QTY	PART NAME 1 2 3 4 5 6 (PRODUCT LEVEL)	SEE PAGE
	1	1	**141-3538**	1	HOSE AS	
I	2	1	**120-7227**	1	HOSE AS	
I	3	1	**120-7226**	1	HOSE AS	
	4	1	**137-3194**	1	TUBE AS	
	5	1	**137-2781**	1	TUBE AS	
	6	1	**8M-2772**	2	CLIP	
M	7	1	**8T-4133**	10	NUT (M10X1.5-THD)	
	8	1	**8T-4121**	12	WASHER-HARD (11X21X2.5-MM THK)	
	9	1	**3B-8489**	5	FITTING-GREASE	
	10	1	**6L-3616**	2	CONNECTOR	
	11	1	**087-5840**	3	PLATE	
	12	1	**5K-9243**	2	ELBOW-FLARED	
	13	1	**033-8248**	4	CLIP	
M	14	1	**8T-4191**	2	BOLT (M10X1.5X16-MM)	

I-REFER TO HYDRAULIC INFORMATION SYSTEM
M-METRIC PART

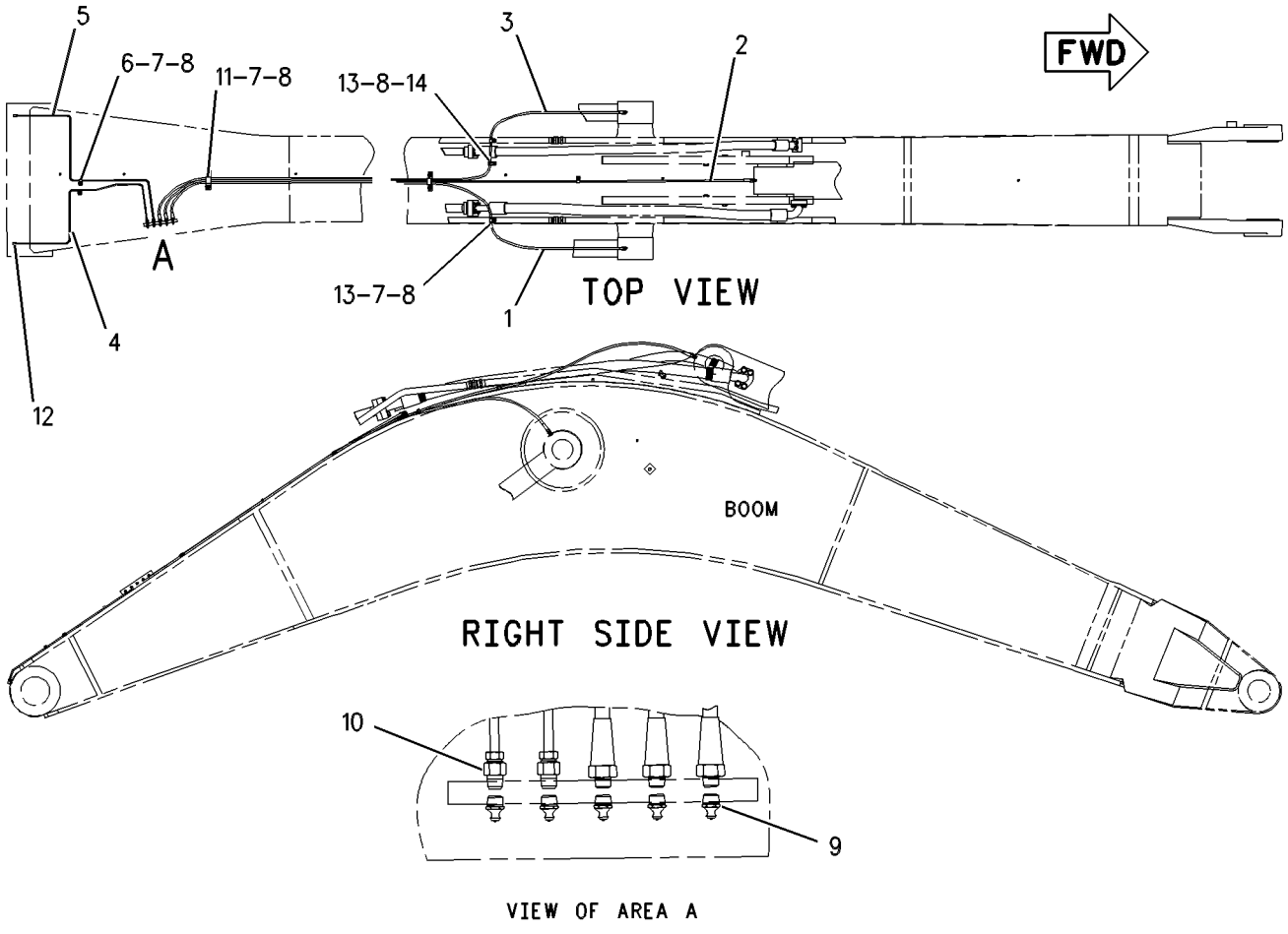

GRAPHIC #1 **<END>** g00528917

294-1426 LINES GP-GREASE

S/N: JGB1-UP; KHS1-UP
PART OF 294-1257, 294-1265 STICK AR-HOE
FOR USE WITH 3.9-M (12.8-FT) STICK
AN ATTACHMENT

SMCS-7510 **i03089426**

NOTE	REF NO	GRAPHIC REF	PART NUMBER	QTY	PART NAME 1 2 3 4 5 6 (PRODUCT LEVEL)	SEE PAGE
	1	1	**330-2704**	1	TUBE AS	
	2	1	**294-1430**	1	TUBE AS	
	3	1	**330-2705**	1	TUBE AS	
	4	1	**294-1434**	1	TUBE AS	
	5	1	**5K-9242**	3	UNION-FLARED	
	6	1	**294-1433**	1	TUBE AS	
	7	1	**294-1435**	1	TUBE AS	
I	8	1	**7Y-2670**	1	HOSE AS	
	9	1	**6V-3342**	1	ELBOW-PIPE	
	10	1	**6L-3616**	8	CONNECTOR	
	11	1	**8T-4121**	8	WASHER-HARD (11X21X2.5-MM THK)	
M	12	1	**8T-4133**	8	NUT (M10X1.5-THD)	
	13	1	**8M-2772**	7	CLIP	
	14	1	**3B-8489**	4	FITTING-GREASE	
	15	1	**087-5838**	1	PLATE	
	16	1	**7J-8611**	1	ELBOW-PIPE	
	17	1	**294-1432**	1	TUBE AS	
I	18	1	**087-5891**	1	HOSE AS	
	19	1	**5H-8936**	1	ADAPTER	

I-REFER TO HYDRAULIC INFORMATION SYSTEM
M-METRIC PART

294-1426 **LINES GP-GREASE** *(contd.)* **i03089426**

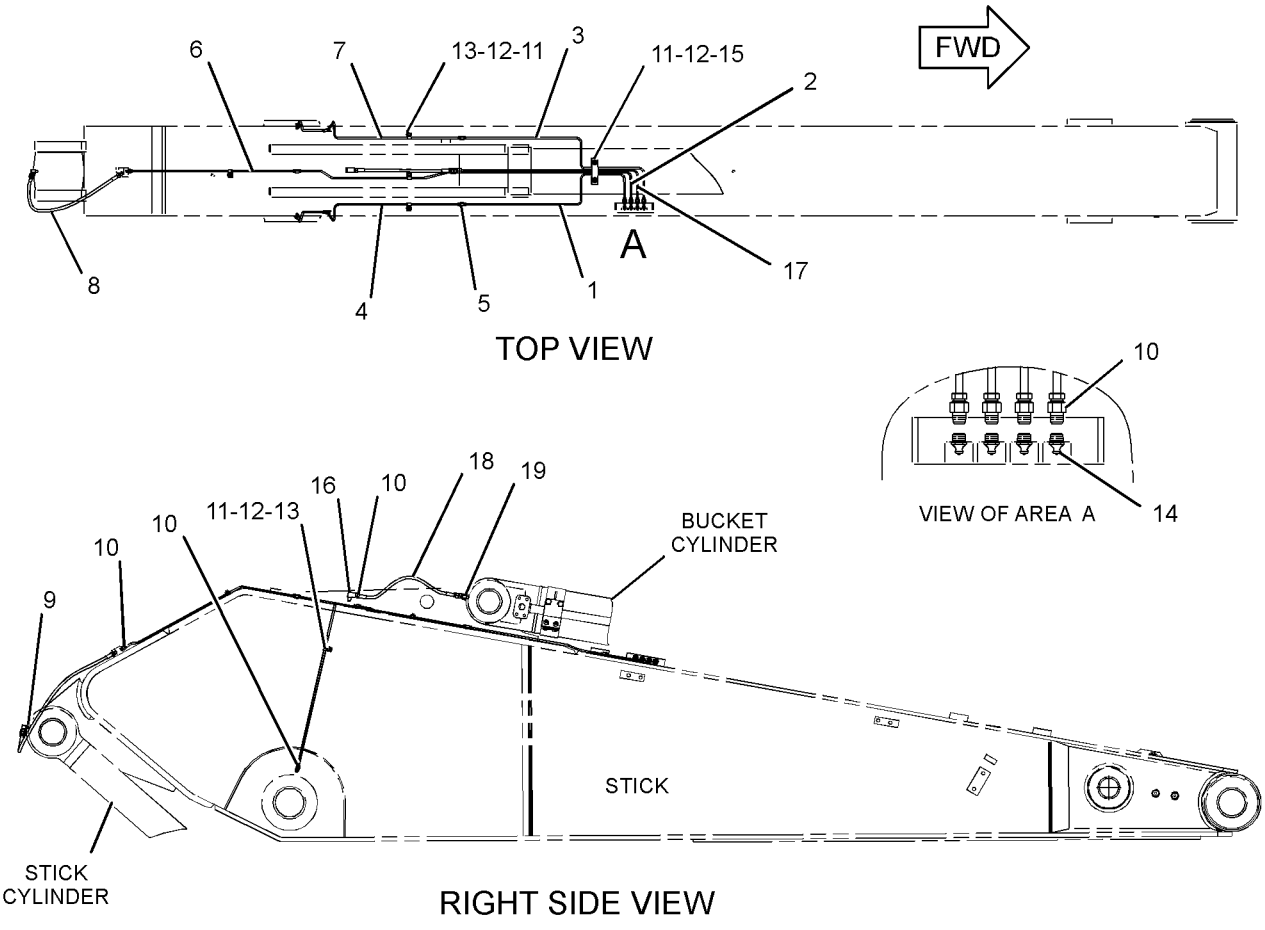

GRAPHIC #1 **<END>** g01432128

IMPLEMENTS

220-2502 LINKAGE AR-BUCKET—UB-FAMILY

S/N: JGB1-UP; KHS1-UP
PART OF 371-6383, 372-4831 LINKAGE AR-FRONT, 343-1203, 347-9838 OPTION AR-LINKAGE
AN ATTACHMENT

SMCS-6513 **i02155225**

NOTE	PART NUMBER	QTY	PART NAME 1 2 3 4 5 6 (PRODUCT LEVEL)	SEE PAGE
Y	*225-4530*	1	CYLINDER & LINES GP	460
Y	*219-8341*	1	LINKAGE GP-BUCKET	828

Y-SEPARATE ILLUSTRATION

<END>

245-5584 LINKAGE AR-BUCKET—TB-FAMILY, WITH LIFTING EYE

S/N: JGB1-UP; KHS1-UP
PART OF 337-8879, 337-8881, 356-3109 OPTION AR-LINKAGE, 356-3108 OPTION AR-MACHINE
AN ATTACHMENT

SMCS-6513 **i02219110**

NOTE	PART NUMBER	QTY	PART NAME 1 2 3 4 5 6 (PRODUCT LEVEL)	SEE PAGE
Y	*225-4527*	1	CYLINDER & LINES GP-BUCKET	460
Y	*251-2651*	1	LINKAGE GP-BUCKET (TB-FAMILY, WITH LIFTING EYE)	830

Y-SEPARATE ILLUSTRATION

<END>

371-6383 LINKAGE AR-FRONT

S/N: JGB1-UP; KHS1-UP
PART OF 371-9200, 371-9205 DISTRIBUTION AR
AN ATTACHMENT

SMCS-6107 **i04191691**

NOTE	PART NUMBER	QTY	PART NAME 1 2 3 4 5 6 (PRODUCT LEVEL)	SEE PAGE
Y	*294-1252*	1	BOOM AR-MASS (HEAVY-DUTY)	811
Y	*247-9307*	1	LINES GP-AUXILIARY HYDRAULIC (MASS BOOM, HIGH PRESSURE)	525
Y	*253-6383*	1	LINES GP-AUXILIARY HYDRAULIC (STICK, HIGH PRESSURE)	527
Y	*220-2502*	1	LINKAGE AR-BUCKET (UB-FAMILY)	826
Y	*220-2500*	1	STICK AR-HOE (MASS)	832

Y-SEPARATE ILLUSTRATION

<END>

IMPLEMENTS

372-4831 LINKAGE AR-FRONT

S/N: JGB1-UP; KHS1-UP

AN ATTACHMENT

SMCS-6107 **i04187410**

NOTE	PART NUMBER	QTY	PART NAME 1 2 3 4 5 6 (PRODUCT LEVEL)	SEE PAGE
Y	*294-1252*	1	BOOM AR-MASS (HEAVY-DUTY)	811
Y	*230-0128*	1	LINES GP-AUXILIARY HYDRAULIC (STICK, HIGH PRESSURE)	519
Y	*247-9307*	1	LINES GP-AUXILIARY HYDRAULIC (MASS BOOM, HIGH PRESSURE)	525
Y	*220-2502*	1	LINKAGE AR-BUCKET (UB-FAMILY)	826
Y	*220-2498*	1	STICK AR-HOE (MASS)	832

Y-SEPARATE ILLUSTRATION

<END>

219-8341 LINKAGE GP-BUCKET–VB-FAMILY

S/N: JGB1-UP; KHS1-UP
PART OF 220-2502 LINKAGE AR-BUCKET
AN ATTACHMENT

SMCS-6513 **i02985263**

NOTE	REF NO	GRAPHIC REF	PART NUMBER	QTY	PART NAME 1 2 3 4 5 6 (PRODUCT LEVEL)	SEE PAGE
	1	1	**3B-8489**	4	FITTING-GREASE	
	2	1	**5B-0651**	1	FITTING-STRAIGHT	
	3	1	**9X-4598**	6	SEAL-LIP TYPE	
	4	1	**148-3307**	1	LINK	
	5	1	**195-5479**	2	PLATE	
	6	1	**195-5480**	1	PLATE	
	7	1	**198-5647**	2	SEAL-O-RING	
	8	1	**212-3086**	1	PIN AS	
	9	1	**212-3088**	1	PIN AS	
	10	1	**212-3090**	1	PIN AS	
	11	1	**212-3092**	1	PIN AS	
	12	1	**212-3094**	1	LINK AS	
	13	1	**212-3095**	1	PLATE	
	14	1	**219-8342**	1	LINK & BEARING AS	
	14B	1	**4I-6718**	4	BUSHING	
	15	1	**093-1349**	2	SEAL-O-RING	
M	16	1	**7X-2553**	9	BOLT (M16X2X40-MM)	
M	17	1	**7X-2562**	3	BOLT (M20X2.5X45-MM)	
	18	1	**8T-4123**	3	WASHER (22X35X3.5-MM THK)	
	19	1	**9X-8257**	9	WASHER (17.5X30X3.5-MM THK)	

M-METRIC PART

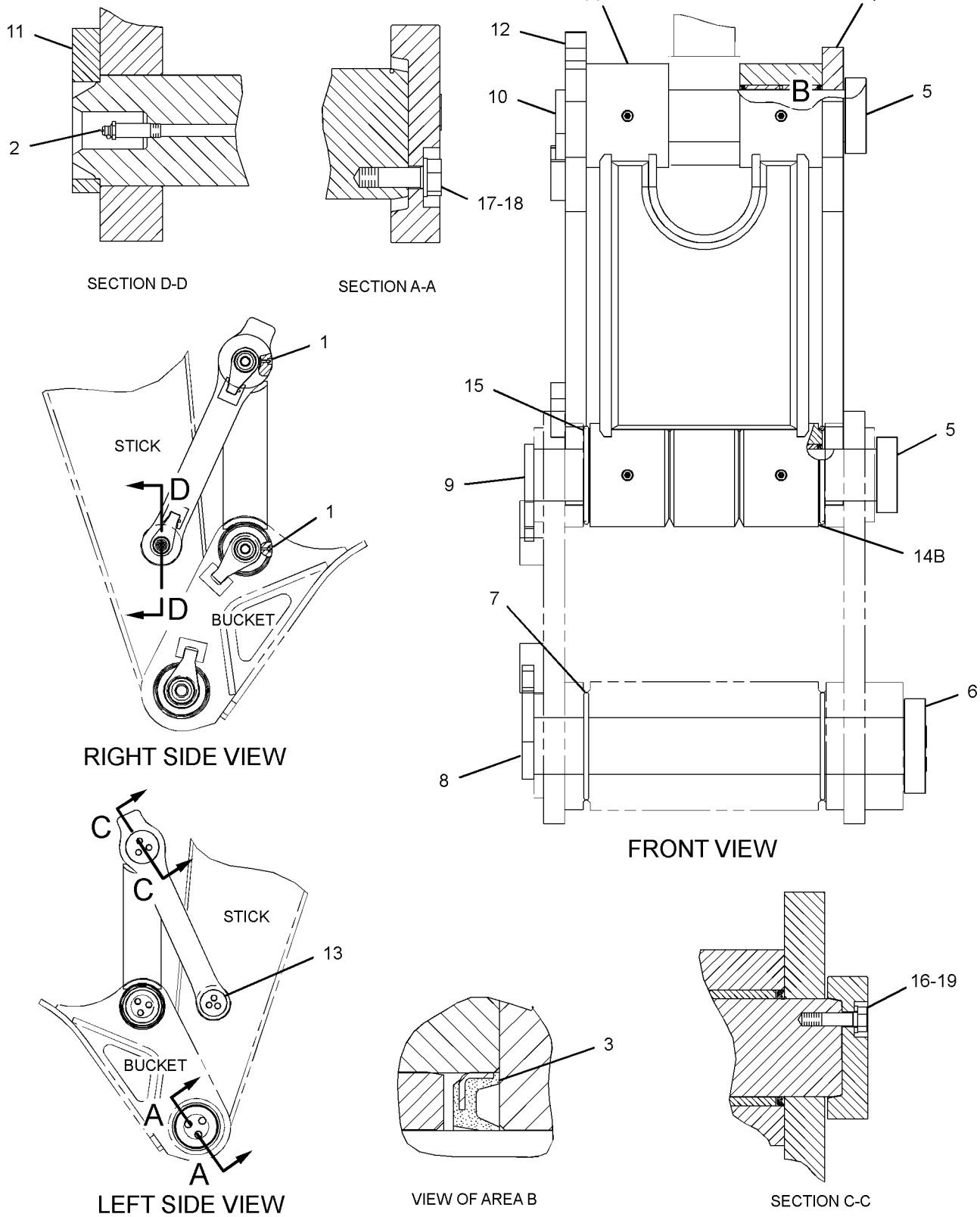

GRAPHIC #1

<END>

g01511402

251-2651 LINKAGE GP-BUCKET—TB-FAMILY, WITH LIFTING EYE

S/N: JGB1-UP; KHS1-UP
PART OF 245-5584 LINKAGE AR-BUCKET
AN ATTACHMENT

SMCS-6513 **i04030852**

NOTE	REF NO	GRAPHIC REF	PART NUMBER	QTY	PART NAME 1 2 3 4 5 6 (PRODUCT LEVEL)	SEE PAGE
	1	1	**3B-8489**	4	FITTING-GREASE	
	2	1	**5B-0651**	1	FITTING-STRAIGHT	
	3	1	**093-1347**	2	SEAL-O-RING	
	4	1	**341-5272**	1	PLATE	
	5	1	**201-2771**	2	WASHER (26X90X8-MM THK)	
	6	1	**341-5135**	1	PLATE	
	7	1	**235-7626**	1	LINK AS	
	8	1	**235-7627**	1	LINK	
	9	1	**235-7628**	1	PIN AS	
	10	1	**235-7636**	1	PIN AS	
	11	1	**235-7639**	1	PIN AS	
	12	1	**235-7642**	1	PIN AS	
	13	1	**251-2652**	1	LINK & BEARING AS	
	13A	1	**087-5548**	2	BUSHING	
	13B	1	**7Y-2397**	2	BUSHING	
	14	1	**9X-4597**	6	SEAL-LIP TYPE	
	15	1	**093-1345**	2	SEAL-O-RING	
M	16	1	**8T-4140**	6	BOLT (M16X2X60-MM)	
	17	1	**8T-4167**	2	WASHER-HARD (26X44X4-MM THK)	
M	18	1	**8T-5379**	2	BOLT (M24X3X50-MM)	
	19	1	**7X-0513**	6	WASHER-HARD (17X30X5-MM THK)	

M-METRIC PART

251-2651 **LINKAGE GP-BUCKET** *(contd.)* **i04030852**

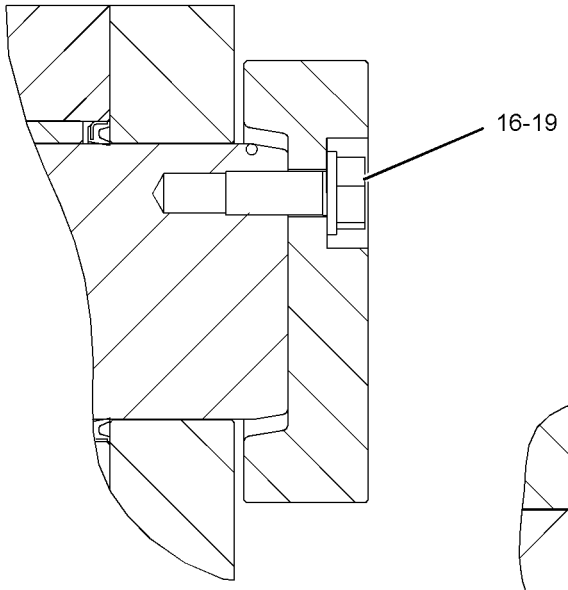

SECTION E-E

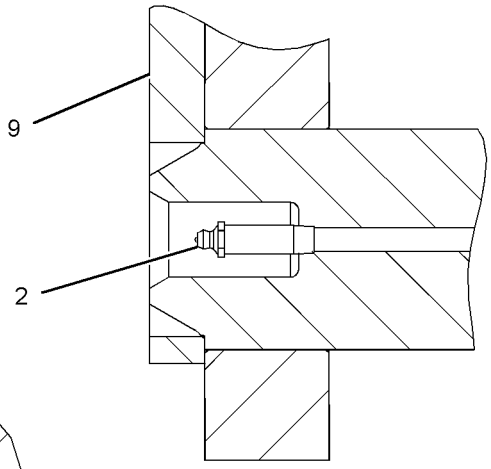

SECTION D-D

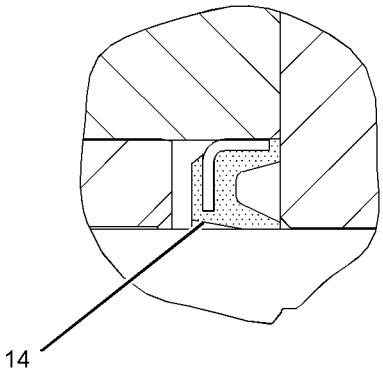

VIEW OF AREA C

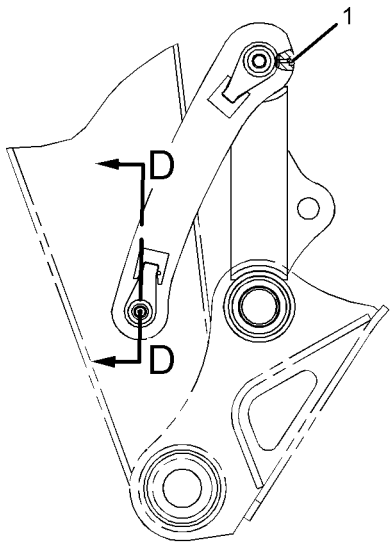

VIEW A-A

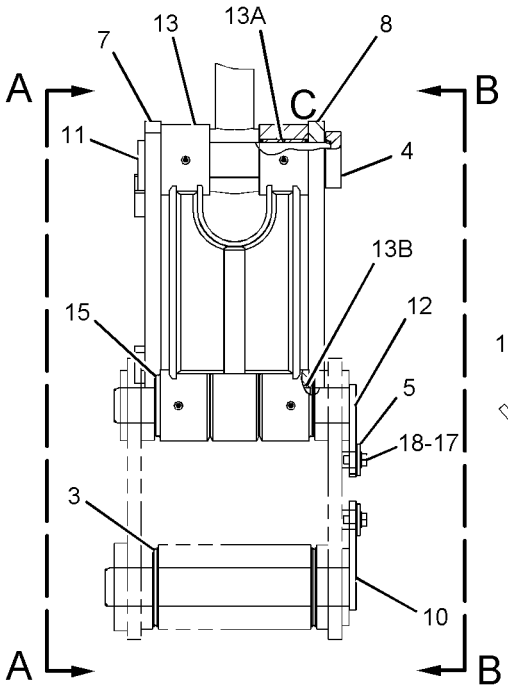

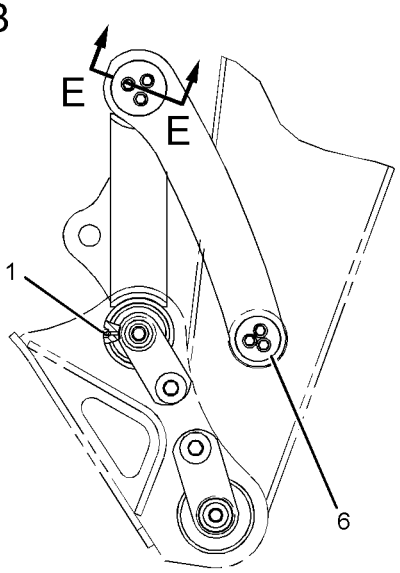

VIEW B-B

GRAPHIC #1 **<END>** g01122838

220-2498 STICK AR-HOE—MASS

S/N: JGB1-UP; KHS1-UP
3-M (9.8-FT). AUTOMATIC LUBRICATION READY
PART OF 372-4831 LINKAGE AR-FRONT, 347-9838 OPTION AR-LINKAGE
AN ATTACHMENT

SMCS-6502 **i02155212**

NOTE	PART NUMBER	QTY	PART NAME 1 2 3 4 5 6 (PRODUCT LEVEL)	SEE PAGE
Y	*128-7448*	1	LINES GP-STICK	655
Y	*228-5440*	1	STICK GP-HOE	834
Y-SEPARATE ILLUSTRATION				

<END>

220-2500 STICK AR-HOE—MASS

S/N: JGB1-UP; KHS1-UP
2.5-M (8.2-FT). AUTOMATIC LUBRICATION READY
PART OF 371-6383 LINKAGE AR-FRONT, 343-1203 OPTION AR-LINKAGE
AN ATTACHMENT

SMCS-6502 **i02155216**

NOTE	PART NUMBER	QTY	PART NAME 1 2 3 4 5 6 (PRODUCT LEVEL)	SEE PAGE
Y	*128-7449*	1	LINES GP-STICK	656
Y	*228-5447*	1	STICK GP-HOE	836
Y-SEPARATE ILLUSTRATION				

<END>

294-1257 STICK AR-HOE

S/N: JGB1-UP; KHS1-UP
3.9-M (12.8-FT)
FOR USE WITH 245-5584—PAGE 826
AN ATTACHMENT

SMCS-6502 **i02861054**

NOTE	PART NUMBER	QTY	PART NAME 1 2 3 4 5 6 (PRODUCT LEVEL)	SEE PAGE
Y	*294-1426*	1	LINES GP-GREASE	824
Y	*289-5759*	1	LINES GP-STICK	658
Y	*297-7419*	1	STICK GP-HOE	840
Y-SEPARATE ILLUSTRATION				

<END>

294-1258 STICK AR-HOE

S/N: JGB1-UP; KHS1-UP
3.4-M (11.2-FT). AUTOMATIC LUBRICATION READY
PART OF 337-8879, 337-8881 OPTION AR-LINKAGE
AN ATTACHMENT

SMCS-6502 **i02861059**

NOTE	PART NUMBER	QTY	PART NAME 1 2 3 4 5 6 (PRODUCT LEVEL)	SEE PAGE
Y	*289-5758*	1	LINES GP-STICK	657
Y	*290-9138*	1	STICK GP-HOE	838
Y-SEPARATE ILLUSTRATION				

<END>

294-1265 STICK AR-HOE—ACCUGRADE READY

S/N: JGB1-UP
3.9-M (12.8-FT)
AN ATTACHMENT

SMCS-6502 **i02860929**

NOTE	PART NUMBER	QTY	PART NAME 1 2 3 4 5 6 (PRODUCT LEVEL)	SEE PAGE
Y	*294-1426*	1	LINES GP-GREASE	824
Y	*289-5759*	1	LINES GP-STICK	658
Y	*297-7442*	1	STICK GP-HOE (ACCUGRADE)	841

Y-SEPARATE ILLUSTRATION

<END>

294-1267 STICK AR-HOE—ACCUGRADE READY

S/N: JGB1-UP; KHS1-UP
3.4-M (11.2-FT). AUTOMATIC LUBRICATION READY
PART OF 356-3109 OPTION AR-LINKAGE, 356-3108 OPTION AR-MACHINE
AN ATTACHMENT

SMCS-6502 **i02860939**

NOTE	PART NUMBER	QTY	PART NAME 1 2 3 4 5 6 (PRODUCT LEVEL)	SEE PAGE
Y	*289-5758*	1	LINES GP-STICK	657
Y	*297-7443*	1	STICK GP-HOE	843

Y-SEPARATE ILLUSTRATION

<END>

228-5440 STICK GP-HOE—MASS

S/N: JGB1-UP; KHS1-UP
3-M (9.8-FT)
PART OF 220-2498 STICK AR-HOE
AN ATTACHMENT

SMCS-6502 **i02155213**

NOTE	REF NO	GRAPHIC REF	PART NUMBER	QTY	PART NAME 1 2 3 4 5 6 (PRODUCT LEVEL)	SEE PAGE
	1	1	**9X-4599**	4	SEAL-LIP TYPE	
B	2	1	**093-0090**	4	SHIM (1-MM THK)	
B	3	1	**093-0122**	2	SHIM (2-MM THK)	
	4	1	**093-0349**	2	WASHER (22X60X6-MM THK)	
	5	1	**093-0364**	2	SPACER (103X140X12-MM THK)	
	6	1	**130-4360**	2	PIN AS	
B	7	1	**133-2427**	4	SHIM (0.5-MM THK)	
	8	1	**134-8944**	2	SPACER (102X180X5-MM THK)	
	9	1	**228-5441**	1	STICK & BEARING AS	
	9A	1	**228-5621**	4	BUSHING	
	9B	1	**4I-6897**	2	BUSHING	
	10	1	**166-1494**	2	SEAL-LIP TYPE	
	11	1	**3B-8489**	4	FITTING-GREASE	
	12	1	**8T-4123**	2	WASHER (22X35X3.5-MM THK)	
M	13	1	**8T-4780**	2	BOLT (M20X2.5X30-MM)	

B-USE AS REQUIRED
M-METRIC PART

228-5440 **STICK GP-HOE** *(contd.)* **i02155213**

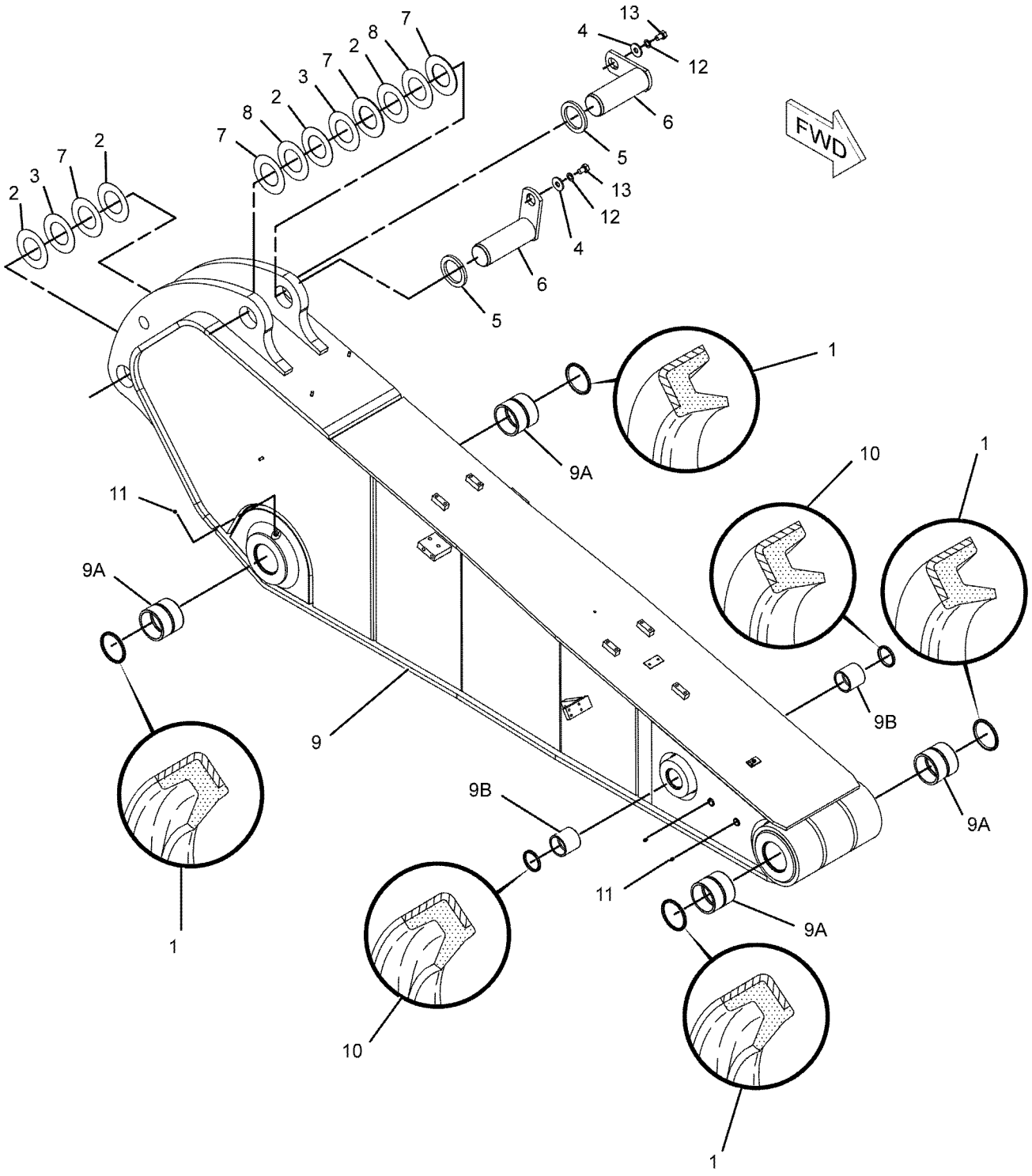

GRAPHIC #1 **<END>** g01094845

228-5447 STICK GP-HOE–MASS

S/N: JGB1-UP; KHS1-UP
2.5-M (8.2-FT)
PART OF 220-2500 STICK AR-HOE
AN ATTACHMENT

SMCS-6502 **i02214008**

NOTE	REF NO	GRAPHIC REF	PART NUMBER	QTY	PART NAME 1 2 3 4 5 6 (PRODUCT LEVEL)	SEE PAGE
	1	1	**9X-4599**	4	SEAL-LIP TYPE	
B	2	1	**093-0090**	4	SHIM (1-MM THK)	
B	3	1	**093-0122**	2	SHIM (2-MM THK)	
	4	1	**093-0349**	2	WASHER (22X60X6-MM THK)	
	5	1	**093-0364**	2	SPACER (103X140X12-MM THK)	
	6	1	**130-4360**	2	PIN AS	
B	7	1	**133-2427**	2	SHIM (0.5-MM THK)	
	8	1	**134-8944**	2	SPACER (102X180X5-MM THK)	
	9	1	**228-5448**	1	STICK & BEARING AS	
	9A	1	**228-5621**	4	BUSHING	
	9B	1	**4I-6897**	2	BUSHING	
	10	1	**166-1494**	2	SEAL-LIP TYPE	
	11	1	**3B-8489**	4	FITTING-GREASE	
	12	1	**8T-4123**	2	WASHER (22X35X3.5-MM THK)	
M	13	1	**8T-4780**	2	BOLT (M20X2.5X30-MM)	
	14	1	**133-2427**	2	SHIM (0.5-MM THK)	

B-USE AS REQUIRED
M-METRIC PART

228-5447 **STICK GP-HOE** *(contd.)* **i02214008**

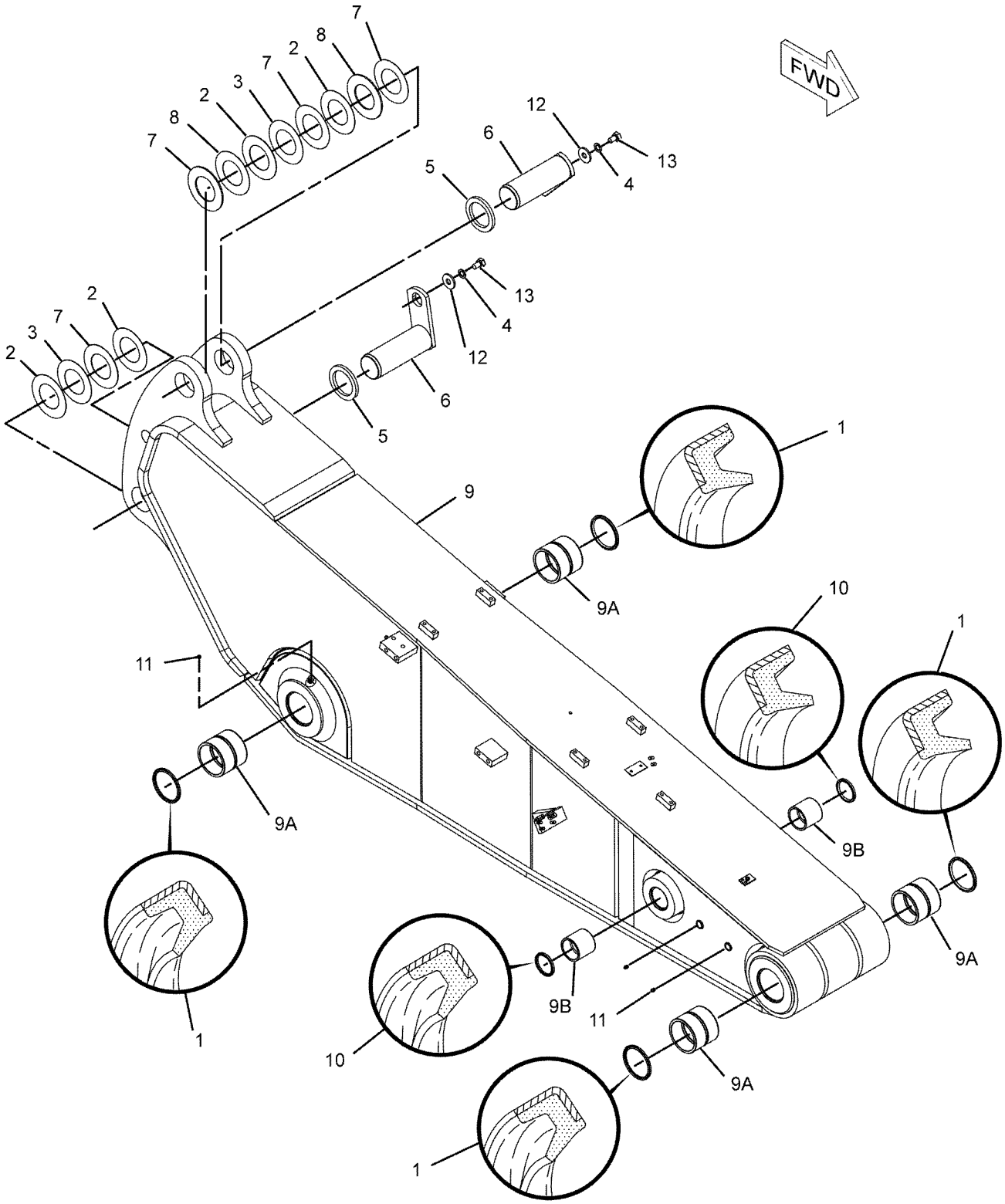

GRAPHIC #1 **<END>** g01095058

IMPLEMENTS

290-9138 STICK GP-HOE

S/N: JGB1-UP; KHS1-UP
3.4-M (11.2-FT)
PART OF 294-1258 STICK AR-HOE
AN ATTACHMENT

SMCS-6502 **i04159909**

NOTE	REF NO	GRAPHIC REF	PART NUMBER	QTY	PART NAME 1 2 3 4 5 6 (PRODUCT LEVEL)	SEE PAGE
	1	1	**3B-8489**	4	FITTING-GREASE	
	2	1	**9X-4598**	2	SEAL-LIP TYPE	
	3	1	**9X-4599**	2	SEAL-LIP TYPE	
B	4	1	**093-0084**	2	SHIM (1-MM THK)	
B	5	1	**093-0090**	2	SHIM (1-MM THK)	
B	6	1	**093-0116**	1	SHIM (2-MM THK)	
B	7	1	**093-0122**	1	SHIM (2-MM THK)	
	8	1	**093-0349**	2	WASHER (22X60X6-MM THK)	
	9	1	**093-0364**	1	SPACER (103X140X12-MM THK)	
B	10	1	**113-2127**	1	SHIM (0.5-MM THK)	
	11	1	**130-4360**	1	PIN AS	
B	12	1	**133-2427**	1	SHIM (0.5-MM THK)	
	13	1	**141-3550**	1	PIN AS	
	14	1	**365-7117**	1	STICK & BEARING AS	
	14A	1	**228-5621**	2	BUSHING	
	14B	1	**4I-6897**	2	BUSHING	
	14C	1	**228-5619**	2	BUSHING	
	15	1	**093-0366**	1	SPACER (93X130X12-MM THK)	
	16	1	**166-1494**	2	SEAL-LIP TYPE	
	17	1	**8T-4123**	2	WASHER (22X35X3.5-MM THK)	
M	18	1	**8T-4780**	2	BOLT (M20X2.5X30-MM)	

B-USE AS REQUIRED
M-METRIC PART

290-9138 **STICK GP-HOE** *(contd.)* **i04159909**

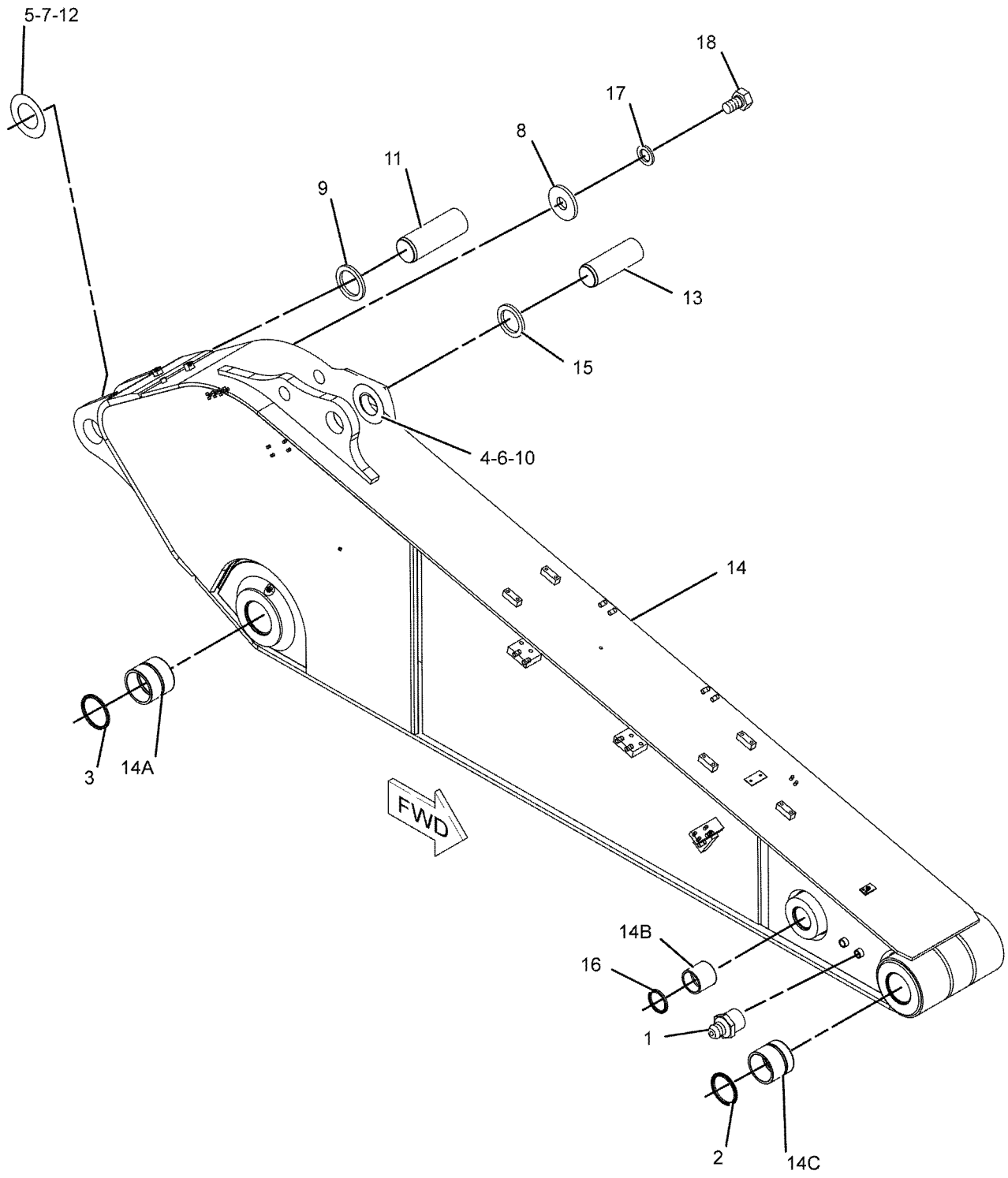

GRAPHIC #1 **<END>** g01095119

297-7419 STICK GP-HOE

S/N: JGB1-UP; KHS1-UP
3.9-M (12.8-FT)
PART OF 294-1257 STICK AR-HOE
AN ATTACHMENT

SMCS-6502 **i04160136**

NOTE	REF NO	GRAPHIC REF	PART NUMBER	QTY	PART NAME 1 2 3 4 5 6 (PRODUCT LEVEL)	SEE PAGE
	1	1	**3B-8489**	4	FITTING-GREASE	
	2	1	**9X-4599**	2	SEAL-LIP TYPE	
B	3	1	**093-0084**	2	SHIM (1-MM THK)	
B	4	1	**093-0090**	2	SHIM (1-MM THK)	
B	5	1	**093-0116**	1	SHIM (2-MM THK)	
B	6	1	**093-0122**	1	SHIM (2-MM THK)	
	7	1	**093-0349**	2	WASHER (22X60X6-MM THK)	
	8	1	**093-0364**	1	SPACER (103X140X12-MM THK)	
B	9	1	**113-2127**	1	SHIM (0.5-MM THK)	
	10	1	**130-4360**	1	PIN AS	
B	11	1	**133-2427**	1	SHIM (0.5-MM THK)	
	12	1	**141-3550**	1	PIN AS	
	13	1	**365-7109**	1	STICK & BEARING AS	
	13A	1	**228-5621**	2	BUSHING	
	13B	1	**4I-6897**	2	BUSHING	
	13C	1	**228-5619**	2	BUSHING	
	14	1	**093-0366**	1	SPACER (93X130X12-MM THK)	
	15	1	**166-1494**	2	SEAL-LIP TYPE	
	16	1	**8T-4123**	2	WASHER (22X35X3.5-MM THK)	
M	17	1	**8T-4780**	2	BOLT (M20X2.5X30-MM)	
	18	1	**9X-4598**	2	SEAL-LIP TYPE	

B-USE AS REQUIRED
M-METRIC PART

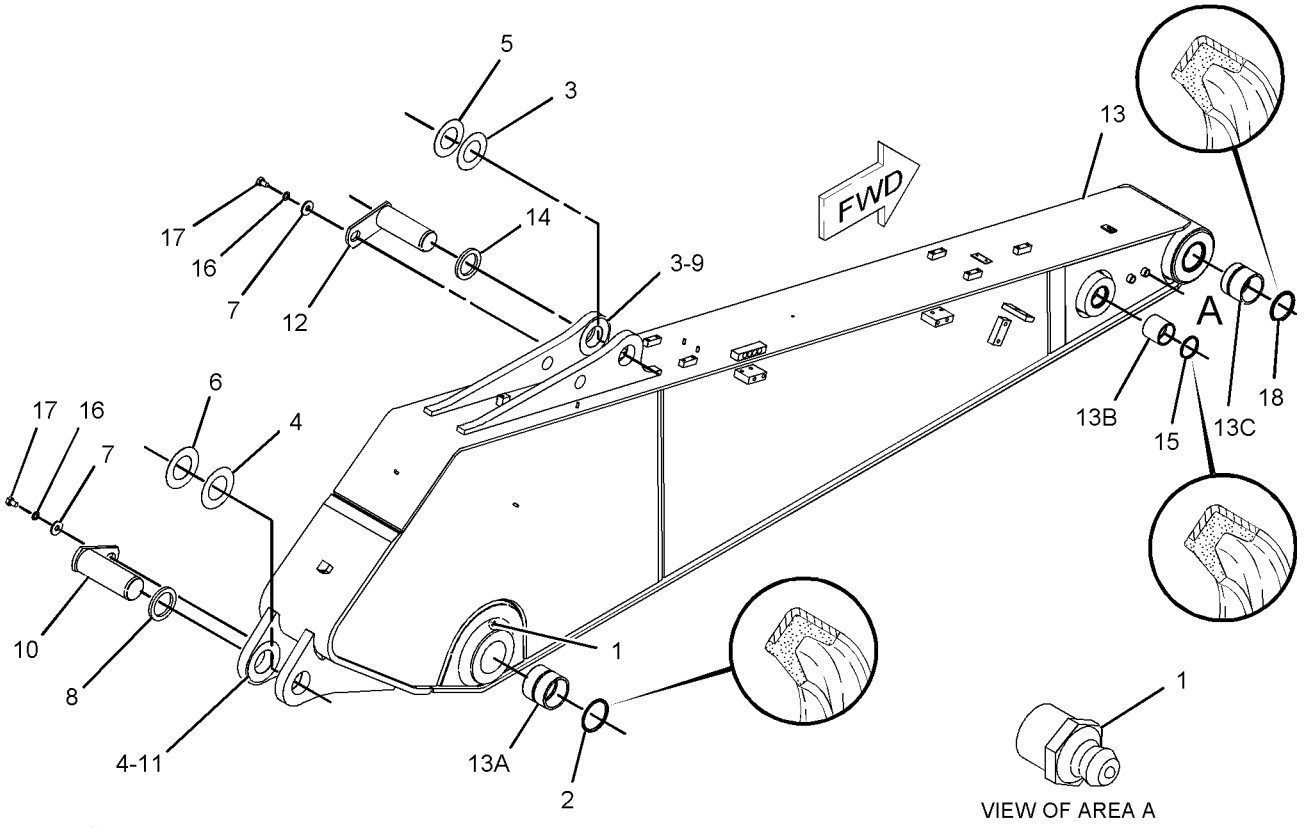

GRAPHIC #1 **<END>** g01095184

IMPLEMENTS

297-7442 STICK GP-HOE—ACCUGRADE READY

S/N: JGB1-UP
3.9-M (12.8-FT)
PART OF 294-1265 STICK AR-HOE
AN ATTACHMENT

SMCS-6502 **i02871391**

NOTE	REF NO	GRAPHIC REF	PART NUMBER	QTY	PART NAME 1 2 3 4 5 6 (PRODUCT LEVEL)	SEE PAGE
	1	1	**3B-8489**	4	FITTING-GREASE	
	2	1	**9X-4598**	2	SEAL-LIP TYPE	
	3	1	**9X-4599**	2	SEAL-LIP TYPE	
B	4	1	**093-0084**	2	SHIM (1-MM THK)	
B	5	1	**093-0090**	2	SHIM (1-MM THK)	
B	6	1	**093-0116**	1	SHIM (2-MM THK)	
B	7	1	**093-0122**	1	SHIM (2-MM THK)	
	8	1	**093-0349**	2	WASHER (22X60X6-MM THK)	
	9	1	**093-0364**	1	SPACER (103X140X12-MM THK)	
B	10	1	**113-2127**	1	SHIM (0.5-MM THK)	
	11	1	**130-4360**	1	PIN AS	
B	12	1	**133-2427**	1	SHIM (0.5-MM THK)	
	13	1	**141-3550**	1	PIN AS	
	14	1	**308-8886**	1	STICK & BEARING AS	
	14A	1	**4I-6897**	2	BUSHING	
	14B	1	**228-5619**	2	BUSHING	
	14C	1	**228-5621**	2	BUSHING	
	15	1	**093-0366**	1	SPACER (93X130X12-MM THK)	
	16	1	**166-1494**	2	SEAL-LIP TYPE	
	17	1	**8T-4123**	2	WASHER (22X35X3.5-MM THK)	
M	18	1	**8T-4780**	2	BOLT (M20X2.5X30-MM)	

B-USE AS REQUIRED
M-METRIC PART

297-7442 **STICK GP-HOE** *(contd.)* **i02871391**

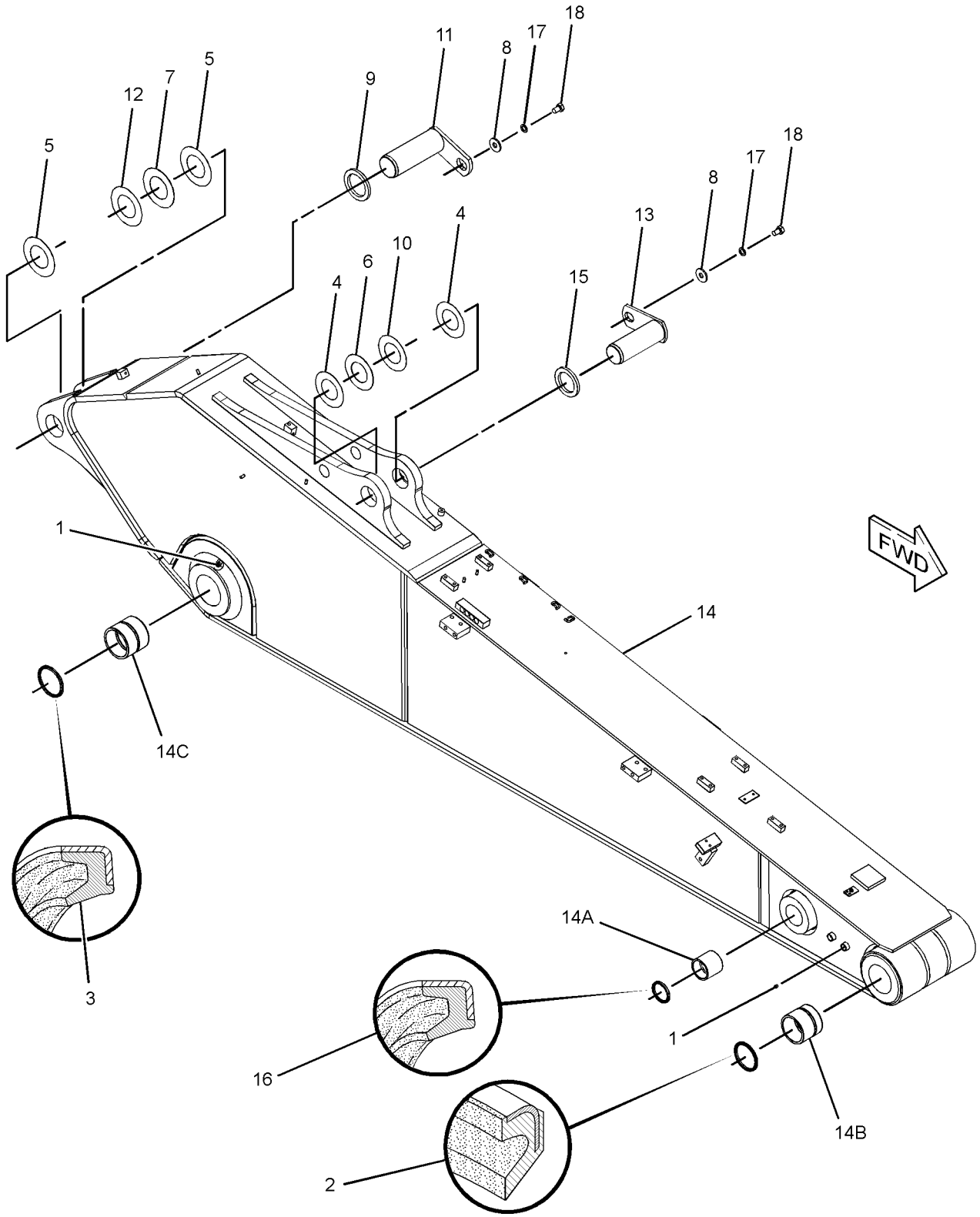

GRAPHIC #1 **<END>** g01455039

297-7443 STICK GP-HOE–ACCUGRADE READY

S/N: JGB1-UP; KHS1-UP
3.4-M (11.2-FT)
PART OF 294-1267 STICK AR-HOE
AN ATTACHMENT

SMCS-6502 **i04159973**

NOTE	REF NO	GRAPHIC REF	PART NUMBER	QTY	PART NAME 1 2 3 4 5 6 (PRODUCT LEVEL)	SEE PAGE
	1	1	**3B-8489**	4	FITTING-GREASE	
	2	1	**9X-4598**	2	SEAL-LIP TYPE	
	3	1	**9X-4599**	2	SEAL-LIP TYPE	
B	4	1	**093-0084**	2	SHIM (1-MM THK)	
B	5	1	**093-0090**	2	SHIM (1-MM THK)	
B	6	1	**093-0116**	1	SHIM (2-MM THK)	
B	7	1	**093-0122**	1	SHIM (2-MM THK)	
	8	1	**093-0349**	2	WASHER (22X60X6-MM THK)	
	9	1	**093-0364**	1	SPACER (103X140X12-MM THK)	
B	10	1	**113-2127**	1	SHIM (0.5-MM THK)	
	11	1	**130-4360**	1	PIN AS	
B	12	1	**133-2427**	1	SHIM (0.5-MM THK)	
	13	1	**141-3550**	1	PIN AS	
	14	1	**365-7123**	1	STICK & BEARING AS	
	14A	1	**4I-6897**	2	BUSHING	
	14B	1	**228-5619**	2	BUSHING	
	14C	1	**228-5621**	2	BUSHING	
	15	1	**093-0366**	1	SPACER (93X130X12-MM THK)	
	16	1	**166-1494**	2	SEAL-LIP TYPE	
	17	1	**8T-4123**	2	WASHER (22X35X3.5-MM THK)	
M	18	1	**8T-4780**	2	BOLT (M20X2.5X30-MM)	

B-USE AS REQUIRED
M-METRIC PART

297-7443 **STICK GP-HOE** *(contd.)* **i04159973**

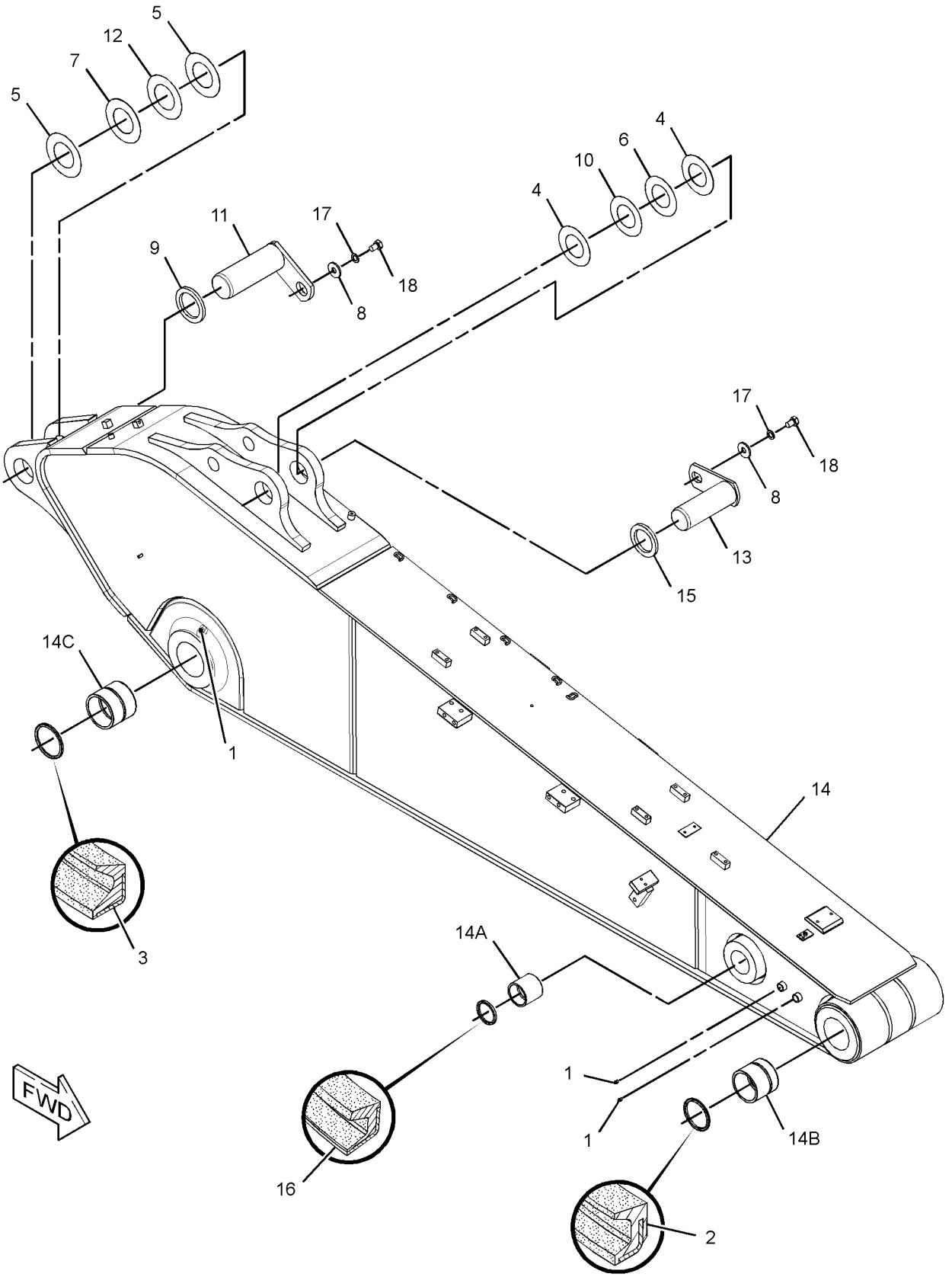

GRAPHIC #1 **<END>** g01457659

4I-4070 ADJUSTER GP-BUCKET—G/U/V/TB-FAMILY

S/N: JGB1-UP

PART OF 366-2776 BUCKET & ADJUSTER GP

AN ATTACHMENT

SMCS-6513, 6700 **i01000553**

NOTE	REF NO	GRAPHIC REF	PART NUMBER	QTY	PART NAME 1 2 3 4 5 6 (PRODUCT LEVEL)	SEE PAGE
B	1	1	**4I-4039**	6	SHIM (1-MM THK)	
B	2	1	**4I-4043**	4	SHIM (0.5-MM THK)	
	3	1	**4I-6626**	1	PIN	
	4	1	**134-8952**	1	PLATE	
M	5	1	**7X-2563**	6	BOLT (M20X2.5X60-MM)	
	6	1	**8T-4123**	6	WASHER (22X35X3.5-MM THK)	
	7	1	**163-3493**	1	FLANGE	

B-USE AS REQUIRED
M-METRIC PART

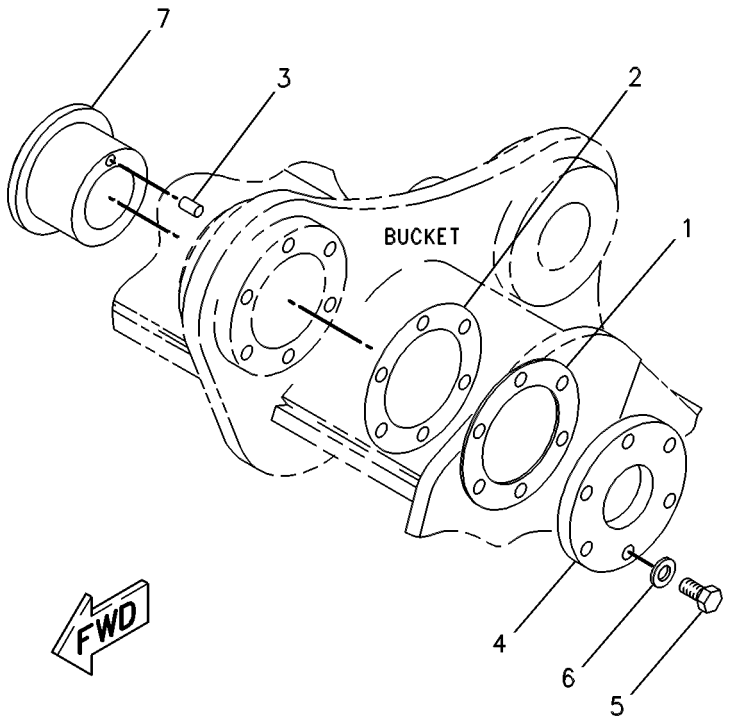

GRAPHIC #1 **<END>** g00262635

366-2776 BUCKET & ADJUSTER GP–

SEVERE SERV SPADE, TB-FAMILY
S/N: JGB1-UP
1772-MM (70-IN) WIDE X 2.4-CU M (3.14-CU YD) CAPACITY.
K-130 ADAPTERS, QTY OF 4
AN ATTACHMENT

SMCS-6503, 6513 **i04204909**

NOTE	PART NUMBER	QTY	PART NAME 1 2 3 4 5 6 (PRODUCT LEVEL)	SEE PAGE
Y	**4I-4070**	1	ADJUSTER GP-BUCKET (G/U/V/TB-FAMILY)	845
Y	**368-6385**	1	BUCKET AS-SEVERE SERVICE SPADE (TB-FAMILY)	847
	2C-9259	2	PLATE-IDENTIFICATION (CAT)	

Y-SEPARATE ILLUSTRATION

<END>

368-6385 BUCKET AS-SEVERE SERVICE SPADE–TB-FAMILY

S/N: JGB1-UP
1772-MM (70-IN) WIDE X 2.4-CU M (3.14-CU YD) CAPACITY.
K-130 ADAPTERS, QTY OF 4
PART OF 366-2776 BUCKET & ADJUSTER GP
AN ATTACHMENT

SMCS-6001 **i04204910**

NOTE	REF NO	GRAPHIC REF	PART NUMBER	QTY	PART NAME 1 2 3 4 5 6 (PRODUCT LEVEL)	SEE PAGE
	1	1	**259-1930**	1	PLATE AS-BOX	
	2	1	**368-7996**	1	EDGE AS	
	2A	1	**264-2136**	1	ADAPTER-TIP (K-130, 2-STRAP, LH)	
	2B	1	**232-0130**	2	ADAPTER-TIP (K-130, 2-STRAP, CENTER)	
	2C	1	**264-2135**	1	ADAPTER-TIP (K-130, 2-STRAP, RH)	
	2D	1	**8P-9770**	1	PLATE	
	3	1	**365-3152**	1	PLATE-WEAR	
	4	1	**368-8003**	5	PLATE-WEAR	
	5	1	**368-8004**	2	PLATE-WEAR	
	6	1	**368-8632**	1	PLATE-WEAR	

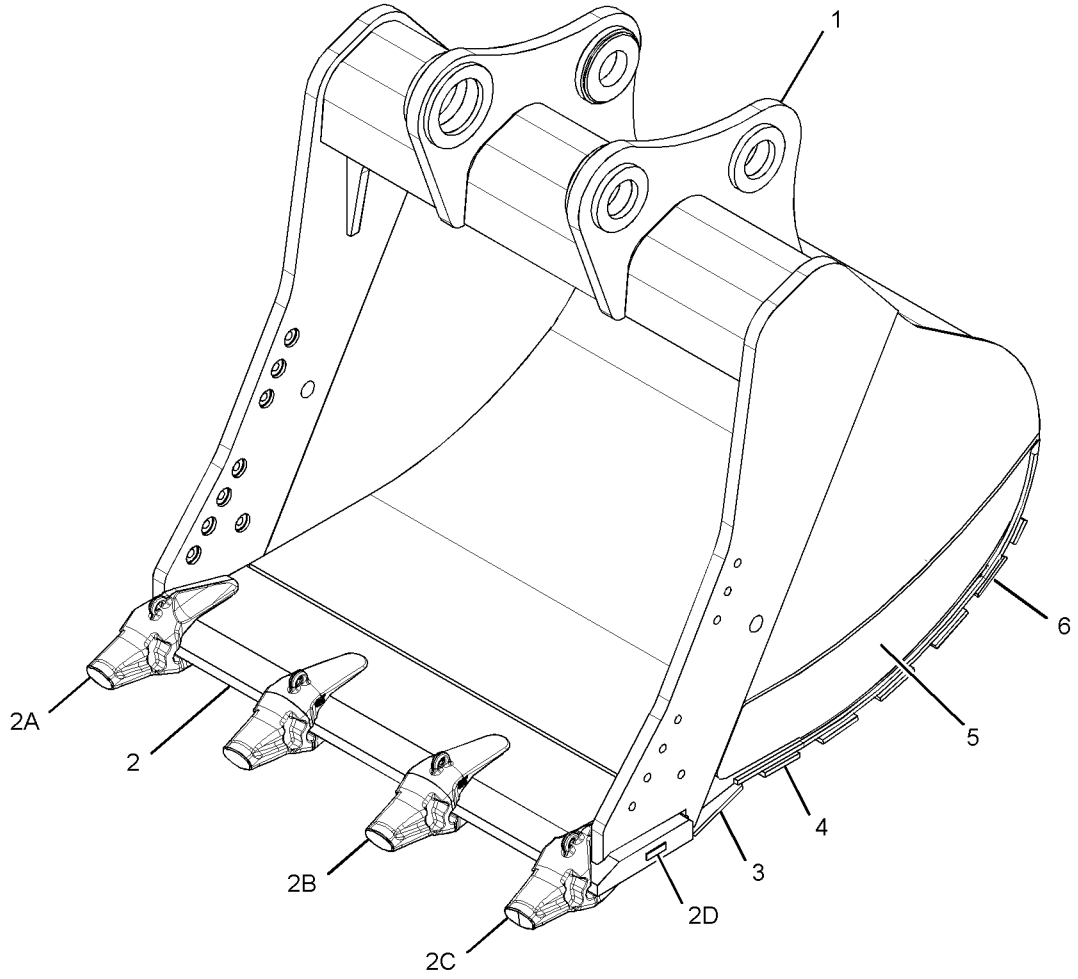

GRAPHIC #1 **<END>** g02393462

WORK TOOLS

302-5148 COUPLER AR-QUICK

S/N: JGB1-UP; KHS1-UP
PART OF 311-3969 COUPLER AR-QUICK
AN ATTACHMENT

SMCS-1408, 5057, 6129 **i02984631**

NOTE	REF NO	GRAPHIC REF	PART NUMBER	QTY	PART NAME 1 2 3 4 5 6 (PRODUCT LEVEL)	SEE PAGE
Y	1	1	*169-0761*	1	LOCK GP-QUICK COUPLER (HYDRAULIC)	850
Y	2	1	**235-5634**	1	YOKE GP-LIFTING	852
	3	1	**159-8036**	2	FILM-WARNING (READ OMM)	
	4	1	**150-8896**	2	FILM-NOTICE (LIFT EYE LOCATION)	

Y-SEPARATE ILLUSTRATION

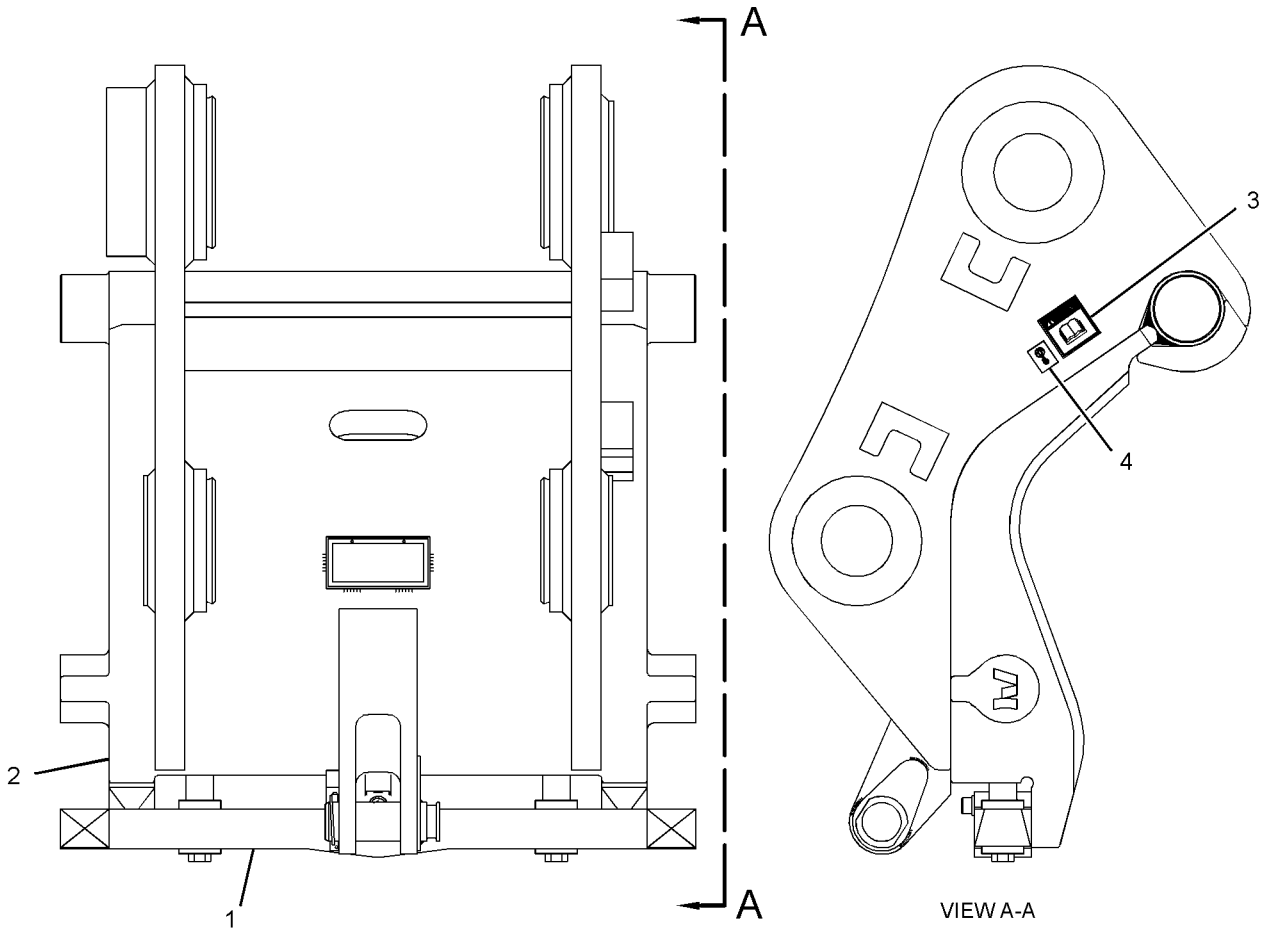

GRAPHIC #1 **<END>** g01446549

311-3969 COUPLER AR-QUICK–DEDICATED WEDGE LOCK

S/N: JGB1-UP; KHS1-UP

AN ATTACHMENT

SMCS-1408, 5057, 6129 **i02913762**

NOTE	PART NUMBER	QTY	PART NAME 1 2 3 4 5 6 (PRODUCT LEVEL)	SEE PAGE
Y	*302-5148*	1	COUPLER AR-QUICK	848
Y	*277-4424*	1	LINES GP-COUPLER	555

Y-SEPARATE ILLUSTRATION

<END>

WORK TOOLS

169-0761 LOCK GP-QUICK COUPLER—HYDRAULIC

S/N: JGB1-UP; KHS1-UP
PART OF 302-5148 COUPLER AR-QUICK
AN ATTACHMENT

SMCS-6129 **i02984701**

NOTE	REF NO	GRAPHIC REF	PART NUMBER	QTY	PART NAME 1 2 3 4 5 6 (PRODUCT LEVEL)	SEE PAGE
Y	1	1	**169-0753**	1	CYLINDER GP-COUPLER	477
M	2	1	**8T-4183**	4	BOLT (M12X1.75X40-MM)	
	3	1	**8T-4223**	4	WASHER-HARD (13.5X25.5X3-MM THK)	
M	4	1	**095-0707**	1	BOLT (M16X2X120-MM)	
M	5	1	**098-5747**	2	NUT (M16X2-THD)	
	6	1	**9X-8257**	2	WASHER (17.5X30X3.5-MM THK)	
	7	1	**169-0756**	2	SPACER (26.4X42.4X75-MM THK)	
	8	1	**169-0737**	2	SHAFT AS	
	9	1	**169-0738**	2	SPRING	
	10	1	**169-0739**	2	RING	
	11	1	**169-0740**	2	RING	
	12	1	**169-0758**	1	WEDGE	
	13	1	**169-0745**	2	PLATE (LOCK)	
M	14	1	**8T-4141**	2	BOLT (M20X2.5X70-MM)	
M	15	1	**169-2519**	2	BOLT (M24X3X180-MM)	

M-METRIC PART
Y-SEPARATE ILLUSTRATION

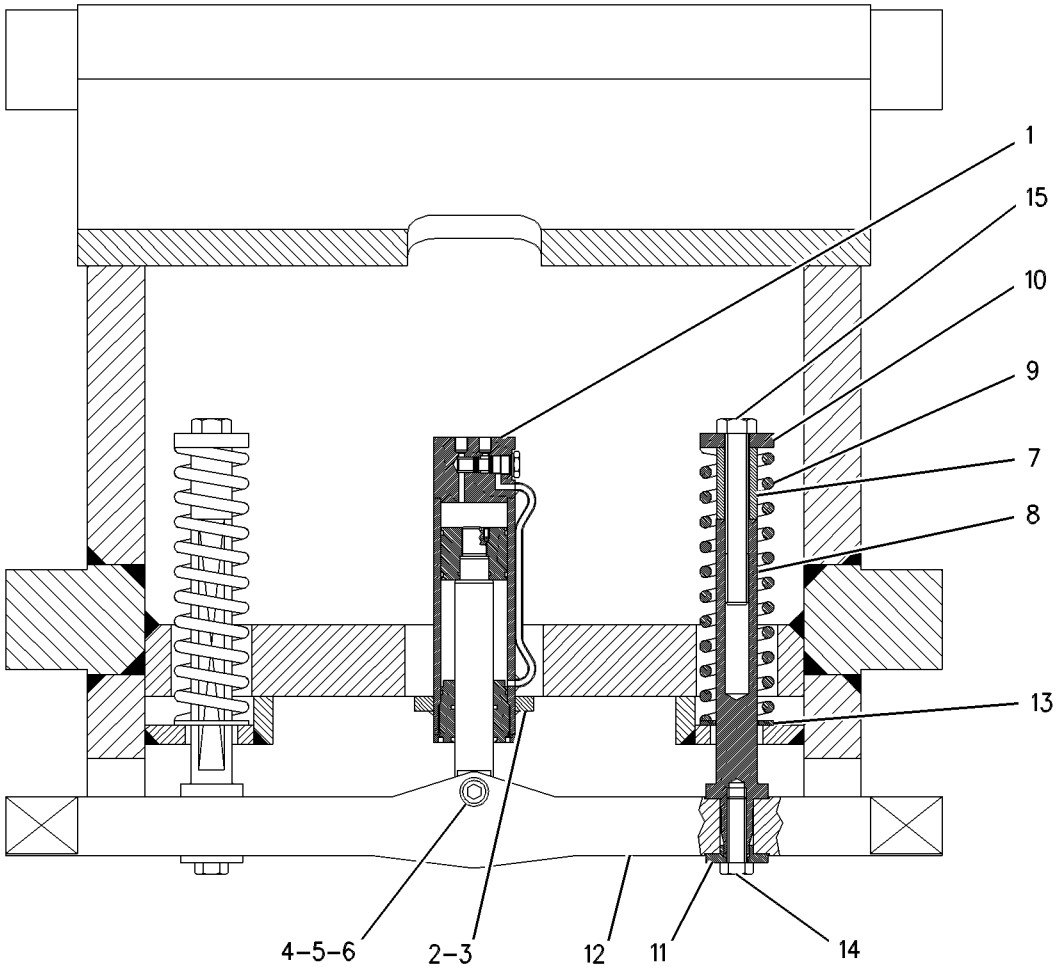

GRAPHIC #1 **<END>** g00554984

WORK TOOLS

246-8124 PIN GP-COUPLER

S/N: JGB1-UP; KHS1-UP
FOR USE WITH TB-LINKAGE
AN ATTACHMENT

SMCS-6129 **i02809225**

NOTE	PART NUMBER	QTY	PART NAME 1 2 3 4 5 6 (PRODUCT LEVEL)	SEE PAGE
M	**8T-5379**	2	BOLT (M24X3X50-MM)	
	235-7636	1	PIN AS	
	235-7642	1	PIN AS	
	271-2898	3	SLEEVE	
	201-2771	2	WASHER (26X90X8-MM THK)	
	8T-4167	2	WASHER-HARD (26X44X4-MM THK)	

M-METRIC PART

<END>

WORK TOOLS

235-5634 YOKE GP-LIFTING

S/N: JGB1-UP; KHS1-UP
PART OF 302-5148 COUPLER AR-QUICK
AN ATTACHMENT

SMCS-6129 **i02984703**

NOTE	REF NO	GRAPHIC REF	PART NUMBER	QTY	PART NAME 1 2 3 4 5 6 (PRODUCT LEVEL)	SEE PAGE
	1	1	**235-5636**	1	PIN AS	
	2	1	**235-5637**	1	LOCKPIN	

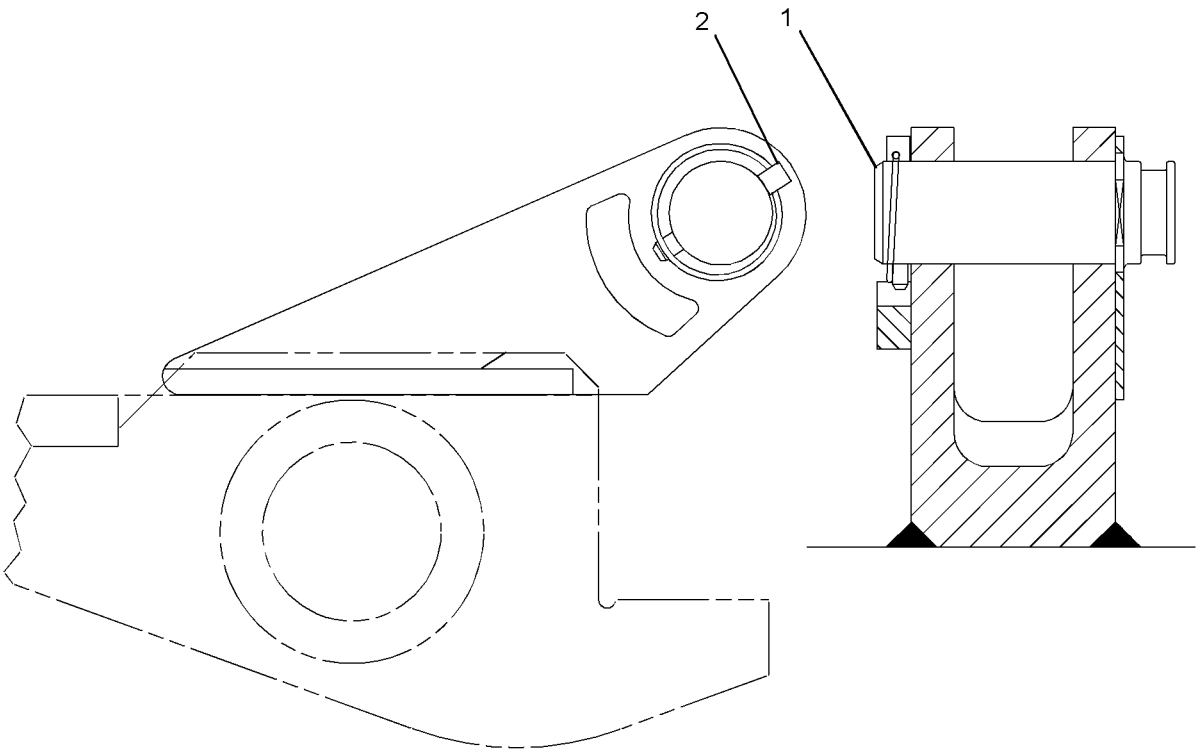

GRAPHIC #1 **<END>** g01173558

OPERATOR STATION

346-8058 ACCESSORY GP-CAB

S/N: JGB1-UP; KHS1-UP

PART OF 356-6716 CAB GP

SMCS-7300 **i03900403**

NOTE	REF NO	GRAPHIC REF	PART NUMBER	QTY	PART NAME 1 2 3 4 5 6 (PRODUCT LEVEL)	SEE PAGE
	1	1	**139-7126**	1	HOLDER	
	2	1	**139-7127**	1	HOLDER	
	3	1	**156-6599**	1	STRIKER	
	4	1	**161-3685**	1	ROD	
	5	1	**161-3697**	1	GUARD	
	6	1	**164-0523**	1	LEVER AS	
	7	1	**164-0527**	1	ROD	
Y	8	1	*164-0528*	1	LEVER GP-CAB DOOR	924
	9	1	**167-7018**	1	COVER AS	
	10	1	**167-7042**	2	SEAL	
	11	1	**171-7426**	1	CABLE AS	
	12	1	*176-1939*	1	LEVER AS	
M		1	**9X-2044**	1	SCREW-TRUSS HEAD (M6X1X16-MM)	
		1	**176-1937**	1	BRACKET AS	
		1	**176-1938**	1	LEVER	
	13	1	**178-5570**	2	GROMMET	
	14	1	**185-8196**	1	GROMMET	
	15	1	**189-2704**	1	SEAL	
M	16	1	**189-2864**	2	SCREW-FLAT HEAD (M8X1.25X30-MM)	
	17	1	**4B-4278**	3	WASHER (10.2X20.5X1.6-MM THK)	
	18	1	**201-4530**	1	BRACKET AS	
	19	1	**205-6295**	1	LATCH AS	
	20	1	**210-5808**	1	SEAL	
	21	1	**235-8912**	1	HANDLE AS	
	22	1	**235-8933**	1	HANDLE AS	
M	23	1	**284-4426**	1	BOLT-WING (M8X1.25X15-MM)	
	24	1	**315-5313**	1	COVER	
Y	25	1	**327-6550**	1	MIRROR GP-REAR VIEW	930
Y	26	1	**346-7375**	1	BRACKET GP-MIRROR	863
	27	1	**9X-8257**	1	WASHER (17.5X30X3.5-MM THK)	
M	28	1	**099-0823**	3	SCREW-MACHINE (M6X1X6-MM)	
E	29	1	**6I-5470**		SEAL (150-CM)	
M	30	1	**105-2169**	2	BOLT AS	
M	31	1	**127-0580**	2	SCREW-FLAT HEAD (M8X1.25X20-MM)	
	32	1	**133-8016**	1	PACKING	
	33	1	**176-1986**	1	LAMP AS-DOME	
		1	**201-4417**	1	LAMP (24-VOLT, 10-WATT) (DOME LIGHT)	
	34	1	**1R-5998**	4	LOCKWASHER	
M	35	1	**3E-8020**	6	SCREW-TRUSS HEAD (M6X1X25-MM)	
M	36	1	**095-0755**	2	SCREW-MACHINE (M4X0.7X12-MM)	
	37	1	**4I-1205**	2	BUMPER	
	38	1	**4I-1206**	2	GUIDE	
	39	1	**4I-3063**	1	SPRING	
	40	1	**4I-3090**	4	SEAL	
M	41	1	**8T-4137**	2	BOLT (M10X1.5X20-MM)	
	42	1	**4I-3144**	2	WASHER-HARD (10.2X22X3.2-MM THK)	
	43	1	**4I-4270**	1	HOLDER-GLASS	
	44	1	**4I-4392**	3	CLIP	
	45	1	**5C-7793**	1	HOOK-COAT	
	46	1	**6V-7636**	4	PIN AS-SPRING	
	47	1	**7X-0578**	2	WASHER-HARD (10.2X32X2.5-MM THK)	
M	48	1	**8T-4133**	5	NUT (M10X1.5-THD)	
M	49	1	**8T-4779**	1	BOLT (M16X2X35-MM)	
M	50	1	**9X-2041**	1	SCREW-TRUSS HEAD (M10X1.5X20-MM)	
M	51	1	**9X-2042**	5	SCREW-TRUSS HEAD (M6X1X12-MM)	
M	52	1	**9X-2044**	5	SCREW-TRUSS HEAD (M6X1X16-MM)	

OPERATOR STATION

346-8058 **ACCESSORY GP-CAB** *(contd.)* **i03900403**

NOTE	REF NO	GRAPHIC REF	PART NUMBER	QTY	PART NAME 1 2 3 4 5 6 (PRODUCT LEVEL)	SEE PAGE
M	53	1	**9X-2045**	2	SCREW-TRUSS HEAD (M6X1X20-MM)	

E-ORDER BY THE CENTIMETER
M-METRIC PART
Y-SEPARATE ILLUSTRATION

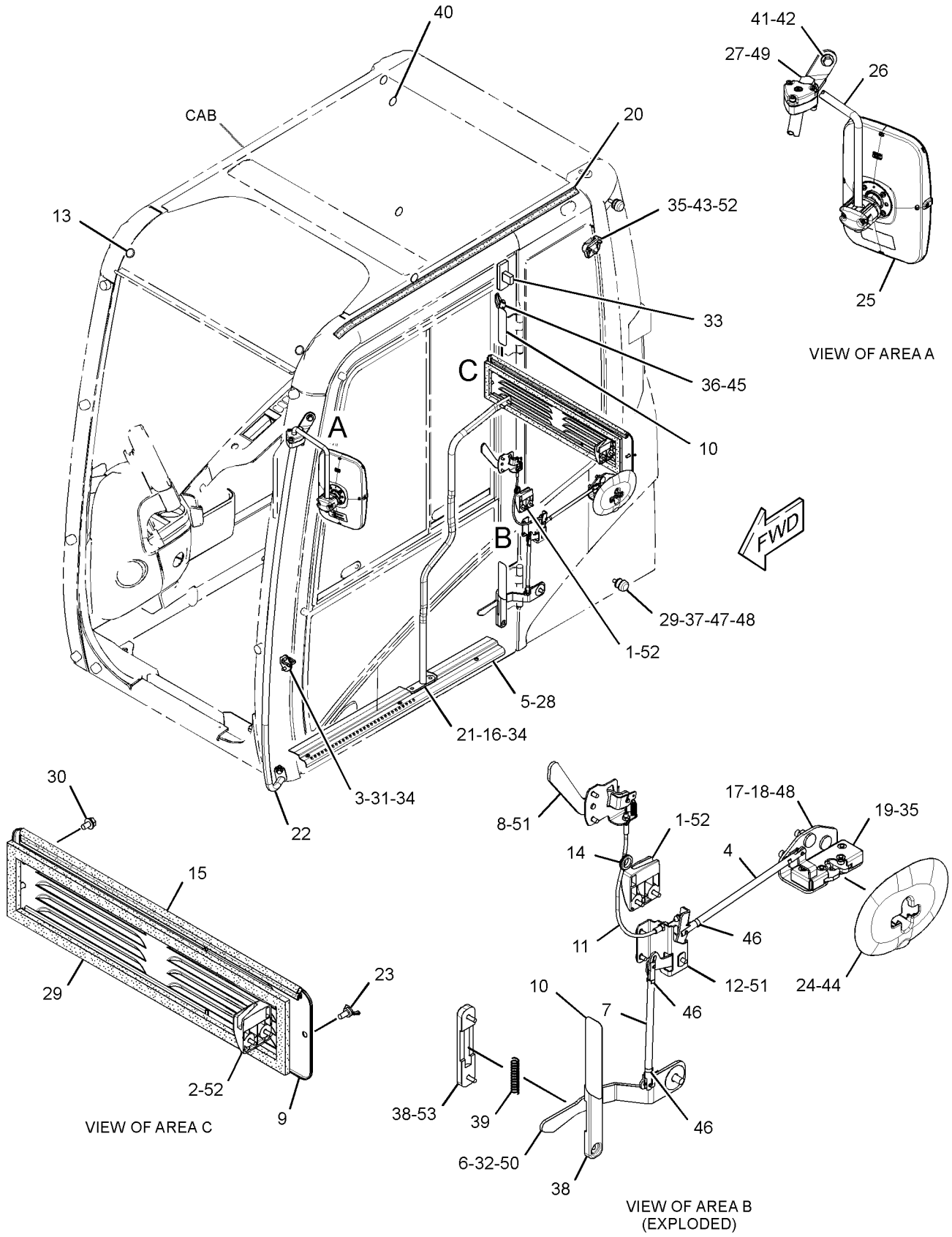

GRAPHIC #1 **<END>** g02132876

OPERATOR STATION

229-9080 AIR CONDITIONER & MOUNTING GP

S/N: JGB1-UP; KHS1-UP

PART OF 229-9079 AIR CONDITIONER AR

SMCS-7320 **i03648700**

NOTE	REF NO	GRAPHIC REF	PART NUMBER	QTY	PART NAME 1 2 3 4 5 6 (PRODUCT LEVEL)	SEE PAGE
	1	1	**293-1136**	1	PANEL AS-CONTROL	
	2	1	**235-8873**	1	HARNESS AS-HEATER & AIR COND (CONTROL PANEL SWITCHES)	
	3	1	**235-8874**	1	SENSOR-TEMPERATURE (AMBIENT AIR)	
	4	1	**235-8875**	1	BRACKET	
	5	1	**235-9006**	1	HARNESS AS-HEATER & AIR COND	
	6	1	**9X-8256**	1	WASHER (6.6X12X2-MM THK)	
M	7	1	**099-2374**	2	BOLT-SOCKET HEAD (M5X0.8X12-MM)	
	8	1	**111-4836**	3	CLIP	
CY	9	1	**316-8917**	1	AIR CONDITIONER GP	859
	10	1	**3S-2093**	2	STRAP-CABLE	
M	11	1	**5C-9553**	1	BOLT (M6X1X16-MM)	
	12	1	**7X-7729**	7	WASHER (11X25X3-MM THK)	
	13	1	**8T-0328**	2	WASHER-HARD (5.5X10X1-MM THK)	
	14	1	**8T-4121**	3	WASHER-HARD (11X21X2.5-MM THK)	
M	15	1	**8T-4136**	7	BOLT (M10X1.5X25-MM)	
M	16	1	**8T-4137**	3	BOLT (M10X1.5X20-MM)	

C-CHANGE FROM PREVIOUS TYPE
M-METRIC PART
Y-SEPARATE ILLUSTRATION

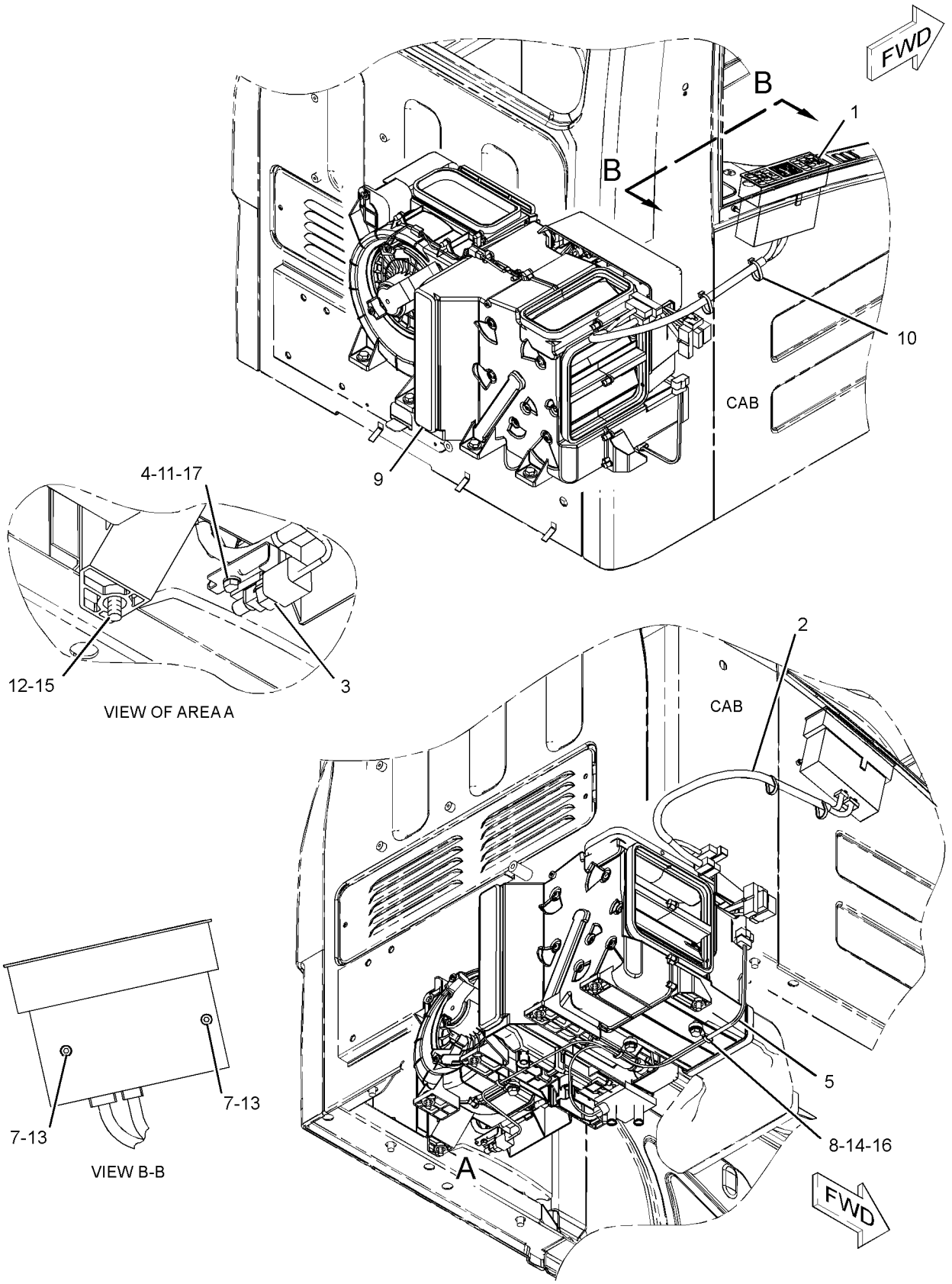

GRAPHIC #1 **<END>** g01435098

OPERATOR STATION

229-9079 AIR CONDITIONER AR

S/N: JGB1-UP; KHS1-UP

PART OF 305-8000 OPERATOR AR

SMCS-7320 **i02159119**

NOTE	PART NUMBER	QTY	PART NAME 1 2 3 4 5 6 (PRODUCT LEVEL)	SEE PAGE
Y	*229-9080*	1	AIR CONDITIONER & MOUNTING GP	856
Y	*229-9082*	1	DUCT GP-CAB AIR	908

Y-SEPARATE ILLUSTRATION

<END>

OPERATOR STATION

316-8917 AIR CONDITIONER GP

S/N: JGB1-UP; KHS1-UP

PART OF 229-9080 AIR CONDITIONER & MOUNTING GP

SMCS-7320 **i03648705**

NOTE	REF NO	GRAPHIC REF	PART NUMBER	QTY	PART NAME 1 2 3 4 5 6 (PRODUCT LEVEL)	SEE PAGE
	1	1	**185-8300**	35	SCREW-TAPPING	
	2	1	**185-8302**	3	SCREW AS-TAPPING	
Y	3	1	**245-7812**	1	HOUSING GP-AIR CONDITIONER (INLET AIR)	920
	4	1	**245-7817**	2	MOTOR AS	
	5	1	**245-7818**	3	CLIP	
	6	1	**245-7819**	2	CLIP	
	7	1	**245-7820**	1	COVER-FRONT	
	8	1	**245-7821**	1	HARNESS AS-HEATER & AIR COND	
	9	1	**245-7825**	1	INSULATOR	
	10	1	**245-7826**	1	INSULATOR	
	11	1	**245-7827**	1	INSULATOR	
	12	1	**245-7828**	1	INSULATOR	
	13	1	**245-7829**	1	PACKING	
	14	1	**245-7830**	1	CLIP	
	15	1	**245-7831**	1	SENSOR AS-TEMPERATURE (COOLANT)	
	16	1	**245-7832**	1	CONTROL AS	
	17	1	**245-7833**	1	CORE AS-HEATER	
	18	1	**245-7834**	1	DAMPER AS	
	19	1	**245-7835**	1	SENSOR AS-TEMPERATURE (AMBIENT AIR)	
Y	20	1	**245-7836**	1	COIL GP-EVAPORATOR	869
	21	1	**245-7838**	1	PACKING	
	22	1	**245-7839**	1	MOTOR AS (WITH FAN)	
	23	1	**245-7856**	3	SCREW AS-TAPPING	
	24	1	**293-1137**	1	FILTER GP-AIR (AIR CONDITIONER)	
		1	**245-7823**	1	FILTER ELEMENT-CAB AIR	
		1	**245-7824**	1	PACKING	
	25	1	**316-8846**	1	PLATE	
	26	1	**316-8847**	2	ROD	
	27	1	**316-8849**	1	ROD	
	28	1	**316-8918**	1	PLATE	
	29	1	**316-8920**	1	ROD	
	30	1	**316-8921**	1	ROD	

Y-SEPARATE ILLUSTRATION

316-8917 AIR CONDITIONER GP *(contd.)* i03648705

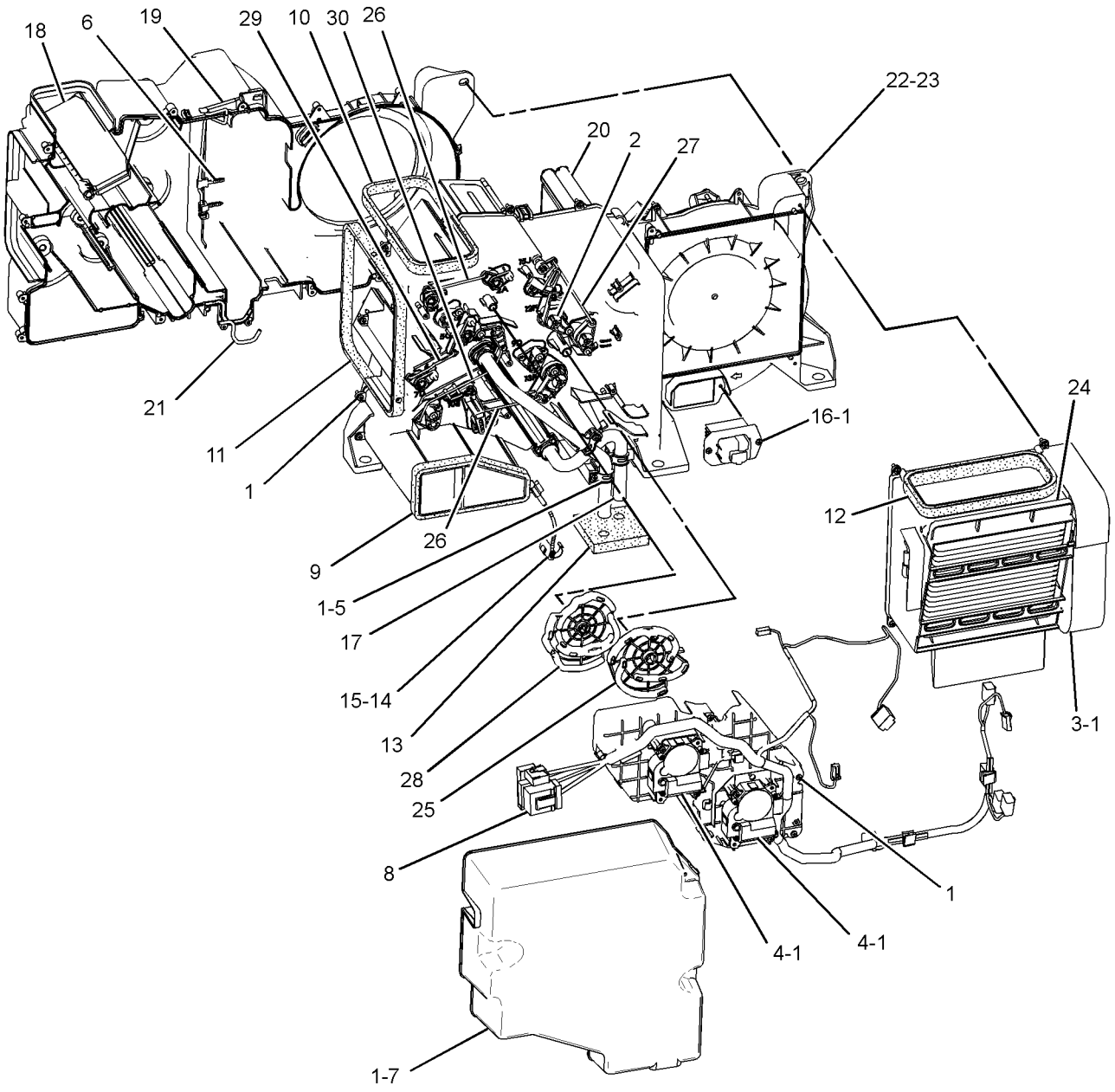

FRONT VIEW
(UPPER RIGHT)

GRAPHIC #1 **<END>** g01684535

OPERATOR STATION

259-7346 ARMREST GP–RH

S/N: JGB1-UP; KHS1-UP

PART OF 259-7348 CONSOLE GP-OPERATOR

SMCS-7307 **i02488250**

NOTE	REF NO	GRAPHIC REF	PART NUMBER	QTY	PART NAME 1 2 3 4 5 6 (PRODUCT LEVEL)	SEE PAGE
M	1	1	**171-7325**	3	SCREW-TAPPING (M5X0.8-THD)	
M	2	1	**185-8286**	2	SCREW-MACHINE (M4X0.7X8-MM)	
	3	1	**235-8951**	1	SUPPORT AS	
	4	1	**235-8996**	1	COVER	
	5	1	**235-8997**	1	KNOB	
	6	1	**279-3161**	1	CUSHION	

M-METRIC PART

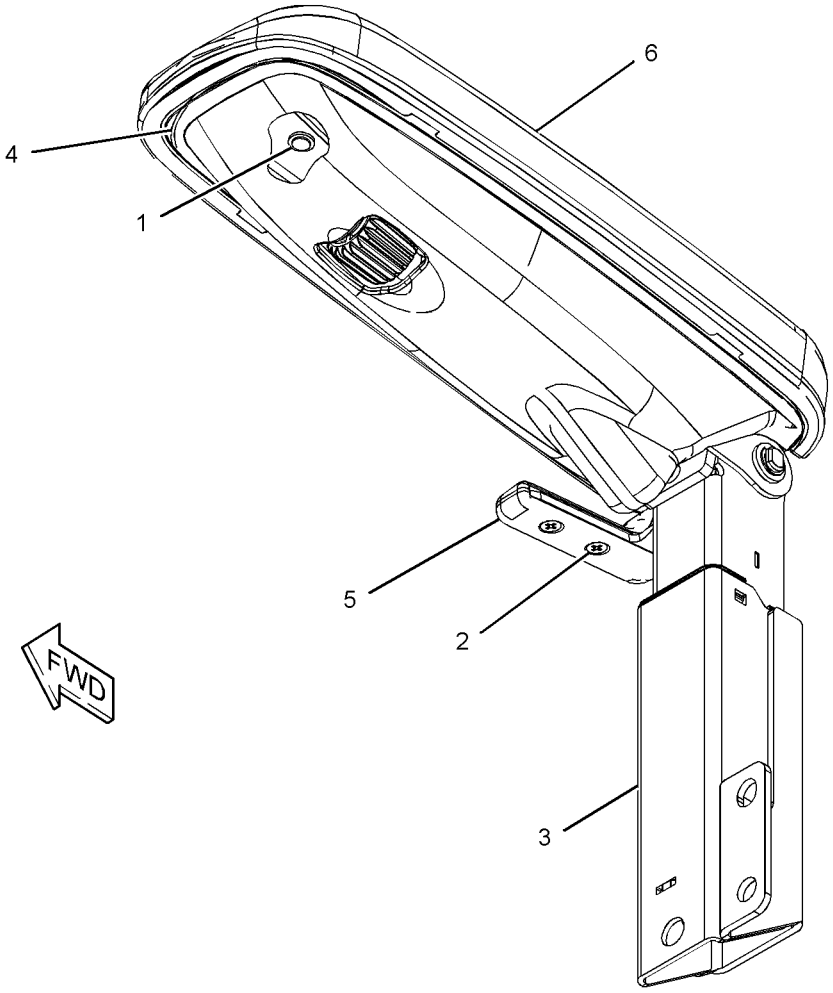

GRAPHIC #1 **<END>** g01217218

OPERATOR STATION

259-7347 ARMREST GP–LH

S/N: JGB1-UP; KHS1-UP

PART OF 259-7349 CONSOLE GP-OPERATOR

SMCS-7307 **i02474510**

NOTE	REF NO	GRAPHIC REF	PART NUMBER	QTY	PART NAME 1 2 3 4 5 6 (PRODUCT LEVEL)	SEE PAGE
M	1	1	**171-7325**	3	SCREW-TAPPING (M5X0.8-THD)	
M	2	1	**185-8286**	2	SCREW-MACHINE (M4X0.7X8-MM)	
	3	1	**235-8952**	1	SUPPORT AS	
	4	1	**235-8996**	1	COVER	
	5	1	**235-8998**	1	KNOB	
	6	1	**259-7345**	1	CUSHION	

M-METRIC PART

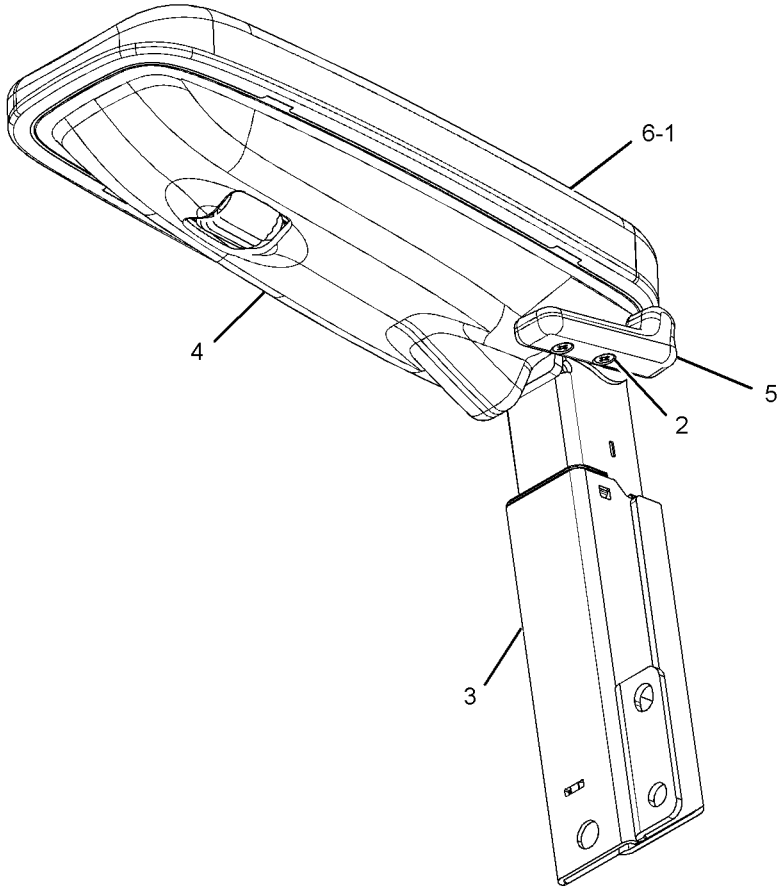

GRAPHIC #1 **<END>** g01210886

OPERATOR STATION

346-7375 BRACKET GP-MIRROR

S/N: JGB1-UP; KHS1-UP

PART OF 346-8058 ACCESSORY GP-CAB

SMCS-7319 **i03810934**

NOTE	REF NO	GRAPHIC REF	PART NUMBER	QTY	PART NAME 1 2 3 4 5 6 (PRODUCT LEVEL)	SEE PAGE
	1	1	**2U-2552**	5	LOCKWASHER	
M	2	1	**6V-5683**	3	BOLT (M6X1X16-MM)	
M	3	1	**9X-6153**	2	BOLT (M6X1X10-MM)	
					PARTS SHOWN IN GRAPHIC(S) WITHOUT A REFERENCE NUMBER ARE NOT SERVICED SEPARATELY	

M-METRIC PART

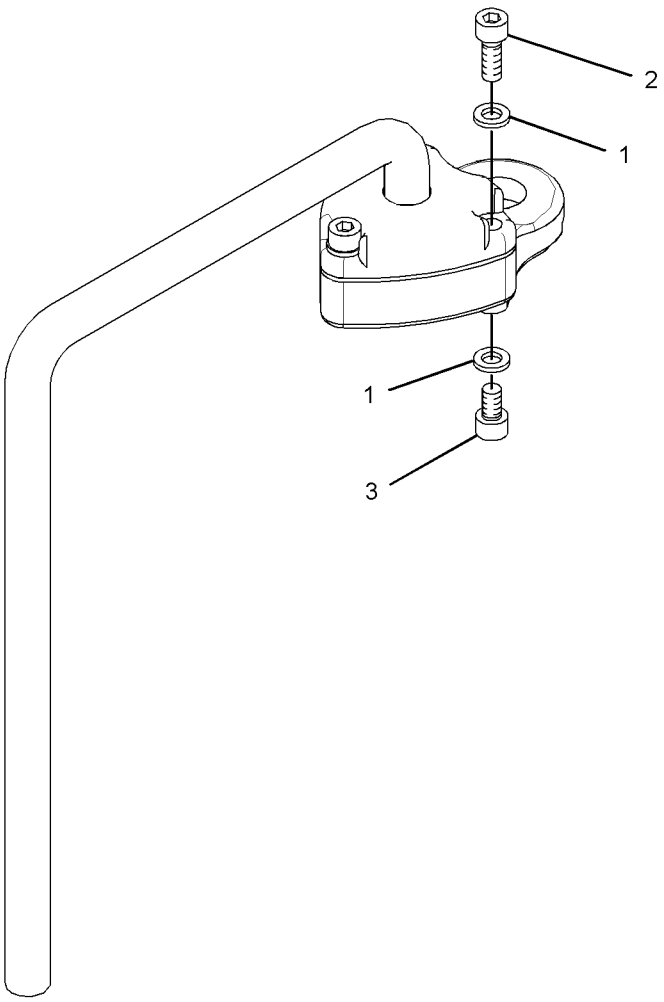

GRAPHIC #1 **<END>** g01962144

OPERATOR STATION

235-8908 CAB GP—INTERIOR

S/N: JGB1-UP; KHS1-UP

PART OF 356-6716 CAB GP

SMCS-7301, 7325 **i02663076**

NOTE	REF NO	GRAPHIC REF	PART NUMBER	QTY	PART NAME 1 2 3 4 5 6 (PRODUCT LEVEL)	SEE PAGE
	1	1	**8Y-6352**	1	LOUVER AS	
	2	1	**156-6656**	1	RAIL	
	3	1	**156-6657**	1	RAIL	
	4	1	**164-0646**	1	CUP	
	5	1	**164-0655**	1	PANEL-SWITCH (OPERATOR CONSOLE)	
	6	1	**164-8474**	2	LOUVER AS-VENT	
	7	1	**170-9724**	5	CLIP	
	8	1	**171-7420**	6	CLIP	
	9	1	**176-1946**	1	PLATE	
	10	1	**176-1947**	1	PLATE	
	11	1	**176-1972**	1	COVER	
	12	1	**185-8214**	1	BRACKET AS	
	13	1	**189-2678**	3	SPACER	
	14	1	**234-6468**	1	COVER AS	
		1	**259-7353**	4	CLIP	
	15	1	**234-6470**	1	COVER-MONITOR	
	16	1	**234-6471**	1	COVER-DUCT	
	17	1	**234-6472**	1	COVER (FRONT LOWER, RH)	
	18	1	**234-6473**	1	COVER-FRONT (UPPER, RH)	
	19	1	**234-6474**	1	COVER (UPPER, RH)	
	20	1	**234-6475**	1	COVER (LOWER, RH)	
	21	1	**234-6476**	1	DUCT	
	22	1	**234-6477**	1	BRACKET AS	
	23	1	**234-6478**	1	BRACKET AS	
	24	1	**234-6480**	1	BRACKET AS	
	25	1	**234-6483**	1	BRACKET AS	
	26	1	**234-6485**	1	BRACKET AS	
	27	1	**234-6490**	1	CUP	
	28	1	**156-6573**	1	COVER	
	29	1	**234-6497**	1	COVER	
	30	1	**234-6498**	3	RIVET	
	31	1	**234-6521**	1	COVER	
	32	1	**234-6547**	1	COVER	
	33	1	**234-6548**	1	COVER	
	34	1	**156-6575**	1	COVER	
	35	1	**234-6550**	1	COVER	
	36	1	**234-6579**	2	NUT-SPEED	
	37	1	**235-8922**	1	COVER	
	38	1	**235-8923**	2	CAP	
	39	1	**297-4823**	1	VISOR	
	40	1	**235-8928**	1	LINER	
	41	1	**235-8929**	2	HANDLE	
	42	1	**185-8205**	5	CLIP	
	43	1	**235-8950**	12	CLIP	
	44	1	**245-7790**	2	SCREW-TAPPING	
M	45	1	**128-2135**	13	SCREW-TRUSS HEAD (M6X1X13-MM)	
M	46	1	**128-2136**	1	SCREW-TRUSS HEAD (M6X1X16-MM)	
	47	1	**189-2855**	1	COVER	
	48	1	**234-6469**	1	COVER	
M	49	1	**9X-2042**	23	SCREW-TRUSS HEAD (M6X1X12-MM)	
M	50	1	**9X-2044**	8	SCREW-TRUSS HEAD (M6X1X16-MM)	
	51	1	**231-2294**	1	BRACKET	

M-METRIC PART

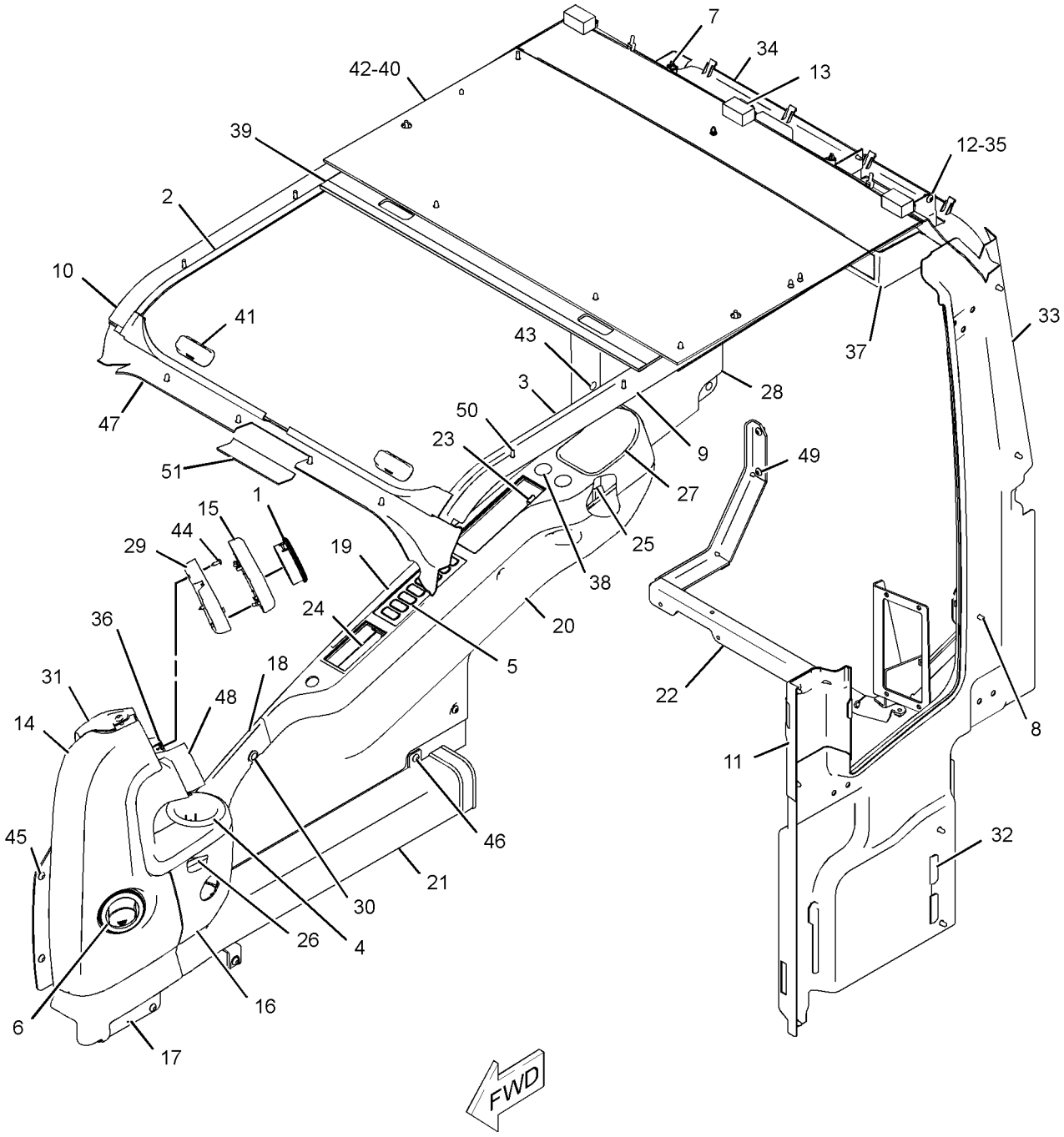

GRAPHIC #1 **<END>** g01241062

OPERATOR STATION

305-8001 CAB GP

S/N: JGB1-UP; KHS1-UP

PART OF 305-8000 OPERATOR AR

SMCS-7301, 7325 **i03900466**

NOTE	REF NO	GRAPHIC REF	PART NUMBER	QTY	PART NAME 1 2 3 4 5 6 (PRODUCT LEVEL)	SEE PAGE
M	1	1	**128-2135**	5	SCREW-TRUSS HEAD (M6X1X13-MM)	
	2	1	**164-8474**	2	LOUVER AS-VENT	
Y	3	1	**356-6716**	1	CAB GP	868
Y	4	1	**234-6501**	1	COVER GP-CAB (REAR)	904
	5	1	**235-9001**	1	SUPPORT	
M	6	1	**8T-4179**	5	BOLT (M12X1.75X20-MM)	
	7	1	**234-6500**	1	COVER GP-STORAGE (CAB, REAR)	
	8	1	**8T-4223**	13	WASHER-HARD (13.5X25.5X3-MM THK)	
M	9	1	**8T-4910**	6	BOLT (M12X1.75X60-MM)	
M	10	1	**8T-6868**	2	BOLT (M12X1.75X80-MM)	
	11	1	**8Y-6967**	2	LOUVER AS-VENT	

M-METRIC PART
Y-SEPARATE ILLUSTRATION

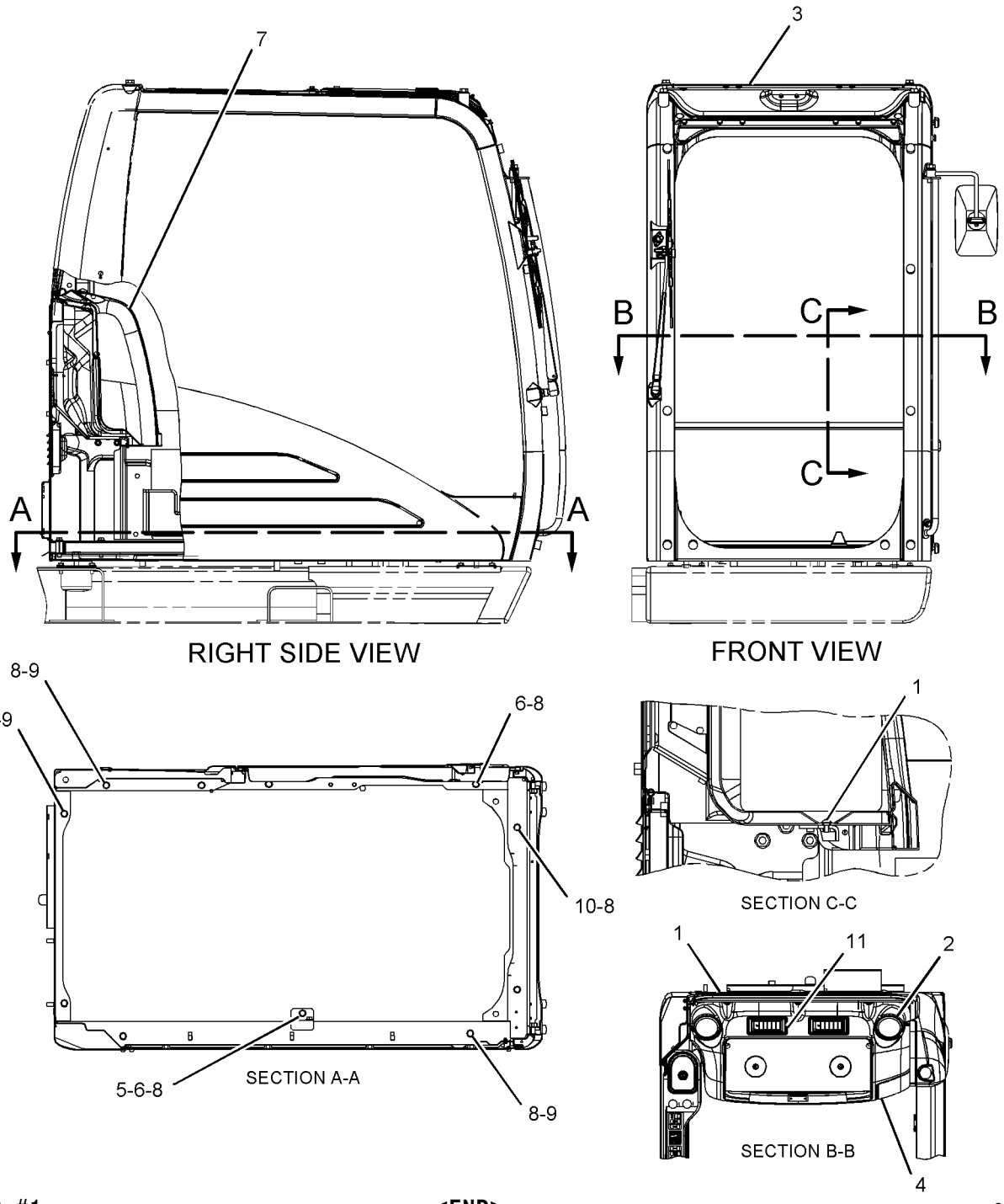

GRAPHIC #1 **<END>** g01098648

OPERATOR STATION

356-6716 CAB GP

S/N: JGB1-UP; KHS1-UP

PART OF 305-8001 CAB GP

SMCS-7301, 7325 **i03900672**

NOTE	PART NUMBER	QTY	PART NAME 1 2 3 4 5 6 (PRODUCT LEVEL)	SEE PAGE
Y	*346-8058*	1	ACCESSORY GP-CAB	853
Y	*235-8908*	1	CAB GP (INTERIOR)	864
Y	*267-3839*	1	CONTROL GP-HEAT & AIR COND	894
Y	**356-6801**	1	DOOR GP-CAB	907
Y	*139-7099*	1	HATCH GP-ROOF	917
Y	*163-6772*	1	LIGHTING GP-FLOOD (CAB)	194
Y	*221-8813*	1	MONITOR & MTG GP-OPERATOR	931
Y	*238-2208*	1	SWITCH GP-WIPER (LOWER)	254
Y	*139-7101*	1	WINDOW GP-CAB (FRONT, UPPER)	962
Y	*227-5343*	1	WINDOW GP-CAB (FRONT, LOWER)	966
Y	*235-8909*	1	WINDOW GP-CAB (SIDE, REAR)	967
Y	*234-6594*	1	WIPER GP-WINDOW (FRONT, UPPER)	970
Y	*291-7767*	1	WIRING GP-CAB	262

Y-SEPARATE ILLUSTRATION

<END>

OPERATOR STATION

245-7836 COIL GP-EVAPORATOR

S/N: JGB1-UP; KHS1-UP

PART OF 316-8917 AIR CONDITIONER GP

SMCS-7343 **i02218157**

NOTE	REF NO	GRAPHIC REF	PART NUMBER	QTY	PART NAME 1 2 3 4 5 6 (PRODUCT LEVEL)	SEE PAGE
	1	1	**245-7837**	1	VALVE AS-EXPANSION	
	2	1	**245-7905**	1	INSULATOR	
M	3	1	**8T-0266**	2	BOLT-SOCKET HEAD (M5X0.8X40-MM)	
	4	1	**121-7136**	1	SEAL-O-RING	
	5	1	**121-7138**	1	SEAL-O-RING	

M-METRIC PART

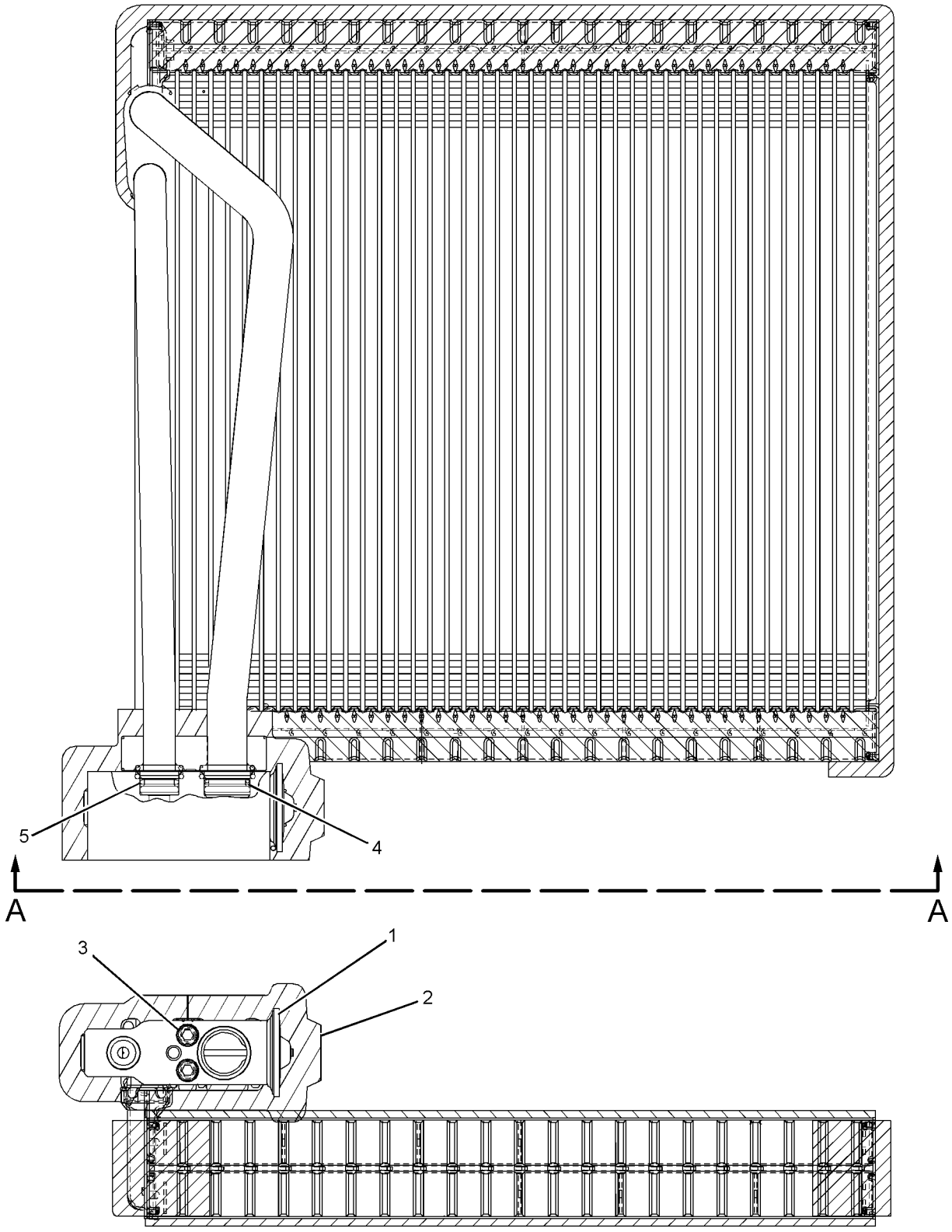

VIEW A-A

GRAPHIC #1 **<END>** g01134658

OPERATOR STATION

276-2403 COMPRESSOR GP-REFRIGERANT

S/N: TXF1-UP; MHX7634-UP

PART OF 291-9259 ENGINE AR-COMPLETE

SMCS-1802 **i03463844**

NOTE	REF NO	GRAPHIC REF	PART NUMBER	QTY	PART NAME 1 2 3 4 5 6 (PRODUCT LEVEL)	SEE PAGE
M	1	1	**258-9892**	2	BOLT (M8X1.25X80-MM)	
	2	1	**305-0325**	1	COMPRESSOR GP-REFRIGERANT	
	3	1	**8T-4224**	4	WASHER-HARD (8.8X16X2-MM THK)	
M	4	1	**8T-3647**	2	BOLT (M8X1.25X80-MM)	
	5	1	**130-5300**	1	CLIP	

M-METRIC PART

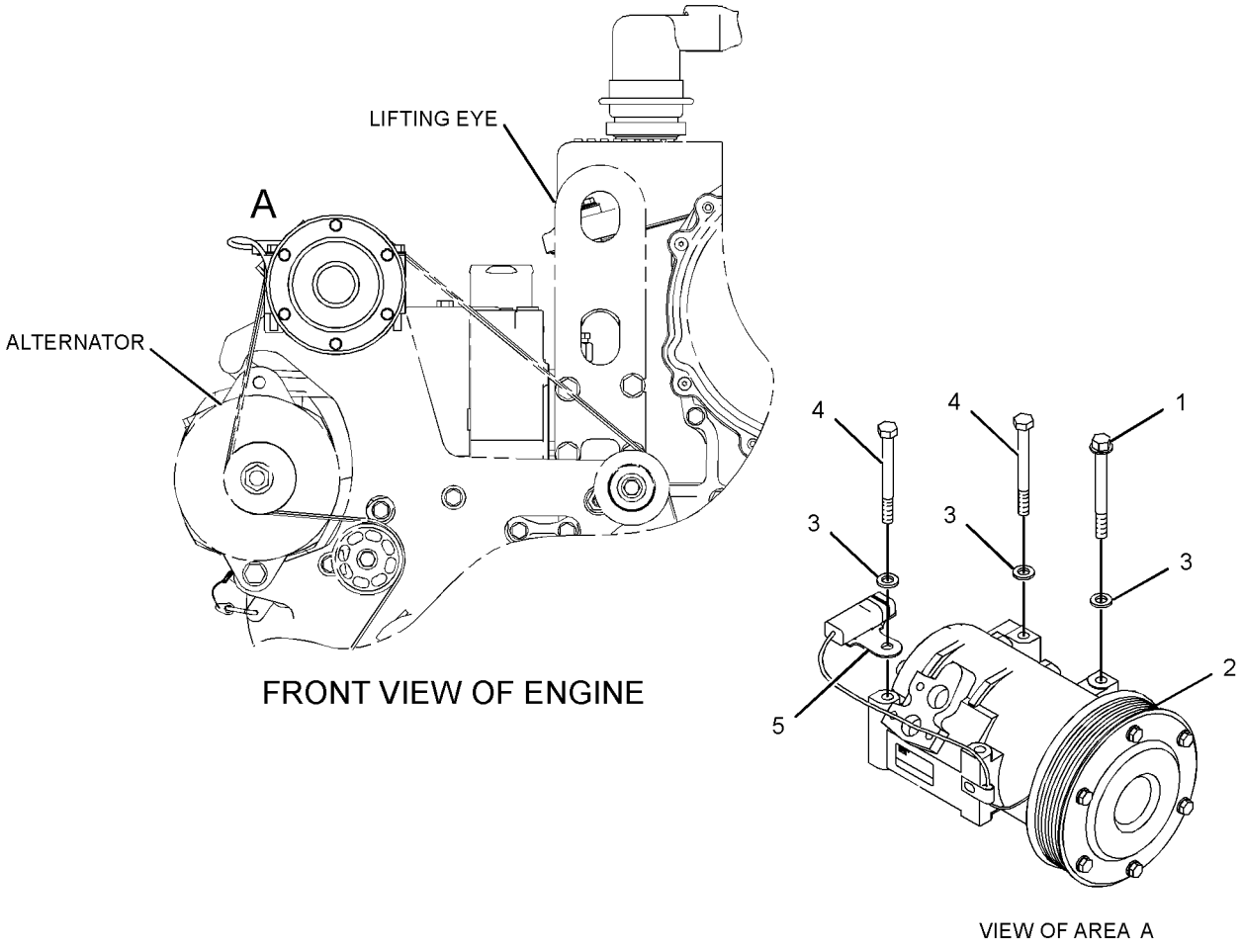

FRONT VIEW OF ENGINE

VIEW OF AREA A

GRAPHIC #1 **<END>** g01407828

OPERATOR STATION

245-7786 CONDENSER & MTG GP-REFRIGERANT

S/N: JGB1-UP; KHS1-UP

PART OF 297-7686 INSTALLATION AR-ENGINE

SMCS-1805 **i03633092**

NOTE	REF NO	GRAPHIC REF	PART NUMBER	QTY	PART NAME 1 2 3 4 5 6 (PRODUCT LEVEL)	SEE PAGE
CY	1	1	**334-6570**	1	CONDENSER GP-REFRIGERANT	873
	2	1	**245-7919**	1	COVER AS	
	3	1	**8T-4121**	8	WASHER-HARD (11X21X2.5-MM THK)	
M	4	1	**8T-4137**	8	BOLT (M10X1.5X20-MM)	

C-CHANGE FROM PREVIOUS TYPE
M-METRIC PART
Y-SEPARATE ILLUSTRATION

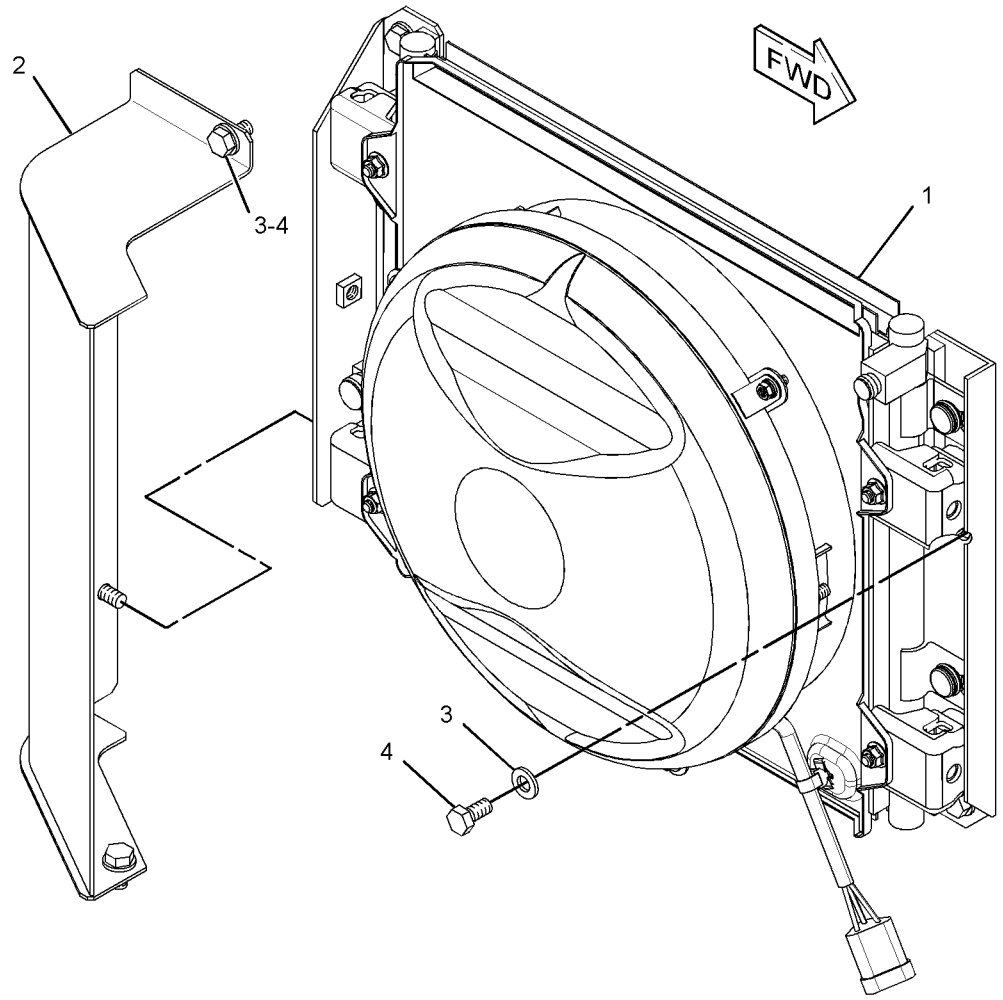

GRAPHIC #1 **<END>** g01949606

OPERATOR STATION

334-6570 CONDENSER GP-REFRIGERANT

S/N: JGB1-UP; KHS1-UP

PART OF 245-7786 CONDENSER & MTG GP-REFRIGERANT

SMCS-1805 **i03633118**

NOTE	REF NO	GRAPHIC REF	PART NUMBER	QTY	PART NAME 1 2 3 4 5 6 (PRODUCT LEVEL)	SEE PAGE
M	1	1	**164-0500**	4	NUT-FLANGE (M8X1.25-THD)	
M	2	1	**227-6846**	8	BOLT AS	
	3	1	**245-7866**	1	CONDENSER AS	
	4	1	**245-7867**	1	HARNESS AS-WIRING (CONDENSER FAN MOTOR)	
		1	**9W-0852**	3	PIN-CONNECTOR (14-GA TO 16-GA)	
		1	**102-8803**	1	KIT-RECEPTACLE (3-PIN)	
					(INCLUDES RECEPTACLE AS & WEDGE)	
	5	1	**245-7868**	4	BUSHING AS	
	6	1	**245-7869**	2	PACKING-RUBBER	
	7	1	**245-7870**	1	STRAP-CABLE	
M	8	1	**245-7871**	4	NUT-FLANGE (M6X1-THD)	
M	9	1	**245-7876**	3	BOLT AS	
	10	1	**245-7904**	2	PACKING-RUBBER	
	11	1	**245-7906**	2	PACKING-RUBBER	
Y	12	1	**336-1157**	1	FAN GP-CONDENSER	909

M-METRIC PART
Y-SEPARATE ILLUSTRATION

334-6570 CONDENSER GP-REFRIGERANT *(contd.)* i03633118

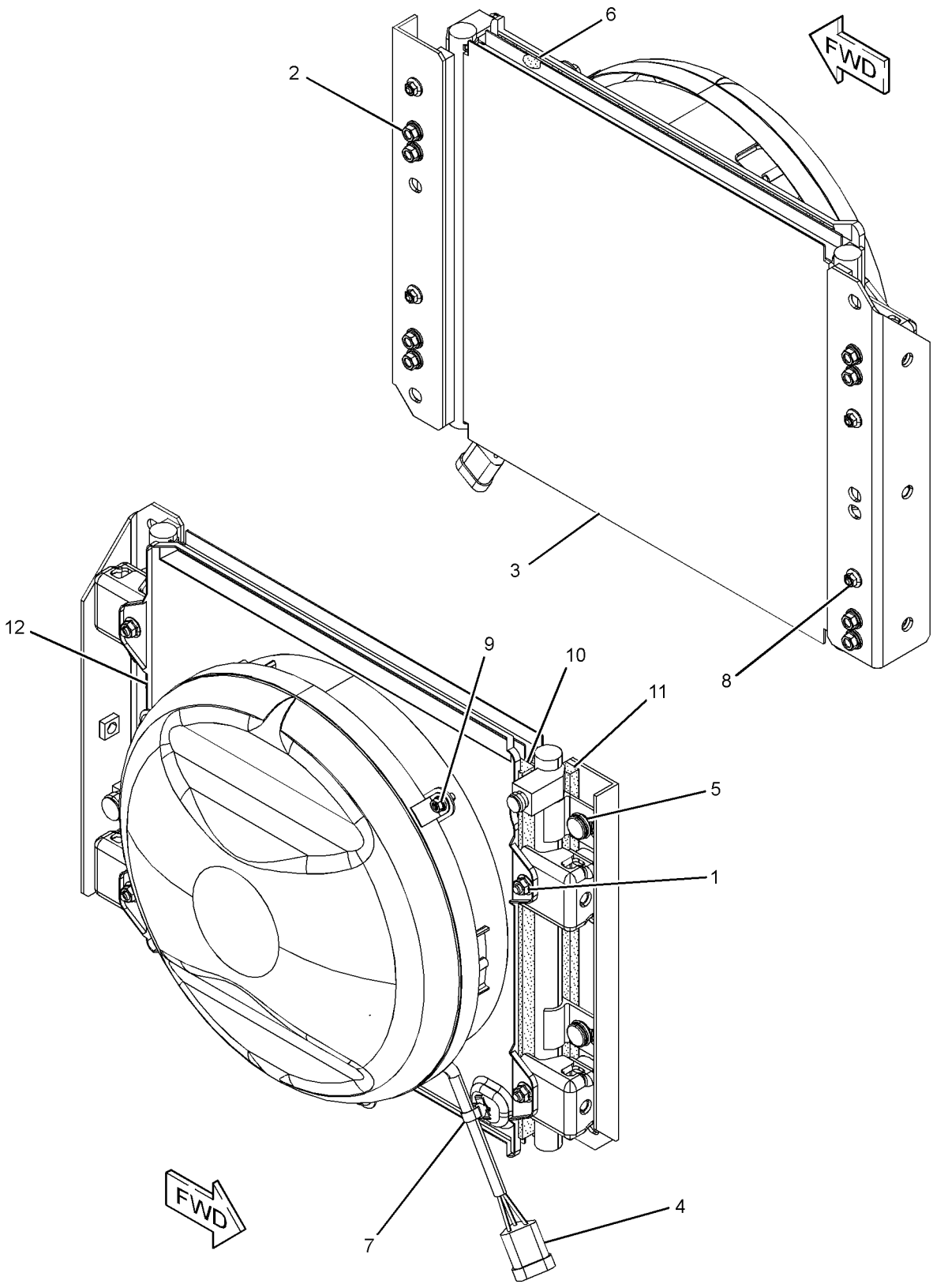

GRAPHIC #1 **<END>** g01752577

OPERATOR STATION

245-7922 CONSOLE GP-OPERATOR

S/N: JGB1-UP; KHS1-UP

PART OF 305-8000 OPERATOR AR

SMCS-5258 **i04013174**

NOTE	REF NO	GRAPHIC REF	PART NUMBER	QTY	PART NAME 1 2 3 4 5 6 (PRODUCT LEVEL)	SEE PAGE
	1	1	**176-1916**	2	GROMMET	
	2	1	**178-5422**	2	GROMMET	
	3	1	**178-5423**	2	GROMMET	
	4	1	**185-8161**	2	INSULATOR	
	5	1	**235-8893**	2	SUPPORT	
	6	1	**235-8894**	2	SUPPORT	
Y	7	1	*259-7349*	1	CONSOLE GP-OPERATOR (LH)	879
Y	8	1	*259-7348*	1	CONSOLE GP-OPERATOR (RH)	877
	9	1	**8T-4121**	4	WASHER-HARD (11X21X2.5-MM THK)	
M	10	1	**8T-4195**	4	BOLT (M10X1.5X30-MM)	
CM	11	1	**9X-2046**	8	SCREW-TRUSS HEAD (M6X1X35-MM)	
CM	12	1	**9X-2045**	12	SCREW-TRUSS HEAD (M6X1X20-MM)	
	13	1	**7K-1181**	4	STRAP-CABLE	
	14	1	**122-9617**	2	GUARD	

C-CHANGE FROM PREVIOUS TYPE
M-METRIC PART
Y-SEPARATE ILLUSTRATION

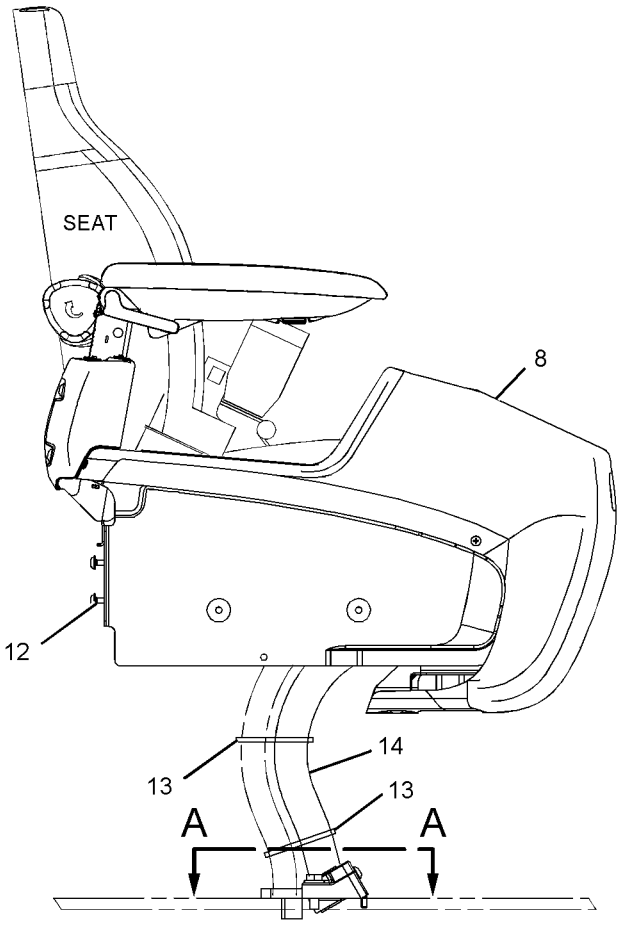

RIGHT SIDE VIEW

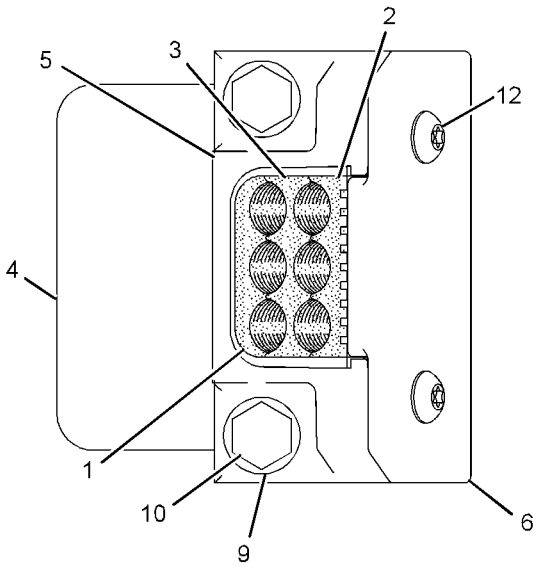

SECTION A-A

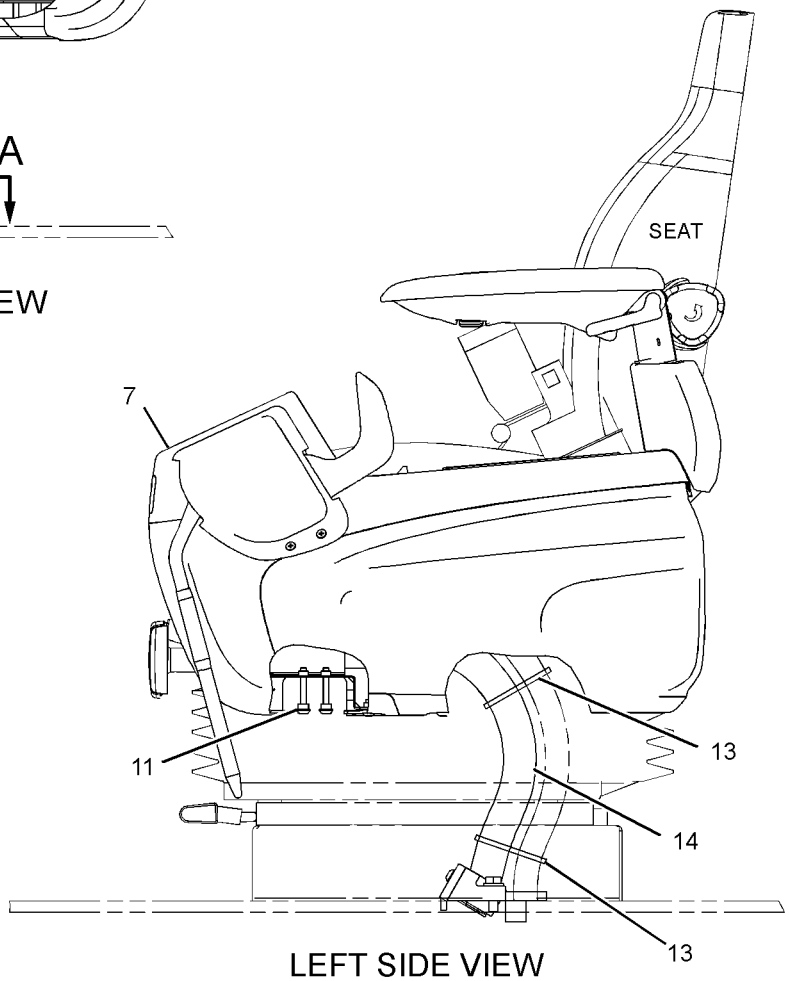

LEFT SIDE VIEW

GRAPHIC #1 **<END>** g01844714

OPERATOR STATION

259-7348 CONSOLE GP-OPERATOR—RH

S/N: JGB1-UP; KHS1-UP

PART OF 245-7922 CONSOLE GP-OPERATOR

SMCS-5258 **i02474320**

NOTE	REF NO	GRAPHIC REF	PART NUMBER	QTY	PART NAME 1 2 3 4 5 6 (PRODUCT LEVEL)	SEE PAGE
M	1	1	**128-2135**	4	SCREW-TRUSS HEAD (M6X1X13-MM)	
	2	1	**185-8284**	1	COVER	
	3	1	**234-6579**	2	NUT-SPEED	
	4	1	**234-6580**	2	CAP	
	5	1	**234-6602**	1	COVER	
	6	1	**234-6604**	1	COVER	
	7	1	**234-6608**	1	COVER	
	8	1	**234-6609**	1	COVER	
	9	1	**234-6610**	1	COVER	
	10	1	**235-8914**	4	NUT-SPEED	
	11	1	**235-8966**	2	BASE-MOUNTING	
	12	1	**245-7790**	2	SCREW-TAPPING	
	13	1	**245-7926**	1	SUPPORT AS	
	14	1	**245-7948**	4	SCREW-TAPPING	
Y	15	1	**259-7346**	1	ARMREST GP (RH)	861
M	16	1	**9X-2041**	3	SCREW-TRUSS HEAD (M10X1.5X20-MM)	

M-METRIC PART
Y-SEPARATE ILLUSTRATION

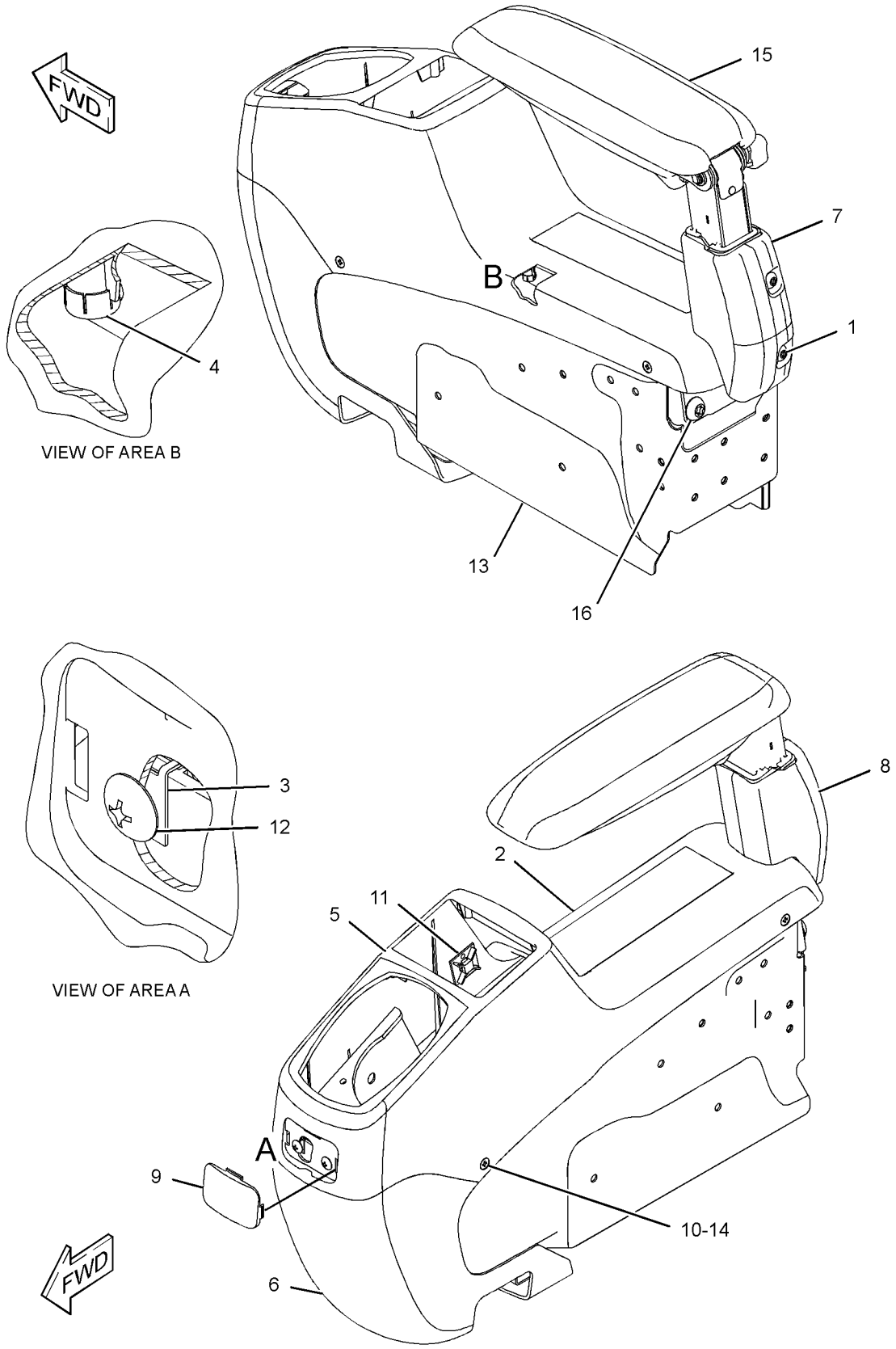

GRAPHIC #1 **<END>** g01217107

OPERATOR STATION

259-7349 CONSOLE GP-OPERATOR—LH

S/N: JGB1-UP; KHS1-UP

PART OF 245-7922 CONSOLE GP-OPERATOR

SMCS-5258 **i02474300**

NOTE	REF NO	GRAPHIC REF	PART NUMBER	QTY	PART NAME 1 2 3 4 5 6 (PRODUCT LEVEL)	SEE PAGE
M	1	1	**128-2135**	5	SCREW-TRUSS HEAD (M6X1X13-MM)	
M	2	1	**171-7325**	3	SCREW-TAPPING (M5X0.8-THD)	
	3	1	**234-6579**	6	NUT-SPEED	
	4	1	**234-6580**	4	CAP	
	5	1	**234-6603**	1	COVER	
	6	1	**234-6605**	1	COVER	
	7	1	**234-6608**	1	COVER	
	8	1	**234-6609**	1	COVER	
	9	1	**234-6610**	1	COVER	
	10	1	**234-6611**	1	CASE	
	11	1	**234-6612**	1	COVER	
Y	12	1	**234-6613**	1	SWITCH GP-POSITION (HYDRAULIC LOCKOUT)	248
	13	1	**234-6614**	1	COVER	
	14	1	**235-8914**	4	NUT-SPEED	
	15	1	**235-8965**	1	GUARD	
	16	1	**245-7790**	3	SCREW-TAPPING	
	17	1	**245-7925**	1	SUPPORT AS	
	18	1	**245-7948**	7	SCREW-TAPPING	
	19	1	**259-7202**	1	ASHTRAY	
Y	20	1	**259-7347**	1	ARMREST GP (LH)	862
M	21	1	**9X-2041**	3	SCREW-TRUSS HEAD (M10X1.5X20-MM)	
M	22	1	**9X-2042**	2	SCREW-TRUSS HEAD (M6X1X12-MM)	

M-METRIC PART
Y-SEPARATE ILLUSTRATION

259-7349 **CONSOLE GP-OPERATOR** *(contd.)* **i02474300**

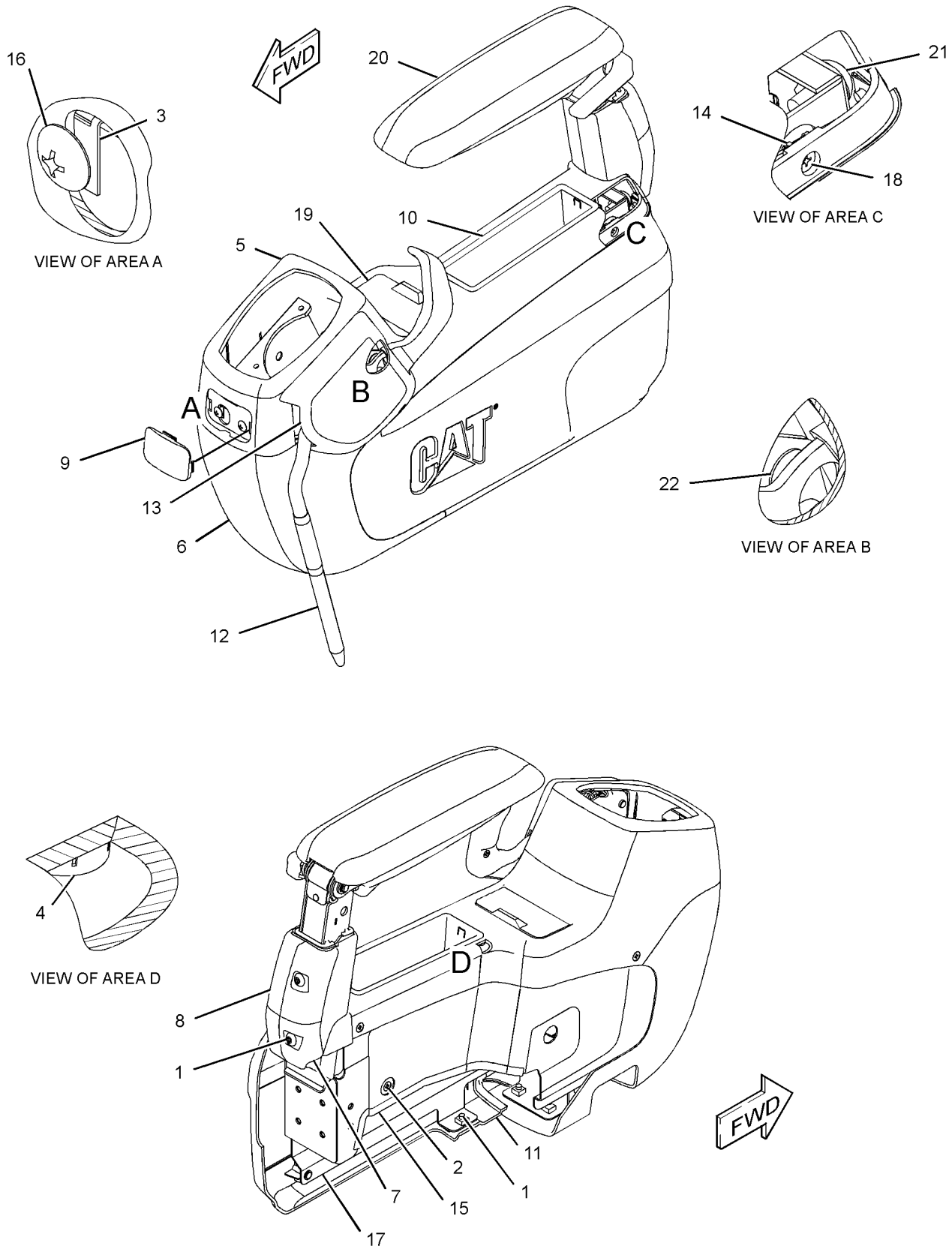

GRAPHIC #1 **<END>** g01217096

OPERATOR STATION

259-7598 CONTROL & MTG GP-JOYSTICK–
WITH SLIDE CONTROL
S/N: JGB1-UP; KHS1-UP
PART OF 255-5843 CONTROL AR-AUXILIARY
AN ATTACHMENT

SMCS-5063, 5705 **i03345040**

NOTE	REF NO	GRAPHIC REF	PART NUMBER	QTY	PART NAME 1 2 3 4 5 6 (PRODUCT LEVEL)	SEE PAGE
CY	1	1	**297-0535**	1	CONTROL GP-JOYSTICK (LH)	899
CY	2	1	**297-0534**	1	CONTROL GP-JOYSTICK (RH)	898
M	3	1	**6V-7357**	6	BOLT (M6X1X25-MM)	
	4	1	**9X-8256**	6	WASHER (6.6X12X2-MM THK)	

C-CHANGE FROM PREVIOUS TYPE
M-METRIC PART
Y-SEPARATE ILLUSTRATION

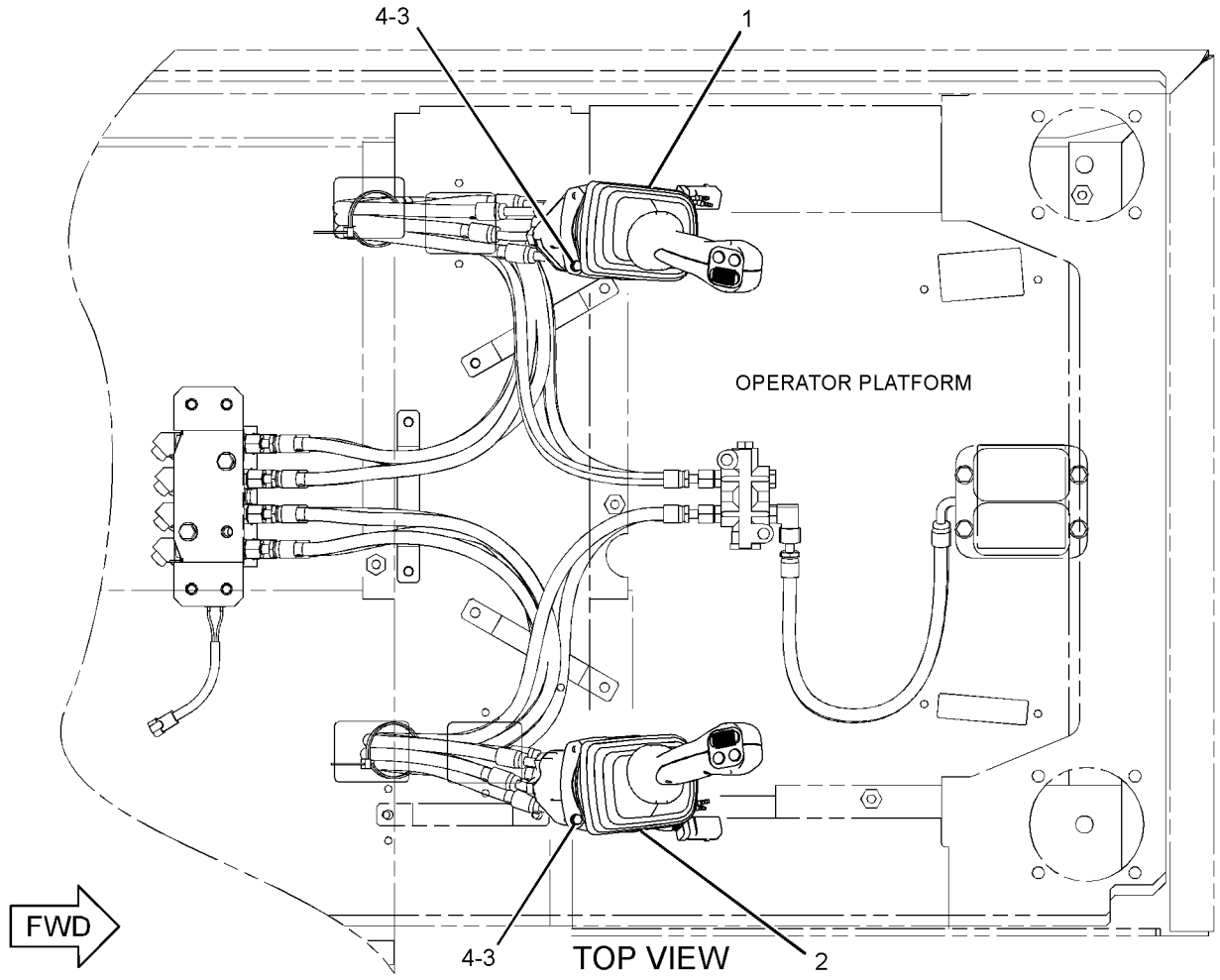

GRAPHIC #1 **<END>** g01541355

OPERATOR STATION

259-7599 CONTROL & MTG GP-JOYSTICK–
3-BUTTON, TRIGGER SWITCH
S/N: JGB1-UP; KHS1-UP
PART OF 255-5844 CONTROL AR-AUXILIARY
AN ATTACHMENT

SMCS-5063, 5705 **i03332420**

NOTE	REF NO	GRAPHIC REF	PART NUMBER	QTY	PART NAME 1 2 3 4 5 6 (PRODUCT LEVEL)	SEE PAGE
CY	1	1	**297-0537**	1	CONTROL GP-JOYSTICK (LH)	901
CY	2	1	**297-0536**	1	CONTROL GP-JOYSTICK (RH)	900
M	3	1	**6V-7357**	6	BOLT (M6X1X25-MM)	
	4	1	**9X-8256**	6	WASHER (6.6X12X2-MM THK)	

C-CHANGE FROM PREVIOUS TYPE
M-METRIC PART
Y-SEPARATE ILLUSTRATION

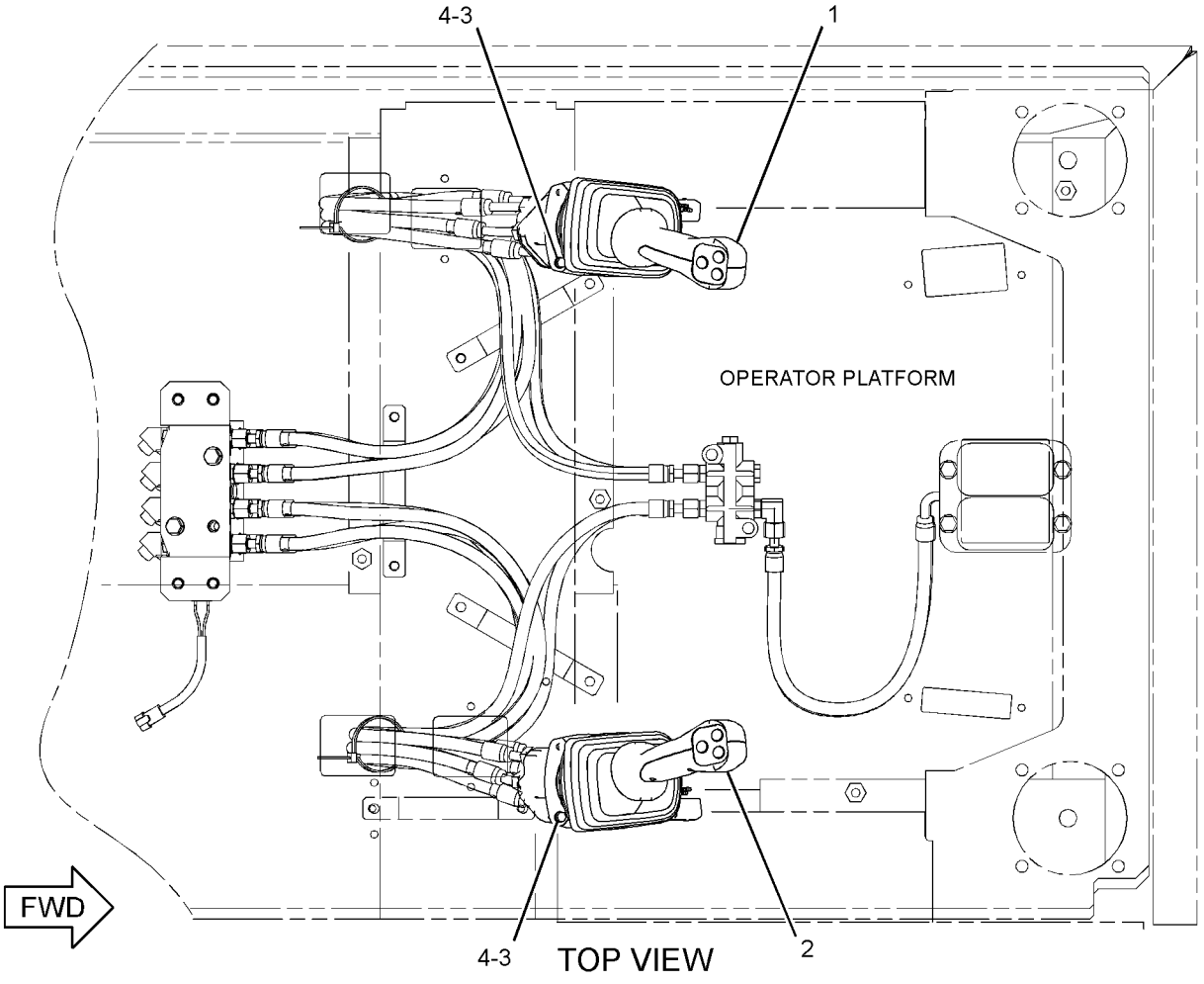

GRAPHIC #1 **<END>** g01717778

OPERATOR STATION

310-0078 CONTROL & MTG GP-JOYSTICK

S/N: JGB1-UP; KHS1-UP
PART OF 371-9202, 371-9204 DISTRIBUTION AR
AN ATTACHMENT

SMCS-5063, 5705 **i03027841**

NOTE	REF NO	GRAPHIC REF	PART NUMBER	QTY	PART NAME 1 2 3 4 5 6 (PRODUCT LEVEL)	SEE PAGE
Y	1	1	**297-0532**	1	CONTROL GP-JOYSTICK (RH)	896
Y	2	1	**297-0533**	1	CONTROL GP-JOYSTICK (LH)	897
M	3	1	**6V-7357**	6	BOLT (M6X1X25-MM)	
	4	1	**9X-8256**	6	WASHER (6.6X12X2-MM THK)	

M-METRIC PART
Y-SEPARATE ILLUSTRATION

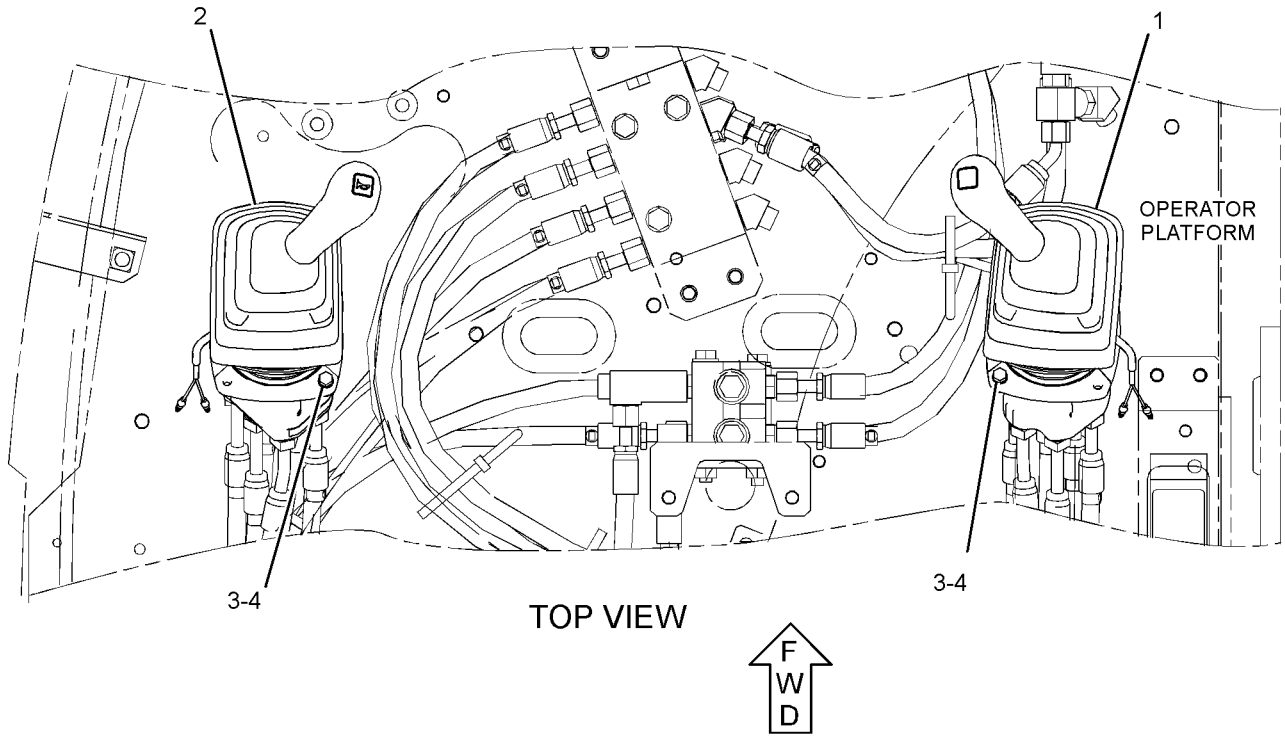

GRAPHIC #1 **<END>** g01442248

OPERATOR STATION

221-8884 CONTROL & MTG GP-PEDAL–LH

S/N: KHS1-UP
PART OF 255-5845 PEDAL AR-AUXILIARY
AN ATTACHMENT

SMCS-5462 **i04012936**

NOTE	REF NO	GRAPHIC REF	PART NUMBER	QTY	PART NAME 1 2 3 4 5 6 (PRODUCT LEVEL)	SEE PAGE
	1	1	**233-5260**	1	LANYARD	
	2	1	**121-1865**	1	PEDAL-RUBBER (LH)	
	3	1	**357-3877**	1	PIN	
	4	1	**153-8723**	1	PEDAL AS	
CY	5	1	**309-5808**	1	CONTROL GP-PEDAL (ELECTRIC)	902
	6	1	**227-7625**	1	SUPPORT AS	
M	7	1	**095-0735**	2	SCREW-MACHINE (M5X0.8X8-MM)	
M	8	1	**7X-2536**	2	BOLT (M8X1.25X14-MM)	
	9	1	**8T-0114**	1	PIN-SPRING	
	10	1	**8T-4121**	3	WASHER-HARD (11X21X2.5-MM THK)	
M	11	1	**8T-4136**	2	BOLT (M10X1.5X25-MM)	
M	12	1	**8T-4191**	1	BOLT (M10X1.5X16-MM)	
	13	1	**8T-4224**	2	WASHER-HARD (8.8X16X2-MM THK)	

C-CHANGE FROM PREVIOUS TYPE
M-METRIC PART
Y-SEPARATE ILLUSTRATION

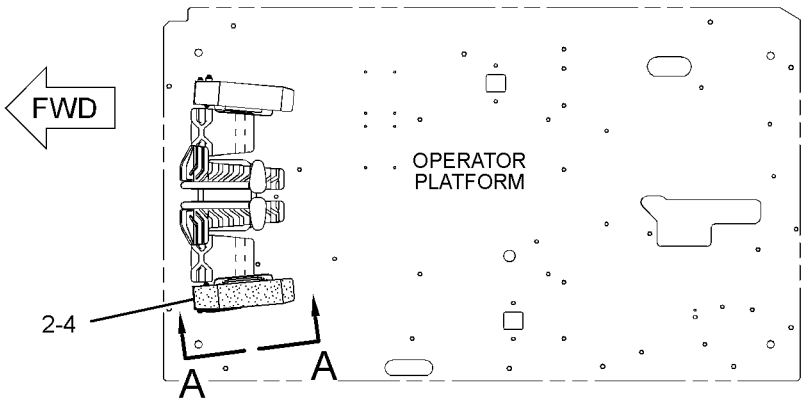

TOP VIEW

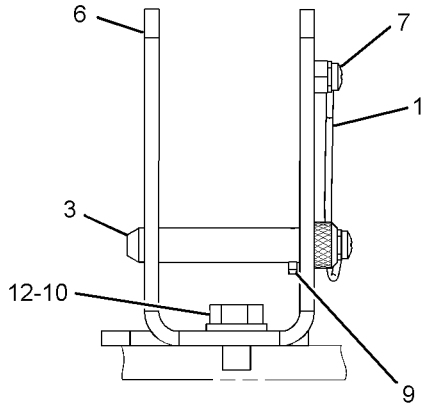

VIEW B-B

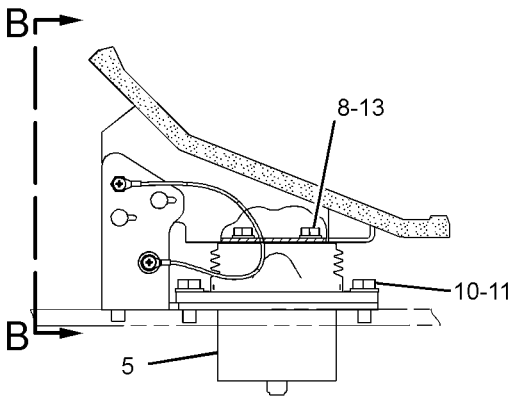

VIEW A-A

GRAPHIC #1 **<END>** g02155930

270-6107 CONTROL GP-FOOT—LEFT ON/OFF SWITCH

S/N: JGB1-UP

PART OF 270-6106 CONTROL AR-AUXILIARY

AN ATTACHMENT

SMCS-1435 **i04166013**

NOTE	REF NO	GRAPHIC REF	PART NUMBER	QTY	PART NAME 1 2 3 4 5 6 (PRODUCT LEVEL)	SEE PAGE
	1	1	**093-2069**	1	GROMMET	
	2		*205-1339*	1	SWITCH GP-PEDAL (WORK TOOL)	
		1	**2Q-4703**	1	SWITCH AS-FOOT (WORK TOOL)	
		1	**205-1340**	1	HARNESS AS-OPERATOR CONTROLS	
		1	**8T-8730**	2	SOCKET-CONNECTOR (16-GA TO 18-GA)	
		1	**2L-8075**	2	TERMINAL-RING (14-GA TO 16-GA, NO. 8 SCREW)	
		1	**155-2270**	1	KIT-CONNECTING PLUG (2-PIN)	
					(INCLUDES PLUG AS, WEDGE & INTERFACE SEAL)	
	3	1	**285-1332**	1	SUPPORT AS	
	4	1	**285-1333**	1	SUPPORT AS	
	5	1	**285-1337**	1	PLATE-STOP	
	6	1	**6V-7646**	1	WASHER-HARD (7.2X25X2-MM THK)	
M	7	1	**8C-8580**	2	BOLT-SOCKET HEAD (M5X0.8X16-MM)	
M	8	1	**8T-0269**	2	BOLT-SOCKET HEAD (M6X1X20-MM)	
	9	1	**8T-4121**	4	WASHER-HARD (11X21X2.5-MM THK)	
M	10	1	**8T-4137**	4	BOLT (M10X1.5X20-MM)	
	11	1	**9X-8256**	1	WASHER (6.6X12X2-MM THK)	
	12	1	**7K-1181**	1	STRAP-CABLE	

M-METRIC PART

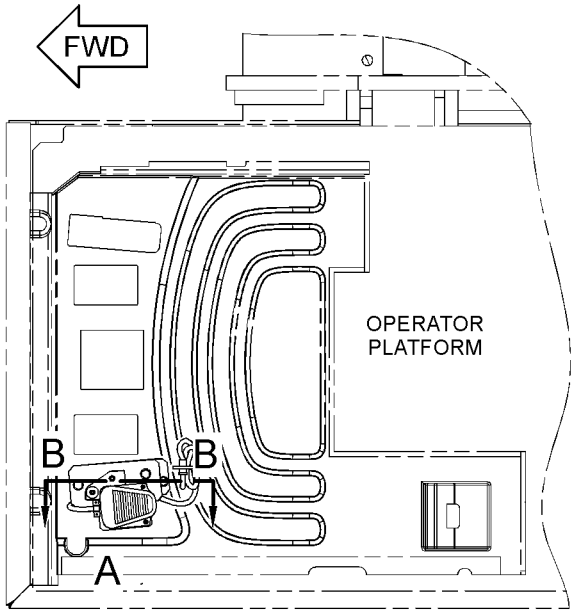

TOP VIEW

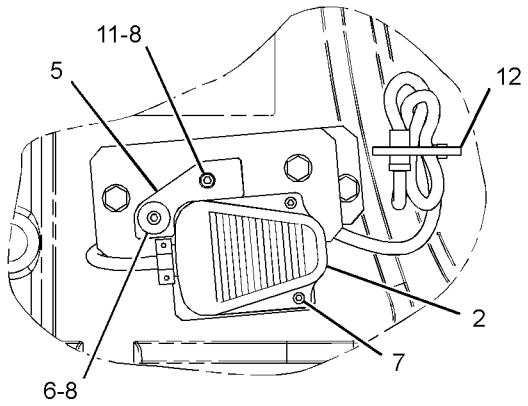

VIEW OF AREA A

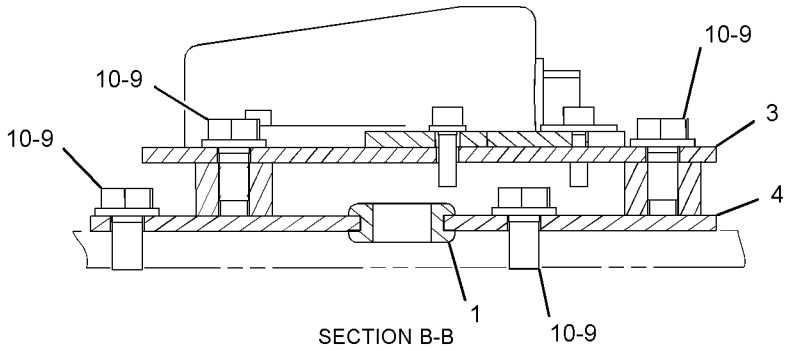

SECTION B-B

GRAPHIC #1 **<END>** g02387681

OPERATOR STATION

235-8969 CONTROL GP-HANDLE–JOYSTICK, LH

S/N: JGB1-UP; KHS1-UP

PART OF 297-0533 CONTROL GP-JOYSTICK

AN ATTACHMENT

SMCS-5705 **i03898483**

NOTE	REF NO	GRAPHIC REF	PART NUMBER	QTY	PART NAME 1 2 3 4 5 6 (PRODUCT LEVEL)	SEE PAGE
	1	1	**124-4010**	1	LEVER	
	2	1	**353-2149**	1	BOOT	
	3	1	**245-7842**	1	KNOB AS	
M		1	**6I-5298**	1	SCREW-TAPPING	
		1	**124-4009**	1	SHAFT	
		1	**222-0225**	1	SWITCH AS-PUSH BUTTON (MANUAL LOW IDLE)	
M	4	1	**096-2617**	2	SCREW-MACHINE (M5X0.8X6-MM)	

M-METRIC PART

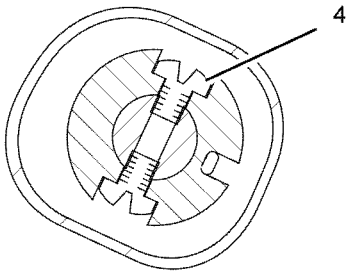

SECTION B-B

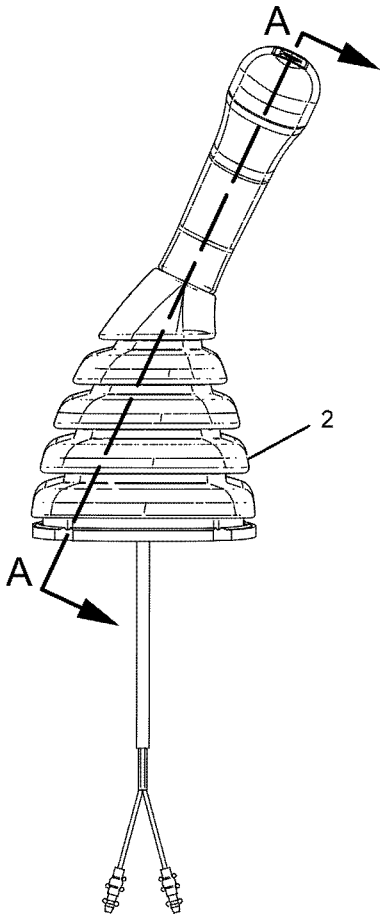

LEFT SIDE VIEW

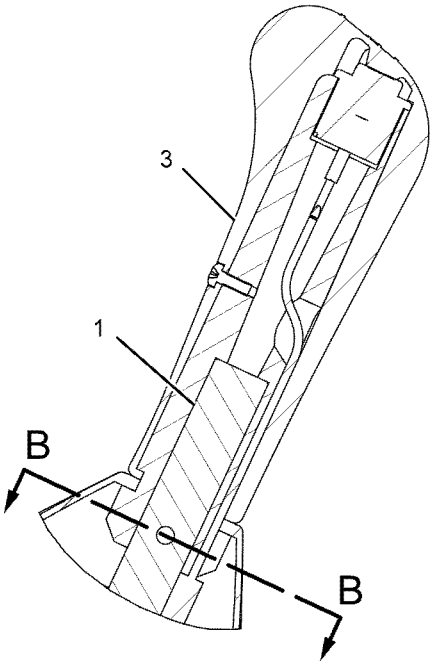

SECTION A-A

GRAPHIC #1 **<END>** g01082395

OPERATOR STATION

235-8970 CONTROL GP-HANDLE–JOYSTICK, RH

S/N: JGB1-UP; KHS1-UP
PART OF 297-0532 CONTROL GP-JOYSTICK
AN ATTACHMENT

SMCS-5705 **i03898950**

NOTE	REF NO	GRAPHIC REF	PART NUMBER	QTY	PART NAME 1 2 3 4 5 6 (PRODUCT LEVEL)	SEE PAGE
	1	1	**124-4010**	1	LEVER	
	2	1	**353-2150**	1	BOOT	
	3	1	**245-7844**	1	KNOB AS	
M		1	**6I-5298**	1	SCREW-TAPPING	
		1	**124-4009**	1	SHAFT	
		1	**222-0225**	1	SWITCH AS-PUSH BUTTON (MANUAL LOW IDLE)	
M	4	1	**096-2617**	2	SCREW-MACHINE (M5X0.8X6-MM)	

M-METRIC PART

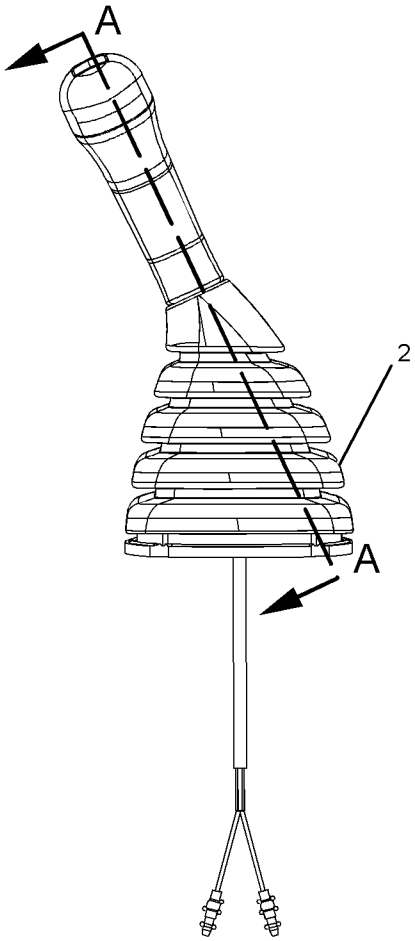

RIGHT SIDE VIEW

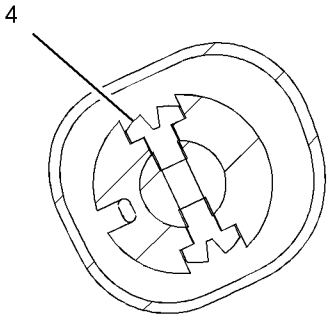

SECTION B-B

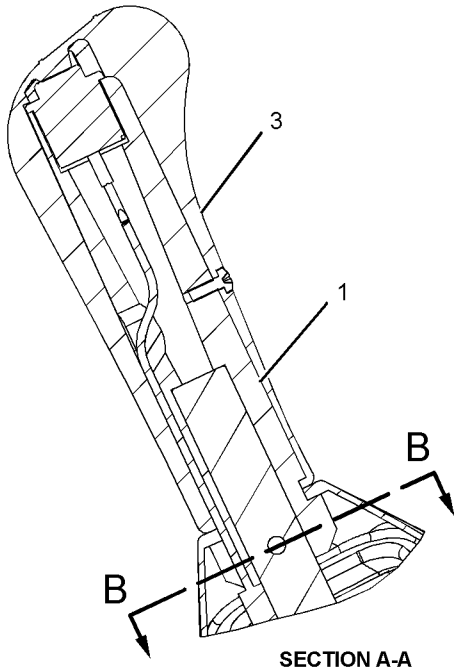

SECTION A-A

GRAPHIC #1 **<END>** g01082427

OPERATOR STATION

260-2109 CONTROL GP-HANDLE—JOYSTICK, RH

S/N: JGB1-UP; KHS1-UP
PART OF 297-0534 CONTROL GP-JOYSTICK
AN ATTACHMENT

SMCS-5705 **i03028030**

NOTE	REF NO	GRAPHIC REF	PART NUMBER	QTY	PART NAME 1 2 3 4 5 6 (PRODUCT LEVEL)	SEE PAGE
M	1	1	**7Y-8463**	1	NUT (M14X2-THD)	
	2	1	**117-8683**	1	PIN-SPRING	
	3	1	**260-2111**	1	LEVER	
C	4	1	**297-4589**	1	CONTROL GP-HANDLE (RH) (RH)	
		1	**247-2693**	1	RECEPTACLE AS-CONNECTOR (6-PIN)	
		1	**9X-3401**	6	PIN-CONNECTOR (16-GA TO 18-GA)	
					—OR—	
		1	**126-1767**	6	PIN-CONNECTOR (14-GA TO 16-GA)	
	5	1	**305-0332**	1	BOOT	

C-CHANGE FROM PREVIOUS TYPE
M-METRIC PART

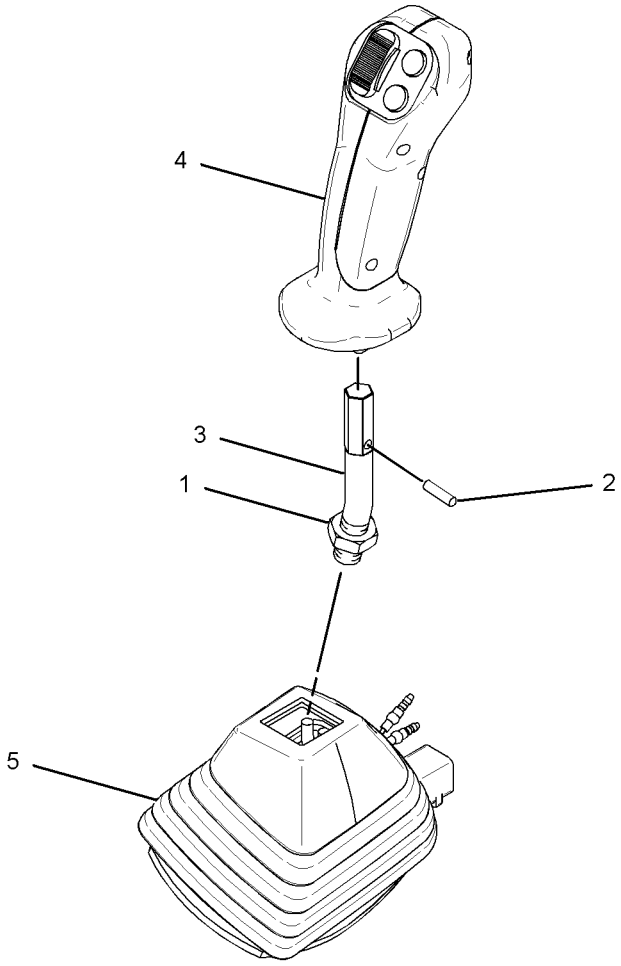

GRAPHIC #1 **<END>** g01541874

OPERATOR STATION

260-2110 CONTROL GP-HANDLE–JOYSTICK, LH

S/N: JGB1-UP; KHS1-UP
PART OF 297-0535 CONTROL GP-JOYSTICK
AN ATTACHMENT

SMCS-5705 **i03028043**

NOTE	REF NO	GRAPHIC REF	PART NUMBER	QTY	PART NAME 1 2 3 4 5 6 (PRODUCT LEVEL)	SEE PAGE
M	1	1	**7Y-8463**	1	NUT (M14X2-THD)	
	2	1	**117-8683**	1	PIN-SPRING	
	3	1	**260-2111**	1	LEVER	
C	4	1	**297-4590**	1	CONTROL GP-HANDLE (LH)	
		1	**9X-3401**	6	PIN-CONNECTOR (16-GA TO 18-GA)	
					–OR–	
		1	**126-1767**	6	PIN-CONNECTOR (14-GA TO 16-GA)	
		1	**247-2693**	1	RECEPTACLE AS-CONNECTOR (6-PIN)	
	5	1	**305-0331**	1	BOOT	

C-CHANGE FROM PREVIOUS TYPE
M-METRIC PART

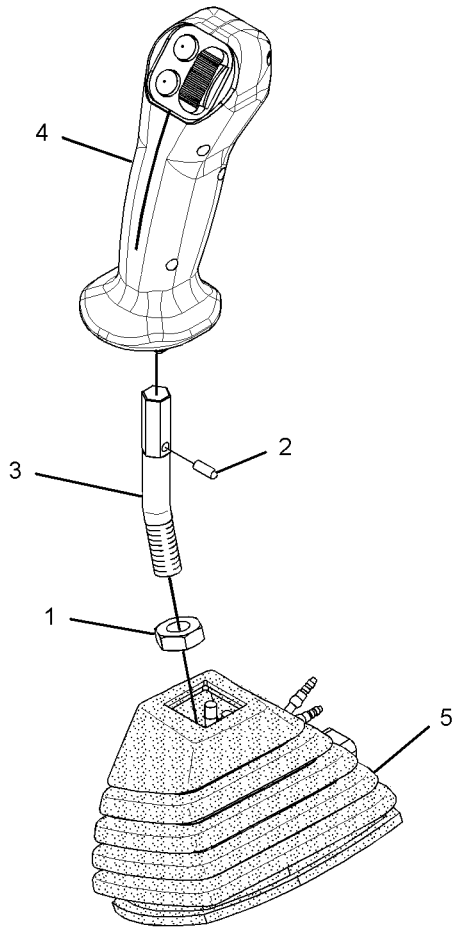

GRAPHIC #1 **<END>** g01428094

OPERATOR STATION

260-2127 CONTROL GP-HANDLE—JOYSTICK, RH

S/N: JGB1-UP; KHS1-UP
PART OF 297-0536 CONTROL GP-JOYSTICK
AN ATTACHMENT

SMCS-5705 **i03803751**

NOTE	REF NO	GRAPHIC REF	PART NUMBER	QTY	PART NAME 1 2 3 4 5 6 (PRODUCT LEVEL)	SEE PAGE
M	1	1	**271-7843**	1	NUT (M14X2-THD)	
	2	1	**117-8683**	1	PIN-SPRING	
	3	1	**305-0332**	1	BOOT	
	4	1	*297-4595*	1	CONTROL GP-HANDLE	
		1	**8T-8737**	2	PLUG-SEAL	
		1	**9X-3401**	4	PIN-CONNECTOR (16-GA TO 18-GA)	
					—OR—	
		1	**126-1767**	4	PIN-CONNECTOR (14-GA TO 16-GA)	
		1	**247-2693**	1	RECEPTACLE AS-CONNECTOR (6-PIN)	
	5	1	**260-2111**	1	LEVER	

M-METRIC PART

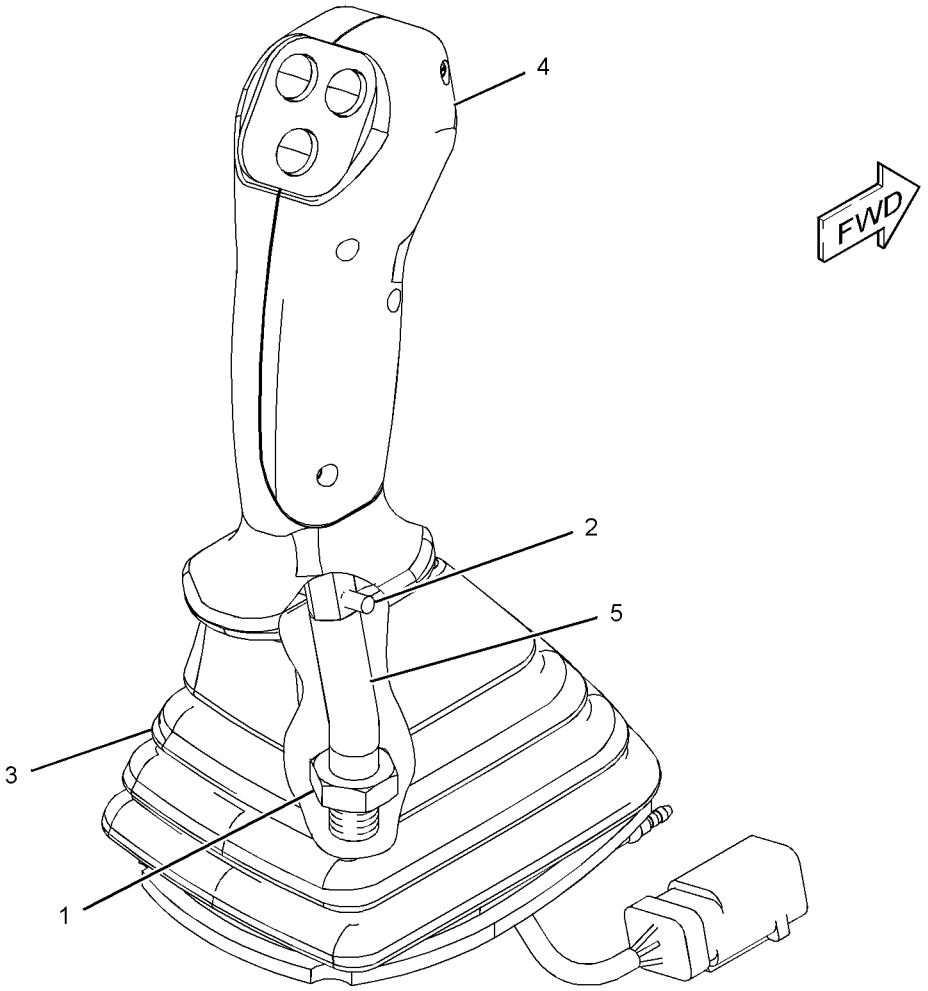

GRAPHIC #1 **<END>** g01216159

OPERATOR STATION

260-2128 CONTROL GP-HANDLE–JOYSTICK, LH

S/N: JGB1-UP; KHS1-UP
PART OF 297-0537 CONTROL GP-JOYSTICK
AN ATTACHMENT

SMCS-5705 **i03803752**

NOTE	REF NO	GRAPHIC REF	PART NUMBER	QTY	PART NAME 1 2 3 4 5 6 (PRODUCT LEVEL)	SEE PAGE
M	1	1	**271-7843**	1	NUT (M14X2-THD)	
	2	1	**117-8683**	1	PIN-SPRING	
	3	1	**305-0331**	1	BOOT	
	4	1	*297-4595*	1	CONTROL GP-HANDLE	
		1	**8T-8737**	2	PLUG-SEAL	
		1	**9X-3401**	4	PIN-CONNECTOR (16-GA TO 18-GA)	
					–OR–	
		1	**126-1767**	4	PIN-CONNECTOR (14-GA TO 16-GA)	
		1	**247-2693**	1	RECEPTACLE AS-CONNECTOR (6-PIN)	
	5	1	**260-2111**	1	LEVER	

M-METRIC PART

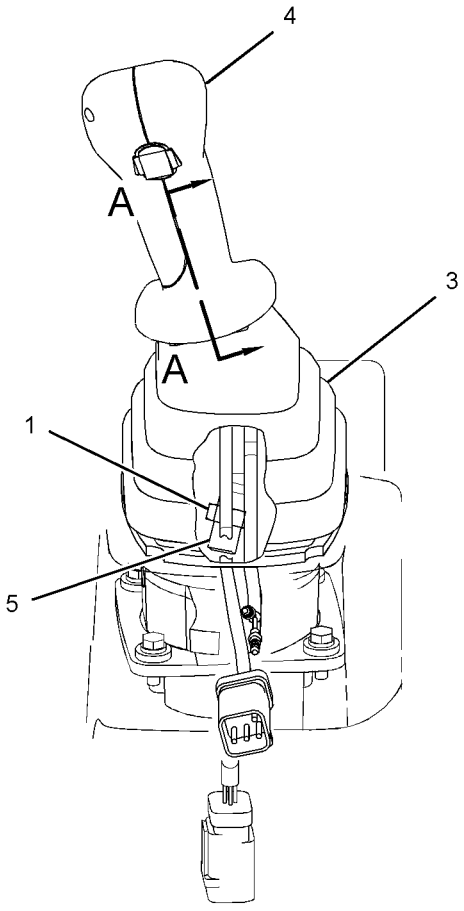

FRONT VIEW

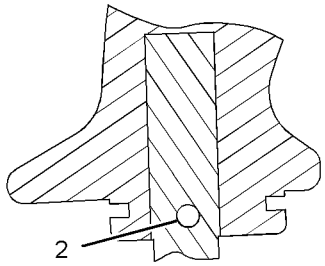

VIEW A-A

GRAPHIC #1 **<END>** g01309545

OPERATOR STATION

267-3839 CONTROL GP-HEAT & AIR COND

S/N: JGB1-UP; KHS1-UP

PART OF 356-6716 CAB GP

SMCS-7309 **i02878750**

NOTE	REF NO	GRAPHIC REF	PART NUMBER	QTY	PART NAME 1 2 3 4 5 6 (PRODUCT LEVEL)	SEE PAGE
	1	1	**293-1136**	1	PANEL AS-CONTROL	
	2	1	**235-8873**	1	HARNESS AS-HEATER & AIR COND (CONTROL PANEL SWITCHES)	
	3	1	**8T-0328**	2	WASHER-HARD (5.5X10X1-MM THK)	
M	4	1	**099-2374**	2	BOLT-SOCKET HEAD (M5X0.8X12-MM)	
	5	1	**3S-2093**	2	STRAP-CABLE	

M-METRIC PART

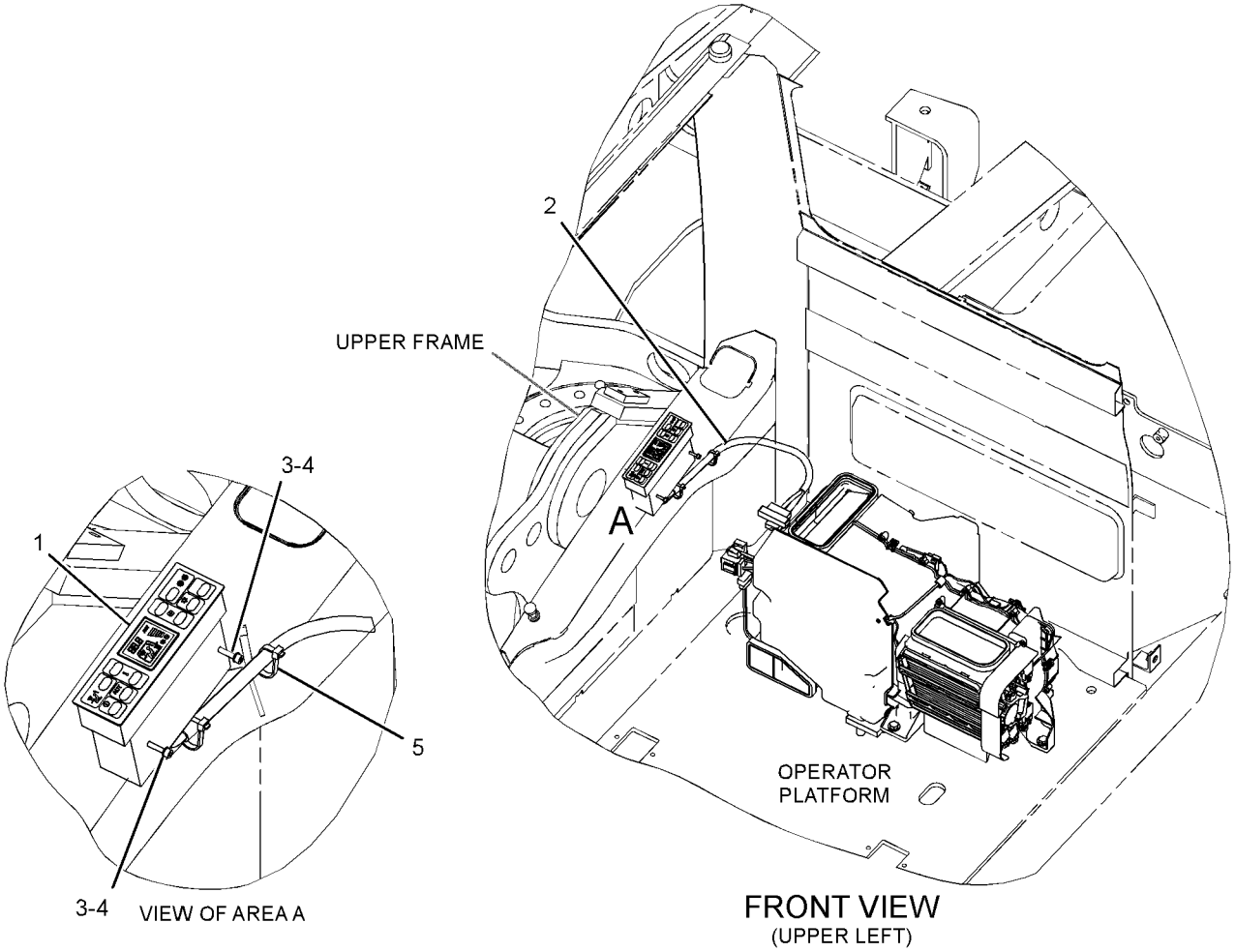

GRAPHIC #1 **<END>** g01434700

OPERATOR STATION

225-5730 CONTROL GP-HYDRAULIC PEDAL

S/N: JGB1-UP; KHS1-UP
PART OF 225-5729 PEDAL AR-AUXILIARY
AN ATTACHMENT

SMCS-5059, 5063 **i04154916**

NOTE	REF NO	GRAPHIC REF	PART NUMBER	QTY	PART NAME 1 2 3 4 5 6 (PRODUCT LEVEL)	SEE PAGE
	1	1	**233-5260**	1	LANYARD	
	2	1	**357-3877**	1	PIN	
	3	1	**135-2274**	1	PEDAL-RUBBER	
	4	1	**164-0614**	1	PEDAL AS	
	5	1	**164-0617**	1	SUPPORT AS	
	6	1	**165-9523**	1	VALVE GP-PILOT (THIRD PEDAL, STRAIGHT TRAVEL)	
	7	1	**8T-4224**	2	WASHER-HARD (8.8X16X2-MM THK)	
M	8	1	**095-0735**	2	SCREW-MACHINE (M5X0.8X8-MM)	
M	9	1	**7X-2536**	2	BOLT (M8X1.25X14-MM)	
	10	1	**8T-0114**	1	PIN-SPRING	
	11	1	**8T-4121**	3	WASHER-HARD (11X21X2.5-MM THK)	
M	12	1	**8T-4136**	2	BOLT (M10X1.5X25-MM)	
M	13	1	**8T-4191**	1	BOLT (M10X1.5X16-MM)	

M-METRIC PART

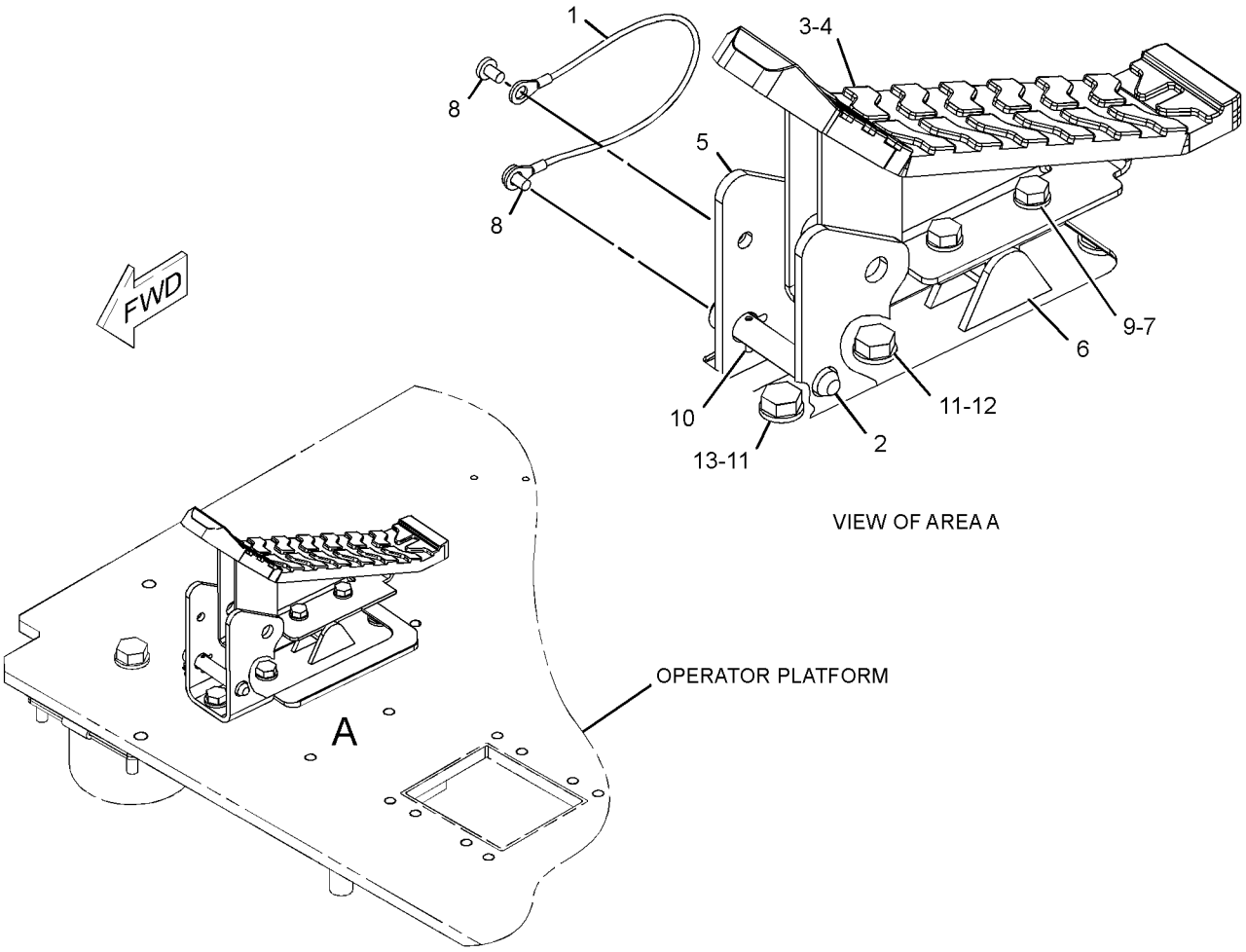

GRAPHIC #1 **<END>** g02170393

OPERATOR STATION

297-0532 CONTROL GP-JOYSTICK–RH

S/N: JGB1-UP; KHS1-UP
PART OF 310-0078 CONTROL & MTG GP-JOYSTICK
AN ATTACHMENT

SMCS-5705 **i04029325**

NOTE	REF NO	GRAPHIC REF	PART NUMBER	QTY	PART NAME 1 2 3 4 5 6 (PRODUCT LEVEL)	SEE PAGE
M	1	1	**271-7843**	1	NUT (M14X2-THD)	
Y	2	1	**235-8970**	1	CONTROL GP-HANDLE (JOYSTICK, RH)	889
Y	3	1	**297-0529**	1	VALVE GP-PILOT (JOYSTICK) (JOYSTICK)	763
	4	1	**6K-0806**	1	STRAP-CABLE	

M-METRIC PART
Y-SEPARATE ILLUSTRATION

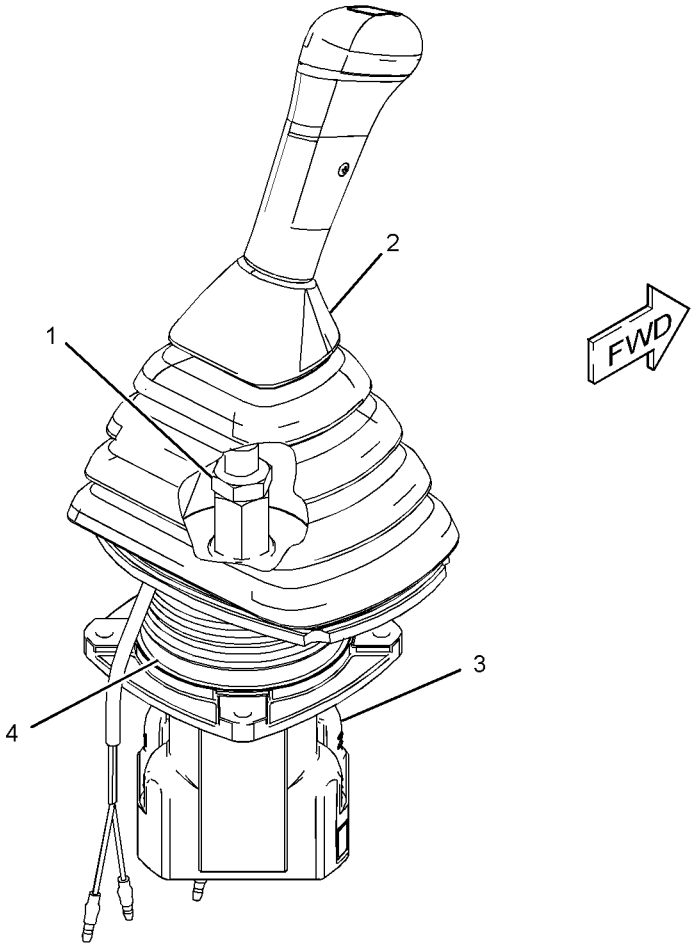

GRAPHIC #1 **<END>** g01452407

OPERATOR STATION

297-0533 CONTROL GP-JOYSTICK–LH

S/N: JGB1-UP; KHS1-UP
PART OF 310-0078 CONTROL & MTG GP-JOYSTICK
AN ATTACHMENT

SMCS-5705 **i04029329**

NOTE	REF NO	GRAPHIC REF	PART NUMBER	QTY	PART NAME 1 2 3 4 5 6 (PRODUCT LEVEL)	SEE PAGE
M	1	1	**271-7843**	1	NUT (M14X2-THD)	
Y	2	1	**235-8969**	1	CONTROL GP-HANDLE (JOYSTICK, LH)	887
Y	3	1	**297-0529**	1	VALVE GP-PILOT (JOYSTICK) (JOYSTICK)	763
	4	1	**6K-0806**	1	STRAP-CABLE	

M-METRIC PART
Y-SEPARATE ILLUSTRATION

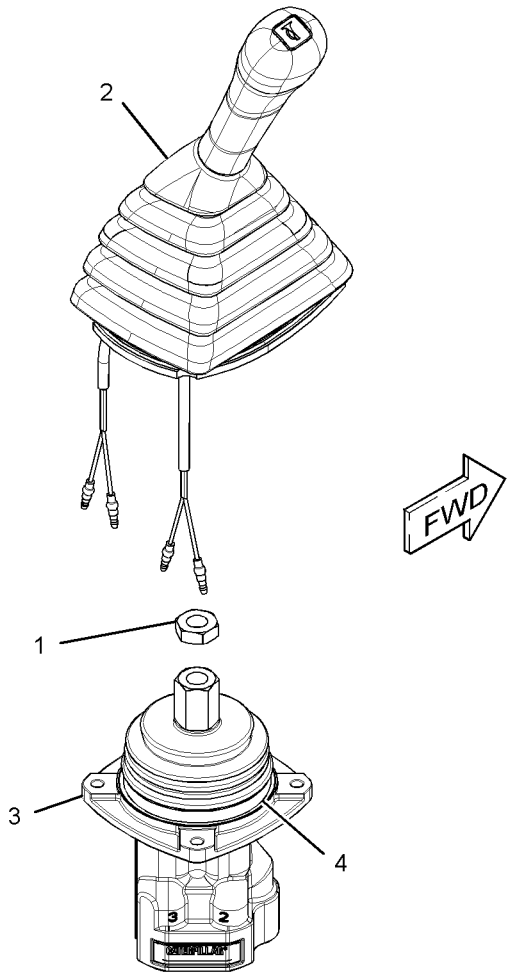

GRAPHIC #1 **<END>** g01452496

OPERATOR STATION

297-0534 CONTROL GP-JOYSTICK–RH

S/N: JGB1-UP; KHS1-UP
PART OF 259-7598 CONTROL & MTG GP-JOYSTICK
AN ATTACHMENT

SMCS-5705 **i03028063**

NOTE	REF NO	GRAPHIC REF	PART NUMBER	QTY	PART NAME 1 2 3 4 5 6 (PRODUCT LEVEL)	SEE PAGE
	1	1	**6K-0806**	1	STRAP-CABLE	
Y	2	1	**260-2109**	1	CONTROL GP-HANDLE (JOYSTICK, RH)	890
Y	3	1	**297-0589**	1	VALVE GP-PILOT (JOYSTICK)	765

Y-SEPARATE ILLUSTRATION

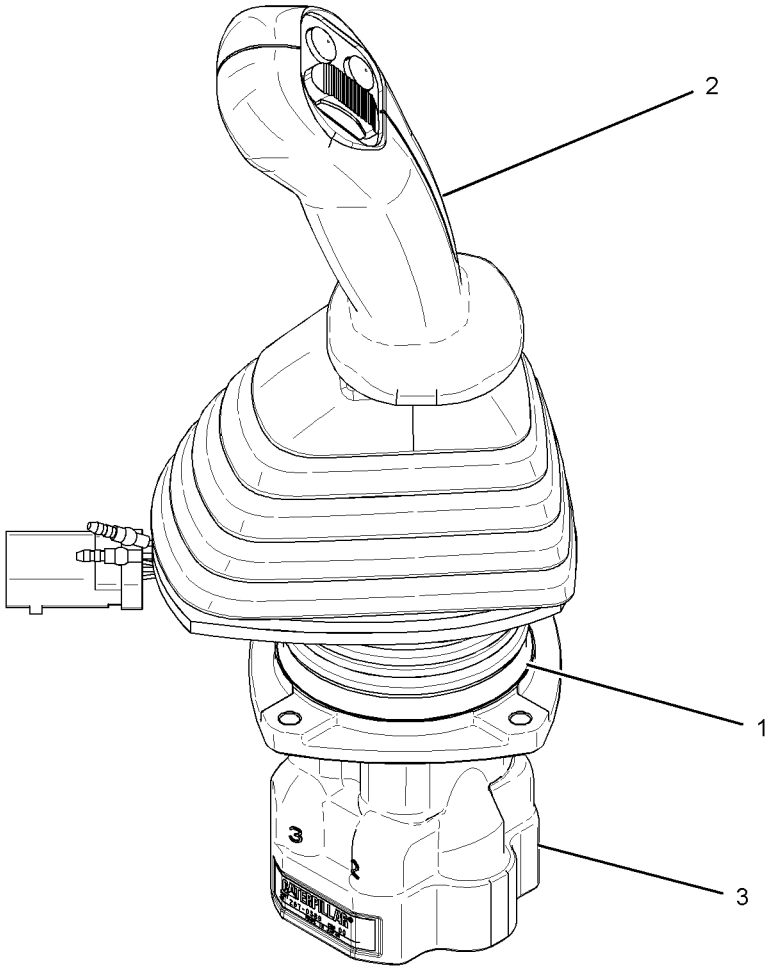

GRAPHIC #1 **<END>** g01539394

OPERATOR STATION

297-0535 CONTROL GP-JOYSTICK–LH

S/N: JGB1-UP; KHS1-UP
PART OF 259-7598 CONTROL & MTG GP-JOYSTICK
AN ATTACHMENT

SMCS-5705 **i03028069**

NOTE	REF NO	GRAPHIC REF	PART NUMBER	QTY	PART NAME 1 2 3 4 5 6 (PRODUCT LEVEL)	SEE PAGE
	1	1	**6K-0806**	1	STRAP-CABLE	
Y	2	1	**260-2110**	1	CONTROL GP-HANDLE (JOYSTICK, LH)	891
Y	3	1	**297-0589**	1	VALVE GP-PILOT (JOYSTICK)	765

Y-SEPARATE ILLUSTRATION

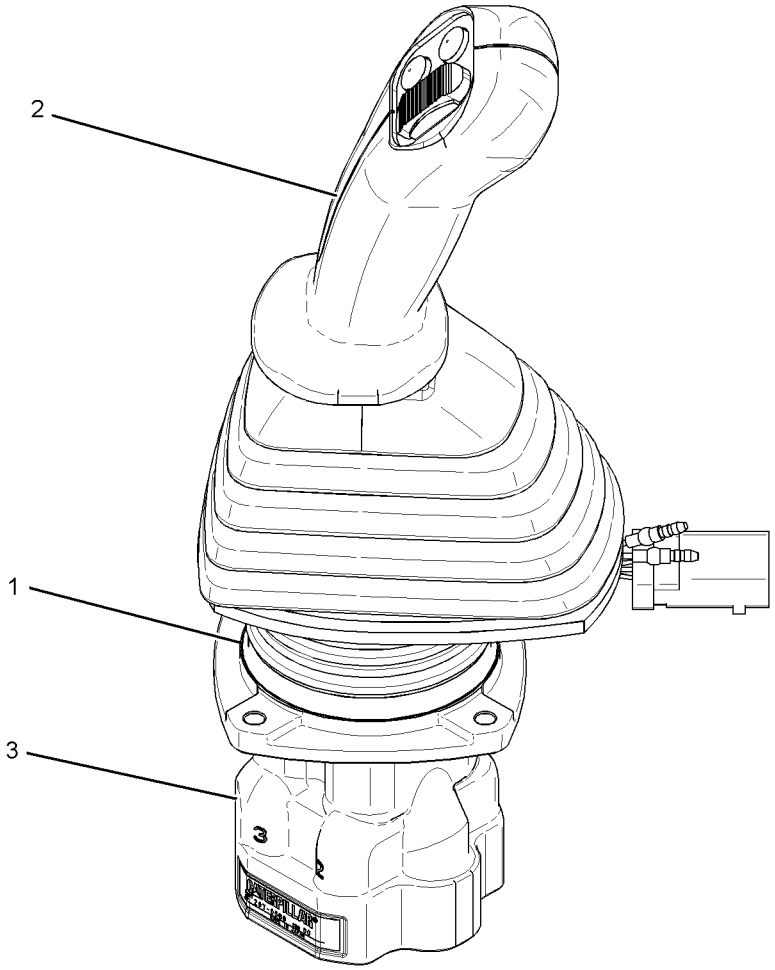

GRAPHIC #1 **<END>** g01541298

OPERATOR STATION

297-0536 CONTROL GP-JOYSTICK–RH

S/N: JGB1-UP; KHS1-UP
PART OF 259-7599 CONTROL & MTG GP-JOYSTICK
AN ATTACHMENT

SMCS-5705 **i03332856**

NOTE	REF NO	GRAPHIC REF	PART NUMBER	QTY	PART NAME 1 2 3 4 5 6 (PRODUCT LEVEL)	SEE PAGE
	1	1	**6K-0806**	1	STRAP-CABLE	
Y	2	1	**260-2127**	1	CONTROL GP-HANDLE (JOYSTICK, RH)	892
Y	3	1	**297-0589**	1	VALVE GP-PILOT (JOYSTICK)	765

Y-SEPARATE ILLUSTRATION

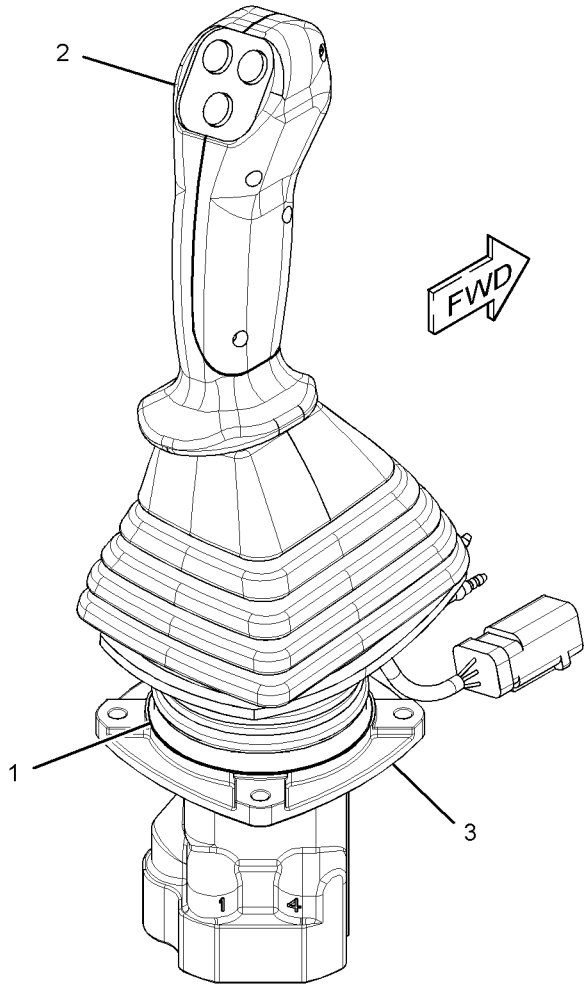

GRAPHIC #1 **<END>** g01718237

OPERATOR STATION

297-0537 CONTROL GP-JOYSTICK–LH

S/N: JGB1-UP; KHS1-UP
PART OF 259-7599 CONTROL & MTG GP-JOYSTICK
AN ATTACHMENT

SMCS-5705 **i03332861**

NOTE	REF NO	GRAPHIC REF	PART NUMBER	QTY	PART NAME 1 2 3 4 5 6 (PRODUCT LEVEL)	SEE PAGE
	1	1	**6K-0806**	1	STRAP-CABLE	
Y	2	1	**260-2128**	1	CONTROL GP-HANDLE (JOYSTICK, LH)	893
Y	3	1	**297-0589**	1	VALVE GP-PILOT (JOYSTICK)	765

Y-SEPARATE ILLUSTRATION

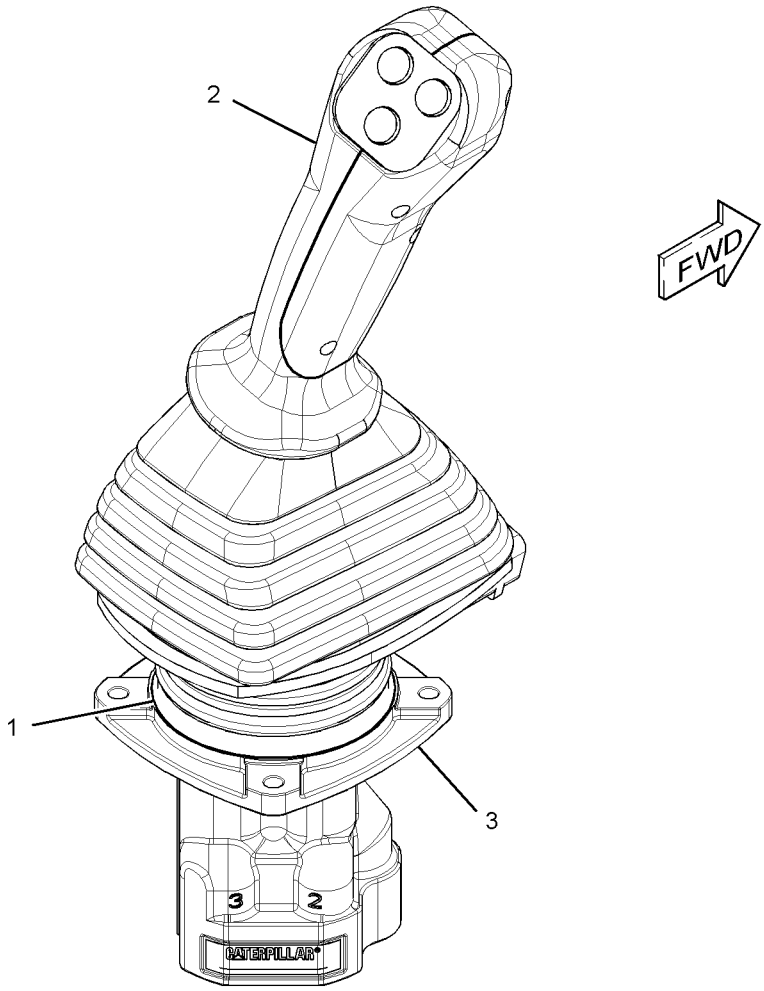

GRAPHIC #1

<END>

g01718236

OPERATOR STATION

309-5808 CONTROL GP-PEDAL–ELECTRIC

S/N: KHS1-UP

PART OF 221-8884 CONTROL & MTG GP-PEDAL

AN ATTACHMENT

SMCS-1435, 5702 **i02878319**

NOTE	REF NO	GRAPHIC REF	PART NUMBER	QTY	PART NAME 1 2 3 4 5 6 (PRODUCT LEVEL)	SEE PAGE
	1	1	**8T-8737**	1	PLUG-SEAL	
	2	1	**9X-3401**	5	PIN-CONNECTOR (16-GA TO 18-GA)	
					–OR–	
		1	**126-1767**	5	PIN-CONNECTOR (14-GA TO 16-GA)	
	3	1	**247-2693**	1	RECEPTACLE AS-CONNECTOR (6-PIN)	
	4	1	**247-5112**	1	BOOT	

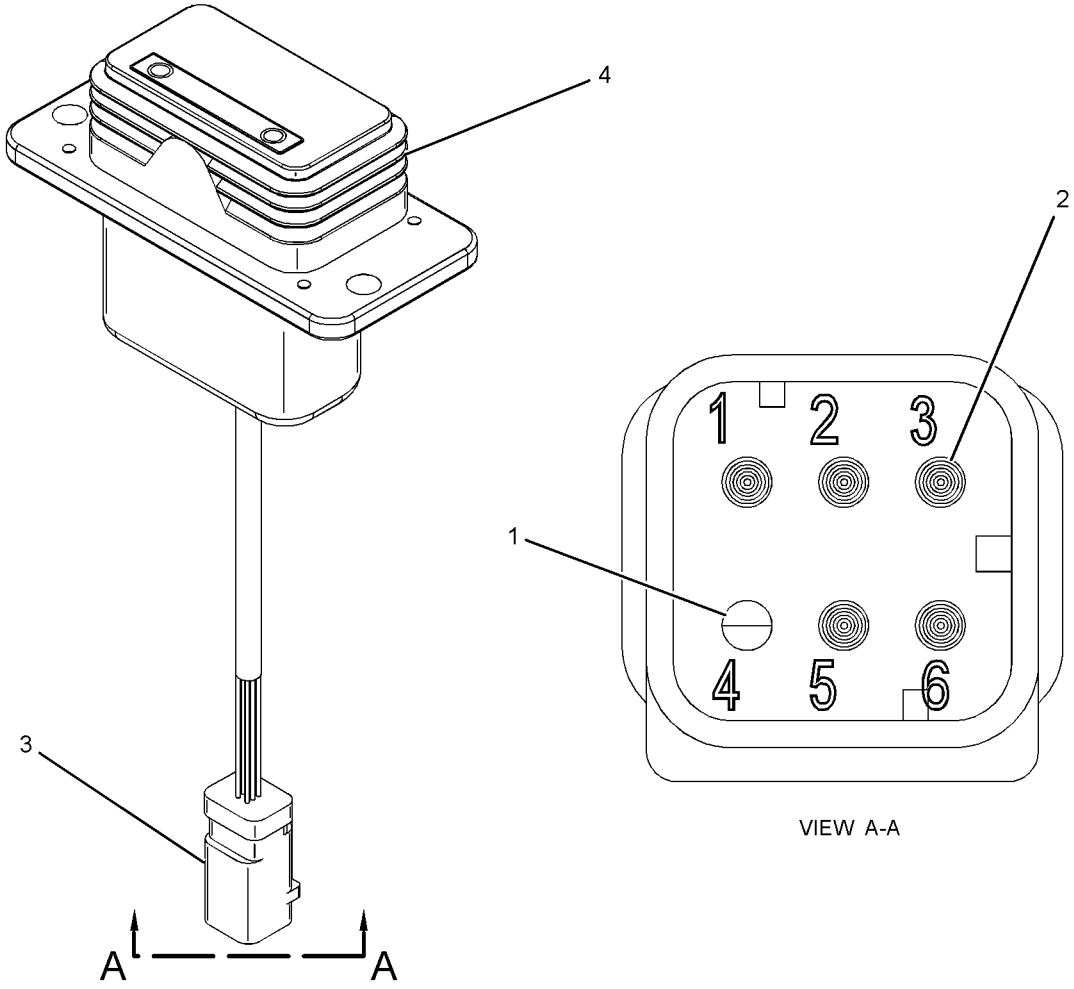

VIEW A-A

GRAPHIC #1 **<END>** g01219365

OPERATOR STATION

170-9497 CONTROL GP-PILOT OPERATED HYD–TRAVEL

S/N: JGB1-UP; KHS1-UP

PART OF 305-8000 OPERATOR AR

SMCS-5059 **i01818773**

NOTE	REF NO	GRAPHIC REF	PART NUMBER	QTY	PART NAME 1 2 3 4 5 6 (PRODUCT LEVEL)	SEE PAGE
	1	1	**096-6166**	2	WASHER-HARD (4.5X9X1-MM THK)	
M	2	1	**095-0728**	2	SCREW-MACHINE (M4X0.7X12-MM)	
	3	1	**8T-4121**	12	WASHER-HARD (11X21X2.5-MM THK)	
M	4	1	**8T-4136**	4	BOLT (M10X1.5X25-MM)	
M	5	1	**8T-4191**	8	BOLT (M10X1.5X16-MM)	
	6	1	**142-5546**	2	KNOB	
	7	1	**117-6356**	2	STEP AS	
	8	1	**122-9610**	2	STEP	
	9	1	**170-9499**	1	LEVER AS (LH)	
	10	1	**170-9498**	1	LEVER AS (RH)	
	11	1	**122-9608**	1	PEDAL-RUBBER (RH)	
	12	1	**117-6350**	1	PEDAL AS (RH)	
	13	1	**122-9609**	1	PEDAL-RUBBER (LH)	
	14	1	**117-6349**	1	PEDAL AS (LH)	

M-METRIC PART

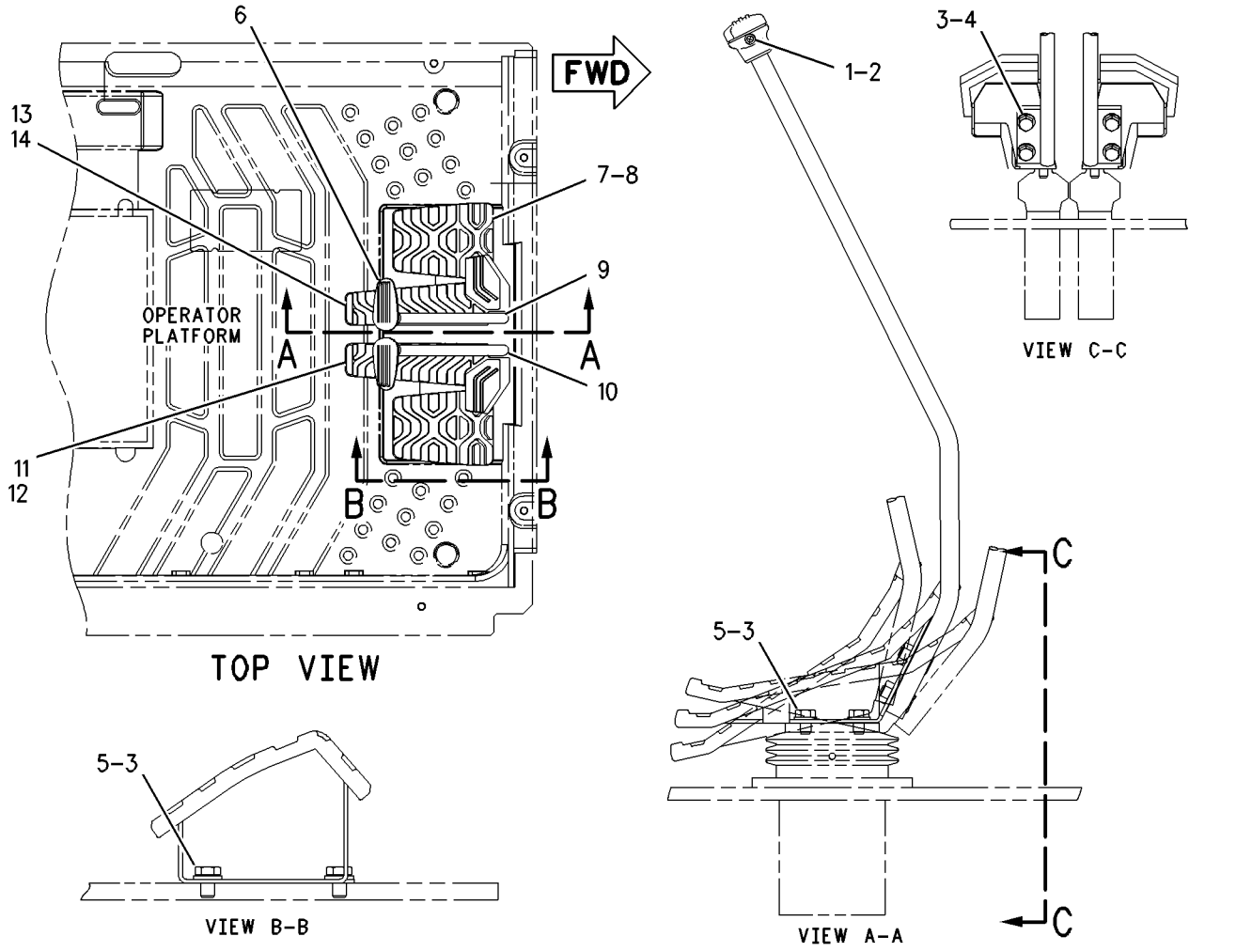

GRAPHIC #1 **<END>** g00672963

OPERATOR STATION

234-6501 COVER GP-CAB–REAR

S/N: JGB1-UP; KHS1-UP

PART OF 305-8001 CAB GP

SMCS-7301, 7308 **i03159181**

NOTE	REF NO	GRAPHIC REF	PART NUMBER	QTY	PART NAME 1 2 3 4 5 6 (PRODUCT LEVEL)	SEE PAGE
	1	1	**234-6499**	1	COVER AS	
	2	1	**234-6502**	1	COVER-ACCESS (FUSE-REAR PANEL)	
	3	1	**234-6593**	2	FASTENER	
					USE WITH COVER WITH A 9-MM DIAMETER UPPER MOUNTING HOLE	
					–OR–	
		1	**245-7929**	2	CLIP	
					USE WITH COVER WITH A 7.6-MM DIAMETER UPPER MOUNTING HOLE	

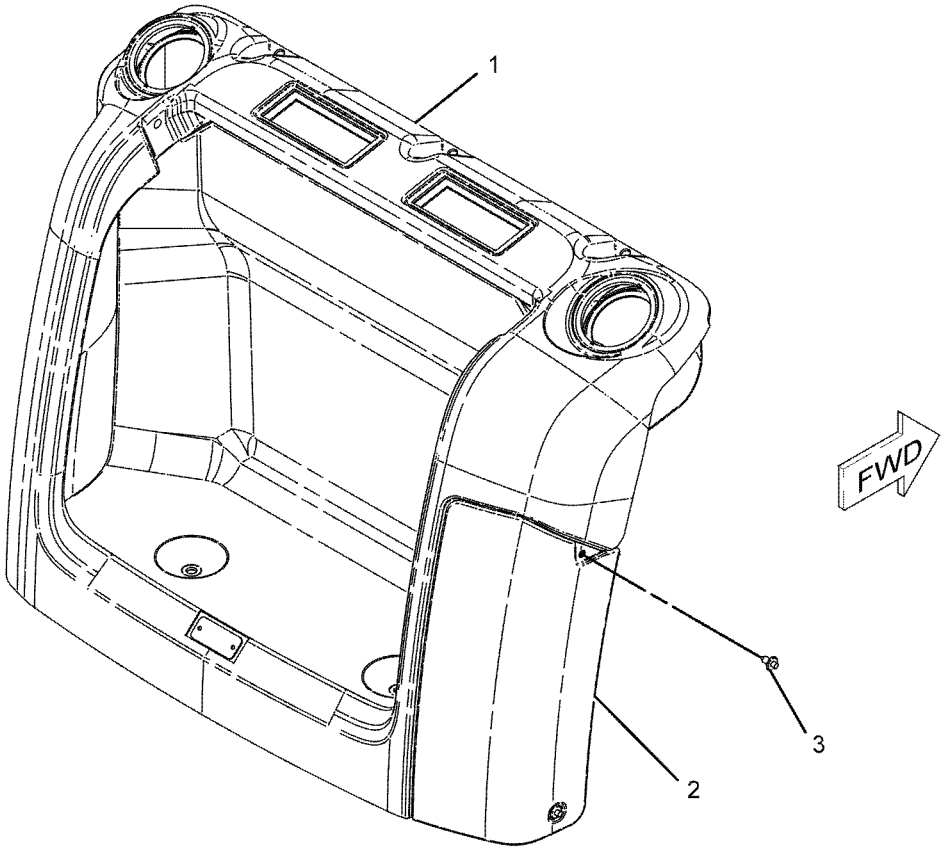

GRAPHIC #1 **<END>** g01101423

OPERATOR STATION

356-6800 DOOR GP-CAB

S/N: JGB1-UP; KHS1-UP

PART OF 356-6801 DOOR GP-CAB

SMCS-7308 **i03900447**

NOTE	REF NO	GRAPHIC REF	PART NUMBER	QTY	PART NAME 1 2 3 4 5 6 (PRODUCT LEVEL)	SEE PAGE
	1	1	**156-6471**	1	GLASS	
	2	1	**156-6598**	1	HOOK	
	3	1	**156-6600**	1	LOCK AS	
		1	**164-0514**	1	CLIP	
		1	**164-0519**	1	CLIP	
	4	1	**156-6643**	2	COVER	
	5	1	**156-6645**	1	HANDLE AS (EXTERIOR)	
		1	**201-4391**	1	CLIP	
	6	1	**161-3639**	1	HANDLE AS (INTERIOR)	
	7	1	**161-3650**	1	COVER AS	
	8	1	**161-3663**	1	SEAL AS	
		1	**151-9497**	45	CLIP	
	9	1	**161-3665**	1	SEAL	
	10	1	**164-0515**	1	JOINT	
	11	1	**167-7039**	1	GROMMET	
M	12	1	**185-8180**	3	SCREW (M6X1X16-MM)	
	13	1	**8T-4224**	2	WASHER-HARD (8.8X16X2-MM THK)	
Y	14	1	**225-0326**	1	WINDOW GP-DOOR	968
	15	1	**259-7354**	1	COVER	
	16	1	**327-6579**	1	HANDLE-PULL	
M	17	1	**096-2622**	2	SCREW-MACHINE (M4X0.7X8-MM)	
M	18	1	**096-3884**	2	NUT-SPRING (M8X1.25-THD)	
M	19	1	**101-8899**	2	SCREW AS (M6X1X16-MM)	
M	20	1	**101-8900**	2	SCREW AS (M6X1X20-MM)	
	21	1	**151-9461**	4	SPACER	
	22	1	**178-5573**	4	SPACER	
	23	1	**178-5574**	3	SPACER	
	24	1	**189-2690**	1	HANDLE	
	25	1	**4I-4286**	1	KNOB	
M	26	1	**9X-2042**	8	SCREW-TRUSS HEAD (M6X1X12-MM)	

M-METRIC PART
Y-SEPARATE ILLUSTRATION

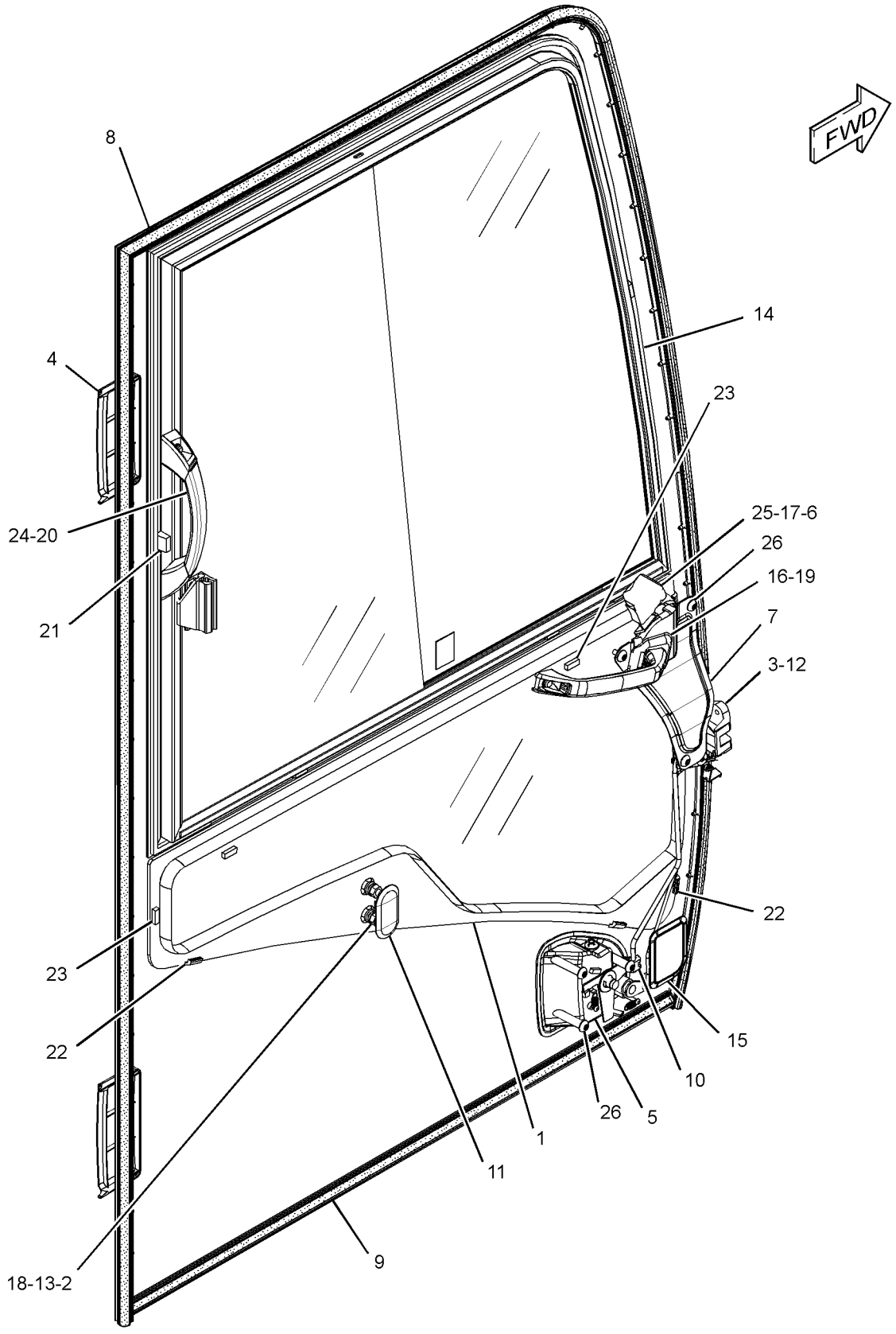

GRAPHIC #1 **<END>** g02150698

OPERATOR STATION

356-6801 DOOR GP-CAB

S/N: JGB1-UP; KHS1-UP
PART OF 356-6716 CAB GP

SMCS-7308 **i03900409**

NOTE	REF NO	GRAPHIC REF	PART NUMBER	QTY	PART NAME 1 2 3 4 5 6 (PRODUCT LEVEL)	SEE PAGE
Y	1	1	*356-6800*	1	DOOR GP-CAB	905
	2	1	*189-2796*	1	DOOR AS	
	2A	1	**4I-3091**	5	BOSS	
	2B	1	**4I-3094**	1	BRACKET AS-GUARD	
M	2C	1	**9X-2041**	6	SCREW-TRUSS HEAD (M10X1.5X20-MM)	
	2D	1	**151-6777**	2	HINGE	

M-METRIC PART
Y-SEPARATE ILLUSTRATION

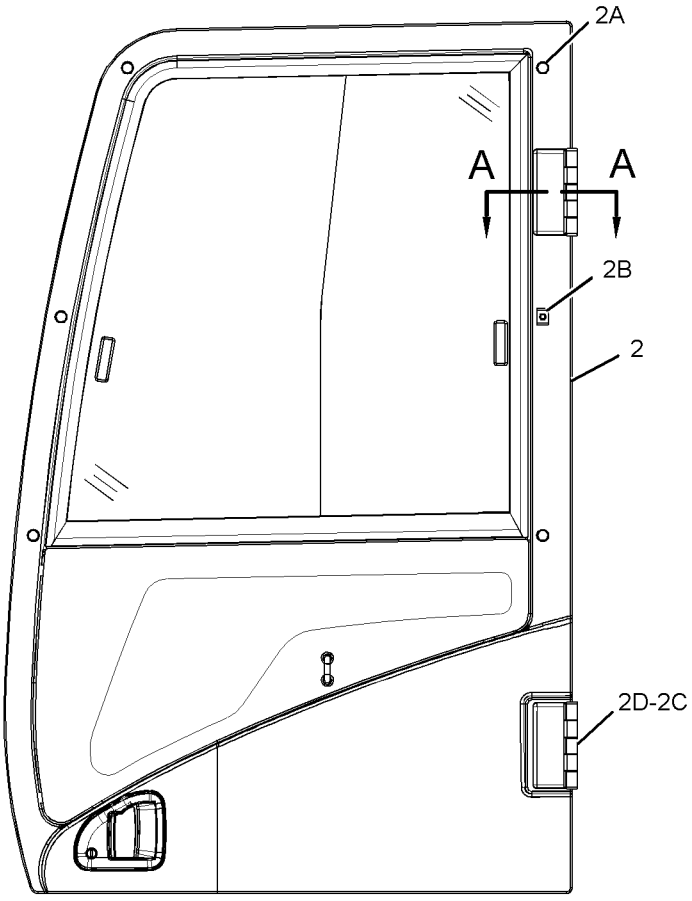

LEFT SIDE VIEW

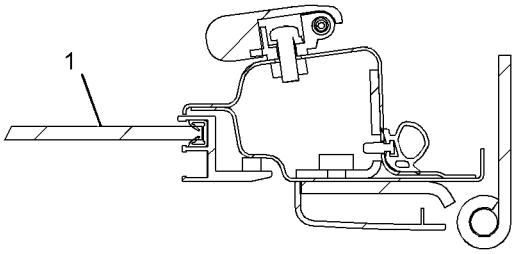

SECTION A-A

GRAPHIC #1 **<END>** g02351207

OPERATOR STATION

229-9082 DUCT GP-CAB AIR

S/N: JGB1-UP; KHS1-UP

PART OF 229-9079 AIR CONDITIONER AR

SMCS-734D **i02902676**

NOTE	REF NO	GRAPHIC REF	PART NUMBER	QTY	PART NAME 1 2 3 4 5 6 (PRODUCT LEVEL)	SEE PAGE
	1	1	**305-0329**	1	FILTER ELEMENT AS-CAB AIR	
	2	1	**235-8876**	1	DUCT AS (FRESH AIR, UPPER)	
		1	**245-7872**	1	INSULATOR	
	3	1	**235-8877**	1	DUCT AS (VENT, REAR)	
		1	**245-7792**	1	INSULATOR	
	4	1	**235-8878**	1	DUCT AS (VENT, FRONT)	
		1	**245-7793**	1	INSULATOR	
	5	1	**235-8879**	1	DUCT AS (FLOOR)	
		1	**245-7873**	1	INSULATOR	
	6	1	**240-5074**	1	DUCT AS (FRESH AIR, LOWER)	
		1	**245-7791**	1	INSULATOR	
M	7	1	**101-8899**	2	SCREW AS (M6X1X16-MM)	
	8	1	**176-1996**	5	CLIP	

M-METRIC PART

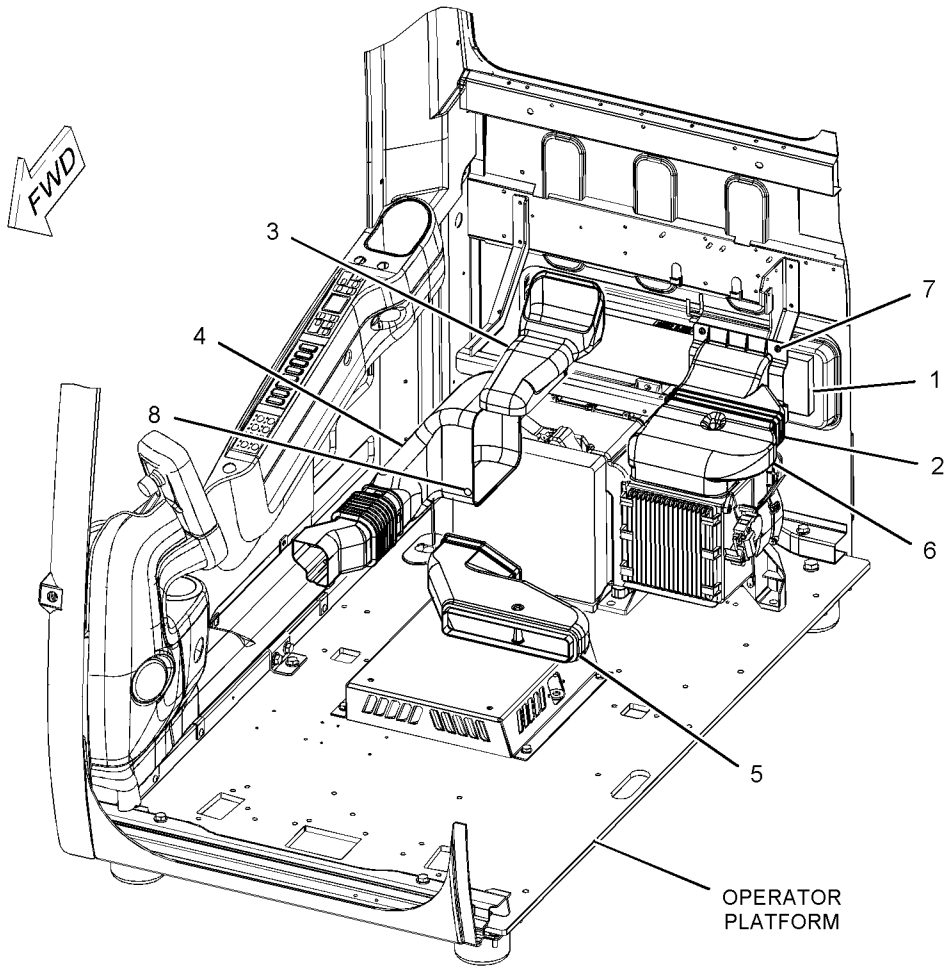

GRAPHIC #1 **<END>** g01098322

OPERATOR STATION

336-1157 FAN GP-CONDENSER

S/N: JGB1-UP; KHS1-UP

PART OF 334-6570 CONDENSER GP-REFRIGERANT

SMCS-1805, 1815 **i03633184**

NOTE	REF NO	GRAPHIC REF	PART NUMBER	QTY	PART NAME 1 2 3 4 5 6 (PRODUCT LEVEL)	SEE PAGE
	1	1	**161-3732**	1	MOTOR AS	
	2	1	**161-3734**	1	RESISTOR AS	
M	3	1	**164-0499**	1	NUT-FLANGE (M5X0.8-THD)	
M	4	1	**245-7877**	6	SCREW AS (M4X0.7X11-MM)	
M	5	1	**245-7903**	1	BOLT AS	
	6	1	**273-5307**	1	FAN AS-CONDENSER (4-BLADE)	
	7	1	**334-6572**	1	COVER	

M-METRIC PART

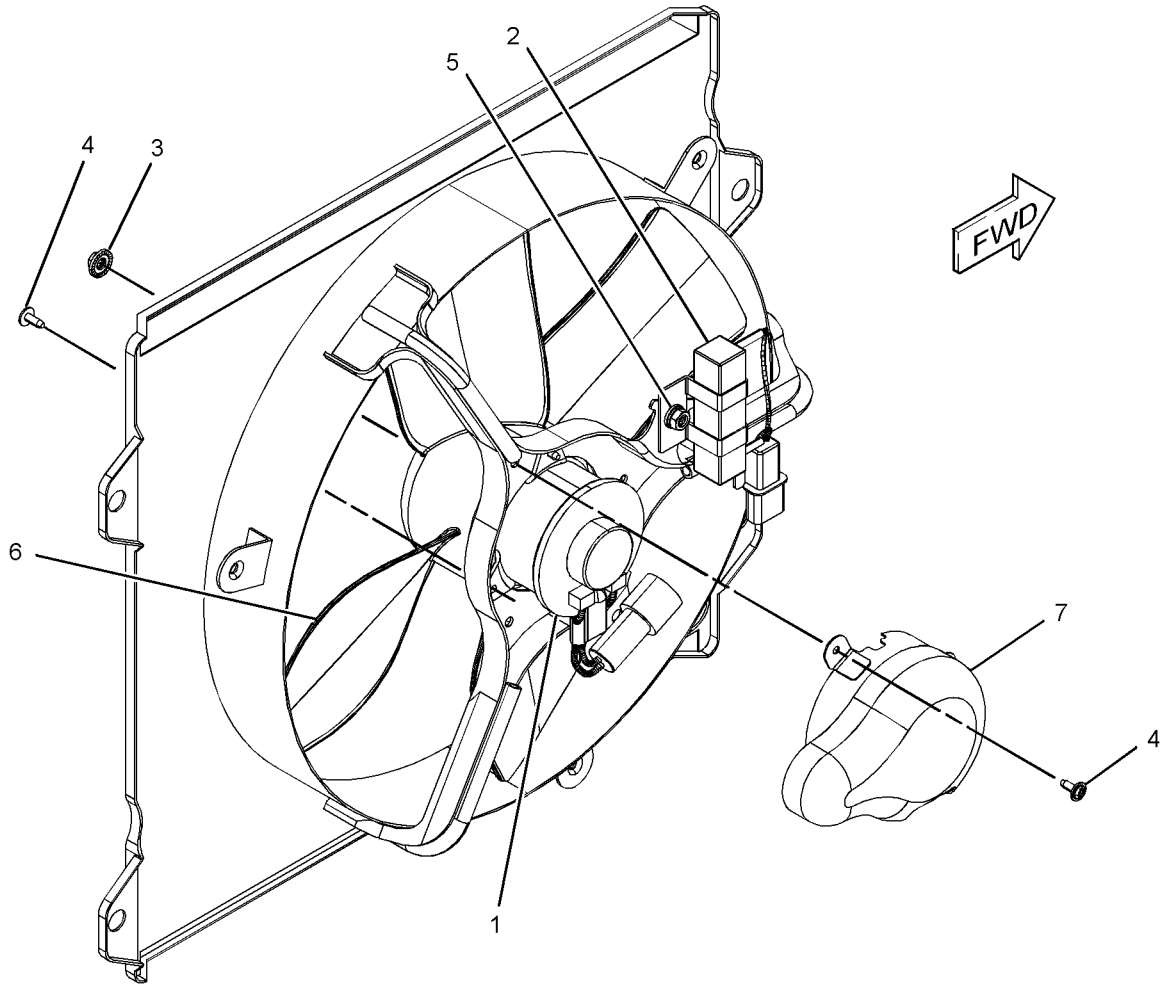

GRAPHIC #1 **<END>** g01750336

OPERATOR STATION

273-5358 FLOOR MAT GP

S/N: JGB1-UP; KHS1-UP
PART OF 357-7974 CAMERA AR, 356-4742 PARTS AR-CAB
AN ATTACHMENT

SMCS-7265, 726M **i03861251**

NOTE	REF NO	GRAPHIC REF	PART NUMBER	QTY	PART NAME 1 2 3 4 5 6 (PRODUCT LEVEL)	SEE PAGE
	1	1	**273-5333**	1	FLOOR MAT	
	2	1	**273-5359**	1	PLATE-RUBBER	
	3	1	**273-5360**	1	PLATE-RUBBER	

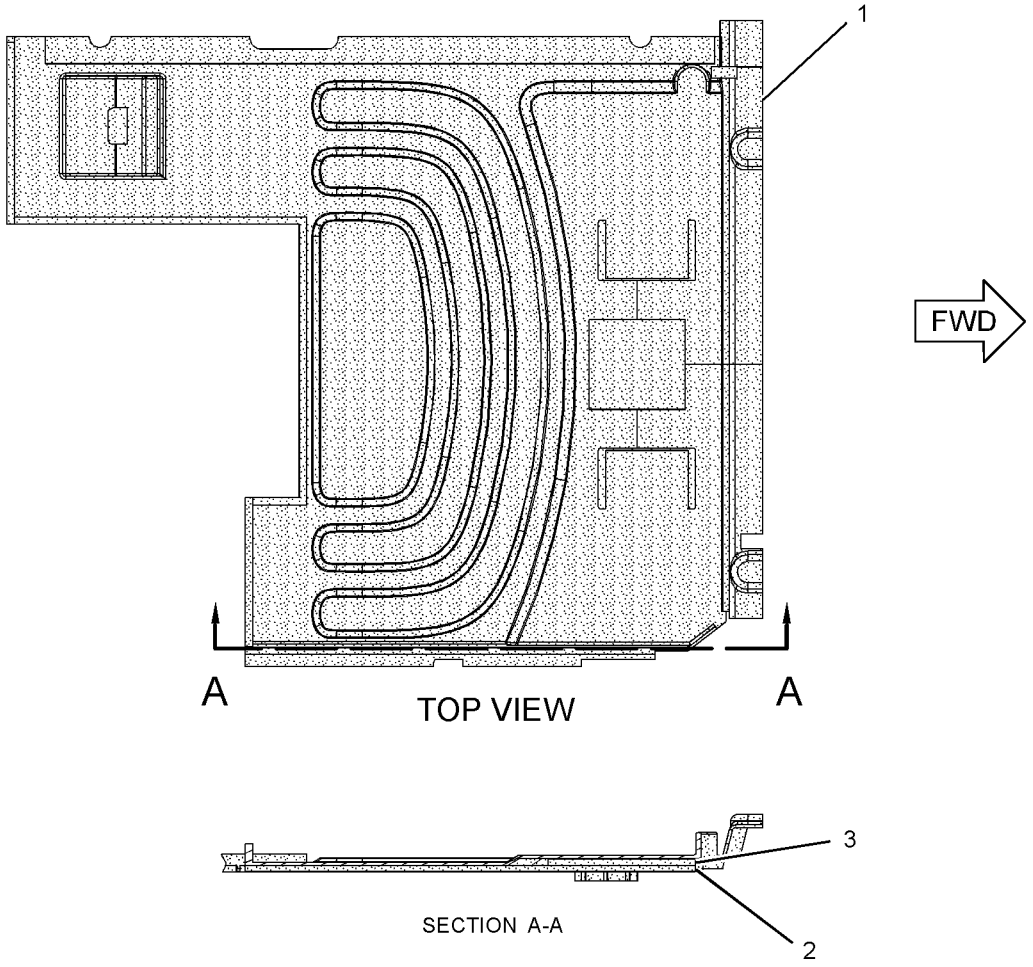

GRAPHIC #1 **<END>** g01235480

OPERATOR STATION

303-2658 GUARD AR-VANDALISM

S/N: JGB1-UP
PART OF 337-8883 OPTION AR-GUARD
AN ATTACHMENT

SMCS-7315 **i02849790**

NOTE	PART NUMBER	QTY	PART NAME 1 2 3 4 5 6 (PRODUCT LEVEL)	SEE PAGE
Y	*207-0159*	1	GUARD GP-VANDALISM (CAB)	911
Y	*304-0010*	1	STORAGE GP-VANDALISM GUARD	400
Y-SEPARATE ILLUSTRATION				

<END>

207-0159 GUARD GP-VANDALISM—CAB

S/N: JGB1-UP
PART OF 303-2658 GUARD AR-VANDALISM
AN ATTACHMENT

SMCS-7315 **i03841509**

NOTE	PART NUMBER	QTY	PART NAME 1 2 3 4 5 6 (PRODUCT LEVEL)	SEE PAGE
Y	*353-8084*	1	GUARD GP-VANDALISM	912
Y	*353-8085*	1	MOUNTING GP-GUARD (VANDALISM)	940
Y-SEPARATE ILLUSTRATION				

<END>

OPERATOR STATION

353-8084 GUARD GP-VANDALISM

S/N: JGB1-UP
PART OF 207-0159 GUARD GP-VANDALISM
AN ATTACHMENT

SMCS-7315 **i03841434**

NOTE	REF NO	GRAPHIC REF	PART NUMBER	QTY	PART NAME 1 2 3 4 5 6 (PRODUCT LEVEL)	SEE PAGE
	1	1	**207-0161**	1	GUARD AS	
	1A	1	**240-5025**	2	HINGE	
	1B	1	**240-5026**	12	RIVET	
	2	1	**207-0164**	1	GUARD AS	
	2A	1	**240-5025**	2	HINGE	
	2B	1	**240-5026**	12	RIVET	
	3	1	**207-0167**	1	GUARD AS	
	3A	1	**240-5025**	2	HINGE	
	3B	1	**240-5026**	12	RIVET	
	4	1	**207-0170**	1	GUARD AS	
	4A	1	**240-5025**	2	HINGE	
	4B	1	**240-5026**	12	RIVET	
	5	1	**207-0173**	1	GUARD AS	
	5A	1	**240-5025**	2	HINGE	
	5B	1	**240-5026**	12	RIVET	

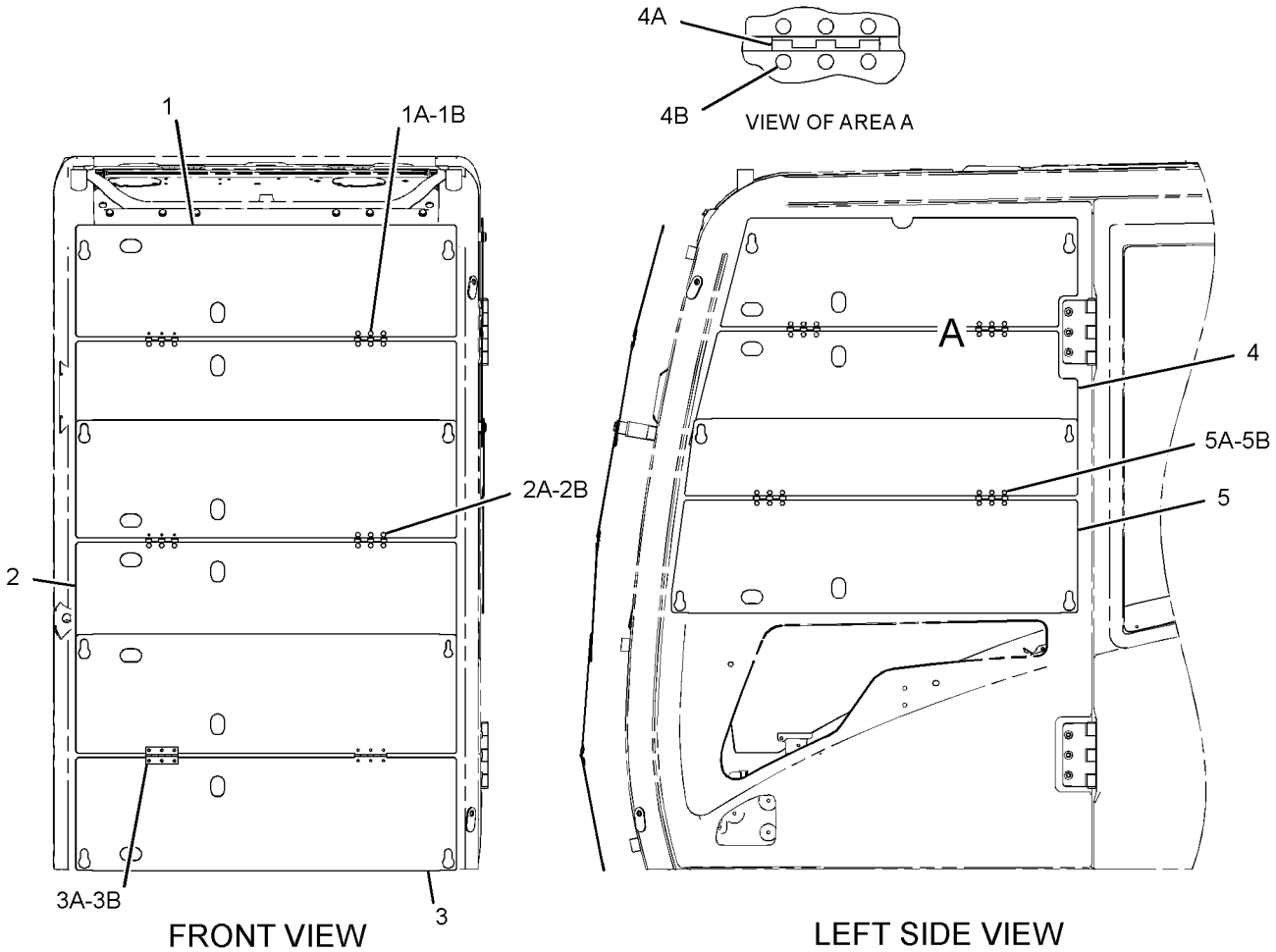

GRAPHIC #1 **<END>** g02151914

OPERATOR STATION

215-6662 GUARD GP-WINDOW

S/N: JGB1-UP; KHS1-UP
CANNOT BE USED WITH VANDALISM GUARDS
AN ATTACHMENT

SMCS-7182, 7315 **i03483431**

NOTE	REF NO	GRAPHIC REF	PART NUMBER	QTY	PART NAME 1 2 3 4 5 6 (PRODUCT LEVEL)	SEE PAGE
	1	1	**5D-4822**	4	RING-RETAINING	
	2	1	**6C-8382**	2	SPRING-LATCH	
	3	1	**176-1928**	2	BRACKET AS	
	4	1	**183-1035**	2	LAMP GP-FLOOD (24-VOLT)	
					(EACH INCLUDES)	
		1	**9X-3463**	1	LAMP-HALOGEN (24-VOLT, 70-WATT)	
	5	1	**196-1569**	1	SUPPORT AS	
	6	1	**196-1571**	1	SUPPORT AS	
	7	1	**196-1572**	2	LATCH AS	
	8	1	**196-1574**	2	BRACKET AS	
	9	1	**327-6601**	1	FRAME AS	
	10	1	**201-4534**	2	PIN	
	11	1	**201-4535**	2	PIN	
	12	1	**207-0216**	2	SPRING AS-GAS	
M	13	1	**096-4882**	2	LOCKNUT (M8X1.25-THD)	
M	14	1	**7X-2553**	2	BOLT (M16X2X40-MM)	
M	15	1	**7Y-0623**	2	LOCKNUT (M16X2-THD)	
	16	1	**8T-4121**	4	WASHER-HARD (11X21X2.5-MM THK)	
M	17	1	**8T-4133**	2	NUT (M10X1.5-THD)	
M	18	1	**8T-4137**	2	BOLT (M10X1.5X20-MM)	
M	19	1	**8T-4139**	6	BOLT (M12X1.75X30-MM)	
M	20	1	**8T-4192**	2	BOLT (M12X1.75X25-MM)	
	21	1	**8T-4223**	8	WASHER-HARD (13.5X25.5X3-MM THK)	
	22	1	**8T-4224**	4	WASHER-HARD (8.8X16X2-MM THK)	
	23	1	**9X-8257**	4	WASHER (17.5X30X3.5-MM THK)	

M-METRIC PART

215-6662 **GUARD GP-WINDOW** *(contd.)* **i03483431**

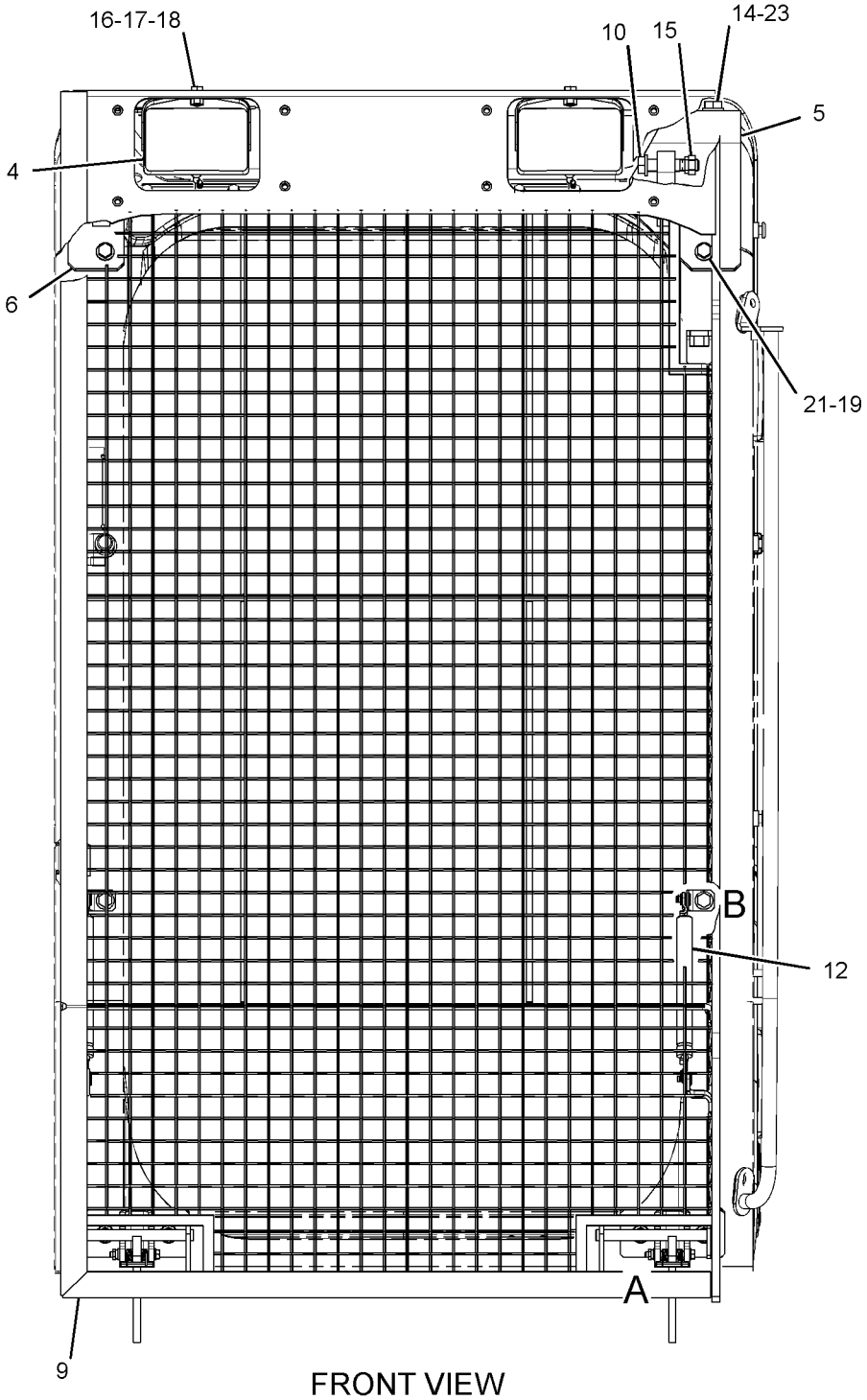

FRONT VIEW

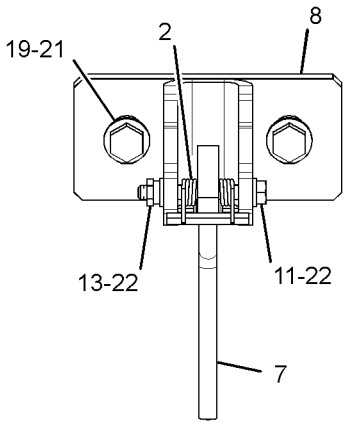

VIEW OF AREA A
(FRAME REMOVED FOR CLARITY)

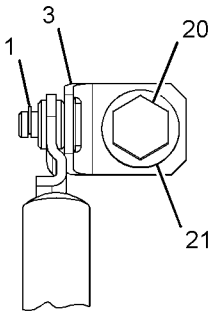

VIEW OF AREA B

GRAPHIC #1 **<END>** g01823354

OPERATOR STATION

216-0611 GUARD GP-WINDOW

S/N: JGB1-UP; KHS1-UP
PART OF 371-9200, 371-9205 DISTRIBUTION AR
AN ATTACHMENT

SMCS-7182, 7315 **i03365860**

NOTE	REF NO	GRAPHIC REF	PART NUMBER	QTY	PART NAME 1 2 3 4 5 6 (PRODUCT LEVEL)	SEE PAGE
	1	1	**5D-4822**	4	RING-RETAINING	
	2	1	**266-0546**	1	FILM-WARNING (FRONT GUARD, READ OMM)	
	3	1	**6C-8382**	2	SPRING-LATCH	
	4	1	**266-0545**	1	FILM-WARNING (TOP GUARD, READ OMM)	
	5	1	**219-0305**	2	FILM-WARNING (NO WELD, NO DRILL, READ OMM)	
	6	1	**167-7141**	1	GUARD AS	
	7	1	**171-7486**	1	GUARD AS	
	8	1	**176-1925**	2	SPRING AS-GAS	
	9	1	**176-1928**	2	BRACKET AS	
	10	1	**183-1035**	2	LAMP GP-FLOOD (24-VOLT) (CANOPY)	
					(EACH INCLUDES)	
		1	**9X-3463**	1	LAMP-HALOGEN (24-VOLT, 70-WATT)	
	11	1	**196-1569**	1	SUPPORT AS	
	12	1	**196-1571**	1	SUPPORT AS	
	13	1	**196-1572**	2	LATCH AS	
	14	1	**196-1574**	2	BRACKET AS	
	15	1	**201-4534**	2	PIN	
	16	1	**201-4535**	2	PIN	
M	17	1	**096-4882**	2	LOCKNUT (M8X1.25-THD)	
M	18	1	**7X-2559**	2	BOLT (M16X2X160-MM)	
M	19	1	**7Y-0623**	2	LOCKNUT (M16X2-THD)	
	20	1	**8T-4121**	4	WASHER-HARD (11X21X2.5-MM THK)	
M	21	1	**8T-4133**	2	NUT (M10X1.5-THD)	
M	22	1	**8T-4137**	2	BOLT (M10X1.5X20-MM)	
M	23	1	**8T-4139**	6	BOLT (M12X1.75X30-MM)	
M	24	1	**8T-4174**	2	BOLT (M16X2X120-MM)	
M	25	1	**8T-4192**	2	BOLT (M12X1.75X25-MM)	
	26	1	**8T-4223**	8	WASHER-HARD (13.5X25.5X3.0-MM THK)	
	27	1	**8T-4224**	4	WASHER-HARD (8.8X16X2-MM THK)	
	28	1	**9X-8257**	6	WASHER (17.5X30.0X3.5-MM THK)	

M-METRIC PART

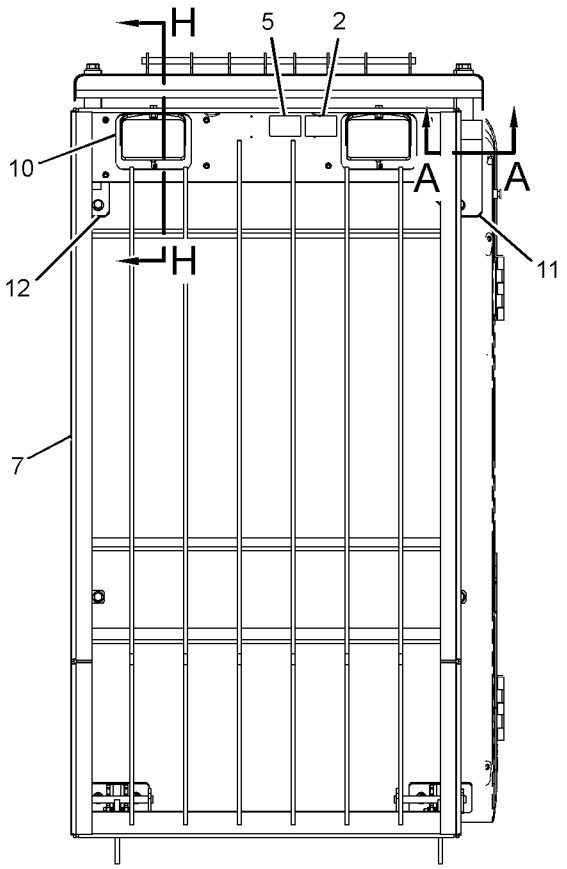

FRONT VIEW

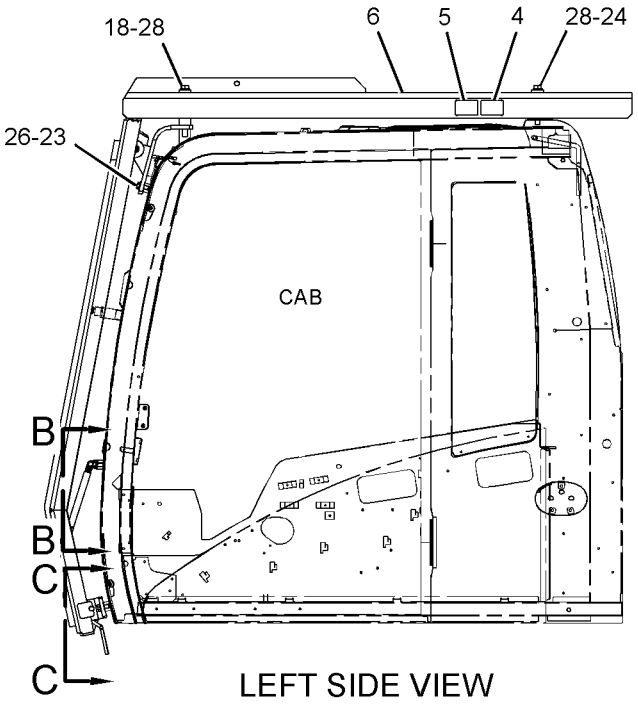

LEFT SIDE VIEW

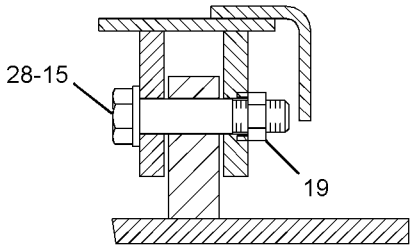

SECTION A-A

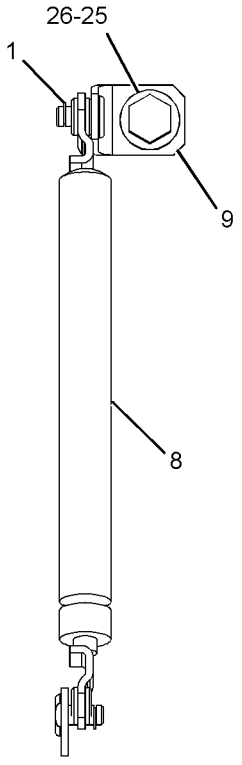

SECTION B-B

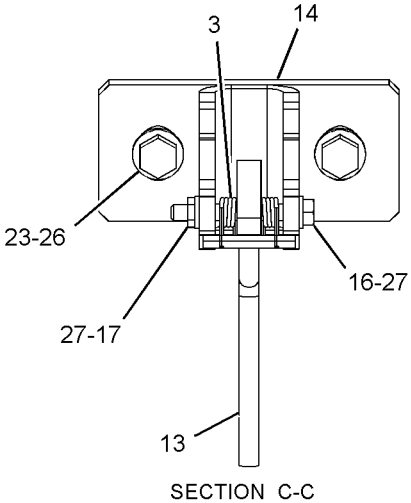

SECTION C-C

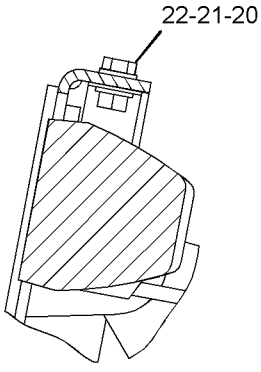

SECTION H-H

GRAPHIC #1 **<END>** g01731934

OPERATOR STATION

139-7099 HATCH GP-ROOF

S/N: JGB1-UP; KHS1-UP
PART OF 356-6716 CAB GP

SMCS-7303 **i02499222**

NOTE	REF NO	GRAPHIC REF	PART NUMBER	QTY	PART NAME 1 2 3 4 5 6 (PRODUCT LEVEL)	SEE PAGE
	1	1	**189-2847**	1	SEAL	
Y	2	1	**189-2849**	1	HATCH GP-ROOF	918
	3	1	**099-3506**	2	SPRING AS-GAS	
M	4	1	**105-2169**	4	BOLT AS	
	5	1	**2Y-5685**	4	RING-RETAINING	

M-METRIC PART
Y-SEPARATE ILLUSTRATION

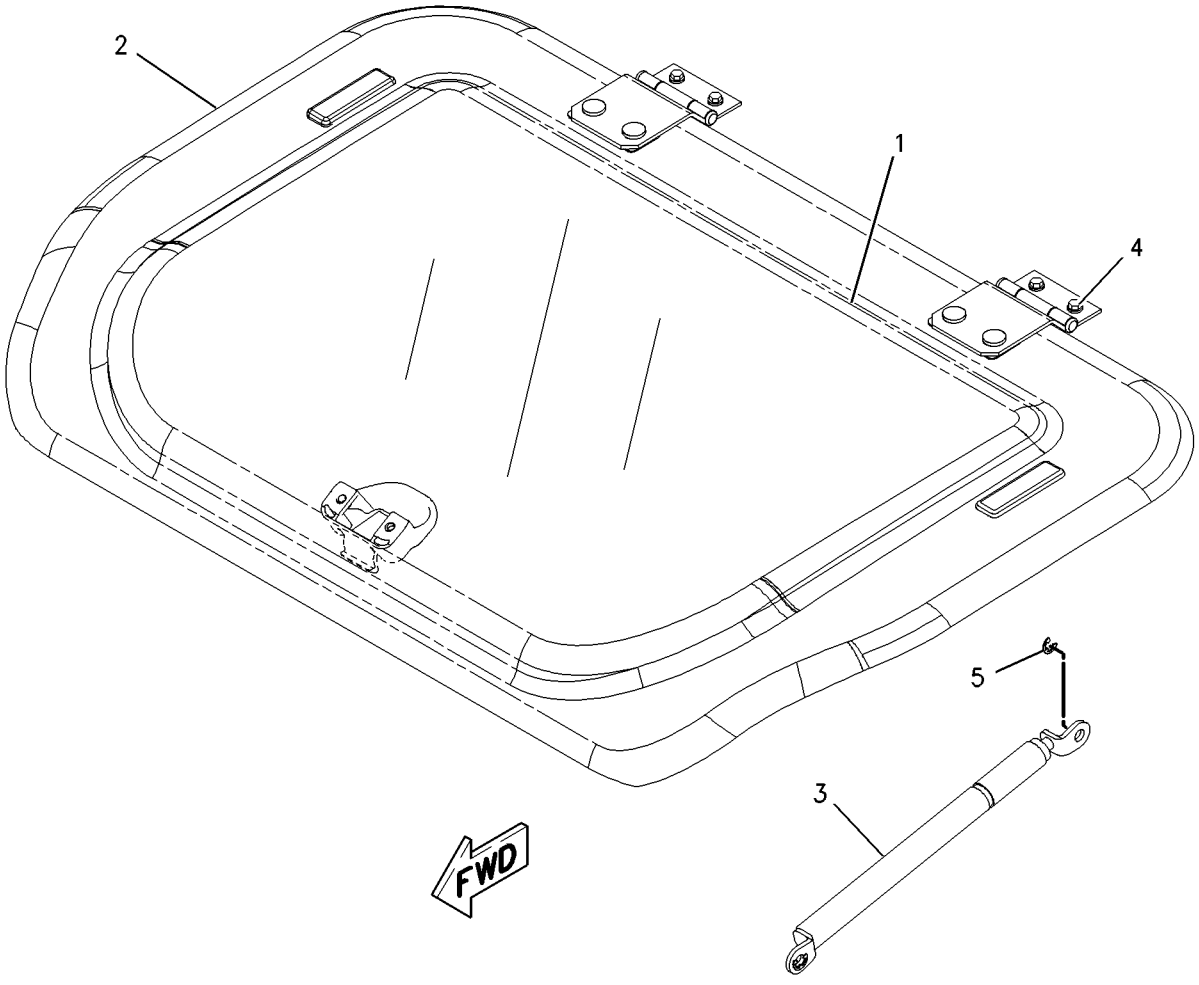

GRAPHIC #1 **<END>** g00844238

OPERATOR STATION

189-2849 HATCH GP-ROOF

S/N: JGB1-UP; KHS1-UP

PART OF 139-7099 HATCH GP-ROOF

SMCS-7303 **i03522729**

NOTE	REF NO	GRAPHIC REF	PART NUMBER	QTY	PART NAME 1 2 3 4 5 6 (PRODUCT LEVEL)	SEE PAGE
	1	1	**161-3694**	1	CATCH	
	2	1	**189-2693**	1	BRACKET AS (RH)	
	3	1	**189-2694**	1	BRACKET AS (LH)	
	4	1	**189-2716**	2	HINGE AS	
	6	1	**085-6449**	2	PACKING	
M	7	1	**100-2881**	4	SCREW-TRUSS HEAD	
	8	1	**171-7477**	2	NUT	
	9	1	**4I-1260**	2	PACKING	
	10	1	**4I-4361**	2	RETAINER	
M	11	1	**6I-5342**	4	NUT (M8X1.25-THD)	
M	12	1	**9X-2045**	2	SCREW-TRUSS HEAD (M6X1X20-MM)	

M-METRIC PART

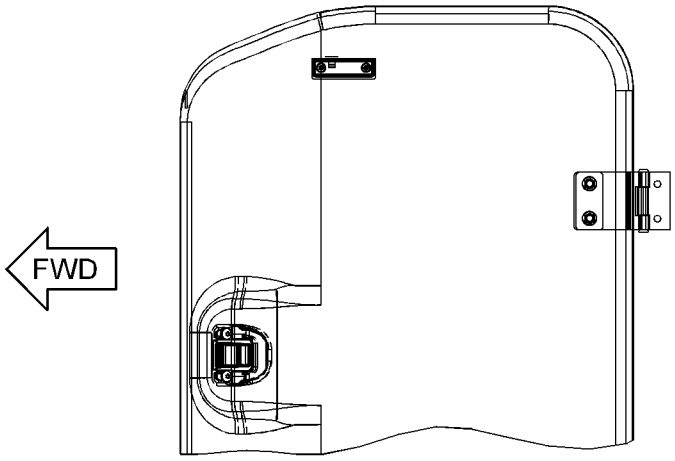

TOP VIEW

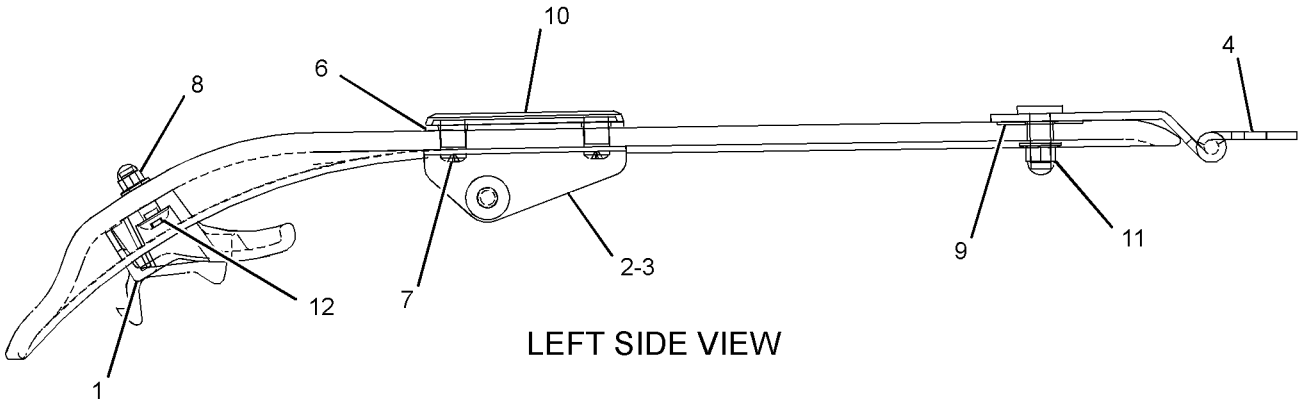

LEFT SIDE VIEW

GRAPHIC #1 **<END>** g01852853

OPERATOR STATION

319-1145 HORN GP-ELECTRIC

S/N: JGB1-UP; KHS1-UP

PART OF 370-3231, 370-4189 CHASSIS AR

SMCS-7402 **i03603582**

NOTE	REF NO	GRAPHIC REF	PART NUMBER	QTY	PART NAME 1 2 3 4 5 6 (PRODUCT LEVEL)	SEE PAGE
	1	1	**213-0710**	1	HORN AS (24-VOLT, LOW TONE)	
	2	1	**213-0711**	1	HORN AS (24-VOLT, HIGH TONE)	
					(EACH HORN AS INCLUDES)	
M		1	**8C-7581**	2	SCREW-MACHINE (M4X0.7X8-MM)	
		1	**8C-9660**	2	WASHER (4.6X7.9X0.8-MM THK)	
		1	**8H-0878**	2	LOCKWASHER	
	3	1	**327-9981**	1	HARNESS AS-PLATFORM (HORN)	
		1	**3S-2093**	3	STRAP-CABLE	
		1	**9W-0852**	2	PIN-CONNECTOR (14-GA TO 16-GA)	
		1	**5P-2321**	2	TERMINAL-FORK (14-GA TO 16-GA, NO. 6 SCREW)	
		1	**243-4505**	1	RECEPTACLE AS-CONNECTOR (2-PIN)	
	4	1	**319-1147**	1	BRACKET	
	5	1	**8T-4121**	2	WASHER-HARD (11X21X2.5-MM THK)	
M	6	1	**8T-4136**	2	BOLT (M10X1.5X25-MM)	
M	7	1	**8T-4200**	4	BOLT (M8X1.25X16-MM)	
	8	1	**8T-4224**	4	WASHER-HARD (8.8X16X2-MM THK)	

M-METRIC PART

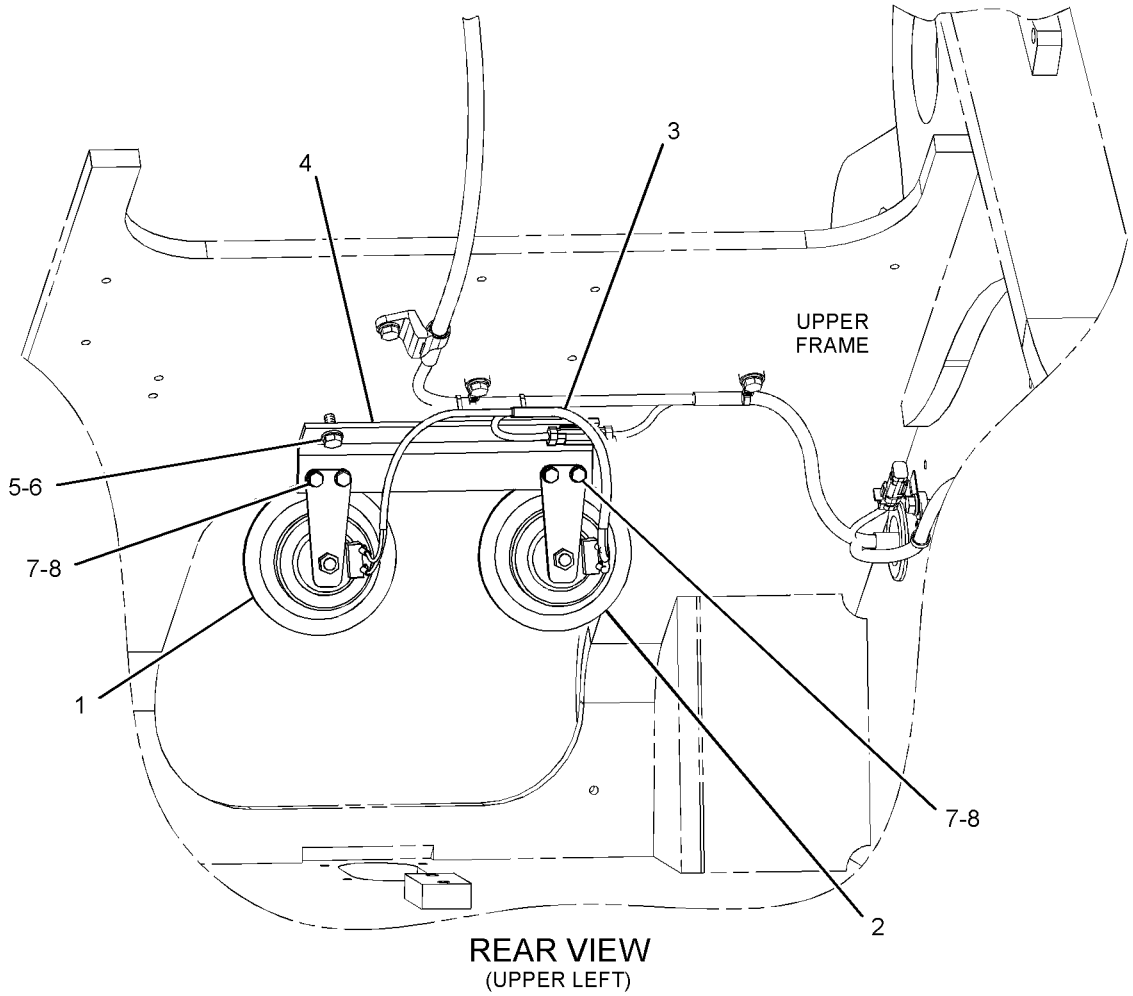

REAR VIEW
(UPPER LEFT)

GRAPHIC #1 **<END>** g01941993

OPERATOR STATION

245-7812 HOUSING GP-AIR CONDITIONER–INLET AIR

S/N: JGB1-UP; KHS1-UP

PART OF 316-8917 AIR CONDITIONER GP

SMCS-7320 **i02503824**

NOTE	REF NO	GRAPHIC REF	PART NUMBER	QTY	PART NAME 1 2 3 4 5 6 (PRODUCT LEVEL)	SEE PAGE
	1	1	**185-8300**	6	SCREW-TAPPING	
	2	1	**196-1666**	1	RELAY (COMPRESSOR CLUTCH)	
	2A	1	**196-1666**	1	RELAY (BLOWER)	
	2B	1	**196-1666**	1	RELAY (CONDENSER)	
	2C	1	**196-1666**	1	RELAY (CONDENSER, HIGH)	
	3	1	**245-7813**	1	MOTOR AS	
	4	1	**245-7814**	1	BRACKET	
	5	1	**245-7815**	1	SENSOR AS-TEMPERATURE (AIR)	
	6	1	**245-7816**	1	DAMPER AS	

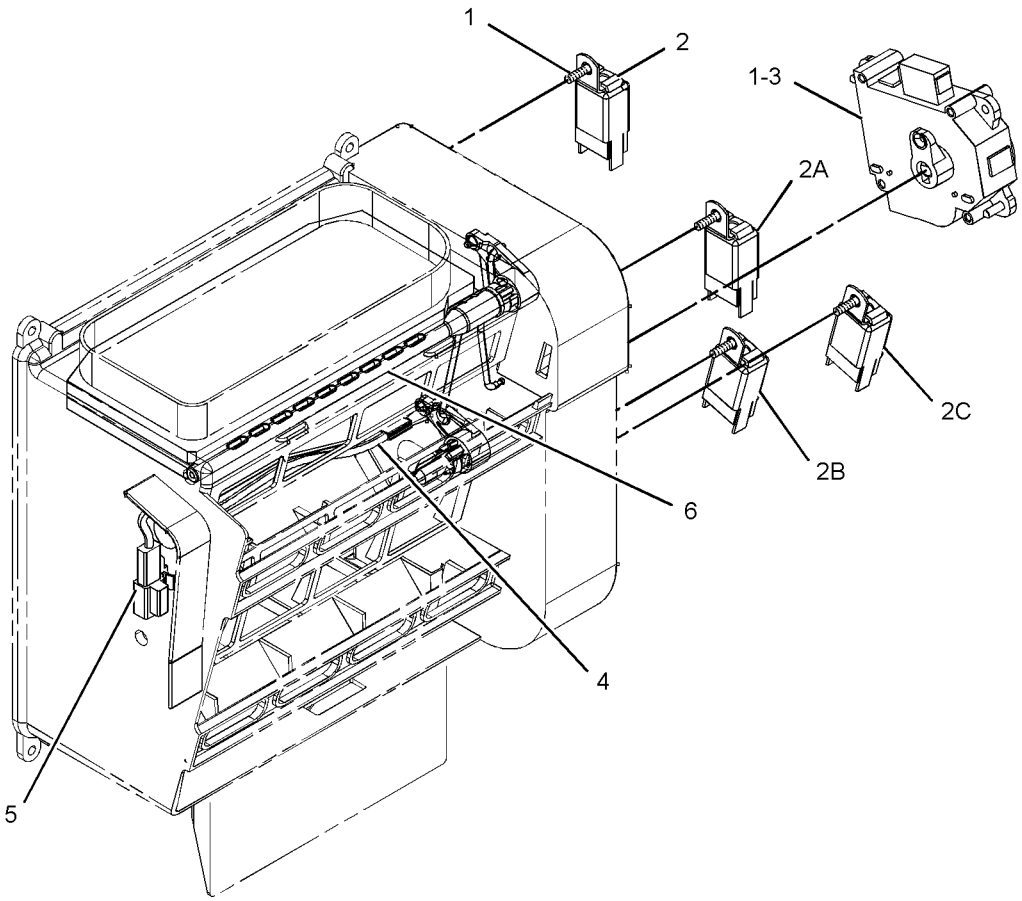

GRAPHIC #1 **<END>** g01253120

351-9652 INSTALLATION AR—ACCUMULATOR

S/N: JGB1-UP; KHS1-UP
AN ATTACHMENT

SMCS-1405, 1802, 1805, 1808, 7174, 7304, 7319, 7320, 7348, 734D **i03897166**

NOTE	PART NUMBER	QTY	PART NAME 1 2 3 4 5 6 (PRODUCT LEVEL)	SEE PAGE
Y	*352-6860*	1	ACCUMULATOR GP-HYDRAULIC (CHARGED)	451
Y-SEPARATE ILLUSTRATION				

<END>

303-2702 INSTALLATION AR-RADIO—COMMUNICATION RADIO

S/N: JGB1-UP; KHS1-UP
CANNOT BE USED WITH 283-2913—PAGE 315
AN ATTACHMENT

SMCS-1408, 7338 **i02848984**

NOTE	PART NUMBER	QTY	PART NAME 1 2 3 4 5 6 (PRODUCT LEVEL)	SEE PAGE
Y	*309-5765*	1	MOUNTING GP-ANTENNA (COMMUNICATION RADIO)	936
Y	*306-8639*	1	WIRING GP-CHASSIS (COMMUNICATION RADIO)	274
Y	*306-8346*	1	WIRING GP-CONVERTER (COMMUNICATION RADIO)	290
Y-SEPARATE ILLUSTRATION				

<END>

OPERATOR STATION

327-6645 KIT-SEAT SUSPENSION–MECHANICAL

S/N: JGB1-UP; KHS1-UP

PART OF 327-6520 SUSPENSION GP-SEAT

SMCS-7312 **i03879152**

NOTE	REF NO	GRAPHIC REF	PART NUMBER	QTY	PART NAME 1 2 3 4 5 6 (PRODUCT LEVEL)	SEE PAGE
	1	1	**327-6646**	1	KIT-CYLINDER (DAMPENER)	
J	2	1	**327-6647**	1	KIT-COVER (SUSPENSION)	
					(INCLUDES COVER & CLIP KIT)	
	3	1	**333-4180**	6	SCREW-BUTTON HEAD (M8X1.25X20-MM)	
	4	1	**333-4181**	1	KIT-HANDLE (SEAT HEIGHT)	
M	5	1	**7Y-7394**	4	SCREW-BUTTON HEAD (M8X1.25X25-MM)	
					PARTS SHOWN IN GRAPHIC(S) WITHOUT A REFERENCE NUMBER ARE NOT SERVICED SEPARATELY	
					AVAILABLE REPAIR KIT(S):	
J			**245-7895**	1	KIT-CLIP	
					(INCLUDES 28 CLIPS)	

J-KIT MARKED J SERVICES PART(S) MARKED J
M-METRIC PART

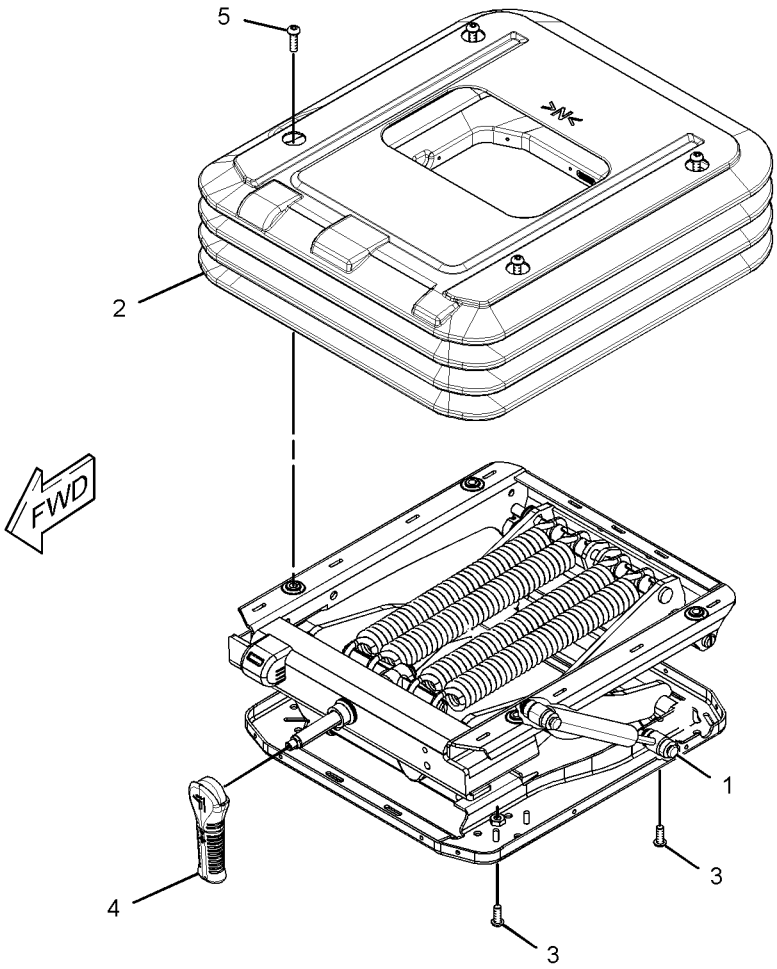

GRAPHIC #1 **<END>** g01689513

OPERATOR STATION

333-4157 KIT-SEAT SUSPENSION–AIR

S/N: JGB1-UP; KHS1-UP
PART OF 327-6521 SUSPENSION GP-SEAT
AN ATTACHMENT

SMCS-7312 **i03440965**

NOTE	REF NO	GRAPHIC REF	PART NUMBER	QTY	PART NAME 1 2 3 4 5 6 (PRODUCT LEVEL)	SEE PAGE
	1	1	**327-6646**	1	KIT-CYLINDER (DAMPENER)	
J	2	1	**333-4158**	1	KIT-COVER (SUSPENSION)	
					(INCLUDES COVER & CLIP KIT)	
	3	1	**333-4159**	1	KIT-VALVE (AIR SEAT)	
		1	**333-4178**	1	NUT	
	4	1	**333-4180**	6	SCREW-BUTTON HEAD (M8X1.25X20-MM)	
M	5	1	**7Y-7394**	4	SCREW-BUTTON HEAD (M8X1.25X25-MM)	
					PARTS SHOWN IN GRAPHIC(S) WITHOUT A REFERENCE NUMBER ARE NOT SERVICED SEPARATELY	
					AVAILABLE REPAIR KIT(S):	
J			**245-7895**	1	KIT-CLIP	
					(INCLUDES 28 CLIPS)	

J-MARKED J SERVICES PART(S) MARKED J
M-METRIC PART

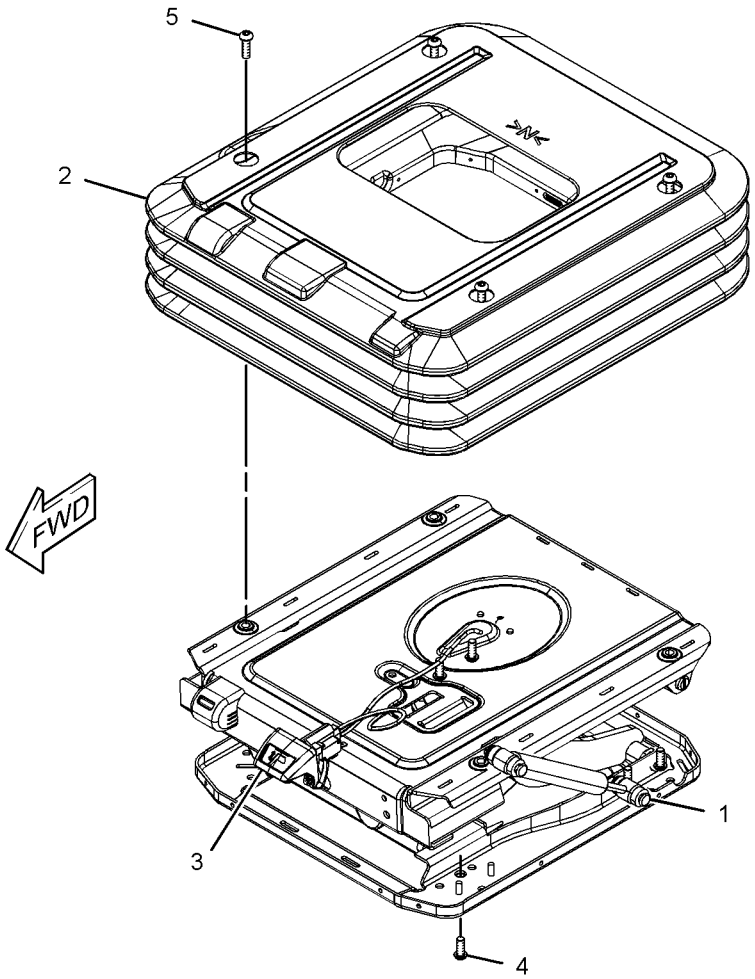

GRAPHIC #1 **<END>** g01689529

OPERATOR STATION

164-0528 LEVER GP-CAB DOOR

S/N: JGB1-UP; KHS1-UP

PART OF 346-8058 ACCESSORY GP-CAB

SMCS-7308 **i02517097**

NOTE	REF NO	GRAPHIC REF	PART NUMBER	QTY	PART NAME 1 2 3 4 5 6 (PRODUCT LEVEL)	SEE PAGE
	1	1	**156-6642**	1	LEVER AS	
	2	1	**164-0664**	1	BRACKET	
	3	1	**176-1941**	1	PIN	
	4	1	**185-8280**	1	WASHER-WAVE (10.5X15X0.3-MM THK)	
	5	1	**185-8281**	1	SPRING	

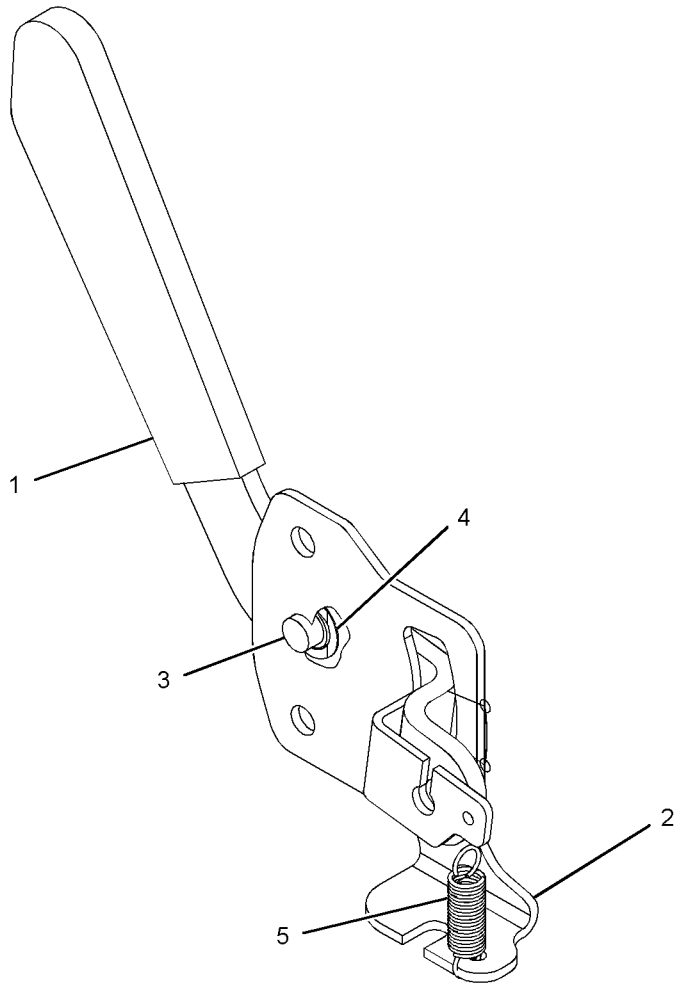

GRAPHIC #1 **<END>** g01217036

OPERATOR STATION

225-5784 LINES GP-AIR CONDITIONER

S/N: JGB1-UP; KHS1-UP

PART OF 370-3231, 370-4189 CHASSIS AR

SMCS-1808 **i03532680**

NOTE	REF NO	GRAPHIC REF	PART NUMBER	QTY	PART NAME 1 2 3 4 5 6 (PRODUCT LEVEL)	SEE PAGE
M	1	1	**8T-4136**	1	BOLT (M10X1.5X25-MM)	
	2	1	**122-9657**	2	CLAMP	
	3	1	**130-0252**	2	HOSE-DRAIN	
	4	1	**176-1902**	1	DRYER-REFRIGERANT (RECEIVER)	
	5	1	**189-3434**	1	ELBOW	
	6	1	**203-2287**	1	CLIP	
	7	1	**229-9121**	1	HOSE AS	
		1	**121-7137**	2	SEAL-O-RING	
		1	**245-7850**	1	PLUG	
	8	1	**229-9122**	1	HOSE AS	
		1	**121-7136**	2	SEAL-O-RING	
		1	**245-7851**	1	PLUG	
	9	1	**229-9123**	1	HOSE AS	
		1	**121-7138**	2	SEAL-O-RING	
		1	**196-1665**	1	SWITCH AS-PRESSURE (REFRIGERANT)	
		1	**185-8293**	1	SEAL-O-RING	
	10	1	**229-9124**	1	HOSE AS	
		1	**121-7138**	2	SEAL-O-RING	
	11	1	**229-9129**	1	BRACKET AS	
	12	1	**235-8891**	1	PLATE	
BC	13	1	**235-9014**	4	CLAMP-SPRING	
					—OR—	
BC	14	1	**5D-1026**	4	CLAMP-BAND	
	15	1	**240-4995**	1	BRACKET AS	
	16	1	**104-3173**	6	CLIP	
	17	1	**121-7098**	1	BRACKET AS	
M		1	**8T-4138**	2	BOLT (M6X1X20-MM)	
		1	**9X-8256**	2	WASHER (6.6X12X2-MM THK)	
	18	1	**133-4419**	1	GROMMET	
	19	1	**1S-0994**	1	CLIP	
	20	1	**2M-9780**	2	SEAL-O-RING	
CE	21	1	**5P-0767**		HOSE (380-CM)	
E	21A	1	**5P-0767**		HOSE (360-CM)	
	22	1	**3K-0360**	3	SEAL-O-RING	
	23	1	**5K-5338**	1	CLIP	
	24	1	**5P-7854**	1	CLIP	
	25	1	**100-4336**	2	CLIP	
	26	1	**6D-4246**	2	CLIP	
	27	1	**245-7918**	1	ADAPTER	
	28	1	**6V-3265**	1	CLIP	
	29	1	**6V-7238**	2	VALVE-SHUTOFF (ENGINE COOLANT)	
M	30	1	**6V-7357**	3	BOLT (M6X1X25-MM)	
	31	1	**6V-7420**	1	ADAPTER	
	32	1	**6K-8178**	1	CLIP	
	33	1	**316-8805**	1	GROMMET	
	34	1	**8M-2773**	1	CLIP	
	35	1	**8T-4121**	17	WASHER-HARD (11X21X2.5-MM THK)	
M	36	1	**8T-4137**	16	BOLT (M10X1.5X20-MM)	
M	37	1	**8T-4200**	2	BOLT (M8X1.25X16-MM)	
	38	1	**8T-4224**	2	WASHER-HARD (8.8X16X2-MM THK)	
M	39	1	**8T-4971**	2	BOLT (M6X1X30-MM)	
	40	1	**9X-8256**	5	WASHER (6.6X12X2-MM THK)	
E	41	1	**102-1174**		GUARD (17-CM)	
	42	1	**305-0441**	2	BAND-MARKER (HS)	
	43	1	**305-0442**	2	BAND-MARKER (HR)	

B-USE AS REQUIRED
C-CHANGE FROM PREVIOUS TYPE
E-ORDER BY THE CENTIMETER
M-METRIC PART

225-5784 **LINES GP-AIR CONDITIONER** *(contd.)* **i03532680**

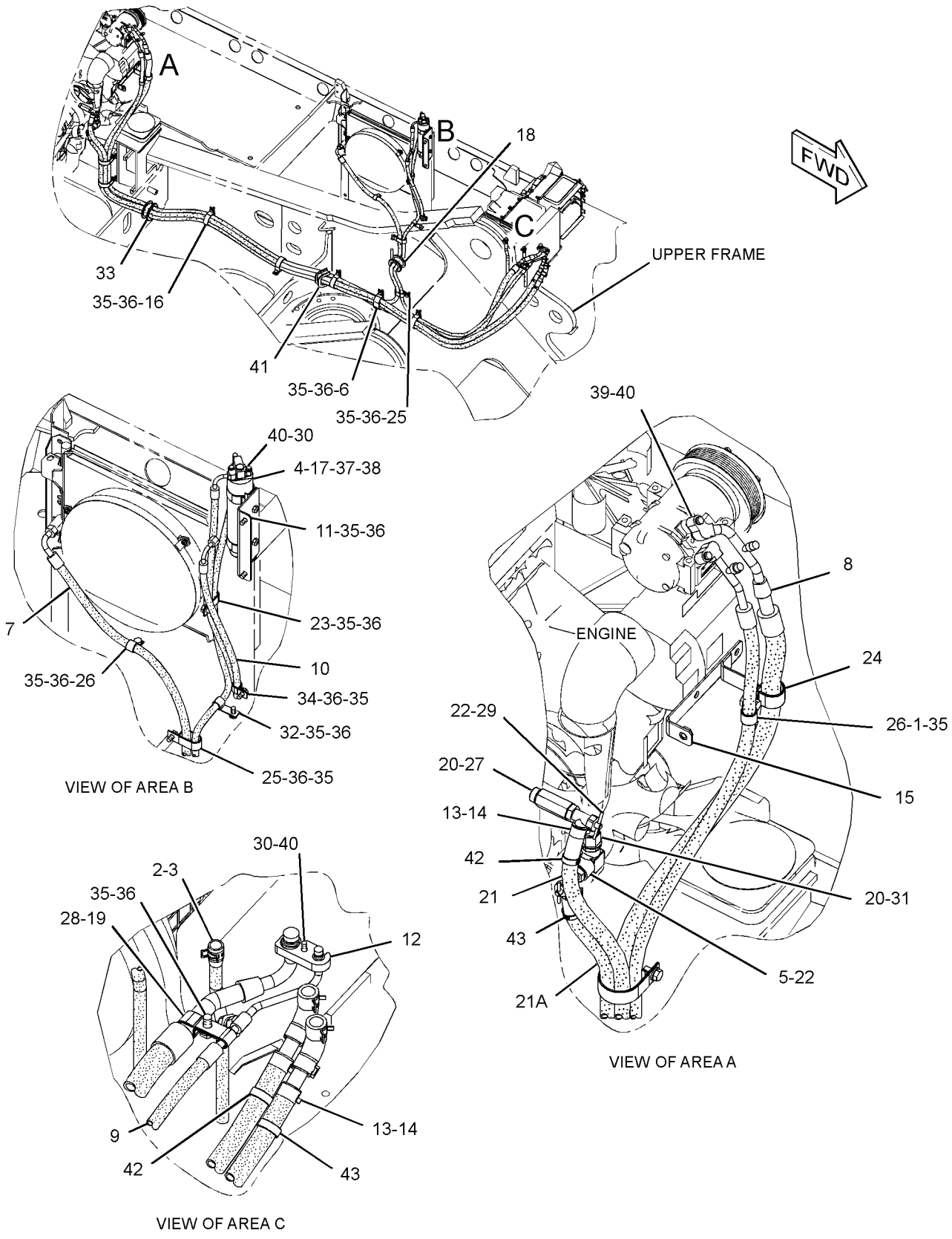

GRAPHIC #1 **<END>** g01782373

OPERATOR STATION

7Y-0059 LITERATURE GP

S/N: JGB1-UP; KHS1-UP

PART OF 370-3231, 370-4189 CHASSIS AR

SMCS-7300 **i03369341**

NOTE	PART NUMBER	QTY	PART NAME 1 2 3 4 5 6 (PRODUCT LEVEL)	SEE PAGE
	099-3645	1	CABLE-LANYARD	
	5P-8500	2	KEY	
	5P-7958	2	SLEEVE-CABLE SPLICE	

<END>

OPERATOR STATION

223-2983 MIRROR GP-REAR VIEW

S/N: JGB1-UP; KHS1-UP

PART OF 370-3231, 370-4189 CHASSIS AR

SMCS-7319 **i02900158**

NOTE	REF NO	GRAPHIC REF	PART NUMBER	QTY	PART NAME 1 2 3 4 5 6 (PRODUCT LEVEL)	SEE PAGE
C	1	1	**320-5397**	1	BAR AS	
					–OR–	
		1	**114-6294**	1	BAR AS	
M	2	1	**135-8575**	4	BOLT AS	
	3	1	**137-2270**	1	MIRROR	
C	4	1	**320-5398**	1	SUPPORT AS	
					–OR–	
		1	**236-9246**	1	SUPPORT AS	
	5	1	**8T-4223**	1	WASHER-HARD (13.5X25.5X3-MM THK)	
M	6	1	**8T-4244**	1	NUT (M12X1.75-THD)	

C-CHANGE FROM PREVIOUS TYPE
M-METRIC PART

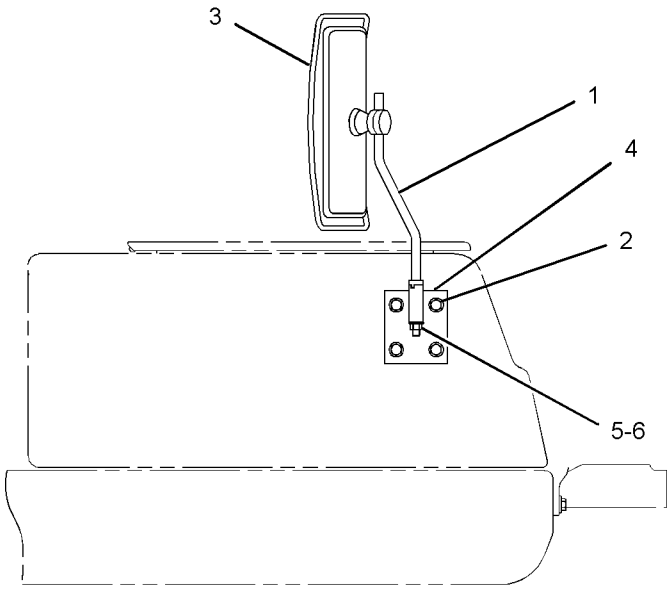

RIGHT SIDE VIEW

GRAPHIC #1 **<END>** g01087952

OPERATOR STATION

327-6550 MIRROR GP-REAR VIEW

S/N: JGB1-UP; KHS1-UP

PART OF 346-8058 ACCESSORY GP-CAB

SMCS-7319 **i03184272**

NOTE	REF NO	GRAPHIC REF	PART NUMBER	QTY	PART NAME 1 2 3 4 5 6 (PRODUCT LEVEL)	SEE PAGE
M	1	1	**8T-0269**	2	BOLT-SOCKET HEAD (M6X1X20-MM)	
	2	1	**9X-8256**	2	WASHER (6.6X12X2-MM THK)	

M-METRIC PART

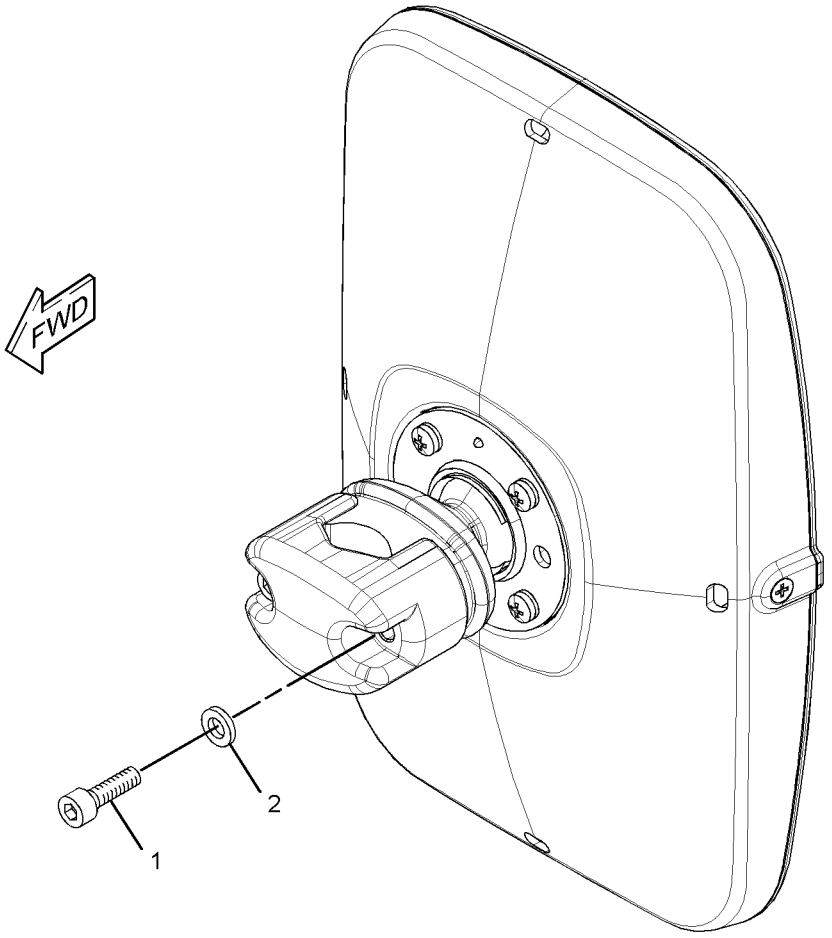

GRAPHIC #1 **<END>** g01615528

OPERATOR STATION

221-8813 MONITOR & MTG GP-OPERATOR

S/N: JGB1-UP; KHS1-UP

PART OF 356-6716 CAB GP

SMCS-7490 **i04004452**

NOTE	REF NO	GRAPHIC REF	PART NUMBER	QTY	PART NAME 1 2 3 4 5 6 (PRODUCT LEVEL)	SEE PAGE
Y	1	1	**349-5408**	1	MONITOR GP-OPERATOR	933
M	2	1	**9X-2046**	3	SCREW-TRUSS HEAD (M6X1X35-MM)	

M-METRIC PART
Y-SEPARATE ILLUSTRATION

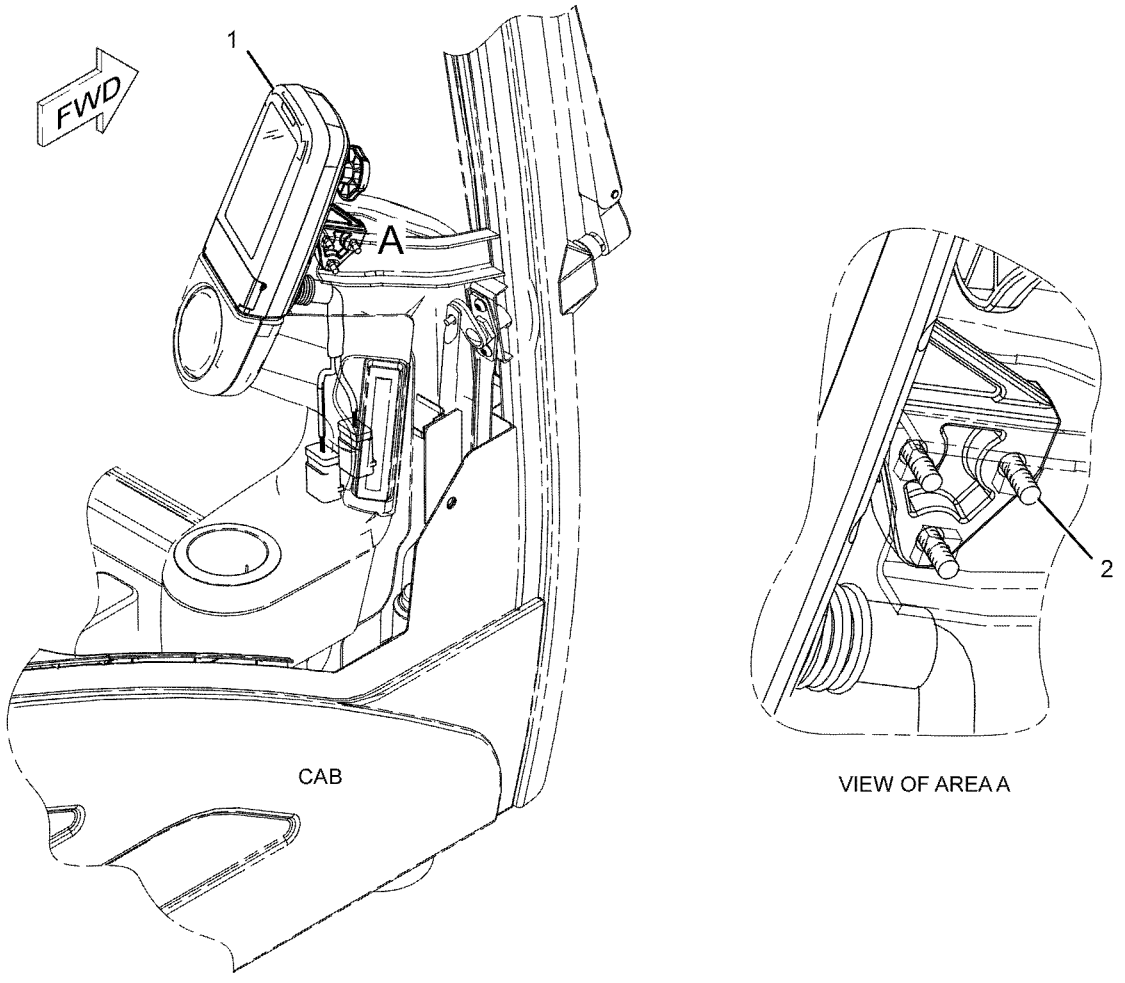

GRAPHIC #1 **<END>** g01129076

OPERATOR STATION

327-7482 MONITOR GP-OPERATOR

S/N: JGB1-UP; KHS1-UP

PART OF 349-5408 MONITOR GP-OPERATOR

SMCS-7490 **i03887269**

NOTE	REF NO	GRAPHIC REF	PART NUMBER	QTY	PART NAME 1 2 3 4 5 6 (PRODUCT LEVEL)	SEE PAGE
	1	1	**247-2694**	1	RECEPTACLE AS-CONNECTOR (12-PIN)	
	2	1	**247-2695**	1	RECEPTACLE AS-CONNECTOR (12-PIN)	
	3	1	**144-1636**	17	PIN-CONNECTOR (14-GA TO 18-GA)	
	4	1	**8T-8737**	7	PLUG-SEAL	
	5	1	**327-7594**	1	COVER AS-MONITOR	

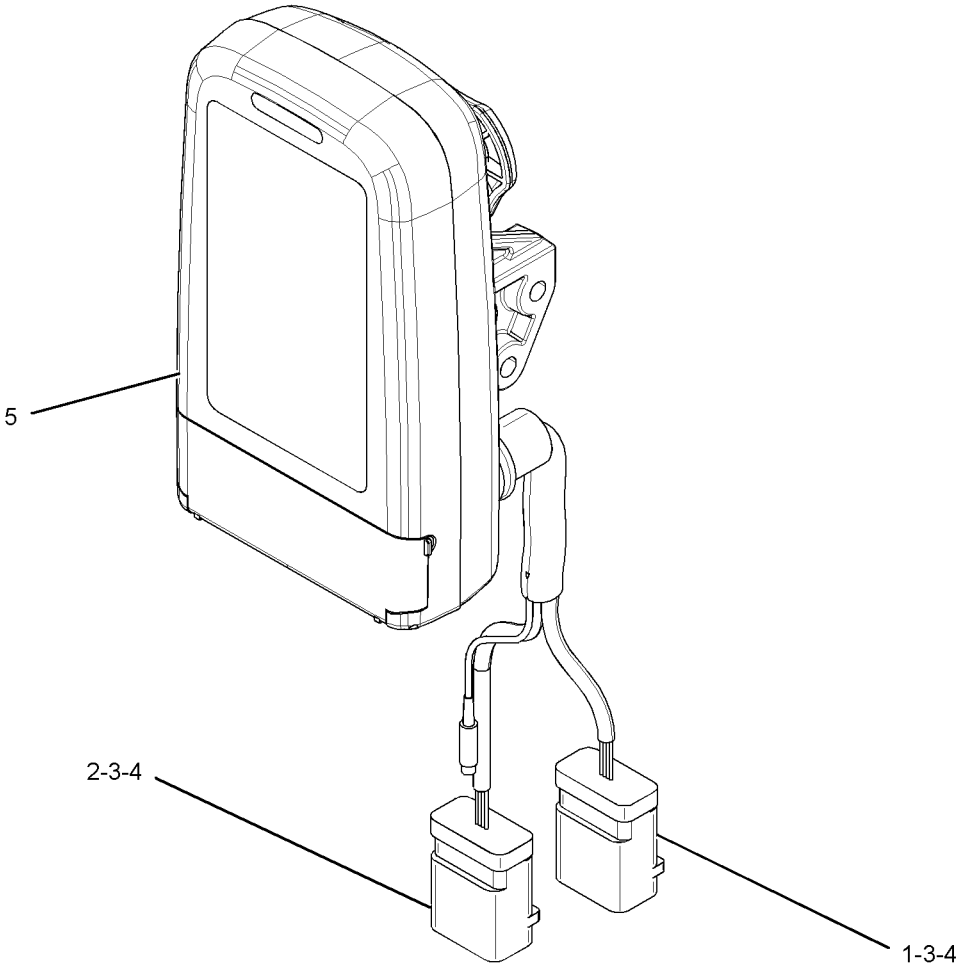

GRAPHIC #1 **<END>** g02046156

OPERATOR STATION

349-5408 MONITOR GP-OPERATOR

S/N: JGB1-UP; KHS1-UP

PART OF 221-8813 MONITOR & MTG GP-OPERATOR

SMCS-7490 **i04004467**

NOTE	REF NO	GRAPHIC REF	PART NUMBER	QTY	PART NAME 1 2 3 4 5 6 (PRODUCT LEVEL)	SEE PAGE
Y	1	1	**327-7482**	1	MONITOR GP-OPERATOR	932
	2	1	**349-5410**	1	SOFTWARE GP-MONITOR	

Y-SEPARATE ILLUSTRATION

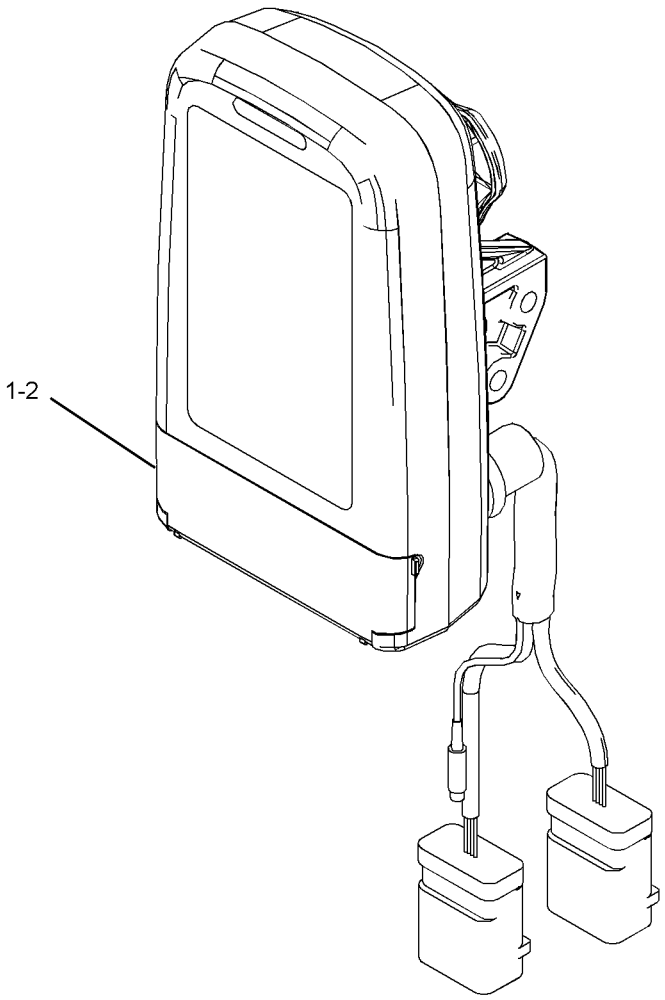

GRAPHIC #1

<END>

g01993756

OPERATOR STATION

270-5603 MOUNTING GP-ANTENNA–ACCUGRADE

S/N: JGB1-UP; KHS1-UP
PART OF 356-4742 PARTS AR-CAB
AN ATTACHMENT

SMCS-7338, 7606 **i02878768**

NOTE	REF NO	GRAPHIC REF	PART NUMBER	QTY	PART NAME 1 2 3 4 5 6 (PRODUCT LEVEL)	SEE PAGE
	1	1	**309-5849**	1	BRACKET AS	
M	2	1	**7X-2552**	2	BOLT (M16X2X30-MM)	
	3	1	**9X-8257**	2	WASHER (17.5X30X3.5-MM THK)	

M-METRIC PART

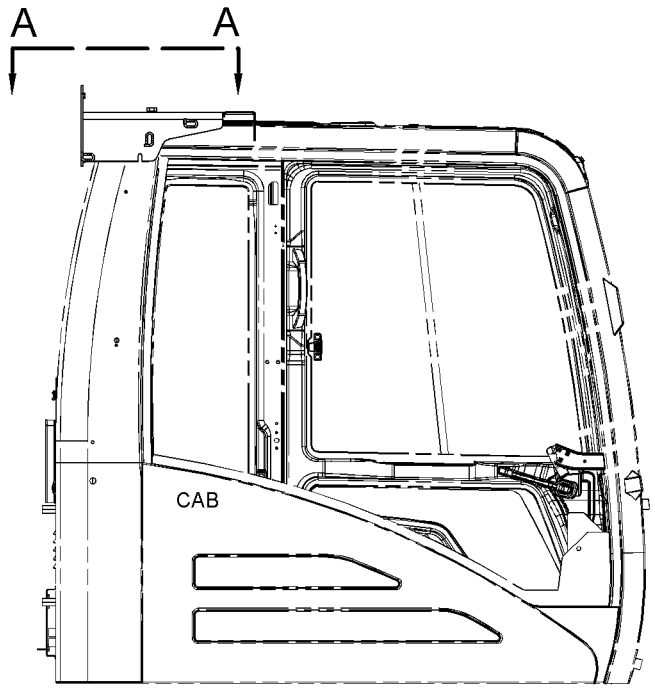

RIGHT SIDE VIEW
(WITHOUT CAB GUARD)

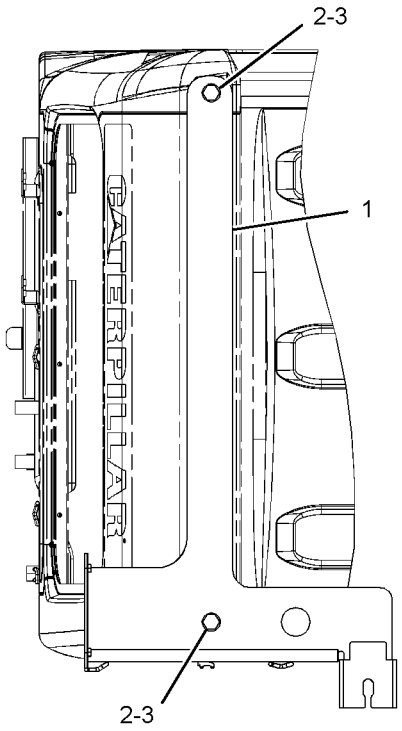

VIEW A-A

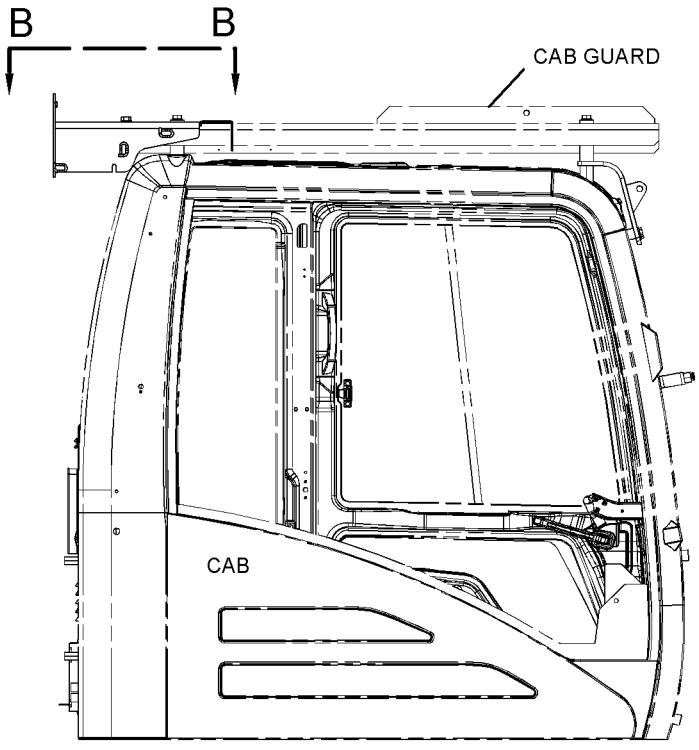

RIGHT SIDE VIEW
(WITH CAB GUARD)

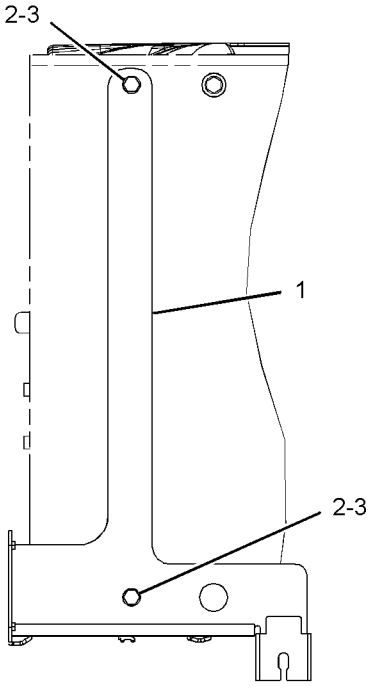

VIEW B-B

GRAPHIC #1 **<END>** g01435822

OPERATOR STATION

309-5765 MOUNTING GP-ANTENNA–COMMUNICATION RADIO

S/N: JGB1-UP; KHS1-UP
PART OF 303-2702 INSTALLATION AR-RADIO
AN ATTACHMENT

SMCS-7338, 7606 **i02849135**

NOTE	REF NO	GRAPHIC REF	PART NUMBER	QTY	PART NAME 1 2 3 4 5 6 (PRODUCT LEVEL)	SEE PAGE
	1	1	**9U-2331**	2	ANTENNA AS (COMMUNICATION RADIO)	
	2	1	**9U-4431**	2	MOUNT-ANTENNA	
	3	1	**309-5796**	1	PLATE	

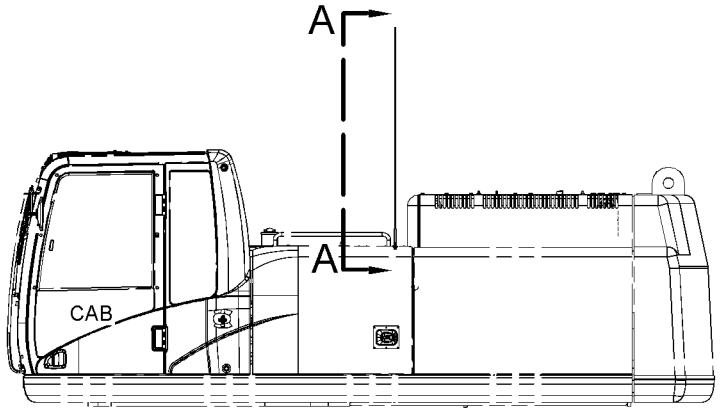

LEFT SIDE VIEW

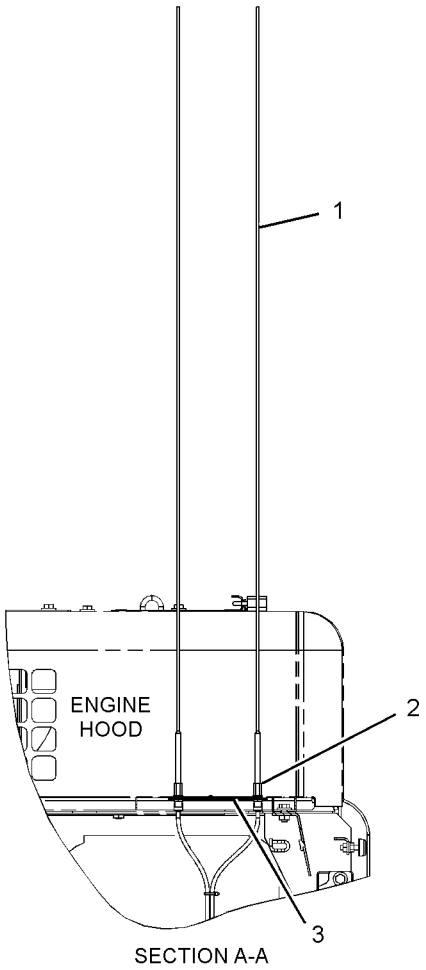

SECTION A-A

GRAPHIC #1 **<END>** g01456327

OPERATOR STATION

309-5771 MOUNTING GP-ANTENNA—PRODUCT LINK

S/N: JGB1-UP; KHS1-UP
PART OF 303-2781 INSTALLATION AR-COMMUNICATION
AN ATTACHMENT

SMCS-7338, 7606 **i03976474**

NOTE	REF NO	GRAPHIC REF	PART NUMBER	QTY	PART NAME 1 2 3 4 5 6 (PRODUCT LEVEL)	SEE PAGE
	1	1	**3S-2093**	2	STRAP-CABLE	
C	2	1	**141-6519**	1	SPACER (6.6X19X10-MM THK)	
M	3	1	**143-9397**	3	SCREW-PAN HEAD (M4X0.7X12-MM)	
	4	1	**284-8532**	1	ANTENNA AS (ROOF)	
		1	**301-0589**	1	ANTENNA (FLEXIBLE)	
C	5	1	**349-5413**	1	BRACKET	
C	6	1	**349-5414**	1	BRACKET AS	
	7	1	**095-0910**	4	CLIP	
	8	1	**161-6987**	3	WASHER-HARD (5.2X16X1.5-MM THK)	
CM	9	1	**6V-7357**	1	BOLT (M6X1X25-MM)	
C	10	1	**8T-4121**	2	WASHER-HARD (11X21X2.5-MM THK)	
CM	11	1	**8T-4137**	2	BOLT (M10X1.5X20-MM)	
M	12	1	**8T-4190**	1	BOLT (M16X2X25-MM)	
	13	1	**9X-2026**	1	WASHER (6.5X17X1-MM THK)	
	14	1	**9X-6165**	1	WASHER (6.5X22X2.5-MM THK)	
	15	1	**9X-8257**	1	WASHER (17.5X30X3.5-MM THK)	

C-CHANGE FROM PREVIOUS TYPE
M-METRIC PART

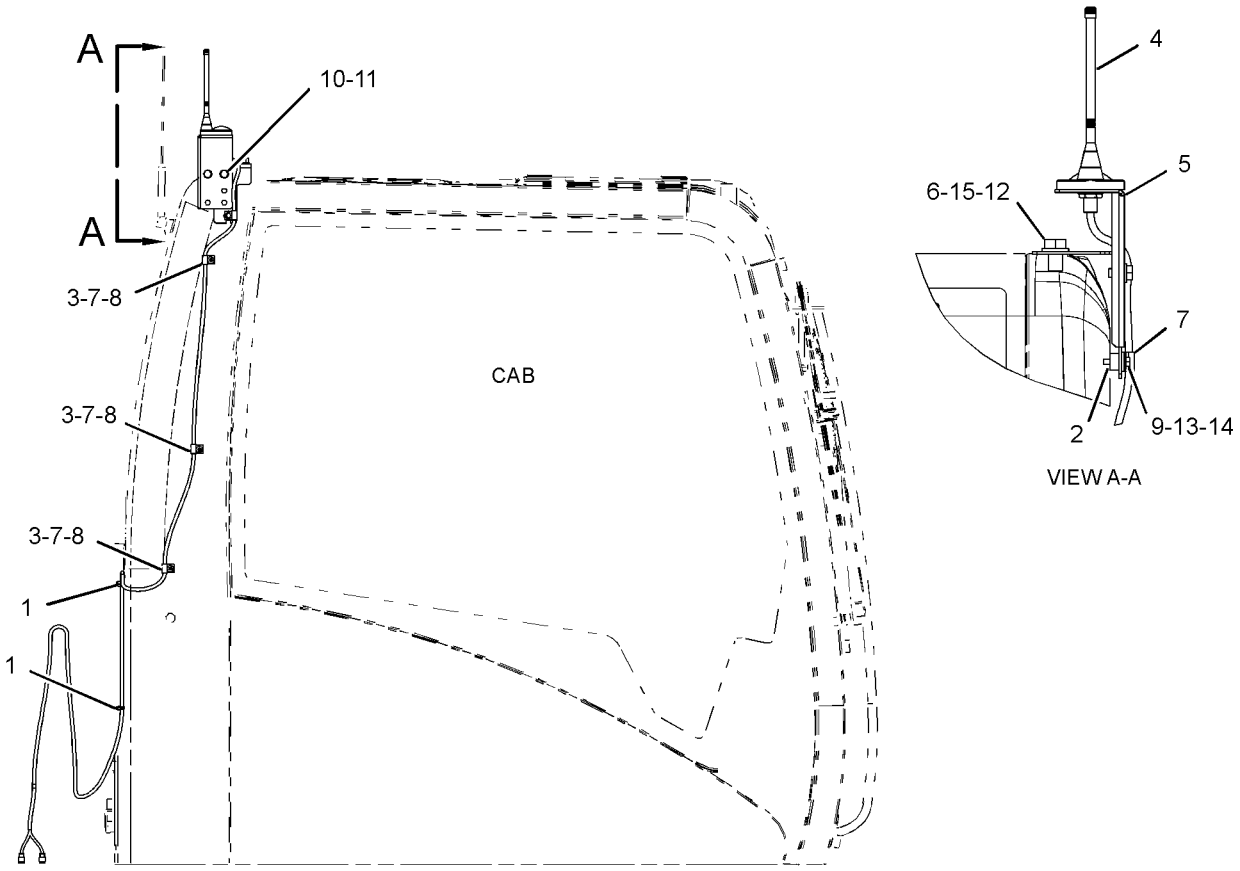

RIGHT SIDE VIEW

GRAPHIC #1 **<END>** g02148772

OPERATOR STATION

309-5805 MOUNTING GP-DISPLAY—WORK AREA VISUAL SYSTEM

S/N: JGB1-UP; KHS1-UP
PART OF 357-7974 CAMERA AR
AN ATTACHMENT

SMCS-7347, 7490 **i03596371**

NOTE	REF NO	GRAPHIC REF	PART NUMBER	QTY	PART NAME 1 2 3 4 5 6 (PRODUCT LEVEL)	SEE PAGE
	1	1	**6I-5976**	1	SHIM (1-MM THK)	
	2	1	**309-5806**	1	BRACKET AS	
		1	**7T-1099**	2	LINK	
	3	1	**8T-4121**	5	WASHER-HARD (11X21X2.5-MM THK)	
M	4	1	**8T-4137**	2	BOLT (M10X1.5X20-MM)	
M	5	1	**8T-4176**	1	BOLT (M12X1.75X90-MM)	
	6	1	**8T-4223**	3	WASHER-HARD (13.5X25.5X3-MM THK)	

M-METRIC PART

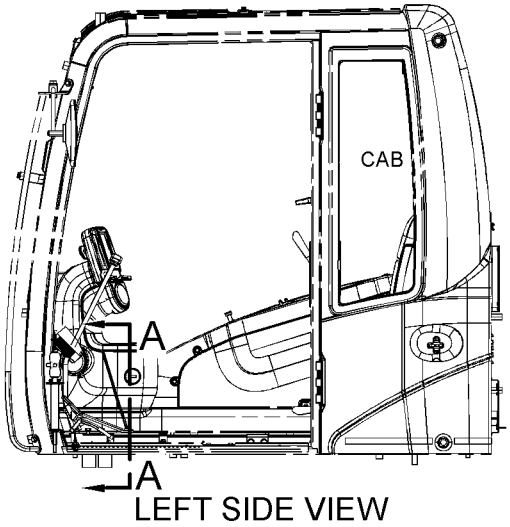

LEFT SIDE VIEW

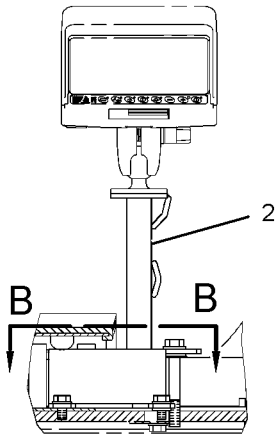

VIEW A-A

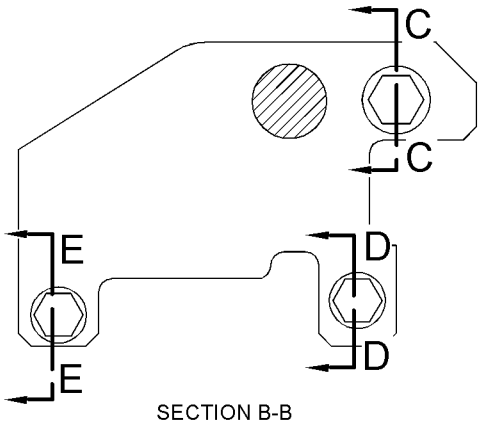

SECTION B-B

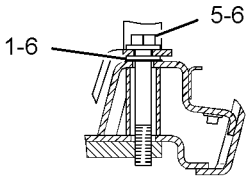

SECTION C-C
(Akashi)

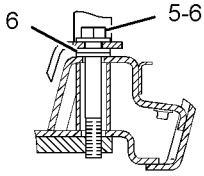

SECTION C-C
(WITH THIRD PEDAL)

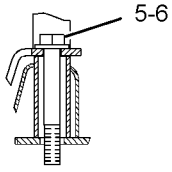

SECTION C-C
(WITH THIRD PEDAL - OPTIONAL DESIGN)

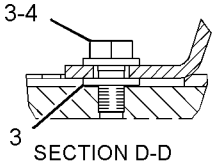

SECTION D-D

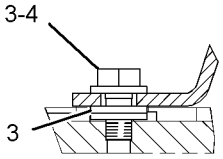

SECTION D-D
(OPTIONAL DESIGN)

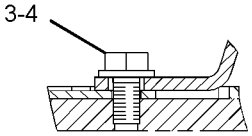

SECTION E-E

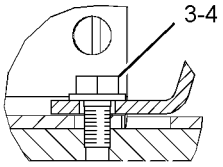

SECTION D-D
(WITH THIRD PEDAL)

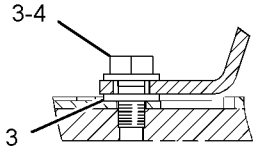

SECTION E-E
(WITH THIRD PEDAL)

GRAPHIC #1 **<END>** g01936534

OPERATOR STATION

353-8085 MOUNTING GP-GUARD

S/N: JGB1-UP
PART OF 207-0159 GUARD GP-VANDALISM
AN ATTACHMENT

SMCS-7150 **i03841491**

NOTE	REF NO	GRAPHIC REF	PART NUMBER	QTY	PART NAME 1 2 3 4 5 6 (PRODUCT LEVEL)	SEE PAGE
	1	1	**7Y-8621**	6	PIN	
	2	1	**7Y-8622**	1	PIN	
M	3	1	**8T-4200**	2	BOLT (M8X1.25X16-MM)	
	4	1	**8T-4224**	2	WASHER-HARD (8.8X16X2-MM THK)	

M-METRIC PART

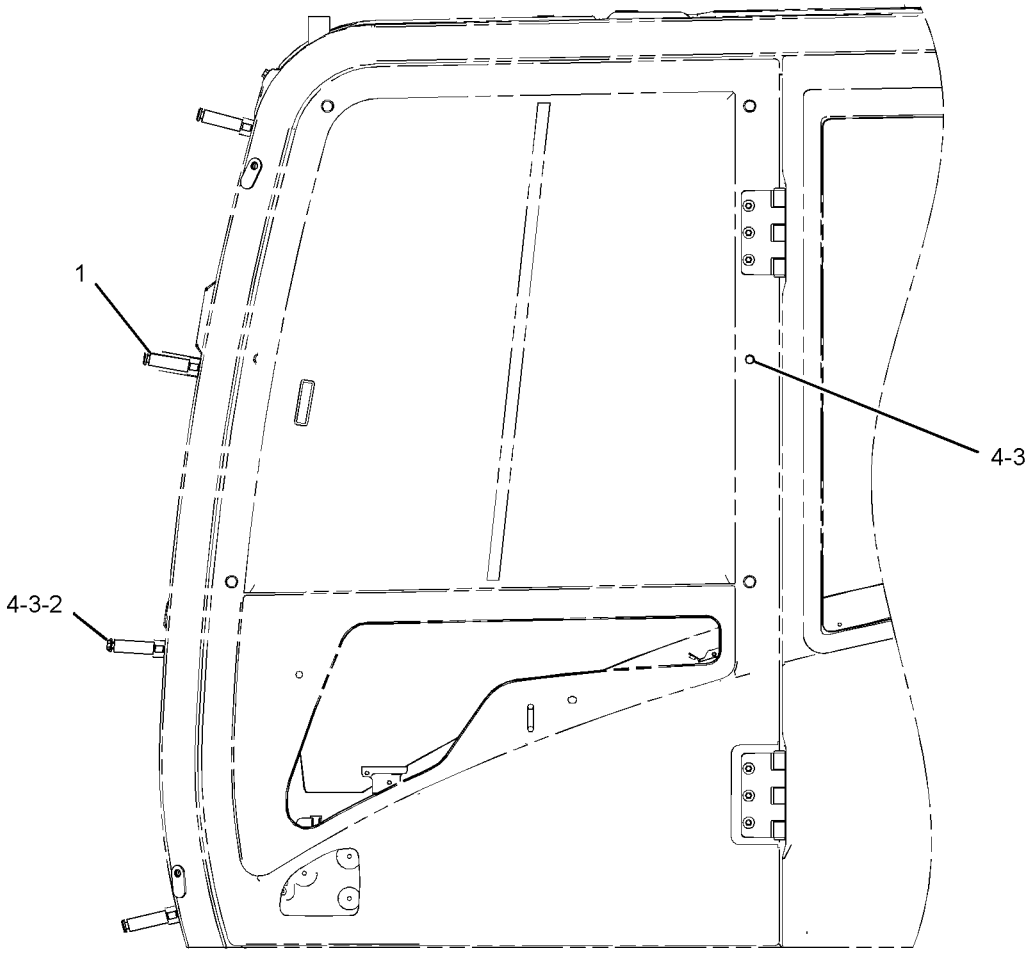

LEFT SIDE VIEW

GRAPHIC #1 **<END>** g02148706

OPERATOR STATION

245-7811 MOUNTING GP-PLATFORM

S/N: JGB1-UP; KHS1-UP

PART OF 370-3231, 370-4189 CHASSIS AR

SMCS-7253 **i02843510**

NOTE	REF NO	GRAPHIC REF	PART NUMBER	QTY	PART NAME 1 2 3 4 5 6 (PRODUCT LEVEL)	SEE PAGE
	1	1	**235-8862**	4	MOUNT AS	
	2	1	**8T-4121**	16	WASHER-HARD (11X21X2.5-MM THK)	
M	3	1	**8T-4195**	16	BOLT (M10X1.5X30-MM)	

M-METRIC PART

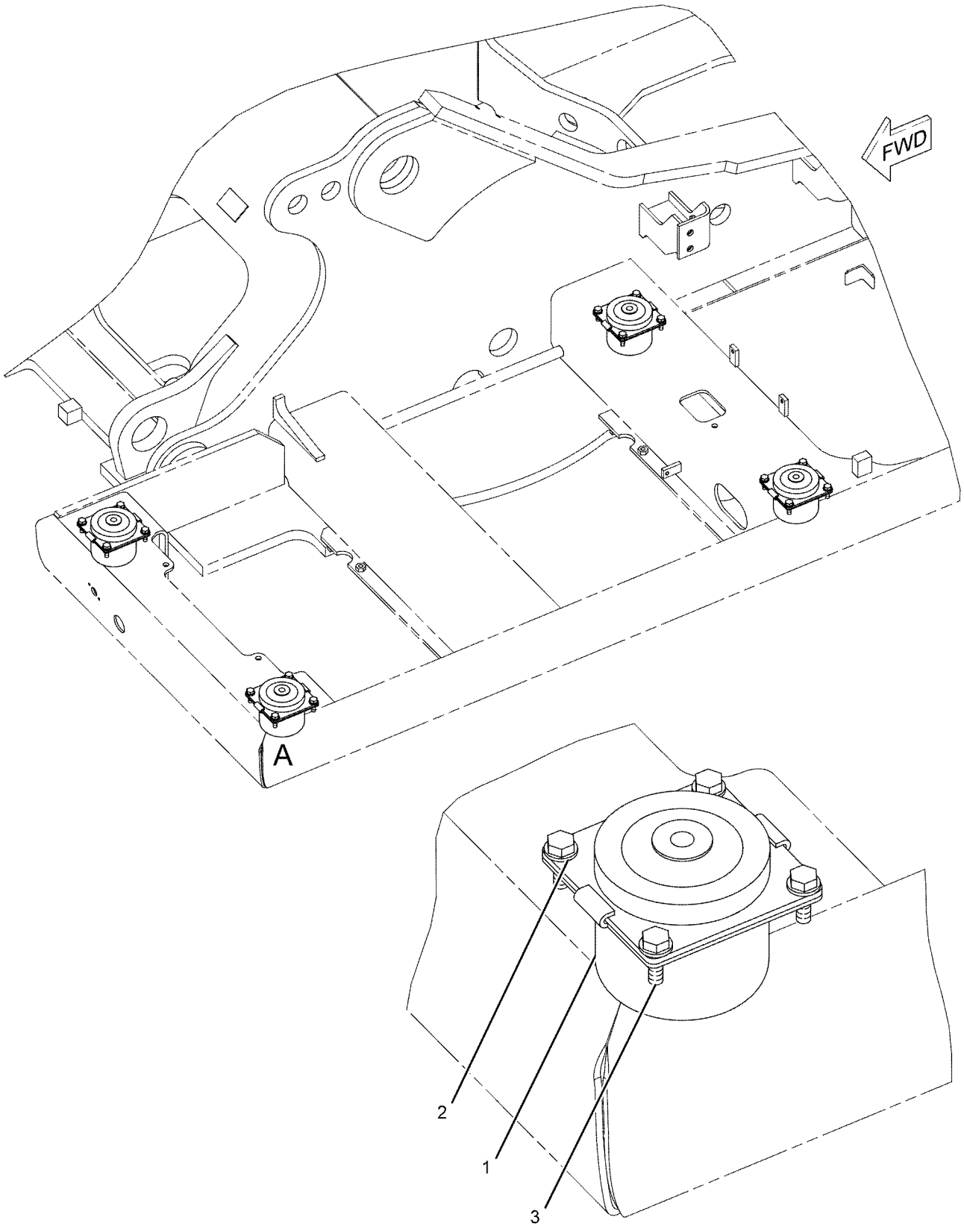

VIEW OF AREA A

GRAPHIC #1 **<END>** g01101486

OPERATOR STATION

305-8000 OPERATOR AR

S/N: JGB1-UP; KHS1-UP
PART OF 370-3231, 370-4189 CHASSIS AR

SMCS-7301 **i03900362**

NOTE	PART NUMBER	QTY	PART NAME 1 2 3 4 5 6 (PRODUCT LEVEL)	SEE PAGE
Y	*229-9079*	1	AIR CONDITIONER AR	858
Y	*305-8001*	1	CAB GP	866
Y	*245-7922*	1	CONSOLE GP-OPERATOR	875
Y	*221-8872*	1	CONTROL & MTG GP-MACHINE	181
Y	*170-9497*	1	CONTROL GP-PILOT OPERATED HYD (TRAVEL)	903
Y	*299-2965*	1	PANEL & MTG GP-CIRCUIT BREAKER	204
Y	*251-0542*	1	PANEL GP-SWITCH (ENGINE SPEED, START)	207
Y	*305-8003*	1	PLATFORM GP-OPERATOR	946
Y	*251-0538*	1	RADIO GP (AM/FM)	947
Y	*327-6501*	1	SEAT & MOUNTING GP (HIGH BACK, TILT)	949
Y	*327-6523*	1	SUPPORT GP-SEAT	956
Y	*251-0433*	1	WIRING GP-CONSOLE	284
Y	*291-7768*	1	WIRING GP-PLATFORM	311

Y-SEPARATE ILLUSTRATION

<END>

356-4742 PARTS AR-CAB

S/N: JGB1-UP; KHS1-UP
PART OF 319-9274, 351-9595 SPECIAL AR
AN ATTACHMENT

SMCS-7301 **i03818910**

NOTE	PART NUMBER	QTY	PART NAME 1 2 3 4 5 6 (PRODUCT LEVEL)	SEE PAGE
Y	*273-5358*	1	FLOOR MAT GP (ACCUGRADE READY)	910
Y	*270-5603*	1	MOUNTING GP-ANTENNA (ACCUGRADE)	934
Y	*336-6334*	1	WIRING GP-CAB (ACCUGRADE)	267

Y-SEPARATE ILLUSTRATION

<END>

OPERATOR STATION

225-5729 PEDAL AR-AUXILIARY

S/N: JGB1-UP; KHS1-UP
PART OF 337-8884 OPTION AR-REGIONAL
AN ATTACHMENT

SMCS-5059 **i03596263**

NOTE	REF NO	GRAPHIC REF	PART NUMBER	QTY	PART NAME 1 2 3 4 5 6 (PRODUCT LEVEL)	SEE PAGE
C	1	1	**260-6948**	1	FILM-INSTRUCTION (OPERATOR CONTROLS, READ OMM)	
FY			*225-5730*	1	CONTROL GP-HYDRAULIC PEDAL	895
FY			*227-0619*	1	LINES GP-PILOT (THIRD PEDAL)	591
FY			*260-8047*	1	LINES GP-PILOT (TRAVEL, STRAIGHT TRAVEL)	594

C-CHANGE FROM PREVIOUS TYPE
F-NOT SHOWN
Y-SEPARATE ILLUSTRATION

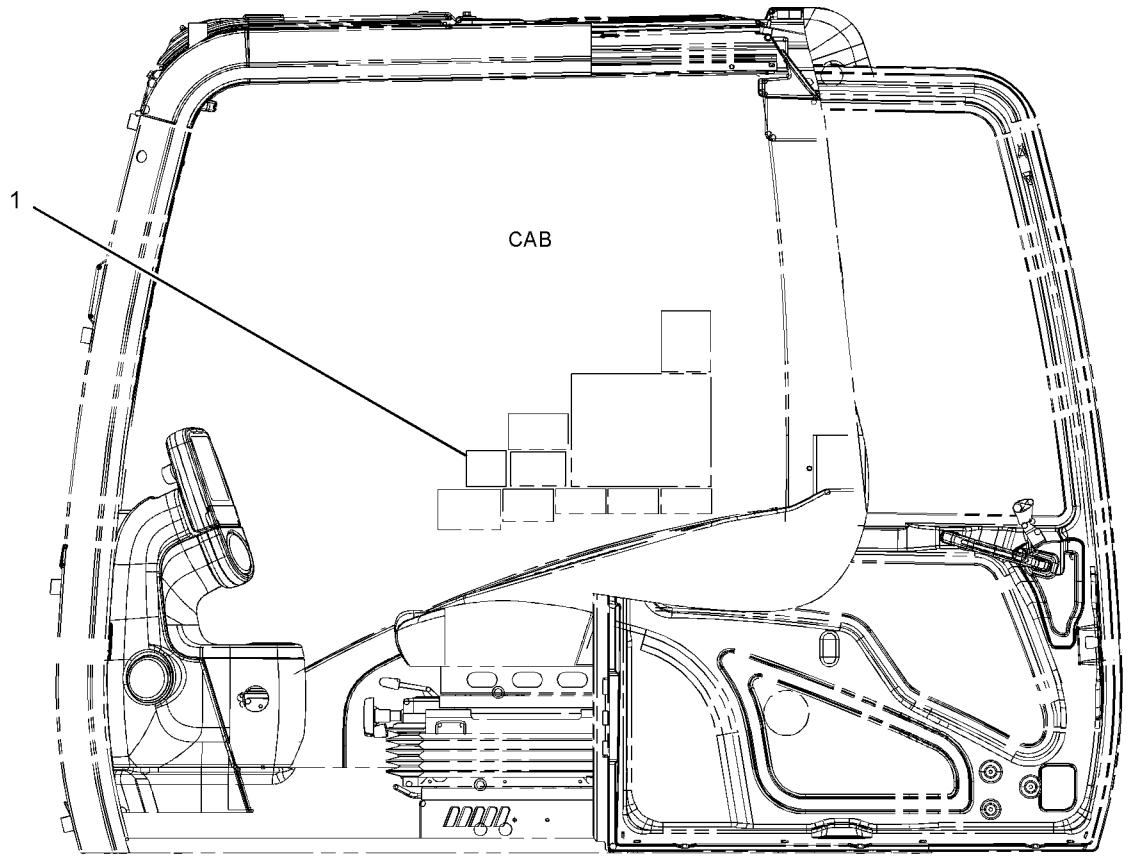

LEFT SIDE VIEW

GRAPHIC #1 **<END>** g01094358

OPERATOR STATION

255-5845 PEDAL AR-AUXILIARY–LH

S/N: KHS1-UP

AN ATTACHMENT

SMCS-5059 **i02847177**

NOTE	PART NUMBER	QTY	PART NAME 1 2 3 4 5 6 (PRODUCT LEVEL)	SEE PAGE
Y	*221-8884*	1	CONTROL & MTG GP-PEDAL (LH)	884
Y	*259-5293*	1	FASTENER GP-WIRING HARNESS (PEDAL CONTROL)	183
Y	*247-7418*	1	FILM GP (OPERATOR CONTROLS, NOTICE)	977

Y-SEPARATE ILLUSTRATION

<END>

OPERATOR STATION

305-8003 PLATFORM GP-OPERATOR

S/N: JGB1-UP; KHS1-UP

PART OF 305-8000 OPERATOR AR

SMCS-7253 **i02843950**

NOTE	REF NO	GRAPHIC REF	PART NUMBER	QTY	PART NAME 1 2 3 4 5 6 (PRODUCT LEVEL)	SEE PAGE
	1	1	**4I-3266**	1	STRIP	
	2	1	**135-8965**	1	GROMMET	
	3	1	**135-8966**	1	GROMMET	
	4	1	**161-3717**	1	STRIP	
	5	1	**240-5071**	1	FLOOR MAT	
	6	1	**293-1170**	1	PLATFORM AS	
M	7	1	**7X-2553**	4	BOLT (M16X2X40-MM)	
	8	1	**8T-4121**	4	WASHER-HARD (11X21X2.5-MM THK)	
M	9	1	**8T-4191**	4	BOLT (M10X1.5X16-MM)	
	10	1	**9X-8257**	4	WASHER (17.5X30X3.5-MM THK)	

M-METRIC PART

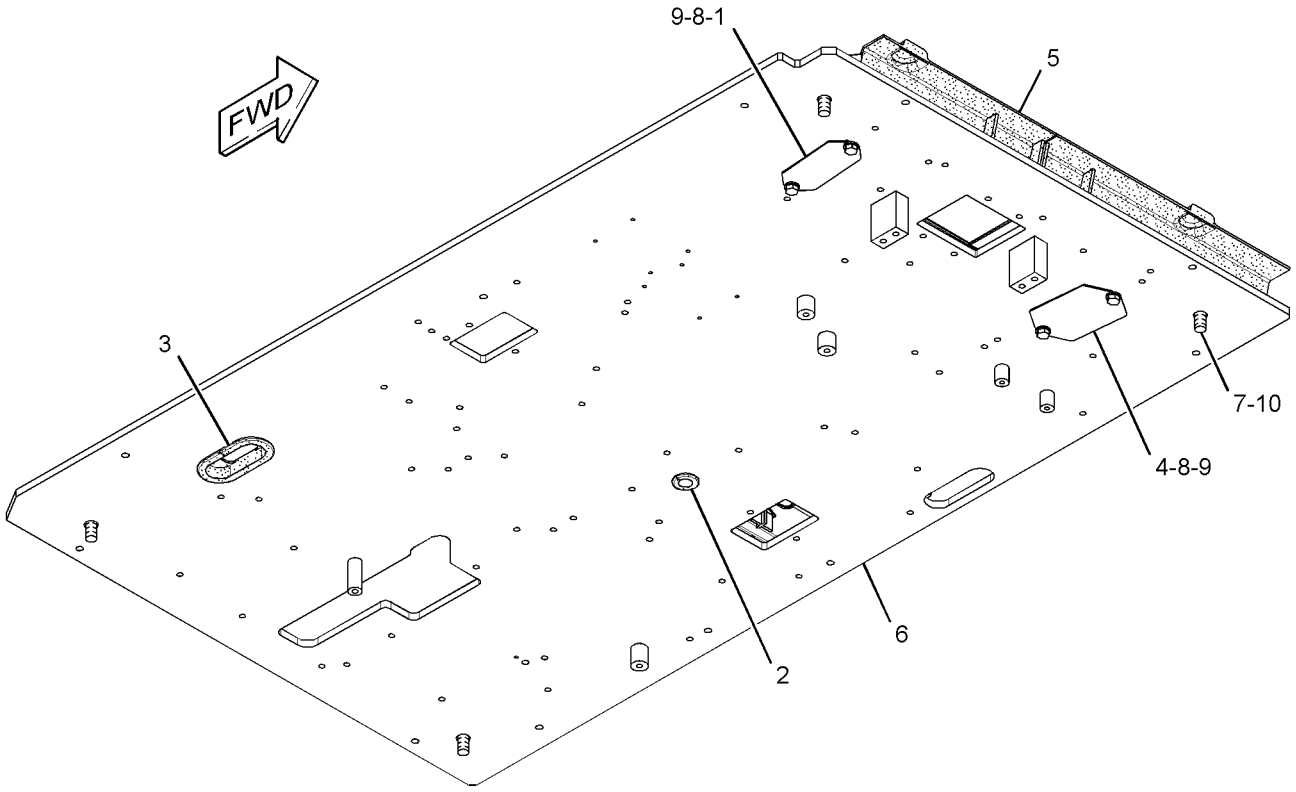

GRAPHIC #1 **<END>** g01475064

OPERATOR STATION

251-0538 RADIO GP

S/N: JGB1-UP; KHS1-UP
PART OF 305-8000 OPERATOR AR

SMCS-7338, 733C **i03024522**

NOTE	REF NO	GRAPHIC REF	PART NUMBER	QTY	PART NAME 1 2 3 4 5 6 (PRODUCT LEVEL)	SEE PAGE
	1	1	**3S-2093**	2	STRAP-CABLE	
	2	1	**106-2704**	2	SCREW AS (M5X0.8X10-MM)	
	3	1	**238-2260**	1	CABLE	
	4	1	**306-8802**	1	RADIO-AM/FM	
	5	1	**259-4914**	1	BRACKET AS	
	6	1	**8K-6211**	1	CLIP	
	7	1	**119-5026**	2	SCREW-PAN HEAD (10-16X0.63-IN)	

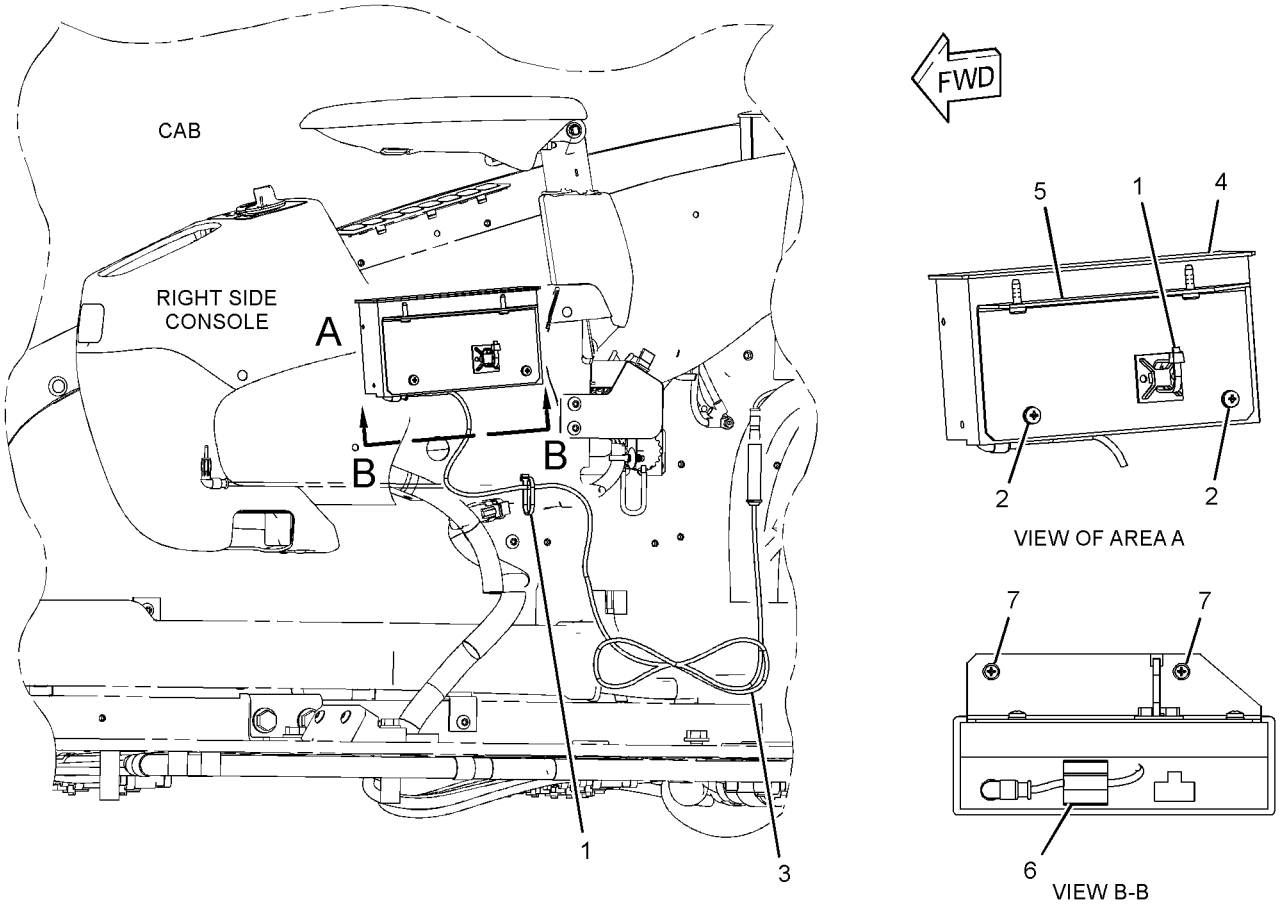

GRAPHIC #1 **<END>** g01322280

OPERATOR STATION

245-7881 SCREEN GP-SUN

S/N: JGB1-UP; KHS1-UP
PART OF 341-3130 OPTION AR-CAB
AN ATTACHMENT

SMCS-7165 **i02440974**

NOTE	REF NO	GRAPHIC REF	PART NUMBER	QTY	PART NAME 1 2 3 4 5 6 (PRODUCT LEVEL)	SEE PAGE
	1	1	**255-4410**	1	SCREEN AS (CAB)	
	2	1	**259-7214**	3	HOOK-RETAINER	
	3	1	**259-7215**	3	HOOK-RETAINER	
M	4	1	**099-0822**	6	BOLT-SOCKET HEAD (M5X0.8X10-MM)	

M-METRIC PART

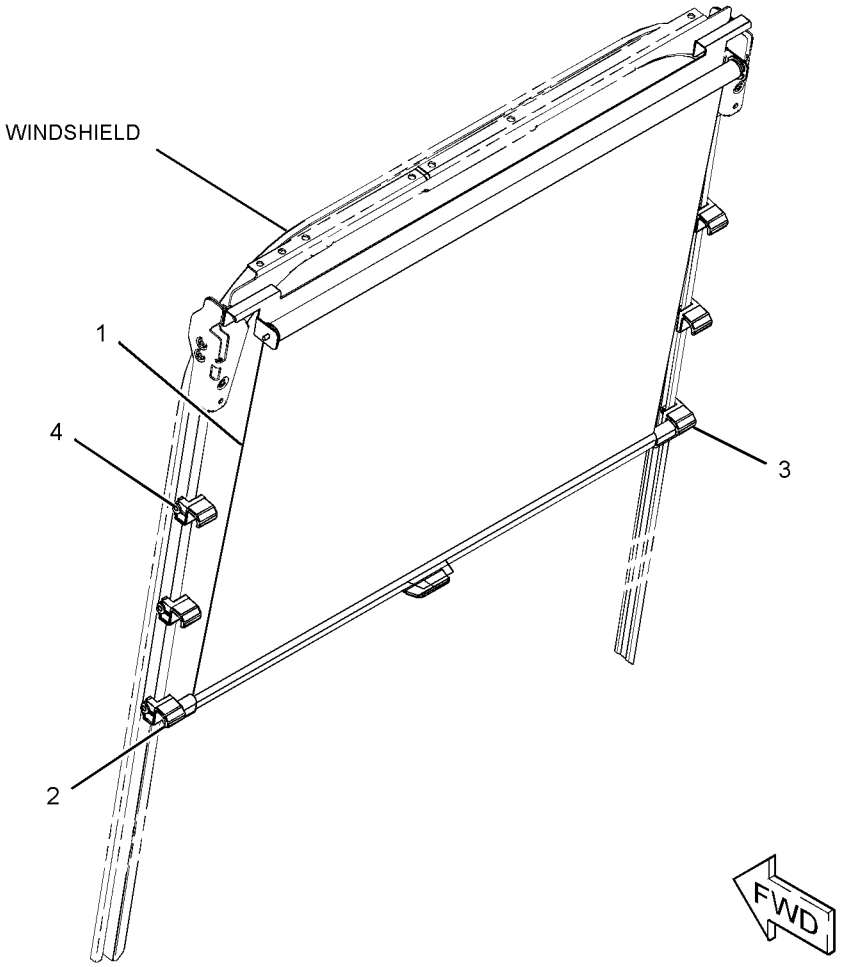

GRAPHIC #1 **<END>** g01177458

OPERATOR STATION

327-6501 SEAT & MOUNTING GP—HIGH BACK, TILT

S/N: JGB1-UP; KHS1-UP
CLOTH
PART OF 305-8000 OPERATOR AR

SMCS-7312 **i03804535**

NOTE	REF NO	GRAPHIC REF	PART NUMBER	QTY	PART NAME 1 2 3 4 5 6 (PRODUCT LEVEL)	SEE PAGE
Y	1	1	*327-6507*	1	SEAT GP-SUSPENSION (HIGH BACK, TILT)	954
M	2	1	**6V-8202**	4	BOLT-SOCKET HEAD (M8X1.25X16-MM)	

M-METRIC PART
Y-SEPARATE ILLUSTRATION

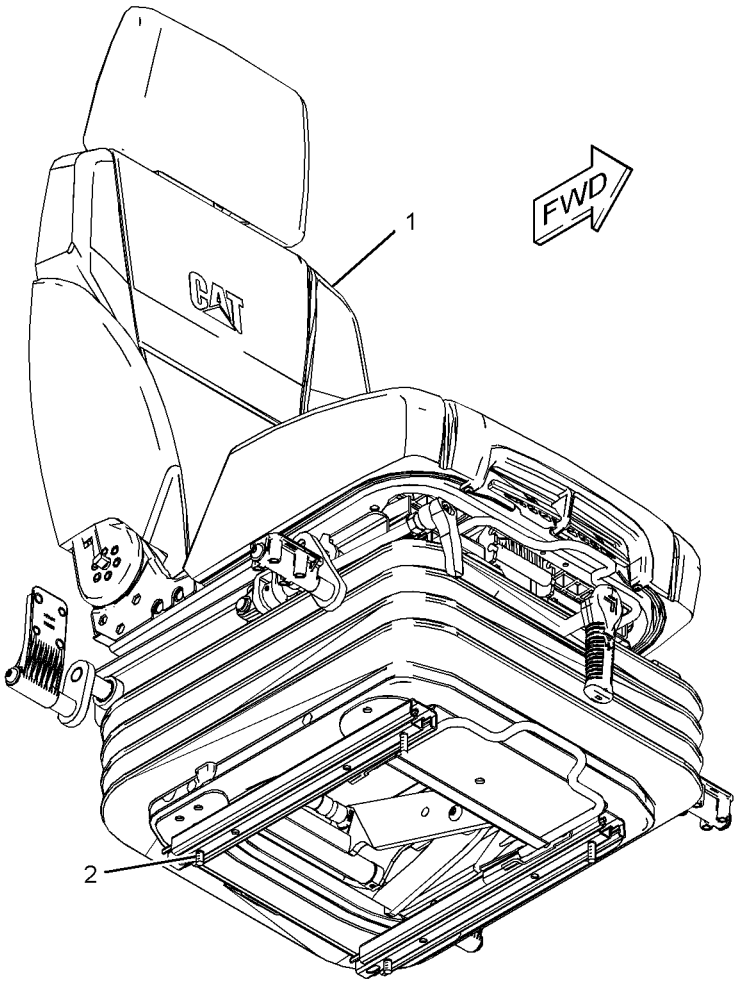

GRAPHIC #1 **<END>** g01803395

OPERATOR STATION

327-6503 SEAT & MOUNTING GP—HIGH BACK, WITH HEATER

S/N: JGB1-UP; KHS1-UP
CLOTH
PART OF 341-3130 OPTION AR-CAB
AN ATTACHMENT

SMCS-7312 **i03880948**

NOTE	REF NO	GRAPHIC REF	PART NUMBER	QTY	PART NAME 1 2 3 4 5 6 (PRODUCT LEVEL)	SEE PAGE
	1	1	**238-2211**	1	SWITCH AS-ROCKER (HEATED SEAT)	
		1	**167-3542**	1	RECEPTACLE-CONNECTOR (5-PIN)	
		1	**167-3543**	4	TERMINAL (MALE)	
Y	2	1	*327-6509*	1	SEAT GP-SUSPENSION (HIGH BACK, WITH HEATER)	955
M	3	1	**6V-8202**	4	BOLT-SOCKET HEAD (M8X1.25X16-MM)	

M-METRIC PART
Y-SEPARATE ILLUSTRATION

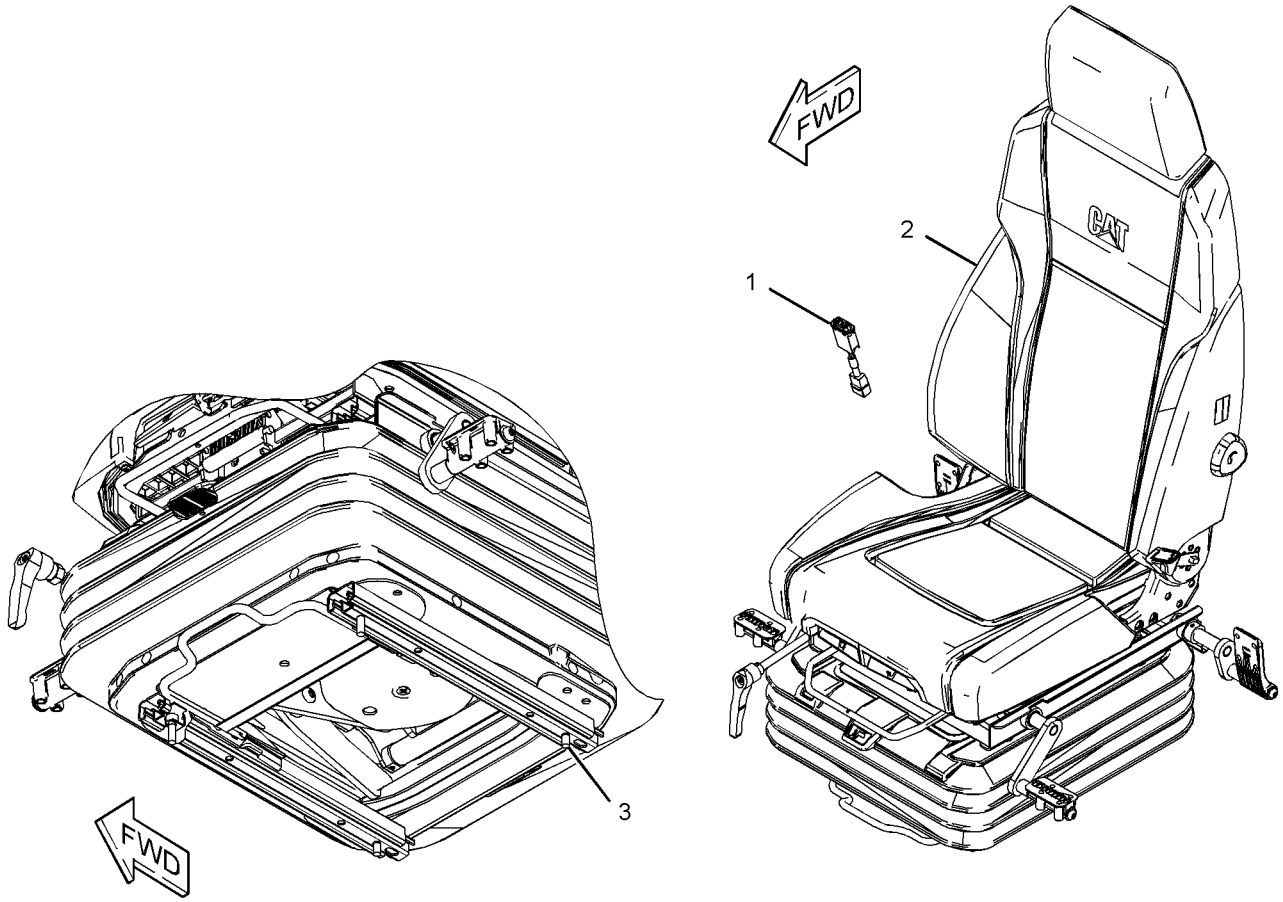

GRAPHIC #1 **<END>** g02146316

OPERATOR STATION

305-0466 SEAT BELT GP–RETRACTABLE, 76-MM

S/N: JGB1-UP; KHS1-UP

PART OF 305-8000 OPERATOR AR

SMCS-7327 **i03440942**

NOTE	REF NO	GRAPHIC REF	PART NUMBER	QTY	PART NAME 1 2 3 4 5 6 (PRODUCT LEVEL)	SEE PAGE
	1	1	**327-6540**	1	SEAT BELT GP	

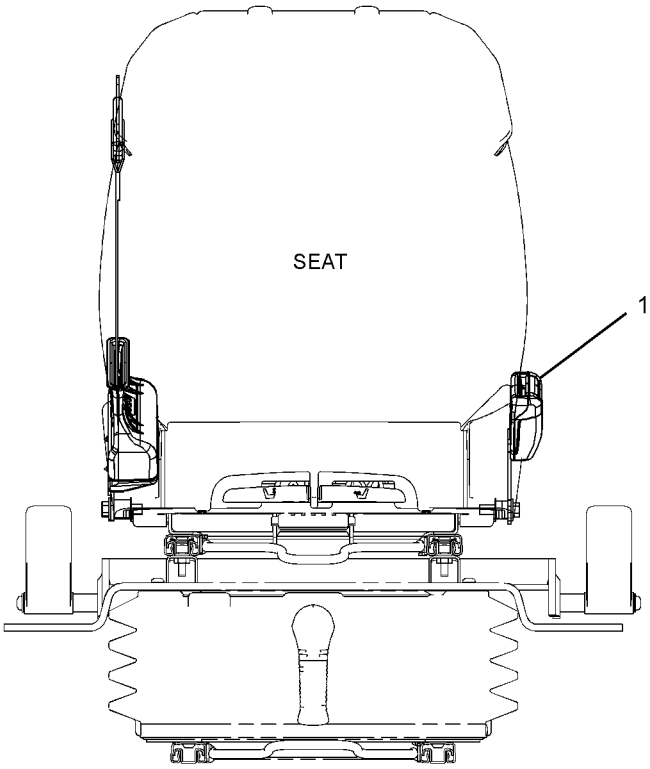

FRONT VIEW

GRAPHIC #1 **<END>** g01813653

OPERATOR STATION

327-6512 SEAT GP—HIGH BACK, TILT

S/N: JGB1-UP; KHS1-UP

PART OF 327-6507 SEAT GP-SUSPENSION

SMCS-7312 **i03986102**

NOTE	REF NO	GRAPHIC REF	PART NUMBER	QTY	PART NAME 1 2 3 4 5 6 (PRODUCT LEVEL)	SEE PAGE
	1	1	**178-5659**	1	HANDLE (LUMBAR SUPPORT ADJUSTER)	
	2	1	**316-8987**	2	BRACKET	
	3	1	**327-6515**	1	HEADREST AS-SEAT	
	4	1	**327-6640**	1	KIT-HANDLE (RECLINER)	
	5	1	**327-6642**	1	KIT-SEAT TILT (ADJUSTER)	
	6	1	**327-6643**	1	KIT-ADJUSTER (CUSHION POSITIONING)	
	7	1	**333-4160**	1	KIT-SEAT (HIGH BACK, MANUAL)	
	8	1	**333-4179**	2	BOLT-SPECIAL	
M	9	1	**9X-2616**	4	SCREW-SOCKET (M8X1.25X16-MM)	

M-METRIC PART

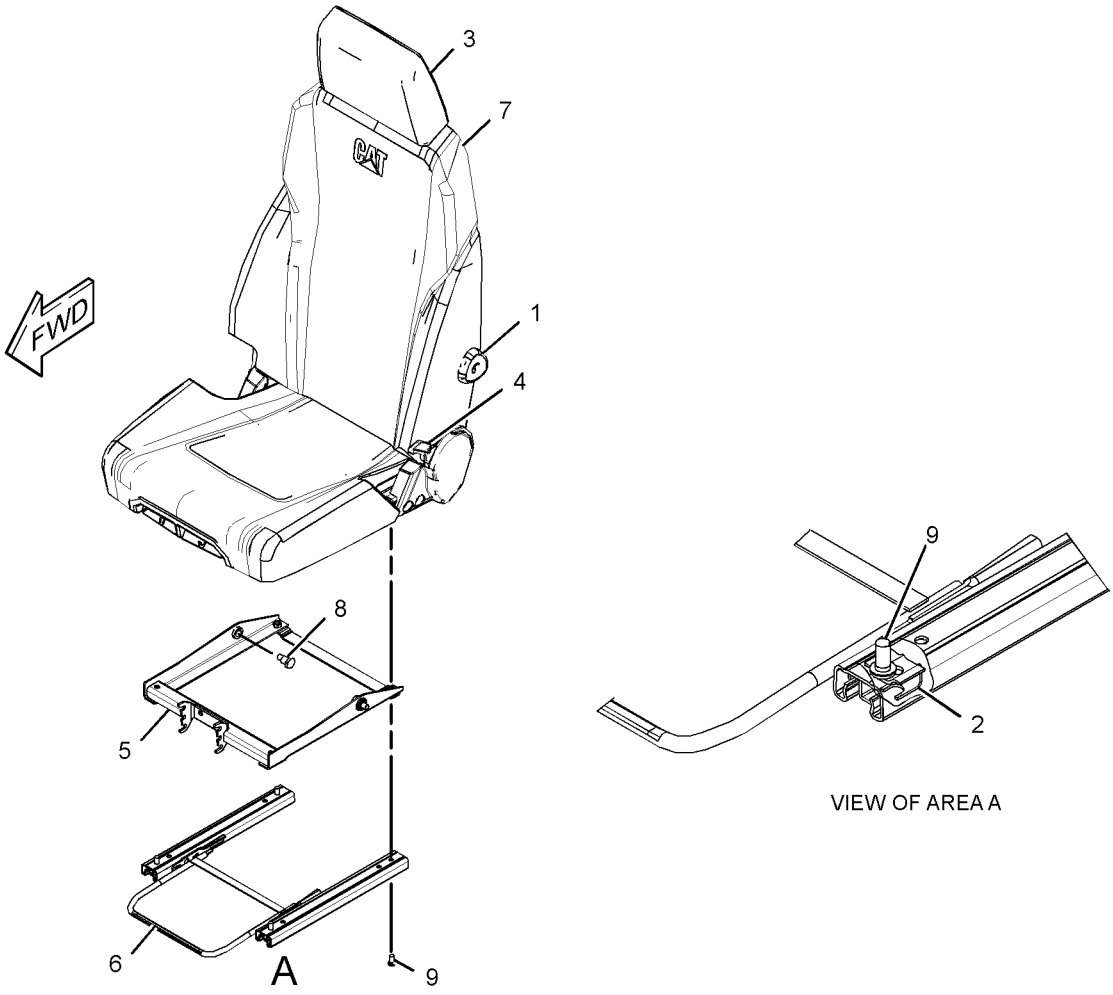

VIEW OF AREA A

GRAPHIC #1 **<END>** g02173701

OPERATOR STATION

327-6513 SEAT GP—HIGH BACK, WITH HEATER

S/N: JGB1-UP; KHS1-UP

PART OF 327-6509 SEAT GP-SUSPENSION

AN ATTACHMENT

SMCS-7312 **i03988673**

NOTE	REF NO	GRAPHIC REF	PART NUMBER	QTY	PART NAME 1 2 3 4 5 6 (PRODUCT LEVEL)	SEE PAGE
	1	1	**178-5659**	1	HANDLE (LUMBAR SUPPORT ADJUSTER)	
	2	1	**316-8987**	2	BRACKET	
	3	1	**327-6515**	1	HEADREST AS-SEAT	
	4	1	**327-6640**	1	KIT-HANDLE (RECLINER)	
	5	1	**327-6642**	1	KIT-SEAT TILT (ADJUSTER)	
	6	1	**327-6643**	1	KIT-ADJUSTER (CUSHION POSITIONING)	
	7	1	**327-6649**	1	KIT-SEAT (HIGH BACK, WITH HEATER)	
	8	1	**333-4179**	2	BOLT-SPECIAL	
M	9	1	**9X-2616**	4	SCREW-SOCKET (M8X1.25X16-MM)	

M-METRIC PART

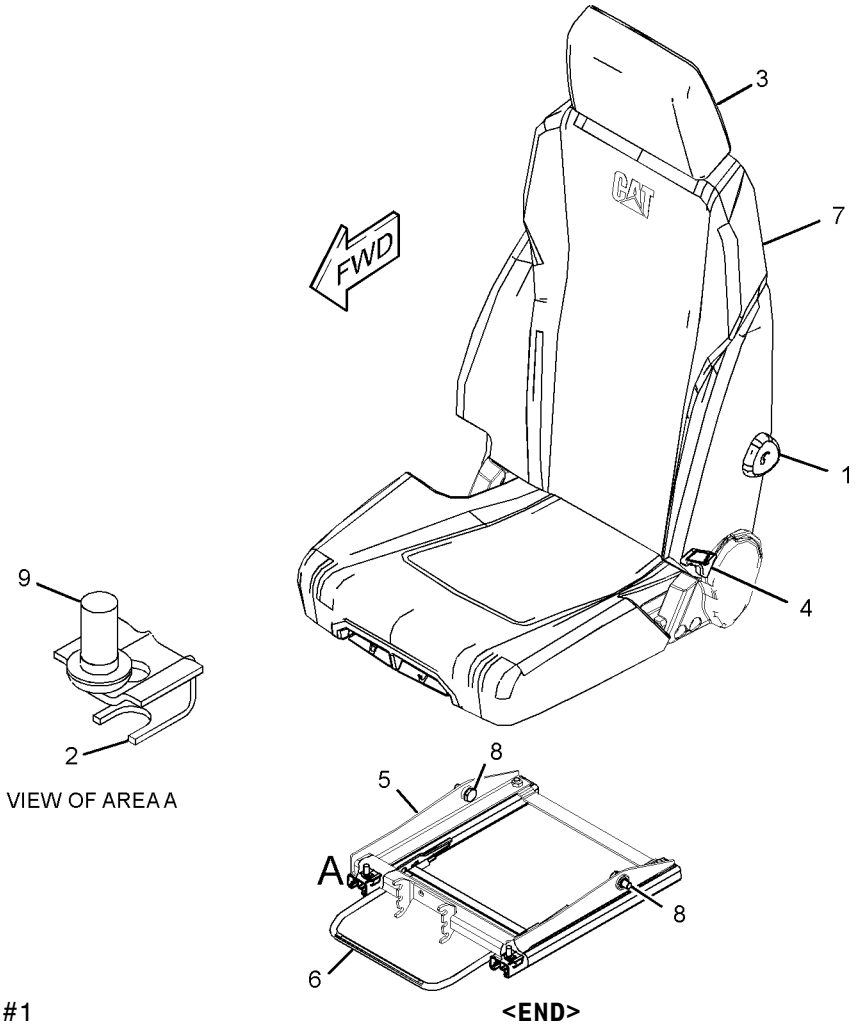

GRAPHIC #1

<END>

g02173863

OPERATOR STATION

327-6507 SEAT GP-SUSPENSION—HIGH BACK, TILT

S/N: JGB1-UP; KHS1-UP

PART OF 327-6501 SEAT & MOUNTING GP

SMCS-7324, 7336 **i03805290**

NOTE	REF NO	GRAPHIC REF	PART NUMBER	QTY	PART NAME 1 2 3 4 5 6 (PRODUCT LEVEL)	SEE PAGE
	1	1	**316-8987**	2	BRACKET	
Y	2	1	**327-6512**	1	SEAT GP (HIGH BACK, TILT)	952
Y	3	1	**327-6520**	1	SUSPENSION GP-SEAT (MECHANICAL)	957
M	4	1	**5A-3604**	4	BOLT-SOCKET HEAD (M8X1.25X25-MM)	

M-METRIC PART
Y-SEPARATE ILLUSTRATION

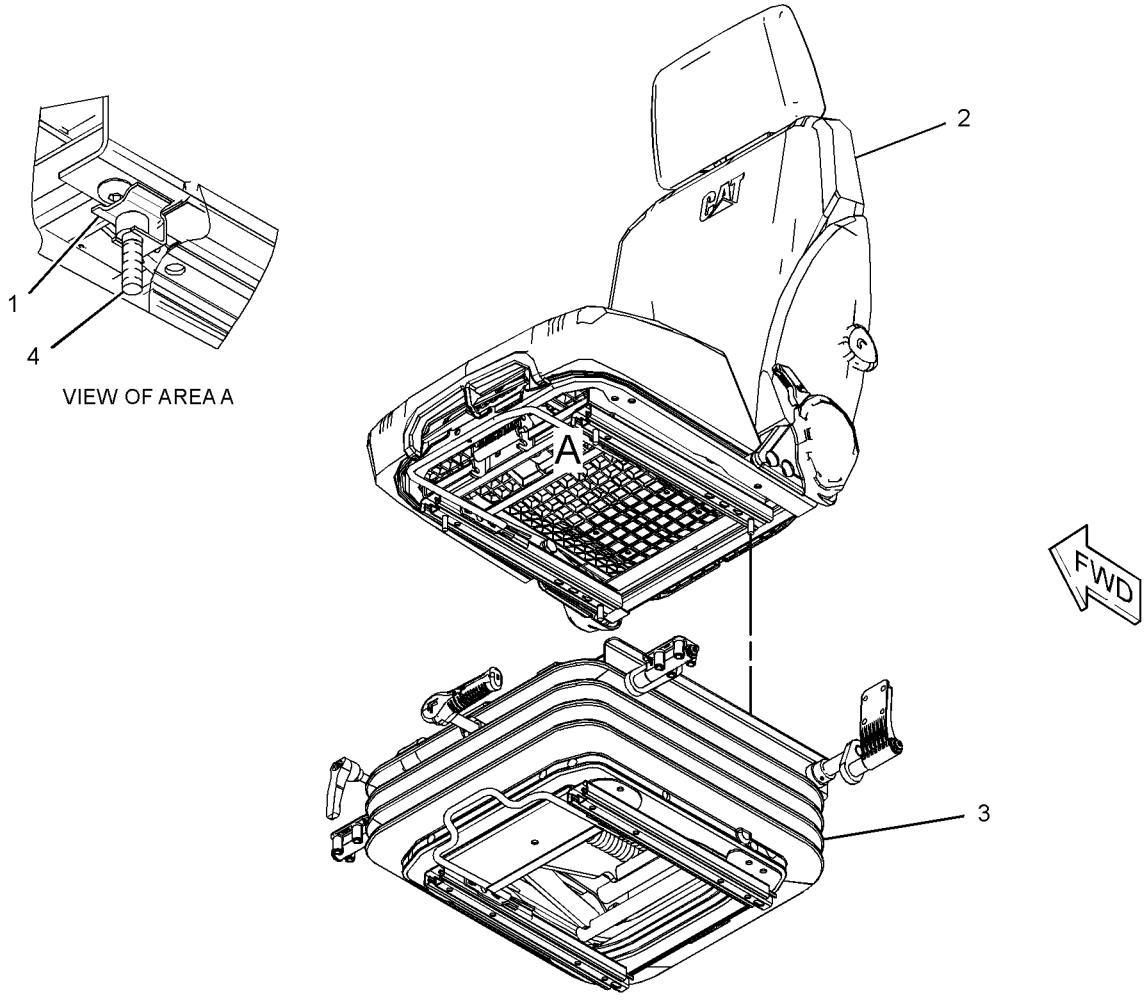

GRAPHIC #1 **<END>** g01998036

OPERATOR STATION

327-6509 SEAT GP-SUSPENSION—HIGH BACK, WITH HEATER

S/N: JGB1-UP; KHS1-UP
PART OF 327-6503 SEAT & MOUNTING GP
AN ATTACHMENT

SMCS-7324, 7336 **i03440940**

NOTE	REF NO	GRAPHIC REF	PART NUMBER	QTY	PART NAME 1 2 3 4 5 6 (PRODUCT LEVEL)	SEE PAGE
	1	1	**7I-2673**	1	STRAP-CABLE	
	2	1	**316-8987**	2	BRACKET	
Y	3	1	**327-6513**	1	SEAT GP (HIGH BACK, WITH HEATER)	953
Y	4	1	**327-6521**	1	SUSPENSION GP-SEAT (AIR)	958
M	5	1	**5A-3604**	4	BOLT-SOCKET HEAD (M8X1.25X25-MM)	

M-METRIC PART
Y-SEPARATE ILLUSTRATION

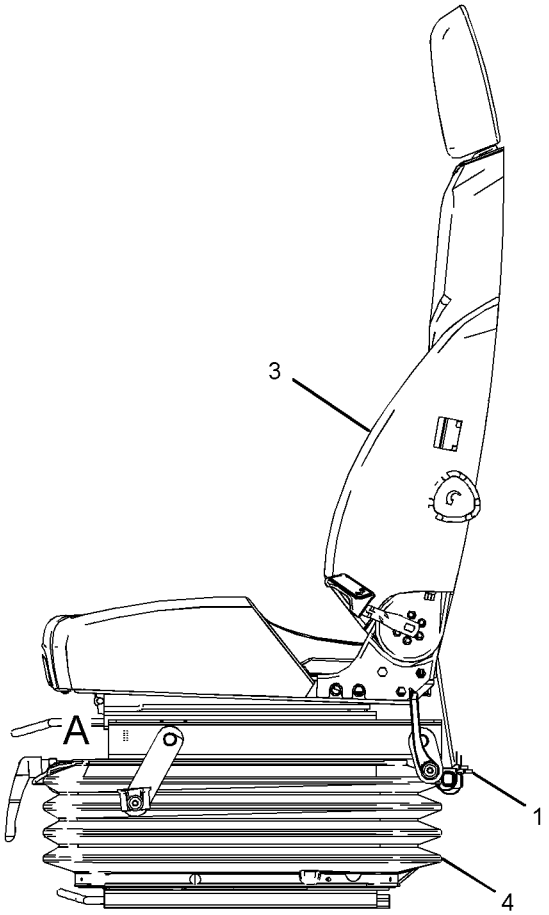

LEFT SIDE VIEW

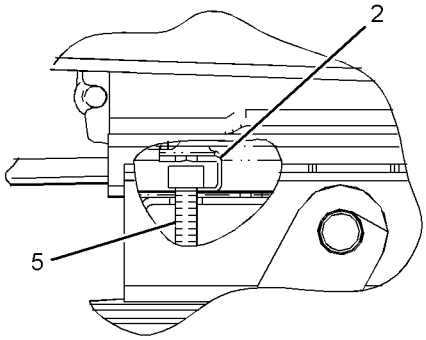

VIEW OF AREA A

GRAPHIC #1 **<END>** g01810781

OPERATOR STATION

327-6523 SUPPORT GP-SEAT

S/N: JGB1-UP; KHS1-UP

PART OF 305-8000 OPERATOR AR

SMCS-7321 **i03440943**

NOTE	REF NO	GRAPHIC REF	PART NUMBER	QTY	PART NAME 1 2 3 4 5 6 (PRODUCT LEVEL)	SEE PAGE
	1	1	**327-6538**	1	SUPPORT AS-SEAT	
	2	1	**8T-4121**	4	WASHER-HARD (11X21X2.5-MM THK)	
M	3	1	**8T-4191**	4	BOLT (M10X1.5X16-MM)	

M-METRIC PART

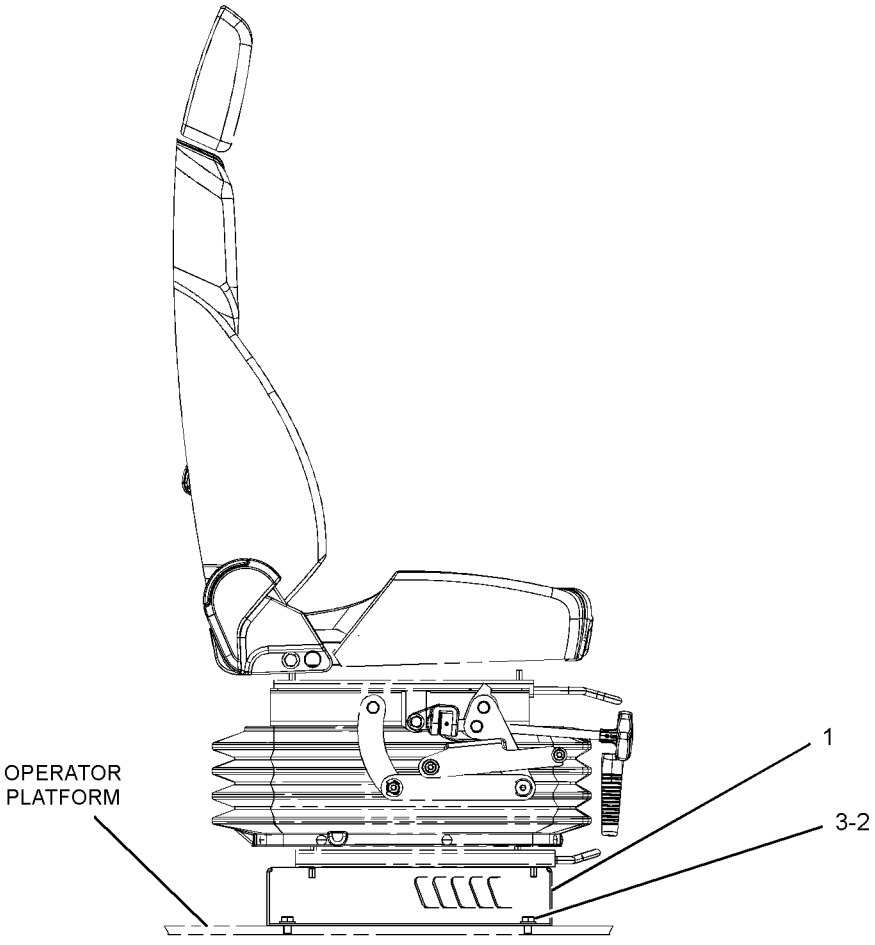

RIGHT SIDE VIEW

GRAPHIC #1 **<END>** g01809475

OPERATOR STATION

327-6520 SUSPENSION GP-SEAT—MECHANICAL

S/N: JGB1-UP; KHS1-UP

PART OF 327-6507 SEAT GP-SUSPENSION

SMCS-7324 **i03805312**

NOTE	REF NO	GRAPHIC REF	PART NUMBER	QTY	PART NAME 1 2 3 4 5 6 (PRODUCT LEVEL)	SEE PAGE
	1	1	**327-6644**	1	KIT-BRACKET (CONSOLE RAISE, LOWER)	
M		1	**7Y-7394**	4	SCREW-BUTTON HEAD (M8X1.25X25-MM)	
Y	2	1	**327-6645**	1	KIT-SEAT SUSPENSION (MECHANICAL)	922
	3	1	**327-6648**	1	KIT-ADJUSTER (SEAT POSITION)	
		1	**333-4180**	6	SCREW-BUTTON HEAD (M8X1.25X20-MM)	

M-METRIC PART
Y-SEPARATE ILLUSTRATION

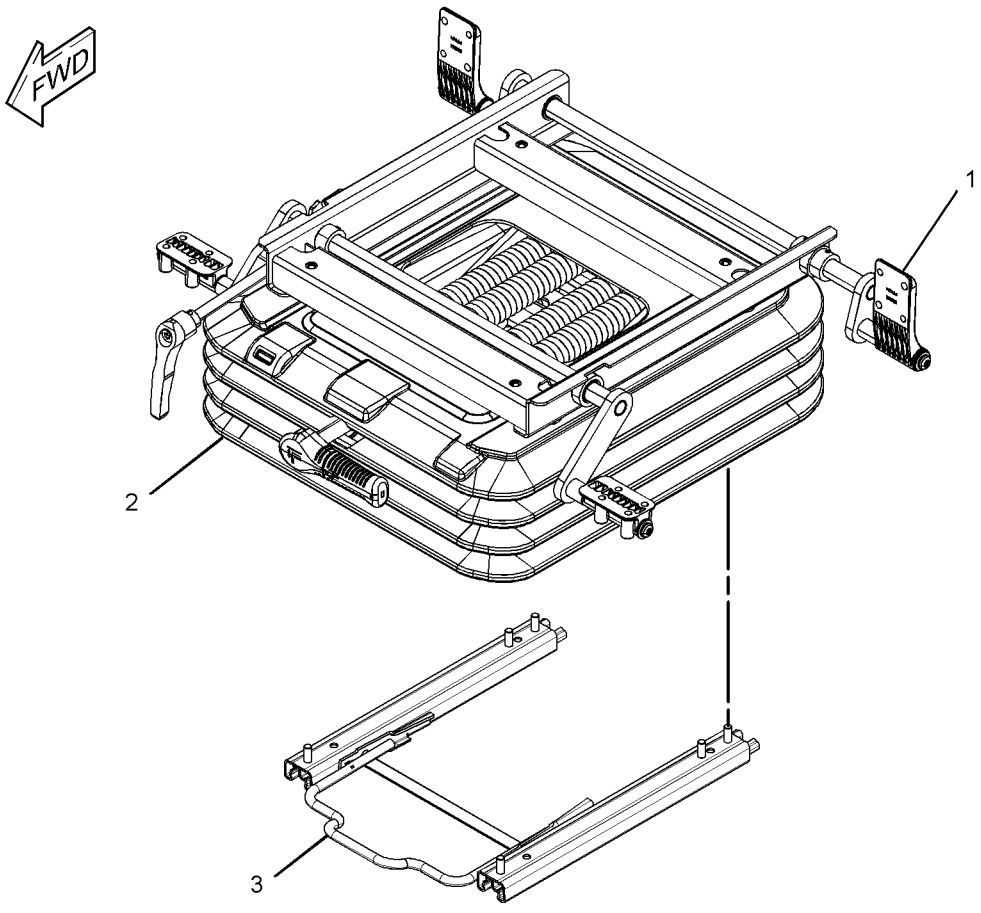

GRAPHIC #1 **<END>** g02006996

OPERATOR STATION

327-6521 SUSPENSION GP-SEAT–AIR

S/N: JGB1-UP; KHS1-UP
PART OF 327-6509 SEAT GP-SUSPENSION
AN ATTACHMENT

SMCS-7324 **i03440962**

NOTE	REF NO	GRAPHIC REF	PART NUMBER	QTY	PART NAME 1 2 3 4 5 6 (PRODUCT LEVEL)	SEE PAGE
	1	1	**7I-2673**	1	STRAP-CABLE	
	2	1	**327-6644**	1	KIT-BRACKET (CONSOLE RAISE, LOWER)	
M		1	**7Y-7394**	4	SCREW-BUTTON HEAD (M8X1.25X25-MM)	
	3	1	**327-6648**	1	KIT-ADJUSTER (SEAT POSITION)	
		1	**333-4180**	6	SCREW-BUTTON HEAD (M8X1.25X20-MM)	
Y	4	1	**333-4157**	1	KIT-SEAT SUSPENSION (AIR)	923

M-METRIC PART
Y-SEPARATE ILLUSTRATION

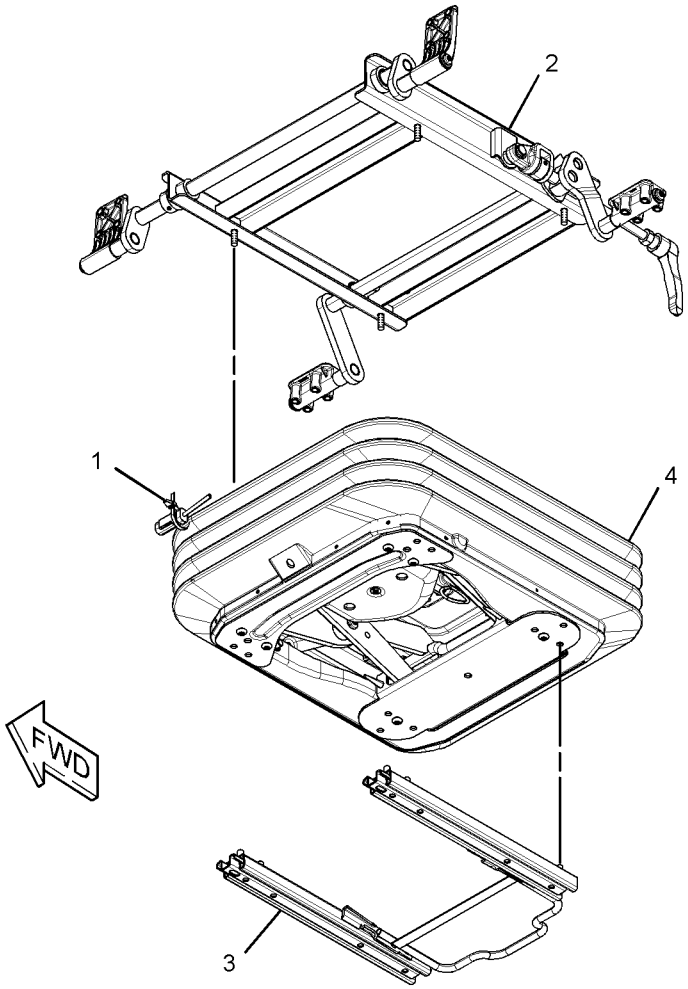

GRAPHIC #1 **<END>** g01637857

OPERATOR STATION

229-9088 WASHER GP-WINDOW—LOWER

S/N: JGB1-UP; KHS1-UP

PART OF 370-3231, 370-4189 CHASSIS AR

SMCS-7306 **i03898409**

NOTE	REF NO	GRAPHIC REF	PART NUMBER	QTY	PART NAME 1 2 3 4 5 6 (PRODUCT LEVEL)	SEE PAGE
Y	1	1	*353-8693*	1	WASHER GP-WINDOW (LOWER)	960
Y	2	1	*353-8694*	1	WASHER GP-WINDOW	961

Y-SEPARATE ILLUSTRATION

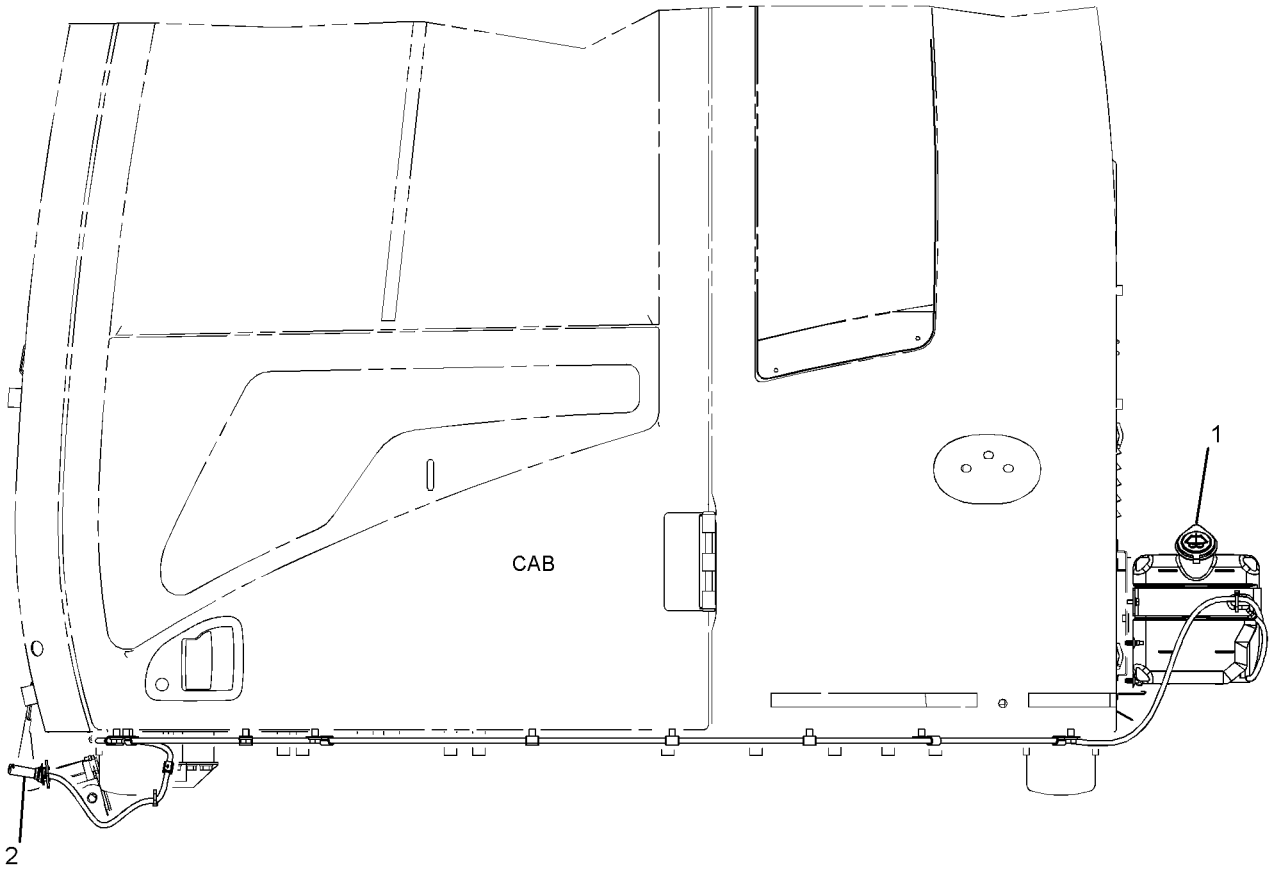

LEFT SIDE VIEW

GRAPHIC #1 **<END>** g02148837

OPERATOR STATION

353-8693 WASHER GP-WINDOW

S/N: JGB1-UP; KHS1-UP

PART OF 229-9088 WASHER GP-WINDOW

SMCS-7306 **i03975693**

NOTE	REF NO	GRAPHIC REF	PART NUMBER	QTY	PART NAME 1 2 3 4 5 6 (PRODUCT LEVEL)	SEE PAGE
	1	1	**3S-2093**	2	STRAP-CABLE	
	2	1	**293-1256**	1	VALVE AS-CHECK	
	3	1	**163-6795**	2	STRAP-CABLE	
	4	1	**7Y-3474**	1	VALVE AS-CHECK (WINDOW WASHER)	
E	5	1	**144-0195**		HOSE (290-CM)	
E	5A	1	**144-0195**		HOSE (30-CM)	
E	5B	1	**144-0195**		HOSE (13-CM)	
	6	1	**235-9012**	1	SUPPORT AS	
	7	1	**176-1932**	1	TANK AS-WINDOW WASHER	
M	8	1	**8T-4970**	2	BOLT (M6X1X14-MM)	
	9	1	**9X-8256**	2	WASHER (6.6X12X2-MM THK)	
	10	1	**6V-3265**	10	CLIP	
	11	1	**8T-4121**	10	WASHER-HARD (11X21X2.5-MM THK)	
M	12	1	**8T-4191**	10	BOLT (M10X1.5X16-MM)	

E-ORDER BY THE CENTIMETER
M-METRIC PART

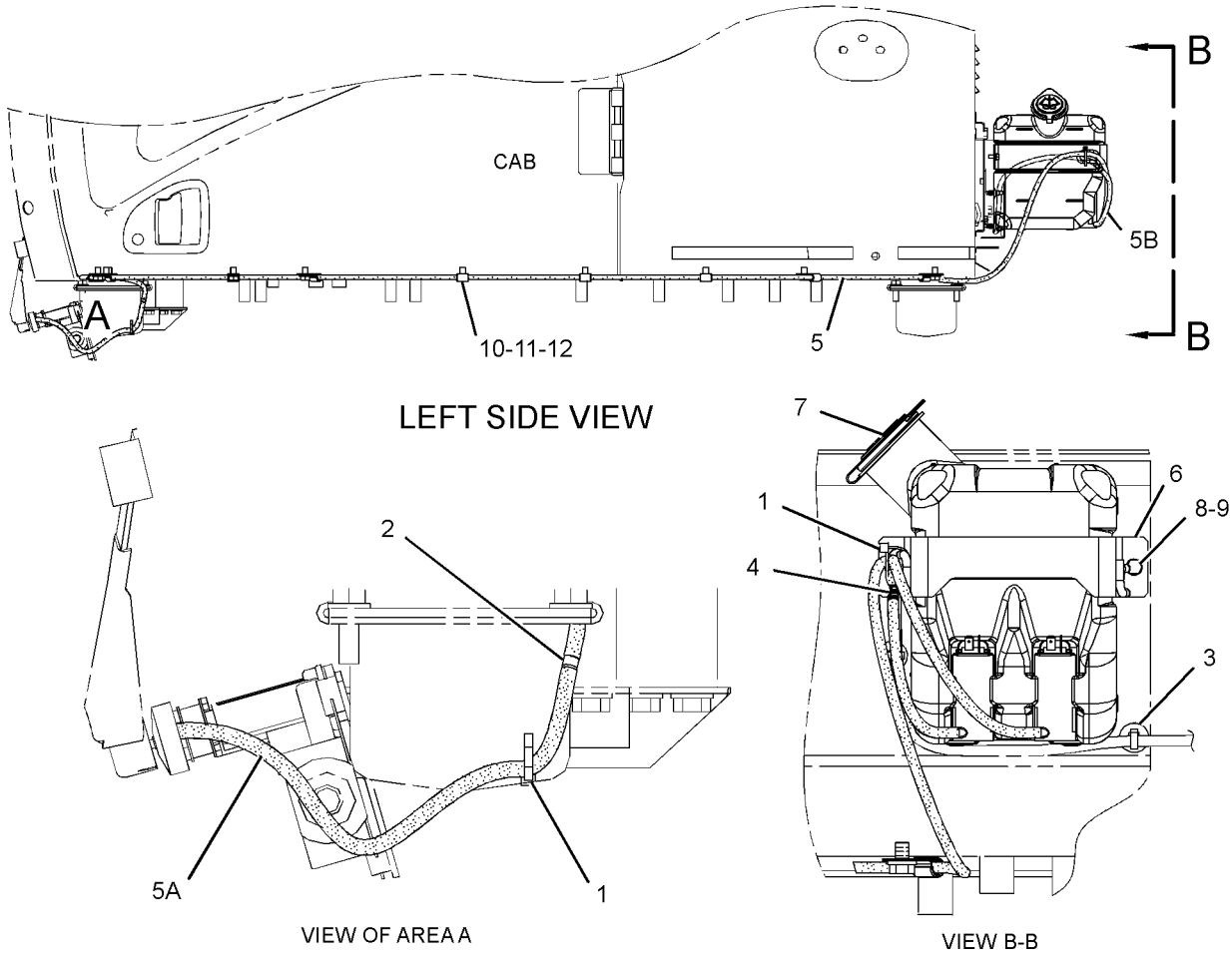

GRAPHIC #1 **<END>** g02153962

OPERATOR STATION

353-8694 WASHER GP-WINDOW

S/N: JGB1-UP; KHS1-UP

PART OF 229-9088 WASHER GP-WINDOW

SMCS-7306 **i03898443**

NOTE	REF NO	GRAPHIC REF	PART NUMBER	QTY	PART NAME 1 2 3 4 5 6 (PRODUCT LEVEL)	SEE PAGE
	1	1	**170-9492**	1	PLATE	
	2	1	**178-5500**	1	NOZZLE AS	
		1	**085-8037**	1	NOZZLE	
		1	**105-9526**	1	ADAPTER	
		1	**105-9527**	1	GASKET	
M	3	1	**3E-9872**	2	SCREW AS (M4X0.7X12-MM)	

M-METRIC PART

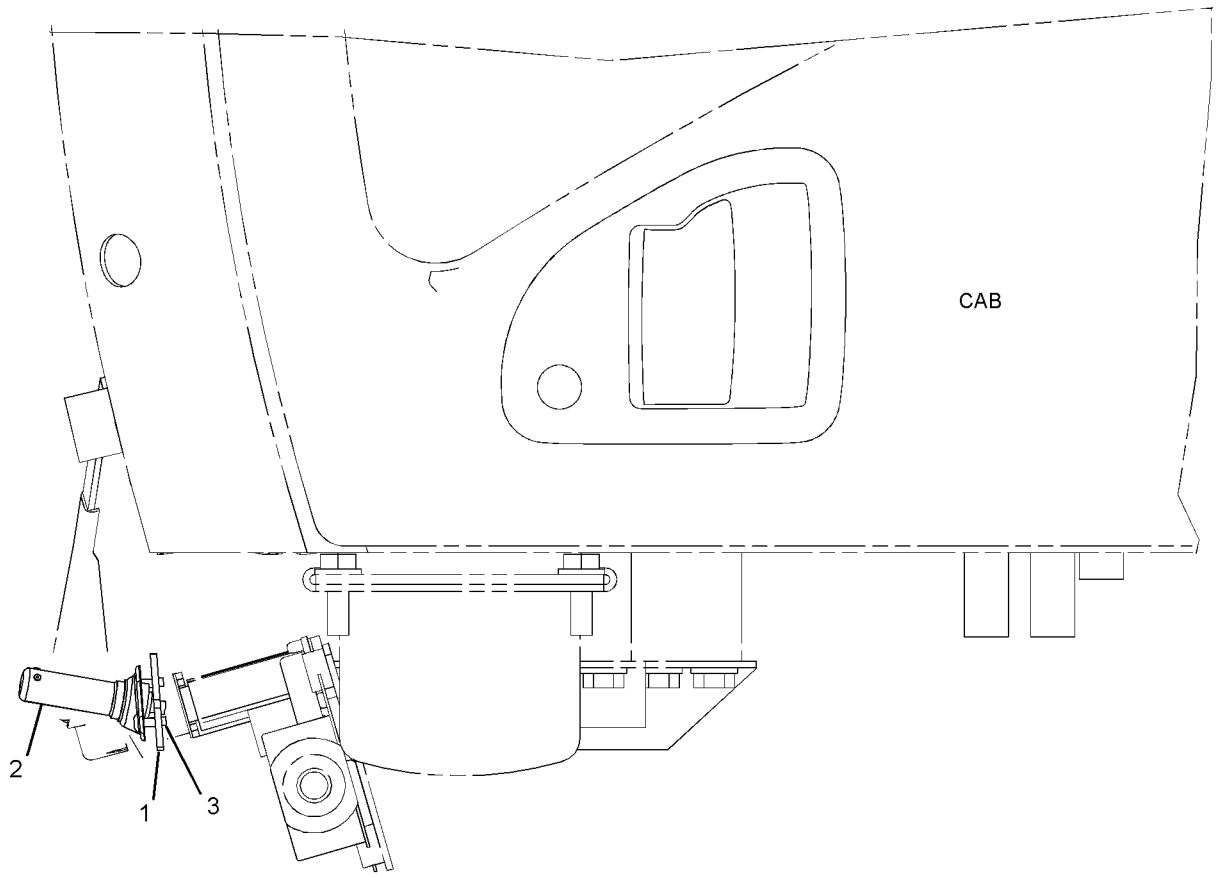

LEFT SIDE VIEW

GRAPHIC #1 **<END>** g02151921

OPERATOR STATION

139-7101 WINDOW GP-CAB—FRONT, UPPER

S/N: JGB1-UP; KHS1-UP

PART OF 356-6716 CAB GP

SMCS-7310 **i03946329**

NOTE	REF NO	GRAPHIC REF	PART NUMBER	QTY	PART NAME 1 2 3 4 5 6 (PRODUCT LEVEL)	SEE PAGE
	1	2	**170-9722**	1	CUSHION	
	2	1	**151-6703**	1	HANDLE-PULL	
	3	1	**151-6704**	2	CAP	
	4	2	**151-6778**	1	FRAME AS	
	4A	2	**156-6470**	1	HANDLE	
	5	1	**151-6785**	1	BRACKET AS	
	6	1	**151-6813**	1	BRACKET AS	
	7	1	**151-6815**	1	BRACKET AS	
	8	1	**273-5345**	1	LINK AS	
	9	1	**273-5346**	1	LINK AS	
	10	1	**151-6831**	1	LOCK AS	
	11	1	**151-6832**	1	LEVER AS	
	12	2	**151-6844**	1	COVER	
	13	1	**151-9557**	2	STOP-RUBBER	
	14	2	**156-6472**	1	GLASS	
	15	2	**156-6554**	1	CABLE AS	
	16	1	**156-6555**	1	STRIKER AS	
	17	2	**156-6562**	1	BRACKET	
	18	2	**273-5274**	1	CATCH AS	
	19	2	**156-6579**	1	STOP	
	20	2	**156-6601**	1	SEAL AS	
	21	2	**156-6627**	1	STOP AS	
	22	1	**161-3684**	2	STOP	
	23	1	**161-3698**	1	SEAL	
	24	2	**164-0648**	1	BRACKET AS	
	25	1	**178-5576**	1	STOP	
M	26	2	**185-8181**	2	SCREW (M4X0.7X10-MM)	
M	27	2	**185-8182**	4	BOLT (M10X1.5X20-MM)	
M	28	2	**5C-8312**	1	NUT (M4X0.7-THD)	
	29	2	**185-8187**	4	WASHER (10.2X22X3.2-MM THK)	
M	30	1	**185-8197**	1	NUT (M10X1.5-THD)	
	31	1	**185-8221**	1	STOP	
M	32	1	**099-0823**	2	SCREW-MACHINE (M6X1X6-MM)	
M	33	1	**101-8900**	2	SCREW AS (M6X1X20-MM)	
	34	1	**117-6306**	1	SWITCH (WINDOW LOWER LIMIT)	
	35	1	**151-9576**	4	ROLLER	
	36	1	**4I-0420**	1	STRIP	
	37	1	**7X-0578**	1	WASHER-HARD (10.2X32X2.5-MM THK)	
M	38	2	**9X-2042**	20	SCREW-TRUSS HEAD (M6X1X12-MM)	
M	39	1,2	**9X-2044**	5	SCREW-TRUSS HEAD (M6X1X16-MM)	
M	40	2	**9X-2045**	3	SCREW-TRUSS HEAD (M6X1X20-MM)	
	41	2	**9X-8256**	2	WASHER (6.6X12X2-MM THK)	

M-METRIC PART

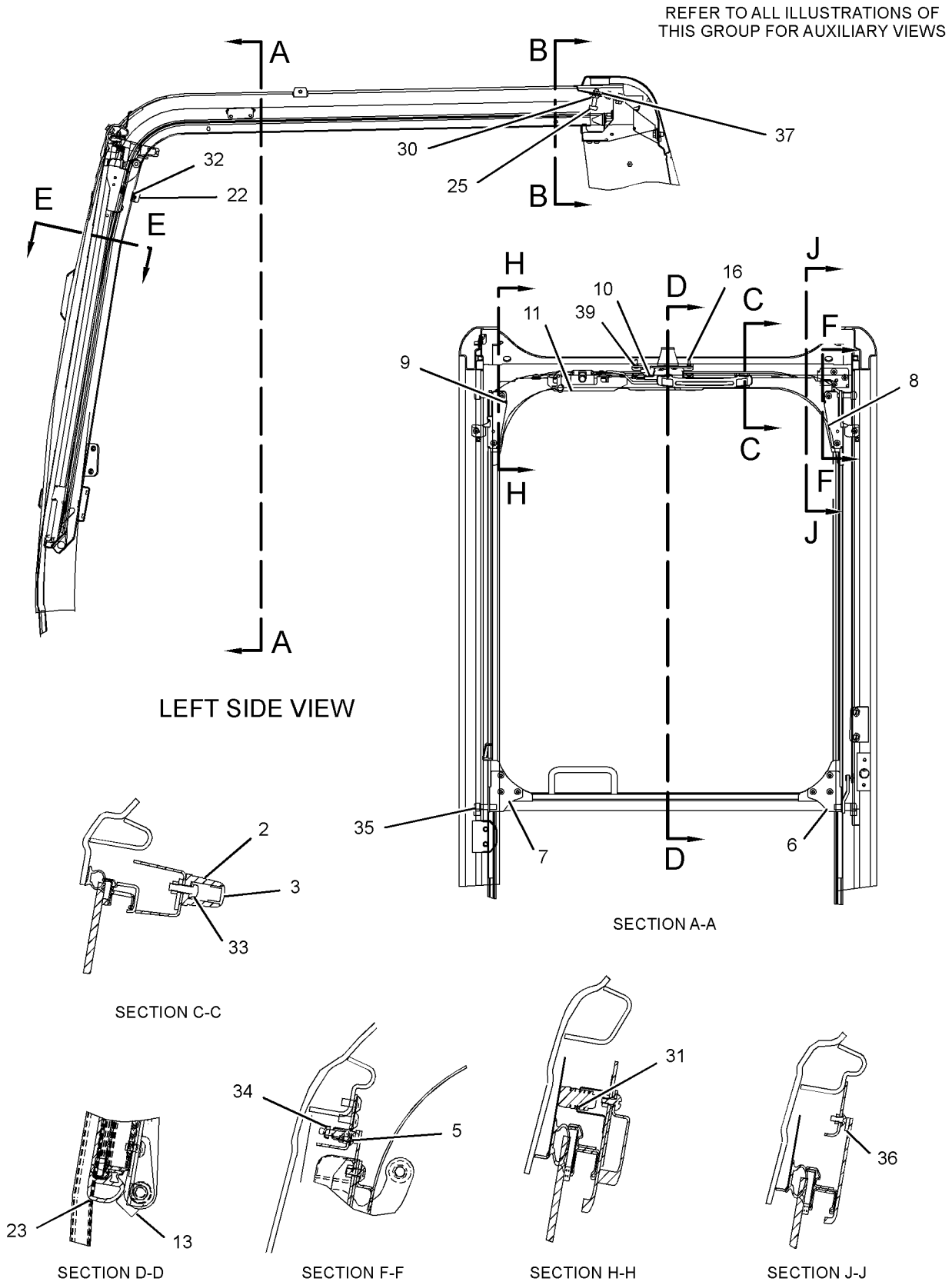

GRAPHIC #1

g01231378

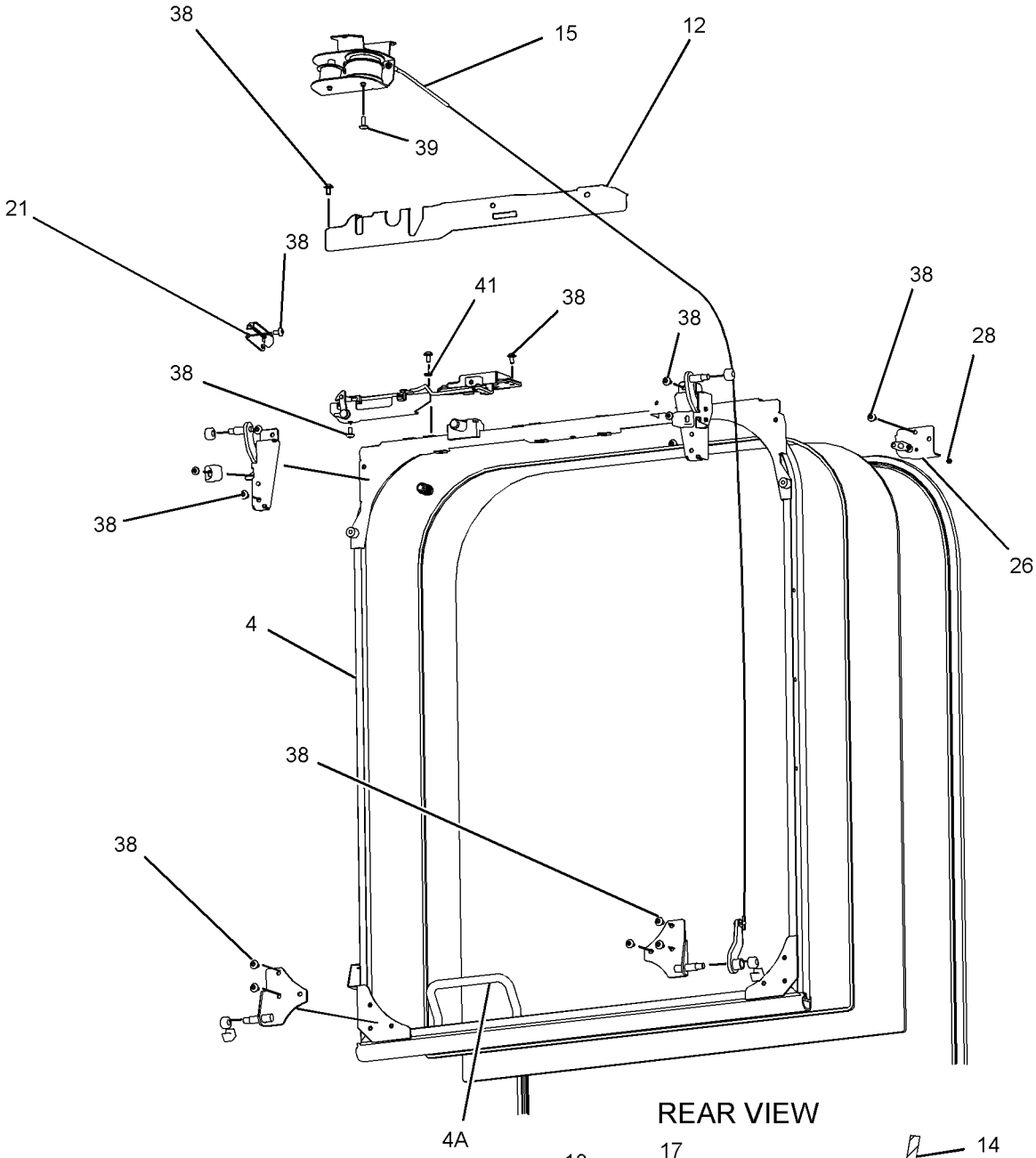

REAR VIEW

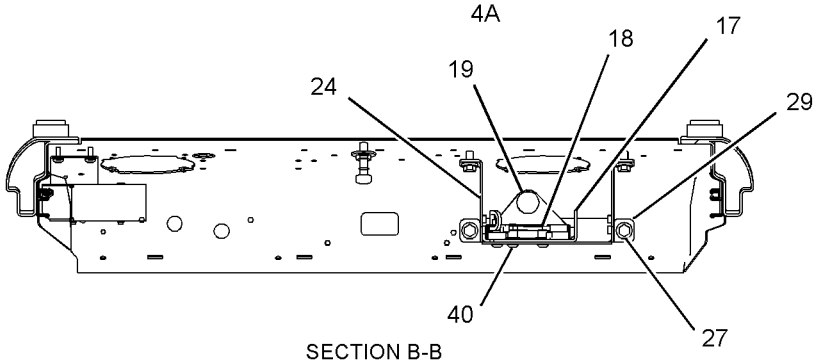

SECTION B-B

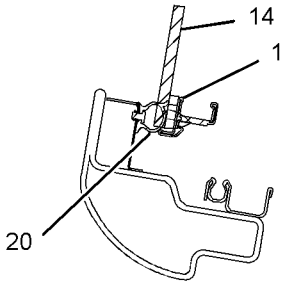

SECTION E-E

GRAPHIC #2 **<END>** g02157234

156-6647 WINDOW GP-CAB–FRONT, LOWER

S/N: JGB1-UP; KHS1-UP

PART OF 227-5343 WINDOW GP-CAB

SMCS-7310 **i03261152**

NOTE	REF NO	GRAPHIC REF	PART NUMBER	QTY	PART NAME 1 2 3 4 5 6 (PRODUCT LEVEL)	SEE PAGE
	1	1	**144-9691**	2	PACKING	
M	2	1	**9X-2042**	2	SCREW-TRUSS HEAD (M6X1X12-MM)	
	3	1	**151-6705**	1	PACKING	
	4	1	**124-3966**	1	STOP	
	5	1	**144-9692**	2	RETAINER	

M-METRIC PART

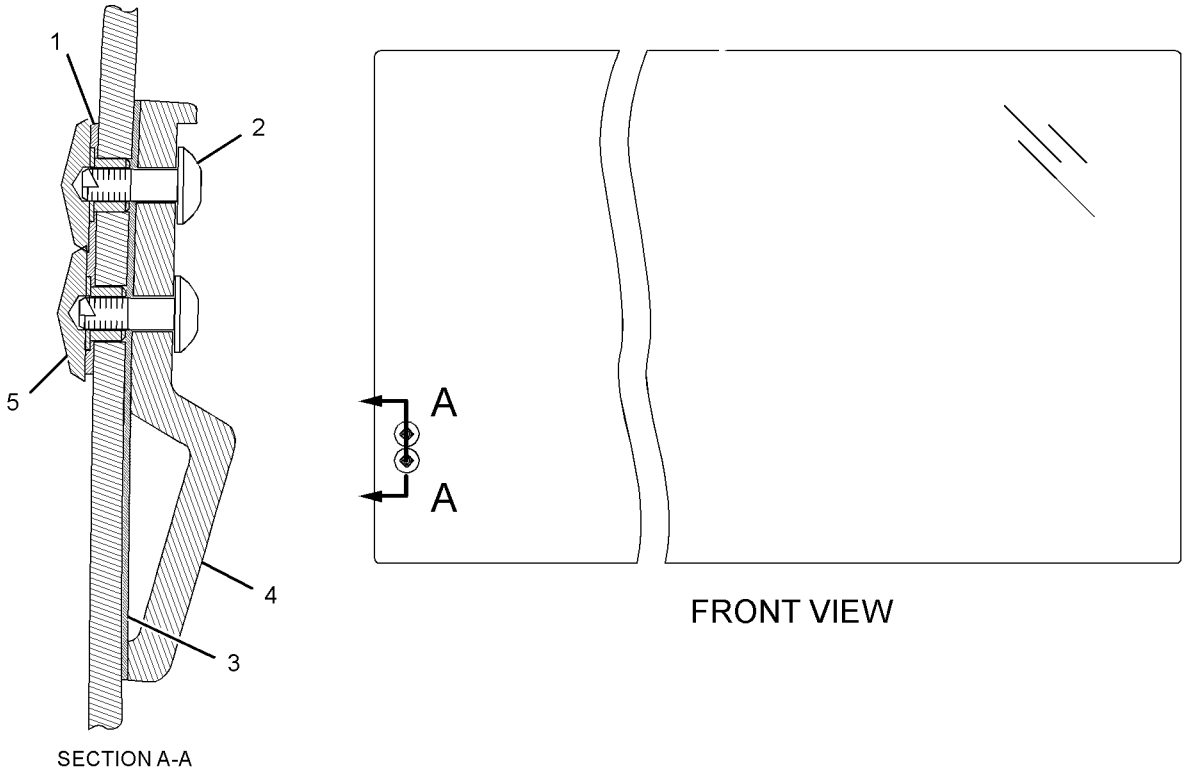

GRAPHIC #1 **<END>** g01662797

OPERATOR STATION

227-5343 WINDOW GP-CAB—FRONT, LOWER

S/N: JGB1-UP; KHS1-UP
PART OF 356-6716 CAB GP

SMCS-7310 **i02882199**

NOTE	REF NO	GRAPHIC REF	PART NUMBER	QTY	PART NAME 1 2 3 4 5 6 (PRODUCT LEVEL)	SEE PAGE
M	1	1	**3E-9871**	2	BOLT AS	
	2	1	**4I-1163**	1	BRACKET	
	3	1	**129-6466**	1	SWITCH AS-ROLLER (WIPER, LOWER)	
		1	**2H-3922**	1	LOCKWASHER	
		1	**6V-8363**	2	SCREW (10-32X0.312-IN)	
		1	**6V-8370**	1	NUT-HEX (3/4-32-THD)	
		1	**8F-1434**	2	LOCKWASHER	
		1	**9X-0199**	1	BOOT-SWITCH	
	4	1	**156-6631**	2	STOP	
	5	1	**156-6646**	1	BRACKET	
Y	6	1	**156-6647**	1	WINDOW GP-CAB (FRONT, LOWER)	965
	7	1	**305-0361**	1	SEAL	
	8	1	**178-5569**	2	SEAL	
	9	1	**189-2702**	2	SEAL	
M	10	1	**9X-2044**	2	SCREW-TRUSS HEAD (M6X1X16-MM)	

M-METRIC PART
Y-SEPARATE ILLUSTRATION

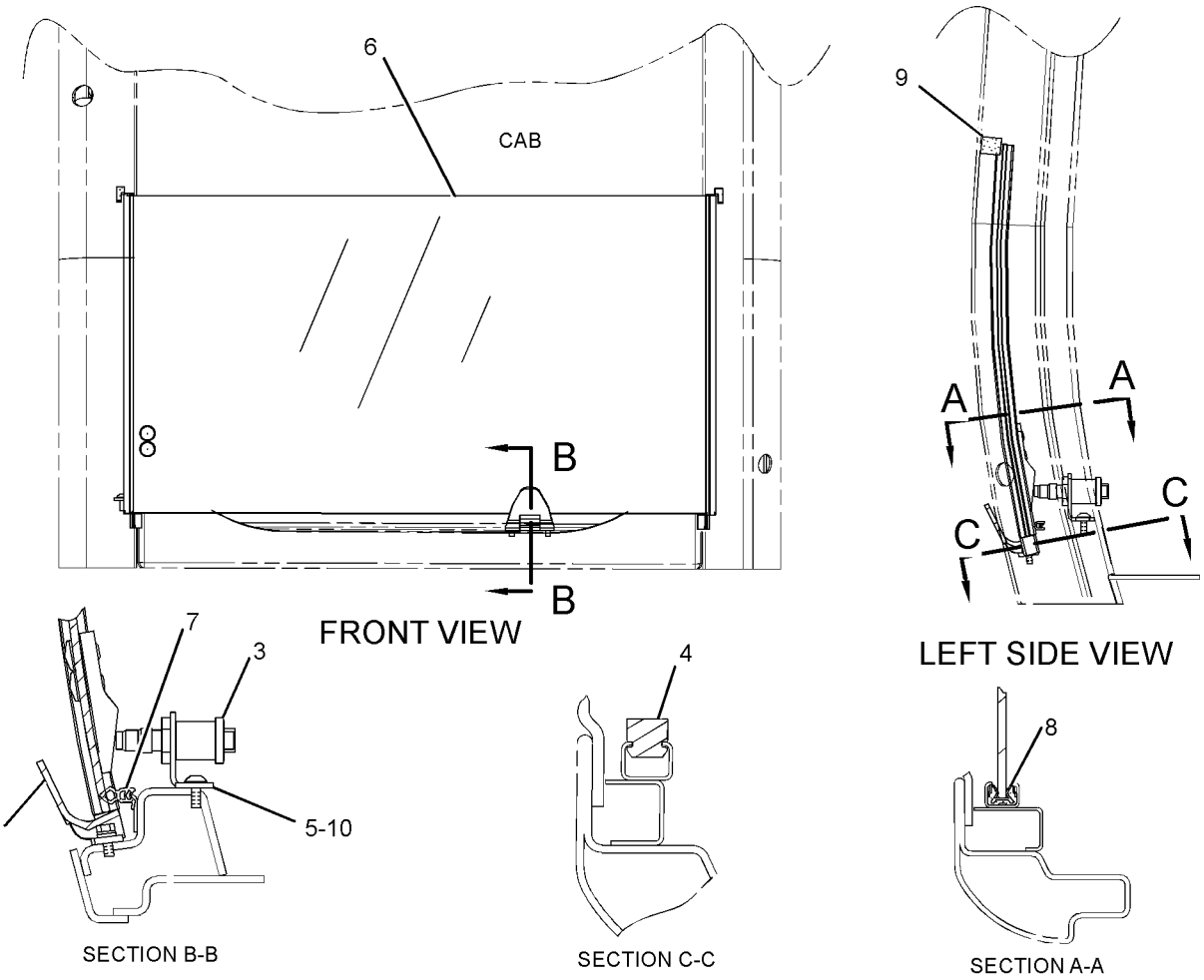

GRAPHIC #1 **<END>** g01401966

OPERATOR STATION

235-8909 WINDOW GP-CAB—SIDE, REAR

S/N: JGB1-UP; KHS1-UP

PART OF 356-6716 CAB GP

SMCS-7310 **i03130025**

NOTE	REF NO	GRAPHIC REF	PART NUMBER	QTY	PART NAME 1 2 3 4 5 6 (PRODUCT LEVEL)	SEE PAGE
	1	1	**151-6790**	1	GLASS	
	2	1	**156-6469**	1	GLASS	
	3	1	**164-0666**	1	SEAL	
	4	1	**178-5572**	4	SPACER	
	5	1	**234-6489**	1	GLASS	
	6	1	**099-3629**	1	RING-KEY	
	7	1	**178-5573**	4	SPACER	
	8	1	**178-5574**	9	SPACER	

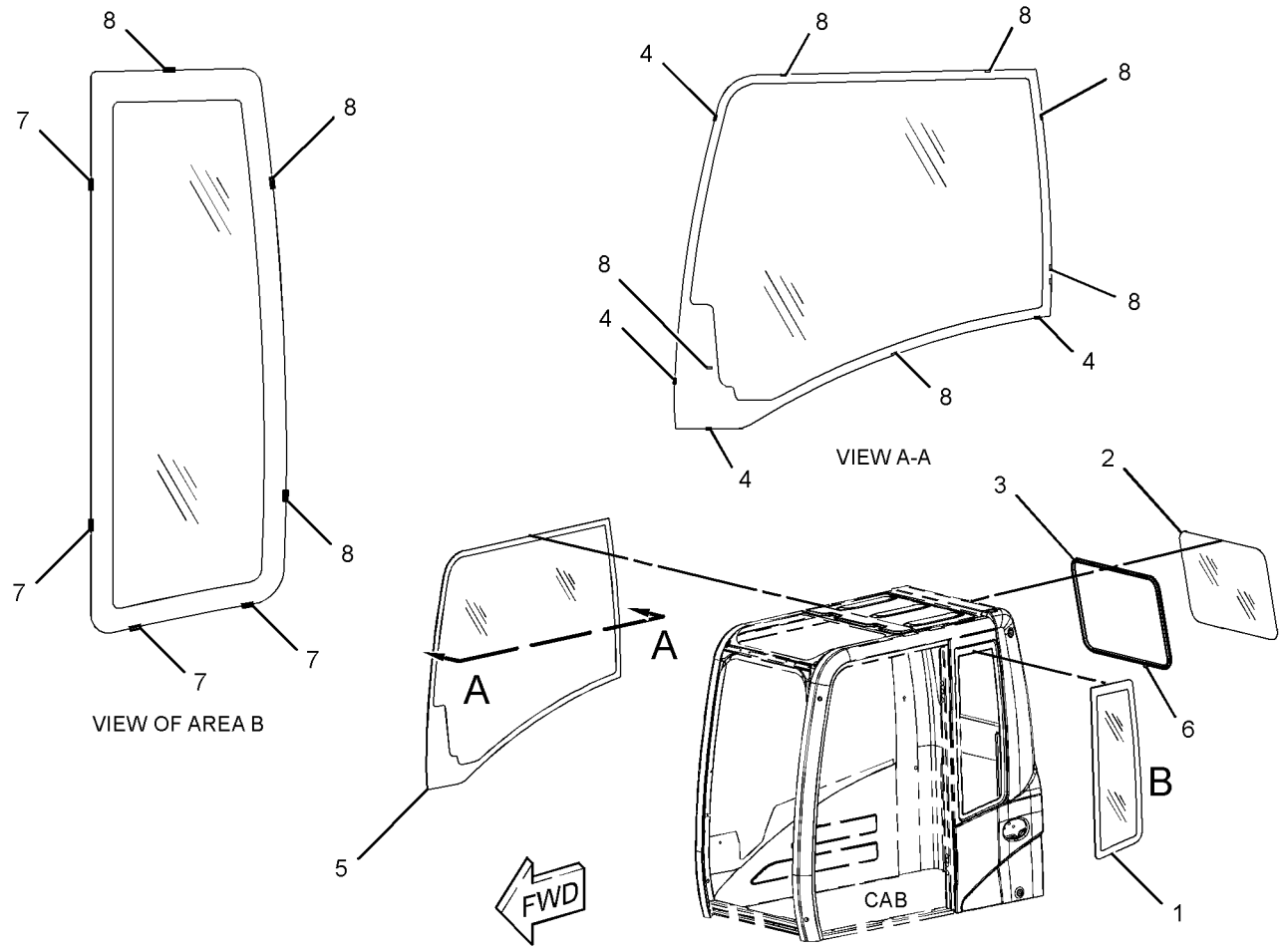

GRAPHIC #1 **<END>** g01616664

OPERATOR STATION

225-0326 WINDOW GP-DOOR

S/N: JGB1-UP; KHS1-UP

PART OF 356-6800 DOOR GP-CAB

SMCS-7308, 7310 **i02286556**

NOTE	REF NO	GRAPHIC REF	PART NUMBER	QTY	PART NAME 1 2 3 4 5 6 (PRODUCT LEVEL)	SEE PAGE
	1	1	**153-2849**	2	BLOCK	
	2	1	**225-0327**	1	LATCH AS	
	3	1	**225-0328**	1	FRAME AS	
	4	1	**225-0329**	1	GLASS	
	5	1	**225-0330**	1	GLASS	
	6	1	**268-1901**	1	SEAL	
	7	1	**225-0332**	1	SEAL	
	8	1	**225-0333**	1	SEAL	
	9	1	**225-0334**	1	SPACER	
	10	1	**225-0335**	2	SPACER	
BD	11	1	**9X-2533**		STOP	

B-USE AS REQUIRED
D-ORDER BY THE METER

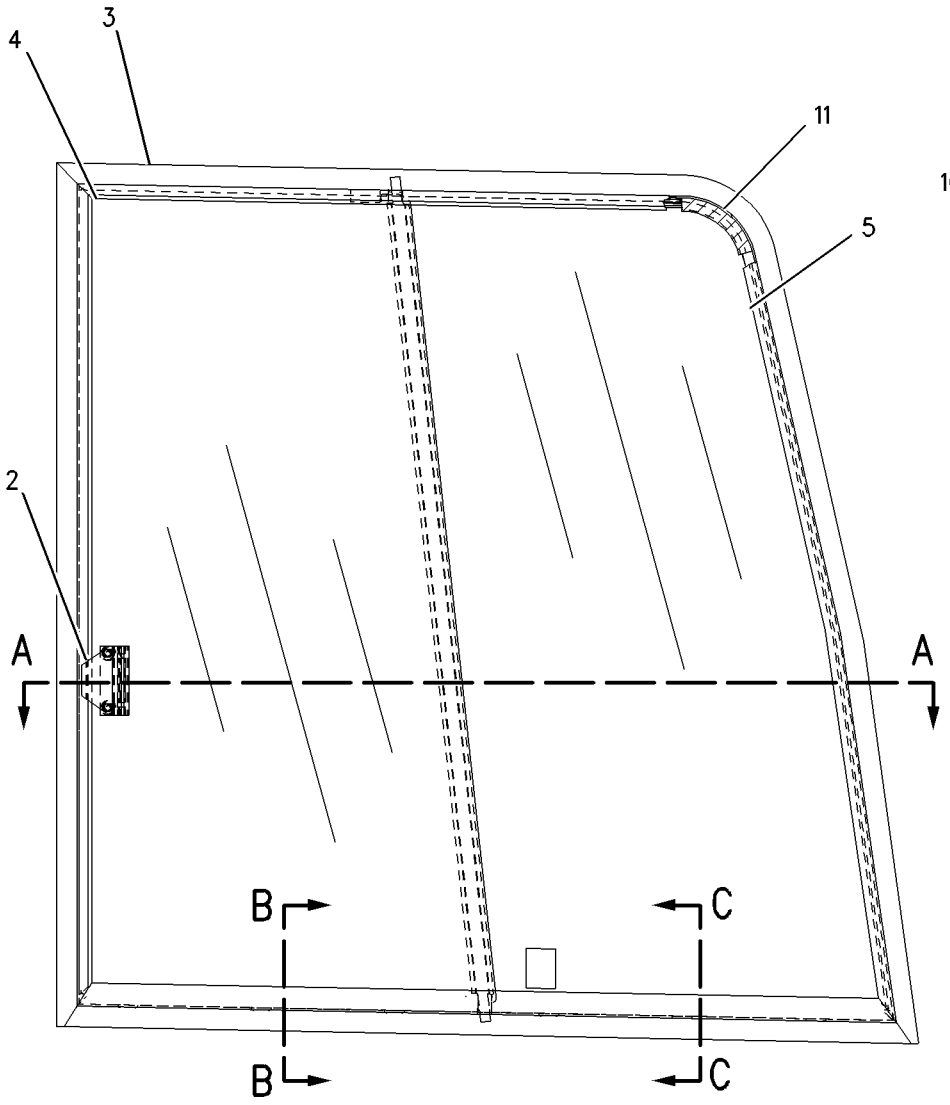

RIGHT SIDE VIEW

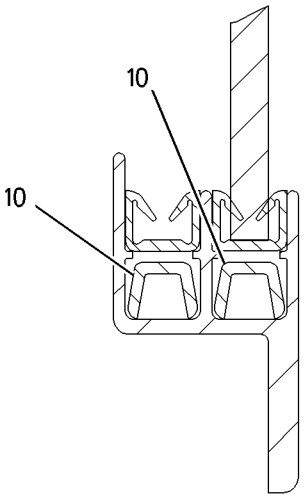

SECTION C-C

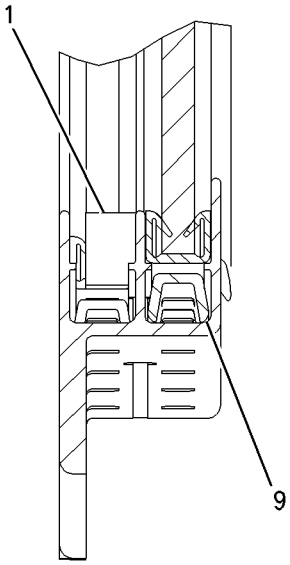

SECTION B-B

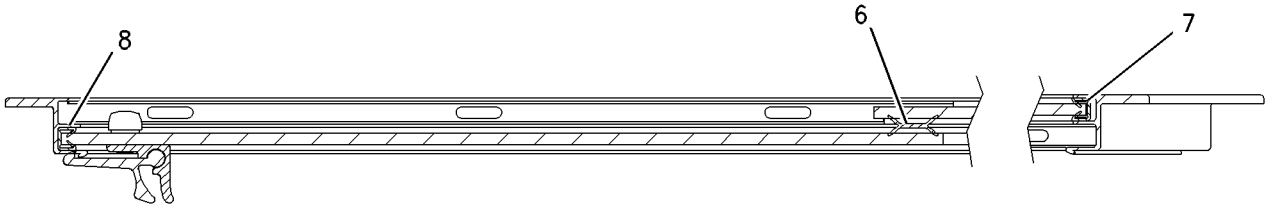

SECTION A-A

GRAPHIC #1 **<END>** g00942082

OPERATOR STATION

234-6594 WIPER GP-WINDOW—FRONT, UPPER

S/N: JGB1-UP; KHS1-UP

PART OF 356-6716 CAB GP

SMCS-7305 **i02894716**

NOTE	REF NO	GRAPHIC REF	PART NUMBER	QTY	PART NAME 1 2 3 4 5 6 (PRODUCT LEVEL)	SEE PAGE
	1	1	**161-3677**	1	HOLDER	
	2	1	**189-3424**	1	MOTOR AS-WINDOW WIPER (UPPER)	
M		1	**6V-8231**	1	NUT (M10X1.25-THD)	
M		1	**7Y-3470**	1	NUT (M20X1-THD)	
		1	**7Y-3472**	1	CAP	
		1	**124-3953**	1	WASHER (20.5X30X2-MM THK)	
	3	1	**235-8932**	1	NOZZLE AS	
	4	1	**155-7042**	1	RELAY AS (UPPER) (WIPER)	
	5	1	**161-3668**	1	ARM AS-WIPER	
		1	**161-3669**	1	GUIDE	
		1	**161-3670**	1	BLADE AS-WIPER (600-MM) (FRONT, UPPER)	
		1	**185-8290**	1	SCREW AS (M3.5X0.6X9-MM)	
	6	1	**163-6795**	1	STRAP-CABLE	
M	7	1	**3E-9872**	2	SCREW AS (M4X0.7X12-MM)	
	8	1	**4I-3090**	1	SEAL	
	9	1	**7Y-7364**	1	GROMMET	
M	10	1	**8T-4134**	4	NUT (M6X1-THD)	
M	11	1	**9X-2042**	2	SCREW-TRUSS HEAD (M6X1X12-MM)	
M	12	1	**9X-2044**	3	SCREW-TRUSS HEAD (M6X1X16-MM)	

M-METRIC PART

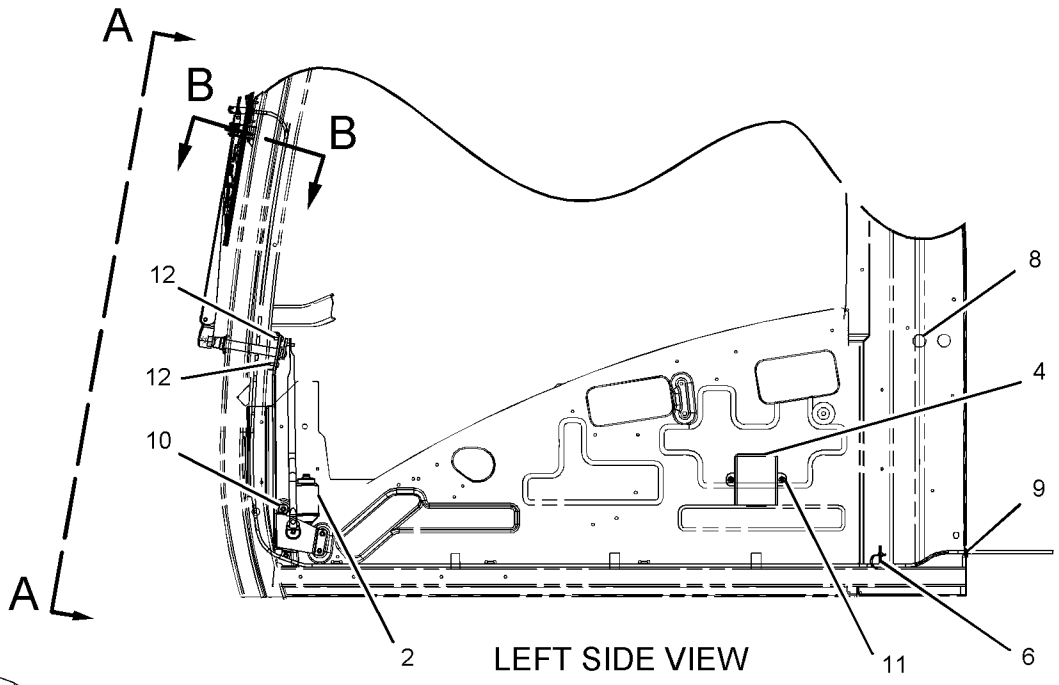

LEFT SIDE VIEW

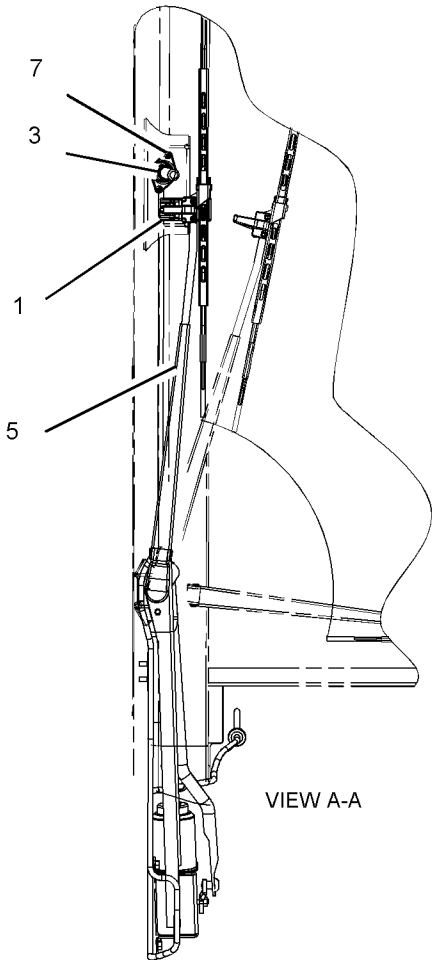

VIEW A-A

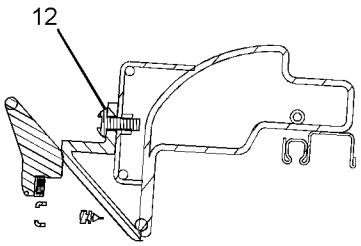

SECTION B-B

GRAPHIC #1 **<END>** g01098021

OPERATOR STATION

244-2118 WIPER GP-WINDOW—FRONT, LOWER

S/N: JGB1-UP; KHS1-UP

PART OF 370-3231, 370-4189 CHASSIS AR

SMCS-7305 **i02894720**

NOTE	REF NO	GRAPHIC REF	PART NUMBER	QTY	PART NAME 1 2 3 4 5 6 (PRODUCT LEVEL)	SEE PAGE
	1	1	**235-8974**	1	BRACKET AS	
	2	1	**293-1140**	1	MOTOR AS-WINDOW WIPER (LOWER)	
	3	1	**4I-5020**	1	ARM AS-WIPER	
	4	1	**4I-5021**	1	BLADE AS-WIPER (275-MM) (FRONT, LOWER)	
	5	1	**8T-4121**	4	WASHER-HARD (11X21X2.5-MM THK)	
M	6	1	**8T-4134**	3	NUT (M6X1-THD)	
M	7	1	**8T-4191**	4	BOLT (M10X1.5X16-MM)	
	8	1	**9X-8256**	3	WASHER (6.6X12X2-MM THK)	

M-METRIC PART

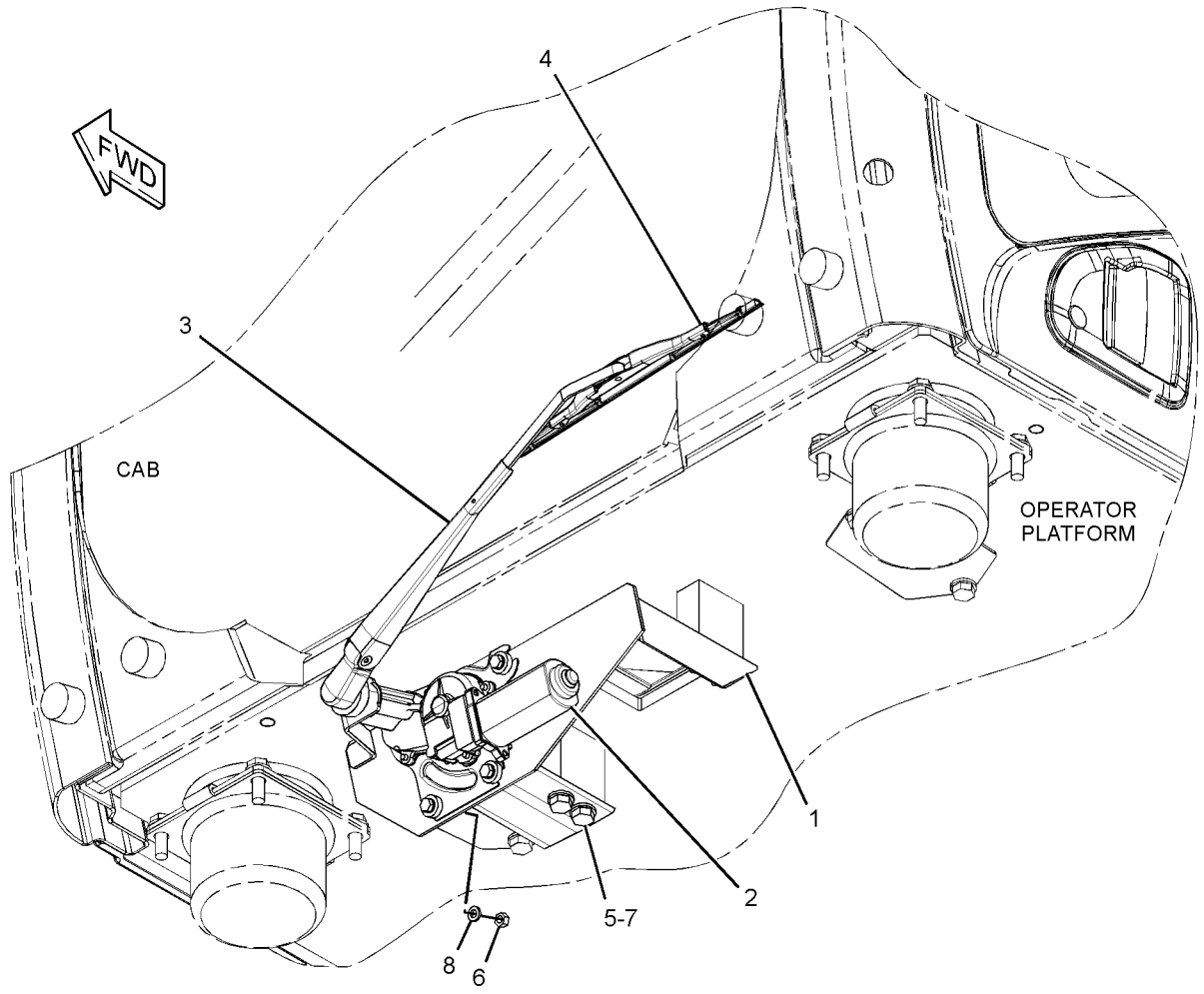

GRAPHIC #1 **<END>** g01365766

SERVICE EQUIPMENT AND SUPPLIES

220-2530 FILM GP—COUNTERWEIGHT REMOVAL

S/N: JGB1-UP

PART OF 309-0166, 309-0167 COUNTERWEIGHT AR

AN ATTACHMENT

SMCS-7405, 7557 **i03840013**

NOTE	REF NO	GRAPHIC REF	PART NUMBER	QTY	PART NAME 1 2 3 4 5 6 (PRODUCT LEVEL)	SEE PAGE
	1	1	**250-6094**	1	FILM-WARNING (CRUSH HAZARD, READ OMM, INTL)	
					—OR—	
		1	**251-1105**	1	FILM-WARNING (CRUSH HAZARD, READ OMM, U.S.)	
	2	1	**318-8835**	1	FILM-INFORMATION (NO SERVICE-READ OMM)	

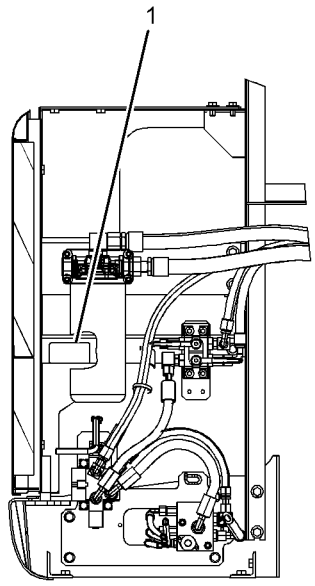

SECTION A-A

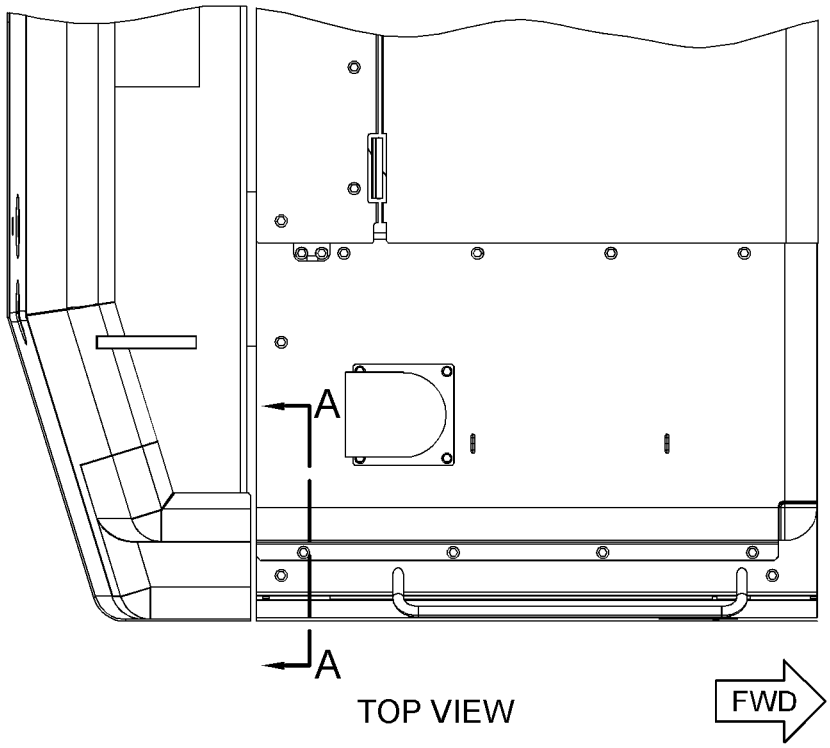

TOP VIEW

FWD

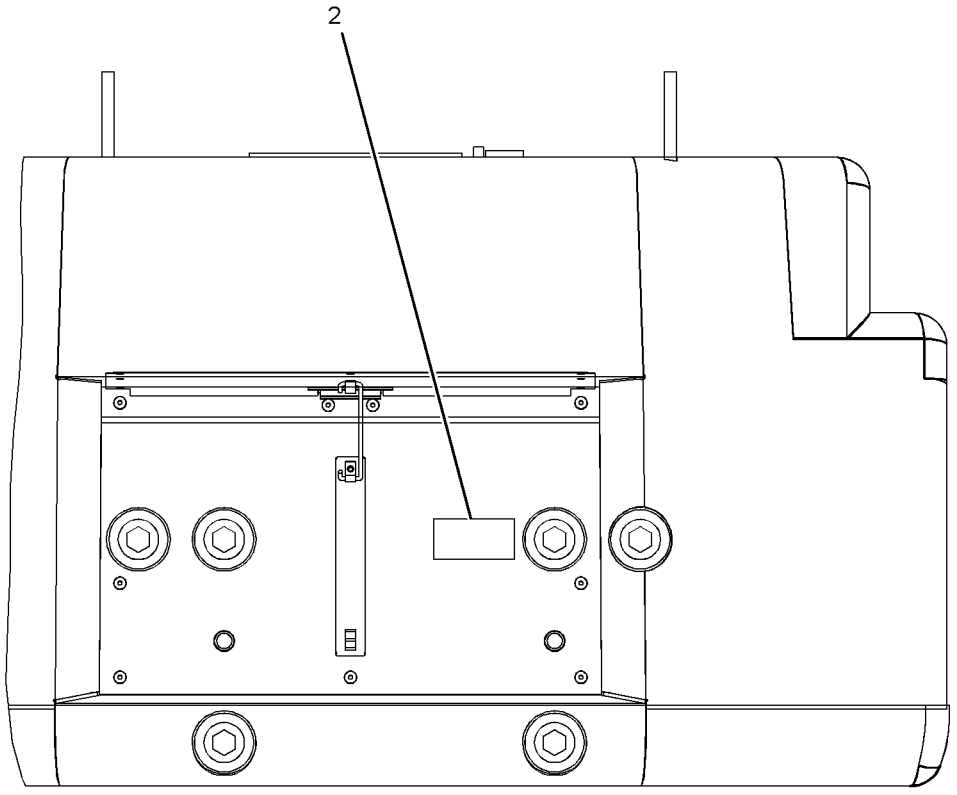

REAR VIEW
(PANEL OPEN)

GRAPHIC #1 **<END>** g01951849

SERVICE EQUIPMENT AND SUPPLIES

247-7410 FILM GP–OPERATOR CONTROLS, NOTICE

S/N: JGB1-UP; KHS1-UP
PART OF 255-5843 CONTROL AR-AUXILIARY
AN ATTACHMENT

SMCS-7405, 7557 **i02472464**

NOTE	REF NO	GRAPHIC REF	PART NUMBER	QTY	PART NAME 1 2 3 4 5 6 (PRODUCT LEVEL)	SEE PAGE
	1	1	**250-8054**	1	FILM-NOTICE (HAMMER, READ OMM)	
	2	1	**260-6941**	1	FILM-INFORMATION (OPERATOR CONTROLS, READ OMM) (JOYSTICK W/ SLIDE CONTROL)	

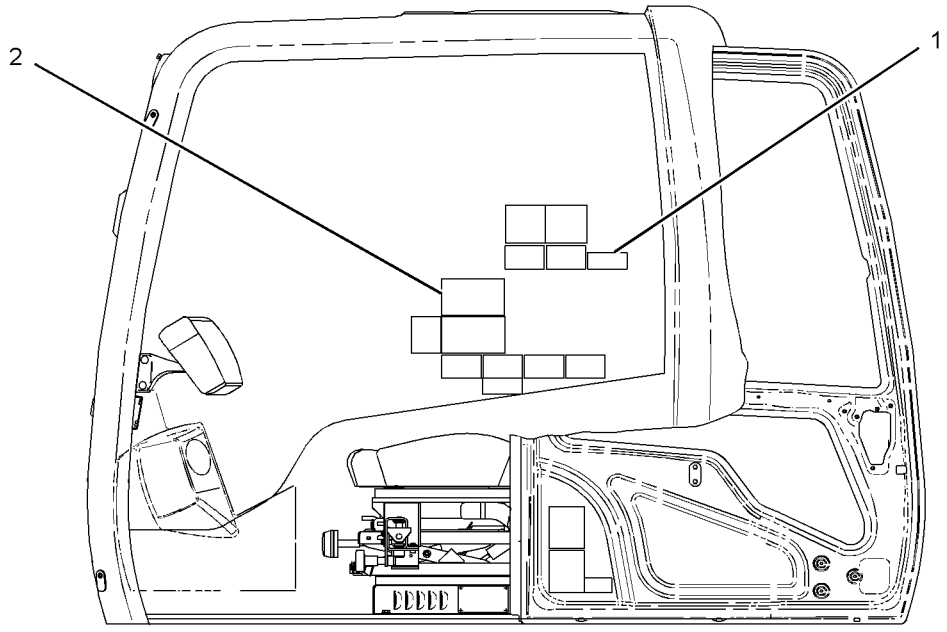

LEFT SIDE VIEW

GRAPHIC #1 **<END>** g01213282

SERVICE EQUIPMENT AND SUPPLIES

247-7411 FILM GP–OPERATOR CONTROLS, NOTICE

S/N: JGB1-UP; KHS1-UP
PART OF 255-5844 CONTROL AR-AUXILIARY
AN ATTACHMENT

SMCS-7405, 7557 **i02862445**

NOTE	REF NO	GRAPHIC REF	PART NUMBER	QTY	PART NAME 1 2 3 4 5 6 (PRODUCT LEVEL)	SEE PAGE
	1	1	**260-6942**	1	FILM-INFORMATION (OPERATOR CONTROLS, READ OMM)	
	2	1	**250-8054**	1	FILM-NOTICE (HAMMER, READ OMM)	

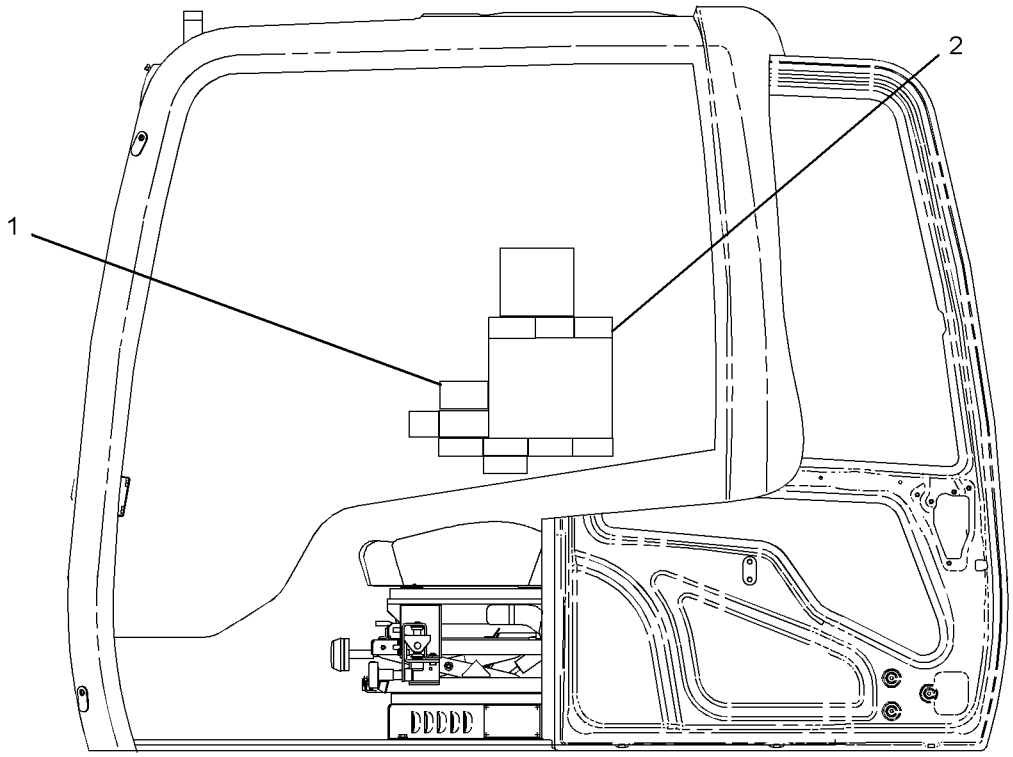

LEFT SIDE VIEW

GRAPHIC #1 **<END>** g01212938

SERVICE EQUIPMENT AND SUPPLIES

247-7418 FILM GP—OPERATOR CONTROLS, NOTICE

S/N: KHS1-UP

PART OF 255-5845 PEDAL AR-AUXILIARY

AN ATTACHMENT

SMCS-7405, 7557 **i02471725**

NOTE	REF NO	GRAPHIC REF	PART NUMBER	QTY	PART NAME 1 2 3 4 5 6 (PRODUCT LEVEL)	SEE PAGE
	1	1	**250-8054**	1	FILM-NOTICE (HAMMER, READ OMM)	
	2	1	**260-6948**	1	FILM-INSTRUCTION (OPERATOR CONTROLS, READ OMM)	

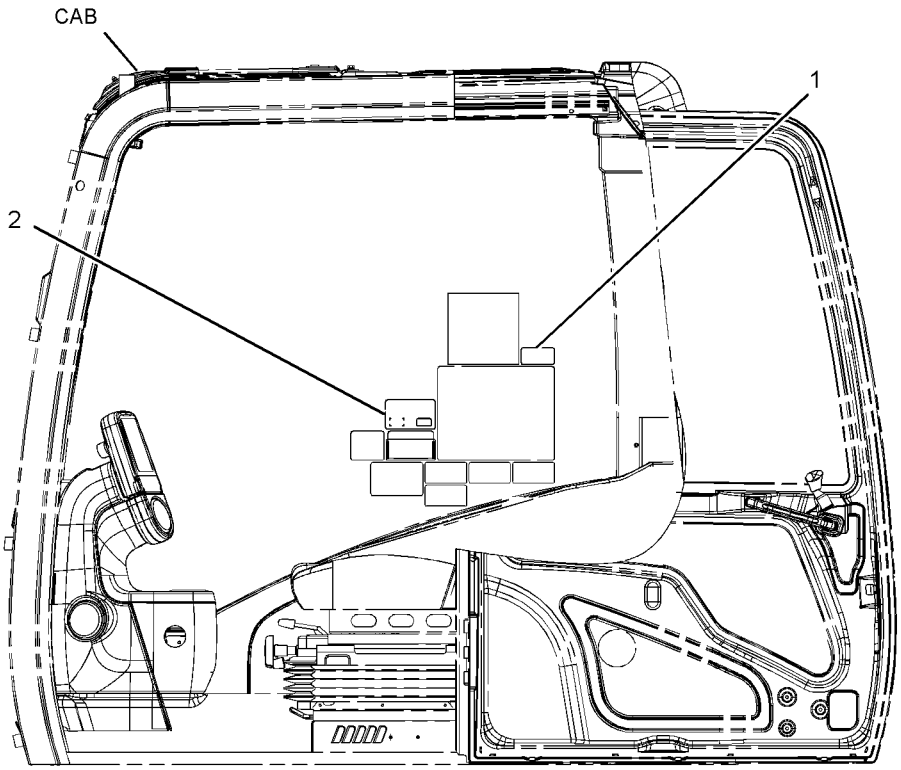

LEFT SIDE VIEW

GRAPHIC #1 **<END>** g01203264

SERVICE EQUIPMENT AND SUPPLIES

247-7465 FILM GP—HAMMER CONTROL, FOOT SWITCH

S/N: JGB1-UP

PART OF 270-6106 CONTROL AR-AUXILIARY

AN ATTACHMENT

SMCS-7405, 7557 **i02472491**

NOTE	REF NO	GRAPHIC REF	PART NUMBER	QTY	PART NAME 1 2 3 4 5 6 (PRODUCT LEVEL)	SEE PAGE
	1	1	**176-2815**	1	FILM-INSTRUCTION (HAMMER CONTROL)	
	2	1	**250-8054**	1	FILM-NOTICE (HAMMER, READ OMM)	

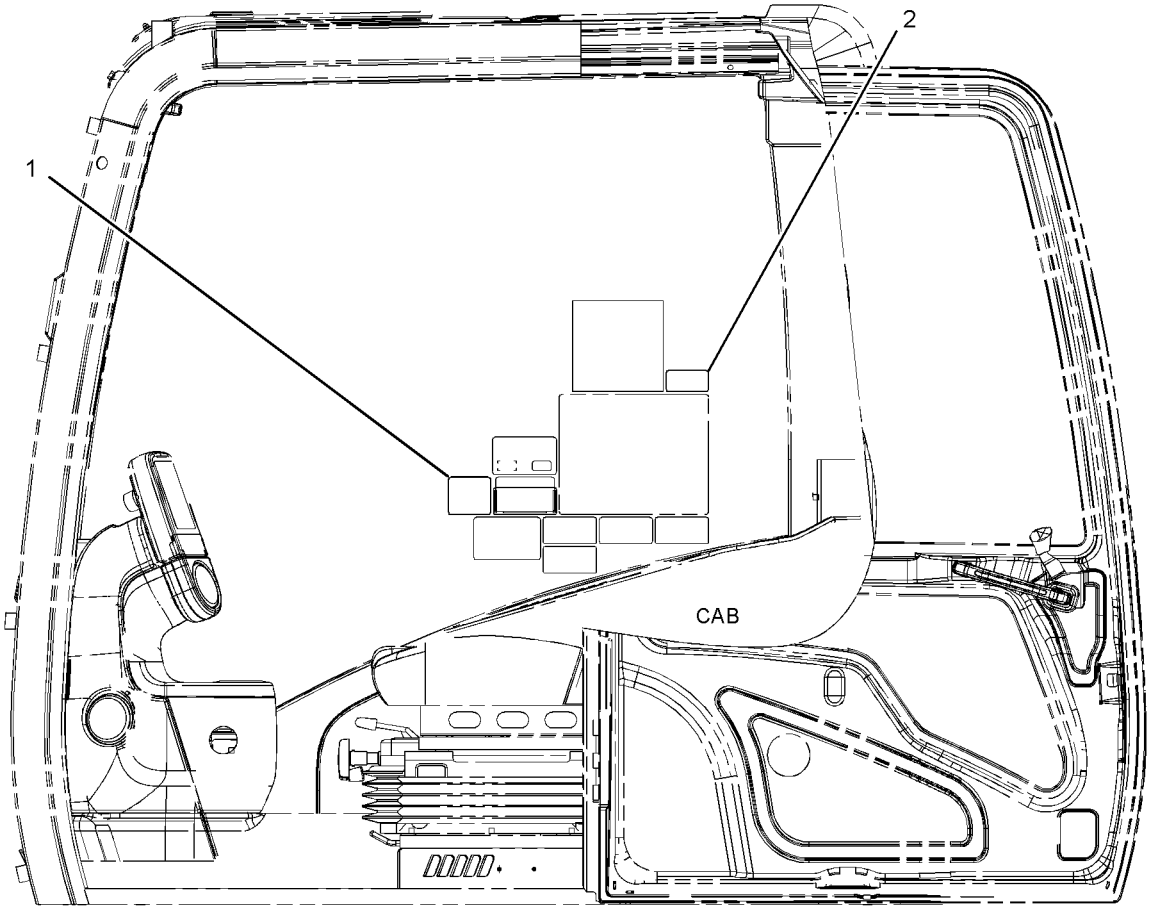

LEFT SIDE VIEW

GRAPHIC #1 **<END>** g01157047

SERVICE EQUIPMENT AND SUPPLIES

257-4596 FILM GP—REVERSING FAN

S/N: KHS1-UP
PART OF 294-1275 CONTROL AR-VARIABLE-SPEED FAN
AN ATTACHMENT

SMCS-7405, 7557 **i02712639**

NOTE	REF NO	GRAPHIC REF	PART NUMBER	QTY	PART NAME 1 2 3 4 5 6 (PRODUCT LEVEL)	SEE PAGE
	1	1	**225-4130**	1	FILM-WARNING (FLYING DEBRIS, STAY BACK, U.S.)	
					—OR—	
		1	**225-4131**	1	FILM-WARNING (FLYING DEBRIS, STAY BACK, INTL)	

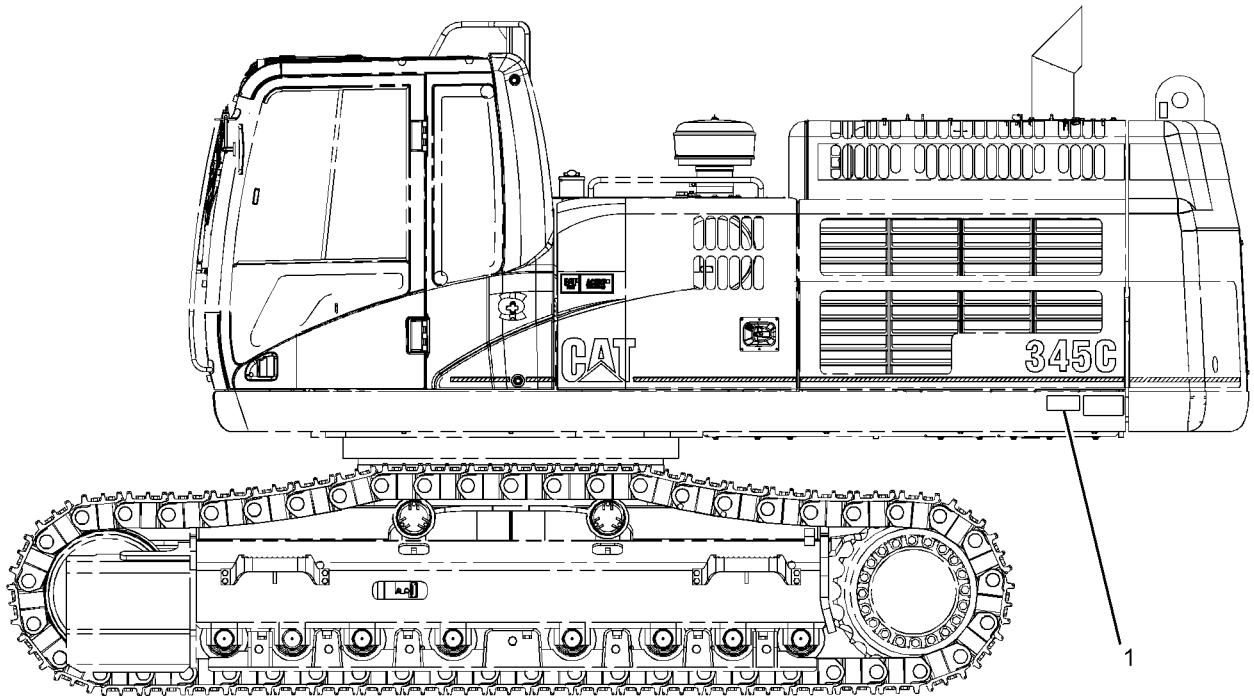

LEFT SIDE VIEW

GRAPHIC #1 **<END>** g01335088

SERVICE EQUIPMENT AND SUPPLIES

268-6816 FILM GP–QUICK COUPLER

S/N: JGB1-UP; KHS1-UP
PART OF 302-9403 CONTROL AR-COUPLER
AN ATTACHMENT

SMCS-7405, 7557 **i02473775**

NOTE	REF NO	GRAPHIC REF	PART NUMBER	QTY	PART NAME 1 2 3 4 5 6 (PRODUCT LEVEL)	SEE PAGE
	1	1	**268-6817**	1	FILM-IDENTIFICATION (QUICK COUPLER)	

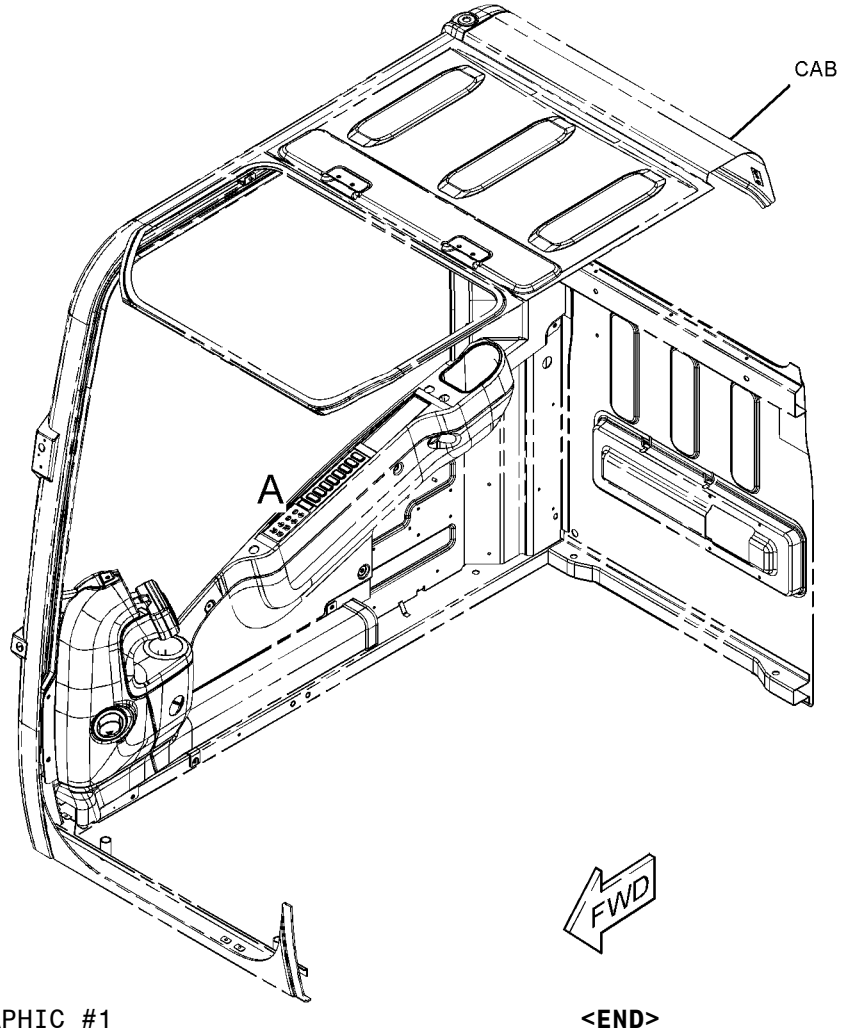

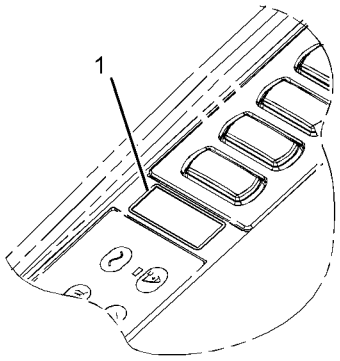

VIEW OF AREA A

GRAPHIC #1 **<END>** g01199575

SERVICE EQUIPMENT AND SUPPLIES

282-5705 FILM GP—QUICK COUPLER

S/N: JGB1-UP
PART OF 344-4211 CONTROL AR-COUPLER
AN ATTACHMENT

SMCS-7405, 7557 **i02888331**

NOTE	REF NO	GRAPHIC REF	PART NUMBER	QTY	PART NAME 1 2 3 4 5 6 (PRODUCT LEVEL)	SEE PAGE
	1	1	**268-4530**	1	FILM-WARNING (CRUSH HAZARD, READ OMM, U.S.)	
					—OR—	
		1	**269-0120**	1	FILM-WARNING (CRUSH HAZARD, READ OMM, INTL)	
	2	1	**268-4531**	1	FILM-INSTRUCTION (COUPLER OPERATION)	
	3	1	**268-8872**	1	FILM-WARNING (CRUSH HAZARD, READ OMM, U.S.)	
					—OR—	
		1	**269-0121**	1	FILM-WARNING (CRUSH HAZARD, READ OMM, INTL)	

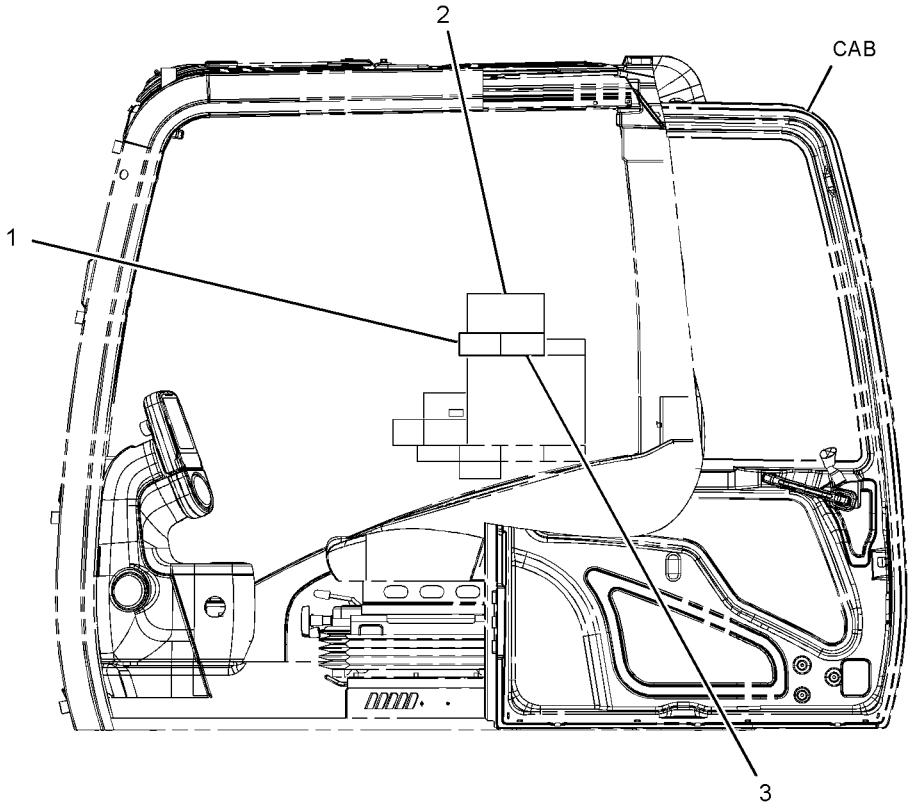

LEFT SIDE VIEW

GRAPHIC #1 **<END>** g01238116

SERVICE EQUIPMENT AND SUPPLIES

303-2787 FILM GP—WORK AREA VISUAL SYSTEM, REAR

S/N: JGB1-UP; KHS1-UP
PART OF 319-9155 CAMERA AR
AN ATTACHMENT

SMCS-7405, 7557 **i02998221**

NOTE	REF NO	GRAPHIC REF	PART NUMBER	QTY	PART NAME 1 2 3 4 5 6 (PRODUCT LEVEL)	SEE PAGE
	1	1	**319-9152**	1	FILM-INSTRUCTION (BATTERY LIFE, CAMERA)	

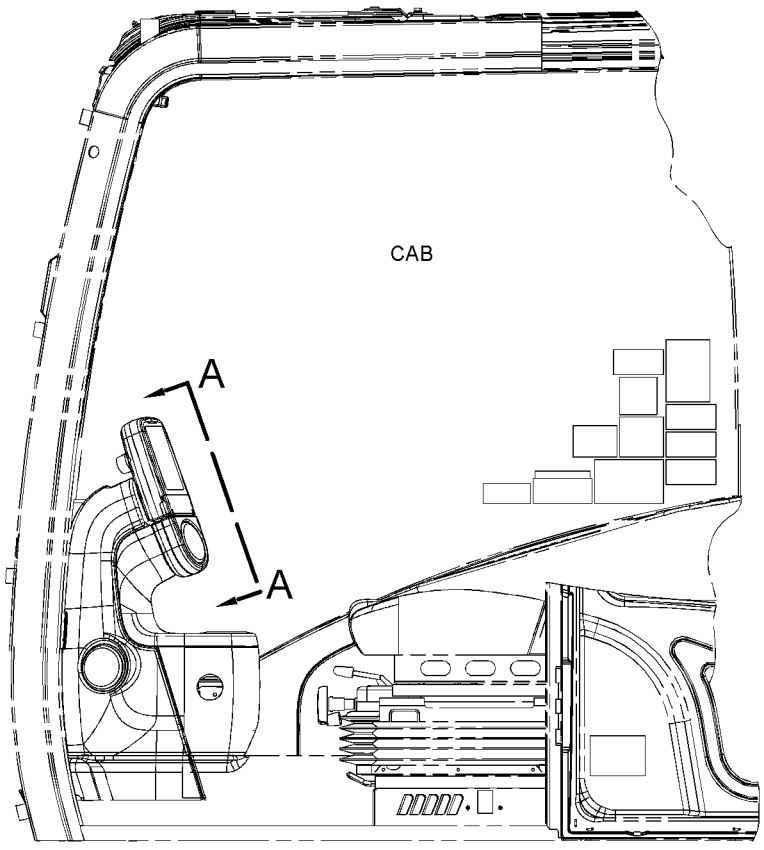

LEFT SIDE VIEW

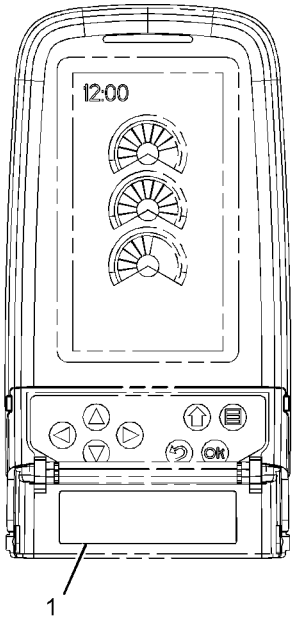

VIEW A-A

GRAPHIC #1 **<END>** g01520371

354-1028 FILM GP–ALT PATTERN CONTROL, WARNING

S/N: JGB1-UP; KHS1-UP

PART OF 310-0387 VALVE AR-ALT PATTERN CONTROL

AN ATTACHMENT

SMCS-7405, 7557 **i04012938**

NOTE	REF NO	GRAPHIC REF	PART NUMBER	QTY	PART NAME 1 2 3 4 5 6 (PRODUCT LEVEL)	SEE PAGE
	1	1	**255-3171**	1	PLATE-INSTRUCTION (CONTROL PATTERN, READ OMM)	
	2	1	**255-3173**	1	FILM-WARNING (CRUSH HAZARD, READ OMM, INTL)	
					–OR–	
		1	**257-5015**	1	FILM-WARNING (CRUSH HAZARD, READ OMM, U.S.)	
	3	1	**349-6653**	1	FILM-INSTRUCTION (OPERATOR CONTROLS, READ OMM)	
	4	1	**4I-2885**	1	CASE (ALTERNATE PATTERN CONTROL)	

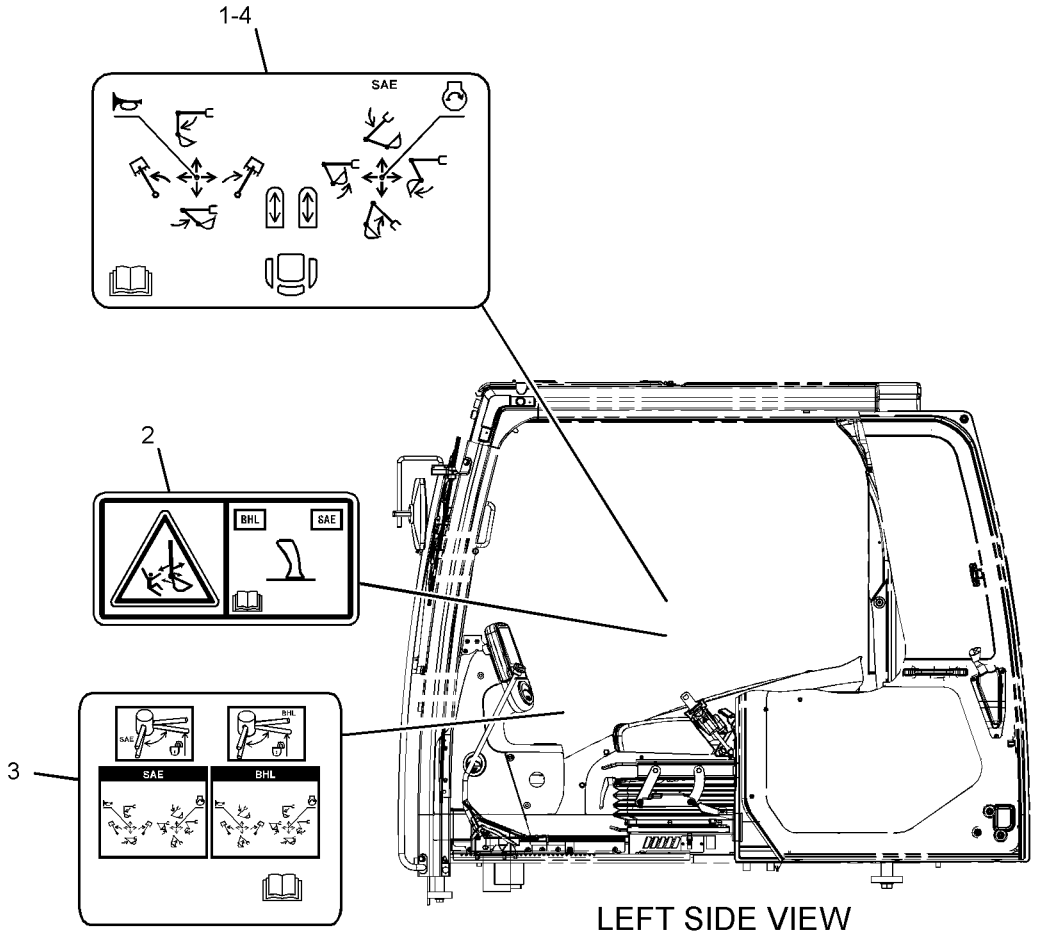

GRAPHIC #1 **<END>** g02161681

SERVICE EQUIPMENT AND SUPPLIES

359-2594 FILM GP

S/N: JGB1-UP; KHS1-UP
PART OF 371-9200, 371-9202, 371-9204, 371-9205 DISTRIBUTION AR
AN ATTACHMENT

SMCS-7405, 7557 **i04154869**

NOTE	REF NO	GRAPHIC REF	PART NUMBER	QTY	PART NAME 1 2 3 4 5 6 (PRODUCT LEVEL)	SEE PAGE
	1	1	**359-2595**	1	FILM-IDENTIFICATION (349D LME)	

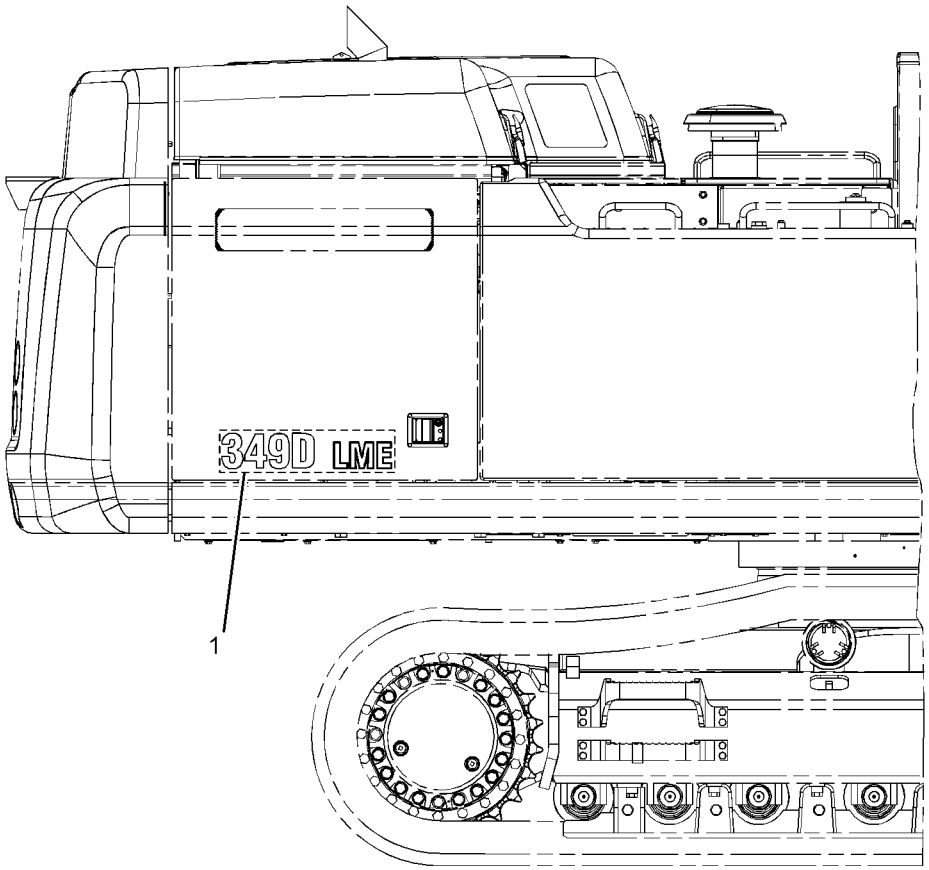

RIGHT SIDE VIEW

GRAPHIC #1 **<END>** g02389343

SERVICE EQUIPMENT AND SUPPLIES

370-3232 PLATE & FILM GP

S/N: JGB1-UP

PART OF 370-3231 CHASSIS AR

SMCS-7405, 7557 **i04199252**

NOTE	REF NO	GRAPHIC REF	PART NUMBER	QTY	PART NAME 1 2 3 4 5 6 (PRODUCT LEVEL)	SEE PAGE
	1	3	**221-8045**	1	FILM-WARNING (SEAT BELT, INTERNATIONAL)	
	2	1	**225-4257**	2	FILM-WARNING (HOT FLUID UNDER PRESS, INTL)	
	3	1	**228-7316**	1	FILM-WARNING (HOT SURFACE, HANDS CLEAR, INTL)	
	4	1	**242-1510**	1	FILM-INSTRUCTION (HYDRAULIC OIL CHECK)	
	5	1,2	**1P-2807**	4	FILM-INFORMATION (LIFT EYE LOCATION)	
E	6	1,2	**294-1307**		FILM-STRIPE (46.5-CM EACH)	
	7	1,2	**102-6046**	2	FILM-IDENTIFICATION (CAT)	
	8	1,2	**253-0861**	2	FILM-INFORMATION (CAT POWER, ACERT TECHNOLOGY)	
	9	1	**290-1727**	1	FILM-IDENTIFICATION (CAT BOOM, RH)	
	10	1	**239-6986**	1	PLATE-IDENTIFICATION (MACHINE)	
N	11	1,2	**228-2781**	2	FILM-WARNING (MACHINE SWING, CRUSHING, INTL)	
	12	1	**367-8661**	2	FILM-IDENTIFICATION (349D L)	
	13	2	**190-5386**	2	FILM-STRIPE (ROUND RED REFLECTIVE)	
	14	2	**290-1728**	1	FILM-IDENTIFICATION (CAT, BOOM, LH)	
	15	1,2	**7X-7644**	4	FILM-INFORMATION (TIE-DOWN)	
	16	2	**143-9536**	1	FILM-IDENTIFICATION (MIN-MAX)	
	17	2	**134-7258**	1	FILM-INFORMATION (EXTENDED LIFE COOLANT)	
	18	2	**229-0887**	1	FILM-INFORMATION (AIR CLEANER)	
	19	2	**137-6606**	1	FILM-IDENTIFICATION (FUEL)	
	20	2	**224-8946**	1	FILM-WARNING (NO ETHER SPRAY/AIR INTK, INTL)	
	21	2	**176-0480**	1	PLATE-WARNING (HOT SURFACE)	
	22	2	**225-0312**	1	FILM-WARNING (JUMP START, READ OMM, INTL)	
	23	2	**146-6747**	1	FILM-INFORMATION (24-VOLT)	
	24	2	**247-7437**	1	FILM-IDENTIFICATION (BATTERY CIRCUIT BREAKER)	
	25	2	**247-7438**	1	FILM-IDENTIFICATION (ELECTRICAL CIRCUIT BREAKER)	
	26	3	**223-9818**	1	FILM-INSTRUCTION (WINDOW CLEANING, READ OMM)	
	27	3	**224-0554**	1	FILM-WARNING (UNIVERSAL, READ OMM, INTL)	
	28	3	**266-5431**	1	FILM-WARNING (CRUSH HAZARD, READ OMM, INTL)	
	29	3	**228-9254**	1	FILM-WARNING (ELEC HAZARD, READ OMM, INTL)	
	30	3	**303-2668**	1	PLATE-INSTRUCTION (AIR CONDITIONER, READ OMM)	
	31	3	**214-7915**	1	FILM-INSTRUCTION (ENGINE SHUTOFF)	
	32	3	**242-1588**	1	FILM-WARNING (FRONT WINDOW, READ OMM, INTL)	
	33	3	**245-5457**	1	FILM-INSTRUCTION (BACKUP CONTROL)	
	34	3	**319-9136**	1	FILM-IDENTIFICATION (FUSE PANEL)	
	35	3	**187-0661**	1	FILM-INSTRUCTION (ALTERNATE EXIT)	
BJ	36	1	**334-4603**	1	FILM-INFORMATION (HYDO ADVANCED 10)	
	37	2	**245-5495**	1	FILM-IDENTIFICATION (CAT, REAR)	
	38	3	**4I-8472**	1	FILM-INSTRUCTION (OPERATOR CONTROLS)	
	39	1	**167-7270**	1	FILM-INSTRUCTION (NO STEP)	
	40	3	**310-6252**	1	FILM-INSTRUCTION (BACKUP CONTROL, READ OMM)	
	41	2	**298-4282**	2	FILM-WARNING (CRUSH HAZARD, STAY BACK, INTL)	
	42	1	**242-6092**	1	FILM-WARNING (ACCUMULATOR PRESSURE)	
	43	1	**367-0844**	1	FILM-INSTRUCTION (FUEL, READ OMM)	
AF			**3N-3790**	1	PLATE-SERIAL NUMBER (ENGINE)	
					(ON RH SIDE OF CYLINDER BLOCK READABLE FROM FRONT OF ENGINE)	

A-NOT PART OF THIS GROUP
B-USE AS REQUIRED
E-ORDER BY THE CENTIMETER
F-NOT SHOWN
J-REQUIRED ONLY WHEN HYDRAULIC TANK IS FILLED WITH HYDO ADVANCED 10 OIL
N-PART MARKED N ON GRAPHIC SHOWS LOCATION OF FILM ON MACHINE EQUIPPED WITH BUMPER

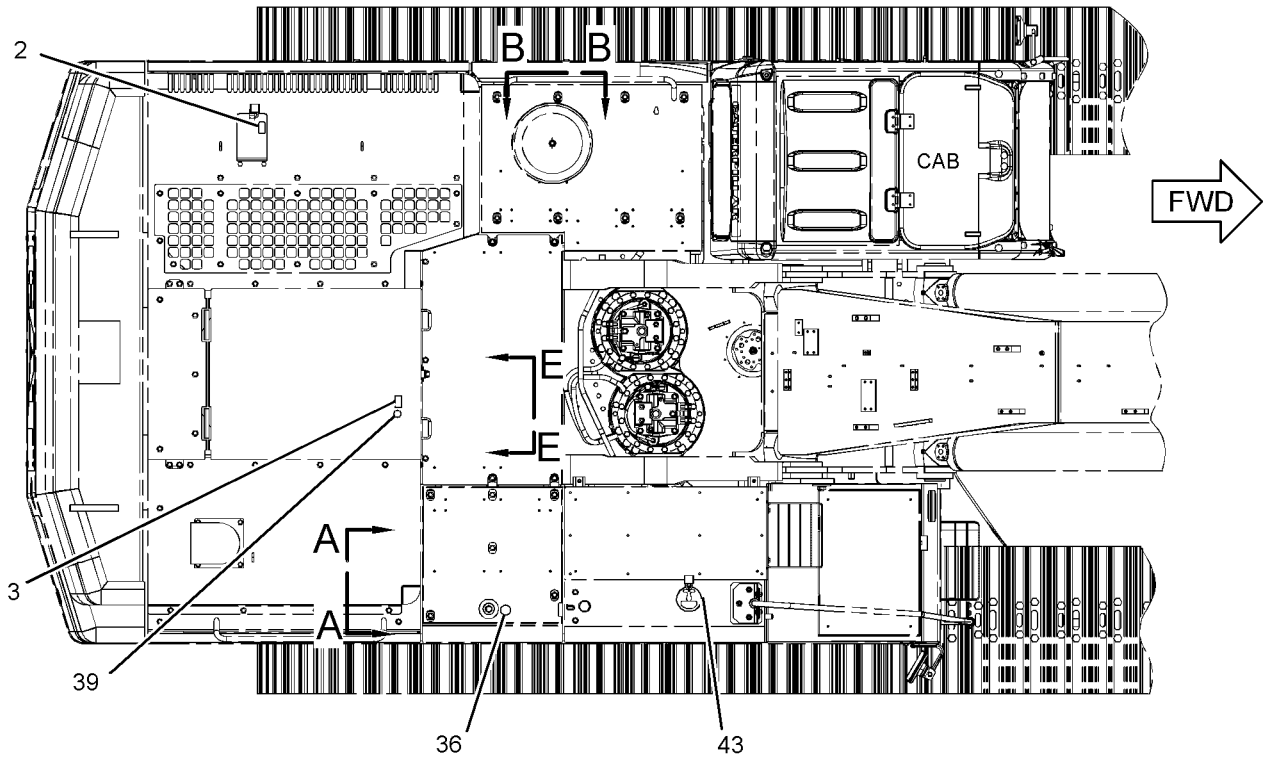

TOP VIEW

REFER TO ALL ILLUSTRATIONS OF THIS GROUP FOR AUXILIARY VIEWS

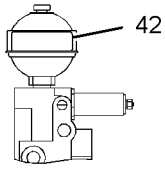

VIEW E-E

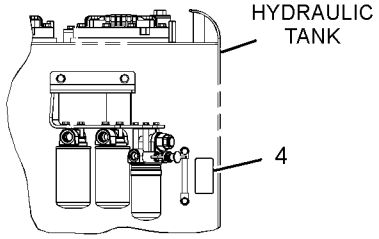

VIEW A-A

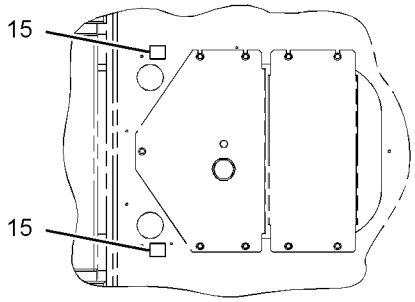

VIEW C-C

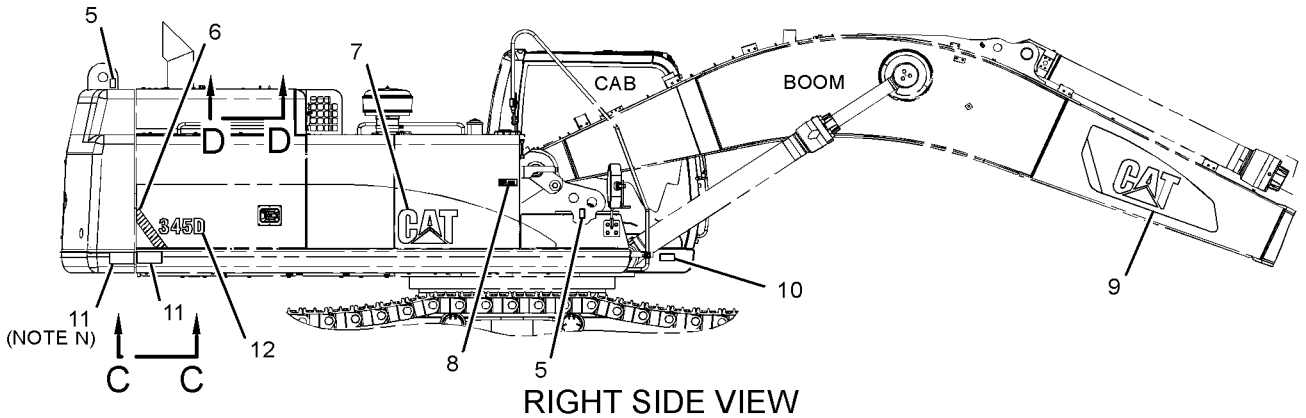

RIGHT SIDE VIEW

GRAPHIC #1 g02389811

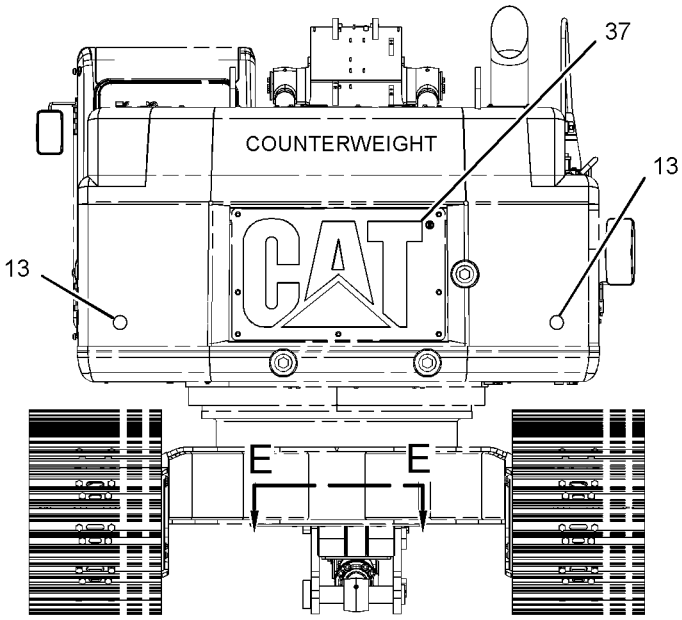

REAR VIEW

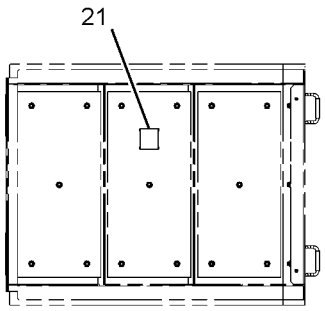

VIEW D-D

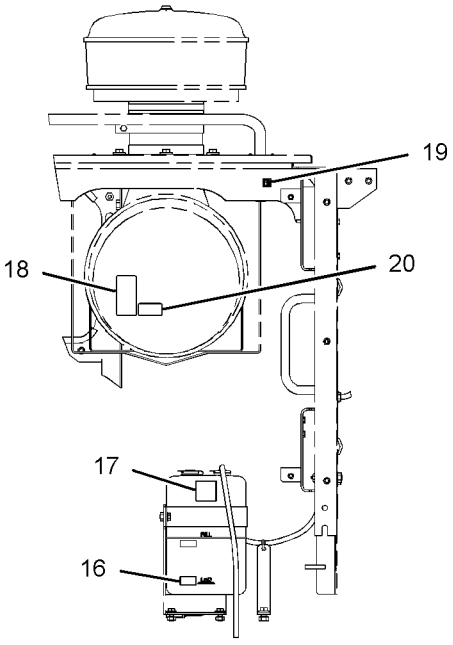

VIEW B-B

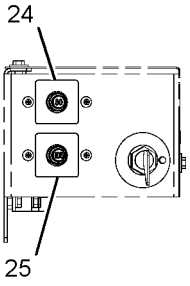

VIEW G-G

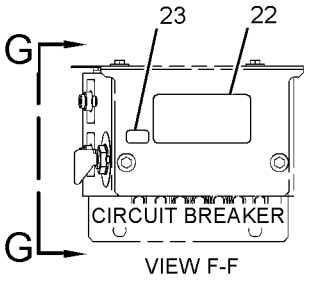

VIEW F-F

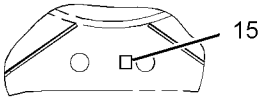

VIEW E-E

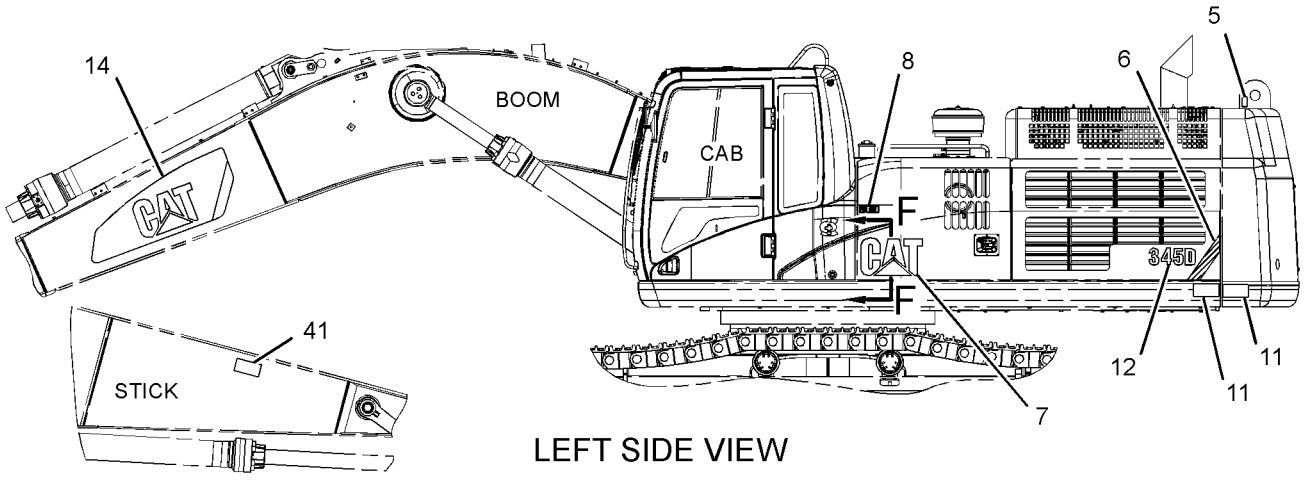

LEFT SIDE VIEW

GRAPHIC #2 g02151414

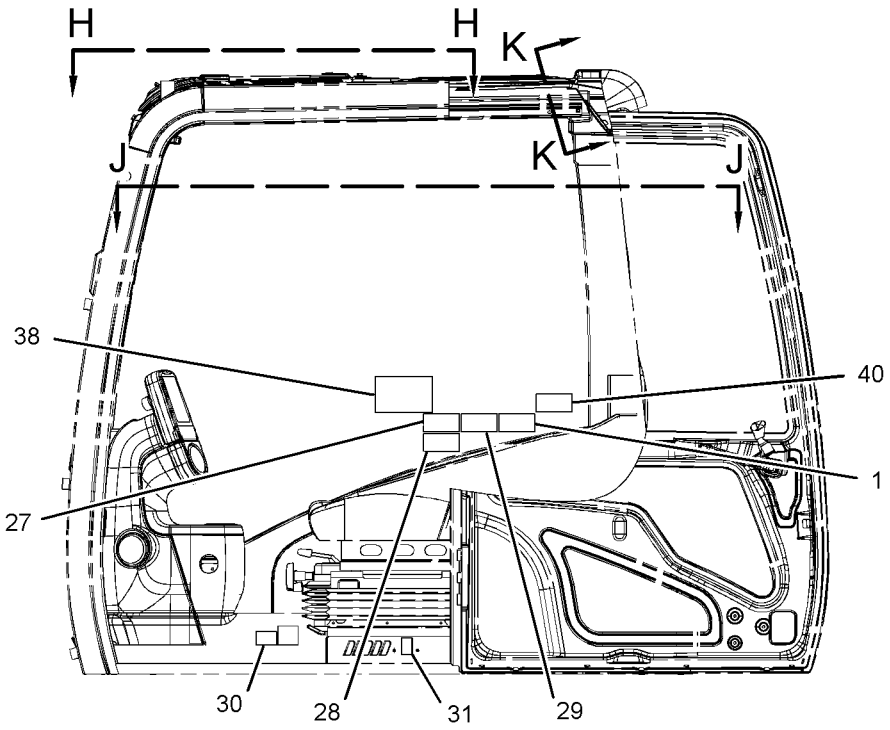

LEFT SIDE VIEW
(CAB)

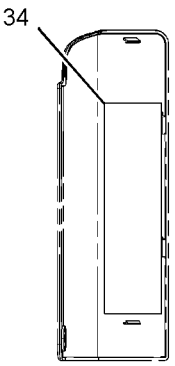

VIEW N-N

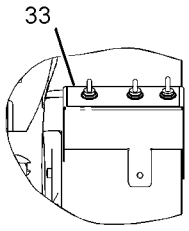

VIEW M-M

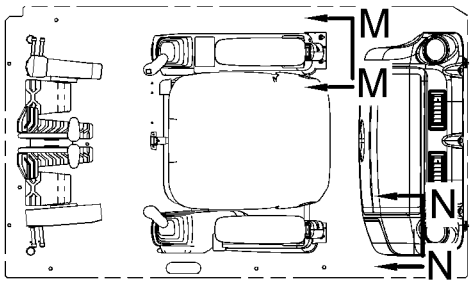

VIEW J-J

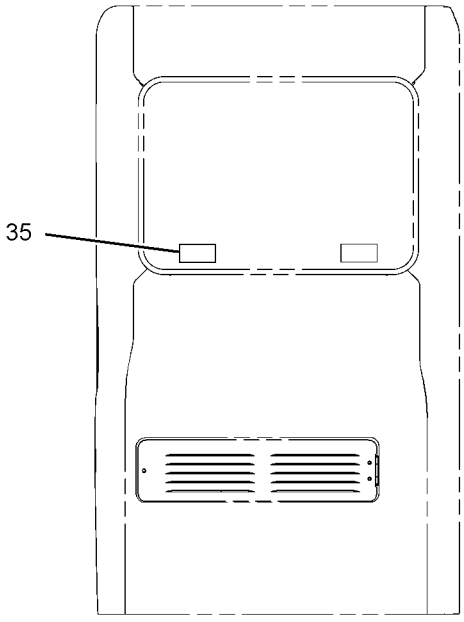

REAR VIEW
(CAB)

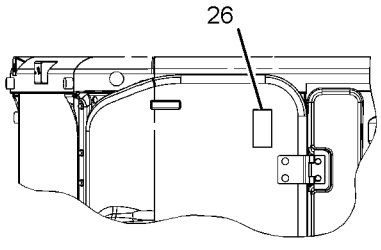

VIEW H-H

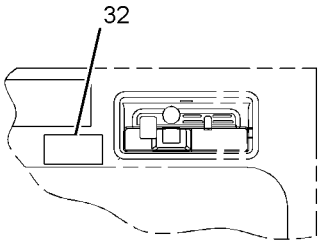

VIEW K-K

GRAPHIC #3 **<END>** g02151415

SERVICE EQUIPMENT AND SUPPLIES

370-4190 PLATE & FILM GP

S/N: KHS1-UP

PART OF 370-4189 CHASSIS AR

SMCS-7405, 7557 **i04199251**

NOTE	REF NO	GRAPHIC REF	PART NUMBER	QTY	PART NAME 1 2 3 4 5 6 (PRODUCT LEVEL)	SEE PAGE
	1	1,2	**1P-2807**	4	FILM-INFORMATION (LIFT EYE LOCATION)	
	2	3	**4I-8472**	1	FILM-INSTRUCTION (OPERATOR CONTROLS)	
	3	1,2	**7X-7644**	4	FILM-INFORMATION (TIE-DOWN)	
	4	3	**8T-6842**	1	FILM-INSTRUCTION (PULL RING, ALTERNATE EXIT)	
	5	1,2	**102-6046**	2	FILM-IDENTIFICATION (CAT)	
	6	1	**112-0545**	2	FILM-INSTRUCTION (TRACK GAUGE)	
	7	2	**134-7258**	1	FILM-INFORMATION (EXTENDED LIFE COOLANT)	
	8	2	**137-6606**	1	FILM-IDENTIFICATION (FUEL)	
	9	2	**143-9536**	1	FILM-IDENTIFICATION (MIN-MAX)	
	10	2	**146-6747**	1	FILM-INFORMATION (24-VOLT)	
	11	1	**167-7270**	1	FILM-INSTRUCTION (NO STEP)	
	12	2	**176-0480**	1	PLATE-WARNING (HOT SURFACE)	
	13	3	**187-0661**	1	FILM-INSTRUCTION (ALTERNATE EXIT)	
	14	2	**190-5386**	2	FILM-STRIPE (ROUND RED REFLECTIVE)	
	15	3	**214-7915**	1	FILM-INSTRUCTION (ENGINE SHUTOFF)	
	16	3	**221-8045**	1	FILM-WARNING (SEAT BELT, INTERNATIONAL)	
	17	3	**223-9818**	1	FILM-INSTRUCTION (WINDOW CLEANING, READ OMM)	
	18	3	**224-0554**	1	FILM-WARNING (UNIVERSAL, READ OMM, INTL)	
	19	2	**224-8946**	1	FILM-WARNING (NO ETHER SPRAY/AIR INTK, INTL)	
	20	2	**225-0312**	1	FILM-WARNING (JUMP START, READ OMM, INTL)	
	21	1	**225-4257**	2	FILM-WARNING (HOT FLUID UNDER PRESS, INTL)	
N	22	1,2	**228-2781**	2	FILM-WARNING (MACHINE SWING, CRUSHING, INTL)	
	23	1	**228-7316**	1	FILM-WARNING (HOT SURFACE, HANDS CLEAR, INTL)	
	24	3	**228-9254**	1	FILM-WARNING (ELEC HAZARD, READ OMM, INTL)	
	25	2	**229-0887**	1	FILM-INFORMATION (AIR CLEANER)	
	26	1	**239-6986**	1	PLATE-IDENTIFICATION (MACHINE)	
	27	1	**242-1510**	1	FILM-INSTRUCTION (HYDRAULIC OIL CHECK)	
	28	3	**242-1588**	1	FILM-WARNING (FRONT WINDOW, READ OMM, INTL)	
	29	3	**242-6092**	1	FILM-WARNING (ACCUMULATOR PRESSURE)	
	30	3	**245-5457**	1	FILM-INSTRUCTION (BACKUP CONTROL)	
	31	2	**245-5495**	1	FILM-IDENTIFICATION (CAT, REAR)	
	32	2	**247-7437**	1	FILM-IDENTIFICATION (BATTERY CIRCUIT BREAKER)	
	33	2	**247-7438**	1	FILM-IDENTIFICATION (ELECTRICAL CIRCUIT BREAKER)	
	34	1,2	**253-0861**	2	FILM-INFORMATION (CAT POWER, ACERT TECHNOLOGY)	
	35	3	**266-5431**	1	FILM-WARNING (CRUSH HAZARD, READ OMM, INTL)	
	36	1	**290-1727**	1	FILM-IDENTIFICATION (CAT BOOM, RH)	
	37	2	**290-1728**	1	FILM-IDENTIFICATION (CAT, BOOM, LH)	
E	38	1,2	**294-1307**		FILM-STRIPE (46.5-CM EACH)	
	39	2	**298-4282**	2	FILM-WARNING (CRUSH HAZARD, STAY BACK, INTL)	
	40	3	**303-2668**	1	PLATE-INSTRUCTION (AIR CONDITIONER, READ OMM)	
	41	3	**310-6252**	1	FILM-INSTRUCTION (BACKUP CONTROL, READ OMM)	
	42	3	**319-9136**	1	FILM-IDENTIFICATION (FUSE PANEL)	
	43	1	**334-4603**	1	FILM-INFORMATION (HYDO ADVANCED 10)	
	44	1,2	**367-8661**	2	FILM-IDENTIFICATION (349D L)	
	45	2	**367-0844**	1	FILM-INSTRUCTION (FUEL, READ OMM)	

E-ORDER BY THE CENTIMETER
N-PARTS MARKED N ON GRAPHIC SHOWS LOCATION OF FILM ON MACHINE EQUIPPED WITH BUMPER

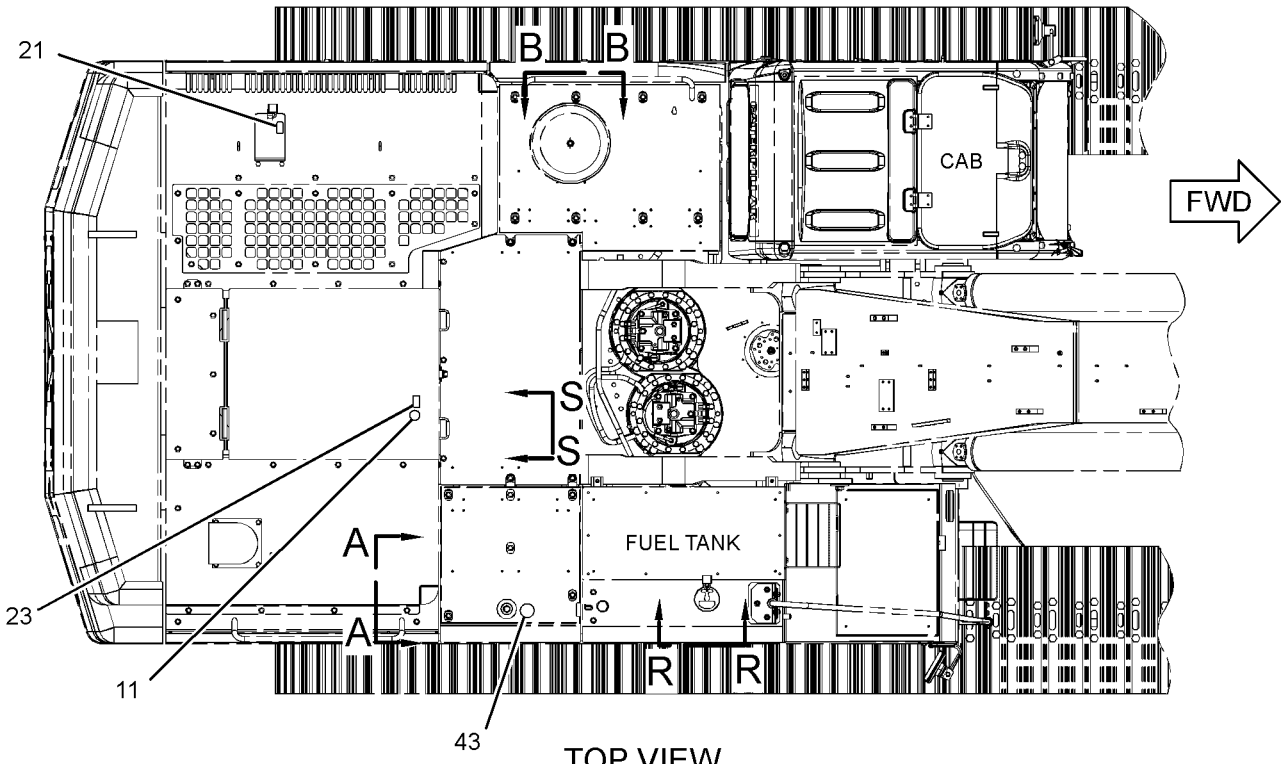

TOP VIEW

REFER TO ALL ILLUSTRATIONS OF THIS GROUP FOR AUXILIARY VIEWS

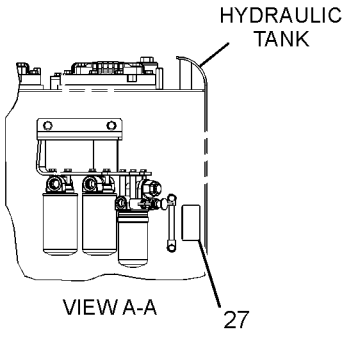

VIEW A-A

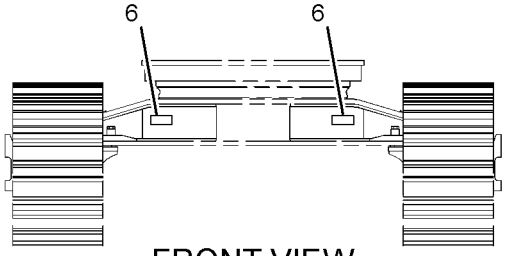

FRONT VIEW
(UNDERCARRIAGE)

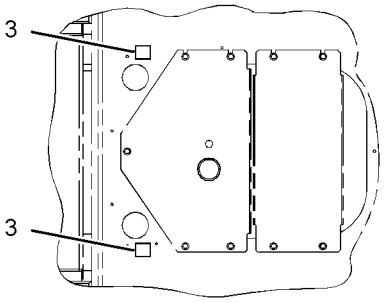

VIEW C-C

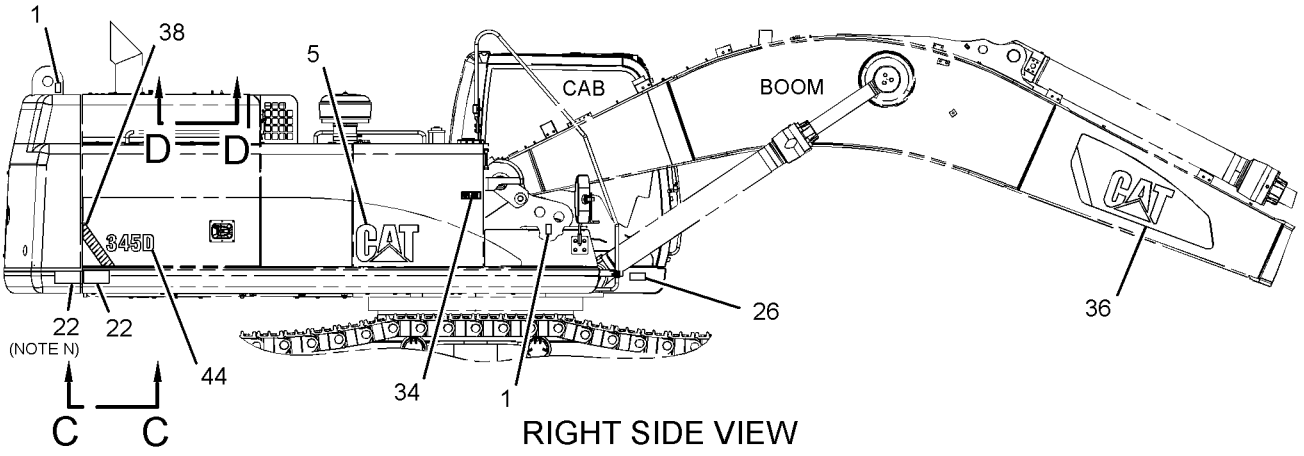

RIGHT SIDE VIEW

GRAPHIC #1 g02391224

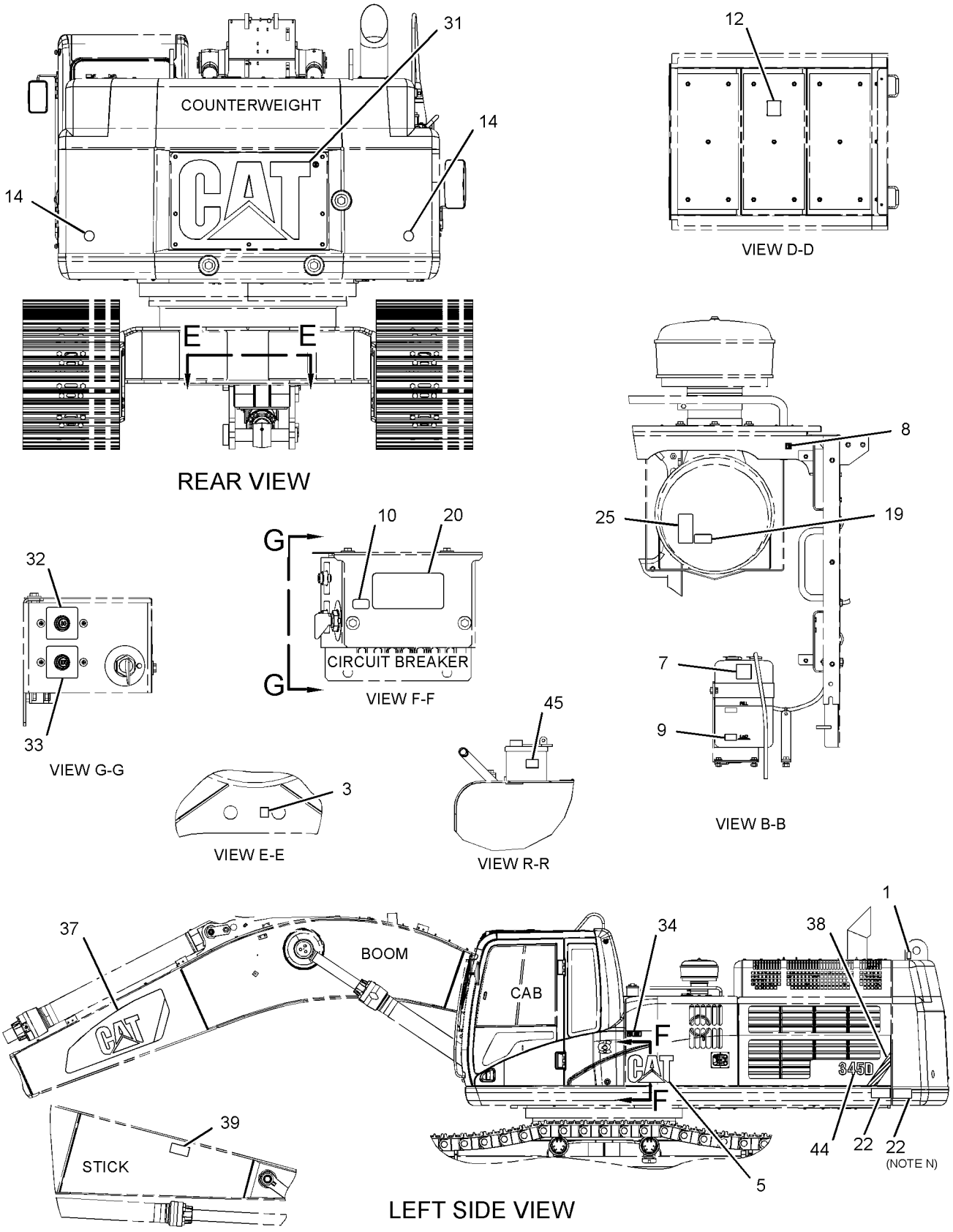

GRAPHIC #2 g02391616

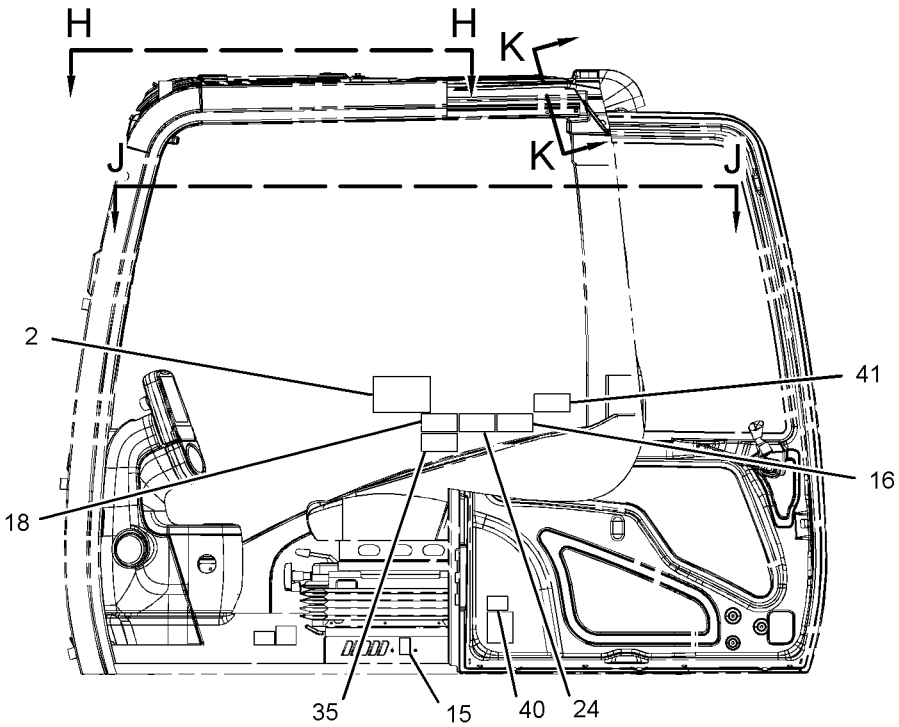

LEFT SIDE VIEW
(CAB)

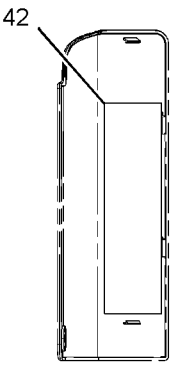

VIEW N-N

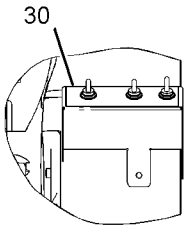

VIEW M-M

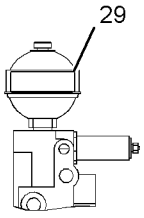

VIEW S-S

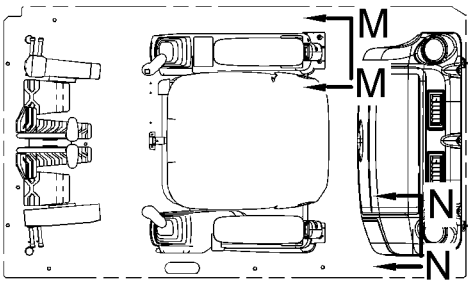

VIEW J-J

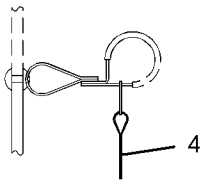

VIEW P-P

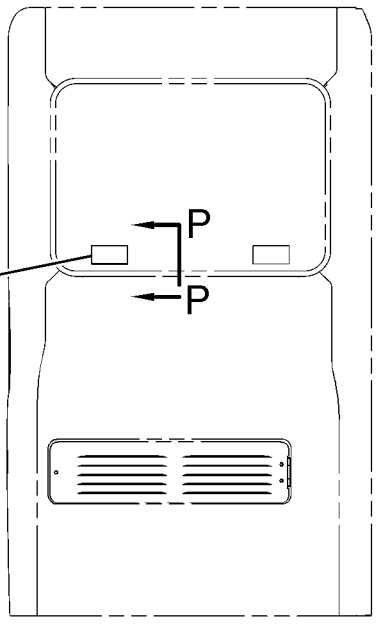

REAR VIEW
(CAB)

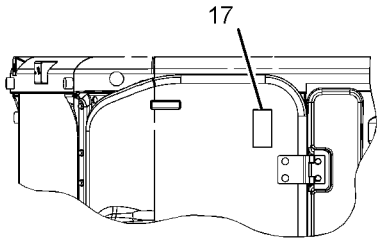

VIEW H-H

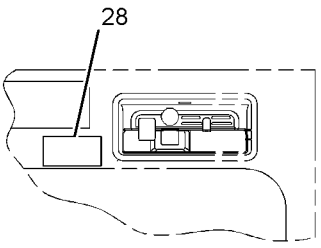

VIEW K-K

GRAPHIC #3 **<END>** g02391957

PART NUMBER INDEX

Part	Page
0	
0L-1026	48
0S-1589	23
0S-1597	242
1	
1A-2170	73
1B-3581	239
1B-3867	108
1B-8705	22
1D-5117	172
1H-1023	242
1H-2629	242
1H-3244	157
1H-3338	247
1H-8278	707
1J-9671	643
1K-8850	370
	371
	375
1M-6119	161
	163
	164
	256
1M-6120	161
	163
	164
	256
1M-9968	243
1M-9971	242
1P-2807	985
	989
1P-3702	98
	643
1P-3703	98
	533
	535
	542
	559
	562
	566
	574
	634
	643
	655
	656
	657
	658
	664
	666
	756
	757
1P-3704	507
	509
	519
	523
	525
	527
	533
	535
	537
	538
	540
	542
	545
	546
	547
	559
	562
	566
	570
	574
	581
	649
	657
	658
	659
	664
	666
	745
1P-3705	507
	509
	519
	523
	525
	527
	533
	535
	537
	538
	540
	542
	545
	546
	547
	559
	562
	566
	570
	574
	581
	649
	657
	658
	659
	664
	666
	745
1P-3706	523
	525
	559
1P-4578	98
	562
	566
	570
	574
	643
1P-4579	640
1P-5767	507
	509
	519
	523
	525
	527
	533
	535
	542
	559
	562
	566
	570
	574
	581
	640
	649
	657
	658
	664
	666
1R-0755	139
1R-1808	79
1R-5998	853
1R-6072	139
	269
1R-6484	743
1S-0994	925
1S-7251	161
	164
	245
	256
1S-7252	161
	163
	245
1S-7446	242
1S-9593	803
1T-0132	674
1T-0808	242
1T-0936	675
	685
1U-8846	44
	319
	353
	485
	489
	492
	664
	667
1W-9311	131
2	
2A-1162	44
2A-4429	35
2B-2404	239
2B-7561	325
	492
2C-9259	846
2D-6392	242
2D-6642	64
	675
	685
	749
	751
	754
	758
	788
2F-6678	243
2G-1830	256
2G-8767	163
2H-3429	242
2H-3922	246
	966
2H-3934	422
	427
	578
	707
2J-1826	730
	735
2J-3961	476
2J-8163	242
2K-4821	157
2L-6679	242
2L-8050	165
2L-8057	164
2L-8058	165
2L-8069	165
	267
2L-8075	165
	209
	885
2L-8077	281
	290
2L-8079	165
	258
	275
	309
2M-9780	139
	542
	578
	585
	587
	620
	643
	648
	675
	679
	681
	685
	707
	718
	769
	925
2N-5243	92
2N-6005	73
2P-2975	777
	778
	780
2P-4304	73
	79
2Q-4703	885
2R-0524	319
2R-0525	319
2R-1236	675
	685
2S-1647	275
2S-2053	81
2S-2493	130
2S-2596	745
	749
2S-4078	152
	570
	574
	581
	640
	648
	649
	730
	735
	774
	775
2S-4706	117
2S-5658	39
2S-5926	409
2S-6708	130
2T-2695	777
	778
	780

► **PRIMARY REFERENCE**

PART NUMBER INDEX

Part	Page
2U-2552	863
2V-3216	317
2W-1145	482
2Y-5685	917
2Y-5829	66
	67
	77
	81
	82
	295
	297
3	
3B-0551	152
3B-0623	32
	34
	58
	73
3B-4501	190
	191
3B-4618	365
	368
	403
3B-8489	353
	355
	462
	463
	464
	465
	466
	467
	813
	815
	817
	822
	823
	824
	828
	830
	834
	836
	838
	840
	841
	843
3D-2824	98
	539
	562
	566
	578
	585
	620
	640
	643
	660
	662
	664
	666
	675
	685
	707
	730
	736
	741
	784
3D-4245	768
	779
	782
	785
	786
3D-5102	239
3D-9143	327
3D-9428	332
	333
	334
	335
3E-2310	600
	620
	625
3E-2338	319
3E-3371	220
	542
	566
3E-3377	474
3E-4297	496
3E-4352	56
	82
3E-4353	159
3E-4356	659
	660
3E-5165	304
3E-5169	311
3E-6788	89
3E-7410	612
3E-7424	122
3E-7427	54
3E-7445	82
3E-7771	243
3E-8016	46
	54
3E-8020	853
3E-8025	502
3E-8320	205
3E-9411	359
	419
	420
3E-9871	966
3E-9872	961
	970
3F-6156	77
3F-9556	157
3G-8054	600
	625
3G-8057	600
	625
3H-0442	749
	751
	754
	758
3H-7654	432
3J-1907	134
	139
	150
	152
	218
	539
	540
	542
	555
	578
	587
	589
	592
	594
	596
	599
	600
	604
	605
	608
	609
	612
	613
	614
	615
	620
	621
	623
	624
	625
	628
	630
	632
	634
	637
	640
	643
	644
	648
	649
	660
	662
	664
	666
	670
	683
	707
	722
	723
	726
	745
	747
	749
	751
	754
	758
	759
	788
	789
	790
	809
3J-5390	118
3J-7354	102
	229
	539
	605
	648
	707
	730
	735
	745
	749
	751
	754
	758
	759
	788
	789
	790
	809
3K-0360	139
	140
	446
	451
	485
	489
	515
	517
	521
	522
	539
	542
	562
	566
	570
	574
	578
	581
	587
	596
	599
	600
	604
	613
	614
	623
	625
	628
	632
	640
	647
	648
	649
	650
	662
	670
	671
	675
	685
	707
	722
	726
	730
	735
	751
	754
	760
	925
3L-3380	242
3L-8187	260
	293
3N-3763	243
3N-3790	985
3P-0623	428
	429
3P-1896	73
3P-1932	102
3P-2001	139
3R-8797	242
3R-8801	243
3R-9965	275
3S-2093	100
	109
	163

PART NUMBER INDEX

Part	Page	Part	Page	Part	Page	Part	Page
	164	3T-7528	496		405	4I-5409	1
	165	3T-9494	242		853		2
	173		243	4I-1206	853		▶193
	179	3T-9524	243	4I-1260	918	4I-5426	166
	185	3T-9525	242	4I-1520	472	4I-5575	630
	196	3V-0046	555	4I-1536	▶441	4I-5795	599
	197	3V-2431	474		444		612
	199	3V-9244	420	4I-1539	441	4I-5849	683
	207			4I-1671	612	4I-5862	441
	209			4I-1704	594	4I-6003	608
	211	**4**			612	4I-6033	647
	214			4I-1780	612	4I-6039	163
	248	4B-2049	243		634	4I-6046	657
	258	4B-3665	38	4I-1783	599		658
	260	4B-4158	409		624	4I-6107	747
	262		675	4I-2187	327	4I-6130	658
	267		685	4I-2509	344	4I-6188	647
	269	4B-4278	853		350	4I-6236	632
	271	4B-9783	789	4I-2599	405	4I-6287	600
	274		790	4I-2885	983		625
	275	4B-9880	792	4I-3038	248	4I-6327	599
	281	4D-1836	311	4I-3063	853		624
	283	4D-3704	23	4I-3090	853	4I-6365	763
	285	4D-7388	139		970		765
	287	4D-7956	485	4I-3091	907	4I-6626	845
	290		489	4I-3094	907	4I-6718	828
	293	4D-9986	768	4I-3144	853	4I-6897	834
	295	4E-1384	368	4I-3266	946		836
	297		403	4I-3503	166		838
	299	4F-5695	31		515		840
	301	4H-2633	82		517		841
	302	4H-6112	485	4I-3510	779		843
	304		489		782	4I-7464	485
	306		693	4I-3511	591		489
	308	4H-9105	432		608	4I-7466	485
	309	4I-0117	368	4I-3514	531		489
	311		403		608	4I-7467	485
	313	4I-0118	368	4I-3556	562		489
	315		403	4I-3569	731	4I-7576	319
	317	4I-0378	150		736	4I-7822	559
	856		152	4I-3573	612		562
	894	4I-0379	139	4I-3941	612		570
	919	4I-0420	962	4I-3981	624	4I-7836	599
	937	4I-0575	344	4I-4039	845		624
	947		346	4I-4043	845		▶744
	960		347	4I-4070	▶845	4I-7889	139
3S-6049	161		350		846		281
	164	4I-0577	344	4I-4270	853		315
	256		346	4I-4286	905		594
3S-6050	161		347	4I-4361	918	4I-7924	336
	163		350	4I-4392	853		340
3S-6605	65	4I-0754	707	4I-4978	813		365
3S-9643	102	4I-0797	599		815		368
3T-3418	242		624		817		372
3T-3422	242	4I-0800	612	4I-4996	344		373
3T-3423	242	4I-0821	612		346		379
	243		624		347		382
3T-3424	242	4I-0833	624		350		384
	243	4I-1129	344	4I-5005	813		385
3T-3434	242		346		815		386
3T-4688	165		347		817		387
3T-4709	242		350	4I-5006	413		392
3T-4710	242	4I-1130	413	4I-5020	972		401
3T-5760	161	4I-1163	966	4I-5021	972		403
	163	4I-1205	133	4I-5106	139	4I-8267	442

▶ **PRIMARY REFERENCE**

PART NUMBER INDEX

Part	Page
4I-8472	985
	989
4I-8965	747
4I-9521	591
	596
	599
	605
	608
	612
	624
	637
	647
4I-9522	589
	591
	596
	605
	608
	612
	647
4I-9523	589
	596
	599
	605
	608
	612
	624
	630
	632
	637
	647
4I-9524	589
	596
	599
	608
	612
	624
	647
4I-9525	591
	596
	599
	605
	608
	612
	624
	637
	647
4I-9526	591
	596
	608
	628
	630
	647
4I-9527	596
	605
	608
	612
	620
	628
	637
	647
4I-9528	596
	599
	608
	624
	647
4J-0520	747
4J-0522	98
	562
	566
	570
	574
	630
	640
	643
4J-0523	632
	726
	736
	747
4J-0524	640
4J-0525	726
	731
	736
4J-0526	726
	731
	736
4J-0527	98
	581
	585
	643
	707
4J-0528	579
4J-5267	587
	723
4J-5309	726
	731
	736
4J-5477	550
	553
	554
	555
	557
	604
	660
4J-6806	774
	775
4J-7533	496
	670
	720
	726
	730
	735
	745
	747
	749
	758
	769
	799
4J-8998	756
	757
4K-1388	722
4K-2039	798
4K-8302	587
4K-8864	559
	649
4L-0734	485
	489
4L-2729	243
4M-0189	94
	702
4M-1827	242
4M-1828	242
4M-1831	242
4M-1853	242
4M-1854	242
4M-1896	243
4N-1114	23
4N-8150	73
4N-9170	353
4P-4369	125
4P-5820	44
	▶230
4P-5918	295
	297
4P-7428	309
	313
4P-7581	166
	180
	258
	262
	269
	275
	287
	295
	297
	302
	304
	309
4P-7582	649
4P-8525	317
4S-1962	302
4T-0987	745
	749
4T-7791	779
	782
	785
	786
4T-8588	476
4W-9160	128
5A-3604	347
	350
	817
	954
	955
5B-0651	828
	830
5B-9318	675
	685
5C-2889	190
	191
5C-2890	247
	262
	267
5C-7261	161
	166
	177
	368
	403
	502
	770
5C-7793	853
5C-7883	166
5C-8312	962
5C-9553	173
	205
	256
	290
	292
	327
	707
	856
5D-1026	492
	925
5D-4822	913
	915
5D-9344	44
5F-0304	44
5F-9144	134
5H-5672	705
5H-8624	640
5H-8936	824
5I-4076	612
	647
5I-4376	604
	608
5I-4396	599
	612
	624
5I-8270	161
	163
5I-8307	139
5I-8416	▶442
	444
5I-8510	527
5I-8511	747
5I-8670	495
5I-8754	482
5I-8790	502
5I-8791	502
5I-8799	502
5I-8800	502
5I-8802	502
5I-8805	502
5I-8809	502
5I-8810	502
5I-8811	502
5I-8812	502
5I-8813	502
5I-8815	502
5I-8820	502
5I-8825	612
5J-2383	683
5J-2974	691
	756
	757
5J-3488	476
5J-5314	242
5K-0430	239
	269
5K-5338	925
5K-8451	649
5K-9090	539
	562
	566
	570
	574
	578

5

▶ PRIMARY REFERENCE

PART NUMBER INDEX

Part	Page	Part	Page	Part	Page	Part	Page
	581	5P-2235	485	5P-7471	98		548
	612		489		570		550
	613	5P-2321	293		574		551
	620		919		643		553
	632	5P-2369	649	5P-7684	675		554
	640	5P-2568	726		685		557
	648		731	5P-7701	73	5R-5927	688
	649		736	5P-7703	570	5S-7349	157
	653	5P-2929	239		574	5S-7382	459
	662	5P-3059	293	5P-7854	925	5S-9134	76
	664	5P-3108	747	5P-7958	928	5V-3854	370
	667	5P-4115	166	5P-8068	89		371
	719		205		707		375
5K-9242	824		256	5P-8077	507		
5K-9243	353		405		509		
	822	5P-4116	111		519	**6**	
	823		156		523		
5L-4758	452		327		525	6A-5591	54
	798		368		527	6C-6760	515
5L-4763	48		403		533		517
5M-2894	146	5P-4889	146		535		521
5M-3034	242	5P-4924	150	5P-8182	98		522
5M-9624	745		152		643	6C-8382	913
	774	5P-5148	640	5P-8211	54		915
	775		647	5P-8215	779	6C-9149	94
5P-0047	533	5P-5528	239		782		690
	535	5P-5598	35		785	6D-2834	605
5P-0048	533	5P-5649	111		786	6D-4244	139
	535	5P-5998	248	5P-8245	21	6D-4246	585
5P-0537	68	5P-6027	336		25		614
5P-0600	130		340		49		925
5P-0743	84	5P-6126	109		52	6D-4247	139
5P-0747	161	5P-6298	242		54	6D-5257	275
	163	5P-6312	239		69	6D-7146	88
	245	5P-6313	239	5P-8246	44	6D-9157	707
	256	5P-6314	239	5P-8247	41	6E-2313	723
5P-0761	161	5P-6727	46		157	6E-2790	769
	163	5P-7460	649	5P-8248	44	6E-3653	730
	256	5P-7461	649	5P-8309	370		735
5P-0767	492	5P-7462	620		371	6E-4280	769
	925	5P-7463	620		375	6E-5431	723
5P-1075	327	5P-7464	640		379	6E-5434	723
	357		649		385	6E-5438	723
	358	5P-7465	640		386	6E-5439	723
5P-1076	94		649		387	6F-4855	501
	121	5P-7468	98		389	6F-7045	246
	122		559		392	6G-2256	166
	123		562		393	6G-2263	163
	127		566		395		203
	128		570		396		239
	133		574		397		258
	326		620		401		271
	332		643		405		287
	333	5P-7469	98	5P-8347	19		299
	334		559		192		306
	335		562	5P-8500	148		309
	344		566		149	6I-0723	707
	350		570		376	6I-0724	707
	360		574		928	6I-1418	180
	405		620	5P-8522	269	6I-5298	887
	542		643	5P-9085	295		889
	707	5P-7470	98	5P-9205	380	6I-5342	918
	821		570	5P-9436	102	6I-5470	853
5P-1318	643		574	5Q-4212	529	6I-5976	938
5P-1442	140		643		531	6I-6441	353

► **PRIMARY REFERENCE**

PART NUMBER INDEX

Part	Page
6I-6550	409
6I-6721	566
	574
6I-6777	782
	786
6I-6904	744
6I-6905	744
6I-6907	744
6J-2419	779
	782
	785
	786
6J-2680	98
	562
	566
	570
	574
	579
	581
	605
	630
6J-4834	570
	574
	581
6J-6855	745
6K-0806	896
	897
	898
	899
	900
	901
6K-3607	139
6K-6307	675
	685
6K-8178	614
	925
6L-3616	822
	823
	824
6M-5062	798
6N-3279	242
6N-3826	242
6N-8863	54
6P-2216	336
	340
	365
	368
	372
	373
	379
	382
	384
	385
	386
	387
	392
	401
	403
6T-0363	242
6T-0371	242
6T-0372	242
6T-3631	252
	260
	293
	315
6T-3632	252
	260
	293
	315
6T-3633	252
	260
	293
	315
6V-0357	614
6V-0400	533
	535
	542
	559
	655
	656
	657
	658
	664
	666
6V-0405	555
6V-0545	559
6V-0683	621
6V-0852	600
	605
	620
	624
	630
	643
	707
6V-0974	600
	625
6V-1250	731
	736
6V-1322	242
6V-1324	542
6V-1572	581
6V-1573	581
6V-1722	102
6V-1819	159
6V-1820	77
6V-1874	98
	644
6V-1875	581
6V-2317	21
	46
	88
	89
	92
6V-2483	581
6V-2722	161
	172
	256
6V-3250	105
6V-3251	61
	92
	104
	107
6V-3265	197
	925
	960
6V-3342	824
6V-3382	675
	685
6V-3535	46
6V-3536	27
6V-3538	32
6V-3668	49
6V-3822	126
	137
6V-3834	89
6V-3908	79
6V-3918	18
	295
	297
6V-3922	782
	786
6V-3940	77
	104
6V-3964	177
6V-3965	600
	605
	620
	625
	630
	643
	707
6V-4248	82
6V-4249	54
6V-4589	249
6V-5043	693
6V-5048	73
	214
	239
6V-5049	73
	214
	219
6V-5063	34
	35
	92
	102
	104
6V-5064	92
6V-5134	89
6V-5192	46
	747
6V-5200	673
6V-5210	190
	191
	262
6V-5215	82
	214
	216
6V-5217	22
	77
6V-5218	85
6V-5219	44
	46
	92
6V-5221	18
	89
	92
6V-5326	731
	736
	745
	749
6V-5386	109
6V-5556	776
6V-5590	38
6V-5597	751
	754
6V-5645	205
6V-5683	863
6V-5696	69
6V-5782	644
6V-5839	21
	24
	72
	77
	81
	82
	100
	106
	125
	126
	137
	295
	297
6V-5842	21
	24
	108
6V-5843	48
6V-6317	77
	100
	137
6V-6353	126
6V-6609	61
	102
	235
	238
6V-6707	98
	644
	707
6V-6715	188
6V-6788	756
	757
6V-6793	632
	726
	736
	747
6V-6923	154
6V-7238	54
	485
	489
	925
6V-7350	106
6V-7357	881
	882
	883
	925
	937
6V-7420	139
	925
6V-7636	853
6V-7646	885
6V-7658	496
6V-7723	704
6V-7728	317
6V-8133	319
6V-8149	21
6V-8187	205
6V-8188	243
6V-8189	157
6V-8197	25
6V-8200	698
6V-8202	949

PART NUMBER INDEX

Part	Page	Part	Page	Part	Page	Part	Page
	950		522		666		554
6V-8212	295		529	6V-8637	539		555
	297		531		643		557
6V-8213	502		548		662	6V-8936	550
6V-8223	474		550	6V-8638	578		553
6V-8225	46		551		620		554
6V-8231	970		553		648		557
6V-8359	73		554	6V-8639	578		587
6V-8362	251		557		613		634
6V-8363	966		578		632		648
6V-8370	966		585		648	6V-8943	614
6V-8374	260		587	6V-8640	542	6V-8944	648
	293		596	6V-8641	604	6V-8946	662
6V-8397	529		604	6V-8642	587	6V-8978	782
	531		613	6V-8713	585		786
	539		614		640	6V-8987	596
	540		620	6V-8714	539	6V-8994	529
	542		632	6V-8716	578		531
	550		640	6V-8721	585	6V-9001	542
	553		643		648		589
	554		648	6V-8723	599		592
	555		649		625		594
	557		650		648		599
	578		660	6V-8724	539		605
	587		793		578		608
	589		794		587		614
	592		804		589		624
	594	6V-8399	791		594		637
	596	6V-8400	570		596	6V-9002	140
	599		766		600		648
	600	6V-8554	555		605	6V-9007	98
	604	6V-8625	578		609		539
	605		596		614		578
	608		604		620		643
	609		640		623		662
	612		648		625		664
	613	6V-8626	587		628		666
	614	6V-8627	660		630	6V-9008	562
	615	6V-8633	660		634		566
	620	6V-8634	600		637		570
	621		623		664		574
	623		632		666	6V-9009	570
	624	6V-8635	79	6V-8754	744	6V-9027	92
	625		581	6V-8774	604		102
	628		613	6V-8777	664	6V-9162	643
	630		653		666	6V-9168	529
	632	6V-8636	539	6V-8781	540		531
	634		542		600		596
	637		555		605	6V-9182	578
	648		587		609		613
	649		589		614	6V-9189	192
	660		592		625	6V-9200	539
	662		594		628		605
	664		596		649		648
	666		599		662	6V-9491	207
	777		604	6V-8782	587		209
	778		608		648	6V-9512	640
	780		613	6V-8785	653	6V-9666	108
	790		624		662	6V-9672	262
6V-8398	140		628	6V-8836	295	6V-9673	293
	511		630		297	6V-9746	98
	513		634		317		539
	515		648	6V-8932	498		540
	517		662	6V-8935	550		542
	521		664		553		578

► **PRIMARY REFERENCE**

PART NUMBER INDEX

Part	Page	Part	Page	Part	Page	Part	Page
	613	7E-7977	35		614	7M-0325	243
	643	7E-7978	35		640	7M-0326	242
	662	7E-8630	121		804	7M-0327	242
	664	7F-0560	172	7J-9933	776	7M-7410	671
	666	7F-3488	242	7K-1181	86	7M-8485	98
	667	7F-3525	242		140		186
6V-9829	614	7G-1060	311		163		319
	628	7G-3413	542		179		562
6V-9836	587	7G-3414	542		258		566
	605	7G-4332	428		260		570
	609	7G-4498	239		267		574
	614	7G-5984	666		269		578
	625	7G-5985	666		271		581
	632	7H-3171	422		274		613
	649		427		275		643
6V-9837	649		432		279		653
6V-9839	662	7H-7055	137		283		662
6V-9840	653	7I-0134	743		285		691
6V-9847	653	7I-0135	743		287		717
6V-9850	599	7I-0966	776		289		720
	605	7I-0970	647		290		745
	623	7I-0972	647		293		777
	624	7I-0986	795		299		778
	648	7I-2272	670		302		779
6V-9852	614		671		304		780
6V-9853	664		723		306		782
	666		751		307		785
6V-9874	662		754		308		786
6V-9877	662		799		309	7M-8651	242
6W-2464	555	7I-2673	109		311	7N-0140	239
6W-6005	161		116		313	7N-0296	239
	163		163		315	7N-0719	205
6Y-0454	428		197		529		►246
6Y-0473	428		269		531	7N-2059	239
6Y-8134	422		309		539	7N-2353	253
	427		313		555	7N-5274	161
6Y-8171	432		955		563		163
6Y-8172	432		958		567	7N-5683	32
6Y-8176	432	7I-2789	761		575	7N-9801	255
6Y-9339	432	7I-6677	562		579	7T-1099	332
6Y-9625	336	7I-7131	706		587		938
	340	7I-7403	795		589	7T-3974	242
		7I-7439	539		591	7T-6799	251
		7I-7586	809		596	7T-9123	243
7		7I-7728	485		599	7W-6390	73
			489		604	7W-9094	137
7C-1445	44	7I-8084	502		608	7X-0310	128
	77		698		609	7X-0345	50
7C-1583	68		772		612		458
7C-1728	68		792		623	7X-0513	830
7C-1821	89		796		624	7X-0562	243
7C-1822	89		797		628	7X-0578	853
7C-3081	73	7I-8102	795		632		962
7C-3082	73	7I-8164	698		634	7X-0579	139
7C-3083	73	7I-8166	698		637	7X-0595	94
7C-3954	73	7I-8171	698		647	7X-0599	581
7C-7851	43	7I-8172	698		653	7X-0618	113
7C-7852	43	7I-8252	628		664	7X-0818	614
7C-9542	76	7I-9001	761		666	7X-0870	89
7D-5363	100	7J-8611	824		875	7X-0871	604
7D-7233	86	7J-9108	511		885	7X-2475	632
7D-7735	140		513	7K-4129	137		731
7E-4846	774		585	7L-2894	242	7X-2489	478
	775		587	7L-6580	102	7X-2533	188
7E-6508	317		612	7M-0324	242	7X-2536	884

► **PRIMARY REFERENCE**

PART NUMBER INDEX

Part	Page	Part	Page	Part	Page	Part	Page
	895		517	7Y-1487	319	7Y-5074	559
7X-2539	139		521	7Y-1488	319	7Y-5219	675
7X-2549	529		522	7Y-1491	319		685
	531	7X-3342	694	7Y-1492	319		731
	551	7X-3373	242	7Y-1493	319		736
7X-2550	548	7X-4803	463	7Y-1495	319		756
	562		465	7Y-1498	319		757
	566	7X-6312	186	7Y-1499	319	7Y-5221	683
	570	7X-6315	182	7Y-1504	319	7Y-5226	749
	574	7X-7644	985	7Y-1507	353		751
	579		989	7Y-1537	329		754
	644	7X-7700	150	7Y-1647	353		758
	726		152	7Y-1648	353	7Y-5235	319
	731	7X-7729	94	7Y-1650	353	7Y-5239	468
	736		109	7Y-1866	409		470
7X-2552	934		115	7Y-1884	409		472
7X-2553	94		133	7Y-1976	109		474
	726		332		111	7Y-5247	581
	736		333	7Y-2397	830		585
	828		334	7Y-2496	688	7Y-5264	413
	913		335	7Y-2670	824	7Y-5265	413
	946		649	7Y-2853	363	7Y-5267	679
7X-2554	533		856		365		681
	535	7Y-0059	1	7Y-2854	363	7Y-5289	712
7X-2555	359		2	7Y-3283	98	7Y-5456	163
	523		▶928		644	7Y-5458	250
	525	7Y-0336	416	7Y-3470	970	7Y-5464	250
7X-2557	507		417	7Y-3472	970	7Y-5497	139
	509		418	7Y-3474	960	7Y-5505	262
	519	7Y-0595	485	7Y-3732	545	7Y-7364	970
	527		489		546	7Y-7394	922
7X-2559	915	7Y-0597	485		547		923
7X-2562	688		489	7Y-3951	209		957
	828	7Y-0623	913		262		958
7X-2563	109		915	7Y-3952	209	7Y-8165	647
	845	7Y-0656	319	7Y-3954	262	7Y-8379	620
7X-2567	50	7Y-0661	319	7Y-3962	165	7Y-8463	890
7X-2569	674	7Y-0662	319		209		891
7X-2573	344	7Y-0808	319		290	7Y-8621	940
	346	7Y-1095	353	7Y-3963	165	7Y-8622	940
	347	7Y-1113	346		209	7Y-8876	370
	350		347		285		371
	813		350	7Y-3964	290		375
	815	7Y-1221	434	7Y-3965	285	7Y-8990	365
7X-2575	325	7Y-1238	485	7Y-3966	290		
	347		489	7Y-3967	285		
	350	7Y-1434	485	7Y-4173	664		
	415		489	7Y-4193	637		
	688	7Y-1459	434	7Y-4294	683	8B-6561	649
7X-2576	416	7Y-1460	434	7Y-4387	623	8C-0564	604
	417	7Y-1469	319	7Y-4529	139	8C-0597	540
	418	7Y-1470	319	7Y-4868	539		614
	492	7Y-1472	319	7Y-4932	472	8C-0620	578
	688	7Y-1473	319	7Y-4941	468		581
7X-2583	430	7Y-1474	319		470	8C-3089	120
	431	7Y-1475	319		472		242
7X-2619	267	7Y-1476	319		474	8C-3095	188
7X-2621	183	7Y-1477	319	7Y-4944	468	8C-3100	108
	184	7Y-1478	319		470	8C-3101	717
	304	7Y-1479	319		472	8C-3102	717
	311	7Y-1480	319		474	8C-3445	79
	614	7Y-1482	319	7Y-4945	472	8C-3446	79
	731	7Y-1483	319	7Y-4956	472		707
	736	7Y-1484	319	7Y-5010	722	8C-3451	707
7X-3164	515	7Y-1485	319	7Y-5011	722	8C-5063	285

8

▶ **PRIMARY REFERENCE**

PART NUMBER INDEX

Part	Page
8C-5064	137
8C-5240	319
8C-5607	188
8C-5608	178
	188
8C-5918	161
	163
8C-6358	172
8C-6561	555
8C-6965	766
8C-7563	640
8C-7581	919
8C-8451	178
	212
	213
8C-8580	885
8C-8723	413
8C-8988	623
8C-8992	360
8C-9161	476
8C-9660	242
	919
8D-5054	813
	815
8E-4272	428
8E-8439	48
8F-0212	723
8F-1434	243
	966
8F-7219	134
8H-0878	919
8H-5303	246
8H-5306	246
8H-5352	482
8H-9789	46
8J-2559	675
	685
8J-4351	89
8J-6815	745
	749
8K-6211	947
8L-2777	64
8L-2786	137
	139
8L-8413	161
	163
	164
	267
	275
	304
8M-0505	137
	139
8M-0506	139
8M-0547	139
8M-0755	150
	152
8M-2772	822
	823
	824
8M-2773	925
8N-0869	164
	256
8N-1544	165
8N-1545	164
8N-1548	165
8N-1549	164
8N-1725	161
	164
	256
8P-9770	847
8S-2332	245
8S-2634	256
8T-0075	613
	620
	630
	648
	664
	666
8T-0076	625
	649
8T-0100	56
8T-0114	884
	895
8T-0226	44
8T-0266	869
8T-0267	708
8T-0269	502
	885
	930
8T-0273	432
8T-0275	75
	137
8T-0281	40
	43
8T-0288	772
	796
	797
	800
	801
	808
8T-0292	102
8T-0328	150
	152
	205
	243
	262
	293
	856
	894
8T-0337	311
8T-0338	22
8T-0343	698
8T-0360	43
8T-0363	430
	431
8T-0404	585
8T-0640	68
8T-0642	295
	297
8T-0643	106
8T-0644	144
8T-0646	21
8T-0788	605
8T-1158	766
8T-1160	213
8T-1482	50
8T-1687	649
8T-1715	139
8T-1779	594
8T-1905	594
	600
	609
	614
	628
	634
	649
8T-2525	562
	566
	570
	574
	621
8T-2920	361
	641
	649
8T-2922	797
8T-3008	720
8T-3490	420
8T-3518	172
8T-3519	172
8T-3597	360
	374
8T-3612	336
	340
	620
8T-3647	600
	625
	871
8T-3957	319
8T-4001	819
8T-4121	21
	86
	94
	98
	109
	111
	140
	166
	183
	184
	192
	196
	197
	200
	203
	204
	212
	213
	219
	239
	256
	258
	269
	271
	275
	279
	281
	287
	289
	299
	301
	302
	304
	306
	309
	311
	313
	329
	338
	339
	353
	365
	368
	370
	371
	375
	403
	405
	420
	459
	507
	509
	515
	517
	519
	521
	522
	527
	537
	538
	540
	542
	545
	546
	547
	559
	562
	566
	570
	574
	581
	585
	587
	589
	592
	596
	600
	605
	614
	621
	625
	628
	634
	641
	644
	649
	659
	660
	664
	666
	688
	706
	708
	731
	736
	822
	823
	824
	856
	872
	875

► **PRIMARY REFERENCE**

PART NUMBER INDEX

Part	Page	Part	Page	Part	Page	Part	Page
	884		824		287		621
	885		853		299		625
	895		913		301		630
	903		915		309		641
	913	8T-4134	970		311		644
	915		972		313		649
	919	8T-4136	86		338		666
	925		98		339		711
	937		109		353		713
	938		115		592		749
	941		140		596		819
	946		166		600		913
	956		256		614		915
	960		269		621	8T-4140	94
	972		281		625		347
8T-4122	50		301		708		350
8T-4123	94		332		853		507
	109		333		856		509
	674		334		872		511
	688		335		885		513
	690		353		913		519
	756		357		915		523
	757		358		925		525
	813		542		937		527
	815		559		938		533
	817		585	8T-4138	179		535
	828		587		405		548
	834		589		589		551
	836		592		625		659
	838		596		649		660
	840		600		925		817
	841		605	8T-4139	98		830
	843		614		111	8T-4141	423
	845		621		119		425
8T-4127	262		625		122		426
8T-4131	94		630		123		850
	698		634		202	8T-4167	50
8T-4132	94		641		332		319
	420		644		333		344
	511		649		334		346
	513		664		335		347
	529		666		511		350
	531		706		513		415
	548		708		515		417
	551		856		517		418
8T-4133	86		884		521		430
	94		895		522		431
	133		903		531		492
	140		919		533		688
	161		925		535		813
	166	8T-4137	86		537		815
	196		94		538		817
	197		109		542		819
	213		133		545		830
	271		140		546		851
	302		166		547	8T-4171	166
	327		200		548		205
	370		203		551		315
	371		204		559		327
	375		212		562	8T-4172	614
	405		219		567		649
	705		239		570	8T-4173	511
	766		258		575		513
	822		269		581		529
	823		275		600		531

► **PRIMARY REFERENCE**

PART NUMBER INDEX

Part	Page
8T-4174	523
	525
	529
	531
	731
	915
8T-4175	511
	513
	523
	525
	548
	551
8T-4176	98
	540
	579
	938
8T-4177	621
8T-4178	21
	98
	594
	644
	662
8T-4179	133
	179
	239
	269
	367
	649
	821
	866
8T-4182	98
	166
	239
	614
	644
	751
	754
8T-4183	94
	128
	326
	344
	350
	363
	365
	485
	489
	507
	509
	511
	513
	519
	523
	525
	527
	559
	570
	585
	641
	751
	754
	850
8T-4184	98
	368
	403
	405
	498
	533
	535
	542
	548
	551
	559
	562
	567
	570
	575
	605
	614
	634
	641
	644
	649
	655
	656
	657
	658
	664
	666
8T-4185	166
	203
	258
	287
	299
	306
	309
	540
	600
	625
8T-4186	192
	575
	581
	605
	660
8T-4187	148
	149
	675
	685
	710
8T-4189	111
	156
	166
	239
	368
	403
	498
	614
	621
8T-4190	196
	197
	937
8T-4191	166
	239
	269
	275
	279
	281
	302
	309
	409
	596
	614
	649
	822
	823
	884
	895
	903
	946
	956
	960
	972
8T-4192	98
	109
	127
	166
	239
	256
	581
	621
	641
	644
	649
	913
	915
8T-4193	507
	509
	519
	523
	525
	527
	559
8T-4194	94
	507
	509
	519
	523
	525
	527
	533
	535
	542
	559
	563
	567
	570
	575
	581
	641
	644
	708
8T-4195	86
	94
	109
	111
	166
	213
	256
	302
	628
	641
	688
	723
	875
	941
8T-4196	86
	94
	98
	140
	166
	289
	309
	329
	420
	537
	538
	545
	546
	547
	563
	567
	570
	575
	605
	644
	649
	659
	660
	751
	754
8T-4198	597
	628
	649
8T-4199	353
8T-4200	194
	327
	368
	403
	919
	925
	940
8T-4205	157
	205
	242
8T-4222	109
8T-4223	94
	98
	109
	111
	113
	119
	133
	166
	179
	190
	191
	202
	239
	256
	269
	329
	485
	489
	498
	507
	509
	511
	513
	515
	517
	519

► **PRIMARY REFERENCE**

PART NUMBER INDEX

Part	Page	Part	Page	Part	Page	Part	Page
	521		177		815	8T-5001	548
	522		180		817		551
	523		194		853	8T-5005	140
	525		212	8T-4780	813		281
	527		213		815		315
	529		239		817	8T-5041	98
	531		327		834		563
	533		342		836		567
	535		343		838		571
	537		368		840		575
	538		403		841		644
	540		498		843		649
	542		600	8T-4908	708		657
	545		615	8T-4910	515		658
	546		621		517		688
	547		625		521		726
	548		630		522		731
	550		644		545		736
	551		708		546	8T-5050	614
	553		723		547	8T-5092	571
	554		871		548		575
	557		884		641		581
	559		895		866	8T-5360	128
	563		905	8T-4944	482		693
	567		913		673	8T-5379	817
	571		915	8T-4956	329		830
	575		919		363		851
	579		925		365	8T-5412	98
	581		940		368		579
	585	8T-4226	161		403		644
	600		166		405		655
	605	8T-4240	319		485		656
	614	8T-4241	698		489	8T-5460	690
	621	8T-4244	113		511	8T-5878	492
	625		121		513	8T-6382	329
	630		128		540	8T-6385	485
	634		190		548		489
	637		191		550	8T-6404	673
	641		485		551	8T-6411	194
	644		489		553	8T-6412	194
	649		511		554	8T-6430	94
	655		513		557		690
	656		531		559	8T-6466	271
	657		548		563		515
	658		551		567		517
	660		688		571		521
	664		929		575		522
	666	8T-4648	111		637		634
	692		405		641	8T-6663	600
	708		511		649		625
	711		537		692	8T-6684	578
	713		538		708		620
	726		540		726	8T-6685	507
	731		542		731		509
	736		551		736		519
	819		563	8T-4970	194		527
	850		567		205	8T-6693	262
	866		575		498	8T-6757	329
	913		659		960		462
	915		731	8T-4971	925	8T-6759	671
	929		736	8T-4986	121		706
	938	8T-4779	94		640		723
8T-4224	26		529	8T-4987	122		745
	157		531		123		749
	166		813	8T-4989	123		761

► **PRIMARY REFERENCE**

PART NUMBER INDEX

Part	Page
	808
8T-6761	708
8T-6764	813
	815
	817
8T-6842	989
8T-6868	513
	634
	660
	866
8T-6869	140
8T-6870	615
	630
	723
8T-6876	85
8T-6912	26
	615
8T-7338	94
	398
	399
	413
	571
	641
8T-7910	555
8T-7971	517
8T-8378	468
8T-8390	476
8T-8442	502
	762
8T-8729	163
	164
	165
	252
	255
	258
	275
	279
	281
	293
	306
	309
	803
8T-8730	163
	165
	258
	267
	275
	281
	290
	306
	309
	885
8T-8731	279
8T-8732	279
8T-8737	163
	164
	165
	209
	211
	250
	258
	267
	275
	279
	281
	283
	287
	289
	290
	293
	295
	297
	304
	306
	309
	474
	715
	892
	893
	902
	932
8T-8827	165
8T-8894	474
8T-8899	643
8T-8915	133
8T-8916	693
8T-8987	640
	648
8T-9080	434
	482
	699
8T-9403	98
	644
8T-9597	482
	696
8T-9598	108
8T-9655	139
	180
8T-9756	161
	163
8U-7381	779
	782
	785
	786
8Y-6352	864
8Y-6967	866
8Y-9603	245

9

Part	Page
9B-7233	251
9C-5344	137
9D-3769	109
9F-2167	533
	535
	542
	559
9F-5599	242
9F-5644	246
9G-0002	161
	163
9G-0005	161
	163
9G-4101	242
	243
9G-4336	165
9G-4343	165
9G-4344	164
9G-7641	207
	209
▶	251
9G-8909	163
9H-3757	242
9L-6770	157
9M-0853	73
9M-1974	18
	19
	21
	22
	44
	46
	54
	77
	85
	88
	89
	92
	102
	104
	214
	216
	295
	297
9M-2307	385
	386
	387
9M-3786	641
9M-5732	385
	386
	387
9M-7609	242
9M-8406	140
9N-0869	180
9R-2060	332
9R-7941	205
9R-7980	205
9S-2544	242
9S-4180	496
	758
	769
9S-4181	98
	562
	570
	643
9S-4183	562
	566
	675
	685
9S-4185	539
	562
	570
	574
	581
	628
	640
	675
	685
	751
	754
	760
9S-4191	596
	600
	605
	614
	620
	625
	628
	632
	640
	707
	723
	726
	751
	754
	759
9S-6130	152
	570
	574
	581
9S-8001	799
9S-8002	32
	59
	73
	92
	102
	120
	124
9S-8003	44
9S-8004	34
	60
	73
	105
	126
	134
	670
	722
	751
	754
9S-8005	44
	60
	61
	102
	140
	670
	671
	726
	730
	735
	751
	754
9S-8006	61
	92
	104
	107
	139
	679
	681
	769
9S-8008	34
	35
	61
	92
	104
9S-8178	148
	149
	710
9S-9334	44
	54
	73

▶ PRIMARY REFERENCE

PART NUMBER INDEX

Part	Page
	79
	92
	104
9T-1614	745
	749
9T-1615	745
9T-9529	679
	681
9U-2331	936
9U-4431	936
9V-3659	370
	371
	375
9W-0335	262
9W-0742	▶172
	256
9W-0844	165
	197
	267
	275
	281
	290
	293
9W-0852	164
	165
	197
	275
	279
	281
	293
	873
	919
9W-2146	433
9W-2201	432
9X-0196	165
9X-0199	966
9X-0262	214
9X-1386	230
	474
9X-1813	156
	220
	221
	222
	225
	247
	249
9X-2021	41
9X-2026	937
9X-2027	37
9X-2041	853
	877
	879
	907
9X-2042	253
	260
	262
	285
	315
	853
	864
	879
	905
	962
	965
	970
9X-2044	262
	853
	864
	962
	966
	970
9X-2045	854
	875
	918
	962
9X-2046	875
	931
9X-2065	213
9X-2097	177
	295
	297
9X-2098	180
9X-2201	121
9X-2205	150
	152
9X-2235	664
	667
9X-2297	613
9X-2480	181
9X-2533	968
9X-2616	952
	953
9X-3401	54
	164
	165
	220
	250
	258
	267
	275
	279
	281
	285
	287
	289
	304
	309
	474
	542
	566
	592
	613
	707
	890
	891
	892
	893
	902
9X-3402	164
	165
	209
	258
	267
	275
	279
	281
	287
	304
	309
	608
9X-3463	190
	191
	194
	913
	915
9X-3495	279
9X-3604	468
	470
	474
9X-3607	472
9X-4385	275
9X-4597	463
	464
	465
	467
	830
9X-4598	462
	464
	828
	838
	840
	841
	843
9X-4599	834
	836
	838
	840
	841
	843
9X-4600	813
	815
	817
9X-6032	696
9X-6153	863
9X-6165	178
	188
	649
	937
9X-6451	54
9X-6579	649
9X-6582	550
	553
	554
	557
9X-6620	125
	132
9X-6650	135
9X-7317	136
9X-7378	32
9X-7380	102
9X-7430	34
9X-7680	762
9X-7737	249
9X-8256	46
	166
	173
	179
	181
	194
	205
	212
	213
	263
	267
	290
9X-8257	94
	196
	197
	329
	347
	350
	398
	399
	413
	485
	489
	507
	509
	511
	513
	519
	523
	525
	527
	529
	531
	533
	535
	548
	551
	571
	632
	641
	673
	712
	726
	731
	736
	817
	828
	850
	853
	913
	915
	934
	937
	946
9X-8267	75
	137
	295
	297
	317
9X-8281	125

▶ **PRIMARY REFERENCE**

PART NUMBER INDEX

Part	Page
9X-8600	150
	152
9X-8979	679
	681
	696
9X-9896	178
9Y-0810	27
9Y-0821	27
9Y-1758	75
9Y-4357	75
9Y-6089	23
9Y-8075	88
9Y-8076	88
9Y-9236	693
0	
002-9372	269
003-7764	139
005-4362	137
005-8593	751
	754
012-0380	247
030-0167	777
	778
	780
030-7935	79
030-7942	137
030-7947	137
030-8188	100
	137
030-8194	100
032-9882	809
033-6033	154
033-8248	822
	823
034-1432	81
036-9821	242
045-4065	243
061-9413	150
	152
061-9455	44
	77
061-9458	54
085-6449	918
085-7356	599
	620
	624
	630
	644
085-8037	961
085-8091	730
	735
086-0507	329
087-4402	594
	596
087-4454	442
	▶443
087-4456	▶444
	446
087-4503	587
087-4532	612
087-4575	443
087-4576	443
087-4577	443
087-4587	612
087-4683	248
087-4710	766
087-4786	675
	685
087-4962	647
087-5087	647
	▶716
087-5379	472
087-5390	478
087-5393	478
087-5397	478
087-5533	470
	474
087-5548	470
	474
	830
087-5550	468
	470
	474
087-5551	468
	470
	474
087-5591	608
	632
087-5708	766
087-5759	589
	612
087-5760	637
087-5762	594
	599
	624
087-5764	612
087-5765	594
087-5766	594
087-5767	589
	662
087-5771	612
087-5777	599
	624
087-5778	637
087-5782	612
087-5838	824
087-5840	822
	823
087-5891	824
087-6584	608
087-8906	710
087-8907	710
087-8909	710
091-9035	289
	309
	647
093-0074	813
	815
	817
093-0084	838
	840
	841
	843
093-0086	688
093-0090	813
	815
	817
	834
	836
	838
	840
	841
	843
093-0106	813
	815
	817
093-0116	838
	840
	841
	843
093-0118	688
093-0122	813
	815
	817
	834
	836
	838
	840
	841
	843
093-0349	329
	813
	815
	817
	834
	836
	838
	840
	841
	843
093-0364	813
	815
	817
	834
	836
	838
	840
	841
	843
093-0366	838
	840
	841
	843
093-0407	148
	149
093-0408	148
	149
093-1294	660
093-1345	830
093-1347	830
093-1349	828
093-1434	466
093-1509	409
093-1730	485
	489
093-1731	485
	489
093-2064	269
093-2069	885
093-3093	743
093-3094	743
093-3328	743
093-7521	500
094-0584	319
	485
	489
094-0876	763
	765
094-1509	485
	489
094-1528	485
	489
094-3709	422
	427
095-0673	766
095-0690	679
	681
095-0707	850
095-0723	262
095-0728	903
095-0735	884
	895
095-0736	150
	152
095-0755	853
095-0757	505
095-0826	707
095-0840	647
095-0843	327
095-0879	474
095-0882	698
095-0886	485
	489
095-0891	319
	485
	489
095-0910	937
095-0929	699
095-0930	478
095-0944	698
095-0965	698
095-0966	698
095-1207	694
095-1260	766
095-1280	421
	424
	474
095-1310	647
095-1319	368
	403
095-1386	139
095-1388	84
095-1392	302
095-1519	501
	761
	795
095-1522	744
095-1572	675
	685
095-1575	766
	809
095-1576	747
	808
095-1578	743
	784
	792
	795

▶ **PRIMARY REFERENCE**

PART NUMBER INDEX

Part	Page
095-1579	779
	785
095-1580	770
095-1582	744
	761
	770
	809
095-1584	495
	782
	786
095-1585	720
095-1586	763
	765
	793
	794
	798
	802
	804
	808
095-1590	495
	770
095-1592	751
	754
	809
095-1594	749
095-1596	495
095-1597	719
	726
	730
	735
	807
095-1599	751
	754
095-1600	683
095-1601	720
095-1602	720
095-1604	807
095-1608	707
095-1625	706
095-1635	468
	470
	474
095-1657	720
095-1663	498
095-1681	496
095-1682	498
095-1698	776
	808
095-1700	720
095-1701	809
095-1716	706
095-1726	472
095-1730	478
095-1735	707
095-1750	696
	793
	794
	809
095-1751	791
	793
	794
	804
095-1777	620
095-1785	808
095-1788	751
095-1789	749
095-1791	719
	726
	730
	735
	807
095-1793	751
	754
095-1806	485
	489
095-2927	409
095-6636	743
095-6639	705
095-6641	705
095-7424	38
095-7930	707
096-0061	219
	608
096-1533	683
096-1598	722
096-1628	763
	765
096-2323	502
096-2617	887
	889
096-2622	905
096-2653	485
	489
096-3001	747
096-3216	319
096-3375	760
096-3376	760
096-3780	327
096-3872	327
096-3884	905
096-4035	109
	111
096-4255	432
096-4509	761
096-4514	761
096-4755	492
096-4879	329
096-4882	342
	343
	913
	915
096-4883	581
	585
096-4884	581
096-4885	347
	350
	712
	817
096-5516	698
096-5916	675
096-5919	675
	685
096-5962	262
096-6100	768
096-6166	207
	209
	262
	311
	903
096-9986	533
	535
098-5747	850
099-0365	744
099-0367	744
099-0822	761
	795
	948
099-0823	853
	962
099-2374	502
	856
	894
099-3506	917
099-3629	967
099-3645	928
099-3990	743
099-6137	763
	765
	766
099-6141	766
099-6144	766
099-6145	766
099-7127	262
099-7241	596
099-7857	133
099-8111	683
	1
100-2881	918
100-3866	419
	420
100-4336	604
	925
100-4982	507
	509
	519
	527
101-2846	263
101-3625	269
101-7397	542
	559
101-7400	587
	637
101-7402	559
	562
	581
	585
101-8899	905
	908
101-8900	905
	962
101-9848	365
	379
	382
	385
	402
102-1173	166
102-1174	542
	925
102-2244	474
102-3888	117
102-5713	400
102-5828	79
102-5829	79
102-6046	985
	989
102-7024	743
102-7685	608
102-7964	285
102-7965	285
102-8016	262
102-8274	589
102-8802	54
	150
	152
	155
	156
	163
	164
	209
	230
	247
	255
	258
	275
	295
	297
	309
	592
	613
	707
102-8803	164
	220
	225
	248
	252
	258
	267
	275
	295
	309
	873
102-8804	165
	218
	290
	474
102-8805	315
102-8806	164
	211
	285
103-1361	637
103-1384	612
103-1399	624
103-2529	165
103-5246	813
	815
	817
103-8133	317
103-8252	784
103-8253	784
103-8254	784
103-8255	784
103-8353	478
104-3173	925
104-3560	31
104-6871	275

► **PRIMARY REFERENCE**

PART NUMBER INDEX

Part	Page
104-8147	413
104-8771	637
104-8774	613
104-8777	599
	624
104-8803	612
104-8821	587
	624
105-1797	295
	297
105-2169	853
	917
105-3478	640
105-3483	647
105-3487	327
105-3489	562
	566
	630
105-5175	260
105-6324	417
	418
105-9526	961
105-9527	961
106-0210	250
106-2704	947
106-3969	117
106-3973	117
107-1678	166
107-5769	24
107-6280	68
107-6479	792
107-6540	782
	786
107-6541	782
	786
107-6631	594
	596
	612
	630
107-7068	722
108-1781	481
	566
	574
	702
108-1782	660
108-1784	559
108-3819	542
108-4282	562
	566
	574
108-7118	608
	664
	666
108-7313	587
108-7322	585
108-7516	608
108-7550	537
	538
	539
	542
109-0868	422
	427
109-1294	698
109-1296	698
109-2013	542
109-9437	50
110-5499	637
110-5525	683
	698
	797
	809
110-7216	485
	489
110-7217	319
110-8769	165
111-0976	604
111-4799	248
111-4836	109
	163
	196
	197
	258
	269
	299
	301
	302
	309
	856
111-4837	161
	163
	196
	197
	256
	275
	281
	301
	302
	311
111-4838	163
	203
	302
	311
111-4839	163
	311
111-6752	612
111-9916	772
	▶793
	796
	801
111-9959	722
111-9973	782
	786
111-9974	782
	786
111-9998	770
112-0083	594
	▶788
112-0085	788
112-0545	989
112-1532	353
112-1533	353
113-2003	640
113-2004	542
113-2127	838
	840
	841
	843
113-5304	72
113-6738	608
113-6741	666
113-6761	612
113-8490	262
113-8491	262
	267
113-8493	262
113-8987	12
	▶24
114-0421	293
114-0550	808
114-0623	793
	794
	798
	804
114-0648	716
114-0649	716
	▶717
114-0741	630
114-0761	472
114-0762	468
	470
	474
114-0763	478
114-1383	485
	489
114-1398	485
	489
114-1399	485
	489
114-1401	485
	489
114-1403	485
	489
114-1541	319
114-6294	929
114-8135	476
115-2972	56
115-2973	56
115-3667	612
115-6370	422
	427
115-6399	323
	▶325
115-7087	131
115-8634	578
115-8645	609
115-8694	460
	▶545
115-8961	545
115-9864	717
115-9865	717
116-0118	163
	183
	184
	196
	197
	203
	271
	275
	281
	302
	304
	311
	315
116-0126	165
116-0128	165
116-0210	262
116-0255	165
116-1091	12
	▶68
116-3500	809
116-3501	809
116-3503	809
116-3504	809
116-3510	809
116-3715	125
117-0067	214
	216
117-0165	12
	▶58
117-0177	12
	▶63
117-0183	12
	▶135
117-2766	12
	▶37
117-2771	12
	▶40
117-2786	12
	▶76
117-2794	12
	▶41
117-6306	962
117-6349	903
117-6350	903
117-6356	903
117-8683	890
	891
	892
	893
117-8801	25
	46
118-3936	470
118-4086	763
	765
118-4087	763
	765
118-4728	139
118-5805	675
	685
119-3662	164
	165
	267
	275
119-5026	207
	209
	947
119-5162	707
119-5219	599
	624
	▶760
119-5388	766
119-5389	766
119-5391	766
119-5398	782
	786
120-4394	696
120-7226	823
120-7227	823
120-9027	192
	248

▶ **PRIMARY REFERENCE**

PART NUMBER INDEX

Part	Page
121-1023	205
121-1038	165
121-1039	165
121-1168	209
121-1173	209
121-1491	670
	671
	723
	772
	▶794
	799
	800
121-1865	884
121-1891	688
121-1948	523
	525
121-5908	126
121-6303	589
	624
	▶795
121-6304	795
121-7098	925
121-7136	869
	925
121-7137	925
121-7138	869
	925
122-4120	365
122-7663	726
	730
	735
122-7664	769
122-7666	726
	730
	735
122-7673	739
	741
122-7674	739
	741
122-7676	730
	735
122-7677	730
	735
122-7678	730
	735
122-7682	726
	730
	735
122-7687	718
122-7689	718
122-7690	▶718
	730
	735
122-7692	739
	741
122-7693	739
	741
122-7694	739
	741
122-7695	741
122-7704	779
	782
	785
	786
122-7708	730
122-7712	730
	735
122-7714	730
	735
122-7716	730
	735
122-7719	730
	735
122-7720	726
	730
	735
122-7748	774
	775
122-7749	774
	775
122-7750	730
	735
	▶774
122-7751	774
122-7752	774
	775
122-7753	730
	735
122-7756	726
	▶775
122-7757	775
122-7765	726
122-7767	691
122-7768	▶691
	726
	735
	754
122-7773	747
122-7774	747
122-7785	726
122-7787	726
	730
	735
122-7788	730
	735
122-7789	730
	735
122-7797	730
	735
122-7848	730
	735
122-9250	768
122-9608	903
122-9609	903
122-9610	903
122-9617	875
122-9657	925
123-0764	52
123-0791	63
123-1373	161
	163
123-1382	433
123-1904	650
123-2003	498
	505
123-2112	468
123-2139	683
123-2431	790
123-2505	570
	574
	581
123-2511	789
123-2514	647
	▶761
123-2515	647
	▶743
123-2535	719
123-2537	719
123-2549	604
	647
	▶789
123-2552	789
	790
123-3790	476
123-4750	604
124-0909	523
	525
	659
124-0911	537
	538
	545
	547
124-1008	608
	624
124-1067	640
124-1106	533
	535
124-1107	533
	535
124-1108	533
	535
124-1109	533
	535
124-1216	659
	660
124-1253	640
124-1266	612
124-1530	675
	685
124-1536	675
	685
124-1537	675
	685
124-1541	675
	685
124-1554	675
	685
124-1555	675
124-1557	675
	685
124-1561	675
	685
124-3296	325
124-3548	262
124-3953	970
124-3966	965
124-4009	887
	889
124-4010	887
	889
124-5043	92
124-9978	422
124-9979	422
	427
125-1286	478
125-1302	205
	▶247
125-6535	243
125-6536	243
125-6537	243
125-7874	165
	258
	267
	275
	281
	285
	295
	304
	306
	309
125-7875	163
	165
	197
	267
	275
	281
	285
	290
	295
	297
	304
126-0081	12
	▶120
126-1766	297
126-1767	54
	220
	250
	285
	542
	566
	592
	613
	707
	890
	891
	892
	893
	902
126-1768	164
	165
	608
126-1774	281
126-1865	766
126-1866	766
126-1913	98
	643
126-1956	478
126-1971	478
126-1978	478
126-2047	478
126-2084	468
126-2132	662
126-4002	675
	685
126-4003	675

▶ **PRIMARY REFERENCE**

PART NUMBER INDEX

Part	Page
	685
126-4004	675
	685
126-4040	675
	685
126-6290	332
	333
	334
	335
126-6367	344
	350
126-6514	802
126-6515	802
126-6516	802
126-6872	599
	608
	624
126-7574	182
126-9992	761
127-0580	853
127-0929	120
127-1343	811
	812
	▶822
127-1347	811
	▶823
127-5483	164
127-5484	165
127-5485	164
127-5486	165
127-5728	12
	▶23
127-6680	688
127-6690	7
	▶507
127-6740	329
127-6754	688
127-6757	688
127-6758	688
127-7678	332
	333
	334
	335
128-0317	108
128-0382	27
128-0383	27
128-0384	27
128-0385	27
128-0395	56
128-0396	56
128-0400	27
128-0401	27
128-0402	27
128-0403	27
128-2135	864
	866
	877
	879
128-2136	864
128-4411	150
	152
128-7448	▶655
	832
128-7449	▶656
	832
128-7514	523
	525
128-7591	542
128-8886	163
128-9001	614
128-9266	468
	470
	472
	474
129-0051	412
129-2893	48
129-2905	24
129-3181	587
129-3400	640
129-5429	133
129-5874	533
	535
129-5947	664
	666
129-5973	461
	▶659
129-6056	546
129-6466	966
129-7970	502
129-7973	502
129-7974	502
130-0252	925
130-4360	813
	817
	834
	836
	838
	840
	841
	843
130-4407	822
130-4499	417
	418
130-5300	54
	871
131-3718	22
131-3983	212
	213
131-5675	730
	735
131-5676	612
131-5818	766
131-5879	94
	111
131-5894	761
131-5915	763
	765
131-5935	730
	735
131-5936	730
	735
131-5937	730
	735
131-5938	741
131-5939	741
131-5942	773
131-5943	773
131-5944	773
131-5945	773
131-6645	92
131-8826	116
	117
131-8829	116
131-8847	128
131-8849	17
	▶119
131-8920	127
131-9482	659
131-9522	647
131-9524	329
131-9534	612
131-9537	647
131-9750	98
	643
132-1596	511
	513
132-1805	163
132-1829	▶155
	262
132-1854	293
132-2155	581
132-5789	18
	100
	126
	166
	258
	262
	275
	279
	281
	287
	289
	295
	297
	306
	309
132-7168	117
132-7293	2
	▶359
132-7295	359
132-7297	359
132-7298	413
132-7299	413
133-2427	813
	815
	817
	834
	836
	838
	840
	841
	843
133-2428	344
	346
	347
	350
133-4419	166
	925
133-5813	539
	596
	612
	630
	632
	647
133-6517	186
133-8016	853
134-3196	133
134-3284	196
	197
134-3297	165
134-4126	182
134-5245	72
134-6793	655
134-6835	666
134-6844	659
134-6852	139
134-6904	647
134-6918	612
134-6921	623
134-6946	608
134-6953	578
134-6955	666
134-6963	647
134-6964	647
134-6966	647
134-6967	647
134-7113	647
134-7114	647
134-7115	647
134-7258	985
	989
134-7515	809
134-8893	▶360
134-8894	360
134-8896	360
134-8944	834
	836
134-8952	845
134-9031	815
134-9137	822
135-2274	895
135-2835	137
135-2836	135
135-3859	675
	685
135-3924	688
135-3980	548
	550
	551
	553
	554
	557
135-4096	▶509
135-8572	150
	152
	365
135-8573	113
	148
	149
	338
	339
	363
	365
	368
	376
	392
	400
	403
	405
135-8574	357

▶ **PRIMARY REFERENCE**

PART NUMBER INDEX

Part	Page	Part	Page	Part	Page	Part	Page
	363	139-7099	868		932		596
	365		▶917	144-6650	79		599
	405	139-7101	868	144-9691	965		604
135-8575	361		▶962	144-9692	965		608
	362	139-7126	853	145-2237	604		613
	365	139-7127	853	145-5106	444		624
	370	139-8736	50		▶445		628
	371	139-8737	50	146-1217	525		630
	375	139-8794	116	146-1220	525		634
	376	139-8849	121	146-1332	329		647
	384	139-8873	50	146-1415	688		662
	405	139-8877	94	146-4936	336		664
	688	139-8883	116		340		666
	929	140-0681	726	146-6747	985	148-8338	613
135-8576	357		735		989		620
	358	140-1493	357	147-3957	813		630
135-8577	361	140-3048	417		815		648
	363		418		817		664
	365	140-8407	675	147-4131	766		666
	367		685	147-4158	773	148-8339	578
135-8578	361	141-1060	133	147-4297	726	148-8340	578
	362	141-2759	262		730		613
135-8965	946	141-3538	822		735		632
135-8966	946		823	147-4298	730		648
135-9044	485	141-3550	838		735	148-8341	585
	489		840	147-4299	726		640
136-2802	485		841		730	148-8344	643
	489		843		735	148-8345	578
136-2803	485	141-5976	111	147-6982	50		620
	489	141-5978	111	147-6983	50		648
136-4182	94	141-6518	363	147-7109	121	148-8347	98
136-4183	37		365	147-7142	121		539
	146		368	148-2104	79		578
136-8899	692		403	148-3307	828		643
	▶694		405	148-3391	813		662
136-9030	694	141-6519	937		815		664
136-9032	694	142-0038	612		817		666
137-2270	929		653	148-3548	675	148-8353	542
137-2781	822	142-1340	116		685		589
	823	142-1403	116	148-4573	353		592
137-2997	399	142-1585	600	148-4685	355		594
137-2998	398		625	148-4703	353		599
137-3001	412	142-5546	903	148-4704	353		604
137-3194	822	142-6583	507	148-8311	139		608
	823	142-6704	527	148-8315	587		613
137-3623	496	143-4146	537	148-8317	539		624
137-3624	496		538	148-8318	623		637
137-3625	496	143-4203	559		632	148-8354	140
137-3626	452	143-4237	535	148-8321	604		648
	496	143-4238	535	148-8322	542	148-8356	570
137-3628	452	143-4254	612	148-8324	662	148-8357	562
	496	143-4262	647	148-8325	604		566
137-3749	38	143-4281	649	148-8327	539		570
137-3797	706	143-7140	675		643		574
137-5646	675		685		662	148-8359	662
	685	143-7319	675	148-8328	660	148-8360	578
137-6606	985		685	148-8335	581		613
	989	143-9397	937		613	148-8361	539
137-6645	237	143-9536	985		653		605
	238		989	148-8336	539		648
138-5708	533	144-0119	79		542	148-8362	578
	535	144-0195	960		587		620
138-5709	533	144-0367	109		589	148-8364	578
	535		585		592		596
139-3326	476	144-1636	249		594		604

▶ **PRIMARY REFERENCE**

PART NUMBER INDEX

Part	Page
	640
	648
148-8366	596
148-8367	599
	605
	623
	624
	648
148-8368	660
148-8371	623
148-8372	585
	648
148-8374	599
	624
	648
148-8378	539
	578
	587
	589
	594
	596
	599
	605
	608
	614
	620
	623
	625
	628
	630
	634
	637
	664
	666
148-8382	585
148-8390	587
148-8391	640
	648
148-8392	664
	666
148-8393	614
148-8395	726
	730
	735
	751
	754
148-8407	596
	600
	605
	614
	620
	625
	628
	632
	640
	707
	723
	726
	751
	754
148-8408	562
	566
148-8411	539
	562
	570
	574
	581
	628
	640
	751
	754
148-8412	648
148-8414	614
148-8415	550
	553
	554
	557
	587
	634
	648
148-8419	550
	553
	554
	555
	557
148-8428	587
	648
148-8429	653
148-8431	653
	662
148-8433	587
	605
	609
	614
	625
	632
	648
148-8435	539
	600
	605
	609
	614
	625
	628
148-8439	604
148-8444	649
148-8445	653
148-8449	662
149-1207	675
	685
149-5050	260
	315
149-5452	529
	531
149-6549	163
	608
150-1714	127
	▶130
150-3036	594
	600
	609
	614
	628
	634
	649
150-3073	640
150-4027	600
	620
	625
150-4044	594
150-4050	605
150-4742	436
	438
	439
150-4766	438
	439
150-4767	439
150-4768	438
	439
150-4770	436
150-5733	809
150-8896	848
151-6703	962
151-6704	962
151-6705	965
151-6777	907
151-6778	962
151-6785	962
151-6790	967
151-6813	962
151-6815	962
151-6831	962
151-6832	962
151-6844	962
151-9461	905
151-9497	905
151-9557	962
151-9576	962
152-2939	693
152-5441	745
152-6996	411
	▶415
153-1588	411
	▶416
153-1624	416
153-2447	279
153-2521	▶190
	196
153-2523	▶191
	193
153-2540	209
153-2541	209
153-2602	267
153-2620	165
153-2630	165
153-2631	267
153-2849	968
153-4906	797
153-5223	766
153-6236	662
153-6248	600
	625
153-6256	640
153-6258	614
153-6259	664
	666
153-6270	613
153-8669	529
153-8723	884
153-8800	548
154-9023	102
155-2255	279
	295
	297
155-2260	165
	221
	222
	258
	267
	275
	283
	295
	309
155-2265	285
	295
	297
155-2270	164
	165
	197
	209
	218
	258
	275
	287
	293
	295
	297
	306
	309
	608
	715
	885
155-2271	165
	290
	304
155-4897	675
	685
155-7042	970
156-2525	139
156-6175	166
	295
	297
156-6469	967
156-6470	962
156-6471	905
156-6472	962
156-6554	962
156-6555	962
156-6562	962
156-6573	864
156-6575	864
156-6579	962
156-6598	905
156-6599	853
156-6600	905
156-6601	962
156-6627	962
156-6631	966
156-6642	924
156-6643	905
156-6645	905
156-6646	966
156-6647	▶965
	966
156-6656	864
156-6657	864
157-0670	102
157-0935	745

▶ **PRIMARY REFERENCE**

PART NUMBER INDEX

Part	Page	Part	Page	Part	Page	Part	Page
157-1606	415	164-0515	905		866	167-3872	675
157-9338	529	164-0519	905	164-9640	604		685
	531	164-0523	853	164-9869	612	167-7018	853
158-8186	773	164-0527	853	165-3010	342	167-7039	905
158-8933	705	164-0528	853	165-3256	707	167-7042	853
158-8987	▶495		▶924	165-5085	664	167-7141	915
	707	164-0614	895		666	167-7270	985
159-4700	445	164-0617	895	165-5970	163		989
	448	164-0646	864		▶252	167-8125	37
159-7320	675	164-0648	962	165-9291	468	167-8987	289
	685	164-0655	715		470	167-9887	411
159-7782	706		864		472		▶419
159-8036	848	164-0664	924		474	167-9899	411
159-8049	161	164-0666	967	165-9293	478		▶420
	164	164-4180	98	165-9431	763	168-0713	776
	256		562		765	168-0763	776
159-9322	164		570	165-9435	763	168-0764	776
	281		643		765	168-0765	776
160-2323	68	164-5546	612	165-9436	763	168-0766	776
160-7689	164	164-5549	600		765	168-1968	599
160-7690	281		625	165-9438	763		608
161-3128	262	164-5550	599		765		624
161-3639	905		624	165-9442	763	168-1969	643
161-3650	905	164-5566	566		765	168-2203	679
161-3663	905		574	165-9443	763		681
161-3665	905	164-5567	600		765	168-3378	704
161-3668	970		605	165-9444	763	168-3379	704
161-3669	970		620		765	168-3382	704
161-3670	970		625	165-9460	763	168-3384	704
161-3677	970		630		765	168-3385	704
161-3684	962		643	165-9461	765	168-3504	696
161-3685	853		707	165-9463	766	168-7319	679
161-3694	918	164-5586	604	165-9464	792		681
161-3697	853	164-5589	540	165-9513	749	168-9595	559
161-3698	962		614		751	168-9641	653
161-3717	946	164-5590	707		754	168-9759	596
161-3732	909	164-5605	600		758		628
161-3734	909		625	165-9514	749	169-0737	850
161-6958	131		649		751	169-0738	850
161-6963	131	164-5608	649		754	169-0739	850
161-6987	937	164-5616	570		758	169-0740	850
162-0177	751		574	165-9523	895	169-0745	850
	754		581	165-9552	766	169-0753	▶477
162-6208	117	164-5619	139	165-9553	766		850
163-2478	35	164-5628	594	165-9554	766	169-0756	850
163-3493	845		596	166-1494	834	169-0758	850
163-6637	165		612		836	169-0761	848
163-6711	285		630		838		▶850
163-6758	262	164-5629	608		840	169-2519	850
163-6759	165	164-5642	612		841	169-3923	477
163-6772	▶194	164-5644	612		843	169-4166	46
	868	164-5645	578	166-2904	34	169-5534	485
163-6773	165	164-5662	649	167-2208	476		489
163-6795	194	164-6869	614	167-2319	476	169-5535	485
	262	164-6872	578	167-3437	194		489
	283	164-6874	599	167-3438	194	169-5559	319
	285		620	167-3441	194	170-2512	315
	960		624	167-3456	194	170-4743	12
	970		630	167-3542	254		▶69
163-6813	194		644		262	170-6888	262
163-6814	194	164-6979	612		950	170-6890	267
163-9361	77		▶790	167-3543	254	170-6929	161
164-0499	909	164-6981	▶446		262		163
164-0500	873		612		950	170-6993	190
164-0514	905	164-8474	864	167-3593	262		191

▶ **PRIMARY REFERENCE**

PART NUMBER INDEX

Part	Page
170-8553	542
	581
	708
170-9324	207
170-9417	190
	191
170-9418	190
	191
170-9419	707
170-9492	961
170-9497	▶903
	943
170-9498	903
170-9499	903
170-9722	962
170-9724	864
170-9850	478
170-9865	468
	470
	472
	474
170-9964	482
170-9985	683
170-9986	683
170-9996	683
171-0036	779
171-0037	779
	782
	785
	786
171-0063	779
	782
171-0064	779
171-0087	763
	765
171-0123	770
171-0124	770
171-0126	770
171-0127	770
171-0128	770
171-0188	620
	▶796
171-0198	772
	▶791
	796
171-0596	542
	566
171-2210	205
171-2212	205
171-2637	98
	562
	566
	570
	574
	640
	643
171-3370	109
171-5349	230
171-6723	643
171-7325	861
	862
	879
171-7420	864
171-7426	853
171-7477	918
171-7486	915
172-2872	419
172-2873	419
172-4432	723
172-6063	317
173-3510	498
173-3513	496
173-3515	496
173-3516	496
173-3517	496
173-3520	809
173-3522	809
173-3523	809
173-3524	809
173-3527	809
173-3529	496
173-4664	562
	566
	574
173-8074	548
	551
174-0503	267
	275
174-2250	647
174-3016	165
	267
	275
174-7791	190
	191
175-4430	790
175-6173	707
175-6174	498
175-6175	498
175-6176	498
	578
	707
175-6177	707
175-6178	498
175-7887	675
	685
175-7897	433
175-7903	476
176-0480	985
	989
176-1902	925
176-1916	875
176-1925	915
176-1928	913
	915
176-1932	960
176-1937	853
176-1938	853
176-1939	853
176-1941	924
176-1946	864
176-1947	864
176-1972	864
176-1986	853
176-1996	908
176-2386	420
176-2391	420
176-2394	420
176-2397	420
176-2407	420
176-2815	978
176-4774	662
176-5331	433
176-5333	433
176-9237	126
176-9299	165
	267
	275
177-1061	612
	653
177-2553	496
177-2617	▶452
	498
177-2619	452
177-2620	498
	▶505
177-2621	505
177-2623	498
177-2625	498
177-5025	555
177-5879	362
177-5880	362
177-8506	521
	553
178-0704	420
178-2334	218
178-2335	218
178-2345	▶218
	219
178-5422	875
178-5423	875
178-5500	961
178-5569	966
178-5570	853
178-5572	967
178-5573	905
	967
178-5574	905
	967
178-5576	962
178-5659	952
	953
178-5870	361
178-5871	361
178-7293	430
	431
	▶433
178-7294	433
178-7296	433
178-7297	433
179-0092	37
179-4182	433
179-5235	531
	548
	551
179-5260	511
	513
179-7456	594
179-7616	647
179-7782	591
179-9618	452
179-9806	496
180-3861	190
	191
180-7459	768
180-7460	768
180-9339	225
	295
180-9340	221
	222
	295
183-1035	913
	915
183-3407	60
	126
183-8068	777
	778
	780
184-3830	682
	▶776
184-3835	683
184-6014	675
	685
184-6015	675
	685
184-9336	596
185-0230	468
	470
	474
185-0231	468
	470
	474
185-0232	468
	470
185-0277	681
185-0280	679
	681
185-0292	704
185-0295	679
	681
185-0296	679
	681
185-0303	696
185-0383	592
185-0407	772
	791
	796
185-0423	770
185-0462	592
	▶792
185-0463	792
185-2638	157
185-2639	157
185-2643	157
185-2644	157
185-2647	157
185-2648	157
185-2650	157
185-2654	157
185-2655	157
185-2658	157
185-8161	875
185-8180	905
185-8181	962
185-8182	962
185-8187	962
185-8196	853
185-8197	962
185-8205	864
185-8214	864
185-8221	962

▶ **PRIMARY REFERENCE**

PART NUMBER INDEX

Part	Page	Part	Page	Part	Page	Part	Page
185-8280	924	189-2849	917		915	202-7001	511
185-8281	924		▶918	196-1572	913		513
185-8284	877	189-2855	864		915		515
185-8286	248	189-2864	853	196-1574	913		517
	861	189-3424	970		915		521
	862	189-3434	925	196-1665	925		522
185-8290	970	190-1106	79	196-1666	920	202-7021	511
185-8293	925	190-5386	985	197-0196	670		513
185-8300	859		989		671	202-7475	48
	920	190-8970	145	197-0199	670	203-0351	124
185-8302	859	191-1782	139		671	203-2076	745
185-9208	207	191-1783	139	197-0273	670	203-2287	925
	209	191-2513	485		671	203-3560	511
186-3735	150		489	197-2471	679	203-3831	108
	152	191-3128	468	197-2472	679	204-0920	109
	155	191-3201	776	197-2474	679	204-1611	163
	156	191-5603	472	197-4385	275		302
	218	191-5604	472	197-8418	85		309
	230	191-5605	472	197-8419	85	204-1673	161
	247	191-5700	▶768	197-9326	56	204-1790	267
	248		809	197-9327	56	204-1882	309
	315	191-7581	696	197-9330	31	204-2281	515
	707	191-7582	696	197-9642	21		517
186-3736	218	191-7583	696	198-2953	409	204-2677	683
186-4574	258	192-6775	600	198-4963	36	204-2762	496
	287	192-7470	679		▶39	204-2844	478
186-5583	420		681	198-5647	828	204-2845	478
186-5584	420	193-2301	675	199-1875	533	204-2846	478
187-0661	985		685		535	205-0826	188
	989	193-6662	511	199-4582	319		209
187-7171	498		513		485	205-1339	885
187-8969	30		548		489	205-1340	885
187-8972	27		551	199-4583	319	205-6295	853
187-9833	511	194-0289	608	199-4719	319	205-9024	319
	513	194-0343	653	199-7891	157	205-9025	319
	551	194-0383	662	199-8436	157	206-2423	295
187-9862	513	194-1207	411			206-5208	209
	548		▶421			206-9290	502
187-9915	509	194-1238	434				698
188-2128	715	194-1239	434				797
188-2199	474	194-1252	423	200-3292	698	206-9291	502
188-4142	▶496		425	200-3489	319		699
	498		426	200-3490	319	206-9294	502
188-4143	496		▶434	200-3501	116	206-9295	502
188-4145	▶498	194-1253	434	200-3620	478	206-9296	502
	707	194-1254	434	201-2771	344	206-9297	502
188-4162	683	194-4741	745		346	206-9298	482
188-4164	683	194-6722	▶221		347	206-9299	502
188-4165	683		223		350	206-9300	502
188-4166	683	194-6725	▶222		813	206-9301	502
188-4170	683		224		815	207-0159	▶911
188-4171	683	194-9473	696		830	207-0161	912
188-4172	683	194-9474	696		851	207-0164	912
188-4173	683	194-9479	703	201-3145	745	207-0167	912
188-4176	683	194-9480	703	201-3146	745	207-0170	912
188-6299	696	194-9481	703	201-4391	905	207-0173	912
189-2678	864	195-0090	647	201-4417	853	207-0216	913
189-2690	905	195-4456	675	201-4530	853	207-6403	707
189-2693	918		685	201-4534	913	207-6404	707
189-2694	918	195-5479	828		915	207-8103	12
189-2702	966	195-5480	828	201-4535	913		▶62
189-2704	853	196-0711	94		915	207-8107	62
189-2716	918	196-1569	913	201-6615	231	207-8572	29
189-2796	907		915	201-6616	232	208-3112	637
189-2847	917	196-1571	913	201-9299	496	208-4156	365

2

▶ **PRIMARY REFERENCE**

PART NUMBER INDEX

Part	Page	Part	Page	Part	Page	Part	Page
208-4157	365		698	220-7098	82	223-3133	405
208-9281	107	214-7915	985	220-7099	82	223-3134	405
209-4575	578		989	220-7133	12	223-3135	405
209-4582	581	214-8310	405		▶81	223-3144	403
209-6001	705	215-1942	474	220-7134	81	223-3150	365
209-6063	679	215-4909	495	220-8678	134	223-3151	365
	681	215-5037	613	221-3775	20		▶377
209-7309	82		▶669	221-5138	745	223-3153	365
210-1743	54	215-6662	▶913	221-8045	985		▶378
210-1744	54	216-0008	478		989	223-3172	365
210-4460	39	216-0611	2	221-8813	868	223-3181	365
210-5808	853		4		▶931	223-3184	365
210-8159	121		▶915	221-8859	542		▶379
210-8163	17	216-6485	554		566	223-3875	14
	▶121	216-6515	529	221-8872	▶181		▶59
210-9966	522		531		943	223-6546	29
211-0587	27		660	221-8874	181	223-6873	546
211-0588	27	216-6539	507	221-8884	▶884	223-6876	545
211-4185	745		509		945		547
211-6807	295	216-6540	507	221-8912	620	223-7463	14
	297		509	221-9357	46		15
211-7895	21	216-6545	523	221-9392	36		▶22
212-0907	474		525	222-0225	887	223-7468	22
212-3086	828	216-6546	523		889	223-7471	22
212-3088	828		525	222-0298	745	223-7852	46
212-3090	828	217-3673	54	222-3088	14	223-9143	108
212-3092	828	217-3674	54		15	223-9145	108
212-3094	828	217-8763	474		▶43	223-9150	56
212-3095	828	217-8946	120	222-3092	12	223-9818	985
212-5148	562	217-9060	102		▶126		989
212-5149	591	218-0404	188	222-3347	745	224-0554	985
212-5326	656	218-7270	43	222-3902	43		989
212-5419	529	218-7272	14	222-3905	43	224-0880	12
212-7728	26		▶46	222-3907	22		▶49
212-9580	▶134	219-0305	915	222-4737	758	224-1270	34
	145	219-1322	477	222-8357	17	224-2675	92
213-0677	54	219-6314	188		▶122	224-3030	35
	707	219-7440	12	222-8358	17	224-3125	35
213-0710	919		▶52		▶50	224-3405	73
213-0711	919	219-7461	295	222-8360	17	224-3881	14
213-0772	262	219-7462	12		▶84		15
213-1585	40		▶295	222-8362	17		▶27
213-3745	604	219-8341	826		▶86	224-4140	49
213-9100	156		▶828	222-8364	114	224-4418	65
214-1639	474	219-8342	828		▶123	224-4441	35
214-7566	32	220-0454	116	222-8365	8	224-4991	144
	59	220-2498	7		▶239	224-6361	102
	79		827	222-8367	1	224-7662	12
	120		▶832		2		▶105
	124	220-2500	7		▶219	224-8170	12
	216		826	223-1615	12		▶85
	224		▶832		▶72	224-8171	85
	226	220-2502	7	223-2977	1	224-8172	85
	227		▶826		2	224-8946	985
	229		827		▶326		989
214-7567	44	220-2530	331	223-2978	326	225-0312	985
214-7568	34		▶973		▶327		989
	60	220-3373	46	223-2982	1	225-0326	905
	85	220-7057	12		2		▶968
	126		▶100		▶361	225-0327	968
	137	220-7058	100	223-2983	1	225-0328	968
	216	220-7082	12		2	225-0329	968
	223		▶79		▶929	225-0330	968
	228	220-7097	12	223-3130	405	225-0332	968
	620		▶82	223-3131	400	225-0333	968

▶ **PRIMARY REFERENCE**

PART NUMBER INDEX

Part	Page	Part	Page	Part	Page	Part	Page
225-0334	968	225-4793	749		▶589	228-5441	834
225-0335	968	225-4796	749	227-0581	578	228-5447	832
225-3284	476	225-4797	749	227-0585	455		▶836
225-4130	979	225-4803	749		▶558	228-5448	836
225-4131	979	225-4804	670	227-0590	707	228-5577	412
225-4257	985		720	227-0592	707	228-5578	412
	989		726	227-0616	559	228-5618	478
225-4504	318		730	227-0617	559	228-5619	838
	▶674		735	227-0619	▶591		840
225-4505	484		745		944		841
	488		747	227-0620	▶501		843
	▶673		749		707	228-5620	468
225-4515	455	225-4818	670	227-0727	664	228-5621	834
	▶480		726	227-2574	12		836
225-4517	482		730		▶25		838
225-4518	699		735	227-3029	428		840
	▶797		745		429		841
225-4522	460		747	227-4892	72		843
	▶462		749	227-5075	102	228-5622	813
225-4523	462	225-4820	730	227-5343	868		815
	▶468		735		▶966		817
225-4524	▶461		745	227-5723	14	228-5810	107
	811		749		▶146	228-5812	14
	812		751	227-6036	▶353		15
225-4525	461		754		411		▶106
	▶467	225-4821	730	227-6042	4	228-7090	85
225-4526	467		735		▶324	228-7093	79
	▶478		745	227-6043	5	228-7316	985
225-4527	▶460		749		▶324		989
	826		751	227-6044	▶318	228-9254	985
225-4528	460		754		323		989
	▶463	225-4824	782	227-6045	318	228-9655	157
225-4529	463	225-4825	782		▶319	228-9656	157
	▶470	225-4830	749	227-6048	319	228-9657	157
225-4530	▶460	225-4831	749	227-6050	324	229-0887	985
	826	225-4832	749		▶492		989
225-4531	460	225-4833	749	227-6075	355	229-2615	12
	▶464	225-4842	779	227-6105	353		▶26
225-4532	464		782	227-6106	353	229-2888	69
	▶472		785	227-6108	485	229-5331	54
225-4533	331		786		489	229-5684	22
	▶466	225-5729	8	227-6215	485	229-5711	26
225-4547	664		▶944		489	229-8084	14
	666	225-5730	▶895	227-6846	873		▶53
	▶706		944	227-7575	262	229-8810	107
225-4548	706	225-5784	1	227-7581	▶188	229-9079	▶858
225-4549	706		2	227-7625	884		943
225-4558	797		▶925	227-8313	21	229-9080	▶856
	▶798	225-6948	85	227-8807	▶447		858
225-4610	▶705	225-7003	107	227-9545	12	229-9082	858
	707	226-4755	46		▶60		▶908
225-4617	468	226-5303	411	228-2775	139	229-9088	1
225-4625	468		▶412	228-2781	985		2
	470	226-6473	676		989		▶959
	474		685	228-4064	82	229-9121	925
225-4626	478	226-6544	675	228-4947	82	229-9122	925
225-4633	478		685		231	229-9123	925
225-4641	478	227-0292	578		232	229-9124	925
225-4642	478	227-0430	506		233	229-9129	925
225-4646	478		▶710		234	229-9974	192
225-4787	749	227-0431	▶707	228-5418	812	230-0114	▶511
225-4789	749		710		▶813	230-0117	▶513
225-4790	749	227-0459	331	228-5419	813	230-0120	▶515
225-4791	749		▶647	228-5440	832	230-0123	▶517
225-4792	749	227-0460	506		▶834	230-0128	▶519

▶ **PRIMARY REFERENCE**

PART NUMBER INDEX

Part	Page	Part	Page	Part	Page	Part	Page
	827	230-4011	165		123	234-6497	864
230-0129	▶521		249	233-1262	122	234-6498	864
230-0132	▶522		258		123	234-6499	904
230-0135	▶548		271	233-1263	122	234-6500	866
230-0136	▶550		283	233-1265	86	234-6501	866
230-0138	▶529		285	233-1272	239		▶904
	714		297	233-1275	17	234-6502	904
230-0140	▶531		309		▶115	234-6521	864
	715	230-4012	803	233-1286	239	234-6547	864
230-0185	640	230-4013	164	233-1311	123	234-6548	864
230-0236	523		166	233-5220	▶88	234-6550	864
230-0237	523		297		89	234-6579	864
230-0238	525	230-4518	92	233-5221	14		877
230-0239	525	230-5008	166		15		879
230-0458	515		260		▶89	234-6580	877
	517		267	233-5260	884		879
	521		285		895	234-6593	904
230-0460	515	230-5010	166	234-1034	205	234-6594	868
	517		209	234-1036	205		▶970
	521		267	234-1037	205	234-6602	877
230-0479	515		279	234-1038	205	234-6603	879
230-0483	550		281	234-1097	262	234-6604	877
230-0917	239		283	234-1122	311	234-6605	879
230-0960	317		285	234-1156	207	234-6608	877
230-0961	14		290		209		879
	15	230-5483	675	234-1158	207	234-6609	877
	▶317		685	234-3901	413		879
230-1340	179	230-7149	214	234-3942	344	234-6610	877
230-1341	179		▶231		346		879
230-2603	102	230-7215	12	234-4355	214	234-6611	879
230-2770	726		▶20		216	234-6612	879
230-2771	726	230-7216	12	234-4442	472	234-6613	▶248
	730		▶21	234-4449	683		879
	735	230-7899	604	234-4450	683	234-6614	879
230-2772	726	230-8136	12	234-4463	468	234-6615	248
	730		▶54	234-4492	542	235-0364	12
	735	231-1698	163	234-4516	472		▶102
230-2773	730	231-1771	1	234-4533	683	235-0932	12
	735		2	234-4539	683		▶77
230-2781	109		▶156		698	235-0935	77
230-2782	109	231-1806	256	234-4620	480	235-0936	77
230-2783	94	231-1836	▶283		▶481	235-1448	89
230-2784	94		284	234-4624	587	235-1451	89
230-2791	94	231-2294	864		▶722	235-5634	848
230-2792	94	231-2295	166	234-5012	216		▶852
230-2793	109		285		▶235	235-5636	852
230-2795	121	231-4707	696	234-5013	139	235-5637	852
230-2797	121	231-6550	675		216	235-6387	137
230-2835	109		685		▶236		▶147
230-2854	109	231-9030	125	234-6468	864	235-7133	▶157
230-2966	111	232-0130	847	234-6469	864		159
230-2969	111	232-3868	675	234-6470	864	235-7527	468
230-2970	111		685	234-6471	864	235-7567	813
230-2971	111	232-4030	730	234-6472	864	235-7626	830
230-2972	111		735	234-6473	864	235-7627	830
230-2973	111	232-4113	720	234-6474	864	235-7628	830
230-3207	21	232-4114	720	234-6475	864	235-7636	830
230-3518	126	232-6180	674	234-6476	864		851
230-3728	136		▶675	234-6477	864	235-7639	830
230-3775	136	232-6181	675	234-6478	864	235-7642	830
230-4009	164	232-6654	675	234-6480	864		851
	165		685	234-6483	864	235-7721	811
	267	233-0891	180	234-6485	864		▶815
	275	233-1246	128	234-6489	967	235-7722	815
	285	233-1257	122	234-6490	864	235-7736	815

▶ **PRIMARY REFERENCE**

PART NUMBER INDEX

Part	Page
235-8200	12
	▶211
235-8862	941
235-8873	856
	894
235-8874	856
235-8875	856
235-8876	908
235-8877	908
235-8878	908
235-8879	908
235-8891	925
235-8893	875
235-8894	875
235-8908	▶864
	868
235-8909	868
	▶967
235-8912	853
235-8914	877
	879
235-8922	864
235-8923	864
235-8928	864
235-8929	864
235-8932	970
235-8933	853
235-8950	864
235-8951	861
235-8952	862
235-8965	879
235-8966	877
235-8969	▶887
	897
235-8970	▶889
	896
235-8974	972
235-8996	861
	862
235-8997	861
235-8998	862
235-9001	866
235-9006	856
235-9012	960
235-9014	925
236-2838	596
236-2839	664
	666
236-2843	596
236-2844	596
236-2848	596
236-2850	608
236-2851	647
236-2852	647
236-2862	578
236-2909	666
236-2992	585
236-2993	581
236-2996	581
236-3024	647
236-3034	640
236-3051	613
236-3052	613
236-3053	613
236-3054	613
236-3204	613
236-3257	501
236-3258	501
236-3259	501
236-3665	327
236-3666	327
236-3668	327
236-3670	327
236-3671	327
236-3672	327
236-3673	327
236-3715	362
236-3721	361
236-4545	239
236-5900	12
	▶104
236-6919	482
	692
236-8745	92
236-9179	139
236-9206	357
236-9212	357
236-9224	358
236-9232	358
236-9234	358
236-9241	139
236-9246	929
236-9349	405
236-9473	372
	373
236-9474	368
236-9475	368
	403
236-9477	401
236-9478	401
236-9479	402
236-9480	368
236-9481	368
	403
236-9483	363
236-9484	403
236-9485	403
236-9486	392
236-9487	392
236-9489	365
236-9490	377
236-9491	377
236-9492	377
	378
236-9493	378
236-9494	378
236-9496	385
236-9497	382
236-9498	382
236-9499	365
236-9500	386
236-9505	370
	371
	375
236-9507	370
	371
	375
236-9508	370
	371
	375
236-9509	370
	371
	375
236-9510	372
	373
236-9769	466
	▶476
236-9966	476
236-9967	476
237-0227	229
	297
237-3016	511
	513
237-3018	548
	551
237-3231	660
237-4376	▶48
	70
237-5586	327
237-7253	70
237-8411	336
	340
237-8412	336
	340
237-8414	373
237-8415	372
	373
237-8416	372
	373
237-8417	372
	373
237-8418	373
237-8647	343
	365
	374
237-8684	336
	340
237-8728	384
237-8729	384
237-8731	405
237-8734	405
237-8749	402
237-8750	392
237-9307	139
237-9323	139
237-9960	317
238-1485	161
238-1506	205
238-2157	▶196
	811
	812
238-2171	301
238-2208	▶254
	868
238-2209	254
238-2210	254
238-2211	950
238-2212	262
238-2260	947
238-2280	205
238-2318	262
238-2351	196
238-2366	209
238-2390	262
238-2391	262
238-2392	205
238-2478	253
238-2479	253
238-2485	▶253
	457
238-2501	161
	163
238-2528	161
	163
238-2535	163
238-5080	44
	54
	60
	100
	135
	236
	237
238-5081	100
	147
238-5082	54
	61
238-5084	44
	54
	79
	104
	693
238-6721	102
238-6728	102
238-6730	102
239-1134	239
	▶255
239-1575	539
239-1576	539
239-1577	539
239-1582	539
239-1603	460
	▶546
239-1604	546
239-1753	624
239-1756	620
239-1760	599
	624
239-1794	562
	566
	630
239-1798	562
	566
	570
	574
239-1820	▶578
	710
239-1838	98
	643
239-2395	214
	▶223
239-2396	139
	214
	▶224
239-2397	214
	▶232
239-3478	▶225
	226
239-5674	214
	▶226
239-5858	131

▶ **PRIMARY REFERENCE**

PART NUMBER INDEX

Part	Page
239-6533	50
239-6551	116
239-6581	17
	▶133
239-6582	133
239-6585	133
239-6662	239
239-6986	985
	989
239-7352	283
	285
239-8135	102
239-8697	669
	▶670
239-8983	730
	735
	▶777
239-8984	566
	574
	726
	▶778
239-8998	669
	▶671
239-9036	562
	566
	570
	574
	▶719
239-9037	719
239-9039	719
239-9040	719
239-9103	▶779
	781
240-2636	48
240-4995	925
240-5025	912
240-5026	912
240-5071	946
240-5074	908
240-7271	14
	15
	▶32
240-7272	14
	15
	▶70
241-0847	53
	65
241-2039	365
241-2270	370
	371
	375
241-2274	370
	371
	375
241-2277	405
241-2282	365
	▶380
241-2283	380
241-2284	380
241-2285	380
241-2289	389
	393
	395
241-4761	12
	▶124
241-7601	12
	▶177
242-1401	65
242-1510	985
	989
242-1588	985
	989
242-1811	39
242-3360	131
242-3374	679
242-6092	985
	989
242-6535	5
	▶551
242-6538	▶553
242-6539	5
	▶554
242-6805	455
	▶692
242-6844	679
242-6880	587
	▶799
242-6890	722
242-6891	722
242-6892	722
242-6893	799
242-6914	698
242-6915	698
242-6916	698
242-6918	698
242-6919	698
242-6920	698
242-6925	722
242-7418	65
242-7477	100
243-1555	12
	▶214
243-1557	21
243-3177	474
243-4505	166
	197
	258
	271
	283
	285
	309
	919
243-4506	164
243-4507	166
	267
	306
243-4508	164
	166
	250
	267
	275
	279
	281
	283
	293
243-4509	166
	258
	287
	309
243-4510	164
	166
	258
	275
	285
	289
	304
	309
243-5362	267
	275
	304
243-6717	27
244-1420	137
244-2118	1
	2
	▶972
244-4120	696
	▶762
244-4468	696
244-4884	137
244-7789	365
244-7791	372
	373
244-7792	365
244-7793	▶381
	403
244-7795	368
	381
244-7799	368
244-7813	396
	397
244-7814	396
	397
244-7816	338
	339
244-7820	365
244-7823	381
244-7908	357
245-2325	519
245-2425	557
245-2432	522
245-5061	662
245-5079	596
245-5081	608
245-5082	690
245-5096	620
245-5122	539
245-5137	578
245-5214	585
245-5219	591
245-5223	589
245-5237	599
	624
245-5317	▶533
	811
	812
245-5457	985
	989
245-5495	985
	989
245-5584	6
	7
	8
	▶826
245-6095	64
245-7760	262
245-7786	17
	▶872
245-7790	864
	877
	879
245-7791	908
245-7792	908
245-7793	908
245-7811	1
	2
	▶941
245-7812	859
	▶920
245-7813	920
245-7814	920
245-7815	920
245-7816	920
245-7817	859
245-7818	859
245-7819	859
245-7820	859
245-7821	859
245-7823	859
245-7824	859
245-7825	859
245-7826	859
245-7827	859
245-7828	859
245-7829	859
245-7830	859
245-7831	859
245-7832	859
245-7833	859
245-7834	859
245-7835	859
245-7836	859
	▶869
245-7837	869
245-7838	859
245-7839	859
245-7842	887
245-7844	889
245-7850	925
245-7851	925
245-7856	859
245-7866	873
245-7867	873
245-7868	873
245-7869	873
245-7870	873
245-7871	873
245-7872	908
245-7873	908
245-7876	873
245-7877	909
245-7881	5
	▶948
245-7895	922
	923
245-7900	344
	346
	347
	350
245-7901	344
	346

▶ **PRIMARY REFERENCE**

PART NUMBER INDEX

Part	Page
	347
	350
245-7903	909
245-7904	873
245-7905	869
245-7906	873
245-7918	925
245-7919	872
245-7922	▶875
	943
245-7925	879
245-7926	877
245-7929	904
245-7948	877
	879
245-9206	109
245-9242	94
245-9247	111
245-9278	94
245-9303	94
246-2641	148
	149
	376
246-2686	186
246-3144	27
246-8124	▶851
246-9353	211
247-2693	283
	285
	890
	891
	892
	893
	902
247-2694	932
247-2695	932
247-2833	12
	▶125
247-2834	125
247-5112	902
247-7410	453
	▶975
247-7411	453
	▶976
247-7418	945
	▶977
247-7437	985
	989
247-7438	985
	989
247-7465	453
	▶978
247-7587	723
247-8712	698
247-8713	699
247-8715	698
247-8717	699
247-8719	699
247-8720	699
247-8721	698
247-8725	699
247-8726	699
247-8729	698
247-8730	699
247-8732	502
247-8733	502
247-8734	502
247-8735	502
247-8786	698
247-8787	699
247-8841	695
247-8897	472
247-8904	470
247-8928	502
247-8929	502
247-8944	699
247-8985	698
247-9022	554
247-9026	554
247-9302	523
	525
247-9303	523
	525
247-9304	523
	525
247-9305	523
	525
247-9306	7
	▶523
247-9307	▶525
	826
	827
247-9373	517
247-9376	517
247-9379	550
	553
247-9383	550
	553
247-9388	522
247-9391	522
247-9440	511
	513
	548
	551
247-9442	515
247-9445	515
247-9498	521
247-9501	521
248-1768	346
	347
	350
248-1965	9
	▶417
248-1966	▶418
248-4840	124
248-4841	124
248-5358	267
248-5513	102
248-7151	▶422
	423
248-7152	421
	▶423
248-7178	409
248-9370	357
248-9445	▶535
	811
248-9461	539
248-9469	613
248-9488	539
248-9553	632
248-9718	533
248-9719	533
248-9835	535
248-9836	535
248-9910	533
248-9913	533
249-0096	216
	▶227
249-0713	▶136
	144
249-1306	698
249-1307	699
249-1308	698
249-5278	12
	▶180
249-6657	698
249-6658	502
249-6659	502
249-6660	502
249-6661	502
249-6670	482
	699
249-6671	695
250-1440	515
	517
	521
	522
250-3998	428
	429
250-4997	358
250-5003	358
250-5058	361
	▶362
250-5059	362
250-5169	▶401
	405
250-5170	405
250-5176	405
250-5284	357
250-5285	357
250-5286	357
250-5302	358
250-5304	358
250-6094	973
250-8054	975
	976
	977
	978
251-0299	311
251-0433	▶284
	943
251-0435	284
	▶285
251-0538	943
	▶947
251-0542	▶207
	943
251-0544	188
	▶209
251-0580	283
251-0602	285
251-0637	262
251-1005	48
251-1105	973
251-2473	417
	418
251-2474	417
	418
251-2651	826
	▶830
251-2652	830
251-4162	176
251-4169	269
251-4314	46
251-4482	527
251-6668	73
251-6669	72
	▶73
251-7757	428
	429
251-8364	428
	429
251-8368	428
	429
252-2685	104
252-4429	429
252-7132	12
	▶159
252-7802	35
253-0861	985
	989
253-1346	409
253-1461	14
	15
	▶144
253-2111	205
253-2695	267
	275
	304
253-2740	428
253-6276	548
	551
253-6383	▶527
	826
253-6432	519
253-6433	519
253-6566	517
253-7404	12
	▶92
254-3080	604
	▶723
254-3944	34
255-1665	596
255-1666	596
255-1819	581
255-1929	578
255-1930	578
255-2009	613
255-2891	119
255-2966	116
255-3057	239
255-3171	983
255-3173	983
255-4410	948
255-5588	730
	735
	▶773
255-5589	773
255-5590	773
255-5591	773

▶ **PRIMARY REFERENCE**

PART NUMBER INDEX

Part	Page
255-5594	773
255-5843	▶453
	456
255-5844	6
	▶453
255-5845	▶945
256-1730	405
256-1758	403
256-1760	368
256-1761	363
256-1763	363
	▶382
256-1764	363
	▶383
256-6453	235
	236
256-6881	239
256-9651	42
257-2015	46
257-3604	429
257-4596	91
	▶979
257-5015	983
258-4524	131
258-6749	604
	▶800
258-8721	64
258-9892	871
259-1930	847
259-4877	285
259-4883	262
259-4884	253
	260
259-4887	281
259-4889	▶271
	457
259-4890	271
259-4914	947
259-4939	267
259-4940	279
259-5293	▶183
	945
259-5294	▶184
	453
259-5295	▶185
	453
259-5507	696
259-6113	332
	333
	334
	335
259-6227	332
	333
	334
	335
259-7180	253
259-7202	879
259-7214	948
259-7215	948
259-7220	260
259-7345	862
259-7346	▶861
	877
259-7347	▶862
	879
259-7348	875
	▶877
259-7349	875
	▶879
259-7353	864
259-7354	905
259-7430	599
	624
	630
	▶801
259-7598	453
	▶881
259-7599	453
	▶882
259-7733	615
259-7788	749
260-0251	▶64
	65
260-0252	▶65
	70
260-0915	64
260-2042	178
260-2109	▶890
	898
260-2110	▶891
	899
260-2111	890
	891
	892
	893
260-2127	▶892
	900
260-2128	▶893
	901
260-2180	620
260-2191	620
260-3003	725
260-3883	803
260-4855	34
260-6941	975
260-6942	976
260-6948	944
	977
260-7524	66
	67
260-7891	454
	455
	▶592
260-8047	▶594
	944
260-8062	98
	643
260-8063	98
	643
260-8067	98
	643
260-8071	578
260-8079	613
261-2290	65
	▶66
261-2291	66
261-2293	67
261-2294	65
	▶67
261-3223	269
262-1421	178
	▶182
262-2185	357
	358
262-2187	379
262-2211	368
	403
262-2603	368
	403
	405
262-2879	180
262-8088	275
262-8502	332
	333
	334
	335
263-1964	539
	▶745
263-4920	34
263-7047	745
264-2135	847
264-2136	847
264-4297	237
	238
264-4501	82
264-5732	295
	297
264-7029	166
	249
	258
	285
	297
	309
264-7030	164
	166
	297
264-7031	166
	285
264-7032	166
	209
	279
	281
	285
	290
264-7033	166
	285
264-7034	164
	165
	275
	285
264-9821	422
264-9971	139
265-1113	56
266-0545	915
266-0546	915
266-0982	614
266-1217	613
266-1296	640
266-1298	640
266-5431	985
	989
266-6191	128
266-6213	128
266-6256	11
	▶128
266-7843	664
	666
	▶809
267-0007	12
	▶75
267-0010	14
	15
	▶18
267-3839	868
	▶894
267-7642	▶260
	457
267-7644	260
267-7671	260
267-7672	260
267-7676	260
	315
267-7695	315
267-7976	207
267-7977	209
268-1901	968
268-1964	262
268-2953	34
268-4530	981
268-4531	981
268-6816	457
	▶980
268-6817	980
268-7027	548
268-7030	548
268-7036	511
268-7039	511
268-8872	981
269-0120	981
269-0121	981
269-2757	▶242
	245
269-2860	48
269-2862	48
269-2864	48
269-6164	12
	▶61
269-9684	662
270-0012	643
270-0013	643
270-0014	643
270-0015	643
270-0032	647
270-5603	▶934
	943
270-5691	730
	751
	▶780
270-5692	539
	▶758
270-5693	758
270-5694	570
	▶781
270-5695	781
270-5696	730
	▶747
270-5697	747
270-5730	730
	▶782
270-5731	745

▶ **PRIMARY REFERENCE**

PART NUMBER INDEX

Part	Page	Part	Page	Part	Page	Part	Page
	749	277-0774	511	283-2984	315		811
	▶784	277-0777	511	283-3074	285		812
270-5949	766	277-0954	507	283-4815	555	289-7912	▶695
270-5950	766		509	283-5990	722		699
270-5953	763		519	284-4426	853	289-8194	▶500
270-6106	▶453		527	284-8532	937		707
	456		▶759	285-0823	25	289-8195	500
270-6107	453	277-1015	513	285-1332	885	290-1727	985
	▶885	277-1018	513	285-1333	885		989
271-2898	851	277-1021	513	285-1337	885	290-1728	985
271-6432	696	277-1024	513	285-1531	643		989
271-7843	892	277-1027	513		▶725	290-8160	192
	893	277-1030	551	285-1768	660	290-8996	192
	896	277-1033	551		▶749	290-9039	331
	897	277-1036	551	285-1777	725		▶344
272-0389	18	277-1039	551	285-1784	▶454	290-9040	344
272-4137	599	277-1042	551		456		350
	624	277-3082	192	285-1786	▶454	290-9138	832
272-4138	620	277-4424	▶555		456		▶838
272-4139	599		849	285-1787	6	291-5480	▶131
	624	278-3707	357		▶454		132
272-4608	570		358	285-1788	▶455	291-6905	108
272-4616	570	278-6469	666	285-1789	▶455	291-7757	▶309
272-4789	239	278-6796	613		456		454
273-5274	962	278-7093	46	285-1790	6		455
273-5307	909	279-3161	861		▶455	291-7758	▶306
273-5333	910	279-3393	696	285-2520	664		455
273-5345	962	279-6060	131		666	291-7766	1
273-5346	962	279-7821	17	285-2715	608		2
273-5358	175		▶118		623		▶160
	▶910	279-9828	233	285-2893	613	291-7767	▶262
	943	279-9829	234	285-3231	188		868
273-5359	910	280-1918	604	285-3232	188	291-7768	▶311
273-5360	910	280-2412	604	286-6399	613		943
274-4490	64	280-2413	604	286-6565	559	291-7804	163
274-6717	228	281-2725	147	287-0164	133	291-7806	311
274-6718	227		▶154	287-2352	723	291-7856	306
274-6719	229	281-2925	126	287-3049	54	291-7860	164
274-6851	132	281-3514	111	287-8404	267	291-9259	11
274-7395	214	281-3554	17	288-7324	295		▶12
	▶237		▶94		297	292-0484	56
274-7396	214	281-3560	113	289-2492	128	292-1200	108
	▶238	281-3585	17	289-5657	596	292-7159	506
275-1253	139		▶109	289-5676	535		▶581
	▶249	281-3586	109	289-5677	535	292-7161	506
275-1380	570		▶111	289-5678	535		▶559
275-1410	656	281-3587	111	289-5734	460	292-7162	506
275-1442	613	281-3616	109		▶537		▶662
275-1443	614	281-3619	109	289-5735	460	292-7163	506
275-1444	615	281-3622	109		▶538		▶640
275-1743	98	281-3637	94	289-5758	▶657	292-7164	506
	643	281-3638	94		832		▶585
275-1819	647	281-3645	94		833	292-7166	454
275-6842	289	281-5898	613	289-5759	▶658		▶562
276-2403	12	282-5705	457		832	292-7168	455
	▶871		▶981		833		▶643
276-7222	56	282-7106	615	289-6591	365	292-7169	454
276-8548	216	282-8737	604		▶384		▶566
	▶228	283-2238	125	289-6592	384	292-7175	91
276-9067	216	283-2783	315	289-6597	405		▶587
	▶229	283-2913	2	289-6771	340	292-7249	581
277-0762	548		3	289-7844	▶460	292-7255	581
277-0765	548		4		811	292-7264	581
277-0768	548		▶315		812	292-7268	581
277-0771	511	283-2914	315	289-7845	▶460	292-7273	559

▶ **PRIMARY REFERENCE**

PART NUMBER INDEX

Part	Page
292-7279	539
292-7306	640
292-7312	640
292-7314	640
292-7320	640
292-7350	570
	574
292-7367	542
292-7437	537
292-7438	537
292-7439	538
292-7440	538
292-7510	643
292-7591	647
292-7752	507
	509
	519
	527
292-9252	106
	▶107
293-0653	745
293-0818	107
	▶108
293-1136	856
	894
293-1137	859
293-1140	972
293-1170	946
293-1256	960
293-6801	148
	149
293-7678	465
	▶474
293-7688	474
293-7693	474
293-8216	427
293-9397	29
294-1250	6
	7
	▶812
294-1252	7
	▶811
	826
	827
294-1257	▶832
294-1258	6
	7
	▶832
294-1265	▶833
294-1267	8
	▶833
294-1275	▶91
294-1307	985
	989
294-1316	4
	▶411
294-1426	▶824
	832
	833
294-1430	824
294-1432	824
294-1433	824
294-1434	824
294-1435	824
294-2963	474
294-4585	12
	▶132
294-5018	332
	333
294-6007	68
294-6467	509
294-6485	507
294-6502	519
294-6504	527
295-9423	662
	▶808
295-9426	▶696
	702
295-9429	94
	▶679
295-9441	481
	▶482
295-9442	91
	▶672
295-9497	▶502
	699
295-9498	699
295-9499	698
295-9500	698
295-9501	698
295-9502	698
295-9503	698
295-9504	698
295-9505	698
295-9506	698
295-9507	698
295-9508	698
295-9509	698
295-9510	698
295-9511	698
295-9512	699
295-9516	698
295-9517	699
295-9518	698
295-9521	698
295-9535	696
	▶703
295-9536	703
295-9537	703
295-9538	703
295-9539	703
295-9540	703
295-9541	703
295-9542	696
295-9544	696
295-9545	696
295-9546	696
295-9547	679
	681
	▶704
295-9549	704
295-9550	679
	681
295-9551	679
	681
295-9574	502
295-9575	502
295-9576	502
295-9577	502
295-9578	502
295-9579	502
295-9580	502
295-9581	502
295-9582	502
295-9583	502
295-9584	502
295-9585	502
295-9600	9
	10
	▶819
295-9601	819
295-9663	▶698
	702
295-9680	547
295-9682	819
295-9684	819
295-9693	698
295-9694	699
295-9695	698
296-4670	506
	▶693
296-6249	324
	▶484
296-6250	484
	▶485
296-6251	485
	489
296-6252	324
	▶488
296-6253	488
	▶489
296-6970	581
296-7020	562
	566
	574
296-7024	562
	566
	574
296-7025	630
296-7087	628
296-7088	628
296-7123	506
	▶596
296-7127	454
	▶599
296-7129	454
	▶570
296-7131	455
	▶574
296-7133	457
	▶604
296-7134	▶539
	714
296-7136	▶98
	455
296-7165	562
	566
	570
	574
296-7166	562
	566
	570
	574
296-7167	562
	566
	574
297-0243	4
	▶506
297-0244	5
	▶506
297-0252	▶714
297-0257	▶714
297-0258	▶715
297-0265	562
	566
	574
	▶805
297-0266	566
	574
	▶806
297-0346	751
	754
297-0349	751
	754
297-0350	751
	754
297-0351	751
	754
297-0354	751
297-0356	751
	754
297-0370	566
	574
	▶720
297-0500	751
	754
	▶804
297-0529	▶763
	896
	897
297-0532	883
	▶896
297-0533	883
	▶897
297-0534	881
	▶898
297-0535	881
	▶899
297-0536	882
	▶900
297-0537	882
	▶901
297-0589	▶765
	898
	899
	900
	901
297-0641	599
	624
	▶772
297-4483	608
297-4510	9
	10
	▶202
297-4513	9
	10
	▶212
297-4516	▶213
	811
297-4525	212

▶ **PRIMARY REFERENCE**

PART NUMBER INDEX

Part	Page
297-4528	213
297-4589	890
297-4590	891
297-4595	892
	893
297-4823	864
297-7419	832
	▶840
297-7439	811
	▶817
297-7442	833
	▶841
297-7443	833
	▶843
297-7547	▶398
	436
	437
297-7548	▶399
	438
297-7564	1
	2
	▶346
297-7565	346
	347
297-7686	4
	5
	▶17
297-7704	693
297-7926	664
	666
297-7927	650
297-9129	9
	▶424
297-9152	▶409
	421
	424
297-9157	409
297-9163	411
	▶431
297-9164	411
	▶430
297-9262	424
	▶425
297-9263	424
	▶426
297-9264	425
	426
	▶427
298-3105	342
298-3108	343
298-3120	367
	▶373
298-3121	373
298-3134	373
298-3148	▶342
	365
298-3153	▶343
	363
298-3201	405
298-4282	985
	989
299-2600	▶258
	454
299-2602	▶287
	454
299-2604	▶313
	457
299-2605	▶293
	331
299-2606	91
	▶299
299-2643	313
299-2646	299
299-2649	287
299-2701	267
299-2856	1
	2
	▶301
299-2908	164
299-2910	164
299-2912	164
299-2914	164
299-2952	267
299-2956	164
299-2960	256
299-2965	▶204
	943
299-2966	204
	▶205
299-2967	205
299-2969	8
	▶256
299-2970	1
	2
	▶161
299-2996	9
	10
	▶273
299-3000	9
	10
	▶302
299-3003	9
	10
	▶304
299-3027	301
299-3036	9
	▶197
299-9620	13
	16
300-1590	9
	10
	▶461
300-1591	461
	▶465
300-4606	432
300-4608	432
300-4610	430
	431
	▶432
300-9805	216
	▶233
300-9806	216
	▶234
301-0091	256
301-0589	937
301-2287	▶428
	438
	439
301-2297	▶429
	436
	438
	439
301-2299	436
	438
	439
301-2300	4
	▶436
	437
301-6343	137
302-1762	474
302-2877	647
302-2880	613
302-2891	634
302-2971	562
	566
	570
	574
	643
302-2981	562
	570
302-2984	506
	▶608
302-2985	506
	▶612
302-2986	620
302-3084	506
	▶690
302-3085	690
302-3097	506
	▶620
302-3114	533
302-3115	533
302-3119	574
302-3139	▶653
	714
302-3140	▶623
	714
302-3143	454
	455
	▶624
302-3147	6
	456
	▶628
302-3148	455
	▶630
302-3150	653
302-3185	506
	▶664
302-3186	506
	▶666
302-3283	▶632
	714
	715
302-3286	559
302-3308	613
302-3340	539
302-3341	539
302-3351	461
	▶547
302-3352	547
302-5148	▶848
	849
302-9403	5
	▶457
302-9466	759
302-9475	▶557
302-9476	557
302-9479	557
302-9546	▶660
	714
	715
302-9547	660
302-9548	660
302-9550	660
302-9552	660
302-9564	529
	531
302-9565	531
302-9580	531
303-1382	▶29
	30
303-1383	▶30
	31
303-1384	▶31
	32
303-2004	245
303-2589	▶436
303-2591	▶436
303-2634	2
	4
	▶437
303-2638	3
	▶437
303-2639	3
	▶437
303-2640	▶438
303-2658	6
	▶911
303-2668	985
	989
303-2682	5
	▶411
303-2702	▶921
303-2711	▶175
303-2781	3
	4
	▶187
303-2787	175
	▶982
303-3141	56
303-3189	42
303-4244	304
303-5952	295
303-8942	9
	▶347
303-9875	1
	2
	▶363
303-9877	363
	▶385
303-9881	385
303-9884	385
303-9933	150
	152
303-9937	150
	152

3

▶ **PRIMARY REFERENCE**

PART NUMBER INDEX

Part	Page
304-0000	387
304-0008	383
	▶386
304-0009	383
	▶387
304-0010	▶400
	911
304-0011	387
304-8008	102
305-0325	871
305-0329	908
305-0331	891
	893
305-0332	890
	892
305-0361	966
305-0441	925
305-0442	925
305-0466	▶951
305-0617	▶35
	36
305-0618	14
	15
	▶36
305-4935	▶459
	693
305-7638	91
	▶113
305-7639	113
305-7640	113
305-7980	4
	5
	▶11
305-8000	1
	2
	▶943
305-8001	▶866
	943
305-8003	943
	▶946
305-9361	429
305-9362	429
305-9363	428
305-9364	428
306-1354	507
	509
	519
	527
306-1355	507
	509
	519
	527
306-3998	242
306-8346	▶290
	921
306-8378	197
306-8411	290
306-8522	302
306-8544	175
	▶307
306-8553	307
306-8587	175
	▶269
306-8589	175
	▶308
306-8590	308
306-8639	▶274
	921
306-8640	274
306-8641	290
306-8692	175
	▶199
306-8693	199
306-8802	947
307-0047	179
307-0683	12
	▶42
307-2671	32
	59
	120
307-2673	44
	60
307-4584	12
	▶245
307-4833	604
307-4834	604
307-4839	604
307-4841	604
307-4848	506
	▶542
307-4954	640
	▶710
307-4955	712
307-4958	640
307-4962	640
307-5088	604
307-5089	604
307-5090	604
307-5093	604
307-5116	585
307-5153	630
307-5199	604
307-5257	558
307-5260	558
307-5270	710
	▶711
307-5271	710
	▶712
307-5272	710
	▶713
307-5274	712
307-5276	711
	713
307-7655	342
	343
307-7757	175
	▶200
307-7760	▶370
	376
307-7764	1
	2
	▶365
307-7771	357
307-7790	370
307-7791	365
307-7814	139
307-7818	1
	▶357
307-7819	2
	356
	▶358
307-7823	358
307-7847	396
	397
307-7848	397
307-7944	91
	▶374
307-7945	374
307-7951	▶371
	374
307-7952	371
307-8002	1
	▶148
307-8003	148
	▶150
307-8005	2
	▶149
307-8006	149
	▶152
308-8439	331
	▶332
308-8440	332
308-8772	344
	346
	347
	350
308-8773	344
	346
	347
	350
308-8774	344
	346
	347
	350
308-8886	841
308-8901	10
	▶350
308-8947	347
	350
308-8953	347
	350
	817
308-8981	817
308-8995	817
309-0166	▶331
309-0167	▶331
309-5137	79
309-5694	212
	213
309-5695	213
309-5733	213
309-5734	213
309-5760	202
309-5765	921
	▶936
309-5769	592
	613
309-5771	187
	▶937
309-5779	4
	5
	▶182
309-5795	608
309-5796	936
309-5797	811
309-5805	175
	▶938
309-5806	938
309-5808	884
	▶902
309-5842	▶178
	187
309-5849	934
309-9941	725
310-0013	▶456
310-0016	▶456
310-0017	▶456
310-0078	3
	▶883
310-0129	751
	754
310-0138	751
	754
310-0139	751
	754
310-0140	751
	754
310-0141	751
	754
310-0142	751
	754
310-0143	751
	754
310-0145	751
310-0147	542
	▶751
310-0149	653
	▶754
310-0210	613
	▶770
310-0231	751
	754
310-0380	747
310-0387	8
	▶714
310-0398	751
310-0415	596
	▶766
310-0419	766
310-0420	766
310-6252	985
	989
310-9497	▶458
	459
310-9670	115
	▶116
310-9691	50
311-1926	437
	▶438
311-3969	▶849
311-4950	12
	▶137
311-4952	137
311-4953	137
311-6452	436
	▶438
311-6458	436
	▶439
311-8145	437

▶ **PRIMARY REFERENCE**

PART NUMBER INDEX

Part	Page
	▶439
311-8148	438
	▶439
311-9505	699
311-9506	698
311-9540	696
311-9549	704
312-2617	139
	▶145
313-2148	12
	▶44
313-3997	27
313-7811	9
	10
	▶388
313-7812	388
	▶389
313-7813	389
313-7814	388
	▶390
313-7815	390
313-7816	390
313-7830	403
313-7833	▶173
	200
313-7939	201
313-7965	9
	10
	▶367
313-7966	367
	▶375
313-7967	375
313-7971	175
	▶201
313-8115	1
	2
	▶338
313-8169	1
	2
	▶139
313-8240	370
	371
	375
313-8279	386
	387
314-8079	559
314-8080	559
314-8081	559
314-8082	559
315-4365	▶38
	94
315-4366	38
315-4367	38
315-4368	38
315-4375	672
	▶681
315-4412	▶802
	808
315-4413	808
315-5313	853
315-9859	61
316-6864	146
316-8805	925
316-8846	859
316-8847	859
316-8849	859
316-8917	856
	▶859
316-8918	859
316-8920	859
316-8921	859
316-8987	952
	953
	954
	955
317-4709	647
317-4710	647
317-9990	12
	▶14
318-2082	243
318-5748	615
318-5859	523
318-5860	523
318-5861	523
318-8835	973
319-0270	70
319-0271	70
319-0873	262
319-0947	164
319-0956	164
319-0962	164
319-0964	164
319-1024	164
319-1037	269
319-1145	1
	2
	▶919
319-1147	919
319-1152	161
319-1158	256
319-1166	258
	309
319-1287	187
	▶278
319-1314	279
319-4289	821
319-4302	179
319-4319	▶179
	187
319-4420	207
	209
	▶250
319-6234	44
	54
	79
	104
319-7384	192
319-9136	985
	989
319-9152	982
319-9155	9
	▶175
319-9223	2
	3
	4
	▶114
319-9245	8
	▶811
319-9274	8
	▶9
319-9713	559
319-9717	542
319-9719	542
319-9721	542
319-9727	542
319-9755	559
319-9775	662
319-9785	539
319-9798	542
319-9866	562
	566
	574
319-9867	562
	566
319-9885	647
319-9963	570
320-0118	707
320-0121	634
320-0122	634
320-0136	559
320-0147	578
320-0151	539
320-2677	432
320-2704	331
	▶333
320-2706	333
320-2707	334
320-2709	▶334
320-2710	1
	2
	▶335
320-2712	335
320-5392	173
320-5396	200
320-5397	929
320-5398	929
320-5477	357
	358
320-5492	▶402
	405
320-5511	338
320-5513	338
320-5609	▶391
	714
320-5690	363
320-5704	368
320-5712	368
320-5715	368
320-5716	368
320-5719	368
320-5774	365
	▶392
320-8834	2
	3
	4
	6
	▶356
321-0529	529
321-5639	19
321-8642	44
321-8671	100
322-8727	620
322-8728	620
322-8736	698
323-3898	332
	333
	334
	335
323-7681	506
	715
	▶756
323-7682	714
	▶757
323-7700	▶726
	756
	757
323-7702	▶730
	756
323-7703	▶735
	757
323-7704	726
	▶739
323-7705	730
	735
	▶741
323-7714	730
	735
324-4044	▶117
	127
324-4111	114
	▶127
324-4136	8
	▶186
324-5770	290
	292
324-5771	292
325-0106	77
325-0821	14
	15
	▶56
325-4505	18
	▶19
325-8787	542
325-8792	612
325-8842	630
325-8845	628
325-8851	664
325-8852	666
325-8853	640
325-8854	559
325-8855	559
325-8856	559
325-8857	559
325-8858	542
325-8871	562
	566
	574
325-8874	643
325-8908	632
325-8909	632
325-9015	640
325-9234	641
326-1643	134
326-2467	329
326-2468	329
326-2469	329
326-2470	329
326-2478	329
326-2482	329
326-2483	688

▶ **PRIMARY REFERENCE**

PART NUMBER INDEX

Part	Page
326-2537	329
326-2547	▶329
	331
326-2548	331
	▶688
326-2864	710
326-4414	809
326-4424	693
	▶702
327-3010	403
327-3142	339
327-3339	365
	▶393
327-3340	393
327-3341	365
	▶394
327-4669	329
327-6501	943
	▶949
327-6503	5
	▶950
327-6507	949
	▶954
327-6509	950
	▶955
327-6512	▶952
	954
327-6513	▶953
	955
327-6515	952
	953
327-6520	954
	▶957
327-6521	955
	▶958
327-6523	943
	▶956
327-6538	956
327-6540	951
327-6550	853
	▶930
327-6579	905
327-6601	913
327-6640	952
	953
327-6642	952
	953
327-6643	952
	953
327-6644	957
	958
327-6645	▶922
	957
327-6646	922
	923
327-6647	922
327-6648	957
	958
327-6649	953
327-7242	458
327-7243	458
327-7244	458
327-7245	458
327-7246	458
327-7252	458
327-7482	▶932
	933
327-7594	932
327-9981	919
328-0021	207
	209
328-0047	164
328-0363	256
328-2035	634
	▶803
329-2793	615
329-3061	46
330-1154	394
330-1155	394
330-1156	391
	▶395
330-1157	395
330-1172	390
	394
330-1312	365
	▶396
330-1313	▶397
	400
330-1314	396
	397
330-1362	400
330-1364	405
330-1367	400
330-1378	139
330-1381	139
330-1382	139
330-1383	139
330-1384	139
330-1434	114
	▶339
330-1435	339
330-2314	542
330-2318	559
330-2340	640
330-2342	581
330-2346	570
330-2364	587
330-2371	98
330-2372	98
330-2373	98
330-2417	600
	625
330-2418	613
330-2704	824
330-2705	824
331-4226	608
331-5007	34
331-5008	34
331-5009	34
331-5010	34
331-5011	34
331-6025	56
332-0194	214
	216
332-2152	35
332-3707	19
333-3081	353
333-3084	353
333-4157	▶923
	958
333-4158	923
333-4159	923
333-4160	952
333-4178	923
333-4179	952
	953
333-4180	922
	923
	957
	958
333-4181	922
333-4610	578
333-4615	559
333-7665	2
	3
	4
	▶715
334-4603	985
	989
334-6570	872
	▶873
334-6572	909
334-9975	673
	▶682
334-9980	682
	▶683
334-9982	683
335-0084	805
	806
	▶807
335-0374	581
335-0517	▶448
	449
335-0545	637
335-1651	44
335-9214	92
336-1157	873
	▶909
336-3545	179
	▶182
336-3566	182
336-6280	275
336-6334	▶267
	943
336-6684	173
	▶176
337-1219	457
	▶634
337-1220	634
337-1257	634
337-2709	563
	567
	575
337-6894	427
337-8879	▶6
337-8881	3
	4
	▶7
337-8883	▶6
337-8884	▶8
337-8885	▶8
338-6865	182
338-6866	182
339-7151	140
339-7152	140
339-8177	56
340-2861	612
341-1429	92
341-1842	150
	152
341-3123	▶5
341-3130	2
	3
	4
	▶5
341-4971	▶9
341-5135	830
341-5272	830
342-1110	327
342-1814	809
342-2924	707
342-7923	26
343-1203	3
	▶7
343-5527	134
344-4211	▶457
344-5677	2
	3
	4
	▶6
344-6849	413
344-6850	413
344-6885	411
	▶413
344-6886	413
344-6887	413
345-3752	▶34
	35
346-2748	365
346-2776	▶372
	376
346-4897	89
346-7375	853
	▶863
346-8058	▶853
	868
347-4413	632
347-9427	▶192
	197
347-9838	3
	▶7
349-3295	2
	3
	4
	▶9
349-3311	92
349-3313	92
349-5408	931
	▶933
349-5410	933
349-5413	937
349-5414	937
349-6653	983
350-6445	347
	350
	817
350-8040	269
350-8070	293
350-8247	5
	▶292

▶ **PRIMARY REFERENCE**

PART NUMBER INDEX

Part	Page	Part	Page	Part	Page	Part	Page
350-8447	304		▶289	357-7974	▶175		
350-8448	164	354-0016	273	358-4889	255		
351-0283	54		▶275	358-9691	405		
351-0286	615	354-0022	160	358-9694	1		
351-3012	1		▶163		2		
	2	354-0023	160		▶376		
	▶403		▶203	358-9695	331		
351-3013	▶340	354-0039	278		▶368		
	403		▶279	358-9696	▶336		
351-3014	340	354-0040	278		368		
351-3017	358		▶281	358-9697	336		
351-3023	139	354-0042	15	359-2594	2		
351-3024	139		▶216		3		
351-3073	372	354-0045	▶297		4		
351-3074	372	354-0048	297		▶984		
351-3075	372	354-1028	714	359-2595	984		
351-3076	336		▶983	361-4360	212		
	340	354-3700	637		213		
351-9595	8	354-3715	▶637		▶220		
	▶10		714	363-6134	621		
351-9652	▶921	354-3799	559	364-6968	1		
351-9674	▶449	354-3800	559		2		
	451	354-3802	655		▶405		
352-6830	449	354-3803	535	365-3152	847		
	▶450	354-3804	647	365-7109	840		
352-6860	▶451	354-3805	581	365-7117	838		
	921	354-3806	562	365-7123	843		
352-6990	▶440		566	366-2776	▶846		
352-7064	673		570	367-0844	985		
352-7229	▶785		574		989		
352-7231	735	354-3808	581	367-8661	985		
	▶786	354-3809	535		989		
352-7232	785	354-3810	657	368-6385	846		
	786	354-3811	533		▶847		
352-7233	785	354-3812	533	368-7996	847		
	786	354-3813	542	368-8003	847		
352-7234	785	354-3814	566	368-8004	847		
352-7237	785	354-3816	574	368-8632	847		
352-7238	786	354-3817	562	370-3230	▶4		
352-7241	786		566	370-3231	▶1		
353-0490	353		570		4		
	▶355		574	370-3232	1		
353-0500	▶323	354-3819	542		▶985		
	324	354-3864	621	370-4188	▶5		
353-0518	353	355-5105	182	370-4189	▶2		
353-2149	887	355-5669	▶685		5		
353-2150	889	355-9764	182	370-4190	2		
353-5105	100	356-0955	46		▶989		
353-5124	105	356-2433	▶15	371-6383	2		
353-5125	61		16		4		
	104	356-3108	▶8		▶826		
	107	356-3109	▶8	371-9200	▶2		
353-5126	61	356-4742	9	371-9201	▶3		
	102		10	371-9202	▶3		
353-5140	35		▶943	371-9204	▶3		
	104	356-5227	685	371-9205	▶4		
353-8084	911	356-6716	866	371-9206	▶4		
	▶912		▶868	372-4831	▶827		
353-8085	911	356-6800	▶905				
	▶940		907				
353-8693	959	356-6801	868				
	▶960		▶907				
353-8694	959	357-3877	884				
	▶961		895				
354-0015	273	357-6591	▶16				

▶ **PRIMARY REFERENCE**

MEMORANDA



© 2011 CATERPILLAR
ALL RIGHTS
RESERVED

CAT, CATERPILLAR, THEIR RESPECTIVE LOGOS, “CATERPILLAR YELLOW” AND THE POWER EDGE TRADE DRESS, AS WELL AS CORPORATE AND PRODUCT IDENTITY USED HEREIN, ARE TRADEMARKS OF CATERPILLAR AND MAY NOT BE USED WITHOUT PERMISSION.