MAIO 1966

MICHIGAN

PARTS MANUAL

RUTHZIL TRATOR COMERCIAL DE PEÇAS LTDA 11 97083-6812 ROLANDO CITRANGULO

No. 2939

MODEL 35R TRACTOR SHOVEL

Information Contained Herein Pertains to Machine Serial Numbers Listed Below:

Perkins: 4182A101ENC & After

Record Your Machine Serial Number Here

_____

CLARK EQUIPMENT COMPANY

5.0C7311B

Printed in U.S.A.

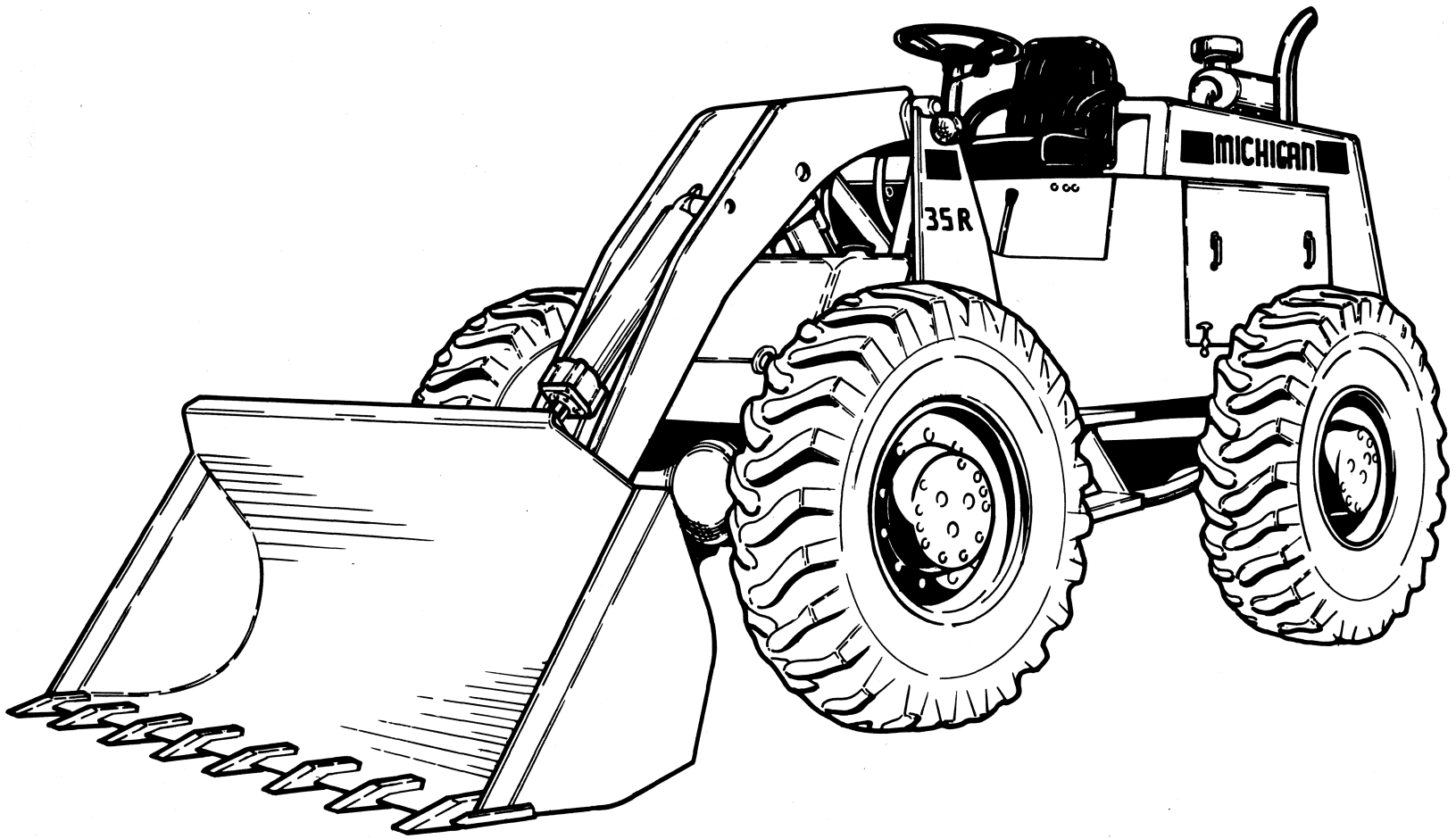

MODEL 35R TRACTOR SHOVEL

TS-13589

MICHIGAN

WARRANTY

Clark Equipment Company (CLARK) has warranted to the Distributor (Seller) who, pursuant to agreement with CLARK, hereby, on its own behalf, warrants to the Buyer each new CLARK product to be free from defects in material and workmanship under normal use and maintenance as herein provided.

Distributor's sole obligation under this warranty shall be limited to repairing, replacing or allowing credit for, at Distributor's option, any part which under normal and proper use and maintenance proves defective in material or workmanship within six (6) months after delivery to or one thousand (1,000) hours of use by Buyer, whichever shall occur first; provided, however, that (i) the product is placed in use not later than one year after shipment from CLARK'S plant; (ii) that notice of any such defect and satisfactory proof thereof is promptly given by Buyer to Distributor, and (iii) such material shall have been returned to Distributor, with transportation charges prepaid and found by Distributor to have been defective.
This warranty does not apply in respect of damage to or defects in any product caused by overloading or other misuse, neglect or accident, nor does this warranty apply to any product which has been repaired or altered in any way which, in the sole judgment of Distributor, affects the performance, stability or general purpose for which it was manufactured.

THIS WARRANTY IS IN LIEU OF ALL OTHER WARRANTIES (EXCEPT OF TITLE), EXPRESSED OR IMPLIED, AND THERE ARE NO WARRANTIES OF MERCHANTABILITY OR OF FITNESS FOR A PARTICULAR PURPOSE. IN NO EVENT SHALL DISTRIBUTOR BE LIABLE FOR CONSEQUENTIAL OR SPECIAL DAMAGES.

This warranty does not apply to parts or trade accessories not manufactured by CLARK, or attachments not manufactured or sold by CLARK. Buyer shall rely solely on the existing warranties, if any, of the respective manufacturers thereof.

IMPROVEMENTS

It is CLARK'S policy to constantly strive to improve its products. The right therefore is reserved to make changes in design and improvements whenever it is believed the efficiency of the product will be improved thereby, but without incurring any obligation to incorporate such improvements in any product which has been shipped or is in service.

Revised May 1, 1966

WHEN ORDERING REPAIR PARTS To assure the best results and to maintain the original quality built into the machine it is important that only Clark-Approved Parts be used when new parts are required.

IMPORTANT: Always furnish the distributor with the machine serial number when ordering parts. Order through your nearest Clark Distributor for THE MICHIGAN LINE.

Always give serial number of machine.

Furnish: Quantity, Part Number and Description.

WHEN PARTS ARE RECEIVED Check immediately for quantity, correctness and condition. Claims for damages, during shipment, should be made to the carrier immediately.

PARTS MANUAL ARRANGEMENT The various parts groups involved in this equipment are arranged in this manual in alphabetical order. Each alphabetical parts group is page numbered separately with the page numbers prefixed by the alphabetical letter designated for that group, i.e., A1, A2, B1, B2, etc. Following the alphabetical and page number designation, and separated therefrom by a hyphen (-), is the page version number, i.e., A1-1, A1-2, etc. This designation indicates the revision numbers assigned to incorporate design changes in the equipment covered by that page.

Parts Groups "A" thru "Y" include all items furnished as standard equipment at date of this publication. All optional and accessory items are listed under Group Z in the rear of this manual.

ABBREVIATIONS

adjusting	adj
assembly	assy
bearing	brg
brake	brk
carrier	crr
cluster	clsr
connecting	connctg
converter	conv
cylinder	cyl
differential	diff
engine	eng
hydraulic	hyd
includes	inc.
inlet	in
instrument	inst
left hand	L.H.
mounting	mtg
outlet	out
planetary	planet
power	pwr
pressure	press
radiator	rad
retainer	ret
right hand	R.H.
ring	rg
section	sectn
steering	strg
temperature	temp
windshield	wndsh

SYMBOLS

†NOT ILLUSTRATED
§NOT SOLD SEPARATELY
‡AS REQUIRED

ALPHABETICAL INDEX 35R

A

Accelerator Pedal E17
Accessories, Engine E12
Air Brake Valve Assembly V3
Air Cleaner Assembly, Engine E13
Air Cleaner & Exhaust System E15
Air Compressor E12
Air Lines, Brake, Section A B5
Air Lines, Brake, Section B B9
Alternator E12
Axle Assembly, Front A3
Axle Assembly, Rear A5
Axle Differential Carrier Assembly, Front A9
Axle Differential Carrier Assembly, Rear A11
Axle Planet Carrier Assembly, Front A12
Axle Planet Carrier Assembly, Rear A13
Axle Tie Rod Assembly A14

B

Battery E5
Battery Cables E9
Belt Fan E12
Belt, Seat Z11
Boom Cylinder Assembly C8

PM 2939
Printed in U.S.A.

CLARK EQUIPMENT

ALPHABETICAL INDEX (Continued) 35R

Boom Group B3
Brake Air Lines – Section A B5
Brake Air Lines – Section B B9
Brake Assembly, Front B13
Brake Assembly, Rear B14
Brake Assembly, Parking B15
Brake Controls B16
Brake Controls, Parking B17
Brake Light E5
Brake Parking Lever Assembly B18
Brake Pedal B16
Brake Power Cluster Assembly B19
Brake Wheel Cylinder Assembly, Front B20
Brake Wheel Cylinder Assembly, Rear B21
Brake Valve Assembly, Air V3
Bucket Assembly Data B22
Bucket Cylinder Assembly C9
Bucket Leveler Valve V4
Bucket Linkage & Indicator B25
Buzzer, Brake Warning E7

C

Cab Assembly Z3
Cab Lights Z5
Cables, Battery E9
Clips C2
Clutch Group, Transmission T6, T7
Cockpit Sound Proofing S5
Color Code, Electrical Wiring E11
Control Valve, Main V7
Control Valve, Steering V11
Control Valve, Transmission V15
Controls, Brake B16
Controls, Engine E17
Controls, Main Valve V16
Controls, Parking Brake B17
Controls, Steering S7
Controls, Three Spool Valve Z16
Controls, Transmission T9
Converter Assembly C5
Converter Charging Pump C5
Converter & Transmission Hydraulic System . H11
Counterweight S5
Cradle, Axle F3
Cylinder Assembly, Boom C8
Cylinder Assembly, Brake Wheel, Front B20
Cylinder Assembly, Brake Wheel, Rear B21
Cylinder Assembly, Bucket C9
Cylinder Assembly, Steering C10

D

Decals & Name Plates N2
Differential Carrier Assembly, Front A9
Differential Carrier Assembly, Rear A11

E

Electrical Gauges & Instrument Panel E3
Electrical System E5
Electrical Wiring & Battery Cables E9
Electrical Wiring Color Code E11
Elements, Filter E12
Engine Accessories E12
Engine Air Cleaner Assembly E13
Engine Air Cleaner & Exhaust System E15
Engine Controls E17
Engine Mounts F3, F5
Engine Oil Pressure Sender E5
Exhaust System E15

F

Fan Belt E12
Fan, Sucker Z10
Filter Elements E12
Frame Assembly F3
Fuel Tank & Lines F7

G

Gauges, Electrical E3
Governor E12
Grille S5

H

Hand Lever Assembly, Brake B18
Harness, Wiring E9
Headlight Assembly E7
Heater Assembly Z7
Heater Piping Z9
Hood S5
Horn B7
Hourmeter E5
Hydraulic Oil Reservoir H3
Hydraulic System, Main H5
Hydraulic System, Steering H7
Hydraulic System, Transmission & Converter . H11

I

Ignition Switch E3
Instrument Panel & Electrical Gauges E3

L

Lever Assembly, Parking Brake B18
Leveler Valve, Bucket V4
Lifting Lugs Z10
Lights, Cab Z5

M

Main Control Valve V7
Main Valve Controls V16
Main Hydraulic System H5

PM 2939
Printed in U.S.A.

ALPHABETICAL INDEX (Continued) 35R

Main Pump Assembly P4
Muffler E15

N
Nameplates & Decals N2
Neutral Start Switch V15

O
Oil Pressure Sender, Engine E5
Oil Reservoir, Hydraulic H3

P
Panels, Side Z10
Parking Brake Assembly B15
Parking Brake Controls B17
Parking Brake Lever Assembly B18
Pedal Accelerator E17
Piping, Heater Z9
Piping, Three Spool Valve Z19
Planet Carrier Assembly, Front A12
Planet Carrier Assembly, Rear A13
Power Cluster Assembly, Brake B19
Pressure Relief Valve, Steering V12
Propeller Shaft Assembly P2, P3
Pump Assembly, Converter Charging C5
Pump Assembly, Main P4
Pump Assembly, Steering P5
Pump Attaching Parts P6

R
Radiator & Connections R2
Regulator, Voltage E12
Relief Valve, Steering Pressure V12
Reservoir, Hydraulic Oil H3

S
Seat Belt Z11
Seat & Supports S3
Sheet Metal Group & Soundproofing S5
Side Panels Z10
Soundproofing, Cockpit S5
Starter E12
Starter Button E3
Steering Control Valve V11
Steering Controls S7
Steering Cylinder Assembly C10
Steering Hydraulic System H7
Steering Pressure Relief Valve V12
Steering Pump Assembly P5
Steering Wheel S7
Sucker Fan Z10
Support, Seat S5
Switch, Ignition E3
Switch, Neutral Start V15

T
Tail Pipe E15
Tank, Fuel F7
Three Spool Valve Assembly Z13
Three Spool Valve Controls Z16
Three Spool Valve Piping Z19
Tie Rod Assembly, Axle A14
Tire & Wheel Data W2
Tool Kit Z20
Transmission Assembly T3
Transmission Clutch Group T6, T7
Transmission Control Valve V15
Transmission Controls T9
Transmission & Converter Hydraulic System . H11

V
Valve, Air Brake V3
Valve, Brake V3
Valve, Bucket Leveler V4
Valve Controls, Main V16
Valve Controls, Three Spool Z16
Valve, Main Control V7
Valve Piping, Three Spool Z19
Valve, Steering Control V11
Valve, Steering Pressure Relief V12
Valve, Three Spool Z13
Valve, Transmission Control V15
Voltage Regulator E12

W
Wheel Cylinder Assembly, Brake, Front B20
Wheel Cylinder Assembly, Brake, Rear B21
Windshield Wiper Z21
Wiper, Windshield Z21
Wiring, Electrical E9
Wheel, Steering S7
Wheel & Tire Data W2
Wiring Harness E9

PM 2939
Printed in U.S.A.

MICHIGAN

Group A

Axle Assembly Front A3
Axle Assembly Rear A5
Axle Differential Carrier Assembly Front A9
Axle Differential Carrier Assembly Rear A11
Axle Planet Carrier Assembly Front A12
Axle Planet Carrier Assembly Rear A13
Axle Tie Rod Assembly A14

PM 2939
Printed in U.S.A.

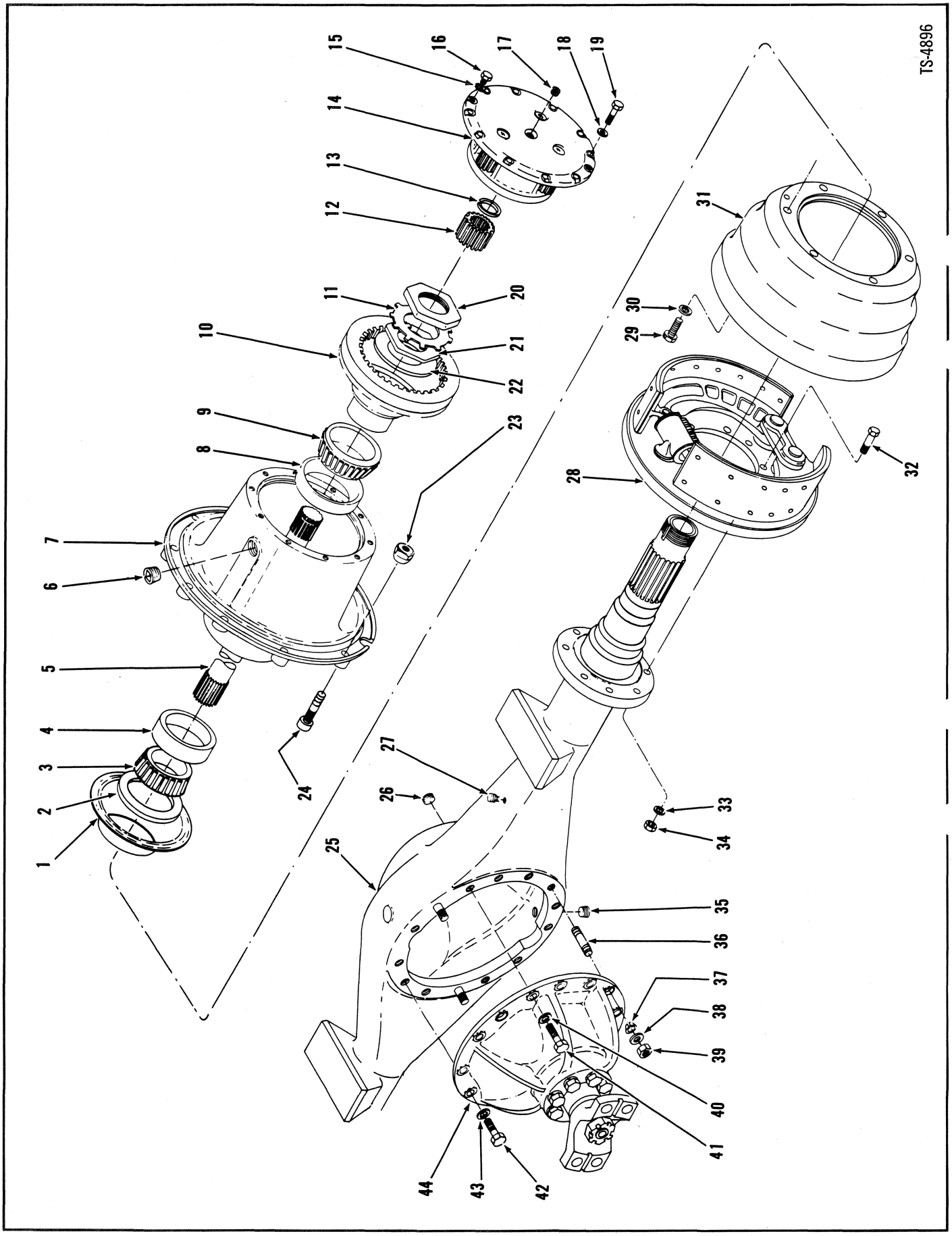

PM 2939
Printed in U.S.A.

Axle Assembly – Front

MICHIGAN

No.	Part No.	Qty.	Description
A	[1]131454	1	Axle assembly
1	109055	2	Slinger oil
2	111726	2	Seal
3	742257	2	Cone
4	742258	2	Cup
5	120093	2	Axle shaft
6	16F-12	2	Plug
7	[2]109639	2	Hub assembly
8	658990	2	Cup
9	658974	2	Cone
10	114591	2	Gear
11	102314	2	Lock
12	120190	2	Gear
12A	†119983	2	Washer
13	224031	2	Ring
14	[3]-----	–	Planet spider
15	-----	–	Omit
16	-----	–	Omit
17	10F-02	2	Plug
18	112278	20	Washer
19	100638	20	Bolt
20	102313	2	Nut
21	102313	2	Nut
22	106572	2	Washer
23	109641	20	Nut
24	109640	20	Bolt
25	105757	1	Housing
26	16F-12	1	Plug
27	106656	1	Breather
28	[3]-----	–	Brake assembly
28A	†120198	8	Cover
29	107256	12	Bolt
30	104412	12	Washer
31	106254	2	Drum
31A	†107608	2	Clip
32	101092	16	Bolt
33	2E-08	16	Lockwasher
34	62D-08	16	Nut
35	16F-12	1	Plug
36	120546	11	Stud
37	103216	3	Dowel
38	112278	3	Washer
39	64D-07	3	Nut
40	112278	2	Washer
41	-----	–	Omit
42	-----	–	Omit
43	112278	7	Washer
44	[3]-----	–	Differential & carrier assembly

[1]Inc. 1➔44
[2]Inc. 4, 8, 22
[3]See Index

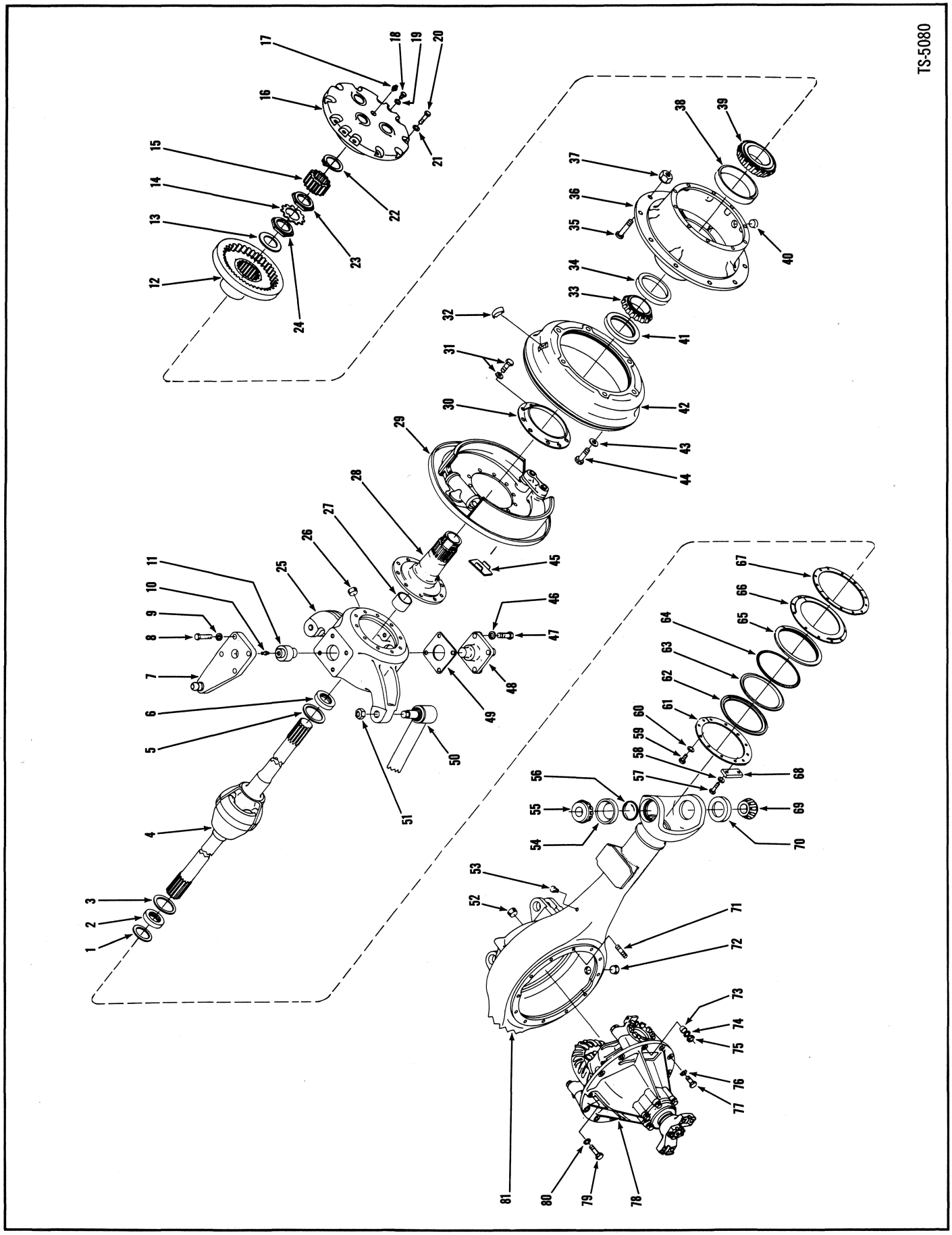

PM 2939
Printed in U.S.A.

Axle Assembly, Rear

MICHIGAN

No.	Part No.	Qty.	Description
A	[1]190811	1	Axle assy
1	109658	2	Washer
2	109659	2	Seal
3	106129	2	Washer
4	119970	2	Axle shaft
5	106129	2	Washer
6	109659	2	Seal
7	————	—	Omit
8	17C-828	8	Bolt
9	4E-08	8	Lockwasher
10	10H-25	2	Fitting grease
11	109668	2	Steering trunnion
12	114591	2	Gear
13	106572	2	Washer
14	102314	2	Lock
15	120190	2	Gear
15A	†119983	2	Washer
16	[7]————	2	Planet carrier assy
17	111805	2	Relief valve
18	————	—	Omit
19	————	—	Omit
20	100638	20	Bolt
21	112278	20	Washer
22	224104	2	Ring
23	102313	2	Nut
24	102313	2	Nut
25	114793	1	Spindle support — L.H.
25A	†114792	1	Spindle support — R.H.
26	11F-12	2	Plug
27	109652	2	Bushing
28	[2]110242	2	Spindle
29	[7]————	2	Brake assy
30	117913	2	Oil slinger
31	106539	20	Bolt
31A	†106762	20	Washer
32	100320	2	Clip
33	742257	2	Cone
34	742258	2	Cup
35	109640	20	Bolt
36	[3]110240	2	Hub assy
37	109641	20	Nut
38	658990	2	Cup
39	658974	2	Cone
40	11F-12	2	Plug
41	111726	2	Seal
42	106815	2	Drum brake
43	104412	12	Washer
44	107256	12	Bolt
45	120198	8	Cover
46	4E-08	12	Lockwasher

[1](DS-8000) Inc. 1→83
[2]Inc. 27
[3]Inc. 34, 38
[7]See Index

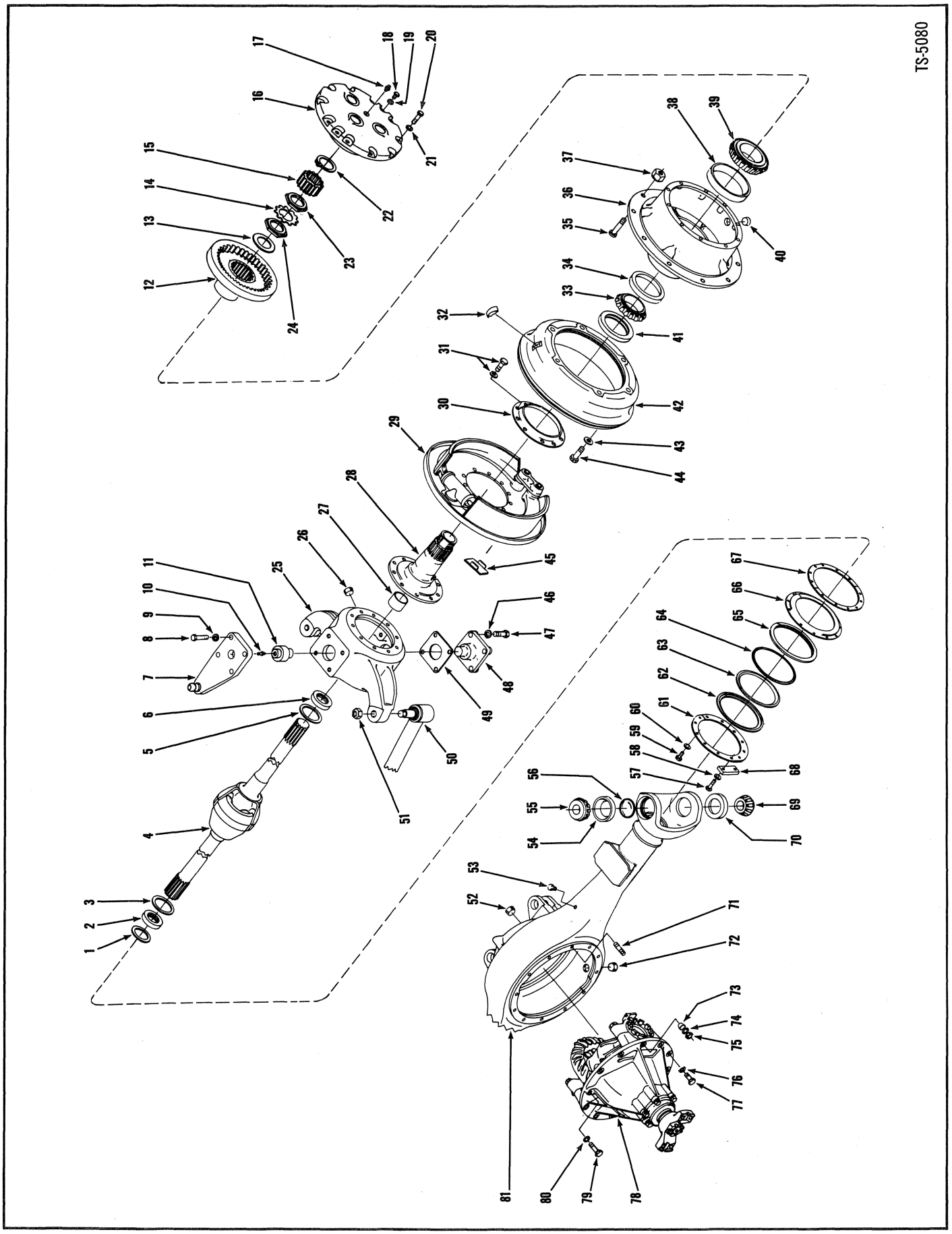

PM 2939
Printed in U.S.A.

Axle Assembly, Rear

MICHIGAN

No.	Part No.	Qty.	Description
47	17C-824	12	Bolt
48	109667	2	Steering trunnion
49	‡[4]109771	—	Shim
49A	‡[5]109772	—	Shim
49B	‡[6]109773	—	Shim
50	[7]———	1	Tie rod assy
51	112174	2	Nut
52	11F-12	1	Plug
53	106656	1	Breather
54	713660	2	Cup
55	713659	2	Cone
56	109670	2	Retainer
57	1C-620	4	Bolt
58	4E-06	4	Lockwasher
59	1C-612	20	Bolt
60	4E-06	20	Lockwasher
61	109666	4	Ring
62	109665	2	Retainer
63	109663	2	Dust seal
64	109664	2	Spring
65	109662	2	Seal
66	109660	2	Retainer
67	109661	2	Gasket
68	114092	2	Stop plate
69	713659	2	Cone
70	713660	2	Cup
71	120456	12	Stud
72	11F-12	1	Plug
73	103216	3	Dowel
74	112278	12	Washer
75	64D-07	12	Nut
76	———	—	Omit
77	———	—	Omit
78	[7]———	1	Diff carrier assy
79	———	—	Omit
80	———	—	Omit
81	118380	1	Housing
82	†117328	1	Brake tee
83	†550325	2	Clip

[4].004" (0,10 mm)
[5].007" (0,18 mm)
[6].010" (0,25 mm)
[7]See Index

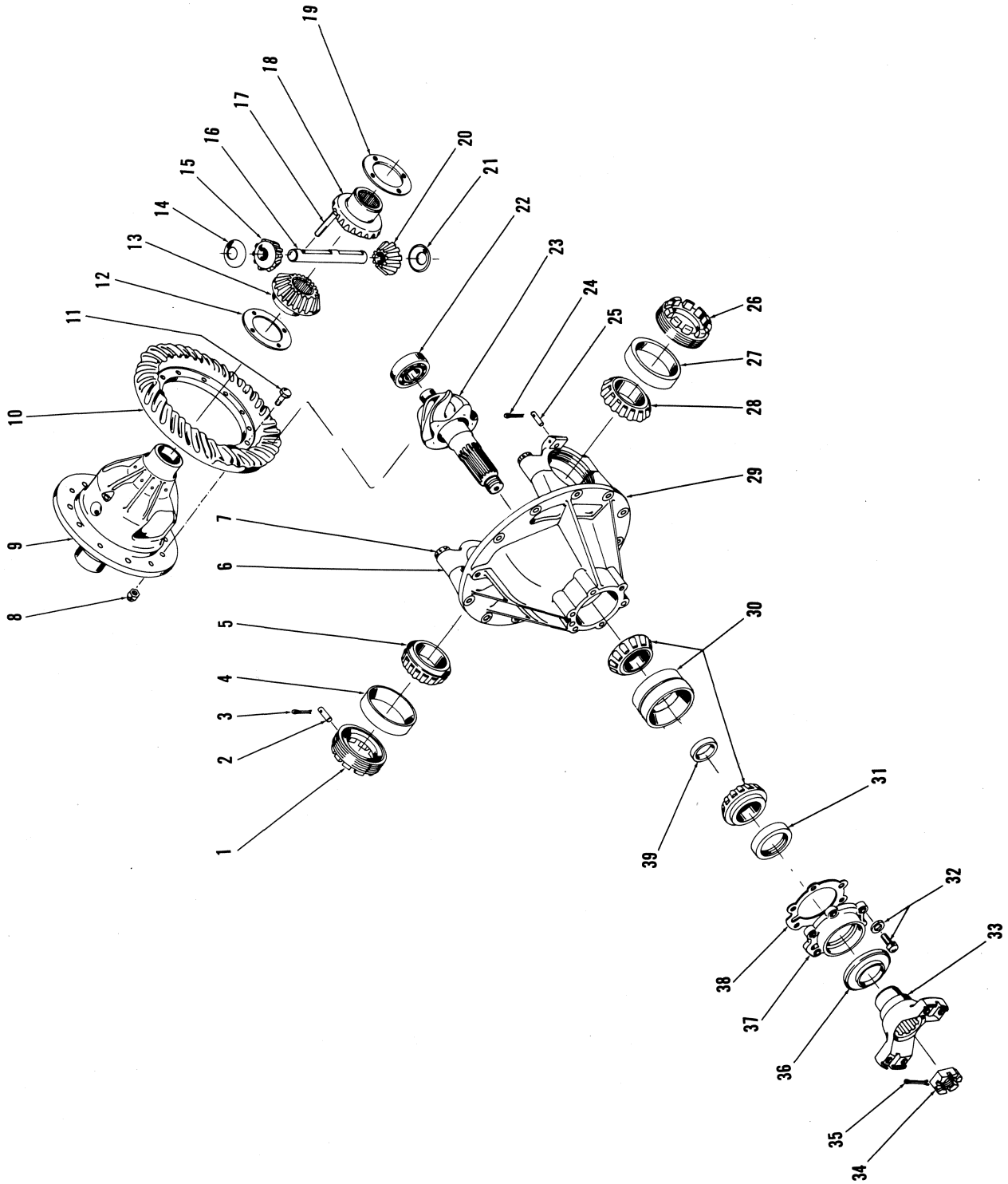

PM 2939
Printed in U.S.A.

Axle Differential Carrier Assembly, Front

MICHIGAN

No.	Part No.	Qty.	Description
A	[1]123136	1	Differential assy
1	123746	1	Nut
2	101411	1	Pin
3	1F-428	1	Pin cotter
4	667279	1	Cup
5	648334	1	Cone
6	§[2]———	2	Cap
7	1C-1040	4	Bolt
7A	†26E-10	4	Lockwasher
8	109389	12	Nut
9	101396	1	Case
10	§[3]———	1	Gear
11	101424	12	Bolt
12	101400	1	Washer
13	101398	1	Gear
14	101399	1	Washer
15	125234	1	Pinion
16	101401	1	Pin
17	666364	1	Pin
18	101398	1	Gear
19	101400	1	Washer
20	125234	1	Pinion
21	101399	1	Washer
22	111437	1	Bearing
23	§[3]———	1	Pinion
24	1F-428	1	Pin cotter
25	101411	1	Pin
26	123746	1	Nut
27	667279	1	Cup
28	648334	1	Cone
29	[4]122984	1	Carrier assy
30	111735	1	Bearing
31	111646	1	Seal
32	17C-724	6	Bolt
32A	†4E-07	6	Lockwasher
33	109644	1	Flange
34	100675	1	Nut
35	1F-424	1	Pin cotter
36	100674	1	Shield
37	122943	1	Retainer
38	101407	1	Gasket
39	815082	1	Spacer kit
40	†[5]111560	1	Differential assy
41	†[6]101395	1	Body assy
42	†[7]122414	1	Gear set

[1]Inc. 1➔39
[2]See 29
[3]See 42
[4]Inc. 6, 7, 7A
[5]Inc. 8➔21, 23
[6]Inc. 9, 12➔21
[7]Inc. 10, 23

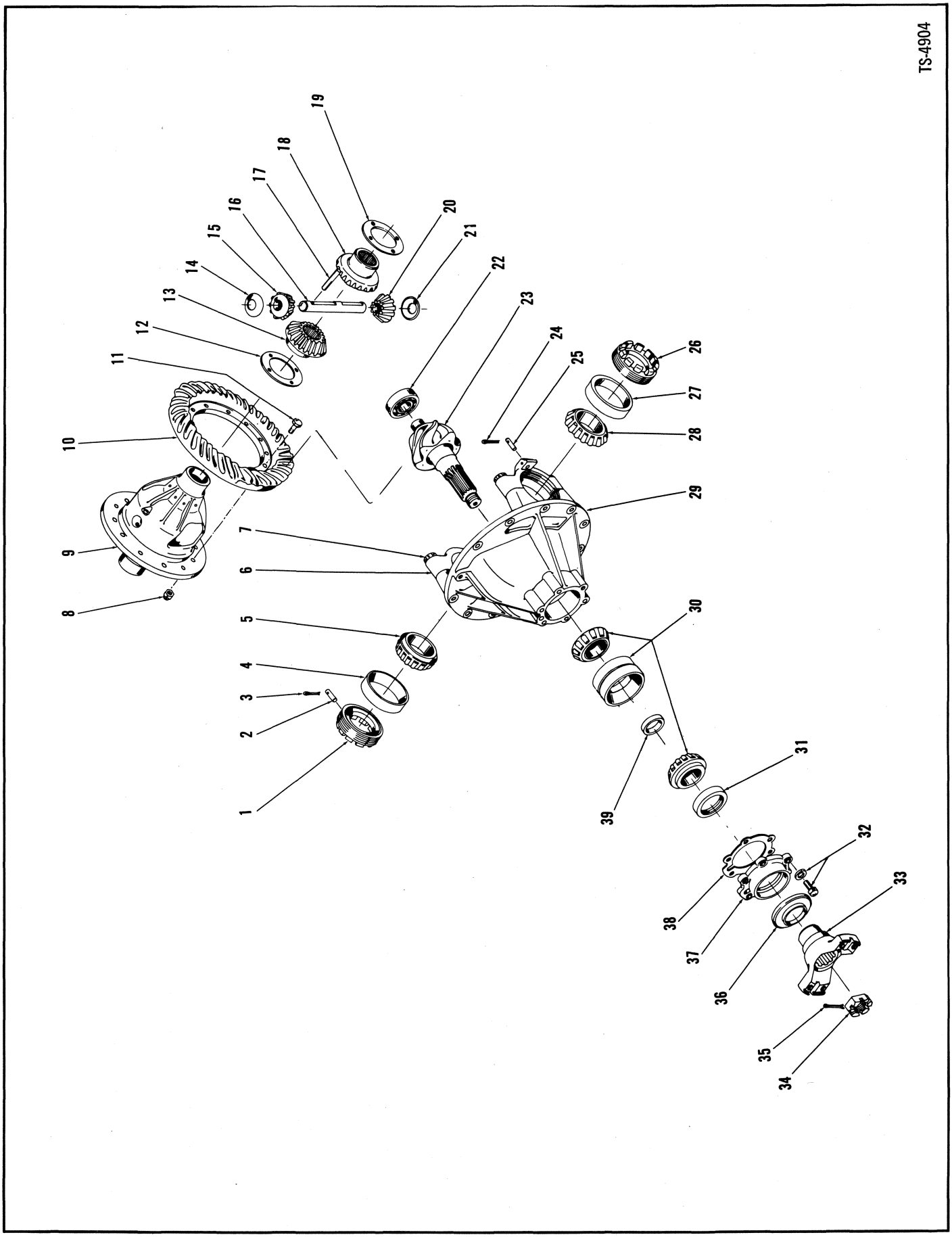

PM 2939
Printed in U.S.A.

Axle Differential Carrier Assembly, Rear

MICHIGAN

No.	Part No.	Qty.	Description
A	[1]123135	1	Differential assy
1	123746	1	Nut
2	101411	1	Pin
3	1F 428	1	Pin cotter
4	667279	1	Cup
5	648334	1	Cone
6	§[2]———	2	Cap
7	1C-1040	4	Bolt
7A	†26E-10	4	Lockwasher
8	109389	12	Nut
9	101396	1	Case
10	§[3]———	1	Gear
11	101424	12	Bolt
12	101400	1	Washer
13	101398	1	Gear
14	101399	1	Washer
15	125234	1	Pinion
16	101401	1	Pin
17	666364	1	Pin
18	101398	1	Gear
19	101400	1	Washer
20	125234	1	Pinion
21	101399	1	Washer
22	111437	1	Bearing
23	§[3]———	1	Pinion
24	1F-428	1	Pin cotter
25	101411	1	Pin
26	123746	1	Nut
27	667279	1	Cup
28	648334	1	Cone
29	[4]122984	1	Carrier assy
30	111735	1	Bearing
31	111646	1	Seal
32	17C-724	6	Bolt
32A	†4E-07	6	Lockwasher
33	109644	1	Flange
34	100675	1	Nut
35	1F-424	1	Pin cotter
36	100674	1	Shield
37	122943	1	Retainer
38	101407	1	Gasket
39	815082	1	Spacer kit
40	†[5]107378	1	Differential assy
41	†[6]101395	1	Body assy
42	†[7]122418	1	Gear set

[1]Inc. 1→39
[2]See 29
[3]See 42
[4]Inc. 6, 7, 7A
[5]Inc. 8→21, 23
[6]Inc. 9, 12→21
[7]Inc. 10, 23

Axle Planet Carrier Assembly, Front

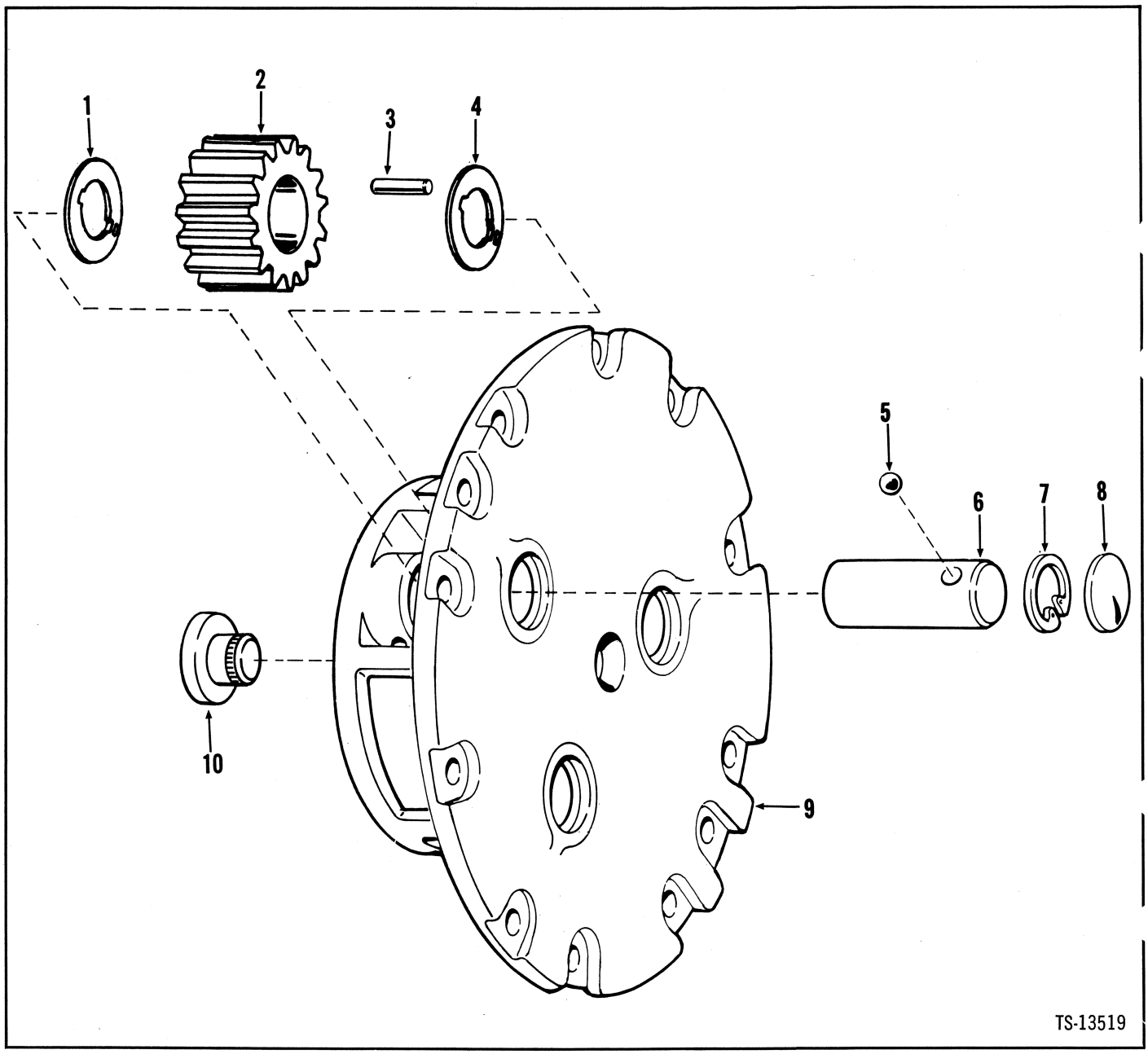

No.	Part No.	Qty.	Description
A	*[1]123605	2	Carrier assy
1	123620	3	Washer
2	123618	3	Gear
3	123627	72	Roller
4	123620	3	Washer
5	10J-12	3	Ball
6	123619	3	Shaft
7	230965	3	Ring snap
8	12F-108	3	Plug
9	123616	1	Carrier
10	118785	1	Button

[1]Inc. 1➔10
*2 used per axle. Quantities listed are for one (1) Carrier.

PM 2939
Printed in U.S.A.

Axle Planet Carrier Assembly, Rear

MICHIGAN

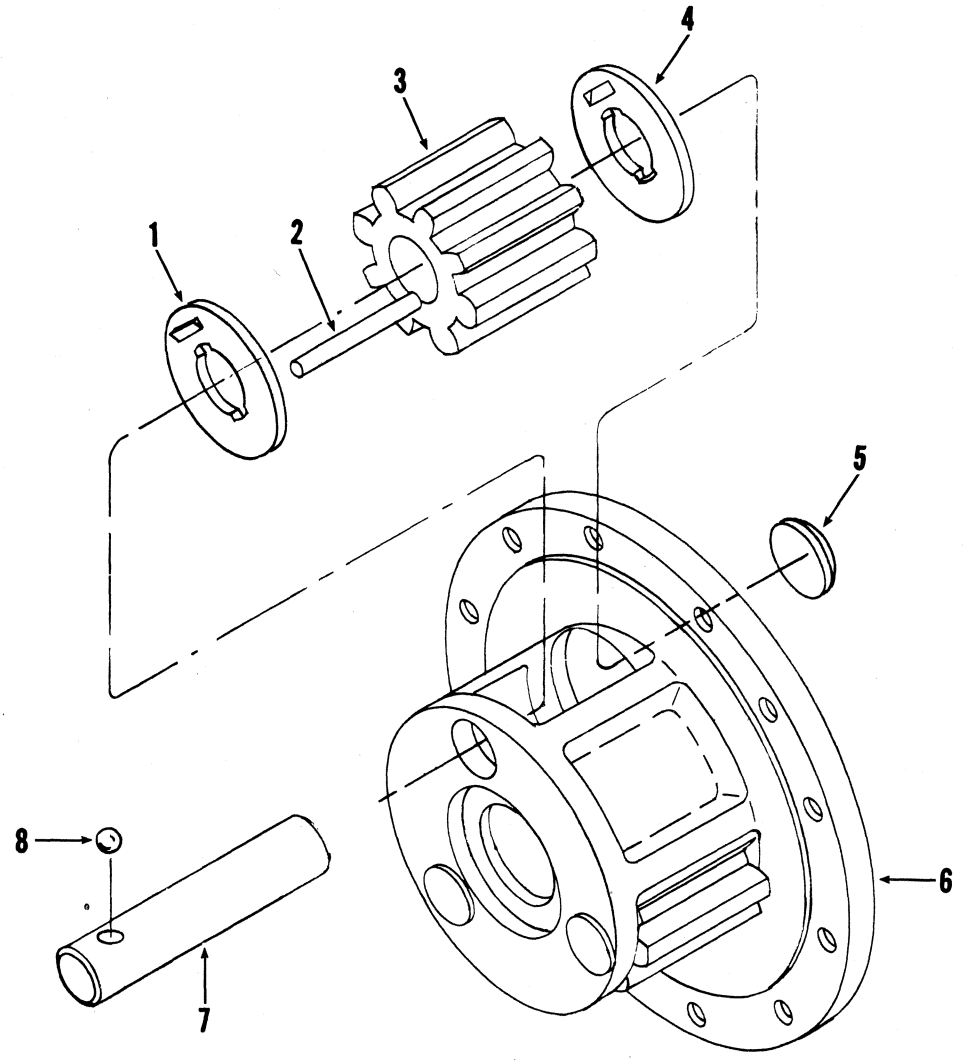

TS-11923 B

No.	Part No.	Qty.	Description
A	[1]123621	2	Carrier assy
1	123620	3	Washer
2	123627	72	Roller
3	123618	3	Gear
4	123620	3	Washer
5	12F-108	3	Plug
6	123623	1	Carrier
7	123619	3	Gear shaft
8	10J-12	3	Ball

[1]Inc. 1→8 Two (2) Carriers used per axle. Quantities listed are for one (1) Carrier.

Axle Tie Rod Assembly

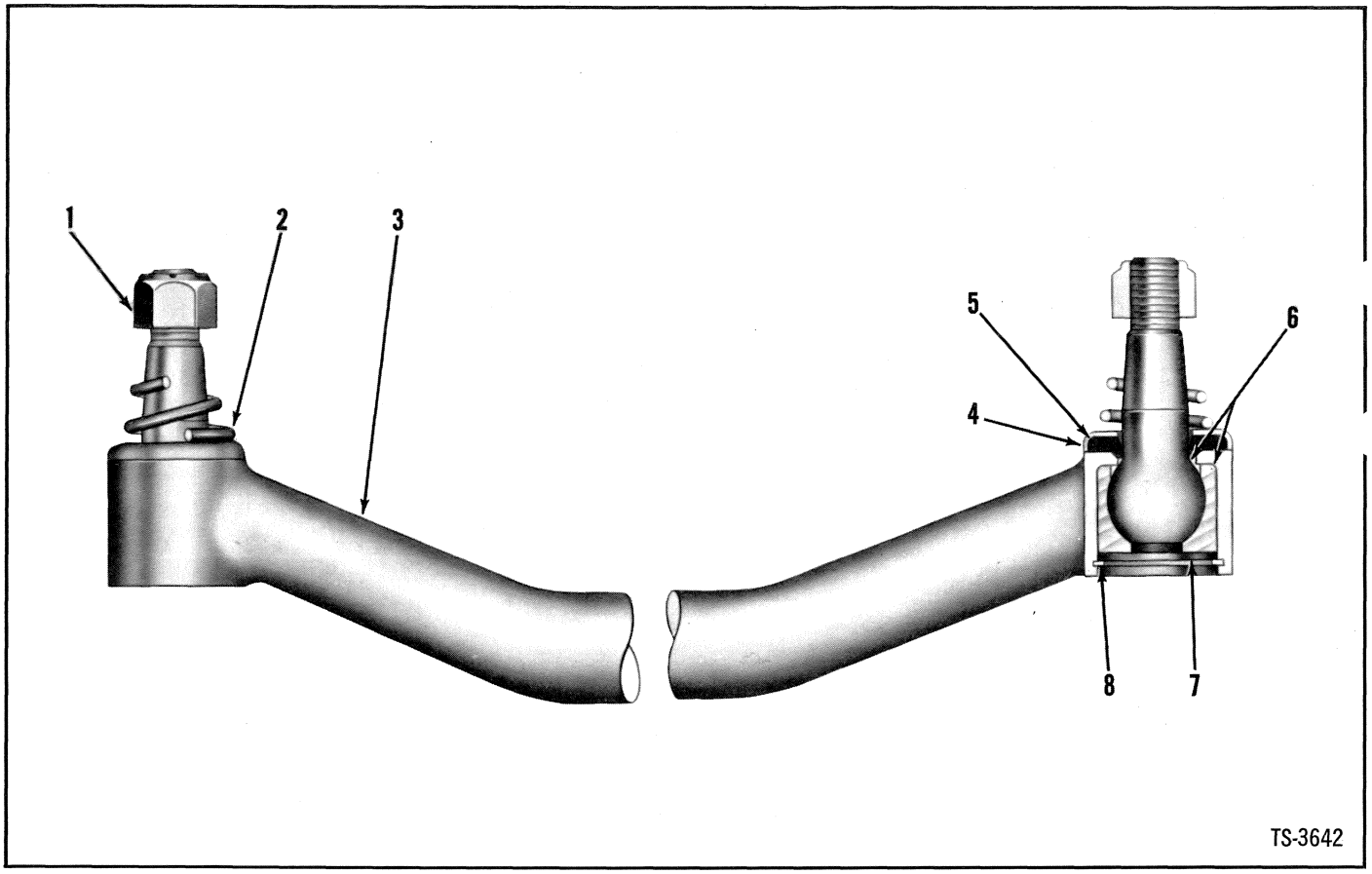

No.	Part No.	Qty.	Description
A	[1]532447	1	Tie rod assy
1	112174	2	Nut
2	106268	2	Spring
3	§[2]————	1	Tie rod
4	106138	2	Retainer
5	106137	2	Washer felt
6	117228	2	Ball stud
7	524066	2	Plate
7A	†10H-25	2	Fitting grease
8	507695	2	Ring snap

[1]Inc. 1➔8
[2]See A

PM 2939
Printed in U.S.A.

MICHIGAN

Group B

Boom Group B3
Brake Air Lines – Section A B5
Brake Air Lines – Section B B9
Brake Assembly, Front B13
Brake Assembly, Rear B14
Brake Assembly, Parking B15
Brake Controls B16
Brake Controls, Parking B17
Brake Parking Lever Assembly B18
Brake Power Cluster Assembly B19
Brake Wheel Cylinder Assembly, Front B20
Brake Wheel Cylinder Assembly, Rear B21
Bucket Assembly Data B22
Bucket Linkage & Indicator B25

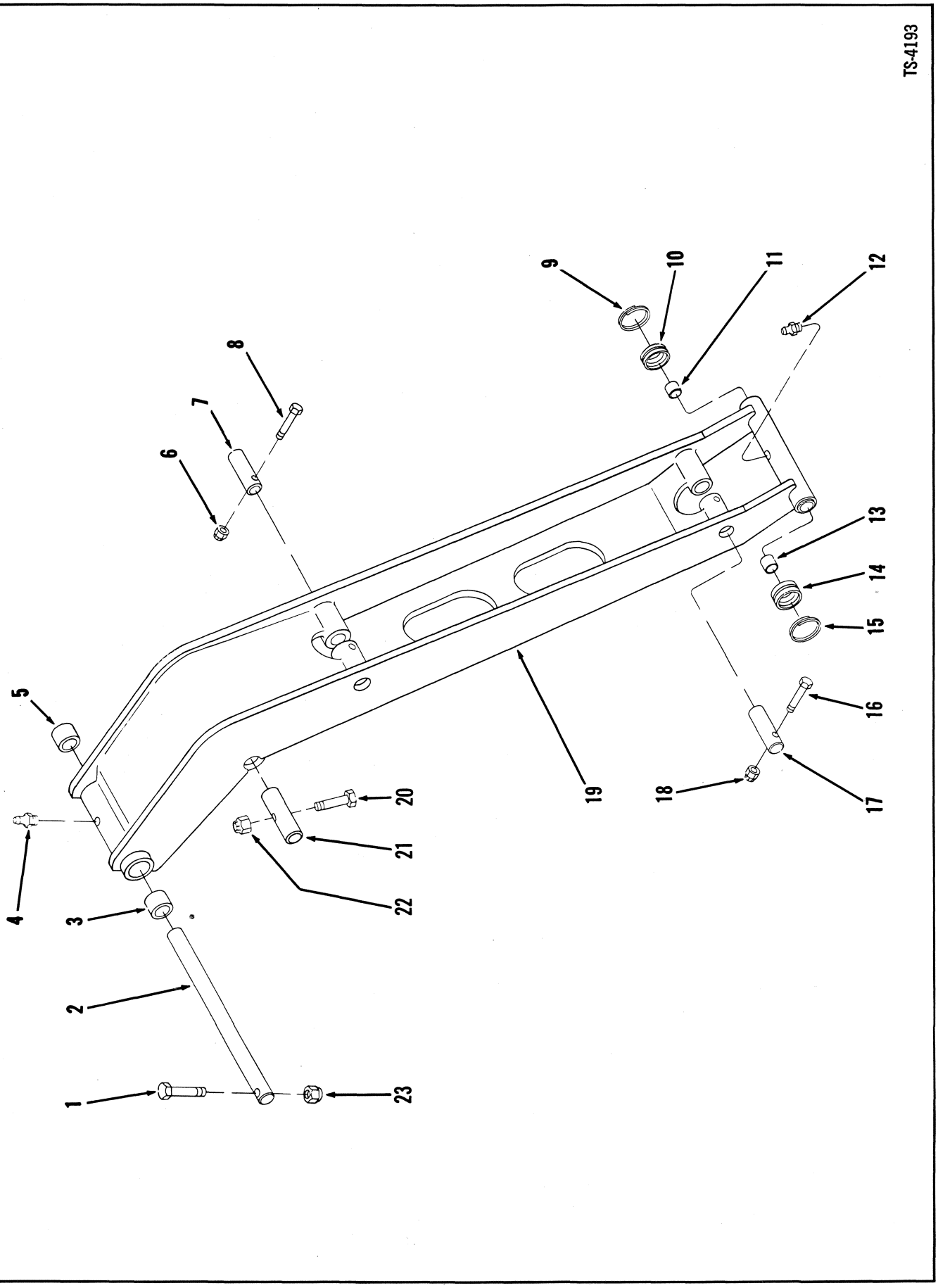

PM 2939
Printed in U.S.A.

Boom Group

MICHIGAN

No.	Part No.	Qty.	Description
1	24C-868	1	Bolt
2	584714	1	Shaft
3	523044	1	Bushing
4	10H-25	1	Fitting grease
5	523044	1	Bushing
6	18D-08	1	Locknut
7	586199	1	Pin
8	24C-856	1	Bolt
9	28H-11100	1	Lockwire
10	585311	1	Seal
11	585644	1	Bushing
12	10H-25	1	Fitting grease
13	585644	1	Bushing
14	585311	1	Seal
15	28H-11100	1	Lockwire
16	24C-856	1	Bolt
17	586199	1	Pin
18	18D-08	1	Nut
19	[1]1517211	1	Boom assy
20	24C-868	1	Bolt
21	590035	1	Pin
22	18D-08	1	Nut
23	18D-08	1	Nut

[1]Inc. 3, 5, 11, 13

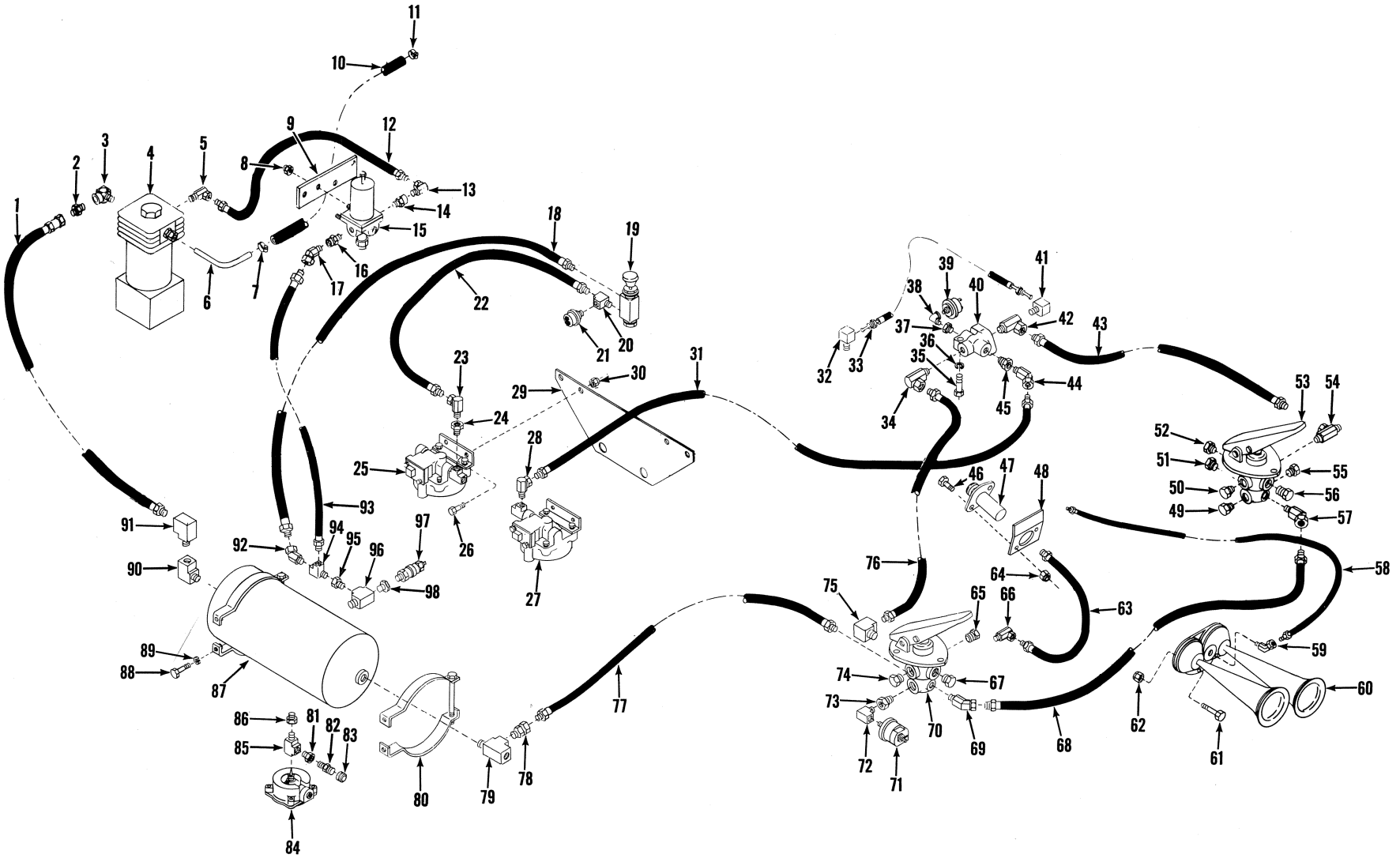
1
2
3
4
5
6
7
8
9
10
11
12
13
14
15
16
17
18
19
20
21
22
23
24
25
26
27
28
29
30
31
32
33
34
35
36
37
38
39
40
41
42
43
44
45
46
47
48
49
50
51
52
53
54
55
56
57
58
59
60
61
62
63
64
65
66
67
68
69
70
71
72
73
74
75
76
77
78
79
80
81
82
83
84
85
86
87
88
89
90
91
92
93
94
95
96
97
98
TS-13527

Brake Air Lines — Section A

MICHIGAN

No.	Part No.	Qty.	Description
1	1545160	1	Hose
2	38F-10	1	Connector
3	731333	1	Elbow
4	[1]———	1	Air compressor
5	31F-1	1	Adapter union
6	1517233	1	Tube
7	521874	1	Clamp
8	18D-04	2	Nut
9	1517214	1	Bracket
10	1517275	1	Hose
11	521874	1	Clamp
12	536936	1	Hose
13	31F-1	1	Adapter union
14	39F-2	1	Fitting straight
15	[1]———	1	Governor
16	39F-2	1	Fitting straight
17	33F-1	1	Adapter union
18	543697	1	Hose
19	1545790	1	Valve hand brake
20	1549038	1	Tee
21	[2]———	1	Switch pressure
22	1527928	1	Hose
23	31F-1	1	Adapter union
24	19F-1	1	Bushing
25	1545789	1	Valve relay
26	24C-616	4	Bolt
27	1545789	1	Valve relay
28	31F-2	1	Adapter union
29	1516112	1	Bracket
30	18D-06	4	Nut
31	564637	1	Hose
32	25F-1	1	Elbow
33	536934	1	Hose
34	31F-4	1	Adapter union
35	24C-644	1	Bolt
36	4E-06	1	Lockwasher
37	19F-4	1	Bushing
38	26F-1	1	Elbow
39	[2]———	1	Switch stop light
40	[3,5]1532592	1	Valve check
41	31F-1	1	Adapter union
42	356609	1	Adapter union
43	592742	1	Hose
44	33F-3	1	Adapter union
45	19F-6	1	Bushing
46	24C-416	2	Bolt
47	530663	1	Switch horn
48	1517215	1	Bracket
48A	†24C-416	2	Bolt
48B	†18D-04	2	Nut

[1]See Index
[2]See Electrical Group
[3]B.W. #223869
[5]Your local authorized Bendix-Westinghouse distributor is equipped to service components of these parts.

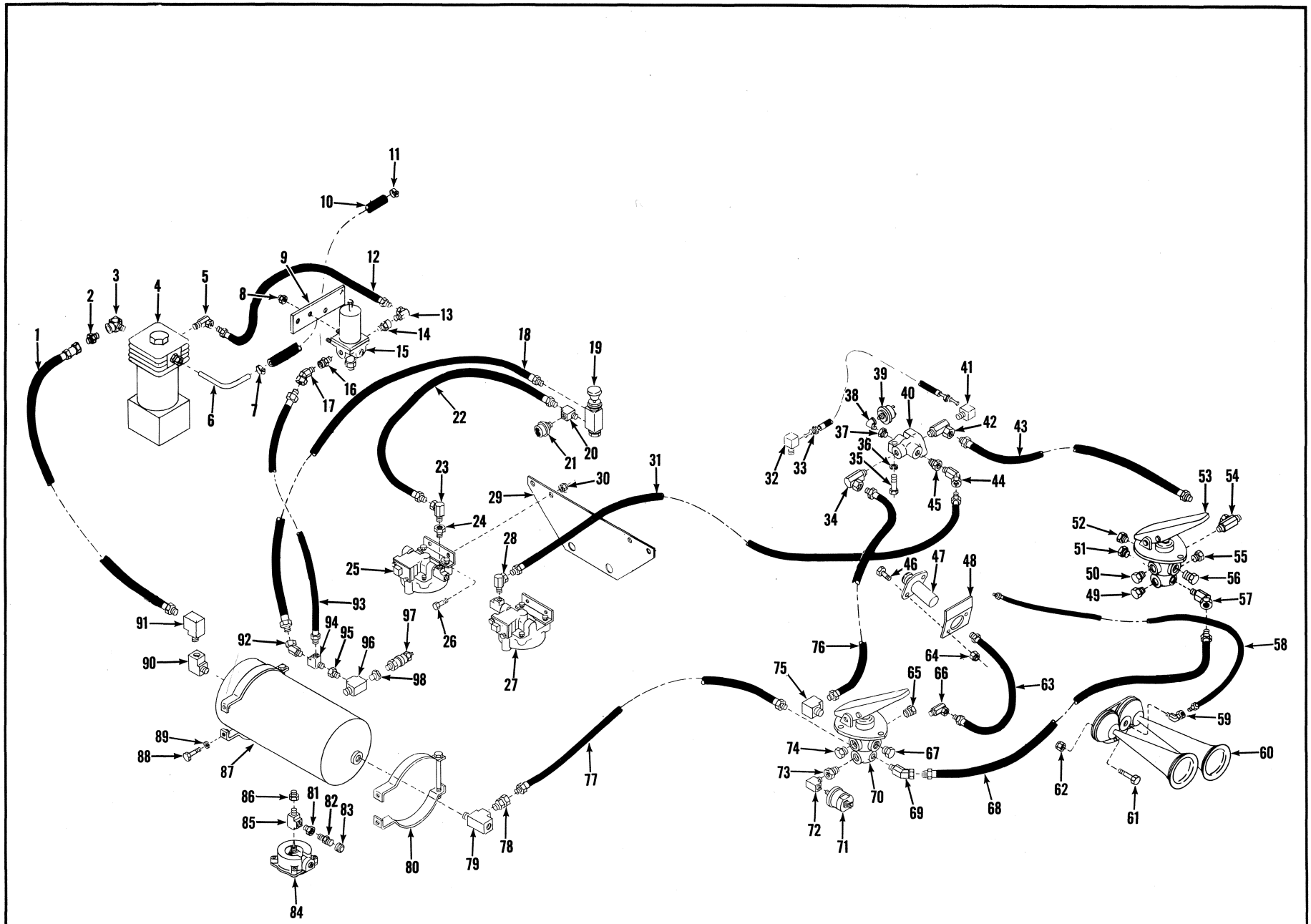
1
2
3
4
5
6
7
8
9
10
11
12
13
14
15
16
17
18
19
20
21
22
23
24
25
26
27
28
29
30
31
32
33
34
35
36
37
38
39
40
41
42
43
44
45
46
47
48
49
50
51
52
53
54
55
56
57
58
59
60
61
62
63
64
65
66
67
68
69
70
71
72
73
74
75
76
77
78
79
80
81
82
83
84
85
86
87
88
89
90
91
92
93
94
95
96
97
98
TS-13527

No.	Part No.	Qty.	Description
49	40K-04	1	Plug
50	40K-08	1	Plug
51	40K-08	1	Plug
52	40K-08	1	Plug
53	[1]———	1	Valve brake
54	31F-4	1	Adapter union
55	40K-04	1	Plug
56	40K-08	1	Plug
57	33F-4	1	Adapter union
58	1517236	1	Hose
59	33F-2	1	Adapter union
60	1517279	1	Horn
61	24C-416	2	Bolt
62	18D-04	2	Nut
63	1511077	1	Hose
64	18D-04	2	Nut
65	40K-08	1	Plug
66	31F-2	1	Adapter union
67	40K-08	1	Plug
68	593483	1	Hose
69	33F-4	1	Adapter union
70	[1]———	1	Valve brake
71	[2]———	1	Sender air press
72	29F-1	1	Elbow
73	19F-1	1	Bushing
74	40K-08	1	Plug
75	29F-3	1	Elbow
76	592783	1	Hose
77	1513323	1	Hose
78	36F-4	1	Adapter union
79	30F-3	1	Tee
80	1515848	2	Bracket
81	19F-1	1	Bushing
82	573618	1	Stem
83	573750	1	Cap
84	1505580	1	Valve drain
85	30F-1	1	Tee
86	19F-5	1	Bushing
87	540707	1	Air reservoir
88	24C-620	4	Bolt
89	4E-06	4	Lockwasher
90	29F-3	1	Elbow
91	29F-3	1	Elbow
92	33F-1	1	Adapter union
93	544273	1	Hose
94	1549038	1	Tee
95	19F-4	1	Bushing
96	30F-3	1	Tee
97	[4,5]507815	1	Valve safety
98	19F-5	1	Bushing

[1]See Index
[2]See Electrical Group
[4]B.W. #205105
[5]Your local authorized Bendix-Westinghouse distributor is equipped to service components of these parts.


TS-13489

Brake Air Lines — Section B

MICHIGAN

No.	Part No.	Qty.	Description
1	536017	1	Tube
2	8D-10	1	Nut
3	[1]550325	1	Clip
4	552374	1	Hose
5	8D-10	1	Nut
6	558587	1	Tube
7	[2]550320	1	Tee
8	558588	1	Tube
9	8D-10	1	Nut
10	552374	1	Hose
11	[1]550325	1	Clip
12	8D-10	1	Nut
13	536017	1	Tube
14	31F-3	1	Adapter union
15	[3]———	1	Pwr clsr assy brk
16	4E-07	3	Lockwasher
17	24C-716	3	Bolt
18	8D-10	1	Nut
19	———	—	Omit
20	———	—	Omit
21	613750	1	Gasket
22	874007	1	Plug
23	613750	1	Gasket
24	874007	1	Plug
25	620238	1	Gasket
26	620235	1	Fitting tube
27	613750	1	Gasket
28	692722	1	Bolt
29	1516135	1	Tube
30	564637	1	Hose
31	33F-3	1	Adapter union
32	[3]———	1	Pwr clsr assy brk
33	4E-07	3	Lockwasher
34	24C-716	3	Bolt
35	18D-08	4	Nut
36	874007	1	Plug
37	613750	1	Gasket
38	613750	1	Gasket
39	874007	1	Plug
40	620238	1	Gasket
41	620235	1	Fitting tube
42	613750	1	Gasket
43	692722	1	Bolt
44	1516131	1	Tube
45	24C-616	1	Bolt
46	30H-16	1	Clip
47	18D-06	1	Nut
48	3213176	1	Tube
49	[2]550320	1	Tee
50	3213177	1	Tube

[1]Mounted on Axle
[2]Furnished with Axle
[3]See Index

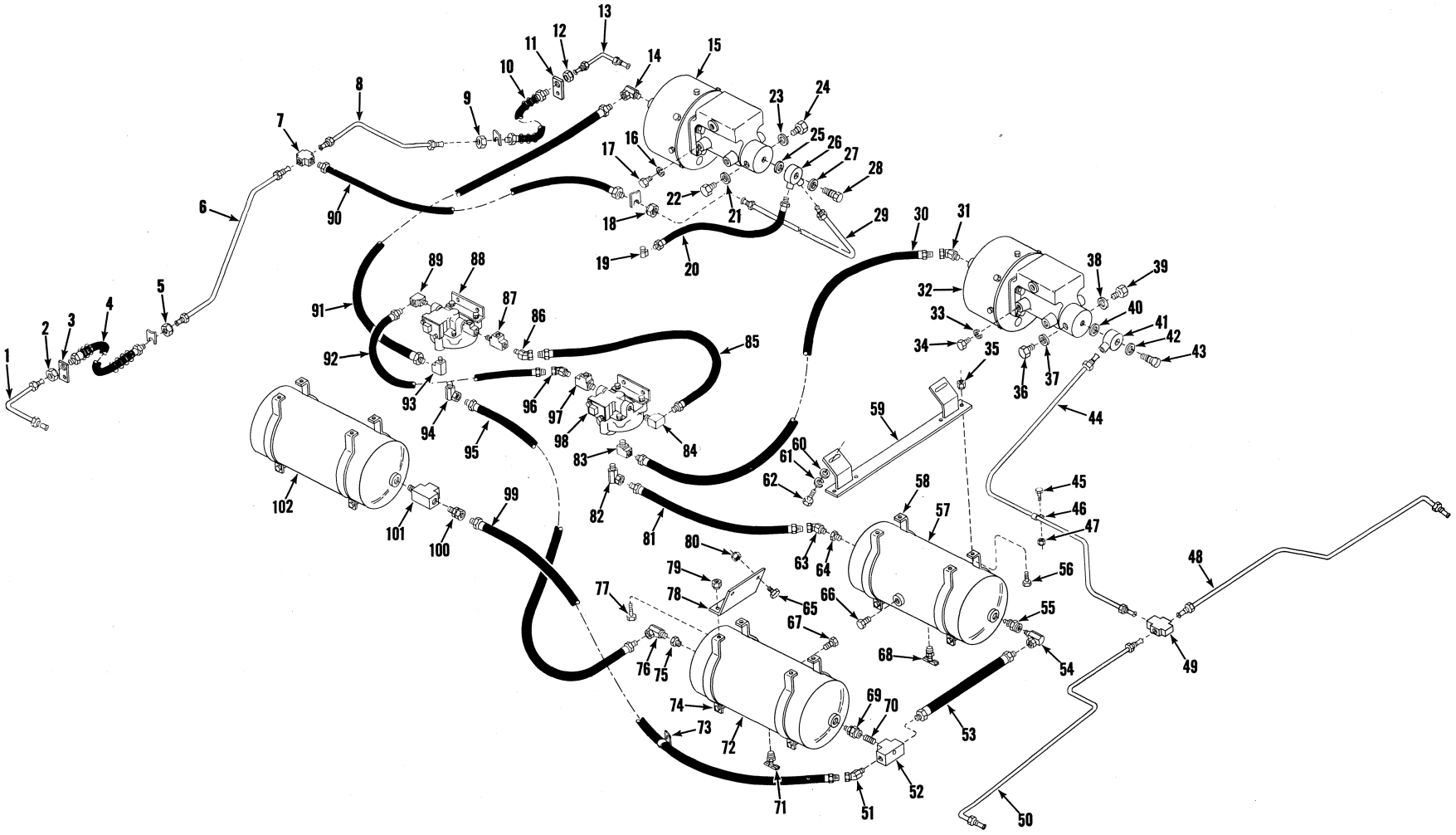
1
2
3
4
5
6
7
8
9
10
11
12
13
14
15
16
17
18
19
20
21
22
23
24
25
26
27
28
29
30
31
32
33
34
35
36
37
38
39
40
41
42
43
44
45
46
47
48
49
50
51
52
53
54
55
56
57
58
59
60
61
62
63
64
65
66
67
68
69
70
71
72
73
74
75
76
77
78
79
80
81
82
83
84
85
86
87
88
89
90
91
92
93
94
95
96
97
98
99
100
101
102

TS-13489

Brake Air Lines – Section B (Continued)

MICHIGAN

No.	Part No.	Qty.	Description
51	33F-4	1	Adapter union
52	28F-3	1	Tee
53	592742	1	Hose
54	31F-4	1	Adapter union
55	593370	1	Valve check
56	24C-620	4	Bolt
57	540707	1	Air reservoir
58	941214	2	Bracket
59	1516114	1	Bracket
60	25E-18	2	Washer
61	4E-06	2	Lockwasher
62	24C-616	2	Bolt
63	33F-3	1	Adapter union
64	19F-6	1	Bushing
65	24C-624	4	Bolt
66	40K-08	1	Plug
67	40K-08	1	Plug
68	72F-4	1	Draincock
69	593370	1	Valve check
70	5K-409	1	Nipple
71	72F-4	1	Drain cock
72	540707	1	Air reservoir
73	30H-48	1	Clip
74	941214	2	Bracket
75	19F-6	1	Bushing
76	31F-3	1	Adapter union
77	24C-620	4	Bolt
78	1516117	2	Bracket
79	18D-06	4	Nut
80	18D-06	4	Nut
81	594113	1	Hose
82	31F-3	1	Adapter union
83	29F-1	1	Elbow
84	29F-1	1	Elbow
85	593495	1	Hose
86	33F-2	1	Adapter union
87	30F-1	1	Tee
88	[4]———	1	Valve relay
89	29F-1	1	Elbow
90	550324	1	Hose
91	564637	1	Hose
92	593495	1	Hose
93	29F-1	1	Elbow
94	31F-3	1	Adapter union
95	564669	1	Hose
96	33F-2	1	Adapter union
97	30F-1	1	Tee
98	[4]———	1	Valve relay
99	564645	1	Hose
100	36F-4	1	Adapter union
101	30F-3	1	Tee
102	540707	1	Air reservoir

[4]See Section A

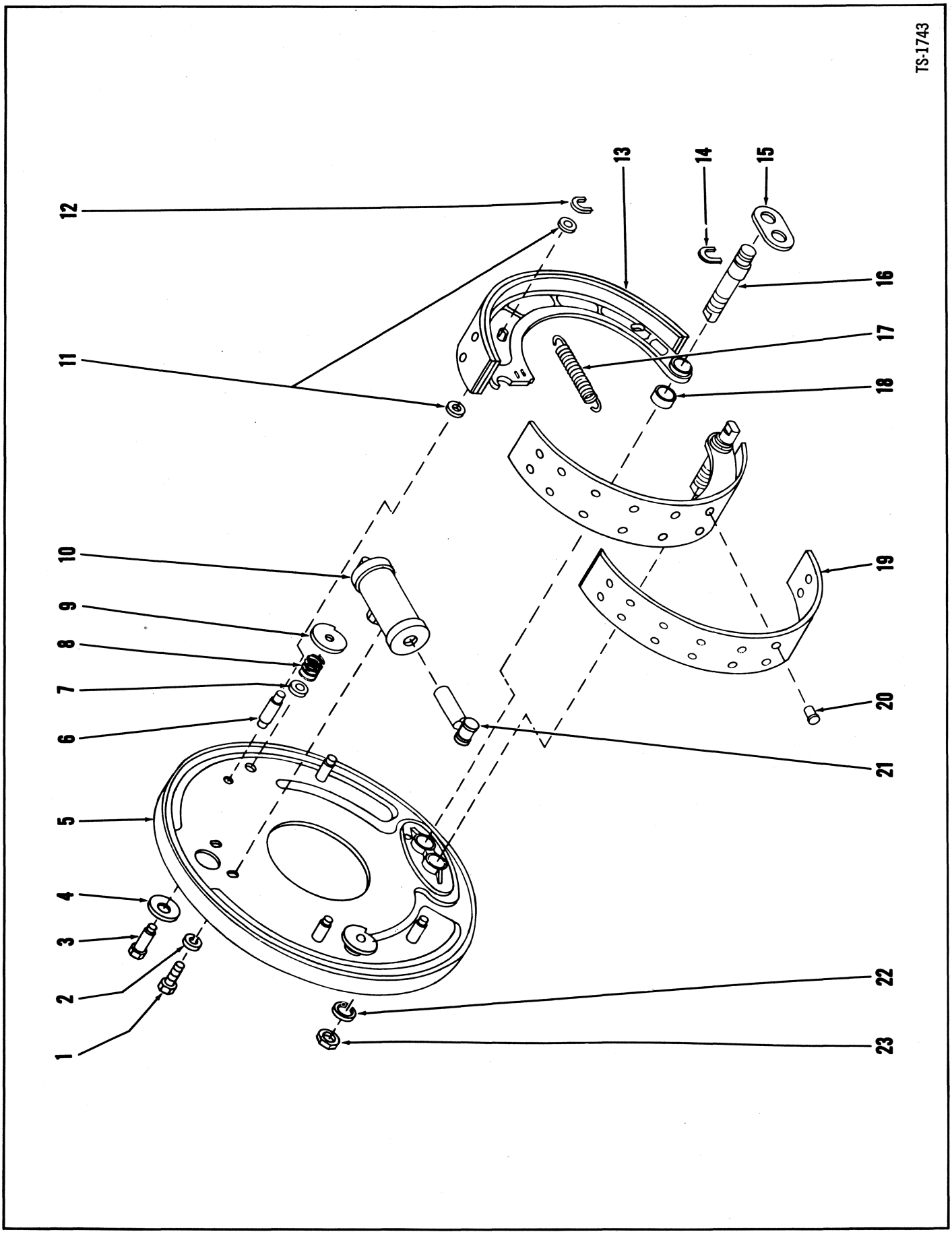

PM 2939
Printed in U.S.A.

Brake Assembly – Front

MICHIGAN

No.	Part No.	Qty.	Description
A	*[1]110932	2	Brake assembly
1	1C-610	2	Bolt
2	4E-06	2	Lockwasher
3	114169	2	Pin
4	100867	2	Washer
5	[2]106586	1	Disc assembly
6	106373	4	Pin
7	————	—	Omit
8	100865	2	Spring
9	100864	2	Cam
10	[3]————	1	Cylinder
11	102322	8	Washer
12	100878	4	"C" – washer
13	[4]118254	2	Shoe assembly
14	101332	2	"C" – washer
15	106970	1	Strut
16	106969	2	Pin
17	106216	1	Spring
18	201966	2	Bushing
19	[5]118256	2	Lining brake 2110616
19A	[6]118257	2	Lining brake
20	3H-1216	36	Rivet
21	————	2	Link
22	4E-12	2	Lockwasher
23	62D-12	2	Nut

*2 brake assemblies used per axle. Quantities listed are for 1 brake assembly.
[1]Inc. 1➔23
[2]Inc. 3, 4, 6➔9
[3]See Index
[4]Inc. 18, 19, 19A, 20
[5]Standard
[6]Over Sized

Brake Assembly, Rear

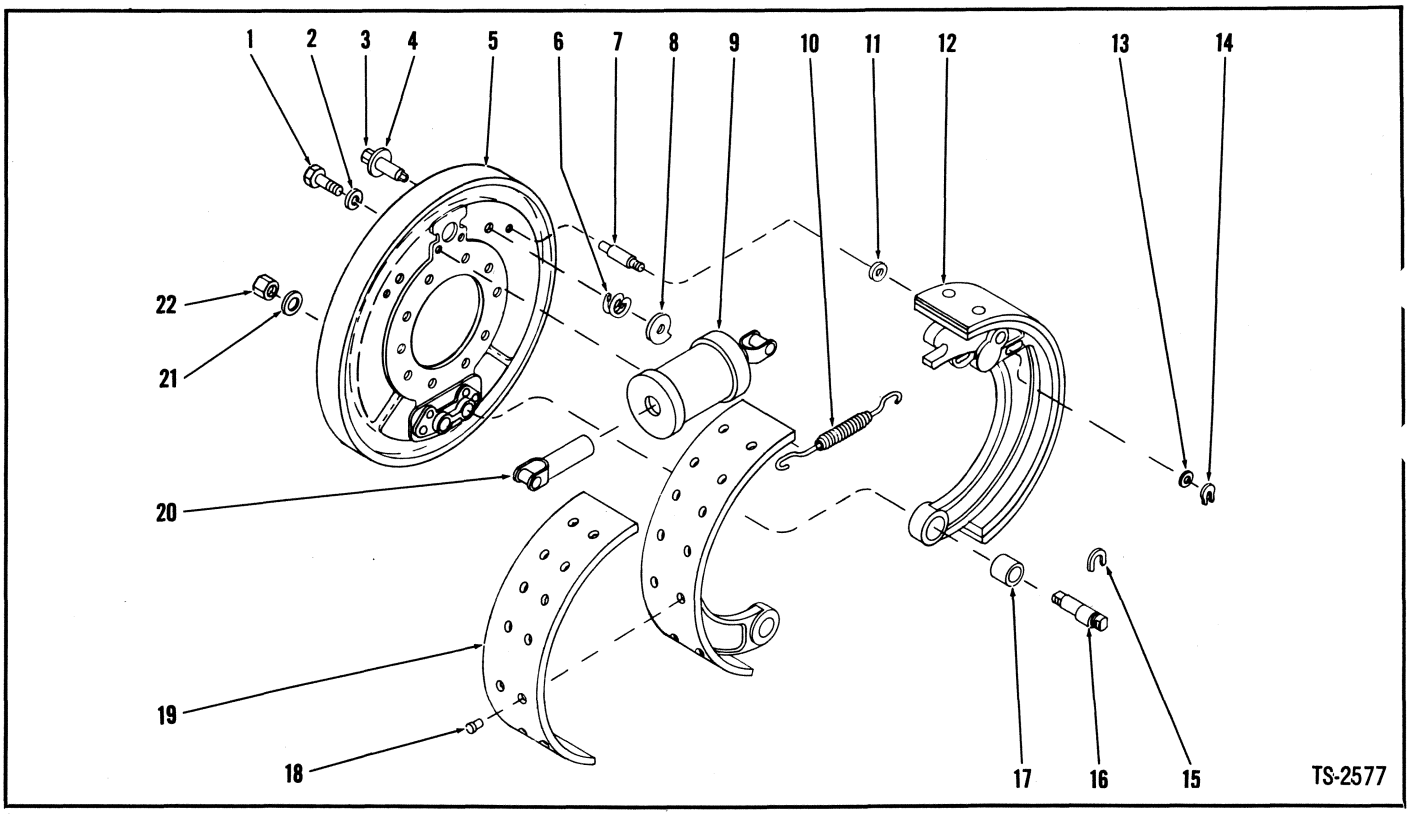

No.	Part No.	Qty.	Description
A	[1]120505	2	Brake assy
1	1C-510	2	Bolt
2	4E-05	2	Lockwasher
3	[2]114170	2	Pin
4	100867	2	Washer
5	[3]106817	1	Disc assy
6	100865	2	Spring
7	100877	2	Pin guide
8	100864	2	Cam
9	[7]———	1	Brake wheel cylinder
10	100879	2	Spring return
11	102322	2	Washer
12	[4]120507	2	Brake shoe assy
13	102322	2	Washer
14	100878	2	C — washer
15	100613	2	C — washer
16	102498	2	Pin anchor
17	102497	2	Bushing
18	23H-707	24	Rivet
19	[5]944216	2	Lining brake 2110600
19A	[6]945998	2	Lining brake
20	853402	2	Link
21	6E-12	2	Lockwasher
22	62D-12	2	Nut

[1]Inc. 1→22. Two (2) Brake Assemblies used per axle. Quantities listed are for one (1) Brake.
[2]Inc. 4
[3]Inc. 3, 4, 6, 7, 8
[4]Inc. 17, 18, 19
[5]Std. Inc. 18
[6]1/16" O.S. Inc. 18
[7]See Index

PM 2939
Printed in U.S.A.

Brake Assembly, Parking

MICHIGAN

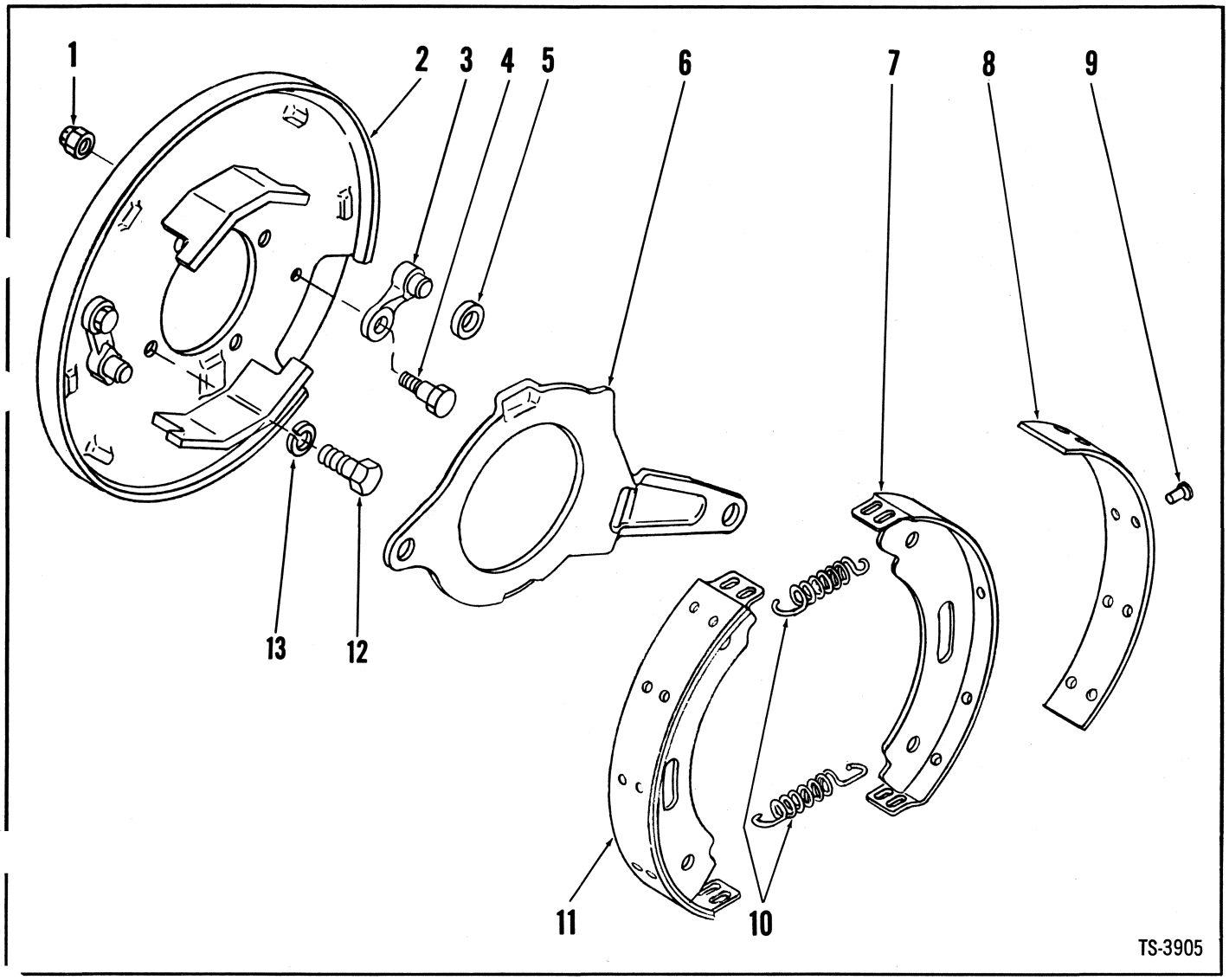

No.	Part No.	Qty.	Description
A	[1]215159	1	Brake assy
1	43D-06	2	Nut
2	[2]801217	1	Plate backing
3	[3]801213	2	Panel kit
4	886718	2	Bolt
5	801215	2	Roller
6	801216	1	Lever
7	§[4]————	2	Brake shoe
8	[5]801214	1	Lining brake
9	23H-504	20	Rivet
10	801193	2	Spring
11	[6]801192	2	Brake shoe assy
12	1C-916	4	Bolt
13	4E-09	4	Lockwasher

[1]Inc. 1➔13
[2]Inc. 1, 3, 4, 5
[3]Inc. 1, 4, 5
[4]See 11
[5]Inc. 9
[6]Inc. 7, 8, 9,

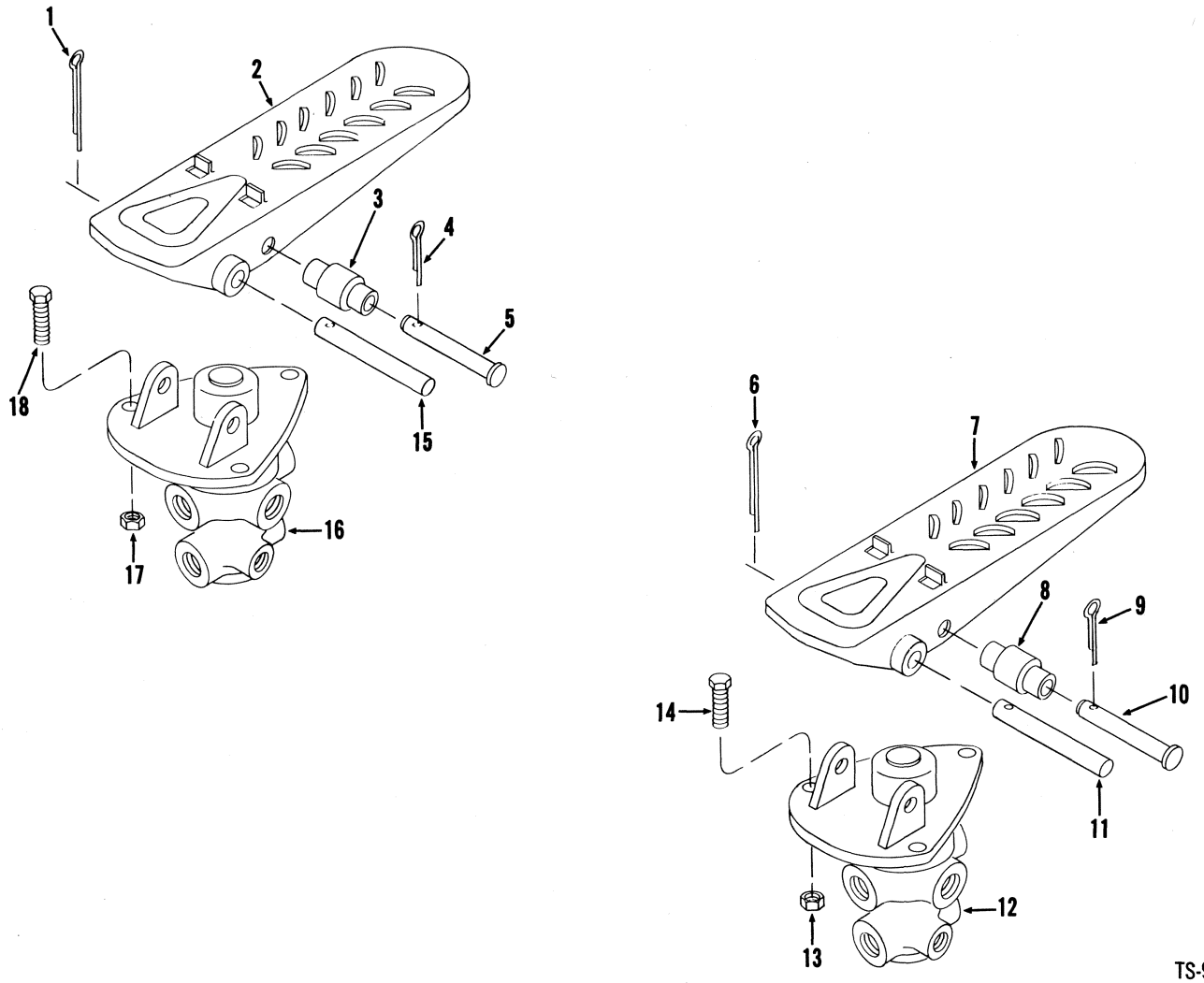

No.	Part No.	Qty.	Description
1	1F-320	1	Pin cotter
2	513930	1	Pedal brake
3	518259	1	Roller
4	1F-312	1	Pin cotter
5	875766	1	Pin
6	1F-320	1	Pin cotter
7	513930	1	Pedal brake
8	518259	1	Roller
9	1F-312	1	Pin cotter
10	875766	1	Pin
11	875767	1	Pin mounting
12	[1]———	1	Valve brake
13	18D-05	3	Nut
14	24C-520	3	Bolt
15	875767	1	Pin mounting
16	[1]———	1	Valve brake
17	18D-05	3	Nut
18	24C-520	3	Bolt

[1]See Index

Brake Controls, Parking

MICHIGAN

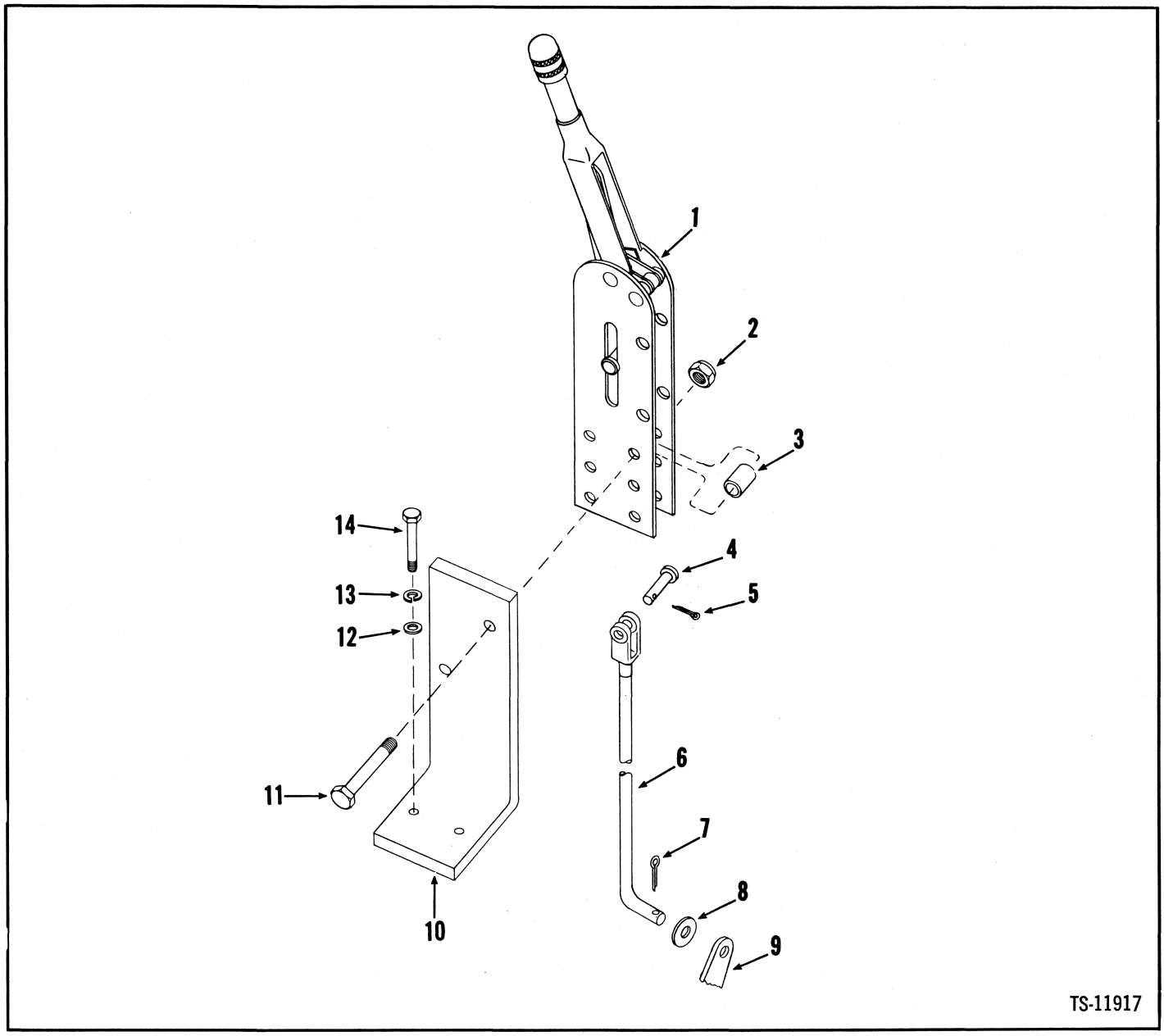

TS-11917

No.	Part No.	Qty.	Description
1	[1]———	1	Hand lever assy
2	18D-05	2	Nut
3	545005	2	Spacer
4	4F-05062	2	Pin
5	1F-312	1	Pin cotter
6	1516159	1	Rod
7	1F-312	1	Pin cotter
8	25E-17	1	Washer
9	[1]———	1	Brake assy
10	1516133	1	Bracket
11	24C-532	2	Bolt
12	25E-17	2	Washer
13	4E-06	2	Lockwasher
14	24C-616	2	Bolt

[1]See Index

PM 2939
Printed in U.S.A.

Brake Parking Lever Assembly

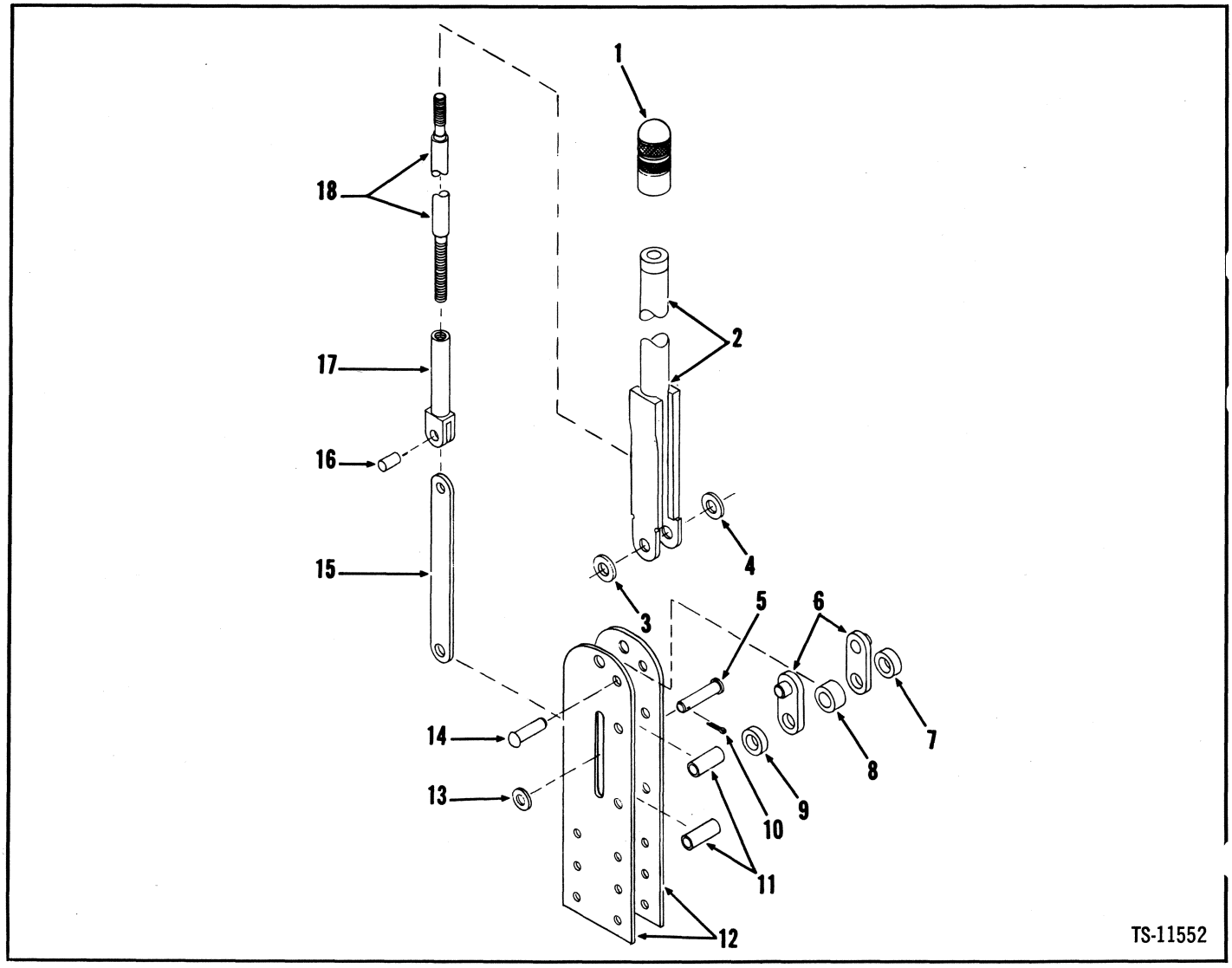

No.	Part No.	Qty.	Description
A	[1]544998	1	Hand lever assy
1	949370	1	Knob
2	866348	1	Body
3	619024	1	Washer
4	619024	1	Washer
5	862738	1	Pin
6	862653	2	Bracket
7	862656	1	Spacer
8	862655	1	Spacer
9	862656	1	Spacer
10	1F-316	1	Pin cotter
11	645095	2	Spacer
12	944969	2	Bracket
13	619019	1	Washer
14	944054	1	Rivet
15	862652	1	Link
16	941238	1	Pin
17	944968	1	Tube
18	866349	1	Screw

[1]Inc. 1→18

PM 2939
Printed in U.S.A.

Brake Power Cluster Assembly

MICHIGAN

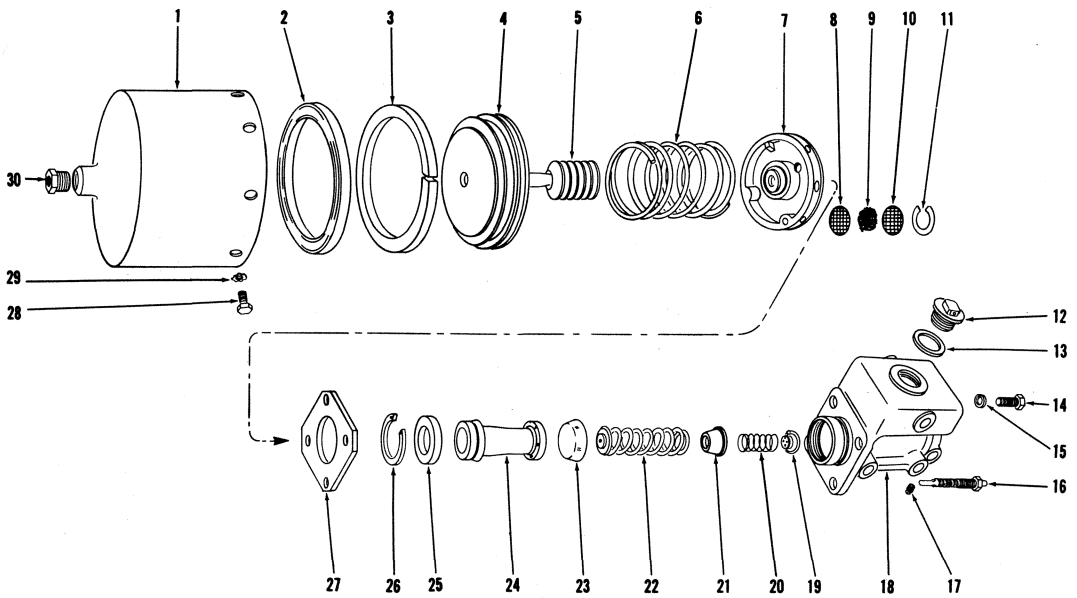

TS-3220

No.	Part No.	Qty.	Description
A	[1]526879	2	Power cluster assy
B	[2]945041	1	Repair kit
1	945034	1	Shell
2	§[3]———	1	Cup
3	§[3]———	1	Wiper
4	§[3]945035	4	Piston
5	§[3]———	1	Boot
6	945036	1	Spring
7	[4]945037	1	Piston head assy
8	945029	1	Screen
9	992163	1	Filter fiber mat
10	945029	1	Screen
11	992164	1	Ring
12	892287	1	Cap
13	857933	1	Gasket
14	1C-624	3	Bolt
15	4E-06	4	Lockwasher
16	945038	1	Indicator
17	10F-02	1	Plug
18	947740	1	Housing
19	§[3]———	1	Valve check
20	945026	1	Spring
21	945042	1	Retainer
22	955321	1	Spring
23	§[3]———	1	Cup
24	§[3]———	1	Piston
25	955326	1	Plate
26	955323	1	Ring
27	945040	1	Plate
28	1C-510	8	Bolt
29	6E-05	8	Lockwasher
30	356612	1	Bushing

[1]Inc. 1➔30. Two (2) Power Clusters used on machine. Quantities listed are for one (1) Power Cluster.
[2]Inc. 2, 3, 5, 19, 23, 24
[3]See B
[4]Inc. 8➔11

Brake Wheel Cylinder — Front

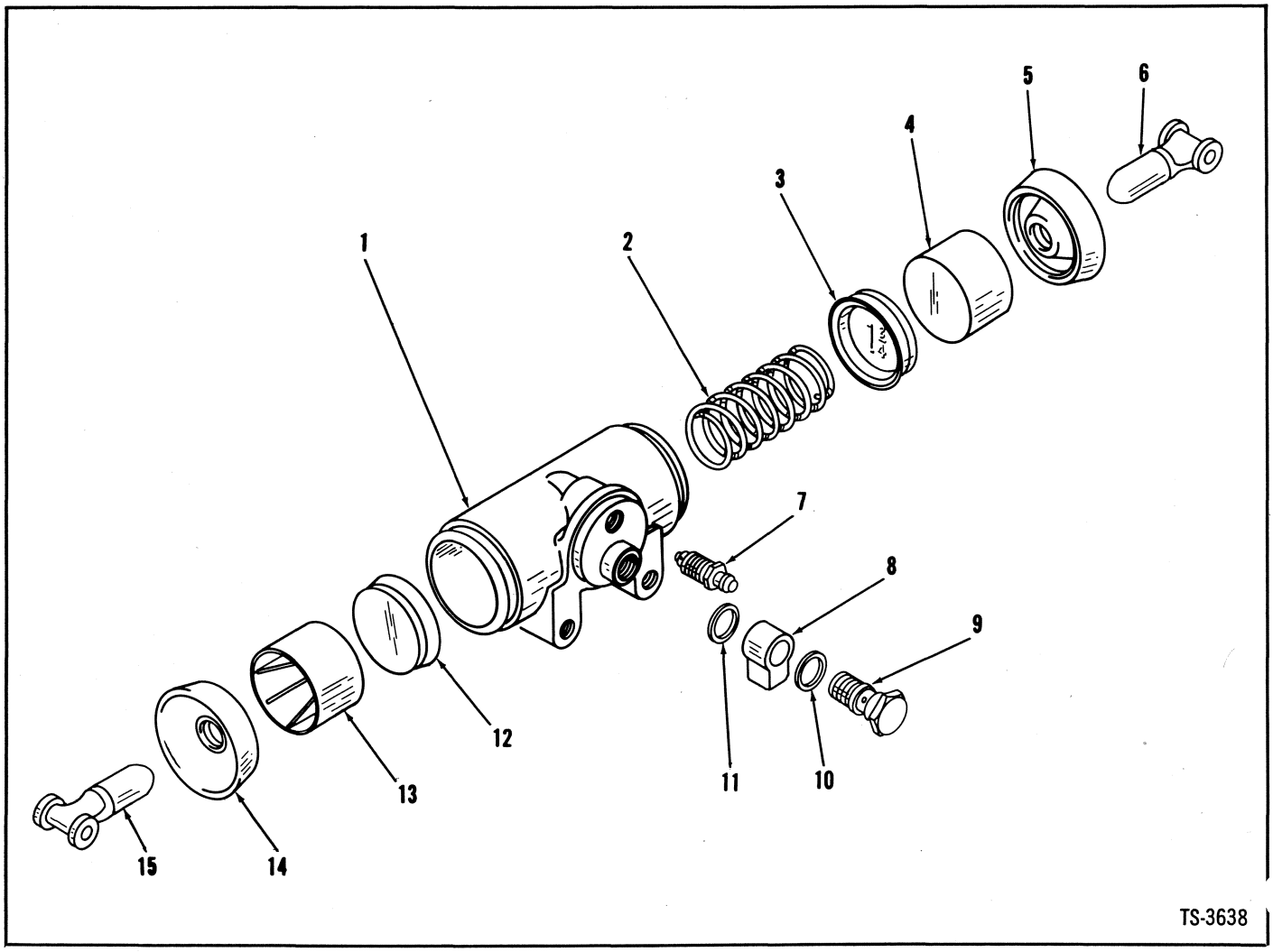

No.	Part No.	Qty.	Description
A	*[1]107014	2	Cylinder assembly
B	[2]940130	1	Repair kit
1	§[3]———	1	Housing
2	956622	1	Spring
3	§[4]———	1	Cup
4	§[3]———	1	Piston
5	§[4]———	1	Boot
6	958553	1	Link
7	208805	1	Bleeder
8	620235	1	Fitting
9	692722	1	Bolt
10	620238	1	Gasket
11	613750	1	Gasket
12	§[4]———	1	Cup
13	§[3]———	1	Piston
14	§[4]———	1	Boot
15	958553	1	Link

*Two (2) Wheel Cylinders used per axle. Quantities listed are for one (1) Wheel Cylinder.
[1]Inc. 1→15
[2]Inc. 3, 5, 12, 14
[3]See A
[4]See B

PM 2939
Printed in U.S.A.

Brake Wheel Cylinder Assembly, Rear

MICHIGAN

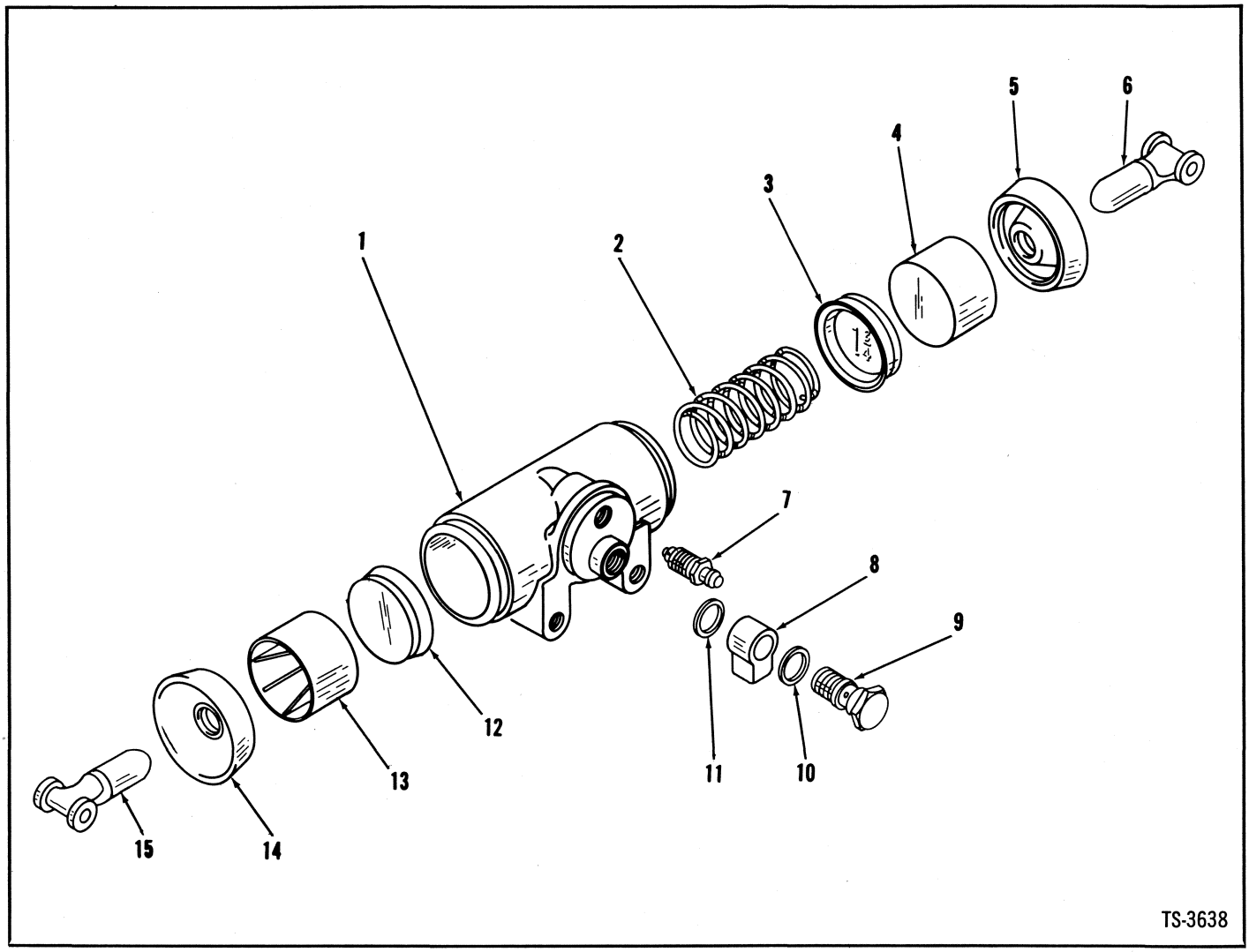

No.	Part No.	Qty.	Description
A	[1]124214	2	Cylinder assembly
B	[2]853405	1	Repair kit
1	§[3]———	1	Housing
2	853400	1	Spring
3	§[4]———	1	Cup
4	§[3]———	1	Piston
5	§[4]———	1	Boot
6	853402	1	Link
7	208805	1	Bleeder
8	620235	1	Fitting
9	692722	1	Bolt
10	620238	1	Gasket
11	613750	1	Gasket
12	§[4]———	1	Cup
13	§[3]———	1	Piston
14	§[4]———	1	Boot
15	853402	1	Link

[1]Inc. 1➔5, 12➔14. Two (2) Wheel Cylinders used per axle. Quantities listed are for one (1) Wheel Cylinder.
[2]Inc. 3, 5, 12, 14
[3]See A
[4]See B

Bucket Assembly Data

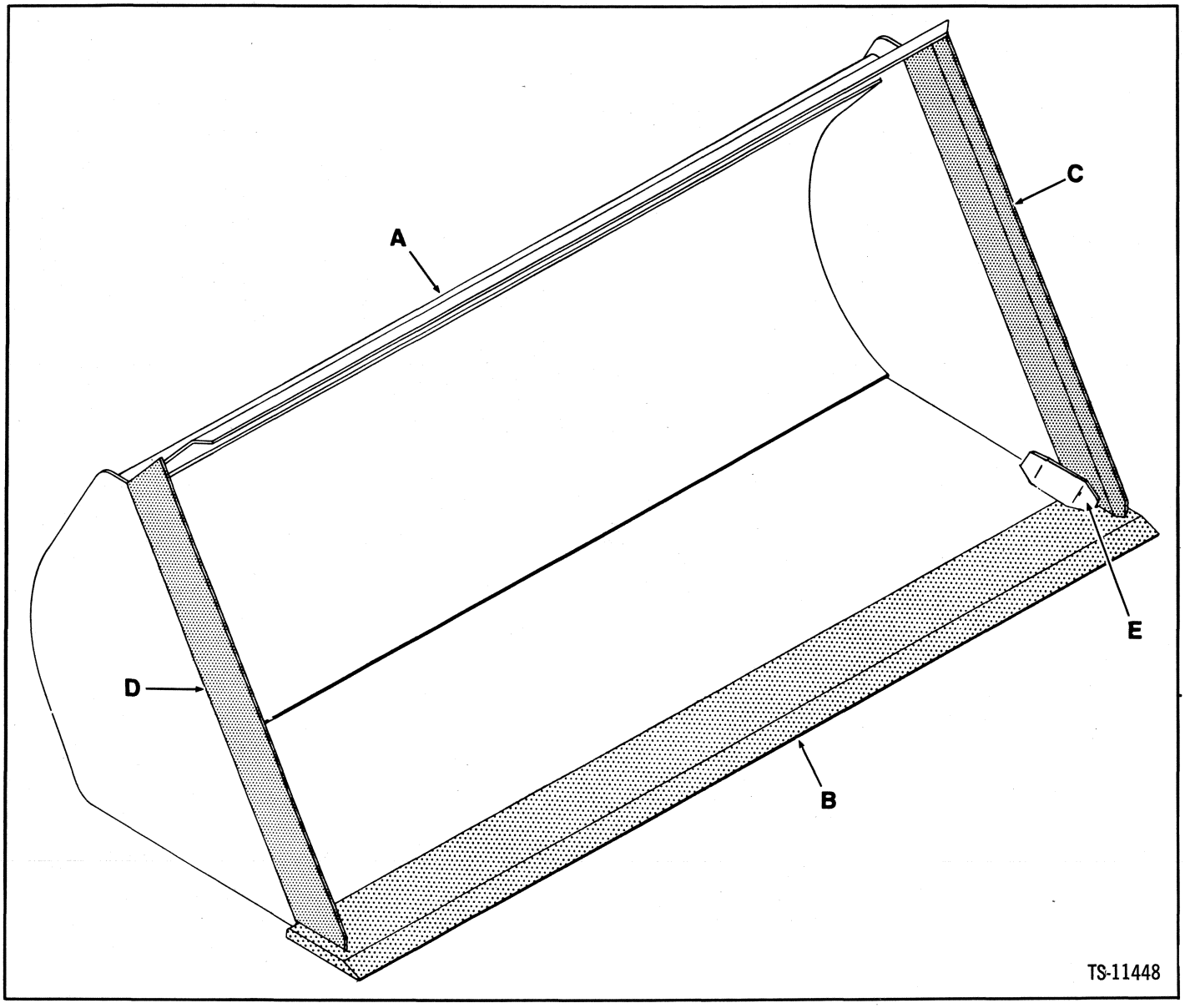

BUCKET				MAIN CUTTING EDGE		SIDE CUTTING EDGES			[1]GUSSET
Item	S.A.E. Heaped Capacity Cu. Yd.	Width	A Part No.	B Part No.	Size "	C L.H. Part No.	D R.H. Part No.	Size "	E Part No.
1	1	83"	586159	586173	¾x8x84-¼	940172	940173	½x3x10	1508522
2	1¼	83"	586174	586173	¾x8x84-¼	586180	586179	½x3x34⅛	1508522
3	1½	83"	1545901	586173	¾x8x84-¼	1545978	1545977	½x3x38.88	1508522
4	1¾	84½"	558260	529115	¾x8x86-¼	940172	940173	½x3x10	1508522
5	2	83"	562488	586173	¾x8x84-¼	940172	940173	½x3x10	1508522
6	2½	96½"	586905	546385	¾x8x97-¼	940172	940173	½x3x10	1508522

[1]2 Required

PM 2939
Printed in U.S.A.

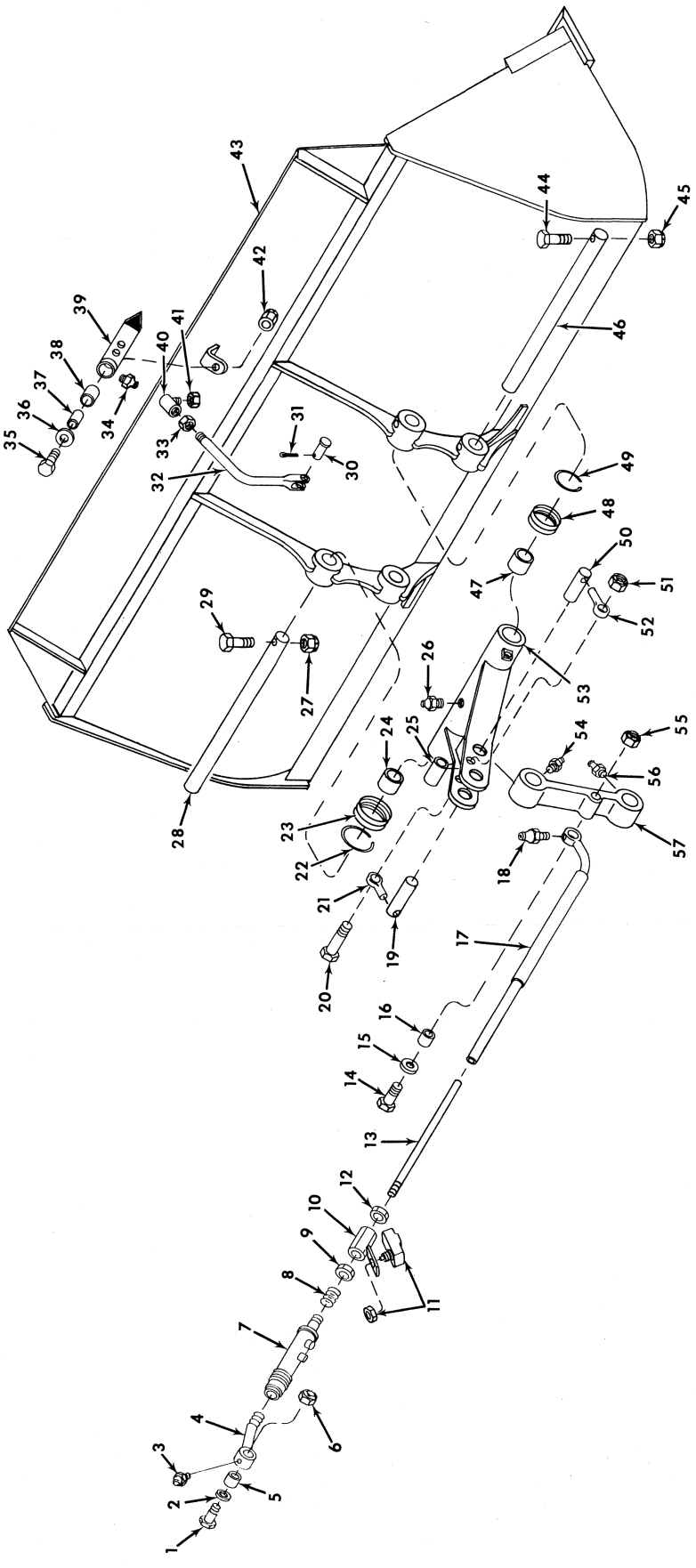

PM 2939
Printed in U.S.A.

Bucket Linkage & Indicator

MICHIGAN

No.	Part No.	Qty.	Description
1	24C-840	1	Bolt
2	619029	1	Washer
3	12H-25	1	Fitting grease
4	567060	1	Rod
5	584406	1	Bushing
6	18D-08	1	Nut
7	[3]———	1	Valve assy leveler
8	106263	1	Spring
9	586433	1	Nut
10	1516631	1	Coupling
11	1516645	1	Switch limit
12	103089	1	Nut
13	567061	1	Rod
14	24C-864	1	Bolt
15	619029	1	Washer
16	584406	1	Bushing
17	584208	1	Level rod
18	10H-35	2	Fitting grease
19	586199	1	Pin mounting
20	24C-888	1	Bolt
21	586452	1	Lockpin
22	28H-11100	1	Lockwire
23	585311	1	Seal
24	585644	1	Bushing
25	584206	1	Spacer
26	10H-25	1	Fitting grease
27	18D-06	1	Nut
28	584715	1	Pin mounting
29	24C-656	1	Bolt
30	4F-08127	1	Pin clevis
31	1F-414	1	Pin cotter
32	[1]586421	1	Rod assy
33	8D-08	1	Nut
34	10H-25	1	Fitting grease
35	24C-844	1	Bolt
36	616796	1	Washer
37	550646	1	Sleeve
38	526767	1	Bushing
39	585780	1	Pointer arm
40	1305485	1	Ball joint
41	18D-08	1	Nut
42	18D-08	1	Nut
43	[3]———	1	Bucket assy
44	24C-656	1	Bolt
45	18D-06	1	Nut
46	584715	1	Pin mounting
47	585644	1	Bushing
48	585311	1	Seal
49	28H-11100	1	Lockwire
50	586199	1	Pin mounting
51	18D-08	1	Nut
52	586452	1	Lockpin
53	[2]586215	1	Link
54	12H-15	1	Fitting grease
55	18D-08	1	Nut
56	10H-25	1	Fitting grease
57	586216	1	Link

[1]Inc. 33, 40
[2]Inc. 24, 47
[3]See Index

MICHIGAN

Group C

Clips C2
Converter Assembly C5
Cylinder Assembly, Boom C8
Cylinder Assembly, Bucket C9
Cylinder Assembly, Steering C10

The following types of clips are used in connection with the various wiring, fuel, air and hydraulic piping systems employed in this unit. When replacing clips identification can be made by checking type and physical dimensions listed to obtain part number.

Insulated Clip

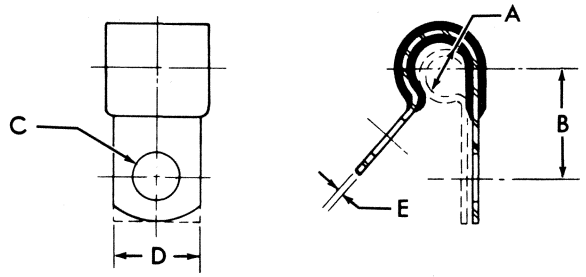

TS-5008

Item No.	Part Number	A	B	C	D	E	F
1	30H-10	3/16	1/2	9/32	1/2	.032	
2	30H-12	3/16	5/8	13/32	3/4	.032	
3	30H-20	5/16	11/16	13/32	3/4	.032	
4	30H-31	1/2	25/32	13/32	3/4	.048	
5	30H-38	5/8	27/32	13/32	3/4	.048	
6	30H-44	11/16	1	17/32	1	.048	
7	30H-50	15/16	1	13/32	3/4	.048	
8	30H-52	15/16	1 1/8	17/32	1	.048	

Insulated Double Clip

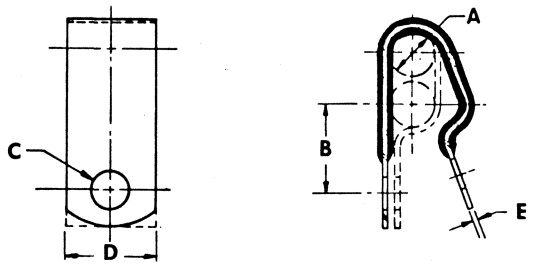

TS-7073

Item No.	Part Number	A	B	C	D	E	F
9	31H-19	3/8	23/32	13/32	3/4	.050	

Closed Clip

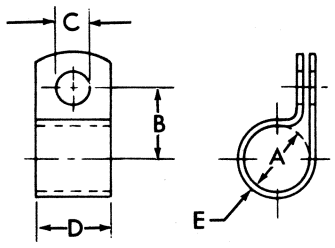

TS-5009

Item No.	Part Number	A	B	C	D	E
10	6H-2	3/16	5/8	13/32	3/4	.032
11	6H-6	1/4	25/32	17/32	7/8	.032
12	6H-16	5/8	13/16	9/32	3/4	.048

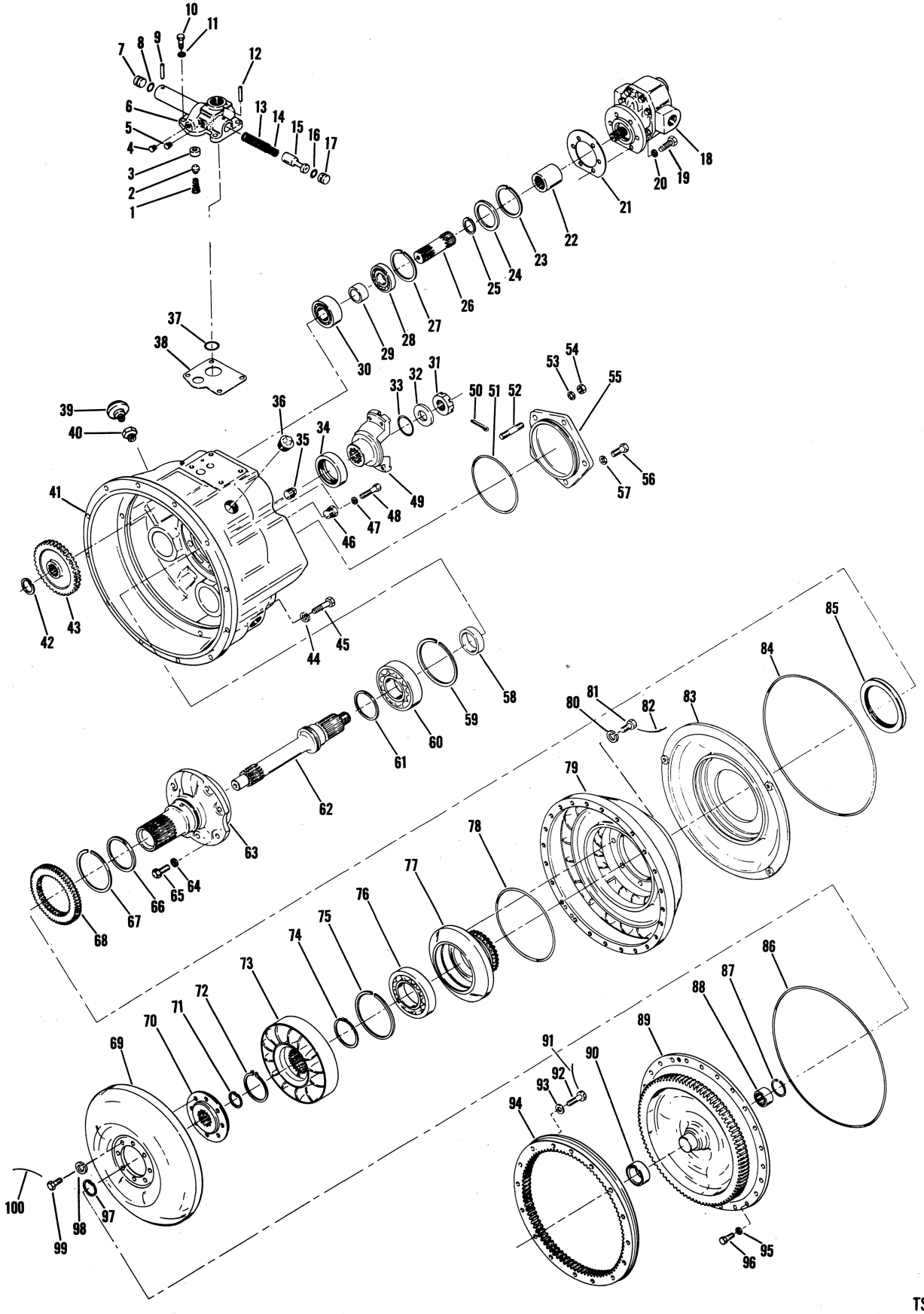

TS-11919

PM 2939
Printed in U.S.A.

Converter Assembly

MICHIGAN

No.	Part No.	Qty.	Description
A	[1]284055	1	Converter assy
1	222312	1	Spring
2	222318	1	Plunger
3	214946	1	Seat
4	40K-02	1	Plug
5	40K-02	1	Plug
6	[2]801548	1	Valve press reg
7	220983	1	Stop
8	25K-30018	1	O-ring
9	660178	1	Pin roll
10	5C-616	4	Bolt
11	5E-05	4	Lockwasher
12	660178	1	Pin roll
13	220982	1	Spring
14	220981	1	Spring
15	801067	1	Piston
16	25K-30018	1	O-ring
17	220983	1	Stop
18	[3]450229	1	Pump conv charging
19	[4]233128	3	Bolt
20	§[5]———	3	Lockwasher
21	551906	1	Gasket
22	214961	1	Sleeve
23	713186	3	Ring snap
24	214929	3	Washer
25	224039	3	Ring snap
26	214928	3	Shaft Pump
27	214954	3	Ring snap
28	214956	3	Bearing
29	214930	3	Spacer
30	214936	3	Bearing
31	201951	1	Nut
32	102745	1	Washer
33	25K-40112	1	O-ring
34	206864	1	Seal
35	16F-08	1	Plug
36	13F-16	1	Plug
37	25K-40104	1	O-ring
38	214949	1	Gasket
39	211433	1	Breather
40	227265	1	Valve check
41	801546	1	Housing
42	711298	3	Ring Snap
43	[6]214931	3	Gear
44	4E-06	12	Lockwasher
45	23C-620	12	Bolt
46	40K-02	2	Plug
47	4E-06	3	Lockwasher
48	1C-628	3	Bolt
49	214940	1	Flange
50	1F-424	1	Pin cotter
51	25K-40512	1	O-ring
52	214730	2	Stud
53	4E-07	2	Lockwasher
54	8D-07	2	Nut

[1](C272-90) Inc. 1→38, 41→43, 46→90, 95→100.) [2]Inc. 7, 8, 9, 12→17

[3]When converter charging pump replacement is required, only a new factory built and tested pump should be used. Proper operation of converter and transmission is dependent on an efficient charging pump. Damage possible by use of a field rebuilt pump can result in repair costs exceeding cost of a new pump alone.

[4]Inc. 20 [5]See 19 [6](39T)

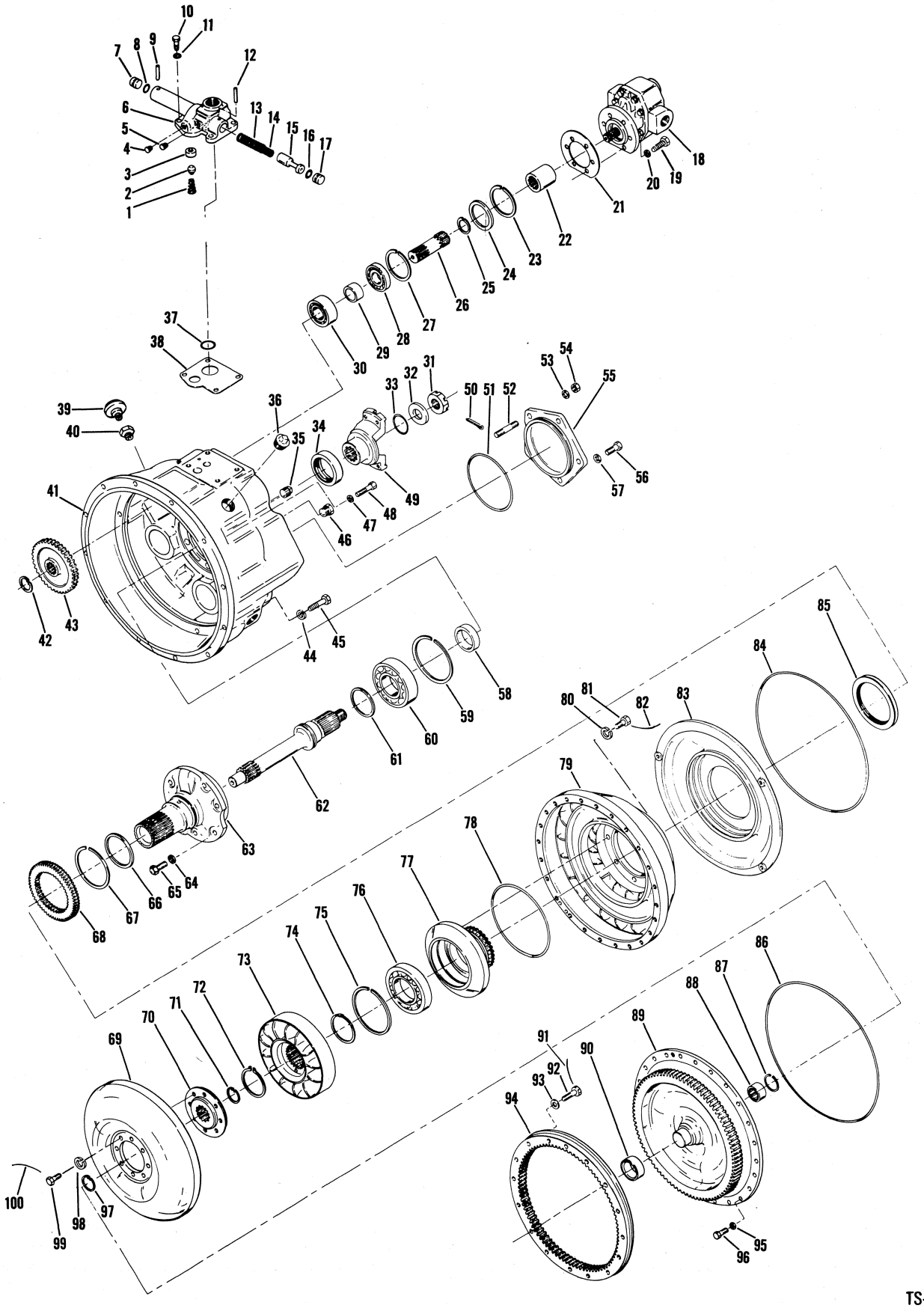

PM 2939
Printed in U.S.A.

Converter Assembly (Cont.)

MICHIGAN

No.	Part No.	Qty.	Description
55	214979	1	Cover
56	1C-720	3	Bolt
57	4E-07	3	Lockwasher
58	214984	1	Spacer
59	214953	1	Ring snap
60	231554	1	Bearing
61	222079	1	Ring
62	214983	1	Shaft turbine
63	214932	1	Stator support
64	7E-08	6	Lockwasher
65	1C-820	6	Bolt
66	221653	1	Ring piston
67	224009	1	Ring snap
68	[7]214951	1	Gear
69	222684	1	Turbine
70	214924	1	Hub turbine
71	659065	1	Ring snap
72	743035	1	Ring snap
73	229565	1	Reaction member
74	229566	1	Spacer
75	214953	1	Ring snap
76	214596	1	Bearing
77	214923	1	Hub impeller
78	60K-40616	1	O-ring
79	214920	1	Impeller
80	25E-19	8	Lockwasher
81	4C-714	8	Bolt
82	‡[11]———	—	Lockwire
83	801818	1	Baffle
84	214939	1	O-ring
85	214941	1	Seal
86	232535	1	O-ring
87	666542	1	Ring snap
88	214988	1	Bearing
89	234503	1	Cover impeller
90	222006	1	Sleeve
91	[10]———	8	Lockwire
92	233092	16	Bolt
93	215909	16	Washer
94	233089	1	Gear
95	§[8]———	24	Lockwasher
96	[9]233128	24	Bolt
97	659065	1	Ring Snap
98	619023	8	Washer
99	209313	8	Bolt
100	‡[11]———	—	Lockwire

[7](41T)
[8]See 96
[9]Inc. 95
[10]14 ga. x 16" lg.
[11]18 ga.

CLARK EQUIPMENT

Cylinder Assembly, Boom — 6″ (152.4 mm)

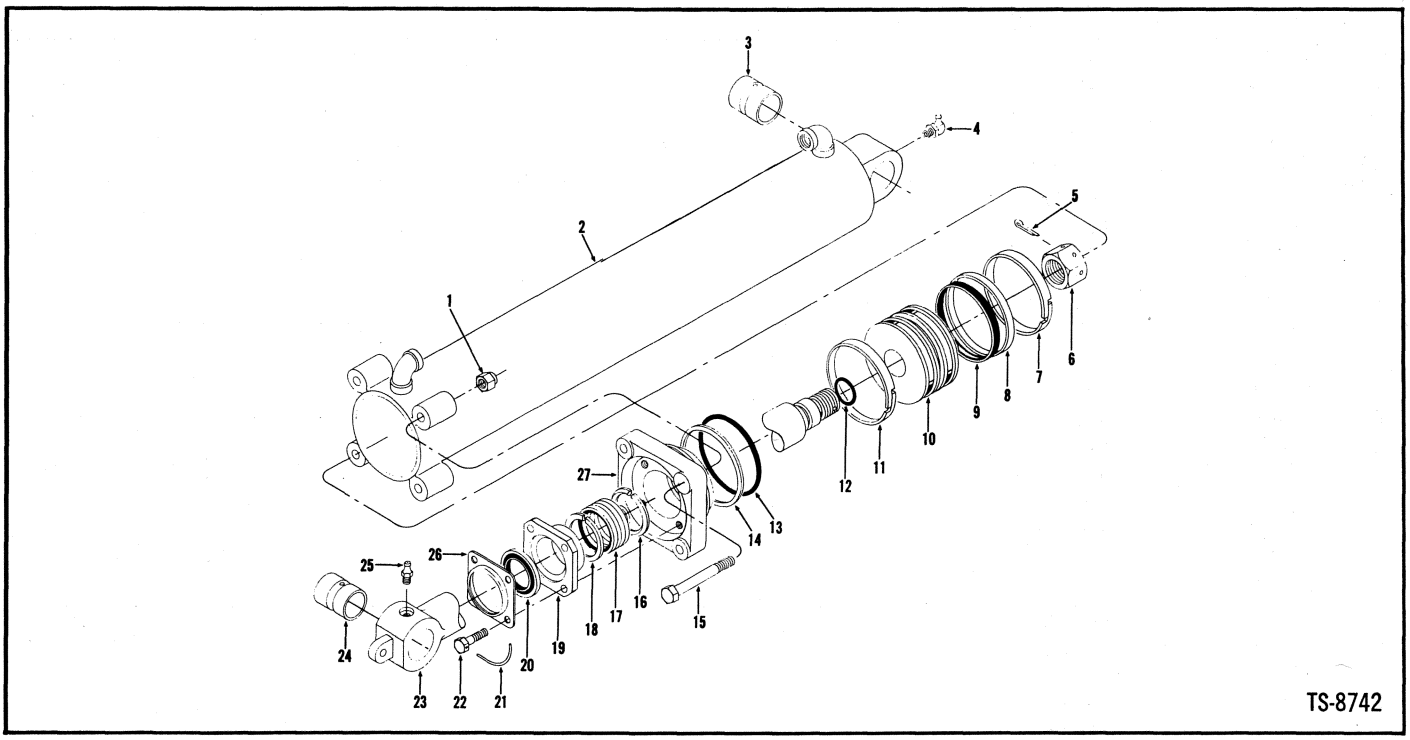

No.	Part No.	Qty.	Description
A	[1]1504471	1	Cylinder assy
1	18D-10	4	Nut
2	[2]586146	1	Cylinder
3	531584	1	Bushing
4	11H-15	1	Fitting grease
5	1F-1068	1	Pin cotter
6	1514650	1	Nut
7	1503013	1	Wear Ring
8	1502845	1	Outer Ring
9	1503467	1	Inner Ring
10	1502846	1	Piston
11	1503013	1	Wear ring
12	25K-60120	1	O-ring
13	1512907	1	O-ring
14	1550997	1	Ring back-up
15	24C-1088	4	Bolt
16	[6]————	2	Male adapter
17	[5]2501108	1	Packing
18	[6]————	2	Female adapter
19	527812	1	Gland
20	550450	1	Seal
21	[3]————	2	Lockwire
22	3C-818	4	Bolt
23	[4]586149	1	Rod
24	531584	1	Bushing
25	10H-35	1	Fitting grease
26	522617	1	Retainer
27	945115	1	Cap

[1]Inc. 1→3, 5→24, 26, 27.
[2]Inc. 3
[3]16 ga. x 13″ lg.
[4]Inc. 24.
[5]Inc. 16, 18
[6]See 17

PM 2939
Printed in U.S.A.

Cylinder Assembly, Bucket – 5″ (122.7 mm)

MICHIGAN

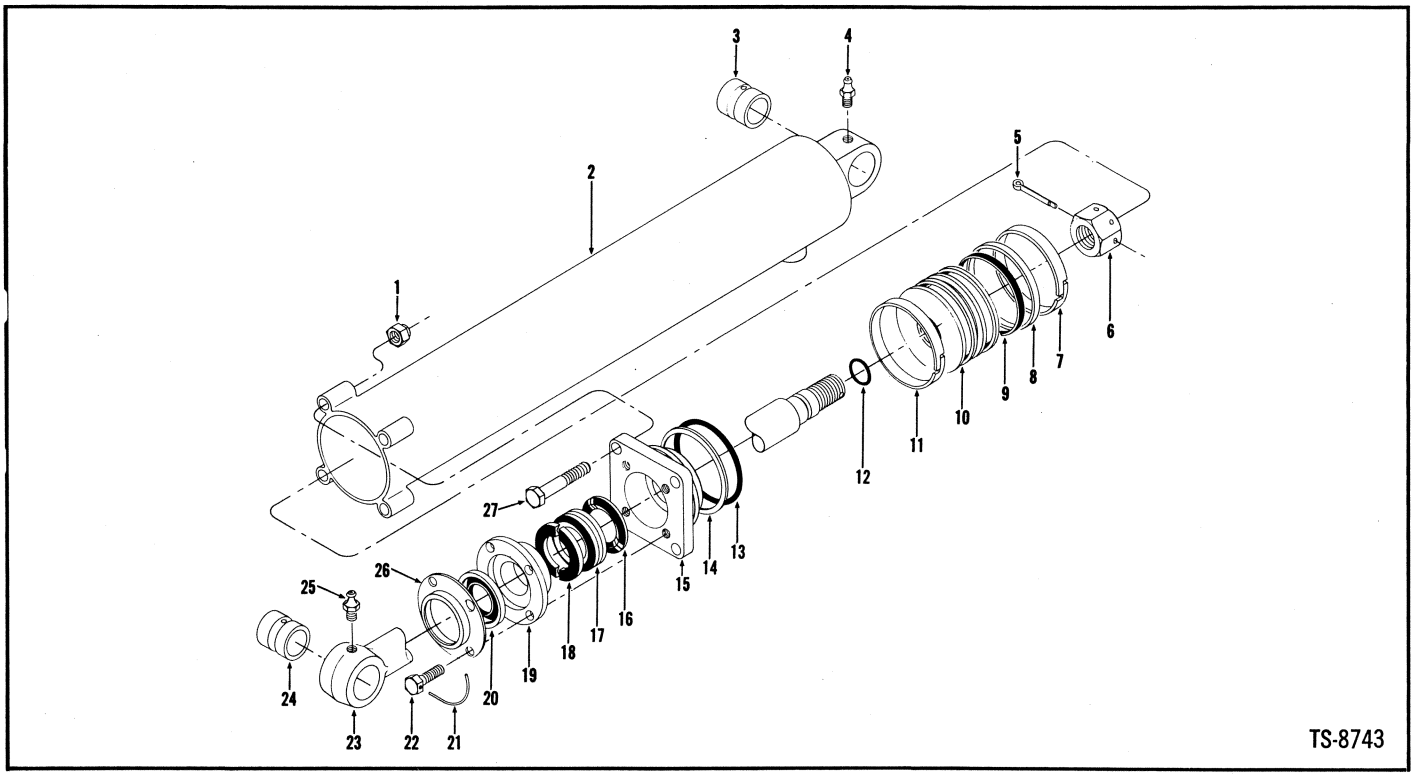

No.	Part No.	Qty.	Description
A	[1]1504470	1	Cylinder assy
1	18D-08	4	Nut
2	[2]586152	1	Cylinder
3	586435	1	Bushing
4	10H-25	1	Fitting grease
5	1F-860	1	Pin cotter
6	1514622	1	Nut
7	1536234	1	Wear ring
8	1536235	1	Outer ring
9	1503465	1	Inner ring
10	1503597	1	Piston
11	1536234	1	Wear ring
12	25K-40112	1	O-ring
13	1512905	1	O-ring
14	947596	1	Ring back-up
15	945120	1	Cap
16	[6]———	2	Male adapter
17	[5]2501107	1	Packing
18	[6]———	2	Female adapter
19	550087	1	Gland
20	587250	1	Seal
21	[3]———	2	Lockwire
22	4C-616	4	Bolt
23	[4]586155	1	Rod
24	586435	1	Bushing
25	10H-25	1	Fitting grease
26	550089	1	Retainer
27	24C-856	4	Bolt

[1]Inc. 1➔3, 5➔24, 26, 27.
[2]Inc. 3
[3]16 ga. x 13″ lg.
[4]Inc. 24
[5]Inc. 16, 18
[6]See 17

PM 2939
Printed in U.S.A.

CLARK EQUIPMENT

Cylinder Assembly, Steering — 2.5″ (63.5 mm)

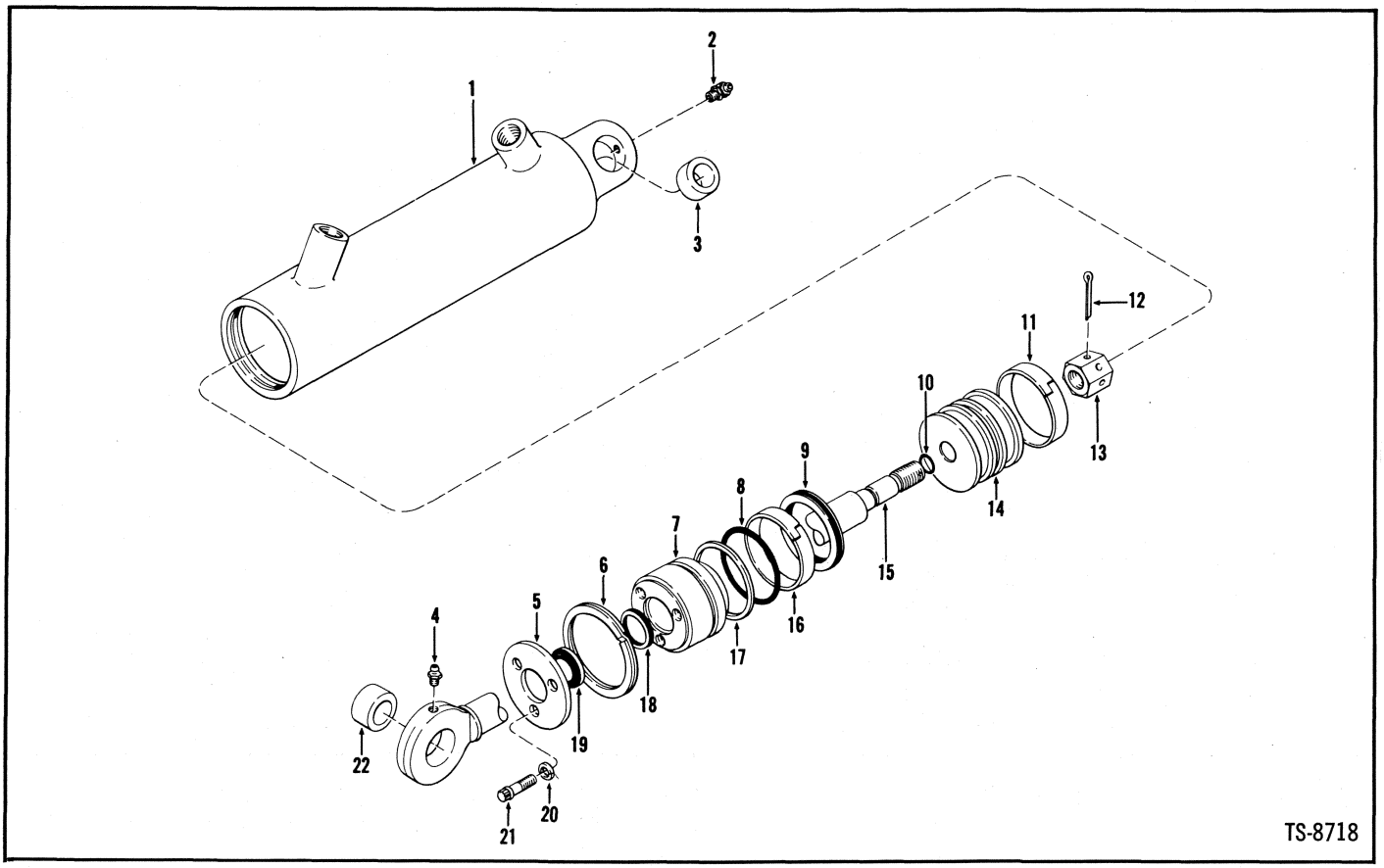

No.	Part No.	Qty.	Description
A	[1]1524562	1	Cylinder assy — R.H.
B	[2]1524563	1	Cylinder assy — L.H.
1	1503574	1	Cylinder — R.H.
1A	1503573	1	Cylinder — L.H.
2	11H-25	1	Fitting grease
3	763451	1	Bushing
4	10H-35	1	Fitting grease
5	1503567	1	Retainer
6	713186	1	Ring snap
7	1503570	1	Cap
8	1306625	1	O-ring
9	1524560	1	Seal ring
10	25K-20016	1	O-ring
11	1503572	1	Wear ring
12	1F-424	1	Pin cotter
13	523325	1	Nut
14	1503568	1	Piston
15	545155	1	Rod
16	1503572	1	Wear ring
17	532948	1	Ring back-up
18	713285	1	Seal
19	1522535	1	Wiper
20	22E-05	3	Lockwasher
21	93G-514	3	Bolt
22	763451	1	Bushing

[1](Inc. 1→22)
[2](Inc. 1A→22)
Two (2) Cylinders used on machine. Quantities listed are for one (1) Cylinder.

PM 2939
Printed in U.S.A.

MICHIGAN

Group E

Electrical Gauges & Instrument Panel E3
Electrical System E5
Electrical Wiring & Battery Cables E9
Electrical Wiring Color Code E11
Engine Accessories E12
Engine Air Cleaner Assembly E13
Engine Air Cleaner & Exhaust System E15
Engine Controls E17

PM 2939
Printed in U.S.A.

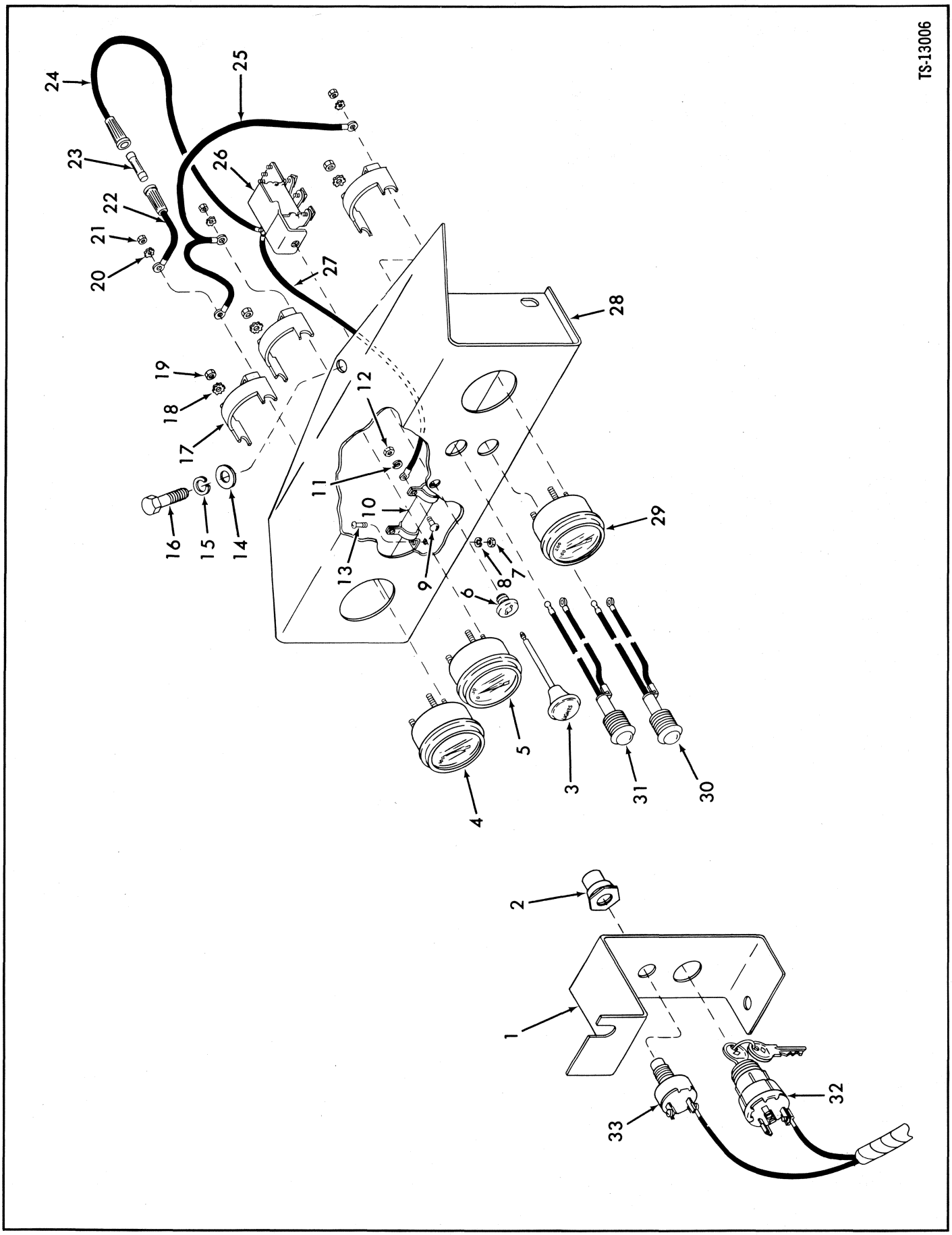

PM 2939
Printed in U.S.A.

Electrical Gauges & Instrument Panel

MICHIGAN

No.	Part No.	Qty.	Description
1	585335	1	Panel
2	857420	1	Boot
3	550742	1	Rod
4	947252	1	Gauge engine temp
5	947250	1	Gauge air pressure
6	550743	1	Bushing
7	12D-06	2	Nut
8	17E-6	2	Lockwasher
9	85G-608	2	Screw
10	556489	1	Resistor
11	17E-6	2	Lockwasher
12	12D-06	2	Nut
13	85G-608	2	Screw
14	25E-17	3	Washer
15	4E-06	3	Lockwasher
16	24C-614	3	Bolt
17	1534136	3	Clamp
18	12E-10	6	Lockwasher
19	14D-10	6	Nut
20	12E-6	6	Lockwasher
21	12D-6	6	Nut
22	[1]———	1	Wire
23	611074	1	Fuse 20A
24	[2]553676	1	Wire assy
25	1516126	1	Wire
26	550741	1	Switch light
27	635376	1	Wire
28	1516161	1	Inst panel
29	947254	1	Gauge converter temp
30	[3]1504956	1	Light warning
30A	943219	1	Bulb
31	[4]1504957	1	Light warning
31A	943219	1	Bulb
32	573548	1	Switch ignition
33	[5]600259	1	Starter button

[1]See 24
[2]Inc. 22, 23
[3]Inc. 30A
Inc. 31A
[5]Inc. 2

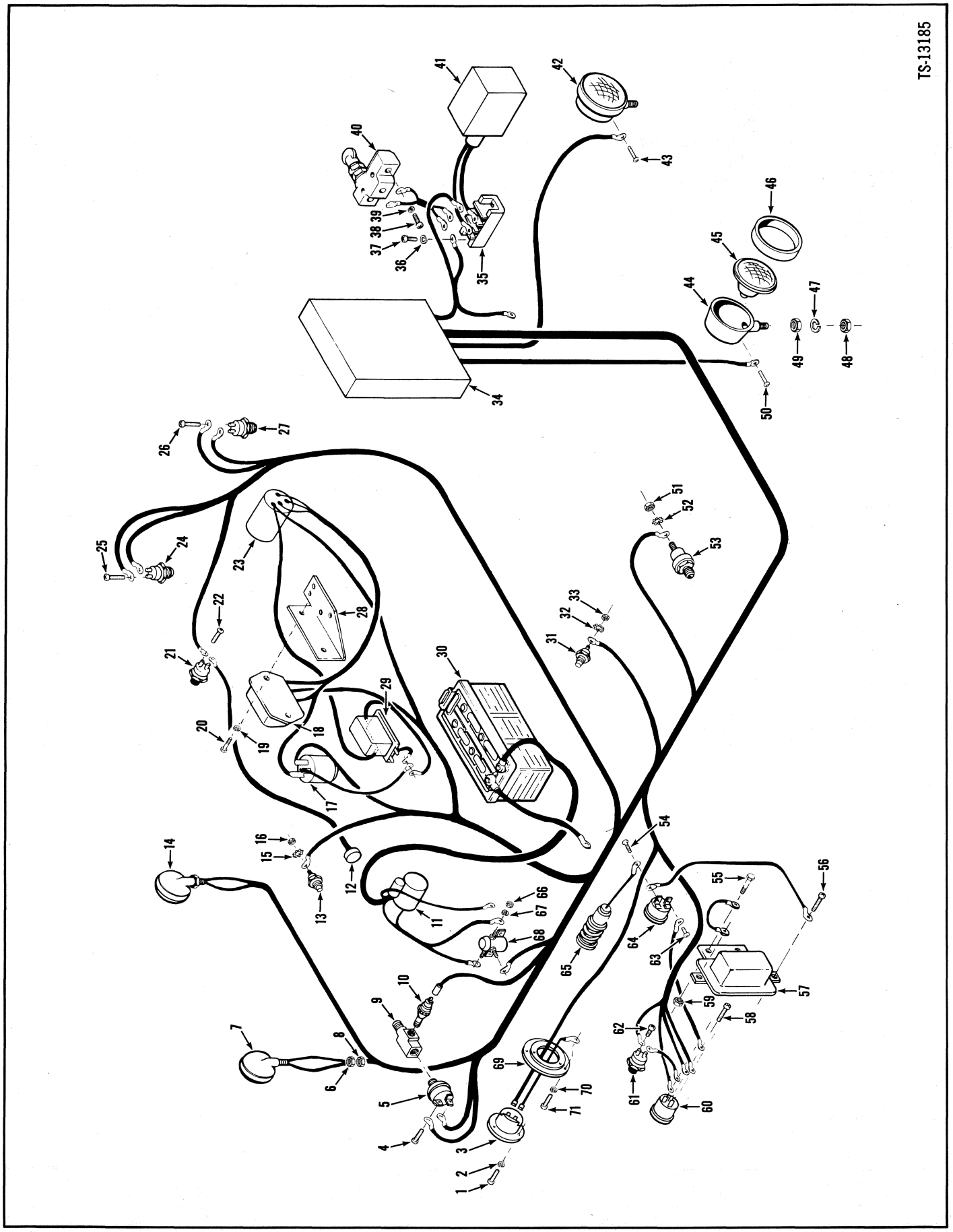
TS-13185

No.	Part No.	Qty.	Description
1	85G-608	3	Screw
2	12E-6	3	Lockwasher
3	[1]1743825	1	Hourmeter
4	85G-1004	2	Screw
5	[2]636260	1	Switch pressure
6	17D-1	2	Nut
7	5203855	1	Light stop & tail
8	17D-1	2	Nut
9	1549038	1	Tee
10	548713	1	Sender eng oil press
11	[3]———	1	Starter
12	[4]———	1	Glow plug
13	551323	1	Sender eng temp
14	5203855	1	Light stop & tail
15	12E-10	1	Lockwasher
16	14D-10	1	Nut
17	3757760	1	Flasher
18	[3]———	1	Regulator voltage
19	4E-05	2	Lockwasher
20	24C-512	2	Bolt
21	[5]600259	1	Button glow plug
21A	857420	1	Boot
22	———	—	Omit
23	[3]———	1	Alternator
24	[6]636260	1	Switch stop light
25	85G-1004	2	Screw
26	———	—	Omit
27	[3]———	1	Switch neutral start
28	1517293	1	Bracket
29	[3]———	1	Relay
30	3220948	1	Battery
31	551323	1	Sender conv temp
32	12E-10	1	Lockwasher
33	14D-10	1	Nut
34	[3]———	1	Inst panel
35	1516644	1	Terminal block
36	17E-10	3	Lockwasher
37	86G-1012	3	Screw
38	86G-1012	2	Screw

[1]Inc. 1 & 2
[2]Inc. 4
[3]See Index
[4]See Engine Parts Manual
[5]Inc. 21A
[6]Inc. 25

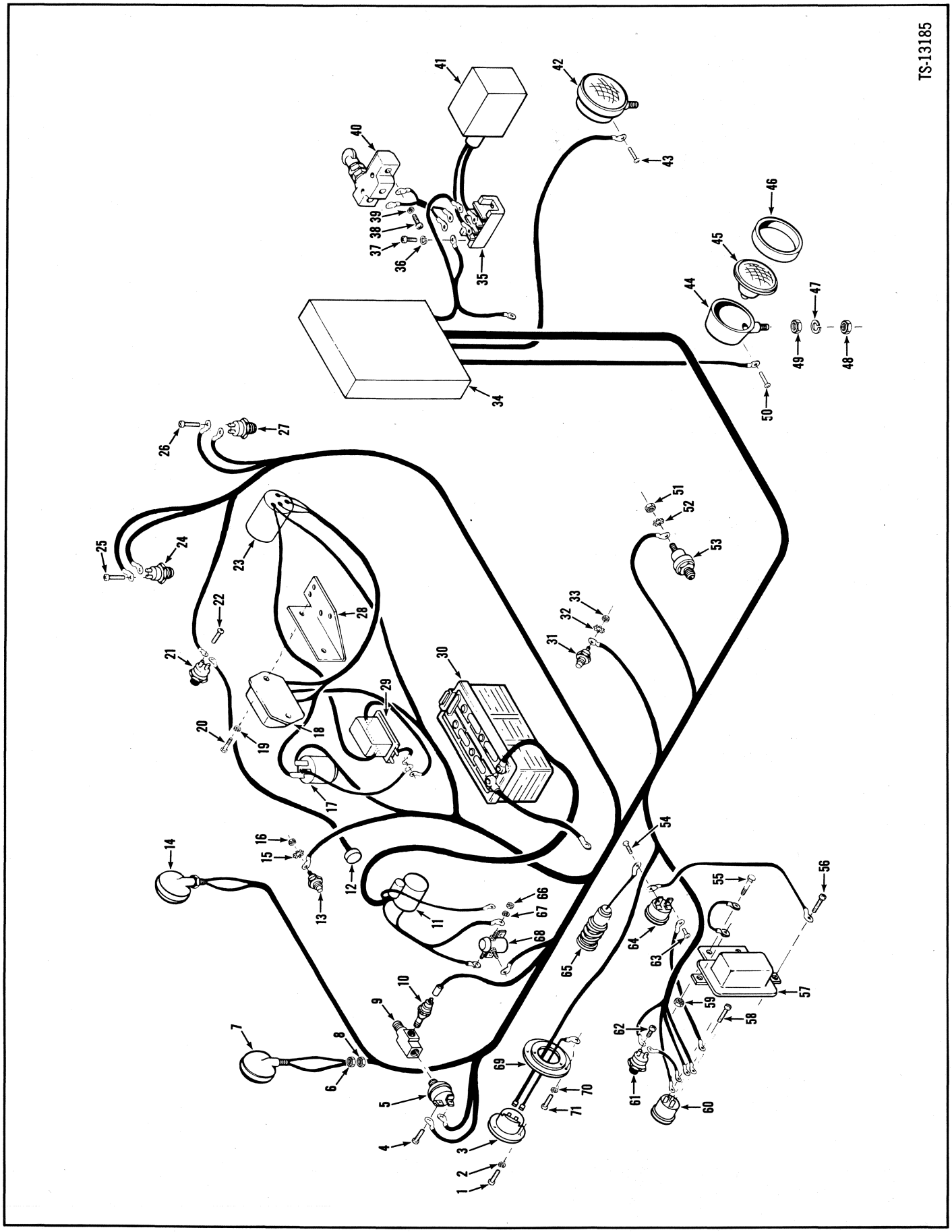

PM 2939
Printed in U.S.A.

No.	Part No.	Qty.	Description
39	17E-10	2	Lockwasher
40	1516645	1	Switch limit
41	1516366	1	Solenoid
42	[9]547529	2	Headlight assy
43	953310	1	Screw
43A	†15E-8	1	Lockwasher
44	§[10]———	2	Housing light
45	944907	2	Sealed unit
46	946389	2	Retainer headlight
47	7E-08	2	Lockwasher
48	7D-08	2	Nut
49	7D-08	2	Nut
50	953310	1	Screw
50A	15E-8	1	Lockwasher
51	14D-10	1	Nut
52	12E-10	1	Lockwasher
53	1534135	1	Sender air press
54	85G-804	1	Screw
55	24C-412	2	Bolt
56	85G-805	2	Screw
57	515763	1	Buzzer brake
58	———	—	Omit
59	18D-04	2	Nut
60	[3]———	1	Switch ignition
61	[3]———	1	Starter button
62	———	—	Omit
63	85G-804	1	Screw
64	[11]1537354	1	Switch relay
65	1548542	1	Light brake warning
65A	†1548521	1	Bulb
66	62D-05	2	Nut
67	23E-05	2	Lockwasher
68	[12]551530	1	Solenoid
69	551251	1	Dampener vibration
70	13E-6	3	Lockwasher
71	85G-608	3	Screw

[3]See Index
Inc. 43→46
[9]See 42
[11]Inc. 54 & 63
[12]Inc. 66 & 67

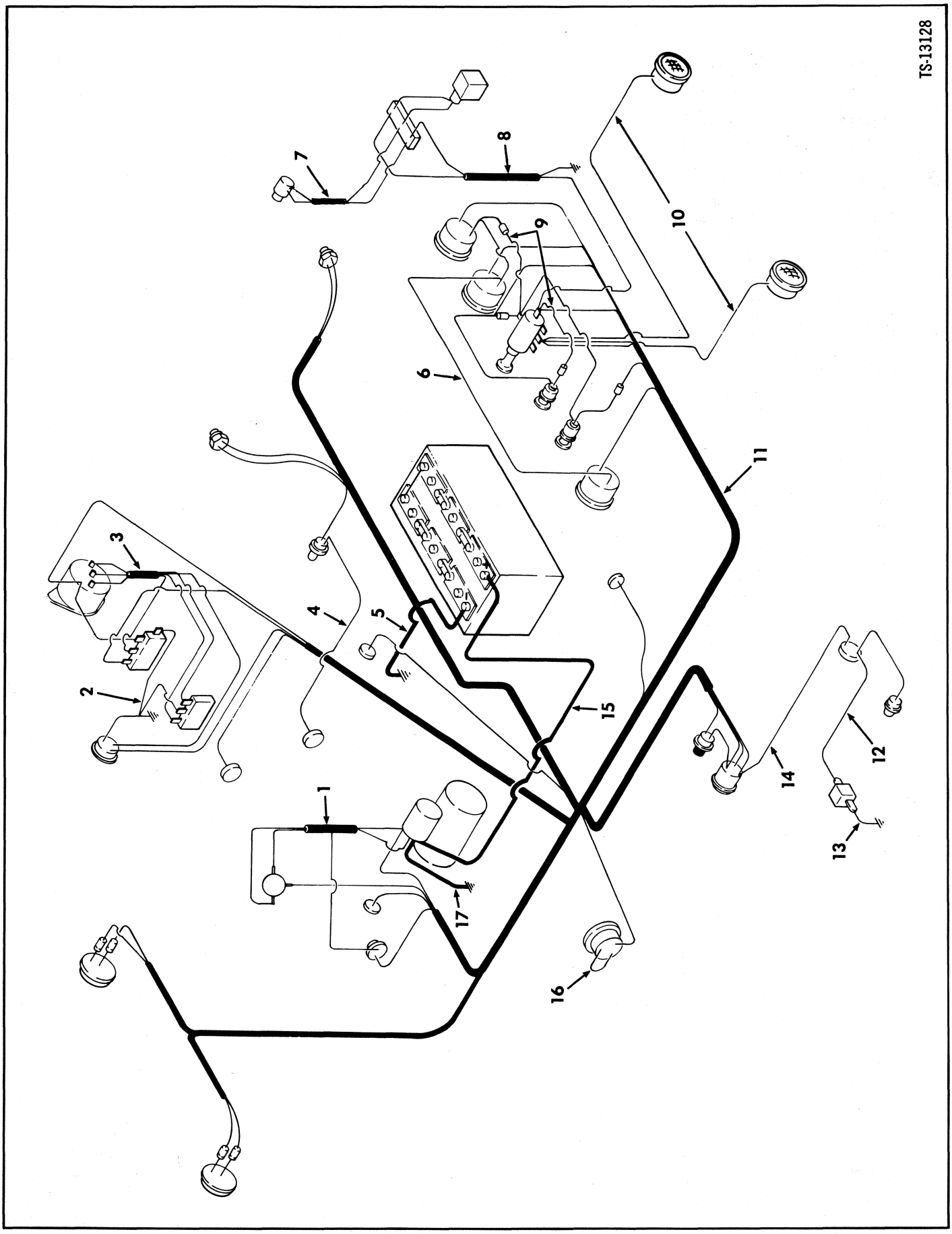

PM 2939
Printed in U.S.A.

Electrical Wiring & Battery Cables

MICHIGAN

No.	Part No.	Qty.	Description
1	1517210	1	Harness
2	1517090	1	Harness
3	1517091	1	Harness
4	522900	1	Wire
5	1538615	1	Cable
6	1516126	1	Wire
7	1516630	1	Wire
8	1516670	1	Wire
9	[1]———	2	Wire
10	585754	2	Wire
11	1517092	1	Harness
12	663579	1	Wire
13	543483	1	Wire
14	658516	1	Wire
15	1538614	1	Cable
16	558960	1	Wire
17	755138	1	Cable

[1]See Electrical Gauges & Instrument Panel

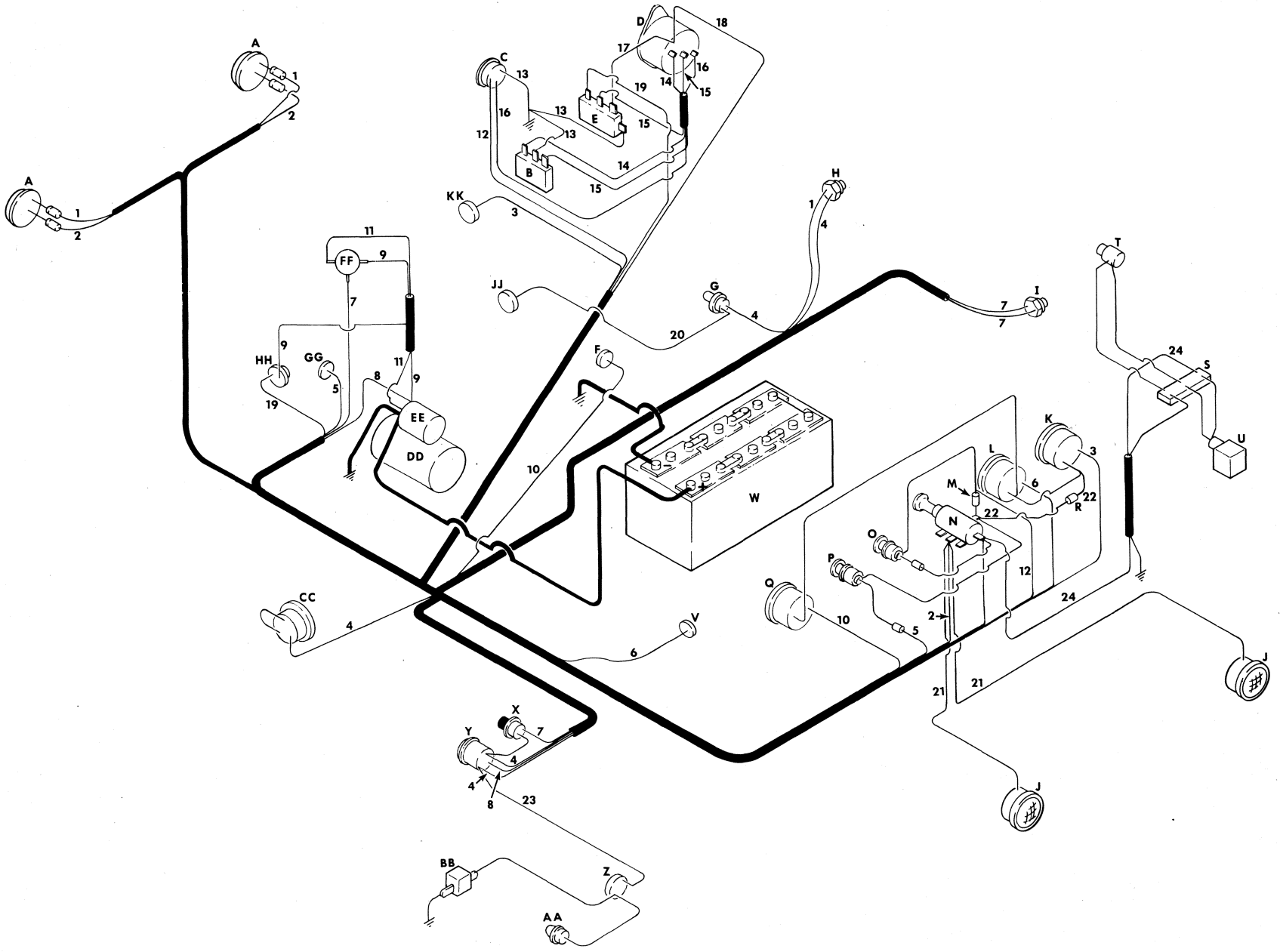

TS-11960

PM 2939
Printed in U.S.A.

ELECTRICAL WIRING COLOR CODE

MICHIGAN

Ref. No.	Color	Color Code
1.	Tan	Stoplights to Brake Light Switch
2.	Yellow	Tail Lights to Light Switch
3.	Brown	Engine Temp. Sender to Engine Temp. Gauge
4.	Red & White	Ignition Switch to Hourmeter & Switches
5.	Dark Green	Engine Oil Press. Sender to Engine Oil Press. Gauge
6.	Light Green	Air Press. Sender to Air Press. Gauge
7.	White	Starter Button to Neutral Start Switch to Solenoid
8.	Red #10	Ignition Switch to Starter Solenoid
9.	Red	Solenoid to Press. Switch & Starter Solenoid
10.	Grey	Converter Temp. Sender to Converter Temp. Gauge
11.	Black	Solenoid to Starter Solenoid
12.	Purple & White	Resistor to Warning Lamp Relay
13.	Black	Warning Lamp Relay, Voltage Regulator & Alternator Relay to Ground
14.	Orange	Alternator to Voltage Regulator
15.	White	Alternator to Voltage Regulator & Alternator Relay
16.	Yellow	Alternator to Warning Lamp Relay
17.	Red	Alternator to Alternator Relay
18.	Red & Black	Alternator to Splice (Ignition Switch Red Wire)
19.	Black	Alternator Relay to Pressure Switch
20.	Black	Glow Plug Switch to Glow Plug
21.	Black	Light Switch to Head Lamps
22.	White	Light Switch to 4 Amp Fuse to Engine Temp. Gauge
23.	Black	Ignition Switch to Low Air Press. Switch
24.	Optional	Ignition Switch to Leveler Terminal Block

35R — Perkins

A — Stop & Tail Lamps
B — Voltage Regulator
C — Warning Lamp Relay
D — Alternator
E — Alternator Relay
F — Converter Temp. Sender
G — Glow Plug Switch
H — Brake Light Switch
I — Neutral Start Switch
J — Head Lamps
K — Engine Temp. Gauge
L — Air Press. Gauge
M — Resistor
N — Light Switch
O — Alternator Warning Light
P — Engine Oil Press. Warning Light
Q — Converter Temp. Gauge
R — 4 Amp Fuse
S — Leveler Terminal Block
T — Leveler Micro Switch
U — Leveler Solenoid Valve
V — Air Press. Sender
W — Battery
X — Starter Button
Y — Ignition Switch
Z — Low Air Press. Switch
AA — Brake Warning Light
BB — Buzzer
CC — Hourmeter
DD — Starter
EE — Starter Solenoid
FF — Solenoid
GG — Engine Oil Press. Sender
HH — Press. Switch
JJ — Glow Plug
KK — Engine Temp. Sender

PM 2939
Printed in U.S.A.

All orders for engine assembly or components thereof should be placed with the nearest Perkins Distributor. To obtain proper items, it is necessary to provide your engine model, serial number and necessary group type number for the equipment required. This data is stamped on the options and accessories plate on the rocker cover of engine.

No.	Part No.	Qty.	Description
1	*[1]3677373	1	Alternator
2	*[2]3551918	1	Starter
3	*[3]3757761	1	Relay
4	*[4]3757762	1	Regulator
5	*[5]———	1	Compressor air
6	*[6]3000719	1	Governor air
7	*[7]3677379	1	Fan
8	*[8]3679322	1	Belt fan
9	*[9]6515733	1	Filter oil
10	*[10]3490349	1	Filter fuel (sec)
11	*[11]3712446	1	Filter fuel (primary)

[1]Perkins 2871708
[2]Perkins 2873002
[3]Perkins 2848608
[4]Perkins 2872503
[5]Perkins 2488719
[6]Perkins 30174
[7]Perkins 31258122
[8]Perkins 2612424
[9]Perkins 41321007
[10]Perkins 2656653
[11]Perkins 30451

*Note: The above listed accessory items are furnished by the engine manufacturer. Specifications on these items are subject to change without notice. It is, therefore, recommended that complete model, specifications and serial number of the engine be provided to your Perkins Engine Distributor when ordering these parts.

Engine & Hydraulic System Filter Replacement Elements

No.	Part No.	Qty.	Description
1	948126	1	Engine air cleaner
2	957577	1	Hyd oil steer
3	957577	1	Hyd oil transm — conv
4	3679328	1	Eng oil
5	3725648	1	Eng fuel

Engine Air Cleaner Assembly

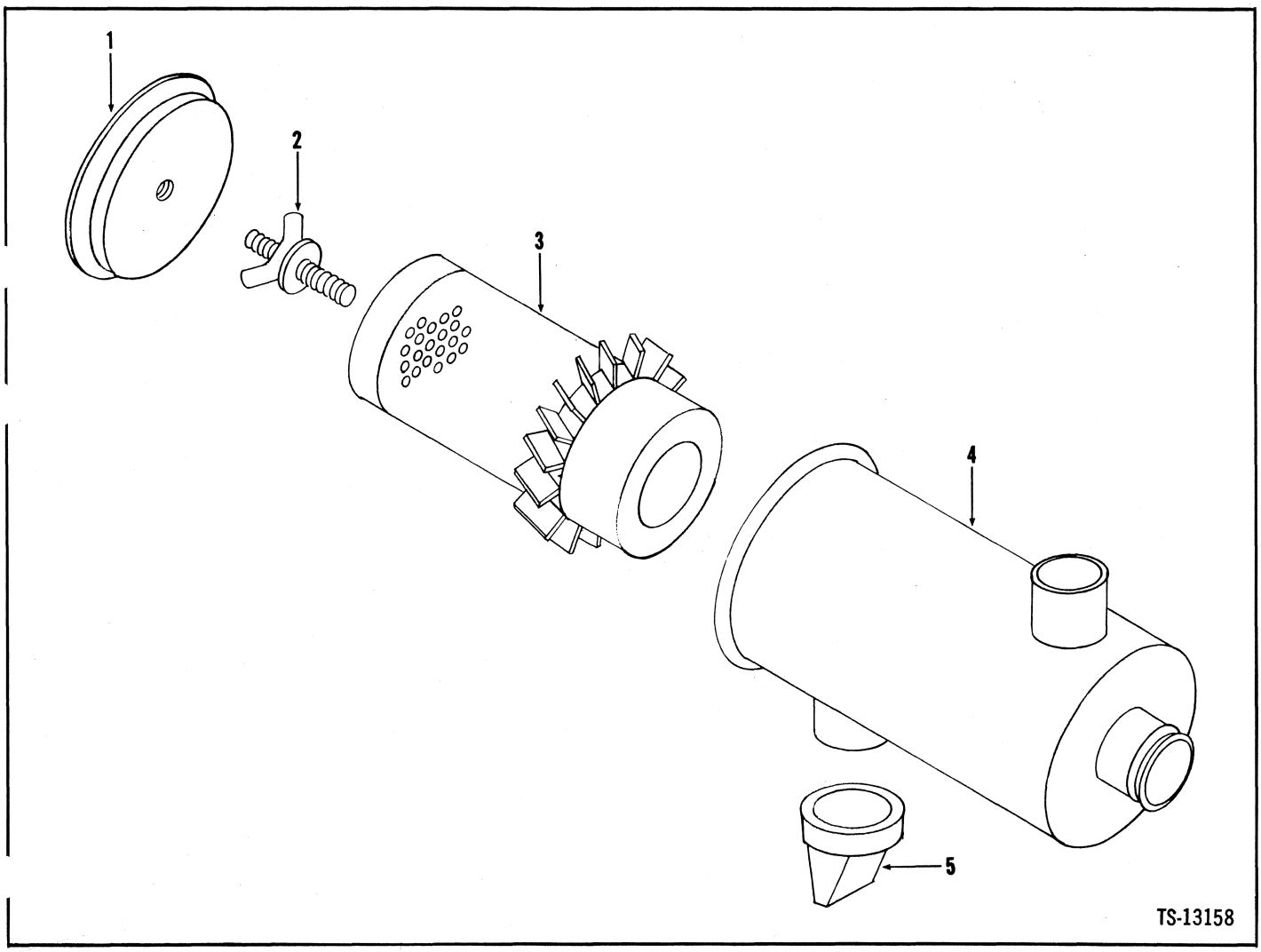

No.	Part No.	Qty.	Description
A	[1]1508075	1	Air cleaner assy
1	948128	1	Cover
2	948127	1	Bolt
3	948126	1	Element
4	§[2]———	1	Body
5	946860	1	Valve

[1]Inc. 1→5
[2]See A

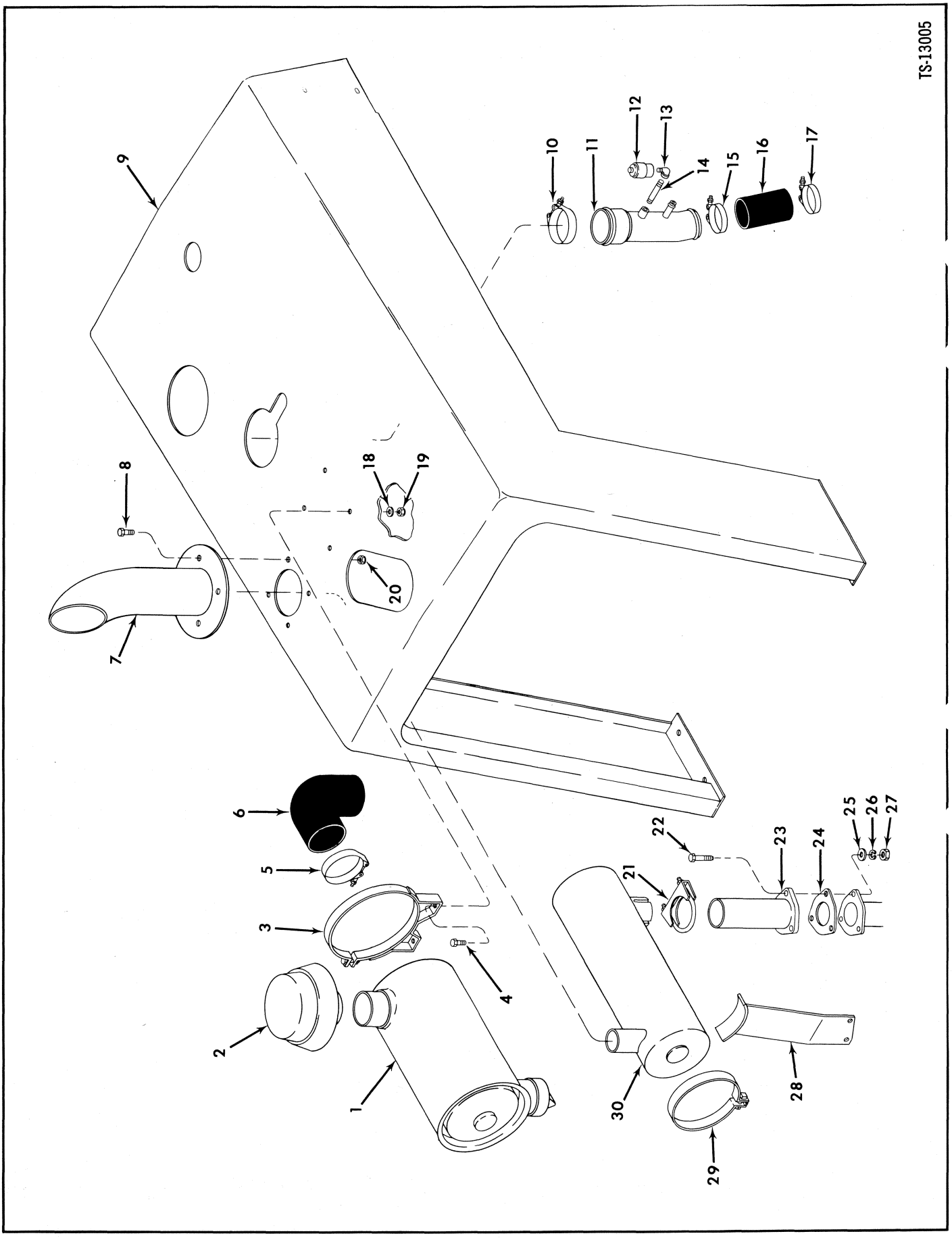

PM 2939
Printed in U.S.A.

Engine Air Cleaner & Exhaust System

MICHIGAN

No.	Part No.	Qty.	Description
1	[1]———	1	Air cleaner assy
2	1902214	1	Cap
3	551660	2	Strap mounting
4	24C-512	4	Bolt
5	545153	1	Clamp
6	1520730	1	Hose
7	1517191	1	Tailpipe
8	24C-616	4	Bolt
9	[1]———	1	Hood
10	545153	1	Clamp
11	1517190	1	Tube
12	1529625	1	Service indic assy
13	29F-1	1	Elbow
14	5K-120	1	Nipple pipe
15	540106	1	Clamp
16	587042	1	Hose
17	540106	1	Clamp
18	619021	4	Washer
19	18D-05	4	Nut
20	18D-04	4	Nut
21	507068	1	Clamp
22	23C-628	3	Bolt
23	1516895	1	Adapter manifold
24	567258	1	Gasket
25	25E-17	3	Washer
26	4E-06	3	Lockwasher
27	61D-06	3	Nut
28	1517192	1	Bracket
29	540689	1	Clamp
30	1517194	1	Muffler

[1]See Index

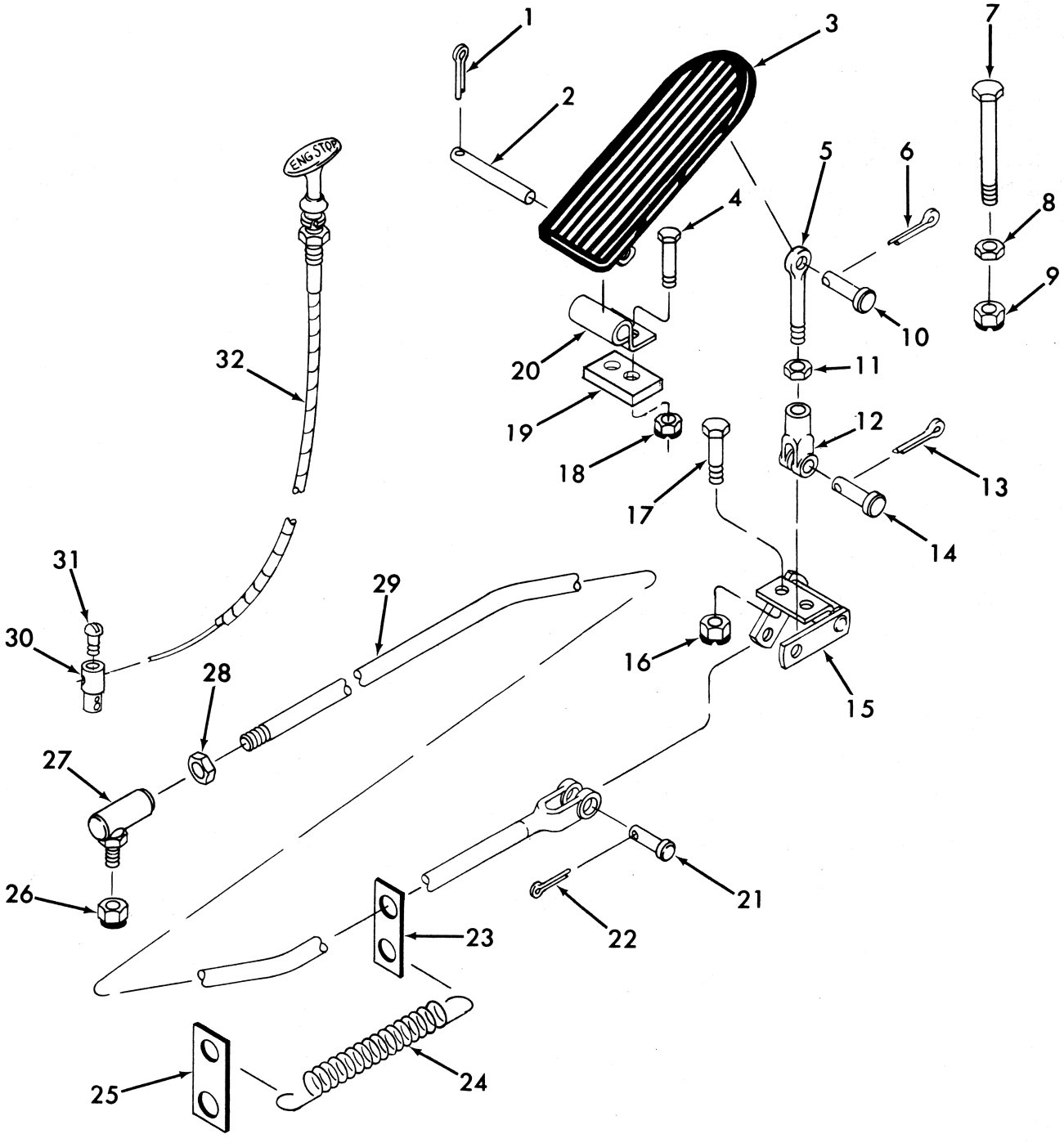

TS-13013

PM 2939
Printed in U.S.A.

MICHIGAN

No.	Part No.	Qty.	Description
1	1F-316	1	Pin cotter
2	623762	1	Pin
3	623829	1	Pedal accelerator
4	24C-416	2	Bolt
5	550619	1	Rod
6	1F-207	1	Pin cotter
7	24C-444	1	Bolt
8	8D-04	1	Nut
9	18D-04	1	Nut
10	4F-04051	1	Pin clevis
11	8D-04	1	Nut
12	2J-4200	1	Clevis
13	1F-207	1	Pin cotter
14	4F-04051	1	Pin clevis
15	1527784	1	Bellcrank assy
16	18D-04	2	Nut
17	24C-412	2	Bolt
18	18D-04	2	Nut
19	572556	1	Bar
20	623760	1	Bracket
21	4F-05062	1	Pin clevis
22	1F-308	1	Pin cotter
23	612279	1	Guide
24	[1]———	1	Spring
25	[1]———	1	Bracket
26	18D-04	1	Nut
27	1306167	1	Ball joint
28	8D-04	1	Nut
29	1516922	1	Rod
30	1523210	1	Connector
31	85G-806	1	Screw
32	1520193	1	Cable

[1]See Perkins Engine Manual
[4]Inc. 23, 27, 28

MICHIGAN

Group F

Frame Assembly F3
Fuel Tank & Lines F7

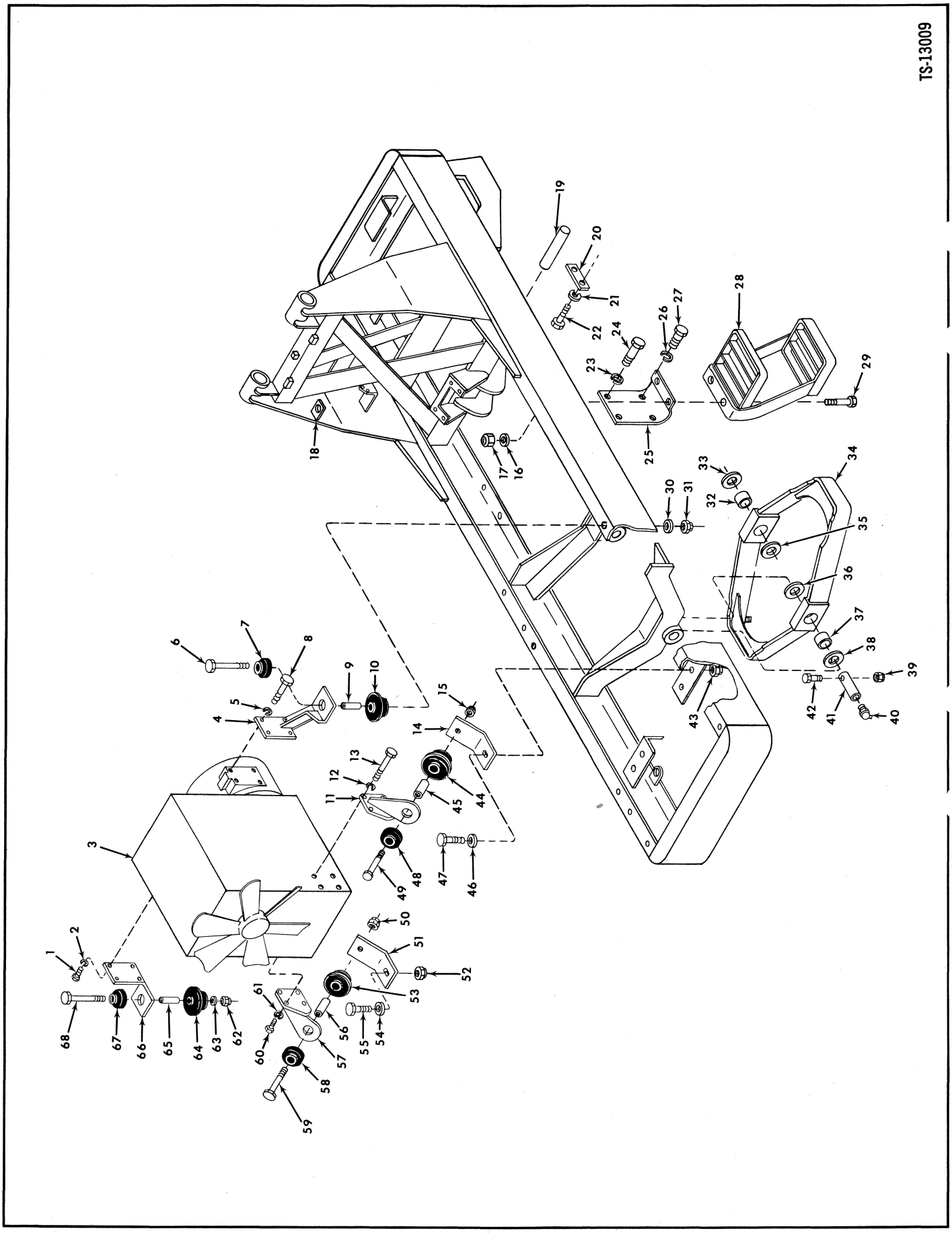

PM 2939
Printed in U.S.A.

Frame Assembly

MICHIGAN

No.	Part No.	Qty.	Description
1	24C-820	4	Bolt
2	4E-08	4	Lockwasher
3	[1]———	1	Engine
4	1516726	1	Engine mount R.H.
5	4E-08	4	Lockwasher
6	24C-864	1	Bolt
7	567416	1	Vibration mount
8	24C-820	4	Bolt
9	652480	1	Sleeve
10	567415	1	Vibration mount
11	1516608	1	Engine mount R.H.
12	4E-07	4	Lockwasher
13	24C-720	4	Bolt
14	1516606	1	Bracket
15	18D-08	1	Nut
16	71D-08	4	Base
17	70D-08	4	Nut
18	1517265	1	Frame
19	1517209	1	Pin
20	1507920	1	Lockplate
21	4E-08	2	Lockwasher
22	24C-820	2	Bolt
23	4E-12	2	Lockwasher
24	23C-1228	2	Bolt top R.H.
25	584165	1	Mount trans R.H.
25A	†584180	1	Mount trans L.H.
26	4E-12	6	Lockwasher
27	23C-1220	6	Bolt
28	585295	2	Step
29	24C-836	4	Bolt
30	71D-08	1	Base
31	70D-08	1	Nut
32	585644	1	Bushing
33	‡551348	—	Washer
34	[2]567290	1	Cradle assy axle
35	‡551347	—	Washer
36	‡551347	—	Washer
37	585644	1	Bushing
38	‡551348	—	Washer
39	18D-08	2	Nut
40	11H-15	2	Fitting grease

[1]See Perkins Parts Manual
[2]Inc. 32, 37

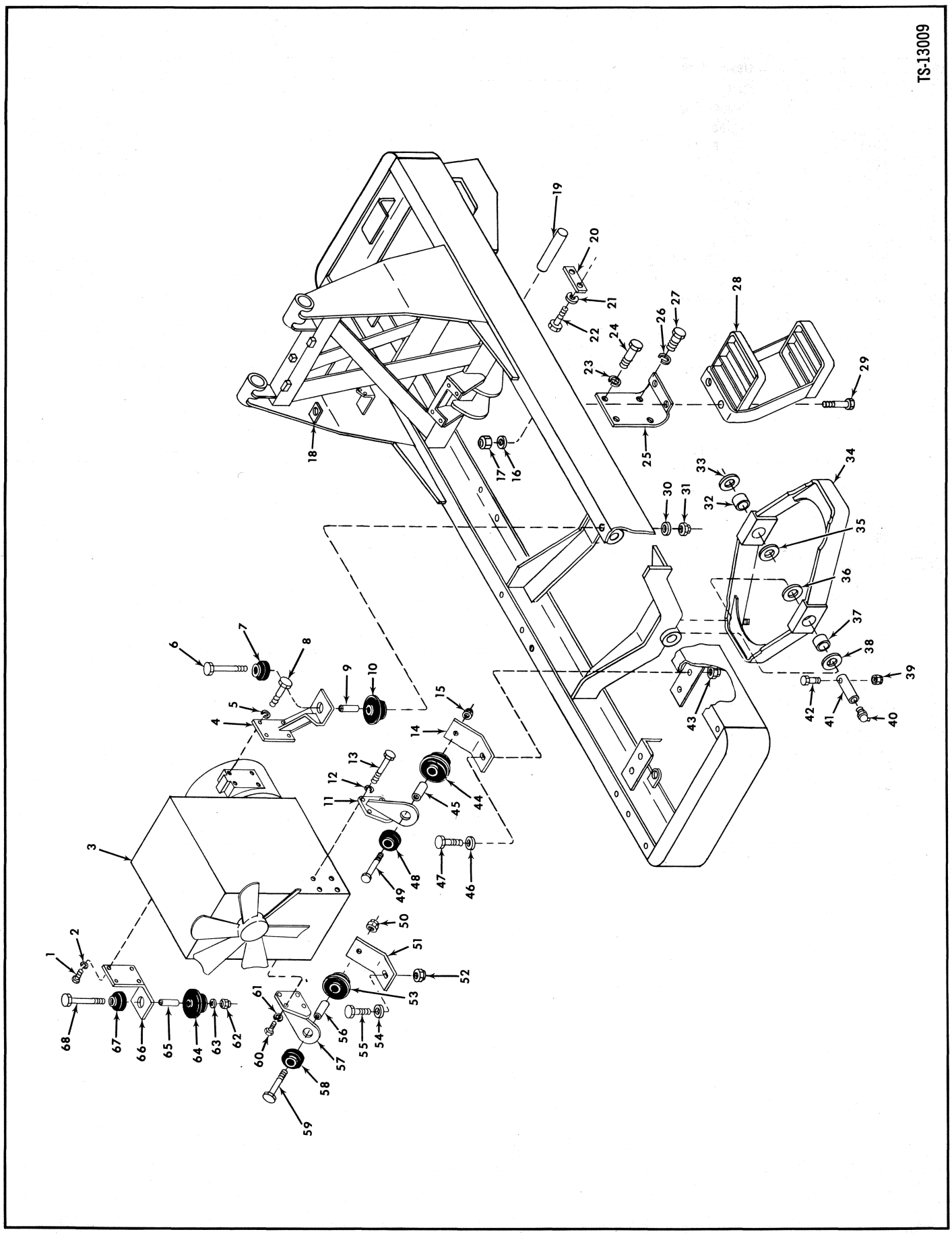

PM 2939
Printed in U.S.A.

Frame Assembly (Continued)

MICHIGAN

No.	Part No.	Qty.	Description
41	585327	2	Pin
42	24C-856	2	Bolt
43	18D-08	1	Nut
44	567415	1	Vibration mount
45	652480	1	Sleeve
46	619029	1	Washer
47	24C-828	1	Bolt
48	567416	1	Vibration mount
49	24C-864	1	Bolt
50	18D-08	1	Nut
51	1516606	1	Bracket
52	18D-08	1	Nut
53	567415	1	Vibration mount
54	619029	1	Washer
55	24C-828	1	Bolt
56	652480	1	Sleeve
57	1516623	1	Engine mount L.H.
58	567416	1	Vibration mount
59	24C-864	1	Bolt
60	24C-720	4	Bolt
61	4E-07	4	Lockwasher
62	70D-08	1	Nut
63	71D-08	1	Base
64	567415	1	Vibration mount
65	652480	1	Sleeve
66	567414	1	Engine mount L.H.
67	567416	1	Vibration mount
68	24C-864	1	Bolt

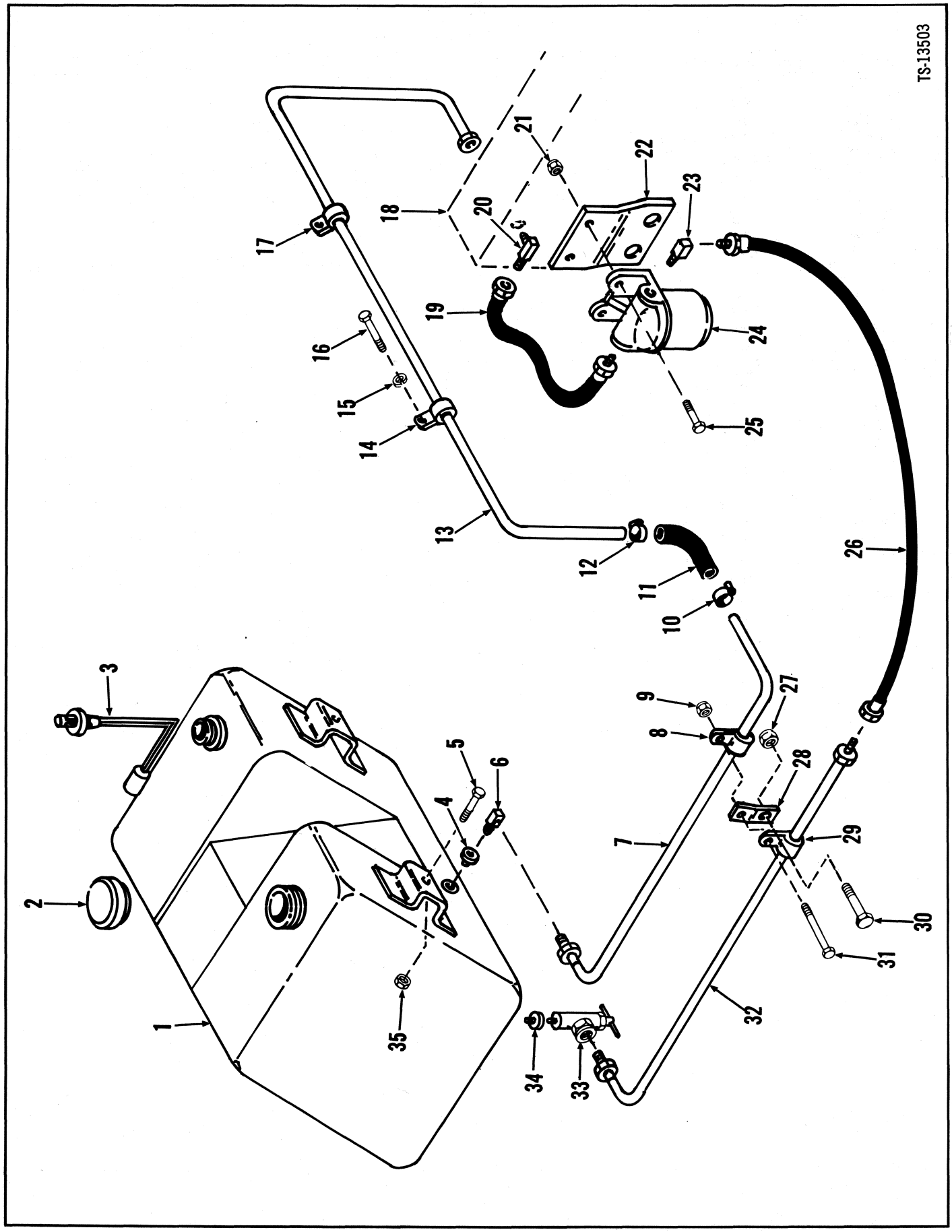

PM 2939
Printed in U.S.A.

Fuel Tank & Lines

MICHIGAN

No.	Part No.	Qty.	Description
1	[1]585116	1	Fuel tank
2	539837	1	Cap
3	946445	1	Gauge fuel
4	19F-1	1	Bushing
5	24C-828	2	Bolt
6	62F-3	1	Elbow
7	3240044	1	Tube
8	30H-15	1	Clip
9	18D-05	1	Nut
10	3220861	1	Clamp
11	3210208	1	Hose
12	3220861	1	Clamp
13	3240045	1	Tube
14	30H-16	1	Clip
15	4E-06	2	Lockwasher
16	24C-612	2	Bolt
17	30H-16	1	Clip
18	[2]———	—	Engine
19	3586032	1	Hose
20	17K-4	1	Elbow
21	18D-05	2	Nut
22	3586031	1	Support
23	29F-1	1	Elbow
23A	†39F-5	1	Connector
24	[3]———	—	Pre filter
25	24C-512	2	Bolt
26	512133	1	Hose
27	18D-08	1	Nut
28	3240050	1	Bracket
29	30H-19	1	Clip
30	24C-816	1	Bolt
31	24C-512	1	Bolt
32	1517289	1	Tube
33	1510577	1	Valve
34	19F-1	1	Bushing
35	18D-08	2	Nut

[1]Inc. 3
[2]See Index
[3]See Engine Parts Manual

MICHIGAN

Group H

Hydraulic Oil Reservoir H3
Hydraulic System, Main H5
Hydraulic System, Steering H7, H9
Hydraulic System, Transmission & Converter H11

Hydraulic Oil Reservoir

MICHIGAN

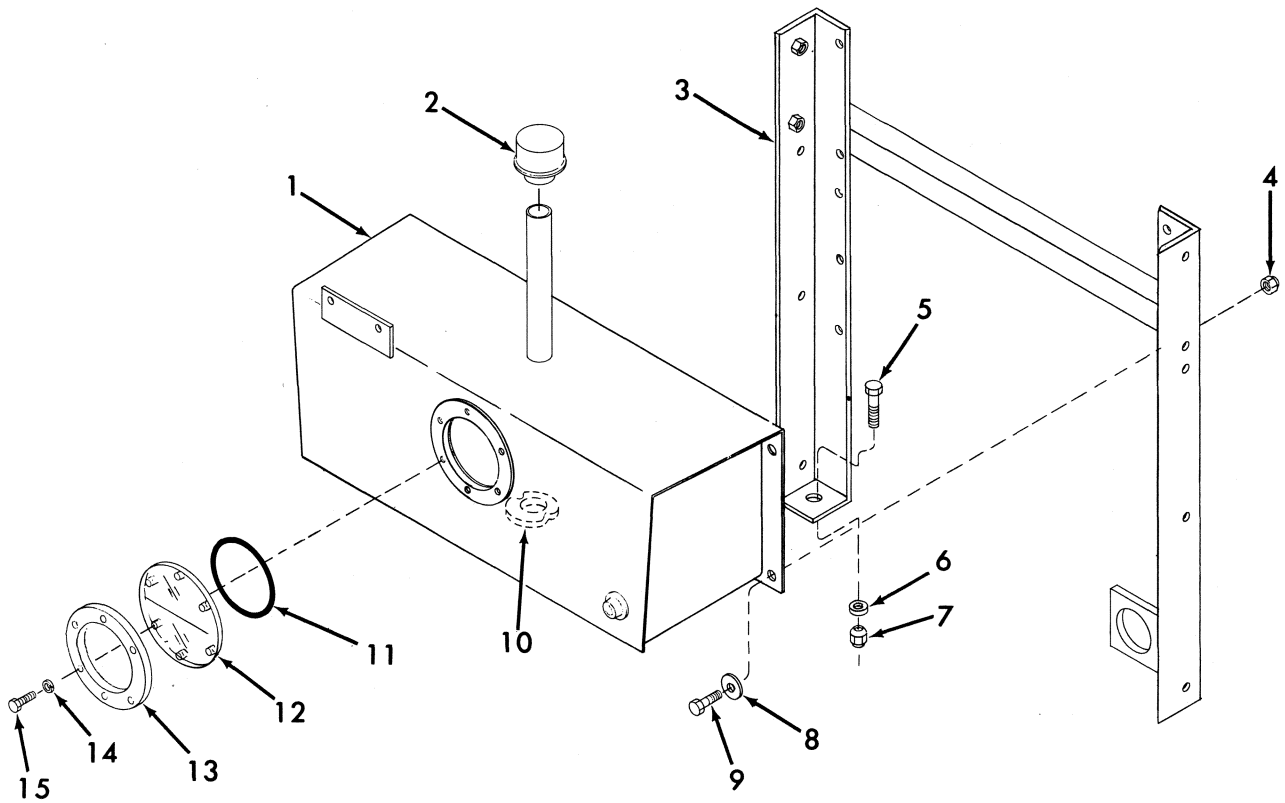

TS-13012

No.	Part No.	Qty.	Description
1	584116	1	Reservoir
2	604639	1	Breather
3	3239542	1	Support
4	18D-08	4	Nut
5	24C-824	2	Bolt
6	71D-08	2	Base
7	70D-08	2	Nut
8	25E-21	3	Washer
9	24C-818	4	Bolt
10	525293	1	Magnet
11	25K-40428	1	O-ring
12	550389	1	Cover
13	550398	1	Ring
14	4E-06	6	Lockwasher
15	24C-616	6	Bolt

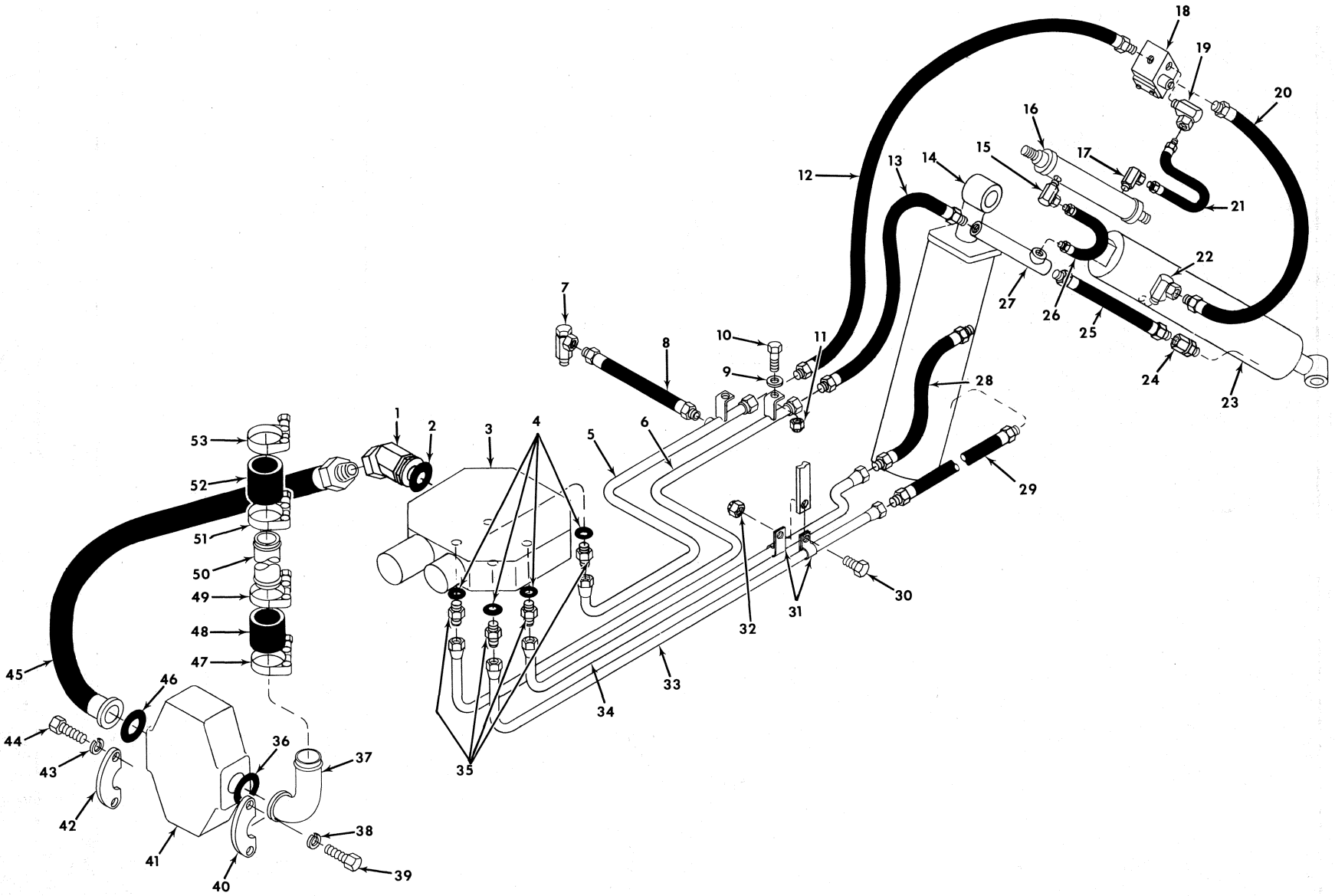
1
2
3
4
5
6
7
8
9
10
11
12
13
14
15
16
17
18
19
20
21
22
23
24
25
26
27
28
29
30
31
32
33
34
35
36
37
38
39
40
41
42
43
44
45
46
47
48
49
50
51
52
53

TS-13000

Hydraulic System, Main

MICHIGAN

No.	Part No.	Qty.	Description
1	[1]583210	1	Adapter
2	91F-8	1	O-ring
3	[6]———	1	Valve assy main
4	91F-9	4	O-ring
5	585861	1	Tube
6	585862	1	Tube
7	[6]———	1	Valve check
8	661558	1	Hose
9	25E-18	2	Washer
10	24C-620	2	Bolt
11	18D-06	2	Nut
12	585867	1	Hose
13	585867	1	Hose
14	[6]———	1	Cylinder assy boom
15	[2]517089	1	Adapter
15A	†91F-6	1	O-ring
16	[6]———	1	Valve level
17	[3]517089	1	Adapter
17A	†91F-6	1	O-ring
18	1516366	1	Solenoid valve
19	[4]517089	1	Adapter
19A	†91F-6	1	O-ring
20	610386	1	Hose
21	661558	1	Hose
22	553843	1	Adapter
23	[6]———	1	Cylinder assy bucket
24	36F-5	1	Adapter
25	612390	1	Hose
26	661558	1	Hose
27	586426	1	Coupling
28	612390	1	Hose
29	612390	1	Hose
30	24C-620	1	Bolt
31	6H-20	2	Clip
32	18D-06	1	Nut
33	1516680	1	Tube
34	1516663	1	Tube
35	[5]1302659	4	Adapter
36	1306623	1	O-ring
37	3585920	1	Suction tube
38	4E-07	4	Lockwasher
39	23C-720	4	Bolt
40	1511520	2	Flange half
41	[6]———	1	Pump main
42	663093	2	Flange half
43	4E-06	4	Lockwasher
44	23C-616	4	Bolt
45	3585765	1	Hose
46	1306622	1	O-ring
47	1545004	1	Clamp
48	536710	1	Hose
49	1545004	1	Clamp
50	562617	1	Tube
51	1545004	1	Clamp
52	536710	1	Hose
53	1545004	1	Clamp

[1]Inc. 2
[2]Inc. 15A
[3]Inc. 17A
[4]Inc. 19A
[5]Inc. 4
[6]See Index

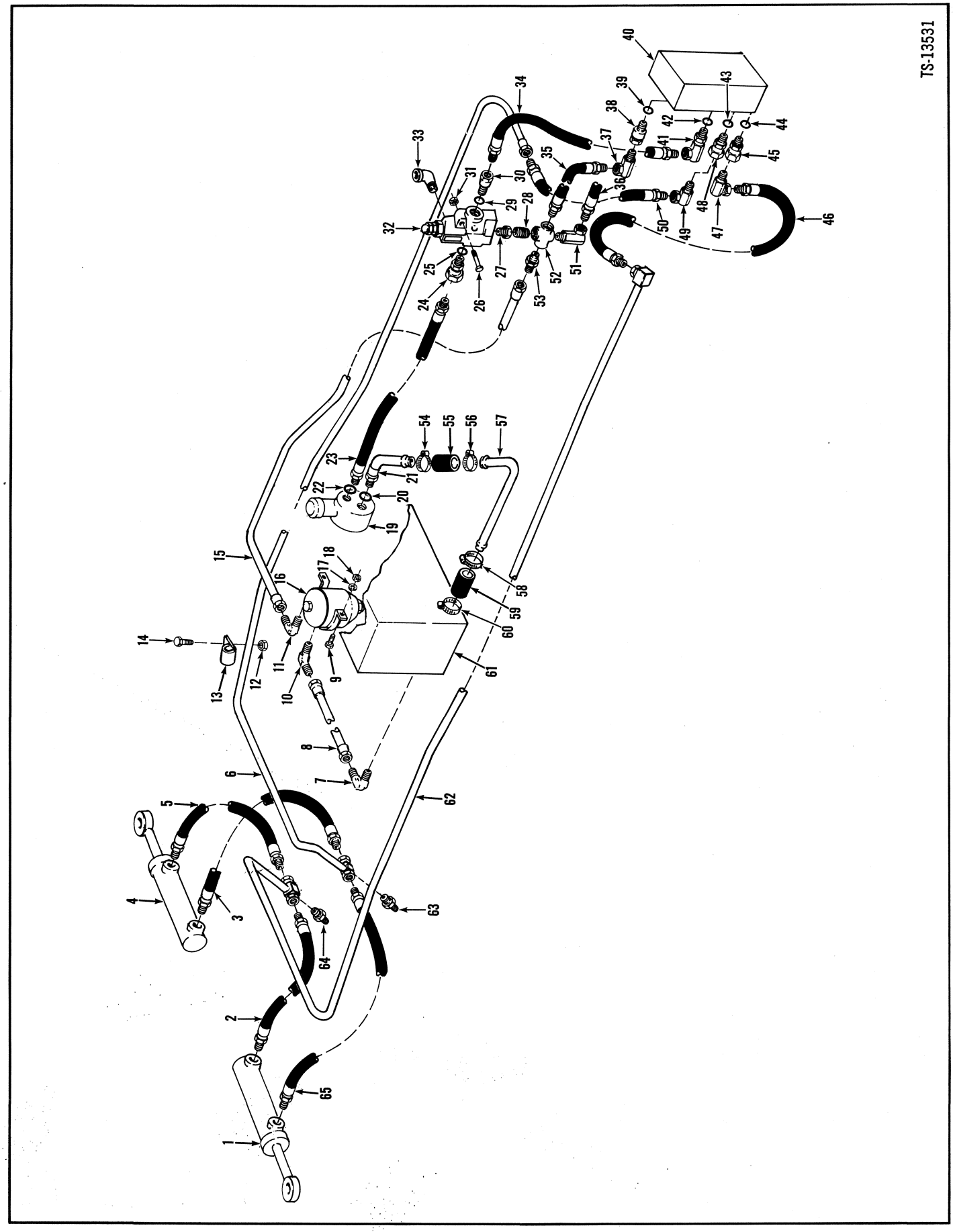

PM 2939
Printed in U.S.A.

Hydraulic System, Steering

MICHIGAN

No.	Part No.	Qty.	Description
1	[1]———	1	Cylinder assy R.H.
2	661558	1	Hose
3	661558	1	Hose
4	[1]———	1	Cylinder assy L.H.
5	661558	1	Hose
6	1517267	1	Tube L.H.
7	1303618	1	Elbow
8	586013	1	Tube
9	24C-516	2	Bolt
10	83F-7	1	Elbow
11	83F-7	1	Elbow
12	18D-08	2	Nut
13	558602	4	Clip
14	24C-824	2	Bolt
15	1517196	1	Tube
16	[2]558598	1	Filter
16A	†957577	1	Filter element
16B	†558599	1	Strap mounting
17	25E-15	2	Washer
18	18D-05	2	Nut
19	[1]———	1	Pump steering
20	91F-8	1	O-ring
21	[3]1524788	1	Tube
22	91F-6	1	O-ring
23	[4]3585750	1	Hose
24	[5]743823	1	Adapter union
25	91F-7	1	O-ring
26	24C-540	2	Bolt
27	356617	1	Bushing
28	5K-409	1	Nipple
29	91F-7	1	O-ring
30	528691	1	Connector
31	18D-05	2	Nut
32	[1]———	1	Relief valve assy

[1]See Index
[2]Inc. 16A
[3]Inc. 20
[4]Inc. 22
[5]Inc. 25

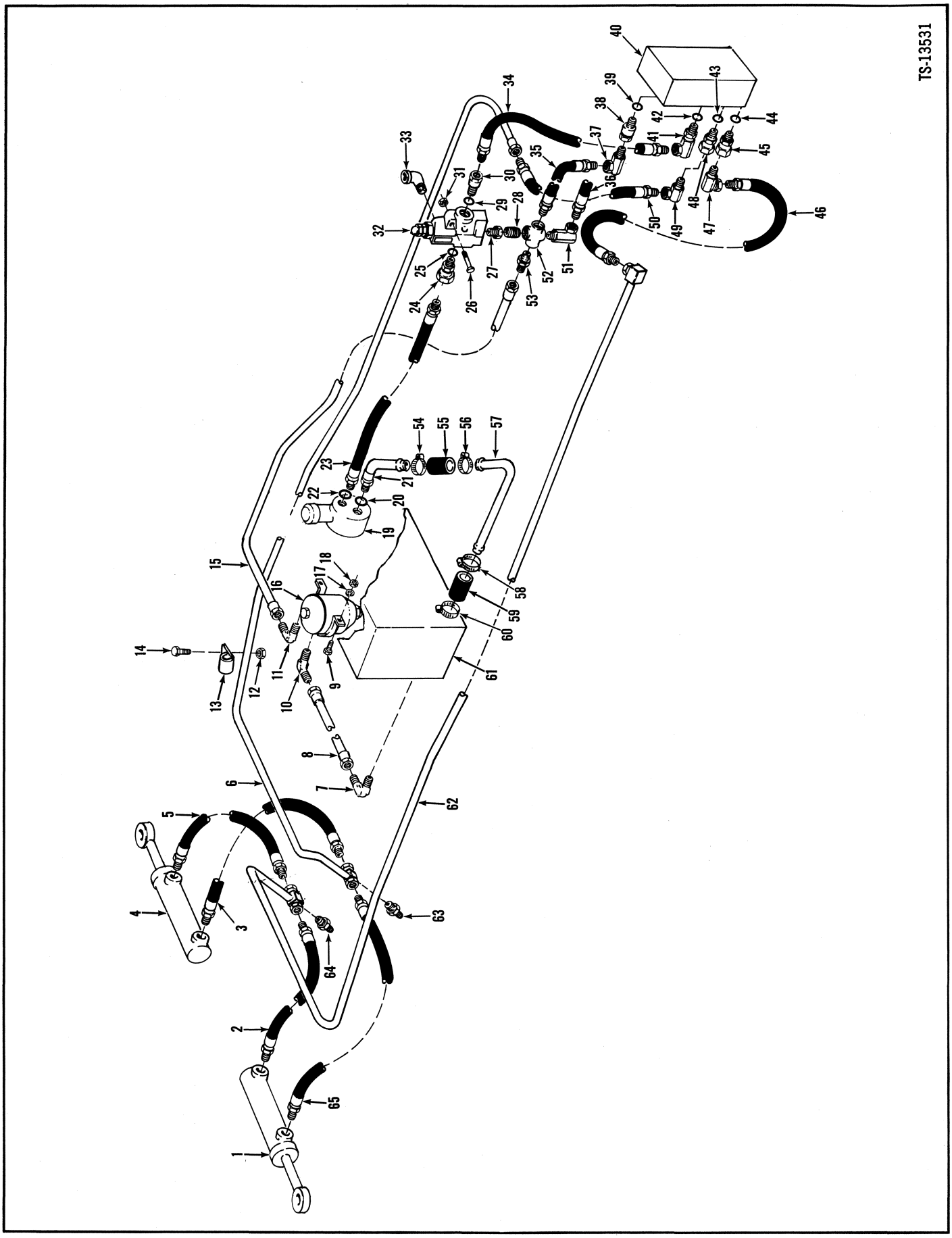

PM 2939
Printed in U.S.A.

Hydraulic System, Steering (Continued)

MICHIGAN

No.	Part No.	Qty.	Description
33	26F-1	1	Elbow
34	661558	1	Hose
35	661558	1	Hose
36	661558	1	Hose
37	1514341	1	Elbow
38	[6]556579	1	Connector
39	91F-6	1	O-ring
40	[1]———	1	Steer valve
41	[7]517089	1	Elbow
42	91F-6	1	O-ring
43	91F-6	1	O-ring
44	91F-6	1	O-ring
45	[8]661564	1	Adapter union
46	661558	1	Hose
47	31F-4	1	Adapter union
48	[9]661564	1	Adapter union
49	31F-4	1	Adapter union
50	661558	1	Hose
51	60K-08	1	Elbow
52	21F-4	1	Cross
53	89F-7	1	Connector
54	1545186	1	Clamp
55	1545741	1	Hose
56	1545186	1	Clamp
57	562616	1	Tube
58	1545186	1	Clamp
59	1545741	1	Hose
60	1545186	1	Clamp
61	[1]———	1	Reservoir
62	1517266	1	Tube
63	641297	1	Bleeder
64	641297	1	Bleeder
65	661558	1	Hose

[1]See Index
[6]Inc. 39
[7]Inc. 42
[8]Inc. 44
[9]Inc. 43

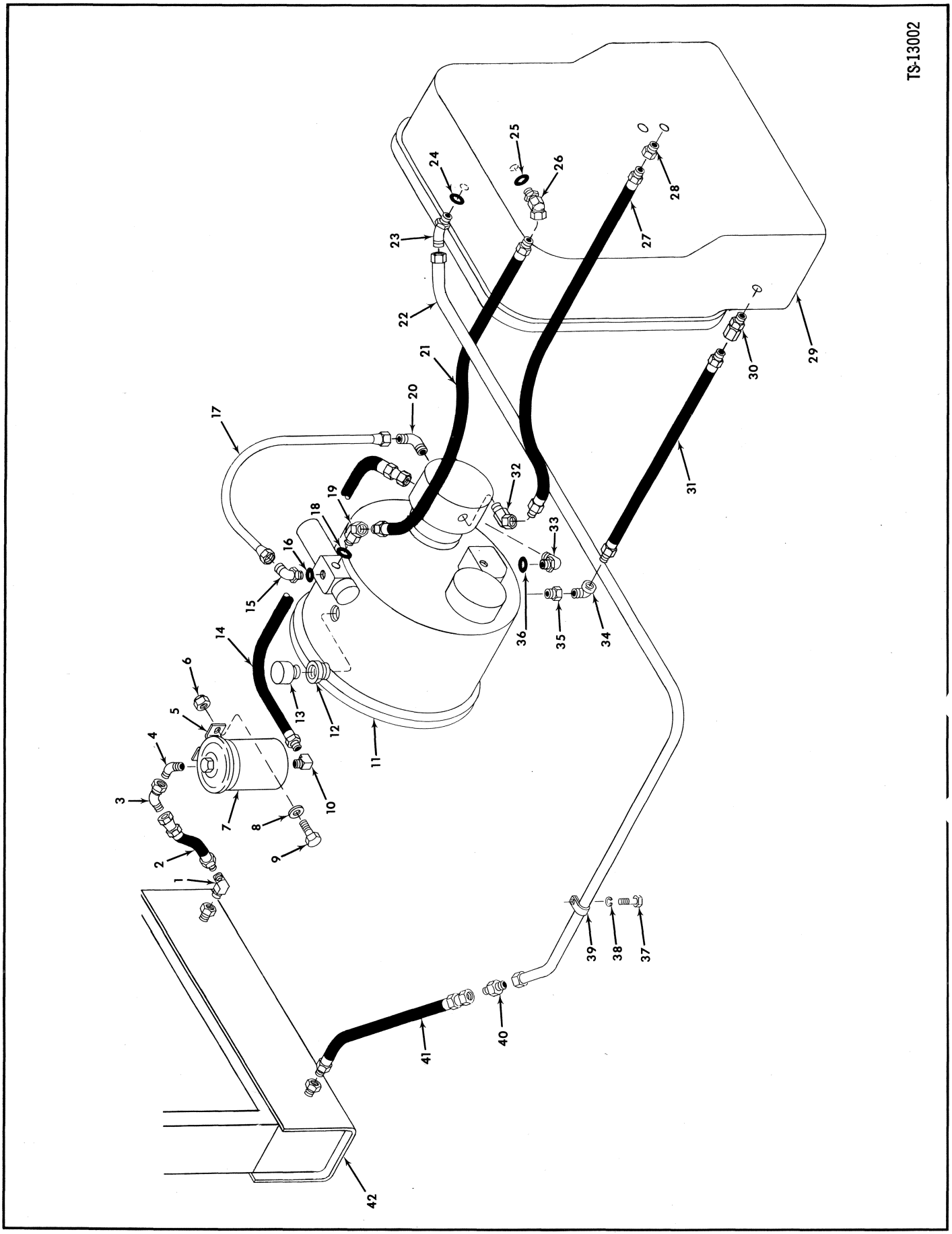

PM 2939
Printed in U.S.A.

Hydraulic System, Transmission & Converter

MICHIGAN

No.	Part No.	Qty.	Description
1	81F-3	1	Elbow
2	1517208	1	Hose
3	12K-7	1	Elbow
4	83F-7	1	Elbow
5	558599	1	Strap mounting
6	18D-05	2	Nut
7	[1]558598	1	Filter
7A	†957577	1	Filter element
8	25E-15	2	Washer
9	24C-516	2	Bolt
10	33F-4	1	Elbow
11	[7]———	1	Converter assy
12	227265	1	Valve check
13	211433	1	Breather
14	1517208	1	Hose
15	[2]18K-8	1	Elbow
16	91F-8	1	O-ring
17	585662	1	Tube
18	91F-6	1	O-ring
19	[3]574290	1	Adapter union
20	83F-8	1	Elbow
21	650599	1	Hose
22	564057	1	Tube
23	[4]18K-8	1	Elbow
24	91F-8	1	O-ring
25	91F-6	1	O-ring
26	574290	1	Adapter union
27	536772	1	Hose
28	356621	1	Bushing
29	[7]———	1	Transmission assy
30	661428	1	Adapter union
31	536772	1	Hose
32	711285	1	Adapter union
33	[6]1302104	1	Elbow
34	29F-4	1	Elbow
35	356621	1	Bushing
36	91F-8	1	O-ring
37	24C-616	1	Bolt
38	4E-06	1	Lockwasher
39	30H-38	1	Clip
40	662250	1	Connector
41	1517208	1	Hose
42	[7]———	1	Radiator assy

[1]Inc. 7A
[2]Inc. 16
[3]Inc. 18
[4]Inc. 24
[5]Inc. 25
[6]Inc. 36
[7]See Index

MICHIGAN

Group N

Nameplates & Decals N2

No.	Part No.	Qty.	Description
1	547852	2	Decal "Michigan"
2	1501805	1	Decal "Michigan"
3	547851	2	Decal "Clark Equipment"
4	1504793	2	Decal model
5	[1]548472	2	Decal oil level
5A	[2]3238006	2	Decal oil level
5B	[3]3238034	2	Decal oil level
5C	[4]3238063	2	Decal oil level
6	[1]585755	1	Decal gear shift
6A	[2]3238018	1	Decal gear shift
6B	[3]3238047	1	Decal gear shift
6C	[4]3238075	1	Decal gear shift
7	549096	2	Decal pointer
8	3239594	2	Decal rear wheel steer
9	[1]1548364	1	Decal brake warning
9A	[2]3585202	1	Decal brake warning
9B	[3]3585206	1	Decal brake warning
10	1549006	1	Decal hand brake
10A	[2]3585200	1	Decal hand brake
10B	[3]3585204	1	Decal hand brake
11	[1]1549005	1	Decal not for parking
11A	[2]3585199	1	Decal not for parking
11B	[3]3585203	1	Decal not for parking
12	[1]548521	1	Decal glow plug
12A	[2]3585960	1	Decal glow plug
12B	[3]3585961	1	Decal glow plug
13	535649	1	Nameplate "Michigan"
14	7G-424	4	Screw
15	17D-1	4	Nut

[1]English
[2]French
[3]German
[4]Spanish

MICHIGAN

Group P

Propeller Shaft Assembly – Axles/Transmission P2
Propeller Shaft Assembly – Converter/Transmission P3
Pump Assembly, Main P4
Pump Assembly, Steering P5
Pump Attaching Parts P6

PM 2939
Printed in U.S.A.

Propeller Shaft Assembly — Axles/Transmission

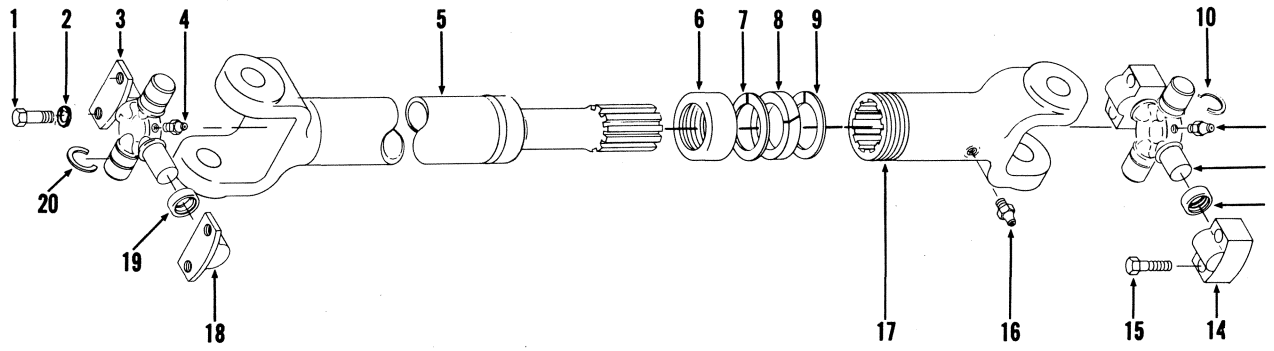

TS-8477

No.	Part No.	Qty.	Description
A	[1]584876	1	Propeller shaft
B	[2]584875	1	Propeller shaft
1	1542298	4	Bolt
2	-----	—	Omit
3	[3]945387	1	Spider u-joint
4	10H-35	1	Fitting grease
5	[4]945391	1	Tube
5A	[5]945386	1	Tube
6	942744	1	Retainer
7	942750	1	Washer
8	942751	1	Felt
9	942750	1	Washer
10	945389	1	Retaining ring
11	10H-35	1	Fitting grease
12	[6]945388	1	Spider u-joint
13	-----	—	Omit
14	§[7]-----	2	Bearing
15	945390	4	Bolt
16	10H-25	1	Fitting grease
17	945385	1	Slip yoke
18	§[8]-----	2	Bearing
19	-----	—	Omit
20	945389	2	Retaining ring

[1]Front Axle to Transmission (Inc. 3→5, 6→12, 14, 16, 17, 18, 20)
[2]Rear Axle to Transmission (Inc. 3, 4, 5A→12, 14, 16, 17, 18, 20)
[3]Inc. 4, 18
[4]Front Axle to Transmission
[5]Rear Axle to Transmission
[6]Inc. 11, 14
[7]See 12
[8]See 3

PM 2939
Printed in U.S.A.

Propeller Shaft Assembly — Converter/Transmission

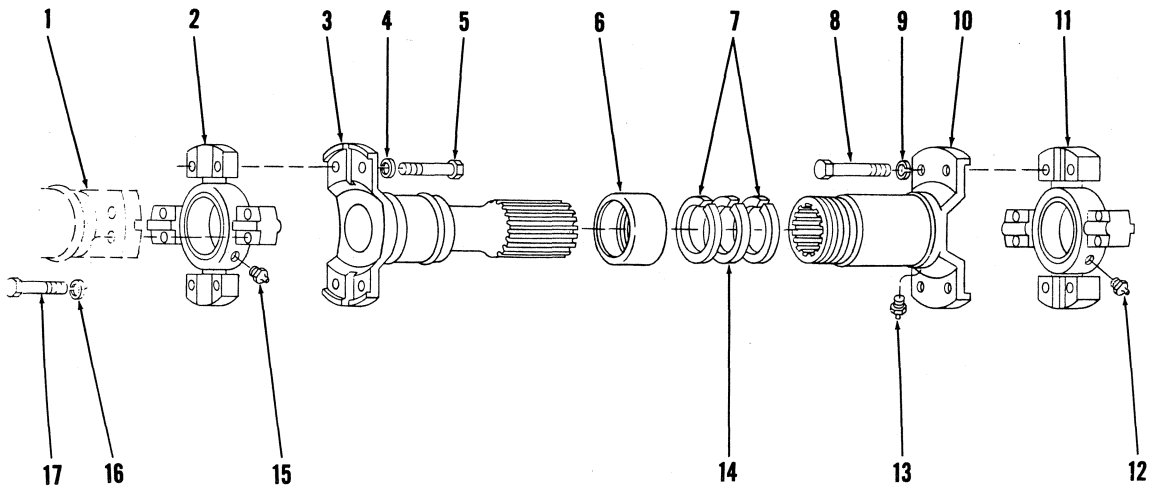

No.	Part No.	Qty.	Description
A	[1]562615	1	Propeller shaft
1	[2]———	—	Flange
2	[3]946067	1	Spider u-joint
3	946068	1	Tube
4	———	—	Omit
5	947388	4	Bolt
6	940654	1	Retainer
7	940653	2	Washer
8	947388	4	Bolt
9	———	—	Omit
10	[4]944868	1	Slip yoke
11	[5]946067	1	Spider u-joint
12	10H-35	1	Fitting grease
13	10H-25	1	Fitting grease
14	940081	1	Felt
15	10H-35	1	Fitting grease
16	———	—	Omit
17	947388	8	Bolt

[1]Inc. 2, 3, 5→8, 10→15
[2]Transmission Flange — Reference Only
[3]Inc. 15
[4]Inc. 13
[5]Inc. 12

Pump Assembly, Main

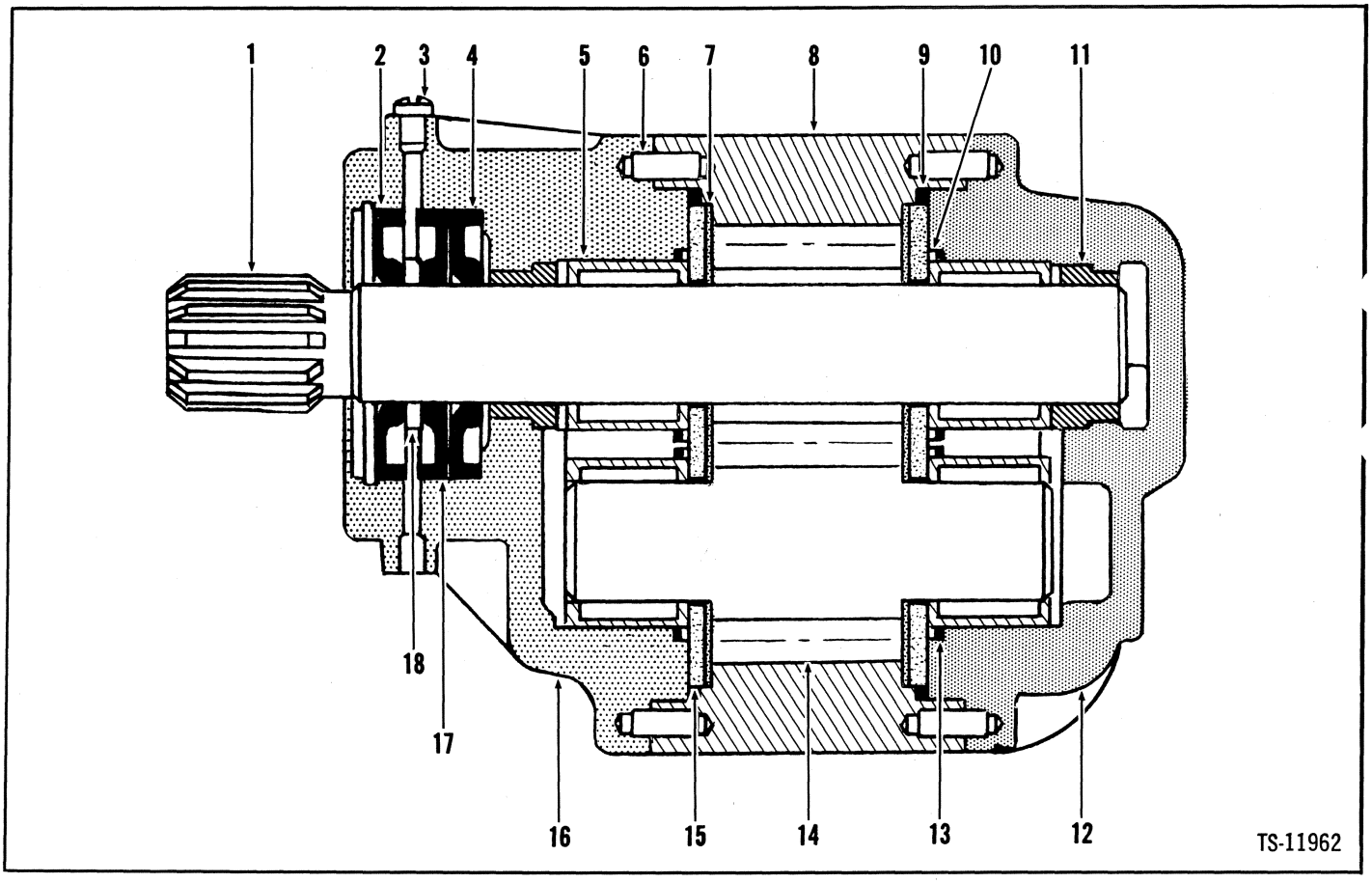

No.	Part No.	Qty.	Description
A	[1]3235788	1	Pump assy
B	[2]3292318	1	Repair kit minor
C	[3]3292320	1	Repair kit major
D	[4]3212065	1	Gear kit
1	§[5]———	1	Shaft
2	3212070	1	Seal
3	4120090	1	Screw
4	3212070	1	Seal
5	§[8]———	4	Bearing
6	214155	4	Dowel
7	§[6]———	2	Shim
8	§[7]———	1	Housing
9	§[6]———	2	O-ring
10	§[6]———	4	Ring back-up
11	§[8]———	2	Bushing
12	§[7]———	1	Cover
13	§[6]———	4	O-ring
14	§[5]———	1	Gear
15	§[8]———	2	Plate
16	§[7]———	1	Adapter
17	3212070	1	Seal
18	3212071	1	Spacer
19	†3291843	4	Bolt

[1]Inc. 1→19
[2]Inc. 2, 4, 7, 9, 10, 11, 13, 17
[3]Inc. 2, 4, 5, 7, 9, 10, 11, 13, 15, 17
[4]Inc. 1, 14
[5]See D
[6]See B
[7]See A
[8]See C

PM 2939
Printed in U.S.A.

Pump Assembly, Steering

MICHIGAN

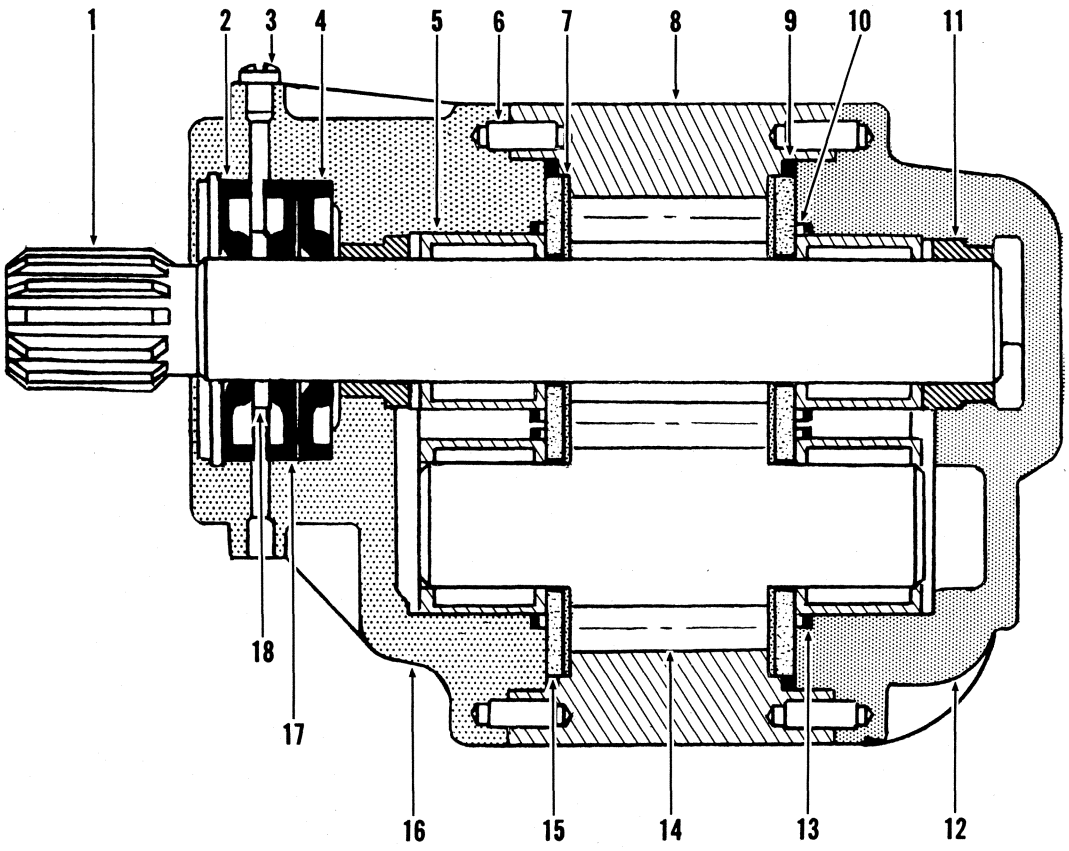

TS-11962

No.	Part No.	Qty.	Description
A	[1]3239446	1	Pump assy
B	[2]3290339	1	Gear kit
1	§[3]————	1	Shaft
2	3290354	1	Seal
3	————	—	Omit
4	3290354	1	Seal
5	3290356	4	Bearing
6	3290342	4	Dowel
7	3290486	2	Shim
8	§[4]————	1	Housing
9	3293109	2	O-ring
10	3290355	4	Ring back-up
11	3290351	2	Bushing
12	§[4]————	1	Cover
13	3290357	4	O-ring
14	§[3]————	1	Gear
15	[5]3290348	1	Wear plate
15A	†[6]3290347	1	Wear plate
16	§[4]————	1	Adapter
17	3290354	1	Seal
18	3290352	1	Spacer
19	†3290343	4	Bolt

[1]Inc. 1→19
[2]Inc. 1, 14
[3]See B
[4]See A
[5]Front
[6]Rear

PM 2939
Printed in U.S.A.

Pump Attaching Parts

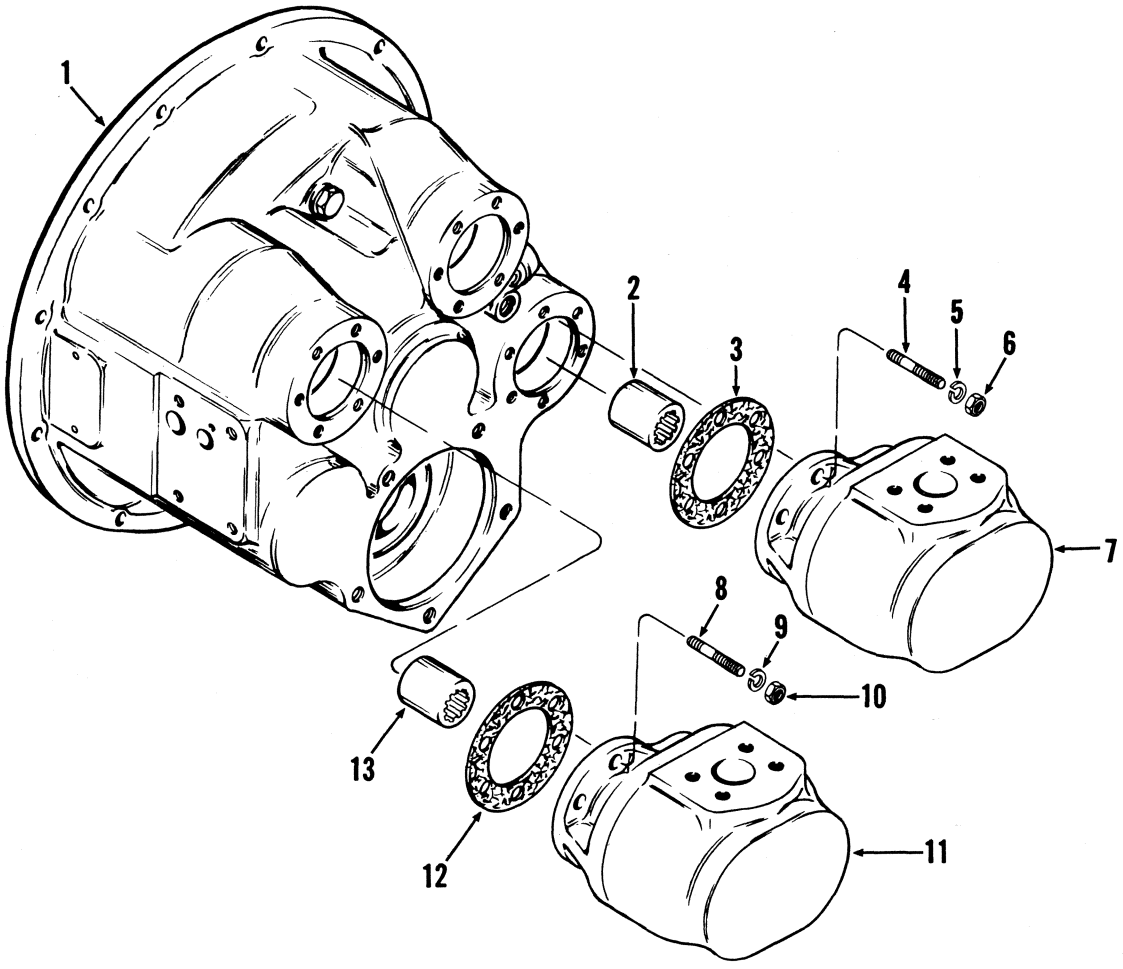

TS-13149 B

No.	Part No.	Qty.	Description
1	[1]————	1	Converter
2	214962	1	Sleeve
3	551906	1	Gasket
4	853334	6	Stud
5	9E-06	6	Lockwasher
6	61D-06	6	Nut
7	[1]————	1	Pump main
8	853334	6	Stud
9	9E-06	6	Lockwasher
10	61D-06	6	Nut
11	[1]————	1	Pump steering
12	551906	1	Gasket
13	214961	1	Sleeve

[1]See Index

PM 2939
Printed in U.S.A.

MICHIGAN

Group R

Radiator & Connections R2

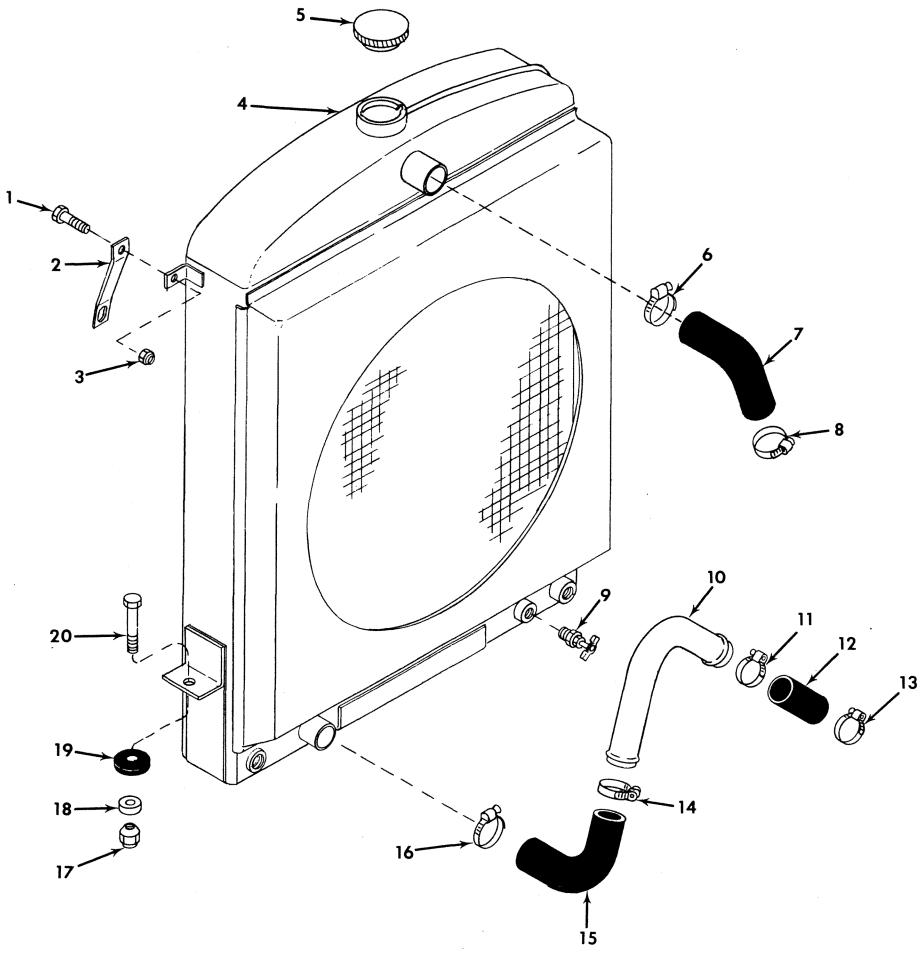

TS-13004

No.	Part No.	Qty.	Description
1	24C-616	2	Bolt
2	3239947	2	Clip
3	18D-06	2	Nut
4	[1]1517304	1	Radiator assy
5	351495	1	Cap
6	784663	1	Clamp
7	2501643	1	Hose
8	784663	1	Clamp
9	72F-02	1	Drain cock
10	1516823	1	Tube
11	784663	1	Clamp
12	555979	1	Hose
13	784663	1	Clamp
14	784663	1	Clamp
15	567255	1	Hose
16	784663	1	Clamp
17	70D-08	2	Nut
18	71D-08	2	Base
19	518233	2	Dampener vibration
20	24C-828	2	Bolt

[1]Inc. 5

PM 2939
Printed in U.S.A.

MICHIGAN

Group S

Seat & Supports S3
Sheet Metal Group & Soundproofing S5
Steering Controls S7

PM 2939
Printed in U.S.A.

MICHIGAN

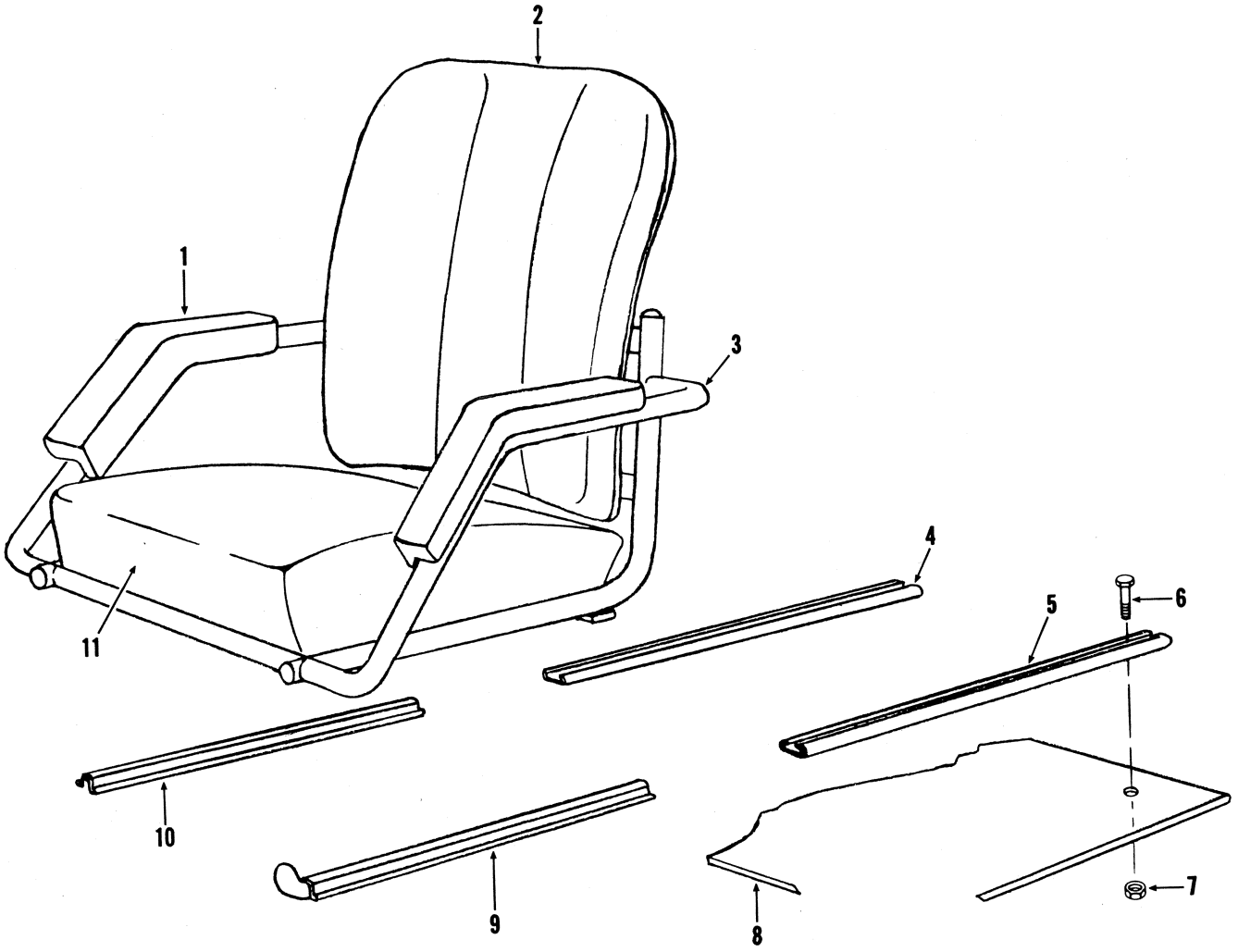

No.	Part No.	Qty.	Description
A	[1]3226863	1	Seat assy
1	3228197	2	Arm rest
2	3228196	1	Back rest
3	3228192	1	Frame
4	3229428	1	Rail
5	3229428	1	Rail
6	8C-412	4	Bolt
6A	†25E-13	4	Washer
7	62D-04	4	Nut
8	[2]———	1	Support
9	3230023	1	Slide — L.H.
10	3230024	1	Slide — R.H.
11	3228195	1	Cushion

[1]Inc. 1➔5, 9➔11
[2]See Index

CLARK EQUIPMENT

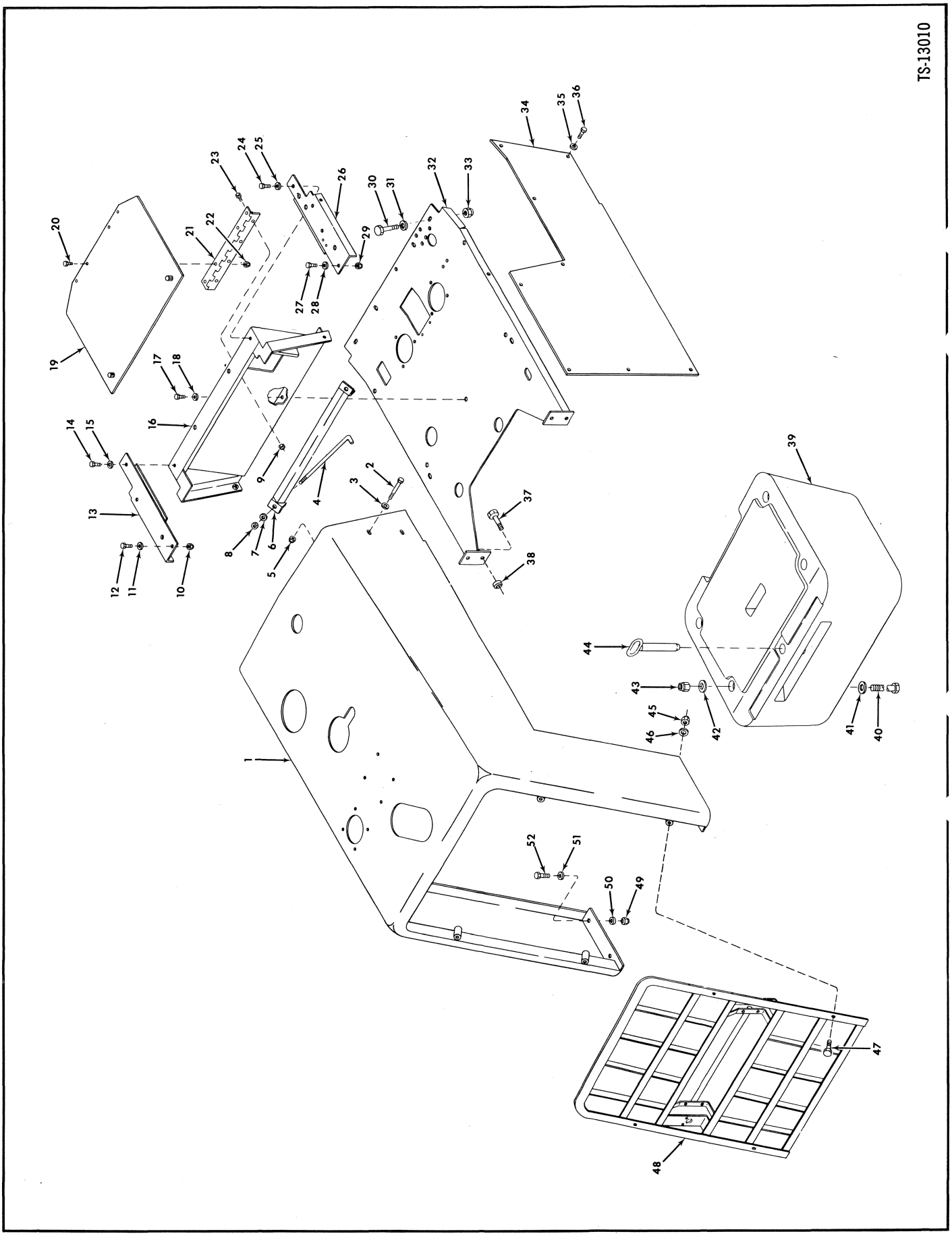

PM 2939
Printed in U.S.A.

Sheet Metal Group & Soundproofing

MICHIGAN

No.	Part No.	Qty.	Description
1	3239517	1	Hood
2	24C-616	4	Bolt
3	25E-18	4	Washer
4	3239429	2	Stud
5	18D-06	4	Nut
6	3239428	1	Battery hold down
7	25E-15	2	Washer
8	18D-05	2	Nut
9	62D-04	4	Nut
10	17D-3	1	Nut
11	619023	1	Washer
12	23C-612	1	Bolt
13	3239531	1	Top plate L.H.
14	23C-612	1	Bolt
15	619023	1	Washer
16	3239525	1	Heelboard
16A	†3239605	1	Soundproofing
17	23C-612	3	Bolt
18	619023	3	Washer
19	3239533	1	Seat support
19A	†3239604	1	Soundproofing
20	8G-412	4	Bolt
21	3239527	1	Hinge
22	62D-04	4	Nut
23	8G-412	4	Bolt
24	23C-612	1	Bolt
25	619023	1	Washer
26	3239529	1	Top plate R.H.
27	23C-612	1	Bolt
28	619023	1	Washer
29	17D-3	1	Nut
30	24C-620	4	Bolt
31	619023	4	Washer
32	3239520	1	Floorboard
33	18D-06	4	Nut
34	3228214	2	Side panel
34A	†3239607	1	Soundproofing — Top R.H.
34B	†3239609	1	Soundproofing — Lower R.H.
34C	†3239606	1	Soundproofing — Top L.H.
34D	†3239608	1	Soundproofing — Lower L.H.
35	25E-18	16	Washer
36	24C-616	16	Bolt
37	24C-620	4	Bolt
38	18D-06	4	Nut
39	3214930	1	Counterweight
40	24C-12240	4	Bolt
41	652478	4	Washer
42	25E-27	4	Washer
43	18D-12	4	Nut
44	550586	1	Pin drawbar
45	18D-06	4	Nut
46	25E-17	4	Washer
47	24C-652	4	Bolt
48	585503	1	Grill radiator
49	70D-08	4	Nut
50	71D-08	4	Base
51	619029	4	Washer
52	24C-828	4	Bolt

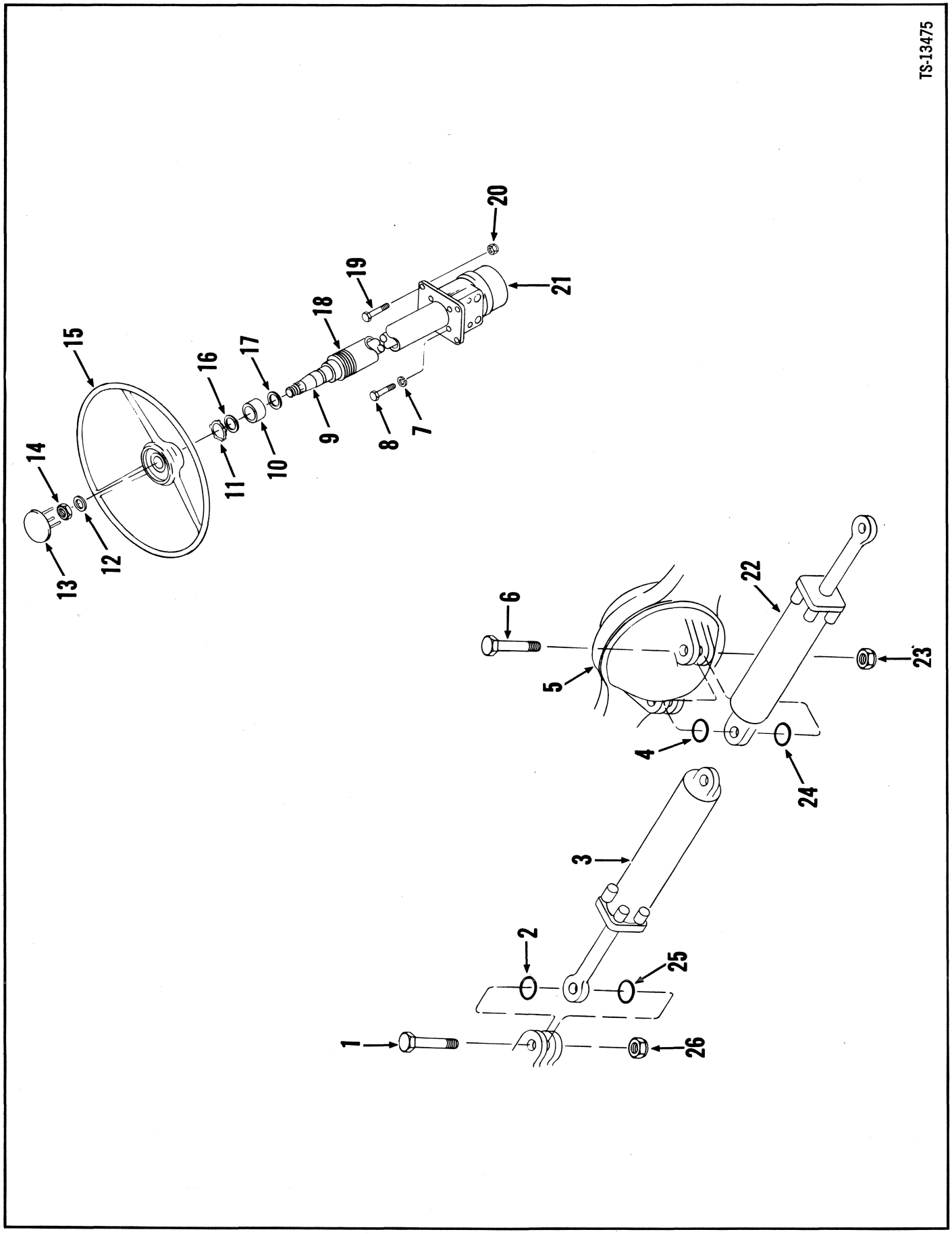

PM 2939
Printed in U.S.A.

Steering Controls

MICHIGAN

No.	Part No.	Qty.	Description
1	24C-1248	2	Bolt
2	1306623	2	O-ring
3	[1]———	1	Cylinder steering
4	1306623	2	O-ring
5	[1]———	1	Axle rear
6	24C-1256	2	Bolt
7	4E-06	4	Lockwasher
8	23C-616	4	Bolt
9	3233205	1	Shaft assy strg
10	3233204	1	Bearing
11	710886	1	Ring snap
12	851771	1	Washer
13	602104	1	Cover
14	8D-08	1	Nut
15	604323	1	Steering wheel
16	3233210	1	Washer
17	3233210	1	Washer
18	3235941	1	Steering column
19	24C-624	4	Bolt
20	18D-06	4	Nut
21	[1]———	1	Valve steering control
22	[1]———	1	Cylinder steering
23	18D-12	2	Nut
24	1306623	2	O-ring
25	1306623	2	O-ring
26	18D-12	2	Nut

[1]See Index

MICHIGAN

Group T

Transmission Assembly T3
Transmission Clutch Group – Forward, Reverse & Low T6
Transmission Clutch Group – High T7
Transmission Controls T9

PM 2939
Printed in U.S.A.

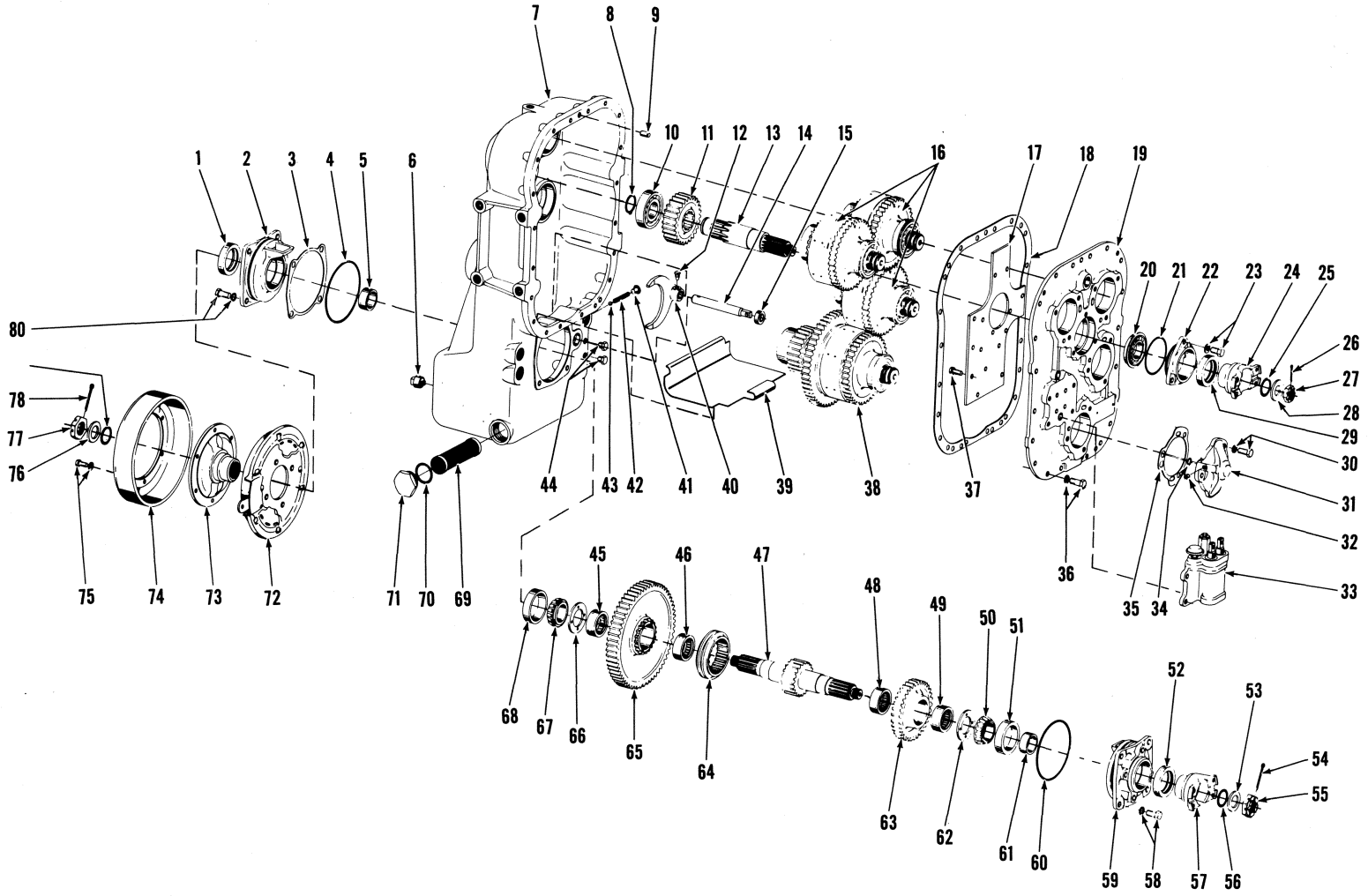
1
2
3
4
5
6
7
8
9
10
11
12
13
14
15
16
17
18
19
20
21
22
23
24
25
26
27
28
29
30
31
32
33
34
35
36
37
38
39
40
41
42
43
44
45
46
47
48
49
50
51
52
53
54
55
56
57
58
59
60
61
62
63
64
65
66
67
68
69
70
71
72
73
74
75
76
77
78
80

TS-3902

Transmission Assembly

MICHIGAN

No.	Part No.	Qty.	Description
A	[1]284177	1	Transmission assy
1	206864	1	Seal
2	215155	1	Cap
3	‡[2]215156	—	Shim
3A	‡[3]215157	—	Shim
3B	‡[4]215158	—	Shim
4	25K-40524	1	O-ring
5	215162	1	Spacer
6	215757	1	Plug
7	[5]801363	1	Case kit
7A	†206864	1	Seal
7B	†218353	1	Plug
7C	†14F-16	3	Plug
8	659065	1	Ring snap
9	214295	2	Dowel pin
10	225603	1	Bearing
11	[6]215166	1	Gear
12	201566	1	Lock screw
13	215165	1	Shaft input
14	215145	1	Shift rail
15	225075	1	Seal
16	[11]———	3	Clutch group
17	215143	1	Oil circuit plate
18	215144	1	Gasket
19	[7]215141	1	Cover assy
20	225824	1	Bearing
21	25K-40316	1	O-ring
22	[8]215198	1	Cap assy
23	1C-718	3	Bolt
23A	†4E-07	3	Lockwasher
24	214940	1	Flange input
25	25K-40112	1	O-ring
26	1F-428	1	Pin cotter
27	201951	1	Nut
28	102745	1	Washer
29	206864	1	Seal
30	1C-718	12	Bolt
30A	†4E-07	12	Lockwasher
31	215163	4	Bearing cap
32	16F-02	4	Plug
33	[11]———	1	Valve trans control
34	25K-30016	4	O-ring
35	215164	4	Gasket
36	1C-718	20	Bolt
36A	4E-07	20	Lockwasher
37	233128	15	Bolt
38	[11]———	1	Clutch group
39	228943	1	Baffle plate
40	215146	1	Shift fork
41	40K-04	1	Plug

[1](2420-69) Inc. 1→80
[2].004", 0,10 mm
[3].007", 0,18 mm
[4].010", 0,25 mm
[5]Inc. 7A, 7B, 7C
[6](26T)
[8]Inc. 29
[11]See Index

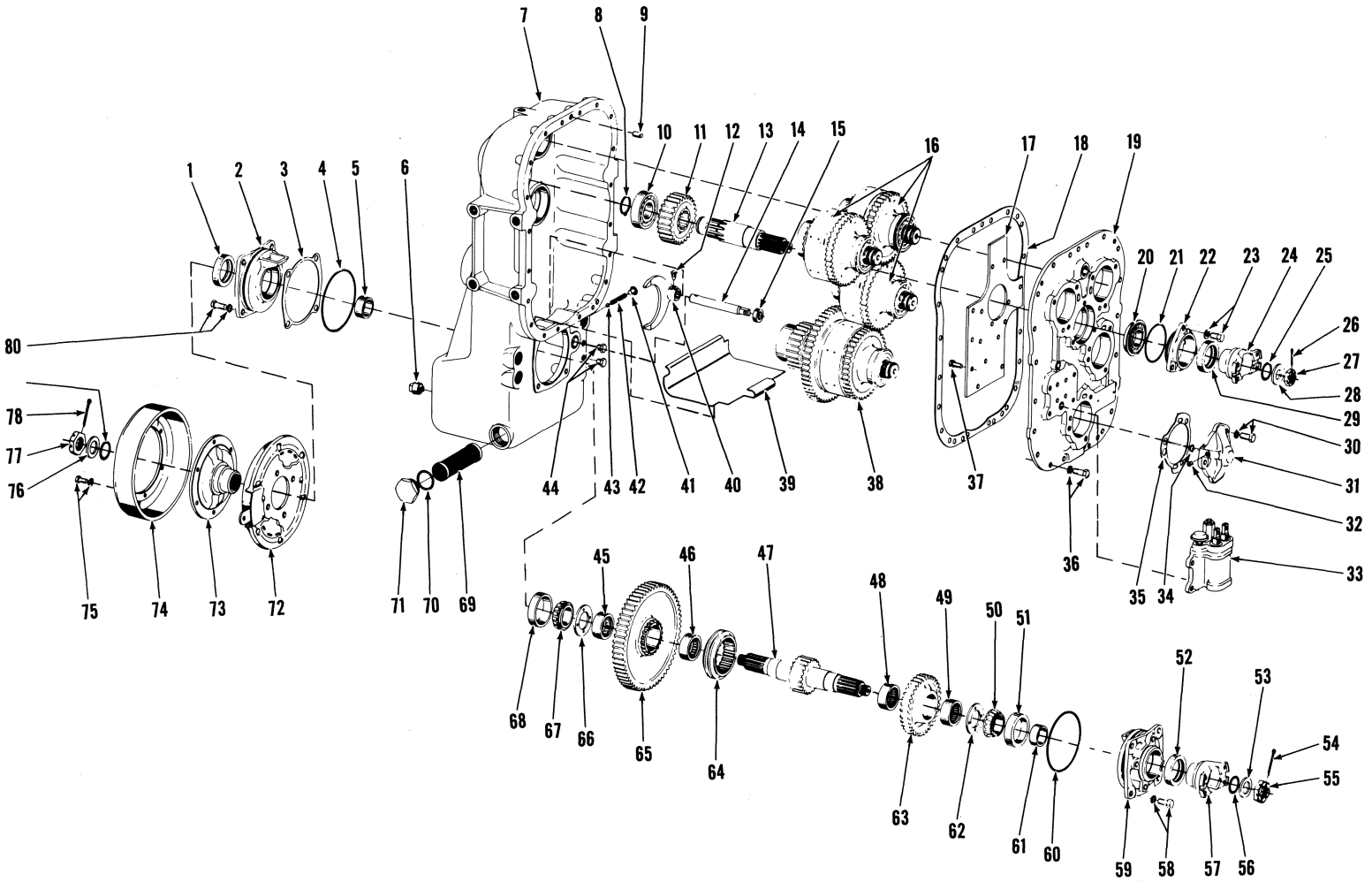
1
2
3
4
5
6
7
8
9
10
11
12
13
14
15
16
17
18
19
20
21
22
23
24
25
26
27
28
29
30
31
32
33
34
35
36
37
38
39
40
41
42
43
44
45
46
47
48
49
50
51
52
53
54
55
56
57
58
59
60
61
62
63
64
65
66
67
68
69
70
71
72
73
74
75
76
77
78
80

TS-3902

Transmission Assembly (Cont.)

MICHIGAN

No.	Part No.	Qty.	Description
42	215191	1	Spring
43	10J-12	1	Ball
44	40K-02	2	Plug
45	225079	1	Bearing
46	225079	1	Bearing
47	215551	1	Shaft output
48	225079	1	Bearing
49	225079	1	Bearing
50	675548	1	Cone
51	675544	1	Cup
52	206864	1	Seal
53	102745	1	Washer
54	1F-428	1	Pin cotter
55	201951	1	Nut
56	25K-40112	1	O-ring
57	214987	1	Flange output
58	1C-820	4	Bolt
58A	†5E-08	4	Lockwasher
59	215155	1	Cap
60	25K-40524	1	O-ring
61	215162	1	Spacer
62	215154	1	Washer
63	[9]215152	1	Gear assy
64	215149	1	Hub shift
65	[10]215150	1	Gear assy
66	215154	1	Washer
67	675548	1	Cone
68	675544	1	Cup
69	215205	1	Screen
70	219373	1	Gasket
71	219370	1	Plug
72	[11]———	1	Parking brake
73	215161	1	Flange
74	215160	1	Drum brake
75	2C-612	6	Bolt
75A	4E-06	6	Lockwasher
76	102745	1	Washer
77	201951	1	Nut
78	1F-428	1	Pin cotter
79	25K-40112	1	O-ring
80	1C-820	4	Bolt
80A	†5E-08	4	Lockwasher

[9](34T) Inc. 48, 49
[10](61T) Inc. 45, 46
[11]See Index

Transmission Clutch Group — Forward, Reverse & Low

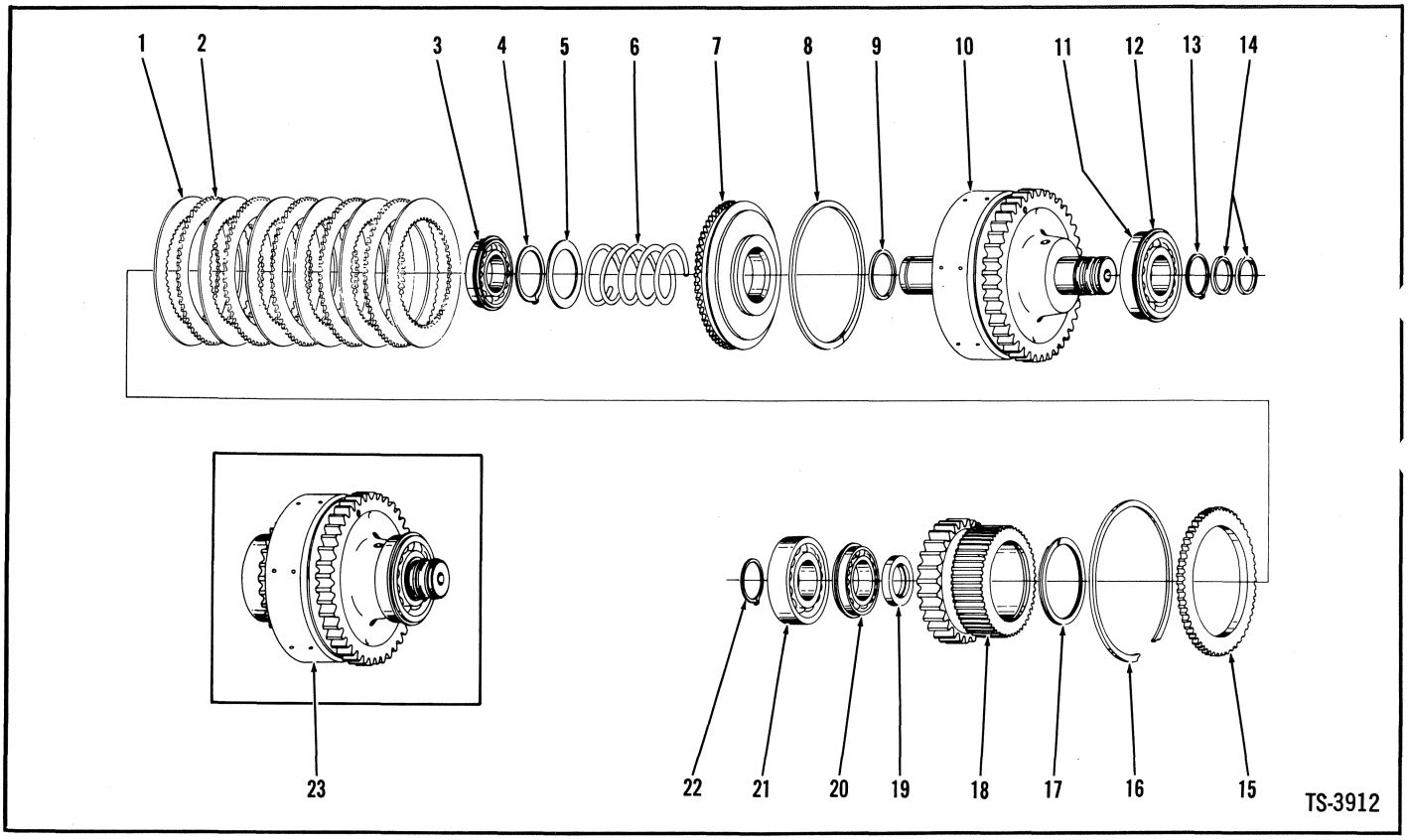

No.	Part No.	Qty.	Description
1	215178	6	Disc inner
2	224772	5	Disc outer
3	225076	1	Bearing
4	654613	1	Ring
5	616848	1	Washer
6	215179	1	Spring
7	215177	1	Piston
8	224771	1	Ring
9	223085	1	Ring
10	[1]215663	1	Drum & gear assy
10A	†215176	1	Seat
10B	†10J-06	1	Ball
11	[2]225602	1	Bearing
12	945374	1	Ring
13	659065	1	Ring
14	215183	2	Ring
15	224774	1	Disc
16	215190	1	Ring
17	225077	1	Ring
18	[3]215180	1	Gear & hub assy
19	215182	1	Spacer
20	225076	1	Bearing
21	225603	1	Bearing
22	659065	1	Ring
23	§[4]———	—	Clutch assy

[1](40T) Inc. 10A, 10B
[2]Inc. 12
[3](28T)
[4]Not sold as an Assembly — Order individual items. This group used three (3) times in transmission — Quantities listed are for one (1) Clutch Group.

PM 2939
Printed in U.S.A.

Transmission Clutch Group – High

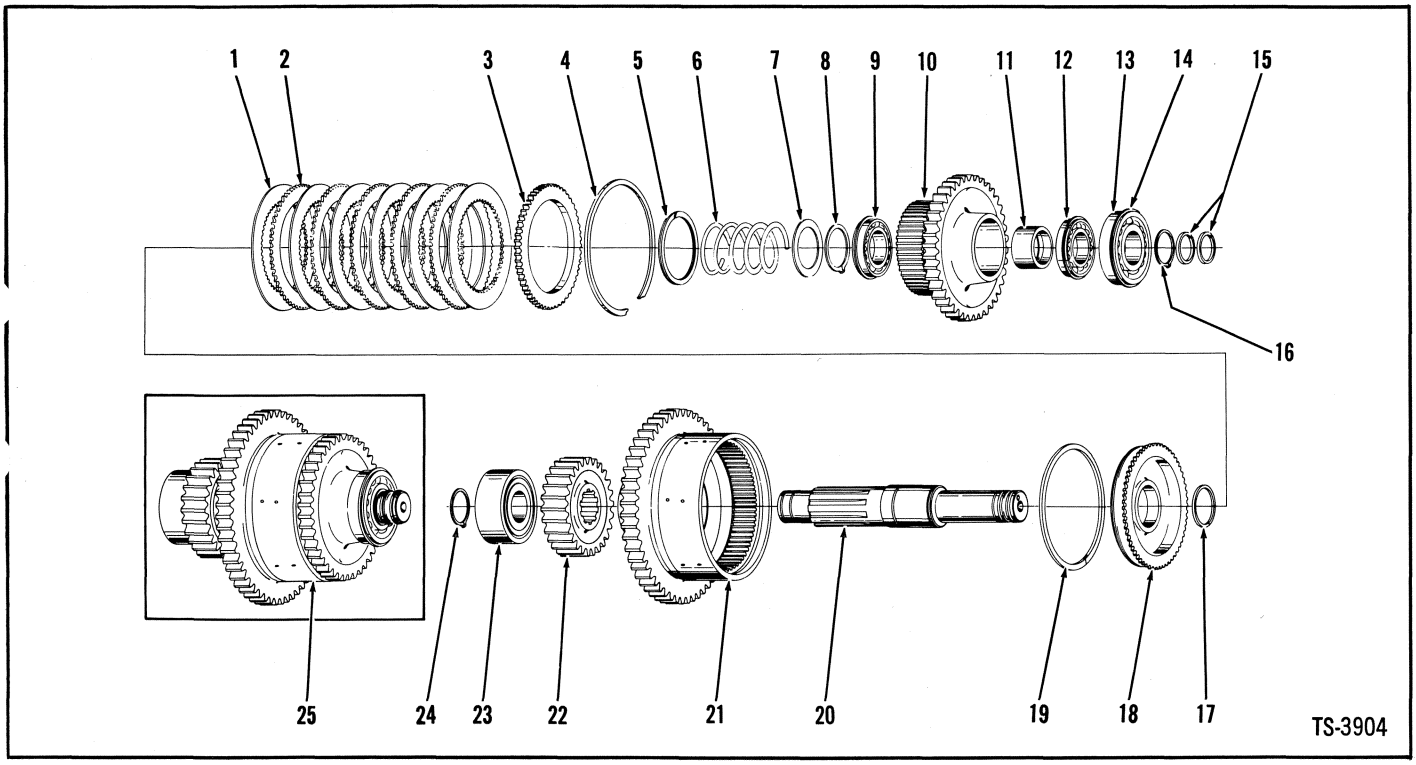

No.	Part No.	Qty.	Description
1	215178	6	Disc inner
2	224772	5	Disc outer
3	224774	1	Plate
4	215190	1	Ring
5	225077	1	Ring
6	215179	1	Spring
7	616848	1	Washer
8	654613	1	Ring
9	225076	1	Bearing
10	[1]215188	1	Gear & hub assy
11	215189	1	Spacer
12	225076	1	Bearing
13	[2]225602	1	Bearing
14	945374	1	Ring
15	215183	2	Ring
16	659065	1	Ring
17	223085	1	Ring
18	215177	1	Piston
19	224771	1	Ring
20	215184	1	Shaft
21	[3]227952	1	Drum & gear assy
21A	†215176	1	Seat
21B	†10J-06	1	Ball
22	[4]215166	1	Gear
23	799595	1	Bearing
24	659065	1	Ring
25	§[5]———	–	Clutch assy

[1](40T)
[2]Inc. 14
[3](53T) Inc. 21A, 21B
[4](26T)
[5]Not sold as an Assembly – Order individual items.

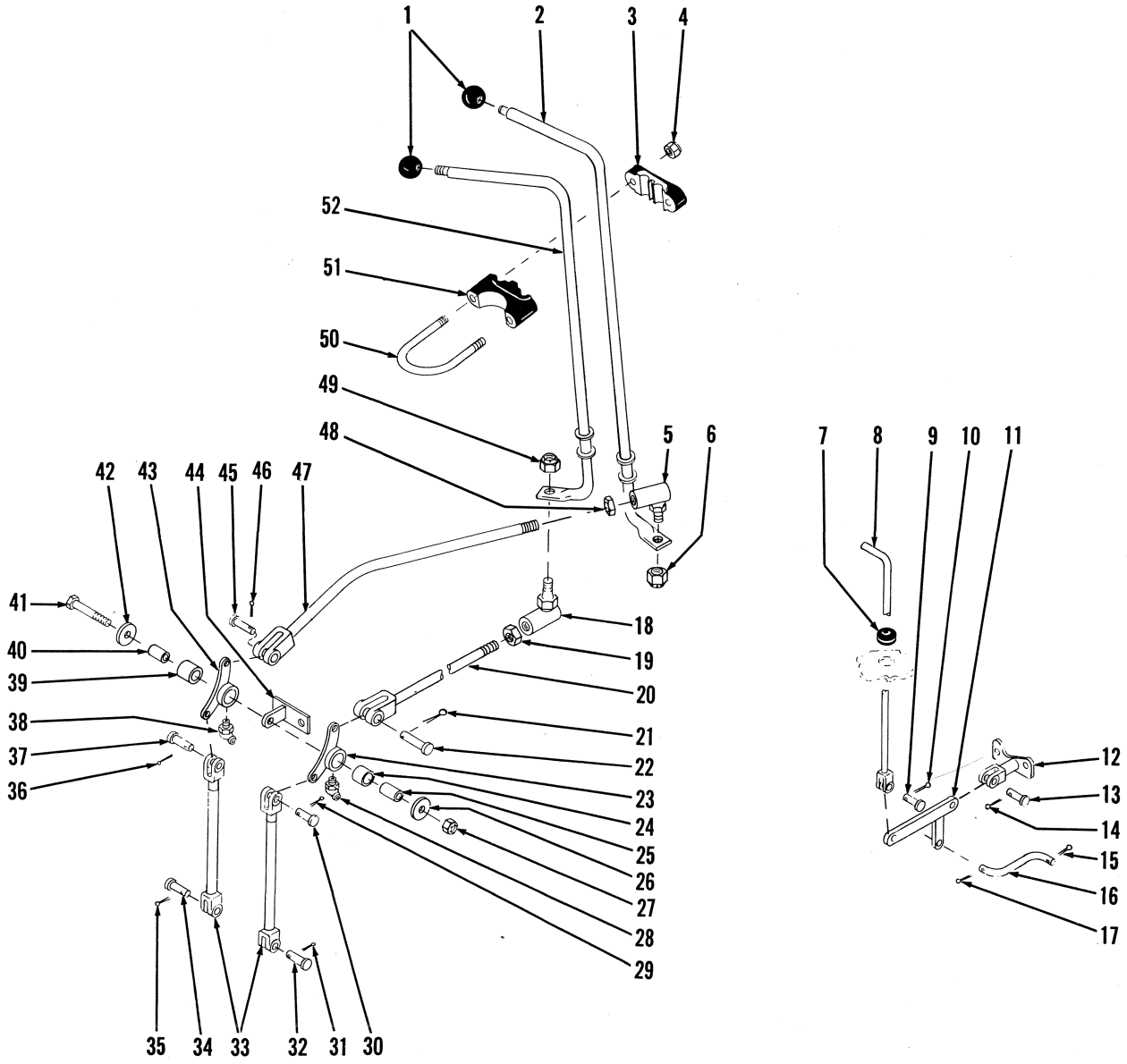

TS-4535

PM 2939
Printed in U.S.A.

Transmission Controls

MICHIGAN

No.	Part No.	Qty.	Description
1	509772	2	Knob
2	585498	1	Ctrl lever fwd & rev
3	[1]1508845	2	Support
4	18D-05	4	Locknut
5	1301362	1	Ball joint
6	18D-06	1	Locknut
7	585309	1	Grommet
8	585764	1	Rod assy
9	4F-06106	1	Pin clevis
10	1F-312	1	Pin cotter
11	585589	1	Bellcrank
12	585593	1	Bracket
12A	†23C-724	2	Bolt
13	4F-06106	1	Pin clevis
14	1F-312	1	Pin cotter
15	1F-312	1	Pin cotter
16	585591	1	Link
17	1F-312	1	Pin cotter
18	1301362	1	Ball joint
19	8D-06	1	Nut
20	[2]585494	1	Rod assy
21	1F-312	1	Pin cotter
22	4F-06106	1	Pin clevis
23	585500	1	Bellcrank
24	585597	1	Bushing
25	585596	1	Sleeve
26	616795	1	Washer
27	18D-08	1	Locknut
28	11H-15	1	Fitting grease
29	1F-312	1	Pin cotter
30	4F-06106	1	Pin clevis
31	1F-312	1	Pin cotter
32	4F-06106	1	Pin clevis
33	585306	1	Rod assy
34	4F-06106	1	Pin clevis
35	1F-312	1	Pin cotter
36	1F-312	1	Pin cotter
37	4F-06106	1	Pin clevis
38	11H-15	1	Fitting grease
39	585597	1	Bushing
40	585596	1	Sleeve
41	24C-856	1	Bolt
42	616795	1	Washer
43	585500	1	Bellcrank
44	586132	1	Bracket
44A	†23C-724	2	Bolt
45	4F-06106	1	Pin clevis
46	1F-312	1	Pin cotter
47	[3]585492	1	Rod assy
48	8D-06	1	Nut
49	18D-06	1	Locknut
50	550672	2	U-bolt
51	[4]———	2	Support
52	585497	1	Ctrl lever 4 speed

[1]Inc. 51
[2]Inc. 18, 19
[3]Inc. 5, 48
[4]See 3

MICHIGAN

Group V

Valve Assembly, Air Brake V3
Valve Assembly, Bucket Leveler V4
Valve Assembly, Main V7
Valve Assembly, Steering Control V11
Valve Assembly, Steering Pressure Relief V12
Valve Assembly, Transmission Control V15
Valve Controls, Main V16

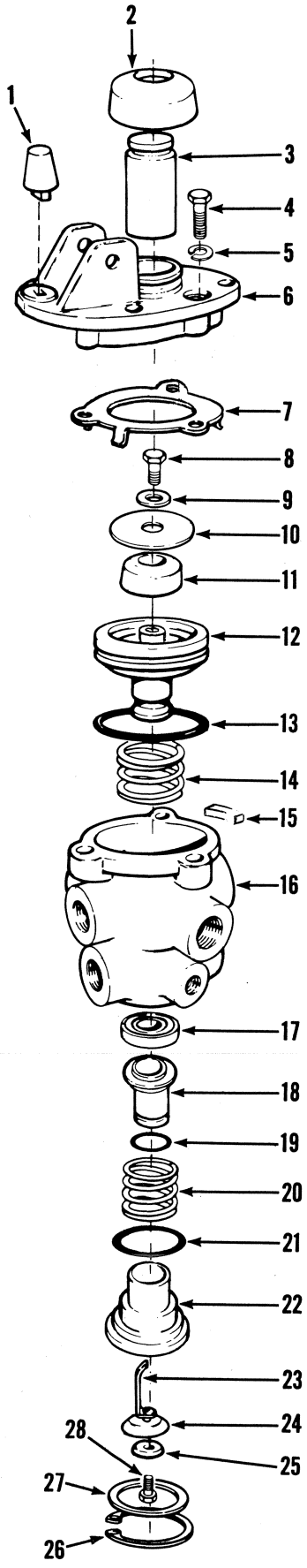

TS-11001

PM 2939
Printed in U.S.A.

Valve Assembly, Air Brake

MICHIGAN

No.	Part No.	Qty.	Description
A	[1]945996	2	Valve assy
B	[2]3290125	1	Repair kit
C	[3]3290124	1	Repair kit
D	[4]3290099	1	Repair kit
E	[5]3290106	1	Repair kit
1	513932	1	Stop rubber
2	875762	1	Boot
3	3290122	1	Plunger
4	1C-520	3	Bolt
5	4E-05	3	Lockwasher
6	949260	1	Plate
7	894543	1	Retainer
8	21C-410	1	Bolt
9	894542	1	Washer
10	894541	1	Valve seat
11	894540	1	Spring
12	894539	1	Piston
13	25K-40204	1	O-ring
14	875754	1	Spring
15	949261	1	Filter
16	3290105	1	Body
17	894537	1	Retainer
18	894538	1	Valve
19	25K-20020	1	O-ring
20	894536	1	Spring
21	25K-30112	1	O-ring
22	894535	1	Valve seat
23	894534	1	Spring
24	894533	1	Diaphragm
25	894532	1	Washer
26	661415	1	Ring
27	949264	1	Washer
28	87G-806	1	Screw

[1]Inc. 1→28 Two (2) Valves used on machine. Quantities listed are for one (1) Valve.
[2]Inc. 1, 2, 11, 13→15, 18→21, 23, 24
[3]Inc. 1, 2, 18, 19, 21, 24
[4]Inc. 8→12
[5]Inc. 17→25, 28

Valve Assembly, Bucket Leveler

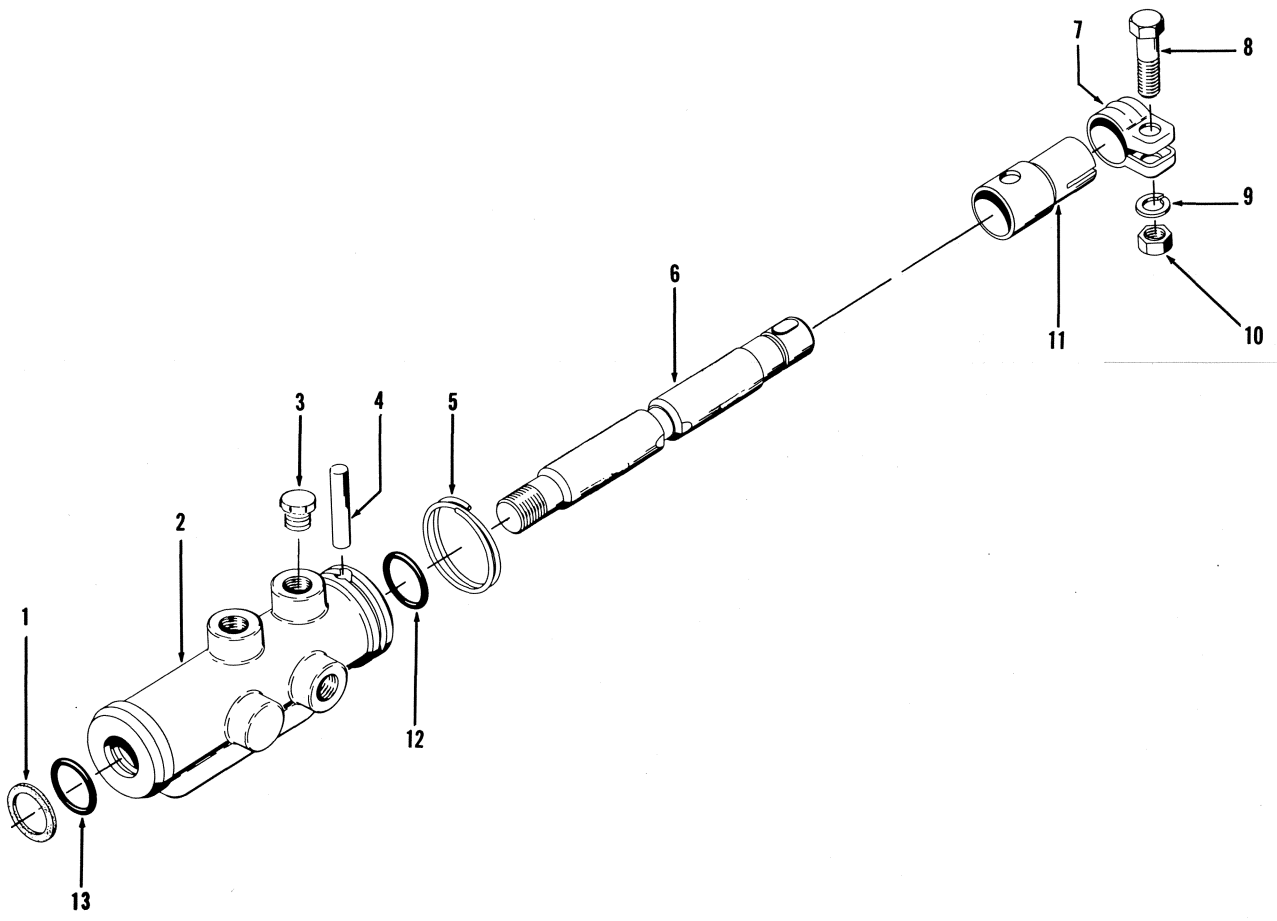

TS-4414

No.	Part No.	Qty.	Description
A	[1]586420	1	Valve assy
1	945409	1	Washer
2	§[2]———	1	Body
3	40K-04	1	Plug
4	601938	1	Dowel
5	945407	1	Ring
6	§[2]———	1	Spool
7	100744	1	Clamp
8	2C-520	1	Bolt
9	4E-05	1	Lockwasher
10	62D-05	1	Nut
11	945408	1	Sleeve
12	945411	1	O-ring
13	945411	1	O-ring

[1]Inc. 1➔13
[2]See A

PM 2939
Printed in U.S.A.

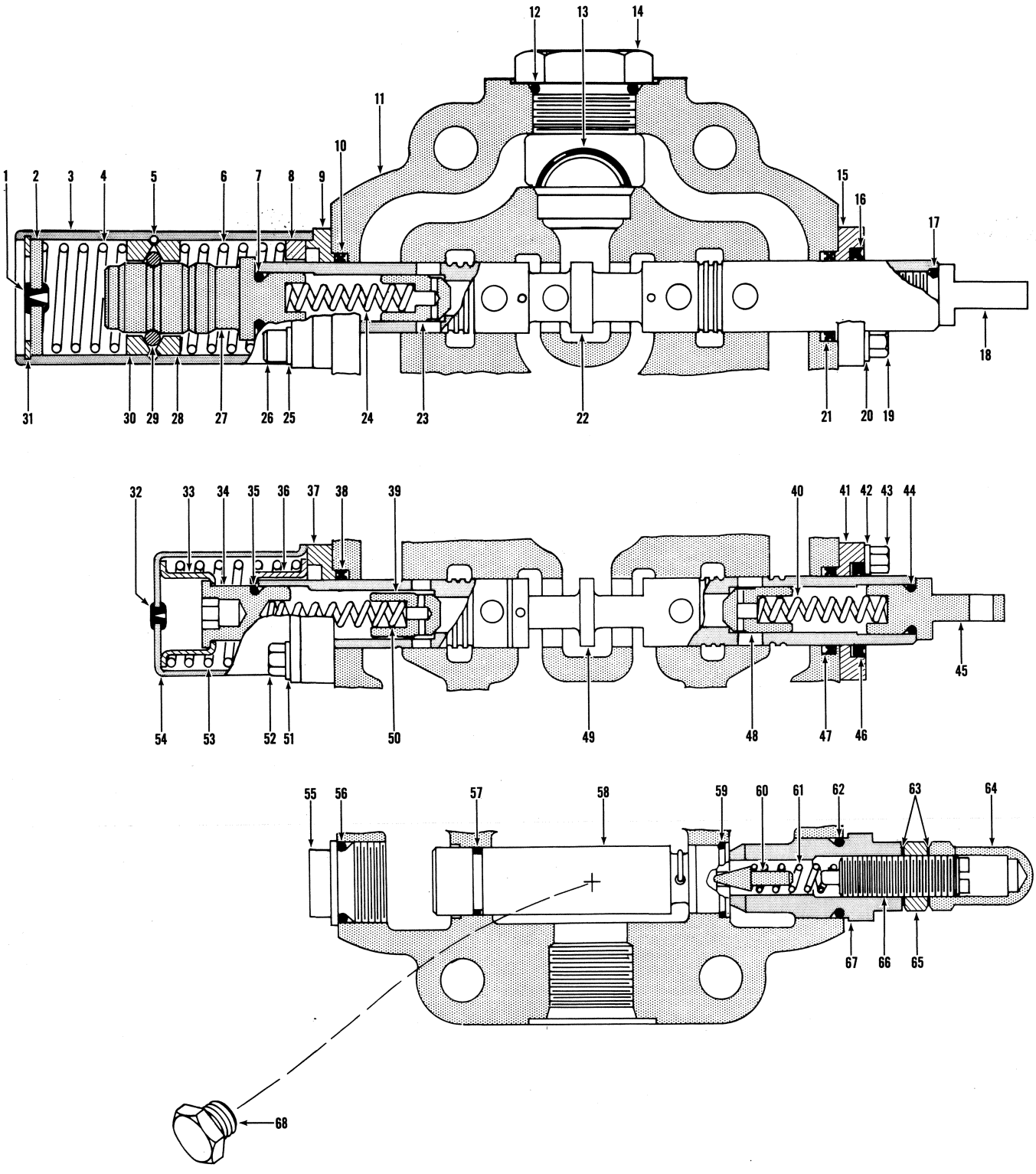

TS-11945

PM 2939
Printed in U.S.A.

Valve Assembly, Main

MICHIGAN

No.	Part No.	Qty.	Description
A	[1]584118	1	Valve assy
1	886763	1	Plug
2	886762	1	Plug
3	945355	1	Cover
4	945356	1	Spring
5	945359	1	Ring
6	945358	1	Spring
7	25K-30014	1	O-ring
8	945360	1	Spacer
9	945849	1	Retainer
10	945225	1	Seal
11	§[3]———	1	Housing
12	91F-10	1	O-ring
13	25K-40106	1	O-ring
14	24K-10	1	Plug
15	945224	1	Retainer
16	1302437	1	Seal
17	25K-30014	1	O-ring
18	945226	1	Eye
19	1C-514	2	Bolt
20	4E-05	2	Lockwasher
21	945225	1	Seal
22	§[3]———	1	Plunger
23	945590	1	Check
24	871388	1	Spring
25	4E-05	2	Lockwasher
26	11G-520	2	Screw
27	945357	1	Cap
28	886758	1	Retainer
29	10J-06	15	Ball
30	886758	1	Retainer
31	755855	1	Snap ring
32	886763	1	Plug
33	888451	1	Retainer
34	888456	1	Cap
35	25K-30014	1	O-ring
36	888451	1	Retainer
37	945224	1	Retainer
38	945225	1	Seal
39	945590	1	Check
40	945503	1	Spring

[1]Inc. 1➔68
[3]See A

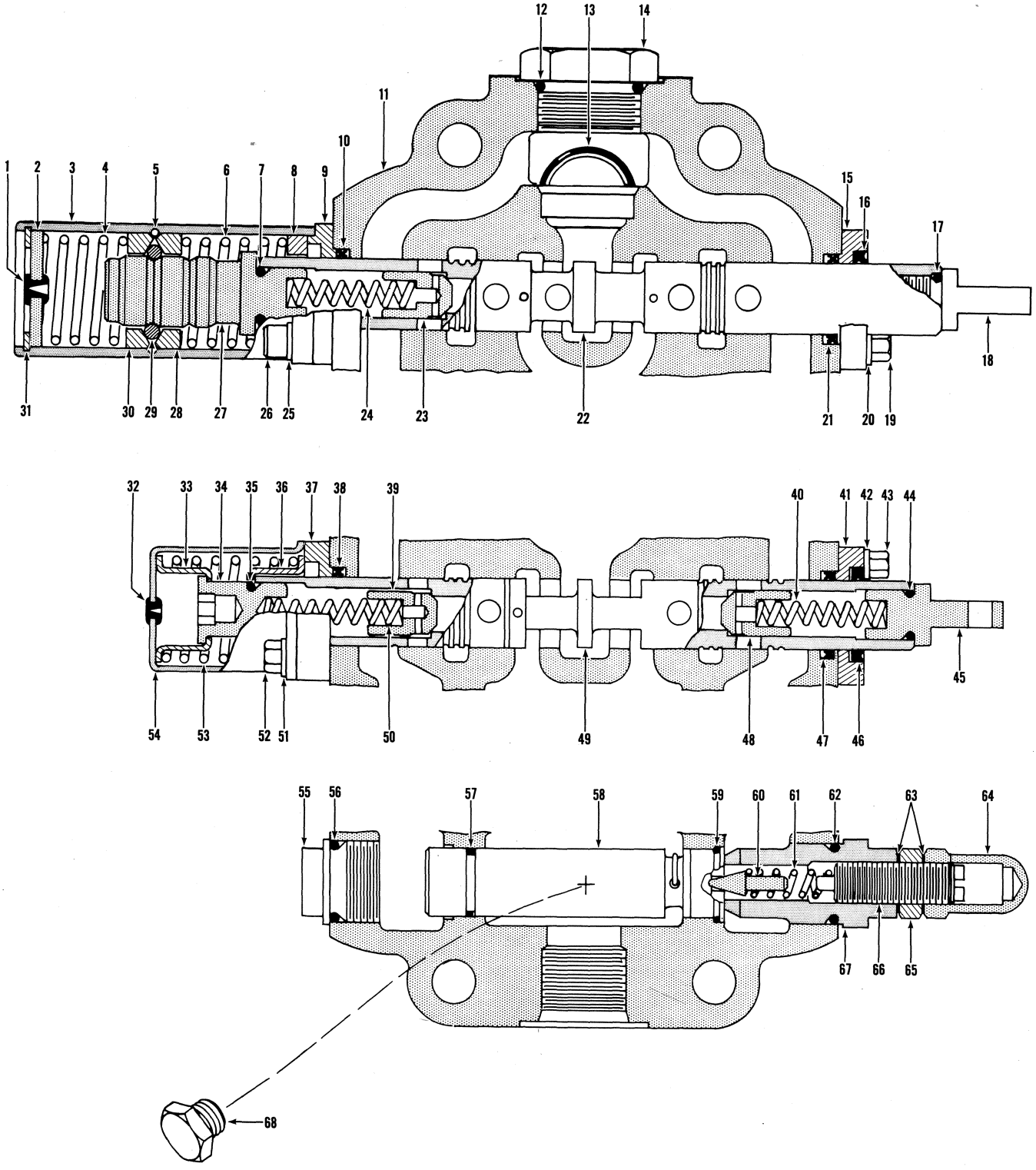

TS-11945

PM 2939
Printed in U.S.A.

Valve Assembly, Main (Continued)

MICHIGAN

No.	Part No.	Qty.	Description
41	945224	1	Retainer
42	4E-05	2	Lockwasher
43	1C-514	2	Bolt
44	25K-30014	1	O-ring
45	945226	1	Eye
46	1302437	1	Seal
47	945225	1	Seal
48	945590	1	Check
49	§[3]———	1	Plunger
50	871388	1	Spring
51	4E-05	2	Lockwasher
52	1C-514	2	Bolt
53	888455	1	Spring
54	886749	1	Cover
55	945227	1	Cap
56	893267	1	O-ring
57	945229	1	O-ring
58	[2]946861	1	Relief valve
59	945832	1	Ring, snap
60	886739	1	Poppet
61	886753	1	Spring
62	893267	1	O-ring
63	613750	2	Washer
64	944853	1	Nut acorn
65	8D-08	1	Nut
66	944890	1	Screw
67	945732	1	Cap
68	16F-04	1	Plug
69	†24C-860	4	Bolt
70	†4E-08	4	Lockwasher

[2]Inc. 57, 59
[3]See A

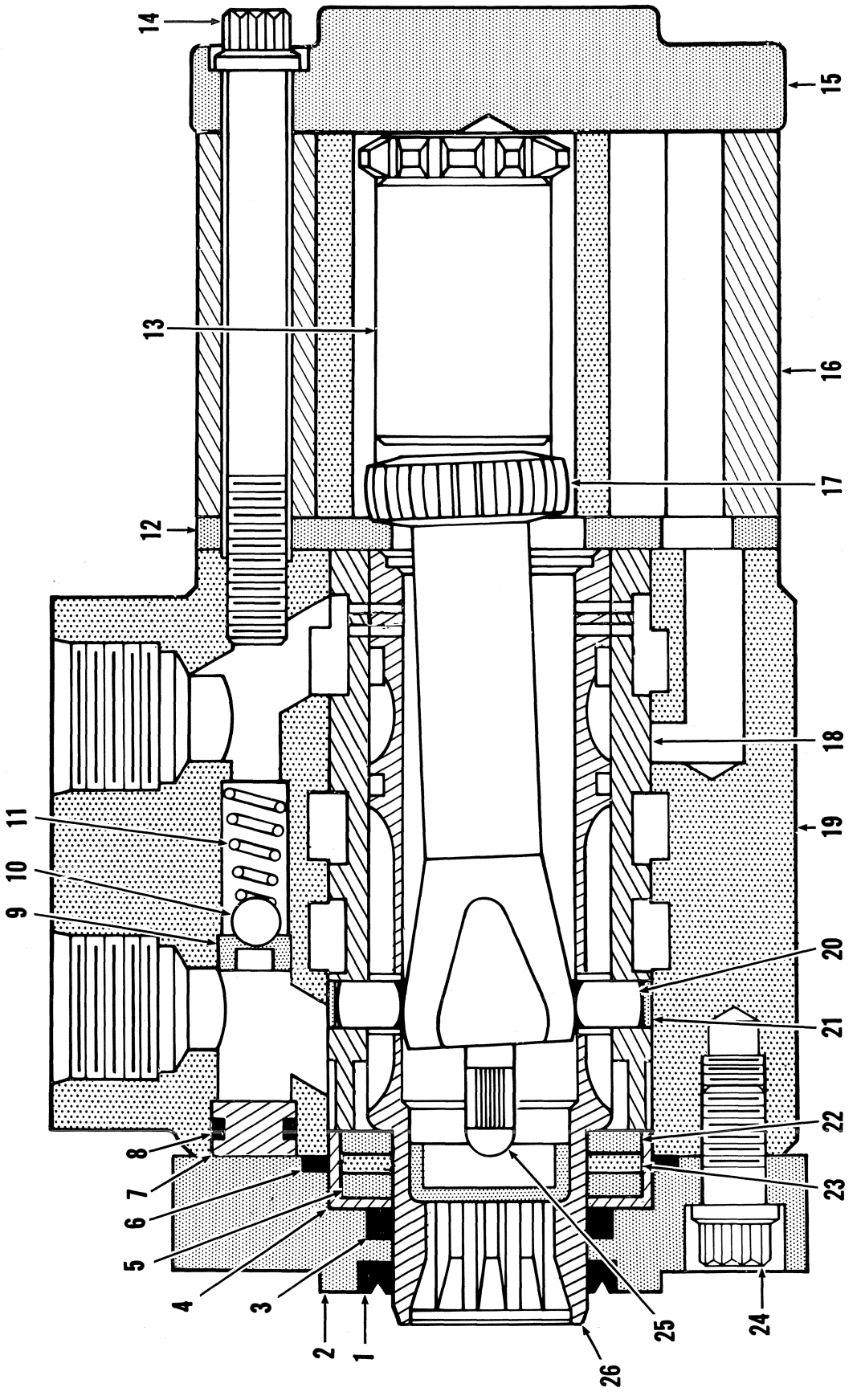

PM 2939
Printed in U.S.A.

Valve Assembly, Steering

MICHIGAN

No.	Part No.	Qty.	Description
A	[1]1514351	1	Valve assy
1	6517944	1	Seal
2	1567081	1	Plate
3	6517945	1	Seal
4	5200241	1	Bearing locator
5	5200240	1	Bearing race
6	6517946	1	Seal
7	991701	1	Plug
8	25K-20010	1	O-ring
9	991702	1	Seat
10	10J-08	1	Ball
11	1567072	1	Spring
12	1567084	1	Plate
13	5200205	1	Spacer
14	94G-540	7	Screw
15	1567080	1	Cap
16	949958	1	Gear set
17	1567085	1	Drive shaft
18	[2]948831	1	Sleeve
19	§[3]———	—	Housing
20	896544	1	Pin
21	1567076	2	Disc
22	5200240	1	Bearing race
23	3292657	1	Bearing
24	71G-510	4	Screw
25	896497	6	Spring
26	§[4]———	—	Spool

[1]Inc. 1→26
[2]Inc. 26
[3]See A
[4]See 18

Valve Assembly, Steering Pressure Relief

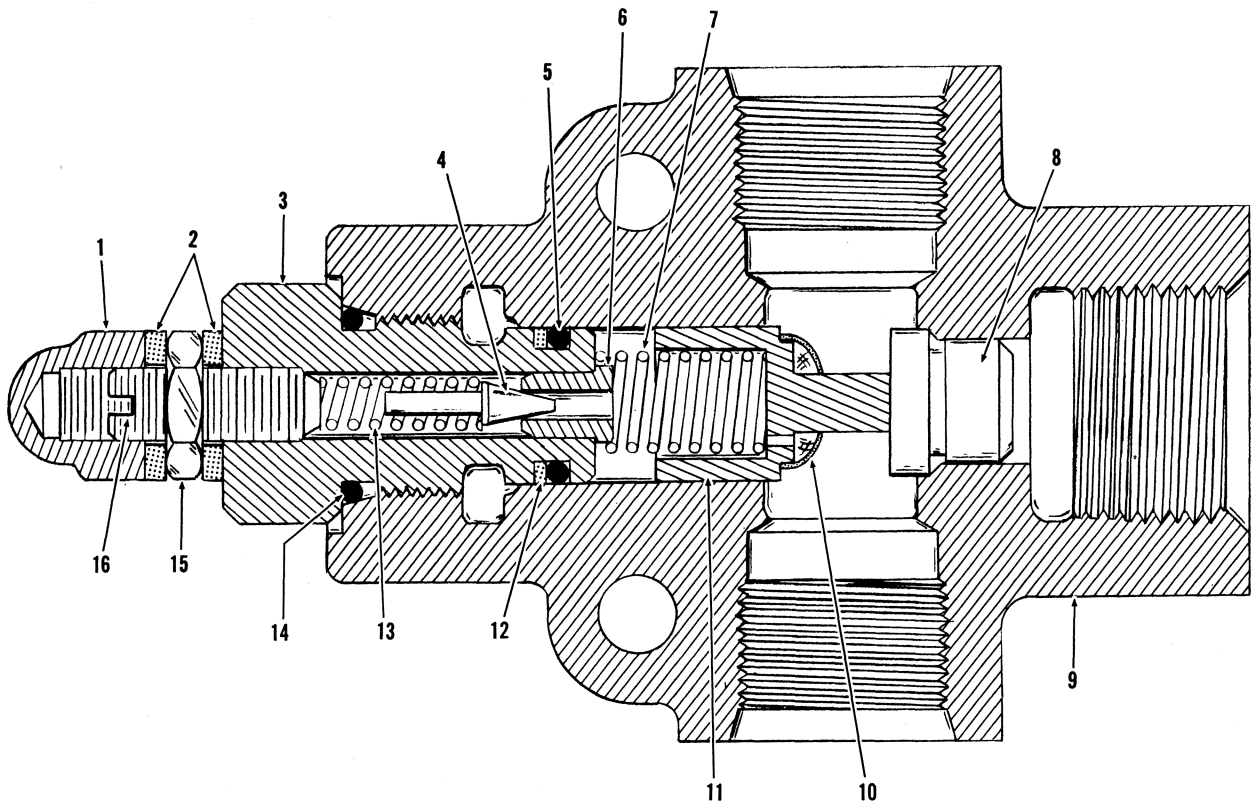

TS-10923

No.	Part No.	Qty.	Description
A	[1]536539	1	Valve assy
1	47D-05	1	Nut
2	730396	2	Washer
3	944467	1	Cap
4	883734	1	Plunger
5	899039	1	O-ring
6	944469	1	Seat
7	944646	1	Spring
8	944645	1	Seat
9	§[2]———	—	Valve body
10	§[3]———	—	Screen poppet
11	[4]944643	1	Poppet assy
12	899038	1	Ring back-up
13	944471	1	Spring
14	91F-6	1	O-ring
15	8D-05	1	Nut
16	33G-514	1	Set screw
17	†40K-02	2	Plug pipe

[1]Inc. 1➔17
[2]See A
[3]See 11
[4]Inc. 10

PM 2939
Printed in U.S.A.

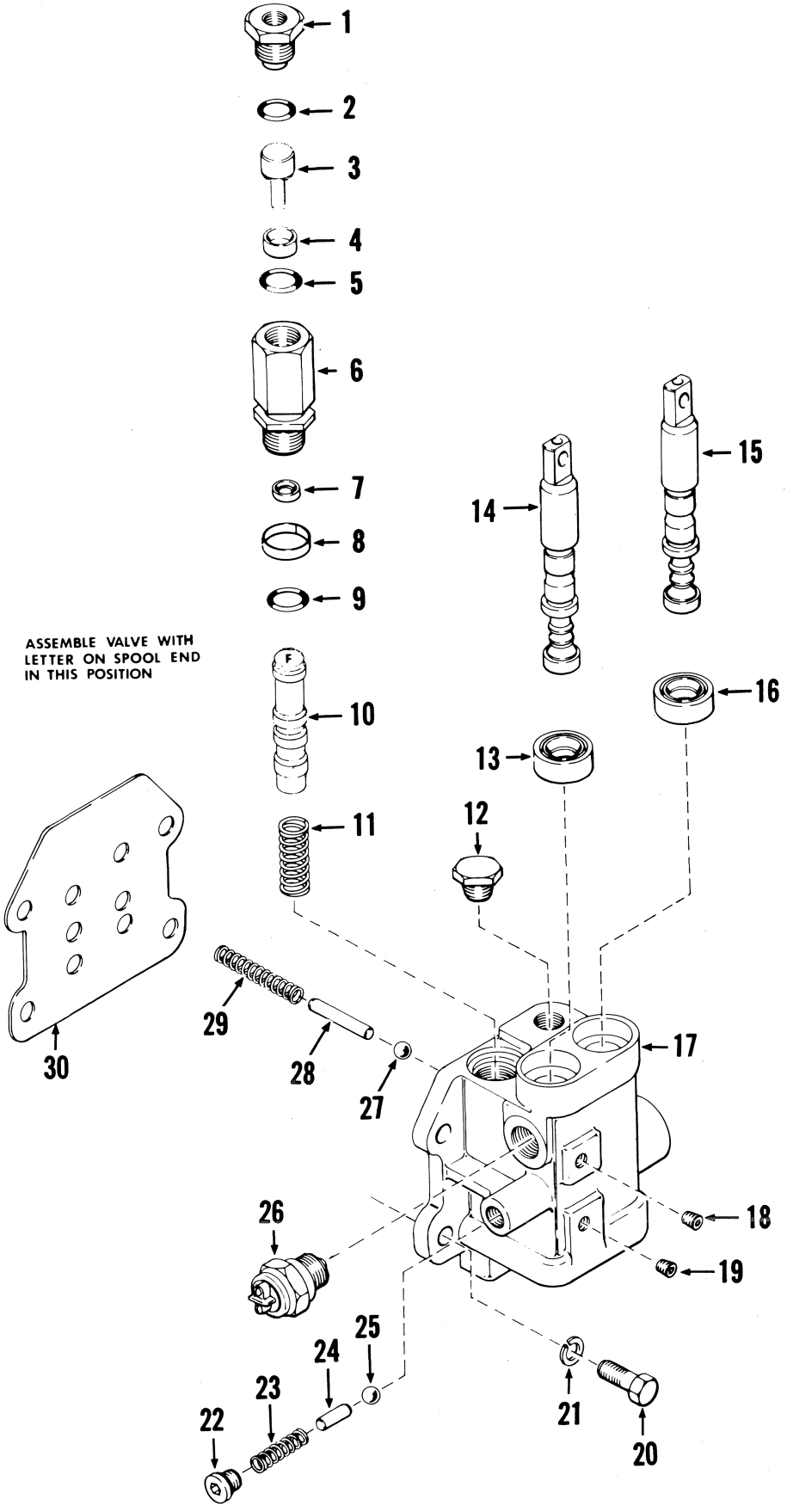
1
2
3
4
5
6
7
8
9
ASSEMBLE VALVE WITH LETTER ON SPOOL END IN THIS POSITION
F
10
11
12
13
14
15
16
17
18
19
20
21
22
23
24
25
26
27
28
29
30

TS-13316

Valve Assembly, Transmission Control

MICHIGAN

No.	Part No.	Qty.	Description
A	[1]232422	1	Valve assy
1	217928	1	Cap
2	91F-8	1	O-ring
3	227674	1	Piston
4	227672	1	Ring
5	25K-30020	1	O-ring
6	[2]219342	1	Declutch valve
7	229131	1	Seal
8	228931	1	Seal
9	25K-30022	1	O-ring
10	§[3]-----	—	Spool
11	219344	1	Spring
12	211433	1	Breather
13	225075	1	Seal
14	§[3]-----	—	Spool
15	§[3]-----	—	Spool
16	225075	1	Seal
17	§[3]-----	—	Housing
18	16F-01	1	Plug
19	16F-01	1	Plug
20	1C-718	4	Bolt
21	4E-07	4	Lockwasher
22	47K-3	1	Plug
23	202200	1	Spring
24	229010	1	Pin
25	10J-12	1	Ball
26	224620	1	Switch neutral start
27	10J-12	1	Ball
28	215194	1	Pin
29	215147	1	Spring
30	229009	1	Gasket

[1]Inc. 1➔30
[2]Inc. 1➔5, 7➔9
[3]See A. For correct operation of the de-clutch feature on this application, item 10 must be installed with the letter "F" in the upright position.

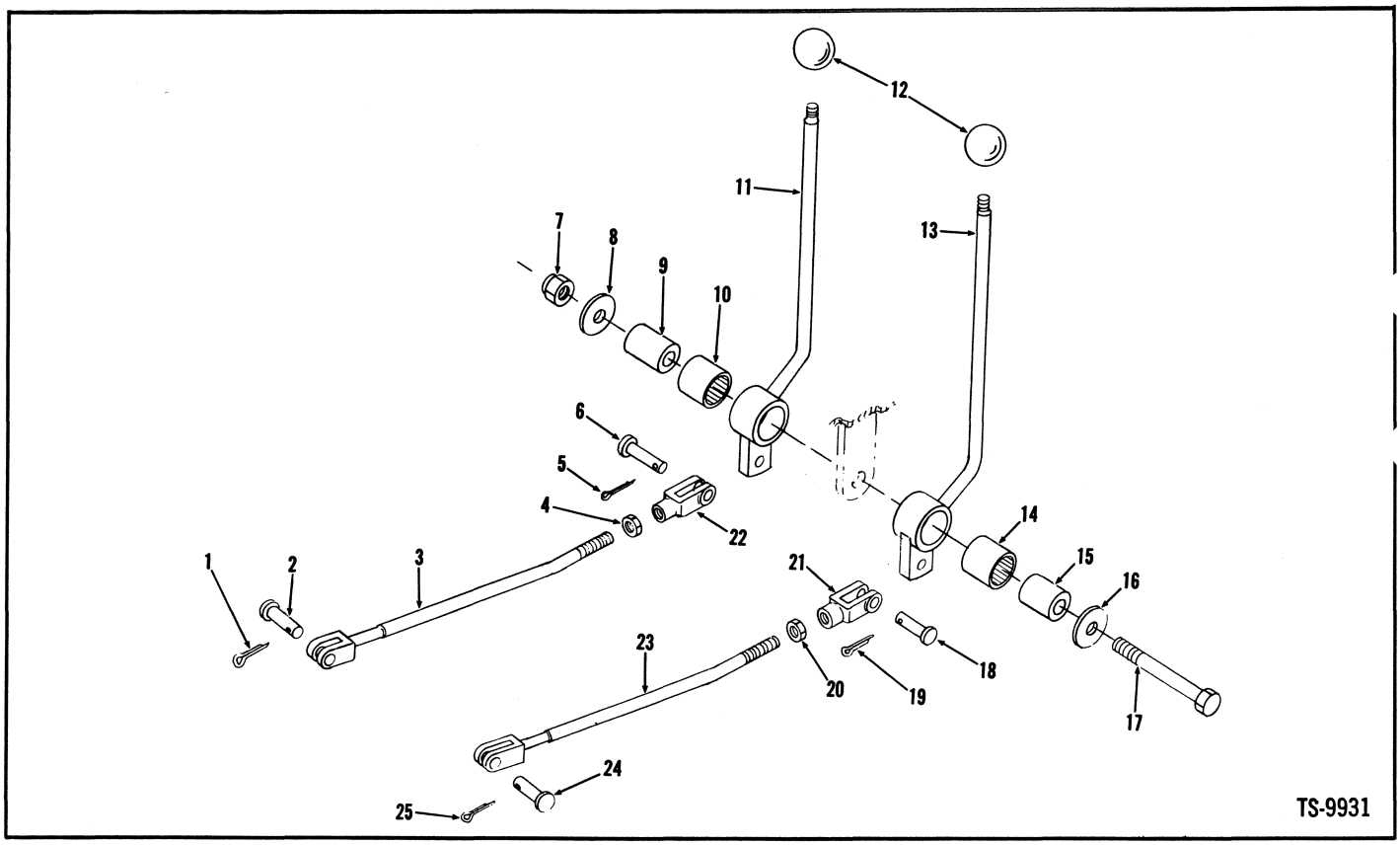

No.	Part No.	Qty.	Description
1	1F-316	1	Pin cotter
2	4F-05062	1	Pin clevis
3	[1]585330	1	Rod assy
4	8D-06	1	Nut
5	1F-316	1	Pin cotter
6	4F-06106	1	Pin clevis
7	18D-08	1	Locknut
8	616795	1	Washer
9	1503251	1	Sleeve
10	675227	1	Bearing
10A	†1522535	2	Seal
11	585601	1	Lever bucket
12	509772	2	Knob
13	585599	1	Lever boom
14	675227	1	Bearing
14A	†1522535	2	Seal
15	1503251	1	Sleeve
16	616795	1	Washer
17	24C-868	1	Bolt
18	4F-06106	1	Pin clevis
19	1F-316	1	Pin cotter
20	8D-06	1	Nut
21	2J-6208	1	Yoke
22	2J-6208	1	Yoke
23	[2]585330	1	Rod assy
24	4F-05062	1	Pin clevis
25	1F-316	1	Pin cotter

[1]Inc. 4, 22
[2]Inc. 20, 21

MICHIGAN

Group W

Wheel & Tire Data W2

PM 2939
Printed in U.S.A.

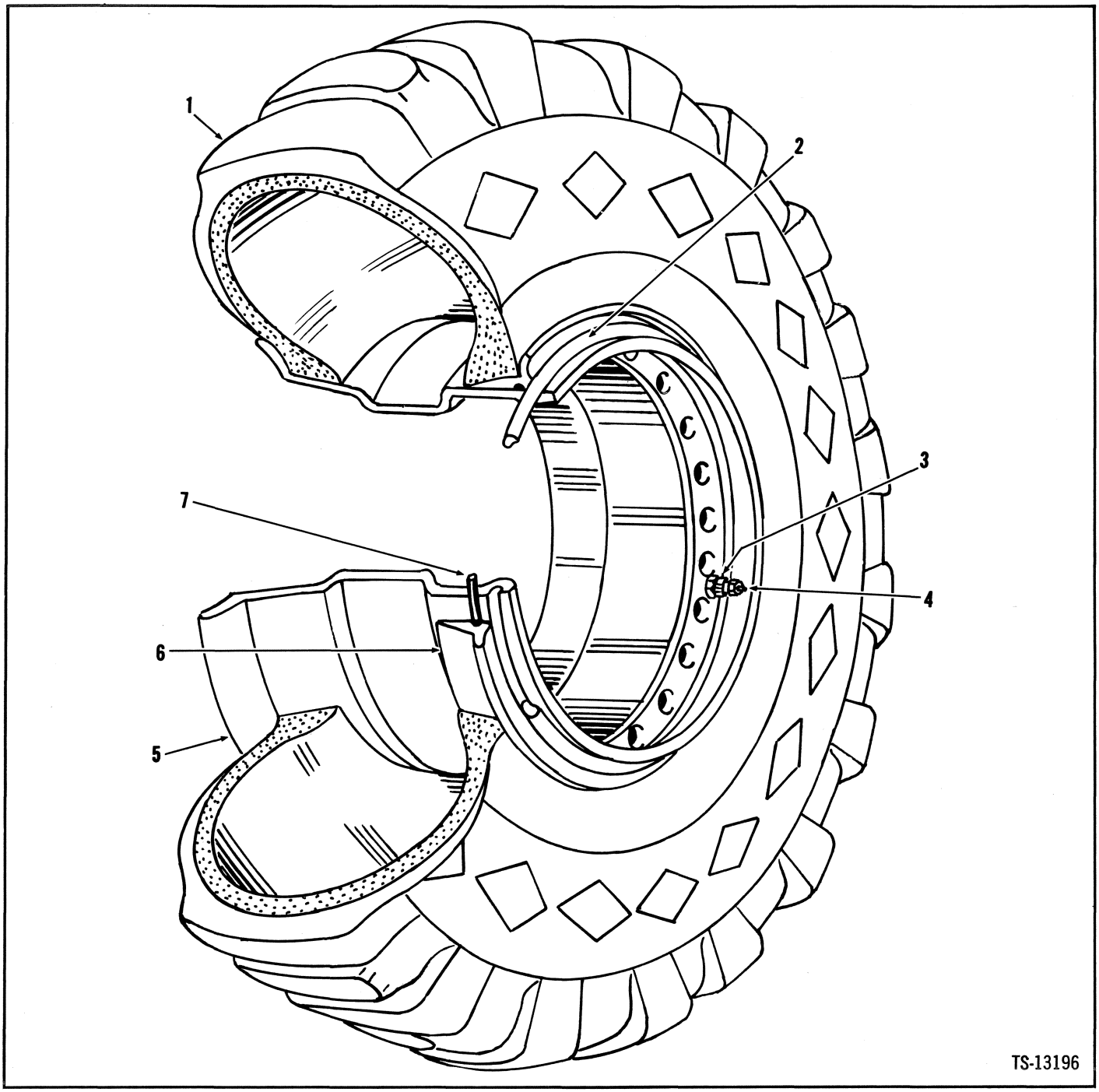

Item No.	Part No. 12.0 x 24	Part No. 13.0 x 24	Part No. 14.0 x 24	Part No. 15.5 x 25	Description	No. Req'd.
1	————	————	————	————	§Tire	4
2	524009	524009	524009	549741	Ring	4
3	————	[1]1504902	[1]1504902	[1]509445	Stem	4
4	————	551685	551685	551685	Cap, valve	4
5	1544718	1544718	1544718	1544600	Wheel	4
6	524010	524010	524010	549742	Flange	4
7	————	941329	941329	112462	O-ring	4

[1]Inc. 4

MICHIGAN

Group Z

Cab Assembly & Cab Lights Z3, Z5
Heater Assembly Z7
Heater Piping Installation Z9
Lifting Lugs Z10
Seat Belt Z11
Side Panels Z10
Sucker Fan Z10
Three Spool Valve Assembly Z13
Three Spool Valve Controls Z16
Three Spool Valve Piping Z19
Tool Kit Z20
Windshield Wipers Z21

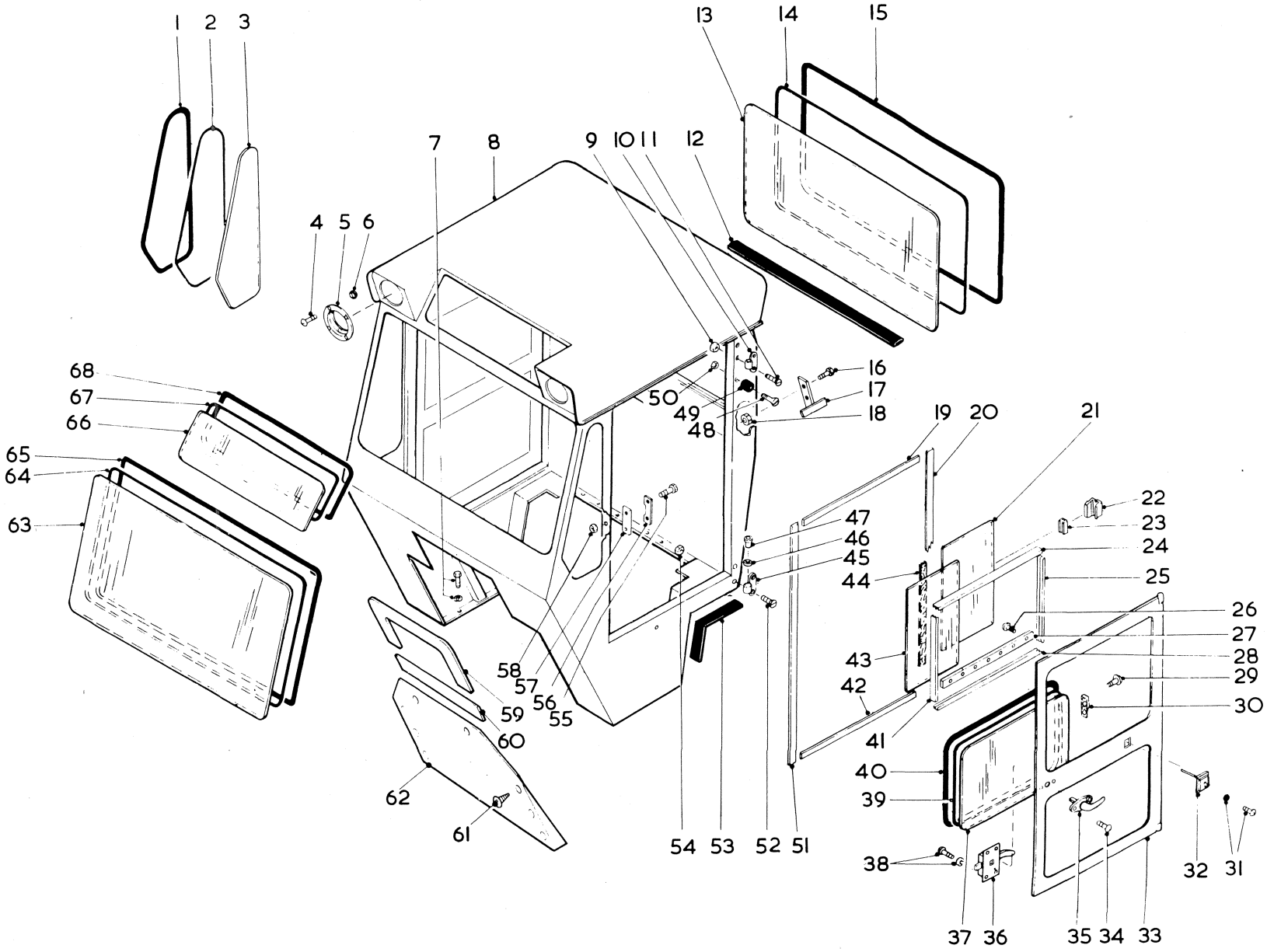
1
2
3
4
5
6
7
8
9
10
11
12
13
14
15
16
17
18
19
20
21
22
23
24
25
26
27
28
29
30
31
32
33
34
35
36
37
38
39
40
41
42
43
44
45
46
47
48
49
50
51
52
53
54
55
56
57
58
59
60
61
62
63
64
65
66
67
68

TS-13176

Cab Assembly & Cab Lights

MICHIGAN

No.	Part No.	Qty.	Description
A	[1]3239522	1	Cab assy
B	[7]3236561	2	Sliding window
1	3226652	2	Moulding
2	3226658	2	Filler strip
3	§[2]———	2	Glass
4	86G-1008	8	Screw
5	568675	2	Adapter
6	51D-10	8	Nut
7	24C-822	4	Bolt
7A	†25E-21	4	Washer
7B	†18D-08	4	Nut
8	3239521	1	Cab
9	18D-05	4	Nut
10	[3]3223910	1	Hinge — L.H.
10A	†[3]3224084	1	Hinge — R.H.
11	8G-516	4	Screw
12	3229096	1	Weatherstrip
13	§[2]———	1	Glass
14	3226659	1	Filler strip
15	3226653	1	Moulding
16	1C-416	4	Bolt
16A	†25E-13	4	Washer
16B	†4E-04	4	Lockwasher
17	3228614	1	Strike — L.H.
17A	†3232942	1	Strike — R.H.
18	18D-04	4	Nut
19	[4]943623	—	Weatherstrip
20	[5]943623	—	Weatherstrip
21	§[2]———	2	Glass
22	§[8]———	2	Catch
23	§[8]———	2	Strip
24	§[8]———	2	Channel glass
25	§[8]———	2	Channel glass
26	18G-406	32	Screw
27	§[8]———	4	Retainer
28	§[8]———	2	Channel glass
29	§[8]———	8	Screw
30	§[8]———	4	Lock
31	3220851	8	Screw
31A	†17E-10	8	Lockwasher
32	3227351	2	Latch
33	[6]3236087	1	Door — L.H.
33A	†[6]3236086	1	Door — R.H.
34	3220881	4	Screw

[1]Inc. 1→6, 8→11, 13→52, 54→58, 63→68
[2]See 69
[3]Inc. 47
[4]6 ft.
[5]7 ft.
[6]Inc. 19, 20, 31, 31A, 32, 34→40, 42
[7]Inc. 21→25, 27→30, 37, 39→41, 43, 44
[8]See B

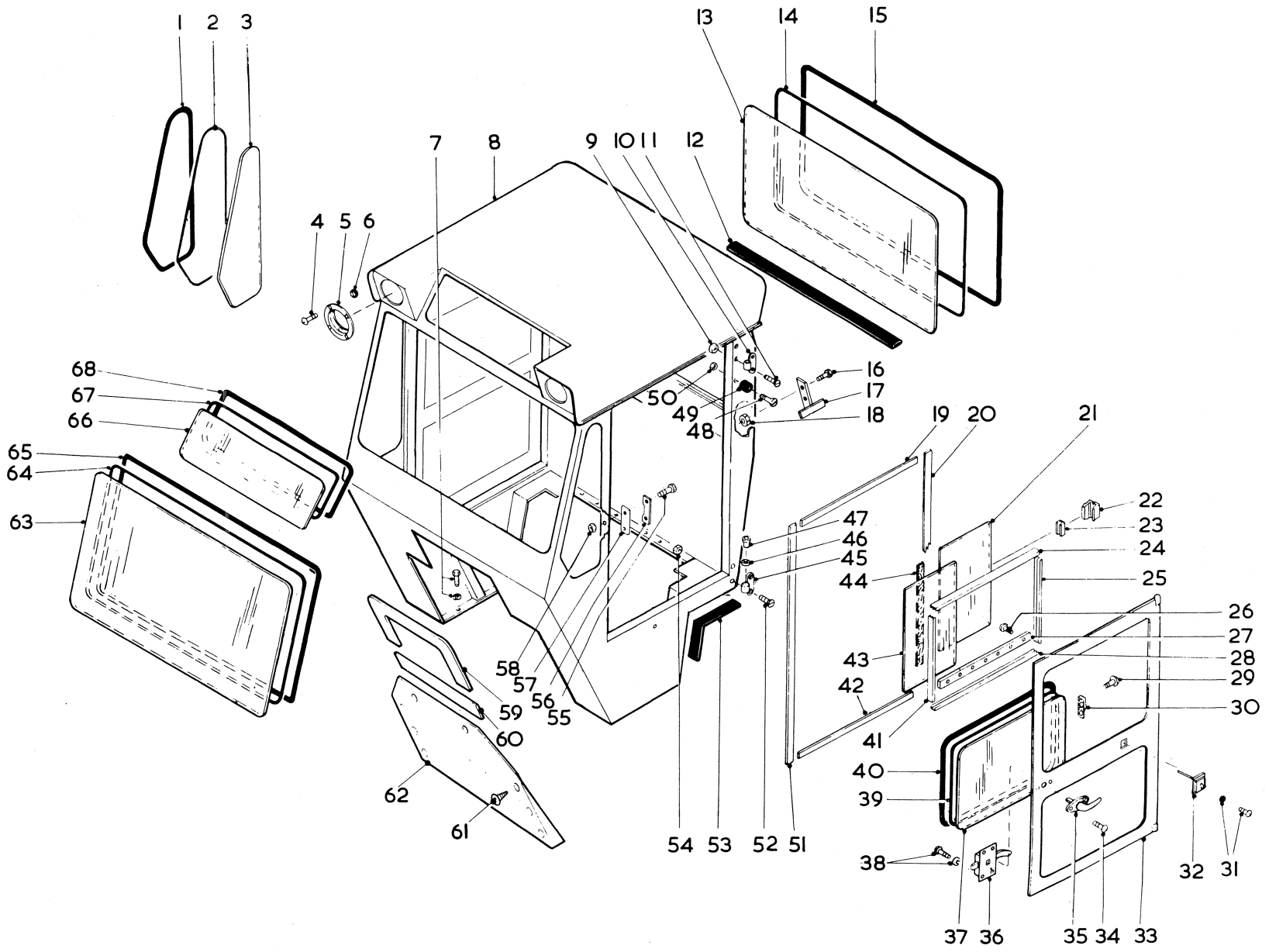
1
2
3
4
5
6
7
8
9
10
11
12
13
14
15
16
17
18
19
20
21
22
23
24
25
26
27
28
29
30
31
32
33
34
35
36
37
38
39
40
41
42
43
44
45
46
47
48
49
50
51
52
53
54
55
56
57
58
59
60
61
62
63
64
65
66
67
68
TS-13176

Cab Assembly & Cab Lights (Continued)

MICHIGAN

No.	Part No.	Qty.	Description
35	3212358	2	Handle
36	3224425	2	Lock
36A	3224429	2	Packer
37	§[2]———	2	Glass
38	3220852	8	Screw
38A	†17E-10	8	Lockwasher
39	3223810	2	Filler strip
40	3223804	2	Moulding
41	§[8]———	2	Channel glass
42	[4]943623	—	Weatherstrip
43	§[2]———	2	Glass
44	§[8]———	2	Weatherstrip
45	[3]3224084	1	Hinge — L.H.
45A	†[3]3223910	1	Hinge — R.H.
46	25E-17	4	Washer
47	568700	4	Bushing
48	3220855	2	Screw
49	302568	2	Bumper
50	3220859	2	Nut
51	[5]943623	—	Weatherstrip
52	8G-516	4	Screw
53	3228796	2	Weatherstrip
54	18D-05	4	Nut
55	18C-412	4	Bolt
56	945576	2	Strike
57	3224424	2	Plate
58	18D-04	4	Nut
59	3228796	1	Weatherstrip
60	3228795	1	Weatherstrip
61	23C-410	6	Bolt
61A	†25E-13	6	Washer
61B	†4E-04	6	Lockwasher
62	3239556	1	Panel
63	§[2]———	1	Glass
64	3226660	1	Filler strip
65	3226654	1	Moulding
66	§[2]———	1	Glass
67	3226656	1	Filler strip
68	3226650	1	Moulding
69	———	1	Glass pattern kit
70	†[9]547006	2	Head light assy
71	†551242	2	Sealed unit
72	†944977	2	Retainer head light
73	†50D-10	6	Nut
74	†540882	2	Wire

[2]See 69
[3]Inc. 47
[5]7 ft.
[8]See B
[9]Inc. 71, 72

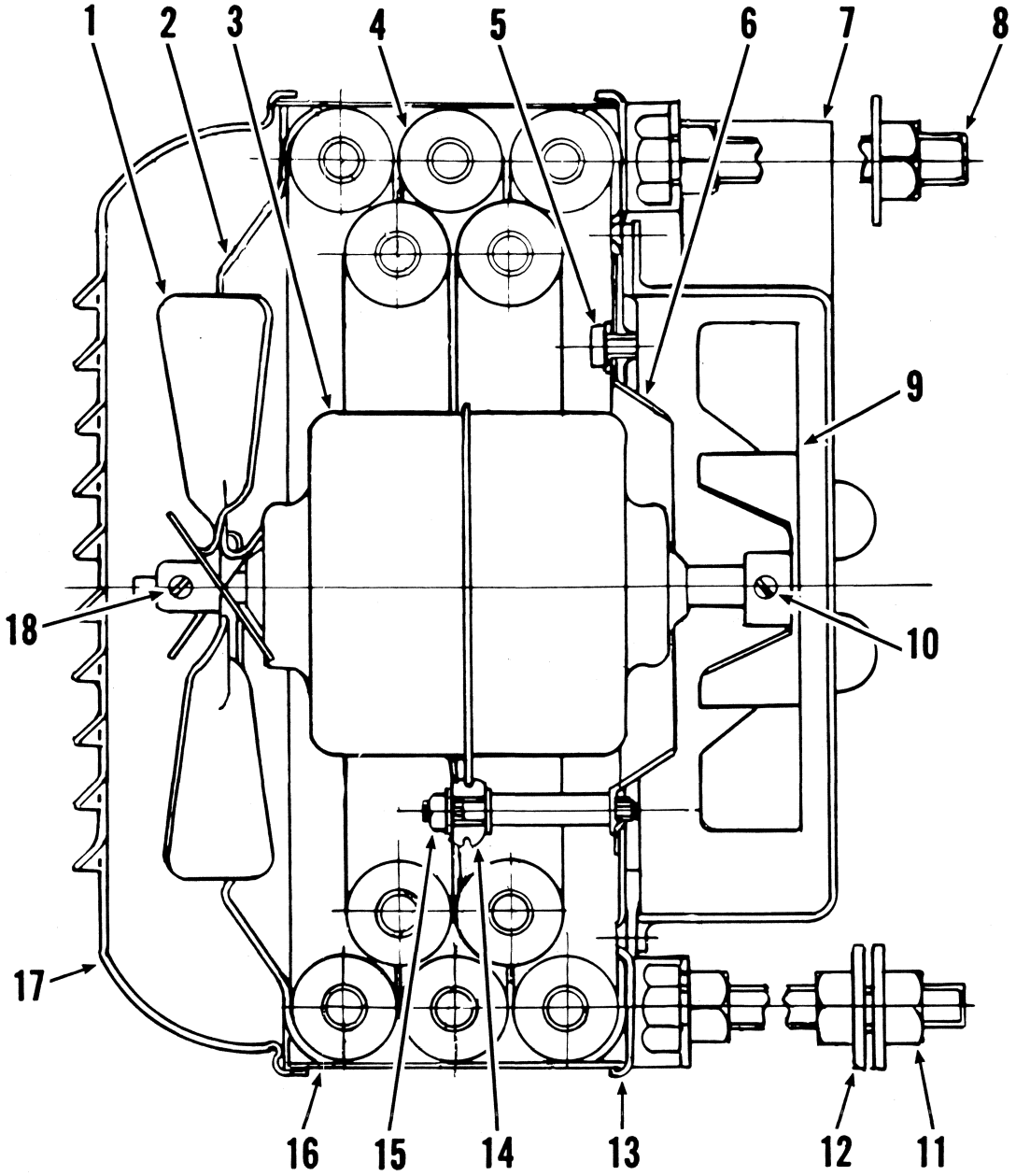

TS-13181

PM 2939
Printed in U.S.A.

Heater Assembly

MICHIGAN

No.	Part No.	Qty.	Description
A	[1]3213135	1	Heater assy
1	3213183	1	Heater fan
2	3213184	1	Cowl
3	3213186	1	Motor
4	3213185	1	Core
5	3213201	3	Screw
5A	†12E-10	3	Lockwasher
6	3213187	1	Cowl
7	3213181	1	Cover
8	3213191	2	Stud
9	3213188	1	Defroster fan
10	3213198	1	Set screw
11	3213204	8	Nut
12	103293	4	Washer
13	3213195	1	Back plate
14	3212857	3	Grommet
15	3221634	3	Nut
15A	†3213202	6	Washer
16	3213190	1	Ring
17	3213182	1	Cover
18	3213198	1	Set screw

[1]Inc. 1→18

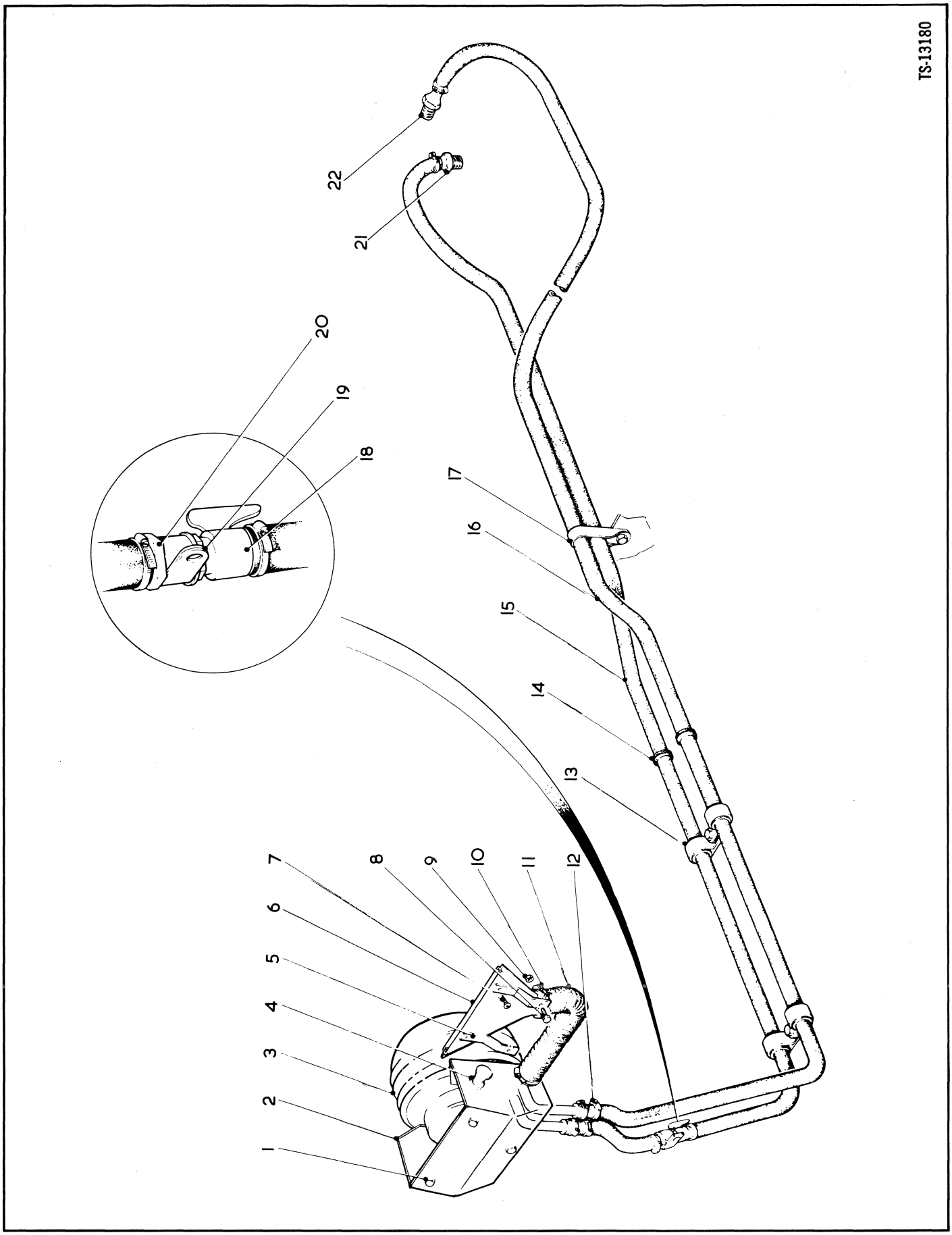

PM 2939
Printed in U.S.A.

Heater Piping Installation

MICHIGAN

No.	Part No.	Qty.	Description
1	24C-618	3	Bolt
1A	†4E-06	3	Lockwasher
2	3228503	1	Bracket
3	[1]———	1	Heater assy
4	3211109	1	Switch
5	3211090	2	Bracket
6	3213138	1	Defroster nozzle
7	65G-1006	2	Screw
8	85G-1008	2	Screw
9	14D-10	2	Nut
10	3213133	2	Clamp
11	3228508	1	Hose
12	3220865	8	Clamp
13	3222517	2	Clip
14	3222492	2	Grommet
15	1529688	1	Hose eng. — heater
16	1529688	1	Hose heater — eng.
17	3220711	3	Clip
18	3211089	1	Stopcock
19	3228510	1	Bracket
19A	†85G-1008	2	Screw
19B	†14D-10	2	Nut
20	3212871	1	Adaptor
21	3211087	1	Adaptor
22	3211087	1	Adaptor
23	†3239855	1	Cable
24	†3239856	1	Cable

[1]See Index

Lifting Lugs

No.	Part No.	Qty.	Description
1	†3212395	2	Lifting lug

Side Panels

No.	Part No.	Qty.	Description
1	†[1]3239833	1	Side panel — L.H.
2	†[1]3239834	1	Side panel — R.H.
3	†1H-306	8	Rivet
4	†1545623	2	Keeper
5	†1545622	4	Latch

[1]Inc. 3, 4

Sucker Fan

No.	Part No.	Qty.	Description
1	†3237100	1	Sucker fan
2	†3237137	1	Spacer
3	†2C-538	4	Bolt
4	†4E-05	4	Lockwasher

PM 2939
Printed in U.S.A.

Seat Belt

MICHIGAN

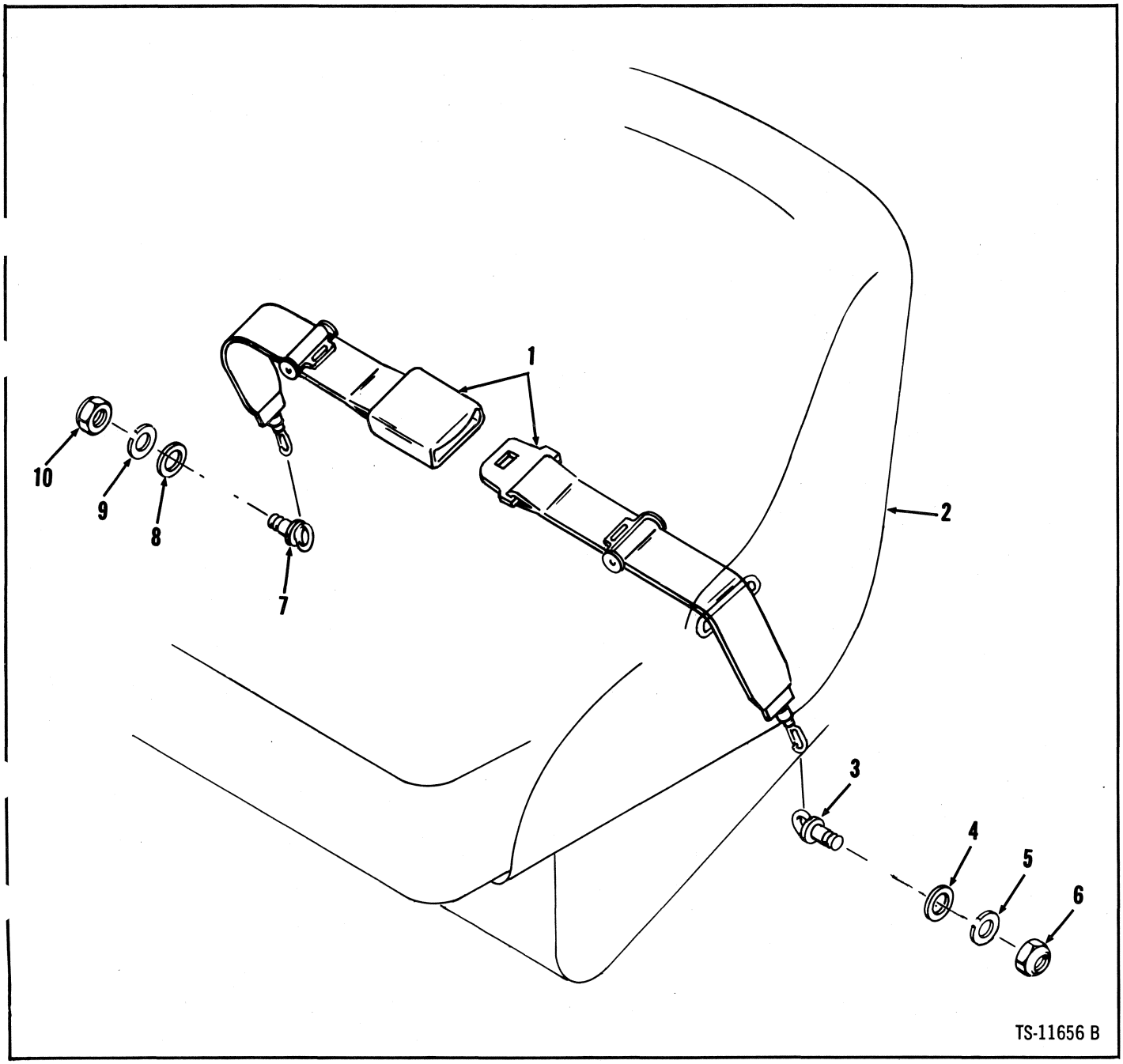

No.	Part No.	Qty.	Description
1	[1]1527745	1	Belt assy
2	[2]————	1	Seat
3	§[3]————	1	Eyebolt
4	§[3]————	1	Washer
5	§[3]————	1	Lockwasher
6	§[3]————	1	Nut
7	§[3]————	1	Eyebolt
8	§[3]————	1	Washer
9	§[3]————	1	Lockwasher
10	§[3]————	1	Nut

[1]Inc. 3➔10
[2]See Index
[3]See 1

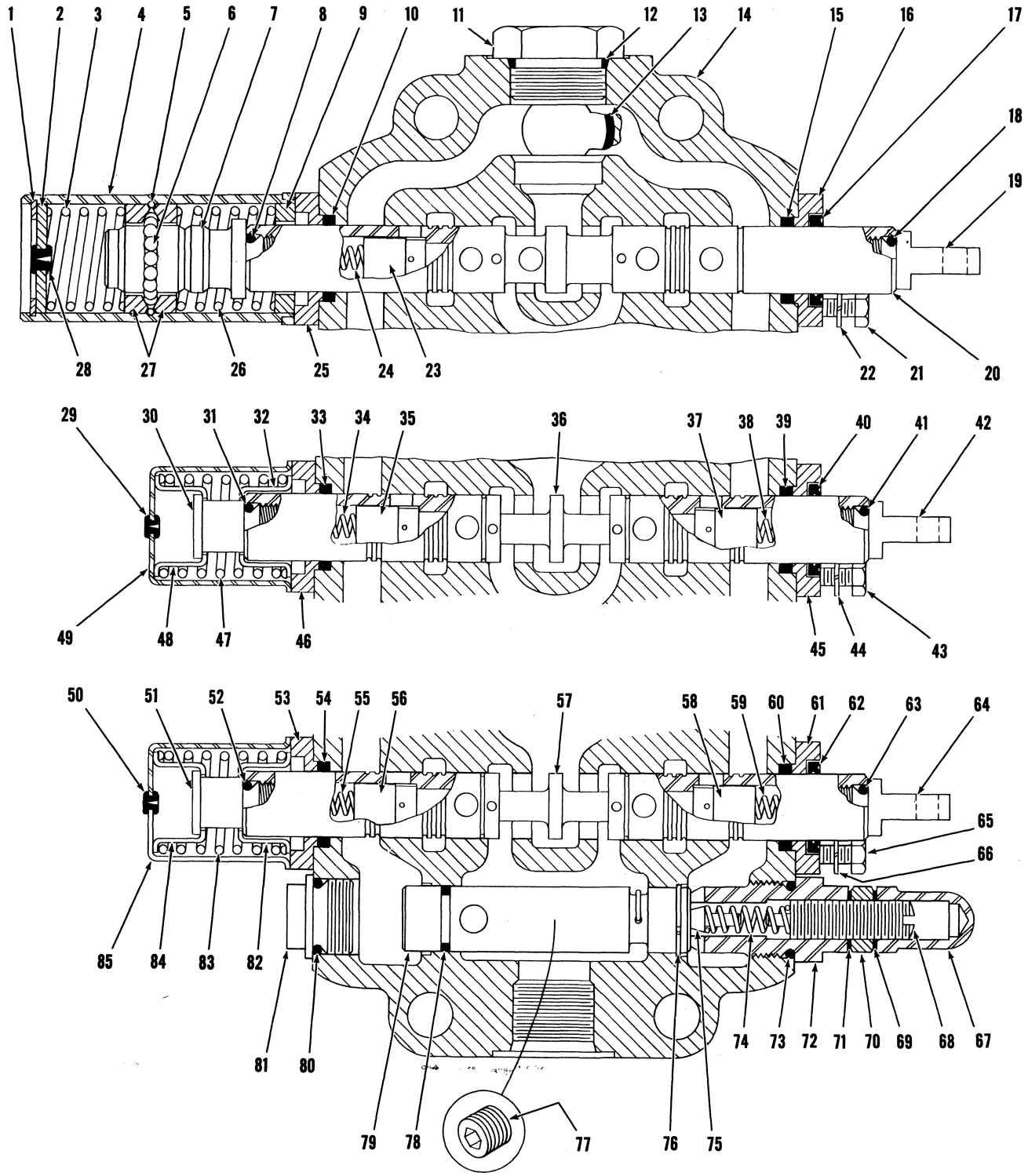
1 2 3 4 5 6 7 8 9 10 11 12 13 14 15 16 17 18 19
28 27 26 25 24 23 22 21 20
29 30 31 32 33 34 35 36 37 38 39 40 41 42
49 48 47 46 45 44 43
50 51 52 53 54 55 56 57 58 59 60 61 62 63 64 65 66
85 84 83 82 81 80 79 78 77 76 75 74 73 72 71 70 69 68 67

TS-4655

Three Spool Valve Assembly

MICHIGAN

No.	Part No.	Qty.	Description
A	[1]586434	1	Valve assy
1	755855	1	Ring snap
2	886762	1	Plug
3	945356	1	Spring
4	945355	1	Cover
5	945359	1	Ring snap
6	10J-06	15	Ball
7	945357	1	Cap
8	25K-30014	1	O-ring
9	945360	1	Spacer
10	945225	1	Seal
11	[2]24K-10	1	Plug
12	91F-10	1	O-ring
13	25K-40106	1	O-ring
14	§[3]————	1	Housing
15	945225	1	Seal
16	945224	1	Retainer wiper seal
17	1302437	1	Wiper seal
18	25K-30014	1	O-ring
19	945226	1	Plunger eye
20	§[3]————	1	Plunger
21	1C-514	4	Bolt
22	4E-05	4	Lockwasher
23	945590	1	Check
24	871388	1	Spring
25	945224	1	Retainer
26	945358	1	Spring
27	886758	2	Retainer
28	886763	1	Bleeder plug
29	886745	1	Bleeder plug
30	888456	1	Cap
31	25K-30014	1	O-ring
32	888451	1	Guide
33	945225	1	Seal
34	871388	1	Spring
35	945590	1	Check
36	§[3]————	1	Plunger
37	945590	1	Check
38	945503	1	Spring
39	945225	1	Seal
40	1302437	1	Wiper seal
41	25K-30014	1	O-ring
42	945226	1	Plunger eye
43	1C-514	4	Bolt
44	4E-05	4	Lockwasher
45	945224	1	Retainer wiper seal

[1]Inc. 1→85
[2]Inc. 12
[3]See A

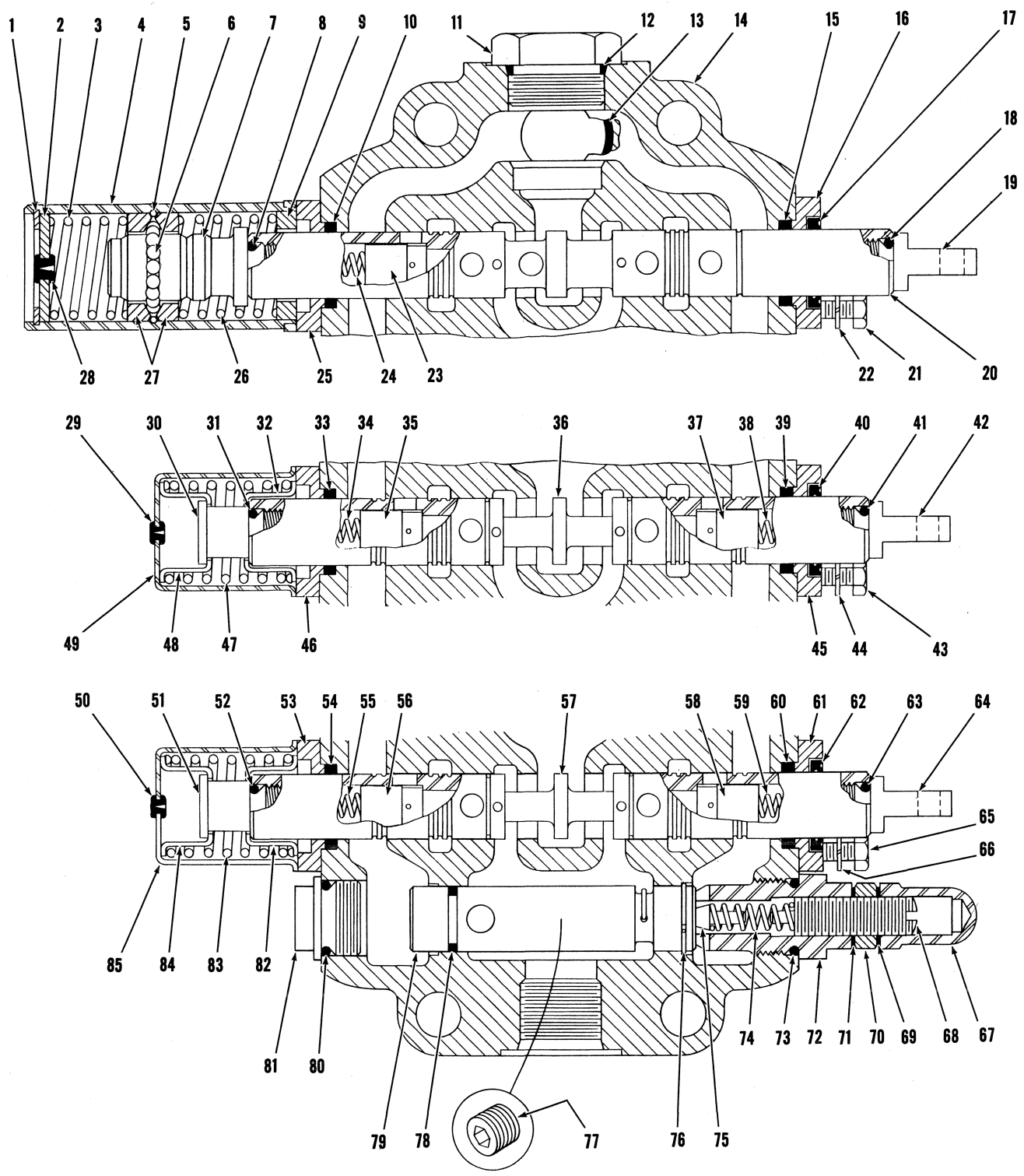

TS-4655

PM 2939
Printed in U.S.A.

Three Spool Valve Assembly (Continued)

MICHIGAN

No.	Part No.	Qty.	Description
46	945224	1	Retainer
47	888455	1	Spring
48	888451	1	Guide
49	886749	1	Cover
50	886745	1	Bleeder plug
51	888456	1	Cap
52	25K-30014	1	O-ring
53	945224	1	Retainer
54	945225	1	Seal
55	871388	1	Spring
56	945590	1	Check
57	§[3]———	1	Plunger
58	945590	1	Check
59	871388	1	Spring
60	945225	1	Seal
61	945224	1	Retainer wiper seal
62	1302437	1	Wiper seal
63	25K-30014	1	O-ring
64	945226	1	Plunger eye
65	1C-514	4	Bolt
66	4E-05	4	Lockwasher
67	944853	1	Acorn nut
68	944890	1	Adjusting screw
69	613750	1	Washer
70	8D-08	1	Nut
71	613750	1	Washer
72	945732	1	Adjusting cap
73	893267	1	O-ring
74	886753	1	Spring
75	886739	1	Poppet
76	945229	1	Ring snap
77	16F-04	1	Plug
78	945832	1	O-ring
79	[4]946861	1	Relief valve assy
80	893267	1	O-ring
81	945227	1	Cap
82	888451	1	Guide
83	888455	1	Spring
84	888451	1	Guide
85	886749	1	Cover

[3]See A
[4]Inc. 76, 78

Three Spool Valve Controls

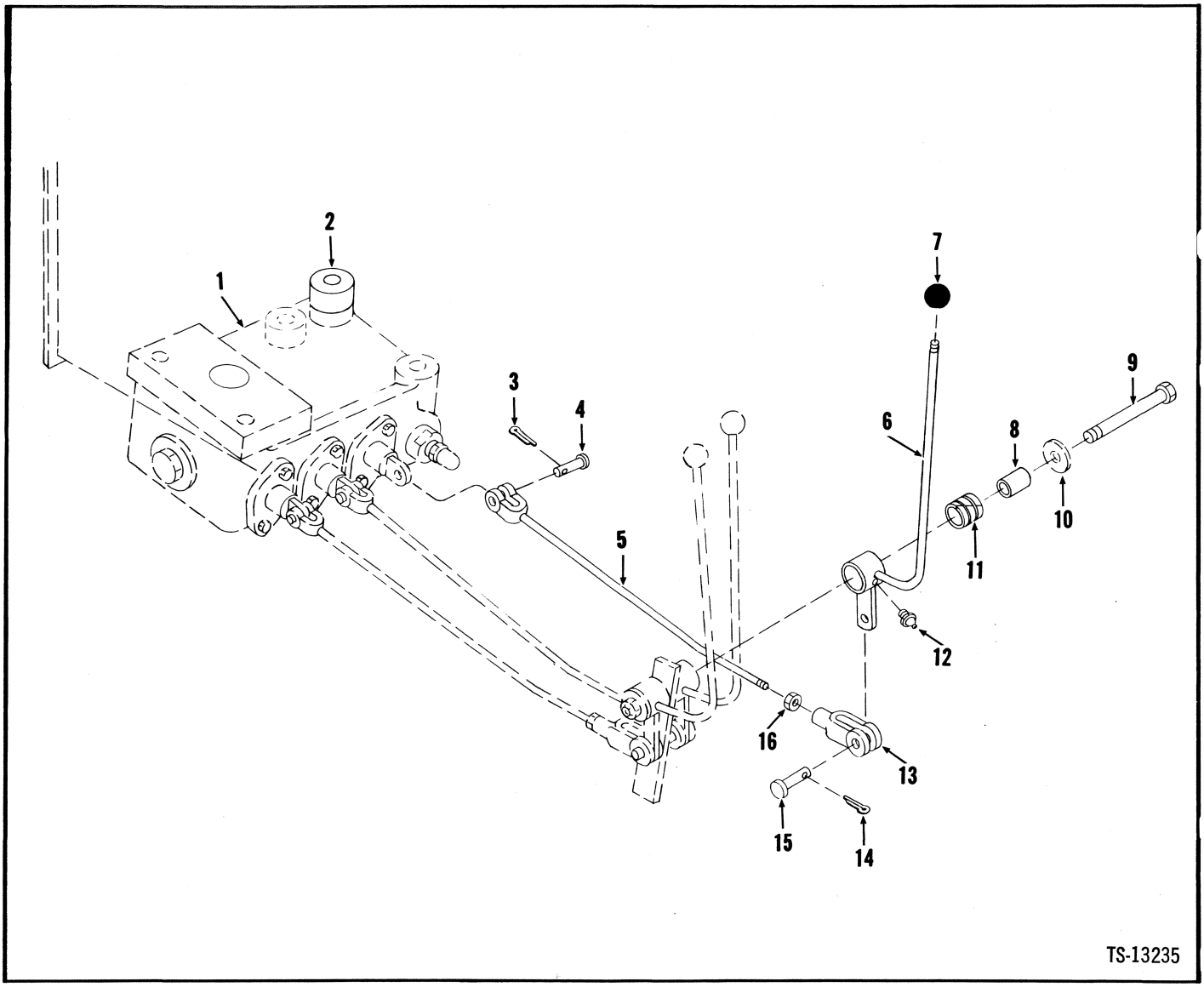

No.	Part No.	Qty.	Description
1	[1]————	—	Valve
2	550288	1	Boss
3	1F-316	1	Pin cotter
4	4F-05062	1	Pin
5	[2]585330	1	Rod
6	562485	1	Lever
7	509772	1	Knob
8	1503251	1	Sleeve
9	24C-892	1	Bolt
10	616795	1	Washer
11	675227	1	Bushing
12	10H-25	1	Fitting grease
13	2J-6208	1	Clevis
14	1F-316	1	Pin cotter
15	4F-06106	1	Pin
16	8D-06	1	Nut

[1]See Index
[2]Inc. 13, 16

PM 2939
Printed in U.S.A.

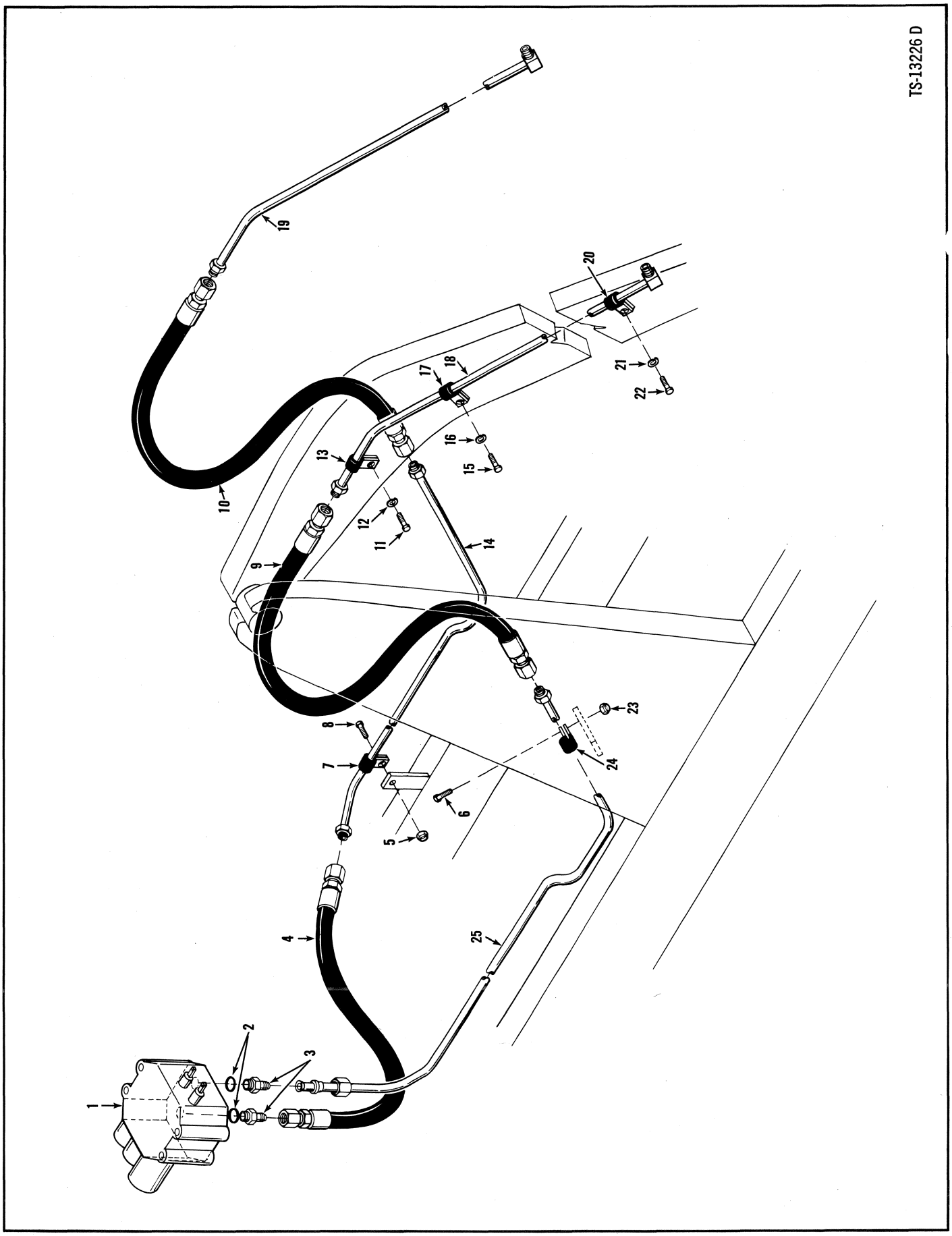

PM 2939
Printed in U.S.A.

Three Spool Valve Piping

MICHIGAN

No.	Part No.	Qty.	Description
1	[1]————	—	Valve assy
2	91F-9	2	O-ring
3	[2]562912	2	Adapter
4	562796	1	Hose
5	18D-06	1	Nut
6	24C-620	2	Bolt
7	30H-38	1	Clip
8	24C-620	1	Bolt
9	562796	1	Hose
10	562796	1	Hose
11	24C-616	2	Bolt
12	4E-06	2	Lockwasher
13	30H-38	2	Clip
14	1519909	1	Tube
15	24C-616	2	Bolt
16	4E-06	2	Lockwasher
17	30H-38	2	Clip
18	1523075	1	Tube L.H.
19	1523075	1	Tube R.H.
20	30H-38	2	Clip
21	4E-06	2	Lockwasher
22	24C-616	2	Bolt
23	18D-06	2	Nut
24	30H-38	2	Clip
25	1519907	1	Tube

[1]See Index
[2]Inc. 2

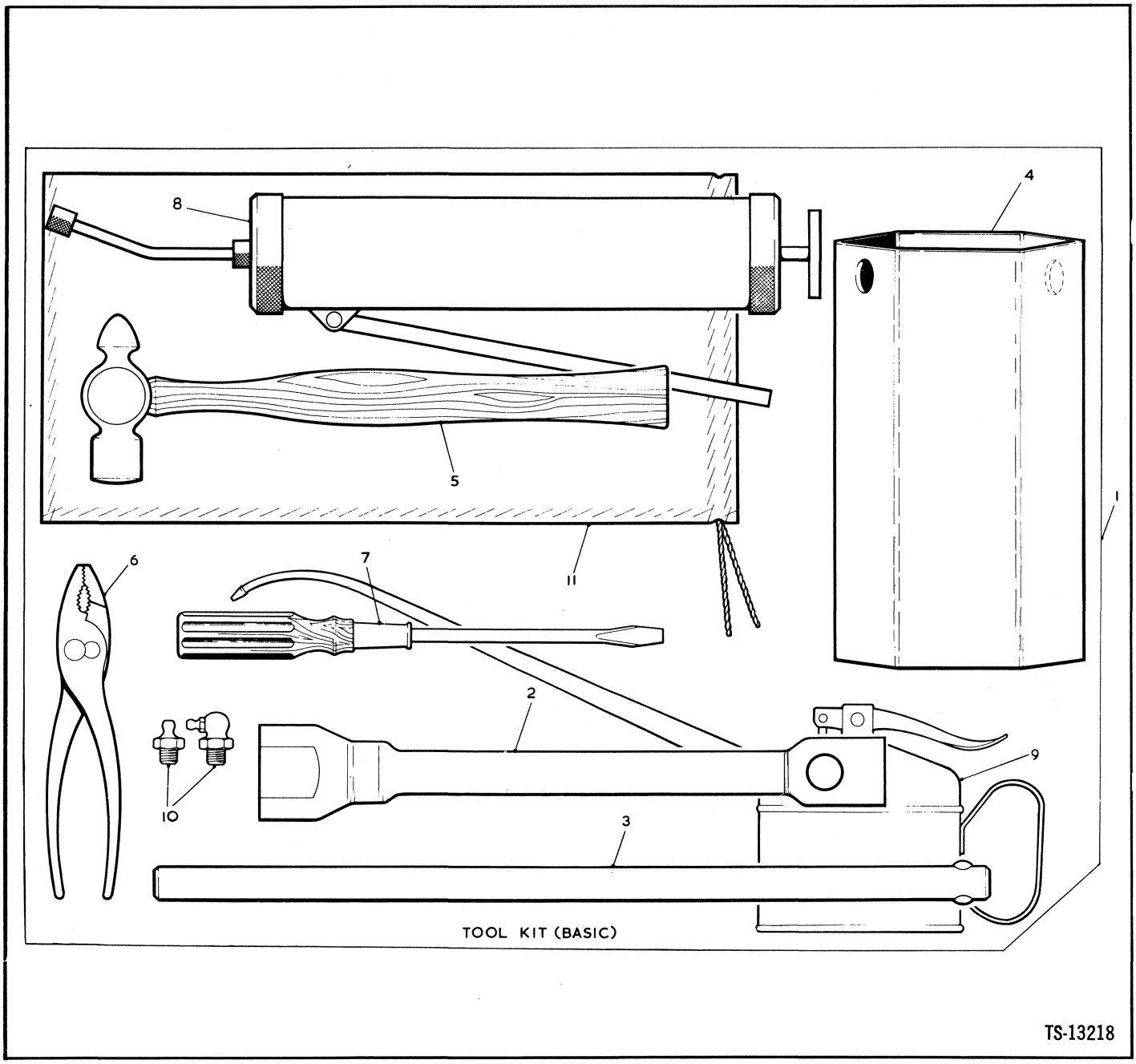

No.	Part No.	Qty.	Description
1	[1]3226183	1	Tool kit
2	711264	1	Wrench
3	552164	1	Handle
4	526629	1	Wrench
5	552165	1	Hammer
6	552166	1	Pliers
7	552167	1	Screwdriver
8	518897	1	Gun grease
9	3201708	1	Oil can
10	10H-2	6	Grease fitting
11	552171	1	Bag tool

[1]Inc. 2→11

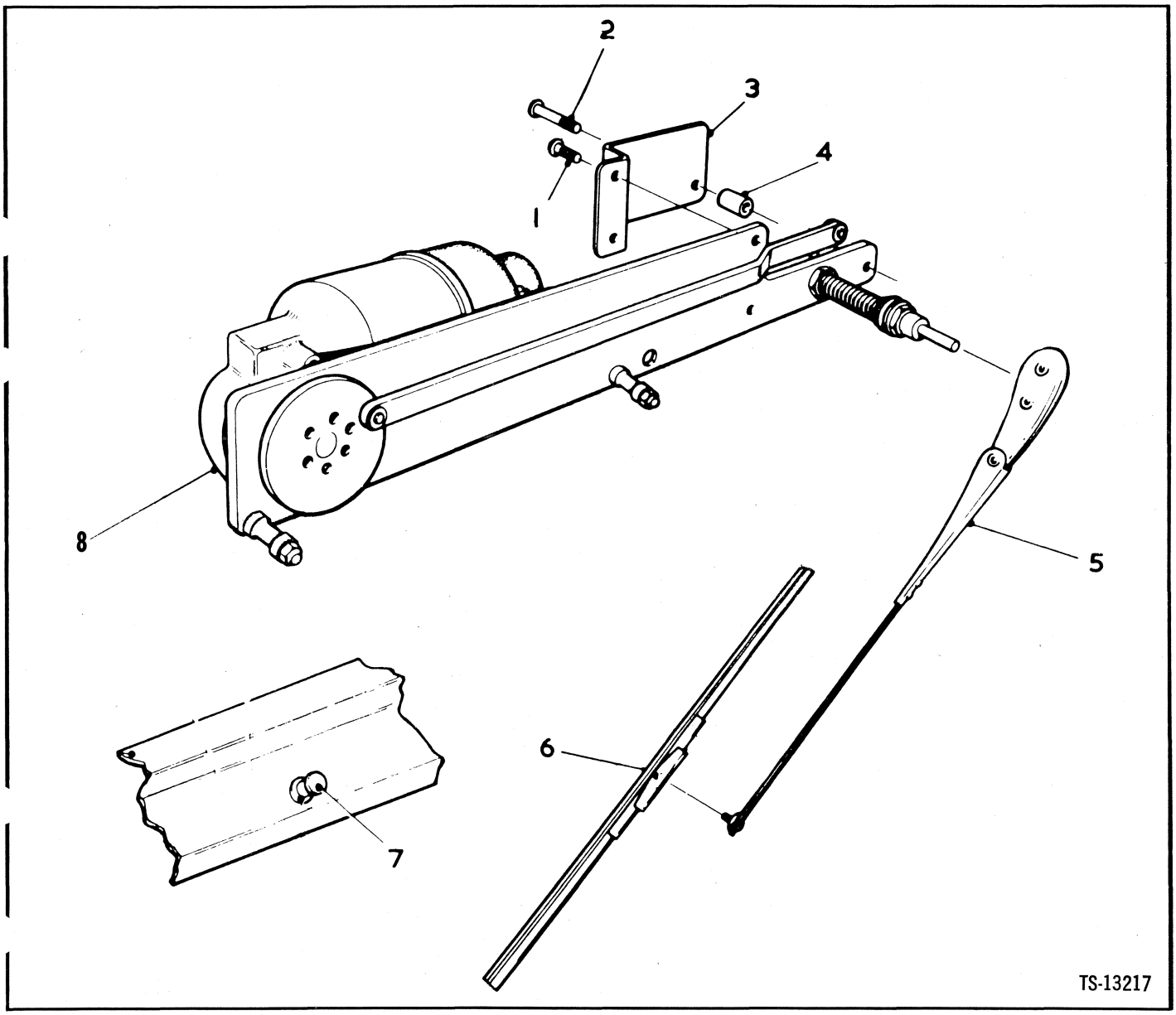

No.	Part No.	Qty.	Description
A	[1,3]3227187	1	Wiper assy
B	[2,4]3227189	1	Wiper assy
1	65G-1006	4	Screw
2	65G-1010	2	Screw
3	3224925	2	Cover plate
4	3224924	2	Spacer
5	[3]3223817	1	Wiper arm
5A	[4]3223816	1	Wiper arm
6	[3]3213498	1	Wiper blade
6A	[4]3227177	1	Wiper blade
7	3204336	2	Switch
8	3227154	2	Wiper motor

[1]Inc. 1➔5, 6, 7, 8
[2]Inc. 1➔4, 5A, 6A, 7, 8
[3]Front
[4]Rear

MICHIGAN

NUMERICAL INDEX

Part No.	Page No.
100320	A5-1
100613	B14-1
100638	A3-1, A5-1
100674	A9-1, A11-1
100675	A9-1, A11-1
100744	V4-1
100864	B13-1, B14-1
100865	B13-1, B14-1
100867	B13-1, B14-1
100877	B14-1
100878	B13-1, B14-1
100879	B14-1
101092	A3-1
101332	B13-1
101395	A9-1, A11-1
101396	A9-1, A11-1
101398	A9-1, A11-1
101399	A9-1, A11-1
101400	A9-1, A11-1
101401	A9-1, A11-1
101407	A9-1, A11-1
101411	A9-1, A11-1
101424	A9-1, A11-1
102313	A3-1, A5-1
102314	A3-1, A5-1
102322	B13-1, B14-1
102497	B14-1
102498	B14-1
102745	C5-1, T3-1, T5-1
103089	B25-1
103216	A3-1, A7-1
103293	Z7-1
104412	A3-1, A5-1
105757	A3-1
106129	A5-1
106137	A14-1
106138	A14-1
106216	B13-1
106254	A3-1
106263	B25-1
106268	A14-1
106373	B13-1
106539	A5-1
106572	A3-1, A5-1
106586	B13-1
106656	A3-1, A7-1
106762	A5-1
106815	A5-1
106817	B14-1
106969	B13-1
106970	B13-1
107014	B20-1
107256	A3-1, A5-1
107378	A11-1
107608	A3-1
109055	A3-1
109389	A9-1, A11-1
109639	A3-1
109640	A3-1, A5-1
109641	A3-1, A5-1
109644	A9-1, A11-1
109652	A5-1
109658	A5-1
109659	A5-1
109660	A7-1
109661	A7-1
109662	A7-1
109663	A7-1
109664	A7-1
109665	A7-1
109666	A7-1
109667	A7-1
109668	A5-1
109670	A7-1
109771	A7-1
109772	A7-1
109773	A7-1
110240	A5-1
110242	A5-1
110932	B13-1
111437	A9-1, A11-1
111560	A9-1
111646	A9-1, A11-1
111726	A3-1, A5-1
111735	A9-1, A11-1
111805	A5-1
112174	A7-1, A14-1
112278	A3-1, A5-1, A7-1
112462	W2-1
114092	A7-1
114169	B13-1
114170	B14-1
114591	A3-1, A5-1
114792	A5-1
114793	A5-1
117228	A14-1
117328	A7-1
117913	A5-1
118254	B13-1
118256	B13-1
118257	B13-1
118380	A7-1
118785	A12-1
119970	A5-1
119983	A3-1, A5-1
120093	A3-1
120190	A3-1, A5-1
120198	A3-1, A5-1
120456	A7-1
120505	B14-1
120507	B14-1
120546	A3-1
122414	A9-1
122418	A11-1
122943	A9-1, A11-1
122984	A9-1, A11-1
123135	A11-1
123136	A9-1
123605	A12-1
123616	A12-1
123618	A12-1, A13-1
123619	A12-1, A13-1
123620	A12-1, A13-1
123621	A13-1
123623	A13-1
123627	A12-1, A13-1
123746	A9-1, A11-1
123748	A9-1
124214	B21-1
125234	A9-1, A11-1
131454	A3-1
190811	A5-1
201566	T3-1
201951	C5-1, T3-1, T5-1
201966	B13-1
202200	V15-1
206864	C5-1, T3-1, T5-1
208805	B20-1, B21-1
209313	C7-1
211433	C5-1, H11-1, V15-1
214155	P4-1
214295	T3-1
214596	C7-1
214730	C5-1
214920	C7-1
214923	C7-1
214924	C7-1
214928	C5-1
214929	C5-1
214930	C5-1
214931	C5-1
214932	C7-1
214936	C5-1
214940	C5-1, T3-1
214941	C7-1
214946	C5-1
214949	C5-1
214951	C7-1
214953	C7-1
214954	C5-1
214956	C5-1
214961	C5-1, P6-1
214962	P6-1
214979	C7-1
214983	C7-1
214984	C7-1
214987	T5-1
214988	C7-1
215141	T3-1
215143	T3-1
215144	T3-1
215145	T3-1
215146	T3-1
215147	V15-1
215149	T5-1
215150	T5-1
215152	T5-1
215154	T5-1
215155	T3-1, T5-1
215156	T3-1
215157	T3-1
215158	T3-1
215159	B15-1
215160	T5-1
215161	T5-1
215162	T3-1, T5-1
215163	T3-1
215164	T3-1
215165	T3-1
215166	T3-1, T7-1
215176	T6-1, T7-1
215177	T6-1, T7-1
215178	T6-1, T7-1
215179	T6-1, T7-1
215180	T6-1
215182	T6-1
215183	T6-1, T7-1
215184	T7-1
215188	T7-1
215189	T7-1
215190	T6-1, T7-1
215191	T5-1
215194	V15-1
215198	T3-1
215205	T5-1
215551	T5-1
215663	T6-1
215757	T3-1
215909	C7-1
217928	V15-1
218353	T3-1
219342	V15-1
219344	V15-1
219370	T5-1
219373	T5-1
219939	C7-1
220981	C5-1
220982	C5-1
220983	C5-1
221653	C7-1
222006	C7-1
222079	C7-1
222312	C5-1
222318	C5-1
222684	C7-1
223085	T6-1, T7-1
224009	C7-1
224031	A3-1
224039	C5-1
224104	A5-1
224620	V15-1
224771	T6-1, T7-1
224772	T6-1, T7-1
224774	T6-1, T7-1
225075	T3-1, V15-1
225076	T6-1, T7-1
225077	T6-1, T7-1
225079	T5-1
225602	T6-1, T7-1
225603	T3-1, T6-1
225824	T3-1
227265	C5-1, H11-1
227672	V15-1
227674	V15-1
227952	T7-1
228931	V15-1
228943	T3-1
229009	V15-1
229010	V15-1
229131	V15-1
229565	C7-1
229566	C7-1
230965	A12-1
231554	C7-1
232422	V15-1
232535	C7-1
233089	C7-1
233092	C7-1
233128	C5-1, C7-1, T3-1
234503	C7-1
284055	C5-1
284177	T3-1
302568	Z5-1
351495	R2-1
356609	B5-1
356612	B19-1
356617	H7-1
356621	H11-1
450229	C5-1
507068	E15-1
507695	A14-1
507815	B7-1
509445	W2-1
509772	T9-1, V16-1, Z16-1
512133	F7-1
513930	B16-1

PM 2939
Printed in U.S.A.

CLARK EQUIPMENT

Part No.	Page No.
513932	V3-1
515763	E7-1
517089	H5-1, H9-1
518233	R2-1
518259	B16-1
518897	Z20-1
521874	B5-1
522617	C8-1
522900	E9-1
523044	B3-1
523325	C10-1
524009	W2-1
524010	W2-1
524066	A14-1
525293	H3-1
526629	Z20-1
526767	B25-1
526879	B19-1
527812	C8-1
528691	H7-1
529115	B22-1
530663	B5-1
531584	C8-1
532447	A14-1
532948	C10-1
535649	N2-1
536017	B9-1
536539	V12-1
536710	H5-1
536772	H11-1
536934	B5-1
536936	B5-1
539837	F7-1
540106	E15-1
540689	E15-1
540707	B7-1, B11-1
540882	Z5-1
543483	E9-1
543697	B5-1
544273	B7-1
544998	B18-1
545005	B17-1
545153	E15-1
545155	C10-1
546385	B22-1
547006	Z5-1
547529	E7-1
547851	N2-1
547852	N2-1
548472	N2-1
548521	N2-1
548713	E5-1
549096	N2-1
549741	W2-1
549742	W2-1
550087	C9-1
550089	C9-1
550288	Z16-1
550320	B9-1
550324	B11-1
550325	A7-1, B9-1
550389	H3-1
550398	H3-1
550450	C8-1
550586	S5-1
550619	E17-1
550646	B25-1
550672	T9-1
550741	E3-1
550742	E3-1
550743	E3-1
551242	Z5-1
551251	E7-1
551323	E5-1
551347	F3-1
551348	F3-1
551530	E7-1
551660	E15-1
551685	W2-1
551906	C5-1, P6-1
552164	Z20-1
552165	Z20-1
552166	Z20-1
552167	Z20-1
552171	Z20-1
552374	B9-1
553676	E3-1
553843	H5-1
555979	R2-1
556489	E3-1
556579	H9-1
558260	B22-1
558587	B9-1
558588	B9-1
558598	H7-1, H11-1
558599	H7-1, H11-1
558602	H7-1
558960	E9-1
562485	Z16-1
562488	B22-1
562615	P3-1
562616	H9-1
562617	H5-1
562796	Z19-1
562912	Z19-1
564057	H11-1
564637	B5-1, B9-1, B11-1
564645	B11-1
564669	B11-1
567060	B25-1
567061	B25-1
567255	R2-1
567258	E15-1
567290	F3-1
567414	F5-1
567415	F3-1, F5-1
567416	F3-1, F5-1
568675	Z3-1
568700	Z5-1
572556	E17-1
573548	E3-1
573618	B7-1
573750	B7-1
574290	H11-1
583210	H5-1
584116	H3-1
584118	V7-1
584165	F3-1
584180	F3-1
584206	B25-1
584208	B25-1
584406	B25-1
584714	B3-1
584715	B25-1
584875	P2-1
584876	P2-1
585116	F7-1
585295	F3-1
585306	T9-1
585309	T9-1
585311	B3-1, B25-1
585327	F5-1
585330	V16-1, Z16-1
585335	E3-1
585492	T9-1
585494	T9-1
585497	T9-1
585498	T9-1
585500	T9-1
585503	S5-1
585589	T9-1
585591	T9-1
585593	T9-1
585596	T9-1
585597	T9-1
585599	V16-1
585601	V16-1
585644	B3-1, B25-1, F3-1
585662	H11-1
585754	E9-1
585755	N2-1
585764	T9-1
585780	B25-1
585861	H5-1
585862	H5-1
585867	H5-1
586013	H7-1
586132	T9-1
586146	C8-1
586149	C8-1
586152	C9-1
586155	C9-1
586159	B22-1
586173	B22-1
586174	B22-1
586179	B22-1
586180	B22-1
586199	B3-1, B25-1
586215	B25-1
586216	B25-1
586420	V4-1
586421	B25-1
586426	H5-1
586433	B25-1
586434	Z13-1
586435	C9-1
586452	B25-1
586905	B22-1
587042	E15-1
587250	C9-1
590035	B3-1
592742	B5-1, B11-1
592783	B7-1
593370	B11-1
593483	B7-1
593495	B11-1
594113	B11-1
600259	E3-1, E5-1
601938	V4-1
602104	S7-1
604323	S7-1
604639	H3-1
610386	H5-1
611074	E3-1
612279	E17-1
612390	H5-1
613750	B9-1, B20-1, B21-1, V9-1, Z15-1
616795	T9-1, V16-1, Z16-1
616796	B25-1
616848	T6-1, T7-1
619019	B18-1
619021	E15-1
619023	C7-1, S5-1
619024	B18-1
619029	B25-1, F5-1, S5-1
620235	B9-1, B20-1, B21-1
620238	B9-1, B20-1, B21-1
623760	E17-1
623762	E17-1
623829	E17-1
635376	E3-1
636260	E5-1
641297	H9-1
645095	B18-1
648334	A9-1, A11-1
650599	H11-1
652478	S5-1
652480	F3-1, F5-1
654613	T6-1, T7-1
658516	E9-1
658974	A3-1, A5-1
658990	A3-1, A5-1
659065	C7-1, T3-1, T6-1, T7-1
660178	C5-1
661415	V3-1
661428	H11-1
661558	H5-1, H7-1, H9-1
661564	H9-1
662250	H11-1
663093	H5-1
663579	E9-1
666364	A9-1, A11-1
666542	C7-1
667279	A9-1, A11-1
675227	V16-1, Z16-1
675544	T5-1
675548	T5-1
692722	B9-1, B20-1, B21-1
711264	Z20-1
711285	H11-1
711298	C5-1
713186	C5-1, C10-1
713285	C10-1
713659	A7-1
713660	A7-1
730396	V12-1
731333	B5-1
742257	A3-1, A5-1
742258	A3-1, A5-1
743035	C7-1
743823	H7-1
755138	E9-1
755855	V7-1, Z13-1
763451	C10-1
784663	R2-1
799595	T7-1
801067	C5-1
801192	B15-1
801193	B15-1
801213	B15-1
801214	B15-1
801215	B15-1
801216	B15-1
801217	B15-1
801363	T3-1
801546	C5-1
801548	C5-1
801818	C7-1
815082	A9-1, A11-1
851771	S7-1
853334	P6-1
853400	B21-1
853402	B14-1, B21-1
853405	B21-1
857420	E3-1, E5-1
857933	B19-1

PM 2939
Printed in U.S.A.

Part No.	Page No.
862652	B18-1
862653	B18-1
862655	B18-1
862656	B18-1
862738	B18-1
866348	B18-1
866349	B18-1
871388	V7-1, V9-1, Z13-1, Z15-1
874007	B9-1
875754	V3-1
875762	V3-1
975766	B16-1
875767	B16-1
883734	V12-1
886718	B15-1
886739	V9-1, Z15-1
886745	Z13-1, Z15-1
886749	V9-1, Z15-1
886753	V9-1, Z15-1
886758	V7-1, Z13-1
886762	V7-1, Z13-1
886763	V7-1, Z13-1
888451	V7-1, Z13-1, Z15-1
888455	V9-1, Z15-1
888456	V7-1, Z13-1, Z15-1
892287	B19-1
893267	V9-1, Z15-1
894532	V3-1
894533	V3-1
894534	V3-1
894535	V3-1
894536	V3-1
894537	V3-1
894538	V3-1
894539	V3-1
894540	V3-1
894541	V3-1
894542	V3-1
894543	V3-1
896497	V11-1
896544	V11-1
899038	V12-1
899039	V12-1
940081	P3-1
940130	B20-1
940172	B22-1
940173	B22-1
940653	P3-1
940654	P3-1
941214	B11-1
941238	B18-1
941329	W2-1
942744	P2-1
942750	P2-1
942751	P2-1
943219	E3-1
943623	Z3-1, Z5-1
944054	B18-1
944216	B14-1
944467	V12-1
944469	V12-1
944471	V12-1
944643	V12-1
944645	V12-1
944646	V12-1
944853	V9-1, Z15-1
944868	P3-1
944890	V9-1, Z15-1
944907	E7-1
944968	B18-1
944969	B18-1
944977	Z5-1
945026	B19-1
945029	B19-1
945034	B19-1
945035	B19-1
945036	B19-1
945037	B19-1
945038	B19-1
945040	B19-1
945041	B19-1
945042	B19-1
945115	C8-1
945120	C9-1
945224	V7-1, V9-1, Z13-1, Z15-1
945225	V7-1, V9-1, Z13-1, Z15-1
945226	V7-1, V9-1, Z13-1, Z15-1
945227	V9-1, Z15-1
945229	V9-1, Z15-1
945355	V7-1, Z13-1
945356	V7-1, Z13-1
945357	V7-1, Z13-1
945358	V7-1, Z13-1
945359	V7-1, Z13-1
945360	V7-1, Z13-1
945374	T6-1, T7-1
945385	P2-1
945386	P2-1
945387	P2-1
945388	P2-1
945389	P2-1
945390	P2-1
945391	P2-1
945407	V4-1
945408	V4-1
945409	V4-1
945411	V4-1
945503	V7-1, Z13-1
945576	Z5-1
945590	V7-1, V9-1, Z13-1, Z15-1
945732	V9-1
945832	V9-1, Z15-1
945849	V7-1
945996	V3-1
945998	B14-1
946067	P3-1
946068	P3-1
946389	E7-1
946445	F7-1
946860	E13-1
946861	V9-1, Z15-1
947250	E3-1
947252	E3-1
947254	E3-1
947388	P3-1
947596	C9-1
947740	B19-1
948126	E12-1, E13-1
948127	E13-1
948128	E13-1
948831	V11-1
949260	V3-1
949261	V3-1
949264	V3-1
949370	B18-1
949958	V11-1
953310	E7-1
955321	B19-1
955323	B19-1
955326	B19-1
956622	B20-1
957577	E12-1, H7-1, H11-1
958553	B20-1
991701	V11-1
991702	V11-1
992163	B19-1
992164	B19-1
1301362	T9-1
1302104	H11-1
1302437	V7-1, V9-1, Z13-1, Z15-1
1302659	H5-1
1303618	H7-1
1305485	B25-1
1306167	E17-1
1306622	H5-1
1306623	H5-1, S7-1
1306625	C10-1
1501805	N2-1
1502845	C8-1
1502846	C8-1
1503013	C8-1
1503251	V15-1, Z16-1
1503465	C9-1
1503467	C8-1
1503567	C10-1
1503568	C10-1
1503570	C10-1
1503572	C10-1
1503573	C10-1
1503574	C10-1
1503597	C9-1
1504470	C9-1
1504471	C8-1
1504793	N2-1
1504902	W2-1
1504956	E3-1
1504957	E3-1
1505580	B7-1
1507920	F3-1
1508075	E13-1
1508522	B22-1
1508845	T9-1
1510577	F7-1
1511077	B7-1
1511520	H5-1
1512905	C9-1
1512907	C8-1
1513323	B7-1
1514341	H9-1
1514351	V11-1
1514622	C9-1
1514650	C8-1
1515848	B7-1
1516112	B5-1
1516114	B11-1
1516117	B11-1
1516126	E3-1, E9-1
1516131	B9-1
1516133	B17-1
1516135	B9-1
1516159	B17-1
1516161	E3-1
1516366	E7-1, H5-1
1516606	F3-1, F5-1
1516608	F3-1
1516623	F5-1
1516630	E9-1
1516631	B25-1
1516644	E5-1
1516645	B25-1, E7-1
1516663	H5-1
1516670	E9-1
1516680	H5-1
1516726	F3-1
1516823	R2-1
1516895	E15-1
1516922	E17-1
1517090	E9-1
1517091	E9-1
1517092	E9-1
1517190	E15-1
1517191	E15-1
1517192	E5-1
1517194	E15-1
1517196	H7-1
1517208	H11-1
1517209	F3-1
1517210	E9-1
1517211	B3-1
1517214	B5-1
1517215	B5-1
1517233	B5-1
1517236	B7-1
1517265	F3-1
1517266	H9-1
1517267	H7-1
1517275	B5-1
1517279	B7-1
1517289	F7-1
1517293	E5-1
1517304	R2-1
1519907	Z19-1
1519909	Z19-1
1520193	E17-1
1520730	E15-1
1522535	C10-1, V16-1
1523075	Z19-1
1523210	E17-1
1524560	C10-1
1524562	C10-1
1524563	C10-1
1524788	H7-1
1527745	Z11-1
1527784	E17-1
1527928	B5-1
1529625	E15-1
1529688	Z9-1
1532592	B5-1
1534135	E7-1
1534136	E3-1
1536234	C9-1
1536235	C9-1
1537354	E7-1
1538614	E9-1
1538615	E9-1
1542298	P2-1
1544600	W2-1
1544718	W2-1
1545004	H5-1
1545160	B5-1
1545186	H9-1
1545622	Z10-1
1545623	Z10-1
1545741	H9-1
1545789	B5-1
1545790	B5-1
1545901	B22-1
1545977	B22-1
1545978	B22-1
1548364	N2-1
1548521	E7-1
1548542	E7-1

CLARK EQUIPMENT

Part No.	Page No.
1549005	N2-1
1549006	N2-1
1549038	B5-1, B7-1, E5-1
1550997	C8-1
1567072	V11-1
1567076	V11-1
1567080	V11-1
1567081	V11-1
1567084	V11-1
1567085	V11-1
1743825	E5-1
1902214	E15-1
2501107	C9-1
2501108	C8-1
2501643	R2-1
3000719	E12-1
3201708	Z20-1
3204336	Z21-1
3210208	F7-1
3211087	Z9-1
3211089	Z9-1
3211090	Z9-1
3211109	Z9-1
3212065	P4-1
3212070	P4-1
3212071	P4-1
3212358	Z5-1
3212395	Z10-1
3212857	Z7-1
3212871	Z9-1
3213133	Z9-1
3213135	Z7-1
3213138	Z9-1
3213176	B9-1
3213177	B9-1
3213181	Z7-1
3213182	Z7-1
3213183	Z7-1
3213184	Z7-1
3213185	Z7-1
3213186	Z7-1
3213187	Z7-1
3213188	Z7-1
3213190	Z7-1
3213191	Z7-1
3213195	Z7-1
3213198	Z7-1
3213201	Z7-1
3213202	Z7-1
3213204	Z7-1
3213498	Z21-1
3214930	S5-1
3220711	Z9-1
3220851	Z3-1
3220852	Z5-1
3220855	Z5-1
3220859	Z5-1
3220861	F7-1
3220865	Z9-1
3220881	Z3-1
3220948	E5-1
3221634	Z7-1
3222492	Z9-1
3222517	Z9-1
3223804	Z5-1
3223810	Z5-1
3223816	Z21-1
3223817	Z21-1
3223910	Z3-1, Z5-1
3224084	Z3-1, Z5-1
3224424	Z5-1
3224425	Z5-1
3224429	Z5-1
3224924	Z21-1
3224925	Z21-1
3226183	Z20-1
3226650	Z5-1
3226652	Z3-1
3226653	Z3-1
3226654	Z5-1
3226658	Z3-1, Z5-1
3226659	Z3-1
3226660	Z5-1
3226863	S3-1
3227154	Z21-1
3227177	Z21-1
3227187	Z21-1
3227189	Z21-1
3227351	Z3-1
3228192	S3-1
3228195	S3-1
3228196	S3-1
3228197	S3-1
3228214	S5-1
3228503	Z9-1
3228508	Z9-1
3228510	Z9-1
3228614	Z3-1
3228795	Z5-1
3228796	Z5-1
3229096	Z3-1
3229428	S3-1
3230023	S3-1
3230024	S3-1
3232942	Z3-1
3233204	S7-1
3233205	S7-1
3233210	S7-1
3235788	P4-1
3235941	S7-1
3236086	Z3-1
3236087	Z3-1
3236561	Z3-1
3237100	Z10-1
3237137	Z10-1
3238006	N2-1
3238018	N2-1
3238034	N2-1
3238047	N2-1
3238063	N2-1
3238075	N2-1
3239428	S5-1
3239429	S5-1
3239446	P5-1
3239517	S5-1
3239520	S5-1
3239521	Z3-1
3239522	Z3-1
3239525	S5-1
3239527	S5-1
3239529	S5-1
3239531	S5-1
3239533	S5-1
3239542	H3-1
3239556	Z5-1
3239594	N2-1
3239604	S5-1
3239605	S5-1
3239606	S5-1
3239607	S5-1
3239608	S5-1
3239609	S5-1
3239833	Z10-1
3239834	Z10-1
3239855	Z9-1
3239856	Z9-1
3239947	R2-1
3240044	F7-1
3240045	F7-1
3240050	F7-1
3290099	V3-1
3290105	V3-1
3290106	V3-1
3290122	V3-1
3290124	V3-1
3290125	V3-1
3290339	P5-1
3290342	P5-1
3290343	P5-1
3290347	P5-1
3290348	P5-1
3290351	P5-1
3290352	P5-1
3290354	P5-1
3290355	P5-1
3290356	P5-1
3290357	P5-1
3290486	P5-1
3291843	P4-1
3292318	P4-1
3292320	P4-1
3292657	V11-1
3293109	P5-1
3490349	E12-1
3551918	E12-1
3585199	N2-1
3585200	N2-1
3585202	N2-1
3585203	N2-1
3585204	N2-1
3585206	N2-1
3585750	H7-1
3585765	H5-1
3585920	H5-1
3585960	N2-1
3585961	N2-1
3586031	F7-1
3586032	F7-1
3677373	E12-1
3677379	E12-1
3679322	E12-1
3679328	E12-1
3712446	E12-1
3725648	E12-1
3757760	E5-1
3757761	E12-1
3757762	E12-1
4120090	P4-1
5200205	V11-1
5200240	V11-1
5200241	V11-1
5203855	E5-1
6515733	E12-1
6517944	V11-1
6517945	V11-1
6517946	V11-1

PM 2939
Printed in U.S.A.