RUTHZIL TRATOR COMERCIAL DE PEÇAS LTDA 11 97083-6812 ROLANDO

380

JCB

OWNERS PARTS BOOK



JCB380 Customer Part Book With BOM

ENGLISH - 9820/1116A - ISSUE 1 - SEP 17 M2500751> 2500850

SETEMBRO 2017

DRAFT

DRAFT

Dear JCB Customer

Even if you have operated this type of equipment before, it is very important that your new machines operations and functions are explained to you by a JCB Dealer Representative following delivery of your new machine.

Following the installation you will know how to gain maximum productivity and performance from your new product.

Please contact your local JCB dealer if the Installation Form has not yet been completed with you.

Your Local JCB Dealer is:

OWNERS PARTS BOOK

JCB380 Customer Part Book With BOM

ENGLISH - 9820/1116A - ISSUE 1 - SEP 17 M2500751> 2500850

Copyright © 2010 JCB SERVICE. All rights reserved. No part of this publication may be reproduced, stored in a retrieval system, or transmitted in any form or by any other means, electronic, mechanical, photocopying or otherwise, without prior permission from JCB SERVICE.

A5-4-Range - Printed In England

DRAFT

Notes:

DRAFT

JCB380 QM

DRAFT

1 MAIN INDEX – JCB380 QM

TITLE	PAGE NUMBER	CHANGE NUMBER
A ATTACHMENTS		
BUCKETS	**A02**	
STANDARD BUCKET, ASSEMBLY, 2.3CUM	A210-5-1	
STANDARD BUCKET, ASSEMBLY, 2.3CUM	A210-10-1	
STANDARD BUCKET, BUCKET, SCOOP ASSEMBLY	A210-15-1	
STANDARD BUCKET, BUCKET, GRANITE/ SCOOP - 1.44 CUM	A210-20-1	
HEAVY DUTY BUCKET, 1.8 CUM - ASSEMBLY	A230-1-1	
HEAVY DUTY BUCKET, 1.8 CUM	A230-5-1	
HEAVY DUTY BUCKET, 2.1 CUM - ASSEMBLY	A230-10-1	
HEAVY DUTY BUCKET, 2.1 CUM	A230-15-1	
HEAVY DUTY BUCKET, 1.61 CUM	A230-20-1	
HEAVY DUTY BUCKET, ASSEMBLY, 1.61 CUM	A230-25-1	
HEAVY DUTY BUCKET, BUCKET, INSTALLATION ASSEMBLY - ROCK BUCKET 1.4 Cu.M	A230-30-1	
HEAVY DUTY BUCKET, BUCKET, ASSEMBLY - ROCK BUCKET 1.4 Cu.M	A230-35-1	
HEAVY DUTY BUCKET, ROCK BUCKET 1.4 CUM	A230-40-1	
HITCHES	**A03**	
HITCH INSTALLATION ASSEMBLIES, ABI, HYDRAULIC	A300-1-1	
HITCH INSTALLATION ASSEMBLIES, HYDRAULIC QUICKHITCH, 29-36T	A300-5-1	
EXCAVATOR QUICK HITCH, 3.1M & 205M ARM	A330-1-1	
EXCAVATOR QUICK HITCH, BASE, KIT	A330-5-1	
MISCELLANEOUS	**A09**	

Continue...

TITLE	PAGE NUMBER	CHANGE NUMBER
REFUELLING PUMP, STRAINER, SUCTION	A920-15-1	
REFUELLING PUMP, COMPONENTS,	A920-20-1	
REFUELLING PUMP, ASSEMBLY, JS305	A920-25-1	
OTHER MISCELLANEOUS ITEMS, .	A990-1-1	
OTHER MISCELLANEOUS ITEMS, ANTI FREEZ FLUID AND MISCELLANEOUS ITEMS	A990-5-1	
OTHER MISCELLANEOUS ITEMS, EDGING STRIP - 30M ROLL	A990-10-1	
OTHER MISCELLANEOUS ITEMS, EDGING STRIP	A990-15-1	

B BODYWORK

BODYWORK/FRAME B01

TITLE	PAGE NUMBER	CHANGE NUMBER
BODYWORK INSTALLATION ASSEMBLIES, MACHINE, COMPLETE	B100-5-1	
BODYWORK INSTALLATION ASSEMBLIES, REVOLVING, FRAME ASSEMBLY	B100-15-1	
CHASSIS, BULKHEAD, AND BAFFLES ASSEMBLY	B110-1-1	
CHASSIS, COMMON PARTS, HOUSEFRAME KIT	B110-5-1	
CHASSIS, FRAME HOUSE, ASSEMBLY	B110-10-1	
FUEL TANK, ABI, - FUEL KIT PARTS	B120-10-1	
FUEL TANK, ABI	B120-15-1	
FUEL TANK, ASSEMBLY	B120-25-1	
HYDRAULIC TANK, ASSEMBLY	B130-10-1	
HYDRAULIC TANK, ABI	B130-15-1	
MOUNTING BRACKETS, ENGINE MOUNTINGS, ASSEMBLY	B160-5-1	

2 MAIN INDEX – JCB380 QM
9820/1116A
ISSUE 0

TITLE	PAGE NUMBER	CHANGE NUMBER
BONNET/ ENGINE COVERS/ GRILLES, RADIATOR, COVER, FOAM KIT	B170-35-1	
BONNET/ ENGINE COVERS/ GRILLES, DOORS, ASSEMBLY	B170-40-1	
BONNET/ ENGINE COVERS/ GRILLES, ENGINE COVER, ASSEMBLY	B170-45-1	
BONNET/ ENGINE COVERS/ GRILLES, COVER, ASSEMBLY - CENTER	B170-50-1	
BONNET/ ENGINE COVERS/ GRILLES, RADIATOR, COVER ASSEMBLY	B170-55-1	
BONNET/ ENGINE COVERS/ GRILLES, TREAD PLATES, ASSEMBLY	B170-60-1	
BONNET/ ENGINE COVERS/ GRILLES, EXHAUST, COVER ASSEMBLY	B170-65-1	
COUNTER WEIGHTS, ASSEMBLY	B180-5-1	
OTHER BODYWORK ITEMS, UNDERCOVERS	B190-1-1	
OTHER BODYWORK ITEMS, KIT, SEAL, FRAME TO COUNTERWEIGHT	B190-25-1	
OTHER BODYWORK ITEMS, KIT, - EXHAUST NOISE INSULATION	B190-30-1	
OTHER BODYWORK ITEMS, TOOLBOX, ASSEMBLY	B190-40-1	
OTHER BODYWORK ITEMS, KIT, NOISE INSULATION	B190-70-1	
OTHER BODYWORK ITEMS, TOOLS, KIT- STANDARD	B190-75-1	
OTHER BODYWORK ITEMS, KIT, WORKLIGHT GUARD	B190-80-1	
OTHER BODYWORK ITEMS, SOUNDPROOFING, FOAM KIT-BAFFELS	B190-85-1	
OTHER BODYWORK ITEMS, TOOLBOX, LID ASSEMBLY	B190-90-1	
OTHER BODYWORK ITEMS, KIT, QUICKHITCH MOUNTING	B190-95-1	
OTHER BODYWORK ITEMS, HANDRAIL, RISER ASSEMBLY	B190-100-1	
OTHER BODYWORK ITEMS, CENTRE JOINT ASSEMBLY	B190-105-1	
OTHER BODYWORK ITEMS, MIRROR, ASSEMBLY	B190-110-1	

DRAFT

Continue...

TITLE	PAGE NUMBER	CHANGE NUMBER
OTHER BODYWORK ITEMS, TRACK GUIDE ASSEMBLY	B190-115-1	
OTHER BODYWORK ITEMS, FRAME, HOUSEFRAME	B190-120-1	
OTHER BODYWORK ITEMS, KIT, FOAM SEALS	B190-125-1	
OTHER BODYWORK ITEMS, SOUNDPROOFING, KIT-BULKHEAD	B190-130-1	
OTHER BODYWORK ITEMS, TOOLBOX, AND SIDESKIN ASSEMBLY	B190-135-1	
OTHER BODYWORK ITEMS, KIT, SOUNDPROOF COUNTERWEIGHT	B190-150-1	
OTHER BODYWORK ITEMS, ABI, LATCH	B190-160-1	
CAB / CANOPY	**B02**	
OPERATOR ENCLOSURE INSTALLATION ASSEMBLIES, CAB, ASSEMBLY	B200-1-1	
OPERATOR ENCLOSURE INSTALLATION ASSEMBLIES, CAB, SHELL ASSEMBLY	B200-5-1	
OPERATOR ENCLOSURE INSTALLATION ASSEMBLIES, COMMON PARTS	B200-10-1	
OPERATOR ENCLOSURE, CAB, ABI	B210-1-1	
ROOF, HATCH	B230-1-1	
ROOF, TOP, LINER	B230-5-1	
DOORS, SLIDING WINDOW, REAR	B240-1-1	
DOORS, ASSEMBLY	B240-5-1	
DOORS, SLIDING WINDOW	B240-10-1	
GLASS/FRAMES, FRONT, BOTTOM	B250-5-1	
GLASS/FRAMES, SCREEN, ASSEMBLY - FRONT	B250-10-1	
MOULDINGS/TRIM, CONSOLE BOX, ASSEMBLY	B270-1-1	
MOULDINGS/TRIM, CAB TRIM ASSEMBLY	B270-5-1	

3 MAIN INDEX – JCB380 QM

9820/1116A

ISSUE 0

TITLE	PAGE NUMBER	CHANGE NUMBER
MOULDINGS/TRIM, PANELS, REAR STOWAGE ABI	B270-10-1	
OTHER OPERATOR ENCLOSURE ITEMS, FLOOR MATS	B290-1-1	
OTHER OPERATOR ENCLOSURE ITEMS, FLOOR MATS, ASSEMBLY	B290-5-1	
OTHER OPERATOR ENCLOSURE ITEMS, CAB, MIRROR	B290-10-1	
OTHER OPERATOR ENCLOSURE ITEMS, FLOOR MATS	B290-20-1	
OTHER OPERATOR ENCLOSURE ITEMS, SEAT SLIDE, LEVER, ASSEMBLY	B290-25-1	
OTHER OPERATOR ENCLOSURE ITEMS, BRACKET, TOP, LEFT HAND SIDE	B290-30-1	
OTHER OPERATOR ENCLOSURE ITEMS, BRACKET, COVER, RIGHT HAND SIDE	B290-35-1	
OTHER OPERATOR ENCLOSURE ITEMS, SUNSCREEN ASSEMBLY	B290-40-1	
OTHER OPERATOR ENCLOSURE ITEMS, FRONT, GUARD, CABIN, OPTIONAL	B290-50-1	
OTHER OPERATOR ENCLOSURE ITEMS, LATCH	B290-55-1	
OTHER OPERATOR ENCLOSURE ITEMS, TOP, GUARD, CABIN, OPTIONAL	B290-60-1	
EXCAVATOR	**B04**	
BOOM, HEAVY DUTY,SPECIAL	B430-10-1	
BOOM, HEAVY DUTY, SPECIAL WITH BUSHES	B430-15-1	
DIPPER, ARM, AND BUSH ASSEMBLY, 2.21M	B440-10-1	
DIPPER, ARM, ASSEMBLY-2.21M - HEAVY DUTY	B440-15-1	
DIPPER, ARM, ASSEMBLY - 2.63M	B440-20-1	
DIPPER, ARM, ASSEMBLY - 3.23M HDS	B440-25-1	
TIPPING LINK, BUCKET LINK, ASSEMBLY, NO LIFT	B460-1-1	

DRAFT

Continue...

TITLE	PAGE NUMBER	CHANGE NUMBER
TIPPING LINK, BUCKET LINK, NO LIFT	B460-5-1	
TIPPING LINK, TRANSPORTATION, NO BUCKET	B460-10-1	
OTHER EXCAVATOR PARTS, ARM, 2.63, BUSH ASSEMBLY	B490-1-1	
REFURBISHMENTS	**B05**	
DECALS MACHINE IDENTIFICATION, COMMON LABEL PACK	B510-5-1	
DECALS MACHINE IDENTIFICATION, JCB, BOOM 14FT	B510-10-1	
DECALS MACHINE IDENTIFICATION, DECALS, INFORMATION; ISO CO	B510-25-1	
DECALS MACHINE IDENTIFICATION, LABLE PACK ASSEMBLY	B510-30-1	
DECALS MACHINE IDENTIFICATION, DECAL, AND INSIGNIA ASSEMBLY - 380 LC QM	B510-35-1	
LABELS WARNING/INFORMATION, DECAL, JCB DIESELMAX	B520-10-1	
LABELS WARNING/INFORMATION, LABELS WARNING/INFORMATION, ASSEMBLY - ROW COMMON LABLES	B520-15-1	
LABELS WARNING/INFORMATION, DECALS, AND HANDBOOK ASSEMBLY	B520-20-1	
TOOLS, GREASE GUN	B530-10-1	
FIRE EXTINGUISHER, ASSEMBLY	B560-1-1	
LUBRICANT, LUBRICANTS PRIMERS AND SEALANTS, ASSEMBLY	B570-1-1	
LUBRICANT, FUEL, ASSEMBLY - 170L	B570-5-1	
LUBRICANT, GREASE	B570-15-1	
LUBRICANT, COOLANT, JCB ANTIFREEZE	B570-20-1	

4 MAIN INDEX – JCB380 QM
9820/1116A
ISSUE 0

TITLE	PAGE NUMBER	CHANGE NUMBER
LUBRICANT, HYDRAULIC OIL, (HP68)	B570-25-1	
C ELECTRICS		
ELECTRICAL	**C01**	
ELECTRICAL INSTALLATION ASSEMBLIES, ELECTRICAL, SYSTEM ASSEMBLY	C100-10-1	
ELECTRICAL INSTALLATION ASSEMBLIES, ELECTRICS, ASSEMBLY - REVOLVING FRAME	C100-15-1	
HARNESSES, HARNESS, LOW FLOW	C110-1-1	
BATTERY, INSTALLATION, ASSEMBLY	C120-10-1	
ISOLATOR BATTERY, ASSEMBLY	C130-5-1	
WORKING LAMPS AND MOUNTINGS, WORKLIGHTS, ASSEMBLY	C160-15-1	
ALARMS/HORN, HORN	C170-1-1	
ALARMS/HORN, TRAVEL ALARM	C170-5-1	
ALARMS/HORN, NOISE, WHITE	C170-10-1	
ALARMS/HORN, REVERSE ALARM	C170-15-1	
BEACON, HAZARD WARNING	C180-1-1	
BEACON, 1x FRONT	C180-5-1	
OTHER ELECTRICAL CIRCUITS, BOOM	C190-1-1	
ELECTRICS, CAB	**C03**	
ELECTRICS CAB INSTALLATION ASSEMBLIES, ELECTRICS, ASSEMBLY - CAB	C300-5-1	
SWITCHES, ENGINE STOP	C330-1-1	
SWITCHES, SLEW LOCK	C330-5-1	
SWITCHES, CUSHION	C330-10-1	

DRAFT

Continue...

TITLE	PAGE NUMBER	CHANGE NUMBER
SWITCHES, CONTROL, ISOLATE	C330-15-1	
SWITCHES, WIPER MOTORS	C330-20-1	
SWITCHES, SCREEN, WASH	C330-25-1	
SWITCHES, RADIO, MUTE	C330-30-1	
SWITCHES, ASSEMBLY	C330-40-1	
SWITCHES, ASSEMBLY	C330-45-1	
SWITCHES, TILT	C330-50-1	
SWITCHES, WORKLIGHTS, STANDARD BUILD	C330-55-1	
SWITCHES, QUICKHITCH	C330-60-1	
SWITCHES, BEACON/STROBE, MULTIPLE	C330-65-1	
INTERIOR LAMP, CAB, 24 VOLT	C335-1-1	
HEATER/AIR CON ASSEMBLY, CONDENSER ASSEMBLY	C340-20-1	
HEATER/AIR CON ASSEMBLY, ATC CONTROL PANEL	C340-35-1	
HEATER/AIR CON ASSEMBLY, UNIT, ATC COMPONENTS	C340-40-1	
HEATER/AIR CON ASSEMBLY, COMMON PARTS	C340-45-1	
HEATER/AIR CON ASSEMBLY, HOSE KIT, AIR CONDITIONING	C340-50-1	
HEATER/AIR CON ASSEMBLY, HEATER, & ATC ASSEMBLY	C340-55-1	
HEATER/AIR CON ASSEMBLY, HOSES AND PIPEWORK, ASSEMBLY - HEATER	C340-60-1	
HEATER/AIR CON ASSEMBLY, AUTOMATIC, TEMPERATURE CONTROL ASSEMBLY	C340-65-1	
RADIO, 12 VOLT, FM	C345-1-1	
FUSES AND RELAYS, MODULES, 24V, BLUE	C350-1-1	
FUSES AND RELAYS, FUSELINK BOX	C350-5-1	

5 MAIN INDEX – JCB380 QM
9820/1116A
ISSUE 0

TITLE	PAGE NUMBER	CHANGE NUMBER
FUSES AND RELAYS, FUSELINK BOX-4 WAY	C350-10-1	
FUSES AND RELAYS, ABI, - TRACKED	C350-15-1	
WIPER MOTORS, ASSEMBLY	C370-1-1	
LIVE LINK, ASSEMBLY, JS305 - DOMESTIC	C380-10-1	
JOYSTICK, SERVO CONTROL (PILOT CONTROL), VALVE CONTROLS, RIGHT SIDE	C385-1-1	
JOYSTICK, SERVO CONTROL (PILOT CONTROL), VALVE CONTROLS, RIGHT SIDE REMOTE	C385-5-1	
JOYSTICK, SERVO CONTROL (PILOT CONTROL), REMOTE CONTROL	C385-10-1	
JOYSTICK, SERVO CONTROL (PILOT CONTROL), VALVE CONTROLS, LEFT SIDE REMOTE	C385-15-1	
OTHER ELECTRICAL ITEMS, CAB DISPLAY 3.5"	C390-1-1	
OTHER ELECTRICAL ITEMS, BOTTLE, WASHER	C390-5-1	
OTHER ELECTRICAL ITEMS, BOTTLE, WASHER ASSEMBLY	C390-10-1	
OTHER ELECTRICAL ITEMS, CONTROLLER (MECU)	C390-15-1	
OTHER ELECTRICAL ITEMS, AUDIO SYSTEM	C390-20-1	
OTHER ELECTRICAL ITEMS, WIPER SENSOR ASSEMBLY	C390-25-1	
OTHER ELECTRICAL ITEMS, CAMERA AND MONITOR, ASSEMBLY	C390-30-1	
OTHER ELECTRICAL ITEMS, ABI, CAMERA AND MONITOR	C390-35-1	
OTHER ELECTRICAL ITEMS, ABI, LED LAMP, NON FLASHING	C390-40-1	
OTHER ELECTRICAL ITEMS, CONTROLLER (HECU)	C390-45-1	

D CONTROLS

DRAFT

Continue...

TITLE	PAGE NUMBER	CHANGE NUMBER
CONTROL, MECHANICAL	**D01**	
EXCAVATOR CONTROLS, JOYSTICK CONTROL, AND FLOOR PLATE ASSEMBLY	D120-5-1	
EXCAVATOR CONTROLS, JOYSTICK CONTROL, ASSEMBLY - STANDARD	D120-10-1	
EXCAVATOR CONTROLS, JOYSTICKS, STANDARD	D120-15-1	
EXCAVATOR CONTROLS, JOYSTICK CONTROL, ASSEMBLY- THIN	D120-20-1	
EXCAVATOR CONTROLS, JOYSTICK CONTROL, ASSEMBLY	D120-25-1	
FOOT PEDALS, ASSEMBLY	D150-1-1	
OTHER MECHANICAL CONTROLS, T-BAR ASSEMBLY	D190-1-1	
E HYDRAULICS		
HYDRAULIC CIRCUITS	**E00**	
HYDRAULIC INSTALLATION ASSEMBLIES, HYDRAULIC, SYSTEM ASSEMBLY	E0-1-1	
HYDRAULIC CIRCUITS	**E01**	
HYDRAULIC CIRCUIT INSTALLATION ASSEMBLIES, DRAIN	E100-5-1	
HYDRAULIC CIRCUIT INSTALLATION ASSEMBLIES, HOSES & FITTINGS, PRESSURE LINE	E100-10-1	
HYDRAULIC CIRCUIT INSTALLATION ASSEMBLIES, HOSES & FITTINGS, PILOT CONTROL LINE, CAB	E100-20-1	
HYDRAULIC CIRCUIT INSTALLATION ASSEMBLIES, LOW FLOW, 2.25M ARM / 2.63M ARM	E100-35-1	
HYDRAULIC CIRCUIT INSTALLATION ASSEMBLIES, LOW FLOW, REVOLVING FRAME	E100-45-1	
HYDRAULIC CIRCUITS ATTACHMENTS, HOSE KIT	E110-1-1	
HYDRAULIC CIRCUITS ATTACHMENTS, HOSES & FITTINGS, MERGED CONTROL	E110-5-1	
HYDRAULIC CIRCUITS CHASSIS, HOSES & FITTINGS, PILOT CONTROL LINE, MAIN	E130-5-1	
HYDRAULIC CIRCUITS CHASSIS, CIRCUIT, PILOT PRESSURE RETURN LINE	E130-10-1	
HYDRAULIC CIRCUITS CHASSIS, HOSE KIT, TRAVEL PEDAL	E130-20-1	
HYDRAULIC CIRCUITS CHASSIS, HOSE KIT, SHUTTLE BLOCK	E130-25-1	
HYDRAULIC CIRCUITS CHASSIS, HOSE KIT, CUSHION VALVE	E130-30-1	
HYDRAULIC CIRCUITS CHASSIS, HOSE KIT, SWING LOCK SOLENOID	E130-35-1	
HYDRAULIC CIRCUITS CHASSIS, CIRCUIT, SHUTTLE VALVE	E130-40-1	
HYDRAULIC CIRCUITS CHASSIS, CIRCUIT, CUSHION VALVE	E130-45-1	
HYDRAULIC CIRCUITS CHASSIS, CIRCUIT, VALVE DUAL CONTROLS (T4i)	E130-50-1	
HYDRAULIC CIRCUITS CHASSIS, HOSE KIT, JOYSTICK , RH	E130-55-1	
HYDRAULIC CIRCUITS CHASSIS, HOSE KIT, JOYSTICK, LEFT HAND SIDE	E130-60-1	
HYDRAULIC CIRCUITS CHASSIS, HOSE KIT, CAB MANIFOLD	E130-65-1	
HYDRAULIC CIRCUITS CHASSIS, HOSES & FITTINGS, MERGED CAB LINES	E130-70-1	
HYDRAULIC CIRCUITS CHASSIS, HOSE KIT	E130-75-1	
HYDRAULIC CIRCUITS CHASSIS, CIRCUIT, HYD PILOT FILTER T2	E130-80-1	
HYDRAULIC CIRCUITS CHASSIS, CIRCUIT, FILTER INLINE FILTER; LINE	E130-85-1	
HYDRAULIC CIRCUITS CHASSIS, ASSEMBLY, VALVE TRACKING	E130-90-1	

DRAFT

Continue...

TITLE	PAGE NUMBER	CHANGE NUMBER
HYDRAULIC CIRCUITS CHASSIS, CIRCUIT, 8 SOLENOID VALVE	E130-95-1	
HYDRAULIC CIRCUITS CHASSIS, CIRCUIT, MANIFOLD BLOCK T2	E130-100-1	
HYDRAULIC CIRCUITS CHASSIS, MANIFOLD, CAB PILOT	E130-105-1	
HYDRAULIC CIRCUITS CHASSIS, CIRCUIT, VALVE HAMMER/AUXILARY RH	E130-110-1	
HYDRAULIC CIRCUITS CHASSIS, HOSE KIT, HAM CON VALVE	E130-115-1	
HYDRAULIC CIRCUITS CHASSIS, HOSE KIT, PUMP	E130-120-1	
HYDRAULIC CIRCUITS CHASSIS, HOSE KIT, 8 STATION SOLENOID	E130-125-1	
HYDRAULIC CIRCUITS CHASSIS, HOSE KIT, TANK MANIFOLD	E130-130-1	
HYDRAULIC CIRCUITS CHASSIS, CIRCUIT, HAMMER/ AUXILARY REVOLVING FRAME	E130-135-1	
HYDRAULIC CIRCUITS CHASSIS, CIRCUIT, MONO, HAMMER/ AUXILARY/ MERGE/ LOW FLOW	E130-140-1	
HYDRAULIC CIRCUITS CHASSIS, CIRCUIT, MONO BOOM, HAMMER / LOW FLOW	E130-145-1	
HYDRAULIC CIRCUITS CHASSIS, CIRCUIT, HAMMER REVOLVING FRAME	E130-150-1	
HYDRAULIC CIRCUITS CHASSIS, CIRCUIT, MONO BOOM, HAMMER / AUXILARY/ MERGE	E130-155-1	
HYDRAULIC CIRCUITS CHASSIS, HAMMER CONTROL	E130-160-1	
HYDRAULIC CIRCUITS CHASSIS, HOSE KIT, MERGED CAB LINES	E130-165-1	
HYDRAULIC CIRCUITS CHASSIS, HOSE KIT, HAMMER CAB LINES	E130-170-1	
HYDRAULIC CIRCUITS CHASSIS, CIRCUIT, MONO BOOM , HAMMER LINE	E130-175-1	

7 MAIN INDEX – JCB380 QM
9820/1116A
ISSUE 0

TITLE	PAGE NUMBER	CHANGE NUMBER
HYDRAULIC CIRCUITS CHASSIS, HOSES & FITTINGS, VALVE, HAMMER/AUXILIARY, TAB BOOM	E130-180-1	
HYDRAULIC CIRCUITS CHASSIS, CIRCUIT, RETURN AND OIL COOLER	E130-185-1	
HYDRAULIC CIRCUITS CHASSIS, HOSES & FITTINGS, TRACTION LINE	E130-190-1	
HYDRAULIC CIRCUITS CHASSIS, CIRCUIT, SWING LINE	E130-195-1	
HYDRAULIC CIRCUITS EXCAVATOR END, TRACTION LINE, MOTOR	E140-1-1	
HYDRAULIC CIRCUITS EXCAVATOR END, HOSES AND PIPEWORK, GREASE LINE	E140-20-1	
HYDRAULIC CIRCUITS EXCAVATOR END, FULL FLOW, 2.63	E140-25-1	
HYDRAULIC CIRCUITS EXCAVATOR END, CIRCUIT, MERGED FLOW	E140-30-1	
HYDRAULIC CIRCUITS EXCAVATOR END, FULL FLOW, 3.23 STD	E140-35-1	
HYDRAULIC CIRCUITS EXCAVATOR END, FULL FLOW, 2.21M	E140-40-1	
HYDRAULIC CIRCUITS EXCAVATOR END, HAMMER	E140-45-1	
HYDRAULIC CIRCUITS EXCAVATOR END, HOSES AND PIPEWORK, LOW FLOW LINE	E140-50-1	
HYDRAULIC CIRCUITS EXCAVATOR END, FILTER, HAMMER LF	E140-55-1	
HYDRAULIC CIRCUITS EXCAVATOR END, CLAMP, HAMMER & LOW FLOW	E140-60-1	
HYDRAULIC CIRCUITS EXCAVATOR END, HAMMER AUX VALVE LH	E140-65-1	
HYDRAULIC CIRCUITS EXCAVATOR END, INSTALLATION, MERGED FLOW SWITCH VALVE	E140-70-1	
HYDRAULIC CIRCUITS EXCAVATOR END, CLAMP, HAMMER	E140-75-1	
HYDRAULIC CIRCUITS EXCAVATOR END, LOW FLOW, 3.23 ARM	E140-80-1	

Continue...

DRAFT

TITLE	PAGE NUMBER	CHANGE NUMBER
HYDRAULIC CIRCUITS EXCAVATOR END, CIRCUIT, BUCKET & ARM LINE	E140-85-1	
HYDRAULIC CIRCUITS EXCAVATOR END, CIRCUIT, ARM LINE - NON HBCV	E140-90-1	
HYDRAULIC CIRCUITS EXCAVATOR END, CIRCUIT, BUCKET LINE	E140-95-1	
HYDRAULIC CIRCUITS EXCAVATOR END, CIRCUIT, BOOM LINE	E140-100-1	
HYDRAULIC CIRCUITS EXCAVATOR END, CIRCUIT, BUCKET CYLINDER LINE	E140-105-1	
HYDRAULIC CIRCUITS EXCAVATOR END, CIRCUIT, BOOM CYLINDER LINE	E140-110-1	
HYDRAULIC CIRCUITS EXCAVATOR END, CIRCUIT, BOOM CYLINDER LINE - LHS	E140-115-1	
HYDRAULIC CIRCUITS EXCAVATOR END, CIRCUIT, BOOM CYLINDER LINE - RHS	E140-120-1	
HYDRAULIC CIRCUITS EXCAVATOR END, CIRCUIT, HDS BOOM - NON HBCV	E140-125-1	
HYDRAULIC CIRCUITS EXCAVATOR END, CIRCUIT, BUCKET CYLINDER	E140-130-1	
HYDRAULIC CIRCUITS EXCAVATOR END, CIRCUIT, BUCKET LINE 3.23M	E140-140-1	
OTHER HYDRAULIC CIRCUITS, SUCTION LINE	E190-1-1	
OTHER HYDRAULIC CIRCUITS, MANIFOLD BLOCK, RIGHT SIDE	E190-5-1	
OTHER HYDRAULIC CIRCUITS, PIPEWORK, OIL RETURN LINE	E190-20-1	
OTHER HYDRAULIC CIRCUITS, GEAR PUMP, LOW FLOW, ASSEMBLY	E190-25-1	
OTHER HYDRAULIC CIRCUITS, VALVE, LOW FLOW, ASSEMBLY	E190-30-1	
OTHER HYDRAULIC CIRCUITS, MANIFOLD BLOCK, LEFT SIDE	E190-35-1	
OTHER HYDRAULIC CIRCUITS, VALVE, HAMMER/AUXILARY, ASSEMBLY	E190-40-1	
OTHER HYDRAULIC CIRCUITS, T HAMMER CAB LINES	E190-45-1	

8 MAIN INDEX – JCB380 QM
9820/1116A
ISSUE 0

TITLE	PAGE NUMBER	CHANGE NUMBER
PUMP & M0T0RS	**E02**	
PUMP/MOTOR INSTALLATION ASSEMBLIES, MAIN PUMP, ASSEMBLY	E200-10-1	
PUMP/MOTOR INSTALLATION ASSEMBLIES, MAIN PUMP, ABI	E200-15-1	
PUMPS GEAR, PUMP, LOW FLOW	E210-5-1	
OTHER HYDRAULIC PUMPS, LOW FLOW	E260-1-1	
VALVES	**E03**	
VALVE, HAMMER & AUXILIARY, RIGHT HAND SIDE	E3-5-1	
VALVE INSTALLATION ASSEMBLIES, MAIN CONTROL VALVE	E300-1-1	
VALVE INSTALLATION ASSEMBLIES, ARM LIMITED VALVE, SOLENOID	E300-5-1	
VALVE INSTALLATION ASSEMBLIES, SOLENOID, VALVE	E300-10-1	
VALVES EXCAVATOR, MAIN CONTROL VALVE, COMPONENTS	E320-5-1	
VALVES SERVO CONTROL (PILOT CONTROL), JOYSTICK CONTROL, LEFT HAND SIDE	E340-1-1	
VALVES SERVO CONTROL (PILOT CONTROL), JOYSTICK CONTROL, RIGHT HAND SIDE	E340-15-1	
OTHER VALVES, CUSHION	E390-1-1	
OTHER VALVES, SOLENOID, DUAL CONTROLS	E390-5-1	
OTHER VALVES, MERGE FLOW, SWITCH VALVE	E390-10-1	
OTHER VALVES, CHECK VALVE	E390-15-1	
OTHER VALVES, AUXILIARY, FOOT CONTROL	E390-20-1	
OTHER VALVES, QUICKHITCH	E390-25-1	
OTHER VALVES, SOLENOID, 8 STATION	E390-30-1	

DRAFT

Continue...

TITLE	PAGE NUMBER	CHANGE NUMBER
OTHER VALVES, SOLENOID	E390-35-1	
OTHER VALVES, VALVE, LOW FLOW	E390-40-1	
OTHER VALVES, HAMMER & AUXILIARY, LEFT HAND SIDE	E390-45-1	
RAMS	**E04**	
RAM INSTALLATION ASSEMBLIES, ARM, BUSHED, 3.23M HDS	E400-1-1	
RAMS DIPPER, ASSEMBLY	E465-5-1	
FILTER	**E05**	
FILTER MAIN HYDRAULIC, RETURN	E510-5-1	
FILTER OTHER HYDRAULIC, ASSEMBLY, DRAIN LINE	E520-1-1	
FILTER RETURN, HAMMER, COMPONENTS, LF330	E540-1-1	

TITLE	PAGE NUMBER	CHANGE NUMBER
F AXLES, WHEELS & TRANSMISSION		
TRACK & SWING GEAR BOX	**F04**	
TRACK SLEW GEARBOX INSTALLATION ASSEMBLIES, SWING, EQUIPMENT ASSEMBLY	F400-1-1	
GEARBOX TRACK, COMPONENTS	F420-1-1	
GEARBOX SLEW/SWING, SWING, MOTOR ASSEMBLY	F440-1-1	
GEARBOX SLEW/SWING, COMPONENTS, 333/K1492	F440-5-1	
CIRCUIT SLEW/SWING GREASING, TURNTABLE BEARING	F480-1-1	
CIRCUIT SLEW/SWING GREASING, UPPER, GREASE LINE	F480-5-1	

9 MAIN INDEX – JCB380 QM
9820/1116A
ISSUE 0

TITLE	PAGE NUMBER	CHANGE NUMBER
J UNDERCARRIAGE		
UNDERCARRIAGE	**J01**	
UNDERCARRIAGE INSTALLATION ASSEMBLIES, UNDERCARRIAGE, ASSEMBLY - STANDARD	J100-10-1	
UNDERCARRIAGE, TRACTION EQUIPMENT, ASSEMBLY	J110-1-1	
RECOIL AND IDLER ASSEMBLY, ASSEMBLY	J120-1-1	
RECOIL AND IDLER ASSEMBLY, NARROW, STANDARD	J120-5-1	
RECOIL UNIT, SPRING ASSEMBLY	J130-1-1	
IDLER ASSEMBLY, .	J140-1-1	
TRACK ROLLERS, ROLLER, INSTALLATION ASSEMBLY - LOWER	J150-20-1	
TRACK ROLLERS, ROLLER, INSTALLATION ASSEMBLY- UPPER	J150-25-1	
TRACK CHAIN, TRACK, SHOE ASSEMBLY	J160-1-1	
TRACK CHAIN, ASSEMBLY, TRACK	J160-10-1	
TRACK CHAIN, COMPONENTS, 48 LINKS	J160-15-1	
OTHER UNDERCARRIAGE PARTS, ROTARY COUPLING	J190-1-1	
OTHER UNDERCARRIAGE PARTS, STEP, ASSEMBLY	J190-5-1	
OTHER UNDERCARRIAGE PARTS, SLEW RING, ACCESS	J190-15-1	
OTHER UNDERCARRIAGE PARTS, TRACK GUIDE, FULL LENGTH	J190-35-1	
OTHER UNDERCARRIAGE PARTS, COVER, UNDER	J190-40-1	
OTHER UNDERCARRIAGE PARTS, COVERS, HOSE ACCESS	J190-45-1	

DRAFT

Continue...

TITLE	PAGE NUMBER	CHANGE NUMBER
OTHER UNDERCARRIAGE PARTS, ROTARY COUPLING, JOINT ASSEMBLY	J190-50-1	
OTHER UNDERCARRIAGE PARTS, COVER, ASSEMBLY - STANDARD	J190-55-1	
OTHER UNDERCARRIAGE PARTS, COVER, ASSEMBLY - STANDARD, MOTORS	J190-60-1	

L ENGINE

ENGINE INSTALLATION ASSEMBLIES L01

ENGINE INSTALLATION ASSEMBLIES, ENGINE ASSEMBLIES COMPLETE	L100-5-1	
ENGINE DIPSTICK, LONG	L140-1-1	
ENGINE DIPSTICK, ABI, LONG	L140-5-1	
OTHER ENGINE RELATED PARTS, TREAD PLATES, P672	L190-1-1	
OTHER ENGINE RELATED PARTS, REMOTE, FILTER	L190-10-1	
OTHER ENGINE RELATED PARTS, CCV FILTER, UNIT	L190-15-1	
OTHER ENGINE RELATED PARTS, DRAIN, HOSE & KEEPER	L190-20-1	
OTHER ENGINE RELATED PARTS, OIL FILTER, REMOTE	L190-25-1	

EXHAUST SYSTEM L02

EXHAUST SYSTEM INSTALLATION ASSEMBLIES, EXHAUST SYSTEM, ASSEMBLY	L200-5-1	

INDUCTION SYSTEM L03

INDUCTION SYSTEM INSTALLATION ASSEMBLIES, POWERCORE WITH SCAVENGER ASSEMBLY	L300-10-1	
INDUCTION FILTER, ABI	L310-1-1	

COOLING SYSTEM L06

COOLING PACK INSTALLATION, COOLING PACK, ASSEMBLY	L610-20-1	
COOLING PACK INSTALLATION, TANK, EXPANSION AND BRACKET ASSEMBLY	L610-25-1	
ABI COOLING PACK, ABI	L620-1-1	
OTHER COOLING SYSTEM PARTS, CRANKCASE VENTILATION, ASSEMBLY	L690-1-1	
OTHER COOLING SYSTEM PARTS, CRANKCASE VENTILATION, ASSEMBLY	L690-5-1	
OTHER COOLING SYSTEM PARTS, SEAL KITS, RADIATOR FAOM	L690-15-1	

FAN INSTALLATION ASSEMBLIES L07

FAN INSTALLATION ASSEMBLIES, CLUTCH, FAN ASSEMBLY, 5-WIRE	L700-1-1	
FAN, DRIVE, 672	L710-1-1	
FAN, HUB, CARRIER & PULLEY	L710-5-1	
FAN, HUB, 672	L710-10-1	
FAN, ABI, 5-WIRE CLUTCH FAN	L710-15-1	
FRONT END AUXILIARY DRIVE, ASSEMBLY	L720-1-1	
FRONT END AUXILIARY DRIVE, COMPLETE, ECCENTRIC TENSIONER	L720-5-1	
FRONT END AUXILIARY DRIVE, IDLER PULLEY & BEARING ASSEMBLY	L720-10-1	

FUEL SYSTEM L08

FUEL SYSTEM INSTALLATION ASSEMBLIES, COOLING SYSTEM, FUEL LINE	L800-10-1	
FUEL SYSTEM INSTALLATION ASSEMBLIES, FUEL SYSTEM, COOLER ASSEMBLY	L800-15-1	
FUEL FILTER, ASSEMBLY, 2 MICRON, FM1000	L820-1-1	

DRAFT

10 MAIN INDEX – JCB380 QM
9820/1116A
ISSUE 0

Continue...

TITLE	PAGE NUMBER	CHANGE NUMBER
FUEL FILTER, ASSEMBLY, 10 MICRON, FM1000	L820-5-1	
FUEL FILTER, 2 MICRON,175 MM, LEFT SIDE, DONALDSON	L820-10-1	

DRAFT

JCB380 XTRA

DRAFT

1 MAIN INDEX – JCB380 XTRA

TITLE	PAGE NUMBER	CHANGE NUMBER
A ATTACHMENTS		
BUCKETS	**A02**	
STANDARD BUCKET, ASSEMBLY, 2.3CUM	A210-5-1	
STANDARD BUCKET, ASSEMBLY, 2.3CUM	A210-10-1	
STANDARD BUCKET, BUCKET, SCOOP ASSEMBLY	A210-15-1	
STANDARD BUCKET, BUCKET, GRANITE/ SCOOP - 1.44 CUM	A210-20-1	
HEAVY DUTY BUCKET, 1.8 CUM - ASSEMBLY	A230-1-1	
HEAVY DUTY BUCKET, 1.8 CUM	A230-5-1	
HEAVY DUTY BUCKET, 2.1 CUM - ASSEMBLY	A230-10-1	
HEAVY DUTY BUCKET, 2.1 CUM	A230-15-1	
HEAVY DUTY BUCKET, 1.61 CUM	A230-20-1	
HEAVY DUTY BUCKET, ASSEMBLY, 1.61 CUM	A230-25-1	
HEAVY DUTY BUCKET, BUCKET, INSTALLATION ASSEMBLY - ROCK BUCKET 1.4 Cu.M	A230-30-1	
HEAVY DUTY BUCKET, BUCKET, ASSEMBLY - ROCK BUCKET 1.4 Cu.M	A230-35-1	
HEAVY DUTY BUCKET, ROCK BUCKET 1.4 CUM	A230-40-1	
HITCHES	**A03**	
HITCH INSTALLATION ASSEMBLIES, ABI, HYDRAULIC	A300-1-1	
HITCH INSTALLATION ASSEMBLIES, HYDRAULIC QUICKHITCH, 29-36T	A300-5-1	
EXCAVATOR QUICK HITCH, 3.1M & 205M ARM	A330-1-1	
EXCAVATOR QUICK HITCH, BASE, KIT	A330-5-1	
MISCELLANEOUS	**A09**	

Continue...

TITLE	PAGE NUMBER	CHANGE NUMBER
REFUELLING PUMP, STRAINER, SUCTION	A920-15-1	
REFUELLING PUMP, COMPONENTS,	A920-20-1	
REFUELLING PUMP, ASSEMBLY, JS305	A920-25-1	
OTHER MISCELLANEOUS ITEMS, .	A990-1-1	
OTHER MISCELLANEOUS ITEMS, ANTI FREEZ FLUID AND MISCELLANEOUS ITEMS	A990-5-1	
OTHER MISCELLANEOUS ITEMS, EDGING STRIP - 30M ROLL	A990-10-1	
OTHER MISCELLANEOUS ITEMS, EDGING STRIP	A990-15-1	

B BODYWORK

BODYWORK/FRAME B01

TITLE	PAGE NUMBER	CHANGE NUMBER
BODYWORK INSTALLATION ASSEMBLIES, MACHINE, COMPLETE	B100-1-1	
BODYWORK INSTALLATION ASSEMBLIES, REVOLVING, FRAME ASSEMBLY	B100-15-1	
CHASSIS, BULKHEAD, AND BAFFLES ASSEMBLY	B110-1-1	
CHASSIS, COMMON PARTS, HOUSEFRAME KIT	B110-5-1	
CHASSIS, FRAME HOUSE, ASSEMBLY	B110-10-1	
FUEL TANK, ABI, - FUEL KIT PARTS	B120-10-1	
FUEL TANK, ABI	B120-15-1	
FUEL TANK, ASSEMBLY	B120-25-1	
HYDRAULIC TANK, ASSEMBLY	B130-10-1	
HYDRAULIC TANK, ABI	B130-15-1	
MOUNTING BRACKETS, ENGINE MOUNTINGS, ASSEMBLY	B160-5-1	

2 MAIN INDEX – JCB380 XTRA
9820/1116A
ISSUE 0

TITLE	PAGE NUMBER	CHANGE NUMBER
BONNET/ ENGINE COVERS/ GRILLES, RADIATOR, COVER, FOAM KIT	B170-35-1	
BONNET/ ENGINE COVERS/ GRILLES, DOORS, ASSEMBLY	B170-40-1	
BONNET/ ENGINE COVERS/ GRILLES, ENGINE COVER, ASSEMBLY	B170-45-1	
BONNET/ ENGINE COVERS/ GRILLES, COVER, ASSEMBLY - CENTER	B170-50-1	
BONNET/ ENGINE COVERS/ GRILLES, RADIATOR, COVER ASSEMBLY	B170-55-1	
BONNET/ ENGINE COVERS/ GRILLES, TREAD PLATES, ASSEMBLY	B170-60-1	
BONNET/ ENGINE COVERS/ GRILLES, EXHAUST, COVER ASSEMBLY	B170-65-1	
COUNTER WEIGHTS, ASSEMBLY	B180-5-1	
OTHER BODYWORK ITEMS, UNDERCOVERS	B190-1-1	
OTHER BODYWORK ITEMS, KIT, SEAL, FRAME TO COUNTERWEIGHT	B190-25-1	
OTHER BODYWORK ITEMS, KIT, - EXHAUST NOISE INSULATION	B190-30-1	
OTHER BODYWORK ITEMS, TOOLBOX, ASSEMBLY	B190-40-1	
OTHER BODYWORK ITEMS, KIT, NOISE INSULATION	B190-70-1	
OTHER BODYWORK ITEMS, TOOLS, KIT- STANDARD	B190-75-1	
OTHER BODYWORK ITEMS, KIT, WORKLIGHT GUARD	B190-80-1	
OTHER BODYWORK ITEMS, SOUNDPROOFING, FOAM KIT-BAFFELS	B190-85-1	
OTHER BODYWORK ITEMS, TOOLBOX, LID ASSEMBLY	B190-90-1	
OTHER BODYWORK ITEMS, KIT, QUICKHITCH MOUNTING	B190-95-1	
OTHER BODYWORK ITEMS, HANDRAIL, RISER ASSEMBLY	B190-100-1	
OTHER BODYWORK ITEMS, CENTRE JOINT ASSEMBLY	B190-105-1	
OTHER BODYWORK ITEMS, MIRROR, ASSEMBLY	B190-110-1	

DRAFT

Continue...

TITLE	PAGE NUMBER	CHANGE NUMBER
OTHER BODYWORK ITEMS, TRACK GUIDE ASSEMBLY	B190-115-1	
OTHER BODYWORK ITEMS, FRAME, HOUSEFRAME	B190-120-1	
OTHER BODYWORK ITEMS, KIT, FOAM SEALS	B190-125-1	
OTHER BODYWORK ITEMS, SOUNDPROOFING, KIT-BULKHEAD	B190-130-1	
OTHER BODYWORK ITEMS, TOOLBOX, AND SIDESKIN ASSEMBLY	B190-135-1	
OTHER BODYWORK ITEMS, KIT, SOUNDPROOF COUNTERWEIGHT	B190-150-1	
OTHER BODYWORK ITEMS, ABI, LATCH	B190-160-1	
CAB / CANOPY	**B02**	
OPERATOR ENCLOSURE INSTALLATION ASSEMBLIES, CAB, ASSEMBLY	B200-1-1	
OPERATOR ENCLOSURE INSTALLATION ASSEMBLIES, CAB, SHELL ASSEMBLY	B200-5-1	
OPERATOR ENCLOSURE INSTALLATION ASSEMBLIES, COMMON PARTS	B200-10-1	
OPERATOR ENCLOSURE, CAB, ABI	B210-1-1	
ROOF, HATCH	B230-1-1	
ROOF, TOP, LINER	B230-5-1	
DOORS, SLIDING WINDOW, REAR	B240-1-1	
DOORS, ASSEMBLY	B240-5-1	
DOORS, SLIDING WINDOW	B240-10-1	
GLASS/FRAMES, FRONT, BOTTOM	B250-5-1	
GLASS/FRAMES, SCREEN, ASSEMBLY - FRONT	B250-10-1	
MOULDINGS/TRIM, CONSOLE BOX, ASSEMBLY	B270-1-1	
MOULDINGS/TRIM, CAB TRIM ASSEMBLY	B270-5-1	

3 MAIN INDEX – JCB380 XTRA
9820/1116A
ISSUE 0

TITLE	PAGE NUMBER	CHANGE NUMBER
MOULDINGS/TRIM, PANELS, REAR STOWAGE ABI	B270-10-1	
OTHER OPERATOR ENCLOSURE ITEMS, FLOOR MATS	B290-1-1	
OTHER OPERATOR ENCLOSURE ITEMS, FLOOR MATS, ASSEMBLY	B290-5-1	
OTHER OPERATOR ENCLOSURE ITEMS, CAB, MIRROR	B290-10-1	
OTHER OPERATOR ENCLOSURE ITEMS, FLOOR MATS	B290-20-1	
OTHER OPERATOR ENCLOSURE ITEMS, SEAT SLIDE, LEVER, ASSEMBLY	B290-25-1	
OTHER OPERATOR ENCLOSURE ITEMS, BRACKET, TOP, LEFT HAND SIDE	B290-30-1	
OTHER OPERATOR ENCLOSURE ITEMS, BRACKET, COVER, RIGHT HAND SIDE	B290-35-1	
OTHER OPERATOR ENCLOSURE ITEMS, SUNSCREEN ASSEMBLY	B290-40-1	
OTHER OPERATOR ENCLOSURE ITEMS, FRONT, GUARD, CABIN, OPTIONAL	B290-50-1	
OTHER OPERATOR ENCLOSURE ITEMS, LATCH	B290-55-1	
OTHER OPERATOR ENCLOSURE ITEMS, TOP, GUARD, CABIN, OPTIONAL	B290-60-1	
EXCAVATOR	**B04**	
BOOM, HEAVY DUTY,SPECIAL	B430-10-1	
BOOM, HEAVY DUTY, SPECIAL WITH BUSHES	B430-15-1	
DIPPER, ARM, AND BUSH ASSEMBLY, 2.21M	B440-10-1	
DIPPER, ARM, ASSEMBLY-2.21M - HEAVY DUTY	B440-15-1	
DIPPER, ARM, ASSEMBLY - 2.63M	B440-20-1	
DIPPER, ARM, ASSEMBLY - 3.23M HDS	B440-25-1	
TIPPING LINK, BUCKET LINK, ASSEMBLY, NO LIFT	B460-1-1	

DRAFT

Continue...

TITLE	PAGE NUMBER	CHANGE NUMBER
TIPPING LINK, BUCKET LINK, NO LIFT	B460-5-1	
TIPPING LINK, TRANSPORTATION, NO BUCKET	B460-10-1	
OTHER EXCAVATOR PARTS, ARM, 2.63, BUSH ASSEMBLY	B490-1-1	
REFURBISHMENTS	**B05**	
DECALS MACHINE IDENTIFICATION, COMMON LABEL PACK	B510-5-1	
DECALS MACHINE IDENTIFICATION, JCB, BOOM 14FT	B510-10-1	
DECALS MACHINE IDENTIFICATION, INSIGNIA 380 XTRA LC	B510-20-1	
DECALS MACHINE IDENTIFICATION, DECALS, INFORMATION; ISO CO	B510-25-1	
DECALS MACHINE IDENTIFICATION, LABLE PACK ASSEMBLY	B510-30-1	
LABELS WARNING/INFORMATION, DECAL, JCB DIESELMAX	B520-10-1	
LABELS WARNING/INFORMATION, LABELS WARNING/INFORMATION, ASSEMBLY - ROW COMMON LABLES	B520-15-1	
LABELS WARNING/INFORMATION, DECALS, AND HANDBOOK ASSEMBLY	B520-20-1	
TOOLS, GREASE GUN	B530-10-1	
FIRE EXTINGUISHER, ASSEMBLY	B560-1-1	
LUBRICANT, LUBRICANTS PRIMERS AND SEALANTS, ASSEMBLY	B570-1-1	
LUBRICANT, FUEL, ASSEMBLY - 170L	B570-5-1	
LUBRICANT, GREASE	B570-15-1	
LUBRICANT, COOLANT, JCB ANTIFREEZE	B570-20-1	
LUBRICANT, HYDRAULIC OIL, (HP68)	B570-25-1	

4 MAIN INDEX – JCB380 XTRA
9820/1116A
ISSUE 0

TITLE	PAGE NUMBER	CHANGE NUMBER
C ELECTRICS		
ELECTRICAL	**C01**	
ELECTRICAL INSTALLATION ASSEMBLIES, ELECTRICAL, SYSTEM ASSEMBLY	C100-10-1	
ELECTRICAL INSTALLATION ASSEMBLIES, ELECTRICS, ASSEMBLY - REVOLVING FRAME	C100-15-1	
HARNESSES, HARNESS, LOW FLOW	C110-1-1	
BATTERY, INSTALLATION, ASSEMBLY	C120-10-1	
ISOLATOR BATTERY, ASSEMBLY	C130-5-1	
WORKING LAMPS AND MOUNTINGS, WORKLIGHTS, ASSEMBLY	C160-15-1	
ALARMS/HORN, HORN	C170-1-1	
ALARMS/HORN, TRAVEL ALARM	C170-5-1	
ALARMS/HORN, NOISE, WHITE	C170-10-1	
ALARMS/HORN, REVERSE ALARM	C170-15-1	
BEACON, HAZARD WARNING	C180-1-1	
BEACON, 1x FRONT	C180-5-1	
OTHER ELECTRICAL CIRCUITS, BOOM	C190-1-1	
ELECTRICS, CAB	**C03**	
ELECTRICS CAB INSTALLATION ASSEMBLIES, ELECTRICS, ASSEMBLY - CAB	C300-5-1	
SWITCHES, ENGINE STOP	C330-1-1	
SWITCHES, SLEW LOCK	C330-5-1	
SWITCHES, CUSHION	C330-10-1	
SWITCHES, CONTROL, ISOLATE	C330-15-1	

DRAFT

Continue...

TITLE	PAGE NUMBER	CHANGE NUMBER
SWITCHES, WIPER MOTORS	C330-20-1	
SWITCHES, SCREEN, WASH	C330-25-1	
SWITCHES, RADIO, MUTE	C330-30-1	
SWITCHES, ASSEMBLY	C330-40-1	
SWITCHES, ASSEMBLY	C330-45-1	
SWITCHES, TILT	C330-50-1	
SWITCHES, WORKLIGHTS, STANDARD BUILD	C330-55-1	
SWITCHES, QUICKHITCH	C330-60-1	
SWITCHES, BEACON/STROBE, MULTIPLE	C330-65-1	
INTERIOR LAMP, CAB, 24 VOLT	C335-1-1	
HEATER/AIR CON ASSEMBLY, CONDENSER ASSEMBLY	C340-20-1	
HEATER/AIR CON ASSEMBLY, ATC CONTROL PANEL	C340-35-1	
HEATER/AIR CON ASSEMBLY, UNIT, ATC COMPONENTS	C340-40-1	
HEATER/AIR CON ASSEMBLY, COMMON PARTS	C340-45-1	
HEATER/AIR CON ASSEMBLY, HOSE KIT, AIR CONDITIONING	C340-50-1	
HEATER/AIR CON ASSEMBLY, HEATER, & ATC ASSEMBLY	C340-55-1	
HEATER/AIR CON ASSEMBLY, HOSES AND PIPEWORK, ASSEMBLY - HEATER	C340-60-1	
HEATER/AIR CON ASSEMBLY, AUTOMATIC, TEMPERATURE CONTROL ASSEMBLY	C340-65-1	
RADIO, 12 VOLT, FM	C345-1-1	
FUSES AND RELAYS, MODULES, 24V, BLUE	C350-1-1	
FUSES AND RELAYS, FUSELINK BOX	C350-5-1	
FUSES AND RELAYS, FUSELINK BOX-4 WAY	C350-10-1	

5 MAIN INDEX – JCB380 XTRA
9820/1116A
ISSUE 0

TITLE	PAGE NUMBER	CHANGE NUMBER
FUSES AND RELAYS, ABI, - TRACKED	C350-15-1	
WIPER MOTORS, ASSEMBLY	C370-1-1	
LIVE LINK, ASSEMBLY, JS305 - DOMESTIC	C380-10-1	
JOYSTICK, SERVO CONTROL (PILOT CONTROL), VALVE CONTROLS, RIGHT SIDE	C385-1-1	
JOYSTICK, SERVO CONTROL (PILOT CONTROL), VALVE CONTROLS, RIGHT SIDE REMOTE	C385-5-1	
JOYSTICK, SERVO CONTROL (PILOT CONTROL), REMOTE CONTROL	C385-10-1	
JOYSTICK, SERVO CONTROL (PILOT CONTROL), VALVE CONTROLS, LEFT SIDE REMOTE	C385-15-1	
OTHER ELECTRICAL ITEMS, CAB DISPLAY 3.5"	C390-1-1	
OTHER ELECTRICAL ITEMS, BOTTLE, WASHER	C390-5-1	
OTHER ELECTRICAL ITEMS, BOTTLE, WASHER ASSEMBLY	C390-10-1	
OTHER ELECTRICAL ITEMS, CONTROLLER (MECU)	C390-15-1	
OTHER ELECTRICAL ITEMS, AUDIO SYSTEM	C390-20-1	
OTHER ELECTRICAL ITEMS, WIPER SENSOR ASSEMBLY	C390-25-1	
OTHER ELECTRICAL ITEMS, CAMERA AND MONITOR, ASSEMBLY	C390-30-1	
OTHER ELECTRICAL ITEMS, ABI, CAMERA AND MONITOR	C390-35-1	
OTHER ELECTRICAL ITEMS, ABI, LED LAMP, NON FLASHING	C390-40-1	
OTHER ELECTRICAL ITEMS, CONTROLLER (HECU)	C390-45-1	
D CONTROLS		
CONTROL, MECHANICAL	**D01**	

DRAFT

Continue...

TITLE	PAGE NUMBER	CHANGE NUMBER
EXCAVATOR CONTROLS, JOYSTICK CONTROL, AND FLOOR PLATE ASSEMBLY	D120-5-1	
EXCAVATOR CONTROLS, JOYSTICK CONTROL, ASSEMBLY - STANDARD	D120-10-1	
EXCAVATOR CONTROLS, JOYSTICKS, STANDARD	D120-15-1	
EXCAVATOR CONTROLS, JOYSTICK CONTROL, ASSEMBLY- THIN	D120-20-1	
EXCAVATOR CONTROLS, JOYSTICK CONTROL, ASSEMBLY	D120-25-1	
FOOT PEDALS, ASSEMBLY	D150-1-1	
OTHER MECHANICAL CONTROLS, T-BAR ASSEMBLY	D190-1-1	

E HYDRAULICS

HYDRAULIC CIRCUITS E00

HYDRAULIC INSTALLATION ASSEMBLIES, HYDRAULIC, SYSTEM ASSEMBLY	E0-1-1	

HYDRAULIC CIRCUITS E01

HYDRAULIC CIRCUIT INSTALLATION ASSEMBLIES, DRAIN	E100-5-1	
HYDRAULIC CIRCUIT INSTALLATION ASSEMBLIES, HOSES & FITTINGS, PRESSURE LINE	E100-10-1	
HYDRAULIC CIRCUIT INSTALLATION ASSEMBLIES, HOSES & FITTINGS, PILOT CONTROL LINE, CAB	E100-20-1	
HYDRAULIC CIRCUIT INSTALLATION ASSEMBLIES, LOW FLOW, 2.25M ARM / 2.63M ARM	E100-35-1	
HYDRAULIC CIRCUIT INSTALLATION ASSEMBLIES, LOW FLOW, REVOLVING FRAME	E100-45-1	
HYDRAULIC CIRCUITS ATTACHMENTS, HOSE KIT	E110-1-1	
HYDRAULIC CIRCUITS ATTACHMENTS, HOSES & FITTINGS, MERGED CONTROL	E110-5-1	

6 MAIN INDEX – JCB380 XTRA
9820/1116A
ISSUE 0

TITLE	PAGE NUMBER	CHANGE NUMBER
HYDRAULIC CIRCUITS CHASSIS, HOSES & FITTINGS, PILOT CONTROL LINE, MAIN	E130-5-1	
HYDRAULIC CIRCUITS CHASSIS, CIRCUIT, PILOT PRESSURE RETURN LINE	E130-10-1	
HYDRAULIC CIRCUITS CHASSIS, HOSE KIT, TRAVEL PEDAL	E130-20-1	
HYDRAULIC CIRCUITS CHASSIS, HOSE KIT, SHUTTLE BLOCK	E130-25-1	
HYDRAULIC CIRCUITS CHASSIS, HOSE KIT, CUSHION VALVE	E130-30-1	
HYDRAULIC CIRCUITS CHASSIS, HOSE KIT, SWING LOCK SOLENOID	E130-35-1	
HYDRAULIC CIRCUITS CHASSIS, CIRCUIT, SHUTTLE VALVE	E130-40-1	
HYDRAULIC CIRCUITS CHASSIS, CIRCUIT, CUSHION VALVE	E130-45-1	
HYDRAULIC CIRCUITS CHASSIS, CIRCUIT, VALVE DUAL CONTROLS (T4i)	E130-50-1	
HYDRAULIC CIRCUITS CHASSIS, HOSE KIT, JOYSTICK , RH	E130-55-1	
HYDRAULIC CIRCUITS CHASSIS, HOSE KIT, JOYSTICK, LEFT HAND SIDE	E130-60-1	
HYDRAULIC CIRCUITS CHASSIS, HOSE KIT, CAB MANIFOLD	E130-65-1	
HYDRAULIC CIRCUITS CHASSIS, HOSES & FITTINGS, MERGED CAB LINES	E130-70-1	
HYDRAULIC CIRCUITS CHASSIS, HOSE KIT	E130-75-1	
HYDRAULIC CIRCUITS CHASSIS, CIRCUIT, HYD PILOT FILTER T2	E130-80-1	
HYDRAULIC CIRCUITS CHASSIS, CIRCUIT, FILTER INLINE FILTER; LINE	E130-85-1	
HYDRAULIC CIRCUITS CHASSIS, ASSEMBLY, VALVE TRACKING	E130-90-1	
HYDRAULIC CIRCUITS CHASSIS, CIRCUIT, 8 SOLENOID VALVE	E130-95-1	

DRAFT

Continue...

TITLE	PAGE NUMBER	CHANGE NUMBER
HYDRAULIC CIRCUITS CHASSIS, CIRCUIT, MANIFOLD BLOCK T2	E130-100-1	
HYDRAULIC CIRCUITS CHASSIS, MANIFOLD, CAB PILOT	E130-105-1	
HYDRAULIC CIRCUITS CHASSIS, CIRCUIT, VALVE HAMMER/AUXILARY RH	E130-110-1	
HYDRAULIC CIRCUITS CHASSIS, HOSE KIT, HAM CON VALVE	E130-115-1	
HYDRAULIC CIRCUITS CHASSIS, HOSE KIT, PUMP	E130-120-1	
HYDRAULIC CIRCUITS CHASSIS, HOSE KIT, 8 STATION SOLENOID	E130-125-1	
HYDRAULIC CIRCUITS CHASSIS, HOSE KIT, TANK MANIFOLD	E130-130-1	
HYDRAULIC CIRCUITS CHASSIS, CIRCUIT, HAMMER/ AUXILARY REVOLVING FRAME	E130-135-1	
HYDRAULIC CIRCUITS CHASSIS, CIRCUIT, MONO, HAMMER/ AUXILARY/ MERGE/ LOW FLOW	E130-140-1	
HYDRAULIC CIRCUITS CHASSIS, CIRCUIT, MONO BOOM, HAMMER / LOW FLOW	E130-145-1	
HYDRAULIC CIRCUITS CHASSIS, CIRCUIT, HAMMER REVOLVING FRAME	E130-150-1	
HYDRAULIC CIRCUITS CHASSIS, CIRCUIT, MONO BOOM, HAMMER / AUXILARY/ MERGE	E130-155-1	
HYDRAULIC CIRCUITS CHASSIS, HAMMER CONTROL	E130-160-1	
HYDRAULIC CIRCUITS CHASSIS, HOSE KIT, MERGED CAB LINES	E130-165-1	
HYDRAULIC CIRCUITS CHASSIS, HOSE KIT, HAMMER CAB LINES	E130-170-1	
HYDRAULIC CIRCUITS CHASSIS, CIRCUIT, MONO BOOM , HAMMER LINE	E130-175-1	
HYDRAULIC CIRCUITS CHASSIS, HOSES & FITTINGS, VALVE, HAMMER/AUXILIARY, TAB BOOM	E130-180-1	
HYDRAULIC CIRCUITS CHASSIS, CIRCUIT, RETURN AND OIL COOLER	E130-185-1	

7 MAIN INDEX – JCB380 XTRA
9820/1116A
ISSUE 0

TITLE	PAGE NUMBER	CHANGE NUMBER
HYDRAULIC CIRCUITS CHASSIS, HOSES & FITTINGS, TRACTION LINE	E130-190-1	
HYDRAULIC CIRCUITS CHASSIS, CIRCUIT, SWING LINE	E130-195-1	
HYDRAULIC CIRCUITS EXCAVATOR END, TRACTION LINE, MOTOR	E140-1-1	
HYDRAULIC CIRCUITS EXCAVATOR END, HOSES AND PIPEWORK, GREASE LINE	E140-20-1	
HYDRAULIC CIRCUITS EXCAVATOR END, FULL FLOW, 2.63	E140-25-1	
HYDRAULIC CIRCUITS EXCAVATOR END, CIRCUIT, MERGED FLOW	E140-30-1	
HYDRAULIC CIRCUITS EXCAVATOR END, FULL FLOW, 3.23 STD	E140-35-1	
HYDRAULIC CIRCUITS EXCAVATOR END, FULL FLOW, 2.21M	E140-40-1	
HYDRAULIC CIRCUITS EXCAVATOR END, HAMMER	E140-45-1	
HYDRAULIC CIRCUITS EXCAVATOR END, HOSES AND PIPEWORK, LOW FLOW LINE	E140-50-1	
HYDRAULIC CIRCUITS EXCAVATOR END, FILTER, HAMMER LF	E140-55-1	
HYDRAULIC CIRCUITS EXCAVATOR END, CLAMP, HAMMER & LOW FLOW	E140-60-1	
HYDRAULIC CIRCUITS EXCAVATOR END, HAMMER AUX VALVE LH	E140-65-1	
HYDRAULIC CIRCUITS EXCAVATOR END, INSTALLATION, MERGED FLOW SWITCH VALVE	E140-70-1	
HYDRAULIC CIRCUITS EXCAVATOR END, CLAMP, HAMMER	E140-75-1	
HYDRAULIC CIRCUITS EXCAVATOR END, LOW FLOW, 3.23 ARM	E140-80-1	
HYDRAULIC CIRCUITS EXCAVATOR END, CIRCUIT, BUCKET & ARM LINE	E140-85-1	
HYDRAULIC CIRCUITS EXCAVATOR END, CIRCUIT, ARM LINE - NON HBCV	E140-90-1	

DRAFT

Continue...

TITLE	PAGE NUMBER	CHANGE NUMBER
HYDRAULIC CIRCUITS EXCAVATOR END, CIRCUIT, BUCKET LINE	E140-95-1	
HYDRAULIC CIRCUITS EXCAVATOR END, CIRCUIT, BOOM LINE	E140-100-1	
HYDRAULIC CIRCUITS EXCAVATOR END, CIRCUIT, BUCKET CYLINDER LINE	E140-105-1	
HYDRAULIC CIRCUITS EXCAVATOR END, CIRCUIT, BOOM CYLINDER LINE	E140-110-1	
HYDRAULIC CIRCUITS EXCAVATOR END, CIRCUIT, BOOM CYLINDER LINE - LHS	E140-115-1	
HYDRAULIC CIRCUITS EXCAVATOR END, CIRCUIT, BOOM CYLINDER LINE - RHS	E140-120-1	
HYDRAULIC CIRCUITS EXCAVATOR END, CIRCUIT, HDS BOOM - NON HBCV	E140-125-1	
HYDRAULIC CIRCUITS EXCAVATOR END, CIRCUIT, BUCKET CYLINDER	E140-130-1	
HYDRAULIC CIRCUITS EXCAVATOR END, CIRCUIT, BUCKET LINE 3.23M	E140-140-1	
OTHER HYDRAULIC CIRCUITS, SUCTION LINE	E190-1-1	
OTHER HYDRAULIC CIRCUITS, MANIFOLD BLOCK, RIGHT SIDE	E190-5-1	
OTHER HYDRAULIC CIRCUITS, PIPEWORK, OIL RETURN LINE	E190-20-1	
OTHER HYDRAULIC CIRCUITS, GEAR PUMP, LOW FLOW, ASSEMBLY	E190-25-1	
OTHER HYDRAULIC CIRCUITS, VALVE, LOW FLOW, ASSEMBLY	E190-30-1	
OTHER HYDRAULIC CIRCUITS, MANIFOLD BLOCK, LEFT SIDE	E190-35-1	
OTHER HYDRAULIC CIRCUITS, VALVE, HAMMER/AUXILARY, ASSEMBLY	E190-40-1	
OTHER HYDRAULIC CIRCUITS, T HAMMER CAB LINES	E190-45-1	
PUMP & M0T0RS	**E02**	
PUMP/MOTOR INSTALLATION ASSEMBLIES, MAIN PUMP, ASSEMBLY	E200-10-1	

8 MAIN INDEX – JCB380 XTRA
9820/1116A
ISSUE 0

TITLE	PAGE NUMBER	CHANGE NUMBER
PUMP/MOTOR INSTALLATION ASSEMBLIES, MAIN PUMP, ABI	E200-15-1	
PUMPS GEAR, PUMP, LOW FLOW	E210-5-1	
OTHER HYDRAULIC PUMPS, LOW FLOW	E260-1-1	
VALVES	**E03**	
VALVE, HAMMER & AUXILIARY, RIGHT HAND SIDE	E3-5-1	
VALVE INSTALLATION ASSEMBLIES, MAIN CONTROL VALVE	E300-1-1	
VALVE INSTALLATION ASSEMBLIES, ARM LIMITED VALVE, SOLENOID	E300-5-1	
VALVE INSTALLATION ASSEMBLIES, SOLENOID, VALVE	E300-10-1	
VALVES EXCAVATOR, MAIN CONTROL VALVE, COMPONENTS	E320-5-1	
VALVES SERVO CONTROL (PILOT CONTROL), JOYSTICK CONTROL, LEFT HAND SIDE	E340-1-1	
VALVES SERVO CONTROL (PILOT CONTROL), JOYSTICK CONTROL, RIGHT HAND SIDE	E340-15-1	
OTHER VALVES, CUSHION	E390-1-1	
OTHER VALVES, SOLENOID, DUAL CONTROLS	E390-5-1	
OTHER VALVES, MERGE FLOW, SWITCH VALVE	E390-10-1	
OTHER VALVES, CHECK VALVE	E390-15-1	
OTHER VALVES, AUXILIARY, FOOT CONTROL	E390-20-1	
OTHER VALVES, QUICKHITCH	E390-25-1	
OTHER VALVES, SOLENOID, 8 STATION	E390-30-1	
OTHER VALVES, SOLENOID	E390-35-1	
OTHER VALVES, VALVE, LOW FLOW	E390-40-1	
OTHER VALVES, HAMMER & AUXILIARY, LEFT HAND SIDE	E390-45-1	

DRAFT

Continue...

TITLE	PAGE NUMBER	CHANGE NUMBER
RAMS	**E04**	
RAM INSTALLATION ASSEMBLIES, ARM, BUSHED, 3.23M HDS	E400-1-1	
RAMS DIPPER, ASSEMBLY	E465-5-1	
FILTER	**E05**	
FILTER MAIN HYDRAULIC, RETURN	E510-5-1	
FILTER OTHER HYDRAULIC, ASSEMBLY, DRAIN LINE	E520-1-1	
FILTER RETURN, HAMMER, COMPONENTS, LF330	E540-1-1	

F AXLES, WHEELS & TRANSMISSION

TRACK & SWING GEAR BOX	**F04**	
TRACK SLEW GEARBOX INSTALLATION ASSEMBLIES, SWING, EQUIPMENT ASSEMBLY	F400-1-1	
GEARBOX TRACK, COMPONENTS	F420-1-1	
GEARBOX SLEW/SWING, SWING, MOTOR ASSEMBLY	F440-1-1	
GEARBOX SLEW/SWING, COMPONENTS, 333/K1492	F440-5-1	
CIRCUIT SLEW/SWING GREASING, TURNTABLE BEARING	F480-1-1	
CIRCUIT SLEW/SWING GREASING, UPPER, GREASE LINE	F480-5-1	

J UNDERCARRIAGE

UNDERCARRIAGE	**J01**	
UNDERCARRIAGE INSTALLATION ASSEMBLIES, UNDERCARRIAGE, ASSEMBLY - STANDARD	J100-10-1	

9 MAIN INDEX – JCB380 XTRA
9820/1116A
ISSUE 0

TITLE	PAGE NUMBER	CHANGE NUMBER
UNDERCARRIAGE, TRACTION EQUIPMENT, ASSEMBLY	J110-1-1	
RECOIL AND IDLER ASSEMBLY, ASSEMBLY	J120-1-1	
RECOIL AND IDLER ASSEMBLY, NARROW, STANDARD	J120-5-1	
RECOIL UNIT, SPRING ASSEMBLY	J130-1-1	
IDLER ASSEMBLY, .	J140-1-1	
TRACK ROLLERS, ROLLER, INSTALLATION ASSEMBLY - LOWER	J150-20-1	
TRACK ROLLERS, ROLLER, INSTALLATION ASSEMBLY- UPPER	J150-25-1	
TRACK CHAIN, TRACK, SHOE ASSEMBLY	J160-1-1	
TRACK CHAIN, ASSEMBLY, TRACK	J160-10-1	
TRACK CHAIN, COMPONENTS, 48 LINKS	J160-15-1	
OTHER UNDERCARRIAGE PARTS, ROTARY COUPLING	J190-1-1	
OTHER UNDERCARRIAGE PARTS, STEP, ASSEMBLY	J190-5-1	
OTHER UNDERCARRIAGE PARTS, SLEW RING, ACCESS	J190-15-1	
OTHER UNDERCARRIAGE PARTS, TRACK GUIDE, FULL LENGTH	J190-35-1	
OTHER UNDERCARRIAGE PARTS, COVER, UNDER	J190-40-1	
OTHER UNDERCARRIAGE PARTS, COVERS, HOSE ACCESS	J190-45-1	
OTHER UNDERCARRIAGE PARTS, ROTARY COUPLING, JOINT ASSEMBLY	J190-50-1	
OTHER UNDERCARRIAGE PARTS, COVER, ASSEMBLY - STANDARD	J190-55-1	
OTHER UNDERCARRIAGE PARTS, COVER, ASSEMBLY - STANDARD, MOTORS	J190-60-1	

L ENGINE

DRAFT

Continue...

TITLE	PAGE NUMBER	CHANGE NUMBER
ENGINE INSTALLATION ASSEMBLIES	**L01**	
ENGINE INSTALLATION ASSEMBLIES, ENGINE ASSEMBLIES COMPLETE	L100-5-1	
ENGINE DIPSTICK, LONG	L140-1-1	
ENGINE DIPSTICK, ABI, LONG	L140-5-1	
OTHER ENGINE RELATED PARTS, TREAD PLATES, P672	L190-1-1	
OTHER ENGINE RELATED PARTS, REMOTE, FILTER	L190-10-1	
OTHER ENGINE RELATED PARTS, CCV FILTER, UNIT	L190-15-1	
OTHER ENGINE RELATED PARTS, DRAIN, HOSE & KEEPER	L190-20-1	
OTHER ENGINE RELATED PARTS, OIL FILTER, REMOTE	L190-25-1	
EXHAUST SYSTEM	**L02**	
EXHAUST SYSTEM INSTALLATION ASSEMBLIES, EXHAUST SYSTEM, ASSEMBLY	L200-5-1	
INDUCTION SYSTEM	**L03**	
INDUCTION SYSTEM INSTALLATION ASSEMBLIES, POWERCORE WITH SCAVENGER ASSEMBLY	L300-10-1	
INDUCTION FILTER, ABI	L310-1-1	
COOLING SYSTEM	**L06**	
COOLING PACK INSTALLATION, COOLING PACK, ASSEMBLY	L610-20-1	
COOLING PACK INSTALLATION, TANK, EXPANSION AND BRACKET ASSEMBLY	L610-25-1	
ABI COOLING PACK, ABI	L620-1-1	
OTHER COOLING SYSTEM PARTS, CRANKCASE VENTILATION, ASSEMBLY	L690-1-1	

10 MAIN INDEX – JCB380 XTRA
9820/1116A
ISSUE 0

TITLE	PAGE NUMBER	CHANGE NUMBER
OTHER COOLING SYSTEM PARTS, CRANKCASE VENTILATION, ASSEMBLY	L690-5-1	
OTHER COOLING SYSTEM PARTS, SEAL KITS, RADIATOR FAOM	L690-15-1	
FAN INSTALLATION ASSEMBLIES	**L07**	
FAN INSTALLATION ASSEMBLIES, CLUTCH, FAN ASSEMBLY, 5-WIRE	L700-1-1	
FAN, DRIVE, 672	L710-1-1	
FAN, HUB, CARRIER & PULLEY	L710-5-1	
FAN, HUB, 672	L710-10-1	
FAN, ABI, 5-WIRE CLUTCH FAN	L710-15-1	
FRONT END AUXILIARY DRIVE, ASSEMBLY	L720-1-1	
FRONT END AUXILIARY DRIVE, COMPLETE, ECCENTRIC TENSIONER	L720-5-1	
FRONT END AUXILIARY DRIVE, IDLER PULLEY & BEARING ASSEMBLY	L720-10-1	
FUEL SYSTEM	**L08**	
FUEL SYSTEM INSTALLATION ASSEMBLIES, COOLING SYSTEM, FUEL LINE	L800-10-1	
FUEL SYSTEM INSTALLATION ASSEMBLIES, FUEL SYSTEM, COOLER ASSEMBLY	L800-15-1	
FUEL FILTER, ASSEMBLY, 2 MICRON, FM1000	L820-1-1	
FUEL FILTER, ASSEMBLY, 10 MICRON, FM1000	L820-5-1	
FUEL FILTER, 2 MICRON,175 MM, LEFT SIDE, DONALDSON	L820-10-1	

DRAFT

- **A02 BUCKETS**

A03 HITCHES

A09 MISCELLANEOUS

A

DRAFT

JCB380 QM

JCB380 XTRA

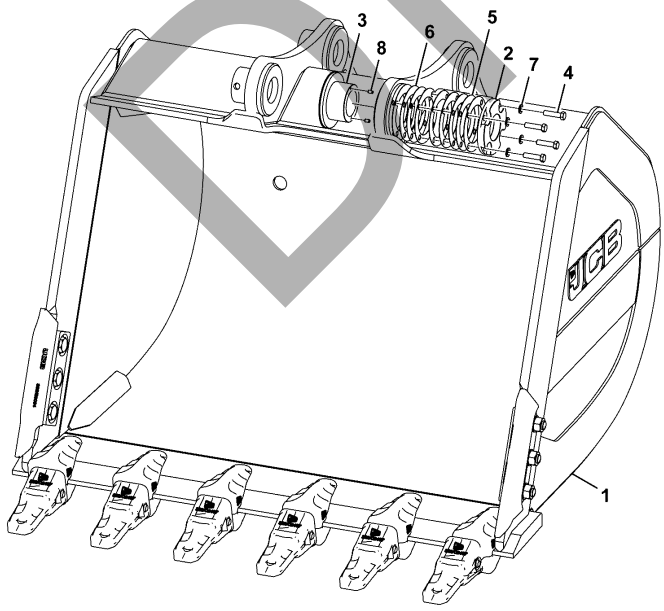

ITEM	Part #	CHANGE NO	DESCRIPTION	USAGE CODE	QTY
1			Assembly Bucket Refer A210-10-1		1
2	400/N7476		Plate End Cap		1
3	400/N7467		Bush Floating		1
4	1316/3715D		Bolt M16 X 65mm		4
5	400/L0820		Plate Shim 1.2mm		3
6	400/L0825		Plate Shim - 1mm		3
7	1422/0011D		Washer (M16)		4
8	400/K7367		Dowel Pin Precision Dowel 10mm x 16mm		1

JCB380 QM

JCB380 XTRA

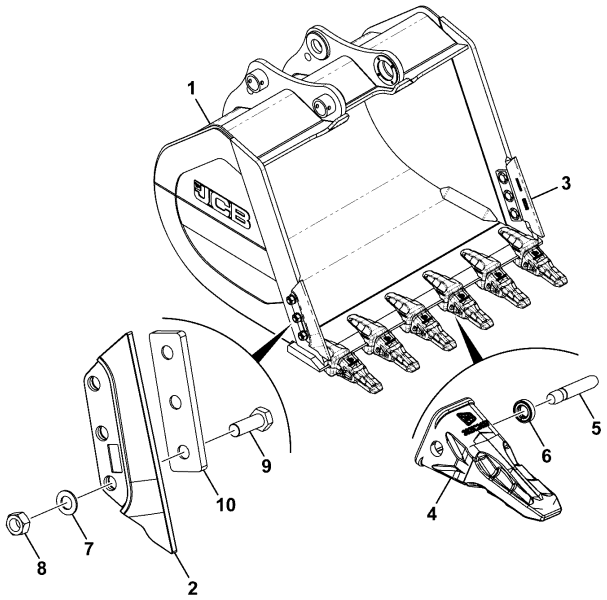

336-E7065-3

ITEM	Part #	CHANGE NO	DESCRIPTION	USAGE CODE	QTY
1	336/E8436		Bucket		1
2	335/G5873		Cutter Left Side		1
3	335/G5876		Cutter Right Side		1
4	336/F1562		Tooth Tip		6
5	332/C2439		Pin Locking		6
6	332/C2440		Washer And Sleeve		6
7	1420/0015Z		Washer (M30)		6
8	1371/1001Z		Nut M30 Hex		6
9	1316/4119Z		Bolt M30 x 90 G10.9		6
10	336/C5677		Plate Spacer		2

JCB380 QM

JCB380 XTRA

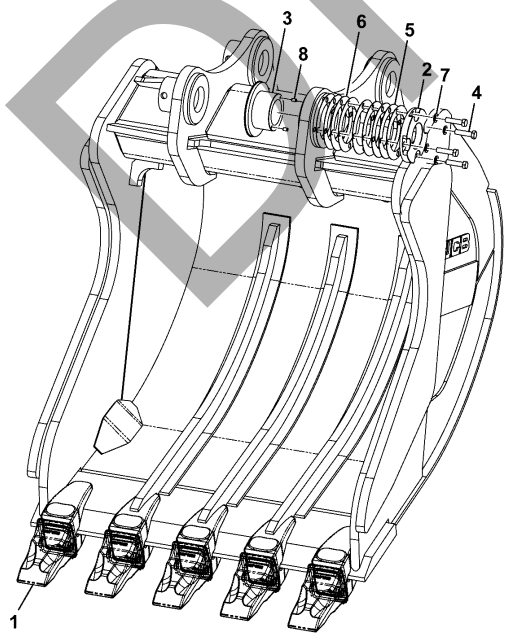

400-K9916-1

ITEM	Part #	CHANGE NO	DESCRIPTION	USAGE CODE	QTY
1	400/G5512		Bucket Scoop ABI Refer A210-20-1		1
2	400/N7476		Plate End Cap		1
3	400/N7467		Bush Floating		1
4	1316/3715D		Bolt M16 X 65mm		4
5	400/L0820		Plate Shim 1.2mm		3
6	400/L0825		Plate Shim - 1mm		3
7	1422/0011D		Washer (M16)		4
8	400/K7367		Dowel Pin Precision Dowel 10mm x 16mm		1

DRAFT

JCB380 QM

JCB380 XTRA

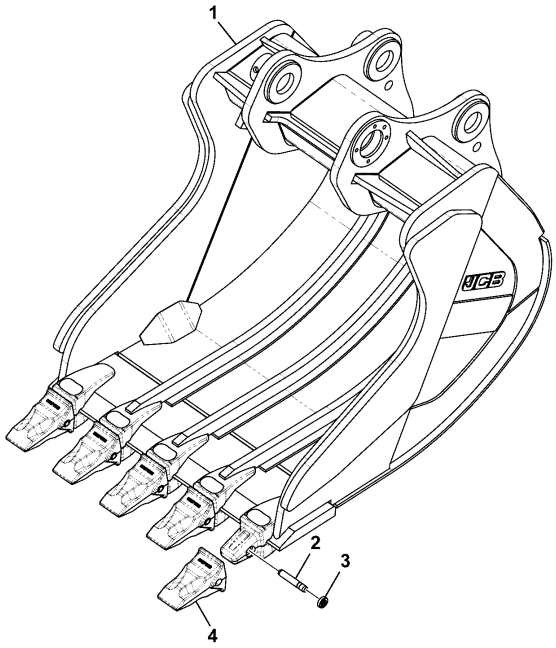

400-G5512-2

ITEM	Part #	CHANGE NO	DESCRIPTION	USAGE CODE	QTY
1	400/G7882		Bucket Scoop - 1.44 CUM		1
2	332/C2439		Pin Locking		5
3	332/C2440		Washer And Sleeve		5
4	336/F1562		Tooth Tip		5

JCB380 QM

JCB380 XTRA

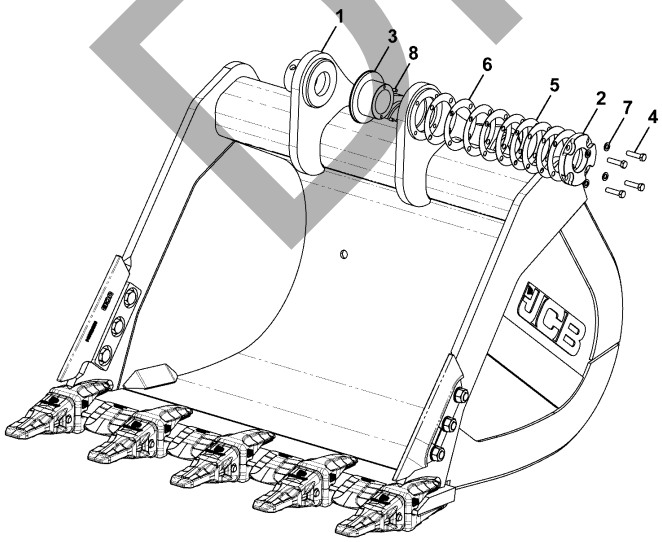

ITEM	Part #	CHANGE NO	DESCRIPTION	USAGE CODE	QTY
1	335/G6609		Bucket Assembly, Heavy Duty, 1.8 Cu.M. Refer A230-5-1		1
2	400/N7476		Plate End Cap		1
3	400/N7467		Bush Floating		1
4	1316/3715D		Bolt M16 X 65mm		4
5	400/L0820		Plate Shim 1.2mm		3
6	400/L0825		Plate Shim - 1mm		3
7	1422/0011D		Washer (M16)		4
8	400/K7367		Dowel Pin Precision Dowel 10mm x 16mm		1

336-D8121-1

DRAFT

JCB380 QM

JCB380 XTRA

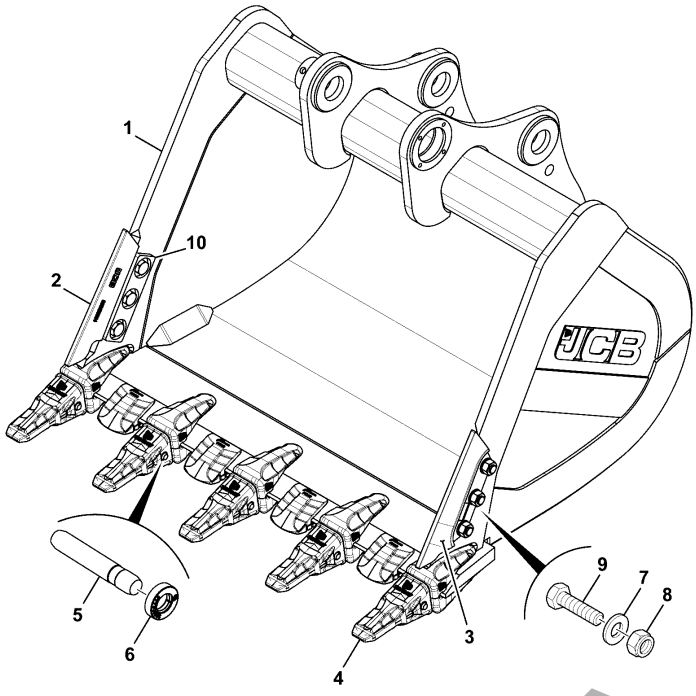

335-G6609-2

ITEM	Part #	CHANGE NO	DESCRIPTION	USAGE CODE	QTY
1	335/G6610		Bucket 1.8 Cum		1
2	335/G5873		Cutter Left Side		1
3	335/G5876		Cutter Right Side		1
4	332/C2437		Tooth Tip 235		5
5	332/C2439		Pin Locking		5
6	332/C2440		Washer And Sleeve		5
7	1420/0015Z		Washer (M30)		6
8	1371/1001Z		Nut M30 Hex		6
9	1316/4119Z		Bolt M30 x 90 G10.9		6
10	336/C5677		Plate Spacer		2

JCB380 QM

JCB380 XTRA

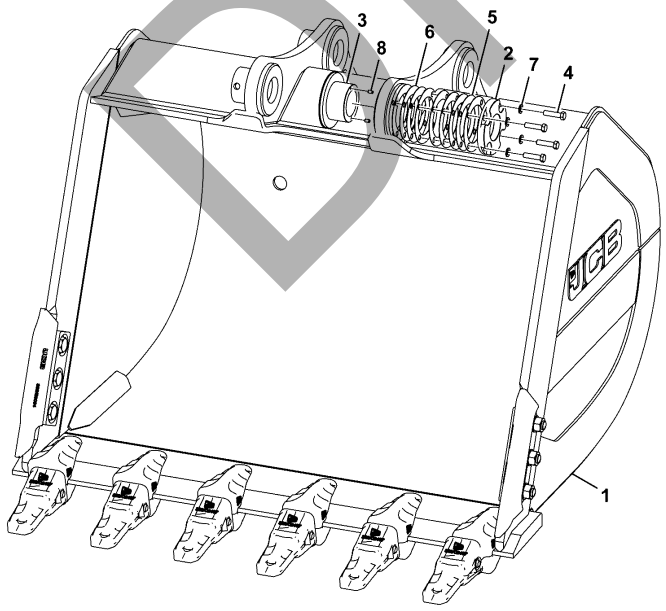

336-E3356-1

ITEM	Part #	CHANGE NO	DESCRIPTION	USAGE CODE	QTY
1			Bucket Assembly 2.1 Cum Refer A230-15-1		1
2	400/N7476		Plate End Cap		1
3	400/N7467		Bush Floating		1
4	1316/3715D		Bolt M16 X 65mm		4
5	400/L0820		Plate Shim 1.2mm		3
6	400/L0825		Plate Shim - 1mm		3
7	1422/0011D		Washer (M16)		4
8	400/K7367		Dowel Pin Precision Dowel 10mm x 16mm		1

DRAFT

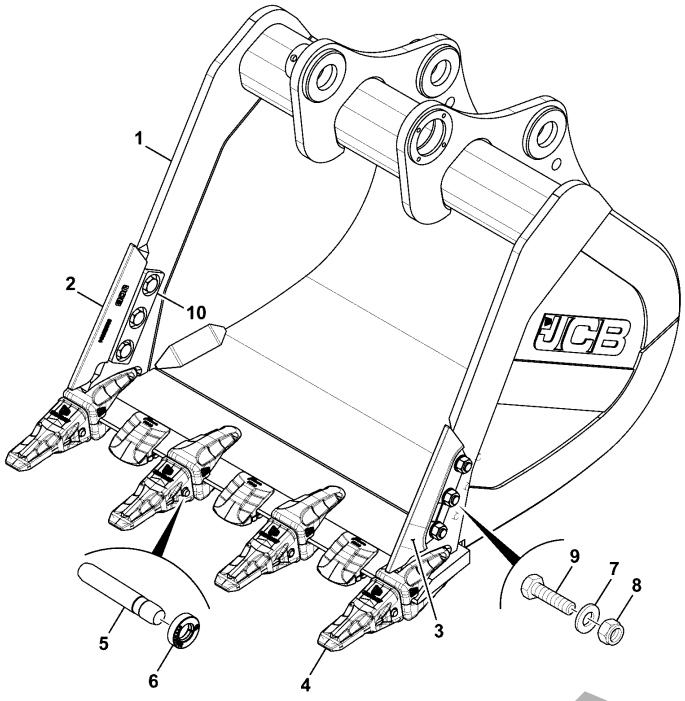

336-E7066-3

JCB380 QM

JCB380 XTRA

ITEM	Part #	CHANGE NO	DESCRIPTION	USAGE CODE	QTY
1	336/E8437		Bucket - 2.1 CUM		1
2	335/G5873		Cutter Left Side		1
3	335/G5876		Cutter Right Side		1
4	336/F1562		Tooth Tip		6
5	332/C2439		Pin Locking		6
6	332/C2440		Washer And Sleeve		6
7	1420/0015Z		Washer (M30)		6
8	1371/1001Z		Nut M30 Hex		6
9	1316/4119Z		Bolt M30 x 90 G10.9		6
10	336/C5677		Plate Spacer		2

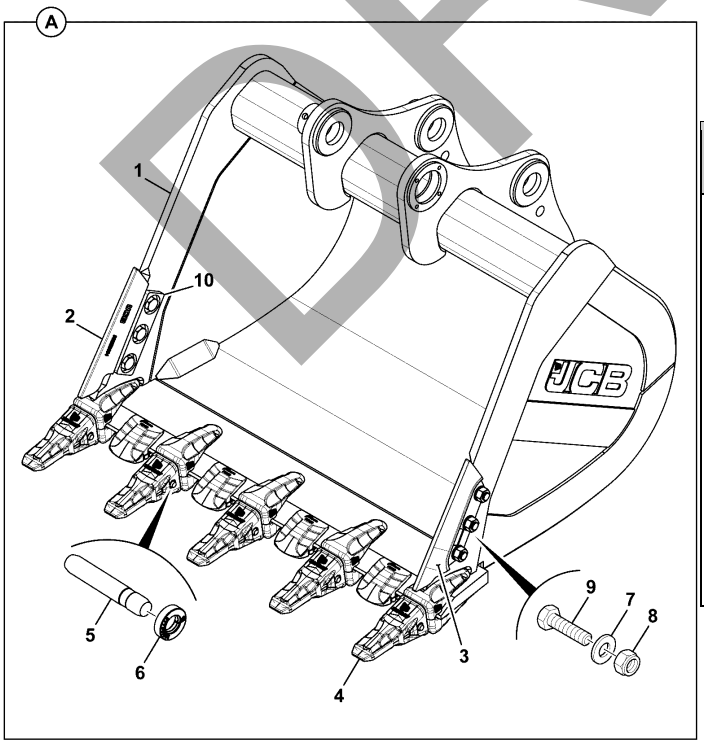

336-A2240-2

JCB380 QM

JCB380 XTRA

ITEM	Part #	CHANGE NO	DESCRIPTION	USAGE CODE	QTY
1	336/A2933		Bucket 1.61 Cu.M.		1
2	335/G5873		Cutter Left Side		1
3	335/G5876		Cutter Right Side		1
4	332/C2437		Tooth Tip 235		5
5	332/C2439		Pin Locking		5
6	332/C2440		Washer And Sleeve		5
7	1420/0015Z		Washer (M30)		6
8	1371/1001Z		Nut M30 Hex		6
9	1316/4119Z		Bolt M30 x 90 G10.9		6
10	336/C5677		Plate Spacer		2

DRAFT

JCB380 QM

JCB380 XTRA

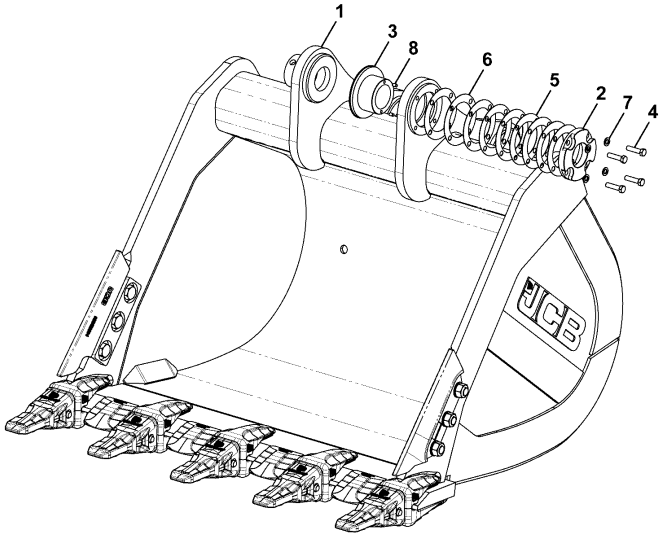

336-D8121-1

ITEM	Part #	CHANGE NO	DESCRIPTION	USAGE CODE	QTY
1	336/A2240		Bucket Assembly, Heavy Duty, 1.61 Cu.M. Refer A230-20-1		1
2	400/N7476		Plate End Cap		1
3	400/N7467		Bush Floating		1
4	1316/3715D		Bolt M16 X 65mm		4
5	400/L0820		Plate Shim 1.2mm		3
6	400/L0825		Plate Shim - 1mm		3
7	1422/0011D		Washer (M16)		4
8	400/K7367		Dowel Pin Precision Dowel 10mm x 16mm		1

JCB380 QM

JCB380 XTRA

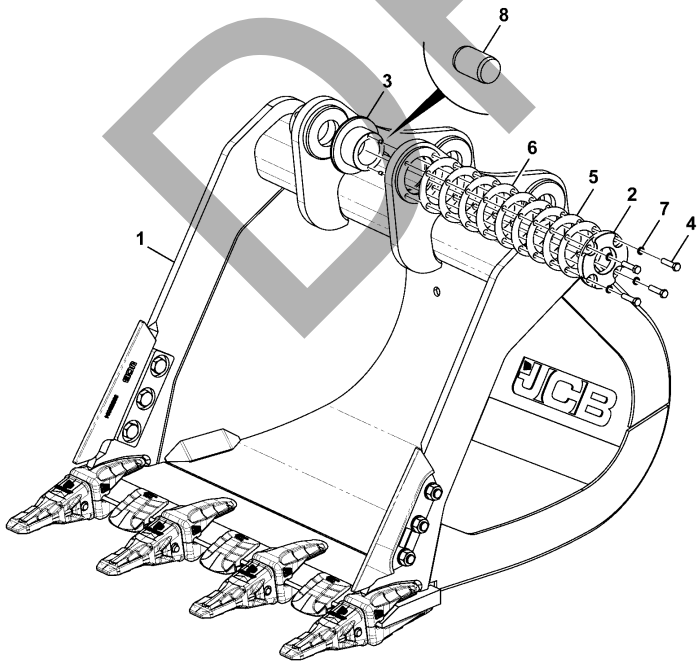

336-D8119-1

ITEM	Part #	CHANGE NO	DESCRIPTION	USAGE CODE	QTY
1			Bucket Assembly - Rock Bucket 1.4 Cu.M ABI Refer A230-35-1		1
2	400/N7476		Plate End Cap		1
3	400/N7467		Bush Floating		1
4	1316/3715D		Bolt M16 X 65mm		4
5	400/L0820		Plate Shim 1.2mm		3
6	400/L0825		Plate Shim - 1mm		3
7	1422/0011D		Washer (M16)		4
8	400/K7367		Dowel Pin Precision Dowel 10mm x 16mm		1

DRAFT

JCB380 QM

JCB380 XTRA

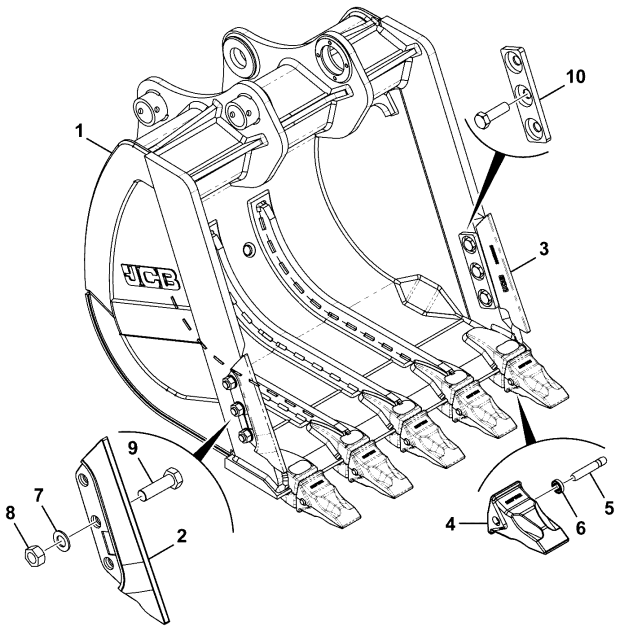

400-L0583-1

ITEM	Part #	CHANGE NO	DESCRIPTION	USAGE CODE	QTY
1	400/L1192		Bucket - Rock bucket1.4 CUM		1
2	335/G5873		Cutter Left Side		1
3	335/G5876		Cutter Right Side		1
4	336/F1562		Tooth Tip		5
5	332/C2439		Pin Locking		5
6	332/C2440		Washer And Sleeve		5
7	1420/0015D		Washer Plain, M30		6
8	1370/1001D		Nut M30		6
9	1316/4120		Bolt		6
10	336/C5677		Plate Spacer		2

DRAFT

JCB380 QM

JCB380 XTRA

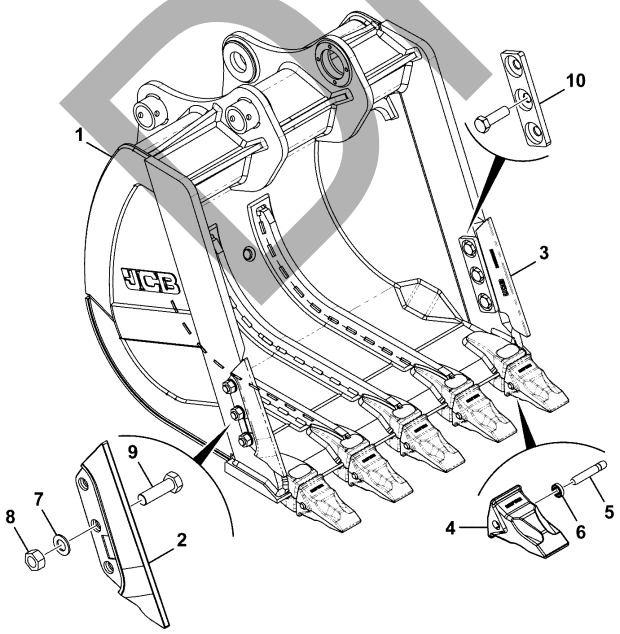

400-L0583-1

ITEM	Part #	CHANGE NO	DESCRIPTION	USAGE CODE	QTY
1	400/L1192		Bucket - Rock bucket1.4 CUM		1
2	335/G5873		Cutter Left Side		1
3	335/G5876		Cutter Right Side		1
4	336/F1562		Tooth Tip		5
5	332/C2439		Pin Locking		5
6	332/C2440		Washer And Sleeve		5
7	1420/0015D		Washer Plain, M30		6
8	1370/1001D		Nut M30		6
9	1316/4120		Bolt		6
10	336/C5677		Plate Spacer		2

A

- A02 BUCKETS
- A03 HITCHES
- A09 MISCELLANEOUS

DRAFT

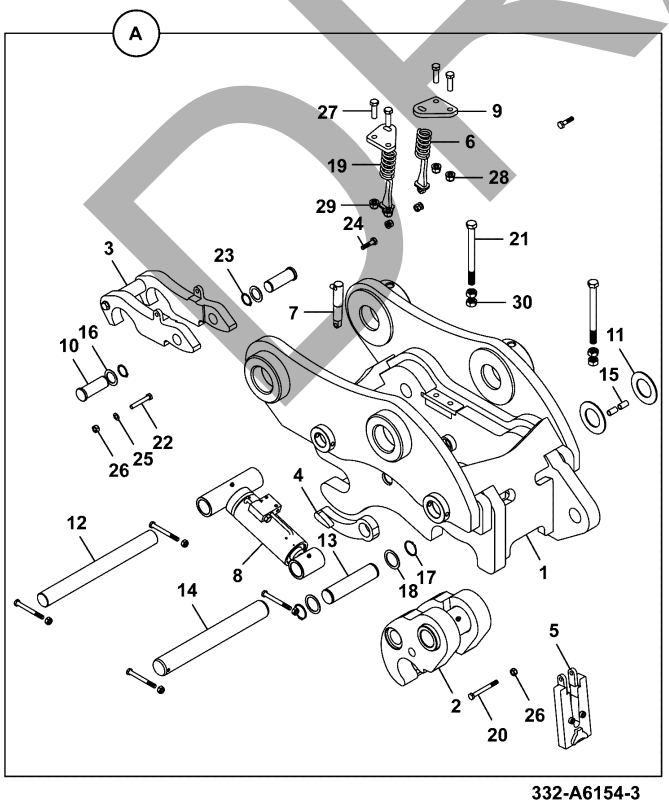

332-A6154-3

JCB380 QM

JCB380 XTRA

ITEM	Part #	CHANGE NO	DESCRIPTION	USAGE CODE	QTY
A			Quickhitch ABI		1
1	:334/E9568		Frame JS360 M/Lock		1
2	:334/E9572		Hook latching		1
3	:334/E9577		Arm front lock		1
4	:334/E9578		Plate push		1
5	:334/E9366		Plate Lock		1
6	:334/E9382		Rod spring assembly		2
7	:334/E9398		Cylinder Hydraulic rear lock		1
8	:333/E5369		Ram Main Hydraulic		1
9	:334/E9388		Plate Spring		2
10	:334/E9397		Pin Lock arm		2
11	:334/E9579		Shim		2
12	:334/E9580		Pin		1
13	:334/E9581		Pin		1

Continue...

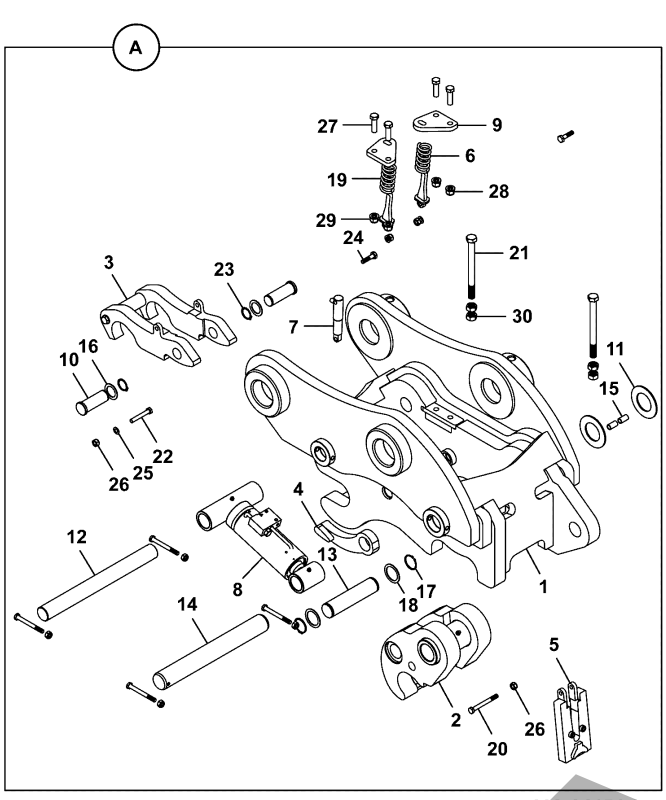

332-A6154-3

ITEM	PART NO	CHANGE NO	DESCRIPTION	USAGE CODE	QTY
14	:334/E9583		Hook Pin		1
15	:334/E9437		Bushing rear lock 22mm		2
16	:334/E9290		Washer 58 X 39 X 2mm		2
17	:334/E9584		Circlip 50 x 1.6mm		2
18	:334/E9585		Washer 51 x 2mm		2
19	:334/E9586		Spring Compression		2
20	:334/E9587		Bolt M12 x 115mm		5
21	:334/E9423		Bolt M20 x 230mm		2
22	:334/E9425		Bolt M12 x 80mm		1
23	:334/E9291		Circlip 38 x 1.75mm		2
24	:334/E9435		Setscrew M12 x 50mm		2
25	:334/E9439		Washer M12		3
26	:334/E9438		Nut M12		8
27	:334/E9588		Setscrew M16 x 55mm		4
28	:334/E9441		Washer M16		4
29	:334/E9444		Nut lock M16		4

A300-1-1 HITCH INSTALLATION ASSEMBLIES, ABI, HYDRAULIC
9820/1116A
ISSUE 0

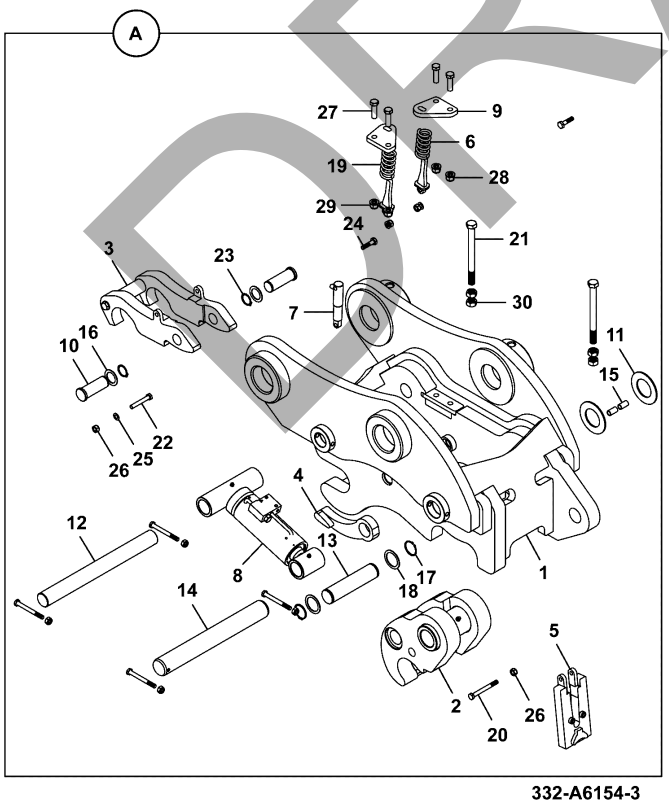

332-A6154-3

ITEM	PART NO	CHANGE NO	DESCRIPTION	USAGE CODE	QTY
30	:334/E9302		Nut M20		4

DRAFT

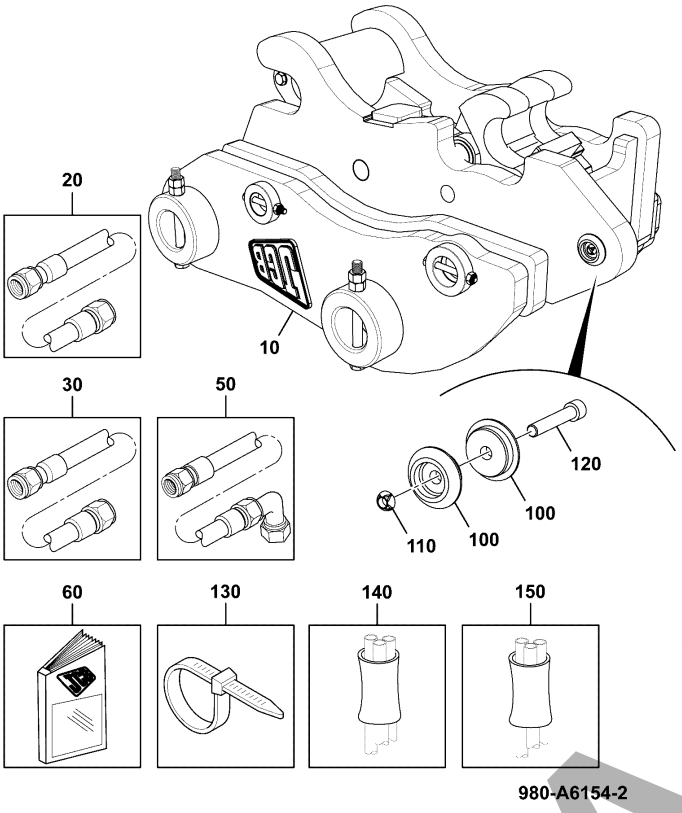

980-A6154-2

JCB380 QM

JCB380 XTRA

ITEM	Part #	CHANGE NO	DESCRIPTION	USAGE CODE	QTY
A	980/A6154		Quickhitch Hydraulic Assembly, 29-36T		1
10			Quickhitch ABI Refer A300-1-1		1
20	:332/A6658		Hose 04 JIC x 1170mm		1
30	:332/A7924		Hose 04 BSP HP x 1175mm		1
50	:332/A9363		Hose 04 JIC HP x 1500mm		1
60	:332/A8019		Manual operator		1
70			Certificate Declaration Of Incorporation		1
80			Dataplate Type 11		1
100	:332/A8528		Cap blanking		2
110	:332/C6066		Nut M12 security scroll nut		1
120	:1391/3515Z		Capscrew M12 x 65		1

A300-5-1 HITCH INSTALLATION ASSEMBLIES, HYDRAULIC QUICKHITCH, 29-36T 9820/1116A ISSUE 0

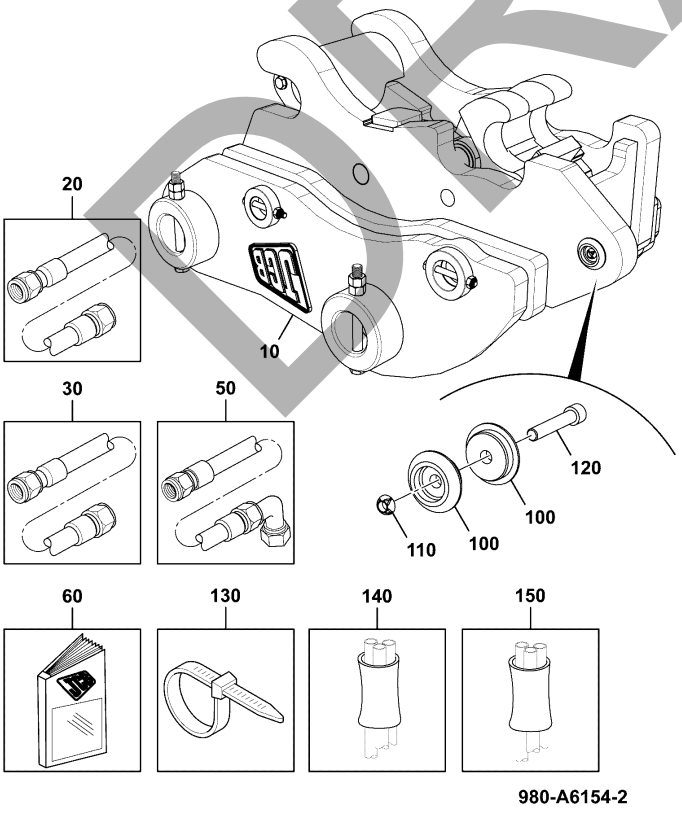

980-A6154-2

ITEM	PART NO	CHANGE NO	DESCRIPTION	USAGE CODE	QTY
130	:121/77603		Tie cable 300mm		4
140	:332/A9798		Sleeve		1
150	:332/A9761		Sleeve		1

DRAFT

JCB380 QM

JCB380 XTRA

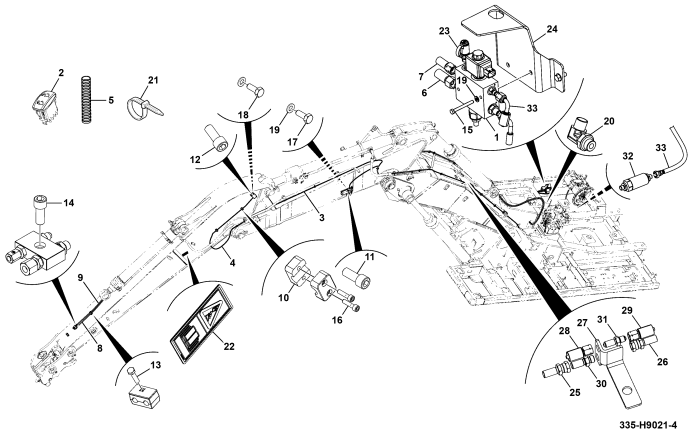

ITEM	Part #	CHANGE NO	DESCRIPTION	USAGE CODE	QTY
1	333/A7800		Kit-base HP SC Refer A330-5-1		1
2			Switch Quickhitch Assembly Refer C330-60-1		1
3	336/B5133		Harness - Boom Quick Hitch		1
4	335/A1607		Harness Arm		1
5	332/P1819		Tube corrugated		1
6	335/A1608		Hose		1
7	400/G4809		Hose		1
8	335/E4929		Hose		1
9	335/E3229		Hose		1
10	332/A6542		Clamp		4
11	1391/3509D		Capscrew M12 x 35mm		2
12	1391/3508D		Capscrew M12 x 30		2

A330-1-1 EXCAVATOR QUICK HITCH, 3.1M & 205M ARM
9820/1116A
ISSUE 0

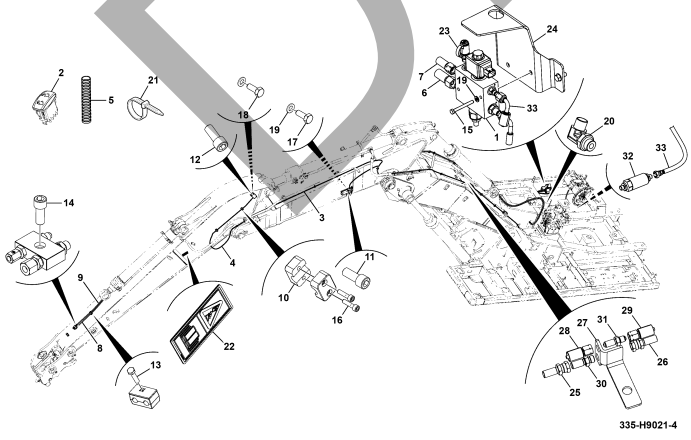

ITEM	PART NO	CHANGE NO	DESCRIPTION	USAGE CODE	QTY
13	1316/0309D		Setscrew high strength M8 x 35mm		4
14	1391/3307D		Capscrew M8 x 25mm		1
15	1316/3213D		Bolt		2
16	1391/3207D		Capscrew M6 x 25mm		4
17	1316/0205D		Screw set		2
18	1316/0203D		Screw		2
19	1420/0006D		Washer M6		6
20	334/L6662		Elbow Adaptor 1/4		1
21	333/J8681		Tie cable (Double loop)		41
22	332/A0768		Label ISO-02D (Crushing/Read manual)		2
23	333/J5928		Adapter test point		1
24	333/K1060		Kit Mounting Quickhitch Refer B190-95-1		1
25	335/C9242		Hose		1
26	335/C9263		Hose		1
27	335/D6077		Bracket		2

DRAFT

Continue...

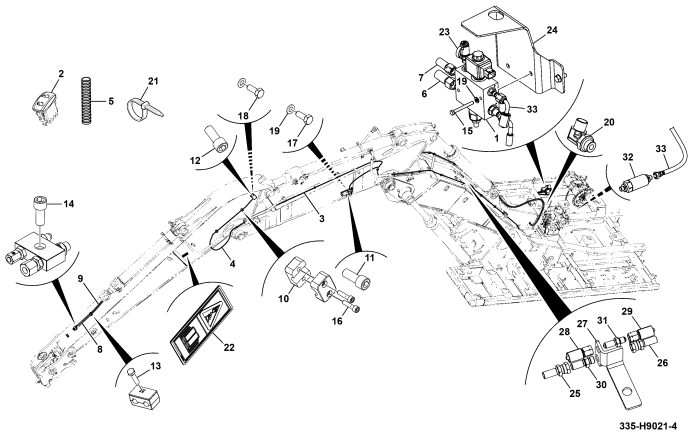

ITEM	PART NO	CHANGE NO	DESCRIPTION	USAGE CODE	QTY
28	335/D0057		Hose		1
29	335/C9249		Hose		1
30	816/10143		Adapter		2
31	335/D6084		Adaptor Bulkhead		2
32			Assembly Check Valve Refer E390-15-1		1
33	400/G1678		Hose		1

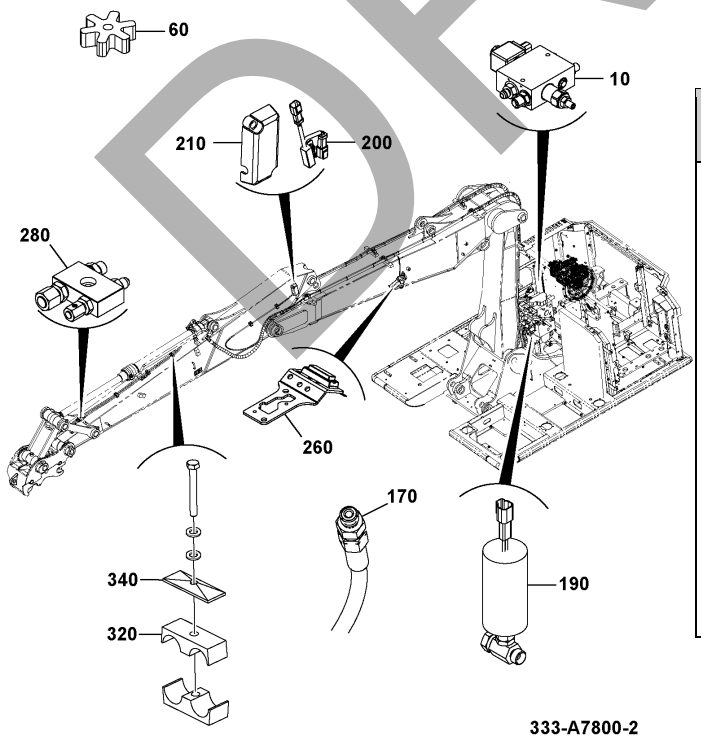

JCB380 QM

JCB380 XTRA

ITEM	Part #	CHANGE NO	DESCRIPTION	USAGE CODE	QTY
10	335/H2506		Valve		1
60	332/A9691		Spacer		2
170	332/A8669		Adapter		1
190			Switch assembly Refer C330-40-1		1
200			Switch assembly Refer C330-45-1		2
210	332/A8519		Cover assembly		2
260	333/A7778		Lamp L.E.D ABI Non Flashing Refer C390-40-1		1
280			Manifold Assembly Refer E390-25-1		1
320	332/A8021		Clamp		10
340	821/00169		Plate cover		5

DRAFT

A

- A02 BUCKETS
- A03 HITCHES
- • A09 MISCELLANEOUS

DRAFT

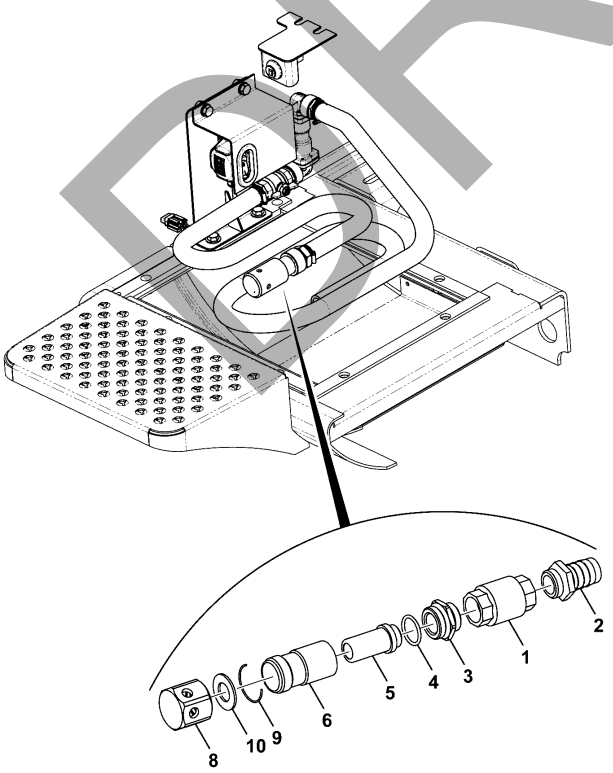

336-B1027-1

JCB380 QM

JCB380 XTRA

ITEM	Part #	CHANGE NO	DESCRIPTION	USAGE CODE	QTY
1	336/D2554		Body Valve		1
2	336/D2555		Connector Hose		1
3	336/D2556		Nipple 3/4Gx1/2G M30x1		1
4	336/D2557		O Ring		1
5	336/D2558		Filter Gas, 1/2''. L=40mm		1
6	336/D2559		Tube Protection Filter		1
8	336/D2560		Cap		1
9	336/D2561		Ring Snap		1
10	336/D2562		Seal		1

JCB380 QM

JCB380 XTRA

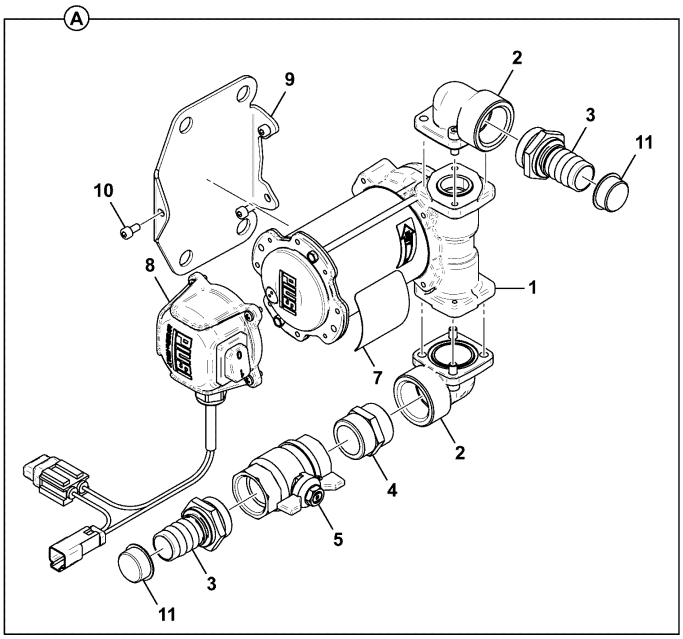

334-L3834-2

ITEM	Part #	CHANGE NO	DESCRIPTION	USAGE CODE	QTY
A	334/L3834		Pump Refueling		1
1	335/C7933		Pump		1
2	335/C7934		Kit Collector		2
3	335/C7935		Adapter Hose		2
4	335/C7937		Adapter Double Hexagonal		1
5	335/C7938		Adaptor		1
7	335/C7941		Plate		1
8	335/C7942		Kit Terminal Hollow		1
9	335/C7943		Bracket Support Pump		1
10	335/C7944		Screw		3
11	335/C7947		Cap Thread Protection		2

JCB380 QM

JCB380 XTRA

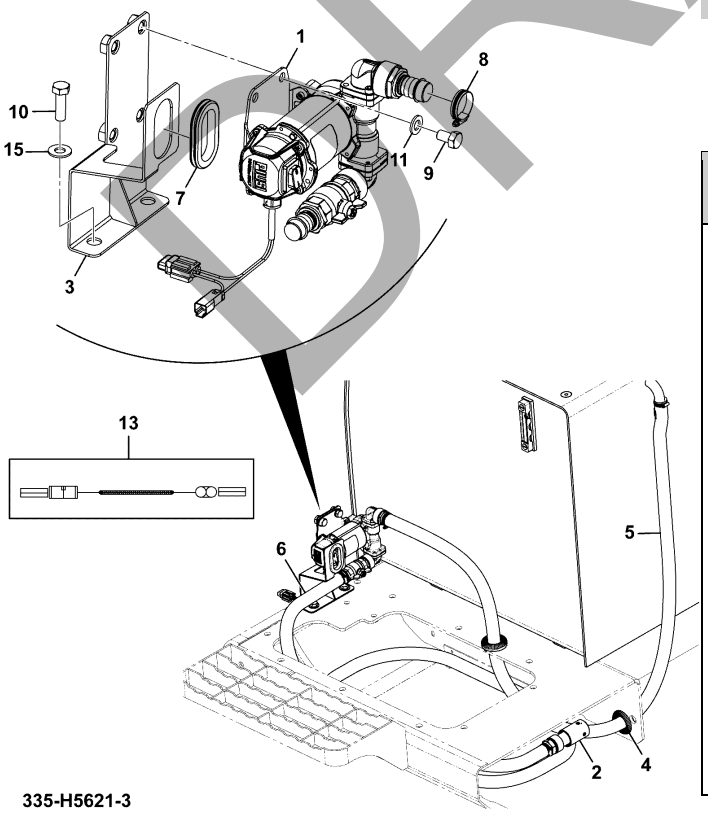

335-H5621-3

ITEM	Part #	CHANGE NO	DESCRIPTION	USAGE CODE	QTY
1	334/L3834		Pump Refueling Refer A920-20-1		1
2	336/B1027		Strainer Suction Refer A920-15-1		1
3	334/P0223		Bracket refueling pump		1
4	JSR0006		Hose CORRUGATED		1
5	834/11508		Hose		1
6	834/10901		Hose refuelling 3500mm long 3.5M		1
7	KHN1260		Grommet rubber		1
8	334/L7497		Clip wormdrive		4
9	1316/0505Z		Screw M12x20		4
10	1316/0510Z		Screw		2
11	1420/0009Z		Washer M12		4
15	1411/0005D		Washer		2

DRAFT

JCB380 QM

JCB380 XTRA

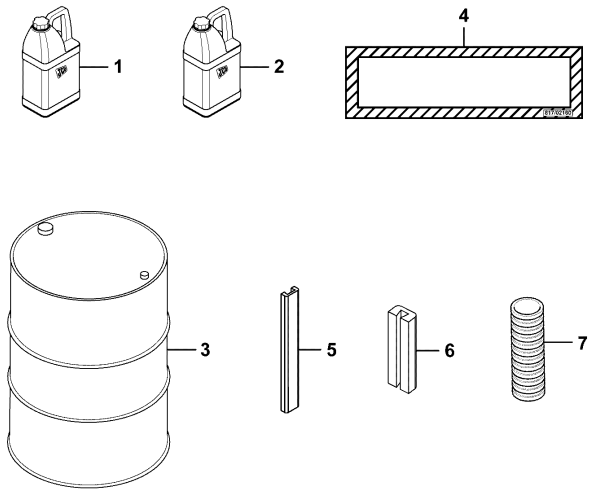

ITEM	Part #	CHANGE NO	DESCRIPTION	USAGE CODE	QTY
1	4000/0300		Fluid Gear Oil		1
2			Diesel Fuel Pink		1
3	4006/0104		Fluid anti-freeze 200 Ltr Refer A990-5-1		1
4	817/02160		Label Chassis Stamping		1
5	JLJ0471		Strip edging (Roll length 30m) Refer A990-10-1		1
6	JLN0051		Strip edging (Roll length 30m) Refer A990-15-1		1
7	JSH0001		Tube corrugated		1

4000-0300-MC

JCB380 QM

JCB380 XTRA

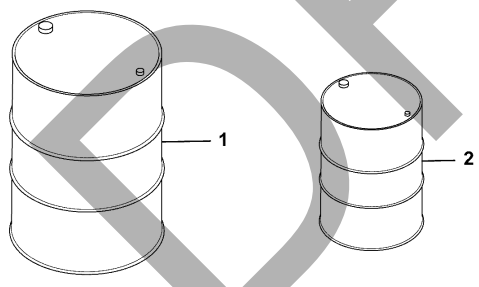

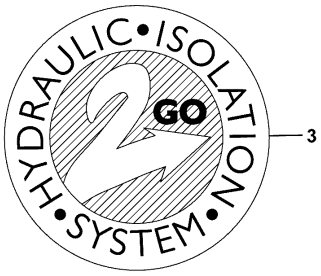

ITEM	Part #	CHANGE NO	DESCRIPTION	USAGE CODE	QTY
1	4006/0104		Fluid anti-freeze 200 Ltr		1
2			Diesel Fuel Pink		1
3	333/K2373		Label logo, isolation hydraulic		1

DRAFT

JCB380 QM

JCB380 XTRA

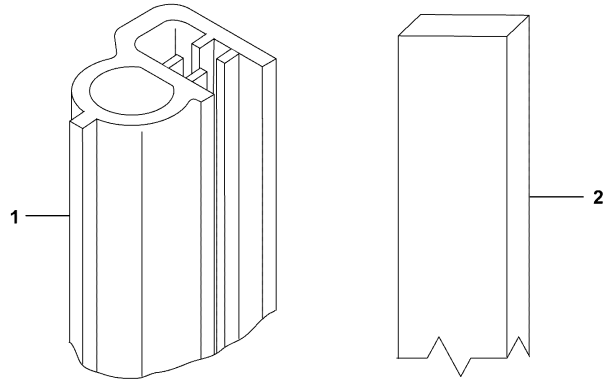

jlj0471-1

ITEM	Part #	CHANGE NO	DESCRIPTION	USAGE CODE	QTY
1	JLJ0472		Strip		1
2	JRJ0384		Strip edging		1

DRAFT

JCB380 QM

JCB380 XTRA

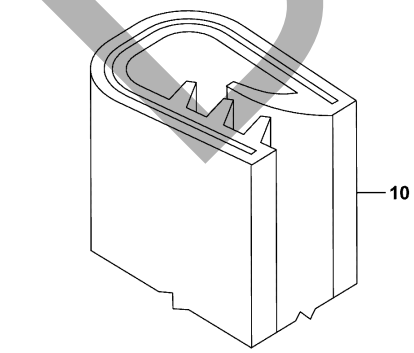

ITEM	Part #	CHANGE NO	DESCRIPTION	USAGE CODE	QTY
10	332/J7200		Strip edging		1

B

- **B01 BODYWORK/FRAME**
- **B02 CAB / CANOPY**
- **B04 EXCAVATOR**
- **B05 REFURBISHMENTS**

DRAFT

JCB380 XTRA

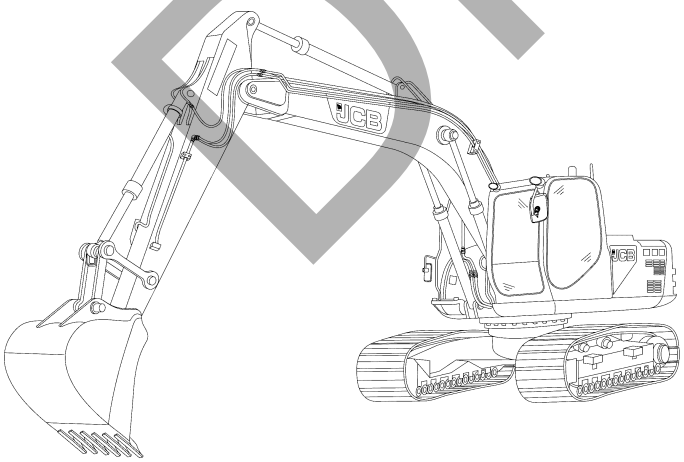

JS37

ITEM	Part #	CHANGE NO	DESCRIPTION	USAGE CODE	QTY
1			Bearing turntable assembly Refer F480-1-1		1
2			Covers under assembly Refer B190-1-1		1
3			Frame Revolving Assembly Refer B100-15-1		1
4			Engine Assembly Refer L100-5-1		1
5			Fan Clutch, 5 Wire, Assembly Refer L700-1-1		1
6			Lubricant And Fuel, Assembly Refer B570-1-1		1
7			Fuel System And Cooler Assembly Refer L800-15-1		1
8			Fuel Assembly - 170 L Refer B570-5-1		1

Continue...

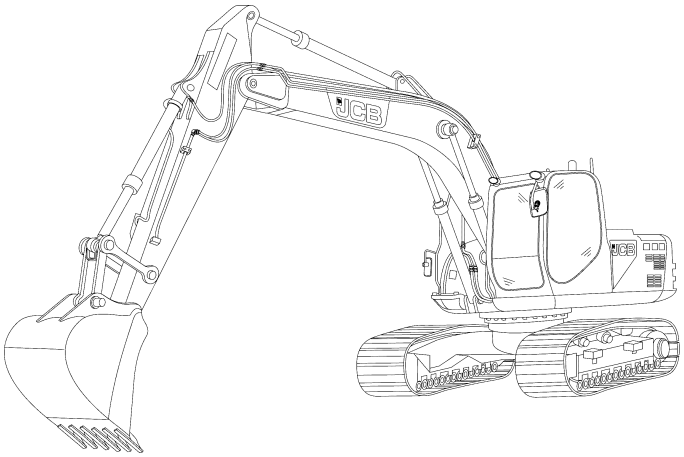

ITEM	PART NO	CHANGE NO	DESCRIPTION	USAGE CODE	QTY
9			Pump Refueling Assembly Refer A920-25-1		1
10			Frame House Assembly Refer B110-10-1		1
11			Bulkhead / Baffle, Assembly Refer B110-1-1		1
12			Handrail Riser, Assembly Refer B190-100-1		1
13			Toolbox And Sideskin Assembly Refer B190-135-1		1
14			Tool Kit, Standard Refer B190-75-1		1
15			Door Assembly Refer B170-40-1		1
16			Plate Tread, Assembly Refer B170-60-1		1
17			Covers Engine, Assembly Refer B170-45-1		1

B100-1-1 BODYWORK INSTALLATION ASSEMBLIES, MACHINE, COMPLETE 9820/1116A ISSUE 0

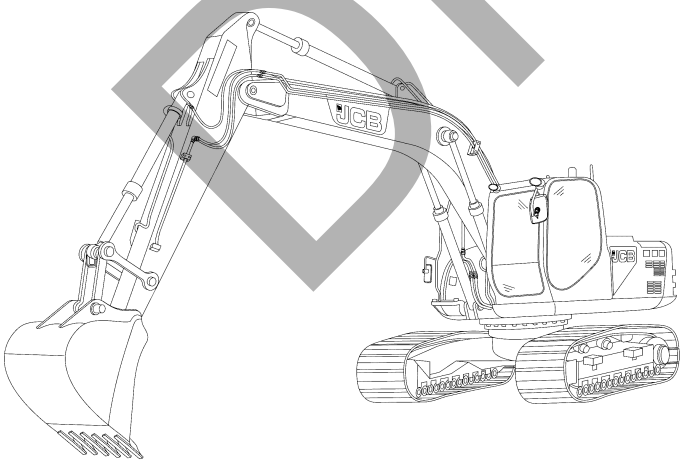

ITEM	PART NO	CHANGE NO	DESCRIPTION	USAGE CODE	QTY
18			Assembly Powercore With Scavenger Refer L300-10-1		1
19			Cooling Pack Assembly Refer L610-20-1		1
20			Cab Assembly Refer B200-1-1		1
21			Control And Joystick Assembly - Cab Refer D120-5-1		1
22			Mirror cab assembly Refer B290-10-1		1
23			Counterweight Assembly Refer B180-5-1		1
24			Oil hydraullic (HP 46) assembly Refer B570-10-1		1
26			Hydraulic System Assembly Refer E0-1-1		1
27			Electrical System Assembly Refer C100-10-1		1

DRAFT

Continue...

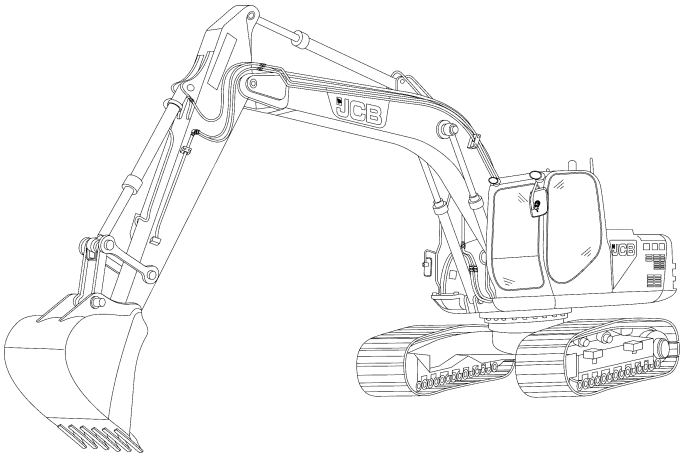

JS37

ITEM	PART NO	CHANGE NO	DESCRIPTION	USAGE CODE	QTY
28			Installation Display 3.5" Cab Refer C390-1-1		1
29			Work light Assembly, Standard Refer C160-15-1		1
30			Camera And Monitor Assembly Refer C390-30-1		1
31			Installation HECU Assembly Refer C390-45-1		1
32			Link Assembly Tipping (NO LIFT) Refer B460-1-1		1
33			Decals And Handbook Assembly - English Refer B520-20-1		1
34			Common Lables Assembly - ROW Refer B520-15-1		1
35			Decal And Insignia Assembly Refer B510-20-1		1
36	332/B0459		Decal JCB Dieselmax Refer B520-10-1		1

B100-1-1 BODYWORK INSTALLATION ASSEMBLIES, MACHINE, COMPLETE 9820/1116A ISSUE 0

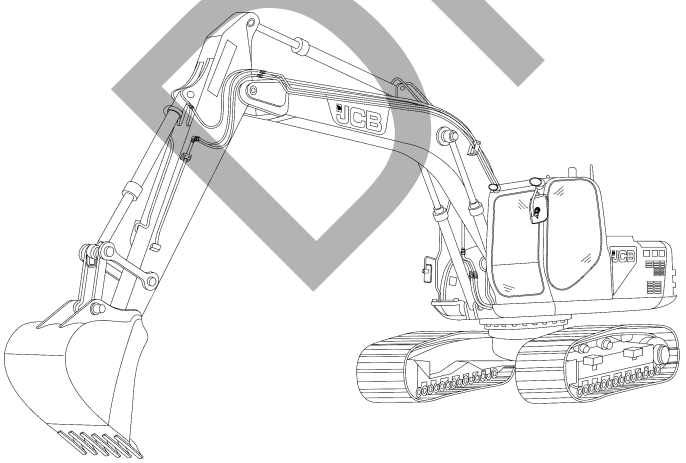

JS37

ITEM	PART NO	CHANGE NO	DESCRIPTION	USAGE CODE	QTY
37			Livelink Assembly Refer C380-10-1		1
38			Heater And ATC Assembly Refer C340-55-1		1
39			Kit-guard Worklight, Assembly Refer B190-80-1		1

DRAFT

JCB380 QM

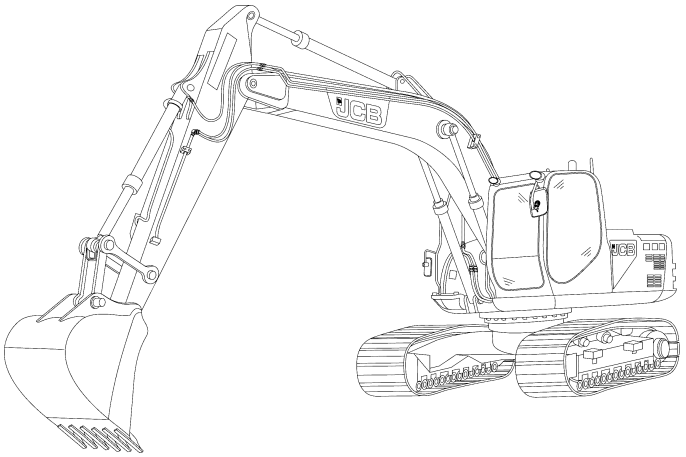

JS37

ITEM	Part #	CHANGE NO	DESCRIPTION	USAGE CODE	QTY
1			Bearing turntable assembly Refer F480-1-1		1
2			Covers under assembly Refer B190-1-1		1
3			Frame Revolving Assembly Refer B100-15-1		1
4			Engine Assembly Refer L100-5-1		1
5			Fan Clutch, 5 Wire, Assembly Refer L700-1-1		1
6			Lubricant And Fuel, Assembly Refer B570-1-1		1
7			Fuel System And Cooler Assembly Refer L800-15-1		1
8			Fuel Assembly - 170 L Refer B570-5-1		1

B100-5-1 BODYWORK INSTALLATION ASSEMBLIES, MACHINE, COMPLETE 9820/1116A ISSUE 0

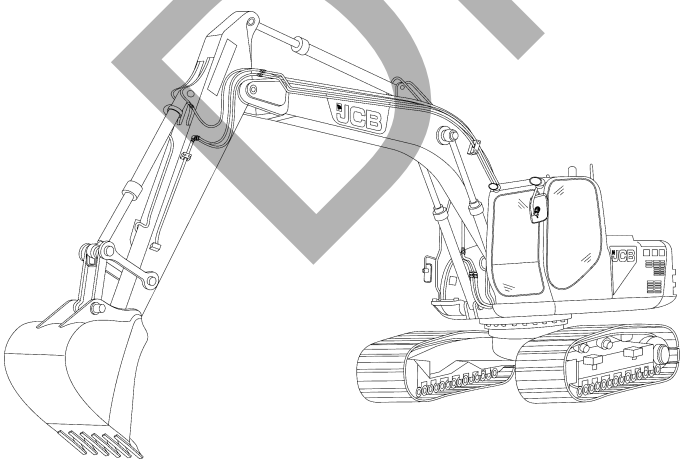

JS37

ITEM	PART NO	CHANGE NO	DESCRIPTION	USAGE CODE	QTY
9			Pump Refueling Assembly Refer A920-25-1		1
10			Frame House Assembly Refer B110-10-1		1
11			Bulkhead / Baffle, Assembly Refer B110-1-1		1
12			Handrail Riser, Assembly Refer B190-100-1		1
13			Toolbox And Sideskin Assembly Refer B190-135-1		1
14			Tool Kit, Standard Refer B190-75-1		1
15			Door Assembly Refer B170-40-1		1
16			Plate Tread, Assembly Refer B170-60-1		1
17			Covers Engine, Assembly Refer B170-45-1		1

DRAFT

Continue...

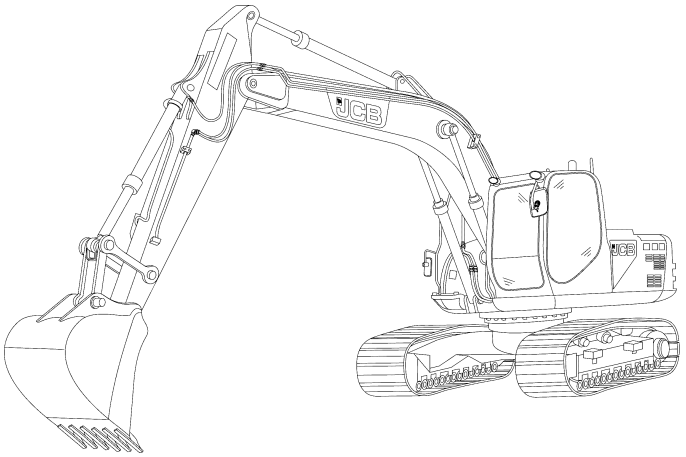

ITEM	PART NO	CHANGE NO	DESCRIPTION	USAGE CODE	QTY
18			Assembly Powercore With Scavenger Refer L300-10-1		1
19			Cooling Pack Assembly Refer L610-20-1		1
20			Cab Assembly Refer B200-1-1		1
21			Control And Joystick Assembly - Cab Refer D120-5-1		1
22			Mirror cab assembly Refer B290-10-1		1
23			Counterweight Assembly Refer B180-5-1		1
24			Oil hydraullic (HP 46) assembly Refer B570-10-1		1
26			Hydraulic System Assembly Refer E0-1-1		1
27			Electrical System Assembly Refer C100-10-1		1

B100-5-1 BODYWORK INSTALLATION ASSEMBLIES, MACHINE, COMPLETE 9820/1116A ISSUE 0

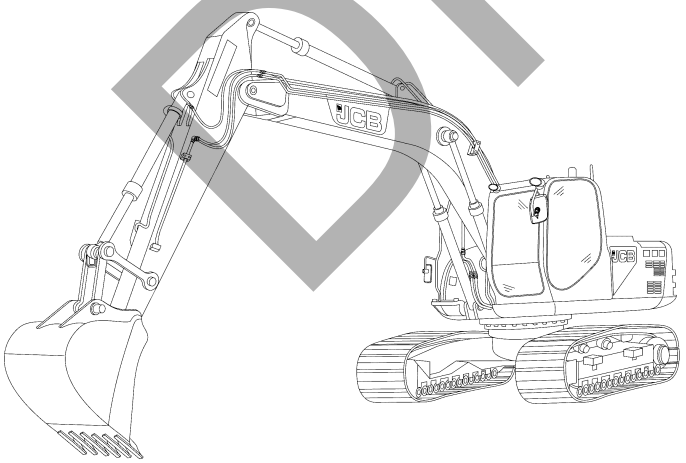

ITEM	PART NO	CHANGE NO	DESCRIPTION	USAGE CODE	QTY
28			Installation Display 3.5" Cab Refer C390-1-1		1
29			Work light Assembly, Standard Refer C160-15-1		1
30			Camera And Monitor Assembly Refer C390-30-1		1
31			Installation HECU Assembly Refer C390-45-1		1
32			Link Assembly Tipping (NO LIFT) Refer B460-1-1		1
33			Decals And Handbook Assembly - English Refer B520-20-1		1
34			Common Lables Assembly - ROW Refer B520-15-1		1
35			Decal Insignia Assembly - 380 LC QM HDS Refer B510-35-1		1

DRAFT

Continue...

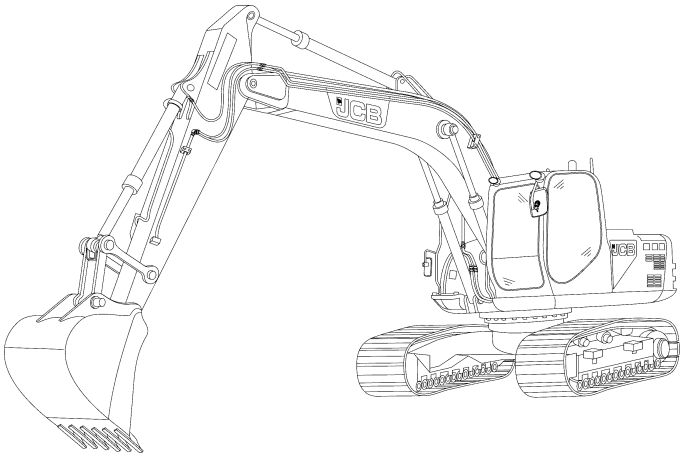

JS37

ITEM	PART NO	CHANGE NO	DESCRIPTION	USAGE CODE	QTY
36	332/B0459		Decal JCB Dieselmax Refer B520-10-1		1
37			Livelink Assembly Refer C380-10-1		1
38			Heater And ATC Assembly Refer C340-55-1		1
39			Kit-guard Worklight, Assembly Refer B190-80-1		1

DRAFT

JCB380 QM

JCB380 XTRA

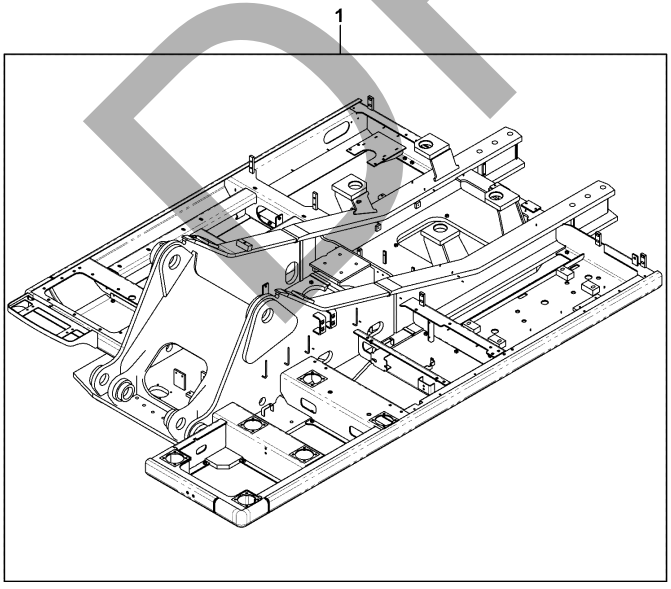

ITEM	Part #	CHANGE NO	DESCRIPTION	USAGE CODE	QTY
1	400/G8989		Frame Revolving		1

JCB380 QM

JCB380 XTRA

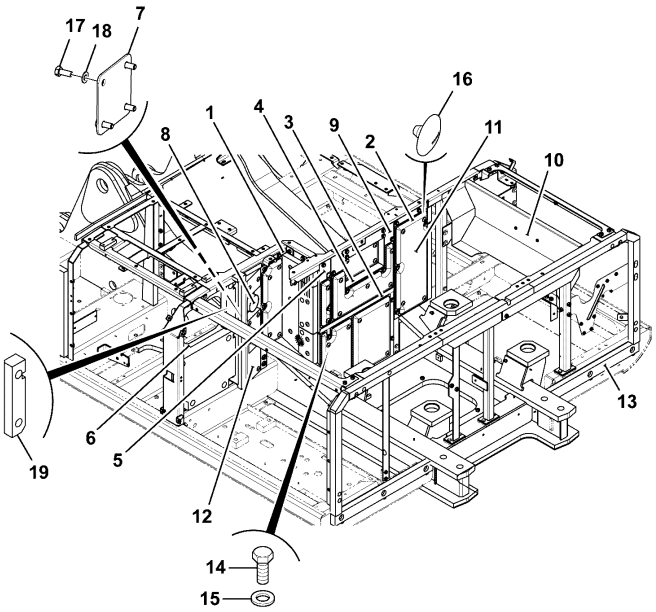

336-B5656-4

ITEM	Part #	CHANGE NO	DESCRIPTION	USAGE CODE	QTY
1	332/K4672		Baffle engine bay LH		1
2	332/K5740		Baffle plate engine bay		1
3	332/K6105		Baffle plate centre		1
4	332/K7314		Cover turbo		1
5	336/C7169		Plate Baffle		1
6	336/B9830		Plate Baffle		1
7	333/K7842		Cover Bulkhead		1
8	336/B9909		Baffle		1
9	333/J8283		Baffle plate centre upper		1
10	336/B5658		Shield Heat		1
11	400/H9241		Bulkhead Soundproof Kit		1
12	336/C7183		Kit Foam, Baffle Soundproofing Refer B190-85-1		1

B110-1-1 CHASSIS, BULKHEAD, AND BAFFLES ASSEMBLY
9820/1116A
ISSUE 0

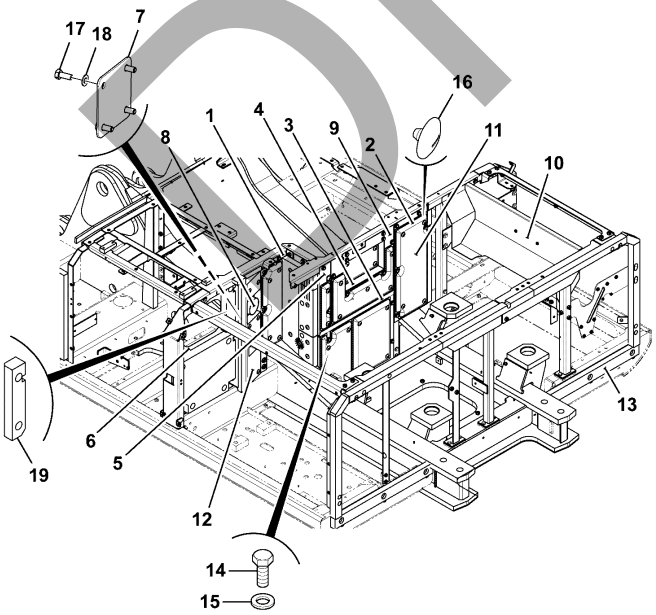

336-B5656-4

ITEM	PART NO	CHANGE NO	DESCRIPTION	USAGE CODE	QTY
13	333/J7460		Kit-seal frame to counterweight Refer B190-25-1		1
14	1316/0507D		Setscrew M12 x 25 grade 10.9		40
15	1411/0005D		Washer		40
16	826/01308		Button Fastener		54
17	1316/0305D		Screw M8 X 20		4
18	1420/0007D		Washer M8		4
19	333/K8453		Foam Cooler Bay, Top		1

DRAFT

JCB380 QM

JCB380 XTRA

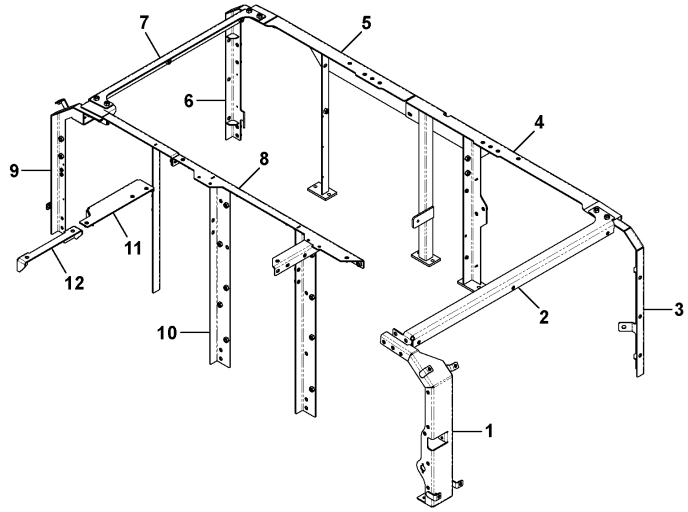

334-J1539-1

ITEM	Part #	CHANGE NO	DESCRIPTION	USAGE CODE	QTY
1	334/K2353		Leg Middle LH		1
2	333/J6518		Frame work brace		1
3	336/B9585		Leg Rear, Left Side		1
4	333/K5034		Frame Work		1
5	333/K4881		Frame Work		1
6	336/B9591		Leg Rear, Right Side		1
7	333/J6516		Frame work brace		1
8	333/J6522		Frame work		1
9	334/K2354		Leg Frame		1
10	333/K6048		Frame Work Centre		1
11	332/K4150		Bracket		1
12	333/J1178		Frame work		1

JCB380 QM

JCB380 XTRA

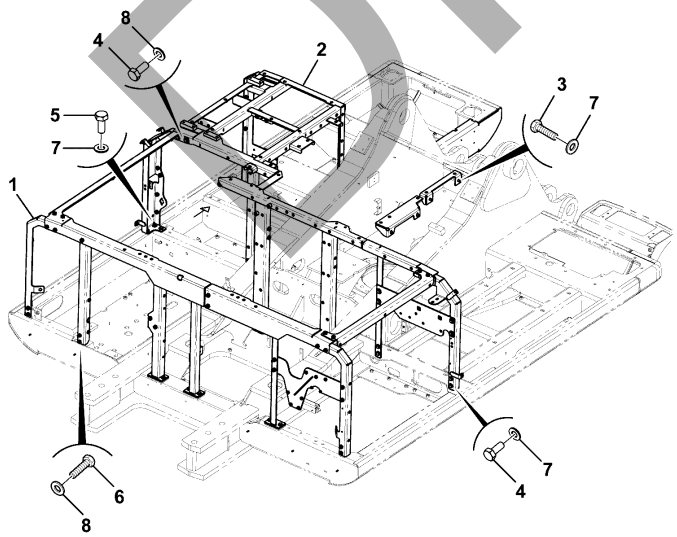

336-F0224-1

ITEM	Part #	CHANGE NO	DESCRIPTION	USAGE CODE	QTY
1	336/B9774		Kit House Frame, Common Parts Refer B110-5-1		1
2	336/F0218		Kit Houseframe Refer B190-120-1		1
3	1316/0505D		Bolt M12 x 20mm		4
4	1316/0508D		Screw M12 X 30		46
5	1316/0509D		Screw M12x35 long		7
6	1316/0510D		Screw		8
7	1411/0005D		Washer		27
8	JHP0049		Washer		38

DRAFT

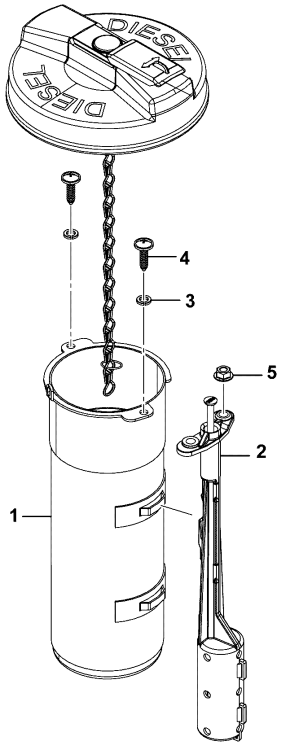

334-K1753-1

JCB380 QM

JCB380 XTRA

ITEM	Part #	CHANGE NO	DESCRIPTION	USAGE CODE	QTY
1	334/J8879		Strainer Fuel Neck		1
2	334/J8878		Float Filler Indicator		1
3	334/J8898		Washer		2
4	334/J8896		Screw		2
5	334/J8897		Nut M5 Standard		1

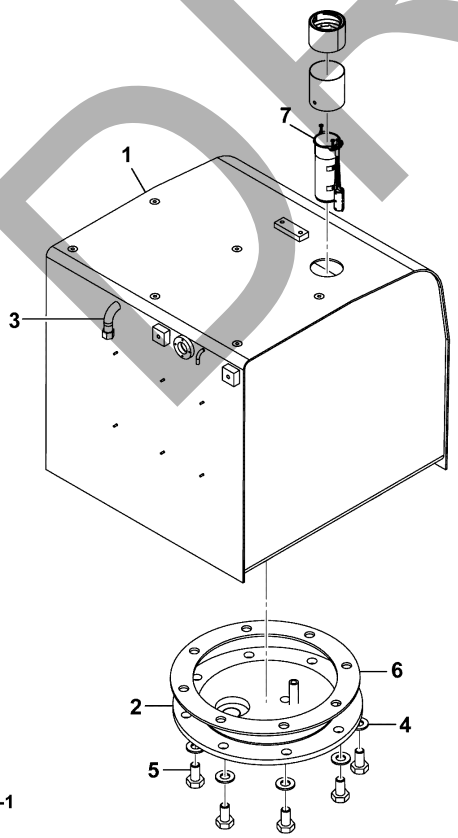

336-A8868-1

JCB380 QM

JCB380 XTRA

ITEM	Part #	CHANGE NO	DESCRIPTION	USAGE CODE	QTY
1	336/A8870		Tank Fuel, ABI		1
2	335/07788		Cover		1
3	331/42586		Cap blanking, 3/4" BSP		1
4	1316/0405D		Screw M10 x 20		8
5	1420/0008D		Washer M10		8
6	KSH0503		Gasket		1
7	334/K1753		Kit - Fuel Tank Refer B120-10-1		1

DRAFT

B120-25-1 FUEL TANK, ASSEMBLY

JCB380 QM

JCB380 XTRA

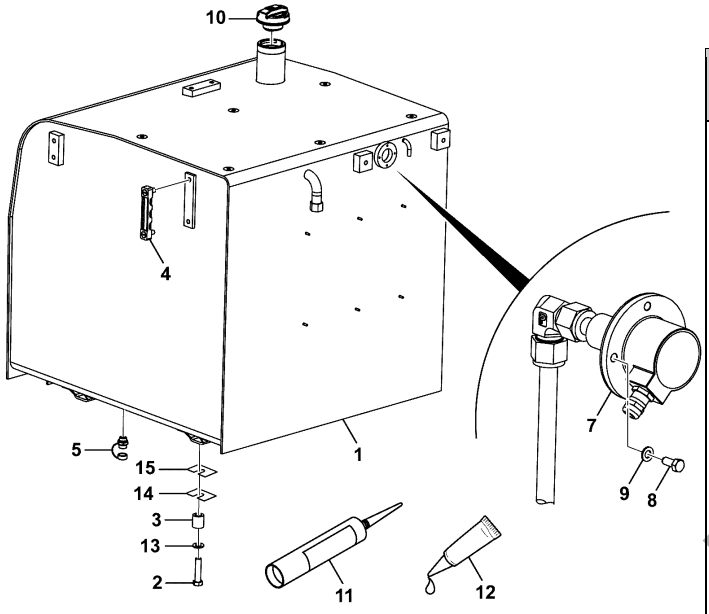

336-B0762-1

ITEM	Part #	CHANGE NO	DESCRIPTION	USAGE CODE	QTY
1	336/A8868		Tank Fuel, ABI Refer B120-15-1		1
2	1316/3717D		Bolt M16 x 75		6
3	JSJ0042		Spacer		6
4	333/K3520		Guage Sight Fuel/Oil		1
5	32/925428		Plug Drain Valve, M20		1
7	335/H1351		Sensor Fuel		1
8	1315/0101Z		Screw		4
9	1420/0005D		Washer M5		4
10	400/A3829		Cap Fuel Vented		1
11			Sealant		0
12	4101/0500		Fluid Locking Loctite 262		0
13	JHP0079		Washer (19mm x 36mm x 4.5mm)		6
14	KHH0040		Plate Shim T=0.03"		6
15	KHH0137		Shim plate		6

B130-10-1 HYDRAULIC TANK, ASSEMBLY

JCB380 QM

JCB380 XTRA

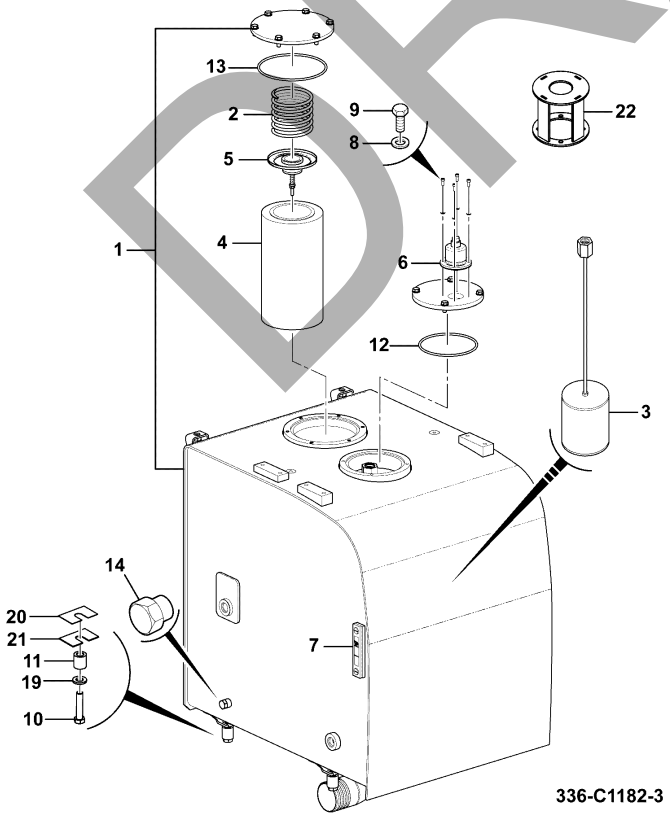

336-C1182-3

ITEM	Part #	CHANGE NO	DESCRIPTION	USAGE CODE	QTY
1	336/D9692		Hydraulic Tank ABI Refer B130-15-1		1
2	JSJ0076		Spring compression		1
3	32/925670		Strainer		1
4	335/D4436		Filter Return		1
5	335/C8032		Valve Relief		1
6	32/925692		Breather air c/w rubber cap		1
7	JHH0119		Gauge		1
8	1420/0006D		Washer M6		4
9	1391/3205D		Capscrew M6 x 20mm		4
10	1316/3717D		Bolt M16 x 75		4
11	JSJ0042		Spacer		4
12	828/J0008		O Ring		1
13	828/J0010		O Ring		1
14	BRJ1545		Plug		1

DRAFT

Continue...

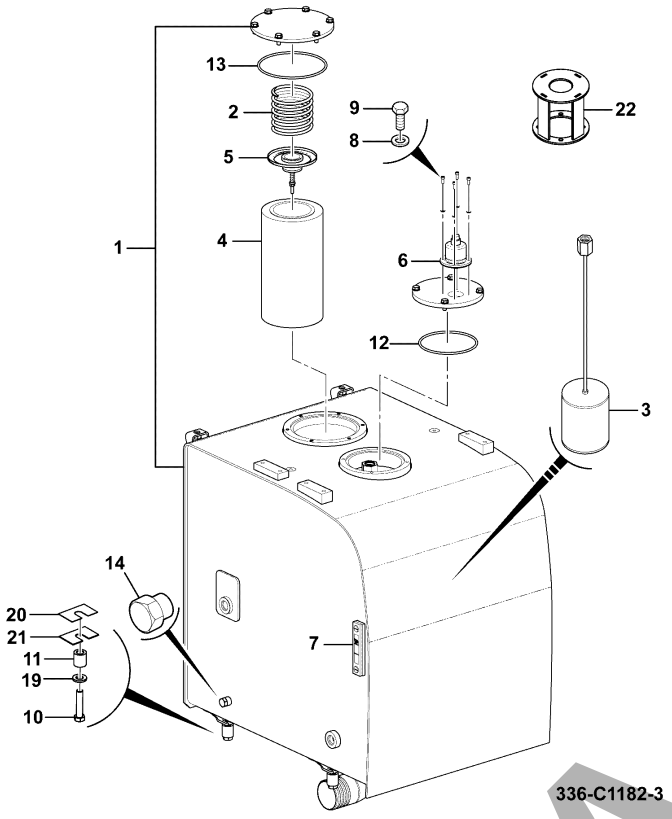

ITEM	PART NO	CHANGE NO	DESCRIPTION	USAGE CODE	QTY
19	JHP0079		Washer (19mm x 36mm x 4.5mm)		4
20	KHH0040		Plate Shim T=0.03"		4
21	KHH0137		Shim plate		4
22	336/A4500		Cover Breather		1

DRAFT

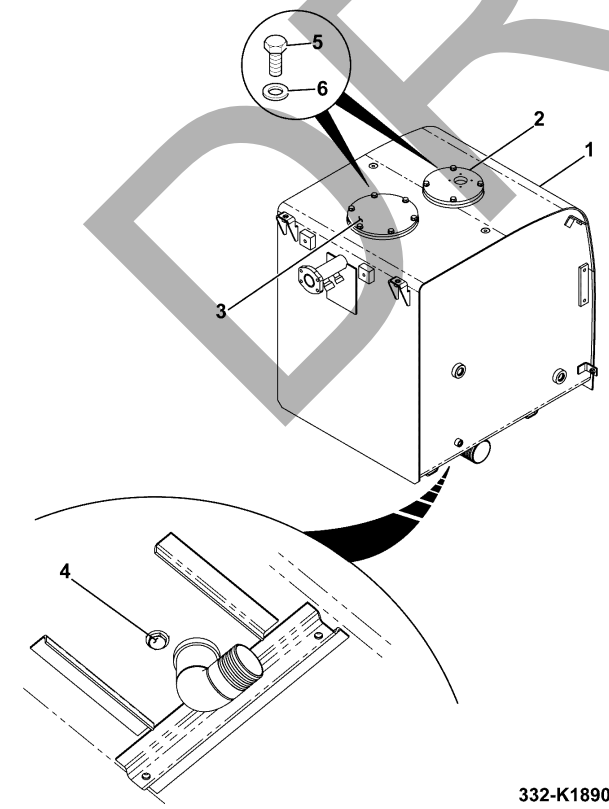

JCB380 QM

JCB380 XTRA

ITEM	Part #	CHANGE NO	DESCRIPTION	USAGE CODE	QTY
1	336/D9674		Tank Hydraulic		1
2	JSJ0078		Cover		1
3	KNJ1822		Cover sump		1
4	BRJ1286		Plug		1
5	1316/0407D		Screw		10
6	1420/0008D		Washer M10		10

JCB380 QM

JCB380 XTRA

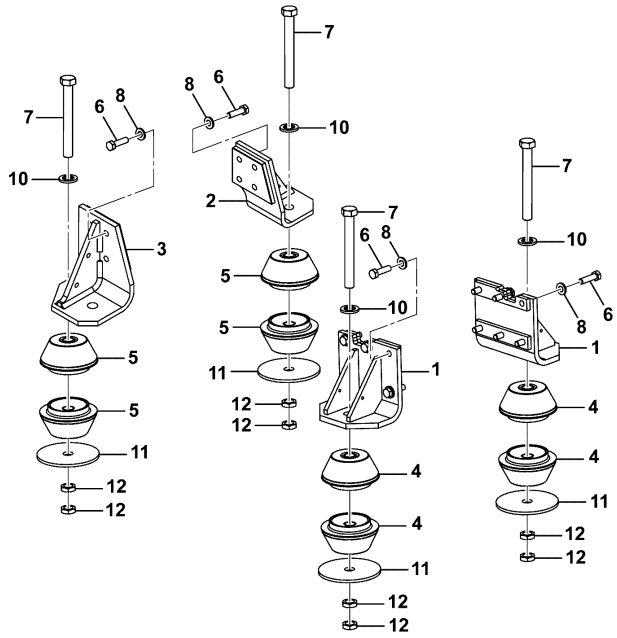

336-B5156-2

ITEM	Part #	CHANGE NO	DESCRIPTION	USAGE CODE	QTY
1	336/B5160		Bracket Mounting, Engine		2
2	336/B5161		Bracket Mounting, Engine, Left Side		1
3	336/B5164		Bracket Mounting, Engine, Right Side		1
4	332/K0952		Rubber engine mount		4
5	332/K0382		Rubber engine mount		4
6	1316/3511D		Bolt		20
7	1316/3827D		Bolt M20 x 170		4
8	JHP0042		Washer M12		20
10	JHP0044		Washer		4
11	332/K2895		Washer rebound		4
12	1371/0702D		Nut M20 high strength		8

JCB380 QM

JCB380 XTRA

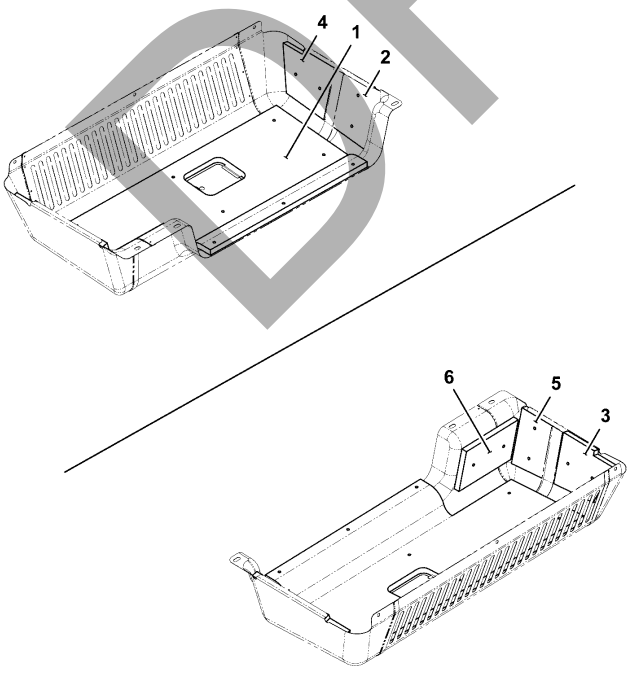

333-K5834-1

ITEM	Part #	CHANGE NO	DESCRIPTION	USAGE CODE	QTY
1	334/J4947		Foam Cooler Cover		1
2	333/K5508		Foam Cooler Cover, Right Side		1
3	333/K5451		Foam Cooler Cover, Left Side		1
4	333/K5507		Foam Cooler Cover, Right Side		1
5	333/K5454		Foam Cooler Cover, Left Side		1
6	333/K5503		Foam Cooler Cover, Back		1

DRAFT

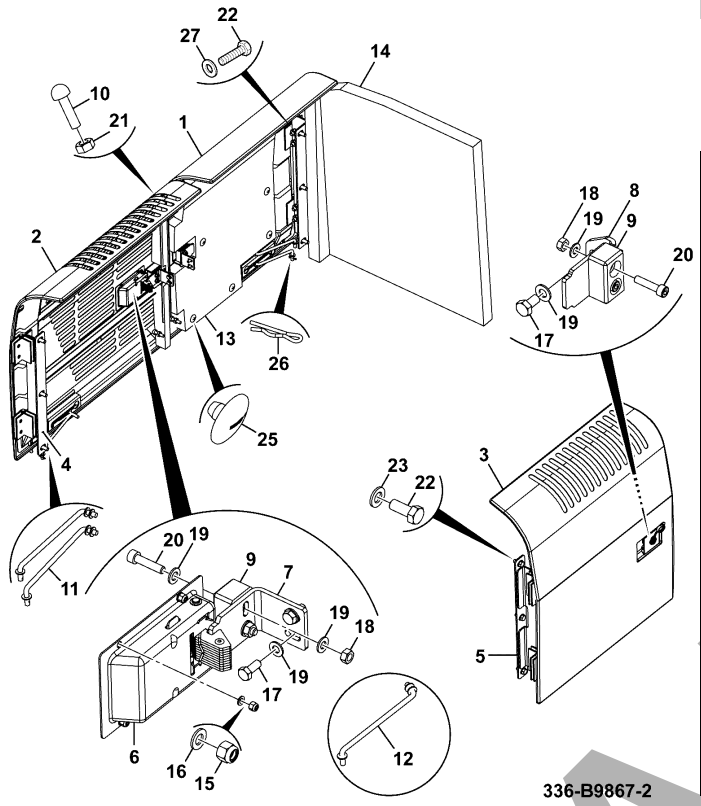

336-B9867-2

JCB380 QM

JCB380 XTRA

ITEM	Part #	CHANGE NO	DESCRIPTION	USAGE CODE	QTY
1	334/K2434		Door Front Left Side		1
2	336/E7764		Assembly Door LH Rear		1
3	334/K2424		Door Rear Right Side		1
4	336/C2562		Plate Mounting, Hinge		1
5	333/J0201		Mounting plate hinge		2
6	333/K1035		Latch paddle yellow		3
7	334/P8621		Bracket Support		2
8	334/J7409		Bracket Door Latch		1
9	333/J3188		Block Door Buffer ABI		3
10	334/L1393		Buffer Rubber		5
11	333/J1800		Stay bar		2
12	333/J1825		Stay bar		1

B170-40-1 BONNET/ ENGINE COVERS/ GRILLES, DOORS, ASSEMBLY
9820/1116A
ISSUE 0

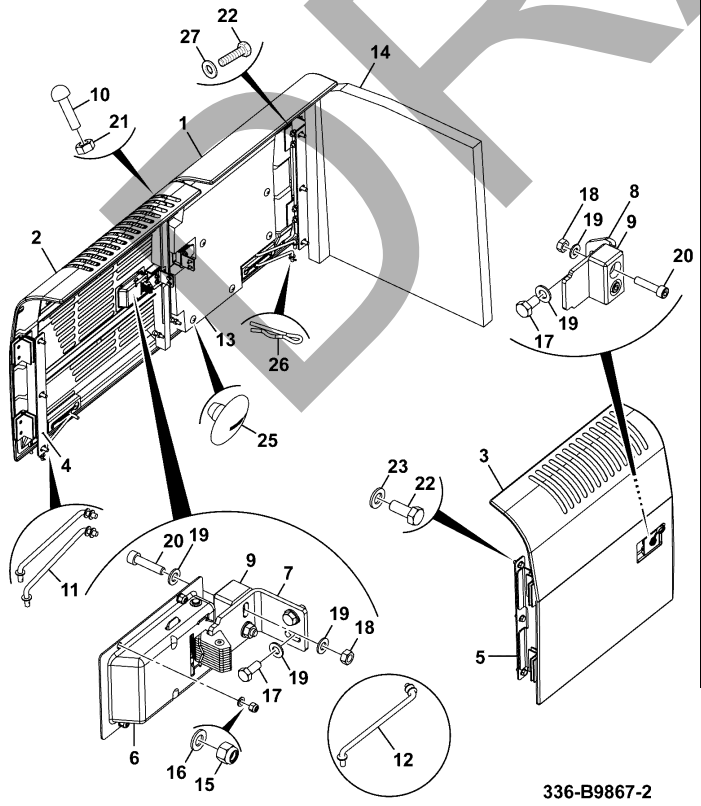

336-B9867-2

ITEM	PART NO	CHANGE NO	DESCRIPTION	USAGE CODE	QTY
13	400/H9200		Assembly S/Proofing LHF Door		1
14	400/J3360		Assembly S/Proofing: Cab Back		1
15	1370/0103D		Nut M6		12
16	1420/0006D		Washer M6		12
17	1316/0305D		Screw M8 X 20		6
18	1370/0201D		Nut Plain M8		6
19	1420/0007D		Washer M8		30
20	1391/3309D		Capscrew M8 X 35		6
21	1370/0301D		Nut (M10)		5
22	1316/0508D		Screw M12 X 30		21
23	JHP0049		Washer		9
25	826/01308		Button Fastener		10
26	KRJ1588		Pin		3
27	1411/0005D		Washer		12

DRAFT

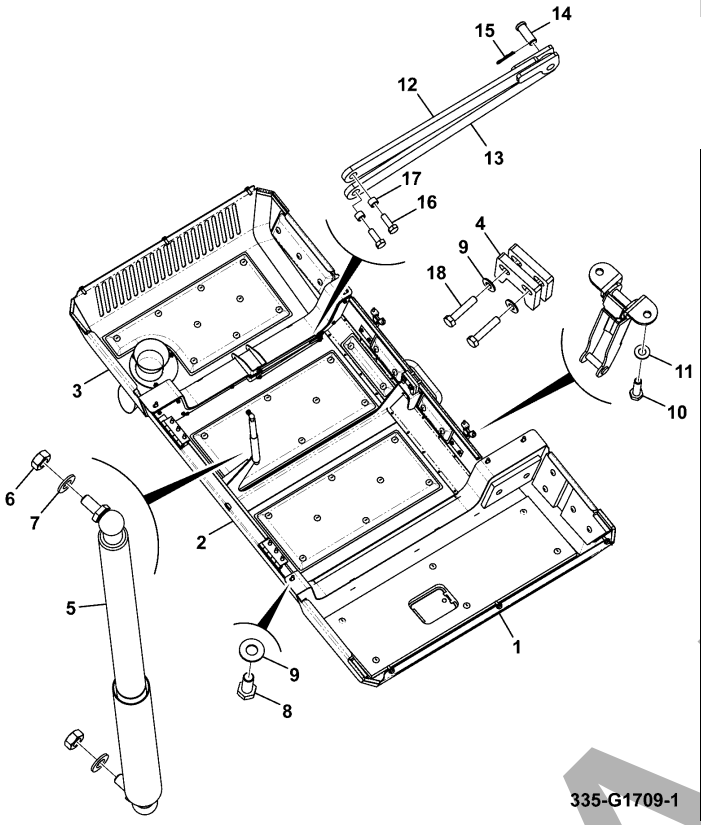

JCB380 QM

JCB380 XTRA

ITEM	Part #	CHANGE NO	DESCRIPTION	USAGE CODE	QTY
1			Cover Radiator, Assembly Refer B170-55-1		1
2			Cover Center, Assembly Refer B170-50-1		1
3			Cover Exhaust, Assembly Refer B170-65-1		1
4	332/K7520		Bracket		2
5	333/J3096		Gas Strut 1000N		1
6	1371/0301Z		Nut High Strength, M10		2
7	1420/0008Z		Washer M10		2
8	1316/0508Z		Screw M12 x 30mm		17
9	1411/0005Z		Washer (1/2" Medium)		20
10	1316/0308Z		Screw M8 x 30mm		4
11	1420/0007Z		Washer M8		8

B170-45-1 BONNET/ ENGINE COVERS/ GRILLES, ENGINE COVER, ASSEMBLY 9820/1116A ISSUE 0

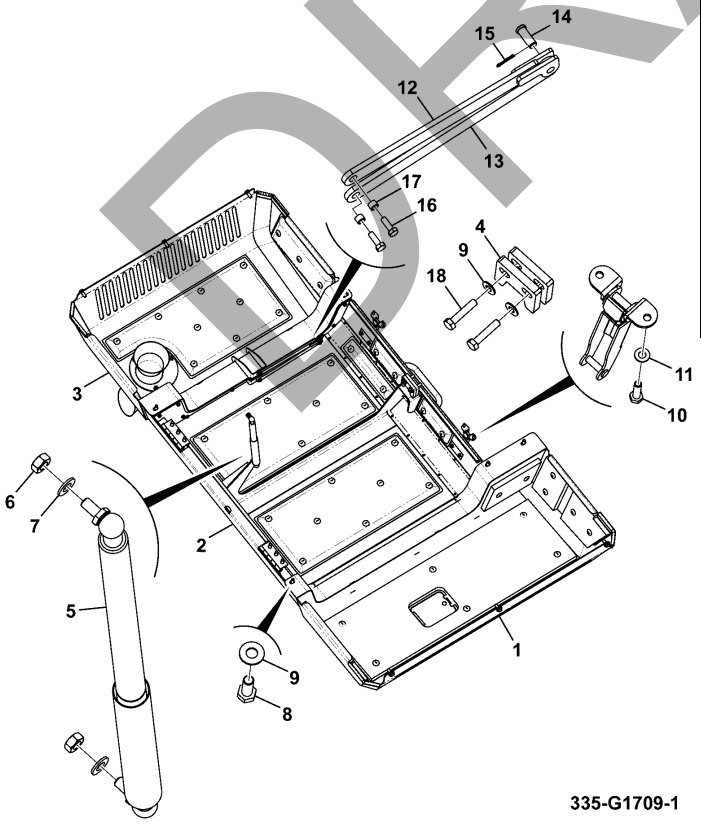

ITEM	PART NO	CHANGE NO	DESCRIPTION	USAGE CODE	QTY
12	332/J9126		Stay upper bar		1
13	332/J9129		Stay lower bar		1
14	2101/0507		Pin clevis		1
15	KRJ1588		Pin		1
16	1316/0307Z		Screw		2
17	332/J9139		Spacer		2
18	1316/0514Z		Bolt		2

DRAFT

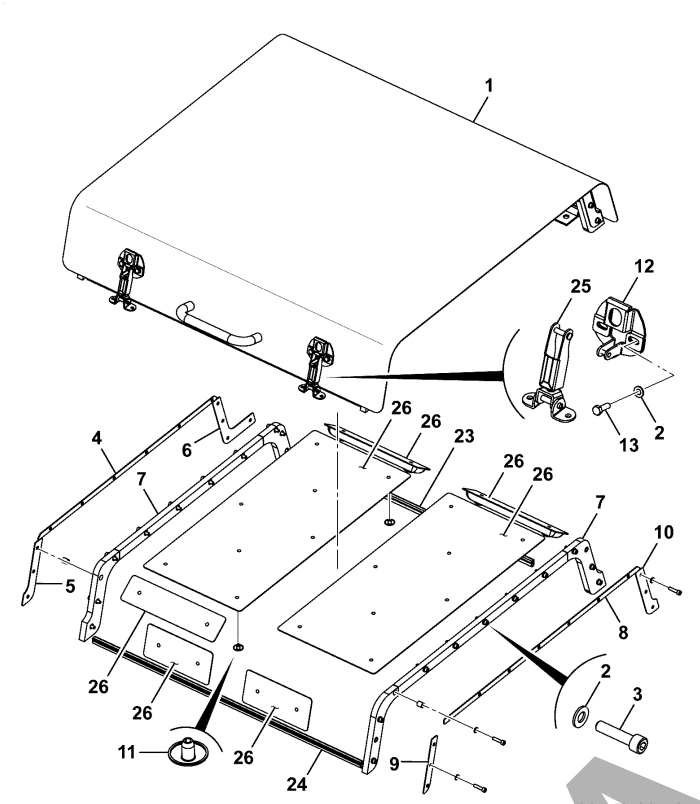

JCB380 QM

JCB380 XTRA

ITEM	Part #	CHANGE NO	DESCRIPTION	USAGE CODE	QTY
1	335/F7297		Cover Center		1
2	1420/0007D		Washer M8		21
3	1391/3309D		Capscrew M8 X 35		17
4	333/J6853		Plate Backing		1
5	333/J6854		Plate Backing		1
6	333/J6855		Plate backing		1
7	336/F1268		Kit Foam Seals Refer B190-125-1		1
8	333/J6989		Plate Backing		1
9	333/J6991		Plate Backing		1
10	333/J6990		Plate backing		1
11	826/01308		Button Fastener		26
12	332/K5085		Plate catch		2
13	1316/0307D		Screw		4
18			Fluid locking		1
23	333/J5225		Seal Edge		1
24	333/J5226		Seal Edge		1

B170-50-1 BONNET/ ENGINE COVERS/ GRILLES, COVER, ASSEMBLY - CENTER 9820/1116A
ISSUE 0

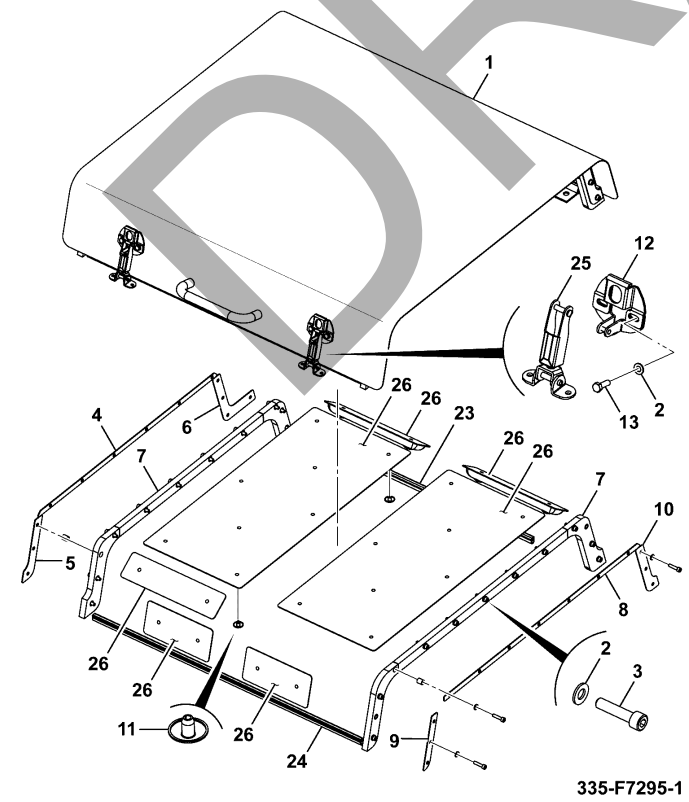

ITEM	PART NO	CHANGE NO	DESCRIPTION	USAGE CODE	QTY
25	332/K5078		Latch		2
26	400/A8366		Soundproofing Engine Cover Kit		1

DRAFT

JCB380 QM

JCB380 XTRA

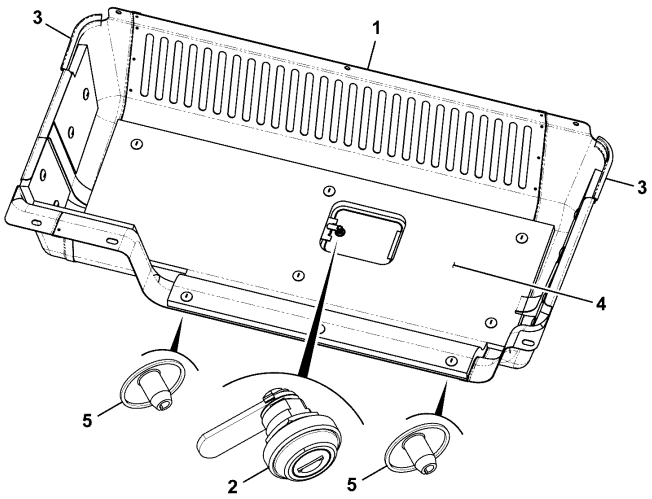

333-K7245-1

ITEM	Part #	CHANGE NO	DESCRIPTION	USAGE CODE	QTY
1	335/H4729		Cover Radiator		1
2	162/03434		Lock Barrel		1
3	926/01119		Seal Strip		2
4	334/J4946		Foam Kit- Radiator Cover Refer B170-35-1		1
5	826/01308		Button Fastener		16

JCB380 QM

JCB380 XTRA

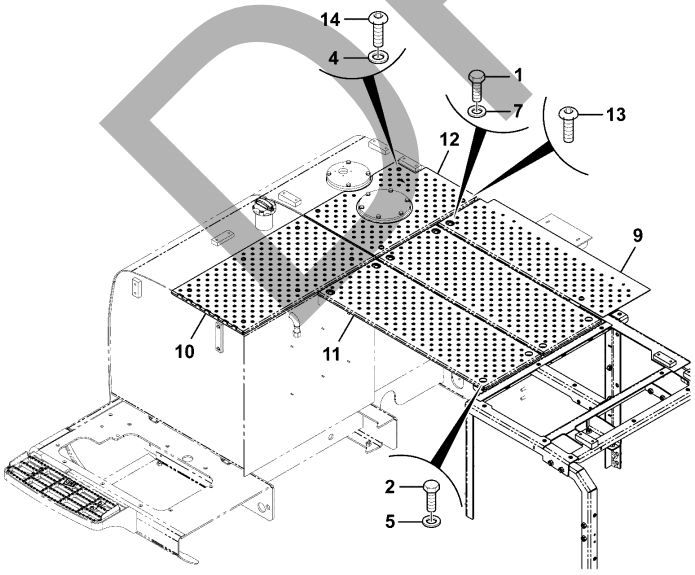

336-B1878-2

ITEM	Part #	CHANGE NO	DESCRIPTION	USAGE CODE	QTY
1	1316/0508D		Screw M12 X 30		2
2	1316/0509D		Screw M12x35 long		7
4	1420/0008D		Washer M10		8
5	1420/0009D		Washer M12		7
7	331/46341		Bush collared		5
9	336/B1959		Plate Tread, Rear		1
10	336/B1970		Plate Tread, Tank		1
11	336/B1972		Plate Tread		2
12	336/B1974		Plate Tread, Hydraulic Tank		1
13	333/K6076		Screw Button Head M12 X 25		3
14	826/11545		Screw Button Head M10 X 16		8

DRAFT

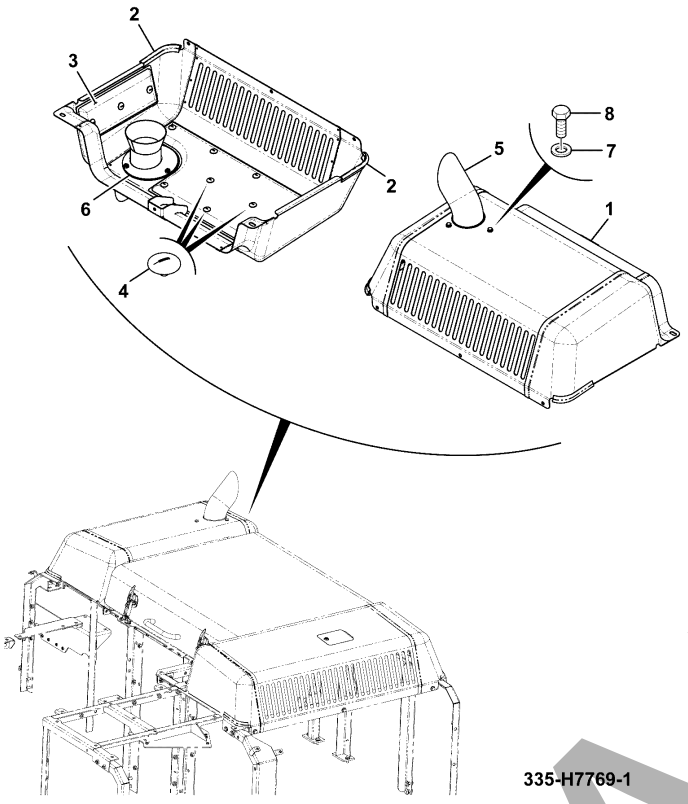

JCB380 QM

JCB380 XTRA

ITEM	Part #	CHANGE NO	DESCRIPTION	USAGE CODE	QTY
1	335/H4569		Cover Engine, Exhaust, Right Side		1
2	926/01119		Seal Strip		2
3	400/A0691		Exhaust Kit, Noise Insulation		1
4	826/01308		Button Fastener		15
5	336/D4895		Exhaust Outlet		1
6	336/C1660		Seal Bonnet, Exhaust		1
7	336/A7109		Spacer M10 X 5		3
8	1316/0408D		Setscrew		3

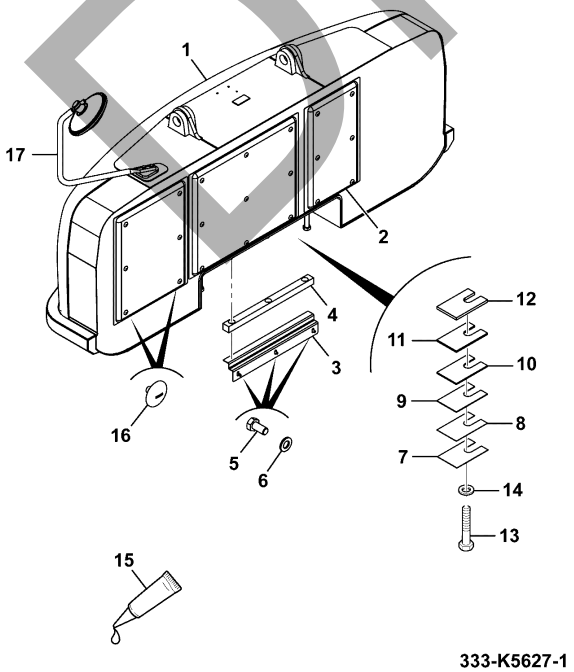

JCB380 QM

JCB380 XTRA

ITEM	Part #	CHANGE NO	DESCRIPTION	USAGE CODE	QTY
1	400/G9470		Counterweight		1
2	400/A8439		Assembly Soundproof kit Counterweight Refer B190-150-1		1
3	333/K0539		Bracket Seal		1
4	333/J7467		Foam seal counterweight		1
5	1316/0507D		Setscrew M12 x 25 grade 10.9		3
6	1420/0009D		Washer M12		3
7	KSB0689		Shim plate 0.8mm		0
8	KSB0690		Shim plate 1.2mm		0
9	KSB0691		Shim plate 2.3mm		0
10	KSB0692		Shim plate 4.5mm		0
11	KSB0693		Shim plate 6.0mm		0
12	333/J1595		Shim plate 10mm		0
13	333/J5469		Bolt M27 x 310mm		6
14	JHP0048		Washer		6

DRAFT

Continue...

ITEM	PART NO	CHANGE NO	DESCRIPTION	USAGE CODE	QTY
15			Loctite 243		0
16	826/01308		Button Fastener		30
17			Assembly Counterweight Mirror Refer B190-110-1		1

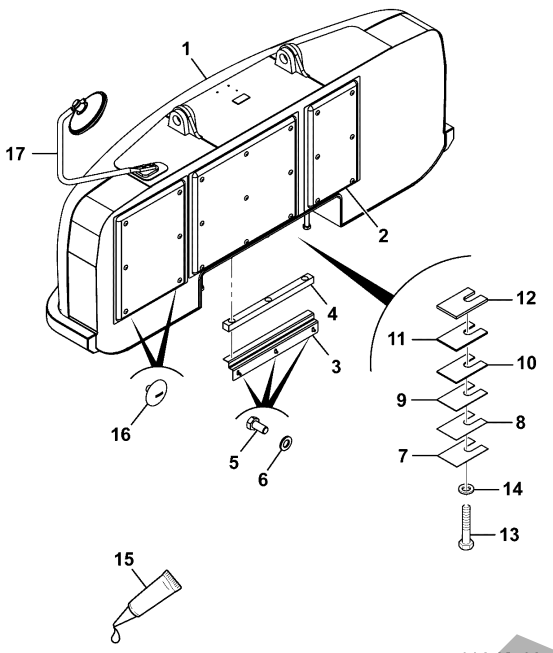

333-K5627-1

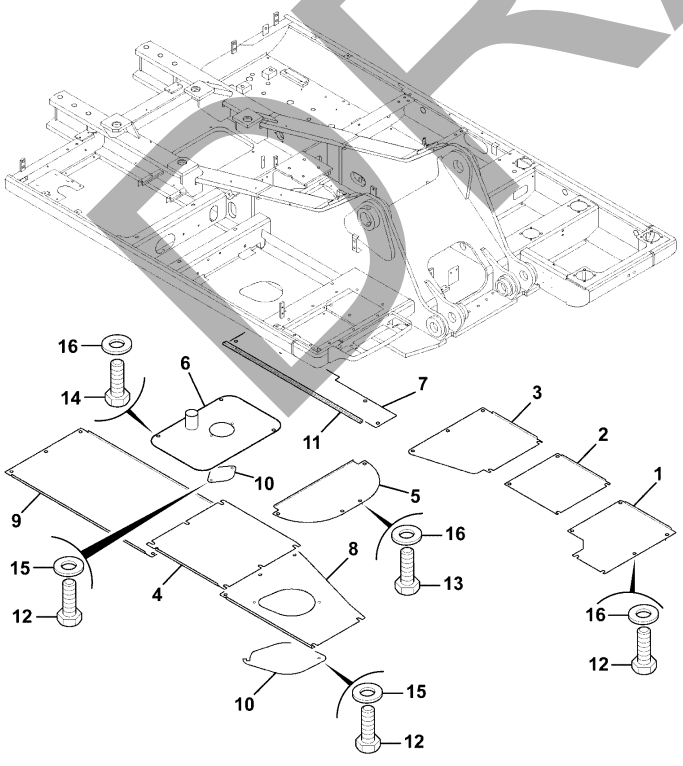

333-K1828-1

JCB380 QM

JCB380 XTRA

ITEM	Part #	CHANGE NO	DESCRIPTION	USAGE CODE	QTY
1	331/45557		Cover under front cab		1
2	331/45558		Cover under middle cab		1
3	332/J1828		Cover under rear cab		1
4	332/J1857		Cover under tank		1
5	332/J8719		Cover under valve block		1
6	333/K1829		Cover under (Engine)		1
7	332/K6427		Cover under radiator bay		1
8	400/F3615		Cover Fuel Tank		1
9	400/F1631		Cover Pump Bay		1
10	331/31978		Cover under access panel		2
11	332/K6428		Rubber Seal		1
12	1316/0405D		Screw M10 x 20		4

DRAFT

Continue...

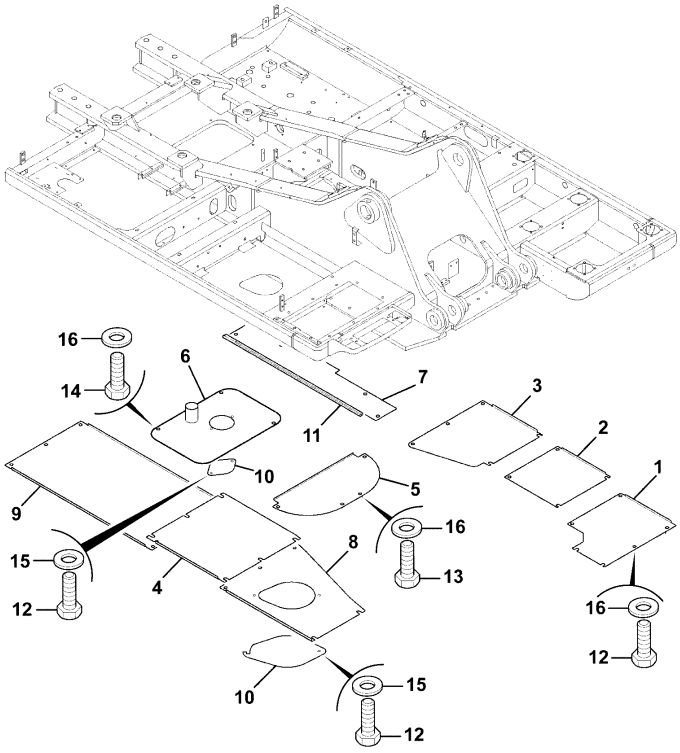

333-K1828-1

ITEM	PART NO	CHANGE NO	DESCRIPTION	USAGE CODE	QTY
13	1316/0509D		Screw M12x35 long		31
14	1316/0514D		Bolt M12 x 60mm		8
15	1420/0008D		Washer M10		4
16	JHP0049		Washer		39

JCB380 QM

JCB380 XTRA

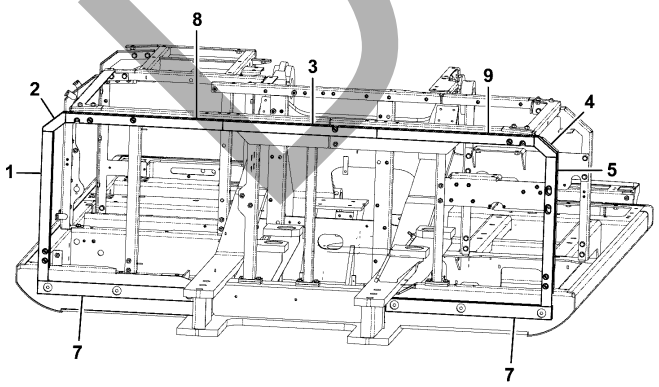

333-J7460-2

ITEM	Part #	CHANGE NO	DESCRIPTION	USAGE CODE	QTY
1	331/51593		Foam counterweight left side		1
2	331/51595		Foam counterweight top, left side		1
3	331/51596		Foam counterweight top centre		1
4	331/51597		Foam counterweight top, right side		1
5	333/J3027		Foam Counterweight right side		1
7	333/J6438		Foam counterweight seal left side		2
8	333/J3026		Foam Counterweight top, left side		1

DRAFT

Continue...

ITEM	PART NO	CHANGE NO	DESCRIPTION	USAGE CODE	QTY
9	331/54984		Foam counterweight top, right side		1

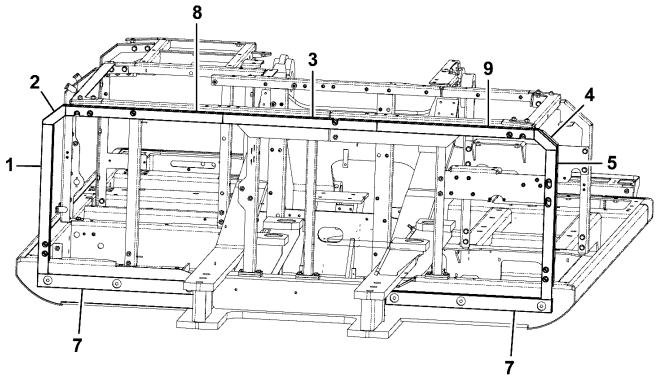

333-J7460-2

JCB380 QM

JCB380 XTRA

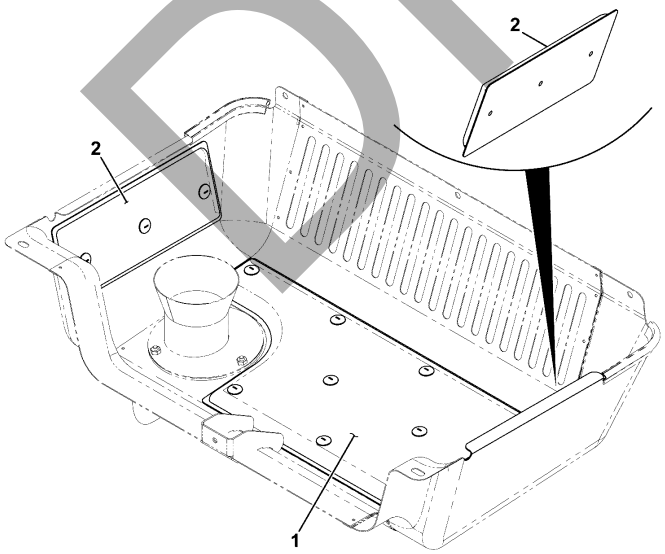

ITEM	Part #	CHANGE NO	DESCRIPTION	USAGE CODE	QTY
1	333/J7974		Soundproofing - Exhaust		1
2	333/J7979		Soundproofing - Exhaust		2

333-J8186-1

DRAFT

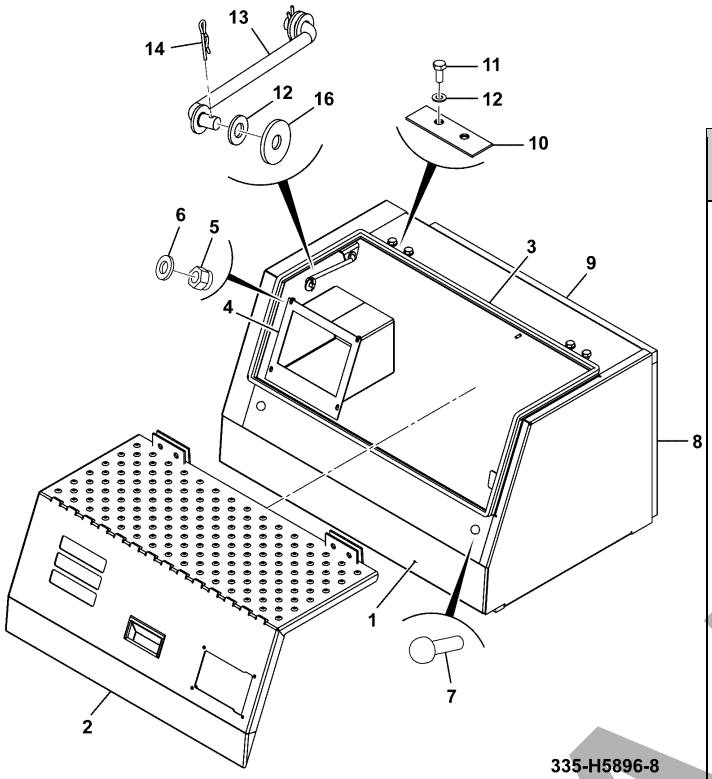

335-H5896-8

JCB380 QM

JCB380 XTRA

ITEM	Part #	CHANGE NO	DESCRIPTION	USAGE CODE	QTY
1	335/H5899		Base Toolbox		1
2			Toolbox Lid, Assembly Refer B190-90-1		1
3	335/H6174		Cushion Rubber		1
4	336/E4601		Box Light		1
5	1370/0001Z		Nut M5		4
6	1420/0005Z		Washer M5		4
7	KHN1395		Stop Rubber		2
8	332/K6068		Foam seal		1
9	332/K6069		Foam seal		1
10	335/H7408		Packing Plate, Hinge		2
11	1316/0407Z		Bolt High Strength		4
12	1420/0008Z		Washer M10		5
13	335/C7925		Stay		1
14	KRJ1588		Pin		2
16	2200/00510		Washer		1

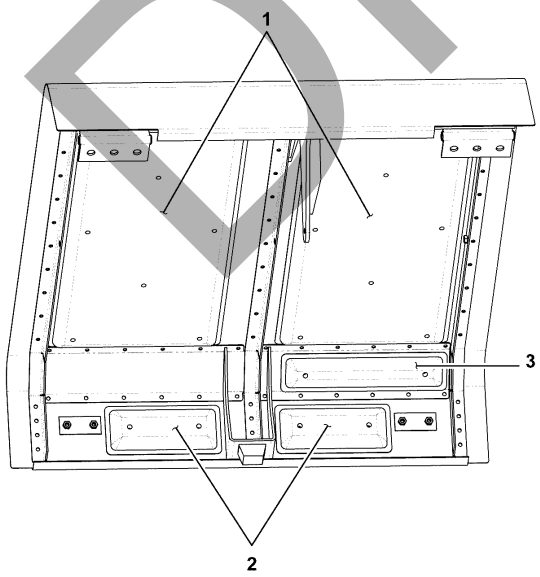

JCB380 QM

JCB380 XTRA

ITEM	Part #	CHANGE NO	DESCRIPTION	USAGE CODE	QTY
1	332/K9433		Panel soundproofing		2
2	333/J2067		Insulation		2
3	333/J2068		Panel soundproofing		3

333-J4125-1

DRAFT

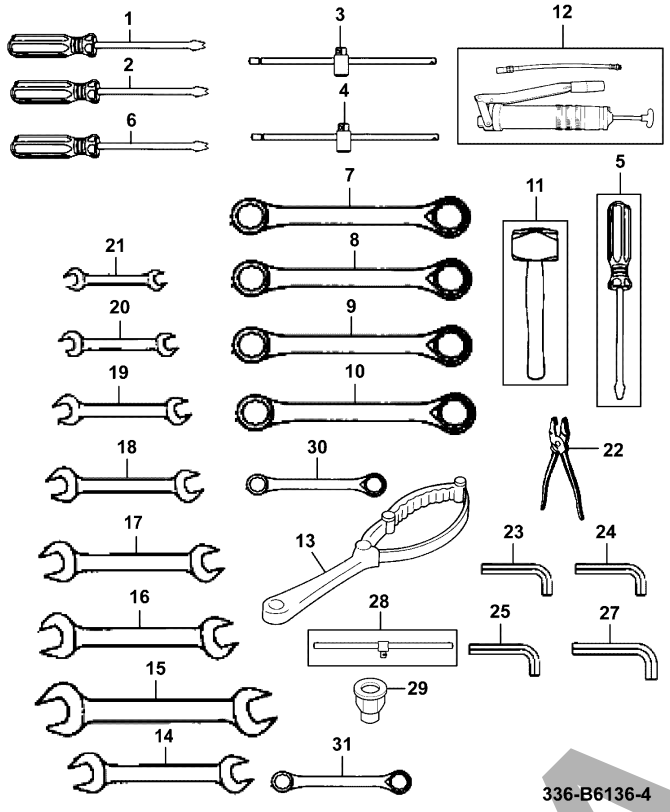

JCB380 QM

JCB380 XTRA

ITEM	Part #	CHANGE NO	DESCRIPTION	USAGE CODE	QTY
1	130/99554		Socket 24mm, Half Inch Sq. Drive		1
2	696/01370		Socket 30MM x 3/4 SQ. DRIVE		1
3	130/99506		Handle Tee		1
4	130/99524		Handle Tee		1
5	130/99522		Screw Driver		1
6	332/Y2445		Socket 1/2" Drive		1
7	332/Y2438		Ring Spanner		1
8	130/99560		Spanner Ring 18 - 19mm		1
9	332/Y2437		Ring Spanner		1
10	332/Y2436		Ring Spanner		1
11	130/99565		Tool Hammer		1
12	915/07300		Gun grease Refer B530-10-1		1
13	229/01545		Tool Filter Wrench		1
14	130/99538		Spanner D.E.		1

B190-75-1 OTHER BODYWORK ITEMS, TOOLS, KIT- STANDARD
9820/1116A
ISSUE 0

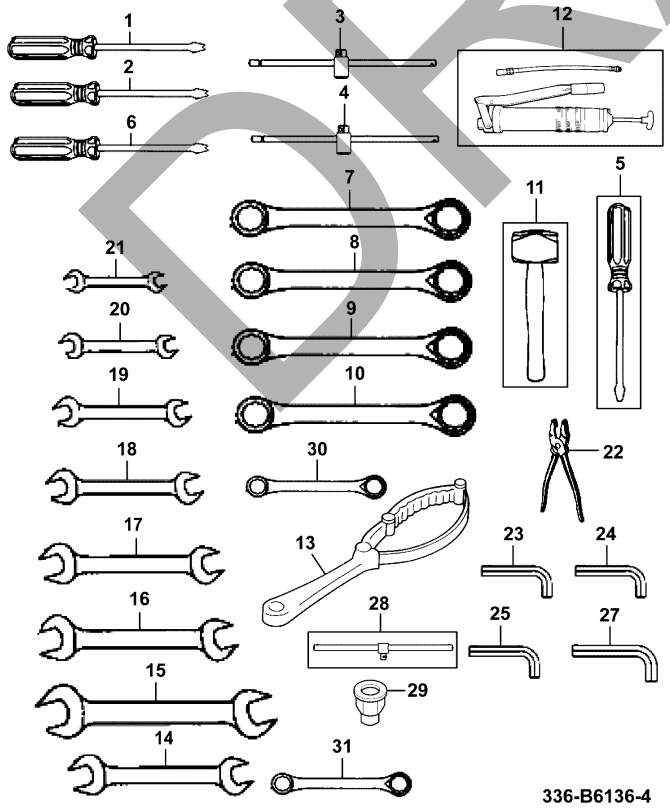

ITEM	PART NO	CHANGE NO	DESCRIPTION	USAGE CODE	QTY
15	130/99555		Spanner D.E. 36 x 41mm		1
16	333/P0719		Spanner Double Ended 30 X32 mm		1
17	130/14015		Spanner D.E. 24 x 26mm		1
18	130/14014		Spanner D.E. 19 x 22mm		1
19	130/14013		Spanner D.E. 14 x 17mm		1
20	130/14012		Spanner Double Ended 12 x 13 mm		1
21	130/14011		Spanner Double Ended 10 x 11 mm		1
22	130/99539		Tool Plier		1
23	40/301594		Key allen 6mm		1
24	130/14053		Key Allen 8 mm		1
25	JRP0086		Key allen, 5mm		1
27	130/14129		Key Allen		1
28	336/B5562		Handle T, 1/4" Drive		1
29	336/B5539		Socket Hexagonal, 1/2" Sq X 27mm		1

DRAFT

Continue...

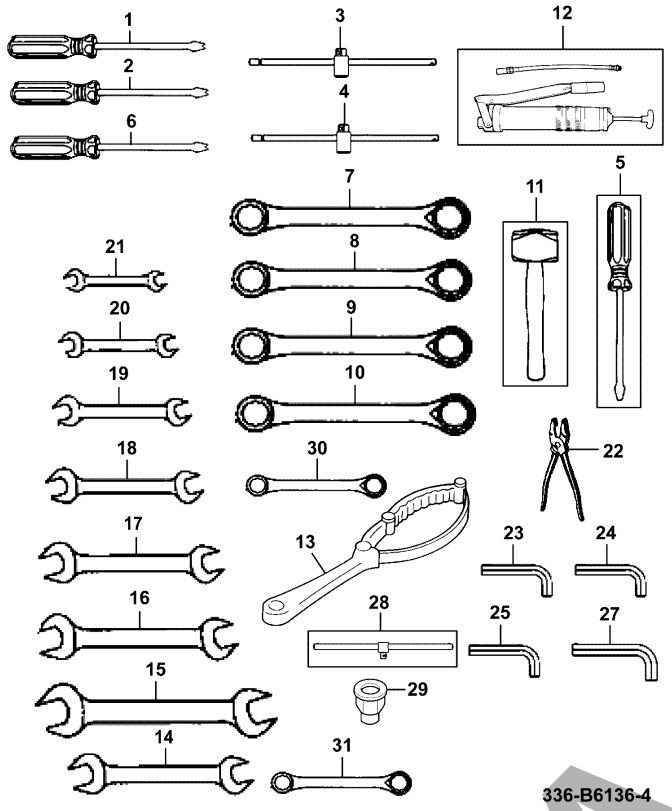

ITEM	PART NO	CHANGE NO	DESCRIPTION	USAGE CODE	QTY
30	336/B5561		Spanner Ring, 10-11mm		1
31	336/B5560		Spanner Ring, 8-9mm		1

JCB380 QM

JCB380 XTRA

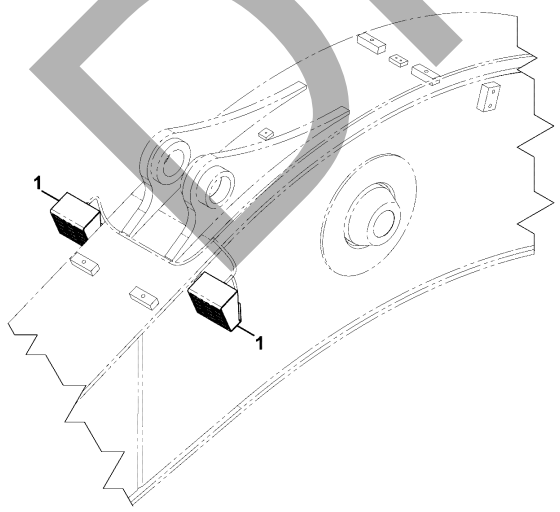

ITEM	Part #	CHANGE NO	DESCRIPTION	USAGE CODE	QTY
1	333/K4290		Guard Lamp		5

333-K4282-1

DRAFT

JCB380 QM

JCB380 XTRA

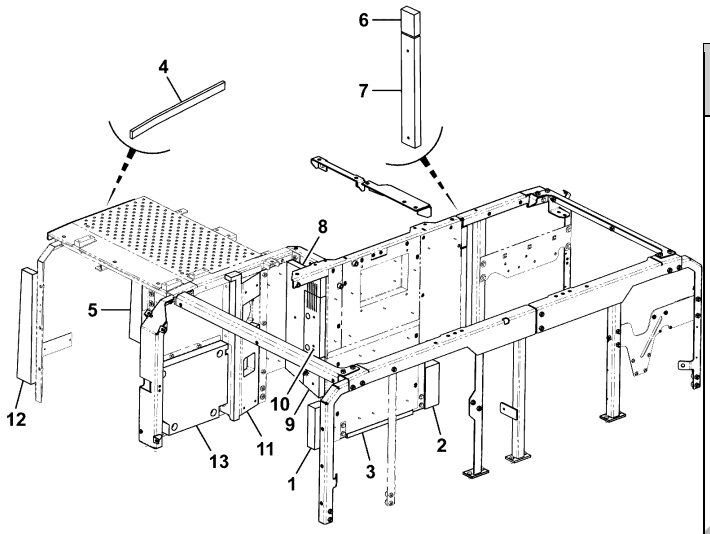

336-C7183-1

ITEM	Part #	CHANGE NO	DESCRIPTION	USAGE CODE	QTY
1	331/47416		Foam inner frame seal		1
2	331/47423		Foam inner frame seal right side		1
3	331/47430		Foam bulkhead lower seal		1
4	331/55233		Foam cab rear		1
5	331/61891		Foam rear cab right side		1
6	332/J1772		Foam		1
7	332/K5746		Foam bulkhead RH		1
8	332/K6120		Foam engine bay		1
9	332/K6122		Foam engine bay		1
10	336/C7173		Foam Engine Bay		1
11	333/K7822		Foam Bulkhead		1
12	926/47800		Cushion foam seal		1
13	333/K5415		Foam Cooler Bay, Bottom		1

JCB380 QM

JCB380 XTRA

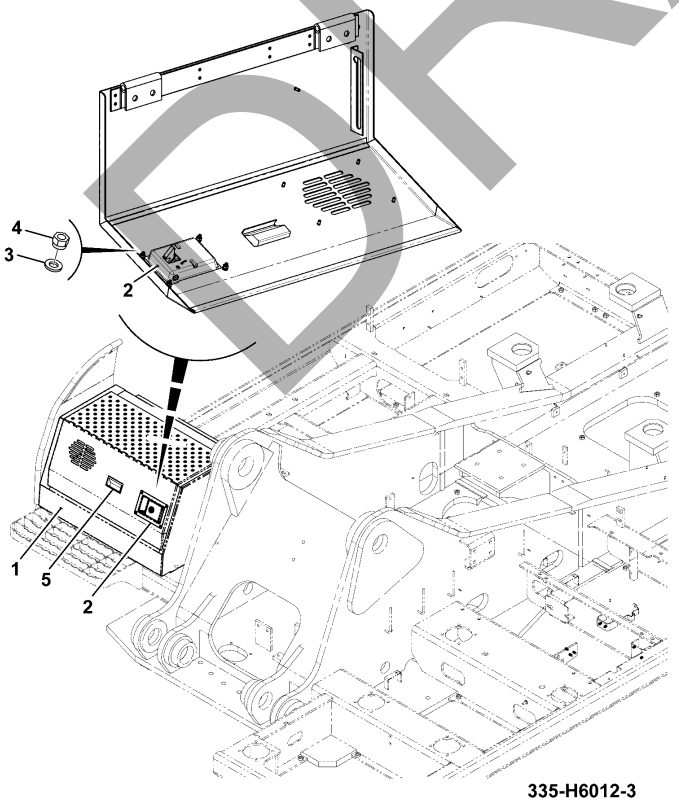

335-H6012-3

ITEM	Part #	CHANGE NO	DESCRIPTION	USAGE CODE	QTY
1	335/H6013		Toolbox Lid		1
2	333/K1035		Latch paddle yellow		1
3	1420/0006Z		Washer M6		4
4	1370/0103Z		Nut self lock M6		4
5	2748/00022		Handle		1

DRAFT

JCB380 QM

JCB380 XTRA

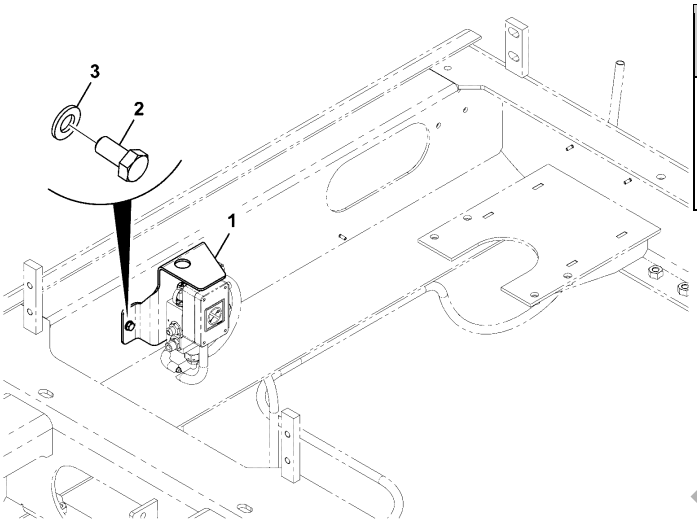

333-K1060-1

ITEM	Part #	CHANGE NO	DESCRIPTION	USAGE CODE	QTY
1	333/K1039		Bracket Solenoid Valve		1
2	1316/0305D		Screw M8 X 20		2
3	1420/0007D		Washer M8		2

DRAFT

JCB380 QM

JCB380 XTRA

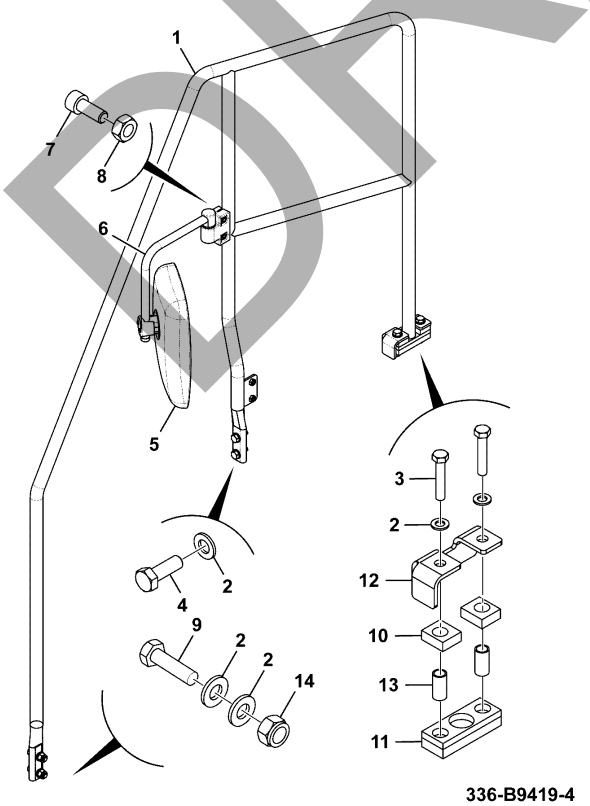

336-B9419-4

ITEM	Part #	CHANGE NO	DESCRIPTION	USAGE CODE	QTY
1	336/B9423		Handrail Riser		1
2	1420/0009D		Washer M12		8
3	1316/3515D		Bolt		2
4	1316/0509D		Screw M12x35 long		2
5	332/J7324		Mirror side, 1400mm rad		1
6	332/U3153		Arm mirror mounting		1
7	1391/3407D		Capscrew M10 x 25mm		2
8	334/C5036		Nut Hex M10		2
9	1316/0511D		Bolt M12 x 45		2
10	332/K7719		Block		2
11	332/K7295		Block		1
12	332/K8222		Plate cover		1
13	332/K7299		Spacer		2
14	1370/0403D		Nut lock M12		2

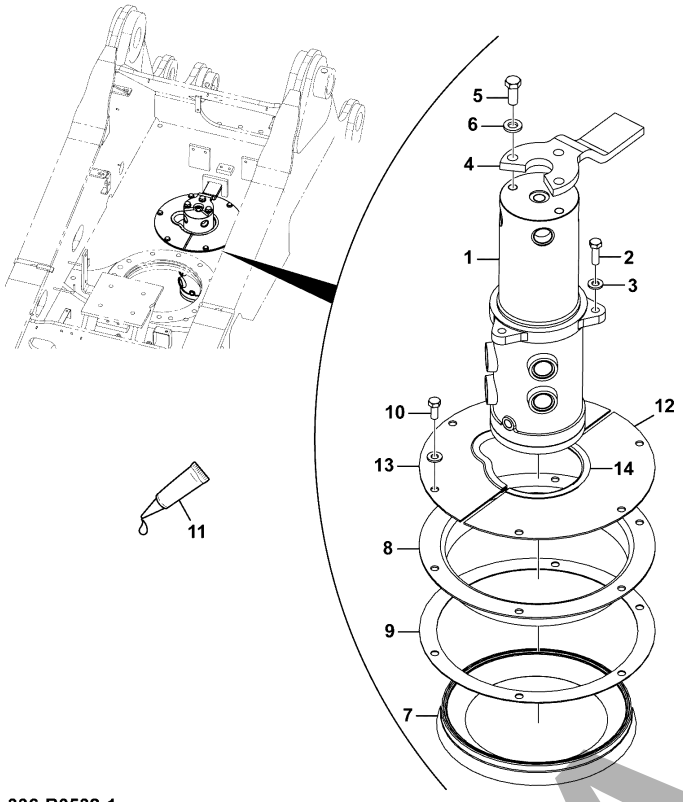

336-B0532-1

JCB380 QM

JCB380 XTRA

ITEM	Part #	CHANGE NO	DESCRIPTION	USAGE CODE	QTY
1			Rotary joint Assembly Refer J190-50-1		1
2	1316/0510D		Screw		3
3	JHP0042		Washer M12		9
4	JSA0156		Bar lock		1
5	1316/0710D		Bolt		3
6	JHP0043		Washer M16		3
7	KHJ0378		Seal ring		1
8	KNJ0998		Retainer seal		1
9	KNJ0961		Gasket rubber		1
10	1316/0508D		Screw M12 X 30		6
11	4101/0500		Fluid Locking Loctite 262		1
12	336/A8150		Cover Rotary Joint		1
13	336/A8166		Cover Rotary Coupling		1
14	JHH0074		Strip Edging		2

B190-105-1 OTHER BODYWORK ITEMS, CENTRE JOINT ASSEMBLY
9820/1116A
ISSUE 0

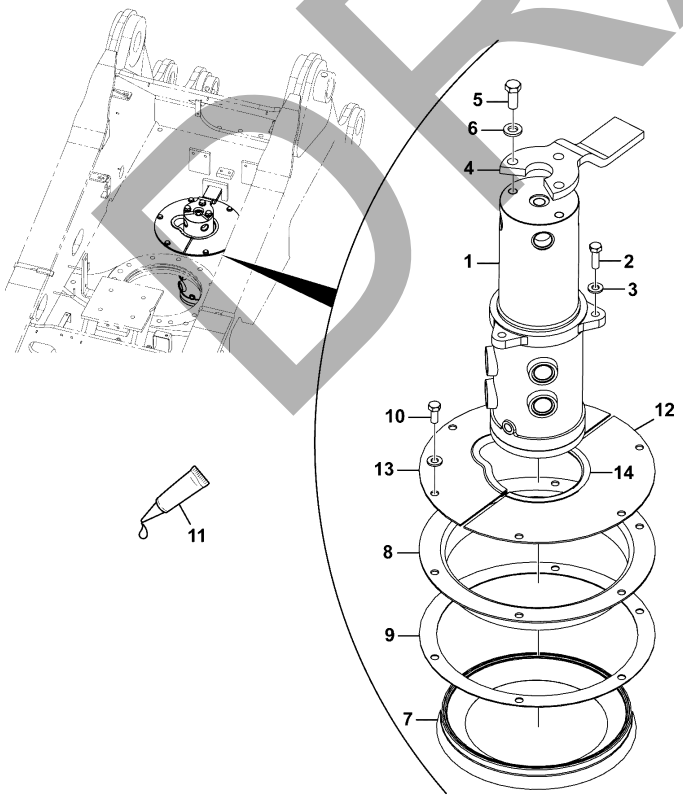

336-B0532-1

ITEM	PART NO	CHANGE NO	DESCRIPTION	USAGE CODE	QTY
15	333/P9926		Loctite - 415		1

DRAFT

JCB380 QM

JCB380 XTRA

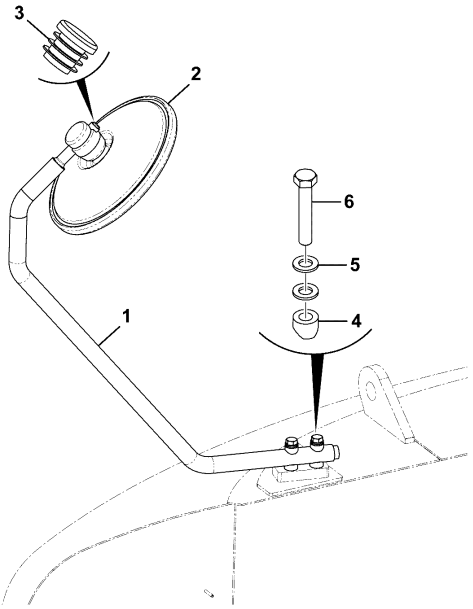

336-E4247-1

ITEM	Part #	CHANGE NO	DESCRIPTION	USAGE CODE	QTY
1			CW Mirror Bracket		1
2	332/J7749		Mirror		1
3	835/10070		Plug Blanking		1
4	336/E8523		Boss -Mirror Mounting		4
5	1420/0009D		Washer M12		4
6	1316/3516D		Bolt M12 x 70		2

JCB380 QM

JCB380 XTRA

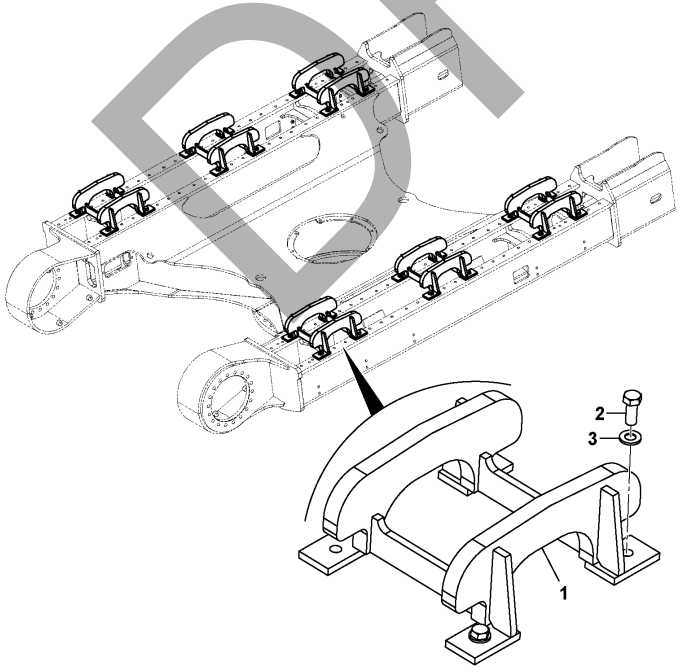

336-F0174-1

ITEM	Part #	CHANGE NO	DESCRIPTION	USAGE CODE	QTY
1	332/K1496		Guide Track		6
2	1316/3812D		Bolt M20 X 50		24
3	JHP0044		Washer		24

DRAFT

JCB380 QM

JCB380 XTRA

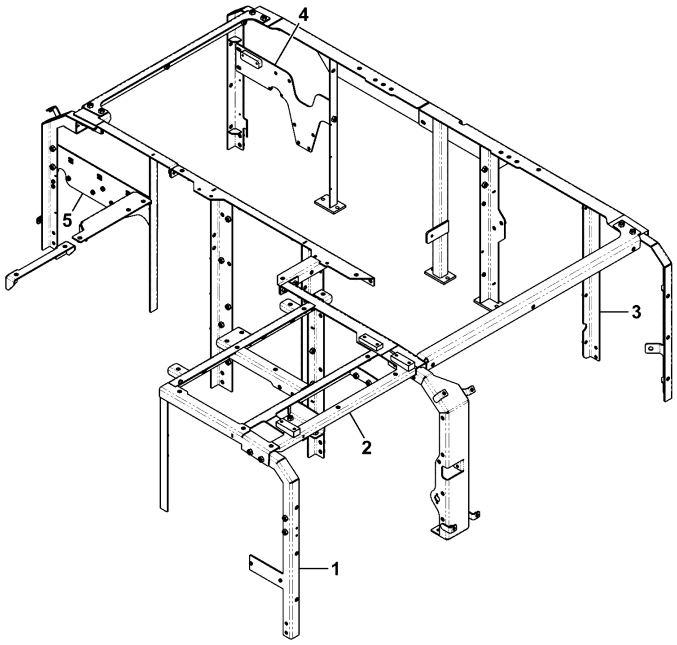

336-F0218-1

ITEM	Part #	CHANGE NO	DESCRIPTION	USAGE CODE	QTY
1	332/K5500		Frame		1
2	333/K8081		Frame House, Rear, Cab		1
3	335/G2716		Frame		1
4	333/J1362		Plate Mounting, Filter		1
5	334/J2340		Plate Filter Mounting		1

DRAFT

JCB380 QM

JCB380 XTRA

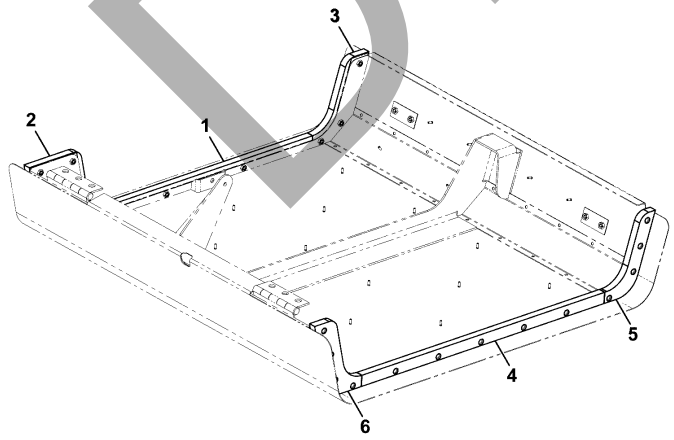

336-F1268-1

ITEM	Part #	CHANGE NO	DESCRIPTION	USAGE CODE	QTY
1	336/F1334		Foam Seal		1
2	336/F1269		Foam Seal		1
3	336/F1274		Foam Seal		1
4	336/F1337		Foam Seal		1
5	336/F1279		Foam Seal		1
6	336/F1272		Foam Seal		1

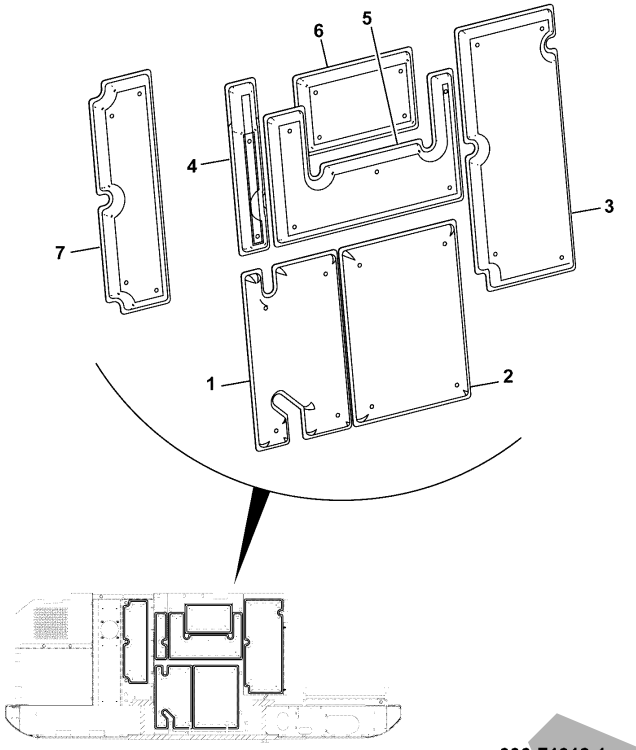

336-F1318-1

JCB380 QM

JCB380 XTRA

ITEM	Part #	CHANGE NO	DESCRIPTION	USAGE CODE	QTY
1	331/47418		Panel soundproofing bulkhead lower, left side		1
2	331/54419		Panel soundproofing bulkhead lower, right side		1
3	332/K5742		Panel soundproofing bulkhead		1
4	332/K7339		Panel soundproofing bulkhead		1
5	332/K7332		Panel soundproofing bulkhead		1
6	336/F1314		Assembly Soundproof Bulkhead		1
7	332/K5911		Panel soundproofing bulkhead		1

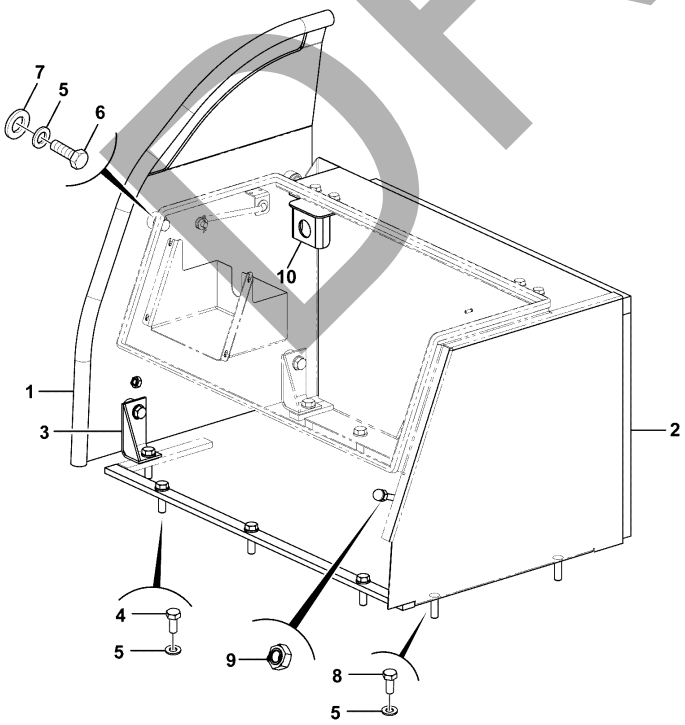

336-F3852-1

JCB380 QM

JCB380 XTRA

ITEM	Part #	CHANGE NO	DESCRIPTION	USAGE CODE	QTY
1	335/H6203		Plate Side Skin		1
2			Toolbox Assembly Refer B190-40-1		1
3	229/01199		Support Side Skin		2
4	1316/0511Z		Bolt		5
5	1420/0009Z		Washer M12		14
6	1316/0505Z		Screw M12x20		4
7	1411/0005Z		Washer (1/2" Medium)		12
8	1316/0509Z		Setscrew		5
9	1370/0301Z		Nut Plain M10		2
10	335/10692		Bracket switch mounting		1

DRAFT

JCB380 QM

JCB380 XTRA

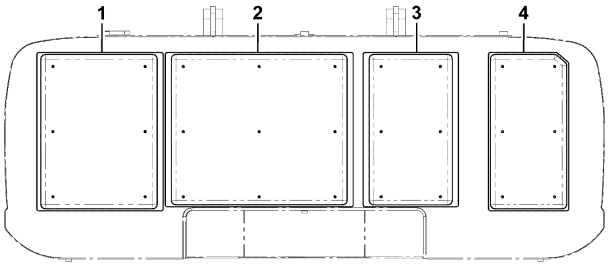

400-A8439-1

ITEM	Part #	CHANGE NO	DESCRIPTION	USAGE CODE	QTY
1	400/H8764		Soundproofing Panel - Counterweight RH		1
2	400/H8762		Soundproofing Panel - Counterweight Central		1
3	400/H8758		Soundproofing Panel - Counterweight LH 1		1
4	400/A8456		Soundproofing Panel - Counterweight LH 2		1

JCB380 QM

JCB380 XTRA



ITEM	Part #	CHANGE NO	DESCRIPTION	USAGE CODE	QTY
1	336/F3461		Latch		1
2	336/F3460		Lever Latch		1

DRAFT

B

- B01 BODYWORK/FRAME
- B02 CAB / CANOPY
- B04 EXCAVATOR
- B05 REFURBISHMENTS

DRAFT

OPERATOR ENCLOSURE INSTALLATION ASSEMBLIES, CAB, ASSEMBLY

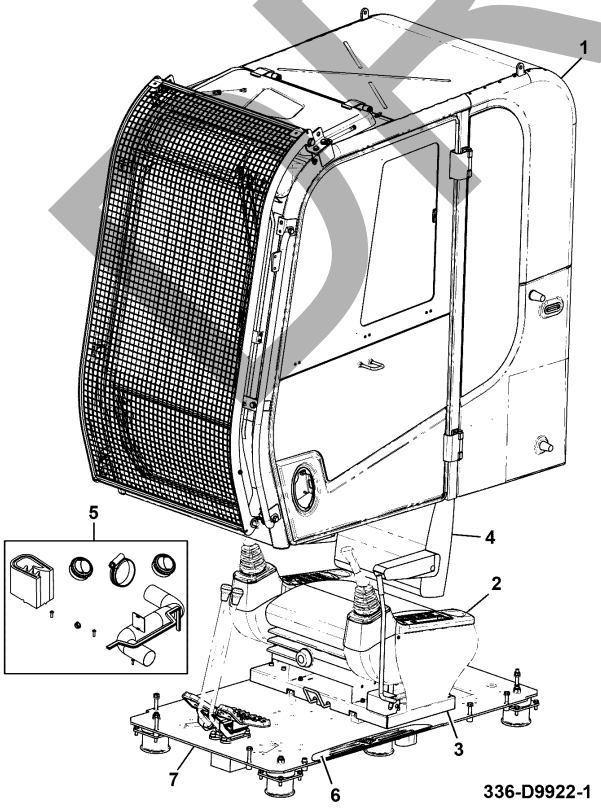

JCB380 QM

JCB380 XTRA

ITEM	Part #	CHANGE NO	DESCRIPTION	USAGE CODE	QTY
1			Cab Shell, Assembly Refer B200-5-1		1
2			Console Assembly Refer B270-1-1		1
3			Lever Assembly, Seat Slide Refer B290-25-1		1
4			Seat Assembly - Operator Refer B260-1-1		1
5			Assembly Common Parts Refer B200-10-1		1
6			Assembly Kick Plate Refer B290-20-1		1
7			Control And Joystick Assembly - Cab Refer D120-5-1		1

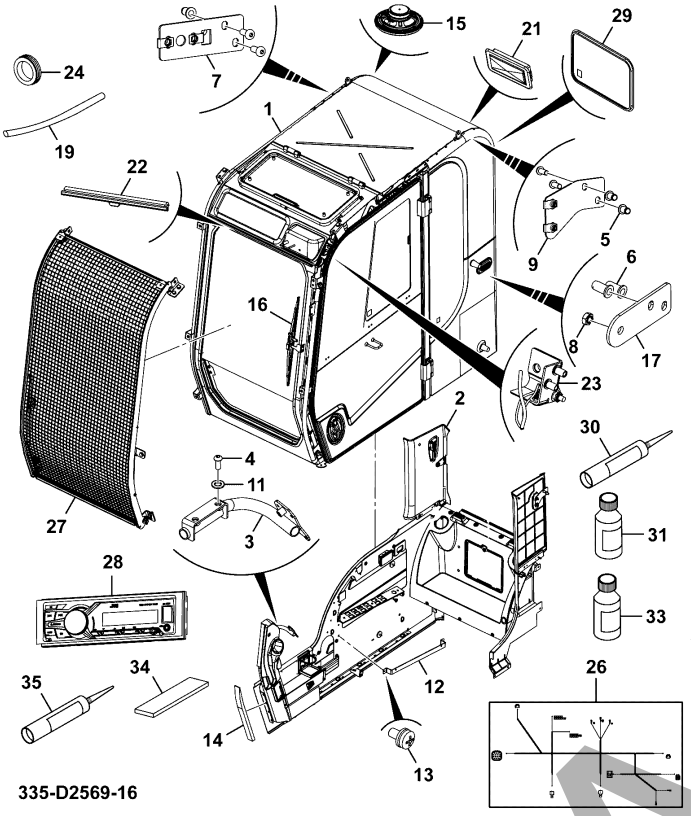

JCB380 QM

JCB380 XTRA

ITEM	Part #	CHANGE NO	DESCRIPTION	USAGE CODE	QTY
1			Cab Refer B210-1-1		1
2			Trim Assembly, Cab Refer B270-5-1		1
3	335/E9095		Bracket Display Mounting		1
4	826/01486		Screw Socket Button Head		6
5	826/01103		Rivet nut M8		4
6	826/01519		Screw M6x25		2
7			Bracket Mounting Cover Col Right Side Refer B290-35-1		1
8	826/01101		Rivet nut M6		2
9			Bracket Top Left Side Refer B290-30-1		1
11	1420/0007D		Washer M8		2

B200-5-1 OPERATOR ENCLOSURE INSTALLATION ASSEMBLIES, CAB, SHELL ASSEMBLY 9820/1116A ISSUE 0

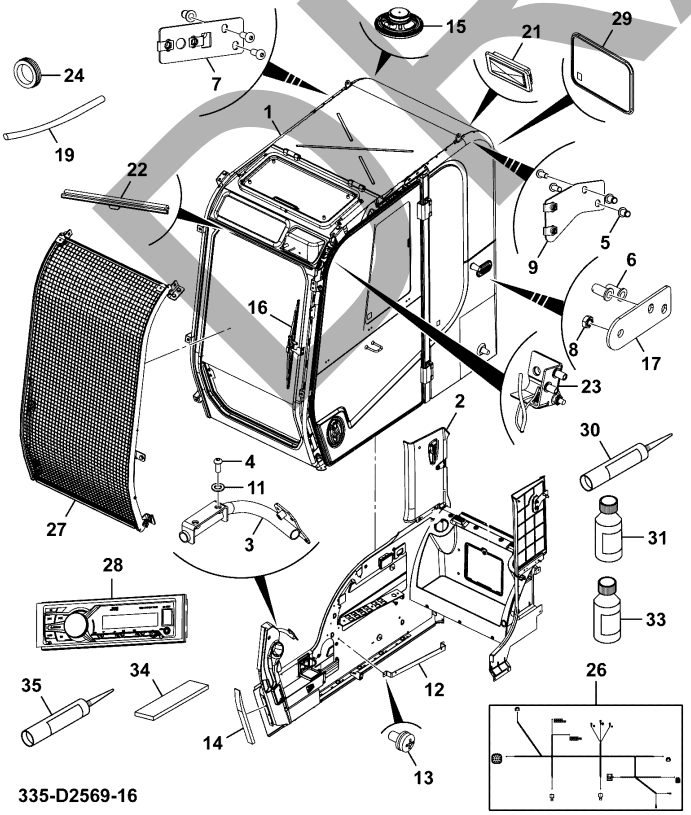

ITEM	PART NO	CHANGE NO	DESCRIPTION	USAGE CODE	QTY
12	334/P6964		Bracket Mounting Panel Right Side		1
13	KHR0736		Screw pan head		2
14	334/P5556		Foam Corner		1
15			Radio Audio System Refer C390-20-1		1
16			Wiper Assembly Refer C370-1-1		1
17	334/L7586		Bracket Bottom Right Side		1
19	KHR1179		Sleeve		1
21	700/37500		Light interior Refer C335-1-1		1
22			Sun Screen Assembly Refer B290-40-1		1
23			Sensor Wiper, Assembly Refer C390-25-1		1
24	2410/0114		Grommet		1
26	335/G8299		Harness Roof, Cab		1
27			Guard Cabin Front Refer B290-50-1		1

DRAFT

Continue...

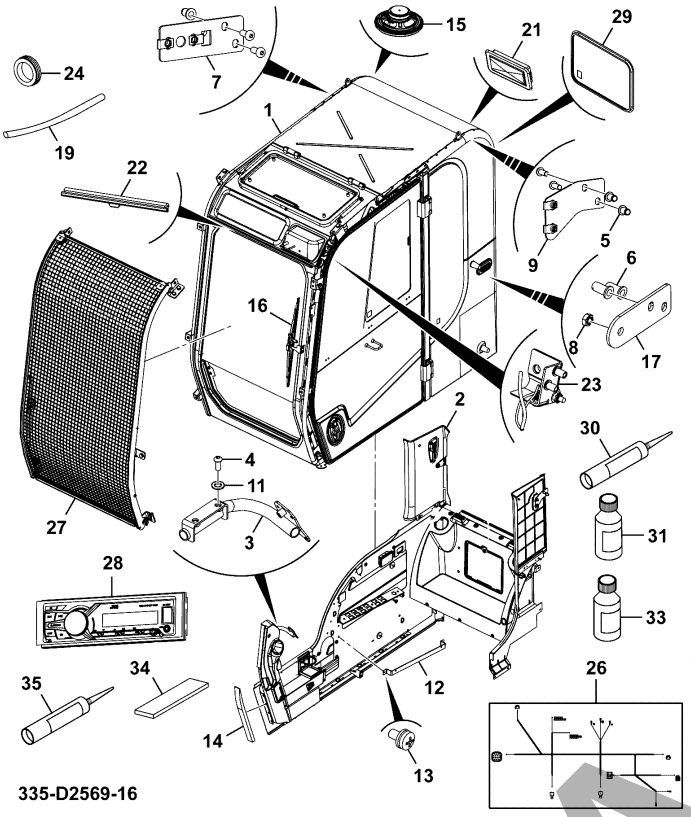

ITEM	PART NO	CHANGE NO	DESCRIPTION	USAGE CODE	QTY
28			Radio Assembly, 12V FM Refer C345-1-1		1
29	336/C7053		GA REAR WINDOW FIX G GA REAR WINDOW FIX G		1
30	646/05321		Adhesive		0
31			Paint Black Primer		0
32			Paint Black Primer		0
33	646/05325		Cleaner Active Wiper		0
34	926/15500		Spacer block		0
35			Glazing Adhesive Direct		0

JCB380 QM

JCB380 XTRA

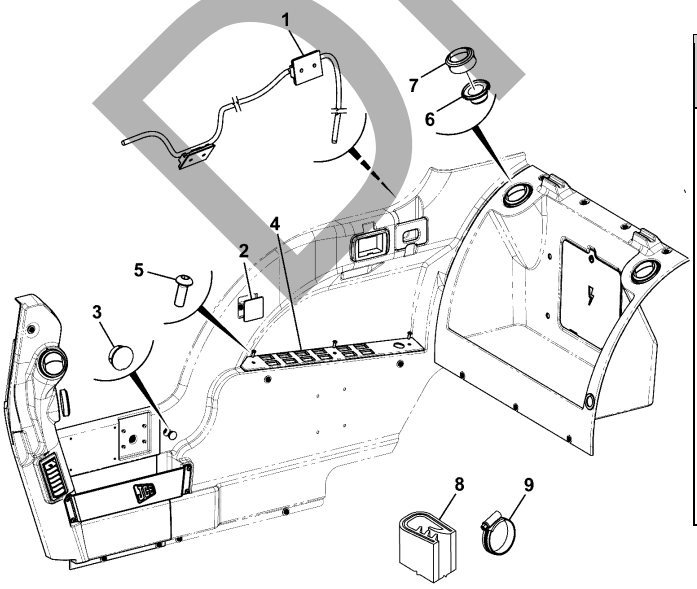

ITEM	Part #	CHANGE NO	DESCRIPTION	USAGE CODE	QTY
1	8340/01011		Mounting Base		2
2	333/K1021		Blank Audio Remote		1
3	333/K1860		Cap Blanking		1
4	333/K0954		Panel Fascia		1
5	826/01428		Screw Button Head M6 x 16		3
6	30/925732		Adaptor Air Vent		2
7	331/26974		Vent air (76.5mm dia.hole)		4
8	333/L7076		Strip Edging		1
9	KHH0143		Band Harness Retainer		4

DRAFT

JCB380 QM

JCB380 XTRA

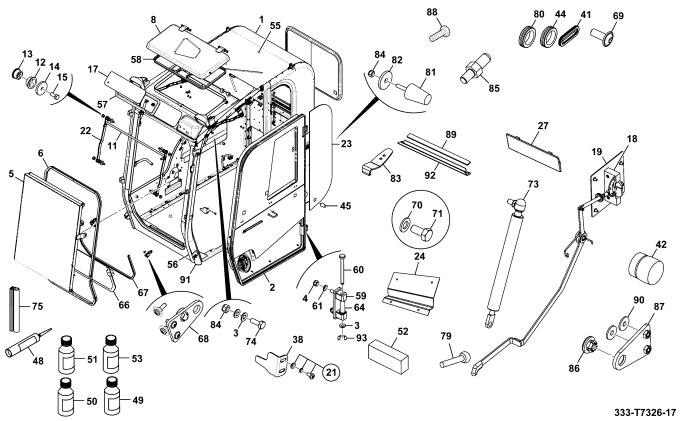

ITEM	Part #	CHANGE NO	DESCRIPTION	USAGE CODE	QTY
1			Cab		1
2	334/L4254		Door Assembly Refer B240-5-1		1
3	1420/0007Z		Washer M8		8
4	1370/0303Z		Nut lock M10		6
5			Assembly Front Screen Refer B250-10-1		1
6	333/J7154		Beading Glass Front		1
8			Roof Hatch Assembly Refer B230-1-1		1
11	333/J7166		Link		1
12	331/36373		Washer		4
13	332/P7552		Spacer		4
14	6900/0569		Washer		4
15	1315/0305		Setscrew M8x20		4
17	333/J7149		Glass Top		1

B210-1-1 OPERATOR ENCLOSURE, CAB, ABI
9820/1116A
ISSUE 0

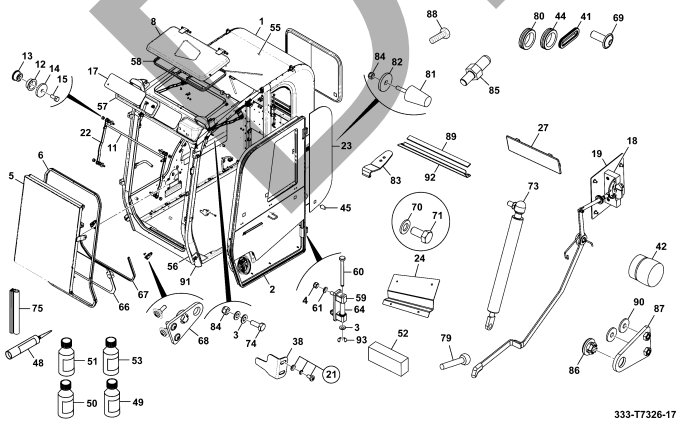

ITEM	PART NO	CHANGE NO	DESCRIPTION	USAGE CODE	QTY
18			Latch Assembly Refer B290-55-1		1
19	334/L8734		Plate Cover Latch		1
21	KHR0736		Screw pan head		12
22	333/J7228		Glass Right Side		1
23	334/L8394		Glass Quarter Left Side		1
24	334/L6866		Cover Motor Wiper		1
27	717/08600		Cover Radio Blanking		1
38	334/L6953		Retainer Blade Wiper		1
41	331/37334		Grommet		1
42	334/L5912		Roller		2
44	332/L1608		Grommet		2
45	6900/0562		Stopper		1
48	646/05321		Adhesive		0
49			Paint Black Primer		0
50			Paint Black Primer		0
51	646/05325		Cleaner Active Wiper		0
52	926/15500		Spacer block		0

DRAFT

Continue...

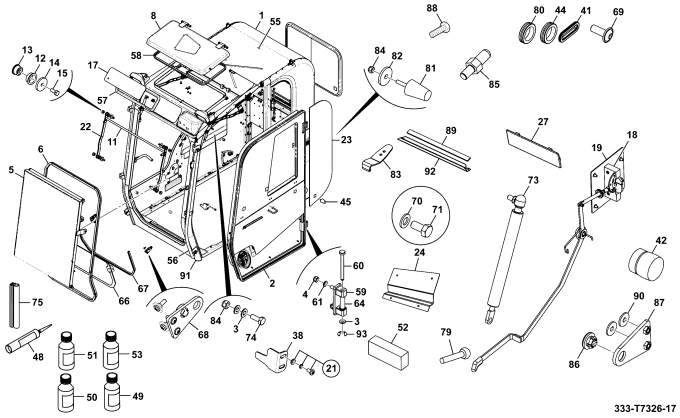

ITEM	PART NO	CHANGE NO	DESCRIPTION	USAGE CODE	QTY
53			Glazing Adhesive Direct		0
55			Liner Top Assembly Refer B230-5-1		1
56	334/P6301		Handrail		1
57	334/P5410		Beading Glass Top		1
58	334/L6315		Beading Screen Top		1
59	334/P5247		Hinge		2
60	334/L6913		Pin Hinge 10 x 126		2
61	1420/0008Z		Washer M10		4
64	40/302877		Bush		2
66			Glass Front Assembly Refer B250-5-1		1
67	333/J7103		Beading Glass Front Lower		1
68	333/J7116		Plate Lock Latch		2
69	826/01559		Screw socket button head, flanged		8
70	1420/0009Z		Washer M12		4
71	1315/0507		Setscrew		4

B210-1-1 OPERATOR ENCLOSURE, CAB, ABI
9820/1116A
ISSUE 0

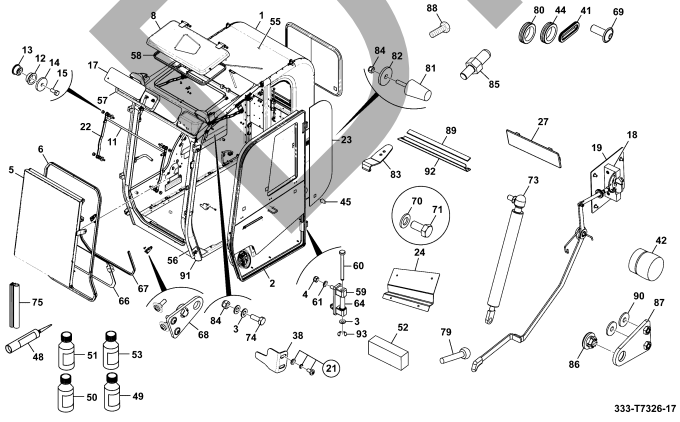

ITEM	PART NO	CHANGE NO	DESCRIPTION	USAGE CODE	QTY
73	334/P8876		Strut Gas Sliding Front		2
74	334/P9127		Pin Strut Gas		2
75	334/P8949		Beading Rest Glass		1
79	KHN1395		Stop Rubber		2
80	2410/0115		Grommet 44.4 x 3.5		6
81	332/P9609		Stopper Windscreen		3
82	333/P3021		Washer 45 x 11 x 5		7
83	331/36356		Hook		2
84	1370/0203Z		Nut lock M8		6
85	334/P8526		Pin		1
86	335/B4278		Bush Nylon		2
87	335/B6056		Plate Lock Latch		2
88	826/01519		Screw M6x25		4
89	335/B8547		Strip Nylon		2
90	823/00516		Washer nylon M6		4
91	1371/0301Z		Nut High Strength, M10		2
92	334/P8948		Rest Glass		1

DRAFT

Continue...

ITEM	PART NO	CHANGE NO	DESCRIPTION	USAGE CODE	QTY
93	821/00318		Circlip		2

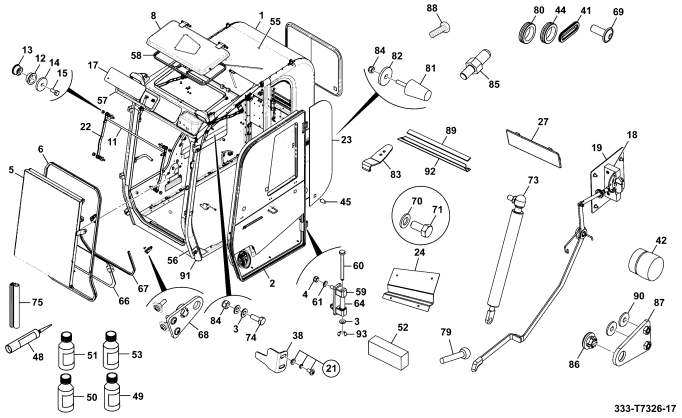

DRAFT

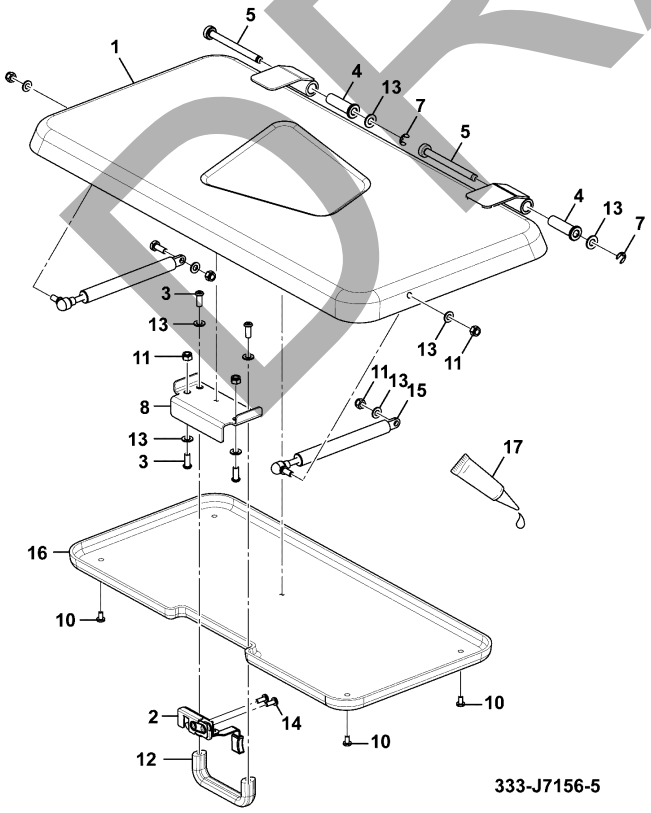

JCB380 QM

JCB380 XTRA

ITEM	Part #	CHANGE NO	DESCRIPTION	USAGE CODE	QTY
1	334/L7705		Cover Top		1
2	334/P7758		Latch Hatch Top		1
3	826/01486		Screw Socket Button Head		4
4	40/302877		Bush		2
5	334/L6913		Pin Hinge 10 x 126		2
7	821/00318		Circlip		2
8	335/B3618		Plate Handle		1
10	KHR0736		Screw pan head		4
11	1370/0203Z		Nut lock M8		6
12	332/P0843		Handle		1
13	1420/0007Z		Washer M8		10
14	KHR0737		Screw Pan Head		2
15	334/P6289		Strut Gas Hatch Roof		2
16	334/P8401		Liner Hatch Roof		1
17	4101/0500		Fluid Locking Loctite 262		0

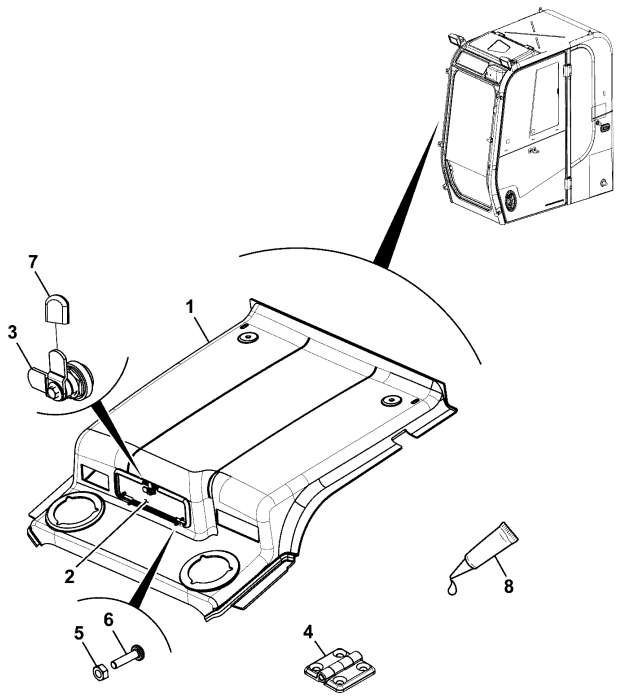

334-P7215-3

JCB380 QM

JCB380 XTRA

ITEM	Part #	CHANGE NO	DESCRIPTION	USAGE CODE	QTY
1	335/A4191		Liner Roof		1
2	334/P9126		Door Liner Roof		1
3	333/Y1377		Lock Grille		1
4	335/B3120		Hinge Door Roof		2
5	1370/9401Z		Nut M4		4
6	826/01411		Screw pan head M4 x 16		4
7	335/E3321		Cover Lock		1
8	4103/3500		Loctite 424		0

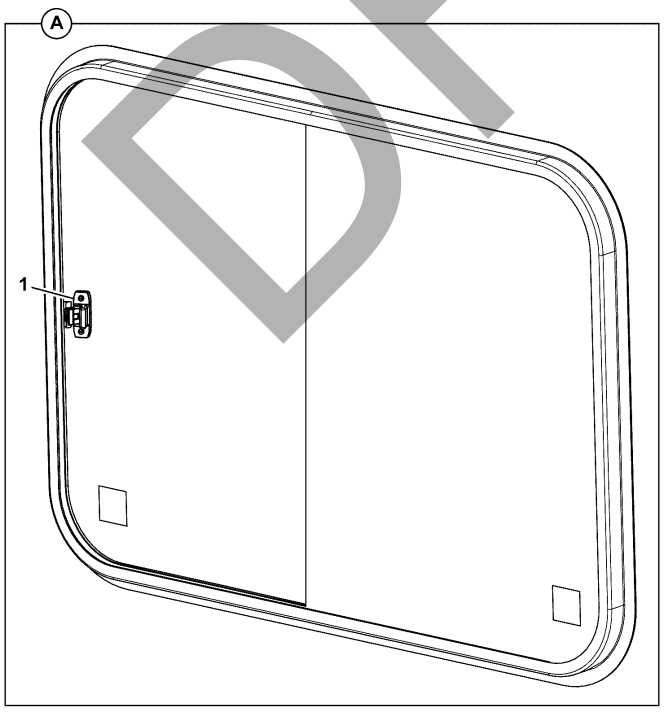

333-J6869-1

JCB380 QM

JCB380 XTRA

ITEM	Part #	CHANGE NO	DESCRIPTION	USAGE CODE	QTY
A	333/J6869		Slide Window Rear, Assembly		1
1	335/E4521		Lock Assembly		1

DRAFT

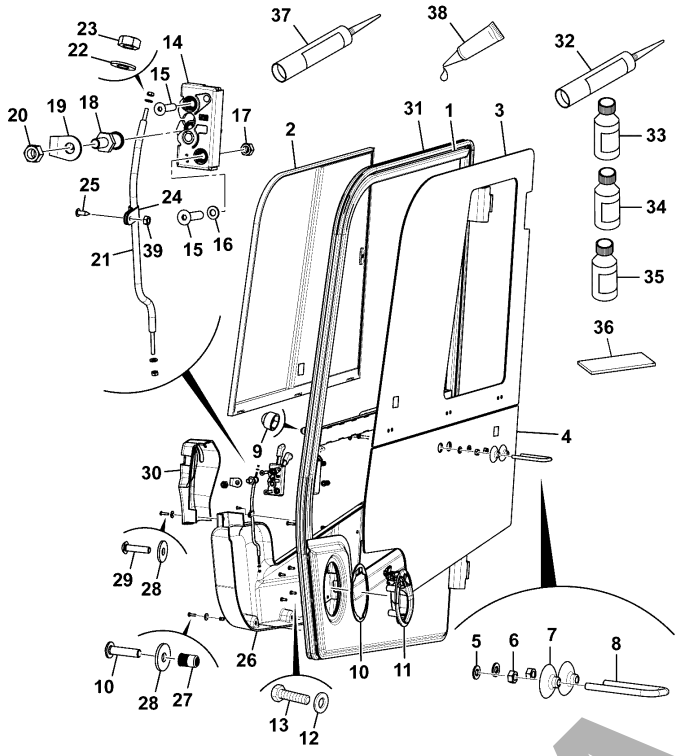

JCB380 QM

JCB380 XTRA

ITEM	Part #	CHANGE NO	DESCRIPTION	USAGE CODE	QTY
1			Frame Door Left Side		1
2	334/L4897		Slide Window Door Assembly Refer B240-10-1		1
3	333/J6713		Glass Upper Door		1
4	333/J7109		Glass Stable Door		1
5	1420/0008Z		Washer M10		4
6	1370/0301Z		Nut Plain M10		4
7	332/L8512		Seal		2
8	334/L6354		Striker Lockback		1
9	331/36379		Cap nut M12		2
10	333/Y2927		Gasket Door Handle		1
11	331/36386		Handle cab door see TI 11/194		1
12	1420/0006Z		Washer M6		4
13	1315/0203Z		Setscrew M6 x 16mm		4

B240-5-1 DOORS, ASSEMBLY
9820/1116A
ISSUE 0

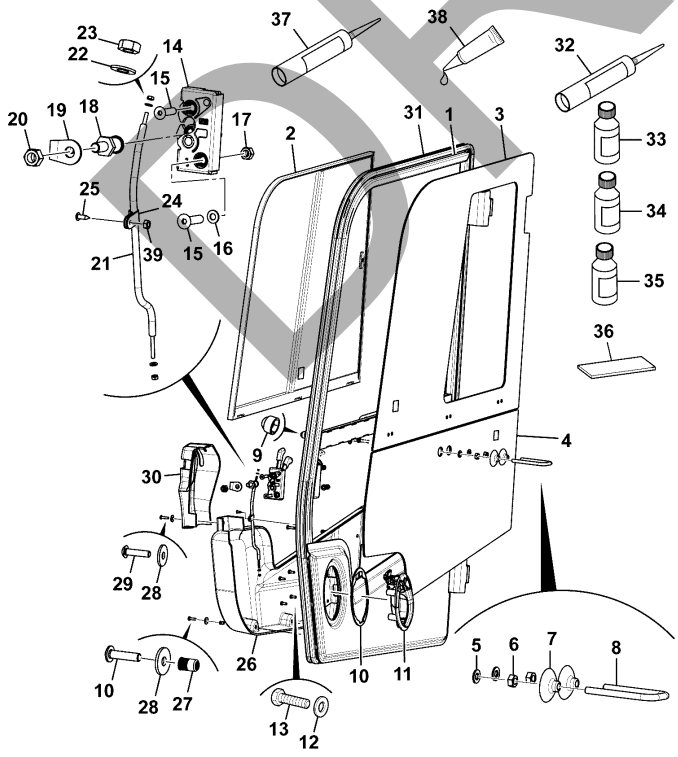

ITEM	PART NO	CHANGE NO	DESCRIPTION	USAGE CODE	QTY
14	336/F3462		432ZX LATCH ABI 432ZX LATCH ABI Refer B190-160-1		1
15	826/10481		Screw socket M8 x 40mm		2
16	1420/0007Z		Washer M8		2
17	1370/0203Z		Nut lock M8		2
18	331/30951		Bolt Door Striker (M12)		1
19	331/26791		Guard Striker		1
20	336/E6502		NUT NUT		1
21	334/L7284		Rod Lock		1
22	1420/0004Z		Washer M4		2
23	1370/9401Z		Nut M4		2
24	KHR1326		Clamp 18mm dia.		1
25	826/01559		Screw socket button head, flanged		1
26	334/P7629		Panel Lower Door		1
27	826/11523		Nut Rivet Nut M6		4
28	823/00516		Washer nylon M6		6
29	826/01560		Screw M6x25		6

DRAFT

Continue...

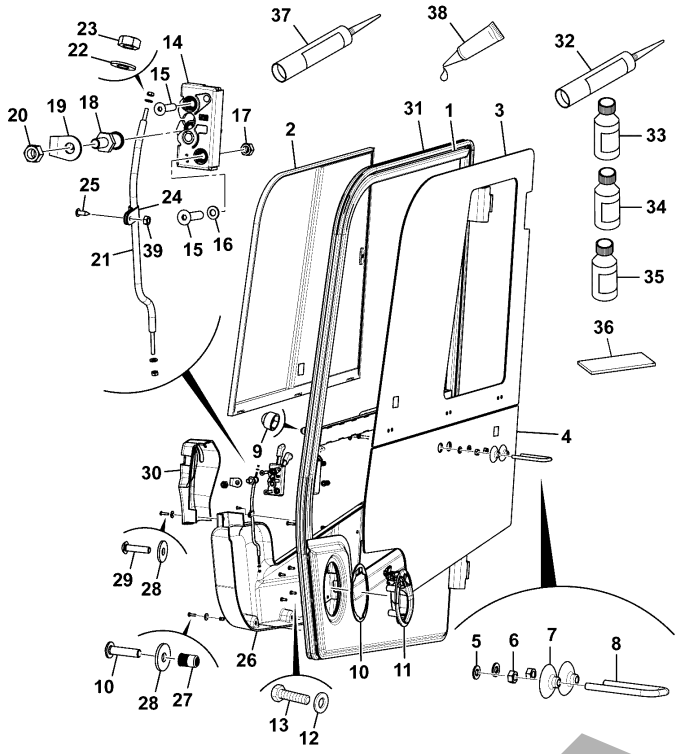

334-L4254-7

ITEM	PART NO	CHANGE NO	DESCRIPTION	USAGE CODE	QTY
30	334/L5596		Cover Latch Door		1
31	334/L7373		Beading Edge Door		1
32	646/05321		Adhesive		0
33			Paint Black Primer		0
34			Paint Black Primer		0
35	646/05325		Cleaner Active Wiper		0
36	926/15500		Spacer block		0
37			Glazing Adhesive Direct		0
38	4101/0500		Fluid Locking Loctite 262		0
39	1370/0103Z		Nut self lock M6		1

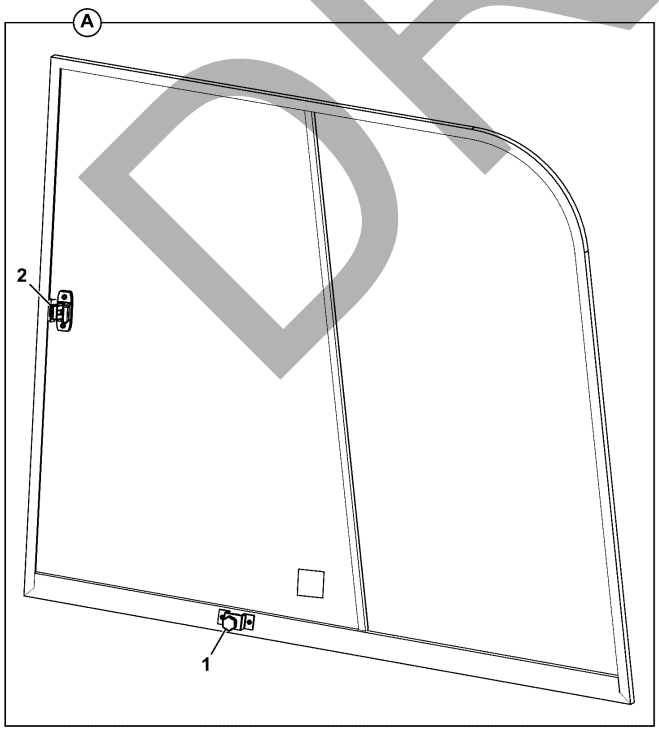

334-L4897-1

JCB380 QM

JCB380 XTRA

ITEM	Part #	CHANGE NO	DESCRIPTION	USAGE CODE	QTY
A	334/L4897		Slide Window Door Assembly		1
1	335/E4520		Lock Push		1
2	335/E4521		Lock Assembly		1

DRAFT

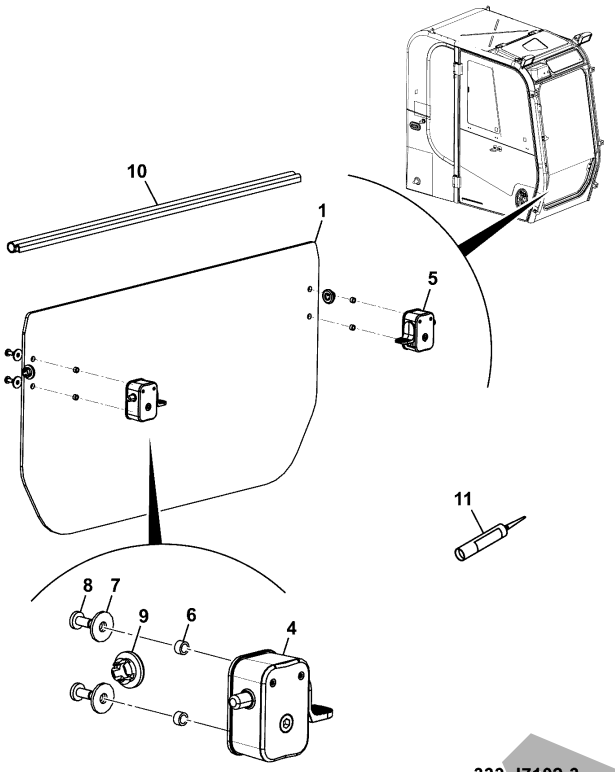

333-J7102-3

JCB380 QM

JCB380 XTRA

ITEM	Part #	CHANGE NO	DESCRIPTION	USAGE CODE	QTY
1	333/J7019		Glass Bottom Front		1
4	334/P8247		Latch Left Side		1
5	334/P8246		Latch Right Side		1
6	335/B3639		Bush Nylon		4
7	823/00516		Washer nylon M6		4
8	KHR0738		Screw pan head		4
9	335/B4278		Bush Nylon		2
10	334/L7702		Beading Screen Front Bottom		1
11	646/05321		Adhesive		0

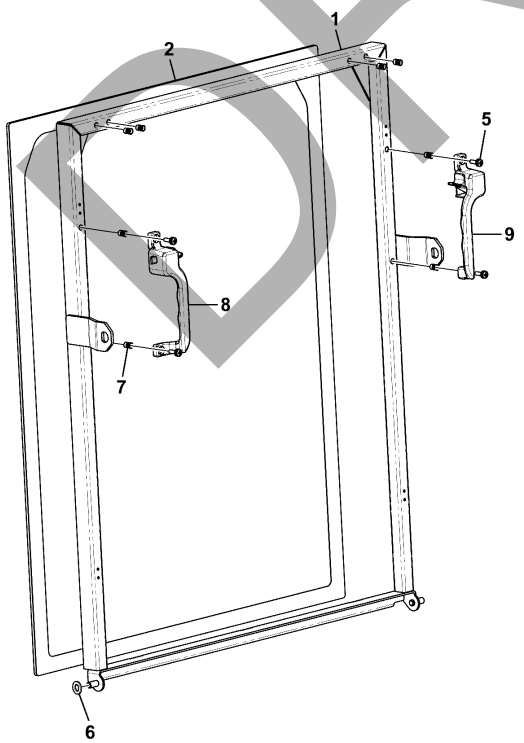

336-C5054-1

JCB380 QM

JCB380 XTRA

ITEM	Part #	CHANGE NO	DESCRIPTION	USAGE CODE	QTY
1	336/D6091		Screen Front		1
2	333/J7034		Glass Front		1
3	926/15500		Spacer block		0
5	KHR0738		Screw pan head		4
6	1420/0008Z		Washer M10		2
7	826/11523		Nut Rivet Nut M6		8
8	331/28235		Latch Right Hand Assembly		1
9	331/28233		Latch Left Hand Assembly		1

DRAFT

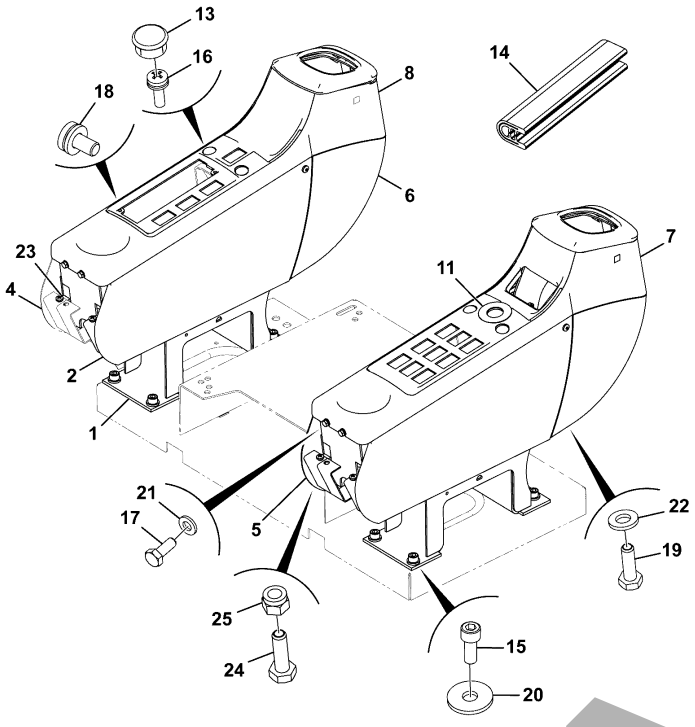

335-C9001-1

JCB380 QM

JCB380 XTRA

ITEM	Part #	CHANGE NO	DESCRIPTION	USAGE CODE	QTY
1	334/J5436		Console DOG Fixed		2
2	333/L6829		Panel side console right side		2
4	333/K0882		Plate Side Console		1
5	333/L9979		Panel side console left side		1
6	333/J8927		Cover Console Lower		2
7	333/K0482		Console Right Side		1
8	333/K1064		Console Left Side No Panel		1
11	333/J1826		Decal Console Cab Right Side		1
13	332/K5436		Cap blanking black		4
14	JHH0074		Strip Edging		0
15	1391/3407D		Capscrew M10 x 25mm		8
16	KHR0738		Screw pan head		4

B270-1-1 MOULDINGS/TRIM, CONSOLE BOX, ASSEMBLY
9820/1116A
ISSUE 0

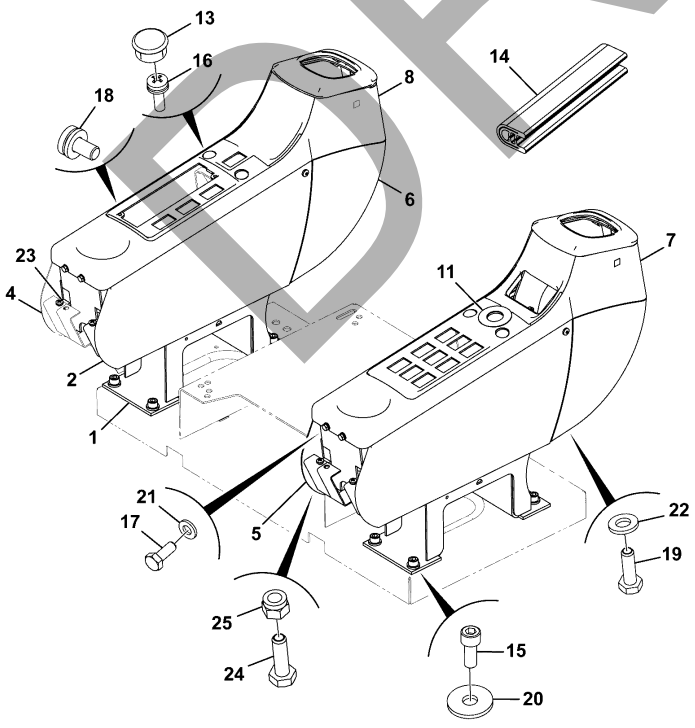

335-C9001-1

ITEM	PART NO	CHANGE NO	DESCRIPTION	USAGE CODE	QTY
17	1316/0203D		Screw		4
18	KHR0736		Screw pan head		12
19	826/01281		Capscrew button head M6 x12		8
20	JHP0046		Washer M10		8
21	1420/0006D		Washer M6		8
22	823/00516		Washer nylon M6		4
23	KHR1447		Clamp		2
24	1316/0205D		Screw set		2
25	1370/0103D		Nut M6		2

DRAFT

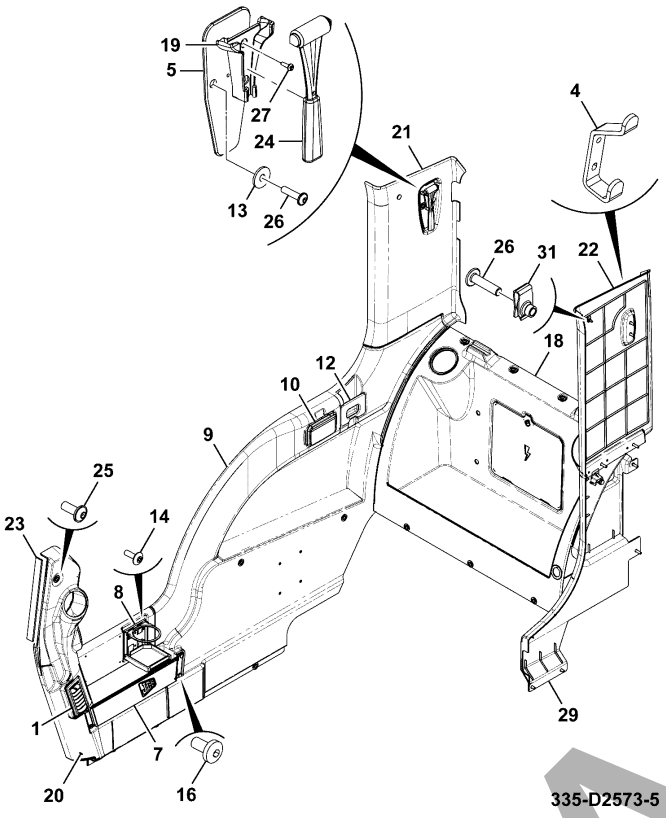

JCB380 QM

JCB380 XTRA

ITEM	Part #	CHANGE NO	DESCRIPTION	USAGE CODE	QTY
1	30/925586		Vent air (rectangular)		1
4	335/C5232		Hook Coat		1
5	332/J1436		Plate Hammer Retainiing		1
7	332/J2776		Panel stowage, side		1
8	331/31695		Holder cup		1
9	333/K0666		Moulding Centre Console		1
10	331/32481		Ashtray		1
12	333/K1068		Plate Retainer Mobile Phone		1
13	823/00516		Washer nylon M6		36
14	KHR0328		Screw Truss		4
16	826/01281		Capscrew button head M6 x12		4
18	333/K1996		Rear Stowage Refer B270-10-1		1

B270-5-1 MOULDINGS/TRIM, CAB TRIM ASSEMBLY
9820/1116A
ISSUE 0

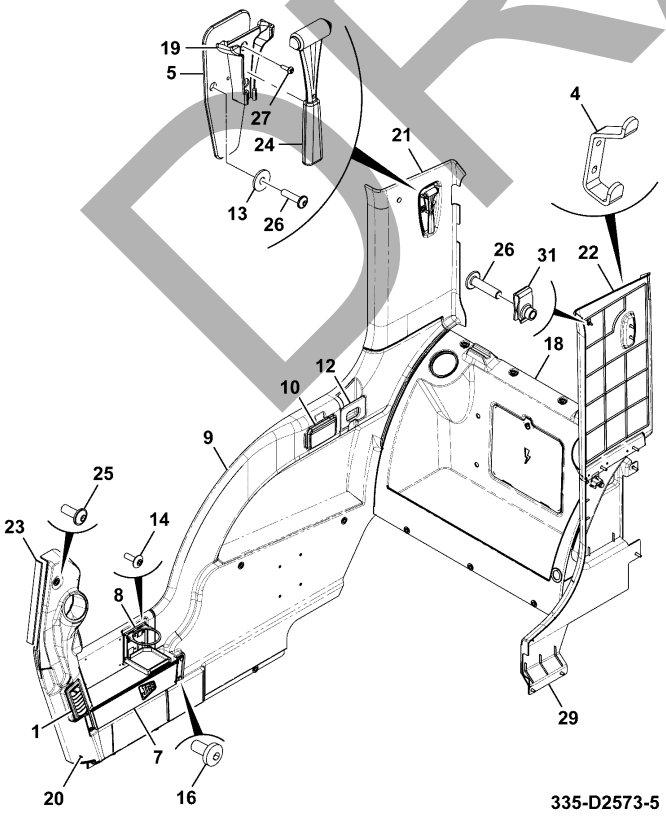

ITEM	PART NO	CHANGE NO	DESCRIPTION	USAGE CODE	QTY
19	332/U4206		Bracket Breaker Tool Holder		1
20	335/A5586		Moulding A Post		1
21	335/A3995		Pillar Trim Right Side		1
22	335/A3947		Pillar Trim Upper Left Side		1
23	335/C4609		Foam A-Post		1
24	265/00678		Hammer Emergency Glass Breaker		1
25	826/01559		Screw socket button head, flanged		5
26	826/01560		Screw M6x25		30
27	1430/0102		Screw		2
29	335/A2238		Pillar Trim Lower Left Side		1
31	333/Y6752		Lug Nut M6		6

DRAFT

JCB380 QM

JCB380 XTRA

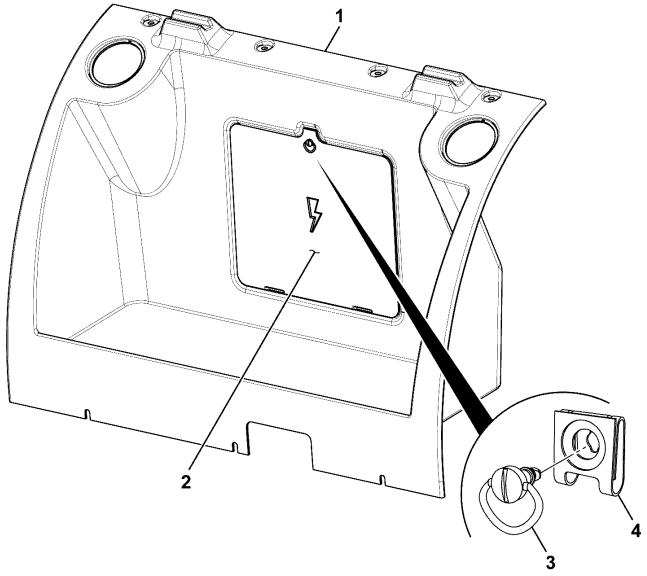

333-J1640-1

ITEM	Part #	CHANGE NO	DESCRIPTION	USAGE CODE	QTY
1	333/K1994		Panel Storage Rear		1
2	333/J3587		Fusebox cover		1
3	331/37941		Stud 1/4 turn bail		1
4	331/37942		Receptacle		1

DRAFT

JCB380 QM

JCB380 XTRA

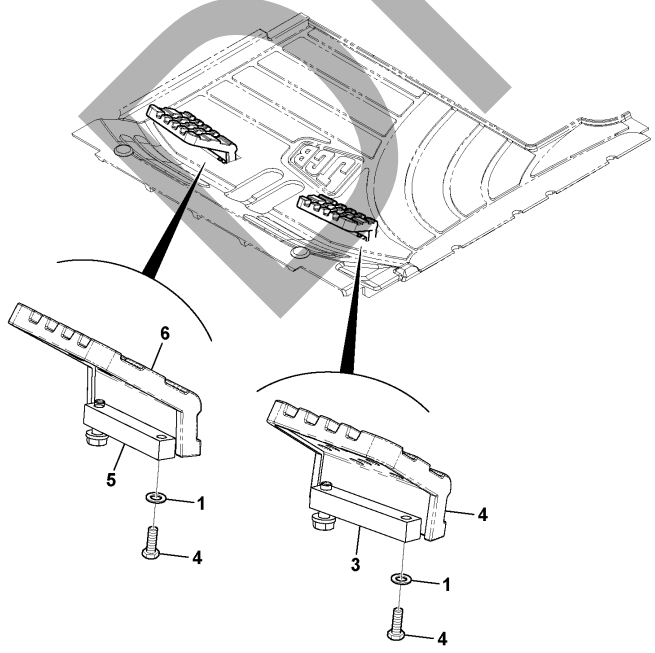

335-E8057-1

ITEM	Part #	CHANGE NO	DESCRIPTION	USAGE CODE	QTY
1	JHP0046		Washer M10		4
2	334/L9862		Plate Boot Left Side		1
3	335/A2539		Foot Rest Left Side		1
4	1315/0409Z		Setscrew M10 x 35		4
5	335/A2542		Foot Rest Right Side		1
6	335/A1274		Plate Boot Right Side		1
7	335/B0654		Floormat		1

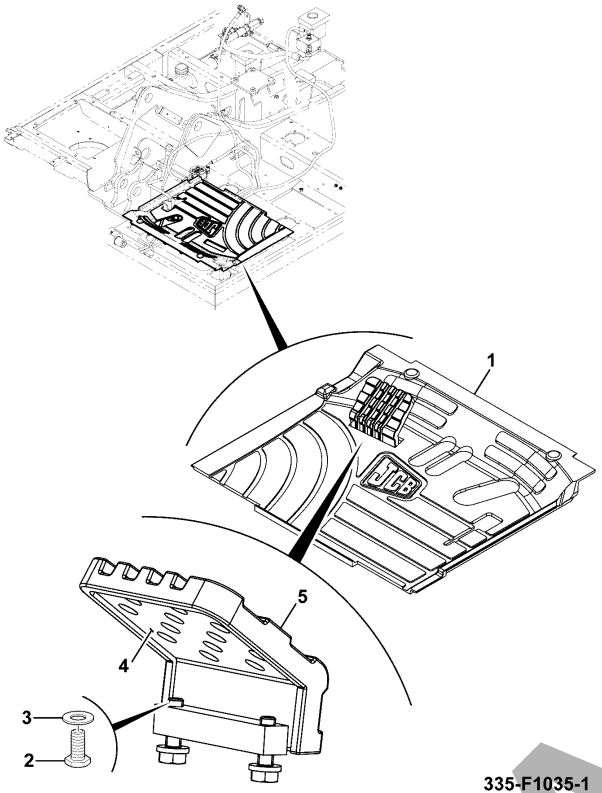

335-F1035-1

JCB380 QM

JCB380 XTRA

ITEM	Part #	CHANGE NO	DESCRIPTION	USAGE CODE	QTY
1	335/C1276		Floormat		1
2	1315/0409Z		Setscrew M10 x 35		2
3	JHP0046		Washer M10		2
4	335/A2539		Foot Rest Left Side		1
5	334/L9862		Plate Boot Left Side		1

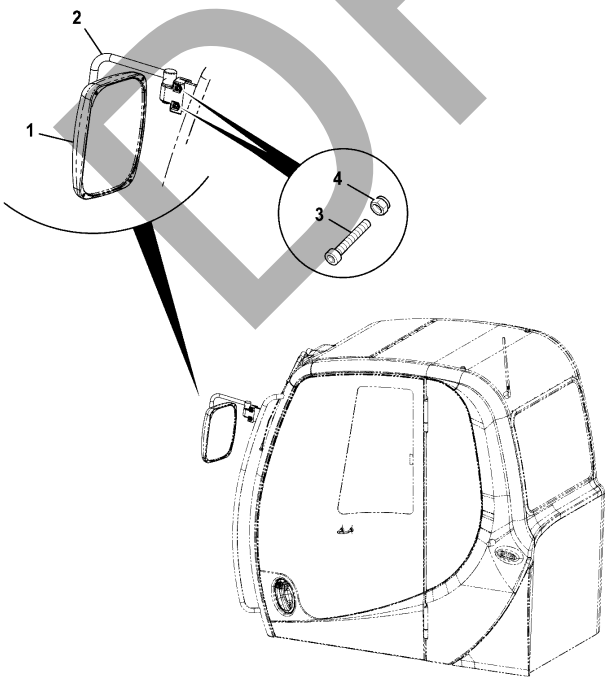

215-11987-2

JCB380 QM

JCB380 XTRA

ITEM	Part #	CHANGE NO	DESCRIPTION	USAGE CODE	QTY
1	332/J7324		Mirror side, 1400mm rad		1
2	332/U3153		Arm mirror mounting		1
3	1391/3407D		Capscrew M10 x 25mm		2
4	334/C5036		Nut Hex M10		2

DRAFT

JCB380 QM

JCB380 XTRA

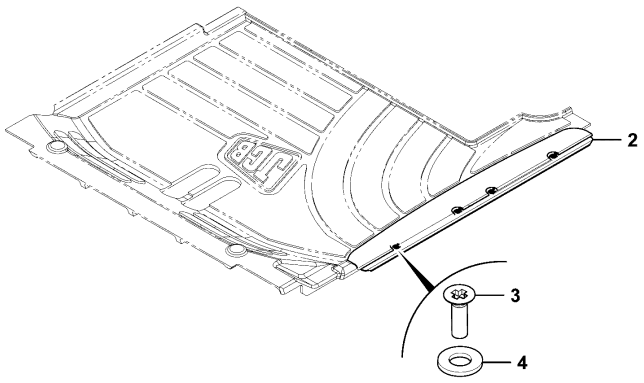

335-A8101-1

ITEM	Part #	CHANGE NO	DESCRIPTION	USAGE CODE	QTY
2	333/J4757		Plate kick		1
3	6013/0103Z		Screw countersunk		4
4	JHP0080		Washer M8		4

JCB380 QM

JCB380 XTRA

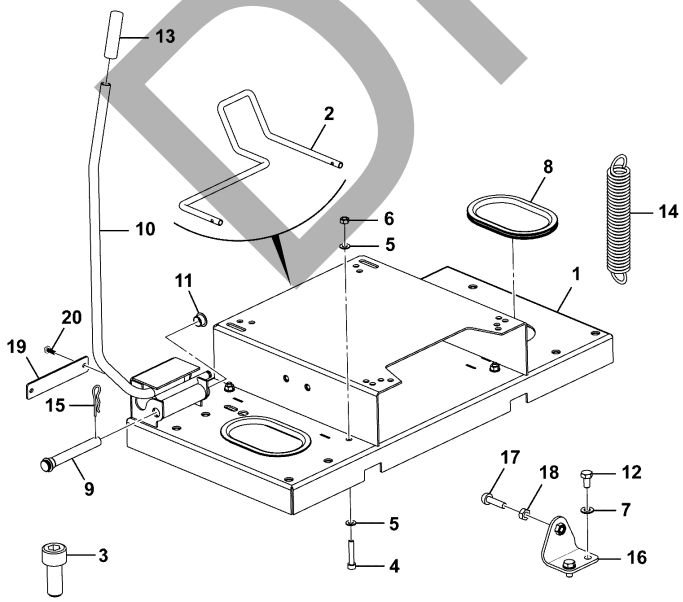

336-D3141-5

ITEM	Part #	CHANGE NO	DESCRIPTION	USAGE CODE	QTY
1			Seatbase WA		1
2	334/J2129		Slide Seat Runner		1
3	1391/3305D		Capscrew M8 x 20mm		4
4	1391/3311D		Capscrew M8 x 45mm		4
5	1420/0007D		Washer M8		8
6	1370/0203D		Nut lock M8		4
7	1420/0008D		Washer M10		2
8	333/K4209		Strip Edging 400mm		2
9	JHN0211		Spindle		1
10	400/A5604		Lever Isolator		1
11	KHN1442		Bush oilless		2
12	1316/0405D		Screw M10 x 20		2
13	KHN1542		Cap		1
14	334/K2303		Spring Tension		1
15	JLV0521		Clip R		1

DRAFT

Continue...

ITEM	PART NO	CHANGE NO	DESCRIPTION	USAGE CODE	QTY
16	333/K4824		Bracket Stop		1
17	KHN1395		Stop Rubber		1
18	1370/0301D		Nut (M10)		1
19	336/F1242		Cover		1
20	336/B4762		Screw M5X13		2

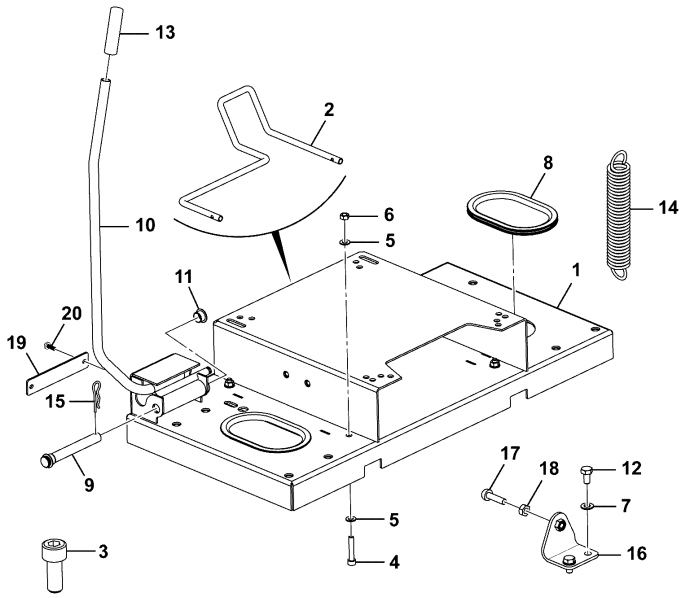

336-D3141-5

JCB380 QM

JCB380 XTRA

ITEM	Part #	CHANGE NO	DESCRIPTION	USAGE CODE	QTY
1	334/L6220		Bracket Top Left Side		1
2	333/Y6752		Lug Nut M6		2

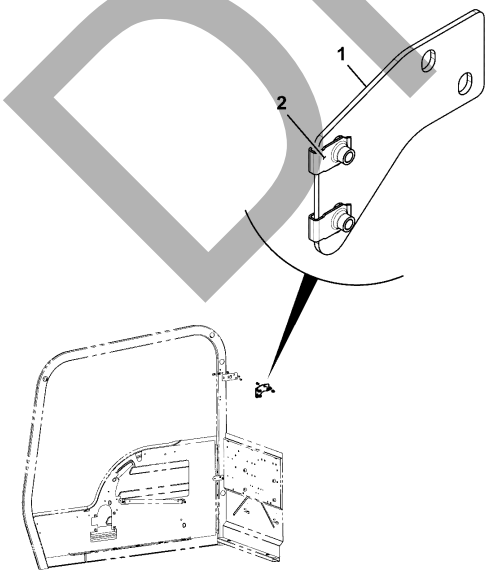

334-L7583-1

DRAFT

JCB380 QM

JCB380 XTRA

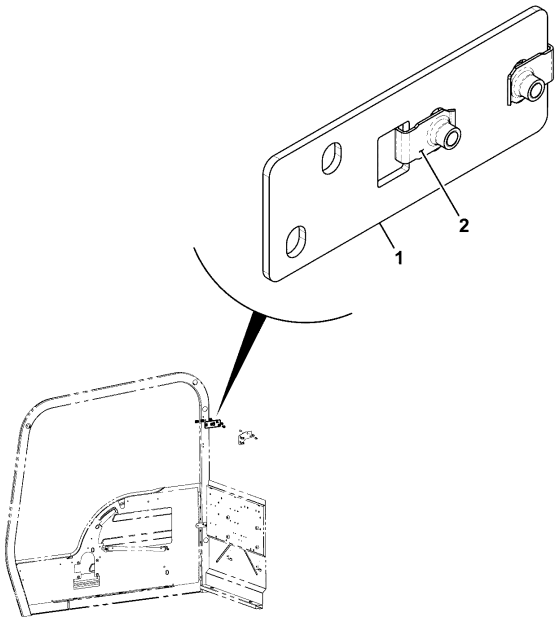

334-L7584-1

ITEM	Part #	CHANGE NO	DESCRIPTION	USAGE CODE	QTY
1	334/L6238		Bracket Top Right Side		1
2	333/Y6752		Lug Nut M6		2

DRAFT

JCB380 QM

JCB380 XTRA

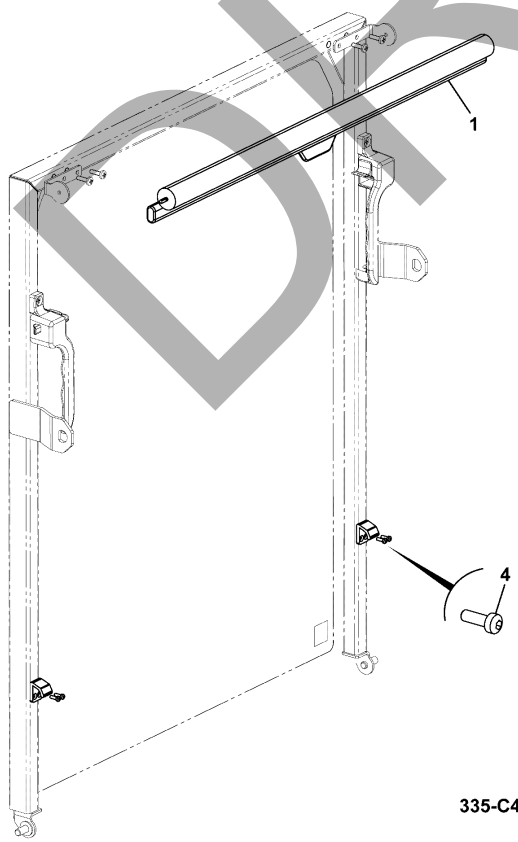

335-C4560-6

ITEM	Part #	CHANGE NO	DESCRIPTION	USAGE CODE	QTY
1	335/F7768		Sun Screen		1
4	826/10996		Screw Button Head M4 x 10mm		8

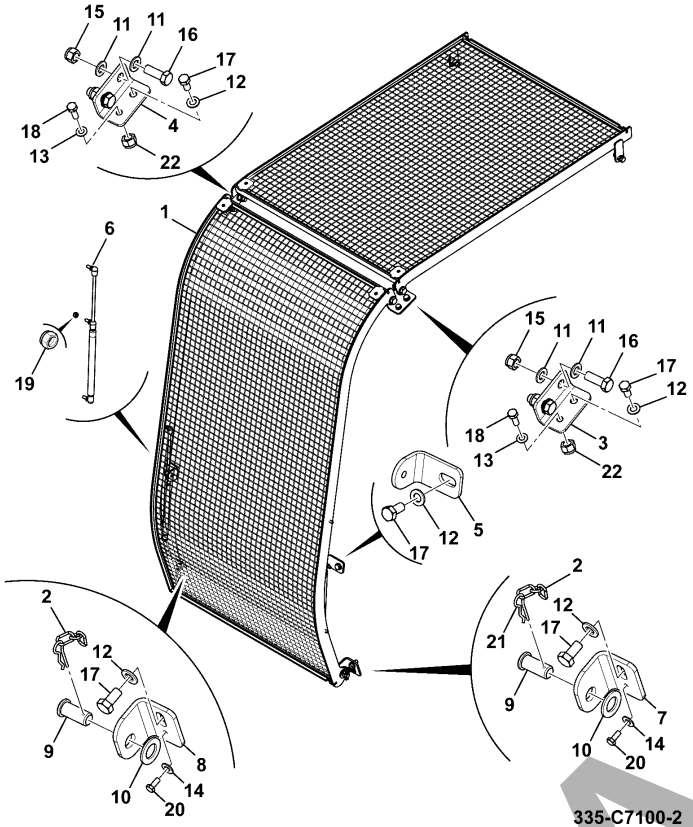

JCB380 QM

JCB380 XTRA

ITEM	Part #	CHANGE NO	DESCRIPTION	USAGE CODE	QTY
1	335/A3602		Guard Cabin Front		1
2	335/G5061		Chain		2
3	335/A3609		Bracket Mounting Grille, Front Left Side		1
4	335/A4298		Bracket Mounting Grille, Front Right Side		1
5	335/A4656		Bracket		2
6	332/P5236		Strut - Gas		2
7	335/A4244		Bracket Left Side		1
8	335/A4245		Bracket Right Side		1
9	335/G5018		Pin		2
10	1420/0012Z		Washer M20		4
11	1420/0011Z		Washer M16		4
12	1420/0009Z		Washer M12		6
13	1420/0008		Washer (M10)		4
14	1420/0007Z		Washer M8		2

B290-50-1 OTHER OPERATOR ENCLOSURE ITEMS, FRONT, GUARD, CABIN, OPTIONAL 9820/1116A ISSUE 0

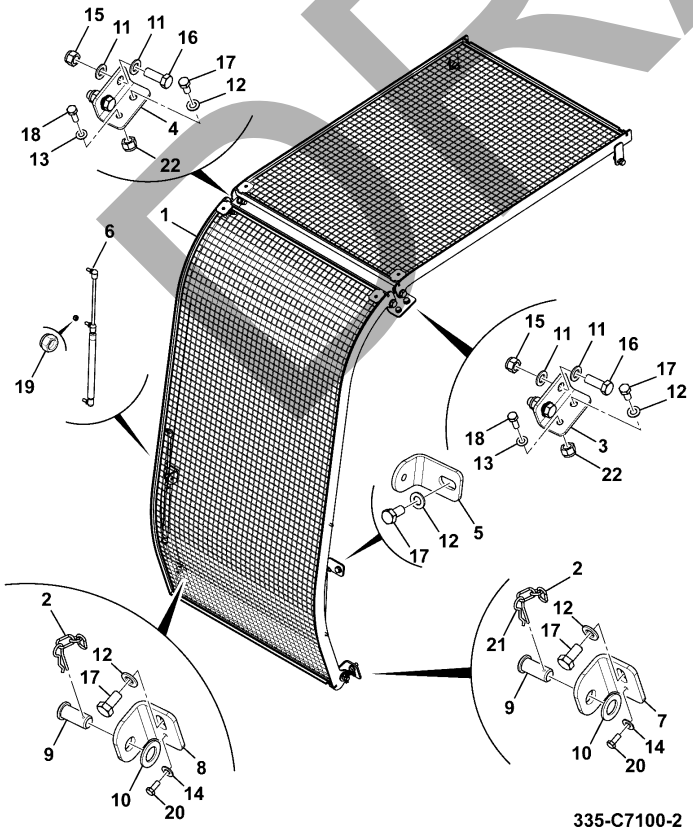

ITEM	PART NO	CHANGE NO	DESCRIPTION	USAGE CODE	QTY
15	1371/0603Z		Nut Lock M16		2
16	1316/0711Z		Screw M16x45mm		2
17	1315/0507		Setscrew		6
18	1315/0408Z		Setscrew M10 x 30mm		2
19	1371/0203Z		Nut Lock (M8)		4
20	1315/0203Z		Setscrew M6 x 16mm		2
21	335/G5026		Clip - " R-Clip"		2
22	1370/0303Z		Nut lock M10		2

DRAFT

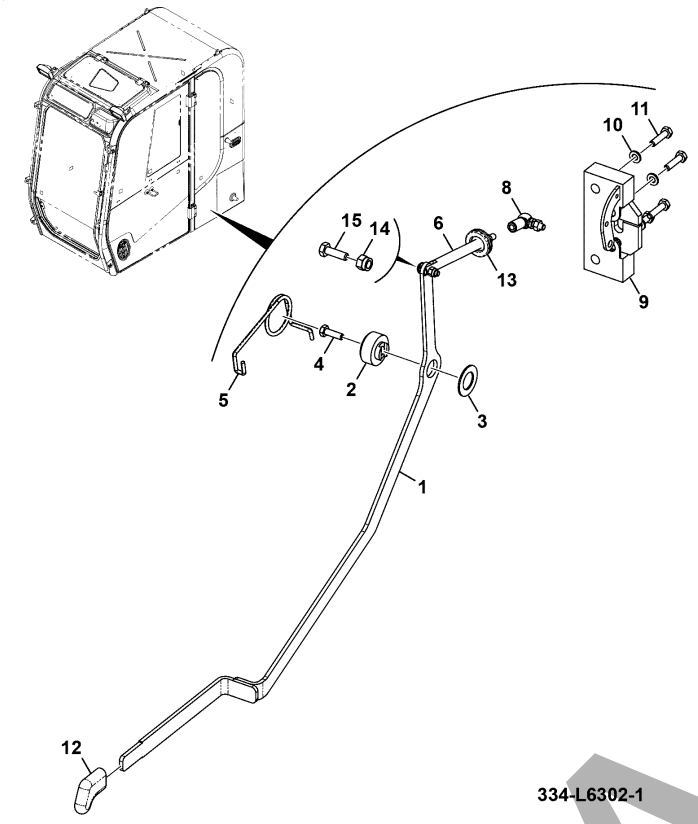

334-L6302-1

JCB380 QM

JCB380 XTRA

ITEM	Part #	CHANGE NO	DESCRIPTION	USAGE CODE	QTY
1	334/L9599		Lever Release Door		1
2	6900/0604		Spacer		1
3	6900/0605		Spacer plastic		1
4	1315/0205Z		Setscrew M6 x 20mm		1
5	6900/0606		Spring		1
6	331/36359		Rod axle		1
8	6900/0627		Joint ball		1
9	6900/0543		Latch		1
10	1420/0006Z		Washer M6		4
11	1315/0207Z		Screw M6x25		4
12	331/19929		Knob		1
13	6900/0652		Grommet		1
14	1370/0003Z		Nut lock M5		1
15	826/01406		Screw M5 x 20		1

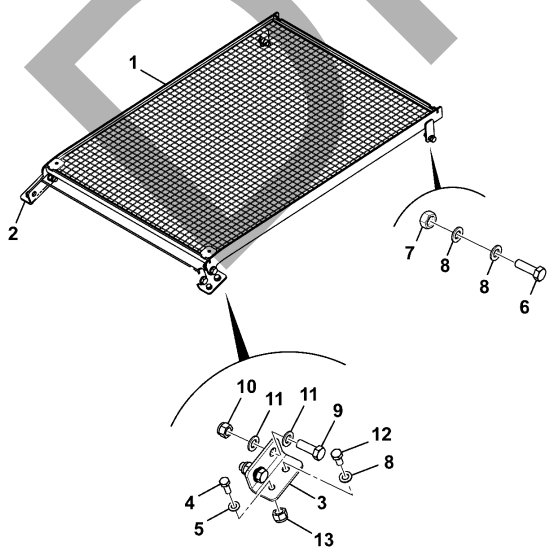

335-C7101-2

JCB380 QM

JCB380 XTRA

ITEM	Part #	CHANGE NO	DESCRIPTION	USAGE CODE	QTY
1	335/A3615		Guard Cabin Top		1
2	335/G4792		Bracket Mounting, Grille, Front RH		1
3	335/G4791		Bracket Mounting, Grille, Front LH		1
4	1315/0408Z		Setscrew M10 x 30mm		2
5	1420/0008		Washer (M10)		4
6	1316/0510Z		Screw		2
7	1370/0403Z		Nut lock M12		2
8	1420/0009Z		Washer M12		6
9	1316/0711Z		Screw M16x45mm		2
10	1371/0603Z		Nut Lock M16		2
11	1420/0011Z		Washer M16		4
12	1315/0507		Setscrew		2
13	1370/0303Z		Nut lock M10		2

DRAFT

B

B01 BODYWORK/FRAME

B02 CAB / CANOPY

• B04 EXCAVATOR

B05 REFURBISHMENTS

DRAFT

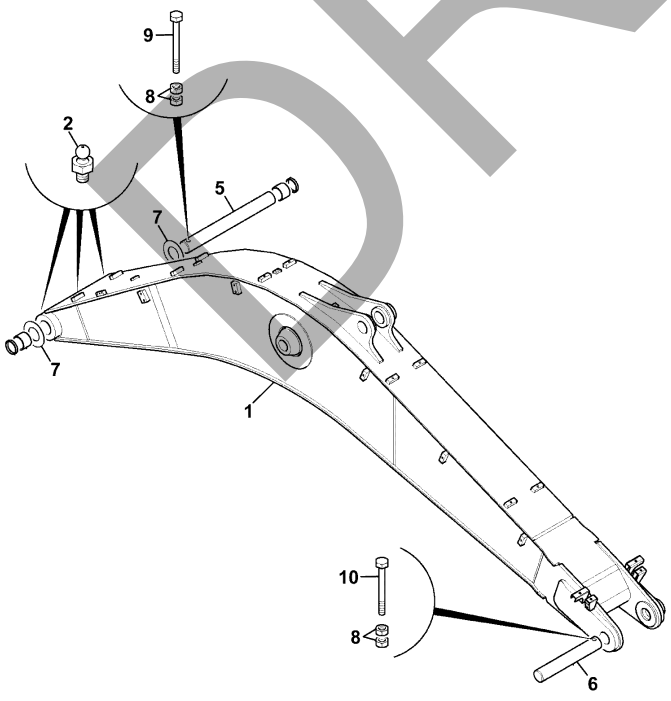

332-K4462-3

JCB380 QM

JCB380 XTRA

ITEM	Part #	CHANGE NO	DESCRIPTION	USAGE CODE	QTY
1	334/P7008		Boom (Bushed) Refer B430-15-1		1
2	JHP0038		Nipple grease angled		3
5	811/90375		Pin pivot boom to frame		1
6	332/J9475		Pin		1
7	KSV0476		Shim plate 1.2mm thick		2
8	1371/1001D		Nut M30		4

JCB380 QM

JCB380 XTRA

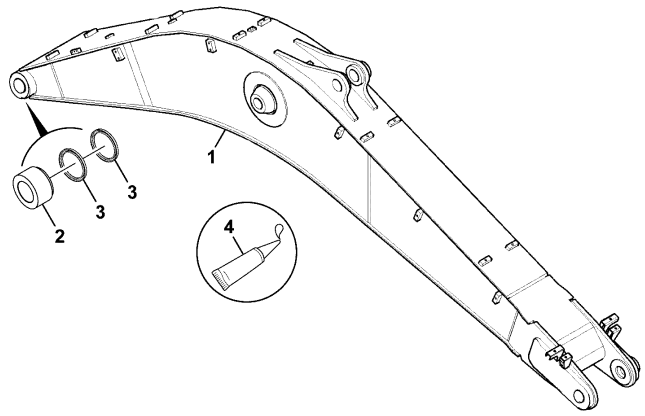

334-P7008-1

ITEM	Part #	CHANGE NO	DESCRIPTION	USAGE CODE	QTY
1			Boom heavy duty special		1
2	332/K8721		Bush		2
3	KHV0107		Seal dust		4
4	4101/1200		Loctite 640		1

JCB380 QM

JCB380 XTRA

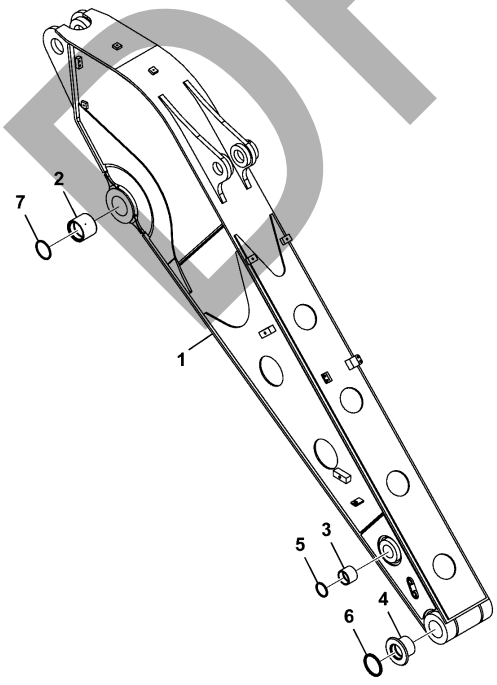

333-K7559-1

ITEM	Part #	CHANGE NO	DESCRIPTION	USAGE CODE	QTY
1	400/C7834		2.21 HD Arm Machined		1
2	332/K8722		Bush EMS		2
3	JSV0333		Bush steel		2
4	JSV0350		Bush steel		2
5	KHV0101		Seal dust		2
6	KHV0103		Seal dust		2
7	KHV0107		Seal dust		2

DRAFT

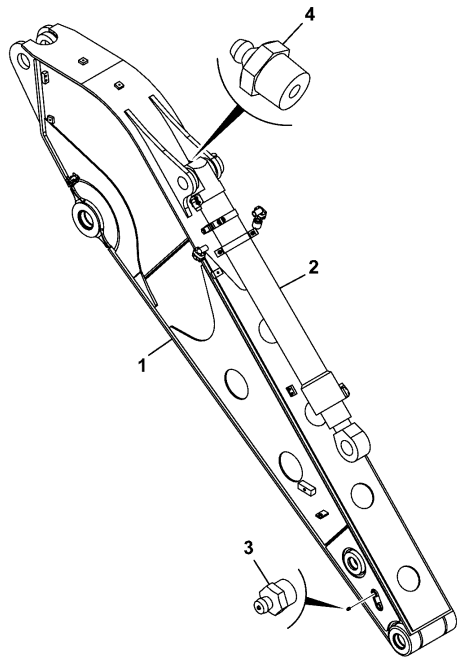

332-J7628-4

JCB380 QM

JCB380 XTRA

ITEM	Part #	CHANGE NO	DESCRIPTION	USAGE CODE	QTY
1			Arm Bushed Assembly, 2.21m Refer B440-10-1		1
2			Assembly Bucket Cylinder Line Refer E140-105-1		1
3	JHP0037		Nipple Grease Straight		3
4	1450/0002		Nipple grease, straight 1/4		1

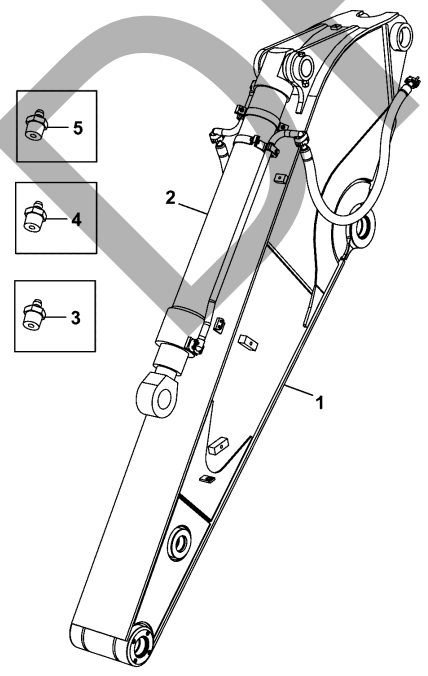

336-F2186-2

JCB380 QM

JCB380 XTRA

ITEM	Part #	CHANGE NO	DESCRIPTION	USAGE CODE	QTY
1	334/P4472		Arm 2.63m long (Bushed) Refer B490-1-1		1
2			Assembly Bucket Cylinder Line Refer E140-105-1		1
3	1450/0002		Nipple grease, straight 1/4		1
4	JHP0037		Nipple Grease Straight		2
5	JHP0038		Nipple grease angled		1

DRAFT

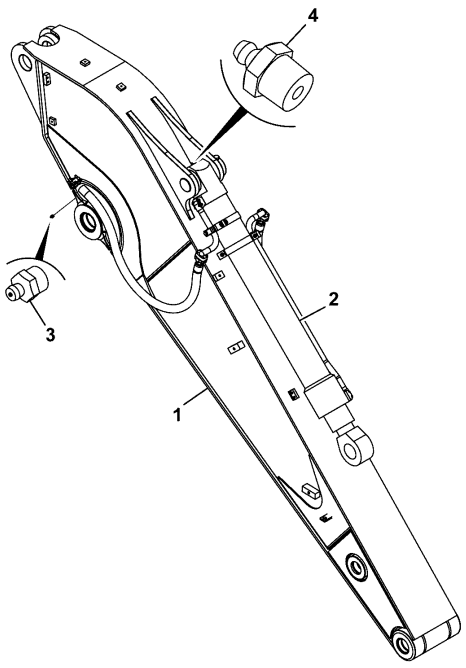

334-L5153-2

JCB380 QM

JCB380 XTRA

ITEM	Part #	CHANGE NO	DESCRIPTION	USAGE CODE	QTY
1			Arm Bushed Assembly, 3.23m Refer E400-1-1		1
2			Circuit Bucket Line - 3.23 Refer E140-140-1		1
3	JHP0037		Nipple Grease Straight		3
4	1450/0002		Nipple grease, straight 1/4		1

DRAFT

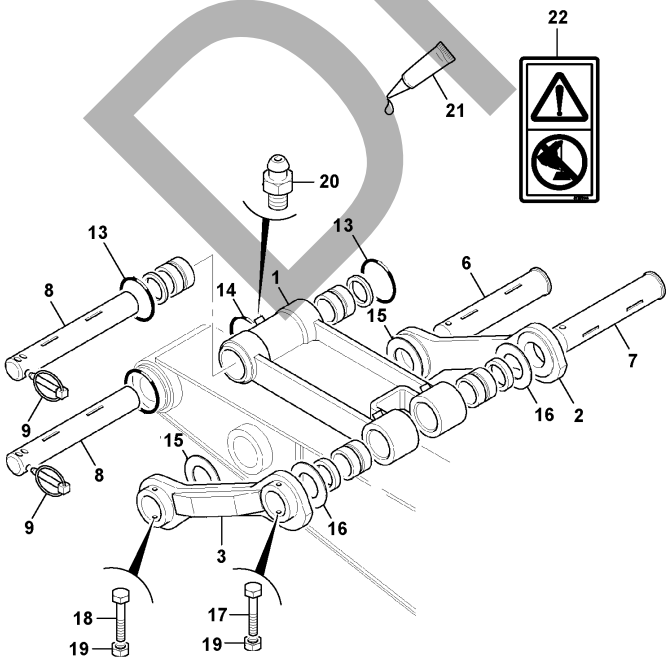

215-11577-8

JCB380 QM

JCB380 XTRA

ITEM	Part #	CHANGE NO	DESCRIPTION	USAGE CODE	QTY
1			Link Bucket Assembly (No Lift) Refer B460-5-1		1
2	333/J2276		Link Arm Machining		1
3	333/J2269		Link Arm Machining		1
6	332/J7710		Pin pivot		1
7	JSV0377		Pin attachment		1
8	JSV0079		Pin attachment		2
9	1316/3827D		Bolt M20 x 170		2
13	KHV0116		O Ring		2
14	KHV0119		O Ring		2
15	KRP1349		Shim 1.2mm thick		2
16	KSP0414		Shim plate 1.2mm thick		2
17	1316/3828D		Bolt M20 x 180 Lg		1
18	1316/3826D		Bolt M20 x 160mm		1
19	1371/0701D		Nut Plain M20		8

Continue...

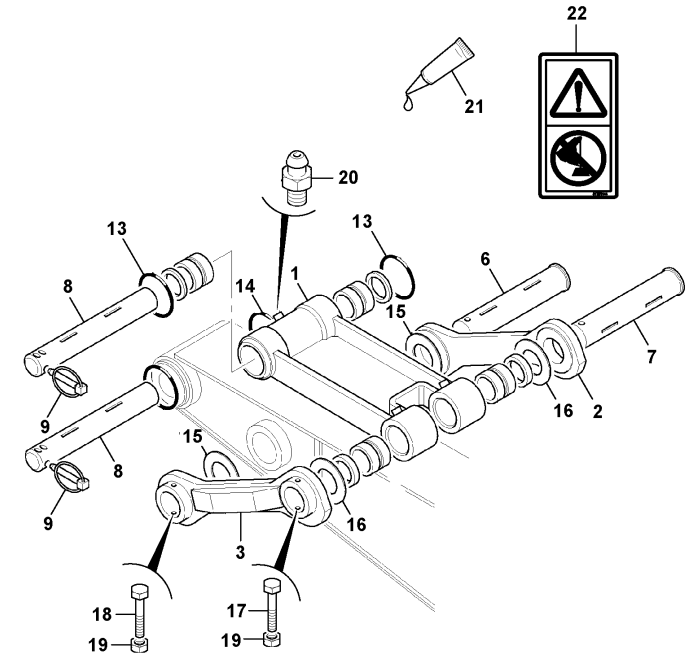

215-11577-8

ITEM	PART NO	CHANGE NO	DESCRIPTION	USAGE CODE	QTY
20	JHP0037		Nipple Grease Straight		3
21	4101/0500		Fluid Locking Loctite 262		0
22	817/70144		Label no pull		1

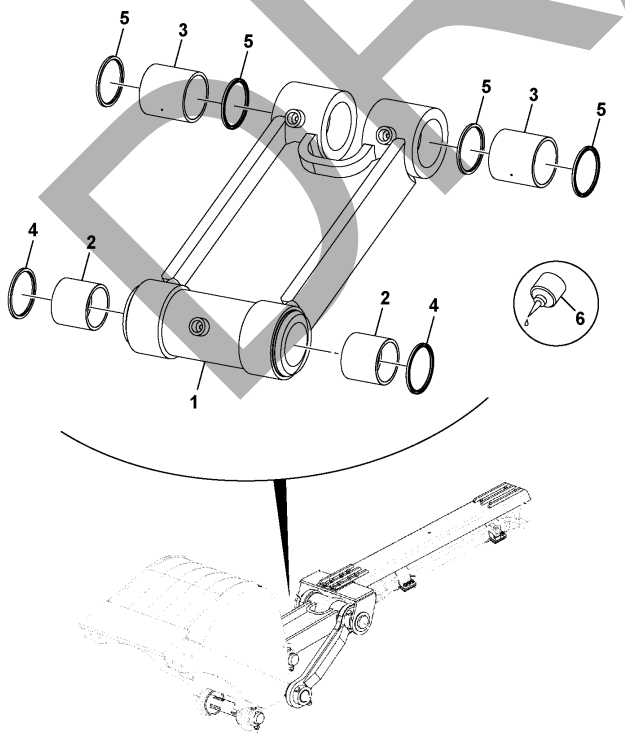

334-J0856-1

JCB380 QM

JCB380 XTRA

ITEM	Part #	CHANGE NO	DESCRIPTION	USAGE CODE	QTY
1	334/K0309		Bucket Link Machine		1
2	JSV0349		Bush steel		2
3	JSV0348		Bush steel		2
4	KHV0103		Seal dust		2
5	KHV0105		Seal dust		4
6	4101/0500		Fluid Locking Loctite 262		0

DRAFT

JCB380 QM

JCB380 XTRA

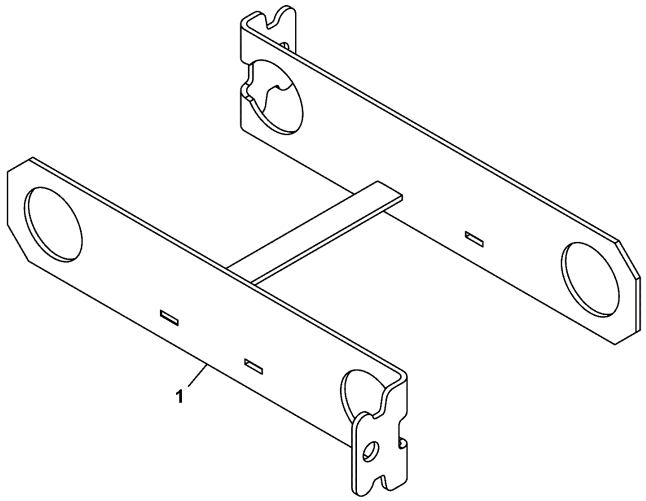

9G0RP392-5

ITEM	Part #	CHANGE NO	DESCRIPTION	USAGE CODE	QTY
1	332/J9887		Link transportation		1

DRAFT

JCB380 QM

JCB380 XTRA

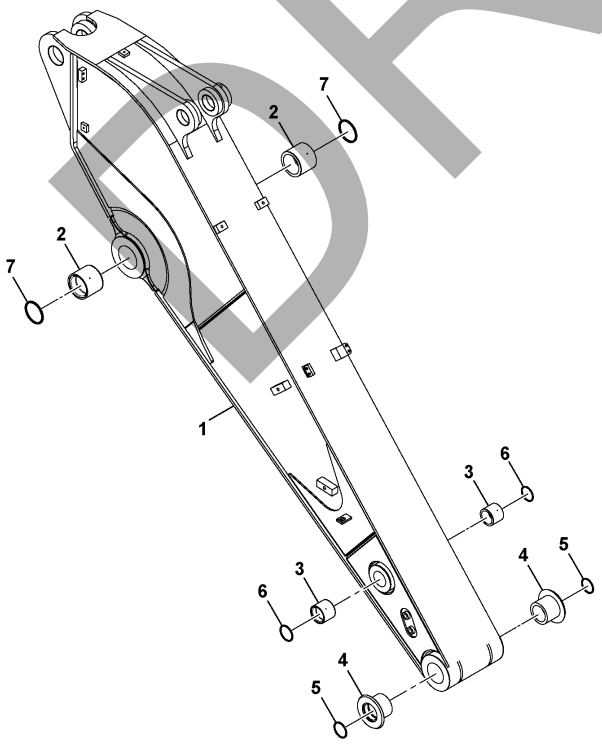

334-P4472-1

ITEM	Part #	CHANGE NO	DESCRIPTION	USAGE CODE	QTY
1	400/C8597		M/C HDS Arm 2.63M		1
2	332/K8722		Bush EMS		2
3	JSV0333		Bush steel		2
4	JSV0350		Bush steel		2
5	KHV0101		Seal dust		2
6	KHV0103		Seal dust		2
7	KHV0107		Seal dust		2

B

- B01 BODYWORK/FRAME
- B02 CAB / CANOPY
- B04 EXCAVATOR
- • B05 REFURBISHMENTS

DRAFT

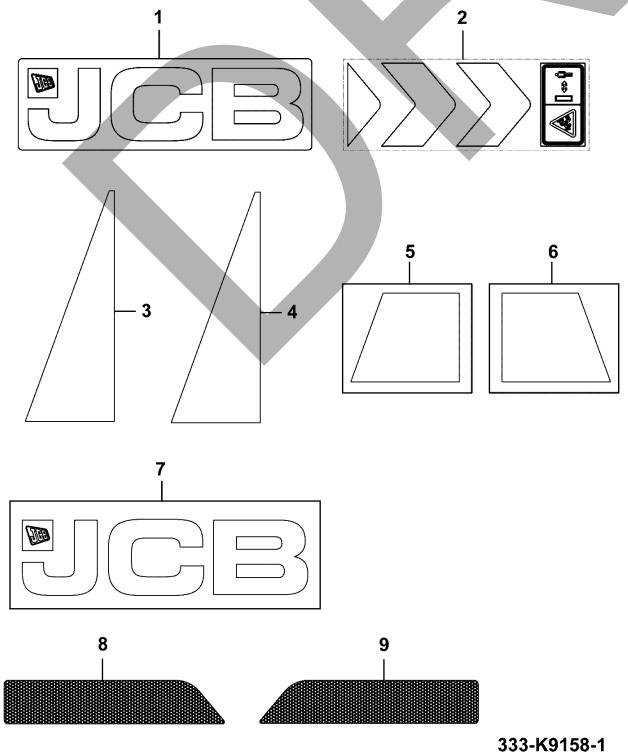

333-K9158-1

JCB380 QM

JCB380 XTRA

ITEM	Part #	CHANGE NO	DESCRIPTION	USAGE CODE	QTY
1	332/G3451		Decal Boom JCB 825 x 257 Refer B510-10-1		2
2	333/J2439		Decal chevron		2
3	333/J3266		Decal door, left side		1
4	333/J3270		Decal door, right side		1
5	333/J3714		Decal skirt, left side		1
6	333/J3718		Decal skirt, right side		1
7	333/J5047		Decal JCB 1630mm x 440mm		1
8	333/J7093		Reflector sheet red		1
9	333/J7099		Reflector sheet red		1

JCB380 QM

JCB380 XTRA

ITEM	Part #	CHANGE NO	DESCRIPTION	USAGE CODE	QTY
1	332/G3451		Decal Boom JCB 825 x 257		2

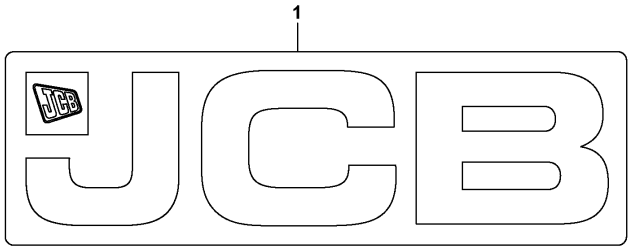

332-G3451-2

JCB380 XTRA

ITEM	Part #	CHANGE NO	DESCRIPTION	USAGE CODE	QTY
1	336/F0797		Label Pack Refer B510-30-1		1
2			Label Common, Pack Refer B510-5-1		1
3	336/E9402		Decal , Machine ID		2
4	336/E9406		Decal , Extra Arm		2
5	336/F0757		Decal , Lift Chart		1
6	336/C5729		Decal Black, XTRA		1
7	336/C5666		Decal White, XTRA		1

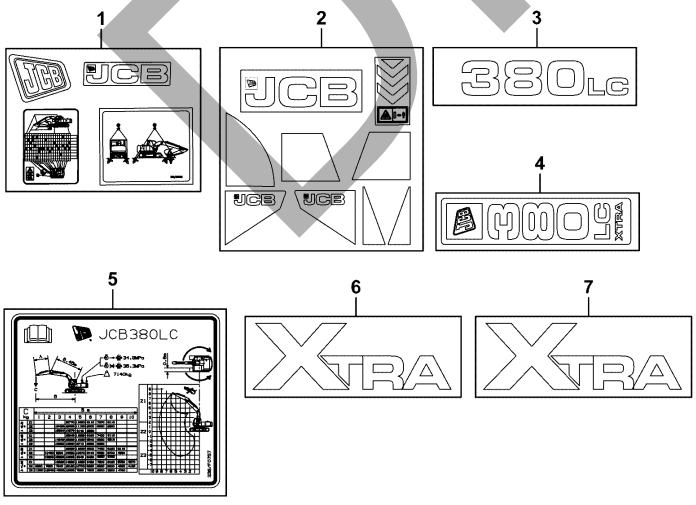

336-F0779-3

DRAFT

JCB380 QM

JCB380 XTRA

ITEM	Part #	CHANGE NO	DESCRIPTION	USAGE CODE	QTY
1	817/19056		Label Controls Track iso		1

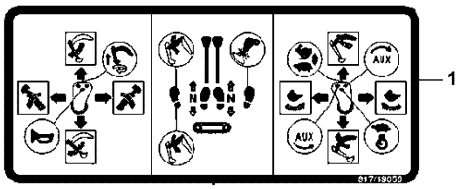

817-19056-1

JCB380 QM

JCB380 XTRA

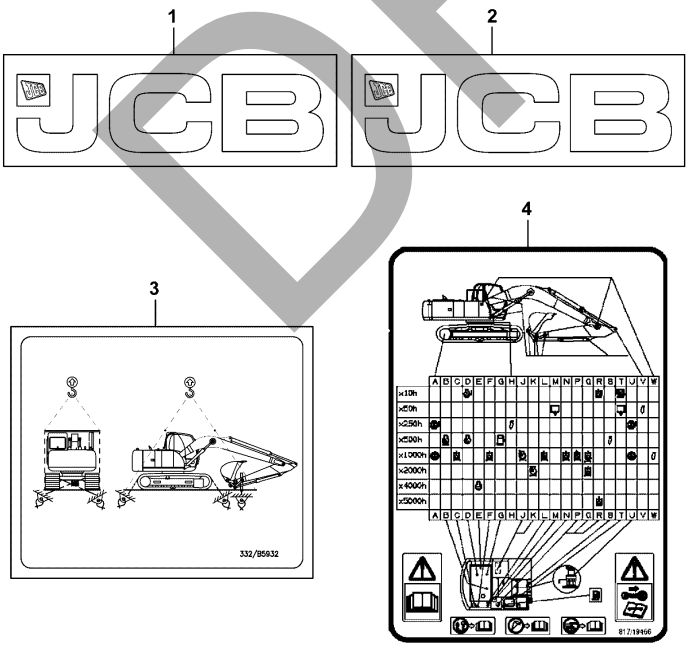

ITEM	Part #	CHANGE NO	DESCRIPTION	USAGE CODE	QTY
1	332/G4520		Decal JCB 920 x 286		2
2	332/K5067		Decal , JCB Logo - Yellow		1
3	817/19466		Decal lubrication chart		1
4	332/B5932		Decal Lift And Tie-down		1

336-F0797-1

DRAFT

DECALS MACHINE IDENTIFICATION, DECAL, AND INSIGNIA ASSEMBLY - 380 LC QM

JCB380 QM

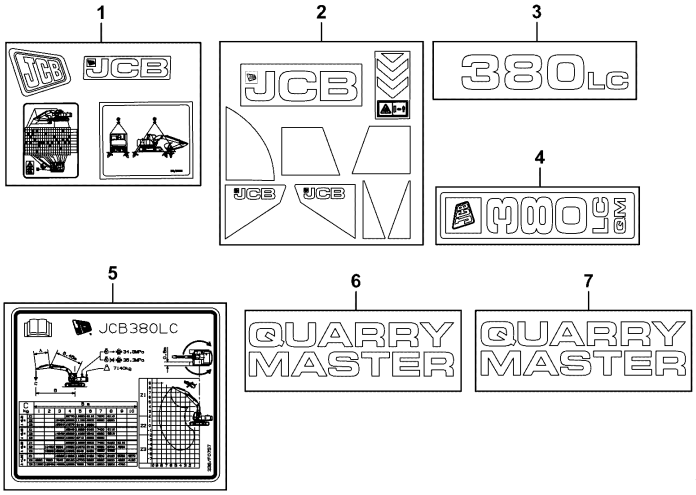

336-F5248-1

ITEM	Part #	CHANGE NO	DESCRIPTION	USAGE CODE	QTY
1	336/F0797		Label Pack Refer B510-30-1		1
2			Label Common, Pack Refer B510-5-1		1
3	336/E9402		Decal , Machine ID		2
4	336/F5243		Decal Arm - 380 LC QM		2
5	336/F0757		Decal , Lift Chart		1
6	336/F5175		Decal QM - Quarry Master Black		1
7	336/F5177		Decal QM - Quarry Master White		1

LABELS WARNING/INFORMATION, DECAL, JCB DIESELMAX

JCB380 QM

JCB380 XTRA

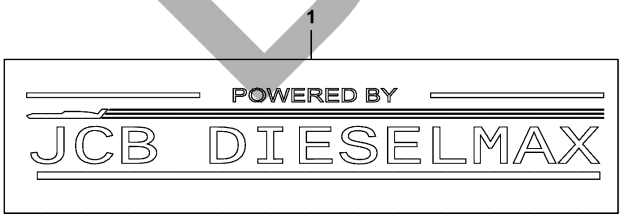

332-B0459-1

ITEM	Part #	CHANGE NO	DESCRIPTION	USAGE CODE	QTY
1	332/B0459		Decal JCB Dieselmax		1

DRAFT

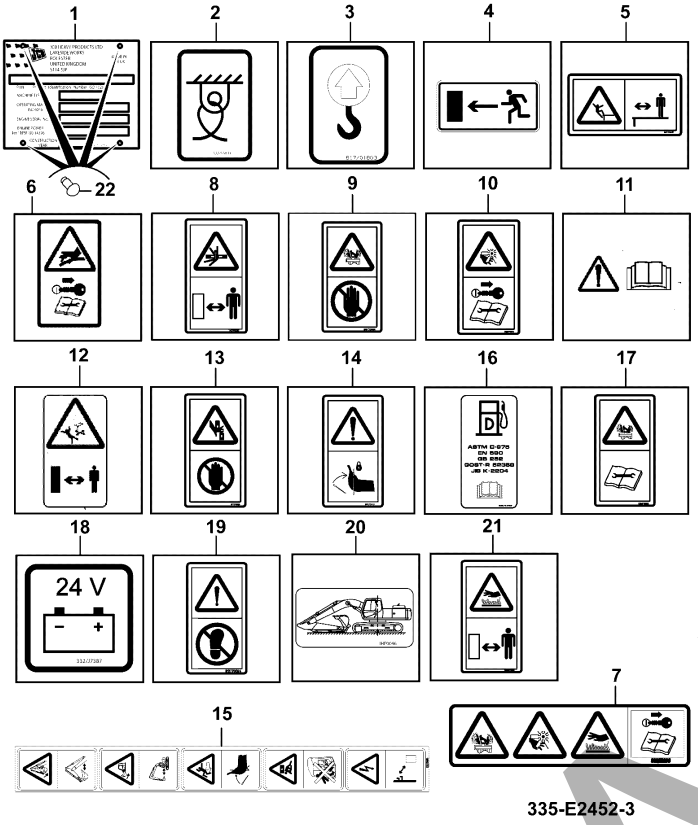

335-E2452-3

JCB380 QM

JCB380 XTRA

ITEM	Part #	CHANGE NO	DESCRIPTION	USAGE CODE	QTY
1			Dataplate ROW		1
2	332/S5833		Label Tie Down		4
3	817/01803		Label Sling Point		4
4	817/19457		Decal Emergency Exit		1
5	817/70001		Label Safety		1
6	817/18532		Decal JS Information / Warning		1
7	332/J2896		Label warning sign ; engine bay		1
8	817/70027		Label ISO-07D		3
9	817/70005		Label ISO-06D		1
10	332/P4679		Label ISO-09F		1
11	817/18541		Decal JS information / warning		1
12	817/19470		Decal Warning Label - Dipper		2

B520-15-1 LABELS WARNING/INFORMATION, LABELS WARNING/INFORMATION, ASSEMBLY - ROW COMMON LABLES 9820/1116A ISSUE 0

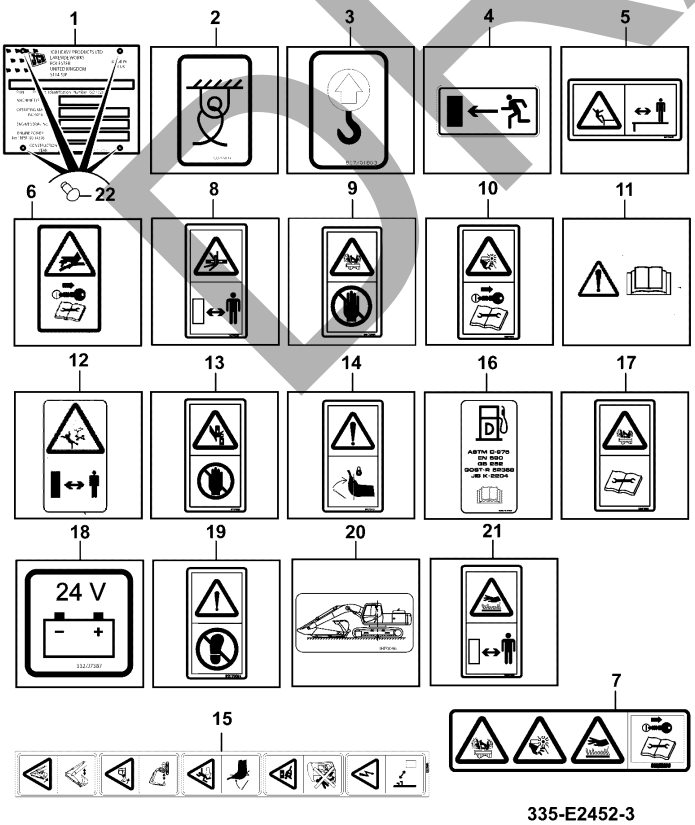

335-E2452-3

ITEM	PART NO	CHANGE NO	DESCRIPTION	USAGE CODE	QTY
13	817/70003		Label Warning-Hazard to Hands		1
14	334/K3643		Decal Warning Sign		1
15	332/J9693		Decal warning sign; europian union multiple		1
16	332/T4796		Label Diesel Fuel		1
17	332/F5860		Decal warning pressure hazard		1
18	332/J7387		Decal 24v		1
19	817/70024		Label warning do not use as step		1
20	JHP0096		Label oil level		1
21	335/E7623		Safety Label, Hot Parts		1
22	JHP0168		Rivet		4

DRAFT

JCB380 QM

JCB380 XTRA

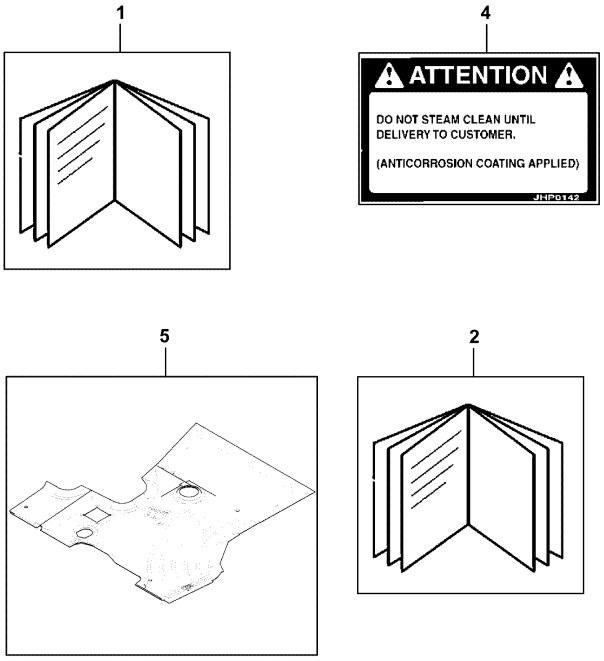

336-F0785-2

ITEM	Part #	CHANGE NO	DESCRIPTION	USAGE CODE	QTY
1	9831/3900		Handbook Operators - English		1
2	9820/1115P		Catalogue JCB370LC Dealer Part Book With BOM		1
4			Decal pre-delivery		1
5	jhp0095		Floormat (Transit Protn)		2

JCB380 QM

JCB380 XTRA

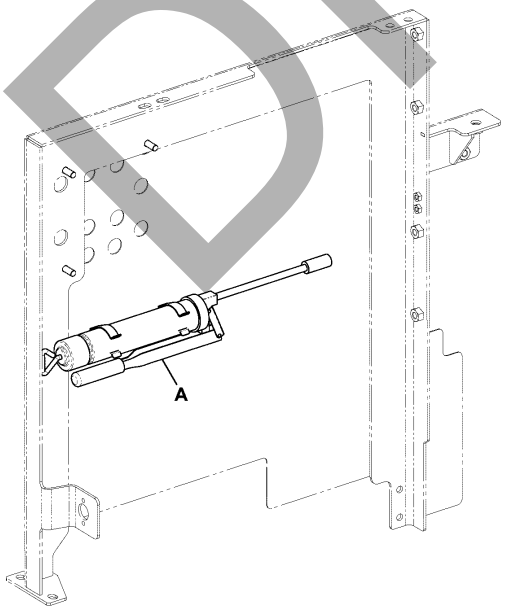

ITEM	Part #	CHANGE NO	DESCRIPTION	USAGE CODE	QTY
A	915/07300		Gun grease		1

915-07300-7

DRAFT

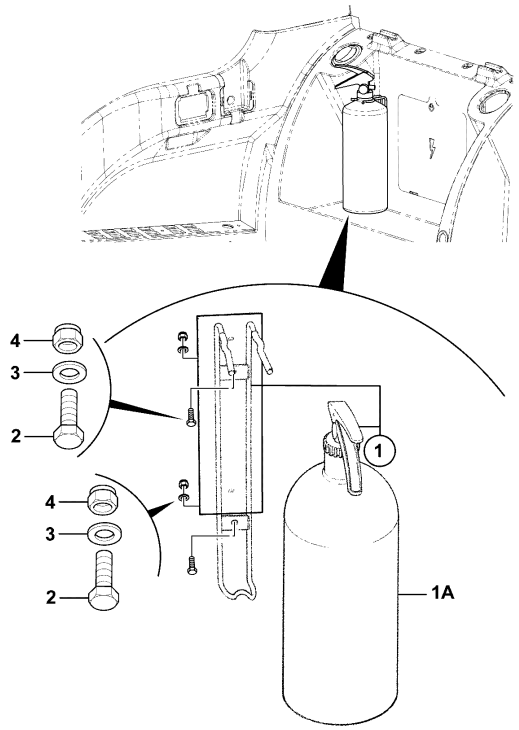

JG0TP019-3

JCB380 QM

JCB380 XTRA

ITEM	Part #	CHANGE NO	DESCRIPTION	USAGE CODE	QTY
1	159/69381		Extinguisher fire c/w cradle		1
1A	:993/68400		Extinguisher fire 2KG ABC Powder		1
2	1315/0103D		Setscrew M5 x 16mm		2
3	1420/0005D		Washer M5		2
4	1370/0003D		Nut Lock M5		2

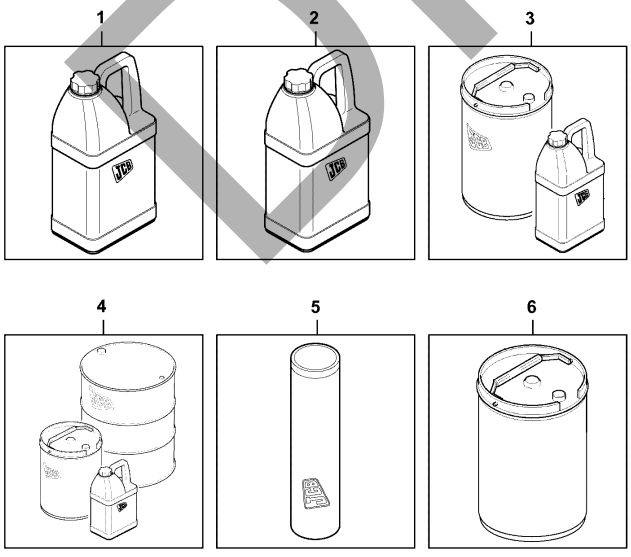

333-J5295-1

JCB380 QM

JCB380 XTRA

ITEM	Part #	CHANGE NO	DESCRIPTION	USAGE CODE	QTY
1	JHP0148		Guard steel export		1
2	KHP0591		Fluid Wash glass		4
3	4000/0300		Fluid Gear Oil Refer A990-1-1		27
4	4001/1800		Oil Engine		25
5			Grease High Pressure Refer B570-15-1		37
6	4006/1100		Fluid antifreeze Refer B570-20-1		27

DRAFT

JCB380 QM

JCB380 XTRA

ITEM	Part #	CHANGE NO	DESCRIPTION	USAGE CODE	QTY
1	130/77705		Diesel LTRS		170

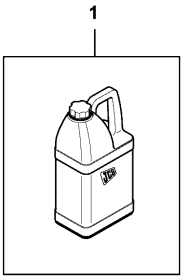

335-F0662-1

DRAFT

JCB380 QM

JCB380 XTRA

ITEM	Part #	CHANGE NO	DESCRIPTION	USAGE CODE	QTY
1		NLA	Grease High Pressure		1
1A	4003/2017		Grease High Pressure 400g x 24 Qty:A/R		0
1B	4003/2006		Grease High Pressure 12.5kg Qty:A/R		0
1C	4003/2005		Grease High Pressure 50kg Qty:A/R		0

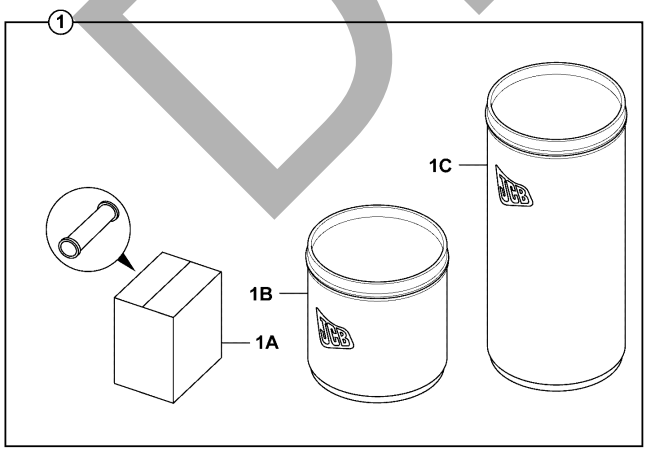

4003-2000-1

JCB380 QM

JCB380 XTRA

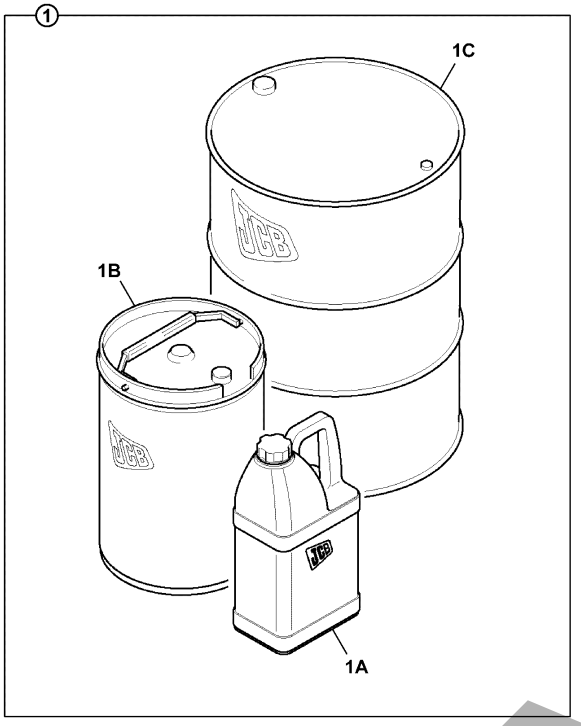

4000-2100-1

ITEM	Part #	CHANGE NO	DESCRIPTION	USAGE CODE	QTY
1	4006/1100		Fluid antifreeze		1
1A	4006/1101		Fluid antifreeze 5 litre HD4X QTY:A/R		0
1B	4006/1120		Fluid antifreeze 20 litre HD4X QTY:A/R		0
1C	4006/1103		Fluid antifreeze 200 litre HD4X QTY:A/R		0

JCB380 QM

JCB380 XTRA

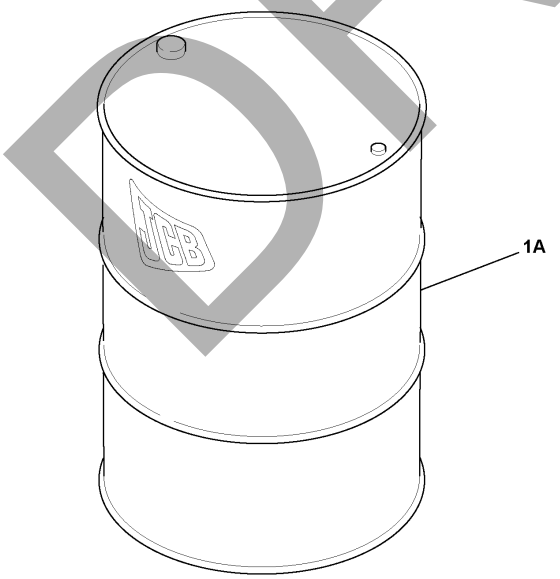

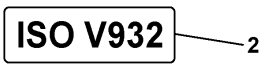

935550

ITEM	Part #	CHANGE NO	DESCRIPTION	USAGE CODE	QTY
1A	4002/0701		Fluid hydraulic ISO68 200 litre		1
2	817/20651		Label hydraulic oil (HP68)		1

DRAFT

- **C01 ELECTRICAL**

C03 ELECTRICS, CAB

C

DRAFT

JCB380 QM

JCB380 XTRA

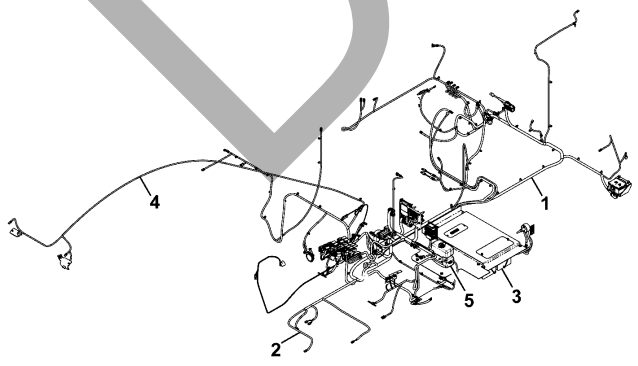

ITEM	Part #	CHANGE NO	DESCRIPTION	USAGE CODE	QTY
1			Electrics Assembly - Revolving Frame Refer C100-15-1		1
2			Electrics Assembly - Cab Refer C300-5-1		1
3			Battery Installation Assembly Refer C120-10-1		1
4			Boom Electrics Assembly Refer C190-1-1		1
5			Bottle washer assembly Refer C390-5-1		1

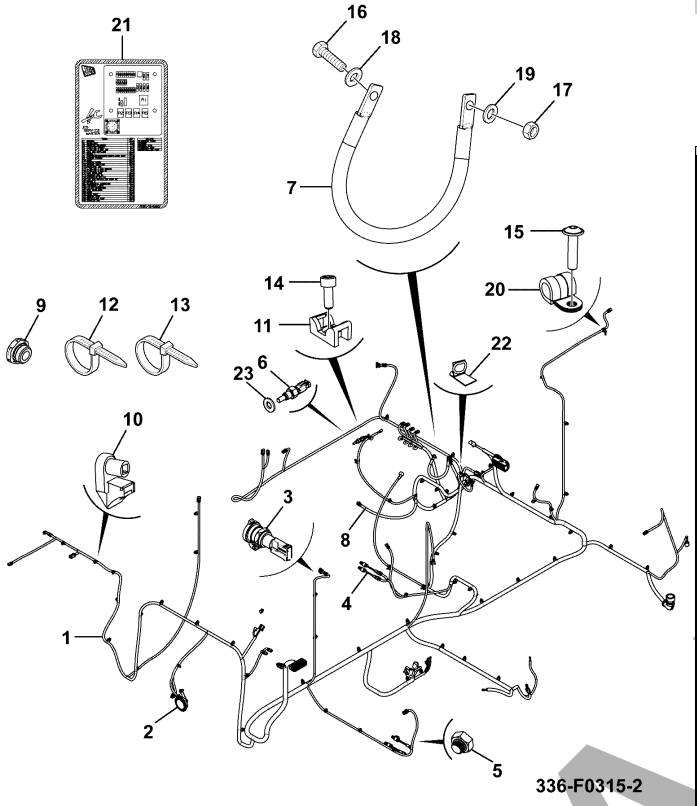

JCB380 QM

JCB380 XTRA

ITEM	Part #	CHANGE NO	DESCRIPTION	USAGE CODE	QTY
1	336/E1034		Harness Revolver		1
2			Horn assembly Refer C170-1-1		1
3	715/04300		Socket beacon		3
4	332/J0669		Switch Low Pressure 5bar 1/4" BSP		4
5	KHJ0363		Plug		1
6	333/K3082		Sensor temperature		1
7	332/K8740		Cable isolator to rev. frame		1
8	333/J2138		Cable engine earth		1
9	816/90806		Plug M16		1
10	826/01274		Cradle cable tie mount		66
11	KHR0319		Clamp special		4
12	333/J8681		Tie cable (Double loop)		9

C100-15-1 ELECTRICAL INSTALLATION ASSEMBLIES, ELECTRICS, ASSEMBLY - REVOLVING FRAME 9820/1116A ISSUE 0

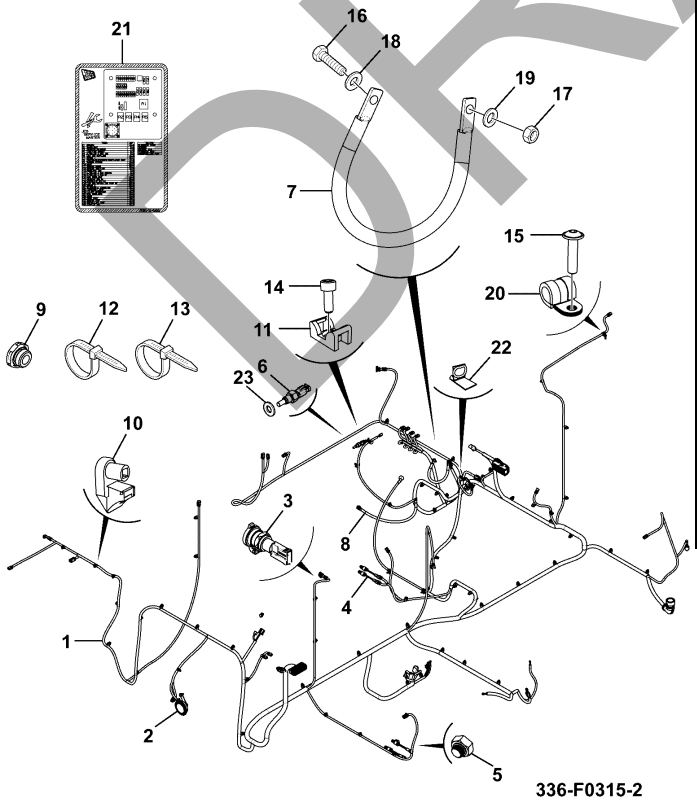

ITEM	PART NO	CHANGE NO	DESCRIPTION	USAGE CODE	QTY
13	826/11447		Tie Cable Locking		57
14	1391/3203D		Capscrew M6 x 16mm		4
15	826/01560		Screw M6x25		1
16	1316/0305D		Screw M8 X 20		1
17	1370/0301D		Nut (M10)		2
18	1420/0007D		Washer M8		1
19	1420/0008D		Washer M10		2
20	821/00410		Clip P 10mm		1
21	335/G4889		Decal Fusebox, Tracked		1
22	263/34900		Harness Clip		1
23	1406/0015		Washer bonded 3/8"		1

DRAFT

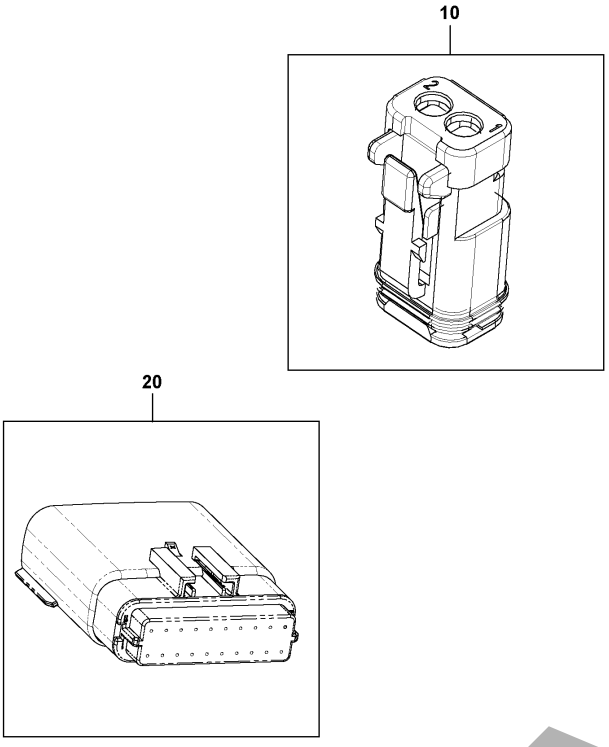

333-K4638-2

JCB380 QM

JCB380 XTRA

ITEM	Part #	CHANGE NO	DESCRIPTION	USAGE CODE	QTY
10	7212/0052		Housing socket,2 way Deutsch		2
20	332/C8203		20 way Pin Hsg 20 way MX150 pin hsg		1

DRAFT

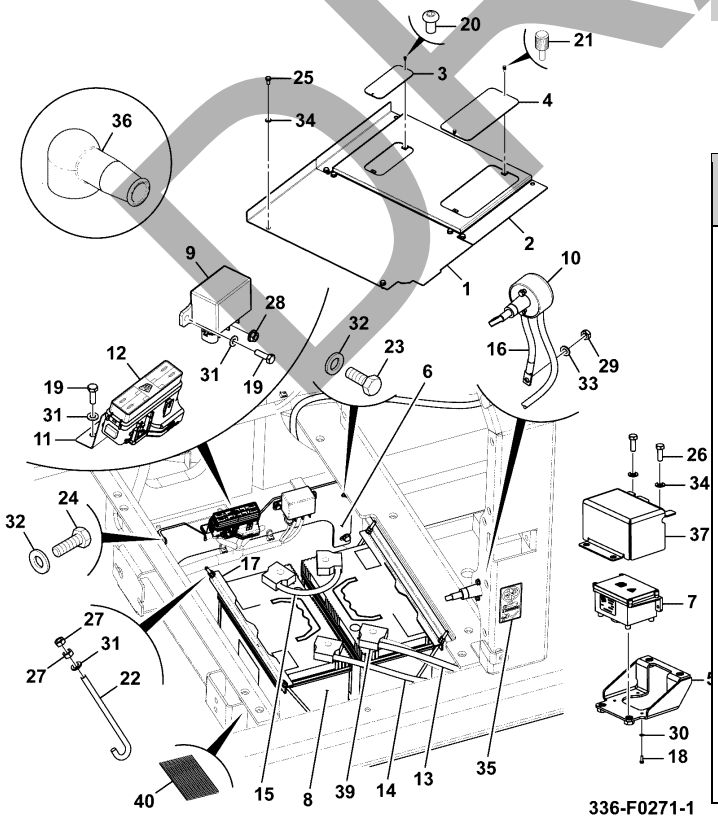

336-F0271-1

JCB380 QM

JCB380 XTRA

ITEM	Part #	CHANGE NO	DESCRIPTION	USAGE CODE	QTY
1	336/C9363		Plate Cover		1
2	336/C9301		Plate Cover, Battery		1
3	331/49664		Plate fuse cover		1
4	332/K7745		Cover plate		1
5	333/K9407		Bracket Pod Box		1
6	336/D5510		Plate Realy mount, WA		1
7	333/K3679		Module Fuse And Relay 24V-Blue Refer C350-1-1		1
8	332/F3103		Battery Wet Charge 12V 110AH Refer C120-5-1		2
9	716/30295		Relay 24 volt		1
10			Isolator Battery, Assembly Refer C130-5-1		1
11	333/J9498		Mount fuse link box		1

Continue...

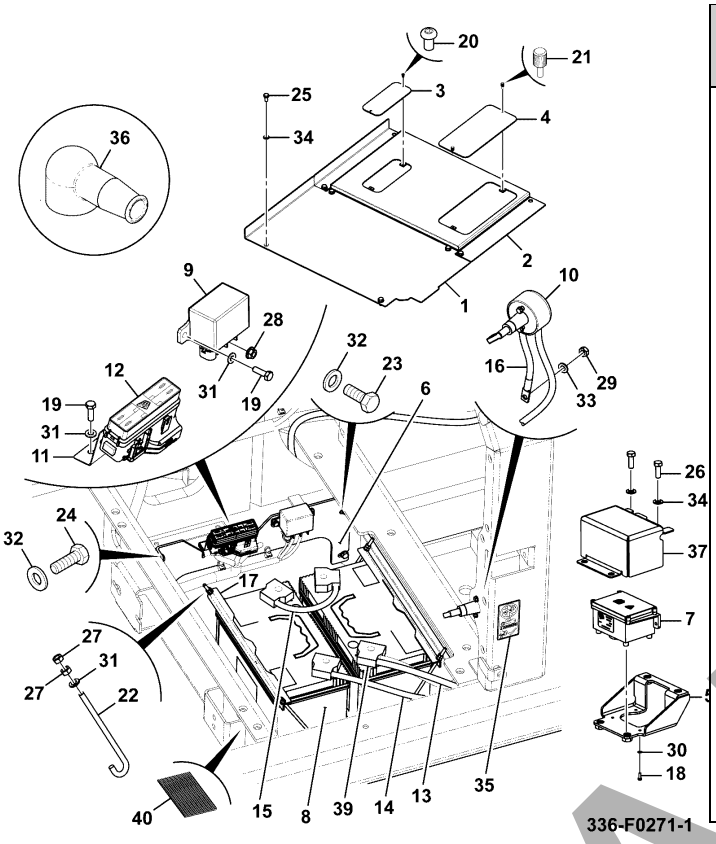

336-F0271-1

ITEM	PART NO	CHANGE NO	DESCRIPTION	USAGE CODE	QTY
12			Box fuselink assembly Refer C350-5-1		1
13	336/F1143		Cable JS370 POSITIVE CABLE		1
14	718/20038		Lead -ve		1
15	JHR0162		Cable battery lead clamp and cover		1
16	332/U2412		Cable Isolator		1
17	332/L2990		Clamp battery		2
18	1316/0103D		Screw		4
19	1316/0205D		Screw set		4
20	826/01673		Screw Button Head, M6 x 10		2
21	826/11036		Screw Thumb M6X15		2
22	826/01763		Bolt Swing M6 x 255mm		4
23	1316/0305D		Screw M8 X 20		2
24	1316/0307D		Screw		2
25	1316/0507D		Setscrew M12 x 25 grade 10.9		10
26	1316/0509D		Screw M12x35 long		2

C120-10-1 BATTERY, INSTALLATION, ASSEMBLY
9820/1116A
ISSUE 0

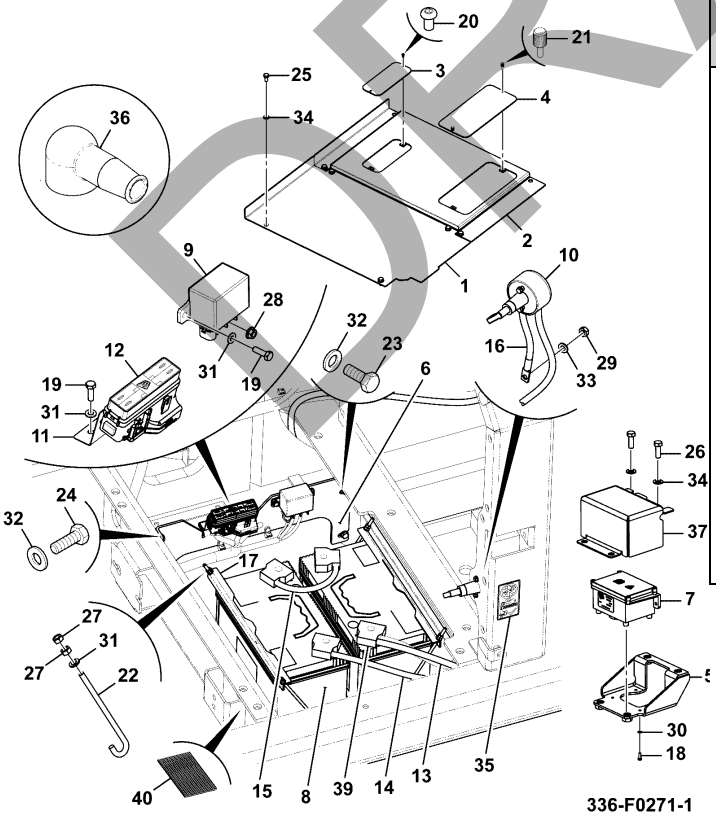

336-F0271-1

ITEM	PART NO	CHANGE NO	DESCRIPTION	USAGE CODE	QTY
27	1370/0101D		Nut plain M6		8
28	1370/0108Z		Nut M6 flange head		2
29	1370/0301D		Nut (M10)		1
30	1420/0005D		Washer M5		4
31	1420/0006D		Washer M6		8
32	1420/0007D		Washer M8		4
33	1420/0008D		Washer M10		1
34	1420/0009D		Washer M12		12
35	333/K0304		Decal isolator key		1
36	KHR1716		Cap Terminal		1
37	333/K9383		Cover Pod Box		1
39	926/43100		Cover Battery Terminal Red		1
40	335/G7793		Mat Rubber		2

DRAFT

JCB380 QM

JCB380 XTRA

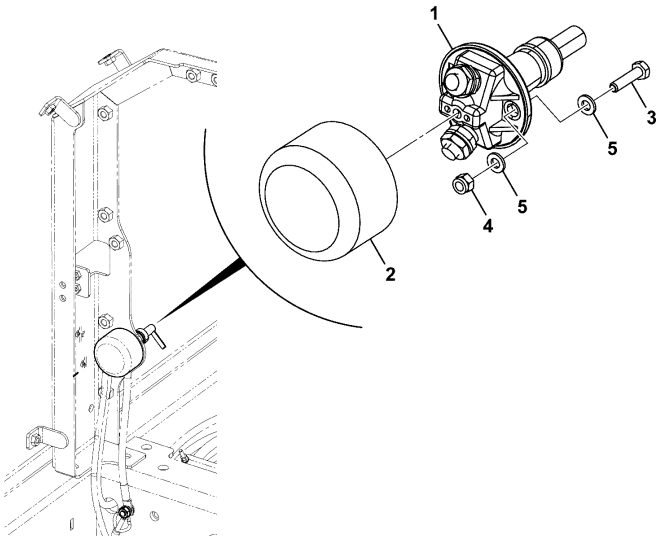

336-C1227-1

ITEM	Part #	CHANGE NO	DESCRIPTION	USAGE CODE	QTY
1	335/E3244		Isolator battery		1
2	265/00893		Cover battery isolator		1
3	1316/0207D		Setscrew M6 X 25		2
4	1370/0103D		Nut M6		2
5	1420/0006D		Washer M6		4

JCB380 QM

JCB380 XTRA

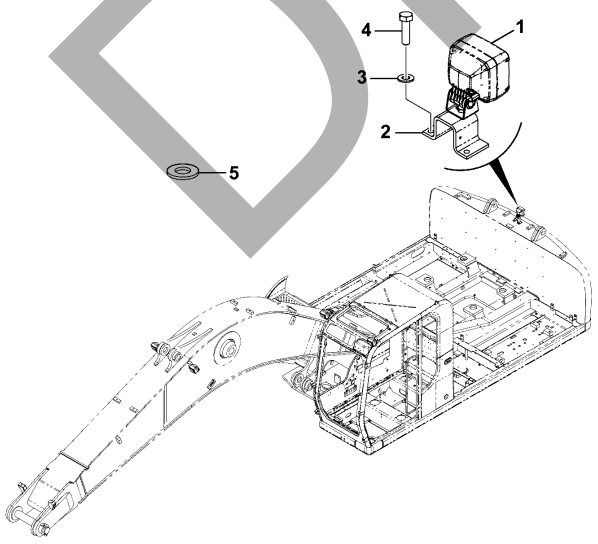

335-F8872-5

ITEM	Part #	CHANGE NO	DESCRIPTION	USAGE CODE	QTY
1	336/D6236		Work lamp 24V DC		6
2	336/F0167		Bracket Rear		1
3	1420/0007D		Washer M8		2
4	1316/0307D		Screw		2
5	JHP0046		Washer M10		1

DRAFT

JCB380 QM

JCB380 XTRA

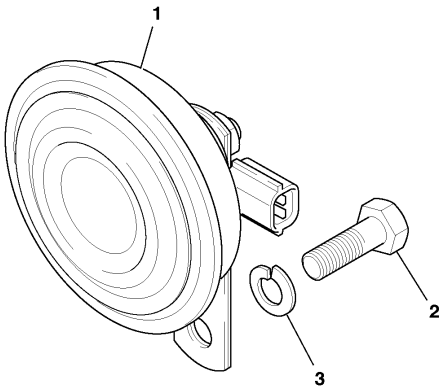

ITEM	Part #	CHANGE NO	DESCRIPTION	USAGE CODE	QTY
1	335/B4671		Horn 24 volt		1
2	1316/0305D		Screw M8 X 20		1
3	1420/0007D		Washer M8		1

923210

DRAFT

JCB380 QM

JCB380 XTRA

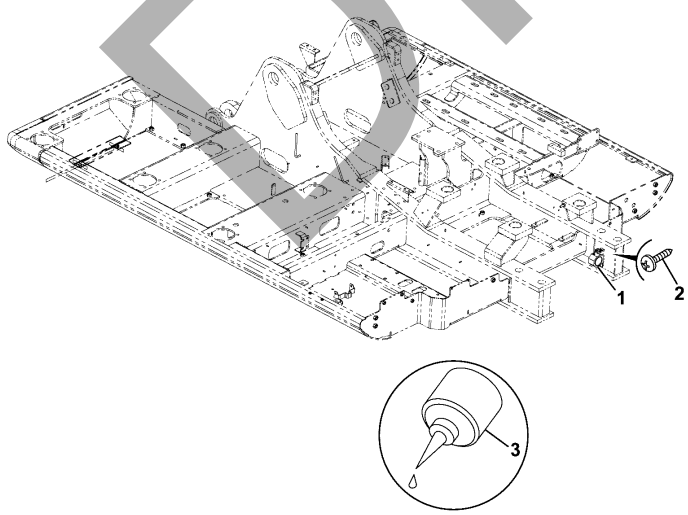

ITEM	Part #	CHANGE NO	DESCRIPTION	USAGE CODE	QTY
1	335/C6340		Alarm Reverse 102dB (A) Refer C170-15-1		1
2	KHR0738		Screw pan head		2
3	4101/0500		Fluid Locking Loctite 262		0

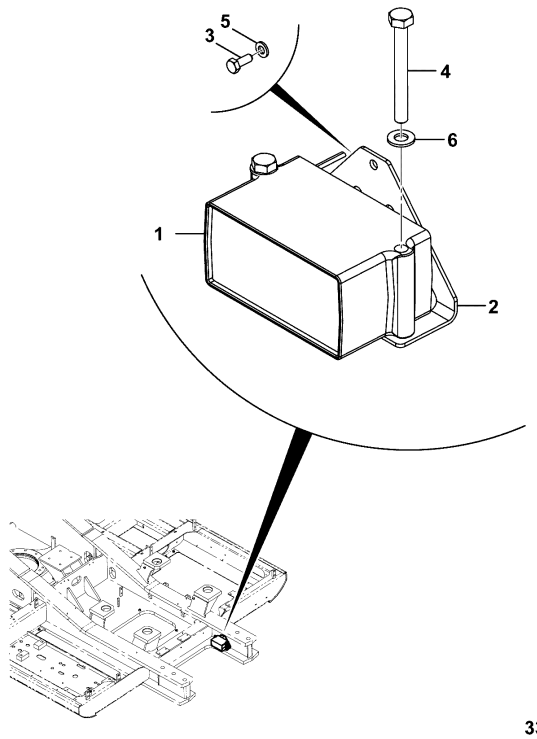

333-K6877-1

JCB380 QM

JCB380 XTRA

ITEM	Part #	CHANGE NO	DESCRIPTION	USAGE CODE	QTY
1	332/S9873		Alarm reverse,107dBA,BBS white noise		1
2	333/K7005		Bracket Alarm		1
3	1316/0203D		Screw		2
4	1316/3419D		Bolt		2
5	1420/0006D		Washer M6		2
6	1420/0008D		Washer M10		2

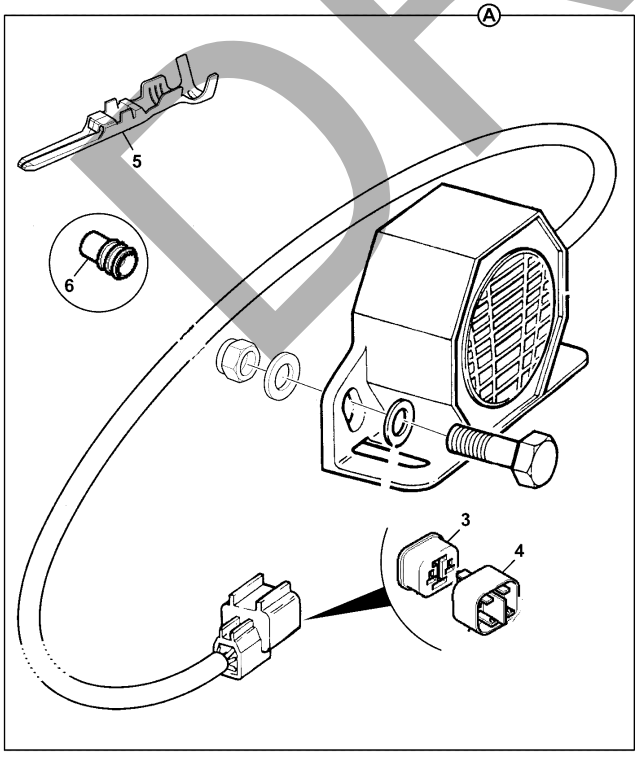

717-07700-1

JCB380 QM

JCB380 XTRA

ITEM	Part #	CHANGE NO	DESCRIPTION	USAGE CODE	QTY
A	335/C6340		Alarm Reverse 102dB (A)		1
3	:7212/0002		Housing 2 Way Pin		1
4	:7212/0004		Retainer 2 Way Pin		1
5	:7204/0001		Connector male		2
6	:7210/0002		Seal wire 1.4-2.2mm OD blue		2

DRAFT

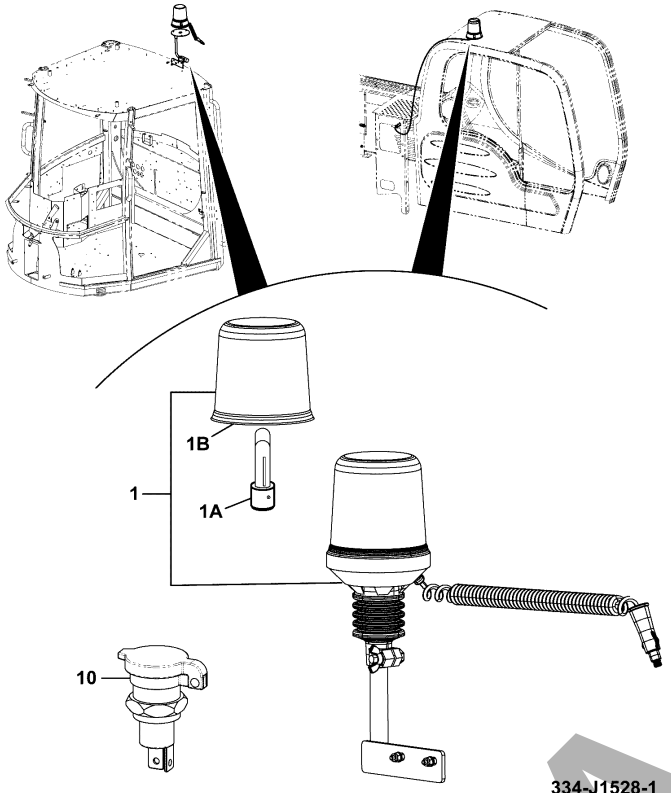

JCB380 QM

JCB380 XTRA

ITEM	Part #	CHANGE NO	DESCRIPTION	USAGE CODE	QTY
1	334/J1528		Beacon Hazard Waring Amber		1
1A	:720/20040		Bulb 24v 70w H1		1
1B	:332/G9439		Lens		1
10	715/04300		Socket beacon		1

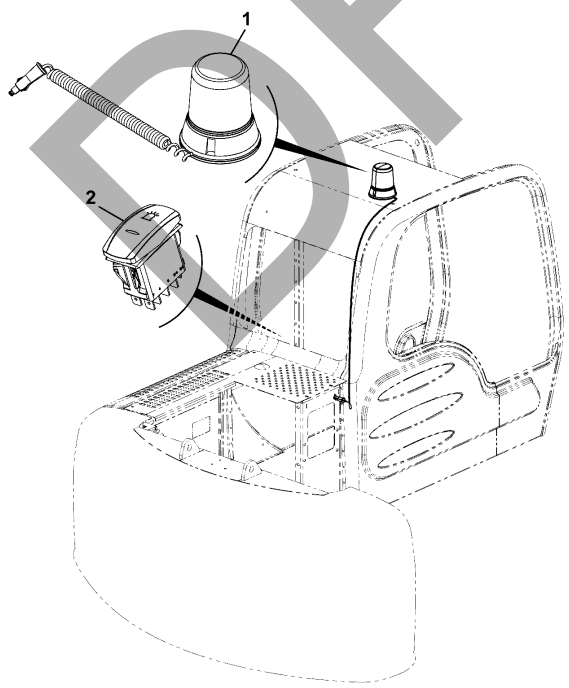

JCB380 QM

JCB380 XTRA

ITEM	Part #	CHANGE NO	DESCRIPTION	USAGE CODE	QTY
1	334/J1528		Beacon Hazard Waring Amber Refer C180-1-1		1
2			Switch Multiple Beacon / Strobe, Assembly Refer C330-65-1		1

DRAFT

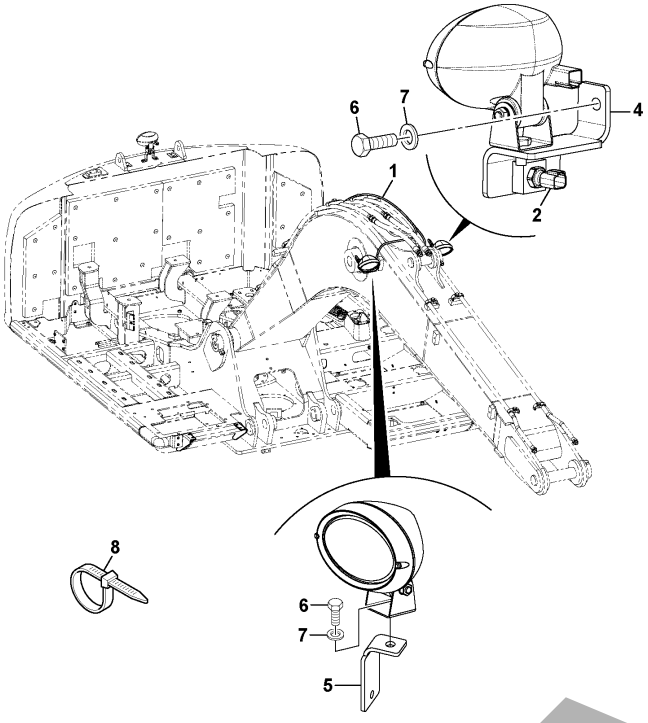

333-K3984-3

JCB380 QM

JCB380 XTRA

ITEM	Part #	CHANGE NO	DESCRIPTION	USAGE CODE	QTY
1	334/J9567		Harness Boom Light		1
2	716/C9471		Sender ambient temperature		1
4	332/B4621		Bracket		1
5	332/B4619		Bracket Worklight		1
6	1316/0709D		Screw		2
7	JHP0043		Washer M16		2
8	333/J8681		Tie cable (Double loop)		14

DRAFT

C01 ELECTRICAL

- **C03 ELECTRICS, CAB**

C

DRAFT

ELECTRICS CAB INSTALLATION ASSEMBLIES, ELECTRICS, ASSEMBLY - CAB

JCB380 QM

JCB380 XTRA

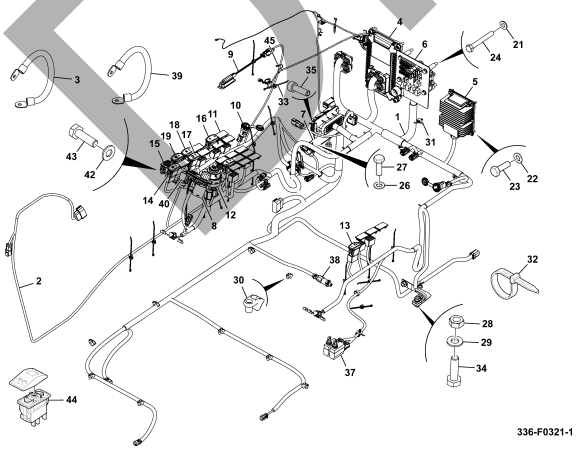

ITEM	Part #	CHANGE NO	DESCRIPTION	USAGE CODE	QTY
1	336/E1032		Harness Cab		1
2	336/E1037		Harness Fascia		1
3	332/E4773		Lead braided earth		1
4			Unit Machine ECU Assembly Refer C390-15-1		1
5	717/C5944		Convertor 24/12volt (8 AMP) die cast housing		1
6	336/A4031		Fuse And Relay PCB, Tracked Refer C350-15-1		1
7	333/K3813		Bracket Mounting Connector		1
8	333/J3967		Controller RPM		1
9	333/J7550		Light Led, Red/White, 12/24 Volt		1
10	332/L6105		Socket Accessory		2
11	701/60010		Blank switch panel		17

Continue...

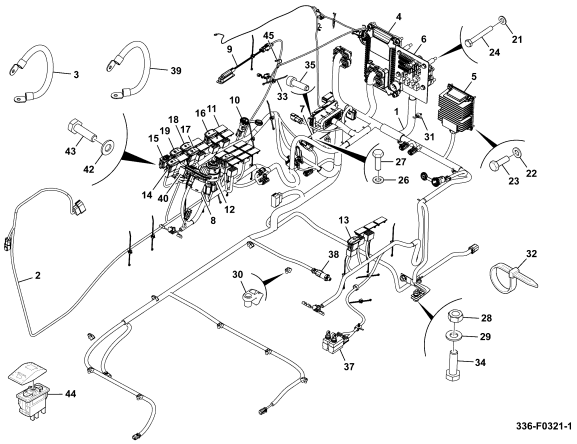

ITEM	PART NO	CHANGE NO	DESCRIPTION	USAGE CODE	QTY
12	701/80184		Switch ignition (Ignition key 701/45501)		1
13			Switch Stop Engine, Assembly Refer C330-1-1		1
14			Switch Isolate Controls, Assembly Refer C330-15-1		1
15			Switch Lock Slew, Assembly Refer C330-5-1		1
16			Switch Cushion Assembly Refer C330-10-1		1
17			Switch Wiper Assembly Refer C330-20-1		1
18			Switch Screenwash assembly Refer C330-25-1		1
19			Switch Mute Radio, Assembly Refer C330-30-1		1
21	1420/0007D		Washer M8		5
22	823/00493		Washer M5 black		2

C300-5-1 ELECTRICS CAB INSTALLATION ASSEMBLIES, ELECTRICS, ASSEMBLY - CAB 9820/1116A ISSUE 0

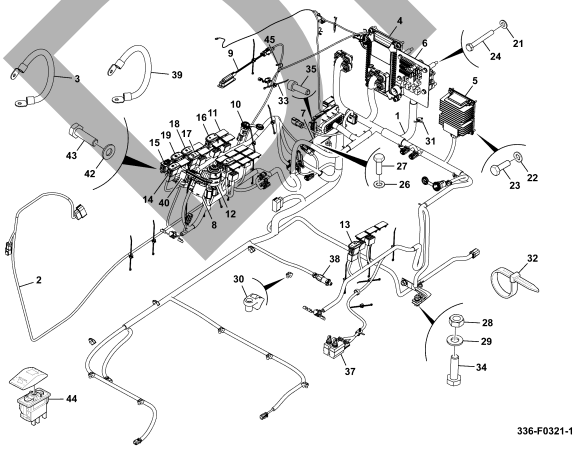

ITEM	PART NO	CHANGE NO	DESCRIPTION	USAGE CODE	QTY
23	1316/0105Z		Screw Screw M5X20		2
24	1316/3315D		Bolt M8x65		4
26	1420/0006D		Washer M6		2
27	1316/0205D		Screw set		2
28	1371/0301D		Nut High Strength		2
29	1420/0008D		Washer M10		3
30	826/01274		Cradle cable tie mount		9
31	242/00290		Tie cable fir tree		10
32	KAR0016		Tie Cable		12
33	333/K2028		Tie Cable		19
34	1316/0409D		Screw M10X35		1
35	1391/9402Z		Capscrew M4 x 12mm		2
37	701/80215		Switch limit		2
38	334/K0142		Transducer 100 Bar		1
39	333/K7988		Lead Earth, Braided		1
40	334/J8604		Relay Mini, 24V		1
42	1420/0005Z		Washer M5		1

Continue...

DRAFT

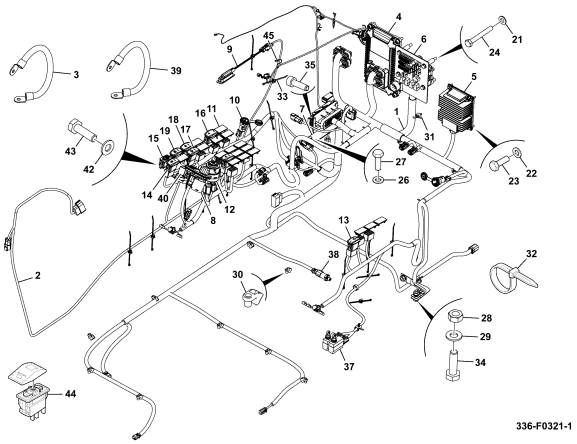

ITEM	PART NO	CHANGE NO	DESCRIPTION	USAGE CODE	QTY
43	1315/0101Z		Screw		1
44			Switch Worklight Assembly Refer C330-55-1		1
45	335/G8299		Harness Roof, Cab		1

DRAFT

JCB380 QM

JCB380 XTRA

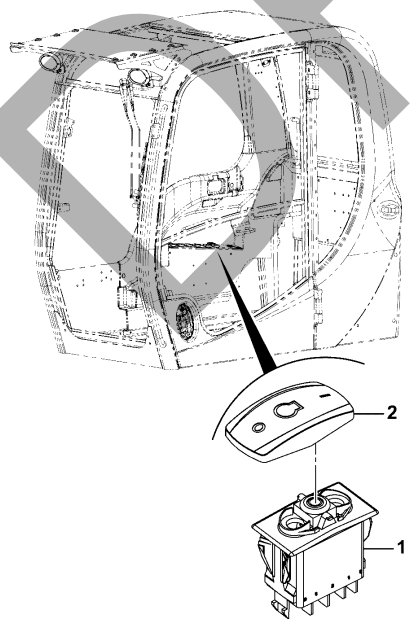

ITEM	Part #	CHANGE NO	DESCRIPTION	USAGE CODE	QTY
1	701/E0032		Switch 24V		1
2	333/L1754		Actuator engine stop		1

JCB380 QM

JCB380 XTRA

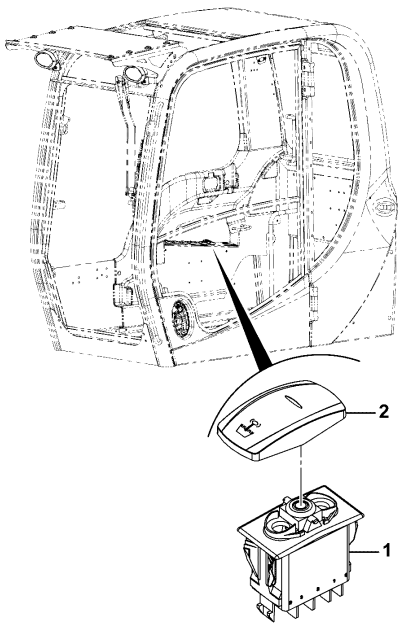

333-L1984-1

ITEM	Part #	CHANGE NO	DESCRIPTION	USAGE CODE	QTY
1	701/E0032		Switch 24V		1
2	335/G2022		Cover Switch-Actuator Swing Lock		1

JCB380 QM

JCB380 XTRA

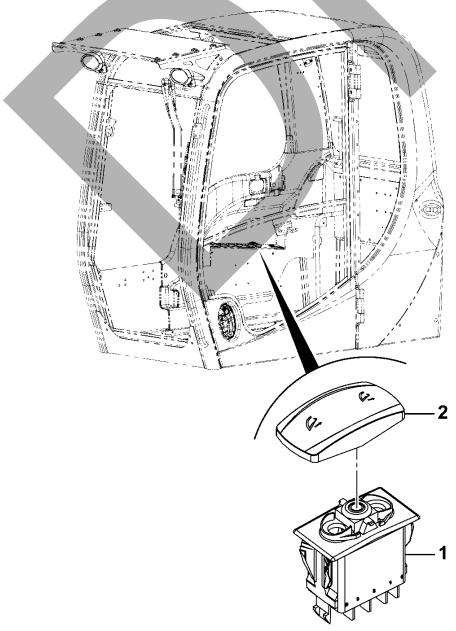

333-L2048-1

ITEM	Part #	CHANGE NO	DESCRIPTION	USAGE CODE	QTY
1	701/E0034		Switch 24V 2 Position SPCO RW		1
2	333/L1758		Actuator cushion black		1

DRAFT

JCB380 QM

JCB380 XTRA

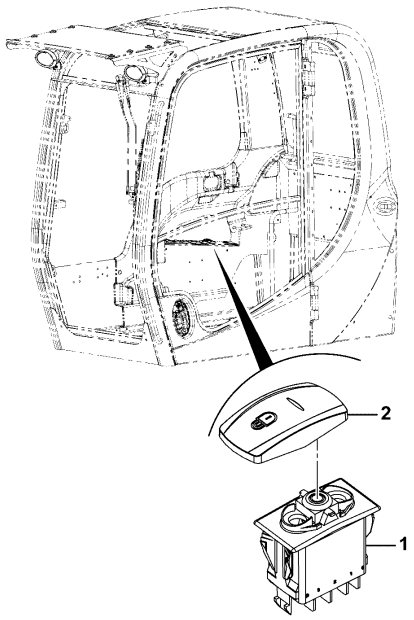

333-L2099-1

ITEM	Part #	CHANGE NO	DESCRIPTION	USAGE CODE	QTY
1	333/K1654		Switch Panel 24V		1
2	701/E8895		Actuator Stabiliser		1

JCB380 QM

JCB380 XTRA

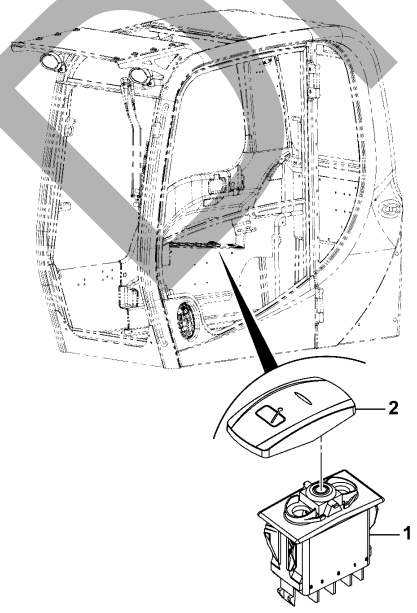

333-L2111-1

ITEM	Part #	CHANGE NO	DESCRIPTION	USAGE CODE	QTY
1	701/E0089		Panel Switch 24V		1
2	701/E8920		Actuator Wiper Rear		1

DRAFT

JCB380 QM

JCB380 XTRA

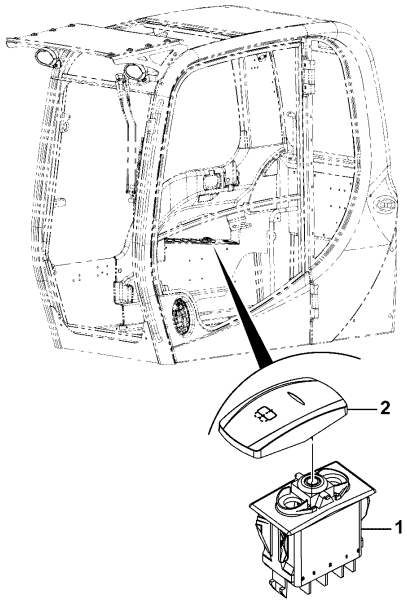

333-L2118-1

ITEM	Part #	CHANGE NO	DESCRIPTION	USAGE CODE	QTY
1	333/K1654		Switch Panel 24V		1
2	701/E8921		Actuator Screen Wash Rear		1

JCB380 QM

JCB380 XTRA

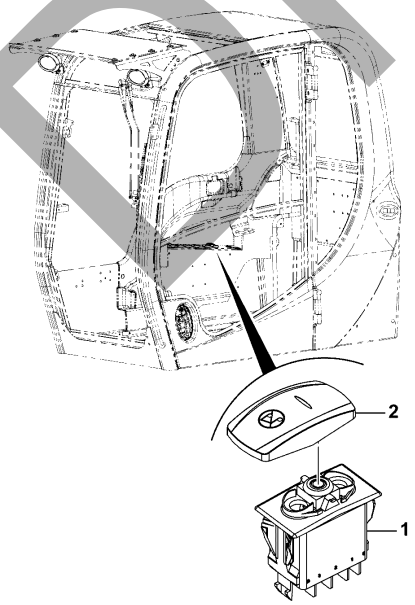

334-P6495-1

ITEM	Part #	CHANGE NO	DESCRIPTION	USAGE CODE	QTY
1	701/E0001		Panel Switch 12V, 2 Position SPCO RW		1
2	701/E8855		Actuator etched mute		1

DRAFT

JCB380 QM

JCB380 XTRA

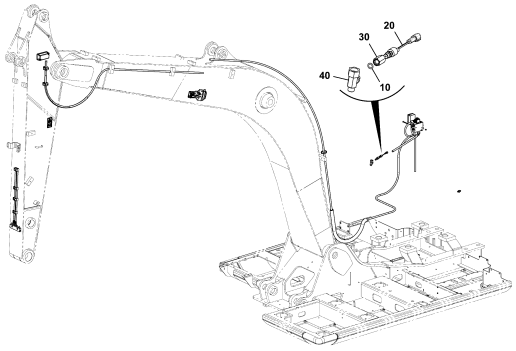

332-A6673-1

ITEM	Part #	CHANGE NO	DESCRIPTION	USAGE CODE	QTY
10	2400/0102		O Ring		1
20	332/J0671		Switch Travel Pressure 20 bar		1
30	332/A7761		Adapter		1
40	332/A5897		Adapter Tee		1

JCB380 QM

JCB380 XTRA

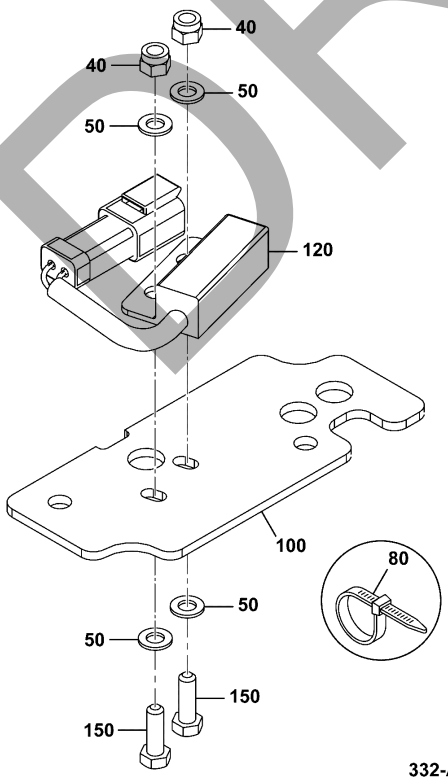

332-A5987-2

ITEM	Part #	CHANGE NO	DESCRIPTION	USAGE CODE	QTY
40	1370/0003Z		Nut lock M5		2
50	1420/0005D		Washer M5		4
80	826/01144		Tie cable 200mm		2
100	332/A8494		Plate		1
120	332/A8540		Switch TILT Refer C330-50-1		1
150	1315/0103Z		Screw		2

DRAFT

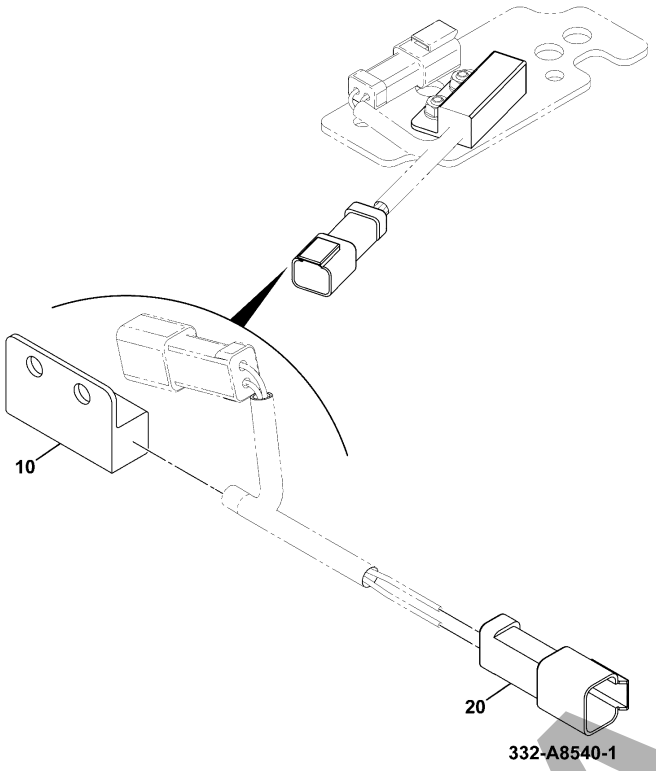

332-A8540-1

JCB380 QM

JCB380 XTRA

ITEM	Part #	CHANGE NO	DESCRIPTION	USAGE CODE	QTY
10	332/A7667		Switch Tilt		1
20	7212/0051		Housing pin,2 way Deutsch		1

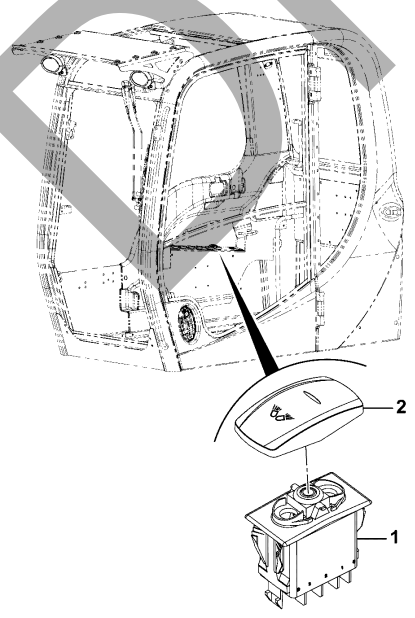

333-L1791-1

JCB380 QM

JCB380 XTRA

ITEM	Part #	CHANGE NO	DESCRIPTION	USAGE CODE	QTY
1	701/E0089		Panel Switch 24V		1
2	701/E8892		Actuator worklight etched		1

DRAFT

JCB380 QM

JCB380 XTRA

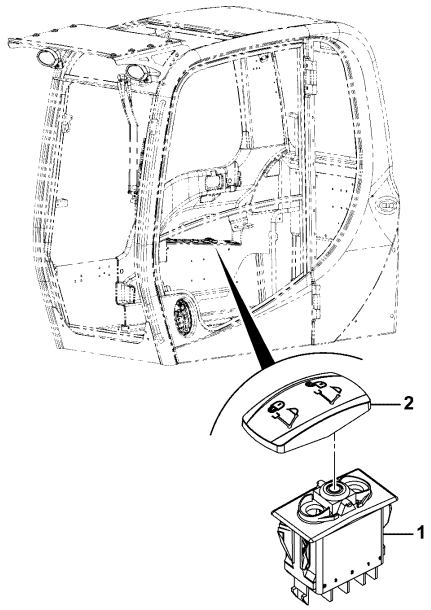

333-L2100-1

ITEM	Part #	CHANGE NO	DESCRIPTION	USAGE CODE	QTY
1	701/E0210		Switch panel		1
2	335/A0965		Actuator Quick Hitch Etched		1

JCB380 QM

JCB380 XTRA

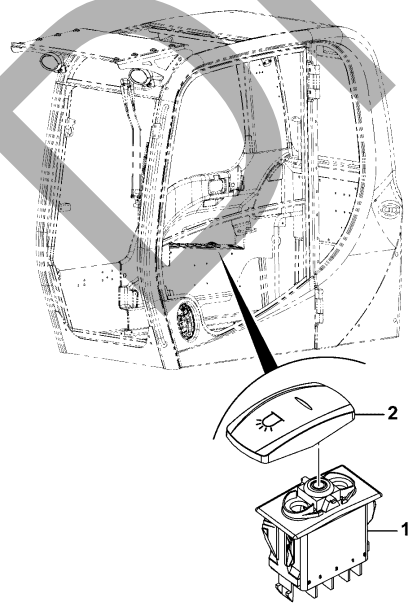

334-P6537-1

ITEM	Part #	CHANGE NO	DESCRIPTION	USAGE CODE	QTY
1	701/E0089		Panel Switch 24V		1
2	701/E8825		Actuator beacon lamp		1

DRAFT

JCB380 QM

JCB380 XTRA

ITEM	Part #	CHANGE NO	DESCRIPTION	USAGE CODE	QTY
1	700/37500		Light interior		1
2	:KHN1692		Bulb 24v 10w		1

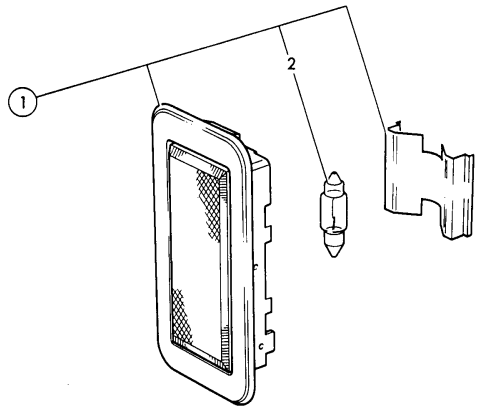

140930

DRAFT

JCB380 QM

JCB380 XTRA

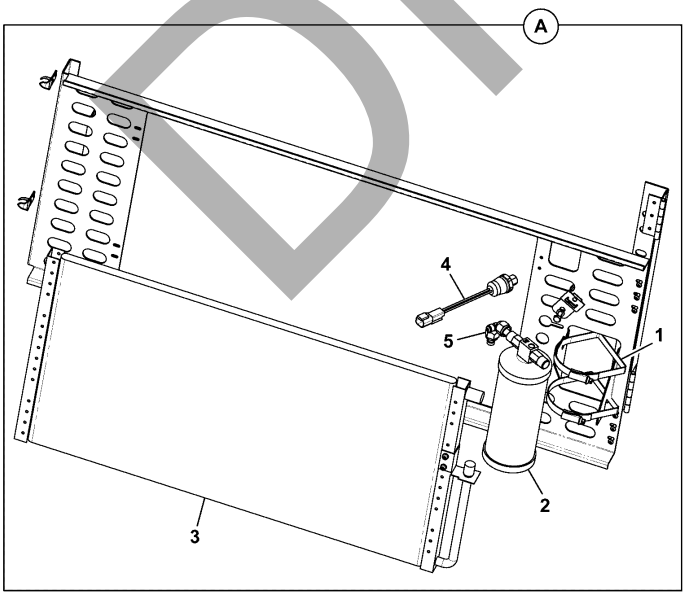

ITEM	Part #	CHANGE NO	DESCRIPTION	USAGE CODE	QTY
A	30/926113		Condenser assembly		1
2	:30/925633		Drier Receiver		1
5	:30/926289		Elbow receiver drier		1
1	:334/P0172		Clip hose		2
3	:336/E8018		Condenser		1
4	:701/80404		Switch binary female		1

30-926113-1

JCB380 QM

JCB380 XTRA

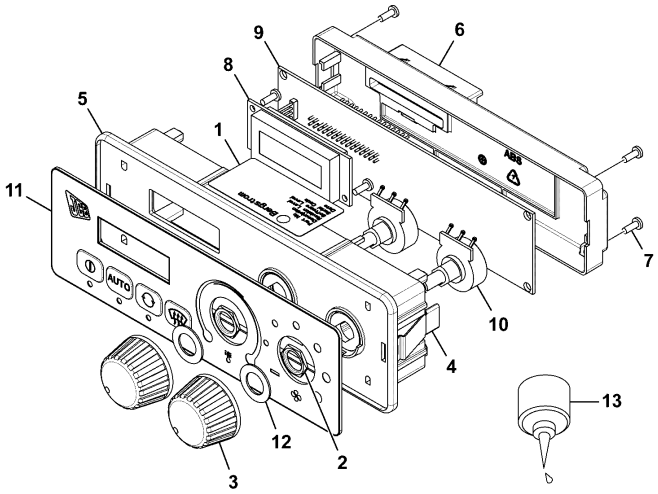

333-K2768-1

ITEM	Part #	CHANGE NO	DESCRIPTION	USAGE CODE	QTY
1	NSP		None serviced part		1
2	997/16500		Nut 7/16"		2
3	331/36910		Knob control		2
4			Clip Control Retaining		2
5			Cover Control		1
6			Housing Rear		1
7			Screw		6
8			Unit LCD PCB		1
9			Unit PCB, ATC Control		1
10			Potentiometer		2
11			Decal		1
12	335/E2786		Washer Nylon		2
13			Seal		0

JCB380 QM

JCB380 XTRA

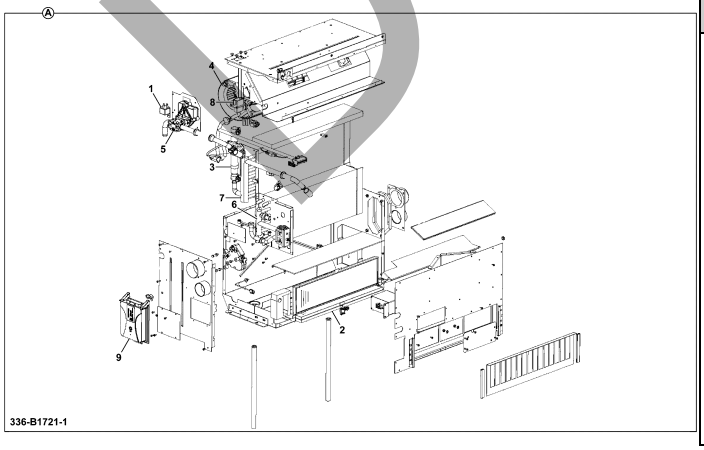

336-B1721-1

ITEM	Part #	CHANGE NO	DESCRIPTION	USAGE CODE	QTY
A	336/B1721		Unit ATC, Cab		1
1	:30/926015		Relay 24v spst		1
2	:30/926020		Filter fresh air		2
3	:30/927144		Hose		1
4	:332/H7297		Blower assembly		1
5	:332/F6577		Valve water counter clockwise rotation		1
6	:332/H7301		Evaporator coil		1
7	:335/E0179		Coil Heater		1
8	:335/E0928		Harness Wire		1
9	:400/A4431		ECU		1

DRAFT

JCB380 QM

JCB380 XTRA

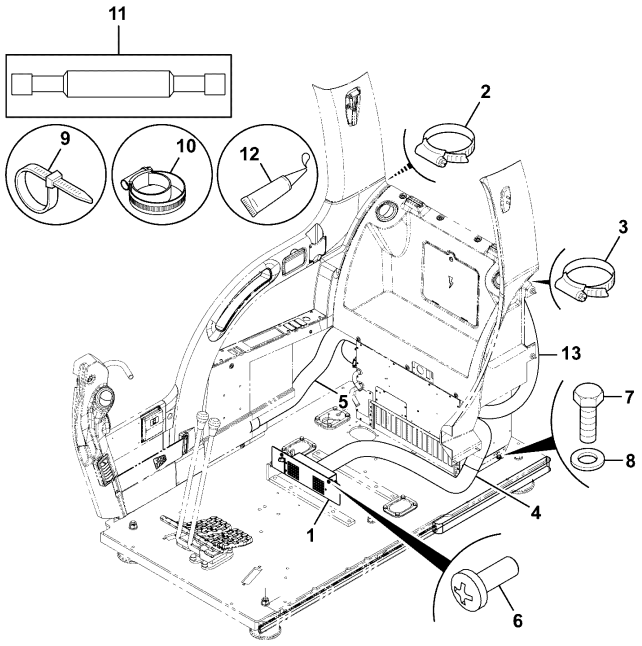

215-11264-10

ITEM	Part #	CHANGE NO	DESCRIPTION	USAGE CODE	QTY
1	331/28366		Plate foot vent		1
2	2201/0012		Clip jubilee, 46/70mm		2
3	334/L7501		Clip Jubilee		4
4	30/925755		Hose air duct 60x1250L foot vent		1
5	30/925756		Hose air duct 60x1450L front vents		1
6	826/01559		Screw socket button head, flanged		2
7	1316/0305D		Screw M8 X 20		4
8	1420/0007D		Washer M8		4
9	826/11447		Tie Cable Locking		8
10	332/L2995		Clip constant tension		4
11	331/32454		Drawing ducting master		0

C340-45-1 HEATER/AIR CON ASSEMBLY, COMMON PARTS
9820/1116A
ISSUE 0

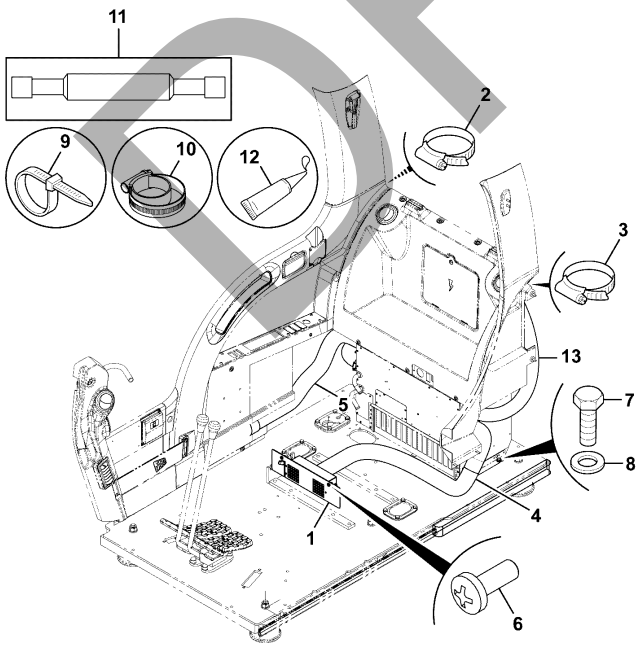

215-11264-10

ITEM	PART NO	CHANGE NO	DESCRIPTION	USAGE CODE	QTY
12	4101/0500		Fluid Locking Loctite 262		0
13	336/D3554		Duct Dia. 50		2

DRAFT

JCB380 QM

JCB380 XTRA

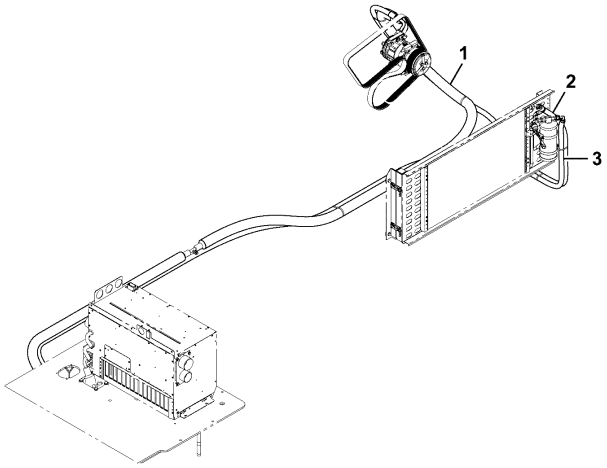

333-K0334-1

ITEM	Part #	CHANGE NO	DESCRIPTION	USAGE CODE	QTY
1	336/D4741		Hose Air Conditioning, No.12, 4400mm Evaporator To Compressor		1
2	336/D4720		Hose Air Conditioning, No.8, 2400mm Compressor To Condenser		1
3	332/J5085		Hose Condenser To Evaporator		1

JCB380 QM

JCB380 XTRA

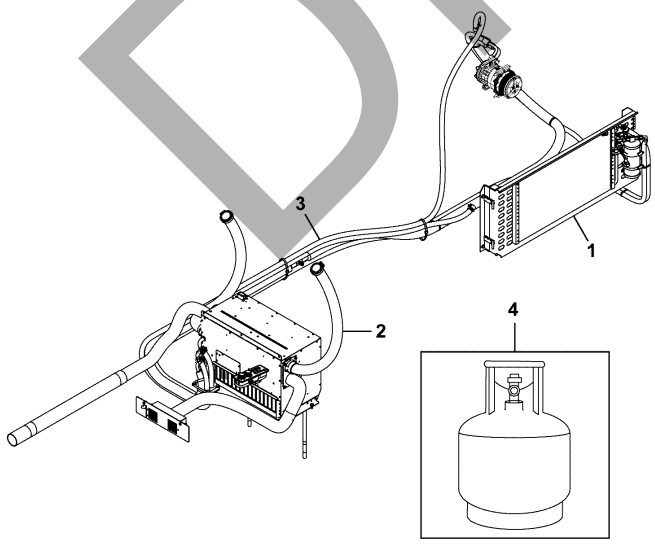

336-C5975-1

ITEM	Part #	CHANGE NO	DESCRIPTION	USAGE CODE	QTY
1			Unit ATC, Assembly Refer C340-65-1		1
2			Heater Common Parts Refer C340-45-1		1
3			Hose Heater, Assembly Refer C340-60-1		1
4	335/C7274		Charge Refrigerant		1

DRAFT

JCB380 QM

JCB380 XTRA

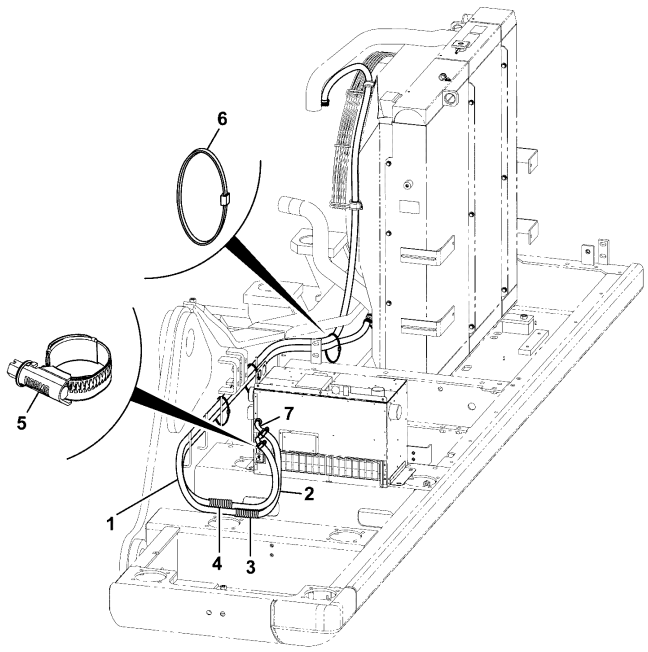

333-K2977-3

ITEM	Part #	CHANGE NO	DESCRIPTION	USAGE CODE	QTY
1	834/10887		Hose water		1
2	333/K2982		Hose 4.45M Heater		1
3	333/K2983		Tube Corrugated 2.9M		1
4	331/22052		Tube Corrugated 4.35M		1
5	334/J4514		Clip Constant-Torque Worm 14-27mm		4
6	KHH0143		Band Harness Retainer		7
7	336/C7670		Heater Hose Slit		2

JCB380 QM

JCB380 XTRA

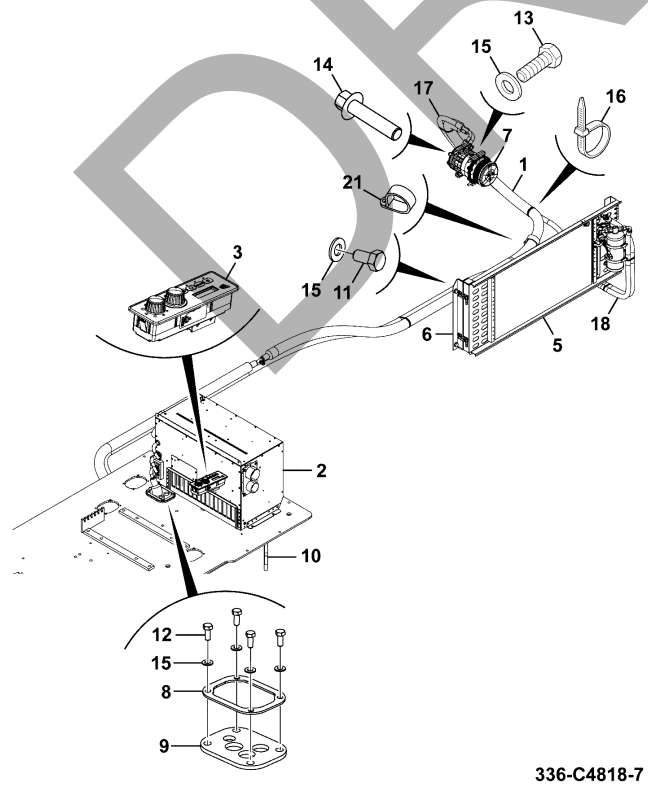

336-C4818-7

ITEM	Part #	CHANGE NO	DESCRIPTION	USAGE CODE	QTY
1	336/D4699		Kit-hose Airconditioning Refer C340-50-1		1
2	336/B1721		Unit ATC, Cab Refer C340-40-1		1
3	333/K2768		Panel Control Air Condition Refer C340-35-1		1
5	30/926113		Condenser assembly Refer C340-20-1		1
6	336/C4826		Bracket Mounting, Condenser		1
7	320/08563		Compressor Air Conditioning 24v		1
8	333/J1258		Plate retainer		1
9	333/J4811		Grommet		1
10	333/J7577		Tube drain 322mm x 12.7mm ID		2
11	1316/0303D		Screw M8 x 16mm		2
12	1316/0305D		Screw M8 X 20		4

DRAFT

Continue...

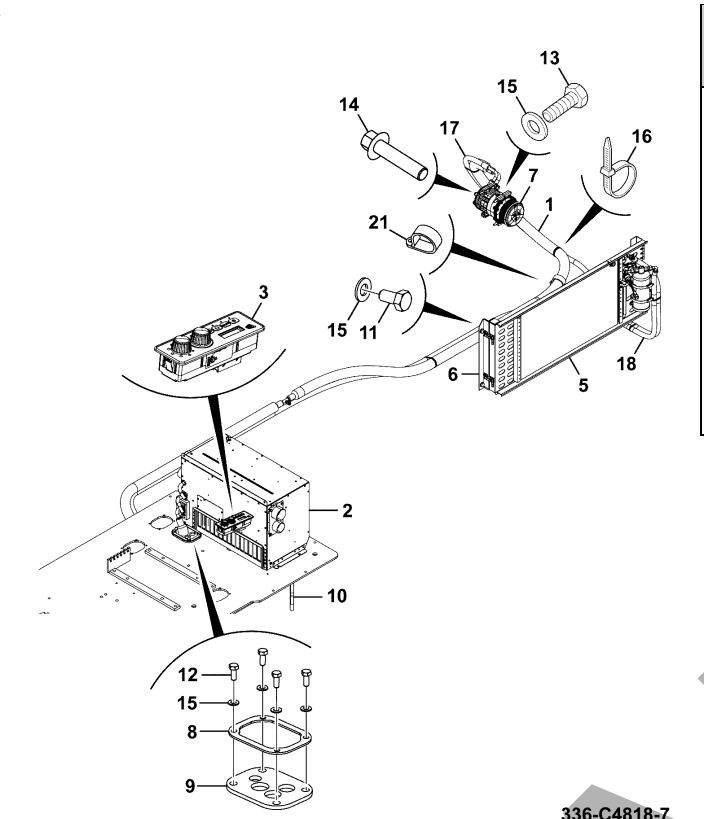

336-C4818-7

ITEM	PART NO	CHANGE NO	DESCRIPTION	USAGE CODE	QTY
13	1316/0307D		Screw		7
14	1317/3320Z		Bolt M8 x 100 Flange Reduced		3
15	1420/0007D		Washer M8		13
16	826/01347		Tie cable 160mm weld stud mounted		7
17	JSR0052		Tube Corrugated		1
18	333/J8107		Hose corrugated 28mm x 5.0M long		1
21	821/00483		Clip Pipe, 48mm Dia		1

JCB380 QM

JCB380 XTRA

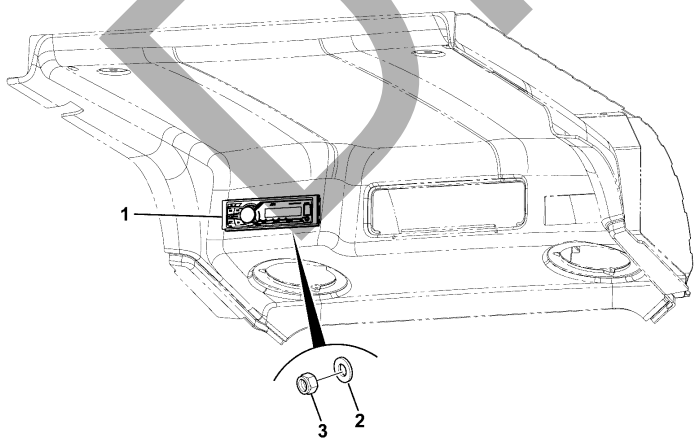

ITEM	Part #	CHANGE NO	DESCRIPTION	USAGE CODE	QTY
1	335/H1063		Radio 12V FM		1
2	1420/0005Z		Washer M5		1
3	1370/0003Z		Nut lock M5		1

336-A2867-1

DRAFT

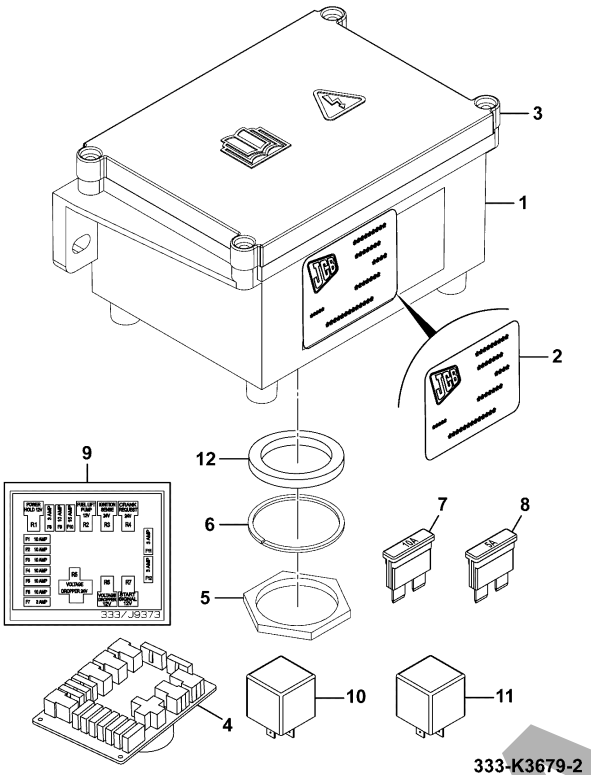

333-K3679-2

JCB380 QM

JCB380 XTRA

ITEM	Part #	CHANGE NO	DESCRIPTION	USAGE CODE	QTY
1	333/K3770		Moulding Box Fuse - Blue		1
2	333/F3981		Decal Engine Fuse And Relay Module		1
3	333/K3775		Fusebox Lid Blue		1
4	NSP		None serviced part		0
5	7210/0048		Nut Deutsch size 24		1
6	7210/0047		Washer lock,Deutsch size 24		1
7	716/05705		Fuse 10 amp		5
8	716/05701		Fuse 3 amp		3
9	333/K3870		Decal Location Fuse		1
10	332/W1815		Relay 24V 30A		1
11	333/S5959		Relay micro 24V, Panasonic		1
12	333/K4024		Gasket Pod Box		1

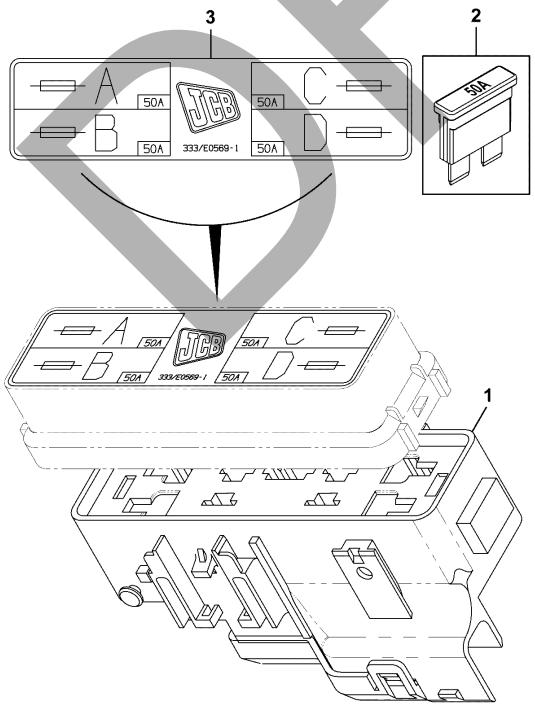

334-L7730-1

JCB380 QM

JCB380 XTRA

ITEM	Part #	CHANGE NO	DESCRIPTION	USAGE CODE	QTY
1	716/30077		Box Fuselink Refer C350-10-1		1
2	716/30081		Fuse Maxi 50Amp		4
3	333/E0569		Decal Primary Fuse		1

DRAFT

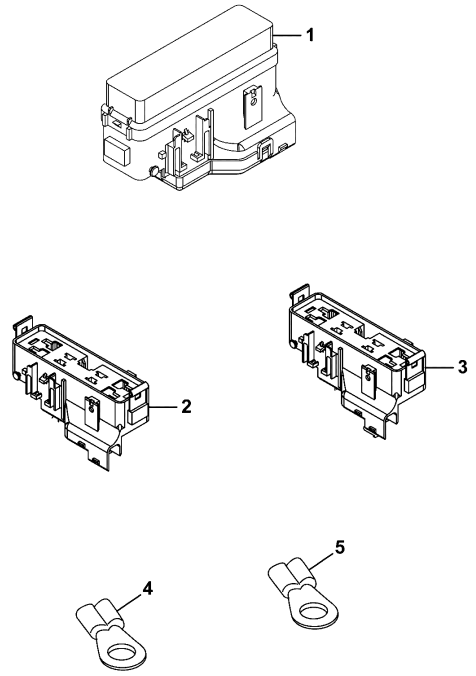

716-30077-2

JCB380 QM

JCB380 XTRA

ITEM	Part #	CHANGE NO	DESCRIPTION	USAGE CODE	QTY
1	716/30077		Box Fuselink		1
2	7232/0008		Housing 2 Way Grey		1
3	7232/0009		Housing 2 way (grey) Blue		1
4	7201/0079		Terminal crimp 4 - 6MM		1
5	7201/0078		Terminal Crimp 8 to 10 mm		1

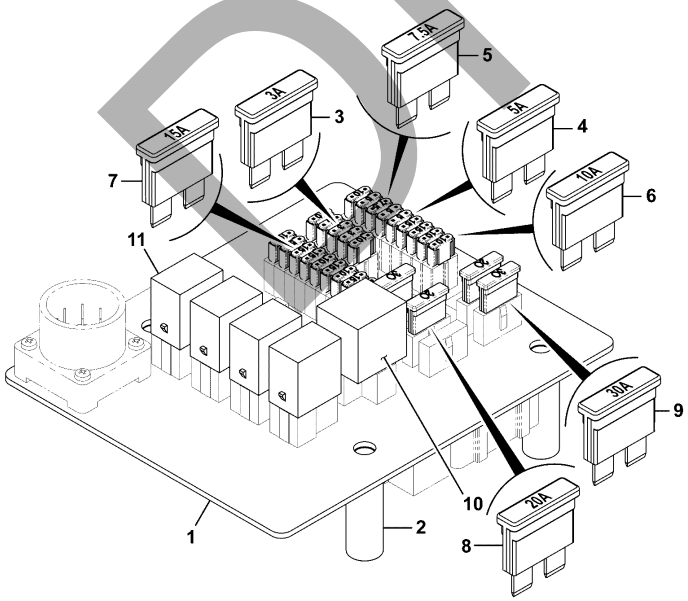

333-J2050-1

JCB380 QM

JCB380 XTRA

ITEM	Part #	CHANGE NO	DESCRIPTION	USAGE CODE	QTY
1	333/J2052		Electrics Fuse and Relay PCB		1
2	333/J0389		Spacer		4
3	716/30350		Fuse Mini 3Amp VIOLET		2
4	716/30351		Fuse Mini 5Amp		5
5	716/30352		Fuse Mini 7.5Amp Brown		1
6	716/30353		Fuse Mini 10Amp RED		8
7	716/30354		Fuse mini 15Amp BLUE		7
8	716/05707		Fuse 20 amp		2
9	716/05709		Fuse 30 amp		4
10	334/J8604		Relay Mini, 24V		1
11	347/20478		Relay 24V		4

DRAFT

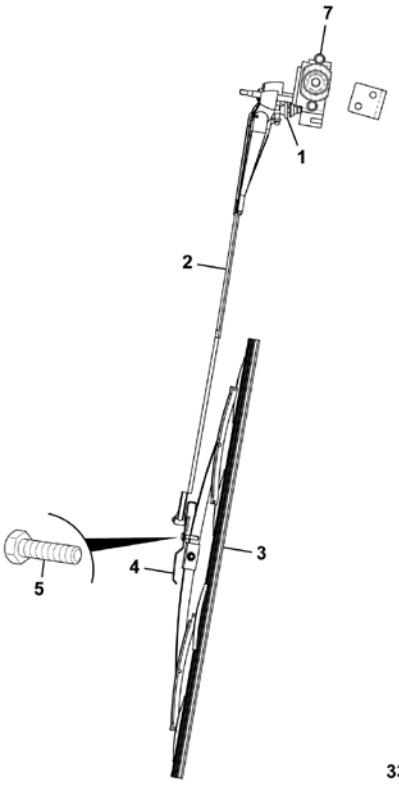

334-P9236-4

JCB380 QM

JCB380 XTRA

ITEM	Part #	CHANGE NO	DESCRIPTION	USAGE CODE	QTY
1	334/P7754		Connector		1
2	334/P8798		Arm Wiper		1
3	6900/0634		Blade Wiper 560mm Long		1
4	335/D3056		Retainer Wiper		1
5	826/01406		Screw M5 x 20		1
7	335/F2255		Motor Wiper		1

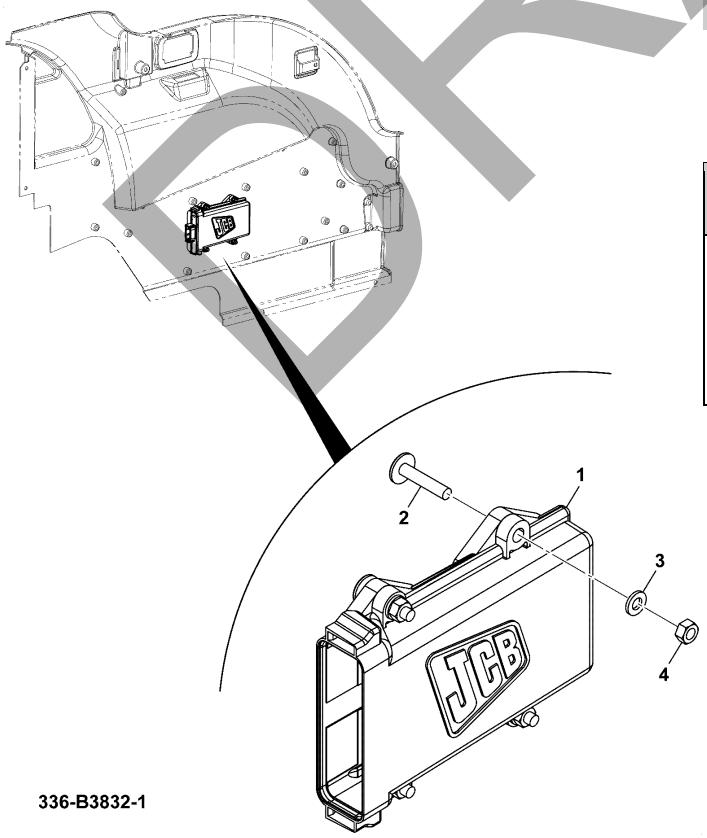

336-B3832-1

JCB380 QM

JCB380 XTRA

ITEM	Part #	CHANGE NO	DESCRIPTION	USAGE CODE	QTY
1	334/Y5172		ECU India Telematics		1
2	826/11692		Screw Torx M6x35		4
3	1420/0006D		Washer M6		4
4	1370/0101D		Nut plain M6		4

DRAFT

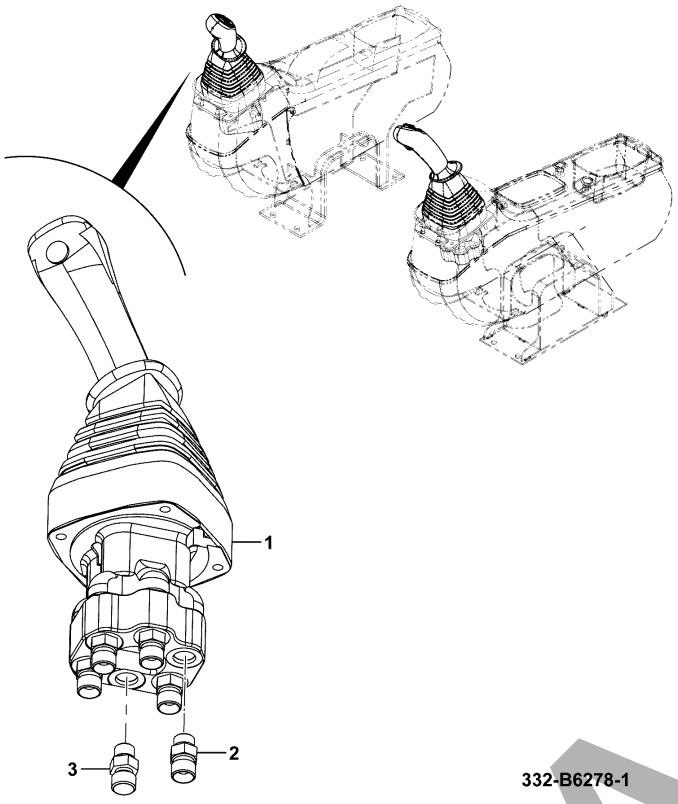

332-B6278-1

JCB380 QM

JCB380 XTRA

ITEM	Part #	CHANGE NO	DESCRIPTION	USAGE CODE	QTY
1	25/222892		Valve Hand Controler Right Hand Refer E340-15-1		1
2	1620/2052		Adaptor 3/8BSP x 9/16		5
3	JHJ0168		Adapter Filtered		1

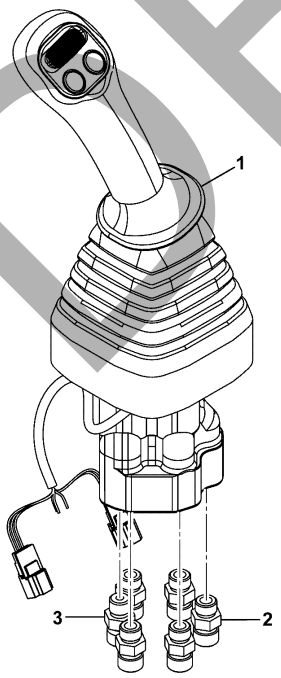

336-B3488-1

JCB380 QM

JCB380 XTRA

ITEM	Part #	CHANGE NO	DESCRIPTION	USAGE CODE	QTY
1	332/B3304		Valve Remote Control Right Side		1
2	1620/2052		Adaptor 3/8BSP x 9/16		5
3	JHJ0168		Adapter Filtered		1

DRAFT

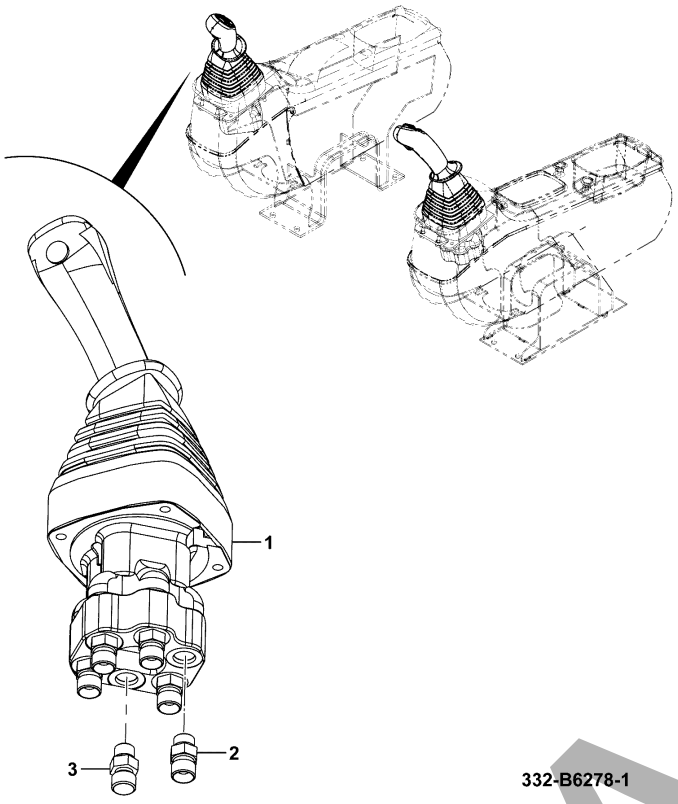

332-B6278-1

JCB380 QM

JCB380 XTRA

ITEM	Part #	CHANGE NO	DESCRIPTION	USAGE CODE	QTY
1	25/222891		Valve Hand Controller Left Hand Refer E340-1-1		1
2	1620/2052		Adaptor 3/8BSP x 9/16		5
3	JHJ0168		Adapter Filtered		1

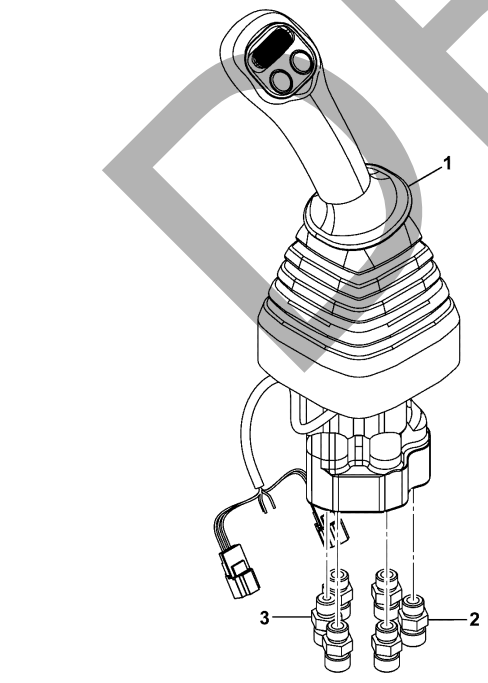

336-B3488-1

JCB380 QM

JCB380 XTRA

ITEM	Part #	CHANGE NO	DESCRIPTION	USAGE CODE	QTY
1	332/B3305		Valve Remote Control Left Side		1
2	1620/2052		Adaptor 3/8BSP x 9/16		5
3	JHJ0168		Adapter Filtered		1

DRAFT

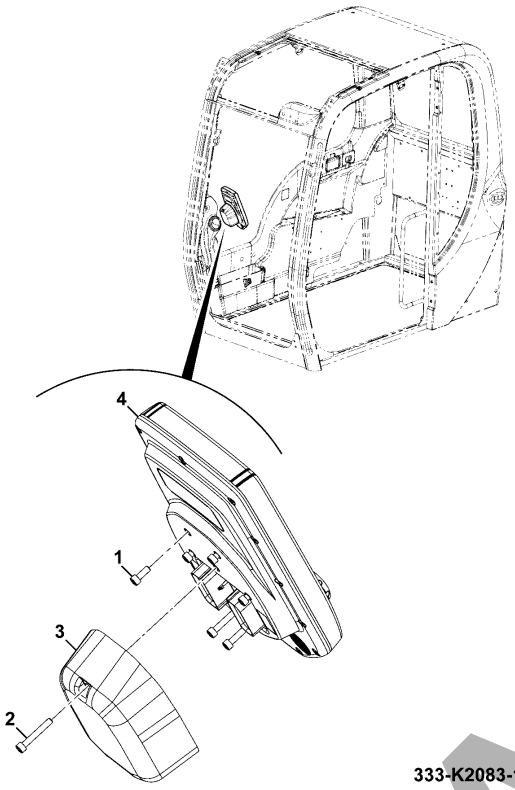

333-K2083-1

JCB380 QM

JCB380 XTRA

ITEM	Part #	CHANGE NO	DESCRIPTION	USAGE CODE	QTY
1	333/J8451		Capscrew #10-32 UNF x 1/2"		4
2	333/J8462		Capscrew #10-32 UNF x 1 1/4"		3
3	333/J8256		Cover back display		1
4	333/K2440		Screen (Display) with encoder 3.5		1

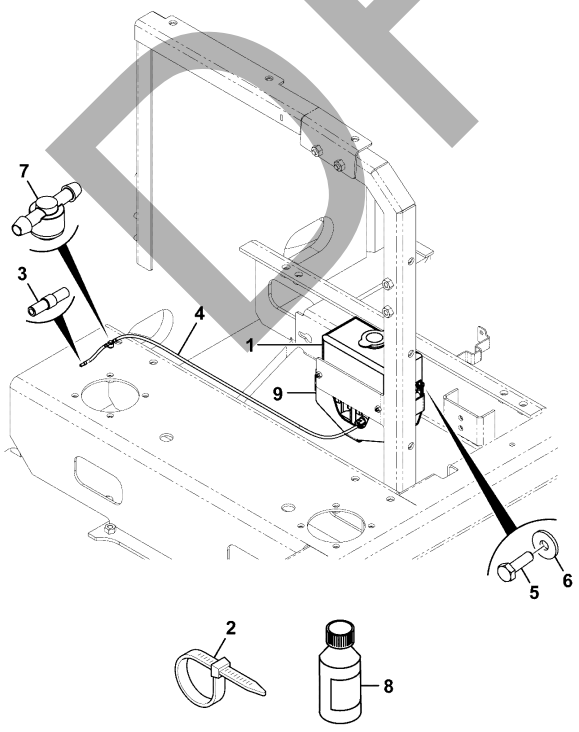

332-J0032-4

JCB380 QM

JCB380 XTRA

ITEM	Part #	CHANGE NO	DESCRIPTION	USAGE CODE	QTY
1	334/J5896		Bottle Washer,ABI, Yellow Cap Refer C390-10-1		1
2	270/00106		Tie cable 385mm		10
4	336/D2639		Tube Washer Bottle		1
5	1316/0205D		Screw set		4
6	823/00588		Washer (M6 x 18mm x 2mm)		4
7	534/09703		Valve non-return		1
8	4006/0500		Screen wash		0
9	400/H7518		Cage Washer Bottle		1

DRAFT

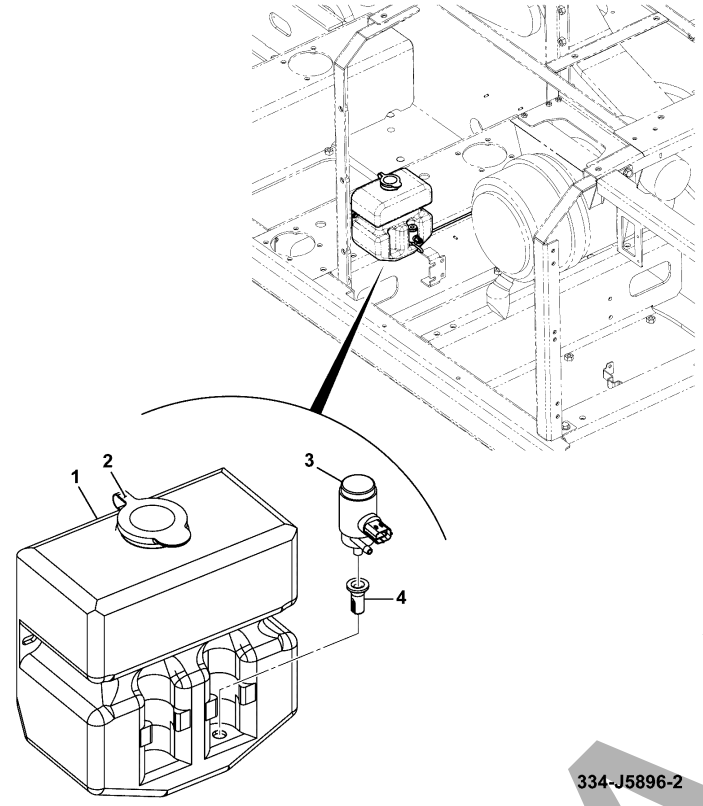

334-J5896-2

JCB380 QM

JCB380 XTRA

ITEM	Part #	CHANGE NO	DESCRIPTION	USAGE CODE	QTY
1	334/K3654		Bottle Windshield Front		1
2	334/C8060		Cap		1
3	714/34600		Pump screen wash 24V		1
4	32/925456		Filter Washer Pump		1

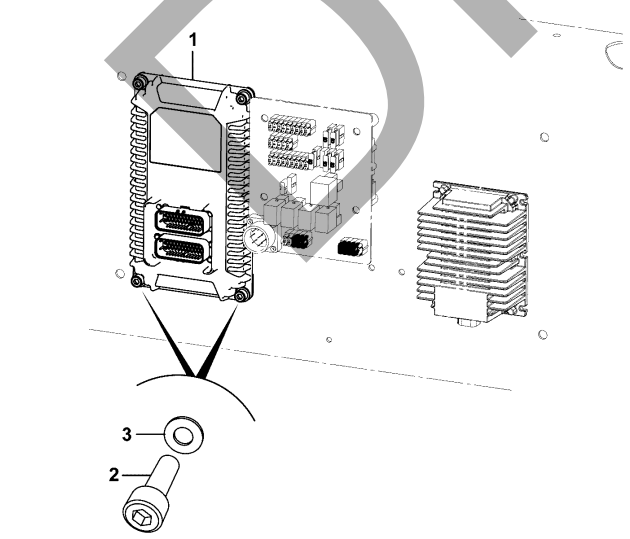

333-K1729-1

JCB380 QM

JCB380 XTRA

ITEM	Part #	CHANGE NO	DESCRIPTION	USAGE CODE	QTY
1	728/J3013		ECU Hardware		1
2	1391/3307D		Capscrew M8 x 25mm		4
3	1420/0007D		Washer M8		4

DRAFT

JCB380 QM

JCB380 XTRA

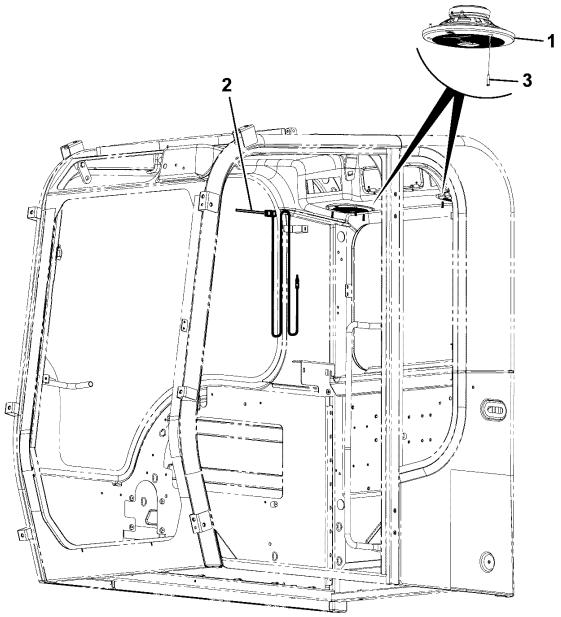

334-P0875-1

ITEM	Part #	CHANGE NO	DESCRIPTION	USAGE CODE	QTY
1	333/Y8683		Speaker		2
2	333/Y8684		Radio Antenna		1
3	826/00852		Screw M4 x 20mm long		6

DRAFT

JCB380 QM

JCB380 XTRA

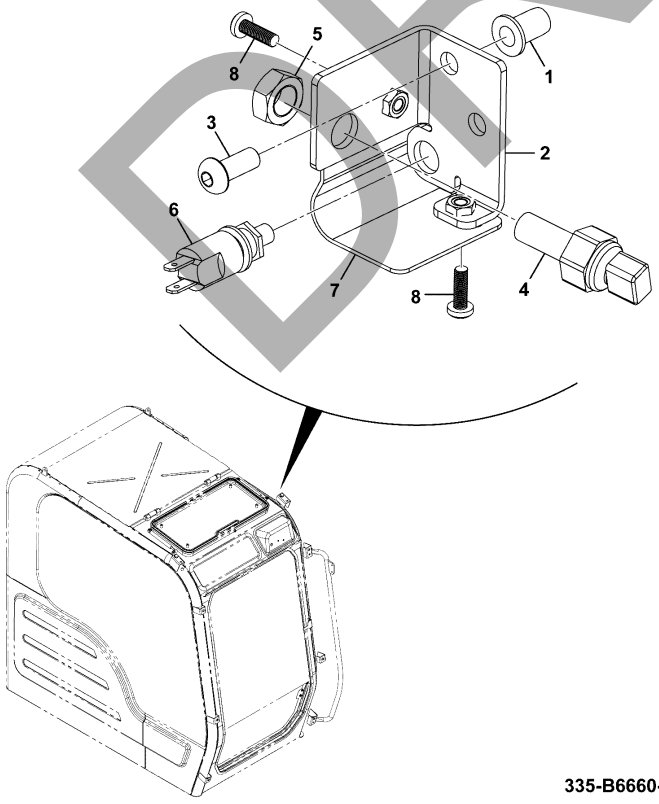

335-B6660-1

ITEM	Part #	CHANGE NO	DESCRIPTION	USAGE CODE	QTY
1	826/01103		Rivet nut M8		2
2	335/B7479		Bracket Sensor		1
3	826/01486		Screw Socket Button Head		2
4	701/42000		Switch Hand Brake, Micro Yellow Top		1
5	1340/0402Z		Nut Thin (1/2" UNF)		1
6	333/K7230		Switch Single Pole		1
7	335/B4958		Cover		1
8	826/00872		Screw M5 x 16		2

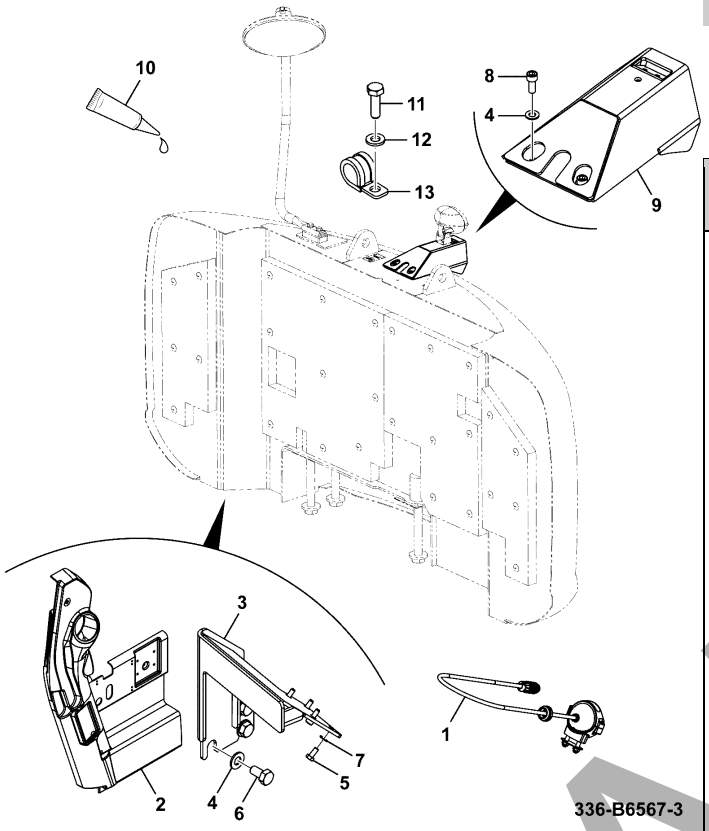

JCB380 QM

JCB380 XTRA

ITEM	Part #	CHANGE NO	DESCRIPTION	USAGE CODE	QTY
1			Camera And Monitor, Assembly Refer C390-35-1		1
2	336/B6612		Moulding A post, Camera		1
3	332/K2857		Bracket mounting		1
4	1420/0007D		Washer M8		5
5	1315/0101Z		Screw		4
6	1316/0303D		Screw M8 x 16mm		3
7	1420/0005Z		Washer M5		4
8	1391/3307D		Capscrew M8 x 25mm		2
9	332/K2800		Bracket camera rear		1
10	4101/0500		Fluid Locking Loctite 262		0
11	1316/0205Z		Screw		1
12	1420/0006Z		Washer M6		1
13	KHR1326		Clamp 18mm dia.		1

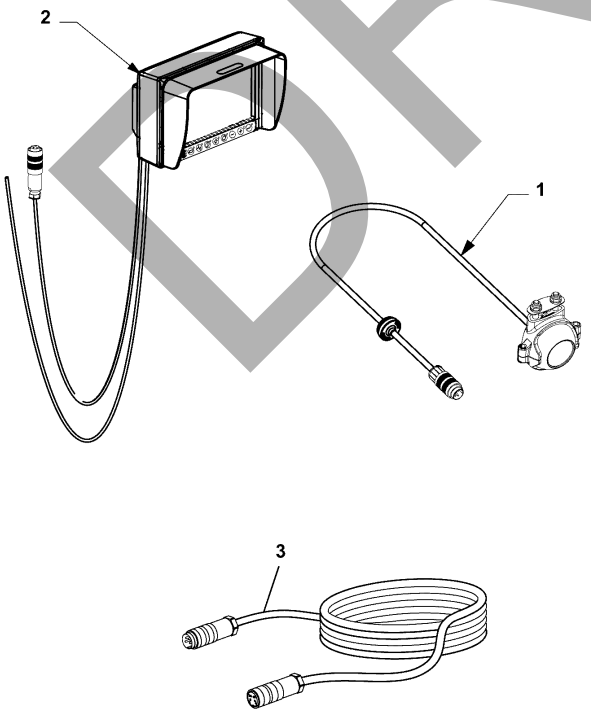

JCB380 QM

JCB380 XTRA

ITEM	Part #	CHANGE NO	DESCRIPTION	USAGE CODE	QTY
1	332/J7924		Camera		1
2	332/J8658		Monitor Video		1
3	332/J3262		Cable Camera - 7500M		1

DRAFT

JCB380 QM

JCB380 XTRA

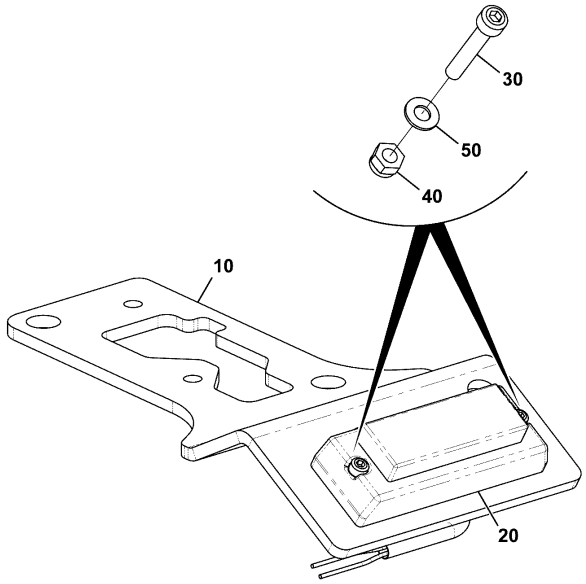

332-A5977-2

ITEM	Part #	CHANGE NO	DESCRIPTION	USAGE CODE	QTY
10	332/A5903		Bracket		1
20	333/A7777		Lamp L.E.D Non Flashing		1
30	1391/9407		Capscrew		2
40	1370/9403D		Nut Lock M4		2
50	1420/0004D		Washer plain M4		2

JCB380 QM

JCB380 XTRA

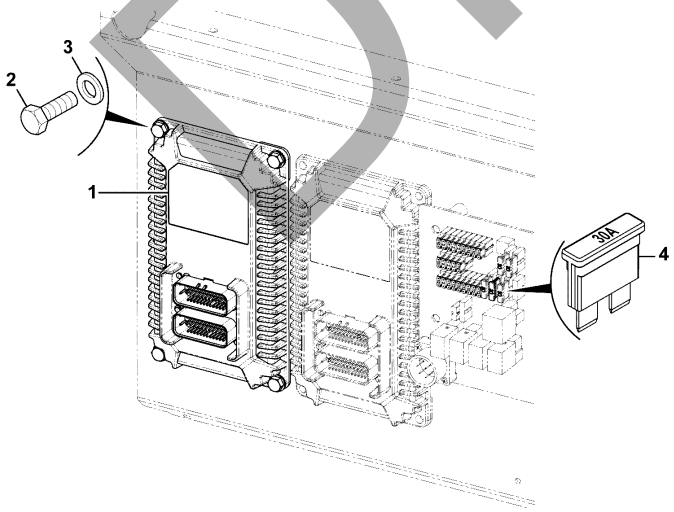

333-K2614-1

ITEM	Part #	CHANGE NO	DESCRIPTION	USAGE CODE	QTY
1	728/J3013		ECU Hardware		1
2	1391/3307D		Capscrew M8 x 25mm		4
3	1420/0007D		Washer M8		4
4	716/05709		Fuse 30 amp		1

DRAFT

• D01 CONTROL, MECHANICAL

D

DRAFT

EXCAVATOR CONTROLS, JOYSTICK CONTROL, AND FLOOR PLATE ASSEMBLY

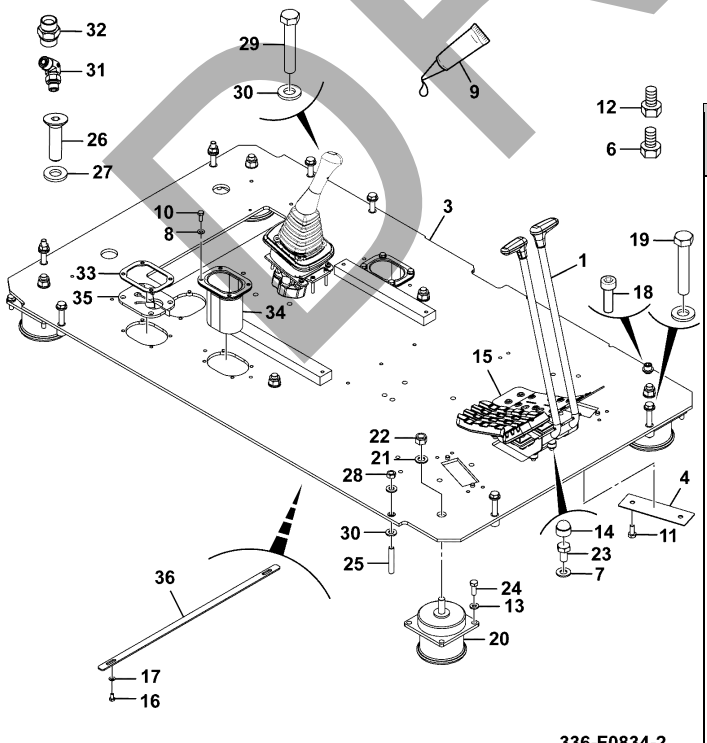

336-F0834-2

JCB380 QM

JCB380 XTRA

ITEM	Part #	CHANGE NO	DESCRIPTION	USAGE CODE	QTY
1			Assembly T-Bar Refer D190-1-1		1
3	335/G7318		Plate Floor		1
4	331/35486		Plate 2mm thick		2
6	1316/0407Z		Bolt High Strength		4
7	1420/0008Z		Washer M10		4
8	1420/0007D		Washer M8		12
9	4101/0500		Fluid Locking Loctite 262		1
10	1316/0305D		Screw M8 X 20		12
11	1316/0403Z		Screw		4
12	1316/0303Z		Setscrew M8 x 16mm		4
13	JHP0046		Washer M10		28
14	KHJ0768		Cap spl		4
15			Pedal Assembly Refer D150-1-1		1
16	1316/0201D		Screw		2

Continue...

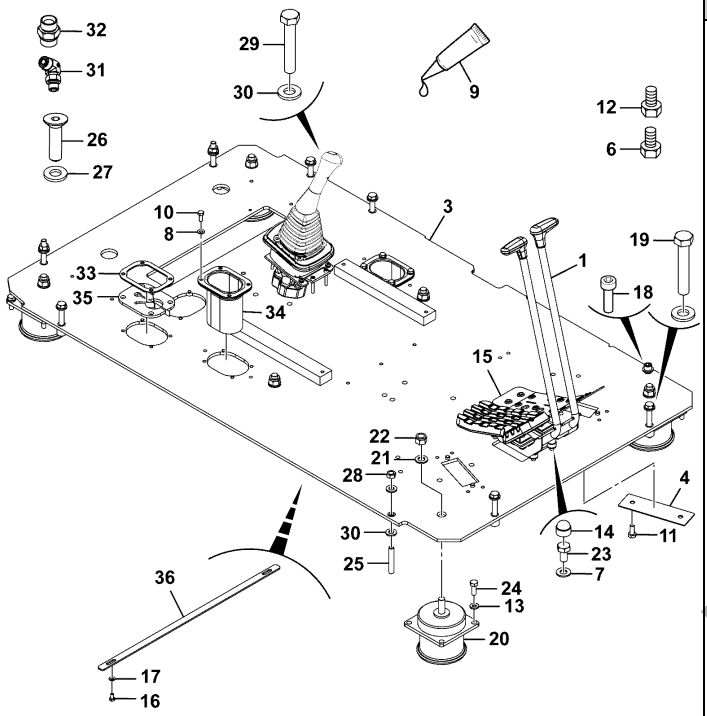

336-F0834-2

ITEM	PART NO	CHANGE NO	DESCRIPTION	USAGE CODE	QTY
17	1420/0006D		Washer M6		2
18	1391/3508D		Capscrew M12 x 30		1
19	1316/3516Z		Bolt		2
20	333/J5301		Rubber mount		6
21	JHP0043		Washer M16		6
22	1371/0603D		Nut M16 self locking		6
23	1316/0405Z		Screw M10 X 20		4
24	1316/0408D		Setscrew		24
25	KHN1256		Bolt		3
26	826/10811		Screw countersunk, socket head M8 x 30		4
27	JHP0080		Washer M8		4
28	1371/0401Z		Nut Hex 12		3
29	1316/3514Z		Bolt (M12 x 60)		3
30	JHP0042		Washer M12		12
31	334/L6374		Elbow Adaptor 1/4		4
32	334/L6367		Adaptor Male		1
33	333/J1258		Plate retainer		1

D120-5-1 EXCAVATOR CONTROLS, JOYSTICK CONTROL, AND FLOOR PLATE ASSEMBLY 9820/1116A ISSUE 0

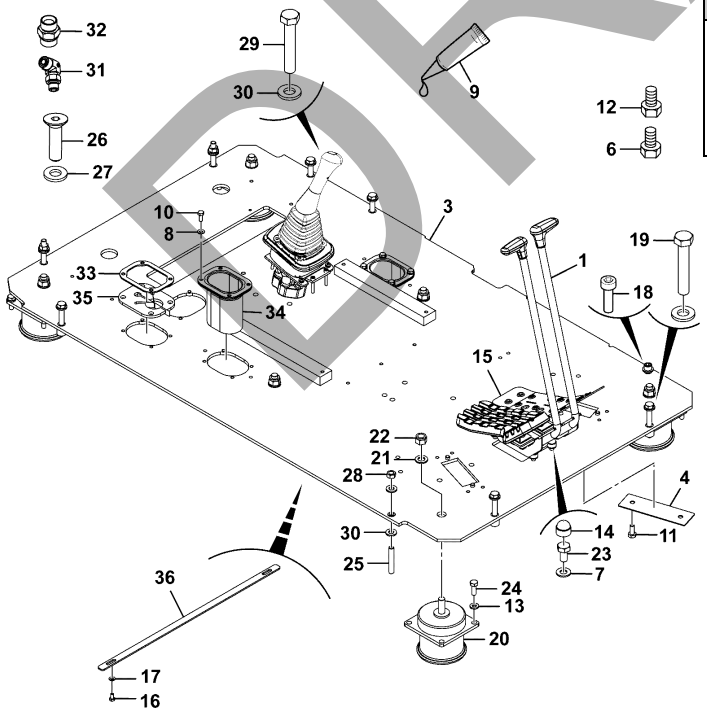

336-F0834-2

ITEM	PART NO	CHANGE NO	DESCRIPTION	USAGE CODE	QTY
34	333/J5713		Gaiter sock		2
35	333/J4812		Grommet		1
36	333/K8124		Strap Retaining, Hose		1

DRAFT

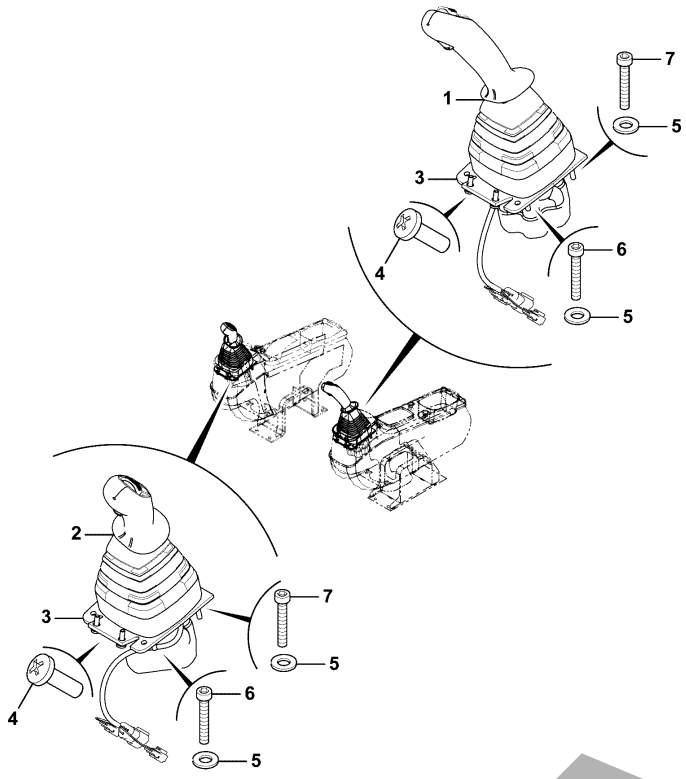

333-K8154-1

JCB380 QM

JCB380 XTRA

ITEM	Part #	CHANGE NO	DESCRIPTION	USAGE CODE	QTY
1			Circuit Remote Control - Left Side Refer C385-15-1		1
2			Circuit Remote Control - Right Side Refer C385-5-1		1
3	331/18592		Plate Mounting Control Valve		2
4	KHR0738		Screw pan head		4
5	MPR2006		Washer Special		8
6	1391/3208D		Capscrew M6x30mm		4
7	1391/3210D		Capscrew M6 x 40mm		4

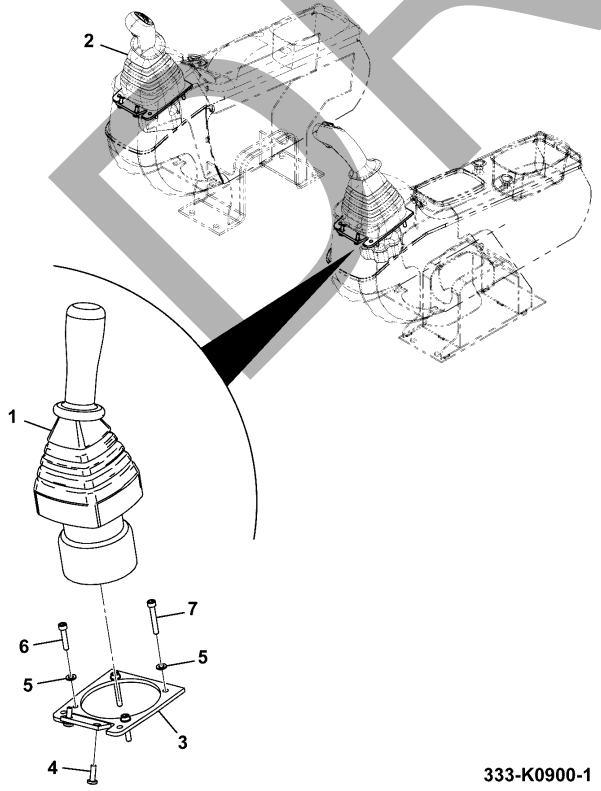

333-K0900-1

JCB380 QM

JCB380 XTRA

ITEM	Part #	CHANGE NO	DESCRIPTION	USAGE CODE	QTY
1			Valve Remote Control LH Refer C385-10-1		1
2			Valve Remote Control RH Refer C385-1-1		1
3	331/18592		Plate Mounting Control Valve		2
4	KHR0738		Screw pan head		4
5	MPR2006		Washer Special		8
6	1391/3208D		Capscrew M6x30mm		4
7	1391/3210D		Capscrew M6 x 40mm		4

DRAFT

JCB380 QM

JCB380 XTRA

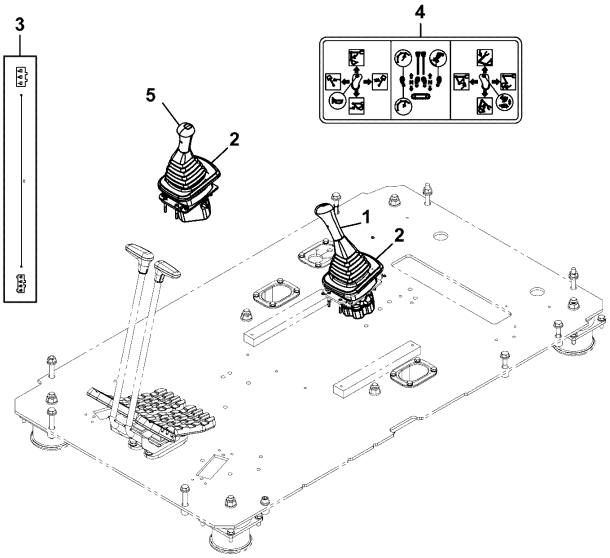

336-F0953-1

ITEM	Part #	CHANGE NO	DESCRIPTION	USAGE CODE	QTY
1			Assembly Joystick Controls Refer D120-10-1		1
2	332/B1738		Bezel Console		2
3	335/G1011		Harness Joystick Control		1
4	332/B2133		Label ISO Controls		1
5	336/D8732		Controller Joystick, RH		1

JCB380 QM

JCB380 XTRA

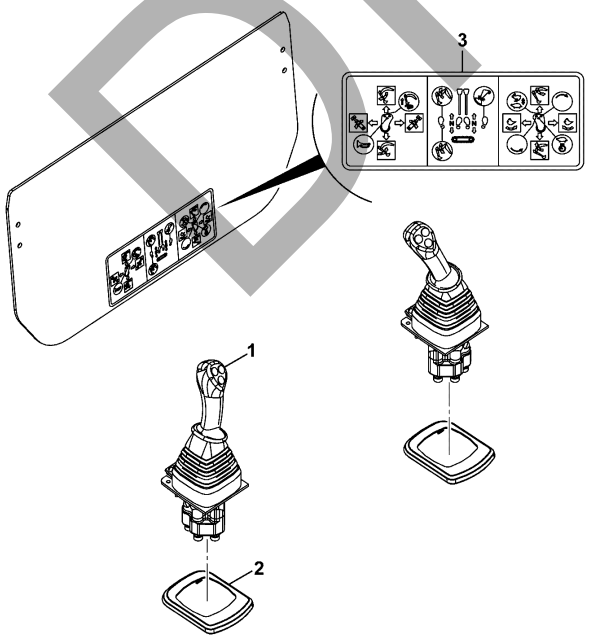

336-F0950-1

ITEM	Part #	CHANGE NO	DESCRIPTION	USAGE CODE	QTY
1			Control Joystick Assembly - Standard Refer D120-15-1		1
2	333/K0635		Controller Bezel		2
3	817/19056		Label Controls Track iso Refer B510-25-1		1

DRAFT

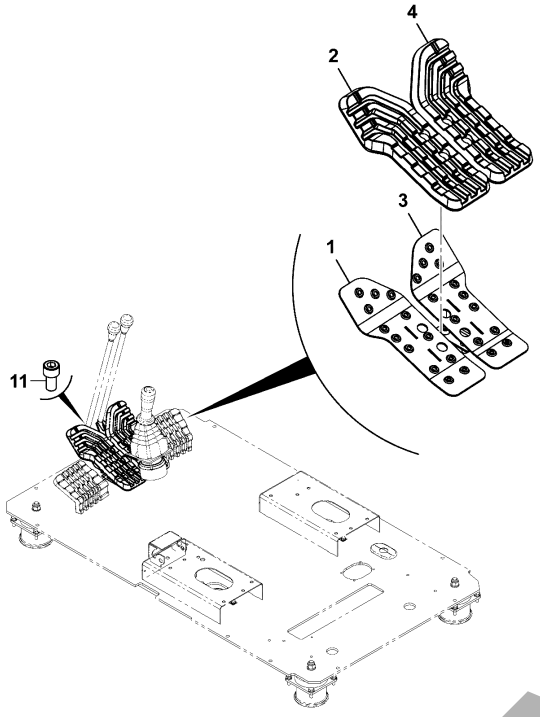

334-L6710-3

JCB380 QM

JCB380 XTRA

ITEM	Part #	CHANGE NO	DESCRIPTION	USAGE CODE	QTY
1	334/L6343		Pedal Left Side		1
2	334/L6348		Boot Pedal Left Side		1
3	334/L9241		Pedal Right Side		1
4	334/L9263		Boot Pedal Right Side		1
11	1391/3405Z		Capscrew		4

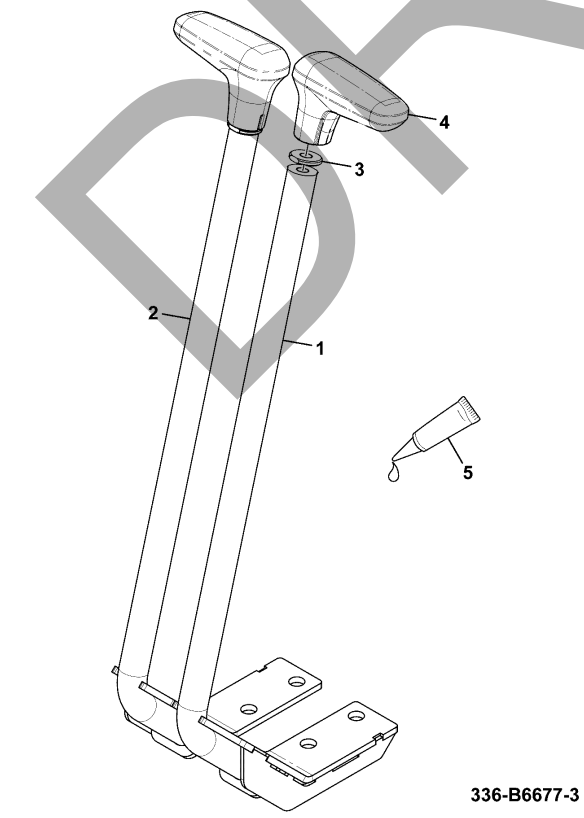

336-B6677-3

JCB380 QM

JCB380 XTRA

ITEM	Part #	CHANGE NO	DESCRIPTION	USAGE CODE	QTY
1	336/B4924		Lever Track, Left Side		1
2	336/B4188		Lever Track, Right Side		1
3	334/T0617		Plate , Locking Tab		2
4	334/T0377		Handle ,Track Lever		2
5	4101/0500		Fluid Locking Loctite 262		1

DRAFT

E

- **E00 HYDRAULIC CIRCUITS**

E01 HYDRAULIC CIRCUITS

E02 PUMP & M0T0RS

E03 VALVES

E04 RAMS

E05 FILTER

DRAFT

JCB380 QM

JCB380 XTRA

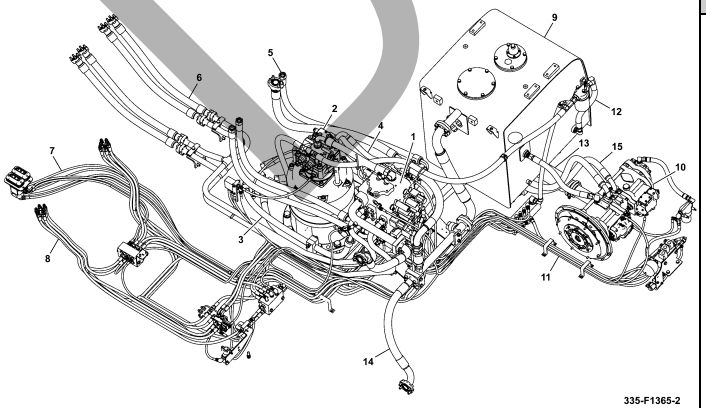

ITEM	Part #	CHANGE NO	DESCRIPTION	USAGE CODE	QTY
1			Valve Assembly Control Refer E300-1-1		1
2			Swing Equipment Assembly Refer F400-1-1		1
3			Circuit Traction Line Refer E130-190-1		1
4			Circuit Swing Line Refer E130-195-1		1
5			Circuit Bucket & Arm Line Refer E140-85-1		1
6			Circuit Boom Line Refer E140-100-1		1
7			Installation Circuit Pilot Control Main Refer E130-5-1		1
8			Circuit Pilot Control Line, Assembly Refer E100-20-1		1

Continue...

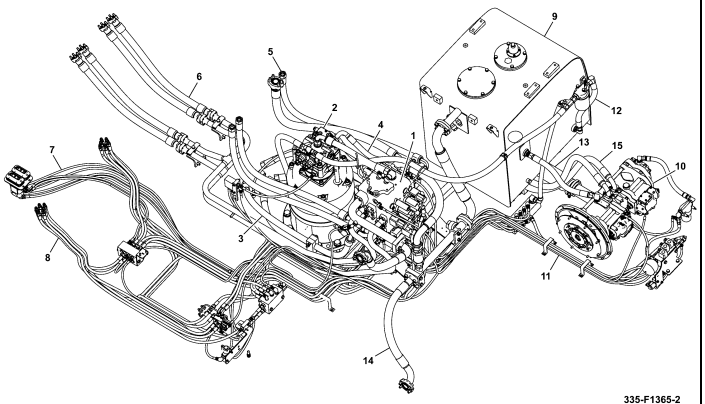

ITEM	PART NO	CHANGE NO	DESCRIPTION	USAGE CODE	QTY
9			Tank Hydraulic, Assembly Refer B130-10-1		1
10			Circuit Main Pump Refer E200-10-1		1
11			Circuit Pilot Pressure and Return Line, Assembly Refer E130-10-1		1
12			Installation Circuit Drain Line Refer E100-5-1		1
13			Installation Circuit Suction Refer E190-1-1		1
14			Circuit Return And Oil Cooler Line Refer E130-185-1		1
15			Installation Pressure Circuit Refer E100-10-1		1

DRAFT

E

E00 HYDRAULIC CIRCUITS
• E01 HYDRAULIC CIRCUITS
E02 PUMP & M0T0RS
E03 VALVES
E04 RAMS
E05 FILTER

DRAFT

JCB380 QM

JCB380 XTRA

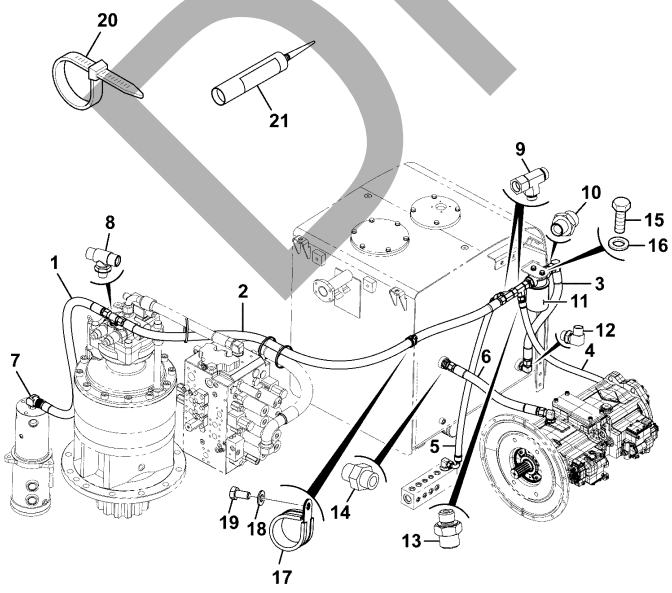

332-K6914-1

ITEM	Part #	CHANGE NO	DESCRIPTION	USAGE CODE	QTY
1	KRJ1704		Hose hydraulic		1
2	332/J8821		Hose 3/4" BSP 1900 ST		1
3	332/K8019		Hose 12 BSP LP x 530mm		1
4	332/K6198		Hose -08 BSP LP 700m		1
5	332/K6203		Hose -08 BSP LP 850m		1
6	332/K6732		Hose -12 BSP LP 530m		1
11	336/C7502		Installation Filter Inline Refer E130-85-1		1
17	821/10387		Clip 35 mm		1
18	1420/0007D		Washer M8		1
19	1316/0303D		Screw M8 x 16mm		1
20	KHH0143		Band Harness Retainer		3

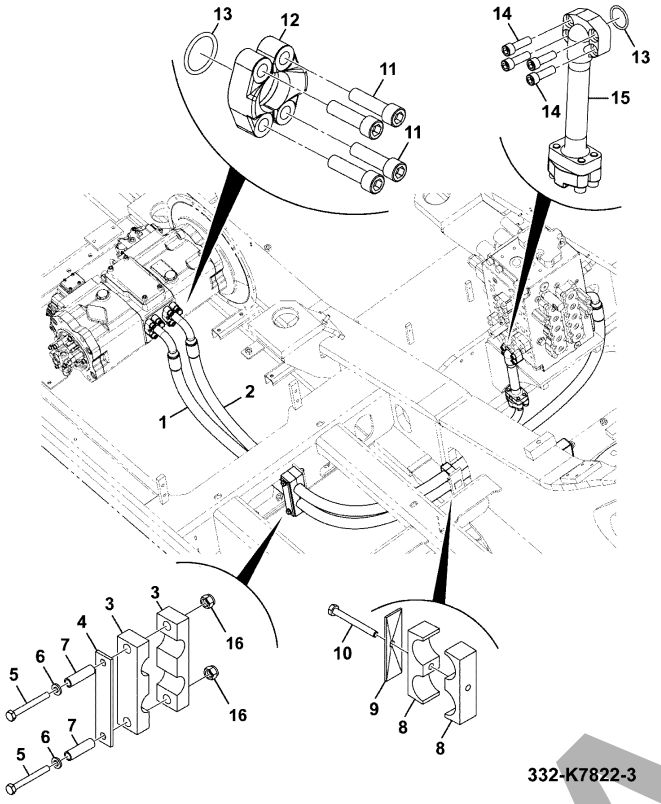

JCB380 QM

JCB380 XTRA

ITEM	Part #	CHANGE NO	DESCRIPTION	USAGE CODE	QTY
1	332/K6074		Hose -16 SAE UHP 258		1
2	332/K6060		Hose -16 SAE UHP 185		1
3	KSJ1379		Clamp hose		2
4	KTJ1238		Plate		1
5	1316/3420D		Bolt high strength		2
6	JHP0046		Washer M10		4
7	KTJ1254		Spacer		2
8	821/00427		Body clamp		2
9	821/00428		Plate clamp cover		1
10	1316/3317D		Bolt M8 x 75mm		1
11	1391/3511D		Capscrew		12
12	210/92901		Pipe flange 1"		8
13	2409/0210		O Ring		5
14	1391/3510D		Capscrew		8
15	332/K4723		Tube Assembly		1

E100-10-1 HYDRAULIC CIRCUIT INSTALLATION ASSEMBLIES, HOSES & FITTINGS, PRESSURE LINE 9820/1116A ISSUE 0

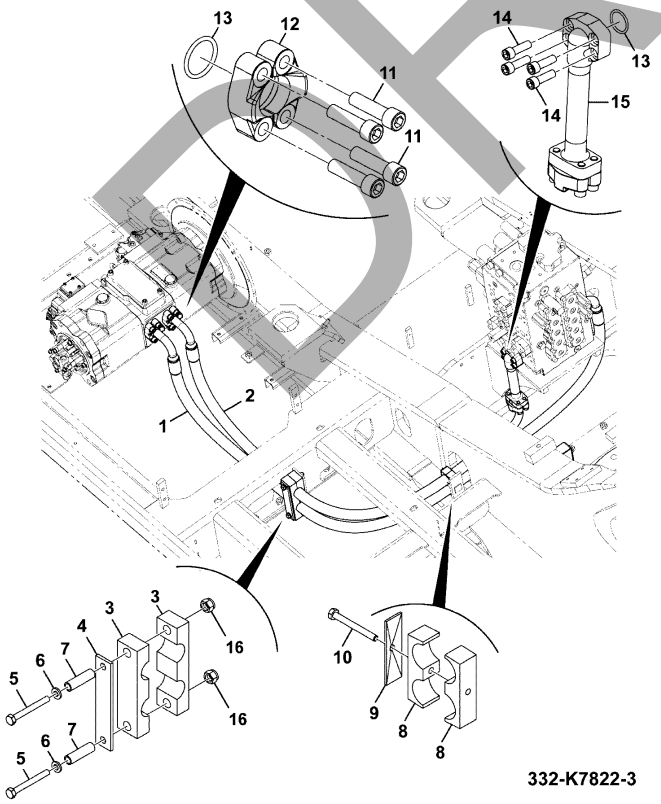

ITEM	PART NO	CHANGE NO	DESCRIPTION	USAGE CODE	QTY
16	1371/0303D		Nut M10 grade 10.9		2

DRAFT

JCB380 QM

JCB380 XTRA

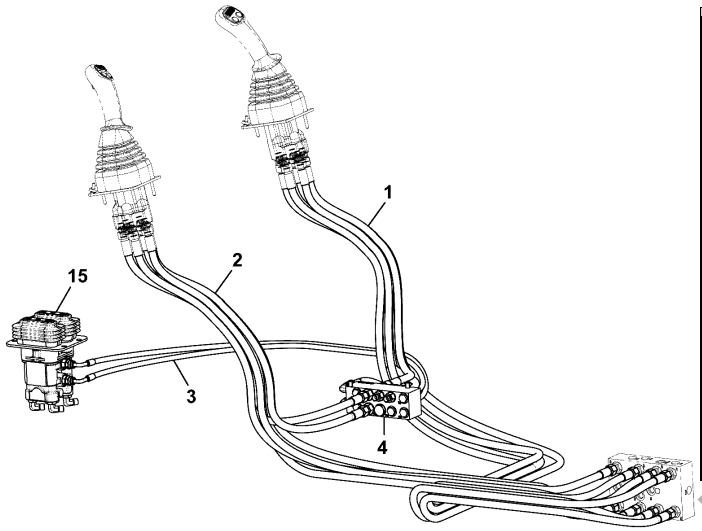

333-K9367-3

ITEM	Part #	CHANGE NO	DESCRIPTION	USAGE CODE	QTY
1			Kit-hose Joystick Right Side Refer E130-55-1		1
2	332/J4334		Kit-hose - joystick left side Refer E130-60-1		1
3	332/J4348		Kit-hose manifold cab Refer E130-65-1		1
4			Manifold Assembly - Cab Refer E130-105-1		1
15			Circuit Tracking Valve Refer E130-90-1		1

JCB380 QM

JCB380 XTRA

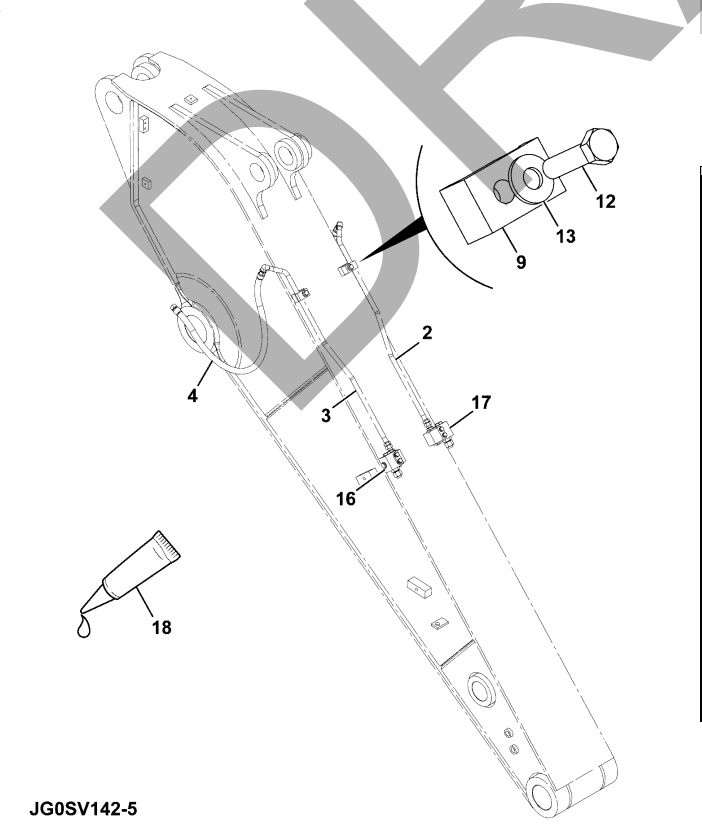

JG0SV142-5

ITEM	Part #	CHANGE NO	DESCRIPTION	USAGE CODE	QTY
2	JLV1736		Pipe low flow LH		1
3	JLV1737		Pipe low flow RH		1
4	JAV0124		Hose		2
9	JRJ0259		Clamp pipe		2
12	1316/3512D		Bolt M12X50		2
13	823/00394		Washer M12		2
16			Block Manifold, Assembly, Right Side Refer E190-5-1		1
17			Block Manifold, Assembly, Left Side Refer E190-35-1		1
18	4101/0500		Fluid Locking Loctite 262		0

DRAFT

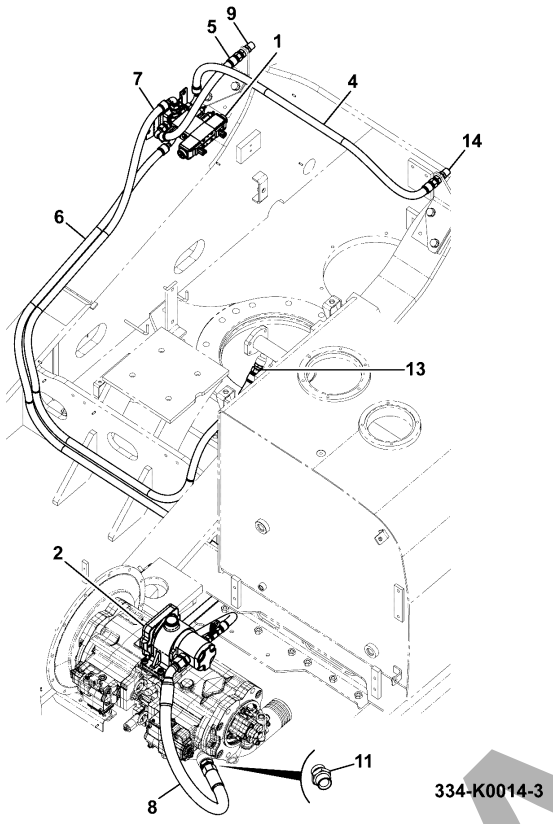

JCB380 QM

JCB380 XTRA

ITEM	Part #	CHANGE NO	DESCRIPTION	USAGE CODE	QTY
1	336/C2403		Valve Low Flow, Assembly Refer E190-30-1		1
2	400/C3107		Pump Gear Refer E190-25-1		1
4	JLV0920		Hose		1
5	334/K3430		Hose BSP HP 600mm		1
6	JRJ0322		Hose		1
7	JRJ0176		Hose hydraulic		1
8	333/K7312		Hose 16 BSP LP 1000mm		1
9	816/10149		Adapter bulkhead		2
11	334/L6394		Adaptor male 1/4 ST		1
13	334/L0979		Adaptor male 1/2 ST		1
14	1356/0204Z		Nut 1/2BSP		4

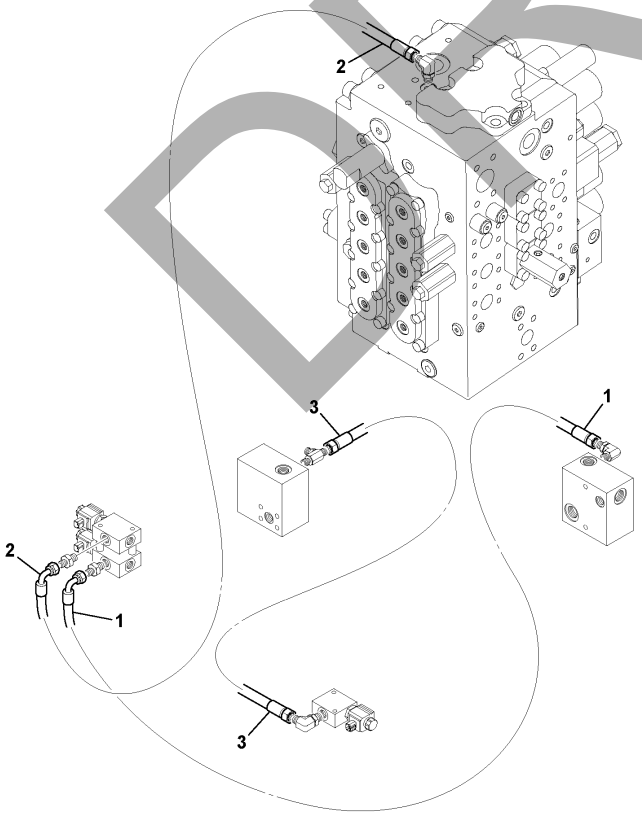

JCB380 QM

JCB380 XTRA

ITEM	Part #	CHANGE NO	DESCRIPTION	USAGE CODE	QTY
1	KBJ2208		Hose 04 BSP LP x 3100mm		1
2	KRJ3591		Hose 1/4"x3500mm ST-90		1
3	KTJ0679		Hose nylon		1

DRAFT

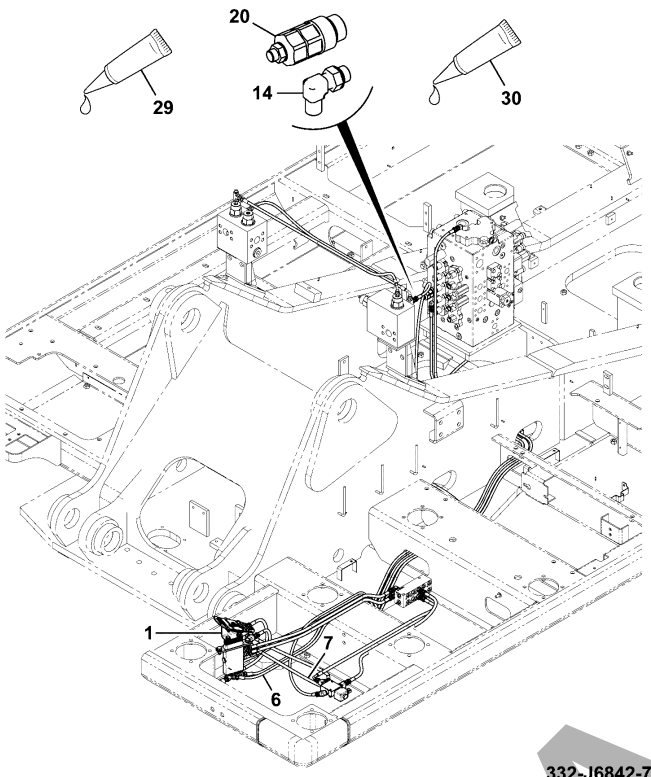

332-J6842-7

JCB380 QM

JCB380 XTRA

ITEM	Part #	CHANGE NO	DESCRIPTION	USAGE CODE	QTY
1			Unit Merged Cab Lines Refer E130-70-1		1
6	332/J6734		Kit hose Refer E130-115-1		1
7	332/J6898		Kit-hose Refer E110-1-1		1
14	334/L6374		Elbow Adaptor 1/4		2
20	BRP0110		Valve auxiliary relief		2
29	4101/0500		Fluid Locking Loctite 262		0
30			Fluid locking		0

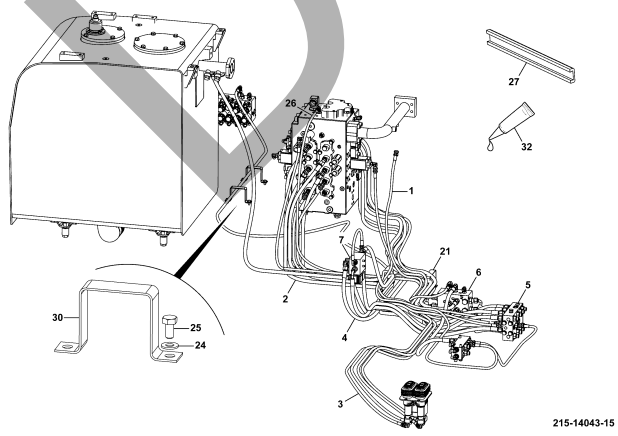

215-14043-15

JCB380 QM

JCB380 XTRA

ITEM	Part #	CHANGE NO	DESCRIPTION	USAGE CODE	QTY
1	332/J4345		Kit-hose cushion valve Refer E130-30-1		1
2	332/J4343		Kit-hose shuttle block Refer E130-25-1		1
3	332/J4340		Kit-hose travel pedal Refer E130-20-1		1
4	333/K7532		Kit-hose Swing Lock Solenoid Refer E130-35-1		1
5			Circuit Shuttle Valve Refer E130-40-1		1
6			Circuit Cushion Valve Refer E130-45-1		1
7			Circuit Valve Dual Control Refer E130-50-1		1
21	KHJ0811		Clamp		2

DRAFT

Continue...

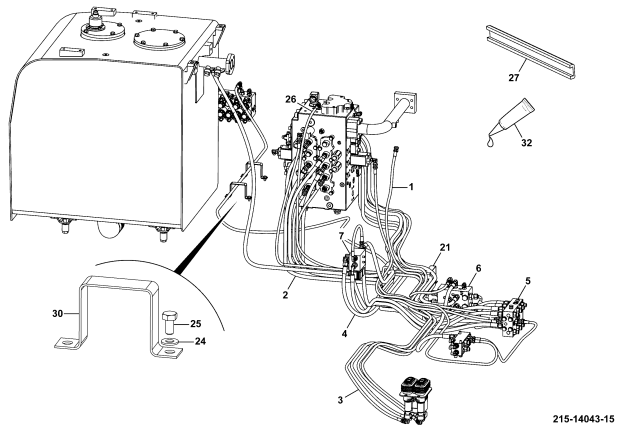

ITEM	PART NO	CHANGE NO	DESCRIPTION	USAGE CODE	QTY
24	1420/0007D		Washer M8		8
25	1316/0303D		Screw M8 x 16mm		8
26	KTJ0812		Hose 1/4" BSP ST-ST x 3250mm		1
27	KSJ2217		Cushion Rubber		4
30	KHJ0858		Clamp		2
32	4102/2700		Loctite		0

JCB380 QM

JCB380 XTRA

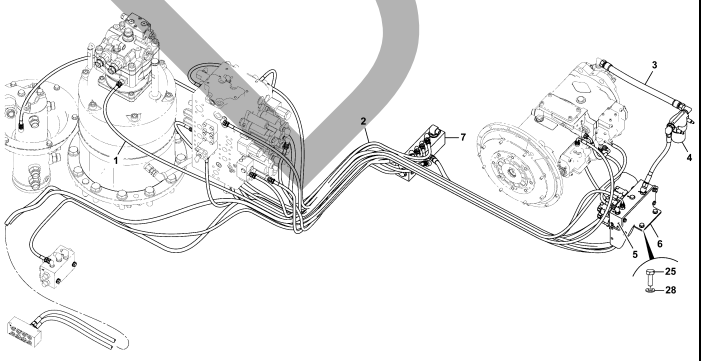

ITEM	Part #	CHANGE NO	DESCRIPTION	USAGE CODE	QTY
1	333/K1350		Kit-hose 8 Station Solenoid Refer E130-125-1		1
2	332/J4349		Kit-hose tank manifold Refer E130-130-1		1
3	333/K1351		Kit-hose Pump Refer E130-120-1		1
4			Circuit Pilot Filter Line Refer E130-80-1		1
5			Circuit 8 Station Solenoid Refer E130-95-1		1
6	333/J0236		Bracket 8 station solenoid		1
7			Circuit Block Assembly Refer E130-100-1		1
25	1316/0408D		Setscrew		2
28	1420/0008D		Washer M10		2

DRAFT

JCB380 QM

JCB380 XTRA

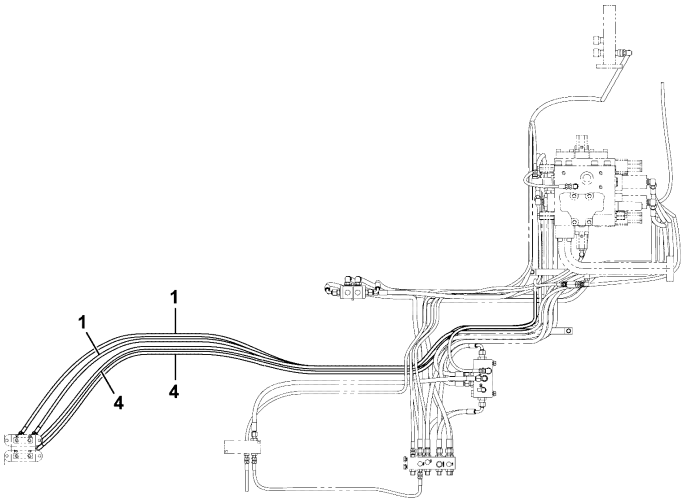

332-J4340-1

ITEM	Part #	CHANGE NO	DESCRIPTION	USAGE CODE	QTY
1	JLJ0314		Hose		2
4	JSV0317		Hose		2

JCB380 QM

JCB380 XTRA

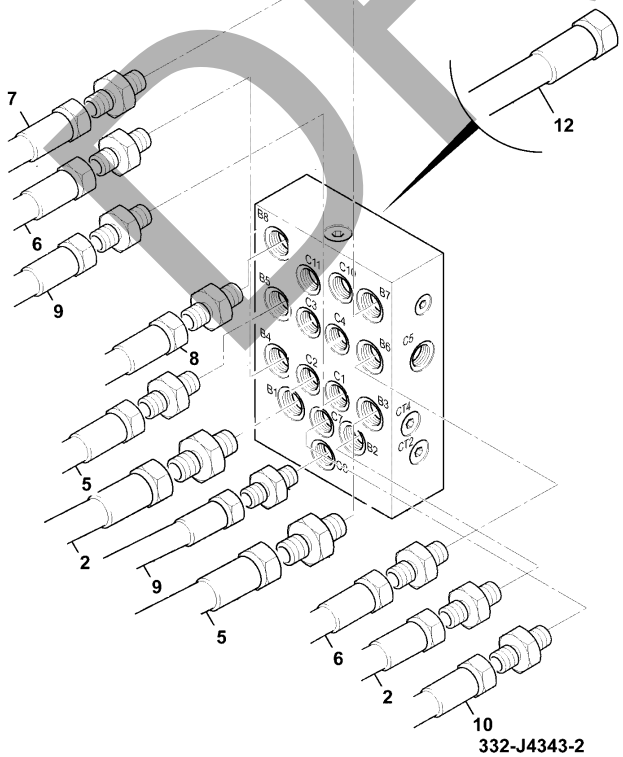

332-J4343-2

ITEM	Part #	CHANGE NO	DESCRIPTION	USAGE CODE	QTY
2	KRJ3934		Hose		2
5	JRJ0376		Hose		2
6	KHJ1039		Hose nylon		2
7	KNJ1123		Hose 3/8" 2000mm 180/180		1
8	KNJ1319		Hose nylon		1
9	KBJ2439		Hose 1/4" BSP ST-ST 2150mm		2
10	MPJ5070		Hose nylon		1
12	KAJ1927		Hose 1/4" 900mm 180/180 Yellow/White		1

DRAFT

JCB380 QM

JCB380 XTRA

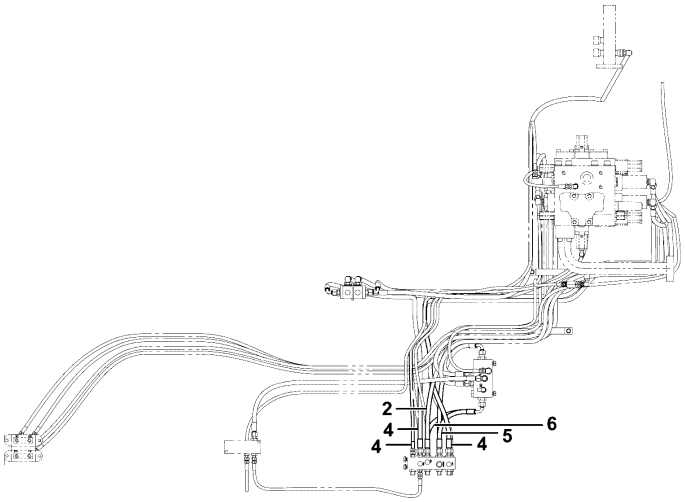

332-J4345-1

ITEM	Part #	CHANGE NO	DESCRIPTION	USAGE CODE	QTY
2	KNJ1123		Hose 3/8" 2000mm 180/180		1
4	KNJ1122		Hose 3/8"BSP ST-ST x 1900mm		3
5	KTJ0676		Hose 1/4"BSP ST-ST 1950mm		1
6	KNJ1072		Hose 3/8"BSP ST-ST x 1700mm		1

JCB380 QM

JCB380 XTRA

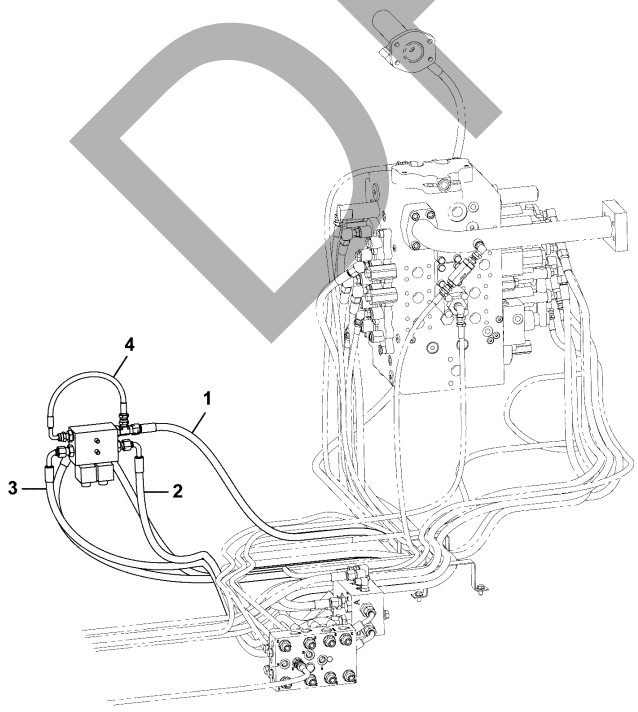

333-K7532-1

ITEM	Part #	CHANGE NO	DESCRIPTION	USAGE CODE	QTY
1	KNJ1125		Hose 3/8"BSP ST-ST x 2200mm		1
2	KNJ1122		Hose 3/8"BSP ST-ST x 1900mm		1
3	JLJ0325		Hose		1
4	JNJ0473		Hose 1/4" x 400		1

DRAFT

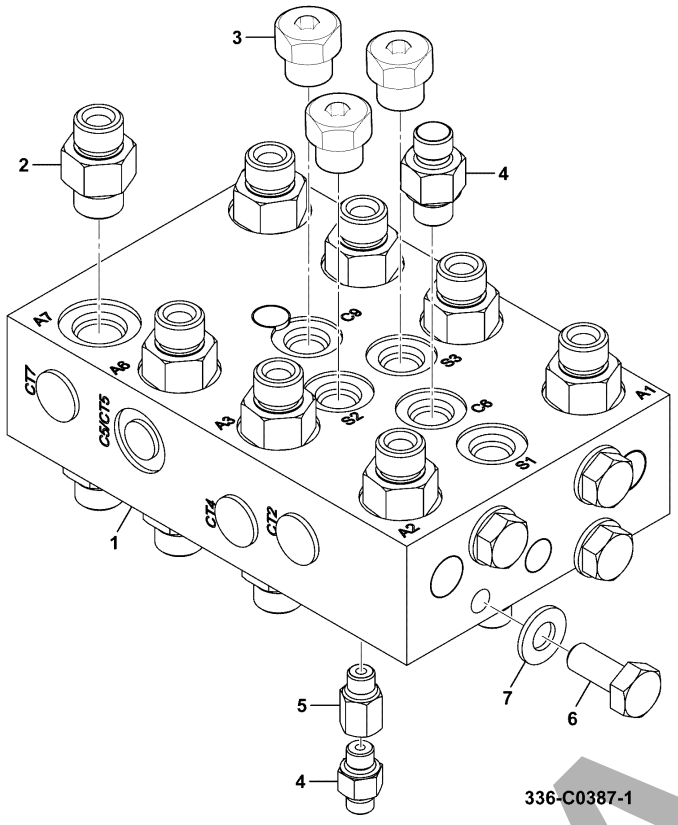

336-C0387-1

JCB380 QM

JCB380 XTRA

ITEM	Part #	CHANGE NO	DESCRIPTION	USAGE CODE	QTY
1	25/222638		Valve shuttle		1
2	334/L6615		Adapter 3/8 male		16
3	KHJ0363		Plug		7
4	334/L6367		Adaptor Male		4
5	333/K4819		Adaptor 1/4 - 1/4 0.7mm		1
6	1316/0407D		Screw		4
7	1420/0008D		Washer M10		4

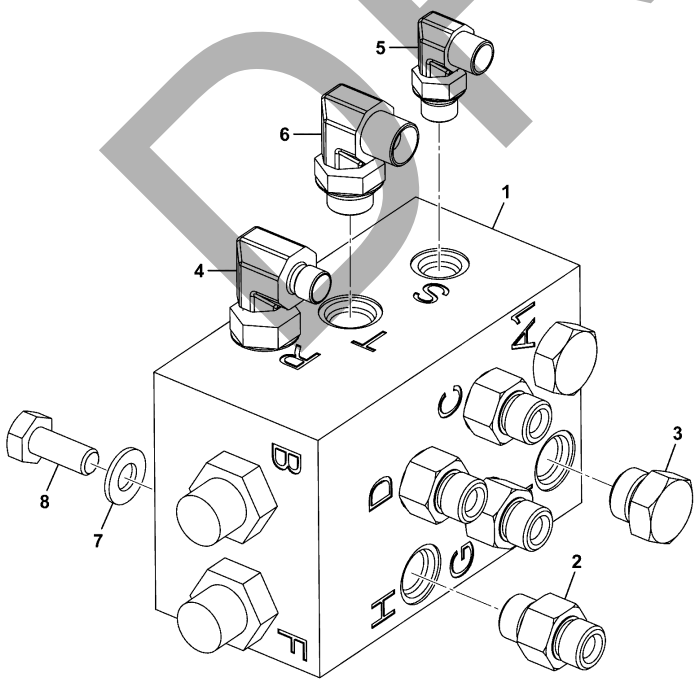

336-C0391-1

JCB380 QM

JCB380 XTRA

ITEM	Part #	CHANGE NO	DESCRIPTION	USAGE CODE	QTY
1	25/220042		Valve cushion Refer E390-1-1		1
2	334/L6615		Adapter 3/8 male		4
3	BRJ1545		Plug		2
4	334/L6554		Elbow adaptor		1
5	334/L6374		Elbow Adaptor 1/4		1
6	334/L6662		Elbow Adaptor 1/4		1
7	1420/0008D		Washer M10		2
8	1316/0407D		Screw		2

DRAFT

JCB380 QM

JCB380 XTRA

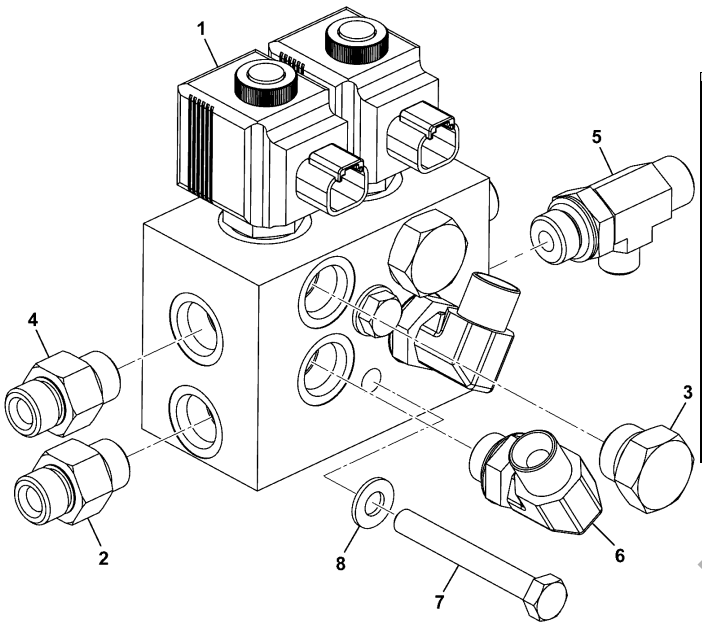

336-C0414-1

ITEM	Part #	CHANGE NO	DESCRIPTION	USAGE CODE	QTY
1	25/221066		Valve dual controls Refer E390-5-1		1
2	334/L6674		Adaptor		1
3	BRJ1545		Plug		2
4	334/L6615		Adapter 3/8 male		2
5	334/L6255		Tee adaptor		1
6	334/L6662		Elbow Adaptor 1/4		2
7	1316/3315D		Bolt M8x65		2
8	1420/0007D		Washer M8		2

JCB380 QM

JCB380 XTRA

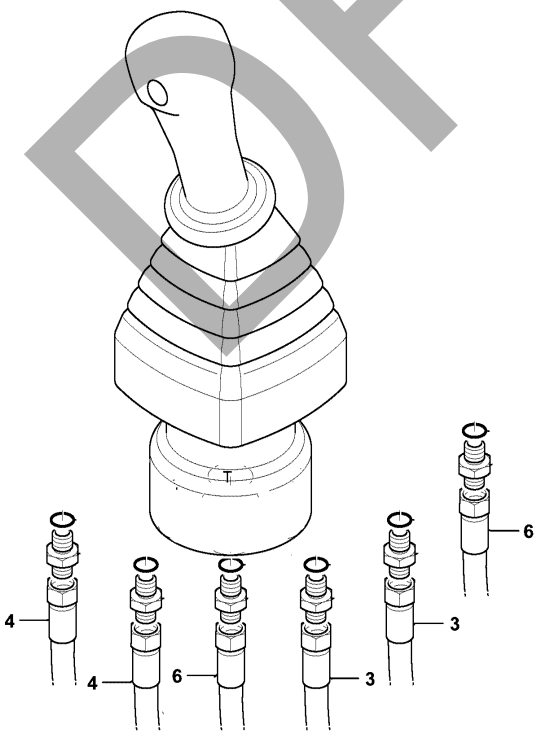

332-J4333-2

ITEM	Part #	CHANGE NO	DESCRIPTION	USAGE CODE	QTY
3	KNJ1123		Hose 3/8" 2000mm 180/180		2
4	KNJ2005		Hose 3/8 BSP 2100 ST-ST		2
6	KNJ1109		Hose 3/8" 1000mm 180/180		2

DRAFT

HYDRAULIC CIRCUITS CHASSIS, HOSE KIT, JOYSTICK, LEFT HAND SIDE

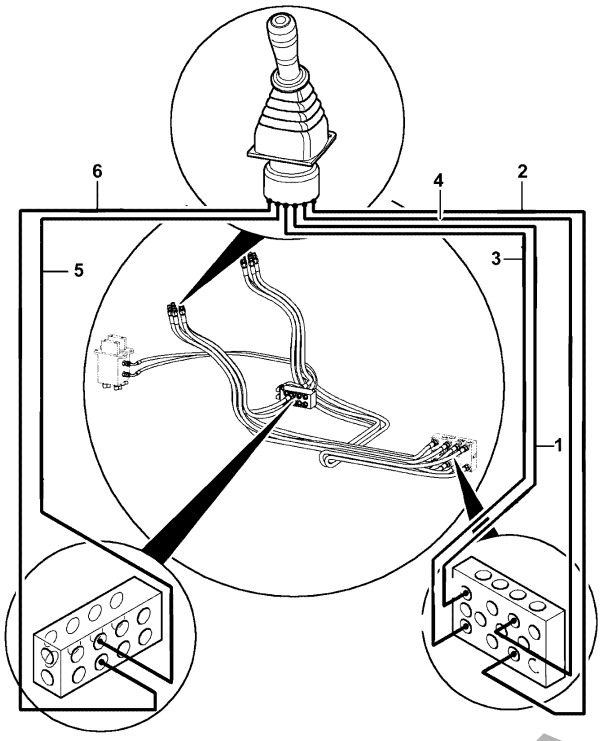

332-J4334-2

JCB380 QM

JCB380 XTRA

ITEM	Part #	CHANGE NO	DESCRIPTION	USAGE CODE	QTY
1	KNJ1314		Hose 3/8"BSP ST-ST x 1650mm		1
2	KNJ2005		Hose 3/8 BSP 2100 ST-ST		1
3	KRJ4133		Hose hyd (l=1750)		1
4	KNJ1123		Hose 3/8" 2000mm 180/180		1
5	KNJ1109		Hose 3/8" 1000mm 180/180		1
6	KNJ1109		Hose 3/8" 1000mm 180/180		1

HYDRAULIC CIRCUITS CHASSIS, HOSE KIT, CAB MANIFOLD

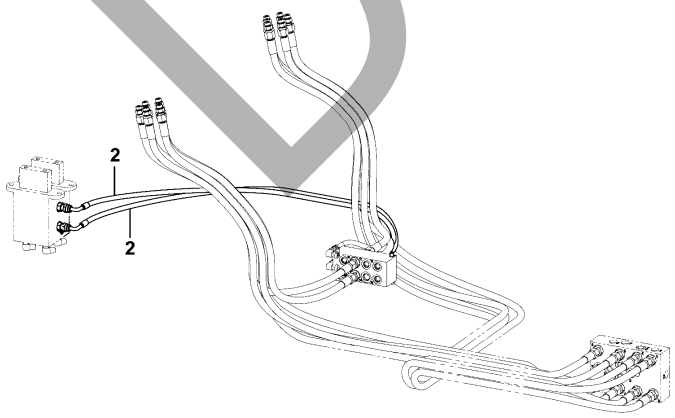

332-J4348-1

JCB380 QM

JCB380 XTRA

ITEM	Part #	CHANGE NO	DESCRIPTION	USAGE CODE	QTY
2	JNV0329		Hose 1/4" BSP ST-90 1200mm		2

DRAFT

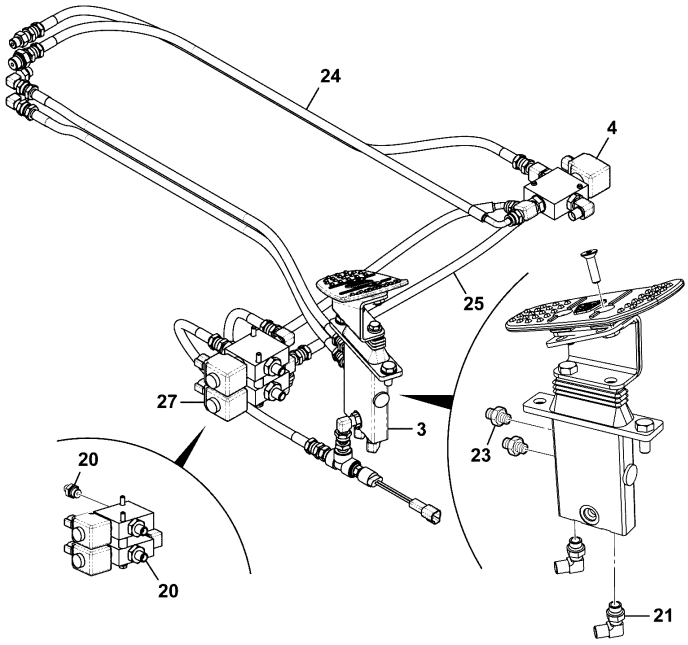

333-K6641-3

JCB380 QM

JCB380 XTRA

ITEM	Part #	CHANGE NO	DESCRIPTION	USAGE CODE	QTY
3	336/C2405		Valve Assembly, Hammer/Auxiliary, TAB Boom Refer E130-180-1		1
4	336/C2212		Valve Assembly, Solenoid Refer E300-10-1		1
20	334/L6674		Adaptor		1
21	334/L6374		Elbow Adaptor 1/4		2
23	334/L6367		Adaptor Male		1
24	333/J9490		Kit-hose Hammer / Auxcillary Refer E130-75-1		1
25	333/K1116		Kit-hose Merged Cab Lines Refer E130-165-1		1
27	336/C2322		Valve Assembly, Solenoid, Arm Limited Refer E300-5-1		1

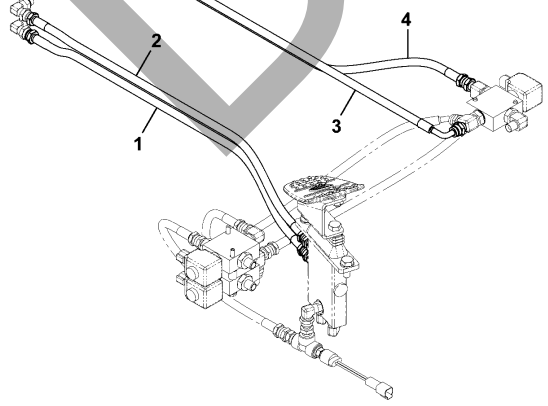

333-J9490-1

JCB380 QM

JCB380 XTRA

ITEM	Part #	CHANGE NO	DESCRIPTION	USAGE CODE	QTY
1	KAJ1927		Hose 1/4" 900mm 180/180 Yellow/White		1
2	KTJ0672		Hose nylon		1
3	KNJ1699		Hose 1/4"BSP ST-90 x 900mm		1
4	JNJ0444		Hose 1/4"BSP ST-ST x 950mm		1

DRAFT

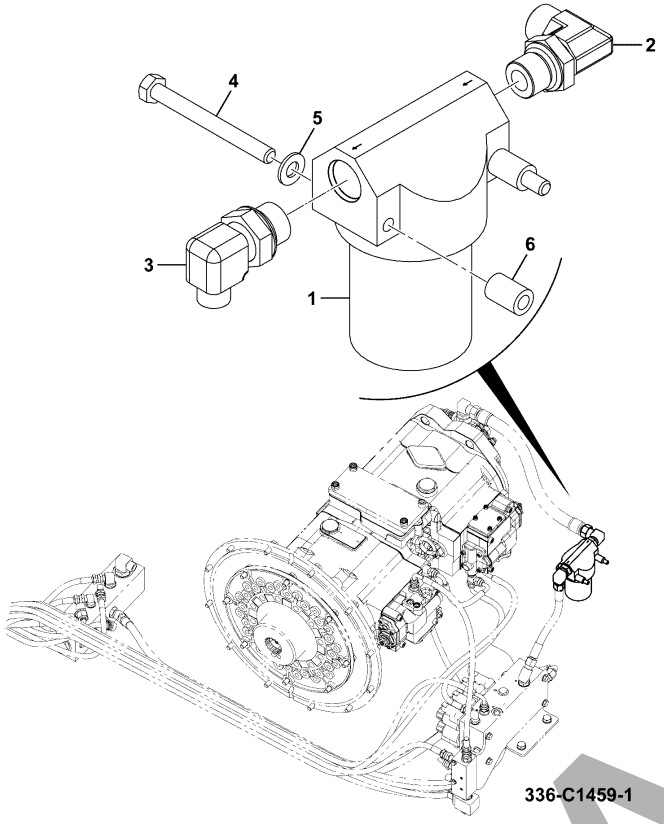

336-C1459-1

JCB380 QM

JCB380 XTRA

ITEM	Part #	CHANGE NO	DESCRIPTION	USAGE CODE	QTY
1	32/925214		Filter Assembly Refer E510-5-1		1
2	334/L6384		Elbow Adaptor 90 male		1
3	334/L6594		Elbow Adaptor, 1/2"-3/8"		1
4	1316/3218D		Bolt		2
5	1420/0006D		Washer M6		2
6	KRN0081		Spacer		2

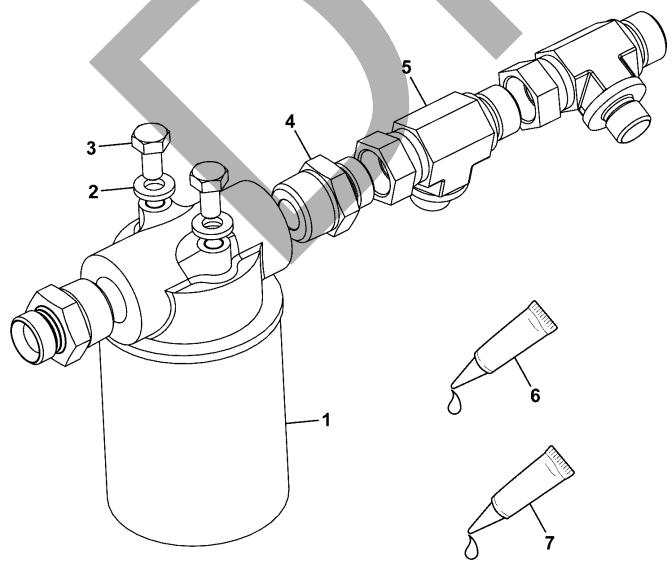

336-C7502-1

JCB380 QM

JCB380 XTRA

ITEM	Part #	CHANGE NO	DESCRIPTION	USAGE CODE	QTY
1	KNJ0287		Filter Inline Refer E520-1-1		1
2	JHP0046		Washer M10		2
3	1316/0405D		Screw M10 x 20		2
4	332/B6989		Adaptor -1 BSPT(M), 3/4 BSP(M)		2
5	816/50021		Adapter tee		2
6	4101/0500		Fluid Locking Loctite 262		0
7			Fluid locking		0

DRAFT

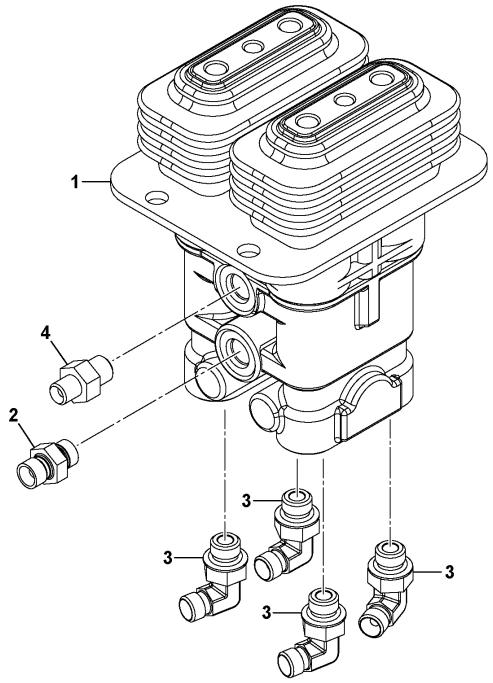

335-A8903-1

JCB380 QM

JCB380 XTRA

ITEM	Part #	CHANGE NO	DESCRIPTION	USAGE CODE	QTY
1	335/B0611		Valve Remote Control		1
2	816/90006		Adaptor filtered M/M		1
3	816/90618		Adaptor elbow 1/4		4
4	1620/2051		Adaptor 1/4"BSP x 9/16"SAE		1

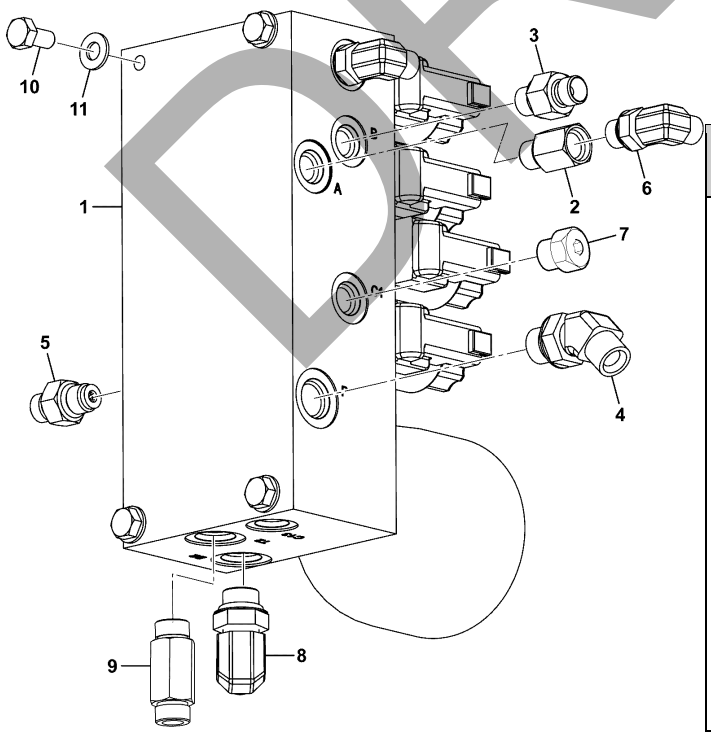

336-C1446-1

JCB380 QM

JCB380 XTRA

ITEM	Part #	CHANGE NO	DESCRIPTION	USAGE CODE	QTY
1	332/J4523		Valve 8 station solenoid inc. accumulator Refer E390-30-1		1
2	333/K4819		Adaptor 1/4 - 1/4 0.7mm		1
3	334/L6367		Adaptor Male		6
4	334/K1294		Adaptor 45 Deg 3/8 JIS (M), 3/8 BSP (M)		1
5	334/K3244		Adaptor		1
6	334/L6374		Elbow Adaptor 1/4		2
7	KHJ0363		Plug		4
8	334/L6662		Elbow Adaptor 1/4		1
9	334/L6615		Adapter 3/8 male		1
10	1316/0303D		Screw M8 x 16mm		4
11	1420/0007D		Washer M8		4

DRAFT

JCB380 QM

JCB380 XTRA

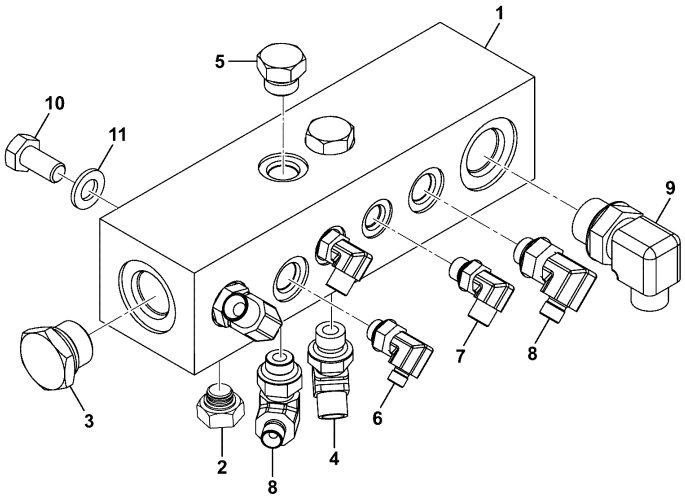

ITEM	Part #	CHANGE NO	DESCRIPTION	USAGE CODE	QTY
1	KTJ1660		Manifold		1
2	KHJ0363		Plug		1
3	BRJ1286		Plug		1
4	334/K1294		Adaptor 45 Deg 3/8 JIS (M), 3/8 BSP (M)		1
5	BRJ1545		Plug		2
6	334/L6662		Elbow Adaptor 1/4		2
7	334/L6374		Elbow Adaptor 1/4		3
8	334/L6554		Elbow adaptor		2
9	334/K1302		Adaptor 90 Deg, 3/4 JIS(M), 1/2 BSP(M)		1
10	1316/0507D		Setscrew M12 x 25 grade 10.9		2
11	1420/0009D		Washer M12		2

336-C0411-1

JCB380 QM

JCB380 XTRA

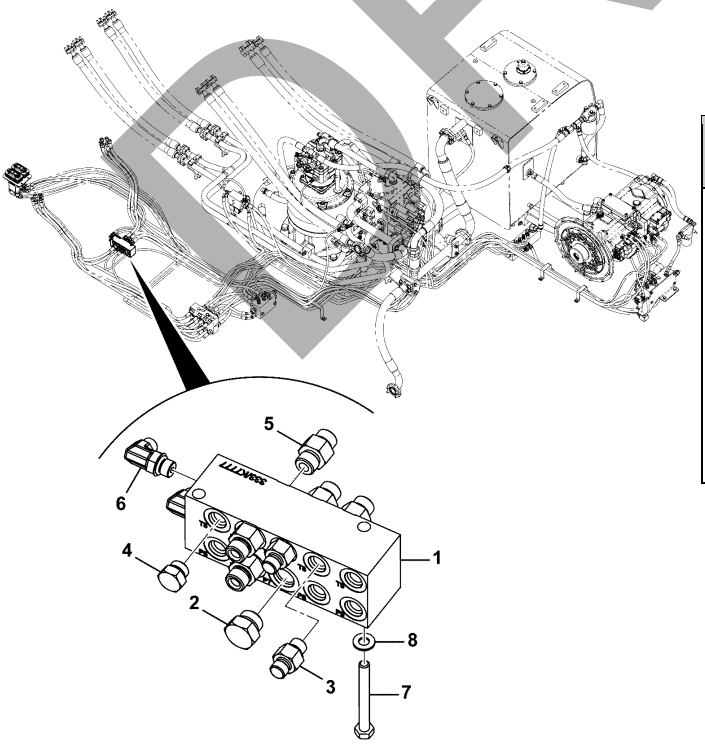

ITEM	Part #	CHANGE NO	DESCRIPTION	USAGE CODE	QTY
1	333/K7777		Manifold Pilot, Cab		1
2	BRJ1545		Plug		2
3	334/L6367		Adaptor Male		2
4	KHJ0363		Plug		8
5	334/L6615		Adapter 3/8 male		7
6	334/L6374		Elbow Adaptor 1/4		2
7	1316/3317D		Bolt M8 x 75mm		2
8	1420/0007D		Washer M8		2

336-C0382-2

DRAFT

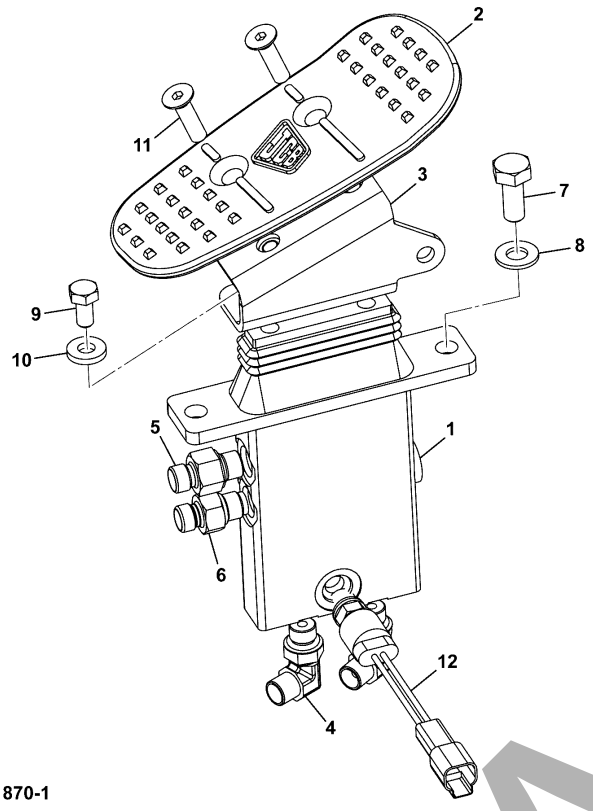

336-C1870-1

JCB380 QM

JCB380 XTRA

ITEM	Part #	CHANGE NO	DESCRIPTION	USAGE CODE	QTY
1	928/60339		Valve hammer, auxiliary foot operated Refer E390-20-1		1
2	589/10161		Pedal		1
3	333/J7177		Bracket		1
4	334/L6374		Elbow Adaptor 1/4		2
5	334/L6367		Adaptor Male		1
6	334/K3244		Adaptor		1
7	1316/0407D		Screw		2
8	1420/0008D		Washer M10		2
9	1316/0303D		Screw M8 x 16mm		2
10	JHP0080		Washer M8		2
11	826/10811		Screw countersunk, socket head M8 x 30		2
12	332/J0669		Switch Low Pressure 5bar 1/4" BSP		1

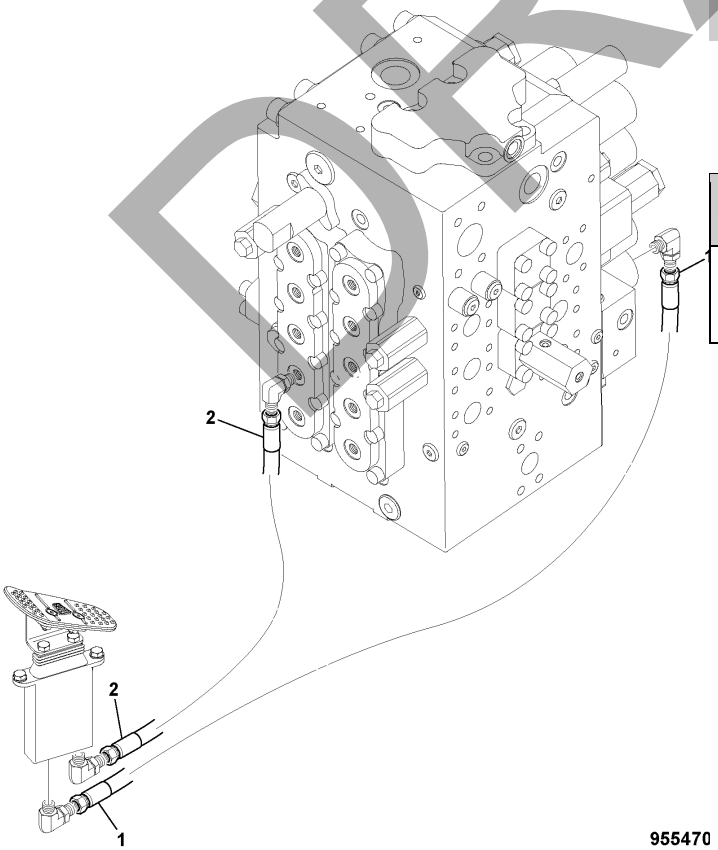

955470

JCB380 QM

JCB380 XTRA

ITEM	Part #	CHANGE NO	DESCRIPTION	USAGE CODE	QTY
1	MPJ5069		Hose nylon		1
2	KTJ0812		Hose 1/4" BSP ST-ST x 3250mm		1

DRAFT

JCB380 QM

JCB380 XTRA

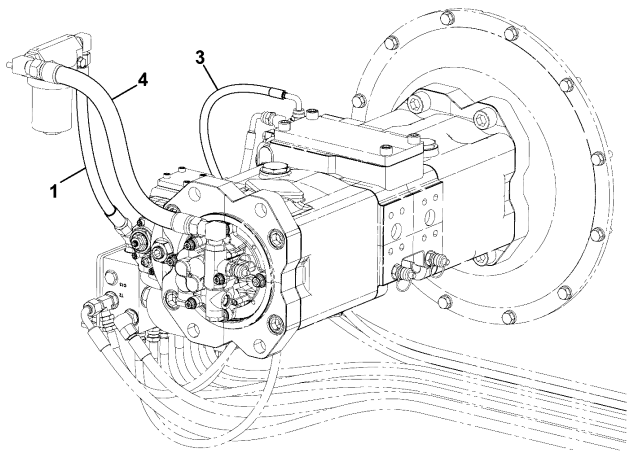

333-K1351-1

ITEM	Part #	CHANGE NO	DESCRIPTION	USAGE CODE	QTY
1	KBJ2208		Hose 04 BSP LP x 3100mm		2
3	332/K7840		Hose - 04 BSP LP 300m		1
4	332/K6180		Hose - 08 BSP LP 570m		1

JCB380 QM

JCB380 XTRA

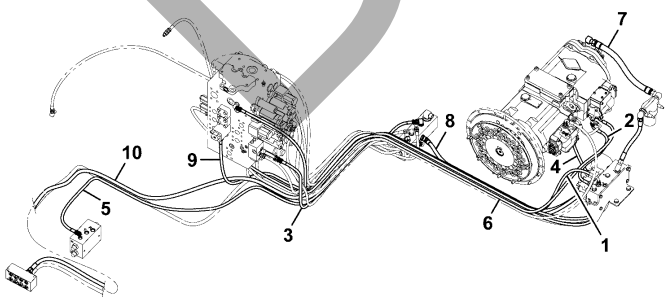

333-K1350-1

ITEM	Part #	CHANGE NO	DESCRIPTION	USAGE CODE	QTY
1	JSV0319		Hose		1
2	KNJ1846		Hose 1/4"BSP ST-90 x 500mm		1
3	MPJ5070		Hose nylon		1
4	KNJ1191		Hose 1/4"BSP ST-ST 2300mm		1
5	KTJ0674		Hose 04 BSP LP x 3700mm		1
6	MPJ2142		Hose 04 BSP LP x 650mm		1
7	332/K7779		Hose -06 BSP LP 330m		1
8	KNJ1958		Hose 3/8"BSP ST-90 x 1550mm		1
9	MPJ5068		Hose 1/4" BSP ST-ST 3000mm		1
10	627/10201		Hose 06 BSP LP x 4900mm		1

DRAFT

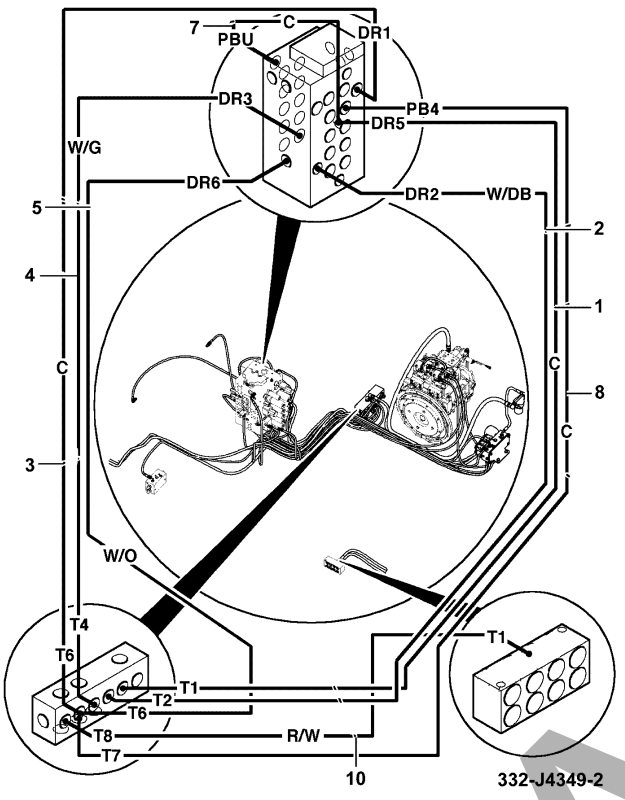

JCB380 QM

JCB380 XTRA

ITEM	Part #	CHANGE NO	DESCRIPTION	USAGE CODE	QTY
1	KNA0363		Hose 1/4"BSP ST-ST 2000mm		1
2	KBJ2439		Hose 1/4" BSP ST-ST 2150mm		1
3	JSV0164		Hose white/green		1
4	KNJ1958		Hose 3/8"BSP ST-90 x 1550mm		1
5	JLV0262		Hose		1
7	KNJ1846		Hose 1/4"BSP ST-90 x 500mm		1
8	KMA0951		Hose nylon		1
10	627/10079		Hose		1

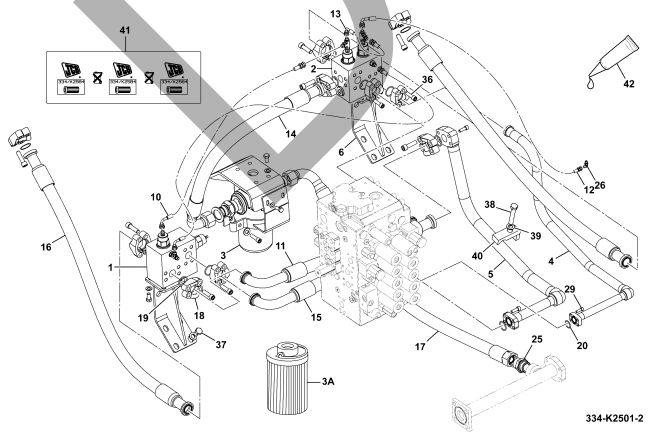

JCB380 QM

JCB380 XTRA

ITEM	Part #	CHANGE NO	DESCRIPTION	USAGE CODE	QTY
1	400/C3419		Valve Auxiliary/Hammer LH Refer E140-65-1		1
2	400/C3414		Valve Auxiliary/Hammer RH Refer E190-40-1		1
3	400/C5089		Filter Hydraulic Hammer Refer E140-55-1		1
3A	:334/K2584		Element Filter Hydraulic LF330		1
4	332/J6475		Pipe		1
5	333/K5112		Pipe		1
6	333/K7338		Bracket Valve Hammer/Auxcillary		2
10	627/10058		Hose 1/4" 1050mm 180/90		2
11	333/K5151		Hose 20 SAE-SAE UHP 820 B		1

DRAFT

Continue...

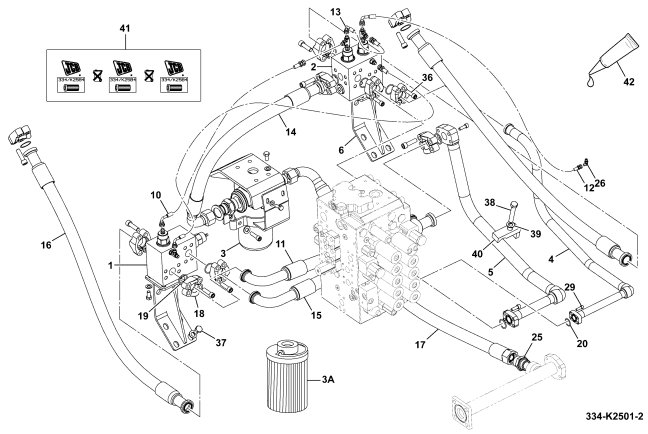

ITEM	PART NO	CHANGE NO	DESCRIPTION	USAGE CODE	QTY
12	KNJ1849		Hose 1/4" BSP ST-90 2300mm		1
13	627/10446		Hose 1/4 290 ST-90		1
14	332/J6579		Hose 880mm		1
15	616/80182		Hose		1
16	332/J6574		Hose 1450mm		2
17	334/K1956		Hose 20 BSP MP 1450m		1
18	KTJ0029		Flange split		20
19	2409/0213		O Ring		10
20	2409/0210		O Ring		2
25	334/K1476		Adapter		1
26	334/L6374		Elbow Adaptor 1/4		1
29	1391/3408D		Capscrew M10 x 30mm		8
36	1391/3612D		Capscrew M14 x 50mm		40
37	1316/0707D		Setscrew M16 x 25 - grade 10.9		8
38	1316/3719D		Bolt M16 x 90mm		1
39	1420/0011D		Washer M16		9

E130-135-1 HYDRAULIC CIRCUITS CHASSIS, CIRCUIT, HAMMER/ AUXILARY REVOLVING FRAME 9820/1116A ISSUE 0

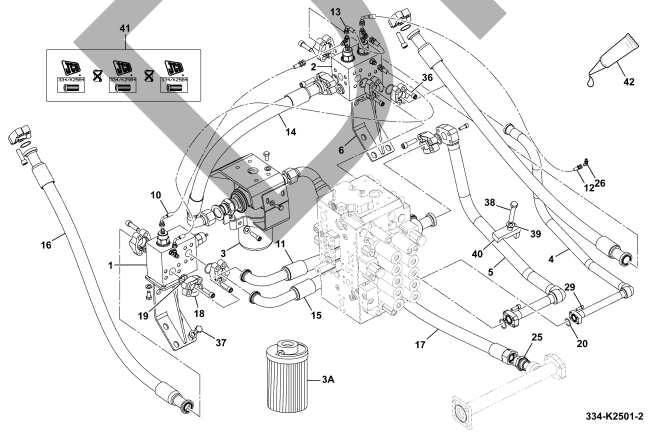

ITEM	PART NO	CHANGE NO	DESCRIPTION	USAGE CODE	QTY
40	332/J6557		Clamp pipe		1
41	334/K2583		Label Filter, Hammer		1
42	4101/0500		Fluid Locking Loctite 262		0

DRAFT

JCB380 QM

JCB380 XTRA

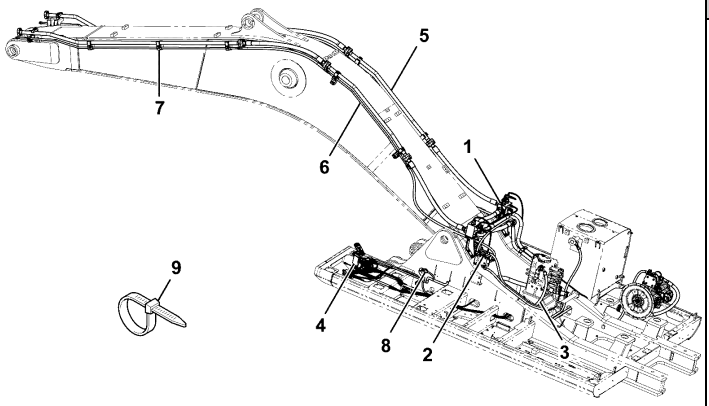

334-J1759-1

ITEM	Part #	CHANGE NO	DESCRIPTION	USAGE CODE	QTY
1			Circuit Hammer/Auxilary Line Revolving Frame Refer E130-135-1		1
2			Circuit Low Flow, Revolving Frame Refer E100-45-1		1
3			Circuit Merged Flow Refer E140-30-1		1
4			Circuit Hammer/Auxiliary/Merged Control Refer E110-5-1		1
5			Circuit hammer line, assembly Refer E140-45-1		1
6			Circuit low flow line, assembly Refer E140-50-1		1
7			Clamping hammer and low flow line, assembly Refer E140-60-1		1
8	333/K6657		Harness Merged,Low Flow		1

E130-140-1 HYDRAULIC CIRCUITS CHASSIS, CIRCUIT, MONO, HAMMER/ AUXILARY/ MERGE/ LOW FLOW 9820/1116A ISSUE 0

ITEM	PART NO	CHANGE NO	DESCRIPTION	USAGE CODE	QTY
9	826/01347		Tie cable 160mm weld stud mounted		2

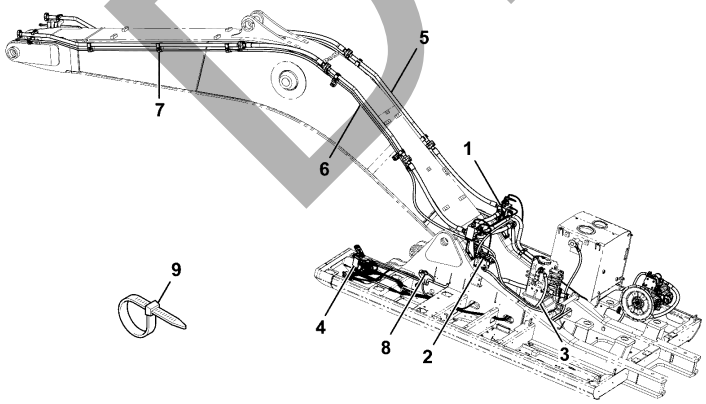

DRAFT

JCB380 QM

JCB380 XTRA

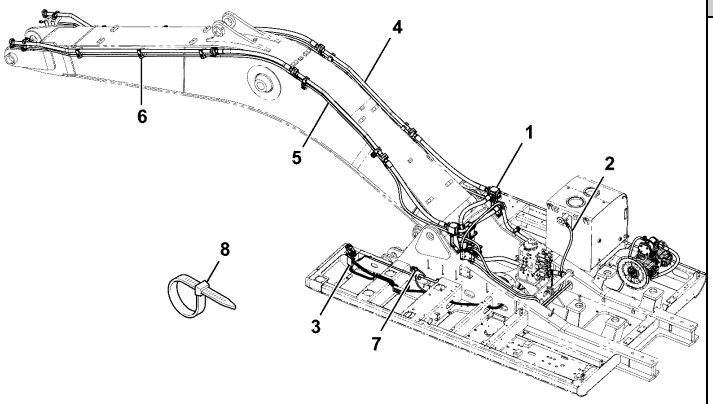

334-J1758-1

ITEM	Part #	CHANGE NO	DESCRIPTION	USAGE CODE	QTY
1			Circuit Hammer Revoling Frame Refer E130-150-1		1
2			Circuit Low Flow, Revolving Frame Refer E100-45-1		1
3			Circuit hammer control assembly Refer E130-160-1		1
4			Circuit hammer line, assembly Refer E140-45-1		1
5			Circuit low flow line, assembly Refer E140-50-1		1
6			Clamping hammer and low flow line, assembly Refer E140-60-1		1
7	333/K4638		Harness Low Flow, ON-OFF Refer C110-1-1		1

E130-145-1 HYDRAULIC CIRCUITS CHASSIS, CIRCUIT, MONO BOOM, HAMMER / LOW FLOW 9820/1116A ISSUE 0

ITEM	PART NO	CHANGE NO	DESCRIPTION	USAGE CODE	QTY
8	826/01347		Tie cable 160mm weld stud mounted		2

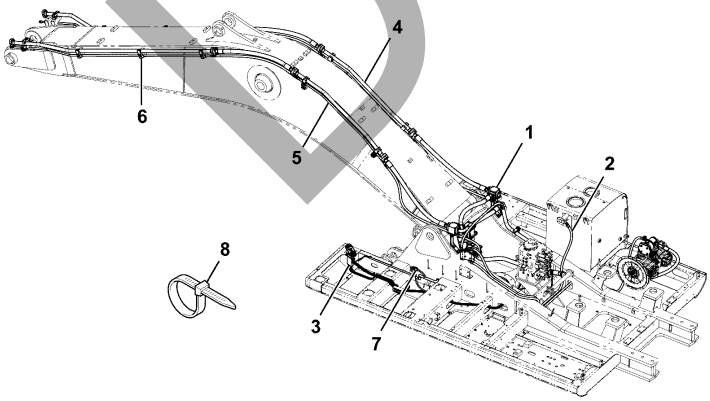

334-J1758-1

DRAFT

JCB380 QM

JCB380 XTRA

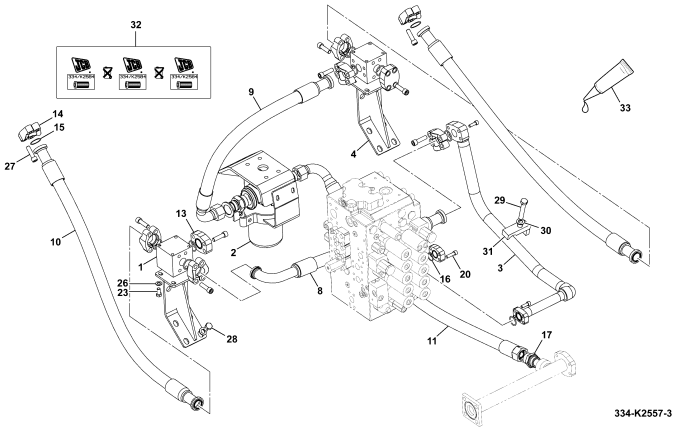

ITEM	Part #	CHANGE NO	DESCRIPTION	USAGE CODE	QTY
1	333/J9845		Block manifold		2
2	400/C5089		Filter Hydraulic Hammer Refer E140-55-1		1
3	333/K5112		Pipe		1
4	333/K7338		Bracket Valve Hammer/Auxcillary		2
8	333/K5151		Hose 20 SAE-SAE UHP 820 B		1
9	332/J6579		Hose 880mm		1
10	332/J6574		Hose 1450mm		2
11	334/K1956		Hose 20 BSP MP 1450m		1
13	JHV0224		Flange blank		2
14	KTJ0029		Flange split		14
15	2409/0213		O Ring		9
16	2409/0210		O Ring		1
17	334/K1476		Adapter		1

E130-150-1 HYDRAULIC CIRCUITS CHASSIS, CIRCUIT, HAMMER REVOLVING FRAME 9820/1116A ISSUE 0

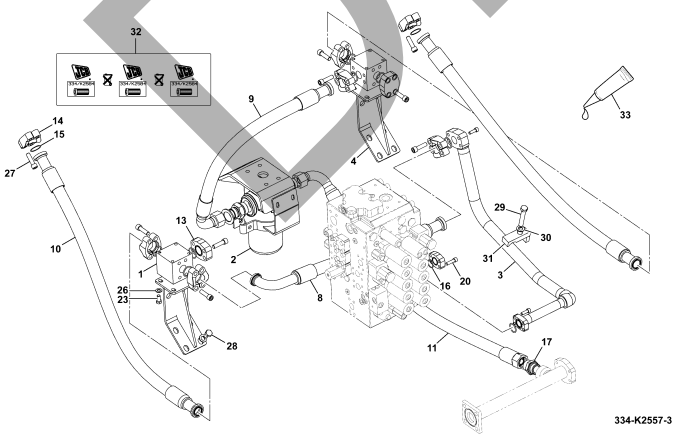

ITEM	PART NO	CHANGE NO	DESCRIPTION	USAGE CODE	QTY
20	1391/3408D		Capscrew M10 x 30mm		4
23	1316/0507D		Setscrew M12 x 25 grade 10.9		8
26	1420/0009D		Washer M12		8
27	1391/3612D		Capscrew M14 x 50mm		36
28	1316/0707D		Setscrew M16 x 25 - grade 10.9		8
29	1316/3719D		Bolt M16 x 90mm		1
30	1420/0011D		Washer M16		9
31	JRV0278		Clamp Pipe		1
32	334/K2583		Label Filter, Hammer		1
33	4101/0500		Fluid Locking Loctite 262		0

DRAFT

JCB380 QM

JCB380 XTRA

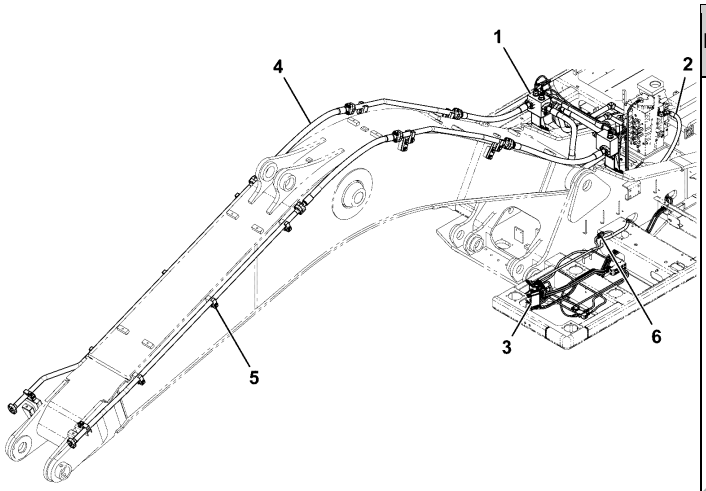

334-J1756-1

ITEM	Part #	CHANGE NO	DESCRIPTION	USAGE CODE	QTY
1			Circuit Hammer/Auxilary Line Revolving Frame Refer E130-135-1		1
2			Circuit Merged Flow Refer E140-30-1		1
3			Circuit Hammer/Auxiliary/Merged Control Refer E110-5-1		1
4			Circuit hammer line, assembly Refer E140-45-1		1
5			Clamping hammer assembly Refer E140-75-1		1
6	334/J9083		Harness Merge-Flow		1

JCB380 QM

JCB380 XTRA

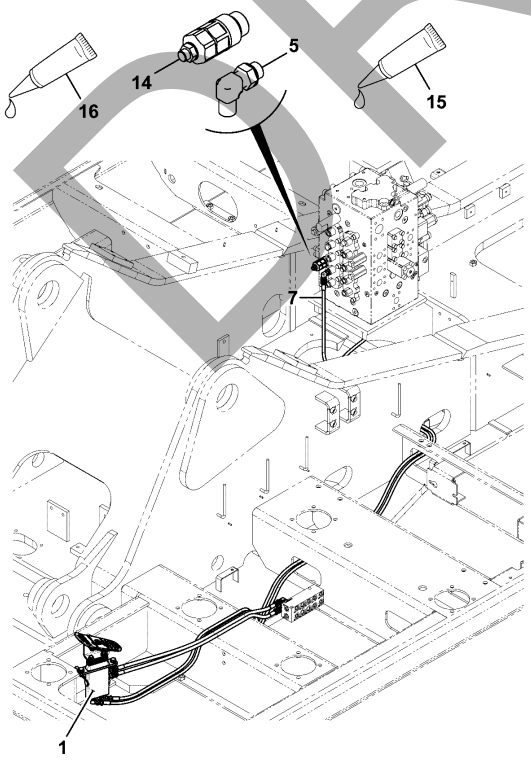

332-J6729-4

ITEM	Part #	CHANGE NO	DESCRIPTION	USAGE CODE	QTY
1			Hammer Cab Lines (T Hammer) Refer E190-45-1		1
5	334/L6374		Elbow Adaptor 1/4		2
7	332/J6734		Kit hose Refer E130-115-1		1
14	BRP0110		Valve auxiliary relief		1
15	4101/0500		Fluid Locking Loctite 262		1
16			Fluid locking		1

DRAFT

JCB380 QM

JCB380 XTRA

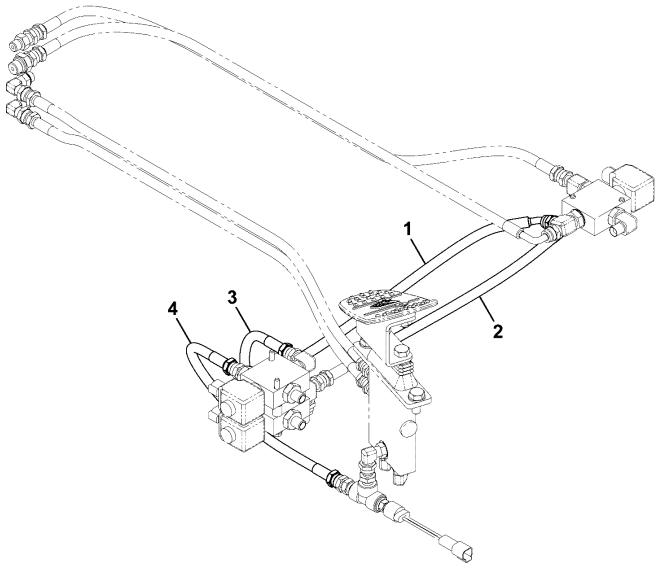

333-K1116-1

ITEM	Part #	CHANGE NO	DESCRIPTION	USAGE CODE	QTY
1	JNJ0480		Hose		1
2	JLV0594		Hose 1/4" BSP ST-90 550mm		1
3	627/10446		Hose 1/4 290 ST-90		1
4	KTJ0670		Hose nylon		1

JCB380 QM

JCB380 XTRA

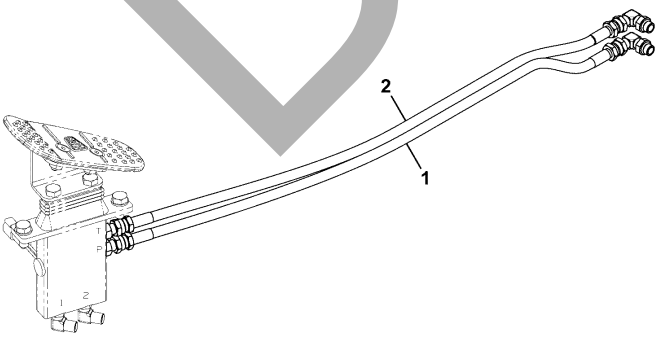

333-J9436-1

ITEM	Part #	CHANGE NO	DESCRIPTION	USAGE CODE	QTY
1	KAJ1927		Hose 1/4" 900mm 180/180 Yellow/White		1
2	KTJ0672		Hose nylon		1

DRAFT

JCB380 QM

JCB380 XTRA

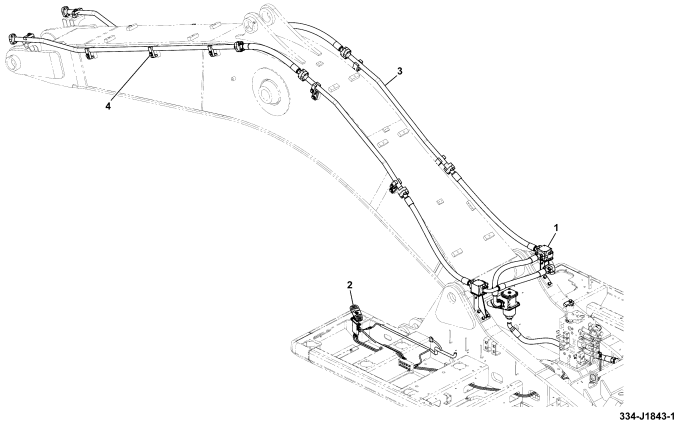

ITEM	Part #	CHANGE NO	DESCRIPTION	USAGE CODE	QTY
1			Circuit Hammer Revoling Frame Refer E130-150-1		1
2			Circuit hammer control assembly Refer E130-160-1		1
3			Circuit hammer line, assembly Refer E140-45-1		1
4			Clamping hammer assembly Refer E140-75-1		1

DRAFT

JCB380 QM

JCB380 XTRA

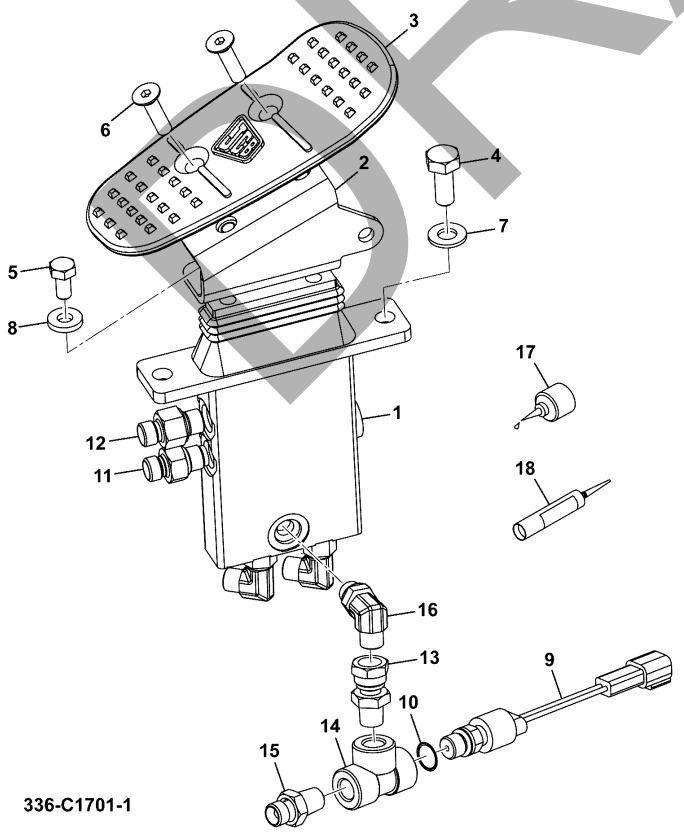

ITEM	Part #	CHANGE NO	DESCRIPTION	USAGE CODE	QTY
1	928/60339		Valve hammer, auxiliary foot operated Refer E390-20-1		1
2	333/J7177		Bracket		1
3	589/10161		Pedal		1
4	1316/0407D		Screw		2
5	1316/0303D		Screw M8 x 16mm		2
6	826/10811		Screw countersunk, socket head M8 x 30		2
7	1420/0008D		Washer M10		2
8	JHP0080		Washer M8		2
9	332/J0669		Switch Low Pressure 5bar 1/4" BSP		1
10	JHP0204		Washer back up		1
11	334/K3244		Adaptor		1
12	334/L6367		Adaptor Male		1

Continue...

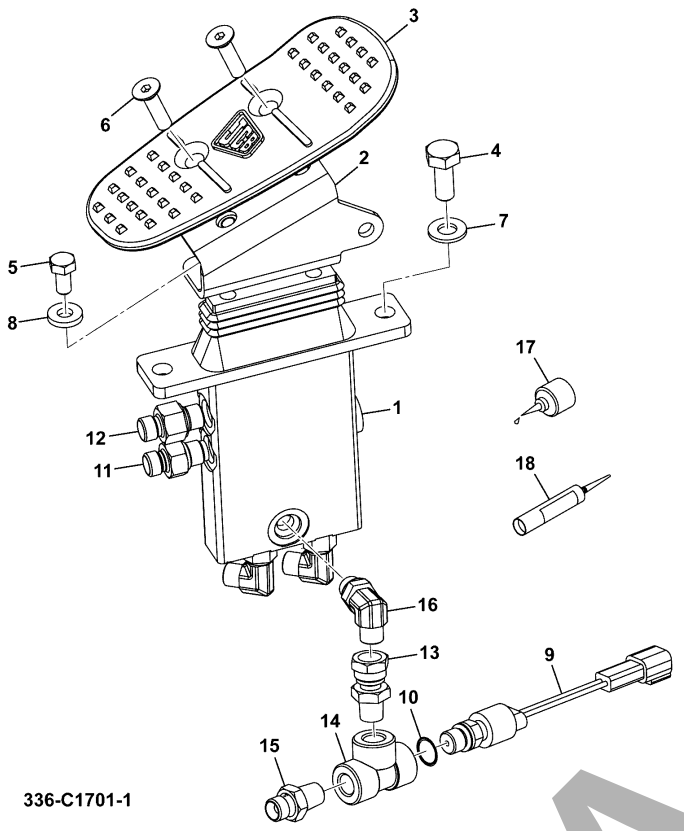

ITEM	PART NO	CHANGE NO	DESCRIPTION	USAGE CODE	QTY
13	334/K1478		Adaptor - 1/4 BSPT(M), 3/8 BSP(F)		1
14	JHJ0172		Adapter tee		1
15	1609/0002		Adapter		1
16	334/L6374		Elbow Adaptor 1/4		3
17	4101/0500		Fluid Locking Loctite 262		0
18			Fluid locking		0

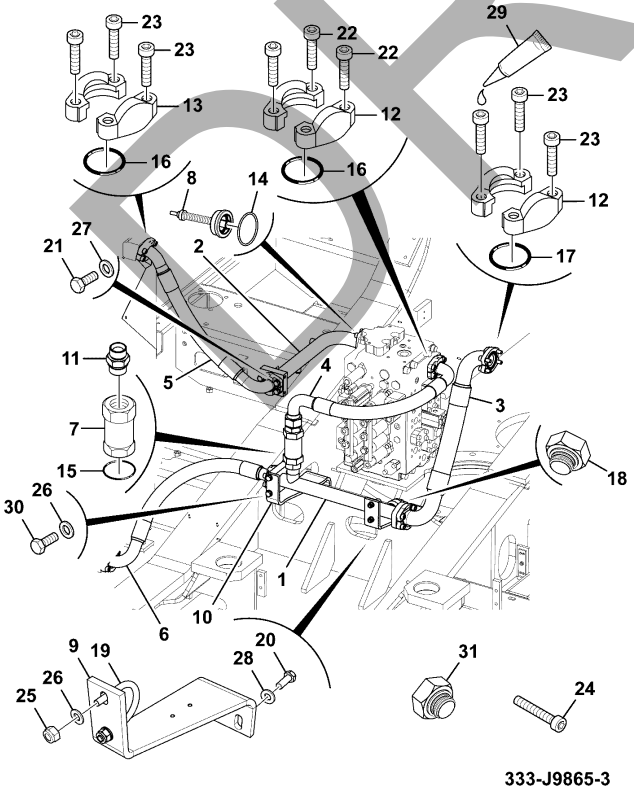

JCB380 QM

JCB380 XTRA

ITEM	Part #	CHANGE NO	DESCRIPTION	USAGE CODE	QTY
1	336/F3879		Pipe Return		1
2			Pipe Assembly, Oil Return Refer E190-20-1		1
3	334/J1210		Hose -32 SAE LP 640mm C		1
4	334/K4505		Hose -24 SAE-BSP LP 770mm C		1
5	336/B9781		Hose -24 SAE LP 740mm C		1
6	333/K3049		Hose - 24 SAE LP 800mm B		1
7	25/222140		Valve Relief 3bar		1
8	KSJ2390		Valve		1
9	332/J5745		Bracket		1
10	333/K8170		Bracket Return Line		1
11	332/J4530		Adaptor 1 1/2 BSP Male		1
12	821/10352		Flange clamp		4

DRAFT

Continue...

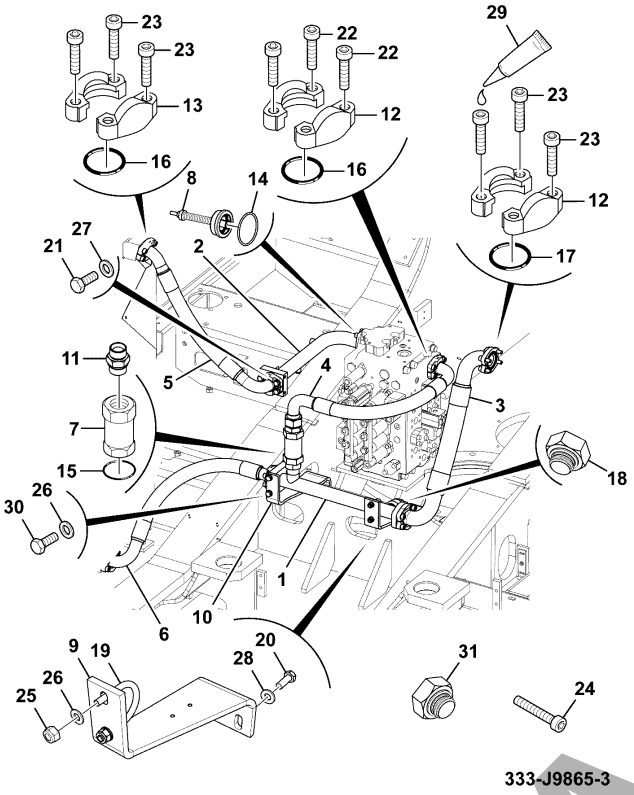

333-J9865-3

ITEM	PART NO	CHANGE NO	DESCRIPTION	USAGE CODE	QTY
13	KTJ1663		Flange Split		10
14	828/J0002		O Ring		1
15	2409/0215		O Ring		1
16	2409/0216		O Ring		5
17	2409/0219		O Ring		2
18	CAJ3912		Plug		1
19	KNJ0720		Bolt U		1
20	1316/3509D		Bolt M12 x 35mm		4
21	1316/3510D		Bolt M12x40 grade 10.9		4
22	1391/3508D		Capscrew M12 x 30		4
23	1391/3509D		Capscrew M12 x 35mm		20
24	1391/3515D		Capscrew M12 x 65		4
25	1370/0303D		Nut lock M10		2
26	1420/0008D		Washer M10		2
27	1420/0009D		Washer M12		6
28	JHP0042		Washer M12		4
29	4101/0500		Fluid Locking Loctite 262		0

E130-185-1 HYDRAULIC CIRCUITS CHASSIS, CIRCUIT, RETURN AND OIL COOLER 9820/1116A ISSUE 0

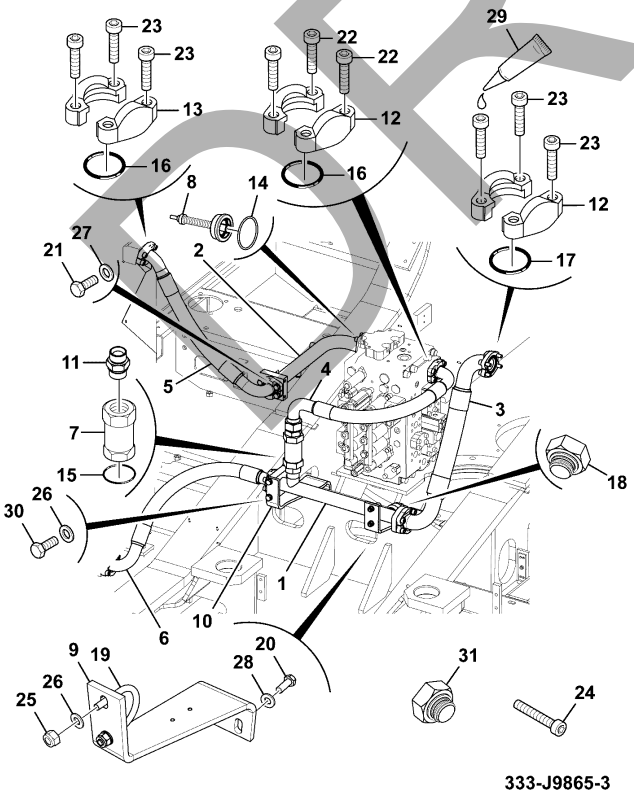

333-J9865-3

ITEM	PART NO	CHANGE NO	DESCRIPTION	USAGE CODE	QTY
30	1316/0508D		Screw M12 X 30		2
31	KHJ0363		Plug		1

DRAFT

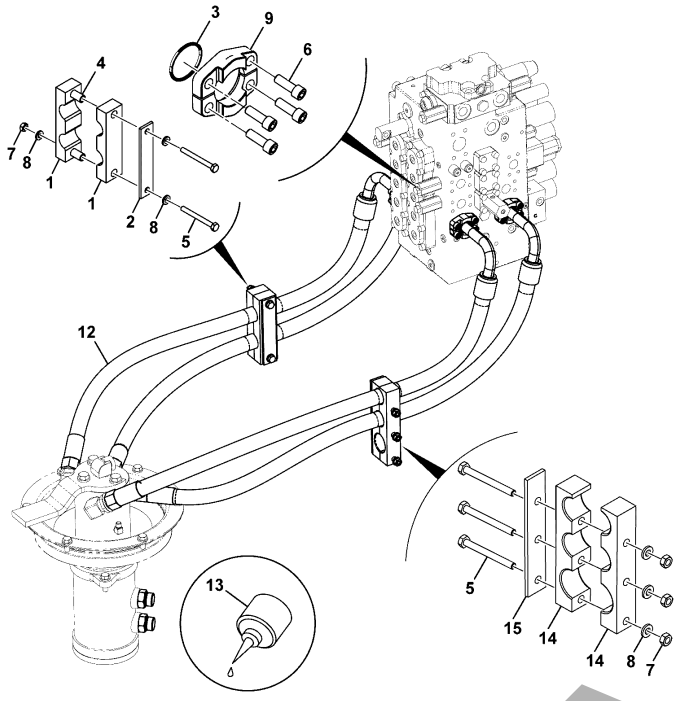

336-F-26721-1

JCB380 QM

JCB380 XTRA

ITEM	Part #	CHANGE NO	DESCRIPTION	USAGE CODE	QTY
1	KSJ1379		Clamp hose		2
2	KTJ1238		Plate		1
3	2409/0210		O Ring		4
4	KTJ1254		Spacer		2
5	1316/3420D		Bolt high strength		5
6	1391/3408D		Capscrew M10 x 30mm		16
7	1371/0301D		Nut High Strength		5
8	JHP0046		Washer M10		10
9	KRJ2682		Flange Split		8
12	332/J4719		Hose		4
13	4101/0500		Fluid Locking Loctite 262		0
14	336/F2673		Clamp		2
15	336/F2674		Plate Kit		1

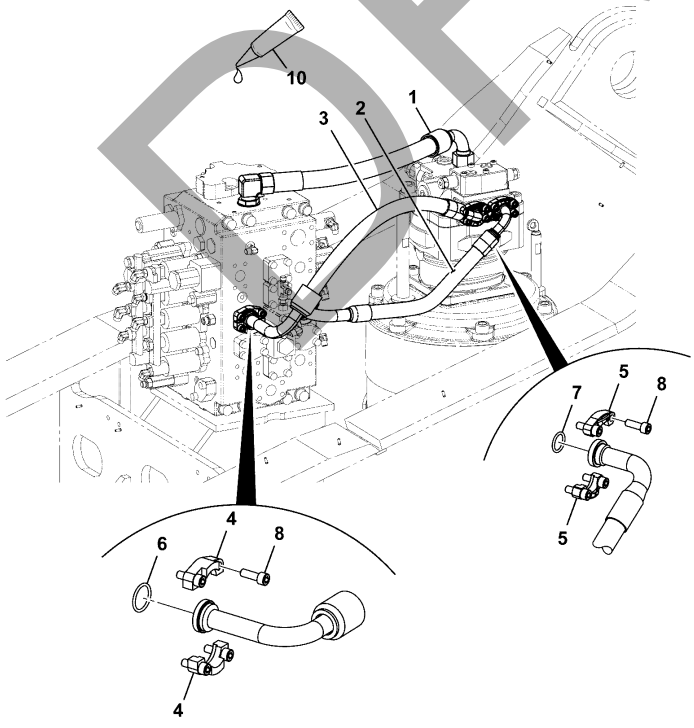

336-F4606-1

JCB380 QM

JCB380 XTRA

ITEM	Part #	CHANGE NO	DESCRIPTION	USAGE CODE	QTY
1	KSJ2315		Hose hydraulic		1
2	333/K6411		Hose 12 SAE EHP 580mm C		1
3	336/F4616		Hose 12 SAE UHP 775mm C		1
4	KRJ2682		Flange Split		4
5	KRJ2681		Flange Split		4
6	2409/0210		O Ring		2
7	2409/0205		O Ring		2
8	1391/3408D		Capscrew M10 x 30mm		16
10	4101/0500		Fluid Locking Loctite 262		0

DRAFT

JCB380 QM

JCB380 XTRA

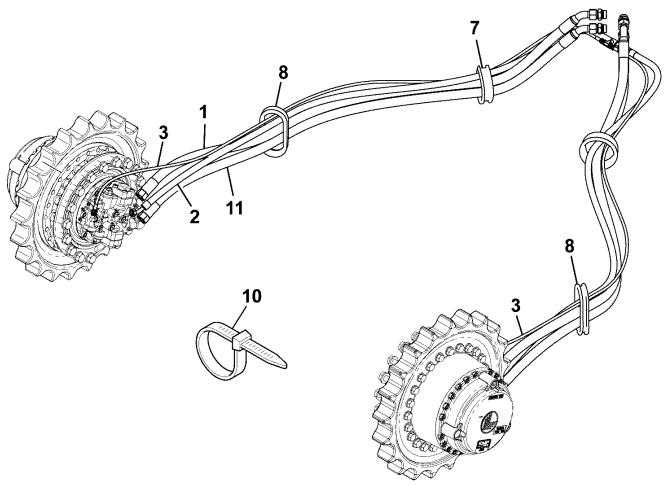

333-K4296-3

ITEM	Part #	CHANGE NO	DESCRIPTION	USAGE CODE	QTY
1	KBA0899		Hose		2
2	333/K9047		Hose -08 BSP LP 2360mm B		2
3	KTJ0678		Hose 1/4" BSP ST-ST 2800mm		2
7	KBA0780		Cushion rubber		2
8	KNA0294		Cushion rubber		2
10	270/00106		Tie cable 385mm		8
11	JBA0196		Hose		2

JCB380 QM

JCB380 XTRA

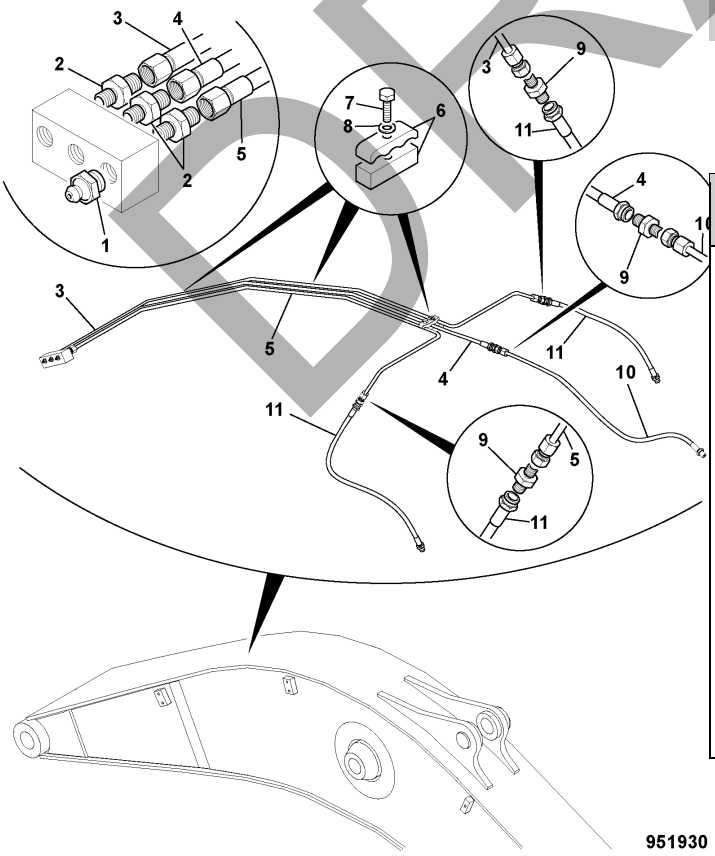

951930

ITEM	Part #	CHANGE NO	DESCRIPTION	USAGE CODE	QTY
1	JHP0037		Nipple Grease Straight		3
2	KMJ0964		Connector		3
3	332/J2815		Pipe Grease left side		1
4	332/J4722		Pipe Centre Grease		1
5	332/J2817		Pipe Grease right side		1
6	KRV0550		Clamp		3
7	1316/0308D		Screw M8x30		6
8	1420/0007D		Washer M8		6
9	KMJ0707		Adapter		3
10	KRV0552		Hose 1/4"BSP x 690mm		1
11	KTJ1134		Hose grease		2

DRAFT

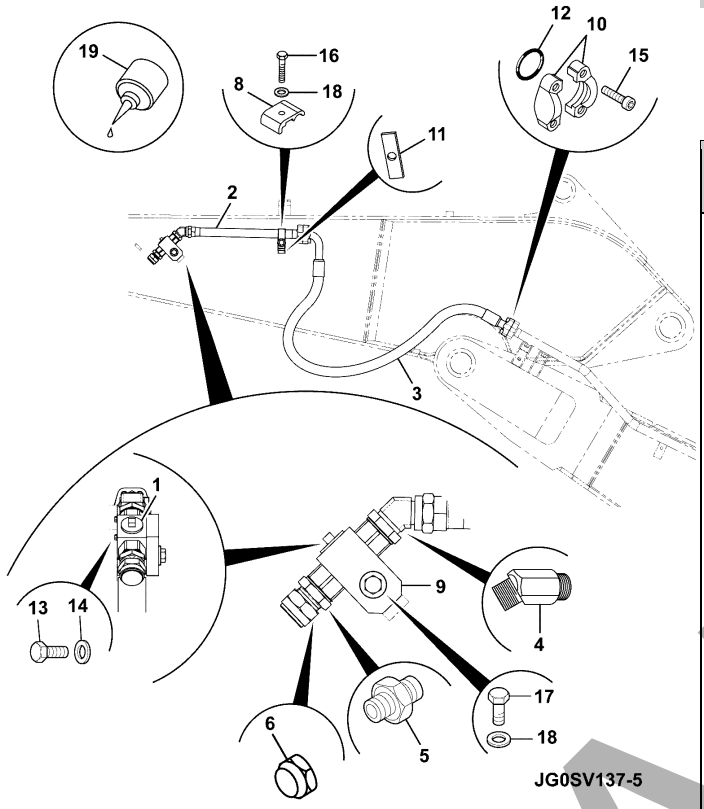

JCB380 QM

JCB380 XTRA

ITEM	Part #	CHANGE NO	DESCRIPTION	USAGE CODE	QTY
1	JSV0352		Valve shut off (Handle 25/206801)		2
2	JSV0351		Pipe hammer		2
3	KSV1014		Hose hydraulic		2
4	334/K1305		Adaptor - 45 1.1/4 JIS, 1.1/4 BSP		2
5	334/K1476		Adapter		2
6	816/80010		Plug		2
8	JRV0278		Clamp Pipe		2
9	400/F5629		Bracket Tap		2
10	KTJ0029		Flange split		8
11	JSV0354		Plate spacer		2
12	2409/0213		O Ring		4
13	1391/3216D		Capscrew		4
14	1420/0006D		Washer M6		4
15	1391/3612D		Capscrew M14 x 50mm		16

E140-25-1 HYDRAULIC CIRCUITS EXCAVATOR END, FULL FLOW, 2.63 9820/1116A ISSUE 0

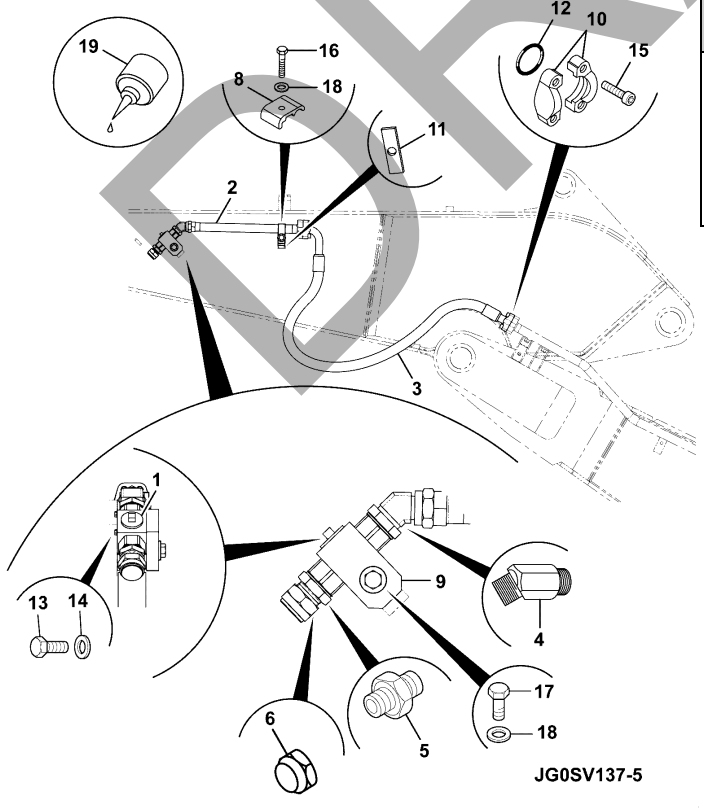

ITEM	PART NO	CHANGE NO	DESCRIPTION	USAGE CODE	QTY
16	1316/3719D		Bolt M16 x 90mm		2
17	1316/3721D		Bolt M16 x 110mm		2
18	823/00409		Washer M16		4
19	4101/0500		Fluid Locking Loctite 262		0

DRAFT

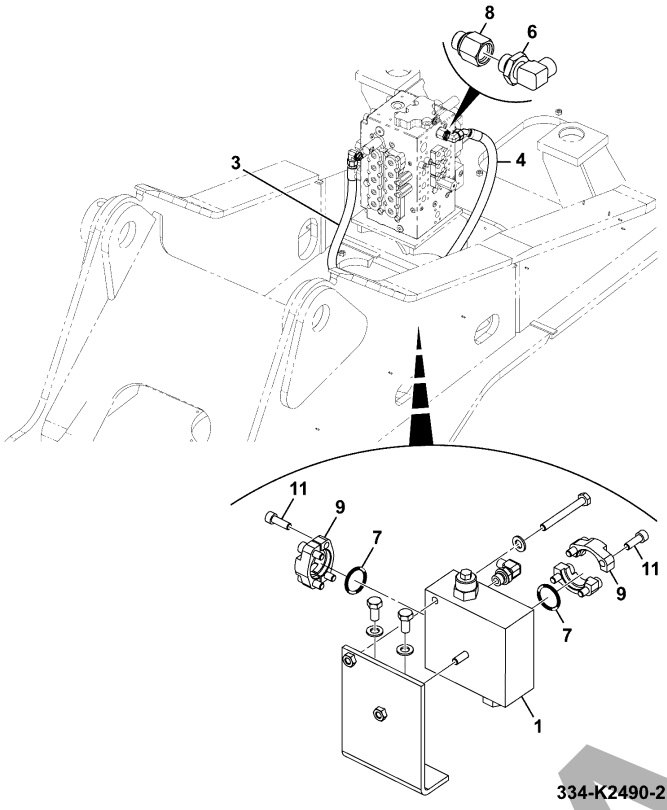

334-K2490-2

JCB380 QM

JCB380 XTRA

ITEM	Part #	CHANGE NO	DESCRIPTION	USAGE CODE	QTY
1	400/C3436		Valve Flow Switch Refer E140-70-1		1
3	334/K2044		Hose 12 SAE - BSP IH		1
4	332/J6945		Hose 3/4 ST-45 950 long		1
6	334/L6548		Elbow adaptor		2
7	2409/0210		O Ring		2
8	KNJ1936		Adapter		2
9	KRJ2682		Flange Split		4
11	1391/3408D		Capscrew M10 x 30mm		8

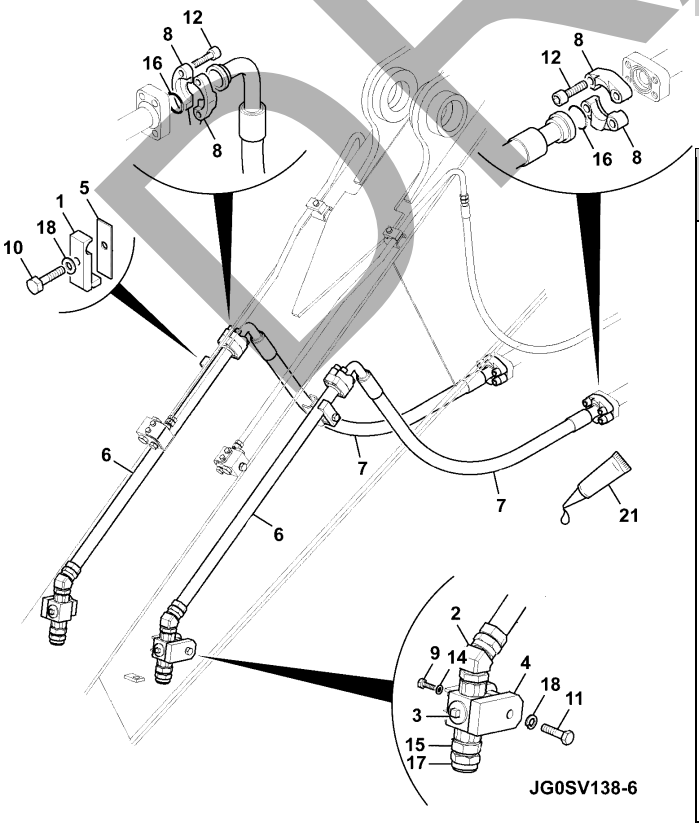

JG0SV138-6

JCB380 QM

JCB380 XTRA

ITEM	Part #	CHANGE NO	DESCRIPTION	USAGE CODE	QTY
1	JRV0278		Clamp Pipe		2
2	334/K1305		Adaptor - 45 1.1/4 JIS, 1.1/4 BSP		2
3	JSV0352		Valve shut off (Handle 25/206801)		2
4	400/F5629		Bracket Tap		2
5	JSV0354		Plate spacer		2
6	JSV0355		Pipe hammer		2
7	KSV1014		Hose hydraulic		2
8	KTJ0029		Flange split		8
9	1391/3216D		Capscrew		4
10	1316/3719D		Bolt M16 x 90mm		2
11	1316/3721D		Bolt M16 x 110mm		2
12	1391/3612D		Capscrew M14 x 50mm		16
14	1420/0006D		Washer M6		4
15	334/K1476		Adapter		2

DRAFT

Continue...

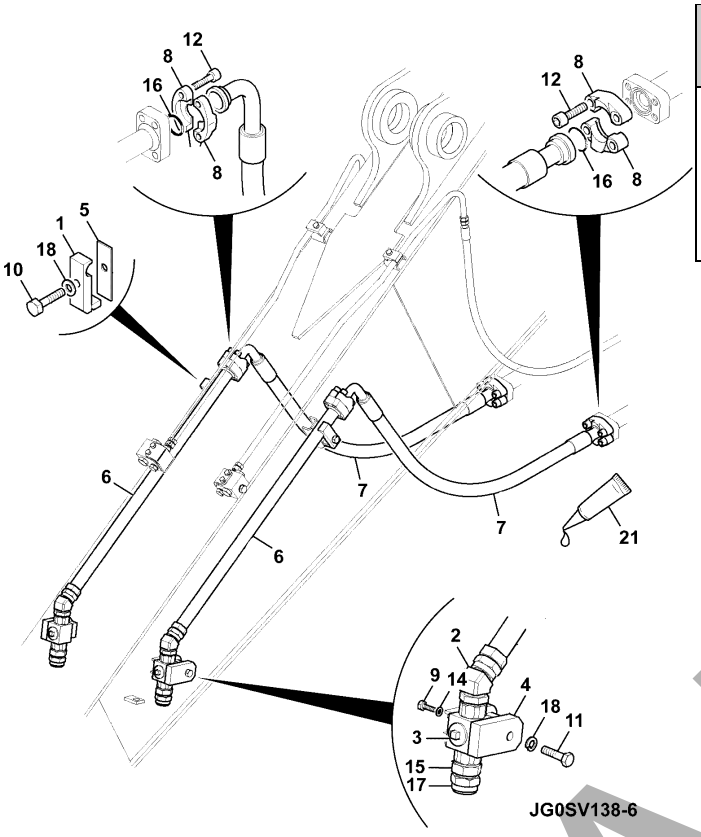

ITEM	PART NO	CHANGE NO	DESCRIPTION	USAGE CODE	QTY
16	2409/0213		O Ring		4
17	816/80010		Plug		2
18	823/00409		Washer M16		4
21	4101/0500		Fluid Locking Loctite 262		0

JCB380 QM

JCB380 XTRA

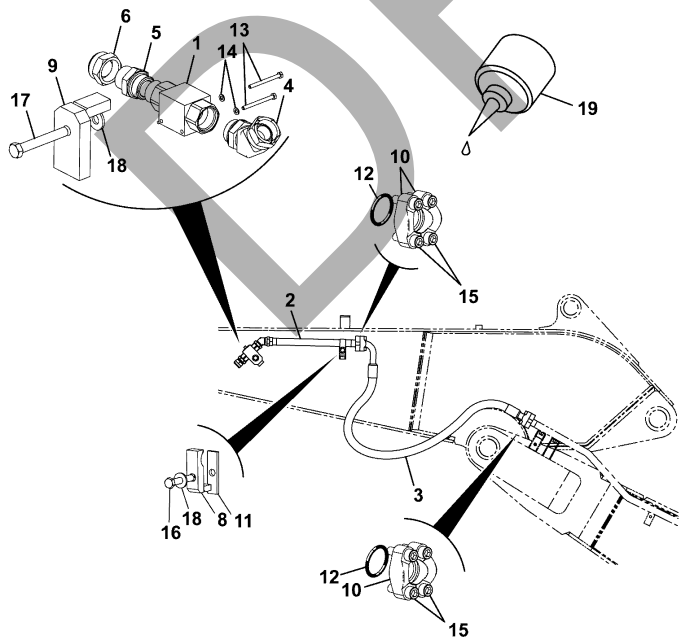

ITEM	Part #	CHANGE NO	DESCRIPTION	USAGE CODE	QTY
1	JSV0352		Valve shut off (Handle 25/206801)		2
2	JSV0351		Pipe hammer		2
3	332/K4616		Hose 1 1/4"BSP x 1500mm		2
4	334/K1305		Adaptor - 45 1.1/4 JIS, 1.1/4 BSP		2
5	334/K1476		Adapter		2
6	816/80010		Plug		2
8	JRV0278		Clamp Pipe		2
9	400/F5629		Bracket Tap		2
10	KTJ0029		Flange split		8
11	JSV0354		Plate spacer		2
12	2409/0213		O Ring		4
13	1391/3216D		Capscrew		4
14	1420/0006D		Washer M6		4
15	1391/3612D		Capscrew M14 x 50mm		16

DRAFT

Continue...

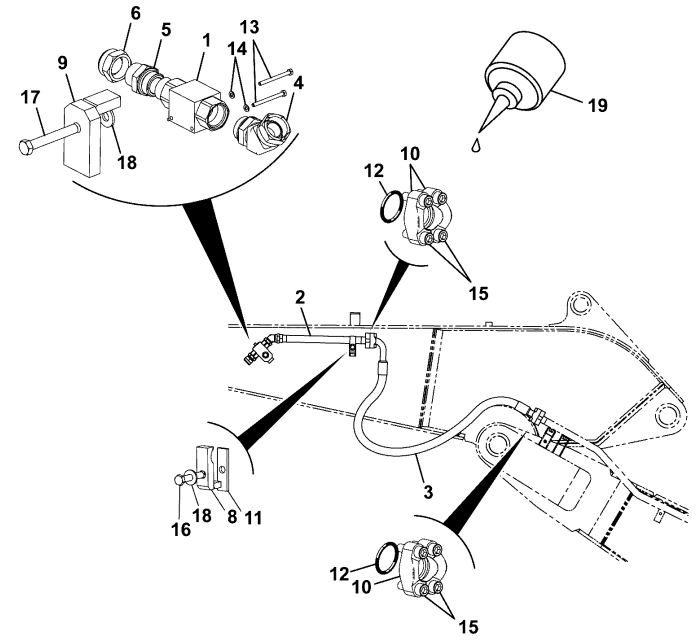

332-K4341-1

ITEM	PART NO	CHANGE NO	DESCRIPTION	USAGE CODE	QTY
16	1316/3719D		Bolt M16 x 90mm		2
17	1316/3721D		Bolt M16 x 110mm		2
18	823/00409		Washer M16		4
19	4101/0500		Fluid Locking Loctite 262		0

JCB380 QM

JCB380 XTRA

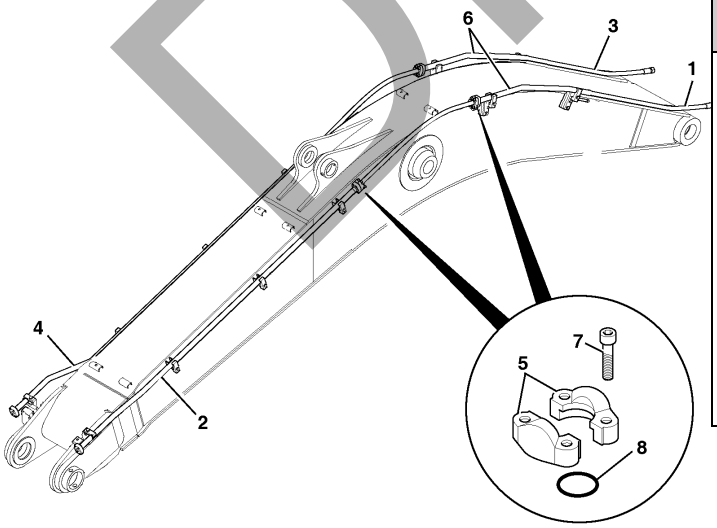

ITEM	Part #	CHANGE NO	DESCRIPTION	USAGE CODE	QTY
1	332/J2818		Pipe 1536mm		1
2	332/J2819		Pipe 3162mm		1
3	332/J2820		Pipe 1536mm		1
4	332/J2821		Pipe 3162mm		1
5	KTJ0029		Flange split		8
6	KTV0866		Hose hydraulic		2
7	1391/3612D		Capscrew M14 x 50mm		16
8	2409/0213		O Ring		4
9	4101/0500		Fluid Locking Loctite 262		0

960450

DRAFT

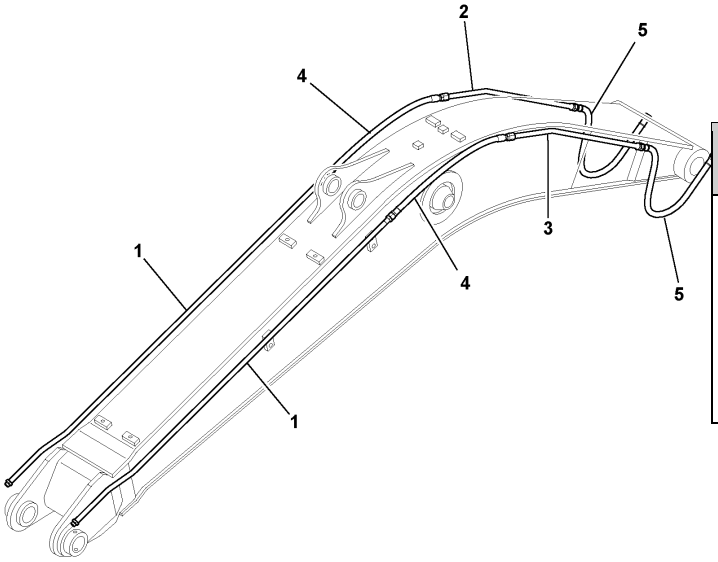

955300

JCB380 QM

JCB380 XTRA

ITEM	Part #	CHANGE NO	DESCRIPTION	USAGE CODE	QTY
1	332/J2823		Pipe low flow		2
2	332/J4882		Pipe low flow RH		1
3	332/J4883		Pipe low flow LH		1
4	JNJ0519		Hose 1/2"BSP x 1380mm		2
5	JRJ0395		Hose 1/2"BSP x 1500mm		2

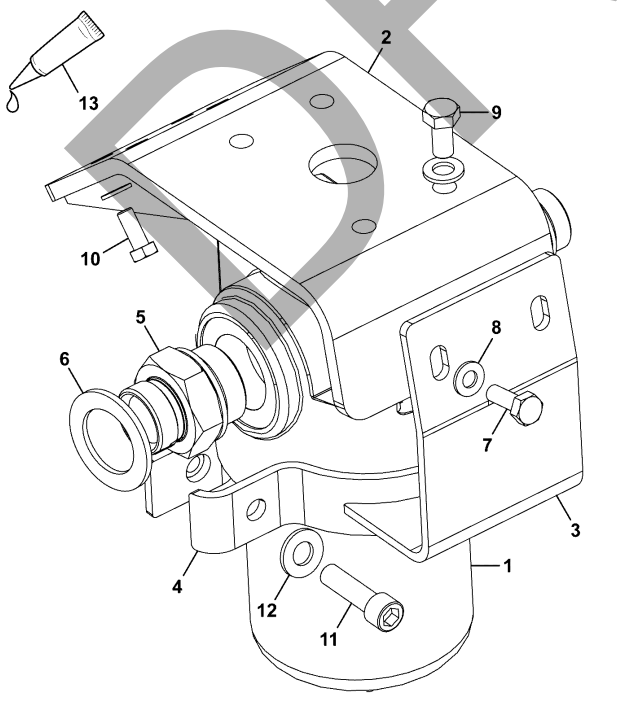

400-C5089-1

JCB380 QM

JCB380 XTRA

ITEM	Part #	CHANGE NO	DESCRIPTION	USAGE CODE	QTY
1	334/K2582		Filter Hydraulic Hammer Refer E540-1-1		1
2	334/K2435		Plate Filter Mounting		1
3	334/K0750		Bracket		1
4	334/K0757		Clamp Band		1
5	1606/0019		Adapter		2
6	1406/0031		Washer Seal		2
7	1316/0408D		Setscrew		2
8	1420/0008D		Washer M10		2
9	1316/0507D		Setscrew M12 x 25 grade 10.9		4
10	1316/0508D		Screw M12 X 30		4
11	1316/3511D		Bolt		2
12	1420/0009D		Washer M12		10
13	4101/0500		Fluid Locking Loctite 262		0

DRAFT

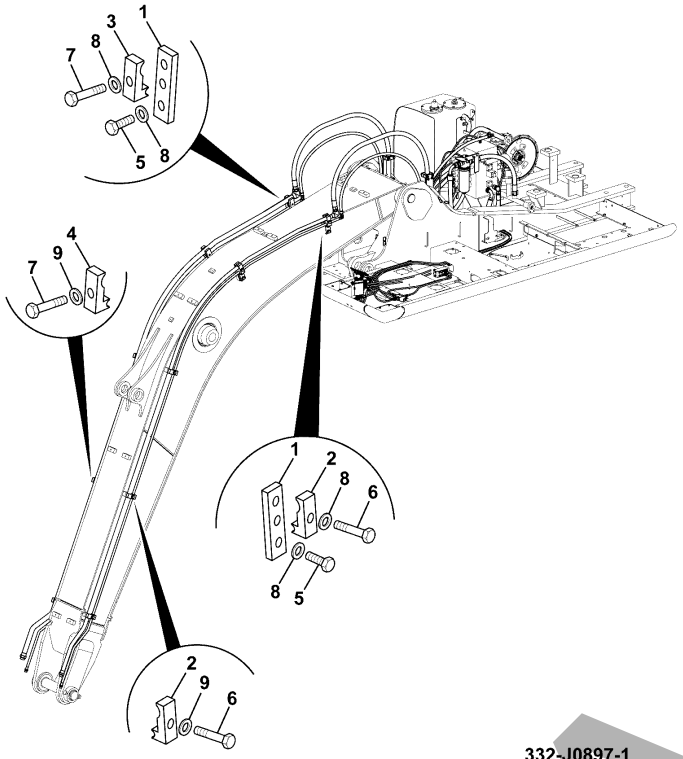

332-J0897-1

JCB380 QM

JCB380 XTRA

ITEM	Part #	CHANGE NO	DESCRIPTION	USAGE CODE	QTY
1	KRV1641		Bar base		4
2	JRV0424		Clamp		10
3	JRV0278		Clamp Pipe		2
4	JRJ0221		Clamp pipe		2
5	1316/3712D		Bolt M16 x 50mm		8
6	1316/3714D		Bolt M16 x 60mm		2
7	1316/3719D		Bolt M16 x 90mm		12
8	823/00409		Washer M16		18
9	1420/0011D		Washer M16		4

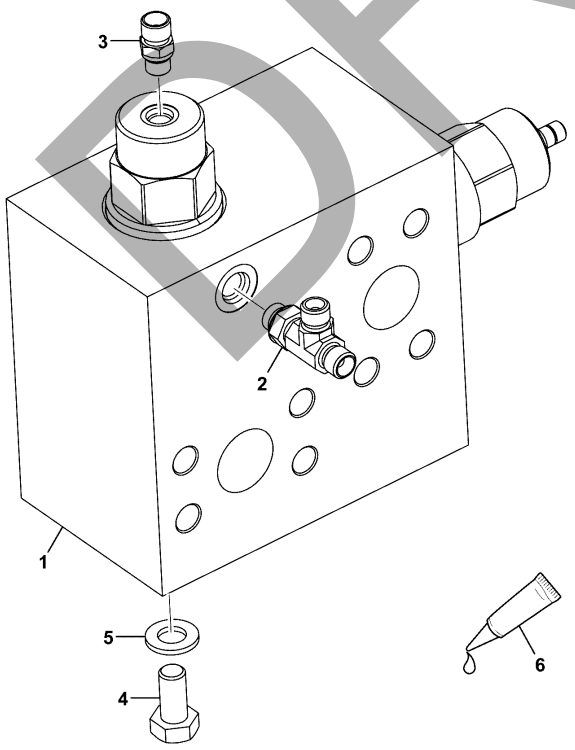

400-C3419-1

JCB380 QM

JCB380 XTRA

ITEM	Part #	CHANGE NO	DESCRIPTION	USAGE CODE	QTY
1	332/K6938		Valve hammer/auxilary LH Refer E390-45-1		1
2	334/L6407		Adaptor Tee 1/4"		1
3	1620/2050		Adaptor 1/4BSP x 7/16SAE		1
4	1316/0507D		Setscrew M12 x 25 grade 10.9		4
5	1420/0009D		Washer M12		4
6	4101/0500		Fluid Locking Loctite 262		0

DRAFT

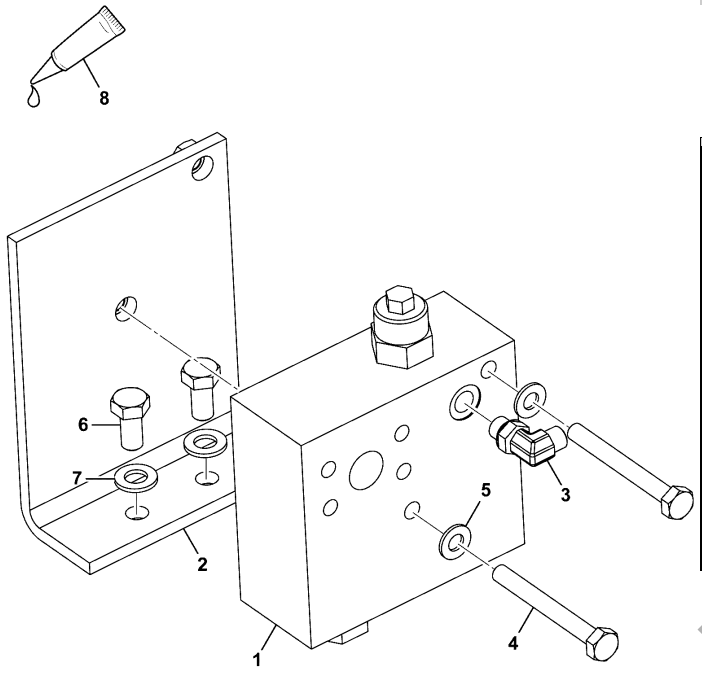

JCB380 QM

JCB380 XTRA

ITEM	Part #	CHANGE NO	DESCRIPTION	USAGE CODE	QTY
1	JSV0329		Valve flow switch Refer E390-10-1		1
2	332/J0846		Plate		1
3	334/L6374		Elbow Adaptor 1/4		1
4	1316/3419D		Bolt		2
5	1420/0008D		Washer M10		2
6	1316/0507D		Setscrew M12 x 25 grade 10.9		2
7	1420/0009D		Washer M12		2
8	4101/0500		Fluid Locking Loctite 262		0

400-C3436-1

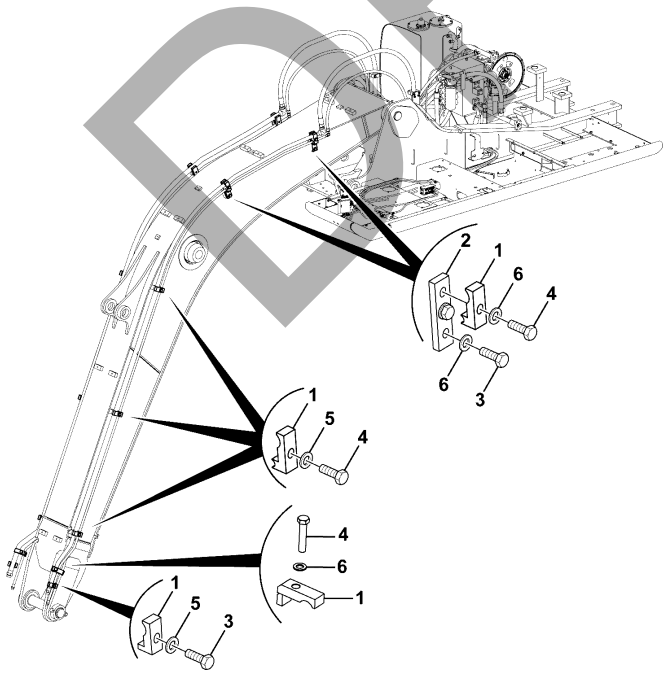

JCB380 QM

JCB380 XTRA

ITEM	Part #	CHANGE NO	DESCRIPTION	USAGE CODE	QTY
1	JRV0278		Clamp Pipe		12
2	KRV1641		Bar base		4
3	1316/3712D		Bolt M16 x 50mm		8
4	1316/3719D		Bolt M16 x 90mm		12
5	823/00409		Washer M16		16
6	1420/0011D		Washer M16		4

332-J0895-1

DRAFT

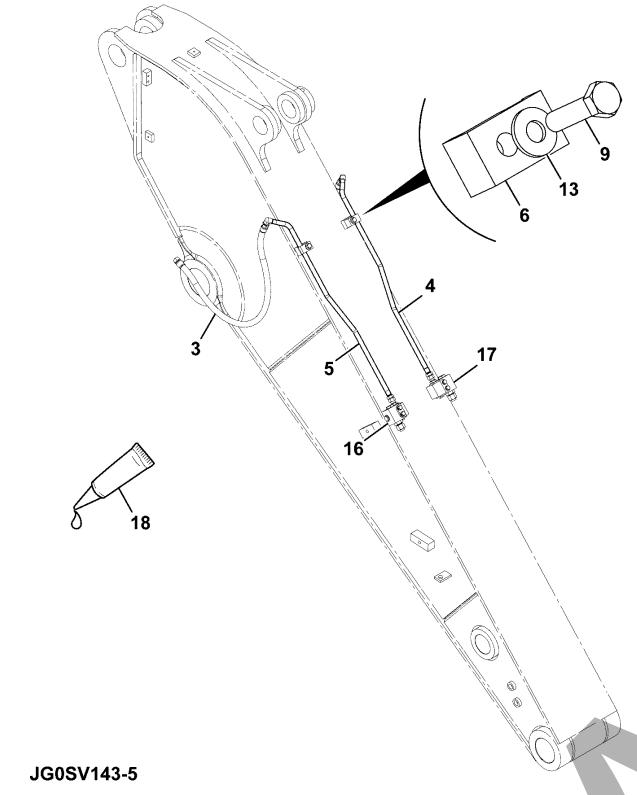

JCB380 QM

JCB380 XTRA

ITEM	Part #	CHANGE NO	DESCRIPTION	USAGE CODE	QTY
3	JLV1371		Hose hydraulic		2
4	JLV1738		Pipe low flow LH		1
5	JLV1739		Pipe low flow RH		1
6	JRJ0259		Clamp pipe		2
9	1316/3512D		Bolt M12X50		2
13	823/00394		Washer M12		2
16			Block Manifold, Assembly, Right Side Refer E190-5-1		1
17			Block Manifold, Assembly, Left Side Refer E190-35-1		1
18	4101/0500		Fluid Locking Loctite 262		0

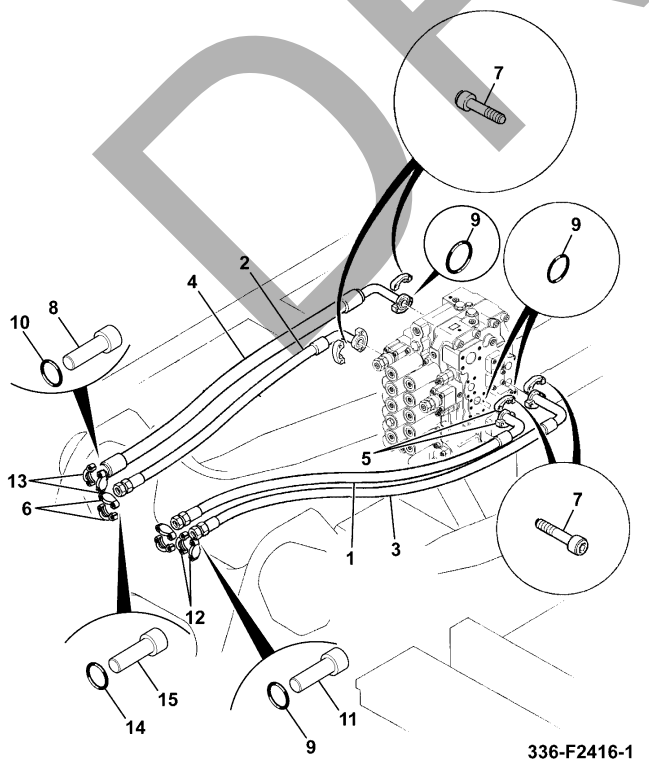

JCB380 QM

JCB380 XTRA

ITEM	Part #	CHANGE NO	DESCRIPTION	USAGE CODE	QTY
1	336/F2469		Hose -20 SAE EPHP 1440mm B		1
2	336/F2427		Hose -24 SAE EHP 1450mm B		1
3	336/F2918		Hose -16 SAE EPHP 1575mm B		1
4	336/F2917		Hose -20 SAE EPHP 1600mm B		1
5	KRJ2682		Flange Split		8
6	JHJ0156		Flange split		2
7	1391/3408D		Capscrew M10 x 30mm		16
8	1391/3612D		Capscrew M14 x 50mm		8
9	2409/0210		O Ring		5
10	2409/0213		O Ring		2
11	1391/3511D		Capscrew		4
12	210/92901		Pipe flange 1"		2
13	KTJ0029		Flange split		4

DRAFT

Continue...

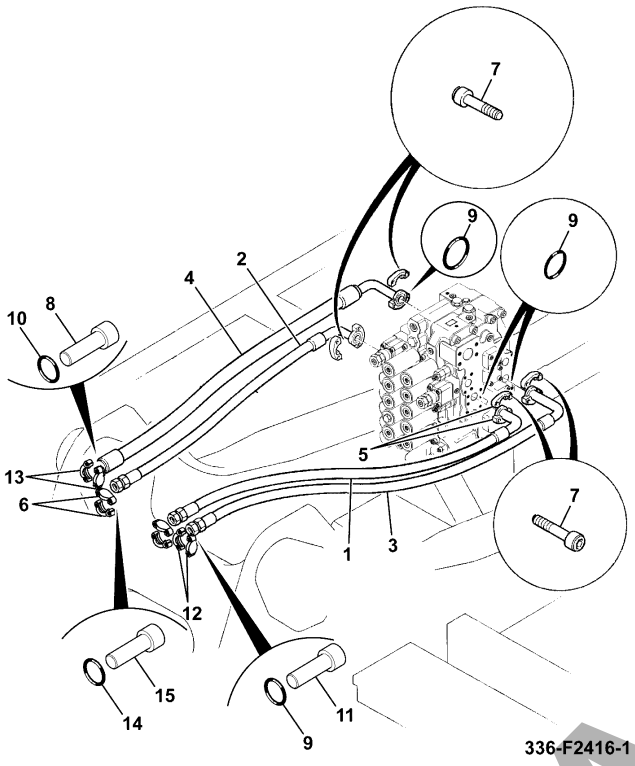

336-F2416-1

ITEM	PART NO	CHANGE NO	DESCRIPTION	USAGE CODE	QTY
14	2409/0216		O Ring		1
15	1391/3714D		Capscrew M16x60		4

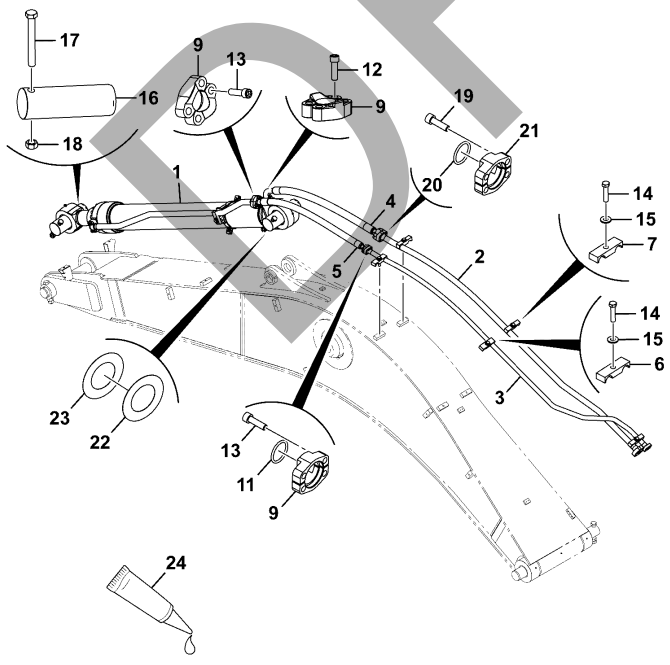

336-F0157-4

JCB380 QM

JCB380 XTRA

ITEM	Part #	CHANGE NO	DESCRIPTION	USAGE CODE	QTY
1	336/F0156		Arm Cylinder Refer E465-5-1		1
2	336/F2476		Pipe Arm Cylinder Inlet		1
3	336/F2919		Pipe Arm Cylinder Outlet		1
4	336/F2493		Hose -24 SAE EHP 1200mm B		1
5	336/F2920		Hose -20 SAE EPHP 1150mm A		1
6	336/F2546		Clamp Pipe		2
7	336/F2584		Clamp Pipe		3
9	KTJ0029		Flange split		6
11	2409/0213		O Ring		3
12	1391/3611D		Capscrew M14 x 45mm		4
13	1391/3612D		Capscrew M14 x 50mm		8
14	1316/3718D		Bolt M16 x 80mm		5

DRAFT

Continue...

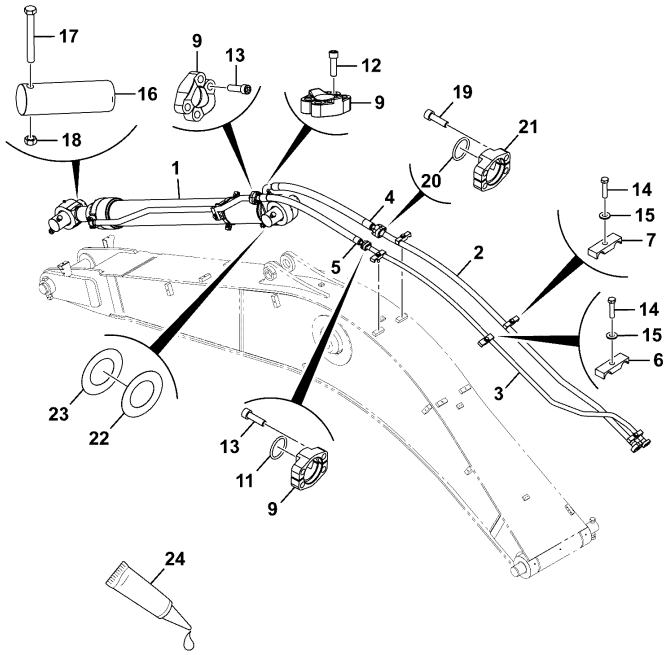

336-F0157-4

ITEM	PART NO	CHANGE NO	DESCRIPTION	USAGE CODE	QTY
15	823/00409		Washer M16		5
16	811/90210		Pin pivot		2
17	1316/4030D		Bolt M24 x 200mm		2
18	1371/0901D		Nut Full M24 (Grade 10.9)		4
19	1391/3714D		Capscrew M16x60		4
20	2409/0216		O Ring		1
21	JHJ0156		Flange split		2
22	KTV0533		Shim plate		1
23	334/J1208		Plate Shim		1
24	4101/0500		Fluid Locking Loctite 262		0

JCB380 QM

JCB380 XTRA

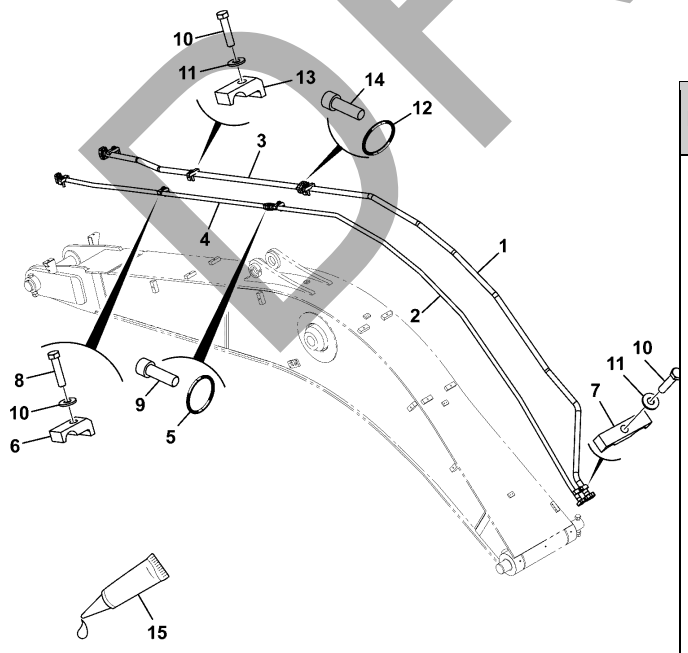

336-F2506-1

ITEM	Part #	CHANGE NO	DESCRIPTION	USAGE CODE	QTY
1	336/F2520		Pipe Bucket Feed		1
2	336/F3004		Pipe Bucket Return		1
3	336/F2521		Pipe Bucket Cylinder Feed		1
4	336/F3005		Pipe Bucket Cylinder Return		1
5	2409/0210		O Ring		1
6	KSV0282		Clamp Bracket		3
7	336/F2546		Clamp Pipe		1
8	1316/3716D		Bolt M16 x 70mm		2
9	1391/3511D		Capscrew		4
10	1316/3718D		Bolt M16 x 80mm		5
11	823/00409		Washer M16		7
12	2409/0213		O Ring		1
13	JRV0278		Clamp Pipe		3
14	1391/3613D		Capscrew		4
15	4101/0500		Fluid Locking Loctite 262		0

DRAFT

JCB380 QM

JCB380 XTRA

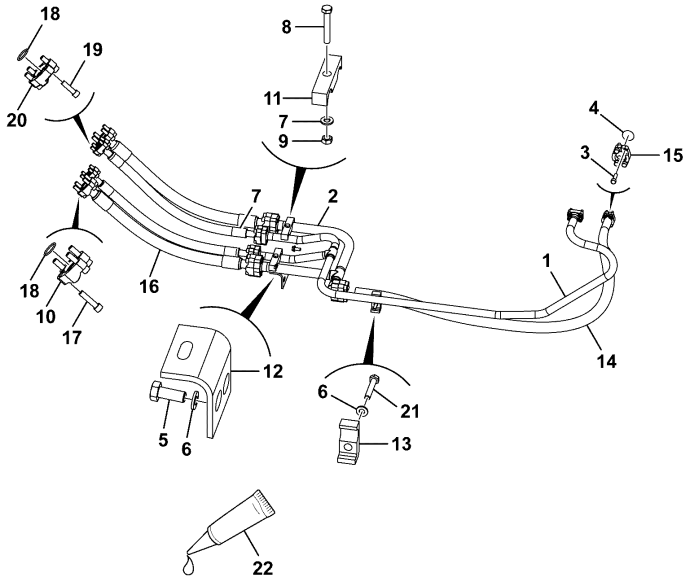

336-F2604-1

ITEM	Part #	CHANGE NO	DESCRIPTION	USAGE CODE	QTY
1	336/F2654		Tube		1
2	336/F2630		Tube Assembly		1
3	1391/3409D		Capscrew M10x35mm		8
4	2409/0210		O Ring		6
5	1316/0508D		Screw M12 X 30		4
6	JHP0042		Washer M12		7
7	336/F2951		Hose -16 SAE SHP 970mm A		2
8	1316/3518D		Bolt		2
9	1371/0401D		Nut M12		2
10	KTJ0029		Flange split		10
11	336/F2546		Clamp Pipe		2
12	336/F2667		Bracket		2
13	KSV0282		Clamp Bracket		1
14	336/F2637		Hose -20 SAE EPHP 1181mm B		1
15	KRJ2682		Flange Split		2

E140-100-1 HYDRAULIC CIRCUITS EXCAVATOR END, CIRCUIT, BOOM LINE 9820/1116A
ISSUE 0

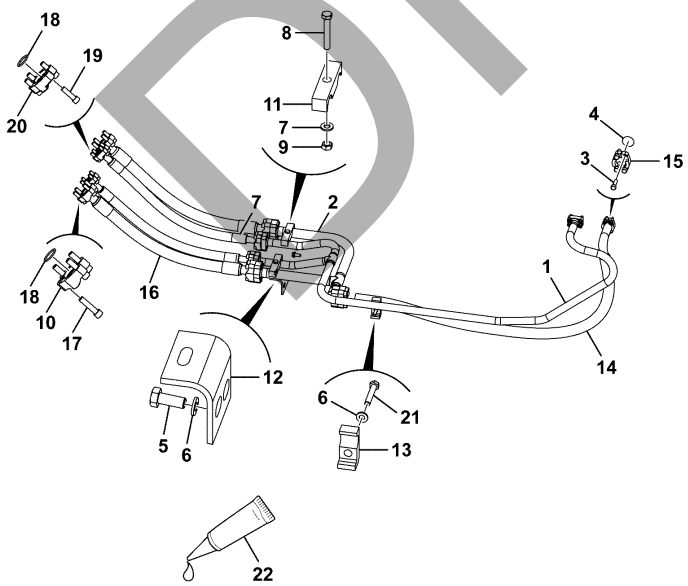

ITEM	PART NO	CHANGE NO	DESCRIPTION	USAGE CODE	QTY
16	336/F2645		Hose -20 SAE EPHP 970mm A		2
17	1391/3614D		Capscrew		20
18	2409/0213		O Ring		5
19	1391/3511D		Capscrew		16
20	210/92901		Pipe flange 1"		8
21	1316/3516D		Bolt M12 x 70		1
22	4101/0500		Fluid Locking Loctite 262		0

336-F2604-1

DRAFT

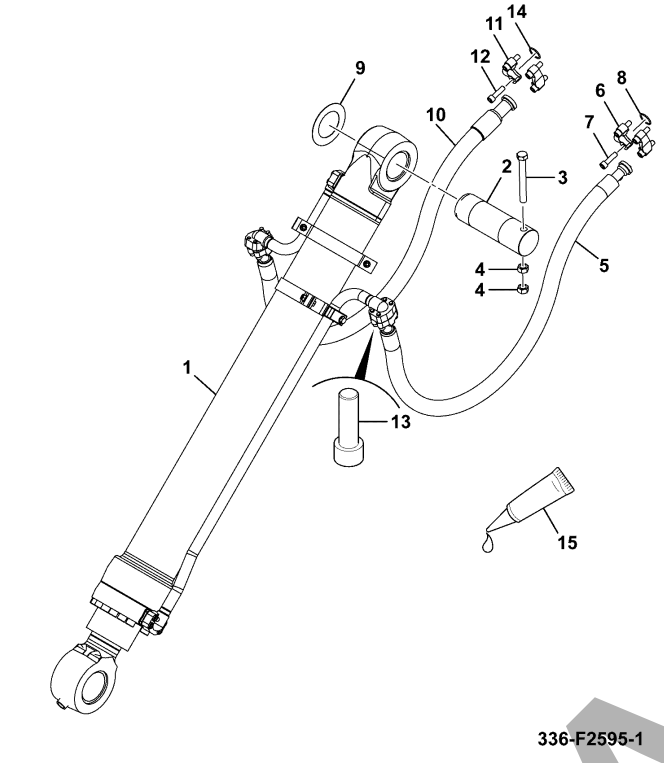

336-F2595-1

JCB380 QM

JCB380 XTRA

ITEM	Part #	CHANGE NO	DESCRIPTION	USAGE CODE	QTY
1			Circuit Bucket Cylinder Refer E140-130-1		1
2	KSV0456		Pin attachment		1
3	1316/3827D		Bolt M20 x 170		1
4	1371/0701D		Nut Plain M20		2
5	336/F2959		Hose -16 SAE EPHP 1500mm A		1
6	210/92901		Pipe flange 1"		6
7	1391/3511D		Capscrew		4
8	2409/0210		O Ring		3
9	KSV0477		Shim plate 1.2mm thick		0
10	336/F2596		Hose -20 SAE EPHP 1500mm A		1
11	KTJ0029		Flange split		2
12	1391/3612D		Capscrew M14 x 50mm		4
13	1391/3513D		Capscrew		8

E140-105-1 HYDRAULIC CIRCUITS EXCAVATOR END, CIRCUIT, BUCKET CYLINDER LINE 9820/1116A ISSUE 0

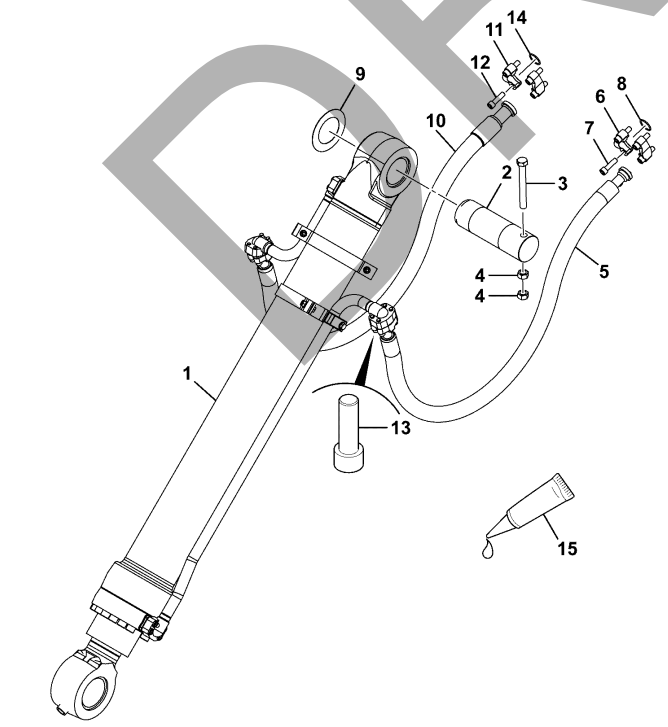

336-F2595-1

ITEM	PART NO	CHANGE NO	DESCRIPTION	USAGE CODE	QTY
14	2409/0213		O Ring		1
15	4101/0500		Fluid Locking Loctite 262		0

DRAFT

JCB380 QM

JCB380 XTRA

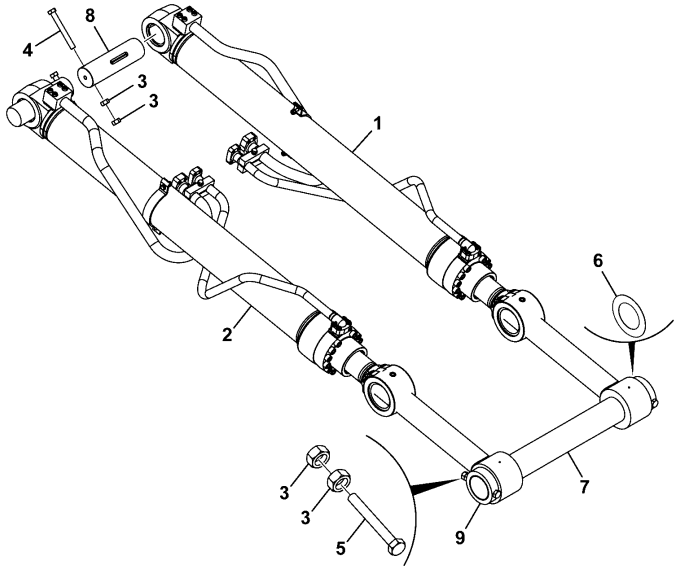

336-F2662-1

ITEM	Part #	CHANGE NO	DESCRIPTION	USAGE CODE	QTY
1			Circuit Boom Cylinder - LHS Refer E140-115-1		1
2			Circuit Boom Cylinder - RHS Refer E140-120-1		1
3	1370/0701D		Nut M20		8
4	1316/3827D		Bolt M20 x 170		2
5	1316/3829D		Bolt M20x2.5x190 grade 12.9		2
6	KHV0190		Shim plate 1.2mm thick		2
7	KSV0454		Pin attachment		1
8	KSV0455		Pin attachment 90 x 303		2
9	KSV0269		Ring lock		2

JCB380 QM

JCB380 XTRA

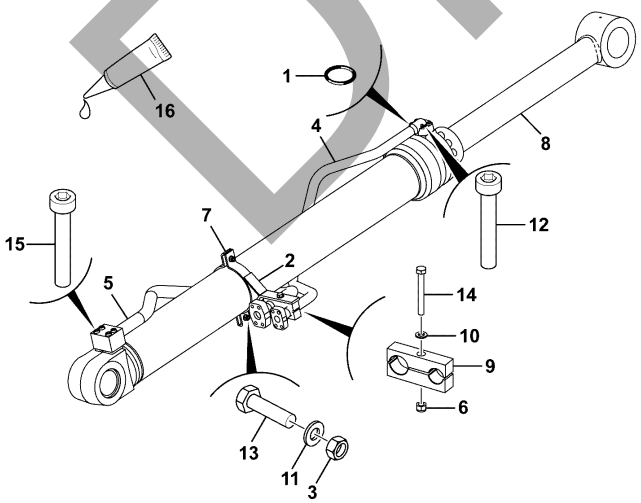

336-F2676-1

ITEM	Part #	CHANGE NO	DESCRIPTION	USAGE CODE	QTY
1	2409/0210		O Ring		2
2	332/J3465		Clamp boom cylinder		1
3	1371/0303D		Nut M10 grade 10.9		2
4	336/F2998		Pipe Boom Cylinder HBCV		1
5	336/F1498		Pipe Boom Line		1
6	1371/0403D		Nut		1
7	332/J3213		Clamp boom cylinder (176)		1
8	336/F1221		Boom Cylinder - JCB		1
9	336/F2546		Clamp Pipe		2
10	1420/0009D		Washer M12		2
11	1420/0008D		Washer M10		4
12	1391/3509D		Capscrew M12 x 35mm		4
13	1316/3410D		Bolt		2

DRAFT

Continue...

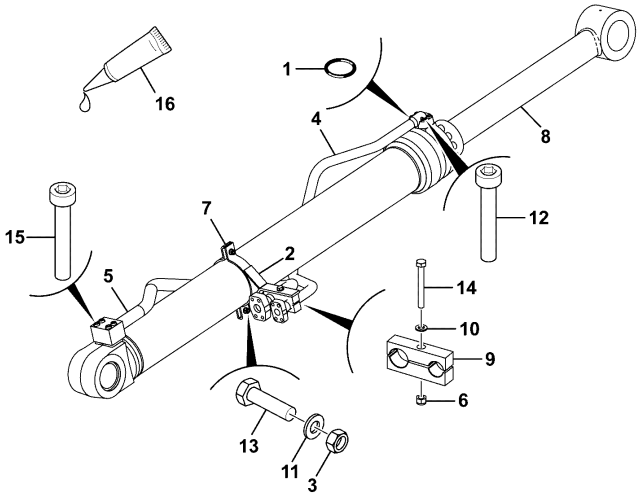

336-F2676-1

ITEM	PART NO	CHANGE NO	DESCRIPTION	USAGE CODE	QTY
14	1316/3520D		Bolt		1
15	1391/3515D		Capscrew M12 x 65		4
16	4101/0500		Fluid Locking Loctite 262		0

JCB380 QM

JCB380 XTRA

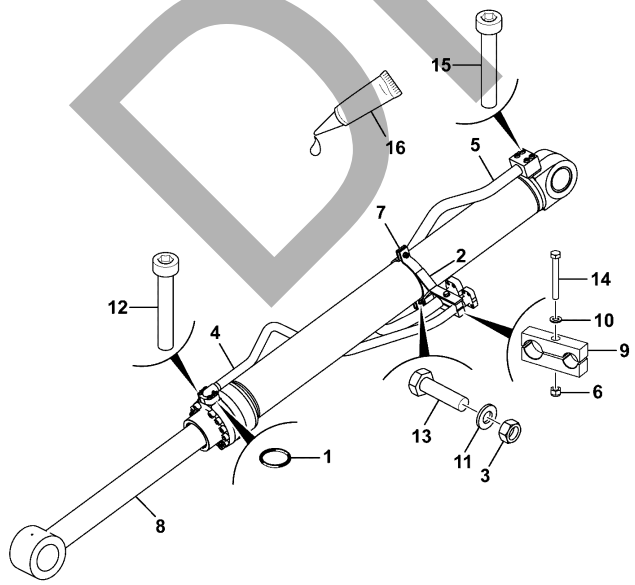

336-F2677-1

ITEM	Part #	CHANGE NO	DESCRIPTION	USAGE CODE	QTY
1	2409/0210		O Ring		2
2	332/J3465		Clamp boom cylinder		1
3	1371/0303D		Nut M10 grade 10.9		2
4	336/F2999		Pipe Boom Cylinder Line HBCV		1
5	336/F1491		Pipe Boom Cylinder Line		1
6	1371/0403D		Nut		1
7	332/J3213		Clamp boom cylinder (176)		1
8	336/F1221		Boom Cylinder - JCB		1
9	336/F2546		Clamp Pipe		2
10	1420/0009D		Washer M12		2
11	1420/0008D		Washer M10		4
12	1391/3509D		Capscrew M12 x 35mm		4

DRAFT

Continue...

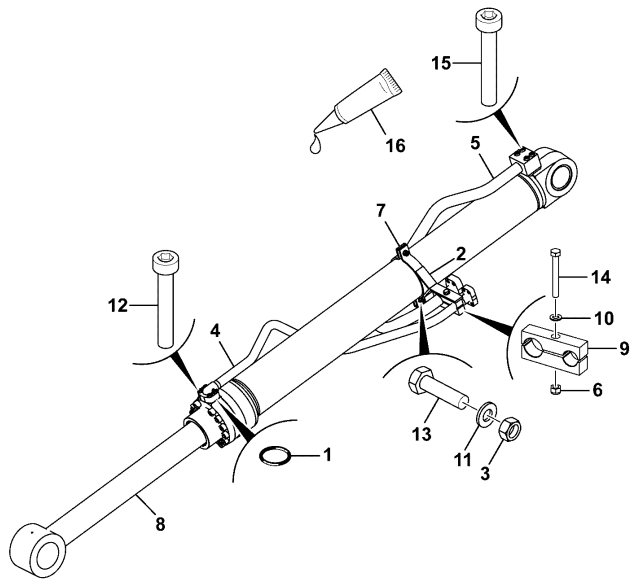

336-F2677-1

ITEM	PART NO	CHANGE NO	DESCRIPTION	USAGE CODE	QTY
13	1316/3410D		Bolt		2
14	1316/3520D		Bolt		1
15	1391/3515D		Capscrew M12 x 65		4
16	4101/0500		Fluid Locking Loctite 262		0

JCB380 QM

JCB380 XTRA

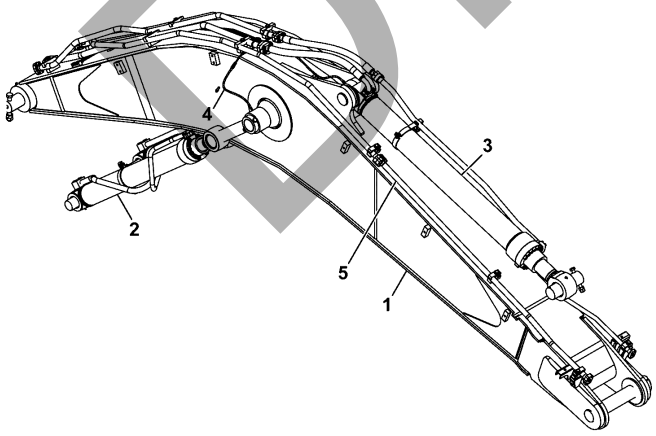

336-F2931-1

ITEM	Part #	CHANGE NO	DESCRIPTION	USAGE CODE	QTY
1			Boom Assembly heavy duty special Refer B430-10-1		1
2			Circuit Boom Cylinder Line Refer E140-110-1		1
3			Circuit Arm Line-Non HBCV Refer E140-90-1		1
4			Circuit Grease Assembly Refer E140-20-1		1
5			Circuit Bucket Line Refer E140-95-1		1

DRAFT

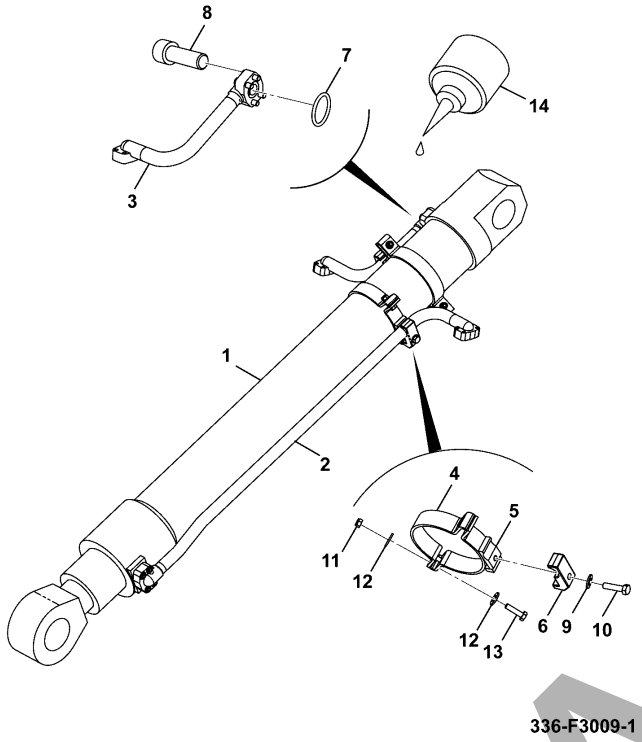

336-F3009-1

JCB380 QM

JCB380 XTRA

ITEM	Part #	CHANGE NO	DESCRIPTION	USAGE CODE	QTY
1	336/F1223		Bucket Cylinder		1
2	336/F3011		Bracket Cylinder Pipe		1
3	336/F2954		Bracket Cylinder Pipe		1
4	332/J3213		Clamp boom cylinder (176)		2
5	332/J3243		Clamp bucket ram (176)		2
6	JRJ0349		Clamp pipe		2
7	2409/0210		O Ring		2
8	1391/3509D		Capscrew M12 x 35mm		8
9	1420/0009D		Washer M12		2
10	1316/3512D		Bolt M12X50		2
11	1371/0303D		Nut M10 grade 10.9		4
12	1420/0008D		Washer M10		8
13	1316/3410D		Bolt		4

E140-130-1 HYDRAULIC CIRCUITS EXCAVATOR END, CIRCUIT, BUCKET CYLINDER 9820/1116A ISSUE 0

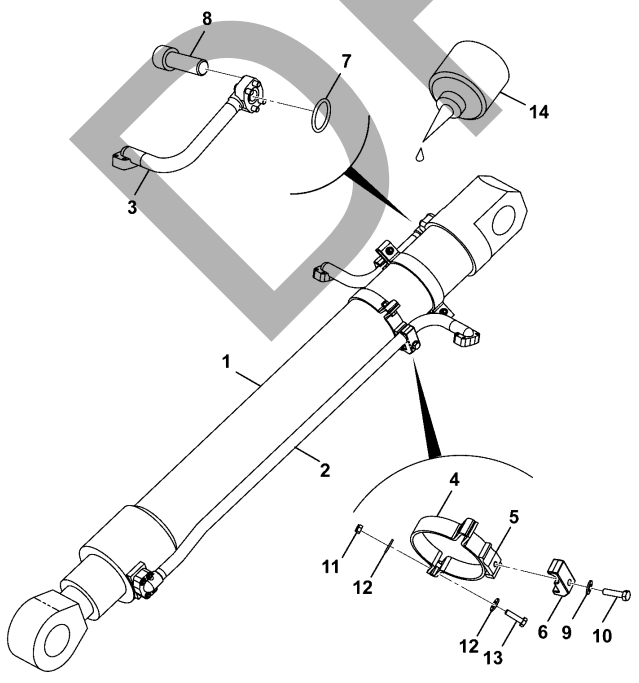

336-F3009-1

ITEM	PART NO	CHANGE NO	DESCRIPTION	USAGE CODE	QTY
14	4101/0500		Fluid Locking Loctite 262		0

DRAFT

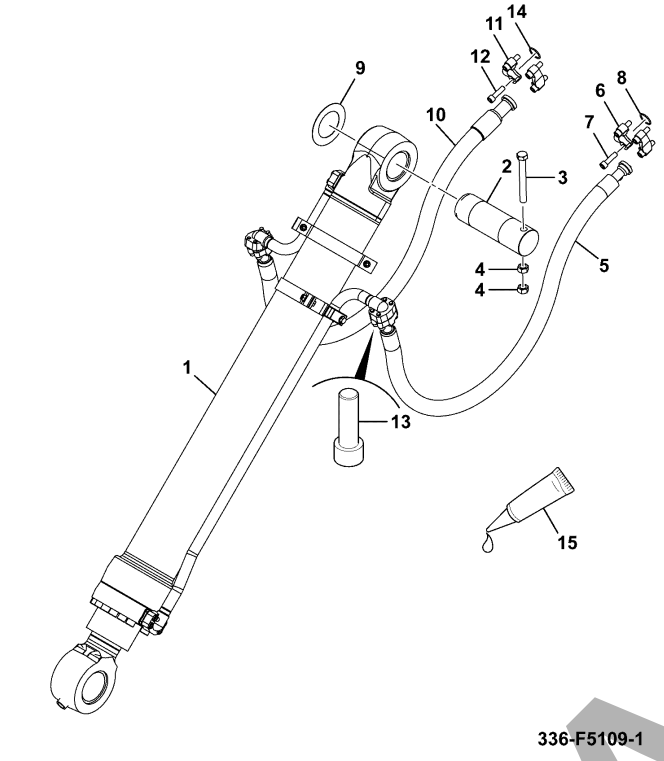

336-F5109-1

JCB380 QM

JCB380 XTRA

ITEM	Part #	CHANGE NO	DESCRIPTION	USAGE CODE	QTY
1			Circuit Bucket Cylinder Refer E140-130-1		1
2	KSV0456		Pin attachment		1
3	1316/3827D		Bolt M20 x 170		1
4	1371/0701D		Nut Plain M20		2
5	336/F5105		Hose - 16 SAE EPHP 1850mm A		1
6	210/92901		Pipe flange 1"		6
7	1391/3511D		Capscrew		4
8	2409/0210		O Ring		3
9	KSV0477		Shim plate 1.2mm thick		0
10	336/F5104		Hose - 20 SAE EHP 1850mm A		1
11	KTJ0029		Flange split		2
12	1391/3612D		Capscrew M14 x 50mm		4
13	1391/3513D		Capscrew		8

E140-140-1 HYDRAULIC CIRCUITS EXCAVATOR END, CIRCUIT, BUCKET LINE 3.23M 9820/1116A ISSUE 0

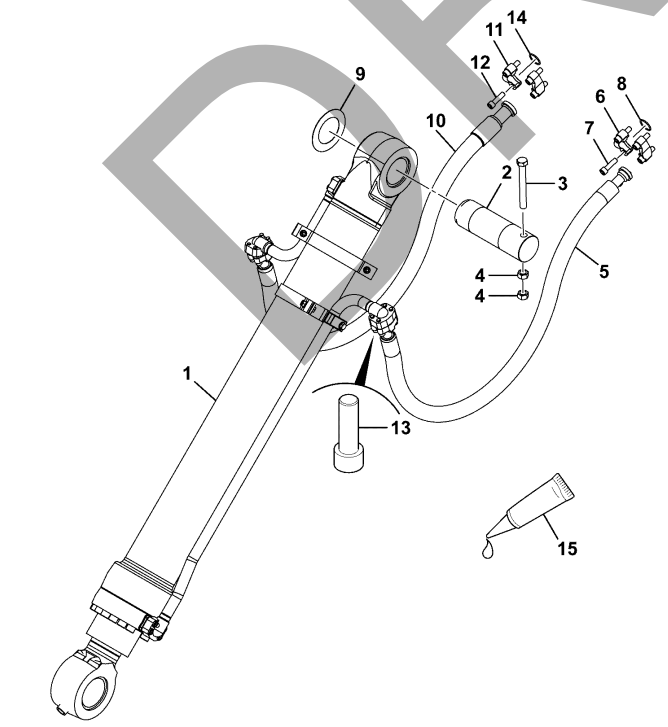

336-F5109-1

ITEM	PART NO	CHANGE NO	DESCRIPTION	USAGE CODE	QTY
14	2409/0213		O Ring		1
15	4101/0500		Fluid Locking Loctite 262		0

DRAFT

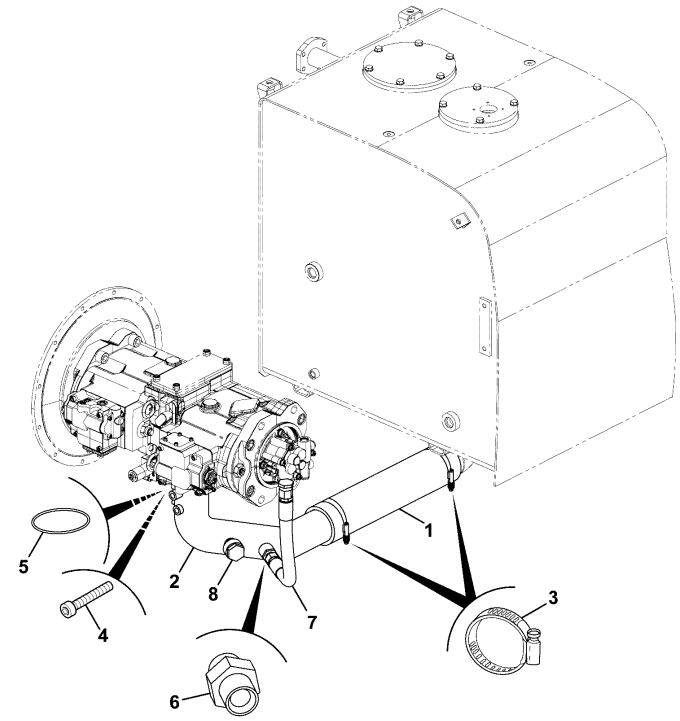

332-K6922-1

JCB380 QM

JCB380 XTRA

ITEM	Part #	CHANGE NO	DESCRIPTION	USAGE CODE	QTY
1	834/11532		Hose		1
2	332/K4774		Pipe suction		1
3	332/S8033		Clamp constant torque (95-118mm)		4
4	1391/3710D		Capscrew M16 x 40		4
5	828/J0006		O Ring		1
6	JLJ0054		Adapter 3/4		1
7	333/K7524		Hose 12 BSP LP 460mm A		1
8	BRJ0174		Plug		1

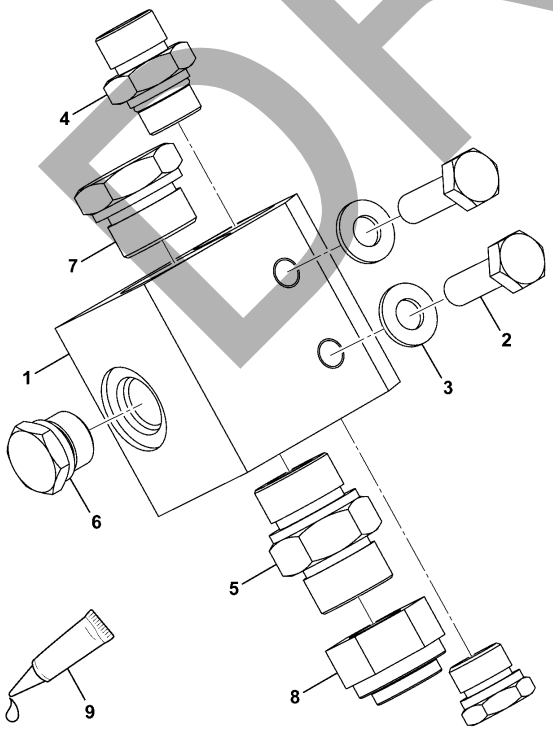

336-C6922-1

JCB380 QM

JCB380 XTRA

ITEM	Part #	CHANGE NO	DESCRIPTION	USAGE CODE	QTY
1	335/F8894		Manifold Block		1
2	1316/0409D		Screw M10X35		2
3	1420/0008D		Washer M10		2
4	1620/2054		Adaptor 1/2BSP x 3/4 SAE		1
5	1620/2059		Adaptor 3/4BSP/1-1/16SAE M/M		1
6	1745/0003		Plug Blanking		2
7	1745/0005		Plug 1-1/16UNF		1
8	816/00196		Cap Blanking Steel 3/4"BSP		1
9	4101/0500		Fluid Locking Loctite 262		0

DRAFT

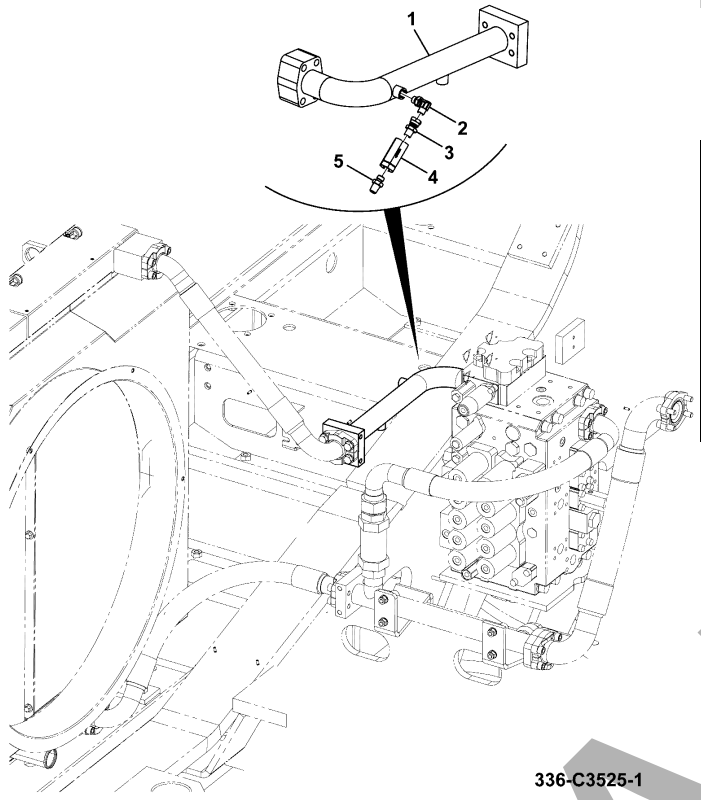

336-C3525-1

JCB380 QM

JCB380 XTRA

ITEM	Part #	CHANGE NO	DESCRIPTION	USAGE CODE	QTY
1	332/K8008		Pipe oil return		1
2	334/L6374		Elbow Adaptor 1/4		1
3	334/K1478		Adaptor - 1/4 BSPT(M), 3/8 BSP(F)		1
4	333/K3339		Filter Line		1
5	1609/0002		Adapter		1

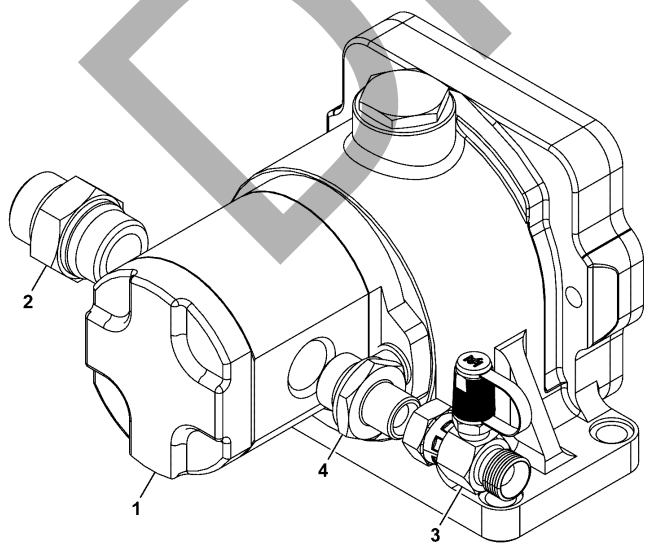

400-C3107-1

JCB380 QM

JCB380 XTRA

ITEM	Part #	CHANGE NO	DESCRIPTION	USAGE CODE	QTY
1	332/K6905		Pump ABI Refer E260-1-1		1
2	334/L6394		Adaptor male 1/4 ST		1
3	335/E8040		Adaptor Test Point		1
4	ANV0071		Adapter		1

DRAFT

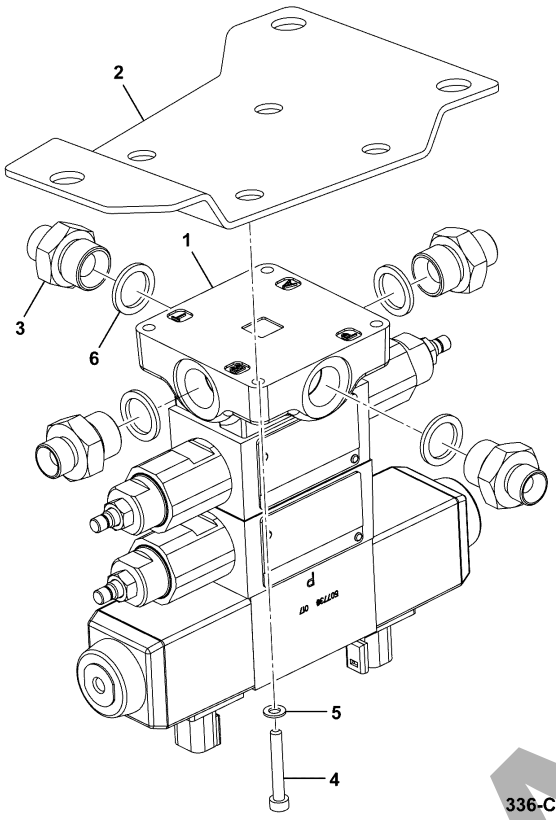

336-C2403-1

JCB380 QM

JCB380 XTRA

ITEM	Part #	CHANGE NO	DESCRIPTION	USAGE CODE	QTY
1	334/J9861		Valve Low Flow Refer E390-40-1		1
2	331/48456		Bracket low flow valve		1
3	1606/2055		Adaptor 1/2" x 3/8"		4
4	1391/3109D		Capscrew M5 x 35mm		4
5	1420/0005D		Washer M5		4
6	1406/0015		Washer bonded 3/8"		4

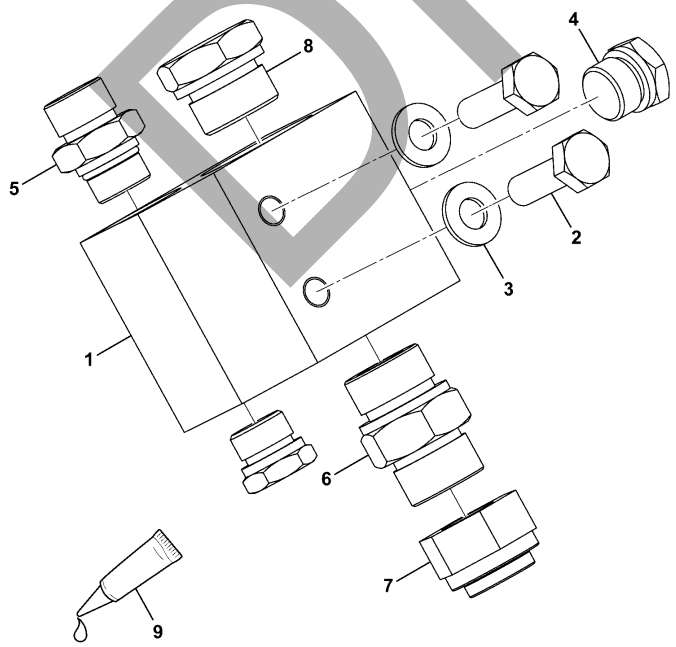

336-C6923-1

JCB380 QM

JCB380 XTRA

ITEM	Part #	CHANGE NO	DESCRIPTION	USAGE CODE	QTY
1	335/F8894		Manifold Block		1
2	1316/0409D		Screw M10X35		2
3	1420/0008D		Washer M10		2
4	1745/0003		Plug Blanking		2
5	1620/2054		Adaptor 1/2BSP x 3/4 SAE		1
6	1620/2059		Adaptor 3/4BSP/1-1/16SAE M/M		1
7	816/00196		Cap Blanking Steel 3/4"BSP		1
8	1745/0005		Plug 1-1/16UNF		1
9	4101/0500		Fluid Locking Loctite 262		0

DRAFT

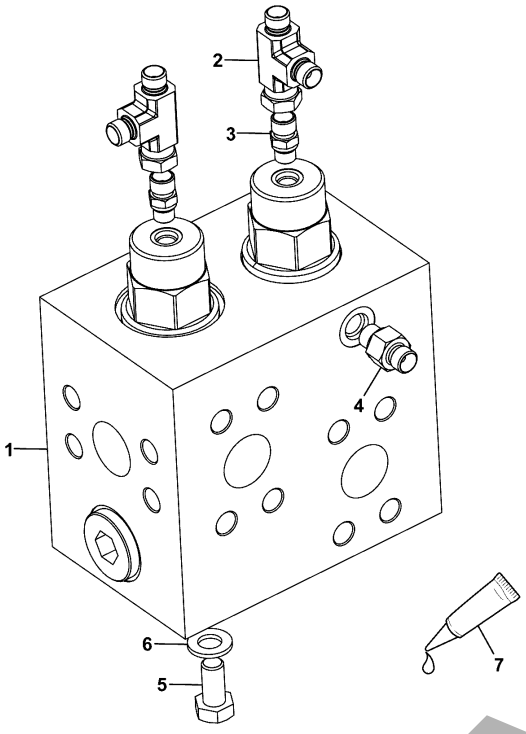

400-C3414-1

JCB380 QM

JCB380 XTRA

ITEM	Part #	CHANGE NO	DESCRIPTION	USAGE CODE	QTY
1	332/K6937		Valve hammer/auxilary RH Refer E3-5-1		1
2	816/91008		Adapter 1/4" TEE M/F/M no O-ring on female connector		2
3	1620/2050		Adaptor 1/4BSP x 7/16SAE		2
4	334/L6367		Adaptor Male		1
5	1316/0507D		Setscrew M12 x 25 grade 10.9		4
6	1420/0009D		Washer M12		4
7	4101/0500		Fluid Locking Loctite 262		0

JCB380 QM

JCB380 XTRA

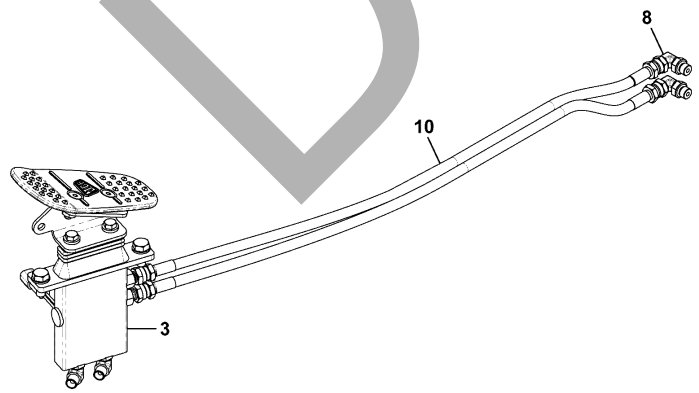

ITEM	Part #	CHANGE NO	DESCRIPTION	USAGE CODE	QTY
3	336/C1870		Circuit Valve - Hammer/ Auxilary RH Refer E130-110-1		1
8	334/L6374		Elbow Adaptor 1/4		2
10	333/J9436		Kit-hose Hammer Refer E130-170-1		1

333-K6567-3

DRAFT

E

- E00 HYDRAULIC CIRCUITS
- E01 HYDRAULIC CIRCUITS
- • E02 PUMP & M0T0RS
- E03 VALVES
- E04 RAMS
- E05 FILTER

DRAFT

JCB380 QM

JCB380 XTRA

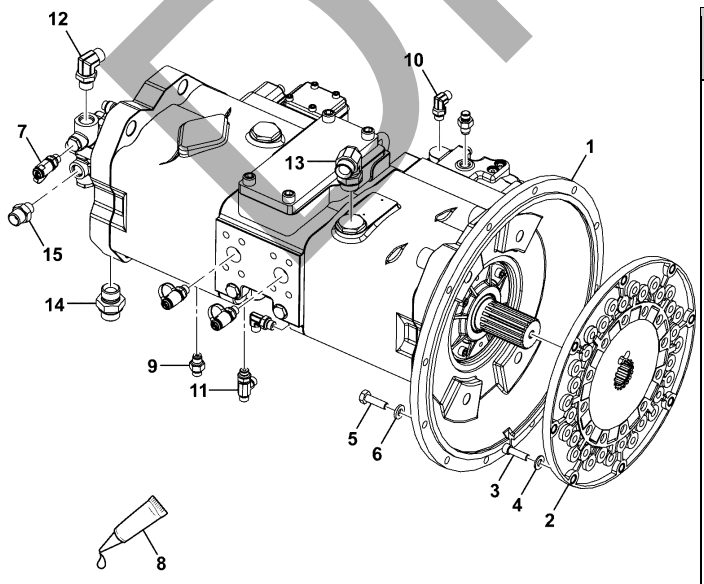

333-J8850-3

ITEM	Part #	CHANGE NO	DESCRIPTION	USAGE CODE	QTY
1	336/F2233		Pump Main ABI Refer E200-15-1		1
2	333/J6581		Coupling Pump		1
3	332/G7380		Capscrew 3/8 UNC x 1 1/4"		8
4	1420/0008D		Washer M10		8
5	1316/0409D		Screw M10X35		6
6	JHP0046		Washer M10		6
7	333/J5928		Adapter test point		3
8	4101/0500		Fluid Locking Loctite 262		0
9	334/K3244		Adaptor		2
10	334/L6374		Elbow Adaptor 1/4		2
11	334/L6407		Adaptor Tee 1/4"		1
12	334/L6384		Elbow Adaptor 90 male		1
13	334/L6548		Elbow adaptor		1
14	JLJ0054		Adapter 3/4		1

Continue...

ITEM	PART NO	CHANGE NO	DESCRIPTION	USAGE CODE	QTY
15	JLJ0104		Adapter 1/2 X 3/8		1

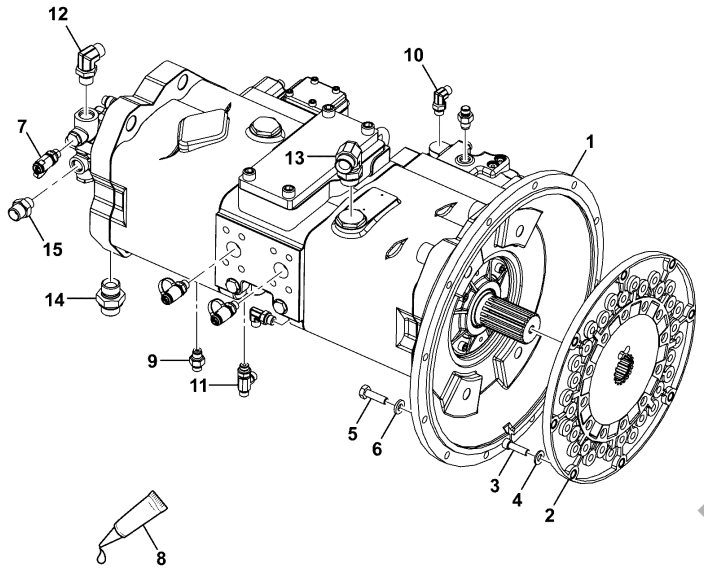

333-J8850-3

JCB380 QM

JCB380 XTRA

ITEM	Part #	CHANGE NO	DESCRIPTION	USAGE CODE	QTY
1	333/K7891		Pump K5V160DTP		1
2	336/F1790		Flange Mount Pump		1

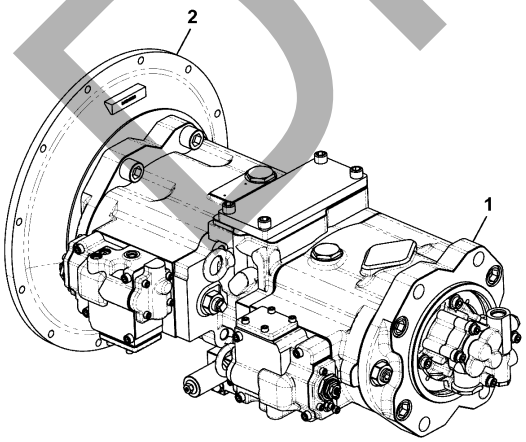

333-K7890-1

DRAFT

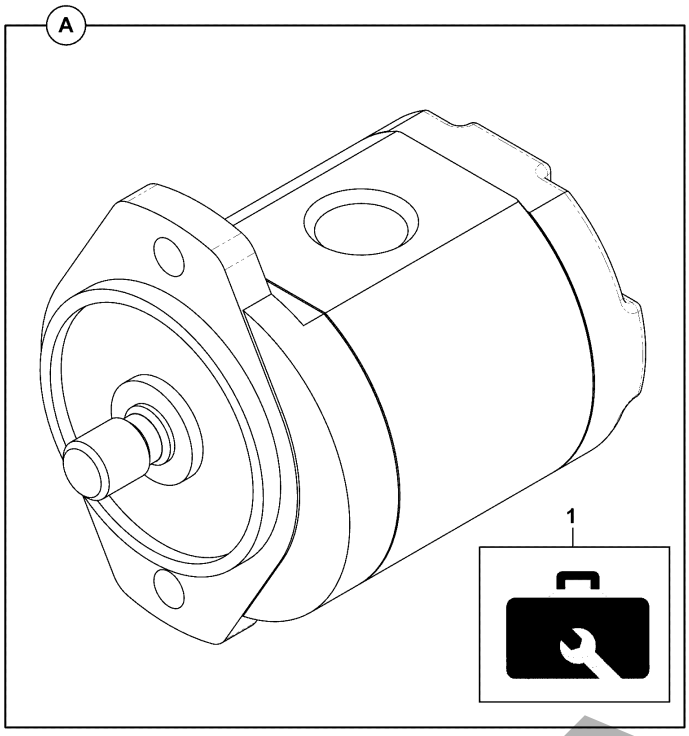

20-925311-1

JCB380 QM

JCB380 XTRA

ITEM	Part #	CHANGE NO	DESCRIPTION	USAGE CODE	QTY
A	20/925311		Pump Low Flow		1
1	:331/37198		Kit repair		1

DRAFT

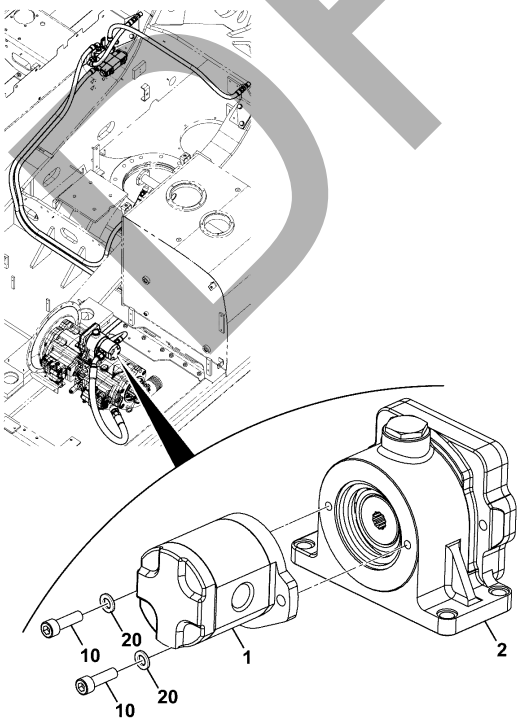

332-K6905-2

JCB380 QM

JCB380 XTRA

ITEM	Part #	CHANGE NO	DESCRIPTION	USAGE CODE	QTY
1	20/925311		Pump Low Flow Refer E210-5-1		1
2	332/K6906		Flange power take off		1
10	1391/3409D		Capscrew M10x35mm		2
20	1420/0008D		Washer M10		2

E

E00 HYDRAULIC CIRCUITS
E01 HYDRAULIC CIRCUITS
E02 PUMP & M0T0RS
• E03 VALVES
E04 RAMS
E05 FILTER

DRAFT

JCB380 QM

JCB380 XTRA

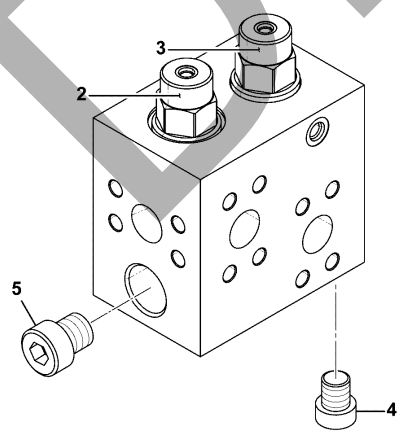

ITEM	Part #	CHANGE NO	DESCRIPTION	USAGE CODE	QTY
A	332/K6937		Valve hammer/auxilary RH		1
2	335/E1992		Element N.C. Logic		1
3	335/E1994		Element N.C. Logic		1
4	335/E1995		Plug 0.75 BSPP		1
5	335/E1996		Plug 1 BSPP		1

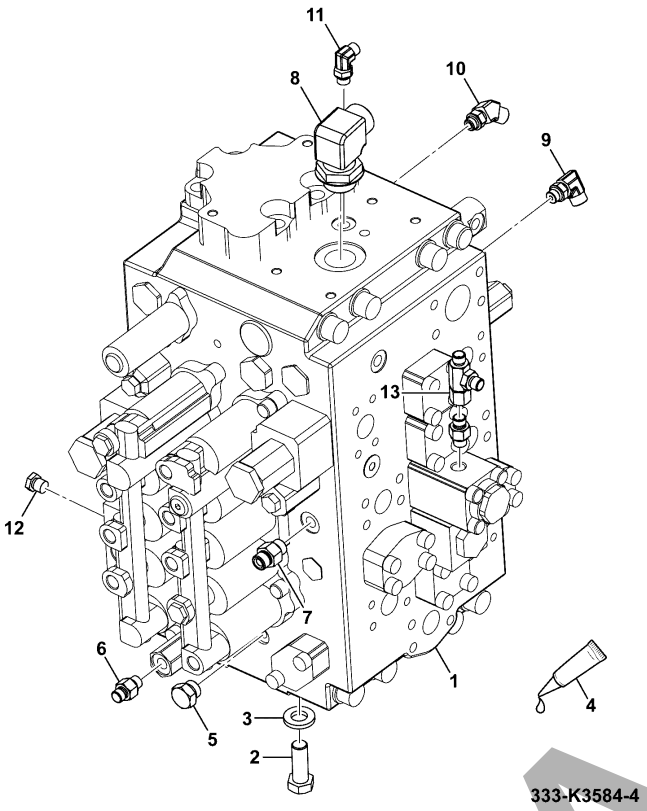

333-K3584-4

JCB380 QM

JCB380 XTRA

ITEM	Part #	CHANGE NO	DESCRIPTION	USAGE CODE	QTY
1	334/J6394		Valve Control Main Standard Refer E320-5-1		1
2	1316/0711D		Setscrew M16 x 45		4
3	JHP0043		Washer M16		4
4	4101/0500		Fluid Locking Loctite 262		0
5	BRJ1545		Plug		1
6	334/L6367		Adaptor Male		5
7	334/L6615		Adapter 3/8 male		1
8	334/L6752		Adaptor Elbow 1/4 "		1
9	334/L6379		Adaptor 1/4 - 3/8" elbow 90 male		7
10	334/K1298		Adaptor		1
11	334/L6374		Elbow Adaptor 1/4		12
12	KHJ0363		Plug		2
13	816/90013		Adaptor tee 1/4F-1/4M-1/4M BSP		1

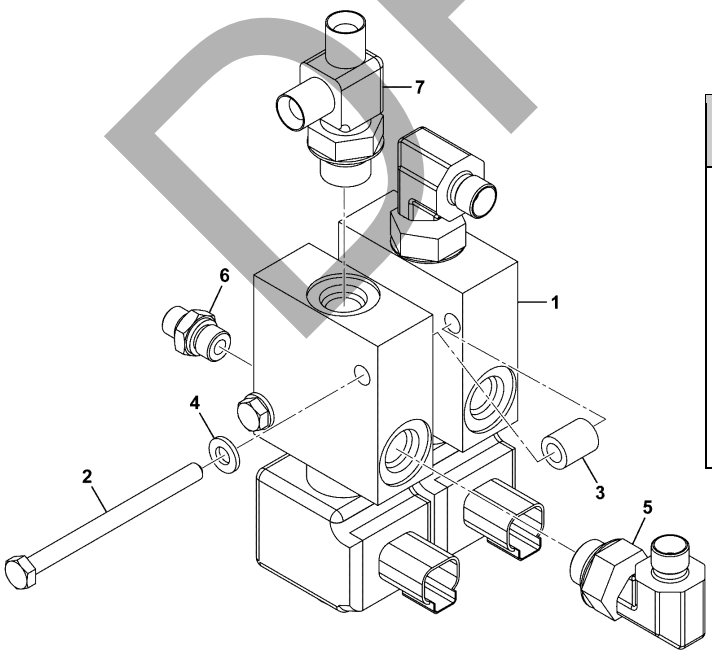

336-C2322-1

JCB380 QM

JCB380 XTRA

ITEM	Part #	CHANGE NO	DESCRIPTION	USAGE CODE	QTY
1	25/221009		Valve solenoid Refer E390-35-1		2
2	1316/3218D		Bolt		2
3	829/31047		Spacer		2
4	1420/0006D		Washer M6		2
5	334/L6554		Elbow adaptor		2
6	334/L6674		Adaptor		3
7	334/K1273		Adaptor T, 3/8 JIS, 1/4 BSP, 1/4 BSP		1

DRAFT

JCB380 QM

JCB380 XTRA

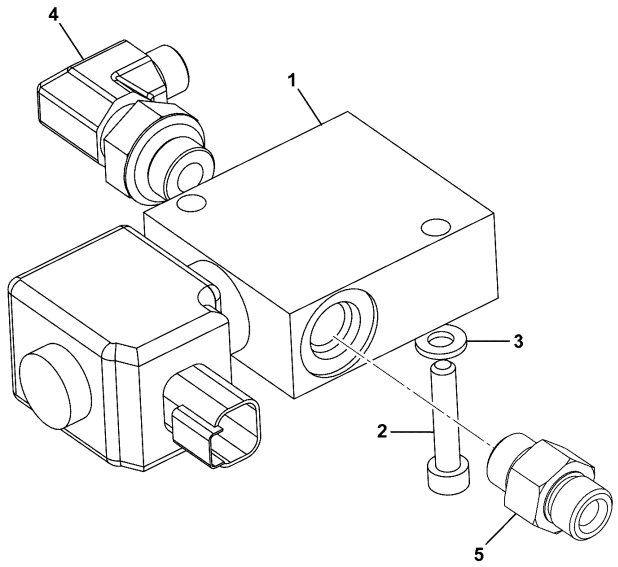

336-C2243-1

ITEM	Part #	CHANGE NO	DESCRIPTION	USAGE CODE	QTY
1	25/221009		Valve solenoid Refer E390-35-1		1
2	1391/3210D		Capscrew M6 x 40mm		2
3	1420/0006D		Washer M6		2
4	334/L6554		Elbow adaptor		1
5	334/K1273		Adaptor T, 3/8 JIS, 1/4 BSP, 1/4 BSP		2

JCB380 QM

JCB380 XTRA

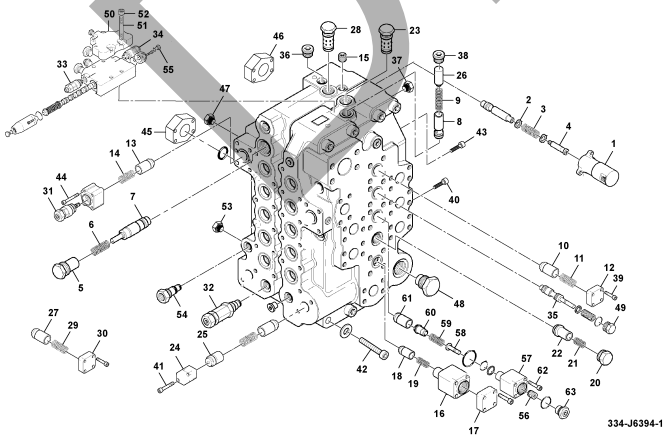

ITEM	Part #	CHANGE NO	DESCRIPTION	USAGE CODE	QTY
A	334/J6394		Valve Control Main Standard		1
1	:25/221764		Cap		1
2	:25/221635		Seat spring		2
3	:25/221765		Spring		1
4	:25/221766		End spool		1
5	:332/C1442		Plug		1
6	:25/221770		Spring		1
7	:336/A1179		Spool Assembly		1
8	:25/221774		Poppet		1
9	:25/221775		Spring		1
10	:25/221630		Valve poppet		2
11	:25/221631		Spring		2
12	:25/221777		Flange		5
13	:25/221778		Poppet		6
14	:25/221779		Spring		10
15	:25/221790		Plug orifice		4

DRAFT

Continue...

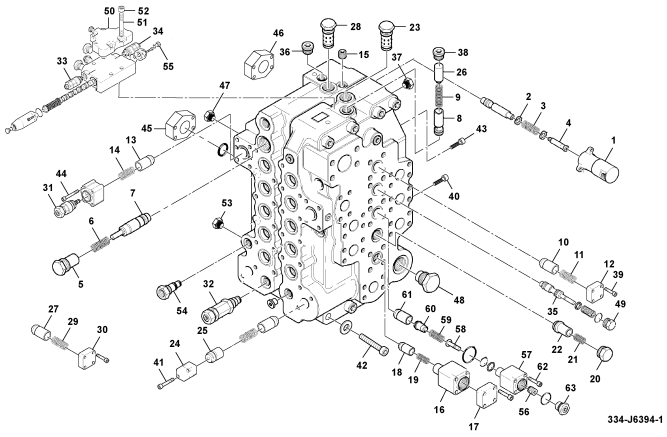

ITEM	PART NO	CHANGE NO	DESCRIPTION	USAGE CODE	QTY
16	:335/E5950		Body Assembly		2
17	:332/D7142		Flange		1
18	:336/A1181		Poppet		17
19	:336/A1182		Spring		1
20	:25/221685		Plug		1
21	:25/221678		Spring		1
22	:332/C1460		Poppet		1
23	:25/221787		Poppet		1
24	:332/C1448		Flange		2
25	:332/C1449		Spacer		2
26	:332/C1451		Spacer		1
27	:332/C1461		Sleeve		1
28	:332/C1462		Poppet		1
29	:332/C1463		Spring		1
30	:332/C1464		Flange		1
31	:336/A1183		Valve Assembly, Anti- Drift		2
32	:335/E5952		Valve Relief		1
33	:333/E3742		Valve Relief 36.3 Bar		5

E320-5-1 VALVES EXCAVATOR, MAIN CONTROL VALVE, COMPONENTS 9820/1116A ISSUE 0

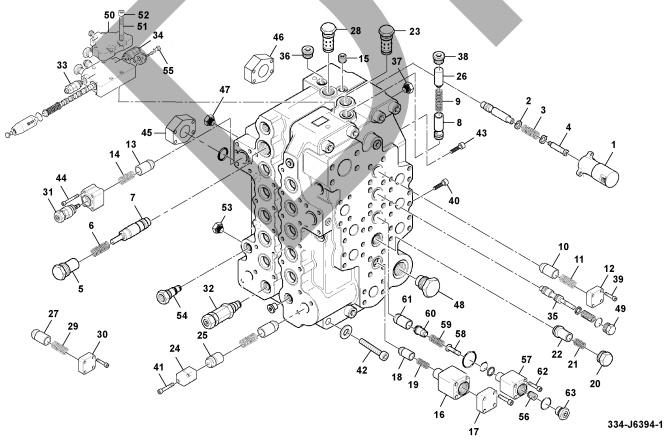

ITEM	PART NO	CHANGE NO	DESCRIPTION	USAGE CODE	QTY
34	:25/222352		Valve relief 24.5 bar		1
35	:25/221796		Valve relief, assy		2
36	:25/221692		Plug assembly		3
37	:25/221690		Plug assembly		9
38	:25/221691		Plug assembly		5
39	:25/221797		Bolt socket-head M10		12
40	:25/221695		Bolt socket-head M10		38
41	:25/221798		Bolt socket-head M10		20
42	:25/221800		Bolt socket-head M16		8
43	:25/221716		Capscrew M6		4
44	:332/C1453		Capscrew		4
45	:335/E5953		Cap		1
46	:25/221802		Cap		2
47	:335/E5947		Plug		1
48	:25/221804		Plug assy.		2
49	:25/221711		Plug assembly		2
50	:332/C1435		Housing		1

DRAFT

Continue...

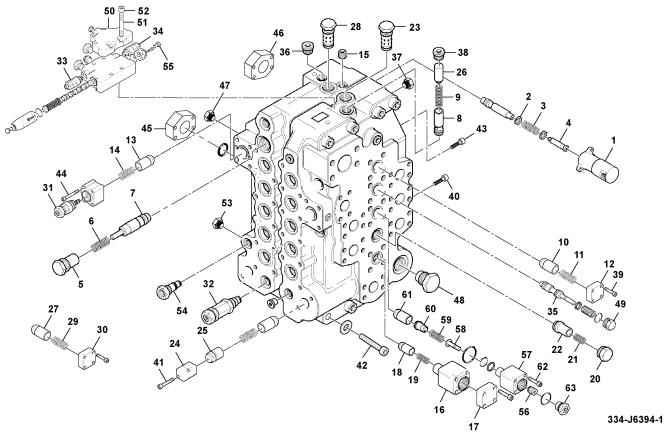

ITEM	PART NO	CHANGE NO	DESCRIPTION	USAGE CODE	QTY
51	:332/D7146		Rod tie		4
52	:25/222362		Nut		4
53	:332/C1417		Plug		1
54	:332/C1477		Plug assembly		4
55	:25/221806		Plug		2
56	:25/221807		Piston		2
57	:332/C1468		Body		2
58	:25/221809		Piston		2
59	:25/221810		Spring		2
60	:25/221811		Sleeve		2
61	:25/221812		Poppet assy.		1
62	:25/221813		Bolt socket-head M10		8
63	:335/E7534		Poppet Assy		1

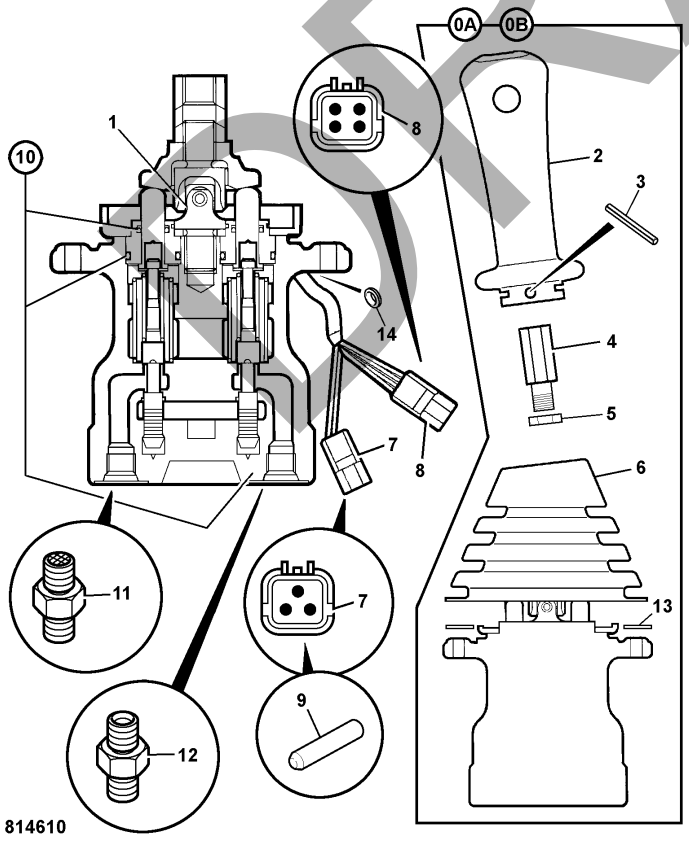

JCB380 QM

JCB380 XTRA

ITEM	Part #	CHANGE NO	DESCRIPTION	USAGE CODE	QTY
A	:25/222891		Valve Hand Controller Left Hand		1
1	:331/11565		Joint knuckle		1
2	:331/14366		Handle with switch		1
3	:826/10591		Pin roll		1
4	:331/11043		Lever		1
5	:826/10628		Nut locking		1
6	:331/20582		Gaiter Joystick		1
7	:721/10400		Connector 3 pin		0
8	:721/10100		Connector 4 pin		0
9	:721/10401		Connector		8
10	:998/10318		Kit-seal (To suit all four plungers)		1
11	JHJ0168		Adapter Filtered		1
12	1620/2052		Adaptor 3/8BSP x 9/16		5
13	25/221280		Plate		1

DRAFT

Continue...

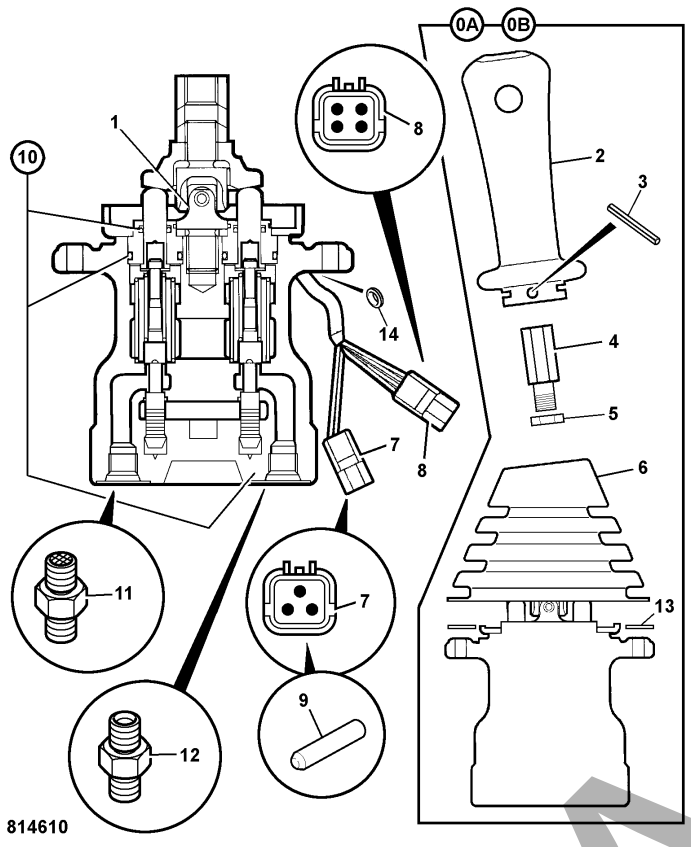

ITEM	PART NO	CHANGE NO	DESCRIPTION	USAGE CODE	QTY
14	:828/10020		Grommet		1

DRAFT

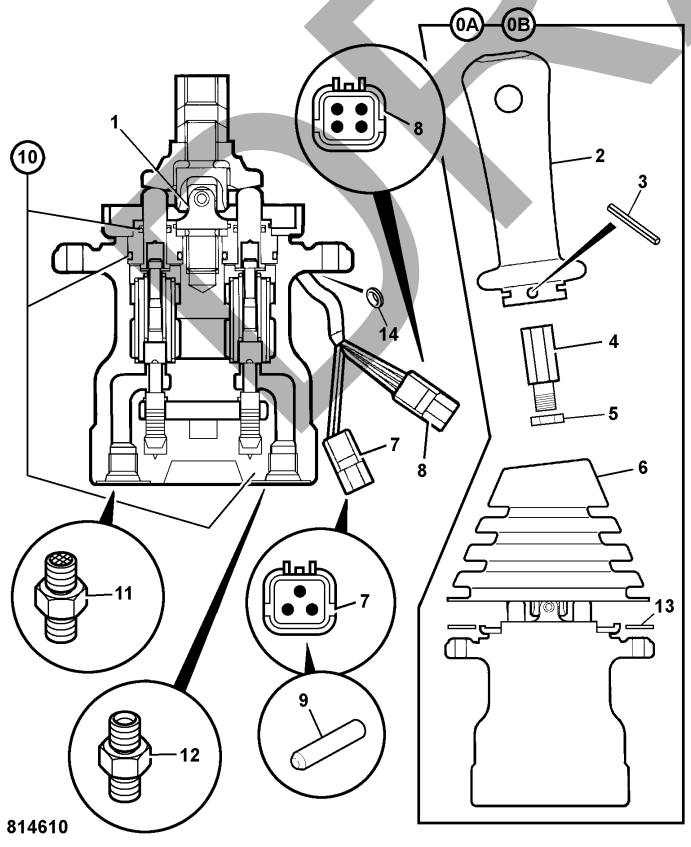

JCB380 QM

JCB380 XTRA

ITEM	Part #	CHANGE NO	DESCRIPTION	USAGE CODE	QTY
B	:25/222892		Valve Hand Controler Right Hand		1
1	:331/11565		Joint knuckle		1
2	:331/14366		Handle with switch		1
3	:826/10591		Pin roll		1
4	:331/11043		Lever		1
5	:826/10628		Nut locking		1
6	:331/20582		Gaiter Joystick		1
7	:721/10400		Connector 3 pin		0
8	:721/10100		Connector 4 pin		0
9	:721/10401		Connector		8
10	:998/10318		Kit-seal (To suit all four plungers)		1
11	JHJ0168		Adapter Filtered		1
12	1620/2052		Adaptor 3/8BSP x 9/16		5
13	25/221280		Plate		1

Continue...

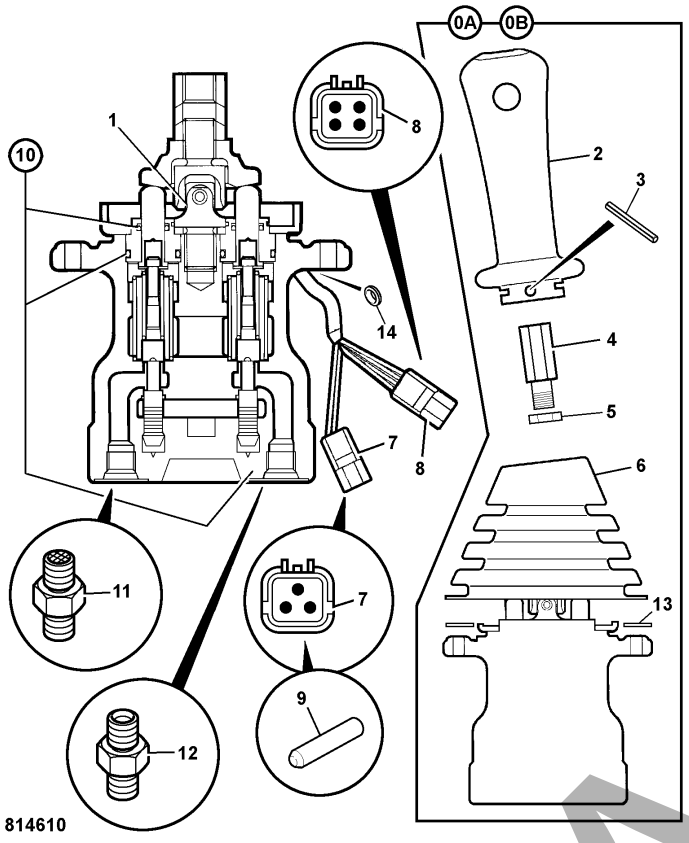

ITEM	PART NO	CHANGE NO	DESCRIPTION	USAGE CODE	QTY
14	:828/10020		Grommet		1

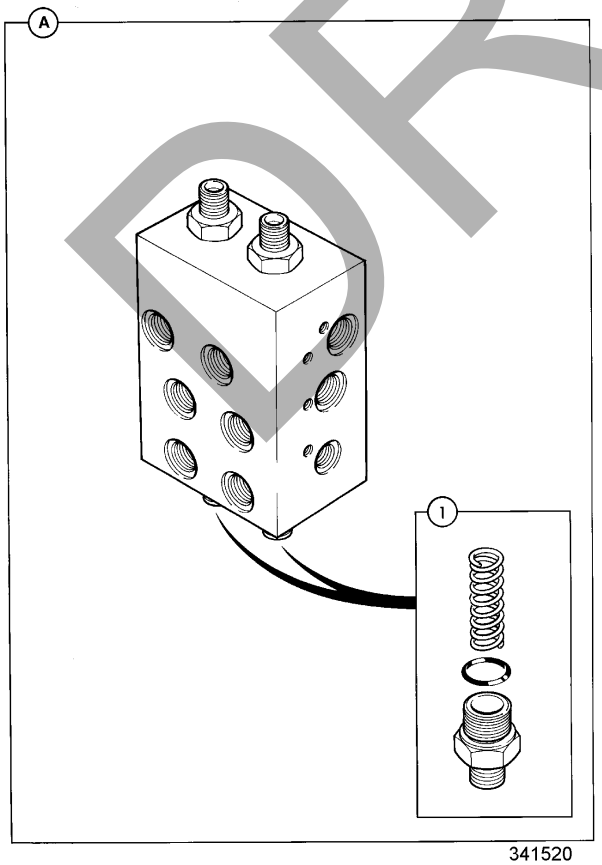

JCB380 QM

JCB380 XTRA

ITEM	Part #	CHANGE NO	DESCRIPTION	USAGE CODE	QTY
A	25/220042		Valve cushion		1
1	340/00055		Kit repair Contains 4 springs & 4 O-rings		1

DRAFT

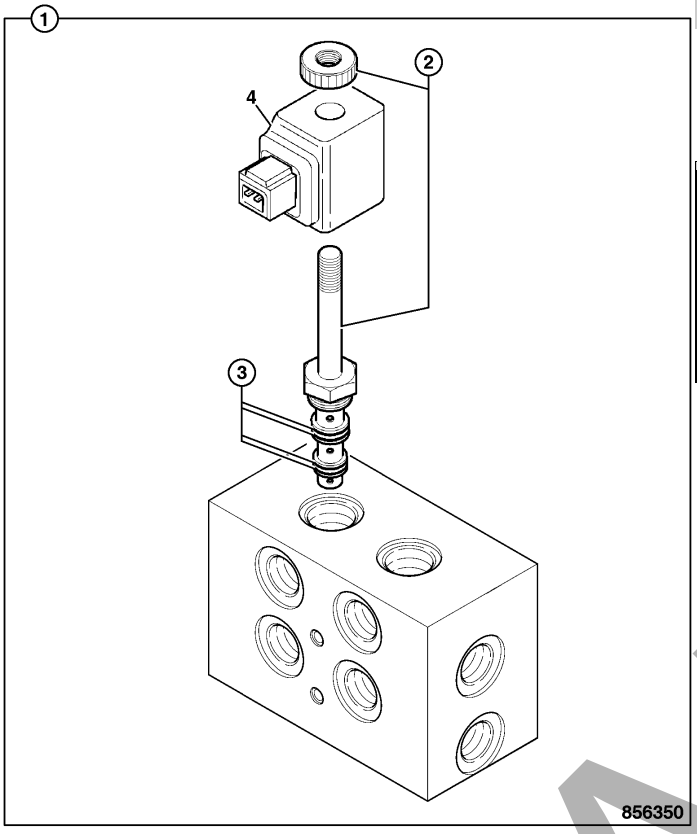

JCB380 QM

JCB380 XTRA

ITEM	Part #	CHANGE NO	DESCRIPTION	USAGE CODE	QTY
1	25/221066		Valve dual controls		1
2	:25/221048		Cartridge Solenoid		2
3	::25/221395		Kit-seal		2
4	:25/221263		Coil 24V		1

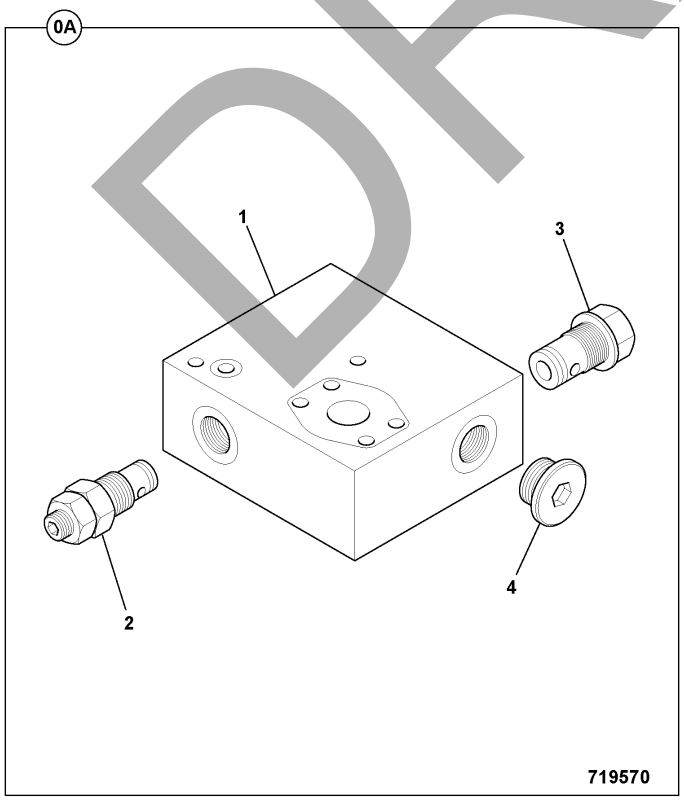

JCB380 QM

JCB380 XTRA

ITEM	Part #	CHANGE NO	DESCRIPTION	USAGE CODE	QTY
A	JSV0329		Valve flow switch		1
2	:6900/0917		Cartridge Pilot		1
2A	::25/940102		Kit-seal		1
3	:25/221289		Valve Check		1
3A	::332/D3794		Kit cartridge valve		1
4	:25/221288		Plug blanking		1

DRAFT

JCB380 QM

JCB380 XTRA

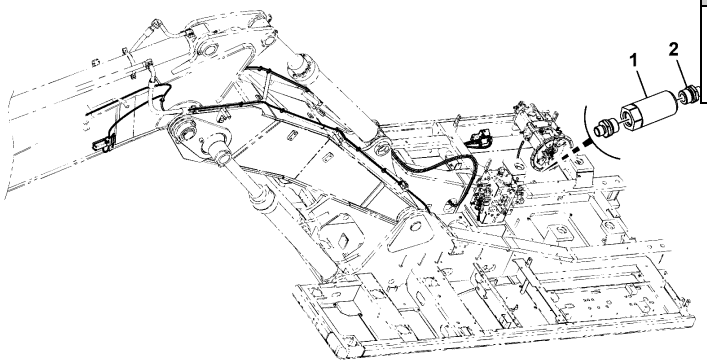

400-F9658-1

ITEM	Part #	CHANGE NO	DESCRIPTION	USAGE CODE	QTY
1	400/B9229		Valve Check 1 bar		1
2	1620/2063		Adaptor 1/4BSP x 3/4SAE		2

DRAFT

JCB380 QM

JCB380 XTRA

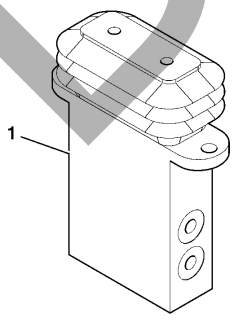

ITEM	Part #	CHANGE NO	DESCRIPTION	USAGE CODE	QTY
1	928/60339		Valve hammer, auxiliary foot operated		1
1A	:333/P8446		Bellows gaiter		1

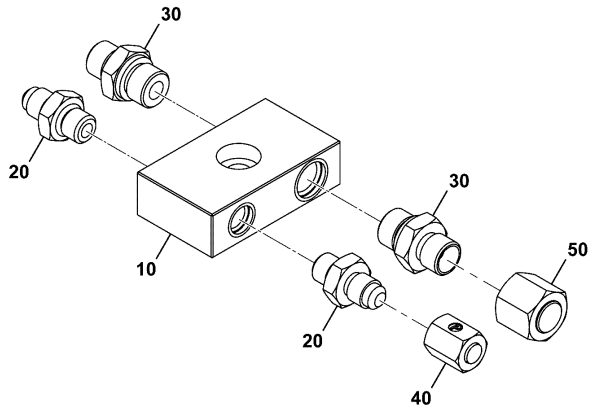

333-A9010-1

JCB380 QM

JCB380 XTRA

ITEM	Part #	CHANGE NO	DESCRIPTION	USAGE CODE	QTY
10	333/A9011		Manifold		1
20	332/A8482		Adaptor 7/16 SAE - 7/16 JIC		2
30	1620/2051		Adaptor 1/4"BSP x 9/16"SAE		2
40	816/90802		Cap 7/16-JIC		1
50	816/90045		Cap blanking 1/4"BSP steel		1

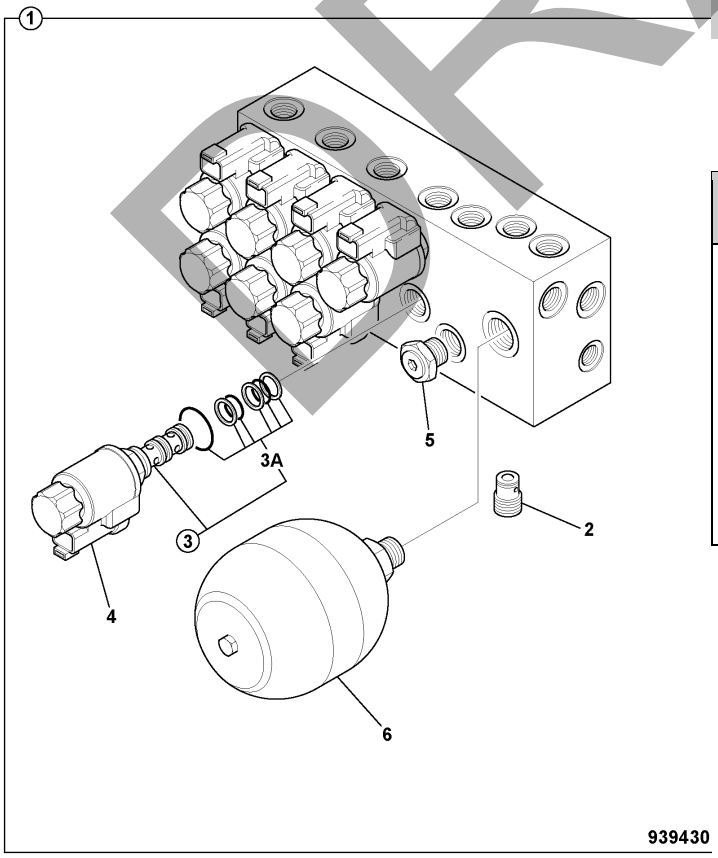

939430

JCB380 QM

JCB380 XTRA

ITEM	Part #	CHANGE NO	DESCRIPTION	USAGE CODE	QTY
1	332/J4523		Valve 8 station solenoid inc. accumulator		1
2	:332/D7870		Valve		1
3	:332/D7866		Valve cartridge		8
3A	::332/F0075		Kit-seal valve stem		1
4	:332/D6317		Coil		8
5	:332/D7867		Valve		1
6	:JHJ0050		Accumulator		1

DRAFT

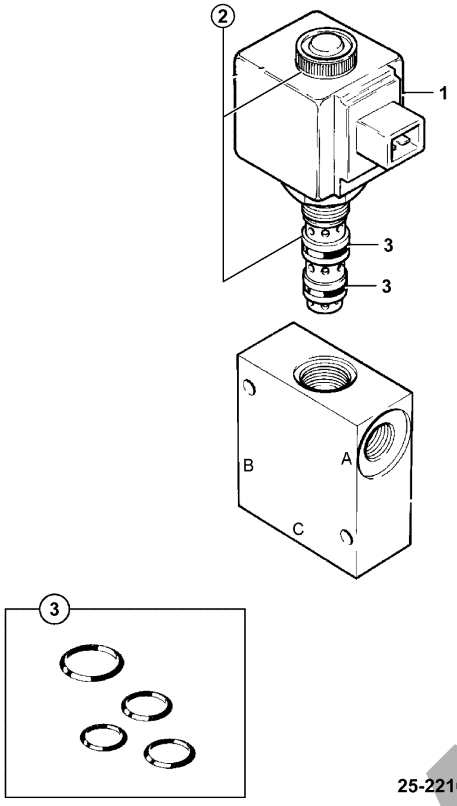

25-221009-1

JCB380 QM

JCB380 XTRA

ITEM	Part #	CHANGE NO	DESCRIPTION	USAGE CODE	QTY
A	25/221009		Valve solenoid		1
1	:25/221263		Coil 24V		1
2	:25/220555		Cartridge valve excl. coil		1
3	::25/220533		Kit seal		1

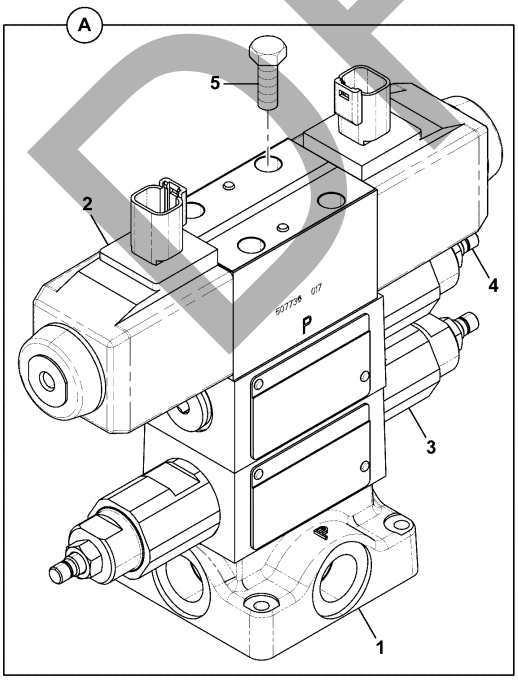

334-J9861-1

JCB380 QM

JCB380 XTRA

ITEM	Part #	CHANGE NO	DESCRIPTION	USAGE CODE	QTY
A	334/J9861		Valve Low Flow		1
1	:NSP		None serviced part		1
2	:332/H1163		Valve directional		1
3	:336/E4944		Valve Dual Relief Section		1
4	:332/H1169		Valve system relief		1
5	:336/E4945		Screw Cap Screw M5X110		4

DRAFT

JCB380 QM

JCB380 XTRA

ITEM	Part #	CHANGE NO	DESCRIPTION	USAGE CODE	QTY
A	332/K6938		Valve hammer/auxilary LH		1
2	335/E1992		Element N.C. Logic		1
3	335/E1993		Valve Relief		1

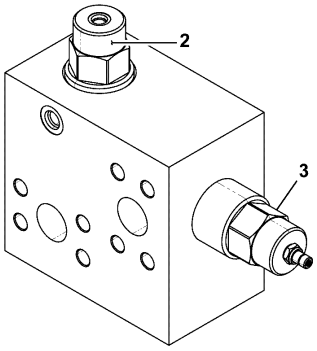

332-K6938-1

DRAFT

E

E00 HYDRAULIC CIRCUITS

E01 HYDRAULIC CIRCUITS

E02 PUMP & M0T0RS

E03 VALVES

- E04 RAMS

E05 FILTER

DRAFT

E400-1-1 RAM INSTALLATION ASSEMBLIES, ARM, BUSHED, 3.23M HDS

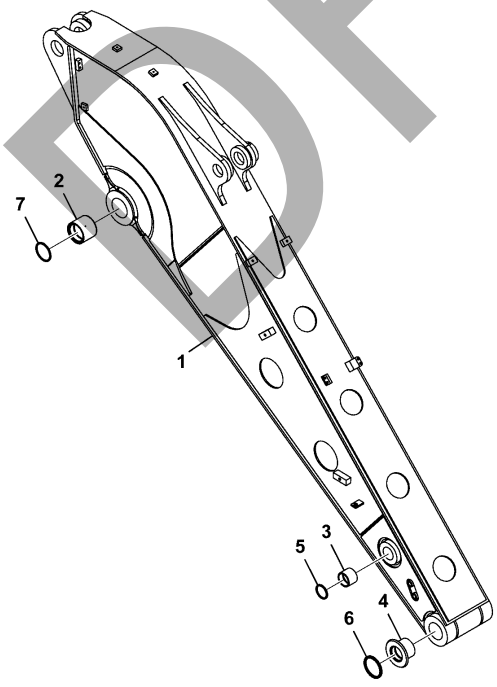

333-K7559-1

JCB380 QM

JCB380 XTRA

ITEM	Part #	CHANGE NO	DESCRIPTION	USAGE CODE	QTY
1	400/C8934		3.23M HDS Arm Machine		1
2	332/K8722		Bush EMS		2
3	JSV0333		Bush steel		2
4	JSV0350		Bush steel		2
5	KHV0101		Seal dust		2
6	KHV0103		Seal dust		2
7	KHV0107		Seal dust		2

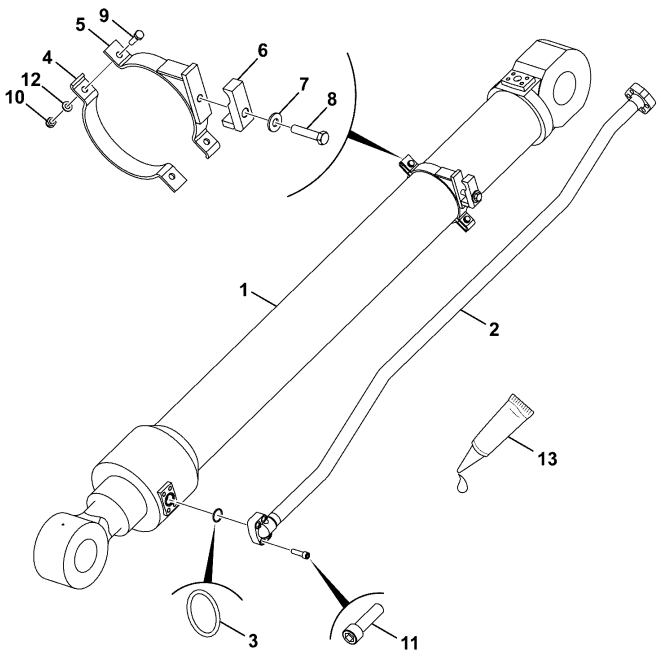

336-F0156-1

JCB380 QM

JCB380 XTRA

ITEM	Part #	CHANGE NO	DESCRIPTION	USAGE CODE	QTY
1	336/F1222		Arm Cylinder		1
2	336/F2025		Pipe Arm Cylinder		1
3	2409/0213		O Ring		1
4	821/10455		Clamp		1
5	332/J2913		Clamp Pipe		1
6	JRV0278		Clamp Pipe		1
7	823/00409		Washer M16		1
8	1316/3717D		Bolt M16 x 75		1
9	1316/3410D		Bolt		2
10	1371/0303D		Nut M10 grade 10.9		2
11	1391/3612D		Capscrew M14 x 50mm		4
12	1420/0008D		Washer M10		4
13	4101/0500		Fluid Locking Loctite 262		0

DRAFT

E

E00 HYDRAULIC CIRCUITS
E01 HYDRAULIC CIRCUITS
E02 PUMP & M0T0RS
E03 VALVES
E04 RAMS
• E05 FILTER

DRAFT

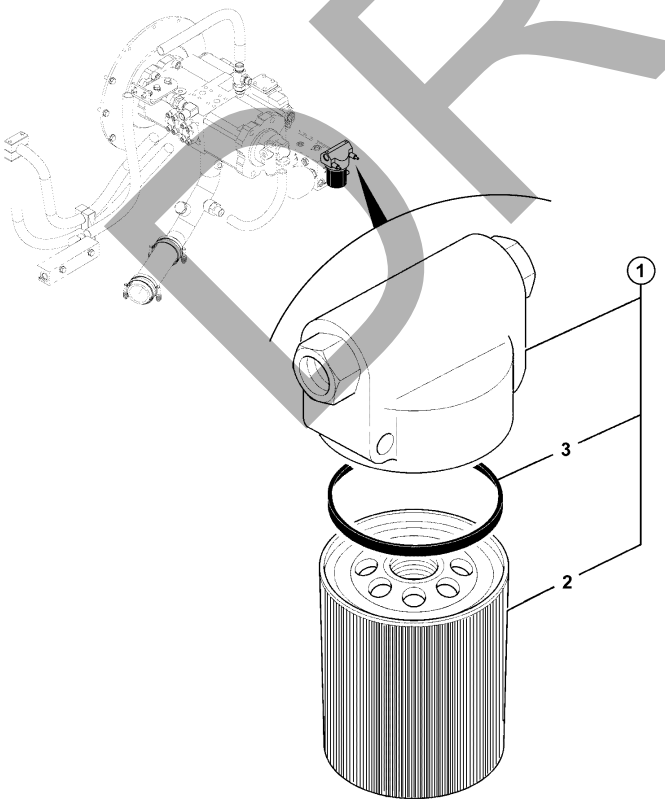

32-925214-3

JCB380 QM

JCB380 XTRA

ITEM	Part #	CHANGE NO	DESCRIPTION	USAGE CODE	QTY
1	32/925214		Filter Assembly		1
2	:KBJ1691		Element servo filter		1
3	:KHJ1032		O Ring		1

JCB380 QM

JCB380 XTRA

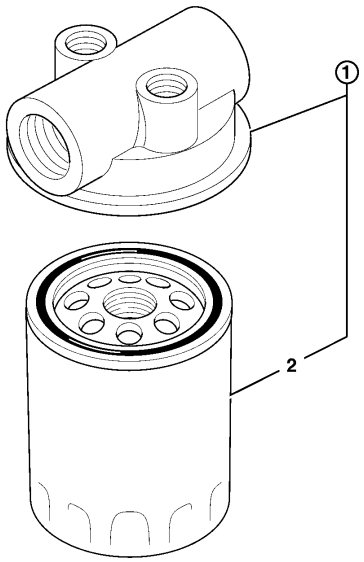

959800

ITEM	Part #	CHANGE NO	DESCRIPTION	USAGE CODE	QTY
1	KNJ0287		Filter Inline		1
2	:KNJ0288		Element oil filter		1

DRAFT

JCB380 QM

JCB380 XTRA

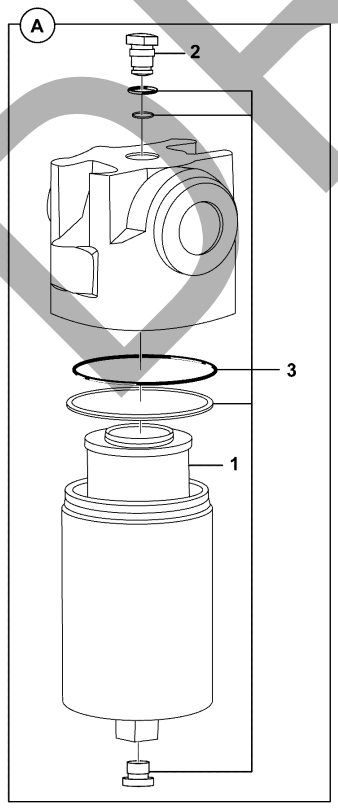

334-K0320-1

ITEM	Part #	CHANGE NO	DESCRIPTION	USAGE CODE	QTY
A	334/K2582		Filter Hydraulic Hammer		1
1	:334/K2584		Element Filter Hydraulic LF330		1
2			'See Remark' NSP		1
3	:336/B4187		Kit Repair LF		1

- **F04 TRACK & SWING GEAR BOX**

F

DRAFT

F400-1-1 TRACK SLEW GEARBOX INSTALLATION ASSEMBLIES, SWING, EQUIPMENT ASSEMBLY

9820/1116A
ISSUE 0

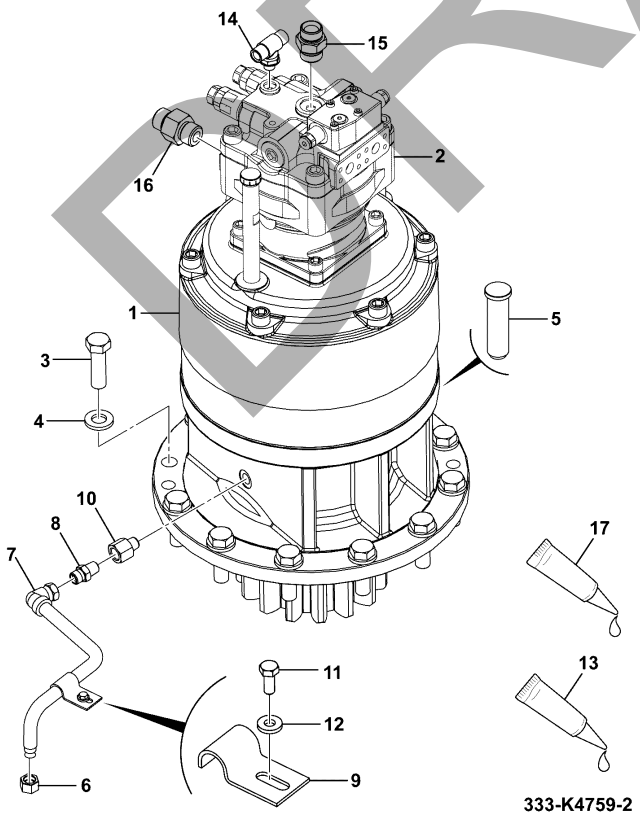

JCB380 QM

JCB380 XTRA

ITEM	Part #	CHANGE NO	DESCRIPTION	USAGE CODE	QTY
1	333/K1492		Gearbox Swing Refer F440-5-1		1
2	20/925615		Motor swing Refer F440-1-1		1
3	1316/4018D		Bolt M24 x 80mm		12
4	JHP0063		Washer		12
5	KRC0079		Pin headed		1
6	332/K3065		Cap Pipe G1/2"		1
7	332/J0679		Pipe slew gearbox drain		1
8	1609/0004		Adapter		1
9	KSC0186		Clamp pipe		1
10	BHJ0967		Socket		1
11	1316/0305D		Screw M8 X 20		1
12	JHP0080		Washer M8		1
13	4101/0500		Fluid Locking Loctite 262		0
14	334/K1495		Adaptor 3/4 BSP, 1/2 JIS		1

Continue...

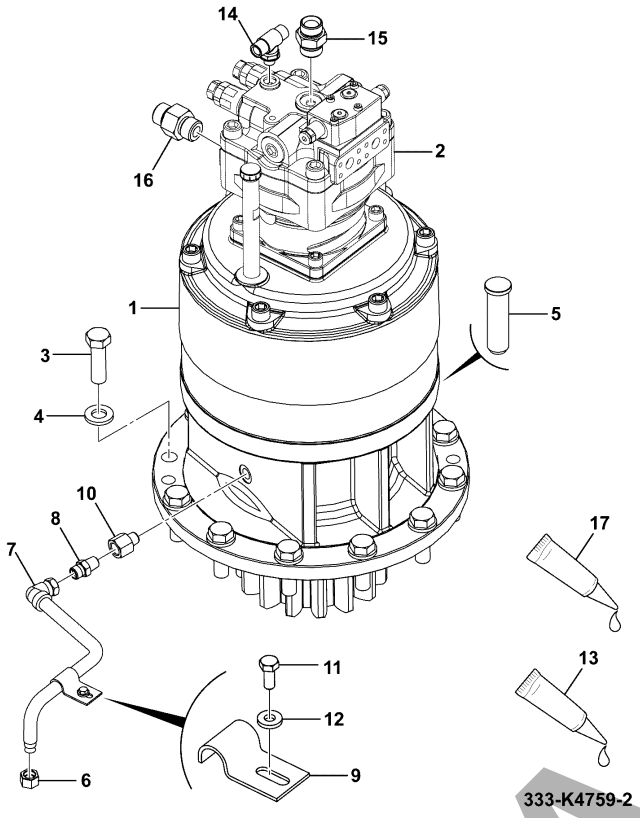

ITEM	PART NO	CHANGE NO	DESCRIPTION	USAGE CODE	QTY
15	334/L6394		Adaptor male 1/4 ST		1
16	334/L6374		Elbow Adaptor 1/4		1
17			Fluid locking		0

JCB380 QM

JCB380 XTRA

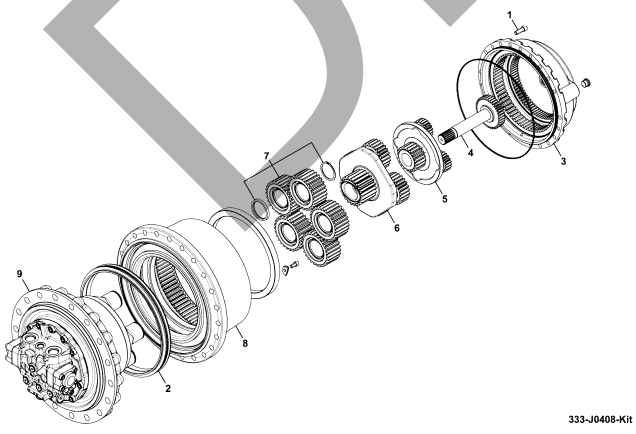

ITEM	Part #	CHANGE NO	DESCRIPTION	USAGE CODE	QTY
A	333/K1153		Motor Drive, Track		1
1	:336/C7643		Kit-screw M12 x 35mm		1
2	:336/C7706		Kit Seals		1
3	:336/C7708		Kit End Cover		1
4	:336/C7709		Gear Sun		1
5	:336/C7669		Gear Reduction Stage		1
6	:336/C7711		Kit Reduction		1
7	:336/C7712		Gear Planetary Assembly		1
8	:336/C7713		Housing And Bearing Assembly		1
9	:336/C7715		Motor		1

DRAFT

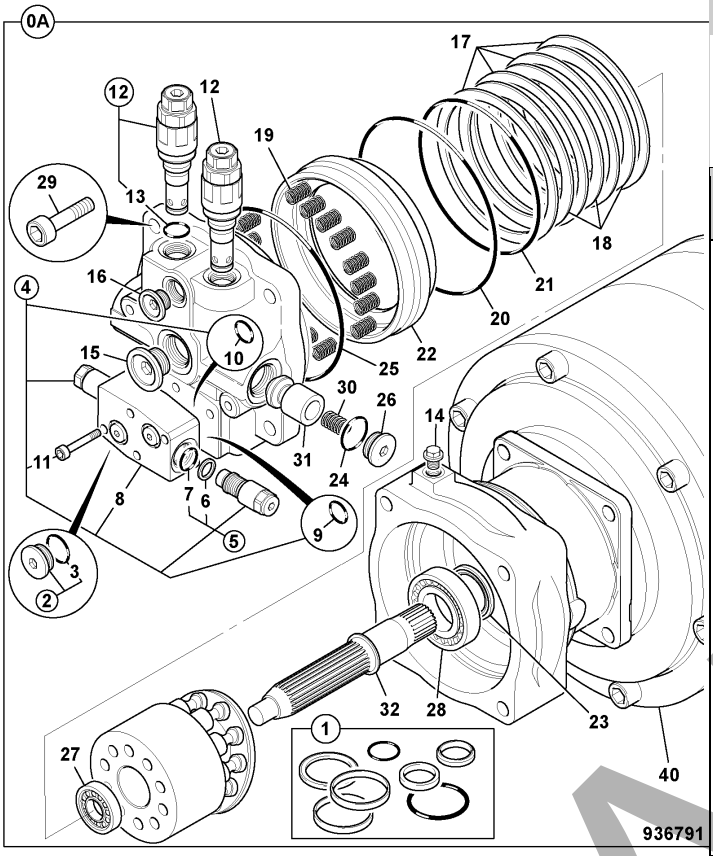

JCB380 QM

JCB380 XTRA

ITEM	Part #	CHANGE NO	DESCRIPTION	USAGE CODE	QTY
A	20/925615		Motor swing		1
1	:332/D6871		Kit-seal swing motor		1
2	:20/950858		Plug		2
3	::LBQ0112		O Ring		1
4	:20/951501		Valve relief assembly		1
5	::20/951500		Valve swing reactionless		2
6	:::828/10228		Seal O ring		1
7	:::332/D6870		Ring back-up		1
8	::20/951063		Casing valve body		1
9	::332/D6899		O Ring		2
10	::332/D6900		O Ring		2
11	::20/951065		Screw		4
12	:332/D6872		Valve Relief		2
13	::828/10221		Seal O ring		1
14	:20/950981		Plug		1

F440-1-1 GEARBOX SLEW/SWING, SWING, MOTOR ASSEMBLY
9820/1116A
ISSUE 0

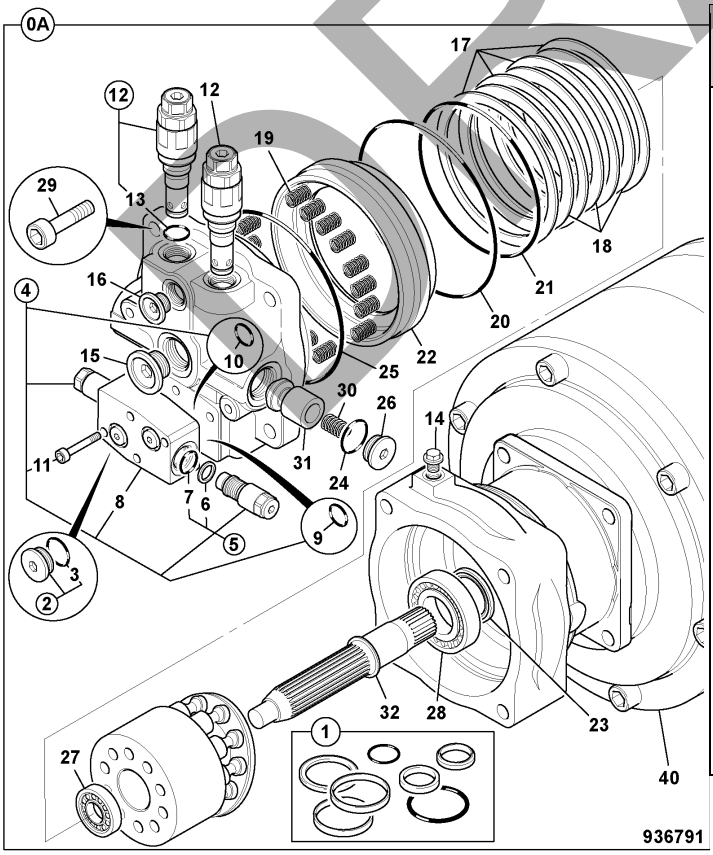

ITEM	PART NO	CHANGE NO	DESCRIPTION	USAGE CODE	QTY
15	:20/950979		Plug		1
16	:20/950980		Plug		1
17	:332/D6873		Plate brake		4
18	:332/D6876		Plate friction brake		3
19	:20/950984		Spring		16
20	:332/D6877		O Ring		1
21	:332/D6878		O Ring		1
22	:332/D6880		Piston brake		1
23	:332/D6881		Seal oil		1
24	:20/951508		O Ring		2
25	:332/D6882		O Ring		1
26	:20/951510		Plug		2
27	:332/D6885		Bearing		1
28	:332/D6888		Bearing		1
29	:332/D6889		Capscrew		4
30	:20/951515		Spring h2		2
31	:20/951516		Plunger h2		2
32	:332/D6892		Shaft		1

DRAFT

JCB380 QM

JCB380 XTRA

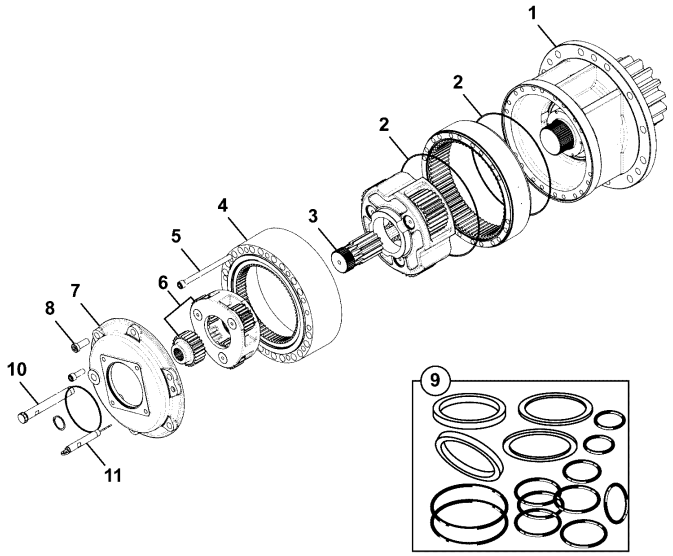

333-K1492-1

ITEM	Part #	CHANGE NO	DESCRIPTION	USAGE CODE	QTY
A	333/K1492		Gearbox Swing		1
1	:334/E8643		Assembly Output		1
2	:20/950975		Seal O ring		2
3	:334/E8892		Gear reduction assembly		1
4	:05/202602		Ring toothed		1
5	:334/E8846		Kit-screw		1
6	:334/E8871		Gear reduction assembly		1
7	:334/E8620		Motor Adaptor		1
8	:334/E8868		Kit-screw		1
9	:334/E8935		Kit-seal		1
10	:334/E8918		Kit-Lubrication (Dipstick Assembly)		1
11	:334/E8916		Kit-Lubrication (Filler Tube & Cap)		1

JCB380 QM

JCB380 XTRA

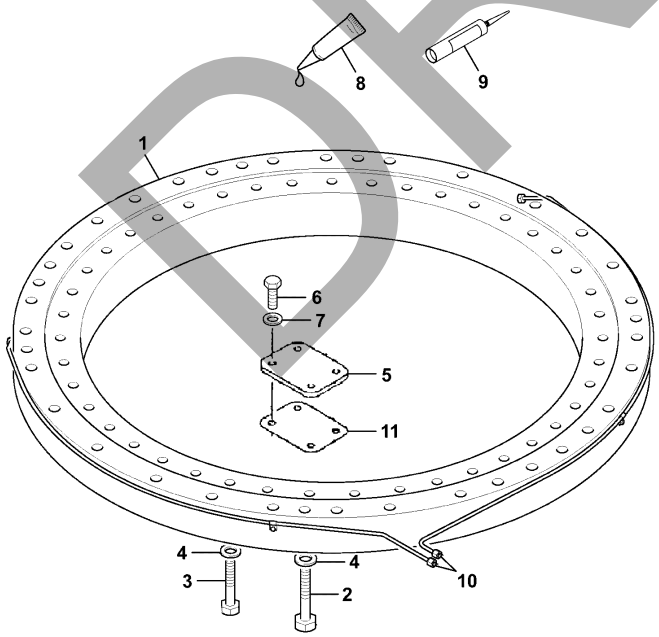

215-12534-2

ITEM	Part #	CHANGE NO	DESCRIPTION	USAGE CODE	QTY
1	JSB0022		Bearing turntable		1
2	1316/4024D		Setscrew M24 x 140 grade 10.9		38
3	1316/4019D		Setscrew M24 X 90 grade 10.9		43
4	JHP0063		Washer		81
5	KSB0396		Plate cover		1
6	1316/0507D		Setscrew M12 x 25 grade 10.9		4
7	1420/0009D		Washer M12		4
8	4101/0500		Fluid Locking Loctite 262		0
9	JHC0001		Sealant liquid packing, Gasket		0
10			Grease Line Upper Assembly Refer F480-5-1		1
11	KSB0397		Gasket cork		1

DRAFT

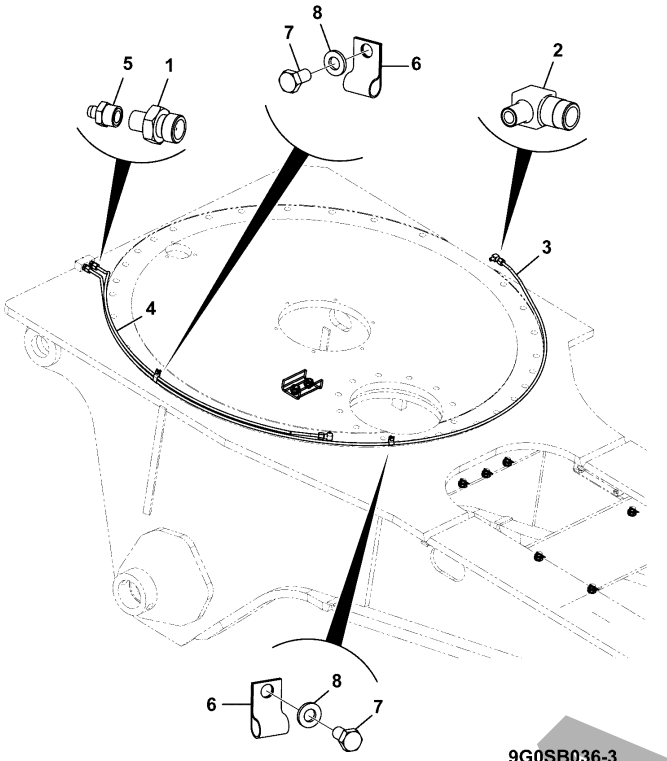

9G0SB036-3

JCB380 QM

JCB380 XTRA

ITEM	Part #	CHANGE NO	DESCRIPTION	USAGE CODE	QTY
1	KMJ0964		Connector		2
2	KMJ0985		Adapter elbow		2
3	KSB0635		Tube assembly		1
4	KSB0636		Tube assembly		1
5	JHP0037		Nipple Grease Straight		2
6	332/U9792		Clip P steel with rubber insert		2
7	1316/0201D		Screw		2
8	1420/0006D		Washer M6		2
9			Fluid locking		0

DRAFT

• J01 UNDERCARRIAGE

J

DRAFT

UNDERCARRIAGE INSTALLATION ASSEMBLIES, UNDERCARRIAGE, ASSEMBLY - STANDARD

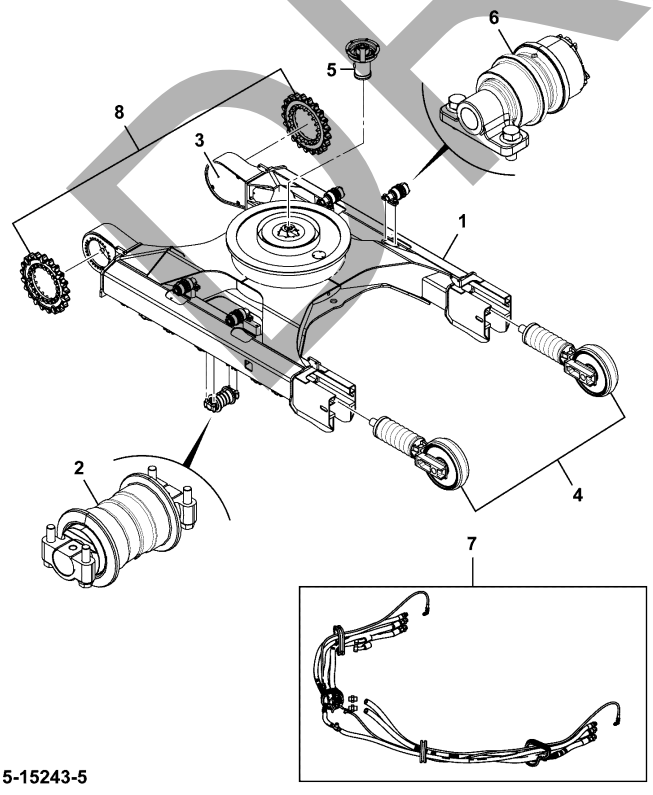

215-15243-5

JCB380 QM

JCB380 XTRA

ITEM	Part #	CHANGE NO	DESCRIPTION	USAGE CODE	QTY
1	335/G7014		Undercarriage		1
2			Roller Assembly - Lower Refer J150-20-1		1
3			Covers Assembly - Undercovers Refer J190-55-1		1
4			Unit recoil assembly Refer J120-1-1		1
5			Joint Center, Assembly Refer B190-105-1		1
6			Roller Assembly - Upper Refer J150-25-1		1
7			Circuit Traction Motor Line Refer E140-1-1		1
8			Traction Equipment Assembly Refer J110-1-1		1

JCB380 QM

JCB380 XTRA

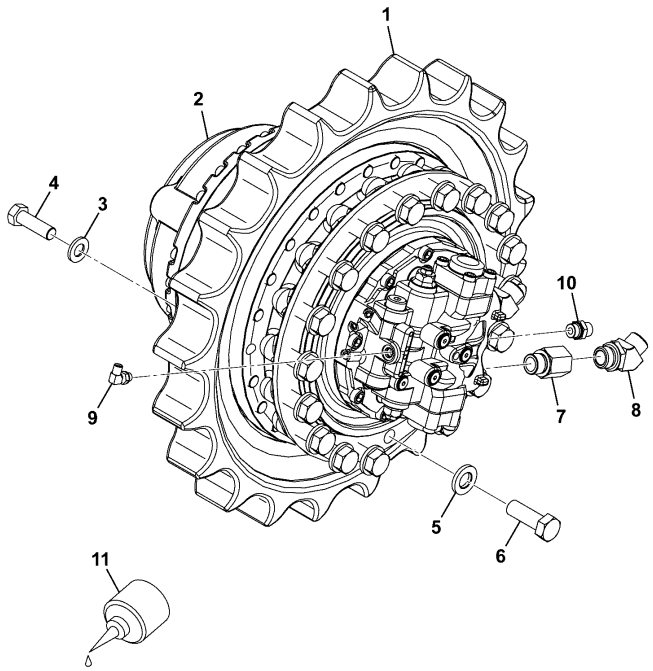

333-K2570-1

ITEM	Part #	CHANGE NO	DESCRIPTION	USAGE CODE	QTY
1	335/D9579		Sprocket		2
2	333/K1153		Motor Drive, Track Refer F420-1-1		2
3	JHP0044		Washer		48
4	1316/3815D		Bolt M20 X 65		48
5	JHP0063		Washer		36
6	1316/4016D		Bolt		36
7	333/K0640		Adaptor Extended-16 M/F 45mm		2
8	334/K1295		Adaptor		4
9	334/L6374		Elbow Adaptor 1/4		2
10	334/L0979		Adaptor male 1/2 ST		2
11	4101/0500		Fluid Locking Loctite 262		0

JCB380 QM

JCB380 XTRA

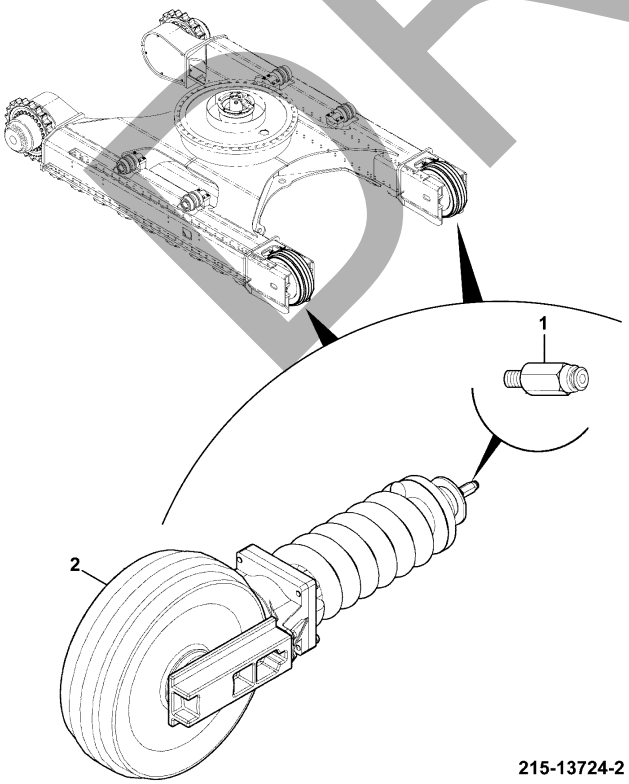

215-13724-2

ITEM	Part #	CHANGE NO	DESCRIPTION	USAGE CODE	QTY
1	331/38160		Valve grease		2
2	50/100231		Idler / Recoil assembly Refer J120-5-1		2

DRAFT

JCB380 QM

JCB380 XTRA

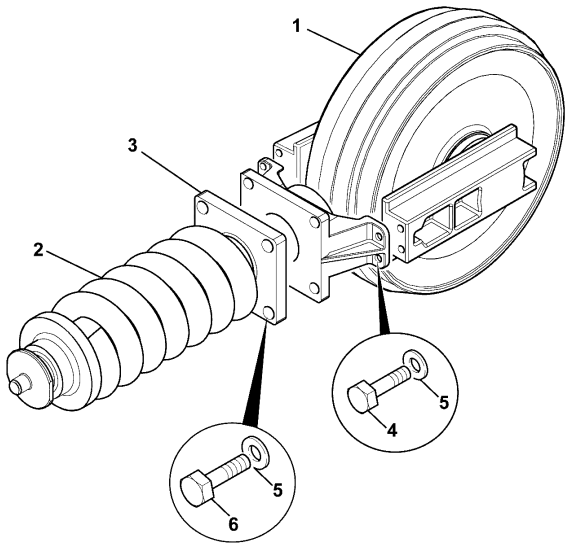

938400

ITEM	Part #	CHANGE NO	DESCRIPTION	USAGE CODE	QTY
1	50/100219		Wheel idler Refer J140-1-1		1
2	50/100229		Spring recoil Refer J130-1-1		1
3	50/100230		Bracket recoil		1
4	1316/3713D		Bolt M16 x 55mm		4
5	1420/0011D		Washer M16		8
6	1316/3714D		Bolt M16 x 60mm		4

JCB380 QM

JCB380 XTRA

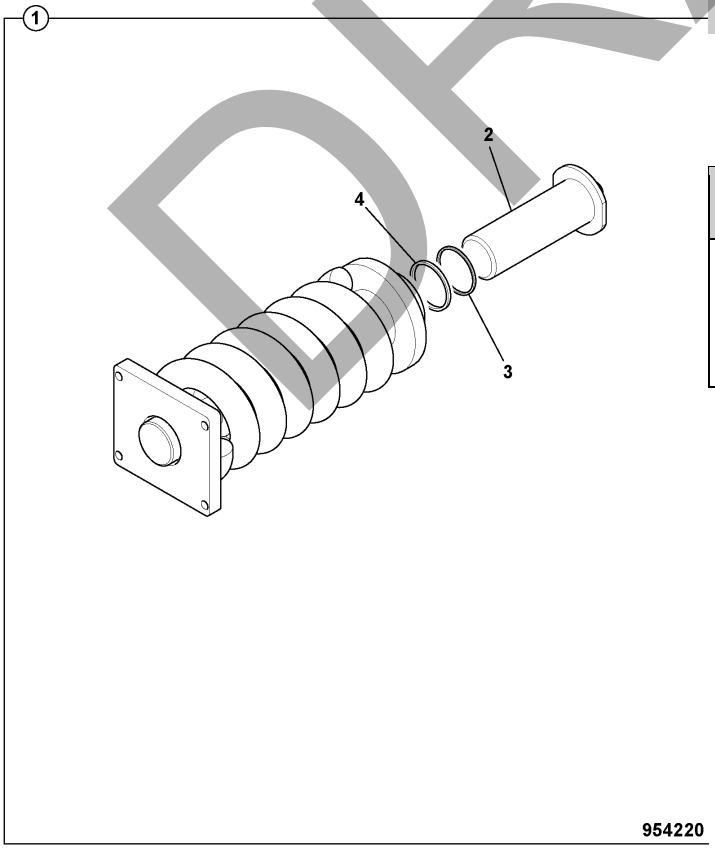

954220

ITEM	Part #	CHANGE NO	DESCRIPTION	USAGE CODE	QTY
1	50/100229		Spring recoil		2
2	:332/D6632		Piston		1
3	:332/D6631		Gasket		1
4	:332/D6630		Gasket		1

DRAFT

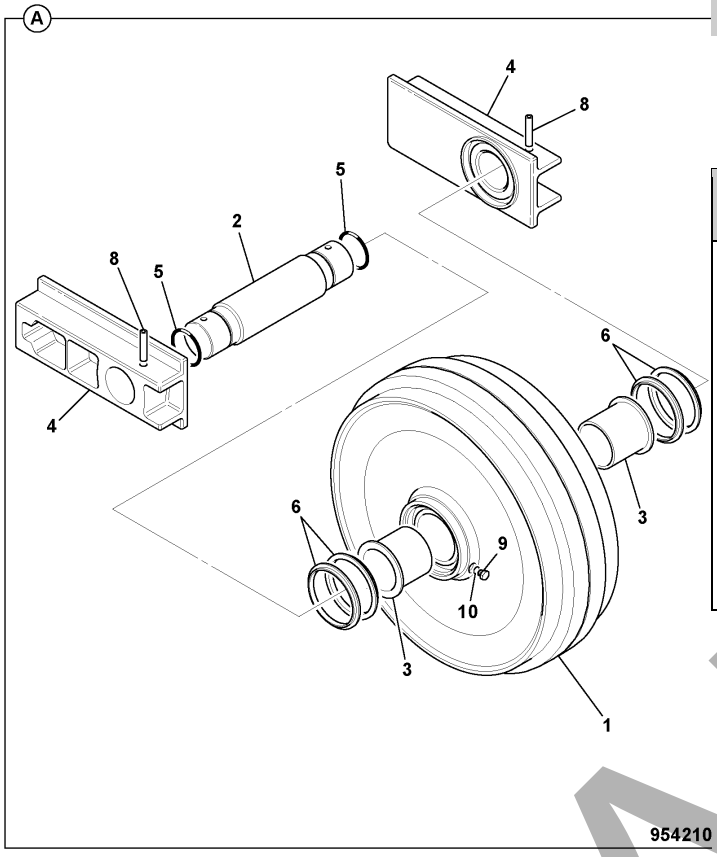

954210

JCB380 QM

JCB380 XTRA

ITEM	Part #	CHANGE NO	DESCRIPTION	USAGE CODE	QTY
A	50/100219		Wheel idler		2
1	:NSP		None serviced part		1
2	:332/C9186		Bush		2
3	:332/C9192		Bush		2
4	:332/C9233		Arm support		2
5	:332/C9244		O Ring		2
6	:332/D6624		Seal assembly		2
8	:332/D6627		Dowel		2
9	:JRA0226		Plug		1
10	:JRA0227		O Ring		1

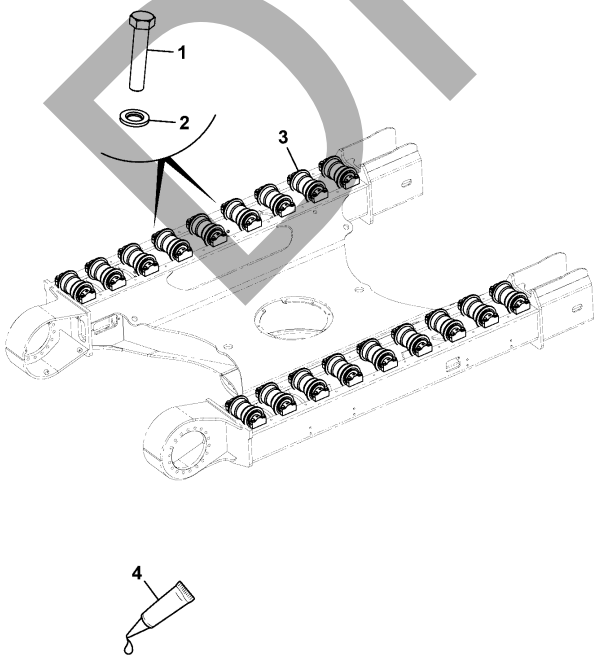

215-12953-4

JCB380 QM

JCB380 XTRA

ITEM	Part #	CHANGE NO	DESCRIPTION	USAGE CODE	QTY
1	1316/3820D		Bolt M20 x 100 LG grade 10.9		72
2	JHP0044		Washer		72
3	335/D9555		Roller Lower		18
4	4101/0500		Fluid Locking Loctite 262		0

DRAFT

JCB380 QM

JCB380 XTRA

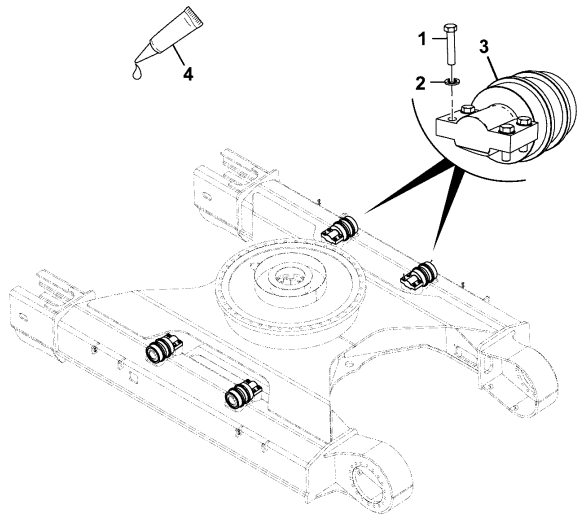

215-13721-1

ITEM	Part #	CHANGE NO	DESCRIPTION	USAGE CODE	QTY
1	1316/3714D		Bolt M16 x 60mm		16
2	1420/0011D		Washer M16		16
3	335/D9563		Roller Upper		4
4	4101/0500		Fluid Locking Loctite 262		0

JCB380 QM

JCB380 XTRA

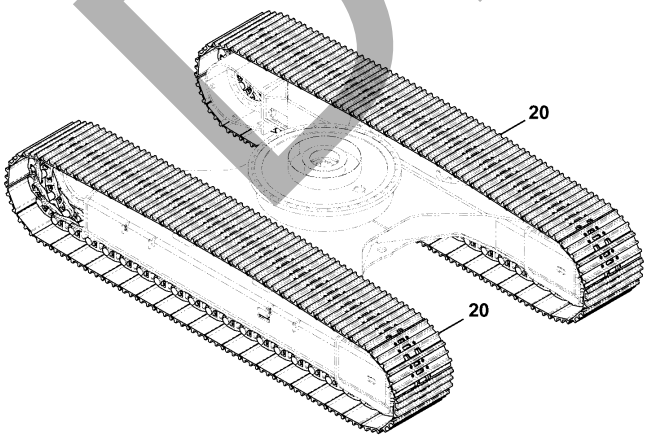

215-14931-1

ITEM	Part #	CHANGE NO	DESCRIPTION	USAGE CODE	QTY
20	332/J5018		Track assembly, 600mm grouser Refer J160-10-1		2

DRAFT

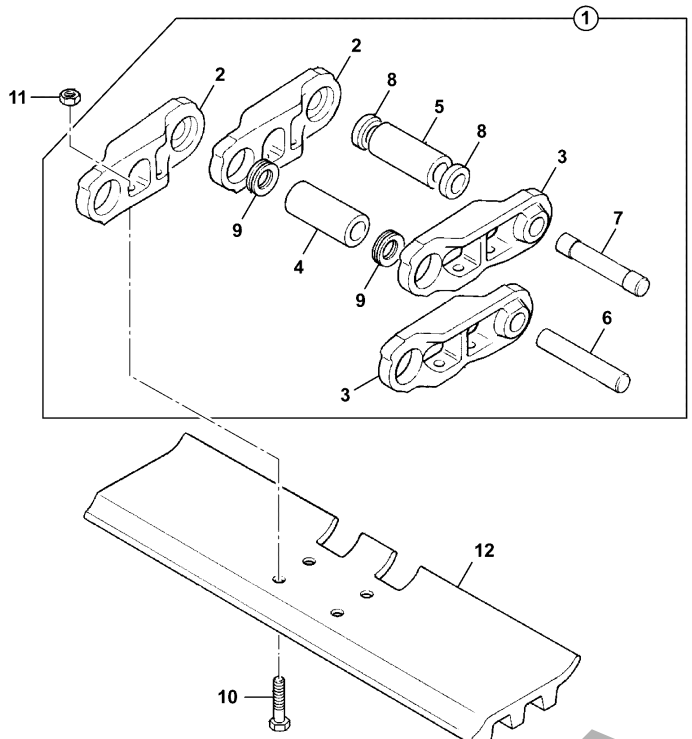

332-J5018-2

JCB380 QM

JCB380 XTRA

ITEM	Part #	CHANGE NO	DESCRIPTION	USAGE CODE	QTY
1	331/53389		Chain Track 48 links Refer J160-15-1		1
2	:332/C4412		Link track right side		48
3	:332/C4759		Link track left side		48
4	:332/J6258		Bushing Regular		47
5	:332/J6259		Bush Master		1
6	:332/J6255		Pin Regular		48
7	:332/J6257		Pin Master		1
8	:332/J6260		Spacer Master pin		2
9	:332/J6263		Seal		94
10	332/J6261		Bolt Track		192
11	332/J6262		Nut Track		192
12	332/J5019		Plate Track 600mm grouser		48

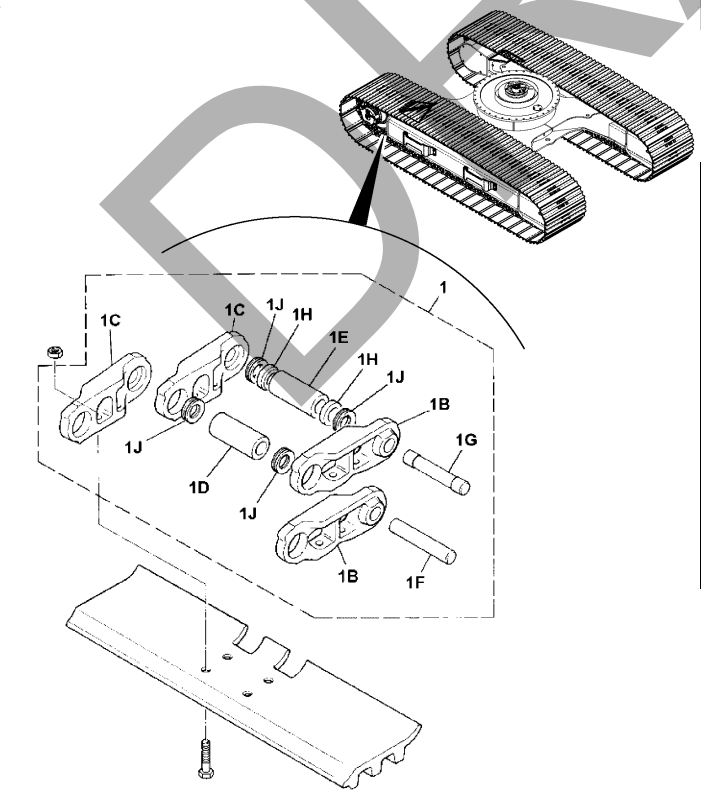

332-P4258-1

JCB380 QM

JCB380 XTRA

ITEM	Part #	CHANGE NO	DESCRIPTION	USAGE CODE	QTY
1	331/53389		Chain Track 48 links		1
1B	:332/C4412		Link track right side		48
1C	:332/C4759		Link track left side		48
1D	:332/J6258		Bushing Regular		47
1E	:332/J6259		Bush Master		1
1F	:332/J6255		Pin Regular		48
1G	:332/J6257		Pin Master		1
1H	:332/J6260		Spacer Master pin		2
1J	:332/J6263		Seal		94

DRAFT

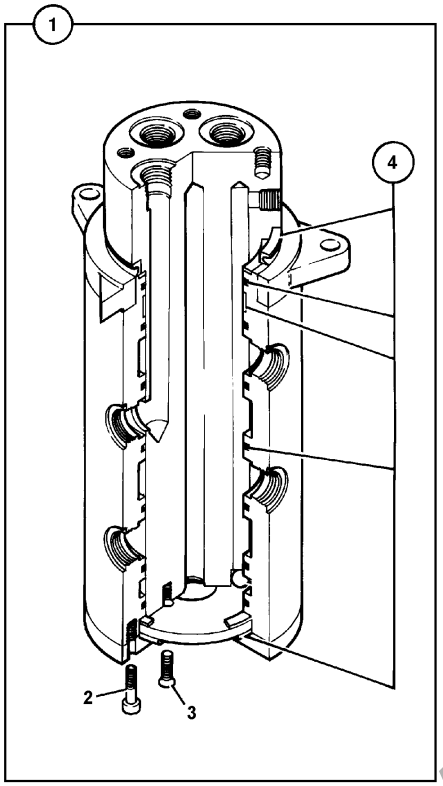

954230

JCB380 QM

JCB380 XTRA

ITEM	Part #	CHANGE NO	DESCRIPTION	USAGE CODE	QTY
1	332/J2616		Coupling rotary		1
2	:45/914513		Capscrew M8 x 20		6
3	:332/F0271		Screw M10 x 20		4
4	:332/D5124		Kit-seal Rotary coupling		1

DRAFT

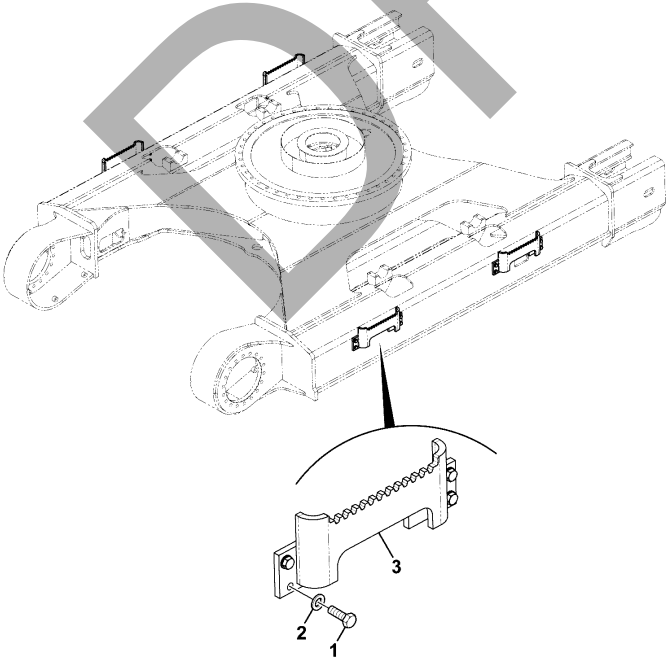

215-12957-4

JCB380 QM

JCB380 XTRA

ITEM	Part #	CHANGE NO	DESCRIPTION	USAGE CODE	QTY
1	1316/3712D		Bolt M16 x 50mm		16
2	1420/0011D		Washer M16		16
3	334/K0557		Step		4

JCB380 QM

JCB380 XTRA

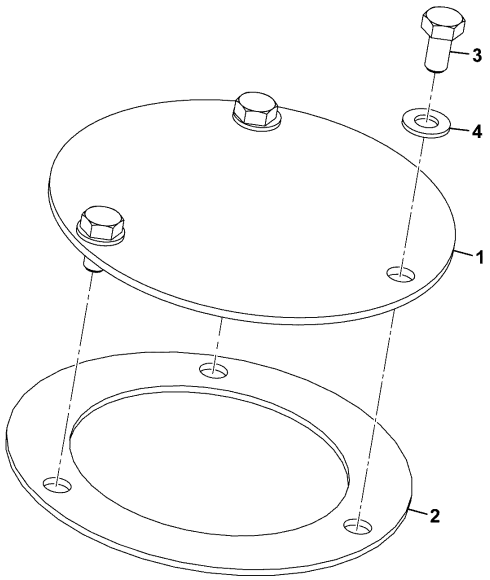

215-14084-1

ITEM	Part #	CHANGE NO	DESCRIPTION	USAGE CODE	QTY
1	BHB0121		Plate cover		1
2	BHB0122		Gasket cork		1
3	1316/0303D		Screw M8 x 16mm		3
4	1420/0007D		Washer M8		3

JCB380 QM

JCB380 XTRA

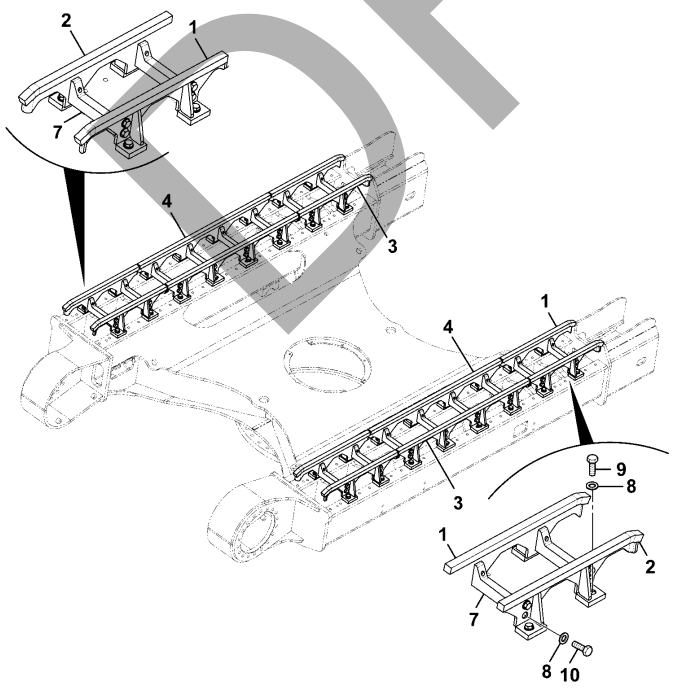

215-13315-3

ITEM	Part #	CHANGE NO	DESCRIPTION	USAGE CODE	QTY
1	332/K1669		Guide Track End RH		4
2	332/K1672		Guide Track End LH		4
3	332/K1671		Guide Centre Track LH		2
4	332/K1668		Guide Centre Track RH		2
7	331/58194		Plate centre support		16
8	JHP0044		Washer		96
9	1316/3814D		Bolt		32
10	1316/3811D		Bolt		64

DRAFT

JCB380 QM

JCB380 XTRA

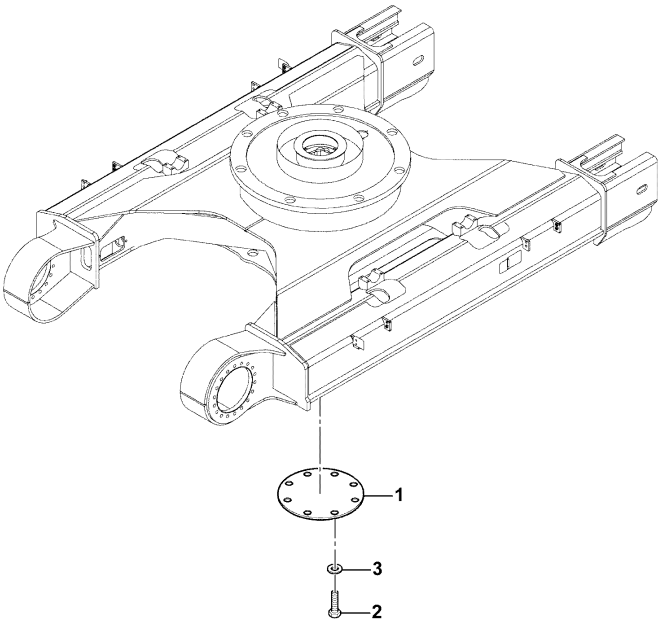

336-E0202-1

ITEM	Part #	CHANGE NO	DESCRIPTION	USAGE CODE	QTY
1	332/J5419		Cover lower undercarriage		1
2	1316/3509D		Bolt M12 x 35mm		8
3	1420/0009D		Washer M12		8

DRAFT

JCB380 QM

JCB380 XTRA

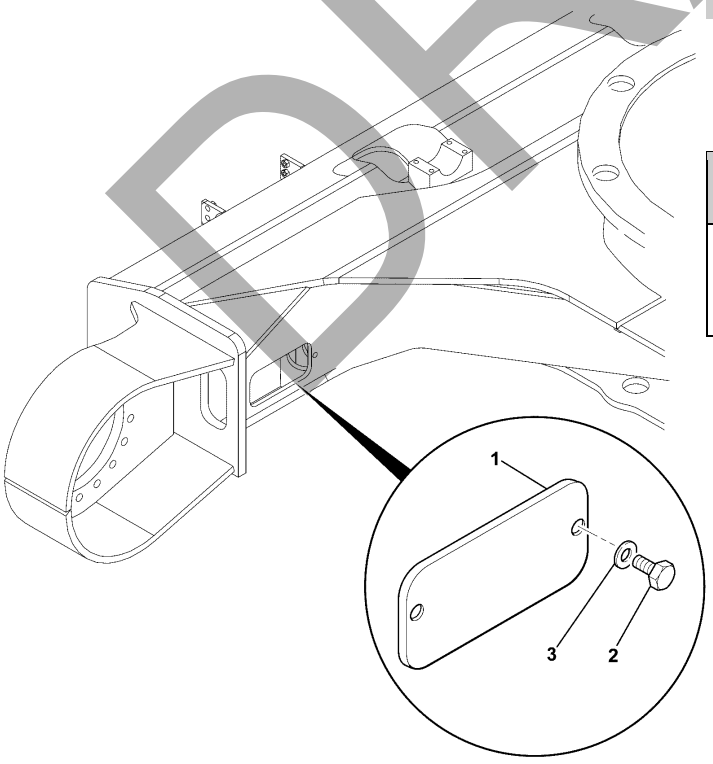

938380

ITEM	Part #	CHANGE NO	DESCRIPTION	USAGE CODE	QTY
1	332/J4674		Cover hose access		2
2	1316/0509D		Screw M12x35 long		4
3	1420/0009D		Washer M12		4

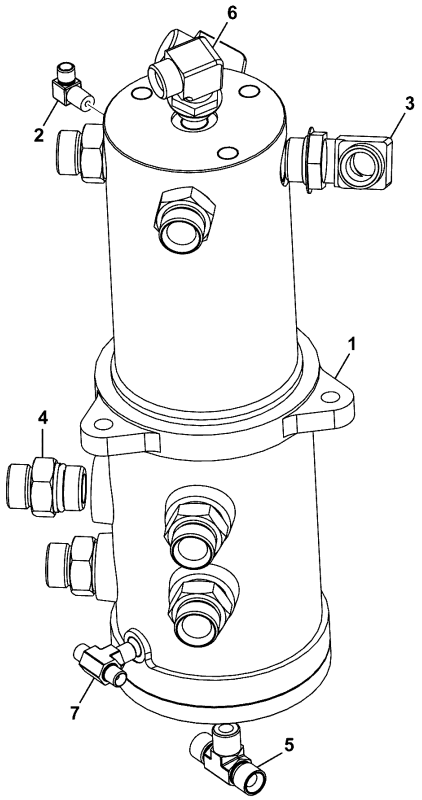

336-C5254-1

JCB380 QM

JCB380 XTRA

ITEM	Part #	CHANGE NO	DESCRIPTION	USAGE CODE	QTY
1	332/J2616		Coupling rotary Refer J190-1-1		1
2	334/K1286		Adaptor 90 1/4" BSP(M)		1
3	334/L6752		Adaptor Elbow 1/4 "		2
4	334/L6394		Adaptor male 1/4 ST		6
5	334/K3248		Adaptor Tee , 1/2 " BSP		1
6	KRJ2504		Adapter elbow		1
7	334/K3536		Adaptor Tee, 1/4" BSP		1

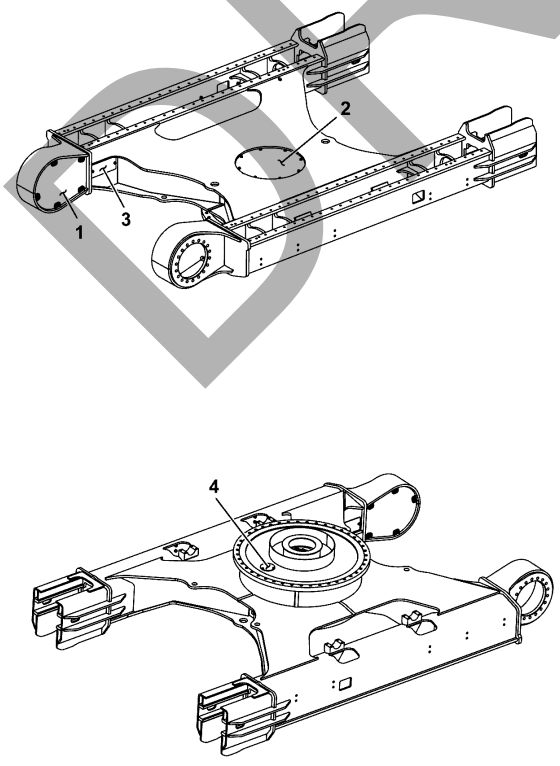

335-G7391-1

JCB380 QM

JCB380 XTRA

ITEM	Part #	CHANGE NO	DESCRIPTION	USAGE CODE	QTY
1			Assembly Motor Cover (STD) Refer J190-60-1		1
2			Cover under assembly Refer J190-40-1		1
3			Cover hose access assembly Refer J190-45-1		1
4			Ring slew access assembly Refer J190-15-1		1

DRAFT

JCB380 QM

JCB380 XTRA

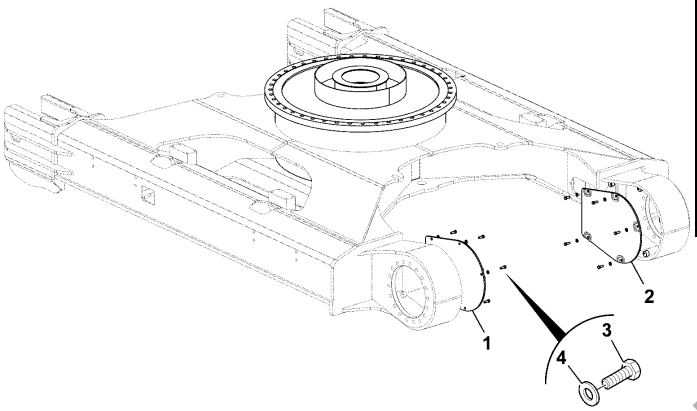

336-B5274-1

ITEM	Part #	CHANGE NO	DESCRIPTION	USAGE CODE	QTY
1	335/G7398		Motor Cover RH, WA		1
2	335/G7413		Motor Cover, LH, WA		1
3	1316/3509D		Bolt M12 x 35mm		10
4	1420/0009D		Washer M12		10
5	4101/0500		Fluid Locking Loctite 262		1

DRAFT

L

- **L01 ENGINE INSTALLATION ASSEMBLIES**
- **L02 EXHAUST SYSTEM**
- **L03 INDUCTION SYSTEM**
- **L06 COOLING SYSTEM**
- **L07 FAN INSTALLATION ASSEMBLIES**
- **L08 FUEL SYSTEM**

DRAFT

JCB380 QM

JCB380 XTRA

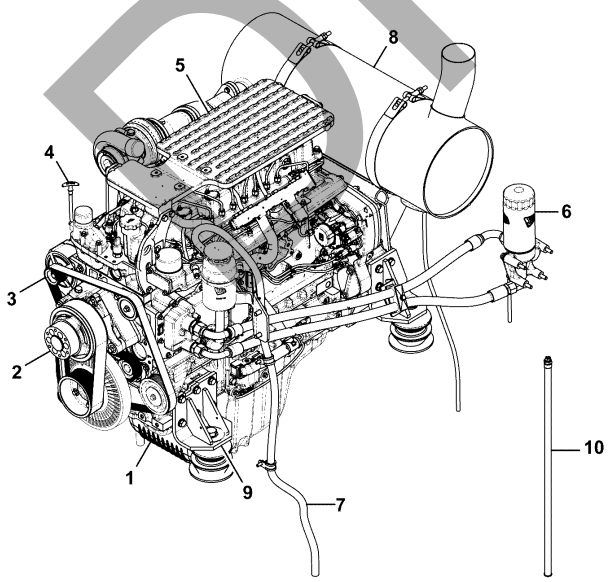

333-K2628-1

ITEM	Part #	CHANGE NO	DESCRIPTION	USAGE CODE	QTY
1	320/40770		Engine 672 TA2-212KW 24V Refer V105-1-1 in 9822/0620		1
2			Fan Drive Assembly Refer L710-1-1		1
3			Drive Fead Assembly Refer L720-1-1		1
4			Dipstick Engine Assembly Refer L140-1-1		1
5			Plate Tread Refer L190-1-1		1
6			Filter Oil, Assembly, Remote Refer L190-25-1		1
7			Crank case ventilation Assembly Refer L690-1-1		1

Continue...

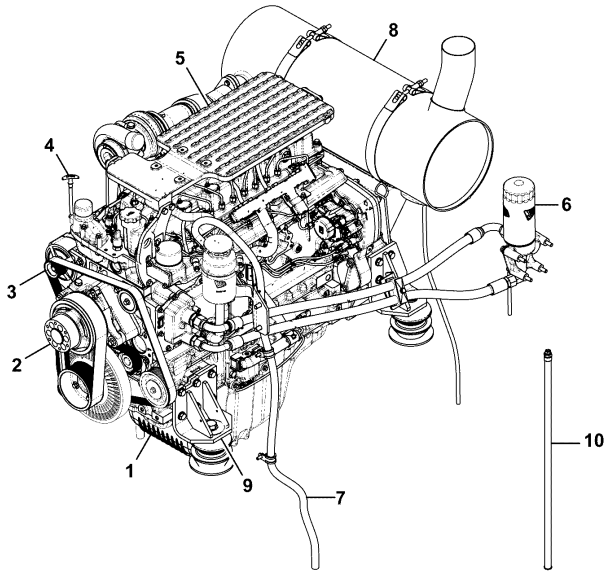

333-K2628-1

ITEM	PART NO	CHANGE NO	DESCRIPTION	USAGE CODE	QTY
8			Exhaust System Assembly Refer L200-5-1		1
9			Mount Engine, Assembly Refer B160-5-1		1
10	340/00184		Hose oil drain & keeper M26 X 1.5 & M12 Refer L190-20-1		1

DRAFT

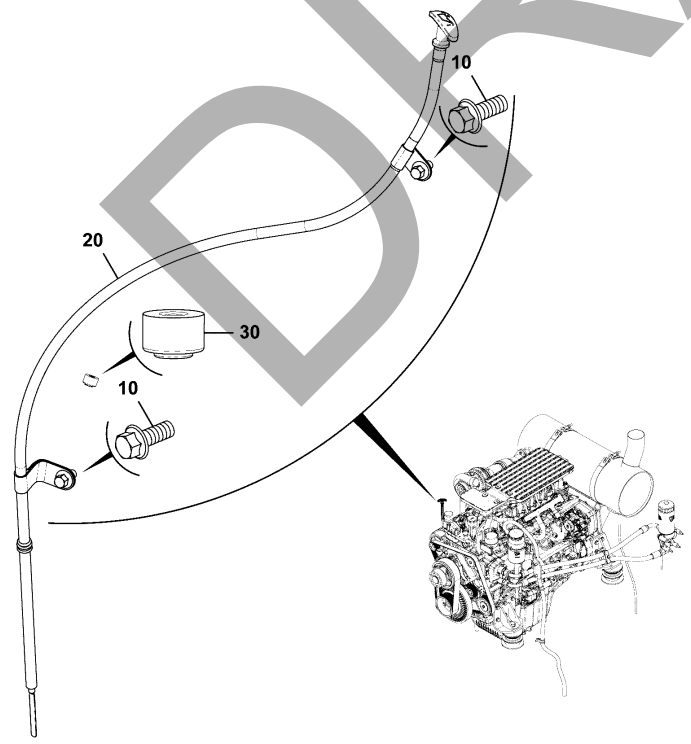

320-21188-2

JCB380 QM

JCB380 XTRA

ITEM	Part #	CHANGE NO	DESCRIPTION	USAGE CODE	QTY
10	1317/3303Z		Bolt flanged M8 x 16		2
20	320/A4071		Dipstick Long - P672, ABI Refer L140-5-1		1
30	320/00903		Plug sealing		1

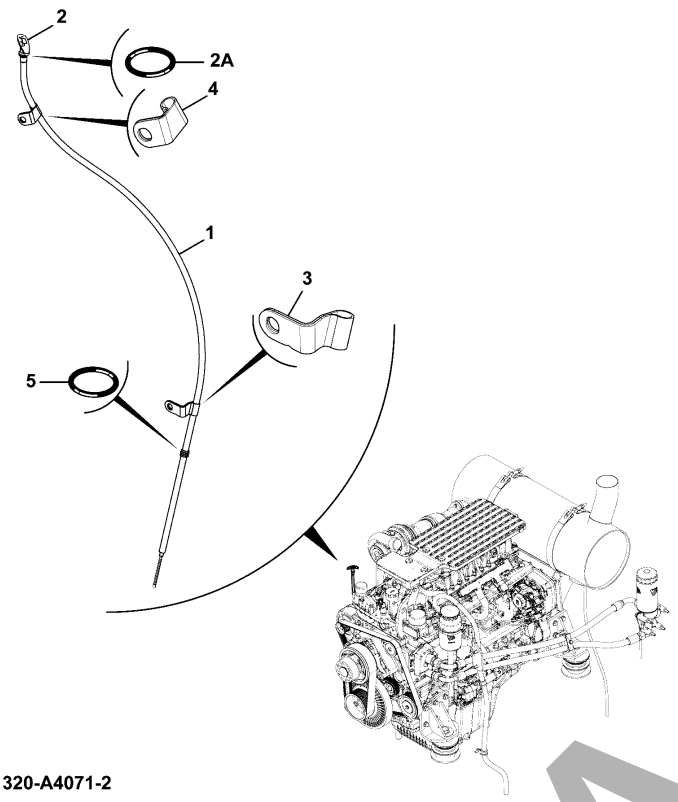

320-A4071-2

JCB380 QM

JCB380 XTRA

ITEM	Part #	CHANGE NO	DESCRIPTION	USAGE CODE	QTY
1	320/A4073		Tube Dipstick, Long, P672		1
2	320/A4072		Blade Dipstick, Long		1
3	320/A4075		P-Clip Dipstick, Lower		1
4	320/07975		Dipstick bracket		1
5	320/04127		O Ring		2

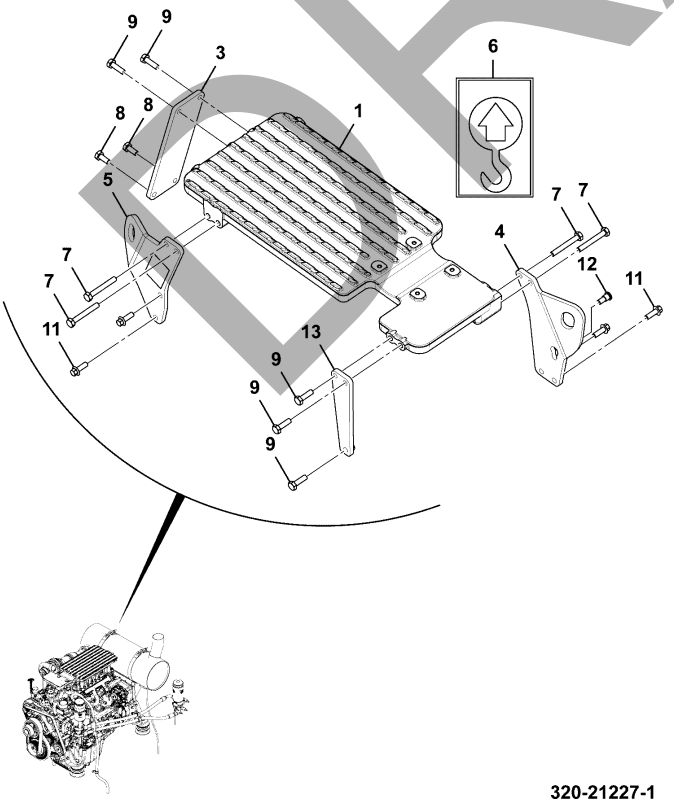

320-21227-1

JCB380 QM

JCB380 XTRA

ITEM	Part #	CHANGE NO	DESCRIPTION	USAGE CODE	QTY
1	320/09439		Plate Tread		1
3	320/09486		Bracket Mounting, Tread Plate		1
4	320/09426		Eye Lifting, Excavator, Front		1
5	320/09425		Eye Lifting, Excavator, Rear		1
6	817/01803		Label Sling Point		2
7	1316/0417D		Setscrew M10 x 75mm		4
8	1316/0407D		Screw		2
9	1316/0409D		Screw M10X35		5
11	1317/3408Z		Bolt M10 x 30 flange reduced		4
12	826/11609		Bolt shoulder M10		1
13	320/09463		Bracket - Spacer, Hot Side		1

DRAFT

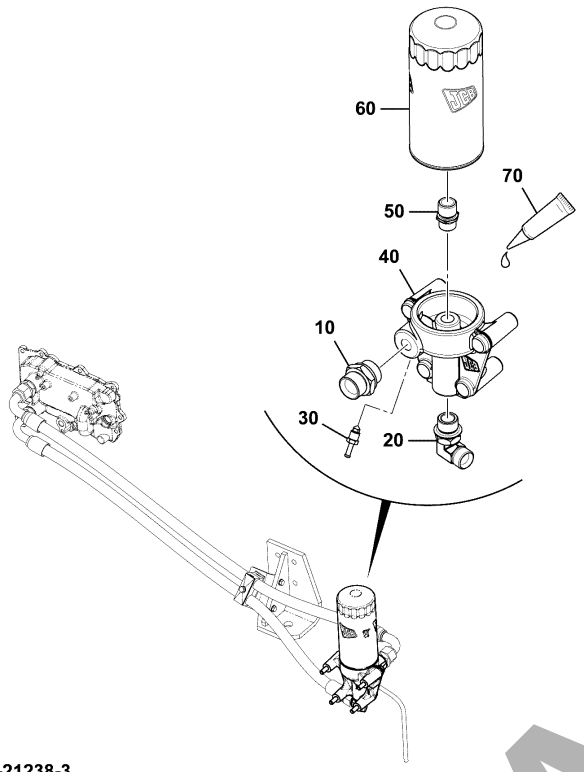

320-21238-3

JCB380 QM

JCB380 XTRA

ITEM	Part #	CHANGE NO	DESCRIPTION	USAGE CODE	QTY
10	320/04458		Adapter		1
20	320/07905		Elbow 90 DEG		1
30	333/K3882		Screw Bleed M12 x 1		1
40	320/04345		Mounting remote filter		1
50	320/A4156		Adaptor Oil Filter		1
60	320/A4038		Filter Oil, P672		1
70	4101/1700		Loctite 2701		0

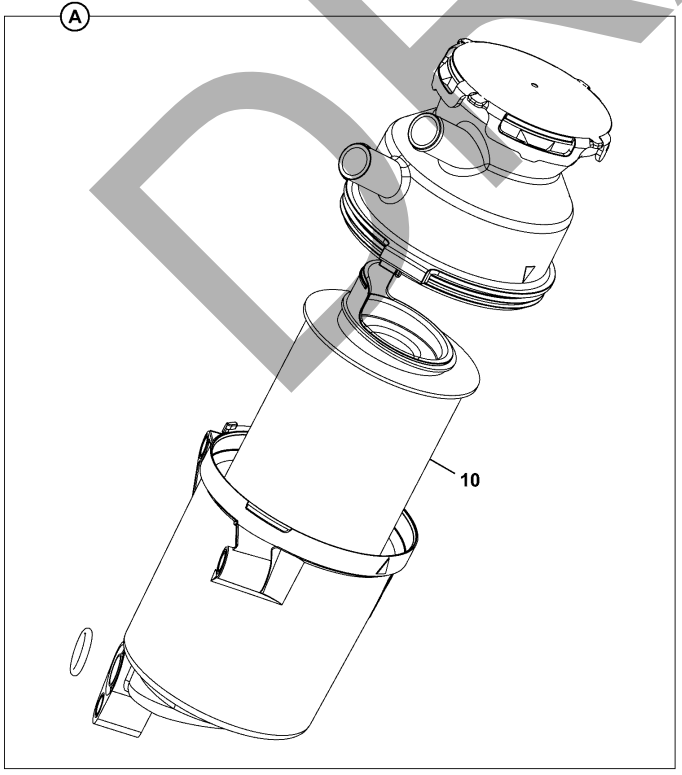

320-07735-1

JCB380 QM

JCB380 XTRA

ITEM	Part #	CHANGE NO	DESCRIPTION	USAGE CODE	QTY
A	320/07735		Filter assembly CCV Refer V260-30-1 in 9822/0500 Refer V260-5-1 in 9822/0500		1
10	320/07853		Element Filter CCV		1

DRAFT

JCB380 QM

JCB380 XTRA

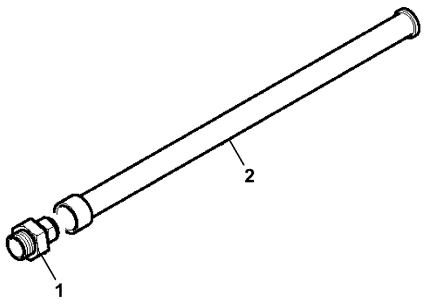

340-00184-3

ITEM	Part #	CHANGE NO	DESCRIPTION	USAGE CODE	QTY
1	32/925439		Plug drain M26 X 1.5		1
2	32/925509		Hose oil drain M26 X 1000MM		1

JCB380 QM

JCB380 XTRA

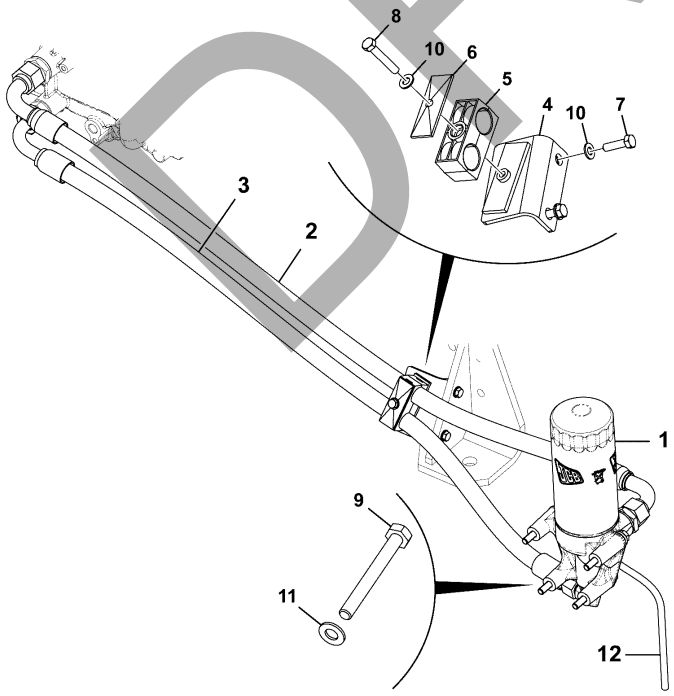

333-J8846-2

ITEM	Part #	CHANGE NO	DESCRIPTION	USAGE CODE	QTY
1			Filter Oil,Assembly, Remote Refer L190-10-1		1
2	320/B4143		Hose Oil Filter		1
3	320/B4142		Hose Engine Oil Return		1
4	333/K2582		Bracket Hose Oil		1
5	333/J6194		Clamp body (Pair)		1
6	821/00443		Plate Cover		1
7	1316/0308D		Screw M8x30		2
8	1316/0312D		Screw		1
9	1316/3418Z		Bolt		4
10	1420/0007D		Washer M8		3
11	1420/0008D		Washer M10		4
12	JHH0047		Hose vinyl		1

DRAFT

L

L01 ENGINE INSTALLATION ASSEMBLIES
• L02 EXHAUST SYSTEM
L03 INDUCTION SYSTEM
L06 COOLING SYSTEM
L07 FAN INSTALLATION ASSEMBLIES
L08 FUEL SYSTEM

DRAFT

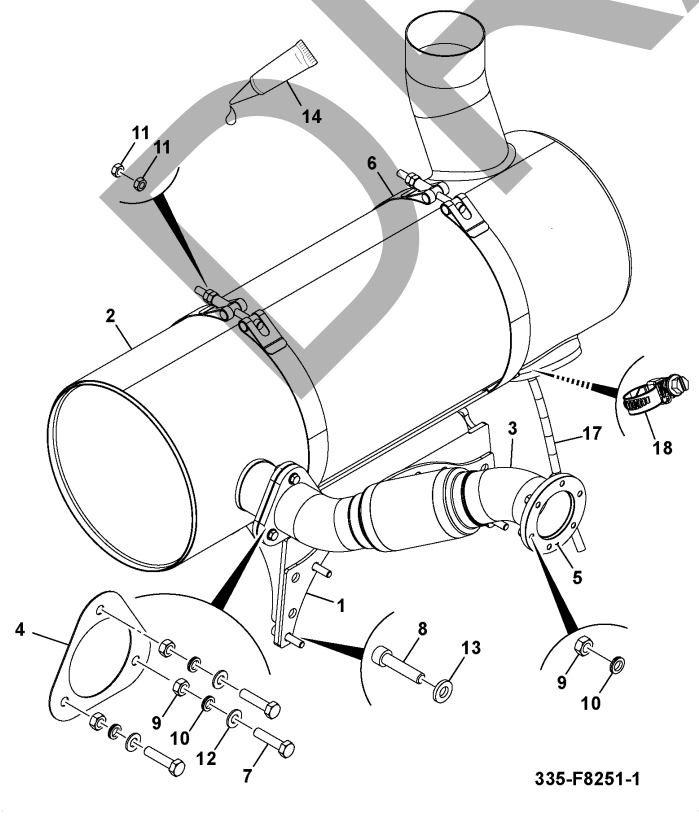

JCB380 QM

JCB380 XTRA

ITEM	Part #	CHANGE NO	DESCRIPTION	USAGE CODE	QTY
1	333/K6402		Bracket Mounting, Exhaust		1
2	335/F1572		Exhaust ABI		1
3	333/K0208		Pipe Link		1
4	333/K2622		Gasket Exhaust		1
5	333/K2620		Gasket Turbo		1
6	332/K7587		Clamp exhaust		2
7	1316/0309D		Setscrew high strength M8 x 35mm		3
8	1391/3411D		Capscrew M10 x 45mm		6
9	1371/0201D		Nut Hex M8 High strength		9
10	823/10516		Washer Nordlock M8		9
11	1371/0301D		Nut High Strength		4
12	1420/0007D		Washer M8		3
13	JHP0046		Washer M10		6

Continue...

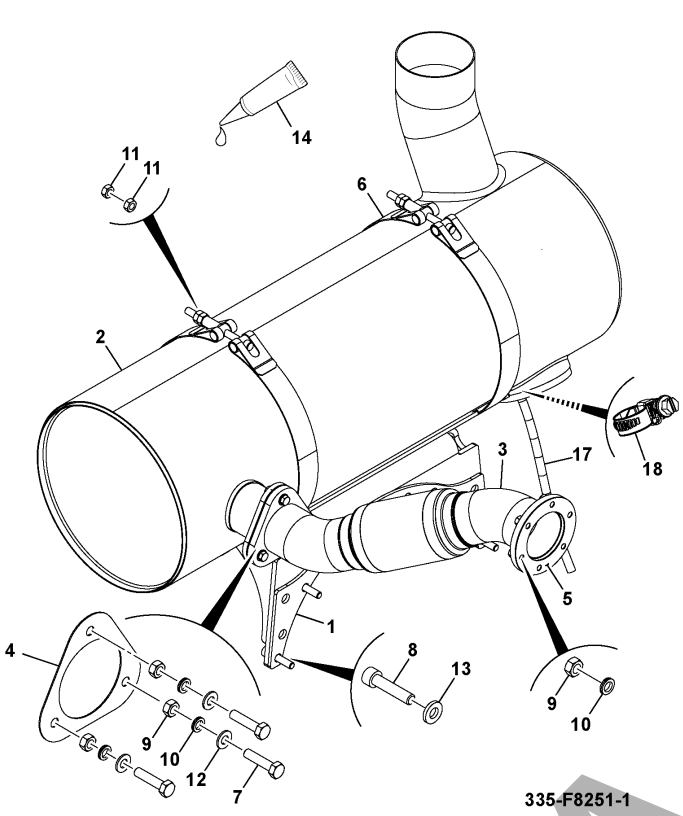

335-F8251-1

ITEM	PART NO	CHANGE NO	DESCRIPTION	USAGE CODE	QTY
14	4101/0500		Fluid Locking Loctite 262		0
17	JHH0053		Tube teflon drain 950mm long		1
18	2201/0001		Clip Worm Drive 8/16mm		1

DRAFT

L

L01 ENGINE INSTALLATION ASSEMBLIES
L02 EXHAUST SYSTEM
• L03 INDUCTION SYSTEM
L06 COOLING SYSTEM
L07 FAN INSTALLATION ASSEMBLIES
L08 FUEL SYSTEM

DRAFT

JCB380 QM

JCB380 XTRA

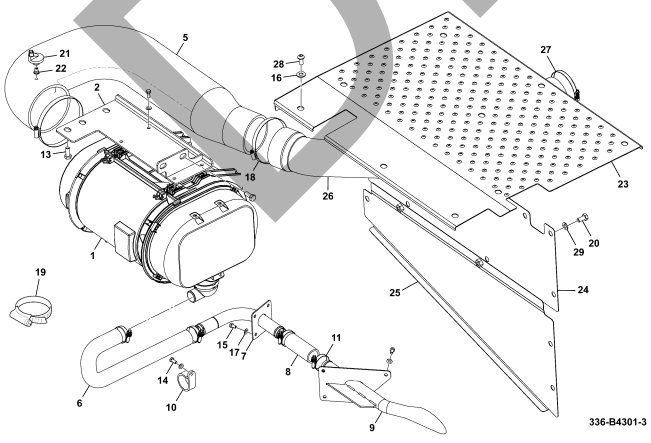

ITEM	Part #	CHANGE NO	DESCRIPTION	USAGE CODE	QTY
1	333/K7977		Cleaner Air, Powercore Refer L310-1-1		1
2	334/J2275		Plate MTG Filter		1
5	336/B9374		Hose Air Cleaner		1
6	334/J2250		Hose Scavenger		1
7	333/K7843		Adaptor Bulkhead		1
8	333/K8249		Hose Connection, Scavenger		1
9	333/K7919		Pipe Scavenger		1
10	821/00483		Clip Pipe, 48mm Dia		2
11	332/G4601		Clip Worm Drive 35 to 50 Dia		4
13	1316/0508D		Screw M12 X 30		4
14	1316/0305D		Screw M8 X 20		6
15	1316/0303D		Screw M8 x 16mm		8
16	1411/0005D		Washer		13
17	1420/0007D		Washer M8		14

Continue...

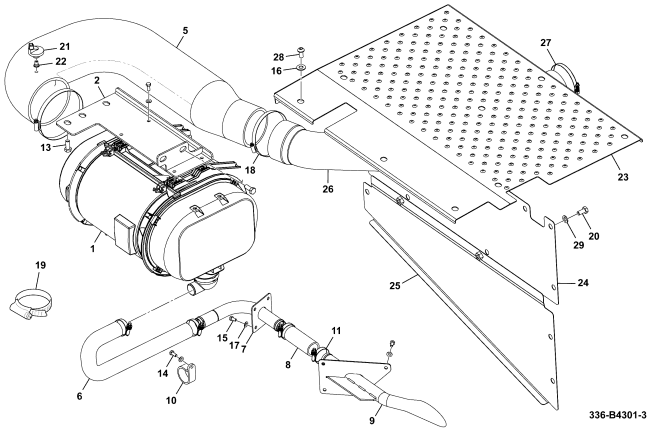

ITEM	PART NO	CHANGE NO	DESCRIPTION	USAGE CODE	QTY
18	2201/0017		Clip worm drive 110-140mm		2
19	KSJ2138		Clip jubilee		1
20	1316/0507D		Setscrew M12 x 25 grade 10.9		12
21	JNH0070		Adaptor vacuum sensor		1
22	162/02674		Sensor Adapter Vacuum		1
23	336/B2668		Plate Tread, Cab, Rear		1
24	332/K5917		Plate baffle upper LH		1
25	332/K7741		Plate baffle lower LH		1
26	333/J7031		Hose induction		1
27	2201/0021		Clip worm drive 105-127mm		1
28	333/K6076		Screw Button Head M12 X 25		9
29	1420/0009D		Washer M12		12

JCB380 QM

JCB380 XTRA

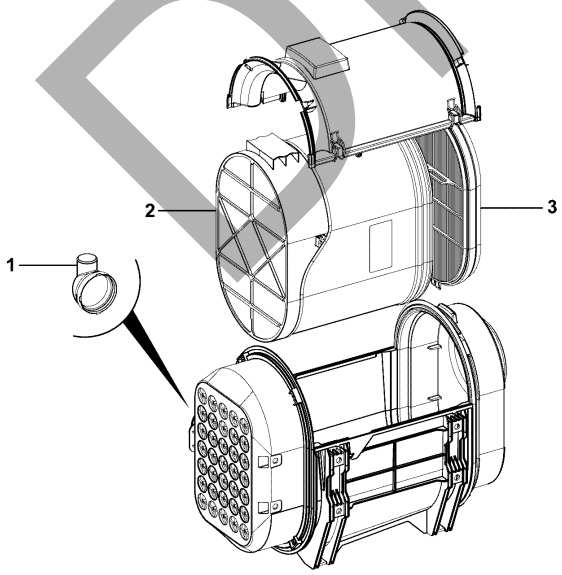

ITEM	Part #	CHANGE NO	DESCRIPTION	USAGE CODE	QTY
1	333/K7896		Adaptor Scavange		1
2	334/R1768		Element Main, Air Obround Filter Assembly		1
3	334/R1769		Element Safety, Air Obrounf Filter Assembly		1

333-K7977-4

DRAFT

L

L01 ENGINE INSTALLATION ASSEMBLIES
L02 EXHAUST SYSTEM
L03 INDUCTION SYSTEM
• L06 COOLING SYSTEM
L07 FAN INSTALLATION ASSEMBLIES
L08 FUEL SYSTEM

DRAFT

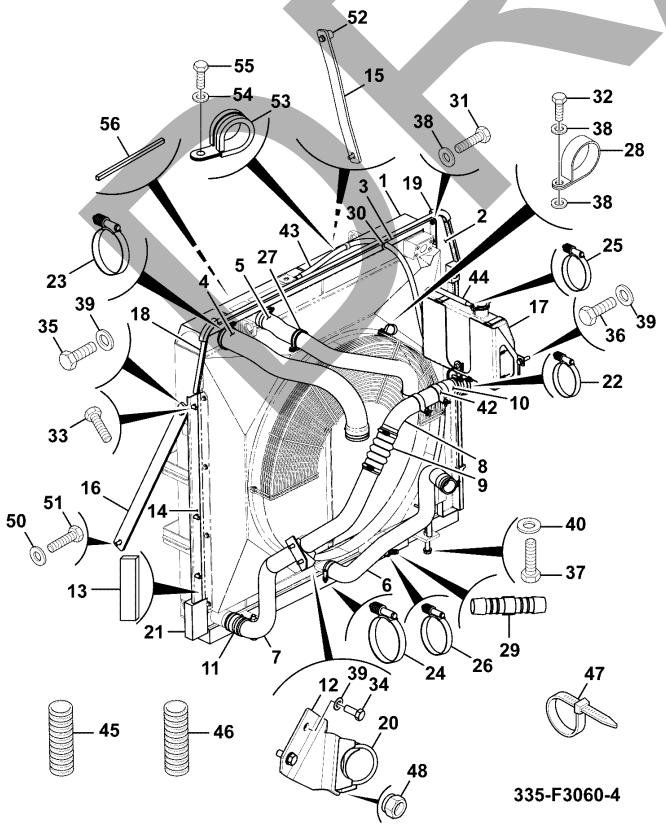

JCB380 QM

JCB380 XTRA

ITEM	Part #	CHANGE NO	DESCRIPTION	USAGE CODE	QTY
1	335/E9647		Cooling Pack, ABI Refer L620-1-1		1
2	335/F3222		Plate Side, Radiator		1
3	335/F3226		Plate Seal		1
4	333/J7059		Hose Air Charge		1
5	336/B1542		Hose Radiator, Top		1
6	336/B1543		Hose Radiator, Bottom		1
7	333/K2088		Pipe CAC Cooler		1
8	333/K2087		Pipe CAC Engine		1
9	834/10456		Hose air charge cooler		1
10	834/11543		Hose turbo outlet		1
11	834/10508		Hose elbow		1
12	333/K2094		Bracket		1
13	333/J9359		Seal Rubber		1
14	335/F3038		Plate Seal		1

Continue...

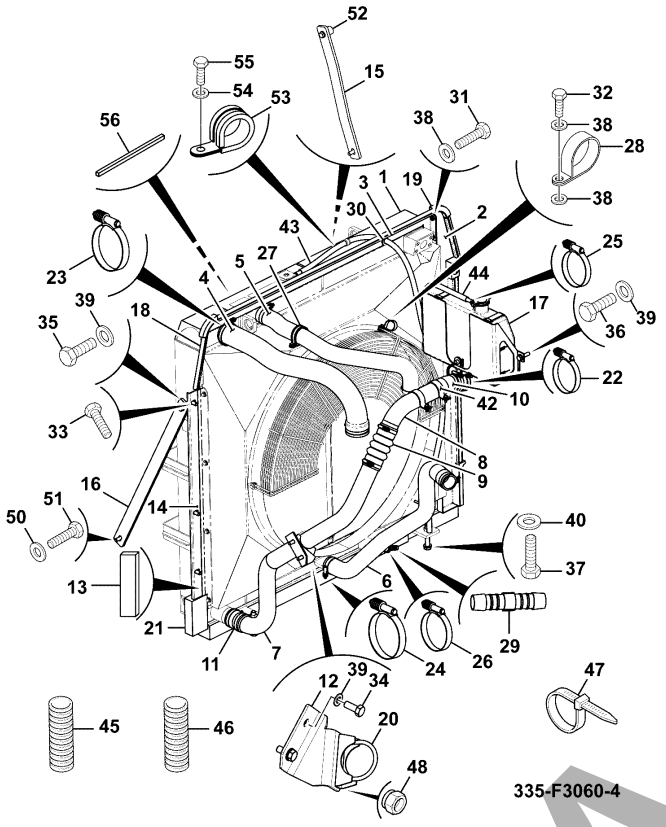

ITEM	PART NO	CHANGE NO	DESCRIPTION	USAGE CODE	QTY
15	335/B3982		Stay Radiator, Front		1
16	333/K9534		Stay Radiator, Rear		1
17			Tank Expansion And Bracket, Assembly Refer L610-25-1		1
18	333/K8643		Seal Edge, 1400mm		1
19	333/D8014		Seal Bonnet, Corner		1
20	KHH0132		Clamp pipe		1
21	336/C4805		Kit-seal Foam, Radiator Refer L690-15-1		1
22	821/10191		Clip Breeze		5
23	821/10192		Clip Breeze (70-93)		2
24	821/10236		Clip Worm Constant Torque		5
25	334/L7504		Clip Jubliee		3
26	334/J4514		Clip Constant-Torque Worm 14-27mm		1
27	332/K1964		Clamp Clip P		2

L610-20-1 COOLING PACK INSTALLATION, COOLING PACK, ASSEMBLY 9820/1116A ISSUE 0

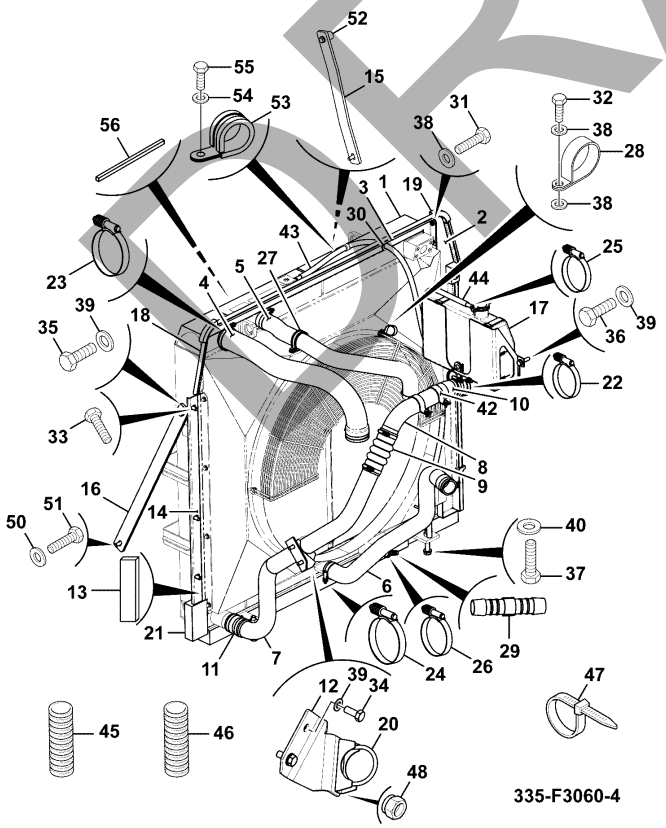

ITEM	PART NO	CHANGE NO	DESCRIPTION	USAGE CODE	QTY
28	821/10127		Clip		1
29	336/B2090		Adaptor Hose		1
30	2410/0012		Grommet		1
31	1316/0303D		Screw M8 x 16mm		6
32	1316/0305D		Screw M8 X 20		5
33	1316/0507D		Setscrew M12 x 25 grade 10.9		3
34	1316/0508D		Screw M12 X 30		2
35	1316/0509D		Screw M12x35 long		2
36	1316/3511D		Bolt		3
37	1316/3719D		Bolt M16 x 90mm		4
38	1420/0007D		Washer M8		11
39	1420/0009D		Washer M12		10
40	1420/0011D		Washer M16		4
42	333/K2300		Clamp Saddle 63mm		2
43	KHH0282		Hose rubber 8mm x 1150mm long		1
44	KHH0222		Hose rubber 8mm x 1400mm		1
45	JSR0017		Tube corrugated		1
46	JSR0072		Tube corrugated		1

DRAFT

Continue...

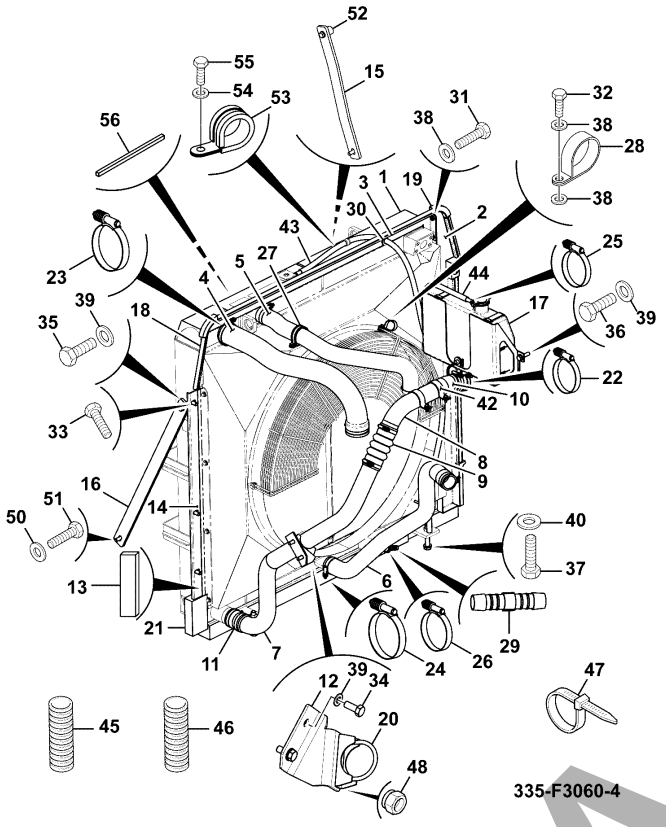

ITEM	PART NO	CHANGE NO	DESCRIPTION	USAGE CODE	QTY
47	826/01347		Tie cable 160mm weld stud mounted		4
48	1370/0203D		Nut lock M8		3
50	JHP0042		Washer M12		2
51	1316/0510D		Screw		2
52	335/F3611		Spacer		3
53	KHR1326		Clamp 18mm dia.		1
54	1420/0006Z		Washer M6		1
55	1315/0203Z		Setscrew M6 x 16mm		1
56	335/G5966		Foam Radiator, Bottom		1

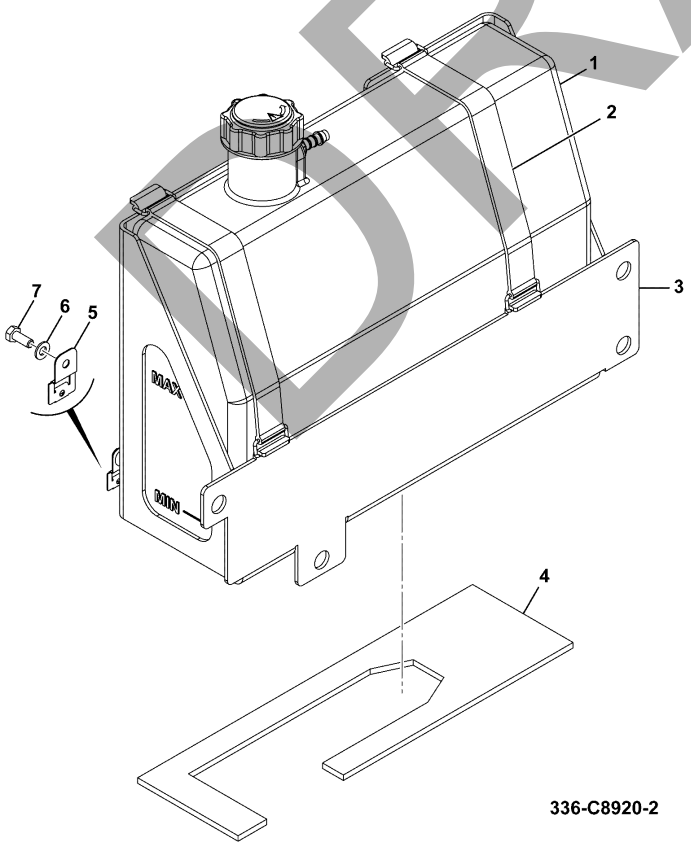

JCB380 QM

JCB380 XTRA

ITEM	Part #	CHANGE NO	DESCRIPTION	USAGE CODE	QTY
1	336/F4926		Bottle Expansion ABI		1
2	333/J1041		Rubber strap		2
3	336/C8925		Bracket Expansion Bottle		1
4	333/J1057		Mat expansion tank		1
5	7210/0067		Clip Deutsch DT Mounting		1
6	1420/0007Z		Washer M8		1
7	1316/0305Z		Bolt High Tensile		1

DRAFT

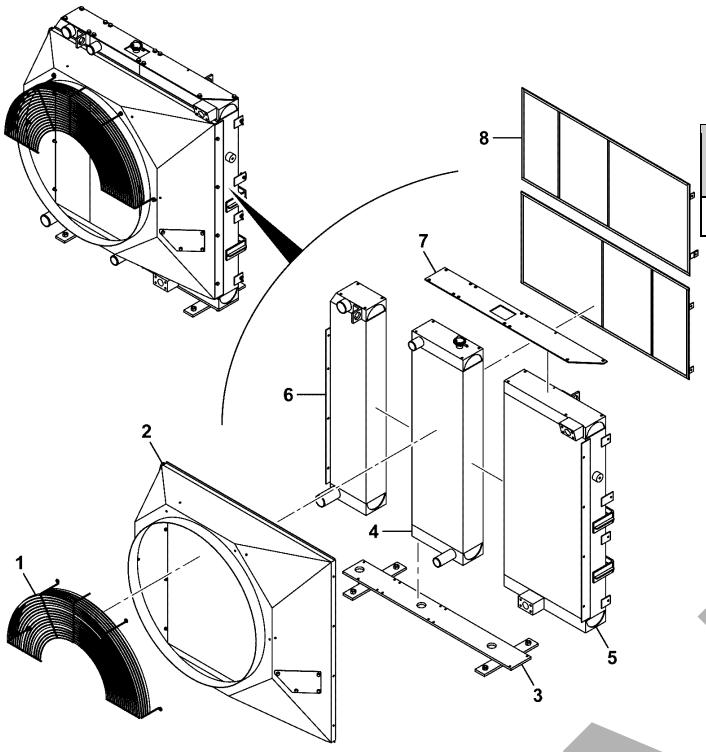

335-E9647-1

JCB380 QM

JCB380 XTRA

ITEM	Part #	CHANGE NO	DESCRIPTION	USAGE CODE	QTY
1	335/C5053		Screen Fly		1

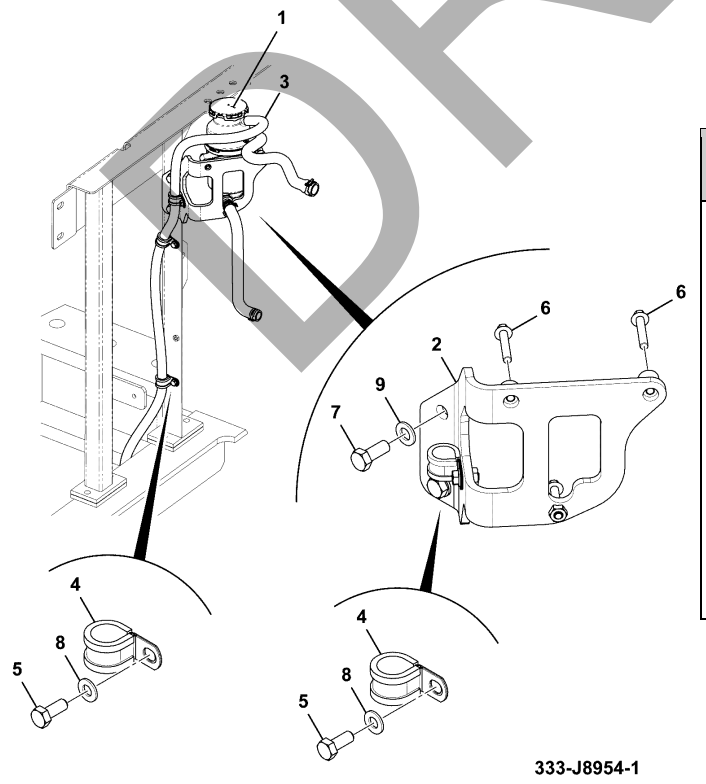

333-J8954-1

JCB380 QM

JCB380 XTRA

ITEM	Part #	CHANGE NO	DESCRIPTION	USAGE CODE	QTY
1	320/21239		Crank Case Ventilation Refer L690-5-1		1
2	333/J8977		Bracket CCV		1
3	333/K0739		Pipe - open loop vent		1
4	333/S3315		Clip P M10 x 22mm		3
5	1316/0305D		Screw M8 X 20		3
6	1317/3311D		Bolt flanged M8 x 45		3
7	1316/0508D		Screw M12 X 30		2
8	1420/0007D		Washer M8		3
9	1420/0009D		Washer M12		2

DRAFT

JCB380 QM

JCB380 XTRA

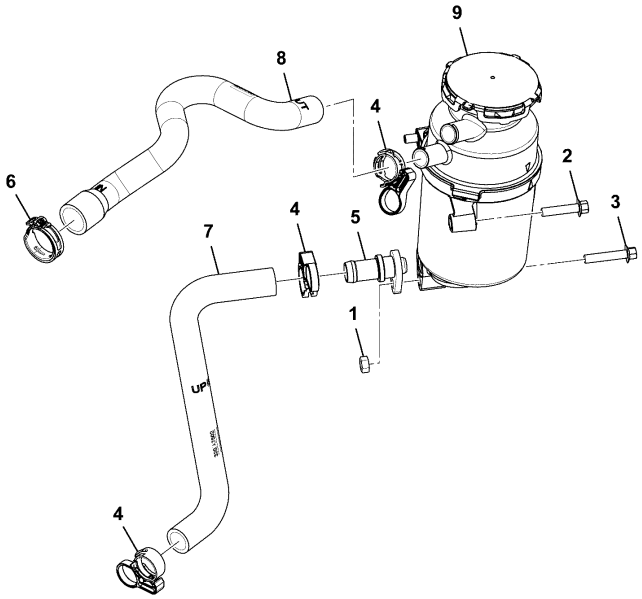

320-21239-1

ITEM	Part #	CHANGE NO	DESCRIPTION	USAGE CODE	QTY
1	1370/0201		Nut Standard (M8)		1
2	1317/3309Z		Bolt flanged hex M8 X 35		2
4	320/00911		Clamp spring band		3
5	320/07801		Plug Drain spigot, CCV		1
6	320/00958		Clamp 32 mm		1
7	320/A7502		Hose Drain, CCV		1
8	320/A7504		Hose Feed, CCV		1
9	320/07735		Filter assembly CCV Refer L190-15-1		1

JCB380 QM

JCB380 XTRA

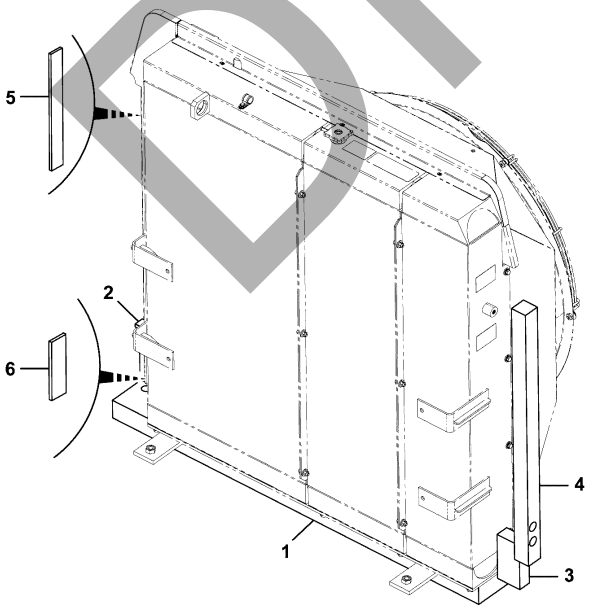

333-K8644-1

ITEM	Part #	CHANGE NO	DESCRIPTION	USAGE CODE	QTY
1	333/K8645		Foam Radiator Seal, Bottom		1
2	333/K0637		Foam Seal Radiator Left Side Lower		1
3	333/J9746		Foam Seal Radiator Right Side Lower		1
4	336/C4808		Foam Seal, Frame		1
5	333/K9223		Strip Foam		1
6	333/K9228		Strip Foam		1

DRAFT

L

L01 ENGINE INSTALLATION ASSEMBLIES
L02 EXHAUST SYSTEM
L03 INDUCTION SYSTEM
L06 COOLING SYSTEM
• L07 FAN INSTALLATION ASSEMBLIES
L08 FUEL SYSTEM

DRAFT

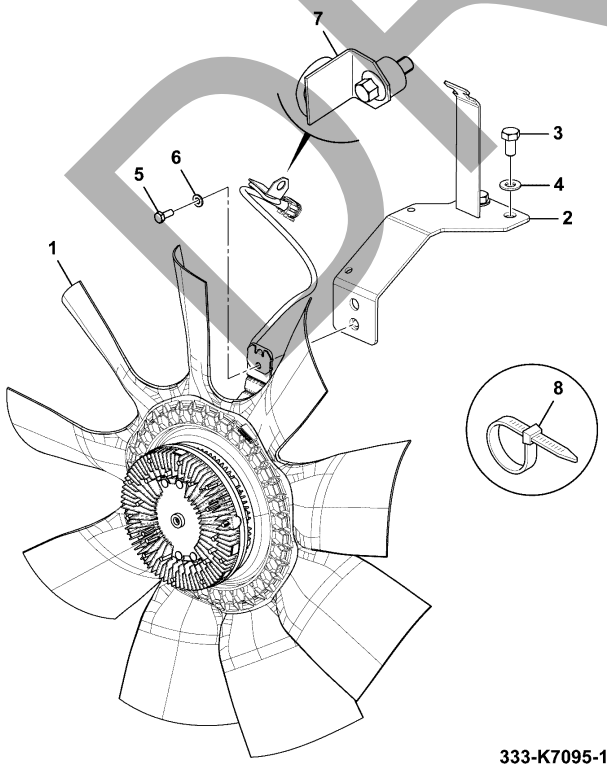

333-K7095-1

JCB380 QM

JCB380 XTRA

ITEM	Part #	CHANGE NO	DESCRIPTION	USAGE CODE	QTY
1	333/K7115		Fan Clutch, 5 Wire Refer L710-15-1		1
2	333/K7128		Bracket Sensor		1
3	1316/0303D		Screw M8 x 16mm		2
4	1420/0007D		Washer M8		2
5	1316/0203D		Screw		1
6	1420/0006D		Washer M6		1
7	263/34900		Harness Clip		1
8	826/11447		Tie Cable Locking		3

JCB380 QM

JCB380 XTRA

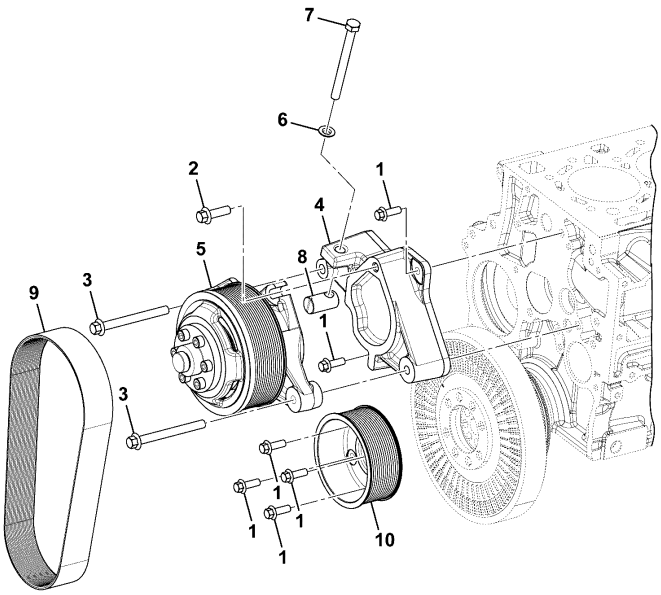

320-21258-2

ITEM	Part #	CHANGE NO	DESCRIPTION	USAGE CODE	QTY
1	1317/3408Z		Bolt M10 x 30 flange reduced		6
2	1317/3510Z		Bolt Flanged, Hexagonal M12 X 40, G 8.8		1
3	1317/3522Z		Bolt Flanged, Hexagonal M12 X 120, G 8.8		2
4	320/08756		Plate Adapter, Fan Hub		1
5			Carrier Hub And Pulley, Assembly Refer L710-5-1		1
6	320/08789		Washer Spherical, M12, Type C		1
7	320/08790		Screw Set, Jacking, M12 X 130		1
8	320/08794		Trunnion Nut M12 320/08794		1
9	320/08808		Belt Stretch, 14PK980		1

L710-1-1 FAN, DRIVE, 672

9820/1116A

ISSUE 0

ITEM	PART NO	CHANGE NO	DESCRIPTION	USAGE CODE	QTY
10	320/08810		Pulley Crank		1

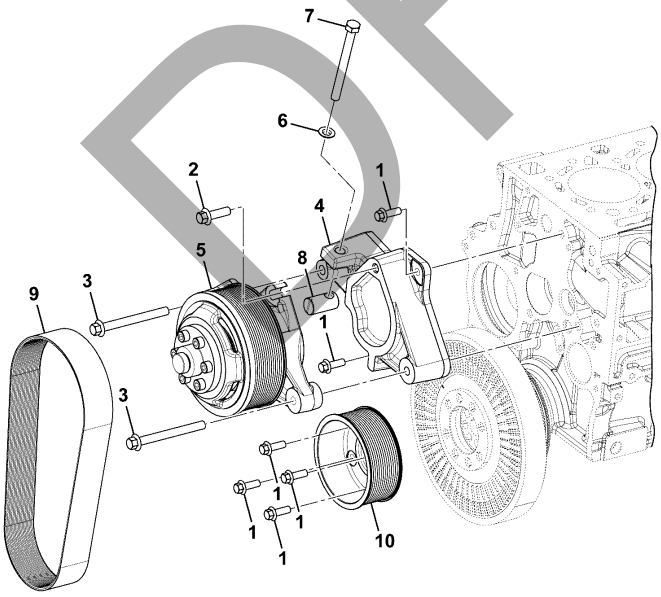

320-21258-2

DRAFT

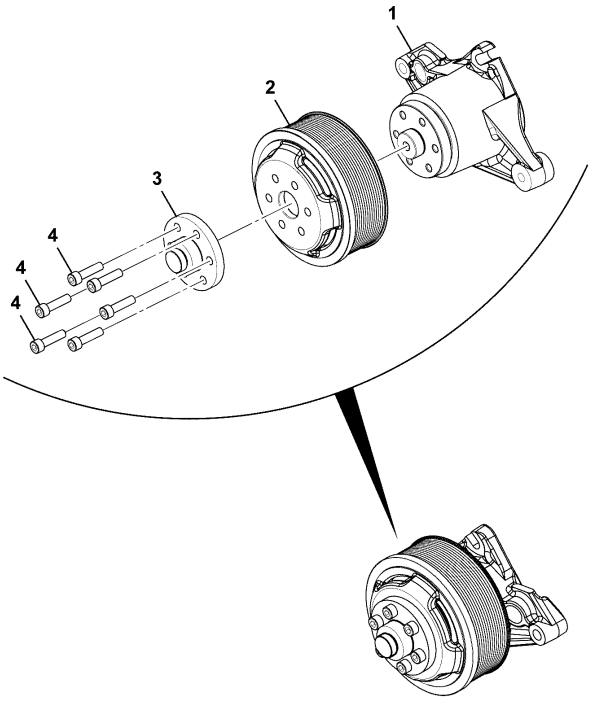

320-08845-2

JCB380 QM

JCB380 XTRA

ITEM	Part #	CHANGE NO	DESCRIPTION	USAGE CODE	QTY
1			Hub Fan, Assembly Refer L710-10-1		1
2			Pulley Fan		1
3	829/31535		Spacer fan		1
4	1391/3410D		Capscrew M10 x 40		6

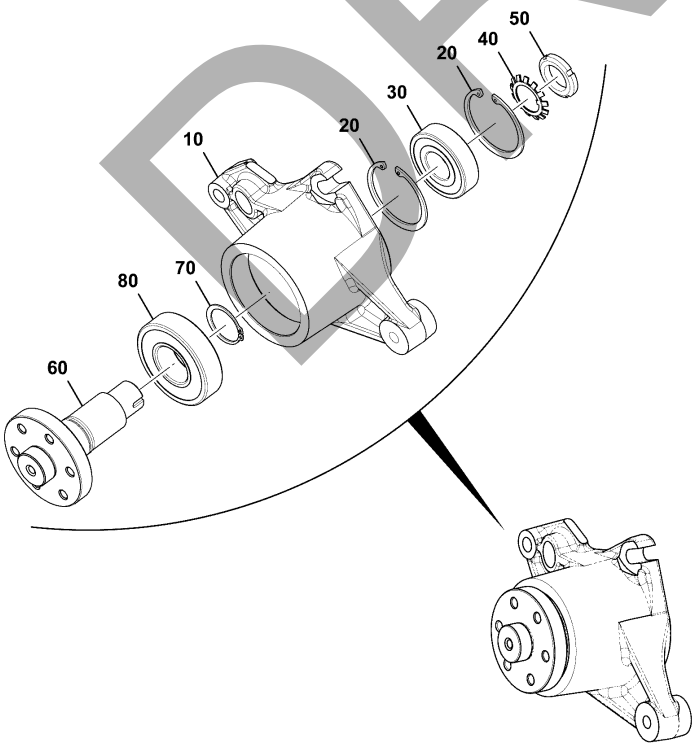

320-08784-1

JCB380 QM

JCB380 XTRA

ITEM	Part #	CHANGE NO	DESCRIPTION	USAGE CODE	QTY
10	320/08795		Carrier Hub, Fan		1
20	2203/1076		Circlip		2
30	320/08786		Bearing Ball, 30 X 72 X 19		1
40	320/08788		Washer Tabbed, Loknut		1
50	320/08787		Nut Lock, Bearing		1
60	320/08793		Shaft Hub, Fan		1
70	2203/0054		Circlip		1
80	320/08785		Bearing Ball, 40 X 90 X 23		1

DRAFT

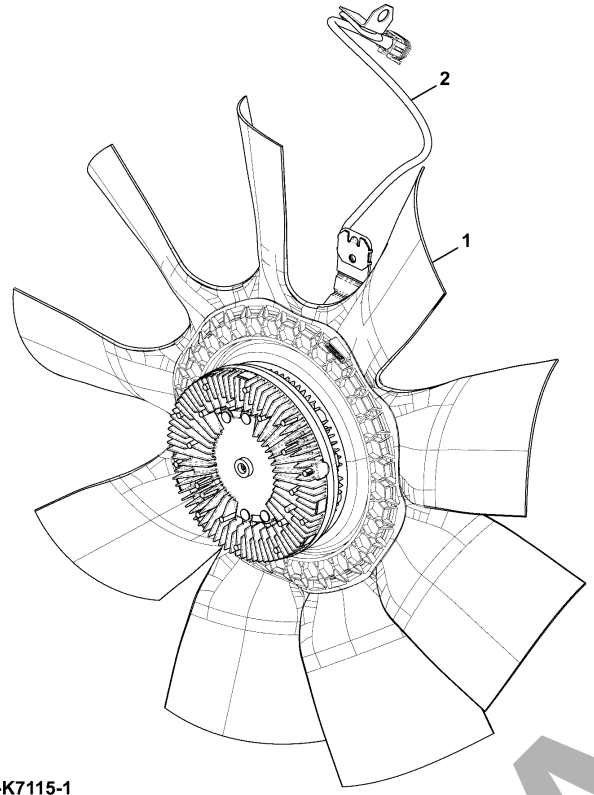

333-K7115-1

JCB380 QM

JCB380 XTRA

ITEM	Part #	CHANGE NO	DESCRIPTION	USAGE CODE	QTY
1	333/J3588		Fan , Dia 850		1
1A	334/D2209		Sensor including bracket		1
2	333/J3591		Clutch 5-Wire		1

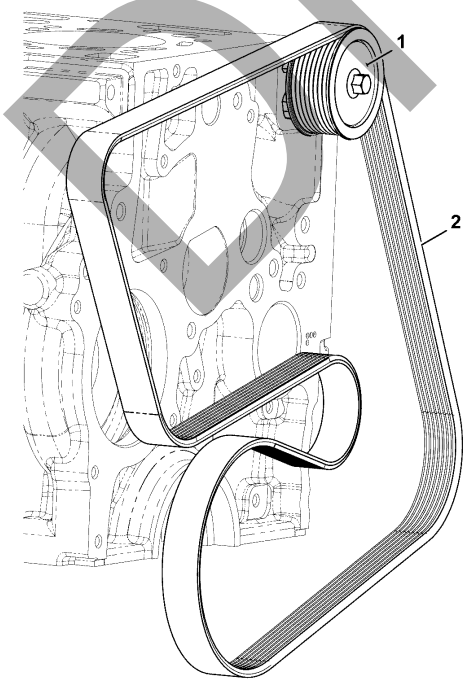

320-21233-2

JCB380 QM

JCB380 XTRA

ITEM	Part #	CHANGE NO	DESCRIPTION	USAGE CODE	QTY
1	320/08783		Tensioner Eccentric, Assembly Refer L720-5-1		1
2	320/08604		Belt drive L=2011		1

DRAFT

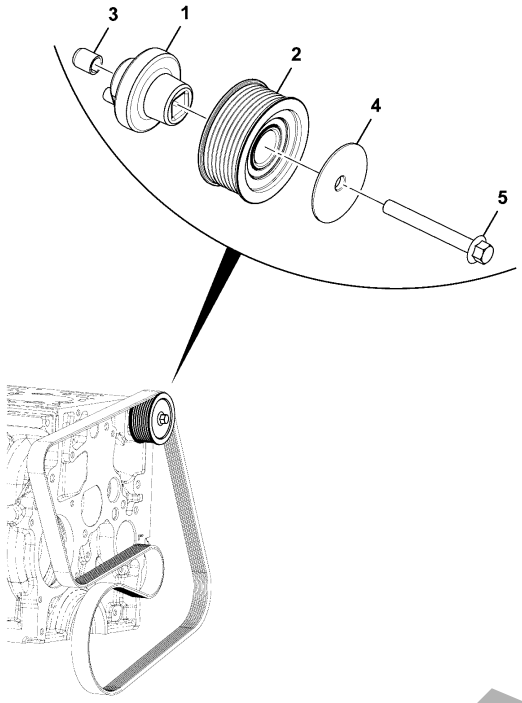

320-08783-1

JCB380 QM

JCB380 XTRA

ITEM	Part #	CHANGE NO	DESCRIPTION	USAGE CODE	QTY
1			Arm Eccentric And Pivot Pin		1
2	320/08780		Pulley Idler And Bearing, Assembly Refer L720-10-1		1
3	320/08791		Dowel Ring, Dia 14 X 16		1
4	320/08593		Washer idler retainer		1
5	1317/3418Z		Bolt M10 x 80		1

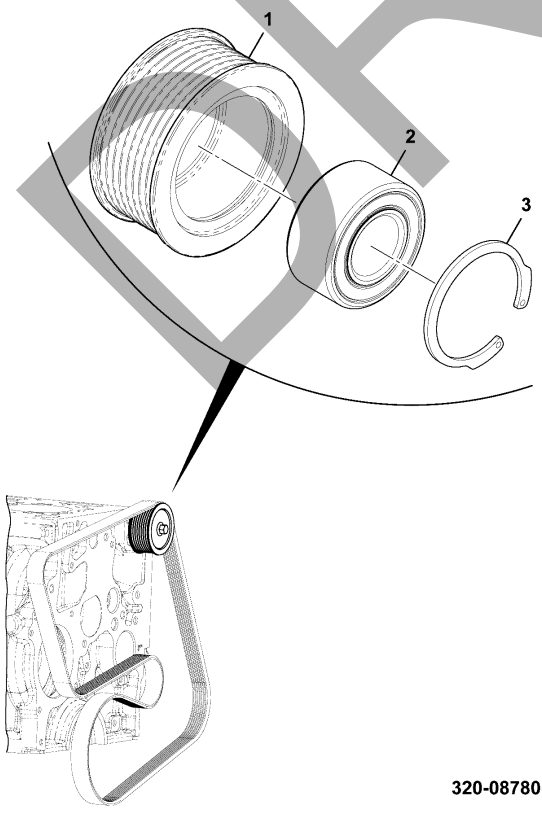

320-08780-1

JCB380 QM

JCB380 XTRA

ITEM	Part #	CHANGE NO	DESCRIPTION	USAGE CODE	QTY
1			Pulley idler		1
2			Bearing Idler Pulley		1
3	320/08594		Circlip		1

DRAFT

L

L01 ENGINE INSTALLATION ASSEMBLIES
L02 EXHAUST SYSTEM
L03 INDUCTION SYSTEM
L06 COOLING SYSTEM
L07 FAN INSTALLATION ASSEMBLIES
• L08 FUEL SYSTEM

DRAFT

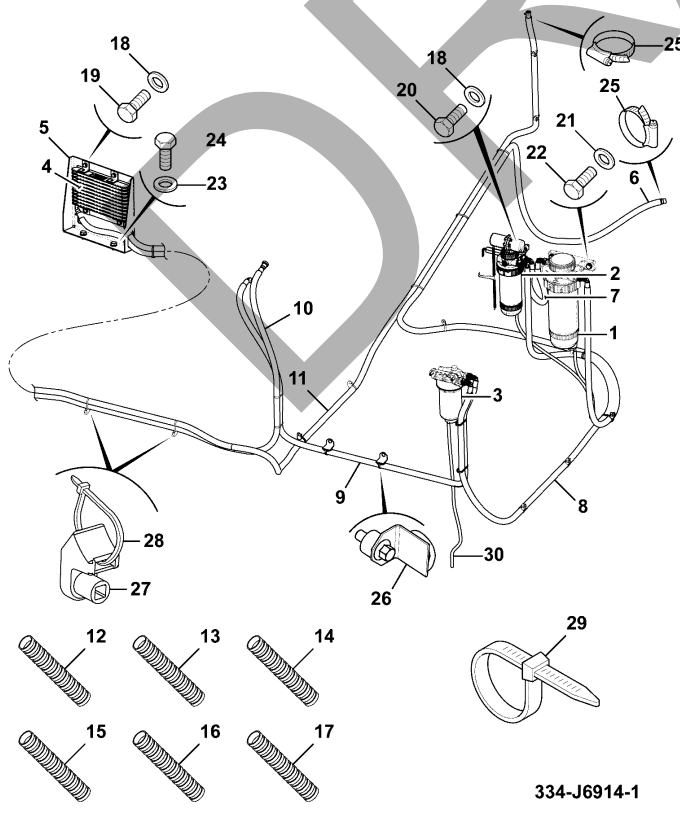

JCB380 QM

JCB380 XTRA

ITEM	Part #	CHANGE NO	DESCRIPTION	USAGE CODE	QTY
1	320/07484		Filter Fuel, 10 Micron, FM1000 Refer L820-5-1		1
2	320/07482		Filter Fuel, FM1000 2MIC Refer L820-1-1		1
3	320/07418		Filter Fuel Element 2 Micron Refer L820-10-1		1
4	332/J9275		Cooler fuel ABI		1
5	332/K0999		Bracket Fuel Cooler		1
6	333/J9830		Hose Fuel 3350 mm		1
7	334/J4367		Hose Fuel 450mm		1
8	333/J7866		Hose Fuel 2550 mm		1
9	320/07288		Hose fuel		1
10	333/J9836		Hose Fuel 2950 mm		1

Continue...

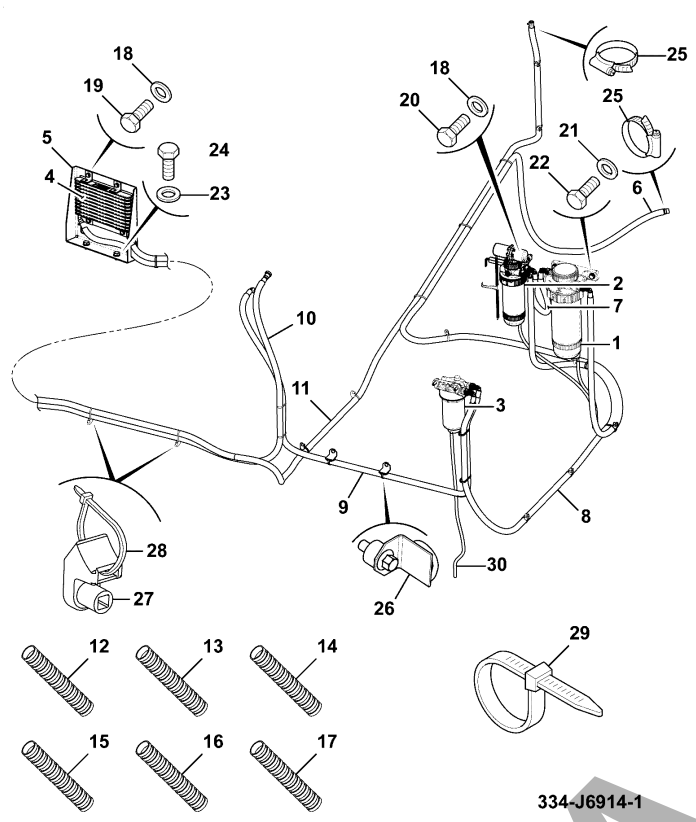

ITEM	PART NO	CHANGE NO	DESCRIPTION	USAGE CODE	QTY
11	332/K8838		Hose diesel fuel 4.7M		1
12	JHH0066		Tube corrugated		1
13	333/K2827		Tube Corrugated		1
14	JSH0007		Tube corrugated 2500mm long		1
15	333/K2830		Tube Corrugated		1
16	332/K8249		Tube Corrugated		1
17	332/K8846		Tube corrugated 4.6M		1
18	1420/0007D		Washer M8		6
19	1316/0303D		Screw M8 x 16mm		4
20	1316/0308D		Screw M8x30		2
21	1420/0008D		Washer M10		4
22	1316/0409D		Screw M10X35		4
23	1420/0009D		Washer M12		2
24	1316/0505D		Bolt M12 x 20mm		2
25	2201/0001		Clip Worm Drive 8/16mm		4
26	263/34900		Harness Clip		2
27	826/01274		Cradle cable tie mount		15

L800-10-1 FUEL SYSTEM INSTALLATION ASSEMBLIES, COOLING SYSTEM, FUEL LINE 9820/1116A ISSUE 0

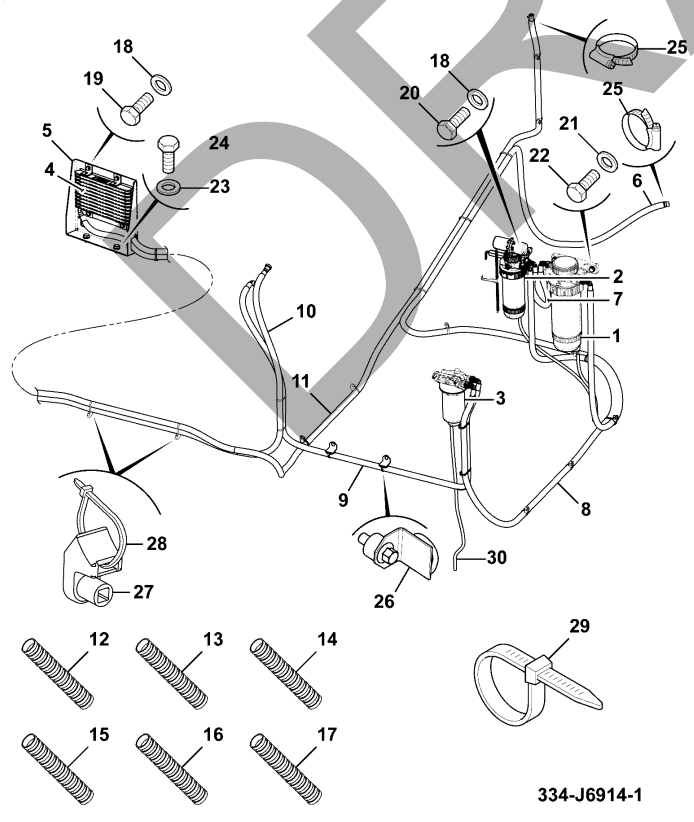

ITEM	PART NO	CHANGE NO	DESCRIPTION	USAGE CODE	QTY
28	826/01347		Tie cable 160mm weld stud mounted		18
29	333/J8681		Tie cable (Double loop)		3
30	JHH0125		Tube		3

DRAFT

JCB380 QM

JCB380 XTRA

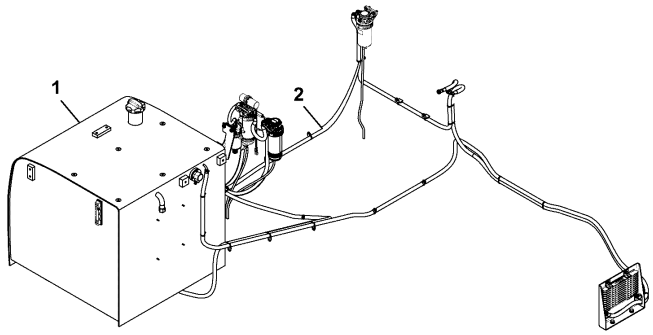

333-K0713-1

ITEM	Part #	CHANGE NO	DESCRIPTION	USAGE CODE	QTY
1			Tank Fuel, Assembly Refer B120-25-1		1
2			Cooler Assembly-Fuel Line Refer L800-10-1		1

JCB380 QM

JCB380 XTRA

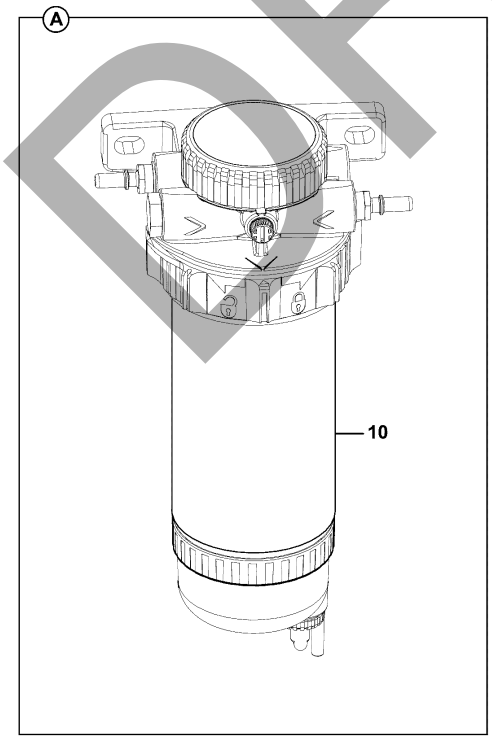

320-07425-1

ITEM	Part #	CHANGE NO	DESCRIPTION	USAGE CODE	QTY
A	320/07482		Filter Fuel, FM1000 2MIC		1
10	320/07483		Element - Fuel Filter		1

DRAFT

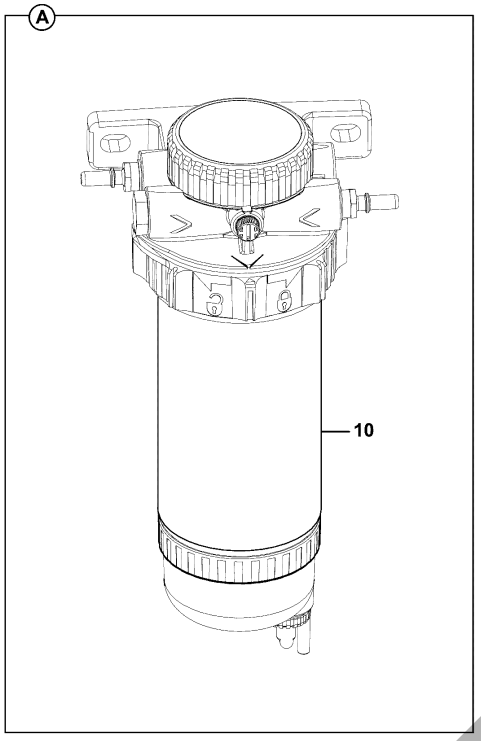

320-07425-1

JCB380 QM

JCB380 XTRA

ITEM	Part #	CHANGE NO	DESCRIPTION	USAGE CODE	QTY
A	320/07484		Filter Fuel, 10 Micron, FM1000		1
10	320/07426		Element Filter, Fuel		1

DRAFT

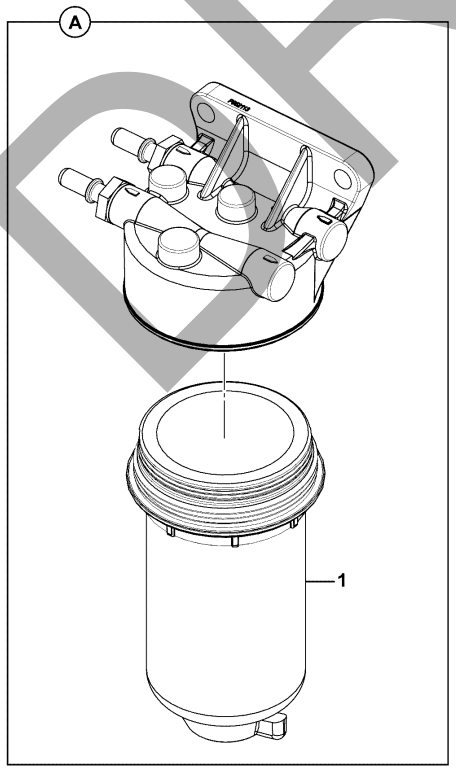

320-07418-1

JCB380 QM

JCB380 XTRA

ITEM	Part #	CHANGE NO	DESCRIPTION	USAGE CODE	QTY
A	320/07418		Filter Fuel Element 2 Micron		1
1	320/07416		Element Filter, Fuel, 2 Micron		1