CATERPILLAR®

CCRC3893-13
September 2009

RUTHZIL TRATOR COMERCIAL DE PEÇAS LTDA 11 97083-6812 ROLANDO

Parts Manual



See "General Information" for New Parts Manual Features.

385B L Excavator

RCD1-Up (Machine)
BLC426-Up (Engine)

Powered By 3456 Engine

Product and Dealer Information

Note: For product identification plate locations, see the section “Product Identification Information” in the Operation and Maintenance Manual.

Delivery Date: _____

Product Information

Model: _____

Product Identification Number: _____

Engine Serial Number: _____

Transmission Serial Number: _____

Generator Serial Number: _____

Attachment Serial Numbers: _____

Attachment Information: _____

Customer Equipment Number: _____

Dealer Equipment Number: _____

Dealer Information

Name: _____ Branch: _____

Address: _____

_____

_____

	Dealer Contact	Phone Number	Hours
Sales:	_____	_____	_____
Parts:	_____	_____	_____
Service:	_____	_____	_____

MEMORANDA

TABLE OF CONTENTS

Name	Page
GENERAL INFORMATION	A5
REPAIR ALTERNATIVES	A8
SUPPLEMENTAL COOLANT ADDITIVES	A9
MAINTENANCE PARTS	A10
INDEX	A15
MACHINE ARRANGEMENT	1
CHASSIS AR	1
GENERAL AR	2
ENGINE ARRANGEMENT	3
ENGINE AR-COMPLETE	3
ENGINE AR-CORE	5
INSTALLATION AR-ENGINE	7
BASIC ENGINE	10
ADAPTER GP-PUMP DRIVE	10
BASE GP-VALVE COVER & INJ HARN	11
CAMSHAFT GP	12
COVER GP-CYLINDER BLOCK	13
COVER GP-FRONT HOUSING	15
COVER GP-VALVE MECHANISM	18
CRANKSHAFT GP	21
CYLINDER BLOCK AS	22
CYLINDER BLOCK GP	24
CYLINDER HEAD AS	28
CYLINDER HEAD GP	34
DAMPER & PULLEY GP	42
DRIVE GP-FAN	44
FASTENER GP-FRONT HOUSING	45
FASTENER GP-VALVE MECHANISM	46
FLYWHEEL GP	47
GEAR GP-CAMSHAFT	48
GEAR GP-FRONT	49
GEAR GP-REAR	51
HOUSING GP-FLYWHEEL	55
HOUSING GP-FRONT	56
LIFTING GP-ENGINE	62
MECHANISM GP-FUEL PUMP & VALVE	64
MOUNTING GP-ENGINE	67
PAN GP-OIL	69
PISTON & ROD GP	71
PLUG GP-CYLINDER HEAD	72
PULLEY GP	73
ROCKER ARM GP	75
SEAL GP-CRANKSHAFT	84
SUPPORT GP-ENGINE	85
VALVE MECHANISM GP	86
LUBRICATION SYSTEM	87
BASE GP-OIL FILTER	87
FASTENER GP-OIL PUMP MOUNTING	89
FILLER GP-ENGINE OIL	90
FILTER GP-ENGINE OIL	91
FUMES DISPOSAL GP	93
GAUGE GP-OIL LEVEL (DIPSTICK)	94
GUIDE GP-OIL LEVEL GAUGE	95
LINES GP-ENGINE OIL	97
LINES GP-ENGINE OIL DRAIN	101
LINES GP-TURBOCHARGER OIL	102
MOUNTING GP-OIL LEVEL GAUGE	103
OIL CHANGE GP-HIGH SPEED	104
PUMP GP-ENGINE OIL	106
COOLING SYSTEM	108
FAN GP-SUCTION	108
FITTING GP-RADIATOR VENT	114
LINES GP-WATER	116
PUMP GP-WATER	119
RADIATOR & AFTERCOOLER GP	121
RADIATOR GP	128
AIR INLET AND EXHAUST SYSTEM	137
AIR CLEANER GP	137
EXTENSION GP-EXHAUST	138
LINES GP-AIR	139
LINES GP-MUFFLER DRAIN	145
MANIFOLD GP-EXHAUST	147
MOUNTING GP-AIR CLEANER	148
MUFFLER GP	149
TURBOCHARGER GP	161
FUEL SYSTEM	163
ADAPTER GP-FAST FILL FUEL	163
COOLER GP-FUEL	165
FILTER GP-FUEL	167
FILTER GP-WATER SEP & FUEL	168
GAUGE GP-SIGHT	169
INJECTOR GP-FUEL	170
LINES GP-FUEL	171
MOUNTING GP-FUEL FILTER	183
PUMP & MOTOR GP-REFUELING	185
PUMP AR-REFUELING	186
PUMP GP-FUEL PRIMING	187
PUMP GP-FUEL TRANSFER	188
PUMP GP-REFUELING	189
TANK & MTG GP-FUEL	191
TANK GP-FUEL	193
VALVE GP-CHECK	197
ELECTRICAL AND STARTING SYSTEM	200
ALARM GP-TRAVEL	200
ALTERNATOR GP-CHARGING	201
BATTERY & WIRING GP	207

TABLE OF CONTENTS

Name	Page
CONTROL & MTG GP-ENGINE ELEK	227
CONTROL & MTG GP-MACHINE	228
CONTROL GP-ENGINE ELECTRONIC	229
CONTROL GP-UNPROGRAMMED	230
ELECTRICAL AR	231
ELECTRONICS GP-MACHINE	232
ELECTRONICS GP-MONITOR	233
LAMP GP-FLOOD	238
LIGHTING GP-CAB	241
LIGHTING GP-CHASSIS	242
LIGHTING GP-FLOOD	243
PANEL GP-CIRCUIT BREAKER	249
SENSOR & MTG GP-PRESSURE	259
SENSOR GP-PRESSURE	260
SENSOR GP-SPEED	263
SENSOR GP-TEMPERATURE	270
SOLENOID GP	271
STARTING AID GP-ETHER	272
STARTING AR-COLD WEATHER	275
STARTING MOTOR GP-ELECTRIC	276
SWITCH GP-DISCONNECT	284
SWITCH GP-MAGNETIC	286
SWITCH GP-REFUELING	287
SWITCH GP-START	288
WIRING GP-BOOM	289
WIRING GP-CAB	292
WIRING GP-CONSOLE	295
WIRING GP-COUNTERWEIGHT	305
WIRING GP-ENGINE	307
WIRING GP-MEDIUM PRESSURE	309
WIRING GP-OVERLOAD WARNING	310
WIRING GP-PLATFORM	312
WIRING GP-REFUELING PUMP	316
WIRING GP-WORK TOOL	320
POWER TRAIN	321
DRIVE GP-FINAL	321
FINAL DRIVE GP	323
POWER TRAIN AR	324
SPROCKET GP	325
FRAME AND BODY	326
BOX & MTG GP-STORAGE	326
BOX GP-BATTERY	328
BOX GP-STORAGE	333
CHAIN GP-COUNTERWEIGHT	335
COUNTERWEIGHT AR	337
COUNTERWEIGHT GP	338
COVER GP-CONTROL VALVE	340
COVER GP-HOOD	341
DOOR AS-ACCESS	342
DOOR GP-ACCESS	344
FRAME GP-UPPER	345
GEAR & BEARING GP-SWING	351
GUARD GP-BOTTOM	359
GUARD GP-SWIVEL	363
HANDRAIL GP	364
HOOD & GUARD GP	366
HOOD GP-ENGINE	383
LUBRICATION GP-ELECTRIC	388
MOTOR GP-LUBRICATION	389
PANEL GP-SOUND SUPPRESSION	390
PUMP GP-LUBRICATION	391
REEL GP-HOSE	393
SHEET AS-SOUND SUPPRESSION	395
STORAGE GP-VANDALISM GUARD	410
WALKWAY GP	412
UNDERCARRIAGE	414
ADJUSTMENT GP-HYDRAULIC TRACK	414
FRAME AR-UNDERCARRIAGE	416
FRAME GP-UNDERCARRIAGE	417
GUARD GP-TRACK GUIDE	419
GUARD GP-TRAVEL MOTOR	423
IDLER GP-FRONT	424
LINK AS-TRACK	428
ROLLER AR-TRACK & CARRIER	429
ROLLER GP-TRACK CARRIER	431
ROLLER GP-TRACK-SINGLE FLANGE	433
SPRING GP-RECOIL	434
TRACK GP	436
HYDRAULIC SYSTEM	440
ACCUMULATOR & MTG GP-HYDRAULIC	440
ACCUMULATOR GP-HYDRAULIC	441
ACTUATOR GP	444
ACTUATOR GP-PUMP	445
BASE GP-OIL FILTER	447
CONTROL AR-AUXILIARY	450
COOLER & MTG GP-HYDRAULIC OIL	453
COOLER GP-HYDRAULIC OIL	459
COUPLING GP-FLEXIBLE	461
COUPLING GP-PUMP	462
CYLINDER & LINES GP-BOOM	463
CYLINDER & LINES GP-BUCKET	465
CYLINDER & LINES GP-STICK	469
CYLINDER & SEAL GP-BOOM	470
CYLINDER & SEAL GP-BUCKET	471
CYLINDER & SEAL GP-HYDRAULIC	475
CYLINDER GP-BOOM	477
CYLINDER GP-BUCKET	479
CYLINDER GP-COUNTERWEIGHT	487
CYLINDER GP-HYDRAULIC	491
DRIVE GP-PUMP	495
DRIVE GP-SWING	496
FASTENER GP-SWING & FINAL DR	504
FILTER & LINES GP-HYDRAULIC	507
FILTER GP-OIL	512

TABLE OF CONTENTS

Name	Page
GAUGE GP-SIGHT	526
GUARD AR-CYLINDER	527
GUARD GP-CYLINDER	528
HEAD GP-PUMP	530
HYDRAULIC AR	532
KIT-INDICATOR	535
LEVER GP-CONTROL	536
LINES GP-AUXILIARY HYDRAULIC	537
LINES GP-BOOM	579
LINES GP-BOOM CYLINDER	595
LINES GP-BUCKET CYLINDER	603
LINES GP-FRONT	609
LINES GP-MOTOR	616
LINES GP-PILOT	620
LINES GP-PUMP	636
LINES GP-REAR ATTACHMENT	647
LINES GP-RETURN & FILTER	652
LINES GP-STICK	657
LINES GP-STICK CYLINDER	665
LINES GP-SWING MOTOR	669
LINES GP-TRAVEL MOTOR	673
MANIFOLD & VALVE GP	676
MOTOR & MTG GP-SWING	684
MOTOR & MTG GP-TRAVEL	686
MOTOR GP-PISTON	687
MOTOR GP-SWING	691
MOTOR GP-TRAVEL	695
MOUNTING GP-COUNTERWEIGHT CYL	697
PUMP & MTG GP-HYDRAULIC	699
PUMP & MTG GP-MAIN HYDRAULIC	701
PUMP GP-GEAR	703
PUMP GP-MAIN HYDRAULIC	705
PUMP GP-PISTON	709
ROTATING GP-MOTOR	715
ROTATING GP-PUMP	717
ROTOR GP-SWIVEL	724
SCREEN GP-HYDRAULIC	726
SWIVEL GP	727
TANK & FILTER GP-HYDRAULIC	728
TANK & MTG GP-HYDRAULIC	733
VALVE & MTG GP-MAIN CONTROL	734
VALVE AR	735
VALVE AR-BOOM LOWERING CONTROL	736
VALVE AR-LOAD CONTROL	738
VALVE AR-STICK LOWERING CONT	740
VALVE GP	741
VALVE GP-CHECK	744
VALVE GP-CHECK & RELIEF	754
VALVE GP-CONTROL	756
VALVE GP-COUNTERWEIGHT CONTROL	813
VALVE GP-LOAD CONTROL	814
VALVE GP-MAIN CONTROL	819
VALVE GP-MANIFOLD & REDUCING	841
VALVE GP-MANUAL	843
VALVE GP-PILOT	846
VALVE GP-PRESSURE REDUCING	847
VALVE GP-PUMP CONTROL	848
VALVE GP-RELIEF	857
VALVE GP-SHUTOFF	867
VALVE GP-SHUTTLE	868
VALVE GP-SOLENOID	872
VALVE GP-SWING CUSHION	879
VALVE GP-TRAVEL COUNTERBALANCE	880
IMPLEMENTS	881
BOOM AR	881
BOOM AR-MASS	882
BOOM AR-REACH	883
BOOM GP	884
LINES GP-GREASE	892
LINKAGE AR-BUCKET	911
LINKAGE GP	915
LINKAGE GP-BUCKET	916
STICK AR	924
STICK AR-HOE	925
STICK GP-HOE	931
WORK TOOLS	955
ADJUSTER GP-BUCKET	955
BUCKET & ADJUSTER GP	956
BUCKET AS-GENERAL PURPOSE	964
BUCKET AS-HEAVY DUTY ROCK	967
PROTECTOR GP-SIDE BAR	972
SIDECUTTER GP	974
TIP GP-LONG	976
TIP GP-PENETRATION	979
TIP GP-PENETRATION PLUS	980
OPERATOR STATION	982
AIR CONDITIONER & MOUNTING GP	982
AIR CONDITIONER AR	986
AIR CONDITIONER GP	987
BOX AS-STORAGE	994
CAB GP	995
COMPRESSOR GP-REFRIGERANT	1001
CONDENSER & MTG GP-REFRIGERANT	1003
CONSOLE GP-OPERATOR	1004
CONTROL & MTG GP-JOYSTICK	1009
CONTROL & MTG GP-PEDAL	1010
CONTROL GP-AIR & TEMPERATURE	1011
CONTROL GP-HANDLE	1012
CONTROL GP-HEAT & AIR COND	1014
CONTROL GP-HYDRAULIC PEDAL	1017
CONTROL GP-JOYSTICK	1018
CONTROL GP-PEDAL	1021

TABLE OF CONTENTS

Name	Page	Name	Page
CONTROL GP-UNPRGMED MONITOR	1022		
COVER GP-WIPER MOTOR	1023		
DOOR GP-CAB	1025		
DUCT GP-AIR	1027		
DUCT GP-DEFROSTER	1028		
FRAME GP-UPPER FRONT WINDOW	1029		
GUARD AR-VANDALISM	1030		
GUARD GP-OVERHEAD	1032		
GUARD GP-VANDALISM	1034		
HORN GP-ELECTRIC	1036		
INSTALLATION GP-RADIO	1037		
LATCH GP-FRONT WINDOW	1038		
LINES GP-AIR CONDITIONER	1040		
LINES GP-HEATER	1043		
MIRROR GP-REAR VIEW	1045		
MONITOR & MTG GP-OPERATOR	1046		
OPERATOR AR	1047		
PEDAL AR-THIRD	1048		
PLATFORM GP	1049		
PLATFORM GP-OPERATOR	1052		
SEAT AR-SUSPENSION	1053		
SEAT BELT GP	1054		
SEAT GP	1055		
SERVICE GP-MONITOR	1058		
SUPPORT GP-SEAT	1060		
SUSPENSION GP-SEAT	1061		
VISOR GP-CAB	1067		
WASHER GP-WINDOW	1068		
WINDOW GP-DOOR	1071		
WINDOW GP-FRONT	1072		
WIPER & WASHER GP-WINDOW	1076		
SERVICE EQUIPMENT AND SUPPLIES	1078		
FILM GP	1078		
PLATE & FILM GP	1082		
PART NUMBER INDEX	B1		

GENERAL INFORMATION

1. MACHINE IDENTIFICATION

Caterpillar machines are identified by Product Identification Numbers (PIN). Some components included in a machine may be identified by Serial Numbers (S/N). Typical components that will be serialized include engines, transmissions, bulldozers, and rippers. The machine and engine are further identified by arrangement numbers and in some cases modification numbers. These numbers are shown on the product identification plate(s) and on the master plate in the operator's compartment.

Caterpillar dealers need all of these numbers to determine accurate parts identification.

SIS *New Feature*

Effective First Quarter 2001 the Caterpillar Product Identification Number (PIN) changed from 8 to 17 characters. In an effort to provide uniform equipment identification, Caterpillar and other construction equipment manufacturers are moving to comply with the latest version of the product identification numbering standard. Non-road machine PINs are defined by ISO 10261. The new PIN format will apply to all Caterpillar machines and generator sets. The PIN plates and frame marking will display the 17 character PIN. The new format will look like the following:

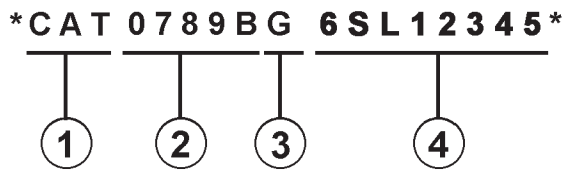

Where:

1. Caterpillar's World Manufacturing Code (characters 1-3)

2. Machine Descriptor (characters 4-8)

3. Check Character (character 9)

4. Machine Indicator Section (MIS) or Product Sequence Number (characters 10-17). These were previously referred to as the Serial Number.

Machines and generator sets produced before First Quarter 2001 will maintain their 8 character PIN format.

Components such as engines, transmissions, axles, etc. and work tools will continue to use an 8 character Serial Number (S/N).

2. ORDERING PARTS

⚠ WARNING

When replacement parts are required for this product Caterpillar recommends using Caterpillar replacement parts or parts with equivalent specifications including, but not limited to, physical dimensions, type, strength and material.

Failure to heed this warning can lead to premature failures, product damage, personal injury or death.

Quality Caterpillar replacement parts are available from Caterpillar dealers throughout the world. Their parts inventories are up to date and include all parts normally required to protect your investment in Caterpillar machines. Dealers may offer repair kits or remanufactured parts to allow selection of the most effective repair alternative for a particular situation. When ordering parts, your order should specify the quantity, part number, part name, and the serial number/product identification number of the machine for which the parts are needed.

3. PARTS MANUAL ORGANIZATION

Product information in this manual is presented as "information elements" that represent all of the components for the specific model. Engine Arrangement and Seat Group are examples of information elements. The information elements are organized alphabetically by part name and secondarily by part number within each major section of the manual.

4. TABLE OF CONTENTS

A table of contents (TOC) is found at the beginning of the manual. The TOC lists each section of the manual with a complete list of all information elements organized as they appear in the manual. Page numbers are provided for quick reference to detailed parts identification illustrations and serviceable consist lists.

5. MAINTENANCE PARTS INDEX

The Maintenance Parts Index, located near the beginning of the manual, references most frequently used maintenance part numbers, providing description, quantity, usage and page number. This information is organized alphabetically by part description.

6. INDEX

The index located near the front of the manual is an alphabetical listing of all information elements included in the manual. Page numbers are provided for quick reference to detailed parts identification illustrations and serviceable consist lists.

7. PART NUMBER INDEX

A numerical index listing all part numbers and the corresponding page number(s) appears at the back of the manual.

8. CAPTIONS

Captions located at the beginning of each information element identify the part number and part name along with additional descriptive information. PIN and S/N information found in each caption should be used to select correct information for a specific machine. Field replacement options, identification of optional attachment components, and where used ("part of") information is also provided.

The first line of a caption is shown in larger type font to indicate the beginning of an information element. Captions for additional pages that may be required to illustrate an information element will be shown in standard type font and will include the term *(contd.)* .

9. NON-SERVICED PARTS

In some instances it is necessary to display non-serviced parts that are a link to a lower level serviceable consist lists. These non-serviced part numbers are shown in *italic* type indicating that they are not available.

10. PARTS LIST REFERENCE NUMBERS

Numbers shown in the Ref No column correspond to numbers used in the associated graphic(s). An alphabetic suffix may be added to a reference number to identify lower level consist items. Numbers shown in the Graphic Ref column refer to the graphic number identifier displayed in the lower left corner of each illustration. The Graphic Ref number may be used in combination with the item Ref No to determine the correct part number. There may be intentional omission of a Ref No in a consist list as information is updated to reflect the latest serviceable part numbers.

11. INDENTED PART NAMES

When a part name is indented in a parts list, it is part of (included in) the group or assembly under which it is indented.

12. ILLUSTRATION REFERENCE LETTERS

When necessary, illustrations contain reference letters (A, B, C etc.) that are intended to track lines and harnesses from one point to another. They are also used to show where to reconnect illustrations that have been separated.

13. ABBREVIATIONS AND SYMBOLS

O.D. – Outside Diameter
I.D. – Inside Diameter
A – Not Part Of This Group
B – Use As Required
C – Change From Previous Type
D – Order By The Meter
E – Order By The Centimeter
F – Not Shown
G – Order By The Inch
I – Refer To Hydraulic Information System
M – Metric Part
R – Remfg Part May Be Available
Y – Separate Illustration
Z – Not Serviced Separately

SIS *New Feature*

14. DESCRIPTION OF TYPE CHANGES

Type - A type is defined as any configuration change that requires an additional Information Element for an Arrangement, Group, or Assembly. If serial number breaks for types are not available, a type # (Type 1, Type 2, etc.) will be displayed in the caption. These "type" changes are identified with a "C" note (change from previous type) in the Parts List. Only the "types" that apply to this Parts Manual will be included. Additional types may exist causing "C" notes to appear on an Information Element when no other types are shown.

15.<END>

This symbol indicates the end of an information element.

NOTE:

Continuing improvement and advancement of product design may cause changes to your machine which may not be included in this publication. Whenever a question arises regarding your Caterpillar product or this publication, please consult your Caterpillar dealer for the latest available information.

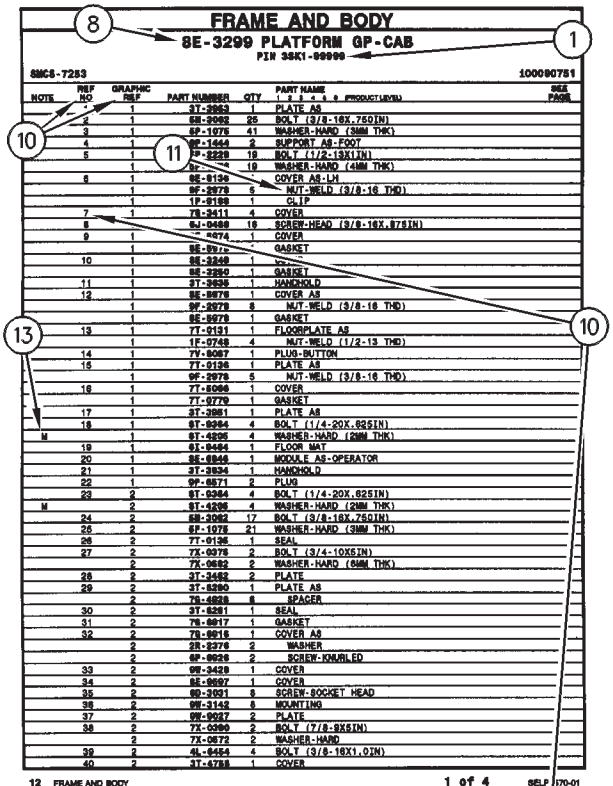

FRAME AND BODY

8E-3299 PLATFORM GP-CAB

PIN 3SK1-99999

SMCS-7283 100090751

NOTE	REF NO	GRAPHIC REF	PART NUMBER	QTY	PART NAME 1 2 3 4 5 6 (PRODUCT LEVEL)	SEE PAGE
	*	1	3T-3863	1	PLATE AS	
	2	1	5E-2062	25	BOLT (3/8-16X.750IN)	
	3	1	5P-1075	41	WASHER-HARD (38MM THK)	
	4	1	9P-1444	2	SUPPORT AS-FOOT	
	5	1	7P-2229	18	BOLT (1/2-13X1IN)	
		1	5P-[illegible]	18	WASHER-HARD (41MM THK)	
	6	1	8E-6136	*	COVER AS-LH	
		1	9F-2978	5	NUT-WELD (3/8-16 THD)	
		1	1P-0169	1	CLIP	
	7	1	7S-2411	4	COVER	
	8		9J-0498	18	SCREW-HEAD (3/8-16X.875IN)	
	9	1	[illegible]-2474	1	COVER	
		1	8E-[illegible]		GASKET	
	10	1	8E-3249	1	[illegible]	
		1	8E-3250	1	GASKET	
	11	1	3T-3536	1	HANDHOLD	
	12	1	8E-8078	1	COVER AS	
		1	9F-2978	8	NUT-WELD (3/8-16 THD)	
		1	8E-8079	1	GASKET	
	13	1	7T-0131	1	FLOORPLATE AS	
		1	1F-0748	4	NUT-WELD (1/2-13 THD)	
	14	1	7V-8087	1	PLUG-BUTTON	
	15	1	7T-0136	1	PLATE AS	
		1	9F-2978	5	NUT-WELD (3/8-16 THD)	
	16	1	7T-8086	1	COVER	
		1	7T-0779	1	GASKET	
	17	1	3T-3861	1	PLATE AS	
	18	1	6T-0364	4	BOLT (1/4-20X.625IN)	
M		1	9T-4295	4	WASHER-HARD (20MM THK)	
	19	1	6L-8494	1	FLOOR MAT	
	20	1	8E-8846	1	MODULE AS-OPERATOR	
	21	1	3T-3834	1	HANDHOLD	
	22	1	9P-8571	2	PLUG	
	23	2	6T-0364	4	BOLT (1/4-20X.625IN)	
M		2	9T-4295	4	WASHER-HARD (20MM THK)	
	24	2	5E-2062	17	BOLT (3/8-16X.750IN)	
	25	2	5P-1075	21	WASHER-HARD (38MM THK)	
	26	2	7T-0135	1	SEAL	
	27	2	7X-0075	2	BOLT (3/4-10X5IN)	
		2	7X-0602	2	WASHER-HARD (64MM THK)	
	28	2	3T-3452	2	PLATE	
	29	2	3T-8290	1	PLATE AS	
		2	7S-4828	8	SPACER	
	30	2	3T-8291	1	SEAL	
	31	2	7S-8817	1	GASKET	
	32	2	7S-8815	1	COVER AS	
		2	2R-2276	2	WASHER	
		2	9P-8926	2	SCREW-KNURLED	
	33	2	9W-3429	1	COVER	
	34	2	8E-8697	1	COVER	
	35	2	9D-3031	8	SCREW-SOCKET HEAD	
	36	2	9W-3142	8	MOUNTING	
	37	2	9W-8027	2	PLATE	
	38	2	7X-0090	2	BOLT (7/8-9X5IN)	
		2	7X-0672	2	WASHER-HARD	
	39	2	4L-6454	4	BOLT (3/8-16X1.0IN)	
	40	2	3T-4788	1	COVER	

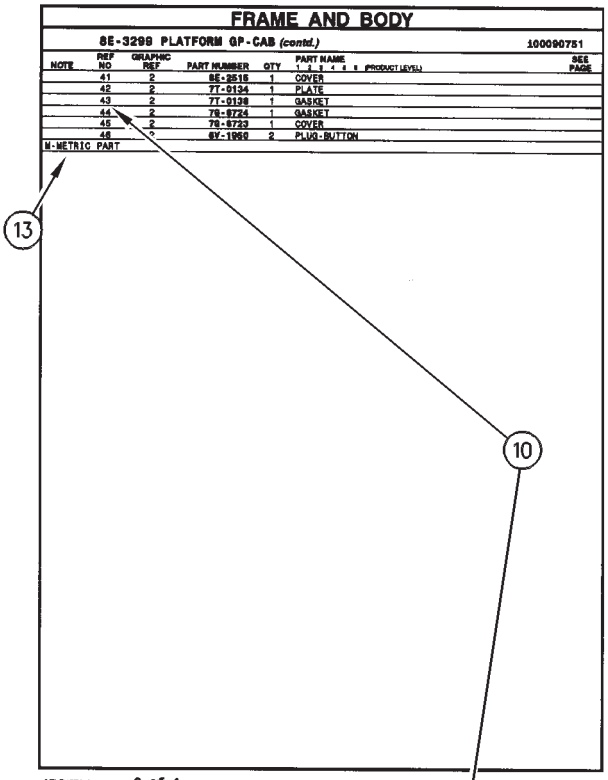

FRAME AND BODY

8E-3299 PLATFORM GP-CAB (contd.) 100090751

NOTE	REF NO	GRAPHIC REF	PART NUMBER	QTY	PART NAME 1 2 3 4 5 6 (PRODUCT LEVEL)	SEE PAGE
	41	2	8E-2516	1	COVER	
	42	2	7T-0134	1	PLATE	
	43	2	7T-0138	1	GASKET	
	44	2	7S-8724	1	GASKET	
	45	2	7S-8723	1	COVER	
	46	2	6V-1950	2	PLUG-BUTTON	

M-METRIC PART

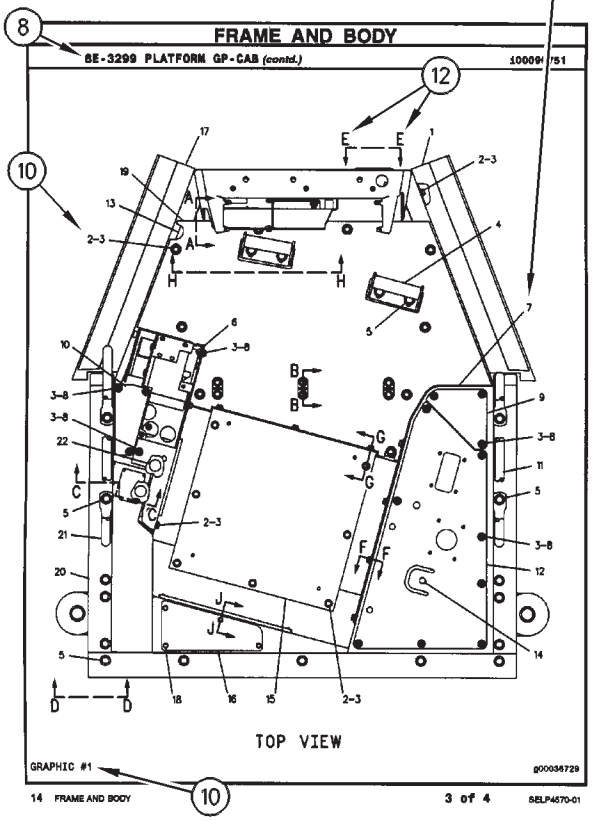

FRAME AND BODY

8E-3299 PLATFORM GP-CAB (contd.) 100090751

TOP VIEW

GRAPHIC #1 g00036729

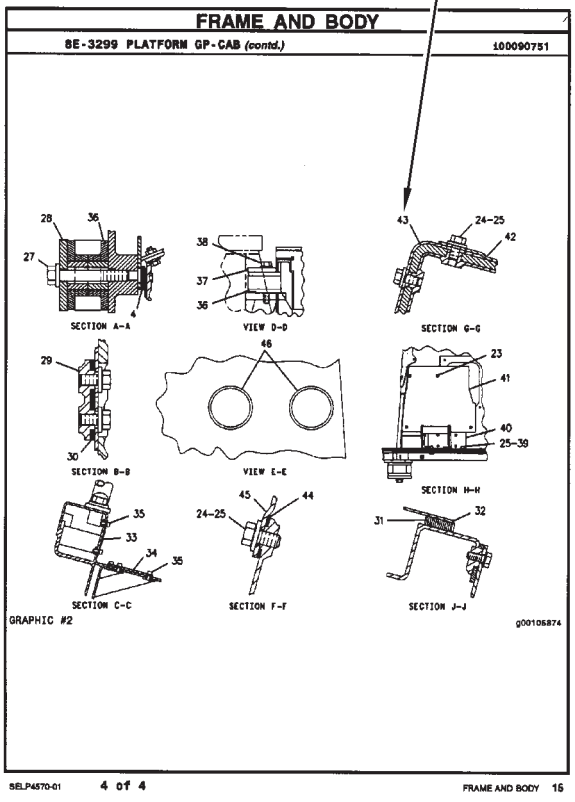

FRAME AND BODY

8E-3299 PLATFORM GP-CAB (contd.) 100090751

SECTION A-A

VIEW D-D

SECTION G-G

SECTION B-B

VIEW E-E

SECTION H-H

SECTION C-C

SECTION F-F

SECTION J-J

GRAPHIC #2 g00105874

REPAIR ALTERNATIVES

REMANUFACTURED COMPONENTS

As an option when making repairs consider Caterpillar Remanufactured Components. Components that are available through the Caterpillar Remanufactured Program are identified three ways in the parts book:

- with the letter R in the note field of the parts list
- with an R* at the beginning of the first line of the caption
- with an *R at the end of the first line of the caption

Typical components included in the Remanufacturing Program include:

ALTERNATORS
CONNECTING RODS
CRANKSHAFTS - UNDERSIZE
CRANKSHAFTS - UPGRADE TO NEW
CYLINDER HEADS
ELECTRONIC CONTROL MODULES (ECM)
ELECTRONIC SENSORS
FUEL INJECTORS
FUEL NOZZLES
FUEL PUMPS
GOVERNORS
OIL PUMPS
PISTONS
SHORT BLOCKS
STARTERS
TURBOCHARGERS - COMPLETE
TURBOCHARGER CARTRIDGES
WATER PUMPS

Caterpillar Remanufactured engines for many engine arrangements are also available.

SUPPLEMENTAL COOLANT ADDITIVES

CUSTOMER BENEFITS:

Protects against cavitation, foam, erosion, corrosion, and scale buildup in cooling systems.

- Provides measured coolant conditioner.

DESCRIPTION:

Additives deplete from the coolant with normal operation. For this reason, Supplemental Coolant Additives (SCA) must be added to all heavy duty coolants at regular intervals. In addition, when not using a fully formulated, pre-charged antifreeze, like Caterpillar's DEAC, an initial charge of SCA must be added to the cooling system. The amount of SCA added to the system is dependent on the capacity of the system.

The SCA for initial fill is provided as a liquid. SCA's for maintenance intervals are available in liquid form and as a spin-on element. (No Spin-on available for 3600 Family of Engines)

NOTE:

The amount of SCA added at initial fill is not the same as the amount added at maintenance intervals.

The coolant additive elements can be used with any ethylene or propylene glycol type antifreeze which meets ASTM D4985 or ASTM D5345 Specifications.

NOTE:

For use with standard heavy duty coolant only, not for use with Extended Life Coolant.

PARTS NEEDED:

Cooling System Capacity		Liquid SCA at Initial Fill	Liquid SCA at Maintenance*	Spin-on SCA Maintenance Element*
Liters	Gallons			
22-30	(6-8)	3P-2044 (1)	6V-3542 (1)	111-2370 (1)
30-38	(8-10)	3P-2044 (1) 6V-3542 (1)	111-2372 (1)	111-2369 (1)
38-49	(10-13)	3P-2044 (1) 8T-1589 (1)	111-2372 (1)	111-2369 (1)
49-64	(13-17)	3P-2044 (2)	8T-1589 (1)	9N-3368 (1)
64-83	(17-22)	3P-2044 (2) 8T-1589 (1)	111-2372 (1) 6V-3542 (1)	111-2371 (1)
83-114	(22-30)	3P-2044 (3) 8T-1589 (1)	3P-2044 (1)	9N-3718 (1)
114-163	(30-43)	3P-2044 (5)	3P-2044 (1) 6V-3542 (1)	111-2371 (2)
163-242	(43-64)	3P-2044 (8)	3P-2044 (2)	9N-3718 (2)

** Normal maintenance period is 250 hrs. See your Operation and Maintenance Manual for complete coolant maintenance instructions.*

( ) Indicates quantity required.

MAINTENANCE PARTS

DESCRIPTION	PART NUMBER	QTY	WHERE USED	PAGE
AIR INLET AND EXHAUST SYSTEM				
FILTER ELEMENT AS-AIR (PRIMARY)	106-3969	1	AIR CLEANER GP	137
FILTER ELEMENT AS-AIR (SECONDARY)	106-3973	1	AIR CLEANER GP	137
GASKET-EXHAUST MANIFOLD	129-9452	6	MANIFOLD GP-EXHAUST	147
BASIC ENGINE				
BELT-SERPENTINE	166-1324	1	PULLEY GP	73
PLUG-DRAIN	109-5839	1	PAN GP-OIL	69
PLUG-O-RING	9S-4185	1	HOUSING GP-FLYWHEEL	55
SEAL-VALVE COVER	242-9537	1	COVER GP-VALVE MECHANISM	18
COOLING SYSTEM				
CAP AS (COOLANT FILL)	204-0920	1	RADIATOR & AFTERCOOLER GP	121
		1	RADIATOR & AFTERCOOLER GP	124
CAP AS (COOLANT OVERFLOW)	171-3370	1	RADIATOR & AFTERCOOLER GP	121
		1	RADIATOR & AFTERCOOLER GP	124
CAP-RADIATOR	099-0001	1	RADIATOR GP	131
		1	RADIATOR GP	133
		1	RADIATOR GP	136
HOSE	171-9015	1	RADIATOR & AFTERCOOLER GP	121
		1	RADIATOR & AFTERCOOLER GP	124
		1	RADIATOR GP	128
HOSE-RADIATOR	171-9016	1	RADIATOR & AFTERCOOLER GP	121
		1	RADIATOR & AFTERCOOLER GP	124
		1	RADIATOR GP	128
REGULATOR-TEMPERATURE (92-DEG C)	248-5513	1	LINES GP-WATER	116

MAINTENANCE PARTS

DESCRIPTION	PART NUMBER	QTY	WHERE USED	PAGE
ELECTRICAL AND STARTING SYSTEM				
BATTERY (12-VOLT)	101-4000	1	BATTERY & WIRING GP	209
BATTERY GP (12-VOLT)	9X-9730	2	BATTERY & WIRING GP	209
		2	BATTERY & WIRING GP	224
	9X-9731	2	BATTERY & WIRING GP	217
CIRCUIT BREAKER AS (15-AMPERE)	6T-3643	4	PANEL GP-CIRCUIT BREAKER	249
CIRCUIT BREAKER AS (15-AMPERE) (CAB LGT, CHASSIS LGT, DOME LT)	6T-3643	1	PANEL GP-CIRCUIT BREAKER	253
CIRCUIT BREAKER AS (15-AMPERE) (MACHINE ECM)	6T-3643	1	PANEL GP-CIRCUIT BREAKER	253
CIRCUIT BREAKER AS (15-AMPERE) (MACHINE ECM, TIMER RELAY)	6T-3643	1	PANEL GP-CIRCUIT BREAKER	253
CIRCUIT BREAKER AS (15-AMPERE) (VIDS ECM)	6T-3643	1	PANEL GP-CIRCUIT BREAKER	253
CIRCUIT BREAKER AS (30-AMPERE)	139-4724	3	PANEL GP-CIRCUIT BREAKER	249
		1	WIRING GP-REFUELING PUMP	316
		1	WIRING GP-REFUELING PUMP	318
CIRCUIT BREAKER AS (30-AMPERE) (A/C, AUX, CTWT, LUB, PNL, WASH)	139-4724	1	PANEL GP-CIRCUIT BREAKER	253
CIRCUIT BREAKER AS (30-AMPERE) (AUX CKT, BOOM LT, HORN, KEY SW)	139-4724	1	PANEL GP-CIRCUIT BREAKER	253
CIRCUIT BREAKER AS (30-AMPERE) (AUX CKT, CONV, LIGHTER, WASHER)	139-4724	1	PANEL GP-CIRCUIT BREAKER	253
CIRCUIT BREAKER AS (80-AMPERE)	171-2210	1	PANEL GP-CIRCUIT BREAKER	249
CIRCUIT BREAKER AS (80-AMPERE) (ALTERNATOR)	171-2210	1	PANEL GP-CIRCUIT BREAKER	253
FUSE (10-AMPERE)	9W-1442	13	WIRING GP-CONSOLE	300
		13	WIRING GP-CONSOLE	303
FUSE (15-AMPERE)	9W-1441	3	WIRING GP-CONSOLE	300
		3	WIRING GP-CONSOLE	303
FUSE (5-AMPERE)	139-5345	9	WIRING GP-CONSOLE	300
		9	WIRING GP-CONSOLE	303
KEY (BATTERY DISCONNECT)	8H-5306	1	SWITCH GP-DISCONNECT	284
		1	SWITCH GP-DISCONNECT	285
LAMP (24-VOLT, 0.2-AMPERE)	7N-5876	3	WIRING GP-CAB	292
LAMP-HALOGEN (24-VOLT, 70-WATT)	9X-3463	1	LAMP GP-FLOOD	238
		1	LAMP GP-FLOOD	239
		1	LAMP GP-FLOOD	240
FRAME AND BODY				
FUSE (10-AMPERE)	3K-8782	1	PUMP GP-LUBRICATION	392
KEY (CORPORATE)	278-1585		BOX GP-BATTERY	332

MAINTENANCE PARTS

DESCRIPTION	PART NUMBER	QTY	WHERE USED	PAGE
FUEL SYSTEM				
CAP AS-FILLER (FUEL TANK)	7X-7700	1	TANK GP-FUEL	193
		1	TANK GP-FUEL	195
ELEMENT-WATER SEPARATOR	133-5673	1	FILTER GP-WATER SEP & FUEL	168
FILTER-FUEL (ADVANCED EFFICIENCY)	1R-0762	2	FILTER GP-FUEL	167
GASKET	9Y-8389	1	PUMP GP-FUEL PRIMING	187
PLUG-O-RING	9S-4185	2	LINES GP-FUEL	177
		2	LINES GP-FUEL	181
STRAINER AS-FUEL	176-0490	1	PUMP GP-REFUELING	189
STRAINER AS-FUEL (FLOAT GAUGE)	303-9933	1	TANK GP-FUEL	195
STRAINER-FUEL	9P-7121	1	TANK GP-FUEL	193

MAINTENANCE PARTS

DESCRIPTION	PART NUMBER	QTY	WHERE USED	PAGE
HYDRAULIC SYSTEM				
BREATHER (SWING DRIVE)	114-8234	1	DRIVE GP-SWING	497
		1	DRIVE GP-SWING	502
	4H-6112	1	DRIVE GP-SWING	499
BREATHER AS (SWING DRIVE)	227-6221	1	DRIVE GP-SWING	499
	231-6864	1	DRIVE GP-SWING	502
BREATHER GP (HYDRAULIC TANK)	212-5467	1	TANK & FILTER GP-HYDRAULIC	728
FILTER (EDGE)	119-2265	1	VALVE GP	741
		1	VALVE GP-MAIN CONTROL	819
		1	VALVE GP-MAIN CONTROL	821
		1	VALVE GP-MAIN CONTROL	823
		1	VALVE GP-MAIN CONTROL	826
		1	VALVE GP-MAIN CONTROL	829
		1	VALVE GP-MAIN CONTROL	832
		1	VALVE GP-MAIN CONTROL	835
		1	VALVE GP-MAIN CONTROL	838
FILTER ELEMENT AS-OIL (STANDARD EFFICIENCY) (HYDRAULIC, RETURN)	126-2081	1	FILTER GP-OIL	516
FILTER ELEMENT AS-OIL (ULTRA HIGH EFFICIENCY) (HYDRAULIC RETURN)	179-9806	1	FILTER GP-OIL	519
FILTER ELEMENT-OIL (ULTRA HIGH EFFICIENCY)	146-9290	1	FILTER GP-OIL	515
FILTER ELEMENT-OIL (ULTRA HIGH EFFICIENCY) (HYDRAULIC)	146-9290	1	FILTER GP-OIL	525
FILTER-OIL (ADVANCED EFFICIENCY) (HYDRAULIC)	185-0337	1	FILTER GP-OIL	518
	4T-6788	1	FILTER GP-OIL	512
PLUG-O-RING	9S-4185	1	LINES GP-PILOT	621
		1	LINES GP-PUMP	636
		1	LINES GP-PUMP	640
		2	MANIFOLD & VALVE GP	676
		4	MANIFOLD & VALVE GP	678
		1	MANIFOLD & VALVE GP	680
		1	MANIFOLD & VALVE GP	682
		1	VALVE GP	741
		2	VALVE GP-CHECK	747
		1	VALVE GP-CHECK	748
			VALVE GP-MAIN CONTROL	819
		1	VALVE GP-MAIN CONTROL	821
		1	VALVE GP-MAIN CONTROL	823
		1	VALVE GP-MAIN CONTROL	826
		1	VALVE GP-MAIN CONTROL	829
		1	VALVE GP-MAIN CONTROL	832
		1	VALVE GP-MAIN CONTROL	835
		1	VALVE GP-MAIN CONTROL	838
PLUG-OIL DRAIN	6I-0723	1	TANK & FILTER GP-HYDRAULIC	728
SCREEN AS	209-6014	1	SCREEN GP-HYDRAULIC	726

MAINTENANCE PARTS

DESCRIPTION	PART NUMBER	QTY	WHERE USED	PAGE
LUBRICATION SYSTEM				
CAP AS-ENGINE OIL FILLER	163-9361	1	FILLER GP-ENGINE OIL	90
FILTER AS-ENGINE OIL (STANDARD EFFICIENCY)	1R-0716	1	FILTER GP-ENGINE OIL	91
FILTER-ENGINE OIL (ADVANCED EFFICIENCY)	1R-1808	1	FILTER GP-ENGINE OIL	92
OPERATOR STATION				
BLADE AS-WIPER	6C-9142	1	COVER GP-WIPER MOTOR	1023
BLADE AS-WIPER (558-MM)	6W-3924	1	WIPER & WASHER GP-WINDOW	1076
CAP-WIPER	6C-9104	1	COVER GP-WIPER MOTOR	1023
FILTER ELEMENT-CAB AIR	108-0688	1	AIR CONDITIONER & MOUNTING GP	982
		1	AIR CONDITIONER & MOUNTING GP	984
LAMP (24-VOLT)	6C-9122	2	COVER GP-WIPER MOTOR	1023
	7N-1996	1	MONITOR & MTG GP-OPERATOR	1046
RECEIVER GP-REFRIGERANT DRYER	175-7162	1	LINES GP-AIR CONDITIONER	1040
SCREEN-FILTER	8T-5913	1	WASHER GP-WINDOW	1068
SEAT BELT GP	122-9625	1	SEAT GP	1057

INDEX

Name	Page
A	
ACCUMULATOR & MTG GP-HYDRAULIC	440
ACCUMULATOR GP-HYDRAULIC	441
	442
	443
ACCUMULATOR-REFRIGERANT	1040
ACTUATOR GP	444
ACTUATOR GP-PUMP	445
	446
ADAPTER GP-FAST FILL FUEL	163
ADAPTER GP-PUMP DRIVE	10
ADJUSTER GP-BUCKET–UB/WB/HB/JB-FAMILY	955
ADJUSTMENT GP-HYDRAULIC TRACK	414
	415
AFTERCOOLER AS	131
	133
AIR CLEANER GP	137
AIR CONDITIONER & MOUNTING GP	982
	984
AIR CONDITIONER AR	986
AIR CONDITIONER GP	987
	990
ALARM GP	200
ALARM GP-TRAVEL	200
ALTERNATOR GP-CHARGING	201
	203
	204
	205
B	
BASE GP-OIL FILTER	87
BASE GP-OIL FILTER–ENGINE	88
BASE GP-OIL FILTER–HYDRAULIC	447
	448
	449
BASE GP-VALVE COVER & INJ HARN	11
BATTERY & WIRING GP	207
	208
	216
	224
BATTERY (12-VOLT)	209
BATTERY GP (12-VOLT)	209
	217
	224
BELT-SERPENTINE	73
BLADE AS-WIPER	1023
BLADE AS-WIPER (558-MM)	1076
BOOM AR	881
BOOM AR-MASS	882
BOOM AR-REACH	883
BOOM GP	884
	886
	888
	890
BOX & MTG GP-STORAGE	326
BOX AS-STORAGE	994
BOX GP-BATTERY	328
	330
	332
BOX GP-STORAGE	333
BREATHER (SWING DRIVE)	497
	499
	502
BREATHER AS (SWING DRIVE)	499
	502
BREATHER GP (HYDRAULIC TANK)	728
BUCKET & ADJUSTER GP	959
BUCKET & ADJUSTER GP–GENERAL PURPOSE, HB-FAMILY	958
	960
	962
BUCKET & ADJUSTER GP–HEAVY DUTY, HB-FAMILY	961
BUCKET & ADJUSTER GP–HEAVY DUTY, JB-FAMILY	963
BUCKET & ADJUSTER GP–HEAVY-DUTY ROCK	957
BUCKET & ADJUSTER GP–HEAVY-DUTY ROCK, HB-FAMILY	956
BUCKET AS-GENERAL PURPOSE–HB-FAMILY	964
	965
	966
BUCKET AS-HEAVY DUTY ROCK	968
	969
BUCKET AS-HEAVY DUTY ROCK–HB-FAMILY	967
	970
BUCKET AS-HEAVY DUTY ROCK–JB-FAMILY	971
C	
CAB GP	995
	996
	1000
CAMSHAFT GP	12
CAP AS (COOLANT FILL)	121
	124
CAP AS (COOLANT OVERFLOW)	121
	124
CAP AS-ENGINE OIL FILLER	90
CAP AS-FILLER (FUEL TANK)	193
	195
CAP-RADIATOR	131
	133
	136

INDEX

Name	Page
CAP-WIPER	1023
CHAIN GP-COUNTERWEIGHT	335
CHASSIS AR	1
CIRCUIT BREAKER AS (15-AMPERE)	249
CIRCUIT BREAKER AS (15-AMPERE) (CAB LGT, CHASSIS LGT, DOME LT)	253
CIRCUIT BREAKER AS (15-AMPERE) (MACHINE ECM)	253
CIRCUIT BREAKER AS (15-AMPERE) (MACHINE ECM, TIMER RELAY)	253
CIRCUIT BREAKER AS (15-AMPERE) (VIDS ECM)	253
CIRCUIT BREAKER AS (30-AMPERE)	249
	316
	318
CIRCUIT BREAKER AS (30-AMPERE) (A/C, AUX, CTWT, LUB, PNL, WASH)	253
CIRCUIT BREAKER AS (30-AMPERE) (AUX CKT, BOOM LT, HORN, KEY SW)	253
CIRCUIT BREAKER AS (30-AMPERE) (AUX CKT, CONV, LIGHTER, WASHER)	253
CIRCUIT BREAKER AS (80-AMPERE)	249
CIRCUIT BREAKER AS (80-AMPERE) (ALTERNATOR)	253
COMPRESSOR GP-REFRIGERANT	1001
	1002
CONDENSER & MTG GP-REFRIGERANT	1003
CONSOLE GP-OPERATOR	1004
	1005
	1007
	1008
CONTROL & MTG GP-ENGINE ELEK	227
CONTROL & MTG GP-JOYSTICK	1009
CONTROL & MTG GP-MACHINE	228
CONTROL & MTG GP-PEDAL	1010
CONTROL AR-AUXILIARY	450
	451
	452
CONTROL GP-AIR & TEMPERATURE	1011
CONTROL GP-ENGINE ELECTRONIC	229
CONTROL GP-HANDLE	1012
	1013
CONTROL GP-HEAT & AIR COND	1014
	1016
CONTROL GP-HYDRAULIC PEDAL	1017
CONTROL GP-JOYSTICK–LH	1018
CONTROL GP-JOYSTICK–RH	1019
	1020
CONTROL GP-PEDAL	1021
CONTROL GP-UNPRGMED MONITOR	1022
CONTROL GP-UNPROGRAMMED	230
CONTROL GP-WASHER & WIPER	1023
COOLER & MTG GP-HYDRAULIC OIL	453
	456
COOLER GP-FUEL	165
COOLER GP-HYDRAULIC OIL	459
	460
CORE AS-ENGINE OIL COOLER	116
CORE AS-FUEL COOLER	165
CORE AS-OIL COOLER	459
CORE AS-OIL COOLER (HYDRAULIC)	460
COUNTERWEIGHT AR	337
COUNTERWEIGHT GP	338
	339
COUPLING GP-FLEXIBLE	461
COUPLING GP-PUMP	462
COVER GP-CONTROL VALVE	340
COVER GP-CYLINDER BLOCK	13
	14
COVER GP-FRONT HOUSING	15
	16
	17
COVER GP-HOOD	341
COVER GP-VALVE MECHANISM	18
	19
	20
COVER GP-WIPER MOTOR	1023
CRANKSHAFT GP	21
CYLINDER & LINES GP-BOOM–LH	463
CYLINDER & LINES GP-BOOM–RH	464
CYLINDER & LINES GP-BUCKET	465
	466
	467
	468
CYLINDER & LINES GP-STICK	469
CYLINDER & SEAL GP-BOOM	470
CYLINDER & SEAL GP-BUCKET	471
	472
	473
	474
CYLINDER & SEAL GP-HYDRAULIC	475
	476
CYLINDER BLOCK AS	22
CYLINDER BLOCK GP	24
	26
CYLINDER GP-BOOM	477
CYLINDER GP-BUCKET	479
	481
	483
	485
CYLINDER GP-COUNTERWEIGHT	487
	489
CYLINDER GP-HYDRAULIC	491
	493
CYLINDER HEAD AS	28
	30
	31
CYLINDER HEAD GP	34
	36
	38

INDEX

Name	Page
	39
	40
D	
DAMPER & PULLEY GP	42
	43
DOOR AS-ACCESS	343
DOOR AS-ACCESS– ENGINE COMPARTMENT	342
DOOR GP-ACCESS	344
DOOR GP-CAB	1025
DRIVE GP-FAN	44
DRIVE GP-FINAL–WITHOUT MOTOR	321
DRIVE GP-PUMP	495
DRIVE GP-SWING	496
	501
DRIVE GP-SWING– WITHOUT MOTOR, FRONT	497
	499
DRIVE GP-SWING– WITHOUT MOTOR, REAR	502
DUCT GP-AIR	1027
DUCT GP-DEFROSTER	1028
E	
ELECTRICAL AR	231
ELECTRONICS GP-MACHINE	232
ELECTRONICS GP-MONITOR	233
	234
	235
	236
	237
ELEMENT-WATER SEPARATOR	168
ENGINE AR-COMPLETE	3
	4
ENGINE AR-CORE	5
	6
EXTENSION GP-EXHAUST	138
F	
FAN GP-SUCTION	108
	111
FASTENER GP-CYLINDER HEAD	34
	40
FASTENER GP-FRONT HOUSING	45
FASTENER GP-OIL PUMP MOUNTING	89
FASTENER GP-SWING & FINAL DR	504
FASTENER GP-VALVE MECHANISM	46
FILLER GP-ENGINE OIL	90
FILM (RETURN FILTER RESET)	513
	521
	523
FILM GP	1078
	1079
	1080
FILM GP–SMARTBOOM	1081
FILM-IDENTIFICATION	987
	1014
FILM-IDENTIFICATION (AIR CONDITIONER)	990
FILM-IDENTIFICATION (BIODEGRADABLE HYDRAULIC OIL)	532
FILM-IDENTIFICATION (CATERPILLAR)	996
FILM-IDENTIFICATION (ELECTRONIC CONTROL MODULE) (SILVER ULTRAPLATE)	233
FILM-INFORMATION (TIE-DOWN)	1089
	1094
FILM-INSTRUCTION (ENGINE SHUTOFF)	211
	219
FILM-INSTRUCTION (HYDRAULIC OIL RETURN FILTER)	516
	519
FILM-INSTRUCTION (NO STEP)	1089
	1094
FILM-INSTRUCTION (PULL RING, ALTERNATE EXIT)	996
FILM-INSTRUCTION (REFUELING PUMP)	189
FILM-INSTRUCTION (WINDOW CLEANING, READ OMM)	1094
FILM-SERVICE METER	1046
FILM-WARNING (AUTO ENG SPEED CONTROL)	1089
FILM-WARNING (COUNTERWEIGHT REMOVAL SYSTEM)	1084
	1086
FILM-WARNING (ENGINE SPEED CONTROL)	1084
	1086
FILM-WARNING (HIGH PRESSURE, READ OMM, U.S.)	1094
FILM-WARNING (HOT SURFACE, HANDS CLEAR, U.S.)	1094
FILM-WARNING (JUMP START, READ OMM)	1094
FILM-WARNING (UNIVERSAL, READ OMM, U.S.)	1094
FILTER & LINES GP-HYDRAULIC– HYDRAULIC RETURN	507
	510
FILTER (EDGE)	741
	819
	821
	823
	826
	829
	832
	835
	838

INDEX

Name	Page
FILTER AS-ENGINE OIL (STANDARD EFFICIENCY)	91
FILTER ELEMENT AS-AIR (PRIMARY)	137
FILTER ELEMENT AS-AIR (SECONDARY)	137
FILTER ELEMENT AS-OIL (STANDARD EFFICIENCY) (HYDRAULIC, RETURN)	516
FILTER ELEMENT AS-OIL (ULTRA HIGH EFFICIENCY) (HYDRAULIC RETURN)	519
FILTER ELEMENT-CAB AIR	982 984
FILTER ELEMENT-OIL (ULTRA HIGH EFFICIENCY)	515
FILTER ELEMENT-OIL (ULTRA HIGH EFFICIENCY) (HYDRAULIC)	525
FILTER GP-ENGINE OIL	91 92
FILTER GP-FUEL	167
FILTER GP-OIL	513 515 516 521 523 525
FILTER GP-OIL–HYDRAULIC	512 518
FILTER GP-OIL–HYDRAULIC RETURN	519
FILTER GP-WATER SEP & FUEL	168
FILTER-ENGINE OIL (ADVANCED EFFICIENCY)	92
FILTER-FUEL (ADVANCED EFFICIENCY)	167
FILTER-OIL (ADVANCED EFFICIENCY) (HYDRAULIC)	512 518
FINAL DRIVE GP	321
FINAL DRIVE GP–WITH MOTOR	323
FITTING GP-RADIATOR VENT	114 115
FLOOR MAT (OPERATOR PLATFORM)	1052
FLYWHEEL GP	47
FRAME AR-UNDERCARRIAGE	416
FRAME GP-UNDERCARRIAGE	417 418
FRAME GP-UPPER	345 347 349 350
FRAME GP-UPPER FRONT WINDOW	1029
FUMES DISPOSAL GP	93
FUSE (10-AMPERE)	300 303 392
FUSE (15-AMPERE)	300 303
FUSE (5-AMPERE)	300 303

G

Name	Page
GASKET	187
GASKET-EXHAUST MANIFOLD	147
GAUGE GP-OIL LEVEL (DIPSTICK)	94
GAUGE GP-SIGHT–FUEL LEVEL	169
GAUGE GP-SIGHT–HYDRAULIC OIL LEVEL	526
GAUGE-OIL LEVEL (SWING DRIVE)	497 499 502
GEAR & BEARING GP-SWING	351 353 355 356 357 358
GEAR GP-CAMSHAFT	48
GEAR GP-FRONT	49
GEAR GP-REAR	51 53
GENERAL AR	2
GUARD AR-CYLINDER–BUCKET	527
GUARD AR-VANDALISM	1030 1031
GUARD GP-BOTTOM	359 361
GUARD GP-CYLINDER–BUCKET	528
GUARD GP-OVERHEAD	1032
GUARD GP-SWIVEL	363
GUARD GP-TRACK GUIDE	420 422
GUARD GP-TRACK GUIDE–CENTER	419
GUARD GP-TRACK GUIDE–FRONT, CENTER, REAR	421
GUARD GP-TRAVEL MOTOR	423
GUARD GP-VANDALISM	1034 1035
GUIDE GP-OIL LEVEL GAUGE	95 96

H

Name	Page
HANDRAIL GP	364
HARNESS AS (TILT CAB)	312 314
HARNESS AS-CHASSIS	208 216
HARNESS AS-ENGINE	209 217 307
HARNESS AS-HEATER & AIR COND	982 984

INDEX

Name	Page
HARNESS AS-PANEL	257
HARNESS AS-PANEL (CIRCUIT BREAKER)	249
HARNESS AS-PLATFORM	312, 314
HARNESS AS-POWER	208, 216
HARNESS AS-POWER (NEUTRAL START RELAY)	210, 218
HARNESS AS-PUMP (REFUELING PUMP)	318
HARNESS AS-RADIO	300
HARNESS AS-SENSOR	312
HARNESS AS-SENSOR (SPEED)	268
HARNESS AS-SWITCH (HYDRAULIC OIL FILTER)	210, 218
HARNESS AS-SWITCH (HYDRAULIC OIL)	210, 218
HARNESS AS-WIRING	11, 269
HARNESS AS-WIRING (AUTOLUBE, BOOM LIGHTS)	210, 218
HARNESS AS-WIRING (COUNTERWEIGHT)	208, 216
HARNESS AS-WIRING (REFUELING PUMP, START)	318
HARNESS AS-WIRING (REFUELING PUMP, STOP)	318
HEAD GP-MOTOR	695
HEAD GP-PUMP	530
HEATER GP-FUEL (WATER SEPARATOR, 12-VOLT)	168
HOOD & GUARD GP	366, 371, 374
HOOD GP-ENGINE	383, 385, 386
HORN AS (24-VOLT, HIGH TONE)	1036
HORN AS (24-VOLT, LOW TONE)	1036
HORN GP-ELECTRIC	1036
HOSE	121, 124, 128
HOSE-RADIATOR	121, 124, 128
HOUSING GP-FLYWHEEL	55
HOUSING GP-FRONT	56, 59
HYDRAULIC AR	532, 533, 534

I

Name	Page
IDLER GP-FRONT	424, 425, 426, 427
INDICATOR AS	513, 521
INDICATOR AS (RETURN FILTER RESET)	523
INDICATOR AS-AIR FILTER CHANGE (AIR RESTRICTION) (AIR FILTER SERVICE)	137
INDICATOR-RESTRICTION	515
INJECTOR GP-FUEL	170
INSTALLATION AR-ENGINE	7, 8, 9
INSTALLATION GP-RADIO	1037

K

Name	Page
KEY (BATTERY DISCONNECT)	284, 285
KEY (CORPORATE)	332
KIT-CONNECTING PLUG (2-PIN)	1011
KIT-INDICATOR–HYDRAULIC OIL FILTER	535
KIT-RECEPTACLE (12-PIN)	249, 253, 300, 303, 312, 1021
KIT-RECEPTACLE (2-PIN)	253, 254, 300, 303, 307
KIT-RETAINING BOLT	229

L

Name	Page
LAMP (24-VOLT)	1023, 1046
LAMP (24-VOLT, 0.2-AMPERE)	292
LAMP GP-FLOOD	238
LAMP GP-FLOOD–BOOM, STICK	240
LAMP GP-FLOOD–FRONT, RH	239
LAMP-HALOGEN (24-VOLT, 70-WATT)	238, 239, 240
LATCH GP-FRONT WINDOW–LH	1039
LATCH GP-FRONT WINDOW–RH	1038
LEVER GP-CONTROL	536
LIFTING GP-ENGINE	62, 63

INDEX

Name	Page
LIGHTING GP-CAB	241
LIGHTING GP-CHASSIS–FRONT	242
LIGHTING GP-FLOOD	243
	245
	247
LINES GP-AIR	139
	140
	141
	142
	144
LINES GP-AIR CONDITIONER	1040
LINES GP-AUXILIARY HYDRAULIC	573
	576
LINES GP-AUXILIARY HYDRAULIC–BOOM	537
	539
LINES GP-AUXILIARY HYDRAULIC–BOOM, MEDIUM PRESSURE	561
	563
LINES GP-AUXILIARY HYDRAULIC–MASS BOOM	541
	543
LINES GP-AUXILIARY HYDRAULIC–STICK, HIGH PRESSURE	545
	547
	549
	551
	553
	555
	557
	559
LINES GP-AUXILIARY HYDRAULIC–STICK, MEDIUM PRESSURE	565
	567
	569
	571
LINES GP-BOOM	579
	581
	585
	589
LINES GP-BOOM CYLINDER	599
LINES GP-BOOM CYLINDER–LH	595
LINES GP-BOOM CYLINDER–RH	597
LINES GP-BOOM–MEDIUM PRESSURE	594
LINES GP-BOOM–STICK LOWERING CONTROL	583
	587
LINES GP-BUCKET CYLINDER	603
	604
	605
	607
	608
LINES GP-ENGINE OIL	97
	99
LINES GP-ENGINE OIL DRAIN	101
LINES GP-FRONT	609
	612
	614
LINES GP-FUEL	177
	181
LINES GP-FUEL–REAR	171
	174
LINES GP-GREASE–BOOM	892
	894
LINES GP-GREASE–MASS BOOM	896
LINES GP-GREASE–STICK	898
	900
	902
	904
	906
	909
LINES GP-HEATER	1043
LINES GP-MOTOR	616
LINES GP-MUFFLER DRAIN	145
LINES GP-PILOT	620
	629
	632
	634
LINES GP-PUMP	636
	641
	644
LINES GP-PUMP–SHUTOFF VALVE	640
LINES GP-REAR ATTACHMENT	647
LINES GP-RETURN & FILTER	652
LINES GP-STICK	657
	658
	659
	660
	661
	662
	663
LINES GP-STICK CYLINDER	665
	666
LINES GP-STICK CYLINDER–LOWERING CONTROL	667
LINES GP-SWING MOTOR	669
	671
LINES GP-TRAVEL MOTOR	673
LINES GP-TURBOCHARGER OIL	102
LINES GP-WATER	116
	118
LINK AS-TRACK	428
LINKAGE AR-BUCKET	911
	912
LINKAGE AR-BUCKET–HB-FAMILY, WITHOUT HOOK	913
LINKAGE AR-BUCKET–JB FAMILY	914
LINKAGE GP	915
LINKAGE GP-BUCKET	918
LINKAGE GP-BUCKET–HB-FAMILY	916

INDEX

Name	Page
LINKAGE GP-BUCKET–HB-FAMILY, WITHOUT HOOK	920
LINKAGE GP-BUCKET–JB-FAMILY	922
LOCK GP	386
LUBRICATION GP-ELECTRIC	388

M

MANIFOLD & VALVE GP	676
	678
MANIFOLD & VALVE GP–MAIN CONTROL VALVE	680
	682
MANIFOLD GP-EXHAUST	147
MECHANISM GP-FUEL PUMP & VALVE	64
	65
	66
MIRROR GP-REAR VIEW	1045
MONITOR & MTG GP-OPERATOR	1046
MOTOR & MTG GP-SWING	684
	685
MOTOR & MTG GP-TRAVEL	686
MOTOR AS-WINDOW WIPER (LOWER)	1076
MOTOR AS-WINDOW WIPER (UPPER)	1023
MOTOR GP-LUBRICATION	389
MOTOR GP-PISTON	687
MOTOR GP-PISTON–FAN	690
MOTOR GP-PISTON–HYDRAULIC OIL COOLER	689
MOTOR GP-SWING	691
	692
	693
MOTOR GP-TRAVEL	695
MOUNTING GP-AIR CLEANER	148
MOUNTING GP-COUNTERWEIGHT CYL	697
MOUNTING GP-ENGINE	67
MOUNTING GP-FUEL FILTER	183
MOUNTING GP-OIL LEVEL GAUGE	103
MUFFLER GP	149
	152
	155
	158

O

OIL CHANGE GP-HIGH SPEED	104
OPERATOR AR	1047

P

PADLOCK GP	191
	192
	326
	332
	371
	375
	1049
PAN GP-OIL	69
PANEL GP-CIRCUIT BREAKER	249
	253
	257
PANEL GP-CONTROL (AIR CONDITIONER)	984
PANEL GP-SOUND SUPPRESSION	390
PEDAL AR-THIRD	1048
PISTON & ROD GP	71
PLATE & FILM GP	1082
	1084
	1086
	1089
	1094
PLATE-IDENTIFICATION (CAB)	997
PLATE-WARNING (FRONT GUARD)	1032
PLATE-WARNING (HIGH PRESSURE CYLINDER)	414
	415
PLATE-WARNING (TOP GUARD)	1032
PLATFORM GP	1049
PLATFORM GP-OPERATOR	1052
PLUG GP-CYLINDER HEAD	72
PLUG-DRAIN	69
PLUG-O-RING	55
	177
	181
	621
	636
	640
	676
	678
	680
	682
	741
	747
	748
	819
	821
	823
	826
	829
	832
	835
	838
PLUG-OIL DRAIN	728
POWER TRAIN AR	324
PROTECTOR GP-SIDE BAR–BUCKET	972
	973
PULLEY GP	73
PUMP & MOTOR GP-REFUELING	185
PUMP & MTG GP-HYDRAULIC	699
	700
PUMP & MTG GP-MAIN HYDRAULIC	701

INDEX

Name	Page
PUMP AR-REFUELING	186
PUMP GP-ENGINE OIL	106, 107
PUMP GP-FUEL PRIMING–MANUAL	187
PUMP GP-FUEL TRANSFER	188
PUMP GP-GEAR	704
PUMP GP-GEAR–PILOT	703
PUMP GP-LUBRICATION	391, 392
PUMP GP-MAIN HYDRAULIC	705, 707
PUMP GP-PISTON	709, 713
PUMP GP-PISTON–FAN MOTOR	711
PUMP GP-REFUELING	189
PUMP GP-WATER	119, 120

R

Name	Page
RADIATOR & AFTERCOOLER GP	121, 124, 127
RADIATOR GP	128, 131, 133, 135, 136
RADIO GP (AM/FM)	1037
RECEIVER GP-REFRIGERANT DRYER	1040
REEL GP-HOSE–GREASE	393
REGULATOR AS-VOLTAGE (24-VOLT)	201
REGULATOR AS-VOLTAGE (24-VOLT) (ALTERNATOR)	205
REGULATOR-TEMPERATURE (92-DEG C)	116
RELAY (24-VOLT)	249, 253, 289, 292, 316
RELAY (24-VOLT) (REFUELING PUMP)	318
ROCKER ARM GP	75, 77, 79, 80, 81, 82, 83
ROLLER AR-TRACK & CARRIER	429, 430
ROLLER GP-TRACK CARRIER	431, 432
ROLLER GP-TRACK-SINGLE FLANGE	433
ROTATING GP-MOTOR	715, 716
ROTATING GP-PUMP	717, 718, 719, 720, 721, 722
ROTOR GP-SWIVEL	724, 725

S

Name	Page
SCREEN AS	726
SCREEN GP-HYDRAULIC–TANK	726
SCREEN-FILTER	1068
SEAL GP-CRANKSHAFT	84
SEAL-VALVE COVER	18
SEAT AR-SUSPENSION	1053
SEAT BELT GP	1057
SEAT BELT GP–RETRACTABLE, 3-IN	1054
SEAT GP	1055, 1057
SENSOR & MTG GP-PRESSURE	259
SENSOR AS-PRESSURE	599
SENSOR AS-PRESSURE (IMPLEMENT/SWING)	622
SENSOR AS-PRESSURE (OVERLOAD WARNING DEVICE)	590
SENSOR AS-TEMPERATURE (AMBIENT)	982, 984, 1014
SENSOR AS-TEMPERATURE (AMBIENT) (AIR & TEMPERATURE CONTROL)	990, 1011
SENSOR GP-PRESSURE	26, 260, 261, 262
SENSOR GP-PRESSURE (ATMOSPHERIC AIR)	259
SENSOR GP-PRESSURE (ENGINE OIL)	24
SENSOR GP-PRESSURE (TURBO OUTLET)	34, 40
SENSOR GP-SPEED	263, 264, 265, 267, 268, 269
SENSOR GP-SPEED (ENGINE SPEED/TIMING PRIMARY)	56, 59
SENSOR GP-SPEED (ENGINE SPEED/TIMING SECONDARY)	56, 59
SENSOR GP-SPEED (ENGINE)	265

INDEX

Name	Page
SENSOR GP-TEMPERATURE	270
SENSOR GP-TEMPERATURE (AMBIENT)	210
	218
SENSOR GP-TEMPERATURE (COOLANT)	116
SENSOR GP-TEMPERATURE (FUEL)	171
	174
SENSOR GP-TEMPERATURE (HYDRAULIC OIL)	728
SENSOR GP-TEMPERATURE (INLET AIR)	34
	40
SENSOR-FUEL LEVEL	193
	195
SENSOR-TEMPERATURE (A/C)	990
SENSOR-TEMPERATURE (EVAPORATOR)	987
SERVICE GP-MONITOR	1058
	1059
SHEET AS-SOUND SUPPRESSION	395
	396
	397
	398
	399
	400
	401
	402
	403
	404
	405
	406
	407
	409
SHEET AS-SOUND SUPPRESSION–RADIATOR	408
SIDECUTTER GP	974
	975
SOLENOID AS	676
	678
SOLENOID AS (24VDC)	875
SOLENOID AS-STARTING MOTOR (24-VOLT)	277
	282
SOLENOID GP	271
SPRING GP-RECOIL	434
	435
SPROCKET GP	325
STARTING AID GP-ETHER	272
STARTING AR-COLD WEATHER	275
STARTING MOTOR GP-ELECTRIC	276
	279
	280
	281
STICK AR–MASS	924
STICK AR-HOE	927
	930
STICK AR-HOE–MASS	928
	929
STICK AR-HOE–REACH	925
	926
STICK GP-HOE	943
	945
	949
	951
STICK GP-HOE–MASS	939
	941
	947
	953
STICK GP-HOE–REACH	931
	933
	935
	937
STORAGE GP-VANDALISM GUARD	410
	411
STRAINER AS-FUEL	189
STRAINER AS-FUEL (FLOAT GAUGE)	195
STRAINER-FUEL	193
SUPPORT GP-ENGINE	85
SUPPORT GP-SEAT	1060
SUSPENSION GP-SEAT	1061
	1063
SUSPENSION GP-SEAT–AIR	1066
SWITCH (LIQUID LEVEL) (FUEL)	287
SWITCH AS (REFUELING PUMP START SWITCH)	318
SWITCH AS (REFUELING PUMP START)	316
SWITCH AS (REFUELING PUMP STOP SWITCH)	318
SWITCH AS (REFUELING PUMP STOP)	316
SWITCH AS-LIMIT (FLOW INDICATOR)	843
	844
	867
SWITCH AS-LIMIT (NEUTRAL START LIMIT SWITCH)	300
SWITCH AS-LIMIT (NEUTRAL START)	303
SWITCH AS-LIQUID LEVEL (HYDRAULIC OIL LEVEL)	728
SWITCH AS-LIQUID LEVEL (OIL LIQUID LEVEL)	69
SWITCH AS-MAGNETIC (24-VOLT) (REFUELING POWER RELAY)	316
	318
SWITCH AS-MAGNETIC (24-VOLT) (START RELAY)	250
	254
SWITCH AS-PRESSURE	1040
SWITCH AS-PRESSURE (OVERLOAD WARNING DEVICE)	590
SWITCH AS-ROCKER	299
SWITCH AS-ROCKER (ALARM CANCEL)	310
SWITCH AS-ROCKER (ETHER STARTING AID)	272
SWITCH AS-ROLLER	1023
SWITCH AS-TOGGLE	305

INDEX

Name	Page
SWITCH AS-TOGGLE (BACKUP ENGINE PUMP REG. VALVE)	296
SWITCH AS-TOGGLE (BACKUP,TRAVEL LEFT)	296
SWITCH AS-TOGGLE (BACKUP,TRAVEL RIGHT)	296
SWITCH AS-TOGGLE (MOMENTARY) (BACKUP GOVERNOR)	296
SWITCH GP-DISCONNECT (BATTERY)	224
SWITCH GP-DISCONNECT–BATTERY	284
	285
SWITCH GP-MAGNETIC	286
SWITCH GP-REFUELING– FUEL TANK SHUTOFF	287
SWITCH GP-START–ENGINE, KEY	288
SWITCH GP-TOGGLE (ENGINE SHUTDOWN)	209
	217
SWITCH-TOGGLE (LUBRICATION MOTOR)	392
SWIVEL GP	727

T

TANK & FILTER GP-HYDRAULIC	728
TANK & MTG GP-FUEL	191
	192
TANK & MTG GP-HYDRAULIC	733
TANK GP-COOLANT (INCLUDES COOLANT LEVEL SWITCH)	121
TANK GP-FUEL	193
	195
TIMER AS-OFF DELAY	249
	254
TIP GP-LONG–J-600, HEAVY-DUTY	976
TIP GP-LONG–J-700	977
TIP GP-LONG–J-700, HEAVY-DUTY	978
TIP GP-PENETRATION–J-600	979
TIP GP-PENETRATION PLUS–J-600	980
TIP GP-PENETRATION PLUS–J-700	981
TRACK GP	436
	437
	438
	439
TURBOCHARGER GP	161
	162

V

VALVE & MTG GP-MAIN CONTROL	734
VALVE AR	735
VALVE AR-BOOM LOWERING CONTROL	737
VALVE AR-BOOM LOWERING CONTROL– BOOM LOWERING	736
VALVE AR-LOAD CONTROL	738
	739
VALVE AR-STICK LOWERING CONT	740
VALVE AS-RELIEF	777
VALVE GP	741
VALVE GP-CHECK	744
	745
	746
	747
	748
	749
	751
	753
VALVE GP-CHECK & RELIEF– STICK LOWERING CONTROL	754
VALVE GP-CHECK–FUEL	197
	198
	199
VALVE GP-CONTROL	759
	764
	768
	775
	778
	788
	793
	800
	806
	847
VALVE GP-CONTROL–LH	783
VALVE GP-CONTROL–MEDIUM PRESSURE	777
VALVE GP-CONTROL–NEUTRAL BYPASS	756
	758
	798
	804
	811
VALVE GP-CONTROL–RH	772
VALVE GP-COUNTERWEIGHT CONTROL	813
VALVE GP-ETHER STARTING (24-VOLT)	272
VALVE GP-FLUID SAMPLING	116
VALVE GP-LOAD CONTROL	814
	816
VALVE GP-MAIN CONTROL	819
	821
	823
	826
	829
	832
	835
	838
VALVE GP-MANIFOLD & REDUCING	841
VALVE GP-MANUAL	845
VALVE GP-MANUAL (AUXILIARY)	545
VALVE GP-MANUAL (COUNTERWEIGHT CONTROL)	648
VALVE GP-MANUAL (SHUTOFF) (AUXILIARY)	549
	553

INDEX

Name	Page
	557
VALVE GP-MANUAL–LH	843
VALVE GP-MANUAL–RH	844
VALVE GP-PILOT–COUNTERWEIGHT	846
VALVE GP-PRESSURE REDUCING	847
VALVE GP-PRESSURE REDUCING (PARKING BRAKE RELEASE)	695
VALVE GP-PUMP CONTROL	850
	851
VALVE GP-PUMP CONTROL–FLOW COMPENSATOR	853
VALVE GP-PUMP CONTROL–PRESSURE COMPENSATOR	848
	855
VALVE GP-PUMP CONTROL–PRESSURE, FLOW COMPENSATOR	852
VALVE GP-RELIEF	813
	857
	858
	859
	860
	861
	862
	863
	864
	865
	866
VALVE GP-RELIEF (LINE)	695
VALVE GP-SHUTOFF–HYDRAULIC PUMP, TANK	867
VALVE GP-SHUTTLE	868
	869
	870
	871
VALVE GP-SOLENOID	841
	872
	873
	874
	875
	877
	878
VALVE GP-SOLENOID (24-VOLT)	756
	823
	826
	832
VALVE GP-SOLENOID (24-VOLT) (24 VDC)	814
VALVE GP-SOLENOID (24-VOLT) (HIGH, LOW RELIEF)	741
	819
	821
	829
	835
	838
VALVE GP-SOLENOID (24-VOLT) (NEUTRAL BYPASS)	798
	804
	811
VALVE GP-SOLENOID (PRESSURE COMPENSATOR, FAN PUMP)	855
VALVE GP-SOLENOID (SWING PARKING BRAKE)	692
VALVE GP-SWING CUSHION–ANTI-REACTION, FINE SWING	879
VALVE GP-TRAVEL COUNTERBALANCE	880
VALVE MECHANISM	86
VALVE MECHANISM GP	86
VALVE-SHUTOFF	1043
VISOR GP-CAB	1067

W

Name	Page
WALKWAY GP	412
	413
WASHER GP-WINDOW	1068
	1069
WINDOW GP-DOOR	1071
WINDOW GP-FRONT	1072
	1074
WIPER & WASHER GP-WINDOW–LOWER	1076
WIRING GP-BOOM	289
WIRING GP-CAB	292
	294
WIRING GP-CONSOLE	295
	302
WIRING GP-CONSOLE–LH	300
	303
WIRING GP-CONSOLE–RH	296
	299
WIRING GP-COUNTERWEIGHT	305
WIRING GP-ENGINE	307
WIRING GP-MEDIUM PRESSURE	309
WIRING GP-OVERLOAD WARNING	310
WIRING GP-PLATFORM	312
	314
WIRING GP-REFUELING PUMP	316
	318
WIRING GP-WORK TOOL	320

MEMORANDA

MACHINE ARRANGEMENT

229-3366 CHASSIS AR

S/N: RCD1-UP

PART OF 229-3365 GENERAL AR

SMCS-7000 **i02207858**

NOTE	PART NUMBER	QTY	PART NAME 1 2 3 4 5 6 (PRODUCT LEVEL)	SEE PAGE
Y	*170-6979*	1	ALARM GP-TRAVEL	200
Y	*204-1940*	1	BATTERY & WIRING GP	207
Y	*170-2807*	1	BOX & MTG GP-STORAGE	326
Y	*171-2592*	1	CONTROL & MTG GP-MACHINE (VIDS, IMPLEMENT)	228
Y	*184-9124*	1	COUNTERWEIGHT GP	339
Y	*199-0071*	1	COVER GP-CONTROL VALVE	340
Y	*195-5493*	1	FRAME GP-UPPER	349
Y	*168-1716*	1	GUARD GP-BOTTOM	359
			S/N: RCD1-220	
Y	*237-8773*	1	GUARD GP-BOTTOM	361
			S/N: RCD221-UP	
Y	*168-1718*	1	HANDRAIL GP	364
Y	*168-1717*	1	HOOD & GUARD GP (SUPPORT)	366
Y	*184-9122*	1	HOOD & GUARD GP (ENGINE HOOD)	371
Y	*222-3847*	1	HOOD & GUARD GP (COVER)	374
Y	*146-6701*	1	HORN GP-ELECTRIC	1036
Y	*243-5652*	1	INSTALLATION GP-RADIO	1037
Y	*150-7033*	1	LIGHTING GP-CHASSIS	242
Y	*138-5276*	1	MIRROR GP-REAR VIEW	1045
Y	*222-3445*	1	OPERATOR AR	1047
Y	*230-3392*	1	PLATE & FILM GP	1089
			S/N: RCD1-220	
Y	*253-4711*	1	PLATE & FILM GP	1094
			S/N: RCD221-UP	
Y	*222-3848*	1	PLATFORM GP	1049
Y	*222-3562*	1	STARTING AR-COLD WEATHER	275
Y	*184-8528*	1	TANK & MTG GP-FUEL	191
Y	*168-1721*	1	WALKWAY GP	412
Y	*192-3595*	1	WASHER GP-WINDOW	1069

Y-SEPARATE ILLUSTRATION

<END>

MACHINE ARRANGEMENT

229-3365 GENERAL AR

S/N: RCD1-UP

SMCS-7000 **i02115506**

NOTE	PART NUMBER	QTY	PART NAME 1 2 3 4 5 6 (PRODUCT LEVEL)	SEE PAGE
Y	*229-3366*	1	CHASSIS AR	1
Y	**164-8237**	1	ELECTRICAL AR	231
Y	*229-3368*	1	FRAME AR-UNDERCARRIAGE	416
Y	*229-3367*	1	HYDRAULIC AR	534
Y	**205-6911**	1	INSTALLATION AR-ENGINE	7
Y	*242-5914*	1	INSTALLATION AR-ENGINE	9
Y	*148-4628*	1	POWER TRAIN AR	324

Y-SEPARATE ILLUSTRATION

<END>

ENGINE ARRANGEMENT

205-5858 ENGINE AR-COMPLETE

S/N: BLC426-UP
412 BRAKE KW (552 BHP) AT 1800 RPM
PART OF 205-6911 INSTALLATION AR-ENGINE

SMCS-1000 **i01967942**

NOTE	PART NUMBER	QTY	PART NAME 1 2 3 4 5 6 (PRODUCT LEVEL)	SEE PAGE
Y	*166-1325*	1	ALTERNATOR GP-CHARGING	203
Y	*201-7337*	1	COMPRESSOR GP-REFRIGERANT	1002
Y	*180-0398*	1	CONTROL & MTG GP-ENGINE ELEK	227
Y	*107-6736*	1	COVER GP-CYLINDER BLOCK (TURBOCHARGER DRAIN COVER)	13
Y	*109-7423*	1	COVER GP-CYLINDER BLOCK	14
Y	*150-3344*	1	COVER GP-FRONT HOUSING	15
Y	*150-4278*	1	COVER GP-FRONT HOUSING (ACCESS)	16
Y	*187-1327*	1	COVER GP-VALVE MECHANISM	20
Y	*172-6764*	1	DAMPER & PULLEY GP	42
Y	*159-5810*	1	ENGINE AR-CORE	5
Y	*109-1657*	1	FASTENER GP-VALVE MECHANISM	46
Y	*178-3326*	1	FILLER GP-ENGINE OIL	90
Y	*128-1471*	1	FILTER GP-FUEL	167
Y	*200-0653*	1	FILTER GP-ENGINE OIL	91
Y	*109-9997*	1	FITTING GP-RADIATOR VENT	114
Y	*194-7097*	1	FLYWHEEL GP	47
Y	*187-3477*	1	FUMES DISPOSAL GP	93
Y	**190-2471**	1	GAUGE GP-OIL LEVEL (DIPSTICK)	94
Y	*4P-9823*	1	GEAR GP-REAR	51
Y	*190-2472*	1	GUIDE GP-OIL LEVEL GAUGE	95
Y	*7E-8996*	1	HOUSING GP-FLYWHEEL	55
Y	*172-4850*	1	HOUSING GP-FRONT	56
Y	*111-2088*	1	LIFTING GP-ENGINE (REAR)	62
Y	*112-2418*	1	LIFTING GP-ENGINE (FRONT)	63
Y	*114-1904*	1	LINES GP-AIR (AIR TO AIR AFTERCOOLER)	139
Y	*127-9039*	1	LINES GP-AIR	140
			S/N: BLC426-536	
Y	*191-6147*	1	LINES GP-AIR	144
Y	*160-6894*	1	LINES GP-ENGINE OIL	97
Y	*173-0004*	1	LINES GP-FUEL	171
Y	*187-6659*	1	LINES GP-TURBOCHARGER OIL	102
Y	*159-3956*	1	LINES GP-WATER	116
Y	*187-6662*	1	LINES GP-WATER (TURBOCHARGER)	118
Y	*135-6552*	1	MANIFOLD GP-EXHAUST	147
Y	*170-3562*	1	MOUNTING GP-OIL LEVEL GAUGE	103
Y	*219-1494*	1	PAN GP-OIL	69
			S/N: BLC426-UP	
Y	*172-6091*	1	PANEL GP-SOUND SUPPRESSION	390
Y	*166-1321*	1	PULLEY GP	73
Y	*100-4265*	1	PUMP GP-FUEL TRANSFER	188
Y	*100-9347*	1	PUMP GP-WATER	119
Y	*102-7664*	1	SENSOR & MTG GP-PRESSURE	259
Y	*171-8963*	1	SENSOR GP-SPEED	265
Y	*105-4729*	1	STARTING MOTOR GP-ELECTRIC	279
Y	*7E-4876*	1	SUPPORT GP-ENGINE	85
Y	*172-4294*	1	WIRING GP-ENGINE	307
			GASKET KITS WILL BE PROVIDED WHEN AVAILABLE	

Y-SEPARATE ILLUSTRATION

ENGINE ARRANGEMENT

235-4685 ENGINE AR-COMPLETE

S/N: BLC1000-UP
412 BRAKE KW (552 BHP) AT 1800 RPM
PART OF 205-6911 INSTALLATION AR-ENGINE

SMCS-1000 **i02089666**

NOTE	PART NUMBER	QTY	PART NAME 1 2 3 4 5 6 (PRODUCT LEVEL)	SEE PAGE
Y	*166-1325*	1	ALTERNATOR GP-CHARGING	203
Y	*201-7337*	1	COMPRESSOR GP-REFRIGERANT	1002
Y	*180-0398*	1	CONTROL & MTG GP-ENGINE ELEK	227
Y	*107-6736*	1	COVER GP-CYLINDER BLOCK (TURBOCHARGER DRAIN COVER)	13
Y	*109-7423*	1	COVER GP-CYLINDER BLOCK	14
Y	*150-4278*	1	COVER GP-FRONT HOUSING (ACCESS)	16
Y	*235-8025*	1	COVER GP-FRONT HOUSING	17
Y	*187-1327*	1	COVER GP-VALVE MECHANISM	20
Y	*172-6764*	1	DAMPER & PULLEY GP	42
Y	*235-3469*	1	ENGINE AR-CORE	6
Y	*109-1657*	1	FASTENER GP-VALVE MECHANISM	46
Y	*178-3326*	1	FILLER GP-ENGINE OIL	90
Y	*200-0653*	1	FILTER GP-ENGINE OIL	91
Y	*128-1471*	1	FILTER GP-FUEL	167
Y	*235-6472*	1	FITTING GP-RADIATOR VENT	115
Y	*194-7097*	1	FLYWHEEL GP	47
Y	*187-3477*	1	FUMES DISPOSAL GP	93
Y	**190-2471**	1	GAUGE GP-OIL LEVEL (DIPSTICK)	94
Y	*4P-9823*	1	GEAR GP-REAR	51
Y	*190-2472*	1	GUIDE GP-OIL LEVEL GAUGE	95
Y	*7E-8996*	1	HOUSING GP-FLYWHEEL	55
Y	*172-4850*	1	HOUSING GP-FRONT	56
Y	*111-2088*	1	LIFTING GP-ENGINE (REAR)	62
Y	*112-2418*	1	LIFTING GP-ENGINE (FRONT)	63
Y	*114-1904*	1	LINES GP-AIR (AIR-TO-AIR AFTERCOOLER)	139
Y	*191-6147*	1	LINES GP-AIR	144
Y	*160-6894*	1	LINES GP-ENGINE OIL	97
Y	*173-0004*	1	LINES GP-FUEL	171
Y	*187-6659*	1	LINES GP-TURBOCHARGER OIL	102
Y	*159-3956*	1	LINES GP-WATER	116
Y	*187-6662*	1	LINES GP-WATER (TURBOCHARGER)	118
Y	*135-6552*	1	MANIFOLD GP-EXHAUST	147
Y	*170-3562*	1	MOUNTING GP-OIL LEVEL GAUGE	103
Y	*219-1494*	1	PAN GP-OIL	69
Y	*172-6091*	1	PANEL GP-SOUND SUPPRESSION	390
Y	*234-5986*	1	PLUG GP-CYLINDER HEAD	72
Y	*166-1321*	1	PULLEY GP	73
Y	*100-4265*	1	PUMP GP-FUEL TRANSFER	188
Y	*100-9347*	1	PUMP GP-WATER	119
Y	*102-7664*	1	SENSOR & MTG GP-PRESSURE	259
Y	*171-8963*	1	SENSOR GP-SPEED	265
Y	*105-4729*	1	STARTING MOTOR GP-ELECTRIC	279
Y	*7E-4876*	1	SUPPORT GP-ENGINE	85
Y	*172-4294*	1	WIRING GP-ENGINE	307
			GASKET KITS WILL BE PROVIDED WHEN AVAILABLE	

Y-SEPARATE ILLUSTRATION

ENGINE ARRANGEMENT

159-5810 ENGINE AR-CORE

S/N: BLC426-UP

PART OF 205-5858 ENGINE AR-COMPLETE

SMCS-1000 **i01547242**

NOTE	PART NUMBER	QTY	PART NAME 1 2 3 4 5 6 (PRODUCT LEVEL)	SEE PAGE
Y	*122-1248*	1	BASE GP-VALVE COVER & INJ HARN	11
Y	*185-9699*	1	CAMSHAFT GP	12
Y	*137-7298*	1	CRANKSHAFT GP	21
Y	*137-8471*	1	CYLINDER BLOCK GP	24
Y	*135-6531*	1	CYLINDER HEAD GP	34
Y	*6I-3638*	1	DRIVE GP-PUMP	495
	169-6285	1	ELECTRONICS GP-ENGINE RATINGS	
Y	*4P-6846*	1	FASTENER GP-FRONT HOUSING	45
Y	*4N-2481*	1	FASTENER GP-OIL PUMP MOUNTING	89
Y	*137-5921*	1	GEAR GP-FRONT	49
Y	*128-8510*	6	INJECTOR GP-FUEL	170
Y	*208-2820*	1	VALVE MECHANISM GP	86
			S/N: BLC426-UP	
YR	*134-3071*	6	PISTON & ROD GP	71
YR	**198-1508**	1	PUMP GP-ENGINE OIL	106
Y	*197-0868*	1	TURBOCHARGER GP	162

R-REMFG PART MAY BE AVAILABLE
Y-SEPARATE ILLUSTRATION

ENGINE ARRANGEMENT

235-3469 ENGINE AR-CORE

S/N: BLC1000-UP

PART OF 235-4685 ENGINE AR-COMPLETE

SMCS-1000 **i02159961**

NOTE	PART NUMBER	QTY	PART NAME 1 2 3 4 5 6 (PRODUCT LEVEL)	SEE PAGE
Y	*122-1248*	1	BASE GP-VALVE COVER & INJ HARN	11
Y	*185-9699*	1	CAMSHAFT GP	12
Y	*137-7298*	1	CRANKSHAFT GP	21
Y	*137-8471*	1	CYLINDER BLOCK GP	24
			S/N: BLC1000-1102	
Y	*249-5631*	1	CYLINDER BLOCK GP	26
			S/N: BLC1103-UP	
Y	*234-5985*	1	CYLINDER HEAD GP	40
Y	*6I-3638*	1	DRIVE GP-PUMP	495
Y	*4P-6846*	1	FASTENER GP-FRONT HOUSING	45
Y	*4N-2481*	1	FASTENER GP-OIL PUMP MOUNTING	89
Y	*137-5921*	1	GEAR GP-FRONT	49
Y	*128-8510*	6	INJECTOR GP-FUEL	170
YR	*134-3071*	6	PISTON & ROD GP	71
YR	**198-1508**	1	PUMP GP-ENGINE OIL	106
Y	*197-0868*	1	TURBOCHARGER GP	162
Y	*148-7482*	1	MECHANISM GP-FUEL PUMP & VALVE	64
	169-6285	1	ELECTRONICS GP-ENGINE RATINGS	

R-REMFG PART MAY BE AVAILABLE
Y-SEPARATE ILLUSTRATION

ENGINE ARRANGEMENT

205-6911 INSTALLATION AR-ENGINE

S/N: RCD1-UP

PART OF 229-3365 GENERAL AR

SMCS-1000 **i02089607**

NOTE	PART NUMBER	QTY	PART NAME 1 2 3 4 5 6 (PRODUCT LEVEL)	SEE PAGE
Y	*205-5858*	1	ENGINE AR-COMPLETE	3
			S/N: RCD1-171	
Y	*235-4685*	1	ENGINE AR-COMPLETE	4
			S/N: RCD172-UP	
Y	*205-6912*	1	MUFFLER GP	149

Y-SEPARATE ILLUSTRATION

ENGINE ARRANGEMENT

220-4843 INSTALLATION AR-ENGINE

S/N: RCD1-167

PART OF 229-3365 GENERAL AR

SMCS-1000 **i01705421**

NOTE	PART NUMBER	QTY	PART NAME 1 2 3 4 5 6 (PRODUCT LEVEL)	SEE PAGE
Y	*151-6654*	1	COOLER & MTG GP-HYDRAULIC OIL	453
Y	*205-6829*	1	COOLER GP-FUEL	165
Y	*151-6655*	1	EXTENSION GP-EXHAUST	138
Y	*151-6652*	1	FAN GP-SUCTION	108
Y	*151-6656*	1	LINES GP-AIR	141
Y	*151-6663*	1	LINES GP-AIR	142
Y	*151-6662*	1	LINES GP-ENGINE OIL DRAIN	101
Y	*208-4100*	1	LINES GP-FUEL	177
Y	*151-6661*	1	LINES GP-MUFFLER DRAIN	145
Y	*151-6657*	1	MOUNTING GP-AIR CLEANER	148
Y	*151-6660*	1	MOUNTING GP-ENGINE	67
Y	*171-9078*	1	MOUNTING GP-FUEL FILTER	183
Y	*196-8182*	1	RADIATOR GP	128
Y	*151-6665*	1	STARTING AID GP-ETHER	272

Y-SEPARATE ILLUSTRATION

ENGINE ARRANGEMENT

242-5914 INSTALLATION AR-ENGINE

S/N: RCD168-UP

PART OF 229-3365 GENERAL AR

SMCS-1000 **i02186549**

NOTE	PART NUMBER	QTY	PART NAME 1 2 3 4 5 6 (PRODUCT LEVEL)	SEE PAGE
Y	*151-6654*	1	COOLER & MTG GP-HYDRAULIC OIL	453
Y	*205-6829*	1	COOLER GP-FUEL	165
Y	*151-6655*	1	EXTENSION GP-EXHAUST	138
Y	*151-6652*	1	FAN GP-SUCTION	108
Y	*151-6656*	1	LINES GP-AIR	141
Y	*151-6663*	1	LINES GP-AIR	142
Y	*151-6662*	1	LINES GP-ENGINE OIL DRAIN	101
Y	*208-4100*	1	LINES GP-FUEL	177
			S/N: RCD168-220	
Y	*237-8812*	1	LINES GP-FUEL	181
			S/N: RCD221-UP	
Y	*151-6661*	1	LINES GP-MUFFLER DRAIN	145
Y	*151-6657*	1	MOUNTING GP-AIR CLEANER	148
Y	*151-6660*	1	MOUNTING GP-ENGINE	67
Y	*171-9078*	1	MOUNTING GP-FUEL FILTER	183
Y	*151-6651*	1	RADIATOR & AFTERCOOLER GP	121
Y	*151-6665*	1	STARTING AID GP-ETHER	272

Y-SEPARATE ILLUSTRATION

BASIC ENGINE

133-9907 ADAPTER GP-PUMP DRIVE

S/N: BLC426-UP

PART OF 6I-3638 DRIVE GP-PUMP

SMCS-1313, 3108 **i01514868**

NOTE	REF NO	GRAPHIC REF	PART NUMBER	QTY	PART NAME 1 2 3 4 5 6 (PRODUCT LEVEL)	SEE PAGE
	1	1	**1B-3867**	2	BALL BEARING	
	2	1	**4F-7957**	3	BOLT (1/4-20X0.875 IN)	
	3	1	**6I-4575**	1	GEAR (34 TEETH)	
	4	1	**9X-2038**	3	WASHER (7X19X2MM THK)	
	5	1	**133-9906**	1	ADAPTER	
	6	1	**1H-8647**	1	RING-SNAP	

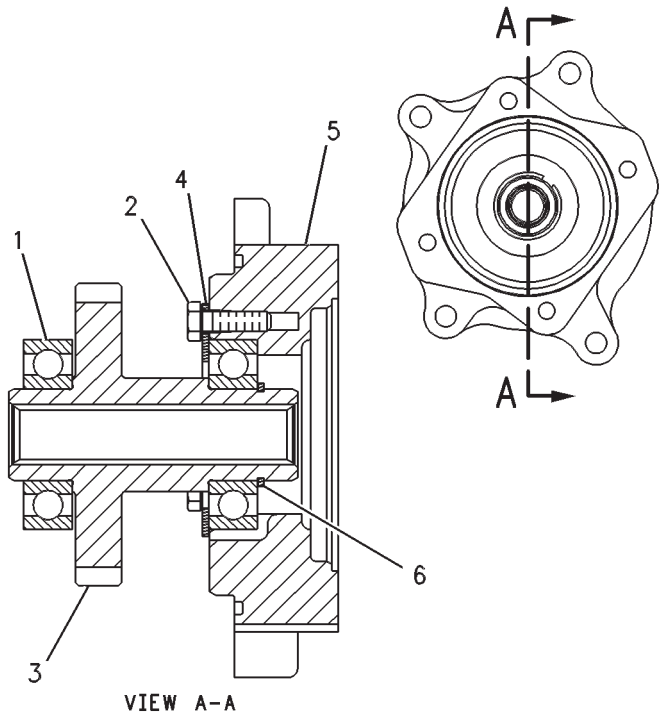

GRAPHIC #1 **<END>** g00263602

BASIC ENGINE

122-1248 BASE GP-VALVE COVER & INJ HARN

S/N: BLC426-UP

PART OF 159-5810, 235-3469 ENGINE AR-CORE

SMCS-1120, 1408 **i02394278**

NOTE	REF NO	GRAPHIC REF	PART NUMBER	QTY	PART NAME 1 2 3 4 5 6 (PRODUCT LEVEL)	SEE PAGE
	1	1	**8H-3127**	6	BOLT (1/4-20X0.75-IN)	
	2	1	**4F-7957**	2	BOLT (1/4-20X0.875-IN)	
	3	1	**5P-0537**	8	WASHER-HARD (7.2X14.5X2-MM THK)	
	4	1	**7E-6508**	6	CAP AS	
	5	1	**122-1486**	1	HARNESS AS-WIRING	
		1	**262-6073**	1	RECEPTACLE AS	
	6	1	**100-5218**	3	CLIP	
	7	1	**100-5219**	3	CLIP	
	8	1	**177-4152**	1	BASE-VALVE MECHANISM COVER	
	9	1	**9L-8925**	14	BOLT (5/16-18X1.25-IN)	
D	10	1	**5P-5678**		SEAL (2.9M)	
	11	1	**122-1472**	1	BOLT (5/16-18X2.36-IN)	
	12	1	**6V-0128**	1	SEAL-CONNECTOR	
	13	1	**123-3202**	2	STRAP-CABLE	

D-ORDER BY THE METER

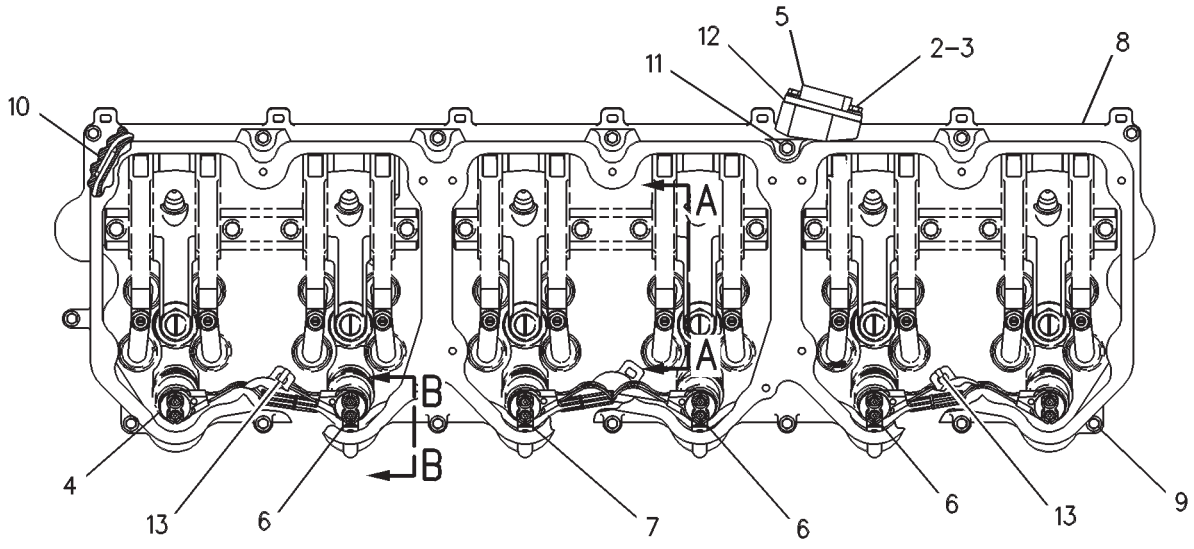

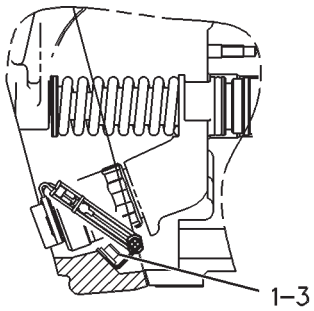

SECTION B-B

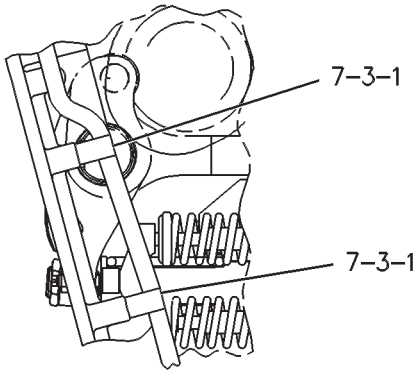

VIEW A-A

GRAPHIC #1 **<END>** g00257337

BASIC ENGINE

185-9699 CAMSHAFT GP

S/N: BLC426-UP

PART OF 159-5810, 235-3469 ENGINE AR-CORE

SMCS-1210 **i03619226**

NOTE	REF NO	GRAPHIC REF	PART NUMBER	QTY	PART NAME 1 2 3 4 5 6 (PRODUCT LEVEL)	SEE PAGE
	1	1	**102-9089**	1	COVER	
	2	1	**119-0036**	3	SCREW-FLAT HEAD (5/16-18X0.875-IN)	
R	3	1	**332-7308**	1	CAMSHAFT	
	4	1	**6V-1197**	1	SEAL-O-RING	

R-REMFG PART MAY BE AVAILABLE

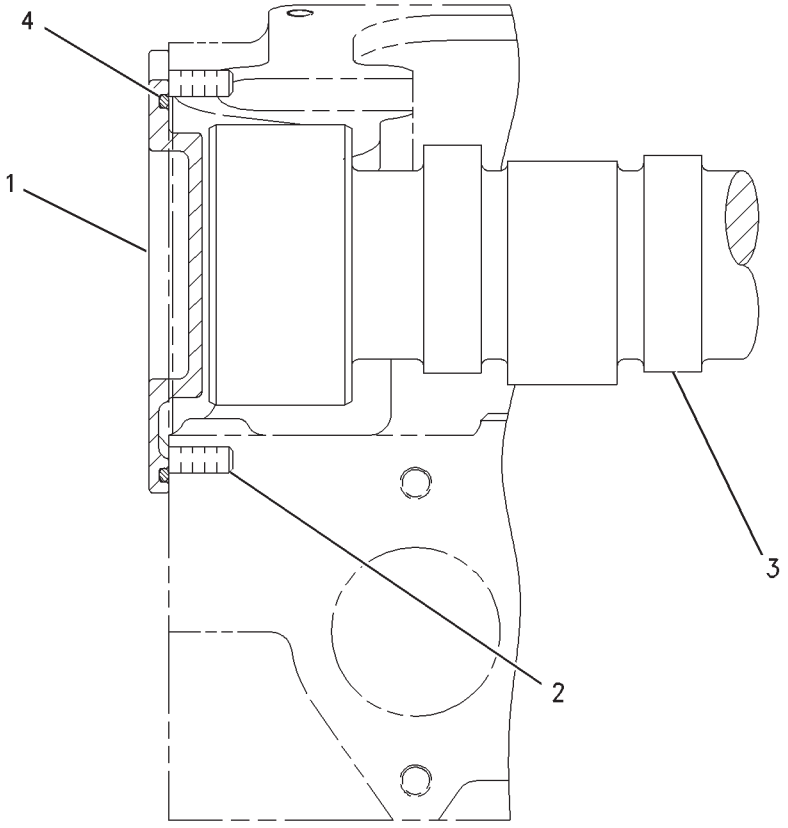

RIGHT SIDE VIEW

GRAPHIC #1 **<END>** g00687973

BASIC ENGINE

107-6736 COVER GP-CYLINDER BLOCK

S/N: BLC426-UP

PART OF 205-5858, 235-4685 ENGINE AR-COMPLETE

SMCS-1201 **i01516054**

NOTE	REF NO	GRAPHIC REF	PART NUMBER	QTY	PART NAME 1 2 3 4 5 6 (PRODUCT LEVEL)	SEE PAGE
	1	1	**0S-1594**	2	BOLT (3/8-16X1 IN)	
	2	1	**5M-2894**	2	WASHER-HARD (10.2X18.5X2.5MM THK)	
	3	1	**4W-9890**	1	COVER	
	4	1	**4N-0699**	1	GASKET	

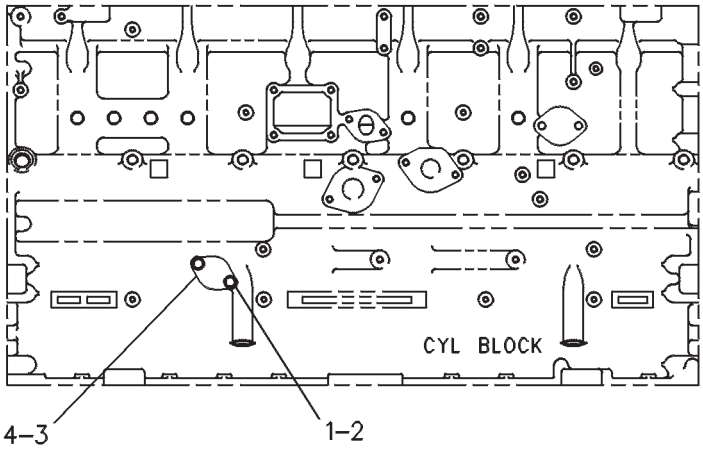

LEFT SIDE VIEW

GRAPHIC #1 **<END>** g00244599

BASIC ENGINE

109-7423 COVER GP-CYLINDER BLOCK

S/N: BLC426-UP

PART OF 205-5858, 235-4685 ENGINE AR-COMPLETE

SMCS-1201 **i01516112**

NOTE	REF NO	GRAPHIC REF	PART NUMBER	QTY	PART NAME 1 2 3 4 5 6 (PRODUCT LEVEL)	SEE PAGE
	1	1	**109-7424**	1	COVER-CYLINDER BLOCK	
	2	1	**5M-2894**	1	WASHER-HARD (10.2X18.5X2.5-MM THK)	
	3	1	**0S-1591**	1	BOLT (3/8-16X1.5-IN)	
	4	1	**109-7425**	1	SEAL-COVER	

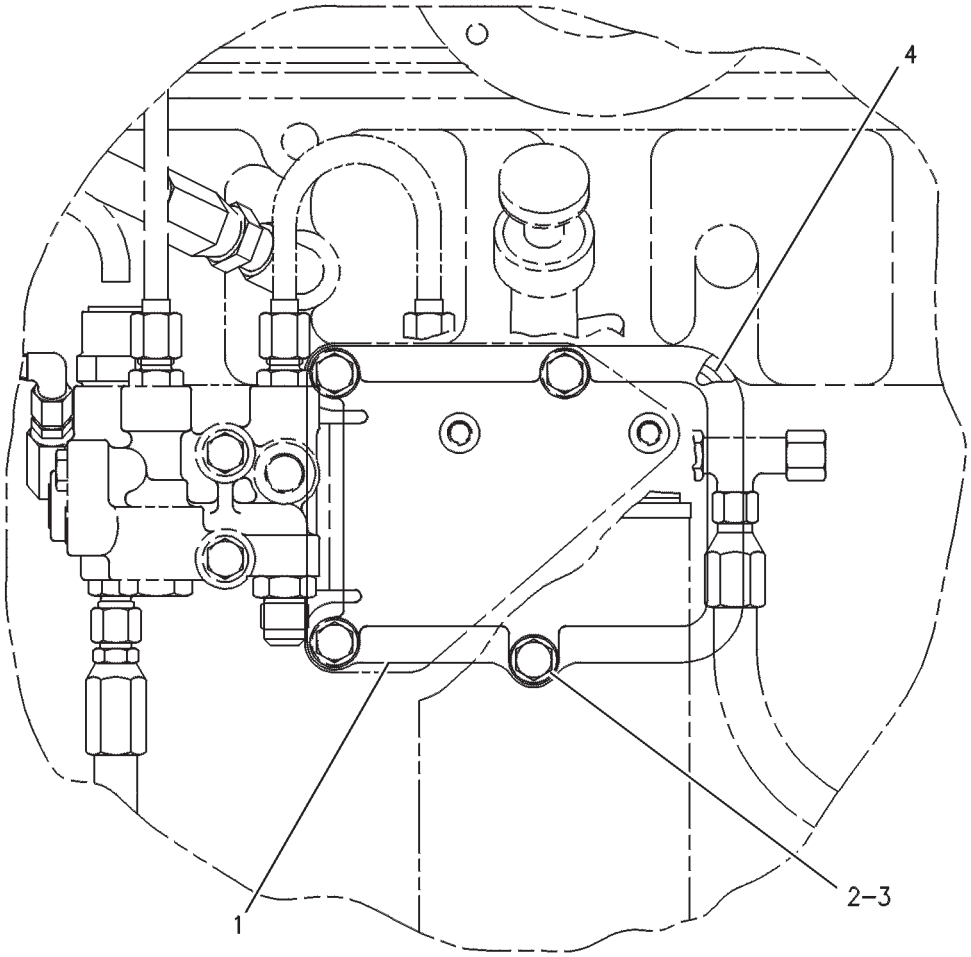

LEFT SIDE VIEW

GRAPHIC #1 **<END>** g00238347

BASIC ENGINE

150-3344 COVER GP-FRONT HOUSING

S/N: BLC426-UP

PART OF 205-5858 ENGINE AR-COMPLETE

SMCS-1150 **i01520964**

NOTE	REF NO	GRAPHIC REF	PART NUMBER	QTY	PART NAME 1 2 3 4 5 6 (PRODUCT LEVEL)	SEE PAGE
	1	1	**117-0218**	1	COVER	
	2	1	**117-0219**	1	GASKET	
	3	1	**1F-7958**	3	NUT-FULL (1/2-13-THD)	
	4	1	**5P-8245**	3	WASHER-HARD (13.5X25.5X3-MM THK)	
	5	1	**7W-6492**	1	PLUG-PIPE	
	6	1	**8T-6764**	1	PLUG-PIPE	
	7	1	**8T-6767**	1	PLUG-PIPE	

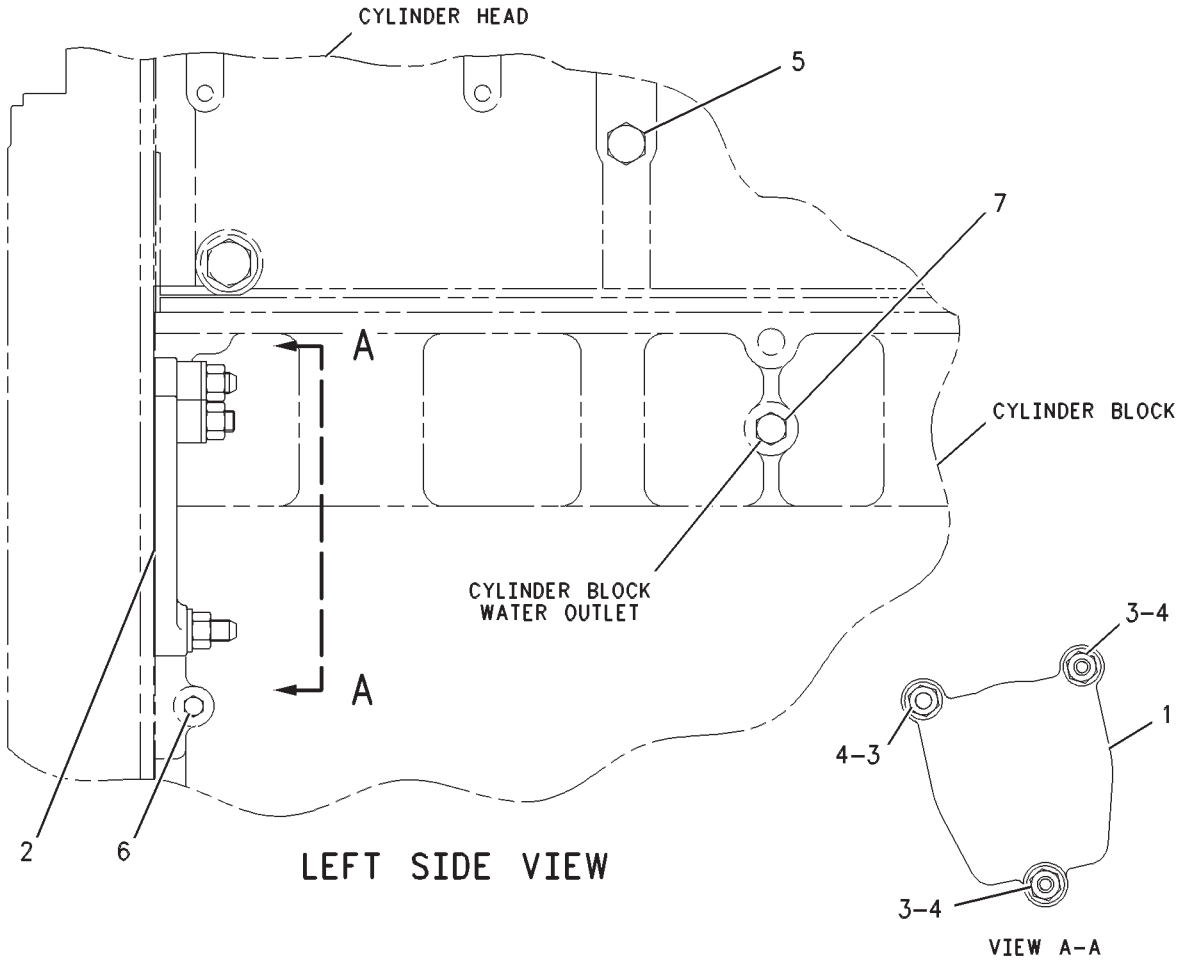

GRAPHIC #1 **<END>** g00598332

BASIC ENGINE

150-4278 COVER GP-FRONT HOUSING

S/N: BLC426-UP

PART OF 205-5858, 235-4685 ENGINE AR-COMPLETE

SMCS-1150 **i01516439**

NOTE	REF NO	GRAPHIC REF	PART NUMBER	QTY	PART NAME 1 2 3 4 5 6 (PRODUCT LEVEL)	SEE PAGE
	1	1	**146-2601**	1	COVER	
	2	1	**2B-2695**	3	BOLT (5/16-18X0.875-IN)	
	3	1	**9M-1974**	5	WASHER-HARD (8.8X16X2-MM THK)	
	4	1	**146-8438**	3	SCREW-BUTTON HEAD	
	5	1	**103-6045**	1	SEAL (FRONT COVER)	
	6	1	**5S-0003**	2	NUT (5/16-18-THD)	
	7	1	**3K-6175**	2	STUD	
	8	1	**4B-3388**	2	BOLT (5/16-18X1.125-IN)	
	9	1	**3E-4352**	2	WASHER-HARD (8.8X20.5X2.5-MM THK)	

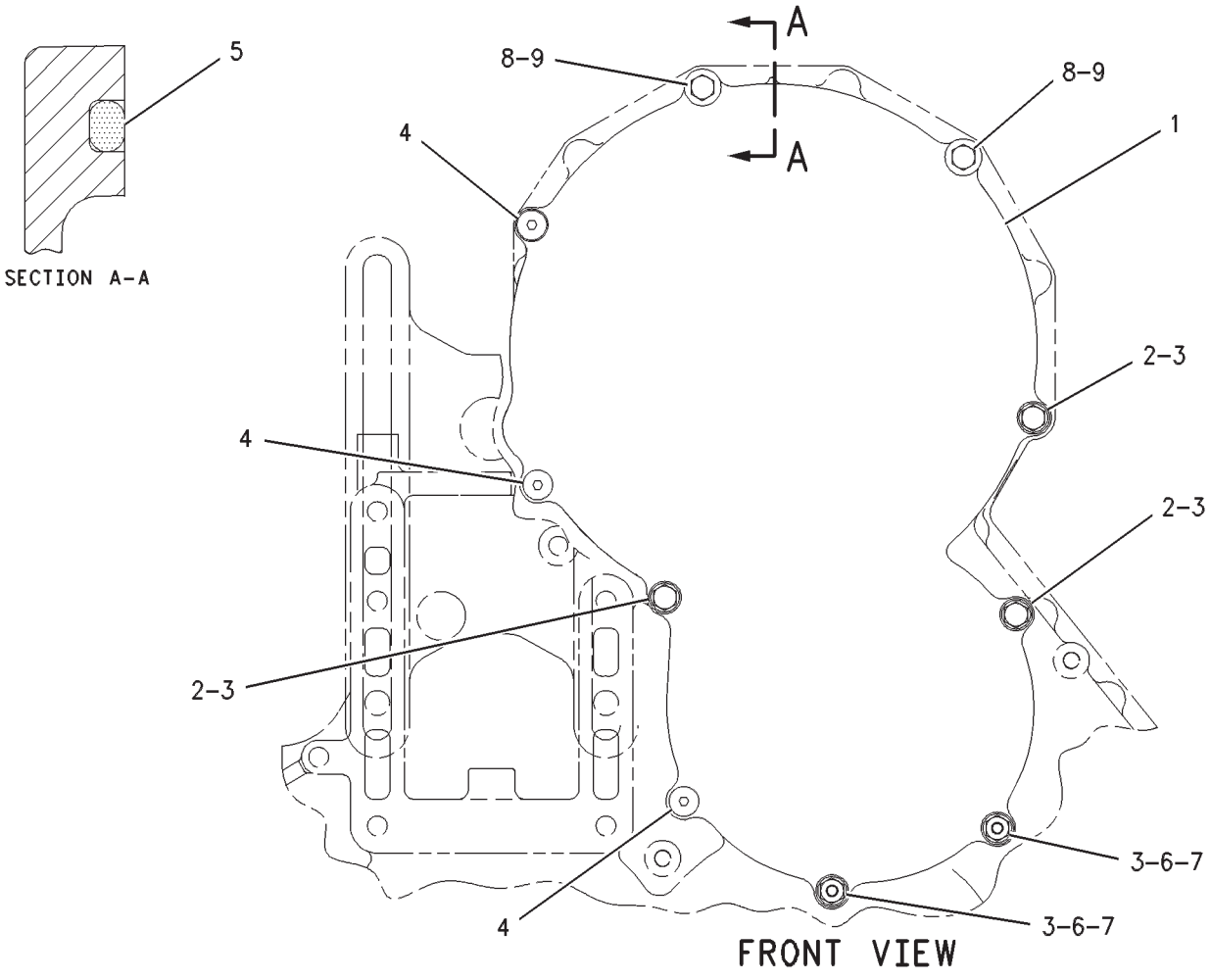

GRAPHIC #1 **<END>** g00311762

BASIC ENGINE

235-8025 COVER GP-FRONT HOUSING

S/N: BLC1000-UP

PART OF 235-4685 ENGINE AR-COMPLETE

SMCS-1150 **i02109049**

NOTE	REF NO	GRAPHIC REF	PART NUMBER	QTY	PART NAME 1 2 3 4 5 6 (PRODUCT LEVEL)	SEE PAGE
	1	1	**117-0218**	1	COVER	
	2	1	**117-0219**	1	GASKET	
	3	1	**1F-7958**	3	NUT-FULL (1/2-13-THD)	
M	4	1	**5P-8245**	3	WASHER-HARD (13.5X25.5X3-MM THK)	
	5	1	**8L-2786**	1	SEAL-O-RING	
	6	1	**8T-6764**	1	PLUG-PIPE	
	7	1	**8T-6767**	1	PLUG-PIPE	
	8	1	**9S-8005**	1	PLUG	

M-METRIC PART

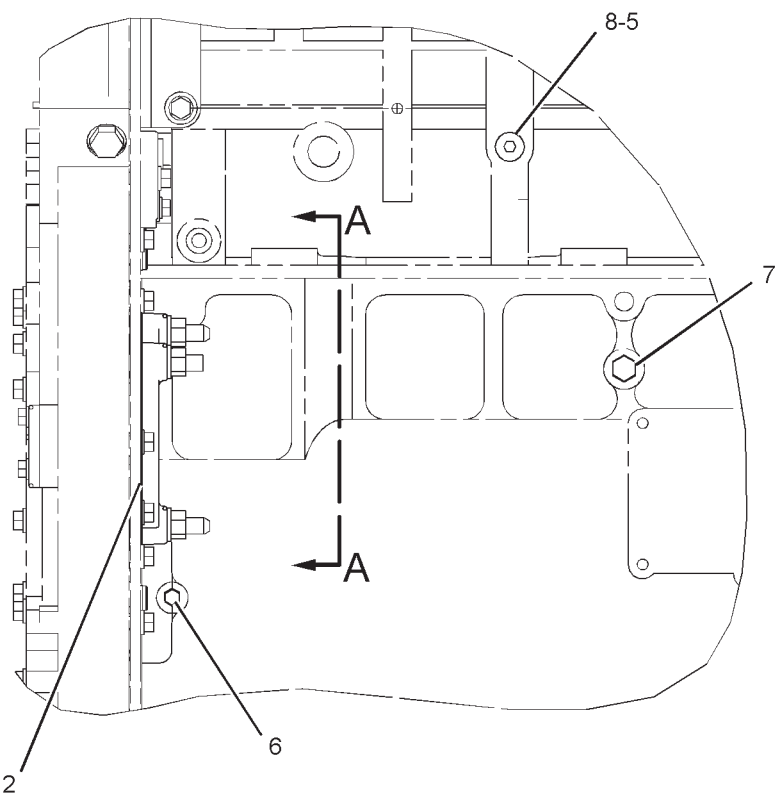

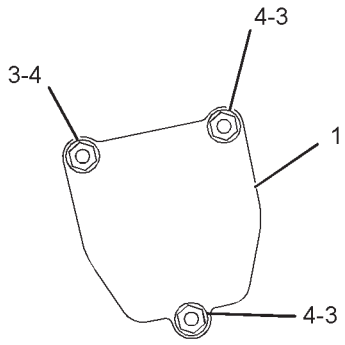

VIEW A-A

GRAPHIC #1

<END>

g01059232

BASIC ENGINE

150-3135 COVER GP-VALVE MECHANISM

S/N: BLC426-UP

PART OF 187-1327 COVER GP-VALVE MECHANISM

SMCS-1107 **i02405247**

NOTE	REF NO	GRAPHIC REF	PART NUMBER	QTY	PART NAME 1 2 3 4 5 6 (PRODUCT LEVEL)	SEE PAGE
	1	1	**150-2557**	1	COVER-VALVE MECH	
	2	1	**242-9537**	1	SEAL-VALVE COVER	
	3	1	**243-1159**	6	FASTENER AS	
					(EACH INCLUDES)	
		1	**149-7378**	1	GROMMET	

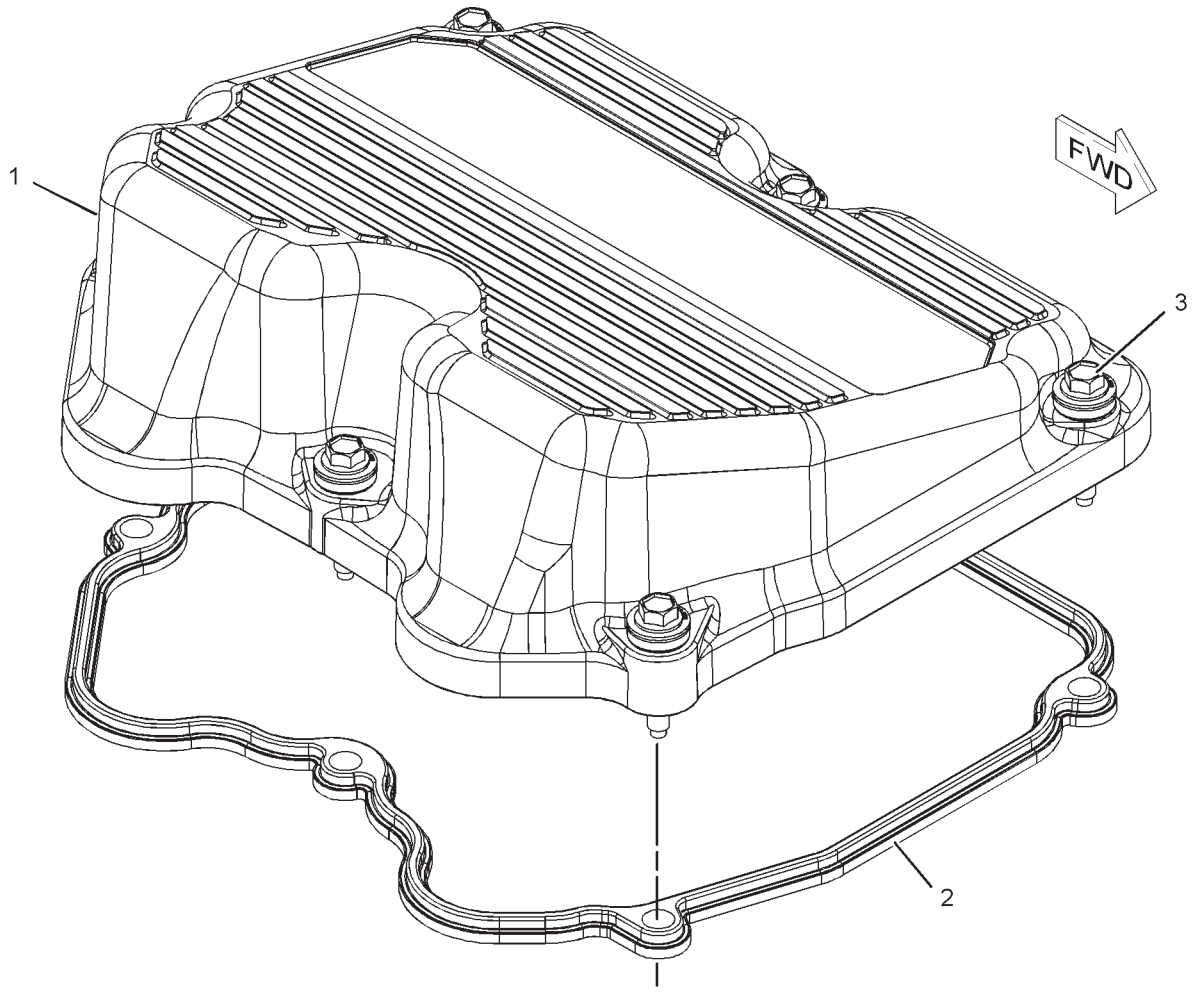

GRAPHIC #1 **<END>** g01055147

BASIC ENGINE

187-1326 COVER GP-VALVE MECHANISM

S/N: BLC426-UP

PART OF 187-1327 COVER GP-VALVE MECHANISM

SMCS-1107 **i01517974**

NOTE	REF NO	GRAPHIC REF	PART NUMBER	QTY	PART NAME 1 2 3 4 5 6 (PRODUCT LEVEL)	SEE PAGE
	1	1	**172-8027**	1	SEAL	
	2	1	**173-2390**	6	FASTENER AS	
	3	1	**187-1325**	1	COVER AS-VALVE	

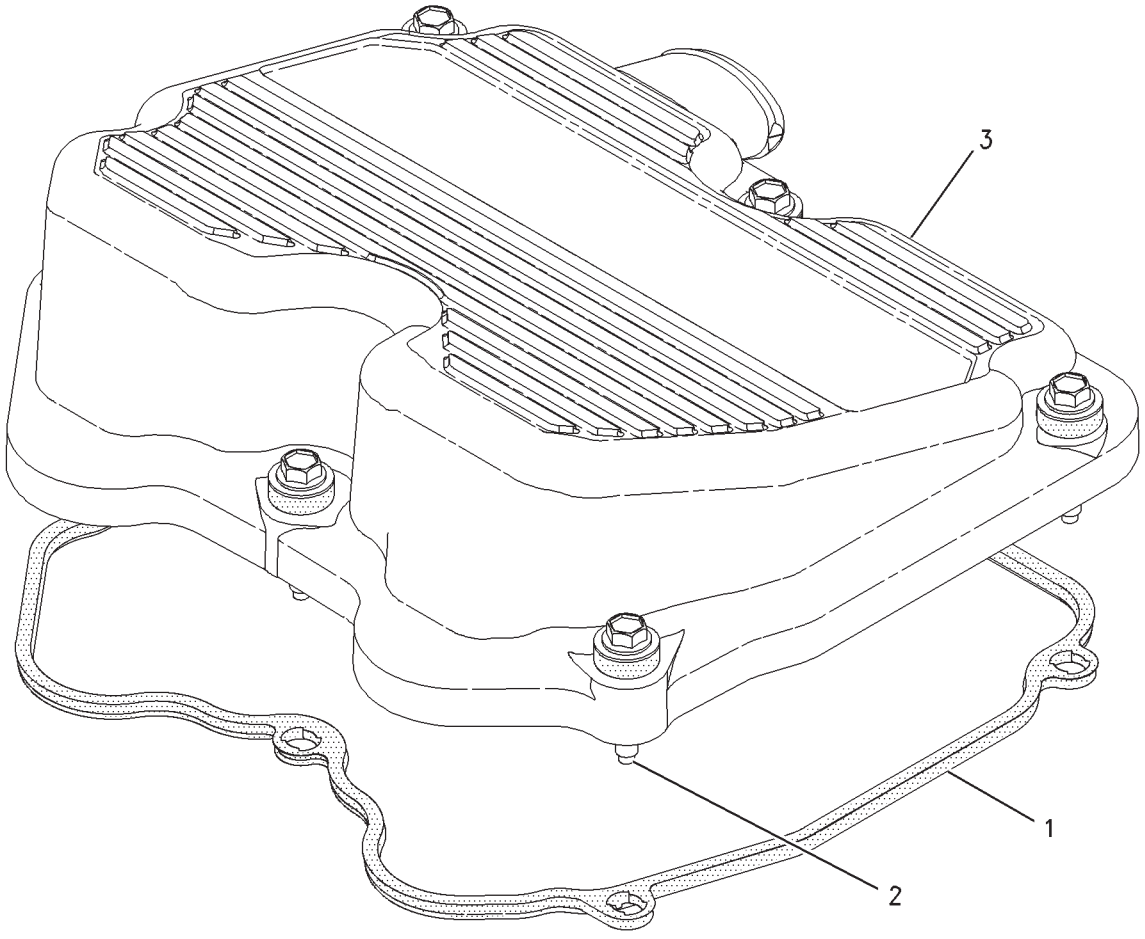

GRAPHIC #1 **<END>** g00740415

BASIC ENGINE

187-1327 COVER GP-VALVE MECHANISM

S/N: BLC426-UP

PART OF 205-5858, 235-4685 ENGINE AR-COMPLETE

SMCS-1107 **i01517961**

NOTE	REF NO	GRAPHIC REF	PART NUMBER	QTY	PART NAME 1 2 3 4 5 6 (PRODUCT LEVEL)	SEE PAGE
Y	1	1	*150-3135*	2	COVER GP-VALVE MECHANISM	18
Y	2	1	*187-1326*	1	COVER GP-VALVE MECHANISM	19

Y-SEPARATE ILLUSTRATION

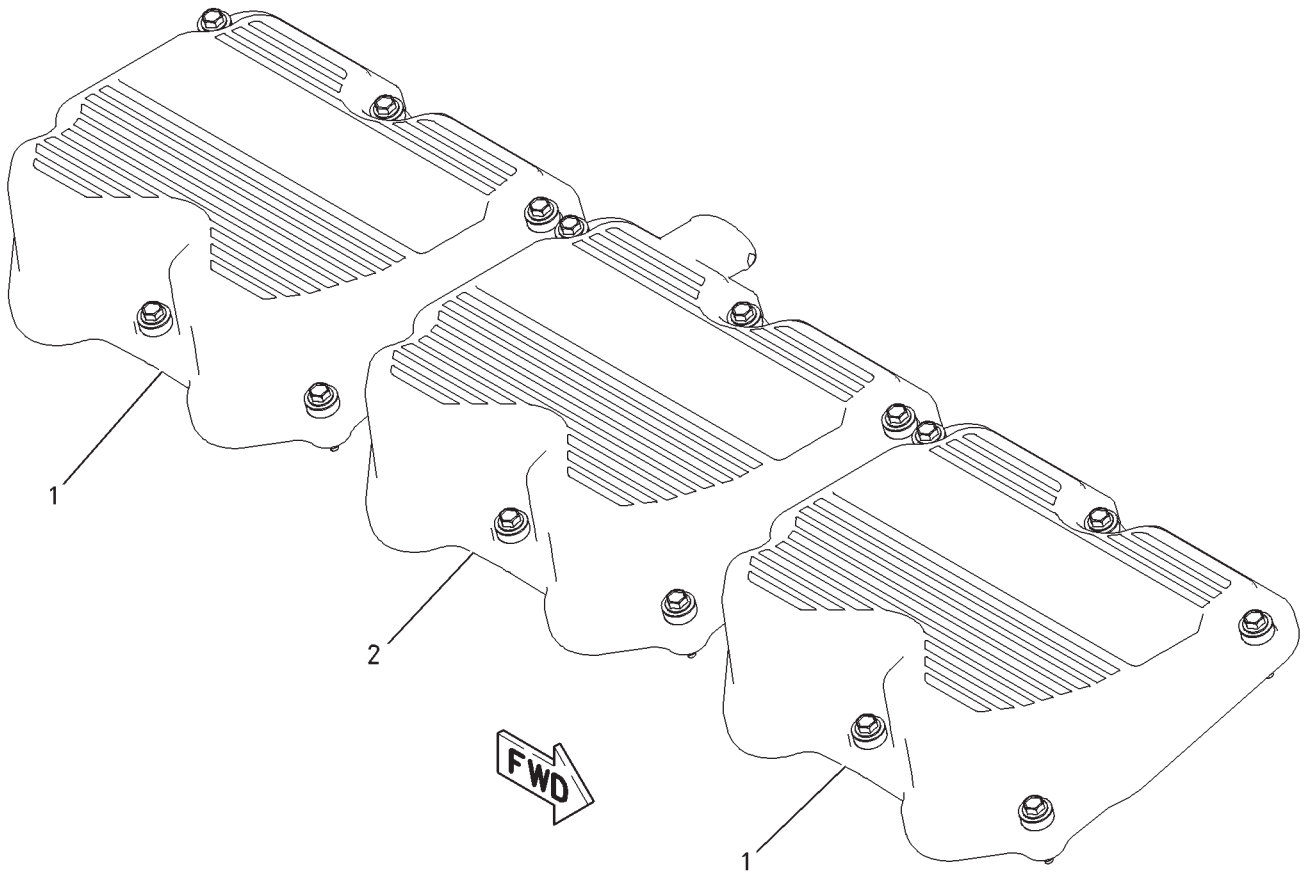

GRAPHIC #1 **<END>** g00740178

BASIC ENGINE

137-7298 CRANKSHAFT GP

S/N: BLC426-UP

PART OF 159-5810, 235-3469 ENGINE AR-CORE

SMCS-1202 **i03351443**

NOTE	REF NO	GRAPHIC REF	PART NUMBER	QTY	PART NAME 1 2 3 4 5 6 (PRODUCT LEVEL)	SEE PAGE
	1	1	**253-1752**	2	PLATE-THRUST	
Y	2	1	**319-7401**	1	SEAL GP-CRANKSHAFT (FRONT)	84
	3	1	**317-8766**	7	BEARING-MAIN (STANDARD)	
AB		1	**4W-5698**		BEARING-MAIN (0.63-MM US)	
AB		1	**4W-5699**		BEARING-MAIN (1.27-MM US)	
AB		1	**4W-5700**		BEARING-MAIN (0.63-MM OS)	
AB		1	**4W-5701**		BEARING-MAIN (0.63-MM US - 0.63-MM OS)	
R	4	1	**137-5920**	1	CRANKSHAFT AS	
	4A	1	**1W-9302**	1	GEAR-CRANKSHAFT (80-TEETH)	
	4B	1	**7S-5005**	1	DOWEL	
	5	1	**4N-0684**	1	DOWEL	

A-NOT PART OF THIS GROUP
B-USE AS REQUIRED
R-REMFG PART MAY BE AVAILABLE
Y-SEPARATE ILLUSTRATION

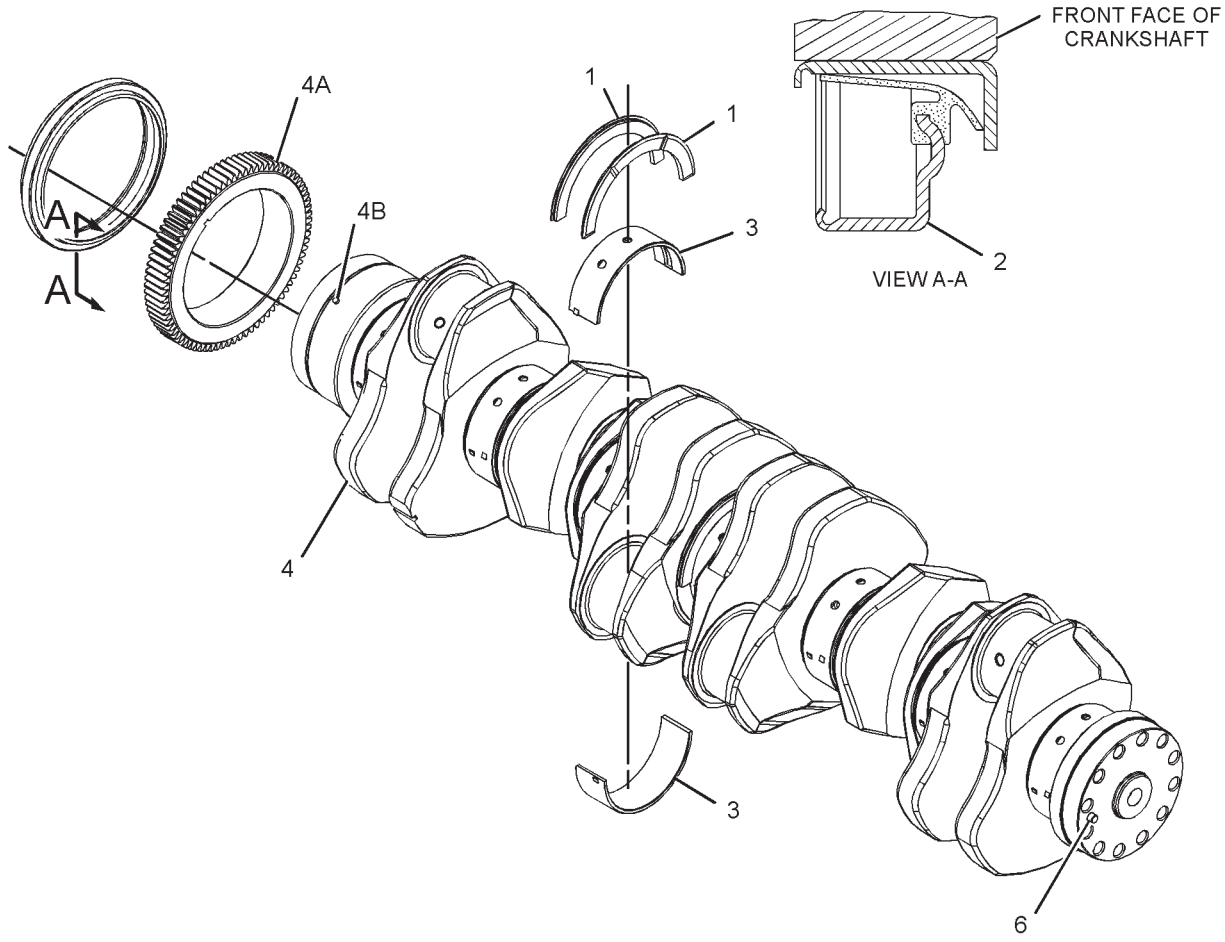

GRAPHIC #1 **<END>** g01726446

BASIC ENGINE

202-1255 CYLINDER BLOCK AS

S/N: BLC614-UP

PART OF 137-8471, 249-5631 CYLINDER BLOCK GP

SMCS-1201 **i01520174**

NOTE	REF NO	GRAPHIC REF	PART NUMBER	QTY	PART NAME 1 2 3 4 5 6 (PRODUCT LEVEL)	SEE PAGE
	1	1	**132-6881**	6	LINER-CYLINDER	
	3	1	**167-8083**	14	BOLT (7/8-14X7.5-IN)	
	4	1	**9H-1031**	14	WASHER-HARD (24X41.5X6-MM THK)	
	5	1	**167-8081**	7	CAP-CRANKSHAFT BEARING	
	6	1	**9L-5854**	6	BAND-FILLER (130.2-MM ID)	
	7	1	**110-2220**	6	SEAL-LINER	
	8	1	**131-3717**	6	SEAL D-RING	
	9	1	**142-6217**	6	SEAL-O-RING	

202-1255 **CYLINDER BLOCK AS** *(contd.)* **i01520174**

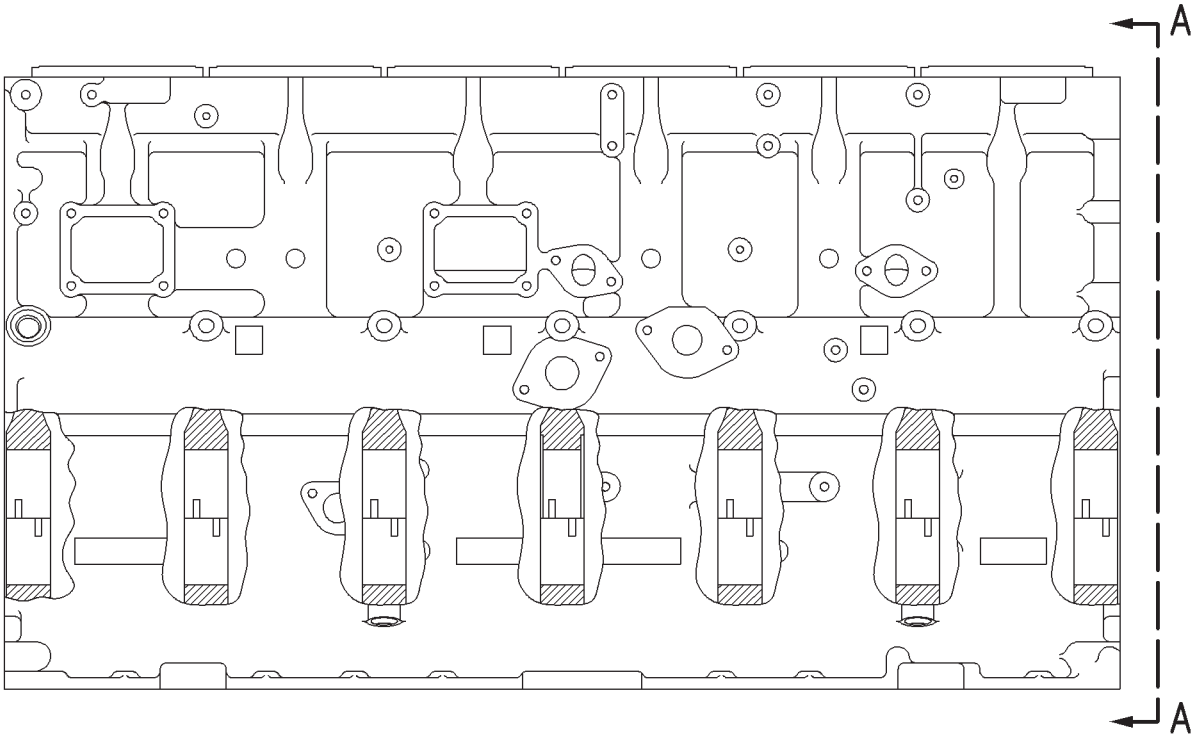

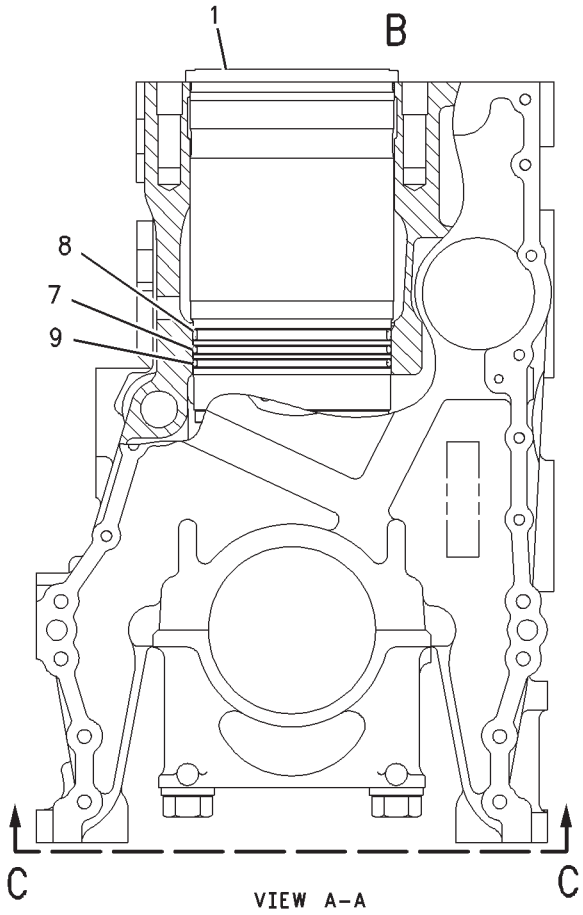

VIEW A-A

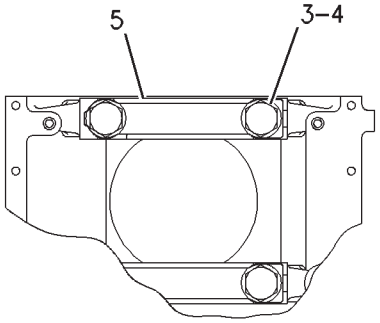

VIEW C-C

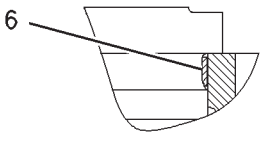

VIEW OF AREA B

GRAPHIC #1 **<END>** g00790078

BASIC ENGINE

137-8471 CYLINDER BLOCK GP

S/N: BLC426-UP

PART OF 159-5810, 235-3469 ENGINE AR-CORE

SMCS-1201 **i02089975**

NOTE	REF NO	GRAPHIC REF	PART NUMBER	QTY	PART NAME 1 2 3 4 5 6 (PRODUCT LEVEL)	SEE PAGE
CY	2	1	**202-1255**	1	CYLINDER BLOCK AS	22
	3	1	**1S-9540**	1	DOWEL	
	4	1	**5P-0840**	1	SEAL-O-RING	
	5	1	**7W-6492**	4	PLUG-PIPE	
	6	1	**6I-1055**	1	DOWEL	
	7	1	**4N-0683**	4	DOWEL	
	8	1	**4N-1650**	1	DOWEL	
	9	1	**6I-4421**	1	PLATE-SPACER	
	10	1	**180-5734**	1	GASKET-PLATE	
	11	1	**8S-9094**	1	PLUG-ORIFICE	
	12	1	**9S-4190**	1	PLUG-O-RING	
	13	1	**114-4427**	1	SEAL-O-RING	
	14	1	**7X-7732**	5	PLUG-PIPE	
Y	16	1	**194-6725**	1	SENSOR GP-PRESSURE (ENGINE OIL)	262
	17	1	**3E-7448**	1	CONNECTOR	
	19	1	**6V-5048**	1	SEAL-O-RING	
	20	1	**9S-4182**	1	PLUG-O-RING	
	21	1	**9X-7378**	1	SEAL-O-RING	
	22	1	**100-7399**	2	PLUG	
	23	1	**250-0466**	2	SEAL-O-RING	
	24	1	**142-2329**	1	SEAL	

C-CHANGE FROM PREVIOUS TYPE
Y-SEPARATE ILLUSTRATION

137-8471 **CYLINDER BLOCK GP** *(contd.)* **i02089975**

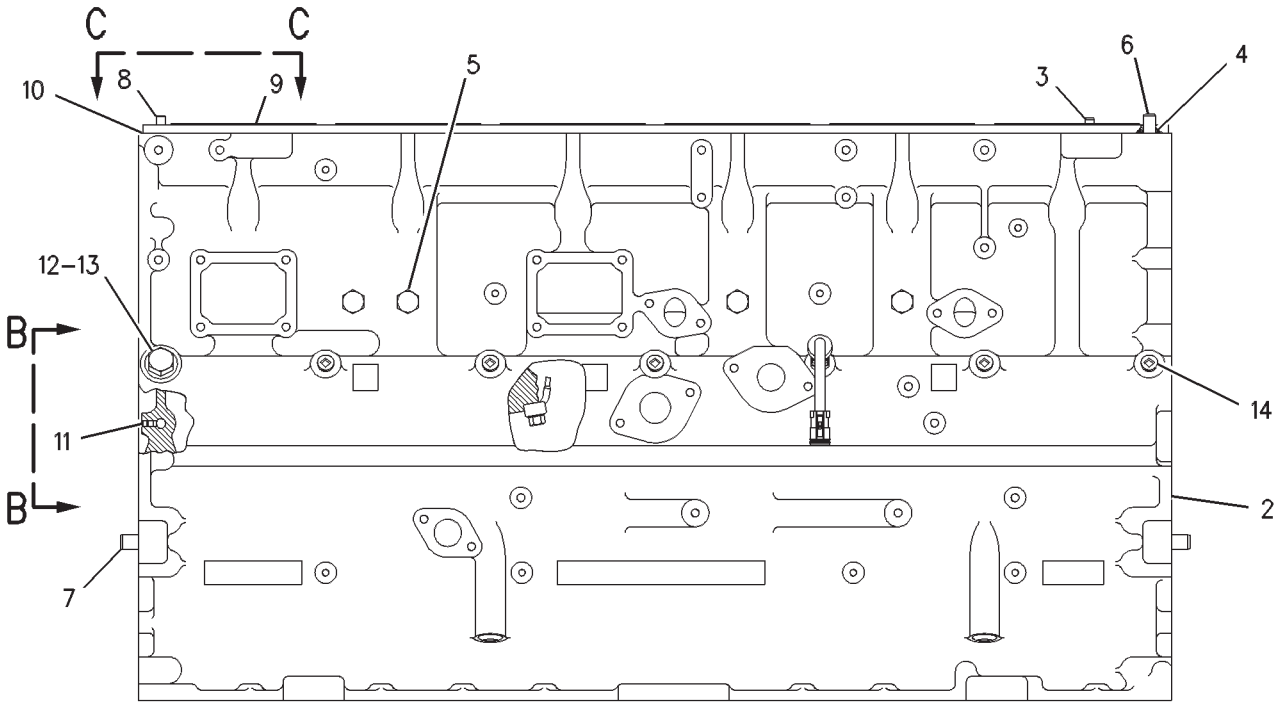

RIGHT SIDE VIEW

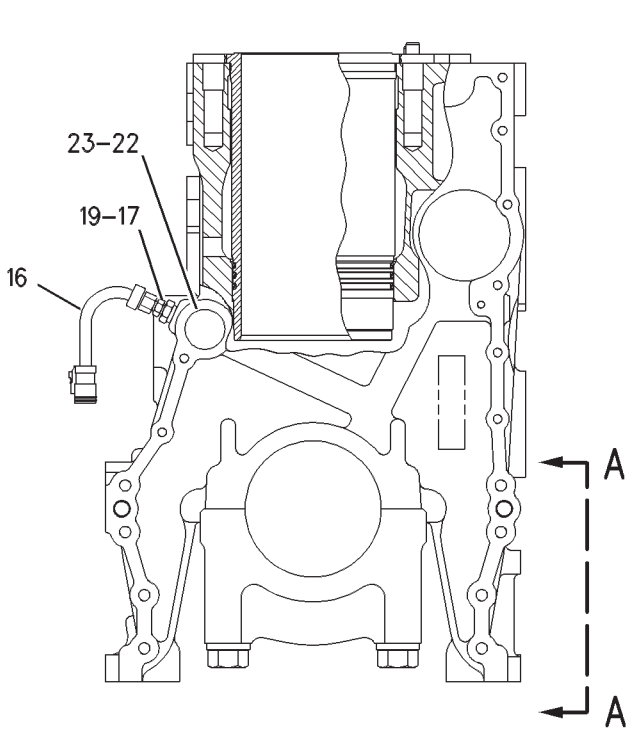

FRONT VIEW

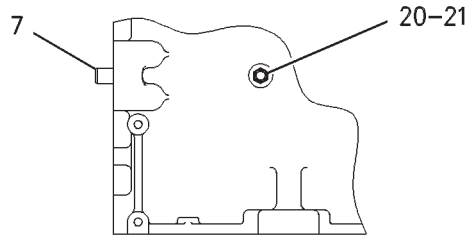

VIEW A-A

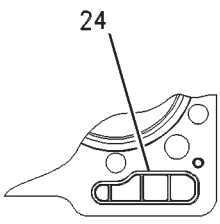

VIEW C-C

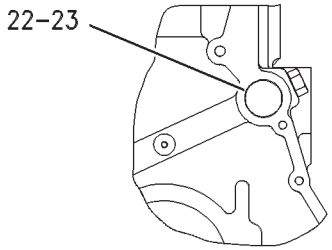

VIEW B-B

GRAPHIC #1 **<END>** g00577866

BASIC ENGINE

249-5631 CYLINDER BLOCK GP

S/N: BLC1103-UP

PART OF 235-3469 ENGINE AR-CORE

SMCS-1201 **i02374822**

NOTE	REF NO	GRAPHIC REF	PART NUMBER	QTY	PART NAME 1 2 3 4 5 6 (PRODUCT LEVEL)	SEE PAGE
Y	1	1	**202-1255**	1	CYLINDER BLOCK AS	22
	2	1	**1S-9540**	1	DOWEL	
	3	1	**5P-0840**	1	SEAL-O-RING	
	4	1	**7W-6492**	4	PLUG-PIPE	
	5	1	**6I-1055**	1	DOWEL	
	6	1	**4N-0683**	2	DOWEL	
	7	1	**4N-1650**	1	DOWEL	
	8	1	**6I-4421**	1	PLATE-SPACER	
	9	1	**227-1204**	1	GASKET	
	10	1	**8S-9094**	1	PLUG-ORIFICE	
	11	1	**7X-7732**	5	PLUG-PIPE	
Y	12	1	**194-6725**	1	SENSOR GP-PRESSURE	262
	13	1	**6V-5048**	1	SEAL-O-RING	
	14	1	**9S-4182**	1	PLUG-O-RING	
	15	1	**9X-7378**	1	SEAL-O-RING	
	16	1	**100-7399**	2	PLUG	
	17	1	**250-0466**	2	SEAL-O-RING	
	18	1	**142-2329**	1	SEAL	
	19	1	**3E-7448**	1	CONNECTOR	
	20	1	**266-6038**	2	DOWEL	

Y-SEPARATE ILLUSTRATION

249-5631 **CYLINDER BLOCK GP** *(contd.)* **i02374822**

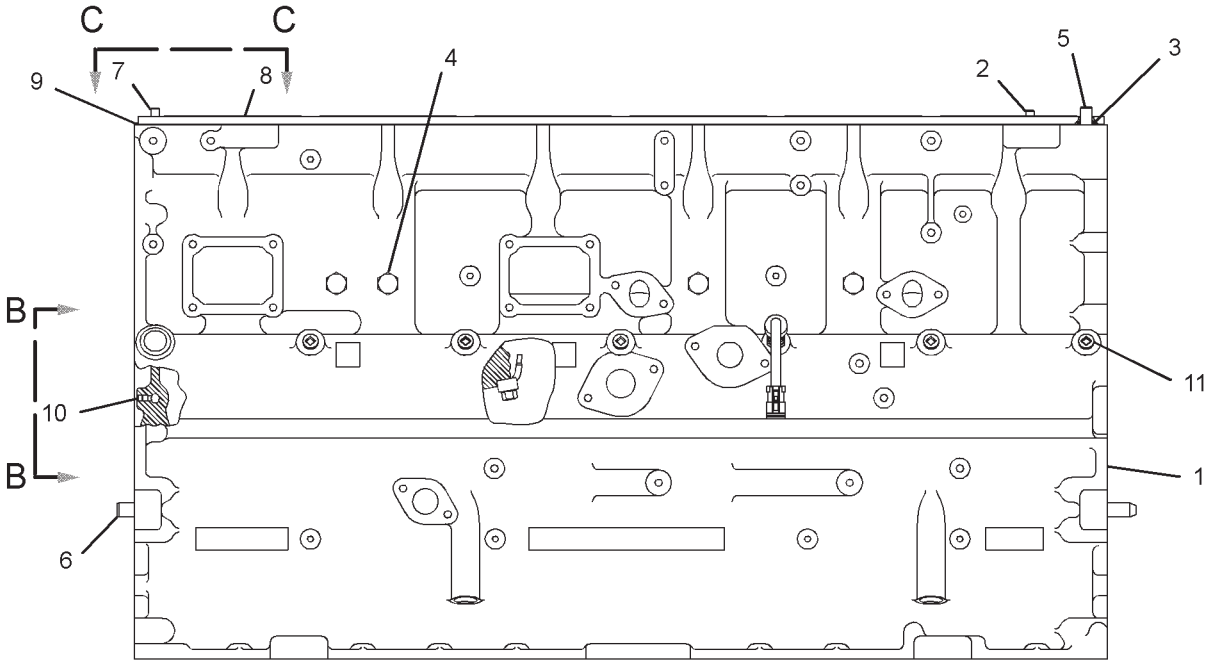

RIGHT SIDE VIEW

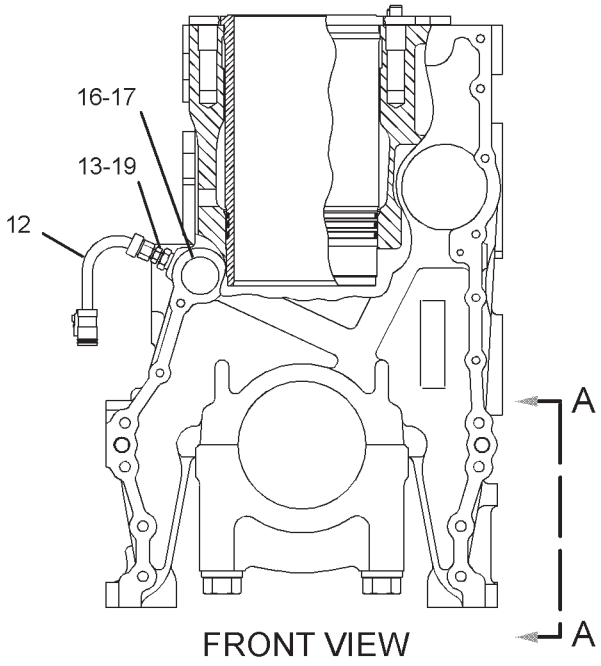

FRONT VIEW

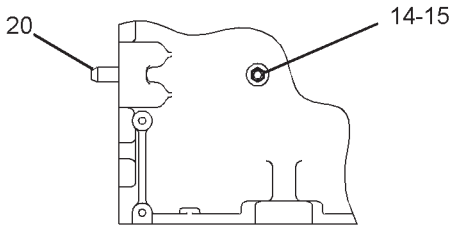

VIEW A-A

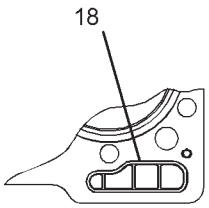

VIEW C-C

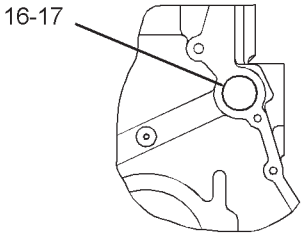

VIEW B-B

GRAPHIC #1 **<END>** g01191832

BASIC ENGINE

223-7263 CYLINDER HEAD AS

S/N: BLC1000-UP
WITH PREFINISHED VALVE SEAT INSERTS
PART OF 243-6741 CYLINDER HEAD AS

SMCS-1100 **i03645107**

NOTE	REF NO	GRAPHIC REF	PART NUMBER	QTY	PART NAME 1 2 3 4 5 6 (PRODUCT LEVEL)	SEE PAGE
	1	1	**122-7375**	24	GUIDE-VALVE (STANDARD)	
AB		1	**122-0447**		GUIDE-VALVE (0.51-MM OS)	
AB		1	**122-8612**		GUIDE-VALVE (0.13-MM OS)	
	2	1	**216-5582**	7	BEARING-SLEEVE (STANDARD)	
AB		1	**217-0751**		BEARING-SLEEVE (0.254-MM OS)	
AB		1	**217-0752**		BEARING-SLEEVE (0.762-MM OS)	
AB		1	**261-3429**		BEARING-SLEEVE (1.778-MM OS)	
AB		1	**261-3430**		BEARING-SLEEVE (1.27-MM OS)	
	3	1	**224-3983**	12	INSERT-SEAT (INLET) (STANDARD)	
		1	**314-3063**		INSERT-VALVE SEAT (0.55 MM US THK)	
		1	**314-3064**		INSERT-VALVE SEAT (INLET 0.13 OS OD)	
		1	**314-3065**		INSERT-VALVE SEAT (0.13 MM OS OD, 0.55 MM US THK)	
		1	**314-3066**		INSERT-VALVE SEAT (INLET 0.26 OS OD)	
		1	**314-3067**		INSERT-VALVE SEAT (0.26 MM OS OD, 0.55 MM US THK)	
		1	**314-3068**		INSERT-VALVE SEAT (INLET 0.51 OS OD)	
		1	**314-3069**		INSERT-VALVE SEAT (0.51 MM OS OD, 0.55 MM US THK)	
	4	1	**226-5561**	12	INSERT-VALVE (EXHAUST) (STANDARD)	
AB		1	**288-4883**		INSERT-VALVE (EXHAUST 0.51 OS OD)	
AB		1	**288-4884**		INSERT-VALVE (EXHAUST 0.76 OS OD)	
	5	1	**263-4920**	6	SLEEVE-INJECTOR (INLET)	
	8	1	**166-2904**	12	SEAL-O-RING	
	9	1	**3B-0623**	17	PLUG-CUP	
	10	1	**3B-0645**	20	PLUG-CUP	
	11	1	**8T-6757**	3	PLUG-PIPE	
	12	1	**9X-7430**	6	SEAL-O-RING	

A-NOT PART OF THIS GROUP
B-USE AS REQUIRED

223-7263 **CYLINDER HEAD AS** *(contd.)* **i03645107**

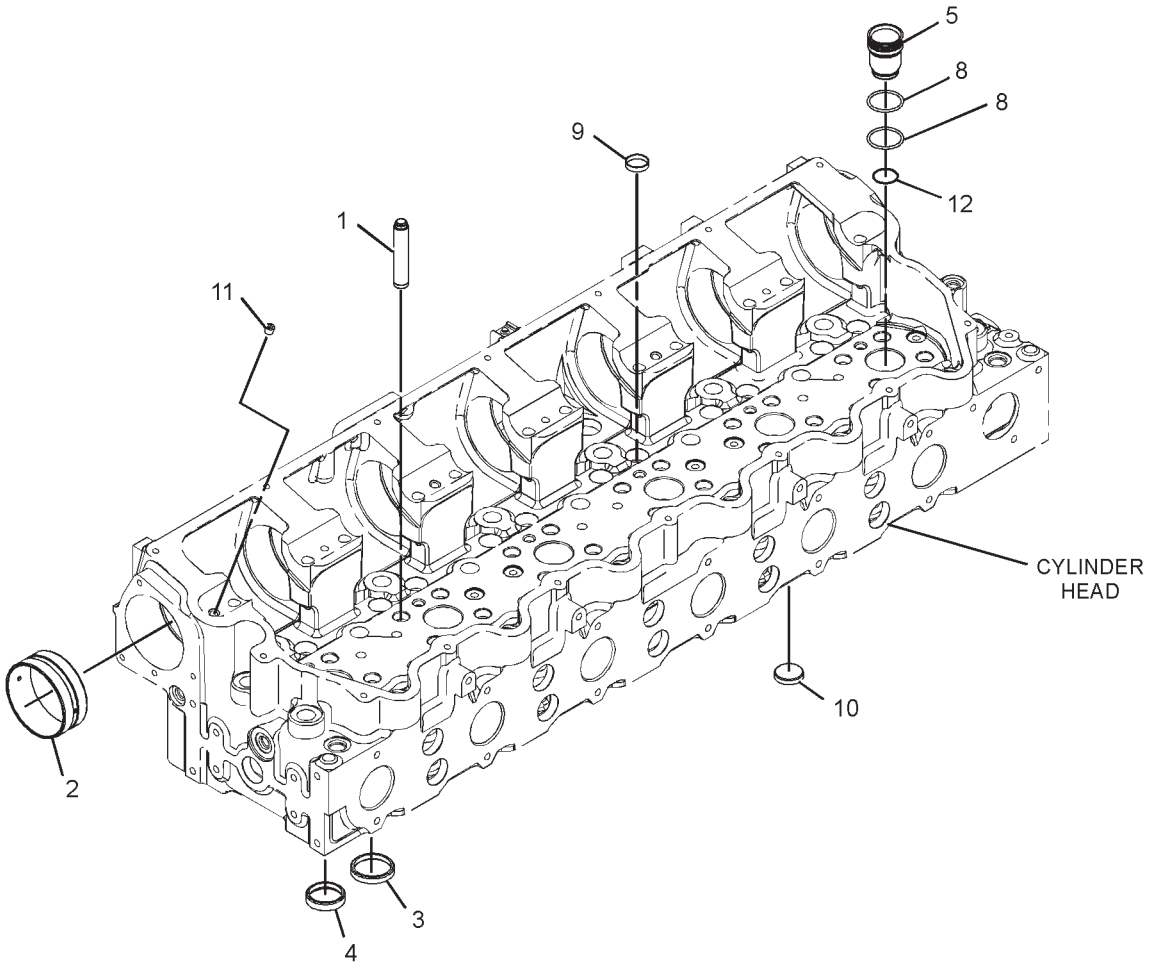

GRAPHIC #1 **<END>** g01370336

BASIC ENGINE

243-0943 CYLINDER HEAD AS

S/N: BLC1000-UP

PART OF 243-6741 CYLINDER HEAD AS

SMCS-1100 **i02097979**

NOTE	REF NO	GRAPHIC REF	PART NUMBER	QTY	PART NAME 1 2 3 4 5 6 (PRODUCT LEVEL)	SEE PAGE
	1	1	**152-7582**	12	INSERT-VALVE SEAT (EXHAUST) (STANDARD)	
AB		1	**167-0642**		INSERT-VALVE SEAT (EXHAUST 0.76-MM OS OD)	
AB		1	**170-4737**		INSERT-VALVE SEAT (EXHAUST 0.51-MM OS OD)	
	2	1	**175-3617**	12	INSERT-VALVE SEAT (INLET) (STANDARD)	
AB		1	**167-0643**		INSERT-VALVE SEAT (INLET 0.76-MM OS OD)	
AB		1	**170-4738**		INSERT-VALVE SEAT (INLET 0.51-MM OS OD)	

A-NOT PART OF THIS GROUP
B-USE AS REQUIRED

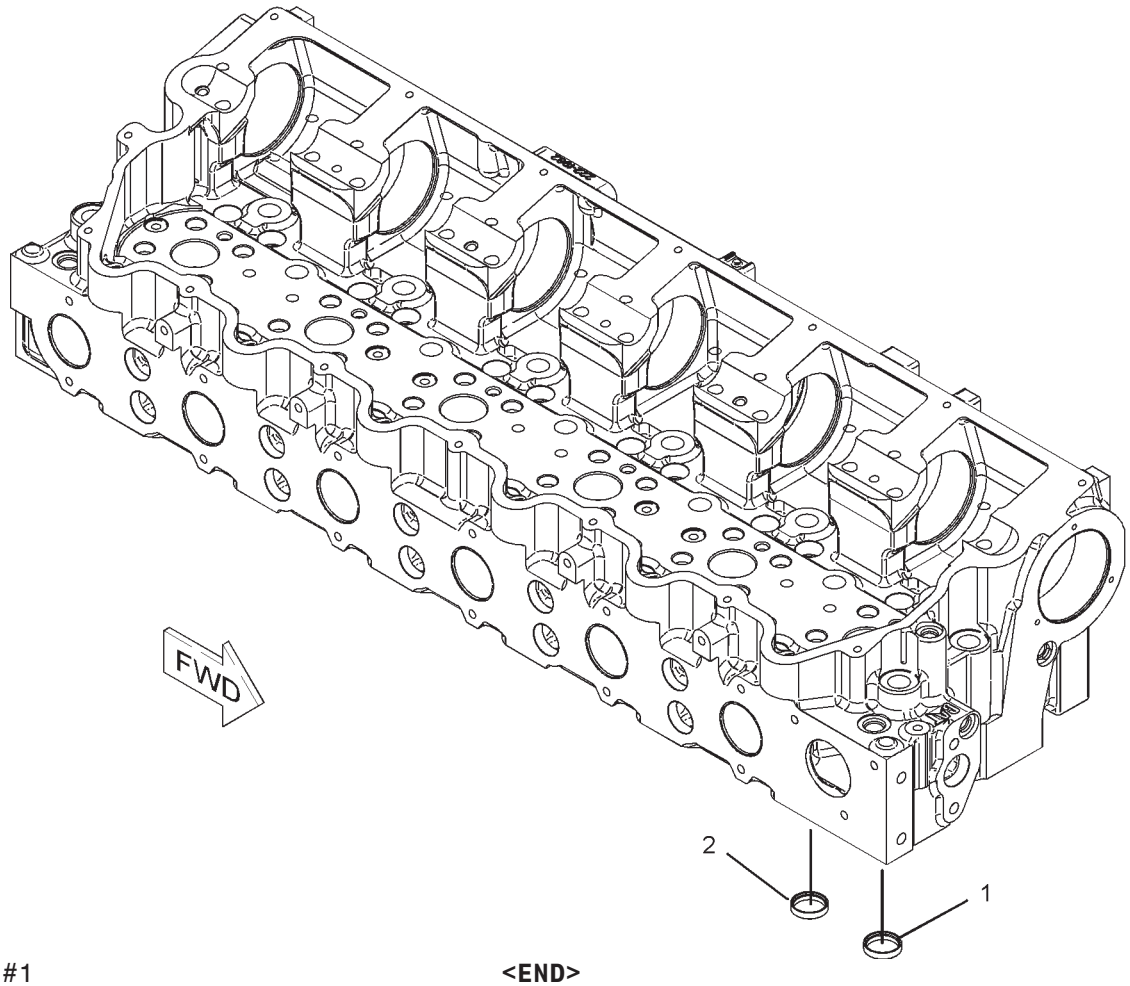

GRAPHIC #1 **<END>** g01028691

BASIC ENGINE

243-6741 CYLINDER HEAD AS

S/N: BLC1000-UP
WITH MACHINE IN PLACE VALVE SEAT INSERTS
PART OF 223-9250 CYLINDER HEAD GP

SMCS-1100 **i02444848**

NOTE	REF NO	GRAPHIC REF	PART NUMBER	QTY	PART NAME 1 2 3 4 5 6 (PRODUCT LEVEL)	SEE PAGE
	1	2	**122-7375**	24	GUIDE-VALVE (STANDARD)	
AB		2	**122-0447**		GUIDE-VALVE (0.51-MM OS)	
AB		2	**122-8612**		GUIDE-VALVE (0.13-MM OS)	
	2	1	**216-5582**	7	BEARING-SLEEVE (STANDARD)	
AB		1	**217-0751**		BEARING-SLEEVE (0.254-MM OS)	
AB		1	**217-0752**		BEARING-SLEEVE (0.762-MM OS)	
	3	2	**227-4239**	6	SLEEVE-INJECTOR	
Y	4	1	**243-0943**	1	CYLINDER HEAD AS	30
					—OR—	
Y		1	**223-7263**	1	CYLINDER HEAD AS	28
	5	2	**166-2903**	6	SEAL-O-RING	
	6	2	**166-2904**	6	SEAL-O-RING	
	7	1	**3B-0623**	17	PLUG-CUP	
	8	1,2	**3B-0645**	20	PLUG-CUP	
	9	2	**8T-6757**	3	PLUG-PIPE	
	10	2	**9X-7430**	6	SEAL-O-RING	

A-NOT PART OF THIS GROUP
B-USE AS REQUIRED
Y-SEPARATE ILLUSTRATION

243-6741 CYLINDER HEAD AS *(contd.)*

i02444848

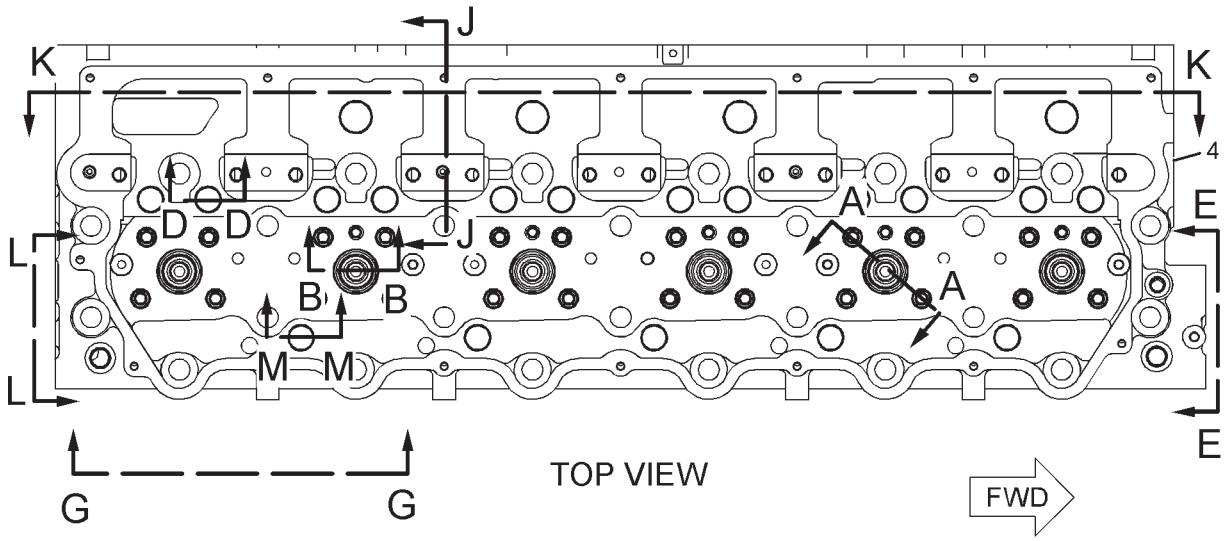

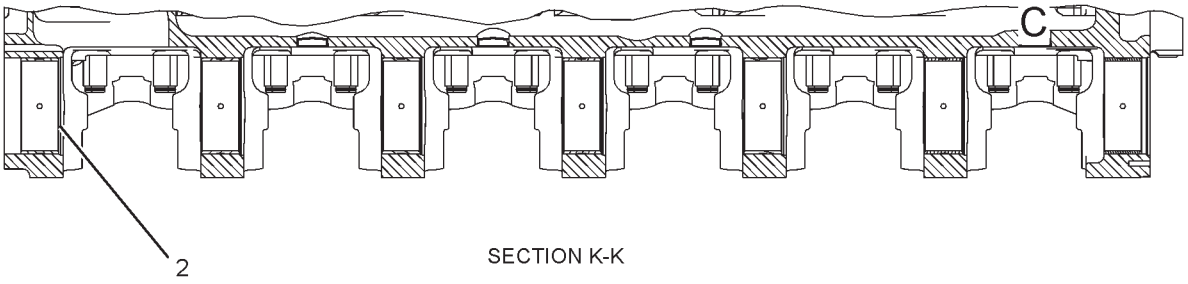

SECTION K-K

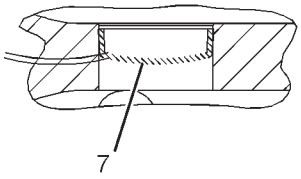

SECTION M-M

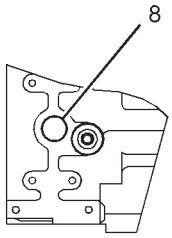

VIEW L-L

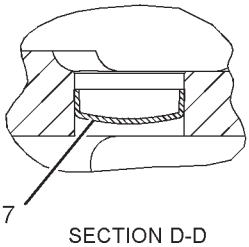

SECTION D-D

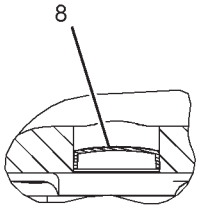

VIEW OF AREA C

REFER TO ALL ILLUSTRATIONS OF
THIS GROUP FOR AUXILIARY VIEWS

GRAPHIC #1

g01221315

243-6741 CYLINDER HEAD AS *(contd.)* **i02444848**

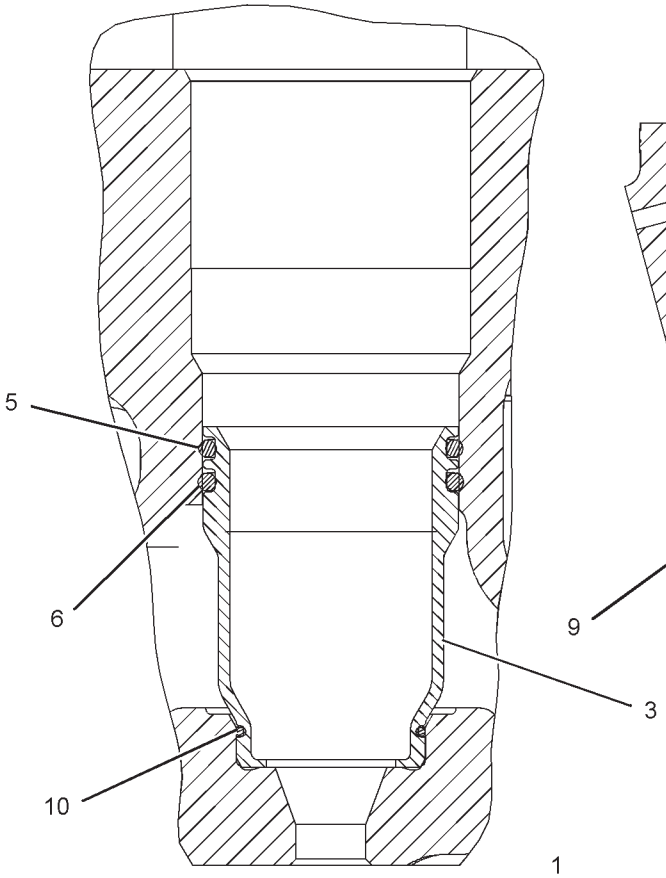

SECTION B-B

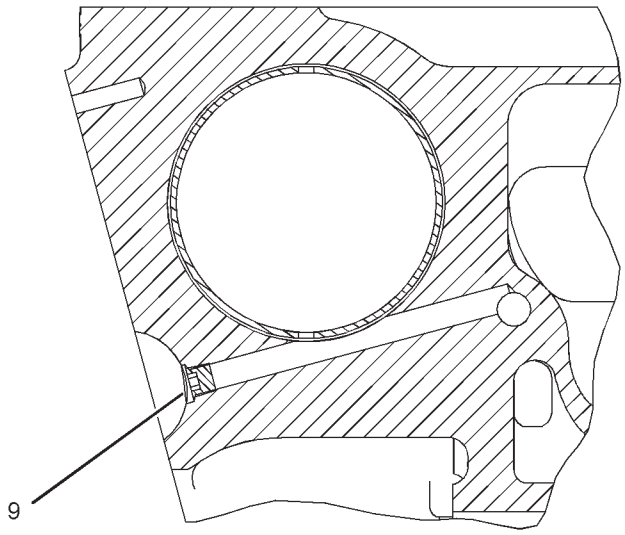

SECTION J-J

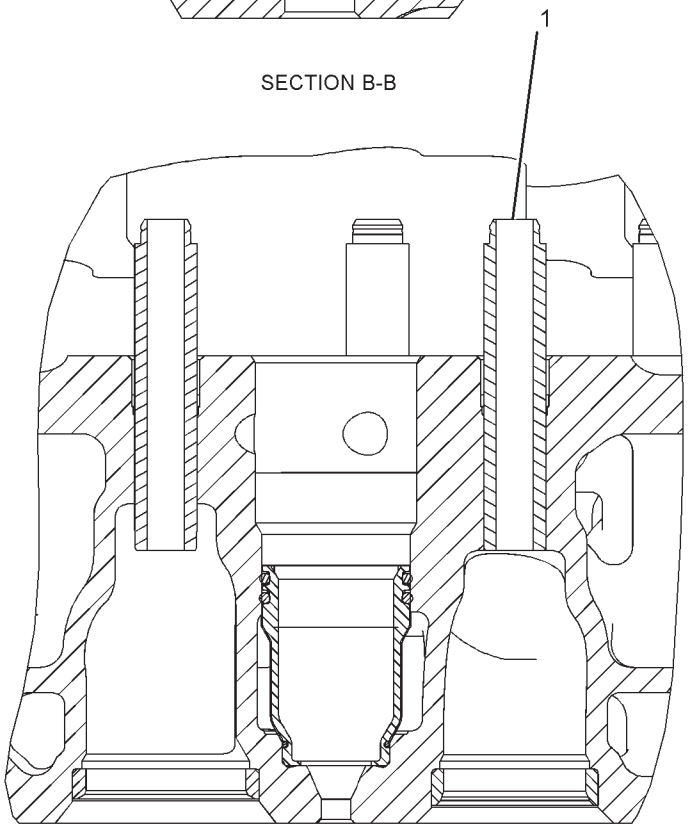

SECTION A-A

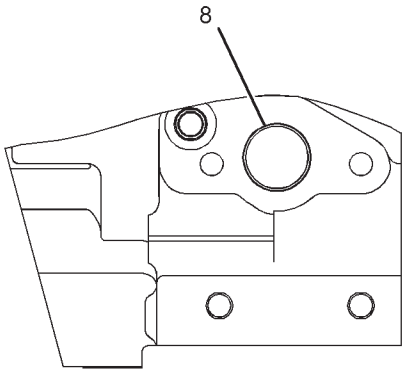

VIEW E-E

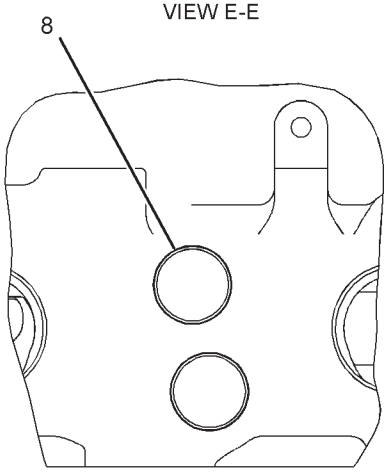

VIEW G-G

GRAPHIC #2 **<END>** g01029134

BASIC ENGINE

135-6531 CYLINDER HEAD GP

S/N: BLC426-UP

PART OF 159-5810 ENGINE AR-CORE

SMCS-1100 **i03210738**

NOTE	REF NO	GRAPHIC REF	PART NUMBER	QTY	PART NAME 1 2 3 4 5 6 (PRODUCT LEVEL)	SEE PAGE
	1	1	**107-8618**	1	SENSOR GP-TEMPERATURE (INLET AIR)	
		1	**102-8803**	1	KIT-RECEPTACLE (3-PIN)	
					(INCLUDES RECEPTACLE AS AND WEDGE)	
		1	**3E-3371**	1	WEDGE-RECEPTACLE LOCK (3-PIN)	
		1	**186-3735**	3	PIN-CONNECTOR (16-GA TO 18-GA)	
BE		1	**112-4550**		SLEEVE	
Y	2	1	**194-6724**	1	SENSOR GP-PRESSURE (TURBO OUTLET)	261
	3	1	**8T-6763**	1	PLUG-PIPE	
	4	1	**153-9653**	1	GASKET-CYLINDER HEAD	
CYR	5	1	**183-5296**	1	CYLINDER HEAD GP	38
	6	1	**194-8124**	6	SLEEVE AS (EXHAUST PORT)	
	7	1	**3E-6772**	24	SEAL	
	8	1	*6I-4025*	16	FASTENER GP-CYLINDER HEAD	
					(EACH INCLUDES)	
	8A	1	**5H-1504**	1	WASHER-HARD (20X33.5X5-MM THK)	
	8B	1	**124-1855**	1	BOLT-12 POINT HEAD (3/4-16X7.638-IN)	
	9	1	**6V-5048**	1	SEAL-O-RING	
	10	1	**6V-5049**	5	SEAL-O-RING	
	11	1	*106-5673*	10	FASTENER GP-CYLINDER HEAD	
					(EACH INCLUDES)	
	11A	1	**124-1854**	1	BOLT-12 POINT HEAD (3/4-16X8.5-IN)	
	11B	1	**5H-1504**	1	WASHER-HARD (20X33.5X5-MM THK)	
	12	1	**2B-0858**	1	PLUG-PIPE	
	13	1	**8L-2786**	1	SEAL-O-RING	
	14	1	**2P-8421**	1	ADAPTER-O-RING	
	15	1	**008-6817**	1	ELBOW	
	16	1	**9S-8004**	3	PLUG	
	17	1	**5P-0840**	1	SEAL-O-RING	
	18	1	**030-3978**	1	CONNECTOR	
	19	1	**6V-5050**	1	SEAL-O-RING	
	20	1	**100-5725**	1	STUD (3/8-16X1.25-IN)	
	21	1	**8T-4896**	1	WASHER-HARD (10.2X18.5X2.5-MM THK)	
	22	1	**8T-6765**	2	PLUG-PIPE	
	23	1	**9S-4191**	1	PLUG-O-RING	
	24	1	**9S-4190**	1	PLUG-O-RING	
	25	1	**6V-3251**	1	SEAL-O-RING	

B-USE AS REQUIRED
C-CHANGE FROM PREVIOUS TYPE
E-ORDER BY THE CENTIMETER
R-REMFG PART MAY BE AVAILABLE
Y-SEPARATE ILLUSTRATION

135-6531 **CYLINDER HEAD GP** *(contd.)* **i03210738**

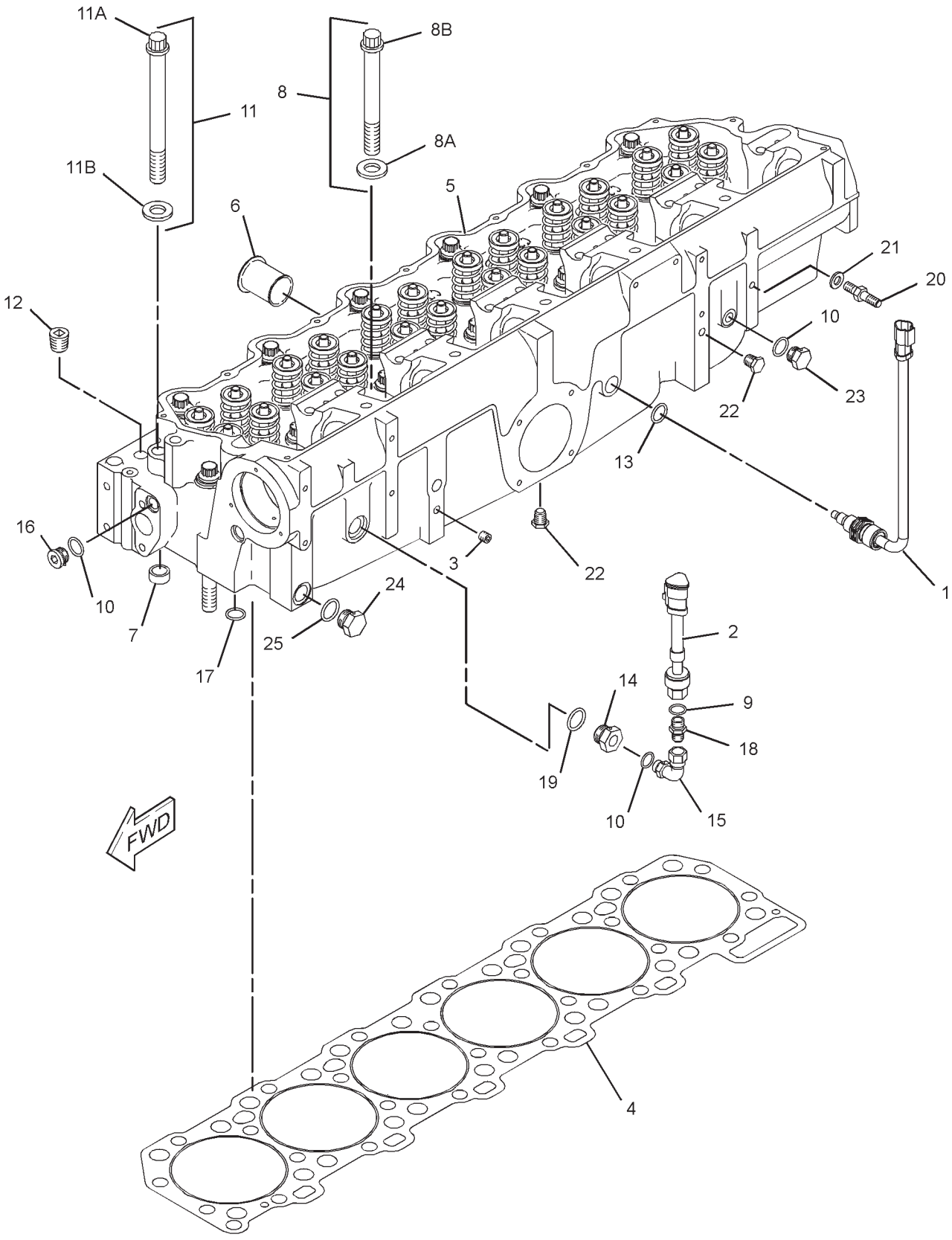

GRAPHIC #1 **<END>** g01640383

BASIC ENGINE

176-9918 CYLINDER HEAD GP*R

S/N: BLC426-UP

PART OF 183-5296 CYLINDER HEAD GP

SMCS-1100 **i02843589**

NOTE	REF NO	GRAPHIC REF	PART NUMBER	QTY	PART NAME 1 2 3 4 5 6 (PRODUCT LEVEL)	SEE PAGE
	1	1	**8T-6757**	3	PLUG-PIPE	
	2	1	**216-5582**	7	BEARING-SLEEVE (STANDARD)	
AB		1	**217-0751**		BEARING-SLEEVE (0.254-MM OS)	
AB		1	**217-0752**		BEARING-SLEEVE (0.762-MM OS)	
AB		1	**261-3429**		BEARING-SLEEVE (1.778-MM OS)	
AB		1	**261-3430**		BEARING-SLEEVE (1.27-MM OS)	
	3	1	**227-4239**	6	SLEEVE-INJECTOR	
	4	1	**3B-0645**	20	PLUG-CUP	
	5	1	**3B-0623**	17	PLUG-CUP	
	6	1	**122-7375**	24	GUIDE-VALVE (STANDARD)	
AB		1	**122-8612**		GUIDE-VALVE (0.13-MM OS)	
AB		1	**122-0447**		GUIDE-VALVE (0.51-MM OS)	
	7	1	**166-2903**	6	SEAL-O-RING (34.59MM ID)	
	8	1	**166-2904**	6	SEAL-O-RING (34.59MM ID)	
	9	1	**9X-7430**	6	SEAL-O-RING	
	10	1	**152-7582**	12	INSERT-VALVE SEAT (EXHAUST) (STANDARD)	
AB		1	**167-0642**		INSERT-VALVE SEAT (EXHAUST 0.76-MM OS OD)	
AB		1	**170-4737**		INSERT-VALVE SEAT (EXHAUST 0.51-MM OS OD)	
	11	1	**175-3617**	12	INSERT-VALVE SEAT (INLET) (STANDARD)	
AB		1	**167-0643**		INSERT-VALVE SEAT (INLET 0.76-MM OS OD)	
AB		1	**170-4738**		INSERT-VALVE SEAT (INLET 0.51-MM OS OD)	

A-NOT PART OF THIS GROUP
B-USE AS REQUIRED

176-9918 CYLINDER HEAD GP *(contd.)* **i02843589**

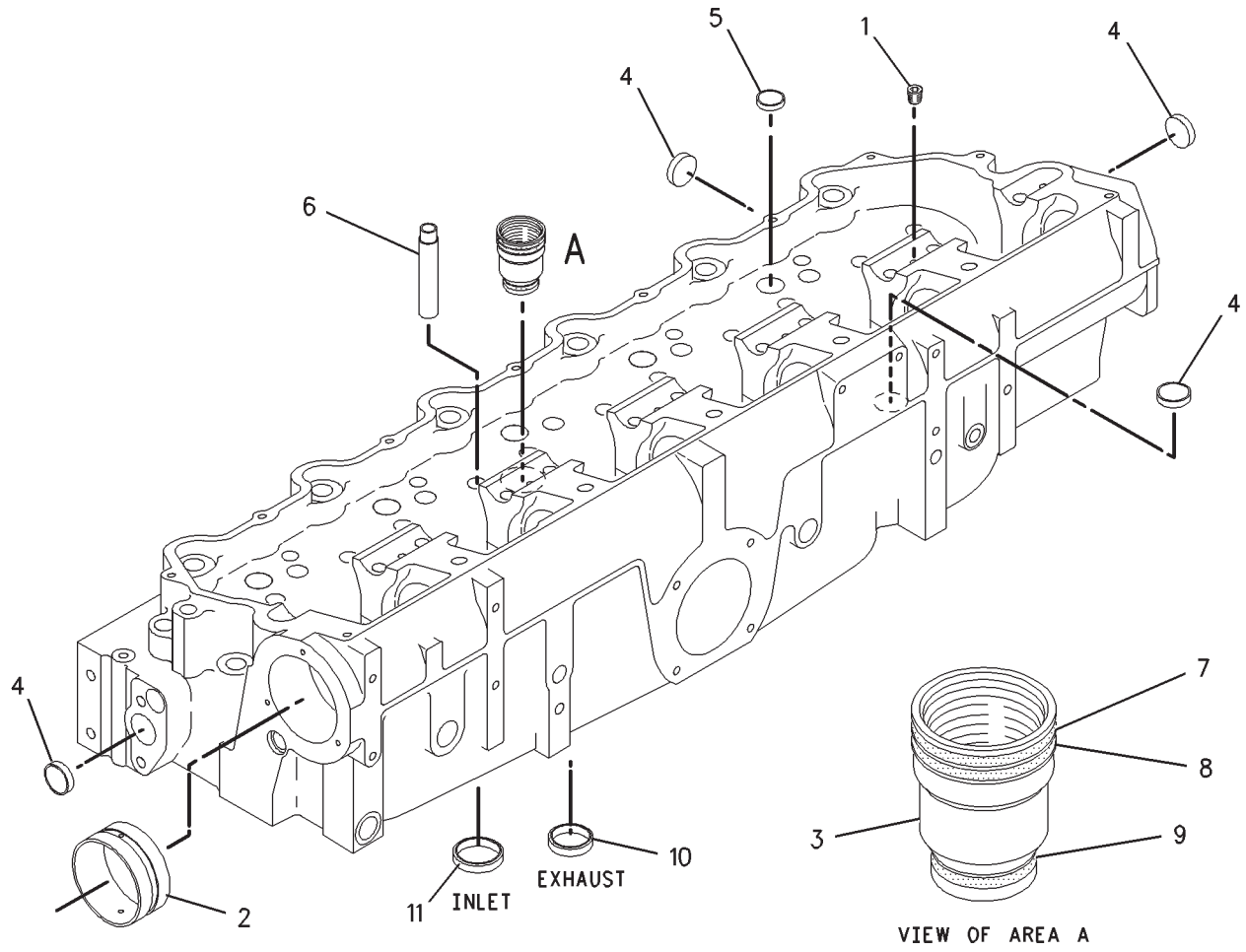

GRAPHIC #1 **<END>** g00673861

BASIC ENGINE

183-5296 CYLINDER HEAD GP*R

S/N: BLC426-UP

PART OF 135-6531 CYLINDER HEAD GP

SMCS-1100 **i01504439**

NOTE	REF NO	GRAPHIC REF	PART NUMBER	QTY	PART NAME 1 2 3 4 5 6 (PRODUCT LEVEL)	SEE PAGE
YR	1	1	**176-9918**	1	CYLINDER HEAD GP	36
	2	1	**153-7023**	12	VALVE-INLET	
	3	1	**153-7024**	12	VALVE-EXHAUST	
	4	1	**6I-0928**	24	WASHER-SPECIAL	
	5	1	**186-2001**	24	ROTOCOIL AS	
	6	1	**175-7523**	24	SPRING-VALVE (INNER)	
	7	1	**2A-4429**	48	LOCK-RETAINER	
	8	1	**102-6229**	24	SEAL-VALVE STEM	
	9	1	**175-7526**	24	SPRING-VALVE (OUTER)	

R-REMFG PART MAY BE AVAILABLE
Y-SEPARATE ILLUSTRATION

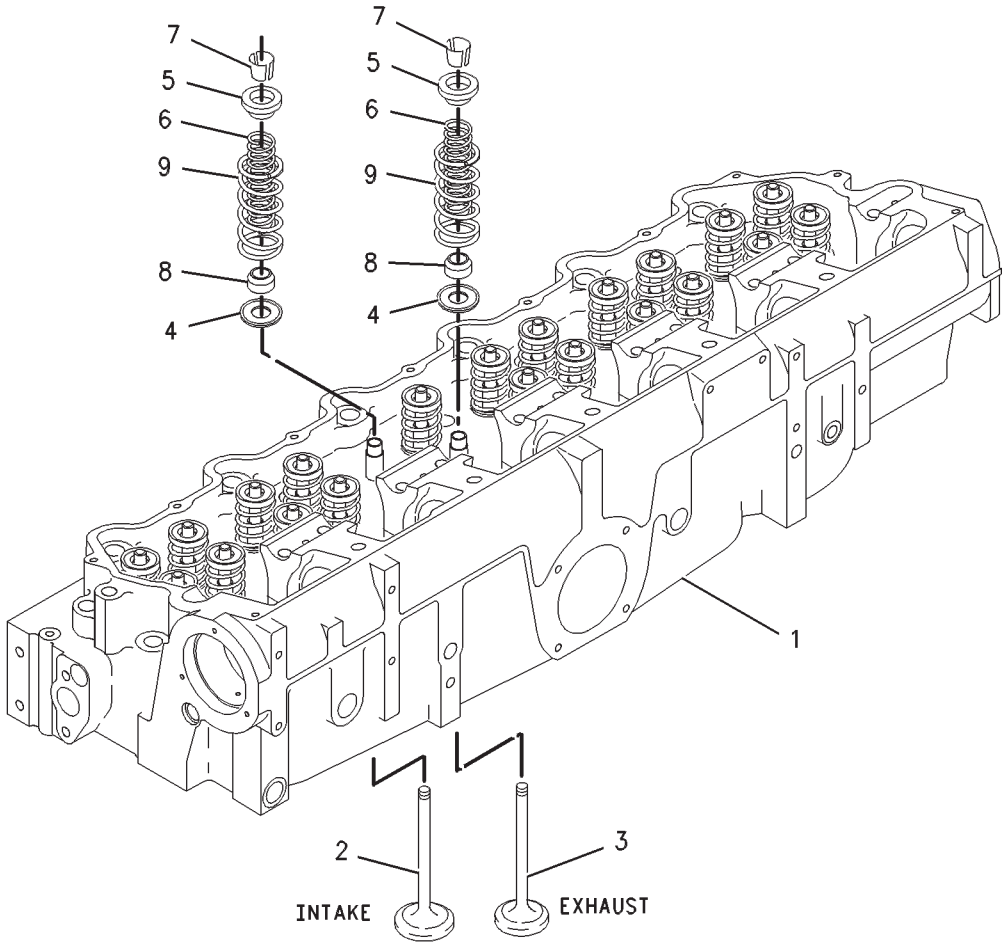

GRAPHIC #1 **<END>** g00631688

BASIC ENGINE

223-9250 CYLINDER HEAD GP*R

S/N: BLC1000-UP

PART OF 234-5985 CYLINDER HEAD GP

SMCS-1100 **i02453772**

NOTE	REF NO	GRAPHIC REF	PART NUMBER	QTY	PART NAME 1 2 3 4 5 6 (PRODUCT LEVEL)	SEE PAGE
	1	1	**2A-4429**	48	LOCK-RETAINER	
	2	1	**6I-0928**	24	WASHER-SPECIAL	
	3	1	**153-7023**	12	VALVE-INLET	
	4	1	**153-7024**	12	VALVE-EXHAUST	
	5	1	**163-2478**	24	SEAL-VALVE STEM	
	6	1	**211-3123**	24	SPRING-VALVE (OUTER)	
CY	7	1	**243-6741**	1	CYLINDER HEAD AS	31
	8	1	**186-2001**	24	ROTOCOIL AS	
	9	1	**211-3122**	24	SPRING-VALVE (INNER)	

C-CHANGE FROM PREVIOUS TYPE
Y-SEPARATE ILLUSTRATION

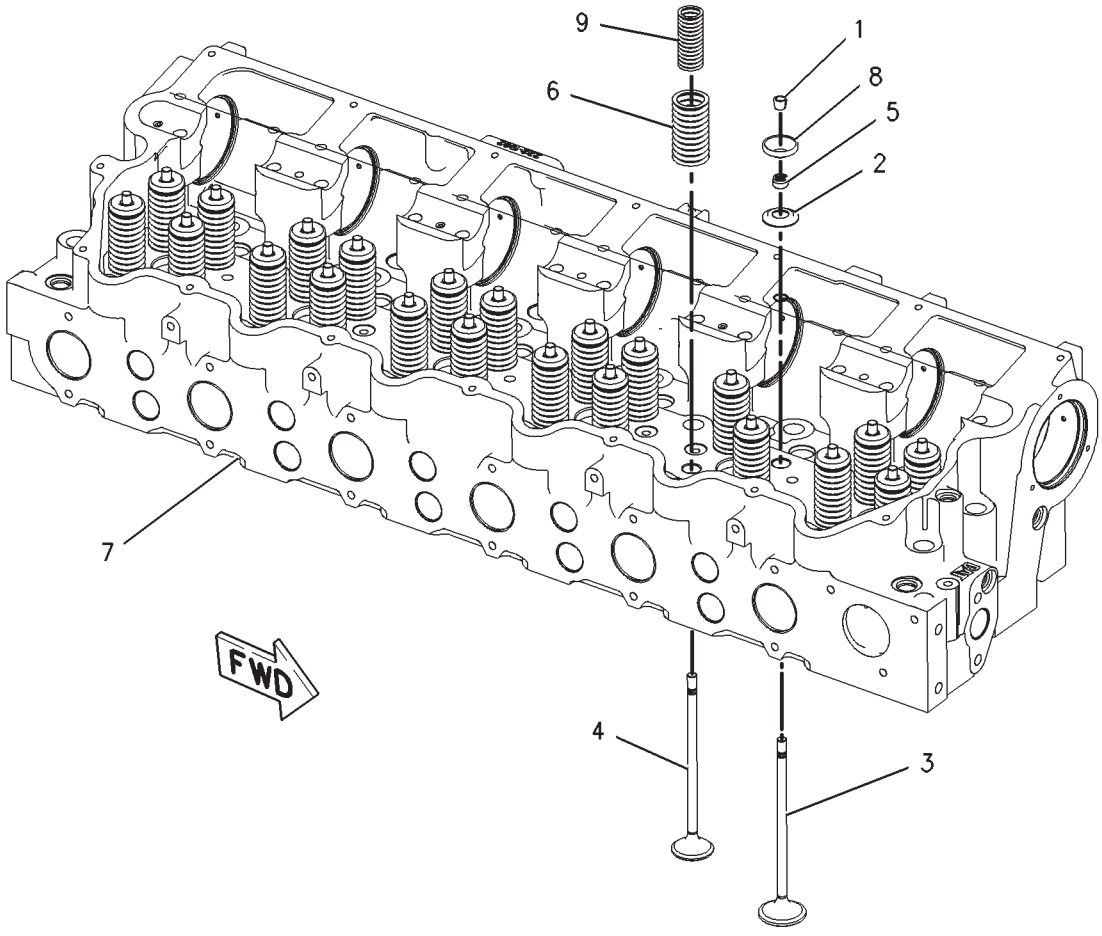

GRAPHIC #1 **<END>** g00955632

BASIC ENGINE

234-5985 CYLINDER HEAD GP

S/N: BLC1000-UP

PART OF 235-3469 ENGINE AR-CORE

SMCS-1100 **i02273141**

NOTE	REF NO	GRAPHIC REF	PART NUMBER	QTY	PART NAME 1 2 3 4 5 6 (PRODUCT LEVEL)	SEE PAGE
YR	1	1	**223-9250**	1	CYLINDER HEAD GP	39
	2	1	**224-5122**	1	GASKET (CYLINDER HEAD)	
	3	1	**3E-6772**	24	SEAL	
	4	1	*6I-4025*	16	FASTENER GP-CYLINDER HEAD	
					(EACH INCLUDES)	
		1	**5H-1504**	1	WASHER-HARD (20X33.5X5-MM THK)	
		1	**124-1855**	1	BOLT-12 POINT HEAD (3/4-16X7.638-IN)	
	5	1	**194-8124**	6	SLEEVE AS (EXHAUST PORT)	
	6	1	*106-5673*	10	FASTENER GP-CYLINDER HEAD	
					(EACH INCLUDES)	
		1	**5H-1504**	1	WASHER-HARD (20X33.5X5-MM THK)	
		1	**124-1855**	1	BOLT-12 POINT HEAD (3/4-16X7.638-IN)	
	7	1	**5P-0840**	1	SEAL-O-RING	
	8	1	**241-6186**	1	ELBOW	
Y	9	1	**194-6724**	1	SENSOR GP-PRESSURE (TURBO OUTLET)	261
	10	1	**6V-5048**	1	SEAL-O-RING	
	11	1	**107-8618**	1	SENSOR GP-TEMPERATURE (INLET AIR)	
		1	**155-2260**	1	KIT-CONNECTING PLUG (3-PIN) (INLET AIR SENSOR)	
					(INCLUDES PLUG AS AND WEDGE)	
		1	**3E-3368**	1	WEDGE-PLUG LOCK (3-PIN)	
E		1	**9X-1813**		SLEEVE (34CM)	
		1	**194-5226**	1	WIRE AS (16-GA) (INLET AIR TEMPERATURE)	
					—OR—	
		1	**194-5227**	1	WIRE AS (14-GA) (INLET AIR TEMPERATURE)	
	12	1	**8L-2786**	1	SEAL-O-RING	
	13	1	**100-5725**	1	STUD (3/8-16X1.25-IN)	
	14	1	**8T-4896**	1	WASHER-HARD (10.2X18.5X2.5-MM THK)	
	16	1	**6V-5049**	1	SEAL-O-RING	
	17	1	*183-3408*	3	PLUG AS	
					(EACH INCLUDES)	
		1	**6V-5049**	1	SEAL-O-RING	
		1	**9S-8004**	1	PLUG	

E-ORDER BY THE CENTIMETER
R-REMFG PART MAY BE AVAILABLE
Y-SEPARATE ILLUSTRATION

234-5985 **CYLINDER HEAD GP** *(contd.)* **i02273141**

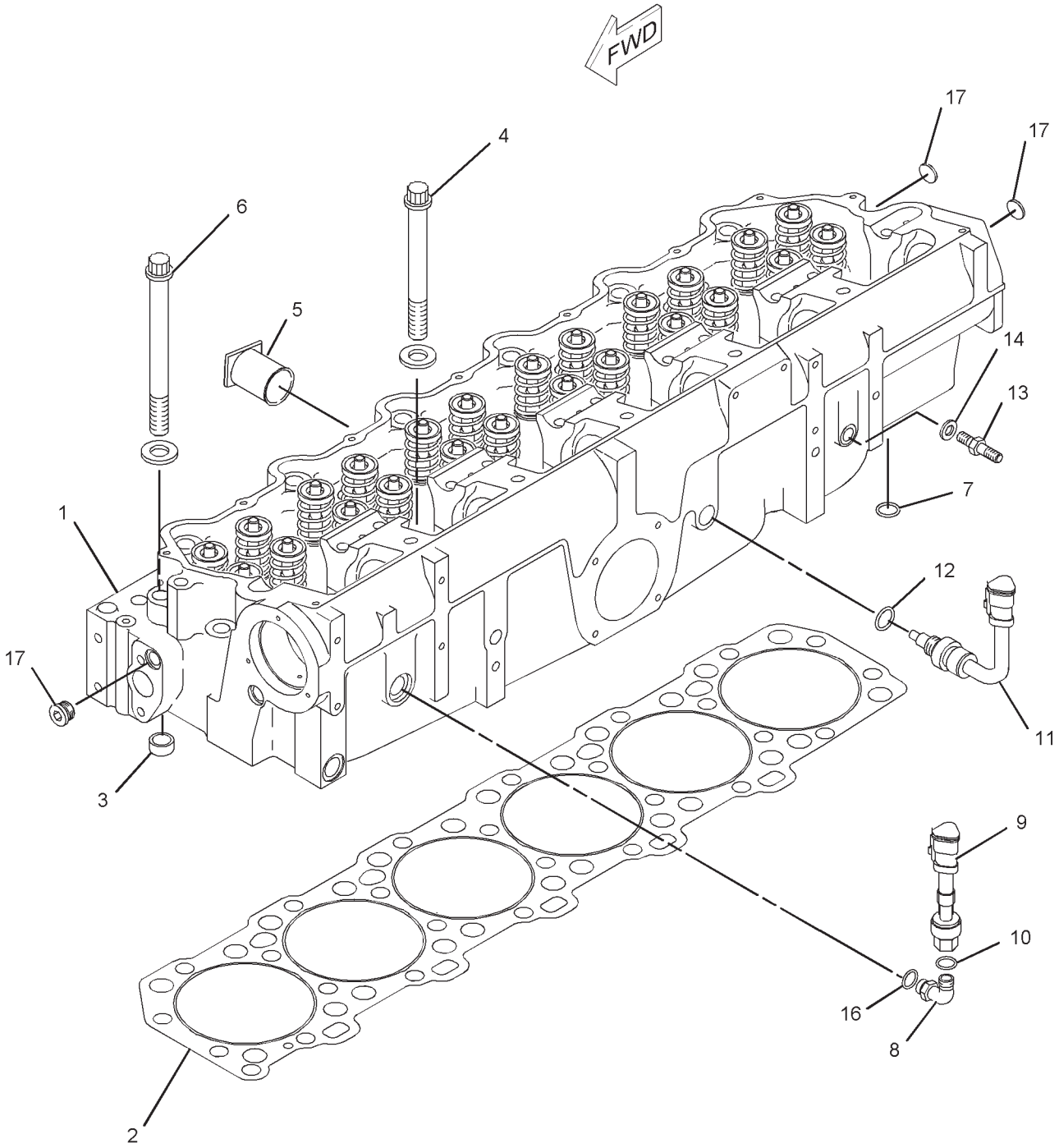

GRAPHIC #1 **<END>** g01138462

BASIC ENGINE

172-6764 DAMPER & PULLEY GP

S/N: BLC426-UP
PART OF 205-5858 ENGINE AR-COMPLETE
TYPE 1

SMCS-1205 **i01517383**

NOTE	REF NO	GRAPHIC REF	PART NUMBER	QTY	PART NAME 1 2 3 4 5 6 (PRODUCT LEVEL)	SEE PAGE
	1	1	**145-9325**	1	PULLEY-CRANKSHAFT	
	2	1	**155-6634**	1	DAMPER AS	
	3	1	**2A-2814**	6	BOLT (5/8-18X5.5IN)	
	4	1	**5P-8247**	6	WASHER-HARD (17X32X3.5MM THK)	

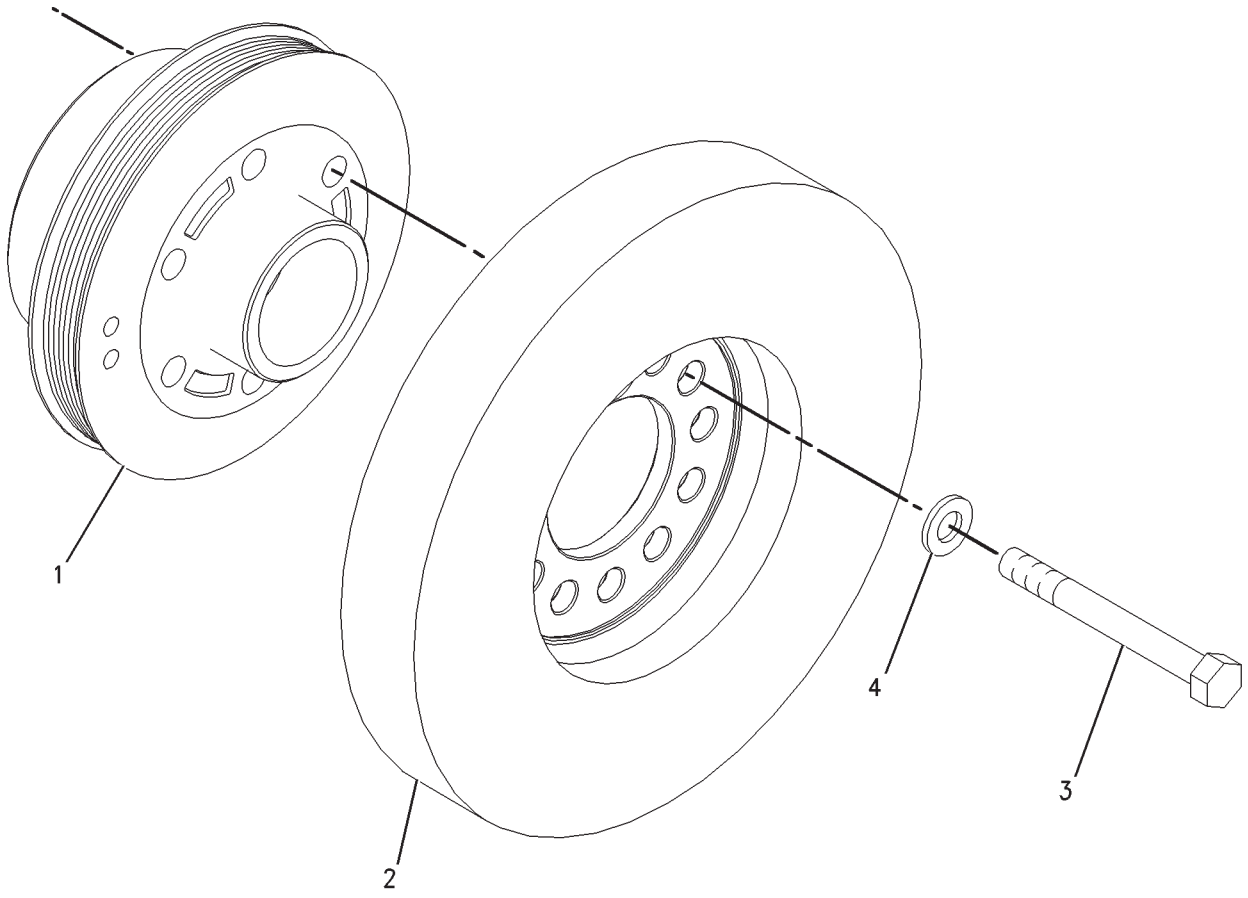

GRAPHIC #1 **<END>** g00787352

BASIC ENGINE

172-6764 DAMPER & PULLEY GP

S/N: BLC426-UP
PART OF 205-5858, 235-4685 ENGINE AR-COMPLETE
TYPE 2

SMCS-1205 **i02060760**

NOTE	REF NO	GRAPHIC REF	PART NUMBER	QTY	PART NAME 1 2 3 4 5 6 (PRODUCT LEVEL)	SEE PAGE
	1	1	**219-7477**	1	ADAPTER	
	2	1	**227-3814**	1	PULLEY	
R	3	1	**155-6634**	1	DAMPER AS	
	4	1	**2A-2814**	6	BOLT (5/8-18X5.5-IN)	
	5	1	**5P-8247**	6	WASHER-HARD (17X32X3.5-MM THK)	

R-REMFG PART MAY BE AVAILABLE

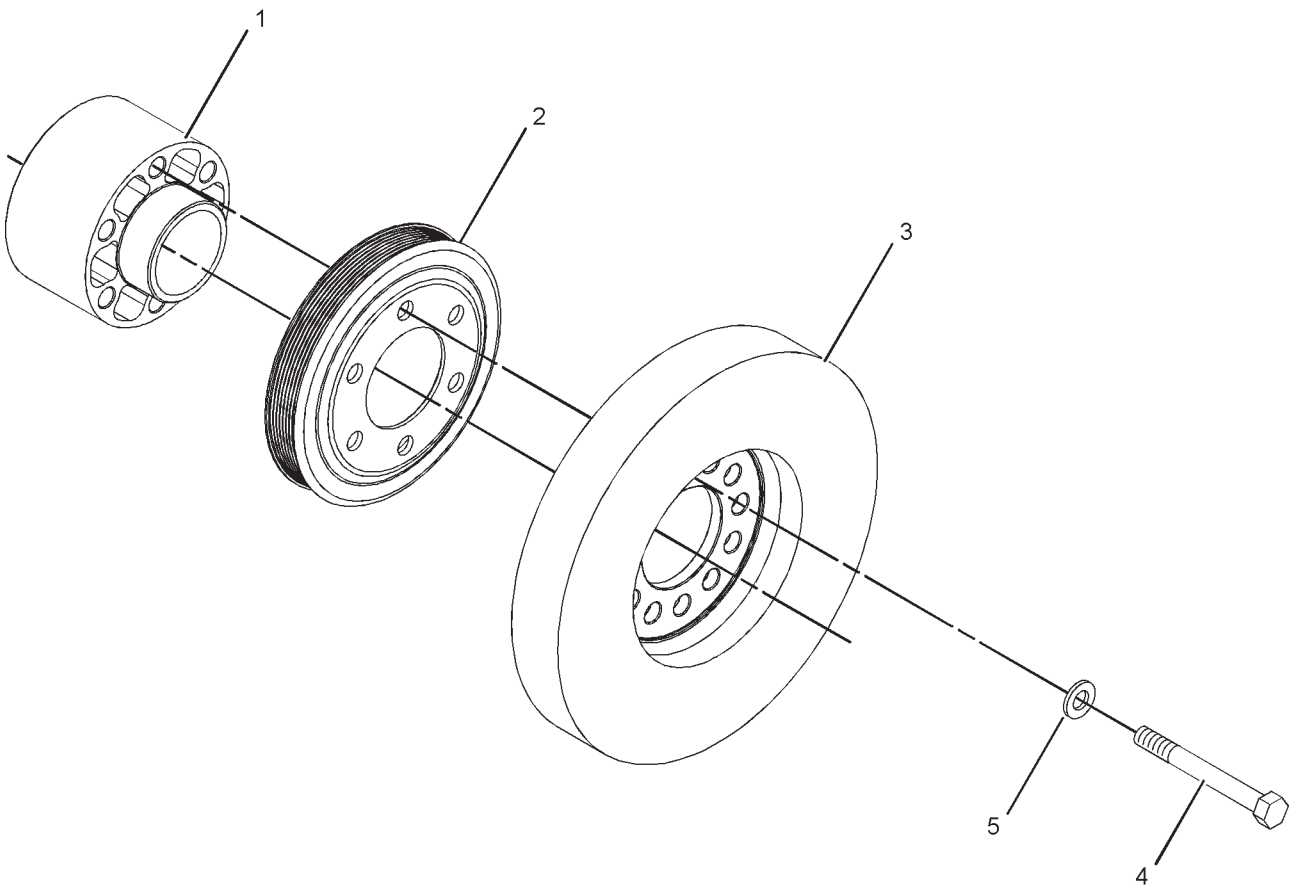

GRAPHIC #1 **<END>** g01060793

BASIC ENGINE

200-3313 DRIVE GP-FAN

S/N: RCD1-UP

PART OF 151-6654 COOLER & MTG GP-HYDRAULIC OIL, 151-6652 FAN GP-SUCTION

SMCS-1359 **i01689460**

NOTE	REF NO	GRAPHIC REF	PART NUMBER	QTY	PART NAME 1 2 3 4 5 6 (PRODUCT LEVEL)	SEE PAGE
	1	1	**150-5870**	1	SHAFT	
	2	1	**137-3751**	1	SEAL-LIP TYPE	
	3	1	**200-3311**	1	HOUSING	
	4	1	**4B-3665**	2	BALL BEARING	
	5	1	**137-3749**	2	SPACER	
	6	1	**6V-5590**	1	RING-RETAINING	
	8	1	**095-7424**	1	RING-RETAINING	

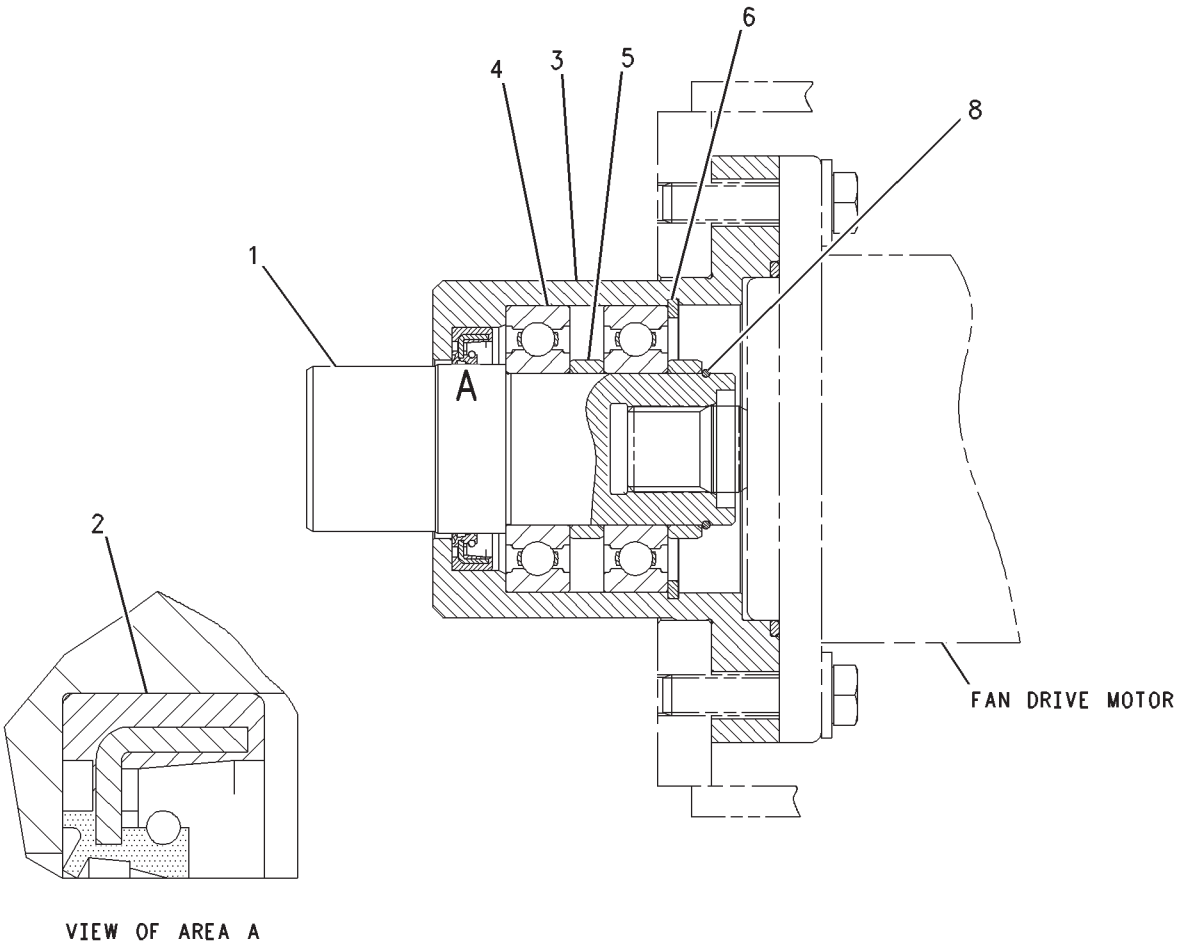

GRAPHIC #1 **<END>** g00875209

BASIC ENGINE

4P-6846 FASTENER GP-FRONT HOUSING

S/N: BLC426-UP

PART OF 159-5810, 235-3469 ENGINE AR-CORE

SMCS-1162 **i01494962**

NOTE	REF NO	GRAPHIC REF	PART NUMBER	QTY	PART NAME 1 2 3 4 5 6 (PRODUCT LEVEL)	SEE PAGE
	1	1	**7N-0452**	1	PLATE	
	2	1	**0S-1594**	2	BOLT (3/8-16X1-IN)	
	3	1	**5M-2894**	2	WASHER-HARD (10.2X18.5X2.5-MM THK)	

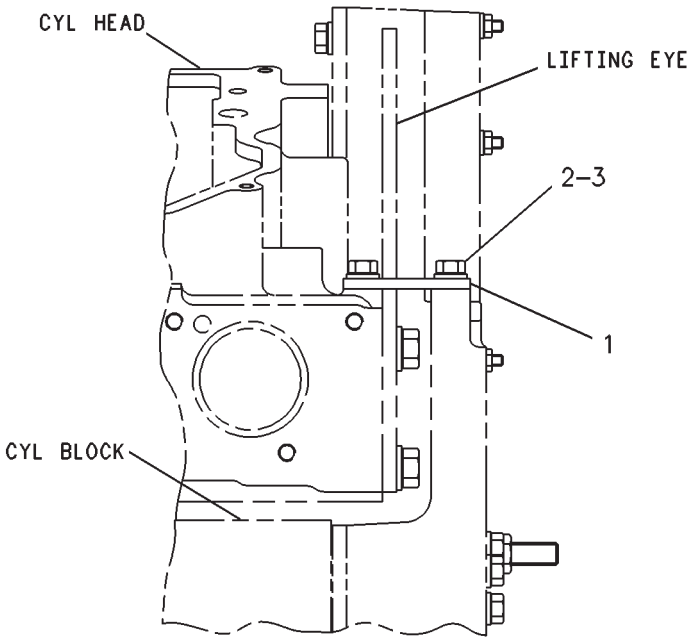

RIGHT SIDE VIEW

GRAPHIC #1

<END>

g00231021

BASIC ENGINE

109-1657 FASTENER GP-VALVE MECHANISM

S/N: BLC426-UP
PART OF 205-5858, 235-4685 ENGINE AR-COMPLETE
CANNOT BE USED WITH JAKE BRAKE

SMCS-1107 **i01503034**

NOTE	REF NO	GRAPHIC REF	PART NUMBER	QTY	PART NAME 1 2 3 4 5 6 (PRODUCT LEVEL)	SEE PAGE
	1	1	**5J-5794**	12	BOLT (1/2-13X3.5-IN)	
	2	1	**8L-8413**	6	STRAP-CABLE	

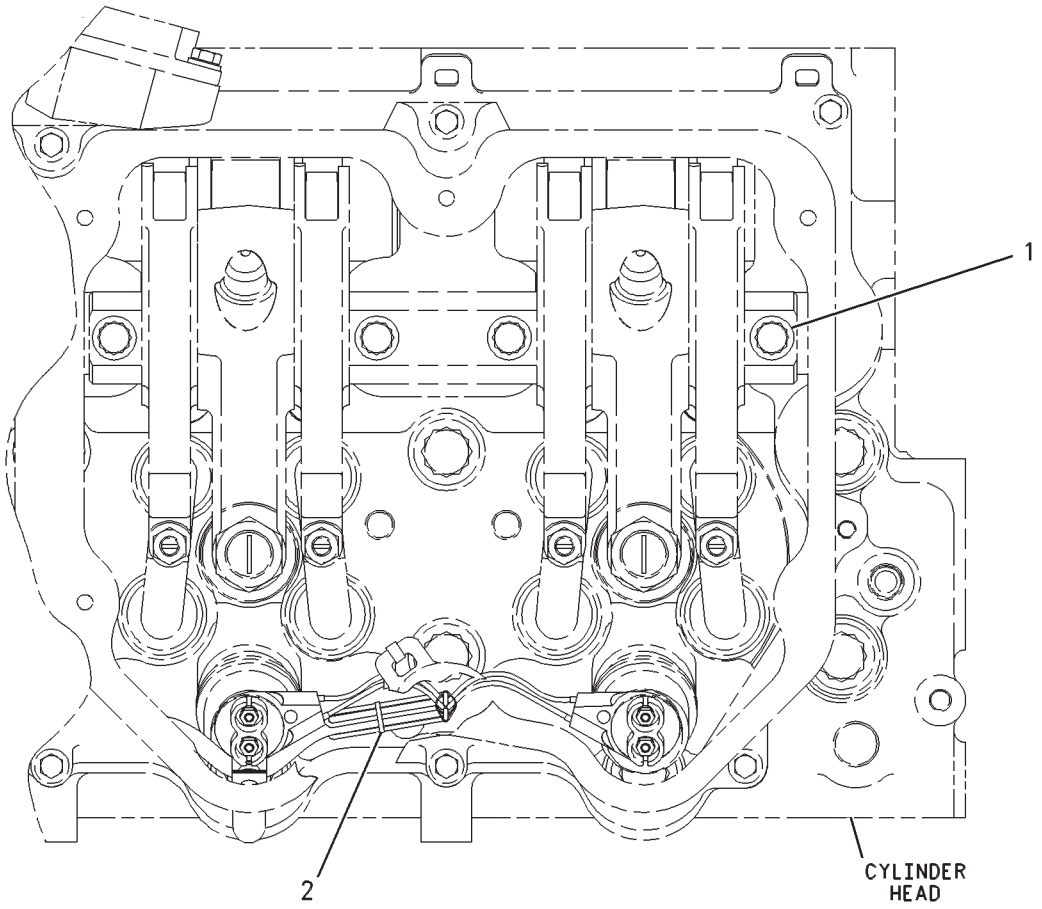

TOP VIEW

GRAPHIC #1 **<END>** g00571205

BASIC ENGINE

194-7097 FLYWHEEL GP

S/N: BLC426-UP

PART OF 205-5858, 235-4685 ENGINE AR-COMPLETE

SMCS-1156 **i01518226**

NOTE	REF NO	GRAPHIC REF	PART NUMBER	QTY	PART NAME 1 2 3 4 5 6 (PRODUCT LEVEL)	SEE PAGE
	1	1	**195-0313**	1	FLYWHEEL AS	
	1A	1	**4N-2514**	1	GEAR (113 TEETH)	
	2	1	**0V-0523**	12	BOLT (5/8-18X4.25IN)	
	3	1	**4D-3704**	12	WASHER-HARD (17X30X5MM THK)	

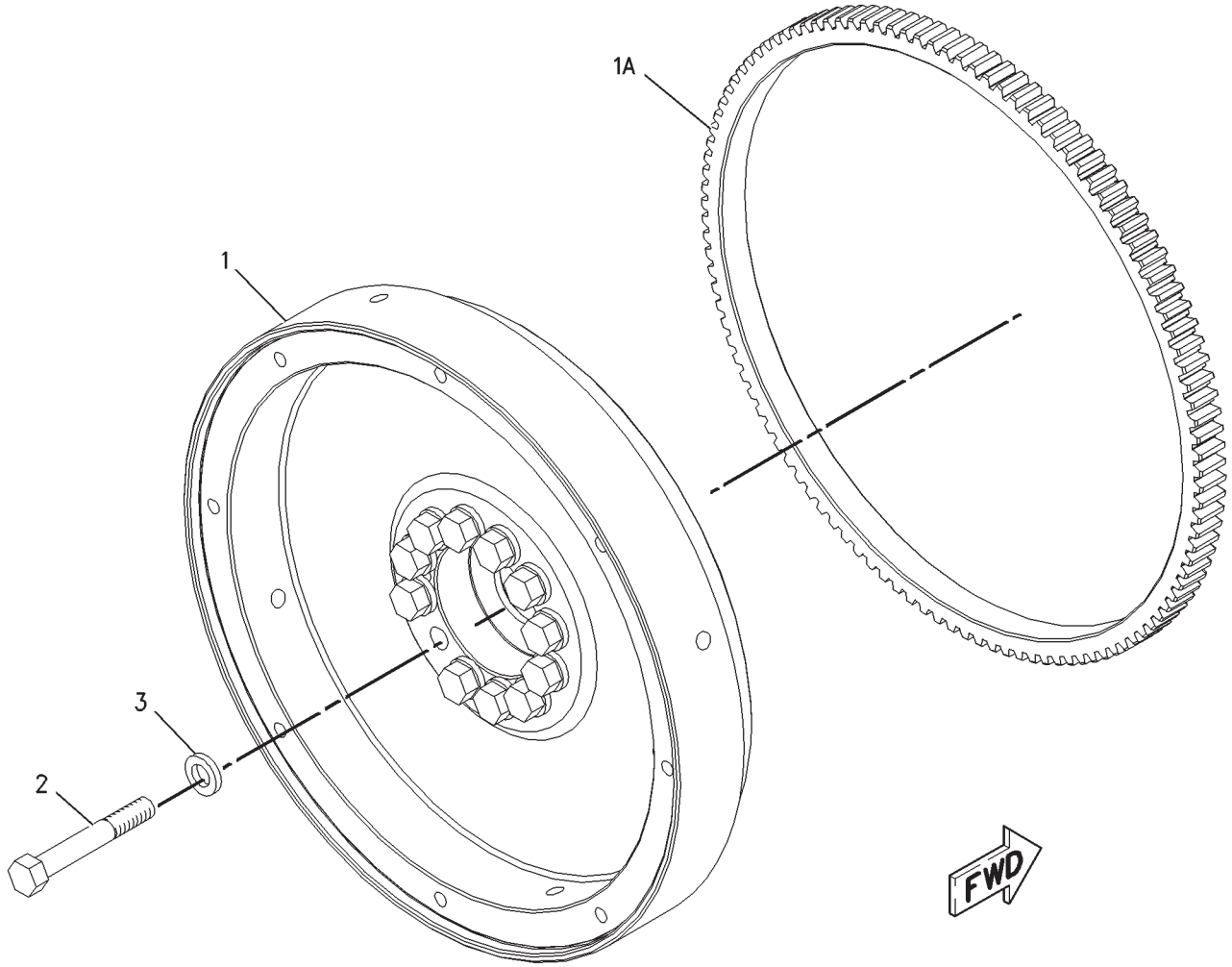

GRAPHIC #1 **<END>** g00788986

BASIC ENGINE

204-2114 GEAR GP-CAMSHAFT

S/N: BLC426-UP

ADDITIONAL BOLTS TO RETAIN PLATES IN HIGH LOAD APPLICATIONS

PART OF 137-5921 GEAR GP-FRONT

SMCS-1206, 1212 **i02198421**

NOTE	REF NO	GRAPHIC REF	PART NUMBER	QTY	PART NAME 1 2 3 4 5 6 (PRODUCT LEVEL)	SEE PAGE
	1	1	**9X-8872**	16	BOLT-LOCKING (3/8-16X0.875-IN)	
	2	1	**103-0126**	1	DOWEL	

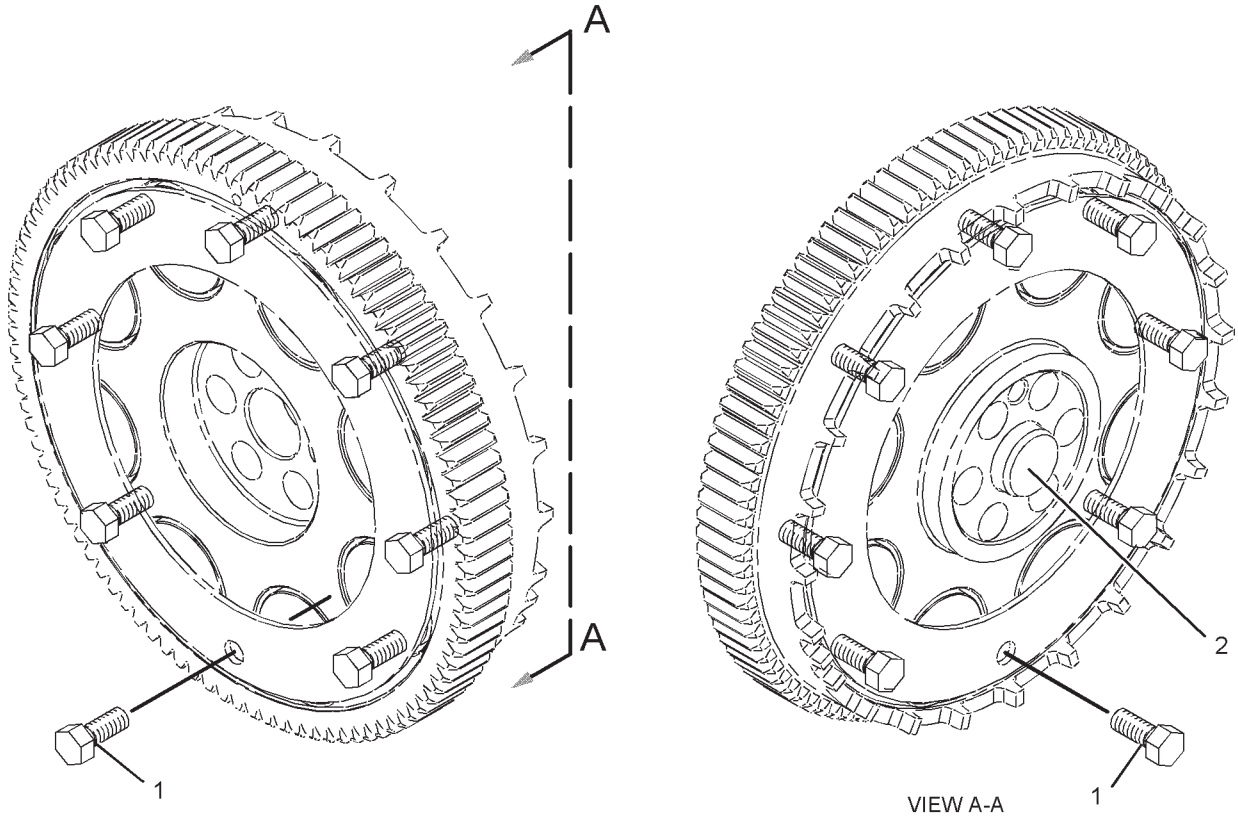

GRAPHIC #1 **<END>** g01110506

BASIC ENGINE

137-5921 GEAR GP-FRONT

S/N: BLC426-UP

PART OF 159-5810, 235-3469 ENGINE AR-CORE

SMCS-1151, 1162, 1206 **i02845643**

NOTE	REF NO	GRAPHIC REF	PART NUMBER	QTY	PART NAME 1 2 3 4 5 6 (PRODUCT LEVEL)	SEE PAGE
	1	1	**0S-1571**	1	BOLT (3/8-16X1.75-IN)	
	2	1	**2J-3118**	5	BOLT-LOCKING (3/8-16X1.25-IN)	
	3	1	**5P-4142**	2	BOLT-LOCKING (3/8-16X1.5-IN)	
	4	1	**1B-8705**	1	KEY-WOODRUFF	
	5	1	**1P-7346**	1	WASHER-HARD (10.2X35X6-MM THK)	
	6	1	**126-1756**	10	BOLT-LOCKING (5/16-18X0.875-IN)	
	7	1	**112-9217**	1	PLATE-THRUST	
	8	1	**130-4701**	1	GEAR AS (56-TEETH)	
		1	**130-4698**	1	BEARING-SLEEVE	
	9	1	**151-5966**	1	SHAFT AS-STUB	
		1	**6I-3623**	1	DOWEL	
	10	1	**6I-3624**	2	PLATE-THRUST	
	11	1	**6I-3625**	1	GEAR AS (71-TEETH)	
		1	**101-8468**	1	BEARING-SLEEVE	
	12	1	**128-2659**	1	GEAR AS (105, 63-TEETH)	
		1	**6I-4581**	1	GEAR (105-TEETH)	
		1	**6I-4582**	1	GEAR (63-TEETH)	
		1	**131-7123**	1	BEARING-SLEEVE	
		1	**1B-8705**	1	KEY-WOODRUFF	
	13	1	**6I-3632**	1	SHAFT-STUB	
	14	1	**158-3416**	1	SHAFT-STUB	
	15	1	**031-3185**	6	BOLT-12 POINT HEAD (5/8-11X3-IN)	
	16	1	**7E-5661**	1	GEAR-OIL PUMP DRIVE (69-TEETH)	
	17	1	**9S-8752**	10	NUT-FULL (3/8-16-THD)	
	18	1	**9X-6458**	12	WASHER-HARD (10.2X22.5X3-MM THK)	
	19	1	**117-8801**	1	SEAL-O-RING	
	20	1	**5E-8771**	1	SEAL-O-RING	
	21	1	**117-8557**	1	PLATE-SEAL	
	22	1	**128-8853**	1	ADAPTER AS	
		1	**6V-3677**	1	DOWEL	
	23	1	**102-5861**	1	PLATE-THRUST	
	24	1	**107-0583**	3	BOLT-LOCKING (1/4-20X0.87-IN)	
Y	25	1	**204-2114**	1	GEAR GP-CAMSHAFT (96 TEETH)	48

Y-SEPARATE ILLUSTRATION

137-5921 **GEAR GP-FRONT** *(contd.)* **i02845643**

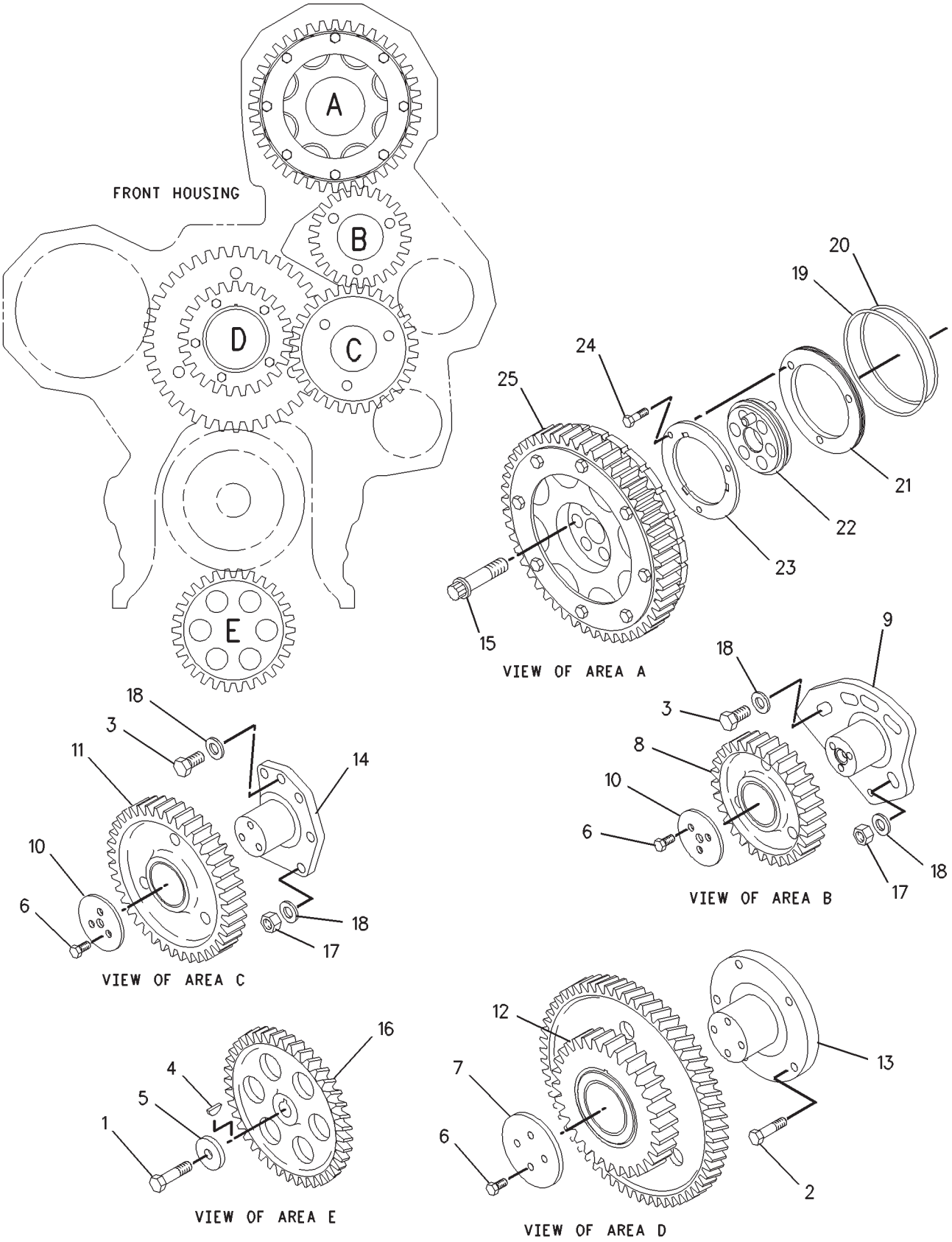

GRAPHIC #1 **<END>** g00682671

BASIC ENGINE

4P-9823 GEAR GP-REAR

S/N: BLC426-UP

PART OF 205-5858, 235-4685 ENGINE AR-COMPLETE

SMCS-1204 **i01673359**

NOTE	REF NO	GRAPHIC REF	PART NUMBER	QTY	PART NAME 1 2 3 4 5 6 (PRODUCT LEVEL)	SEE PAGE
C	1	1	**187-8230**	1	ADAPTER AS	
	2	1	**160-8184**	1	BEARING-SLEEVE	
C	3	1	**187-8202**	1	GEAR AS-DRIVE (64-TEETH)	
	4	1	**4F-6024**	1	PIN	
	5	1	**4N-1230**	2	SEAL-O-RING	
	6	1	**1A-2029**	6	BOLT (3/8-16X1.125-IN)	
C	7	1	**187-8229**	1	ADAPTER AS	
	8	1	**160-8184**	1	BEARING-SLEEVE	
C	9	1	**187-8194**	1	GEAR AS-DRIVE (64-TEETH)	
	10	1	**4F-6024**	1	PIN	
	11	1	**2W-0494**	1	GEAR AS-IDLER (64-TEETH)	
	12	1	**1W-4738**	1	BEARING-SLEEVE	
	13	1	**2W-0493**	1	GEAR AS-IDLER (74-TEETH)	
	14	1	**1W-4738**	1	BEARING-SLEEVE	
	15	1	**1W-4746**	2	RETAINER-GEAR	
	16	1	**1A-1460**	6	BOLT (1/2-13X2-IN)	
	17	1	**2W-0496**	1	GEAR AS-CRANKSHAFT (68-TEETH)	
	18	1	**4N-0684**	1	DOWEL	
	19	1	**5M-2894**	8	WASHER-HARD (10.2X18.5X2.5-MM THK)	
	20	1	**0T-0768**	6	BOLT (7/16-14X1.75-IN)	
	21	1	**5P-8244**	6	WASHER-HARD (12X22.5X2.5-MM THK)	
	22	1	**4B-4043**	4	BOLT (5/8-11X1.375-IN)	
	23	1	**5P-8247**	4	WASHER-HARD (17X32X3.5-MM THK)	
	24	1	**7N-8374**	2	COVER-PUMP	
	25	1	**5F-3106**	2	SEAL-O-RING	
	26	1	**4M-0189**	1	SEAL-O-RING	
	27	1	**116-3046**	1	COVER	
	28	1	**0S-1585**	2	BOLT (1/2-13X1.5-IN)	
	29	1	**5P-8245**	2	WASHER-HARD (13.5X25.5X3-MM THK)	
	30	1	**0S-1619**	1	BOLT (3/8-16X3-IN)	
	31	1	**2P-2772**	1	COVER	
	32	1	**4N-0933**	1	GASKET	
	33	1	**0S-1594**	1	BOLT (3/8-16X1-IN)	

C-CHANGE FROM PREVIOUS TYPE

4P-9823 **GEAR GP-REAR** *(contd.)* **i01673359**

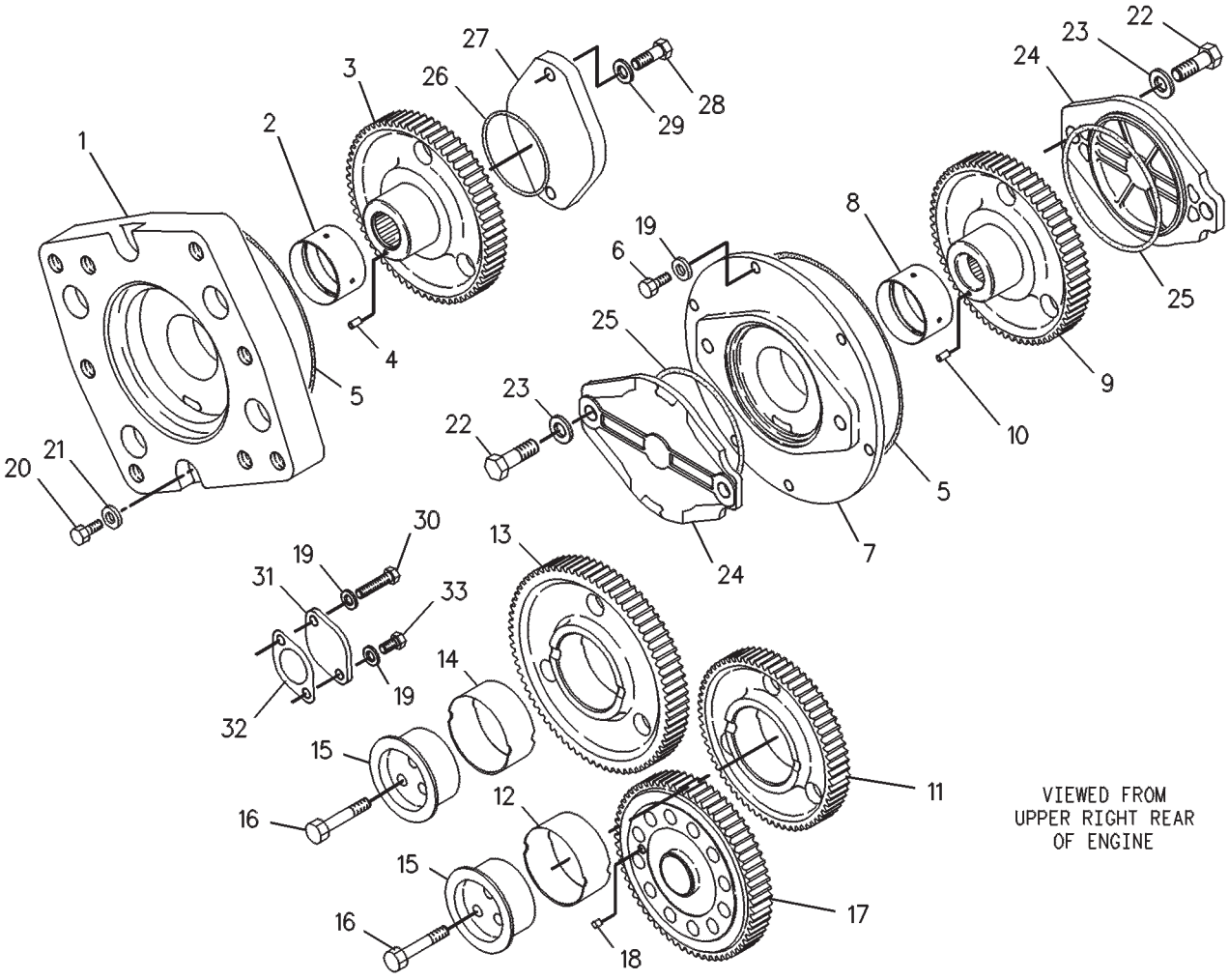

GRAPHIC #1 **<END>** g00239603

BASIC ENGINE

4P-9823 GEAR GP-REAR

S/N: BLC1207-UP

PART OF 235-4685 ENGINE AR-COMPLETE

SMCS-1204 **i03504600**

NOTE	REF NO	GRAPHIC REF	PART NUMBER	QTY	PART NAME 1 2 3 4 5 6 (PRODUCT LEVEL)	SEE PAGE
	1	1	**187-8230**	1	ADAPTER AS	
	2	1	**160-8184**	1	BEARING-SLEEVE	
	3	1	**187-8202**	1	GEAR AS-DRIVE (64-TEETH)	
	4	1	**4F-6024**	1	PIN	
	5	1	**4N-1230**	2	SEAL-O-RING	
	6	1	**1A-2029**	6	BOLT (3/8-16X1.125-IN)	
	7	1	**187-8229**	1	ADAPTER AS	
	8	1	**160-8184**	1	BEARING-SLEEVE	
	9	1	**187-8194**	1	GEAR AS-DRIVE (64-TEETH)	
	10	1	**4F-6024**	1	PIN	
	11	1	**2W-0494**	1	GEAR AS-IDLER (64-TEETH)	
	12	1	**1W-4738**	1	BEARING-SLEEVE	
	13	1	**2W-0493**	1	GEAR AS-IDLER (74-TEETH)	
	14	1	**1W-4738**	1	BEARING-SLEEVE	
	15	1	**1W-4746**	2	RETAINER-GEAR	
	16	1	**1A-1460**	6	BOLT (1/2-13X2-IN)	
	17	1	**2W-0496**	1	GEAR AS-CRANKSHAFT (68-TEETH)	
	18	1	**4N-0684**	1	DOWEL	
	19	1	**5M-2894**	8	WASHER-HARD (10.2X18.5X2.5-MM THK)	
	20	1	**0T-0768**	6	BOLT (7/16-14X1.75-IN)	
	21	1	**5P-8244**	6	WASHER-HARD (12X22.5X2.5-MM THK)	
	22	1	**4B-4043**	4	BOLT (5/8-11X1.375-IN)	
	23	1	**5P-8247**	4	WASHER-HARD (17X32X3.5-MM THK)	
	24	1	**7N-8374**	2	COVER-PUMP	
	25	1	**5F-3106**	2	SEAL-O-RING	
	26	1	**4M-0189**	1	SEAL-O-RING	
C	27	1	**175-3721**	1	COVER	
C	28	1	**0S-1621**	2	BOLT (1/2-13X1-IN)	
	29	1	**5P-8245**	2	WASHER-HARD (13.5X25.5X3-MM THK)	
	30	1	**0S-1619**	1	BOLT (3/8-16X3-IN)	
	31	1	**2P-2772**	1	COVER	
	32	1	**234-8937**	1	SEAL-INTEGRAL	
	33	1	**0S-1594**	1	BOLT (3/8-16X1-IN)	

C-CHANGE FROM PREVIOUS TYPE

4P-9823 **GEAR GP-REAR** *(contd.)* **i03504600**

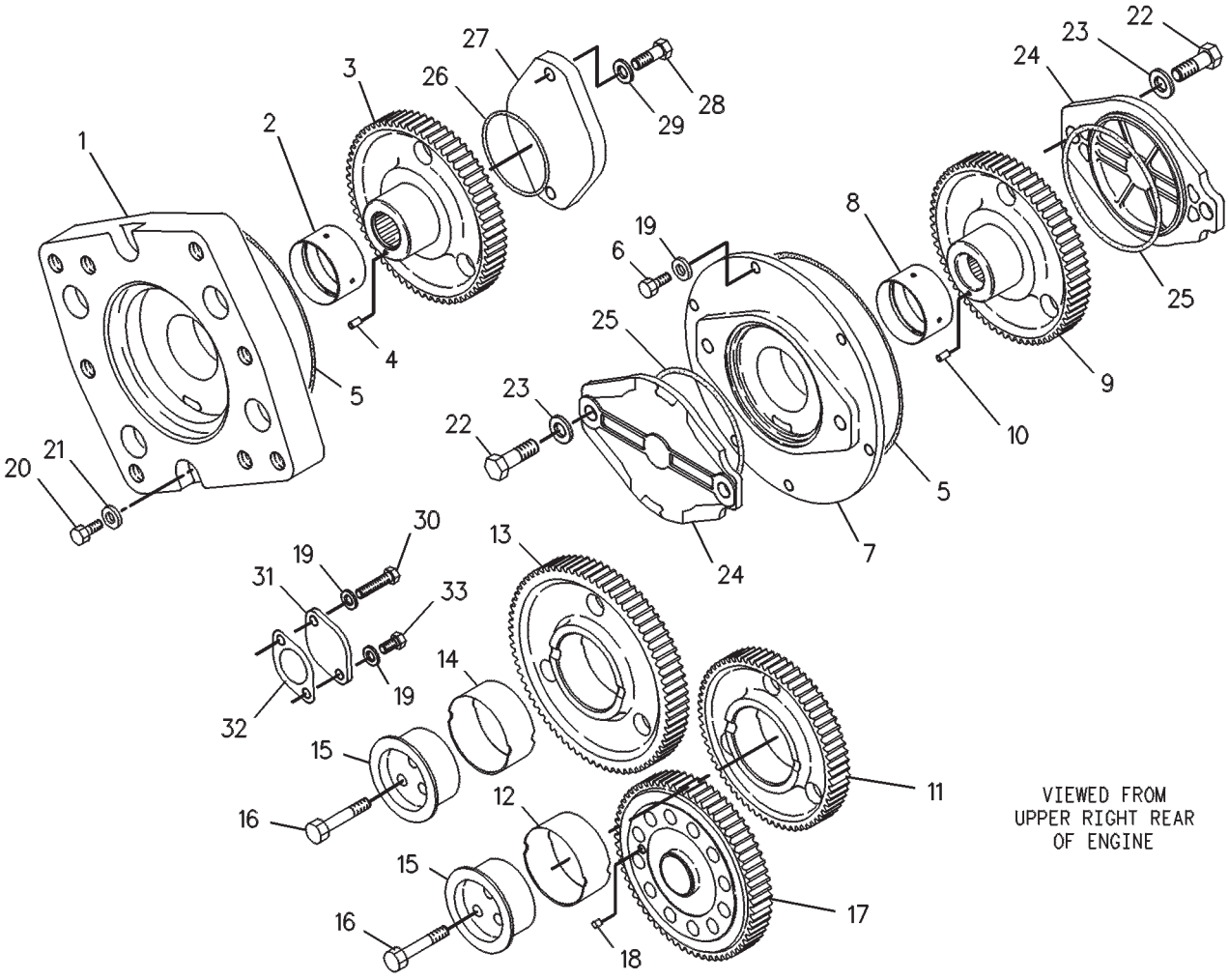

GRAPHIC #1 **<END>** g00239603

BASIC ENGINE

7E-8996 HOUSING GP-FLYWHEEL

S/N: BLC426-UP

PART OF 205-5858, 235-4685 ENGINE AR-COMPLETE

SMCS-1157 **i01097936**

NOTE	REF NO	GRAPHIC REF	PART NUMBER	QTY	PART NAME 1 2 3 4 5 6 (PRODUCT LEVEL)	SEE PAGE
	1	1	**108-5914**	1	HOUSING AS	
	2	1	**8M-9315**	2	BEARING-SLEEVE	
	3	1	**9S-8005**	2	PLUG-O-RING	
	4	1	**8L-2786**	3	SEAL-O-RING	
	5	1	**3K-8460**	5	PLUG	
	6	1	**9S-4191**	1	PLUG-O-RING	
	7	1	**6V-5049**	1	SEAL-O-RING	
	8	1	**9S-4185**	1	PLUG-O-RING	
	9	1	**1W-3136**	1	BAFFLE	
	10	1	**9S-4182**	1	PLUG-O-RING	
	11	1	**6V-5048**	1	SEAL-O-RING	
	12	1	**5P-7814**	5	SEAL-O-RING	
B	13	1	**1U-8846**		SEALANT-GASKET	
	14	1	**165-3930**	6	BOLT (3/8-16X1.625-IN)	
	15	1	**165-3932**	6	BOLT (3/8-16X2-IN)	
	16	1	**5J-5793**	1	BOLT-12 POINT HEAD (1/2-13X1.75-IN)	
	17	1	**9K-7290**	8	BOLT-12 POINT HEAD (1/2-13X1.5-IN)	
	18	1	**165-3936**	1	BOLT (3/8-16X4.5-IN)	
	19	1	**8L-2786**	1	SEAL-O-RING	
	20	1	**9S-4185**	1	PLUG-O-RING	
	21	1	**5P-8245**	9	WASHER-HARD (13.5X25.5X3-MM THK)	

B-USE AS REQUIRED

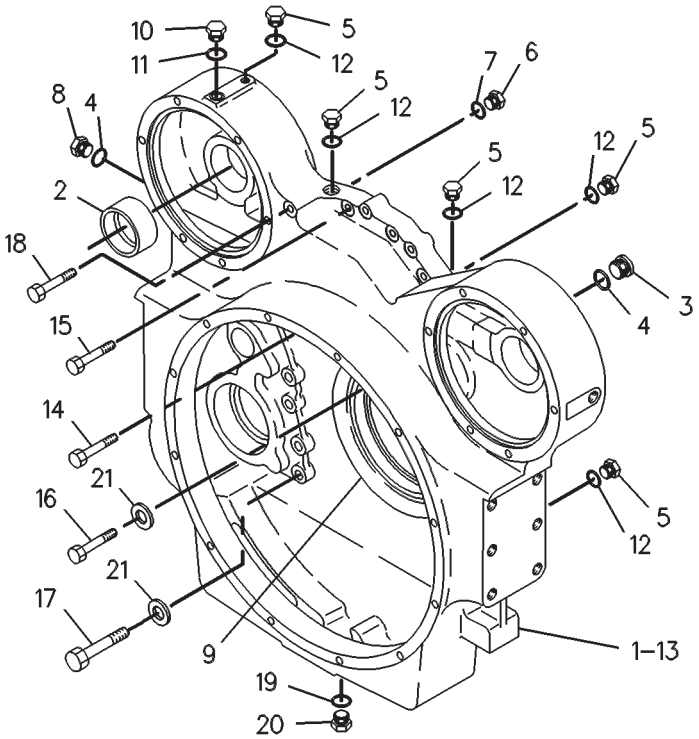

GRAPHIC #1 **<END>** g00252411

BASIC ENGINE

172-4850 HOUSING GP-FRONT

S/N: BLC426-UP

PART OF 205-5858, 235-4685 ENGINE AR-COMPLETE

SMCS-1151, 1162, 1206 **i01517298**

NOTE	REF NO	GRAPHIC REF	PART NUMBER	QTY	PART NAME 1 2 3 4 5 6 (PRODUCT LEVEL)	SEE PAGE
	1	1	**172-4849**	1	HOUSING AS-FRONT	
		1	**3E-8044**	1	STUD (1/2-13X2.95-IN)	
		1	**172-0285**	1	HOUSING-FRONT	
	2	1,2	**5P-4255**	8	BOLT-LOCKING (3/8-16X1-IN)	
	3	1,2	**5M-2894**	21	WASHER-HARD (10.2X18.5X2.5-MM THK)	
	4	1,2	**0S-1588**	15	BOLT (3/8-16X1.25-IN)	
	5	2	**120-9243**	2	STUD-SPECIAL (BRAKE)	
	6	2	**166-9144**	1	GASKET	
	7	2	**155-9820**	1	PLATE AS	
		2	**153-1025**	2	DOWEL	
	8	2	**155-3629**	1	GASKET	
	9	1	**0L-2070**	1	BOLT (3/8-16X2.25-IN)	
	10	2	**9S-8752**	2	NUT-FULL (3/8-16-THD)	
	11	1,2	**126-1757**	12	WASHER (10.85X19.3X1.27-MM THK)	
	12	1,2	**129-5428**	12	STUD (BRAKE)	
	13	2	**129-5427**	2	WASHER-SPECIAL (SEALING)	
	14	2	**161-7228**	1	BRACKET AS	
	15	1,2	**0S-1591**	3	BOLT (3/8-16X1.5-IN)	
	16	2	**0S-1571**	3	BOLT (3/8-16X1.75-IN)	
	17	2	**101-3120**	2	SPACER (10.5X25X20-MM THK)	
	18	1,2	**3P-1155**	2	SEAL-O-RING	
	19	1,2	**9X-6458**	14	WASHER-HARD (10.2X22.5X3-MM THK)	
Y	20	1	**142-8394**	1	SENSOR GP-SPEED (ENGINE SPEED/TIMING SECONDARY)	264
	21	1,2	**0T-0055**	3	BOLT (3/8-16X4.25-IN)	
	22	1,2	**117-1385**	2	SEAL-O-RING	
	23	1	**132-9770**	1	SPACER AS	
		1	**1W-6448**	2	DOWEL	
	24	1,2	**2H-3755**	2	BOLT (5/16-18X0.43-IN)	
	25	1,2	**9M-1974**	4	WASHER-HARD (8.8X16X2-MM THK)	
	26	2	**147-3801**	1	SPACER AS	
		2	**1W-6448**	1	DOWEL	
Y	27	2	**142-8393**	1	SENSOR GP-SPEED (ENGINE SPEED/TIMING PRIMARY)	263
	28	1	**7C-1445**	1	COVER	
	29	1	**061-9455**	1	SEAL-O-RING	
	30	1	**2B-2695**	2	BOLT (5/16-18X0.875-IN)	
	31	2	**7X-4805**	2	SEAL-O-RING	
	32	1	**172-5241**	1	COVER AS	

Y-SEPARATE ILLUSTRATION

172-4850 **HOUSING GP-FRONT** *(contd.)* **i01517298**

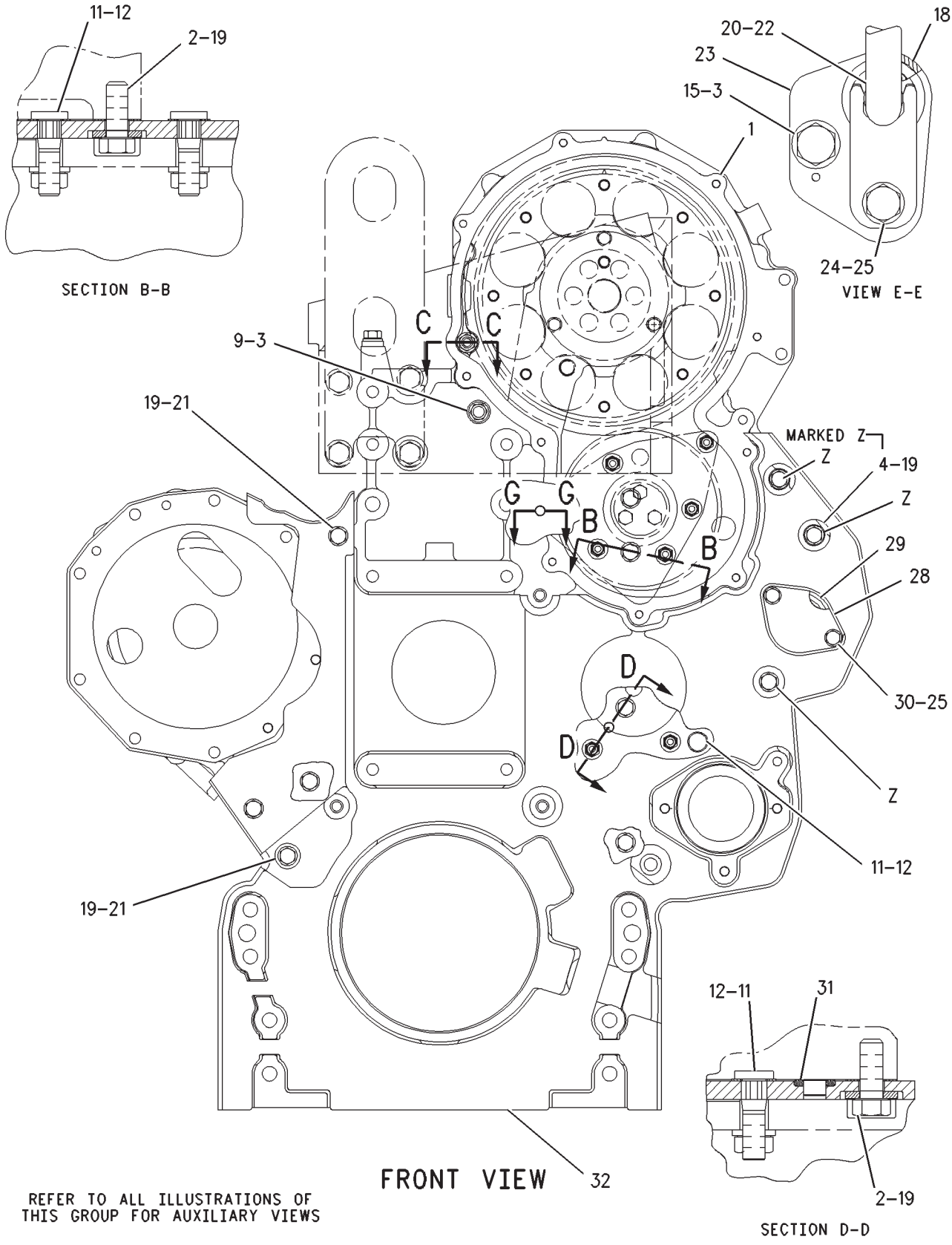

GRAPHIC #1 g00788383

172-4850 **HOUSING GP-FRONT** *(contd.)* **i01517298**

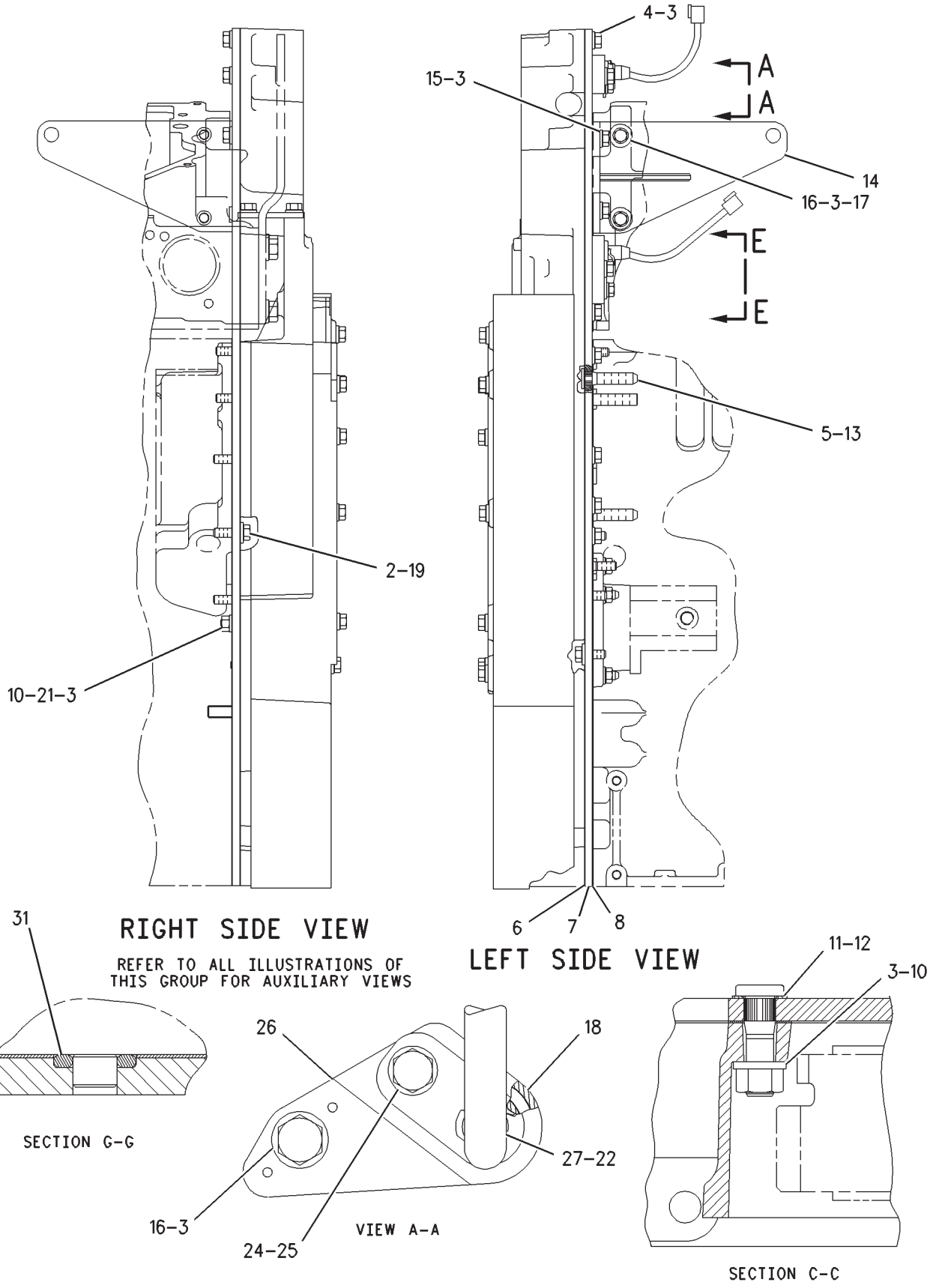

GRAPHIC #2 **<END>** g00788384

BASIC ENGINE

172-4850 HOUSING GP-FRONT

S/N: BLC1207-UP

PART OF 235-4685 ENGINE AR-COMPLETE

SMCS-1151, 1162, 1206 **i02373196**

NOTE	REF NO	GRAPHIC REF	PART NUMBER	QTY	PART NAME 1 2 3 4 5 6 (PRODUCT LEVEL)	SEE PAGE
	1	1	**172-4849**	1	HOUSING AS-FRONT	
		1	**3E-8044**	1	STUD (1/2-13X2.95-IN)	
		1	**172-0285**	1	HOUSING-FRONT	
	2	1,2	**5P-4255**	8	BOLT-LOCKING (3/8-16X1-IN)	
	3	1,2	**5M-2894**	21	WASHER-HARD (10.2X18.5X2.5-MM THK)	
	4	1,2	**0S-1588**	15	BOLT (3/8-16X1.25-IN)	
	5	2	**120-9243**	2	STUD-SPECIAL (BRAKE)	
	6	2	**166-9144**	1	GASKET	
	7	2	**155-9820**	1	PLATE AS	
		2	**153-1025**	2	DOWEL	
	8	2	**155-3629**	1	GASKET	
	9	1	**0L-2070**	1	BOLT (3/8-16X2.25-IN)	
	10	2	**9S-8752**	2	NUT-FULL (3/8-16-THD)	
	11	1,2	**126-1757**	12	WASHER (10.85X19.3X1.27-MM THK)	
	12	1,2	**129-5428**	12	STUD (BRAKE)	
	13	2	**129-5427**	2	WASHER-SPECIAL (SEALING)	
	14	2	**161-7228**	1	BRACKET AS	
	15	1,2	**0S-1591**	3	BOLT (3/8-16X1.5-IN)	
	16	2	**0S-1571**	3	BOLT (3/8-16X1.75-IN)	
	17	2	**101-3120**	2	SPACER (10.5X25X20-MM THK)	
	18	1,2	**3P-1155**	2	SEAL-O-RING	
	19	1,2	**9X-6458**	14	WASHER-HARD (10.2X22.5X3-MM THK)	
CY	20	1	**201-6617**	1	SENSOR GP-SPEED (ENGINE SPEED/TIMING SECONDARY)	269
	21	1,2	**0T-0055**	3	BOLT (3/8-16X4.25-IN)	
C	22	1,2	**203-3940**	2	SEAL-O-RING	
	23	1	**132-9770**	1	SPACER AS	
		1	**1W-6448**	2	DOWEL	
	24	1,2	**2H-3755**	2	BOLT (5/16-18X0.43-IN)	
	25	1,2	**9M-1974**	4	WASHER-HARD (8.8X16X2-MM THK)	
	26	2	**147-3801**	1	SPACER AS	
		2	**1W-6448**	1	DOWEL	
CY	27	2	**201-6615**	1	SENSOR GP-SPEED (ENGINE SPEED/TIMING PRIMARY)	268
	28	1	**7C-1445**	1	COVER	
	29	1	**061-9455**	1	SEAL-O-RING	
	30	1	**2B-2695**	2	BOLT (5/16-18X0.875-IN)	
	31	2	**7X-4805**	2	SEAL-O-RING	
	32	1	**172-5241**	1	COVER AS	

C-CHANGE FROM PREVIOUS TYPE
Y-SEPARATE ILLUSTRATION

172-4850 **HOUSING GP-FRONT** *(contd.)* **i02373196**

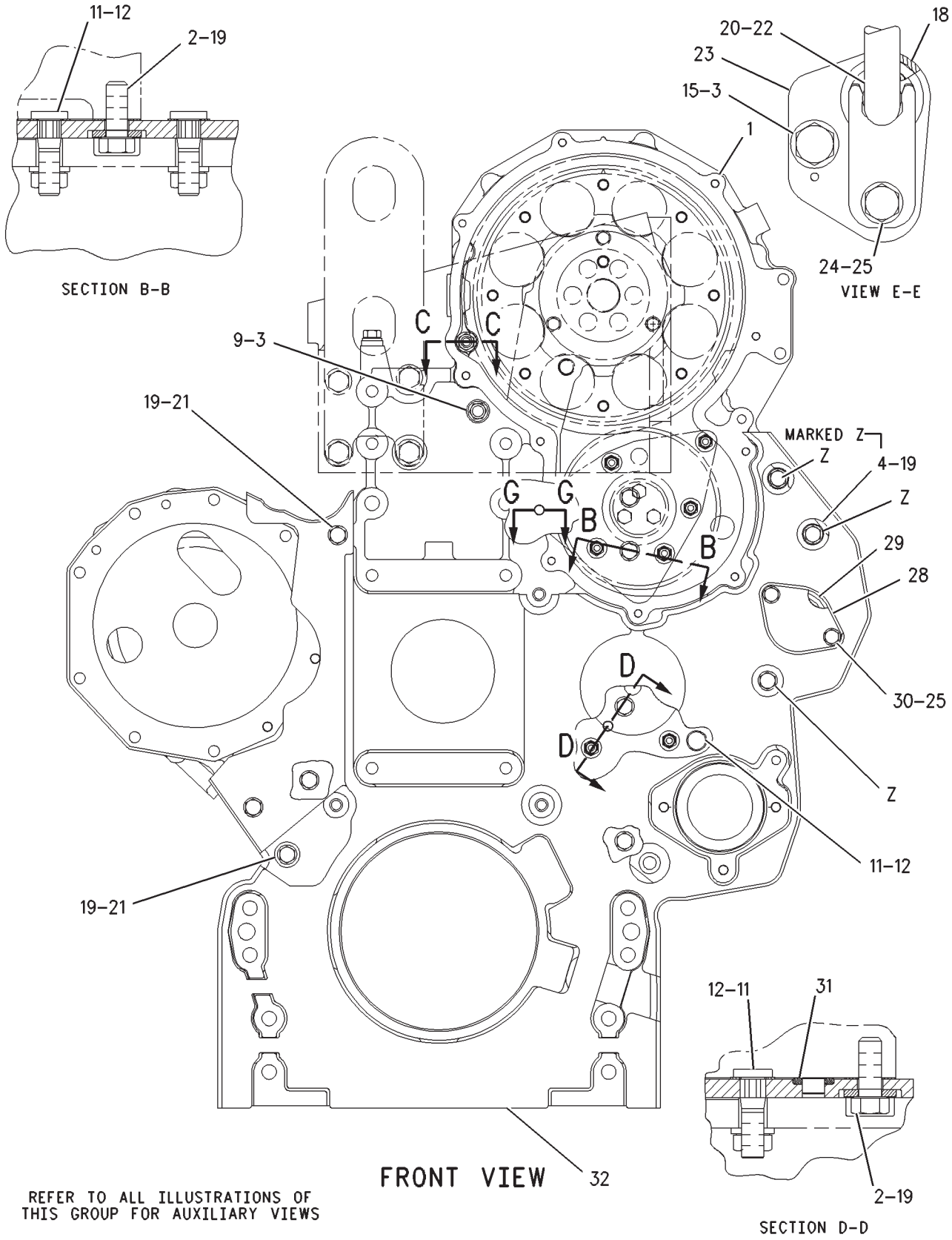

GRAPHIC #1 g00788383

172-4850 **HOUSING GP-FRONT** *(contd.)* **i02373196**

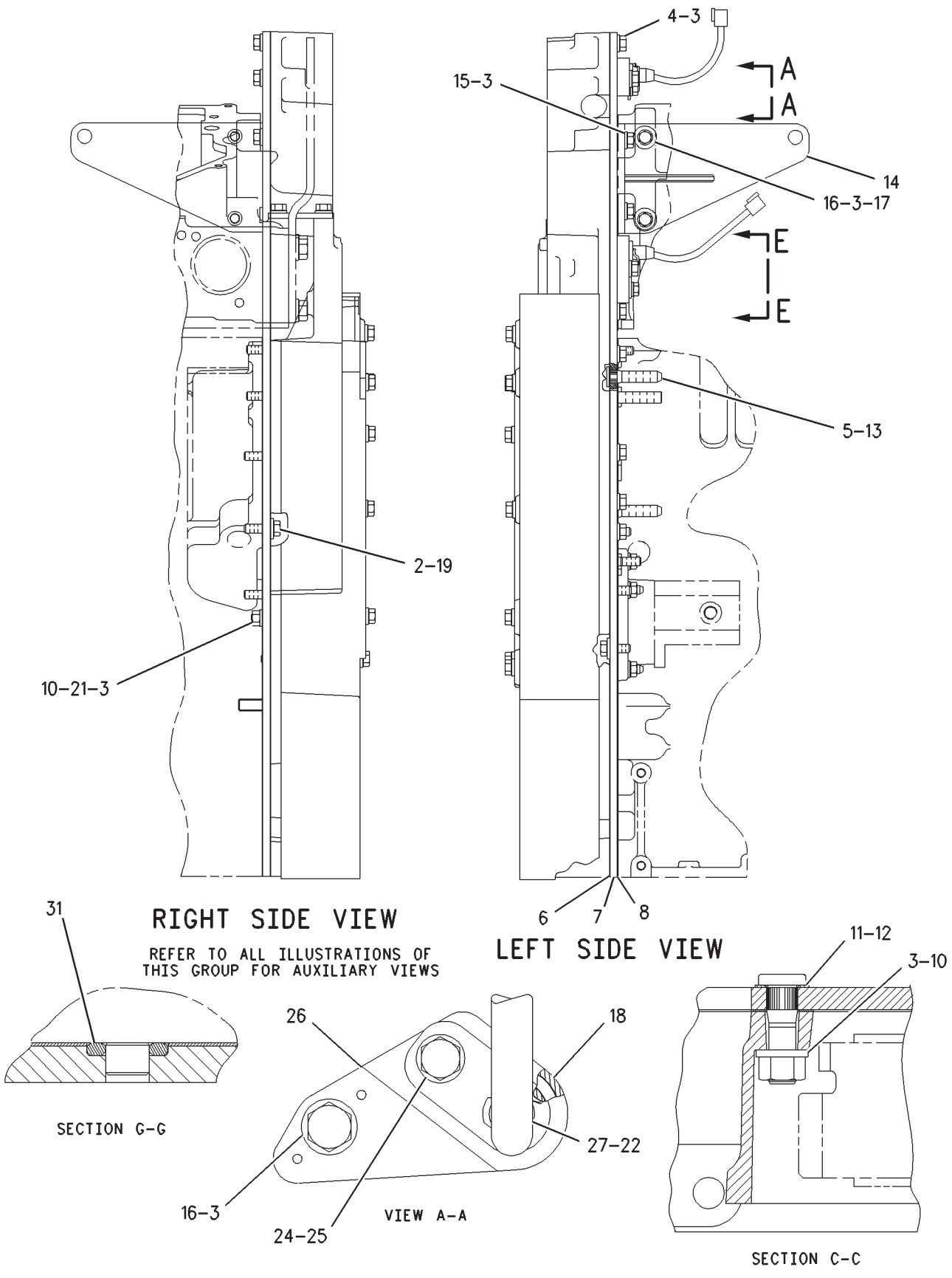

GRAPHIC #2 **<END>** g00788384

BASIC ENGINE

111-2088 LIFTING GP-ENGINE

S/N: BLC426-UP
REAR, LOW PROFILE LIFTING EYE
PART OF 205-5858, 235-4685 ENGINE AR-COMPLETE

SMCS-1122 **i01503053**

NOTE	REF NO	GRAPHIC REF	PART NUMBER	QTY	PART NAME 1 2 3 4 5 6 (PRODUCT LEVEL)	SEE PAGE
	1	1	**109-9985**	1	EYE-LIFTING	
	2	1	**0S-1594**	8	BOLT (3/8-16X1 IN)	
	3	1	**5M-2894**	8	WASHER-HARD (10.2X18.5X2.5MM THK)	

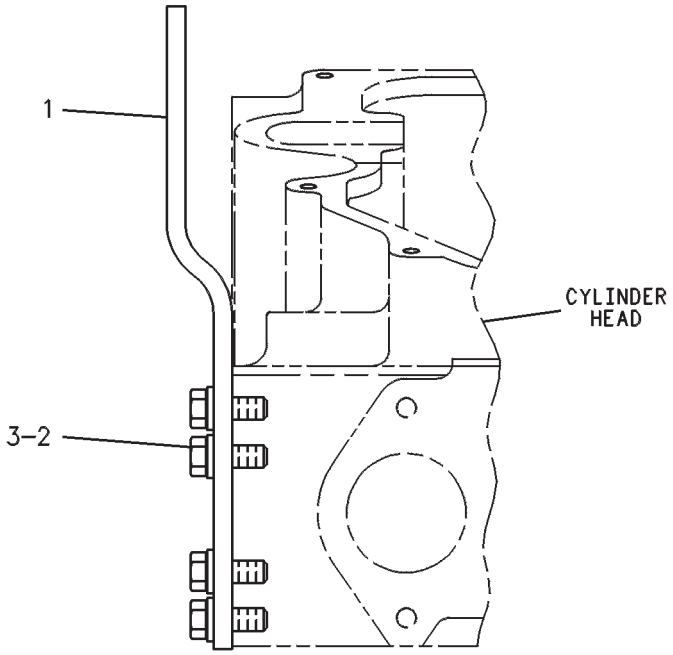

GRAPHIC #1 **<END>** g00238183

BASIC ENGINE

112-2418 LIFTING GP-ENGINE

S/N: BLC426-UP

PART OF 205-5858, 235-4685 ENGINE AR-COMPLETE

SMCS-1122 **i01516137**

NOTE	REF NO	GRAPHIC REF	PART NUMBER	QTY	PART NAME 1 2 3 4 5 6 (PRODUCT LEVEL)	SEE PAGE
	1	1	**104-8586**	1	EYE-LIFTING	
	2	1	**0S-1595**	4	BOLT (1/2-13X1.25-IN)	
	3	1	**5P-8245**	4	WASHER-HARD (13.5X25.5X3-MM THK)	

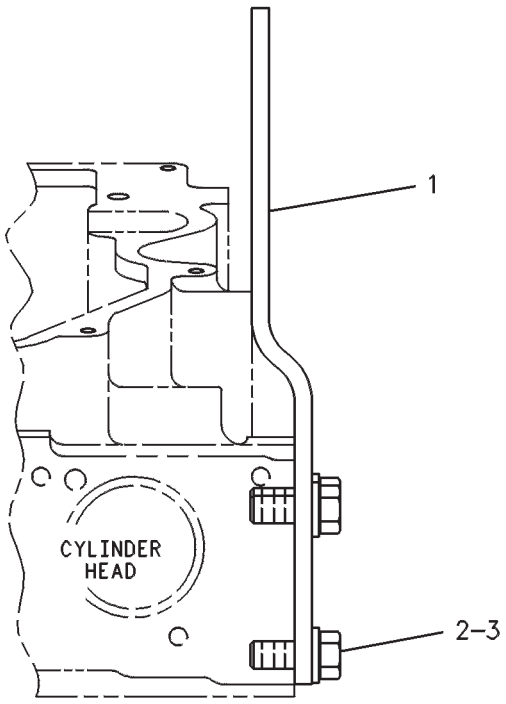

GRAPHIC #1 **<END>** g00238168

BASIC ENGINE

148-7482 MECHANISM GP-FUEL PUMP & VALVE

S/N: BLC1000-UP
PART OF 235-3469 ENGINE AR-CORE
TYPE 1

SMCS-1102 **i02098615**

NOTE	REF NO	GRAPHIC REF	PART NUMBER	QTY	PART NAME 1 2 3 4 5 6 (PRODUCT LEVEL)	SEE PAGE
CY	1	1	*198-9898*	3	ROCKER ARM GP	75
	2	1	**6I-1458**	12	BRIDGE-VALVE	

C-CHANGE FROM PREVIOUS TYPE
Y-SEPARATE ILLUSTRATION

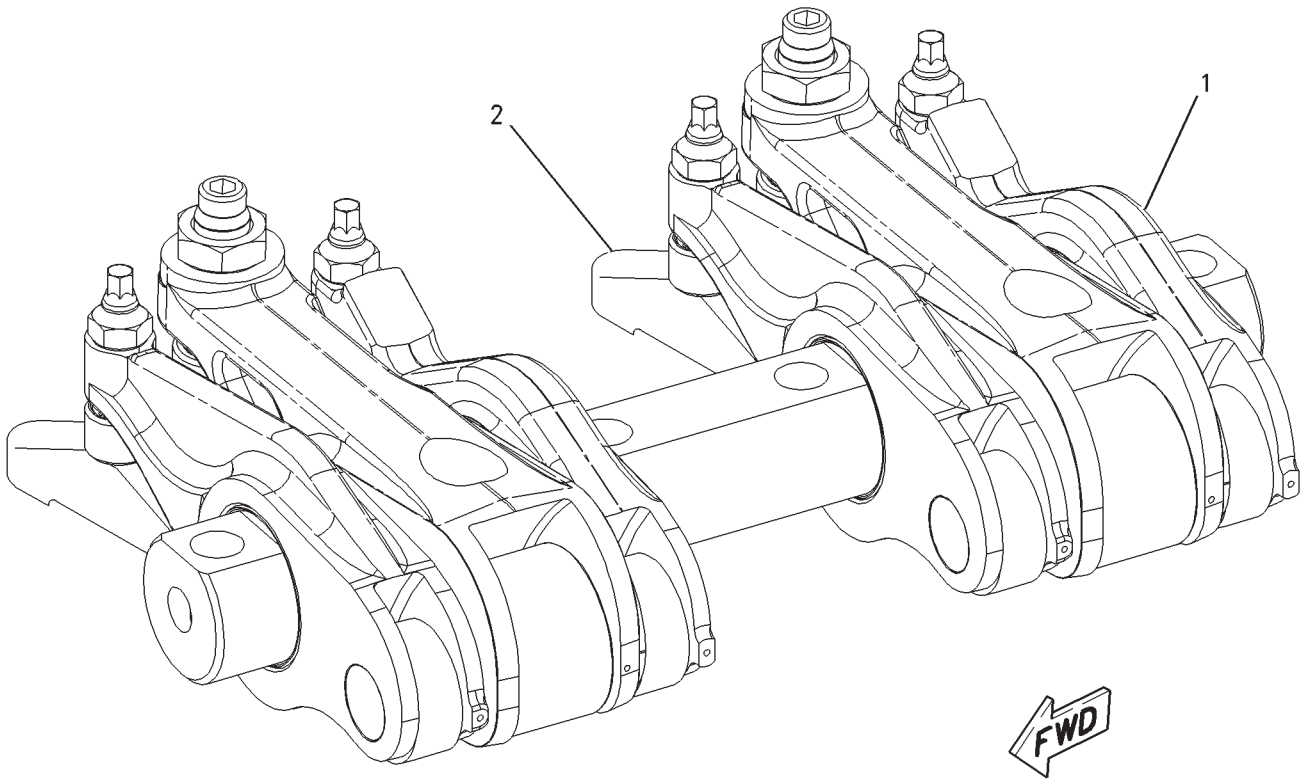

GRAPHIC #1 **<END>** g00905240

BASIC ENGINE

148-7482 MECHANISM GP-FUEL PUMP & VALVE

S/N: BLC1000-UP
PART OF 235-3469 ENGINE AR-CORE
TYPE 2

SMCS-1102 **i02473405**

NOTE	REF NO	GRAPHIC REF	PART NUMBER	QTY	PART NAME 1 2 3 4 5 6 (PRODUCT LEVEL)	SEE PAGE
CY	1	1	*278-1931*	3	ROCKER ARM GP	79
	2	1	**6I-1458**	12	BRIDGE-VALVE	

C-CHANGE FROM PREVIOUS TYPE
Y-SEPARATE ILLUSTRATION

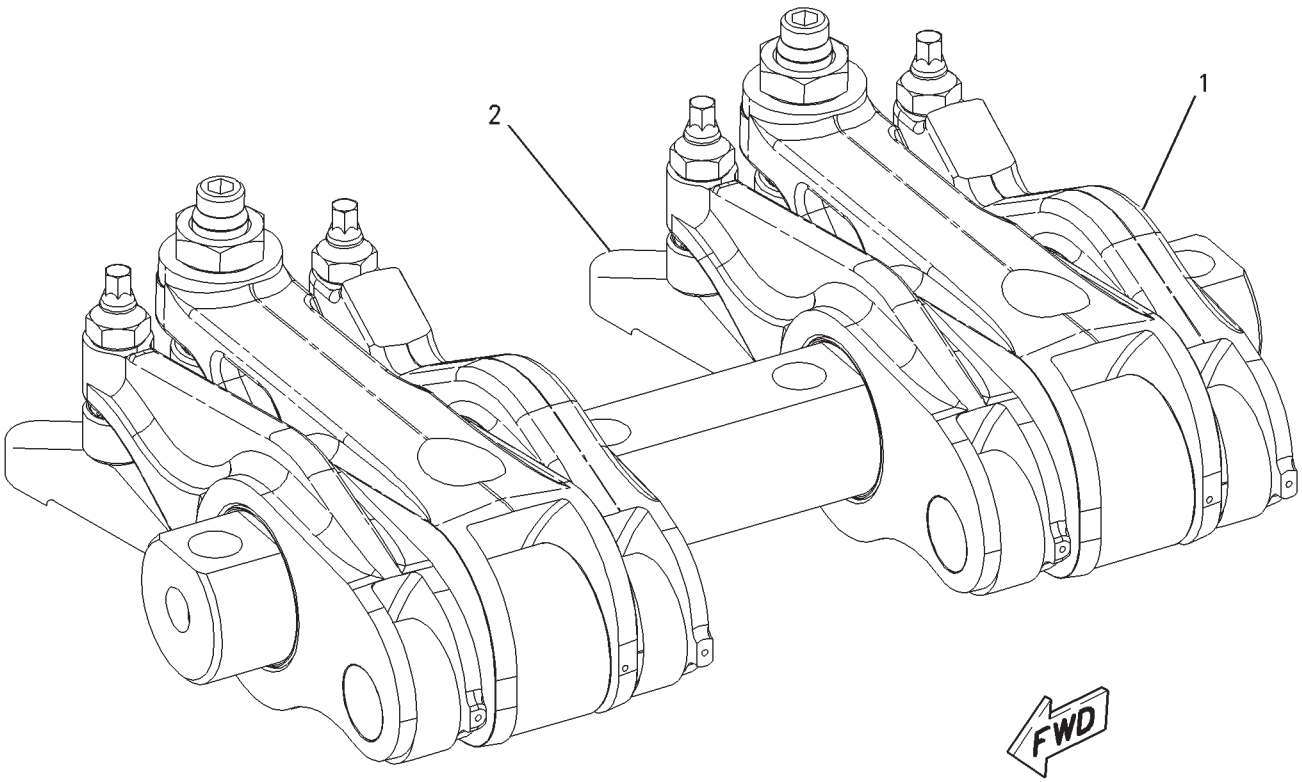

GRAPHIC #1 **<END>** g00905240

BASIC ENGINE

148-7482 MECHANISM GP-FUEL PUMP & VALVE

S/N: BLC1000-UP
PART OF 235-3469 ENGINE AR-CORE
TYPE 3

SMCS-1102 **i03430366**

NOTE	REF NO	GRAPHIC REF	PART NUMBER	QTY	PART NAME 1 2 3 4 5 6 (PRODUCT LEVEL)	SEE PAGE
CY	1	1	*328-4237*	3	ROCKER ARM GP	81
	2	1	**6I-1458**	12	BRIDGE-VALVE	

C-CHANGE FROM PREVIOUS TYPE
Y-SEPARATE ILLUSTRATION

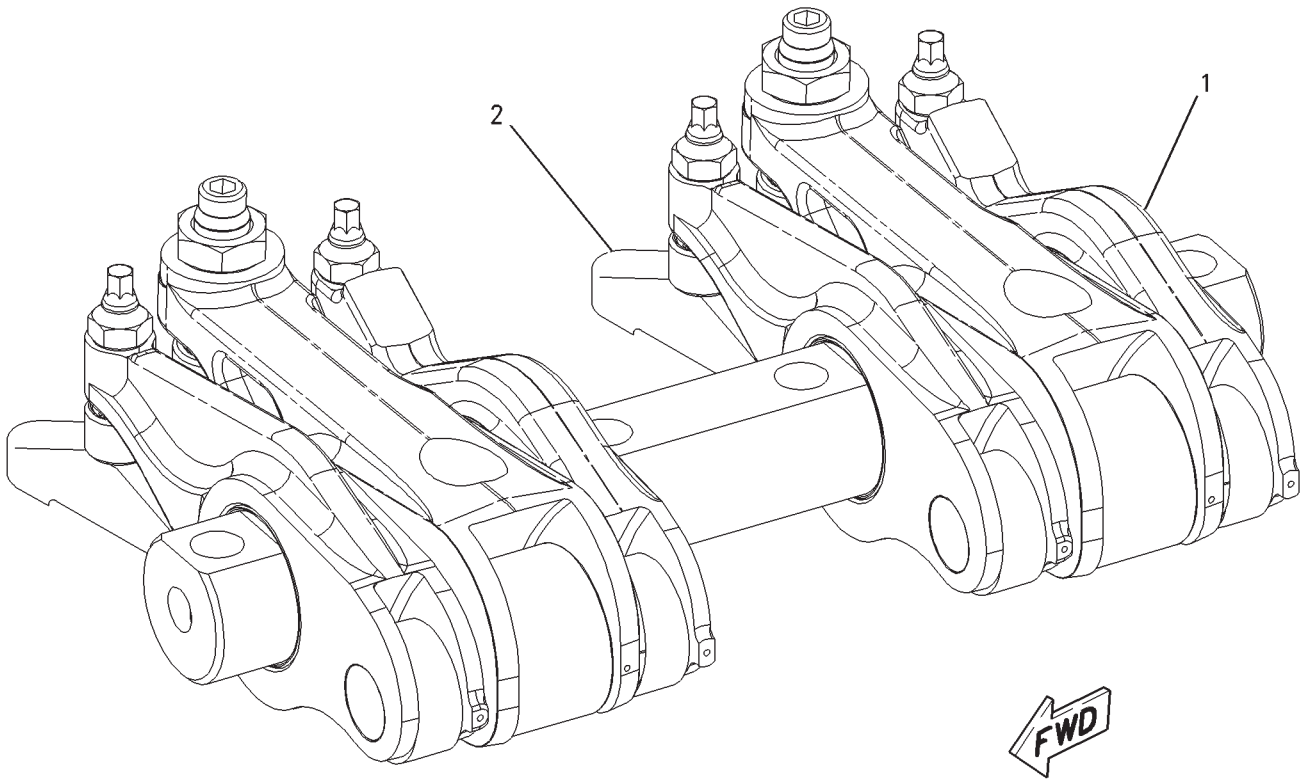

GRAPHIC #1 **<END>** g00905240

BASIC ENGINE

151-6660 MOUNTING GP-ENGINE

S/N: RCD1-UP

PART OF 220-4843, 242-5914 INSTALLATION AR-ENGINE

SMCS-1152 **i03650883**

NOTE	REF NO	GRAPHIC REF	PART NUMBER	QTY	PART NAME 1 2 3 4 5 6 (PRODUCT LEVEL)	SEE PAGE
	1	1	**171-9057**	2	BRACKET AS	
	2	1	**8C-6362**	8	BOLT (5/8-11X2.75-IN)	
	3	1	**8T-4122**	8	WASHER-HARD (17X32X3.5-MM THK)	
	4	1	**9W-7388**	6	WASHER (26X144X12-MM THK)	
M	5	1	**7X-2567**	6	BOLT (M24X3X160-MM)	
	6	1	**8T-4167**	6	WASHER-HARD (26X44X4-MM THK)	
	7	1	**147-6983**	6	MOUNT-FLEXIBLE	
	8	1	**147-6982**	6	MOUNT-FLEXIBLE	
	9	1	**8T-1482**	6	WASHER-HARD (26X50X8-MM THK)	
M	10	1	**139-8873**	6	SUPPORT AS	
M	11	1	**7X-2553**	8	BOLT (M16X2X40-MM)	
	12	1	**9X-8257**	8	WASHER (17.5X30X3.5-MM THK)	
	13	1	**171-9054**	2	BRACKET AS	

M-METRIC PART

151-6660 **MOUNTING GP-ENGINE** *(contd.)* **i03650883**

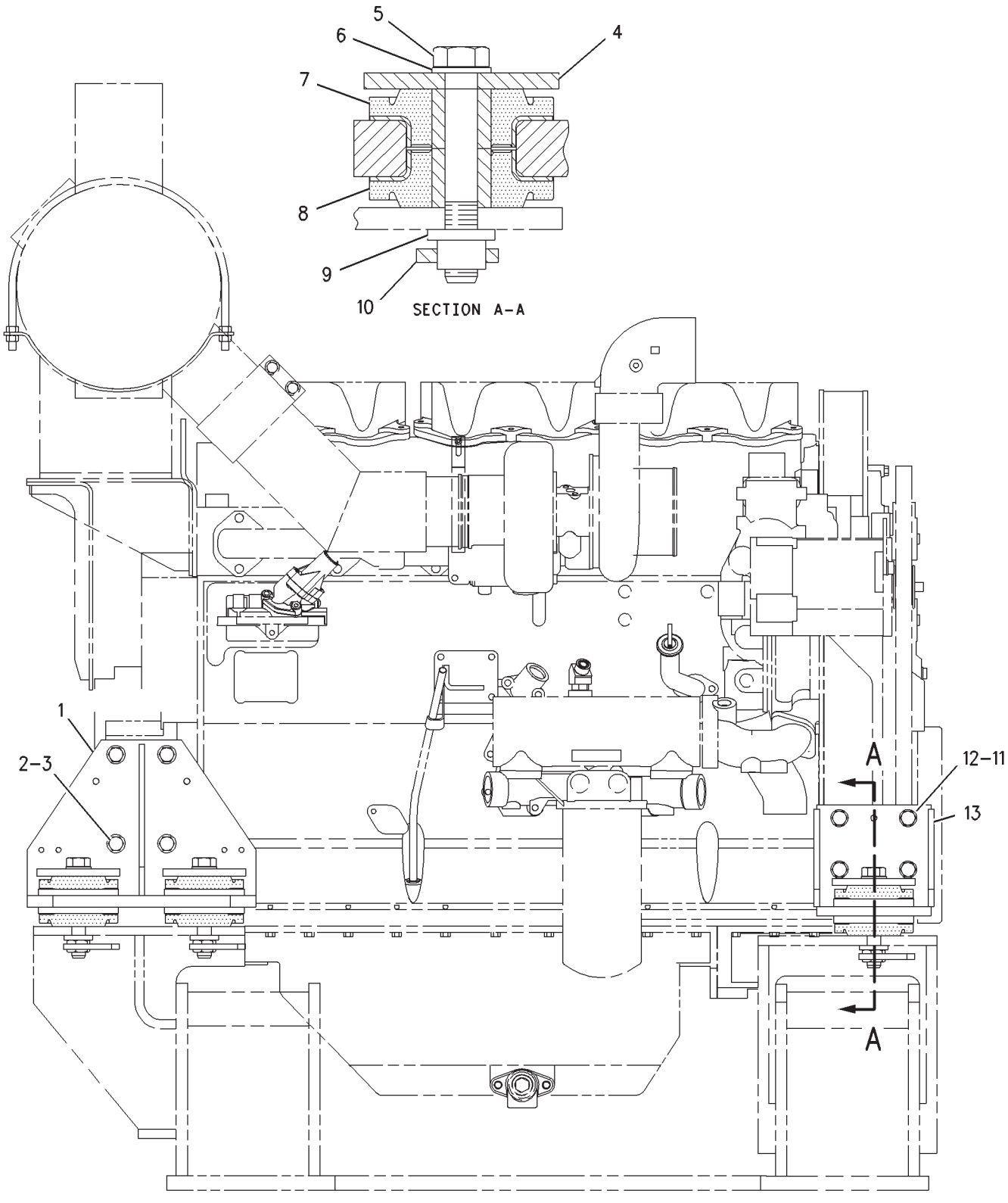

RIGHT SIDE VIEW

GRAPHIC #1 **<END>** g00892255

BASIC ENGINE

219-1494 PAN GP-OIL

S/N: BLC426-UP
PAN PIECES HAVE LARGER HOLES
PART OF 205-5858, 235-4685 ENGINE AR-COMPLETE

SMCS-1302 **i01702770**

NOTE	REF NO	GRAPHIC REF	PART NUMBER	QTY	PART NAME 1 2 3 4 5 6 (PRODUCT LEVEL)	SEE PAGE
	1	1	**7E-4661**	1	PLATE	
	2	1	**136-4303**	1	PLUG AS-CONNECTOR (2-PIN)	
		1	**155-2270**	1	KIT-CONNECTING PLUG (2-PIN)	
					(INCLUDES PLUG AS AND WEDGE)	
		1	**3E-3362**	1	WEDGE-PLUG LOCK (2-PIN)	
		1	**8T-8737**	2	PLUG-SEAL	
	3	1	**188-0208**	1	PAN-OIL (CENTER)	
	4	1	**188-0210**	2	GASKET (RAIL)	
	5	1	**213-0677**	1	SWITCH AS-LIQUID LEVEL (OIL LIQUID LEVEL)	
		1	**102-8802**	1	KIT-RECEPTACLE (2-PIN)	
					(INCLUDES RECEPTACLE AS AND WEDGE)	
		1	**3E-3365**	1	WEDGE-RECEPTACLE LOCK (2-PIN)	
		1	**144-1636**	2	PIN-CONNECTOR (14-GA TO 18-GA)	
	6	1	**219-1495**	1	PAN-OIL (FRONT)	
	7	1	**219-1496**	1	PAN-OIL (REAR)	
	8	1	**0S-1587**	2	BOLT (1/2-13X1.75-IN)	
	9	1	**0S-1588**	18	BOLT (3/8-16X1.25-IN)	
	10	1	**3D-2824**	1	SEAL-O-RING	
	11	1	**4P-0519**	1	ADAPTER AS-DRAIN	
	11A	1	**109-5839**	1	PLUG-DRAIN	
	11B	1	**109-5840**	1	ADAPTER-PLUG	
	12	1	**5M-2894**	18	WASHER-HARD (10.2X18.5X2.5-MM THK)	
	13	1	**6V-3830**	1	SEAL-O-RING	
	14	1	**8T-2501**	40	BOLT (3/8-16X2-IN)	
	15	1	**8T-4896**	40	WASHER-HARD (10.2X18.5X2.5-MM THK)	
B	16	1	**1U-8846**		SEALANT-GASKET	

B-USE AS REQUIRED

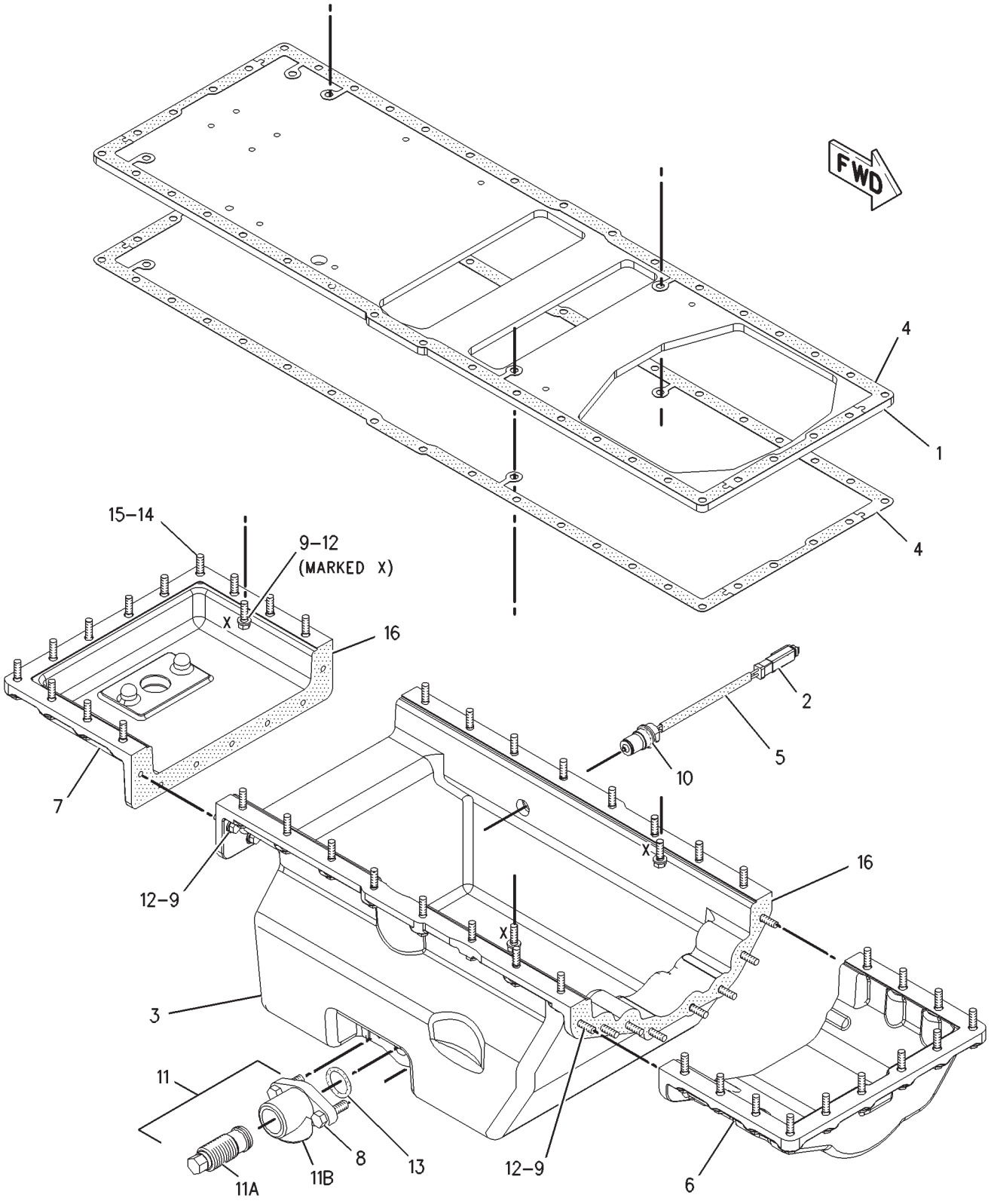

GRAPHIC #1 **<END>** g00877272

BASIC ENGINE

134-3071 PISTON & ROD GP*R

S/N: BLC426-UP

PART OF 159-5810, 235-3469 ENGINE AR-CORE

SMCS-1225 **i03309646**

NOTE	REF NO	GRAPHIC REF	PART NUMBER	QTY	PART NAME 1 2 3 4 5 6 (PRODUCT LEVEL)	SEE PAGE
R	1	1	**192-8810**	1	CROWN AS-PISTON	
	2	1	**284-6039**	1	SKIRT-PISTON	
	3	1	**168-7246**	1	PIN-PISTON	
	4	1	**7E-1177**	2	RETAINER-PIN	
R	5	1	**9Y-6054**	1	ROD AS-CONNECTING	
	5A	1	**4P-7377**	1	BEARING-SLEEVE	
	5B	1	**7N-2043**	2	DOWEL	
M	5C	1	**7E-4195**	2	BOLT-CONNECTING ROD (M16X1.5X97-MM)	
	6	1	**153-4101**	1	RING-PISTON TOP	
	7	1	**147-1730**	1	RING-PISTON (INTERMEDIATE)	
	8	1	**139-8505**	1	RING-PISTON (OIL)	
	9	1	**328-5573**	1	BEARING-CONNECTING ROD (STANDARD)	
	10	1	**151-5925**	1	BOLT (7/16-14-THD)	
	11	1	**277-3076**	1	TUBE AS-OIL JET	

M-METRIC PART
R-REMFG PART MAY BE AVAILABLE

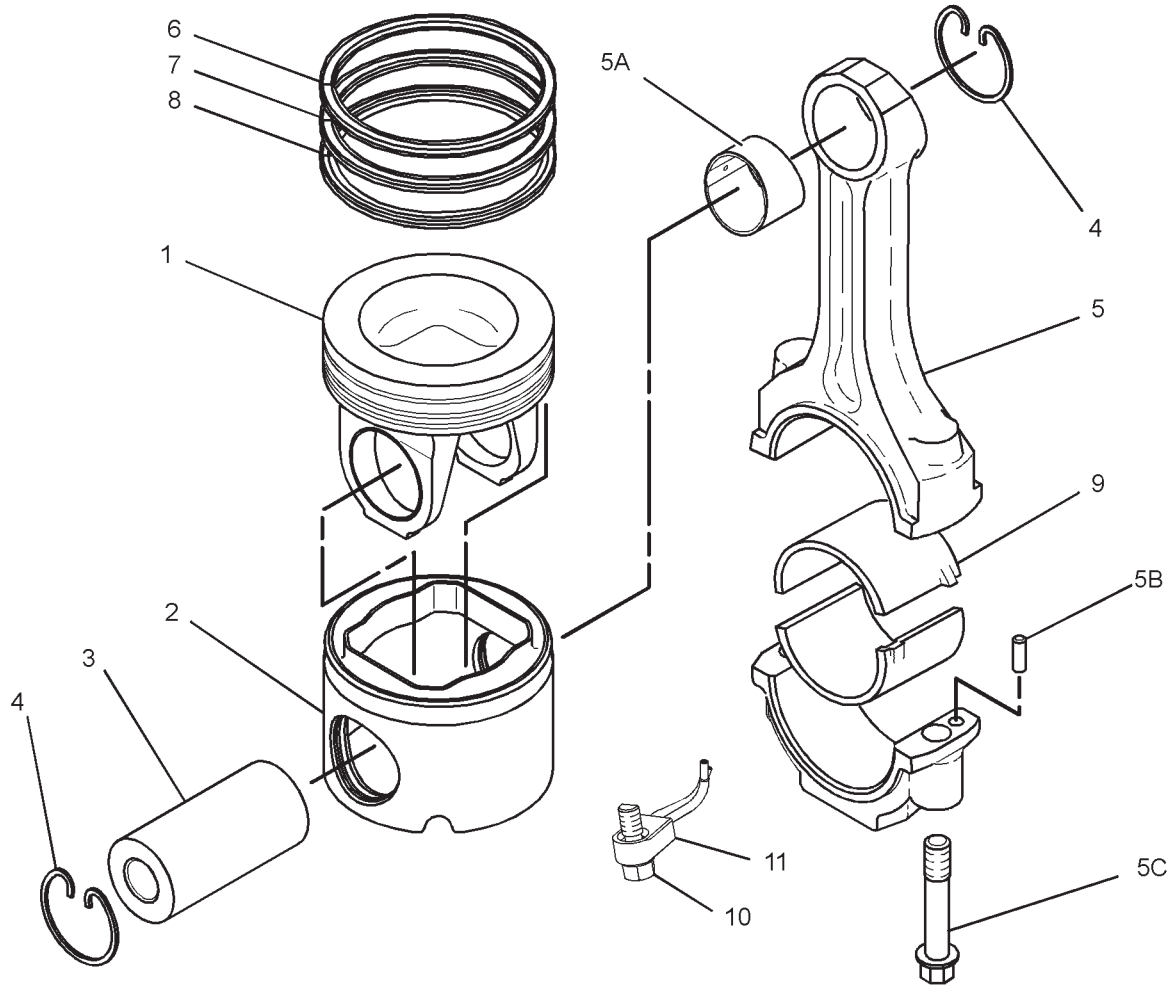

GRAPHIC #1 **<END>** g01301945

BASIC ENGINE

234-5986 PLUG GP-CYLINDER HEAD

S/N: BLC1000-UP

PART OF 235-4685 ENGINE AR-COMPLETE

SMCS-1100 **i02109061**

NOTE	REF NO	GRAPHIC REF	PART NUMBER	QTY	PART NAME 1 2 3 4 5 6 (PRODUCT LEVEL)	SEE PAGE
	1	1	*183-3408*	4	PLUG AS	
					(EACH INCLUDES)	
		1	**6V-5049**	1	SEAL-O-RING (11.89MM ID)	
		1	**9S-8004**	1	PLUG	
	2	1	**6V-3251**	1	SEAL-O-RING (19.18MM ID)	
	3	1	**6V-6609**	1	SEAL-O-RING	
	4	1	**9S-8005**	1	PLUG	
	5	1	**9S-8006**	1	PLUG	

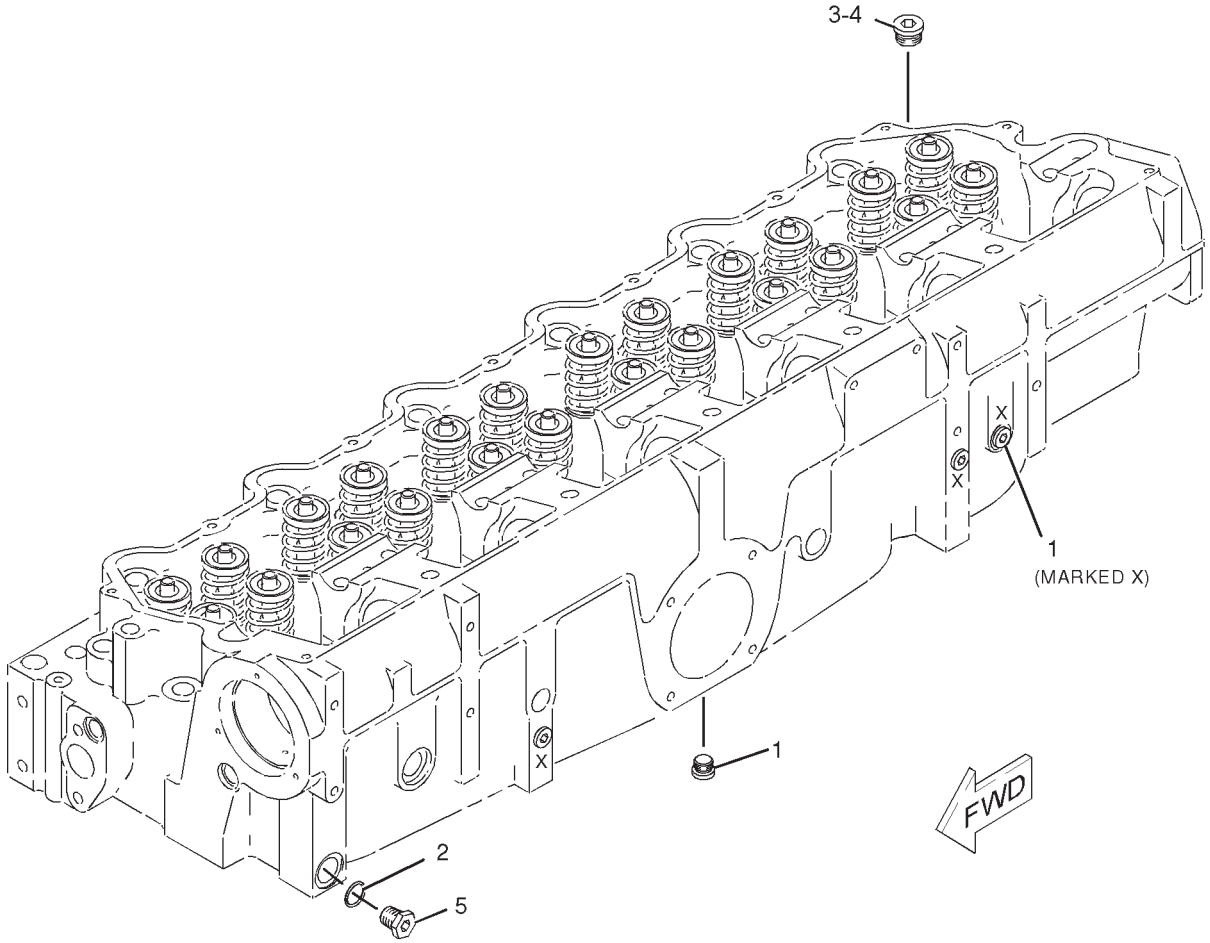

GRAPHIC #1 **<END>** g01037920

BASIC ENGINE

166-1321 PULLEY GP

S/N: BLC426-UP

PART OF 205-5858, 235-4685 ENGINE AR-COMPLETE

SMCS-1205, 1207, 1358, 1384, 1425 **i01786014**

NOTE	REF NO	GRAPHIC REF	PART NUMBER	QTY	PART NAME 1 2 3 4 5 6 (PRODUCT LEVEL)	SEE PAGE
	1	1	**133-7023**	2	PULLEY AS-IDLER	
					(EACH INCLUDES)	
		1	**151-2898**	1	SPACER (10.4X38.1X20-MM THK)	
M		1	**151-2900**	1	BOLT (M10X1.5X54.25-MM)	
		1	**166-6358**	1	COVER-DUST	
	2	1	**145-9331**	1	SUPPORT-ALTERNATOR	
	3	1	**223-9055**	1	BRACKET	
	4	1	**166-1323**	1	PULLEY AS-IDLER	
		1	**5P-8245**	1	WASHER-HARD (13.5X25.5X3-MM THK)	
M		1	**6V-8336**	1	BOLT (M12X1.75X70-MM)	
	5	1	**166-1324**	1	BELT-SERPENTINE	
	6	1	**173-1498**	2	PULLEY AS-IDLER (8-GROOVE)	
					(EACH INCLUDES)	
M		1	**151-2900**	1	BOLT (M10X1.5X54.25-MM)	
		1	**166-6358**	1	COVER-DUST	
		1	**173-1500**	1	SPACER (10.4X45.1X1.8-MM THK)	
	7	1	**190-0649**	1	BELT TENSIONER	
	8	1	**123-0791**	1	PULLEY (8-GROOVE)	
	9	1	**1A-1460**	4	BOLT (1/2-13X2-IN)	
	10	1	**1F-7958**	2	NUT-FULL (1/2-13-THD)	
	11	1	**4M-8548**	2	STUD-TAPERLOCK	
	12	1	**5B-9603**	6	BOLT (3/8-16X5-IN)	
	13	1	**5P-8245**	2	WASHER-HARD (13.5X25.5X3-MM THK)	
	14	1	**6V-5839**	1	WASHER (11X21X2.5-MM THK)	
M	15	1	**8T-0643**	1	BOLT (M10X1.5X80-MM)	

M-METRIC PART

166-1321 **PULLEY GP** *(contd.)* **i01786014**

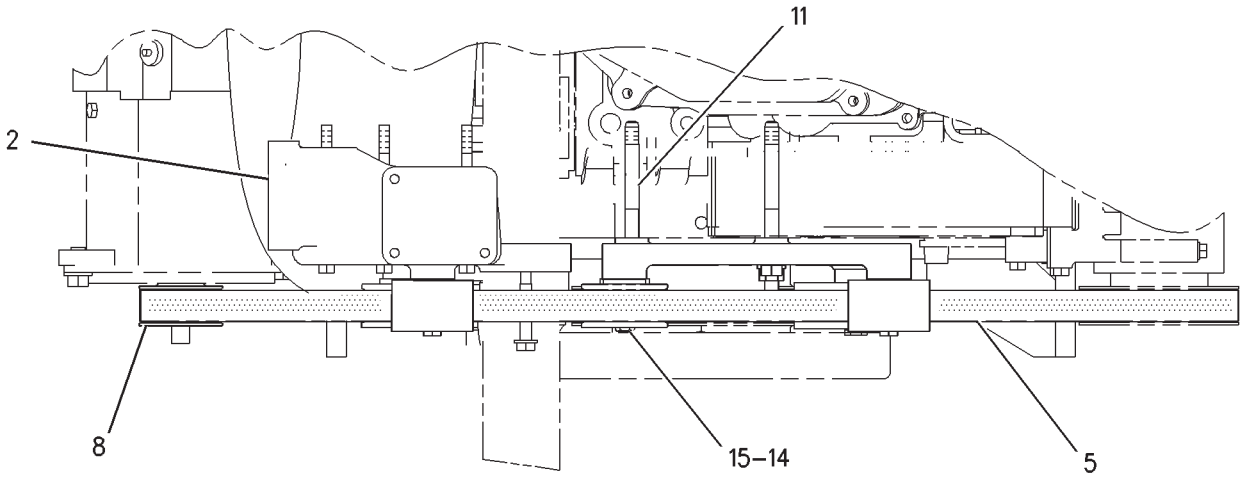

TOP VIEW

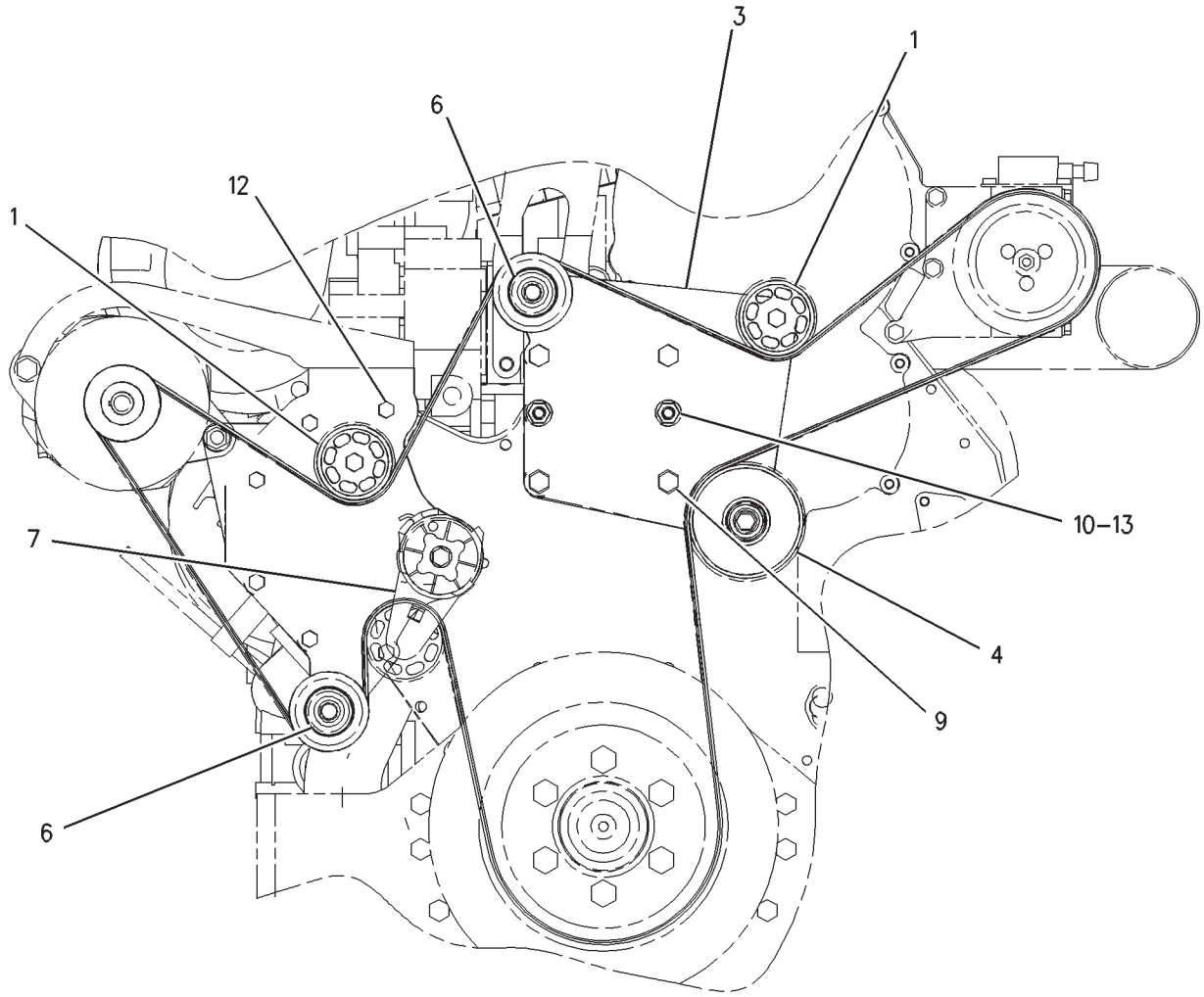

FRONT VIEW

GRAPHIC #1 **<END>** g00787099

BASIC ENGINE

198-9898 ROCKER ARM GP

S/N: BLC1000-UP

PART OF 148-7482 MECHANISM GP-FUEL PUMP & VALVE

SMCS-1123 **i02588255**

NOTE	REF NO	GRAPHIC REF	PART NUMBER	QTY	PART NAME 1 2 3 4 5 6 (PRODUCT LEVEL)	SEE PAGE
	1	1	**6I-0901**	1	SHAFT AS-ROCKER ARM	
		1	**4B-9782**	2	BALL	
	2	1	**276-5317**	4	NUT (3/8-24-THD)	
	3	1	**258-8721**	4	BUTTON	
W	4	1	**192-4151**	2	BUTTON (24MM ID)	
					—OR—	
J		1	**4P-7371**	2	INSERT (14.75MM ID)	
W	5	1	**196-5069**	2	SCREW-ARM ADJUSTMENT (9/16-18X2-IN) (9/16-18 THD)	
					—OR—	
J		1	**4P-4278**	2	SCREW-UNIT INJ ADJUSTMENT (7/8-18 THD)	
W	6	1	**196-5070**	2	NUT-JAM (9/16-18-THD)	
					—OR—	
J		1	**4P-4279**	2	NUT-JAM (7/8-18-THD) (7/8-18 THD)	
	7	1	**232-0253**	4	SCREW-ARM ADJUSTMENT (3/8-24X1.20-IN)	
R	8	1	**203-8822**	2	ROCKER ARM AS (EXHAUST VALVE ROCKER)	
R	9	1	**203-8824**	2	ROCKER ARM AS (INLET VALVE ROCKER)	
R	10	1	**207-5248**	2	ROCKER ARM AS (UNIT INJECTOR ROCKER)	
W	11	1	**061-8639**	2	SEAL-O-RING (15.54MM ID)	
					—OR—	
J		1	**032-9313**	2	SEAL-O-RING (12.37MM ID)	
	12	1	**8L-2777**	4	SEAL-O-RING (10.77MM ID)	

J-PARTS MARKED J MUST BE USED TOGETHER ON OLDER ROCKER ARM ASSEMBLIES
R-REMFG PART MAY BE AVAILABLE
W-PARTS MARKED W MUST BE USED TOGETHER ON NEWER ROCKER ARM ASSEMBLIES

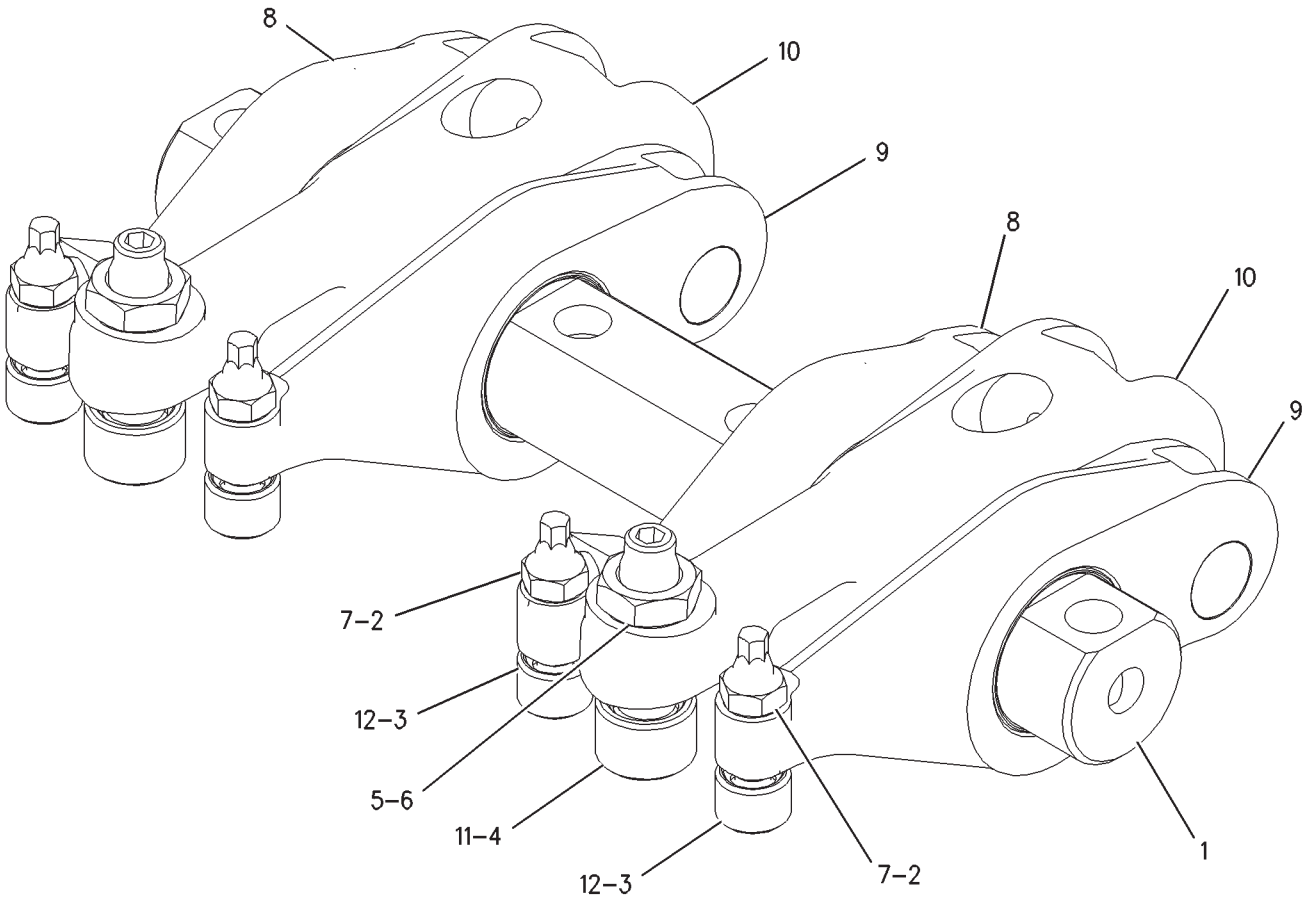

GRAPHIC #1 **<END>** g00905507

BASIC ENGINE

207-5244 ROCKER ARM GP

S/N: BLC426-UP

PART OF 208-2820 VALVE MECHANISM GP

SMCS-1123 **i01547360**

NOTE	REF NO	GRAPHIC REF	PART NUMBER	QTY	PART NAME 1 2 3 4 5 6 (PRODUCT LEVEL)	SEE PAGE
	1	1	**6I-0901**	1	SHAFT AS-ROCKER ARM	
	1A	1	**4B-9782**	2	BALL	
	2	1	**9L-7712**	4	NUT (3/8-24-THD)	
	3	1	**061-8639**	2	SEAL-O-RING	
	4	1	**104-9270**	4	BUTTON	
R	5	1	**162-9175**	2	ROCKER ARM AS	
	6	1	**170-8661**	2	ROCKER ARM AS	
	7	1	**183-7547**	4	SCREW	
	8	1	**192-4151**	1	BUTTON	
	9	1	**192-8215**	2	ARM AS	
	10	1	**196-5069**	2	SCREW-ARM ADJUSTMENT	
	11	1	**196-5070**	2	NUT-JAM (9/16-18-THD)	
	12	1	**8L-2777**	4	SEAL-O-RING	

R-REMFG PART MAY BE AVAILABLE

207-5244 **ROCKER ARM GP** *(contd.)* **i01547360**

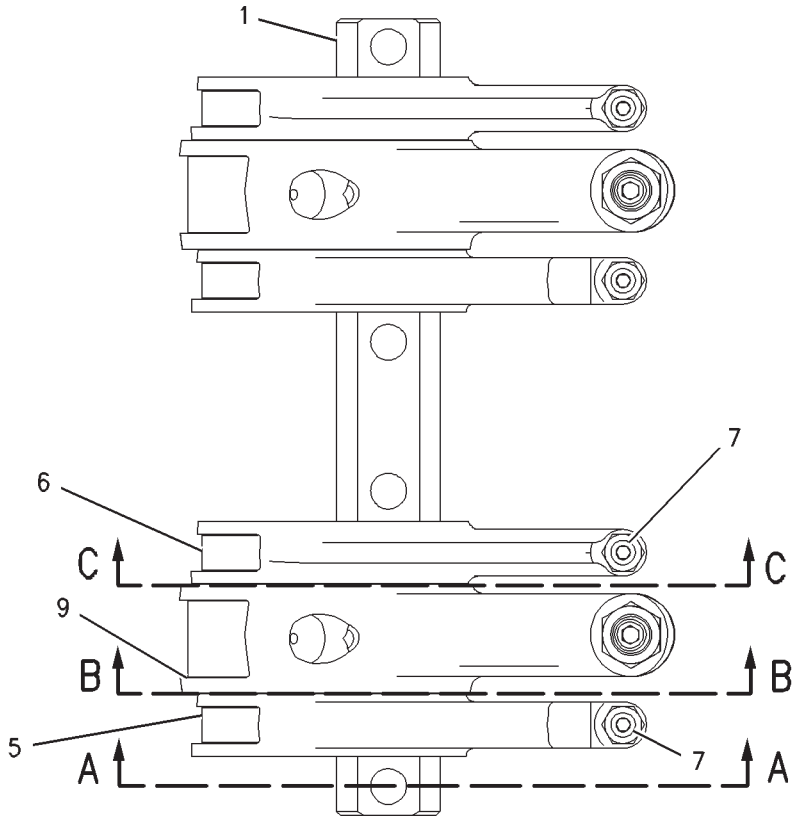

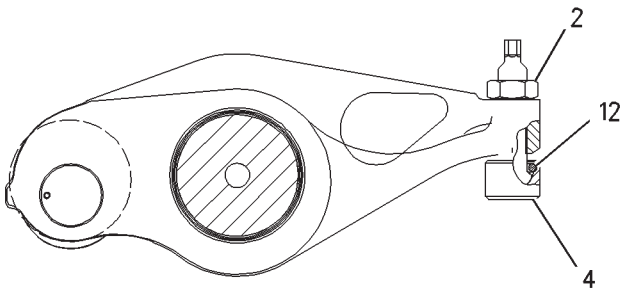

SECTION C-C

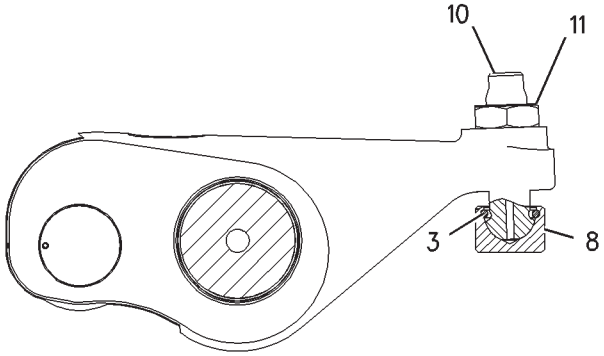

SECTION B-B

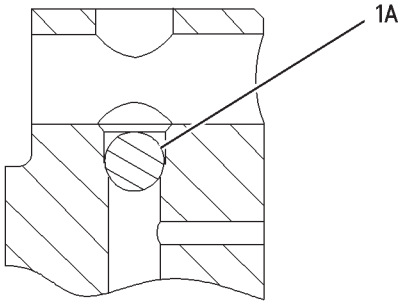

VIEW OF SHAFT AS.

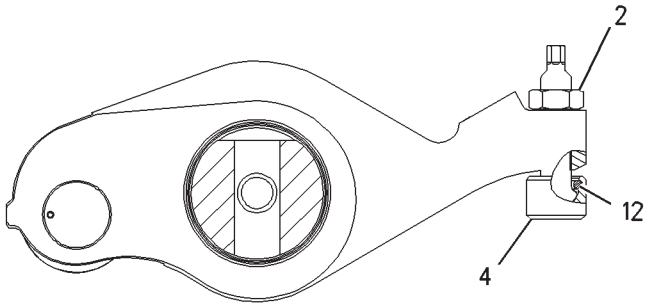

SECTION A-A

GRAPHIC #1 **<END>** g00805047

BASIC ENGINE

278-1931 ROCKER ARM GP

S/N: BLC1000-UP

PART OF 148-7482 MECHANISM GP-FUEL PUMP & VALVE

SMCS-1123 **i03212242**

NOTE	REF NO	GRAPHIC REF	PART NUMBER	QTY	PART NAME 1 2 3 4 5 6 (PRODUCT LEVEL)	SEE PAGE
	1	1	**307-8322**	1	SHAFT AS-ROCKER ARM	
		1	**4B-9782**	2	BALL	
	2	1	**276-5317**	4	NUT (3/8-24-THD)	
	3	1	**192-4151**	2	BUTTON	
	4	1	**196-5069**	2	SCREW-ARM ADJUSTMENT (9/16-18X2-IN)	
	5	1	**196-5070**	2	NUT-JAM (9/16-18-THD)	
R	6	1	**203-8824**	2	ROCKER ARM AS (INLET VALVE ROCKER)	
	7	1	**274-4491**	4	SCREW-ARM ADJUSTMENT (3/8-24X1.20-IN)	
	8	1	**258-8721**	4	BUTTON	
R	9	1	**254-6081**	2	ROCKER ARM AS (EXHAUST VALVE ROCKER)	
R	10	1	**278-1365**	2	ROCKER ARM AS (UNIT INJECTOR ROCKER)	
	11	1	**061-8639**	2	SEAL-O-RING	
	12	1	**8L-2777**	4	SEAL-O-RING	

R-REMFG PART MAY BE AVAILABLE

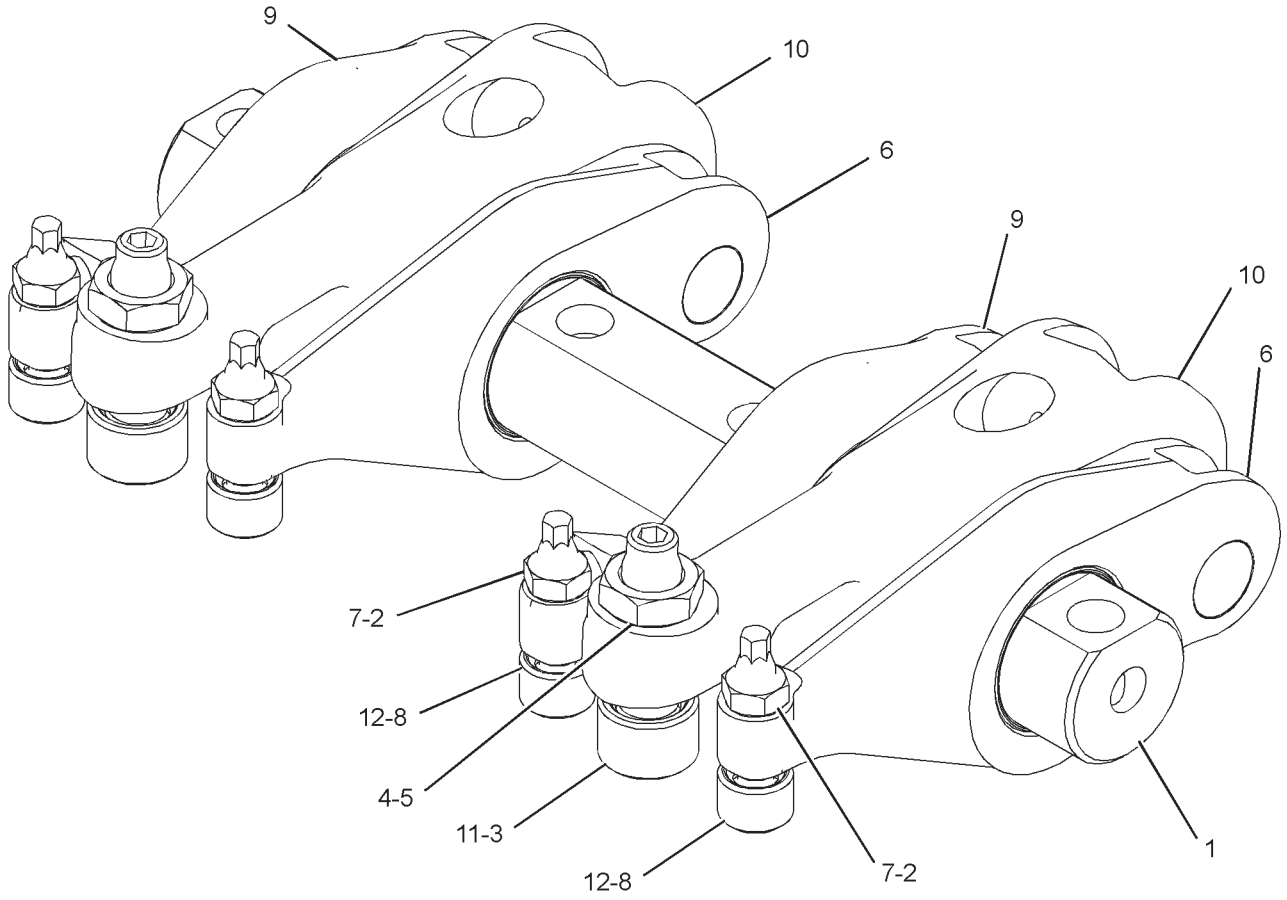

GRAPHIC #1 **<END>** g01234257

BASIC ENGINE

320-2796 ROCKER ARM GP

S/N: BLC426-UP

PART OF 328-4237 ROCKER ARM GP

SMCS-1123 **i03326363**

NOTE	REF NO	GRAPHIC REF	PART NUMBER	QTY	PART NAME 1 2 3 4 5 6 (PRODUCT LEVEL)	SEE PAGE
	1	1	**258-8721**	1	BUTTON	
	2	1	**274-4491**	1	SCREW-ARM ADJUSTMENT (3/8-24X1.20-IN)	
	3	1	**276-5317**	1	NUT (3/8-24-THD)	
R	4	1	**320-2797**	1	ROCKER ARM AS	
	5	1	**8L-2777**	1	SEAL-O-RING	

R-REMFG PART MAY BE AVAILABLE

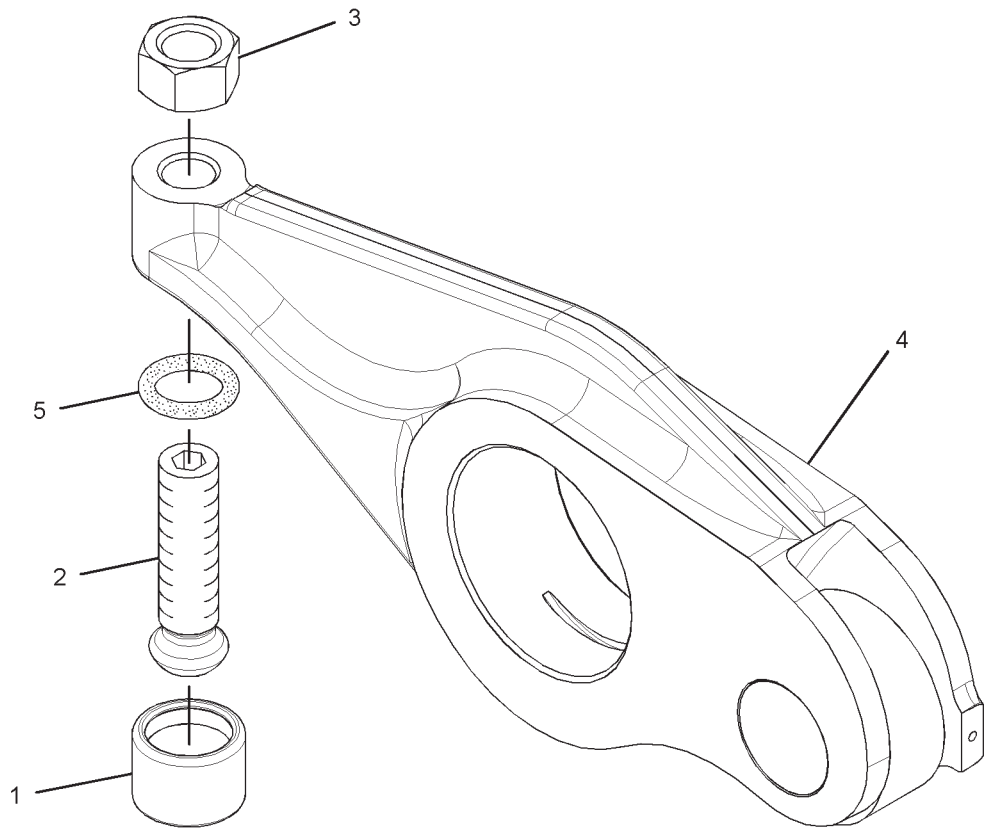

GRAPHIC #1 **<END>** g01526902

BASIC ENGINE

328-4237 ROCKER ARM GP

S/N: BLC426-UP

PART OF 148-7482 MECHANISM GP-FUEL PUMP & VALVE

SMCS-1123 **i03430482**

NOTE	REF NO	GRAPHIC REF	PART NUMBER	QTY	PART NAME 1 2 3 4 5 6 (PRODUCT LEVEL)	SEE PAGE
	1	1	**307-8322**	1	SHAFT AS-ROCKER ARM	
		1	**4B-9782**	2	BALL	
YR	2	1	*320-2796*	2	ROCKER ARM GP (INTAKE)	80
YR	3	1	*328-4238*	2	ROCKER ARM GP (UNIT INJECTOR)	82
YR	4	1	*328-4239*	2	ROCKER ARM GP	83

R-REMFG PART MAY BE AVAILABLE
Y-SEPARATE ILLUSTRATION

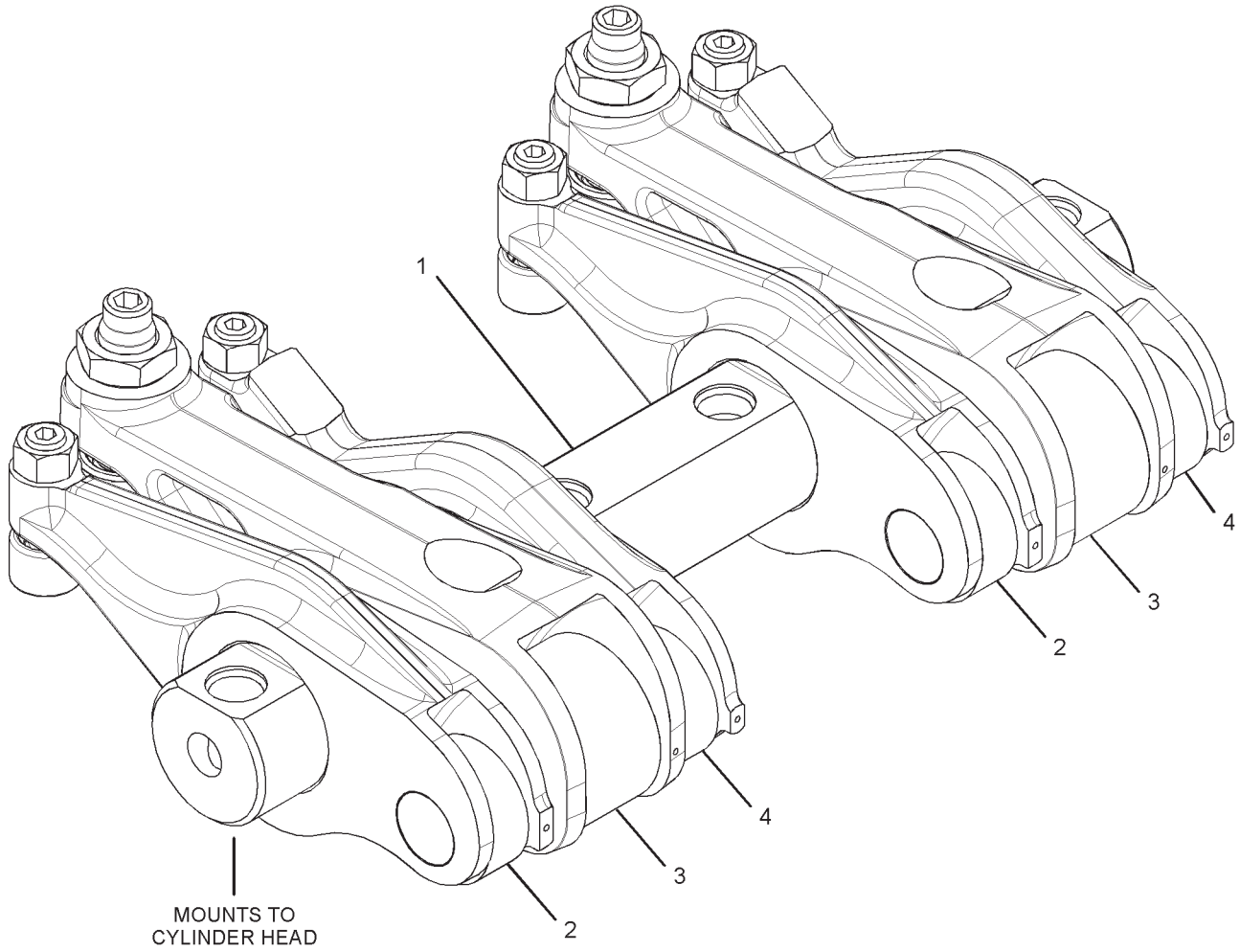

GRAPHIC #1 **<END>** g01786893

BASIC ENGINE

328-4238 ROCKER ARM GP*R

S/N: BLC426-UP

PART OF 328-4237 ROCKER ARM GP

SMCS-1123 **i03326323**

NOTE	REF NO	GRAPHIC REF	PART NUMBER	QTY	PART NAME 1 2 3 4 5 6 (PRODUCT LEVEL)	SEE PAGE
	1	1	**192-4151**	1	BUTTON	
	2	1	**196-5069**	1	SCREW-ARM ADJUSTMENT (9/16-18X2-IN)	
	3	1	**196-5070**	1	NUT-JAM (9/16-18-THD)	
R	4	1	**278-1365**	1	ROCKER ARM AS	
	5	1	**061-8639**	1	SEAL-O-RING	

R-REMFG PART MAY BE AVAILABLE

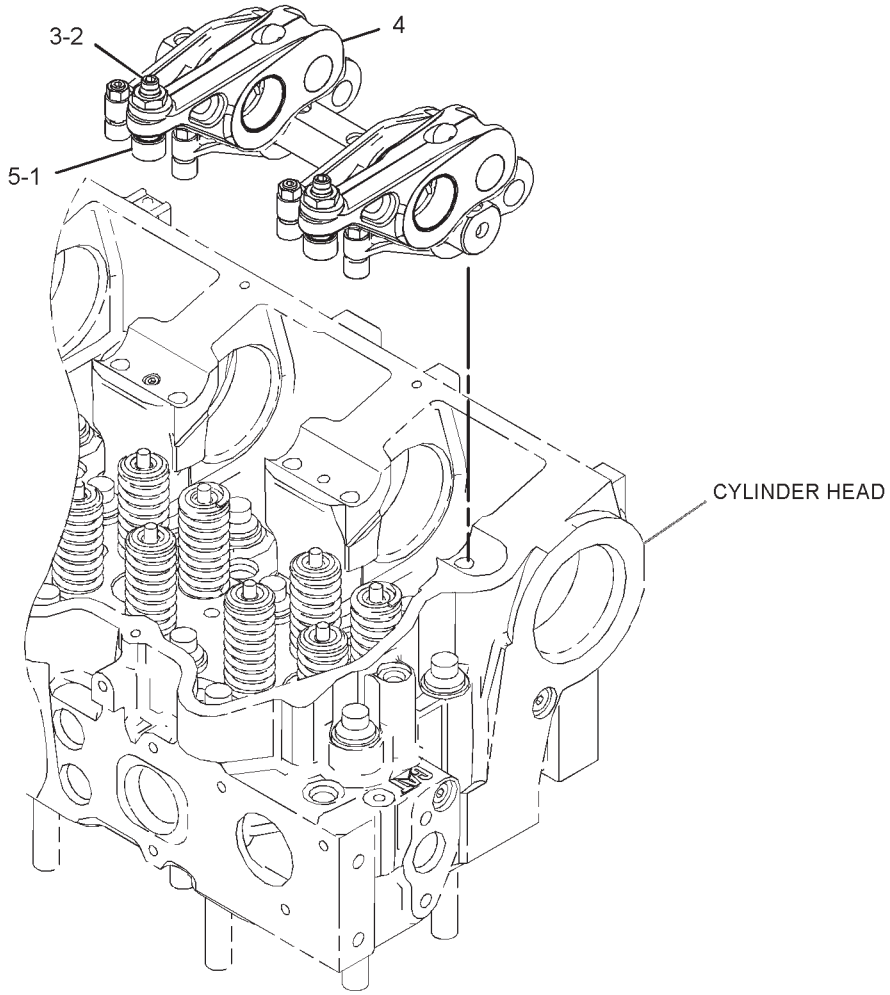

GRAPHIC #1 **<END>** g01707153

BASIC ENGINE

328-4239 ROCKER ARM GP*R

S/N: BLC426-UP

PART OF 328-4237 ROCKER ARM GP

SMCS-1123 **i03430800**

NOTE	REF NO	GRAPHIC REF	PART NUMBER	QTY	PART NAME 1 2 3 4 5 6 (PRODUCT LEVEL)	SEE PAGE
	1	1	**258-8721**	1	BUTTON	
	2	1	**274-4491**	1	SCREW-ARM ADJUSTMENT (3/8-24X1.20-IN)	
	3	1	**276-5317**	1	NUT (3/8-24-THD)	
	4	1	**328-4240**	1	ROCKER ARM AS	
	5	1	**8L-2777**	1	SEAL-O-RING	

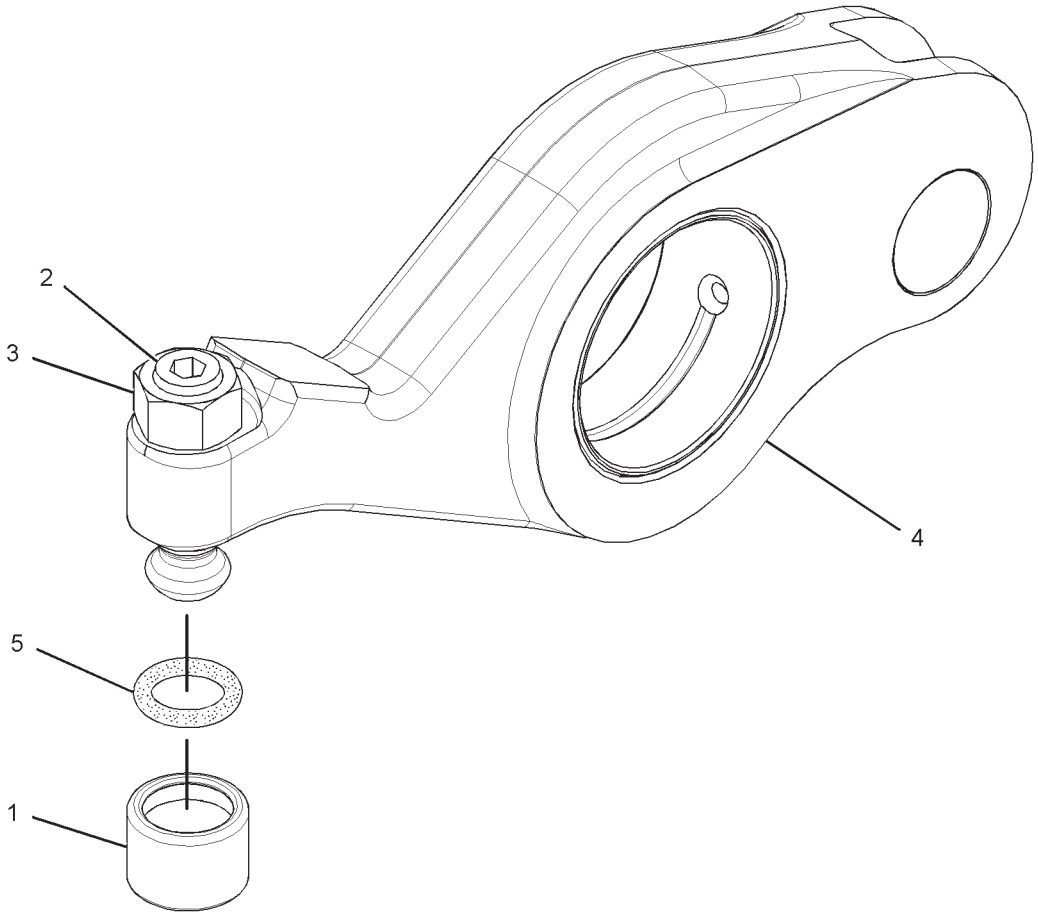

GRAPHIC #1 **<END>** g01784933

BASIC ENGINE

319-7401 SEAL GP-CRANKSHAFT

S/N: BLC426-UP

PART OF 137-7298 CRANKSHAFT GP

SMCS-1160, 1161 **i03191287**

NOTE	REF NO	GRAPHIC REF	PART NUMBER	QTY	PART NAME 1 2 3 4 5 6 (PRODUCT LEVEL)	SEE PAGE
	1	1	**142-5867**	1	SEAL-CRANKSHAFT (FRONT)	

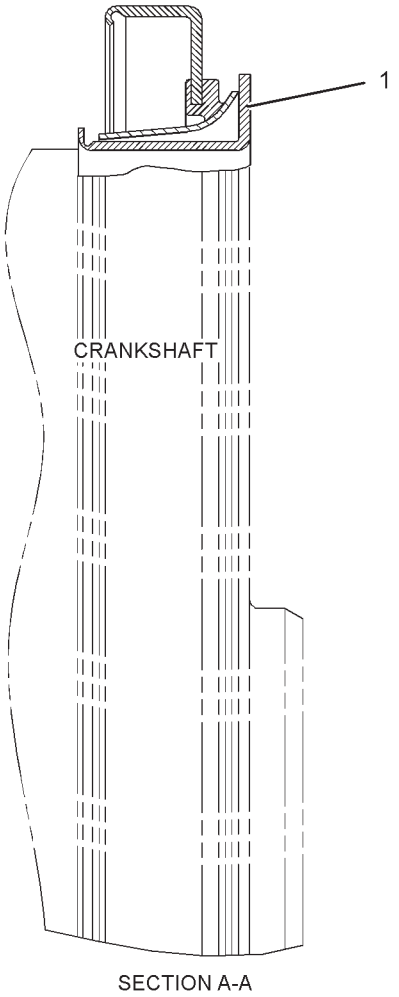

SECTION A-A

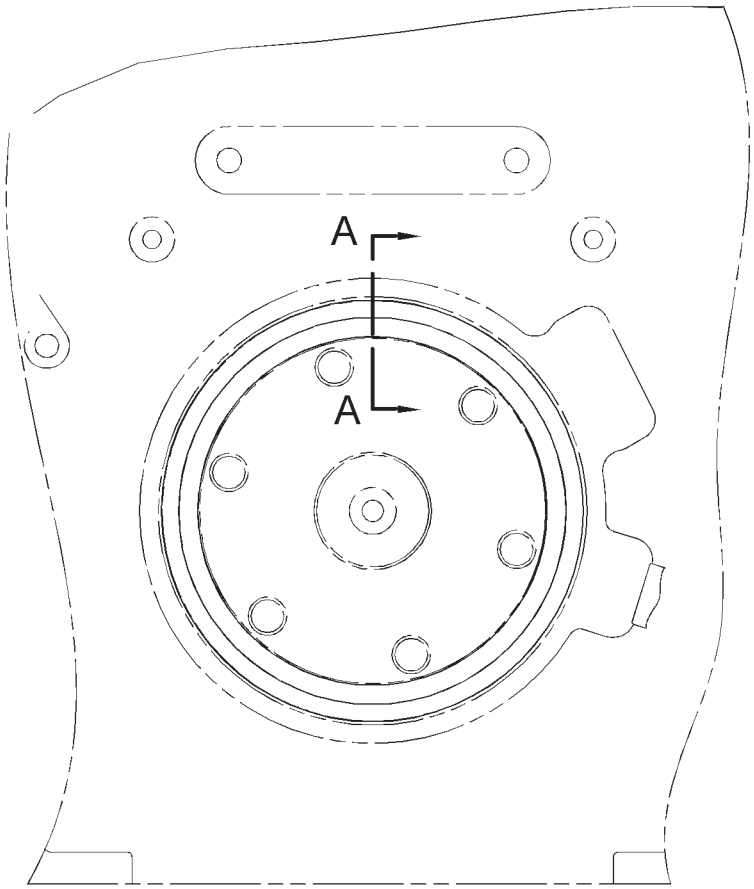

FRONT VIEW OF ENGINE

GRAPHIC #1 **<END>** g01516169

BASIC ENGINE

7E-4876 SUPPORT GP-ENGINE

S/N: BLC426-UP

PART OF 205-5858, 235-4685 ENGINE AR-COMPLETE

SMCS-1152, 1153, 1154 **i00621681**

NOTE	REF NO	GRAPHIC REF	PART NUMBER	QTY	PART NAME 1 2 3 4 5 6 (PRODUCT LEVEL)	SEE PAGE
	1	1	**7E-4875**	1	SUPPORT AS	
	2	1	**6F-5282**	8	BOLT (1/2-13X5.25IN)	
		1	**2M-0849**	8	WASHER (5MM THK)	

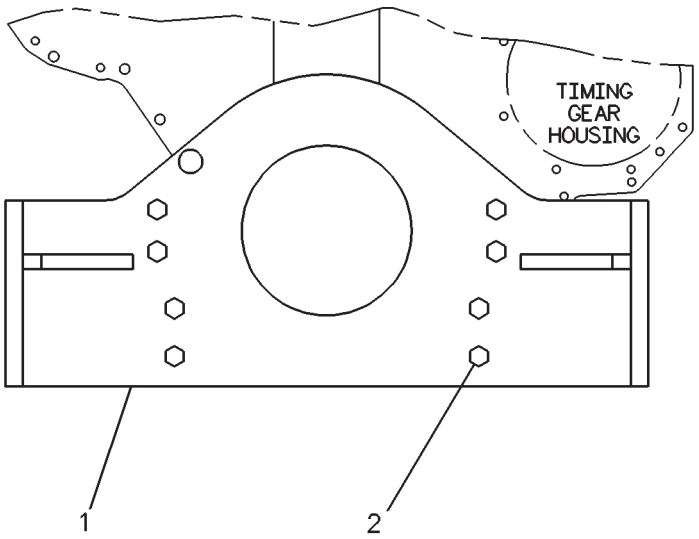

GRAPHIC #1 **<END>** g00220050

BASIC ENGINE

208-2820 VALVE MECHANISM GP

S/N: BLC426-UP

PART OF 159-5810 ENGINE AR-CORE

SMCS-1209 **i01547335**

NOTE	REF NO	GRAPHIC REF	PART NUMBER	QTY	PART NAME 1 2 3 4 5 6 (PRODUCT LEVEL)	SEE PAGE
Y	1	1	*207-5244*	3	ROCKER ARM GP	77
	2	1	**6I-1458**	12	BRIDGE-VALVE	

Y-SEPARATE ILLUSTRATION

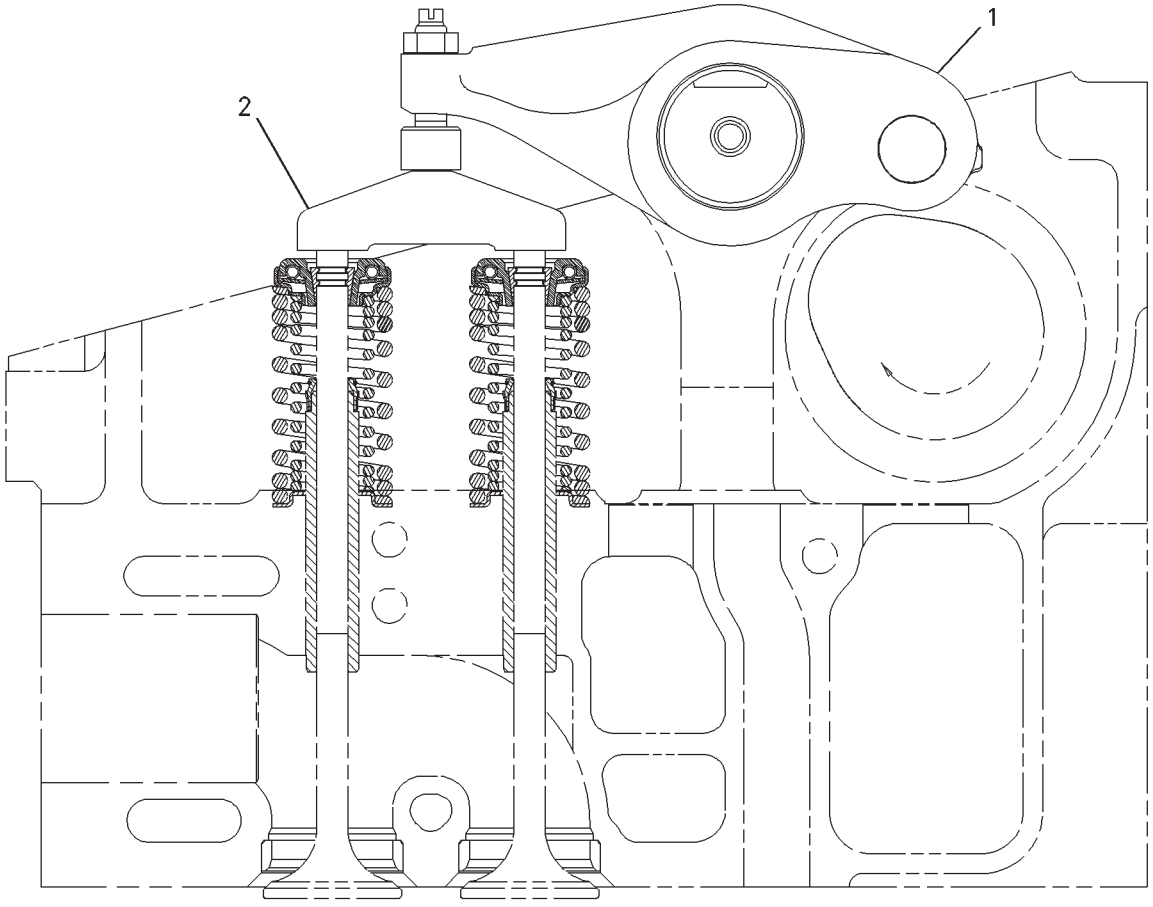

GRAPHIC #1 **<END>** g00805060

LUBRICATION SYSTEM

200-0654 BASE GP-OIL FILTER

S/N: BLC426-UP

PART OF 200-0653 FILTER GP-ENGINE OIL

SMCS-1306 **i01518343**

NOTE	REF NO	GRAPHIC REF	PART NUMBER	QTY	PART NAME 1 2 3 4 5 6 (PRODUCT LEVEL)	SEE PAGE
Y	1	1	*200-0655*	1	BASE GP-OIL FILTER (ENGINE)	88
	2	1	**061-7540**	2	SEAL-O-RING	
	3	1	**153-6680**	1	ELBOW	
	4	1	**0S-1588**	4	BOLT (3/8-16X1.25-IN)	
	5	1	**5M-2894**	4	WASHER-HARD (10.2X18.5X2.5-MM THK)	

Y-SEPARATE ILLUSTRATION

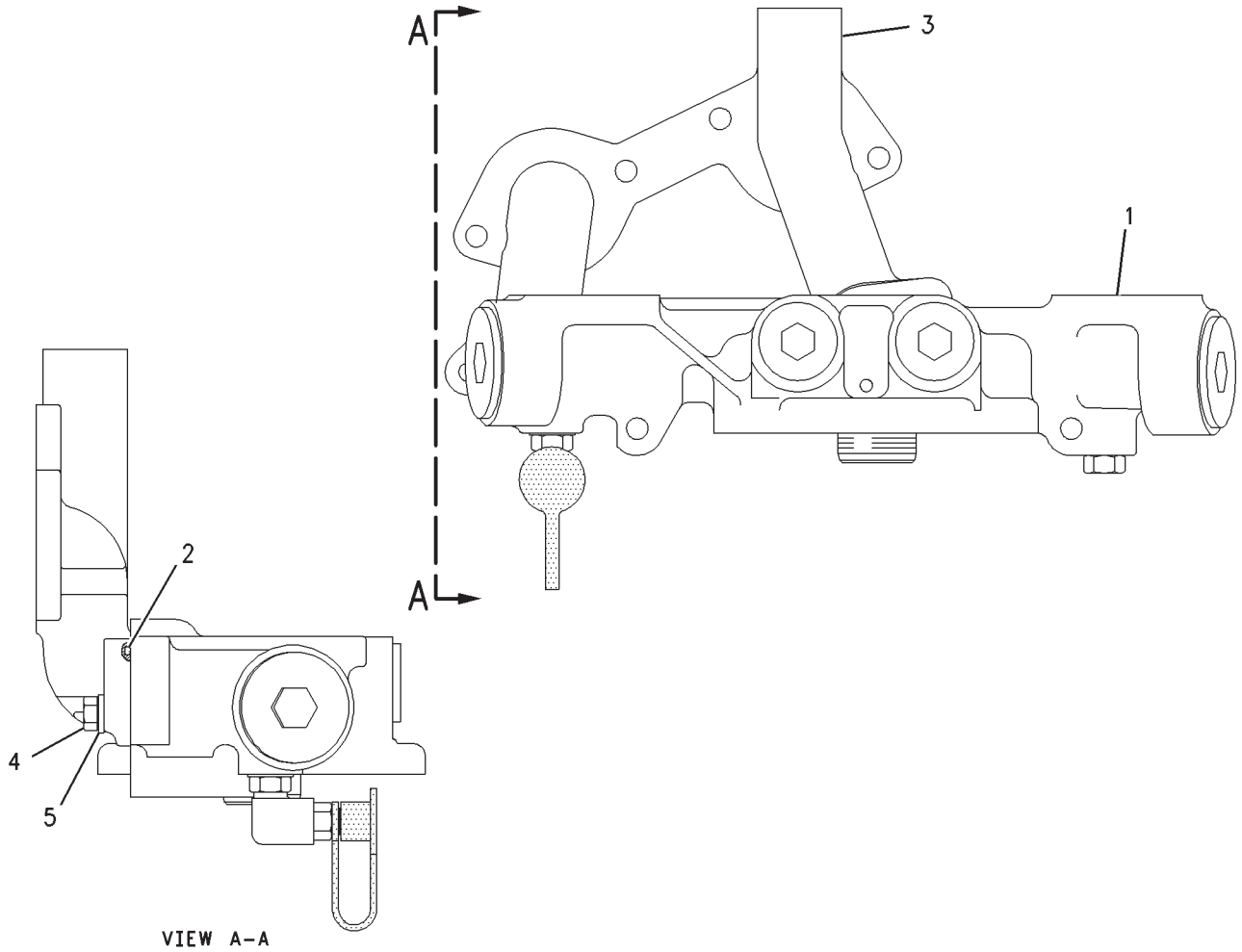

GRAPHIC #1 **<END>** g00788143

LUBRICATION SYSTEM

200-0655 BASE GP-OIL FILTER–ENGINE

S/N: BLC426-UP

PART OF 200-0654 BASE GP-OIL FILTER

SMCS-1306 **i03596369**

NOTE	REF NO	GRAPHIC REF	PART NUMBER	QTY	PART NAME 1 2 3 4 5 6 (PRODUCT LEVEL)	SEE PAGE
	1	1	**176-1363**	1	BASE GP-OIL FILTER	
		1	**2P-4304**	1	STUD-HOLLOW	
		1	**9L-7657**	2	PLUG-CUP	
	2	1	**9S-4191**	1	PLUG-O-RING	
	3	1	**6V-5049**	2	SEAL-O-RING	
	4	1	**8C-6712**	1	ELBOW	
	5	1	**8C-3446**	1	VALVE-FLUID SAMPLING (ENGINE OIL)	
	6	1	**1P-1367**	2	PLUNGER	
	7	1	**4N-8150**	2	SPRING	
	8	1	**5P-7701**	2	SEAL-O-RING	
	9	1	**9S-9334**	2	PLUG-O-RING	
	10	1	**3J-7354**	1	SEAL-O-RING	
	11	1	**8C-3445**	1	CAP-DUST	

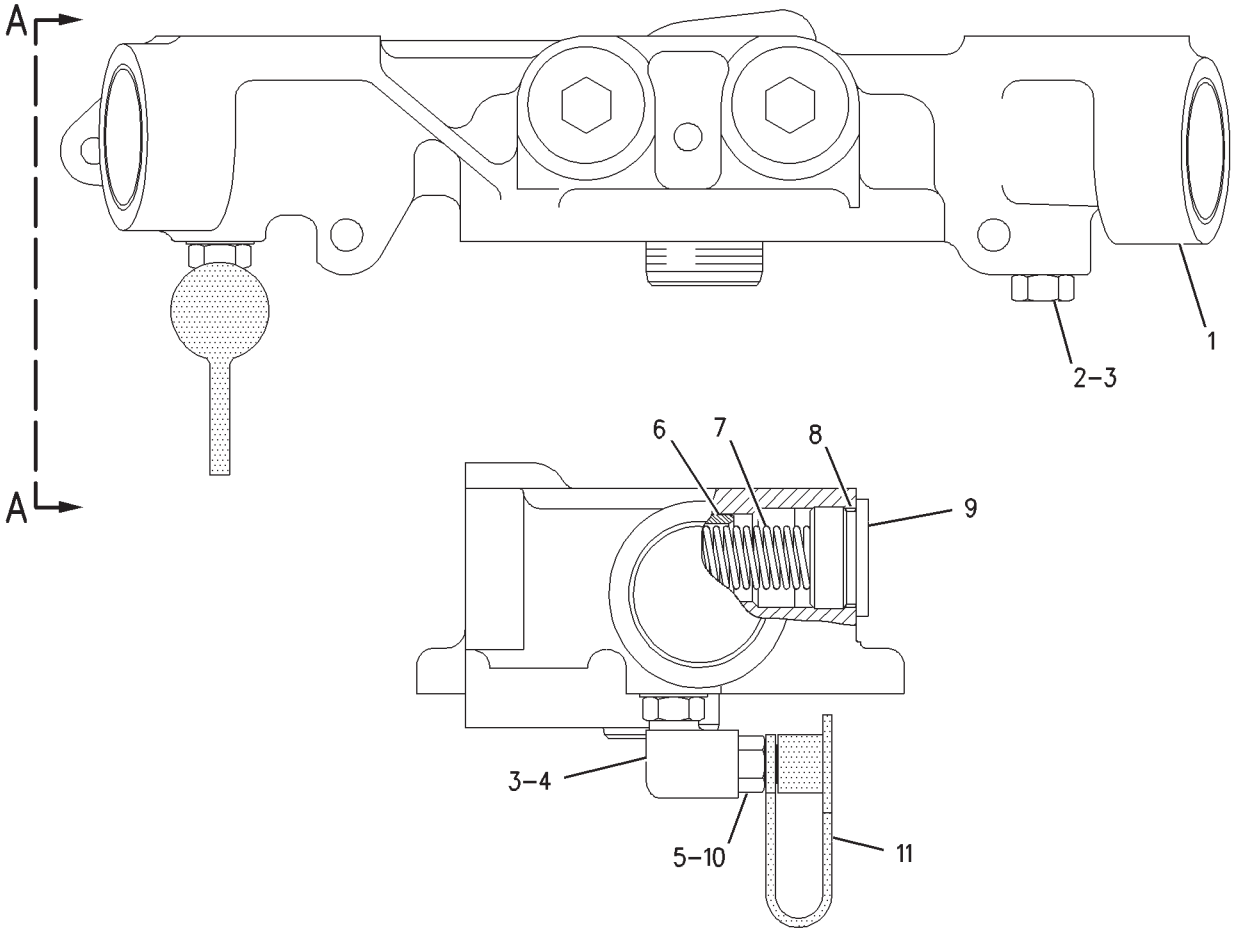

VIEW A–A

GRAPHIC #1 **<END>** g00788118

LUBRICATION SYSTEM

4N-2481 FASTENER GP-OIL PUMP MOUNTING

S/N: BLC426-UP

PART OF 159-5810, 235-3469 ENGINE AR-CORE

SMCS-1304 **i01742917**

NOTE	REF NO	GRAPHIC REF	PART NUMBER	QTY	PART NAME 1 2 3 4 5 6 (PRODUCT LEVEL)	SEE PAGE
	1	1	**0L-1143**	2	BOLT (3/8-16X2.50 IN)	
	2	1	**0S-1590**	1	BOLT (3/8-16X2 IN)	
	3	1	**5M-2894**	3	WASHER-HARD (10.2X18.5X2.5MM THK)	

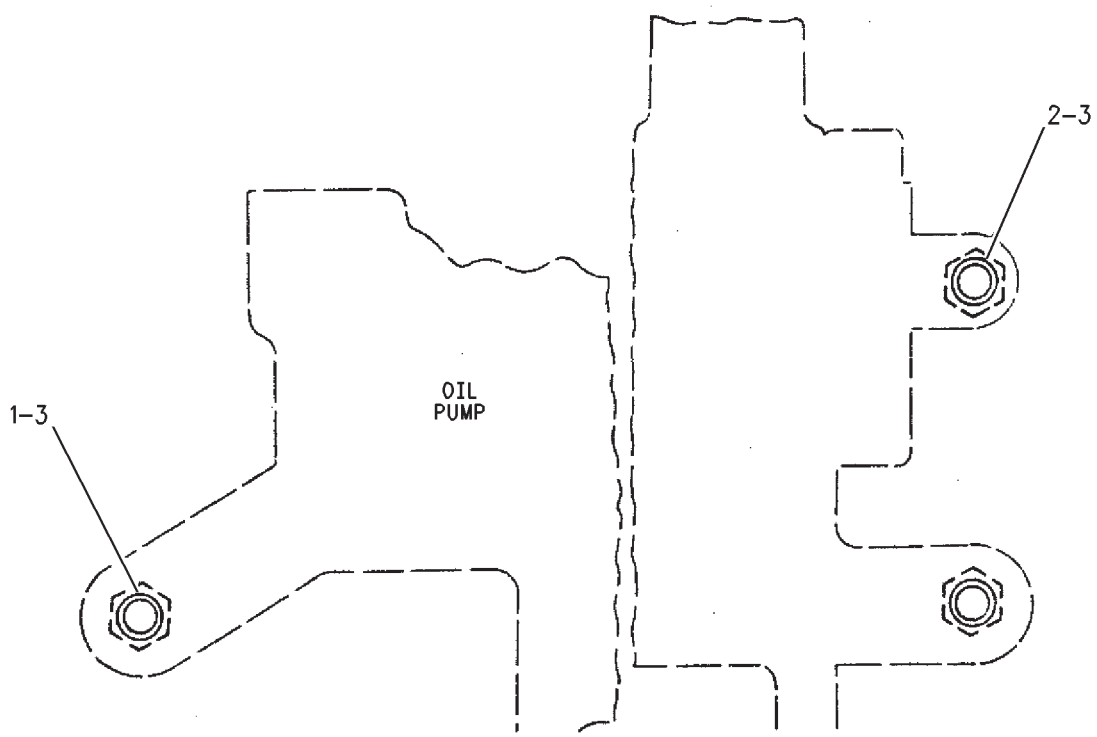

GRAPHIC #1 **<END>** g00892415

LUBRICATION SYSTEM

178-3326 FILLER GP-ENGINE OIL

S/N: BLC426-UP

PART OF 205-5858, 235-4685 ENGINE AR-COMPLETE

SMCS-1316 **i01517681**

NOTE	REF NO	GRAPHIC REF	PART NUMBER	QTY	PART NAME 1 2 3 4 5 6 (PRODUCT LEVEL)	SEE PAGE
	1	1	**3F-6156**	1	HOOK	
	2	1	**163-9361**	1	CAP AS-ENGINE OIL FILLER	
	3	1	**178-3325**	1	TUBE AS	
	4	1	**0S-1588**	2	BOLT (3/8-16X1.25-IN)	
	5	1	**5M-2894**	2	WASHER-HARD (10.2X18.5X2.5-MM THK)	
	6	1	**8C-0624**	1	SEAL-O-RING	

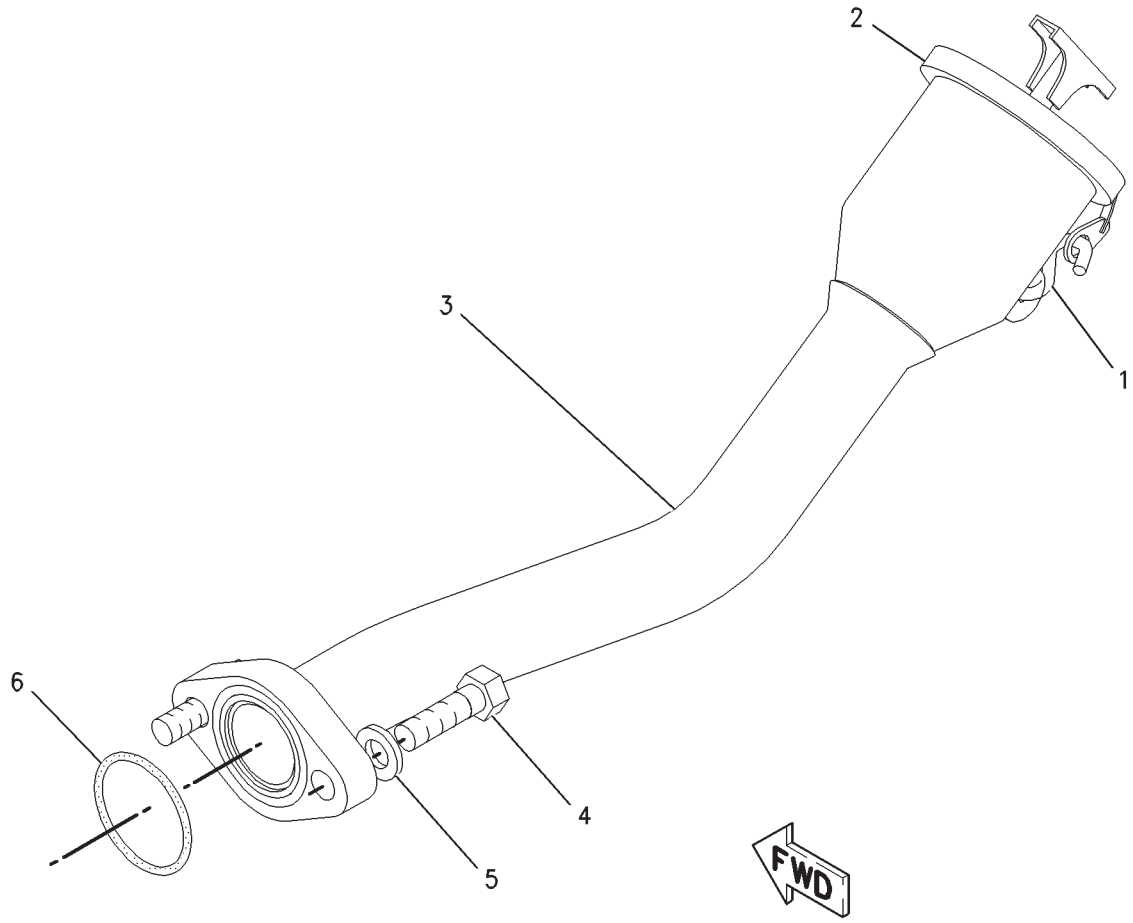

GRAPHIC #1 **<END>** g00788144

LUBRICATION SYSTEM

200-0653 FILTER GP-ENGINE OIL

S/N: BLC426-UP

PART OF 205-5858, 235-4685 ENGINE AR-COMPLETE

SMCS-1308 **i01518281**

NOTE	REF NO	GRAPHIC REF	PART NUMBER	QTY	PART NAME 1 2 3 4 5 6 (PRODUCT LEVEL)	SEE PAGE
Y	1	1	*200-0654*	1	BASE GP-OIL FILTER	87
	2	1	**8C-5230**	2	SEAL-O-RING	
	3	1	**0S-1619**	2	BOLT (3/8-16X3-IN)	
	4	1	**1R-0716**	1	FILTER AS-ENGINE OIL (STANDARD EFFICIENCY)	
	5	1	**0S-1608**	2	BOLT (3/8-16X3.75-IN)	
	6	1	**1A-2029**	6	BOLT (3/8-16X1.125-IN)	
	7	1	**3P-0650**	2	SEAL-O-RING	
	8	1	**5M-2894**	10	WASHER-HARD (10.2X18.5X2.5-MM THK)	

Y-SEPARATE ILLUSTRATION

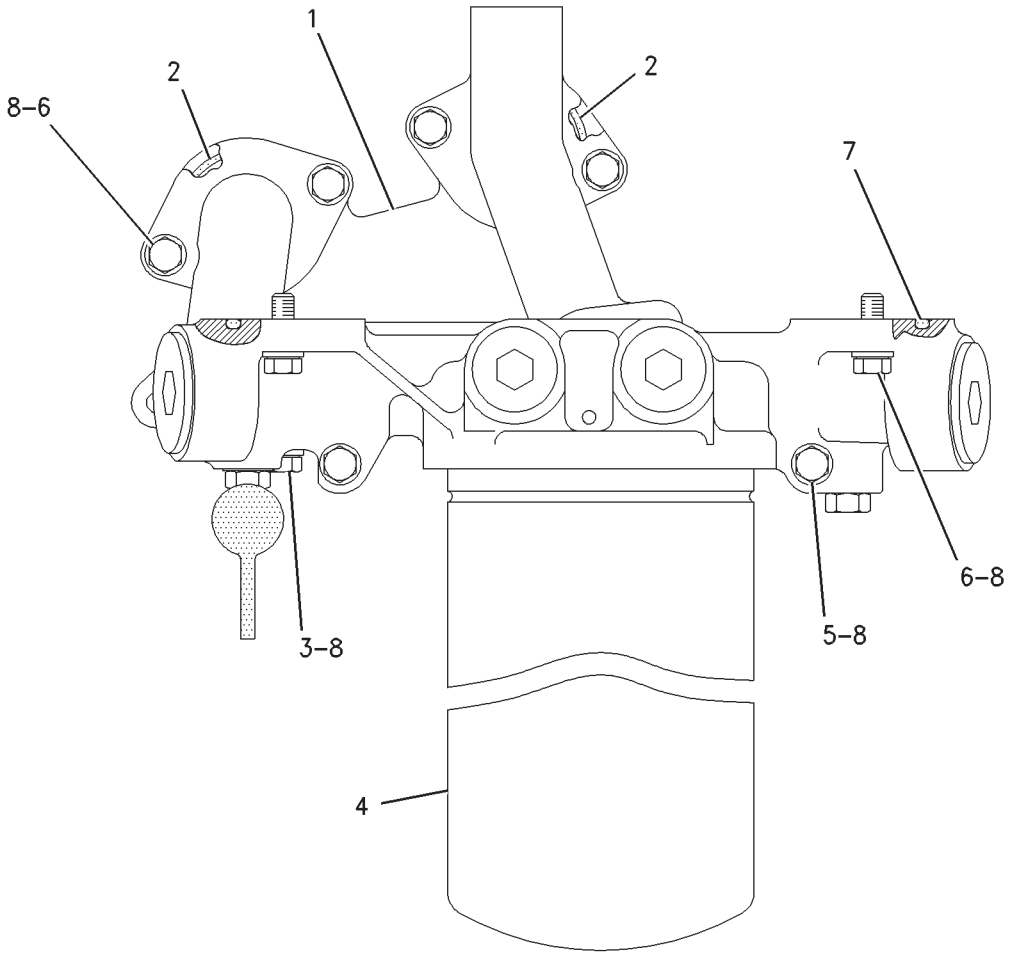

RIGHT SIDE VIEW

GRAPHIC #1 **<END>** g00788246

LUBRICATION SYSTEM

200-0653 FILTER GP-ENGINE OIL

S/N: BLC1207-UP

PART OF 235-4685 ENGINE AR-COMPLETE

SMCS-1308 **i02379791**

NOTE	REF NO	GRAPHIC REF	PART NUMBER	QTY	PART NAME 1 2 3 4 5 6 (PRODUCT LEVEL)	SEE PAGE
Y	1	1	**200-0654**	1	BASE GP-OIL FILTER	87
	2	1	**8C-5230**	2	SEAL-O-RING	
	3	1	**0S-1619**	2	BOLT (3/8-16X3-IN)	
C	4	1	**1R-1808**	1	FILTER-ENGINE OIL (ADVANCED EFFICIENCY)	
	5	1	**0S-1608**	2	BOLT (3/8-16X3.75-IN)	
	6	1	**1A-2029**	6	BOLT (3/8-16X1.125-IN)	
	7	1	**3P-0650**	2	SEAL-O-RING	
	8	1	**5M-2894**	10	WASHER-HARD (10.2X18.5X2.5-MM THK)	

C-CHANGE FROM PREVIOUS TYPE
Y-SEPARATE ILLUSTRATION

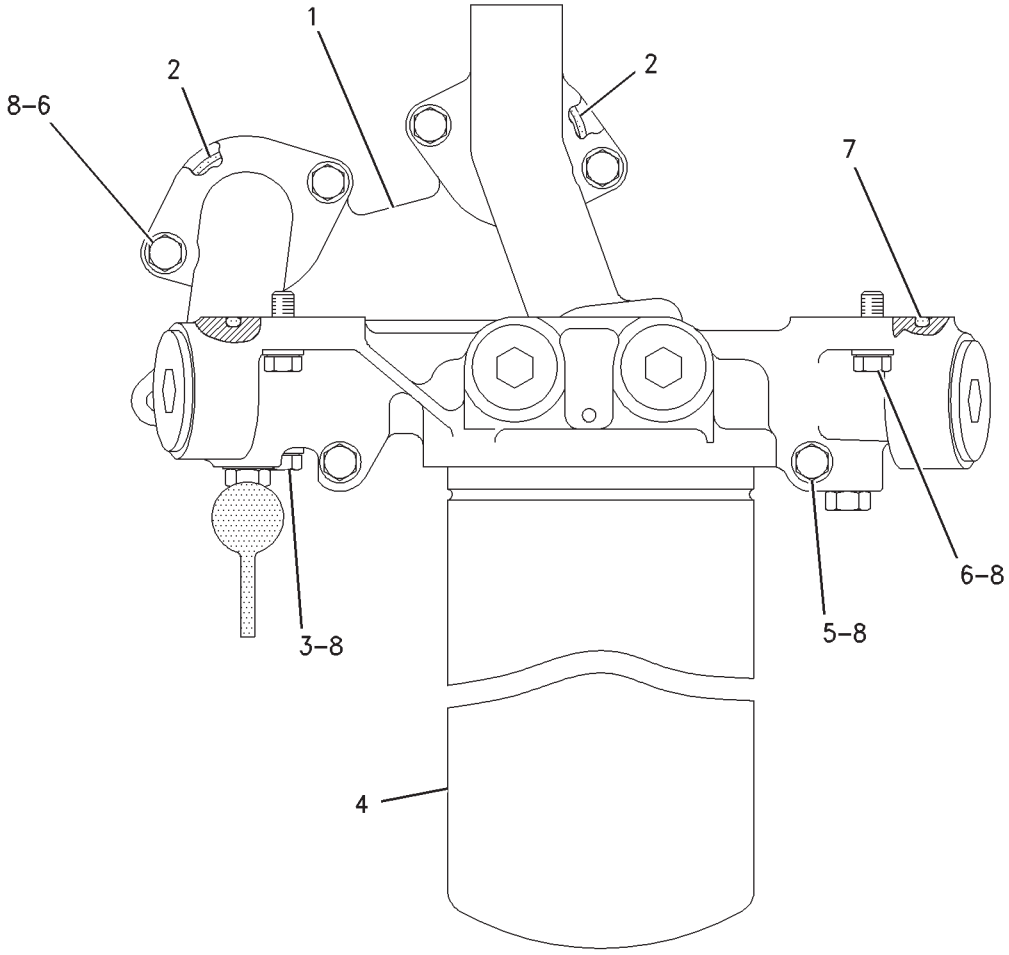

RIGHT SIDE VIEW

GRAPHIC #1 **<END>** g00788246

LUBRICATION SYSTEM

187-3477 FUMES DISPOSAL GP

S/N: BLC426-UP

PART OF 205-5858, 235-4685 ENGINE AR-COMPLETE

SMCS-1317 **i01674324**

NOTE	REF NO	GRAPHIC REF	PART NUMBER	QTY	PART NAME 1 2 3 4 5 6 (PRODUCT LEVEL)	SEE PAGE
	1	1	**8T-6703**	1	CLAMP-HOSE	
	2	1	**187-3476**	1	HOSE-FUMES	
	3	1	**5P-2369**	1	CLIP	

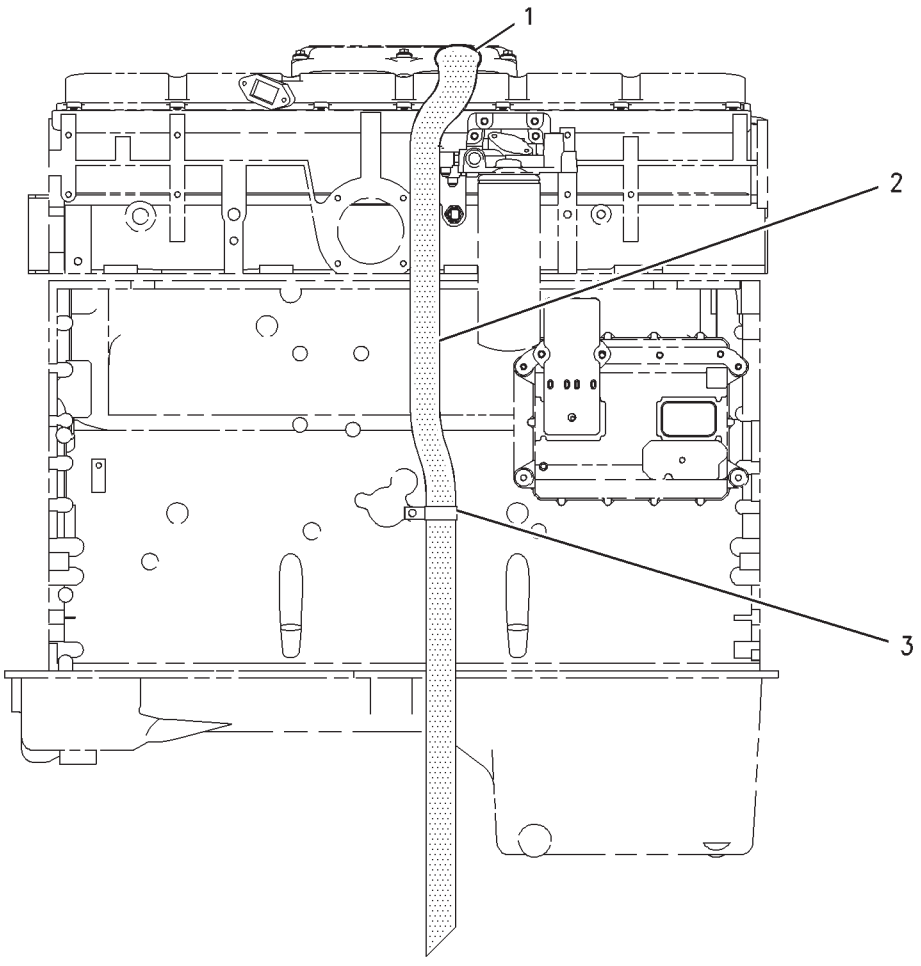

LEFT SIDE VIEW

GRAPHIC #1 **<END>** g00788096

LUBRICATION SYSTEM

190-2471 GAUGE GP-OIL LEVEL (DIPSTICK)

S/N: BLC426-UP
ENGINE
PART OF 205-5858, 235-4685 ENGINE AR-COMPLETE

SMCS-1326 **i01521378**

NOTE	REF NO	GRAPHIC REF	PART NUMBER	QTY	PART NAME 1 2 3 4 5 6 (PRODUCT LEVEL)	SEE PAGE
					(NO SERVICED PARTS)	

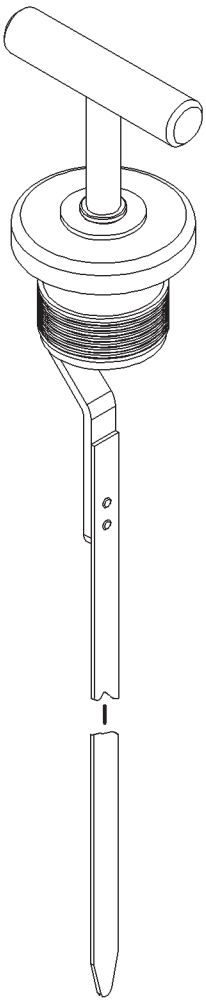

GRAPHIC #1 **<END>** g00790495

LUBRICATION SYSTEM

190-2472 GUIDE GP-OIL LEVEL GAUGE

S/N: BLC426-UP

PART OF 205-5858, 235-4685 ENGINE AR-COMPLETE

SMCS-1326 **i01518162**

NOTE	REF NO	GRAPHIC REF	PART NUMBER	QTY	PART NAME 1 2 3 4 5 6 (PRODUCT LEVEL)	SEE PAGE
J	1	1	**165-6170**	3	PLUG	
	2	1	**190-2470**	1	TUBE AS-GUIDE	
	3	1	**118-5068**	1	SEAL-O-RING	
	4	1	**1A-2029**	1	BOLT (3/8-16X1.125-IN)	
	5	1	**9S-8752**	1	NUT-FULL (3/8-16-THD)	
	6	1	**9X-6458**	2	WASHER-HARD (10.2X22.5X3-MM THK)	
J-USE TO PLUG OPTIONAL DIPSTICK LOCATIONS						

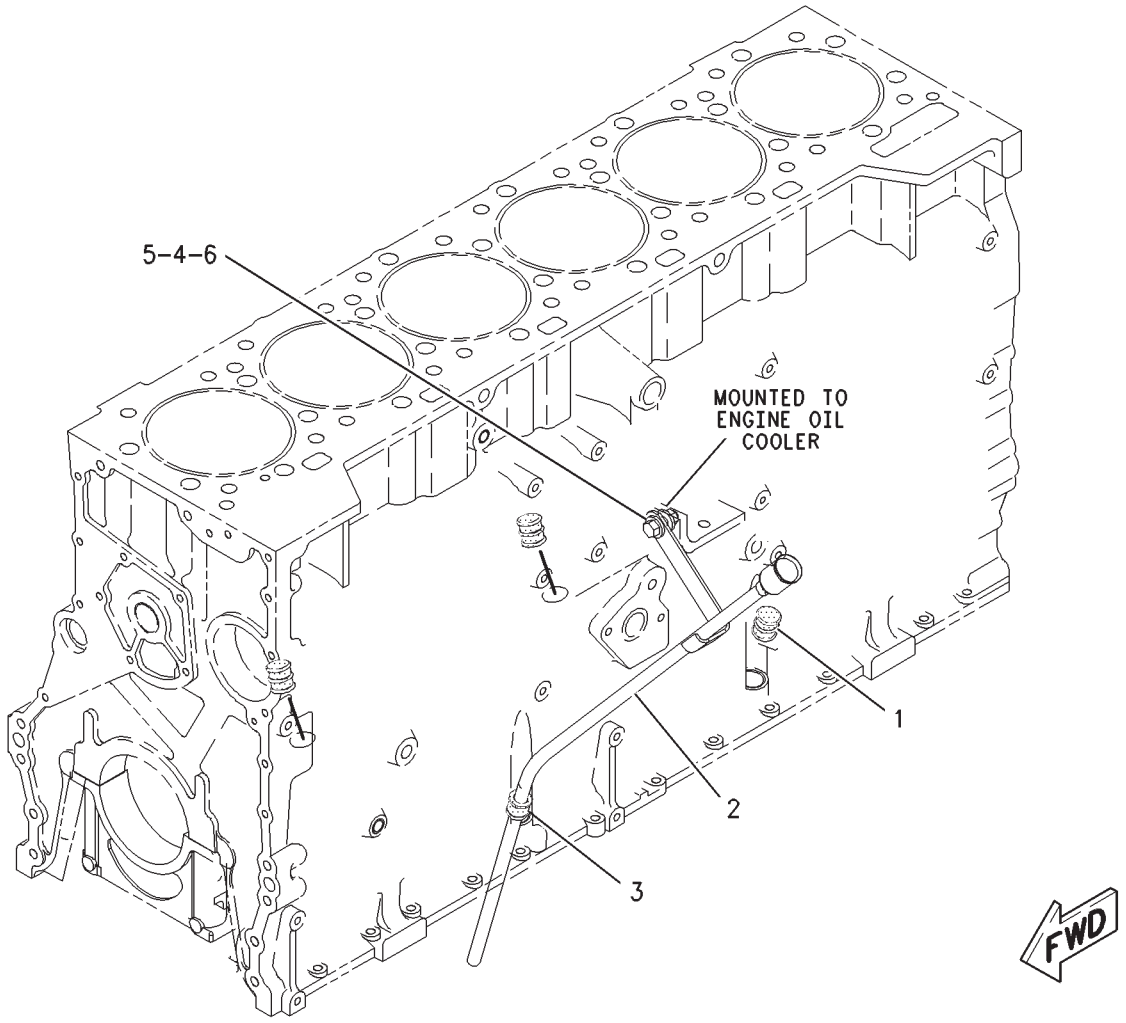

GRAPHIC #1 **<END>** g00788902

LUBRICATION SYSTEM

190-2472 GUIDE GP-OIL LEVEL GAUGE

S/N: BLC1207-UP

PART OF 235-4685 ENGINE AR-COMPLETE

SMCS-1326 **i02410090**

NOTE	REF NO	GRAPHIC REF	PART NUMBER	QTY	PART NAME 1 2 3 4 5 6 (PRODUCT LEVEL)	SEE PAGE
C	1	1	**3E-7445**	1	CLAMP-HOSE	
J	2	1	**165-6170**	3	PLUG	
	3	1	**190-2470**	1	TUBE AS-GUIDE	
C	4		**264-4501**	1	LOCK AS	
	5	1	**118-5068**	1	SEAL-O-RING	
	6	1	**1A-2029**	1	BOLT (3/8-16X1.125-IN)	
	7	1	**9S-8752**	1	NUT-FULL (3/8-16-THD)	
	8	1	**9X-6458**	2	WASHER-HARD (10.2X22.5X3-MM THK)	

C-CHANGE FROM PREVIOUS TYPE
J-USE TO PLUG OPTIONAL DIPSTICK LOCATIONS

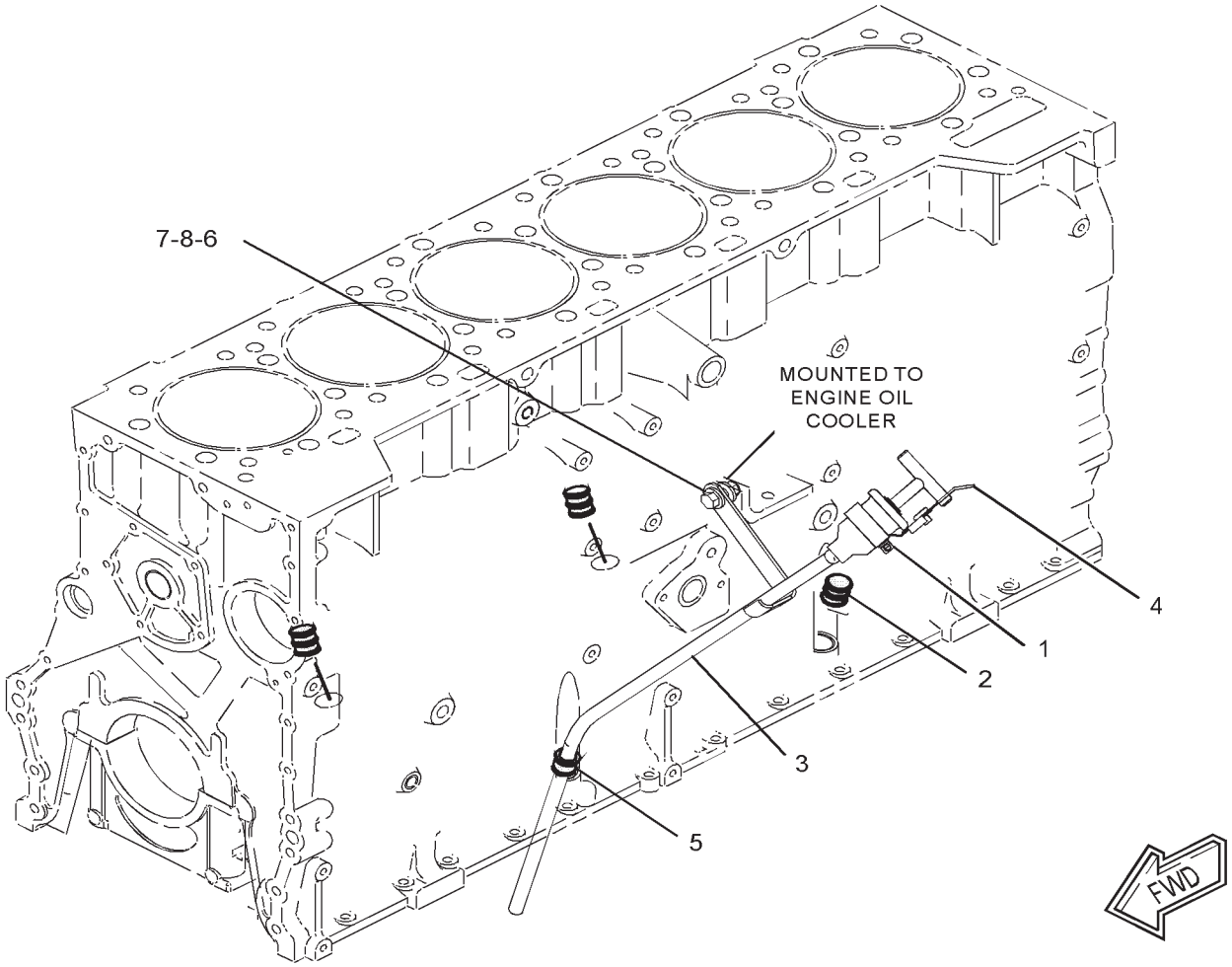

GRAPHIC #1 **<END>** g01219914

LUBRICATION SYSTEM

160-6894 LINES GP-ENGINE OIL

S/N: BLC426-UP

PART OF 205-5858, 235-4685 ENGINE AR-COMPLETE

SMCS-1307 **i02957550**

NOTE	REF NO	GRAPHIC REF	PART NUMBER	QTY	PART NAME 1 2 3 4 5 6 (PRODUCT LEVEL)	SEE PAGE
	1	1	**3T-6471**	1	SCREEN AS	
		1	**3T-6469**	1	WASHER (19X26X1.6-MM THK)	
	2	1	**4N-0913**	1	SCREEN AS-SUCTION	
	3	1	**4N-0914**	1	CLIP	
	4	1	**4N-8410**	1	TUBE-COOLER BYPASS	
	5	1	**4P-7373**	1	TUBE AS	
	6	1	**4P-9131**	1	SUPPORT-BELL	
	7	1	**7E-4508**	1	TUBE AS	
	8	1	**7E-4509**	1	TUBE AS	
	9	1	**7E-5142**	1	CONNECTOR	
	10	1	**8N-2104**	1	BELL AS-SUCTION	
		1	**1F-0750**	2	NUT-WELD (3/8-16-THD)	
	12	1	**9Y-5373**	1	ELBOW	
I	13	1	**172-8827**	1	HOSE AS	
	14	1	**030-7955**	1	TEE-FLARED	
	15	1	**030-8194**	1	CONNECTOR	
	16	1	**0L-1351**	3	BOLT (3/8-16X0.875-IN)	
	17	1	**0S-1590**	4	BOLT (3/8-16X2-IN)	
	18	1	**0S-1591**	2	BOLT (3/8-16X1.5-IN)	
	19	1	**109-0072**	1	SEAL-O-RING	
	20	1	**109-0076**	1	SEAL-O-RING	
	21	1	**109-0078**	2	SEAL-O-RING	
	22	1	**114-2687**	3	SEAL-O-RING	
	23	1	**5P-4142**	2	BOLT-LOCKING (3/8-16X1.5-IN)	
	24	1	**2M-9780**	1	SEAL-O-RING	
	25	1	**3B-1915**	2	BOLT (3/8-16X1.375-IN)	
	26	1	**3J-1907**	1	SEAL-O-RING	
	27	1	**127-5447**	2	SPACER (10.5X20X12-MM THK)	
	28	1	**6V-5134**	1	SEAL-O-RING	
	29	1	**9X-6458**	3	WASHER-HARD (10.2X22.5X3-MM THK)	

I-REFER TO HYDRAULIC INFORMATION SYSTEM

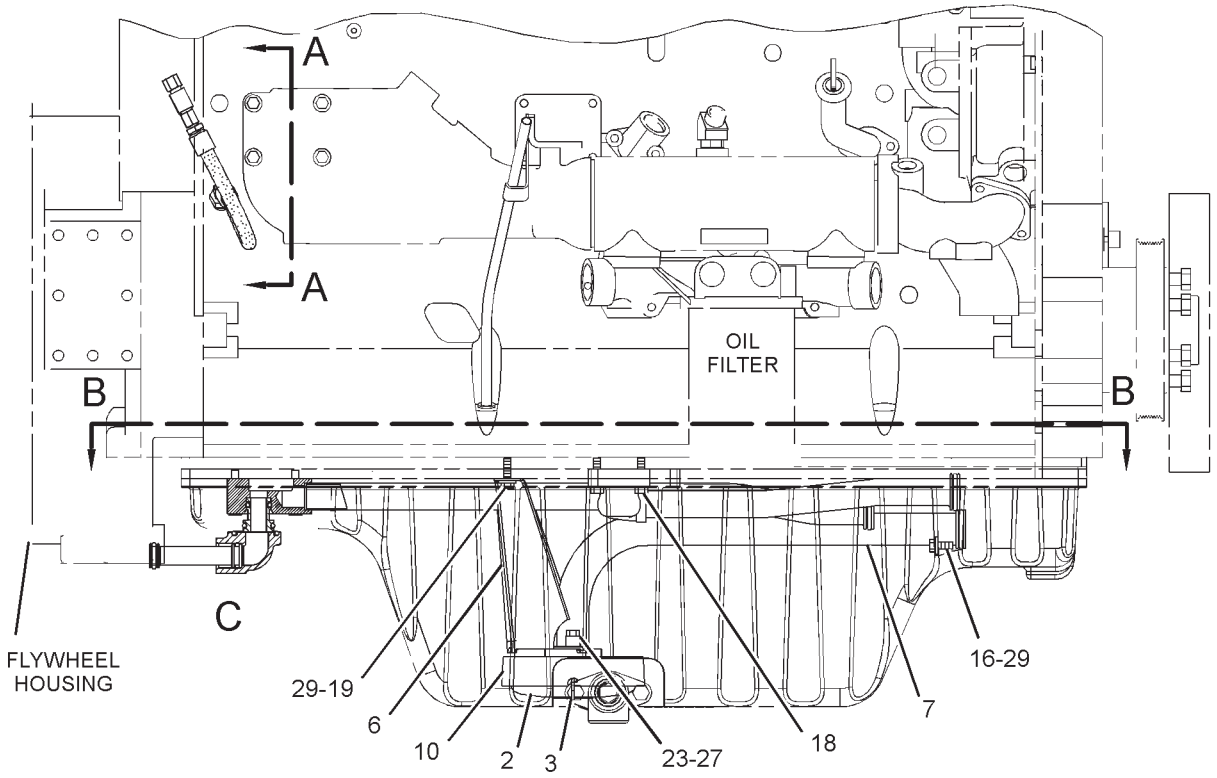

RIGHT SIDE VIEW OF ENGINE

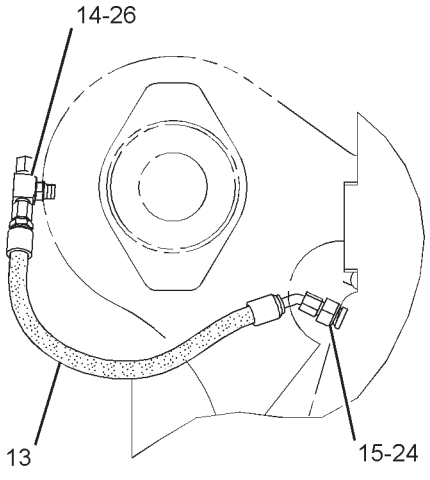

VIEW A-A

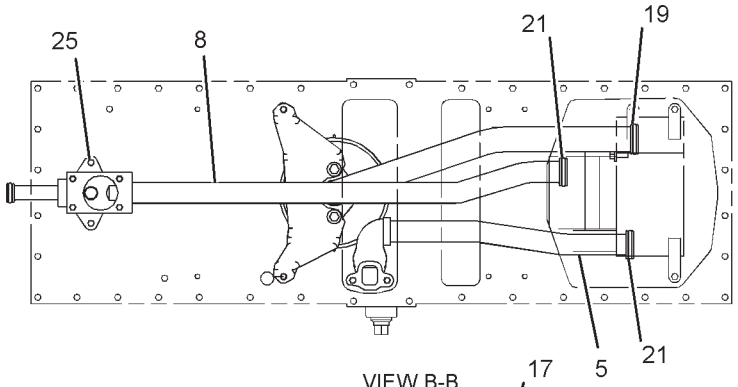

VIEW B-B

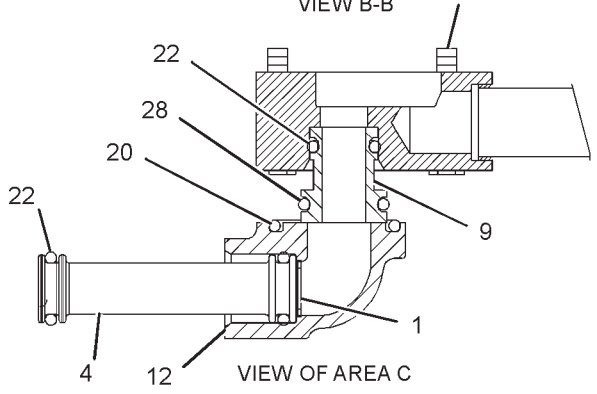

VIEW OF AREA C

GRAPHIC #1

<END>

g01435753

LUBRICATION SYSTEM

160-6894 LINES GP-ENGINE OIL

S/N: BLC1209-UP

PART OF 235-4685 ENGINE AR-COMPLETE

SMCS-1307 **i03596362**

NOTE	REF NO	GRAPHIC REF	PART NUMBER	QTY	PART NAME 1 2 3 4 5 6 (PRODUCT LEVEL)	SEE PAGE
	1	1	**3T-6471**	1	SCREEN AS	
		1	**3T-6469**	1	WASHER (19X26X1.6-MM THK)	
	2	1	**4N-8410**	1	TUBE-COOLER BYPASS	
	3	1	**4P-7373**	1	TUBE AS	
	4	1	**7E-4509**	1	TUBE AS	
	5	1	**7E-5142**	1	CONNECTOR	
	7	1	**9Y-5373**	1	ELBOW	
I	8	1	**172-8827**	1	HOSE AS	
C	9	1	**292-9782**	1	BRACKET	
C	10	1	**292-9783**	1	TUBE AS	
	11	1	**030-7955**	1	TEE-FLARED	
	12	1	**030-8194**	1	CONNECTOR	
	13	1	**0L-1351**	1	BOLT (3/8-16X0.875-IN)	
	14	1	**0S-1588**	2	BOLT (3/8-16X1.25-IN)	
	15	1	**0S-1590**	4	BOLT (3/8-16X2-IN)	
	16	1	**0S-1591**	2	BOLT (3/8-16X1.5-IN)	
	17	1	**109-0072**	1	SEAL-O-RING	
	18	1	**109-0076**	1	SEAL-O-RING	
	19	1	**109-0078**	2	SEAL-O-RING	
	20	1	**114-2687**	3	SEAL-O-RING	
C	21	1	**2K-4973**	2	LOCKNUT (3/8-16-THD)	
	22	1	**2M-9780**	1	SEAL-O-RING	
	23	1	**3B-1915**	2	BOLT (3/8-16X1.375-IN)	
	24	1	**3J-1907**	1	SEAL-O-RING	
	25	1	**6V-5134**	1	SEAL-O-RING	
C	26	1	**9X-6458**	5	WASHER-HARD (10.2X22.5X3-MM THK)	

C-CHANGE FROM PREVIOUS TYPE
I-REFER TO HYDRAULIC INFORMATION SYSTEM

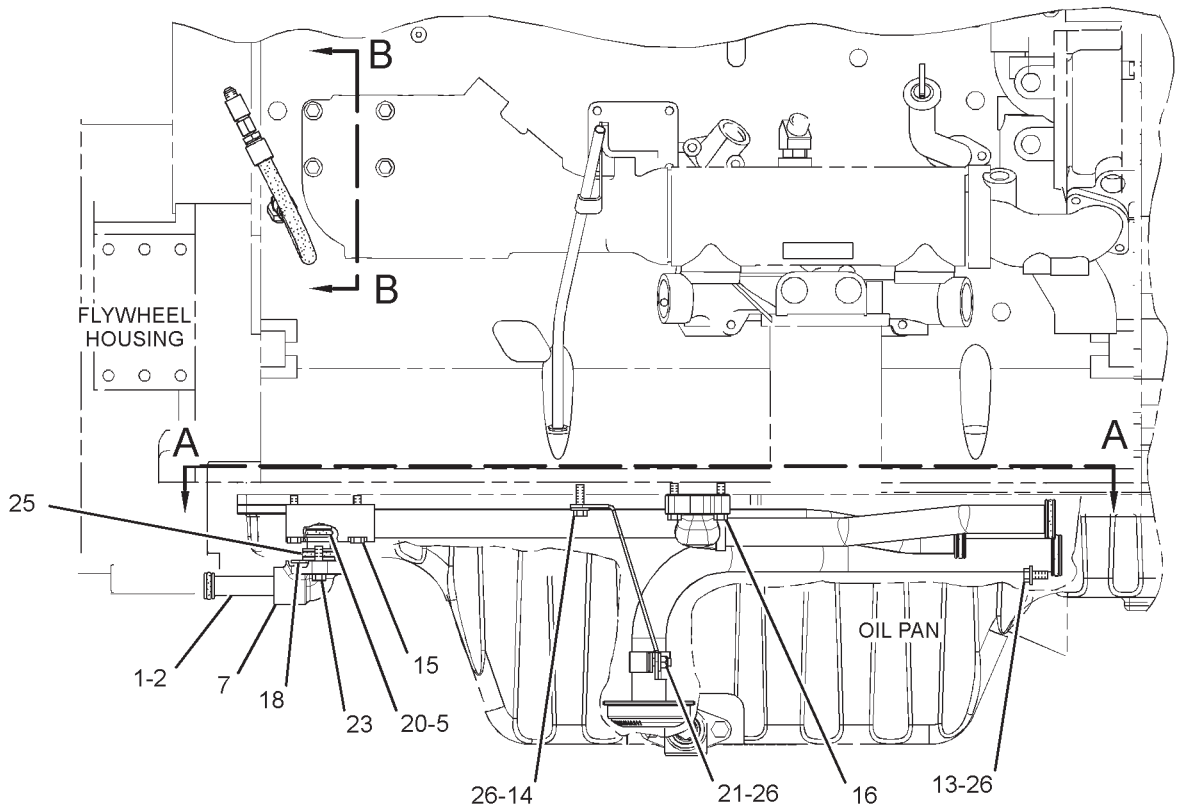

RIGHT SIDE VIEW OF ENGINE

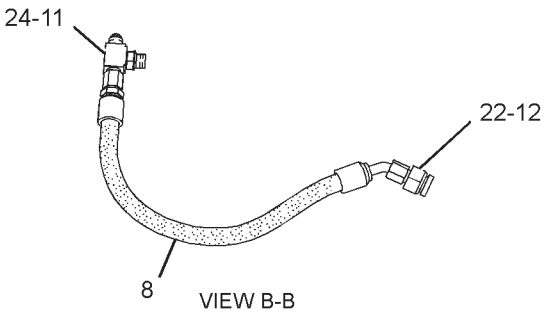

VIEW B-B

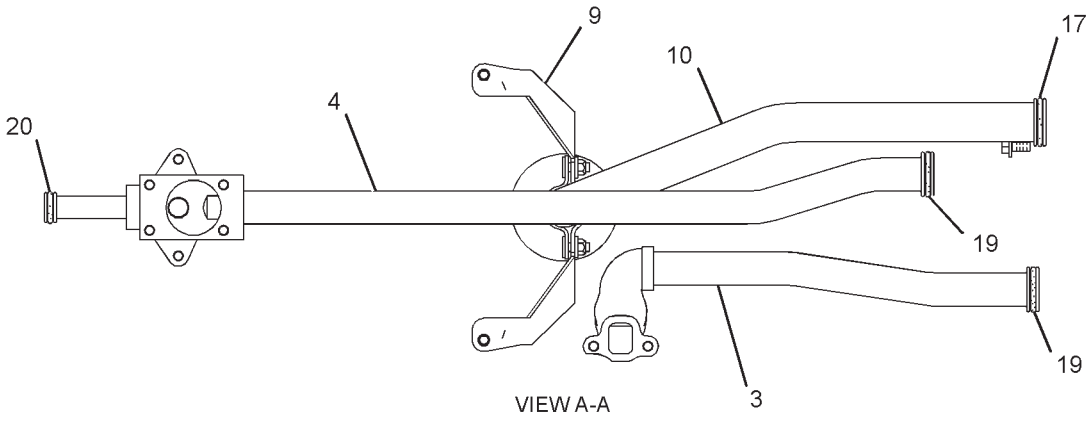

VIEW A-A

GRAPHIC #1 **<END>** g01699361

LUBRICATION SYSTEM

151-6662 LINES GP-ENGINE OIL DRAIN

S/N: RCD1-UP

PART OF 220-4843, 242-5914 INSTALLATION AR-ENGINE

SMCS-1307 **i02951725**

NOTE	REF NO	GRAPHIC REF	PART NUMBER	QTY	PART NAME 1 2 3 4 5 6 (PRODUCT LEVEL)	SEE PAGE
	1	1	**005-4273**	1	CONNECTOR-HOSE	
	2	1	**095-1390**	1	CLAMP-HOSE	
E	3	1	**5P-2094**		HOSE (20-CM)	

E-ORDER BY THE CENTIMETER

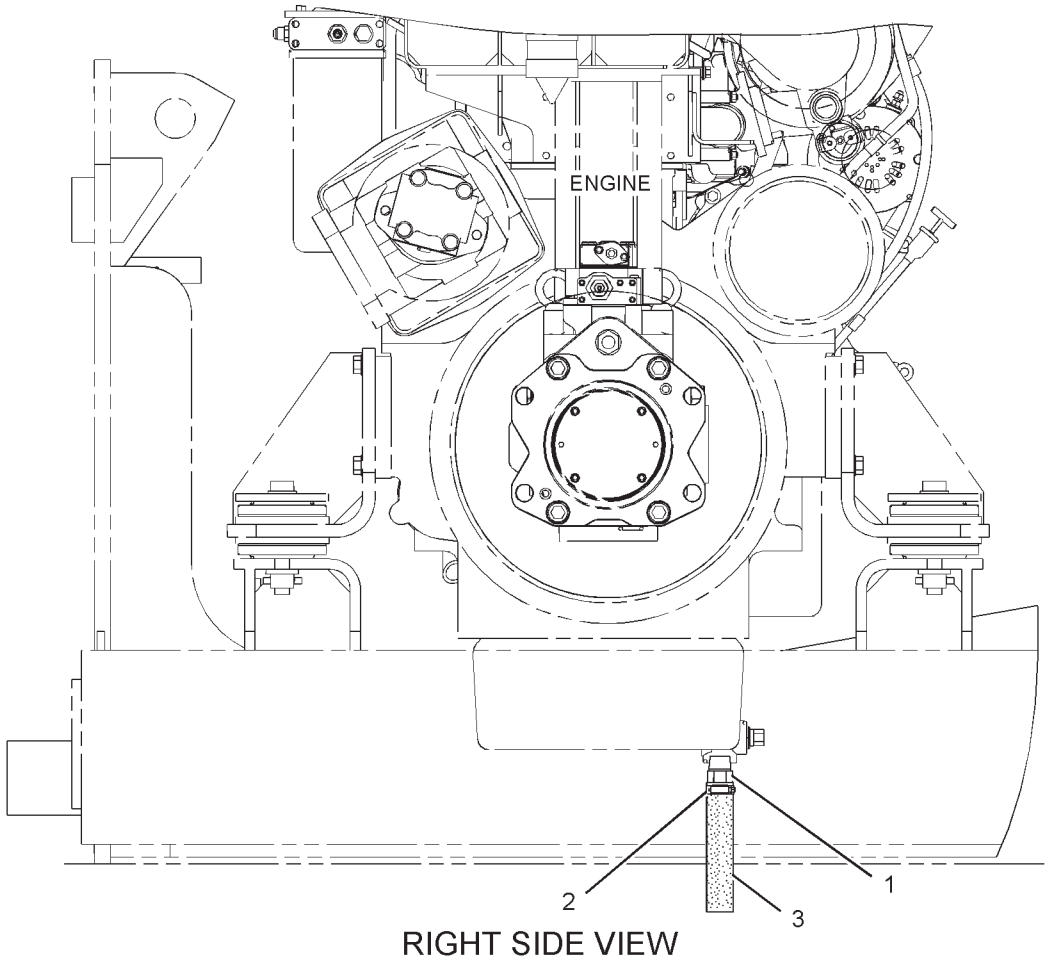

RIGHT SIDE VIEW

GRAPHIC #1 **<END>** g01109818

LUBRICATION SYSTEM

187-6659 LINES GP-TURBOCHARGER OIL

S/N: BLC426-UP

PART OF 205-5858, 235-4685 ENGINE AR-COMPLETE

SMCS-1052 **i01518104**

NOTE	REF NO	GRAPHIC REF	PART NUMBER	QTY	PART NAME 1 2 3 4 5 6 (PRODUCT LEVEL)	SEE PAGE
	1	1	**7N-7559**	1	GASKET	
	2	1	**106-3544**	1	ELBOW	
	3	1	**6V-8626**	1	ELBOW	
	3A	1	**136-7226**	1	SEAL-O-RING	
	3B	1	**136-7227**	1	SEAL-O-RING	
	4	1	**192-5462**	1	TUBE AS-OIL	
	5	1	**192-5464**	1	TUBE AS-OIL	
	6	1	**0L-2070**	2	BOLT (3/8-16X2.25-IN)	
	7	1	**0S-1571**	2	BOLT (3/8-16X1.75-IN)	
	8	1	**114-2687**	1	SEAL-O-RING	
	9	1	**1A-2029**	2	BOLT (3/8-16X1.125-IN)	
	10	1	**6V-5266**	1	SEAL-O-RING	
	11	1	**7N-8875**	1	GASKET	
	12	1	**9X-6458**	2	WASHER-HARD (10.2X22.5X3-MM THK)	

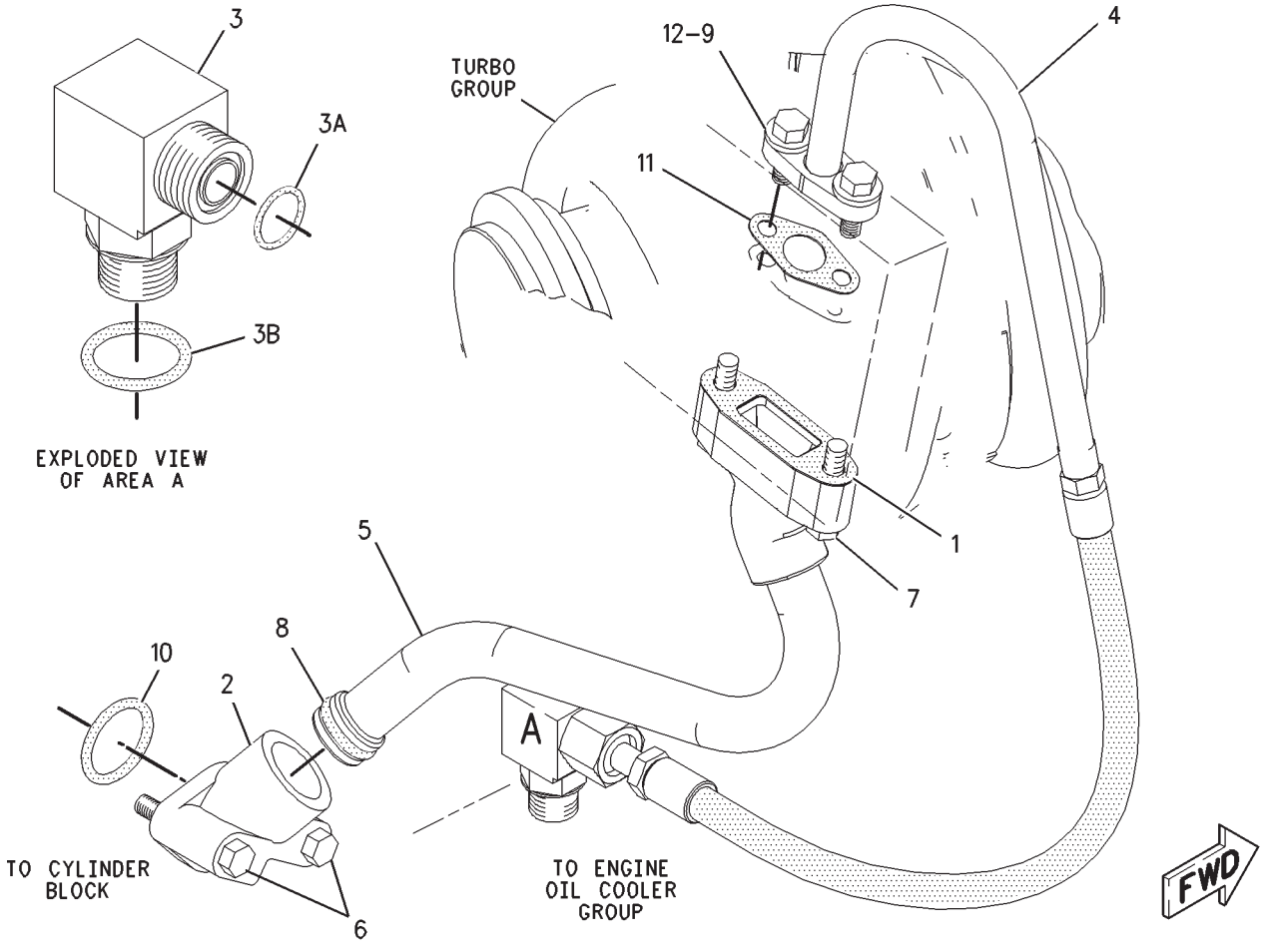

GRAPHIC #1 **<END>** g00789197

LUBRICATION SYSTEM

170-3562 MOUNTING GP-OIL LEVEL GAUGE

S/N: BLC426-UP

PART OF 205-5858, 235-4685 ENGINE AR-COMPLETE

SMCS-1326 **i01516693**

NOTE	REF NO	GRAPHIC REF	PART NUMBER	QTY	PART NAME 1 2 3 4 5 6 (PRODUCT LEVEL)	SEE PAGE
	1	1	**2W-2021**	1	BRACKET	
	2	1	**0S-1594**	1	BOLT (3/8-16X1 IN)	
	3	1	**9X-6458**	1	WASHER-HARD (10.2X22.5X3MM THK)	

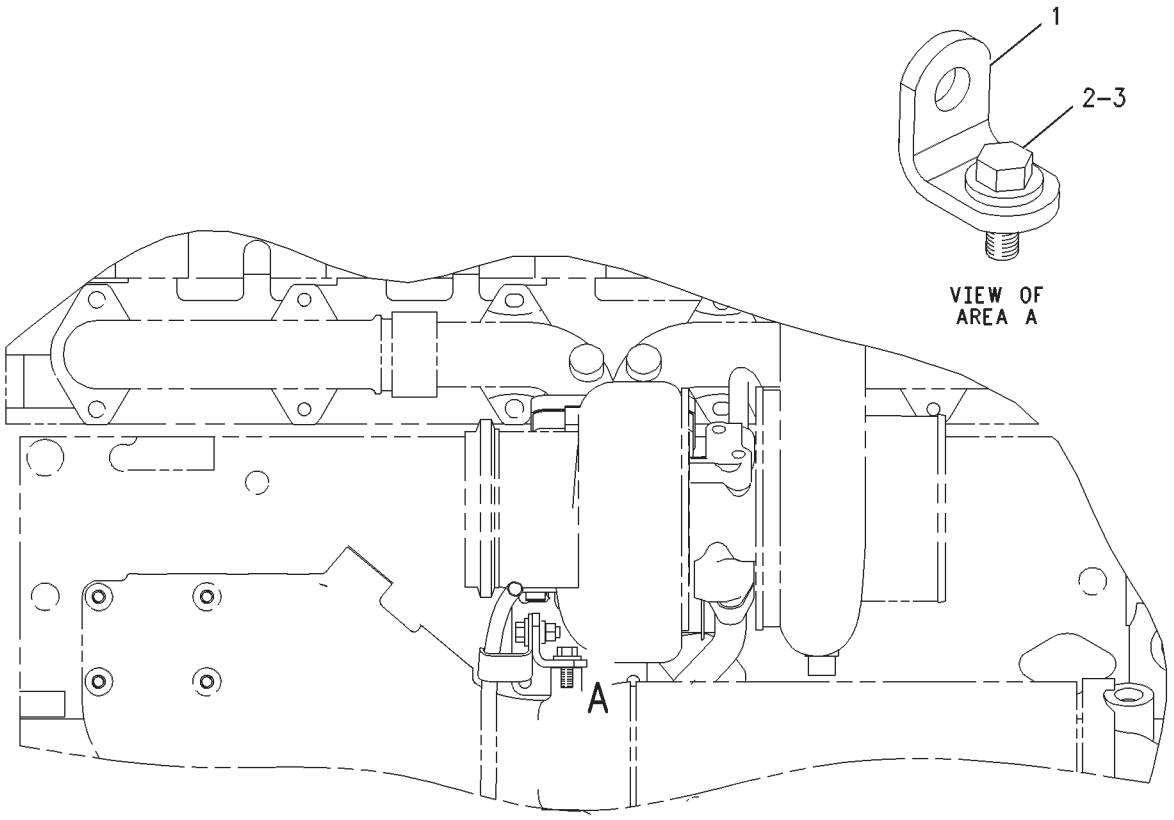

RIGHT SIDE VIEW

GRAPHIC #1 **<END>** g00601288

LUBRICATION SYSTEM

201-3825 OIL CHANGE GP-HIGH SPEED

S/N: RCD1-UP

AN ATTACHMENT

SMCS-1325 **i03539804**

NOTE	REF NO	GRAPHIC REF	PART NUMBER	QTY	PART NAME 1 2 3 4 5 6 (PRODUCT LEVEL)	SEE PAGE
	1	1	**201-3826**	1	SUPPORT AS	
	2	1	**9S-9272**	1	CAP AS	
	3	1	**1P-7919**	1	COUPLER-MALE	
	4	1	**6K-8420**	1	LOCKNUT (1-1/16-12-THD)	
I	5	1	**031-4564**	1	HOSE AS	
	6	1	**3B-0551**	1	PLUG-PIPE	
	7	1	**5P-1075**	1	WASHER-HARD (10.2X22.5X3-MM THK)	
	8	1	**8T-2502**	2	BOLT (3/8-16X1.125-IN)	
	9	1	**6V-3830**	1	SEAL-O-RING	
	10	1	**310-9508**	1	ADAPTER	
	11	1	**8T-4835**	1	BOLT (1/2-13X2-IN)	
	12	1	**8T-4223**	1	WASHER-HARD (13.5X25.5X3-MM THK)	
	13	1	**8B-3410**	1	GASKET	
	14	1	**222-8210**	1	CONNECTOR	
	15	1	**8T-8920**	1	BOLT (1/2-13X3.25-IN)	
	16	1	**145-5181**	1	SPACER (13.5X25X12-MM THK)	

I-REFER TO HYDRAULIC INFORMATION SYSTEM

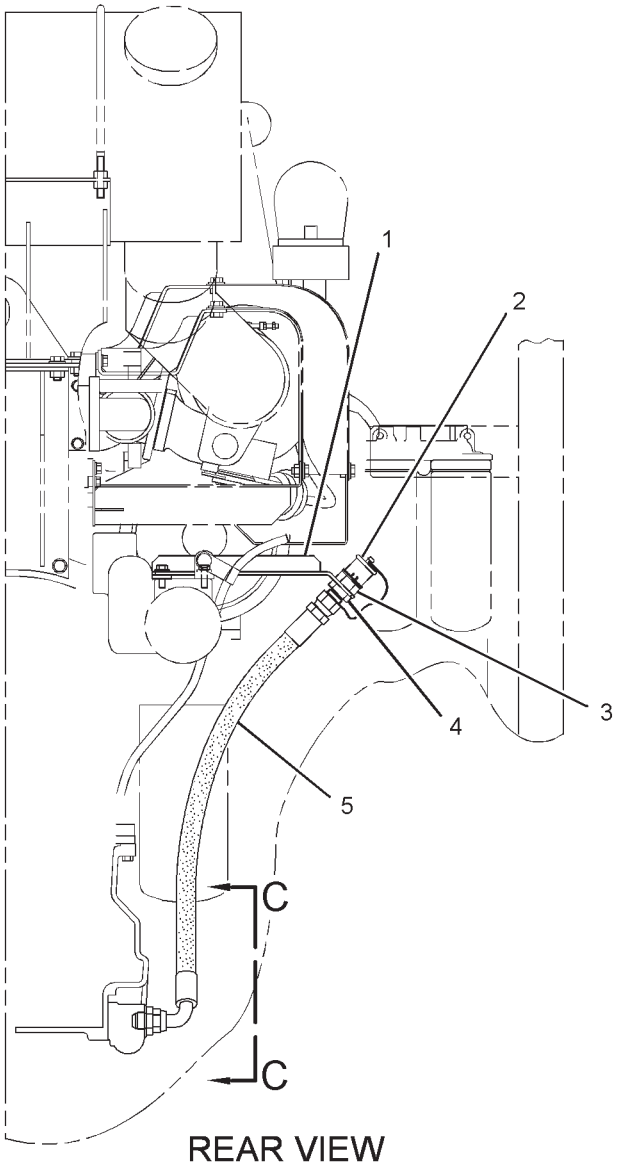

REAR VIEW

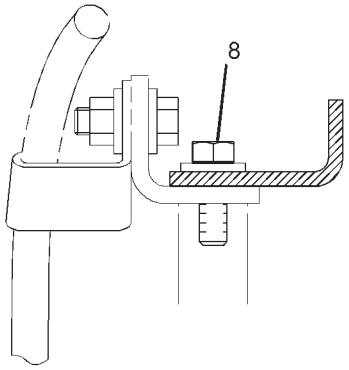

SECTION B-B

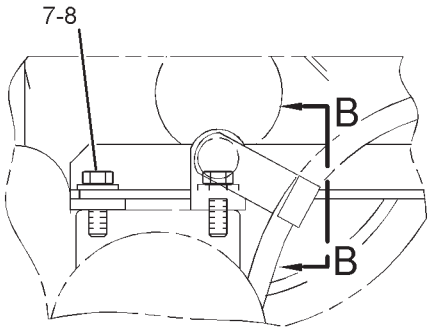

VIEW OF AREA A

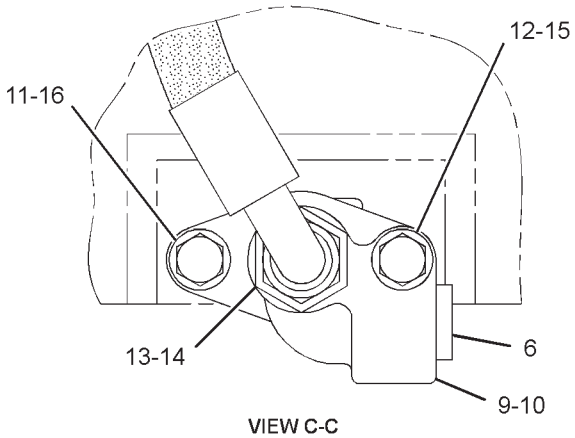

VIEW C-C

GRAPHIC #1 **<END>** g01869685

LUBRICATION SYSTEM

198-1508 PUMP GP-ENGINE OIL*R

S/N: BLC426-UP

PART OF 159-5810 ENGINE AR-CORE

SMCS-1304, 1315 **i03342724**

NOTE	REF NO	GRAPHIC REF	PART NUMBER	QTY	PART NAME 1 2 3 4 5 6 (PRODUCT LEVEL)	SEE PAGE
	1	1	**4N-0513**	1	BODY AS-OIL PUMP	
		1	**7N-2156**	2	BEARING-SLEEVE	
		1	**8M-8489**	2	DOWEL	
	2	1	**1M-0644**	2	BOLT (3/8-16X2.25-IN)	
	3	1	**5M-2894**	2	WASHER-HARD (10.2X18.5X2.5-MM THK)	
	4	1	**5F-4899**	4	BOLT (3/8-16X5.5-IN)	
	5	1	**9Y-1792**	1	RETAINER	
	6	1	**2S-2760**	1	SPRING	
	7	1	**6N-1931**	1	PLUNGER	
	8	1	**162-2679**	1	SHAFT AS-PUMP	
	9	1	**162-2682**	1	SHAFT AS-PUMP	
	10	1	**4N-5339**	1	SPACER AS-OIL PUMP	
		1	**7N-2155**	2	BEARING-SLEEVE	
	11	1	**4N-0587**	1	BODY AS-PUMP	
		1	**7N-2213**	2	BEARING-SLEEVE	
	12	1	**7W-6529**	1	GEAR (8-TEETH)	
	13	1	**7W-7142**	1	GEAR (8-TEETH)	

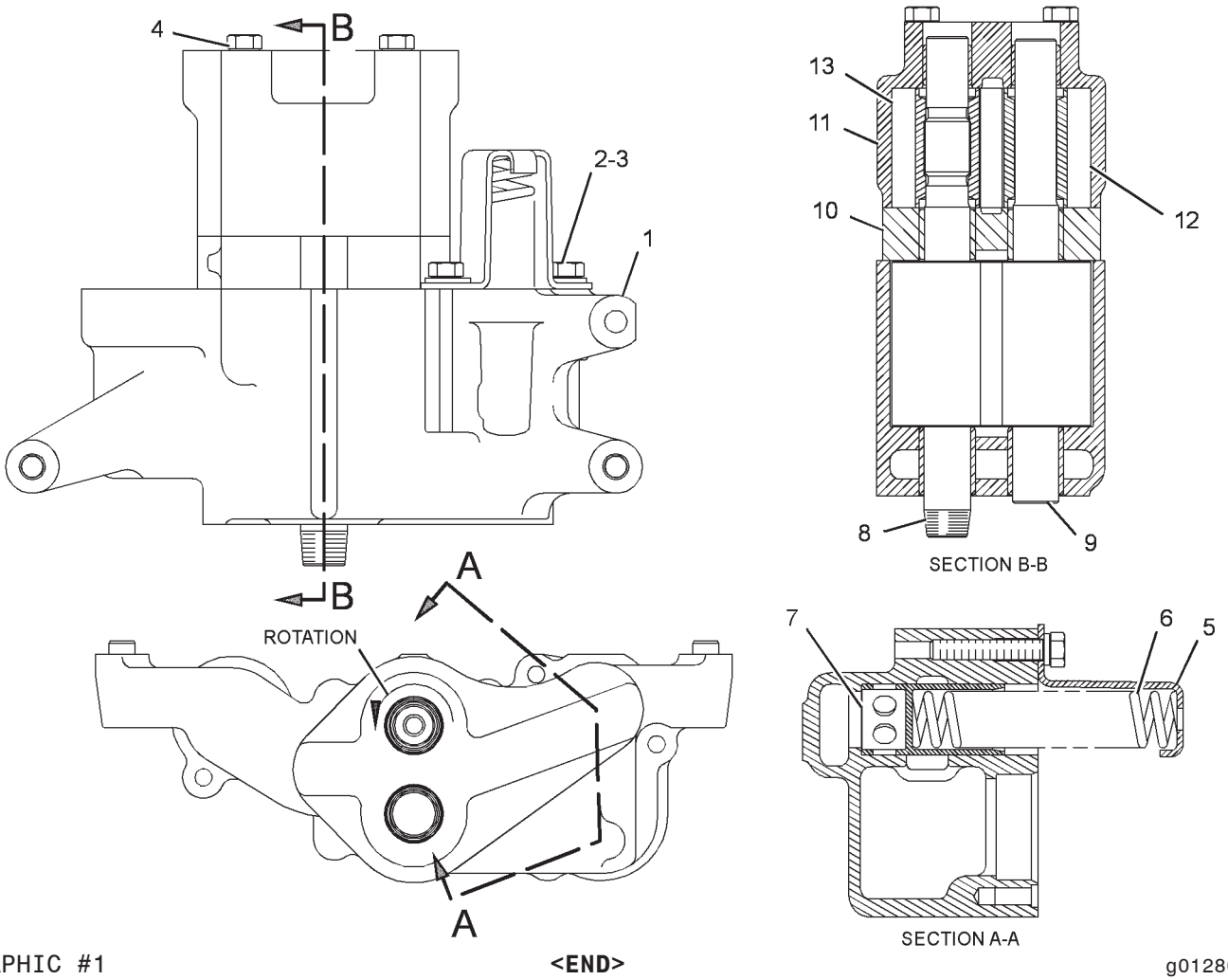

GRAPHIC #1 **<END>** g01280522

LUBRICATION SYSTEM

198-1508 PUMP GP-ENGINE OIL*R

S/N: BLC1000-UP

PART OF 235-3469 ENGINE AR-CORE

SMCS-1304, 1315 **i03645793**

NOTE	REF NO	GRAPHIC REF	PART NUMBER	QTY	PART NAME 1 2 3 4 5 6 (PRODUCT LEVEL)	SEE PAGE
	1	1	**2S-2760**	1	SPRING	
	2	1	**4N-5339**	1	SPACER AS-OIL PUMP	
		1	**7N-2155**	2	BEARING-SLEEVE	
	3	1	**6N-1931**	1	PLUNGER	
	4	1	**6N-2343**	1	BODY AS-PUMP	
	5	1	**7W-6528**	1	GEAR-PUMP (8-TEETH)	
	6	1	**7W-7141**	1	GEAR-PUMP (8-TEETH)	
	7	1	**9Y-1792**	1	RETAINER	
	8	1	**145-8503**	1	SHAFT AS-IDLER	
	9	1	**202-3572**	1	SHAFT AS-DRIVE	
	10	1	**235-1587**	1	BODY AS	
	10A	1	**8M-8489**	2	DOWEL	
	10B	1	**2S-7905**	1	PLUG-PIPE	
	10C	1	**7N-2156**	2	BEARING-SLEEVE	
	11	1	**1M-0644**	2	BOLT (3/8-16X2.25-IN)	
	13	1	**5F-4899**	4	BOLT (3/8-16X5.5-IN)	
	14	1	**5M-2894**	2	WASHER-HARD (10.2X18.5X2.5-MM THK)	

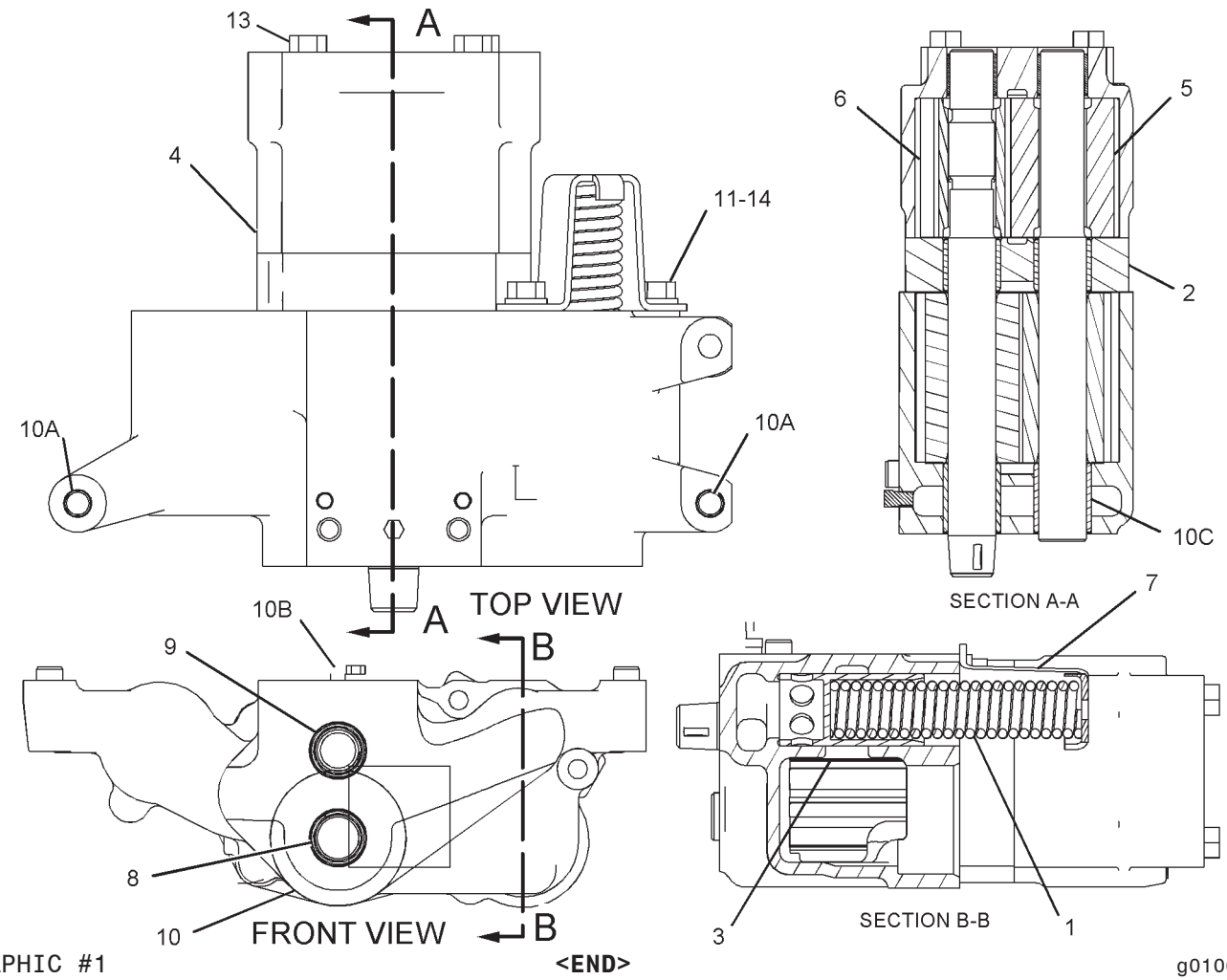

GRAPHIC #1 **<END>** g01066706

COOLING SYSTEM

151-6652 FAN GP-SUCTION

S/N: RCD1-UP

PART OF 220-4843, 242-5914 INSTALLATION AR-ENGINE

SMCS-1356 **i01973723**

NOTE	REF NO	GRAPHIC REF	PART NUMBER	QTY	PART NAME 1 2 3 4 5 6 (PRODUCT LEVEL)	SEE PAGE
	1	1	**162-6356**	2	GUARD AS	
Y	2	1	**209-6058**	1	MOTOR GP-PISTON	689
M	3	1	**7X-2552**	6	BOLT (M16X2X30-MM)	
	4	1	**7X-0515**	22	WASHER-HARD (17X35X5-MM THK)	
	5	1	**139-8878**	1	SPIDER AS (8-BLADE)	
	6	2	**171-8989**	1	SUPPORT AS-FAN (RH)	
	7	2	**171-8996**	1	SUPPORT AS-FAN (RADIATOR)	
	8	2	**171-8983**	1	SUPPORT AS-FAN (LH)	
M	9	1	**8T-4195**	10	BOLT (M10X1.5X30-MM)	
	10	1	**7X-7729**	20	WASHER (11X25X3-MM THK)	
M	11	2	**8T-4139**	3	BOLT (M12X1.75X30-MM)	
	12	2	**139-8733**	1	ADAPTER-FAN	
Y	13	2	**200-3313**	1	DRIVE GP-FAN	44
M	14	2	**8T-4194**	2	BOLT (M12X1.75X50-MM)	
	15	2	**8T-4223**	2	WASHER-HARD (13.5X25.5X3-MM THK)	
M	16	2	**8T-4196**	8	BOLT (M10X1.5X35-MM)	
	17	2	**8T-4121**	8	WASHER-HARD (11X21X2.5-MM THK)	
	18	2	**139-8753**	1	LOCKWASHER	
M	19	1	**8T-7338**	8	BOLT (M16X2X45-MM)	
M	20	1	**8T-4140**	4	BOLT (M16X2X60-MM)	
M	21	1	**8T-4132**	6	NUT (M16X2-THD)	
M	22	1	**8T-4183**	6	BOLT (M12X1.75X40-MM)	
	23	1	**5P-1076**	6	WASHER-HARD (13.5X30X4-MM THK)	
M	24	1	**136-4182**	2	BOLT (M16X2X100-MM)	
	25	1	**171-8995**	1	SUPPORT AS-FAN (RH)	
	26	1	**171-8991**	1	SUPPORT AS-FAN (LH)	
M	27	1	**8T-4133**	2	NUT (M10X1.5-THD)	
M	28	1	**8T-4186**	2	BOLT (M10X1.5X40-MM)	
	29	1	**162-6357**	2	PLATE	
M	30	1	**8T-4137**	6	BOLT (M10X1.5X20-MM)	
	31	2	**4M-0189**	1	SEAL-O-RING	

M-METRIC PART
Y-SEPARATE ILLUSTRATION

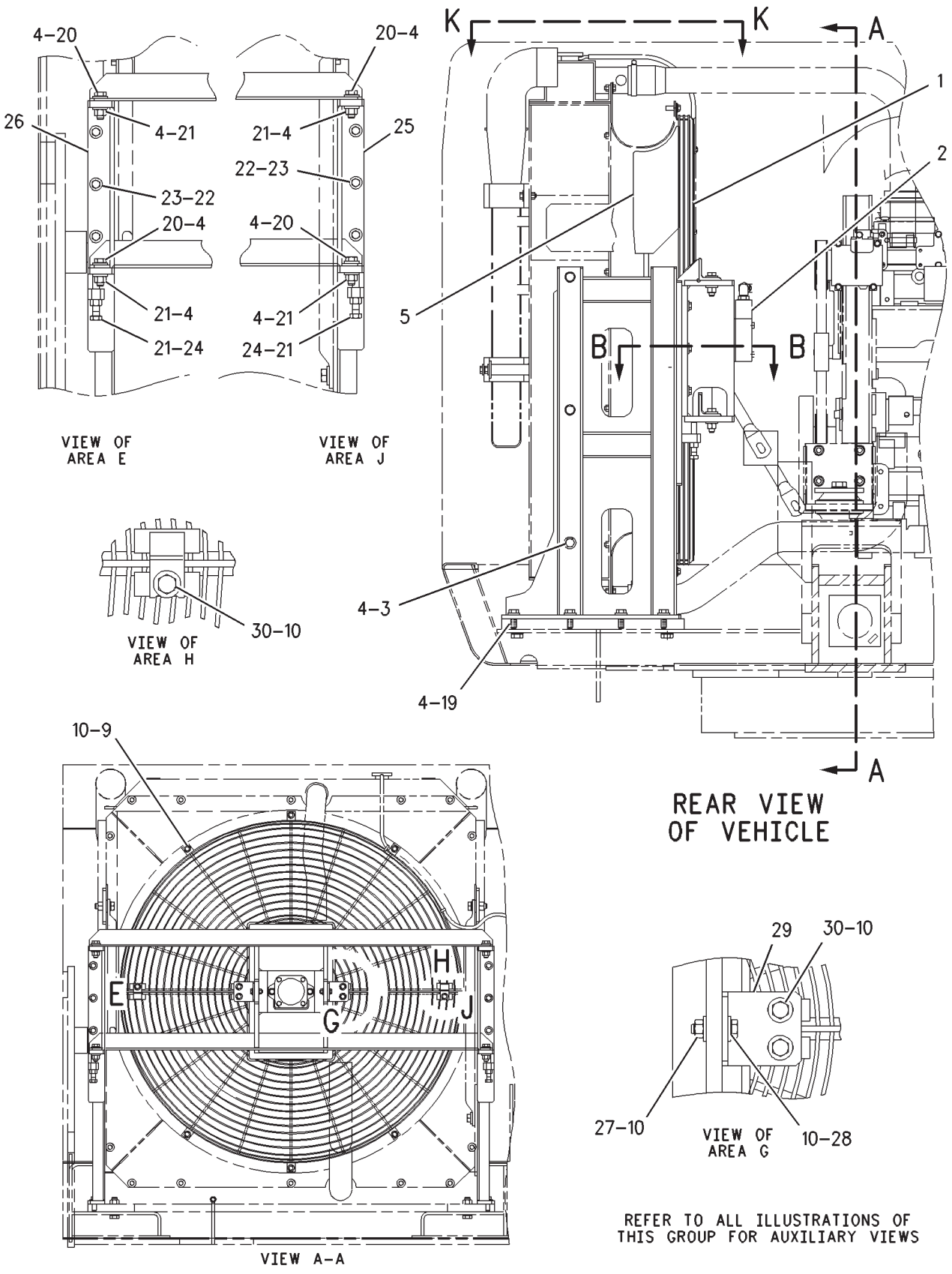

GRAPHIC #1 g00788868

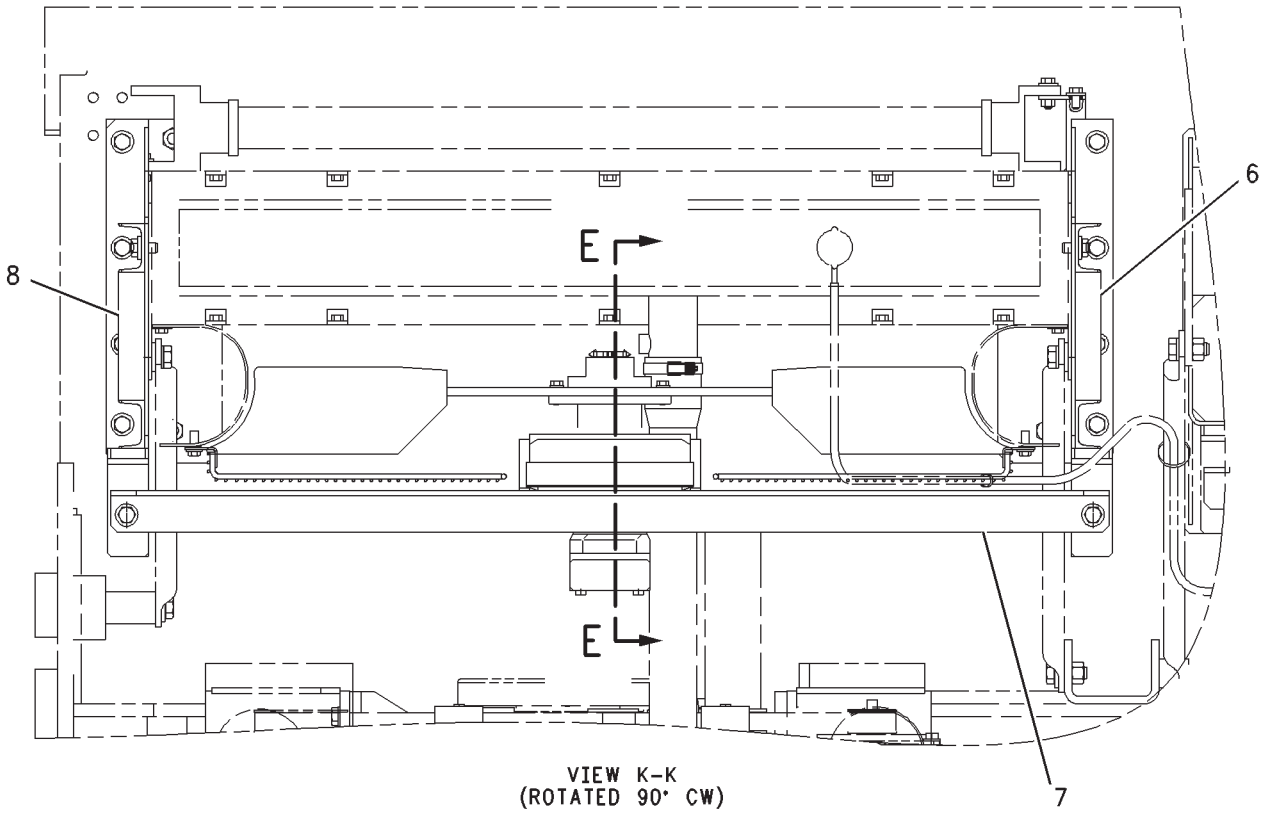

VIEW K-K
(ROTATED 90° CW)



VIEW C-C

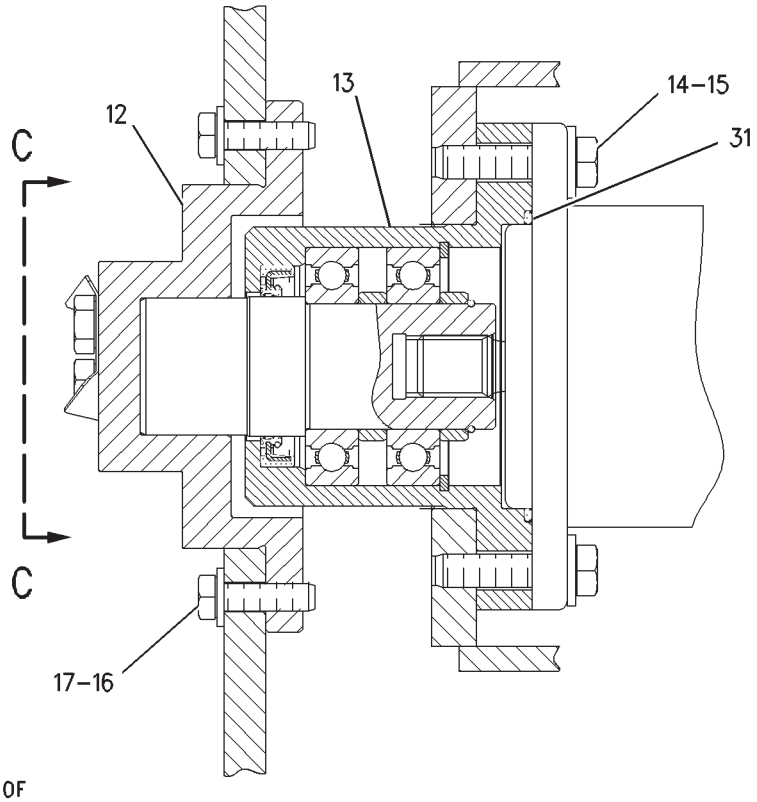

SECTION B-B

REFER TO ALL ILLUSTRATIONS OF
THIS GROUP FOR AUXILIARY VIEWS

GRAPHIC #2 **<END>** g00909725

COOLING SYSTEM

151-6652 FAN GP-SUCTION

S/N: RCD168-UP

PART OF 242-5914 INSTALLATION AR-ENGINE

SMCS-1356 **i02486455**

NOTE	REF NO	GRAPHIC REF	PART NUMBER	QTY	PART NAME 1 2 3 4 5 6 (PRODUCT LEVEL)	SEE PAGE
	1	1	**162-6356**	2	GUARD AS	
CYR	2	1	**247-8978**	1	MOTOR GP-PISTON (FAN)	690
M	3	1	**7X-2552**	6	BOLT (M16X2X30-MM)	
	4	1	**7X-0515**	22	WASHER-HARD (17X35X5-MM THK)	
	5	1	**139-8878**	1	SPIDER AS (8-BLADE)	
	6	2	**171-8989**	1	SUPPORT AS-FAN (RH)	
	7	2	**171-8996**	1	SUPPORT AS-FAN (RADIATOR)	
	8	2	**171-8983**	1	SUPPORT AS-FAN (LH)	
M	9	1	**8T-4195**	10	BOLT (M10X1.5X30-MM)	
	10	1	**7X-7729**	20	WASHER (11X25X3-MM THK)	
M	11	2	**8T-4139**	3	BOLT (M12X1.75X30-MM)	
	12	2	**139-8733**	1	ADAPTER-FAN	
Y	13	2	*200-3313*	1	DRIVE GP-FAN	44
M	14	2	**8T-4194**	2	BOLT (M12X1.75X50-MM)	
	15	2	**8T-4223**	2	WASHER-HARD (13.5X25.5X3-MM THK)	
M	16	2	**8T-4196**	8	BOLT (M10X1.5X35-MM)	
	17	2	**8T-4121**	8	WASHER-HARD (11X21X2.5-MM THK)	
	18	2	**139-8753**	1	LOCKWASHER	
M	19	1	**8T-7338**	8	BOLT (M16X2X45-MM)	
M	20	1	**8T-4140**	4	BOLT (M16X2X60-MM)	
M	21	1	**8T-4132**	6	NUT (M16X2-THD)	
M	22	1	**8T-4183**	6	BOLT (M12X1.75X40-MM)	
	23	1	**5P-1076**	6	WASHER-HARD (13.5X30X4-MM THK)	
M	24	1	**136-4182**	2	BOLT (M16X2X100-MM)	
	25	1	**171-8995**	1	SUPPORT AS-FAN (RH)	
	26	1	**171-8991**	1	SUPPORT AS-FAN (LH)	
M	27	1	**8T-4133**	2	NUT (M10X1.5-THD)	
M	28	1	**8T-4186**	2	BOLT (M10X1.5X40-MM)	
	29	1	**162-6357**	2	PLATE	
M	30	1	**8T-4137**	6	BOLT (M10X1.5X20-MM)	
	31	2	**4M-0189**	1	SEAL-O-RING	

C-CHANGE FROM PREVIOUS TYPE
M-METRIC PART
R-REMFG PART MAY BE AVAILABLE
Y-SEPARATE ILLUSTRATION

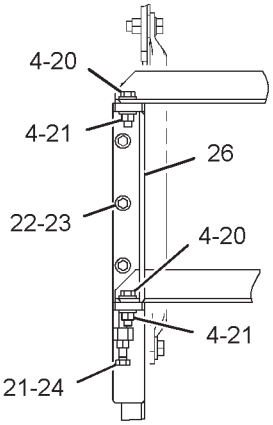

VIEW OF AREA E

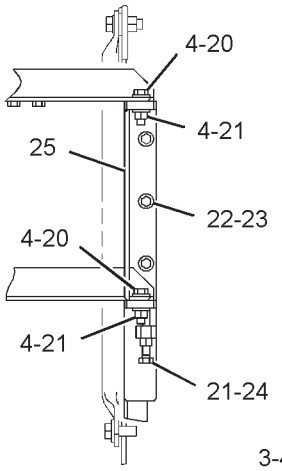

VIEW OF AREA J

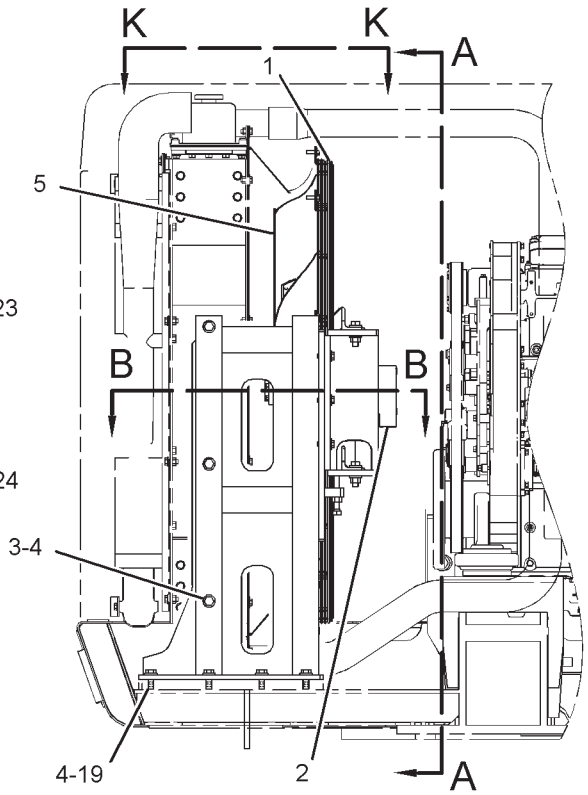

REAR VIEW

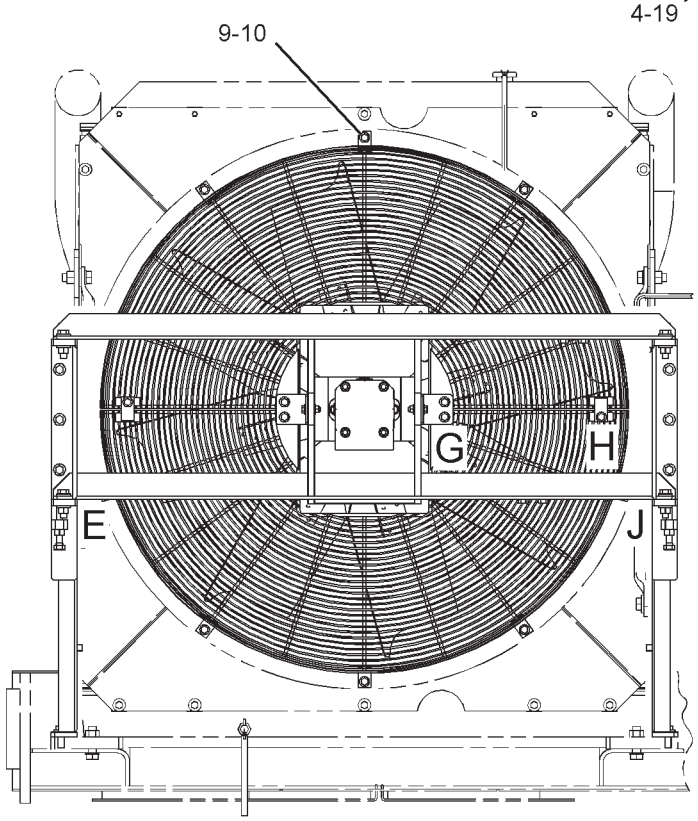

VIEW A-A

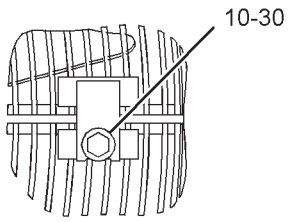

VIEW OF AREA H

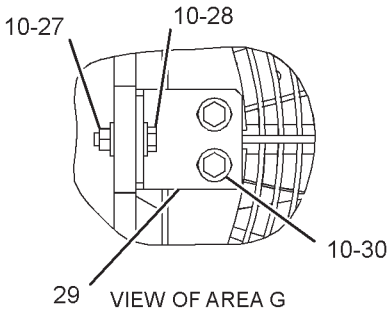

VIEW OF AREA G

REFER TO ALL ILLUSTRATIONS OF THIS GROUP FOR AUXILIARY VIEWS

GRAPHIC #1

g01243610

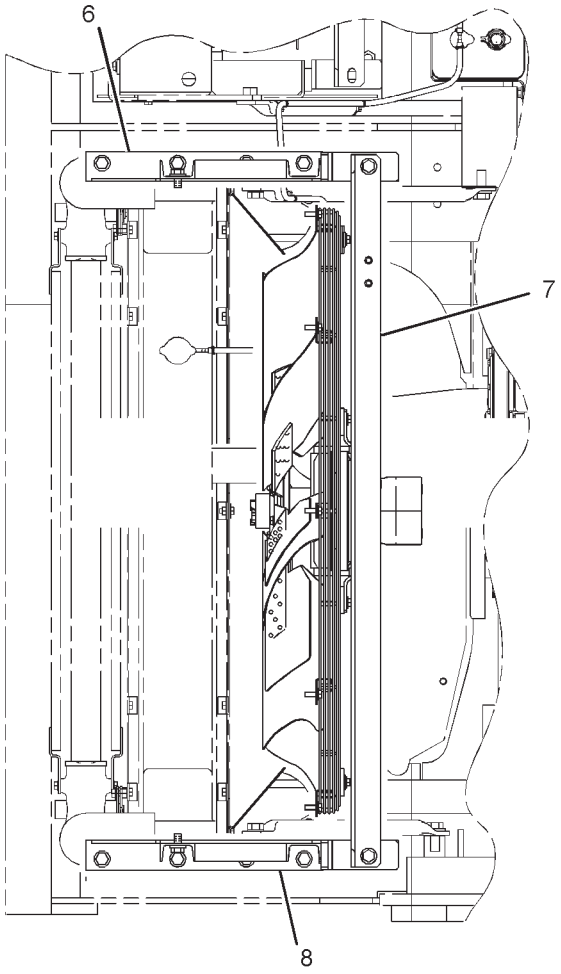

VIEW K-K

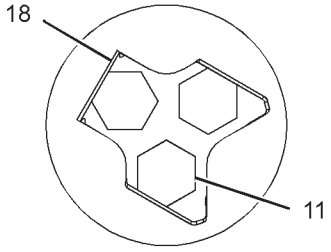

VIEW C-C

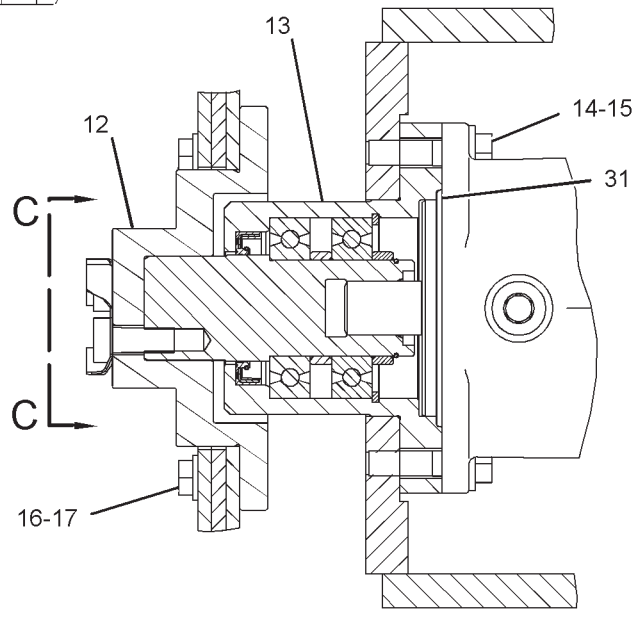

SECTION B-B

GRAPHIC #2 **<END>** g01243611

COOLING SYSTEM

109-9997 FITTING GP-RADIATOR VENT

S/N: BLC426-UP

PART OF 205-5858 ENGINE AR-COMPLETE

SMCS-1353 **i01516133**

NOTE	REF NO	GRAPHIC REF	PART NUMBER	QTY	PART NAME 1 2 3 4 5 6 (PRODUCT LEVEL)	SEE PAGE
	1	1	**8T-6767**	1	PLUG-PIPE	
	2	1	**7E-4039**	1	ORIFICE	
	3	1	**3B-7255**	1	BUSHING-REDUCING	

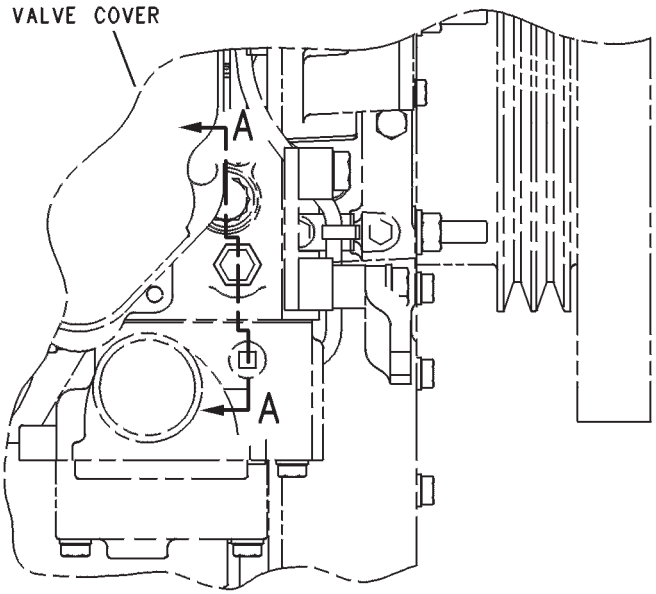

TOP VIEW

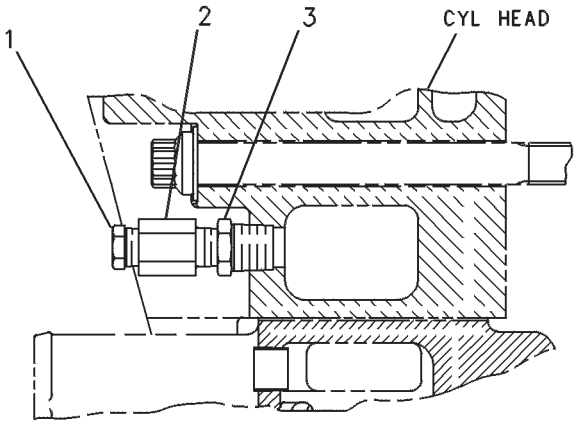

SECTION A-A

GRAPHIC #1 **<END>** g00237861

COOLING SYSTEM

235-6472 FITTING GP-RADIATOR VENT

S/N: BLC1000-UP

PART OF 235-4685 ENGINE AR-COMPLETE

SMCS-1353 **i02103146**

NOTE	REF NO	GRAPHIC REF	PART NUMBER	QTY	PART NAME 1 2 3 4 5 6 (PRODUCT LEVEL)	SEE PAGE
	1	1	**8T-6767**	1	PLUG-PIPE	
	2	1	**7E-4039**	1	ORIFICE	
	3	1	**5P-1838**	1	ADAPTER	
	4	1	**6V-6609**	1	SEAL-O-RING	

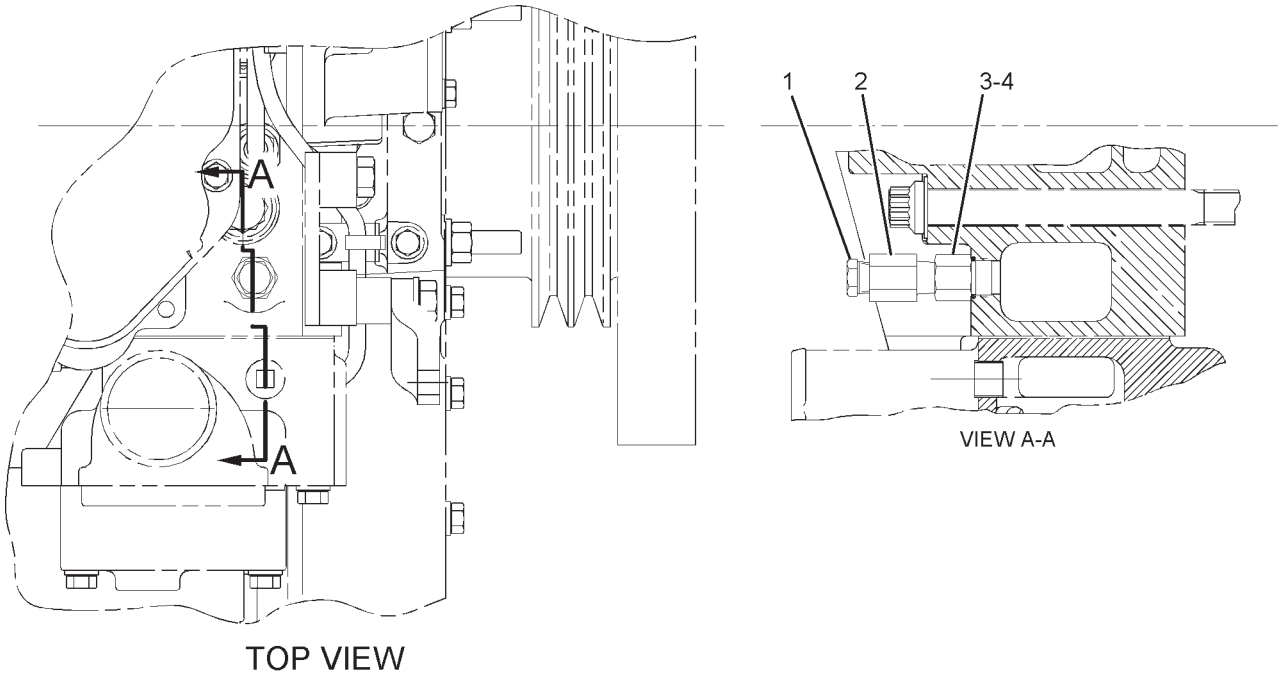

TOP VIEW

GRAPHIC #1 **<END>** g01072241

COOLING SYSTEM

159-3956 LINES GP-WATER

S/N: BLC426-UP

PART OF 205-5858, 235-4685 ENGINE AR-COMPLETE

SMCS-1355, 1380 **i02158624**

NOTE	REF NO	GRAPHIC REF	PART NUMBER	QTY	PART NAME 1 2 3 4 5 6 (PRODUCT LEVEL)	SEE PAGE
	1	1	**3S-9643**	1	SEAL-LIP TYPE	
	2	1	**4N-1156**	1	GASKET-REGULATOR COVER	
	3	1	**248-5513**	1	REGULATOR-TEMPERATURE (92-DEG C)	
	4	1	**8T-4983**	2	CLAMP-HOSE	
	5	1	**9Y-2585**	1	COVER-WATER PUMP	
	6	1	**9Y-4104**	1	HOSE	
Y	7	1	**102-2240**	1	SENSOR GP-TEMPERATURE (COOLANT)	270
	8	1	**104-8583**	1	MANIFOLD-HOUSING	
	9	1	**104-8584**	1	HOUSING-REGULATOR	
	10	1	**104-8585**	1	GASKET-REGULATOR	
	11	1	**125-0434**	1	SEAL-INTEGRAL	
	12	1	**126-4935**	2	SEAL-INTEGRAL	
R	13	1	**133-0125**	1	CORE AS-ENGINE OIL COOLER	
	14	1	**145-3849**	1	COVER	
	15	1	**157-0670**	1	CAP-DUST	
	16	1	**163-9385**	1	BONNET-OUTLET	
	17	1	**170-4860**	1	BONNET-INLET	
	18	1	**011-5224**	1	BUSHING-REDUCING	
	19	1	**0L-1352**	5	BOLT (3/8-16X3.25-IN)	
	20	1	**0S-1591**	3	BOLT (3/8-16X1.5-IN)	
	21	1	**0S-1594**	6	BOLT (3/8-16X1-IN)	
	22	1	**0S-1608**	5	BOLT (3/8-16X3.75-IN)	
	23	1	**0T-0573**	1	BOLT (3/8-16X2.75-IN)	
	24	1	**109-0077**	2	SEAL-O-RING	
	25	1	**109-0093**	1	SEAL-O-RING	
	26	1	**154-9024**	1	VALVE GP-FLUID SAMPLING	
	27	1	**5M-2894**	11	WASHER-HARD (10.2X18.5X2.5-MM THK)	
	28	1	**6V-6609**	1	SEAL-O-RING	
	29	1	**7W-6534**	1	PLUG-PIPE	
	30	1	**7X-7731**	5	PLUG-PIPE	
	31	1	**8T-6761**	1	PLUG-PIPE	
	32	1	**8T-6762**	6	PLUG-PIPE	
	33	1	**8T-6763**	1	PLUG-PIPE	
	34	1	**8T-6767**	2	PLUG-PIPE	
	35	1	**9S-8001**	1	PLUG-O-RING	

R-REMFG PART MAY BE AVAILABLE
Y-SEPARATE ILLUSTRATION

159-3956 **LINES GP-WATER** *(contd.)* **i02158624**

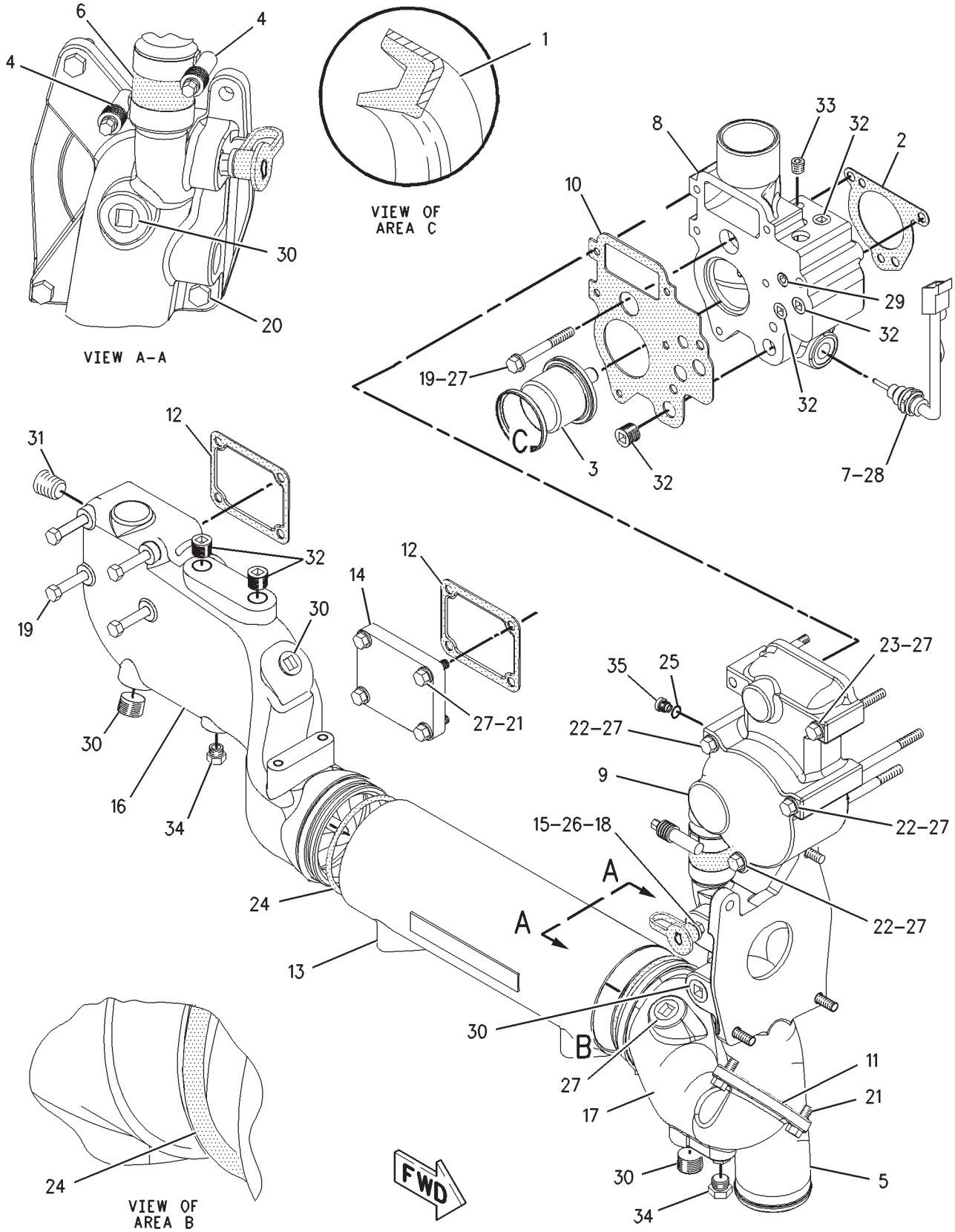

GRAPHIC #1 **<END>** g00787431

COOLING SYSTEM

187-6662 LINES GP-WATER

S/N: BLC426-UP

PART OF 205-5858, 235-4685 ENGINE AR-COMPLETE

SMCS-1355, 1380 **i01727154**

NOTE	REF NO	GRAPHIC REF	PART NUMBER	QTY	PART NAME 1 2 3 4 5 6 (PRODUCT LEVEL)	SEE PAGE
	2	1	**7N-7628**	4	GASKET	
	3	1	**7N-7878**	2	PLATE-COVER	
	4	1	**8N-0788**	1	COVER	
	5	1	**171-4364**	1	SPACER (11X19X11.5-MM THK)	
C	6	1	**211-7754**	1	HOSE AS	
	7	1	**192-5466**	1	TUBE AS-WATER	
	8	1	**0L-1352**	1	BOLT (3/8-16X3.25-IN)	
	9	1	**0S-1594**	8	BOLT (3/8-16X1-IN)	
C	10	1	**211-5237**	1	CONNECTOR	
	11	1	**1B-3057**	1	CLIP	
	12	1	**2T-1922**	1	ELBOW	
	13	1	**5M-2894**	9	WASHER-HARD (10.2X18.5X2.5-MM THK)	
	14	1	**6V-8398**	3	SEAL-O-RING	
	15	1	**8C-6871**	1	CONNECTOR	

C-CHANGE FROM PREVIOUS TYPE

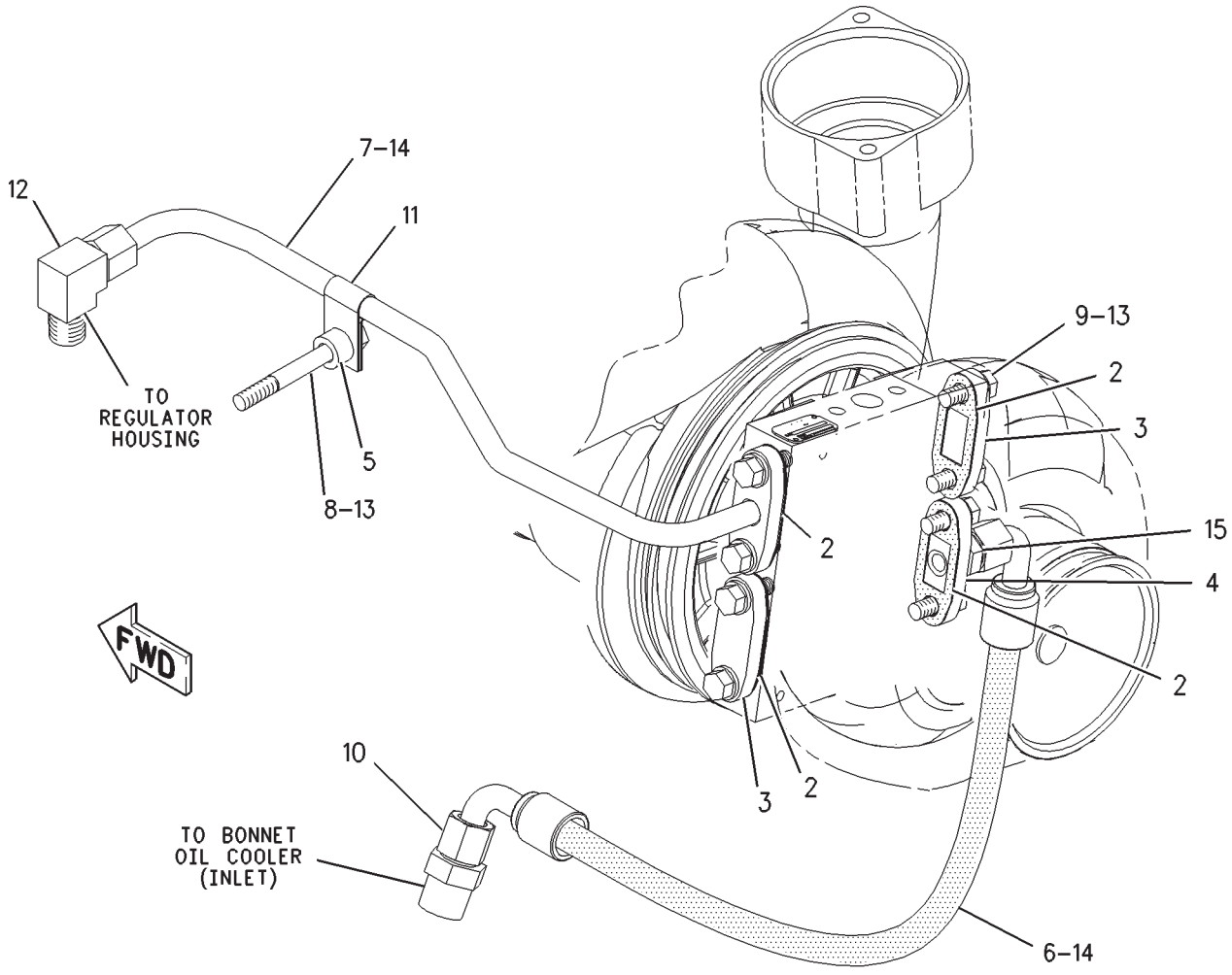

GRAPHIC #1 **<END>** g00887865

COOLING SYSTEM

100-9347 PUMP GP-WATER

S/N: BLC426-UP
PROVIDES CAST IRON ADAPTOR
PART OF 205-5858, 235-4685 ENGINE AR-COMPLETE

SMCS-1361 **i01502987**

NOTE	REF NO	GRAPHIC REF	PART NUMBER	QTY	PART NAME 1 2 3 4 5 6 (PRODUCT LEVEL)	SEE PAGE
YCR	1	1	**135-4925**	1	PUMP GP-WATER	120
	2	1	**4P-2383**	1	ADAPTER	
	3	1	**9M-3786**	1	SEAL-O-RING	
	4	1	**122-3772**	1	SEAL-O-RING	
	5	1	**109-0077**	1	SEAL-O-RING	

C-CHANGE FROM PREVIOUS TYPE
R-REMFG PART MAY BE AVAILABLE
Y-SEPARATE ILLUSTRATION

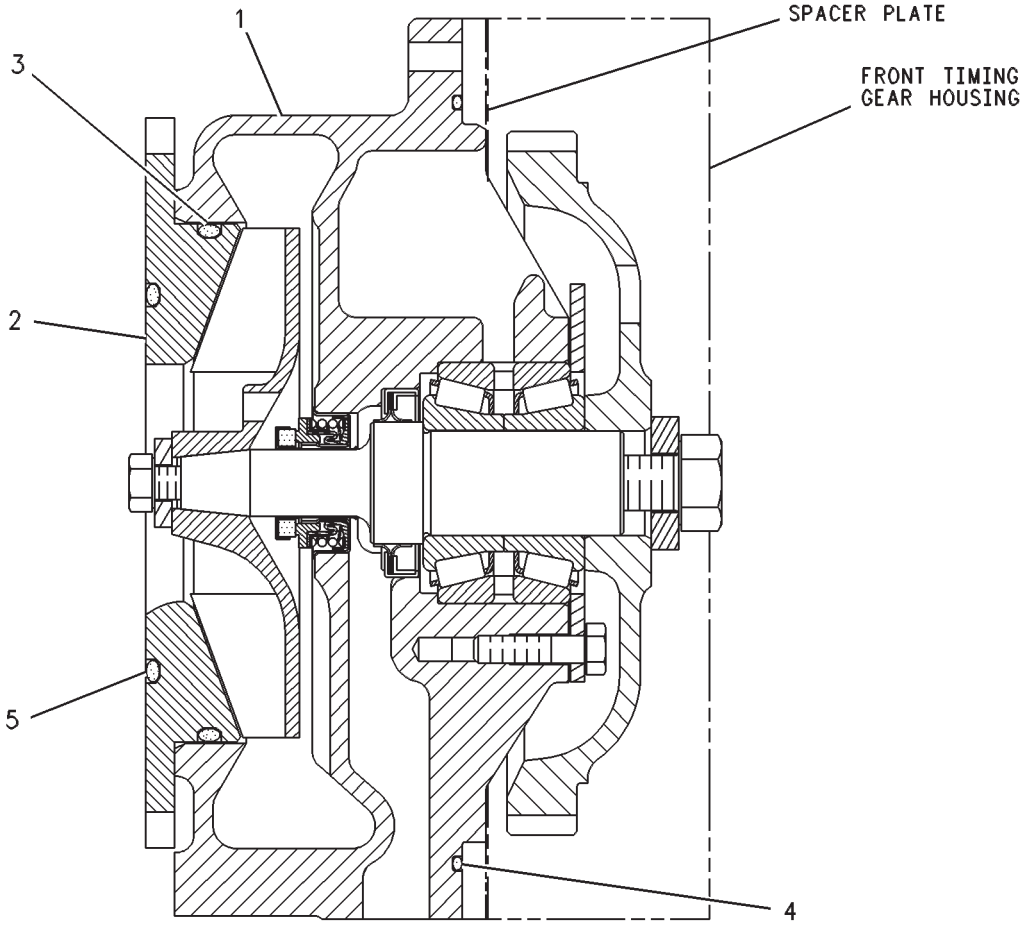

GRAPHIC #1 **<END>** g00263504

COOLING SYSTEM

135-4925 PUMP GP-WATER*R

S/N: BLC426-UP

PART OF 100-9347 PUMP GP-WATER

SMCS-1361 **i01742862**

NOTE	REF NO	GRAPHIC REF	PART NUMBER	QTY	PART NAME 1 2 3 4 5 6 (PRODUCT LEVEL)	SEE PAGE
	1	1	**135-4918**	1	HOUSING-WATER PUMP	
	2	1	**129-9907**	1	IMPELLER-PUMP	
J	3	1	**9M-6527**	1	WASHER-HARD (10.2X25.5X5-MM THK)	
	4	1	**0S-1591**	1	BOLT (3/8-16X1.5-IN)	
	5	1	**1A-1135**	1	BOLT (5/8-11X2-IN)	
J	6	1	**128-0317**	1	SEAL GP	
	7	1	**6I-3643**	1	GEAR (74-TEETH)	
J	8	1	**153-1256**	1	SEAL-LIP TYPE	
J	9	1	**135-4928**	1	SHAFT-WATER PUMP	
J	10	1	**5S-0581**	1	WASHER-HARD (17X38X8-MM THK)	
	11	1	**1B-7182**	4	BOLT (5/16-18X1.25-IN)	
J	12	1	**108-7930**	1	BEARING AS-ROLLER	
J	13	1	**136-1107**	1	RETAINER	
J	14	1	**136-3742**	1	PLUG-FELT	
					AVAILABLE REPAIR KIT(S):	
J			**138-6744**	1	KIT-PUMP REBUILD (WATER)	
			128-2922	1	KIT-GASKET (WATER PUMP)	
					(ALSO INCLUDES O-RINGS)	

J-KIT MARKED J SERVICES PARTS MARKED J

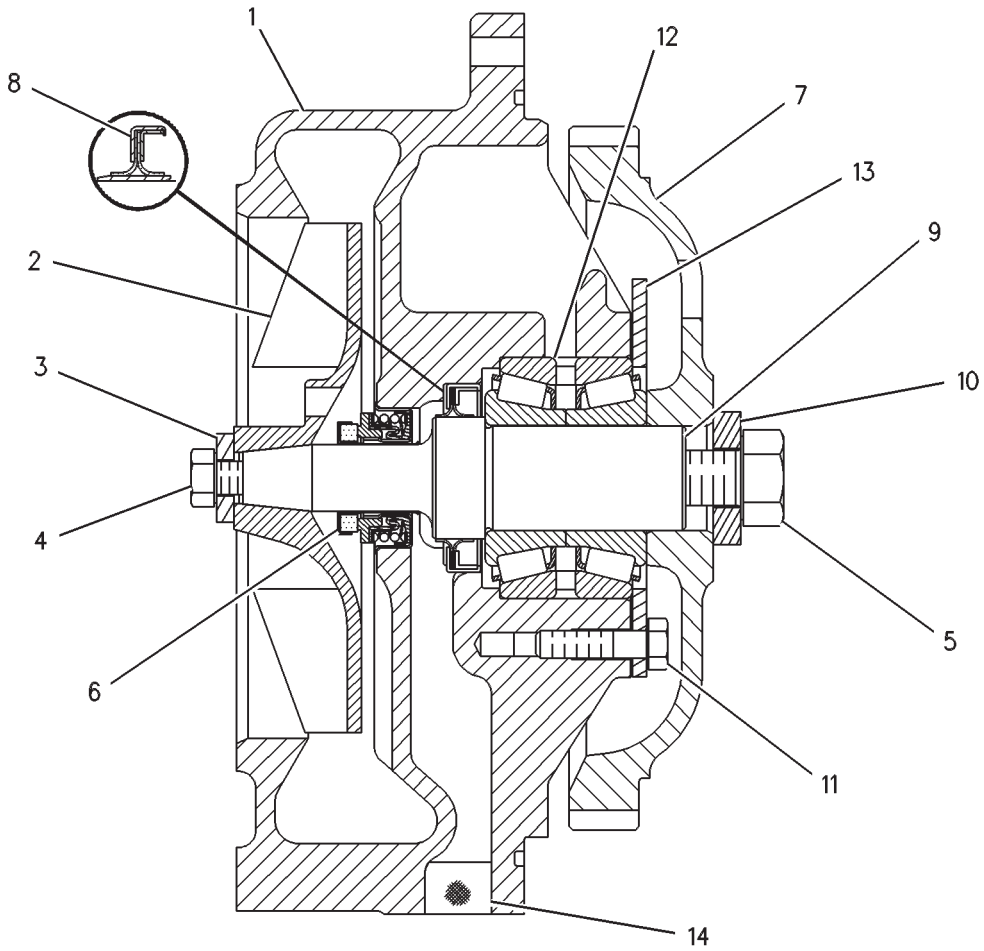

GRAPHIC #1 **<END>** g00263499

COOLING SYSTEM

151-6651 RADIATOR & AFTERCOOLER GP

S/N: RCD168-241

PART OF 242-5914 INSTALLATION AR-ENGINE

SMCS-1063, 1353 **i02115630**

NOTE	REF NO	GRAPHIC REF	PART NUMBER	QTY	PART NAME 1 2 3 4 5 6 (PRODUCT LEVEL)	SEE PAGE
CY	1	1	**210-7996**	1	RADIATOR GP	133
	2	1	**144-0367**	1	CLAMP-HOSE	
	3	1	**171-9004**	1	SHROUD AS	
	4	1	**171-9015**	1	HOSE	
	5	1	**8T-4985**	3	CLAMP-HOSE	
M	6	1	**8T-4141**	4	BOLT (M20X2.5X70-MM)	
	7	2	**8T-4123**	6	WASHER (22X35X3.5-MM THK)	
	8	1	**171-9002**	1	BRACE	
	9	1	**7Y-1241**	1	BAND	
M	10	1	**8T-4179**	2	BOLT (M12X1.75X20-MM)	
	11	1	**8T-4223**	2	WASHER-HARD (13.5X25.5X3-MM THK)	
C	12	1	**230-2780**	1	TANK GP-COOLANT (INCLUDES COOLANT LEVEL SWITCH)	
		1	**171-3370**	1	CAP AS (COOLANT OVERFLOW)	
		1	**204-0920**	1	CAP AS (COOLANT FILL)	
M	13	2	**8T-4136**	16	BOLT (M10X1.5X25-MM)	
	14	1	**8T-4222**	14	WASHER-PLATED (11X32X2.5-MM THK)	
	15	1	**1P-4278**	1	CLAMP-HOSE	
E	16	1	**7Y-1976**		HOSE-WATER (110-CM)	
	17	2	**7K-1181**	5	STRAP-CABLE	
	18	1	**171-9003**	1	BRACE	
	19	1	**171-9016**	1	HOSE-RADIATOR	
M	20	2	**8T-6430**	2	BOLT (M20X2.5X50-MM)	
	21	2	**8T-5439**	4	WASHER-HARD (21.5X45X6-MM THK)	
M	22	2	**7X-2563**	2	BOLT (M20X2.5X60-MM)	
	23	2	**160-5945**	1	ELBOW	
	24	2	**5P-4961**	2	CLAMP-HOSE	
E	25	2	**5P-1420**		HOSE (140-CM)	
	26	2	**102-5758**	1	END-HOSE	
	27	2	**8T-4121**	2	WASHER-HARD (11X21X2.5-MM THK)	
BD	28	2	**5P-6882**		SEAL	
	29	2	**196-8104**	1	SUPPORT AS	
	30	2	**5P-1076**	2	WASHER-HARD (13.5X30X4-MM THK)	
M	31	2	**8T-4956**	2	BOLT (M12X1.75X35-MM)	
	32	2	**196-8102**	1	BAND AS	
M	32A	2	**8T-3490**	2	NUT-WELD (M10X1.5-THD)	
	33	2	**204-1611**	3	STRAP-CABLE	

B-USE AS REQUIRED
C-CHANGE FROM PREVIOUS TYPE
D-ORDER BY THE METER
E-ORDER BY THE CENTIMETER
M-METRIC PART
Y-SEPARATE ILLUSTRATION

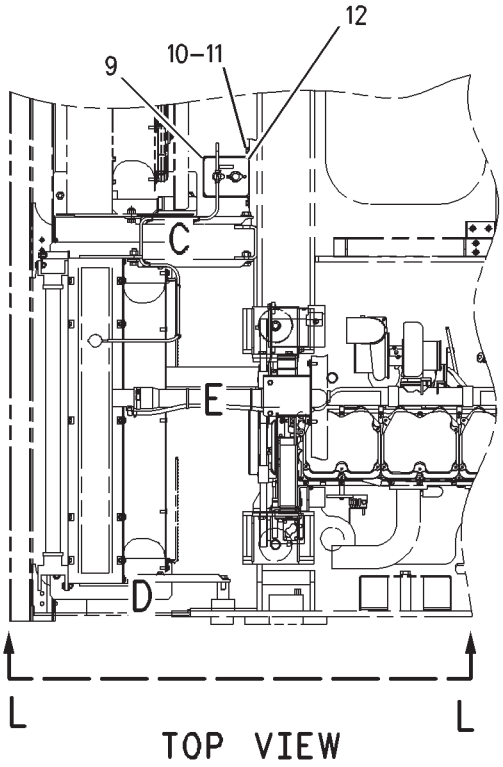

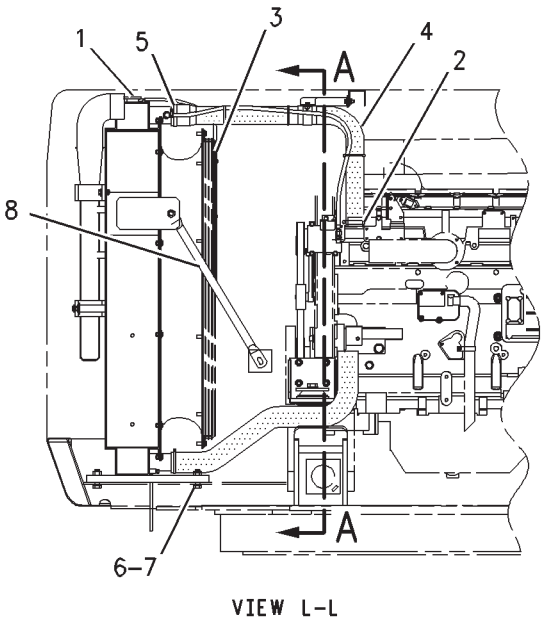

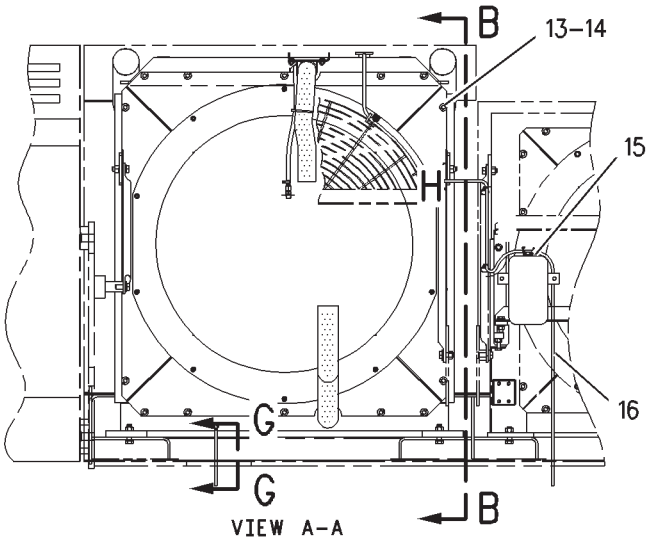

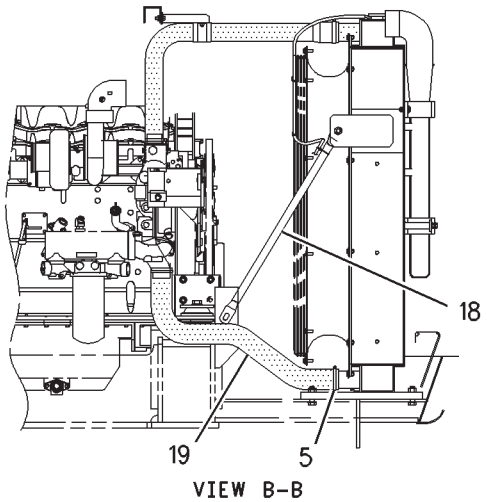

REFER TO ALL ILLUSTRATIONS
OF THIS GROUP FOR AUXILIARY VIEWS

GRAPHIC #1 g00841864

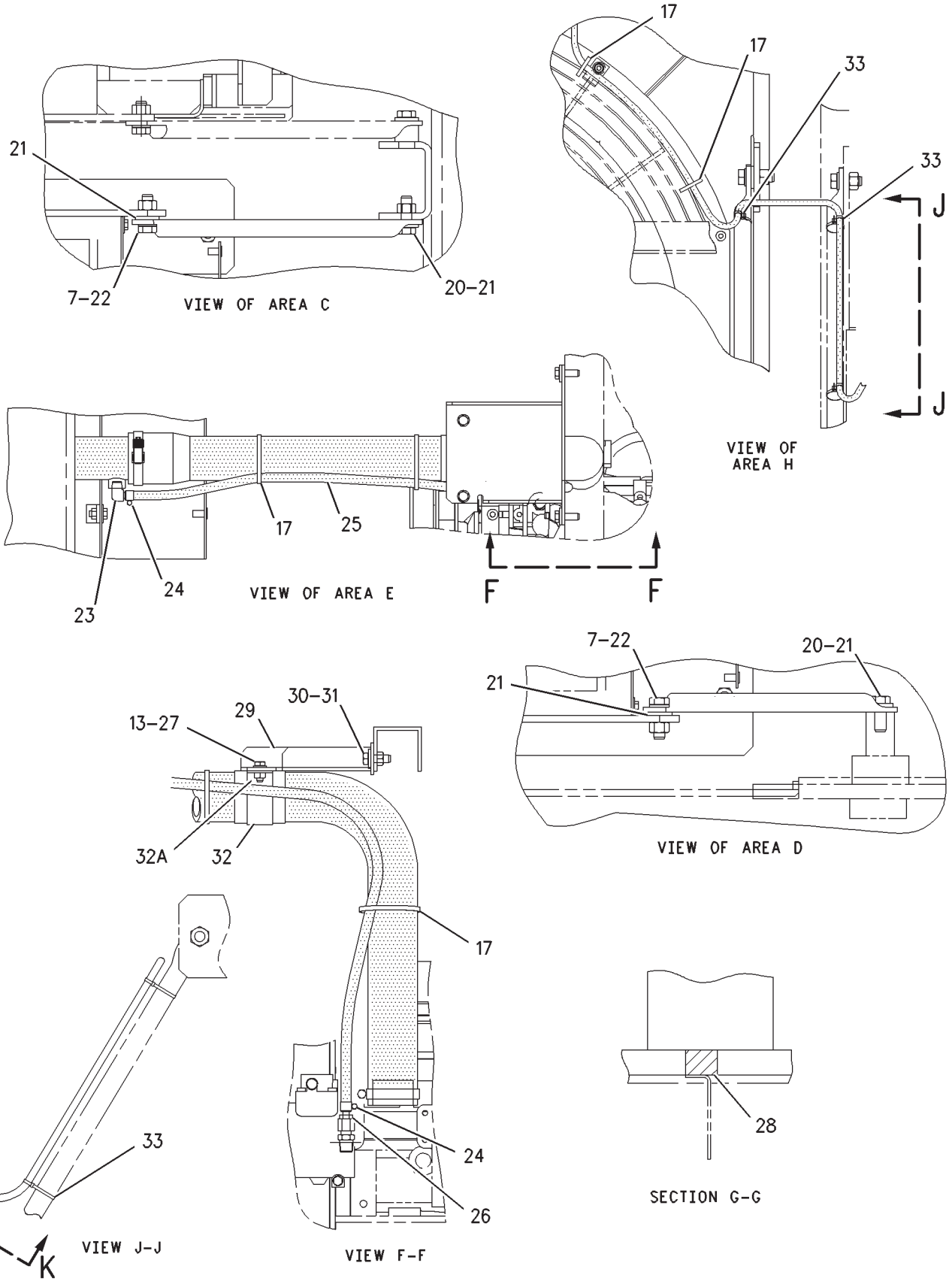

GRAPHIC #2

<END>

g00841865

COOLING SYSTEM

151-6651 RADIATOR & AFTERCOOLER GP

S/N: RCD242-UP

PART OF 242-5914 INSTALLATION AR-ENGINE

SMCS-1063, 1353 **i02212136**

NOTE	REF NO	GRAPHIC REF	PART NUMBER	QTY	PART NAME 1 2 3 4 5 6 (PRODUCT LEVEL)	SEE PAGE
Y	1	1	**210-7996**	1	RADIATOR GP	133
C	2	1	**144-0367**	1	CLAMP-HOSE	
	3	1	**171-9004**	1	SHROUD AS	
	4	1	**171-9015**	1	HOSE	
	5	1	**8T-4985**	3	CLAMP-HOSE	
M	6	1	**8T-4141**	4	BOLT (M20X2.5X70-MM)	
	7	2	**8T-4123**	6	WASHER (22X35X3.5-MM THK)	
	8	1	**171-9002**	1	BRACE	
	9	1	**7Y-1241**	1	BAND	
M	10	1	**8T-4179**	2	BOLT (M12X1.75X20-MM)	
	11	1	**8T-4223**	2	WASHER-HARD (13.5X25.5X3-MM THK)	
C	12	1	**245-9206**	1	TANK AS-EXPANSION (INCLUDES COOLANT LEVEL SWITCH)	
		1	**171-3370**	1	CAP AS (COOLANT OVERFLOW)	
		1	**204-0920**	1	CAP AS (COOLANT FILL)	
M	13	2	**8T-4136**	16	BOLT (M10X1.5X25-MM)	
	14	1	**8T-4222**	14	WASHER-PLATED (11X32X2.5-MM THK)	
	15	1	**1P-4278**	1	CLAMP-HOSE	
E	16	1	**7Y-1976**		HOSE-WATER (110-CM)	
	17	2	**7K-1181**	5	STRAP-CABLE	
	18	1	**171-9003**	1	BRACE	
	19	1	**171-9016**	1	HOSE-RADIATOR	
M	20	2	**8T-6430**	2	BOLT (M20X2.5X50-MM)	
	21	2	**8T-5439**	4	WASHER-HARD (21.5X45X6-MM THK)	
M	22	2	**7X-2563**	2	BOLT (M20X2.5X60-MM)	
	23	2	**160-5945**	1	ELBOW	
	24	2	**5P-4961**	2	CLAMP-HOSE	
E	25	2	**5P-1420**		HOSE (140-CM)	
	26	2	**102-5758**	1	END-HOSE	
	27	2	**8T-4121**	2	WASHER-HARD (11X21X2.5-MM THK)	
BD	28	2	**5P-6882**		SEAL	
	29	2	**196-8104**	1	SUPPORT AS	
	30	2	**5P-1076**	2	WASHER-HARD (13.5X30X4-MM THK)	
M	31	2	**8T-4956**	2	BOLT (M12X1.75X35-MM)	
	32	2	**196-8102**	1	BAND AS	
M	32A	2	**8T-3490**	2	NUT-WELD (M10X1.5-THD)	
	33	2	**204-1611**	3	STRAP-CABLE	

B-USE AS REQUIRED
C-CHANGE FROM PREVIOUS TYPE
D-ORDER BY THE METER
E-ORDER BY THE CENTIMETER
M-METRIC PART
Y-SEPARATE ILLUSTRATION

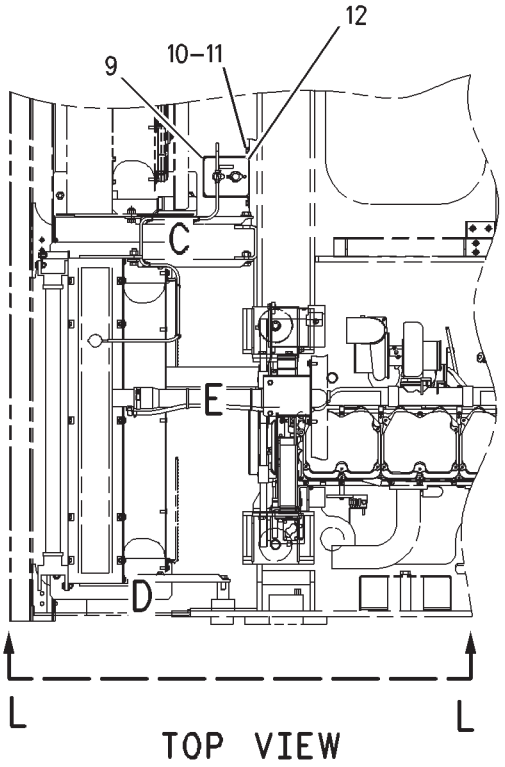

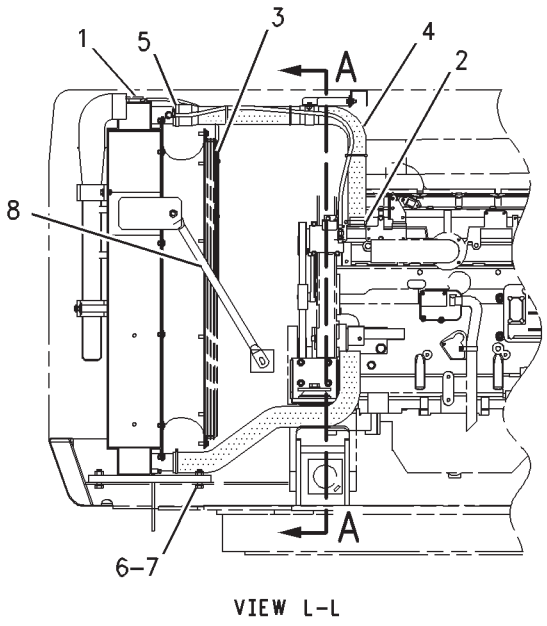

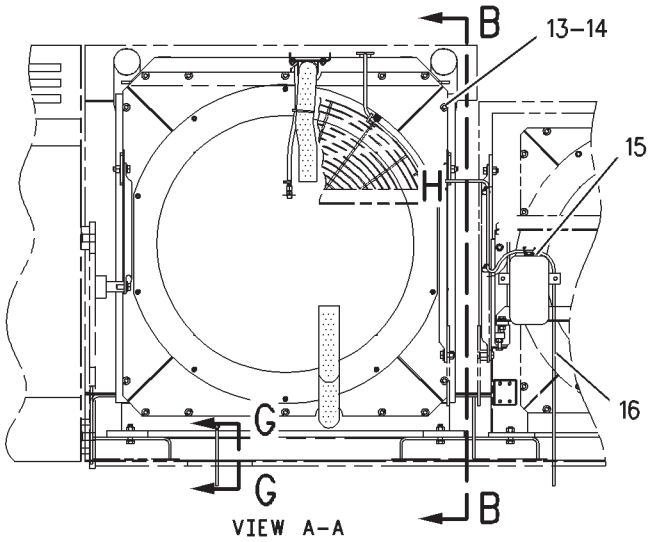

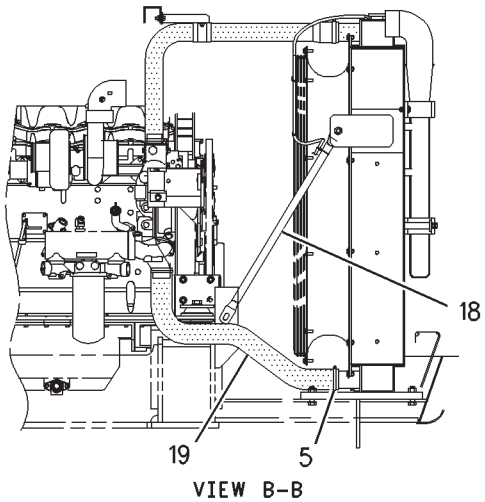

REFER TO ALL ILLUSTRATIONS
OF THIS GROUP FOR AUXILIARY VIEWS

GRAPHIC #1 g00841864

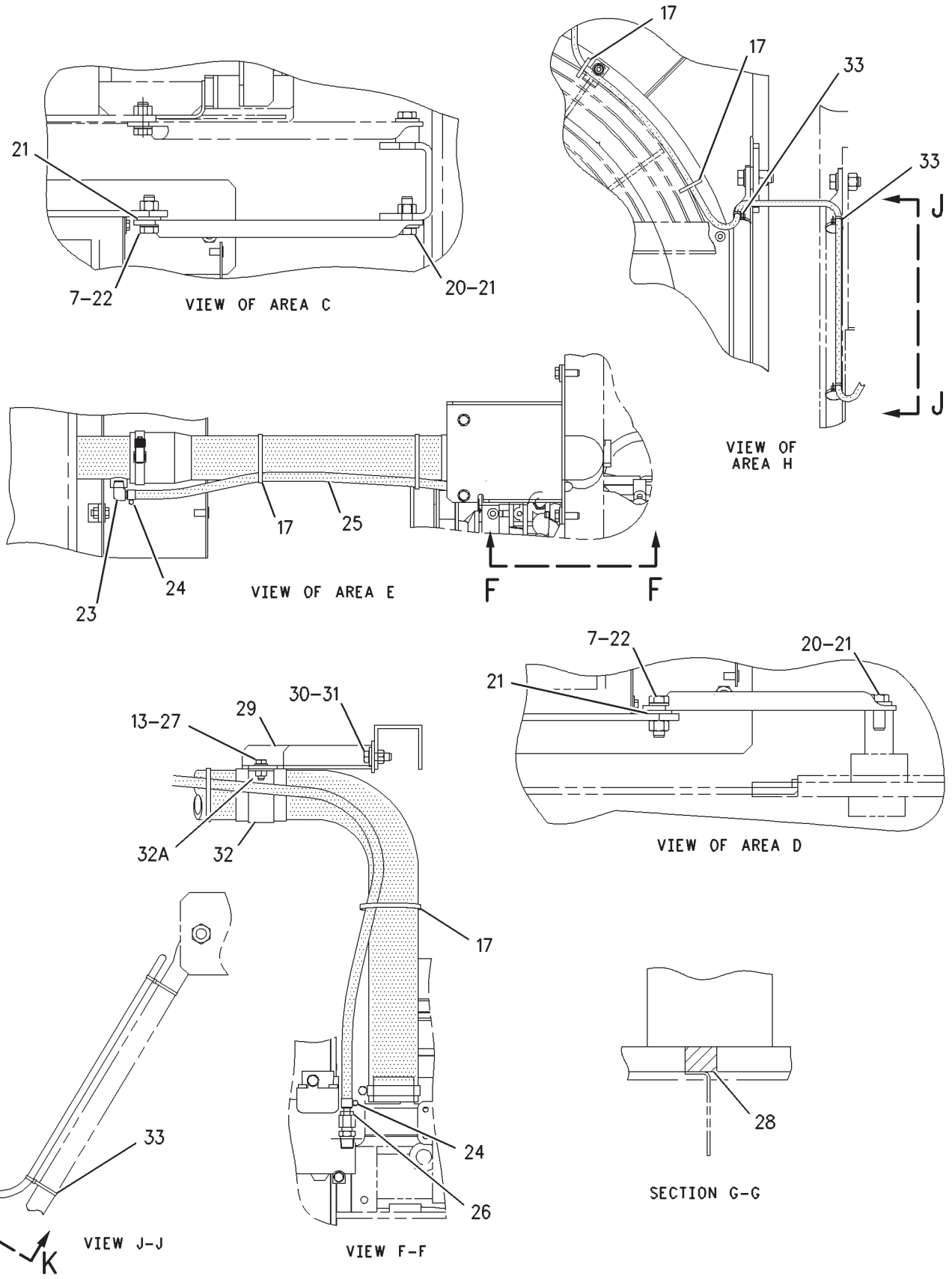

GRAPHIC #2

<END>

g00841865

COOLING SYSTEM

210-8025 RADIATOR & AFTERCOOLER GP

S/N: RCD1-167

PART OF 196-8182 RADIATOR GP

SMCS-1063, 1353 **i02163168**

NOTE	PART NUMBER	QTY	PART NAME 1 2 3 4 5 6 (PRODUCT LEVEL)	SEE PAGE
Y	**210-7989**	1	RADIATOR GP	131
			—OR—	
Y	**210-8026**	1	RADIATOR GP	135

Y-SEPARATE ILLUSTRATION

<END>

COOLING SYSTEM

196-8182 RADIATOR GP

S/N: RCD1-167

PART OF 220-4843 INSTALLATION AR-ENGINE

SMCS-1353 **i02344558**

NOTE	REF NO	GRAPHIC REF	PART NUMBER	QTY	PART NAME 1 2 3 4 5 6 (PRODUCT LEVEL)	SEE PAGE
Y	1	1	**210-8025**	1	RADIATOR & AFTERCOOLER GP	127
	2	1	**144-0367**	1	CLAMP-HOSE	
	3	1	**171-9004**	1	SHROUD AS	
	4	1	**171-9015**	1	HOSE	
	5	1,2	**8T-4985**	3	CLAMP-HOSE	
M	6	1	**8T-4141**	4	BOLT (M20X2.5X70-MM)	
	7	1,2	**8T-4123**	6	WASHER (22X35X3.5-MM THK)	
	8	1	**171-9002**	1	BRACE	
	9	2	**7Y-1241**	1	BAND	
M	10	2	**8T-4179**	2	BOLT (M12X1.75X20-MM)	
	11	2	**8T-4223**	2	WASHER-HARD (13.5X25.5X3-MM THK)	
	12	2	**245-9206**	1	TANK AS-EXPANSION (INCLUDES COOLANT LEVEL SWITCH)	
M	13	1	**8T-4136**	16	BOLT (M10X1.5X25-MM)	
	14	1	**8T-4222**	14	WASHER-PLATED (11X32X2.5-MM THK)	
	15	1	**1P-4278**	1	CLAMP-HOSE	
E	16	1	**7Y-1976**		HOSE-WATER (110-CM)	
	17	1,2	**7K-1181**	7	STRAP-CABLE	
	18	2	**171-9003**	1	BRACE	
	19	2	**171-9016**	1	HOSE-RADIATOR	
M	20	2	**8T-6430**	2	BOLT (M20X2.5X50-MM)	
	21	2	**8T-5439**	4	WASHER-HARD (21.5X45X6-MM THK)	
M	22	2	**7X-2563**	2	BOLT (M20X2.5X60-MM)	
	23	2	**160-5945**	1	ELBOW	
	24	1,2	**5P-4961**	2	CLAMP-HOSE	
E	25	2	**5P-1420**		HOSE (140-CM)	
	26	1	**102-5758**	1	END-HOSE	
	27	1	**8T-4121**	2	WASHER-HARD (11X21X2.5-MM THK)	
	28	1	**205-9743**	1	SEAL	
	29	1	**196-8104**	1	SUPPORT AS	
	30	1	**5P-1076**	2	WASHER-HARD (13.5X30X4-MM THK)	
M	31	1	**8T-4956**	2	BOLT (M12X1.75X35-MM)	
	32	1	**196-8102**	1	BAND AS	

E-ORDER BY THE CENTIMETER
M-METRIC PART
Y-SEPARATE ILLUSTRATION

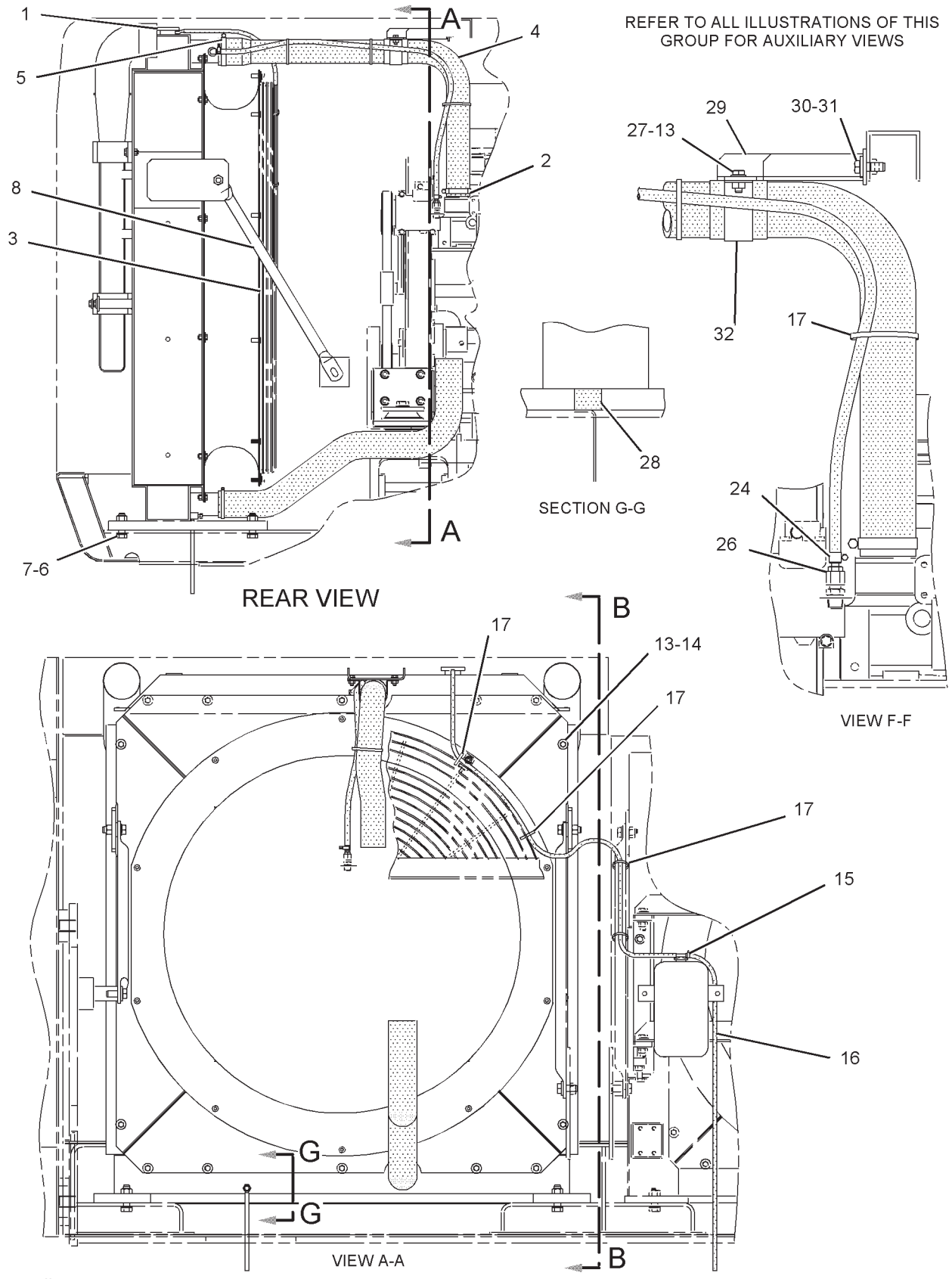

GRAPHIC #1

g01097771

196-8182 **RADIATOR GP** *(contd.)* **i02344558**

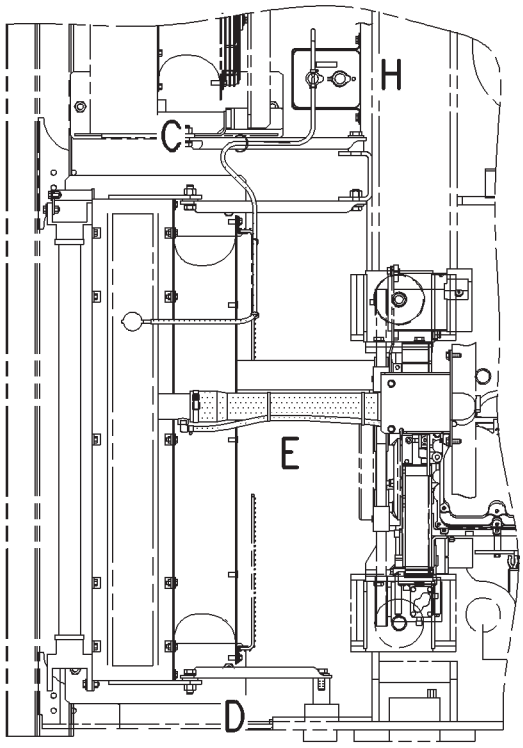

TOP VIEW

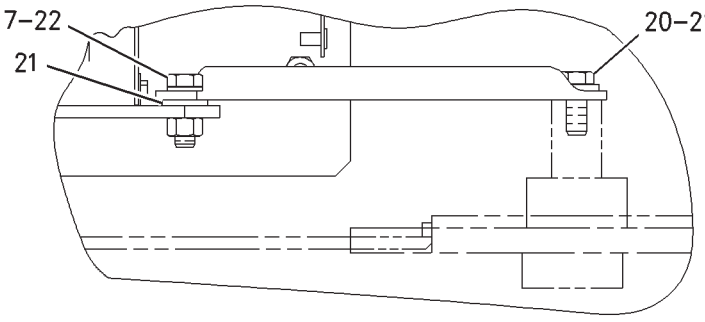

VIEW OF AREA D

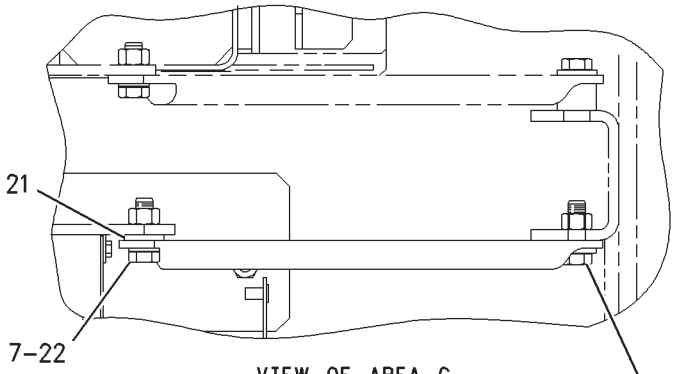

VIEW OF AREA C

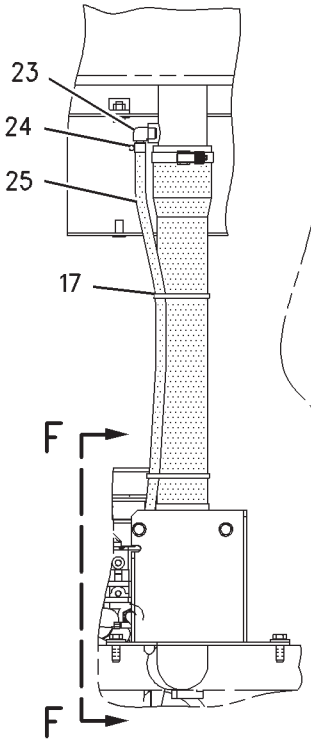

VIEW OF AREA E
(ROTATED 90°CW)

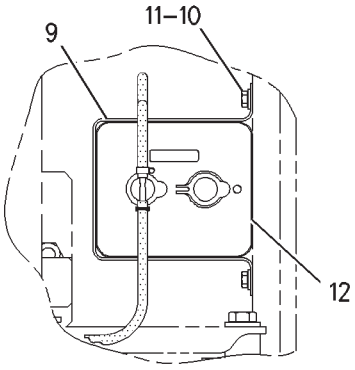

VIEW OF
AREA H

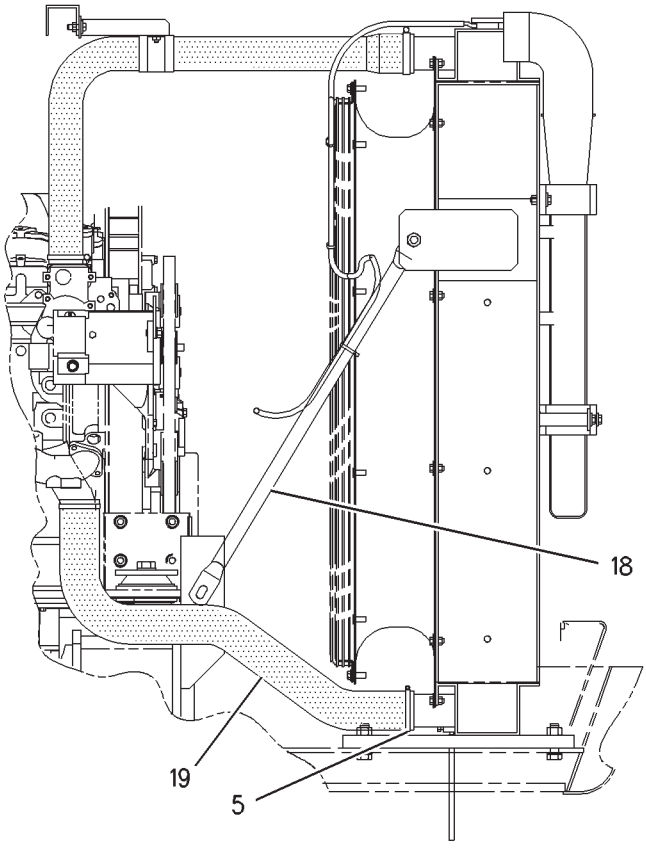

VIEW B-B

REFER TO ALL ILLUSTRATIONS OF
THIS GROUP FOR AUXILIARY VIEWS

GRAPHIC #2 **<END>** g00790672

COOLING SYSTEM

210-7989 RADIATOR GP

S/N: RCD1-167

PART OF 210-8025 RADIATOR & AFTERCOOLER GP

SMCS-1353 **i02429331**

NOTE	REF NO	GRAPHIC REF	PART NUMBER	QTY	PART NAME 1 2 3 4 5 6 (PRODUCT LEVEL)	SEE PAGE
	1	1	**210-8030**	1	RADIATOR AS	
	2	1	**099-0001**	1	CAP-RADIATOR	
	3	1	**210-7994**	1	DRAIN AS	
	4	1	**210-7995**	1	HOSE-WATER	
E	5	1	**7Y-1976**		HOSE-WATER (190-CM)	
	6	1	**096-4035**	2	CLIP	
	7	1	**196-8085**	1	AFTERCOOLER AS	
M	8	1	**8T-4136**	6	BOLT (M10X1.5X25-MM)	
	9	1	**8T-4121**	6	WASHER-HARD (11X21X2.5-MM THK)	
	10	1	**196-8090**	3	PLATE	
	11	1	**210-7993**	1	PLATE	
	12	1	**210-7992**	1	PLATE	
M	13	1	**8T-4139**	8	BOLT (M12X1.75X30-MM)	
	14	1	**8T-4223**	16	WASHER-HARD (13.5X25.5X3-MM THK)	
M	15	1	**8T-4192**	4	BOLT (M12X1.75X25-MM)	
M	16	1	**8T-4956**	4	BOLT (M12X1.75X35-MM)	
	17	1	**196-8088**	4	SEAL	
	18	1	**196-8089**	4	BOSS	
	19	1	**210-8078**	2	GASKET	

E-ORDER BY THE CENTIMETER
M-METRIC PART

210-7989 **RADIATOR GP** *(contd.)* **i02429331**

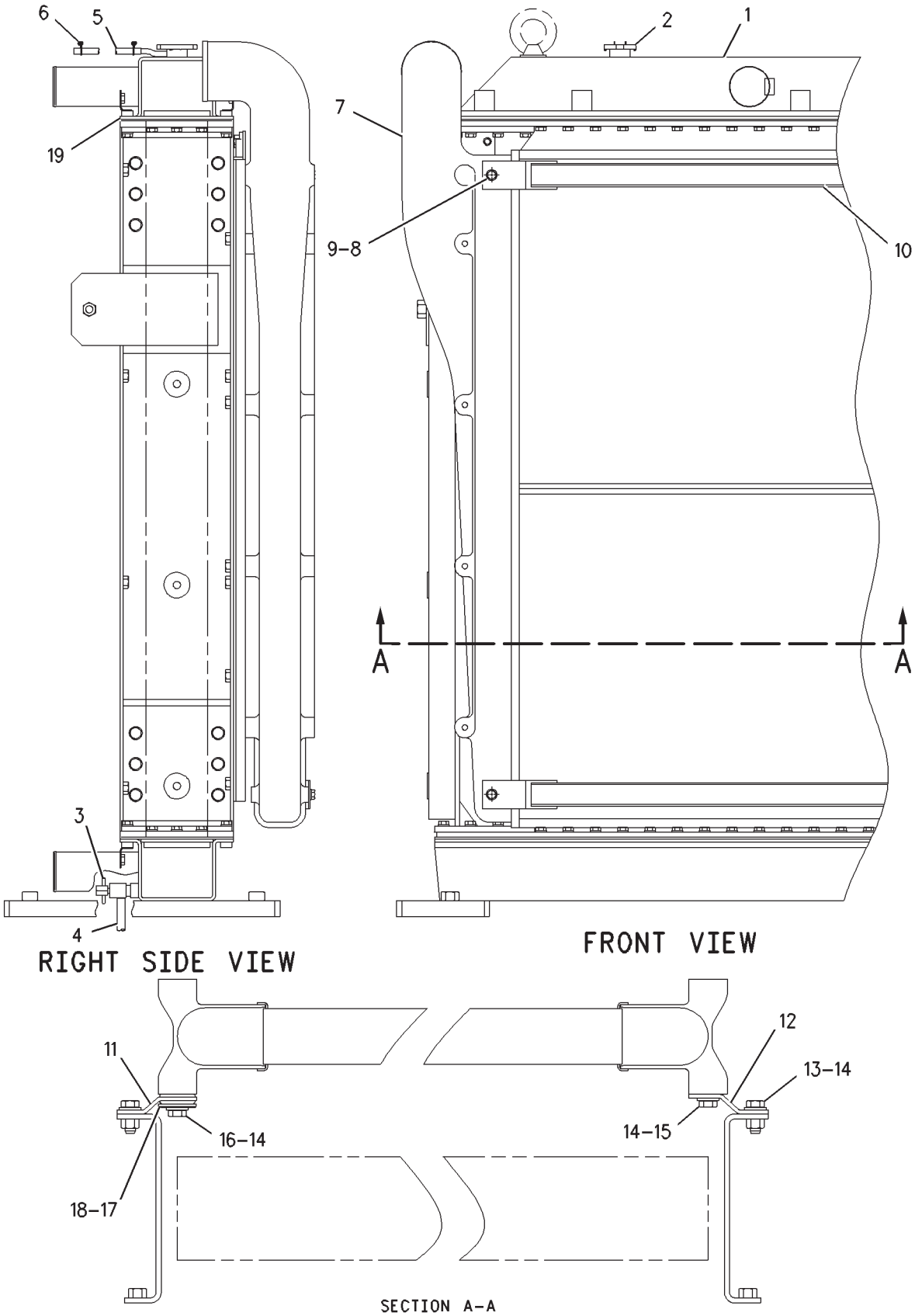

GRAPHIC #1 **<END>** g00941311

COOLING SYSTEM

210-7996 RADIATOR GP

S/N: RCD168-UP

PART OF 151-6651 RADIATOR & AFTERCOOLER GP

SMCS-1353 **i02115253**

NOTE	REF NO	GRAPHIC REF	PART NUMBER	QTY	PART NAME 1 2 3 4 5 6 (PRODUCT LEVEL)	SEE PAGE
	1	1	**210-7997**	1	RADIATOR AS	
	2	1	**099-0001**	1	CAP-RADIATOR	
	3	1	**210-7994**	1	DRAIN AS	
	4	1	**210-7995**	1	HOSE-WATER	
E	5	1	**7Y-1976**		HOSE-WATER (190-CM)	
	6	1	**096-4035**	2	CLIP	
	7	1	**196-8085**	1	AFTERCOOLER AS	
M	8	1	**8T-4136**	6	BOLT (M10X1.5X25-MM)	
	9	1	**8T-4121**	6	WASHER-HARD (11X21X2.5-MM THK)	
	10	1	**196-8090**	3	PLATE	
	11	1	**210-7993**	1	PLATE	
	12	1	**210-7992**	1	PLATE	
M	13	1	**8T-4139**	8	BOLT (M12X1.75X30-MM)	
	14	1	**8T-4223**	16	WASHER-HARD (13.5X25.5X3-MM THK)	
M	15	1	**8T-4192**	4	BOLT (M12X1.75X25-MM)	
M	16	1	**8T-4956**	4	BOLT (M12X1.75X35-MM)	
	17	1	**196-8088**	4	SEAL	
	18	1	**196-8089**	4	BOSS	
	19	1	**210-8078**	2	GASKET	

E-ORDER BY THE CENTIMETER
M-METRIC PART

210-7996 RADIATOR GP *(contd.)* i02115253

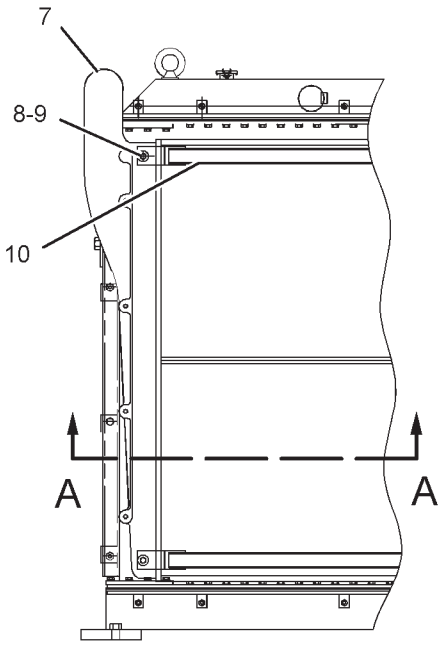

FRONT VIEW

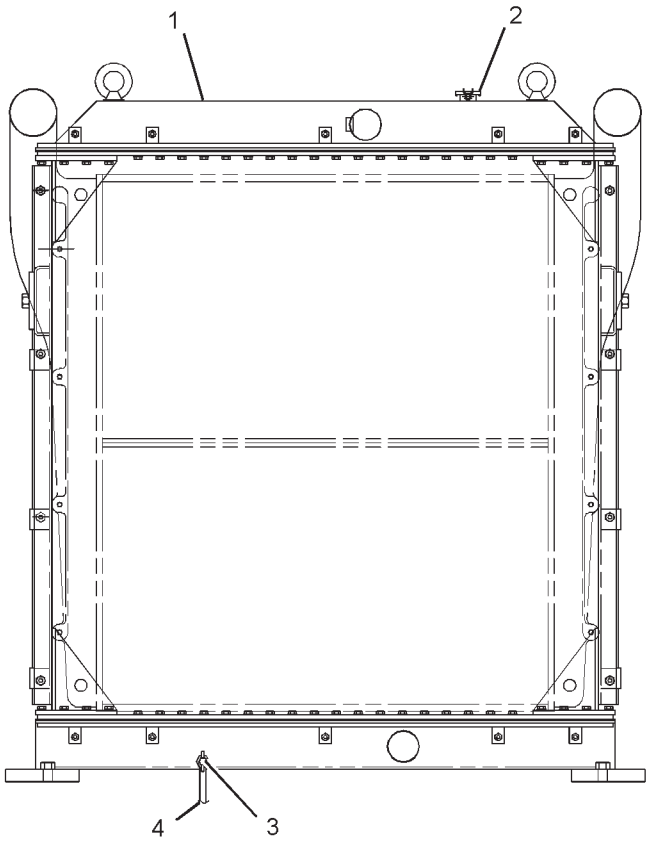

REAR VIEW

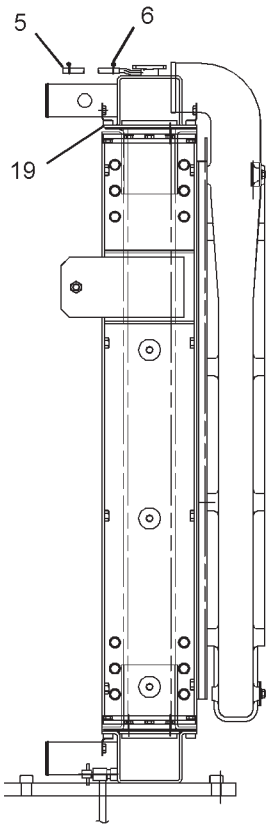

RIGHT SIDE VIEW

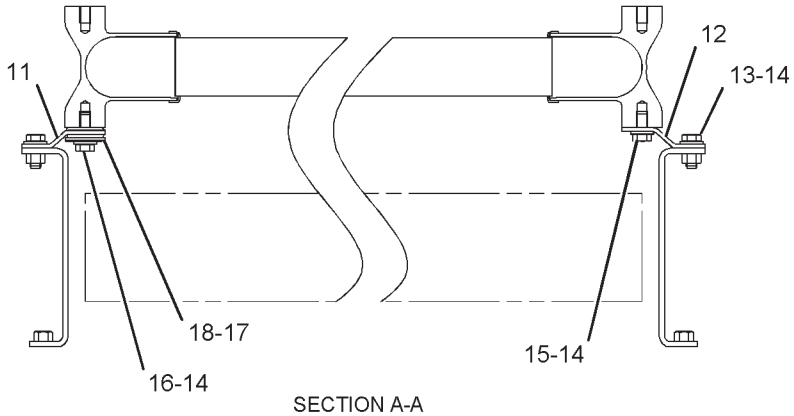

SECTION A-A

GRAPHIC #1 **<END>** g01089349

COOLING SYSTEM

210-8026 RADIATOR GP

S/N: RCD1-167

PART OF 210-8025 RADIATOR & AFTERCOOLER GP

SMCS-1353 **i02163397**

NOTE	REF NO	GRAPHIC REF	PART NUMBER	QTY	PART NAME 1 2 3 4 5 6 (PRODUCT LEVEL)	SEE PAGE
Y	1	1	**210-8027**	1	RADIATOR GP	136
	2	1	**195-0980**	1	CORE AS	
M	3	1	**8T-4956**	8	BOLT (M12X1.75X35-MM)	
	4	1	**8T-4223**	8	WASHER-HARD (13.5X25.5X3-MM THK)	

M-METRIC PART
Y-SEPARATE ILLUSTRATION

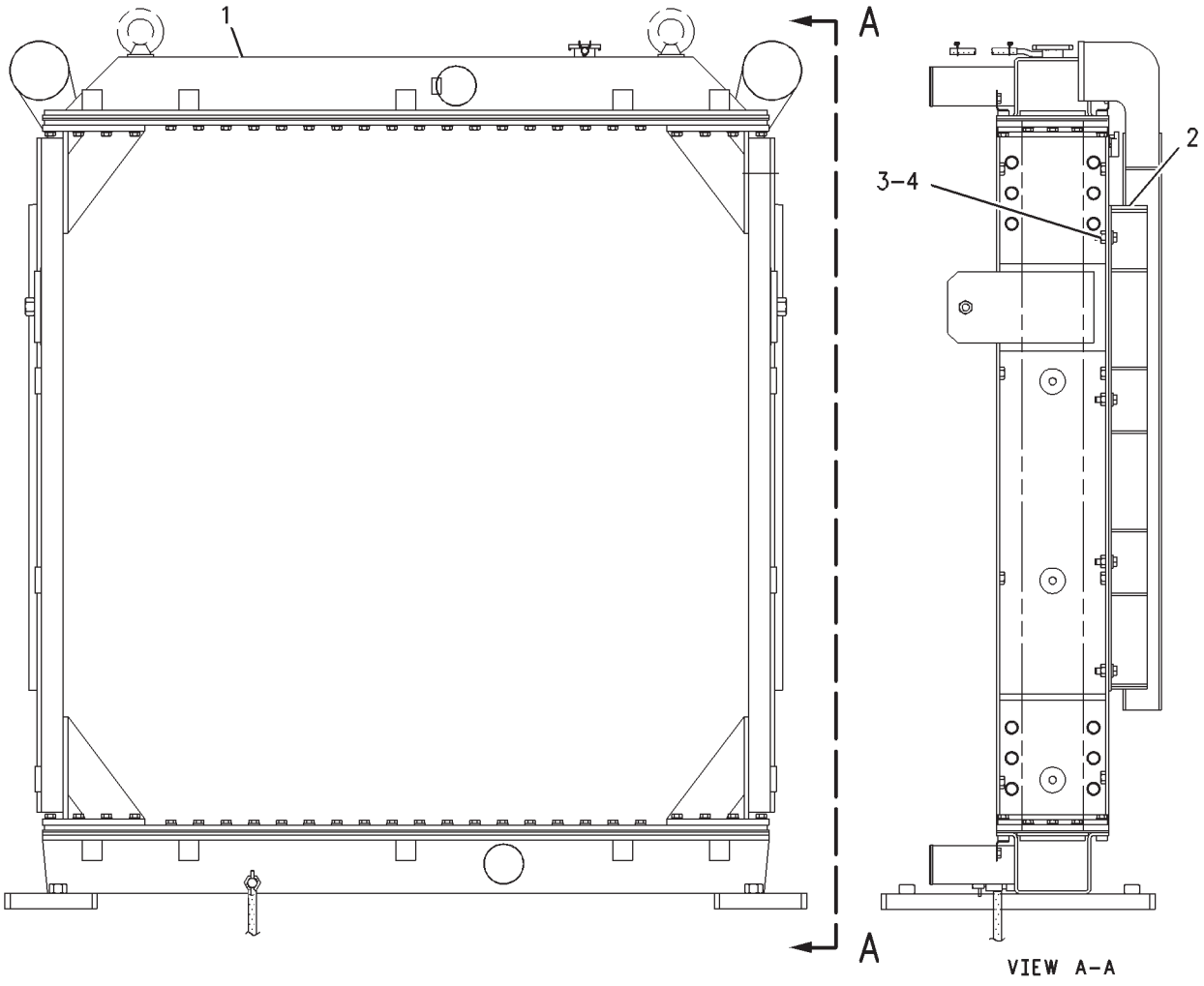

GRAPHIC #1 **<END>** g00942342

COOLING SYSTEM

210-8027 RADIATOR GP

S/N: RCD1-UP

PART OF 210-8026 RADIATOR GP

SMCS-1353 **i02284253**

NOTE	REF NO	GRAPHIC REF	PART NUMBER	QTY	PART NAME 1 2 3 4 5 6 (PRODUCT LEVEL)	SEE PAGE
	1	1	**210-8030**	1	RADIATOR AS	
	2	1	**099-0001**	1	CAP-RADIATOR	
E	3	1	**7Y-1976**		HOSE-WATER (190-CM)	
	4	1	**096-4035**	2	CLIP	
	5	1	**210-7994**	1	DRAIN AS	
	6	1	**210-7995**	1	HOSE-WATER	
	7	1	**210-8078**	2	GASKET	

E-ORDER BY THE CENTIMETER

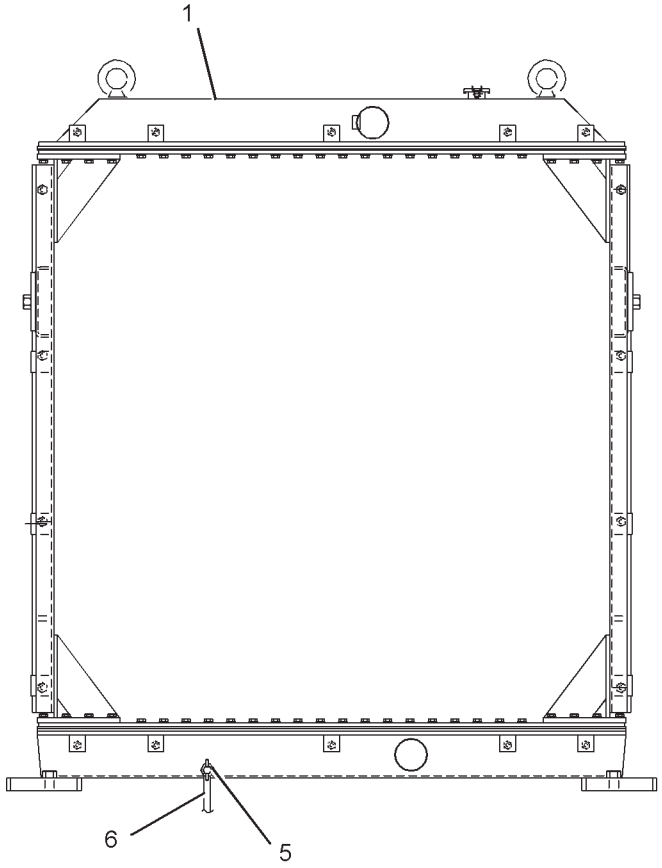

REAR VIEW

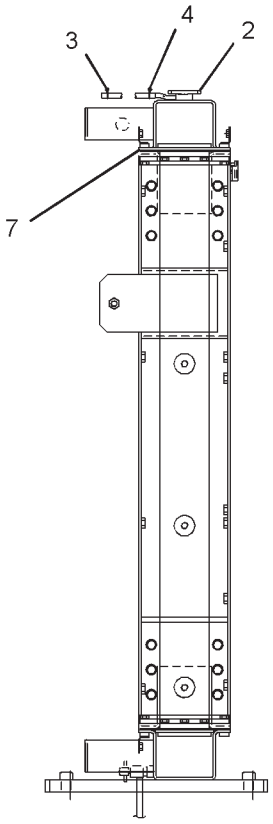

RIGHT SIDE VIEW

GRAPHIC #1 **<END>** g01097592

AIR INLET AND EXHAUST SYSTEM

151-6658 AIR CLEANER GP

S/N: RCD1-UP

PART OF 151-6657 MOUNTING GP-AIR CLEANER

SMCS-1051, 1054 **i01519315**

NOTE	REF NO	GRAPHIC REF	PART NUMBER	QTY	PART NAME 1 2 3 4 5 6 (PRODUCT LEVEL)	SEE PAGE
	1	1	**106-3969**	1	FILTER ELEMENT AS-AIR (PRIMARY)	
	2	1	**106-3973**	1	FILTER ELEMENT AS-AIR (SECONDARY)	
	3	1	**111-4376**	1	COVER AS	
E		1	**7X-2634**		SEAL (13CM)	
	4	1	**4S-6818**	2	ROD AS	
	5	1	**6L-3314**	1	CLAMP AS	
	6	1	**6L-3316**	1	CLAMP AS	
	7	1	**131-4770**	1	CUP AS	
	8	1	**1S-5485**	1	VALVE-AIR CLEANER DUST	
	9	1	**3R-5818**	1	BODY AS	
	10	1	**7W-0629**	1	ADAPTER AS-FILTER	
	11	1	**162-6208**	1	INDICATOR AS-AIR FILTER CHANGE (AIR RESTRICTION) (AIR FILTER SERVICE)	

E-ORDER BY THE CENTIMETER

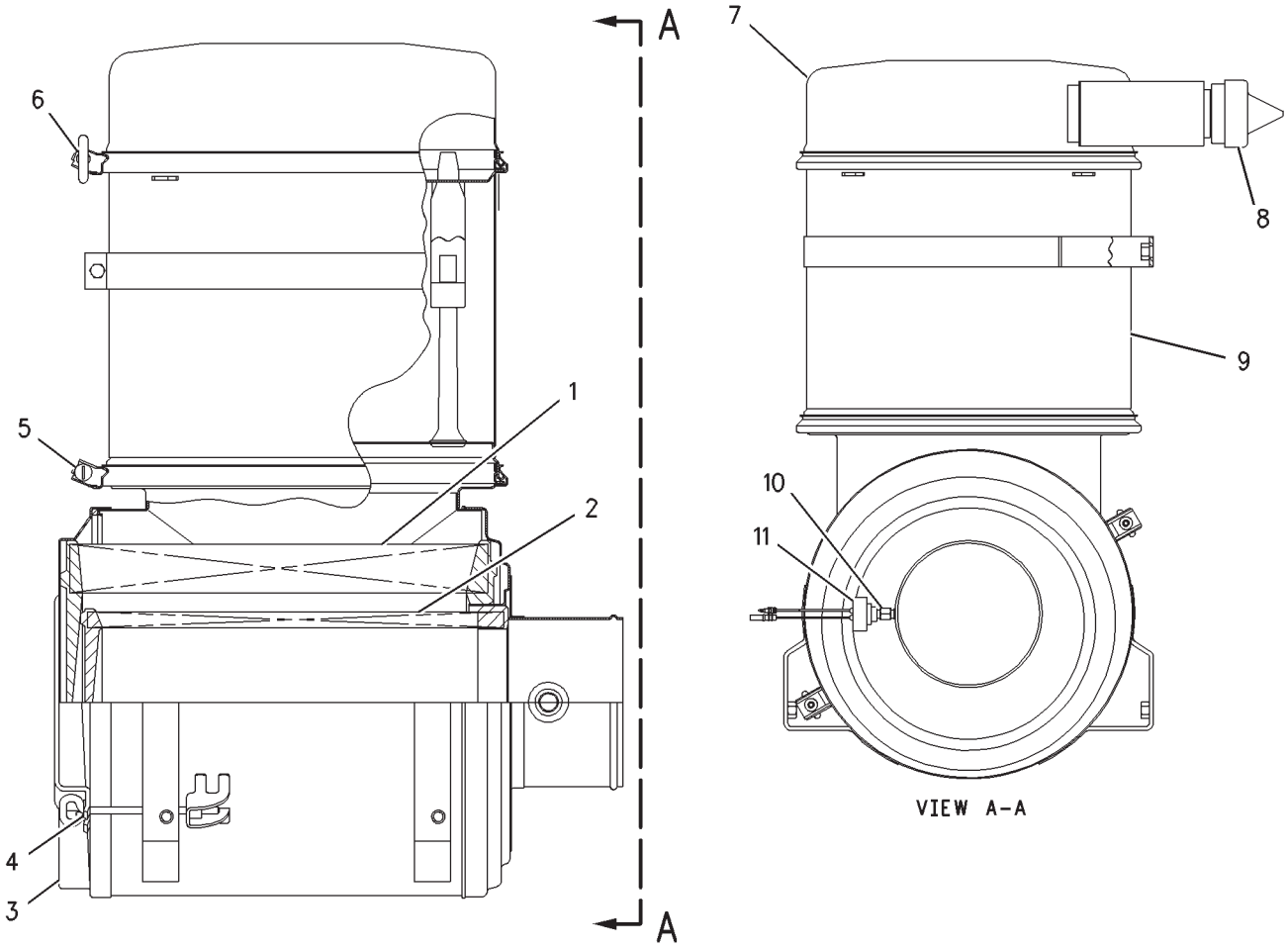

GRAPHIC #1 **<END>** g00789841

AIR INLET AND EXHAUST SYSTEM

151-6655 EXTENSION GP-EXHAUST

S/N: RCD1-UP

PART OF 220-4843, 242-5914 INSTALLATION AR-ENGINE

SMCS-1061 **i01519072**

NOTE	REF NO	GRAPHIC REF	PART NUMBER	QTY	PART NAME 1 2 3 4 5 6 (PRODUCT LEVEL)	SEE PAGE
	1	1	**171-9038**	1	PIPE AS	
M	2	1	**8T-4139**	4	BOLT (M12X1.75X30MM)	
	3	1	**5P-1076**	4	WASHER-HARD (13.5X30X4MM THK)	

M-METRIC PART

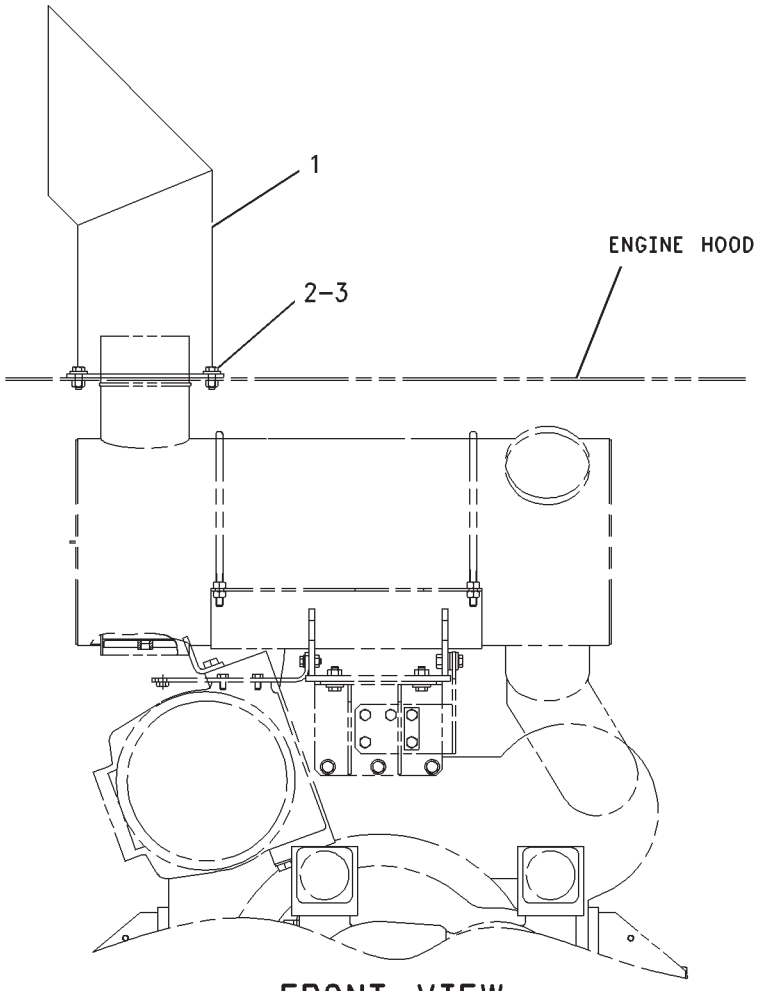

FRONT VIEW

GRAPHIC #1 **<END>** g00790150

AIR INLET AND EXHAUST SYSTEM

114-1904 LINES GP-AIR

S/N: BLC426-UP
PROVIDES A 90 DEGREE TURBO COMPRESSOR OUTLET ELBOW
PART OF 205-5858, 235-4685 ENGINE AR-COMPLETE
FOR USE WITH 101.6 MM (4 IN) DIAMETER HOSE

SMCS-1071 **i01503071**

NOTE	REF NO	GRAPHIC REF	PART NUMBER	QTY	PART NAME 1 2 3 4 5 6 (PRODUCT LEVEL)	SEE PAGE
	1	1	**8T-6757**	1	PLUG-PIPE	
	2	1	**5M-2894**	2	WASHER-HARD (10.2X18.5X2.5-MM THK)	
	3	1	**7W-3145**	2	PLATE	
	4	1	**0S-1594**	2	BOLT (3/8-16X1-IN)	
	5	1	**5H-7704**	2	SEAL-O-RING	
	6	1	**7C-5665**	1	ELBOW	

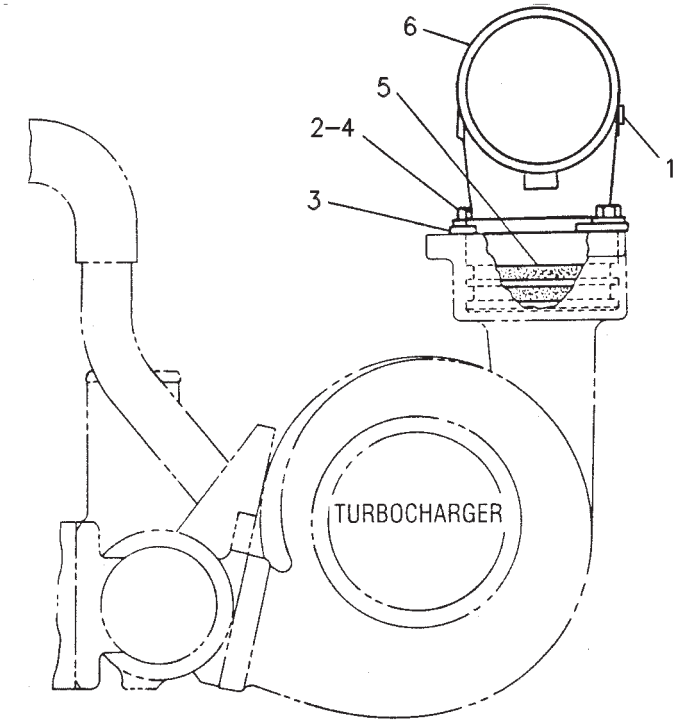

GRAPHIC #1 **<END>** g00247052

AIR INLET AND EXHAUST SYSTEM

127-9039 LINES GP-AIR

S/N: BLC426-536

PART OF 205-5858 ENGINE AR-COMPLETE

SMCS-1071 **i02478031**

NOTE	REF NO	GRAPHIC REF	PART NUMBER	QTY	PART NAME 1 2 3 4 5 6 (PRODUCT LEVEL)	SEE PAGE
	1	1	**0S-1588**	4	BOLT (3/8-16X1.25-IN)	
	2	1	**5M-2894**	4	WASHER-HARD (10.2X18.5X2.5-MM THK)	
	3	1	**8T-6765**	1	PLUG-PIPE	
	4	1	**101-3125**	1	GASKET (AIR INLET MANIFOLD)	
	5	1	**125-5032**	1	ELBOW	

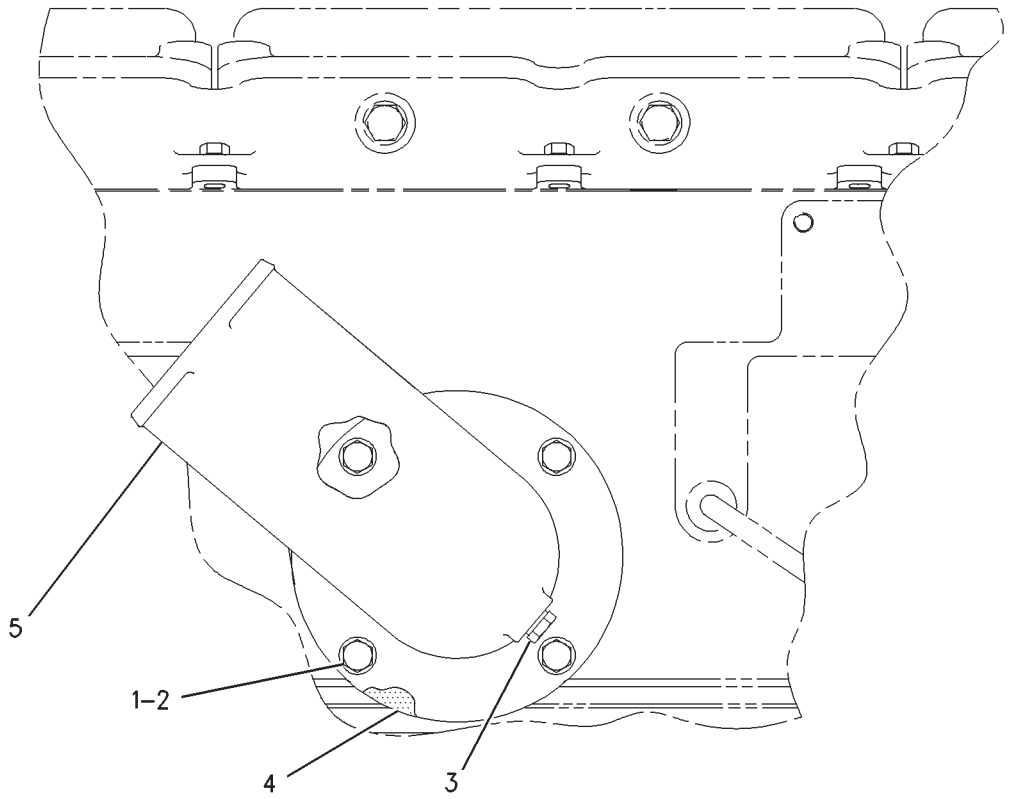

LEFT SIDE VIEW

GRAPHIC #1 **<END>** g00806909

AIR INLET AND EXHAUST SYSTEM

151-6656 LINES GP-AIR

S/N: RCD1-UP

PART OF 220-4843, 242-5914 INSTALLATION AR-ENGINE

SMCS-1071 **i01742895**

NOTE	REF NO	GRAPHIC REF	PART NUMBER	QTY	PART NAME 1 2 3 4 5 6 (PRODUCT LEVEL)	SEE PAGE
	1	1	**171-9019**	1	PIPE AS	
	2	1	**171-9018**	1	HOSE	
	3	1	**8T-4989**	1	CLAMP-HOSE	
	4	1	**8T-4988**	3	CLAMP-HOSE	
	5	1	**171-9017**	1	HOSE	
M	6	1	**8T-4133**	8	NUT (M10X1.5-THD)	
	7	1	**7Y-1275**	2	U-BOLT	
	8	1	**8T-4121**	5	WASHER-HARD (11X21X2.5-MM THK)	
	9	1	**201-3736**	1	PLATE AS	
	10	1	**201-3738**	1	HOSE	
	11	1	**095-1392**	1	CLAMP-HOSE	
	12	1	**104-3173**	1	CLIP	
M	13	1	**8T-4136**	1	BOLT (M10X1.5X25-MM)	
M	14	1	**8T-4192**	4	BOLT (M12X1.75X25-MM)	
	15	1	**5P-1076**	4	WASHER-HARD (13.5X30X4-MM THK)	

M-METRIC PART

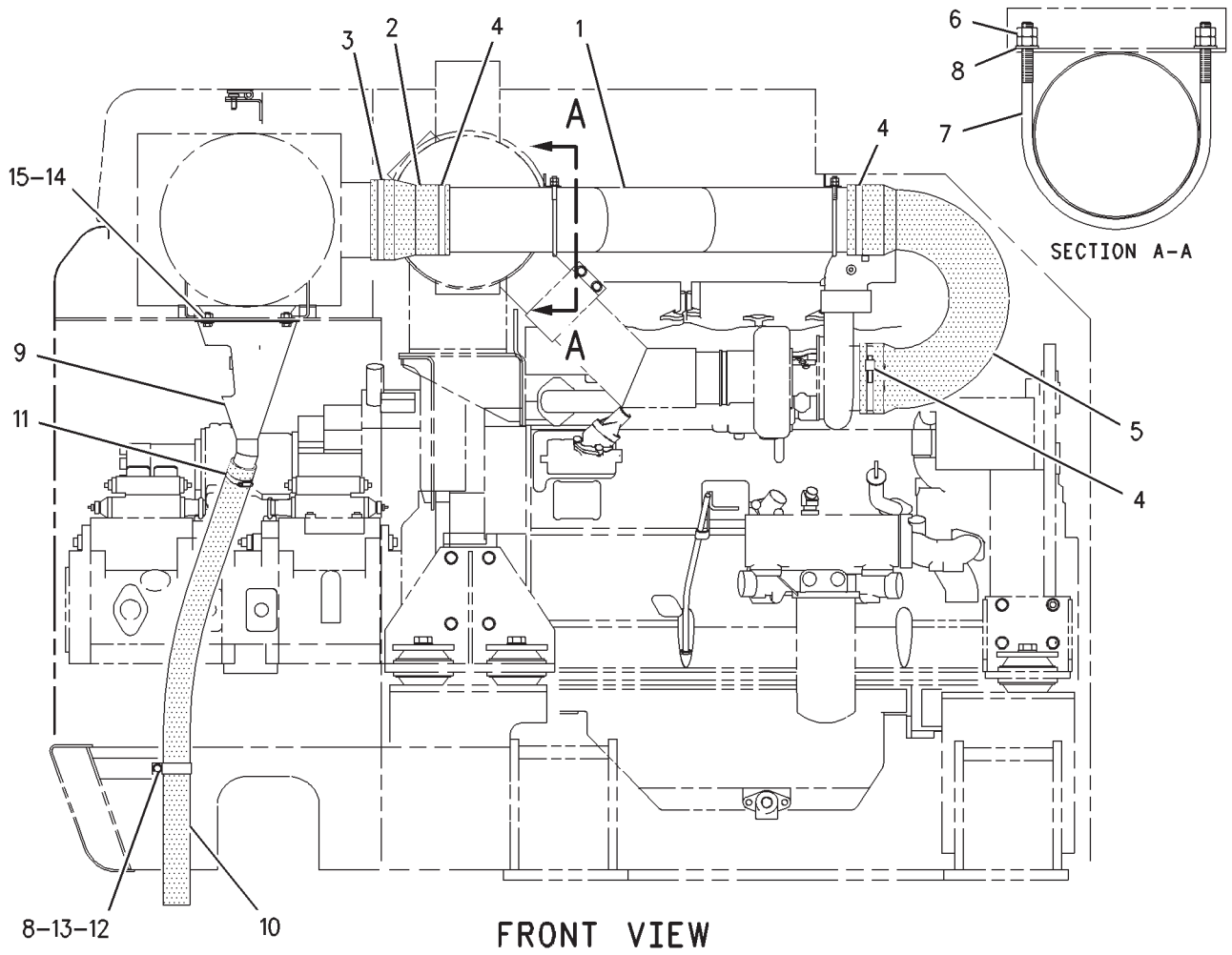

GRAPHIC #1 **<END>** g00892327

AIR INLET AND EXHAUST SYSTEM

151-6663 LINES GP-AIR

S/N: RCD1-UP

PART OF 220-4843, 242-5914 INSTALLATION AR-ENGINE

SMCS-1071 **i02077423**

NOTE	REF NO	GRAPHIC REF	PART NUMBER	QTY	PART NAME 1 2 3 4 5 6 (PRODUCT LEVEL)	SEE PAGE
	1	1	**9X-6654**	4	CLAMP-HOSE	
	2	1	**230-2895**	1	HOSE	
	3	1	**8T-4986**	12	CLAMP-HOSE	
	4	1	**171-9027**	1	PIPE AS	
	5	1	**230-2894**	1	HOSE	
	6	1	**101-3125**	1	GASKET (AIR INLET MANIFOLD)	
	7	1	**9B-7237**	4	BOLT (3/8-16X1.25-IN)	
	8	1	**8T-4896**	4	WASHER-HARD (10.2X18.5X2.5-MM THK)	
	9	1	**171-9032**	1	PIPE AS	
	10	1	**171-9026**	1	HOSE	
	11	1	**171-9030**	1	PIPE AS	
	12	1	**171-9025**	1	HOSE	
	13	1	**8T-6765**	2	PLUG-PIPE	
M	14	1	**8T-4195**	4	BOLT (M10X1.5X30-MM)	
	15	1	**8T-4222**	4	WASHER-PLATED (11X32X2.5-MM THK)	
M	16	1	**8T-4244**	8	NUT (M12X1.75-THD)	
	17	1	**147-7142**	2	U-BOLT	
	18	1	**8T-4223**	4	WASHER-HARD (13.5X25.5X3-MM THK)	

M-METRIC PART

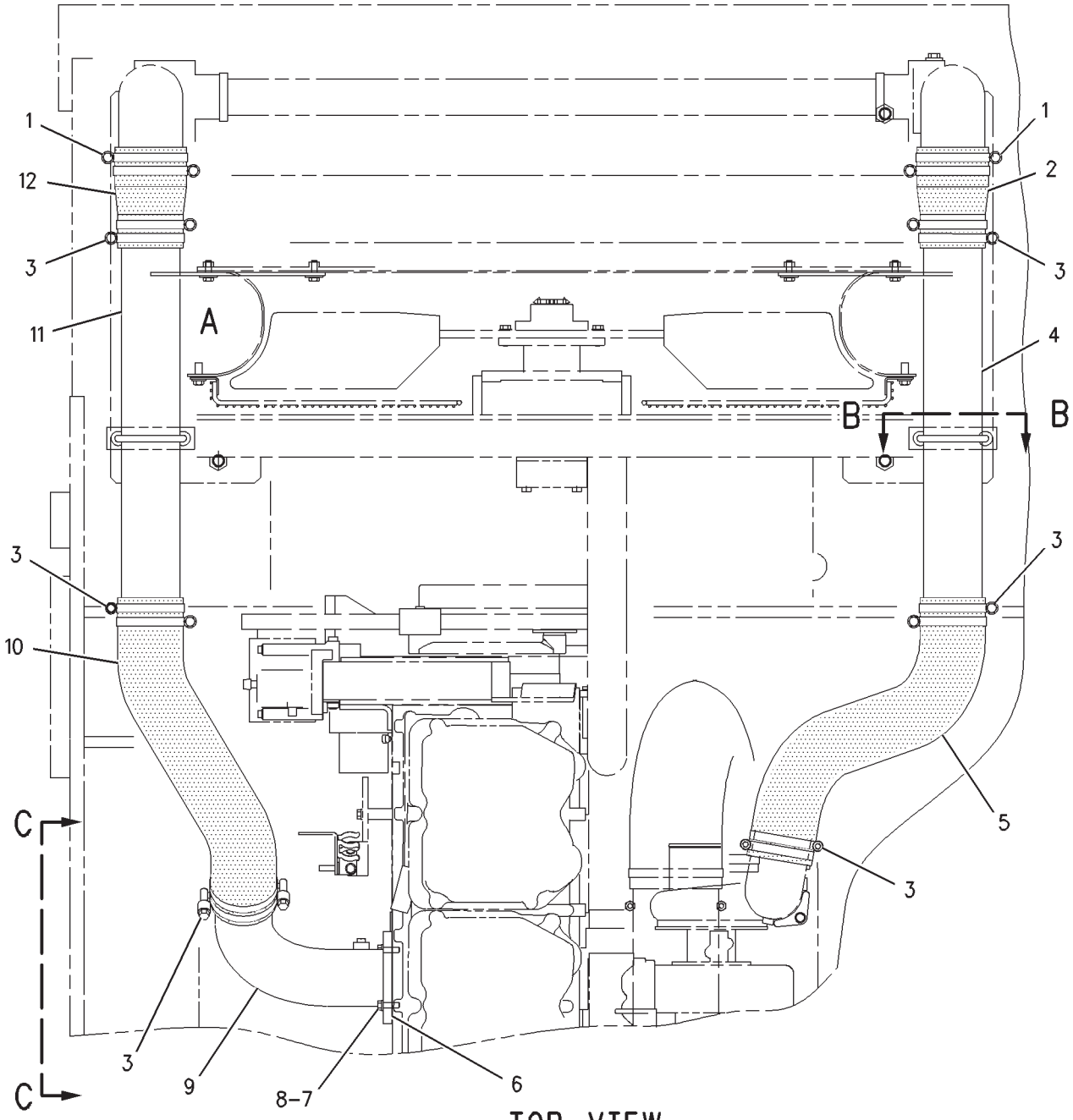

TOP VIEW

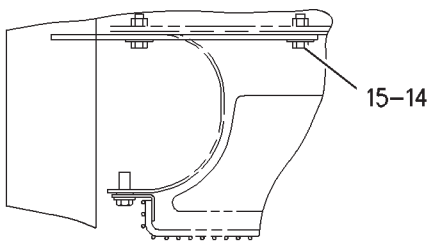

VIEW OF AREA A

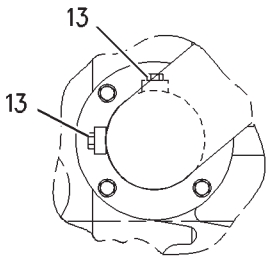

VIEW C-C

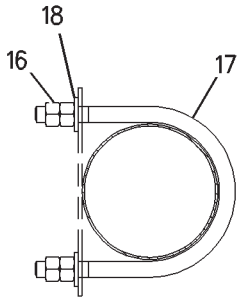

SECTION B-B

GRAPHIC #1 **<END>** g00892376

AIR INLET AND EXHAUST SYSTEM

191-6147 LINES GP-AIR

S/N: BLC426-UP

PART OF 205-5858, 235-4685 ENGINE AR-COMPLETE

SMCS-1071 **i01744058**

NOTE	REF NO	GRAPHIC REF	PART NUMBER	QTY	PART NAME 1 2 3 4 5 6 (PRODUCT LEVEL)	SEE PAGE
	1	1	**2N-2765**	2	BOLT-HIGH TEMPERATURE (3/8-16X1.75 IN)	
	2	1	**2N-2766**	2	LOCKNUT	
	3	1	**5L-8854**	2	RING-SEALING	
	4	1	**9Y-8968**	1	COUPLING-EXHAUST	
	5	1	**137-5103**	1	SUPPORT-EXHAUST PIPE	

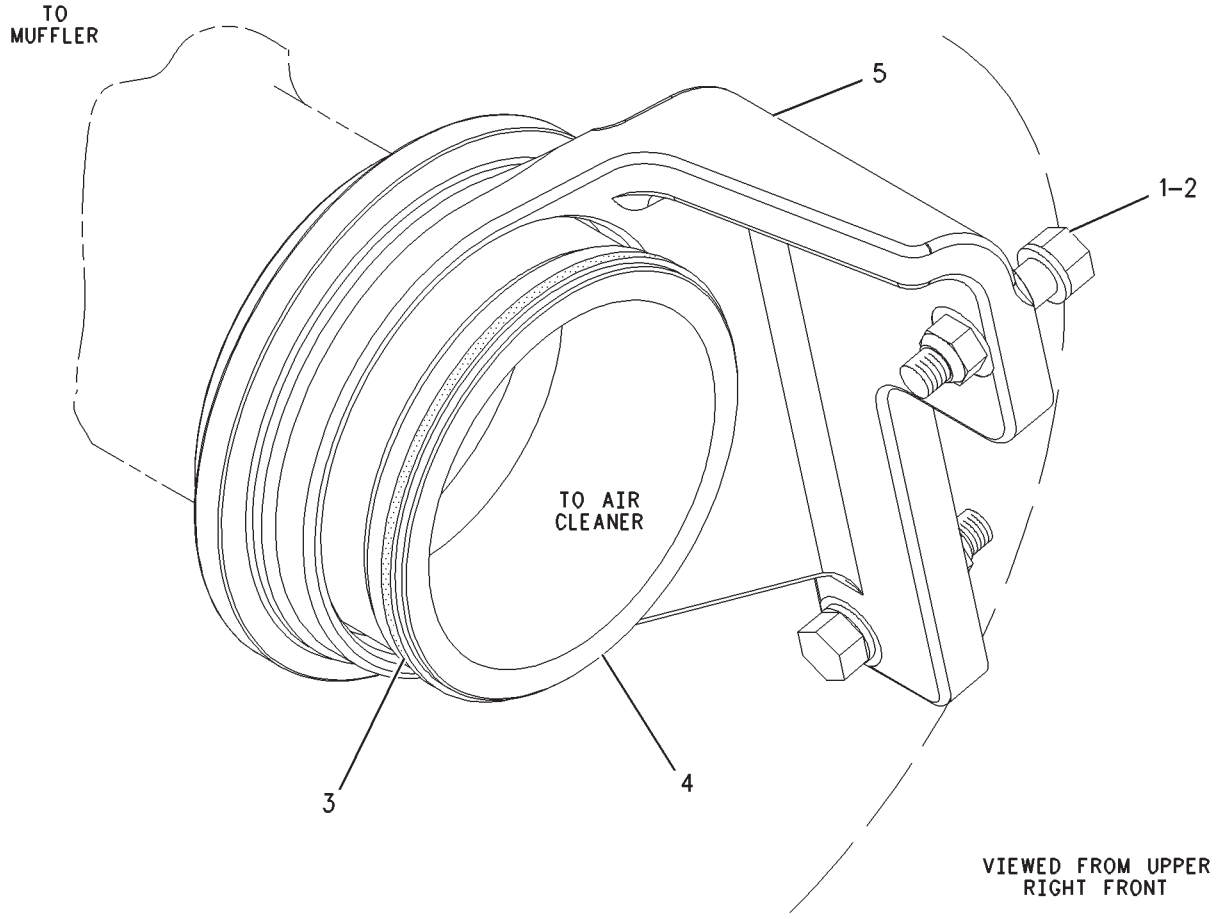

GRAPHIC #1 **<END>** g00892918

AIR INLET AND EXHAUST SYSTEM

151-6661 LINES GP-MUFFLER DRAIN

S/N: RCD1-UP

PART OF 220-4843, 242-5914 INSTALLATION AR-ENGINE

SMCS-1062 **i01744060**

NOTE	REF NO	GRAPHIC REF	PART NUMBER	QTY	PART NAME 1 2 3 4 5 6 (PRODUCT LEVEL)	SEE PAGE
	1	1	**171-9074**	1	PIPE AS	
	2	1	**5P-4961**	1	CLAMP-HOSE	
E	3	1	**5P-1442**		HOSE (60CM)	
M	6	1	**8T-4136**	1	BOLT (M10X1.5X25-MM)	
	7	1	**7X-7729**	2	WASHER (11X25X3-MM THK)	
	8	1	**151-6641**	2	CLIP	
M	10	1	**8T-4137**	1	BOLT (M10X1.5X20-MM)	

E-ORDER BY THE CENTIMETER
M-METRIC PART

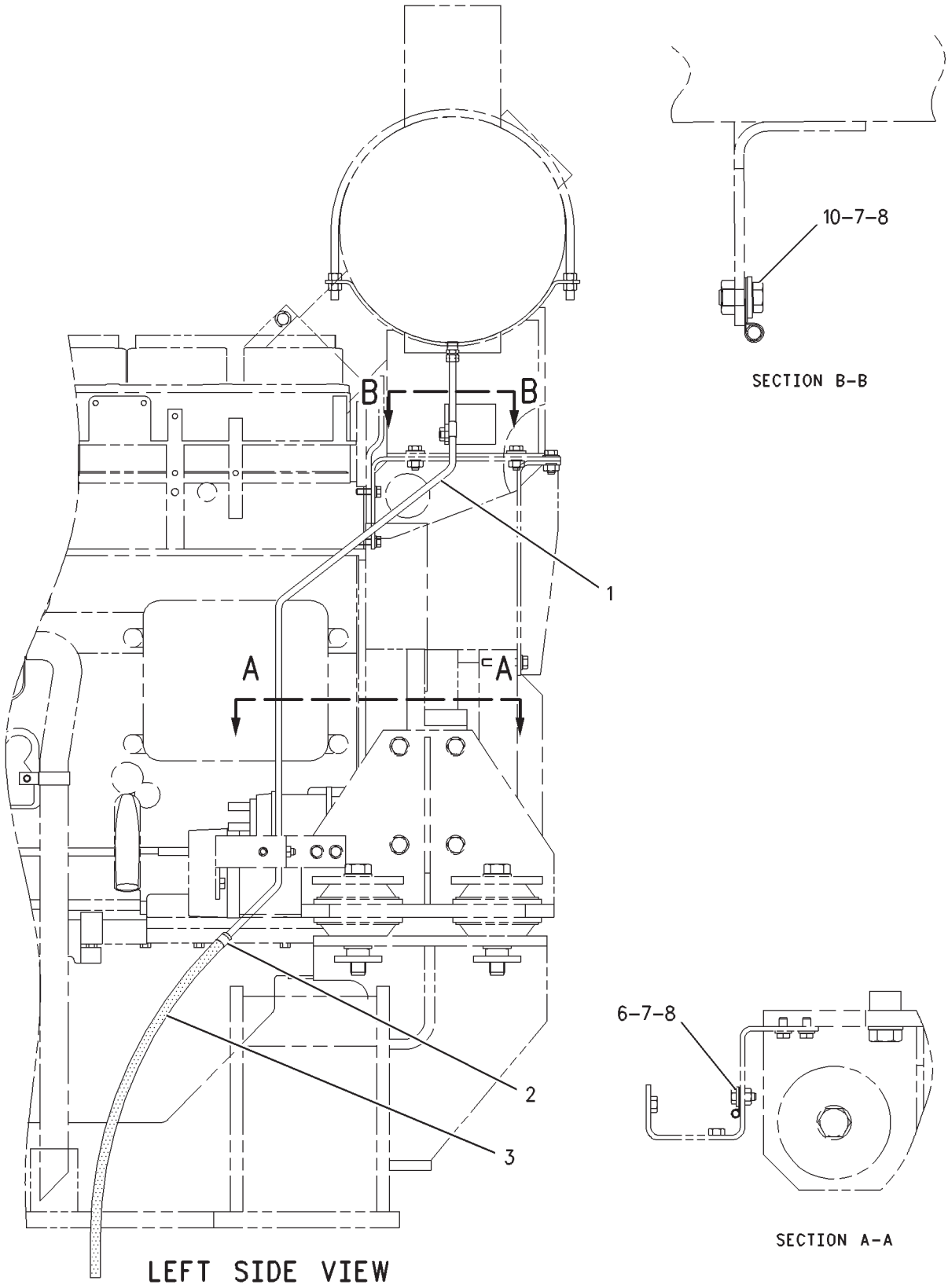

GRAPHIC #1 **<END>** g00892952

AIR INLET AND EXHAUST SYSTEM

135-6552 MANIFOLD GP-EXHAUST

S/N: BLC426-UP

PART OF 205-5858, 235-4685 ENGINE AR-COMPLETE

SMCS-1059 **i01743017**

NOTE	REF NO	GRAPHIC REF	PART NUMBER	QTY	PART NAME 1 2 3 4 5 6 (PRODUCT LEVEL)	SEE PAGE
	1	1	**2N-2766**	12	LOCKNUT	
		1	**5M-2894**	12	WASHER-HARD (10.2X18.5X2.5MM THK)	
	2	1	**129-9452**	6	GASKET-EXHAUST MANIFOLD	
	3	1	**101-7354**	1	MANIFOLD-EXHAUST	
	4	1	**102-8608**	2	MANIFOLD-EXHAUST	
	5	1	**2S-3770**	1	SPACER (33.5MM THK)	
	6	1	**108-3612**	11	SPACER (11.13X19.05X53MM THK)	
	7	1	**106-1792**	11	STUD-TAPERLOCK (3/8-16X3.93 IN)	
	8	1	**4S-6137**	1	STUD-TAPERLOCK (3/8-16X3.1IN)	

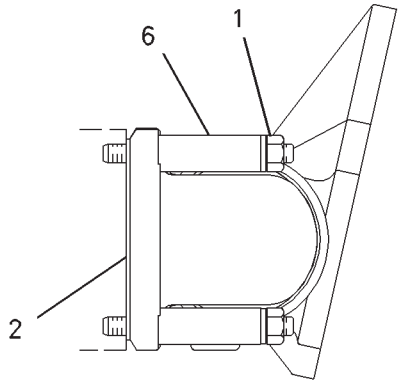

VIEW B-B

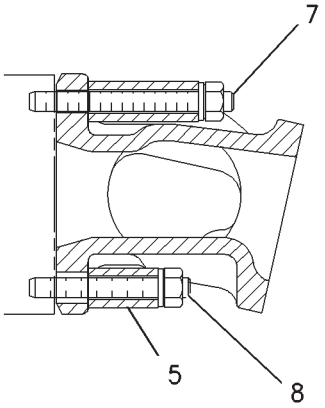

SECTION A-A

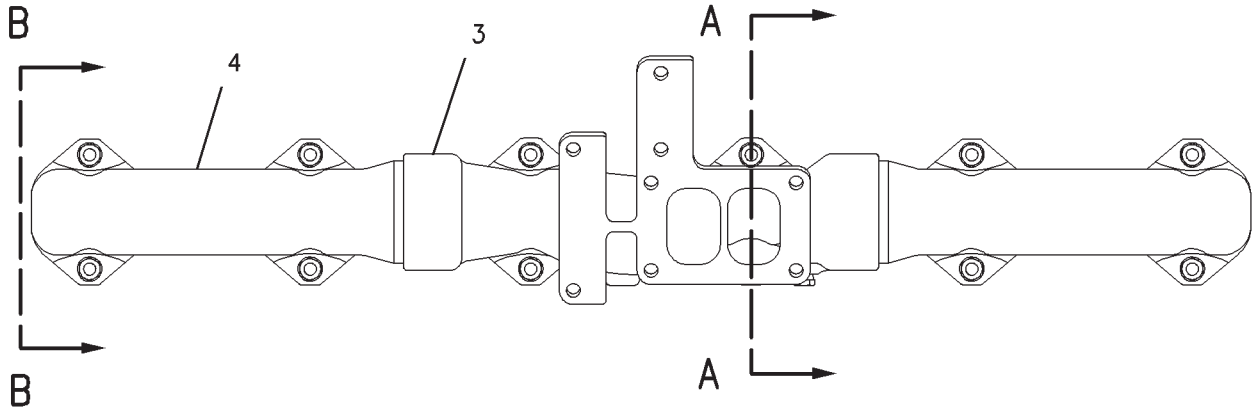

GRAPHIC #1 **<END>** g00892387

AIR INLET AND EXHAUST SYSTEM

151-6657 MOUNTING GP-AIR CLEANER

S/N: RCD1-UP

PART OF 220-4843, 242-5914 INSTALLATION AR-ENGINE

SMCS-1051 **i01519275**

NOTE	REF NO	GRAPHIC REF	PART NUMBER	QTY	PART NAME 1 2 3 4 5 6 (PRODUCT LEVEL)	SEE PAGE
Y	1	1	**151-6658**	1	AIR CLEANER GP	137
M	2	1	**8T-4956**	4	BOLT (M12X1.75X35-MM)	
	3	1	**8T-4223**	4	WASHER-HARD (13.5X25.5X3-MM THK)	

M-METRIC PART
Y-SEPARATE ILLUSTRATION

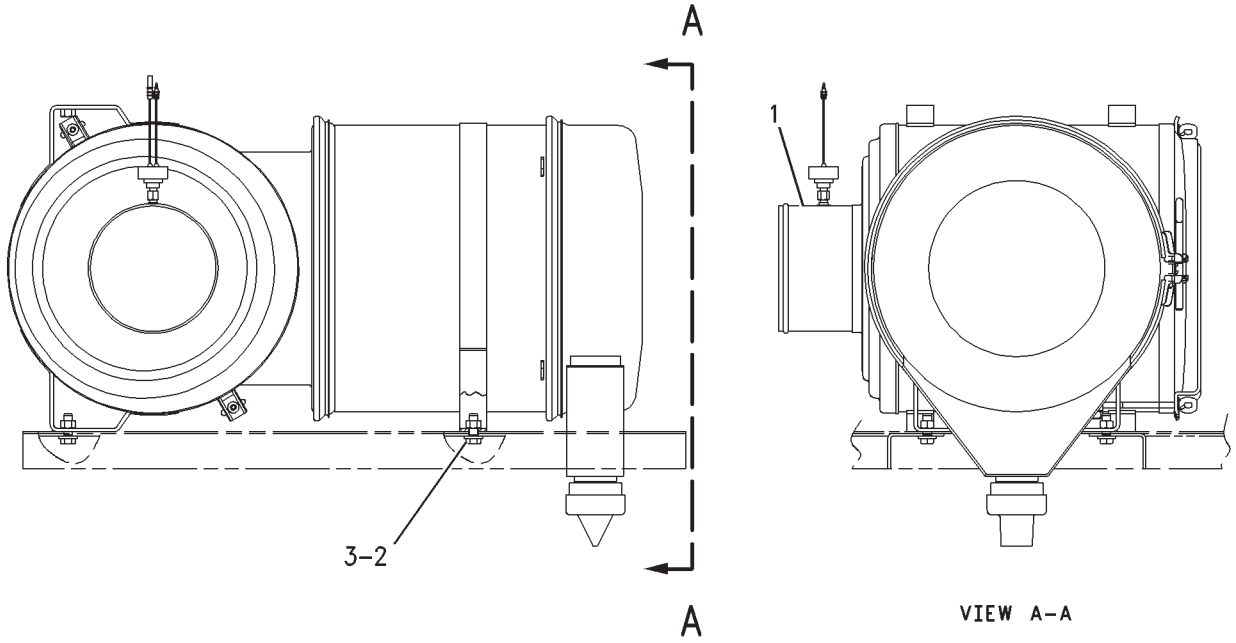

VIEW A-A

GRAPHIC #1 **<END>** g00789801

AIR INLET AND EXHAUST SYSTEM

205-6912 MUFFLER GP

S/N: RCD1-221

PART OF 205-6911 INSTALLATION AR-ENGINE

SMCS-1062 **i03247667**

NOTE	REF NO	GRAPHIC REF	PART NUMBER	QTY	PART NAME 1 2 3 4 5 6 (PRODUCT LEVEL)	SEE PAGE
	1	1	**196-8202**	1	MUFFLER GP	
	2	1	**131-8847**	2	U-BOLT	
	3	1	**7Y-1144**	1	CLAMP AS	
	4	1	**171-9053**	1	PIPE AS	
	5	1	**4W-9160**	1	CLAMP-V BAND	
	6	1	**7X-0316**	2	BOLT (7/16-14X3.5-IN)	
	7	1	**8T-5360**	2	WASHER (12X22.5X2.5-MM THK)	
	8	1	**171-9046**	1	BRACKET AS	
	9	1	**171-9049**	1	BRACKET AS	
M	10	1	**8T-4956**	6	BOLT (M12X1.75X35-MM)	
	11	1	**8T-4223**	4	WASHER-HARD (13.5X25.5X3-MM THK)	
	12	1	**5P-1076**	4	WASHER-HARD (13.5X30X4-MM THK)	
	13	1	**171-9042**	1	BRACKET AS	
M	14	1	**8T-4244**	10	NUT (M12X1.75-THD)	
C	15	1,2	**8T-2501**	10	BOLT (3/8-16X2-IN)	
M	16	1	**7Y-1727**	2	BOLT (M12X1.75X60-MM)	
	17	1	**7Y-1729**	1	GASKET	
	18	1	**7Y-1924**	1	SPACER (9X19X23-MM THK)	
M	19	1	**8T-4137**	8	BOLT (M10X1.5X20-MM)	
C	20	1	**7X-7729**	10	WASHER (11X25X3-MM THK)	
C	21	1	**222-8259**	1	SHIELD AS-HEAT (PERFORATED)	
C	23	1	**7X-0289**	3	BOLT (3/8-16X1.875-IN)	
	24	2	**205-6716**	7	SPACER (10.5X20X19-MM THK)	
	26	1	**217-5449**	6	SPACER (10.5X20X29-MM THK)	
C	28	1	**222-8267**	1	SUPPORT AS	
C	29	1	**222-8263**	1	SUPPORT AS	
M	30	2	**8T-4136**	1	BOLT (M10X1.5X25-MM)	
C	31	2	**8T-4121**	1	WASHER-HARD (11X21X2.5-MM THK)	
	32	2	**8M-2773**	1	CLIP	
	33	1	**8T-8911**	1	BOLT (5/16-18X2-IN)	
M	36	2	**8T-4196**	2	BOLT (M10X1.5X35-MM)	
	37	2	**217-5459**	1	SHIELD AS-HEAT	
C	38	2	**222-8275**	1	CLAMP AS	

C-CHANGE FROM PREVIOUS TYPE
M-METRIC PART

205-6912 **MUFFLER GP** *(contd.)* **i03247667**

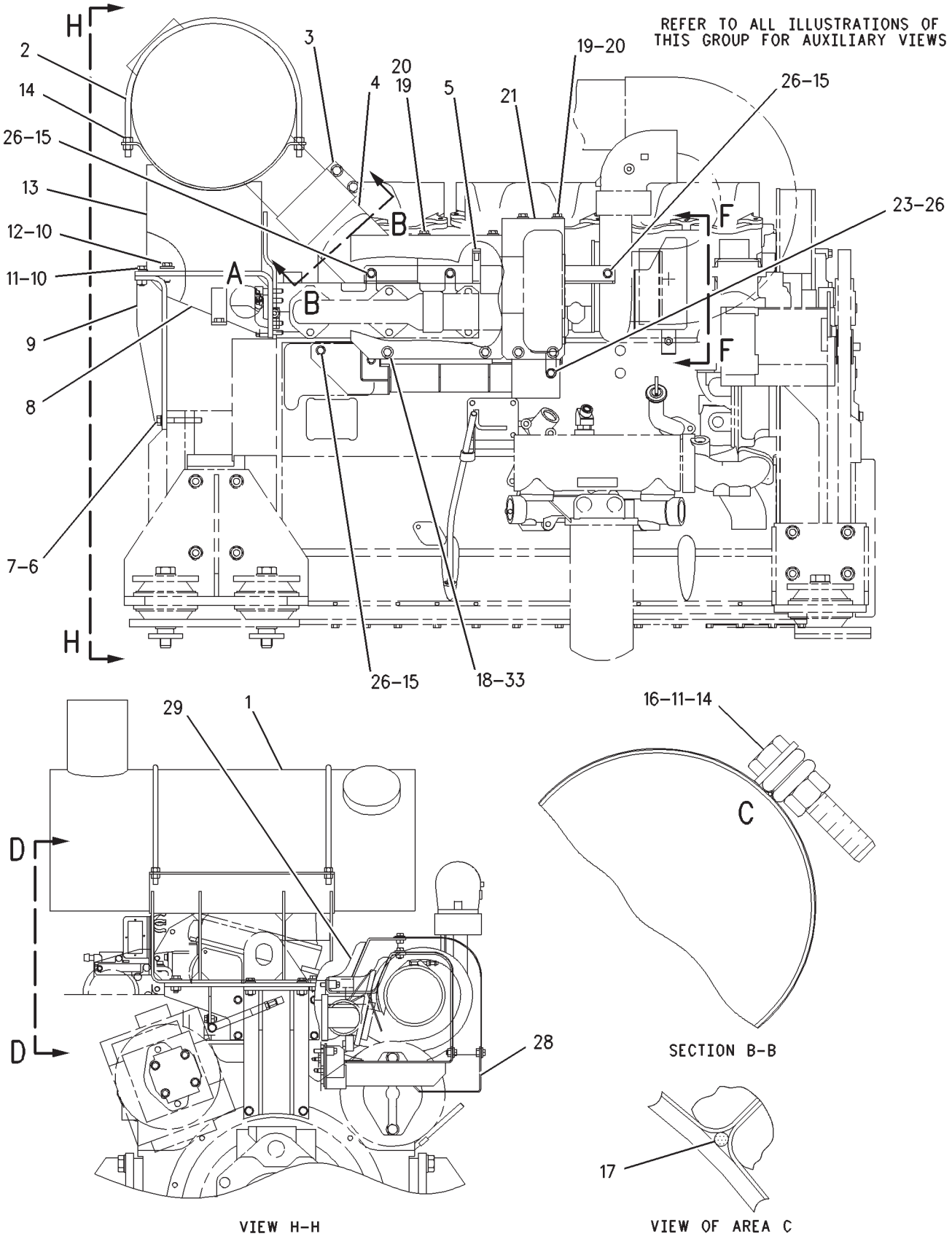

GRAPHIC #1 g00874246

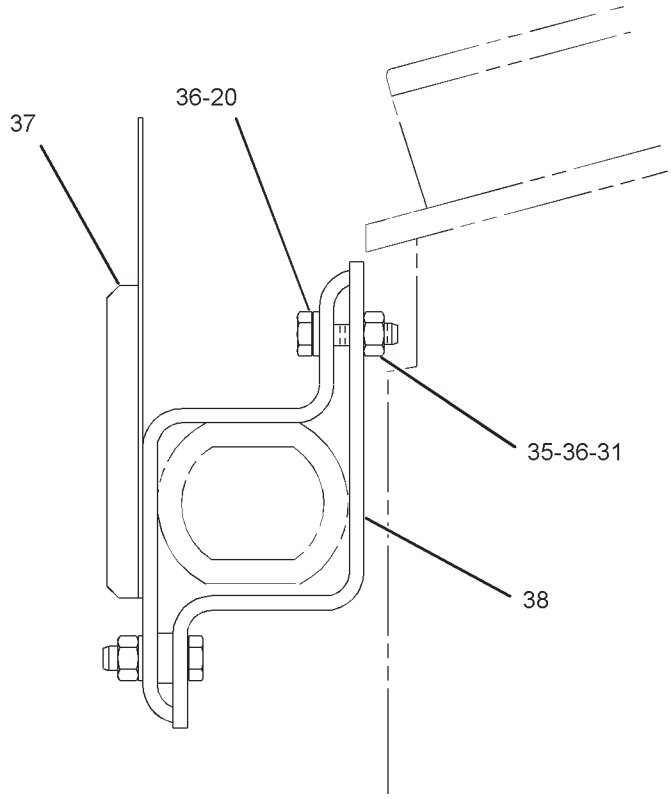

VIEW F-F

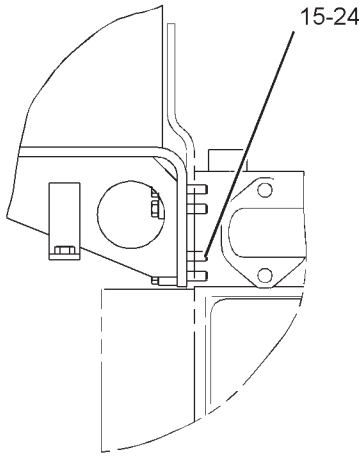

VIEW OF AREA A

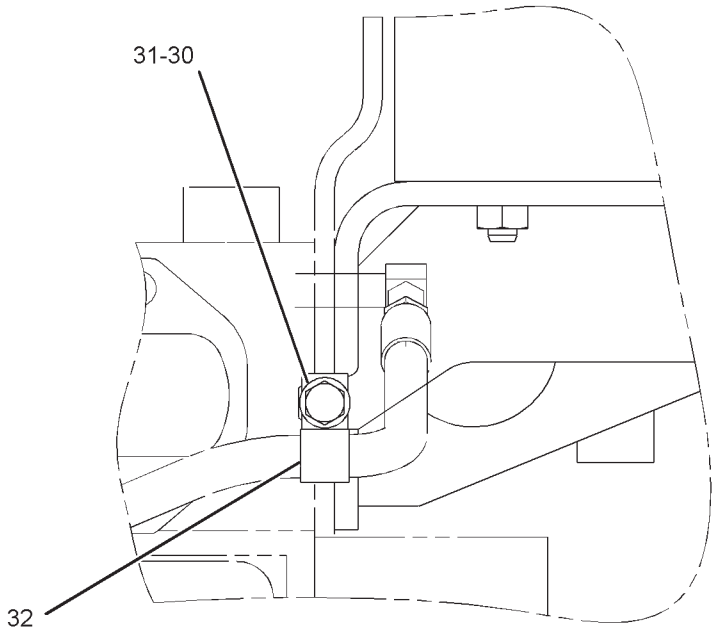

VIEW D-D

GRAPHIC #2 **<END>** g01118200

AIR INLET AND EXHAUST SYSTEM

205-6912 MUFFLER GP

S/N: RCD222-257

PART OF 205-6911 INSTALLATION AR-ENGINE

SMCS-1062 **i03247662**

NOTE	REF NO	GRAPHIC REF	PART NUMBER	QTY	PART NAME 1 2 3 4 5 6 (PRODUCT LEVEL)	SEE PAGE
	1	1	**196-8202**	1	MUFFLER GP	
	2	1	**131-8847**	2	U-BOLT	
	3	1	**7Y-1144**	1	CLAMP AS	
	4	1	**171-9053**	1	PIPE AS	
	5	1	**4W-9160**	1	CLAMP-V BAND	
	6	1	**7X-0316**	2	BOLT (7/16-14X3.5-IN)	
	7	1	**8T-5360**	2	WASHER (12X22.5X2.5-MM THK)	
	8	1	**171-9046**	1	BRACKET AS	
	9	1	**171-9049**	1	BRACKET AS	
M	10	1	**8T-4956**	6	BOLT (M12X1.75X35-MM)	
	11	1	**8T-4223**	4	WASHER-HARD (13.5X25.5X3-MM THK)	
	12	1	**5P-1076**	4	WASHER-HARD (13.5X30X4-MM THK)	
C	13	2	**233-1314**	1	SUPPORT AS	
M	14	1	**8T-4244**	10	NUT (M12X1.75-THD)	
	15	1,2	**8T-2501**	10	BOLT (3/8-16X2-IN)	
M	16	1	**7Y-1727**	2	BOLT (M12X1.75X60-MM)	
	17	1	**7Y-1729**	1	GASKET	
	18	1	**7Y-1924**	1	SPACER (9X19X23-MM THK)	
M	19	1	**8T-4137**	8	BOLT (M10X1.5X20-MM)	
	20	1,2	**7X-7729**	10	WASHER (11X25X3-MM THK)	
	21	1	**222-8259**	1	SHIELD AS-HEAT (PERFORATED)	
C	22	2	**233-1292**	1	PLATE	
	23	1	**7X-0289**	3	BOLT (3/8-16X1.875-IN)	
	24	2	**205-6716**	7	SPACER (10.5X20X19-MM THK)	
C	25	2	**8T-4224**	3	WASHER-HARD (8.8X16X2-MM THK)	
	26	1	**217-5449**	6	SPACER (10.5X20X29-MM THK)	
CM	27	2	**8T-4908**	3	BOLT (M8X1.25X25-MM)	
	28	1	**222-8267**	1	SUPPORT AS	
C	29	1	**233-1312**	1	BRACKET AS	
M	30	2	**8T-4136**	1	BOLT (M10X1.5X25-MM)	
	31	2	**8T-4121**	1	WASHER-HARD (11X21X2.5-MM THK)	
	32	2	**8M-2773**	1	CLIP	
	33	1	**8T-8911**	1	BOLT (5/16-18X2-IN)	
M	36	2	**8T-4196**	2	BOLT (M10X1.5X35-MM)	
	37	2	**217-5459**	1	SHIELD AS-HEAT	
	38	2	**222-8275**	1	CLAMP AS	

C-CHANGE FROM PREVIOUS TYPE
M-METRIC PART

205-6912 **MUFFLER GP** *(contd.)* **i03247662**

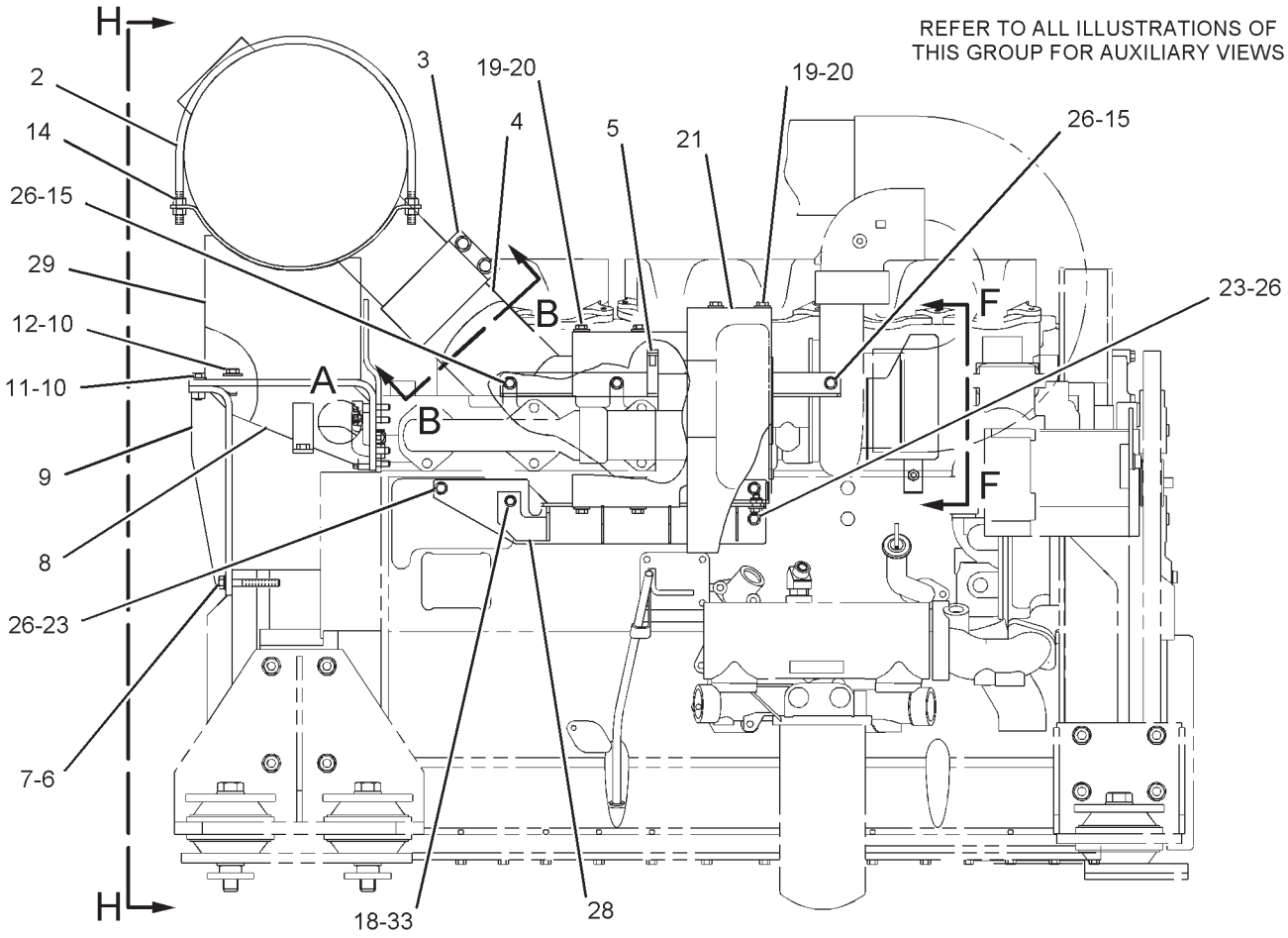

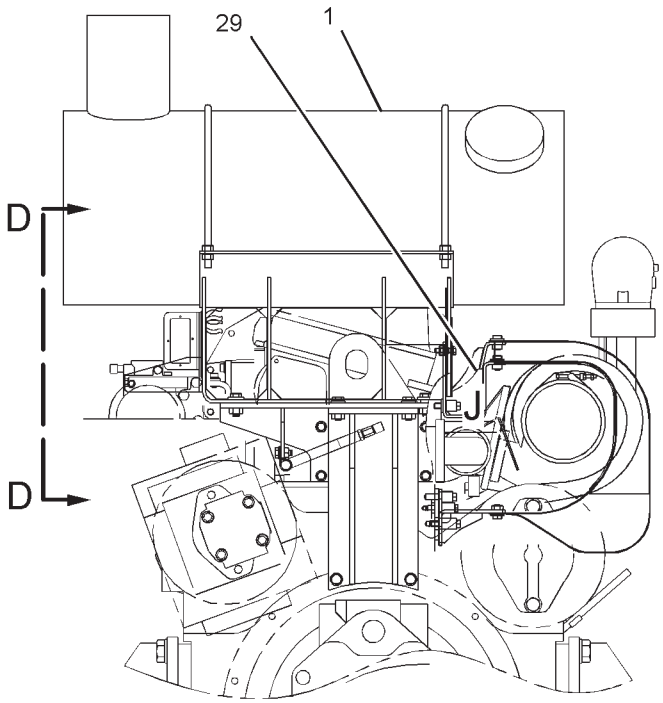

VIEW H-H

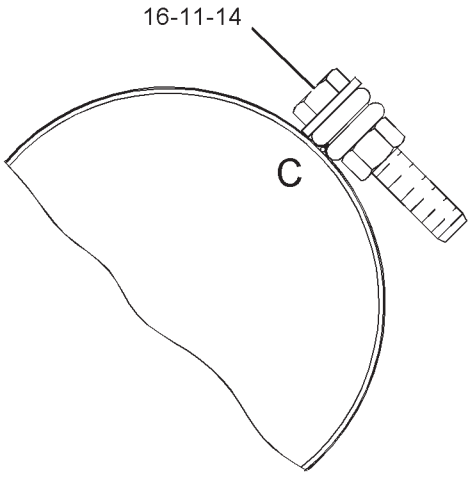

SECTION B-B

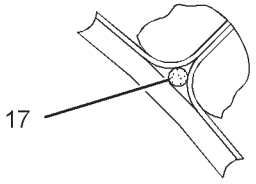

VIEW OF AREA C

GRAPHIC #1

g01114052

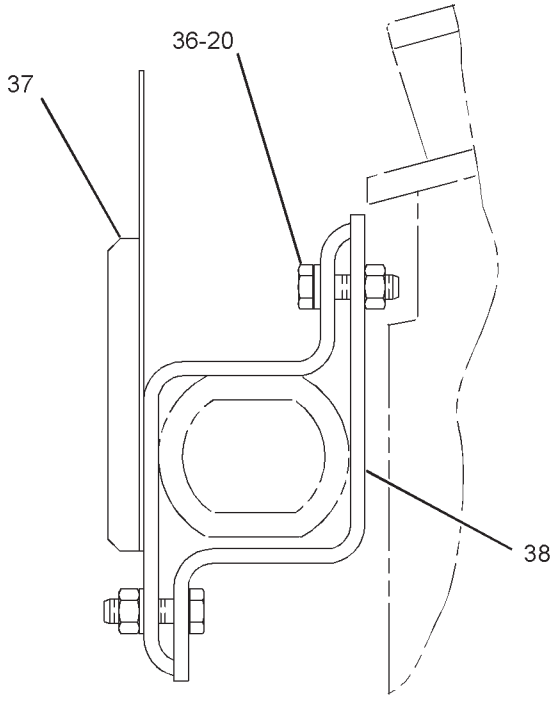

VIEW F-F

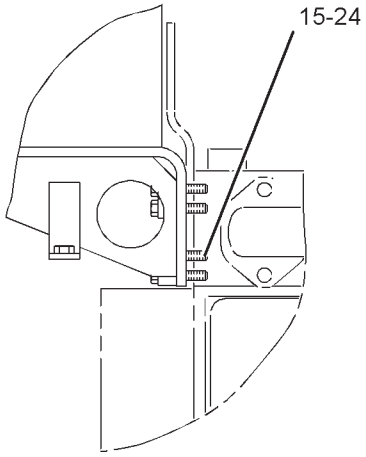

VIEW OF AREA A

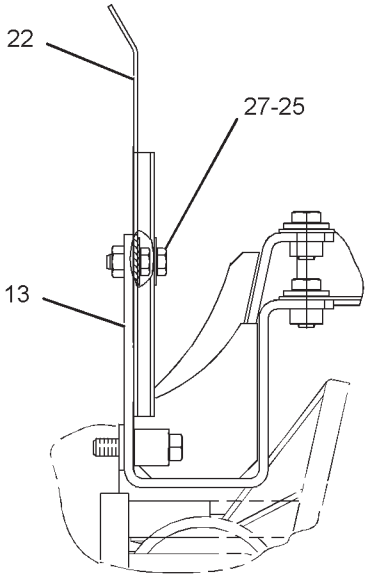

VIEW OF AREA J

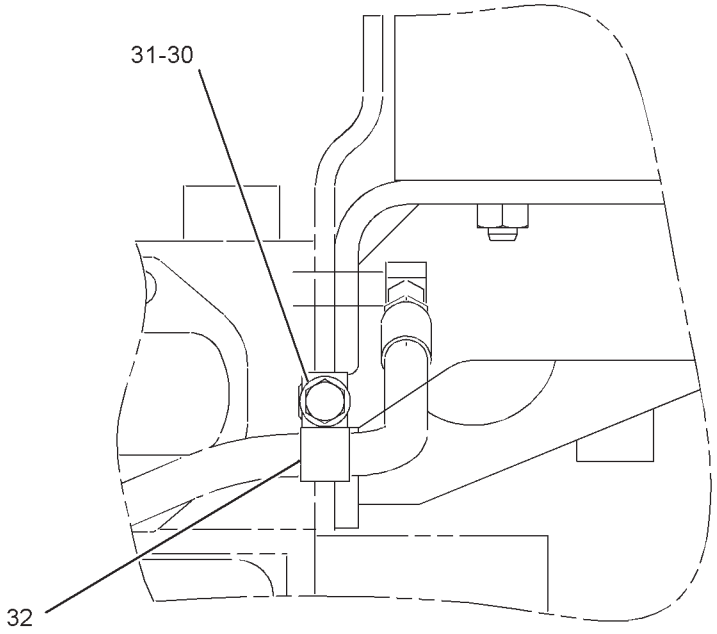

VIEW D-D

GRAPHIC #2 **<END>** g01114053

AIR INLET AND EXHAUST SYSTEM

205-6912 MUFFLER GP

S/N: RCD258-UP
PART OF 205-6911 INSTALLATION AR-ENGINE
TYPE 1

SMCS-1062 **i03247660**

NOTE	REF NO	GRAPHIC REF	PART NUMBER	QTY	PART NAME 1 2 3 4 5 6 (PRODUCT LEVEL)	SEE PAGE
C	1	1	**262-1684**	1	MUFFLER AS	
	2	1	**131-8847**	2	U-BOLT	
	3	1	**7Y-1144**	1	CLAMP AS	
	4	1	**171-9053**	1	PIPE AS	
	5	1	**4W-9160**	1	CLAMP-V BAND	
	6	1	**7X-0316**	2	BOLT (7/16-14X3.5-IN)	
	7	1	**8T-5360**	2	WASHER (12X22.5X2.5-MM THK)	
	8	1	**171-9046**	1	BRACKET AS	
	9	1	**171-9049**	1	BRACKET AS	
M	10	1	**8T-4956**	6	BOLT (M12X1.75X35-MM)	
	11	1	**8T-4223**	4	WASHER-HARD (13.5X25.5X3-MM THK)	
	12	1	**5P-1076**	4	WASHER-HARD (13.5X30X4-MM THK)	
	13	2	**233-1314**	1	SUPPORT AS	
M	14	1	**8T-4244**	10	NUT (M12X1.75-THD)	
	15	1,2	**8T-2501**	10	BOLT (3/8-16X2-IN)	
M	16	1	**7Y-1727**	2	BOLT (M12X1.75X60-MM)	
	17	1	**7Y-1729**	1	GASKET	
	18	1	**7Y-1924**	1	SPACER (9X19X23-MM THK)	
M	19	1	**8T-4137**	8	BOLT (M10X1.5X20-MM)	
	20	1,2	**7X-7729**	10	WASHER (11X25X3-MM THK)	
	21	1	**222-8259**	1	SHIELD AS-HEAT (PERFORATED)	
	22	2	**233-1292**	1	PLATE	
	23	1	**7X-0289**	3	BOLT (3/8-16X1.875-IN)	
	24	2	**205-6716**	7	SPACER (10.5X20X19-MM THK)	
	25	2	**8T-4224**	3	WASHER-HARD (8.8X16X2-MM THK)	
	26	1	**217-5449**	6	SPACER (10.5X20X29-MM THK)	
M	27	2	**8T-4908**	3	BOLT (M8X1.25X25-MM)	
	28	1	**222-8267**	1	SUPPORT AS	
	29	1	**233-1312**	1	BRACKET AS	
M	30	2	**8T-4136**	1	BOLT (M10X1.5X25-MM)	
	31	2	**8T-4121**	1	WASHER-HARD (11X21X2.5-MM THK)	
	32	2	**8M-2773**	1	CLIP	
	33	1	**8T-8911**	1	BOLT (5/16-18X2-IN)	
M	36	2	**8T-4196**	2	BOLT (M10X1.5X35-MM)	
	37	2	**217-5459**	1	SHIELD AS-HEAT	
	38	2	**222-8275**	1	CLAMP AS	

C-CHANGE FROM PREVIOUS TYPE
M-METRIC PART

205-6912 **MUFFLER GP** *(contd.)* **i03247660**

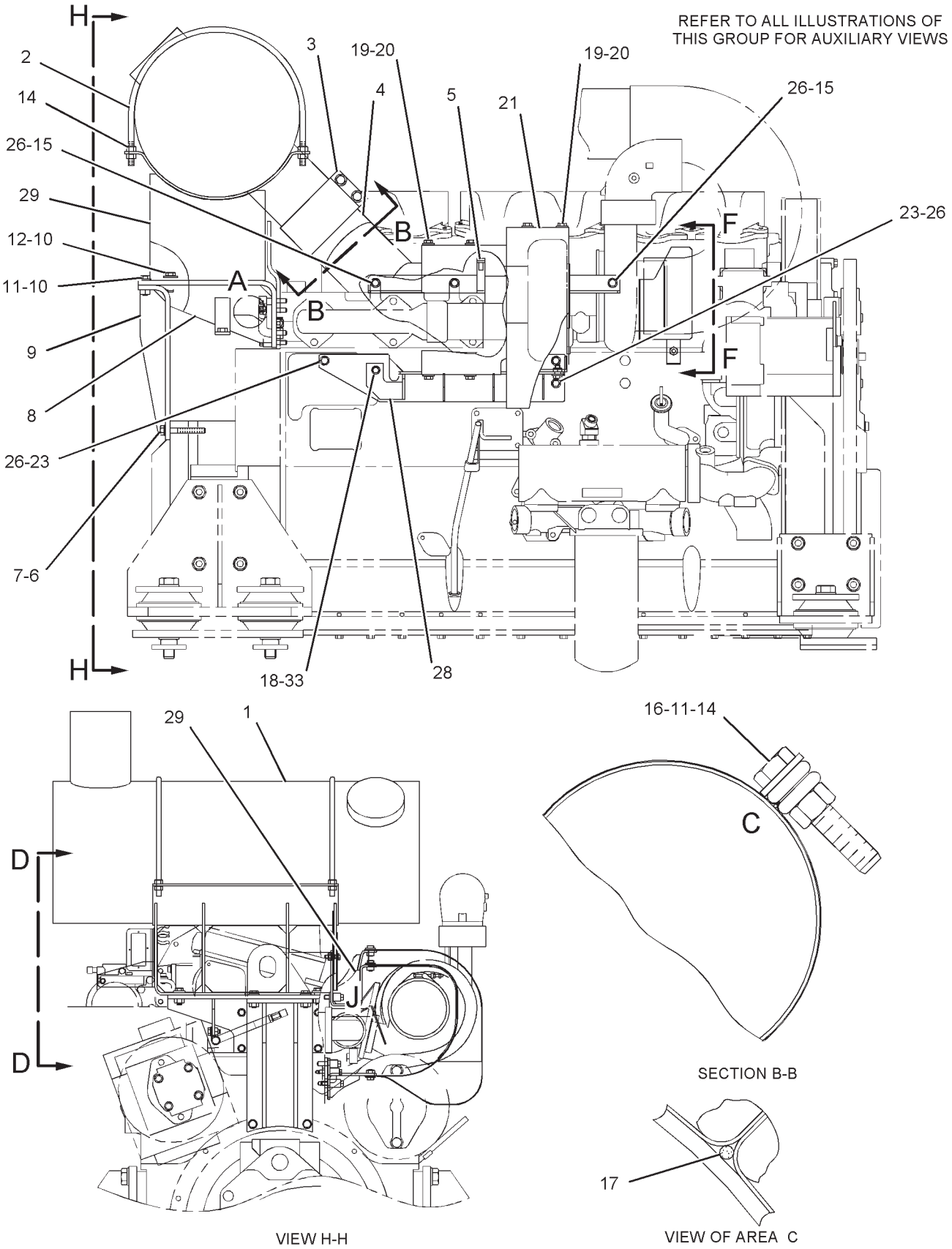

GRAPHIC #1

g01114052

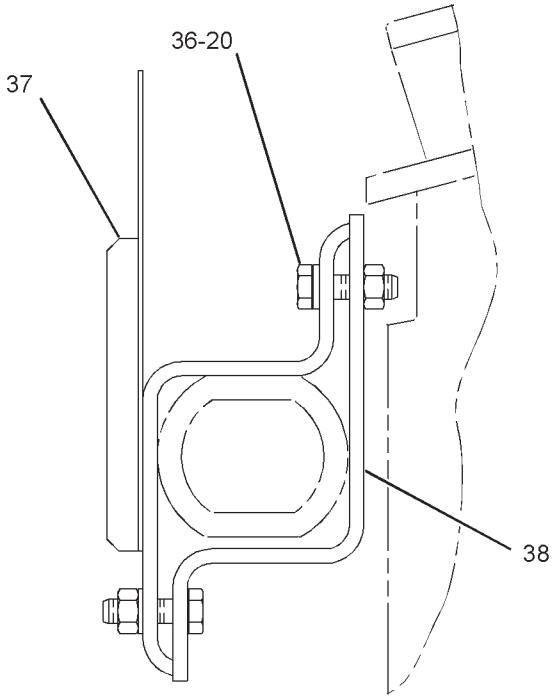

VIEW F-F

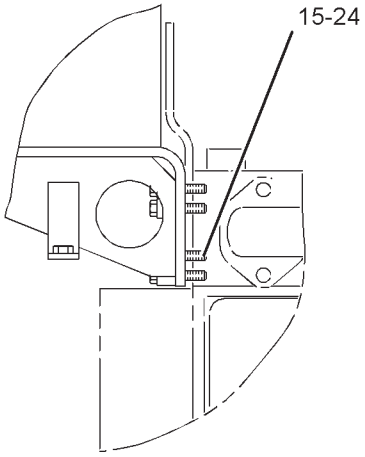

VIEW OF AREA A

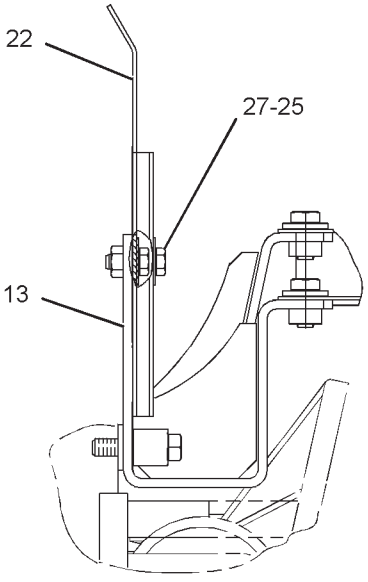

VIEW OF AREA J

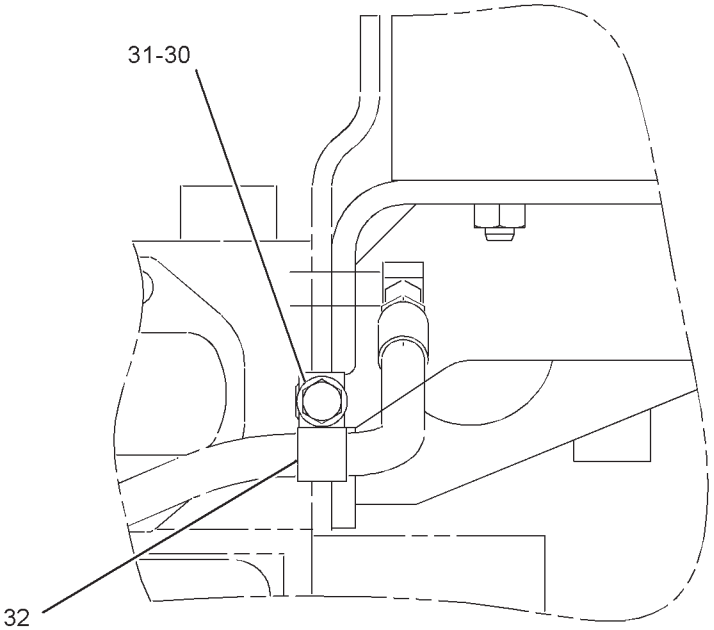

VIEW D-D

GRAPHIC #2 **<END>** g01114053

AIR INLET AND EXHAUST SYSTEM

205-6912 MUFFLER GP

S/N: RCD258-UP
PART OF 205-6911 INSTALLATION AR-ENGINE
TYPE 2

SMCS-1062 **i03247804**

NOTE	REF NO	GRAPHIC REF	PART NUMBER	QTY	PART NAME 1 2 3 4 5 6 (PRODUCT LEVEL)	SEE PAGE
C	1	1	**262-1684**	1	MUFFLER AS	
	2	1	**131-8847**	2	U-BOLT	
	3	1	**7Y-1144**	1	CLAMP AS	
	4	1	**171-9053**	1	PIPE AS	
	5	1	**4W-9160**	1	CLAMP-V BAND	
	6	1	**7X-0316**	2	BOLT (7/16-14X3.5-IN)	
	7	1	**8T-5360**	2	WASHER (12X22.5X2.5-MM THK)	
	8	1	**171-9046**	1	BRACKET AS	
M		1	**8T-3490**	2	NUT-WELD (M10X1.5-THD)	
M		1	**8T-3597**	4	NUT-WELD (M12X1.75-THD)	
	9	1	**171-9049**	1	BRACKET AS	
M		1	**8T-3597**	2	NUT-WELD (M12X1.75-THD)	
M	10	1	**8T-4956**	6	BOLT (M12X1.75X35-MM)	
	11	1	**8T-4223**	4	WASHER-HARD (13.5X25.5X3-MM THK)	
	12	1	**5P-1076**	4	WASHER-HARD (13.5X30X4-MM THK)	
	13	2	**233-1314**	1	SUPPORT AS	
		2	**7X-7729**	3	WASHER (11X25X3-MM THK)	
M		2	**8T-3490**	4	NUT-WELD (M10X1.5-THD)	
M		2	**8T-3612**	2	NUT-WELD (M8X1.25-THD)	
M	14	1	**8T-4244**	10	NUT (M12X1.75-THD)	
	15	1,2	**8T-2501**	10	BOLT (3/8-16X2-IN)	
M	16	1	**7Y-1727**	2	BOLT (M12X1.75X60-MM)	
	17	1	**7Y-1729**	1	GASKET	
	18	1	**7Y-1924**	1	SPACER (9X19X23-MM THK)	
M	19	1	**8T-4137**	8	BOLT (M10X1.5X20-MM)	
	20	1,2	**7X-7729**	10	WASHER (11X25X3-MM THK)	
C	21	1	**287-0140**	1	SHIELD AS-HEAT (PERFORATED)	
	22	2	**233-1292**	1	PLATE	
	23	1	**7X-0289**	3	BOLT (3/8-16X1.875-IN)	
	24	2	**205-6716**	7	SPACER (10.5X20X19-MM THK)	
	25	2	**8T-4224**	3	WASHER-HARD (8.8X16X2-MM THK)	
	26	1	**217-5449**	6	SPACER (10.5X20X29-MM THK)	
M	27	2	**8T-4908**	3	BOLT (M8X1.25X25-MM)	
C	28	1	**287-0151**	1	SUPPORT AS	
M		1	**8T-3490**	4	NUT-WELD (M10X1.5-THD)	
	29	1	**233-1312**	1	BRACKET AS	
M		1	**8T-3490**	2	NUT-WELD (M10X1.5-THD)	
M		1	**8T-3612**	1	NUT-WELD (M8X1.25-THD)	
M	30	2	**8T-4136**	1	BOLT (M10X1.5X25-MM)	
	31	2	**8T-4121**	1	WASHER-HARD (11X21X2.5-MM THK)	
	32	2	**8M-2773**	1	CLIP	
	33	1	**8T-8911**	1	BOLT (5/16-18X2-IN)	
M	36	2	**8T-4196**	2	BOLT (M10X1.5X35-MM)	
	37	2	**217-5459**	1	SHIELD AS-HEAT	
	38	2	**222-8275**	1	CLAMP AS	
C	39	1	**287-0141**	1	SHIELD AS-HEAT (PERFORATED)	

C-CHANGE FROM PREVIOUS TYPE
M-METRIC PART

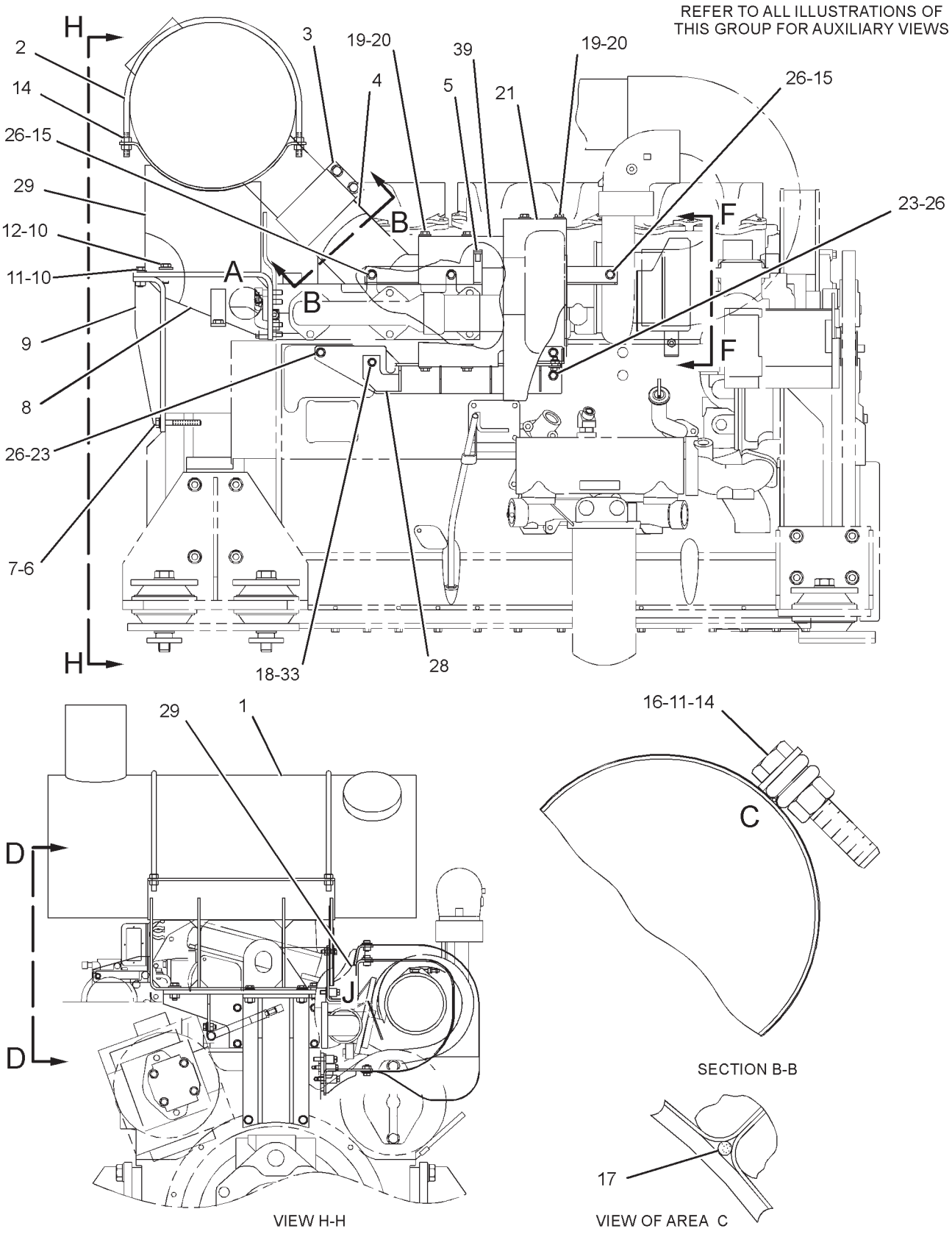

GRAPHIC #1

g01261293

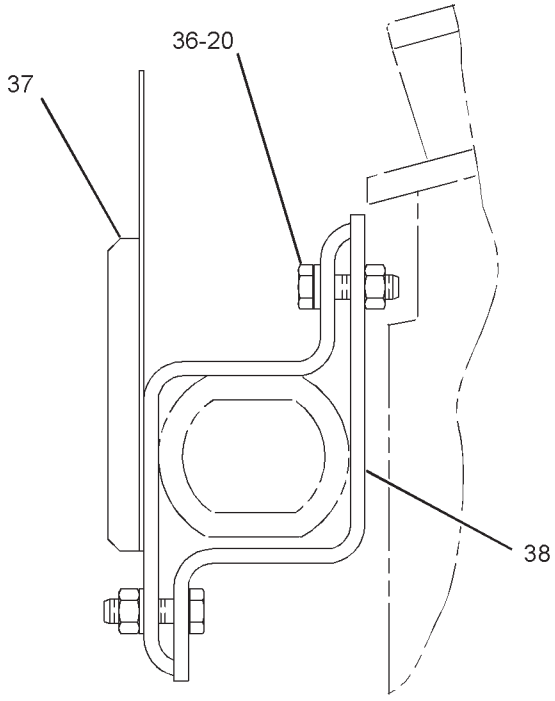

VIEW F-F

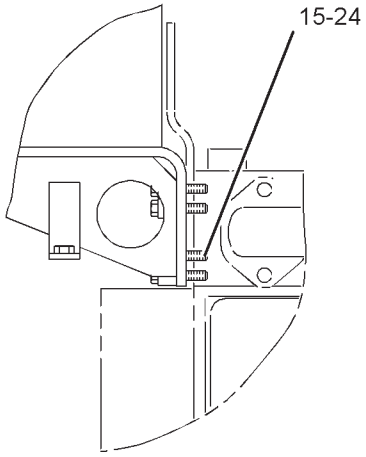

VIEW OF AREA A

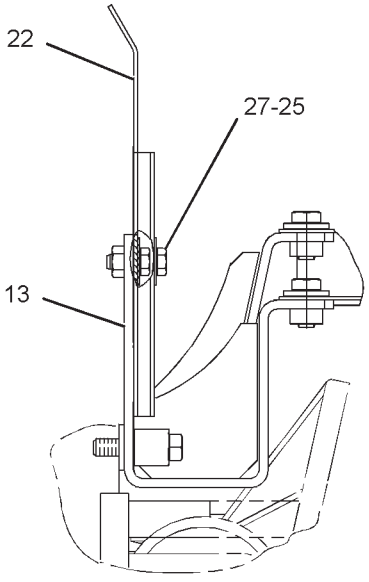

VIEW OF AREA J

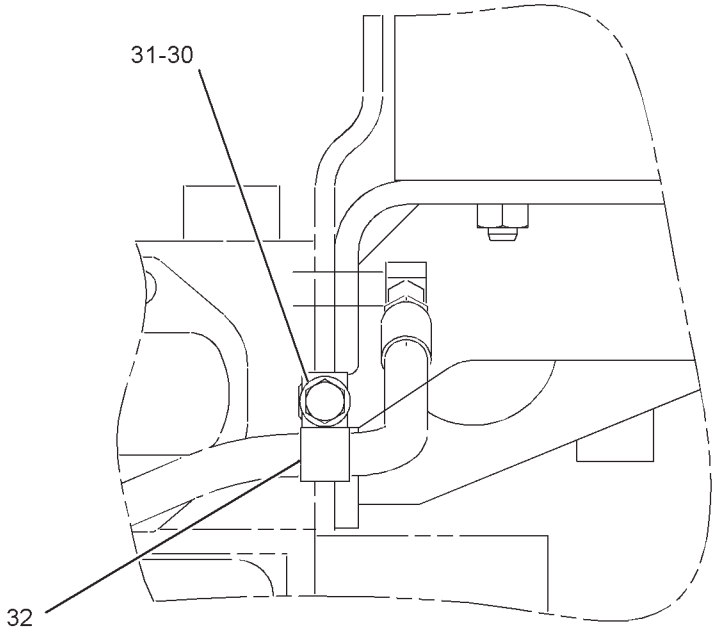

VIEW D-D

GRAPHIC #2 **<END>** g01114053

AIR INLET AND EXHAUST SYSTEM

194-7923 TURBOCHARGER GP

S/N: BLC426-UP

PART OF 197-0868 TURBOCHARGER GP

SMCS-1052, 1053 **i01515580**

NOTE	REF NO	GRAPHIC REF	PART NUMBER	QTY	PART NAME 1 2 3 4 5 6 (PRODUCT LEVEL)	SEE PAGE
	1	1	**9N-2038**	1	CLAMP AS-TURBINE	
	2	1	**115-7087**	1	BOLT (M6X0.04X10.4-MM)	
	3	1	**137-4550**	1	CLAMP AS-COMPRESSOR	
	4	1	**161-6958**	1	CLIP-HOSE	
	5	1	**161-6960**	1	HOSE	
	6	1	**161-6963**	2	CLAMP	
R	7	1	**167-9270**	1	CARTRIDGE GP-TURBOCHARGER	
	8	1	**194-7914**	1	HOUSING AS-TURBINE	
	9	1	**194-7915**	1	COVER AS-COMPRESSOR	
		1	**2V-4868**	1	FITTING	

R-REMFG PART MAY BE AVAILABLE

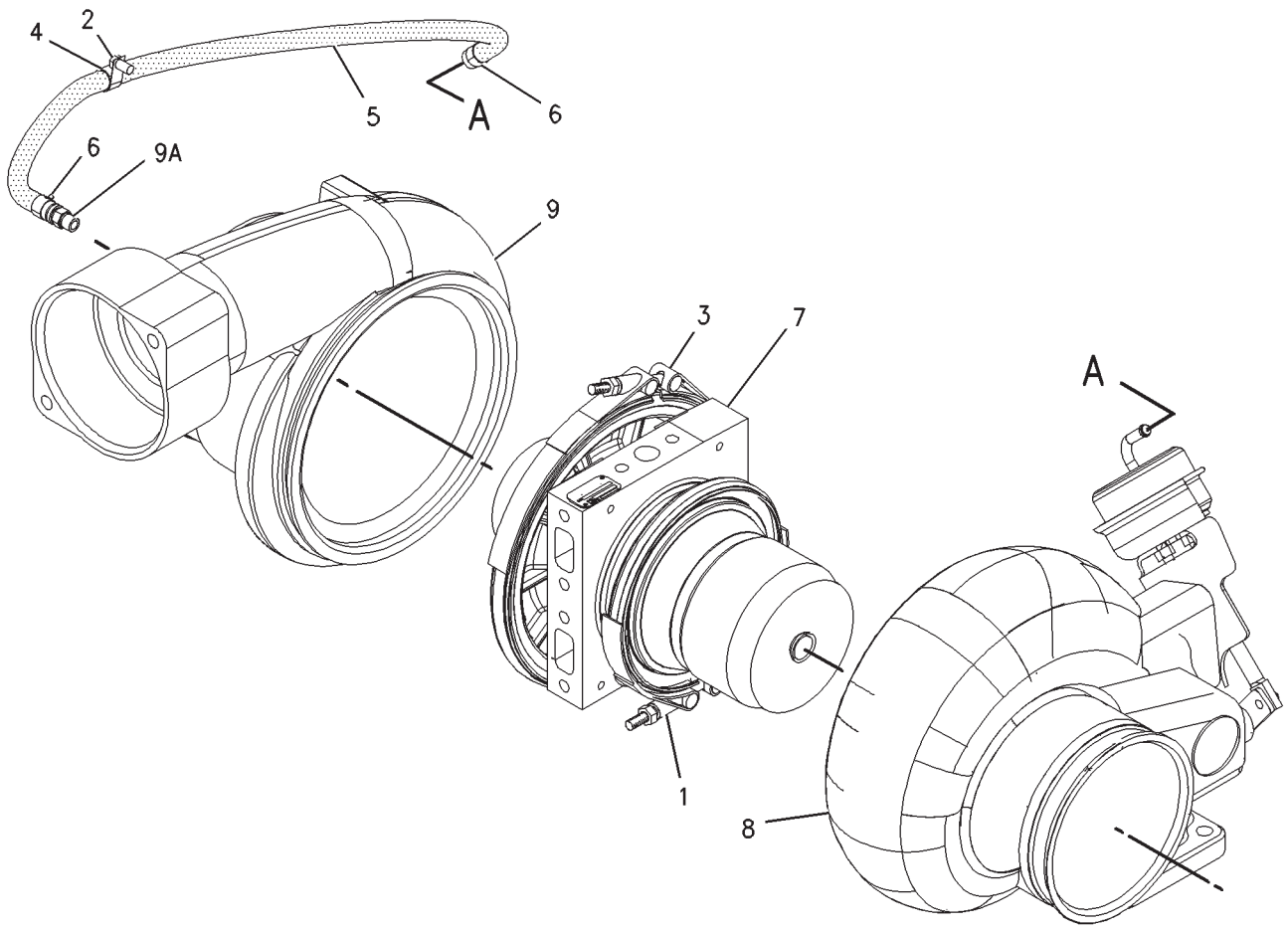

GRAPHIC #1 **<END>** g00787306

AIR INLET AND EXHAUST SYSTEM

197-0868 TURBOCHARGER GP

S/N: BLC426-UP

PART OF 159-5810, 235-3469 ENGINE AR-CORE

SMCS-1052, 1053 **i01515561**

NOTE	REF NO	GRAPHIC REF	PART NUMBER	QTY	PART NAME 1 2 3 4 5 6 (PRODUCT LEVEL)	SEE PAGE
Y	1	1	**194-7923**	1	TURBOCHARGER GP	161
	2	1	**1S-4295**	1	GASKET-TURBOCHARGER	
	3	1	**2N-2765**	4	BOLT-HIGH TEMPERATURE (3/8-16X1.75 IN)	
	4	1	**2N-2766**	4	LOCKNUT	

Y-SEPARATE ILLUSTRATION

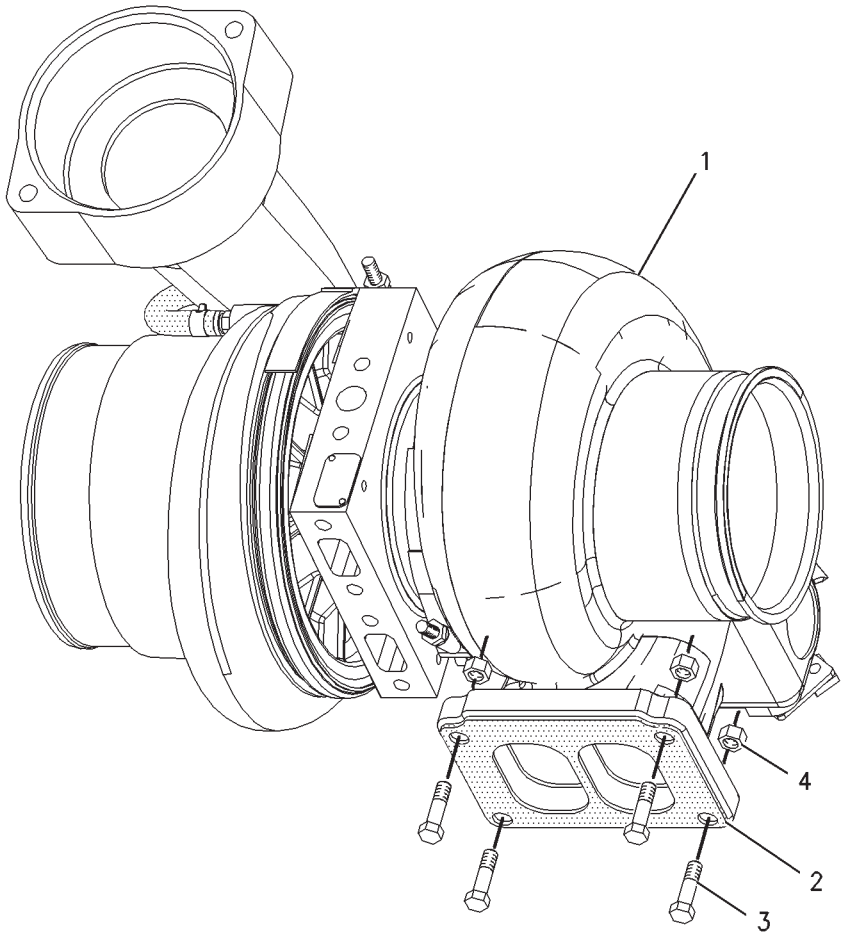

GRAPHIC #1 **<END>** g00787504

FUEL SYSTEM

220-2422 ADAPTER GP-FAST FILL FUEL

S/N: RCD1-UP
AN ATTACHMENT

SMCS-1710 **i02492639**

NOTE	REF NO	GRAPHIC REF	PART NUMBER	QTY	PART NAME 1 2 3 4 5 6 (PRODUCT LEVEL)	SEE PAGE
	1	1	**188-5095**	1	VENT AS	
	2	1	**221-7693**	1	VALVE (FAST FILL FUEL)	
	3	1	**5P-2618**	1	CONNECTOR	
	4	1	**8K-0968**	1	ELBOW	
	5	1	**217-5703**	1	RECEIVER (FAST FILL FUEL)	
	6	1	**9D-0630**	1	CAP-DUST	
	7	1	**220-2421**	1	HOSE AS	
	8	1	**1H-8128**	1	SEAL-O-RING	
	9	1	**5H-6734**	1	SEAL-O-RING	
	10	1	**1J-9671**	2	SEAL-O-RING	
	11	1	**8T-4121**	12	WASHER-HARD (11X21X2.5-MM THK)	
M	12	1	**105-3484**	6	BOLT-SOCKET HEAD (M10X1.5X25-MM)	
M	13	1	**8T-4136**	6	BOLT (M10X1.5X25-MM)	
	14	1	**193-1598**	1	ELBOW	
M	15	1	**8T-4648**	4	BOLT (M12X1.75X70-MM)	
	16	1	**8T-4223**	4	WASHER-HARD (13.5X25.5X3-MM THK)	
	17	1	**4J-0527**	1	SEAL-O-RING	

M-METRIC PART

220-2422 **ADAPTER GP-FAST FILL FUEL** *(contd.)* **i02492639**

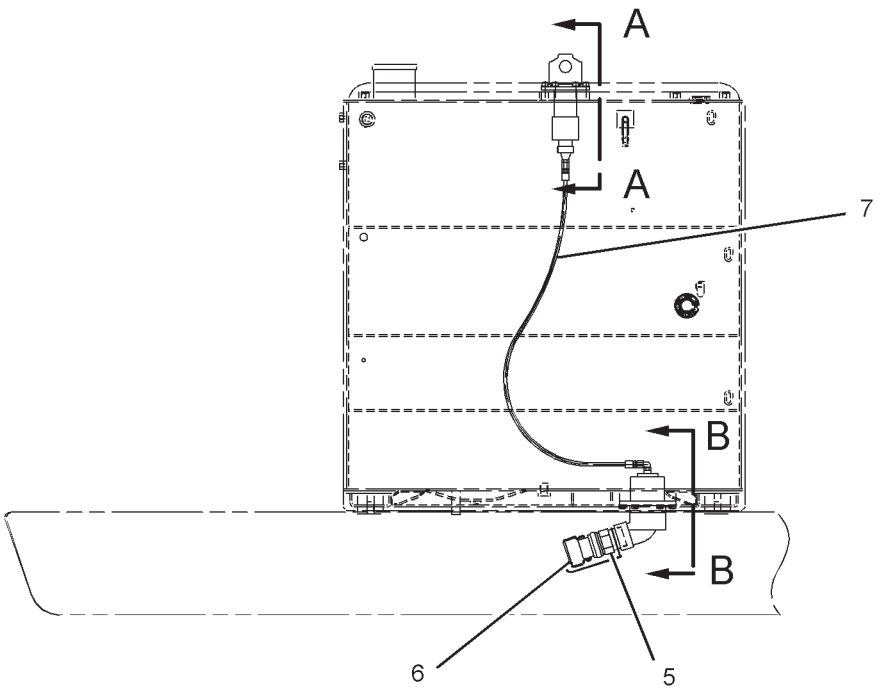

LEFT SIDE VIEW

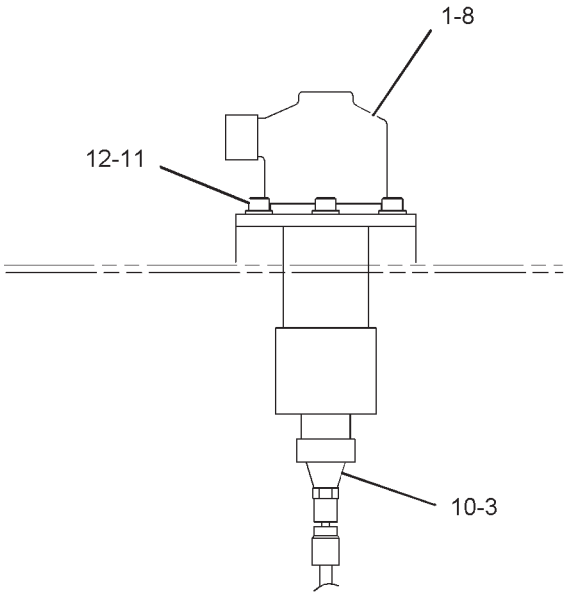

VIEW A-A

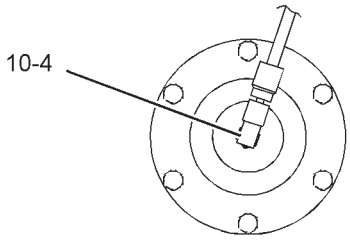

VIEW C-C

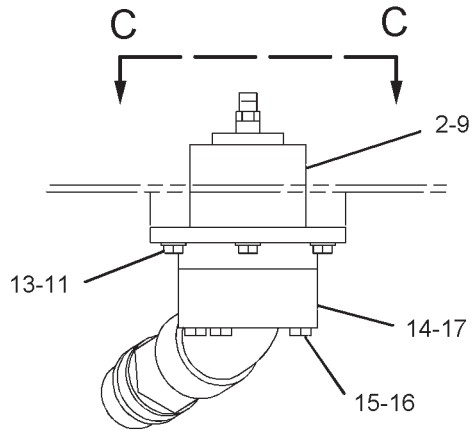

VIEW B-B

GRAPHIC #1 **<END>** g01130300

FUEL SYSTEM

205-6829 COOLER GP-FUEL

S/N: RCD1-UP

PART OF 220-4843, 242-5914 INSTALLATION AR-ENGINE

SMCS-1712 **i02230615**

NOTE	REF NO	GRAPHIC REF	PART NUMBER	QTY	PART NAME 1 2 3 4 5 6 (PRODUCT LEVEL)	SEE PAGE
	1	1	**205-6833**	2	SUPPORT AS	
	2	1	**205-6830**	1	SUPPORT AS	
	3	1	**129-5429**	1	CORE AS-FUEL COOLER	
M	4	1	**8T-4136**	8	BOLT (M10X1.5X25-MM)	
	5	1	**8T-4121**	8	WASHER-HARD (11X21X2.5-MM THK)	
	6	1	**8T-8915**	4	BOLT (3/8-16X3.25-IN)	
	7	1	**134-3196**	4	WASHER (10.2X39.6X2.3-MM THK)	
	8	1	**141-1060**	8	MOUNT-ISOLATION	

M-METRIC PART

205-6829 **COOLER GP-FUEL** *(contd.)* **i02230615**

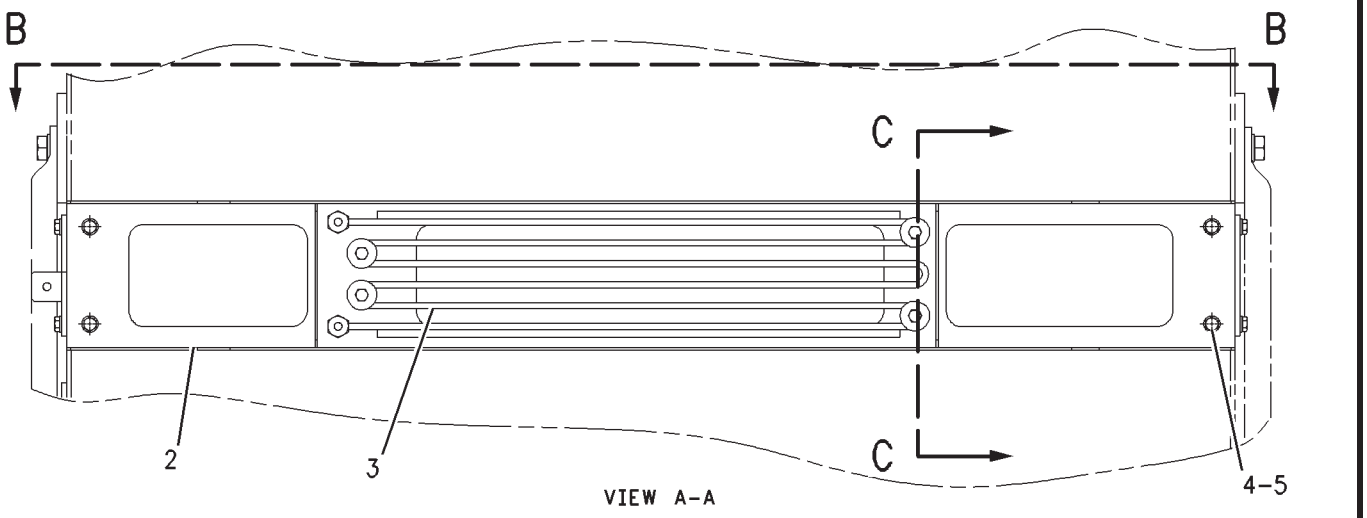

VIEW A-A

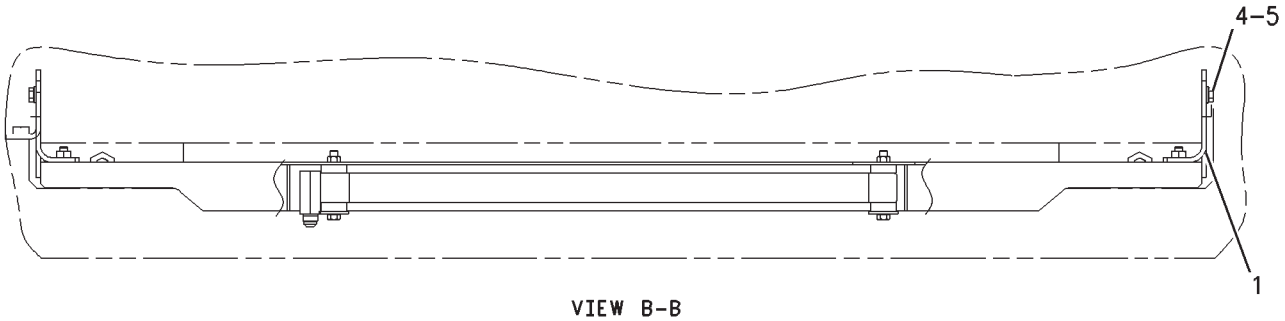

VIEW B-B

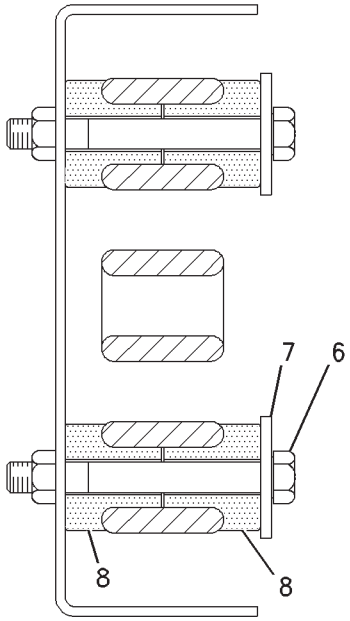

SECTION C-C

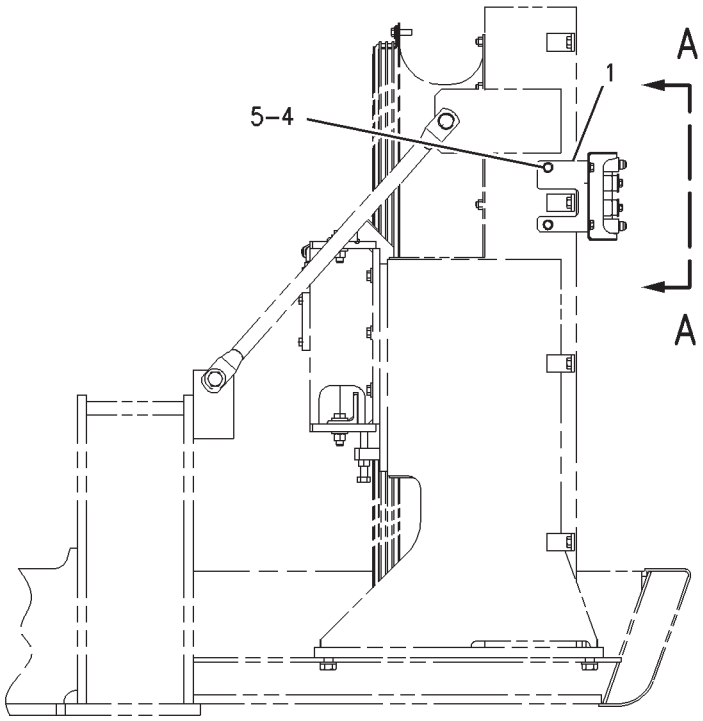

FRONT VIEW

GRAPHIC #1 **<END>** g00892390

FUEL SYSTEM

128-1471 FILTER GP-FUEL

S/N: BLC426-UP

PART OF 205-5858, 235-4685 ENGINE AR-COMPLETE

SMCS-1261 **i01033872**

NOTE	REF NO	GRAPHIC REF	PART NUMBER	QTY	PART NAME 1 2 3 4 5 6 (PRODUCT LEVEL)	SEE PAGE
	1	1	**1R-0762**	2	FILTER-FUEL (ADVANCED EFFICIENCY)	

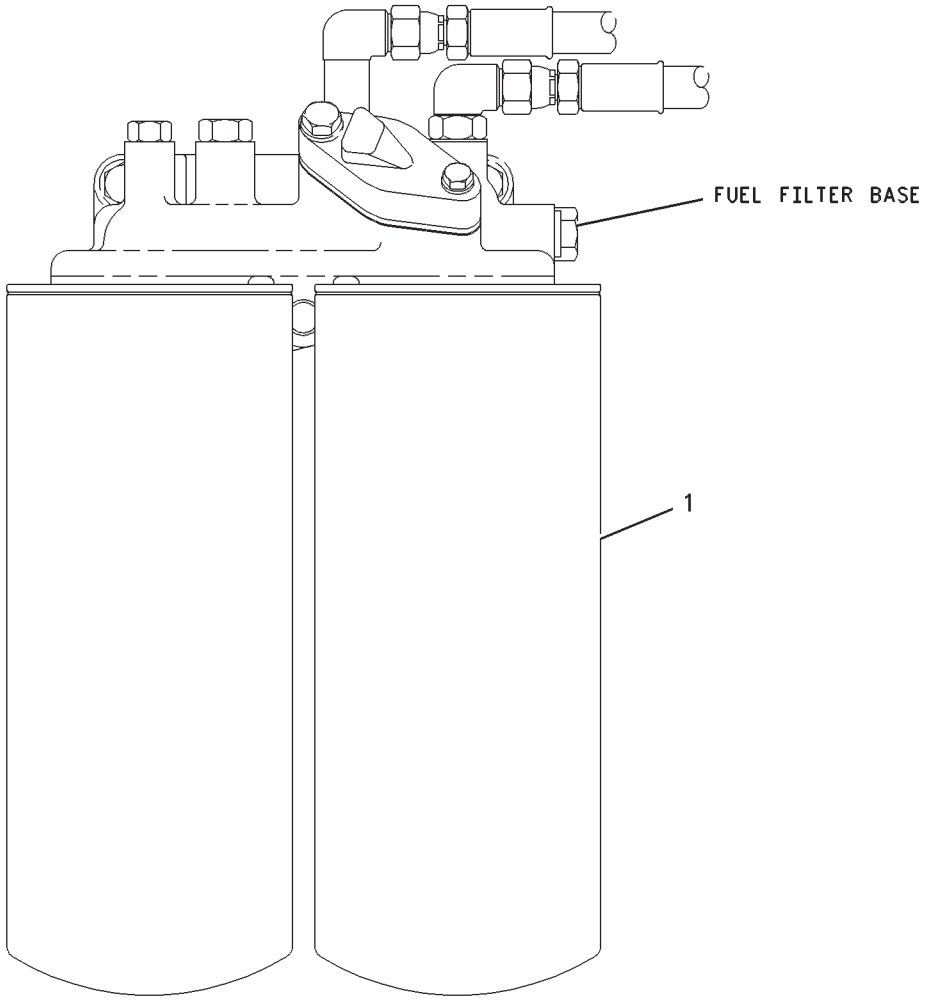

GRAPHIC #1 **<END>** g00533272

FUEL SYSTEM

133-5671 FILTER GP-WATER SEP & FUEL

S/N: RCD1-UP

PART OF 208-4100, 237-8812 LINES GP-FUEL

SMCS-1261, 1263 **i01484501**

NOTE	REF NO	GRAPHIC REF	PART NUMBER	QTY	PART NAME 1 2 3 4 5 6 (PRODUCT LEVEL)	SEE PAGE
	1	1	**137-4367**	1	BASE AS	
	2	1	**133-5673**	1	ELEMENT-WATER SEPARATOR	
	3	1	**129-0375**	1	BOWL AS-WATER COLLECTION	
FJ		1	**155-2629**	1	HEATER GP-FUEL (WATER SEPARATOR, 12-VOLT)	
FJ		1	**157-1206**	1	BOWL AS-WATER COLLECTION (24-VOLT HEATER)	
					AVAILABLE REPAIR KIT(S):	
			141-0284	1	KIT-FUEL FILTER & WATER SEP	
					(INCLUDES REPLACEMENT SEALS FOR SEALS DAMAGED DURING INSTALLATION OF REPLACEMENT ELEMENT AND/OR BOWL)	

F-NOT SHOWN
J-USE TO PREVENT FREEZING OF THE WATER AND/OR "WAXING" OF THE FUEL

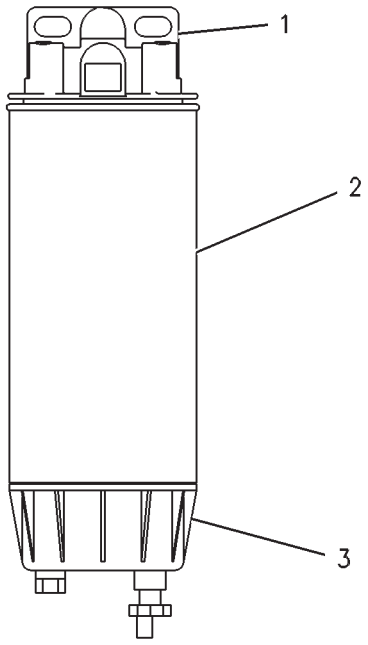

GRAPHIC #1 **<END>** g00262735

FUEL SYSTEM

223-3095 GAUGE GP-SIGHT—FUEL LEVEL

S/N: RCD1-UP

PART OF 218-7945, 237-8771 TANK GP-FUEL

SMCS-7479 **i02300428**

NOTE	REF NO	GRAPHIC REF	PART NUMBER	QTY	PART NAME 1 2 3 4 5 6 (PRODUCT LEVEL)	SEE PAGE
	1	1	**236-3258**	2	BLOCK	
M	2	1	**236-3259**	2	BOLT-SPECIAL	
	3	1	**237-8526**	1	TUBE	
	4	1	**095-1519**	4	SEAL-O-RING	
	5	1	**6F-4855**	4	SEAL-O-RING	

M-METRIC PART

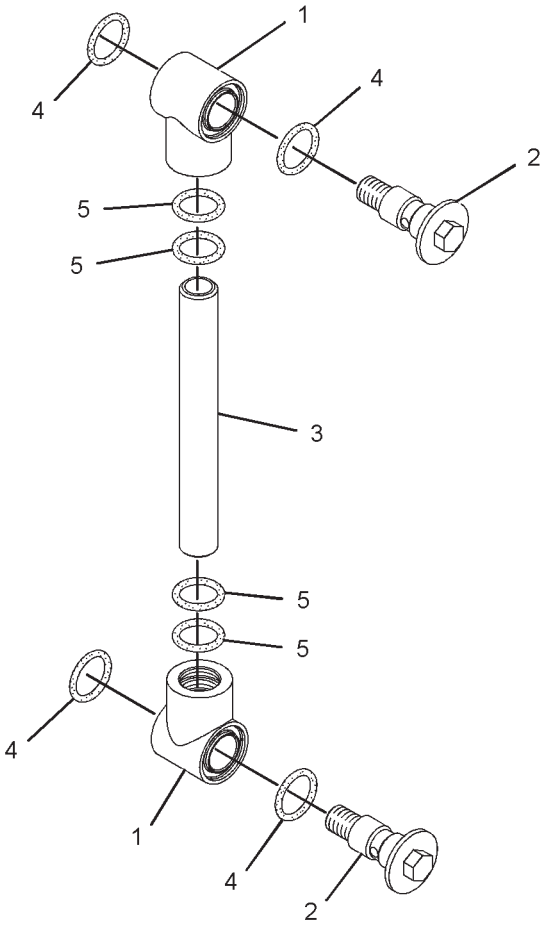

GRAPHIC #1 **<END>** g01091508

FUEL SYSTEM

128-8510 INJECTOR GP-FUEL

S/N: BLC426-UP

PART OF 159-5810, 235-3469 ENGINE AR-CORE

SMCS-1251, 1254, 1290, 1713 **i01745822**

NOTE	REF NO	GRAPHIC REF	PART NUMBER	QTY	PART NAME 1 2 3 4 5 6 (PRODUCT LEVEL)	SEE PAGE
	1	1	**6I-0213**	1	CLAMP	
	2	1	**8S-9191**	1	BOLT (3/8-16X4-IN)	
	3	1	**100-5072**	1	SPACER (9.8X15.85X37.6-MM THK)	
R	4	1	**211-3025**	1	INJECTOR GP-FUEL	
	4A	1	**9X-7317**	1	SEAL-O-RING	
	4B	1	**9X-7418**	1	SEAL-O-RING	
	4C	1	**9X-7419**	1	SEAL-O-RING	

R-REMFG PART MAY BE AVAILABLE

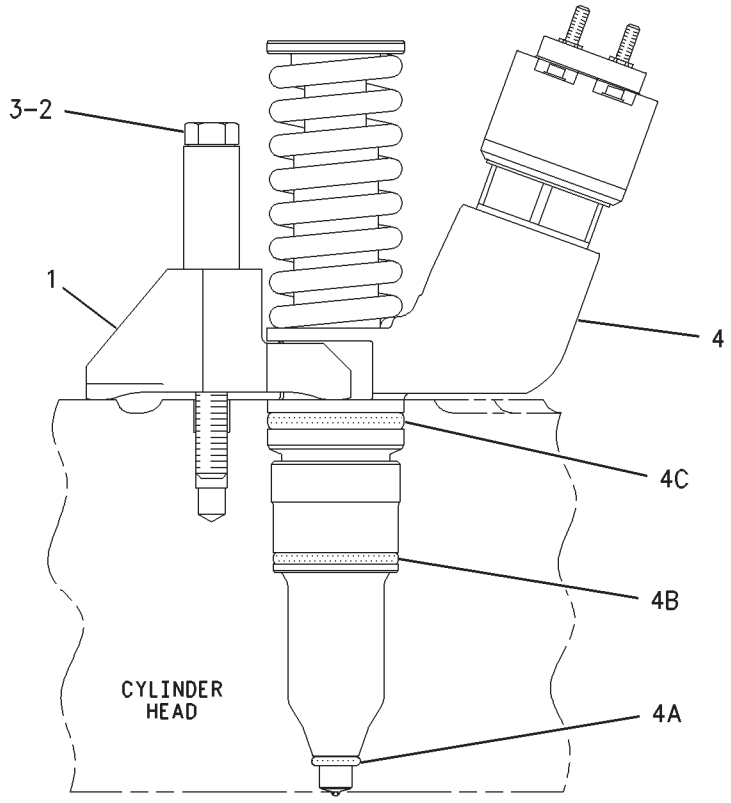

REAR VIEW

GRAPHIC #1 **<END>** g00665501

FUEL SYSTEM

173-0004 LINES GP-FUEL–REAR

S/N: BLC426-570

PART OF 205-5858 ENGINE AR-COMPLETE

SMCS-1274 **i02079419**

NOTE	REF NO	GRAPHIC REF	PART NUMBER	QTY	PART NAME 1 2 3 4 5 6 (PRODUCT LEVEL)	SEE PAGE
	1	1	**3S-2093**	4	STRAP-CABLE	
	2	1	**8S-4950**	1	CAP	
	3	1	**102-2240**	1	SENSOR GP-TEMPERATURE (FUEL)	
		1	**102-8803**	1	KIT-RECEPTACLE (3-PIN)	
					(INCLUDES RECEPTACLE AS & WEDGE)	
		1	**3E-3371**	1	WEDGE-RECEPTACLE LOCK (3-PIN)	
BE		1	**9X-1813**		SLEEVE	
	4	2	**103-4656**	1	MANIFOLD-FUEL	
I	5	1	**103-4669**	1	HOSE AS	
	6	1	**136-4301**	1	BASE AS-FUEL FILTER	
		1	**9S-4167**	2	STUD-HOLLOW (1-14X1.47-IN)	
	7	1	**147-3396**	1	CONNECTOR-PORT	
I	8	1	**148-1335**	1	HOSE AS	
Y	9	1	**156-5783**	1	VALVE GP-CHECK	197
	10	1	**166-2854**	1	BRACKET	
Y	11	2	**183-2824**	1	PUMP GP-FUEL PRIMING (MANUAL)	187
I	12	2	**186-0684**	1	HOSE AS	
I	13	2	**186-0685**	1	HOSE AS	
I	14	1	**248-6268**	1	HOSE AS	
	15	1	**030-7936**	1	CONNECTOR	
	16	1	**030-7947**	1	ELBOW	
	17	1	**030-7962**	1	ELBOW	
	18	1	**033-6042**	1	SEAL-O-RING	
	19	1	**053-0700**	1	TEE-SWIVEL	
	20	1	**067-2551**	1	CLIP	
	21	1	**0L-1143**	2	BOLT (3/8-16X2.5-IN)	
	22	1	**0S-1571**	3	BOLT (3/8-16X1.75-IN)	
	23	1	**1P-7625**	1	ELBOW	
	24	1,2	**2P-7214**	2	ELBOW	
	25	1,2	**2R-6806**	3	CONNECTOR-O-RING	
	26	1	**5M-2894**	6	WASHER-HARD (10.2X18.5X2.5-MM THK)	
	27	1	**6K-9194**	1	ELBOW-FLARED	
	28	1	**6V-4589**	1	SEAL-O-RING	
	29	2	**6V-5048**	2	SEAL-O-RING	
	30	1,2	**6V-5049**	15	SEAL-O-RING	
M	31	1	**6V-6317**	1	BOLT (M10X1.5X20-MM)	
	32	1	**8L-2786**	2	SEAL-O-RING	
	33	1	**8M-0506**	1	ADAPTER-O-RING	
	34	2	**9S-4182**	1	PLUG-O-RING	
	35	1	**9S-4191**	6	PLUG-O-RING	
	36	2	**9S-8002**	1	PLUG-O-RING	
	37	2	**9S-8004**	1	PLUG	

B-USE AS REQUIRED
E-ORDER BY THE CENTIMETER
I-REFER TO HYDRAULIC INFORMATION SYSTEM
M-METRIC PART
Y-SEPARATE ILLUSTRATION

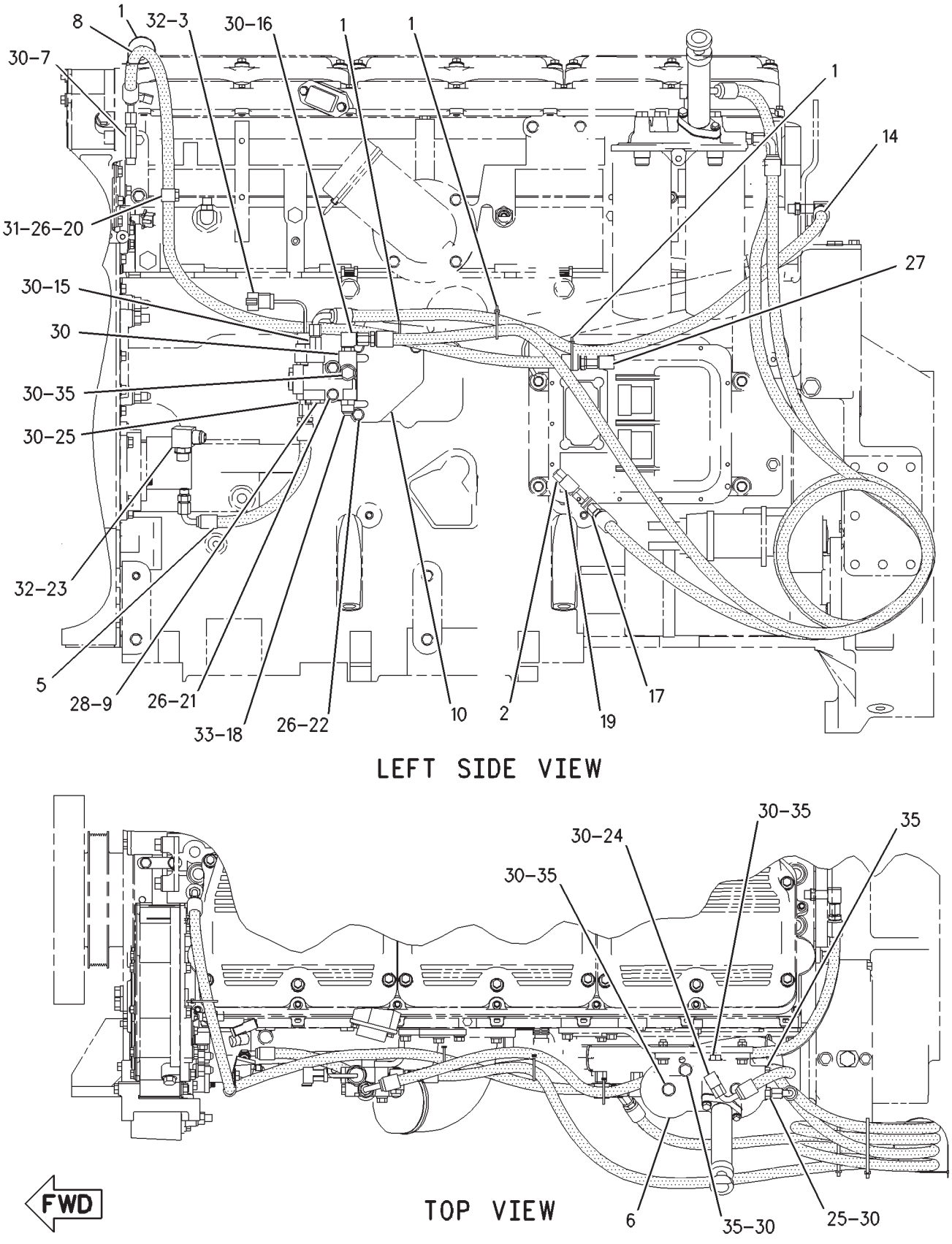

GRAPHIC #1 g00864832

173-0004 **LINES GP-FUEL** *(contd.)* **i02079419**

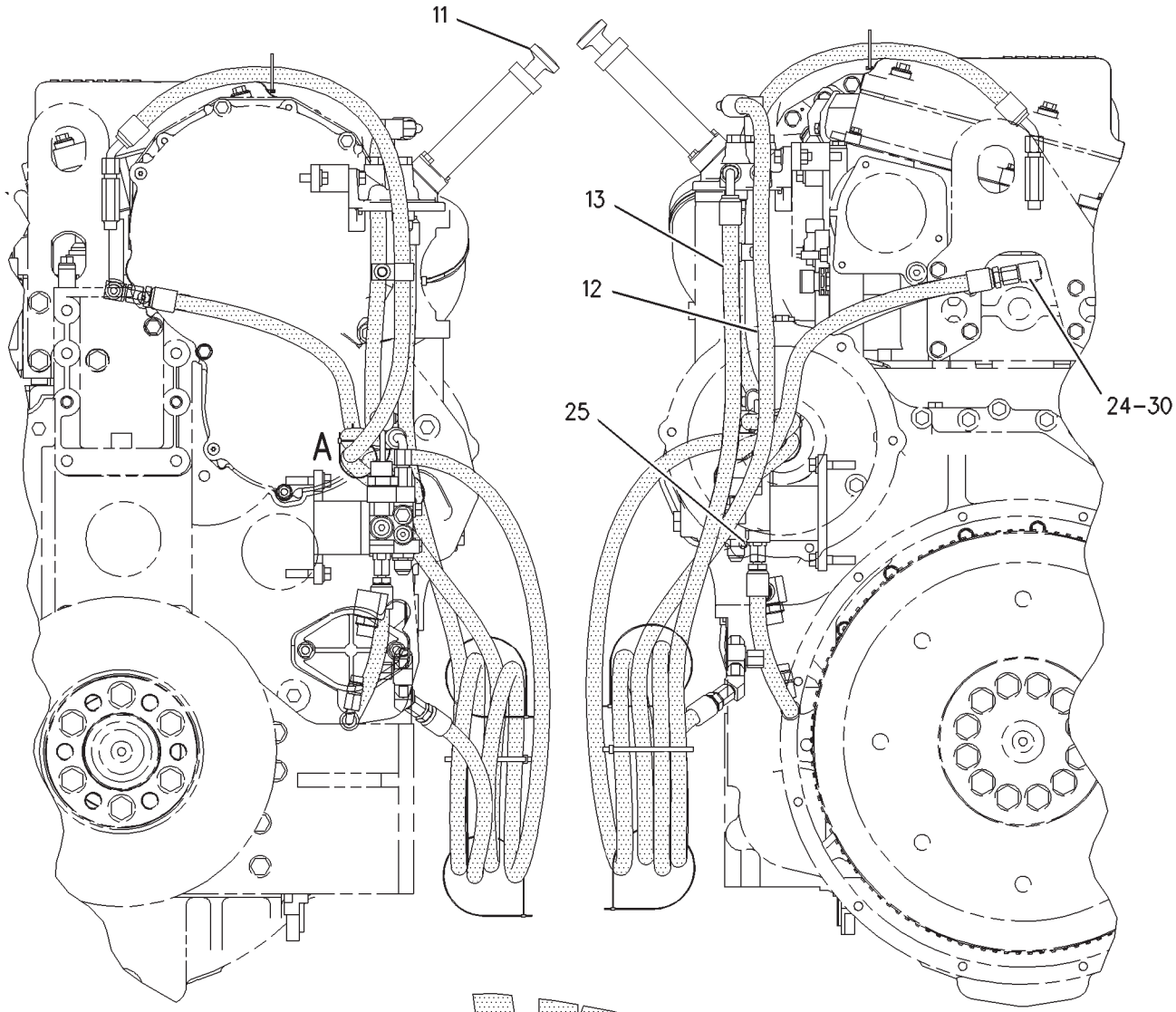

GRAPHIC #2

<END>

g00864833

FUEL SYSTEM

173-0004 LINES GP-FUEL–REAR

S/N: BLC571-UP

PART OF 205-5858, 235-4685 ENGINE AR-COMPLETE

SMCS-1274 **i02079414**

NOTE	REF NO	GRAPHIC REF	PART NUMBER	QTY	PART NAME 1 2 3 4 5 6 (PRODUCT LEVEL)	SEE PAGE
C	1	2	**3S-2093**	2	STRAP-CABLE	
	2	2	**8S-4950**	1	CAP	
Y	3	2	**102-2240**	1	SENSOR GP-TEMPERATURE (FUEL)	270
	4	1	**103-4656**	1	MANIFOLD-FUEL	
I	5	2	**103-4669**	1	HOSE AS	
	6	2	**136-4301**	1	BASE AS-FUEL FILTER	
		2	**9S-4167**	2	STUD-HOLLOW (1-14X1.47-IN)	
	7	2	**166-2854**	1	BRACKET	
Y	8	2	**183-2824**	1	PUMP GP-FUEL PRIMING (MANUAL)	187
I	9	1	**186-0684**	1	HOSE AS	
I	10	1	**186-0685**	1	HOSE AS	
I	11	1	**248-6268**	1	HOSE AS	
CY	12	2	*233-6742*	1	VALVE GP-CHECK (FUEL) (FUEL FILTER)	198
CI	13	2	**239-5838**	1	HOSE AS	
	14	2	**030-7936**	1	CONNECTOR	
C	15	2	**030-7937**	1	CONNECTOR-PORT	
	16	2	**030-7947**	1	ELBOW	
C	17	2	**030-7962**	2	ELBOW	
	18	2	**033-6042**	1	SEAL-O-RING	
	19	2	**053-0700**	1	TEE-SWIVEL	
C	20	2	**067-2551**	2	CLIP	
	21	2	**0L-1143**	2	BOLT (3/8-16X2.5-IN)	
	22	2	**0S-1571**	3	BOLT (3/8-16X1.75-IN)	
	23	2	**1P-7625**	1	ELBOW	
	24	1	**2P-7214**	2	ELBOW	
	25	2	**2R-6806**	3	CONNECTOR-O-RING	
	26	2	**5M-2894**	6	WASHER-HARD (10.2X18.5X2.5-MM THK)	
	27	1	**6V-5048**	2	SEAL-O-RING	
	28	1,2	**6V-5049**	15	SEAL-O-RING	
M	29	2	**6V-6317**	1	BOLT (M10X1.5X20-MM)	
	30	2	**8L-2786**	2	SEAL-O-RING	
	31	2	**8M-0506**	1	ADAPTER-O-RING	
	32	1	**9S-4182**	1	PLUG-O-RING	
	33	2	**9S-4191**	6	PLUG-O-RING	
	34	1	**9S-8002**	1	PLUG-O-RING	
	35	1	**9S-8004**	1	PLUG	

C-CHANGE FROM PREVIOUS TYPE
I-REFER TO HYDRAULIC INFORMATION SYSTEM
M-METRIC PART
Y-SEPARATE ILLUSTRATION

173-0004 **LINES GP-FUEL** *(contd.)* **i02079414**

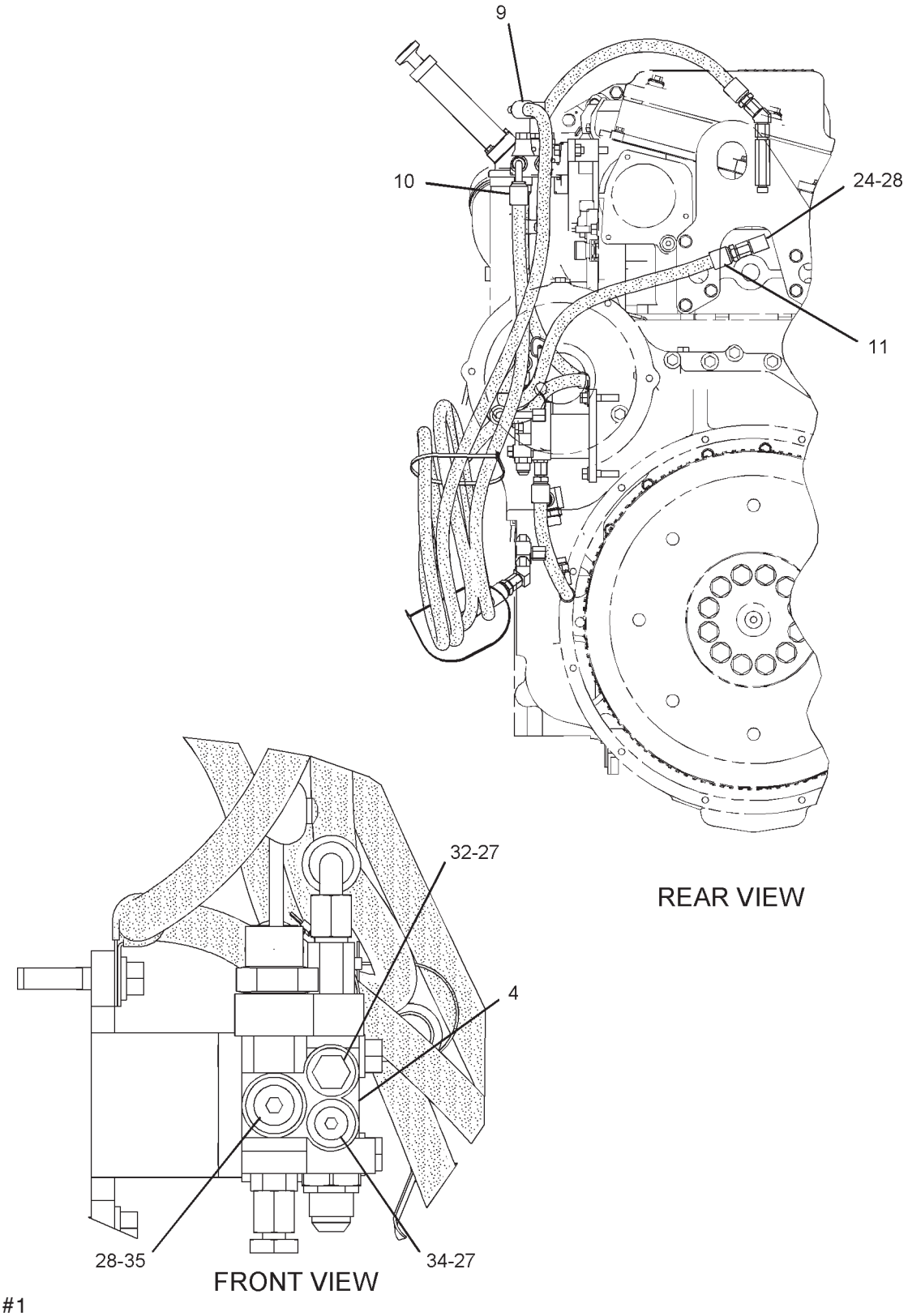

GRAPHIC #1 g01049414

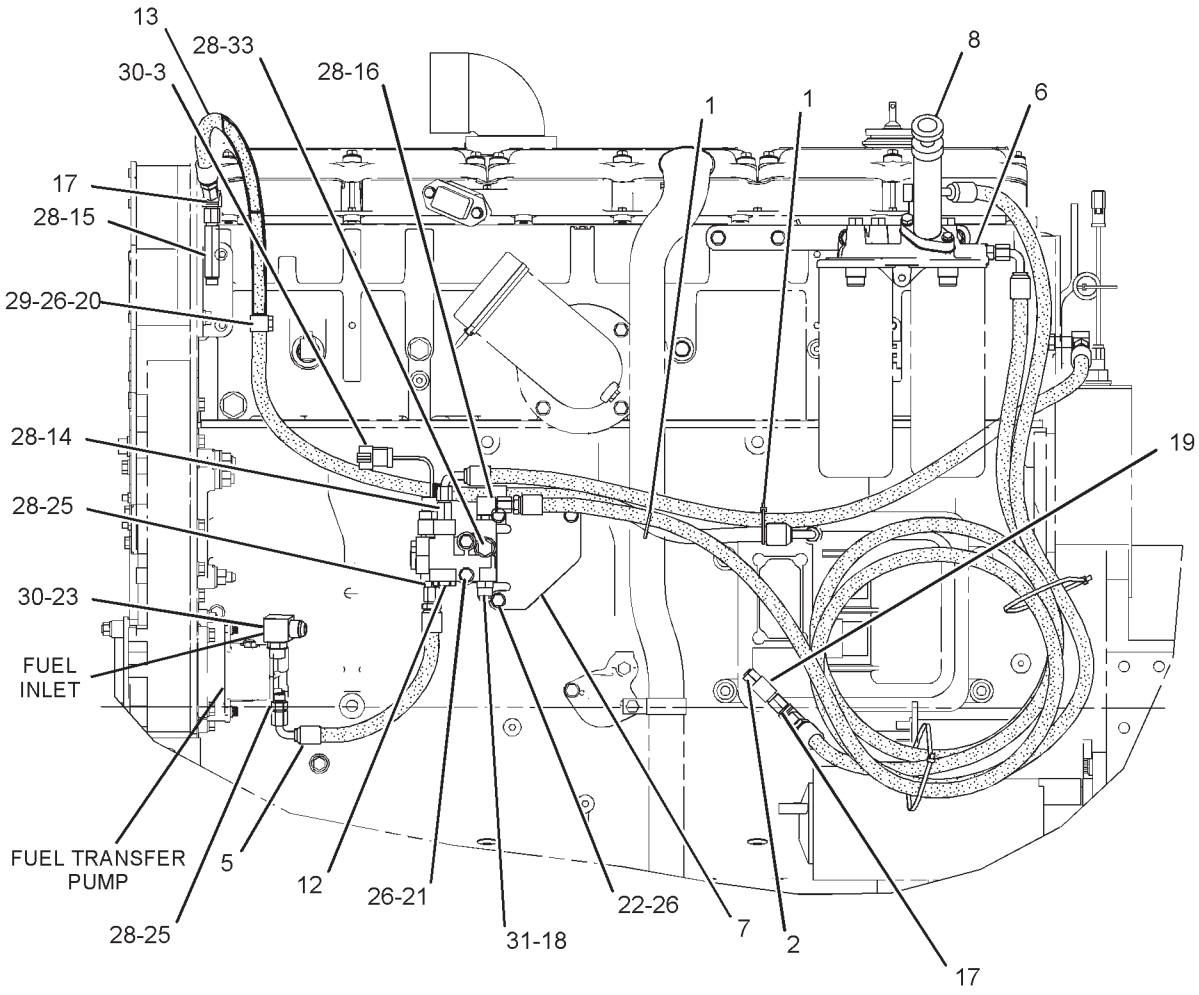

LEFT SIDE VIEW

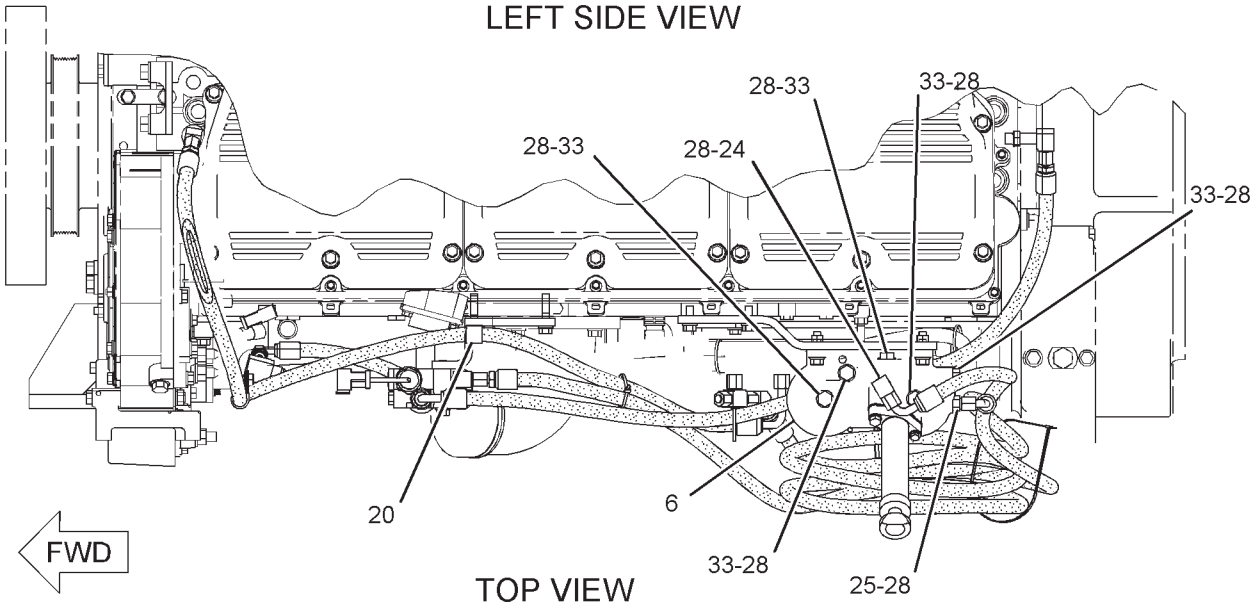

TOP VIEW

GRAPHIC #2

<END>

g01049174

FUEL SYSTEM

208-4100 LINES GP-FUEL

S/N: RCD1-220

PART OF 220-4843, 242-5914 INSTALLATION AR-ENGINE

SMCS-1274 **i01743563**

NOTE	REF NO	GRAPHIC REF	PART NUMBER	QTY	PART NAME 1 2 3 4 5 6 (PRODUCT LEVEL)	SEE PAGE
I	1	1	**208-4037**	1	HOSE AS	
I	2	2	**214-8020**	1	HOSE AS	
I	3	1	**203-5095**	1	HOSE AS	
	4	3	**5I-3876**	4	GROMMET	
	5	3	**170-3026**	2	GROMMET	
E	6	2	**5P-1442**		HOSE (55CM)	
	7	2	**095-1386**	1	CLAMP-HOSE	
	8	3	**7C-4354**	5	CLIP	
	9	2,3	**8T-4121**	38	WASHER-HARD (11X21X2.5-MM THK)	
	10	3	**5P-6994**	1	CLIP	
I	11	1	**214-8021**	1	HOSE AS	
M	12	3	**8T-4196**	2	BOLT (M10X1.5X35-MM)	
Y	13	3	**133-5671**	1	FILTER GP-WATER SEP & FUEL	168
	14	3	**6D-4244**	7	CLIP	
M	15	2,3	**8T-4137**	32	BOLT (M10X1.5X20-MM)	
	16	3	**9S-4185**	2	PLUG-O-RING	
	17	3	**3K-0360**	4	SEAL-O-RING	
	18	3	**184-8347**	1	GUARD	
M	19	3	**8T-4195**	2	BOLT (M10X1.5X30-MM)	
	20	3	**2P-7636**	1	CONNECTOR	
	21	3	**208-4360**	1	GUARD	
	22	2,3	**4I-7889**	2	SPACER (11X25X45-MM THK)	
M	23	2,3	**8T-5005**	2	BOLT (M10X1.5X70-MM)	
	24	3	**203-5105**	1	SHEET AS	
	25	1,2,3	**7K-1181**	8	STRAP-CABLE	
	26	2,3	**6D-1641**	21	CLIP	
	27	3	**1P-7625**	1	ELBOW	
	28	3	**030-7972**	1	ELBOW	
	29	2	**8M-0547**	2	ELBOW-FLARED (SWIVEL)	

E-ORDER BY THE CENTIMETER
I-REFER TO HYDRAULIC INFORMATION SYSTEM
M-METRIC PART
Y-SEPARATE ILLUSTRATION

208-4100 **LINES GP-FUEL** *(contd.)* **i01743563**

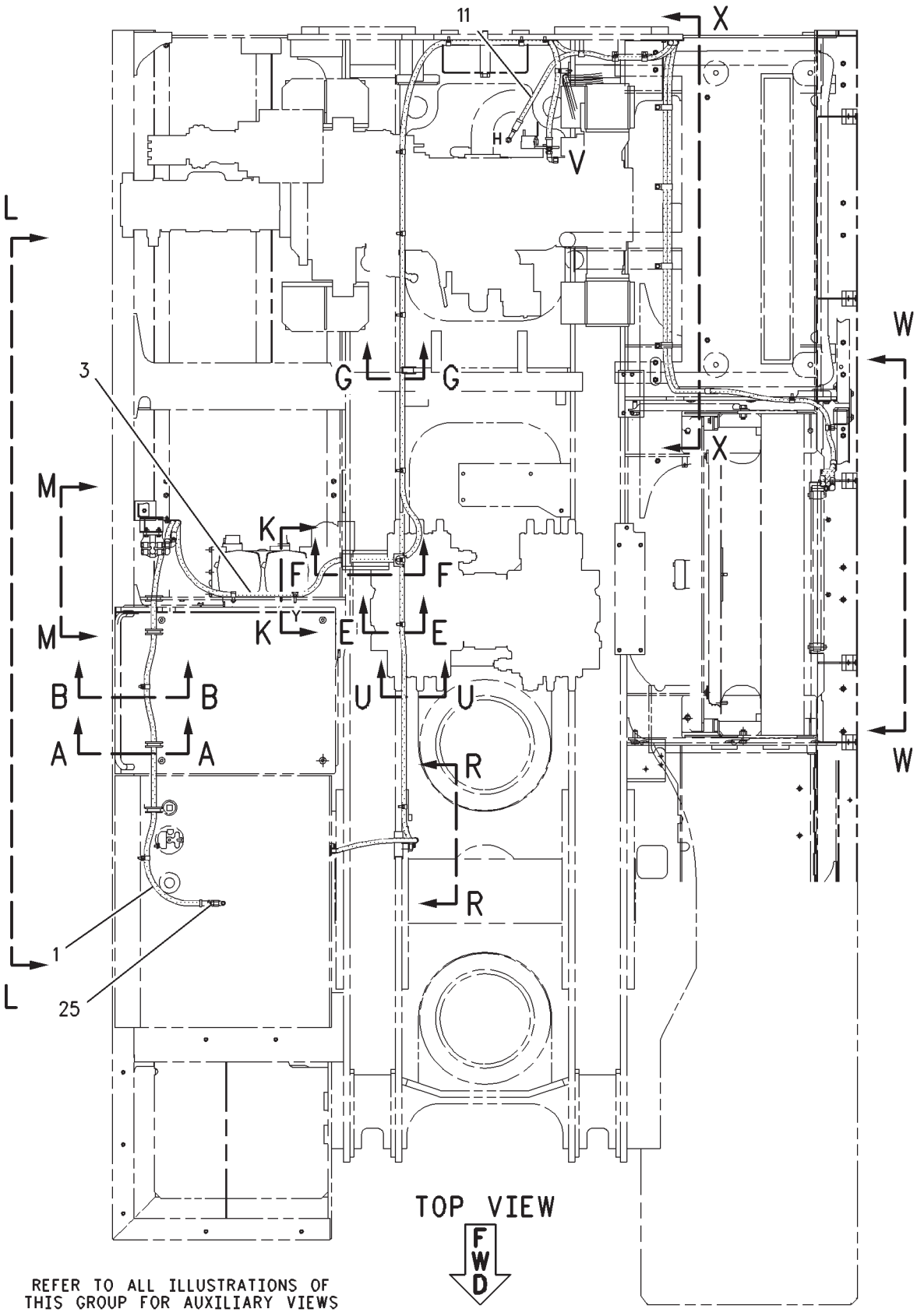

GRAPHIC #1 g00892743

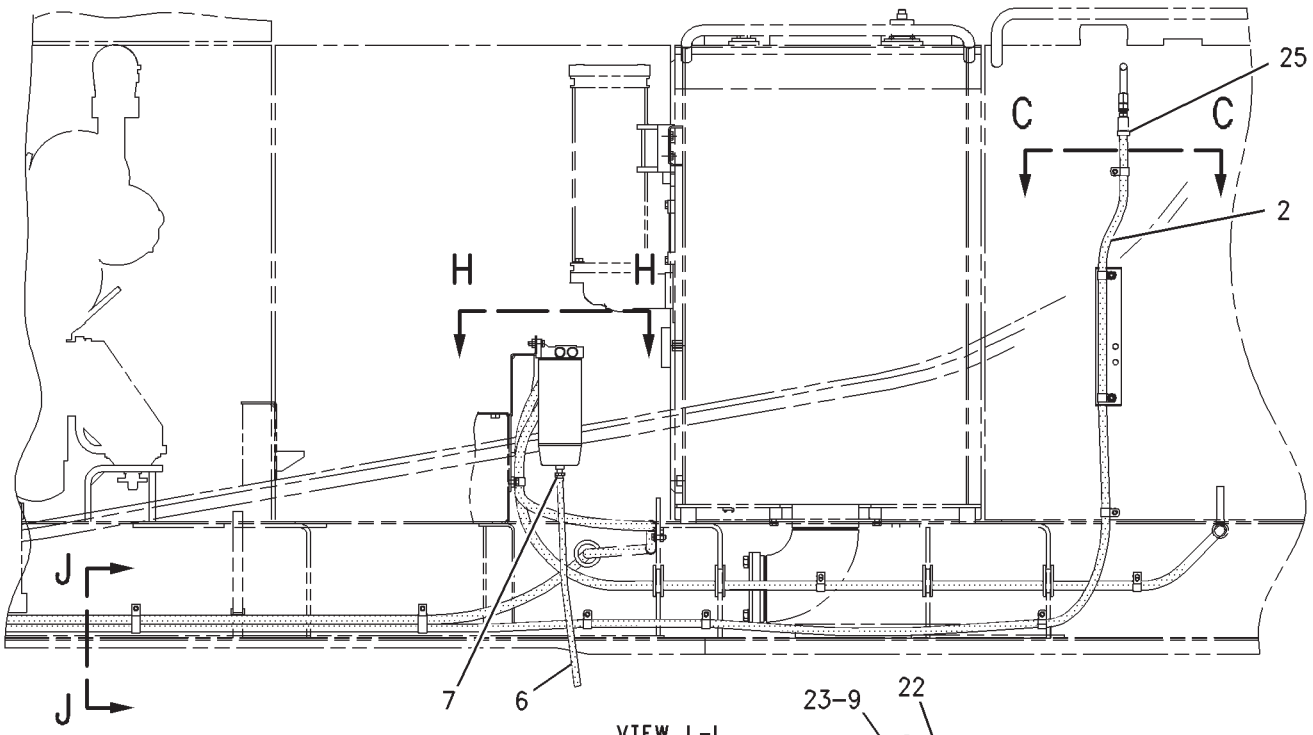

VIEW L-L

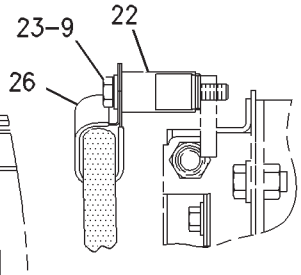

SECTION Z-Z

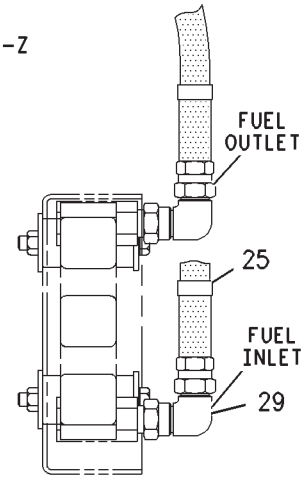

SECTION Y-Y

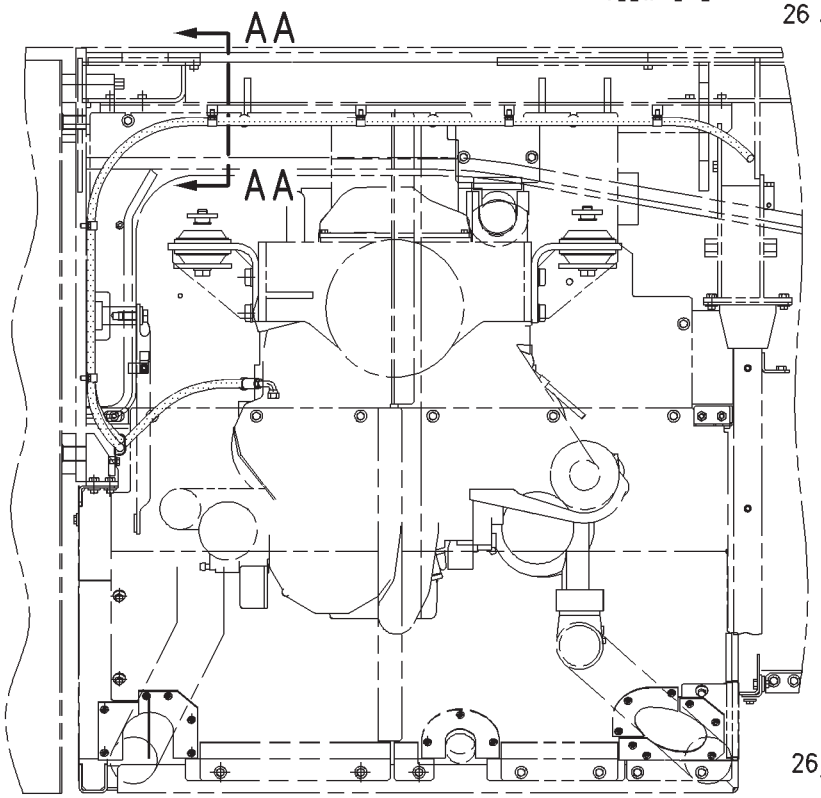

SECTION X-X

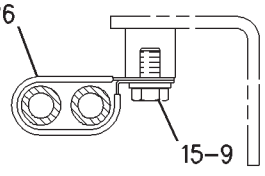

SECTION AA-AA

REFER TO ALL ILLUSTRATIONS OF
THIS GROUP FOR AUXILIARY VIEWS

GRAPHIC #2

g00892745

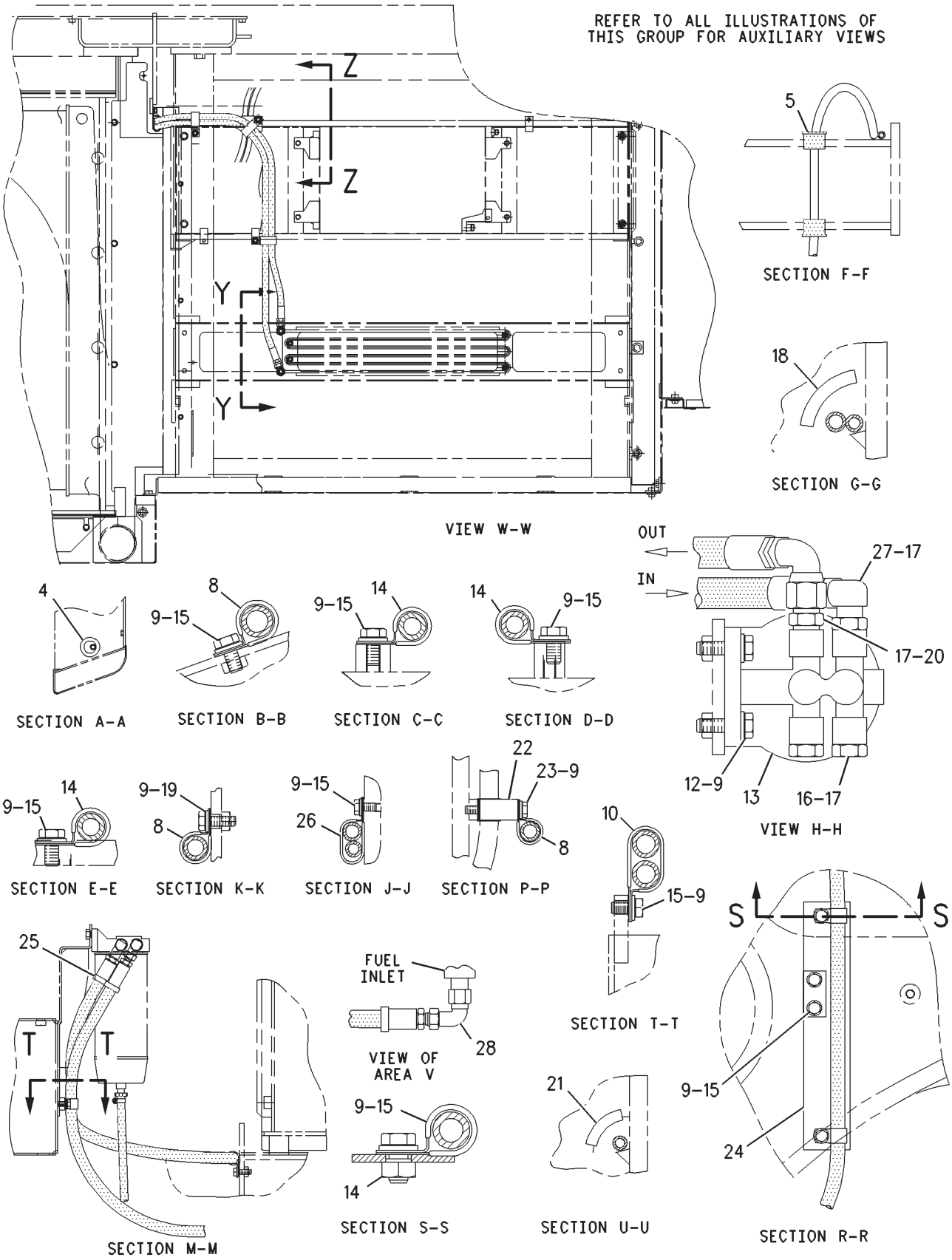

GRAPHIC #3 **<END>** g00892749

FUEL SYSTEM

237-8812 LINES GP-FUEL

S/N: RCD221-UP

PART OF 242-5914 INSTALLATION AR-ENGINE

SMCS-1274 **i02186223**

NOTE	REF NO	GRAPHIC REF	PART NUMBER	QTY	PART NAME 1 2 3 4 5 6 (PRODUCT LEVEL)	SEE PAGE
	1	1	**4I-0379**	1	VALVE-MANUAL (DRAIN, FUEL TANK)	
	2	1	**003-7764**	2	END-HOSE	
	3	1	**095-1386**	4	CLAMP-HOSE	
Y	4	1	**133-5671**	1	FILTER GP-WATER SEP & FUEL	168
	5	1	**170-3026**	2	GROMMET	
	6	1	**184-8347**	1	GUARD	
I	7	1	**203-5095**	1	HOSE AS	
	8	1	**203-5105**	1	SHEET AS	
I	9	1	**208-4037**	1	HOSE AS	
	10	1	**208-4360**	1	GUARD	
I	11	1	**214-8020**	1	HOSE AS	
I	12	1	**214-8021**	1	HOSE AS	
	13	1	**030-7972**	1	ELBOW	
	14	1	**1P-7625**	1	ELBOW	
	15	1	**3K-0360**	4	SEAL-O-RING	
	16	1	**4I-7889**	1	SPACER (11X25X45-MM THK)	
	17	1	**5I-3876**	4	GROMMET	
	18	1	**5P-6994**	1	CLIP	
	19	1	**6D-1641**	20	CLIP	
	20	1	**6D-4244**	7	CLIP	
	21	1	**6K-3607**	1	CONNECTOR	
	22	1	**7C-4354**	5	CLIP	
	23	1	**7K-1181**	8	STRAP-CABLE	
	24	1	**8M-0547**	2	ELBOW-FLARED (SWIVEL)	
	25	1	**8T-4121**	40	WASHER-HARD (11X21X2.5-MM THK)	
M	26	1	**8T-4137**	35	BOLT (M10X1.5X20-MM)	
M	27	1	**8T-4195**	2	BOLT (M10X1.5X30-MM)	
M	28	1	**8T-4196**	2	BOLT (M10X1.5X35-MM)	
M	29	1	**8T-5005**	1	BOLT (M10X1.5X70-MM)	
	30	1	**9M-8406**	3	CLIP	
	31	1	**9S-4185**	2	PLUG-O-RING	
BE	32	1	**5P-1442**		HOSE (131-CM)	

B-USE AS REQUIRED
E-ORDER BY THE CENTIMETER
I-REFER TO HYDRAULIC INFORMATION SYSTEM
M-METRIC PART
Y-SEPARATE ILLUSTRATION

237-8812 **LINES GP-FUEL** *(contd.)* **i02186223**

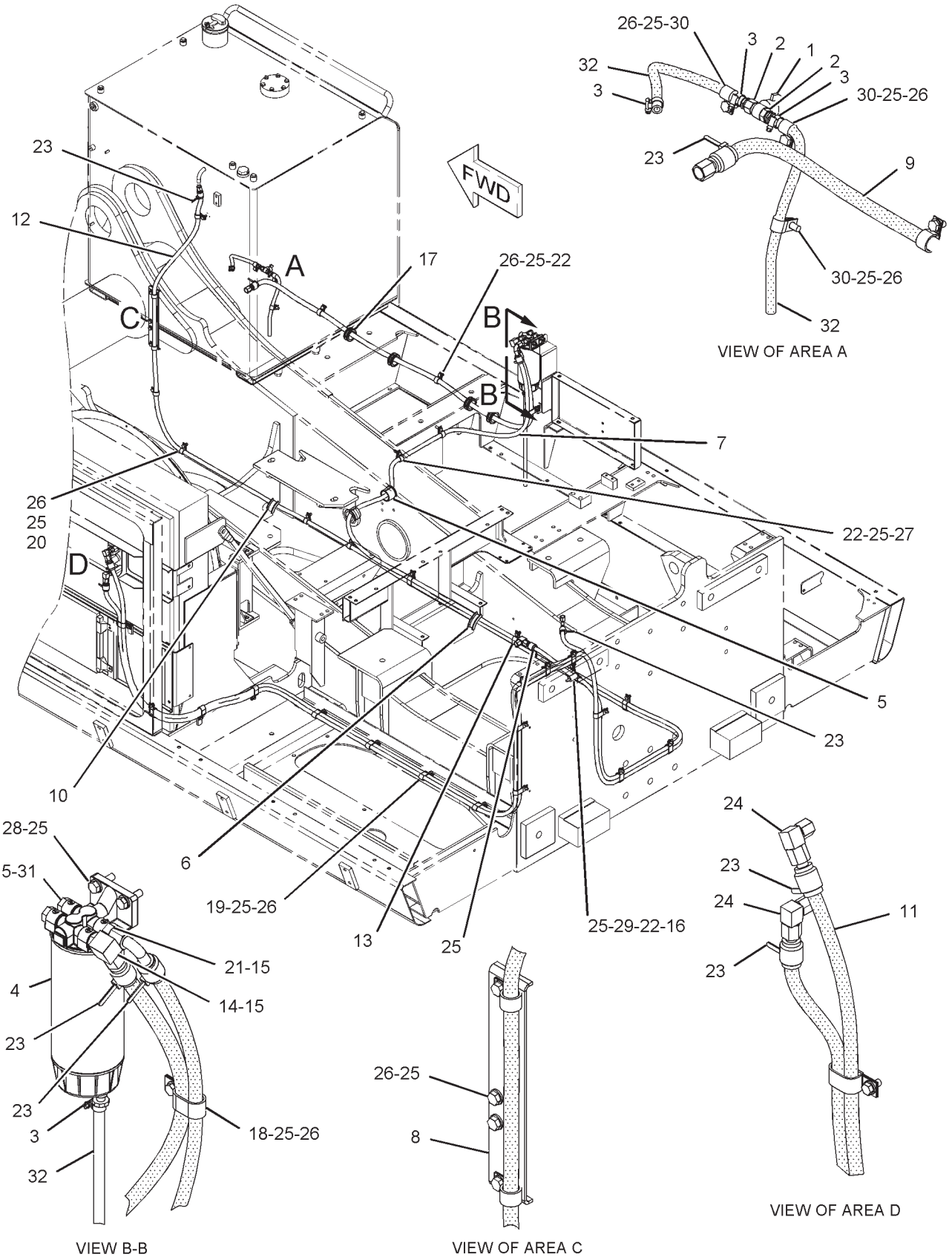

GRAPHIC #1 **<END>** g01109522

FUEL SYSTEM

171-9078 MOUNTING GP-FUEL FILTER

S/N: RCD1-UP

PART OF 220-4843, 242-5914 INSTALLATION AR-ENGINE

SMCS-1261 **i01743039**

NOTE	REF NO	GRAPHIC REF	PART NUMBER	QTY	PART NAME 1 2 3 4 5 6 (PRODUCT LEVEL)	SEE PAGE
	1	1	**5K-8451**	4	CLIP	
M	2	1	**8T-4136**	7	BOLT (M10X1.5X25-MM)	
	3	1	**8T-4121**	13	WASHER-HARD (11X21X2.5-MM THK)	
	4	1	**171-9075**	1	SUPPORT AS	
	5	1	**096-0061**	6	STRAP-CABLE	
M	6	1	**8T-4137**	4	BOLT (M10X1.5X20-MM)	
	7	1	**171-9079**	2	SUPPORT AS	
M	9	1	**8T-4195**	3	BOLT (M10X1.5X30-MM)	
	10	1	**8M-2773**	1	CLIP	
	11	1	**7X-7729**	1	WASHER (11X25X3-MM THK)	

M-METRIC PART

171-9078 **MOUNTING GP-FUEL FILTER** *(contd.)* **i01743039**

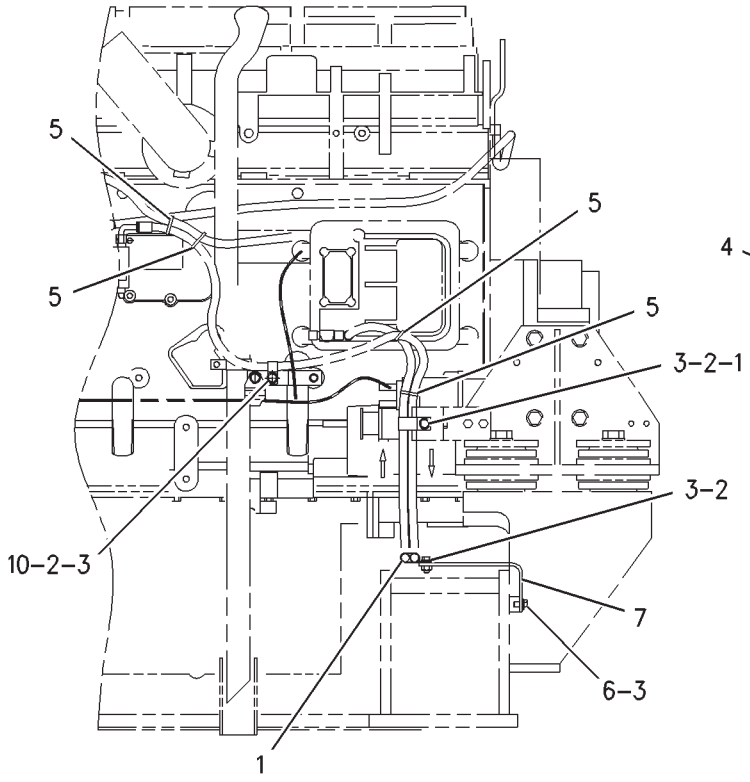

VIEW B-B

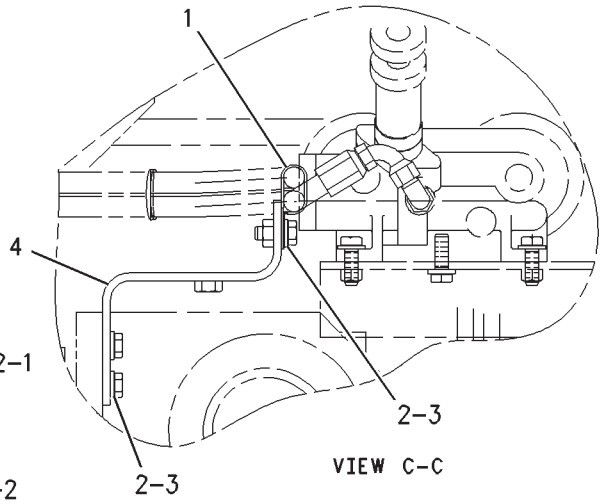

VIEW C-C

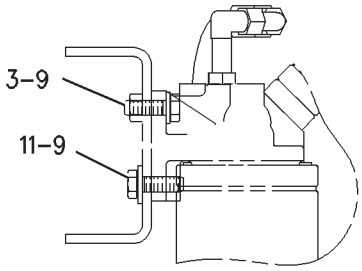

VIEW A-A

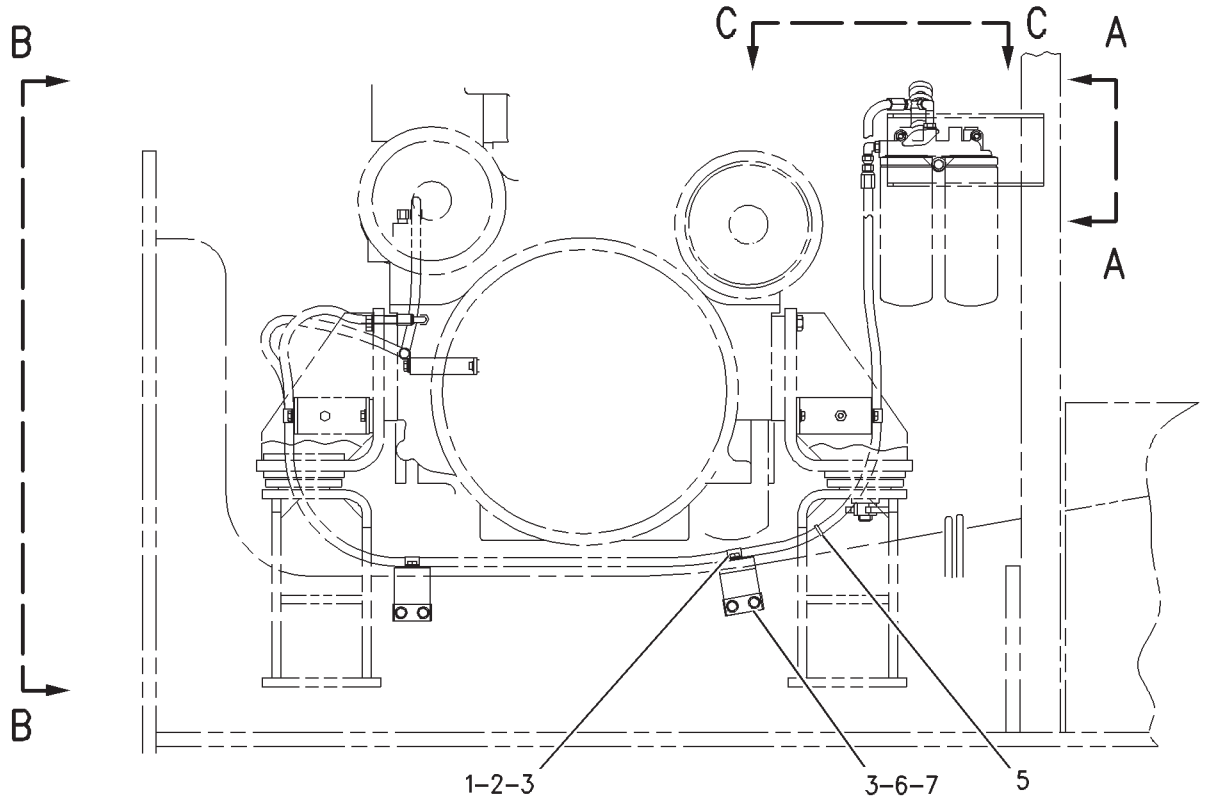

REAR VIEW

GRAPHIC #1 **<END>** g00892391

FUEL SYSTEM

165-4962 PUMP & MOTOR GP-REFUELING

S/N: RCD1-UP
PART OF 180-6854 PUMP GP-REFUELING
AN ATTACHMENT

SMCS-1295 **i01251933**

NOTE	REF NO	GRAPHIC REF	PART NUMBER	QTY	PART NAME 1 2 3 4 5 6 (PRODUCT LEVEL)	SEE PAGE
	1	1	**121-1038**	1	HOUSING-RECEPTACLE	
	2	1	**116-0128**	1	SEAL	
	3	1	**121-1039**	2	TERMINAL (MALE)	

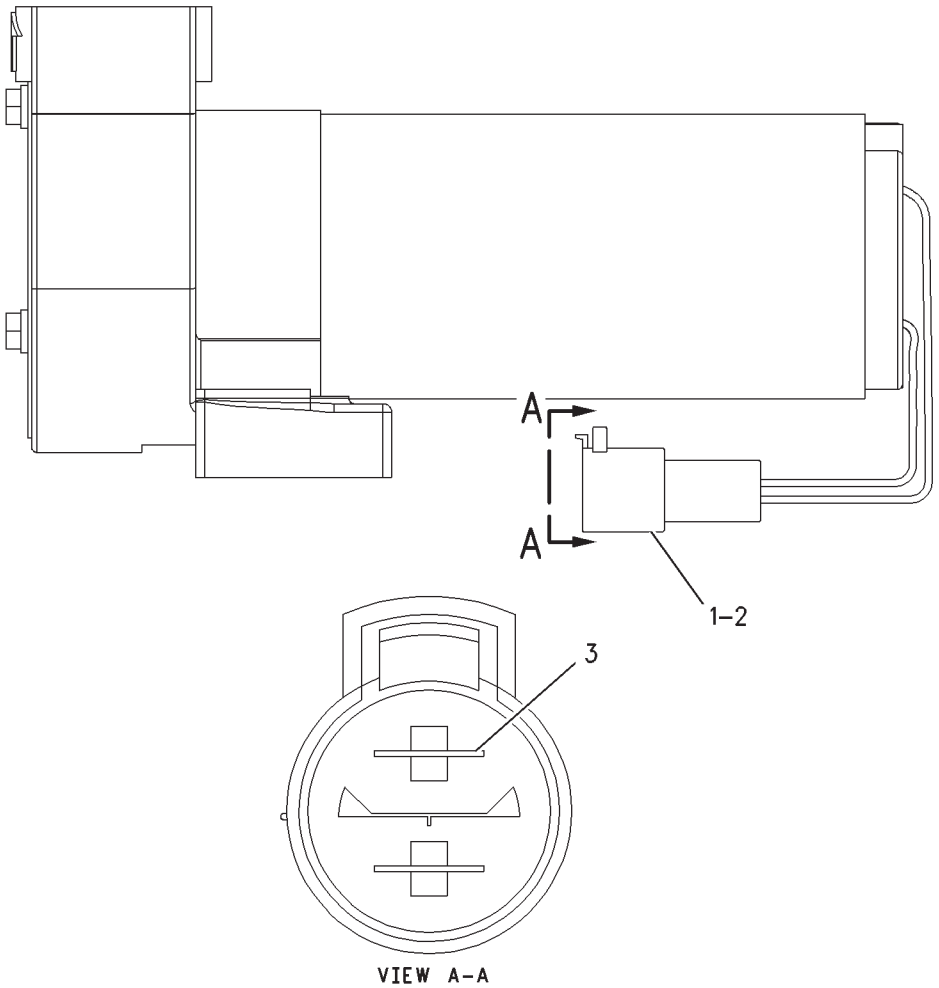

GRAPHIC #1 **<END>** g00676516

FUEL SYSTEM

180-6894 PUMP AR-REFUELING

S/N: RCD1-UP

AN ATTACHMENT

SMCS-1295 **i01531258**

NOTE	PART NUMBER	QTY	PART NAME 1 2 3 4 5 6 (PRODUCT LEVEL)	SEE PAGE
Y	*180-6854*	1	PUMP GP-REFUELING	189
Y	*170-6980*	1	WIRING GP-REFUELING PUMP	316

Y-SEPARATE ILLUSTRATION

<END>

FUEL SYSTEM

183-2824 PUMP GP-FUEL PRIMING–MANUAL

S/N: BLC426-UP

PART OF 173-0004 LINES GP-FUEL

SMCS-1258 **i03626035**

NOTE	REF NO	GRAPHIC REF	PART NUMBER	QTY	PART NAME 1 2 3 4 5 6 (PRODUCT LEVEL)	SEE PAGE
	1	1	**9Y-8389**	1	GASKET	
	2	1	**183-2823**	1	PUMP AS-FUEL PRIMING	
	3	1	**8T-4205**	1	WASHER-HARD (7.2X14.5X2-MM THK)	
	4	1	**8T-4224**	1	WASHER-HARD (8.8X16X2-MM THK)	
M	5	1	**8T-4971**	1	BOLT (M6X1X30-MM)	
M	6	1	**8T-7547**	1	BOLT (M8X1.25X30-MM)	

M-METRIC PART

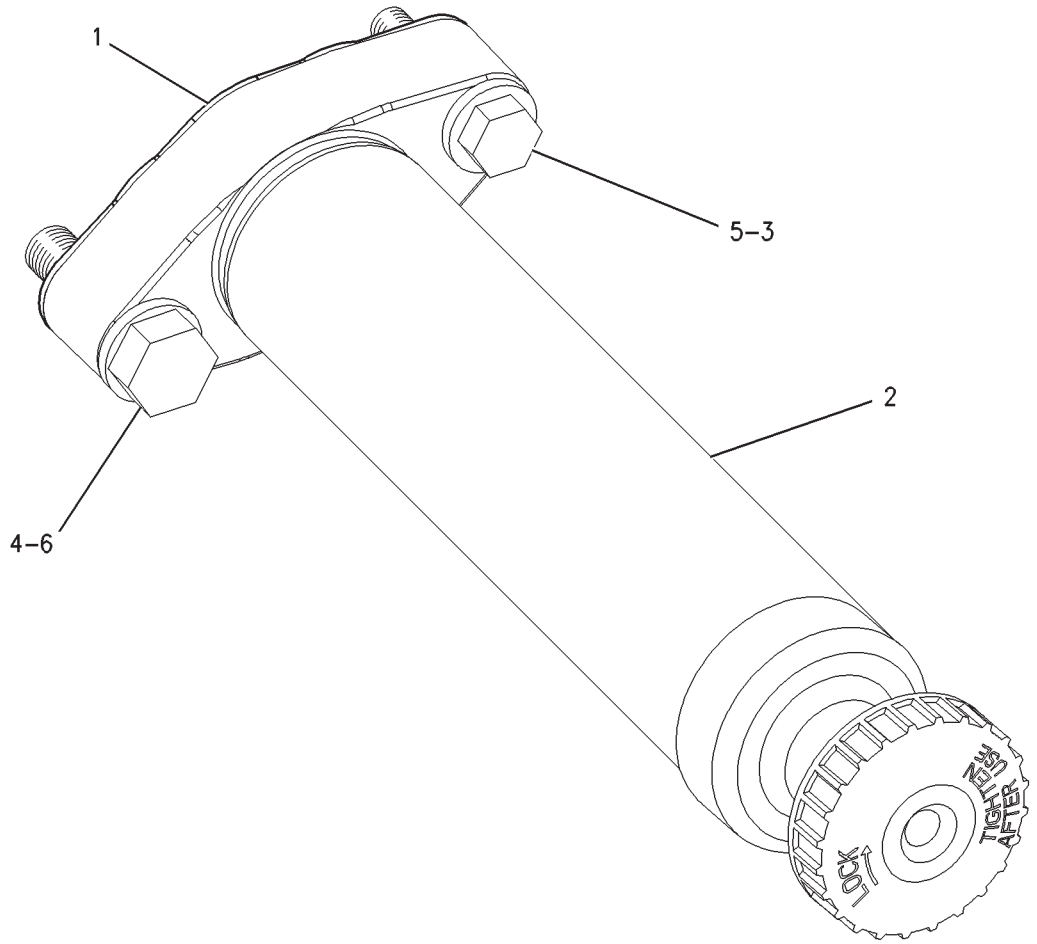

GRAPHIC #1 **<END>** g00671515

FUEL SYSTEM

100-4265 PUMP GP-FUEL TRANSFER

S/N: BLC426-UP

PART OF 205-5858, 235-4685 ENGINE AR-COMPLETE

SMCS-1256 **i02881501**

NOTE	REF NO	GRAPHIC REF	PART NUMBER	QTY	PART NAME 1 2 3 4 5 6 (PRODUCT LEVEL)	SEE PAGE
	1	1	**103-4672**	1	COVER (HYDRAULIC PUMP DRIVE)	
	2	1	**316-6864**	1	PUMP GP-FUEL TRANSFER	
	3	1	**107-5769**	2	SEAL-O-RING	
	4	1	**1T-0765**	2	BOLT (3/8-16X1-IN)	
	5	1	**5M-2894**	2	WASHER-HARD (10.2X18.5X2.5-MM THK)	
	6	1	**6H-0406**	2	STUD-TAPERLOCK (3/8-16X1.968-IN)	
	7	1	**9S-8752**	2	NUT-FULL (3/8-16-THD)	

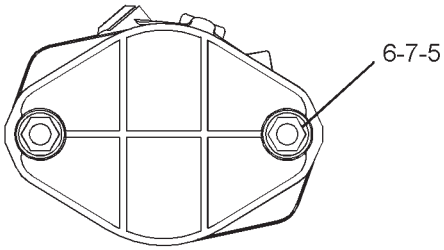

VIEW A-A

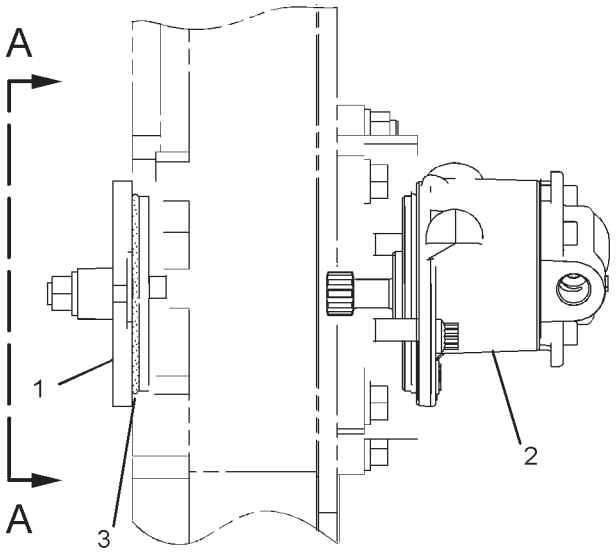

LEFT SIDE VIEW

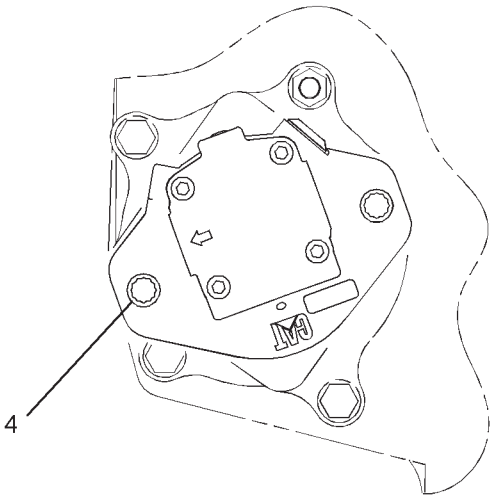

REAR VIEW

GRAPHIC #1 **<END>** g01261844

FUEL SYSTEM

180-6854 PUMP GP-REFUELING

S/N: RCD1-UP
PART OF 180-6894 PUMP AR-REFUELING
AN ATTACHMENT

SMCS-1295 **i01888778**

NOTE	REF NO	GRAPHIC REF	PART NUMBER	QTY	PART NAME 1 2 3 4 5 6 (PRODUCT LEVEL)	SEE PAGE
E	1	1	**103-2556**		HOSE (270CM)	
E	1A	1	**103-2556**		HOSE (400CM)	
	2	1	**176-0436**	1	SHEET AS	
Y	3	1	**165-4962**	1	PUMP & MOTOR GP-REFUELING	185
	4	1	**2S-3440**	4	CLAMP-HOSE	
	5	1	**105-6701**	3	CONNECTOR-HOSE	
	6	1	**006-5707**	2	ELBOW-PIPE	
	7	1	**2S-1647**	2	GROMMET	
	8	1	**4D-7388**	3	CLIP	
M	9	1	**8T-4137**	2	BOLT (M10X1.5X20-MM)	
	10	1	**8T-4121**	5	WASHER-HARD (11X21X2.5-MM THK)	
Y	11	1	**5C-6108**	1	SWITCH GP-REFUELING (FUEL TANK SHUTOFF)	287
	12	1	**122-4021**	1	COVER	
M	13	1	*135-8573*	9	BOLT AS	
					(EACH INCLUDES)	
		1	**5P-1076**	1	WASHER-HARD (13.5X30X4-MM THK)	
M		1	**8T-4192**	1	BOLT (M12X1.75X25-MM)	
	14	1	**152-9562**	1	BRACKET AS	
M	15	1	**8T-4186**	2	BOLT (M10X1.5X40-MM)	
	16	1	**120-5114**	1	FILM-INSTRUCTION (REFUELING PUMP)	
	17	1	**176-0490**	1	STRAINER AS-FUEL	
	18	1	**176-0433**	1	COVER	
	19	1	**152-9560**	1	SHEET	
	20	1	**2D-0388**	1	GROMMET	
	21	1	**221-2685**	1	SHEET AS	
	22	1	**221-2683**	1	SHEET AS	
M	23	1	**8T-4133**	1	NUT (M10X1.5-THD)	

E-ORDER BY THE CENTIMETER
M-METRIC PART
Y-SEPARATE ILLUSTRATION

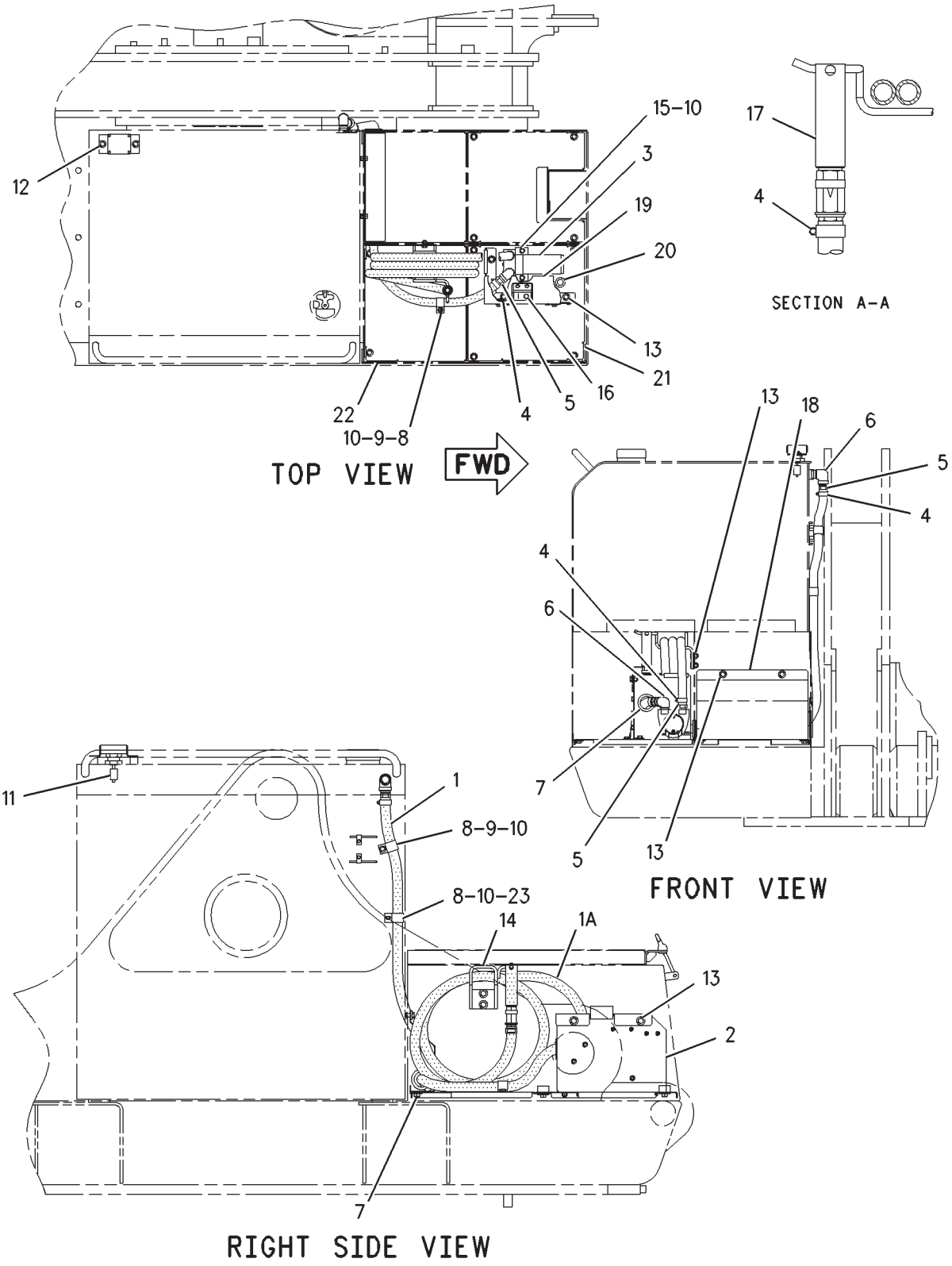

GRAPHIC #1 **<END>** g00801523

FUEL SYSTEM

184-8528 TANK & MTG GP-FUEL

S/N: RCD1-220
1240-L (328-US GAL)
PART OF 229-3366 CHASSIS AR

SMCS-1273 **i01888791**

NOTE	REF NO	GRAPHIC REF	PART NUMBER	QTY	PART NAME 1 2 3 4 5 6 (PRODUCT LEVEL)	SEE PAGE
	1	1	**5P-8502**	1	PADLOCK GP	
		1	**5P-8500**	1	KEY	
		1	**8Y-6364**	1	SLEEVE	
	2	1	**7Y-1863**	6	SPACER (20.5X38X34-MM THK)	
M	3	1	*135-8572*	2	BOLT AS (M12X1.75X20-MM)	
					(EACH INCLUDES)	
M		1	**8T-4179**	1	BOLT (M12X1.75X20-MM)	
		1	**5P-1076**	1	WASHER-HARD (13.5X30X4-MM THK)	
Y	4	1	**218-7945**	1	TANK GP-FUEL	193
M	5	1	**8T-4187**	6	BOLT (M20X2.5X80-MM)	
B	6	1	**093-0407**	6	SHIM (0.4-MM THK)	
B	7	1	**093-0408**	6	SHIM (1-MM THK)	

B-USE AS REQUIRED
M-METRIC PART
Y-SEPARATE ILLUSTRATION

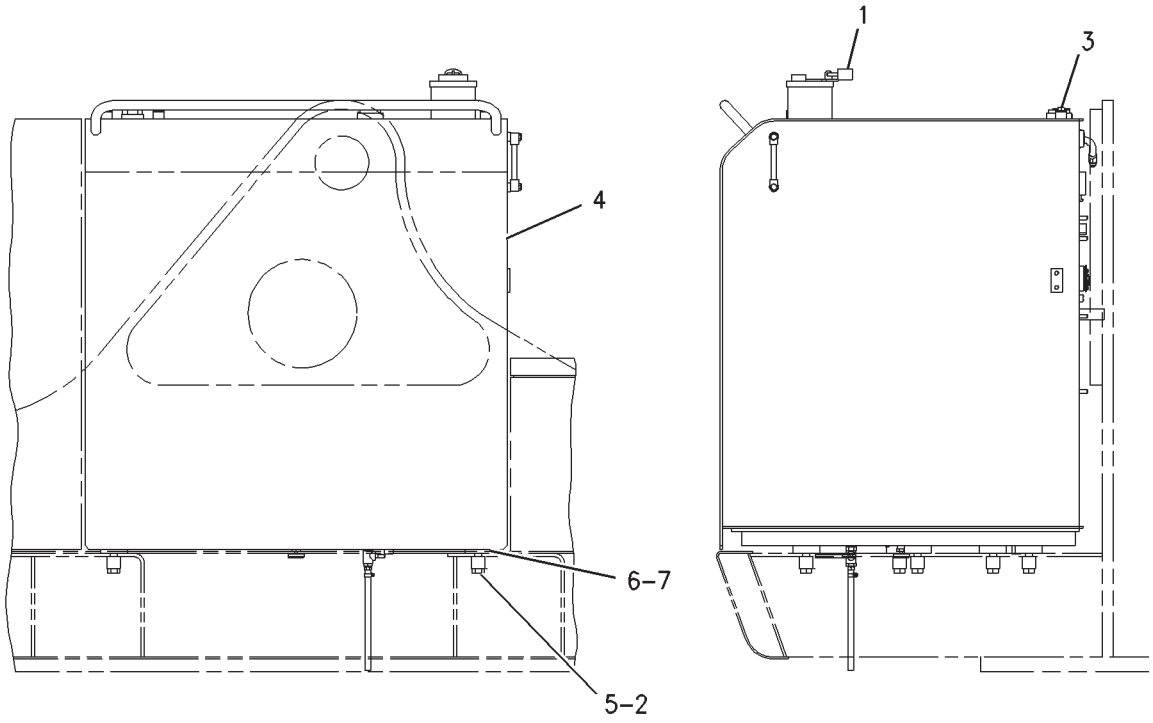

RIGHT SIDE VIEW FRONT VIEW

GRAPHIC #1 **<END>** g00979880

FUEL SYSTEM

184-8528 TANK & MTG GP-FUEL

S/N: RCD221-UP
1240-L (328-US GAL)
PART OF 229-3366 CHASSIS AR

SMCS-1273 **i02728668**

NOTE	REF NO	GRAPHIC REF	PART NUMBER	QTY	PART NAME 1 2 3 4 5 6 (PRODUCT LEVEL)	SEE PAGE
	1	1	**246-2641**	1	PADLOCK GP	
		1	**5P-8500**	1	KEY	
	2	1	**9S-8178**	6	SPACER (0.891X1.625X1.5-IN THK)	
M	3	1	**135-8572**	2	BOLT AS (M12X1.75X20-MM)	
CY	4	1	**237-8771**	1	TANK GP-FUEL	195
M	5	1	**8T-4187**	6	BOLT (M20X2.5X80-MM)	
B	6	1	**093-0407**	6	SHIM (0.4-MM THK)	
B	7	1	**093-0408**	6	SHIM (1-MM THK)	

B-USE AS REQUIRED
C-CHANGE FROM PREVIOUS TYPE
M-METRIC PART
Y-SEPARATE ILLUSTRATION

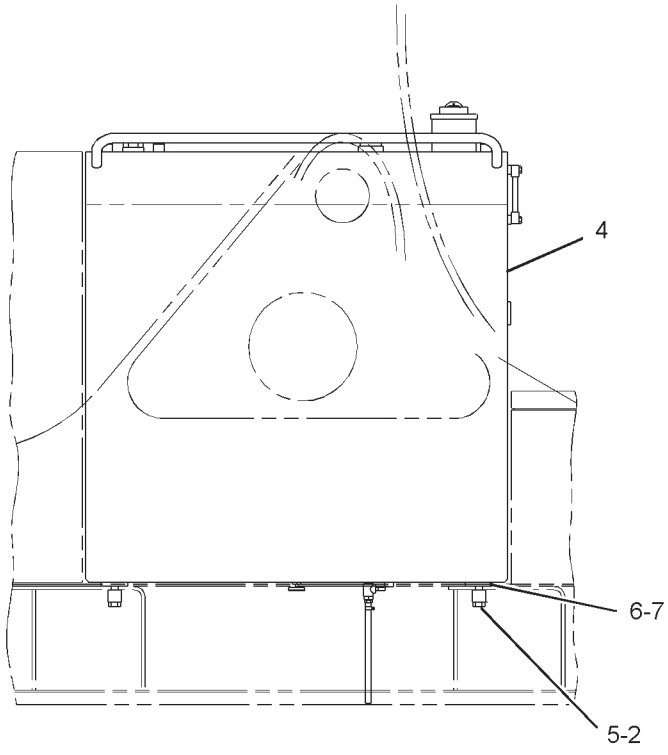

RIGHT SIDE VIEW

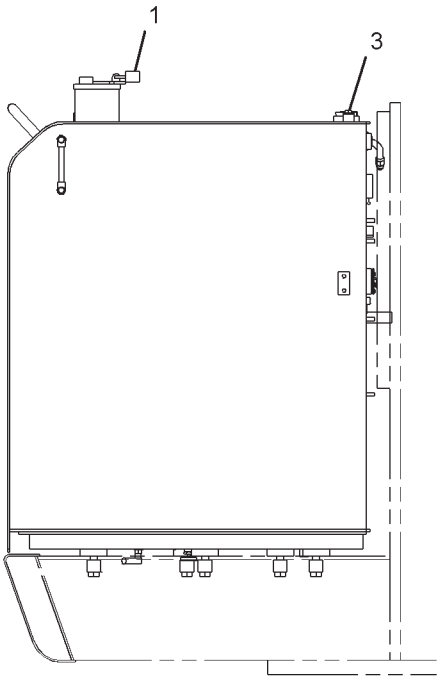

FRONT VIEW

GRAPHIC #1 **<END>** g01106198

FUEL SYSTEM

218-7945 TANK GP-FUEL

S/N: RCD1-220
1240L (327.57GAL)
PART OF 184-8528 TANK & MTG GP-FUEL

SMCS-1273 **i02279813**

NOTE	REF NO	GRAPHIC REF	PART NUMBER	QTY	PART NAME 1 2 3 4 5 6 (PRODUCT LEVEL)	SEE PAGE
	1	1	**3E-2306**	1	VALVE AS (FUEL DRAIN)	
	2	1	**4I-0378**	1	GASKET-RUBBER	
	3	1	**5P-1046**	1	CONNECTOR	
	4	1	**7X-7700**	1	CAP AS-FILLER (FUEL TANK)	
		1	**9X-2205**	1	KIT-CAP FILTER (FUEL TANK)	
		1	**9X-8600**	1	SEAL-O-RING	
Y	5	1	**223-3095**	1	GAUGE GP-SIGHT (FUEL LEVEL)	169
	6	1	**9P-7121**	1	STRAINER-FUEL	
	7	1	**061-9413**	1	CONNECTOR	
	8	1	**095-1386**	1	CLAMP-HOSE	
M	9	1	**135-8572**	2	BOLT AS (M12X1.75X20-MM)	
	10	1	**164-3417**	1	COVER	
	11	1	**165-2881**	1	VALVE-BALL (SEDIMENT, WATER)	
	12	1	**183-1065**	1	SENSOR-FUEL LEVEL	
	12A	1	**9X-3401**	2	PIN-CONNECTOR (16-GA TO 18-GA)	
	12B	1	**102-8802**	2	KIT-RECEPTACLE (2-PIN)	
					(INCLUDES RECEPTACLE AS & WEDGE)	
	13	1	**187-1679**	1	COVER	
Z	14	1		1	TANK AS-FUEL	
M	15	1	**095-0736**	5	SCREW-MACHINE (M5X0.8X10-MM)	
	16	1	**1H-8128**	1	SEAL-O-RING	
	17	1	**2S-4078**	1	SEAL-O-RING	
	18	1	**3B-0551**	1	PLUG-PIPE	
	19	1	**3J-1907**	1	SEAL-O-RING	
	20	1	**5H-6734**	1	SEAL-O-RING	
	21	1	**8T-0328**	5	WASHER-HARD (5.5X10X1-MM THK)	
	22	1	**8T-4121**	12	WASHER-HARD (11X21X2.5-MM THK)	
M	23	1	**8T-4136**	12	BOLT (M10X1.5X25-MM)	
	24	1	**9M-6522**	1	CONNECTOR	
	25	1	**9S-6130**	1	PLUG	
E	26	1	**5P-1442**		HOSE (28-CM)	

E-ORDER BY THE CENTIMETER
M-METRIC PART
Y-SEPARATE ILLUSTRATION
Z-NOT SERVICED SEPARATELY

218-7945 TANK GP-FUEL *(contd.)* **i02279813**

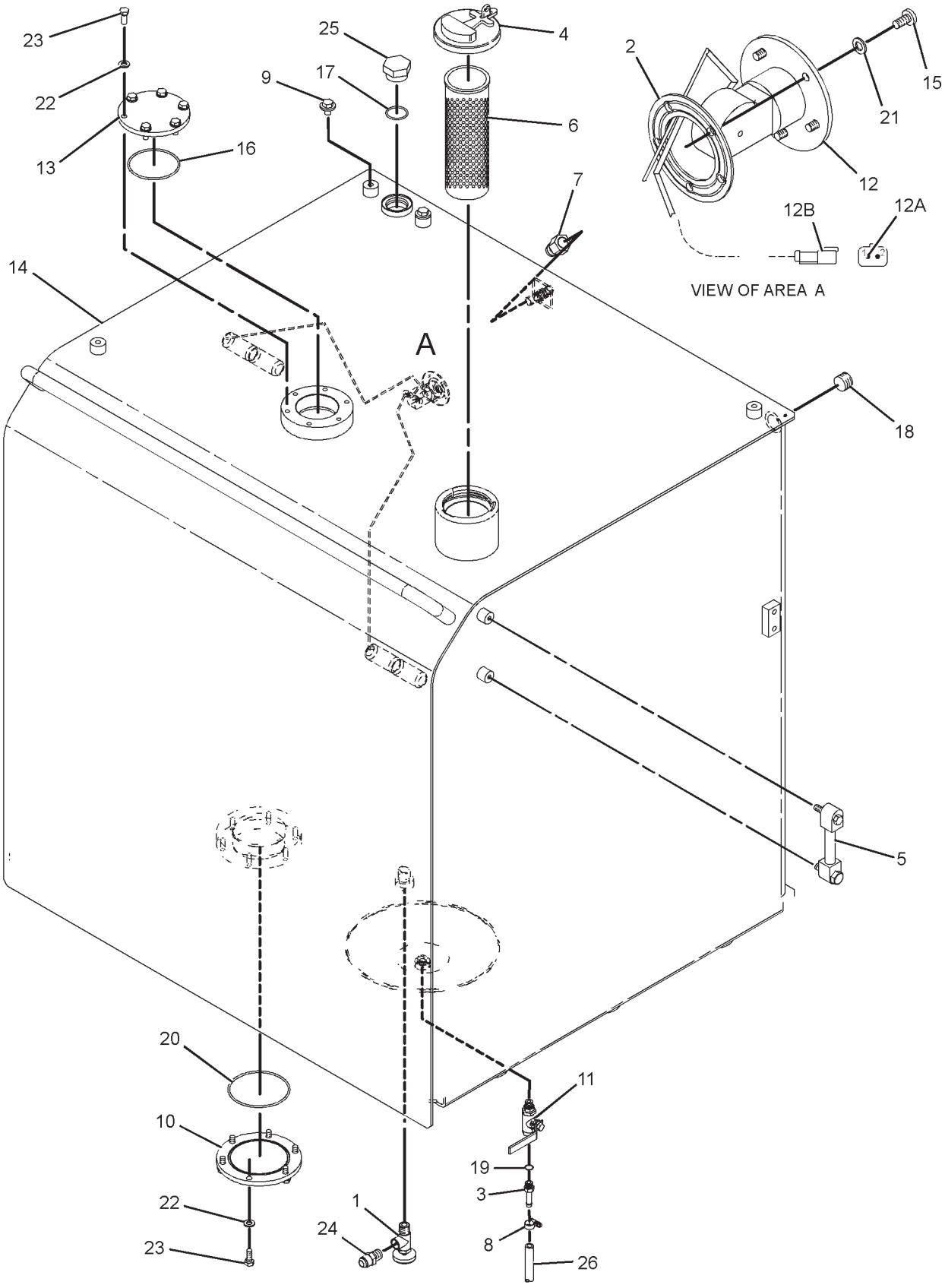

GRAPHIC #1

<END>

g01161818

FUEL SYSTEM

237-8771 TANK GP-FUEL

S/N: RCD221-UP
1240-L (328-US GAL)
PART OF 184-8528 TANK & MTG GP-FUEL

SMCS-1273 **i03531020**

NOTE	REF NO	GRAPHIC REF	PART NUMBER	QTY	PART NAME 1 2 3 4 5 6 (PRODUCT LEVEL)	SEE PAGE
	1	1	**3E-2306**	1	VALVE AS (FUEL DRAIN)	
	2	1	**4I-0378**	1	GASKET-RUBBER	
	3	1	**5P-4924**	1	ELBOW	
	4	1	**7X-7700**	1	CAP AS-FILLER (FUEL TANK)	
		1	**9X-2205**	1	KIT-CAP FILTER (FUEL TANK)	
		1	**9X-8600**	1	SEAL-O-RING	
J	5	1	**303-9933**	1	STRAINER AS-FUEL (FLOAT GAUGE)	
	6	1	**061-9413**	1	CONNECTOR	
M	7	1	**135-8572**	2	BOLT AS	
	8	1	**164-3417**	1	COVER	
	9	1	**183-1065**	1	SENSOR-FUEL LEVEL	
	9A	1	**9X-3401**	2	PIN-CONNECTOR (16-GA TO 18-GA)	
	9B	1	**102-8802**	1	KIT-RECEPTACLE (2-PIN)	
					(KIT INCLUDES RECEPTACLE AS & WEDGE)	
	10	1	**187-1679**	1	COVER	
Z	11	1		1	TANK AS-FUEL	
Y	12	1	**223-3095**	1	GAUGE GP-SIGHT (FUEL LEVEL)	169
M	13	1	**095-0736**	5	SCREW-MACHINE (M5X0.8X10-MM)	
	14	1	**1H-8128**	1	SEAL-O-RING	
	15	1	**2S-4078**	1	SEAL-O-RING	
	16	1	**3B-0551**	1	PLUG-PIPE	
	17	1	**3J-1907**	1	SEAL-O-RING	
	18	1	**5H-6734**	1	SEAL-O-RING	
	19	1	**8T-0328**	5	WASHER-HARD (5.5X10X1-MM THK)	
	20	1	**8T-4121**	12	WASHER-HARD (11X21X2.5-MM THK)	
M	21	1	**8T-4136**	12	BOLT (M10X1.5X25-MM)	
	22	1	**9M-6522**	1	CONNECTOR	
	23	1	**9S-6130**	1	PLUG	
					AVAILABLE REPAIR KIT(S):	
J			**303-9937**	1	KIT-GAUGE (FUEL STRAINER)	
					(INCLUDES STOPPER & GAUGE FLOAT)	

J-KIT MARKED J SERVICES PART(S) MARKED J
M-METRIC PART
Y-SEPARATE ILLUSTRATION
Z-NOT SERVICED SEPARATELY

237-8771 TANK GP-FUEL *(contd.)* **i03531020**

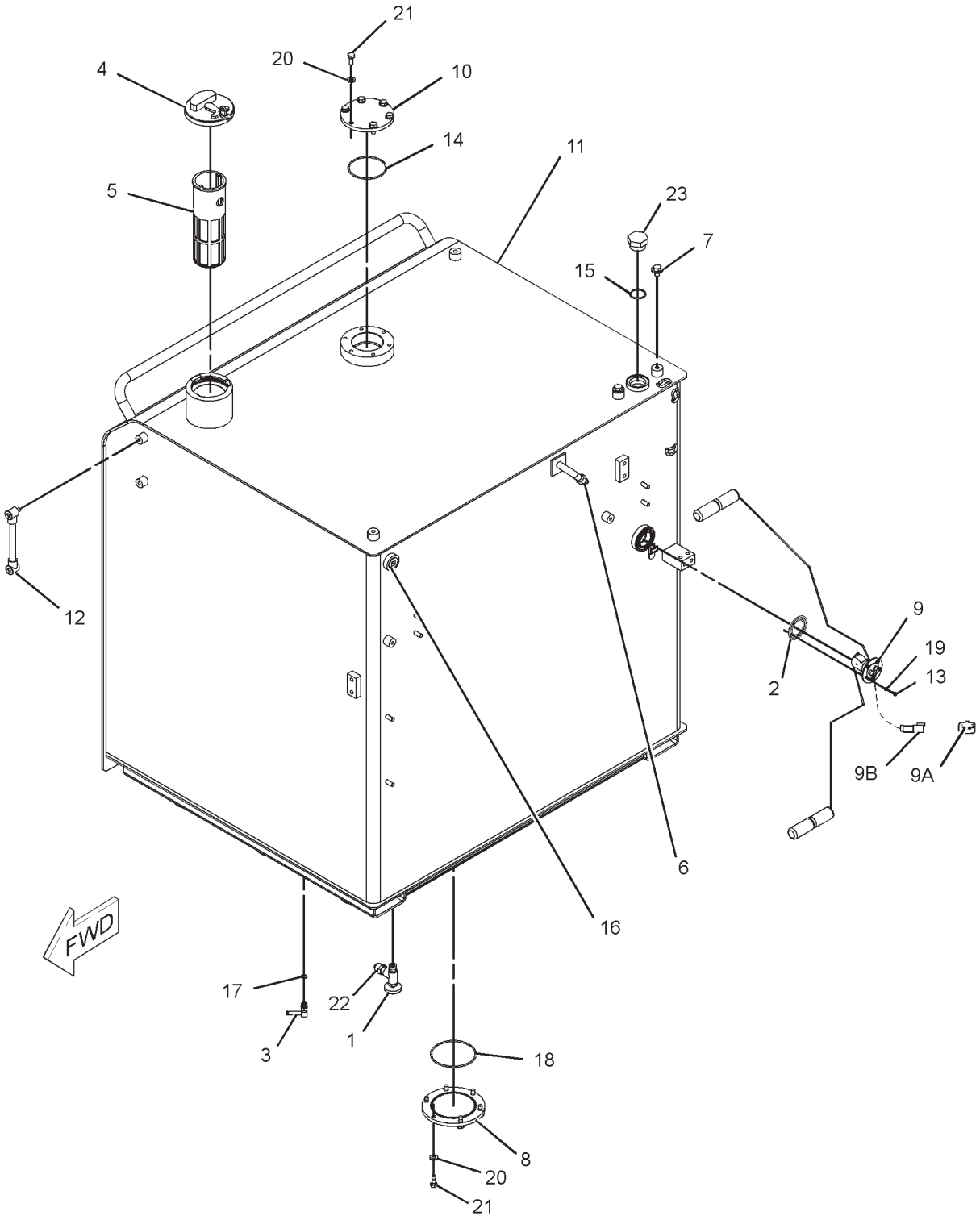

GRAPHIC #1 **<END>** g01155992

FUEL SYSTEM

156-5783 VALVE GP-CHECK–FUEL

S/N: BLC426-570

PART OF 173-0004 LINES GP-FUEL

SMCS-1251 **i01672624**

NOTE	REF NO	GRAPHIC REF	PART NUMBER	QTY	PART NAME 1 2 3 4 5 6 (PRODUCT LEVEL)	SEE PAGE
	1	1	**6V-6923**	1	RING-BACKUP (13.16MM ID)	
	2	1	**033-6033**	1	SEAL-O-RING (12.42MM ID)	

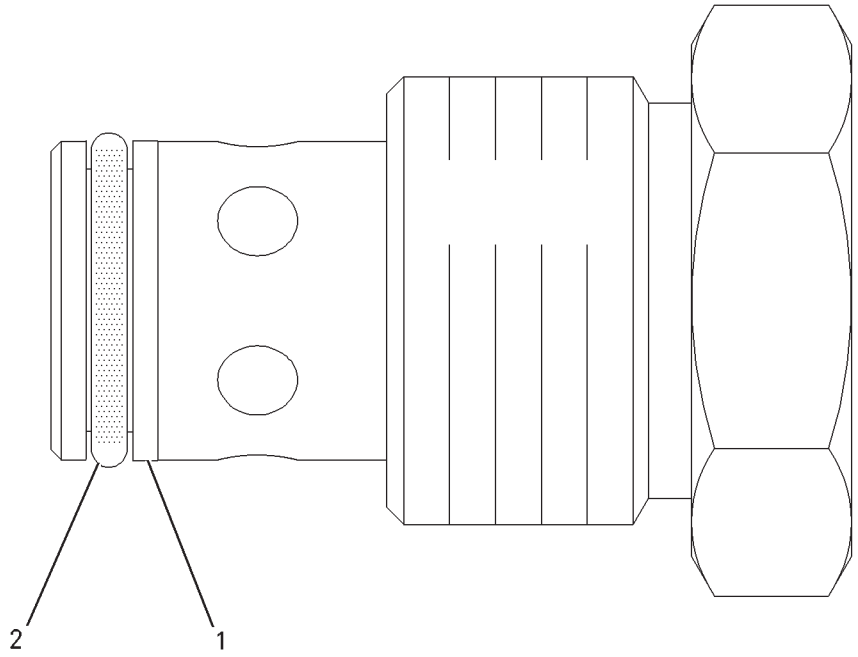

GRAPHIC #1 **<END>** g00864141

FUEL SYSTEM

233-6742 VALVE GP-CHECK–FUEL

S/N: BLC571-UP

PART OF 173-0004 LINES GP-FUEL

SMCS-1251 **i02447190**

NOTE	REF NO	GRAPHIC REF	PART NUMBER	QTY	PART NAME 1 2 3 4 5 6 (PRODUCT LEVEL)	SEE PAGE
Y	1	1	**281-2725**	1	VALVE GP-CHECK (FUEL)	199
	2	1	**6V-4589**	1	SEAL-O-RING	

Y-SEPARATE ILLUSTRATION

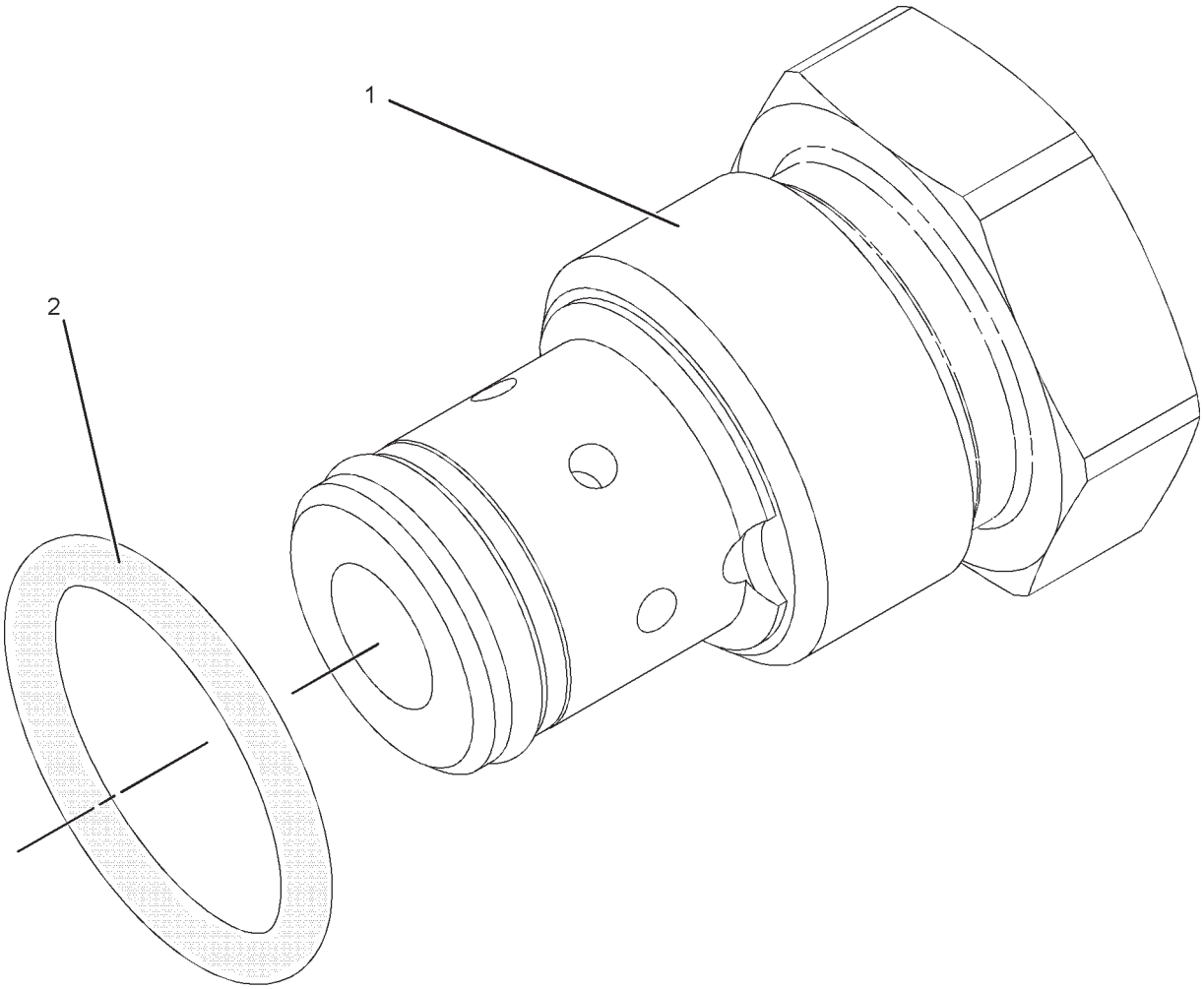

GRAPHIC #1 **<END>** g01031823

FUEL SYSTEM

281-2725 VALVE GP-CHECK–FUEL

S/N: BLC571-UP

PART OF 233-6742 VALVE GP-CHECK

SMCS-1251 **i02447467**

NOTE	REF NO	GRAPHIC REF	PART NUMBER	QTY	PART NAME 1 2 3 4 5 6 (PRODUCT LEVEL)	SEE PAGE
	1	1	**6V-6923**	1	RING-BACKUP	
	2	1	**033-6033**	1	SEAL-O-RING	

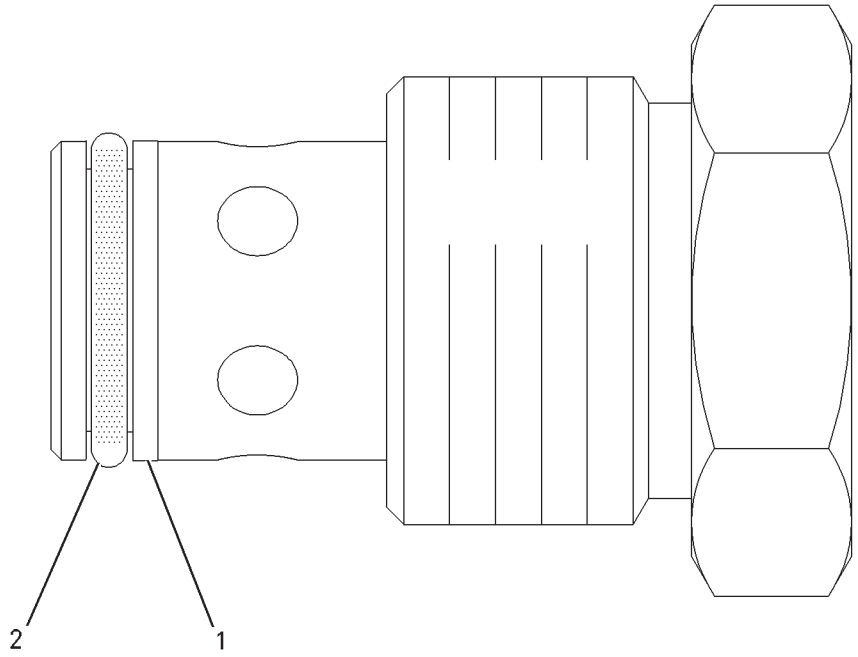

GRAPHIC #1 **<END>** g00864141

ELECTRICAL AND STARTING SYSTEM

170-6979 ALARM GP-TRAVEL

S/N: RCD1-UP

PART OF 229-3366 CHASSIS AR

SMCS-7429 **i02371754**

NOTE	REF NO	GRAPHIC REF	PART NUMBER	QTY	PART NAME 1 2 3 4 5 6 (PRODUCT LEVEL)	SEE PAGE
	1	1	**213-9100**	1	ALARM GP	
		1	**102-8802**	1	KIT-RECEPTACLE (2-PIN)	
					(INCLUDES RECEPTACLE AS & WEDGE)	
E		1	**9X-1813**		SLEEVE (31-CM)	
M	2	1	**8T-4189**	2	BOLT (M8X1.25X20-MM)	
	3	1	**8T-4224**	2	WASHER-HARD (8.8X16X2-MM THK)	

E-ORDER BY THE CENTIMETER
M-METRIC PART

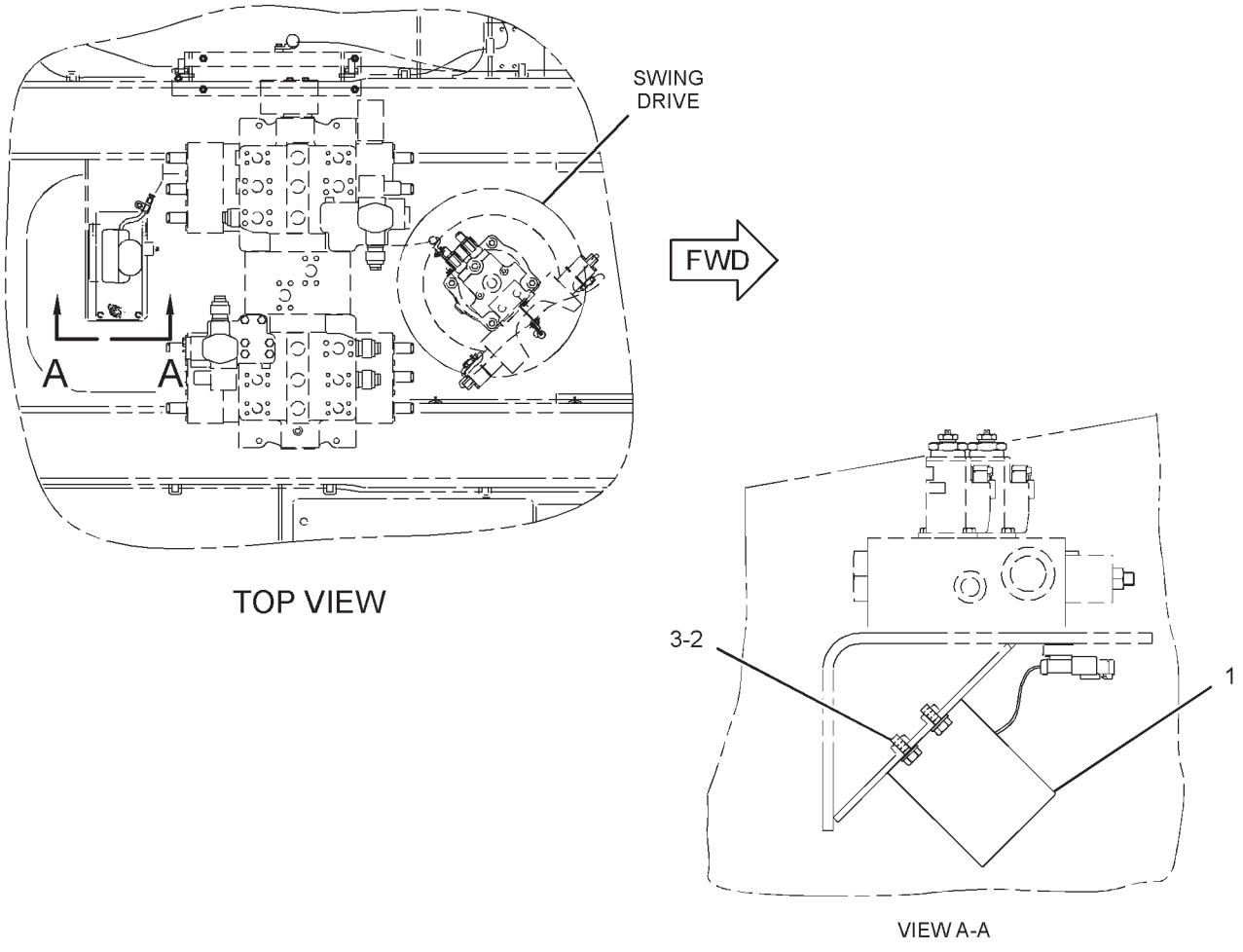

GRAPHIC #1 **<END>** g01285213

ELECTRICAL AND STARTING SYSTEM

3E-7577 ALTERNATOR GP-CHARGING*R

S/N: BLC426-1131
24 VOLT, 75 AMPERE
PART OF 166-1325 ALTERNATOR GP-CHARGING

SMCS-1405 **i03632188**

NOTE	REF NO	GRAPHIC REF	PART NUMBER	QTY	PART NAME 1 2 3 4 5 6 (PRODUCT LEVEL)	SEE PAGE
	1	1	**9S-2011**	1	SCREW-MACHINE (1/4-20X0.5-IN)	
	2	1	**1H-3244**	1	LOCKWASHER	
	3	1	**187-2034**	1	NUT-FLANGE (5/8-18-THD)	
	5	1	**9S-2260**	1	PLATE-COVER	
	6	1	**9S-2255**	1	COVER	
	7	1	**9S-2262**	1	GASKET	
	8	1	**9S-2544**	6	SCREW-HEX HEAD (8-32X11.13-MM)	
	9	1	**9B-7233**	10	LOCKWASHER	
	10	1	**9S-2437**	5	SCREW-TAPPING (10-24X19.05-MM)	
	11	1	**8F-1434**	5	LOCKWASHER	
	12	1	**5P-3418**	1	BEARING-ROLLER	
	13	1	**5P-3419**	1	RACE-BEARING INNER	
	14	1	**9S-2396**	1	BUSHING-TERMINAL	
	15	1	**9S-2393**	3	DIODE-NEGATIVE	
	16	1	**9N-0943**	1	PLUG-BEARING WELL	
	17	1	**9F-2247**	1	PLUG-PIPE	
J	18	1	**9S-2292**	1	HEAT SINK AS	
	19	1	**100-6656**	1	DIODE AS-ALTERNATOR	
	20	1	**9S-9830**	4	SCREW-FORMING (8-32X19.05-MM)	
	21	1	**8C-9660**	4	WASHER (4.6X7.9X0.8-MM THK)	
	22	1	**9S-2300**	4	INSULATOR	
	23	1	**9S-2301**	1	INSULATION	
	24	1	**9S-2248**	1	COIL & SUPPORT AS	
	25	1	**9N-3388**	3	BOLT (10-24X0.75-IN)	
	26	1	**3T-6354**	1	REGULATOR AS-VOLTAGE (24-VOLT)	
	27	1	**7N-9023**	1	SCREW AS (8-32X26.9-MM)	
	28	1	**6N-1872**	2	SCREW AS (8-32X1.25-IN)	
	29	1	**4B-2043**	4	NUT (8-32-THD)	
	30	1	**100-6657**	1	PLATE	
	31	1	**9S-2302**	1	ROTOR AS	
	32	1	**9S-2005**	1	GROMMET	
	33	1	**2L-8075**	3	TERMINAL-RING (14-GA TO 16-GA, NO. 8 SCREW)	
	34	1	**100-6658**	1	WIRE AS-ALTERNATOR	
	35	1	**9S-2389**	1	STUD AS	
	36	1	**9L-6770**	1	CAP-DUST	
	37	1	**2P-5616**	1	FRAME-DRIVE END	
	38	1	**9S-2390**	1	RETAINER	
	39	1	**9X-2500**	4	SCREW-HEX FLANGE (10-24X38.1-MM)	
	40	1	**9S-2009**	4	BOLT-FLANGE HEAD (10-24X3.625-IN)	
	41	1	**100-6532**	1	COLLAR-ALTERNATOR	
	42	1	**5P-7807**	1	BALL BEARING	
	43	1	**100-6531**	1	FAN-ALTERNATOR (11-BLADE)	
	44	1	**9S-3451**	1	STATOR AS	
	45	1	**9S-2006**	1	INSULATOR	
	46	1	**9S-2005**	1	GROMMET	
	47	1	**9S-2014**	3	CLIP	
					AVAILABLE REPAIR KIT(S):	
			9S-2013	1	KIT-RELAY TERMINAL (ALTERNATOR)	
					(INCLUDES BUSHING, O-RING & HARDWARE)	
			9S-2012	1	KIT-OUTPUT TERMINAL (ALTERNATOR)	
					(INCLUDES GASKETS,TERMINALS, & HARDWARE)	
J			**9S-2290**	3	KIT-DIODE JUNCTION STUD (HEAT SINK)	
					(EACH INCLUDES INSULATOR & STUD)	
J			**9S-2291**	3	KIT-POSITIVE DIODE (HEAT SINK)	
					(EACH INCLUDES DIODE)	

3E-7577 ALTERNATOR GP-CHARGING *(contd.)* i03632188

J-PART MARKED J INCLUDES KIT(S) MARKED J

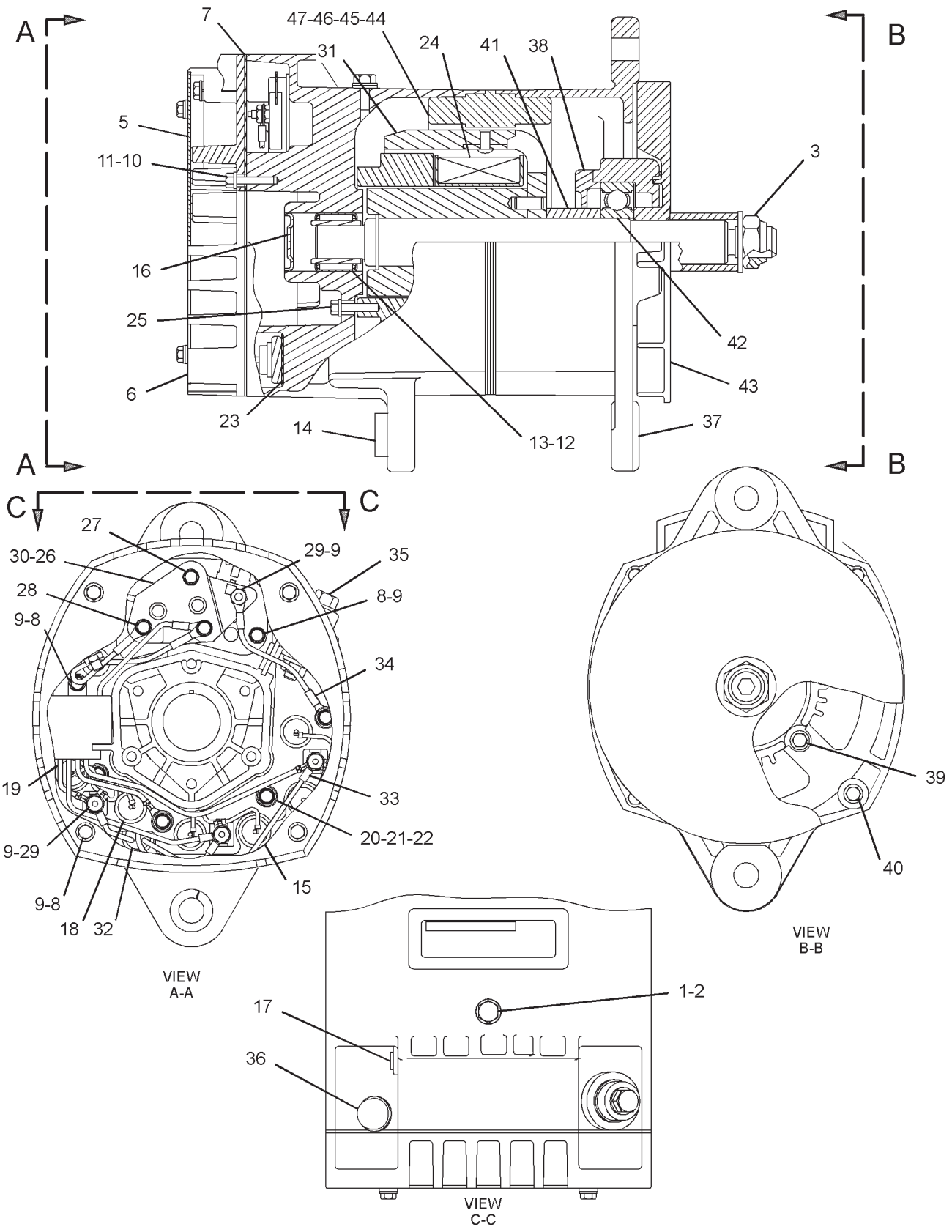

GRAPHIC #1 **<END>** g01948566

ELECTRICAL AND STARTING SYSTEM

166-1325 ALTERNATOR GP-CHARGING

S/N: BLC426-UP

PART OF 205-5858, 235-4685 ENGINE AR-COMPLETE

SMCS-1405 **i01645659**

NOTE	REF NO	GRAPHIC REF	PART NUMBER	QTY	PART NAME 1 2 3 4 5 6 (PRODUCT LEVEL)	SEE PAGE
YR	1	1	**3E-7577**	1	ALTERNATOR GP-CHARGING	201
	2	1	**166-1326**	1	BRACKET	
	3	1	**0L-1351**	2	BOLT (3/8-16X0.875-IN)	
	4	1	**5P-2566**	1	BOLT (1/2-13X1.5-IN)	
	5	1	**1K-6872**	1	LOCKNUT (1/2-13-THD)	
	6	1	**5M-2894**	2	WASHER-HARD (10.2X18.5X2.5-MM THK)	
	7	1	**5P-8245**	3	WASHER-HARD (13.5X25.5X3-MM THK)	
	8	1	**9H-8260**	1	BOLT (1/2-13X6.25-IN)	

R-REMFG PART MAY BE AVAILABLE
Y-SEPARATE ILLUSTRATION

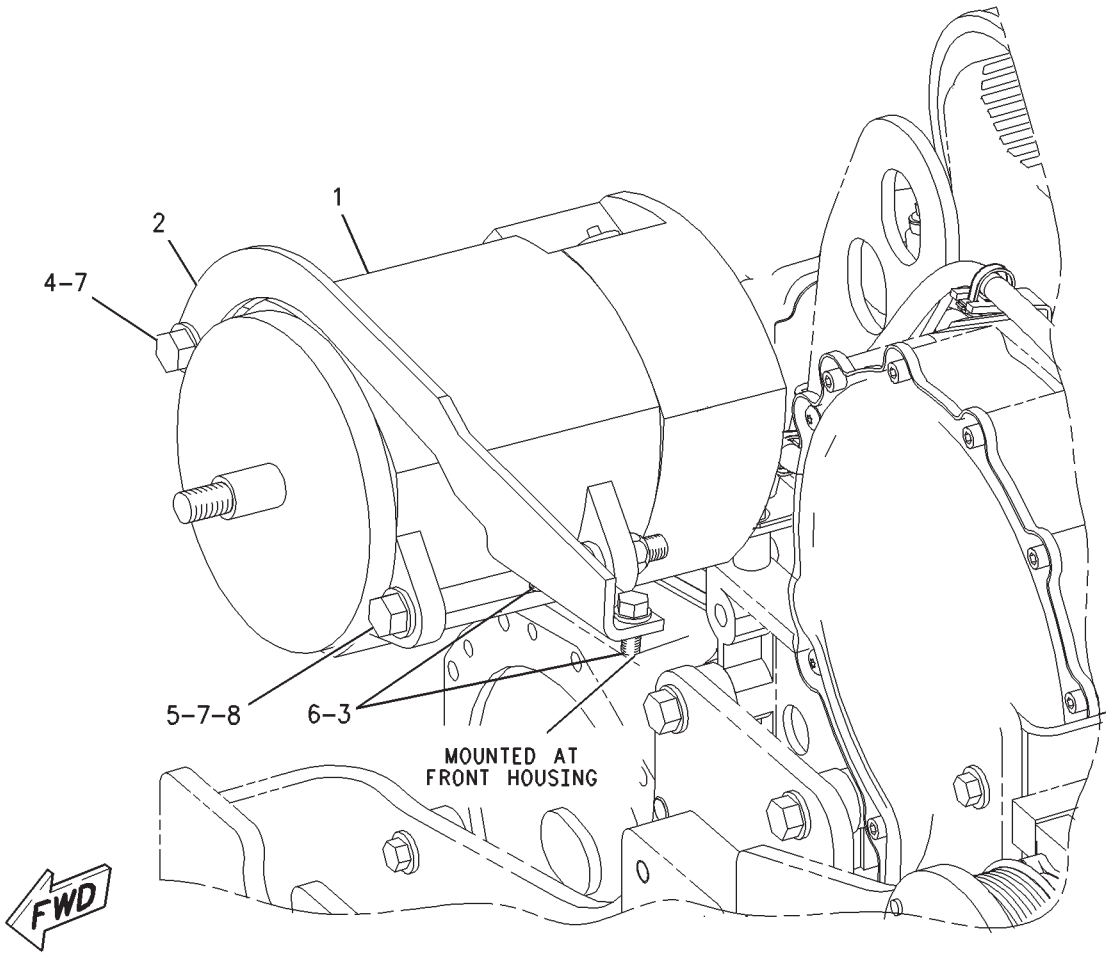

GRAPHIC #1 **<END>** g00787234

ELECTRICAL AND STARTING SYSTEM

166-1325 ALTERNATOR GP-CHARGING

S/N: BLC1132-UP

PART OF 235-4685 ENGINE AR-COMPLETE

SMCS-1405 **i02155146**

NOTE	REF NO	GRAPHIC REF	PART NUMBER	QTY	PART NAME 1 2 3 4 5 6 (PRODUCT LEVEL)	SEE PAGE
CYR	1	1	**177-9953**	1	ALTERNATOR GP-CHARGING (24-VOLT, 80-AMPERE)	205
	2	1	**166-1326**	1	BRACKET	
	3	1	**0L-1351**	2	BOLT (3/8-16X0.875-IN)	
	4	1	**5P-2566**	1	BOLT (1/2-13X1.5-IN)	
	5	1	**1K-6872**	1	LOCKNUT (1/2-13-THD)	
	6	1	**5M-2894**	2	WASHER-HARD (10.2X18.5X2.5-MM THK)	
	7	1	**5P-8245**	3	WASHER-HARD (13.5X25.5X3-MM THK)	
	8	1	**9H-8260**	1	BOLT (1/2-13X6.25-IN)	

C-CHANGE FROM PREVIOUS TYPE
R-REMFG PART MAY BE AVAILABLE
Y-SEPARATE ILLUSTRATION

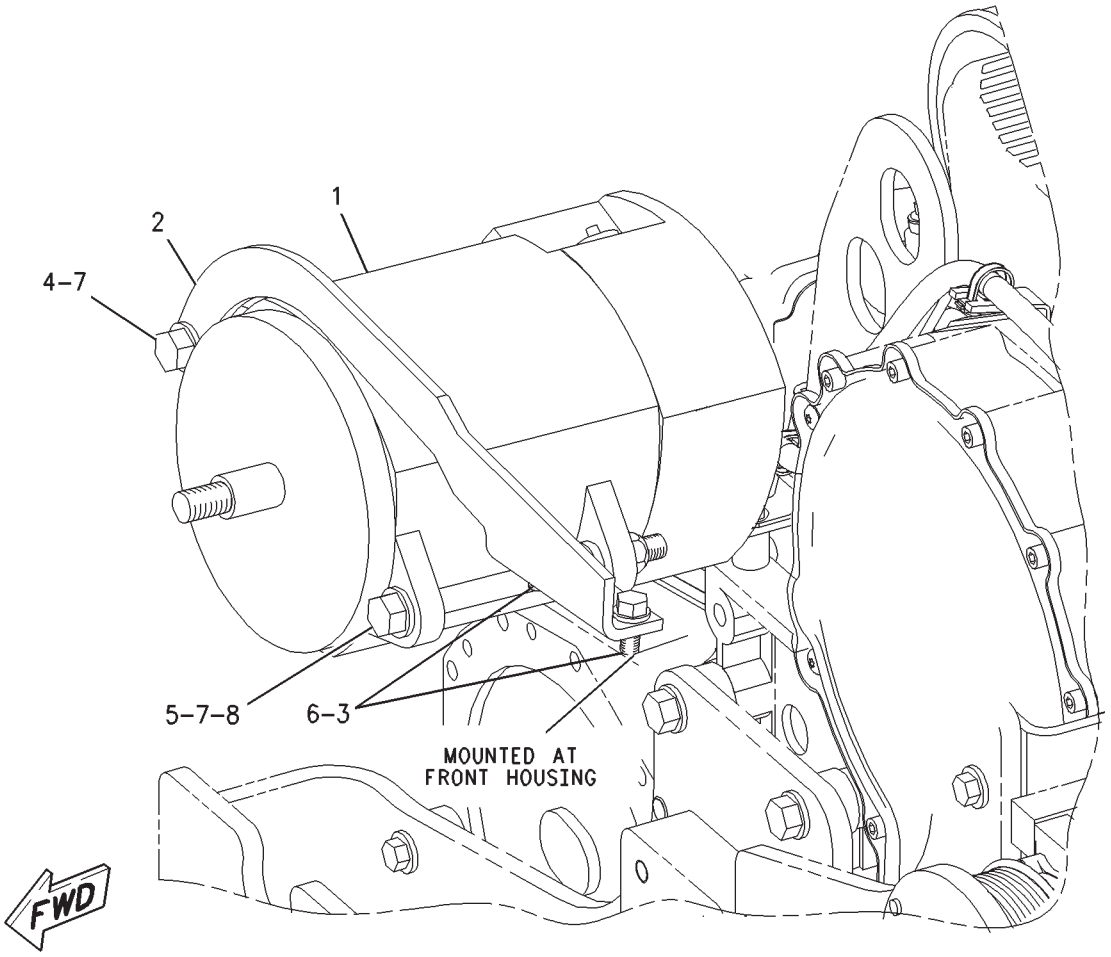

GRAPHIC #1 **<END>** g00787235

ELECTRICAL AND STARTING SYSTEM

177-9953 ALTERNATOR GP-CHARGING*R

S/N: BLC1132-UP
24-VOLT, 80-AMPERE
PART OF 166-1325 ALTERNATOR GP-CHARGING

SMCS-1405 **i02703713**

NOTE	REF NO	GRAPHIC REF	PART NUMBER	QTY	PART NAME 1 2 3 4 5 6 (PRODUCT LEVEL)	SEE PAGE
	1	1	**185-2653**	1	FRAME	
	2	1	**5S-7349**	1	BOLT (1/4-20X0.5-IN)	
	3	1	**185-2639**	1	FAN AS	
	4	1	**1H-3244**	1	LOCKWASHER	
	5	1	**185-2645**	1	FRAME	
	6	1	**2K-4821**	1	LOCKNUT (5/8-18-THD)	
	7	1	**5P-8247**	1	WASHER-HARD (17X32X3.5-MM THK)	
	8	1	**185-2651**	1	COVER	
	9	1	**8T-4205**	1	WASHER-HARD (7.2X14.5X2-MM THK)	
	10	1	**185-2647**	1	GROMMET	
	11	1	**9L-6770**	1	CAP-DUST	
	12	1	**185-2643**	1	STATOR AS	
	13	1	**185-2638**	2	COLLAR	
	14	1	**185-2654**	1	PLATE	
	15	1	**185-2650**	1	ROTOR AS	
	16	1	**185-2644**	1	COIL AS	
	17	1	**185-2648**	1	REGULATOR AS-VOLTAGE (24-VOLT) (ALTERNATOR)	
J	18	1	**6V-8189**	1	NUT (5/16-18-THD)	
J	19	1	**8T-4224**	1	WASHER-HARD (8.8X16X2-MM THK)	
J	20	1	**3F-9556**	1	LOCKWASHER	
					AVAILABLE REPAIR KIT(S):	
J			**199-7891**		KIT-TERMINAL (ALTERNATOR)	
					(INCLUDES INSULATORS, WASHERS, NUT, STEP NUT)	
			185-2655		KIT-BEARING (ALTERNATOR)	
					(INCLUDES 2 BEARINGS)	
			199-8436		KIT-TERMINAL (ALTERNATOR)	
					(INCLUDES HOLDER AS, PLATE, INSULATOR, PIN, BOLT, GROMMET, NUT)	
			185-2658		KIT-HARDWARE (ALTERNATOR)	
					(INCLUDES BOLTS)	

J-KIT MARKED J AVAILABLE FOR PARTS MARKED J

177-9953 ALTERNATOR GP-CHARGING *(contd.)* **i02703713**

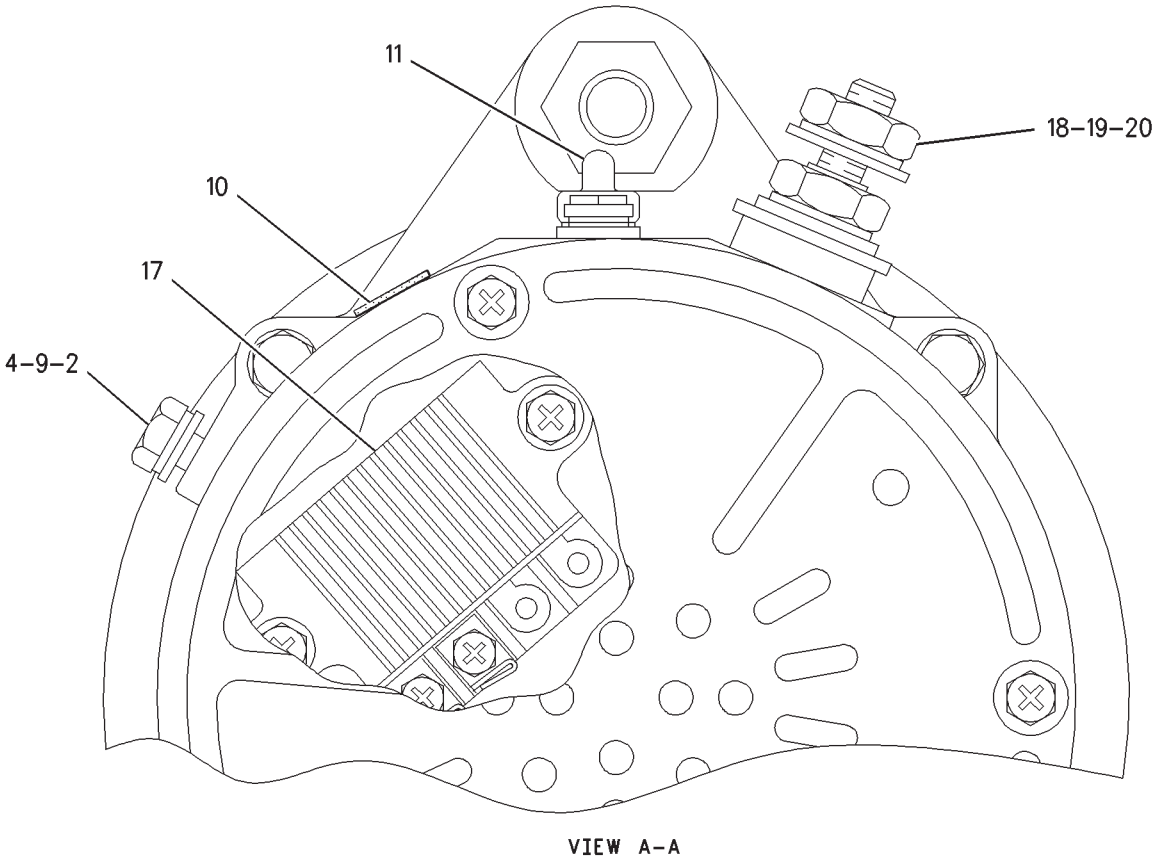

GRAPHIC #1 **<END>** g00795850

ELECTRICAL AND STARTING SYSTEM

204-1940 BATTERY & WIRING GP

S/N: RCD1-UP

PART OF 229-3366 CHASSIS AR

SMCS-1401, 1402, 1408 **i01676183**

NOTE	PART NUMBER	QTY	PART NAME 1 2 3 4 5 6 (PRODUCT LEVEL)	SEE PAGE
Y	*204-4154*	1	BATTERY & WIRING GP	208
Y	*203-7577*	1	WIRING GP-PLATFORM	312

Y-SEPARATE ILLUSTRATION

<END>

ELECTRICAL AND STARTING SYSTEM

204-4154 BATTERY & WIRING GP

S/N: RCD1-242
SMART BOOM
PART OF 204-1940 BATTERY & WIRING GP

SMCS-1401, 1402, 1408 **i02216747**

NOTE	REF NO	GRAPHIC REF	PART NUMBER	QTY	PART NAME 1 2 3 4 5 6 (PRODUCT LEVEL)	SEE PAGE
	1	1	**7Y-3281**	1	GROMMET	
	2	1,2,3,4	**3S-2093**	45	STRAP-CABLE	
	3	1,2,3,4	**116-0118**	22	CLIP	
	4	1,2,3,4	**111-4837**	51	CLIP	
M	5	1,2,3,4	**8T-4137**	68	BOLT (M10X1.5X20-MM)	
	6	1,2,3,4	**8T-4121**	106	WASHER-HARD (11X21X2.5-MM THK)	
	7	1	**4I-5426**	1	GROMMET	
	8	1	**167-3628**	1	HARNESS AS-WIRING (COUNTERWEIGHT)	
		1	**102-8803**	1	KIT-RECEPTACLE (3-PIN)	
					(INCLUDES RECEPTACLE AS & WEDGE)	
C	9	2	**223-2244**	1	HARNESS AS-POWER	
		2	**127-5484**	1	RECEPTACLE AS-CONNECTOR (1-PIN)	
		2	**127-5485**	1	PLUG AS-CONNECTOR (1-PIN)	
		2	**102-8802**	1	KIT-RECEPTACLE (2-PIN)	
		2	**102-8804**	1	KIT-RECEPTACLE (4-PIN)	
		2	**102-8805**	1	KIT-RECEPTACLE (6-PIN)	
		2	**102-8801**	4	KIT-RECEPTACLE (12-PIN)	
					(EACH RECEPTACLE KIT INCLUDES RECEPTACLE AS & WEDGE)	
		2	**3S-2093**	9	STRAP-CABLE	
		2	**155-2255**	5	KIT-CONNECTING PLUG (12-PIN)	
		2	**155-2265**	1	KIT-CONNECTING PLUG (8-PIN)	
		2	**155-2270**	1	KIT-CONNECTING PLUG (2-PIN)	
		2	**155-2274**	1	KIT-CONNECTING PLUG (6-PIN)	
					(EACH PLUG KIT INCLUDES PLUG AS, WEDGE & INTERFACE SEAL)	
	10	2	**170-6976**	1	CABLE AS	
		2	**1S-7251**	1	TERMINAL-CABLE (00-GA, 1/2-IN BOLT)	
E		2	**5P-0761**		CABLE (00-GA, RED) (615-CM)	
		2	**8N-0869**	1	COVER-TERMINAL (RED)	
		2	**8N-1725**	1	COVER-TERMINAL (RED)	
		2	**3S-6049**	1	TERMINAL AS-BATTERY (POSITIVE)	
		2	**1M-6119**	1	BOLT (5/16-18X1.375-IN)	
		2	**1M-6120**	1	NUT (5/16-18-THD)	
	11	2	**111-4838**	17	CLIP	
	12	2	**111-4839**	17	STRAP	
M	13	2,4	**8T-4195**	5	BOLT (M10X1.5X30-MM)	
	14	2	**205-9714**	1	HARNESS AS-CHASSIS	
		2	**160-7690**	1	PLUG AS-CONNECTOR (70-PIN)	
		2	**159-9322**	1	SEAL-O-RING	
		2	**102-8802**	4	KIT-RECEPTACLE (2-PIN)	
		2	**102-8803**	3	KIT-RECEPTACLE (3-PIN)	
		2	**102-8805**	1	KIT-RECEPTACLE (6-PIN)	
		2	**102-8801**	2	KIT-RECEPTACLE (12-PIN)	
					(EACH RECEPTACLE KIT INCLUDES RECEPTACLE AS & WEDGE)	
		2	**3S-2093**	6	STRAP-CABLE	
		2	**155-2255**	2	KIT-CONNECTING PLUG (12-PIN)	
		2	**155-2260**	3	KIT-CONNECTING PLUG (3-PIN)	
		2	**155-2270**	26	KIT-CONNECTING PLUG (2-PIN)	

204-4154 **BATTERY & WIRING GP** *(contd.)* **i02216747**

NOTE	REF NO	GRAPHIC REF	PART NUMBER	QTY	PART NAME 1 2 3 4 5 6 (PRODUCT LEVEL)	SEE PAGE
		2	**155-2274**	1	KIT-CONNECTING PLUG (6-PIN)	
					(EACH PLUG KIT INCLUDES PLUG AS, WEDGE & INTERFACE SEAL)	
M	15	1,2,3, 4	**8T-4191**	19	BOLT (M10X1.5X16-MM)	
	16	3	**205-1428**	1	HARNESS AS-ENGINE	
		3	**127-5486**	1	RECEPTACLE AS-CONNECTOR (1-PIN)	
		3	**9X-0141**	1	PLUG AS-CONNECTOR (40-PIN)	
		3	**9X-3490**	2	SEAL-CONNECTOR (40-PIN)	
		3	**102-8805**	1	KIT-RECEPTACLE (6-PIN)	
		3	**102-8801**	1	KIT-RECEPTACLE (12-PIN)	
					(EACH RECEPTACLE KIT INCLUDES RECEPTACLE AS & WEDGE)	
		3	**155-2270**	4	KIT-CONNECTING PLUG (2-PIN)	
					(INCLUDES PLUG AS, WEDGE & INTERFACE SEAL)	
	17	2	**108-7303**	1	GROMMET	
Y	18	2	*217-2970*	1	PANEL GP-CIRCUIT BREAKER	257
	19	1	**198-7070**	1	SUPPORT AS	
	20	3,4	**111-4836**	9	CLIP	
C	21	1	**5P-2566**	1	BOLT (1/2-13X1.5-IN)	
	22	1	**8D-0482**	1	GROMMET	
	23	1	**161-3115**	1	COVER	
	24	2	**204-1771**	1	PLATE	
	25	1	**9X-9730**	2	BATTERY GP (12-VOLT)	
					(EACH INCLUDES)	
		1	**7N-0060**	2	VENT AS	
		1	**101-4000**	1	BATTERY (12-VOLT)	
M	26	1	**157-4822**	2	BOLT (M10X1.5X250-MM)	
	27	1	**8V-0622**	1	CABLE AS	
		1	**8C-5917**	1	TERMINAL AS-BATTERY (POSITIVE)	
		1	**1M-6119**	2	BOLT (5/16-18X1.375-IN)	
		1	**1M-6120**	2	NUT (5/16-18-THD)	
E		1	**5P-0761**		CABLE (00-GA, RED) (14-CM)	
		1	**8T-9757**	1	TERMINAL AS-BATTERY (NEGATIVE)	
		1	**9G-0003**	1	COVER-TERMINAL (BLACK)	
		1	**9G-0004**	1	COVER-TERMINAL (RED)	
	28	1	**116-0081**	1	CABLE AS	
		1	**1S-7252**	1	TERMINAL-CABLE (00-GA, 3/8-IN BOLT)	
E		1	**5P-0747**		CABLE (00-GA, BLACK) (35-CM)	
		1	**7N-5274**	1	COVER-TERMINAL (BLACK)	
		1	**9G-8909**	1	COVER-TERMINAL (BLACK)	
		1	**3S-6050**	1	TERMINAL AS-BATTERY (NEGATIVE)	
		1	**1M-6119**	1	BOLT (5/16-18X1.375-IN)	
		1	**1M-6120**	1	NUT (5/16-18-THD)	
	29	1	**161-3117**	2	KNOB AS	
					(EACH INCLUDES)	
M		1	**7X-2533**	1	BOLT (M6X1X35-MM)	
M	30	1	**4I-5049**	2	NUT-SPACER (M6X1-THD)	
M	31	1	**5C-7261**	2	NUT (M8X1.25-THD)	
	32	1	**124-9108**	2	ROD	
	33	1	**5P-1075**	2	WASHER-HARD (10.2X22.5X3-MM THK)	
	34	2	**132-1805**	1	STRAP AS-GROUND	
	35	2	**170-2512**	1	SWITCH GP-TOGGLE (ENGINE SHUTDOWN)	
	36	1	**170-6977**	1	BRACKET AS	
	37	3	**197-4357**	1	BRACKET AS	
	38	2	**167-3593**	1	STRAP	
M	39	2	**3E-8048**	4	SCREW-MACHINE (M3X0.5X6-MM)	
	40	2	**096-5962**	4	WASHER-HARD (3.4X7X0.8-MM THK)	
	41	1	**214-9384**	1	BRACKET AS	
	42	1	**170-9328**	1	STRAP AS-GROUND	

204-4154 **BATTERY & WIRING GP** *(contd.)* **i02216747**

NOTE	REF NO	GRAPHIC REF	PART NUMBER	QTY	PART NAME 1 2 3 4 5 6 (PRODUCT LEVEL)	SEE PAGE
	43	1,3	**6G-2256**	2	CLAMP	
	44	1,3	**6G-2263**	2	SPACER (10.5X19X28.5-MM THK)	
	45	1,3	**2G-8767**	2	WASHER (10.5X60X3-MM THK)	
M	46	1,3	**8T-4185**	2	BOLT (M10X1.5X50-MM)	
	47	4	**153-2475**	1	BRACKET AS	
	48	4	**153-2450**	4	BRACKET AS	
	49	1,4	**8T-4224**	13	WASHER-HARD (8.8X16X2-MM THK)	
M	50	1,4	**8T-4199**	9	BOLT (M8X1.25X12-MM)	
	51	4	**153-2447**	2	BRACKET AS	
M	52	4	**8T-4189**	4	BOLT (M8X1.25X20-MM)	
	53	4	**153-2451**	1	BRACKET AS	
	54	2	**3E-5169**	1	GUARD-SWITCH	
	55	1	**204-1795**	1	BRACKET AS	
	56	3	**170-6971**	1	HARNESS AS-SWITCH (HYDRAULIC OIL FILTER)	
		3	**102-8806**	1	KIT-RECEPTACLE (8-PIN)	
					(INCLUDES RECEPTACLE AS & WEDGE)	
		3	**155-2260**	2	KIT-CONNECTING PLUG (3-PIN)	
		3	**155-2270**	1	KIT-CONNECTING PLUG (2-PIN)	
		3	**155-2271**	2	KIT-CONNECTING PLUG (4-PIN)	
					(EACH PLUG KIT INCLUDES PLUG AS, WEDGE & INTERFACE SEAL)	
	57	3	**121-1044**	1	HARNESS AS-POWER (NEUTRAL START RELAY)	
		3	**102-8804**	1	KIT-RECEPTACLE (4-PIN)	
					(INCLUDES RECEPTACLE AS & WEDGE)	
	58	1,4	**7K-1181**	20	STRAP-CABLE	
	59	4	**170-9334**	1	HARNESS AS-WIRING (AUTOLUBE, BOOM LIGHTS)	
		4	**102-8805**	1	KIT-RECEPTACLE (6-PIN)	
					(INCLUDES RECEPTACLE AS & WEDGE)	
		4	**155-2274**	1	KIT-CONNECTING PLUG (6-PIN)	
					(INCLUDES PLUG AS, WEDGE & INTERFACE SEAL)	
M	60	1	**8T-4179**	1	BOLT (M12X1.75X20-MM)	
	61	3	**204-1779**	1	BRACKET AS	
	62	3	**238-1507**	1	BRACKET AS	
	63	3	**204-1807**	1	BRACKET AS	
	64	3	**8T-2501**	1	BOLT (3/8-16X2-IN)	
	65	3	**8T-9377**	1	BOLT (3/8-16X2.25-IN)	
	66	2	**9X-3495**	1	CLIP AS	
CM	67	1,2,3	**8T-4136**	9	BOLT (M10X1.5X25-MM)	
	68	3	**193-3476**	1	BRACKET AS	
	69	2	**4K-8864**	4	CLIP	
	70	2	**096-5863**	1	GROMMET	
C	71	1	**204-1948**	1	HARNESS AS-SWITCH (HYDRAULIC OIL)	
		1	**102-8802**	2	KIT-RECEPTACLE (2-PIN)	
		1	**102-8803**	1	KIT-RECEPTACLE (3-PIN)	
		1	**102-8801**	1	KIT-RECEPTACLE (12-PIN)	
					(EACH RECEPTACLE KIT INCLUDES RECEPTACLE AS & WEDGE)	
		1	**9X-4813**	1	RECEPTACLE AS-CONNECTOR (3-PIN)	
		1	**3S-2093**	1	STRAP-CABLE	
		1	**155-2255**	1	KIT-CONNECTING PLUG (12-PIN)	
		1	**155-2265**	1	KIT-CONNECTING PLUG (8-PIN)	
		1	**155-2260**	4	KIT-CONNECTING PLUG (3-PIN)	
		1	**155-2270**	5	KIT-CONNECTING PLUG (2-PIN)	
		1	**155-2271**	1	KIT-CONNECTING PLUG (4-PIN)	
		1	**155-2274**	1	KIT-CONNECTING PLUG (6-PIN)	
					(EACH PLUG KIT INCLUDES PLUG AS, WEDGE & INTERFACE SEAL)	
	72	3	**107-8618**	1	SENSOR GP-TEMPERATURE (AMBIENT)	
		3	**102-8803**	1	KIT-RECEPTACLE (3-PIN)	
					(INCLUDES RECEPTACLE AS & WEDGE)	

204-4154 **BATTERY & WIRING GP** *(contd.)* **i02216747**

NOTE	REF NO	GRAPHIC REF	PART NUMBER	QTY	PART NAME 1 2 3 4 5 6 (PRODUCT LEVEL)	SEE PAGE
		3	**3E-3371**	1	WEDGE-RECEPTACLE LOCK (3-PIN)	
		3	**186-3735**	3	PIN-CONNECTOR (16-GA TO 18-GA)	
E		3	**112-4550**		SLEEVE (31-CM)	
	73	2	**214-7915**	1	FILM-INSTRUCTION (ENGINE SHUTOFF)	

C-CHANGE FROM PREVIOUS TYPE
E-ORDER BY THE CENTIMETER
M-METRIC PART
Y-SEPARATE ILLUSTRATION

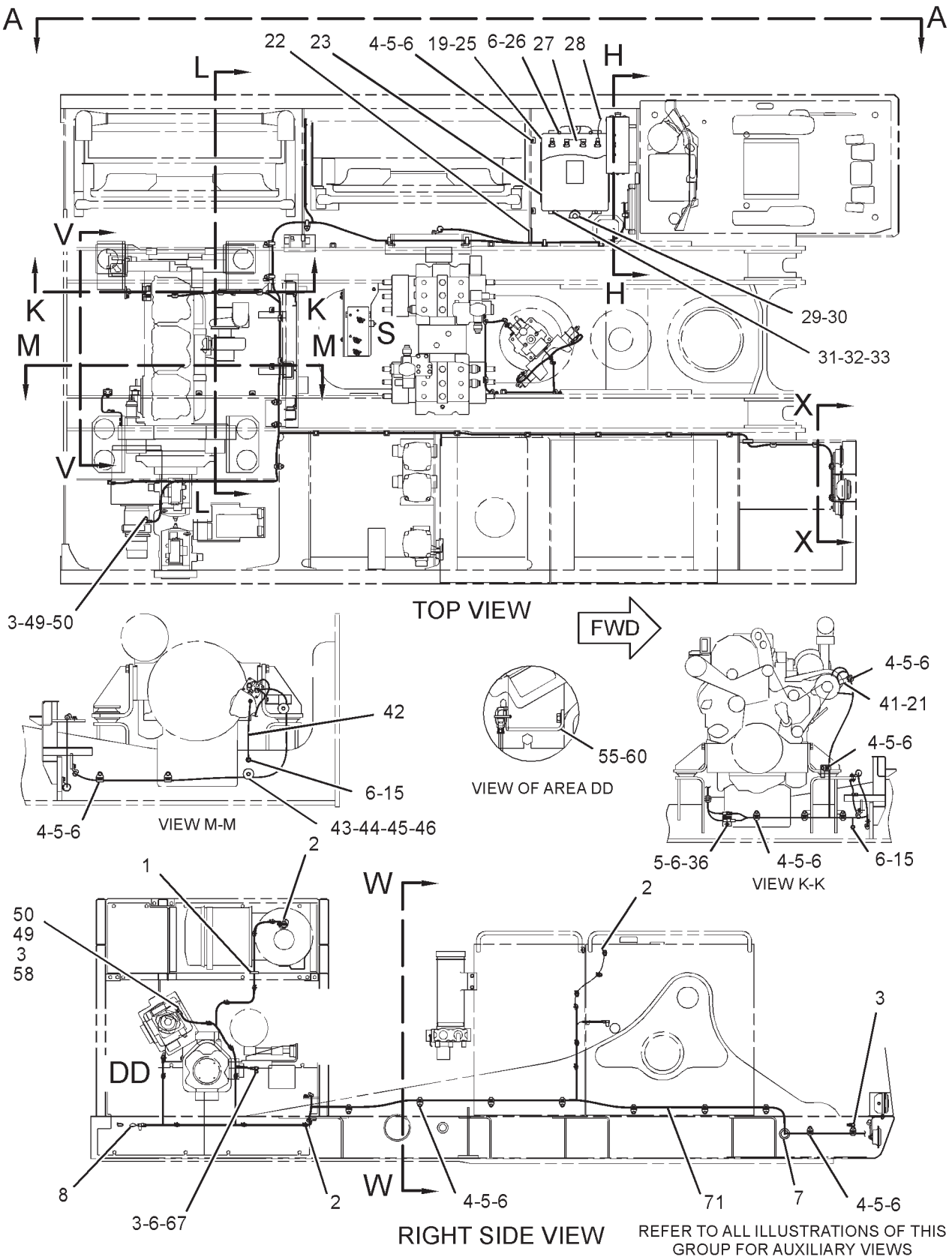

GRAPHIC #1

g01295279

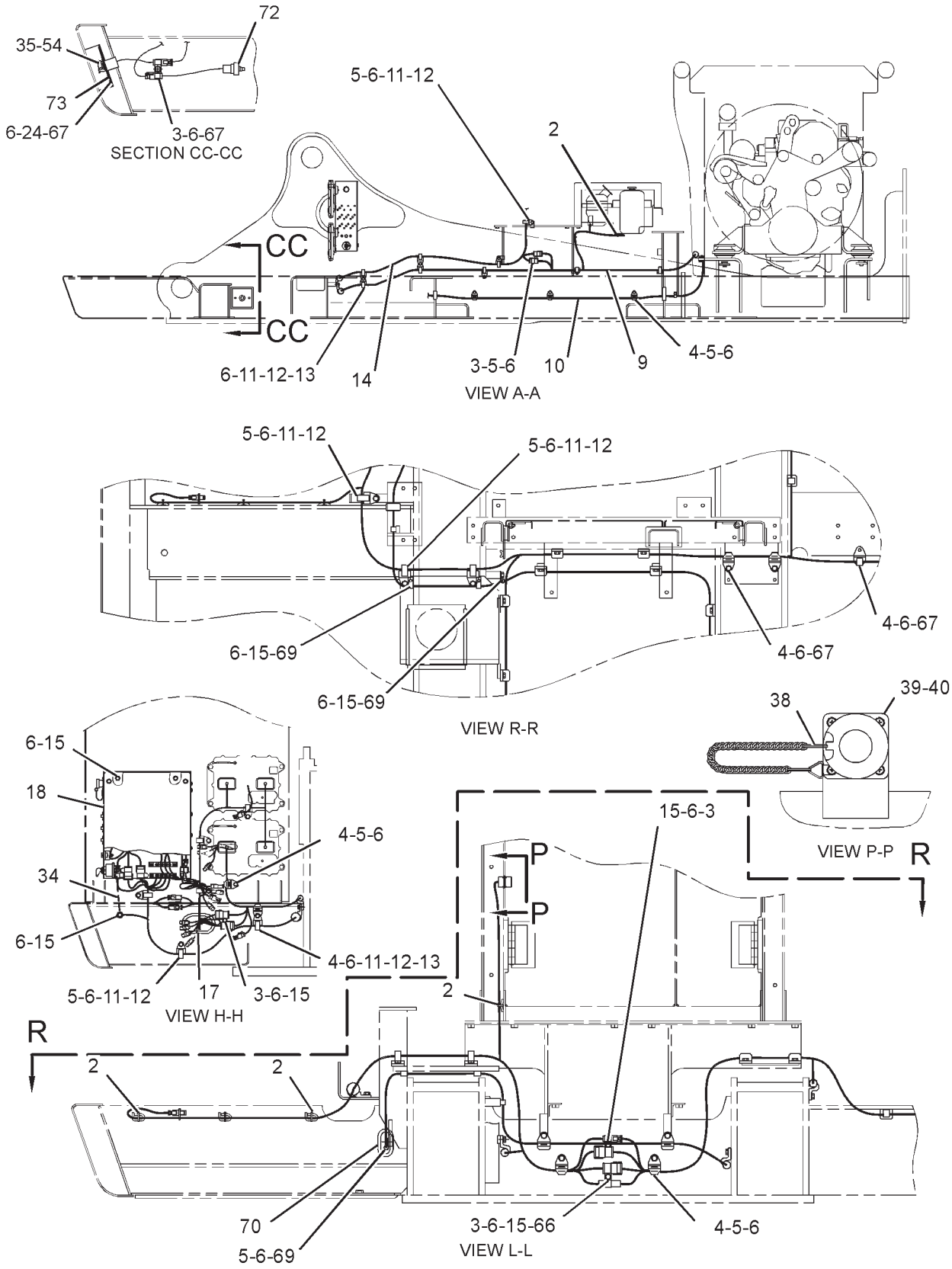

GRAPHIC #2

g01295297

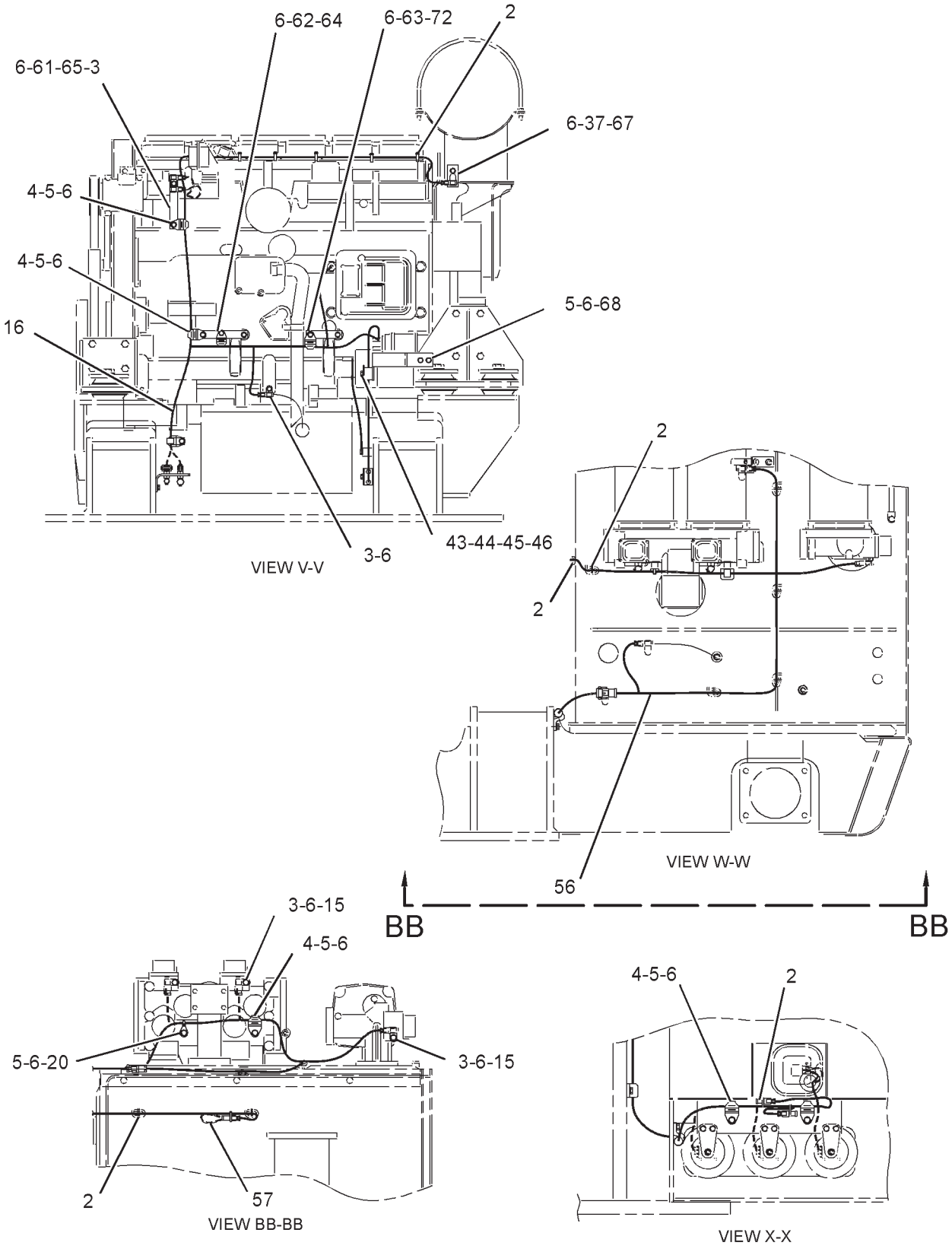

GRAPHIC #3

g01295304

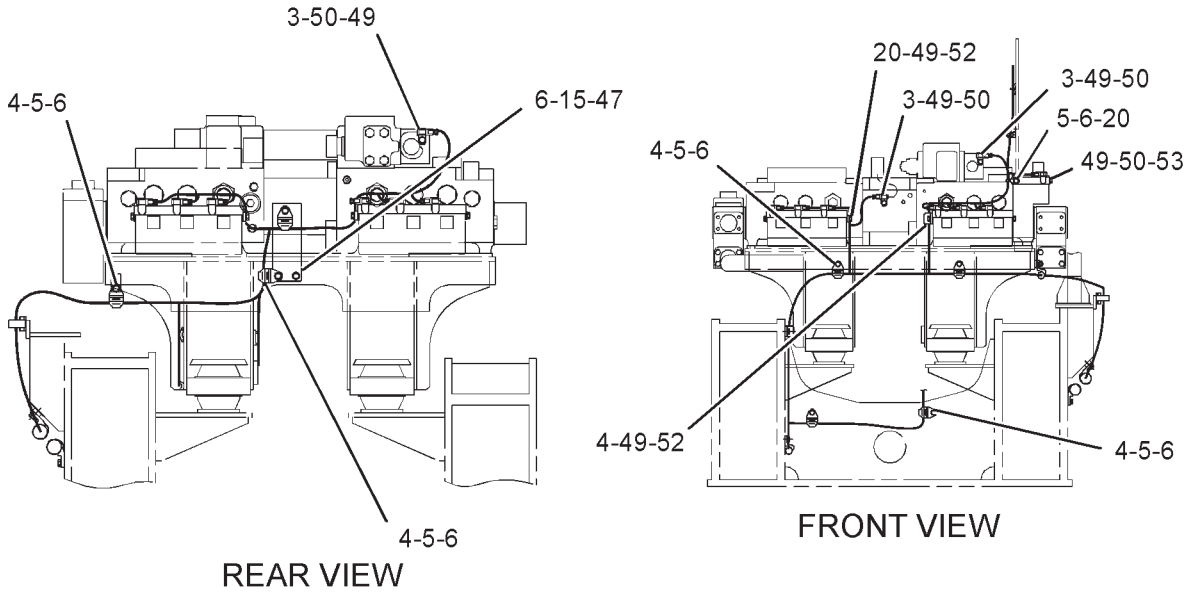

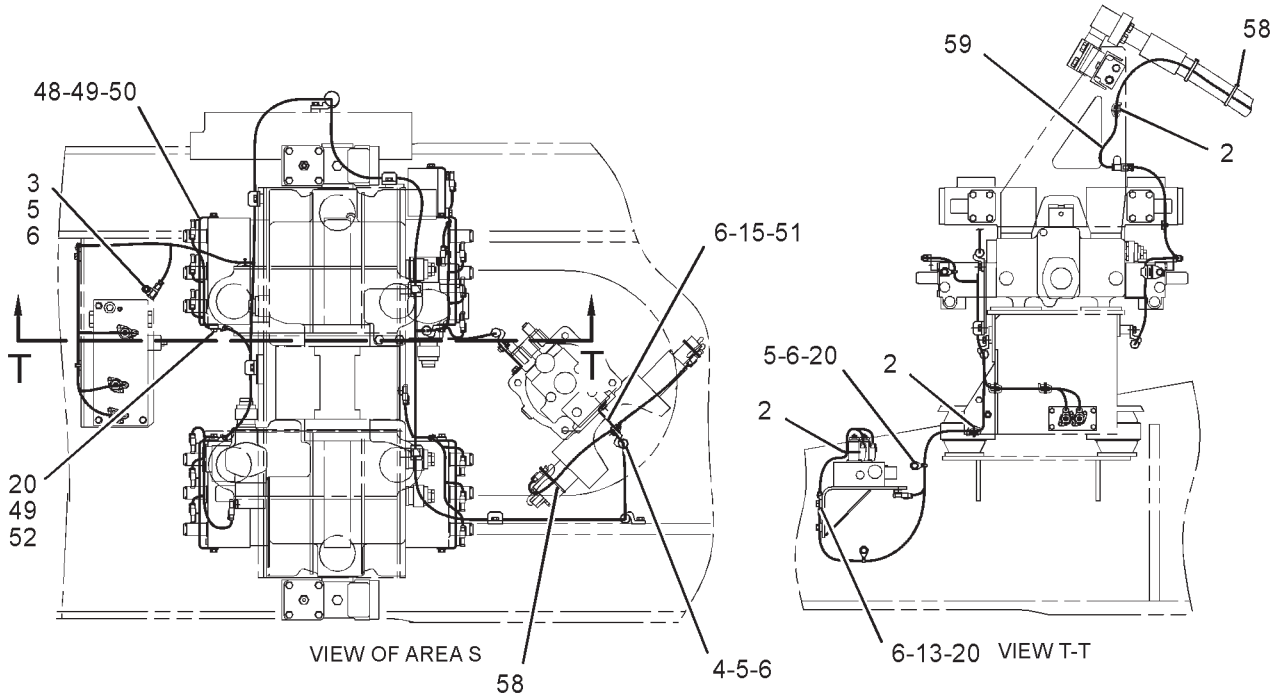

GRAPHIC #4 **<END>** g01295281

ELECTRICAL AND STARTING SYSTEM

204-4154 BATTERY & WIRING GP

S/N: RCD243-UP
SMART BOOM
PART OF 204-1940 BATTERY & WIRING GP

SMCS-1401, 1402, 1408 **i02687246**

NOTE	REF NO	GRAPHIC REF	PART NUMBER	QTY	PART NAME 1 2 3 4 5 6 (PRODUCT LEVEL)	SEE PAGE
	1	1	**7Y-3281**	1	GROMMET	
	2	1,2,3,4	**3S-2093**	45	STRAP-CABLE	
	3	1,2,3,4	**116-0118**	22	CLIP	
	4	1,2,3,4	**111-4837**	51	CLIP	
M	5	1,2,3,4	**8T-4137**	68	BOLT (M10X1.5X20-MM)	
	6	1,2,3,4	**8T-4121**	106	WASHER-HARD (11X21X2.5-MM THK)	
	7	1	**4I-5426**	1	GROMMET	
	8	1	**167-3628**	1	HARNESS AS-WIRING (COUNTERWEIGHT)	
		1	**102-8803**	1	KIT-RECEPTACLE (3-PIN)	
					(INCLUDES RECEPTACLE AS & WEDGE)	
C	9	2	**251-8649**	1	HARNESS AS-POWER	
		2	**102-8801**	4	KIT-RECEPTACLE (12-PIN)	
		2	**102-8802**	1	KIT-RECEPTACLE (2-PIN)	
		2	**102-8804**	1	KIT-RECEPTACLE (4-PIN)	
		2	**102-8805**	1	KIT-RECEPTACLE (6-PIN)	
					(EACH RECEPTACLE KIT INCLUDES RECEPTACLE AS & WEDGE)	
		2	**3S-2093**	9	STRAP-CABLE	
		2	**8T-8827**	1	BOOT (RED)	
		2	**127-5483**	1	PLUG AS-CONNECTOR (1-PIN)	
		2	**127-5485**	1	PLUG AS-CONNECTOR (1-PIN)	
		2	**155-2255**	5	KIT-CONNECTING PLUG (12-PIN)	
		2	**155-2265**	1	KIT-CONNECTING PLUG (8-PIN)	
		2	**155-2270**	2	KIT-CONNECTING PLUG (2-PIN)	
		2	**155-2274**	1	KIT-CONNECTING PLUG (6-PIN)	
					(EACH PLUG KIT INCLUDES PLUG AS, WEDGE & INTERFACE SEAL)	
	10	2	**170-6976**	1	CABLE AS	
		2	**1S-7251**	1	TERMINAL-CABLE (00-GA, 1/2-IN BOLT)	
E		2	**5P-0761**		CABLE (00-GA, RED) (615-CM)	
		2	**8N-0869**	1	COVER-TERMINAL (RED)	
		2	**8N-1725**	1	COVER-TERMINAL (RED)	
		2	**3S-6049**	1	TERMINAL AS-BATTERY (POSITIVE)	
		2	**1M-6119**	1	BOLT (5/16-18X1.375-IN)	
		2	**1M-6120**	1	NUT (5/16-18-THD)	
	11	2	**111-4838**	17	CLIP	
	12	2	**111-4839**	17	STRAP	
M	13	2,4	**8T-4195**	5	BOLT (M10X1.5X30-MM)	
	14	2	**205-9714**	1	HARNESS AS-CHASSIS	
		2	**160-7690**	1	PLUG AS-CONNECTOR (70-PIN)	
		2	**159-9322**	1	SEAL-O-RING	
		2	**102-8802**	4	KIT-RECEPTACLE (2-PIN)	
		2	**102-8803**	3	KIT-RECEPTACLE (3-PIN)	
		2	**102-8805**	1	KIT-RECEPTACLE (6-PIN)	
		2	**102-8801**	2	KIT-RECEPTACLE (12-PIN)	
					(EACH RECEPTACLE KIT INCLUDES RECEPTACLE AS & WEDGE)	
		2	**3S-2093**	6	STRAP-CABLE	
		2	**155-2255**	2	KIT-CONNECTING PLUG (12-PIN)	
		2	**155-2260**	3	KIT-CONNECTING PLUG (3-PIN)	
		2	**155-2270**	26	KIT-CONNECTING PLUG (2-PIN)	

204-4154 **BATTERY & WIRING GP** *(contd.)* **i02687246**

NOTE	REF NO	GRAPHIC REF	PART NUMBER	QTY	PART NAME 1 2 3 4 5 6 (PRODUCT LEVEL)	SEE PAGE
		2	**155-2274**	1	KIT-CONNECTING PLUG (6-PIN)	
					(EACH PLUG KIT INCLUDES PLUG AS, WEDGE & INTERFACE SEAL)	
M	15	1,2,3, 4	**8T-4191**	19	BOLT (M10X1.5X16-MM)	
	16	3	**205-1428**	1	HARNESS AS-ENGINE	
		3	**127-5486**	1	RECEPTACLE AS-CONNECTOR (1-PIN)	
		3	**9X-0141**	1	PLUG AS-CONNECTOR (40-PIN)	
		3	**9X-3490**	2	SEAL-CONNECTOR (40-PIN)	
		3	**102-8805**	1	KIT-RECEPTACLE (6-PIN)	
		3	**102-8801**	1	KIT-RECEPTACLE (12-PIN)	
					(EACH RECEPTACLE KIT INCLUDES RECEPTACLE AS & WEDGE)	
		3	**155-2270**	4	KIT-CONNECTING PLUG (2-PIN)	
					(INCLUDES PLUG AS, WEDGE & INTERFACE SEAL)	
	17	2	**108-7303**	1	GROMMET	
Y	18	2	*217-2970*	1	PANEL GP-CIRCUIT BREAKER	257
	19	1	**198-7070**	1	SUPPORT AS	
	20	3,4	**111-4836**	9	CLIP	
	21	1	**5P-2566**	1	BOLT (1/2-13X1.5-IN)	
	22	1	**8D-0482**	1	GROMMET	
	23	1	**161-3115**	1	COVER	
	24	2	**204-1771**	1	PLATE	
	25	1	**9X-9731**	2	BATTERY GP (12-VOLT)	
					(EACH INCLUDES)	
		1	**7N-0060**	2	VENT AS	
M	26	1	**157-4822**	2	BOLT (M10X1.5X250-MM)	
	27	1	**8V-0622**	1	CABLE AS	
		1	**8C-5917**	1	TERMINAL AS-BATTERY (POSITIVE)	
		1	**1M-6119**	2	BOLT (5/16-18X1.375-IN)	
		1	**1M-6120**	2	NUT (5/16-18-THD)	
E		1	**5P-0761**		CABLE (00-GA, RED) (14-CM)	
		1	**8T-9757**	1	TERMINAL AS-BATTERY (NEGATIVE)	
		1	**9G-0003**	1	COVER-TERMINAL (BLACK)	
		1	**9G-0004**	1	COVER-TERMINAL (RED)	
	28	1	**116-0081**	1	CABLE AS	
		1	**1S-7252**	1	TERMINAL-CABLE (00-GA, 3/8-IN BOLT)	
E		1	**5P-0747**		CABLE (00-GA, BLACK) (35-CM)	
		1	**7N-5274**	1	COVER-TERMINAL (BLACK)	
		1	**9G-8909**	1	COVER-TERMINAL (BLACK)	
		1	**3S-6050**	1	TERMINAL AS-BATTERY (NEGATIVE)	
		1	**1M-6119**	1	BOLT (5/16-18X1.375-IN)	
		1	**1M-6120**	1	NUT (5/16-18-THD)	
	29	1	**161-3117**	2	KNOB AS	
					(EACH INCLUDES)	
M		1	**7X-2533**	1	BOLT (M6X1X35-MM)	
M	30	1	**4I-5049**	2	NUT-SPACER (M6X1-THD)	
M	31	1	**5C-7261**	2	NUT (M8X1.25-THD)	
	32	1	**124-9108**	2	ROD	
	33	1	**5P-1075**	2	WASHER-HARD (10.2X22.5X3-MM THK)	
	34	2	**132-1805**	1	STRAP AS-GROUND	
	35	2	**170-2512**	1	SWITCH GP-TOGGLE (ENGINE SHUTDOWN)	
	36	1	**170-6977**	1	BRACKET AS	
	37	3	**197-4357**	1	BRACKET AS	
	38	2	**167-3593**	1	STRAP	
M	39	2	**3E-8048**	4	SCREW-MACHINE (M3X0.5X6-MM)	
	40	2	**096-5962**	4	WASHER-HARD (3.4X7X0.8-MM THK)	
	41	1	**214-9384**	1	BRACKET AS	
	42	1	**170-9328**	1	STRAP AS-GROUND	
	43	1,3	**6G-2256**	2	CLAMP	

204-4154 **BATTERY & WIRING GP** *(contd.)* **i02687246**

NOTE	REF NO	GRAPHIC REF	PART NUMBER	QTY	PART NAME 1 2 3 4 5 6 (PRODUCT LEVEL)	SEE PAGE
	44	1,3	**6G-2263**	2	SPACER (10.5X19X28.5-MM THK)	
	45	1,3	**2G-8767**	2	WASHER (10.5X60X3-MM THK)	
M	46	1,3	**8T-4185**	2	BOLT (M10X1.5X50-MM)	
	47	4	**153-2475**	1	BRACKET AS	
	49	1,4	**8T-4224**	9	WASHER-HARD (8.8X16X2-MM THK)	
M	50	1,4	**8T-4199**	5	BOLT (M8X1.25X12-MM)	
	51	4	**153-2447**	2	BRACKET AS	
M	52	4	**8T-4189**	4	BOLT (M8X1.25X20-MM)	
	53	4	**153-2451**	1	BRACKET AS	
	54	2	**3E-5169**	1	GUARD-SWITCH	
	55	1	**204-1795**	1	BRACKET AS	
	56	3	**170-6971**	1	HARNESS AS-SWITCH (HYDRAULIC OIL FILTER)	
		3	**102-8806**	1	KIT-RECEPTACLE (8-PIN)	
					(INCLUDES RECEPTACLE AS & WEDGE)	
		3	**155-2260**	2	KIT-CONNECTING PLUG (3-PIN)	
		3	**155-2270**	1	KIT-CONNECTING PLUG (2-PIN)	
		3	**155-2271**	2	KIT-CONNECTING PLUG (4-PIN)	
					(EACH PLUG KIT INCLUDES PLUG AS, WEDGE & INTERFACE SEAL)	
	57	3	**121-1044**	1	HARNESS AS-POWER (NEUTRAL START RELAY)	
		3	**102-8804**	1	KIT-RECEPTACLE (4-PIN)	
					(INCLUDES RECEPTACLE AS & WEDGE)	
	58	1,4	**7K-1181**	8	STRAP-CABLE	
	59	4	**170-9334**	1	HARNESS AS-WIRING (AUTOLUBE, BOOM LIGHTS)	
		4	**102-8805**	1	KIT-RECEPTACLE (6-PIN)	
					(INCLUDES RECEPTACLE AS & WEDGE)	
		4	**155-2274**	1	KIT-CONNECTING PLUG (6-PIN)	
					(INCLUDES PLUG AS, WEDGE & INTERFACE SEAL)	
M	60	1	**8T-4179**	1	BOLT (M12X1.75X20-MM)	
	61	3	**204-1779**	1	BRACKET AS	
	62	3	**238-1507**	1	BRACKET AS	
	63	3	**204-1807**	1	BRACKET AS	
	64	3	**8T-2501**	1	BOLT (3/8-16X2-IN)	
	65	3	**8T-9377**	1	BOLT (3/8-16X2.25-IN)	
	66	2	**9X-3495**	1	CLIP AS	
M	67	1,2,3	**8T-4136**	9	BOLT (M10X1.5X25-MM)	
	68	3	**193-3476**	1	BRACKET AS	
	69	2	**4K-8864**	4	CLIP	
	70	2	**096-5863**	1	GROMMET	
	71	1	**204-1948**	1	HARNESS AS-SWITCH (HYDRAULIC OIL)	
		1	**102-8802**	2	KIT-RECEPTACLE (2-PIN)	
		1	**102-8803**	1	KIT-RECEPTACLE (3-PIN)	
		1	**102-8801**	1	KIT-RECEPTACLE (12-PIN)	
					(EACH RECEPTACLE KIT INCLUDES RECEPTACLE AS & WEDGE)	
		1	**9X-4813**	1	RECEPTACLE AS-CONNECTOR (3-PIN)	
		1	**3S-2093**	1	STRAP-CABLE	
		1	**155-2255**	1	KIT-CONNECTING PLUG (12-PIN)	
		1	**155-2265**	1	KIT-CONNECTING PLUG (8-PIN)	
		1	**155-2260**	4	KIT-CONNECTING PLUG (3-PIN)	
		1	**155-2270**	5	KIT-CONNECTING PLUG (2-PIN)	
		1	**155-2271**	1	KIT-CONNECTING PLUG (4-PIN)	
		1	**155-2274**	1	KIT-CONNECTING PLUG (6-PIN)	
					(EACH PLUG KIT INCLUDES PLUG AS, WEDGE & INTERFACE SEAL)	
	72	3	**107-8618**	1	SENSOR GP-TEMPERATURE (AMBIENT)	
		3	**102-8803**	1	KIT-RECEPTACLE (3-PIN)	
					(INCLUDES RECEPTACLE AS & WEDGE)	
		3	**3E-3371**	1	WEDGE-RECEPTACLE LOCK (3-PIN)	
		3	**186-3735**	3	PIN-CONNECTOR (16-GA TO 18-GA)	

204-4154 **BATTERY & WIRING GP** *(contd.)* **i02687246**

NOTE	REF NO	GRAPHIC REF	PART NUMBER	QTY	PART NAME 1 2 3 4 5 6 (PRODUCT LEVEL)	SEE PAGE
E		3	**112-4550**		SLEEVE (31-CM)	
	73	2	**214-7915**	1	FILM-INSTRUCTION (ENGINE SHUTOFF)	

C-CHANGE FROM PREVIOUS TYPE
E-ORDER BY THE CENTIMETER
M-METRIC PART
Y-SEPARATE ILLUSTRATION

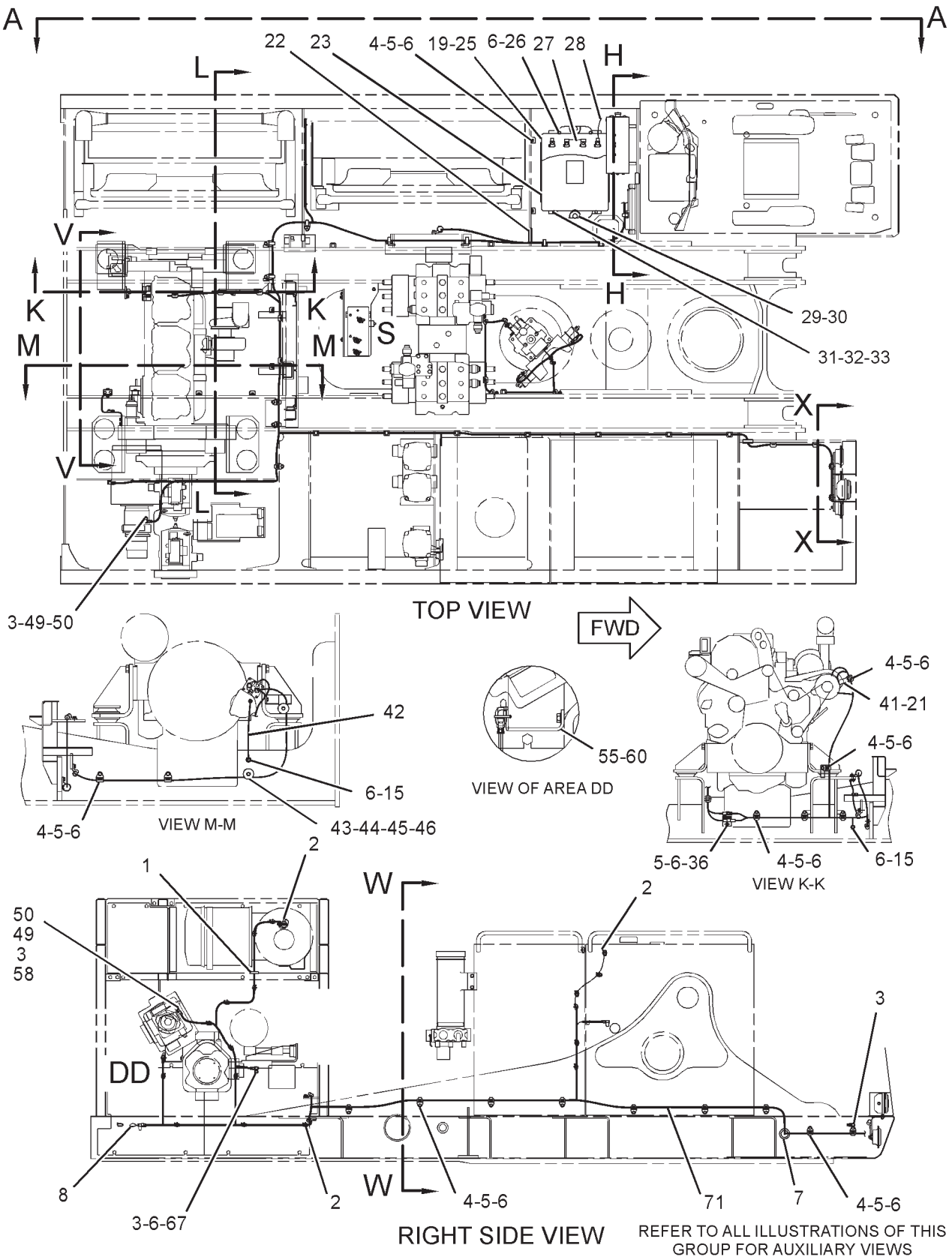

GRAPHIC #1

g01295279

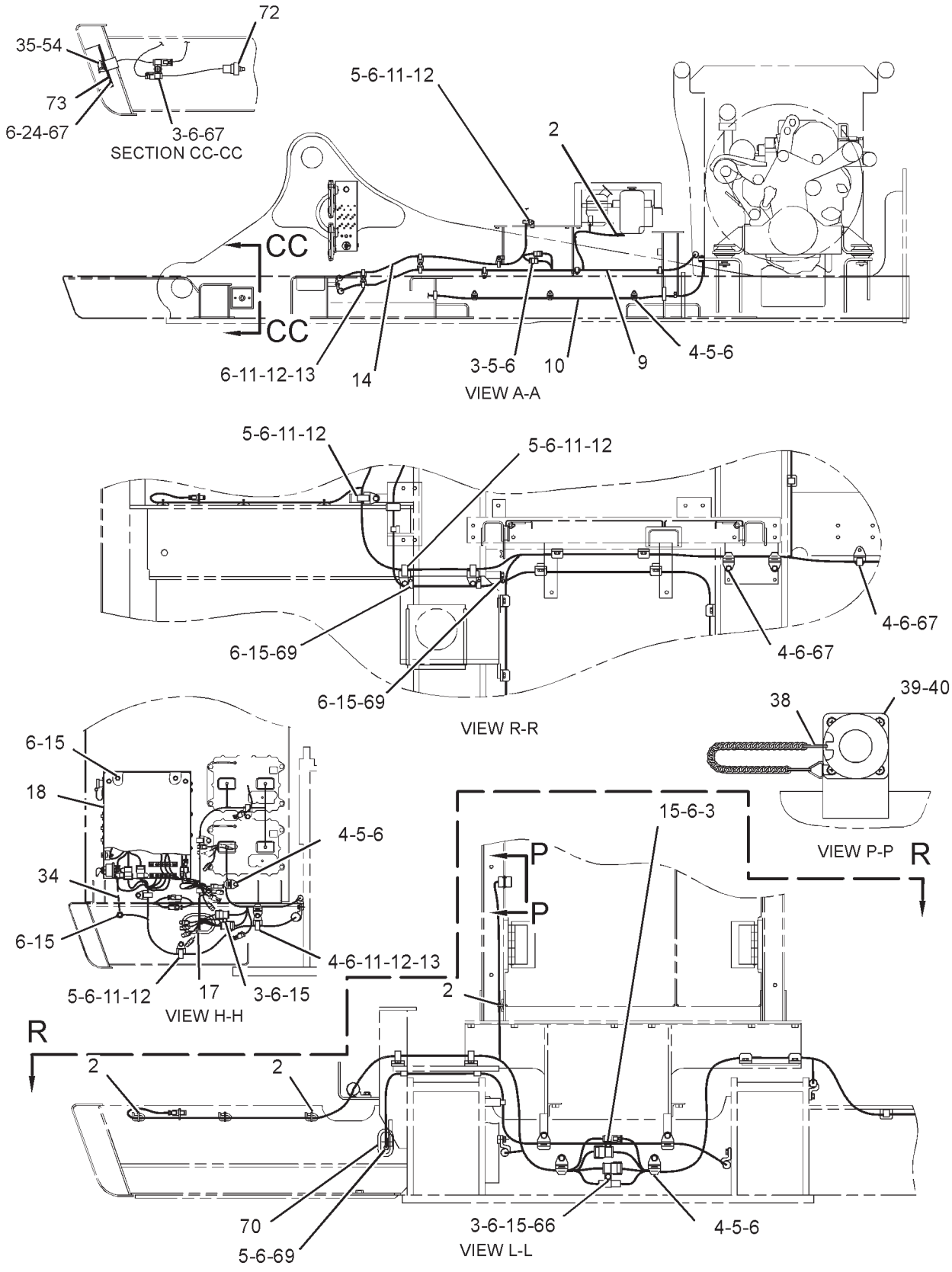

GRAPHIC #2

g01295297

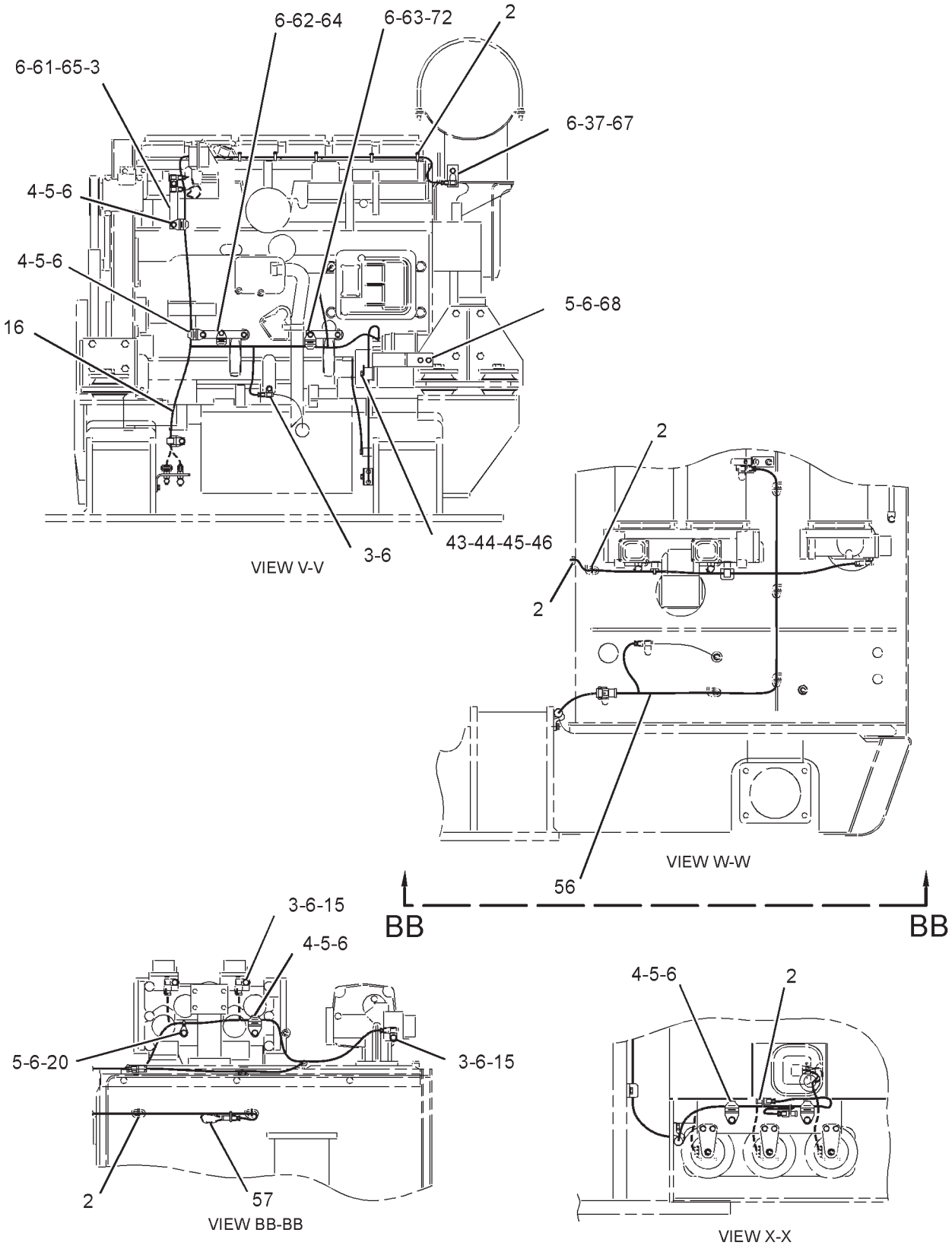

GRAPHIC #3

g01295304

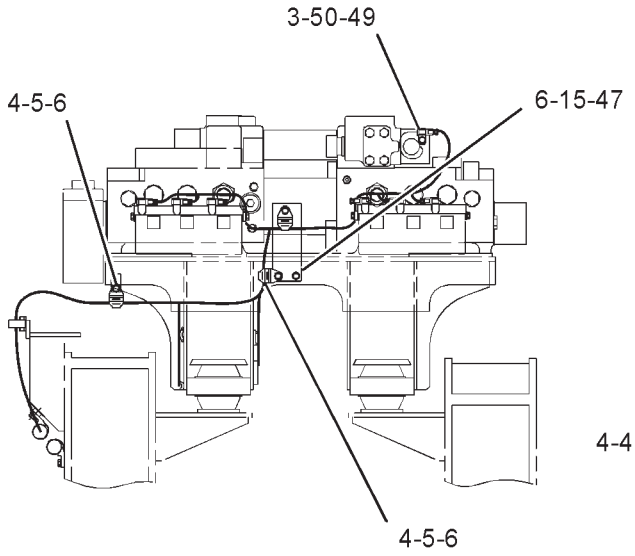

REAR VIEW

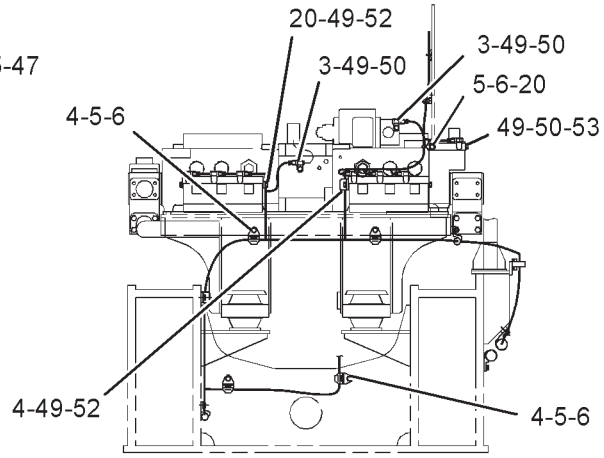

FRONT VIEW

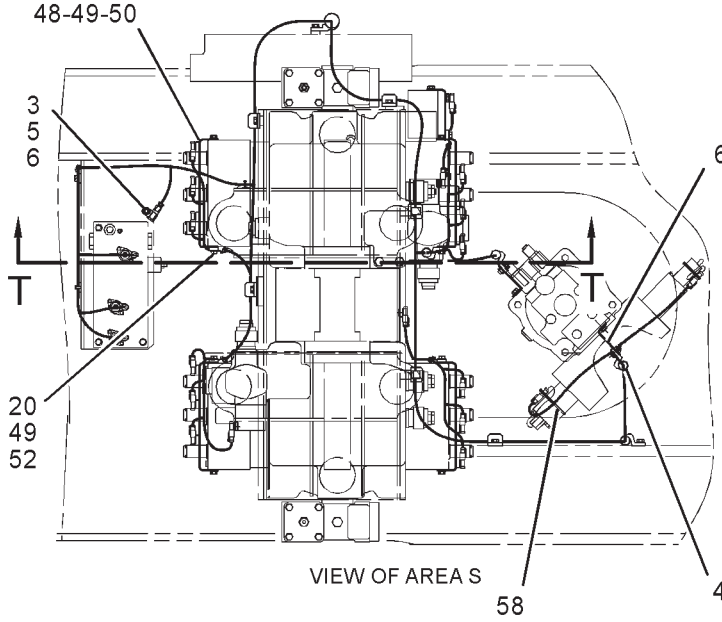

VIEW OF AREA S

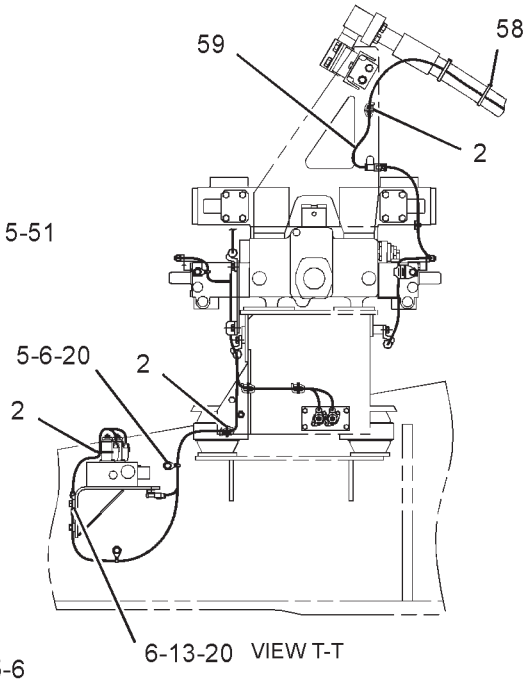

VIEW T-T

GRAPHIC #4 **<END>** g01295281

ELECTRICAL AND STARTING SYSTEM

222-3563 BATTERY & WIRING GP

S/N: RCD1-UP

PART OF 222-3562 STARTING AR-COLD WEATHER

SMCS-1401, 1402, 1408 **i01749275**

NOTE	REF NO	GRAPHIC REF	PART NUMBER	QTY	PART NAME 1 2 3 4 5 6 (PRODUCT LEVEL)	SEE PAGE
	1	1,2	**111-4837**	15	CLIP	
M	2	1,2	**8T-4195**	10	BOLT (M10X1.5X30-MM)	
Y	3	1	**7N-0719**	1	SWITCH GP-DISCONNECT (BATTERY)	285
	4	1,2	**8T-4121**	14	WASHER-HARD (11X21X2.5-MM THK)	
M	5	2	**8T-4137**	4	BOLT (M10X1.5X20-MM)	
	6	1,2	**8M-2770**	9	CLIP	
M	7	2	**8T-4191**	1	BOLT (M10X1.5X16-MM)	
M	8	2	**157-4822**	4	BOLT (M10X1.5X250-MM)	
	9	2	**170-6966**	1	CABLE AS	
		2	**1S-7252**	1	TERMINAL-CABLE (00-GA, 3/8-IN BOLT)	
E		2	**5P-0747**		CABLE (00-GA, BLACK) (665CM)	
		2	**7N-5274**	1	COVER-TERMINAL (BLACK)	
		2	**8L-8413**	1	STRAP-CABLE	
		2	**9G-8909**	1	COVER-TERMINAL (BLACK)	
		2	**3S-6050**	1	TERMINAL AS-BATTERY (NEGATIVE)	
		2	**1M-6119**	1	BOLT (5/16-18X1.375-IN)	
		2	**1M-6120**	1	NUT (5/16-18-THD)	
M	10	2	**8T-4136**	3	BOLT (M10X1.5X25-MM)	
	11	2	**8V-0622**	1	CABLE AS	
		2	**8C-5917**	1	TERMINAL AS-BATTERY (POSITIVE)	
		2	**8T-9757**	1	TERMINAL AS-BATTERY (NEGATIVE)	
		2	**1M-6119**	2	BOLT (5/16-18X1.375-IN)	
		2	**1M-6120**	2	NUT (5/16-18-THD)	
E		2	**5P-0761**		CABLE (00-GA, RED) (14CM)	
		2	**9G-0003**	1	COVER-TERMINAL (BLACK)	
		2	**8L-8413**	1	STRAP-CABLE	
		2	**9G-0004**	1	COVER-TERMINAL (RED)	
		2	**8L-8413**	1	STRAP-CABLE	
	12	2	**170-6965**	1	CABLE AS	
		2	**1S-7251**	1	TERMINAL-CABLE (00-GA, 1/2-IN BOLT)	
E		2	**5P-0761**		CABLE (00-GA, RED) (285CM)	
		2	**8N-1725**	1	COVER-TERMINAL (RED)	
		2	**8L-8413**	1	STRAP-CABLE	
		2	**8N-0869**	1	COVER-TERMINAL (RED)	
		2	**3S-6049**	1	TERMINAL AS-BATTERY (POSITIVE)	
		2	**1M-6119**	1	BOLT (5/16-18X1.375-IN)	
		2	**1M-6120**	1	NUT (5/16-18-THD)	
	13	2	**9X-9730**	2	BATTERY GP (12-VOLT)	
					(EACH INCLUDES)	
		2	**7N-0060**	6	VENT AS	
	14	2	**198-7070**	1	SUPPORT AS	

E-ORDER BY THE CENTIMETER
M-METRIC PART
Y-SEPARATE ILLUSTRATION

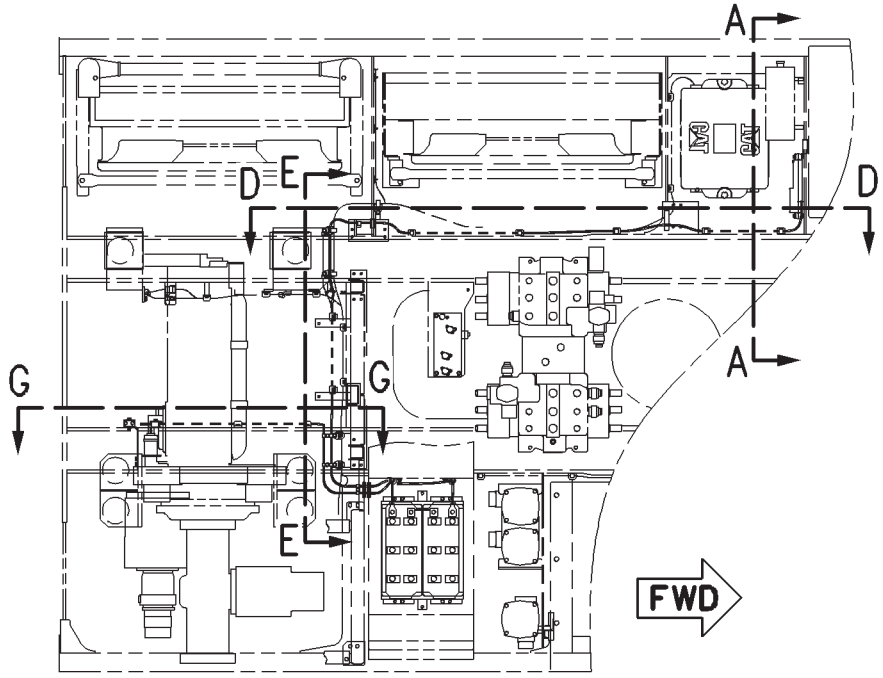

TOP VIEW

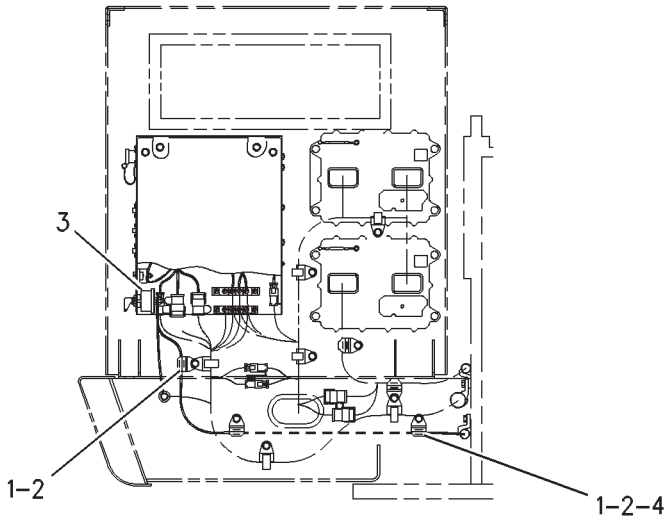

SECTION A-A

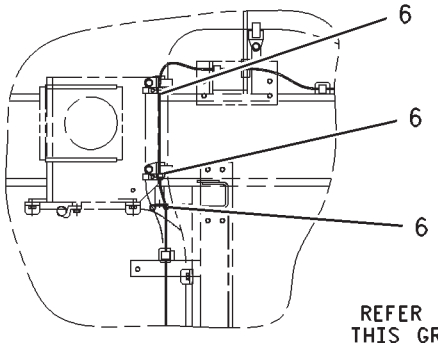

VIEW K-K

REFER TO ALL ILLUSTRATIONS OF THIS GROUP FOR AUXILIARY VIEWS

GRAPHIC #1 g00883198

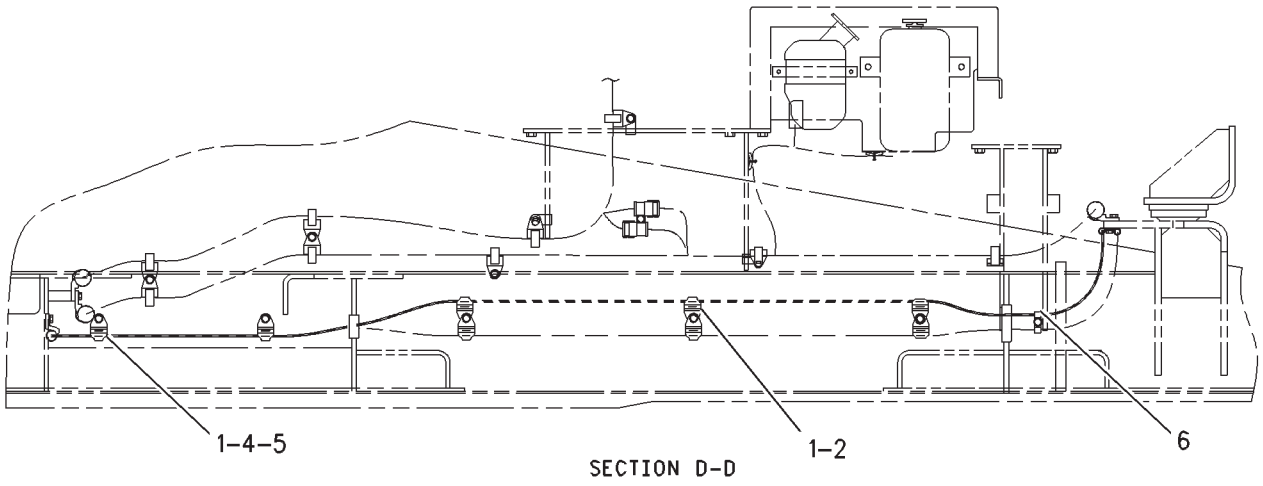

SECTION D-D

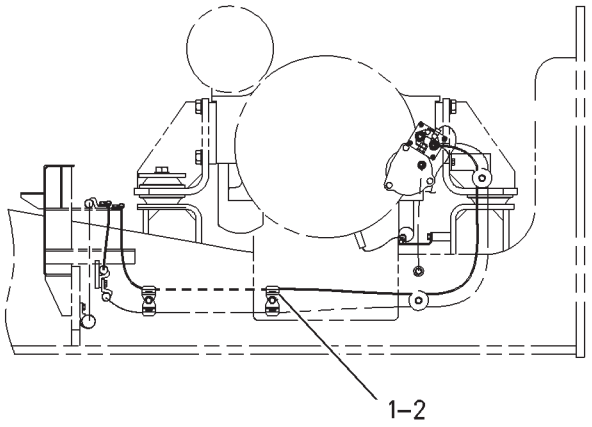

SECTION G-G

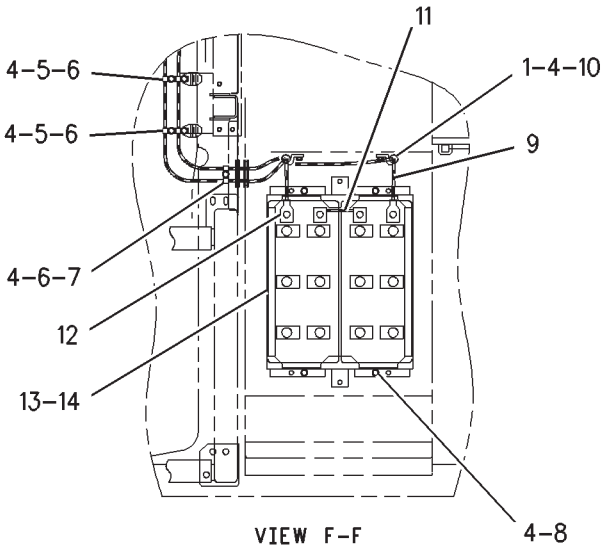

VIEW F-F

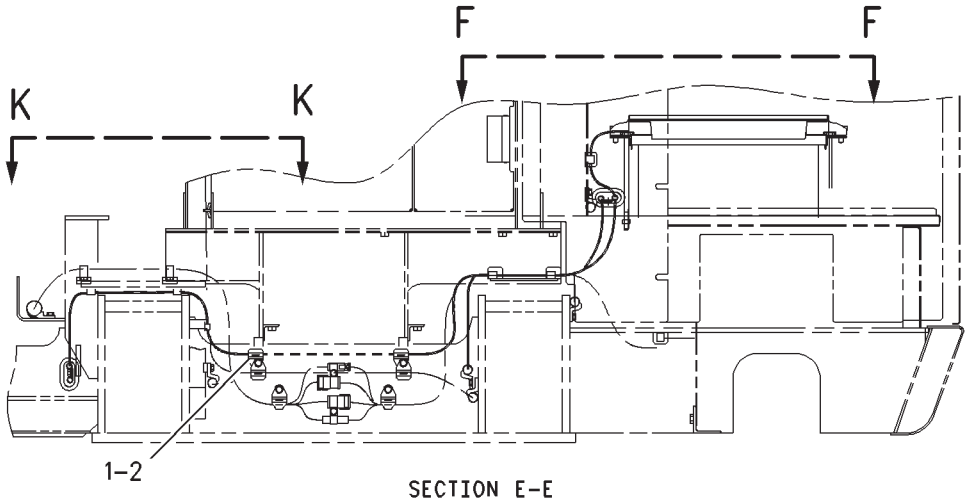

SECTION E-E

GRAPHIC #2 **<END>** g00883200

ELECTRICAL AND STARTING SYSTEM

180-0398 CONTROL & MTG GP-ENGINE ELEK

S/N: BLC426-UP

PART OF 205-5858, 235-4685 ENGINE AR-COMPLETE

SMCS-1901 **i01645345**

NOTE	REF NO	GRAPHIC REF	PART NUMBER	QTY	PART NAME 1 2 3 4 5 6 (PRODUCT LEVEL)	SEE PAGE
	1	1	**6I-1418**	4	SPACER (8.2X12.7X28.7-MM THK)	
	2	1	**8T-9655**	8	MOUNT-ISOLATION	
Y	3	1	*115-3055*	1	CONTROL GP-ENGINE ELECTRONIC	229
	4	1	**175-1367**	4	SPACER (8.8X16X10-MM THK)	
	5	1	**144-6284**	1	PLATE	
	6	1	**1D-4538**	4	BOLT (5/16-18X2.25-IN)	
	7	1	**2B-2694**	3	BOLT (5/16-18X2-IN)	
	8	1	**3E-4352**	3	WASHER-HARD (8.8X20.5X2.5-MM THK)	
	9	1	**9M-1974**	4	WASHER-HARD (8.8X16X2-MM THK)	
	10	1	**9N-0869**	8	WASHER-HARD (8.8X25.5X2-MM THK)	

Y-SEPARATE ILLUSTRATION

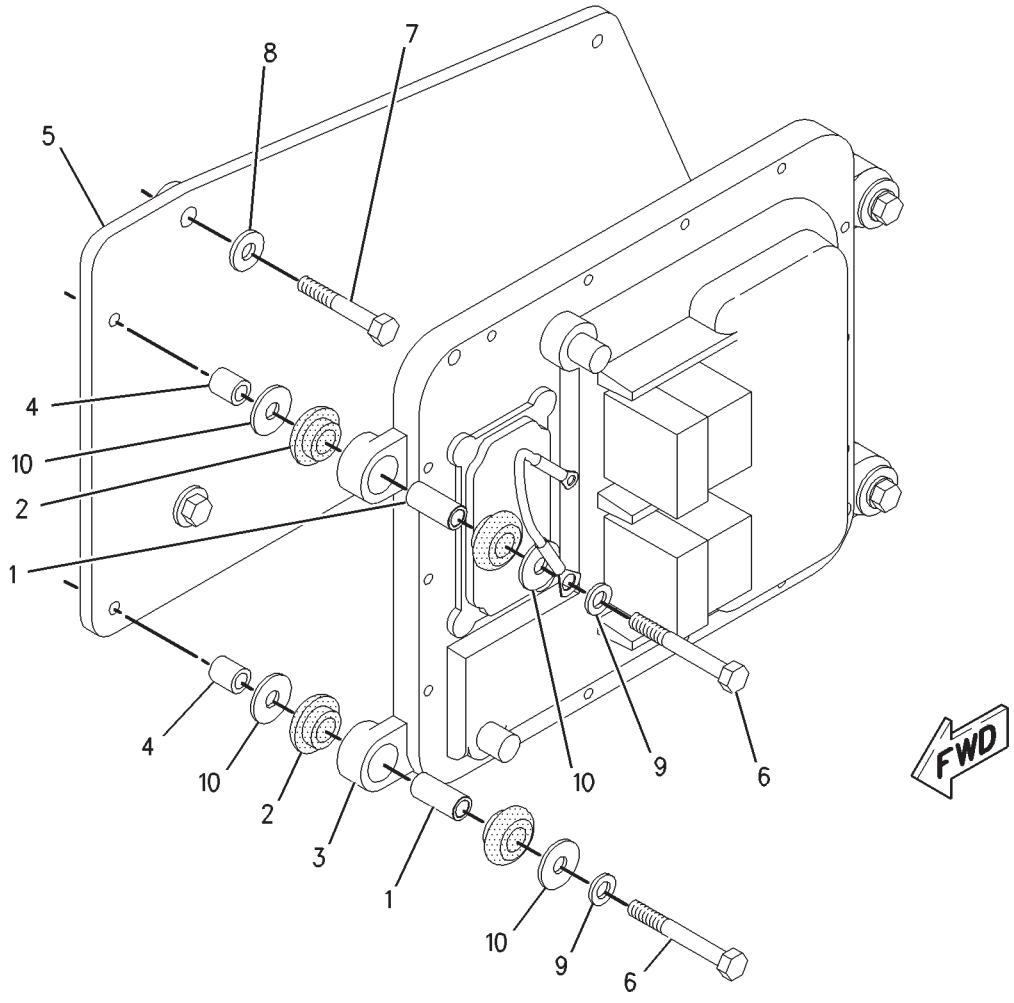

GRAPHIC #1 **<END>** g00790730

ELECTRICAL AND STARTING SYSTEM

171-2592 CONTROL & MTG GP-MACHINE

S/N: RCD1-UP

PART OF 229-3366 CHASSIS AR

SMCS-1931, 7600 **i01522521**

NOTE	REF NO	GRAPHIC REF	PART NUMBER	QTY	PART NAME 1 2 3 4 5 6 (PRODUCT LEVEL)	SEE PAGE
Y	1	1	*151-2099*	1	CONTROL GP-UNPROGRAMMED	230
YR	2	1	**169-0489**	1	CONTROL GP-UNPRGMED MONITOR	1022
M	3	1	**7X-0818**	4	BOLT (M8X1.25X45-MM)	
	4	1	**9N-0869**	6	WASHER-HARD (8.8X25.5X2-MM THK)	
M	5	1	**8T-6869**	4	BOLT (M8X1.25X60-MM)	
	6	1	**9M-1974**	2	WASHER-HARD (8.8X16X2-MM THK)	
	7	1	**8T-9655**	16	MOUNT-ISOLATION	
	8	1	**6I-1418**	4	SPACER (8.2X12.7X28.7-MM THK)	
	9	1	**145-0487**	4	SPACER (8.2X12.7X43.6-MM)	

M-METRIC PART
R-REMFG PART MAY BE AVAILABLE
Y-SEPARATE ILLUSTRATION

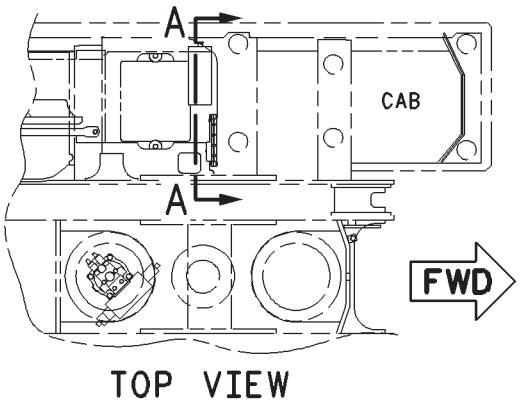

TOP VIEW

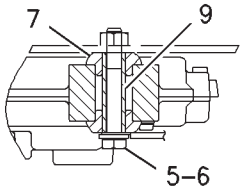

SECTION B–B

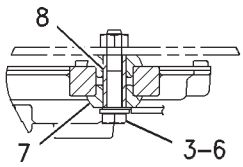

SECTION C–C

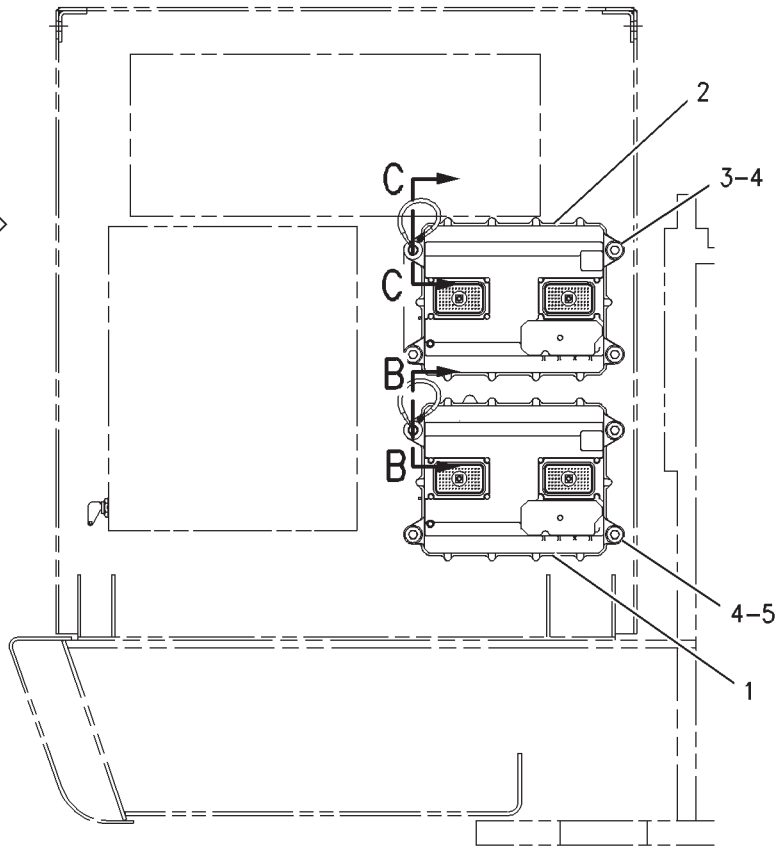

VIEW A–A

GRAPHIC #1 **<END>** g00792400

ELECTRICAL AND STARTING SYSTEM

115-3055 CONTROL GP-ENGINE ELECTRONIC

S/N: BLC426-UP

PART OF 180-0398 CONTROL & MTG GP-ENGINE ELEK

SMCS-1901 **i01664602**

NOTE	REF NO	GRAPHIC REF	PART NUMBER	QTY	PART NAME 1 2 3 4 5 6 (PRODUCT LEVEL)	SEE PAGE
	1	1	**212-9450**	1	CONTROL GP-ENGINE ELECTRONIC	
	2	1	**126-7574**	1	SCREW-PAN HEAD (8-32X9.52MM)	
	3	1	**7X-6315**	1	STRAP AS	
					AVAILABLE REPAIR KIT(S):	
M			**6V-6703**	2	KIT-RETAINING BOLT	
					(EACH INCLUDES BOLT, RETAINING RING AND 4 O-RING SEALS)	

M-METRIC PART

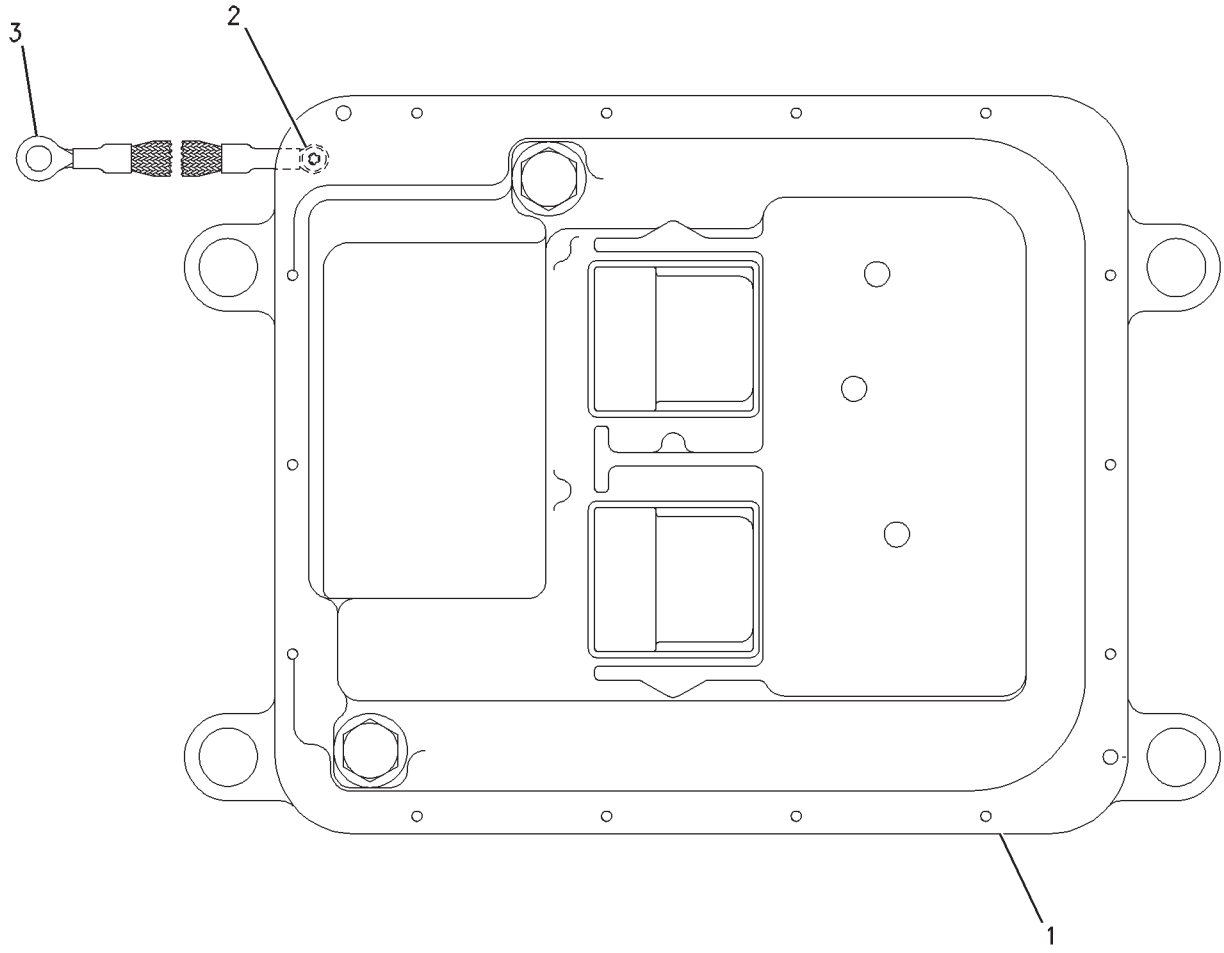

GRAPHIC #1 **<END>** g00847377

ELECTRICAL AND STARTING SYSTEM

151-2099 CONTROL GP-UNPROGRAMMED

S/N: RCD1-UP

PART OF 171-2592 CONTROL & MTG GP-MACHINE

SMCS-7610 **i01524666**

NOTE	REF NO	GRAPHIC REF	PART NUMBER	QTY	PART NAME 1 2 3 4 5 6 (PRODUCT LEVEL)	SEE PAGE
R	1	1	**151-2106**	1	CONTROL GP-UNPROGRAMMED	
		1	**7X-6315**	1	STRAP AS-GROUND	
		1	**134-4126**	1	WASHER (4.52X8.28X0.76-MM THK)	
		1	**184-2472**	1	SCREW-PAN HEAD (NO 8-32X9.52-MM)	

R-REMFG PART MAY BE AVAILABLE

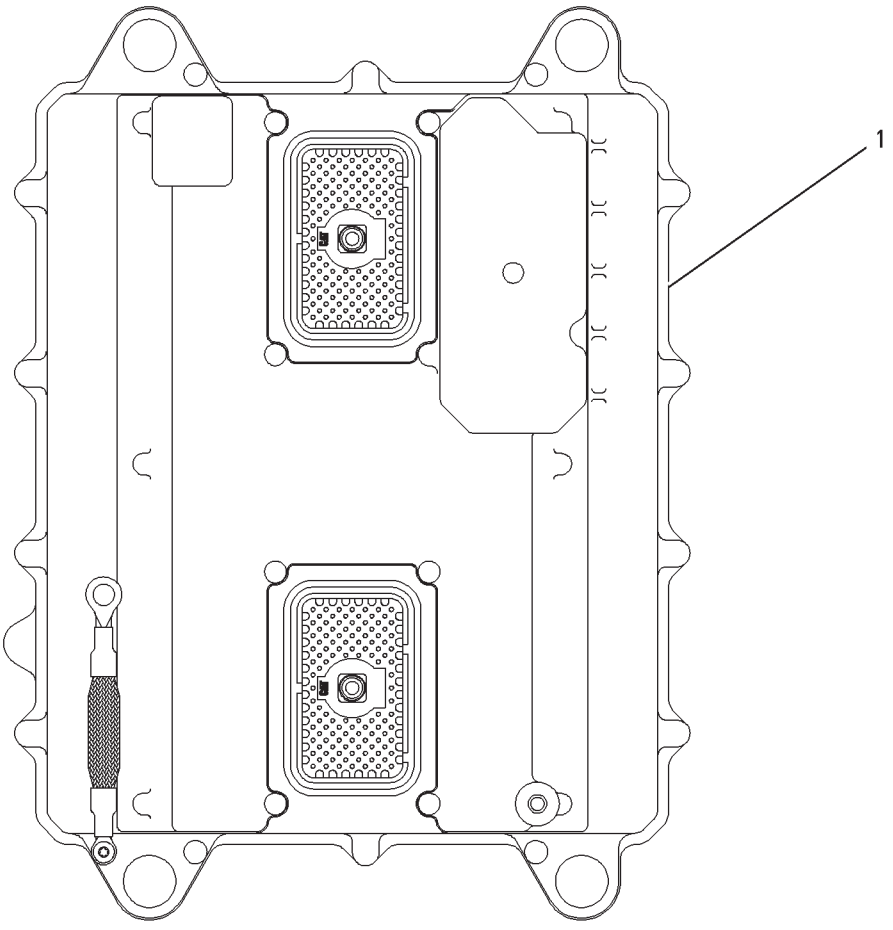

GRAPHIC #1 **<END>** g00777262

ELECTRICAL AND STARTING SYSTEM

164-8237 ELECTRICAL AR

S/N: RCD1-UP

PART OF 229-3365 GENERAL AR

SMCS-1408 **i02086855**

NOTE	PART NUMBER	QTY	PART NAME 1 2 3 4 5 6 (PRODUCT LEVEL)	SEE PAGE
Y	*171-2659*	1	ELECTRONICS GP-MACHINE	232
Y	*211-5593*	1	ELECTRONICS GP-MONITOR (VIDS)	234
Y	*164-8239*	1	ELECTRONICS GP-MONITOR (MESSAGE CENTER)	233

Y-SEPARATE ILLUSTRATION

<END>

ELECTRICAL AND STARTING SYSTEM

171-2659 ELECTRONICS GP-MACHINE

S/N: RCD1-UP
VALVE CONTROL
PART OF 164-8237 ELECTRICAL AR

SMCS-7610, 7620 **i02957060**

NOTE	PART NUMBER	QTY	PART NAME 1 2 3 4 5 6 (PRODUCT LEVEL)	SEE PAGE
	319-4277	1	SOFTWARE GP-MACHINE	
			-OR-	
	319-4278	1	SERVICE GP-MACHINE	
			(OPTIONAL SERVICE REPLACEMENT) (INCLUDES CONTROL-GP & SOFTWARE)	

<END>

ELECTRICAL AND STARTING SYSTEM

164-8239 ELECTRONICS GP-MONITOR

S/N: RCD1-UP

PART OF 164-8237 ELECTRICAL AR

SMCS-7490, 7601, 7610, 7620 **i01814221**

NOTE	PART NUMBER	QTY	PART NAME 1 2 3 4 5 6 (PRODUCT LEVEL)	SEE PAGE
	180-3038	1	SOFTWARE GP-MONITOR	
			(SOFTWARE ONLY)	
			—OR—	
	177-7710	1	MODULE GP-MESSAGE CENTER (VIDS)	
			(INCLUDES SOFTWARE)	
			(OPTIONAL SERVICE REPLACEMENT)	
	134-3379	1	FILM-IDENTIFICATION (ELECTRONIC CONTROL MODULE) (SILVER ULTRAPLATE)	
			<END>	

ELECTRICAL AND STARTING SYSTEM

211-5593 ELECTRONICS GP-MONITOR

S/N: RCD1-UP
MONITOR CONTROL
PART OF 164-8237 ELECTRICAL AR

SMCS-7490, 7601, 7610, 7620 **i02097967**

NOTE	PART NUMBER	QTY	PART NAME 1 2 3 4 5 6 (PRODUCT LEVEL)	SEE PAGE
	221-8770	1	SOFTWARE GP-MONITOR (VIDS)	
			(SOFTWARE ONLY)	
			—OR—	
Y	**221-8771**	1	SERVICE GP-MONITOR (VIDS)	1058
			(INCLUDES SOFTWARE) (OPTIONAL SERVICE REPLACEMENT)	
Y-SEPARATE ILLUSTRATION				

<END>

ELECTRICAL AND STARTING SYSTEM

211-5594 ELECTRONICS GP-MONITOR

S/N: RCD1-UP
MONITOR CONTROL
AN ATTACHMENT

SMCS-7490, 7601, 7610, 7620 **i02535456**

NOTE	PART NUMBER	QTY	PART NAME 1 2 3 4 5 6 (PRODUCT LEVEL)	SEE PAGE
	247-5159	1	SOFTWARE GP-MONITOR	
			(SOFTWARE ONLY)	
			—OR—	
	247-5160	1	CONTROL GP-ELECTRONIC	
			(OPTIONAL SERVICE REPLACEMENT)(PREPROGRAMMED CONTROL GROUP)	

<END>

ELECTRICAL AND STARTING SYSTEM

211-5595 ELECTRONICS GP-MONITOR

S/N: RCD1-UP
MONITOR CONTROL
AN ATTACHMENT

SMCS-7490, 7601, 7610, 7620 **i03601384**

NOTE	PART NUMBER	QTY	PART NAME 1 2 3 4 5 6 (PRODUCT LEVEL)	SEE PAGE
	221-8774	1	SOFTWARE GP-MONITOR	
			-OR-	
	221-8775	1	SERVICE GP-MONITOR	
			(OPTIONAL SERVICE REPLACEMENT)(INCLUDES CONTROL GP & SOFTWARE)	
	184-2472	1	SCREW-PAN HEAD (NO 8-32X9.52-MM)	
	7X-6315	1	STRAP AS-GROUND	
	134-4126	1	WASHER (4.52X8.28X0.76-MM THK)	
R-REMFG PART MAY BE AVAILABLE				

<END>

ELECTRICAL AND STARTING SYSTEM

211-5596 ELECTRONICS GP-MONITOR

S/N: RCD1-UP
MONITOR CONTROL
AN ATTACHMENT

SMCS-7490, 7601, 7610, 7620 **i02094287**

NOTE	PART NUMBER	QTY	PART NAME 1 2 3 4 5 6 (PRODUCT LEVEL)	SEE PAGE
	221-8776	1	SOFTWARE GP-MONITOR	
			(SOFTWARE ONLY)	
			—OR—	
Y	**221-8777**	1	SERVICE GP-MONITOR	1059
			(OPTIONAL SERVICE REPLACEMENT)	

Y-SEPARATE ILLUSTRATION

<END>

ELECTRICAL AND STARTING SYSTEM

153-2521 LAMP GP-FLOOD

S/N: RCD1-UP
24-VOLT
PART OF 6C-8619 LIGHTING GP-CAB, 150-7033 LIGHTING GP-CHASSIS, 153-2595, 170-6914, 170-6915 LIGHTING GP-FLOOD
ALSO AN ATTACHMENT

SMCS-1434 **i03626397**

NOTE	REF NO	GRAPHIC REF	PART NUMBER	QTY	PART NAME 1 2 3 4 5 6 (PRODUCT LEVEL)	SEE PAGE
M	1	1	**6V-5210**	2	SCREW-MACHINE (M4X0.7X10-MM)	
	2	1	**3B-4501**	2	LOCKWASHER	
	3	1	**9X-3463**	1	LAMP-HALOGEN (24-VOLT, 70-WATT)	
	4	1	**8T-4223**	1	WASHER-HARD (13.5X25.5X3-MM THK)	
M	5	1	**8T-4244**	1	NUT (M12X1.75-THD)	
M	6	1	**174-7791**	1	SCREW-TAPPING	
	7	1	**5C-2889**	1	LOCKWASHER	
	8	1	**170-6993**	1	COVER	
M	9	1	**180-3861**	4	SCREW-TAPPING	
	10	1	**170-9417**	1	LENS AS (FLOOD)	
	11	1	**170-9418**	1	BAND	

M-METRIC PART

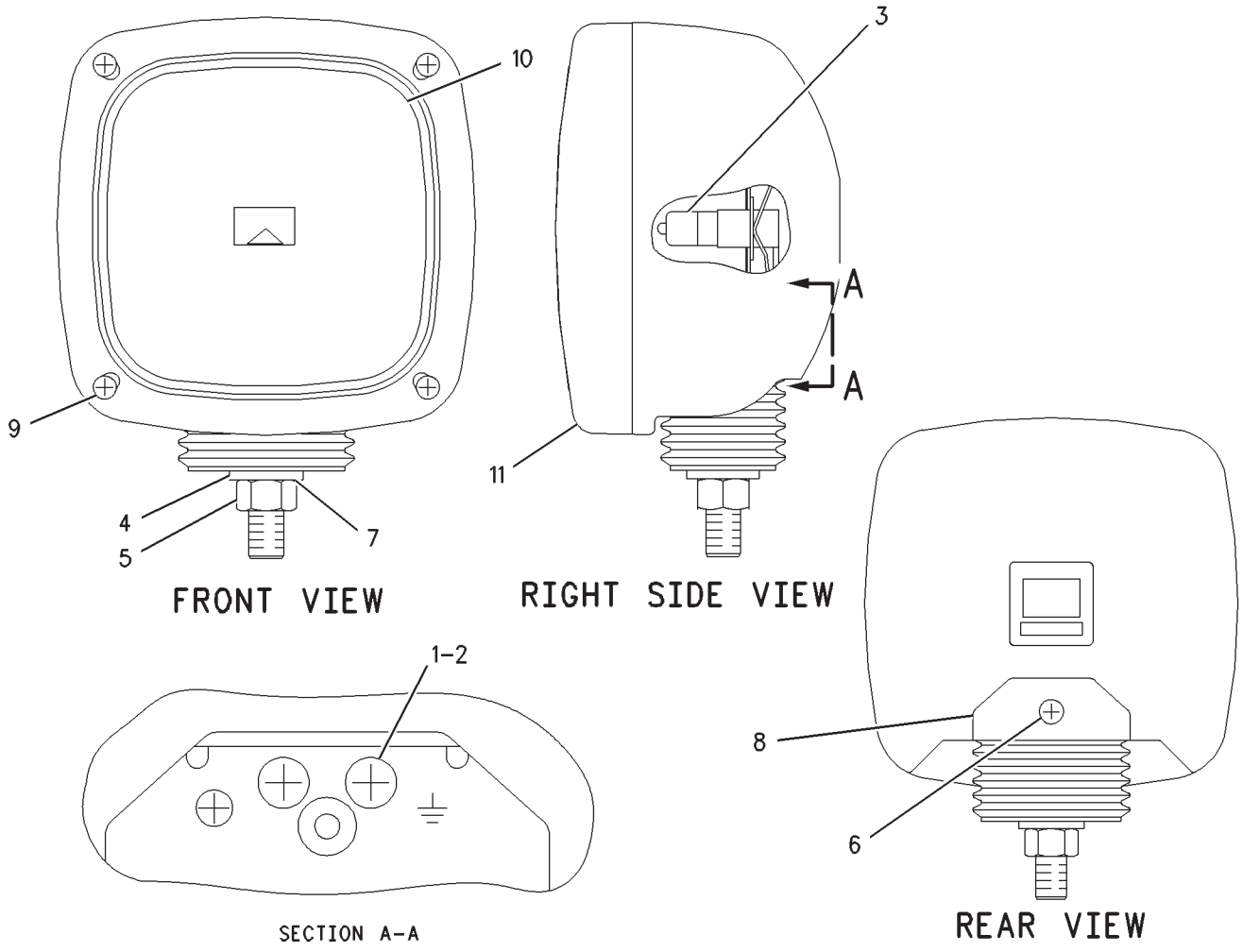

GRAPHIC #1 **<END>** g00646000

ELECTRICAL AND STARTING SYSTEM

153-2523 LAMP GP-FLOOD–FRONT, RH

S/N: RCD1-UP
24-VOLT
PART OF 150-7033 LIGHTING GP-CHASSIS

SMCS-1434 **i02635978**

NOTE	REF NO	GRAPHIC REF	PART NUMBER	QTY	PART NAME 1 2 3 4 5 6 (PRODUCT LEVEL)	SEE PAGE
M	1	1	**6V-5210**	2	SCREW-MACHINE (M4X0.7X10-MM)	
	2	1	**3B-4501**	2	LOCKWASHER	
	3	1	**9X-3463**	1	LAMP-HALOGEN (24-VOLT, 70-WATT)	
	4	1	**8T-4223**	1	WASHER-HARD (13.5X25.5X3-MM THK)	
M	5	1	**8T-4244**	1	NUT (M12X1.75-THD)	
M	6	1	**174-7791**	1	SCREW-TAPPING	
	7	1	**5C-2889**	1	LOCKWASHER	
	8	1	**170-6993**	1	COVER	
	9	1	**170-9417**	1	LENS AS (FLOOD)	
M	10	1	**180-3861**	4	SCREW-TAPPING	
	11	1	**170-9418**	1	BAND	

M-METRIC PART

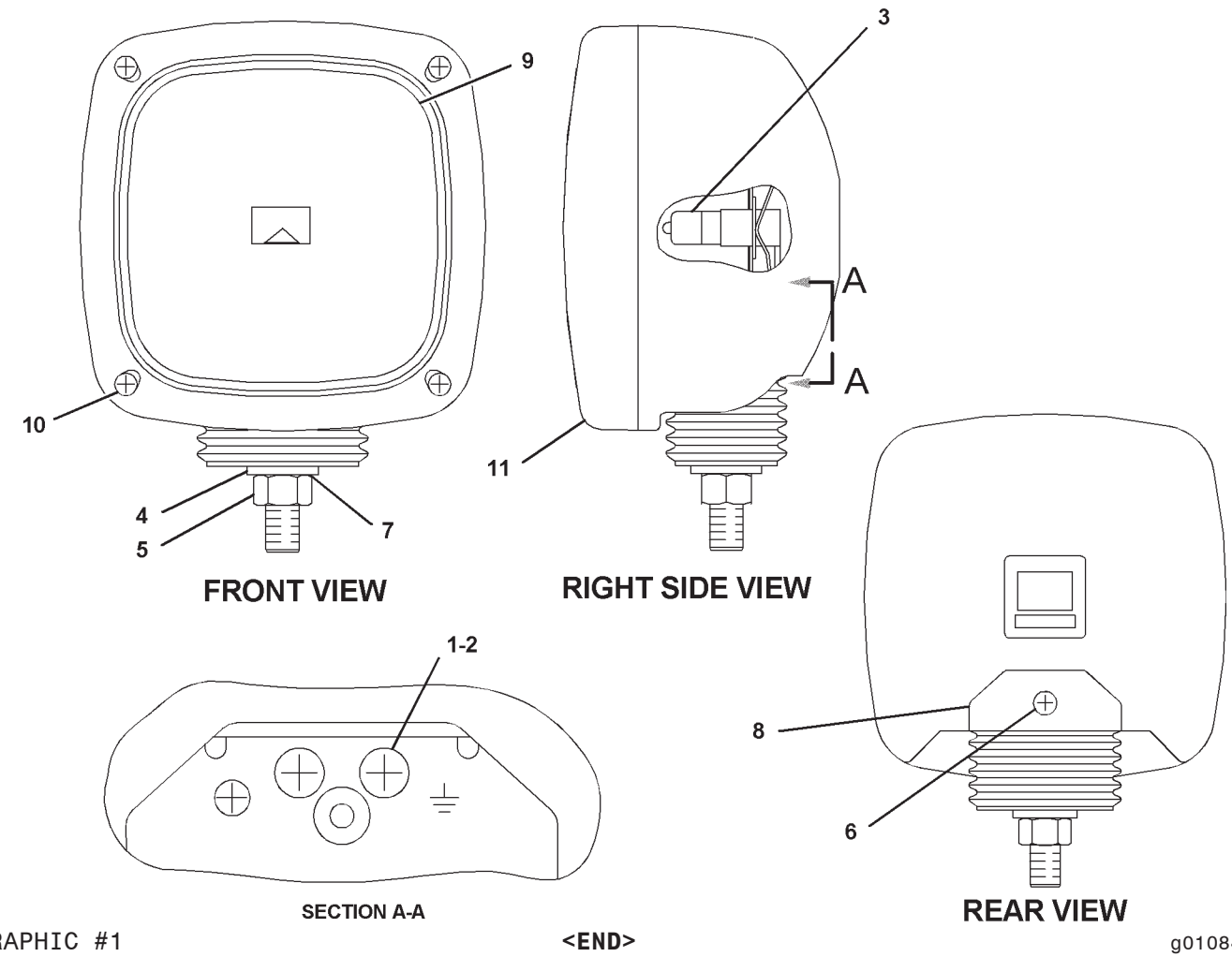

GRAPHIC #1 **<END>** g01084899

ELECTRICAL AND STARTING SYSTEM

153-2524 LAMP GP-FLOOD–BOOM, STICK

S/N: RCD1-UP
24-VOLT
PART OF 126-3162 GUARD GP-OVERHEAD, 153-2595, 170-6914, 170-6915 LIGHTING GP-FLOOD
AN ATTACHMENT

SMCS-1434 **i02135349**

NOTE	REF NO	GRAPHIC REF	PART NUMBER	QTY	PART NAME 1 2 3 4 5 6 (PRODUCT LEVEL)	SEE PAGE
M	1	1	**6V-5210**	2	SCREW-MACHINE (M4X0.7X10-MM)	
	2	1	**3B-4501**	2	LOCKWASHER	
	3	1	**9X-3463**	1	LAMP-HALOGEN (24-VOLT, 70-WATT)	
	4	1	**8T-4223**	1	WASHER-HARD (13.5X25.5X3-MM THK)	
M	5	1	**8T-4244**	1	NUT (M12X1.75-THD)	
M	6	1	**174-7791**	1	SCREW-TAPPING	
	7	1	**5C-2889**	1	LOCKWASHER	
	8	1	**170-6993**	1	COVER	
M	9	1	**180-3861**	4	SCREW-TAPPING	
	10	1	**170-9417**	1	LENS AS	
	11	1	**170-9418**	1	BAND	

M-METRIC PART

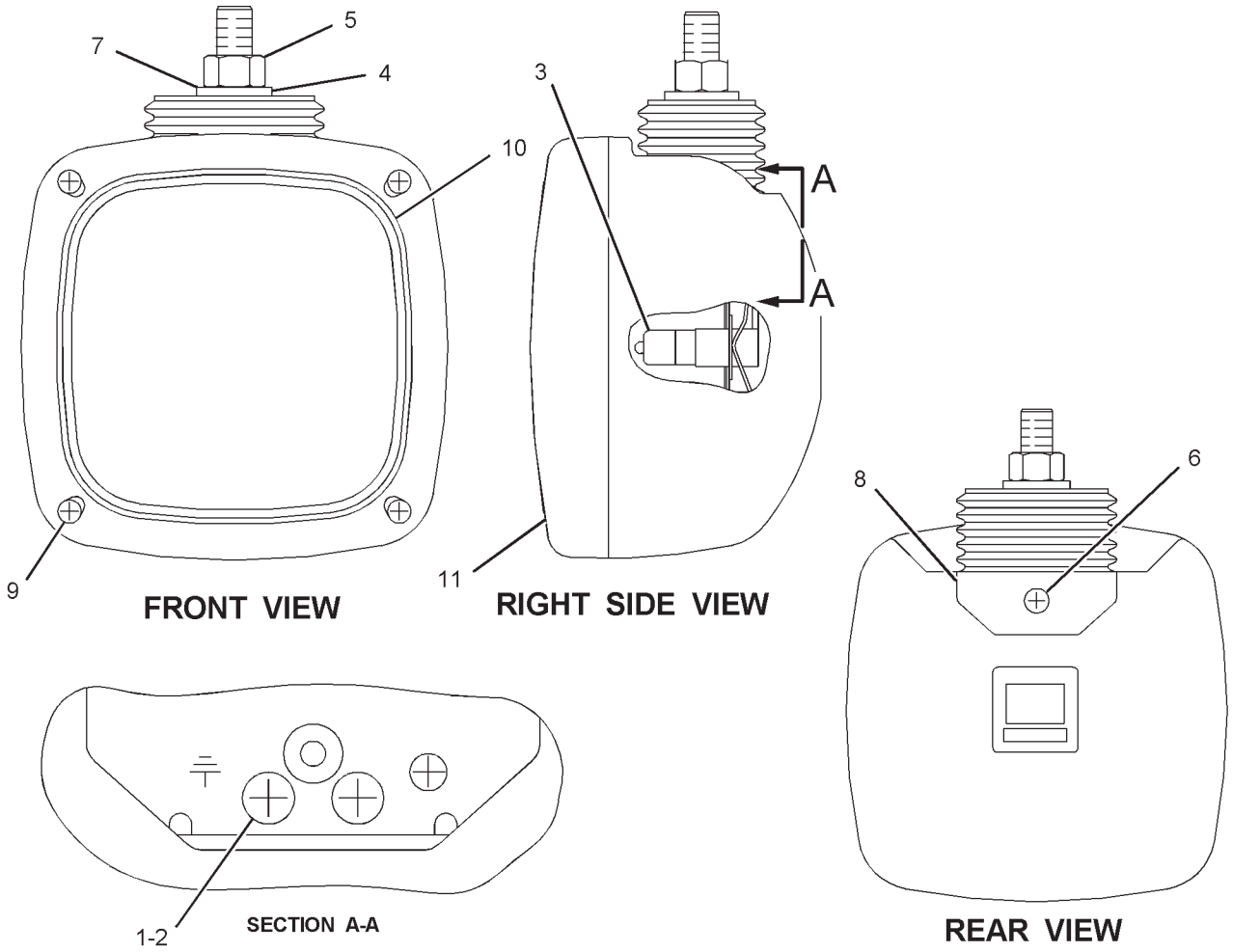

GRAPHIC #1 **<END>** g01084938

ELECTRICAL AND STARTING SYSTEM

6C-8619 LIGHTING GP-CAB

S/N: RCD1-UP

PART OF 153-2915 CAB GP

SMCS-1433 **i01811006**

NOTE	REF NO	GRAPHIC REF	PART NUMBER	QTY	PART NAME 1 2 3 4 5 6 (PRODUCT LEVEL)	SEE PAGE
Y	1	1	**153-2521**	2	LAMP GP-FLOOD (24-VOLT, VERTICAL MOUNT)	238
	2	1	**117-7028**	2	HARNESS AS	
	3	1	**6C-8793**	1	SUPPORT AS (RH)	
	4	1	**6C-8795**	1	SUPPORT AS (LH)	
	5	1	**6C-8840**	1	ANGLE (LH)	
	6	1	**6C-8959**	1	ANGLE (RH)	
M	7	1	**7X-2553**	2	BOLT (M16X2X40-MM)	
	8	1	**8T-4122**	4	WASHER-HARD (17X32X3.5-MM THK)	
M	9	1	**8T-4186**	2	BOLT (M10X1.5X40-MM)	
M	10	1	**8T-4779**	2	BOLT (M16X2X35-MM)	
	11	1	**8T-4121**	4	WASHER-HARD (11X21X2.5-MM THK)	
	12	1	**2D-9535**	2	GROMMET	
	13	1	**095-0827**	2	LOCKWASHER	
M	14	1	**8T-4133**	2	NUT (M10X1.5-THD)	

M-METRIC PART
Y-SEPARATE ILLUSTRATION

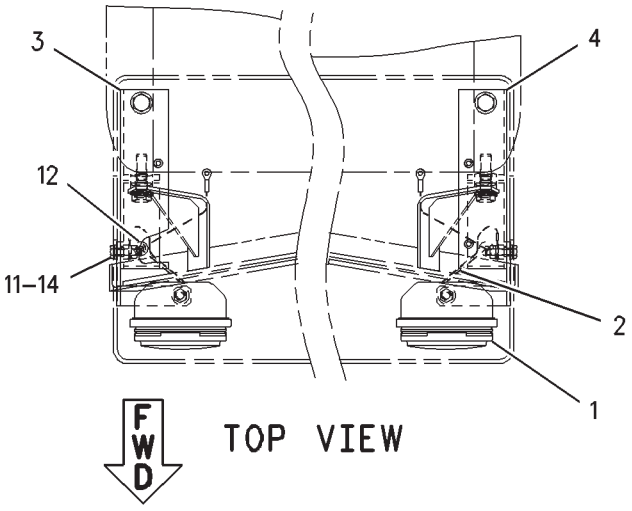

TOP VIEW

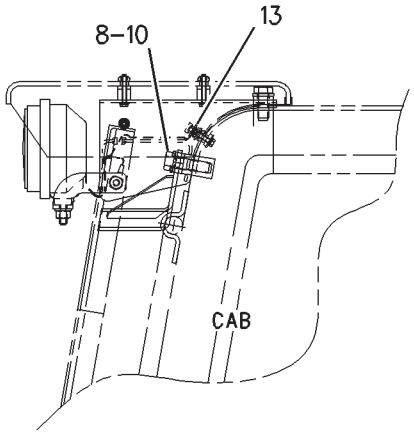

LEFT SIDE VIEW

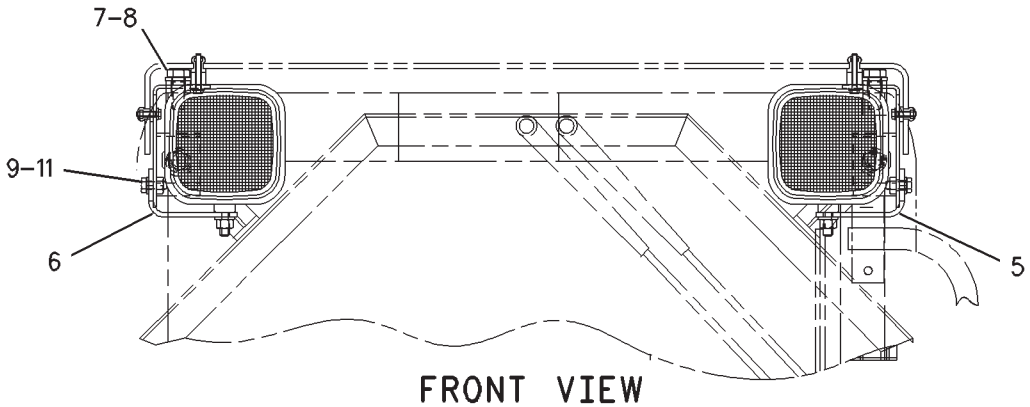

FRONT VIEW

GRAPHIC #1 **<END>** g00898413

ELECTRICAL AND STARTING SYSTEM

150-7033 LIGHTING GP-CHASSIS–FRONT

S/N: RCD1-UP
24-VOLT
PART OF 229-3366 CHASSIS AR

SMCS-1429 **i03626167**

NOTE	REF NO	GRAPHIC REF	PART NUMBER	QTY	PART NAME 1 2 3 4 5 6 (PRODUCT LEVEL)	SEE PAGE
Y	1	1	**153-2521**	1	LAMP GP-FLOOD (24-VOLT) (LH)	238
Y	2	1	**153-2523**	1	LAMP GP-FLOOD (24-VOLT) (RH)	239

Y-SEPARATE ILLUSTRATION

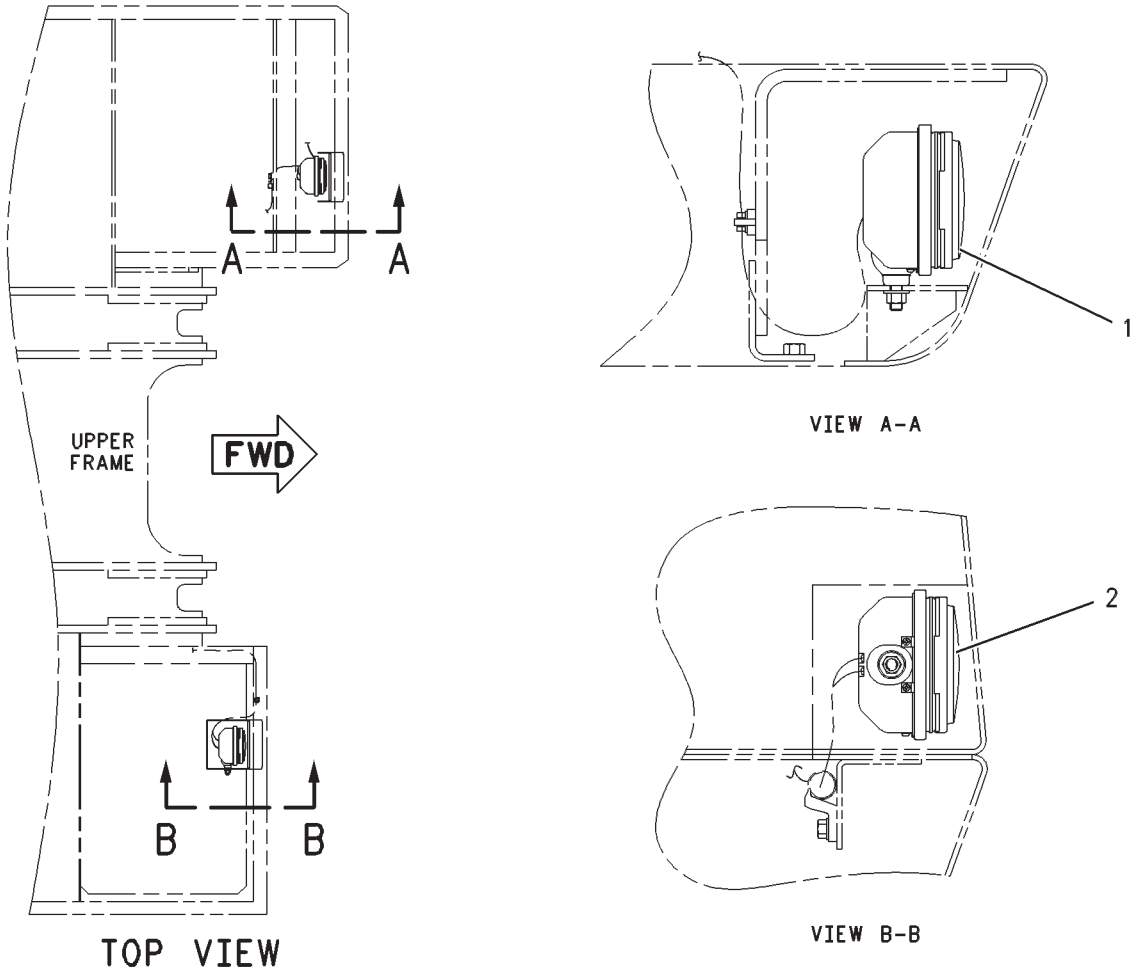

GRAPHIC #1 **<END>** g00530517

ELECTRICAL AND STARTING SYSTEM

153-2595 LIGHTING GP-FLOOD

S/N: RCD1-UP
G BOOM
PART OF 150-2804 BOOM AR
AN ATTACHMENT

SMCS-1434 **i01886320**

NOTE	REF NO	GRAPHIC REF	PART NUMBER	QTY	PART NAME 1 2 3 4 5 6 (PRODUCT LEVEL)	SEE PAGE
	1	1	**231-9920**	1	HARNESS AS	
		1	**102-8804**	2	KIT-RECEPTACLE (4-PIN)	
		1	**102-8805**	1	KIT-RECEPTACLE (6-PIN)	
					(EACH RECEPTACLE KIT INCLUDES RECEPTACLE AS & WEDGE)	
		1	**155-2271**	1	KIT-CONNECTING PLUG (4-PIN)	
					(INCLUDES PLUG AS & WEDGE)	
	2	1	**116-0118**	2	CLIP	
C	3	1	**8T-4121**	20	WASHER-HARD (11X21X2.5-MM THK)	
CM	4	1	**8T-4133**	16	NUT (M10X1.5-THD)	
C	5	1	**111-4836**	17	CLIP	
	6	1	**7Y-8273**	2	BRACKET AS	
M	7	1	**8T-4179**	6	BOLT (M12X1.75X20-MM)	
	8	1	**8T-4223**	10	WASHER-HARD (13.5X25.5X3-MM THK)	
Y	9	1	**153-2524**	2	LAMP GP-FLOOD (24-VOLT)	240
Y	10	1	**153-2521**	2	LAMP GP-FLOOD (24-VOLT)	238
	11	1	**7Y-5416**	2	SHEET	
M	12	1	**5C-9553**	12	BOLT (M6X1X16-MM)	
	13	1	**9X-8256**	12	WASHER (6.6X12X2-MM THK)	
	14	1	**8P-8540**	2	GROMMET	
M	15	1	**8T-4137**	3	BOLT (M10X1.5X20-MM)	
M	16	1	**8T-4191**	1	BOLT (M10X1.5X16-MM)	
	17	1	**111-4837**	1	CLIP	

C-CHANGE FROM PREVIOUS TYPE
M-METRIC PART
Y-SEPARATE ILLUSTRATION

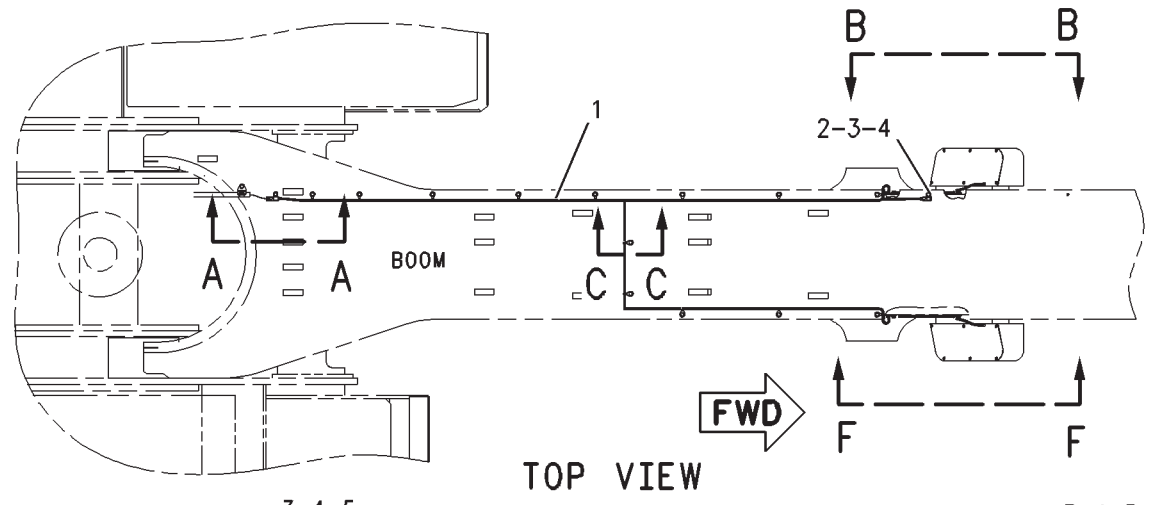

TOP VIEW

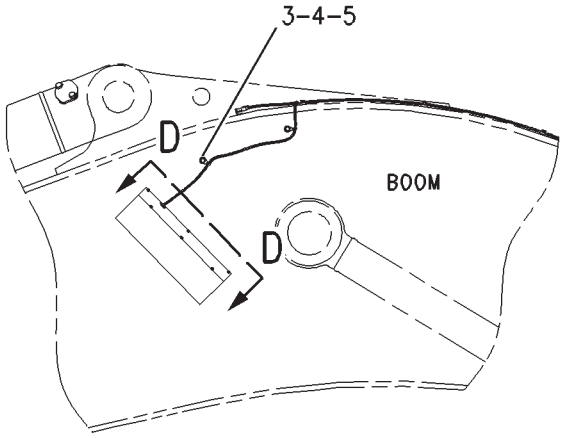

VIEW B-B

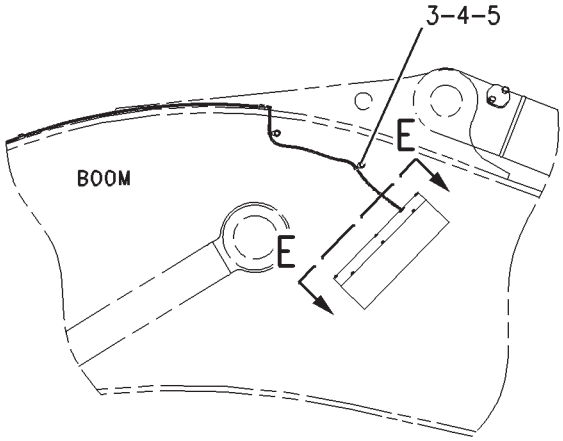

VIEW F-F

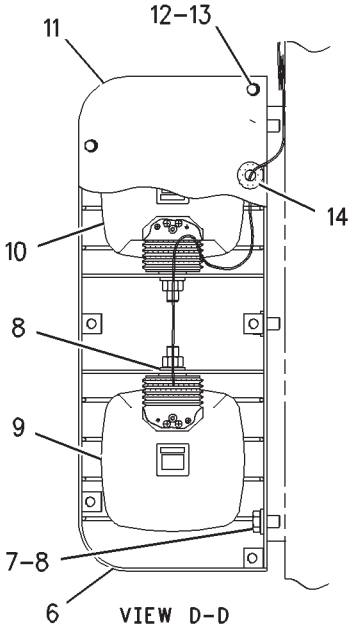

VIEW D-D

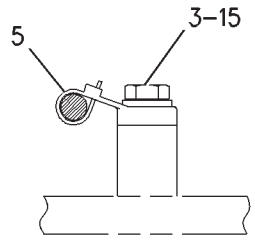

SECTION C-C

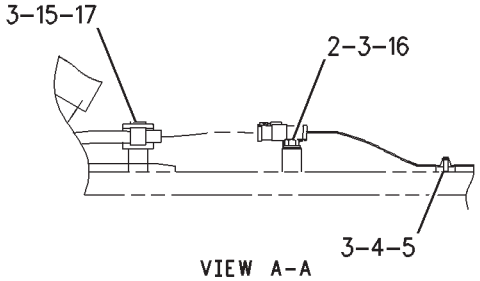

VIEW A-A

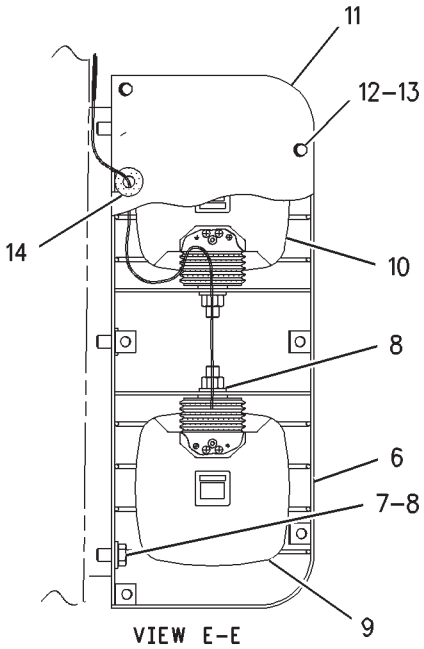

VIEW E-E

GRAPHIC #1 **<END>** g00796089

ELECTRICAL AND STARTING SYSTEM

170-6914 LIGHTING GP-FLOOD

S/N: RCD1-UP
PART OF 150-2803 BOOM AR-REACH
AN ATTACHMENT

SMCS-1434 **i02182503**

NOTE	REF NO	GRAPHIC REF	PART NUMBER	QTY	PART NAME 1 2 3 4 5 6 (PRODUCT LEVEL)	SEE PAGE
	1	1	**170-9341**	1	HARNESS AS	
		1	**102-8805**	1	KIT-RECEPTACLE (6-PIN)	
	2	1	**116-0118**	2	CLIP	
	3	1	**8T-4121**	18	WASHER-HARD (11X21X2.5-MM THK)	
M	4	1	**8T-4133**	14	NUT (M10X1.5-THD)	
	5	1	**111-4836**	15	CLIP	
	6	1	**7Y-8273**	2	BRACKET AS	
M	7	1	**8T-4179**	6	BOLT (M12X1.75X20-MM)	
	8	1	**8T-4223**	10	WASHER-HARD (13.5X25.5X3-MM THK)	
Y	9	1	**153-2524**	2	LAMP GP-FLOOD (24-VOLT)	240
Y	10	1	**153-2521**	2	LAMP GP-FLOOD (24-VOLT)	238
	11	1	**7Y-5416**	2	SHEET	
M	12	1	**5C-9553**	12	BOLT (M6X1X16-MM)	
	13	1	**9X-8256**	12	WASHER (6.6X12X2-MM THK)	
	14	1	**8P-8540**	2	GROMMET	
M	15	1	**8T-4137**	3	BOLT (M10X1.5X20-MM)	
M	16	1	**8T-4191**	1	BOLT (M10X1.5X16-MM)	
	17	1	**111-4837**	1	CLIP	

M-METRIC PART
Y-SEPARATE ILLUSTRATION

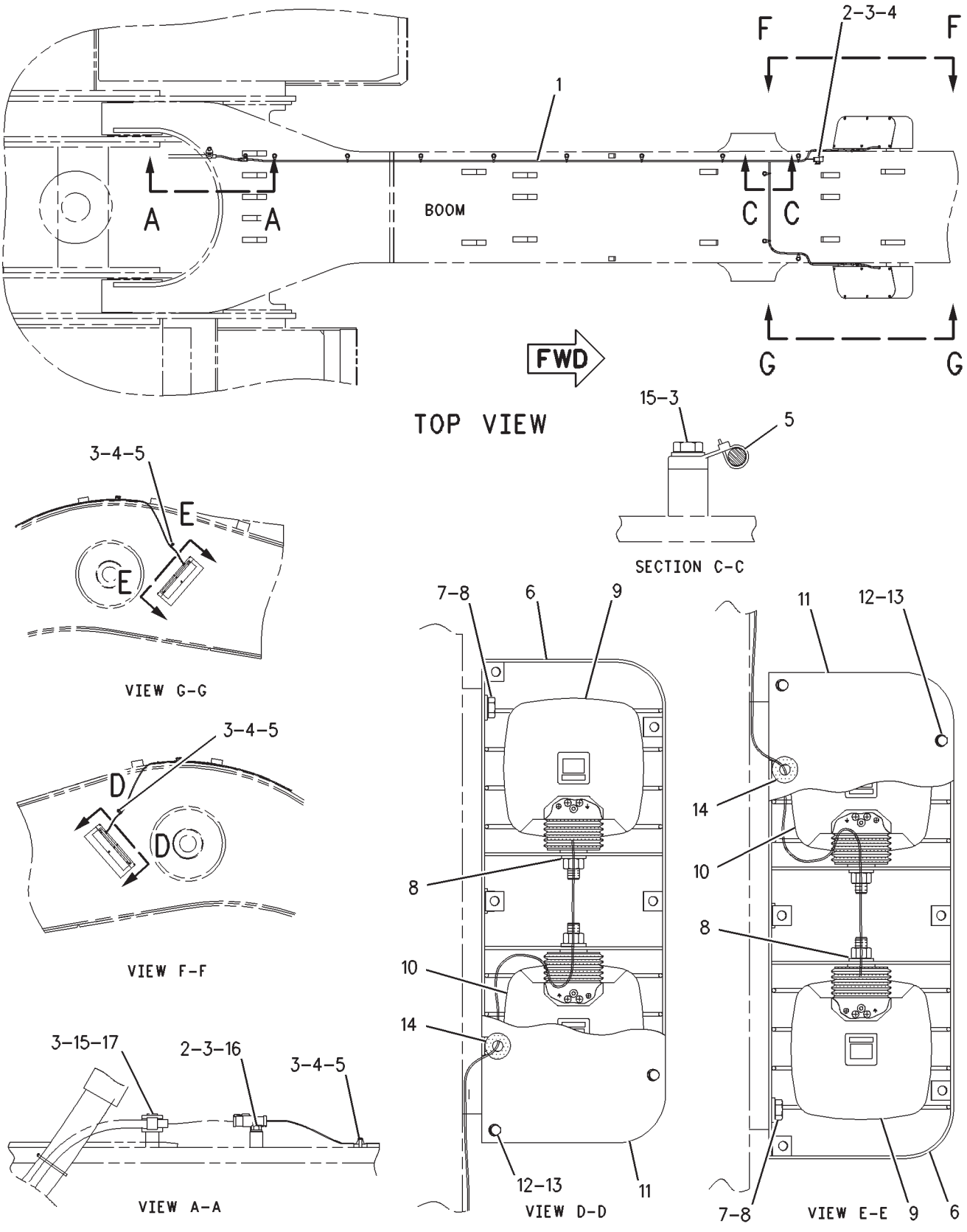

GRAPHIC #1 **<END>** g00848440

ELECTRICAL AND STARTING SYSTEM

170-6915 LIGHTING GP-FLOOD

S/N: RCD1-UP
MASS BOOM
PART OF 150-2805 BOOM AR-MASS
AN ATTACHMENT

SMCS-1434 **i01734397**

NOTE	REF NO	GRAPHIC REF	PART NUMBER	QTY	PART NAME 1 2 3 4 5 6 (PRODUCT LEVEL)	SEE PAGE
	1	1	**170-6990**	1	HARNESS AS	
		1	**102-8804**	1	KIT-RECEPTACLE (4-PIN)	
		1	**102-8805**	1	KIT-RECEPTACLE (6-PIN)	
		1	**155-2271**	1	KIT-CONNECTING PLUG (4-PIN)	
	2	1	**116-0118**	2	CLIP	
	3	1	**8T-4121**	25	WASHER-HARD (11X21X2.5-MM THK)	
M	4	1	**8T-4133**	21	NUT (M10X1.5-THD)	
	5	1	**111-4836**	22	CLIP	
	6	1	**7Y-8273**	2	BRACKET AS	
M	7	1	**8T-4179**	6	BOLT (M12X1.75X20-MM)	
	8	1	**8T-4223**	10	WASHER-HARD (13.5X25.5X3-MM THK)	
Y	9	1	**153-2524**	2	LAMP GP-FLOOD (24-VOLT)	240
Y	10	1	**153-2521**	2	LAMP GP-FLOOD (24-VOLT)	238
	11	1	**7Y-5416**	2	SHEET	
M	12	1	**5C-9553**	12	BOLT (M6X1X16-MM)	
	13	1	**9X-8256**	12	WASHER (6.6X12X2-MM THK)	
	14	1	**8P-8540**	2	GROMMET	
M	15	1	**8T-4137**	3	BOLT (M10X1.5X20-MM)	
M	16	1	**8T-4191**	1	BOLT (M10X1.5X16-MM)	
	17	1	**111-4837**	1	CLIP	

M-METRIC PART
Y-SEPARATE ILLUSTRATION

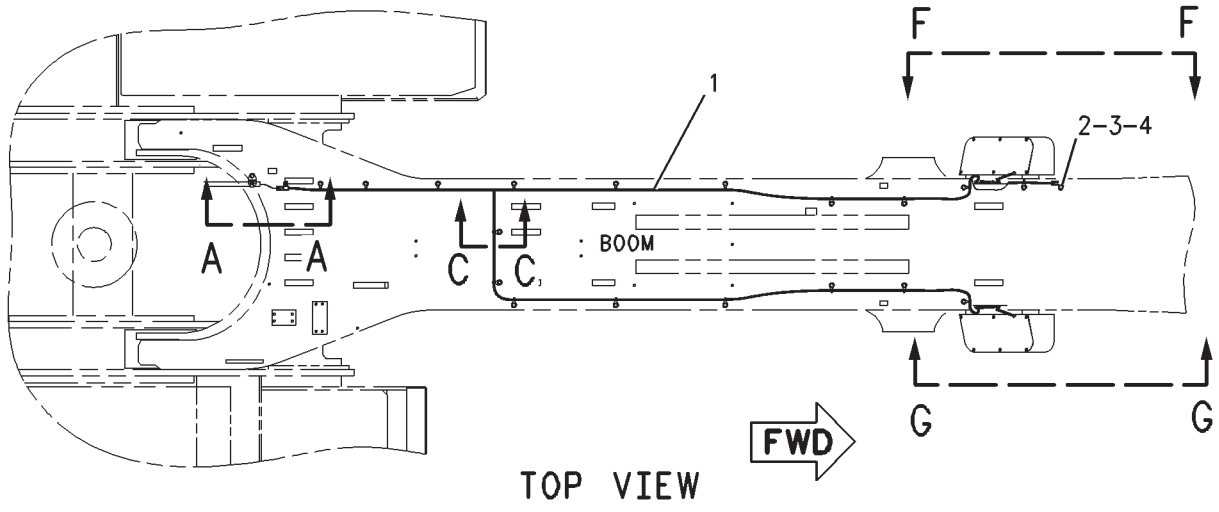

TOP VIEW

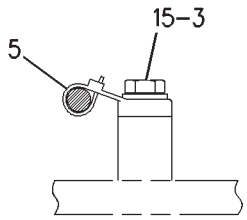

SECTION C-C

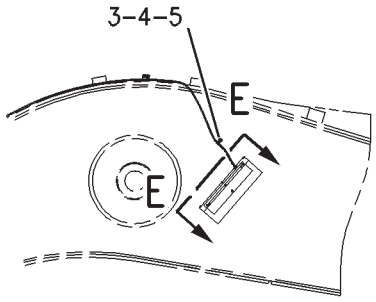

VIEW G-G

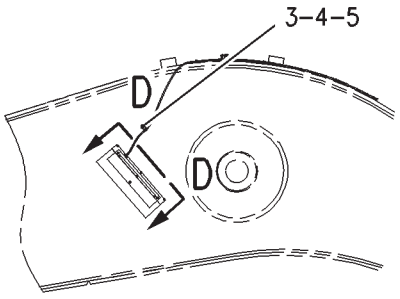

VIEW F-F

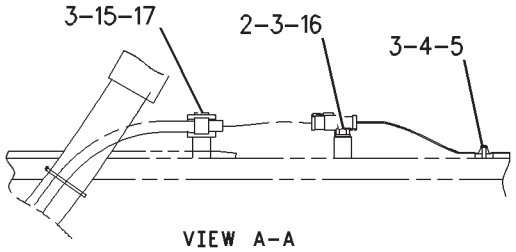

VIEW A-A

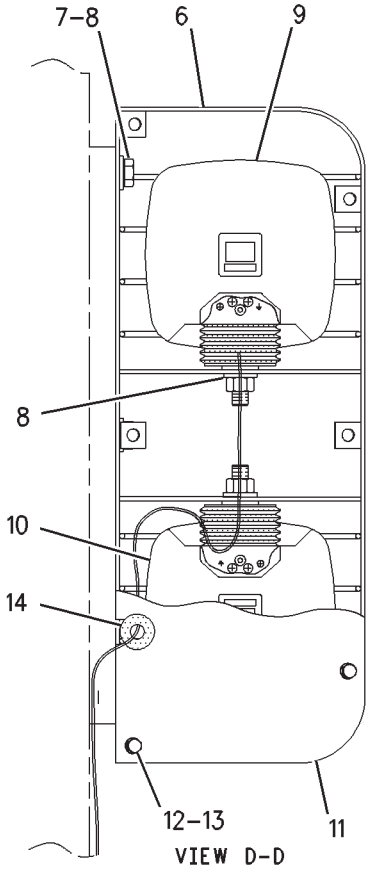

VIEW D-D

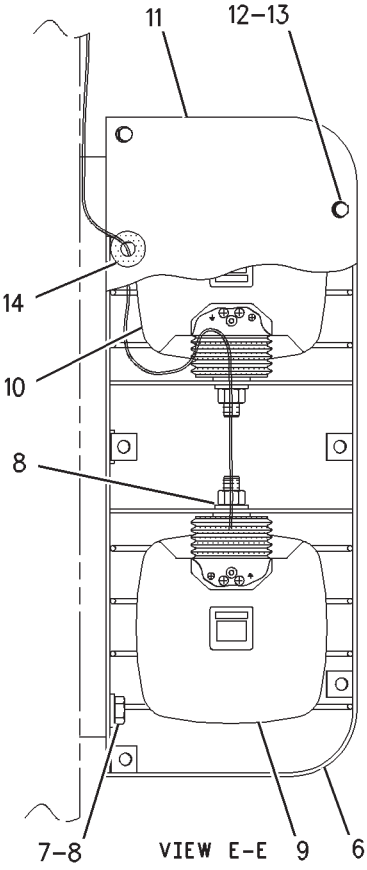

VIEW E-E

GRAPHIC #1 **<END>** g00796187

ELECTRICAL AND STARTING SYSTEM

204-1939 PANEL GP-CIRCUIT BREAKER

S/N: RCD1-191

PART OF 217-2970 PANEL GP-CIRCUIT BREAKER

SMCS-1417 **i01889088**

NOTE	REF NO	GRAPHIC REF	PART NUMBER	QTY	PART NAME 1 2 3 4 5 6 (PRODUCT LEVEL)	SEE PAGE
	1	1	**170-9304**	1	BRACKET AS	
M	2	1	**8T-4191**	4	BOLT (M10X1.5X16-MM)	
	3	1	**8T-4121**	4	WASHER-HARD (11X21X2.5-MM THK)	
	4	1	**204-1938**	1	COVER AS	
M	5	2	**8C-7581**	4	SCREW-MACHINE (M4X0.7X8-MM)	
	6	2	**096-6166**	8	WASHER-HARD (4.5X9X1-MM THK)	
	7	1	**9X-8486**	12	SCREW-MACHINE (8-32X0.75-IN)	
	8	1,2	**8T-0328**	16	WASHER-HARD (5.5X10X1-MM THK)	
	9	1	**139-4724**	3	CIRCUIT BREAKER AS (30-AMPERE)	
					(EACH INCLUDES)	
		1	**6V-8378**	2	NUT (10-32-THD)	
		1	**8F-1434**	2	LOCKWASHER	
		1	**8T-0328**	2	WASHER-HARD (5.5X10X1-MM THK)	
	10	1	**171-2210**	1	CIRCUIT BREAKER AS (80-AMPERE)	
		1	**1H-3244**	2	LOCKWASHER	
		1	**6V-8187**	2	NUT (1/4-28-THD)	
		1	**8T-4205**	2	WASHER-HARD (7.2X14.5X2-MM THK)	
	11	1	**6V-5645**	2	SCREW-MACHINE (10-32X0.87-IN)	
Y	12	1	**7N-0718**	1	SWITCH GP-DISCONNECT (BATTERY)	284
	13	1	**3E-8320**	1	PLATE-INSTRUCTION (BATTERY)	
	14	1	**6T-3643**	4	CIRCUIT BREAKER AS (15-AMPERE)	
					(EACH INCLUDES)	
		1	**6V-8376**	2	SCREW-MACHINE (8-32X0.25-IN)	
		1	**9B-7233**	2	LOCKWASHER	
M	15	1,2	**7X-2619**	13	BOLT (M6X1X10-MM)	
	16	1,2	**9X-8256**	36	WASHER (6.6X12X2-MM THK)	
	17	1,2	**161-3128**	9	RELAY (24-VOLT)	
	18	2	**170-6970**	1	HARNESS AS-PANEL (CIRCUIT BREAKER)	
		2	**102-8801**	2	KIT-RECEPTACLE (12-PIN)	
		2	**102-8802**	2	KIT-RECEPTACLE (2-PIN)	
					(EACH RECEPTACLE KIT INCLUDES RECEPTACLE AS & WEDGE)	
		2	**155-2255**	2	KIT-CONNECTING PLUG (12-PIN)	
		2	**155-2270**	3	KIT-CONNECTING PLUG (2-PIN)	
		2	**155-2271**	1	KIT-CONNECTING PLUG (4-PIN)	
					(EACH CONNECTING PLUG KIT INCLUDES PLUG AS & WEDGE)	
	19	1	**150-6970**	1	WIRE AS	
Y	20	2	**125-1302**	1	SWITCH GP-MAGNETIC (24-VOLT) (START RELAY)	286
	21	1	**170-9306**	1	WIRE AS	
	22	2	**3S-2093**	7	STRAP-CABLE	
M	23	1,2	**8T-6411**	7	SCREW-MACHINE (M6X1X12-MM)	
	24	1	**170-9307**	1	WIRE AS	
M	25	2	**3E-8048**	4	SCREW-MACHINE (M3X0.5X6-MM)	
	26	2	**096-5962**	4	WASHER-HARD (3.4X7X0.8-MM THK)	
	27	1	**150-6967**	1	CABLE AS	
	28	1	**150-6966**	1	CABLE AS	
	29	2	**145-3084**	1	RESISTOR AS	
M	30	2	**095-0735**	4	SCREW-MACHINE (M5X0.8X8-MM)	
	31	1	**132-1817**	1	TIMER AS-OFF DELAY	
	32	1	**136-4055**	1	STRIP	
	33	1	**163-6712**	1	WIRE AS	
	34	1	**7Y-5499**	2	BLOCK AS-TERMINAL	
	35	2	**151-9360**	2	RESISTOR AS	
M	36	2	**8T-4970**	4	BOLT (M6X1X14-MM)	
M	37	2	**095-0728**	4	SCREW-MACHINE (M4X0.7X12-MM)	

204-1939 **PANEL GP-CIRCUIT BREAKER** *(contd.)* **i01889088**

NOTE	REF NO	GRAPHIC REF	PART NUMBER	QTY	PART NAME 1 2 3 4 5 6 (PRODUCT LEVEL)	SEE PAGE
	38	2	**105-9985**	1	CLIP	
	39	2	**111-4719**	2	CLIP	
	40	1	**163-6649**	1	WIRE AS	
	41	1	**163-6650**	1	WIRE AS	
	42	2	**102-8015**	2	RESISTOR AS	
	43	2	**105-9983**	1	CLIP	
	44	1	**134-3351**	1	BRACKET AS	
	45	2	**163-6713**	1	WIRE AS	
	46	1	**149-5068**	1	BAR-BUS	
	47	2	**149-5058**	1	WIRE AS	
	48	1	**167-3593**	1	STRAP	
	49	2	**165-4026**	1	SWITCH AS-MAGNETIC (24-VOLT) (START RELAY)	
		2	**4F-2294**	2	NUT-JAM (5/16-24-THD)	
		2	**6V-8186**	2	NUT-FULL (5/16-24-THD)	
		2	**6V-8378**	2	NUT (10-32-THD)	
	50	1	**158-0077**	1	PLATE	
M	51	2	**9X-2480**	2	BOLT (M6X1X45-MM)	
	52	2	**160-5024**	2	SPACER (7X14X31.5-MM)	
M	53	1	**095-0742**	8	SCREW-MACHINE (M6X1X16-MM)	

M-METRIC PART
Y-SEPARATE ILLUSTRATION

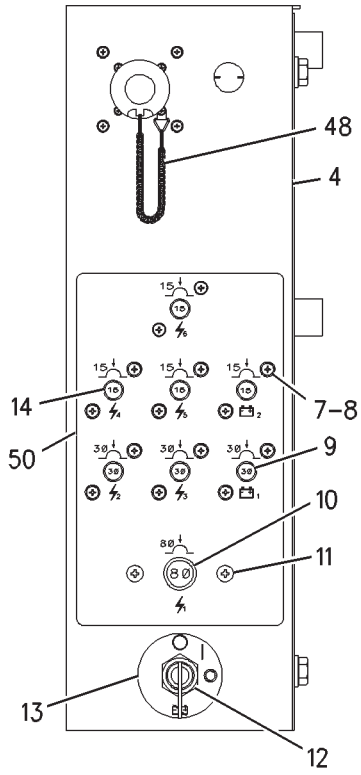

VIEW A-A

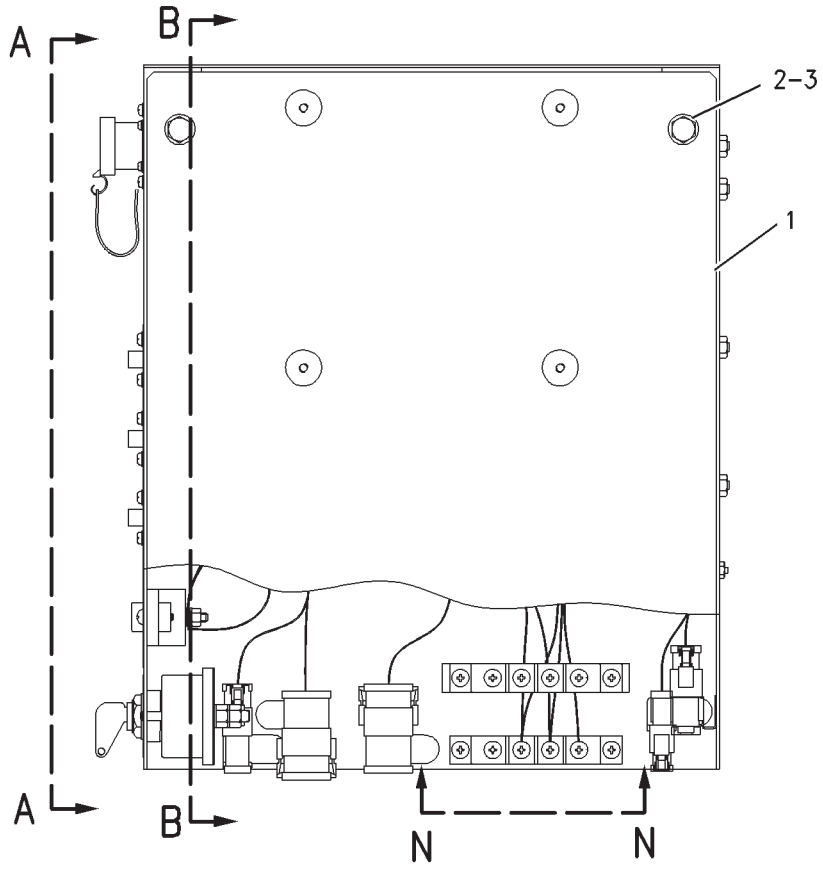

FRONT VIEW

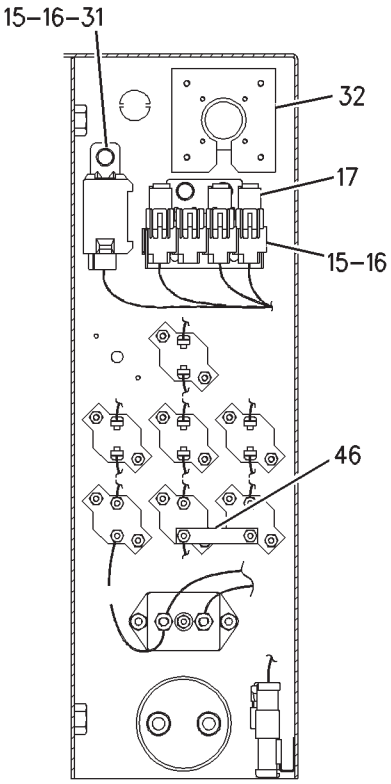

SECTION D-D

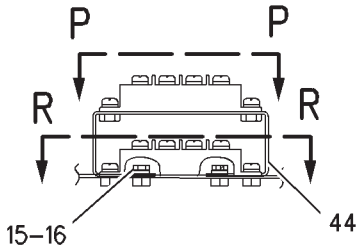

VIEW N-N

REFER TO ALL ILLUSTRATIONS OF THIS GROUP FOR AUXILIARY VIEWS

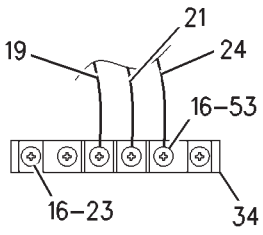

VIEW P-P

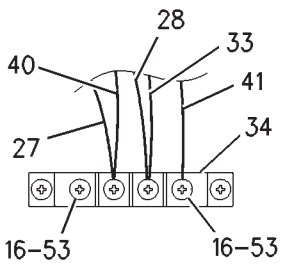

VIEW R-R

GRAPHIC #1 g00851963

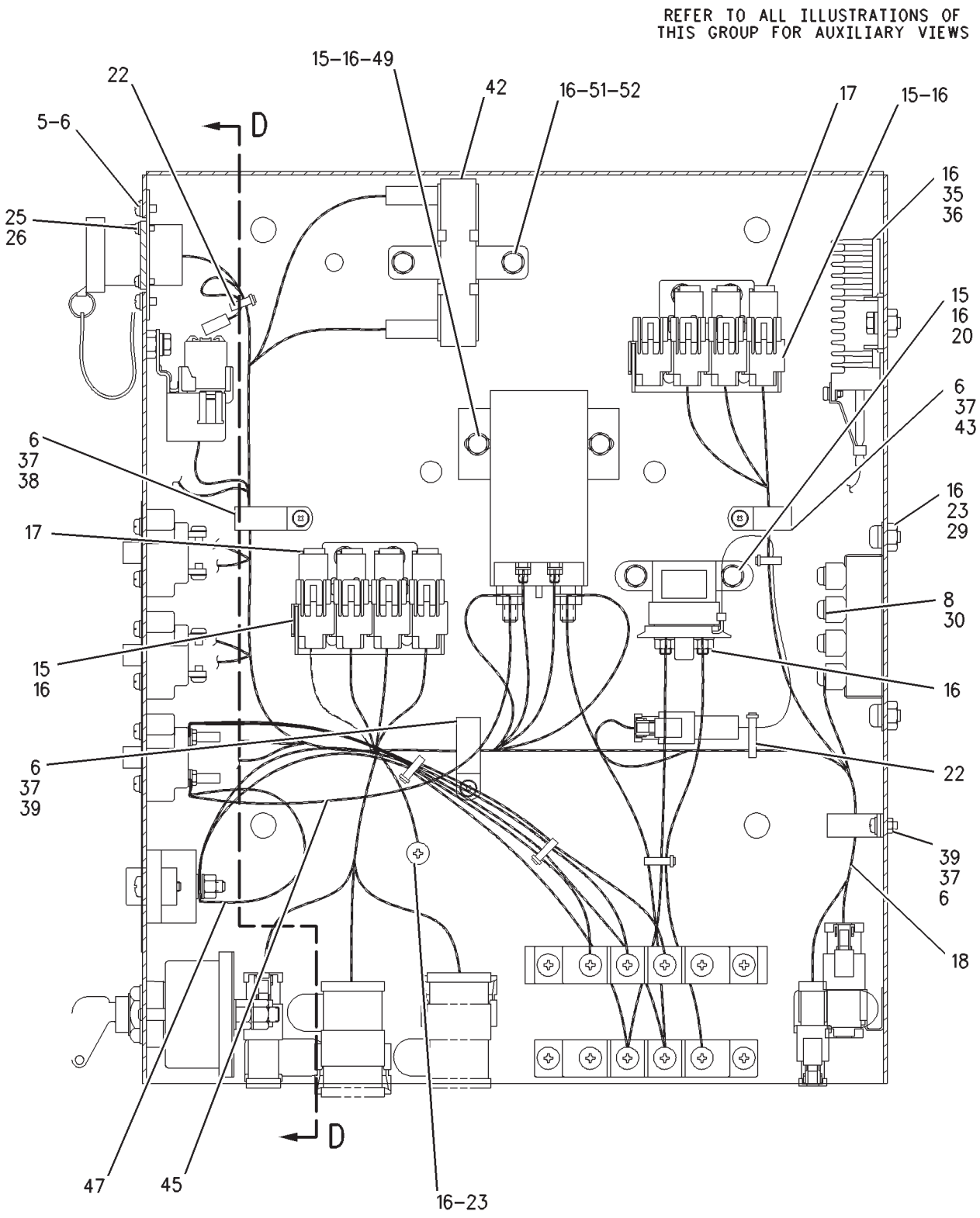

SECTION B-B

GRAPHIC #2 **<END>** g00851964

ELECTRICAL AND STARTING SYSTEM

204-1939 PANEL GP-CIRCUIT BREAKER

S/N: RCD192-UP

PART OF 217-2970 PANEL GP-CIRCUIT BREAKER

SMCS-1417 **i02408864**

NOTE	REF NO	GRAPHIC REF	PART NUMBER	QTY	PART NAME 1 2 3 4 5 6 (PRODUCT LEVEL)	SEE PAGE
C	1	1	**231-1734**	1	BRACKET AS	
M	2	1	**8T-4191**	4	BOLT (M10X1.5X16-MM)	
	3	1	**8T-4121**	4	WASHER-HARD (11X21X2.5-MM THK)	
	4	1	**204-1938**	1	COVER AS	
M	5	2	**8C-7581**	4	SCREW-MACHINE (M4X0.7X8-MM)	
	6	2	**096-6166**	8	WASHER-HARD (4.5X9X1-MM THK)	
	7	1	**9X-8486**	12	SCREW-MACHINE (8-32X0.75-IN)	
C	8	1,2	**8T-0328**	18	WASHER-HARD (5.5X10X1-MM THK)	
	9	1	**139-4724**	1	CIRCUIT BREAKER AS (30-AMPERE) (AUX CKT, CONV, LIGHTER, WASHER)	
	9A	1	**139-4724**	1	CIRCUIT BREAKER AS (30-AMPERE) (A/C, AUX, CTWT, LUB, PNL, WASH)	
	9B	1	**139-4724**	1	CIRCUIT BREAKER AS (30-AMPERE) (AUX CKT, BOOM LT, HORN, KEY SW)	
					(EACH INCLUDES)	
		1	**6V-8378**	2	NUT (10-32-THD)	
		1	**8F-1434**	2	LOCKWASHER	
		1	**8T-0328**	2	WASHER-HARD (5.5X10X1-MM THK)	
	10	1	**171-2210**	1	CIRCUIT BREAKER AS (80-AMPERE) (ALTERNATOR)	
		1	**253-2111**	2	LOCKWASHER	
		1	**6V-8187**	2	NUT (1/4-28-THD)	
		1	**8T-4205**	2	WASHER-HARD (7.2X14.5X2-MM THK)	
	11	1	**6V-5645**	2	SCREW-MACHINE (10-32X0.87-IN)	
Y	12	1	**7N-0718**	1	SWITCH GP-DISCONNECT (BATTERY) (BATTERY)	284
	13	1	**3E-8320**	1	PLATE-INSTRUCTION (BATTERY)	
	14	1	**6T-3643**	1	CIRCUIT BREAKER AS (15-AMPERE) (CAB LGT, CHASSIS LGT, DOME LT)	
	14A	1	**6T-3643**	1	CIRCUIT BREAKER AS (15-AMPERE) (MACHINE ECM, TIMER RELAY)	
	14B	1	**6T-3643**	1	CIRCUIT BREAKER AS (15-AMPERE) (VIDS ECM)	
	14C	1	**6T-3643**	1	CIRCUIT BREAKER AS (15-AMPERE) (MACHINE ECM)	
					(EACH INCLUDES)	
		1	**6V-8376**	2	SCREW-MACHINE (8-32X0.25-IN)	
		1	**9B-7233**	2	LOCKWASHER	
M	15	1,2	**7X-2619**	13	BOLT (M6X1X10-MM)	
C	16	1,2	**9X-8256**	33	WASHER (6.6X12X2-MM THK)	
	17	2	**161-3128**	9	RELAY (24-VOLT)	
C	18	2	**231-1733**	1	HARNESS AS-BOX	
		2	**3S-2093**	32	STRAP-CABLE	
		2	**8C-6354**	1	CAP-RECEPTACLE	
		2	**121-1022**	5	DIODE	
		2	**155-2270**	3	KIT-CONNECTING PLUG (2-PIN)	
		2	**102-8802**	1	KIT-RECEPTACLE (2-PIN)	
		2	**155-2271**	1	KIT-CONNECTING PLUG (4-PIN)	
		2	**102-8801**	2	KIT-RECEPTACLE (12-PIN)	
		2	**155-2255**	2	KIT-CONNECTING PLUG (12-PIN)	
					(EACH KIT INCLUDES RECEPTACLE AS AND WEDGE)	
	19	1	**150-6970**	1	WIRE AS	
Y	20	2	**125-1302**	1	SWITCH GP-MAGNETIC (24-VOLT) (START RELAY)	286
	21	1	**170-9306**	1	WIRE AS	
	22	2	**3S-2093**	7	STRAP-CABLE	
M	23	1,2	**8T-6411**	7	SCREW-MACHINE (M6X1X12-MM)	
	24	1	**170-9307**	1	WIRE AS	
M	25	2	**3E-8048**	4	SCREW-MACHINE (M3X0.5X6-MM)	
	26	2	**096-5962**	4	WASHER-HARD (3.4X7X0.8-MM THK)	
	27	1	**150-6967**	1	CABLE AS	
	28	1	**150-6966**	1	CABLE AS	

204-1939 **PANEL GP-CIRCUIT BREAKER** *(contd.)* **i02408864**

NOTE	REF NO	GRAPHIC REF	PART NUMBER	QTY	PART NAME 1 2 3 4 5 6 (PRODUCT LEVEL)	SEE PAGE
	29	2	**145-3084**	1	RESISTOR AS	
M	30	2	**095-0735**	4	SCREW-MACHINE (M5X0.8X8-MM)	
	31	1	**132-1817**	1	TIMER AS-OFF DELAY	
	32	1	**136-4055**	1	STRIP	
	33	1	**231-1738**	1	WIRE AS	
C	34	1	**7Y-5499**	2	BLOCK AS-TERMINAL	
	35	2	**151-9360**	2	RESISTOR AS	
		2	**102-8802**	1	KIT-RECEPTACLE (2-PIN)	
		2	**9W-0852**	1	PIN-CONNECTOR (14-GA)	
M	36	2	**8T-4970**	4	BOLT (M6X1X14-MM)	
M	37	2	**095-0728**	4	SCREW-MACHINE (M4X0.7X12-MM)	
	38	2	**105-9985**	1	CLIP	
	39	2	**111-4719**	2	CLIP	
	40	1	**163-6649**	1	WIRE AS	
	41	1	**163-6650**	1	WIRE AS	
C	42	2	**102-8015**	1	RESISTOR AS	
	43	2	**105-9983**	1	CLIP	
	44	1	**134-3351**	1	BRACKET AS	
C	45	2	**231-1739**	1	WIRE AS	
	46	1	**149-5068**	1	BAR-BUS	
	47	2	**149-5058**	1	WIRE AS	
	48	1	**167-3593**	1	STRAP	
C	49	2	**213-0772**	1	SWITCH AS-MAGNETIC (24-VOLT) (START RELAY)	
	50	1	**158-0077**	1	PLATE	
CM	53	1,2	**8T-4127**	2	SCREW-MACHINE (M5X0.8X20-MM)	
CM	54	1	**095-0742**	7	SCREW-MACHINE (M6X1X16-MM)	

C-CHANGE FROM PREVIOUS TYPE
M-METRIC PART
Y-SEPARATE ILLUSTRATION

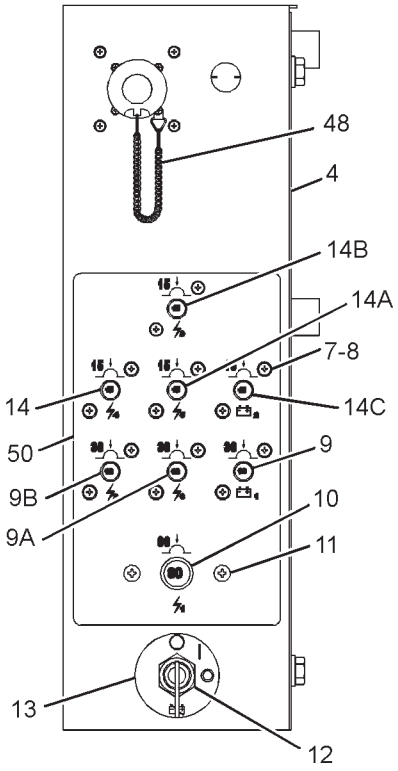

LEFT SIDE VIEW

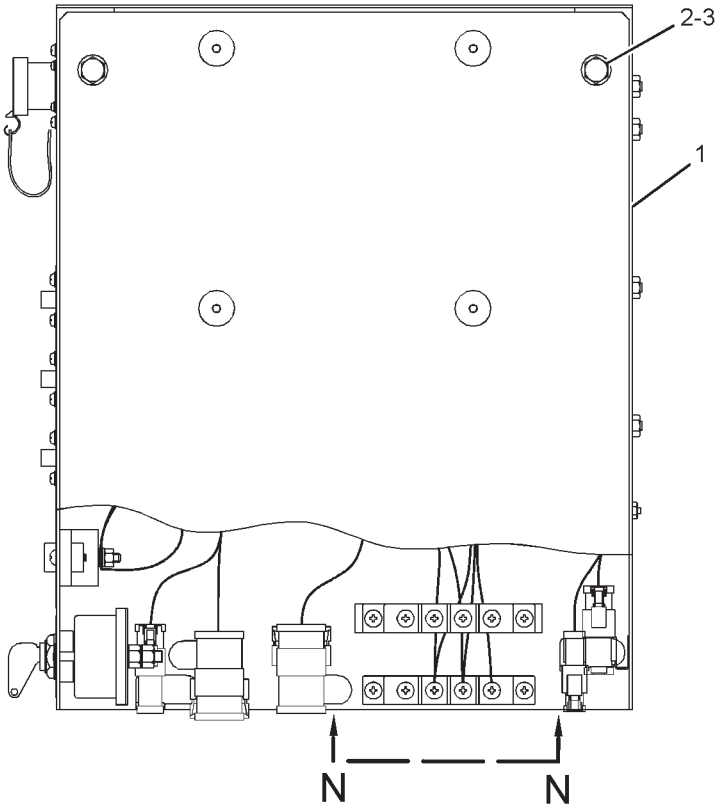

REAR VIEW

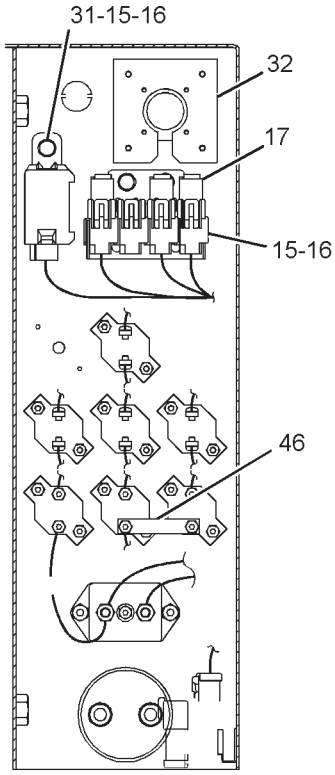

SECTION D-D

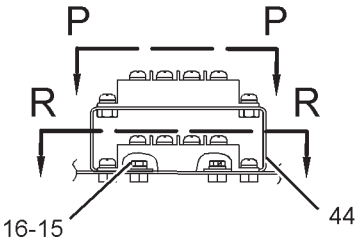

VIEW N-N

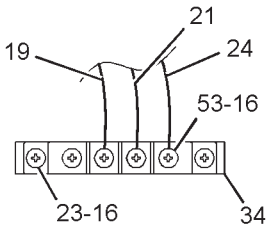

VIEW P-P

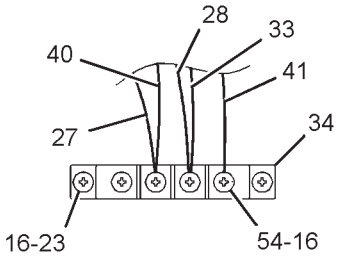

SECTION R-R

GRAPHIC #1

g01255834

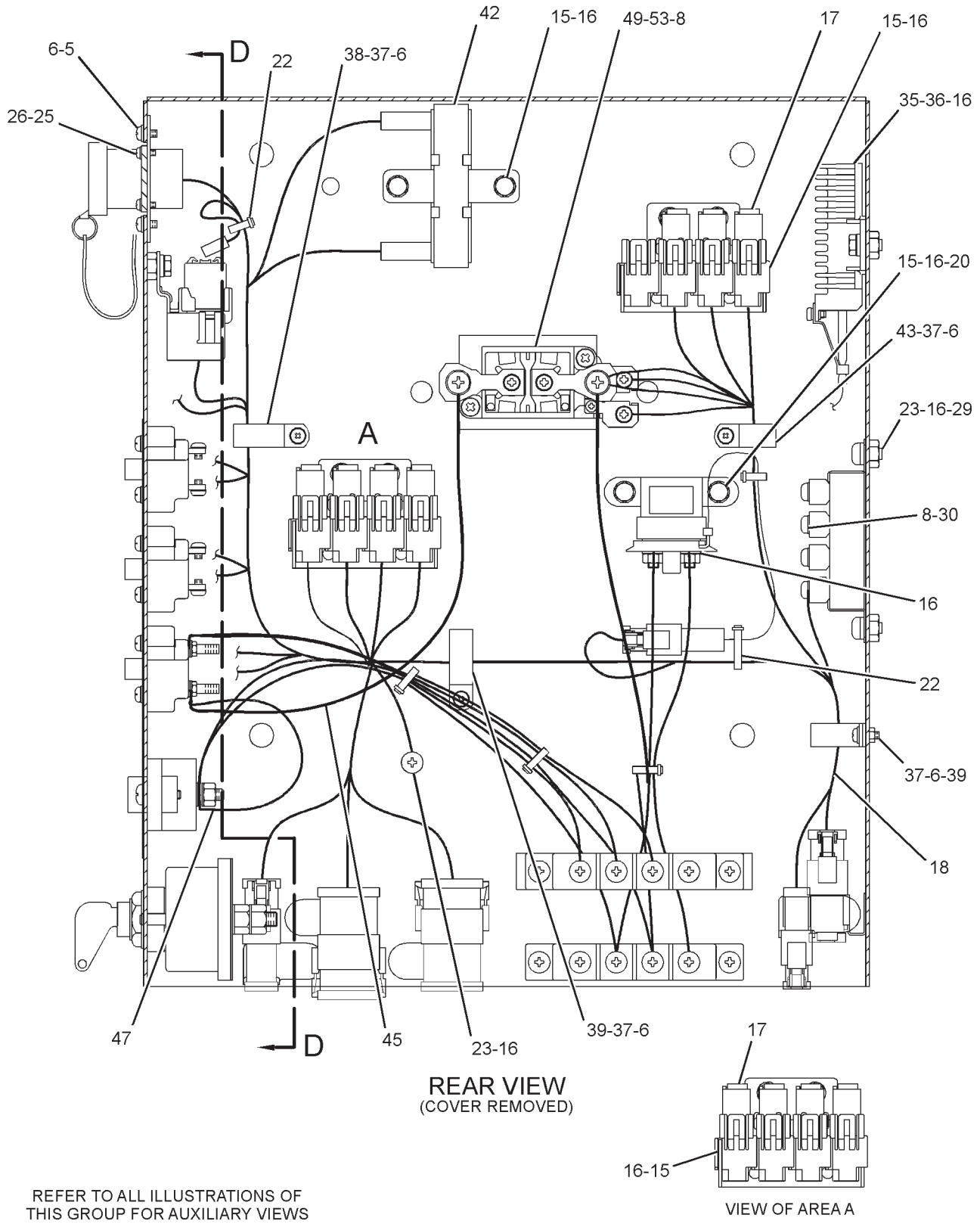

REAR VIEW
(COVER REMOVED)

VIEW OF AREA A

REFER TO ALL ILLUSTRATIONS OF
THIS GROUP FOR AUXILIARY VIEWS

GRAPHIC #2 **<END>** g01255823

ELECTRICAL AND STARTING SYSTEM

217-2970 PANEL GP-CIRCUIT BREAKER

S/N: RCD1-UP

PART OF 204-4154 BATTERY & WIRING GP

SMCS-1417 **i02298359**

NOTE	REF NO	GRAPHIC REF	PART NUMBER	QTY	PART NAME 1 2 3 4 5 6 (PRODUCT LEVEL)	SEE PAGE
Y	1	1	*204-1939*	1	PANEL GP-CIRCUIT BREAKER	249
	2	1	**9R-7941**	1	SOCKET AS	
		1	**9R-7980**	1	COVER	
	3	1	**177-6632**	1	HARNESS AS-PANEL	
	4	1	**3S-2093**	5	STRAP-CABLE	

Y-SEPARATE ILLUSTRATION

217-2970 **PANEL GP-CIRCUIT BREAKER** *(contd.)* **i02298359**

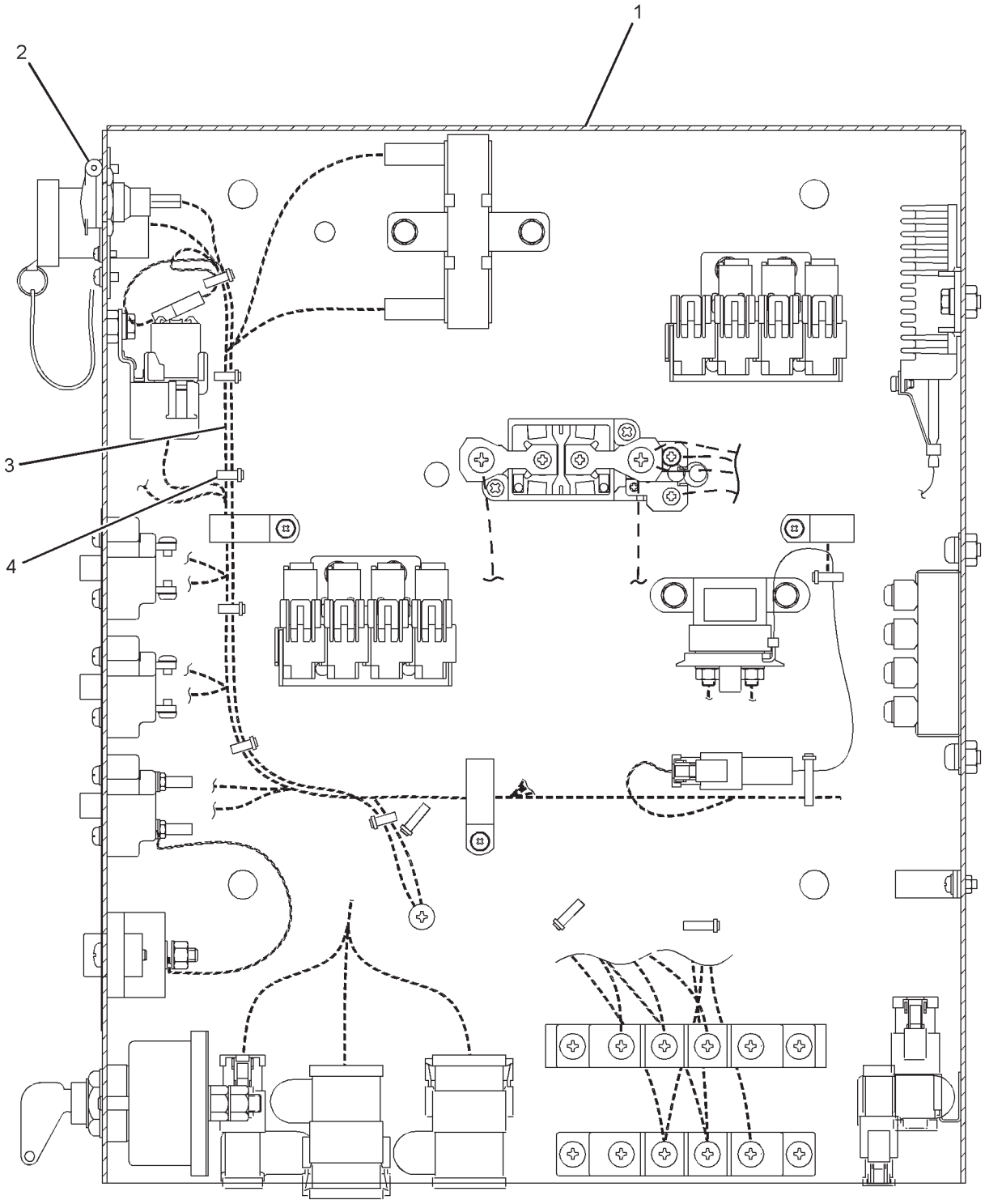

GRAPHIC #1 **<END>** g01163267

ELECTRICAL AND STARTING SYSTEM

102-7664 SENSOR & MTG GP-PRESSURE

S/N: BLC426-UP

PART OF 205-5858, 235-4685 ENGINE AR-COMPLETE

SMCS-1408 **i02757338**

NOTE	REF NO	GRAPHIC REF	PART NUMBER	QTY	PART NAME 1 2 3 4 5 6 (PRODUCT LEVEL)	SEE PAGE
	1	1	**166-6693**	1	ADAPTER	
	2	1	**6V-5048**	2	SEAL-O-RING	
CY	3	1	**194-6722**	1	SENSOR GP-PRESSURE (ATMOSPHERIC AIR)	260
	4	1	**9S-4182**	2	PLUG-O-RING	
	5	1	**1T-0720**	2	BOLT-12 POINT HEAD (3/8-16X1.25-IN)	
	6	1	**5M-2894**	2	WASHER-HARD (10.2X18.5X2.5-MM THK)	
	7	1	**6V-3683**	1	SEAL-O-RING	
	8	1	**8J-4351**	1	SEAL-O-RING	
	9	1	**6V-5049**	1	SEAL-O-RING	

C-CHANGE FROM PREVIOUS TYPE
Y-SEPARATE ILLUSTRATION

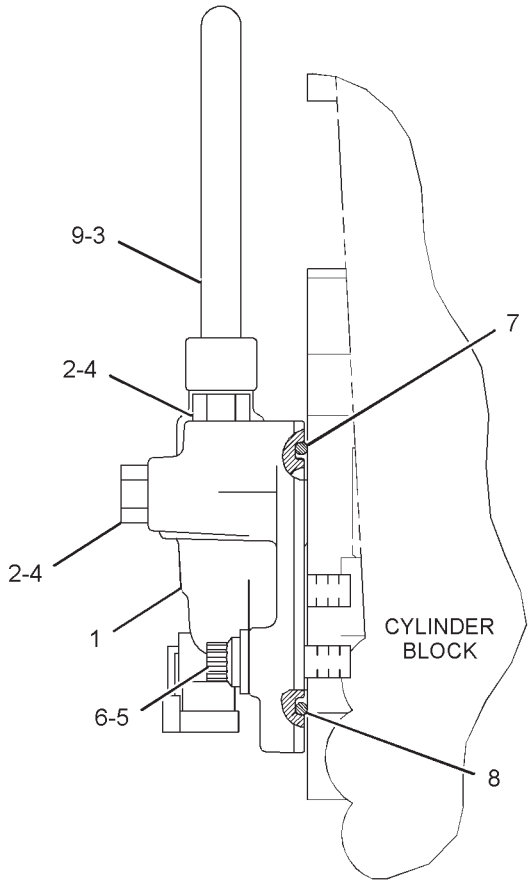

REAR VIEW OF ENGINE

GRAPHIC #1 **<END>** g01387165

ELECTRICAL AND STARTING SYSTEM

194-6722 SENSOR GP-PRESSURE

S/N: BLC426-UP

PART OF 102-7664 SENSOR & MTG GP-PRESSURE

SMCS-1439, 1916, 1917, 1923, 1924 **i03579871**

NOTE	REF NO	GRAPHIC REF	PART NUMBER	QTY	PART NAME 1 2 3 4 5 6 (PRODUCT LEVEL)	SEE PAGE
E	1	1	**9X-1813**		SLEEVE (34-CM)	
	2	1	**155-2260**	1	KIT-CONNECTING PLUG (3-PIN)	
					(INCLUDES PLUG AS & WEDGE)	
	3	1	*180-9340*	3	SOCKET-CONNECTOR (14-GA TO 18-GA)	
	4	1	**3E-3368**	1	WEDGE-PLUG LOCK (3-PIN)	

E-ORDER BY THE CENTIMETER

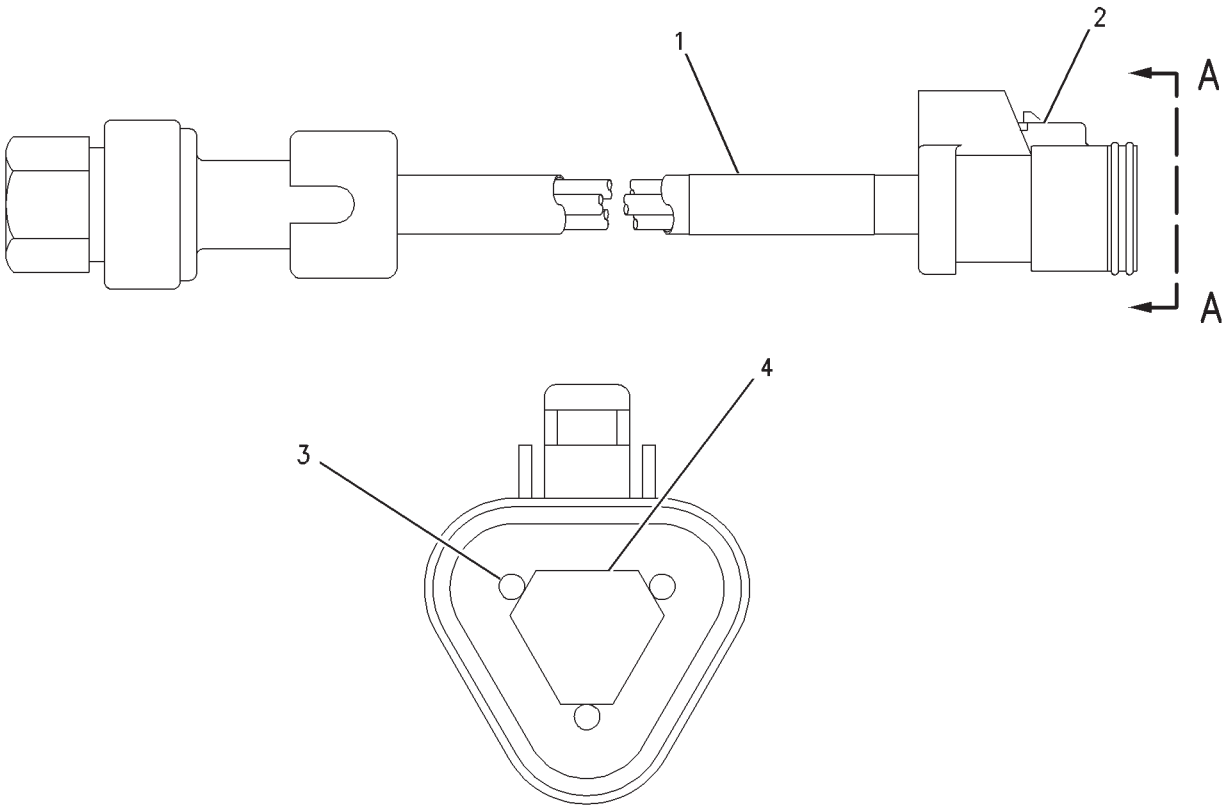

VIEW A-A

GRAPHIC #1 **<END>** g00851220

ELECTRICAL AND STARTING SYSTEM

194-6724 SENSOR GP-PRESSURE

S/N: BLC426-UP

PART OF 135-6531, 234-5985 CYLINDER HEAD GP

SMCS-1439, 1916, 1917, 1923, 1924 **i01648773**

NOTE	REF NO	GRAPHIC REF	PART NUMBER	QTY	PART NAME 1 2 3 4 5 6 (PRODUCT LEVEL)	SEE PAGE
B	1	1	**9X-1813**		SLEEVE	
	2	1	**155-2260**	1	KIT-CONNECTING PLUG (3-PIN)	
					(INCLUDES PLUG AS AND WEDGE)	
	3	1	**180-9340**	3	SOCKET-CONNECTOR	
	4	1	**3E-3368**	1	WEDGE-PLUG LOCK (3-PIN)	

B-USE AS REQUIRED

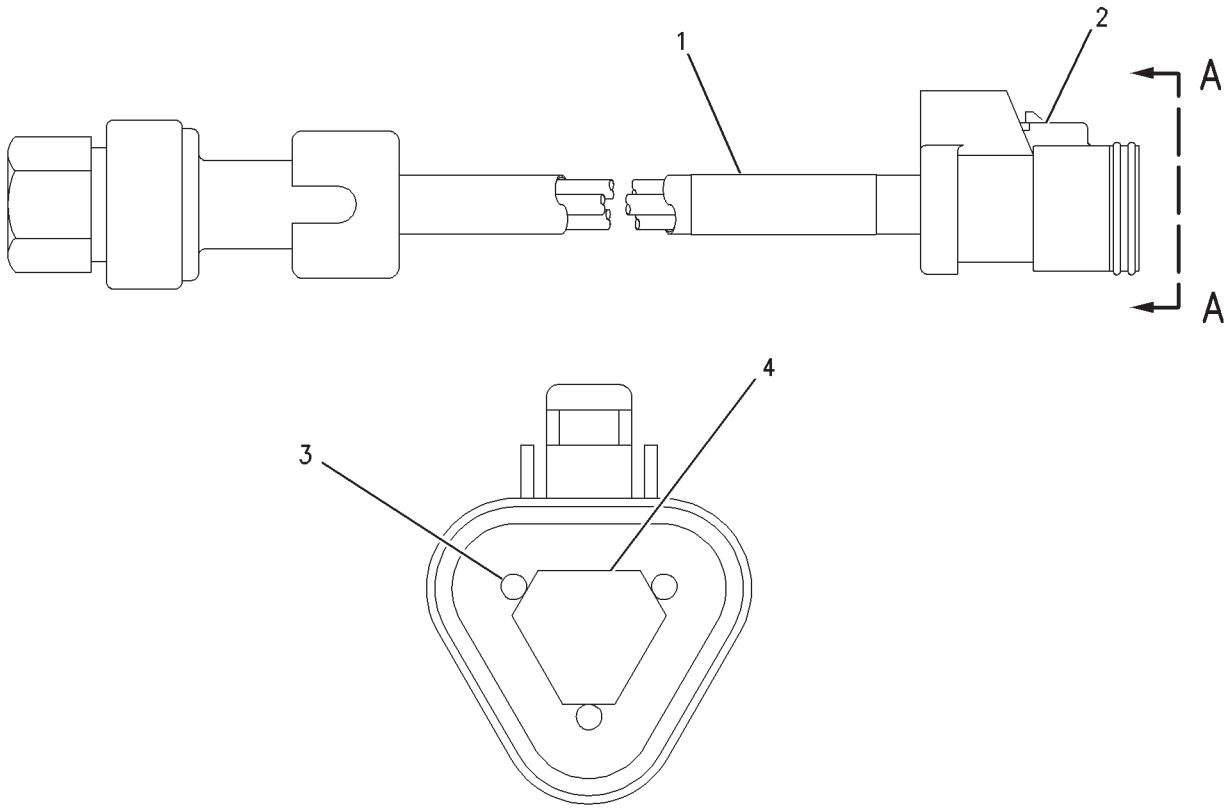

VIEW A-A

GRAPHIC #1 **<END>** g00851220

ELECTRICAL AND STARTING SYSTEM

194-6725 SENSOR GP-PRESSURE

S/N: BLC426-UP

PART OF 137-8471, 249-5631 CYLINDER BLOCK GP

SMCS-1439, 1916, 1917, 1923, 1924 **i03579874**

NOTE	REF NO	GRAPHIC REF	PART NUMBER	QTY	PART NAME 1 2 3 4 5 6 (PRODUCT LEVEL)	SEE PAGE
E	1	1	**9X-1813**		SLEEVE (34-CM)	
	2	1	**155-2260**	1	KIT-CONNECTING PLUG (3-PIN)	
					(INCLUDES PLUG AS & WEDGE)	
	3	1	**180-9340**	3	SOCKET-CONNECTOR (14-GA TO 18-GA)	
	4	1	**3E-3368**	1	WEDGE-PLUG LOCK (3-PIN)	

E-ORDER BY THE CENTIMETER

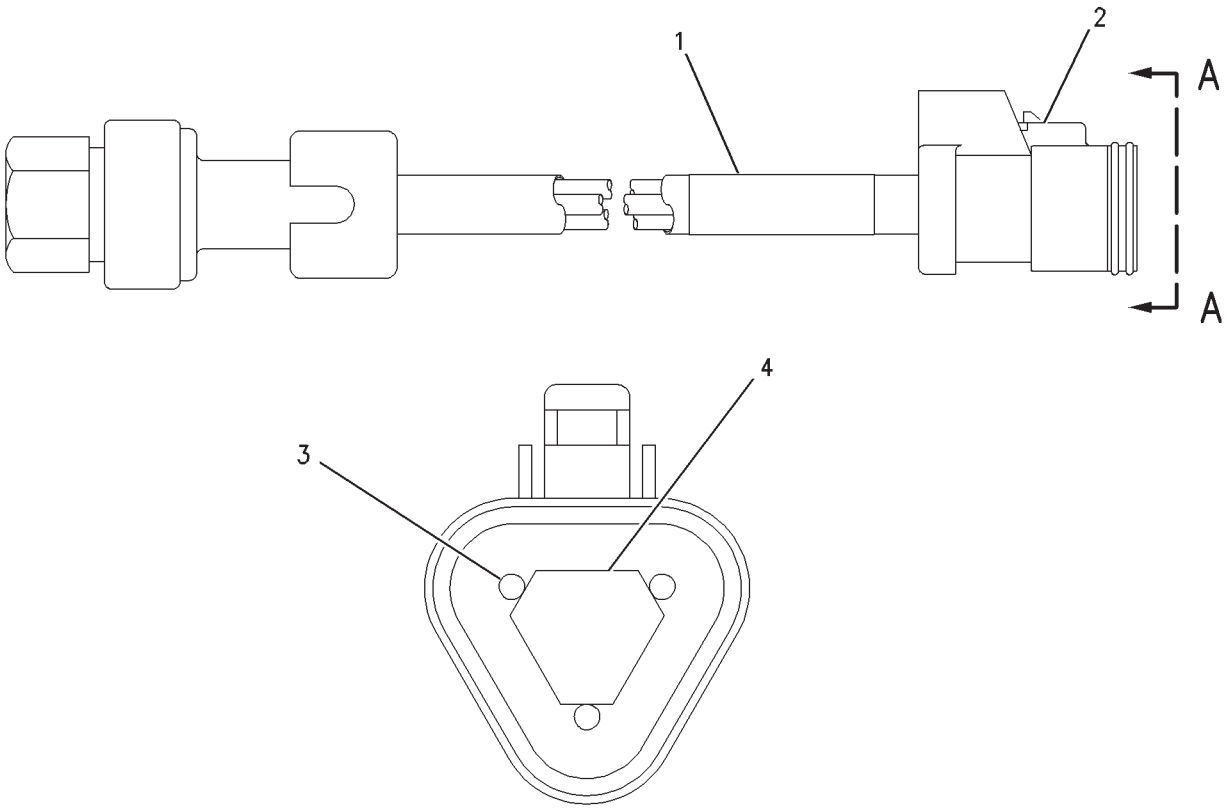

VIEW A-A

GRAPHIC #1 **<END>** g00851220

ELECTRICAL AND STARTING SYSTEM

142-8393 SENSOR GP-SPEED

S/N: BLC426-1206
PART OF 172-4850 HOUSING GP-FRONT
FIELD REPLACEMENT ORDER 201-6615—PAGE 268

SMCS-1907, 1912, 4803, 7493 **i01566331**

NOTE	REF NO	GRAPHIC REF	PART NUMBER	QTY	PART NAME 1 2 3 4 5 6 (PRODUCT LEVEL)	SEE PAGE
					(NO SERVICED PARTS)	

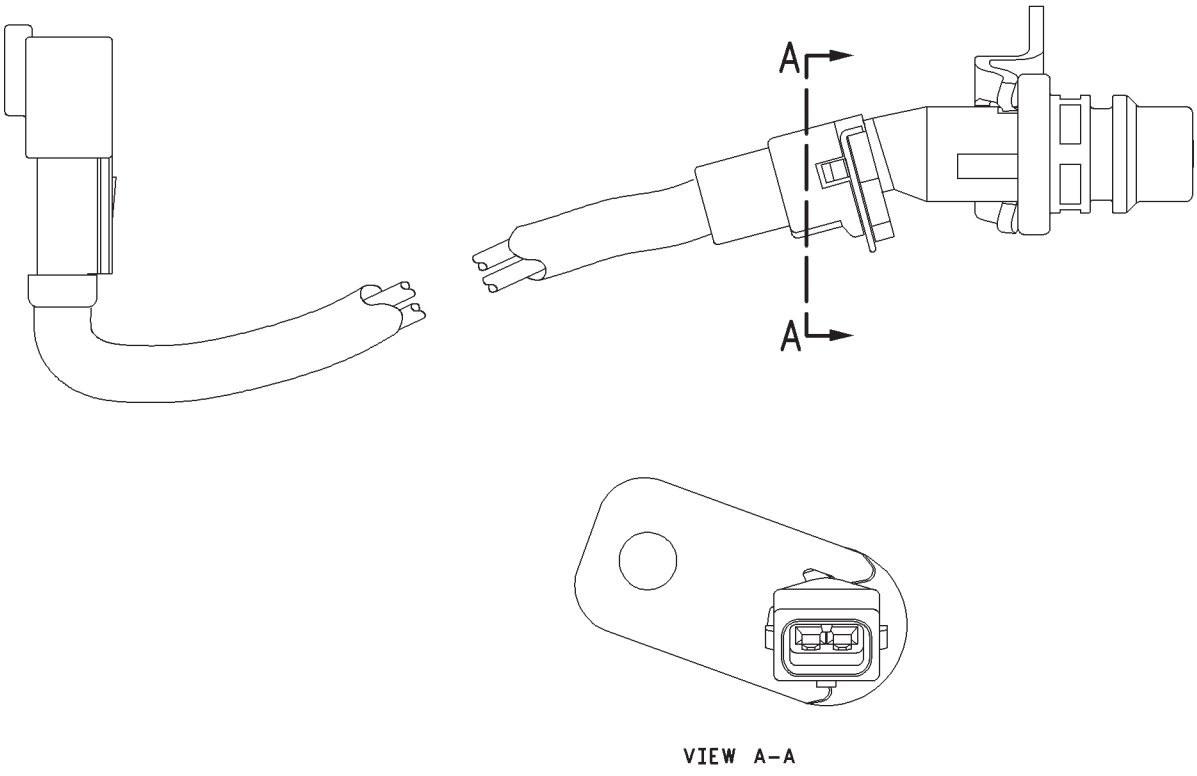

VIEW A-A

GRAPHIC #1 **<END>** g00814292

ELECTRICAL AND STARTING SYSTEM

142-8394 SENSOR GP-SPEED

S/N: BLC426-1206
PART OF 172-4850 HOUSING GP-FRONT
FIELD REPLACEMENT ORDER 201-6617—PAGE 269

SMCS-1907, 1912, 4803, 7493 **i01566419**

NOTE	REF NO	GRAPHIC REF	PART NUMBER	QTY	PART NAME 1 2 3 4 5 6 (PRODUCT LEVEL)	SEE PAGE
					(NO SERVICED PARTS)	

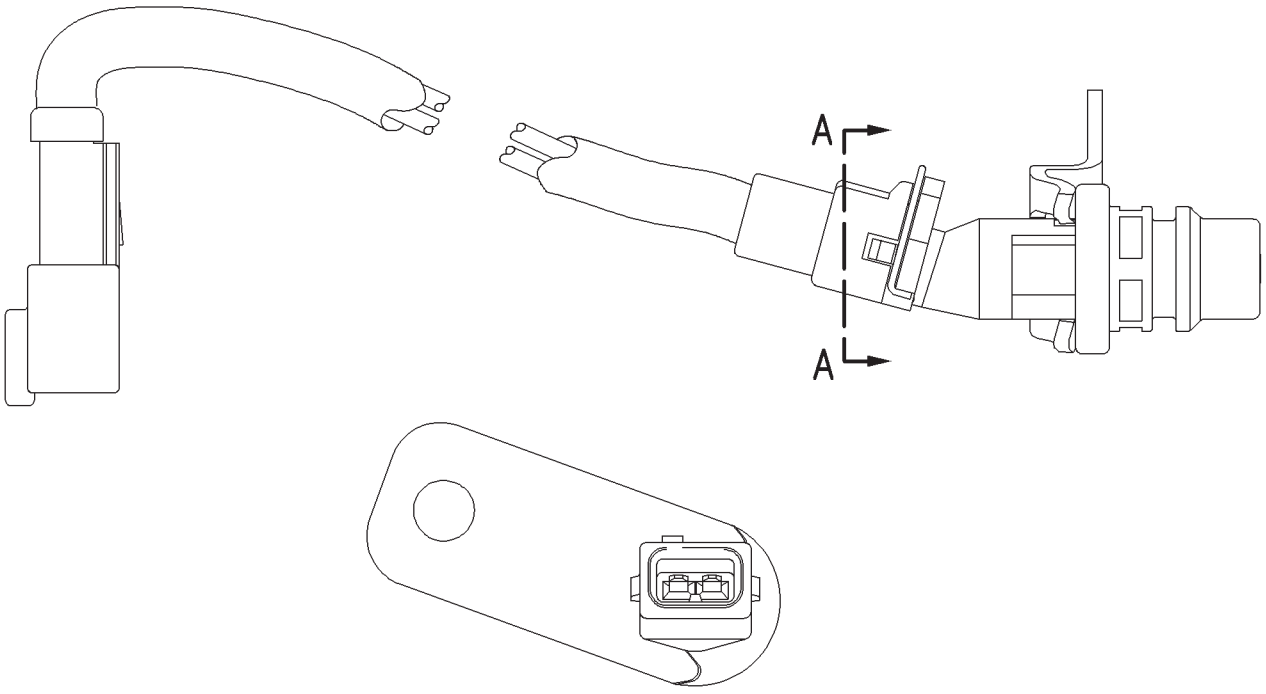

VIEW A-A

GRAPHIC #1 **<END>** g00814140

ELECTRICAL AND STARTING SYSTEM

171-8963 SENSOR GP-SPEED

S/N: BLC426-UP

PART OF 205-5858, 235-4685 ENGINE AR-COMPLETE

SMCS-1907, 1912, 4803, 7493 **i01833134**

NOTE	REF NO	GRAPHIC REF	PART NUMBER	QTY	PART NAME 1 2 3 4 5 6 (PRODUCT LEVEL)	SEE PAGE
	1	1	**1V-6341**	1	SEAL	
	3	1	**6B-6683**	1	NUT (5/8-18-THD)	
Y	4	1	**189-5746**	1	SENSOR GP-SPEED (ENGINE)	267
	5	1	**5P-8247**	1	WASHER-HARD (17X32X3.5-MM THK)	

Y-SEPARATE ILLUSTRATION

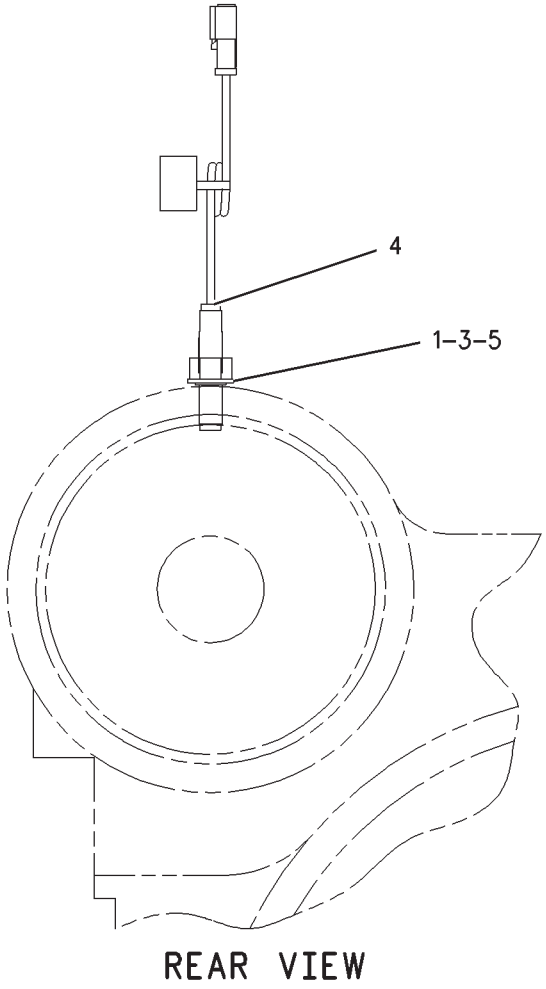

REAR VIEW

GRAPHIC #1 g00936444

171-8963 **SENSOR GP-SPEED** *(contd.)* **i01833134**

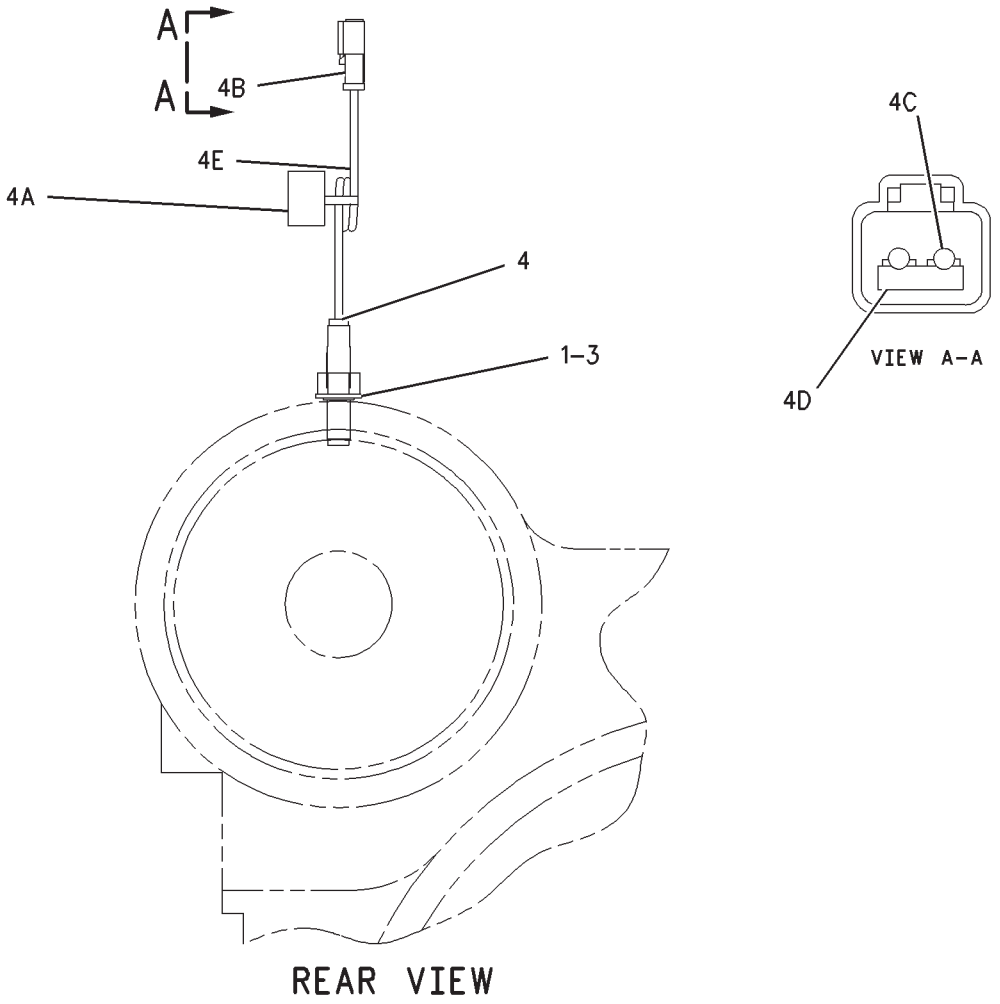

GRAPHIC #2 **<END>** g00790511

ELECTRICAL AND STARTING SYSTEM

189-5746 SENSOR GP-SPEED

S/N: BLC426-UP
MAGNETIC (LOW OUTPUT)
PART OF 171-8963 SENSOR GP-SPEED

SMCS-1907, 1912, 4803, 7493 **i03286575**

NOTE	REF NO	GRAPHIC REF	PART NUMBER	QTY	PART NAME 1 2 3 4 5 6 (PRODUCT LEVEL)	SEE PAGE
	1	1	**171-5349**	1	STRAP-MARKER	
	2	1	**102-8802**	1	KIT-RECEPTACLE (2-PIN)	
					(INCLUDES RECEPTACLE AS & WEDGE)	
	3	1	**9X-3401**	2	PIN-CONNECTOR (16-GA TO 18-GA)	
					–OR–	
		1	**126-1767**	2	PIN-CONNECTOR (14-GA)	
E	4	1	**9X-1386**		SLEEVE (14-CM)	

E-ORDER BY THE CENTIMETER

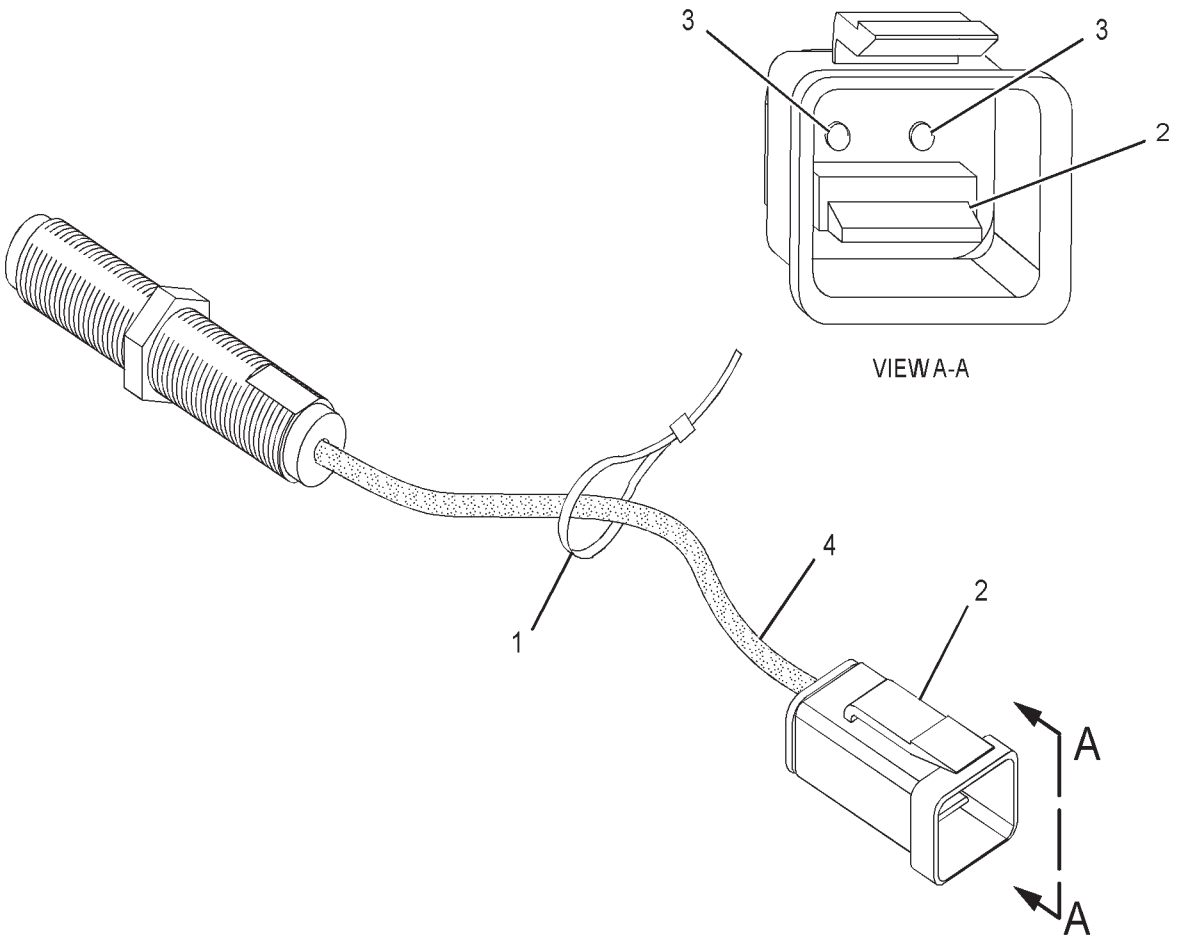

GRAPHIC #1 **<END>** g01353977

ELECTRICAL AND STARTING SYSTEM

201-6615 SENSOR GP-SPEED

S/N: BLC1207-UP
PART OF 172-4850 HOUSING GP-FRONT
FIELD REPLACEMENT FOR 142-8393—PAGE 263

SMCS-1907, 1912, 4803, 7493 **i02945685**

NOTE	REF NO	GRAPHIC REF	PART NUMBER	QTY	PART NAME 1 2 3 4 5 6 (PRODUCT LEVEL)	SEE PAGE
	1	1	**133-0260**	1	BRACKET	
	2	1	**188-9429**	1	HARNESS AS-SENSOR (SPEED)	

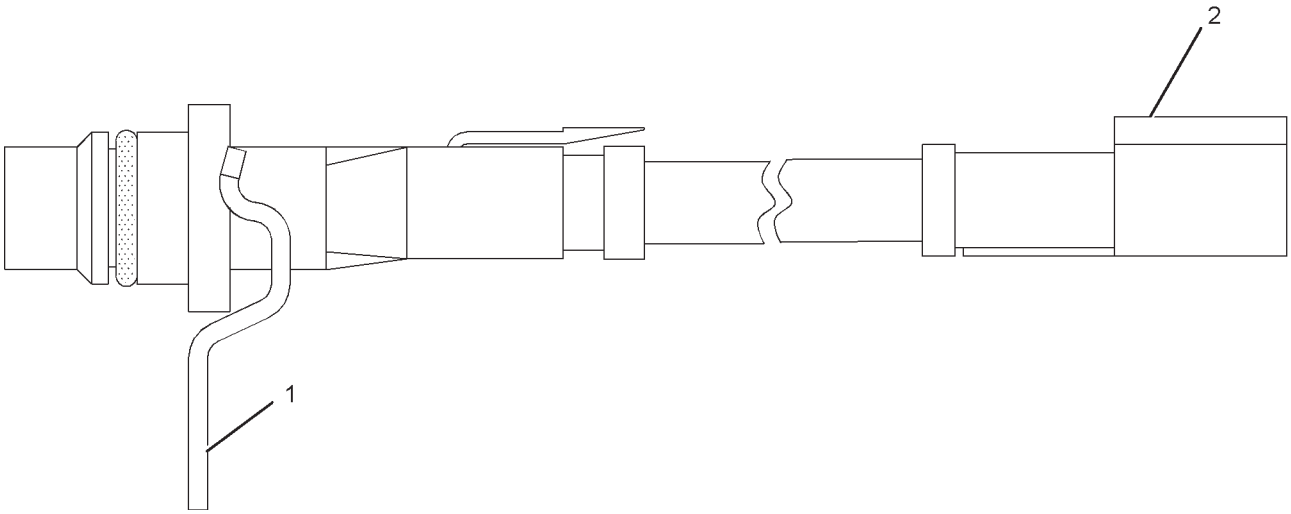

GRAPHIC #1 **<END>** g01009894

ELECTRICAL AND STARTING SYSTEM

201-6617 SENSOR GP-SPEED

S/N: BLC1207-UP
PART OF 172-4850 HOUSING GP-FRONT
FIELD REPLACEMENT FOR 142-8394—PAGE 264

SMCS-1907, 1912, 4803, 7493 **i02103122**

NOTE	REF NO	GRAPHIC REF	PART NUMBER	QTY	PART NAME 1 2 3 4 5 6 (PRODUCT LEVEL)	SEE PAGE
	1	1	**133-0261**	1	BRACKET	
	2	1	**189-0852**	1	HARNESS AS-WIRING	
		1	**102-8802**	1	KIT-RECEPTACLE (2-PIN)	
					(INCLUDES RECEPTACLE AS AND WEDGE)	
		1	**155-2270**	1	KIT-CONNECTING PLUG (2-PIN)	
					(INCLUDES PLUG AS AND WEDGE)	

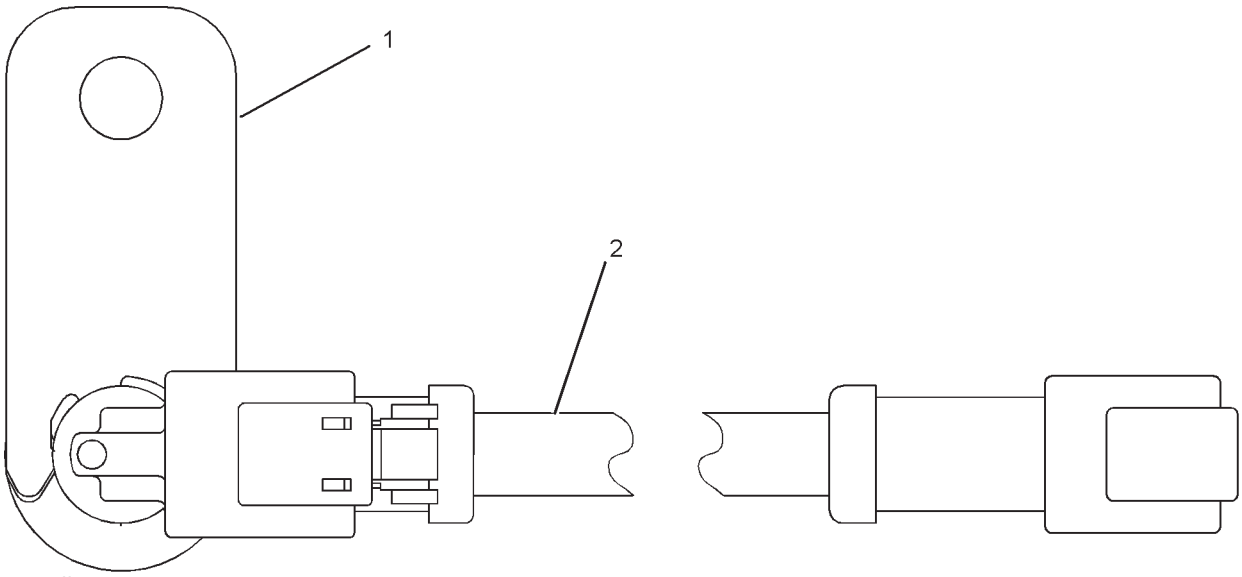

GRAPHIC #1 **<END>** g01071396

ELECTRICAL AND STARTING SYSTEM

102-2240 SENSOR GP-TEMPERATURE

PART OF 173-0004 LINES GP-FUEL, 159-3956 LINES GP-WATER, 201-1770 TANK & FILTER GP-HYDRAULIC

SMCS-1906, 1921, 1922, 1928, 1929, 3290, 7344 **i01521189**

NOTE	REF NO	GRAPHIC REF	PART NUMBER	QTY	PART NAME 1 2 3 4 5 6 (PRODUCT LEVEL)	SEE PAGE
BE	2	1	**9X-1813**		SLEEVE	
	3	1	**102-8803**	1	KIT-RECEPTACLE (3-PIN)	
					(INCLUDES RECEPTACLE AS AND WEDGE)	
	4	1	**186-3735**	3	PIN-CONNECTOR (16-GA TO 18-GA)	
	5	1	**3E-3371**	1	WEDGE-RECEPTACLE LOCK (3-PIN)	

B-USE AS REQUIRED
E-ORDER BY THE CENTIMETER

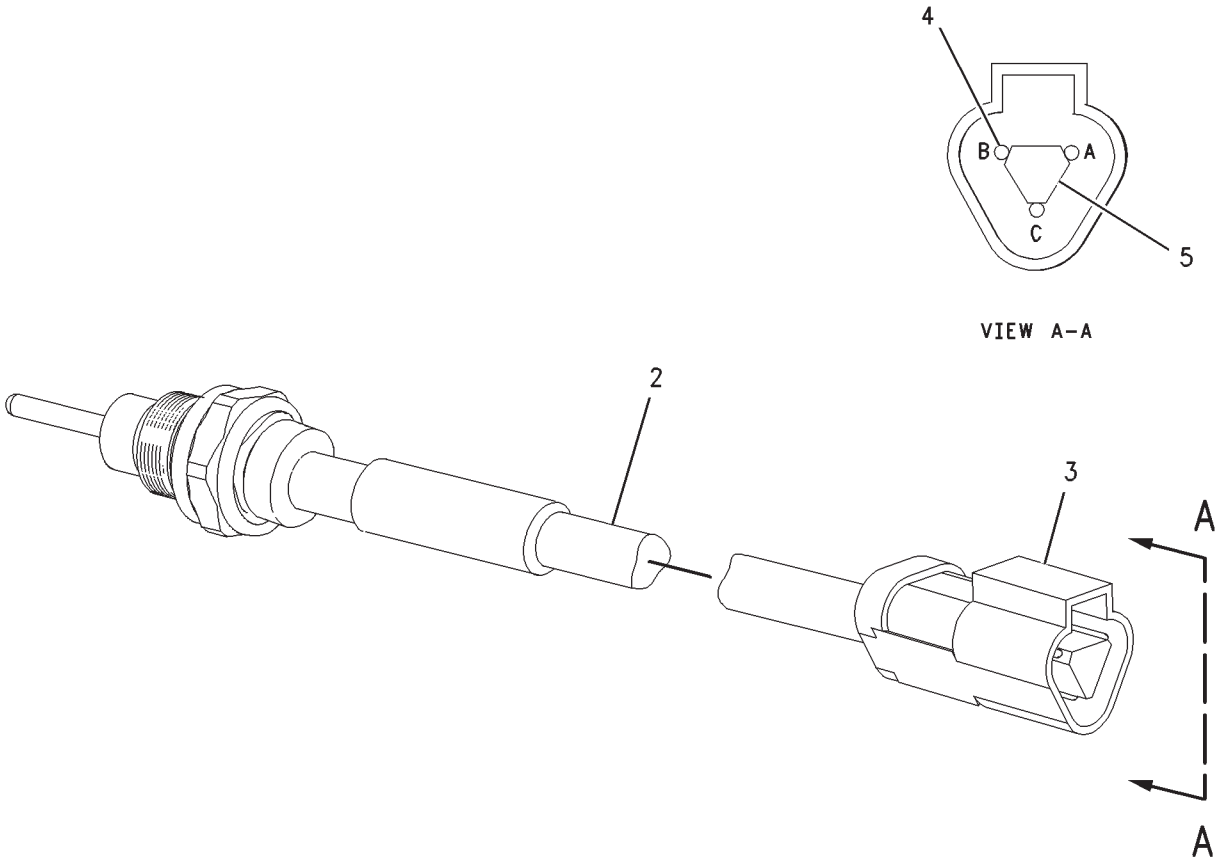

GRAPHIC #1 **<END>** g00790343

ELECTRICAL AND STARTING SYSTEM

156-2829 SOLENOID GP

S/N: RCD206-UP
PART OF 194-0946, 194-0947 MANIFOLD & VALVE GP
ALSO AN ATTACHMENT

SMCS-1426, 1467, 7499 **i03491580**

NOTE	REF NO	GRAPHIC REF	PART NUMBER	QTY	PART NAME 1 2 3 4 5 6 (PRODUCT LEVEL)	SEE PAGE
	1	1	**146-3728**	1	WASHER-SPRING	
	2	1	**148-2350**	1	COIL AS	
	3	1	**154-4133**	1	CARTRIDGE AS	
		1	**214-7568**	2	SEAL-O-RING	

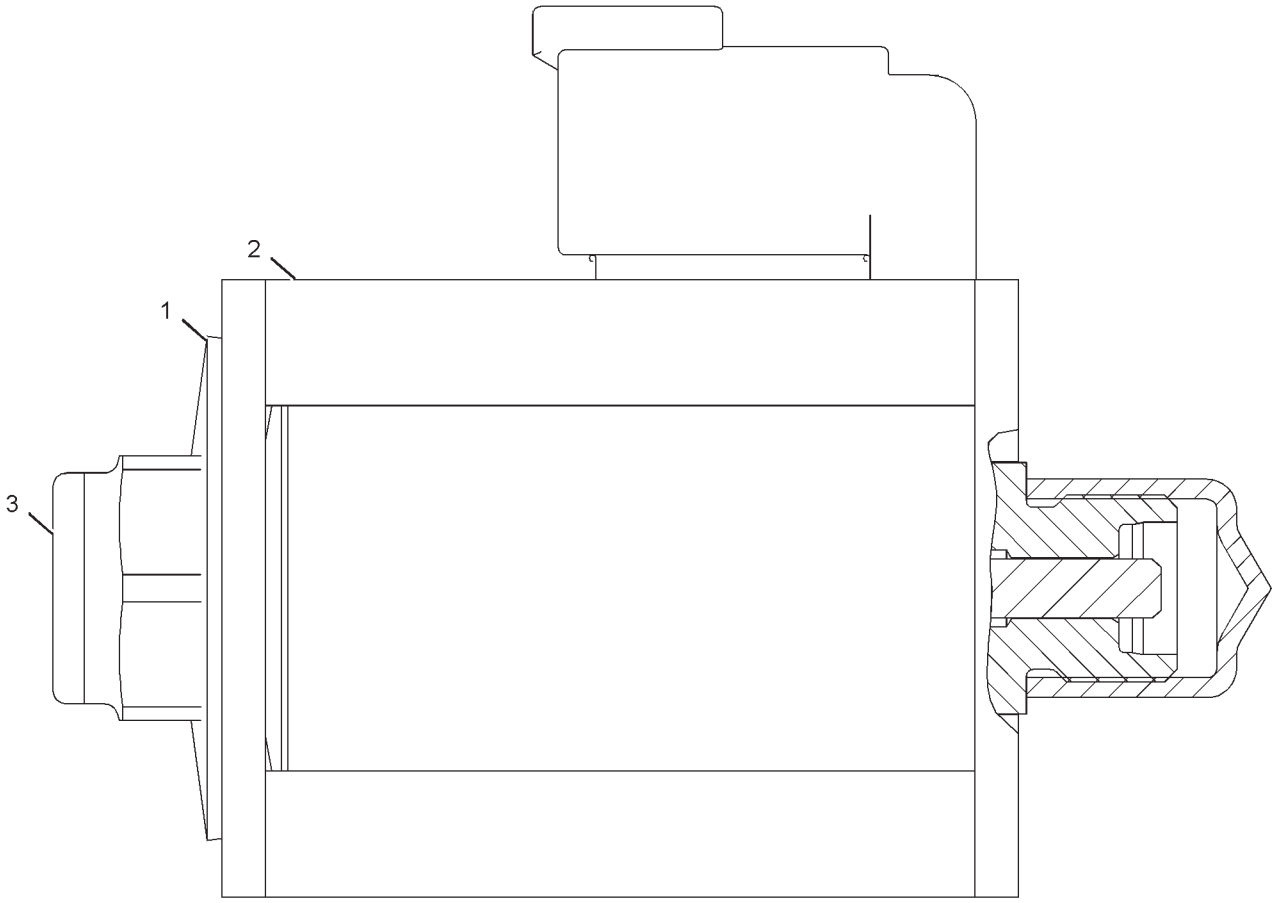

GRAPHIC #1 **<END>** g01118096

ELECTRICAL AND STARTING SYSTEM

151-6665 STARTING AID GP-ETHER

S/N: RCD1-UP

PART OF 220-4843, 242-5914 INSTALLATION AR-ENGINE

SMCS-1456 **i01632853**

NOTE	REF NO	GRAPHIC REF	PART NUMBER	QTY	PART NAME 1 2 3 4 5 6 (PRODUCT LEVEL)	SEE PAGE
	4	1	**2B-2404**	2	CLIP	
	5	1,2	**3D-5102**	7	GROMMET	
M	6	1	**8T-4137**	1	BOLT (M10X1.5X20-MM)	
	7	1	**8T-4121**	4	WASHER-HARD (11X21X2.5-MM THK)	
	8	1	**171-9133**	1	TUBE	
	10	1	**205-6666**	1	TUBE	
	11	1	**5K-0430**	3	CLIP	
	12	1,2	**5P-6312**	2	UNION	
	13	1,2	**5P-6313**	4	NUT (5/16-24-THD)	
	14	1,2	**5P-6314**	4	SLEEVE	
	15	1	**171-9131**	1	TUBE	
	16	1	**205-6824**	1	PLATE AS	
M	17	1	**8T-4136**	2	BOLT (M10X1.5X25-MM)	
M	18	1	**8T-4244**	1	NUT (M12X1.75-THD)	
	19	1	**5P-1076**	1	WASHER-HARD (13.5X30X4-MM THK)	
	20	1	**7N-0140**	1	TUBE AS-COIL	
M	21	1	**8T-4191**	1	BOLT (M10X1.5X16-MM)	
	22	1,2	**6P-1306**	2	GROMMET	
	23	1,2	**1B-3581**	2	CLIP	
M	24	1	**8T-4956**	1	BOLT (M12X1.75X35-MM)	
	25	1,2	**8T-4223**	3	WASHER-HARD (13.5X25.5X3-MM THK)	
	26	1	**111-4784**	1	SWITCH AS-ROCKER (ETHER STARTING AID)	
		1	**116-0173**	1	CONNECTOR-RECEPTACLE	
		1	**116-0174**	4	TERMINAL	
	27	2	**3E-6332**	1	VALVE GP-ETHER STARTING (24-VOLT)	
		2	**102-8802**	1	KIT-RECEPTACLE (2-PIN)	
		2	**3E-3365**	1	WEDGE-RECEPTACLE LOCK (2-PIN)	
		2	**7N-9801**	1	GASKET	
		2	**186-3735**	2	PIN-CONNECTOR (16-GA TO 18-GA)	
	28	2	**5P-2948**	1	FITTING AS	
		2	**4K-9821**	1	SLEEVE	
		2	**4K-9822**	1	NUT (5/16-24-THD)	
	29	2	**7N-2059**	1	CLAMP AS	
M	30	1,2	**7X-2548**	2	BOLT (M12X1.75X16-MM)	
	31	2	**205-6823**	1	TUBE	
M	32	2	**8T-4189**	4	BOLT (M8X1.25X20-MM)	
	33	2	**8T-4224**	4	WASHER-HARD (8.8X16X2-MM THK)	
	34	1	**6N-9995**	1	ATOMIZER-ETHER	

M-METRIC PART

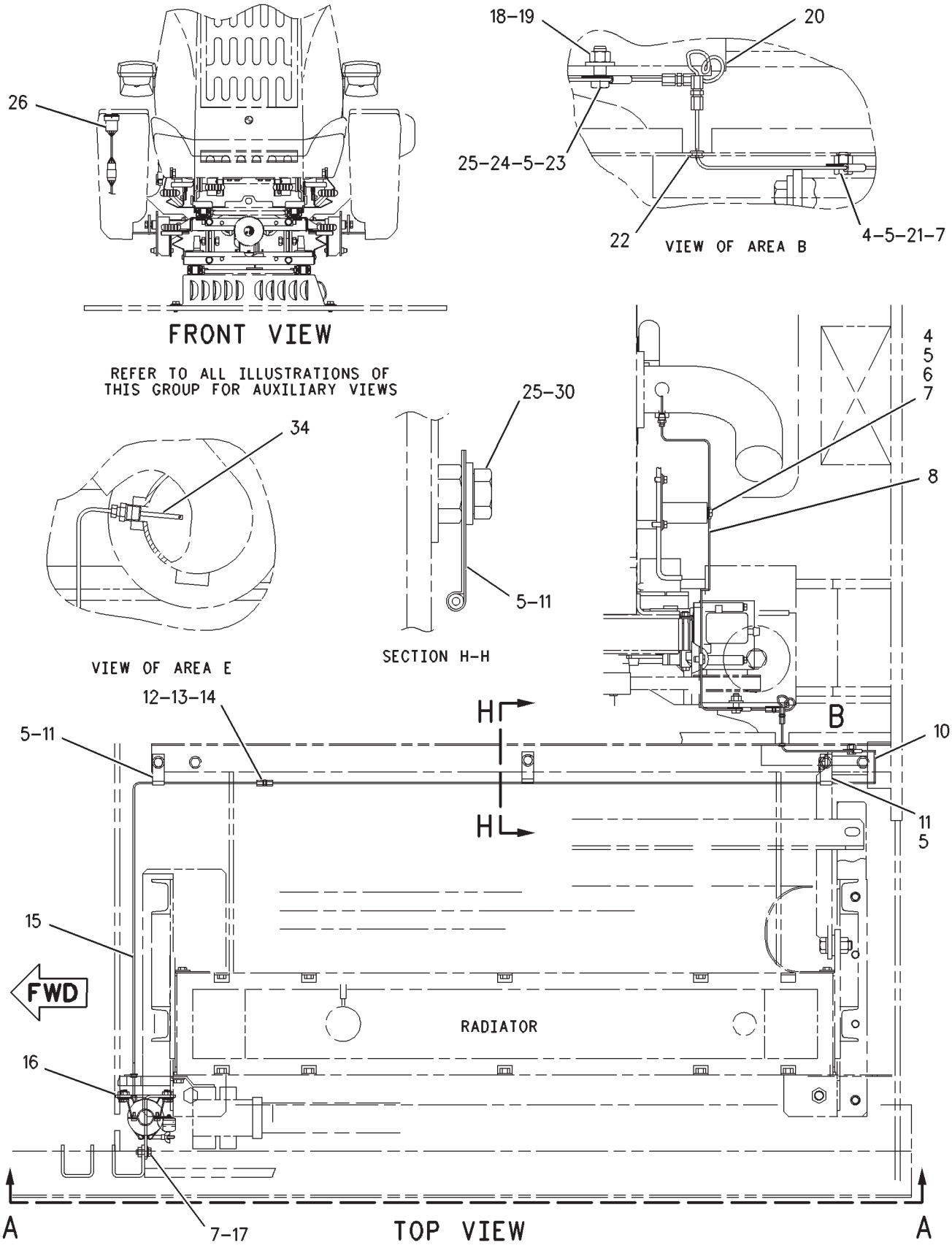

GRAPHIC #1

g00846334

151-6665 **STARTING AID GP-ETHER** *(contd.)* **i01632853**

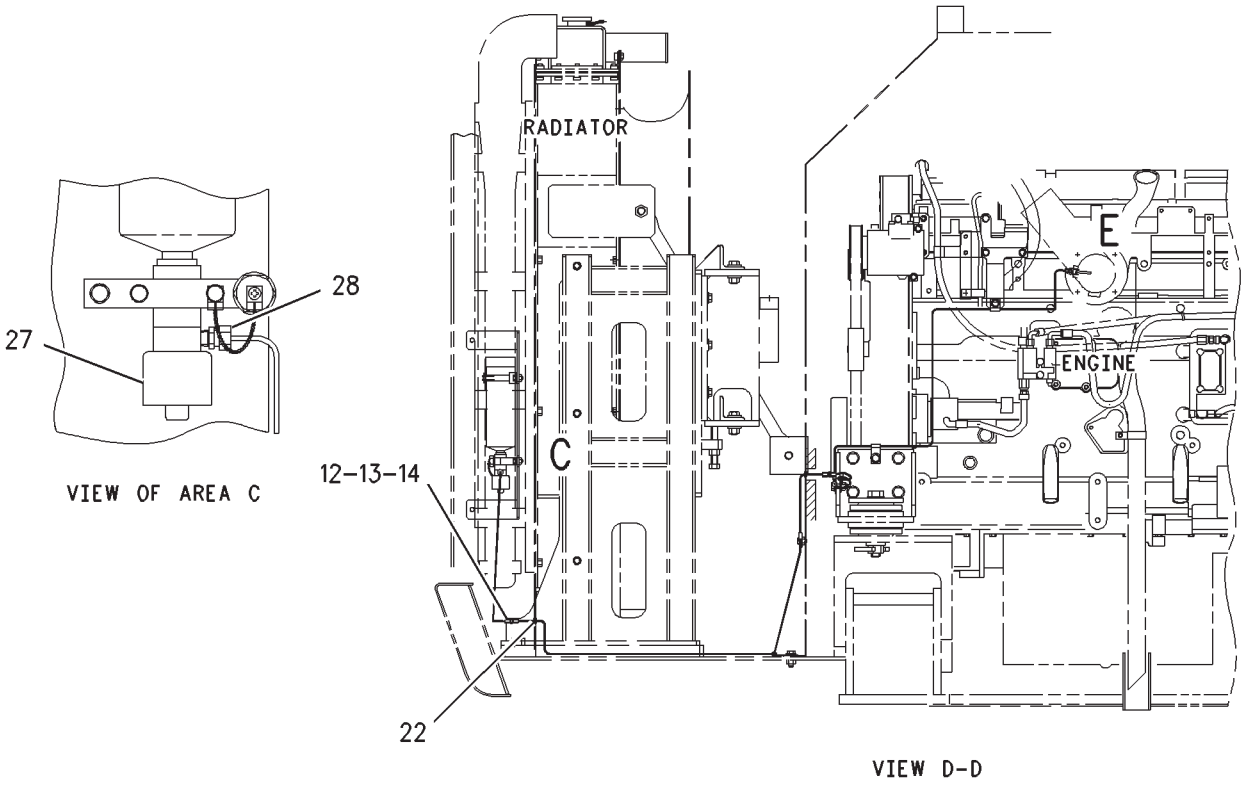

REFER TO ALL ILLUSTRATIONS OF
THIS GROUP FOR AUXILIARY VIEWS

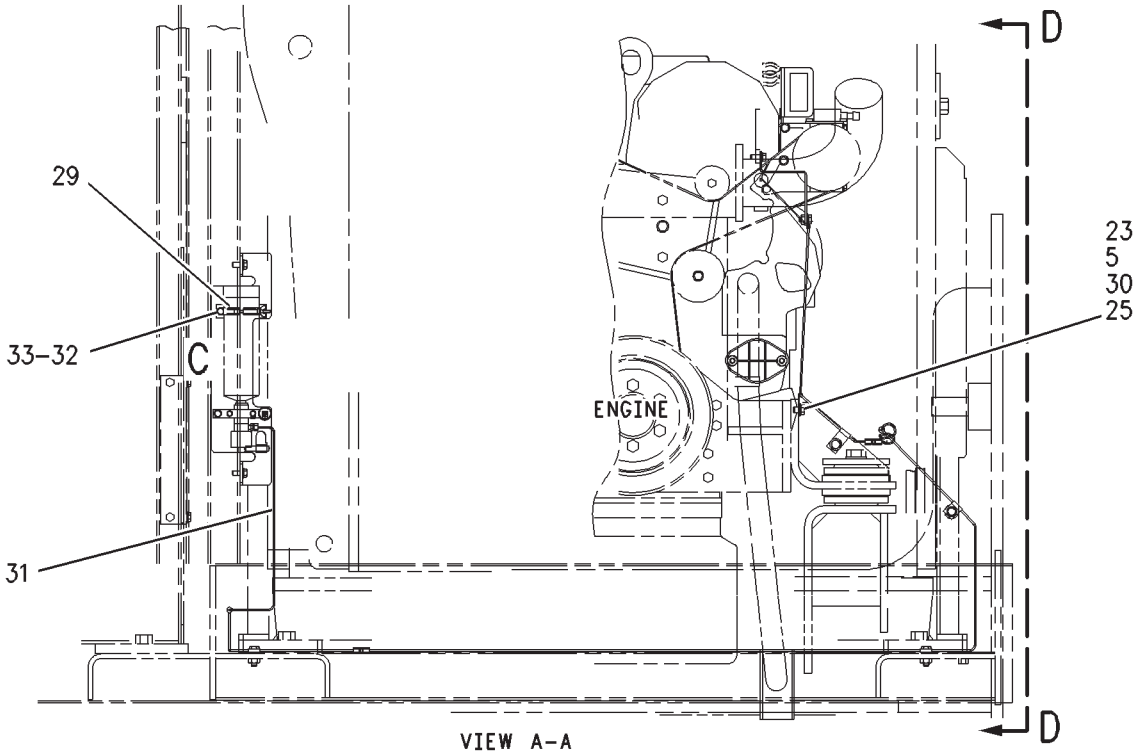

GRAPHIC #2 **<END>** g00805085

ELECTRICAL AND STARTING SYSTEM

222-3562 STARTING AR-COLD WEATHER

S/N: RCD1-UP

PART OF 229-3366 CHASSIS AR

SMCS-1450 **i01710429**

NOTE	PART NUMBER	QTY	PART NAME 1 2 3 4 5 6 (PRODUCT LEVEL)	SEE PAGE
Y	*222-3564*	1	BOX GP-BATTERY	332
Y	*222-3563*	1	BATTERY & WIRING GP	224

Y-SEPARATE ILLUSTRATION

<END>

ELECTRICAL AND STARTING SYSTEM

6V-0890 STARTING MOTOR GP-ELECTRIC*R

S/N: BLC426-563
24-VOLT
PART OF 105-4729 STARTING MOTOR GP-ELECTRIC
FIELD REPLACEMENT ORDER 237-1962–PAGE 281

SMCS-1453 **i00964332**

NOTE	REF NO	GRAPHIC REF	PART NUMBER	QTY	PART NAME 1 2 3 4 5 6 (PRODUCT LEVEL)	SEE PAGE
	1	1	**7M-0326**	1	CONNECTOR	
	2	1	**9H-3757**	2	WASHER (0.516X1X0.094-IN THK)	
	3	1	**1S-7446**	3	SCREW-MACHINE (8-32X0.437-IN)	
	4	1	**8C-9660**	3	WASHER (4.6X7.9X0.8-MM THK)	
	5	1	**9S-2544**	9	SCREW-HEX HEAD (8-32X11.13-MM)	
	6	1	**7M-0327**	1	WASHER-THRUST (17.4X25.4X1.6-MM THK)	
	7	1	**3T-3418**	1	FRAME AS-END	
		1	**3T-3423**	1	CUP	
		1	**9G-4101**	1	BUSHING-END	
		1	**3T-3424**	1	PLUG-FELT	
	8	1	**3T-9525**	1	PLATE AS-BRUSH	
		1	**6T-0371**	1	INSULATOR	
		1	**5P-6298**	12	SCREW-MACHINE (10-32X0.5-IN)	
		1	**9F-5599**	12	LOCKWASHER	
		1	**6T-0372**	1	PLATE	
		1	**6T-0363**	6	HOLDER AS-BRUSH	
					(EACH INCLUDES)	
		1	**3T-9494**	1	SPRING	
		1	**2L-6679**	3	PLATE-INSULATOR	
		1	**3T-4709**	3	PLATE	
		1	**3T-4710**	3	PLATE	
		1	**7F-3525**	6	WASHER-BUSHING (0.207X0.39X0.09-IN THK)	
	9	1	**7F-3491**	2	WASHER (0.516X1X0.094-IN THK)	
	10	1	**3T-3422**	1	WIRE AS	
	11	1	**2J-8163**	2	SEAL-O-RING	
	12	1	**7X-3373**	1	BOLT (5/16-18X0.88-IN)	
	13	1	**3T-3434**	6	PLUG	
	14	1	**5J-5314**	5	BOLT (5/16-18X1.5-IN)	
	15	1	**3L-3380**	1	BUSHING-TERMINAL	
	16	1	**036-9821**	1	WASHER	
	17	1	**4M-1828**	1	RETAINER-SPRING	
	18	1	**4M-1829**	1	BOOT-RUBBER	
	19	1	**9M-7606**	1	PLUNGER AS	
	20	1	**9M-7609**	1	SPRING (SHIFT LEVER)	
	21	1	**4M-1827**	1	RETAINER-SPRING	
	22	1	**8C-3089**	1	SEAL-O-RING	
	23	1	**4M-1853**	1	LEVER AS-SHIFT	
	24	1	**5M-3034**	1	LOCKNUT (5/16-24-THD)	
	25	1	**7L-2894**	4	GASKET	
	26	1	**4M-1831**	4	PLUG-LEVER HOUSING	
	27	1	**4M-1854**	1	SHAFT-LEVER	
	28	1	**1H-1023**	1	SEAL-O-RING	
	29	1	**2D-6392**	1	SEAL-O-RING	
	30	1	**7T-3974**	1	HOUSING AS-DRIVE	
	31	1	**6N-3826**	1	DRIVE AS-MOTOR	
	32	1	**2H-3429**	2	RING-RETAINING	
	33	1	**6V-1322**	4	BOLT (1/4-20X0.375-IN)	
	34	1	**8T-4205**	4	WASHER-HARD (7.2X14.5X2-MM THK)	
	35	1	**6N-3279**	1	INSULATOR	
	36	1	**036-9823**	13	BOLT (1/4-28X1-IN)	
	37	1	**1M-9971**	1	SPACER (0.835X1.72X0.188-IN THK)	
	38	1	**1H-2629**	3	STRIP-INSULATION	
	39	1	**7M-0324**	1	COIL AS-FIELD	
	40	1	**3F-0379**	12	SCREW-POLE SHOE (3/8-24-THD)	

6V-0890 **STARTING MOTOR GP-ELECTRIC** *(contd.)* **i00964332**

NOTE	REF NO	GRAPHIC REF	PART NUMBER	QTY	PART NAME 1 2 3 4 5 6 (PRODUCT LEVEL)	SEE PAGE
	41	1	**7F-3488**	6	SHOE-POLE	
	42	1	**7M-8651**	1	ARMATURE AS	
	43	1	**7M-0325**	1	INSULATOR	
	44	1	**3T-9524**	6	BRUSH AS	
	45	1	**3N-3763**	1	KIT-TERMINAL (STARTING MOTOR)	
					(INCLUDES INSULATOR, BUSHINGS & WASHER)	
	46	1	**125-6537**	1	INSULATOR	
	47	1	**3R-8801**	1	CLAMP	
	48	1	**8F-1434**	2	LOCKWASHER	
	49	1	**6V-8188**	6	NUT (1/2-13-THD)	
	50	1	**7X-0562**	6	WASHER-HARD (13.5X19X0.8-MM THK)	
	51	1	**4B-2049**	6	NUT (10-32-THD)	
	52	1	**8T-0328**	10	WASHER-HARD (5.5X10X1-MM THK)	
	53	1	**3T-9494**	6	SPRING	
	54	1	**3E-7771**	1	HOUSING AS (STARTING MOTOR)	
	55	1	**9G-4101**	1	BUSHING-END	
	56	1	**3T-3424**	3	PLUG-FELT	
	57	1	**3T-3423**	3	CUP	
	58	1	**1M-9968**	1	BUSHING	
	59	1	**2F-6678**	1	SEAL-LIP TYPE	
	60	1	**4L-2729**	1	WASHER (0.844X1.9X0.188-IN THK)	
	61	1	**4M-1896**	1	BUSHING-TERMINAL	
	62	1	**045-4065**	4	SCREW-MACHINE (10-32X0.75-IN)	
	63	1	**6V-8373**	3	SCREW-MACHINE (6-32X0.187-IN)	
	64	1	**9G-6770**	1	CONTACT AS	
	65	1	**6T-1120**	1	BUSHING-TERMINAL	
	66	1	**4M-1815**	1	SPRING-CONTACT	
	67	1	**125-6535**	1	COVER-STARTING MOTOR	
	68	1	**7T-9123**	1	GASKET-PLATE	
	69	1	**125-6533**	1	SOLENOID AS-STARTING MOTOR (24-VOLT)	
	70	1	**125-6536**	1	TERMINAL AS	

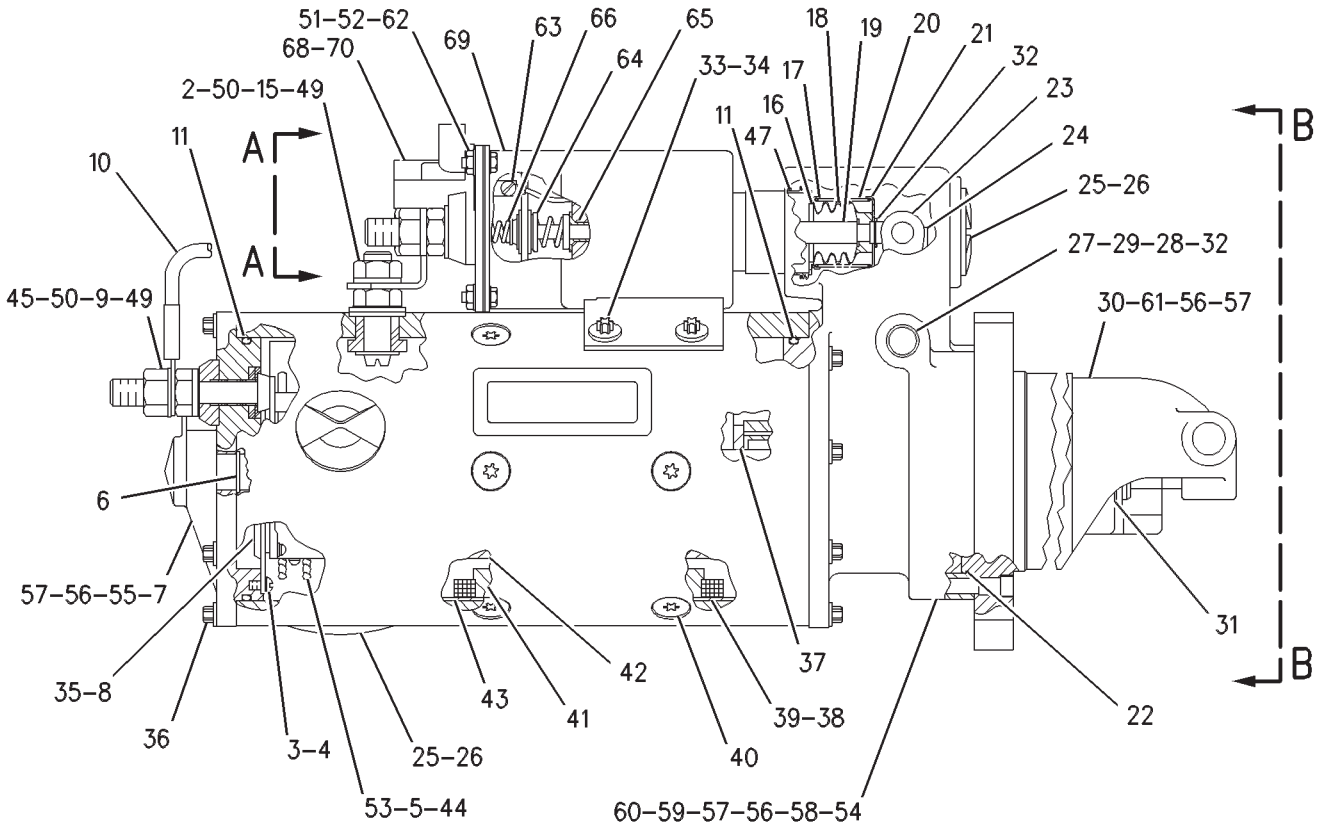

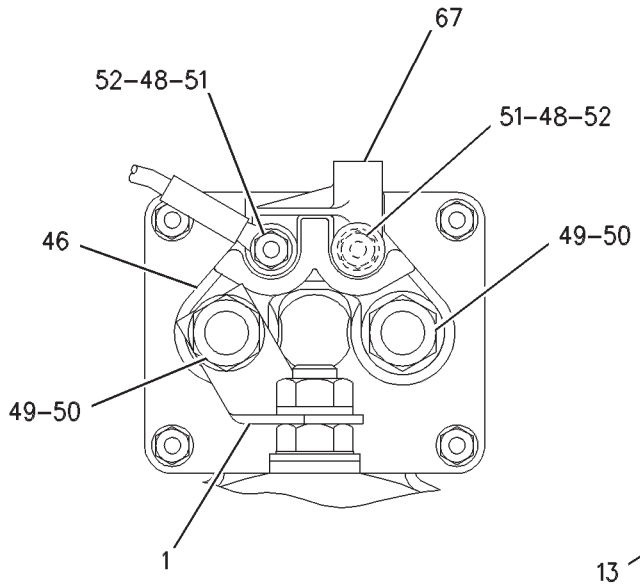

VIEW A-A

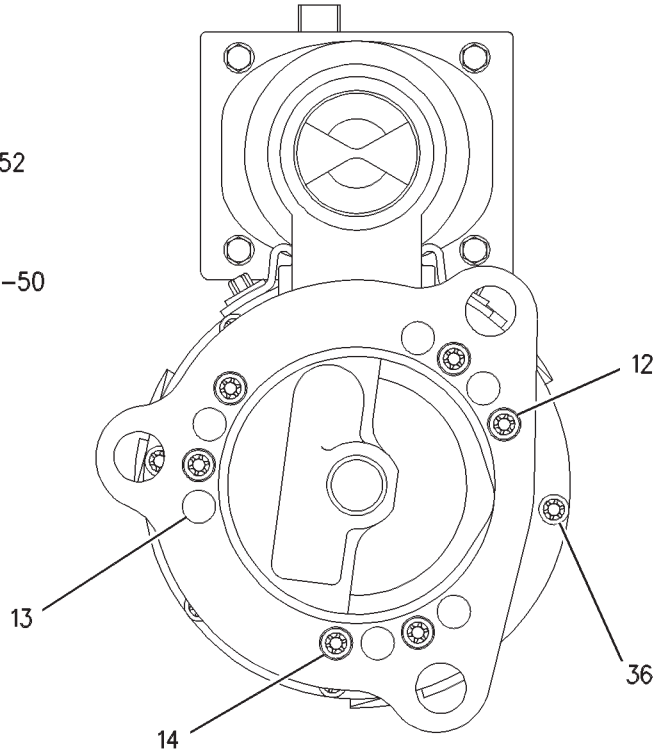

VIEW B-B

GRAPHIC #1 **<END>** g00500274

ELECTRICAL AND STARTING SYSTEM

105-4729 STARTING MOTOR GP-ELECTRIC

S/N: BLC426-563

PART OF 205-5858 ENGINE AR-COMPLETE

SMCS-1453 **i00964240**

NOTE	REF NO	GRAPHIC REF	PART NUMBER	QTY	PART NAME 1 2 3 4 5 6 (PRODUCT LEVEL)	SEE PAGE
	1	1	**8S-2332**	3	BOLT-12 POINT HEAD (5/8-11X1.75IN)	
	2	1	**4N-1059**	1	GASKET	
YR	3	1	**6V-0890**	1	STARTING MOTOR GP-ELECTRIC	276
	4	1	**105-4728**	1	WIRE AS	

R-REMFG PART MAY BE AVAILABLE
Y-SEPARATE ILLUSTRATION

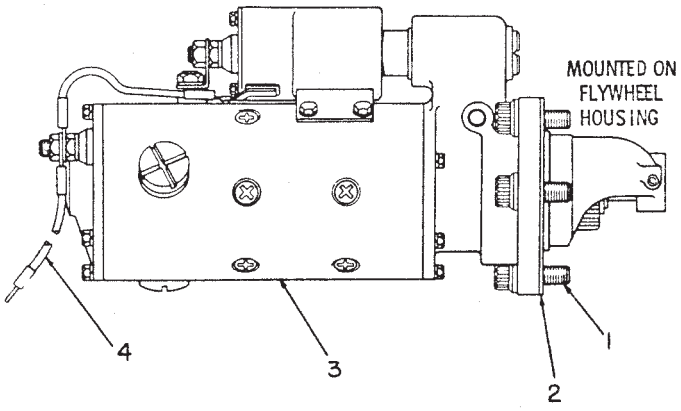

GRAPHIC #1 **<END>** g00082994

ELECTRICAL AND STARTING SYSTEM

105-4729 STARTING MOTOR GP-ELECTRIC

S/N: BLC564-UP

PART OF 205-5858, 235-4685 ENGINE AR-COMPLETE

SMCS-1453 **i01972233**

NOTE	REF NO	GRAPHIC REF	PART NUMBER	QTY	PART NAME 1 2 3 4 5 6 (PRODUCT LEVEL)	SEE PAGE
	1	1	**8S-2332**	3	BOLT-12 POINT HEAD (5/8-11X1.75 IN)	
	2	1	**4N-1059**	1	GASKET	
YR	3	1	**237-1962**	1	STARTING MOTOR GP-ELECTRIC	281
	4	1	**105-4728**	1	WIRE AS	

R-REMFG PART MAY BE AVAILABLE
Y-SEPARATE ILLUSTRATION

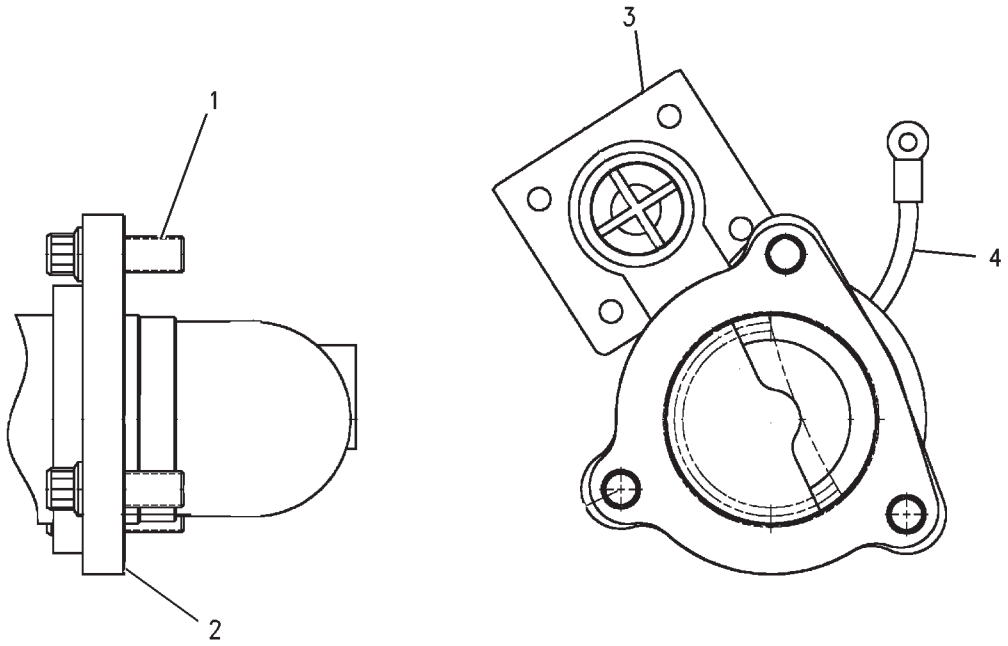

GRAPHIC #1 **<END>** g00658745

ELECTRICAL AND STARTING SYSTEM

237-1962 STARTING MOTOR GP-ELECTRIC*R

S/N: BLC564-UP
24-VOLT
PART OF 105-4729 STARTING MOTOR GP-ELECTRIC
FIELD REPLACEMENT FOR 6V-0890—PAGE 276

SMCS-1453 **i03630205**

NOTE	REF NO	GRAPHIC REF	PART NUMBER	QTY	PART NAME 1 2 3 4 5 6 (PRODUCT LEVEL)	SEE PAGE
	1	1	**7M-0326**	1	CONNECTOR	
	2	1	**9H-3757**	2	WASHER (0.516X1X0.094-IN THK)	
	3	1	**1S-7446**	3	SCREW-MACHINE (8-32X0.437-IN)	
	4	1	**8C-9660**	3	WASHER (4.6X7.9X0.8-MM THK)	
	5	1	**9S-2544**	9	SCREW-HEX HEAD (8-32X11.13-MM)	
	6	1	**7M-0327**	1	WASHER-THRUST (17.4X25.4X1.6-MM THK)	
	7	1	**3T-3418**	1	FRAME AS-END	
		1	**3T-3423**	1	CUP	
		1	**3T-3424**	1	PLUG-FELT	
		1	**9G-4101**	1	BUSHING-END	
	8	1	**3T-9525**	1	PLATE AS-BRUSH	
	8A	1	**6T-0371**	1	INSULATOR	
	8B	1	**5P-6298**	12	SCREW-MACHINE (10-32X0.5-IN)	
		1	**9F-5599**	12	LOCKWASHER	
	8C	1	**7F-3525**	6	WASHER-BUSHING (0.207X0.39X0.09-IN THK)	
	8D	1	**6T-0372**	1	PLATE	
	8E	1	**3T-4709**	3	PLATE	
	8F	1	**2L-6679**	3	PLATE-INSULATOR	
	8G	1	**3T-4710**	3	PLATE	
	8H	1	**6T-0363**	6	HOLDER AS-BRUSH (STARTING MOTOR)	
					(EACH INCLUDES)	
	8J	1	**3T-9494**	1	SPRING	
	9	1	**1T-0808**	2	WASHER (0.516X0.812X0.09-IN THK)	
	10	1	**3T-3422**	1	WIRE AS (STARTING MOTOR)	
	11	1	**2J-8163**	2	SEAL-O-RING	
	12	1	**7X-3373**	1	BOLT (5/16-18X0.88-IN)	
	13	1	**3T-3434**	6	PLUG	
	14	1	**5J-5314**	5	BOLT (5/16-18X1.5-IN)	
	15	1	**3L-3380**	1	BUSHING-TERMINAL	
	16	1	**036-9821**	1	WASHER	
	17	1	**4M-1828**	1	RETAINER-SPRING	
	18	1	**306-3998**	1	BOOT-RUBBER	
	19	1	**9M-7609**	1	SPRING (SHIFT LEVER)	
	20	1	**4M-1827**	1	RETAINER-SPRING	
	21	1	**8C-3089**	1	SEAL-O-RING	
	22	1	**4M-1853**	1	LEVER AS-SHIFT	
	23	1	**5M-3034**	1	LOCKNUT (5/16-24-THD)	
	24	1	**7L-2894**	4	GASKET	
	25	1	**4M-1831**	4	PLUG-LEVER HOUSING	
	26	1	**4M-1854**	1	SHAFT-LEVER	
	27	1	**1H-1023**	1	SEAL-O-RING	
	28	1	**2D-6392**	1	SEAL-O-RING	
	29	1	**7T-3974**	1	HOUSING AS-DRIVE	
	30	1	**6N-3826**	1	DRIVE AS-MOTOR	
	31	1	**2H-3429**	2	RING-RETAINING	
	32	1	**6V-1322**	4	BOLT (1/4-20X0.375-IN)	
	33	1	**8T-4205**	4	WASHER-HARD (7.2X14.5X2-MM THK)	
	34	1	**6N-3279**	1	INSULATOR	
	35	1	**0S-1597**	13	BOLT (1/4-28X1-IN)	
	36	1	**1M-9971**	1	SPACER (0.835X1.72X0.188-IN THK)	
	37	1	**1H-2629**	3	STRIP-INSULATION	
	38	1	**7M-0324**	1	COIL AS-FIELD	
	39	1	**3R-8797**	12	SCREW & WASHER AS (3/8-24X0.72-IN)	
	40	1	**7F-3488**	6	SHOE-POLE	

237-1962 STARTING MOTOR GP-ELECTRIC *(contd.)* i03630205

NOTE	REF NO	GRAPHIC REF	PART NUMBER	QTY	PART NAME 1 2 3 4 5 6 (PRODUCT LEVEL)	SEE PAGE
	41	1	**7M-8651**	1	ARMATURE AS	
	42	1	**7M-0325**	1	INSULATOR	
	43	1	**3T-9524**	6	BRUSH AS	
	44	1	**3N-3763**	1	KIT-TERMINAL (STARTING MOTOR)	
					(INCLUDES BUSHINGS & WASHERS)	
	45	1	**125-6537**	1	INSULATOR	
	46	1	**3R-8801**	1	CLAMP	
	47	1	**8F-1434**	2	LOCKWASHER	
	48	1	**6V-8188**	6	NUT (1/2-13-THD)	
	49	1	**7X-0562**	6	WASHER-HARD (13.5X19X0.8-MM THK)	
	50	1	**4B-2049**	6	NUT (10-32-THD)	
	51	1	**8T-0328**	10	WASHER-HARD (5.5X10X1-MM THK)	
	52	1	**3T-9494**	6	SPRING (STARTING MOTOR)	
	53	1	**3E-7771**	1	HOUSING AS (STARTING MOTOR)	
	54	1	**9G-4101**	1	BUSHING-END	
	55	1	**3T-3424**	3	PLUG-FELT	
	56	1	**3T-3423**	3	CUP	
	57	1	**1M-9968**	1	BUSHING	
	58	1	**2F-6678**	1	SEAL-LIP TYPE	
	59	1	**4L-2729**	1	WASHER (0.844X1.9X0.188-IN THK)	
	60	1	**4M-1896**	1	BUSHING-TERMINAL	
	61	1	**045-4065**	4	SCREW-MACHINE (10-32X0.75-IN)	
	62	1	**125-6535**	1	COVER-STARTING MOTOR	
	63	1	**7T-9123**	1	GASKET-PLATE	
	64	1	**318-2082**	1	SOLENOID AS-STARTING MOTOR (24-VOLT)	
	65	1	**125-6536**	1	TERMINAL AS	

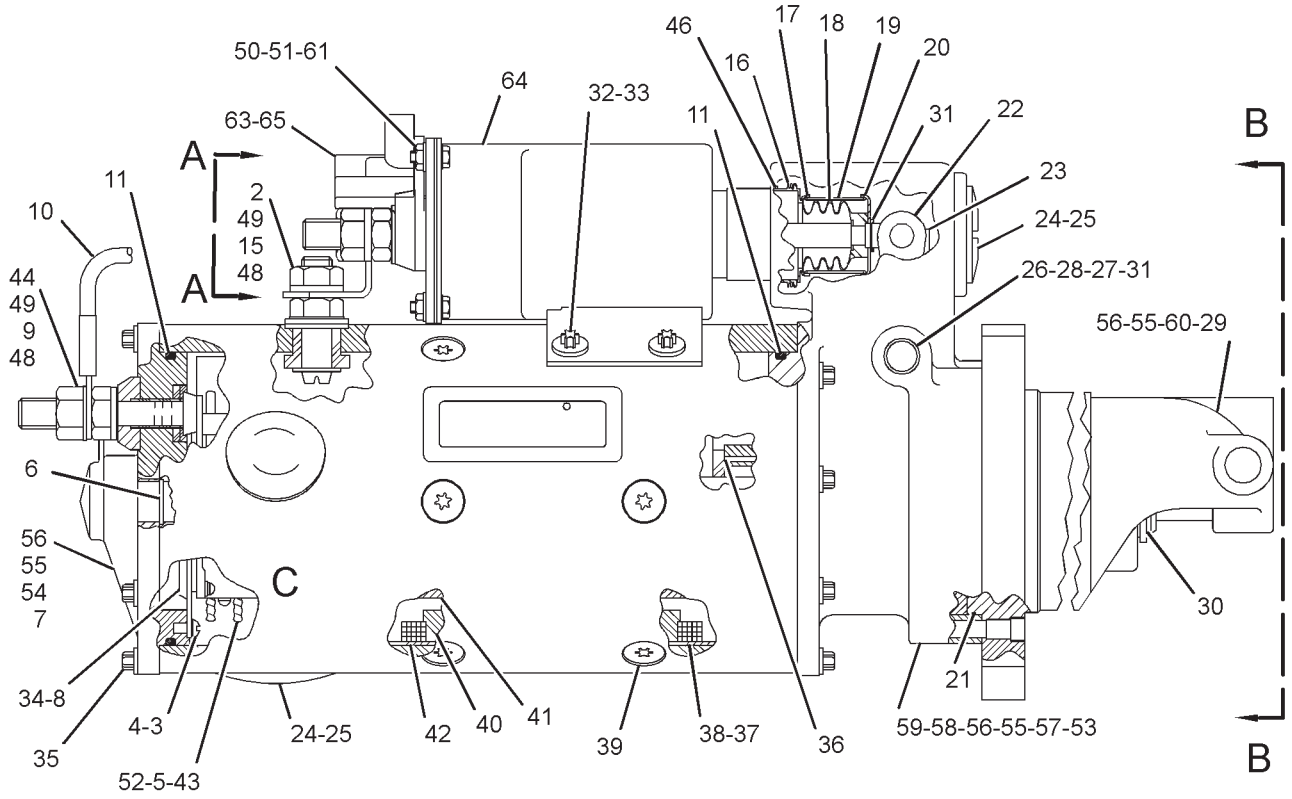

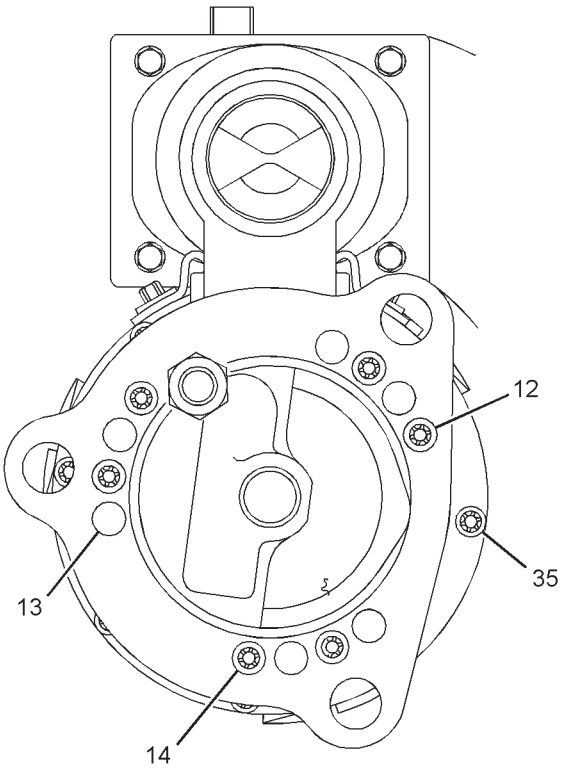

VIEW B-B

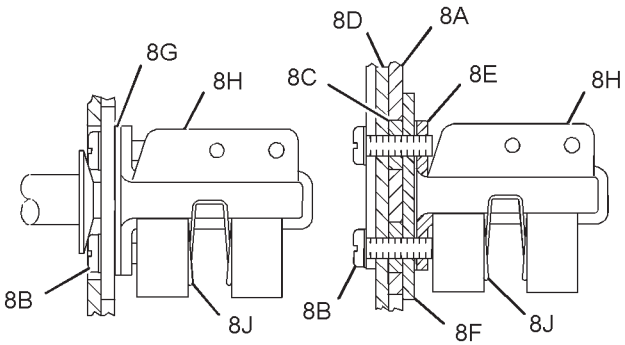

VIEW OF AREA C

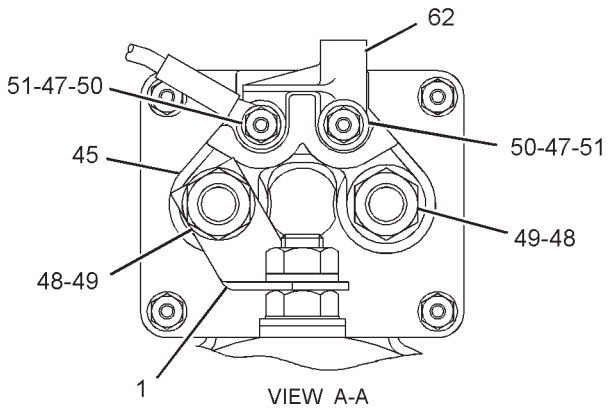

VIEW A-A

GRAPHIC #1 **<END>** g01453239

ELECTRICAL AND STARTING SYSTEM

7N-0718 SWITCH GP-DISCONNECT–BATTERY

S/N: RCD1-UP

PART OF 204-1939 PANEL GP-CIRCUIT BREAKER

SMCS-1411 **i02481739**

NOTE	REF NO	GRAPHIC REF	PART NUMBER	QTY	PART NAME 1 2 3 4 5 6 (PRODUCT LEVEL)	SEE PAGE
	1	1	**8H-5306**	1	KEY (BATTERY DISCONNECT)	
	2	1	**8H-5303**	1	NUT (3/4-16-THD)	
	3	1	**2H-3922**	2	LOCKWASHER	
	4	1	**9F-5644**	2	LOCKWASHER	
	5	1	**6F-7045**	2	NUT-FULL (3/8-24-THD)	

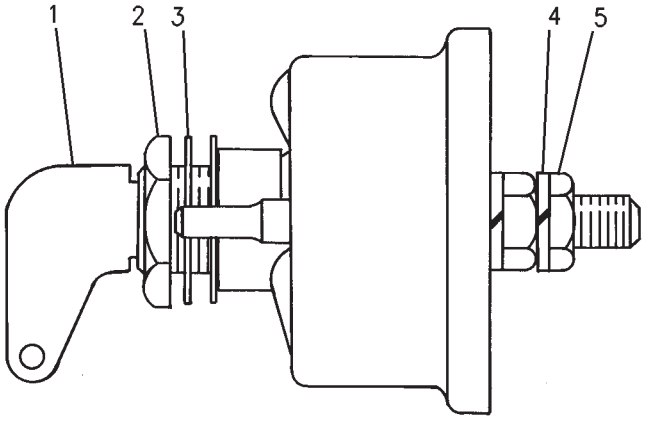

GRAPHIC #1 **<END>** g00699216

ELECTRICAL AND STARTING SYSTEM

7N-0719 SWITCH GP-DISCONNECT–BATTERY

S/N: RCD1-UP

PART OF 222-3563 BATTERY & WIRING GP

SMCS-1411 **i02490079**

NOTE	REF NO	GRAPHIC REF	PART NUMBER	QTY	PART NAME 1 2 3 4 5 6 (PRODUCT LEVEL)	SEE PAGE
	1	1	**8H-5306**	1	KEY (BATTERY DISCONNECT)	
	2	1	**8H-5303**	1	NUT (3/4-16-THD)	
	3	1	**2H-3922**	2	LOCKWASHER	
	4	1	**9F-5644**	2	LOCKWASHER	
	5	1	**6F-7045**	2	NUT-FULL (3/8-24-THD)	

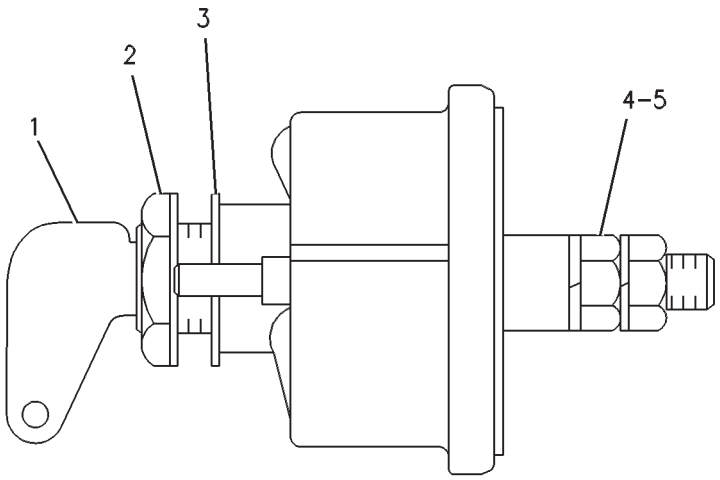

GRAPHIC #1 **<END>** g00272142

ELECTRICAL AND STARTING SYSTEM

125-1302 SWITCH GP-MAGNETIC

S/N: RCD1-UP
24-VOLT
PART OF 204-1939 PANEL GP-CIRCUIT BREAKER

SMCS-7499 **i03276825**

NOTE	REF NO	GRAPHIC REF	PART NUMBER	QTY	PART NAME 1 2 3 4 5 6 (PRODUCT LEVEL)	SEE PAGE
	1	1	**102-8802**	1	KIT-RECEPTACLE (2-PIN)	
					(INCLUDES RECEPTACLE AS & WEDGE)	
	2	1	**186-3735**	2	PIN-CONNECTOR (16-GA TO 18-GA)	
	3	1	**1H-3338**	2	LOCKWASHER (EXTERNAL TOOTH)	
	4	1	**012-0380**	2	LOCKWASHER	
M	5	1	**5C-2890**	2	NUT (M6X1-THD)	
E	6	1	**9X-1813**		SLEEVE (16-CM)	

E-ORDER BY THE CENTIMETER
M-METRIC PART

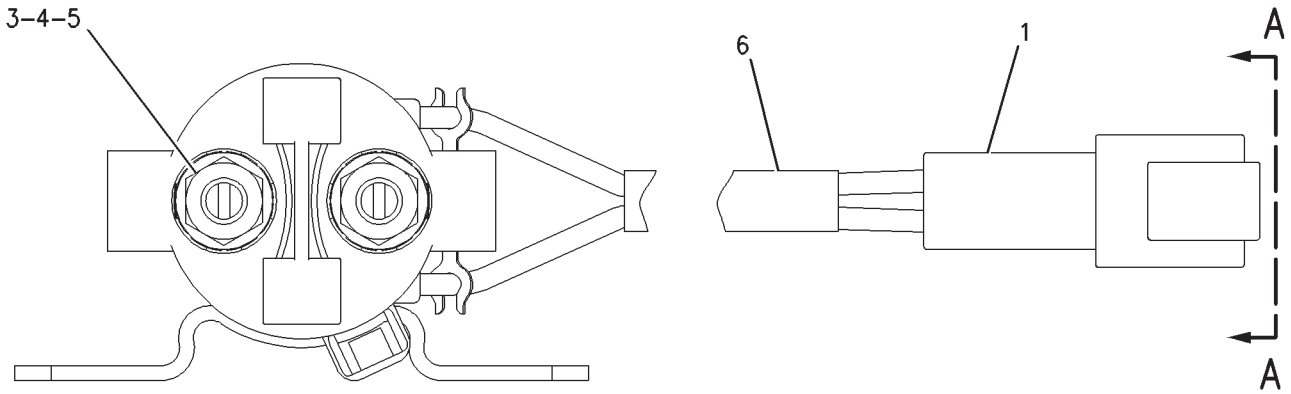

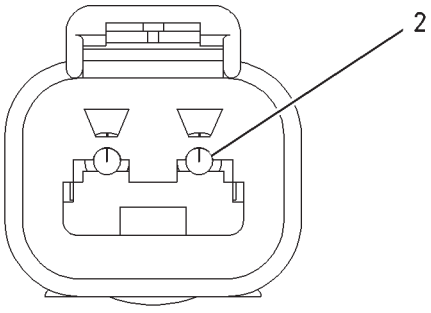

VIEW A-A

GRAPHIC #1 **<END>** g00988004

ELECTRICAL AND STARTING SYSTEM

5C-6108 SWITCH GP-REFUELING—FUEL TANK SHUTOFF

S/N: RCD1-UP
PART OF 180-6854 PUMP GP-REFUELING
AN ATTACHMENT

SMCS-1295 **i03036919**

NOTE	REF NO	GRAPHIC REF	PART NUMBER	QTY	PART NAME 1 2 3 4 5 6 (PRODUCT LEVEL)	SEE PAGE
	1	1	**8J-9236**	1	SWITCH (LIQUID LEVEL) (FUEL)	
	2	1	**5C-6074**	1	FITTING	
	3	1	**2S-4078**	1	SEAL-O-RING	
	4	1	**3D-2824**	1	SEAL-O-RING	
	5	1	**8S-1815**	1	PLUG	
	6	1	**8S-1814**	2	INSULATOR	
	7	1	**4B-2049**	2	NUT (10-32-THD)	
	8	1	**8S-1812**	1	TERMINAL	
	9	1	**9B-4499**	1	SCREW-MACHINE (8-36X0.375-IN)	
	10	1	**7N-9194**	1	TERMINAL	
E	11	1	**7X-3159**		TUBE-HEAT SHRINK (3-CM)	

E-ORDER BY THE CENTIMETER

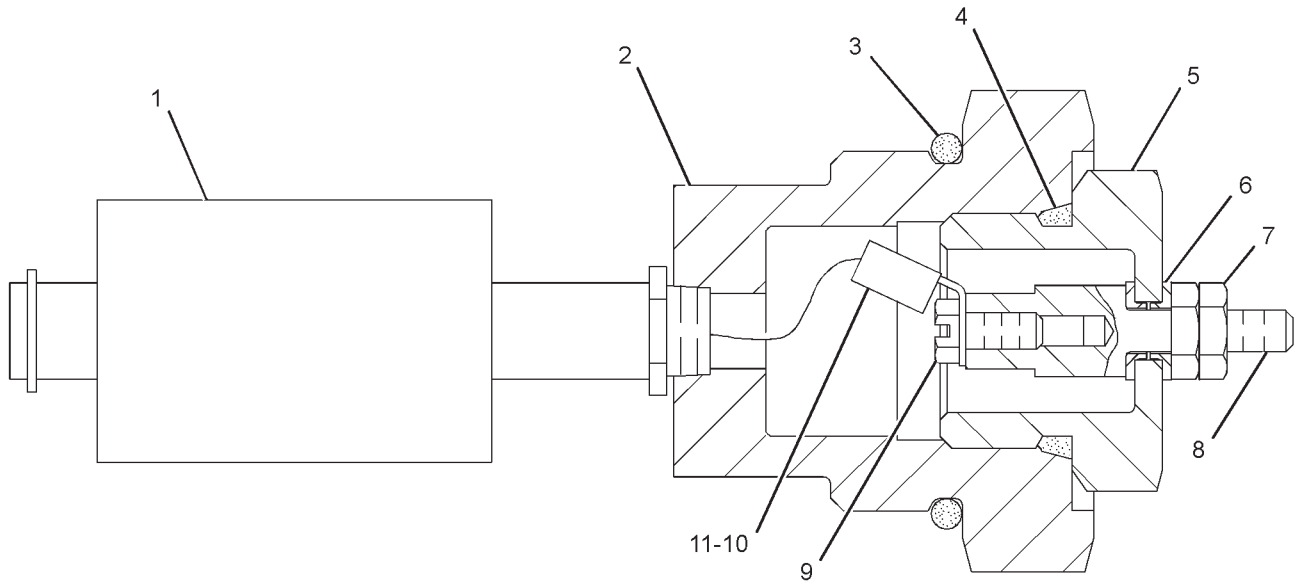

GRAPHIC #1 **<END>** g01420403

ELECTRICAL AND STARTING SYSTEM

9G-7641 SWITCH GP-START–ENGINE, KEY

S/N: RCD1-UP

PART OF 206-3382 WIRING GP-CONSOLE

SMCS-1416 **i01943219**

NOTE	REF NO	GRAPHIC REF	PART NUMBER	QTY	PART NAME 1 2 3 4 5 6 (PRODUCT LEVEL)	SEE PAGE
	1	1	**6V-8362**	4	SCREW-MACHINE (8-32X0.31-IN)	
	2	1	**9B-7233**	4	LOCKWASHER	
	3	1	**7T-6799**	1	NUT-MOUNTING (1-32-THD)	
AF			**5P-8500**	1	KEY (IGNITION)	

A-NOT PART OF THIS GROUP
F-NOT SHOWN

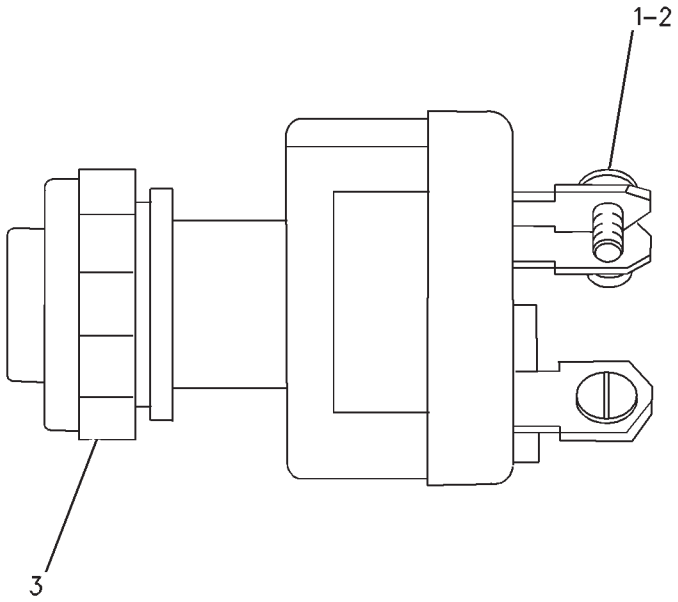

GRAPHIC #1 **<END>** g00699802

ELECTRICAL AND STARTING SYSTEM

217-5090 WIRING GP-BOOM

S/N: RCD1-UP
SMART BOOM
PART OF 213-4216 VALVE AR-BOOM LOWERING CONTROL
AN ATTACHMENT

SMCS-1408 **i01889313**

NOTE	REF NO	GRAPHIC REF	PART NUMBER	QTY	PART NAME 1 2 3 4 5 6 (PRODUCT LEVEL)	SEE PAGE
	1	1	**217-5087**	1	HARNESS AS	
		1	**155-2270**	4	KIT-CONNECTING PLUG (2-PIN)	
					(INCLUDES PLUG AS & WEDGE)	
	2	2	**209-3967**	1	HARNESS AS	
		2	**102-8802**	1	KIT-RECEPTACLE (2-PIN)	
		2	**102-8805**	1	KIT-RECEPTACLE (6-PIN)	
					(EACH RECEPTACLE KIT INCLUDES RECEPTACLE AS & WEDGE)	
		2	**155-2270**	2	KIT-CONNECTING PLUG (2-PIN)	
					(INCLUDES PLUG AS & WEDGE)	
	3	1,2	**3S-2093**	36	STRAP-CABLE	
	4	2	**161-3128**	1	RELAY (24-VOLT)	

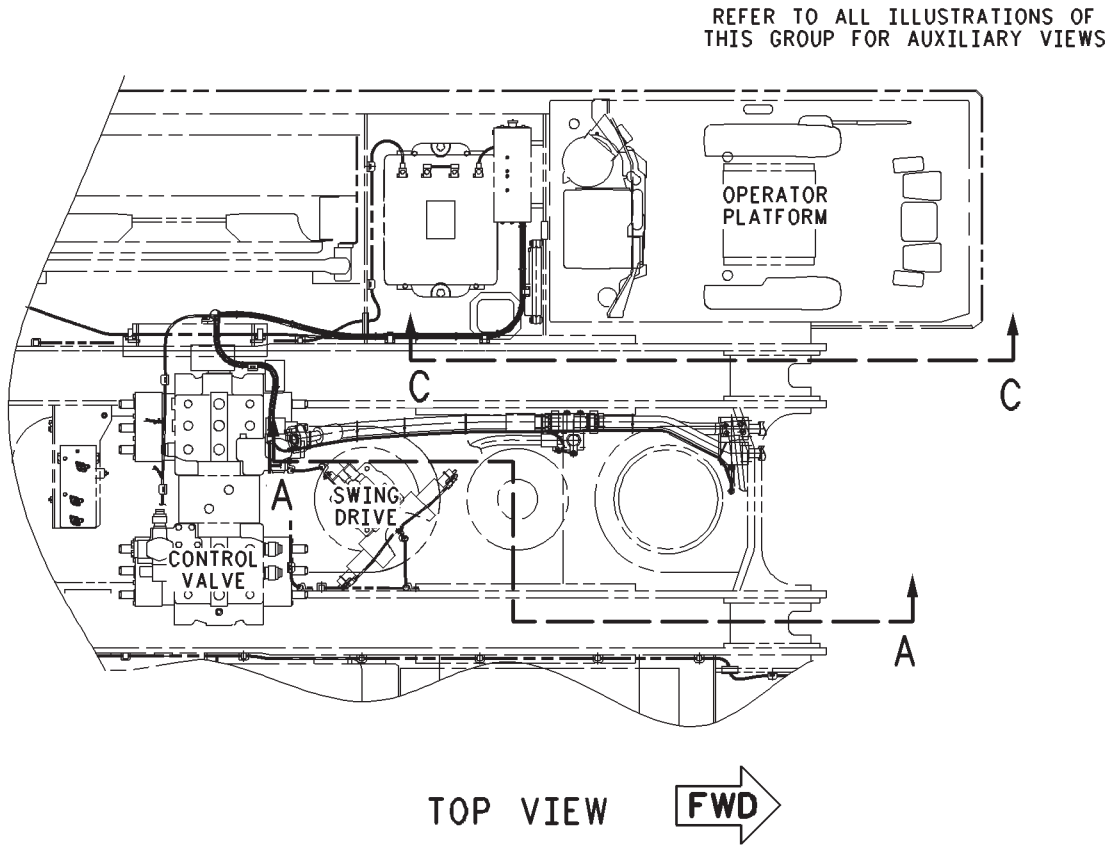

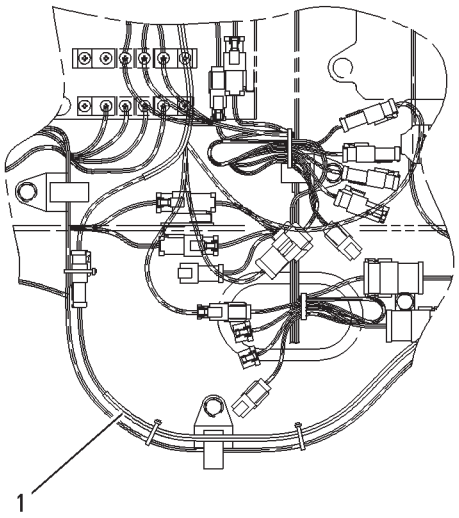

VIEW OF AREA E

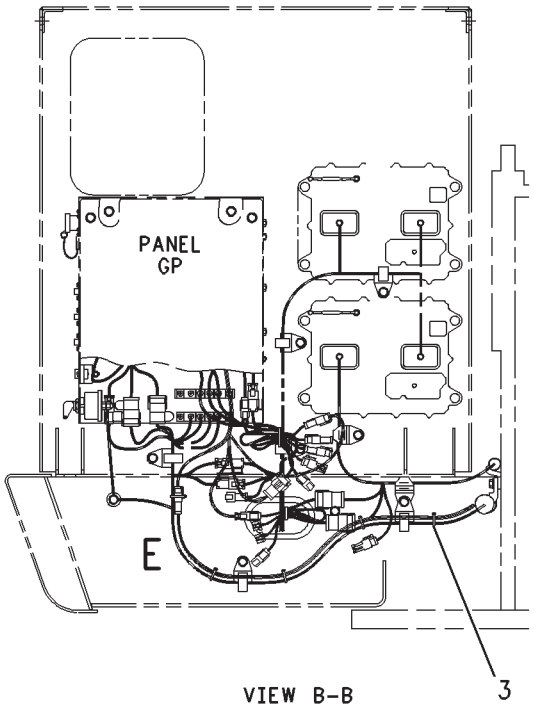

VIEW B-B

GRAPHIC #1 g00984052

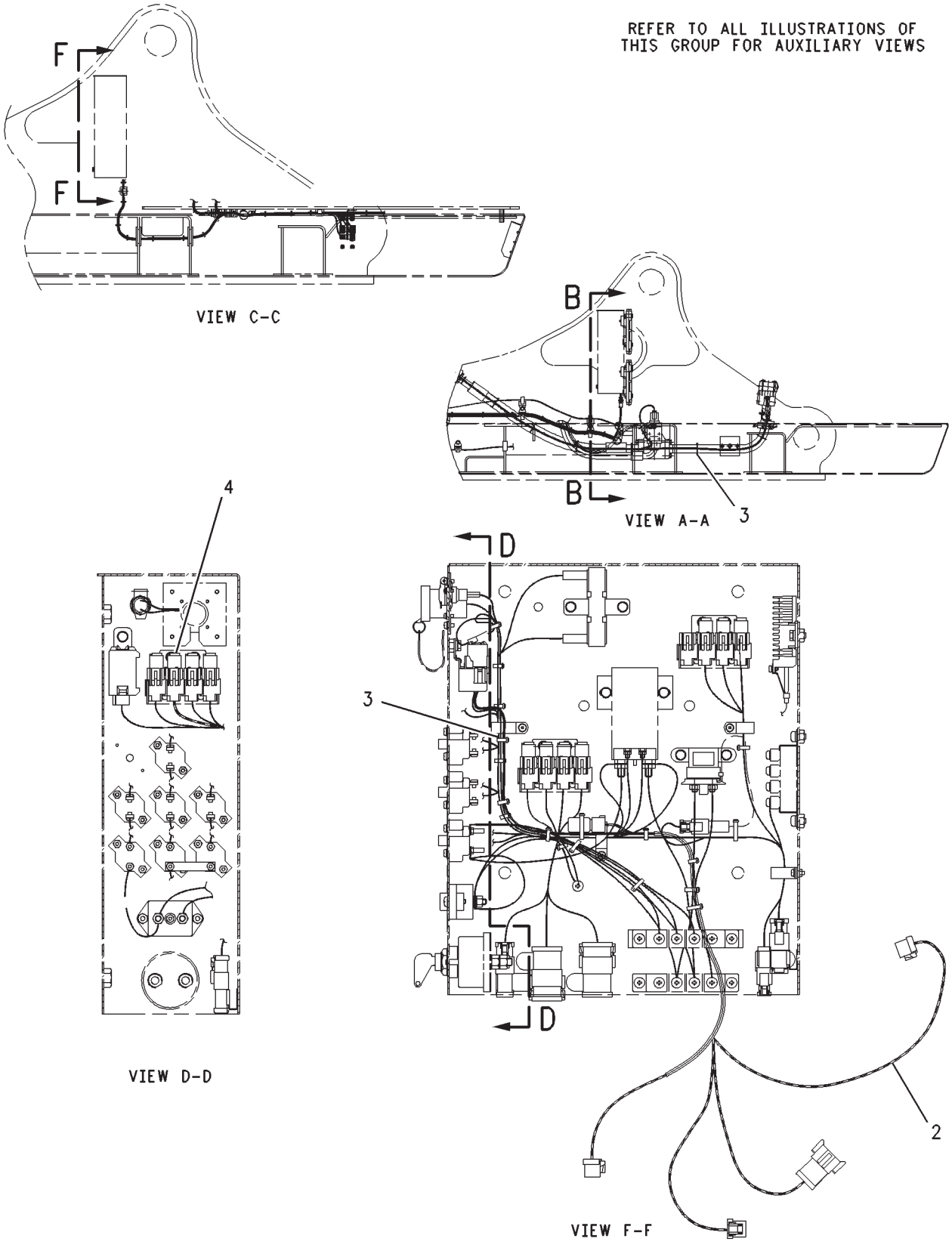

GRAPHIC #2 **<END>** g00984053

ELECTRICAL AND STARTING SYSTEM

153-2914 WIRING GP-CAB

S/N: RCD1-UP

PART OF 153-2915 CAB GP

SMCS-1408, 7301 **i01736249**

NOTE	REF NO	GRAPHIC REF	PART NUMBER	QTY	PART NAME 1 2 3 4 5 6 (PRODUCT LEVEL)	SEE PAGE
	1	1	**7N-5876**	3	LAMP (24-VOLT, 0.2-AMPERE)	
	2	1	**9W-0335**	1	LIGHTER AS-CIGAR (24-VOLT)	
		1	**6T-6505**	1	HOUSING-RECEPTACLE (BLADE, POSITIVE LOCK)	
		1	**6T-6506**	1	TERMINAL-BLADE (14-GA TO 18-GA)	
		1	**3M-6018**	1	TERMINAL	
	3	1	**111-4871**	1	RELAY (24-VOLT)	
	4	1	**132-1829**	1	ALARM GP (24-VOLT)	
		1	**8T-8729**	2	PIN-CONNECTOR (16-GA TO 18-GA)	
		1	**102-8802**	1	KIT-RECEPTACLE (2-PIN)	
					(INCLUDES RECEPTACLE AS AND WEDGE)	
	5	1	**176-1777**	1	HARNESS AS	
		1	**102-8802**	1	KIT-RECEPTACLE (2-PIN)	
					(INCLUDES RECEPTACLE AS AND WEDGE)	
		1	**102-8801**	1	KIT-RECEPTACLE (12-PIN)	
					(INCLUDES RECEPTACLE AS AND WEDGE)	
	6	1	**176-1778**	1	HARNESS AS	
		1	**102-8802**	1	KIT-RECEPTACLE (2-PIN)	
					(INCLUDES RECEPTACLE AS AND WEDGE)	
		1	**102-8806**	1	KIT-RECEPTACLE (8-PIN)	
					(INCLUDES RECEPTACLE AS AND WEDGE)	
M	7	1	**6V-2314**	1	BOLT (M5X0.8X35-MM)	
M	8	1	**7Y-3173**	1	SCREW-BUTTON HEAD (M4X0.7X12-MM)	
	9	1	**8T-0328**	1	WASHER-HARD (5.5X10X1-MM THK)	
	10	1	**8T-4121**	1	WASHER-HARD (11X21X2.5-MM THK)	
M	11	1	**8T-4137**	1	BOLT (M10X1.5X20-MM)	
	12	1	**3S-2093**	23	STRAP-CABLE	

M-METRIC PART

153-2914 **WIRING GP-CAB** *(contd.)* **i01736249**

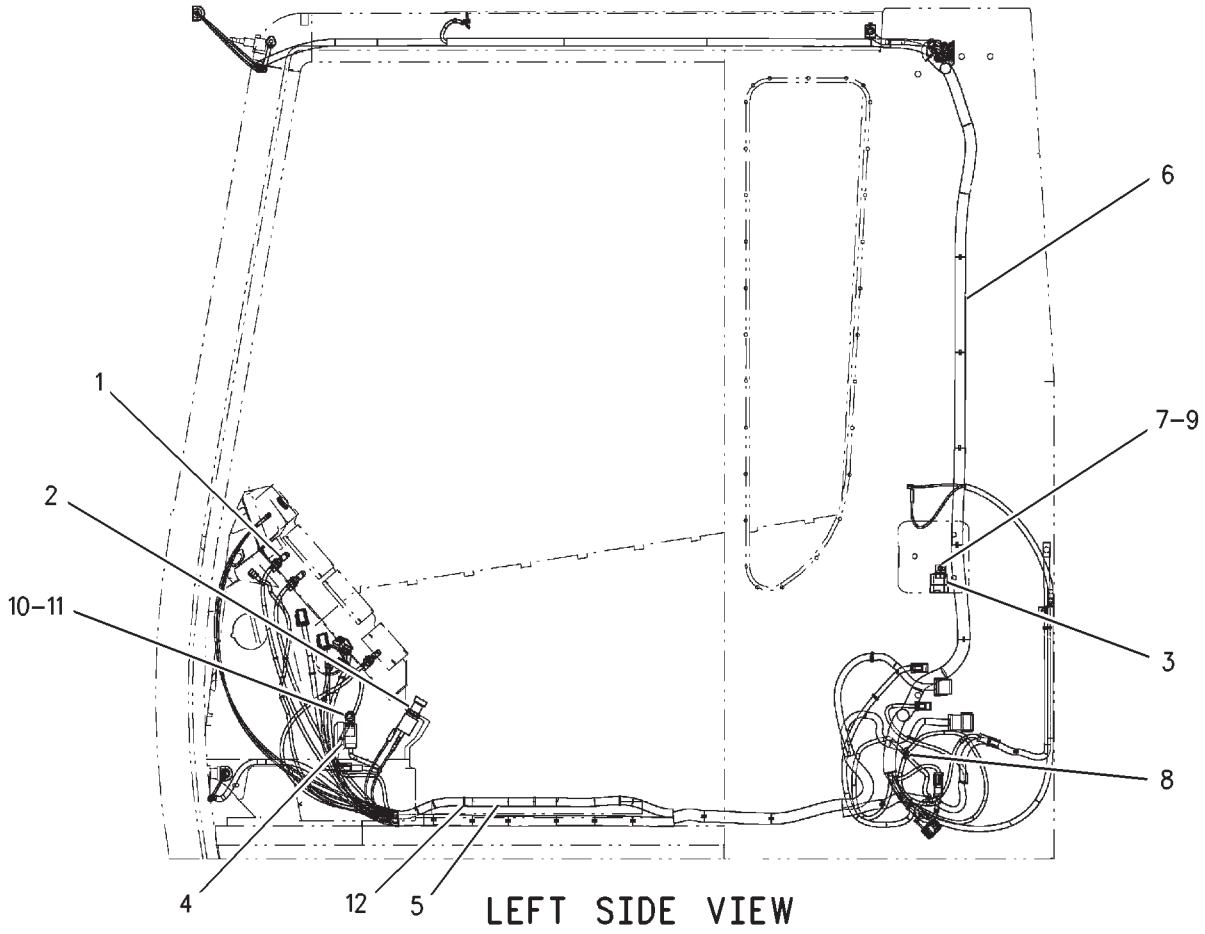

GRAPHIC #1 **<END>** g00891515

ELECTRICAL AND STARTING SYSTEM

237-2191 WIRING GP-CAB

S/N: RCD1-UP
PART OF 237-3586 SEAT AR-SUSPENSION
AN ATTACHMENT

SMCS-1408, 7301 **i01912614**

NOTE	REF NO	GRAPHIC REF	PART NUMBER	QTY	PART NAME 1 2 3 4 5 6 (PRODUCT LEVEL)	SEE PAGE
	1	1	**3S-2093**	14	STRAP-CABLE	
	2	1	**237-2193**	1	HARNESS AS	
		1	**102-8802**	1	KIT-RECEPTACLE (2-PIN)	
		1	**102-8806**	10	KIT-RECEPTACLE (8-PIN)	
					(EACH RECEPTACLE KIT INCLUDES RECEPTACLE AS & WEDGE)	
		1	**155-2265**	1	KIT-CONNECTING PLUG (8-PIN)	
					(INCLUDES PLUG AS, WEDGE & INTERFACE SEAL)	

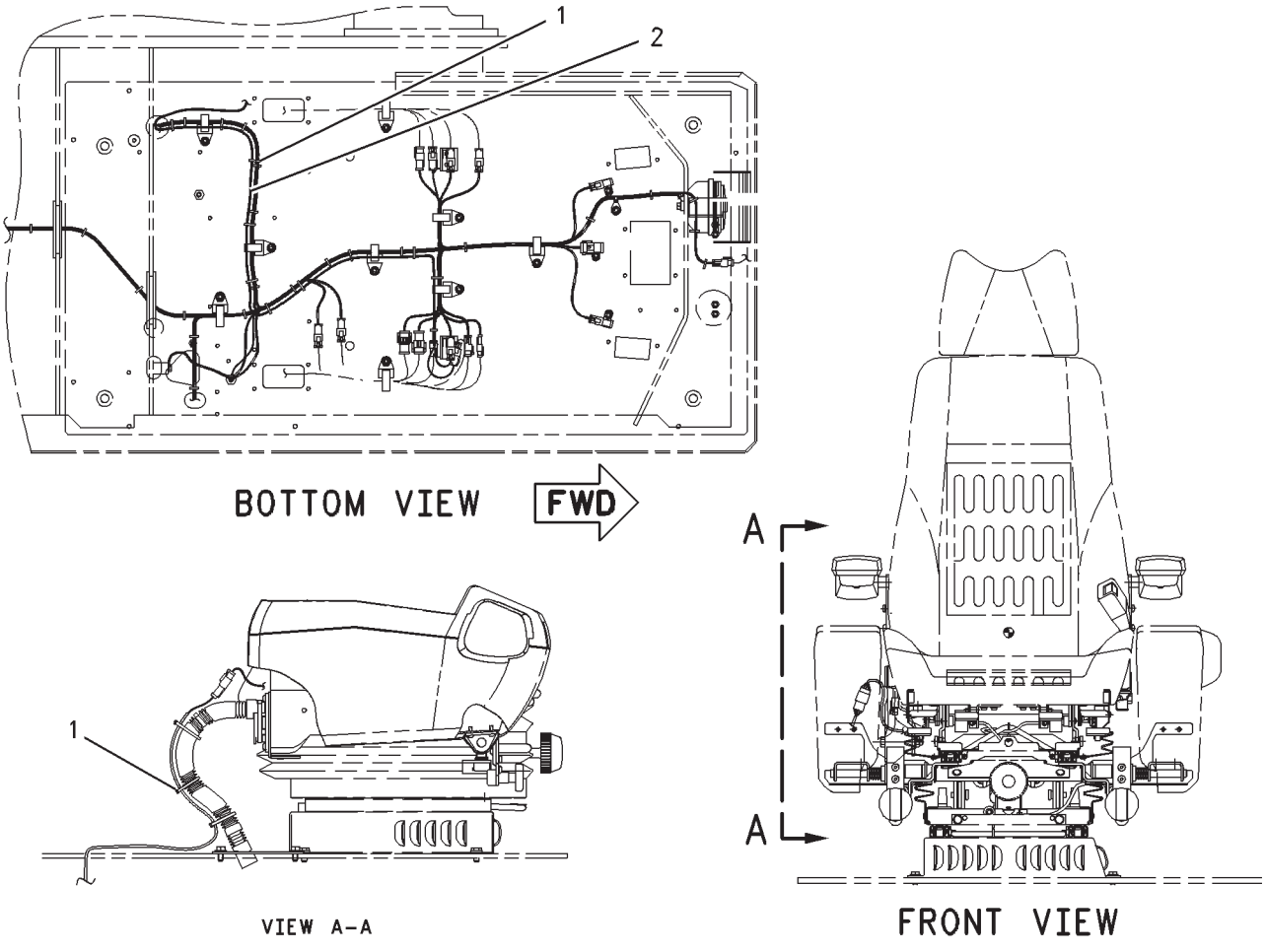

GRAPHIC #1 **<END>** g01000860

ELECTRICAL AND STARTING SYSTEM

163-2152 WIRING GP-CONSOLE

S/N: RCD1-167

PART OF 222-3445 OPERATOR AR

SMCS-1408 **i01856811**

NOTE	PART NUMBER	QTY	PART NAME 1 2 3 4 5 6 (PRODUCT LEVEL)	SEE PAGE
Y	*216-6790*	1	WIRING GP-CONSOLE (LH)	300
Y	*206-3382*	1	WIRING GP-CONSOLE (RH)	296

Y-SEPARATE ILLUSTRATION

<END>

ELECTRICAL AND STARTING SYSTEM

206-3382 WIRING GP-CONSOLE–RH

S/N: RCD1-UP

PART OF 163-2152, 244-6767 WIRING GP-CONSOLE

SMCS-1408 **i01856817**

NOTE	REF NO	GRAPHIC REF	PART NUMBER	QTY	PART NAME 1 2 3 4 5 6 (PRODUCT LEVEL)	SEE PAGE
	1	1	**114-0421**	1	SWITCH AS-TOGGLE (BACKUP ENGINE PUMP REG. VALVE)	
		1	**3L-8187**	12	LOCKWASHER	
		1	**6T-3631**	2	NUT-HEX (15/32-32-THD)	
		1	**6T-3632**	1	LOCKWASHER	
		1	**6T-3633**	1	RING-LOCKING	
		1	**6V-8374**	12	SCREW-MACHINE (6-32X0.25-IN)	
	2	1	**110-7884**	1	SWITCH AS-TOGGLE (MOMENTARY) (BACKUP GOVERNOR)	
		1	**3L-8187**	3	LOCKWASHER	
		1	**6T-3631**	2	NUT-HEX (15/32-32-THD)	
		1	**6T-3632**	1	LOCKWASHER	
		1	**6T-3633**	1	RING-LOCKING	
		1	**6V-8374**	3	SCREW-MACHINE (6-32X0.25-IN)	
Y	3	1	**9G-7641**	1	SWITCH GP-START (ENGINE, KEY)	288
	4	1	**113-0308**	1	SEAL-O-RING	
	5	1	**121-1160**	1	WASHER (25.5X34X1-MM THK)	
	6	1	**138-5135**	1	PANEL AS-CONTROL	
	7	1	**185-9208**	1	KNOB AS	
M	8	1	**6V-5210**	4	SCREW-MACHINE (M4X0.7X10-MM)	
	9	1	**096-6166**	4	WASHER-HARD (4.5X9X1-MM THK)	
	10	1	**106-0107**	1	SWITCH GP-ROTARY (THROTTLE POSITION)	
		1	**102-8805**	1	KIT-RECEPTACLE (6-PIN)	
		1	**3E-3383**	1	WEDGE-RECEPTACLE LOCK (6-PIN)	
M		1	**7Y-5458**	1	NUT (M12X1-THD)	
		1	**7Y-5464**	1	WASHER (12.2X15.4X0.5-MM THK)	
		1	**8T-8737**	1	PLUG-SEAL	
		1	**106-0210**	1	SEAL	
	11	1	**207-4095**	1	HARNESS AS	
		1	**102-8802**	3	KIT-RECEPTACLE (2-PIN)	
		1	**102-8807**	1	KIT-CONNECTING PLUG (2-PIN)	
		1	**102-8806**	1	KIT-RECEPTACLE (8-PIN)	
		1	**102-8801**	2	KIT-RECEPTACLE (12-PIN)	
		1	**155-2255**	2	KIT-CONNECTING PLUG (12-PIN)	
		1	**155-2265**	1	KIT-CONNECTING PLUG (8-PIN)	
		1	**155-2270**	1	KIT-CONNECTING PLUG (2-PIN)	
		1	**155-2274**	3	KIT-CONNECTING PLUG (6-PIN)	
	12	1	**116-0082**	4	STRAP	
	13	1	**106-0211**	1	BRACKET AS	
M		1	**6V-9632**	2	NUT-WELD (M6X1-THD)	
	14	1	**3S-2093**	2	STRAP-CABLE	
	15	1	**125-4726**	1	CLIP	
	16	1	**9G-0011**	2	SWITCH AS-TOGGLE (BACKUP,TRAVEL RIGHT)	
					(EACH INCLUDES)	
		1	**3L-8187**	3	LOCKWASHER	
		1	**6T-3631**	2	NUT-HEX (15/32-32-THD)	
		1	**6T-3632**	1	LOCKWASHER	
		1	**6T-3633**	1	RING-LOCKING	
		1	**6V-8374**	3	SCREW-MACHINE (6-32X0.25-IN)	
	17	1	**119-5026**	3	SCREW-PAN HEAD (10-16X0.63-IN)	
	18	1	**121-1049**	1	BRACKET	
	19	1	**7N-8008**	1	SWITCH AS-TOGGLE (BACKUP,TRAVEL LEFT)	
		1	**3L-8187**	6	LOCKWASHER	
		1	**6T-3631**	2	NUT-HEX (15/32-32-THD)	
		1	**6T-3632**	1	LOCKWASHER	
		1	**6T-3633**	1	RING-LOCKING	
		1	**6V-8374**	6	SCREW-MACHINE (6-32X0.25-IN)	

206-3382 **WIRING GP-CONSOLE** ***(contd.)*** **i01856817**

M-METRIC PART
Y-SEPARATE ILLUSTRATION

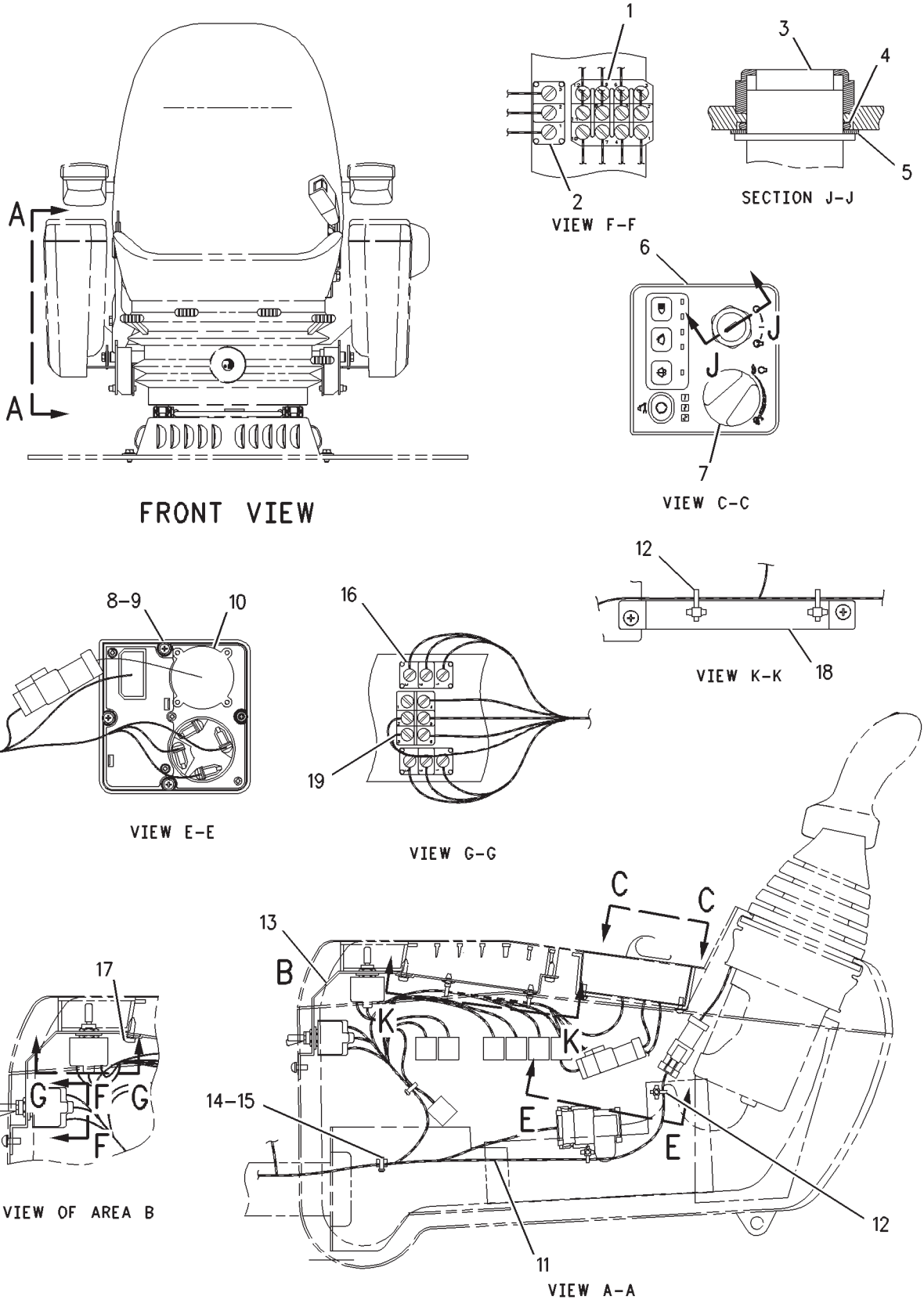

GRAPHIC #1 **<END>** g00878010

ELECTRICAL AND STARTING SYSTEM

206-3479 WIRING GP-CONSOLE–RH

S/N: RCD1-UP
SMART BOOM
PART OF 213-4216 VALVE AR-BOOM LOWERING CONTROL
AN ATTACHMENT

SMCS-1408 **i01856827**

NOTE	REF NO	GRAPHIC REF	PART NUMBER	QTY	PART NAME 1 2 3 4 5 6 (PRODUCT LEVEL)	SEE PAGE
	1	1	**186-4639**	1	SWITCH AS-ROCKER	
		1	**167-3542**	1	CONNECTOR-RECEPTACLE	
		1	**167-3543**	5	TERMINAL	

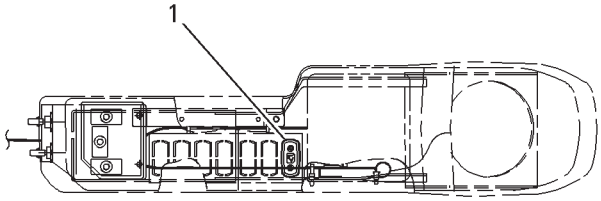

VIEW A-A

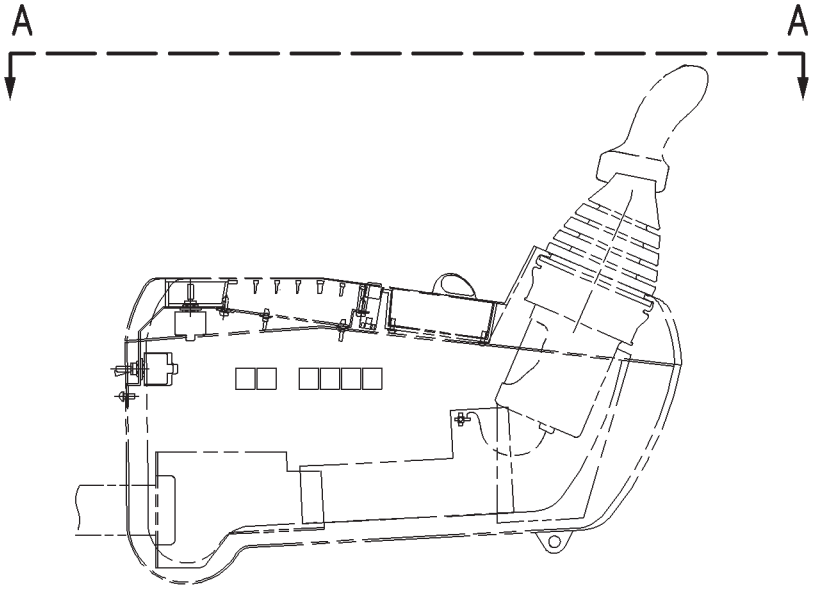

RIGHT SIDE VIEW

GRAPHIC #1 **<END>** g00864285

ELECTRICAL AND STARTING SYSTEM

216-6790 WIRING GP-CONSOLE–LH

S/N: RCD1-167

PART OF 163-2152 WIRING GP-CONSOLE

SMCS-1408 **i02194165**

NOTE	REF NO	GRAPHIC REF	PART NUMBER	QTY	PART NAME 1 2 3 4 5 6 (PRODUCT LEVEL)	SEE PAGE
	1	1	**119-5026**	4	SCREW-PAN HEAD (10-16X0.63-IN)	
	2	1	**139-5345**	9	FUSE (5-AMPERE)	
	3	1	**9W-1442**	13	FUSE (10-AMPERE)	
	4	1	**9W-1441**	3	FUSE (15-AMPERE)	
	5	1	**7Y-5493**	1	TOOL (FUSE PULLER)	
	6	1	**111-4799**	1	SWITCH AS-LIMIT (NEUTRAL START LIMIT SWITCH)	
		1	**102-8803**	1	KIT-RECEPTACLE (3-PIN)	
					(INCLUDES RECEPTACLE AS & WEDGE)	
BD		1	**5P-5998**		TUBE	
M	7	1	**120-9027**	2	SCREW-PAN HEAD (M3X0.5X16-MM)	
	8	1	**096-5962**	2	WASHER-HARD (3.4X7X0.8-MM THK)	
	9	1	**215-7902**	1	HARNESS AS-CONSOLE	
		1	**102-8801**	1	KIT-RECEPTACLE (12-PIN)	
		1	**102-8802**	1	KIT-RECEPTACLE (2-PIN)	
					(EACH RECEPTACLE KIT INCLUDES RECEPTACLE AS & WEDGE)	
		1	**3S-2093**	9	STRAP-CABLE	
		1	**8T-8737**	7	PLUG-SEAL	
		1	**111-4812**	1	BASE	
		1	**116-0128**	1	SEAL	
		1	**121-1038**	1	HOUSING-RECEPTACLE	
		1	**134-3297**	1	SEAL	
		1	**155-2255**	2	KIT-CONNECTING PLUG (12-PIN)	
					(EACH INCLUDES PLUG AS, WEDGE & INTERFACE SEAL)	
		1	**155-2265**	1	KIT-CONNECTING PLUG (8-PIN)	
		1	**155-2260**	1	KIT-CONNECTING PLUG (3-PIN)	
		1	**155-2270**	1	KIT-CONNECTING PLUG (2-PIN)	
		1	**155-2271**	1	KIT-CONNECTING PLUG (4-PIN)	
		1	**155-2274**	1	KIT-CONNECTING PLUG (6-PIN)	
					(EACH PLUG KIT INCLUDES PLUG AS, WEDGE & INTERFACE SEAL)	
	10	1	**116-0082**	2	STRAP	
	11	1	**125-4726**	1	CLIP	
	12	1	**3S-2093**	15	STRAP-CABLE	
	13	1	**136-4731**	1	HARNESS AS-RADIO	
		1	**102-8806**	2	KIT-RECEPTACLE (8-PIN)	
					(EACH INCLUDES RECEPTACLE AS & WEDGE)	
		1	**3S-2093**	4	STRAP-CABLE	
		1	**8T-8737**	8	PLUG-SEAL	
		1	**155-2265**	1	KIT-CONNECTING PLUG (8-PIN)	
					(INCLUDES PLUG AS, WEDGE & INTERFACE SEAL)	
	14	1	**111-4846**	1	CABLE	

B-USE AS REQUIRED
D-ORDER BY THE METER
M-METRIC PART

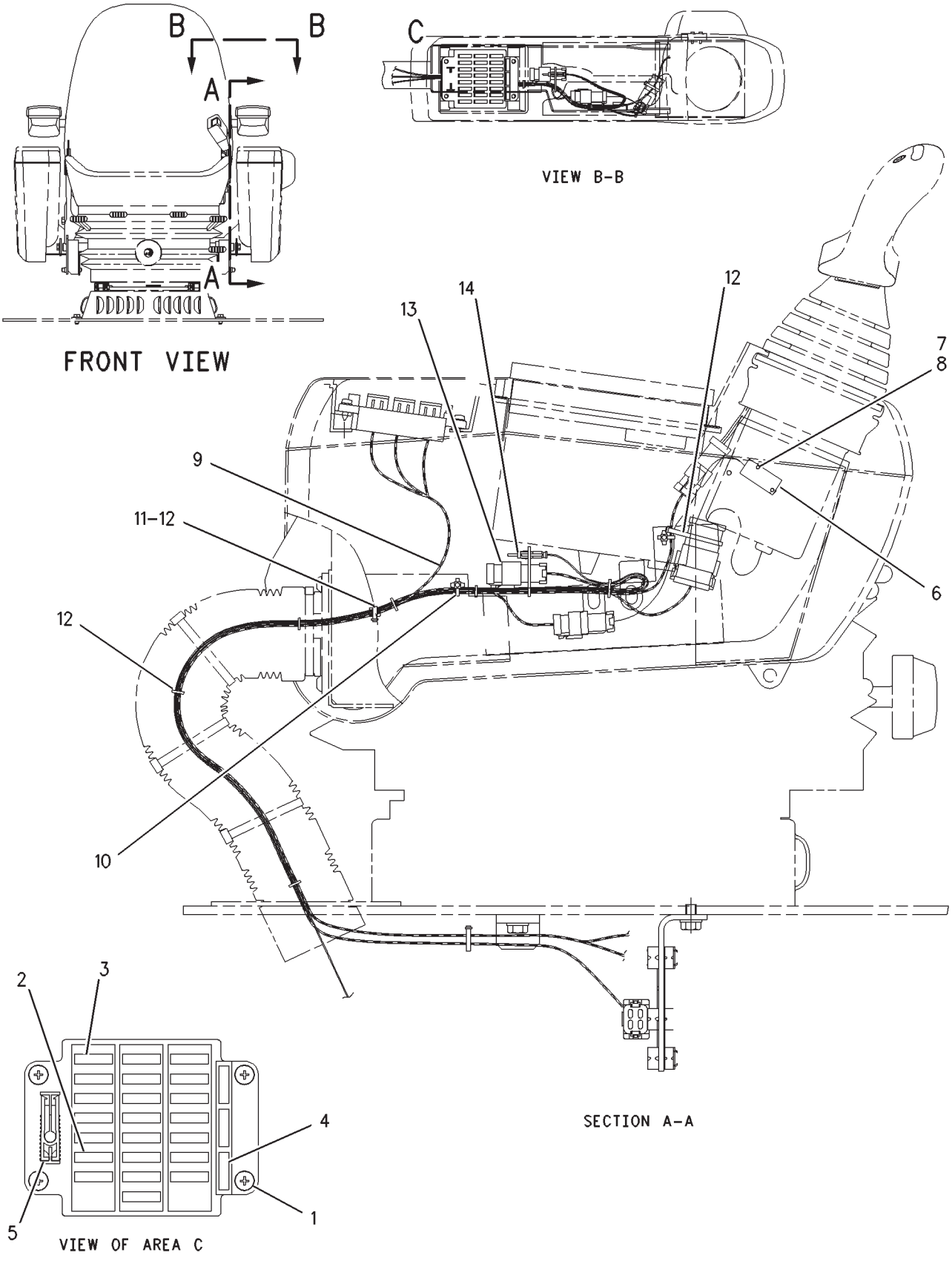

GRAPHIC #1 **<END>** g00893252

ELECTRICAL AND STARTING SYSTEM

244-6767 WIRING GP-CONSOLE

S/N: RCD168-UP

PART OF 222-3445 OPERATOR AR

SMCS-1408 **i02125855**

NOTE	PART NUMBER	QTY	PART NAME 1 2 3 4 5 6 (PRODUCT LEVEL)	SEE PAGE
Y	*206-3382*	1	WIRING GP-CONSOLE (RH)	296
Y	*244-8555*	1	WIRING GP-CONSOLE (LH) (LH)	303

Y-SEPARATE ILLUSTRATION

<END>

ELECTRICAL AND STARTING SYSTEM

244-8555 WIRING GP-CONSOLE–LH

S/N: RCD168-UP

PART OF 244-6767 WIRING GP-CONSOLE

SMCS-1408 **i02125950**

NOTE	REF NO	GRAPHIC REF	PART NUMBER	QTY	PART NAME 1 2 3 4 5 6 (PRODUCT LEVEL)	SEE PAGE
	1	1	**119-5026**	4	SCREW-PAN HEAD (10-16X0.63-IN)	
	2	1	**139-5345**	9	FUSE (5-AMPERE)	
	3	1	**9W-1442**	13	FUSE (10-AMPERE)	
	4	1	**9W-1441**	3	FUSE (15-AMPERE)	
	5	1	**7Y-5493**	1	TOOL (FUSE PULLER)	
	6	1	**111-4799**	1	SWITCH AS-LIMIT (NEUTRAL START)	
		1	**102-8803**	1	KIT-RECEPTACLE (3-PIN)	
					(INCLUDES RECEPTACLE AS & WEDGE)	
M	7	1	**120-9027**	2	SCREW-PAN HEAD (M3X0.5X16-MM)	
	8	1	**096-5962**	2	WASHER-HARD (3.4X7X0.8-MM THK)	
	9	1	**215-7902**	1	HARNESS AS-CONSOLE	
		1	**111-4812**	1	BASE (FUSE)	
		1	**102-8802**	1	KIT-RECEPTACLE (2-PIN)	
		1	**102-8801**	1	KIT-RECEPTACLE (12-PIN)	
					(EACH RECEPTACLE KIT INCLUDES RECEPTACLE AS & WEDGE)	
		1	**8T-8737**	7	PLUG-SEAL	
		1	**116-0128**	1	SEAL	
		1	**134-3297**	1	SEAL	
		1	**155-2255**	2	KIT-CONNECTING PLUG (12-PIN)	
		1	**155-2260**	1	KIT-CONNECTING PLUG (3-PIN)	
		1	**155-2270**	1	KIT-CONNECTING PLUG (2-PIN)	
		1	**155-2274**	1	KIT-CONNECTING PLUG (6-PIN)	
					(EACH PLUG KIT INCLUDES PLUG AS, WEDGE & INTERFACE SEAL)	
		1	**155-2272**	1	PLUG AS-CONNECTOR (4-PIN)	
	10	1	**116-0082**	2	STRAP	
	11	1	**125-4726**	1	CLIP	
	12	1	**3S-2093**	16	STRAP-CABLE	
	13	1	**243-5653**	1	HARNESS AS-CONSOLE	
		1	**102-8804**	1	KIT-RECEPTACLE (4-PIN)	
		1	**102-8806**	1	KIT-RECEPTACLE (8-PIN)	
					(EACH RECEPTACLE KIT INCLUDES RECEPTACLE AS & WEDGE)	
		1	**8T-8737**	1	PLUG-SEAL	
		1	**155-2272**	1	PLUG AS-CONNECTOR (4-PIN)	
	14	1	**111-4846**	1	CABLE	

M-METRIC PART

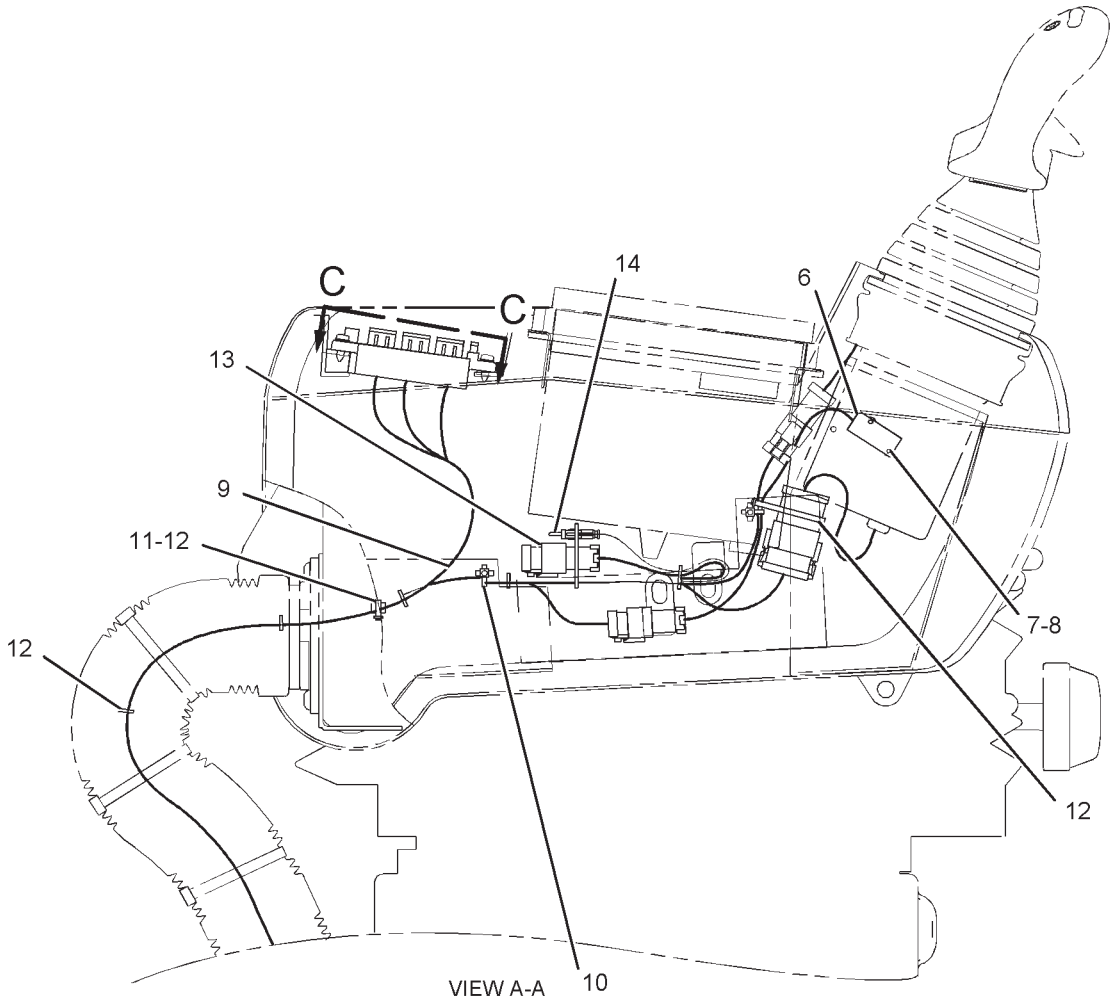

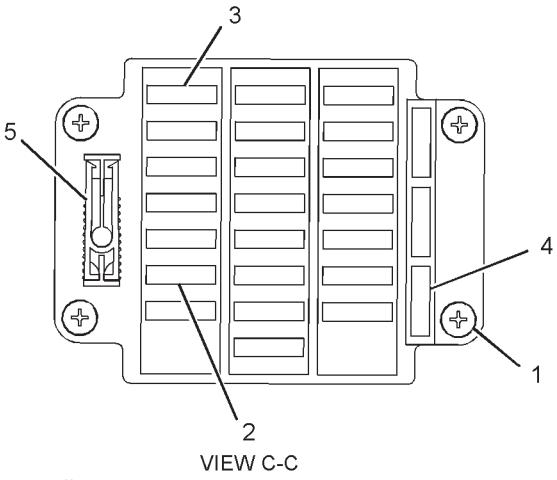

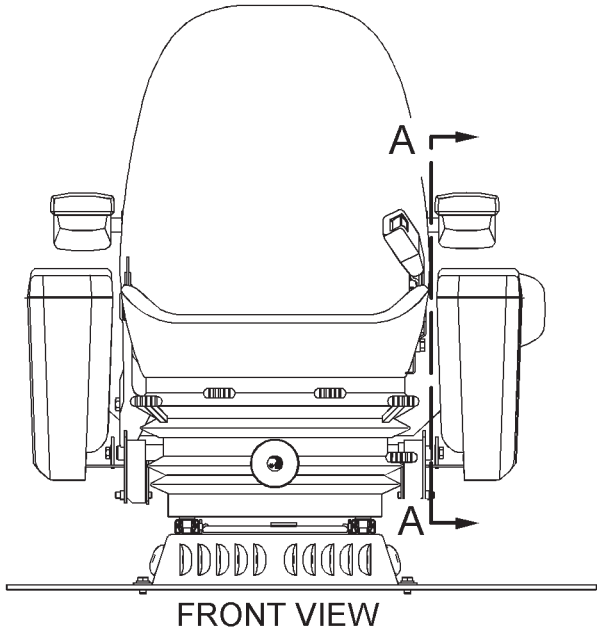

GRAPHIC #1 **<END>** g01093310

ELECTRICAL AND STARTING SYSTEM

170-6854 WIRING GP-COUNTERWEIGHT

S/N: RCD1-UP
COUNTERWEIGHT REMOVAL
PART OF 157-9989 COUNTERWEIGHT AR
AN ATTACHMENT

SMCS-7056 **i01738011**

NOTE	REF NO	GRAPHIC REF	PART NUMBER	QTY	PART NAME 1 2 3 4 5 6 (PRODUCT LEVEL)	SEE PAGE
	1	1	**170-6986**	1	HARNESS AS	
		1	**102-8803**	1	KIT-RECEPTACLE (3-PIN)	
		1	**155-2270**	1	KIT-CONNECTING PLUG (2-PIN)	
	2	1	**3S-2093**	6	STRAP-CABLE	
	3	1	**8T-4121**	1	WASHER-HARD (11X21X2.5-MM THK)	
	4	1	**116-0118**	1	CLIP	
M	5	1	**8T-4137**	1	BOLT (M10X1.5X20-MM)	
	6	1	**114-0421**	1	SWITCH AS-TOGGLE	
		1	**3L-8187**	12	LOCKWASHER	
		1	**6T-3631**	2	NUT-HEX (15/32-32-THD)	
		1	**6T-3632**	1	LOCKWASHER	
		1	**6T-3633**	1	RING-LOCKING	
		1	**6V-8374**	12	SCREW-MACHINE (6-32X0.25-IN)	
	7	1	**132-1854**	1	BRACKET	
M	8	1	**6V-9673**	2	SCREW-MACHINE (M5X0.8X12-MM)	
	9	1	**8T-0328**	2	WASHER-HARD (5.5X10X1-MM THK)	
	10	1	**111-4836**	1	CLIP	

M-METRIC PART

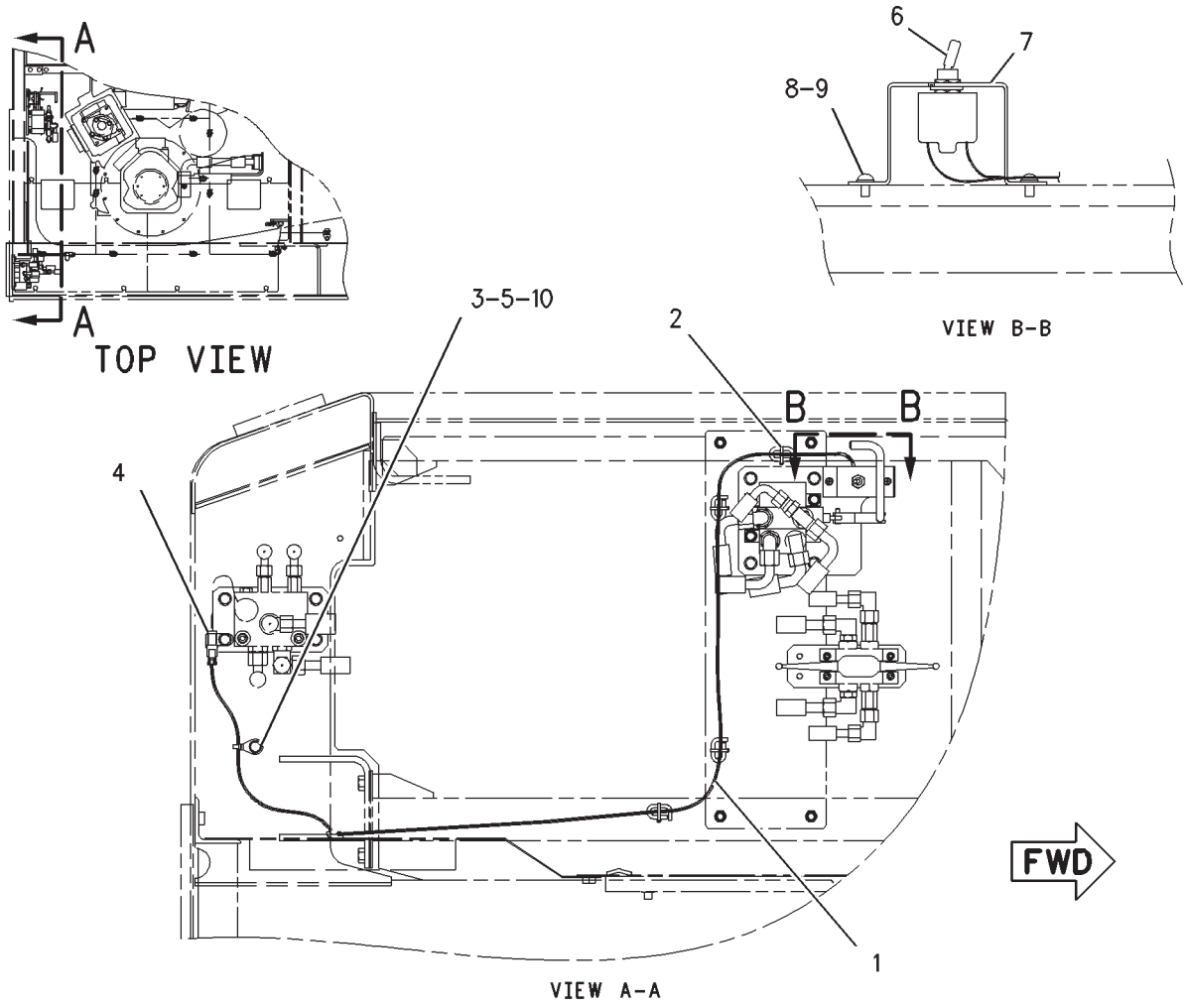

GRAPHIC #1 **<END>** g00838290

ELECTRICAL AND STARTING SYSTEM

172-4294 WIRING GP-ENGINE

S/N: BLC426-UP

PART OF 205-5858, 235-4685 ENGINE AR-COMPLETE

SMCS-1408 **i01517288**

NOTE	REF NO	GRAPHIC REF	PART NUMBER	QTY	PART NAME 1 2 3 4 5 6 (PRODUCT LEVEL)	SEE PAGE
	1	1	**145-3850**	1	HARNESS AS-ENGINE	
		1	**155-2270**	4	KIT-CONNECTING PLUG (2-PIN)	
					(INCLUDES PLUG AS AND WEDGE)	
		1	**102-8812**	4	SEAL	
		1	**102-8802**	1	KIT-RECEPTACLE (2-PIN)	
					(INCLUDES RECEPTACLE AS AND WEDGE)	
		1	**102-8803**	4	KIT-RECEPTACLE (3-PIN)	
					(INCLUDES RECEPTACLE AS AND WEDGE)	
		1	**155-2255**	1	KIT-CONNECTING PLUG (12-PIN)	
					(INCLUDES PLUG AS AND WEDGE)	
		1	**102-8817**	1	SEAL	
		1	**110-6845**	1	PLUG AS-CONNECTOR (40-PIN)	
		1	**110-6844**	1	SEAL	
		1	**110-6846**	1	PLUG AS-CONNECTOR (40-PIN)	
		1	**110-6844**	1	SEAL	
		1	**155-2260**	4	KIT-CONNECTING PLUG (3-PIN)	
					(INCLUDES PLUG AS AND WEDGE)	
		1	**102-8813**	4	SEAL	
	2	1	**4P-7581**	7	CLIP	
	3	1	**4P-8134**	3	CLIP	
	4	1	**3S-2093**	19	STRAP-CABLE	
	5	1	**0S-0509**	5	BOLT (3/8-16X0.75-IN)	
	6	1	**5M-2894**	11	WASHER-HARD (10.2X18.5X2.5-MM THK)	
	7	1	**2H-3755**	1	BOLT (5/16-18X0.43-IN)	
	8	1	**3E-4352**	1	WASHER-HARD (8.8X20.5X2.5-MM THK)	
	9	1	**8Y-7833**	1	WIRE AS	
	10	1	**6V-8801**	3	NUT (3/8-16-THD)	
	11	1	**8T-4896**	2	WASHER-HARD (10.2X18.5X2.5-MM THK)	
	12	1	**0T-0573**	2	BOLT (3/8-16X2.75-IN)	
	13	1	**9M-9224**	1	SPACER (0.406X0.75X1.688-IN THK)	
	14	1	**9X-6258**	4	SCREW-MACHINE (6-32X0.5-IN)	
	15	1	**4B-5324**	4	WASHER (3.9X9.6X1.2-MM THK)	
	16	1	**7K-1181**	1	STRAP-CABLE	
	17	1	**0T-0102**	1	BOLT (3/8-16X0.625-IN)	
	18	1	**161-3972**	1	BRACKET	
	19	1	**110-8213**	1	BRACKET AS	
	20	1	**2S-3770**	1	SPACER (11X19X33.5-MM THK)	

172-4294 **WIRING GP-ENGINE** *(contd.)* **i01517288**

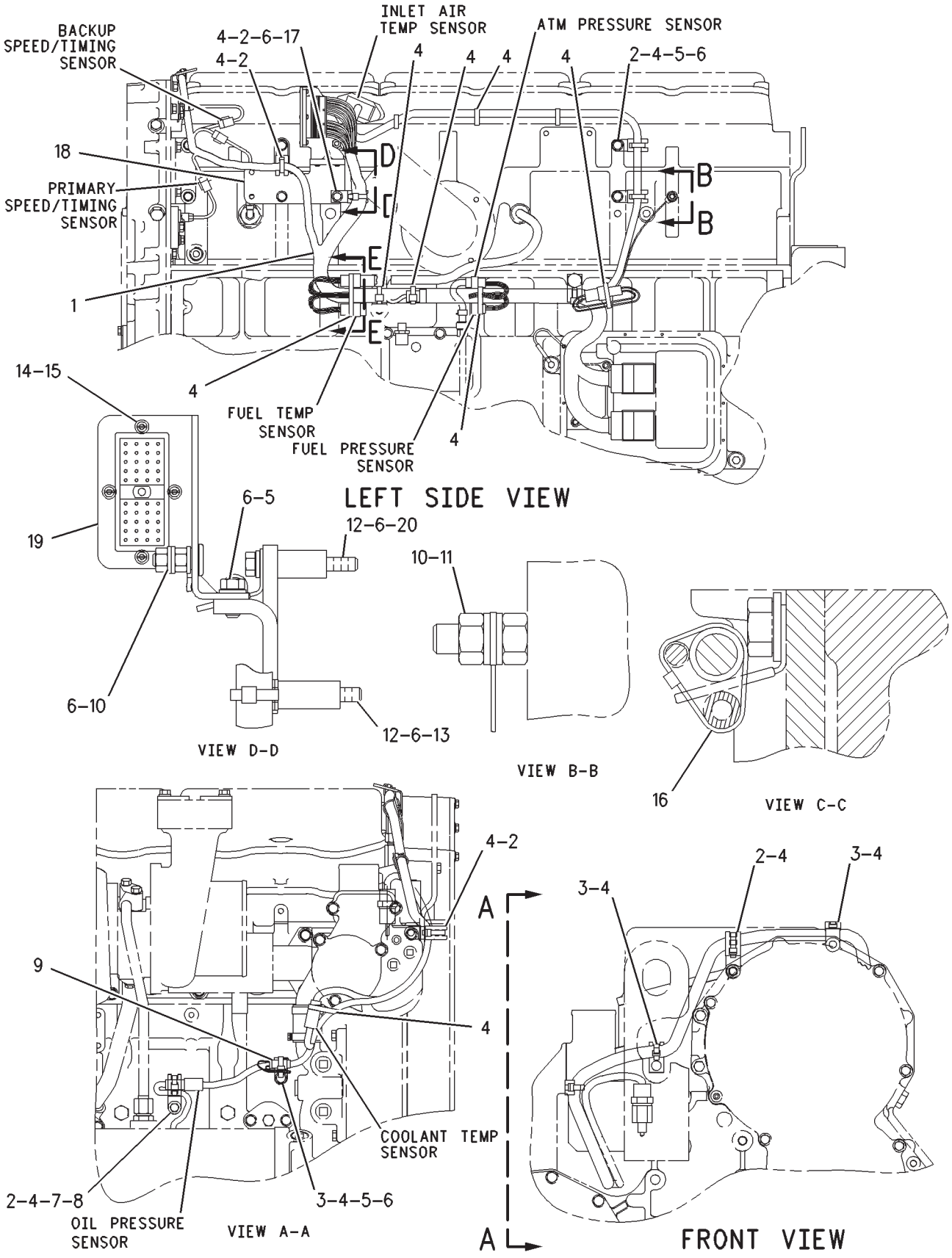

GRAPHIC #1 **<END>** g00788032

ELECTRICAL AND STARTING SYSTEM

206-4359 WIRING GP-MEDIUM PRESSURE

S/N: RCD1-UP
MEDIUM PRESSURE
PART OF 196-9816 CONTROL AR-AUXILIARY
AN ATTACHMENT

SMCS-1408 **i01535569**

NOTE	REF NO	GRAPHIC REF	PART NUMBER	QTY	PART NAME 1 2 3 4 5 6 (PRODUCT LEVEL)	SEE PAGE
	1	1	**208-2676**	1	HARNESS AS	
		1	**102-8803**	1	KIT-RECEPTACLE (3-PIN)	
		1	**155-2270**	1	KIT-CONNECTING PLUG (2-PIN)	
B	2	1	**3S-2093**	25	STRAP-CABLE	

B-USE AS REQUIRED

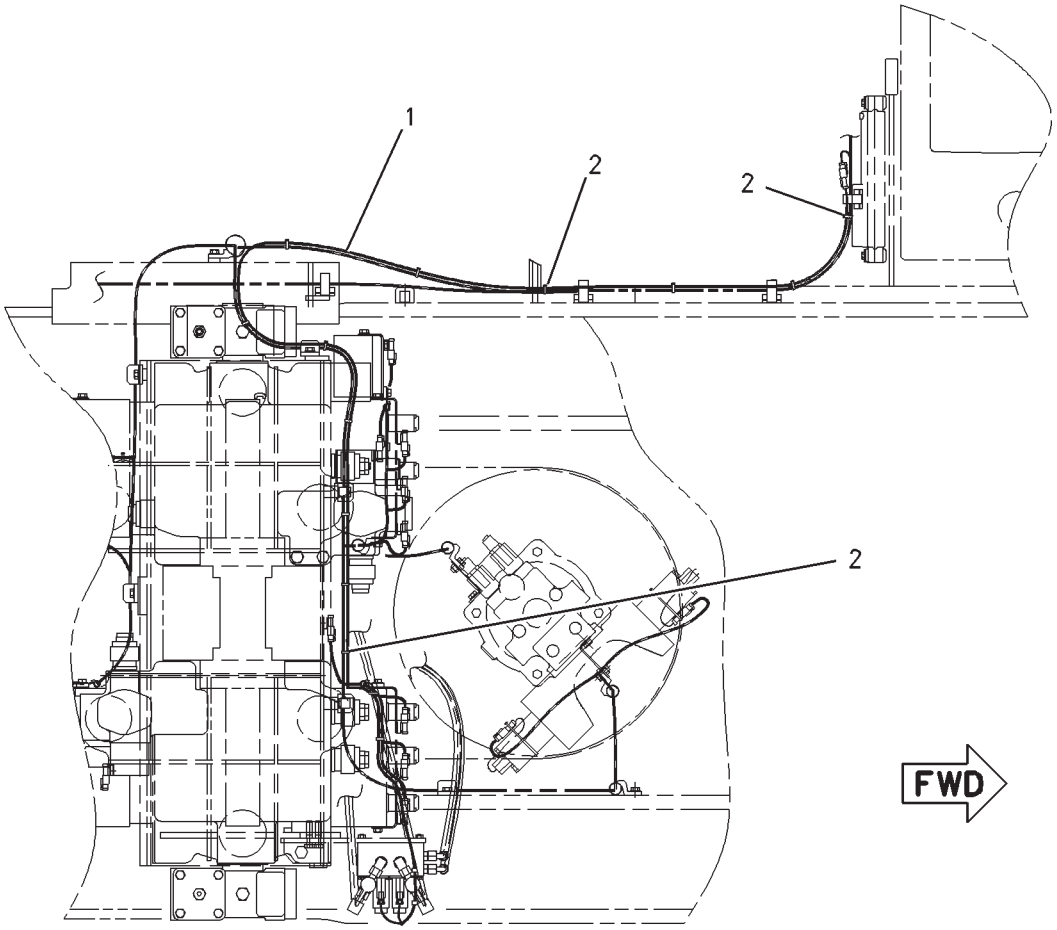

TOP VIEW

GRAPHIC #1 **<END>** g00800596

ELECTRICAL AND STARTING SYSTEM

170-6983 WIRING GP-OVERLOAD WARNING

S/N: RCD1-UP
O.L.W.D.
PART OF 171-0026, 213-4216 VALVE AR-BOOM LOWERING CONTROL AN ATTACHMENT

SMCS-1408 **i01535161**

NOTE	REF NO	GRAPHIC REF	PART NUMBER	QTY	PART NAME 1 2 3 4 5 6 (PRODUCT LEVEL)	SEE PAGE
	1	1	**132-1828**	1	SWITCH AS-ROCKER (ALARM CANCEL)	
		1	**116-0173**	1	CONNECTOR-RECEPTACLE	
		1	**116-0174**	4	TERMINAL	
M	2	1	**8T-4137**	3	BOLT (M10X1.5X20-MM)	
	3	1	**8T-4121**	3	WASHER-HARD (11X21X2.5-MM THK)	
	4	1	**111-4836**	3	CLIP	
	5	1	**170-6984**	1	HARNESS AS	
		1	**102-8803**	1	KIT-RECEPTACLE (3-PIN)	
		1	**155-2260**	1	KIT-CONNECTING PLUG (3-PIN)	

M-METRIC PART

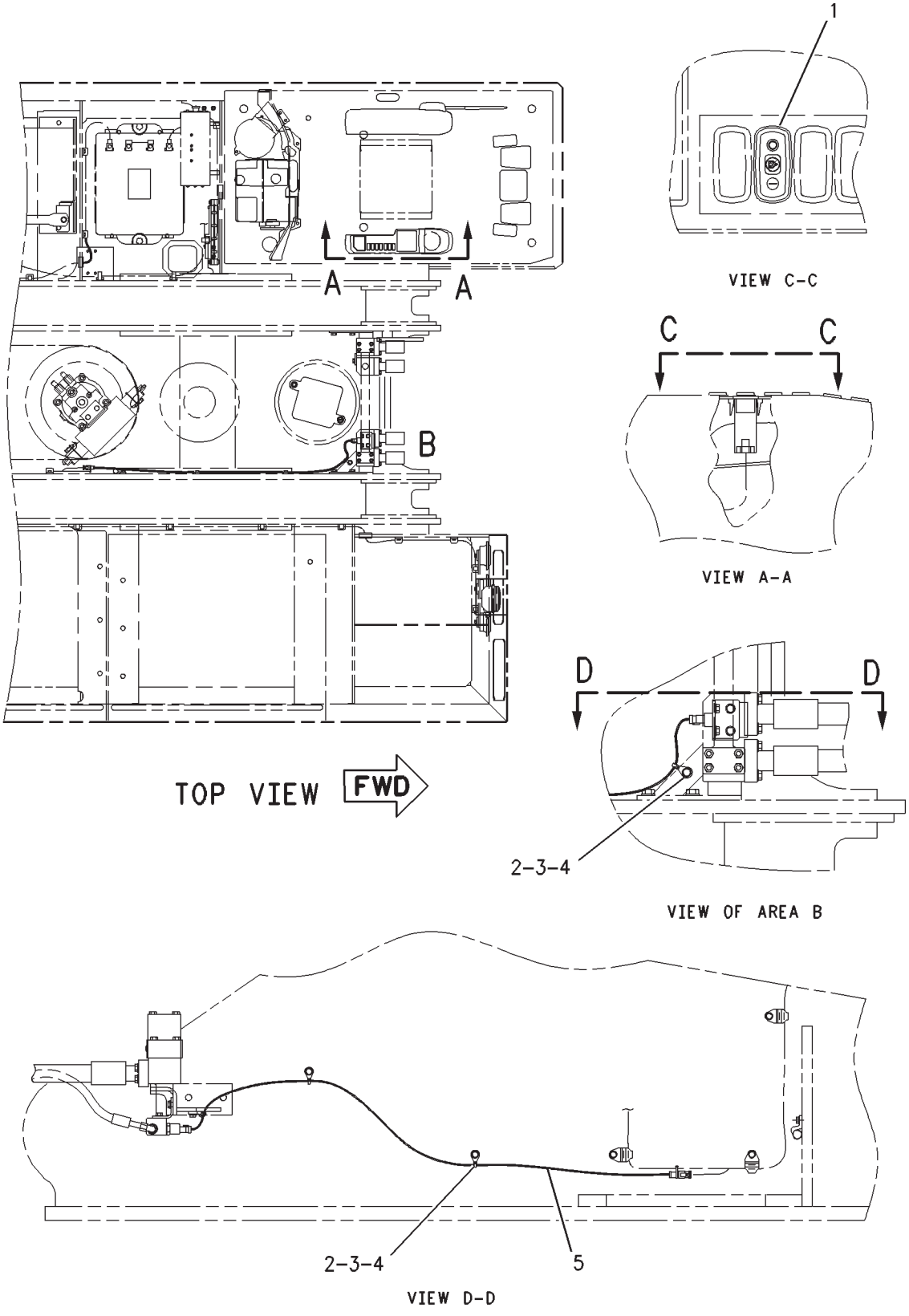

GRAPHIC #1 **<END>** g00801454

ELECTRICAL AND STARTING SYSTEM

203-7577 WIRING GP-PLATFORM

S/N: RCD1-UP
PART OF 204-1940 BATTERY & WIRING GP
TYPE 1

SMCS-1408 **i02338085**

NOTE	REF NO	GRAPHIC REF	PART NUMBER	QTY	PART NAME 1 2 3 4 5 6 (PRODUCT LEVEL)	SEE PAGE
C	1	1	**227-8090**	1	HARNESS AS-PLATFORM	
		1	**102-8802**	5	KIT-RECEPTACLE (2-PIN)	
		1	**102-8805**	3	KIT-RECEPTACLE (6-PIN)	
		1	**102-8806**	3	KIT-RECEPTACLE (8-PIN)	
		1	**102-8801**	6	KIT-RECEPTACLE (12-PIN)	
					(EACH RECEPTACLE KIT INCLUDES RECEPTACLE AS & WEDGE)	
		1	**155-2255**	8	KIT-CONNECTING PLUG (12-PIN)	
		1	**155-2260**	1	KIT-CONNECTING PLUG (3-PIN)	
		1	**155-2265**	3	KIT-CONNECTING PLUG (8-PIN)	
		1	**155-2270**	5	KIT-CONNECTING PLUG (2-PIN)	
		1	**155-2274**	5	KIT-CONNECTING PLUG (6-PIN)	
					(EACH PLUG KIT INCLUDES PLUG AS, WEDGE & INTERFACE SEAL)	
		1	**147-1445**	1	PLUG AS-CONNECTOR (70-PIN)	
		1	**160-7689**	2	PLUG AS-CONNECTOR (70-PIN)	
					(EACH PLUG AS INCLUDES)	
		1	**159-9322**	1	SEAL-O-RING	
	2	1	**216-3205**	1	HARNESS AS (TILT CAB)	
		1	**102-8802**	4	KIT-RECEPTACLE (2-PIN)	
		1	**102-8803**	2	KIT-RECEPTACLE (3-PIN)	
		1	**102-8804**	3	KIT-RECEPTACLE (4-PIN)	
		1	**102-8805**	4	KIT-RECEPTACLE (6-PIN)	
		1	**102-8806**	1	KIT-RECEPTACLE (8-PIN)	
					(EACH RECEPTACLE KIT INCLUDES RECEPTACLE AS & WEDGE)	
		1	**155-2265**	1	KIT-CONNECTING PLUG (8-PIN)	
		1	**155-2260**	1	KIT-CONNECTING PLUG (3-PIN)	
		1	**155-2270**	4	KIT-CONNECTING PLUG (2-PIN)	
		1	**155-2271**	2	KIT-CONNECTING PLUG (4-PIN)	
		1	**155-2274**	2	KIT-CONNECTING PLUG (6-PIN)	
					(EACH PLUG KIT INCLUDES PLUG AS, WEDGE & INTERFACE SEAL)	
	3	1	**108-7303**	2	GROMMET	
	4	1	**8T-4121**	23	WASHER-HARD (11X21X2.5-MM THK)	
M	5	1	**8T-4137**	16	BOLT (M10X1.5X20-MM)	
M	6	1	**8T-4191**	7	BOLT (M10X1.5X16-MM)	
	7	1	**116-0229**	2	BRACKET AS	
	8	1	**111-4838**	12	CLIP	
	9	1	**111-4839**	12	STRAP	
	10	1	**7G-1060**	1	STRAP AS-GROUND	
	11	1	**116-0118**	3	CLIP	
	12	1	**111-4836**	2	CLIP	
	13	1	**3S-2093**	27	STRAP-CABLE	
	14	1	**233-8749**	1	HARNESS AS-SENSOR	
		1	**102-8803**	1	KIT-RECEPTACLE (3-PIN)	
					(INCLUDES RECEPTACLE AS & WEDGE)	
		1	**155-2260**	1	KIT-CONNECTING PLUG (3-PIN)	
					(INCLUDES PLUG AS, WEDGE & INTERFACE SEAL)	

C-CHANGE FROM PREVIOUS TYPE
M-METRIC PART

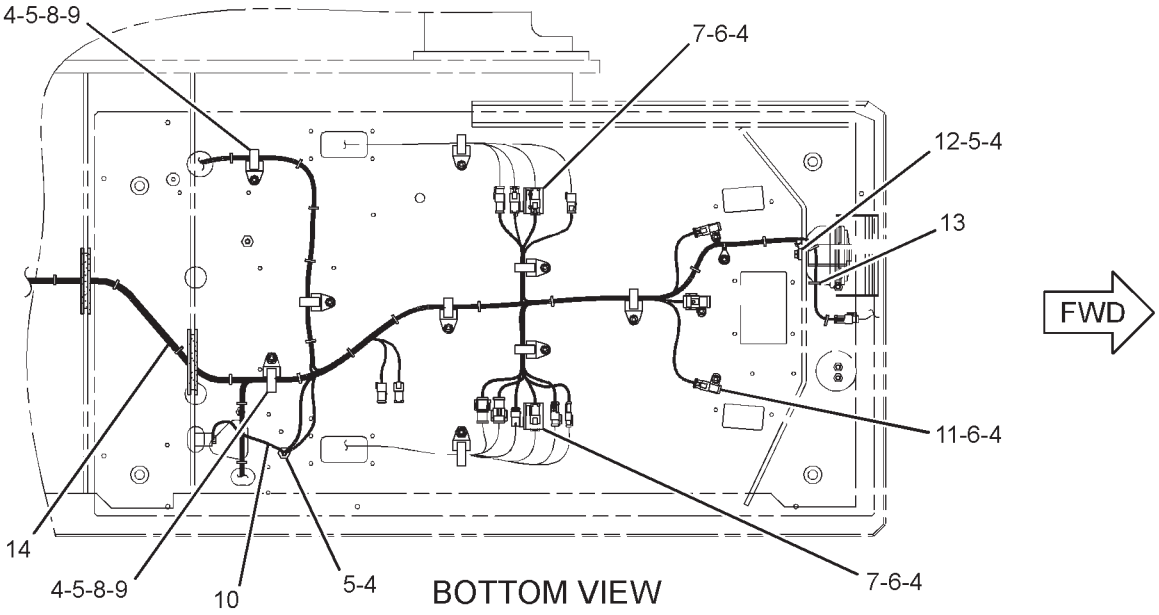

BOTTOM VIEW

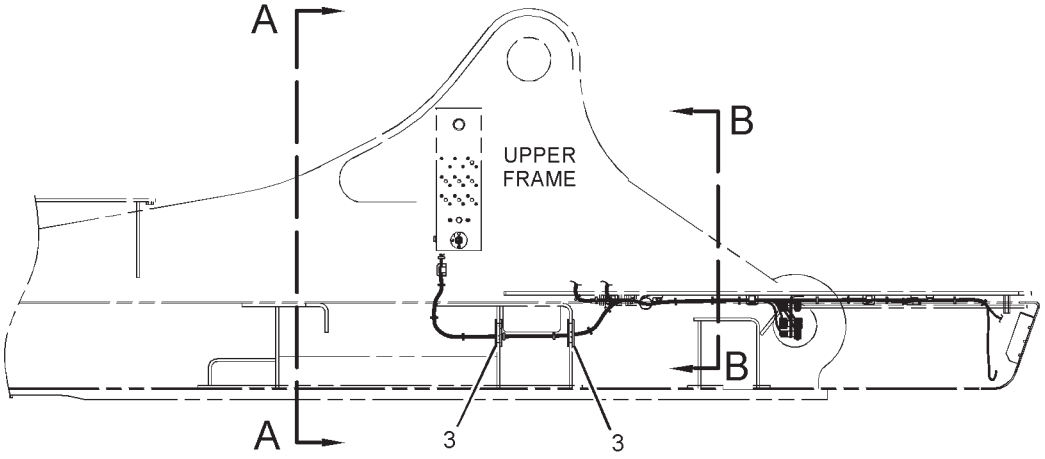

RIGHT SIDE VIEW

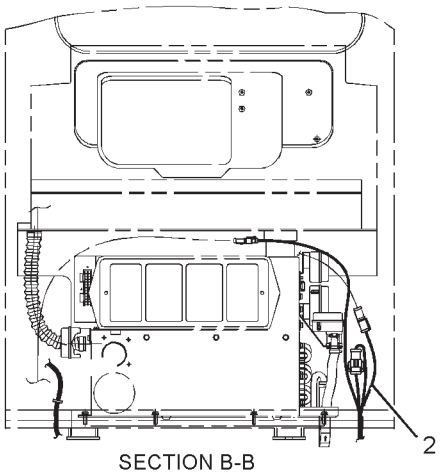

SECTION B-B

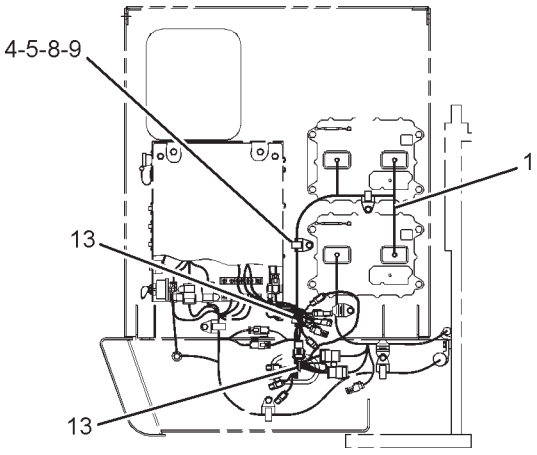

VIEW A-A

GRAPHIC #1 **<END>** g01301417

ELECTRICAL AND STARTING SYSTEM

203-7577 WIRING GP-PLATFORM

S/N: RCD1-UP
PART OF 204-1940 BATTERY & WIRING GP
TYPE 2

SMCS-1408 **i02338133**

NOTE	REF NO	GRAPHIC REF	PART NUMBER	QTY	PART NAME 1 2 3 4 5 6 (PRODUCT LEVEL)	SEE PAGE
C	1	1	**233-8719**	1	HARNESS AS-PLATFORM	
		1	**102-8802**	5	KIT-RECEPTACLE (2-PIN)	
		1	**102-8805**	3	KIT-RECEPTACLE (6-PIN)	
		1	**102-8806**	3	KIT-RECEPTACLE (8-PIN)	
		1	**102-8801**	6	KIT-RECEPTACLE (12-PIN)	
					(EACH RECEPTACLE KIT INCLUDES RECEPTACLE AS & WEDGE)	
		1	**155-2255**	8	KIT-CONNECTING PLUG (12-PIN)	
		1	**155-2260**	1	KIT-CONNECTING PLUG (3-PIN)	
		1	**155-2265**	3	KIT-CONNECTING PLUG (8-PIN)	
		1	**155-2270**	7	KIT-CONNECTING PLUG (2-PIN)	
		1	**155-2274**	5	KIT-CONNECTING PLUG (6-PIN)	
					(EACH PLUG KIT INCLUDES PLUG AS, WEDGE & INTERFACE SEAL)	
		1	**147-1445**	1	PLUG AS-CONNECTOR (70-PIN)	
		1	**160-7689**	2	PLUG AS-CONNECTOR (70-PIN)	
					(EACH PLUG AS INCLUDES)	
		1	**159-9322**		SEAL-O-RING	
	2	1	**216-3205**	1	HARNESS AS (TILT CAB)	
		1	**102-8802**	4	KIT-RECEPTACLE (2-PIN)	
		1	**102-8803**	2	KIT-RECEPTACLE (3-PIN)	
		1	**102-8804**	3	KIT-RECEPTACLE (4-PIN)	
		1	**102-8805**	4	KIT-RECEPTACLE (6-PIN)	
		1	**102-8806**	1	KIT-RECEPTACLE (8-PIN)	
					(EACH RECEPTACLE KIT INCLUDES RECEPTACLE AS & WEDGE)	
		1	**155-2265**	1	KIT-CONNECTING PLUG (8-PIN)	
		1	**155-2260**	1	KIT-CONNECTING PLUG (3-PIN)	
		1	**155-2270**	4	KIT-CONNECTING PLUG (2-PIN)	
		1	**155-2271**	2	KIT-CONNECTING PLUG (4-PIN)	
		1	**155-2274**	2	KIT-CONNECTING PLUG (6-PIN)	
					(EACH PLUG KIT INCLUDES PLUG AS, WEDGE & INTERFACE SEAL)	
	3	1	**108-7303**	2	GROMMET	
	4	1	**8T-4121**	23	WASHER-HARD (11X21X2.5-MM THK)	
M	5	1	**8T-4137**	16	BOLT (M10X1.5X20-MM)	
M	6	1	**8T-4191**	7	BOLT (M10X1.5X16-MM)	
	7	1	**116-0229**	2	BRACKET AS	
	8	1	**111-4838**	12	CLIP	
	9	1	**111-4839**	12	STRAP	
	10	1	**7G-1060**	1	STRAP AS-GROUND	
	11	1	**116-0118**	3	CLIP	
	12	1	**111-4836**	2	CLIP	
	13	1	**3S-2093**	27	STRAP-CABLE	

C-CHANGE FROM PREVIOUS TYPE
M-METRIC PART

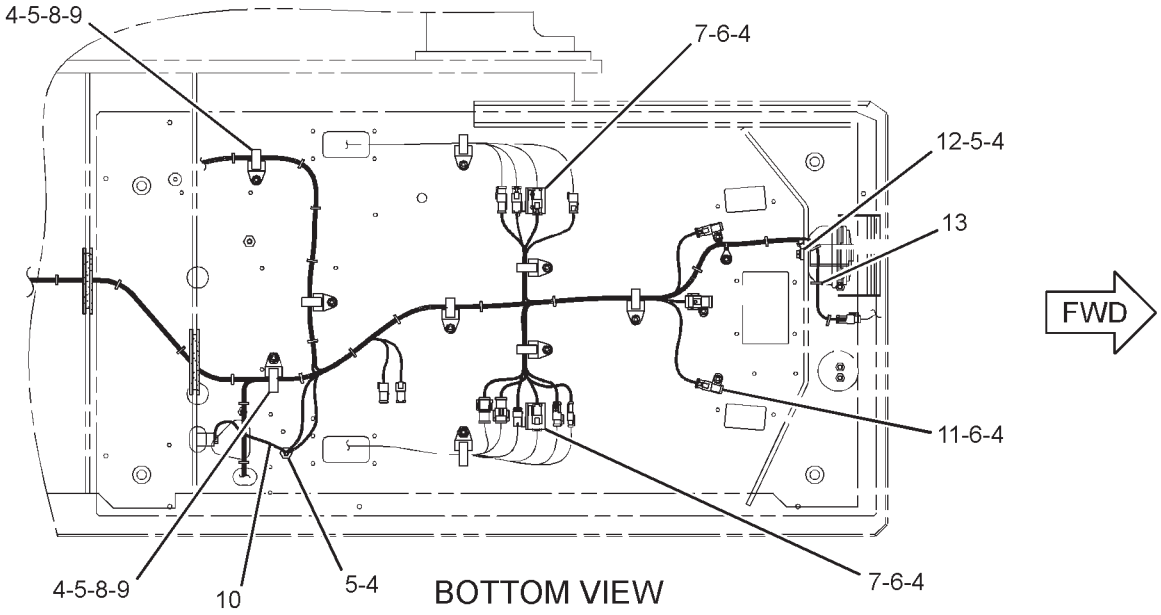

BOTTOM VIEW

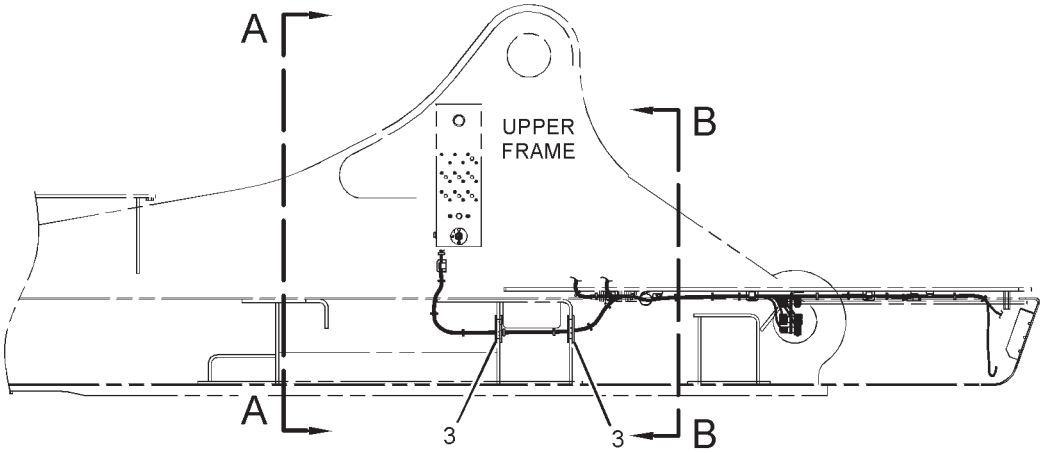

RIGHT SIDE VIEW

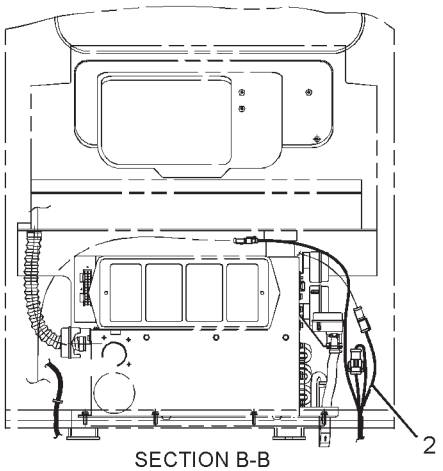

SECTION B-B

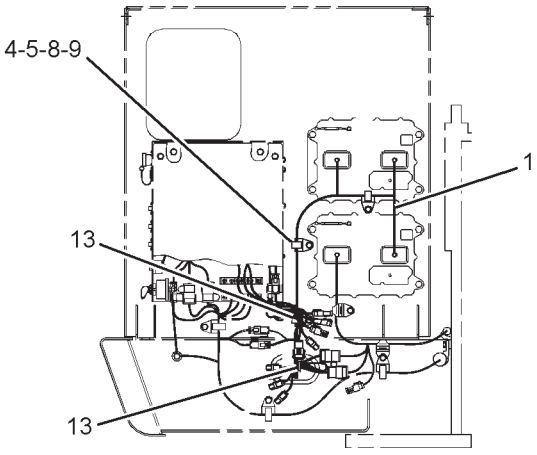

VIEW A-A

GRAPHIC #1 **<END>** g01301419

ELECTRICAL AND STARTING SYSTEM

170-6980 WIRING GP-REFUELING PUMP

S/N: RCD1-UP
PART OF 180-6894 PUMP AR-REFUELING
AN ATTACHMENT
TYPE 1

SMCS-1408 **i01534981**

NOTE	REF NO	GRAPHIC REF	PART NUMBER	QTY	PART NAME 1 2 3 4 5 6 (PRODUCT LEVEL)	SEE PAGE
	1	1	**3S-2093**	4	STRAP-CABLE	
	2	1	**152-9643**	1	PLATE	
	3	1	**8T-0328**	3	WASHER-HARD (5.5X10X1-MM THK)	
M	4	1	**8T-4191**	2	BOLT (M10X1.5X16-MM)	
	5	1	**8T-4121**	4	WASHER-HARD (11X21X2.5-MM THK)	
	6	1	**116-0118**	3	CLIP	
M	7	1	**8T-4137**	1	BOLT (M10X1.5X20-MM)	
	8	1	**111-4836**	3	CLIP	
	9	1	**149-5017**	1	HARNESS AS	
		1	**102-8802**	1	KIT-RECEPTACLE (2-PIN)	
M	10	1	**8T-4195**	1	BOLT (M10X1.5X30-MM)	
M	11	1	**8T-4171**	4	BOLT (M6X1X12-MM)	
	12	1	**9X-8256**	4	WASHER (6.6X12X2-MM THK)	
	13	1	**149-5050**	2	RELAY (24-VOLT)	
	14	1	**165-4026**	1	SWITCH AS-MAGNETIC (24-VOLT) (REFUELING POWER RELAY)	
	15	1	**116-0097**	1	SWITCH AS (REFUELING PUMP STOP)	
		1	**102-8802**	1	KIT-RECEPTACLE (2-PIN)	
		1	**3E-3365**	1	WEDGE-RECEPTACLE LOCK (2-PIN)	
	16	1	**116-0095**	1	SWITCH AS (REFUELING PUMP START)	
	17	1	**139-4724**	1	CIRCUIT BREAKER AS (30-AMPERE)	
	18	1	**9X-8486**	2	SCREW-MACHINE (8-32X0.75-IN)	
	19	1	**150-6972**	1	WIRE AS	
	20	1	**150-6971**	1	WIRE AS	

M-METRIC PART

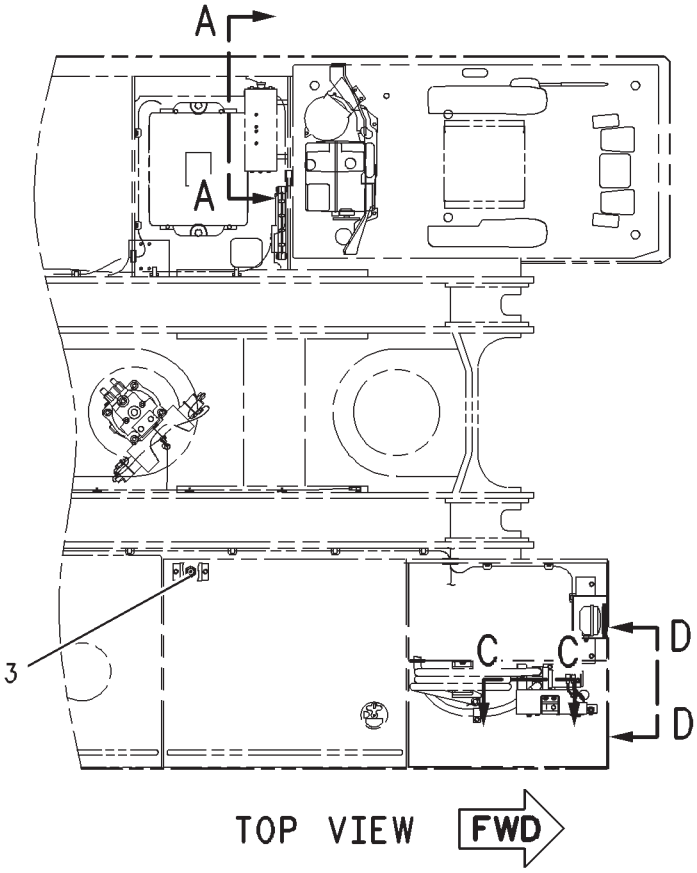

TOP VIEW FWD

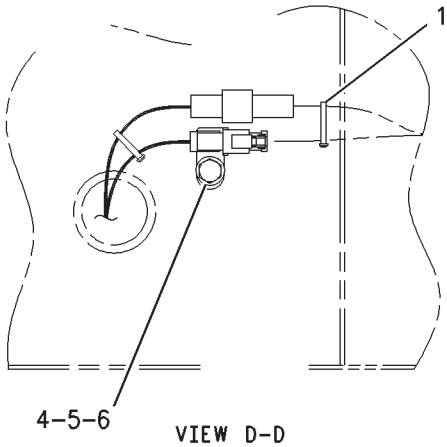

VIEW D-D

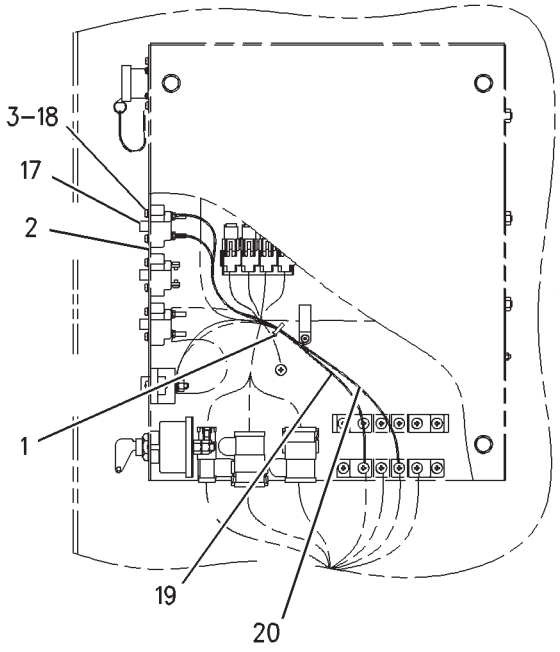

VIEW A-A

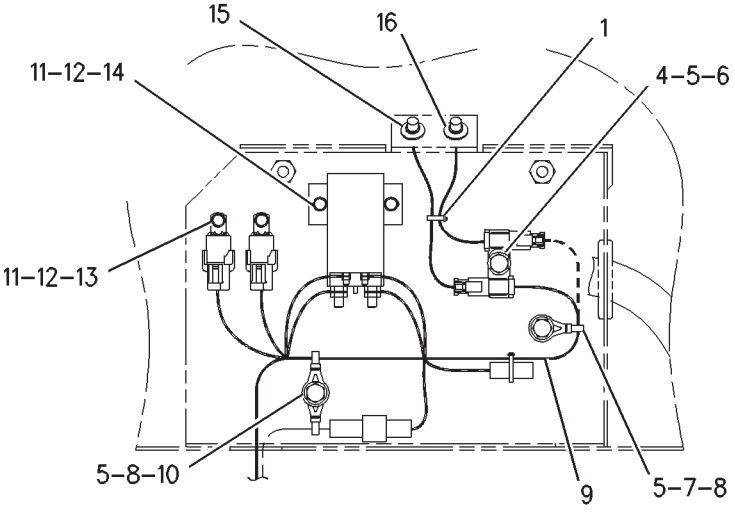

VIEW C-C

GRAPHIC #1 **<END>** g00803011

ELECTRICAL AND STARTING SYSTEM

170-6980 WIRING GP-REFUELING PUMP

S/N: RCD1-UP
PART OF 180-6894 PUMP AR-REFUELING
AN ATTACHMENT
TYPE 2

SMCS-1408 **i02358625**

NOTE	REF NO	GRAPHIC REF	PART NUMBER	QTY	PART NAME 1 2 3 4 5 6 (PRODUCT LEVEL)	SEE PAGE
	1	1	**3S-2093**	4	STRAP-CABLE	
	2	1	**152-9643**	1	PLATE	
C	3	1	**8T-0328**	5	WASHER-HARD (5.5X10X1-MM THK)	
M	4	1	**8T-4191**	2	BOLT (M10X1.5X16-MM)	
	5	1	**8T-4121**	4	WASHER-HARD (11X21X2.5-MM THK)	
	6	1	**116-0118**	3	CLIP	
M	7	1	**8T-4137**	1	BOLT (M10X1.5X20-MM)	
	8	1	**111-4836**	3	CLIP	
C	9	1	**238-2077**	1	HARNESS AS-PUMP (REFUELING PUMP)	
		1	**116-0126**	1	HOUSING-PLUG	
		1	**121-1038**	1	HOUSING-RECEPTACLE	
		1	**102-8802**	2	KIT-RECEPTACLE (2-PIN)	
					(EACH INCLUDES RECEPTACLE AS & WEDGE)	
		1	**3S-2093**	3	STRAP-CABLE	
		1	**121-1022**	1	DIODE	
		1	**155-2270**	1	KIT-CONNECTING PLUG (2-PIN)	
					(INCLUDES PLUG AS,WEDGE & INTERFACE SEAL)	
M	10	1	**8T-4195**	1	BOLT (M10X1.5X30-MM)	
CM	11	1	**8T-4171**	2	BOLT (M6X1X12-MM)	
C	12	1	**9X-8256**	2	WASHER (6.6X12X2-MM THK)	
	13	1	**149-5050**	2	RELAY (24-VOLT) (REFUELING PUMP)	
C	14	1	**213-0772**	1	SWITCH AS-MAGNETIC (24-VOLT) (REFUELING POWER RELAY)	
	15	1	**116-0097**	1	SWITCH AS (REFUELING PUMP STOP SWITCH)	
		1	**1S-0812**	2	SCREW-TAPPING	
		1	**3K-0835**	1	NUT (5/8-24-THD)	
		1	**6F-0253**	1	LOCKWASHER	
		1	**8T-8748**	1	ADAPTER-MOUNT	
D		1	**6V-2689**		TUBE-HEAT SHRINK (6.35-MM DIA) (0.2-M)	
		1	**116-0098**	1	HARNESS AS-WIRING (REFUELING PUMP, STOP)	
		1	**155-2270**	1	KIT-CONNECTING PLUG (2-PIN)	
					(INCLUDES PLUG AS,WEDGE & INTERFACE SEAL)	
	16	1	**116-0095**	1	SWITCH AS (REFUELING PUMP START SWITCH)	
D		1	**6V-2689**		TUBE-HEAT SHRINK (6.35-MM DIA) (0.2-M)	
		1	**116-0096**	1	HARNESS AS-WIRING (REFUELING PUMP, START)	
		1	**102-8802**	1	KIT-RECEPTACLE (2-PIN)	
					(INCLUDES RECEPTACLE AS & WEDGE)	
	17	1	**139-4724**	1	CIRCUIT BREAKER AS (30-AMPERE)	
		1	**6V-8378**	2	NUT (10-32-THD)	
		1	**8F-1434**	2	LOCKWASHER	
		1	**8T-0328**	2	WASHER-HARD (5.5X10X1-MM THK)	
	18	1	**9X-8486**	2	SCREW-MACHINE (8-32X0.75-IN)	
	19	1	**150-6972**	1	WIRE AS	
	20	1	**150-6971**	1	WIRE AS	
CM	21	1	**5C-5302**	2	SCREW (M5X0.8X30-MM)	

C-CHANGE FROM PREVIOUS TYPE
D-ORDER BY THE METER
M-METRIC PART

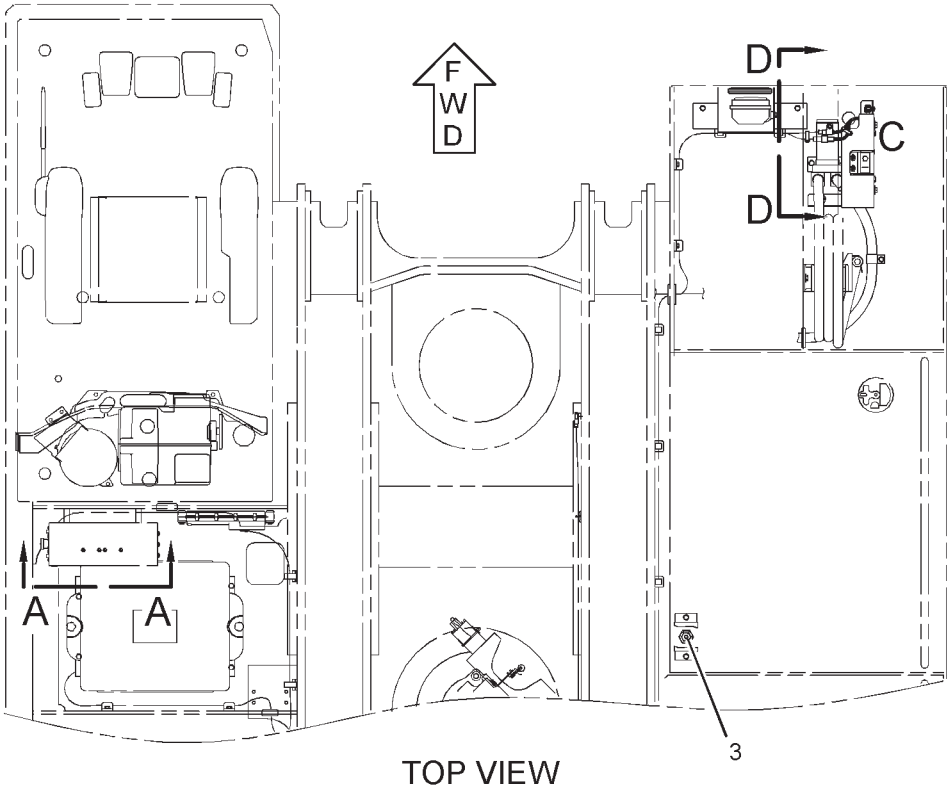

TOP VIEW

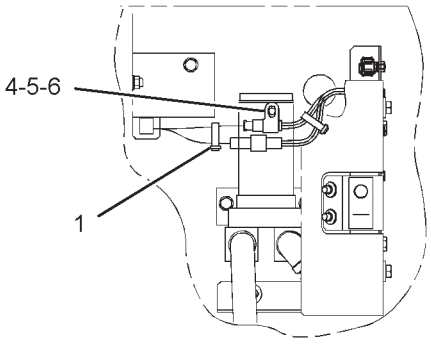

VIEW OF AREA C

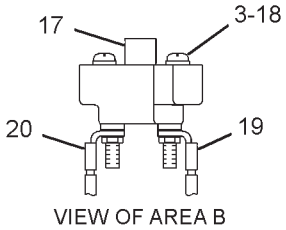

VIEW OF AREA B

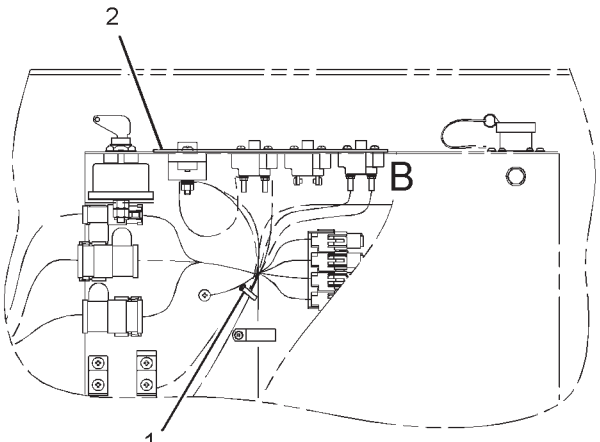

VIEW A-A

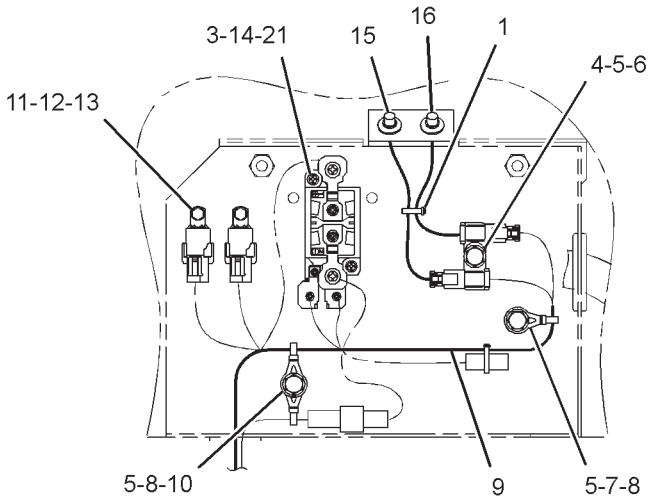

VIEW D-D

GRAPHIC #1 **<END>** g01309621

ELECTRICAL AND STARTING SYSTEM

170-6991 WIRING GP-WORK TOOL

S/N: RCD1-UP
PART OF 196-9815 CONTROL AR-AUXILIARY
AN ATTACHMENT

SMCS-1408 **i01534770**

NOTE	REF NO	GRAPHIC REF	PART NUMBER	QTY	PART NAME 1 2 3 4 5 6 (PRODUCT LEVEL)	SEE PAGE
	1	1	**170-6992**	1	HARNESS AS	
		1	**102-8803**	1	KIT-RECEPTACLE (3-PIN)	
		1	**155-2271**	1	KIT-CONNECTING PLUG (4-PIN)	
	2	1	**3S-2093**	1	STRAP-CABLE	

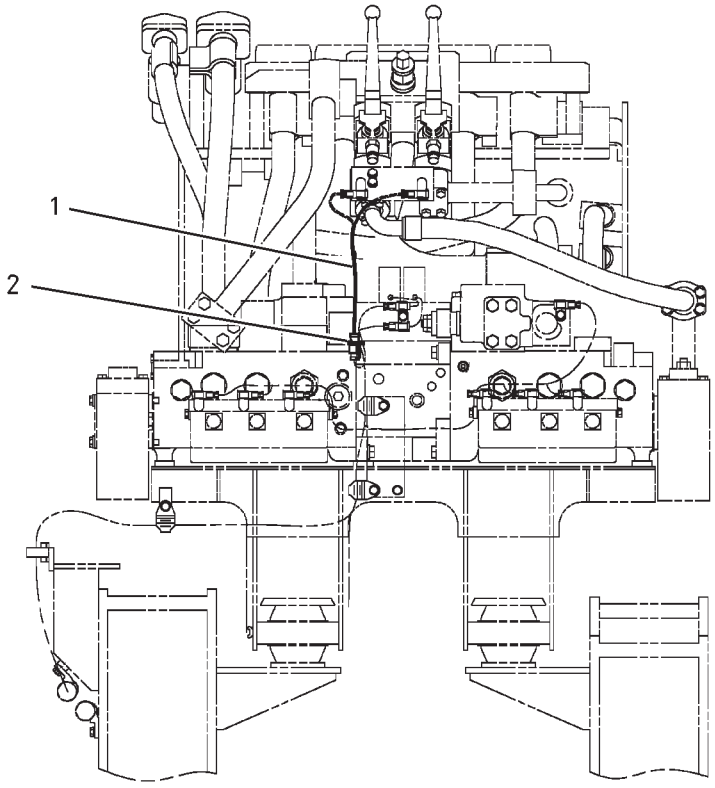

GRAPHIC #1 **<END>** g00797181

POWER TRAIN

199-4661 DRIVE GP-FINAL—WITHOUT MOTOR

S/N: RCD1-UP

PART OF 199-4662 DRIVE GP-FINAL

SMCS-4050 **i02305305**

NOTE	REF NO	GRAPHIC REF	PART NUMBER	QTY	PART NAME 1 2 3 4 5 6 (PRODUCT LEVEL)	SEE PAGE
	1	1	**3E-2338**	2	PLUG-PIPE	
B	2	1	**6I-6373**	1	SHIM (1.2-MM THK)	
B	3	1	**6I-6375**	1	SHIM (1.4-MM THK)	
	4	1	**7M-8485**	2	SEAL-O-RING	
B	5	1	**7Y-0807**	1	SHIM (1.6-MM THK)	
B	6	1	**7Y-0808**	1	SHIM (1.6-MM THK)	
	7	1	**7Y-1090**	1	GEAR-RING (66-TEETH)	
	8	1	**7Y-1493**	1	SPACER (8.7X50X14-MM THK)	
	9	1	**114-1541**	6	PIN-DOWEL	
	10	1	**148-4575**	3	GEAR-PLANETARY (31-TEETH)	
	11	1	**148-4579**	1	GEAR-SUN (22-TEETH)	
	12	1	**148-4580**	1	GEAR-RING (101-TEETH)	
	13	1	**148-4582**	1	HOUSING	
	14	1	**148-4585**	1	GEAR-COUPLING (95-TEETH)	
	15	1	**148-4616**	1	GEAR-SUN (37-TEETH)	
	16	1	**148-4617**	1	RING-RETAINING	
	17	1	**163-6082**	1	CONE	
	18	1	**163-6083**	1	CUP	
	19	1	**171-8706**	1	CONE	
	20	1	**171-8707**	1	CUP	
	21	1	**188-2103**	1	SEAL GP	
	22	1	**191-2508**	1	SPACER	
	23	1	**199-4533**	4	GEAR-PLANETARY (21-TEETH)	
	24	1	**199-4545**	1	GEAR-SUN (21 TEETH)	
	25	1	**199-4546**	3	GEAR-PLANETARY (22 TEETH)	
	26	1	**199-4553**	1	HOUSING-MOTOR	
	27	1	**199-4609**	8	BEARING AS	
	28	1	**199-4611**	14	WASHER	
	29	1	**199-4650**	1	CARRIER-PLANETARY	
	30	1	**199-4663**	1	COVER-HOUSING	
	31	1	**199-4665**	1	CARRIER-PLANETARY	
	32	1	**199-4666**	1	CARRIER-PLANETARY	
	33	1	**199-4669**	3	BEARING AS	
	34	1	**199-4670**	3	BEARING AS	
	35	1	**199-4671**	6	WASHER	
	36	1	**199-4688**	3	SHAFT-PLANETARY	
	37	1	**199-4689**	3	SHAFT-PLANETARY	
	38	1	**199-4690**	4	SHAFT-PLANETARY	
B	39	1	**227-6177**	1	SHIM	
B	40	1	**227-6178**	1	SHIM	
B	41	1	**227-6179**	1	SHIM	
B	42	1	**227-6180**	1	SHIM	
	43	1	**095-0891**	3	PIN-SPRING	
M	44	1	**096-3216**	2	SETSCREW-SOCKET (M12X1.75X12-MM)	
	45	1	**099-5194**	7	PIN-SPRING	
	46	1	**5P-4981**	1	RING-RETAINING	
	47	1	**7Y-0640**	1	SEAL-O-RING	
	48	1	**7Y-0795**	1	SPACER (115X145.1X25.5-MM THK)	
	49	1	**7Y-1492**	1	SPACER (67X101.1X10-MM THK)	
M	50	1	**7Y-5215**	22	BOLT-SOCKET HEAD (M24X3X90-MM)	
M	51	1	**7Y-5231**	20	BOLT (M30X3.5X260-MM)	
M	52	1	**8T-0273**	16	BOLT-SOCKET HEAD (M12X1.75X40-MM)	
	53	1	**9X-8258**	20	WASHER (33X56X6-MM THK)	
B	54	1	**1U-8846**		SEALANT-GASKET	

B-USE AS REQUIRED
M-METRIC PART

199-4661 **DRIVE GP-FINAL** *(contd.)* **i02305305**

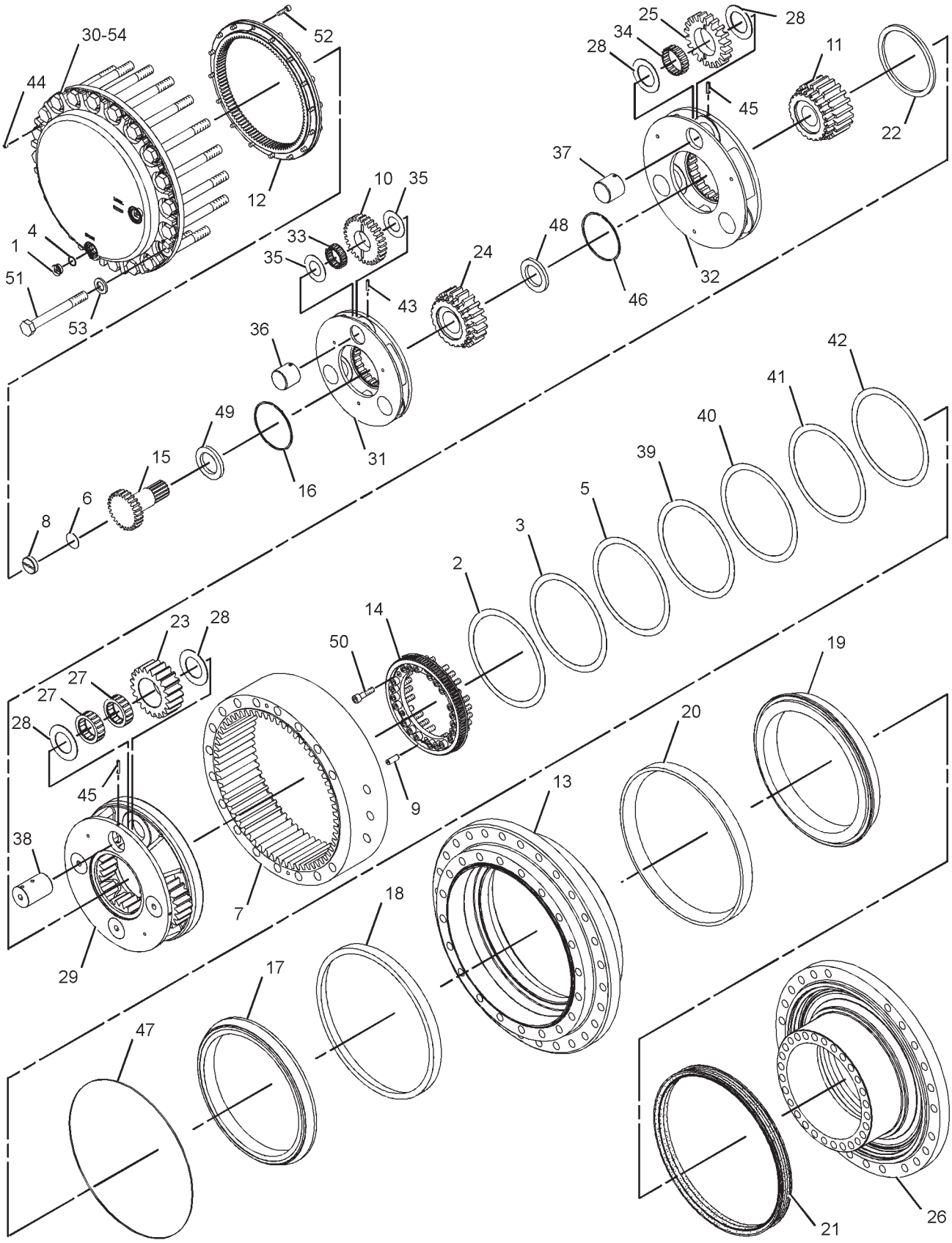

GRAPHIC #1 **<END>** g01156518

POWER TRAIN

199-4662 FINAL DRIVE GP–WITH MOTOR

S/N: RCD1-UP

PART OF 148-4628 POWER TRAIN AR

SMCS-4050 **i02629048**

NOTE	REF NO	GRAPHIC REF	PART NUMBER	QTY	PART NAME 1 2 3 4 5 6 (PRODUCT LEVEL)	SEE PAGE
Y	1	1	*199-4661*	1	FINAL DRIVE GP (WITHOUT MOTOR)	321
Y	2	1	*155-9198*	1	MOTOR & MTG GP-TRAVEL	686

Y-SEPARATE ILLUSTRATION

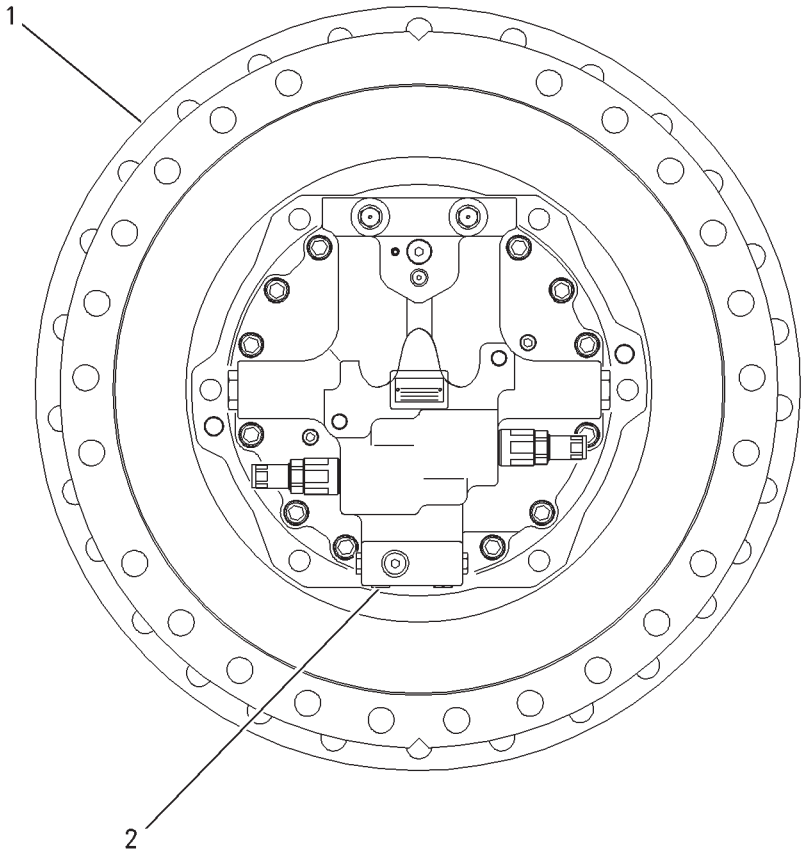

GRAPHIC #1 **<END>** g00892571

POWER TRAIN

148-4628 POWER TRAIN AR

S/N: RCD1-UP

PART OF 229-3365 GENERAL AR

SMCS-3000, 4000 **i01693191**

NOTE	PART NUMBER	QTY	PART NAME 1 2 3 4 5 6 (PRODUCT LEVEL)	SEE PAGE
Y	*148-4597*	1	DRIVE GP-SWING	496
Y	*148-4625*	1	DRIVE GP-SWING	501
Y	*148-4627*	1	FASTENER GP-SWING & FINAL DR	504
Y	*199-4662*	2	FINAL DRIVE GP	323
Y	*145-3014*	2	SPROCKET GP	325

Y-SEPARATE ILLUSTRATION

<END>

POWER TRAIN

145-3014 SPROCKET GP

S/N: RCD1-UP

PART OF 148-4628 POWER TRAIN AR

SMCS-4164 **i01632844**

NOTE	REF NO	GRAPHIC REF	PART NUMBER	QTY	PART NAME 1 2 3 4 5 6 (PRODUCT LEVEL)	SEE PAGE
	1	1	**2B-7558**	2	CORK	
M	2	1	**145-2970**	28	BOLT	
	3	1	**199-4501**	28	SPACER (31.5X56X5-MM THK)	
	4	1	**201-1704**	1	SPROCKET	

M-METRIC PART

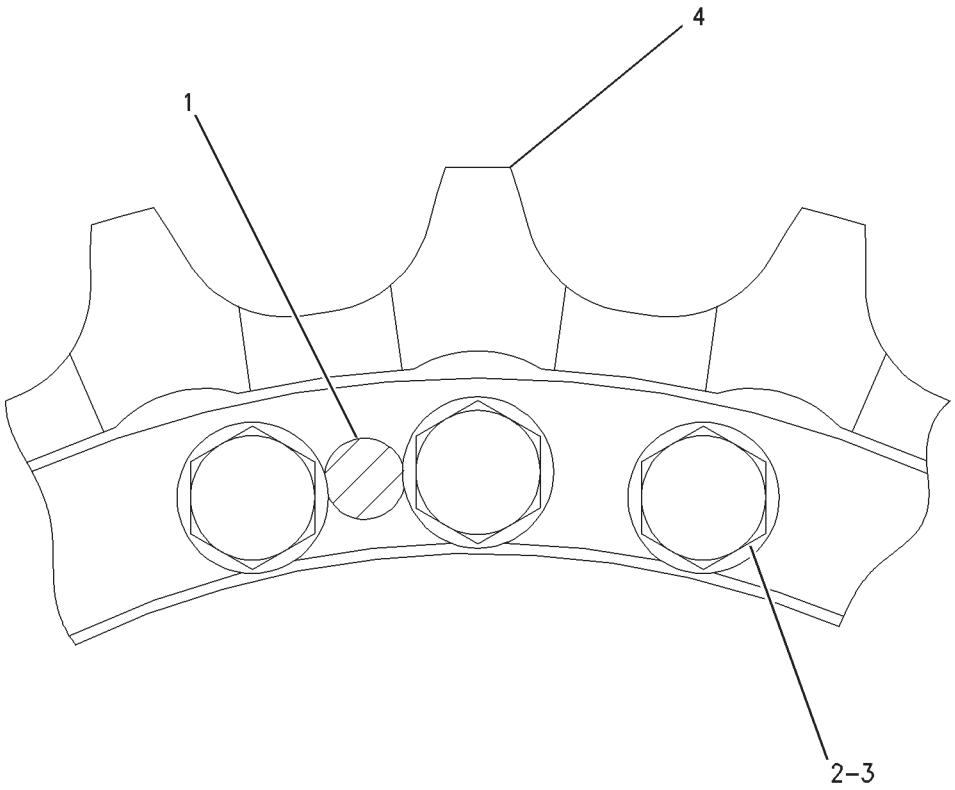

GRAPHIC #1 **<END>** g00792573

FRAME AND BODY

170-2807 BOX & MTG GP-STORAGE

S/N: RCD1-UP

PART OF 229-3366 CHASSIS AR

SMCS-7268 **i01822022**

NOTE	REF NO	GRAPHIC REF	PART NUMBER	QTY	PART NAME 1 2 3 4 5 6 (PRODUCT LEVEL)	SEE PAGE
Y	1	1	*170-2808*	1	BOX GP-STORAGE	333
	2	1	**5P-8502**	2	PADLOCK GP	
					(EACH INCLUDES)	
		1	**5P-8500**	1	KEY	
		1	**8Y-6364**	1	SLEEVE	
M	3	1	**8T-4192**	5	BOLT (M12X1.75X25-MM)	
	4	1	**5P-1076**	19	WASHER-HARD (13.5X30X4-MM THK)	
M	5	1	**8T-4956**	2	BOLT (M12X1.75X35-MM)	
	6	1	**221-2689**	1	SHEET	
	7	1	**221-2688**	1	SHEET	
	8	1	**221-2690**	1	SHEET AS	
	9	1	**221-2687**	1	SHEET	
M	10	1	**8T-4139**	12	BOLT (M12X1.75X30-MM)	

M-METRIC PART
Y-SEPARATE ILLUSTRATION

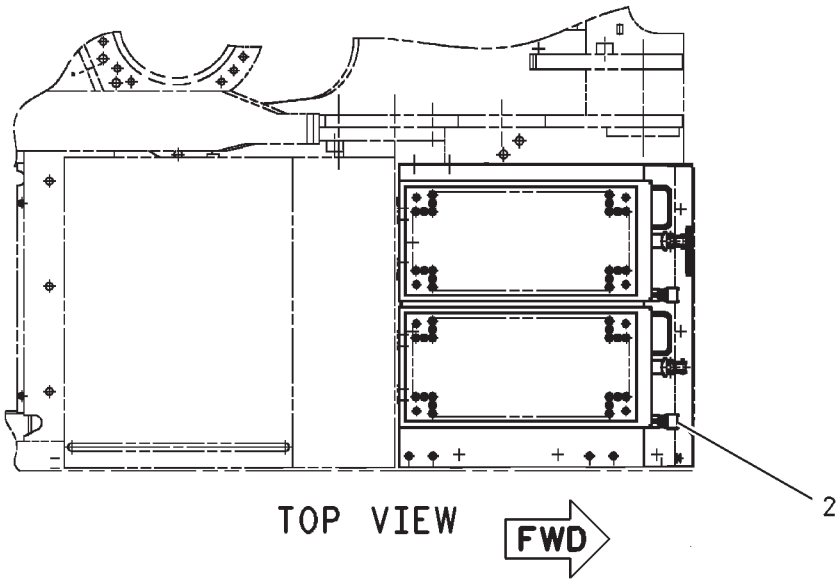

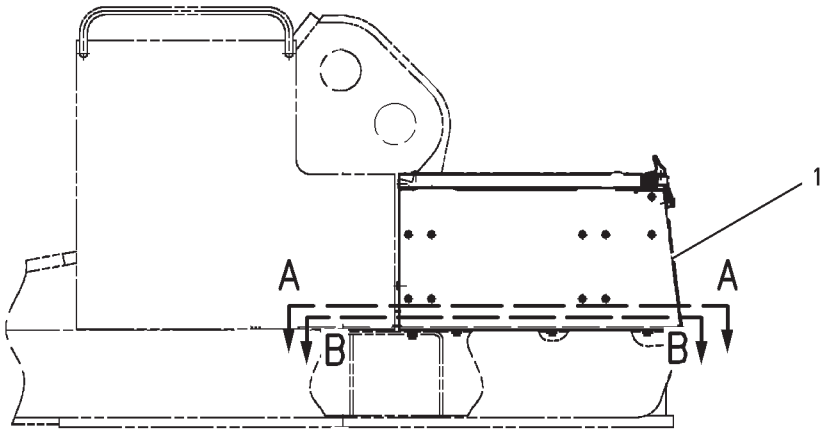

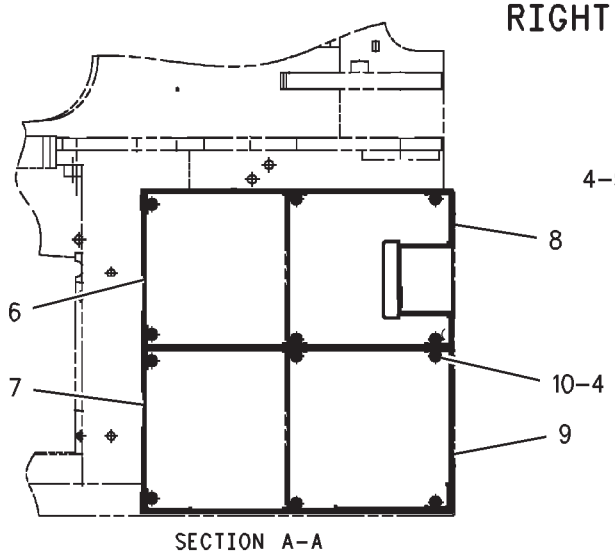

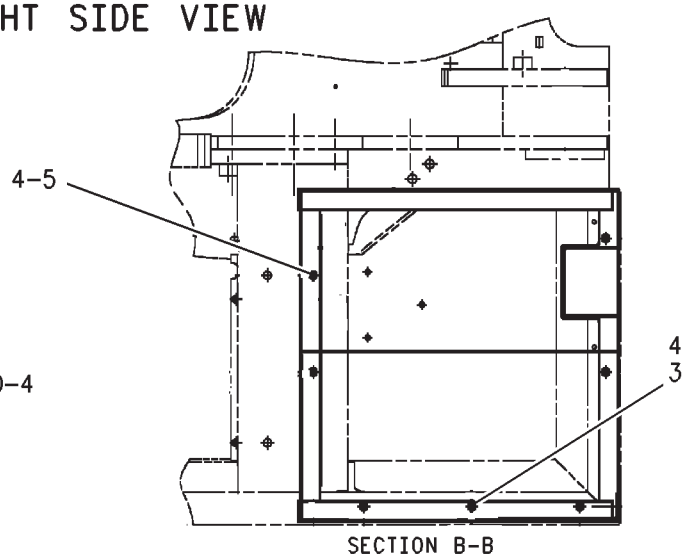

GRAPHIC #1 **<END>** g00930286

FRAME AND BODY

214-8033 BOX GP-BATTERY

S/N: RCD1-UP
PART OF 222-3564 BOX GP-BATTERY
TYPE 1

SMCS-7257 **i02567806**

NOTE	REF NO	GRAPHIC REF	PART NUMBER	QTY	PART NAME 1 2 3 4 5 6 (PRODUCT LEVEL)	SEE PAGE
	1	1	**214-8035**	1	COVER AS	
		1	**3D-9143**	1	HINGE-BUTT	
		1	**7Y-2812**		HANDLE	
M		1	**8T-5413**		STUD-WELD (M10X1.5X25-MM OAL)	
	2	1	**214-8034**	1	SHEET	
	3	1	**4I-2187**	1	SUPPORT AS	
	4	1	**214-8038**	1	BOX AS	
	5	1	**8T-4121**	4	WASHER-HARD (11X21X2.5-MM THK)	
M	6	1	**8T-4133**	4	NUT (M10X1.5-THD)	
	7	1	**9M-3835**	2	LATCH-RUBBER	
	8	1	**2M-5795**	2	PIN-CLEVIS	
	9	1	**3B-4607**	2	PIN-COTTER	
	10	1	**096-3780**	1	PIN-CLEVIS	
	11	1	**095-0843**	1	PIN-COTTER	
M	12	1	**137-2255**	6	BOLT (M8X1.25X8-MM)	
	13	1	**5P-4116**	6	WASHER-HARD (8.8X20.5X2-MM THK)	
M	14	1	**5C-7261**	6	NUT (M8X1.25-THD)	
	15	1	**093-2064**	1	GROMMET	

M-METRIC PART

214-8033 **BOX GP-BATTERY** *(contd.)* **i02567806**

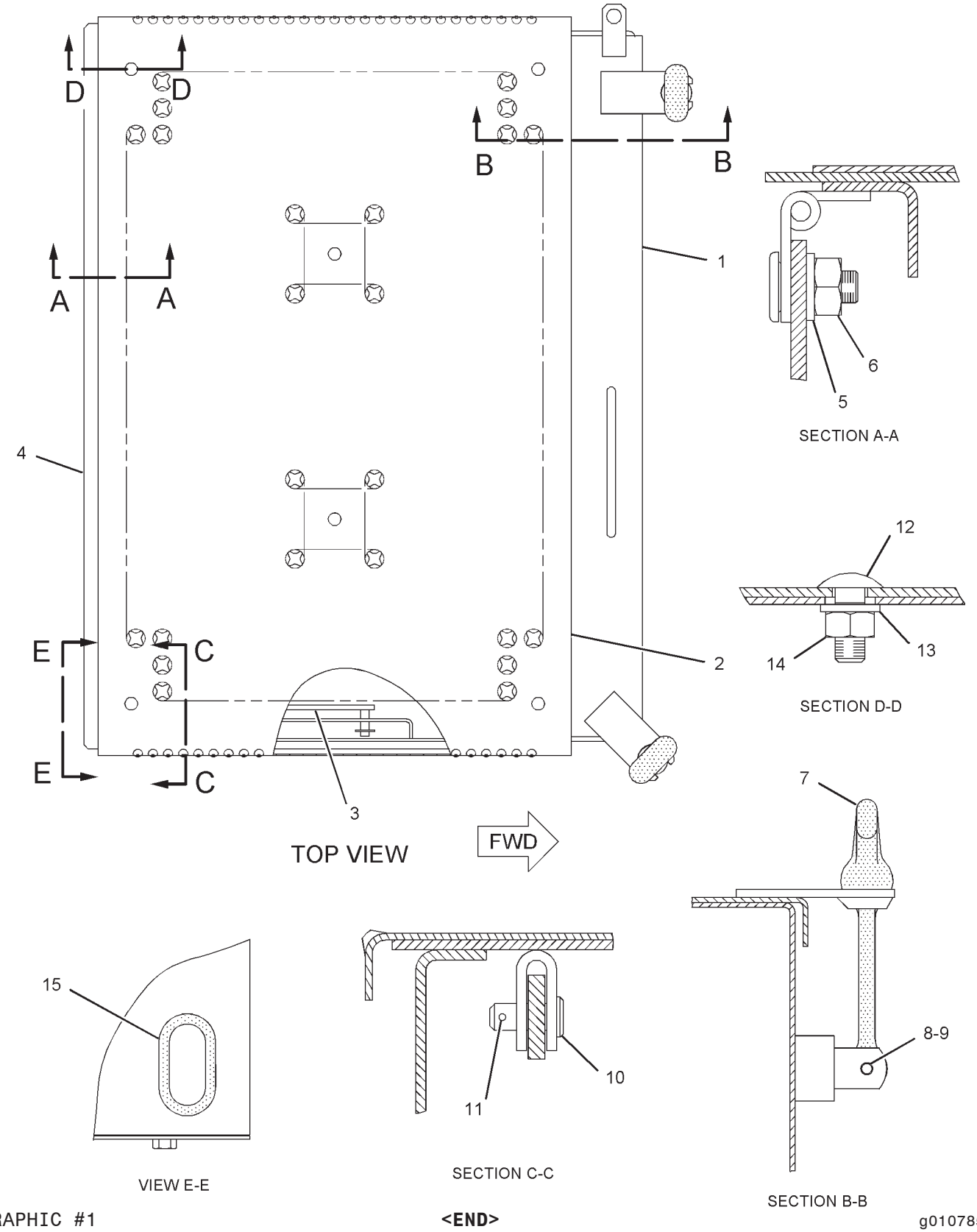

GRAPHIC #1

<END>

g01078593

FRAME AND BODY

214-8033 BOX GP-BATTERY

S/N: RCD1-UP
PART OF 222-3564 BOX GP-BATTERY
TYPE 2

SMCS-7257 **i02403865**

NOTE	REF NO	GRAPHIC REF	PART NUMBER	QTY	PART NAME 1 2 3 4 5 6 (PRODUCT LEVEL)	SEE PAGE
	1	1	**251-9347**	1	COVER AS	
		1	**3D-9143**	2	HINGE-BUTT	
		1	**7Y-2812**	1	HANDLE	
M		1	**8T-5413**	4	STUD-WELD (M10X1.5X25-MM OAL)	
	2	1	**214-8034**	1	SHEET	
	3	1	**4I-2187**	1	SUPPORT AS	
	4	1	**251-9349**	1	BOX AS	
	5	1	**8T-4121**	4	WASHER-HARD (11X21X2.5-MM THK)	
M	6	1	**8T-4133**	4	NUT (M10X1.5-THD)	
	7	1	**9M-3835**	2	LATCH-RUBBER	
	8	1	**2M-5795**	2	PIN-CLEVIS	
	9	1	**3B-4607**	2	PIN-COTTER	
	10	1	**096-3780**	1	PIN-CLEVIS	
	11	1	**095-0843**	1	PIN-COTTER	
M	12	1	**137-2255**	6	BOLT (M8X1.25X8-MM)	
	13	1	**5P-4116**	6	WASHER-HARD (8.8X20.5X2-MM THK)	
M	14	1	**5C-7261**	6	NUT (M8X1.25-THD)	
	15	1	**093-2064**	1	GROMMET	

M-METRIC PART

214-8033 **BOX GP-BATTERY** *(contd.)* **i02403865**

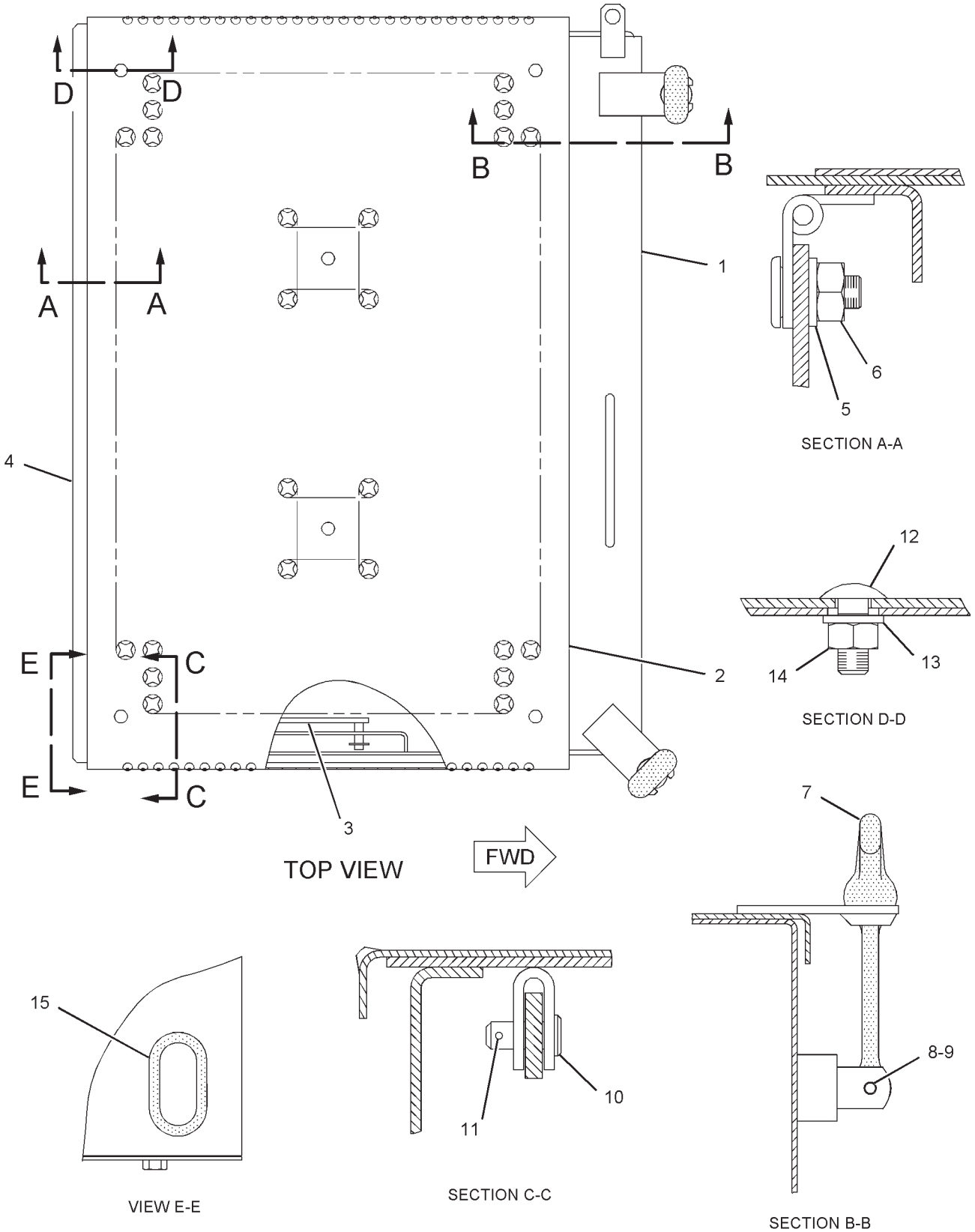

GRAPHIC #1

<END>

g01078593

FRAME AND BODY

222-3564 BOX GP-BATTERY

S/N: RCD1-UP

PART OF 222-3562 STARTING AR-COLD WEATHER

SMCS-7257 **i02446432**

NOTE	REF NO	GRAPHIC REF	PART NUMBER	QTY	PART NAME 1 2 3 4 5 6 (PRODUCT LEVEL)	SEE PAGE
	1	1	**177-5719**	1	COVER AS	
Y	2	1	*214-8033*	1	BOX GP-BATTERY	328
	3	1	**177-5715**	1	SHEET AS-SOUND SUPPRESSION	
		1	**2S-1647**	1	GROMMET	
		1	**4I-7924**	4	WASHER (4.5X40X1.2-MM THK)	
		1	**6P-2216**	4	CAP	
		1	**177-5716**	1	INSULATION	
	4	1	**246-2641**	1	PADLOCK GP	
		1	**278-1585**		KEY (CORPORATE)	
M	5	1	**135-8573**	4	BOLT AS	

M-METRIC PART
Y-SEPARATE ILLUSTRATION

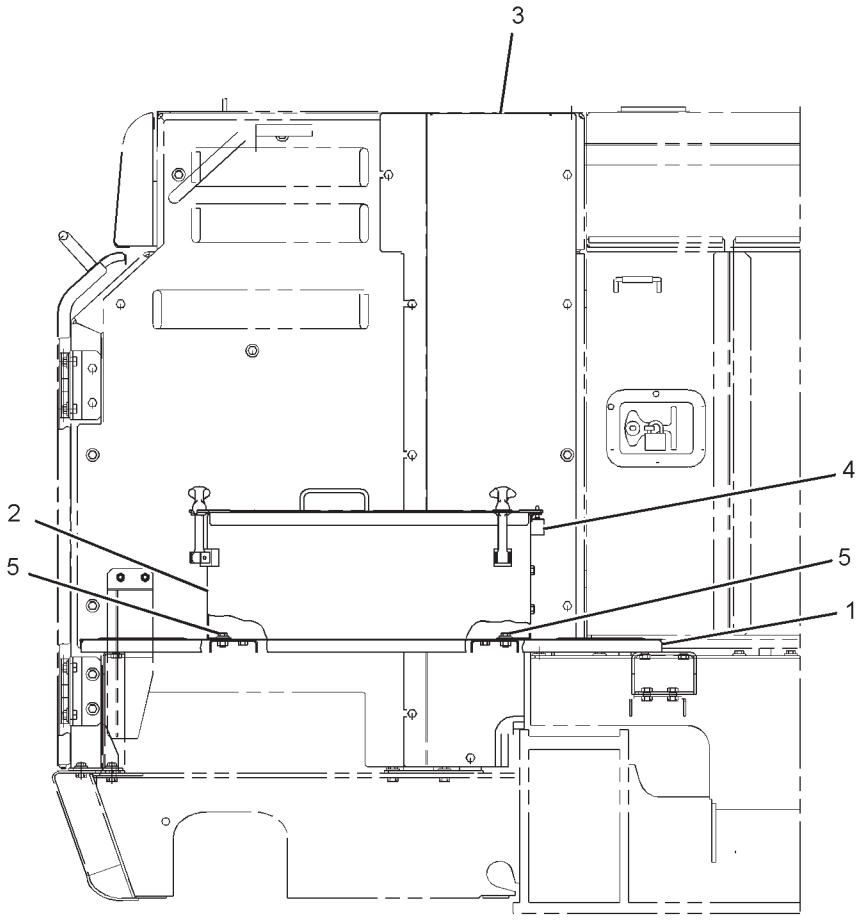

FRONT VIEW

GRAPHIC #1

<END>

g01092776

FRAME AND BODY

170-2808 BOX GP-STORAGE

S/N: RCD1-UP

PART OF 170-2807 BOX & MTG GP-STORAGE

SMCS-7268 **i01888303**

NOTE	REF NO	GRAPHIC REF	PART NUMBER	QTY	PART NAME 1 2 3 4 5 6 (PRODUCT LEVEL)	SEE PAGE
	1	1	**4I-2187**	2	SUPPORT AS	
					(EACH INCLUDES)	
		1	**4B-4278**	1	WASHER (10.2X20.5X1.6-MM THK)	
	2	1	**9M-3835**	2	LATCH-RUBBER	
	3	1	**148-4993**	2	PLATE	
	4	1	**148-4997**	2	DOOR AS	
	5	1	**170-2809**	1	BOX AS	
	6	1	**177-5632**	1	GROMMET	
	7	1	**095-0843**	2	PIN-COTTER	
	8	1	**095-1314**	2	PIN-CLEVIS	
M	9	1	**137-2255**	10	BOLT (M8X1.25X8-MM)	
	10	1	**2M-5795**	2	PIN-CLEVIS	
	11	1	**3B-4607**	2	PIN-COTTER	
M	12	1	**5C-7261**	10	NUT (M8X1.25-THD)	
	13	1	**5P-4116**	10	WASHER-HARD (8.8X20.5X2-MM THK)	
	14	1	**7Y-3281**	1	GROMMET	
	15	1	**8T-4121**	8	WASHER-HARD (11X21X2.5-MM THK)	
M	16	1	**8T-4133**	8	NUT (M10X1.5-THD)	
	17	1	**8T-4224**	4	WASHER-HARD (8.8X16X2-MM THK)	

M-METRIC PART

170-2808 **BOX GP-STORAGE** *(contd.)* **i01888303**

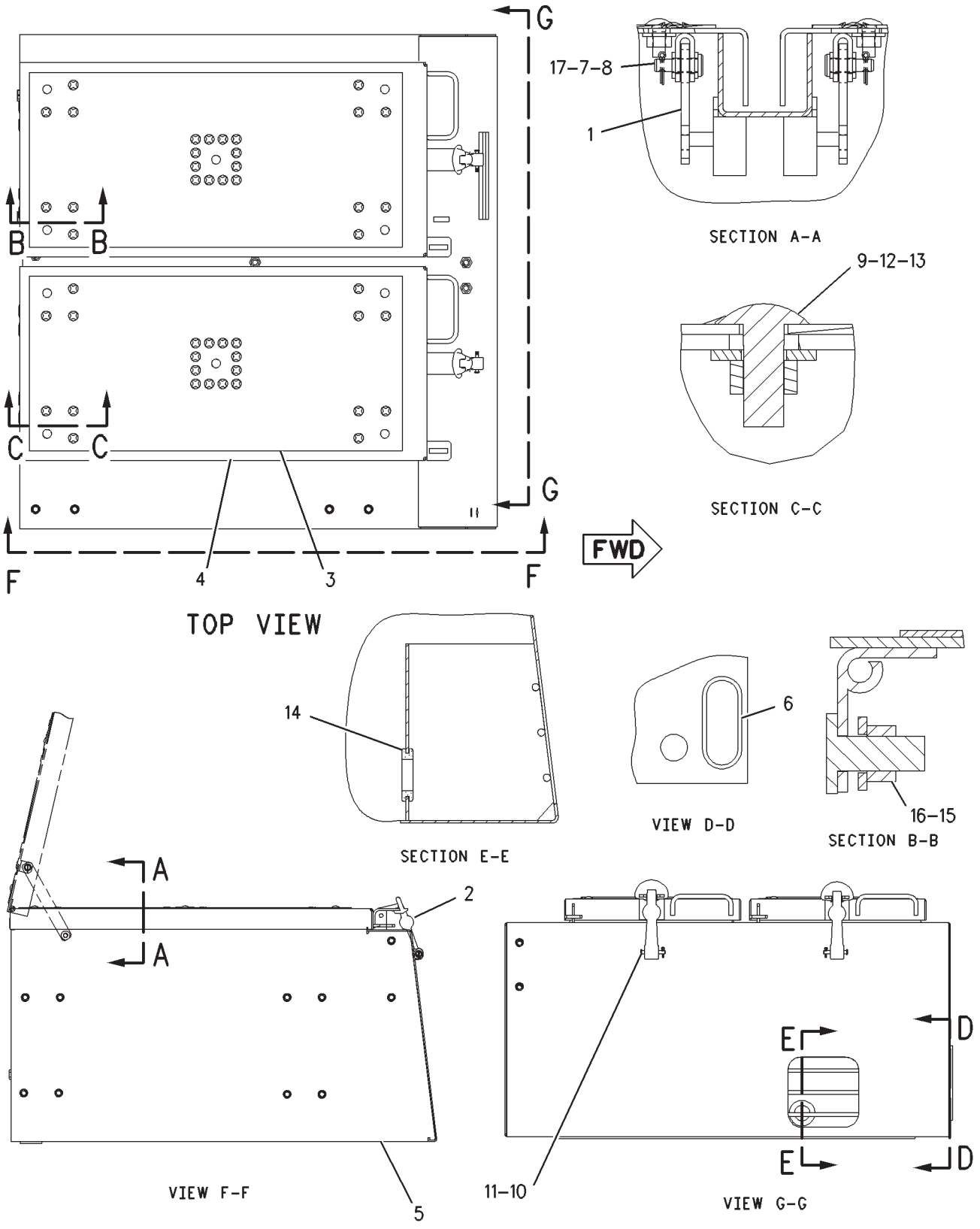

GRAPHIC #1 **<END>** g00979690

FRAME AND BODY

197-2173 CHAIN GP-COUNTERWEIGHT

S/N: RCD1-UP
PART OF 157-9989 COUNTERWEIGHT AR
AN ATTACHMENT

SMCS-6404, 7056 **i01738049**

NOTE	REF NO	GRAPHIC REF	PART NUMBER	QTY	PART NAME 1 2 3 4 5 6 (PRODUCT LEVEL)	SEE PAGE
	1	1	**173-8097**	2	CHAIN AS	
	2	1	**173-8099**	1	CASE AS	
	3	1	**146-1335**	2	SPACER	
M	4	1	**7X-2578**	2	BOLT (M24X3X200-MM)	
	5	1	**8T-4167**	2	WASHER-HARD (26X44X4-MM THK)	
	6	1	**146-1336**	2	PIN	
M	7	1	**096-4879**	2	NUT (M36X4-THD)	
	8	1	**086-0507**	2	PIN	
	9	1	**173-8103**	1	PLATE	
M	10	1	**8T-4139**	3	BOLT (M12X1.75X30-MM)	
	11	1	**8T-4223**	7	WASHER-HARD (13.5X25.5X3-MM THK)	
	12	1	**173-8102**	1	PIN	
	13	1	**173-8094**	2	SPROCKET AS	
					(EACH INCLUDES)	
		1	**173-8095**	1	BEARING-SLEEVE	
		1	**3B-8489**	1	FITTING-GREASE	
		1	**173-8096**	1	SPROCKET	
	14	1	**173-8104**	1	GUIDE AS	
M	15	1	**8T-4956**	4	BOLT (M12X1.75X35-MM)	
	16	1	**173-8106**	1	SUPPORT	
M	17	1	*146-1346*	2	PIN	
M	18	1	**8T-4131**	2	NUT (M20X2.5-THD)	
	19	1	**093-0349**	2	WASHER (22X60X6-MM THK)	

M-METRIC PART

197-2173 **CHAIN GP-COUNTERWEIGHT** *(contd.)* **i01738049**

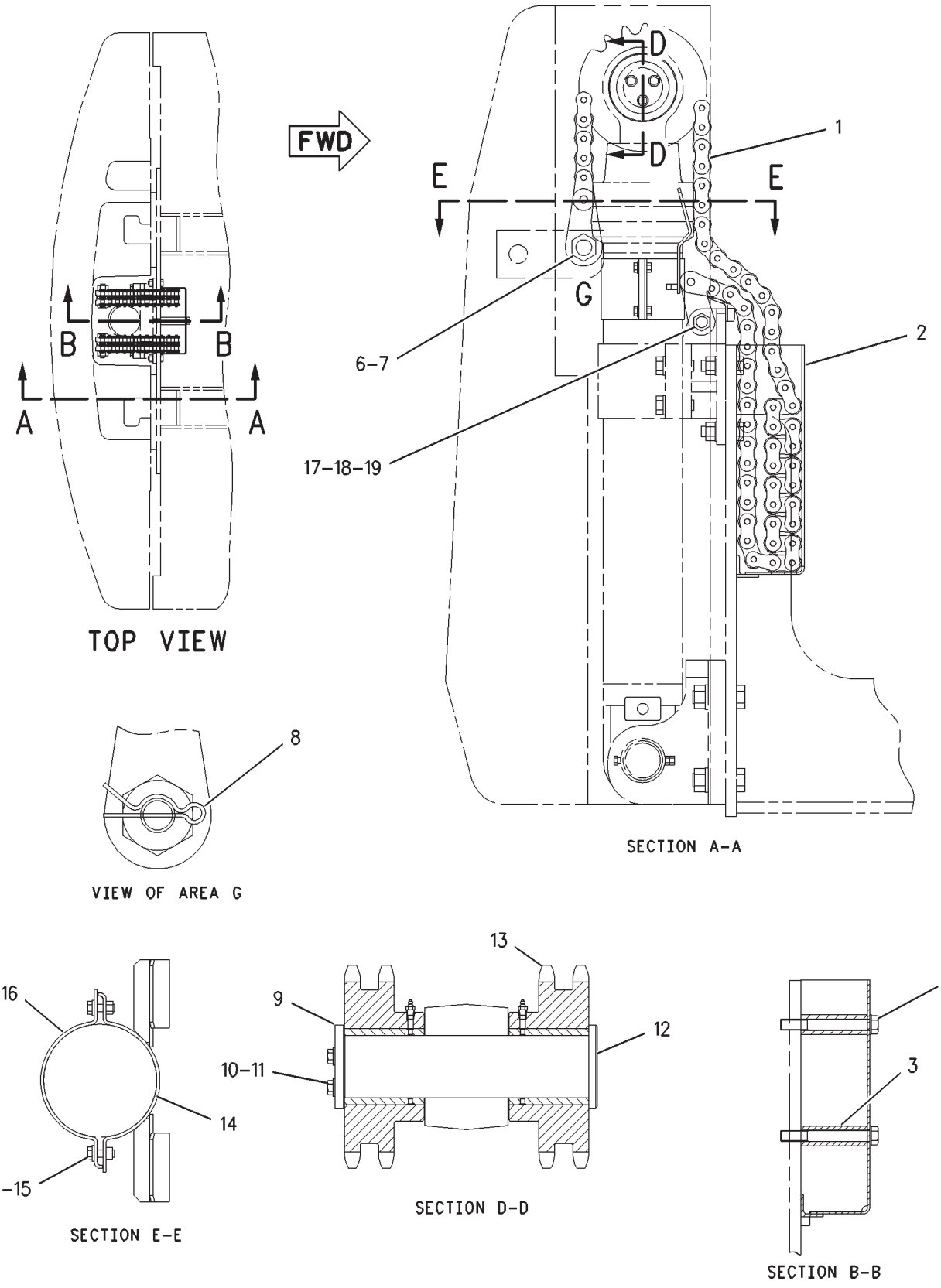

GRAPHIC #1 **<END>** g00838522

FRAME AND BODY

157-9989 COUNTERWEIGHT AR

S/N: RCD1-UP
REMOVAL
AN ATTACHMENT

SMCS-7056 **i01734403**

NOTE	PART NUMBER	QTY	PART NAME 1 2 3 4 5 6 (PRODUCT LEVEL)	SEE PAGE
Y	*197-2173*	1	CHAIN GP-COUNTERWEIGHT	335
Y	*168-1710*	1	COUNTERWEIGHT GP	338
Y	*155-9196*	1	CYLINDER GP-COUNTERWEIGHT	487
Y	*172-4955*	1	FILM GP	1080
Y	*158-3896*	1	FRAME GP-UPPER	345
Y	*175-0640*	1	HOOD GP-ENGINE	383
Y	*168-9379*	1	LINES GP-REAR ATTACHMENT	647
Y	*197-2172*	1	MOUNTING GP-COUNTERWEIGHT CYL	697
Y	*170-6854*	1	WIRING GP-COUNTERWEIGHT	305

Y-SEPARATE ILLUSTRATION

<END>

FRAME AND BODY

168-1710 COUNTERWEIGHT GP

S/N: RCD1-UP
PART OF 157-9989 COUNTERWEIGHT AR
AN ATTACHMENT

SMCS-7056 **i01701013**

NOTE	REF NO	GRAPHIC REF	PART NUMBER	QTY	PART NAME 1 2 3 4 5 6 (PRODUCT LEVEL)	SEE PAGE
	1	1	**3S-8536**	6	SPACER (0.406X0.656X0.38-IN THK)	
	2	1	**170-2904**	1	COUNTERWEIGHT AS	
	3	1	**170-2977**	6	SPACER (39X100X50-MM THK)	
	4	1	**180-6812**	1	NAMEPLATE	
M	5	1	**190-6820**	6	BOLT (M36X4X560-MM)	
	6	1	**3F-1417**	6	WASHER (10.3X30.2X3-MM THK)	
M	7	1	**8T-4136**	6	BOLT (M10X1.5X25-MM)	

M-METRIC PART

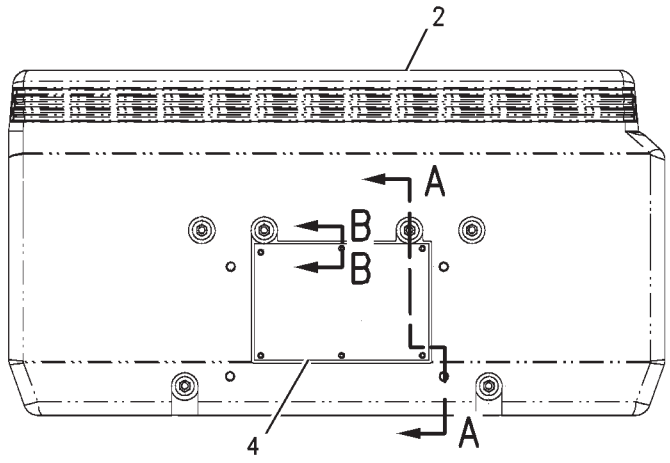

REAR VIEW

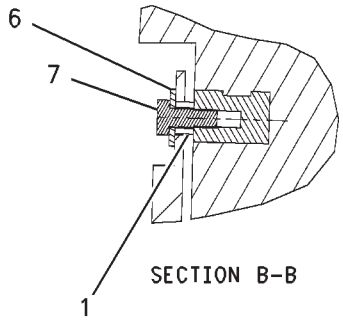

SECTION B-B

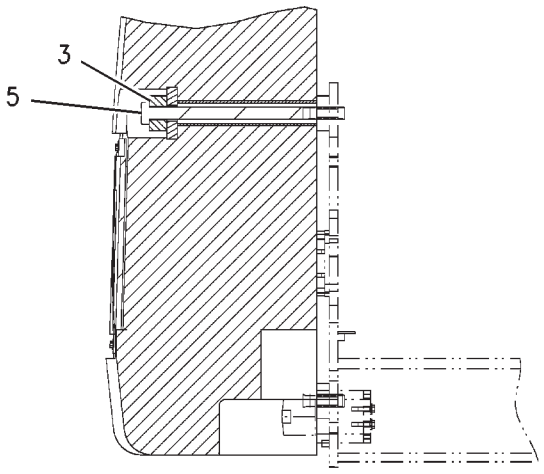

SECTION A-A

GRAPHIC #1 **<END>** g00877088

FRAME AND BODY

184-9124 COUNTERWEIGHT GP

S/N: RCD1-UP

PART OF 229-3366 CHASSIS AR

SMCS-7056 **i01755913**

NOTE	REF NO	GRAPHIC REF	PART NUMBER	QTY	PART NAME 1 2 3 4 5 6 (PRODUCT LEVEL)	SEE PAGE
	1	1	**170-2977**	6	SPACER (39X100X50-MM THK)	
M	2	1	**190-6820**	6	BOLT (M36X4X560-MM)	
	3	1	*203-5208*	1	COUNTERWEIGHT GP	
		1	**190-7212**	1	COUNTERWEIGHT AS	
		1	**203-5209**	1	LINER	

M-METRIC PART

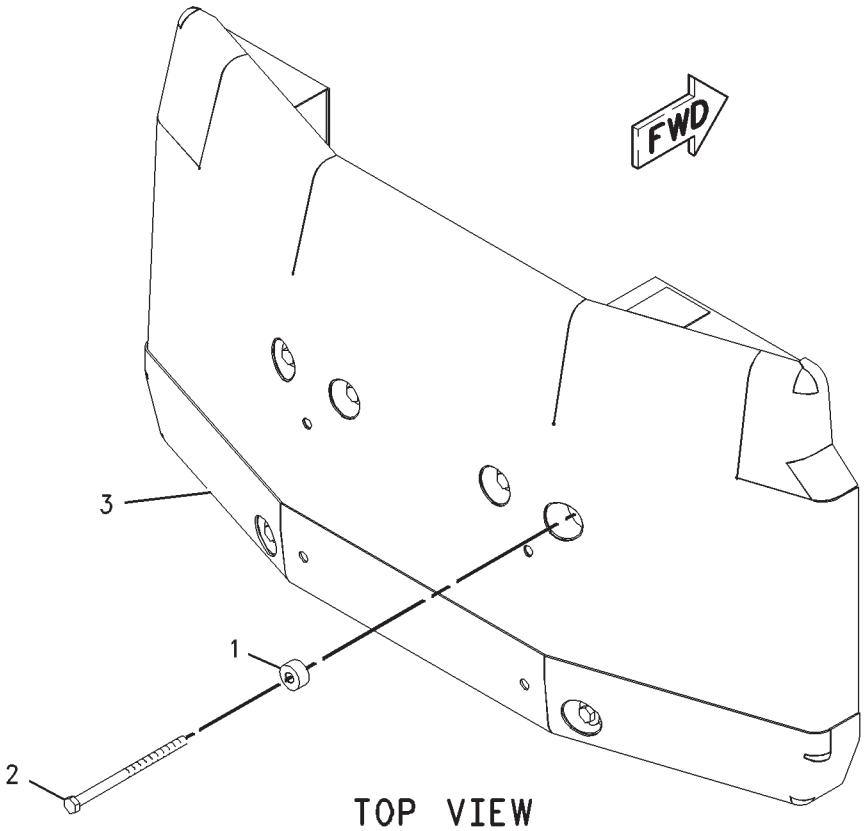

TOP VIEW
(REAR)

GRAPHIC #1 **<END>** g00898419

FRAME AND BODY

199-0071 COVER GP-CONTROL VALVE

S/N: RCD1-UP

PART OF 229-3366 CHASSIS AR

SMCS-7150 **i03612070**

NOTE	REF NO	GRAPHIC REF	PART NUMBER	QTY	PART NAME 1 2 3 4 5 6 (PRODUCT LEVEL)	SEE PAGE
M	1	1	**135-8573**	5	BOLT AS	
	2	1	**184-9085**	1	COVER AS	

M-METRIC PART

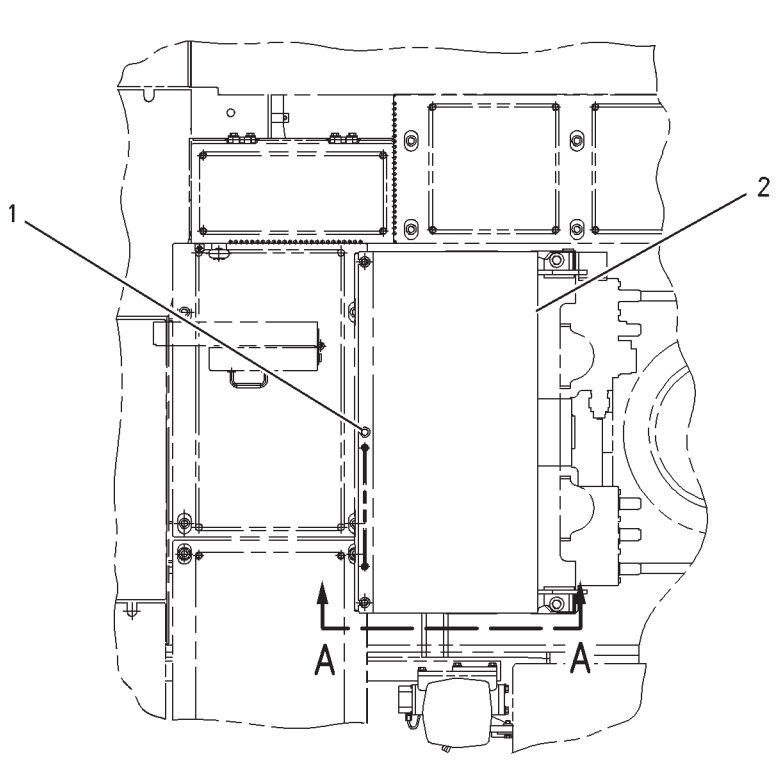

TOP VIEW

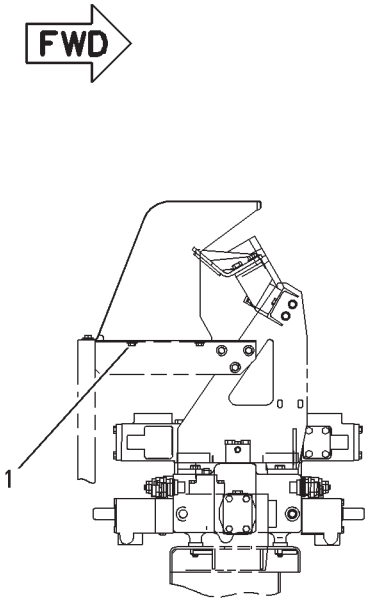

SECTION A-A

GRAPHIC #1 **<END>** g00795605

FRAME AND BODY

184-9091 COVER GP-HOOD

S/N: RCD1-UP

PART OF 222-3847 HOOD & GUARD GP

SMCS-7251 **i01744083**

NOTE	REF NO	GRAPHIC REF	PART NUMBER	QTY	PART NAME 1 2 3 4 5 6 (PRODUCT LEVEL)	SEE PAGE
	1	1	**184-8261**	1	SHEET	
	2	1	**175-1033**	1	COVER AS	
M	3	1	**137-2255**	8	BOLT (M8X1.25X8-MM)	
	4	1	**5P-4116**	8	WASHER-HARD (8.8X20.5X2-MM THK)	
M	6	1	**5C-7261**	8	NUT (M8X1.25-THD)	

M-METRIC PART

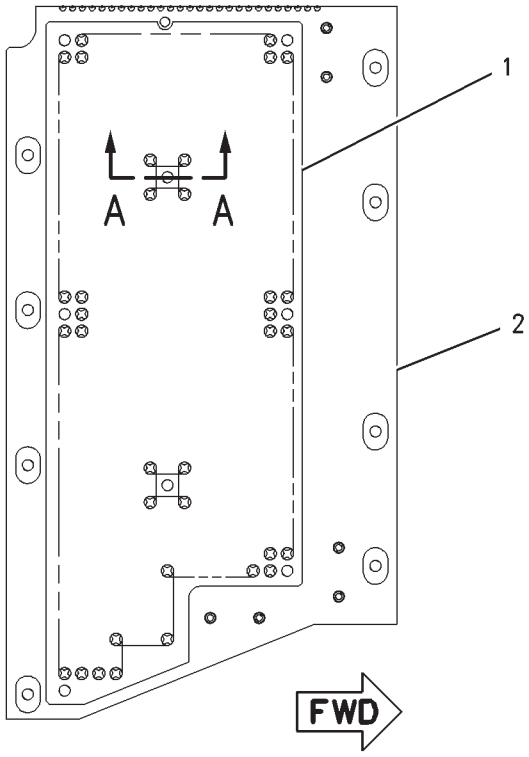

TOP VIEW

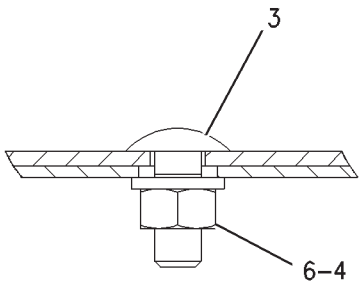

SECTION A-A

GRAPHIC #1 **<END>** g00892962

FRAME AND BODY

203-5096 DOOR AS-ACCESS—ENGINE COMPARTMENT

S/N: RCD1-UP

PART OF 222-3847 HOOD & GUARD GP

SMCS-7273 **i02396010**

NOTE	REF NO	GRAPHIC REF	PART NUMBER	QTY	PART NAME 1 2 3 4 5 6 (PRODUCT LEVEL)	SEE PAGE
	1	1	**203-5097**	1	INSULATION	
	2	1	*203-5099*	1	DOOR AS	
	2A	1	**4I-7949**	2	HINGE	
	2B	1	**4I-7948**	2	HINGE AS	
	3	1	**203-5098**	1	INSULATION	
D	4	1	**101-9848**		SEAL (0.45-M)	
	5	1	**6P-2216**	8	CAP	
	6	1	**4I-7924**	8	WASHER (4.5X40X1.2-MM THK)	

D-ORDER BY THE METER

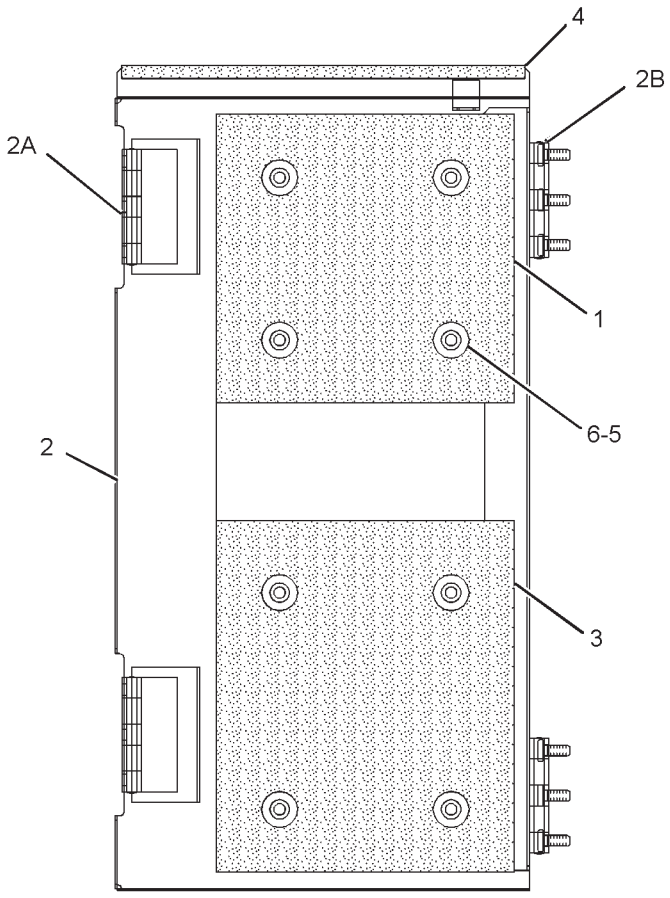

REAR VIEW

GRAPHIC #1 **<END>** g01312861

FRAME AND BODY

203-5101 DOOR AS-ACCESS

S/N: RCD1-UP

PART OF 222-3847 HOOD & GUARD GP

SMCS-7273 **i02396011**

NOTE	REF NO	GRAPHIC REF	PART NUMBER	QTY	PART NAME 1 2 3 4 5 6 (PRODUCT LEVEL)	SEE PAGE
	1	1	**101-9848**	1	SEAL (0.4-M)	
	2	1	**203-5161**	1	INSULATION	
	3	1	**203-5162**	1	INSULATION	
	4	1	**184-8258**	1	SHEET-RUBBER	
	5	1	**6P-2216**	4	CAP	
	6	1	**4I-7924**	4	WASHER (4.5X40X1.2-MM THK)	
Z	7	1		1	DOOR AS	

Z-NOT SERVICED SEPARATELY

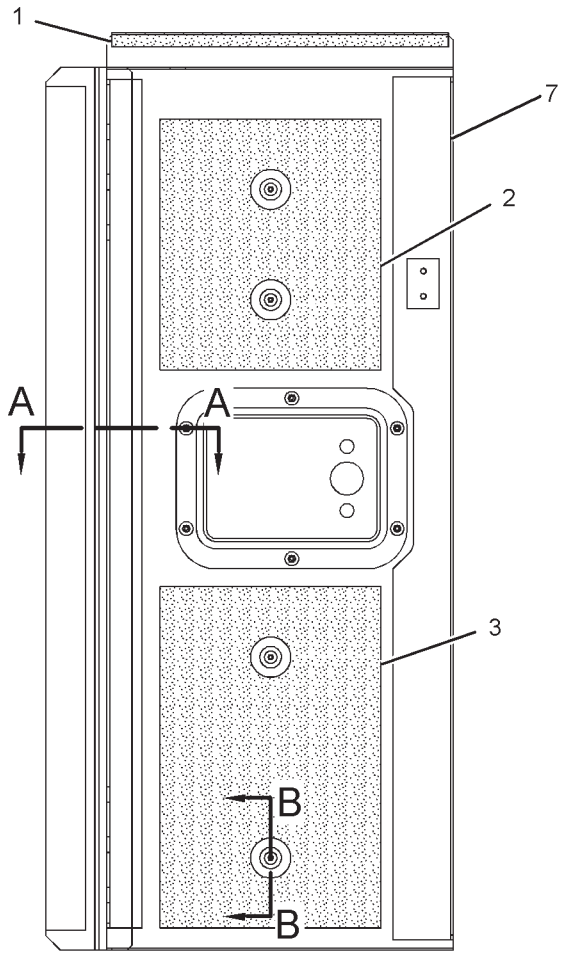

REAR VIEW

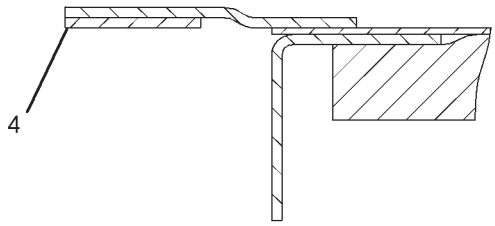

SECTION A-A

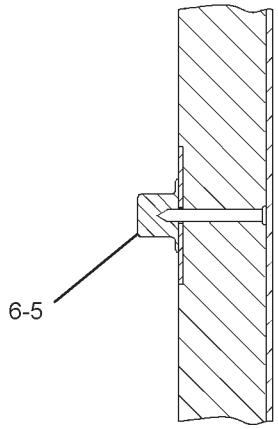

SECTION B-B

GRAPHIC #1 **<END>** g01301517

FRAME AND BODY

177-5580 DOOR GP-ACCESS

S/N: RCD1-UP

PART OF 222-3847 HOOD & GUARD GP

SMCS-7273 **i01726547**

NOTE	REF NO	GRAPHIC REF	PART NUMBER	QTY	PART NAME 1 2 3 4 5 6 (PRODUCT LEVEL)	SEE PAGE
	1	1	*177-5588*	1	DOOR AS	
		1	**105-6855**	2	HINGE	
	2	1	**177-5587**	1	LINER (33MM X 1129MM)	
	3	1	**177-5581**	1	INSULATION (325MM X 430MM)	
	4	1	**177-5586**	1	LINER (115MM X 33MM)	
	5	1	**177-5582**	3	INSULATION (575MM X 180MM)	
	6	1	**177-5583**	1	INSULATION (250MM X 575MM)	
	7	1	**177-5584**	1	INSULATION (325MM X 180MM)	

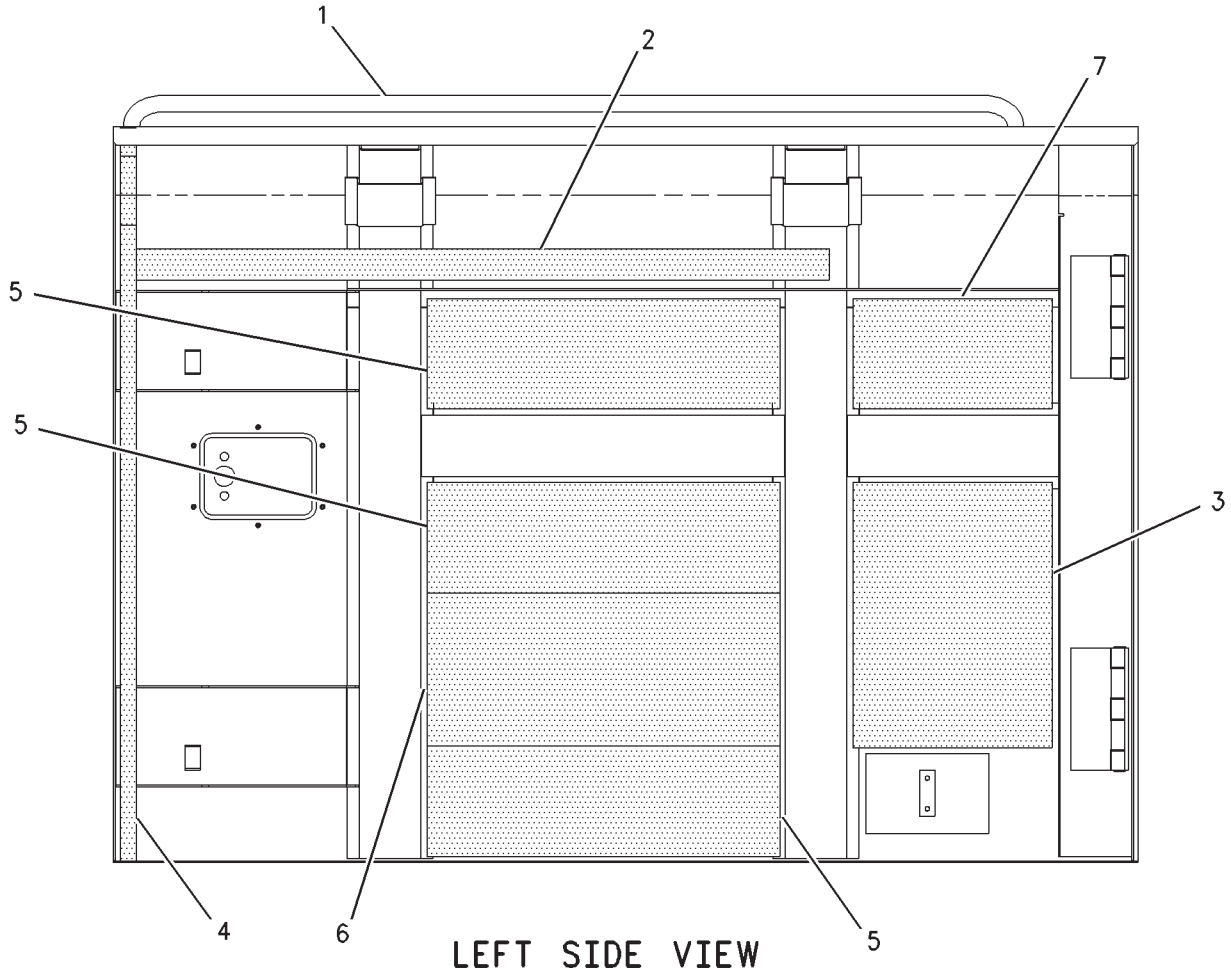

LEFT SIDE VIEW

GRAPHIC #1 **<END>** g00887275

FRAME AND BODY

158-3896 FRAME GP-UPPER

S/N: RCD1-UP
PART OF 157-9989 COUNTERWEIGHT AR
AN ATTACHMENT
TYPE 1

SMCS-7051 **i01755919**

NOTE	REF NO	GRAPHIC REF	PART NUMBER	QTY	PART NAME 1 2 3 4 5 6 (PRODUCT LEVEL)	SEE PAGE
	1	1	**217-2817**	1	FRAME AS-UPPER	
	2	1	**174-8345**	2	PIN AS	
	3	1	**115-2670**	2	PIN AS	
M	4	1	**7X-2573**	4	BOLT (M24X3.0X40MM)	
	5	1	**8T-4167**	4	WASHER-HARD (26X44X4MM THK)	
	6	1	**201-2771**	4	WASHER (26X90X8MM THK)	
	7	1	**123-5574**	4	SPACER (14MM THK)	
B	8	1	**174-8354**	8	SHIM	
B	9	1	**123-5362**	4	SHIM (1.0MM THK)	
B	10	1	**123-5364**	4	SHIM (2.0MM THK)	
	11	1	**126-6367**	2	SUPPORT	
	12	1	**4I-2509**	2	PLATE-END	
M	13	1	**8T-4183**	8	BOLT (M12X1.75X40MM)	
	14	1	**5P-1076**	8	WASHER-HARD (13.5X30X4MM THK)	

B-USE AS REQUIRED
M-METRIC PART

158-3896 **FRAME GP-UPPER** *(contd.)* **i01755919**

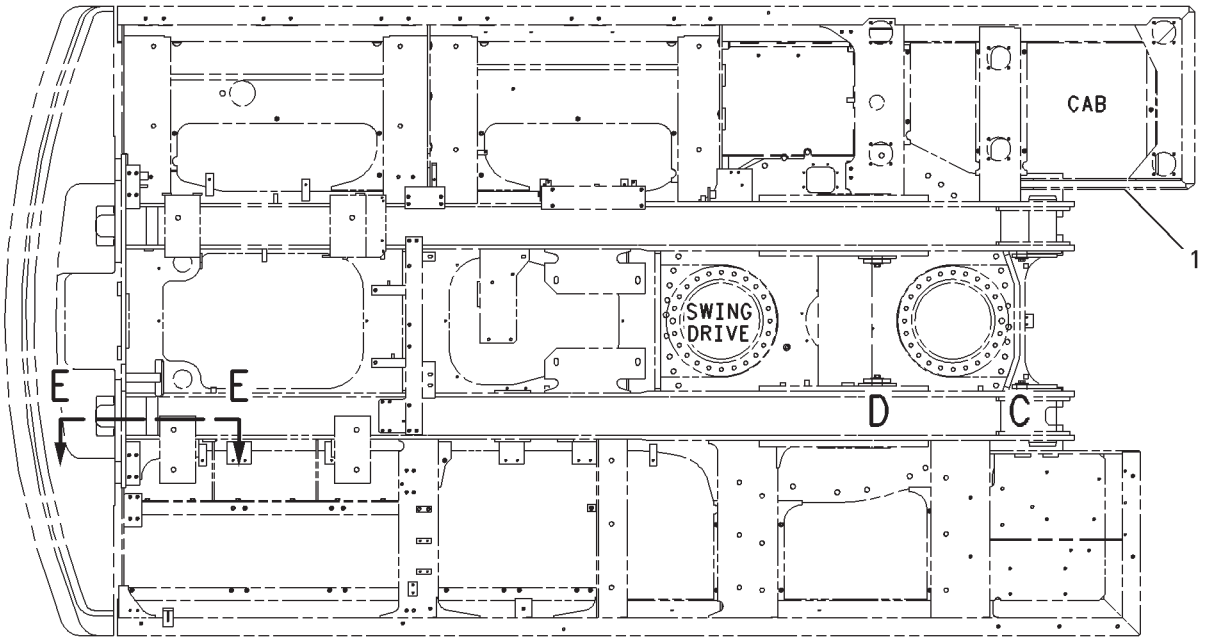

FWD TOP VIEW

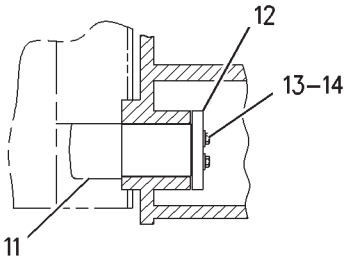

SECTION E-E

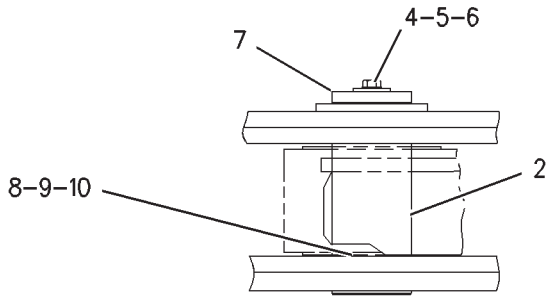

VIEW OF AREA D

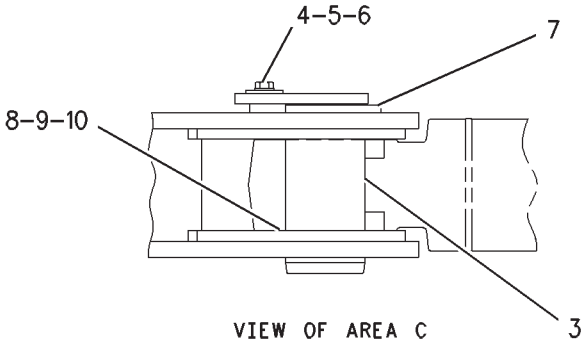

VIEW OF AREA C

GRAPHIC #1 **<END>** g00898425

FRAME AND BODY

158-3896 FRAME GP-UPPER

S/N: RCD1-UP
PART OF 157-9989 COUNTERWEIGHT AR
AN ATTACHMENT
TYPE 2

SMCS-7051 **i02332224**

NOTE	REF NO	GRAPHIC REF	PART NUMBER	QTY	PART NAME 1 2 3 4 5 6 (PRODUCT LEVEL)	SEE PAGE
C	1	1	**236-6887**	1	FRAME AS-UPPER	
	2	1	**234-3956**	2	PIN AS	
	3	1	**115-2670**	2	PIN AS	
M	4	1	**7X-2573**	2	BOLT (M24X3X40-MM)	
	5	1	**8T-4167**	4	WASHER-HARD (26X44X4-MM THK)	
	6	1	**201-2771**	4	WASHER (26X90X8-MM THK)	
	7	1	**123-5574**	4	SPACER (153X210X14-MM THK)	
B	8	1	**174-8354**	8	SHIM (0.5-MM THK)	
B	9	1	**123-5362**	4	SHIM (1-MM THK)	
B	10	1	**123-5364**	4	SHIM (2-MM THK)	
	11	1	**126-6367**	2	SUPPORT	
	12	1	**4I-2509**	2	PLATE-END	
M	13	1	**8T-4183**	8	BOLT (M12X1.75X40-MM)	
	14	1	**5P-1076**	8	WASHER-HARD (13.5X30X4-MM THK)	
M	15	1	**7X-2574**	2	BOLT (M24X3X45-MM)	

B-USE AS REQUIRED
C-CHANGE FROM PREVIOUS TYPE
M-METRIC PART

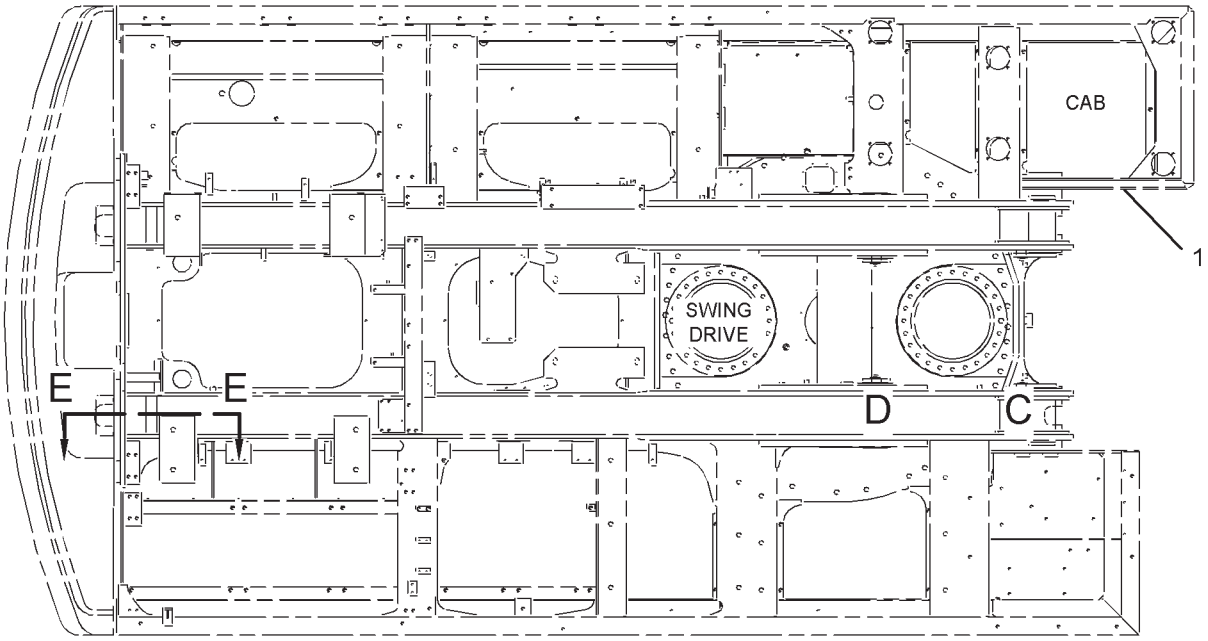

FWD

TOP VIEW

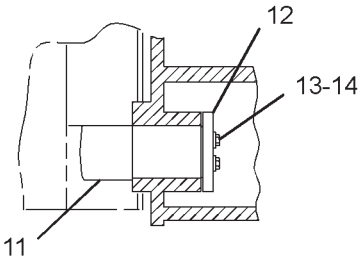

SECTION E-E

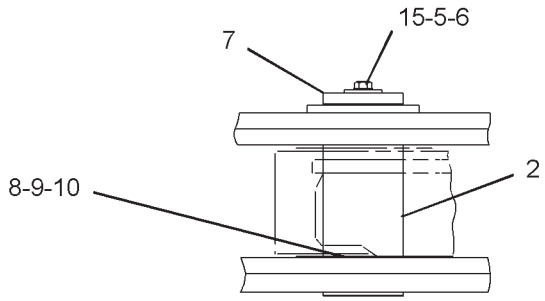

VIEW OF AREA D

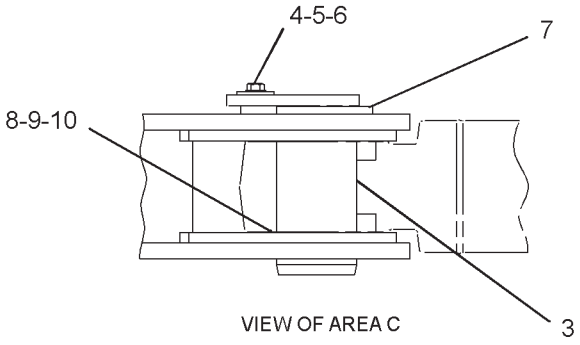

VIEW OF AREA C

GRAPHIC #1 **<END>** g01266831

FRAME AND BODY

195-5493 FRAME GP-UPPER

S/N: RCD1-160

PART OF 229-3366 CHASSIS AR

SMCS-7051 **i01530082**

NOTE	REF NO	GRAPHIC REF	PART NUMBER	QTY	PART NAME 1 2 3 4 5 6 (PRODUCT LEVEL)	SEE PAGE
	1	1	**200-4926**	1	FRAME AS-UPPER	
	2	1	**174-8345**	2	PIN AS	
	3	1	**115-2670**	2	PIN AS	
M	4	1	**7X-2573**	4	BOLT (M24X3.0X40MM)	
	5	1	**8T-4167**	4	WASHER-HARD (26X44X4MM THK)	
	6	1	**201-2771**	4	WASHER	
	7	1	**123-5574**	4	SPACER (14MM THK)	
B	8	1	**174-8354**	8	SHIM	
B	9	1	**123-5362**	4	SHIM (1.0MM THK)	
B	10	1	**123-5364**	4	SHIM (2.0MM THK)	

B-USE AS REQUIRED
M-METRIC PART

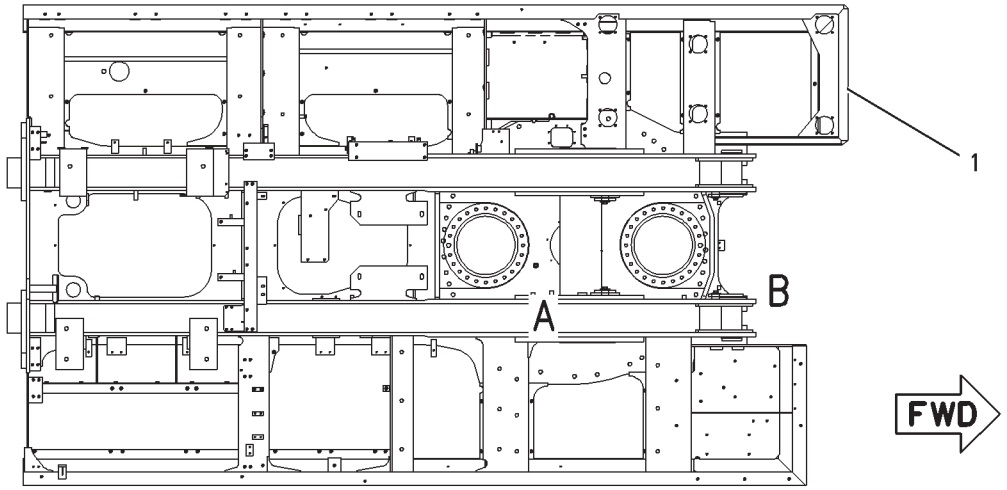

TOP VIEW

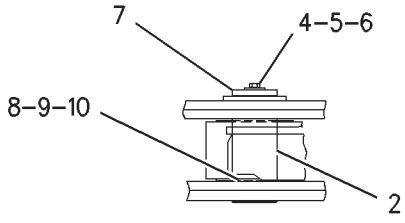

VIEW OF AREA A

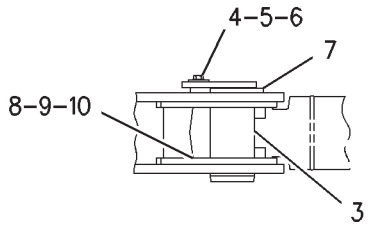

VIEW OF AREA B

GRAPHIC #1 **<END>** g00794613

FRAME AND BODY

195-5493 FRAME GP-UPPER

S/N: RCD161-UP

PART OF 229-3366 CHASSIS AR

SMCS-7051 **i02351127**

NOTE	REF NO	GRAPHIC REF	PART NUMBER	QTY	PART NAME 1 2 3 4 5 6 (PRODUCT LEVEL)	SEE PAGE
C	1	1	**236-6886**	1	FRAME AS-UPPER	
	2	1	**234-3956**	2	PIN AS	
	3	1	**115-2670**	2	PIN AS	
M	4	1	**7X-2574**	2	BOLT (M24X3X45-MM)	
	5	1	**8T-4167**	4	WASHER-HARD (26X44X4-MM THK)	
	6	1	**201-2771**	4	WASHER (26X90X8-MM THK)	
	7	1	**123-5574**	4	SPACER (153X210X14-MM THK)	
B	8	1	**174-8354**	8	SHIM (0.5-MM THK)	
B	9	1	**123-5362**	4	SHIM (1-MM THK)	
B	10	1	**123-5364**	4	SHIM (2-MM THK)	
M	11	1	**7X-2573**	2	BOLT (M24X3X40-MM)	

B-USE AS REQUIRED
C-CHANGE FROM PREVIOUS TYPE
M-METRIC PART

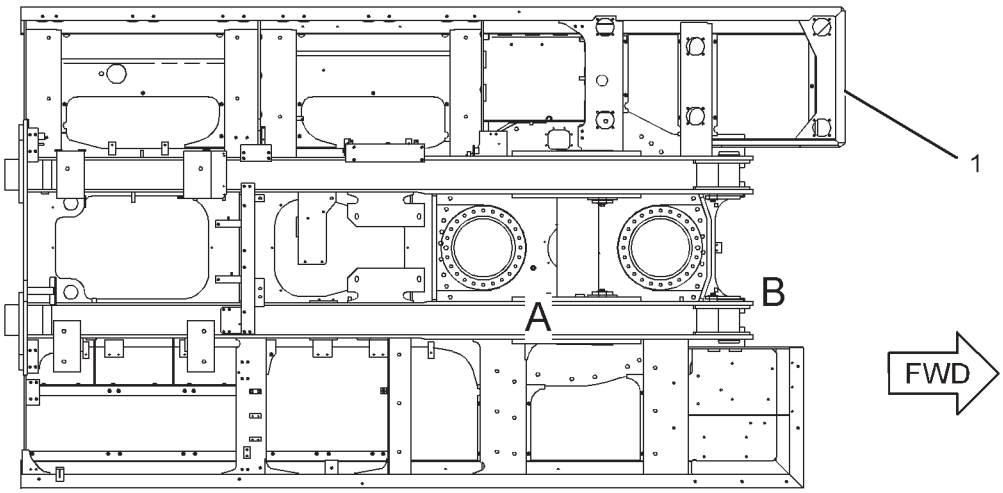

TOP VIEW

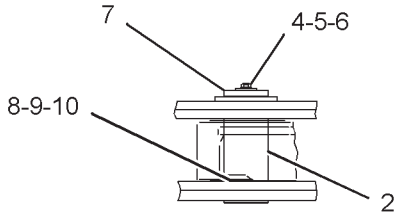

VIEW OF AREA A

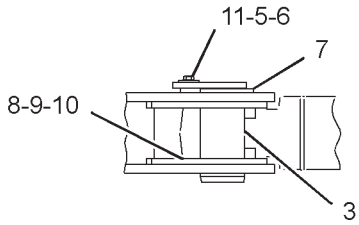

VIEW OF AREA B

GRAPHIC #1 **<END>** g01277870

FRAME AND BODY

148-4650 GEAR & BEARING GP-SWING

S/N: RCD152-230

PART OF 229-3368 FRAME AR-UNDERCARRIAGE

SMCS-7063 **i02434649**

NOTE	REF NO	GRAPHIC REF	PART NUMBER	QTY	PART NAME 1 2 3 4 5 6 (PRODUCT LEVEL)	SEE PAGE
	1	1	**5K-9243**	4	ELBOW-FLARED	
	2	1	**7Y-1095**	2	DOWEL	
	3	1	**199-4498**	1	TUBE AS (RH)	
	4	1	**3B-8489**	2	FITTING-GREASE	
M	5	1	**8T-4199**	4	BOLT (M8X1.25X12-MM)	
	6	1	**4N-9170**	4	CLIP	
	7	1	**8T-4121**	28	WASHER-HARD (11X21X2.5-MM THK)	
	8	1	**7Y-1106**	1	BOOT	
	9	1	**7Y-1107**	1	RETAINER	
	10	1	**7Y-1108**	1	RETAINER	
	11	1	**199-4499**	1	TUBE AS (LH)	
	12	1	**199-4502**	74	BOLT (M30X3.5X235-MM)	
	13	1	**7Y-1648**	1	STRIP	
	14	1	**7Y-1647**	1	GASKET	
B	15	1	**1U-8846**		SEALANT-GASKET	
Y	17	1	**199-4491**	1	GEAR & BEARING GP-SWING	355
	18	1	**207-4918**	48	BOLT (M30X3.5X210-MM)	
M	19	1	**8T-4136**	28	BOLT (M10X1.5X25-MM)	
	20	1	**7Y-1110**	1	GASKET	
	21	1	**7Y-1109**	1	STRIP	
	22	1	**6I-6563**	12	CORK	
	23	1	**199-4501**	122	SPACER (31.5X56X5-MM THK)	
	27	1	**8T-6757**	2	PLUG-PIPE	

B-USE AS REQUIRED
M-METRIC PART
Y-SEPARATE ILLUSTRATION

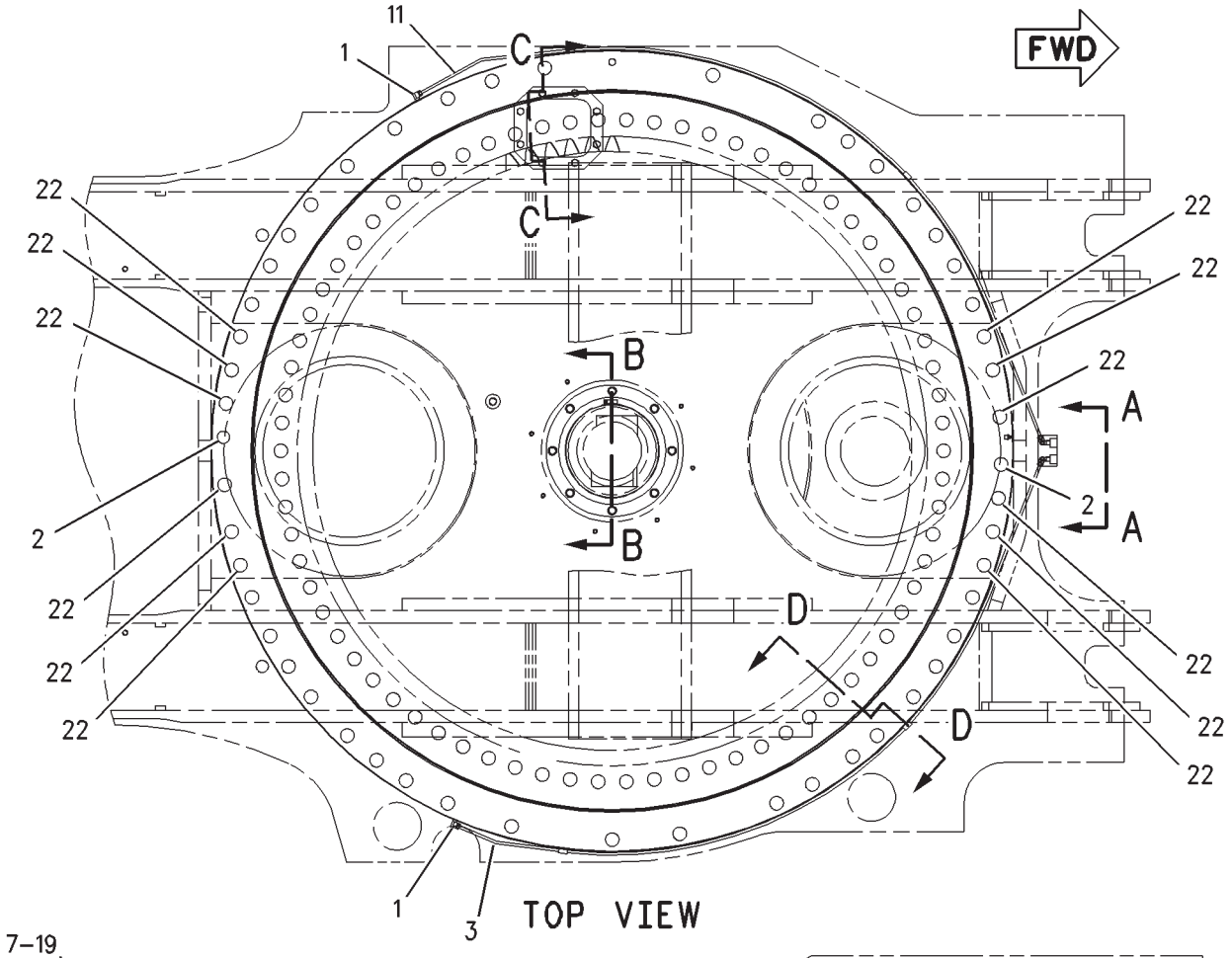

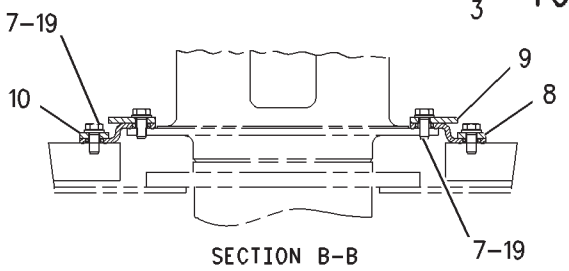

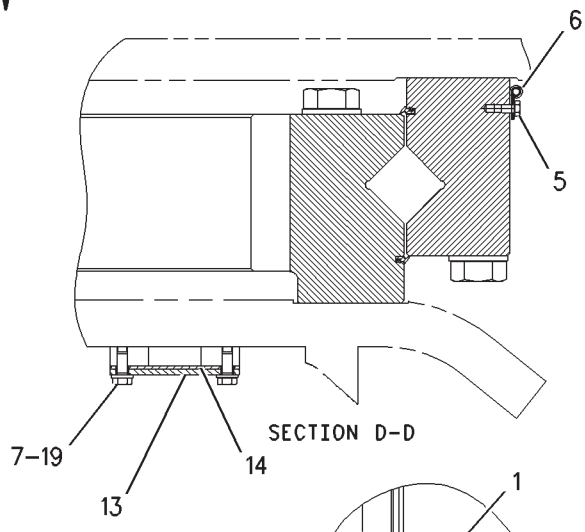

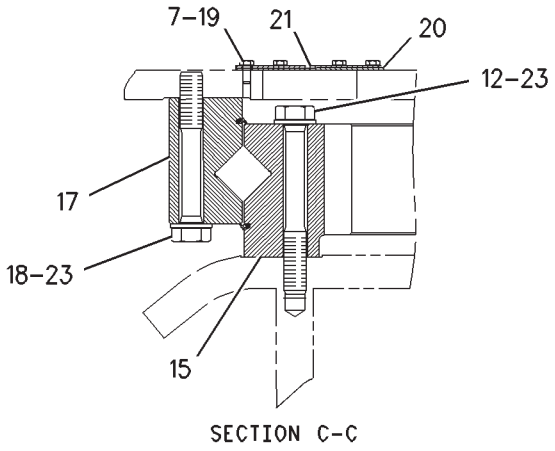

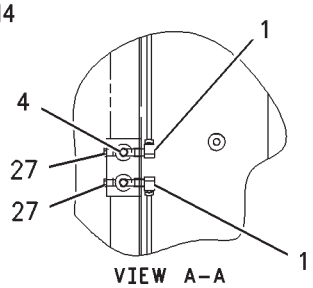

GRAPHIC #1 **<END>** g00775966

FRAME AND BODY

148-4650 GEAR & BEARING GP-SWING

S/N: RCD231-UP

PART OF 229-3368 FRAME AR-UNDERCARRIAGE

SMCS-7063 **i02442443**

NOTE	REF NO	GRAPHIC REF	PART NUMBER	QTY	PART NAME 1 2 3 4 5 6 (PRODUCT LEVEL)	SEE PAGE
	1	1	**3B-8489**	2	FITTING-GREASE	
	2	1	**5K-9243**	4	ELBOW-FLARED	
	3	1	**6I-6563**	12	CORK	
	4	1	**7Y-1106**	1	BOOT	
	5	1	**7Y-1107**	1	RETAINER	
	6	1	**7Y-1108**	1	RETAINER	
	7	1	**7Y-1109**	1	STRIP	
	8	1	**7Y-1110**	1	GASKET	
	9	1	**7Y-1647**	1	GASKET	
	10	1	**199-4501**	122	SPACER (31.5X56X5-MM THK)	
	11	1	**199-4502**	74	BOLT (M30X3.5X235-MM)	
	12	1	**199-4554**	1	TUBE AS (RH)	
	13	1	**199-4555**	1	TUBE AS (LH)	
CY	14	1	**227-6098**	1	GEAR & BEARING GP-SWING	357
	15	1	**207-4918**	48	BOLT (M30X3.5X210-MM)	
	16	1	**4N-9170**	4	CLIP	
	17	1	**7Y-1095**	2	DOWEL	
	18	1	**7Y-1648**	1	STRIP	
	19	1	**8T-4121**	28	WASHER-HARD (11X21X2.5-MM THK)	
M	20	1	**8T-4136**	28	BOLT (M10X1.5X25-MM)	
M	21	1	**8T-4199**	4	BOLT (M8X1.25X12-MM)	
	22	1	**8T-6757**	2	PLUG-PIPE	
B	23	1	**1U-8846**		SEALANT-GASKET	

B-USE AS REQUIRED
C-CHANGE FROM PREVIOUS TYPE
M-METRIC PART
Y-SEPARATE ILLUSTRATION

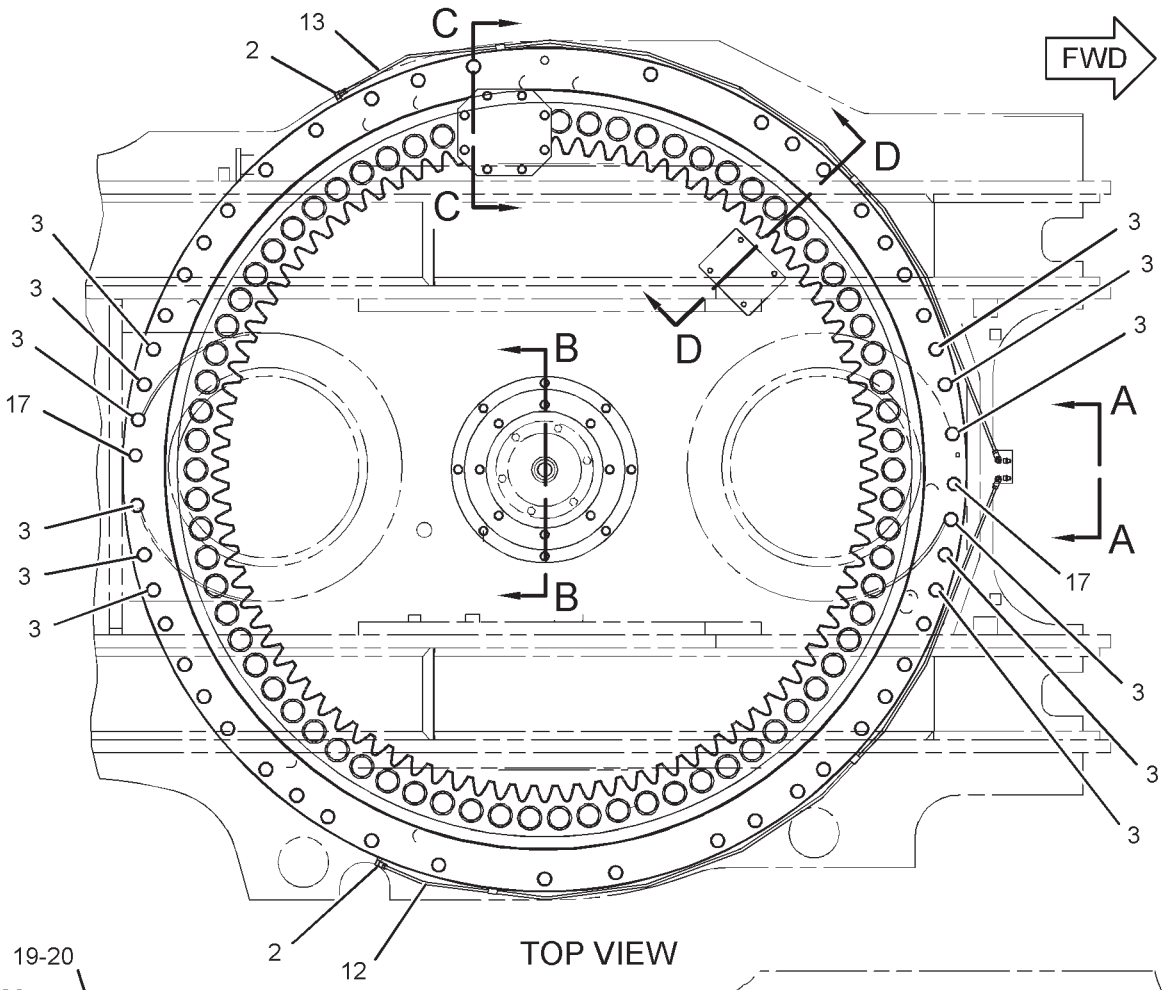

TOP VIEW

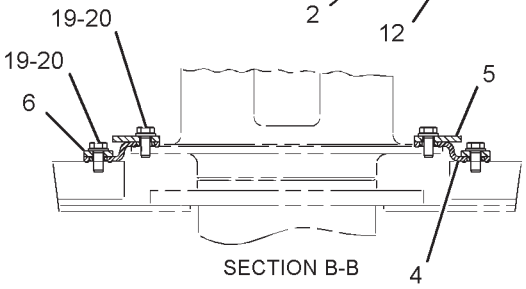

SECTION B-B

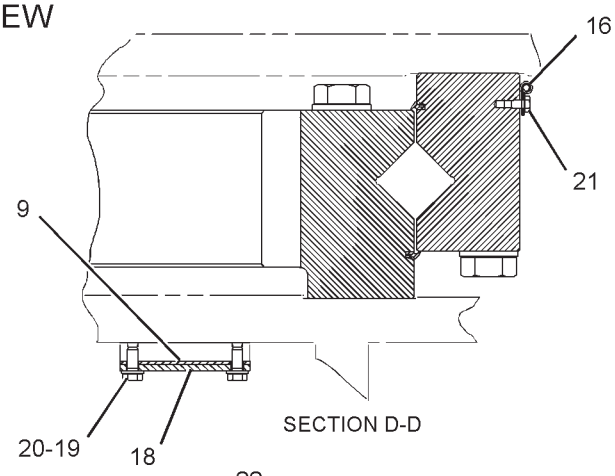

SECTION D-D

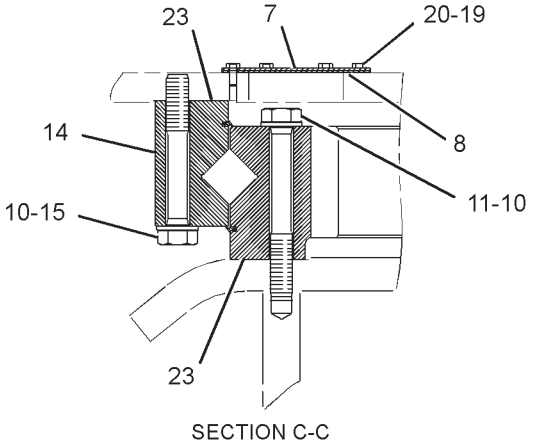

SECTION C-C

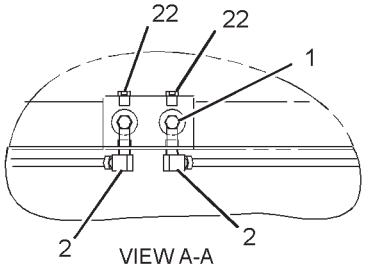

VIEW A-A

GRAPHIC #1 **<END>** g01232739

FRAME AND BODY

199-4491 GEAR & BEARING GP-SWING

S/N: RCD1-UP

PART OF 148-4650 GEAR & BEARING GP-SWING

REPLACED BY 227-6098—PAGE 357

SMCS-7063 **i03587360**

NOTE	PART NUMBER	QTY	PART NAME 1 2 3 4 5 6 (PRODUCT LEVEL)	SEE PAGE
Y	*199-4492*	1	GEAR & BEARING GP-SWING (84-BEARING)	356
			-OR-	
	199-4493	1	GEAR & BEARING GP-SWING (90-BEARING)	
	3B-8489	1	FITTING-GREASE	
E	**148-4685**		SEAL (1100-CM)	

E-ORDER BY THE CENTIMETER
Y-SEPARATE ILLUSTRATION

<END>

FRAME AND BODY

199-4492 GEAR & BEARING GP-SWING

S/N: RCD1-UP

PART OF 199-4491, 227-6098 GEAR & BEARING GP-SWING

SMCS-7063 **i02951745**

NOTE	REF NO	GRAPHIC REF	PART NUMBER	QTY	PART NAME 1 2 3 4 5 6 (PRODUCT LEVEL)	SEE PAGE
BE	1	1	**110-7183**		SEAL	
	2	1	**3B-8489**	1	FITTING-GREASE	

B-USE AS REQUIRED
E-ORDER BY THE CENTIMETER

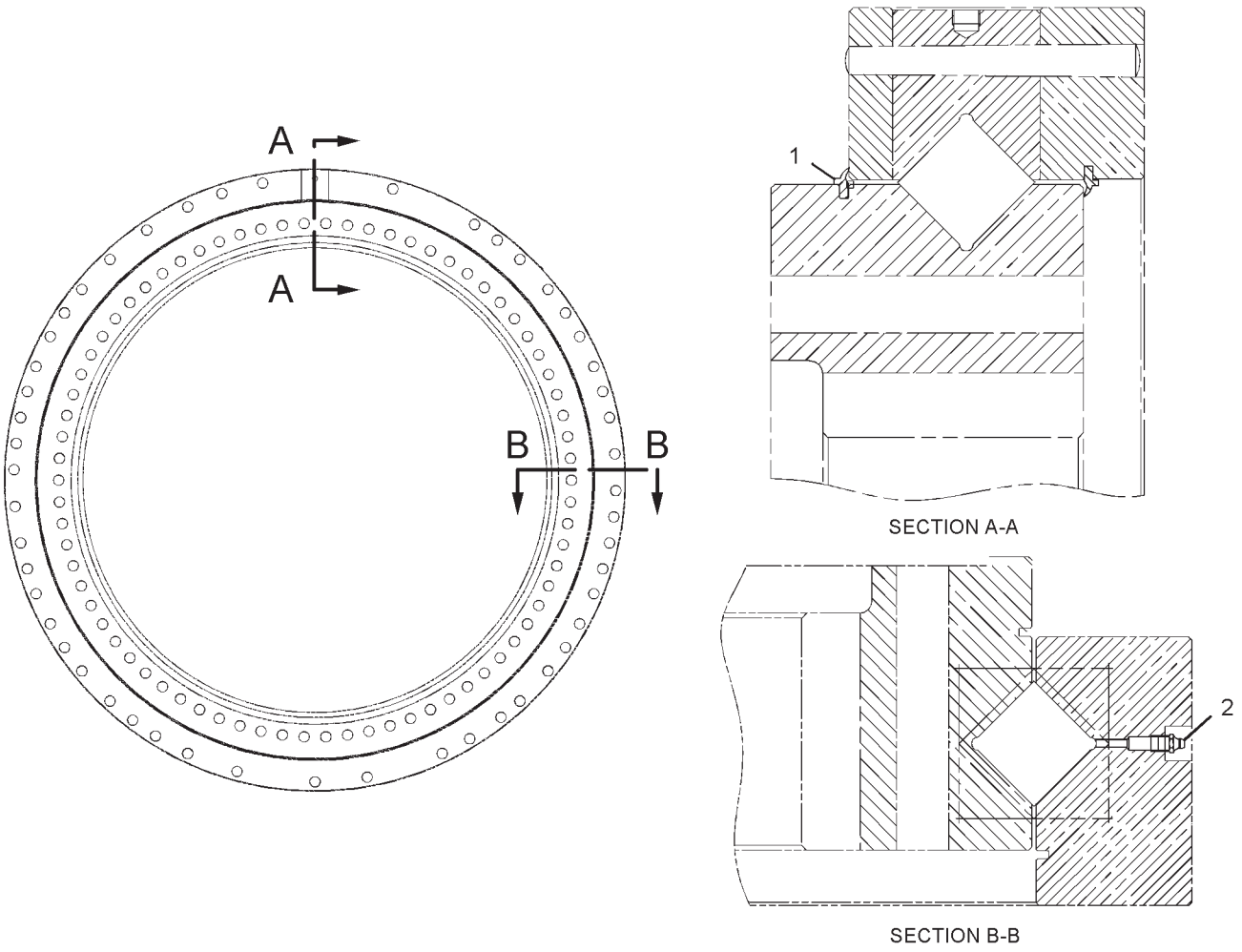

GRAPHIC #1 **<END>** g01113556

FRAME AND BODY

227-6098 GEAR & BEARING GP-SWING

S/N: RCD231-UP

PART OF 148-4650 GEAR & BEARING GP-SWING

SMCS-7063 **i03639920**

NOTE	PART NUMBER	QTY	PART NAME 1 2 3 4 5 6 (PRODUCT LEVEL)	SEE PAGE
Y	*227-6099*	1	GEAR & BEARING GP-SWING (90-BEARING)	358
			—OR—	
Y	*199-4492*	1	GEAR & BEARING GP-SWING (84-BEARING)	356

Y-SEPARATE ILLUSTRATION

<END>

FRAME AND BODY

227-6099 GEAR & BEARING GP-SWING

S/N: RCD231-UP

PART OF 227-6098 GEAR & BEARING GP-SWING

SMCS-7063 **i02951749**

NOTE	REF NO	GRAPHIC REF	PART NUMBER	QTY	PART NAME 1 2 3 4 5 6 (PRODUCT LEVEL)	SEE PAGE
Z	1	1		1	RACE AS-OUTER	
Z	2	1		1	RACE-BEARING	
Z	3	1		90	ROLLER	
Z	4	1		68	SEPARATOR	
Z	5	1		22	SEPARATOR	
	6	1	**227-6077**	1	SEAL-DUST	
	7	1	**3B-8489**	1	FITTING-GREASE	
E	8	1	**148-4685**		SEAL (537-CM)	

E-ORDER BY THE CENTIMETER
Z-NOT SERVICED SEPARATELY

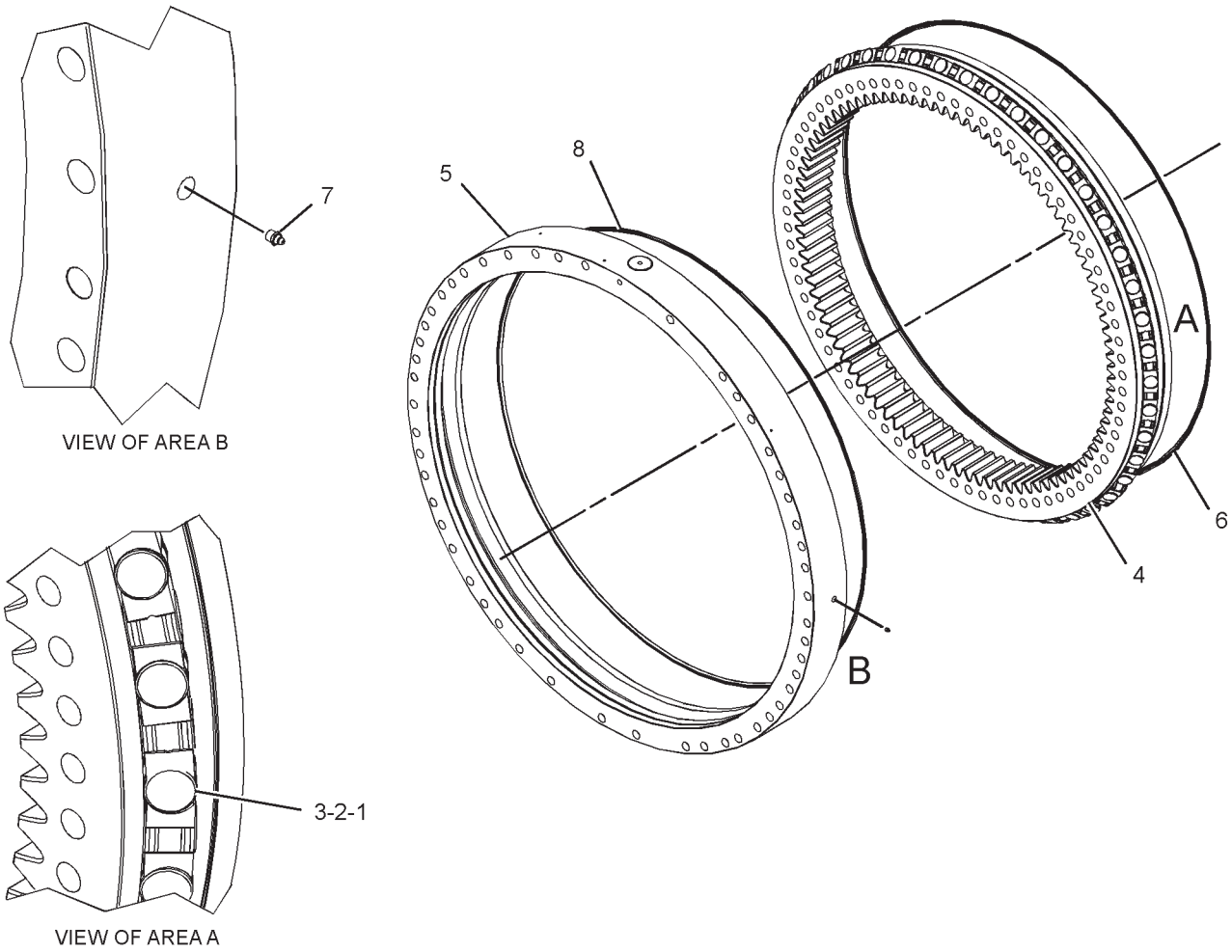

GRAPHIC #1

<END>

g01232646

FRAME AND BODY

168-1716 GUARD GP-BOTTOM

S/N: RCD1-220

PART OF 229-3366 CHASSIS AR

SMCS-7153 **i02142003**

NOTE	REF NO	GRAPHIC REF	PART NUMBER	QTY	PART NAME 1 2 3 4 5 6 (PRODUCT LEVEL)	SEE PAGE
	1	1	**170-2942**	1	SHEET	
	2	1	**170-2956**	1	SHEET AS	
	3	1	**193-9421**	1	SHEET AS	
	4	1	**170-2943**	1	SHEET	
	5	1	**193-9419**	1	SHEET AS	
	6	1	**170-7471**	1	SHEET	
	7	1	**138-5690**	1	COVER AS	
	8	1	**170-2950**	1	SHEET	
	9	1	**170-2949**	1	SHEET	
	10	1	**170-2948**	2	SHEET	
	11	1	**170-2947**	2	SHEET	
	12	1	**170-2946**	1	SHEET	
	13	1	**170-2951**	1	SHEET AS	
M	14	1	**135-8575**	56	BOLT AS (M12X1.75X30-MM)	
M	15	1	**135-8577**	25	BOLT AS	
	16	1	**7Y-2853**	25	SPACER (13X38X5-MM THK)	
	17	1	**7Y-2854**	2	SPACER (24X38X3-MM THK)	

M-METRIC PART

168-1716 **GUARD GP-BOTTOM** *(contd.)* **i02142003**

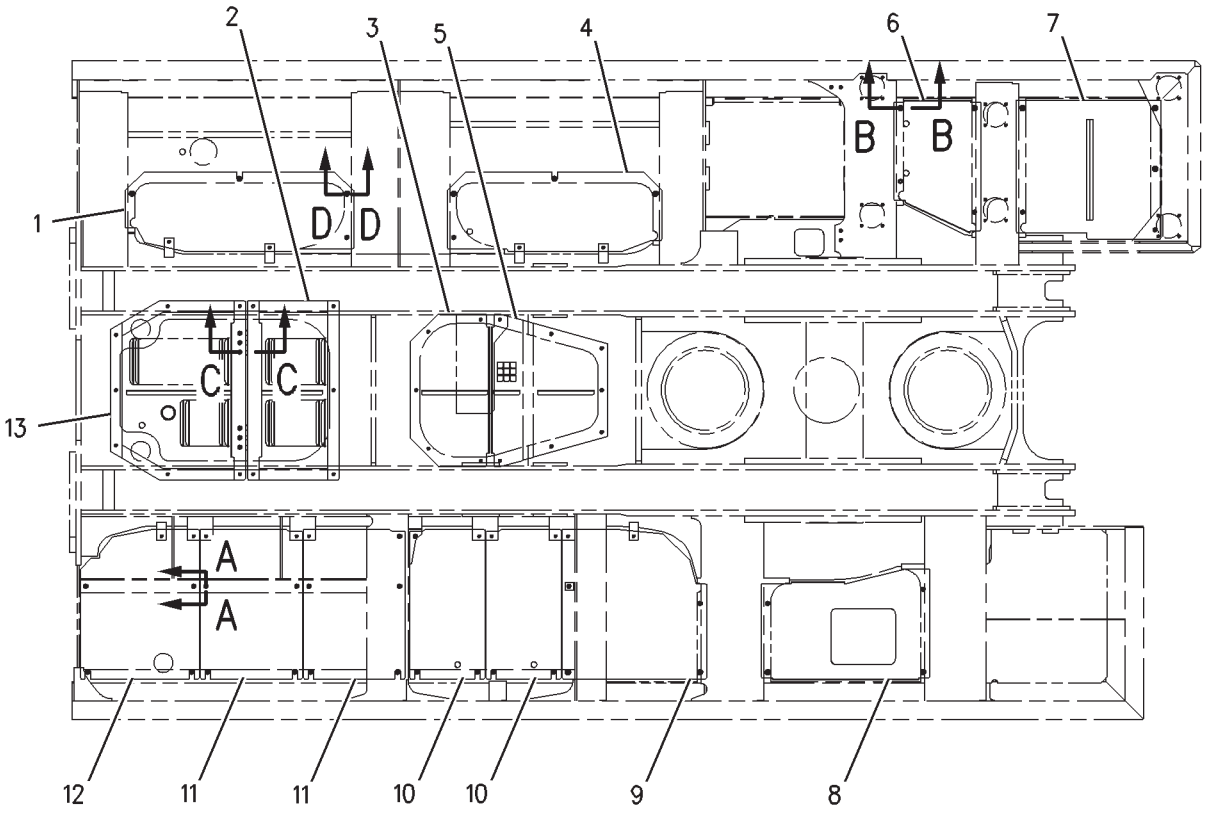

BOTTOM VIEW

FWD

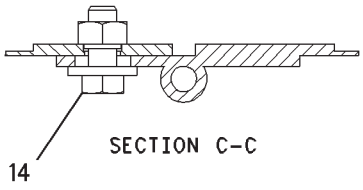

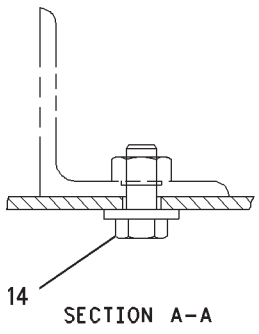

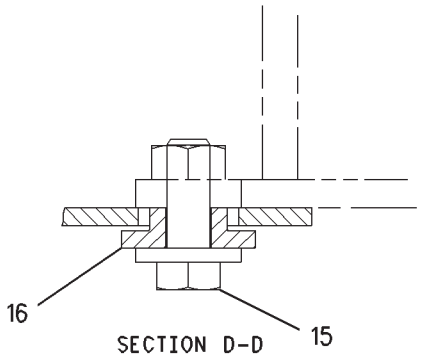

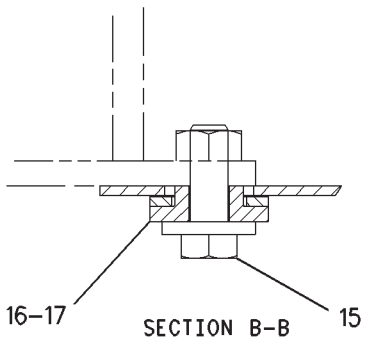

GRAPHIC #1 **<END>** g00892574

FRAME AND BODY

237-8773 GUARD GP-BOTTOM

S/N: RCD221-UP

PART OF 229-3366 CHASSIS AR

SMCS-7153 **i02125086**

NOTE	REF NO	GRAPHIC REF	PART NUMBER	QTY	PART NAME 1 2 3 4 5 6 (PRODUCT LEVEL)	SEE PAGE
	1	1	**170-2942**	1	SHEET	
	2	1	**170-2956**	1	SHEET AS	
	3	1	**193-9421**	1	SHEET AS	
	4	1	**170-2943**	1	SHEET	
	5	1	**193-9419**	1	SHEET AS	
	6	1	**170-7471**	1	SHEET	
	7	1	**138-5690**	1	COVER AS	
	8	1	**170-2950**	1	SHEET	
	9	1	**170-2949**	1	SHEET	
	10	1	**170-2948**	2	SHEET	
	11	1	**170-2947**	2	SHEET	
	12	1	**170-2946**	1	SHEET	
	13	1	**170-2951**	1	SHEET AS	
M	14	1	**135-8575**	56	BOLT AS (M12X1.75X30-MM)	
M	15	1	**135-8577**	25	BOLT AS	
	16	1	**7Y-2853**	25	SPACER (13X38X5-MM THK)	
	17	1	**7Y-2854**	2	SPACER (24X38X3-MM THK)	

M-METRIC PART

237-8773 **GUARD GP-BOTTOM** *(contd.)* **i02125086**

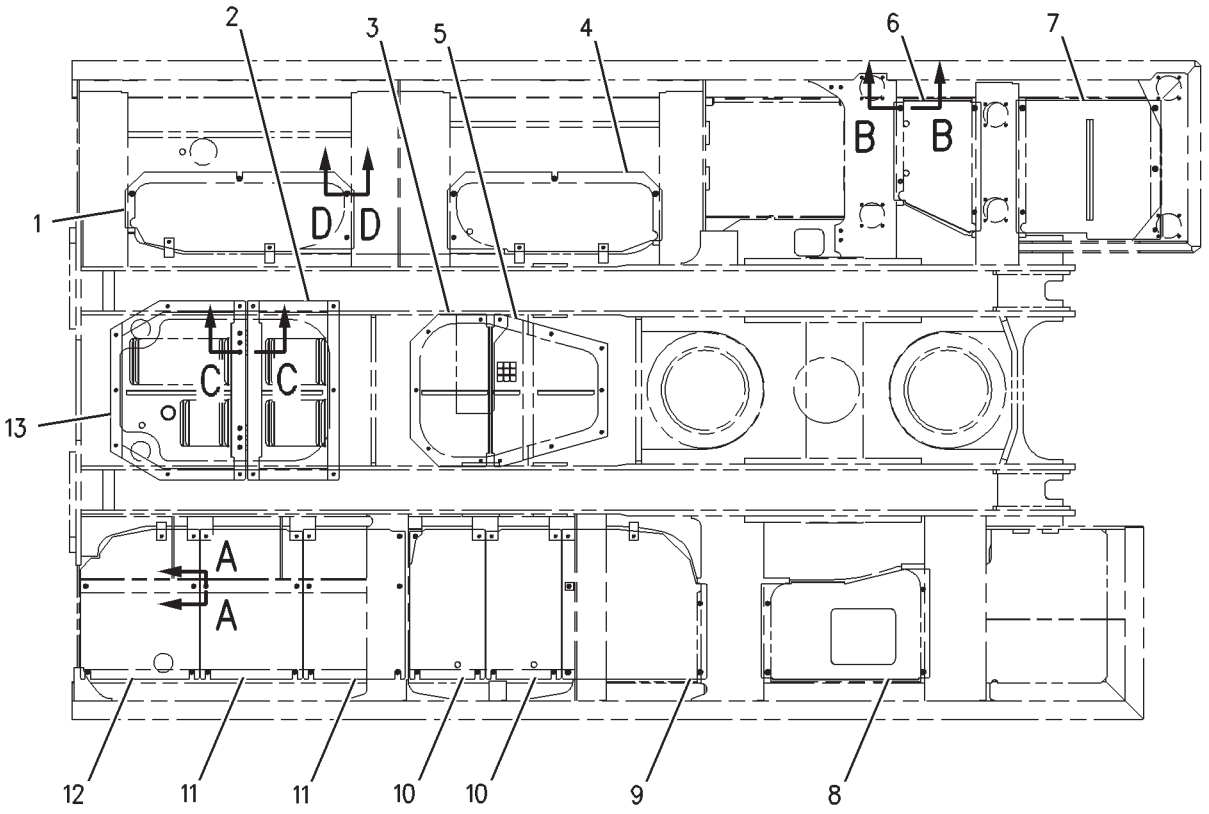

BOTTOM VIEW

FWD

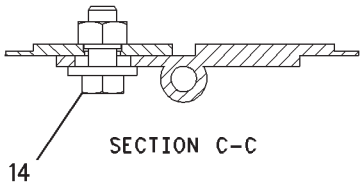

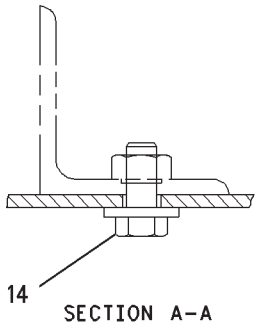

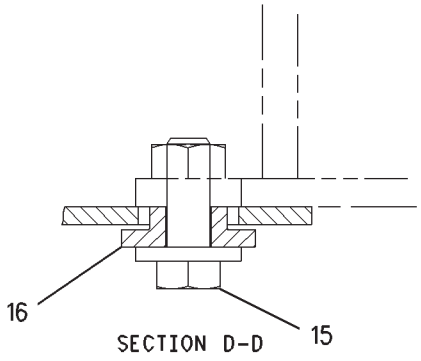

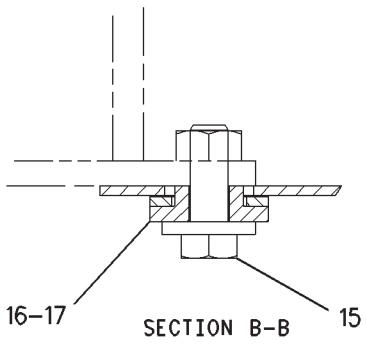

GRAPHIC #1 **<END>** g00892574

FRAME AND BODY

172-2954 GUARD GP-SWIVEL

S/N: RCD152-UP

PART OF 229-3368 FRAME AR-UNDERCARRIAGE

SMCS-7183 **i03493580**

NOTE	REF NO	GRAPHIC REF	PART NUMBER	QTY	PART NAME 1 2 3 4 5 6 (PRODUCT LEVEL)	SEE PAGE
	1	1	**172-2955**	2	COVER AS	
					(EACH INCLUDES)	
		1	**7Y-2812**	1	HANDLE	
	2	1	**103-5240**	1	COVER AS	
M	3	1	**7X-2553**	10	BOLT (M16X2X40-MM)	
M	4	1	**100-3866**	2	BOLT-SELF-LOCKING (M16X2X40-MM)	
	5	1	**3E-9411**	2	WASHER-HARD (17.5X38X6-MM THK)	
	6	1	**103-5241**	10	SPACER	
	7	1	**103-5242**	6	SPACER (32X46X5.5-MM THK)	

M-METRIC PART

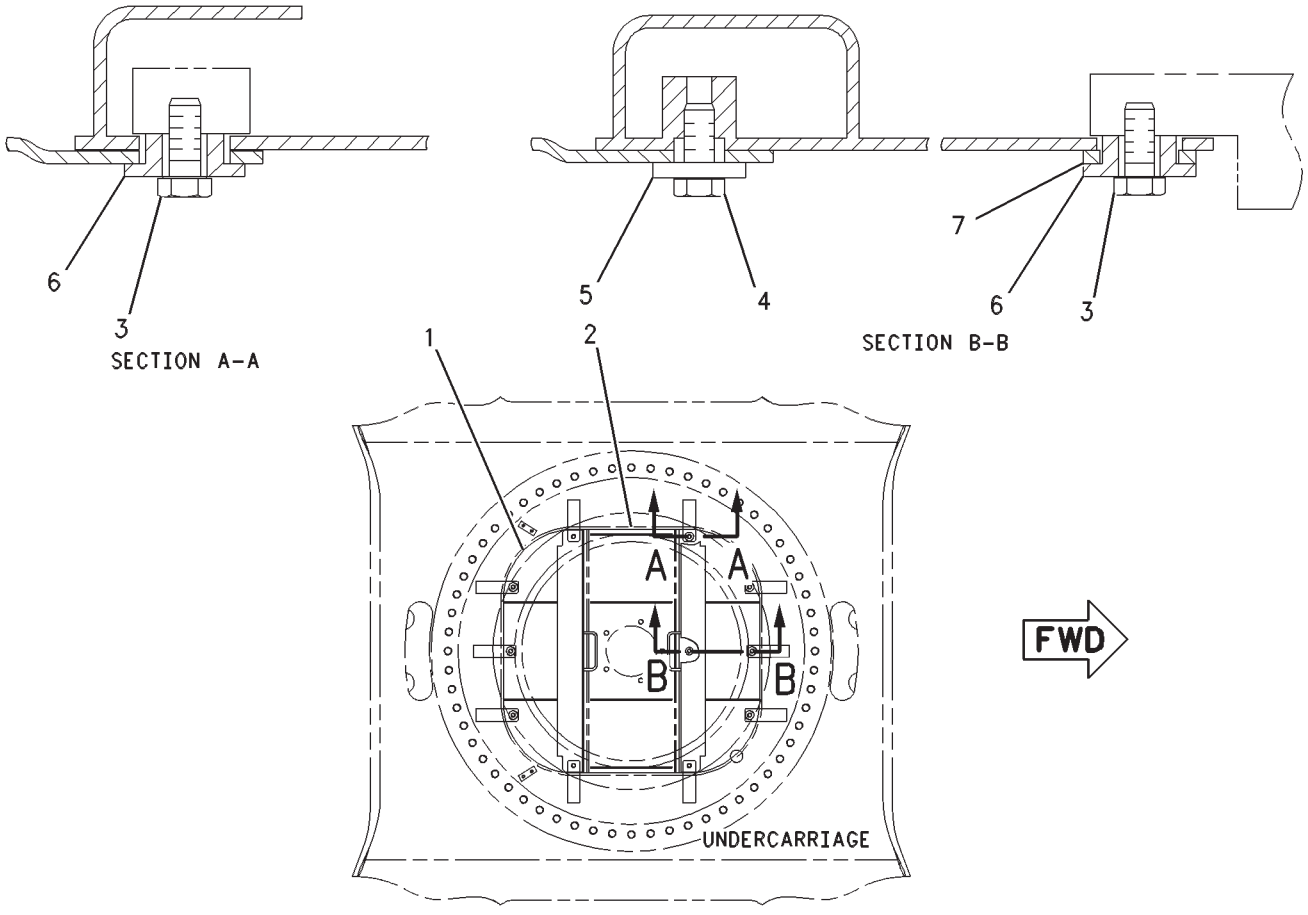

GRAPHIC #1

<END>

g00583262

FRAME AND BODY

168-1718 HANDRAIL GP

S/N: RCD1-UP

PART OF 229-3366 CHASSIS AR

SMCS-7256 **i01886728**

NOTE	REF NO	GRAPHIC REF	PART NUMBER	QTY	PART NAME 1 2 3 4 5 6 (PRODUCT LEVEL)	SEE PAGE
	1	1	**148-4977**	1	HANDRAIL AS	
	2	1	**190-6829**	1	HANDRAIL AS	
	3	1	**190-6910**	1	HANDRAIL AS	
M	4	1	**8T-4139**	14	BOLT (M12X1.75X30-MM)	
	5	1	**8T-4223**	24	WASHER-HARD (13.5X25.5X3-MM THK)	
M	6	1	**8T-4194**	10	BOLT (M12X1.75X50-MM)	

M-METRIC PART

168-1718 **HANDRAIL GP** *(contd.)* **i01886728**

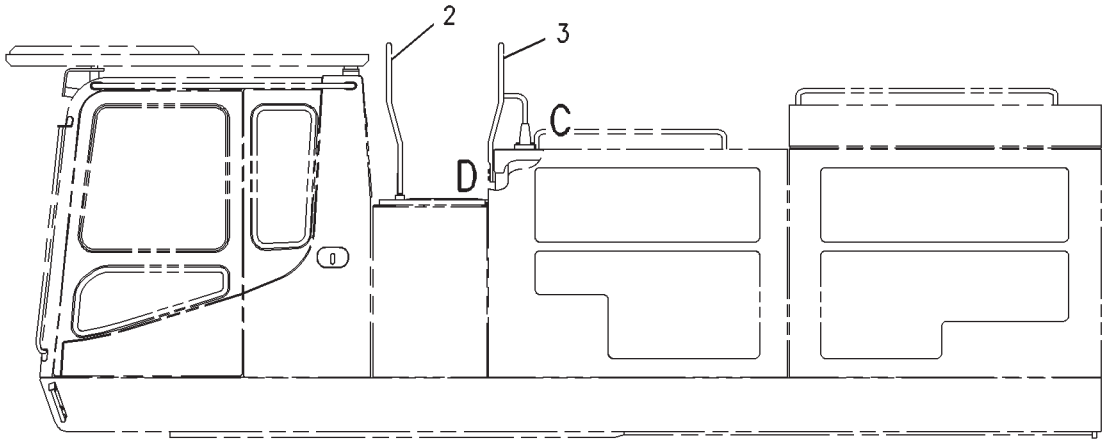

LEFT SIDE VIEW

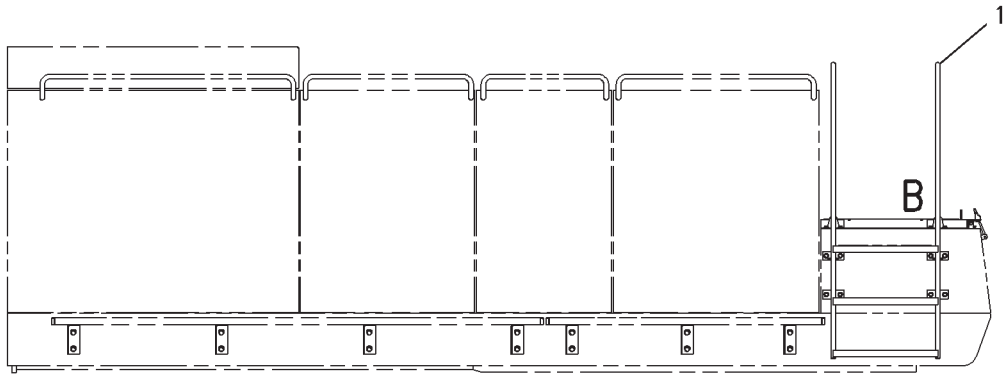

RIGHT SIDE VIEW

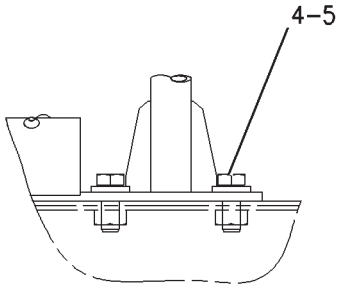

VIEW OF AREA B

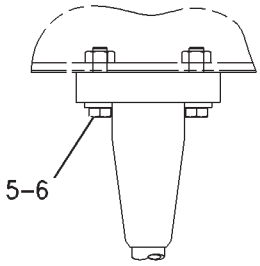

VIEW OF AREA C

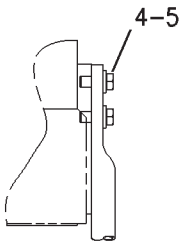

VIEW OF AREA D

GRAPHIC #1 **<END>** g00979521

FRAME AND BODY

168-1717 HOOD & GUARD GP

S/N: RCD1-UP
SUPPORT
PART OF 229-3366 CHASSIS AR

SMCS-7251, 7276 **i01676313**

NOTE	REF NO	GRAPHIC REF	PART NUMBER	QTY	PART NAME 1 2 3 4 5 6 (PRODUCT LEVEL)	SEE PAGE
M	1	1,3	*135-8577*	27	BOLT AS	
					(EACH INCLUDES)	
		1	**5P-1076**	1	WASHER-HARD (13.5X30X4-MM THK)	
M		1	**8T-4956**	1	BOLT (M12X1.75X35-MM)	
M	2	1,2,3	*135-8575*	84	BOLT AS (M12X1.75X30-MM)	
					(EACH INCLUDES)	
		1	**5P-1076**	1	WASHER-HARD (13.5X30X4-MM THK)	
M		1	**8T-4139**	1	BOLT (M12X1.75X30-MM)	
	3	1	**175-0677**	1	SUPPORT AS	
	4	1	**175-0733**	1	SUPPORT AS	
	5	1	**175-0811**	1	SUPPORT AS	
	6	1	**7Y-2854**	3	SPACER (24X38X3-MM THK)	
	7	2	**175-0757**	1	SUPPORT AS	
	8	2	**175-0681**	2	PLATE	
	9	2	**175-0837**	1	SUPPORT AS	
	10	2	**175-0696**	1	SUPPORT AS	
	11	1	**175-0724**	1	SUPPORT AS	
M	12	1,3	*135-8573*	10	BOLT AS (M12X1.75X25-MM)	
					(EACH INCLUDES)	
		1	**5P-1076**	1	WASHER-HARD (13.5X30X4-MM THK)	
M		1	**8T-4192**	1	BOLT (M12X1.75X25-MM)	
	13	3	**175-0801**	1	SUPPORT AS	
	14	3	**175-0809**	1	SUPPORT AS	
	15	3	**175-0754**	1	SUPPORT AS	
	16	1	**175-0745**	1	SUPPORT AS	
	17	3	**175-0751**	1	SUPPORT AS	
	18	3	**175-0803**	1	SUPPORT AS	
	19	3	**175-0791**	1	SUPPORT AS	
	20	3	**175-0764**	1	SUPPORT AS	
	21	3	**175-0675**	1	SUPPORT AS	
	22	3	**175-0902**	1	SUPPORT AS	
	23	3	**190-6996**	1	SUPPORT AS	
	24	3	**190-6993**	1	SUPPORT AS	
	25	2	**175-0749**	1	SUPPORT	
	26	2	**175-0673**	2	SUPPORT AS	
	27	3	**204-3410**	1	SUPPORT AS	
	28	2	**190-6999**	2	SPACER (24X50X3-MM THK)	
	29	1,2	**190-6919**	5	SPACER (24X38X16.5-MM THK)	
M	30	1,2	*135-8578*	8	BOLT AS (M12X1.75X40-MM)	
					(EACH INCLUDES)	
		1,2	**5P-1076**	1	WASHER-HARD (13.5X30X4-MM THK)	
M		1,2	**8T-4183**	1	BOLT (M12X1.75X40-MM)	
	31	1,2	**7Y-8990**	5	SPACER (24X38X1.5-MM THK)	
	32	1	**203-5194**	1	SUPPORT AS	
	33	1	**208-4146**	1	SUPPORT AS	
	34	1	**208-4158**	1	SUPPORT AS	
B	35	3	**208-4149**	6	SHIM (0.2-MM THK)	
B	36	3	**208-4153**	5	SHIM (0.5-MM THK)	
B	37	3	**208-4150**	6	SHIM (1-MM THK)	
	38	2	**203-5179**	1	ANGLE	
B	39	3	**208-4151**	6	SHIM (0.5-MM THK)	
B	40	3	**208-4152**	4	SHIM (0.2-MM THK)	
B	41	3	**208-4154**	6	SHIM (1-MM THK)	
B	42	3	**208-4148**	3	SHIM (0.2-MM THK)	
	43	2	**214-8019**	1	SUPPORT AS	

168-1717 **HOOD & GUARD GP** *(contd.)* **i01676313**

NOTE	REF NO	GRAPHIC REF	PART NUMBER	QTY	PART NAME 1 2 3 4 5 6 (PRODUCT LEVEL)	SEE PAGE
	44	3	**214-8014**	1	SUPPORT AS-ENCLOSURE	

B-USE AS REQUIRED
M-METRIC PART

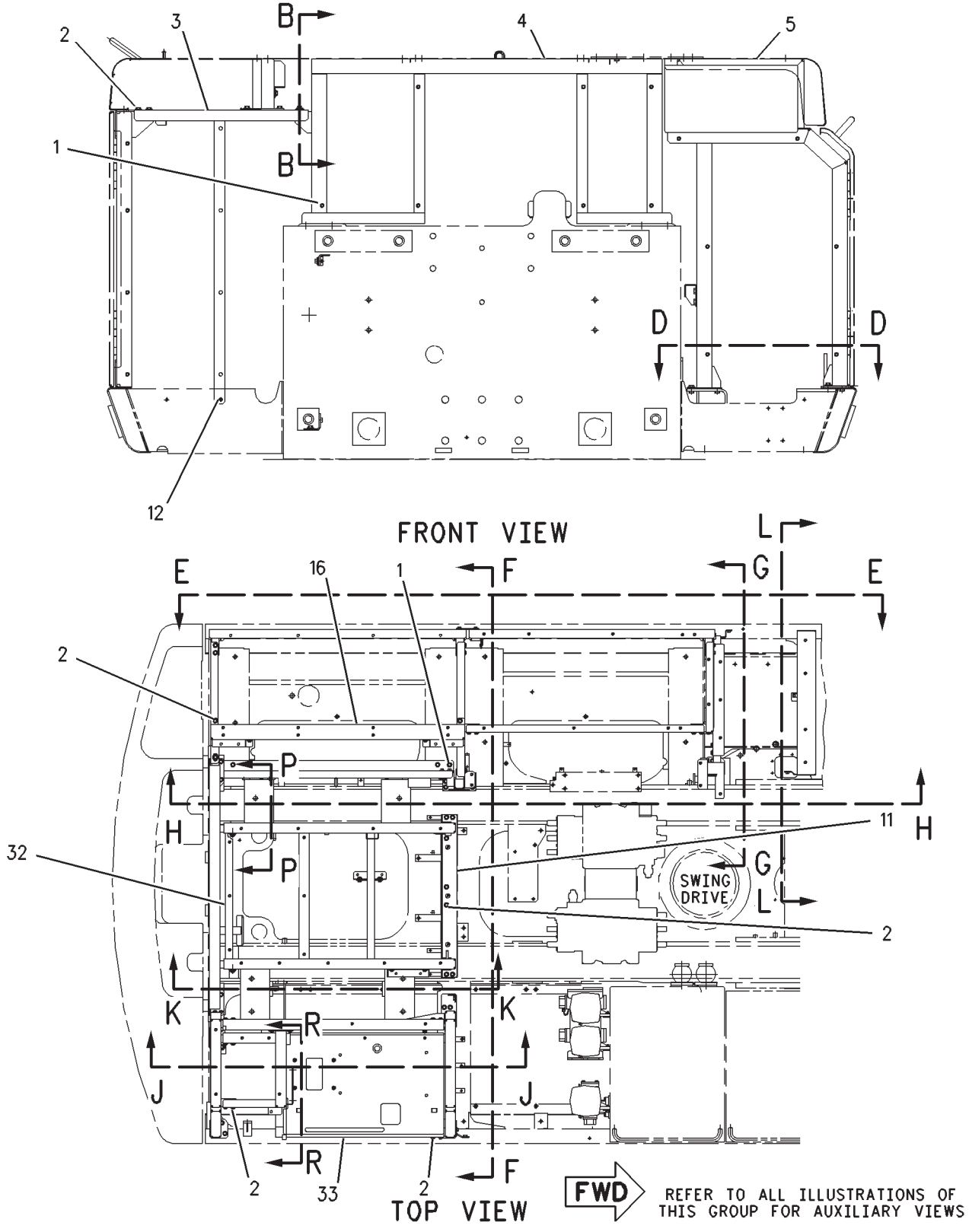

GRAPHIC #1 g00866602

168-1717 **HOOD & GUARD GP** *(contd.)* **i01676313**

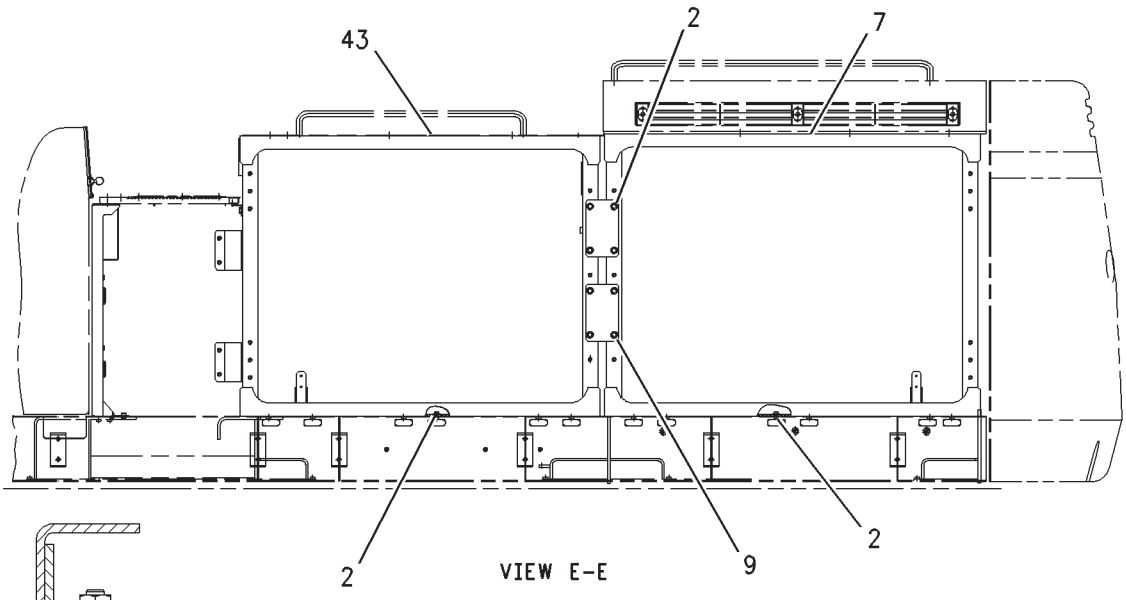

VIEW E-E

REFER TO ALL ILLUSTRATIONS OF THIS GROUP FOR AUXILIARY VIEWS

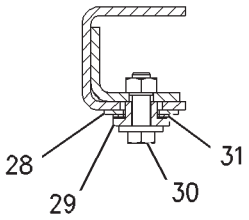

SECTION P-P

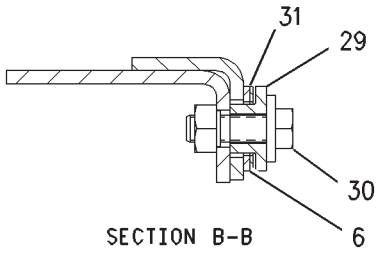

SECTION B-B

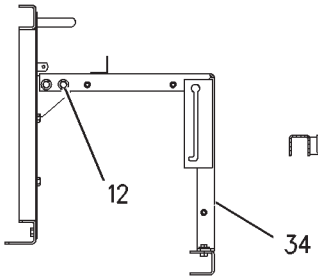

SECTION R-R

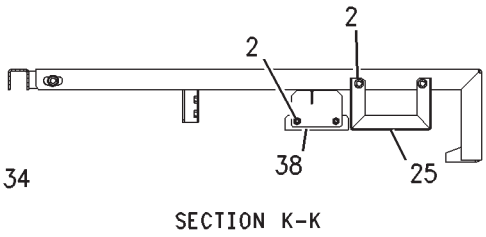

SECTION K-K

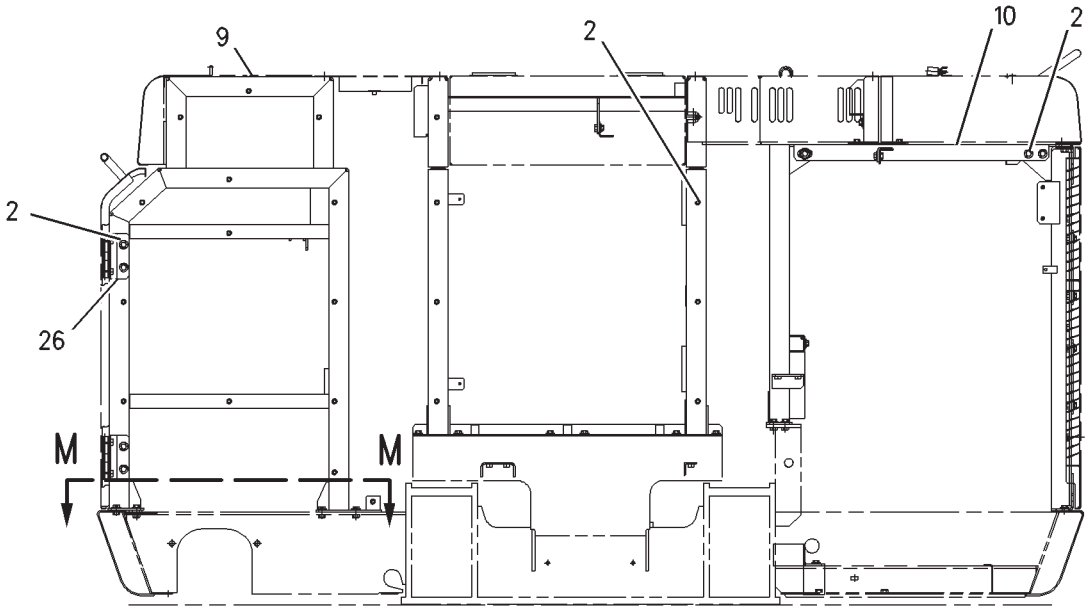

SECTION F-F

GRAPHIC #2

g00866600

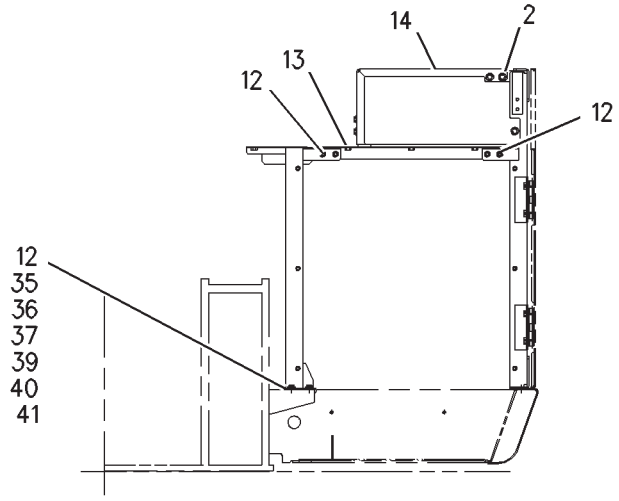

SECTION G-G

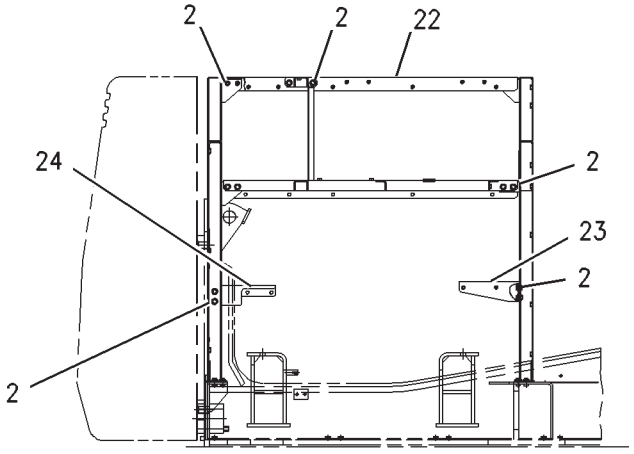

SECTION J-J

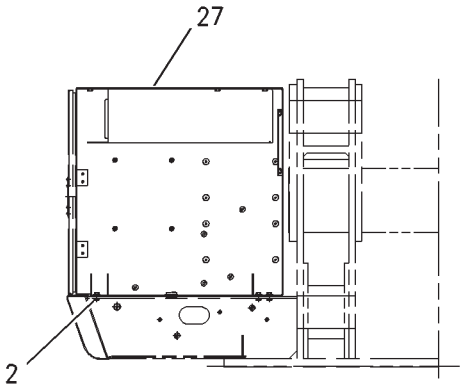

SECTION L-L

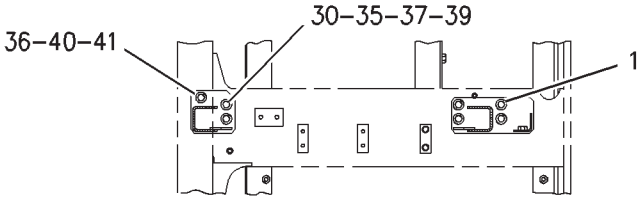

SECTION M-M

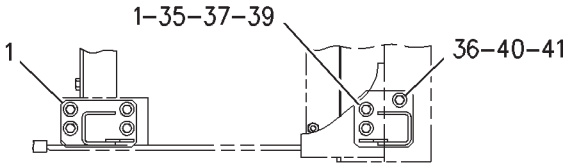

SECTION D-D

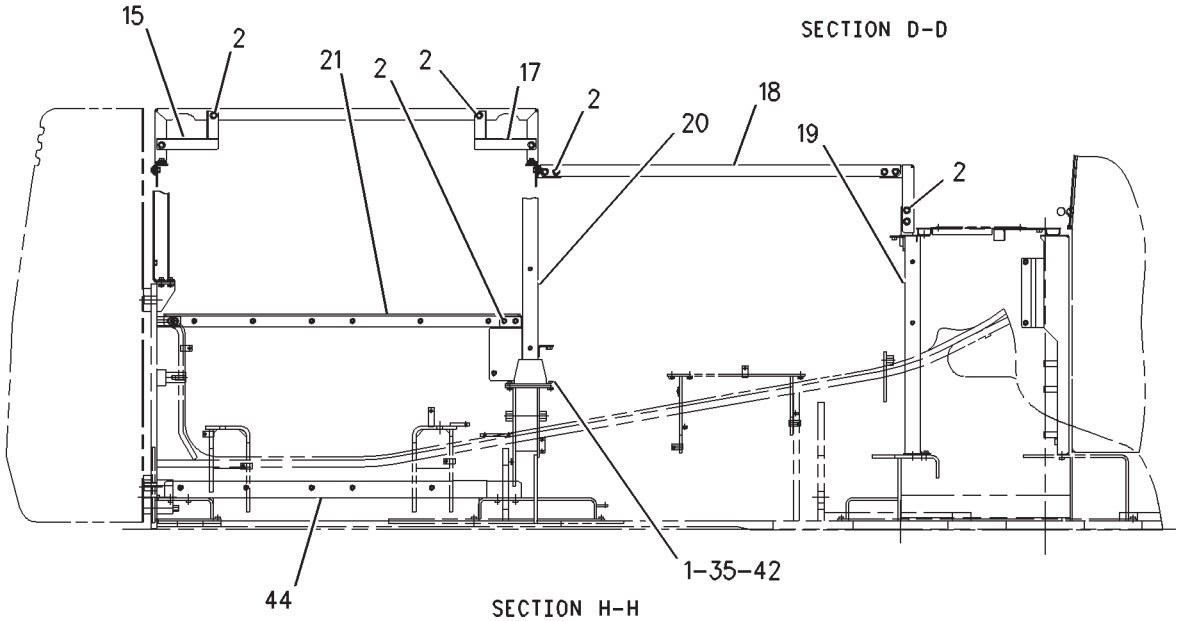

SECTION H-H

GRAPHIC #3 **<END>** g00866601

FRAME AND BODY

184-9122 HOOD & GUARD GP

S/N: RCD1-UP
ENGINE HOOD
PART OF 229-3366 CHASSIS AR

SMCS-7251, 7276 **i01888823**

NOTE	REF NO	GRAPHIC REF	PART NUMBER	QTY	PART NAME 1 2 3 4 5 6 (PRODUCT LEVEL)	SEE PAGE
Y	1	1	*177-5634*	1	HOOD GP-ENGINE	385
	2	1	**177-5647**	1	SHEET AS	
M	3	1	*135-8575*	19	BOLT AS (M12X1.75X30-MM)	
					(EACH INCLUDES)	
		1	**5P-1076**	1	WASHER-HARD (13.5X30X4-MM THK)	
M		1	**8T-4139**	1	BOLT (M12X1.75X30-MM)	
Y	4	1	*177-5663*	1	HOOD GP-ENGINE	386
	5	1	**177-5673**	1	COVER AS	
	6	1	**177-5652**	1	HOOD AS	
		1	**4I-7924**	6	WASHER (4.5X40X1.2-MM THK)	
		1	**6P-2216**	6	CAP	
		1	**177-5653**	1	INSULATION	
		1	**177-5654**	1	INSULATION	
		1	**177-5655**	1	INSULATION	
M	7	1	*135-8573*	22	BOLT AS (M12X1.75X25-MM)	
					(EACH INCLUDES)	
		1	**5P-1076**	1	WASHER-HARD (13.5X30X4-MM THK)	
M		1	**8T-4192**	1	BOLT (M12X1.75X25-MM)	
	8	1	**177-5597**	1	SHEET AS	
		1	**4I-7924**	6	WASHER (4.5X40X1.2-MM THK)	
		1	**6P-2216**	6	CAP	
		1	**177-5598**	1	INSULATION	
	9	1	**177-5683**	1	GRILL AS	
	10	1	**5P-8502**	1	PADLOCK GP	
		1	**5P-8500**	1	KEY	
		1	**8Y-6364**	1	SLEEVE	
	11	1	**190-7018**	1	SPRING	
	12	1	**190-7017**	1	SPRING	
	13	1	**190-7014**	4	SUPPORT AS	
	14	1	**095-1319**	2	PIN-CLEVIS	
	15	1	**095-1320**	2	PIN-CLEVIS	
	16	1	**3B-4618**	4	PIN-COTTER	
	17	1	**8T-4121**	12	WASHER-HARD (11X21X2.5-MM THK)	
	18	1	**177-5575**	1	SUPPORT	
	19	1	**2M-5795**	2	PIN-CLEVIS	
	20	1	**3B-4607**	2	PIN-COTTER	
	21	1	**9M-3835**	2	LATCH-RUBBER	
	22	1	**190-6999**	9	SPACER (24X50X3-MM THK)	
	23	1	**190-6919**	2	SPACER (24X38X16.5-MM THK)	
M	24	1	*135-8578*	2	BOLT AS (M12X1.75X40-MM)	
					(EACH INCLUDES)	
		1	**5P-1076**	1	WASHER-HARD (13.5X30X4-MM THK)	
M		1	**8T-4183**	1	BOLT (M12X1.75X40-MM)	
	25	1	**7Y-2853**	7	SPACER (13X38X5-MM THK)	
M	26	1	*135-8577*	7	BOLT AS (M12X1.75X35-MM)	
					(EACH INCLUDES)	
		1	**5P-1076**	1	WASHER-HARD (13.5X30X4-MM THK)	
M		1	**8T-4956**	1	BOLT (M12X1.75X35-MM)	
M	27	1	**8T-4244**	8	NUT (M12X1.75-THD)	
	28	1	**5P-1076**	14	WASHER-HARD (13.5X30X4-MM THK)	
M	29	1	**7I-1639**	2	PIN	
	30	1	**7I-1640**	2	BRACKET AS	
B	31	1	**4I-8578**	6	SHIM (1-MM THK)	
B	32	1	**4I-8594**	6	SHIM (0.5-MM THK)	
B	33	1	**4I-8595**	6	SHIM (0.2-MM THK)	

184-9122 **HOOD & GUARD GP** *(contd.)* **i01888823**

NOTE	REF NO	GRAPHIC REF	PART NUMBER	QTY	PART NAME 1 2 3 4 5 6 (PRODUCT LEVEL)	SEE PAGE
	34	1	**141-6460**	1	SUPPORT	
M	35	1	**7X-2549**	4	BOLT (M12X1.75X100-MM)	

B-USE AS REQUIRED
M-METRIC PART
Y-SEPARATE ILLUSTRATION

184-9122 **HOOD & GUARD GP** *(contd.)* **i01888823**

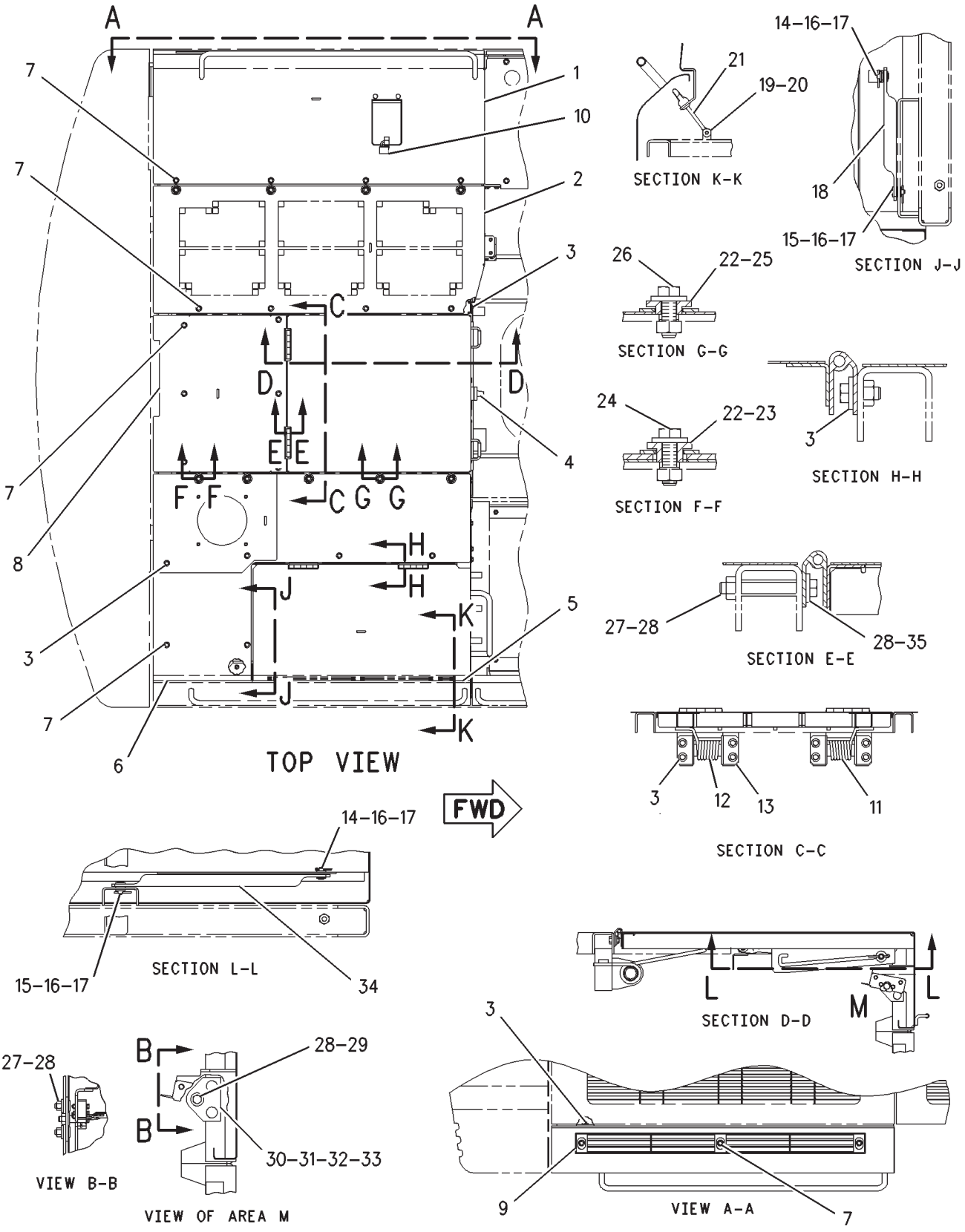

GRAPHIC #1 **<END>** g00866656

FRAME AND BODY

222-3847 HOOD & GUARD GP

S/N: RCD1-UP

PART OF 229-3366 CHASSIS AR

SMCS-7251, 7276 **i02374985**

NOTE	REF NO	GRAPHIC REF	PART NUMBER	QTY	PART NAME 1 2 3 4 5 6 (PRODUCT LEVEL)	SEE PAGE
M	1	1,2,3, 4,5	**135-8573**	128	BOLT AS (M12X1.75X25-MM)	
M	2	1,2,4, 5,6	**135-8575**	64	BOLT AS (M12X1.75X30-MM)	
	3	2	**177-5857**	1	LINER AS	
	4	2	**177-5853**	1	SHEET AS	
		2	**177-5854**	1	LINER AS	
Y	5	2	**175-0976**	1	SHEET AS-SOUND SUPPRESSION	399
	6	2	**175-0999**	1	SHEET AS	
		2	**4I-7924**	9	WASHER (4.5X40X1.2-MM THK)	
		2	**6P-2216**	9	CAP	
		2	**175-1001**	1	INSULATION	
	7	2	**175-1004**	1	SHEET AS	
		2	**4I-7924**	4	WASHER (4.5X40X1.2-MM THK)	
		2	**6P-2216**	4	CAP	
		2	**175-1005**	1	INSULATION	
	8	2	**175-0981**	1	SHEET	
M	9	5	**105-3481**	2	BOLT-SOCKET HEAD (M8X1.25X20-MM)	
Y	10	1	*184-9091*	1	COVER GP-HOOD	341
	11	1	**175-1030**	1	COVER AS	
	12	1	**175-1029**	1	SHEET	
Y	13	3	**218-7758**	1	SHEET AS-SOUND SUPPRESSION	408
	14	5	**203-6247**	1	DOOR AS	
		5	**105-6855**	2	HINGE	
Y	15	3	**175-0786**	1	SHEET AS-SOUND SUPPRESSION	395
Y	16	3	**175-0830**	1	SHEET AS-SOUND SUPPRESSION	396
	17	2	**175-1008**	1	SHEET AS	
		2	**4I-7924**	3	WASHER (4.5X40X1.2-MM THK)	
		2	**6P-2216**	3	CAP	
		2	**148-5063**	1	INSULATION	
Y	18	2	**203-5096**	1	DOOR AS-ACCESS (ENGINE COMPARTMENT)	342
Y	19	2	**203-5101**	1	DOOR AS-ACCESS	343
	20	2	**175-0983**	1	SHEET AS	
	21	5	**203-6240**	1	DOOR AS	
		5	**105-6855**	2	HINGE	
	22	3	**184-8262**	1	SHEET AS	
	23	4	**175-0898**	1	SHEET AS	
		4	**4I-0240**	1	LINER	
		4	**4I-7924**	6	WASHER (4.5X40X1.2-MM THK)	
		4	**6P-2216**	6	CAP	
	24	4	**203-5006**	1	SHEET AS	
Y	25	4	**203-4880**	1	SHEET AS-SOUND SUPPRESSION	401
	26	4	**184-8880**	1	SHEET AS	
		4	**9M-2307**	5	WASHER (5.2X19X2-MM THK)	
		4	**9M-5732**	5	RIVET-POP	
		4	**223-6656**	1	SHEET-RUBBER	
Y	27	4	**175-0913**	1	SHEET AS-SOUND SUPPRESSION	398
B	28	2	**220-8537**	2	SHIM (.5MM THK)	
B	29	2	**220-8536**	2	SHIM (1.0MM THK)	
	30	4	**175-0989**	1	SHEET AS	
		4	**4I-7924**	3	WASHER (4.5X40X1.2-MM THK)	
		4	**6P-2216**	3	CAP	
		4	**175-0991**	1	INSULATION	
Y	31	4	**184-8884**	1	SHEET AS-SOUND SUPPRESSION	400
Y	32	4	**175-0876**	1	SHEET AS-SOUND SUPPRESSION	397
	33	4	**175-0889**	1	SHEET AS	

222-3847 **HOOD & GUARD GP** *(contd.)* **i02374985**

NOTE	REF NO	GRAPHIC REF	PART NUMBER	QTY	PART NAME 1 2 3 4 5 6 (PRODUCT LEVEL)	SEE PAGE
		4	**175-0884**	1	LINER	
	34	4	**177-5885**	4	ANGLE	
	35	4	**175-0883**	1	SHEET AS	
		4	**175-0884**	1	LINER	
	36	5	**177-5539**	1	DOOR AS	
		5	**177-5540**	1	LINER	
	37	5	**122-4049**	1	ROD	
	38	5	**8T-4121**	7	WASHER-HARD (11X21X2.5-MM THK)	
	39	5	**3B-4618**	1	PIN-COTTER	
	40	4	**131-3957**	3	BAR	
M	41	4	**8T-4138**	12	BOLT (M6X1X20-MM)	
	42	4	**9X-8256**	11	WASHER (6.6X12X2-MM THK)	
	43	4	**4E-1384**	6	BUMPER-CONICAL	
M	44	4	**5C-7261**	6	NUT (M8X1.25-THD)	
	45	4	**190-6914**	1	SUPPORT	
	46	4	**7I-1418**	1	SUPPORT AS	
	47	4,5,6	**5P-4115**	10	WASHER-HARD (7.2X19X2-MM THK)	
	48	4	**4I-8019**	1	SUPPORT	
M	49	4	**105-3487**	2	BOLT-SOCKET HEAD (M6X1X20-MM)	
	50	4	**146-4952**	1	STOP	
M	51	4	**7X-2619**	2	BOLT (M6X1X10-MM)	
M	52	1	**135-8572**	9	BOLT AS (M12X1.75X20-MM)	
M	53	1	**8T-4244**	6	NUT (M12X1.75-THD)	
	54	1,2,6	**5P-1076**	22	WASHER-HARD (13.5X30X4-MM THK)	
	55	6	**190-6916**	1	BRACKET AS	
	56	2,6	**4I-2599**	4	SOCKET	
Y	57	5	**177-5580**	1	DOOR GP-ACCESS	344
	58	5	**177-5601**	1	DOOR AS	
		5	**165-3010**	2	HINGE	
	59	6	**190-6915**	1	SUPPORT	
	60	6	**105-6836**	2	SUPPORT AS	
					(EACH INCLUDES)	
		6	**105-6837**	1	ANGLE	
		6	**105-6838**	1	LINER	
M	61	6	**8T-4137**	4	BOLT (M10X1.5X20-MM)	
	62	6	**7X-7729**	4	WASHER (11X25X3-MM THK)	
	63	6	**177-5701**	1	ROD	
	64	6	**096-2320**	1	KNOB	
M	65	5	**6V-7744**	6	LOCKNUT (M10X1.5-THD)	
	66	5	**8T-1578**	3	PAWL	
	67	5	**5P-0540**	6	NUT-HEX FULL (9/16-18-THD)	
M	68	5	**8T-4136**	6	BOLT (M10X1.5X25-MM)	
	69	5	**8Y-4000**	3	LATCH AS (T-BAR, COMPARTMENT)	
	70	5	**246-2641**	3	PADLOCK GP	
					(EACH INCLUDES)	
		5	**5P-8500**	1	KEY	
	71	5	**190-7001**	1	SUPPORT AS	
	72	5	**8T-4157**	1	STRIKER AS	
		5	**8T-4158**	1	WASHER-SPECIAL (CONICAL)	
B	73	5	**6I-5977**	2	SHIM (2-MM THK)	
B	74	5	**6I-5976**	2	SHIM (1-MM THK)	
	75	6	**9D-1058**	1	SPRING	
M	76	5	**099-0492**	4	LOCKNUT (M6X1-THD)	
	77	5	**6V-6777**	1	LATCH AS-DOOR	
	78	1,5	**7I-1857**	4	SUPPORT	
M	79	1,5	**105-3482**	14	BOLT-SOCKET HEAD (M8X1.25X16-MM)	
	80	1,5	**8T-4224**	16	WASHER-HARD (8.8X16X2-MM THK)	
M	81	5	**7X-2533**	4	BOLT (M6X1X35-MM)	
	82	6	**095-0843**	1	PIN-COTTER	

222-3847 **HOOD & GUARD GP** *(contd.)* **i02374985**

NOTE	REF NO	GRAPHIC REF	PART NUMBER	QTY	PART NAME 1 2 3 4 5 6 (PRODUCT LEVEL)	SEE PAGE
	83	1	**208-4160**	1	SHEET	
B	84	2	**208-4156**	2	SHIM (1-MM THK)	
B	85	2	**208-4157**	2	SHIM (0.5-MM THK)	
	86	1	**208-4452**	1	COVER AS	
		1	**175-1024**	1	LINER	
Y	87	3	**218-7761**	1	SHEET AS-SOUND SUPPRESSION	409
	88	3	**208-4449**	1	SHEET AS	
		3	**096-3872**	1	GROMMET	
Y	89	4	**214-8011**	1	SHEET AS-SOUND SUPPRESSION	402
M	90	4	**135-8574**	2	BOLT AS (M12X1.75X25-MM)	
	91	2,6	**214-8310**	8	PLATE	
M	92	2,6	**096-4884**	8	LOCKNUT (M12X1.75-THD)	
M	93	6	**8T-4648**	8	BOLT (M12X1.75X70-MM)	
Y	94	4	**214-8378**	1	SHEET AS-SOUND SUPPRESSION	403
Y	95	4	**214-8381**	1	SHEET AS-SOUND SUPPRESSION	404
Y	96	4	**214-8387**	1	SHEET AS-SOUND SUPPRESSION	406
Y	97	4	**214-8389**	1	SHEET AS-SOUND SUPPRESSION	407
Y	98	4	**214-8383**	1	SHEET AS-SOUND SUPPRESSION	405

B-USE AS REQUIRED
M-METRIC PART
Y-SEPARATE ILLUSTRATION

222-3847 **HOOD & GUARD GP** *(contd.)* **i02374985**

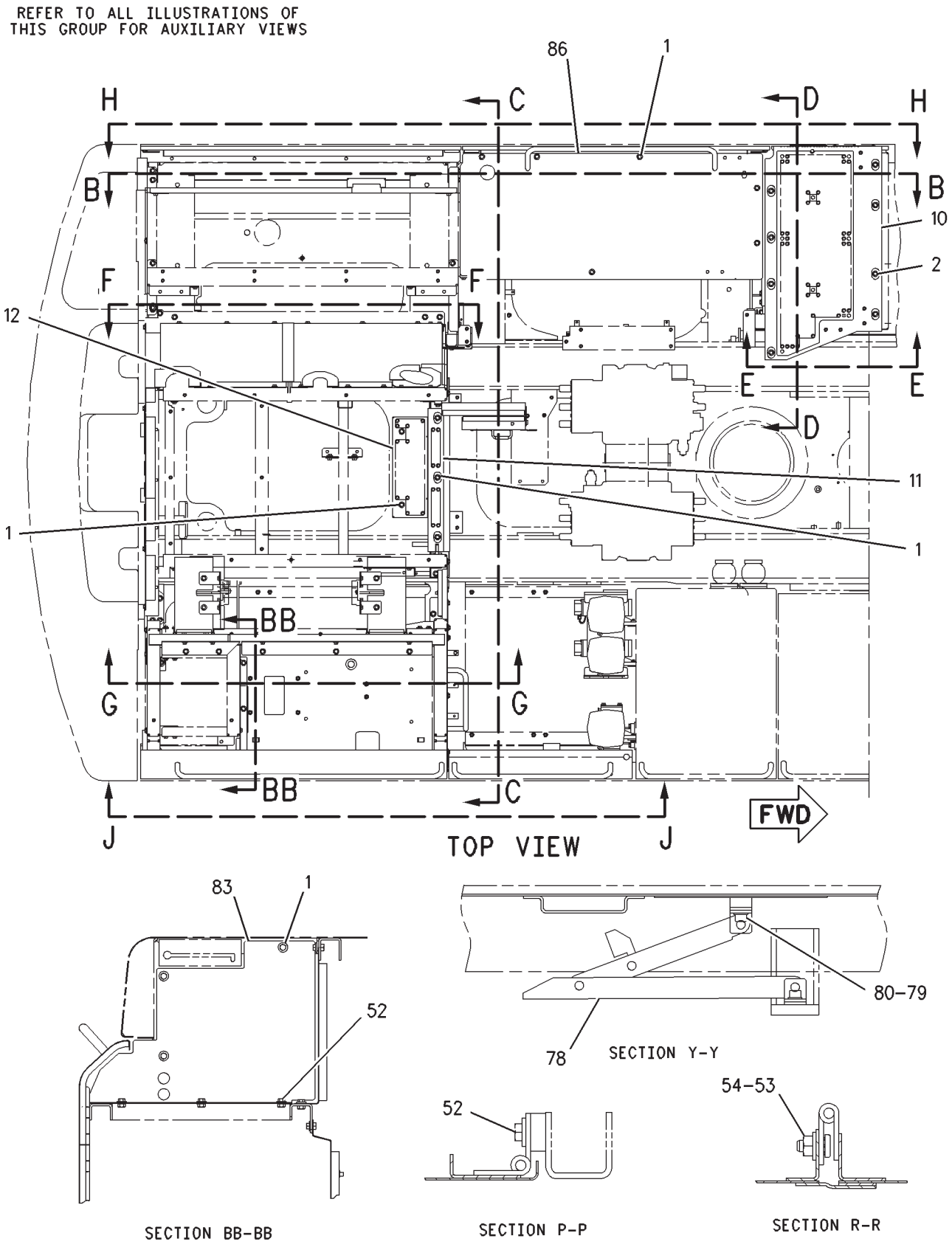

GRAPHIC #1

g00885978

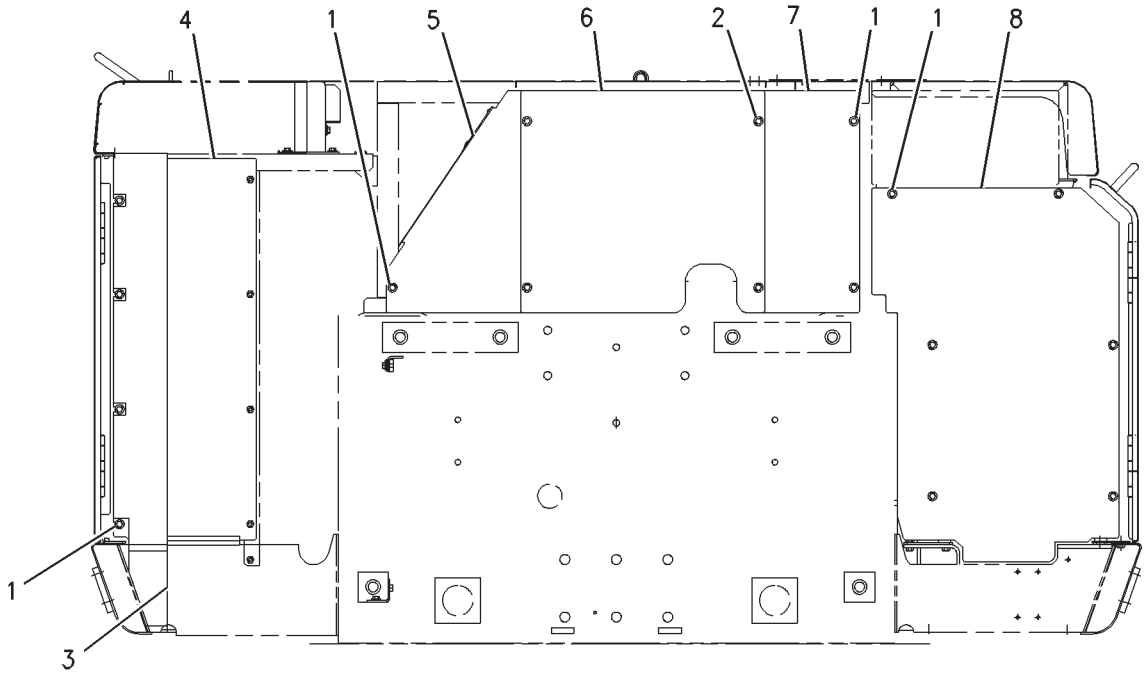

REAR VIEW

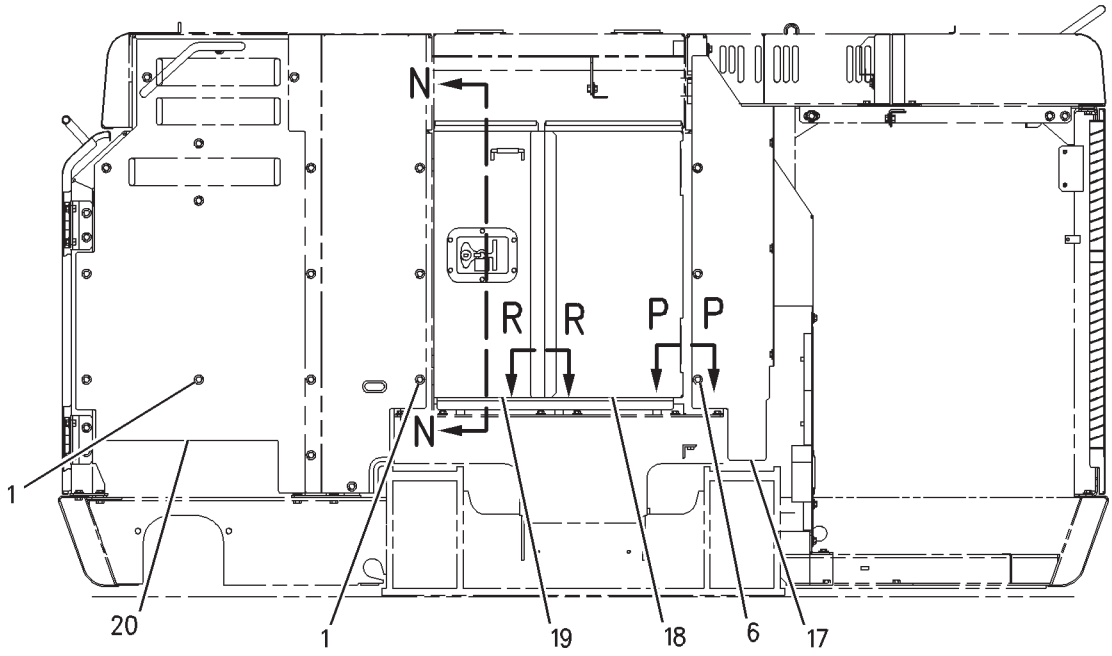

SECTION C-C

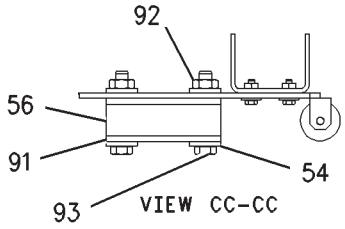

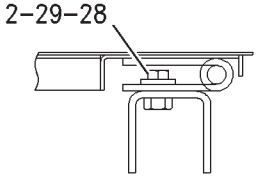

SECTION W-W

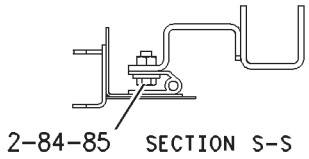

REFER TO ALL ILLUSTRATIONS OF THIS GROUP FOR AUXILIARY VIEWS

GRAPHIC #2 g00885979

222-3847 **HOOD & GUARD GP** *(contd.)* **i02374985**

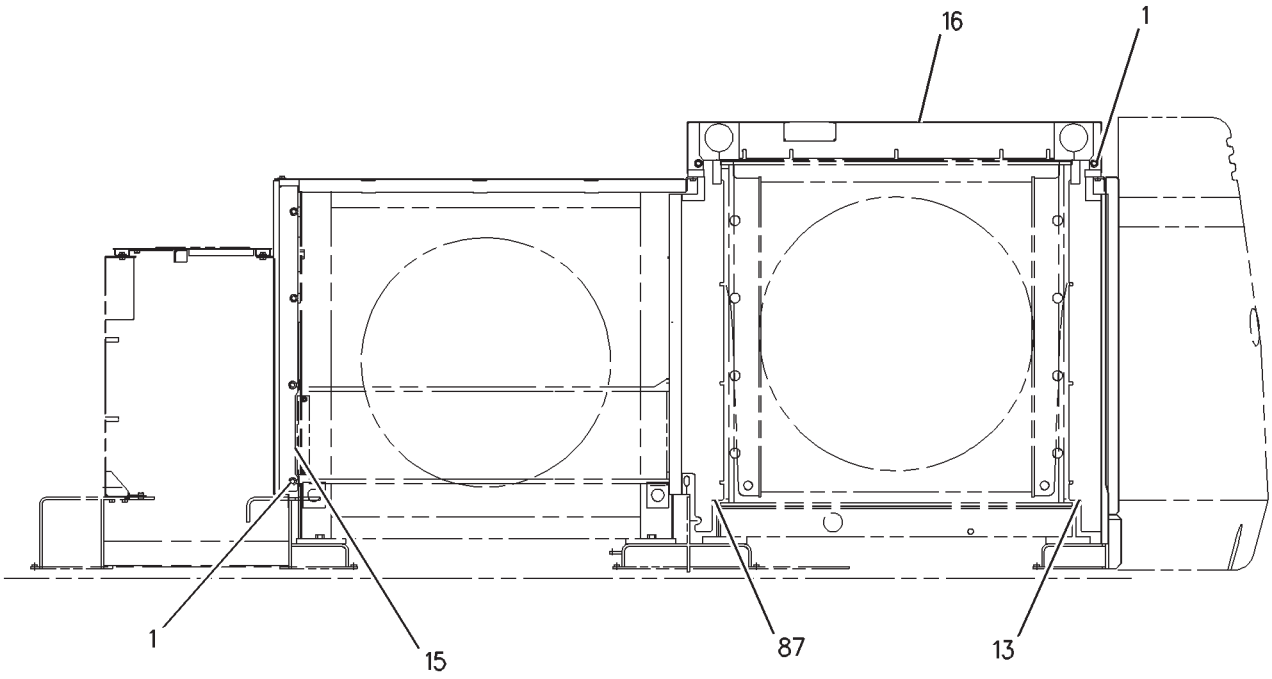

SECTION B-B

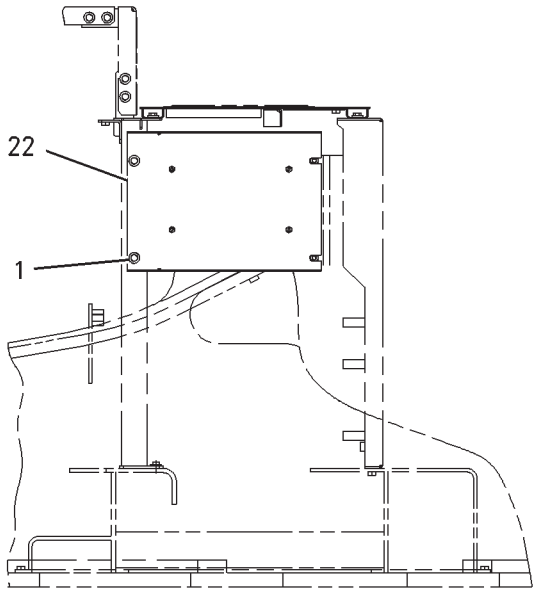

SECTION E-E

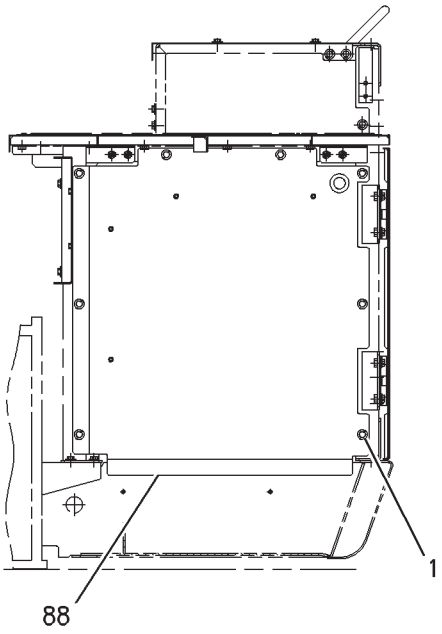

SECTION D-D

GRAPHIC #3 g00885980

222-3847 HOOD & GUARD GP *(contd.)* i02374985

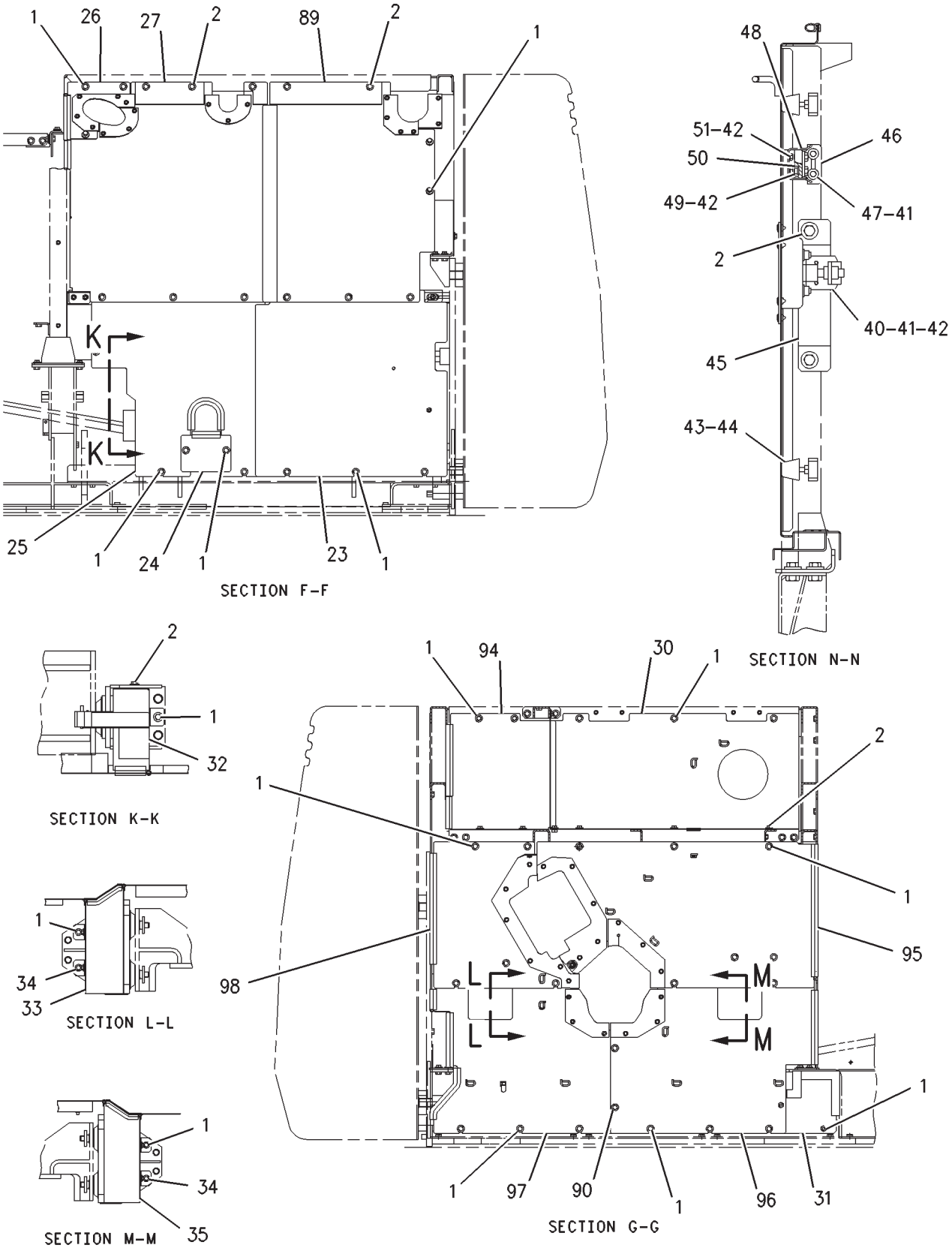

GRAPHIC #4 g00885982

222-3847 **HOOD & GUARD GP** *(contd.)* **i02374985**

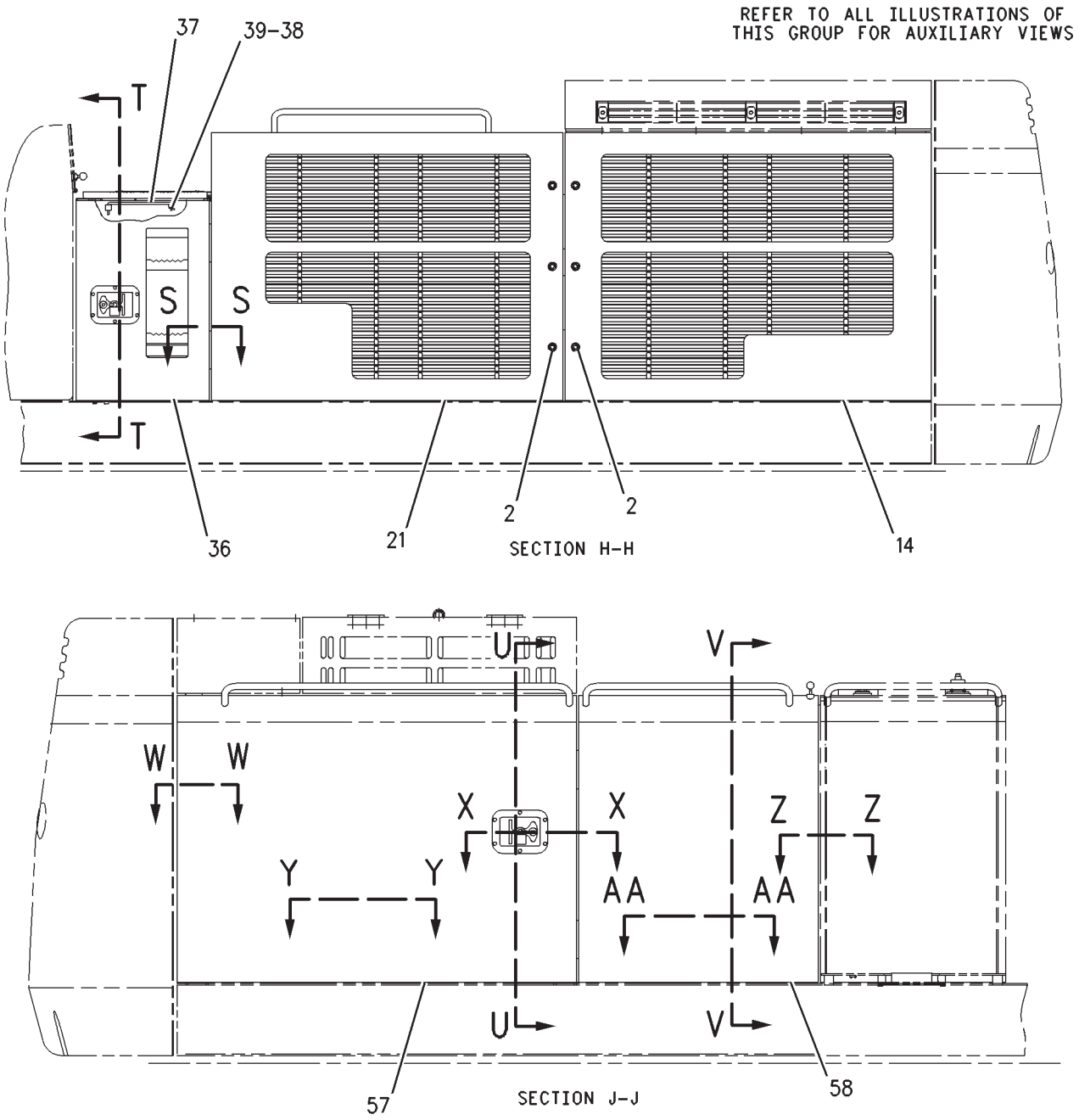

GRAPHIC #5 g00885983

222-3847 **HOOD & GUARD GP** *(contd.)* **i02374985**

REFER TO ALL ILLUSTRATIONS OF
THIS GROUP FOR AUXILIARY VIEWS

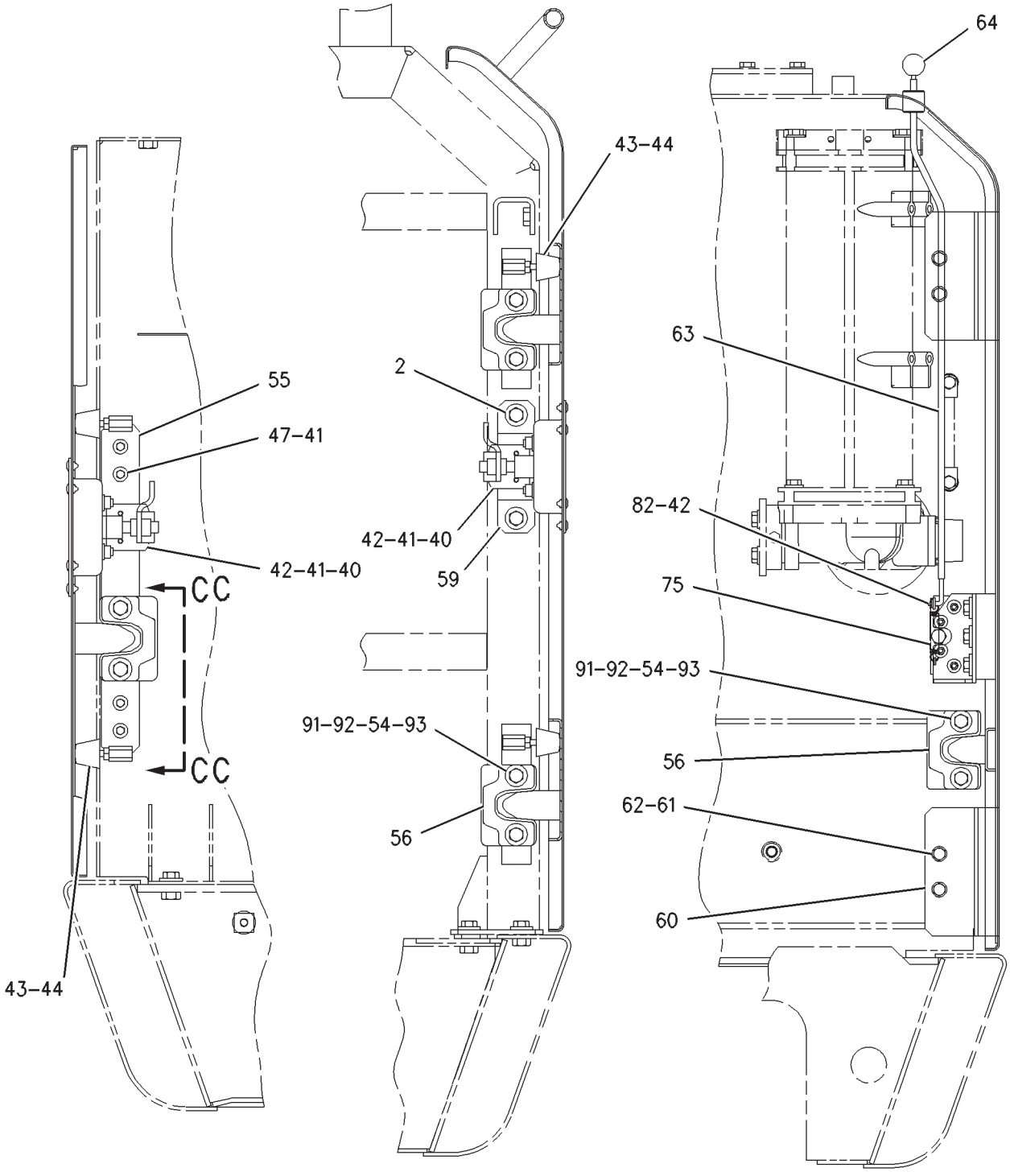

GRAPHIC #6 **<END>** g00885984

FRAME AND BODY

175-0640 HOOD GP-ENGINE

S/N: RCD1-UP
COUNTERWEIGHT REMOVAL
PART OF 157-9989 COUNTERWEIGHT AR
AN ATTACHMENT

SMCS-7251 **i01701098**

NOTE	REF NO	GRAPHIC REF	PART NUMBER	QTY	PART NAME 1 2 3 4 5 6 (PRODUCT LEVEL)	SEE PAGE
	1	1	**177-5889**	1	SUPPORT AS	
	2	1	**177-5892**	1	SUPPORT AS	
	3	1	**177-5894**	1	SHEET AS-SOUND SUPPRESSION	
		1	**4I-7924**	9	WASHER (4.5X40X1.2-MM THK)	
		1	**6P-2216**	9	CAP	
		1	**096-3872**	1	GROMMET	
		1	**177-5895**	1	INSULATION	
		1	**177-5896**	1	INSULATION	
E		1	**5P-8309**		SEAL (70CM)	
M	5	1	*135-8575*	4	BOLT AS (M12X1.75X30-MM)	
					(EACH INCLUDES)	
		1	**5P-1076**	1	WASHER-HARD (13.5X30X4-MM THK)	
M		1	**8T-4139**	1	BOLT (M12X1.75X30-MM)	
	6	1	**193-9623**	1	SHEET AS	
		1	**4I-7924**	6	WASHER (4.5X40X1.2-MM THK)	
		1	**6P-2216**	6	CAP	
		1	**177-5598**	1	INSULATION	
	7	1	**218-7644**	1	SHEET AS-SOUND SUPPRESSION	
		1	**4I-7924**	2	WASHER (4.5X40X1.2-MM THK)	
		1	**6P-2216**	2	CAP	
		1	**9M-2307**	7	WASHER (5.2X19X2-MM THK)	
		1	**9M-5732**	7	RIVET-POP	
		1	**138-5471**	1	INSULATION	
		1	**214-8386**	1	SHEET-RUBBER	
	8	1	**218-7647**	1	SHEET AS	
		1	**218-7649**	1	LINER	
M	9	1	*135-8573*	3	BOLT AS (M12X1.75X25-MM)	
					(EACH INCLUDES)	
		1	**5P-1076**	1	WASHER-HARD (13.5X30X4-MM THK)	
M		1	**8T-4192**	1	BOLT (M12X1.75X25-MM)	
	10	1	**218-7650**	1	SHEET AS	
		1	**218-7649**	1	LINER	

E-ORDER BY THE CENTIMETER
M-METRIC PART

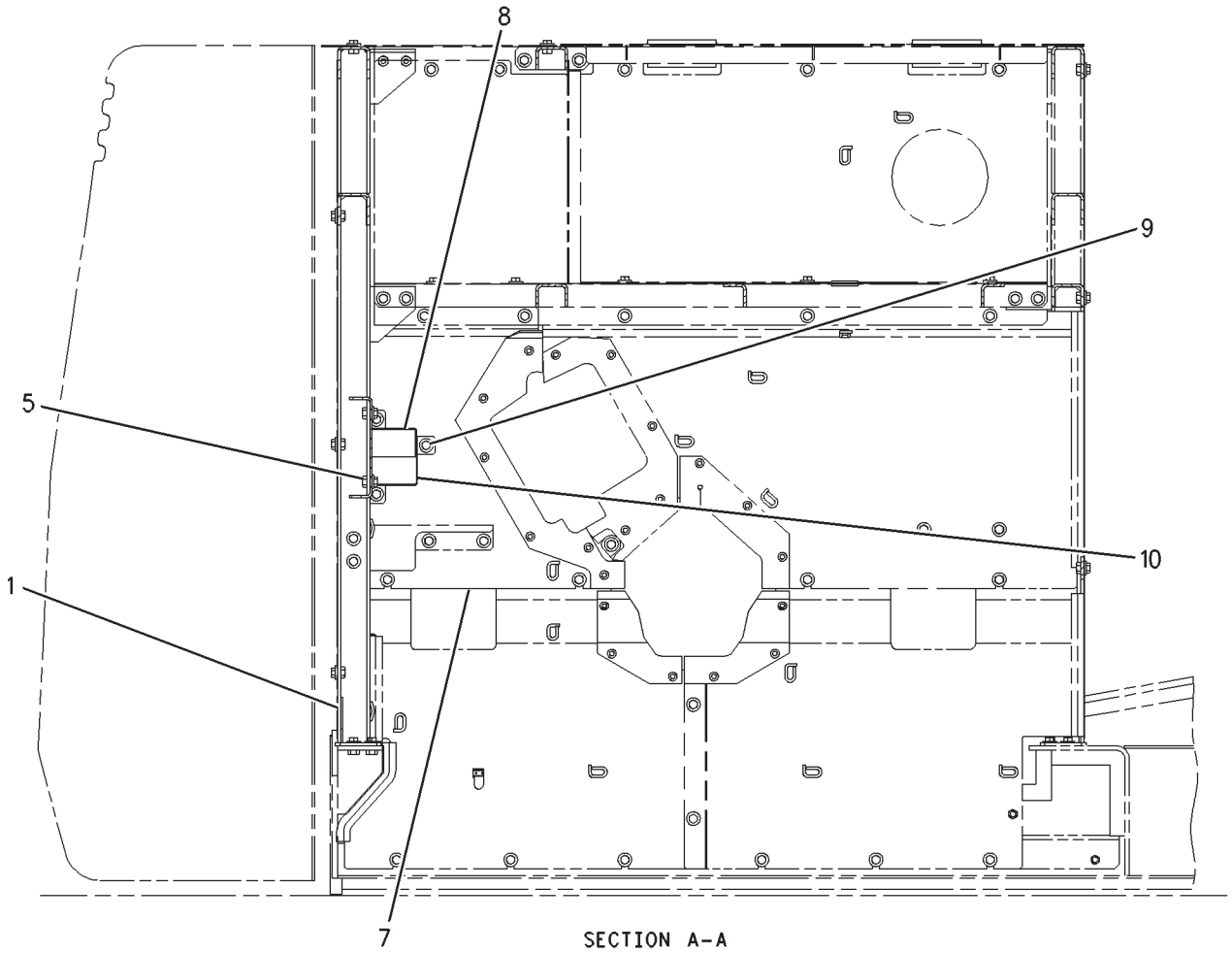

SECTION A-A

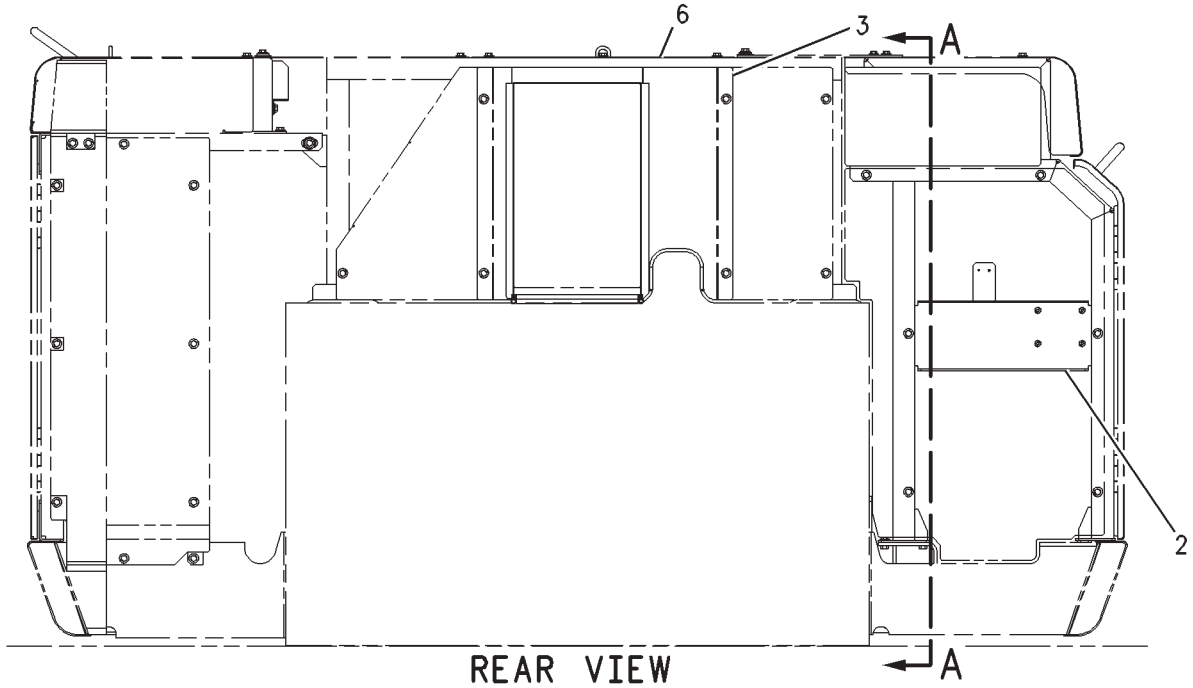

REAR VIEW

GRAPHIC #1 **<END>** g00883042

FRAME AND BODY

177-5634 HOOD GP-ENGINE

S/N: RCD1-UP

PART OF 184-9122 HOOD & GUARD GP

SMCS-7251 **i01734432**

NOTE	REF NO	GRAPHIC REF	PART NUMBER	QTY	PART NAME 1 2 3 4 5 6 (PRODUCT LEVEL)	SEE PAGE
	1	1	*177-5638*	1	HOOD AS-ENGINE	
		1	**6S-6652**	1	PLATE	
	2	1	**1K-8850**	1	SPRING	
	3	1	**7Y-8876**	1	DOOR AS	
		1	**4K-8501**	2	CLIP	
		1	**6S-6649**	1	PLATE	
		1	**9V-3659**	1	HINGE	
M	4	1	**8T-4133**	2	NUT (M10X1.5-THD)	
	5	1	**8T-4121**	2	WASHER-HARD (11X21X2.5-MM THK)	
	6	1	**5V-3854**	1	BUMPER	
	7	1	**177-5636**	1	LINER	
	8	1	**138-5600**	1	LINER	
	9	1	**177-5635**	1	LINER	
	10	1	**177-5637**	2	LINER	
	11	1	**177-5860**	1	LINER	

M-METRIC PART

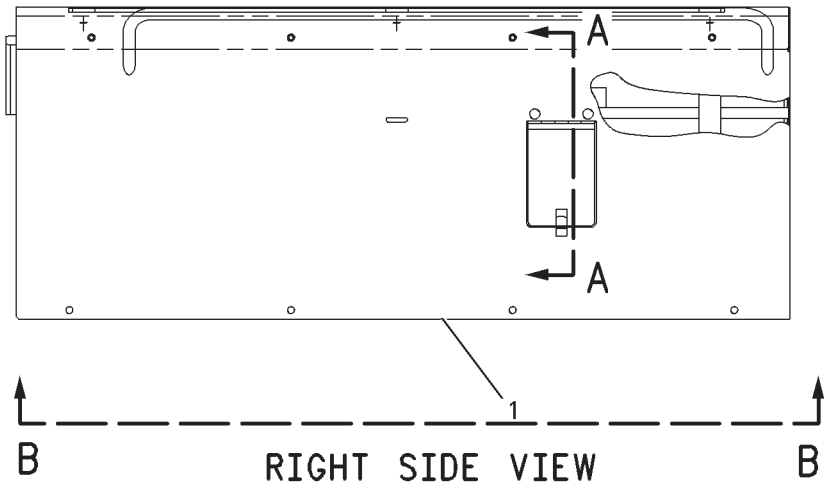

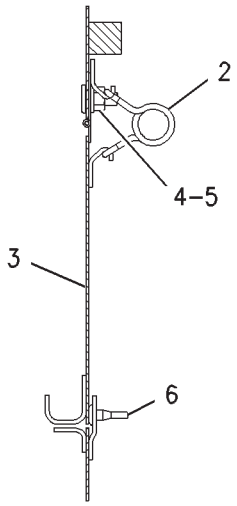

SECTION A-A

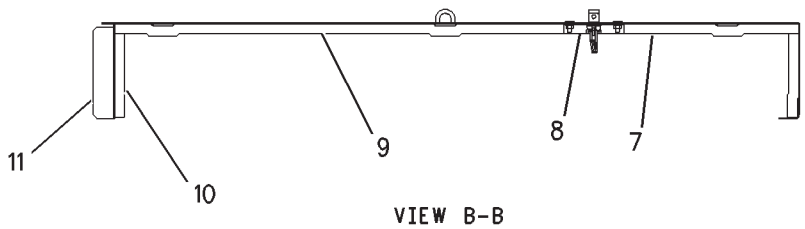

VIEW B-B

GRAPHIC #1 **<END>** g00783535

FRAME AND BODY

177-5663 HOOD GP-ENGINE

S/N: RCD1-UP

PART OF 184-9122 HOOD & GUARD GP

SMCS-7251 **i02997541**

NOTE	REF NO	GRAPHIC REF	PART NUMBER	QTY	PART NAME 1 2 3 4 5 6 (PRODUCT LEVEL)	SEE PAGE
	1	1	**4I-7924**	18	WASHER (4.5X40X1.2-MM THK)	
	2	1	**4I-7973**	1	STRIP	
B	3	1	**4I-8268**	1	SHIM (0.2-MM THK)	
B	4	1	**4I-8269**	2	SHIM (0.5-MM THK)	
	5	1	**4I-8587**	1	PLATE	
	6	1	**5G-0811**	1	BUSHING-TERMINAL	
	7	1	**6P-2216**	18	CAP	
	8	1	**6V-2331**	1	HANDLE AS-OUTSIDE	
		1	**6V-6887**	1	KEEPER	
	9	1	**6V-3354**	2	LATCH AS-DOOR	
	10	1	**7Y-3610**	1	LEVER AS	
	11	1	**8T-2888**	1	LOCK GP	
	12	1	**122-5260**	1	LEVER AS	
B	13	1	**135-8888**	1	SHIM (1.6-MM THK)	
	14	1	**177-5664**	9	INSULATION	
	15	1	**177-5666**	1	HOOD AS	
	15A	1	**165-3010**	2	HINGE	
	16	1	**177-5695**	1	ROD AS	
	17	1	**177-5697**	1	ROD AS	
	18	1	**177-5699**	2	ROD	
M	19	1	**099-0492**	8	LOCKNUT (M6X1-THD)	
	20	1	**5P-4115**	2	WASHER-HARD (7.2X19X2-MM THK)	
	21	1	**6V-7636**	4	PIN AS-SPRING	
M	22	1	**7X-2533**	8	BOLT (M6X1X35-MM)	
M	23	1	**8T-0269**	2	BOLT-SOCKET HEAD (M6X1X20-MM)	
M	24	1	**8T-4171**	2	BOLT (M6X1X12-MM)	
M	25	1	**8T-4200**	2	BOLT (M8X1.25X16-MM)	
	26	1	**8T-4224**	2	WASHER-HARD (8.8X16X2-MM THK)	
	27	1	**9X-8256**	8	WASHER (6.6X12X2-MM THK)	
	28	1	**9D-1058**	2	SPRING	
D	29	1	**5P-6027**		LOCKWIRE (0.35-M EACH)	
	30	1	**301-9823**	1	RING	
	31	1	**6V-8823**	2	WASHER-HARD (19.25X27X2-MM THK)	

B-USE AS REQUIRED
D-ORDER BY THE METER
M-METRIC PART

177-5663 **HOOD GP-ENGINE** *(contd.)* **i02997541**

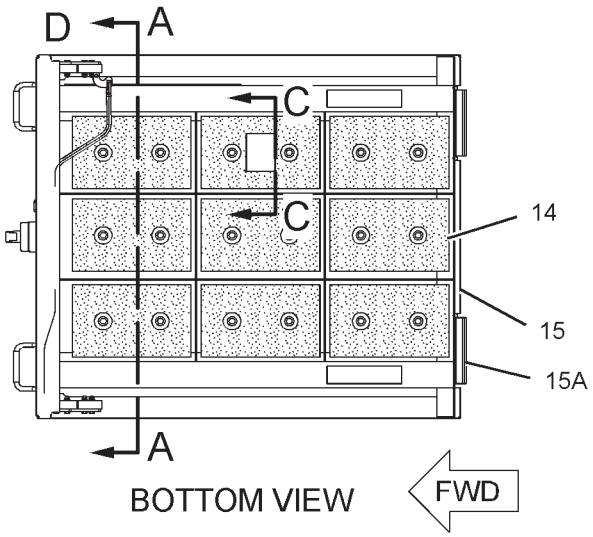

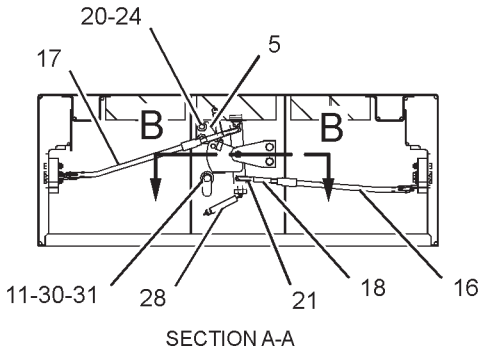

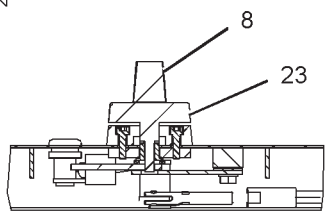

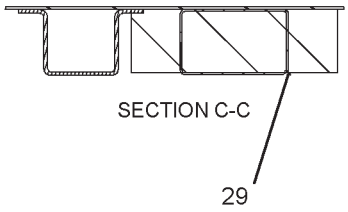

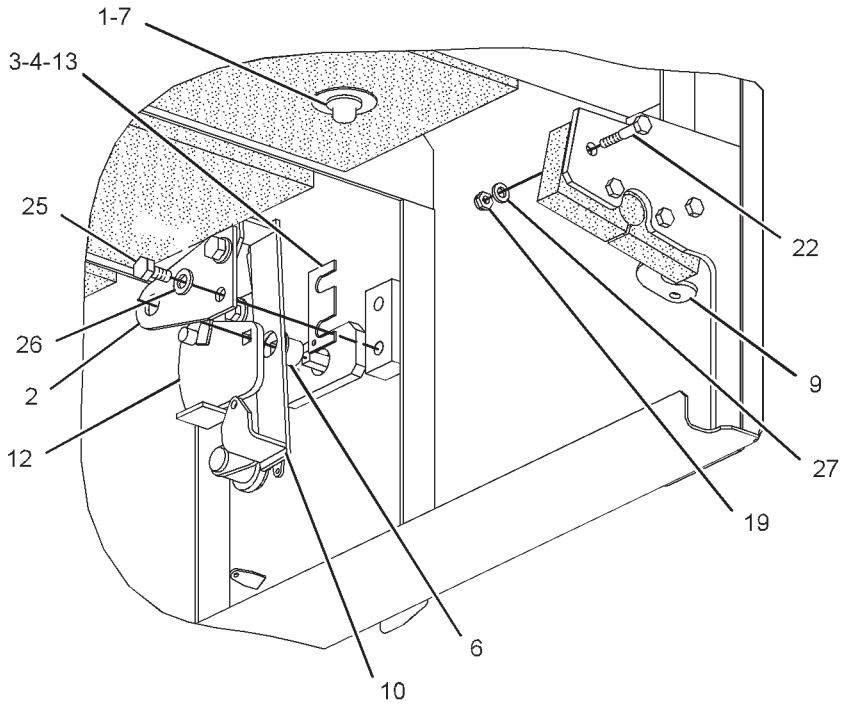

GRAPHIC #1 **<END>** g01428472

FRAME AND BODY

152-9604 LUBRICATION GP-ELECTRIC

S/N: RCD1-UP
CANNOT BE USED WITH 180-6894—PAGE 186
AN ATTACHMENT

SMCS-7510, 7540 **i02107450**

NOTE	REF NO	GRAPHIC REF	PART NUMBER	QTY	PART NAME 1 2 3 4 5 6 (PRODUCT LEVEL)	SEE PAGE
Y	1	1	**152-9610**	1	REEL GP-HOSE (GREASE)	393
Y	2	1	*202-2977*	1	PUMP GP-LUBRICATION	392
	3	1	**202-2964**	1	PLATE AS	
	4	1	**152-9605**	1	SUPPORT AS	
	5	1	**152-9616**	1	SUPPORT AS	
	6	1	**2S-1647**	1	GROMMET	
M	7	1	**8T-4136**	10	BOLT (M10X1.5X25-MM)	
	8	1	**093-0386**	8	WASHER-PLATED (11X25X4.5-MM THK)	
M	9	1	**8T-4137**	4	BOLT (M10X1.5X20-MM)	
	10	1	**8T-4121**	10	WASHER-HARD (11X21X2.5-MM THK)	
	11	1	**152-9617**	2	STRIP	
M	12	1	**8T-4195**	4	BOLT (M10X1.5X30-MM)	
M	13	1	**3E-8048**	4	SCREW-MACHINE (M3X0.5X6-MM)	
	14	1	**096-5962**	4	WASHER-HARD (3.4X7X0.8-MM THK)	

M-METRIC PART
Y-SEPARATE ILLUSTRATION

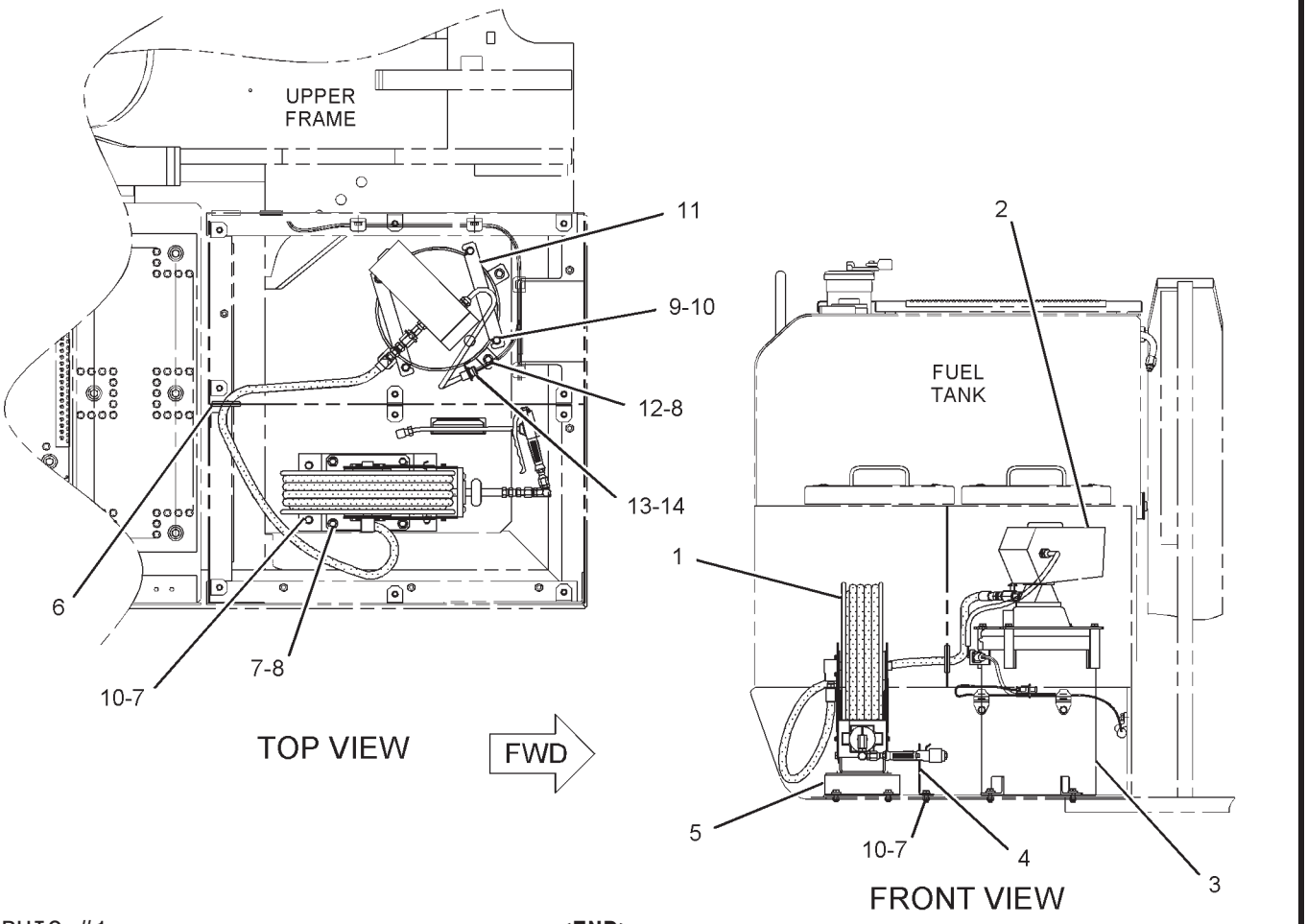

GRAPHIC #1 **<END>** g01095227

FRAME AND BODY

105-6988 MOTOR GP-LUBRICATION

S/N: RCD1-UP
PART OF 202-2977 PUMP GP-LUBRICATION
AN ATTACHMENT

SMCS-1300, 5927 **i03612569**

NOTE	REF NO	GRAPHIC REF	PART NUMBER	QTY	PART NAME 1 2 3 4 5 6 (PRODUCT LEVEL)	SEE PAGE
	1	1	**105-6990**	1	VALVE AS-LUBRICATION	
		1	**112-0540**	1	SHEET	
	2	1	**095-1603**	1	SEAL-O-RING	
	3	1	**105-6989**	1	MOTOR AS-LUBRICATION	
	4	1	**118-6083**	1	RETAINER	
	5	1	**118-6084**	1	SEAL-U-CUP	
	6	1	**118-6085**	1	RING	

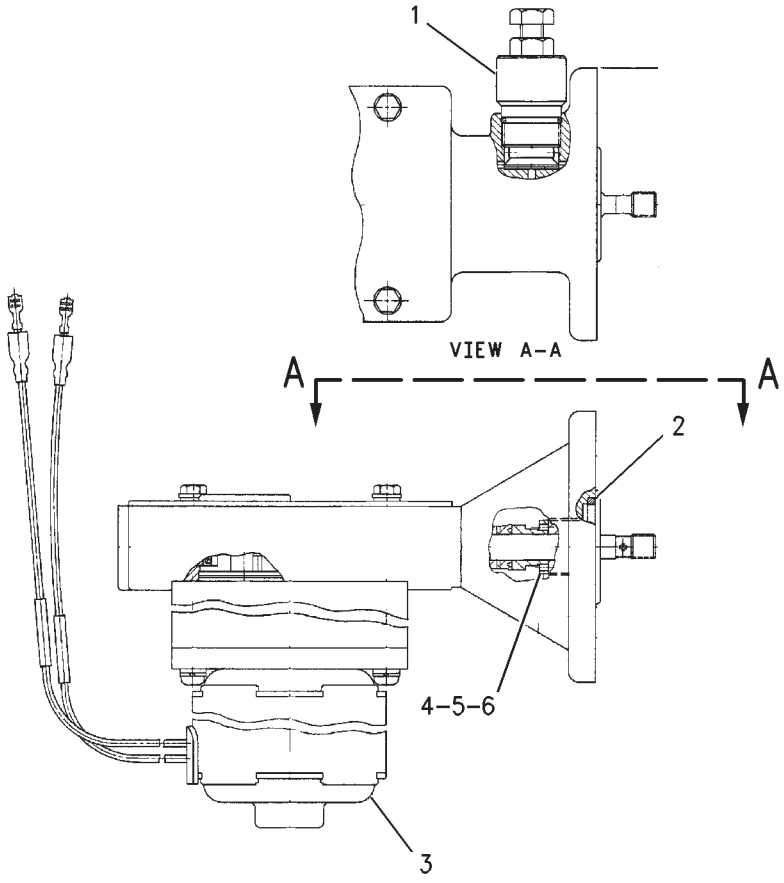

GRAPHIC #1 **<END>** g00853748

FRAME AND BODY

172-6091 PANEL GP-SOUND SUPPRESSION

S/N: BLC426-UP

PART OF 205-5858, 235-4685 ENGINE AR-COMPLETE

SMCS-1801, 7076, 7261 **i01517367**

NOTE	REF NO	GRAPHIC REF	PART NUMBER	QTY	PART NAME 1 2 3 4 5 6 (PRODUCT LEVEL)	SEE PAGE
	1	1	**172-6090**	1	PANEL AS-SOUND SUPPRESSION	
	2	1	**5B-0841**	2	BOLT (5/8-18X1.75-IN)	
	3	1	**5M-2894**	3	WASHER-HARD (10.2X18.5X2.5-MM THK)	
	4	1	**3B-1915**	3	BOLT (3/8-16X1.375-IN)	
	5	1	**5P-8247**	2	WASHER-HARD (17X32X3.5-MM THK)	
	6	1	**104-6202**	2	CLIP	

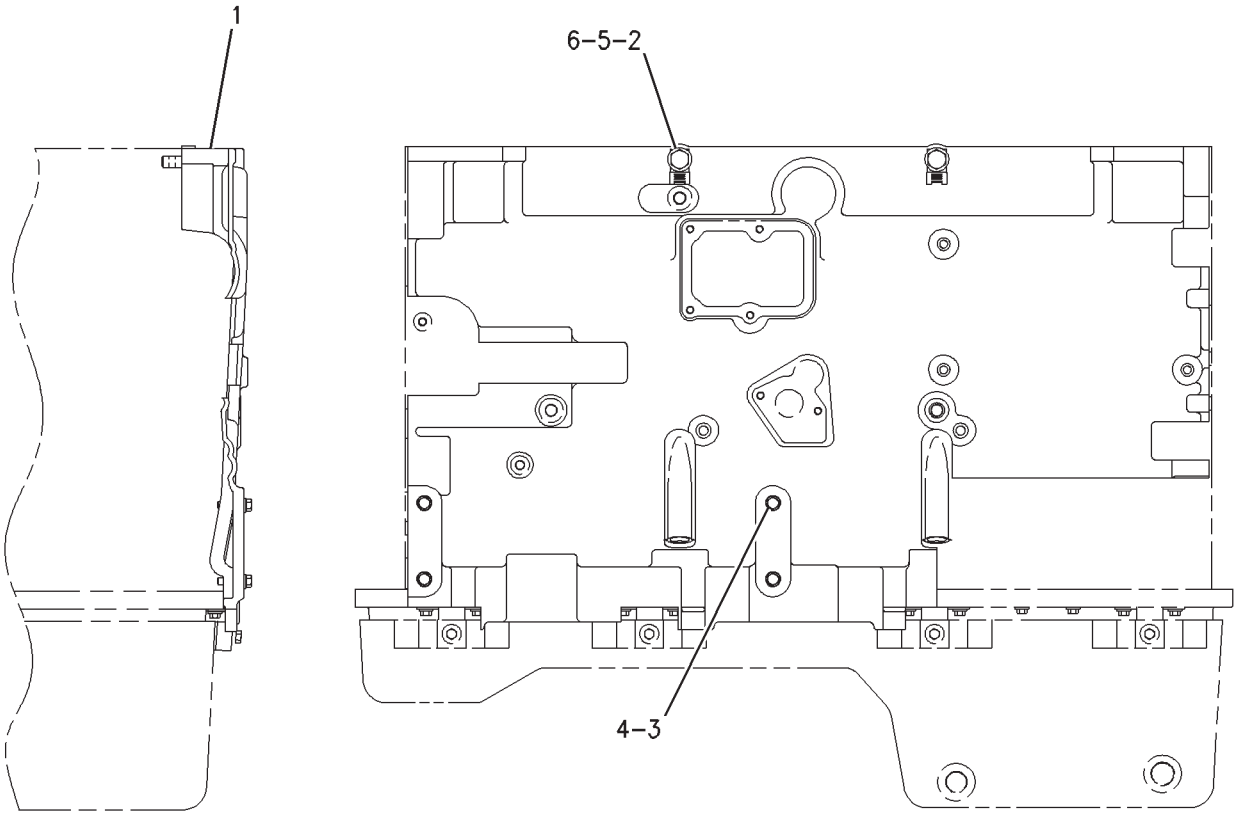

FRONT VIEW LEFT SIDE VIEW

GRAPHIC #1 **<END>** g00789883

FRAME AND BODY

105-6991 PUMP GP-LUBRICATION

S/N: RCD1-UP
PART OF 202-2977 PUMP GP-LUBRICATION
AN ATTACHMENT

SMCS-7516, 7540 **i02182886**

NOTE	REF NO	GRAPHIC REF	PART NUMBER	QTY	PART NAME 1 2 3 4 5 6 (PRODUCT LEVEL)	SEE PAGE
	1	1	**108-6640**	1	PIN-SPRING	
	2	1	**105-6992**	1	ROD	
	3	1	**105-6993**	1	WASHER	
M	4	1	**5C-2890**	1	NUT (M6X1-THD)	
	5	1	**095-0840**	1	PIN-COTTER	
	6	1	**112-0541**	1	TUBE	

M-METRIC PART

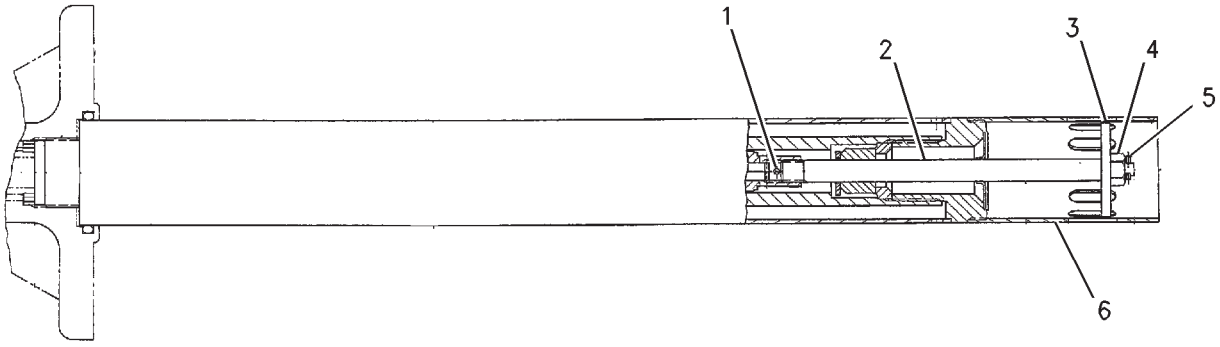

GRAPHIC #1 **<END>** g00853746

FRAME AND BODY

202-2977 PUMP GP-LUBRICATION

S/N: RCD1-UP
PART OF 152-9604 LUBRICATION GP-ELECTRIC
AN ATTACHMENT

SMCS-7516, 7540 **i02628744**

NOTE	REF NO	GRAPHIC REF	PART NUMBER	QTY	PART NAME 1 2 3 4 5 6 (PRODUCT LEVEL)	SEE PAGE
	1	1	**202-2978**	1	COVER AS	
		1	**3K-8782**	1	FUSE (10-AMPERE)	
		1	**105-6999**	1	WIRE AS (MOTOR SWITCH)	
		1	**108-6642**	1	SWITCH-TOGGLE (LUBRICATION MOTOR)	
	2	1	**108-6635**	1	COVER	
	3	1	**105-6997**	1	NOZZLE AS	
	4	1	**105-6995**	1	GREASE GUN GP	
	5	1	**108-6671**	2	CONNECTOR	
	6	1	**105-6996**	1	SWIVEL JOINT AS	
M	7	1	**108-6638**	3	BOLT-WING	
Y	8	1	**105-6991**	1	PUMP GP-LUBRICATION	391
	9	1	**108-6636**	1	COVER AS	
		1	**112-0542**	1	PACKING (35.5-MM ID)	
		1	**112-0543**	1	PACKING (290-MM OD)	
	10	1	**105-6994**	1	VALVE AS (MANUAL)	
Y	11	1	**105-6988**	1	MOTOR GP-LUBRICATION	389
M	12	1	**8T-6412**	3	SCREW-MACHINE (M6X1X20-MM)	
	13	1	**9X-8256**	3	WASHER (6.6X12X2-MM THK)	

M-METRIC PART
Y-SEPARATE ILLUSTRATION

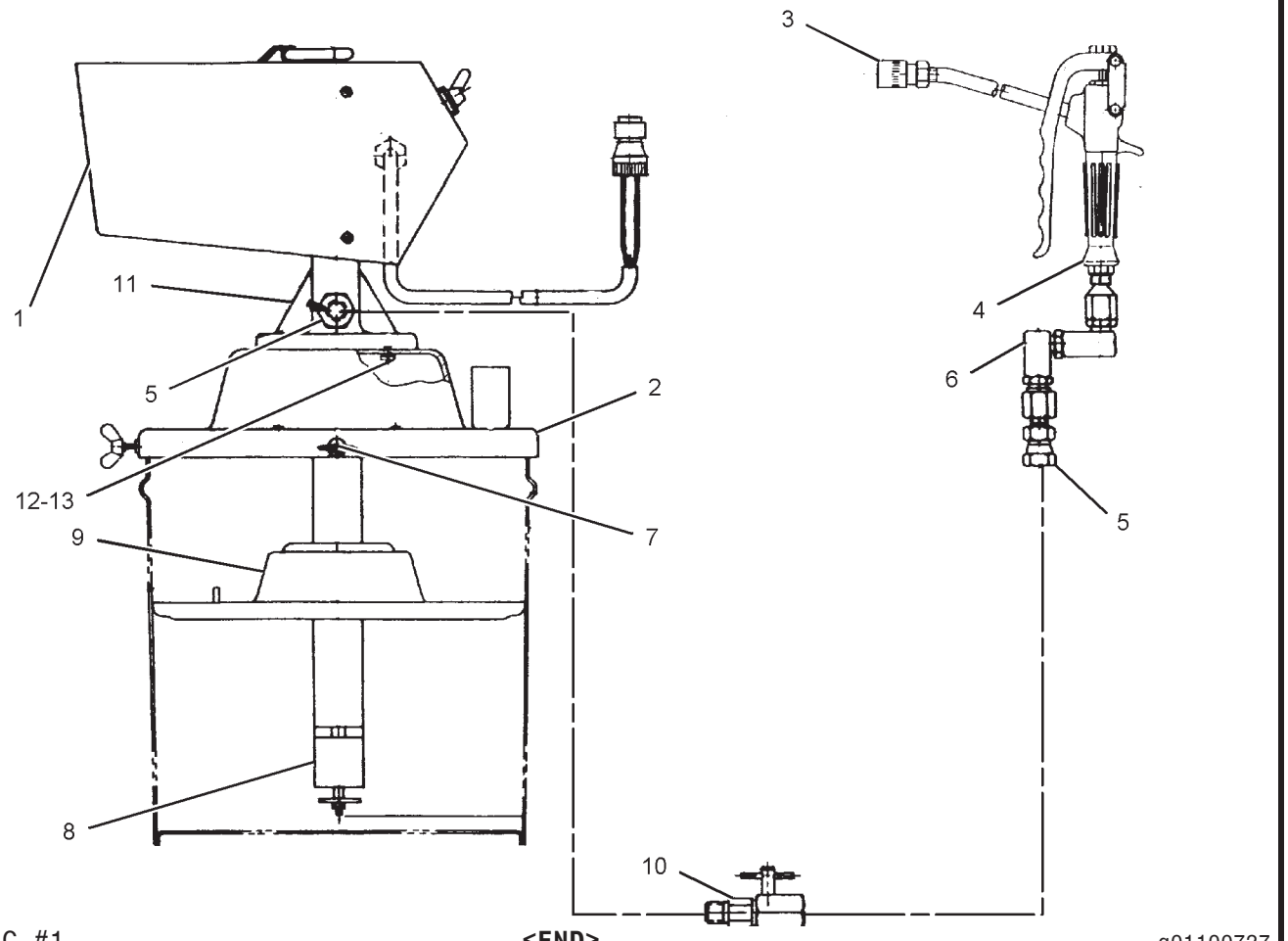

GRAPHIC #1 **<END>** g01100727

FRAME AND BODY

152-9610 REEL GP-HOSE–GREASE

S/N: RCD1-UP
PART OF 152-9604 LUBRICATION GP-ELECTRIC
AN ATTACHMENT

SMCS-7510 **i02637328**

NOTE	REF NO	GRAPHIC REF	PART NUMBER	QTY	PART NAME 1 2 3 4 5 6 (PRODUCT LEVEL)	SEE PAGE
	1	1	**105-6980**	1	BEARING AS	
	2	1	**105-6985**	2	STOP	
	3	1	**105-6981**	1	SWIVEL	
	4	1	**105-6979**	1	SUPPORT	
	5	1	**105-6976**	1	WHEEL AS	
I	6	1	**105-6986**	1	HOSE AS	
	7	1	**108-6639**	1	ELBOW	
	8	1	**105-6972**	1	SUPPORT	
	9	1	**105-6973**	1	BEARING	
	10	1	**105-6974**	1	SPRING	
	11	1	**105-6975**	1	CASE-SPRING	
	12	1	**105-6977**	1	SUPPORT	
	13	1	**105-6984**	1	SUPPORT	
	14	1	**105-6983**	1	SPRING	
	15	1	**105-6982**	1	STOP	
	16	1	**105-6971**	1	ROLLER AS	
	17	1	**180-6828**	1	HOSE AS	
	18	1	**112-0557**	1	SUPPORT AS	
	19	1	**108-6672**	1	CONNECTOR	
J	20	1	**200-3544**	1	WASHER (28.5X34X2-MM THK)	
J	21	1	**096-0034**	2	SEAL-O-RING	
J	22	1	**5I-4653**	2	RING-BACKUP	
J	23	1	**200-3545**	1	WASHER (20.5X32X1.6-MM THK)	
J	24	1	**095-0919**	1	RING-RETAINING	
					AVAILABLE REPAIR KIT(S):	
J			**200-3543**	1	KIT-SEAL (MANUAL GREASE REEL)	

I-REFER TO HYDRAULIC INFORMATION SYSTEM
J-KIT MARKED J SERVICE(S) PARTS MARKED J

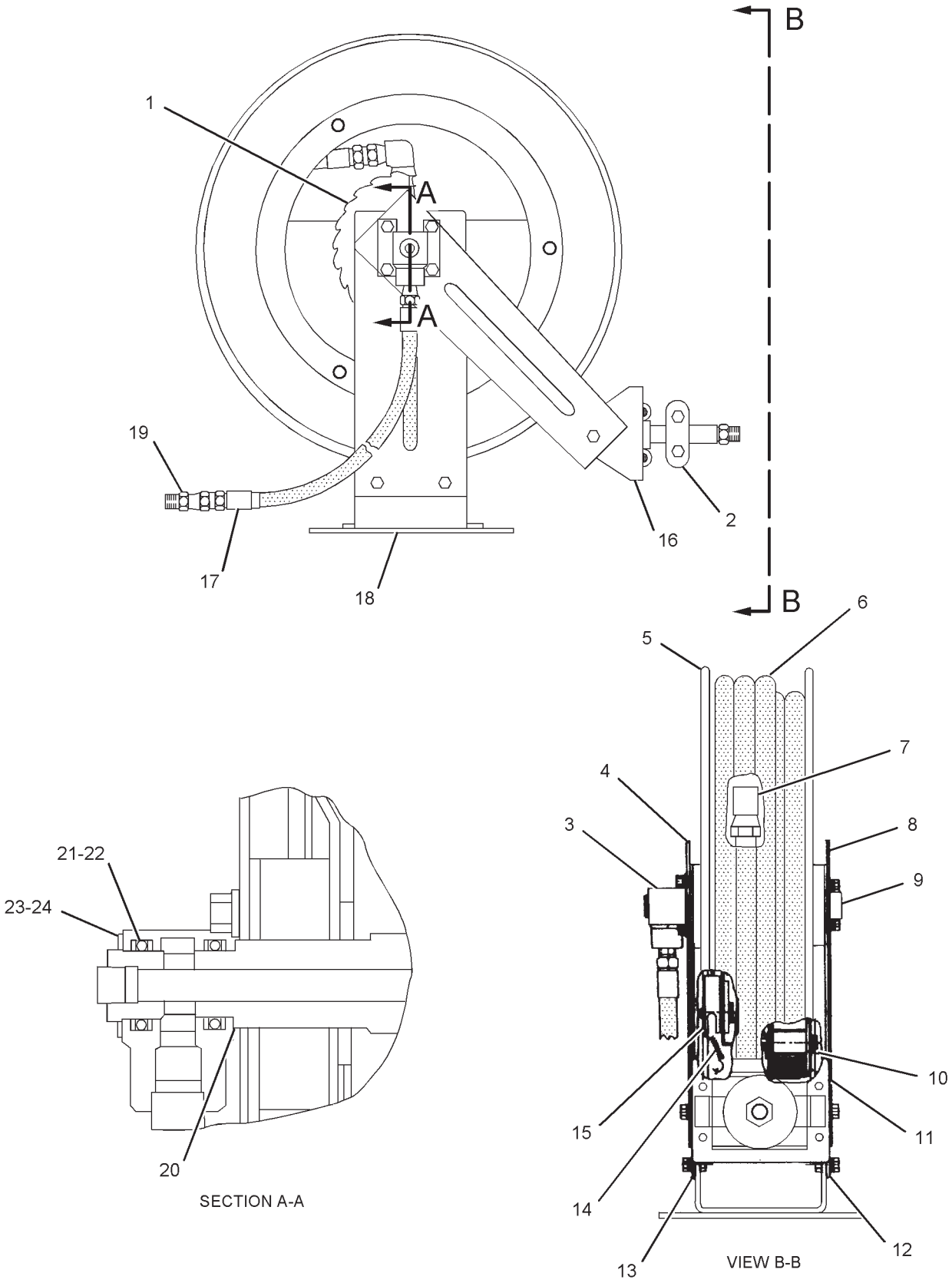

GRAPHIC #1 **<END>** g01071159

FRAME AND BODY

175-0786 SHEET AS-SOUND SUPPRESSION

S/N: RCD1-UP

PART OF 222-3847 HOOD & GUARD GP

SMCS-1801, 7076, 7251, 7267 **i02395993**

NOTE	REF NO	GRAPHIC REF	PART NUMBER	QTY	PART NAME 1 2 3 4 5 6 (PRODUCT LEVEL)	SEE PAGE
	1	1	**175-0788**	1	LINER	
	2	1	**175-0790**	1	LINER	
Z	3	1		1	SHEET	
	4	1	**175-0789**	1	LINER	

Z-NOT SERVICED SEPARATELY

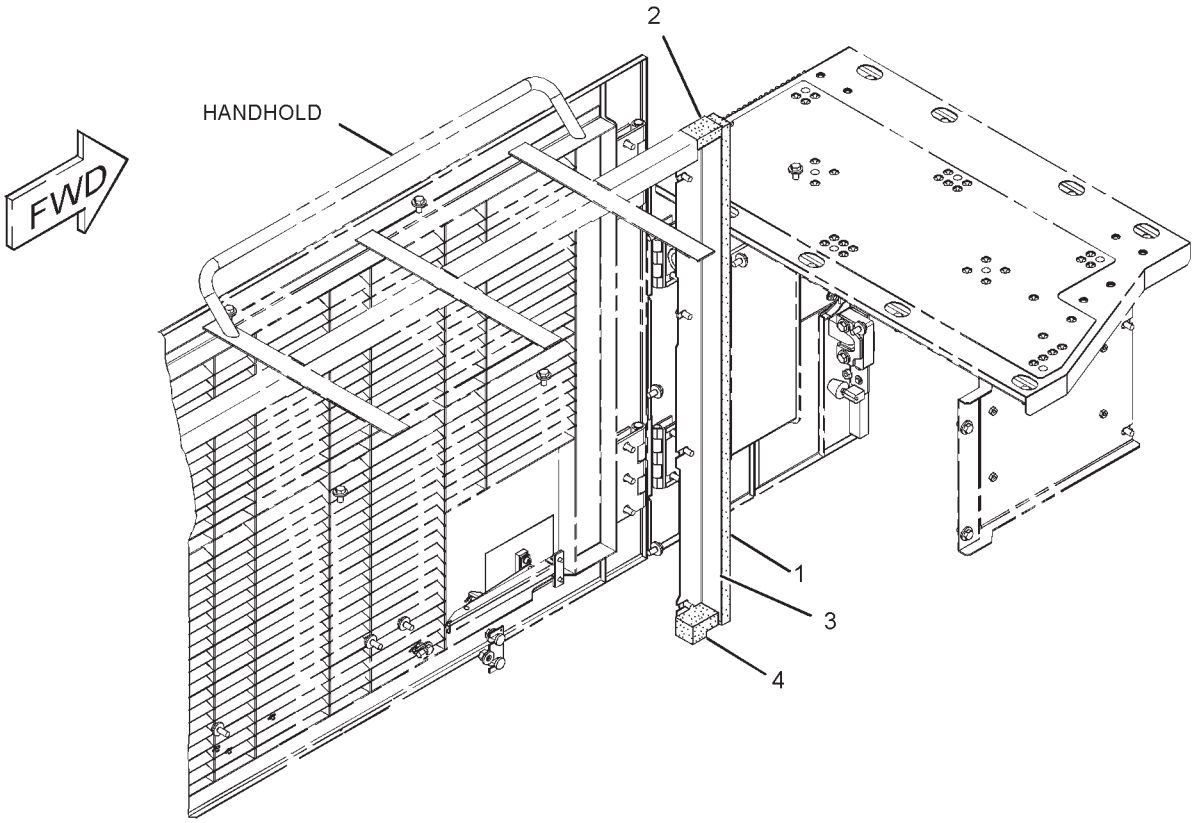

GRAPHIC #1 **<END>** g01300938

FRAME AND BODY

175-0830 SHEET AS-SOUND SUPPRESSION

S/N: RCD1-UP

PART OF 222-3847 HOOD & GUARD GP

SMCS-1801, 7076, 7251, 7267 **i02396006**

NOTE	REF NO	GRAPHIC REF	PART NUMBER	QTY	PART NAME 1 2 3 4 5 6 (PRODUCT LEVEL)	SEE PAGE
	1	1	**165-2827**	2	LINER	
Z	2	1		1	SHEET AS	
	3	1	**175-0832**	2	LINER	

Z-NOT SERVICED SEPARATELY

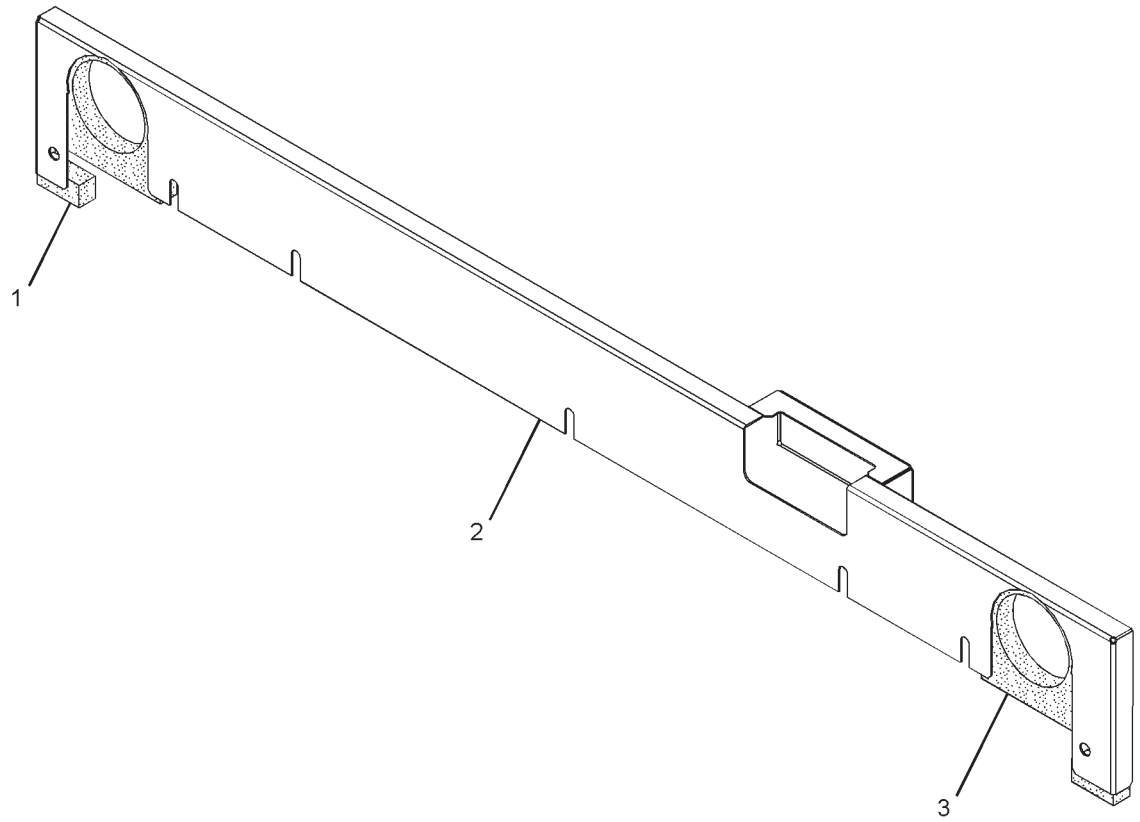

GRAPHIC #1 **<END>** g01295021

FRAME AND BODY

175-0876 SHEET AS-SOUND SUPPRESSION

S/N: RCD1-UP

PART OF 222-3847 HOOD & GUARD GP

SMCS-1801, 7076, 7251, 7267 **i02426723**

NOTE	REF NO	GRAPHIC REF	PART NUMBER	QTY	PART NAME 1 2 3 4 5 6 (PRODUCT LEVEL)	SEE PAGE
D	1	1	**5P-8309**		SEAL (0.3-M)	
	2	1	**175-0985**	1	LINER	
Z	3	1		1	SHEET AS	
	4	1	**184-9102**	1	LINER	
	5	1	**184-9103**	1	LINER	
	6	1	**175-0897**	1	LINER	

D-ORDER BY THE METER
Z-NOT SERVICED SEPARATELY

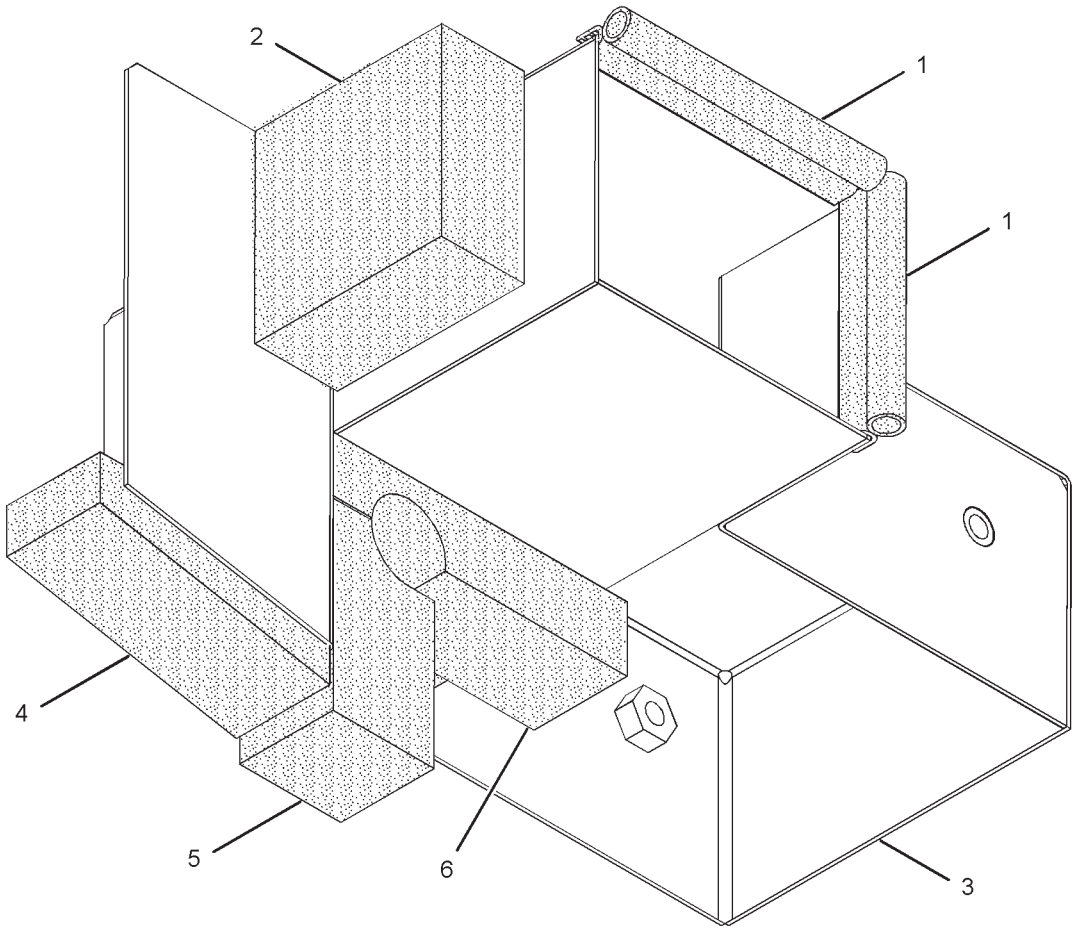

GRAPHIC #1 **<END>** g01287127

FRAME AND BODY

175-0913 SHEET AS-SOUND SUPPRESSION

S/N: RCD1-UP

PART OF 222-3847 HOOD & GUARD GP

SMCS-1801, 7076, 7251, 7267 **i01726553**

NOTE	REF NO	GRAPHIC REF	PART NUMBER	QTY	PART NAME 1 2 3 4 5 6 (PRODUCT LEVEL)	SEE PAGE
	2	1	**190-7006**	1	SHEET-RUBBER	
	3	1	**190-7007**	1	SHEET-RUBBER	
	4	1	**175-0917**	1	INSULATION	
	5	1	**175-0916**	1	INSULATION	
	6	1	**9M-5732**	6	RIVET-POP	
	7	1	**9M-2307**	6	WASHER (5.2X19X2-MM THK)	
	8	1	**6P-2216**	14	CAP	
	9	1	**4I-7924**	14	WASHER (4.5X40X1.2-MM THK)	
D	10	1	**5P-8309**		SEAL (.2M)	

D-ORDER BY THE METER

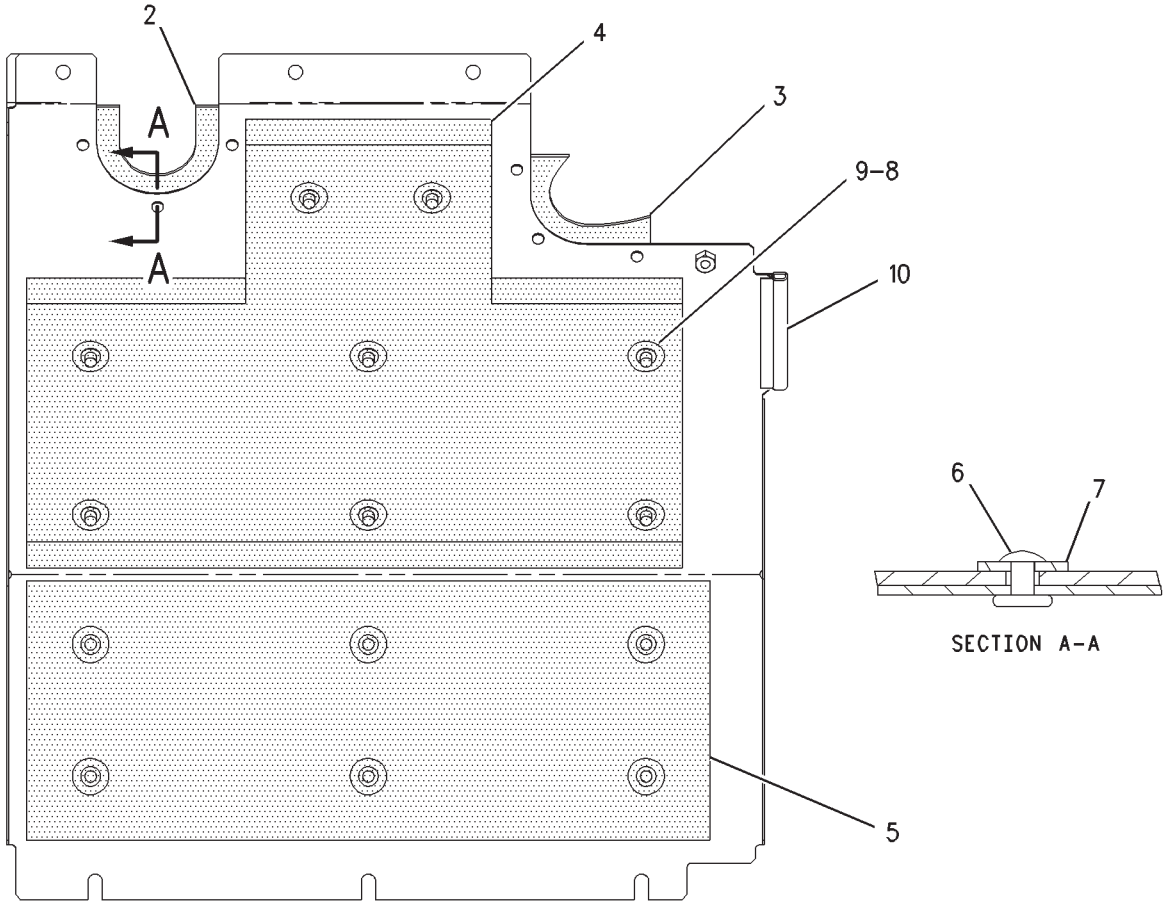

GRAPHIC #1 **<END>** g00853895

FRAME AND BODY

175-0976 SHEET AS-SOUND SUPPRESSION

S/N: RCD1-UP

PART OF 222-3847 HOOD & GUARD GP

SMCS-1801, 7076, 7251, 7267 **i01726545**

NOTE	REF NO	GRAPHIC REF	PART NUMBER	QTY	PART NAME 1 2 3 4 5 6 (PRODUCT LEVEL)	SEE PAGE
	1	1	*175-0978*	1	SHEET AS	
	2	1	**175-0977**	1	INSULATION	
	3	1	**6P-2216**	4	CAP	
	4	1	**4I-7924**	4	WASHER (4.5X40X1.2-MM THK)	
	5	1	**199-0087**	1	SHEET-RUBBER	
	6	1	**9M-2307**	2	WASHER (5.2X19X2-MM THK)	
	7	1	**9M-5732**	2	RIVET-POP	

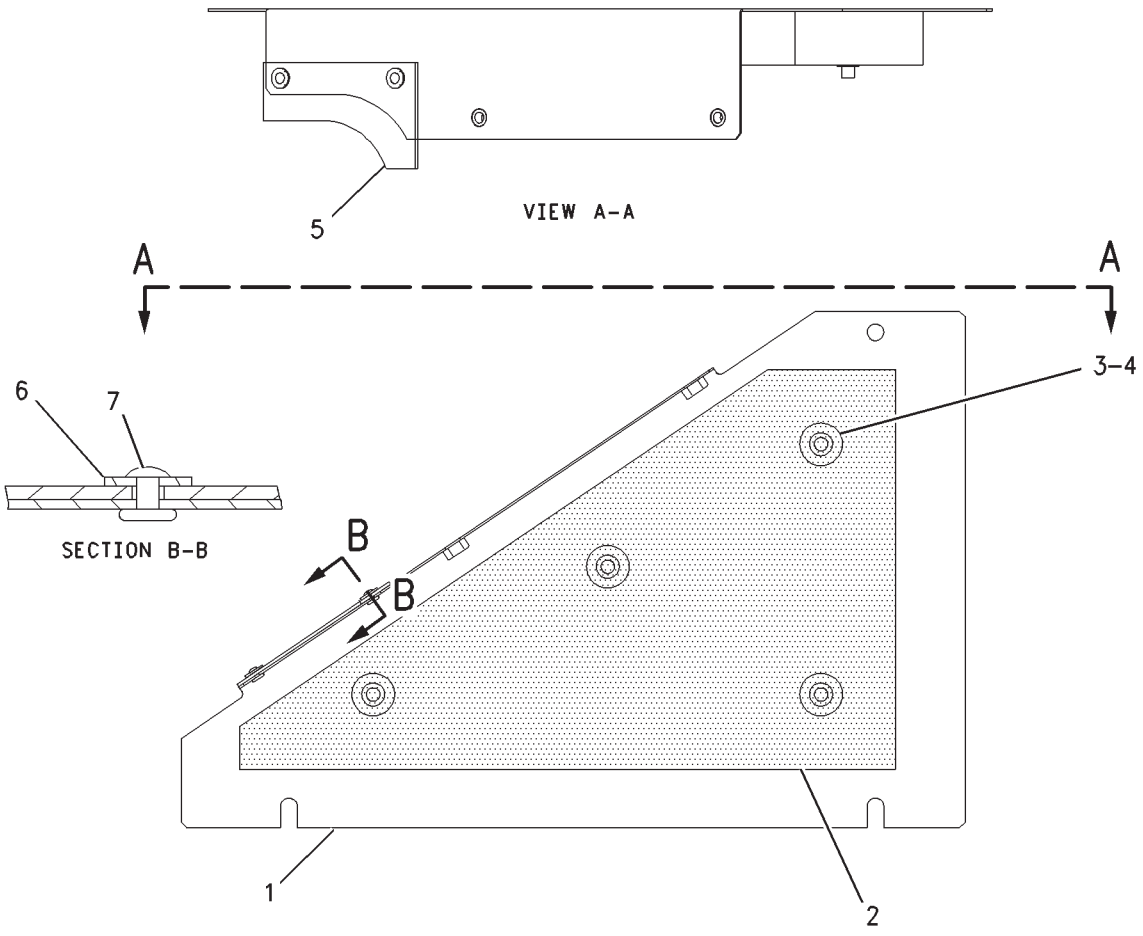

GRAPHIC #1 **<END>** g00887290

FRAME AND BODY

184-8884 SHEET AS-SOUND SUPPRESSION

S/N: RCD1-UP

PART OF 222-3847 HOOD & GUARD GP

SMCS-1801, 7076, 7251, 7267 **i02396007**

NOTE	REF NO	GRAPHIC REF	PART NUMBER	QTY	PART NAME 1 2 3 4 5 6 (PRODUCT LEVEL)	SEE PAGE
Z	1	1		1	SHEET	
	2	1	**184-8886**	1	LINER	
	3	1	**184-8885**	1	LINER	

Z-NOT SERVICED SEPARATELY

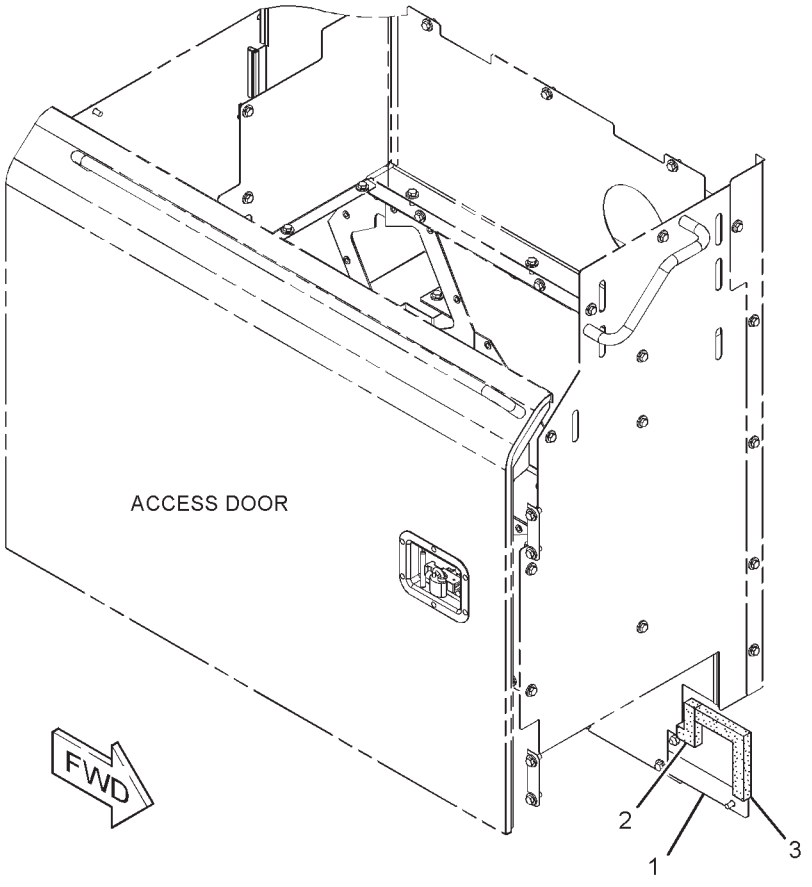

GRAPHIC #1 **<END>** g01301429

FRAME AND BODY

203-4880 SHEET AS-SOUND SUPPRESSION

S/N: RCD1-UP

PART OF 222-3847 HOOD & GUARD GP

SMCS-1801, 7076, 7251, 7267 **i02396008**

NOTE	REF NO	GRAPHIC REF	PART NUMBER	QTY	PART NAME 1 2 3 4 5 6 (PRODUCT LEVEL)	SEE PAGE
	1	1	**175-0907**	1	INSULATION	
	2	1	**6P-2216**	5	CAP	
	3	1	**4I-7924**	5	WASHER (4.5X40X1.2-MM THK)	
E	4	1	**5P-8309**		SEAL (0.4-M)	
	5	1	**177-5732**	1	LINER	
Z	6	1		1	SHEET AS	

E-ORDER BY THE CENTIMETER
Z-NOT SERVICED SEPARATELY

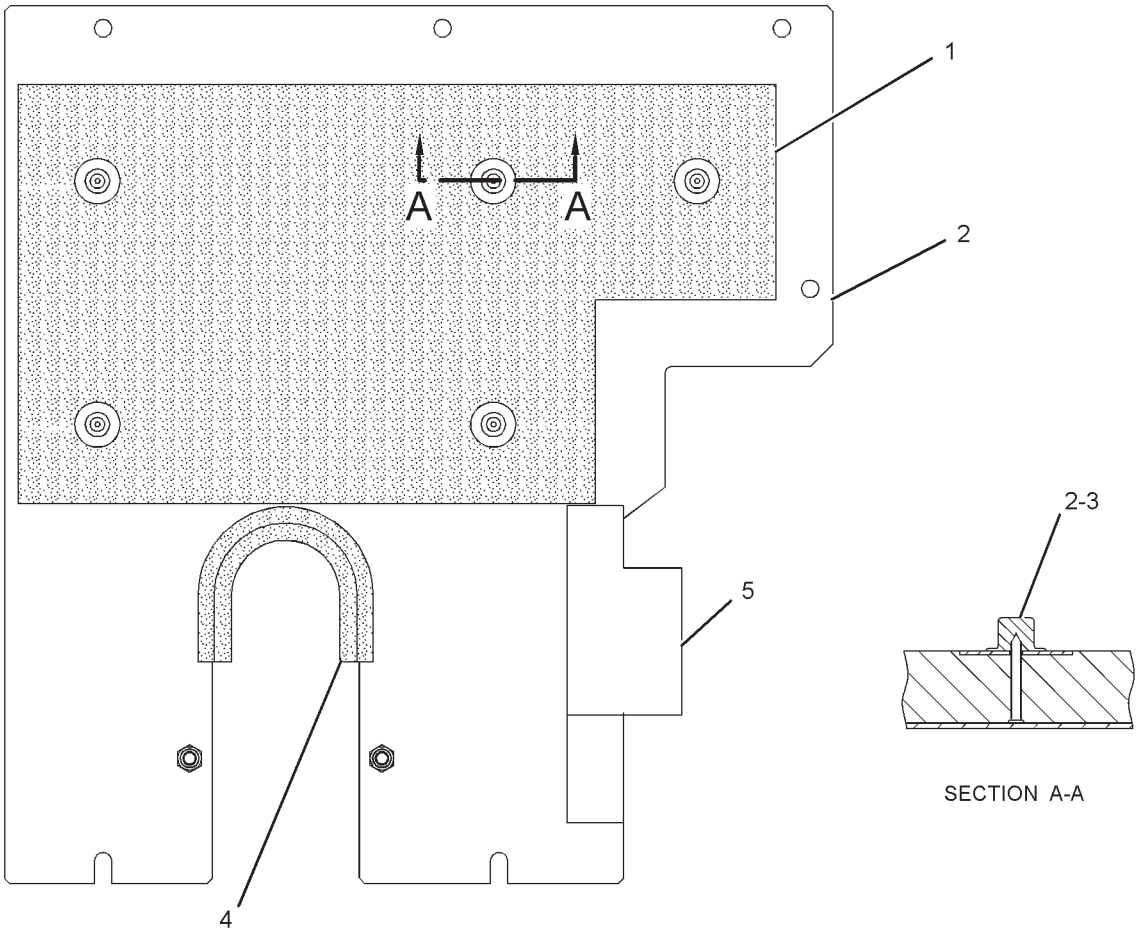

GRAPHIC #1 **<END>** g01300913

FRAME AND BODY

214-8011 SHEET AS-SOUND SUPPRESSION

S/N: RCD1-UP

PART OF 222-3847 HOOD & GUARD GP

SMCS-1801, 7076, 7251, 7267 **i02396012**

NOTE	REF NO	GRAPHIC REF	PART NUMBER	QTY	PART NAME 1 2 3 4 5 6 (PRODUCT LEVEL)	SEE PAGE
	1	1	**9M-5732**	4	RIVET-POP	
	2	1	**190-7003**	1	SHEET-RUBBER	
	3	1	**175-0911**	1	INSULATION	
	4	1	**175-0912**	1	INSULATION	
	5	1	**6P-2216**	14	CAP	
	6	1	**4I-7924**	14	WASHER (4.5X40X1.2-MM THK)	
	7	1	**9M-2307**	4	WASHER (5.2X19X2-MM THK)	

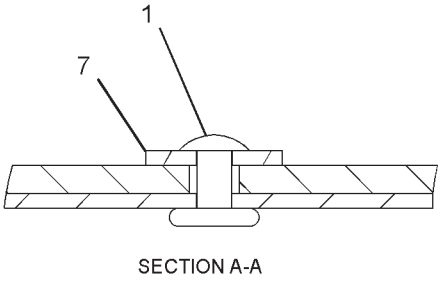

SECTION A-A

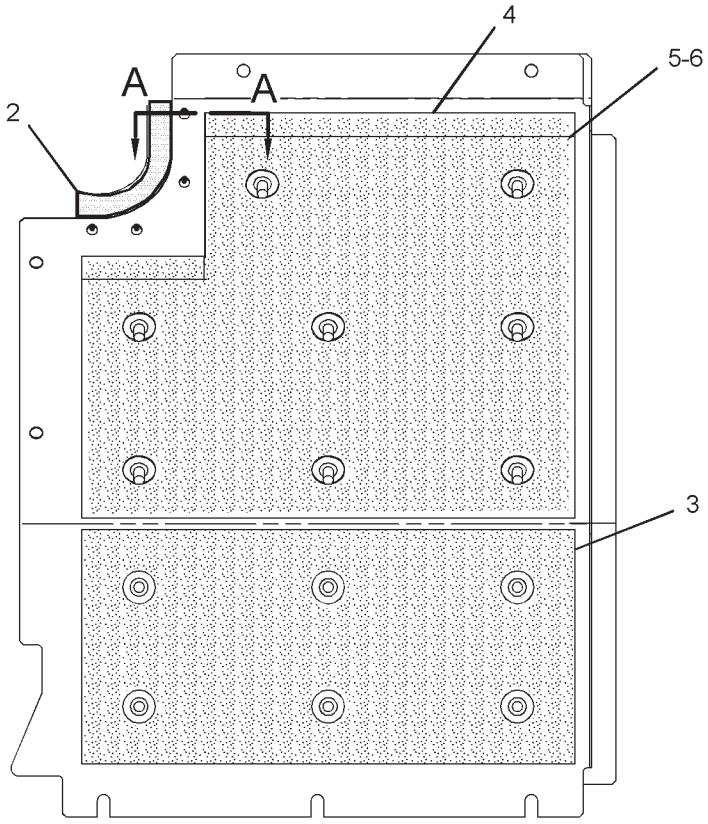

GRAPHIC #1 **<END>** g01257940

FRAME AND BODY

214-8378 SHEET AS-SOUND SUPPRESSION

S/N: RCD1-UP

PART OF 222-3847 HOOD & GUARD GP

SMCS-1801, 7076, 7251, 7267 **i02396014**

NOTE	REF NO	GRAPHIC REF	PART NUMBER	QTY	PART NAME 1 2 3 4 5 6 (PRODUCT LEVEL)	SEE PAGE
Z	1	1		1	SHEET AS	
	2	1	**7I-0424**	1	LINER	
	3	1	**6P-2216**	4	CAP	
	4	1	**4I-7924**	4	WASHER (4.5X40X1.2-MM THK)	
D	5	1	**5P-8309**		SEAL (0.4-M)	
D	6	1	**101-9848**		SEAL (0.2-M)	

D-ORDER BY THE METER
Z-NOT SERVICED SEPARATELY

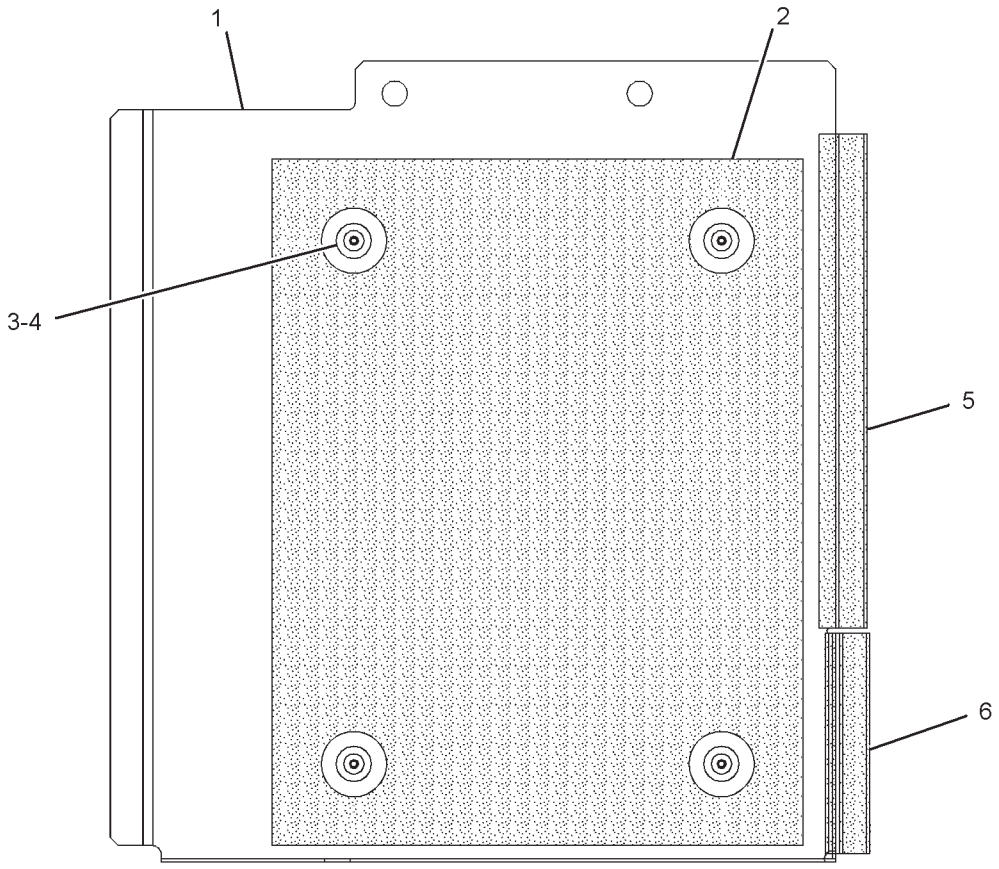

GRAPHIC #1 **<END>** g01305336

FRAME AND BODY

214-8381 SHEET AS-SOUND SUPPRESSION

S/N: RCD1-UP

PART OF 222-3847 HOOD & GUARD GP

SMCS-1801, 7076, 7251, 7267 **i02396016**

NOTE	REF NO	GRAPHIC REF	PART NUMBER	QTY	PART NAME 1 2 3 4 5 6 (PRODUCT LEVEL)	SEE PAGE
Z	1	1		1	SHEET AS	
	2	1	**214-8382**	1	SHEET-RUBBER	
	3	1	**190-7075**	1	SHEET-RUBBER	
D	4	1	**5P-8309**		SEAL (0.60-M)	
	5	1	**7I-1926**	1	LINER	
	6	1	**6P-2216**	6	CAP	
	7	1	**4I-7924**	6	WASHER (4.5X40X1.2-MM THK)	
	8	1	**9M-5732**	8	RIVET-POP	
	9	1	**9M-2307**	8	WASHER (5.2X19X2-MM THK)	

D-ORDER BY THE METER
Z-NOT SERVICED SEPARATELY

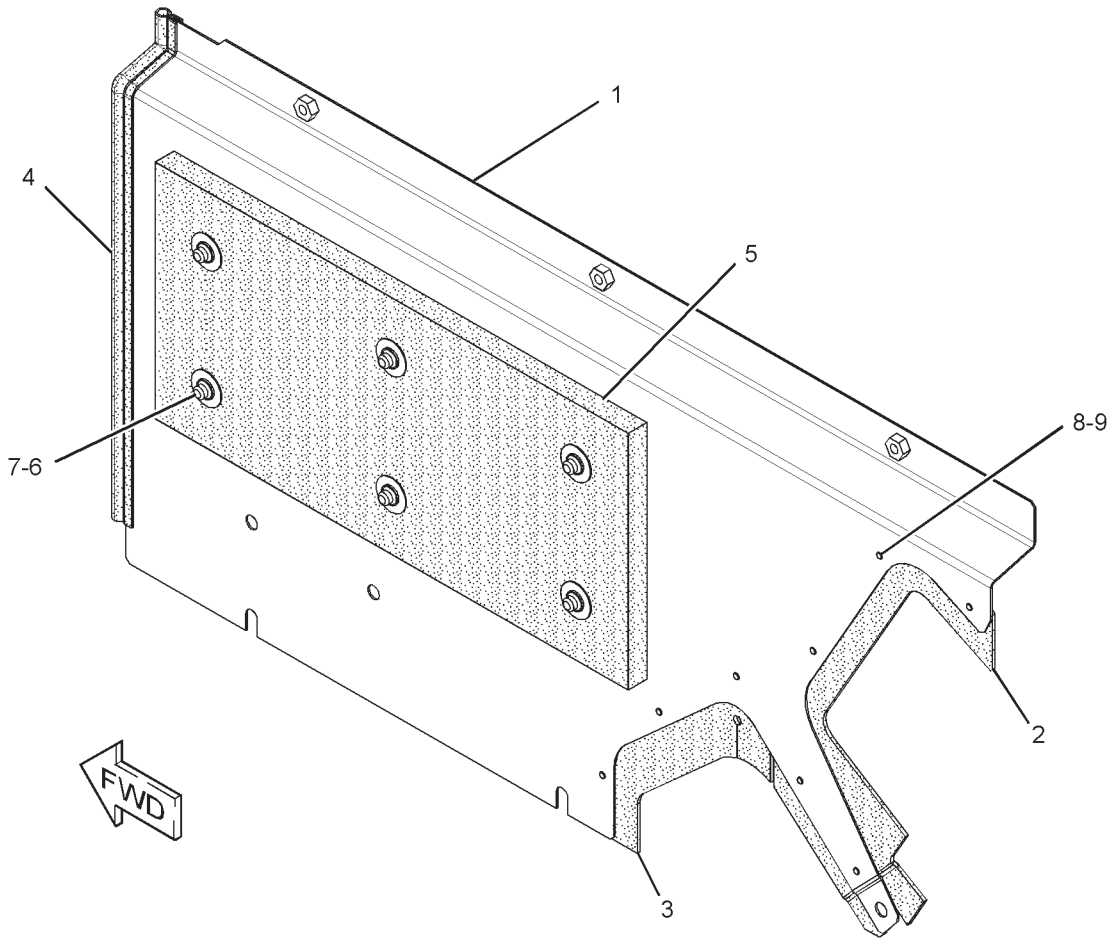

GRAPHIC #1 **<END>** g01297240

FRAME AND BODY

214-8383 SHEET AS-SOUND SUPPRESSION

S/N: RCD1-UP

PART OF 222-3847 HOOD & GUARD GP

SMCS-1801, 7076, 7251, 7267 **i02396021**

NOTE	REF NO	GRAPHIC REF	PART NUMBER	QTY	PART NAME 1 2 3 4 5 6 (PRODUCT LEVEL)	SEE PAGE
Z	1	1		1	SHEET AS	
	2	1	**214-8386**	1	SHEET-RUBBER	
	3	1	**170-2789**	1	LINER	
	4	1	**6P-2216**	4	CAP	
	5	1	**4I-7924**	4	WASHER (4.5X40X1.2-MM THK)	
	6	1	**9M-5732**	7	RIVET-POP	
	7	1	**9M-2307**	7	WASHER (5.2X19X2-MM THK)	
D	8	1	**5P-8309**		SEAL (0.46-M)	

D-ORDER BY THE METER
Z-NOT SERVICED SEPARATELY

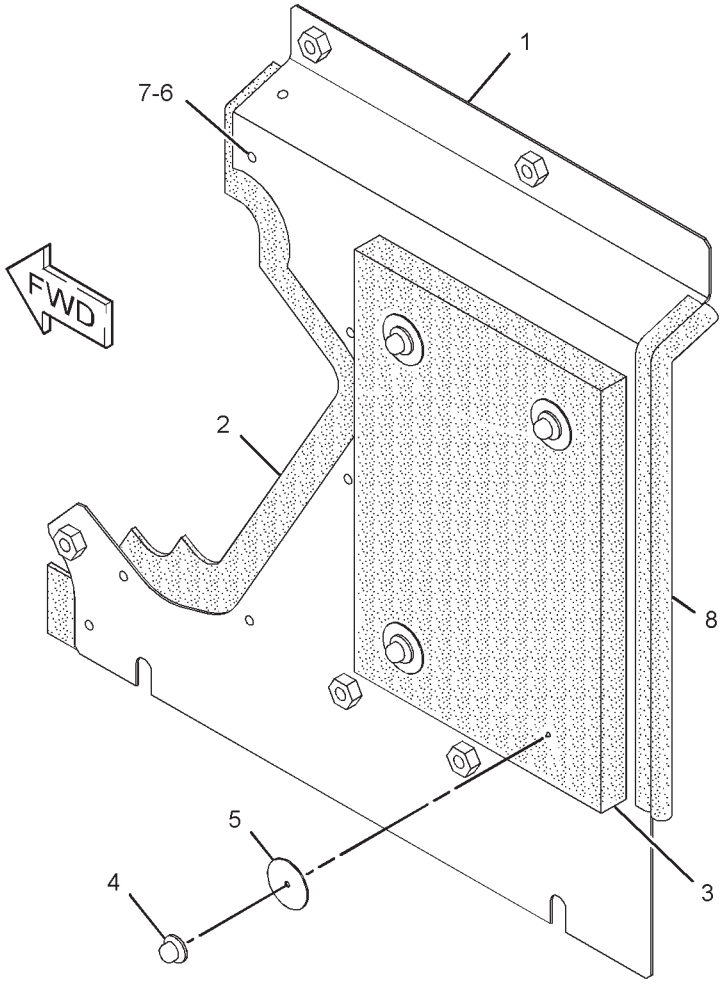

GRAPHIC #1 **<END>** g01295079

FRAME AND BODY

214-8387 SHEET AS-SOUND SUPPRESSION

S/N: RCD1-UP

PART OF 222-3847 HOOD & GUARD GP

SMCS-1801, 7076, 7251, 7267 **i02396022**

NOTE	REF NO	GRAPHIC REF	PART NUMBER	QTY	PART NAME 1 2 3 4 5 6 (PRODUCT LEVEL)	SEE PAGE
D	1	1	**5P-8309**		SEAL (0.4-M)	
Z	2	1		1	SHEET AS	
	3	1	**175-0934**	1	INSULATION	
	4	1	**214-8388**	1	SHEET-RUBBER	
	5	1	**6P-2216**	5	CAP	
	6	1	**4I-7924**	5	WASHER (4.5X40X1.2-MM THK)	
	7	1	**9M-5732**	3	RIVET-POP	
	8	1	**9M-2307**	3	WASHER (5.2X19X2-MM THK)	

D-ORDER BY THE METER
Z-NOT SERVICED SEPARATELY

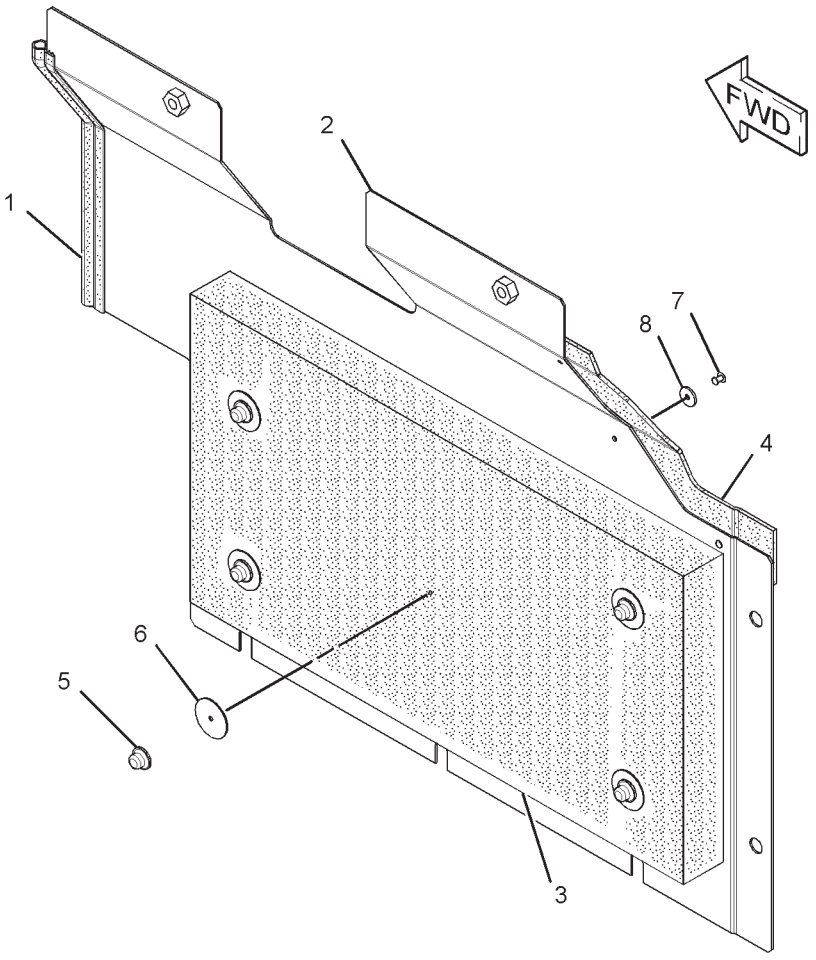

GRAPHIC #1 **<END>** g01293039

FRAME AND BODY

214-8389 SHEET AS-SOUND SUPPRESSION

S/N: RCD1-UP

PART OF 222-3847 HOOD & GUARD GP

SMCS-1801, 7076, 7251, 7267 **i02396025**

NOTE	REF NO	GRAPHIC REF	PART NUMBER	QTY	PART NAME 1 2 3 4 5 6 (PRODUCT LEVEL)	SEE PAGE
Z	1	1		1	SHEET AS	
	2	1	**214-8392**	1	SHEET-RUBBER	
	3	1	**175-0934**	1	INSULATION	
	4	1	**6P-2216**	5	CAP	
	5	1	**4I-7924**	5	WASHER (4.5X40X1.2-MM THK)	
	6	1	**9M-5732**	3	RIVET-POP	
	7	1	**9M-2307**	3	WASHER (5.2X19X2-MM THK)	
D	8	1	**5P-8309**		SEAL (0.1-M)	
D	8A	1	**5P-8309**		SEAL (0.23-M)	
D	8B	1	**5P-8309**		SEAL (0.25-M)	

D-ORDER BY THE METER
Z-NOT SERVICED SEPARATELY

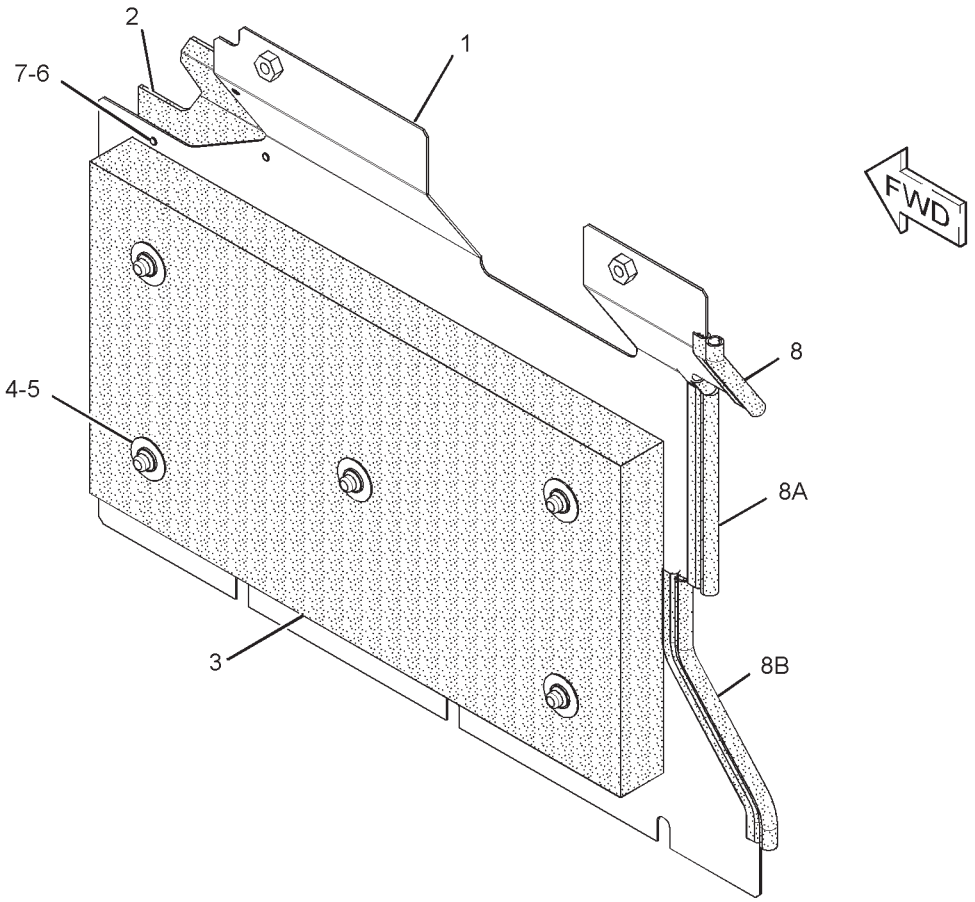

GRAPHIC #1 **<END>** g01292625

FRAME AND BODY

218-7758 SHEET AS-SOUND SUPPRESSION–RADIATOR

S/N: RCD1-UP

PART OF 222-3847 HOOD & GUARD GP

SMCS-1801, 7076, 7251, 7267 **i02395964**

NOTE	REF NO	GRAPHIC REF	PART NUMBER	QTY	PART NAME 1 2 3 4 5 6 (PRODUCT LEVEL)	SEE PAGE
	1	1	**175-0874**	1	LINER	
	2	1	**138-5506**	1	LINER	
	3	1	**175-0962**	1	LINER	
	4	1	**175-0961**	1	LINER	

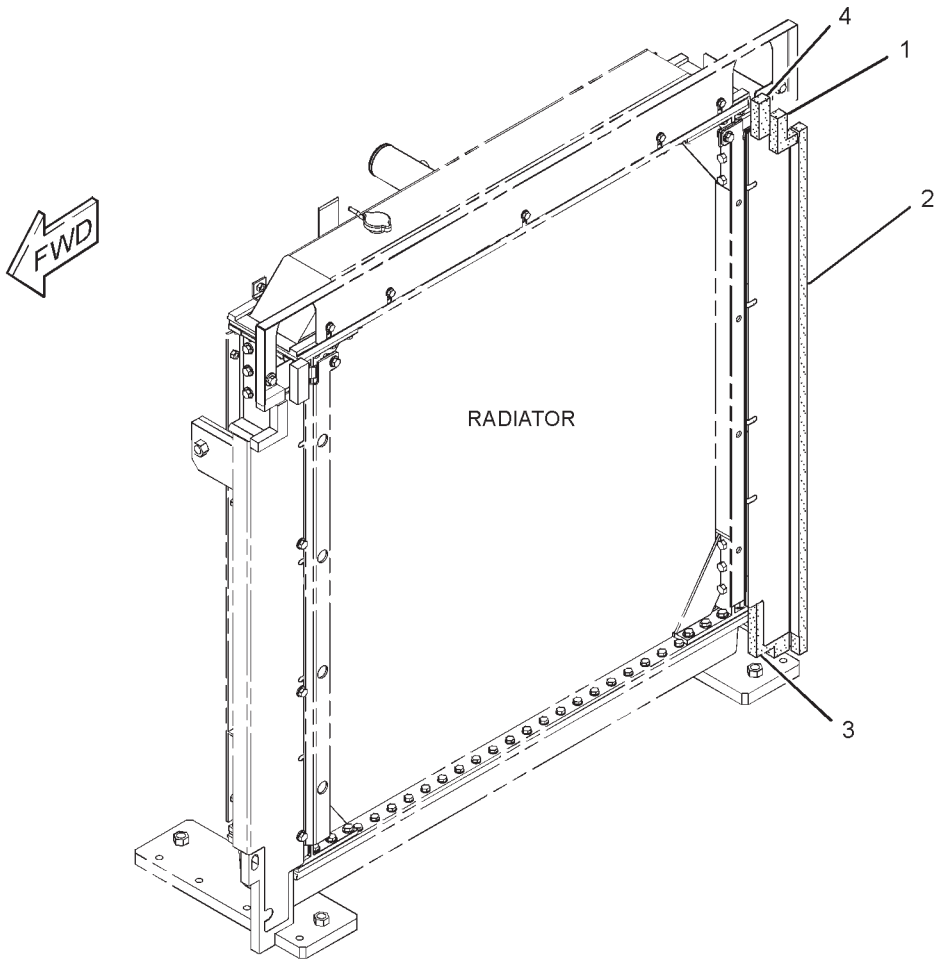

GRAPHIC #1 **<END>** g01351408

FRAME AND BODY

218-7761 SHEET AS-SOUND SUPPRESSION

S/N: RCD1-UP

PART OF 222-3847 HOOD & GUARD GP

SMCS-1801, 7076, 7251, 7267 **i02395971**

NOTE	REF NO	GRAPHIC REF	PART NUMBER	QTY	PART NAME 1 2 3 4 5 6 (PRODUCT LEVEL)	SEE PAGE
Z	1	1		1	SHEET AS	
	2	1	**175-0808**	1	LINER	
	3	1	**214-8031**	1	LINER	
	4	1	**175-0843**	1	LINER	
	5	1	**175-0961**	1	LINER	

Z-NOT SERVICED SEPARATELY

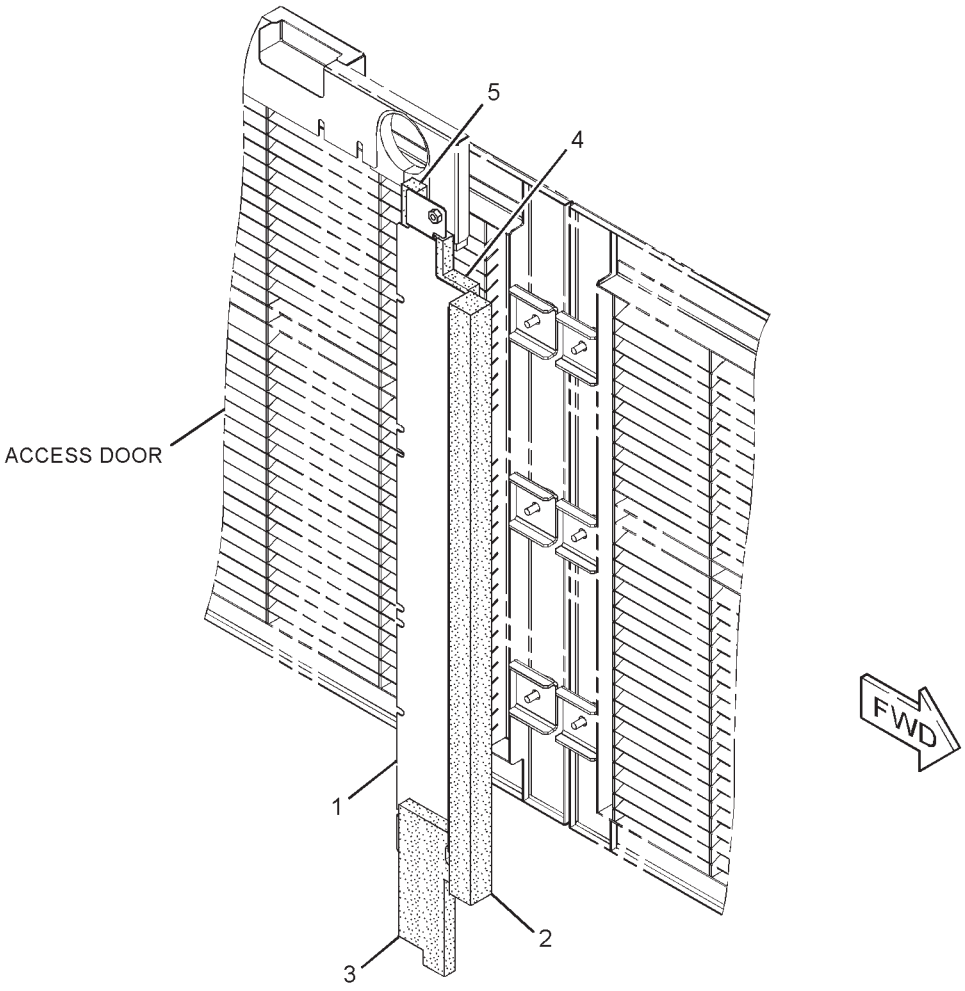

GRAPHIC #1 **<END>** g01293030

FRAME AND BODY

110-4840 STORAGE GP-VANDALISM GUARD

S/N: RCD1-UP
PART OF 222-5140 GUARD AR-VANDALISM
ALSO AN ATTACHMENT

SMCS-7315 **i01738068**

NOTE	REF NO	GRAPHIC REF	PART NUMBER	QTY	PART NAME 1 2 3 4 5 6 (PRODUCT LEVEL)	SEE PAGE
	1	1	**110-4841**	1	CHANNEL AS	
	2	1	**110-4843**	1	SUPPORT AS	
	3	1	**110-4845**	1	SUPPORT AS	
M	4	1	**8T-4139**	2	BOLT (M12X1.75X30-MM)	
	5	1	**8T-4223**	6	WASHER-HARD (13.5X25.5X3-MM THK)	
M	6	1	**8T-4179**	4	BOLT (M12X1.75X20-MM)	
	7	1	**4I-8147**	1	CABLE AS	
M	8	1	**4I-8242**	1	BOLT-WING	
	9	1	**2G-8767**	1	WASHER (10.5X60X3-MM THK)	
	10	1	**096-2323**	1	RING-RETAINING (EXTERNAL)	

M-METRIC PART

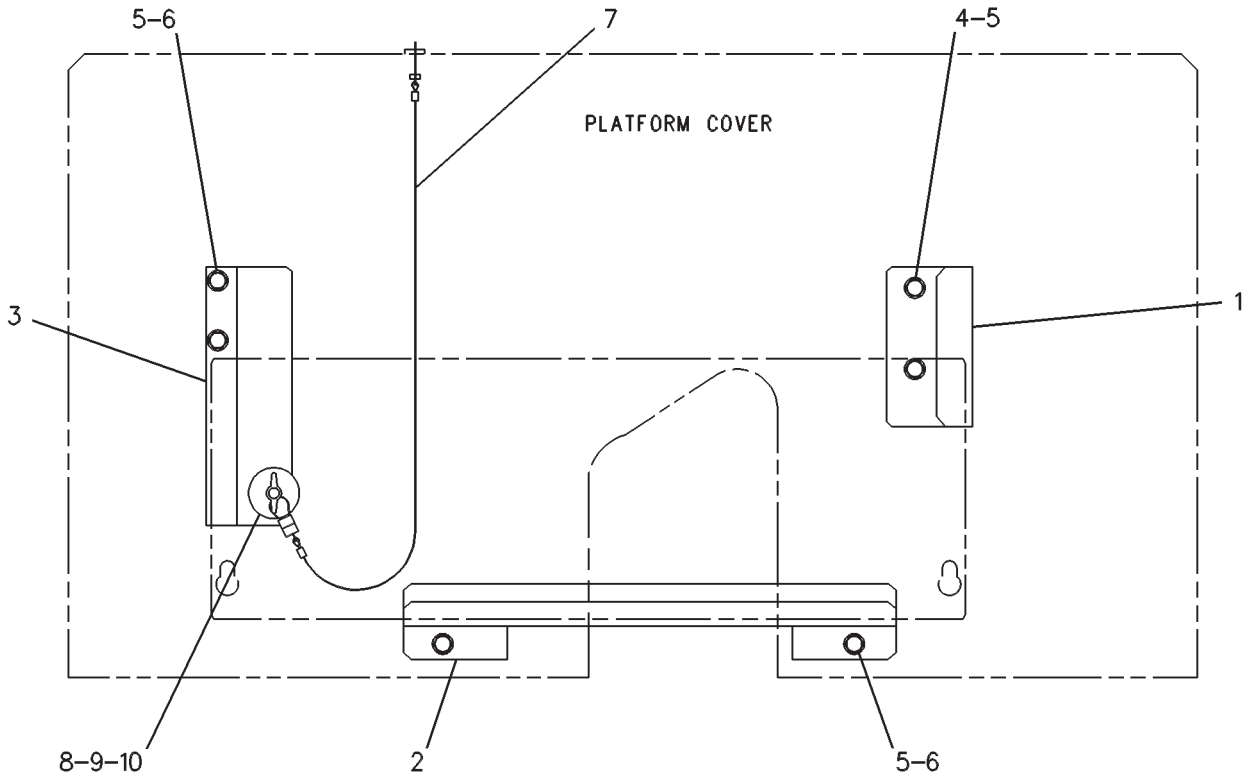

GRAPHIC #1 **<END>** g00248912

FRAME AND BODY

148-5029 STORAGE GP-VANDALISM GUARD

S/N: RCD1-UP
VANDALISM GUARD
PART OF 155-1211 GUARD AR-VANDALISM
AN ATTACHMENT

SMCS-7315 **i01035596**

NOTE	REF NO	GRAPHIC REF	PART NUMBER	QTY	PART NAME 1 2 3 4 5 6 (PRODUCT LEVEL)	SEE PAGE
	1	1	**162-0342**	1	COVER GP	
		1	**8T-0328**	3	WASHER-HARD (5.5X10X1-MM THK)	
M		1	**095-0736**	3	SCREW-MACHINE (M5X0.8X10-MM)	
		1	**116-1655**	1	CLIP	
	2	1	**162-0343**	1	COVER AS	
M	3	1	**8T-4179**	3	BOLT (M12X1.75X20-MM)	
	4	1	**8T-4223**	3	WASHER-HARD (13.5X25.5X3-MM THK)	

M-METRIC PART

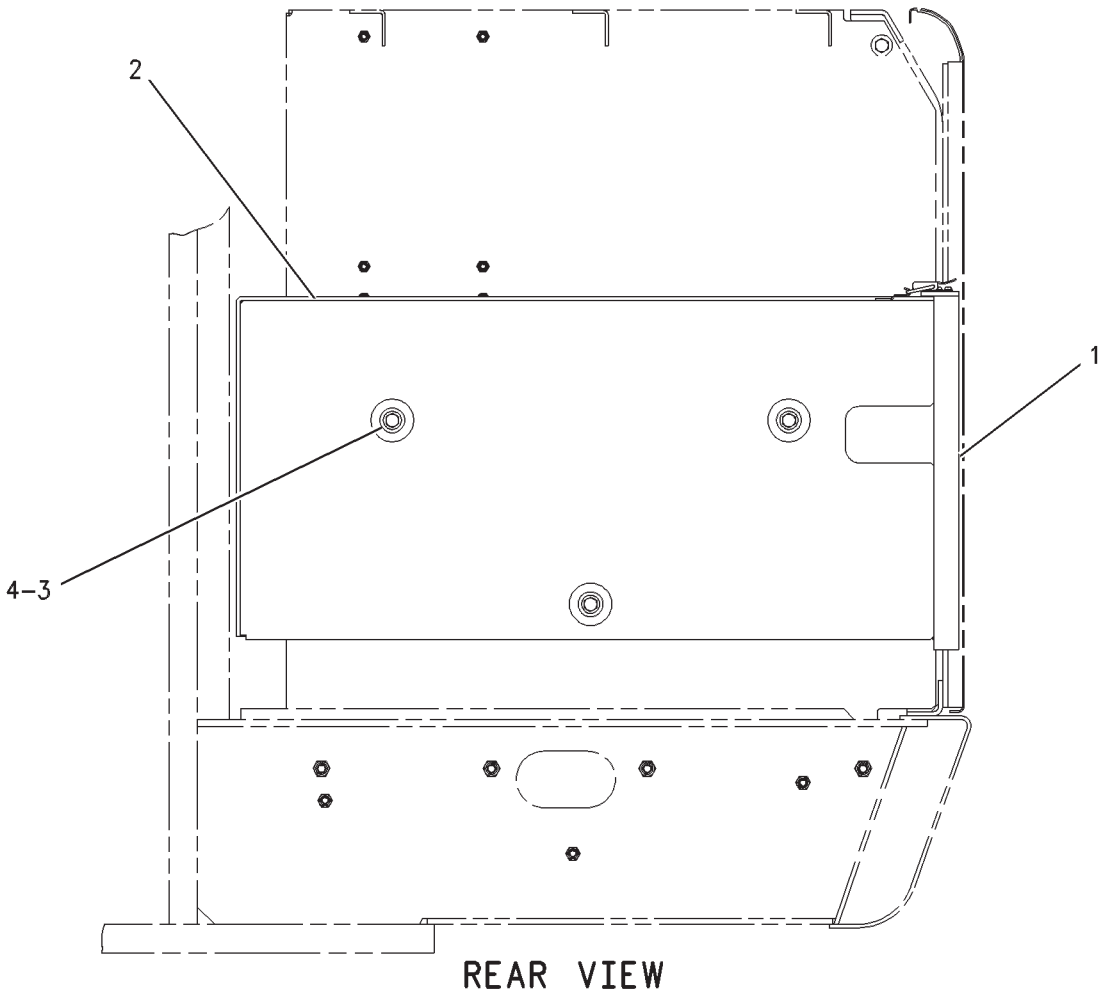

REAR VIEW

GRAPHIC #1 **<END>** g00538880

FRAME AND BODY

168-1721 WALKWAY GP

S/N: RCD1-160

PART OF 229-3366 CHASSIS AR

SMCS-7255 **i02117240**

NOTE	REF NO	GRAPHIC REF	PART NUMBER	QTY	PART NAME 1 2 3 4 5 6 (PRODUCT LEVEL)	SEE PAGE
	1	1	**170-2892**	1	WALKWAY AS	
	2	1	**170-2896**	2	WALKWAY AS	
	3	1	**138-5717**	1	WALKWAY AS	
M	4	1	**8T-4190**	28	BOLT (M16X2X25-MM)	
	5	1	**9X-8257**	28	WASHER (17.5X30X3.5-MM THK)	
	6	1	**170-2999**	1	HANDRAIL AS	
M	7	1	**8T-4139**	2	BOLT (M12X1.75X30-MM)	
	8	1	**8T-4223**	2	WASHER-HARD (13.5X25.5X3-MM THK)	

M-METRIC PART

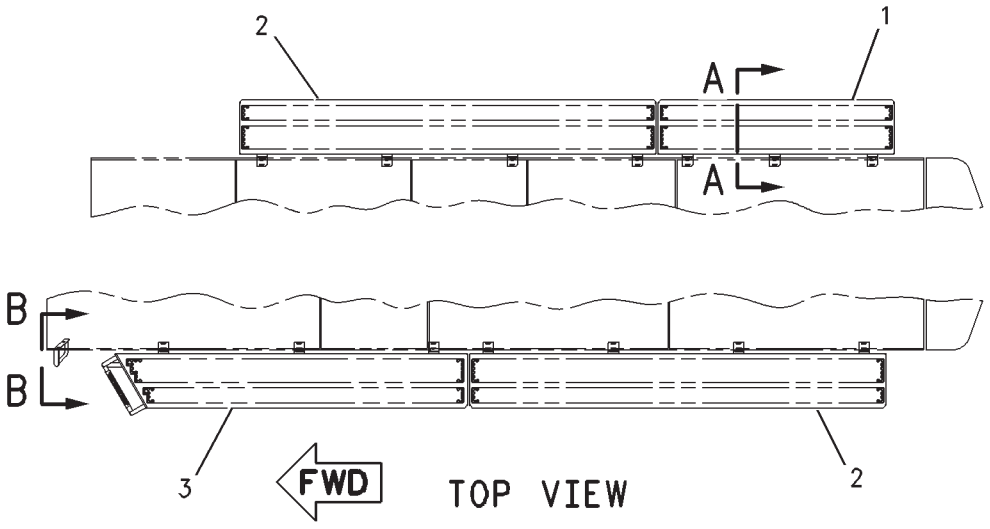

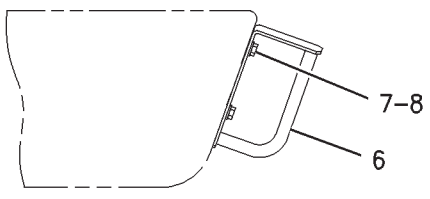

VIEW B-B

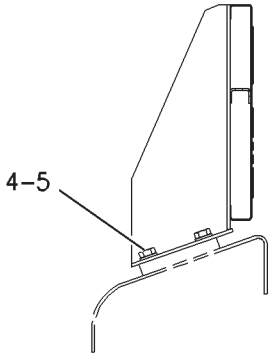

SECTION A-A

GRAPHIC #1 **<END>** g00979736

FRAME AND BODY

168-1721 WALKWAY GP

S/N: RCD161-UP

PART OF 229-3366 CHASSIS AR

SMCS-7255 **i03101803**

NOTE	REF NO	GRAPHIC REF	PART NUMBER	QTY	PART NAME 1 2 3 4 5 6 (PRODUCT LEVEL)	SEE PAGE
	1	1	**293-7098**	1	WALKWAY AS	
	2	1	**170-2999**	1	HANDRAIL AS	
C	3	1	**293-7103**	5	WALKWAY AS	
M	4	1	**8T-4139**	2	BOLT (M12X1.75X30-MM)	
CM	5	1	**8T-4190**	26	BOLT (M16X2X25-MM)	
	6	1	**8T-4223**	2	WASHER-HARD (13.5X25.5X3-MM THK)	
C	7	1	**3E-9411**	26	WASHER-HARD (17.5X38X6-MM THK)	

C-CHANGE FROM PREVIOUS TYPE
M-METRIC PART

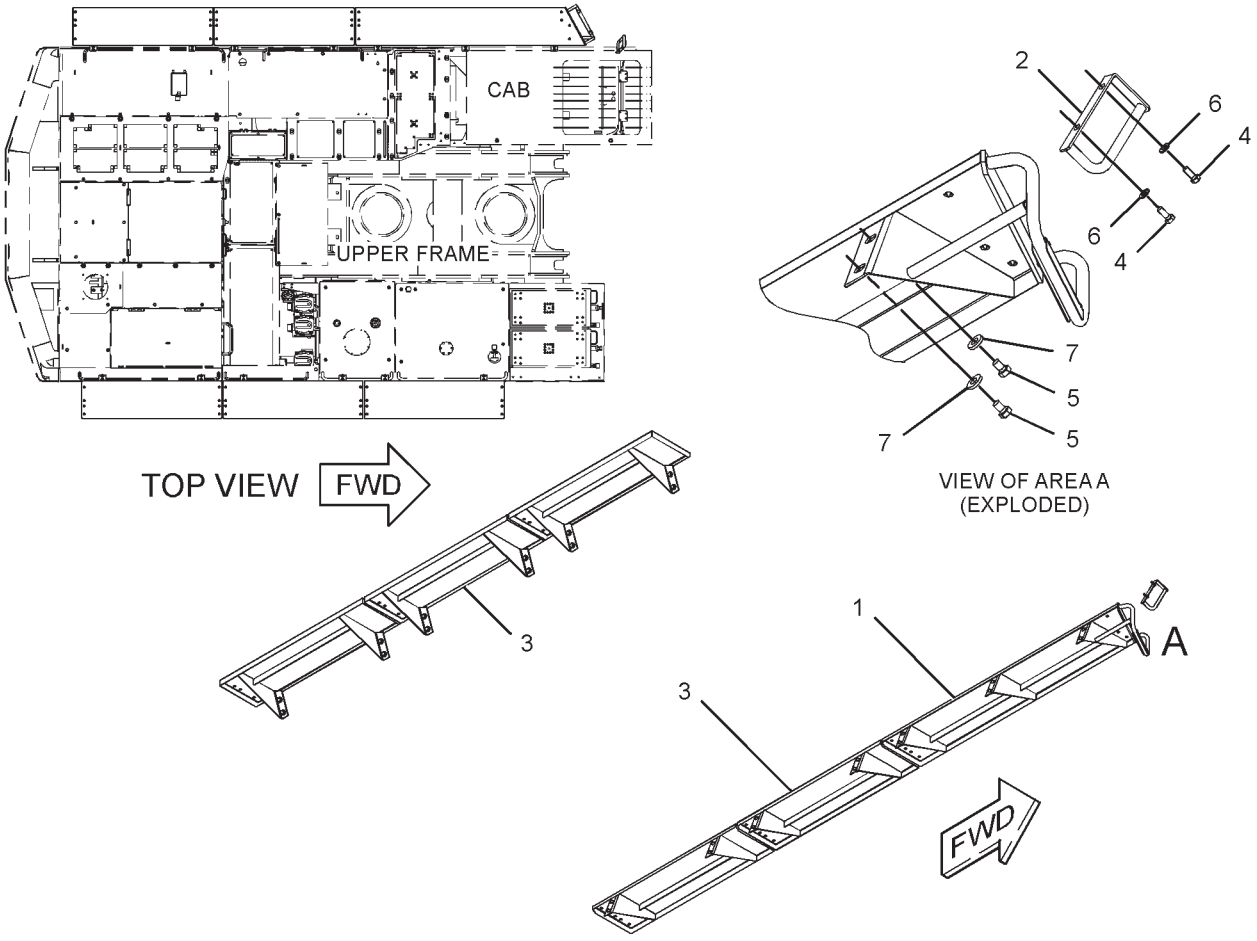

GRAPHIC #1 **<END>** g01671639

UNDERCARRIAGE

168-6743 ADJUSTMENT GP-HYDRAULIC TRACK

S/N: RCD152-UP
PART OF 145-3015 IDLER GP-FRONT
FIELD REPLACEMENT ORDER 297-9154—PAGE 415

SMCS-4157 **i02551803**

NOTE	REF NO	GRAPHIC REF	PART NUMBER	QTY	PART NAME 1 2 3 4 5 6 (PRODUCT LEVEL)	SEE PAGE
M	1	1	**8T-4191**	2	BOLT (M10X1.5X16-MM)	
	2	1	**168-6745**	1	PLATE AS	
	2A	1	**4B-4158**	4	SCREW-DRIVE (NO 4X0.25-IN)	
	2B	1	**5P-9891**	1	PLATE-WARNING (HIGH PRESSURE CYLINDER)	
	3	1	**168-6744**	1	CYLINDER	
	4	1	**136-2442**	1	PISTON	
	5	1	**248-7179**	2	SEAL-O-RING	
	6	1	**136-2445**	2	RING-BACKUP	
	7	1	**7Y-4633**	2	RING-BACKUP	
	8	1	**136-2443**	1	SEAL-LIP TYPE	
	9	1	**136-2444**	1	RING	
	10	1	**095-2927**	1	VALVE-FILL	
	11	1	**2S-5926**	1	VALVE-RELIEF	

M-METRIC PART

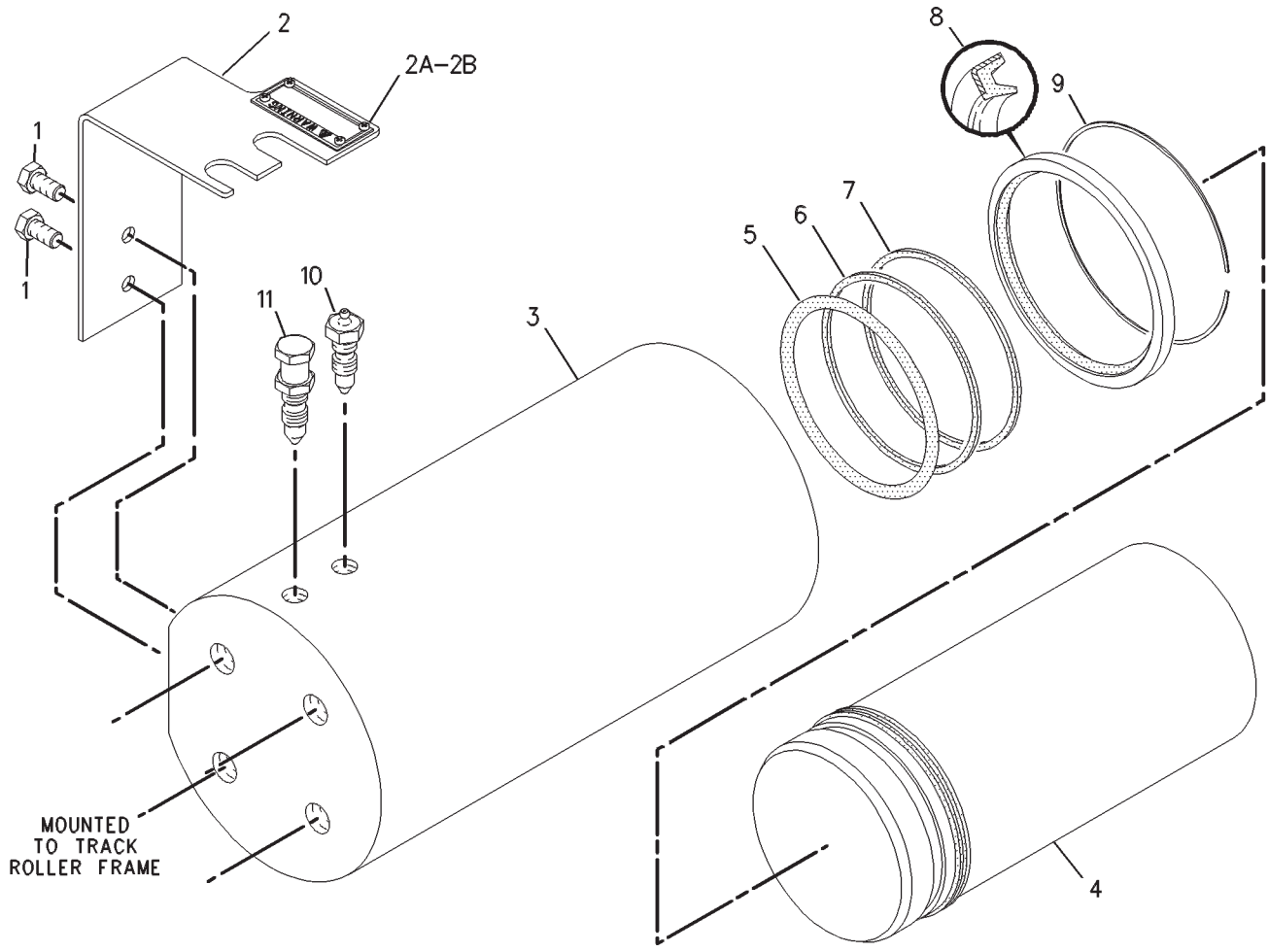

GRAPHIC #1 **<END>** g00533678

UNDERCARRIAGE

297-9154 ADJUSTMENT GP-HYDRAULIC TRACK

S/N: RCD1-UP

FIELD REPLACEMENT FOR 168-6743—PAGE 414

SMCS-4157 **i03090281**

NOTE	REF NO	GRAPHIC REF	PART NUMBER	QTY	PART NAME 1 2 3 4 5 6 (PRODUCT LEVEL)	SEE PAGE
M	1	1	**8T-4191**	2	BOLT (M10X1.5X16-MM)	
	2	1	**168-6745**	1	PLATE AS	
	2A	1	**4B-4158**	4	SCREW-DRIVE (NO 4X0.25-IN)	
	2B	1	**5P-9891**	1	PLATE-WARNING (HIGH PRESSURE CYLINDER)	
	3	1	**168-6744**	1	CYLINDER	
	4	1	**297-9158**	1	PISTON	
	5	1	**248-7179**	2	SEAL-O-RING	
	6	1	**136-2445**	2	RING-BACKUP	
	7	1	**7Y-4633**	2	RING-BACKUP	
	8	1	**136-2443**	1	SEAL-LIP TYPE	
	9	1	**136-2444**	1	RING	
	10	1	**095-2927**	1	VALVE-FILL	
	11	1	**2S-5926**	1	VALVE-RELIEF	

M-METRIC PART

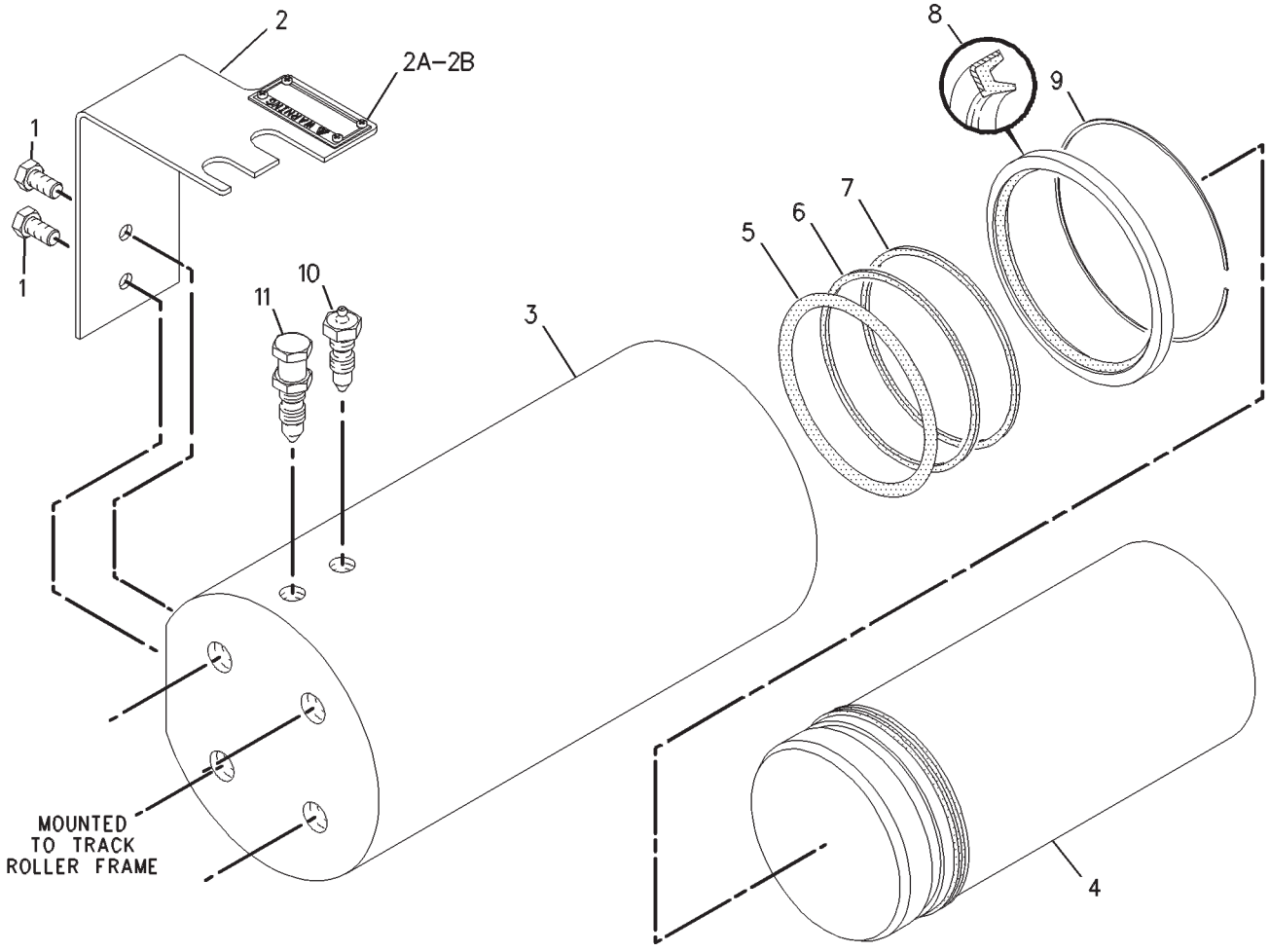

GRAPHIC #1 **<END>** g00533678

UNDERCARRIAGE

229-3368 FRAME AR-UNDERCARRIAGE

S/N: RCD152-UP

PART OF 229-3365 GENERAL AR

SMCS-4151 **i02414247**

NOTE	PART NUMBER	QTY	PART NAME 1 2 3 4 5 6 (PRODUCT LEVEL)	SEE PAGE
Y	*253-2304*	1	FRAME GP-UNDERCARRIAGE	418
Y	*148-4650*	1	GEAR & BEARING GP-SWING	351
Y	*172-2954*	1	GUARD GP-SWIVEL	363
Y	*172-3001*	1	GUARD GP-TRACK GUIDE	419
Y	*167-9842*	1	GUARD GP-TRAVEL MOTOR	423
Y	*145-3015*	1	IDLER GP-FRONT	426
Y	*145-3013*	1	ROLLER AR-TRACK & CARRIER	429
Y	*174-0214*	2	TRACK GP	438

Y-SEPARATE ILLUSTRATION

<END>

UNDERCARRIAGE

172-3087 FRAME GP-UNDERCARRIAGE

S/N: RCD152-230

PART OF 229-3368 FRAME AR-UNDERCARRIAGE

SMCS-4150 **i03117664**

NOTE	REF NO	GRAPHIC REF	PART NUMBER	QTY	PART NAME 1 2 3 4 5 6 (PRODUCT LEVEL)	SEE PAGE
	1	1	**172-3089**	1	FRAME AS-CARBODY	
	2	1	**172-3112**	1	FRAME AS-TRACK (RH)	
	2A	1	**7Y-1000**	2	BRACKET	
	2B	1	**174-8353**	1	BRACKET	
	3	1	**172-3113**	1	FRAME AS-TRACK (LH)	
	3A	1	**7Y-1000**	2	BRACKET	
	3B	1	**174-8353**	1	BRACKET	
	4	1	**172-3088**	4	PLATE	
	5	1	**146-4700**	4	STEP	
M	6	1	**8T-7338**	24	BOLT (M16X2X45-MM)	
	7	1	**9X-8257**	40	WASHER (17.5X30X3.5-MM THK)	
	8	1	**172-2871**	4	PLATE	
	9	1	**7Y-8942**	2	PLATE	
M	10	1	**7X-2552**	16	BOLT (M16X2X30-MM)	
	11	1	**207-4919**	44	BOLT (M36X4X180-MM)	
	12	1	**107-9711**	36	SPACER (37X70X65-MM THK)	
M	13	1	**7Y-5245**	8	BOLT (M36X4X150-MM)	
M	14	1	**147-2001**	8	BOLT (M36X4X100-MM)	
B	15	1	**104-8147**	24	PLUG	

B-USE AS REQUIRED
M-METRIC PART

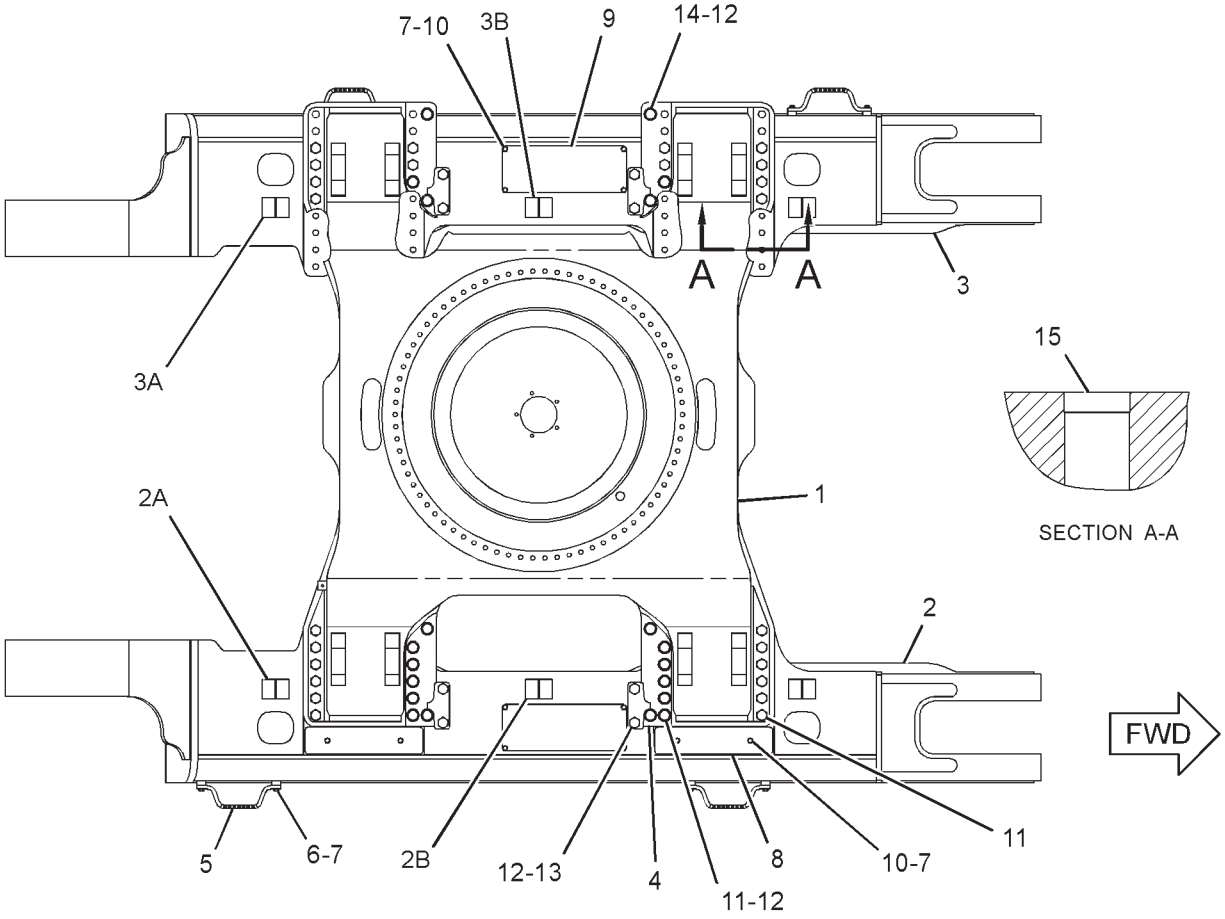

TOP VIEW

GRAPHIC #1 **<END>** g01601015

UNDERCARRIAGE

253-2304 FRAME GP-UNDERCARRIAGE

S/N: RCD231-UP

PART OF 229-3368 FRAME AR-UNDERCARRIAGE

SMCS-4150 **i02413645**

NOTE	REF NO	GRAPHIC REF	PART NUMBER	QTY	PART NAME 1 2 3 4 5 6 (PRODUCT LEVEL)	SEE PAGE
	1	1	**172-3089**	1	FRAME AS-CARBODY	
	2	1	**172-3112**	1	FRAME AS-TRACK (RH)	
		1	**7Y-1000**	2	BRACKET	
	3	1	**172-3113**	1	FRAME AS-TRACK (LH)	
		1	**7Y-1000**	2	BRACKET	
	4	1	**198-5510**	4	PLATE	
	5	1	**146-4700**	4	STEP	
M	6	1	**8T-7338**	24	BOLT (M16X2X45-MM)	
	7	1	**9X-8257**	40	WASHER (17.5X30X3.5-MM THK)	
	8	1	**172-2871**	4	PLATE	
	9	1	**7Y-8942**	2	PLATE	
M	10	1	**7X-2552**	16	BOLT (M16X2X30-MM)	
	11	1	**207-4919**	44	BOLT (M36X4X180-MM)	
	12	1	**107-9711**	36	SPACER (37X70X65-MM THK)	
M	13	1	**7Y-5245**	8	BOLT (M36X4X150-MM)	
M	14	1	**147-2001**	8	BOLT (M36X4X100-MM)	
	15	1	**104-8147**	24	PLUG	

M-METRIC PART

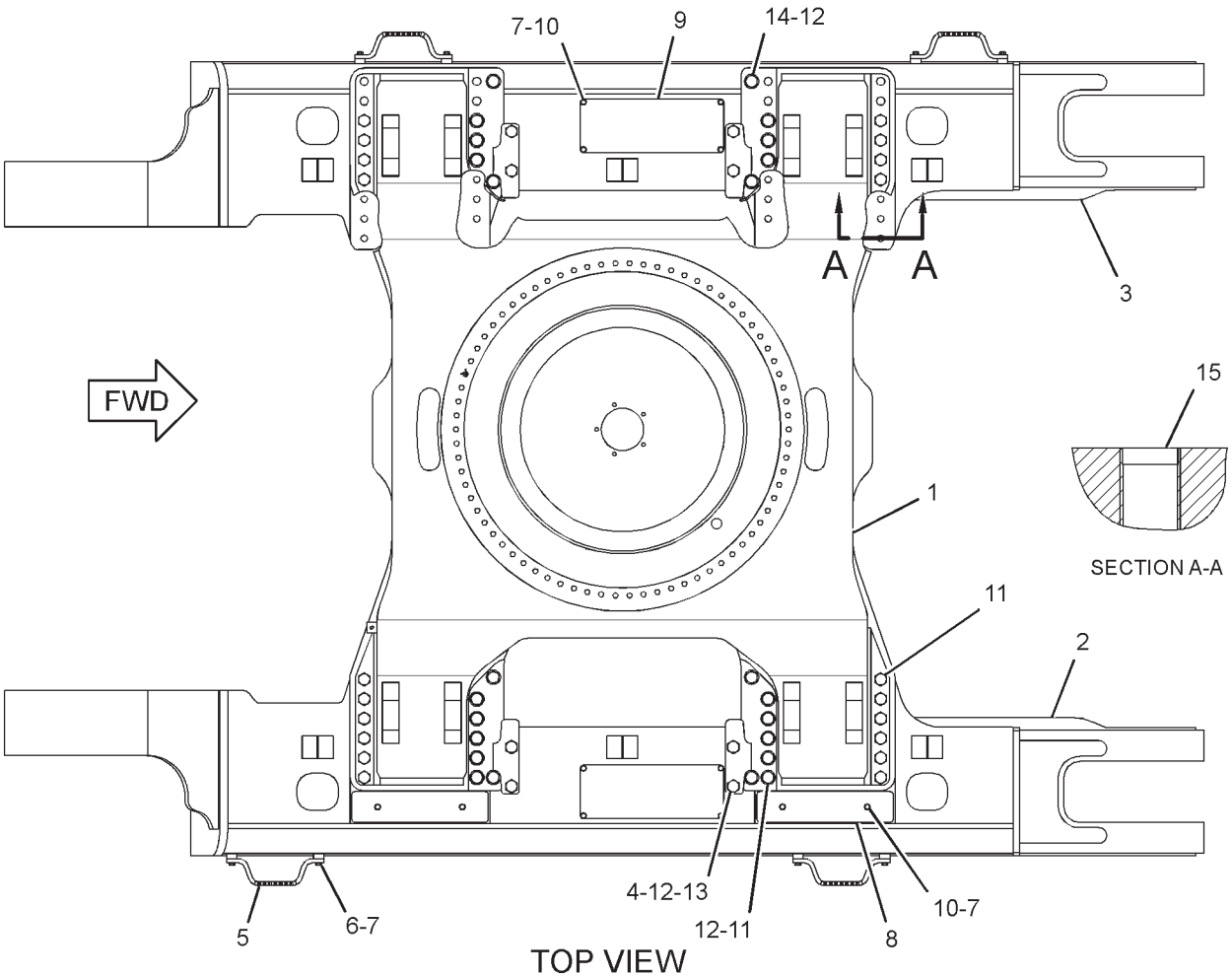

TOP VIEW

GRAPHIC #1

<END>

g01330182

UNDERCARRIAGE

172-3001 GUARD GP-TRACK GUIDE–CENTER

S/N: RCD152-UP

PART OF 229-3368 FRAME AR-UNDERCARRIAGE

SMCS-4177 **i03494084**

NOTE	REF NO	GRAPHIC REF	PART NUMBER	QTY	PART NAME 1 2 3 4 5 6 (PRODUCT LEVEL)	SEE PAGE
	1	1	**176-2108**	2	GUARD AS-TRACK GUIDE	
M	2	1	**8C-8723**	8	BOLT (M30X3.5X80-MM)	
	3	1	**148-3111**	8	SPACER (30X55X24-MM)	

M-METRIC PART

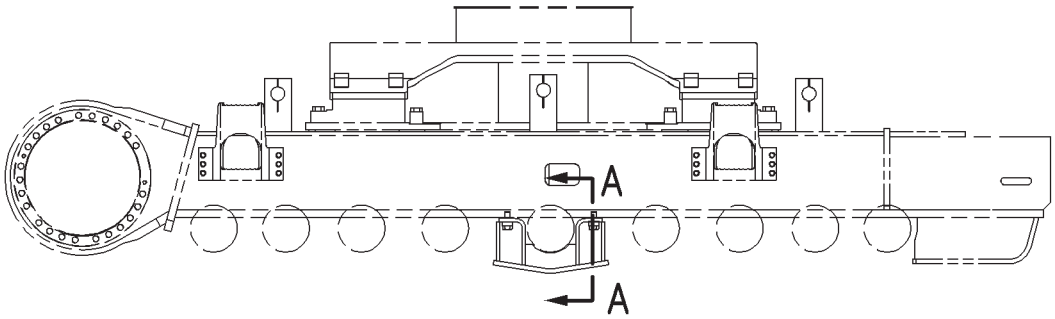

RIGHT SIDE VIEW

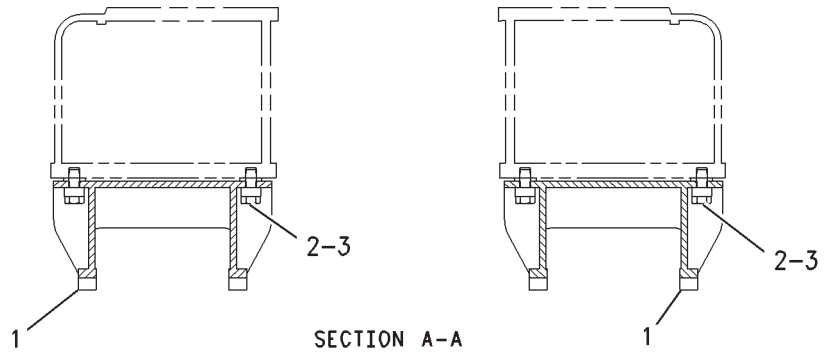

SECTION A-A

GRAPHIC #1 **<END>** g00792893

UNDERCARRIAGE

174-8499 GUARD GP-TRACK GUIDE

S/N: RCD1-UP
FULL LENGTH
AN ATTACHMENT

SMCS-4177 **i01532379**

NOTE	REF NO	GRAPHIC REF	PART NUMBER	QTY	PART NAME 1 2 3 4 5 6 (PRODUCT LEVEL)	SEE PAGE
	1	1	**174-8502**	4	GUARD AS-TRACK GUIDE	
	2	1	**174-8503**	4	GUARD AS-TRACK GUIDE	
M	3	1	**8C-8723**	32	BOLT (M30X3.5X80-MM)	
	4	1	**148-3111**	32	SPACER (30X55X24-MM)	
	5	1	**176-2146**	16	PIPE	
M	6	1	**176-7524**	16	BOLT (M30X3.5X450-MM)	
	7	1	**9X-8258**	32	WASHER (33X56X6-MM THK)	
	8	1	**101-2160**	16	SUPPORT AS	
					(EACH INCLUDES)	
M		1	**8C-8722**	1	NUT (M30X3.5-THD)	
	9	1	**174-8331**	1	FRAME AS-TRACK	
	10	1	**174-8332**	1	FRAME AS-TRACK	

M-METRIC PART

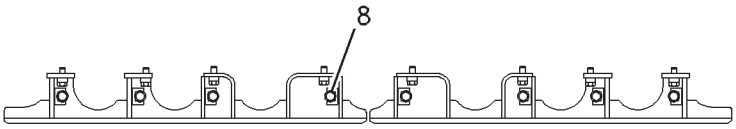

VIEW C-C

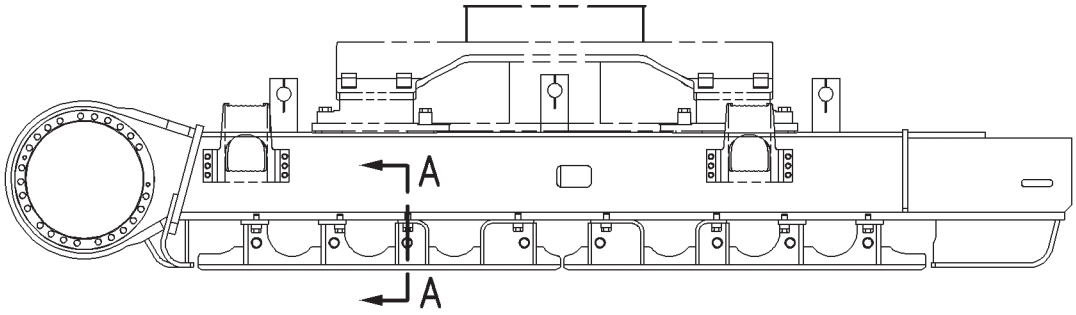

RIGHT SIDE VIEW

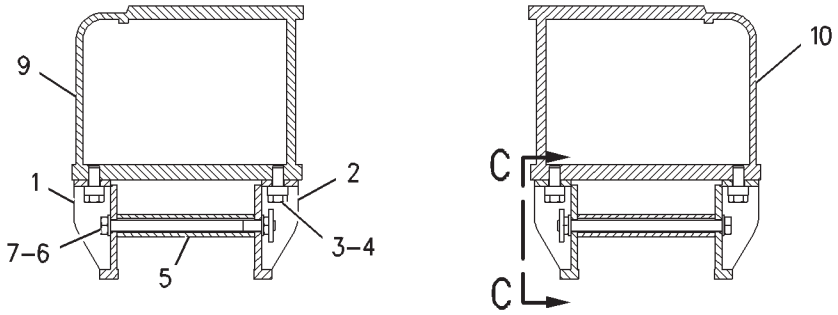

SECTION A-A

GRAPHIC #1 **<END>** g00796224

UNDERCARRIAGE

186-5655 GUARD GP-TRACK GUIDE–FRONT, CENTER, REAR

S/N: RCD1-UP

AN ATTACHMENT

SMCS-4177 **i03429809**

NOTE	REF NO	GRAPHIC REF	PART NUMBER	QTY	PART NAME 1 2 3 4 5 6 (PRODUCT LEVEL)	SEE PAGE
	1	1	**148-3111**	24	SPACER (30X55X24-MM)	
	2	1	**176-2108**	2	GUARD AS-TRACK GUIDE	
	3	1	**189-3987**	4	GUARD AS-TRACK GUIDE	
M	4	1	**8C-8723**	24	BOLT (M30X3.5X80-MM)	

QUANTITIES SHOWN ARE THOSE REQUIRED FOR BOTH LH AND RH SIDES
M-METRIC PART

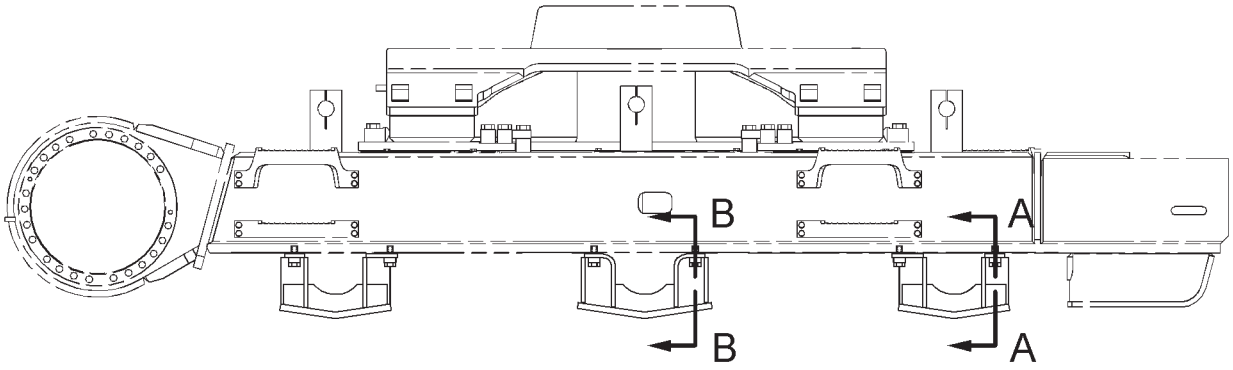

RIGHT SIDE VIEW

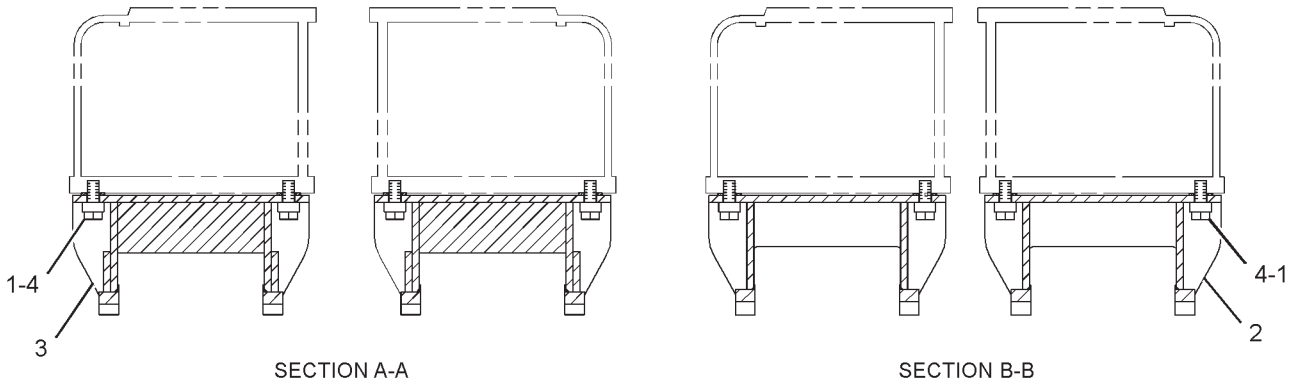

SECTION A-A SECTION B-B

GRAPHIC #1 **<END>** g01785554

UNDERCARRIAGE

242-8160 GUARD GP-TRACK GUIDE

S/N: RCD1-UP
FULL LENGTH, KIT
AN ATTACHMENT

SMCS-4177 **i02355306**

NOTE	PART NUMBER	QTY	PART NAME 1 2 3 4 5 6 (PRODUCT LEVEL)	SEE PAGE
M	**8C-8723**	32	BOLT (M30X3.5X80-MM)	
M	**176-7524**	16	BOLT (M30X3.5X450-MM)	
	174-8502	4	GUARD AS-TRACK GUIDE	
	174-8503	4	GUARD AS-TRACK GUIDE	
	176-2146	16	PIPE	
	148-3111	32	SPACER (30X55X24-MM)	
	101-2160	16	SUPPORT AS	
	9X-8258	32	WASHER (33X56X6-MM THK)	

M-METRIC PART

<END>

UNDERCARRIAGE

167-9842 GUARD GP-TRAVEL MOTOR

S/N: RCD152-UP

PART OF 229-3368 FRAME AR-UNDERCARRIAGE

SMCS-7163 **i03383381**

NOTE	REF NO	GRAPHIC REF	PART NUMBER	QTY	PART NAME 1 2 3 4 5 6 (PRODUCT LEVEL)	SEE PAGE
	1	1	**176-2149**	1	COVER AS (RH)	
	2	1	**176-2150**	1	COVER AS (LH)	
	3	1	**176-2157**	1	COVER AS (RH)	
	4	1	**176-2158**	1	COVER AS (LH)	
	5	1	**176-2159**	1	COVER AS (RH)	
	5A	1	**7Y-2812**	1	HANDLE	
	6	1	**176-2162**	1	COVER AS (LH)	
	6A	1	**7Y-2812**	1	HANDLE	
	7	1	**176-2163**	1	COVER AS (RH)	
	8	1	**176-2164**	1	COVER AS (LH)	
	9	1	**176-2165**	1	COVER AS (RH)	
	10	1	**176-2166**	1	COVER AS (LH)	
	11	1	**254-2999**	1	COVER AS (RH)	
	12	1	**254-3000**	1	COVER AS (LH)	
M	13	1	**100-3866**	54	BOLT-SELF-LOCKING (M16X2X40-MM)	
	14	1	**3E-9411**	54	WASHER-HARD (17.5X38X6-MM THK)	

M-METRIC PART

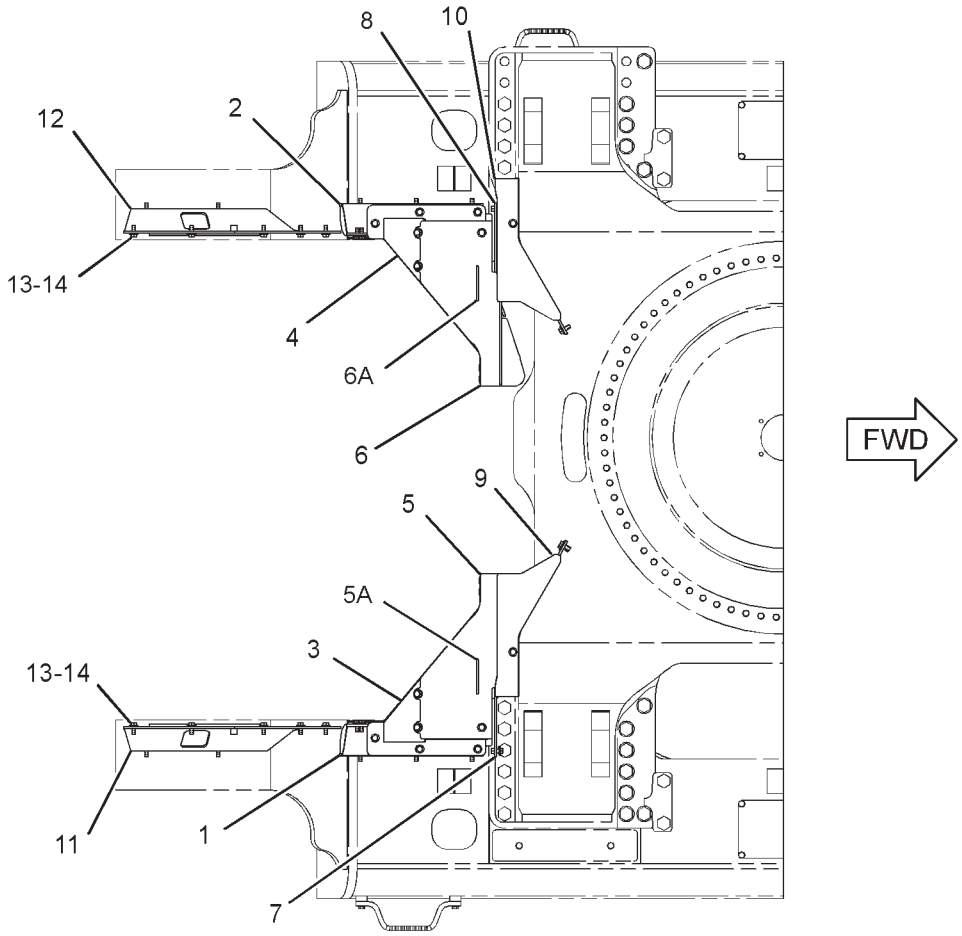

TOP VIEW

GRAPHIC #1

<END>

g01753255

UNDERCARRIAGE

145-3009 IDLER GP-FRONT

S/N: RCD152-230

PART OF 145-3015 IDLER GP-FRONT

SMCS-4159 **i03494648**

NOTE	REF NO	GRAPHIC REF	PART NUMBER	QTY	PART NAME 1 2 3 4 5 6 (PRODUCT LEVEL)	SEE PAGE
Y	1	1	*145-3011*	1	SPRING GP-RECOIL	434
M	2	1	**8T-5878**	4	BOLT (M24X3X80-MM)	
Y	3	1	**194-1157**	1	IDLER GP-FRONT	427

M-METRIC PART
Y-SEPARATE ILLUSTRATION

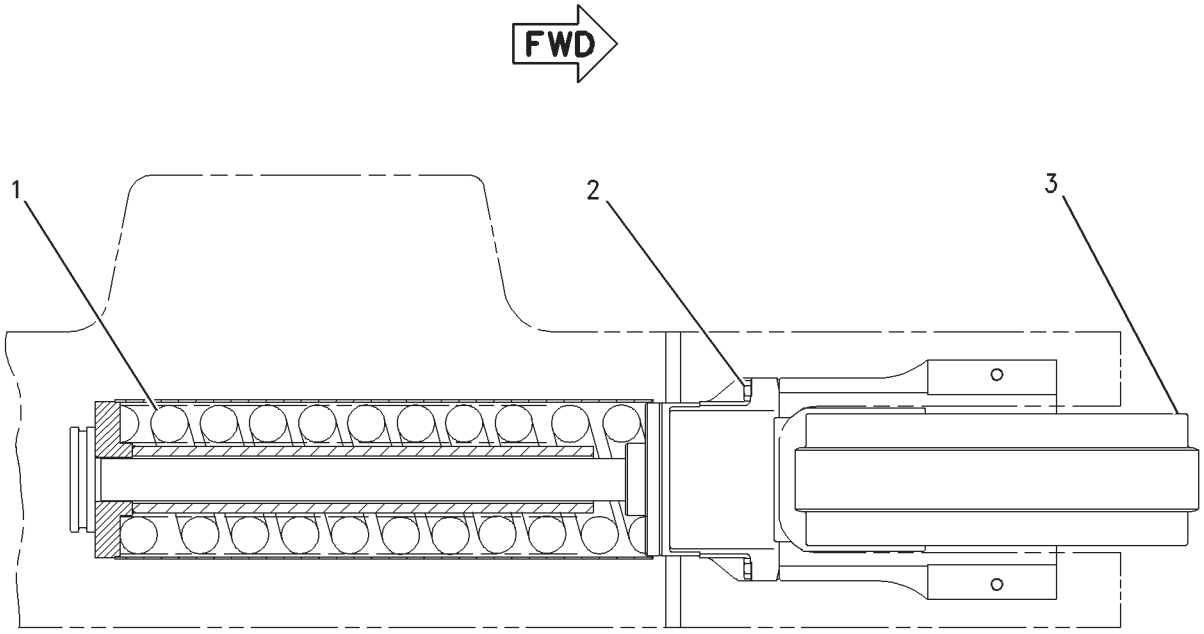

TOP VIEW

GRAPHIC #1 **<END>** g00892636

UNDERCARRIAGE

145-3009 IDLER GP-FRONT

S/N: RCD231-UP

PART OF 145-3015 IDLER GP-FRONT

SMCS-4159 **i02387108**

NOTE	REF NO	GRAPHIC REF	PART NUMBER	QTY	PART NAME 1 2 3 4 5 6 (PRODUCT LEVEL)	SEE PAGE
CY	1	1	*239-4379*	1	SPRING GP-RECOIL	435
M	2	1	**8T-5878**	4	BOLT (M24X3X80-MM)	
Y	3	1	**194-1157**	1	IDLER GP-FRONT	427

C-CHANGE FROM PREVIOUS TYPE
M-METRIC PART
Y-SEPARATE ILLUSTRATION

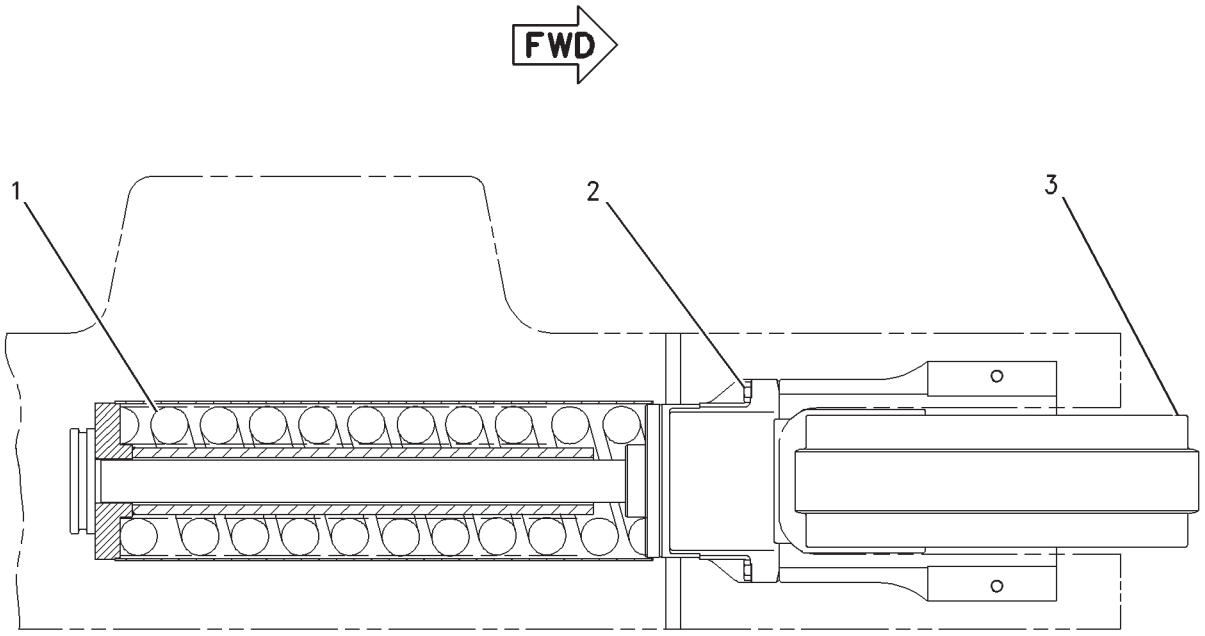

TOP VIEW

GRAPHIC #1 **<END>** g00892636

UNDERCARRIAGE

145-3015 IDLER GP-FRONT

S/N: RCD152-UP

PART OF 229-3368 FRAME AR-UNDERCARRIAGE

SMCS-4159 **i03494650**

NOTE	REF NO	GRAPHIC REF	PART NUMBER	QTY	PART NAME 1 2 3 4 5 6 (PRODUCT LEVEL)	SEE PAGE
M	1	1	**8T-5878**	4	BOLT (M24X3X80-MM)	
	2	1	**8T-4167**	4	WASHER-HARD (26X44X4-MM THK)	
Y	3	1	*168-6743*	2	ADJUSTMENT GP-HYDRAULIC TRACK	414
	4	1	**168-6747**	2	SPACER	
M	5	1	**099-8112**	4	SETSCREW-SOCKET (M20X2.5X25-MM)	
Y	6	1	*145-3009*	2	IDLER GP-FRONT	424

M-METRIC PART
Y-SEPARATE ILLUSTRATION

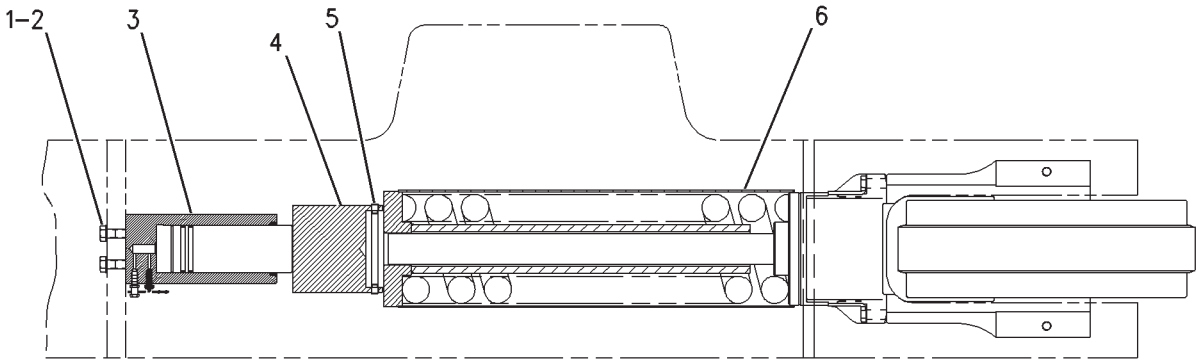

GRAPHIC #1 **<END>** g00792860

UNDERCARRIAGE

194-1157 IDLER GP-FRONT

S/N: RCD152-UP

PART OF 145-3009 IDLER GP-FRONT

SMCS-4159 **i01528437**

NOTE	REF NO	GRAPHIC REF	PART NUMBER	QTY	PART NAME 1 2 3 4 5 6 (PRODUCT LEVEL)	SEE PAGE
	1	1	**7H-3171**	1	PLUG-PIPE	
	2	1	**203-4862**	1	IDLER AS	
	2A	1	**6Y-7599**	2	BEARING-IDLER	
	3	1	**171-5825**	2	SEAL GP-DUO-CONE	
	4	1	**2H-3928**	2	SEAL-O-RING	
	5	1	**194-1155**	2	PIN	
	6	1	**194-1156**	2	BEARING-IDLER	
	7	1	**202-4902**	1	SHAFT	
	9	1	**102-0883**	2	PLUG-PIPE	
	10	1	**194-1162**	2	DOWEL	

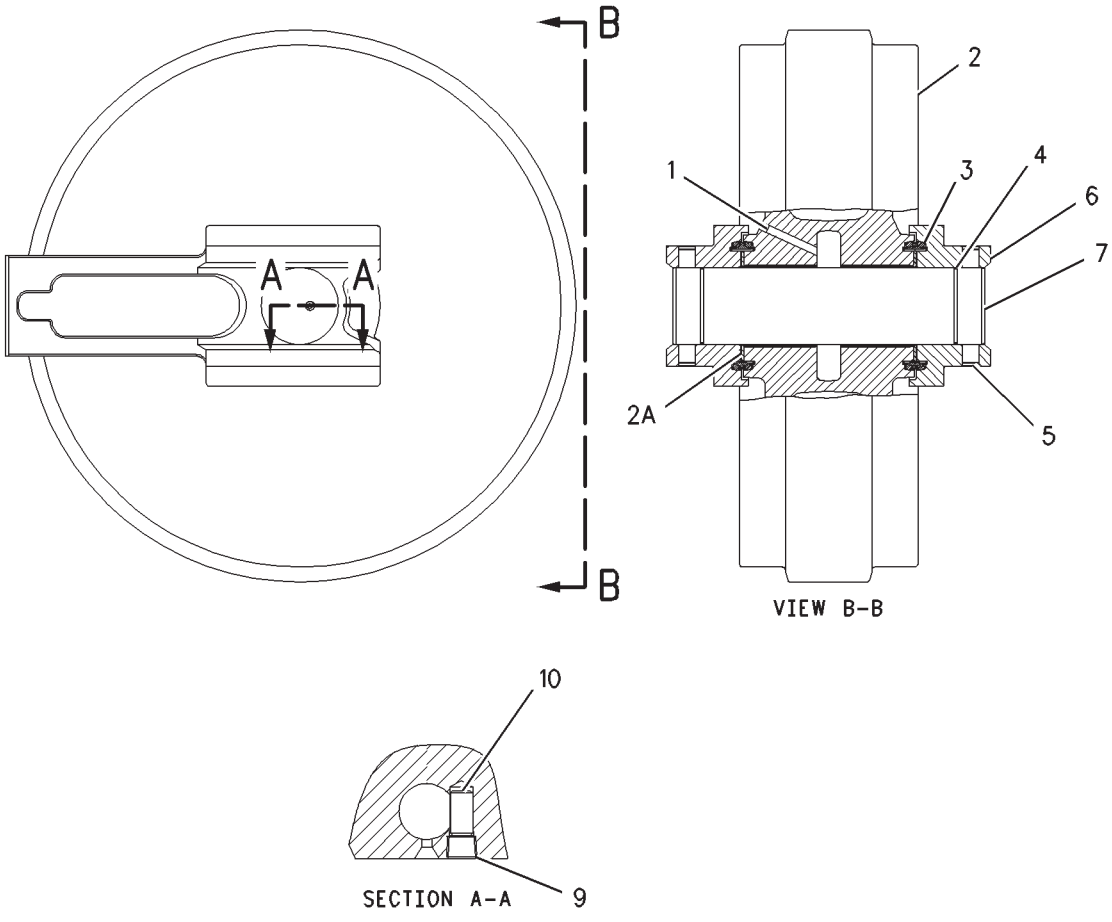

GRAPHIC #1 **<END>** g00794616

UNDERCARRIAGE

174-0216 LINK AS-TRACK

S/N: RCD152-UP
SEALED
PART OF 174-0213, 174-0214 TRACK GP
ALSO AN ATTACHMENT

SMCS-4169, 4171 **i01556569**

NOTE	REF NO	GRAPHIC REF	PART NUMBER	QTY	PART NAME 1 2 3 4 5 6 (PRODUCT LEVEL)	SEE PAGE
	1	1	**174-0217**	51	LINK-TRACK (RH) (RH)	
	2	1	**8E-1887**	1	BUSHING-MASTER	
	3	1	**174-0220**	1	PIN-TRACK LINK	
	4	1	**1S-4445**	2	SPACER	
	5	1	**174-0218**	51	LINK-TRACK (LH) (LH)	
	6	1	**174-0219**	50	PIN-TRACK	
	7	1	**8E-1886**	50	BUSHING-TRACK	
	8	1	**1S-4446**	204	WASHER-SEAL	

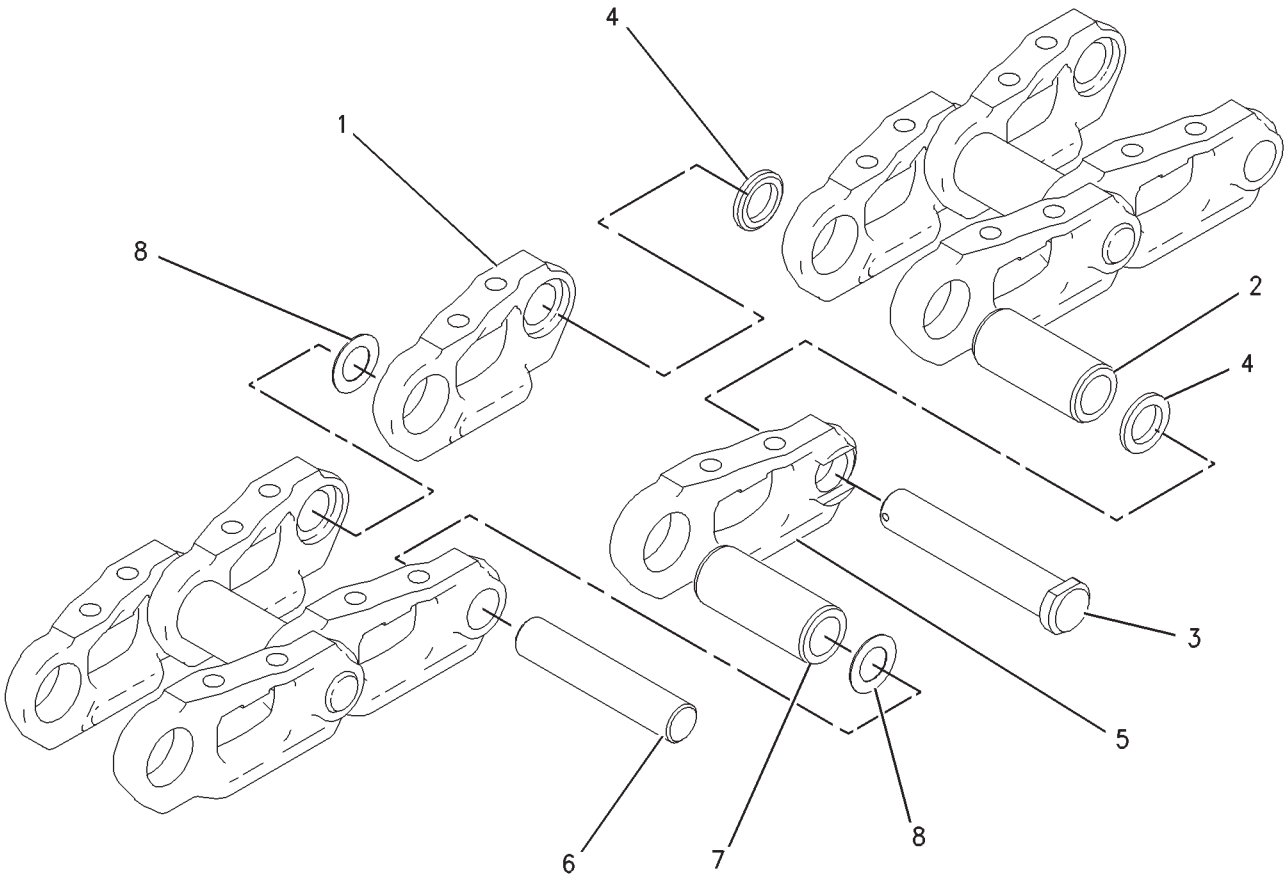

GRAPHIC #1 **<END>** g00778754

UNDERCARRIAGE

145-3013 ROLLER AR-TRACK & CARRIER

S/N: RCD152-UP

PART OF 229-3368 FRAME AR-UNDERCARRIAGE

SMCS-4154, 4180 **i01526009**

NOTE	REF NO	GRAPHIC REF	PART NUMBER	QTY	PART NAME 1 2 3 4 5 6 (PRODUCT LEVEL)	SEE PAGE
M	1	1	**7X-2584**	6	BOLT (M30X3.5X140-MM)	
Y	2	1	**175-3274**	6	ROLLER GP-TRACK CARRIER	431
Y	3	1	**185-5065**	18	ROLLER GP-TRACK-SINGLE FLANGE	433
	4	1	**9X-8258**	72	WASHER (33X56X6-MM THK)	
M	5	1	**107-3953**	72	BOLT (M30X3.5X150-MM)	

M-METRIC PART
Y-SEPARATE ILLUSTRATION

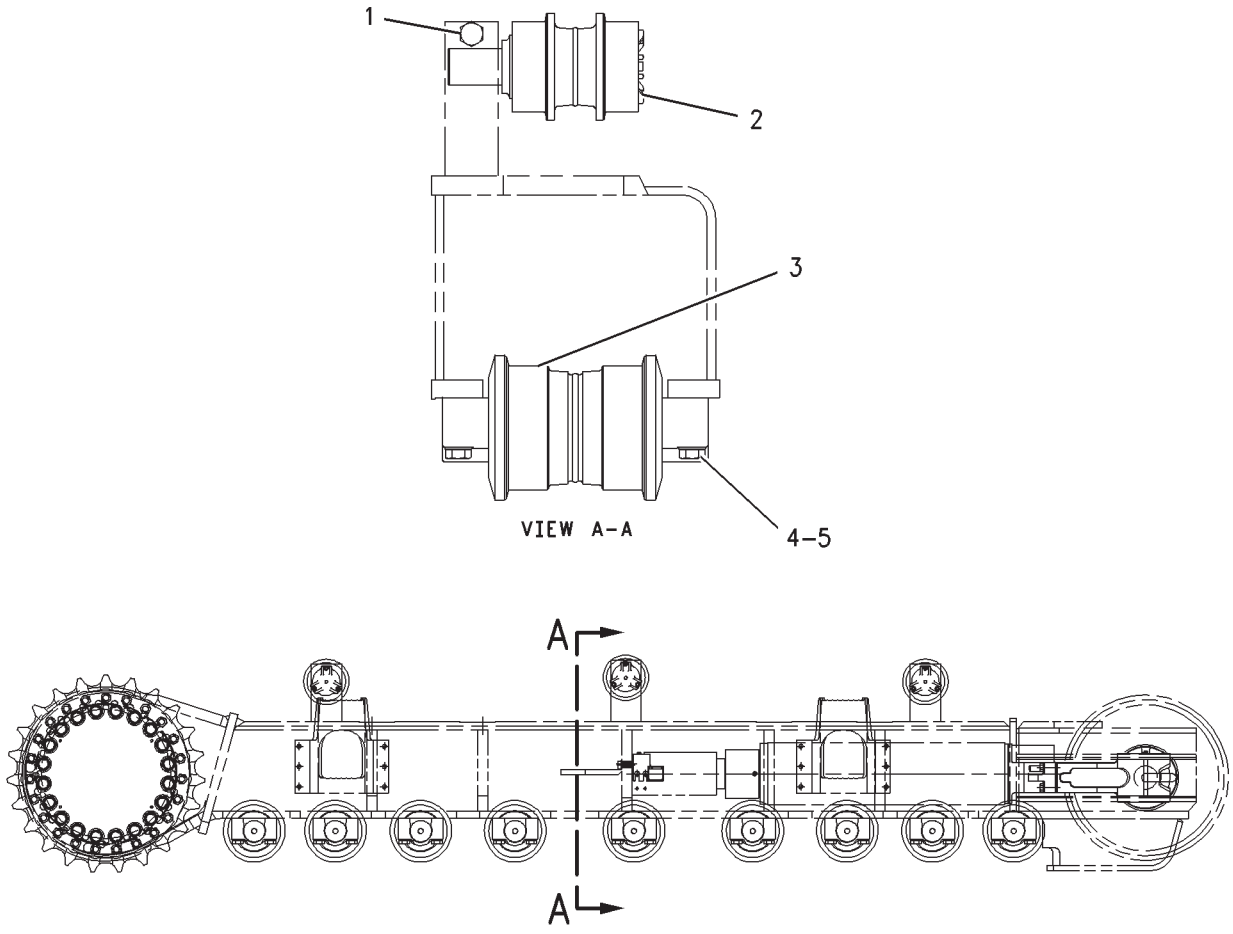

GRAPHIC #1 **<END>** g00777502

UNDERCARRIAGE

145-3013 ROLLER AR-TRACK & CARRIER

S/N: RCD1-UP

PART OF 229-3368 FRAME AR-UNDERCARRIAGE

SMCS-4154, 4180 **i02219232**

NOTE	REF NO	GRAPHIC REF	PART NUMBER	QTY	PART NAME 1 2 3 4 5 6 (PRODUCT LEVEL)	SEE PAGE
M	1	1	**7X-2584**	6	BOLT (M30X3.5X140-MM)	
CY	2	1	**242-4066**	6	ROLLER GP-TRACK CARRIER	432
Y	3	1	**185-5065**	18	ROLLER GP-TRACK-SINGLE FLANGE	433
	4	1	**9X-8258**	72	WASHER (33X56X6-MM THK)	
M	5	1	**107-3953**	72	BOLT (M30X3.5X150-MM)	

QUANTITIES SHOWN ARE THOSE REQUIRED FOR BOTH LH AND RH SIDES
C-CHANGE FROM PREVIOUS TYPE
M-METRIC PART
Y-SEPARATE ILLUSTRATION

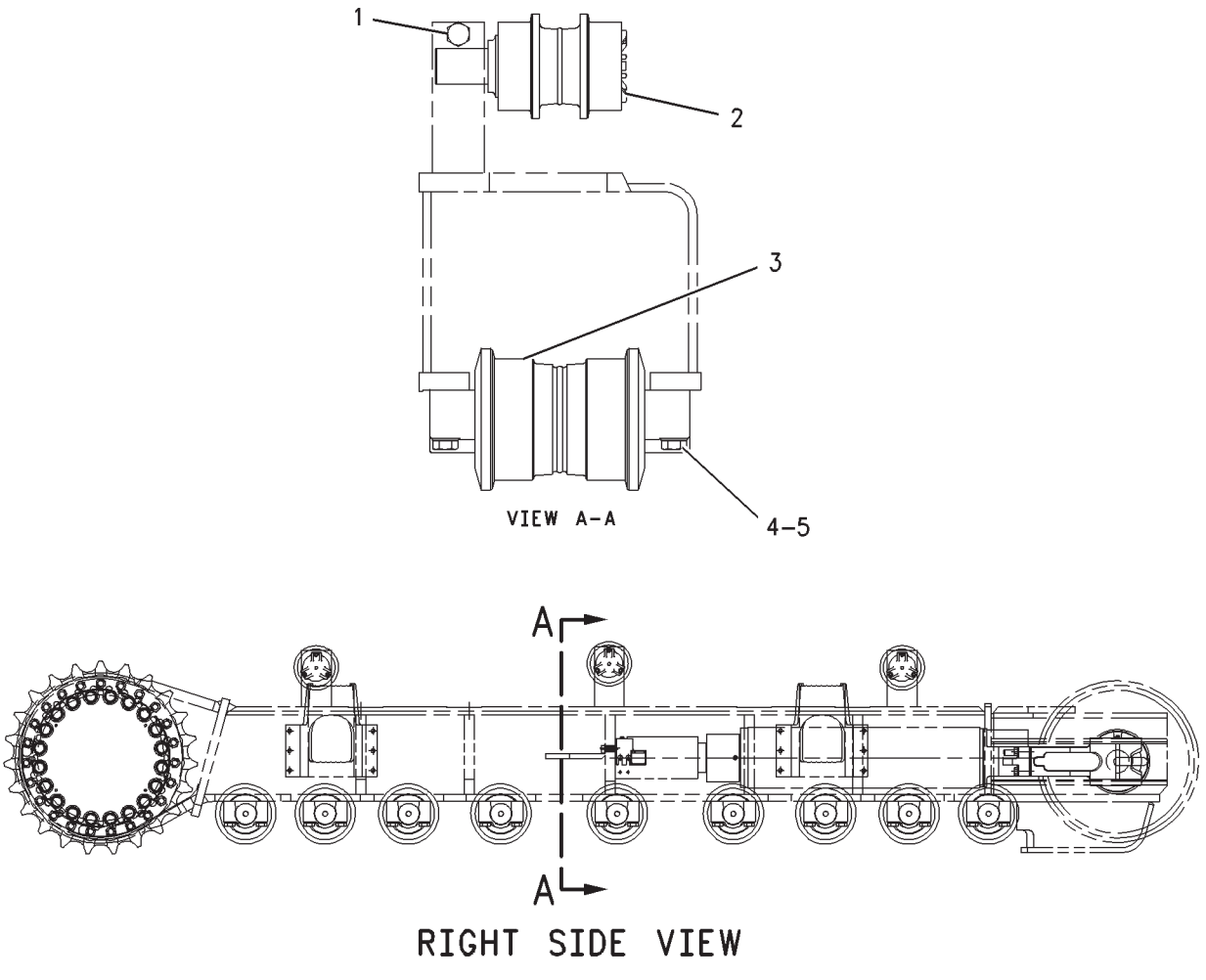

GRAPHIC #1 **<END>** g00777502

UNDERCARRIAGE

175-3274 ROLLER GP-TRACK CARRIER

S/N: RCD152-UP

PART OF 145-3013 ROLLER AR-TRACK & CARRIER

SMCS-4154 **i01684698**

NOTE	REF NO	GRAPHIC REF	PART NUMBER	QTY	PART NAME 1 2 3 4 5 6 (PRODUCT LEVEL)	SEE PAGE
	1	1	**176-3241**	1	SHAFT AS-TRACK	
	2	1	**9W-2201**	1	SEAL GP-DUO-CONE	
	3	1	**6Y-8169**	1	ROLLER & BEARING AS	
	3A	1	**6Y-8171**	1	BEARING-CARRIER ROLLER	
	3B	1	**6Y-8172**	1	BEARING-CARRIER ROLLER	
	4	1	**6Y-9339**	1	RETAINER	
	5	1	**6Y-8176**	1	WASHER-THRUST	
	6	1	**4H-9105**	1	SEAL-O-RING	
M	7	1	**8T-8441**	5	BOLT-SOCKET HEAD (M12X1.75X25-MM)	
	8	1	**7H-3171**	1	PLUG-PIPE	
	9	1	**6Y-8177**	1	COVER-CARRIER ROLLER	

M-METRIC PART

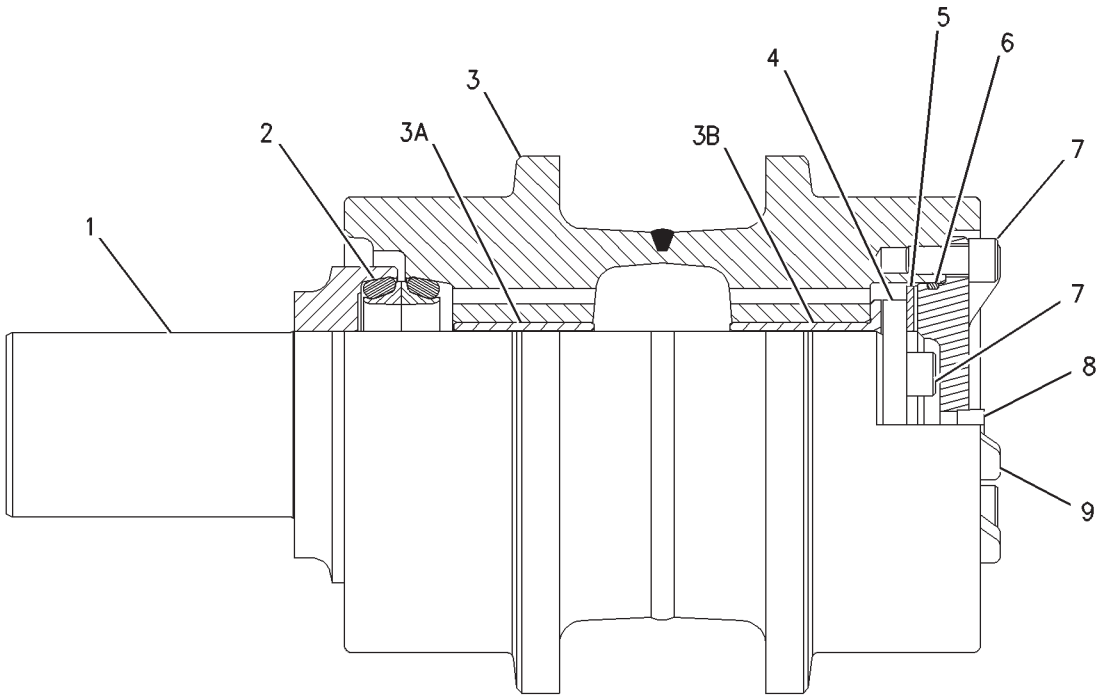

GRAPHIC #1 **<END>** g00793182

UNDERCARRIAGE

242-4066 ROLLER GP-TRACK CARRIER

S/N: RCD1-UP

PART OF 145-3013 ROLLER AR-TRACK & CARRIER

SMCS-4154 **i03139529**

NOTE	REF NO	GRAPHIC REF	PART NUMBER	QTY	PART NAME 1 2 3 4 5 6 (PRODUCT LEVEL)	SEE PAGE
	1	1	**4H-9105**	1	SEAL-O-RING	
	2	1	**6Y-8176**	1	WASHER-THRUST (78X116X4.5-MM THK)	
	3	1	**320-2677**	1	COVER	
	4	1	**6Y-9339**	1	RETAINER	
	5	1	**242-4067**	1	ROLLER & BEARING AS	
	5A	1	**6Y-8171**	1	BEARING-CARRIER ROLLER	
	5B	1	**6Y-8172**	1	BEARING-CARRIER ROLLER	
	6	1	**242-4070**	1	SHAFT AS	
	7	1	**171-5811**	1	SEAL GP-DUO-CONE	
	8	1	**7H-3171**	1	PLUG-PIPE	
M	9	1	**8T-8441**	5	BOLT-SOCKET HEAD (M12X1.75X25-MM)	

M-METRIC PART

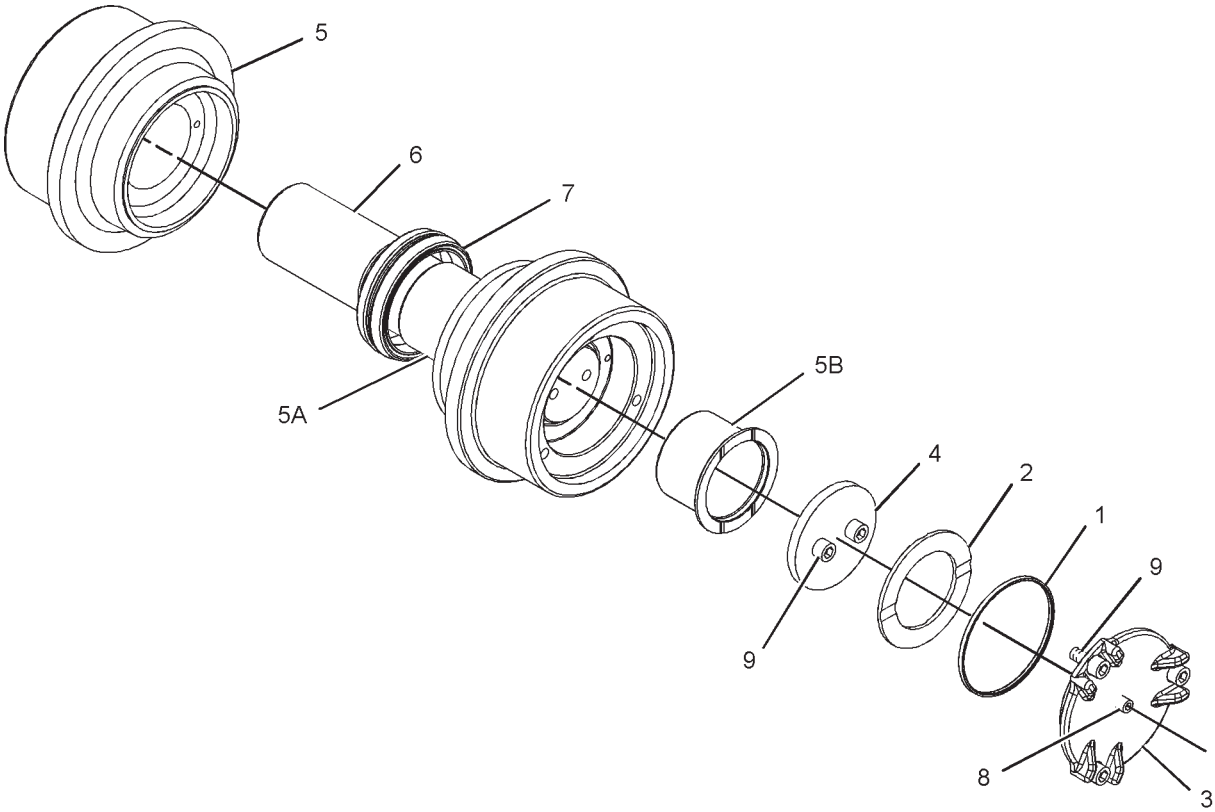

GRAPHIC #1 **<END>** g01077617

UNDERCARRIAGE

185-5065 ROLLER GP-TRACK-SINGLE FLANGE

S/N: RCD152-UP

PART OF 145-3013 ROLLER AR-TRACK & CARRIER

SMCS-4180 **i02135475**

NOTE	REF NO	GRAPHIC REF	PART NUMBER	QTY	PART NAME 1 2 3 4 5 6 (PRODUCT LEVEL)	SEE PAGE
	1	1	**185-5093**	1	ROLLER & BEARING AS	
	1A	1	**6Y-8127**	2	BEARING-TRACK ROLLER	
	2	1	**9W-2146**	1	PLUG	
	3	1	**176-5332**	2	SEAL GP-DUO-CONE	
	3A	1	**176-5334**	2	RING-TORIC	
	4	1	**178-7291**	2	COLLAR-TRACK ROLLER	
	5	1	**178-7540**	2	DOWEL	
	6	1	**178-7292**	1	SHAFT-TRACK ROLLER	
	7	1	**175-7900**	2	SEAL-O-RING	

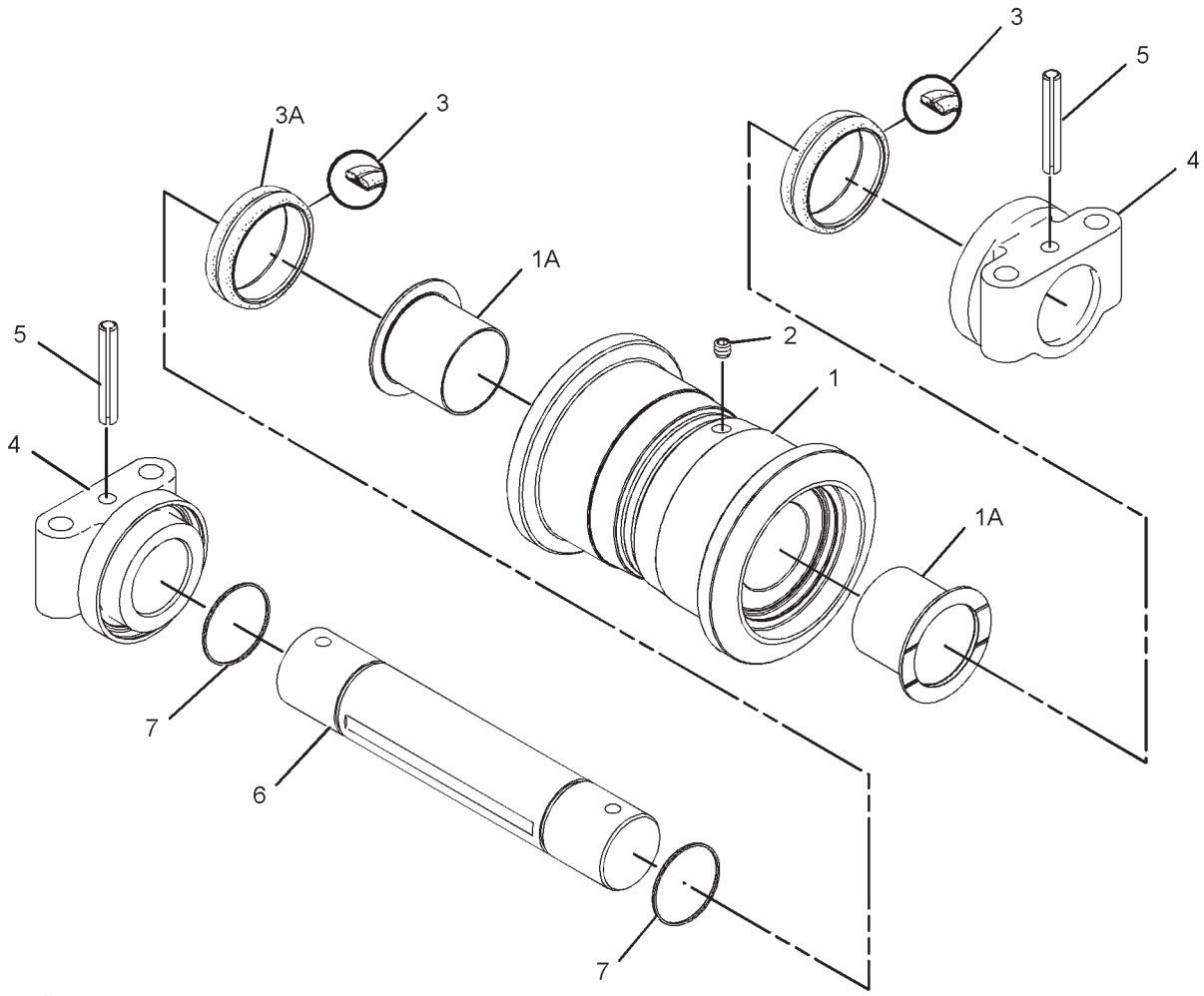

GRAPHIC #1 **<END>** g01088233

UNDERCARRIAGE

145-3011 SPRING GP-RECOIL

S/N: RCD1-UP

PART OF 145-3009 IDLER GP-FRONT

SMCS-4158 **i01756396**

NOTE	REF NO	GRAPHIC REF	PART NUMBER	QTY	PART NAME 1 2 3 4 5 6 (PRODUCT LEVEL)	SEE PAGE
	1	1	**168-6733**	1	ROD	
	2	1	**168-6734**	1	SUPPORT AS	
	3	1	**168-6738**	1	SPRING	
	4	1	**168-6739**	1	SUPPORT	
	5	1	**168-6740**	1	WASHER	
M	6	1	**168-6741**	1	NUT (M85X6-THD)	
	7	1	**168-6742**	1	PLATE	
M	8	1	**8T-6594**	2	BOLT-SOCKET HEAD (M16X2X35-MM)	

M-METRIC PART

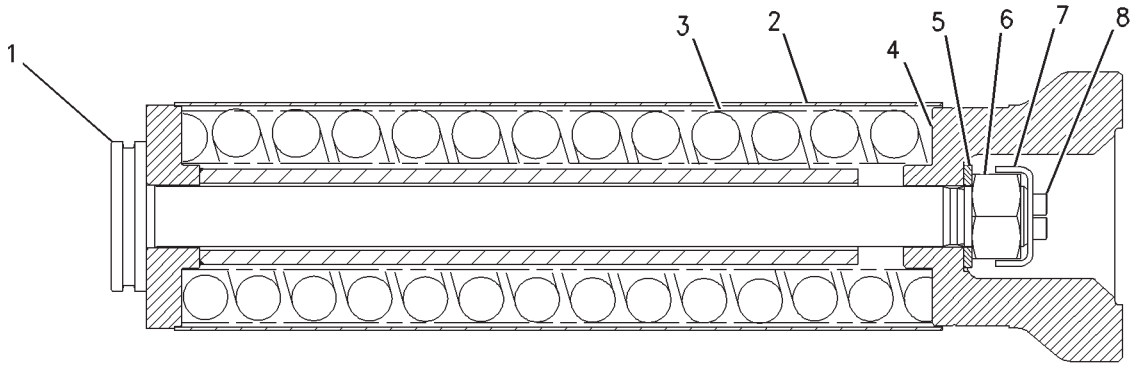

GRAPHIC #1 **<END>** g00898527

UNDERCARRIAGE

239-4379 SPRING GP-RECOIL

S/N: RCD231-UP

PART OF 145-3009 IDLER GP-FRONT

SMCS-4158 **i02387115**

NOTE	REF NO	GRAPHIC REF	PART NUMBER	QTY	PART NAME 1 2 3 4 5 6 (PRODUCT LEVEL)	SEE PAGE
	1	1	**168-6733**	1	ROD	
	2	1	**168-6734**	1	SUPPORT AS	
	3	1	**168-6738**	1	SPRING	
	4	1	**239-4380**	1	SUPPORT	
	5	1	**168-6740**	1	WASHER	
M	6	1	**168-6741**	1	NUT (M85X6-THD)	
	7	1	**168-6742**	1	PLATE	
M	8	1	**8T-6594**	2	BOLT-SOCKET HEAD (M16X2X35-MM)	

M-METRIC PART

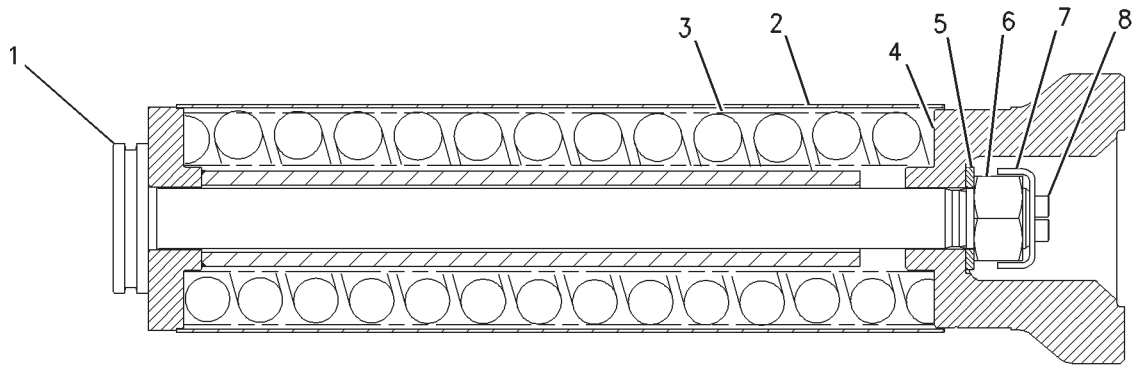

GRAPHIC #1 **<END>** g00898527

UNDERCARRIAGE

158-0005 TRACK GP

S/N: RCD152-230
900 DOUBLE GROUSER SHOE, TRAP, SEALED
PART OF 229-3368 FRAME AR-UNDERCARRIAGE

SMCS-4170 **i01556550**

NOTE	PART NUMBER	QTY	PART NAME 1 2 3 4 5 6 (PRODUCT LEVEL)	SEE PAGE
	186-5479	1	SPACER GP-UNDERCARRIAGE	
Y	**174-0214**	1	TRACK GP	438

Y-SEPARATE ILLUSTRATION

<END>

UNDERCARRIAGE

174-0213 TRACK GP

S/N: RCD1-UP
750MM (29.5IN) DOUBLE GROUSER SHOE. TRAP, SEALED
PART OF 253-2305 TRACK GP
AN ATTACHMENT

SMCS-4170 **i01888638**

NOTE	REF NO	GRAPHIC REF	PART NUMBER	QTY	PART NAME 1 2 3 4 5 6 (PRODUCT LEVEL)	SEE PAGE
Y	1	1	**174-0216**	1	LINK AS-TRACK	428
M	2	1	**174-0221**	204	BOLT-TRACK	
	3	1	**174-0225**	51	SHOE-TRACK	
	4	1	**174-0222**	204	NUT-TRACK	

M-METRIC PART
Y-SEPARATE ILLUSTRATION

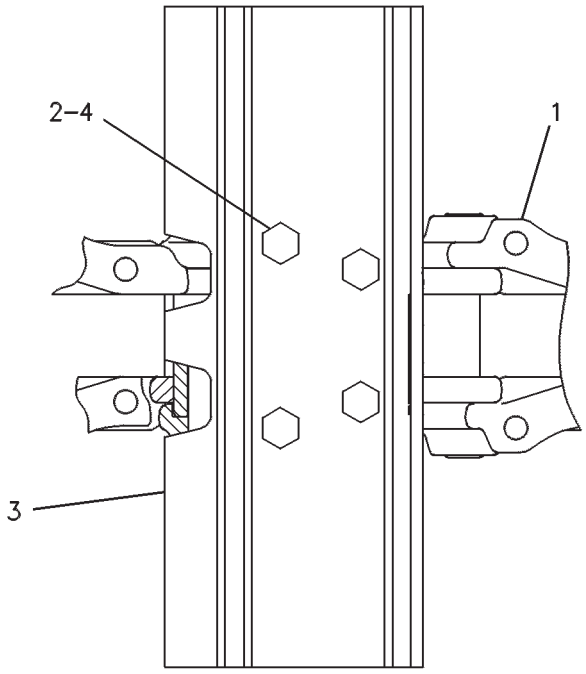

GRAPHIC #1 **<END>** g00242724

UNDERCARRIAGE

174-0214 TRACK GP

S/N: RCD152-UP
900MM (35.43IN) DOUBLE GROUSER SHOE, TRAP, SEALED
PART OF 229-3368 FRAME AR-UNDERCARRIAGE, 158-0005 TRACK GP

SMCS-4170 **i01888643**

NOTE	REF NO	GRAPHIC REF	PART NUMBER	QTY	PART NAME 1 2 3 4 5 6 (PRODUCT LEVEL)	SEE PAGE
Y	1	1	**174-0216**	1	LINK AS-TRACK	428
	2	1	**174-0226**	51	SHOE-TRACK	
M	3	1	**174-0221**	204	BOLT-TRACK	
	4	1	**174-0222**	204	NUT-TRACK	

M-METRIC PART
Y-SEPARATE ILLUSTRATION

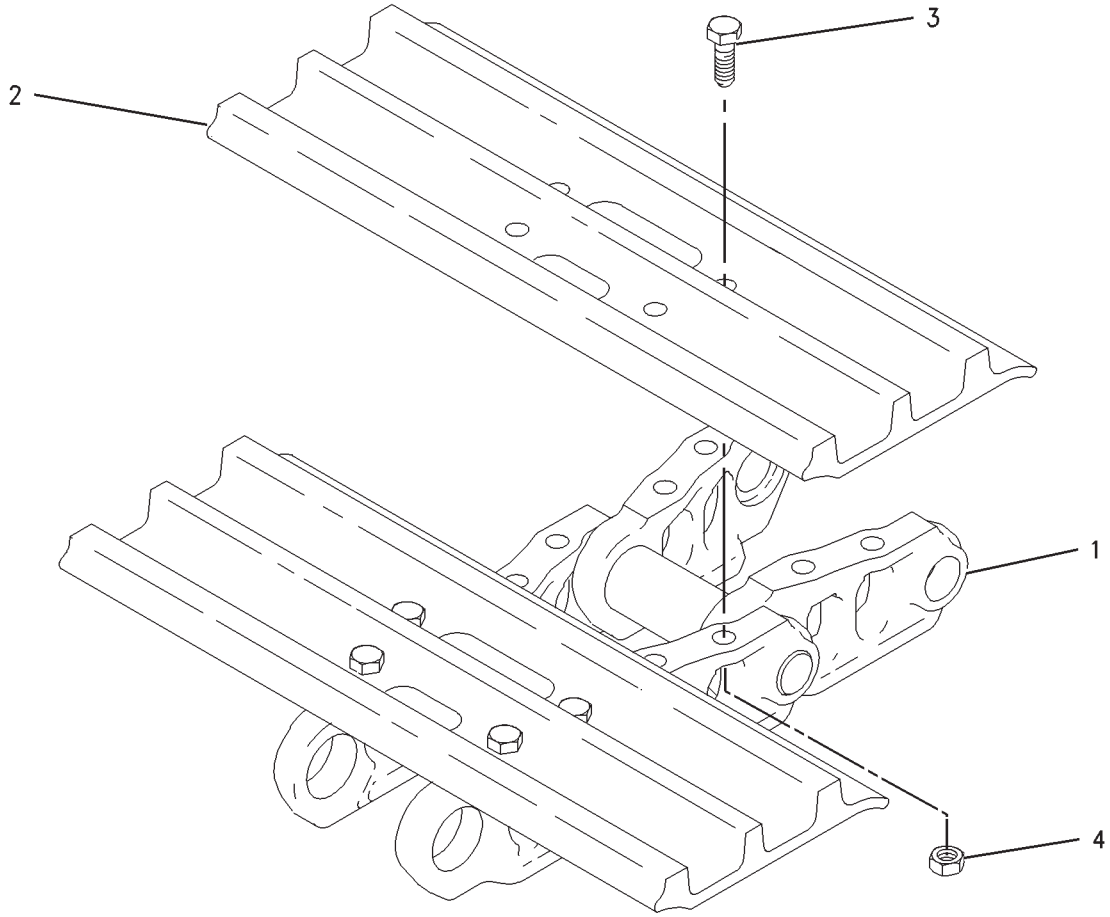

GRAPHIC #1 **<END>** g00731630

UNDERCARRIAGE

253-2305 TRACK GP

S/N: RCD1-UP
750-MM (29.5-IN) DOUBLE GROUSER SHOE. TRAP, SEALED
AN ATTACHMENT

SMCS-4170 **i02195952**

NOTE	PART NUMBER	QTY	PART NAME 1 2 3 4 5 6 (PRODUCT LEVEL)	SEE PAGE
Y	*174-0213*	1	TRACK GP	437
	172-3088	2	PLATE	

Y-SEPARATE ILLUSTRATION

<END>

HYDRAULIC SYSTEM

160-4138 ACCUMULATOR & MTG GP-HYDRAULIC

S/N: RCD1-UP

PART OF 168-9377 LINES GP-PILOT

SMCS-5077 **i01089702**

NOTE	REF NO	GRAPHIC REF	PART NUMBER	QTY	PART NAME 1 2 3 4 5 6 (PRODUCT LEVEL)	SEE PAGE
	1	1	**161-6876**	1	ACCUMULATOR	
	2	1	**161-1309**	1	SUPPORT	
	3	1	**161-6880**	1	CORE	
	4	1	**161-6879**	1	CAP	

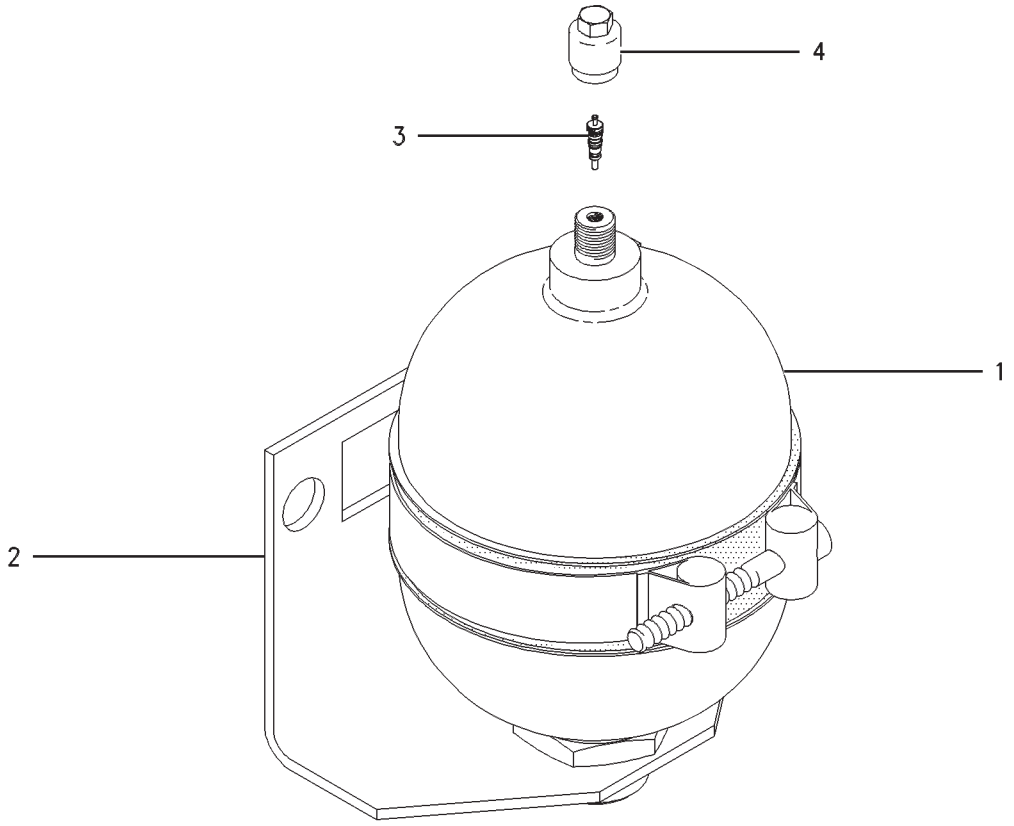

GRAPHIC #1 **<END>** g00570311

HYDRAULIC SYSTEM

215-4905 ACCUMULATOR GP-HYDRAULIC

S/N: RCD1-UP

PART OF 168-9375 LINES GP-RETURN & FILTER

SMCS-5077 **i01889300**

NOTE	PART NUMBER	QTY	PART NAME 1 2 3 4 5 6 (PRODUCT LEVEL)	SEE PAGE
Y	*215-4906*	1	ACCUMULATOR GP-HYDRAULIC	442
			—OR—	
Y	*215-4907*	1	ACCUMULATOR GP-HYDRAULIC	443

Y-SEPARATE ILLUSTRATION

<END>

HYDRAULIC SYSTEM

215-4906 ACCUMULATOR GP-HYDRAULIC

S/N: RCD1-UP

PART OF 215-4905 ACCUMULATOR GP-HYDRAULIC

SMCS-5077 **i01895172**

NOTE	REF NO	GRAPHIC REF	PART NUMBER	QTY	PART NAME 1 2 3 4 5 6 (PRODUCT LEVEL)	SEE PAGE
	1	1	**087-4577**	1	SEAL	
	2	1	**087-4576**	1	CAP	
	3	1	**087-4575**	1	CORE	

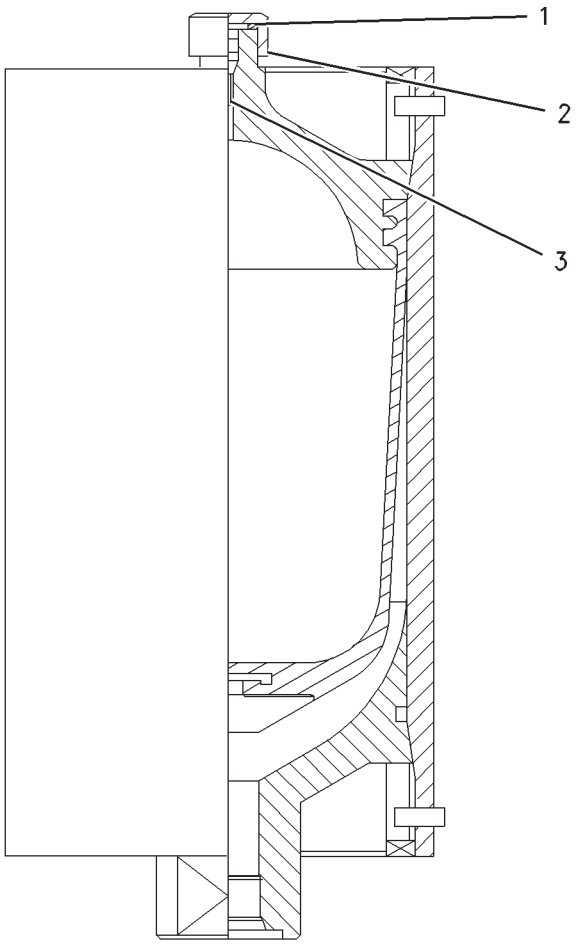

GRAPHIC #1 **<END>** g00986138

HYDRAULIC SYSTEM

215-4907 ACCUMULATOR GP-HYDRAULIC

S/N: RCD1-UP

PART OF 215-4905 ACCUMULATOR GP-HYDRAULIC

SMCS-5077 **i01895174**

NOTE	REF NO	GRAPHIC REF	PART NUMBER	QTY	PART NAME 1 2 3 4 5 6 (PRODUCT LEVEL)	SEE PAGE
	1	1	**4I-5862**	1	CAP	
	2	1	**4I-1539**	1	CORE	
	3	1	**7I-8133**	1	BODY	
	4	1	**7I-8135**	1	SEAL	

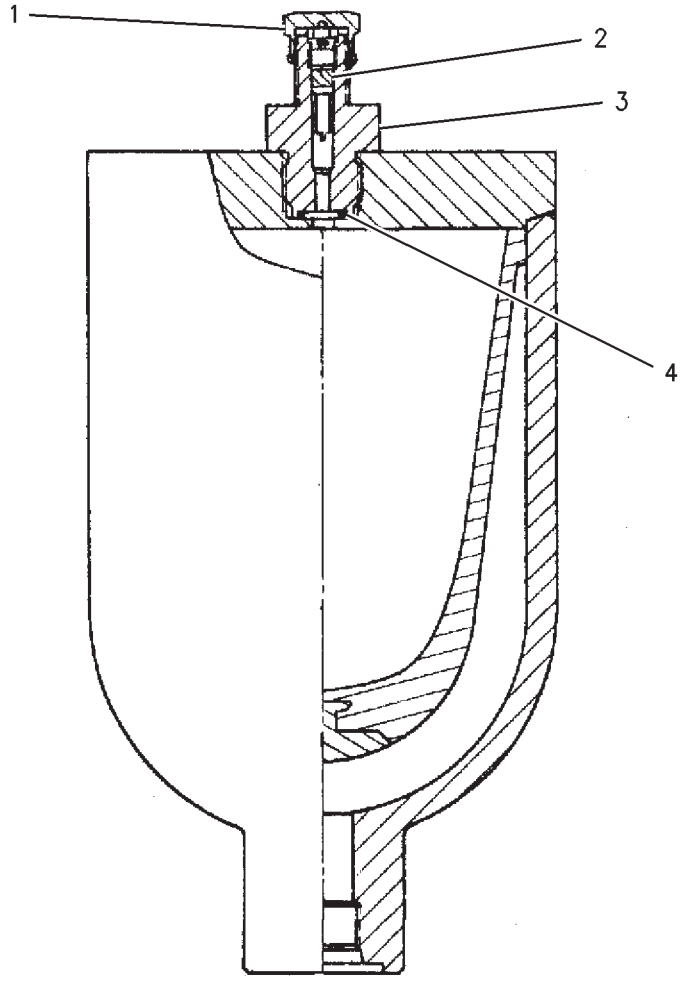

GRAPHIC #1 **<END>** g00986153

HYDRAULIC SYSTEM

209-5982 ACTUATOR GP

S/N: RCD1-UP

PART OF 170-9918 PUMP GP-PISTON

SMCS-5078 **i02404415**

NOTE	REF NO	GRAPHIC REF	PART NUMBER	QTY	PART NAME 1 2 3 4 5 6 (PRODUCT LEVEL)	SEE PAGE
	1	1	**155-9141**	1	PISTON	
	2	1	**155-9142**	1	GUIDE	
	3	1	**155-9143**	1	SPRING	
	4	1	**191-7584**	1	GUIDE	
	5	1	**155-9139**	1	PISTON	

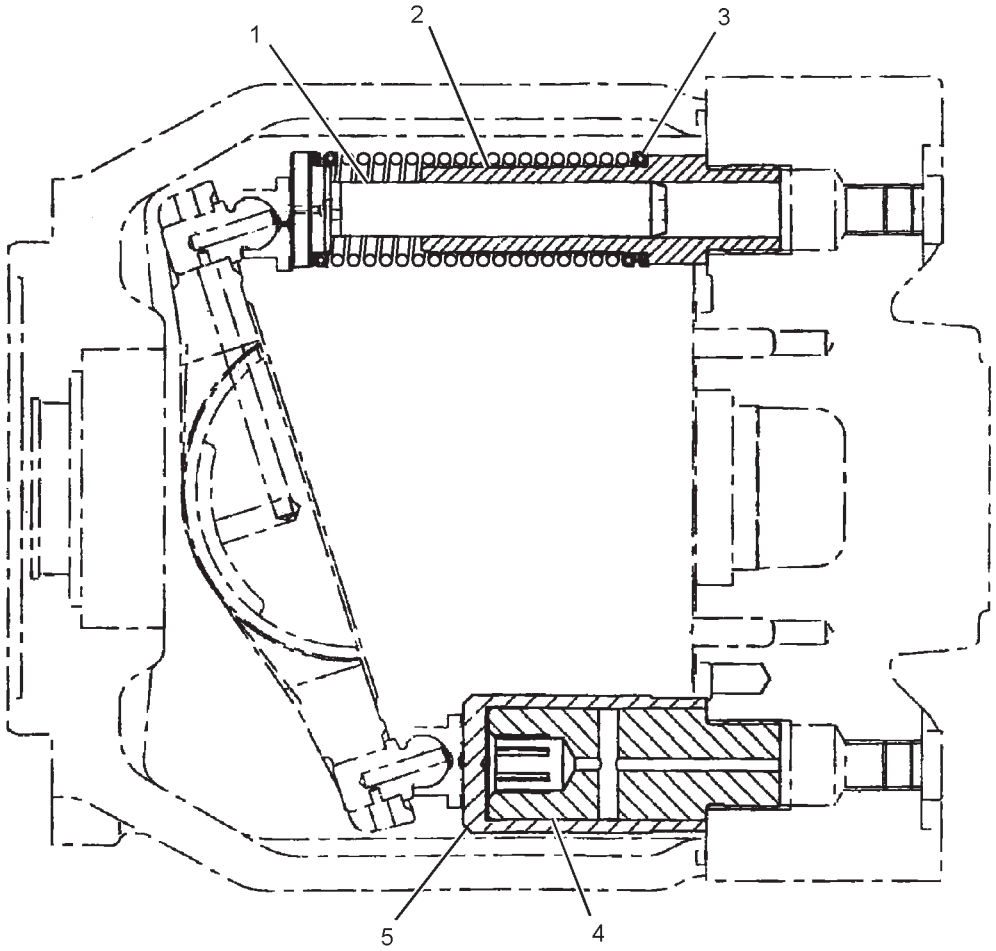

GRAPHIC #1 **<END>** g01201563

HYDRAULIC SYSTEM

158-9103 ACTUATOR GP-PUMP

S/N: RCD1-UP

PART OF 155-9206, 259-0878 PUMP GP-PISTON

SMCS-5078 **i03576423**

NOTE	REF NO	GRAPHIC REF	PART NUMBER	QTY	PART NAME 1 2 3 4 5 6 (PRODUCT LEVEL)	SEE PAGE
	1	1	**6E-3869**	1	SPRING	
B	2	1	**165-9396**	1	ROD (159.2-MM, OAL)	
B	3	1	**165-9397**	1	ROD (159.4-MM, OAL)	
B	4	1	**165-9398**	1	ROD (159.0-MM, OAL)	
B	5	1	**165-9399**	1	ROD (158.8-MM, OAL)	
	6	1	**165-9400**	1	SEAT	
	7	1	**165-9395**	1	PISTON	

B-USE AS REQUIRED

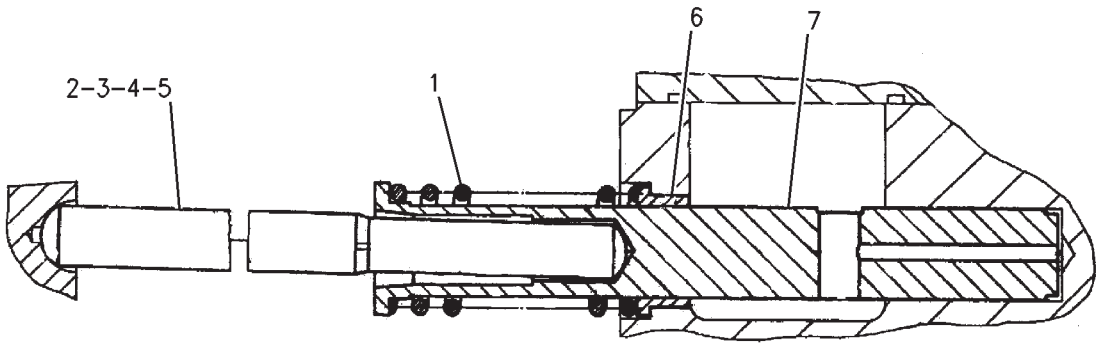

GRAPHIC #1 **<END>** g00703193

HYDRAULIC SYSTEM

158-9104 ACTUATOR GP-PUMP

S/N: RCD1-UP

PART OF 155-9206, 259-0878 PUMP GP-PISTON

SMCS-5078 **i03575745**

NOTE	REF NO	GRAPHIC REF	PART NUMBER	QTY	PART NAME 1 2 3 4 5 6 (PRODUCT LEVEL)	SEE PAGE
	1	1	**6E-3872**	1	SPRING	
B	2	1	**165-9402**	1	ROD (152.2-MM, OAL)	
B	3	1	**165-9403**	1	ROD (151.8-MM, OAL)	
B	4	1	**165-9404**	1	ROD (152-MM, OAL)	
B	5	1	**165-9405**	1	ROD (152.4-MM, OAL)	
	6	1	**165-9401**	1	PISTON	

B-USE AS REQUIRED

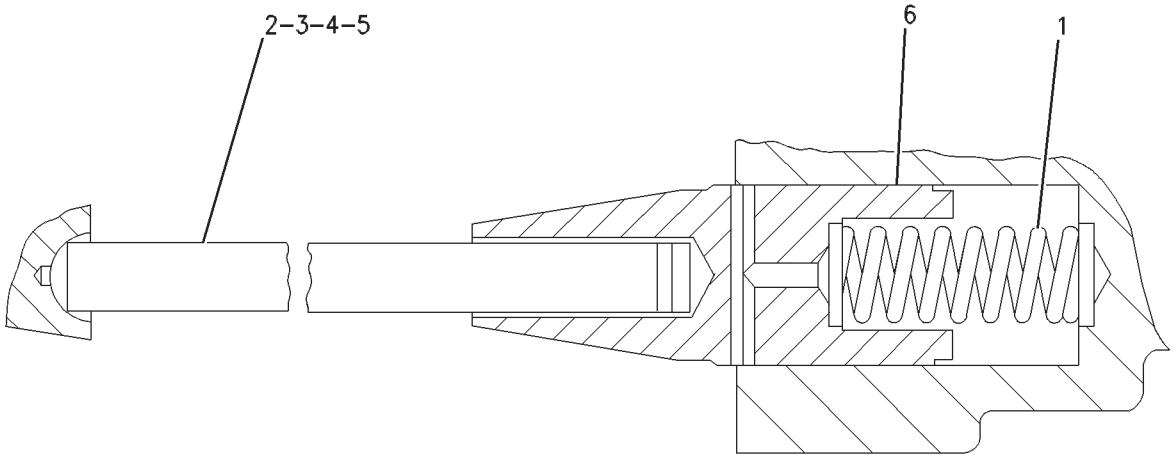

GRAPHIC #1 **<END>** g00652408

HYDRAULIC SYSTEM

129-8053 BASE GP-OIL FILTER—HYDRAULIC

S/N: RCD1-UP

PART OF 126-2112, 188-4150 FILTER GP-OIL

SMCS-5068 **i03529625**

NOTE	REF NO	GRAPHIC REF	PART NUMBER	QTY	PART NAME 1 2 3 4 5 6 (PRODUCT LEVEL)	SEE PAGE
	1	1	**3J-1907**	2	SEAL-O-RING	
	2	1	**7Y-5272**	4	PIN-SPRING	
M	3	1	**137-3626**	2	BOLT-SHOULDER (M6X1X28.75-MM)	
	4	1	**137-3630**	2	PLATE-SLIDE	
	5	1	**6V-7658**	4	SEAL-O-RING	
					—OR—	
	5A	1	**177-2619**	4	PACKING	
	6	1	**137-3631**	2	PACKING	
	7	1	**5L-4758**	2	SEAL-O-RING	
	8	1	**137-3628**	2	SHIM (0.1-MM THK)	
	9	1	**137-3632**	2	PLUG AS	

M-METRIC PART

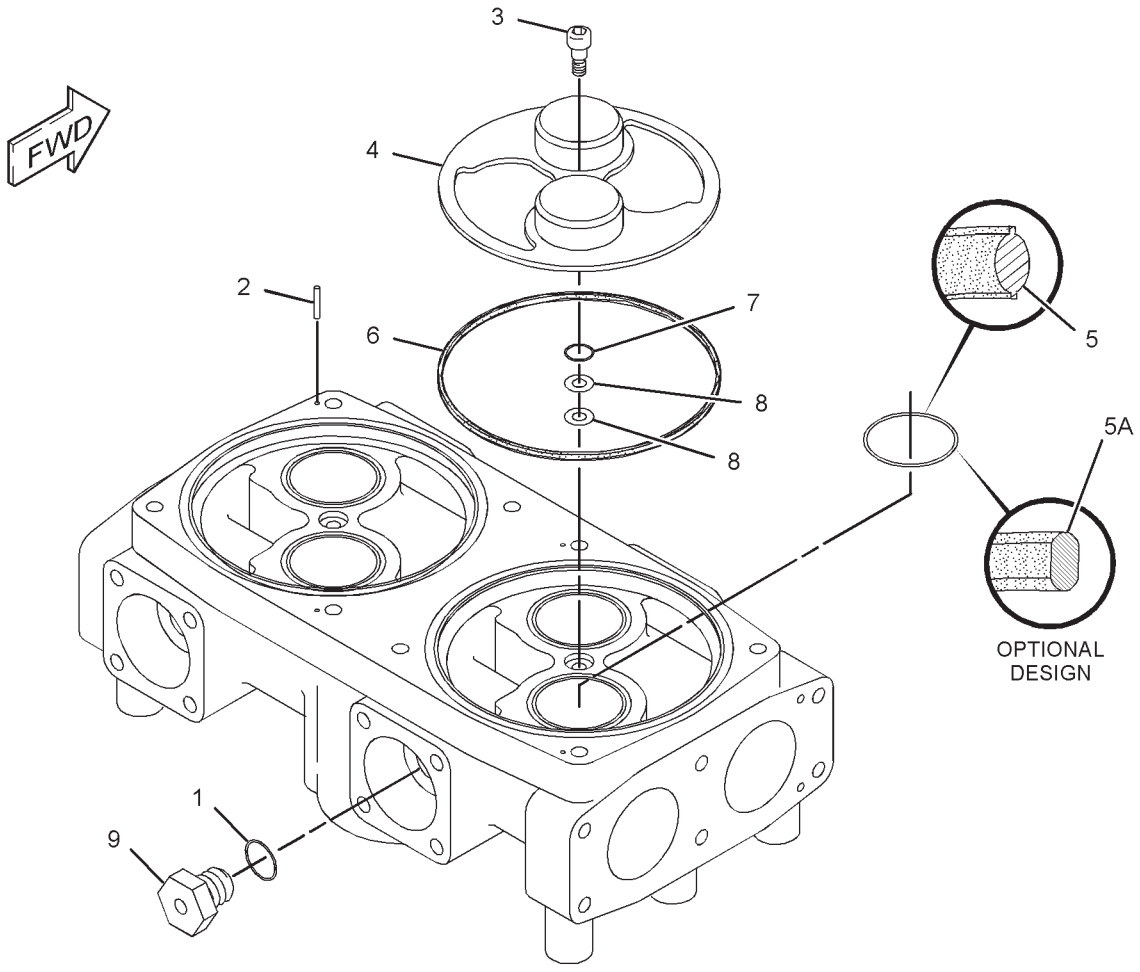

GRAPHIC #1 **<END>** g01833730

HYDRAULIC SYSTEM

173-3503 BASE GP-OIL FILTER–HYDRAULIC

S/N: RCD1-UP
PART OF 188-4147 FILTER GP-OIL
TYPE 1

SMCS-5068 **i01893724**

NOTE	REF NO	GRAPHIC REF	PART NUMBER	QTY	PART NAME 1 2 3 4 5 6 (PRODUCT LEVEL)	SEE PAGE
	1	1	**173-3504**	1	BLOCK	
	2	1	**5L-4758**	1	SEAL-O-RING	
	3	1	**6V-7658**	2	SEAL-O-RING	
	4	1	**173-3505**	1	PLATE-SLIDE	
	5	1	**137-3631**	1	PACKING	
M	6	1	**137-3626**	1	BOLT-SHOULDER (M6X1X28.75-MM)	
	7	1	**173-3506**	1	PLUG AS	
	8	1	**3J-1907**	1	SEAL-O-RING	
	9	1	**7Y-5272**	2	PIN-SPRING	
	10	1	**137-3628**	1	SHIM (0.1-MM THK)	

M-METRIC PART

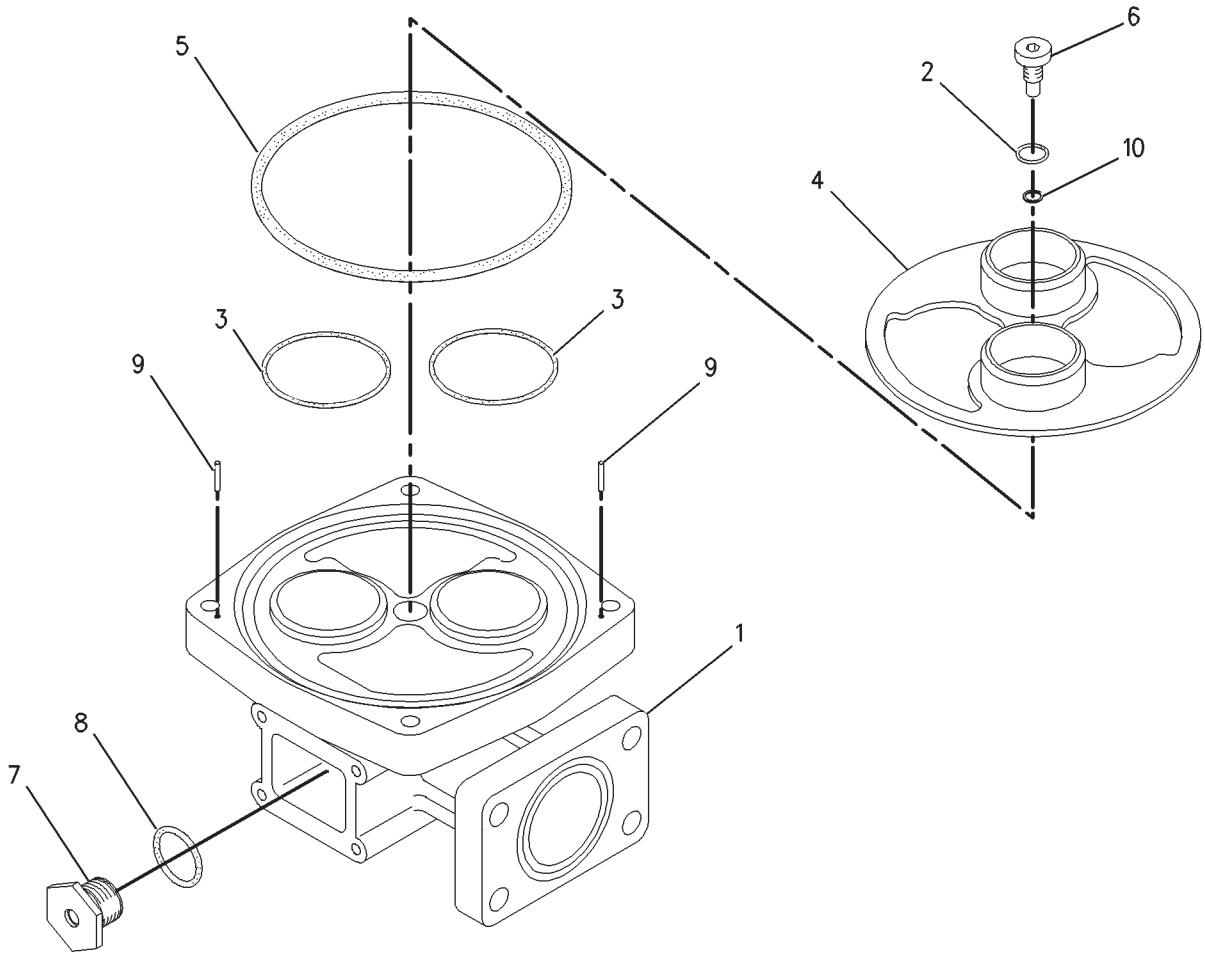

GRAPHIC #1 **<END>** g00669130

HYDRAULIC SYSTEM

173-3503 BASE GP-OIL FILTER–HYDRAULIC

S/N: RCD1-UP
PART OF 188-4147 FILTER GP-OIL
TYPE 2

SMCS-5068 **i02553552**

NOTE	REF NO	GRAPHIC REF	PART NUMBER	QTY	PART NAME 1 2 3 4 5 6 (PRODUCT LEVEL)	SEE PAGE
C	1	1	**204-2763**	1	BLOCK	
	2	1	**5L-4758**	1	SEAL-O-RING	
C	3	1	**177-2619**	2	PACKING	
	4	1	**173-3505**	1	PLATE-SLIDE	
	5	1	**137-3631**	1	PACKING	
M	6	1	**137-3626**	1	BOLT-SHOULDER (M6X1X28.75-MM)	
	7	1	**173-3506**	1	PLUG AS	
	8	1	**3J-1907**	1	SEAL-O-RING	
	9	1	**7Y-5272**	2	PIN-SPRING	
	10	1	**137-3628**	1	SHIM (0.1-MM THK)	

C-CHANGE FROM PREVIOUS TYPE
M-METRIC PART

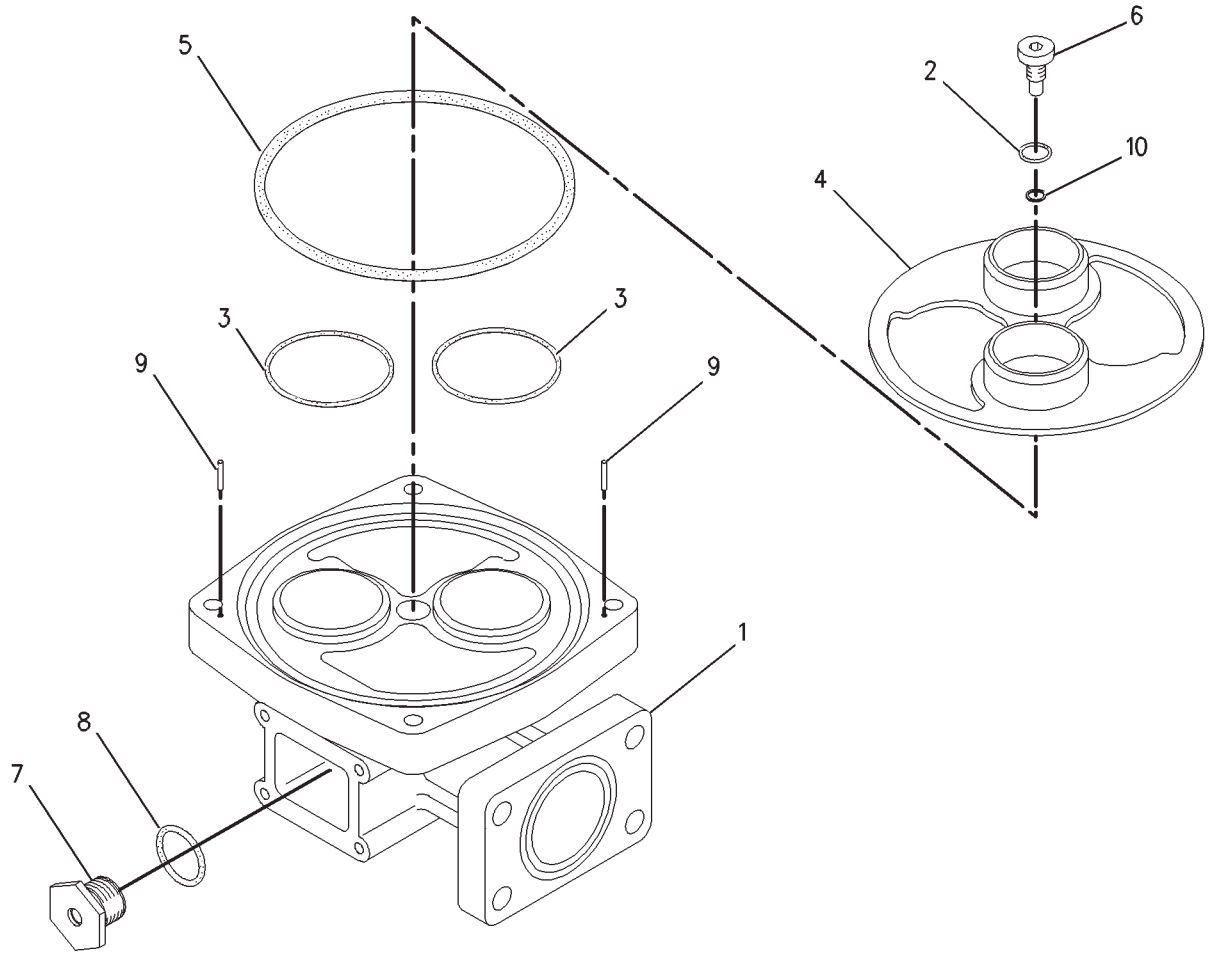

GRAPHIC #1 **<END>** g00669130

HYDRAULIC SYSTEM

196-9814 CONTROL AR-AUXILIARY

S/N: RCD1-UP
SINGLE ACTION, 2 PUMP FLOW
AN ATTACHMENT

SMCS-5051 **i01734504**

NOTE	PART NUMBER	QTY	PART NAME 1 2 3 4 5 6 (PRODUCT LEVEL)	SEE PAGE
Y	*152-9515*	1	FILM GP	1078
Y	*176-4361*	1	LINES GP-FRONT	614

Y-SEPARATE ILLUSTRATION

<END>

HYDRAULIC SYSTEM

196-9815 CONTROL AR-AUXILIARY

S/N: RCD1-UP
COMBINED FUNCTION WITH MEDIUM PRESSURE
AN ATTACHMENT

SMCS-5051 **i01531552**

NOTE	PART NUMBER	QTY	PART NAME 1 2 3 4 5 6 (PRODUCT LEVEL)	SEE PAGE
Y	*196-9816*	1	CONTROL AR-AUXILIARY	452
Y	*152-9515*	1	FILM GP	1078
Y	*168-9378*	1	LINES GP-FRONT	612
Y	*170-6991*	1	WIRING GP-WORK TOOL	320

Y-SEPARATE ILLUSTRATION

<END>

HYDRAULIC SYSTEM

196-9816 CONTROL AR-AUXILIARY

S/N: RCD1-UP
MEDIUM PRESSURE CIRCUIT (LOAD SENSING)
PART OF 196-9815 CONTROL AR-AUXILIARY
AN ATTACHMENT

SMCS-5051 **i01531568**

NOTE	PART NUMBER	QTY	PART NAME 1 2 3 4 5 6 (PRODUCT LEVEL)	SEE PAGE
Y	*206-4358*	1	LINES GP-PILOT	634
Y	*206-4357*	1	LINES GP-PUMP	641
Y	*206-4359*	1	WIRING GP-MEDIUM PRESSURE (BOOM)	309

Y-SEPARATE ILLUSTRATION

<END>

HYDRAULIC SYSTEM

151-6654 COOLER & MTG GP-HYDRAULIC OIL

S/N: RCD1-UP

PART OF 220-4843, 242-5914 INSTALLATION AR-ENGINE

SMCS-1356, 1374, 5058 **i02299240**

NOTE	REF NO	GRAPHIC REF	PART NUMBER	QTY	PART NAME 1 2 3 4 5 6 (PRODUCT LEVEL)	SEE PAGE
CY	1	2	**210-8103**	1	COOLER GP-HYDRAULIC OIL	459
	2	2	**171-9005**	1	SHROUD AS	
	3	2	**201-3785**	2	GUARD AS	
YR	4	2	**200-3252**	1	MOTOR GP-PISTON	687
	5	2	**171-9003**	1	BRACE	
	6	2	**139-8877**	1	SPIDER AS (8-BLADE)	
	7	1	**204-1073**	1	SUPPORT AS	
M	8	1	**8T-4195**	10	BOLT (M10X1.5X30-MM)	
	9	1	**7X-7729**	20	WASHER (11X25X3-MM THK)	
M	10	1	**8T-4136**	20	BOLT (M10X1.5X25-MM)	
	11	1	**8T-4222**	20	WASHER-PLATED (11X32X2.5-MM THK)	
M	12	1	**7X-2563**	4	BOLT (M20X2.5X60-MM)	
	13	1	**8T-4123**	6	WASHER (22X35X3.5-MM THK)	
	14	1	**171-9002**	1	BRACE	
M	15	2	**8T-4139**	3	BOLT (M12X1.75X30-MM)	
	16	2	**139-8733**	1	ADAPTER-FAN	
Y	17	2	**200-3313**	1	DRIVE GP-FAN	44
M	18	2	**8T-4194**	2	BOLT (M12X1.75X50-MM)	
	19	2	**8T-4223**	2	WASHER-HARD (13.5X25.5X3-MM THK)	
M	20	2	**8T-4196**	8	BOLT (M10X1.5X35-MM)	
	21	2	**8T-4121**	8	WASHER-HARD (11X21X2.5-MM THK)	
	22	2	**139-8753**	1	LOCKWASHER	
M	23	1	**8T-6430**	4	BOLT (M20X2.5X50-MM)	
M	24	1	**8T-4140**	4	BOLT (M16X2X60-MM)	
	25	1	**7X-0515**	8	WASHER-HARD (17X35X5-MM THK)	
M	26	1	**8T-4132**	6	NUT (M16X2-THD)	
M	27	1	**8T-4183**	6	BOLT (M12X1.75X40-MM)	
	28	1	**5P-1076**	6	WASHER-HARD (13.5X30X4-MM THK)	
	29	1	**171-8991**	1	SUPPORT AS-FAN (LH)	
M	30	1	**136-4182**	2	BOLT (M16X2X100-MM)	
	31	1	**8T-5439**	2	WASHER-HARD (21.5X45X6-MM THK)	
	32	1	**171-8995**	1	SUPPORT AS-FAN (RH)	
M	33	1	**8T-4137**	6	BOLT (M10X1.5X20-MM)	
E	34	1	**5P-5649**		SEAL (120 CM)	
	35	1	**162-6357**	2	PLATE	
M	36	1	**8T-4186**	2	BOLT (M10X1.5X40-MM)	
M	37	1	**8T-4133**	2	NUT (M10X1.5-THD)	
	38	2	**4M-0189**	1	SEAL-O-RING	

C-CHANGE FROM PREVIOUS TYPE
E-ORDER BY THE CENTIMETER
M-METRIC PART
R-REMFG PART MAY BE AVAILABLE
Y-SEPARATE ILLUSTRATION

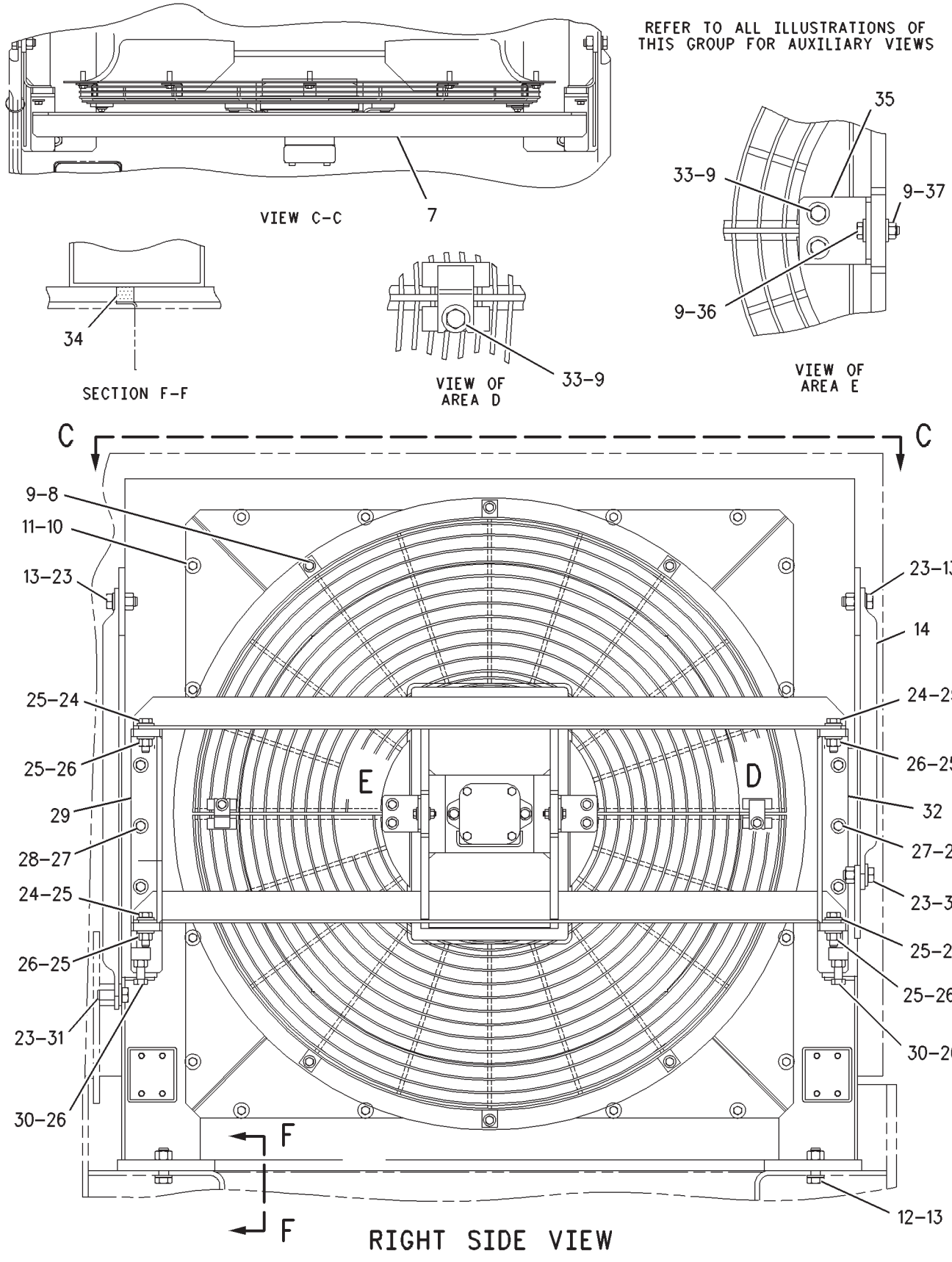

GRAPHIC #1 g00790154

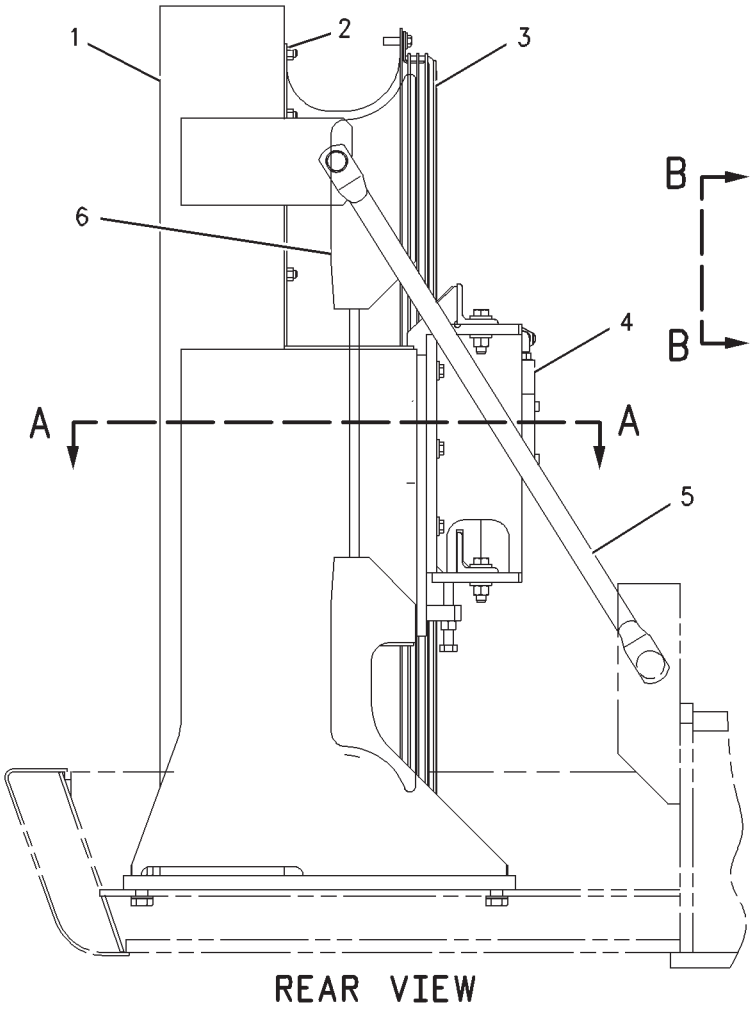

REAR VIEW

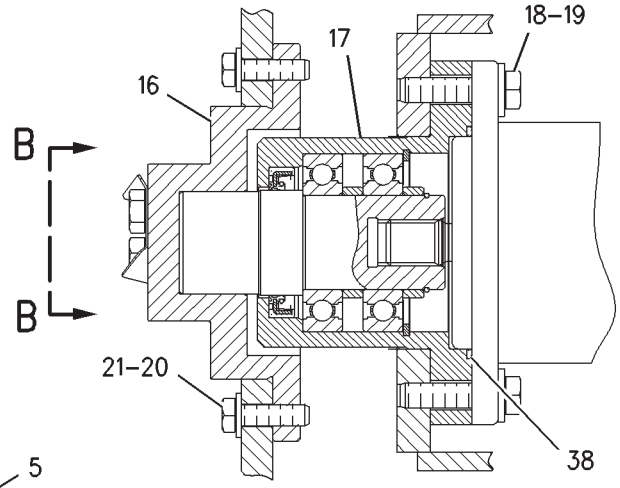

SECTION A-A

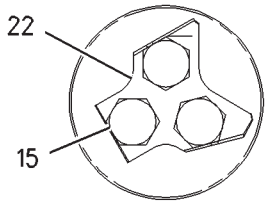

VIEW B-B

REFER TO ALL ILLUSTRATIONS OF THIS GROUP FOR AUXILIARY VIEWS

GRAPHIC #2 **<END>** g00892638

HYDRAULIC SYSTEM

151-6654 COOLER & MTG GP-HYDRAULIC OIL

S/N: RCD168-UP

PART OF 242-5914 INSTALLATION AR-ENGINE

SMCS-1356, 1374, 5058 **i02983355**

NOTE	REF NO	GRAPHIC REF	PART NUMBER	QTY	PART NAME 1 2 3 4 5 6 (PRODUCT LEVEL)	SEE PAGE
CY	1	2	**210-8157**	1	COOLER GP-HYDRAULIC OIL	460
	2	2	**171-9005**	1	SHROUD AS	
	3	2	**201-3785**	2	GUARD AS	
YR	4	2	**200-3252**	1	MOTOR GP-PISTON	687
	5	2	**171-9003**	1	BRACE	
	6	2	**139-8877**	1	SPIDER AS (8-BLADE)	
	7	1	**204-1073**	1	SUPPORT AS	
M	8	1	**8T-4195**	10	BOLT (M10X1.5X30-MM)	
	9	1	**7X-7729**	20	WASHER (11X25X3-MM THK)	
M	10	1	**8T-4136**	20	BOLT (M10X1.5X25-MM)	
	11	1	**8T-4222**	20	WASHER-PLATED (11X32X2.5-MM THK)	
M	12	1	**7X-2563**	4	BOLT (M20X2.5X60-MM)	
	13	1	**8T-4123**	6	WASHER (22X35X3.5-MM THK)	
	14	1	**171-9002**	1	BRACE	
M	15	2	**8T-4139**	3	BOLT (M12X1.75X30-MM)	
	16	2	**139-8733**	1	ADAPTER-FAN	
Y	17	2	**200-3313**	1	DRIVE GP-FAN	44
M	18	2	**8T-4194**	2	BOLT (M12X1.75X50-MM)	
	19	2	**8T-4223**	5	WASHER-HARD (13.5X25.5X3-MM THK)	
M	20	2	**8T-4196**	8	BOLT (M10X1.5X35-MM)	
	21	2	**8T-4121**	8	WASHER-HARD (11X21X2.5-MM THK)	
M	23	1	**8T-6430**	4	BOLT (M20X2.5X50-MM)	
M	24	1	**8T-4140**	4	BOLT (M16X2X60-MM)	
	25	1	**7X-0515**	8	WASHER-HARD (17X35X5-MM THK)	
M	26	1	**8T-4132**	6	NUT (M16X2-THD)	
M	27	1	**8T-4183**	6	BOLT (M12X1.75X40-MM)	
	28	1	**5P-1076**	6	WASHER-HARD (13.5X30X4-MM THK)	
	29	1	**171-8991**	1	SUPPORT AS-FAN (LH)	
M	30	1	**136-4182**	2	BOLT (M16X2X100-MM)	
	31	1	**8T-5439**	2	WASHER-HARD (21.5X45X6-MM THK)	
	32	1	**171-8995**	1	SUPPORT AS-FAN (RH)	
M	33	1	**8T-4137**	6	BOLT (M10X1.5X20-MM)	
D	34	1	**5P-5649**		SEAL (1.2-M)	
	35	1	**162-6357**	2	PLATE	
M	36	1	**8T-4186**	2	BOLT (M10X1.5X40-MM)	
M	37	1	**8T-4133**	2	NUT (M10X1.5-THD)	
	38	2	**4M-0189**	1	SEAL-O-RING	

C-CHANGE FROM PREVIOUS TYPE
D-ORDER BY THE METER
M-METRIC PART
R-REMFG PART MAY BE AVAILABLE
Y-SEPARATE ILLUSTRATION

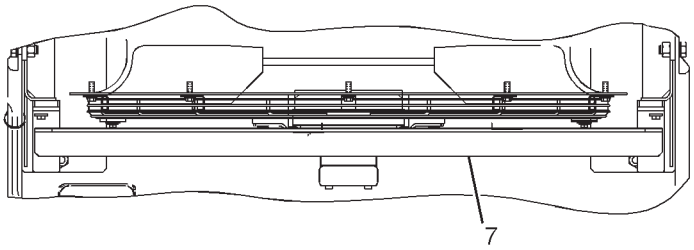

VIEW C-C

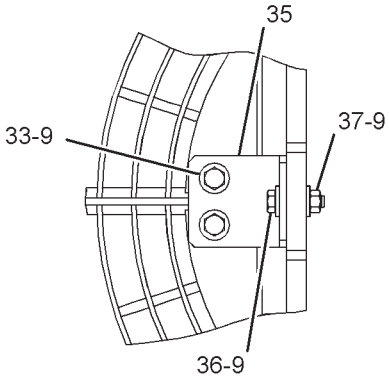

VIEW OF AREA E

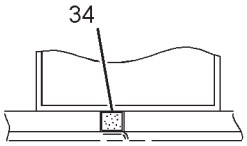

SECTION F-F

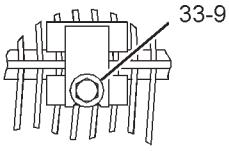

VIEW OF AREA D

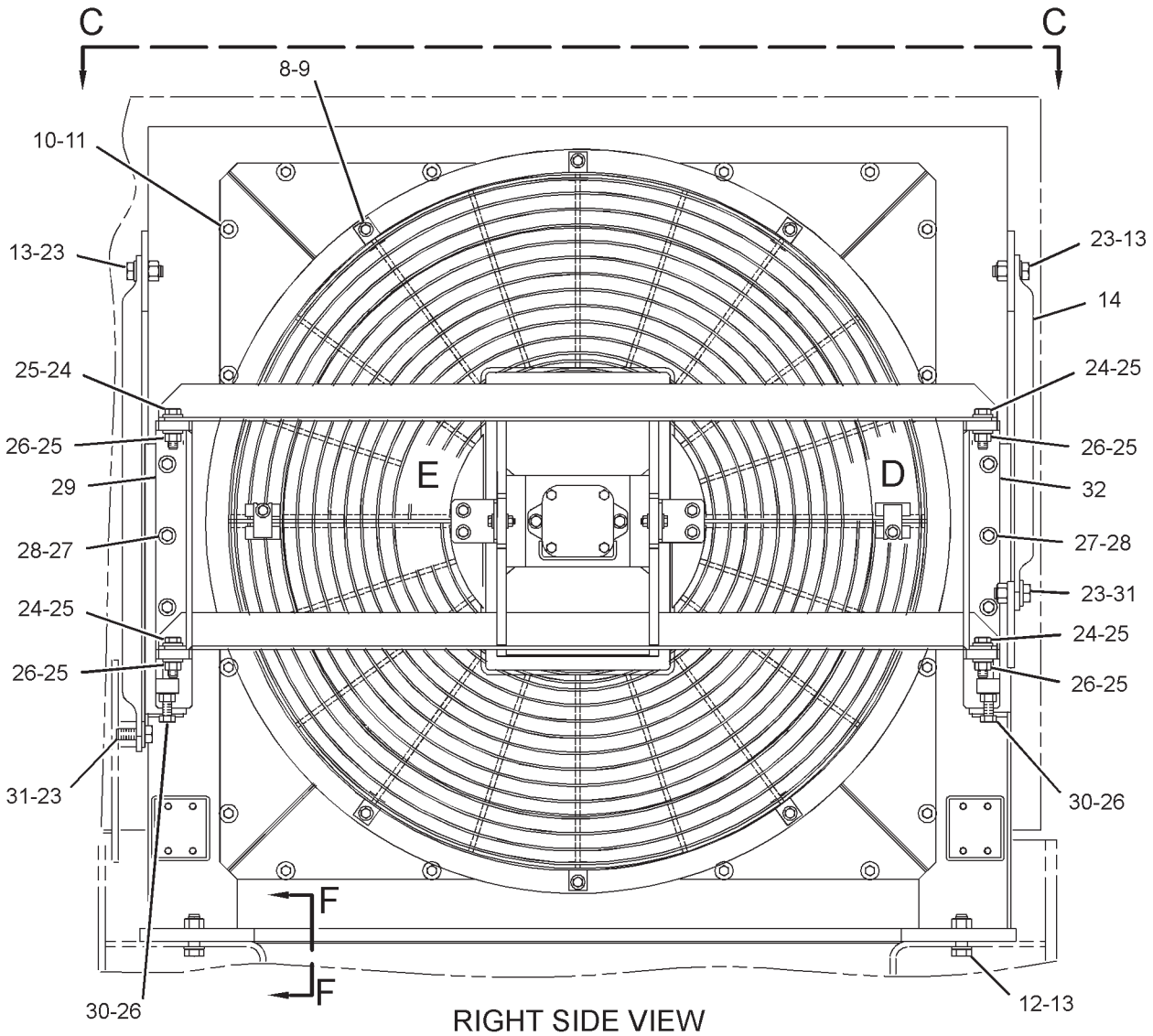

RIGHT SIDE VIEW

GRAPHIC #1

g01514495

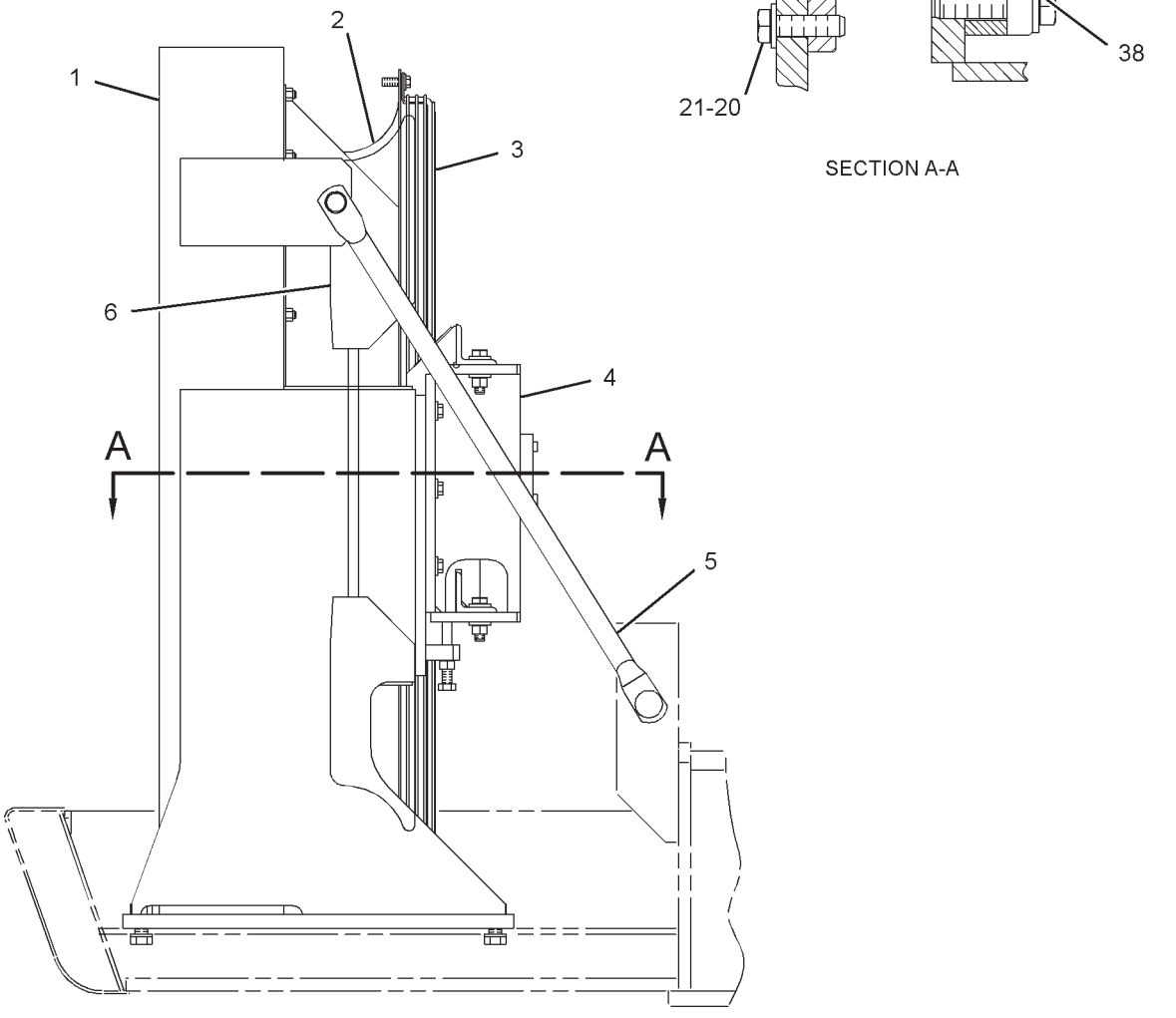

GRAPHIC #2 **<END>** g01514496

HYDRAULIC SYSTEM

210-8103 COOLER GP-HYDRAULIC OIL

S/N: RCD1-UP

PART OF 151-6654 COOLER & MTG GP-HYDRAULIC OIL

SMCS-1374 **i02299303**

NOTE	REF NO	GRAPHIC REF	PART NUMBER	QTY	PART NAME 1 2 3 4 5 6 (PRODUCT LEVEL)	SEE PAGE
	1	1	**196-8136**	2	SEAL	
	2	1	**196-8137**	2	SEAL	
	3	1	**196-8138**	2	SUPPORT AS	
	4	1	**210-8004**	1	FRAME AS	
	5	1	**210-8081**	2	SEAL-O-RING	
	6	1	**210-8104**	1	CORE AS-OIL COOLER	
	7	1	**8T-4121**	20	WASHER-HARD (11X21X2.5-MM THK)	
M	8	1	**8T-4195**	20	BOLT (M10X1.5X30-MM)	

M-METRIC PART

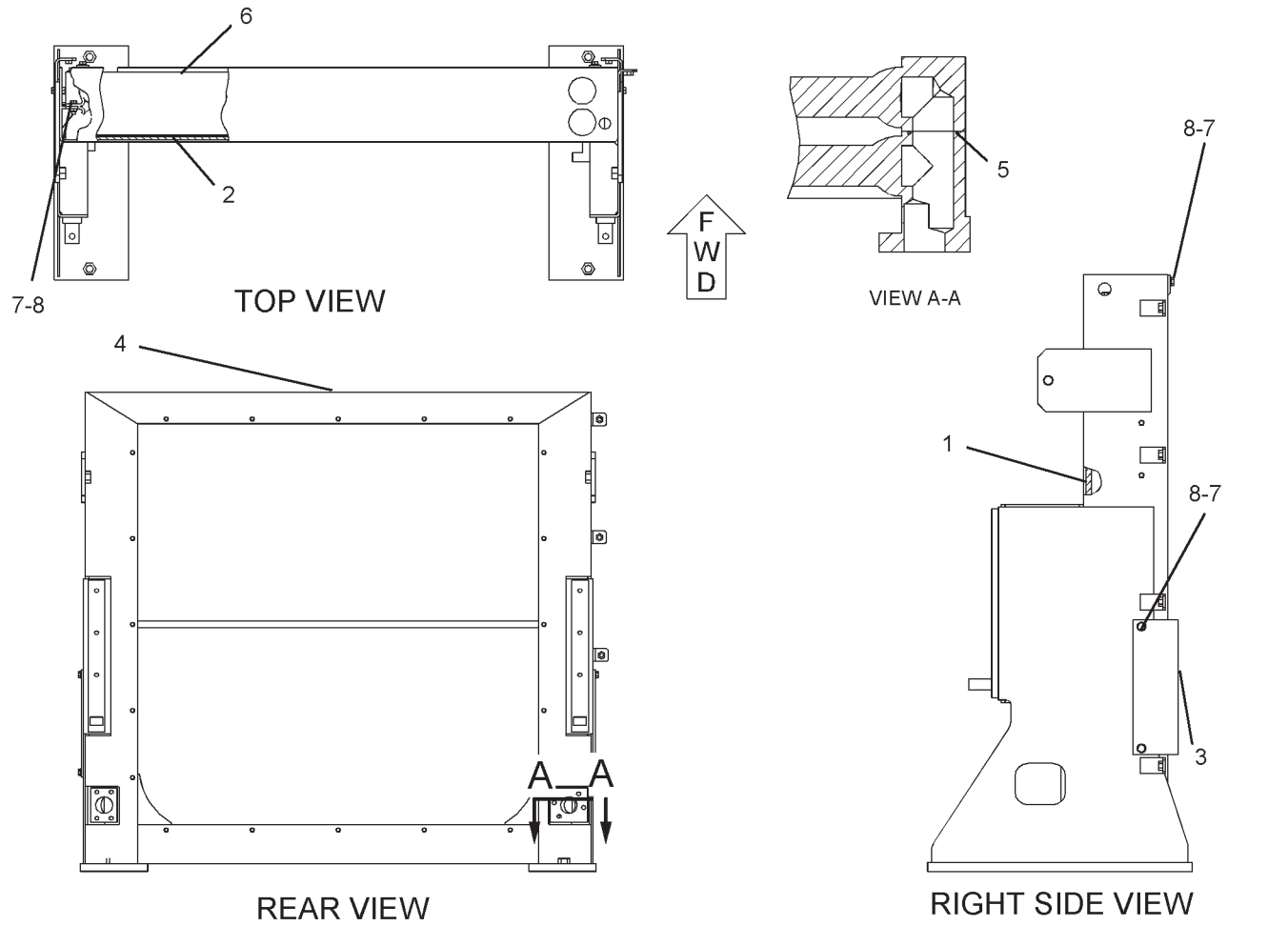

GRAPHIC #1 **<END>** g01054478

HYDRAULIC SYSTEM

210-8157 COOLER GP-HYDRAULIC OIL

S/N: RCD168-UP

PART OF 151-6654 COOLER & MTG GP-HYDRAULIC OIL

SMCS-1374 **i02957730**

NOTE	REF NO	GRAPHIC REF	PART NUMBER	QTY	PART NAME 1 2 3 4 5 6 (PRODUCT LEVEL)	SEE PAGE
	1	1	**196-8137**	2	SEAL	
	2	1	**210-8081**	2	SEAL-O-RING	
	3	1	**281-3516**	1	CORE AS-OIL COOLER (HYDRAULIC)	
	4	1	**230-2925**	1	FRAME AS	
	5	1	**230-2926**	2	SUPPORT AS	
	6	1	**230-2927**	2	SEAL	
	7	1	**8T-4121**	20	WASHER-HARD (11X21X2.5-MM THK)	
M	8	1	**8T-4195**	20	BOLT (M10X1.5X30-MM)	
	9	1	**281-3517**	2	SEAL	

M-METRIC PART

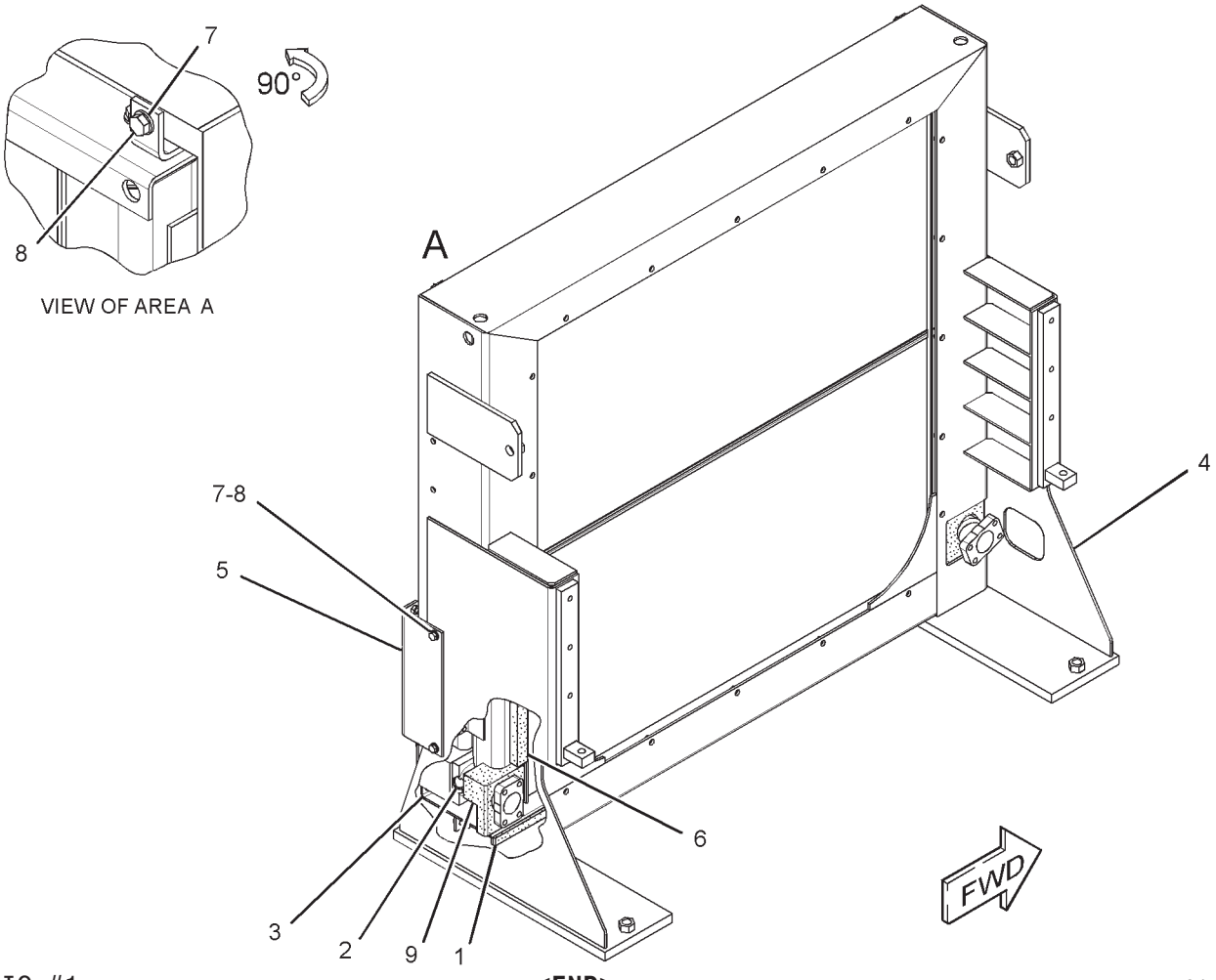

GRAPHIC #1 **<END>** g01576214

HYDRAULIC SYSTEM

196-8133 COUPLING GP-FLEXIBLE

S/N: RCD1-UP

PART OF 151-6646 COUPLING GP-PUMP

SMCS-3252 **i01888977**

NOTE	REF NO	GRAPHIC REF	PART NUMBER	QTY	PART NAME 1 2 3 4 5 6 (PRODUCT LEVEL)	SEE PAGE
	1	1	**212-8525**	1	HUB	
	2	1	**212-8526**	4	CAGE-SPRING	
	3	1	**212-8527**	2	SPACER	
	4	1	**212-8528**	2	PLATE	
	5	1	**212-8529**	1	SPACER	
	6	1	**212-8530**	1	SPACER	
	7	1	**212-8531**	1	COLLAR	
	8	1	**217-5450**	10	SPRING AS	
	9	1	**217-5451**	10	SPRING AS	
	10	1	**8T-8920**	20	BOLT (1/2-13X3.25 IN)	
	11	1	**8T-9389**	20	BOLT (1/2-13X2.75 IN)	

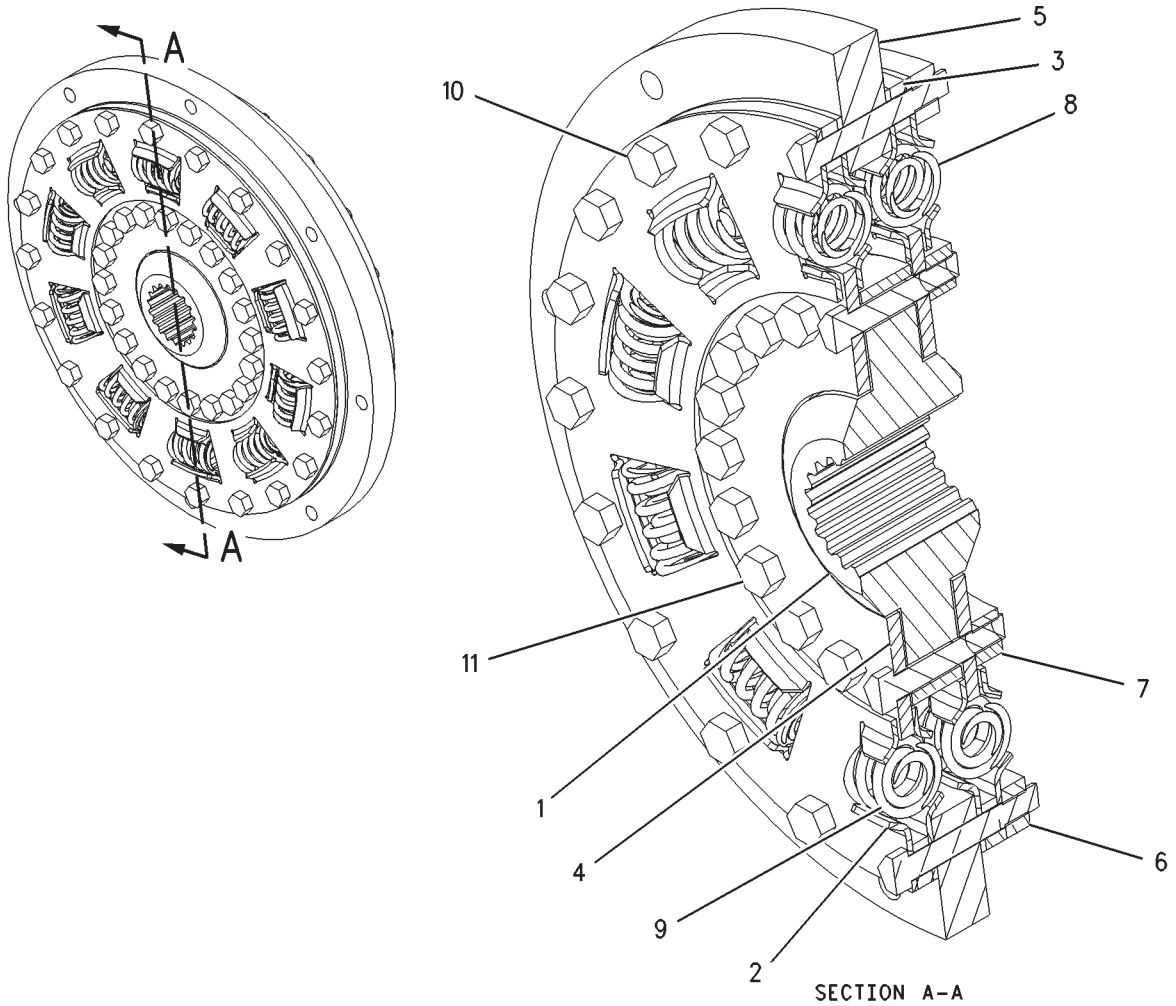

GRAPHIC #1 **<END>** g00984297

HYDRAULIC SYSTEM

151-6646 COUPLING GP-PUMP

S/N: RCD1-UP

PART OF 151-6645 PUMP & MTG GP-MAIN HYDRAULIC

SMCS-5062 **i02778873**

NOTE	REF NO	GRAPHIC REF	PART NUMBER	QTY	PART NAME 1 2 3 4 5 6 (PRODUCT LEVEL)	SEE PAGE
Y	1	1	**196-8133**	1	COUPLING GP-FLEXIBLE	461
	2	1	**8T-4835**	8	BOLT (1/2-13X2-IN)	

Y-SEPARATE ILLUSTRATION

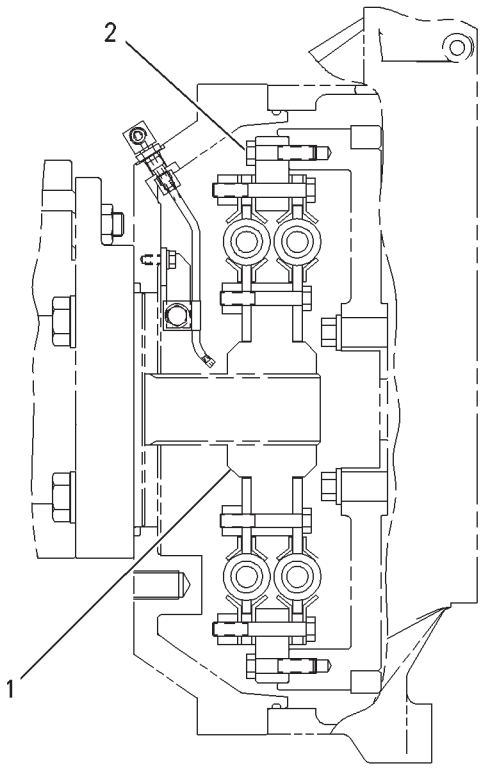

GRAPHIC #1 **<END>** g00848912

HYDRAULIC SYSTEM

155-9065 CYLINDER & LINES GP-BOOM–LH

S/N: RCD1-UP

PART OF 150-2804 BOOM AR, 150-2805 BOOM AR-MASS, 150-2803 BOOM AR-REACH AN ATTACHMENT

SMCS-5456, 7562 **i01686265**

NOTE	PART NUMBER	QTY	PART NAME 1 2 3 4 5 6 (PRODUCT LEVEL)	SEE PAGE
Y	*155-9067*	1	CYLINDER & SEAL GP-BOOM	470
Y	*168-9659*	1	LINES GP-BOOM CYLINDER	595

Y-SEPARATE ILLUSTRATION

<END>

HYDRAULIC SYSTEM

155-9066 CYLINDER & LINES GP-BOOM–RH

S/N: RCD1-UP

PART OF 150-2804 BOOM AR, 150-2805 BOOM AR-MASS, 150-2803 BOOM AR-REACH AN ATTACHMENT

SMCS-5456, 7562 **i01532285**

NOTE	PART NUMBER	QTY	PART NAME 1 2 3 4 5 6 (PRODUCT LEVEL)	SEE PAGE
Y	*155-9067*	1	CYLINDER & SEAL GP-BOOM	470
Y	*168-9660*	1	LINES GP-BOOM CYLINDER	597

Y-SEPARATE ILLUSTRATION

<END>

HYDRAULIC SYSTEM

155-9072 CYLINDER & LINES GP-BUCKET

S/N: RCD1-UP
PART OF 157-9986, 220-2423 LINKAGE AR-BUCKET
AN ATTACHMENT

SMCS-5457 **i01535570**

NOTE	PART NUMBER	QTY	PART NAME 1 2 3 4 5 6 (PRODUCT LEVEL)	SEE PAGE
Y	**155-9073**	1	CYLINDER & SEAL GP-BUCKET	471
Y	**168-9382**	1	LINES GP-BUCKET CYLINDER	603

Y-SEPARATE ILLUSTRATION

<END>

HYDRAULIC SYSTEM

155-9075 CYLINDER & LINES GP-BUCKET

S/N: RCD1-UP
PART OF 157-9987 LINKAGE AR-BUCKET
AN ATTACHMENT

SMCS-5457 **i01534620**

NOTE	PART NUMBER	QTY	PART NAME 1 2 3 4 5 6 (PRODUCT LEVEL)	SEE PAGE
Y	*155-9076*	1	CYLINDER & SEAL GP-BUCKET	472
Y	*168-9383*	1	LINES GP-BUCKET CYLINDER	604

Y-SEPARATE ILLUSTRATION

<END>

HYDRAULIC SYSTEM

215-9859 CYLINDER & LINES GP-BUCKET

S/N: RCD1-UP

PART OF 220-2423 LINKAGE AR-BUCKET

AN ATTACHMENT

SMCS-5457 **i03383902**

NOTE	PART NUMBER	QTY	PART NAME 1 2 3 4 5 6 (PRODUCT LEVEL)	SEE PAGE
Y	*209-6036*	1	CYLINDER & SEAL GP-BUCKET	473
Y	*168-9382*	1	LINES GP-BUCKET CYLINDER	603

Y-SEPARATE ILLUSTRATION

<END>

HYDRAULIC SYSTEM

215-9963 CYLINDER & LINES GP-BUCKET

S/N: RCD1-UP
PART OF 220-2438 LINKAGE AR-BUCKET
AN ATTACHMENT

SMCS-5457 **i02125139**

NOTE	PART NUMBER	QTY	PART NAME 1 2 3 4 5 6 (PRODUCT LEVEL)	SEE PAGE
Y	*215-9964*	1	CYLINDER & SEAL GP-BUCKET	474
Y	*168-9383*	1	LINES GP-BUCKET CYLINDER	604

Y-SEPARATE ILLUSTRATION

<END>

HYDRAULIC SYSTEM

155-9069 CYLINDER & LINES GP-STICK

S/N: RCD1-UP

PART OF 150-2804 BOOM AR, 150-2805 BOOM AR-MASS, 150-2803 BOOM AR-REACH AN ATTACHMENT

SMCS-5458 **i01686358**

NOTE	PART NUMBER	QTY	PART NAME 1 2 3 4 5 6 (PRODUCT LEVEL)	SEE PAGE
Y	*155-9070*	1	CYLINDER & SEAL GP-HYDRAULIC	475
Y	*173-4907*	1	LINES GP-STICK CYLINDER	665

Y-SEPARATE ILLUSTRATION

<END>

HYDRAULIC SYSTEM

155-9067 CYLINDER & SEAL GP-BOOM

S/N: RCD1-UP

PART OF 155-9065, 155-9066 CYLINDER & LINES GP-BOOM

AN ATTACHMENT

SMCS-5456 **i02239814**

NOTE	REF NO	GRAPHIC REF	PART NUMBER	QTY	PART NAME 1 2 3 4 5 6 (PRODUCT LEVEL)	SEE PAGE
	1	1	**3B-8489**	1	FITTING-GREASE	
Y	2	1	**155-9068**	1	CYLINDER GP-BOOM	477
	3	1	**113-5950**	4	SEAL-LIP TYPE	
	4	1	**8T-6757**	1	PLUG-PIPE	

Y-SEPARATE ILLUSTRATION

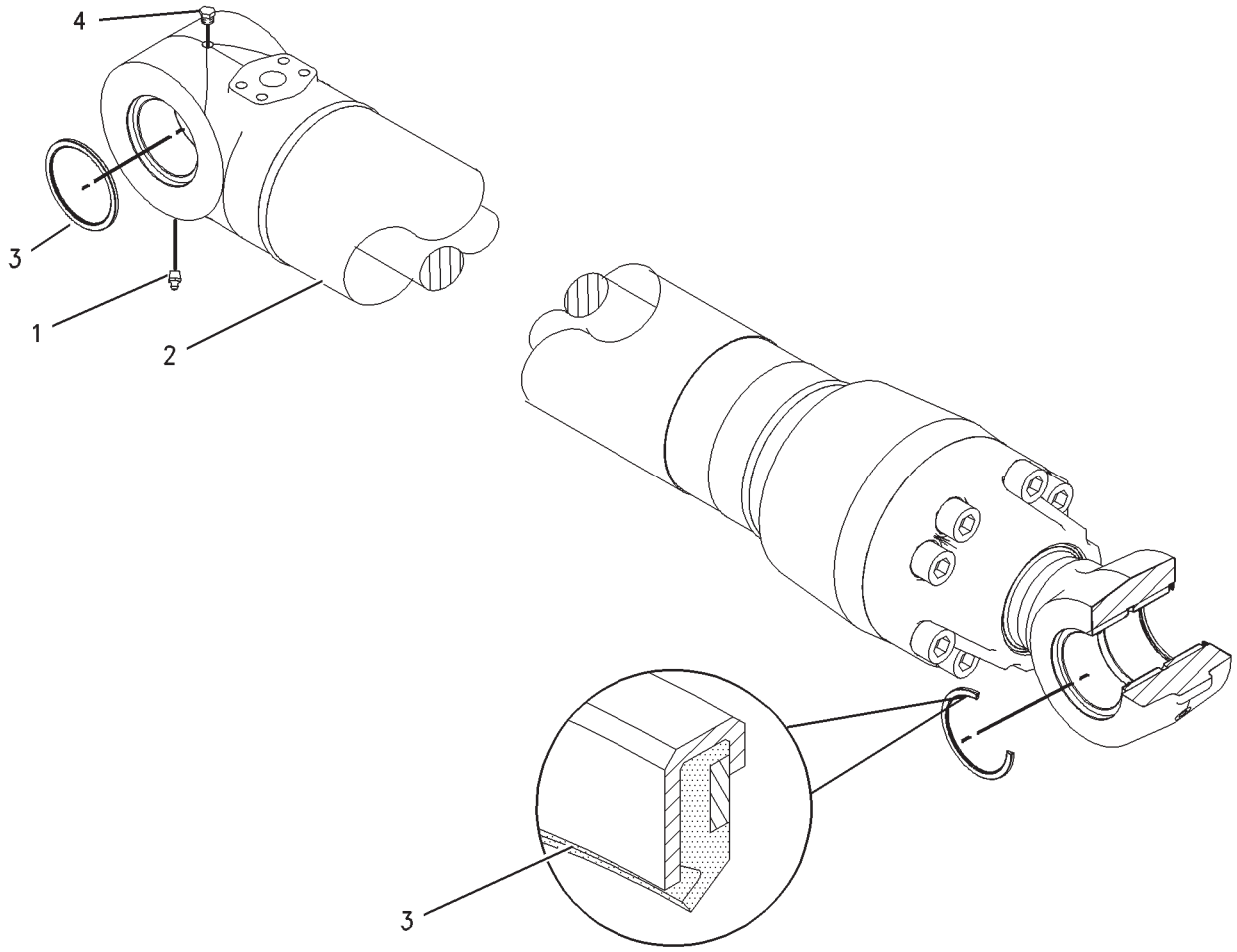

GRAPHIC #1 **<END>** g00797328

HYDRAULIC SYSTEM

155-9073 CYLINDER & SEAL GP-BUCKET

S/N: RCD1-UP
PART OF 155-9072 CYLINDER & LINES GP-BUCKET
AN ATTACHMENT

SMCS-5457 **i01547931**

NOTE	REF NO	GRAPHIC REF	PART NUMBER	QTY	PART NAME 1 2 3 4 5 6 (PRODUCT LEVEL)	SEE PAGE
	1	1	**9X-4599**	2	SEAL-LIP TYPE	
Y	2	1	**155-9074**	1	CYLINDER GP-BUCKET	479
	3	1	**9X-4600**	2	SEAL-LIP TYPE	
	4	1	**3B-8489**	1	FITTING-GREASE	

Y-SEPARATE ILLUSTRATION

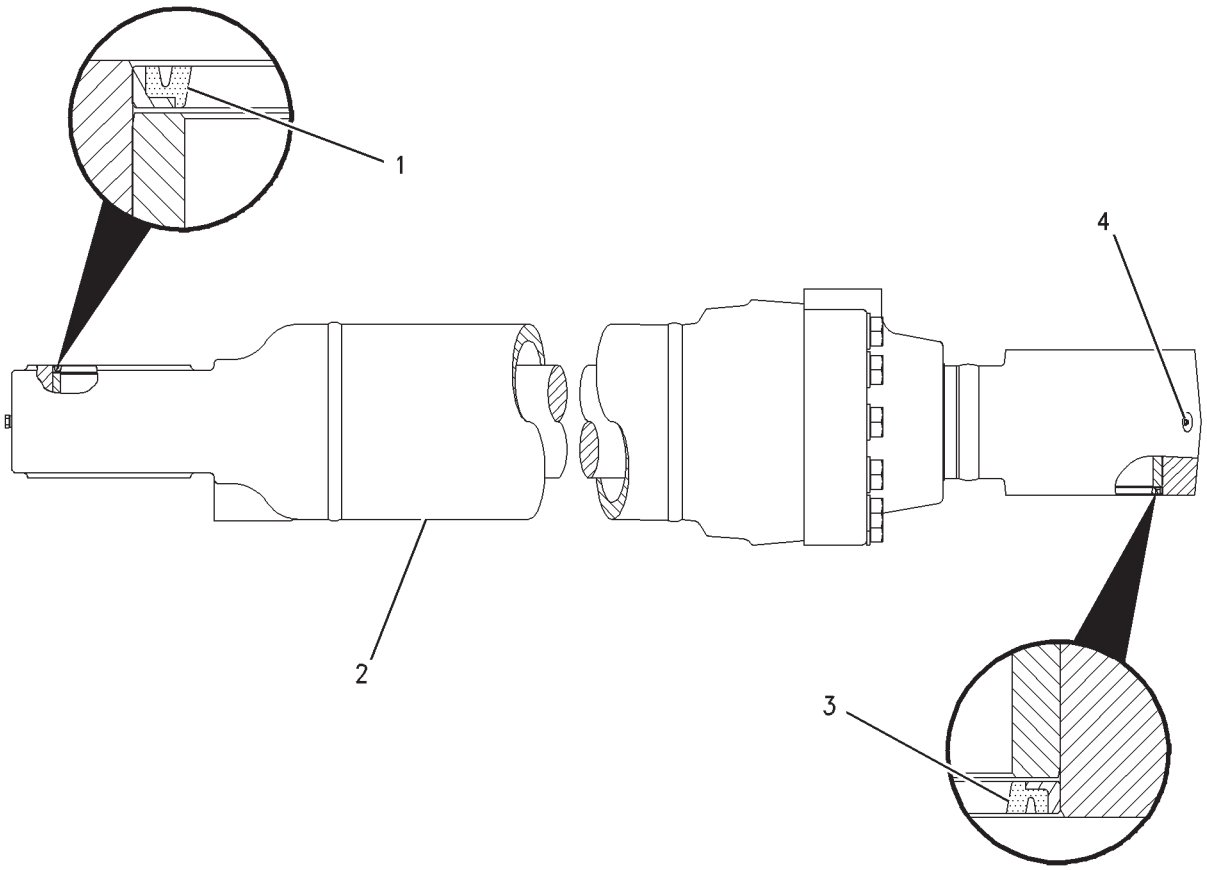

GRAPHIC #1 **<END>** g00777156

HYDRAULIC SYSTEM

155-9076 CYLINDER & SEAL GP-BUCKET

S/N: RCD1-UP
PART OF 155-9075 CYLINDER & LINES GP-BUCKET
AN ATTACHMENT

SMCS-5457 **i01535576**

NOTE	REF NO	GRAPHIC REF	PART NUMBER	QTY	PART NAME 1 2 3 4 5 6 (PRODUCT LEVEL)	SEE PAGE
	1	1	**9X-4600**	2	SEAL-LIP TYPE	
Y	2	1	**155-9077**	1	CYLINDER GP-BUCKET	481
	3	1	**9X-4601**	2	SEAL-LIP TYPE	
	4	1	**3B-8489**	1	FITTING-GREASE	

Y-SEPARATE ILLUSTRATION

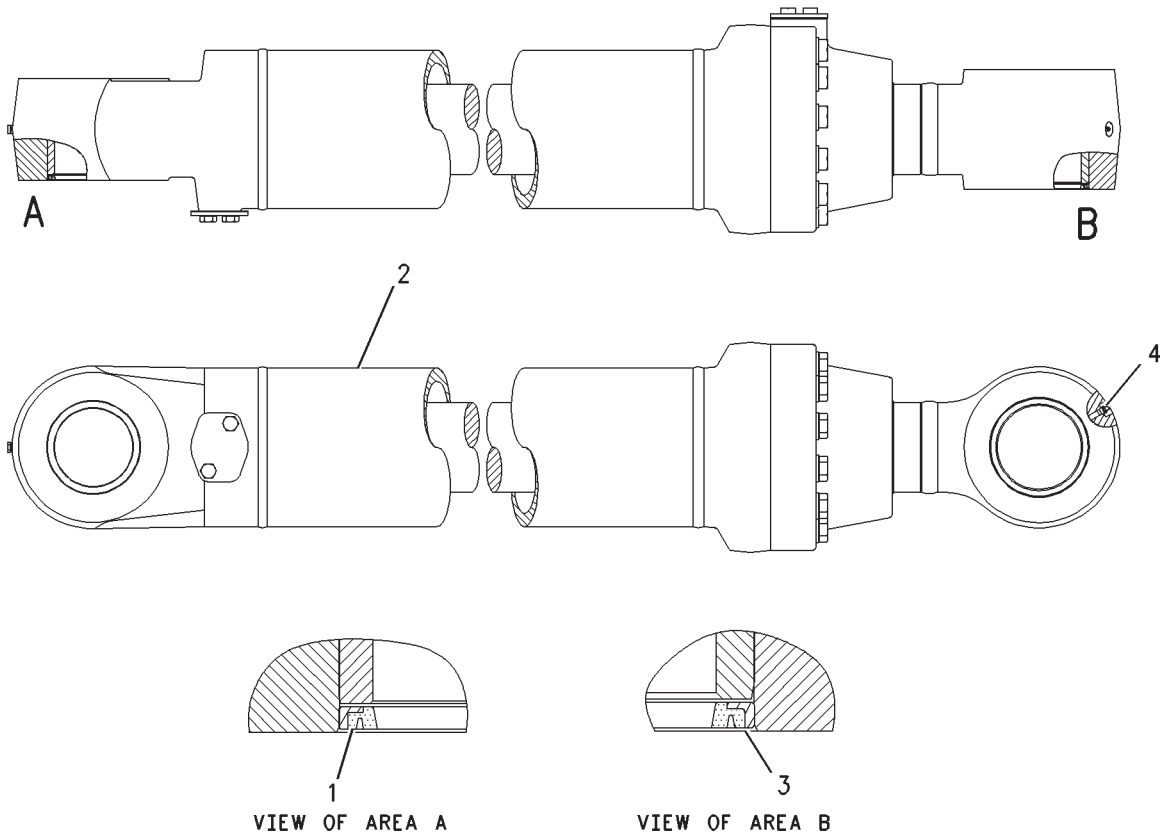

GRAPHIC #1 **<END>** g00801416

HYDRAULIC SYSTEM

209-6036 CYLINDER & SEAL GP-BUCKET

S/N: RCD1-UP
PART OF 215-9859 CYLINDER & LINES GP-BUCKET
AN ATTACHMENT

SMCS-5457 **i03384009**

NOTE	REF NO	GRAPHIC REF	PART NUMBER	QTY	PART NAME 1 2 3 4 5 6 (PRODUCT LEVEL)	SEE PAGE
	1	1	**9X-4599**	2	SEAL-LIP TYPE	
Y	2	1	*209-6037*	1	CYLINDER GP-BUCKET	483
	3	1	**9X-4600**	2	SEAL-LIP TYPE	
	4	1	**3B-8489**	1	FITTING-GREASE	

Y-SEPARATE ILLUSTRATION

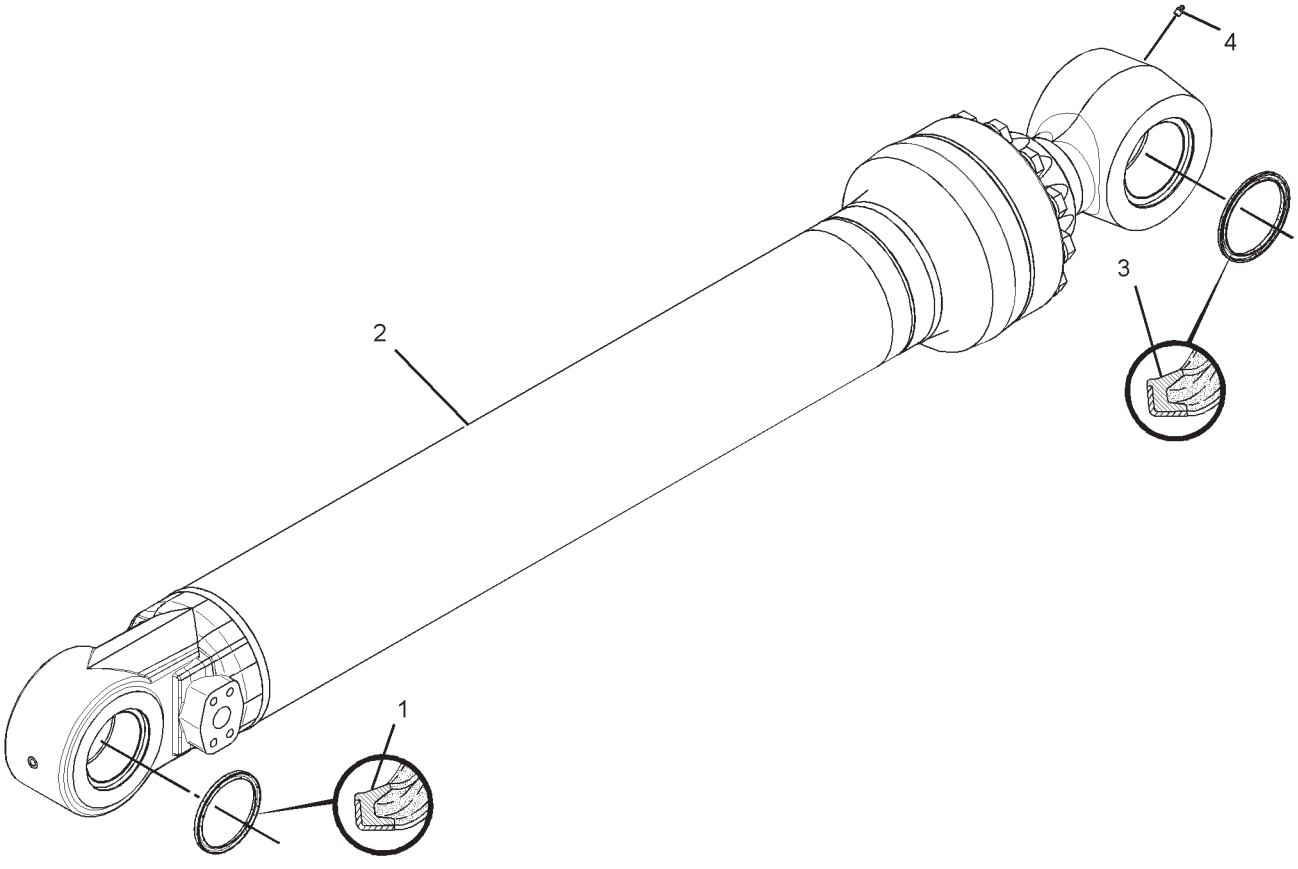

GRAPHIC #1 **<END>** g01755655

HYDRAULIC SYSTEM

215-9964 CYLINDER & SEAL GP-BUCKET

S/N: RCD1-UP
PART OF 215-9963 CYLINDER & LINES GP-BUCKET
AN ATTACHMENT

SMCS-5457 **i02125557**

NOTE	REF NO	GRAPHIC REF	PART NUMBER	QTY	PART NAME 1 2 3 4 5 6 (PRODUCT LEVEL)	SEE PAGE
	1	1	**9X-4600**	2	SEAL-LIP TYPE	
Y	2	1	**215-9965**	1	CYLINDER GP-BUCKET	485
	3	1	**9X-4601**	2	SEAL-LIP TYPE	
	4	1	**3B-8489**	1	FITTING-GREASE	

Y-SEPARATE ILLUSTRATION

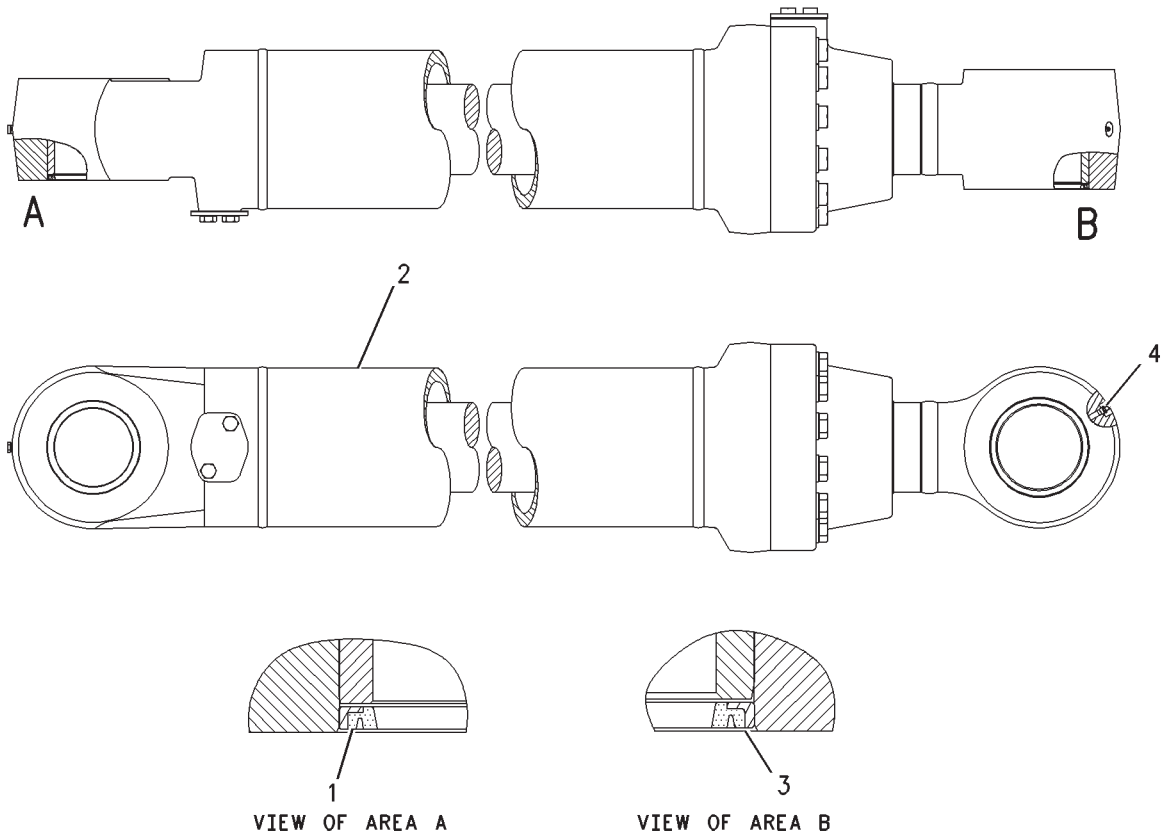

GRAPHIC #1 **<END>** g00801416

HYDRAULIC SYSTEM

155-9070 CYLINDER & SEAL GP-HYDRAULIC

S/N: RCD1-UP
PART OF 155-9069 CYLINDER & LINES GP-STICK
AN ATTACHMENT
TYPE 1

SMCS-7562 **i01535258**

NOTE	REF NO	GRAPHIC REF	PART NUMBER	QTY	PART NAME 1 2 3 4 5 6 (PRODUCT LEVEL)	SEE PAGE
	1	1	**9X-4600**	4	SEAL-LIP TYPE	
Y	2	1	**155-9071**	1	CYLINDER GP-HYDRAULIC	491

Y-SEPARATE ILLUSTRATION

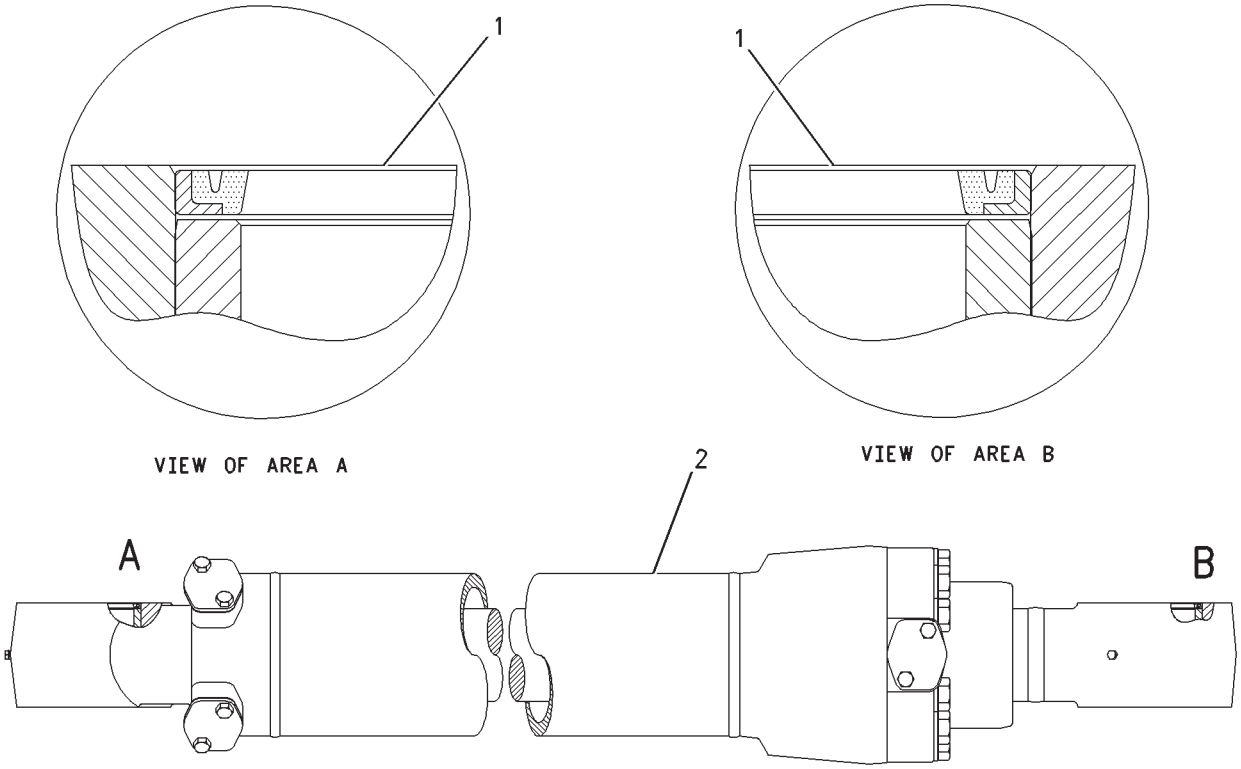

GRAPHIC #1 **<END>** g00800024

HYDRAULIC SYSTEM

155-9070 CYLINDER & SEAL GP-HYDRAULIC

S/N: RCD1-UP
PART OF 155-9069 CYLINDER & LINES GP-STICK
AN ATTACHMENT
TYPE 2

SMCS-7562 **i02443422**

NOTE	REF NO	GRAPHIC REF	PART NUMBER	QTY	PART NAME 1 2 3 4 5 6 (PRODUCT LEVEL)	SEE PAGE
	1	1	**9X-4600**	4	SEAL-LIP TYPE	
Y	2	1	**259-0871**	1	CYLINDER GP-HYDRAULIC	493

Y-SEPARATE ILLUSTRATION

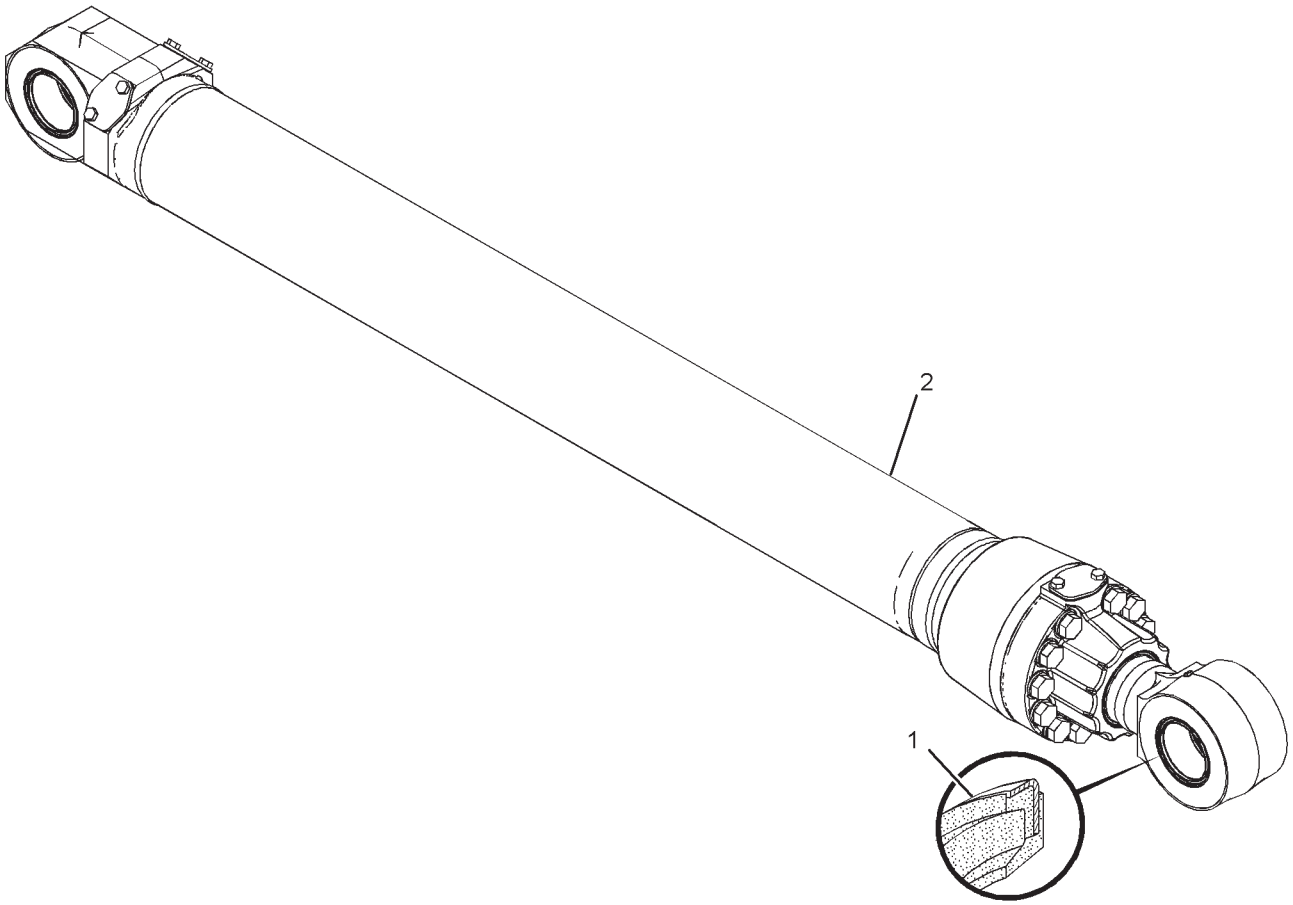

GRAPHIC #1 **<END>** g01221409

HYDRAULIC SYSTEM

155-9068 CYLINDER GP-BOOM

S/N: RCD1-UP
210-MM (8.3-IN) BORE X 1967-MM (77.4-IN) STROKE
PART OF 155-9067 CYLINDER & SEAL GP-BOOM
AN ATTACHMENT

SMCS-5456 **i03086487**

NOTE	REF NO	GRAPHIC REF	PART NUMBER	QTY	PART NAME 1 2 3 4 5 6 (PRODUCT LEVEL)	SEE PAGE
	1	1	**155-9092**	1	PISTON	
J	2	1	**155-9093**	2	RING	
	3	1	**155-9095**	1	STOP	
	4	1	**155-9100**	1	BEARING-SLEEVE	
J	5	1	**170-9852**	1	SEAL-BUFFER	
R	6	1	**322-8719**	1	CYLINDER AS-HYDRAULIC	
	6A	1	**244-4258**	1	BEARING-SLEEVE	
J	7	1	**172-3918**	1	SEAL AS	
	8	1	**188-4192**	1	LOCKNUT-SPECIAL	
J	9	1	**216-0010**	1	SEAL-U-CUP	
R	10	1	**155-9087**	1	ROD AS	
	10A	1	**172-2997**	1	BEARING-SLEEVE	
J	11	1	**095-1732**	1	SEAL-O-RING	
J	12	1	**155-9094**	1	RING	
J	13	1	**155-9096**	1	RING-SEAL	
	14	1	**155-9097**	1	HEAD	
J	15	1	**155-9098**	1	RING-BACKUP	
	16	1	**155-9099**	1	RING-RETAINING	
J	17	1	**155-9103**	1	RING-BACKUP	
J	18	1	**165-9295**	1	SEAL-LIP TYPE	
M	19	1	**7X-2489**	11	BOLT (M24X3X100-MM)	
	20	1	**8T-4167**	11	WASHER-HARD (26X44X4-MM THK)	
					AVAILABLE REPAIR KIT(S):	
J			**204-2726**	1	KIT-SEAL (BOOM CYLINDER)	

J-KIT MARKED J SERVICES PARTS MARKED J
M-METRIC PART
R-REMFG PART MAY BE AVAILABLE

155-9068 CYLINDER GP-BOOM *(contd.)* **i03086487**

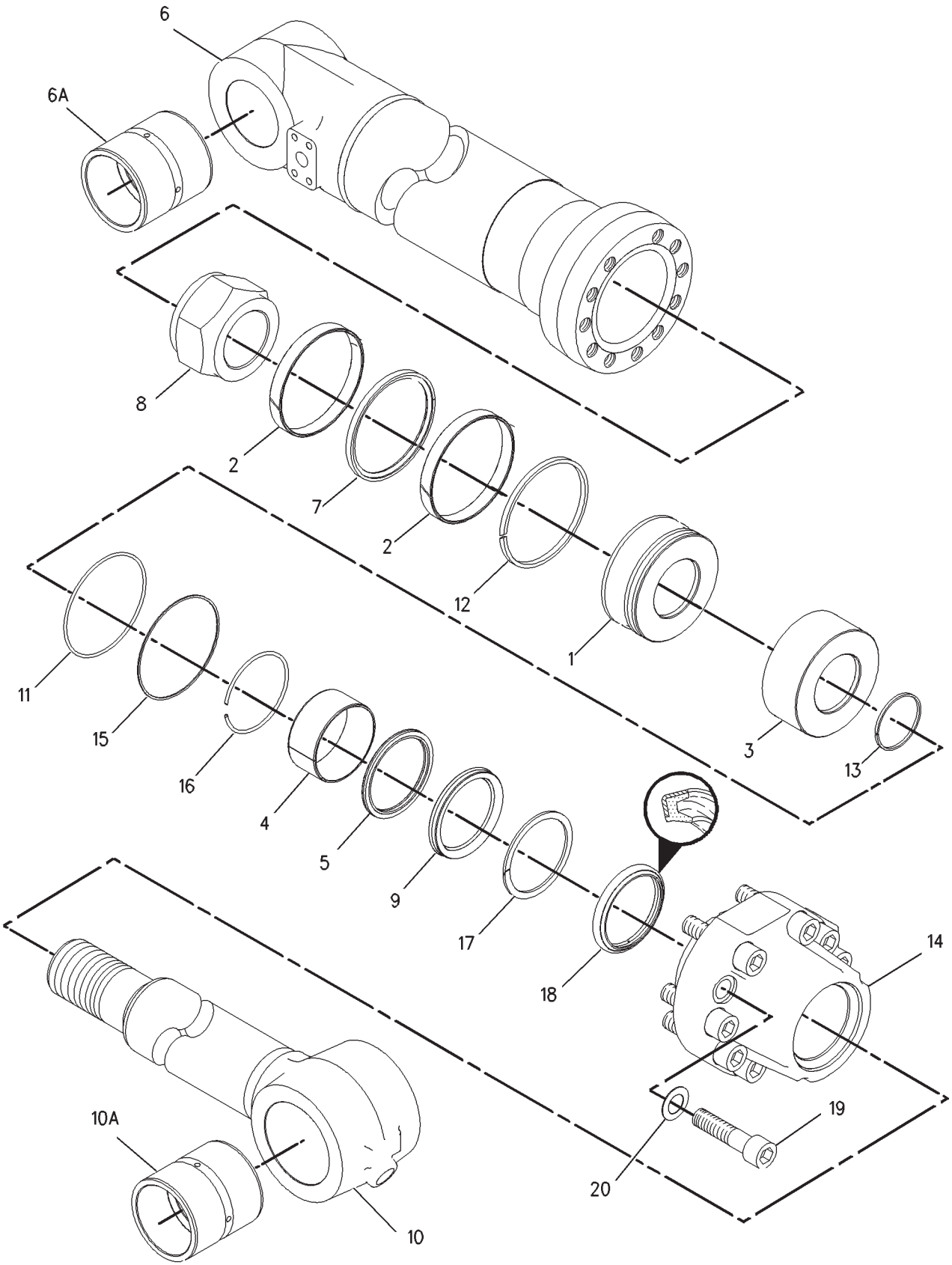

GRAPHIC #1 **<END>** g00979417

HYDRAULIC SYSTEM

155-9074 CYLINDER GP-BUCKET

S/N: RCD1-UP
200-MM (7.9-IN) BORE X 1451-MM (57.1-IN) STROKE
PART OF 155-9073 CYLINDER & SEAL GP-BUCKET
AN ATTACHMENT

SMCS-5457 **i02955826**

NOTE	REF NO	GRAPHIC REF	PART NUMBER	QTY	PART NAME 1 2 3 4 5 6 (PRODUCT LEVEL)	SEE PAGE
	1	1	**170-9912**	1	CYLINDER AS	
	1A	1	**9T-8511**	1	BEARING-SLEEVE	
M	2	1	**116-3513**	1	LOCKNUT	
J	3	1	**147-5738**	2	RING	
J	4	1	**8C-9179**	1	SEAL AS	
J	5	1	**147-5776**	1	RING	
	6	1	**147-5737**	1	PISTON	
J	7	1	**095-1731**	1	SEAL-O-RING	
J	8	1	**4I-6330**	1	RING-BACKUP	
	9	1	**147-5739**	1	HEAD	
	10	1	**155-9162**	1	ROD AS	
	10A	1	**6E-0813**	1	BEARING-SLEEVE	
	11	1	**8T-4167**	11	WASHER-HARD (26X44X4-MM THK)	
M	12	1	**7X-2454**	11	BOLT (M24X3X110-MM)	
	13	1	**102-0786**	1	RING-RETAINING	
	14	1	**128-9261**	1	BEARING-SLEEVE	
J	15	1	**216-0009**	1	SEAL-U-CUP	
J	16	1	**170-9851**	1	SEAL-BUFFER	
J	17	1	**147-5771**	1	RING-BACKUP	
J	18	1	**165-9294**	1	SEAL-LIP TYPE	
					AVAILABLE REPAIR KIT(S):	
J			**215-9995**	1	KIT-SEAL (BUCKET CYLINDER)	

J-KIT MARKED J SERVICES PARTS MARKED J
M-METRIC PART

155-9074 CYLINDER GP-BUCKET *(contd.)* i02955826

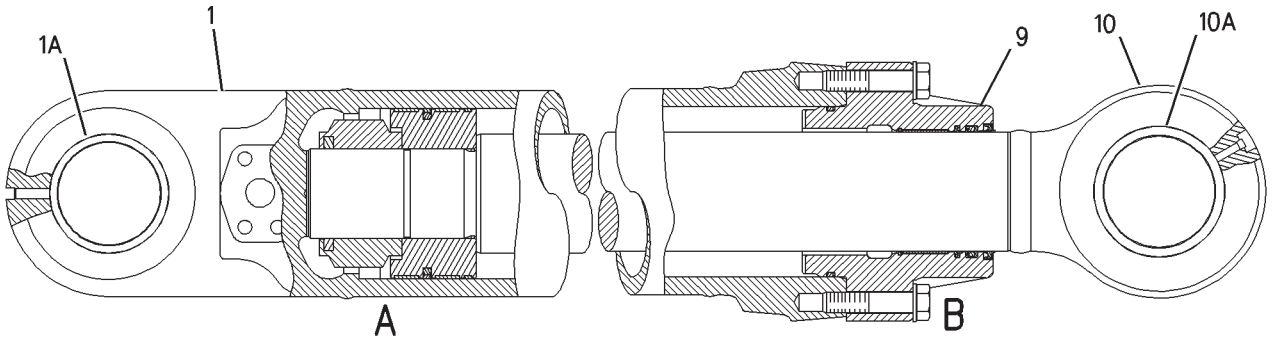

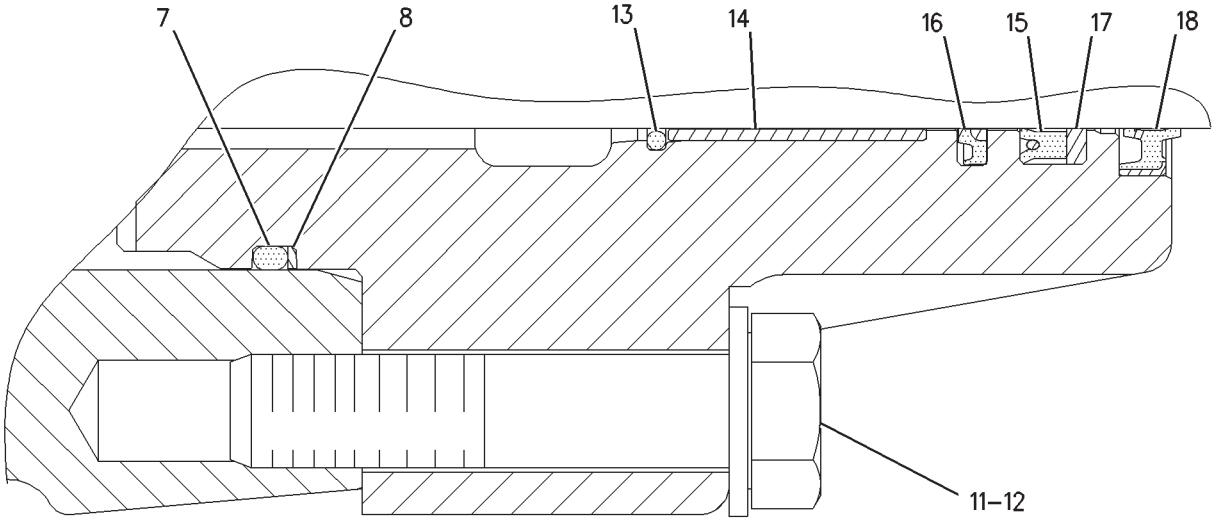

VIEW OF AREA B

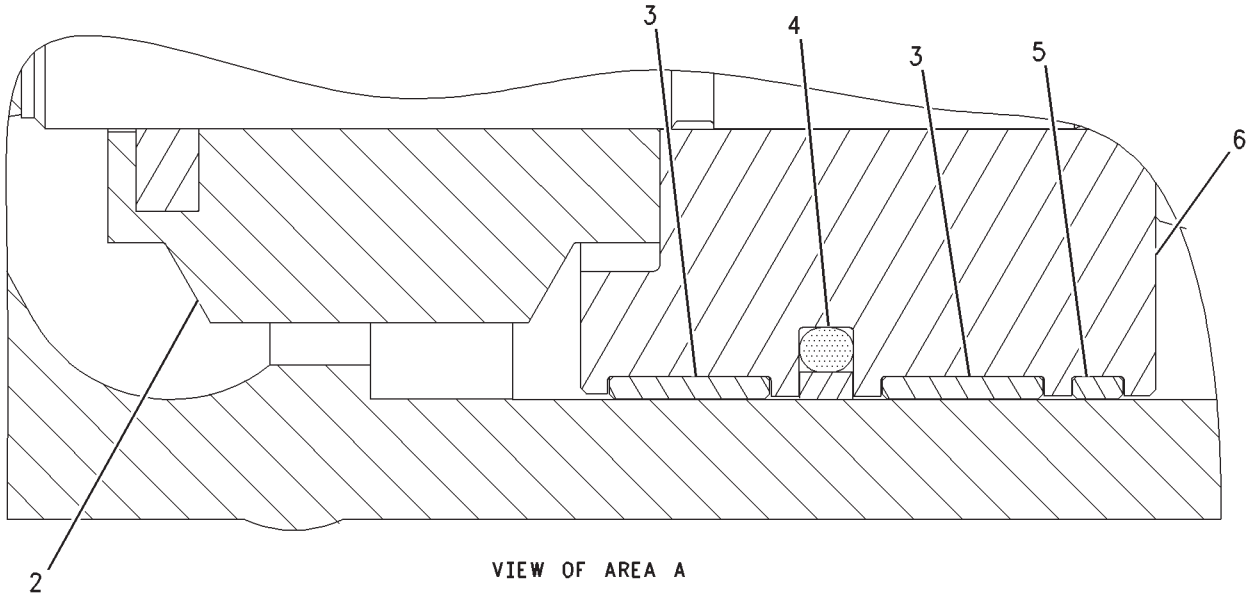

VIEW OF AREA A

GRAPHIC #1 **<END>** g00804648

HYDRAULIC SYSTEM

155-9077 CYLINDER GP-BUCKET

S/N: RCD1-UP
220-MM (8.7-IN) BORE X 1586-MM (62.4-IN) STROKE
PART OF 155-9076 CYLINDER & SEAL GP-BUCKET
AN ATTACHMENT

SMCS-5457 **i02955864**

NOTE	REF NO	GRAPHIC REF	PART NUMBER	QTY	PART NAME 1 2 3 4 5 6 (PRODUCT LEVEL)	SEE PAGE
R	1	1	**170-9914**	1	CYLINDER AS	
	1A	1	**172-2848**	1	BEARING-SLEEVE	
JM	2	1	**116-3516**	1	LOCKNUT	
J	3	1	**155-9157**	2	RING	
J	4	1	**8C-9182**	1	SEAL AS	
J	5	1	**173-3414**	1	RING	
	6	1	**215-9972**	1	PISTON	
J	7	1	**095-1733**	1	SEAL-O-RING	
J	8	1	**4I-6442**	1	RING-BACKUP	
	9	1	**103-8361**	1	HEAD	
R	10	1	**155-9171**	1	ROD AS	
	10A	1	**6E-0886**	1	BEARING-SLEEVE	
	11	1	**8T-4167**	12	WASHER-HARD (26X44X4-MM THK)	
M	12	1	**8T-0363**	12	BOLT (M24X3X120-MM)	
	13	1	**103-8364**	1	RING-RETAINING	
	14	1	**128-9262**	1	BEARING-SLEEVE	
J	15	1	**170-9853**	1	SEAL-BUFFER	
J	16	1	**216-0011**	1	SEAL-U-CUP	
J	17	1	**215-9864**	1	RING-BACKUP	
J	18	1	**167-2496**	1	SEAL-WIPER	
					AVAILABLE REPAIR KIT(S):	
J			**216-0000**	1	KIT-SEAL (BUCKET CYLINDER)	

J-KIT MARKED J SERVICES PARTS MARKED J
M-METRIC PART
R-REMFG PART MAY BE AVAILABLE

155-9077 CYLINDER GP-BUCKET *(contd.)* i02955864

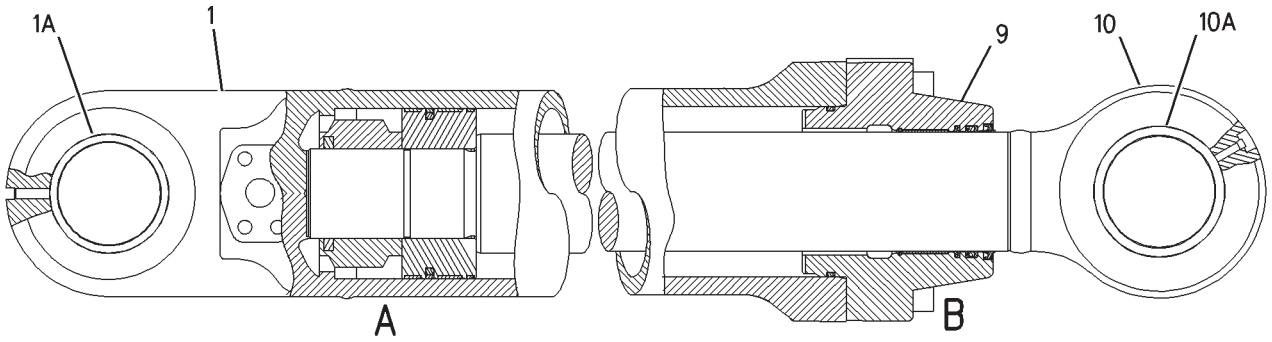

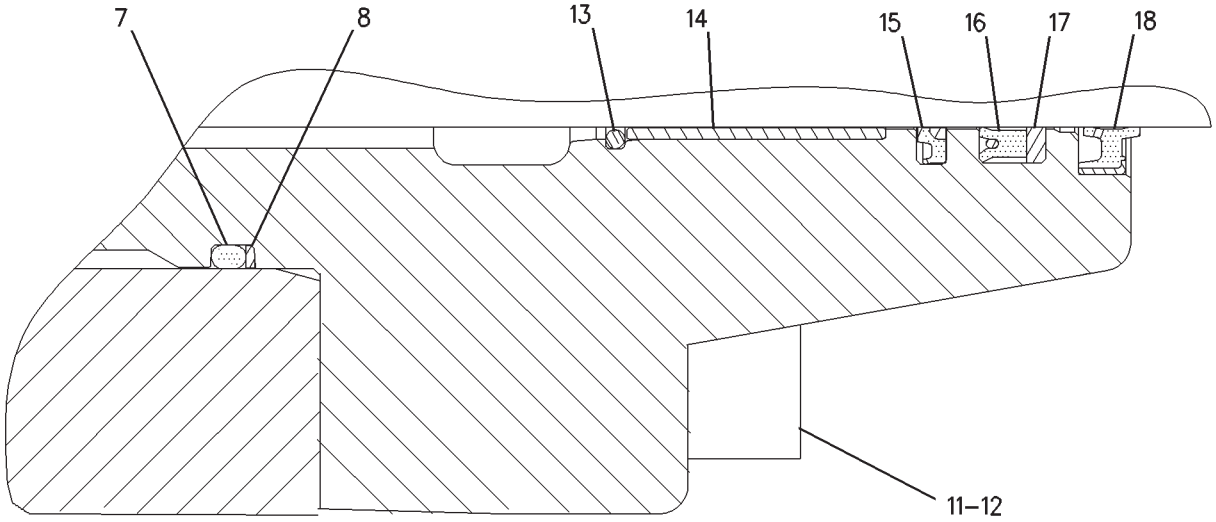

VIEW OF AREA B

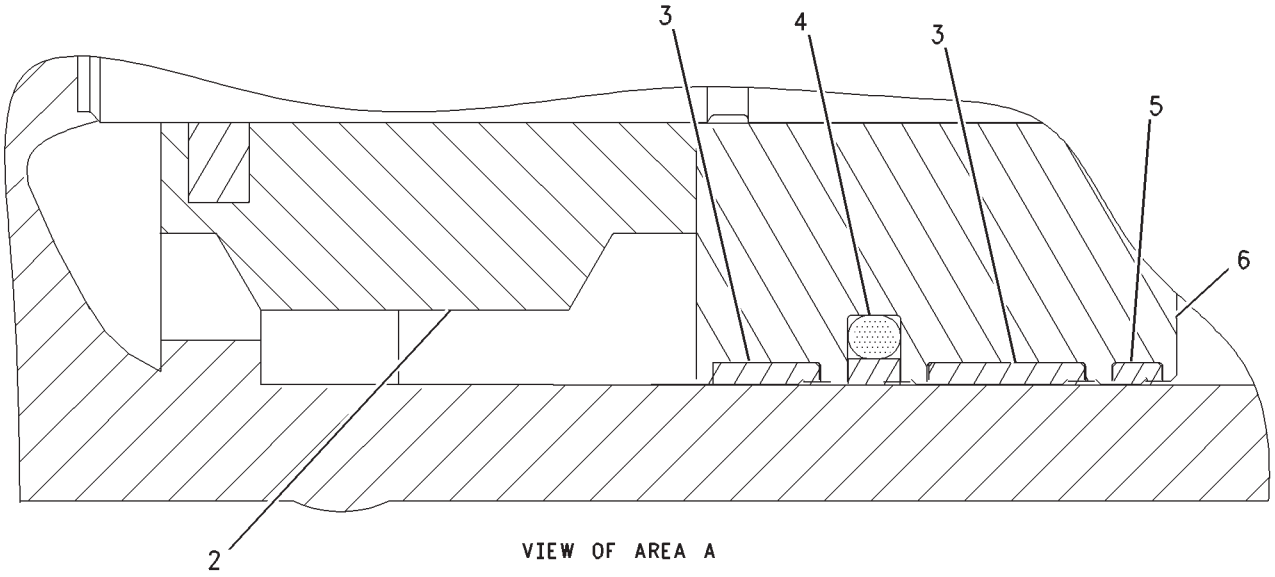

VIEW OF AREA A

GRAPHIC #1 **<END>** g00777403

HYDRAULIC SYSTEM

209-6037 CYLINDER GP-BUCKET

S/N: RCD1-UP
200-MM (7.9-IN) BORE X 1451-MM (57.1-IN) STROKE
PART OF 209-6036 CYLINDER & SEAL GP-BUCKET
AN ATTACHMENT

SMCS-5457 **i03384083**

NOTE	REF NO	GRAPHIC REF	PART NUMBER	QTY	PART NAME 1 2 3 4 5 6 (PRODUCT LEVEL)	SEE PAGE
	1	1	**209-6038**	1	CYLINDER AS	
	1A	1	**9T-8511**	1	BEARING-SLEEVE	
	2	1	**209-6024**	1	LOCKNUT-SPECIAL	
J	3	1	**147-5738**	2	RING	
J	4	1	**8C-9179**	1	SEAL AS	
J	5	1	**147-5776**	1	RING	
	6	1	**209-6025**	1	PISTON	
J	7	1	**095-1731**	1	SEAL-O-RING	
J	8	1	**4I-6330**	1	RING-BACKUP	
	9	1	**209-6026**	1	HEAD	
	10	1	**209-6043**	1	ROD AS	
	10A	1	**6E-0813**	1	BEARING-SLEEVE	
	11	1	**9X-8258**	11	WASHER (33X56X6-MM THK)	
M	12	1	**9X-6618**	11	BOLT (M30X3.5X130-MM)	
	13	1	**102-0786**	1	RING-RETAINING	
	14	1	**128-9261**	1	BEARING-SLEEVE	
J	15	1	**170-9851**	1	SEAL-BUFFER	
J	16	1	**216-0009**	1	SEAL-U-CUP	
J	17	1	**147-5771**	1	RING-BACKUP	
J	18	1	**165-9294**	1	SEAL-LIP TYPE	
					AVAILABLE REPAIR KIT(S):	
J			**215-9995**	1	KIT-SEAL (BUCKET CYLINDER)	
					(ALSO INCLUDES SEAL-RING)	

J-KIT MARKED J SERVICES PART(S) MARKED J
M-METRIC PART

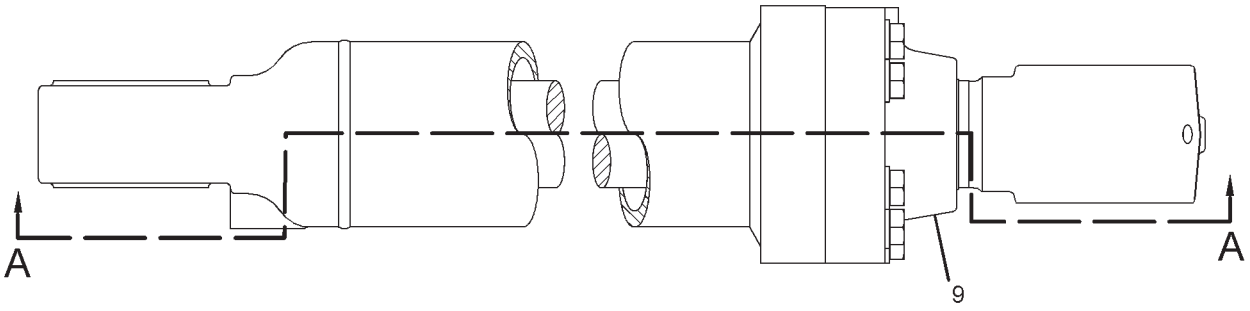

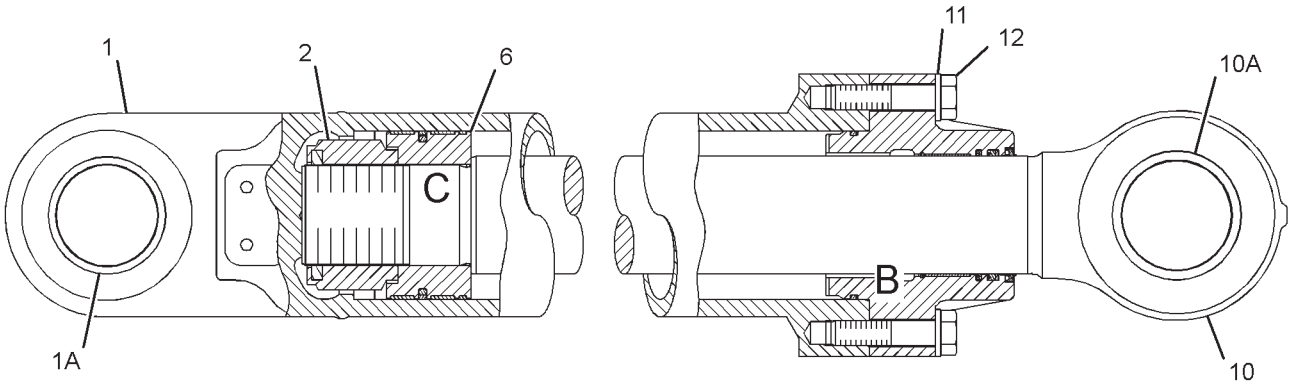

SECTION A-A

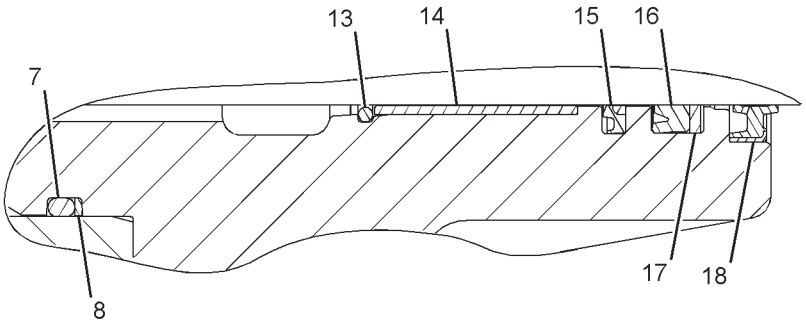

VIEW OF AREA B

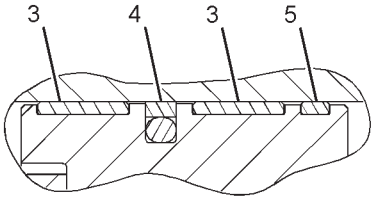

VIEW OF AREA C

GRAPHIC #1 **<END>** g01818283

HYDRAULIC SYSTEM

215-9965 CYLINDER GP-BUCKET

S/N: RCD1-UP
220-MM (8.7-IN) BORE X 1586-MM (62.4-IN) STROKE
PART OF 215-9964 CYLINDER & SEAL GP-BUCKET
AN ATTACHMENT

SMCS-5457 **i02955965**

NOTE	REF NO	GRAPHIC REF	PART NUMBER	QTY	PART NAME 1 2 3 4 5 6 (PRODUCT LEVEL)	SEE PAGE
	1	1	**215-9966**	1	CYLINDER AS	
	1A	1	**172-2848**	1	BEARING-SLEEVE	
M	2	1	**116-3516**	1	LOCKNUT	
J	3	1	**155-9157**	2	RING	
J	4	1	**8C-9182**	1	SEAL AS	
J	5	1	**173-3414**	1	RING	
	6	1	**215-9972**	1	PISTON	
J	7	1	**095-1733**	1	SEAL-O-RING	
J	8	1	**4I-6442**	1	RING-BACKUP	
	9	1	**173-3366**	1	HEAD	
R	10	1	**155-9171**	1	ROD AS	
	10A	1	**6E-0886**	1	BEARING-SLEEVE	
	11	1	**9X-8399**	12	WASHER (33X56X6-MM THK)	
M	12	1	**9X-6618**	12	BOLT (M30X3.5X130-MM)	
	13	1	**103-8364**	1	RING-RETAINING	
	14	1	**128-9262**	1	BEARING-SLEEVE	
J	15	1	**170-9853**	1	SEAL-BUFFER	
J	16	1	**216-0011**	1	SEAL-U-CUP	
J	17	1	**215-9864**	1	RING-BACKUP	
J	18	1	**165-9296**	1	SEAL-LIP TYPE	
					AVAILABLE REPAIR KIT(S):	
J			**216-0000**	1	KIT-SEAL (BUCKET CYLINDER)	
					(INCLUDES PARTS MARKED J & SEAL RING)	

J-KIT MARKED J SERVICES PART(S) MARKED J
M-METRIC PART
R-REMFG PART MAY BE AVAILABLE

215-9965 CYLINDER GP-BUCKET *(contd.)* **i02955965**

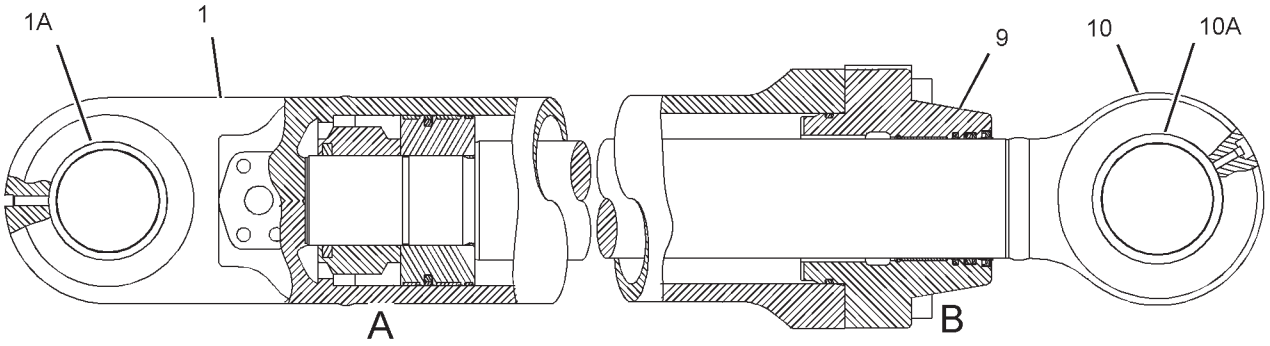

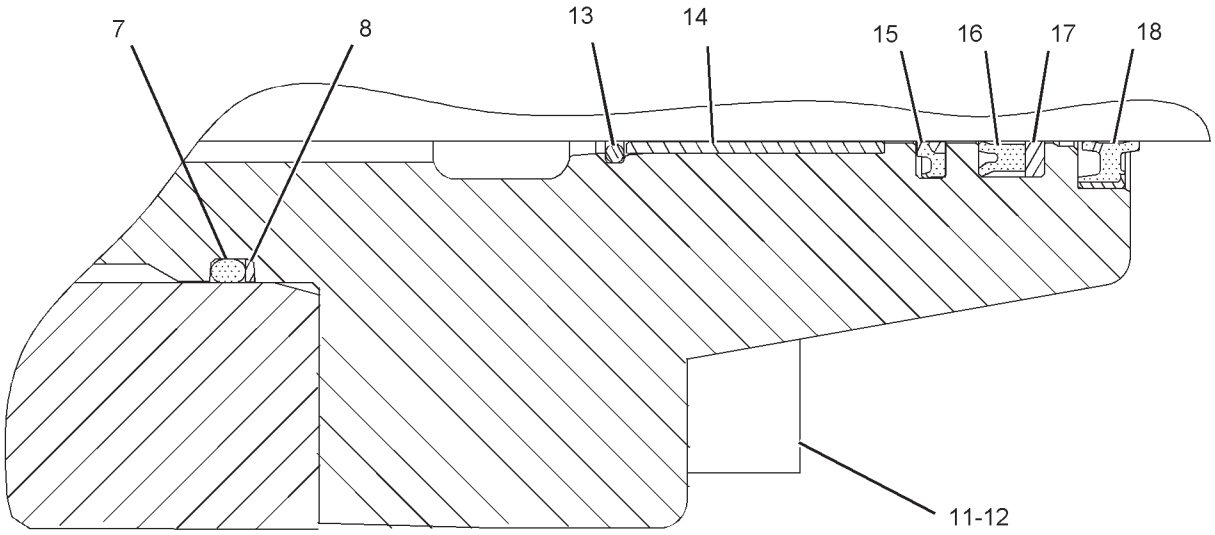

VIEW OF AREA B

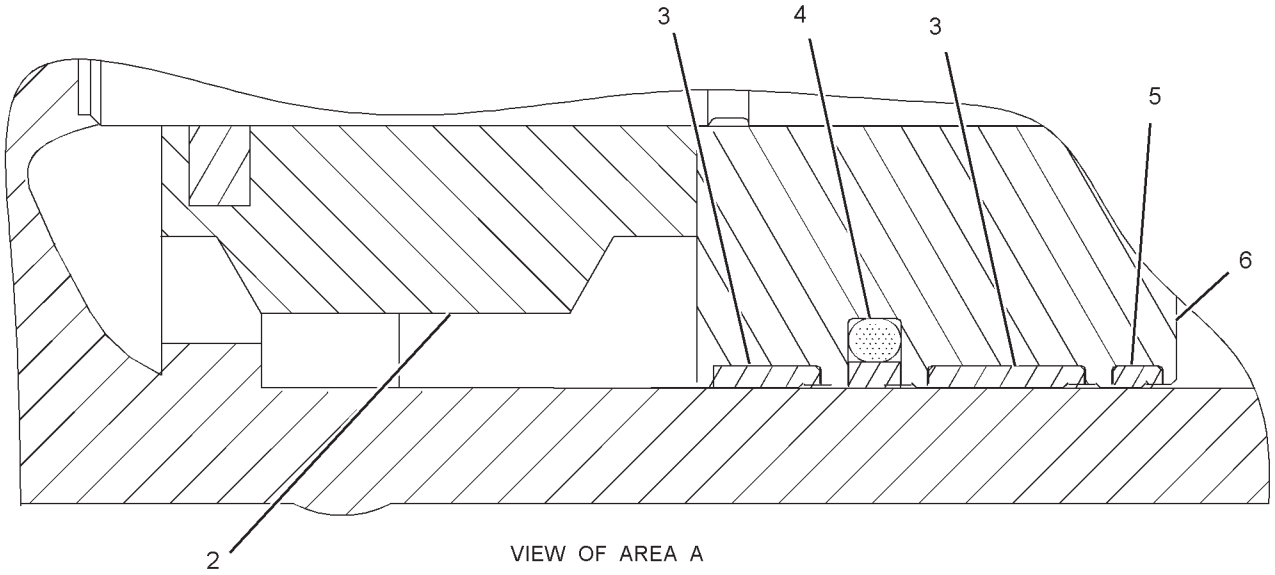

VIEW OF AREA A

GRAPHIC #1 **<END>** g01106026

HYDRAULIC SYSTEM

155-9196 CYLINDER GP-COUNTERWEIGHT

S/N: RCD1-UP
PART OF 157-9989 COUNTERWEIGHT AR
AN ATTACHMENT

SMCS-5409 **i01701089**

NOTE	REF NO	GRAPHIC REF	PART NUMBER	QTY	PART NAME 1 2 3 4 5 6 (PRODUCT LEVEL)	SEE PAGE
Y	1	1	**155-9197**	1	CYLINDER GP-COUNTERWEIGHT	489
	2	1	**3B-8489**	2	FITTING-GREASE	
	3	1	**7X-4803**	2	SEAL-LIP TYPE	
	4	1	**096-0854**	2	SEAL-LIP TYPE	

Y-SEPARATE ILLUSTRATION

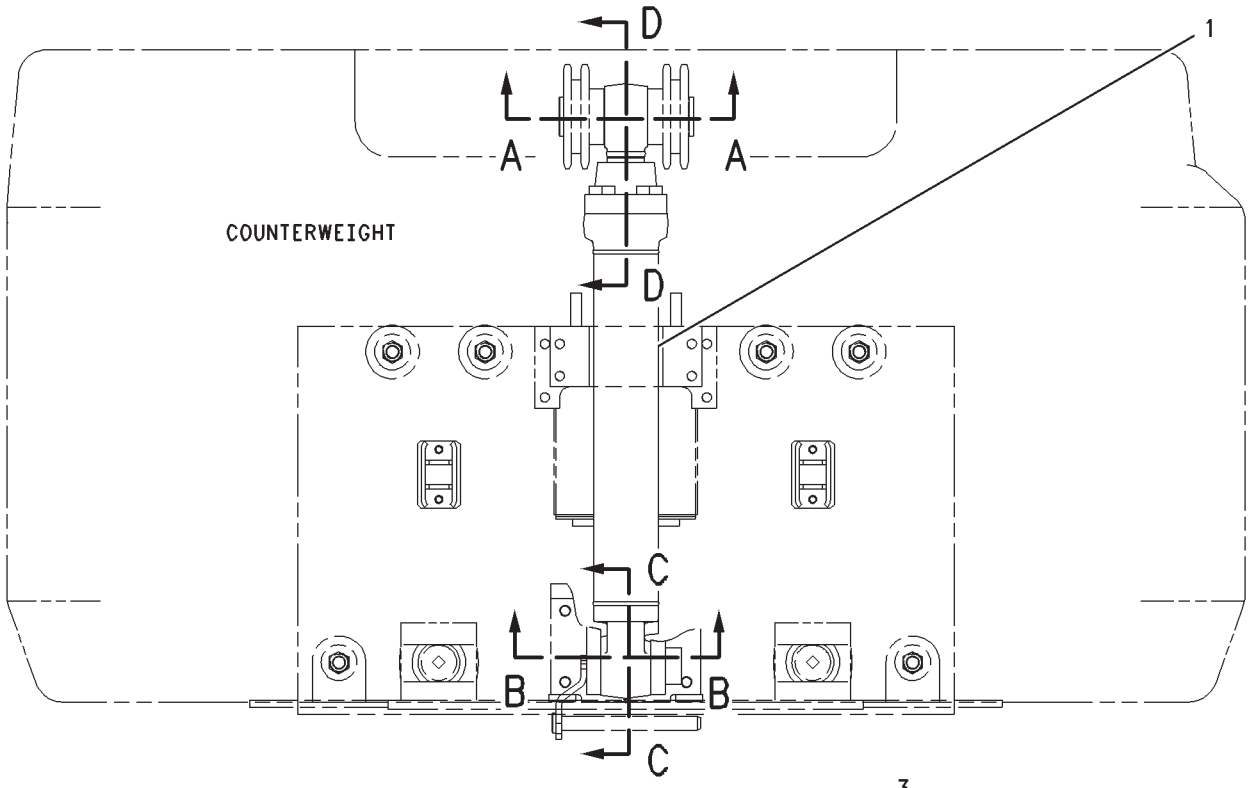

FRONT VIEW

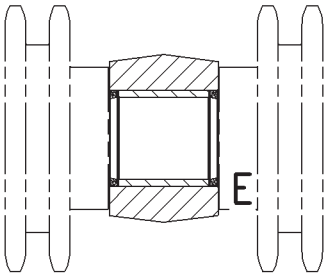

SECTION A-A

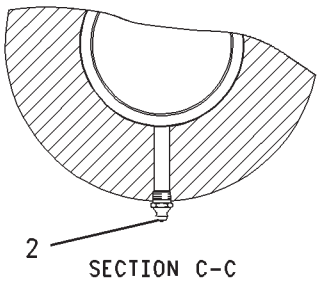

SECTION C-C

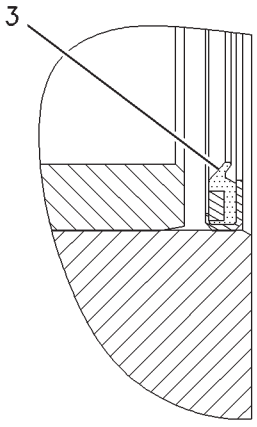

VIEW OF AREA F

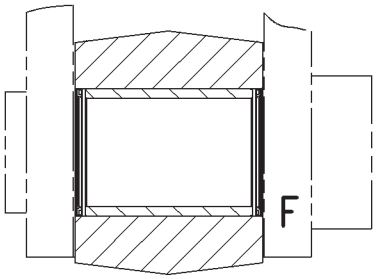

SECTION B-B

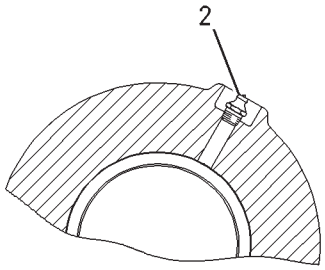

SECTION D-D

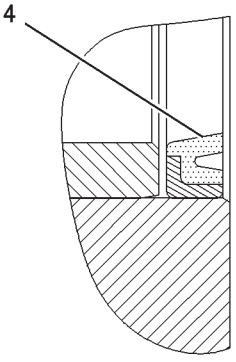

VIEW OF AREA E

GRAPHIC #1 **<END>** g00838715

HYDRAULIC SYSTEM

155-9197 CYLINDER GP-COUNTERWEIGHT

S/N: RCD1-UP
150-MM (5.9-IN) BORE X 940-MM (37-IN) STROKE
PART OF 155-9196 CYLINDER GP-COUNTERWEIGHT
AN ATTACHMENT

SMCS-5409 **i02956032**

NOTE	REF NO	GRAPHIC REF	PART NUMBER	QTY	PART NAME 1 2 3 4 5 6 (PRODUCT LEVEL)	SEE PAGE
	1	1	**188-4224**	1	CYLINDER AS	
	1A	1	**7Y-4666**	1	BEARING-SLEEVE	
M	2	1	**7Y-4695**	1	LOCKNUT (M80X2-THD)	
J	3	1	**188-4217**	2	RING	
J	4	1	**9X-3601**	1	SEAL AS	
J	5	1	**188-4218**	1	RING	
	6	1	**188-4216**	1	PISTON	
J	7	1	**095-1633**	1	SEAL-O-RING	
J	8	1	**7Y-4673**	1	RING-BACKUP	
	9	1	**7Y-4660**	1	HEAD	
M	10	1	**7Y-5215**	8	BOLT-SOCKET HEAD (M24X3X90-MM)	
	11	1	**173-3363**	1	ROD AS	
	11A	1	**7Y-5102**	1	BEARING-SLEEVE	
	12	1	**7Y-4672**	1	RING-RETAINING	
	13	1	**114-0760**	1	BEARING-SLEEVE	
J	14	1	**128-9265**	1	SEAL-BUFFER	
J	15	1	**170-9864**	1	SEAL-U-CUP	
J	16	1	**7Y-4669**	1	RING-BACKUP	
J	17	1	**165-9290**	1	SEAL-LIP TYPE	
					AVAILABLE REPAIR KIT(S):	
J			**191-5619**	1	KIT-SEAL (COUNTERWEIGHT CYLINDER)	

J-KIT MARKED J SERVICES PARTS MARKED J
M-METRIC PART

155-9197 CYLINDER GP-COUNTERWEIGHT *(contd.)* i02956032

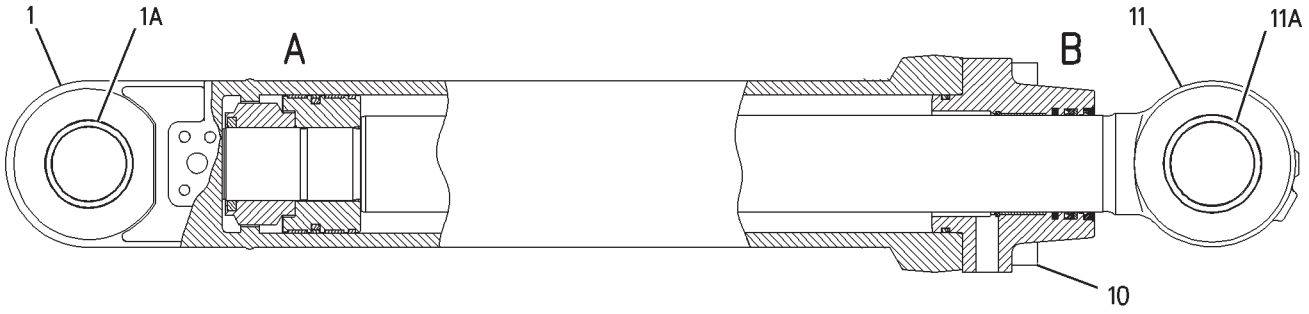

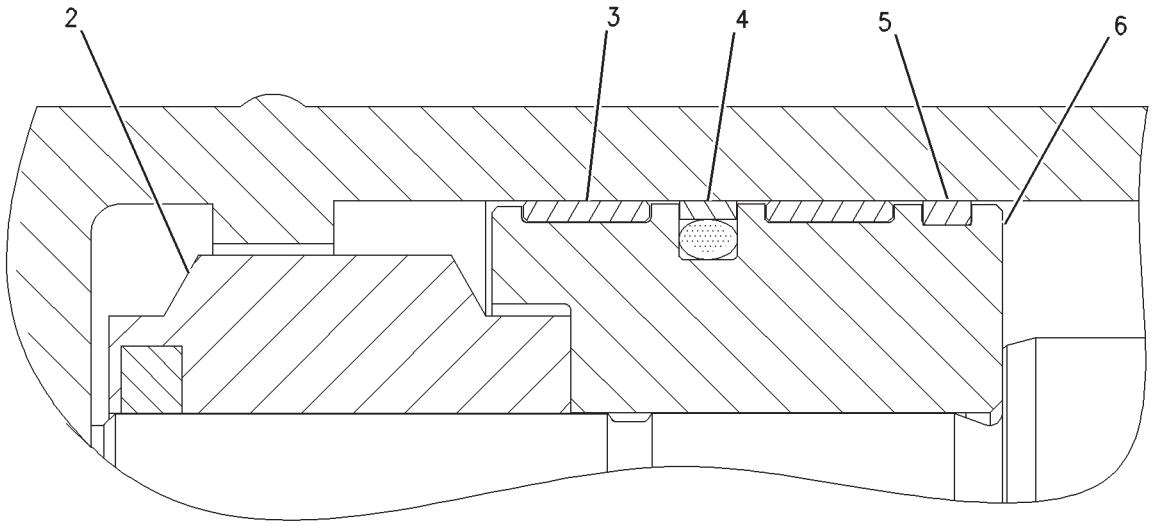

VIEW OF AREA A

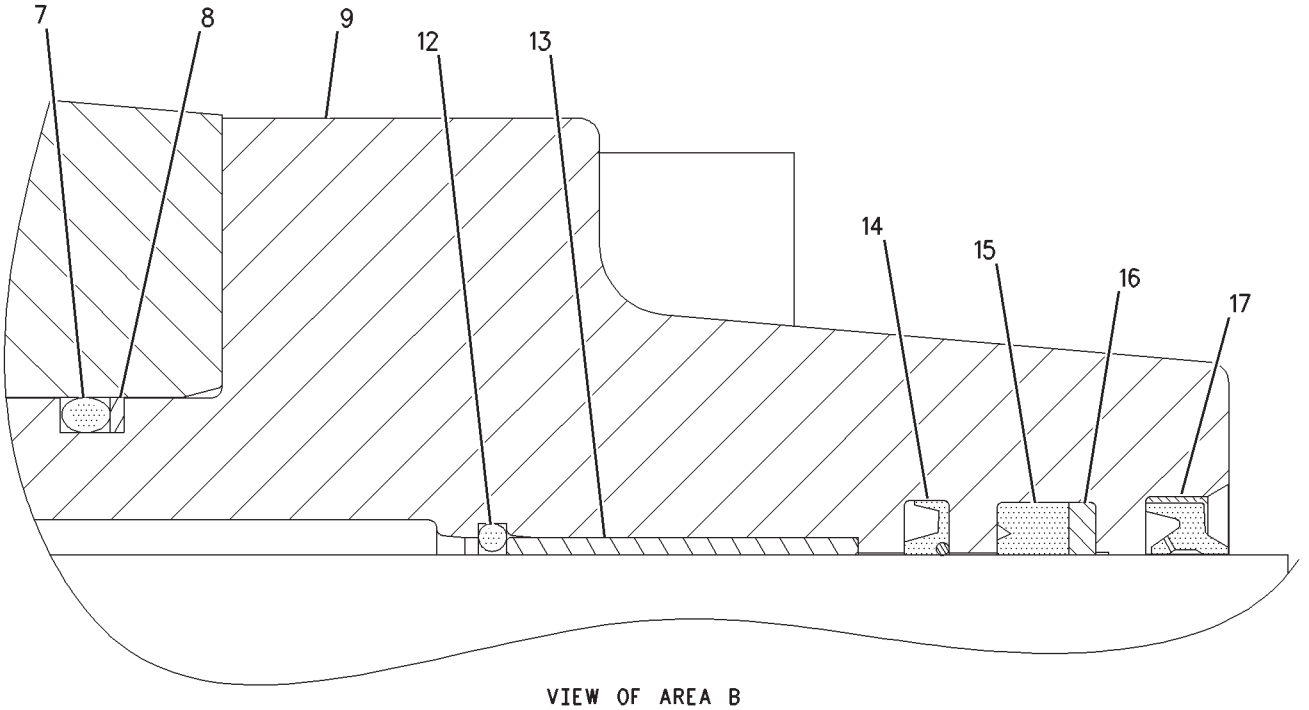

VIEW OF AREA B

GRAPHIC #1 **<END>** g00776738

HYDRAULIC SYSTEM

155-9071 CYLINDER GP-HYDRAULIC

S/N: RCD1-UP
220-MM (8.7-IN) BORE X 2262-MM (89-IN) STROKE
PART OF 155-9070 CYLINDER & SEAL GP-HYDRAULIC
AN ATTACHMENT

SMCS-4303, 5102, 5105, 5116, 5138, 5149, 5362, 5576, 5816, 7201, 7562

i02956057

NOTE	REF NO	GRAPHIC REF	PART NUMBER	QTY	PART NAME 1 2 3 4 5 6 (PRODUCT LEVEL)	SEE PAGE
R	1	1	**170-9910**	1	CYLINDER AS	
	1A	1	**172-2848**	1	BEARING-SLEEVE	
M	2	1	**116-3516**	1	LOCKNUT	
	3	1	**155-9157**	2	RING	
J	4	1	**8C-9182**	1	SEAL AS	
J	5	1	**173-3414**	1	RING	
	6	1	**215-9972**	1	PISTON	
J	7	1	**095-1733**	1	SEAL-O-RING	
J	8	1	**4I-6442**	1	RING-BACKUP	
	9	1	**173-3366**	1	HEAD	
J	10	1	**155-9153**	1	ROD AS	
	10A	1	**172-2848**	1	BEARING-SLEEVE	
	11	1	**9X-8399**	12	WASHER (33X56X6-MM THK)	
M	12	1	**9X-6618**	12	BOLT (M30X3.5X130-MM)	
J	13	1	**165-9296**	1	SEAL-LIP TYPE	
J	14	1	**216-0011**	1	SEAL-U-CUP	
	15	1	**191-5704**	1	STOP	
J	16	1	**215-9864**	1	RING-BACKUP	
	17	1	**128-9262**	1	BEARING-SLEEVE	
	18	1	**103-8364**	1	RING-RETAINING	
	19	1	**116-3518**	1	STOP	
J	20	1	**116-3519**	1	RING-SEAL	
J	21	1	**170-9853**	1	SEAL-BUFFER	
	22	1	**4I-6329**	1	NUT	
M	23	1	**095-1274**	1	SETSCREW-SOCKET	
					AVAILABLE REPAIR KIT(S):	
J			**216-0000**	1	KIT-SEAL (HYDRAULIC CYLINDER)	

J-KIT MARKED J SERVICES PARTS MARKED J
M-METRIC PART
R-REMFG PART MAY BE AVAILABLE

155-9071 CYLINDER GP-HYDRAULIC *(contd.)* i02956057

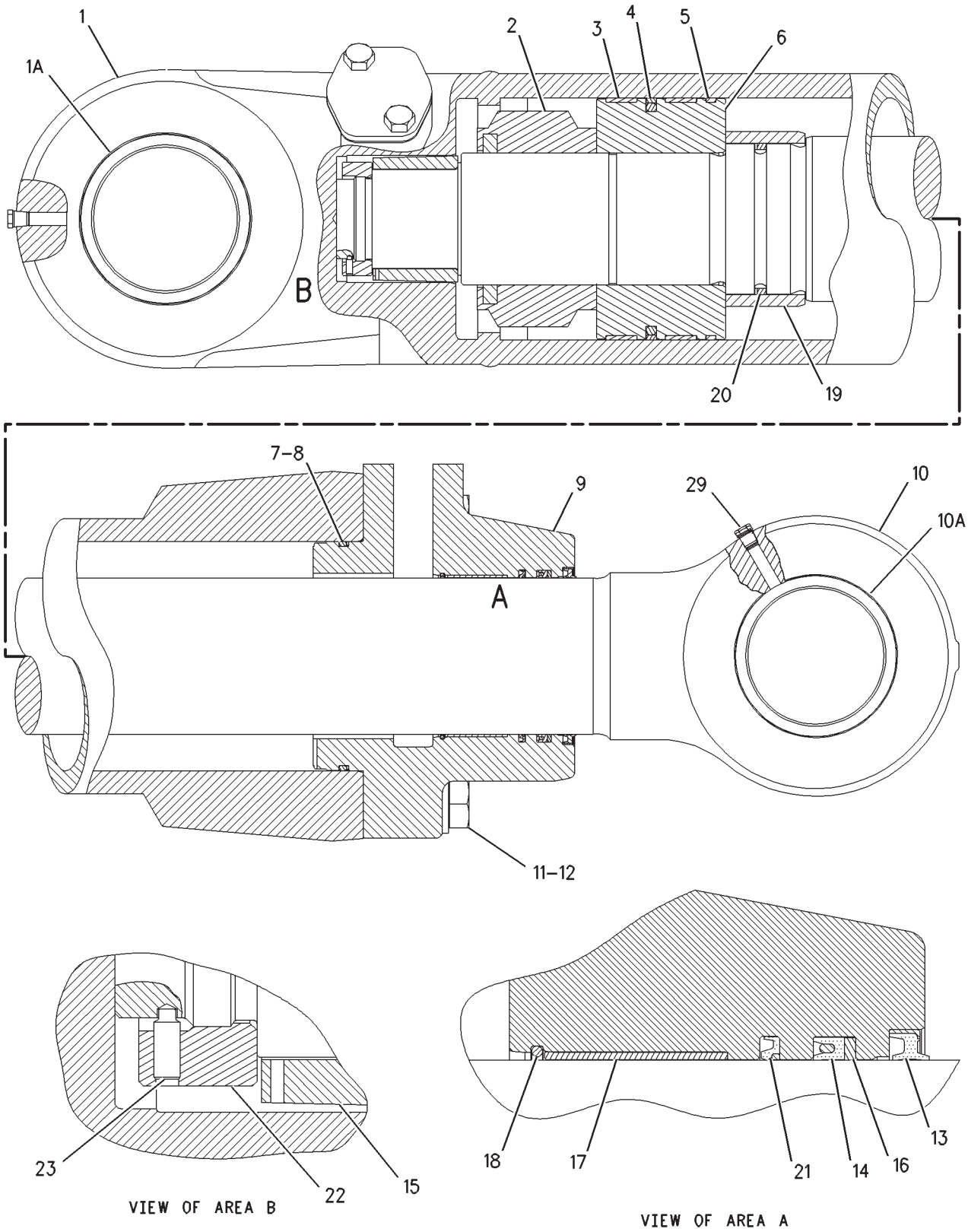

GRAPHIC #1 **<END>** g00979418

HYDRAULIC SYSTEM

259-0871 CYLINDER GP-HYDRAULIC

S/N: RCD1-UP
220-MM (8.7-IN) BORE X 2262-MM (89-IN) STROKE
PART OF 155-9070 CYLINDER & SEAL GP-HYDRAULIC
AN ATTACHMENT

SMCS-4303, 5102, 5105, 5116, 5138, 5149, 5362, 5576, 5816, 7201, 7562

i02956396

NOTE	REF NO	GRAPHIC REF	PART NUMBER	QTY	PART NAME 1 2 3 4 5 6 (PRODUCT LEVEL)	SEE PAGE
R	1	1	**283-6093**	1	CYLINDER AS	
	1A	1	**172-2848**	1	BEARING-SLEEVE	
M	2	1	**116-3516**	1	LOCKNUT	
	3	1	**155-9157**	2	RING	
J	4	1	**8C-9182**	1	SEAL AS	
J	5	1	**173-3414**	1	RING	
	6	1	**215-9972**	1	PISTON	
J	7	1	**095-1733**	1	SEAL-O-RING	
J	8	1	**4I-6442**	1	RING-BACKUP	
	9	1	**173-3366**	1	HEAD	
J	10	1	**259-0872**	1	ROD AS	
	10A	1	**172-2848**	1	BEARING-SLEEVE	
	11	1	**9X-8258**	12	WASHER (33X56X6-MM THK)	
M	12	1	**9X-6618**	12	BOLT (M30X3.5X130-MM)	
J	13	1	**165-9296**	1	SEAL-LIP TYPE	
J	14	1	**216-0011**	1	SEAL-U-CUP	
	15	1	**191-5704**	1	STOP	
J	16	1	**215-9864**	1	RING-BACKUP	
	17	1	**128-9262**	1	BEARING-SLEEVE	
	18	1	**103-8364**	1	RING-RETAINING	
	19	1	**116-3518**	1	STOP	
J	20	1	**116-3519**	1	RING-SEAL	
J	21	1	**170-9853**	1	SEAL-BUFFER	
	22	1	**4I-6329**	1	NUT	
M	23	1	**095-1274**	1	SETSCREW-SOCKET (M6X1X16-MM)	
					AVAILABLE REPAIR KIT(S):	
J			**216-0000**	1	KIT-SEAL (HYDRAULIC CYLINDER)	

J-KIT MARKED J SERVICES PARTS MARKED J
M-METRIC PART
R-REMFG PART MAY BE AVAILABLE

259-0871 CYLINDER GP-HYDRAULIC *(contd.)* **i02956396**

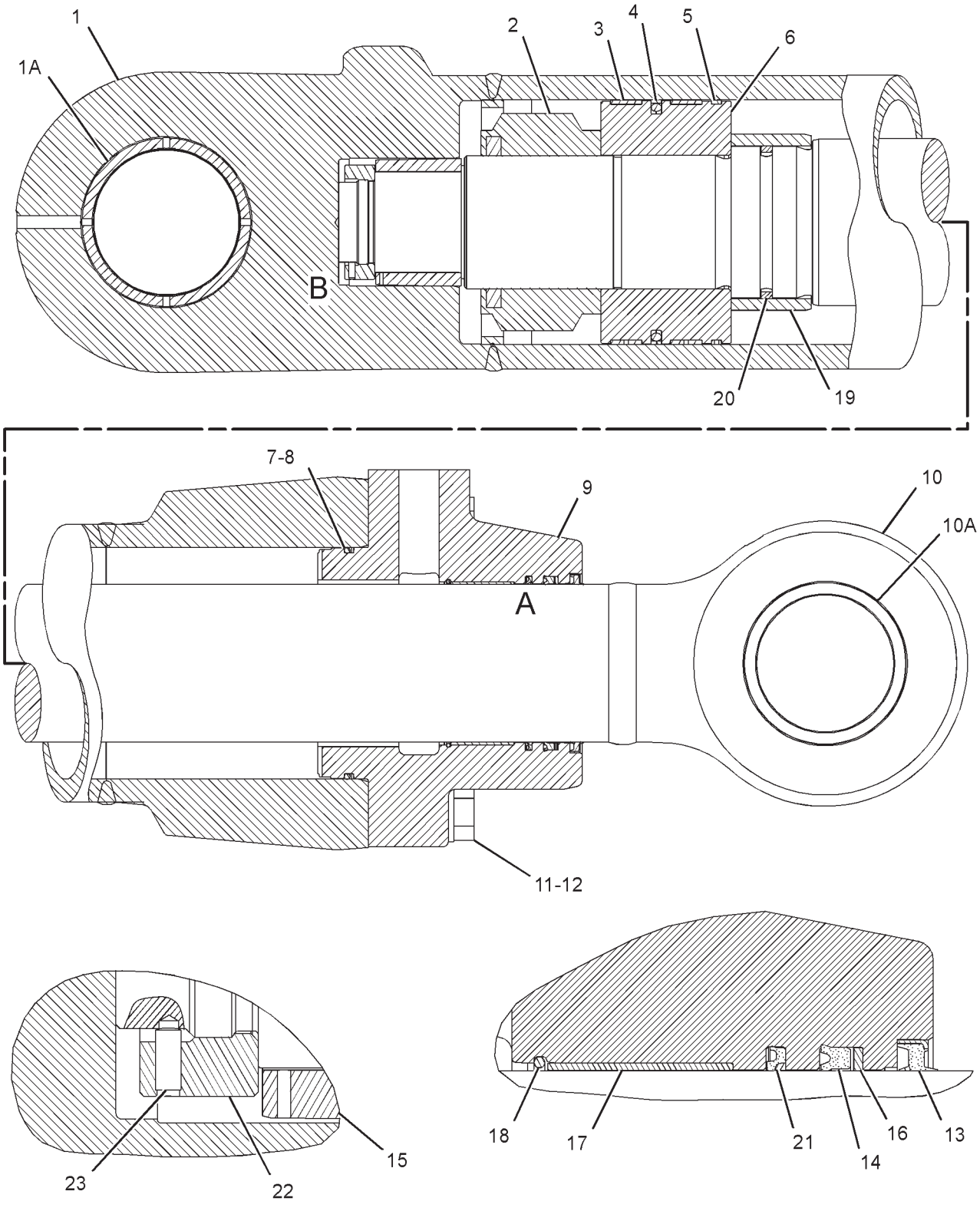

GRAPHIC #1 **<END>** g01225880

HYDRAULIC SYSTEM

6I-3638 DRIVE GP-PUMP

S/N: BLC426-UP

PART OF 159-5810, 235-3469 ENGINE AR-CORE

SMCS-3108 **i02936794**

NOTE	REF NO	GRAPHIC REF	PART NUMBER	QTY	PART NAME 1 2 3 4 5 6 (PRODUCT LEVEL)	SEE PAGE
	1	1	**0S-1590**	3	BOLT (3/8-16X2-IN)	
	2	1	**8T-9527**	1	SEAL-O-RING	
YC	3	1	*133-9907*	1	ADAPTER GP-PUMP DRIVE	10
	4	1	**5M-2894**	4	WASHER-HARD (10.2X18.5X2.5-MM THK)	
	5	1	**9S-8752**	1	NUT-FULL (3/8-16-THD)	

C-CHANGE FROM PREVIOUS TYPE
Y-SEPARATE ILLUSTRATION

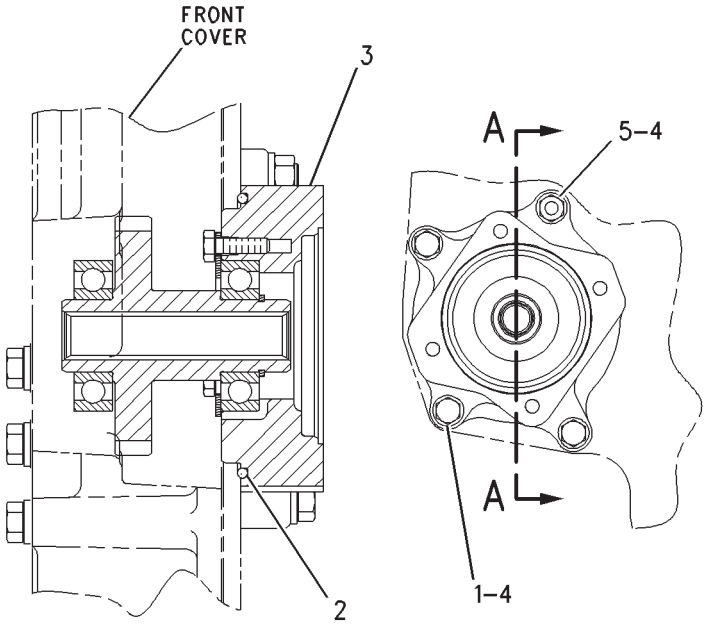

SECTION A–A

GRAPHIC #1 **<END>** g00892672

HYDRAULIC SYSTEM

148-4597 DRIVE GP-SWING

S/N: RCD1-UP
WITH MOTOR
PART OF 148-4628 POWER TRAIN AR

SMCS-5459 **i01525480**

NOTE	REF NO	GRAPHIC REF	PART NUMBER	QTY	PART NAME 1 2 3 4 5 6 (PRODUCT LEVEL)	SEE PAGE
Y	1	1	*155-9201*	1	MOTOR & MTG GP-SWING	684
Y	2	1	*148-4598*	1	DRIVE GP-SWING (WITHOUT MOTOR, FRONT)	497

Y-SEPARATE ILLUSTRATION

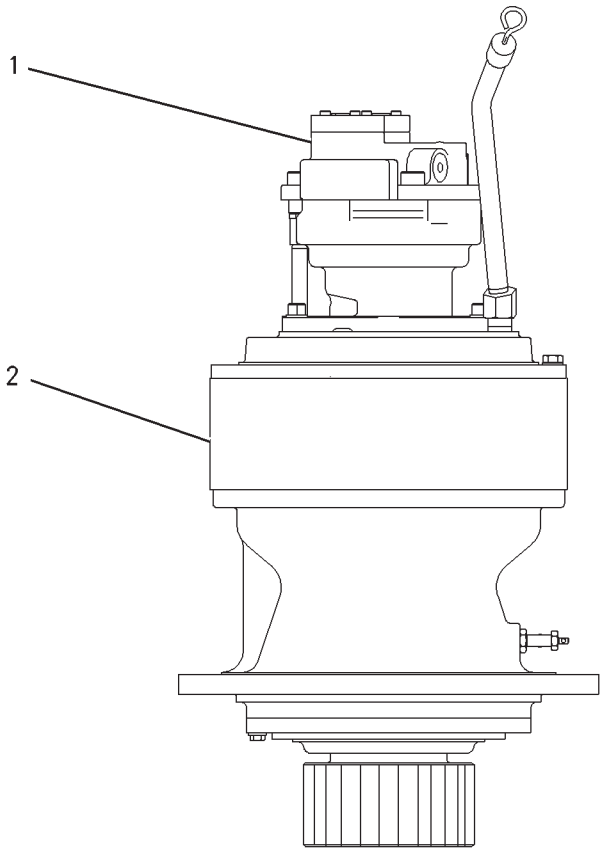

GRAPHIC #1 **<END>** g00792568

HYDRAULIC SYSTEM

148-4598 DRIVE GP-SWING—WITHOUT MOTOR, FRONT

S/N: RCD1-UP

PART OF 148-4597 DRIVE GP-SWING

TYPE 1

SMCS-5459 **i02237454**

NOTE	REF NO	GRAPHIC REF	PART NUMBER	QTY	PART NAME 1 2 3 4 5 6 (PRODUCT LEVEL)	SEE PAGE
	1	1	**148-4602**	4	GEAR-PLANETARY (24-TEETH)	
M	2	1	**094-1528**	8	WASHER (53X84X1-MM THK)	
	3	1	**148-4608**	4	SHAFT-PLANETARY	
	4	1	**191-2525**	1	COVER-HOUSING	
	5	1	**148-4600**	1	GEAR-SUN (17-TEETH)	
M	6	1	**7I-7684**	2	SPACER (50X79.6X6-MM THK)	
	7	1	**199-4680**	1	GAUGE-OIL LEVEL (SWING DRIVE)	
	8	1	**199-4678**	1	PIPE AS	
	9	1	**096-1441**	1	RING-RETAINING	
	10	1	**093-1730**	1	RING-RETAINING	
	11	1	**148-4601**	1	GEAR-SUN (17-TEETH)	
	12	1	**191-2511**	1	CARRIER-PLANETARY	
	13	1	**114-1322**	1	RING-RETAINING	
	14	1	**148-4607**	1	CARRIER-PLANETARY	
	15	1	**148-4604**	1	GEAR-RING (67-TEETH)	
B	17	1	**1U-8846**		SEALANT-GASKET	
	18	1	**110-7149**	1	RING-RETAINING	
	19	1	**9U-8693**	1	BEARING-ROLLER	
	20	1	**6V-7238**	1	VALVE-SHUTOFF	
	21	1	**3K-0360**	1	SEAL-O-RING	
	22	1	**7I-7619**	1	BEARING-ROLLER	
	23	1	**128-9170**	2	SEAL-LIP TYPE	
	24	1	**199-4496**	1	SHAFT-PINION	
	25	1	**7I-7611**	1	CAGE	
M	26	1	**8T-4183**	10	BOLT (M12X1.75X40-MM)	
	27	1	**8T-4223**	10	WASHER-HARD (13.5X25.5X3-MM THK)	
	28	1	**5M-4454**	1	SEAL-O-RING	
	29	1	**191-2524**	1	HOUSING	
	30	1	**148-4611**	8	WASHER (71.3X112X1-MM THK)	
	31	1	**191-2514**	8	BEARING AS	
	32	1	**148-4609**	4	SHAFT-PLANETARY	
	33	1	**148-4603**	4	GEAR-PLANETARY (24-TEETH)	
	34	1	**099-5194**	8	PIN-SPRING	
M	35	1	**8T-6383**	24	BOLT (M16X2X200-MM)	
	36	1	**9X-8257**	24	WASHER (17.5X30X3.5-MM THK)	
	37	1	**191-2513**	4	BEARING AS-ROLLER	
	38	1	**231-6864**	1	BREATHER AS (SWING DRIVE)	
		1	**093-5150**	1	COUPLING-PIPE	
		1	**114-8234**	1	BREATHER (SWING DRIVE)	
		1	**231-6969**	1	NIPPLE-PIPE	
	39	1	**171-9413**	1	SPACER (140.5X160X103.2-MM THK)	
	40	1	**199-4672**	1	CONNECTOR AS	
		1	**6V-9746**	1	SEAL-O-RING	

B-USE AS REQUIRED
M-METRIC PART

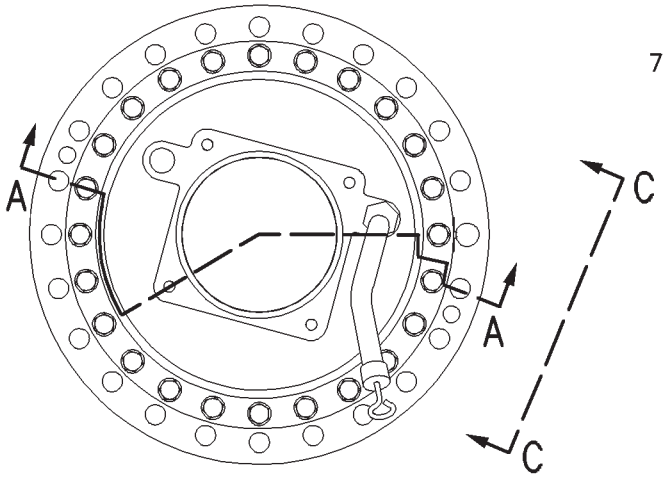

TOP VIEW

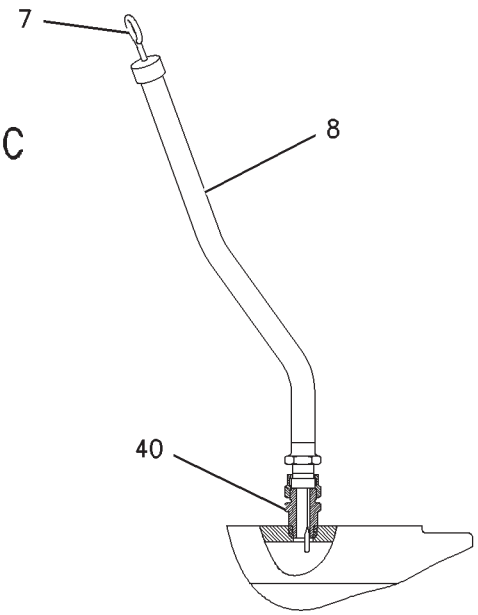

VIEW C-C

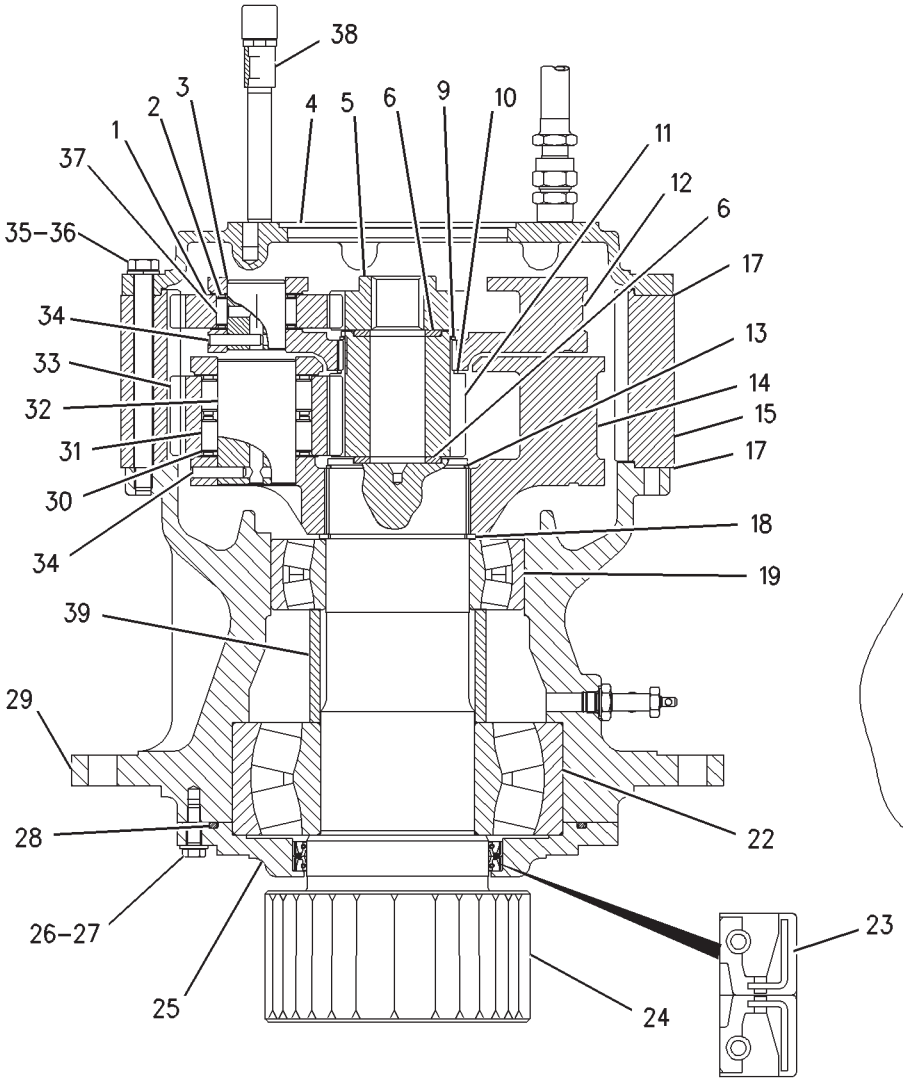

SECTION A-A

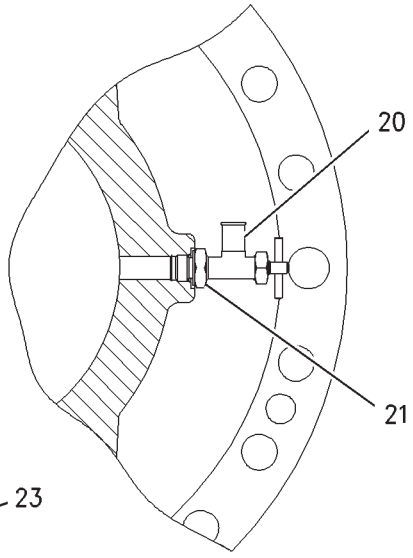

SECTION B-B

GRAPHIC #1 **<END>** g00898469

HYDRAULIC SYSTEM

148-4598 DRIVE GP-SWING—WITHOUT MOTOR, FRONT

S/N: RCD1-UP

PART OF 148-4597 DRIVE GP-SWING

TYPE 2

SMCS-5459 **i02956207**

NOTE	REF NO	GRAPHIC REF	PART NUMBER	QTY	PART NAME 1 2 3 4 5 6 (PRODUCT LEVEL)	SEE PAGE
	1	1	**148-4602**	4	GEAR-PLANETARY (24-TEETH)	
M	2	1	**094-1528**	8	WASHER (53X84X1-MM THK)	
	3	1	**148-4608**	4	SHAFT-PLANETARY	
	4	1	**191-2525**	1	COVER-HOUSING	
	5	1	**148-4600**	1	GEAR-SUN (17-TEETH)	
M	6	1	**7I-7684**	2	SPACER (50X79.6X6-MM THK)	
	7	1	**199-4680**	1	GAUGE-OIL LEVEL (SWING DRIVE)	
	8	1	**199-4678**	1	PIPE AS	
	9	1	**096-1441**	1	RING-RETAINING	
	10	1	**093-1730**	1	RING-RETAINING	
	11	1	**148-4601**	1	GEAR-SUN (17-TEETH)	
	12	1	**191-2511**	1	CARRIER-PLANETARY	
	13	1	**114-1322**	1	RING-RETAINING	
	14	1	**148-4607**	1	CARRIER-PLANETARY	
	15	1	**148-4604**	1	GEAR-RING (67-TEETH)	
B	17	1	**1U-8846**		SEALANT-GASKET	
	18	1	**110-7149**	1	RING-RETAINING	
	19	1	**9U-8693**	1	BEARING-ROLLER	
	20	1	**6V-7238**	1	VALVE-SHUTOFF	
	21	1	**3K-0360**	1	SEAL-O-RING	
	22	1	**7I-7619**	1	BEARING-ROLLER	
	23	1	**128-9170**	2	SEAL-LIP TYPE	
	24	1	**199-4496**	1	SHAFT-PINION	
	25	1	**7I-7611**	1	CAGE	
M	26	1	**8T-4183**	10	BOLT (M12X1.75X40-MM)	
	27	1	**8T-4223**	10	WASHER-HARD (13.5X25.5X3-MM THK)	
	28	1	**5M-4454**	1	SEAL-O-RING	
	29	1	**191-2524**	1	HOUSING	
	30	1	**148-4611**	8	WASHER (71.3X112X1-MM THK)	
	31	1	**191-2514**	8	BEARING AS	
	32	1	**148-4609**	4	SHAFT-PLANETARY	
	33	1	**148-4603**	4	GEAR-PLANETARY (24-TEETH)	
	34	1	**099-5194**	8	PIN-SPRING	
M	35	1	**8T-6383**	24	BOLT (M16X2X200-MM)	
	36	1	**9X-8257**	24	WASHER (17.5X30X3.5-MM THK)	
	37	1	**191-2513**	4	BEARING AS-ROLLER	
C	38	1	**227-6221**	1	BREATHER AS (SWING DRIVE)	
		1	**4H-6112**	1	BREATHER (SWING DRIVE)	
		1	**227-6215**	1	BOSS	
		1	**267-6785**	1	PIPE	
	39	1	**171-9413**	1	SPACER (140.5X160X103.2-MM THK)	
	40	1	**199-4672**	1	CONNECTOR AS	
		1	**6V-9746**	1	SEAL-O-RING	

B-USE AS REQUIRED
C-CHANGE FROM PREVIOUS TYPE
M-METRIC PART

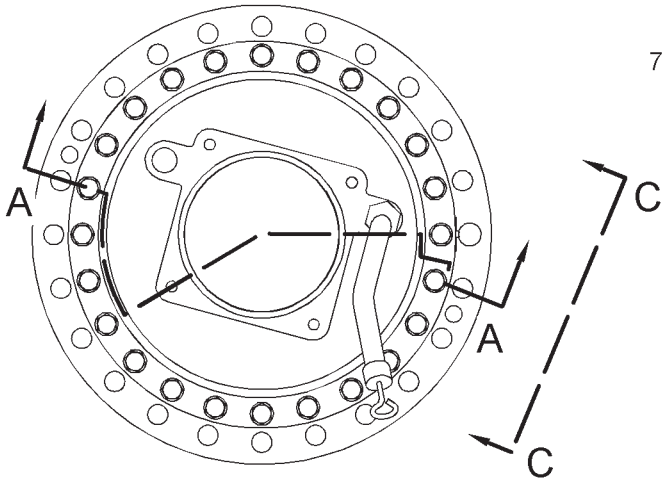

TOP VIEW

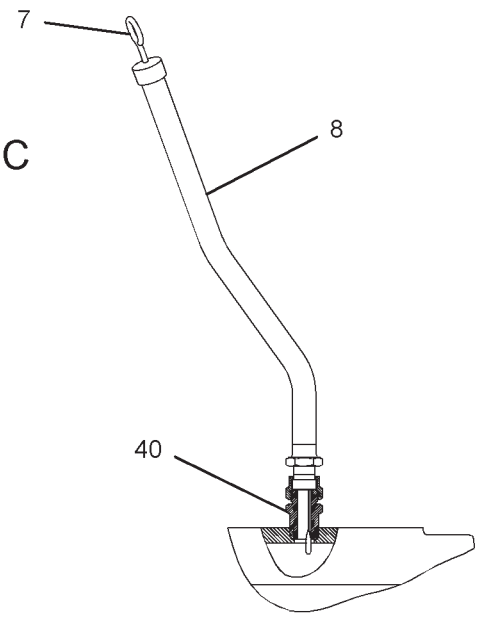

VIEW C-C

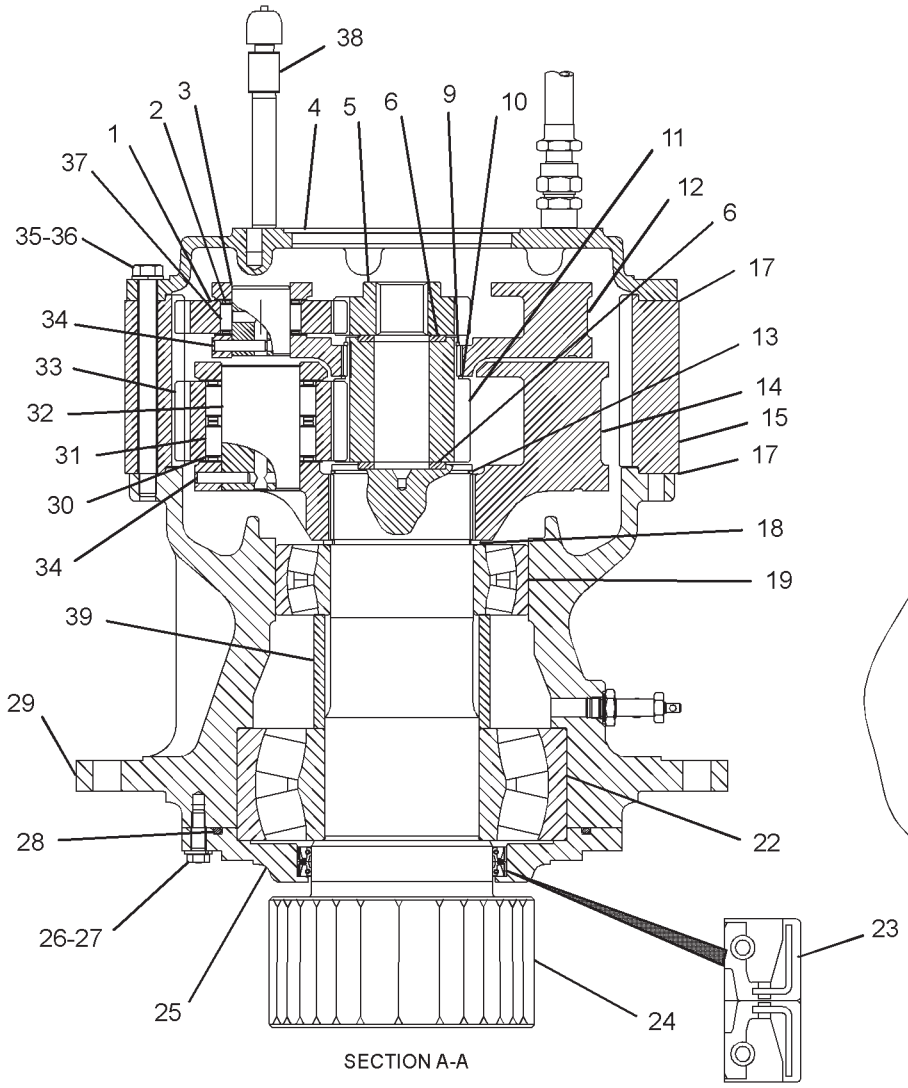

SECTION A-A

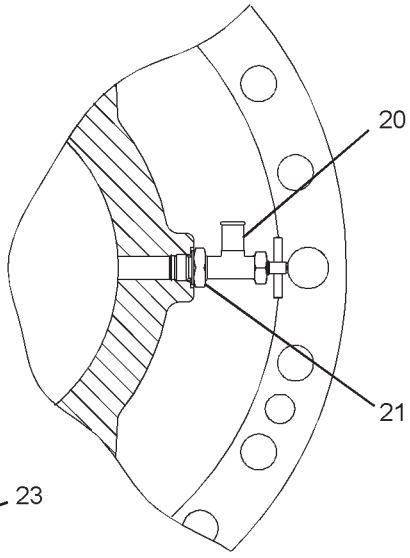

SECTION B-B

GRAPHIC #1 **<END>** g01225494

HYDRAULIC SYSTEM

148-4625 DRIVE GP-SWING

S/N: RCD1-UP
WITH MOTOR
PART OF 148-4628 POWER TRAIN AR

SMCS-5459 **i01744092**

NOTE	REF NO	GRAPHIC REF	PART NUMBER	QTY	PART NAME 1 2 3 4 5 6 (PRODUCT LEVEL)	SEE PAGE
Y	1	1	*155-9203*	1	MOTOR & MTG GP-SWING	685
Y	2	1	*148-4626*	1	DRIVE GP-SWING (WITHOUT MOTOR, REAR)	502

Y-SEPARATE ILLUSTRATION

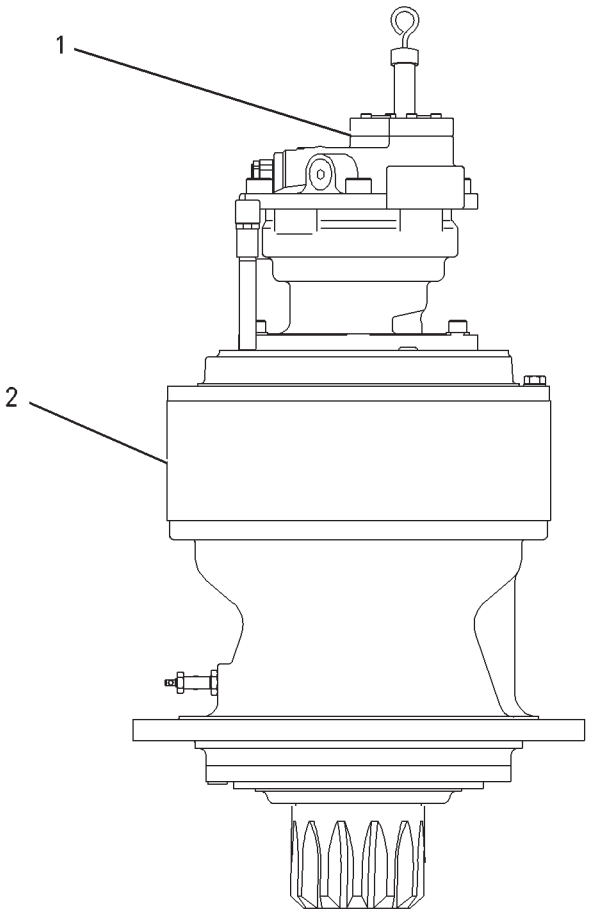

GRAPHIC #1 **<END>** g00892939

HYDRAULIC SYSTEM

148-4626 DRIVE GP-SWING—WITHOUT MOTOR, REAR

S/N: RCD1-UP

PART OF 148-4625 DRIVE GP-SWING

SMCS-5459 **i03547663**

NOTE	REF NO	GRAPHIC REF	PART NUMBER	QTY	PART NAME 1 2 3 4 5 6 (PRODUCT LEVEL)	SEE PAGE
	1	1	**148-4602**	4	GEAR-PLANETARY (24-TEETH)	
M	2	1	**094-1528**	8	WASHER (53X84X1-MM THK)	
	3	1	**148-4608**	4	SHAFT-PLANETARY	
	4	1	**191-2525**	1	COVER-HOUSING	
	5	1	**148-4600**	1	GEAR-SUN (17-TEETH)	
M	6	1	**7I-7684**	2	SPACER (50X79.6X6-MM THK)	
	7	1	**199-4672**	1	CONNECTOR AS	
		1	**6V-9746**	1	SEAL-O-RING	
	8	1	**199-4674**	1	PIPE AS	
	9	1	**096-1441**	1	RING-RETAINING	
	10	1	**093-1730**	1	RING-RETAINING	
	11	1	**148-4601**	1	GEAR-SUN (17-TEETH)	
	12	1	**191-2511**	1	CARRIER-PLANETARY	
	13	1	**114-1322**	1	RING-RETAINING	
	14	1	**148-4607**	1	CARRIER-PLANETARY	
	15	1	**148-4604**	1	GEAR-RING (67-TEETH)	
B	17	1	**1U-8846**		SEALANT-GASKET	
	18	1	**110-7149**	1	RING-RETAINING	
	19	1	**9U-8693**	1	BEARING-ROLLER	
	20	1	**7I-7619**	1	BEARING-ROLLER	
	21	1	**128-9170**	2	SEAL-LIP TYPE	
	22	1	**199-4496**	1	SHAFT-PINION	
	23	1	**7I-7611**	1	CAGE	
M	24	1	**8T-4183**	10	BOLT (M12X1.75X40-MM)	
	25	1	**8T-4223**	10	WASHER-HARD (13.5X25.5X3-MM THK)	
	26	1	**5M-4454**	1	SEAL-O-RING	
	27	1	**191-2524**	1	HOUSING	
	28	1	**6V-7238**	1	VALVE-SHUTOFF	
	29	1	**3K-0360**	1	SEAL-O-RING	
	30	1	**148-4611**	8	WASHER (71.3X112X1-MM THK)	
	31	1	**191-2514**	8	BEARING AS	
	32	1	**148-4609**	4	SHAFT-PLANETARY	
	33	1	**148-4603**	4	GEAR-PLANETARY (24-TEETH)	
	34	1	**099-5194**	8	PIN-SPRING	
M	35	1	**8T-6383**	24	BOLT (M16X2X200-MM)	
	36	1	**9X-8257**	24	WASHER (17.5X30X3.5-MM THK)	
	37	1	**191-2513**	4	BEARING AS-ROLLER	
	38	1	**231-6864**	1	BREATHER AS (SWING DRIVE)	
		1	**093-5150**	1	COUPLING-PIPE	
		1	**114-8234**	1	BREATHER (SWING DRIVE)	
		1	**231-6969**		NIPPLE-PIPE	
	39	1	**171-9413**	1	SPACER (140.5X160X103.2-MM THK)	
	40	1	**199-4681**	1	GAUGE-OIL LEVEL (SWING DRIVE)	

B-USE AS REQUIRED
M-METRIC PART

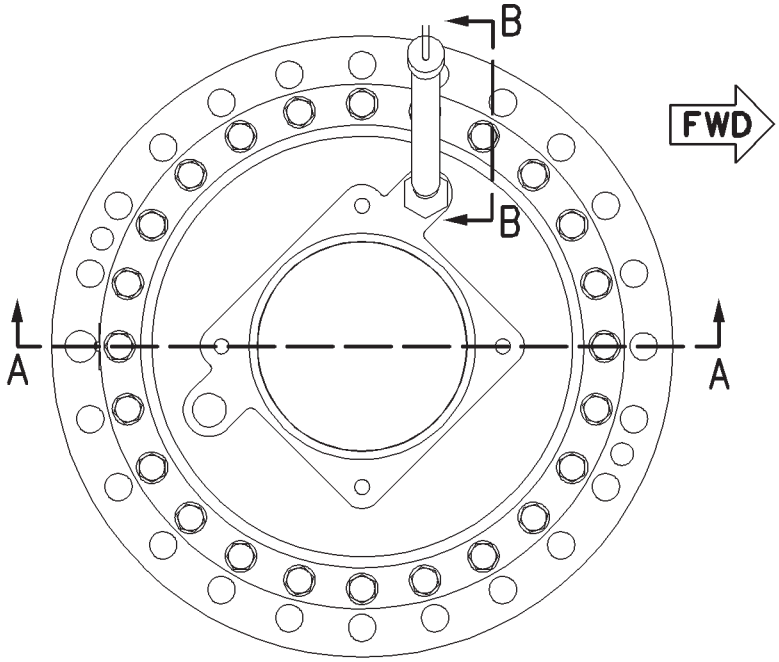

TOP VIEW

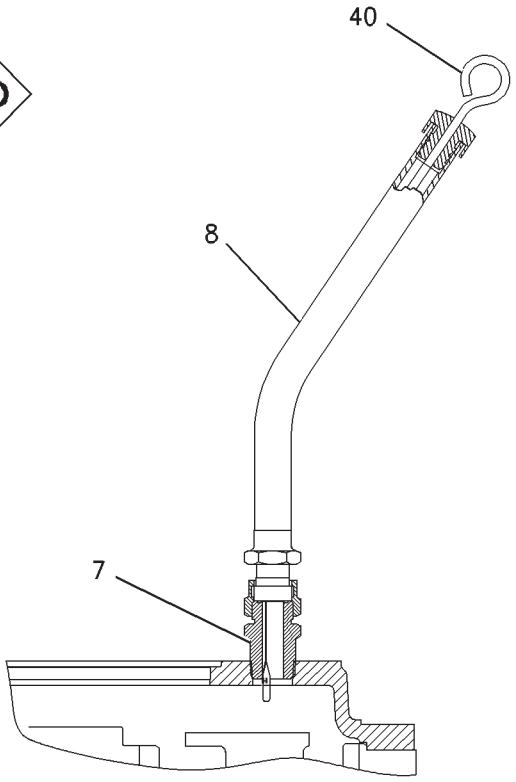

VIEW B-B

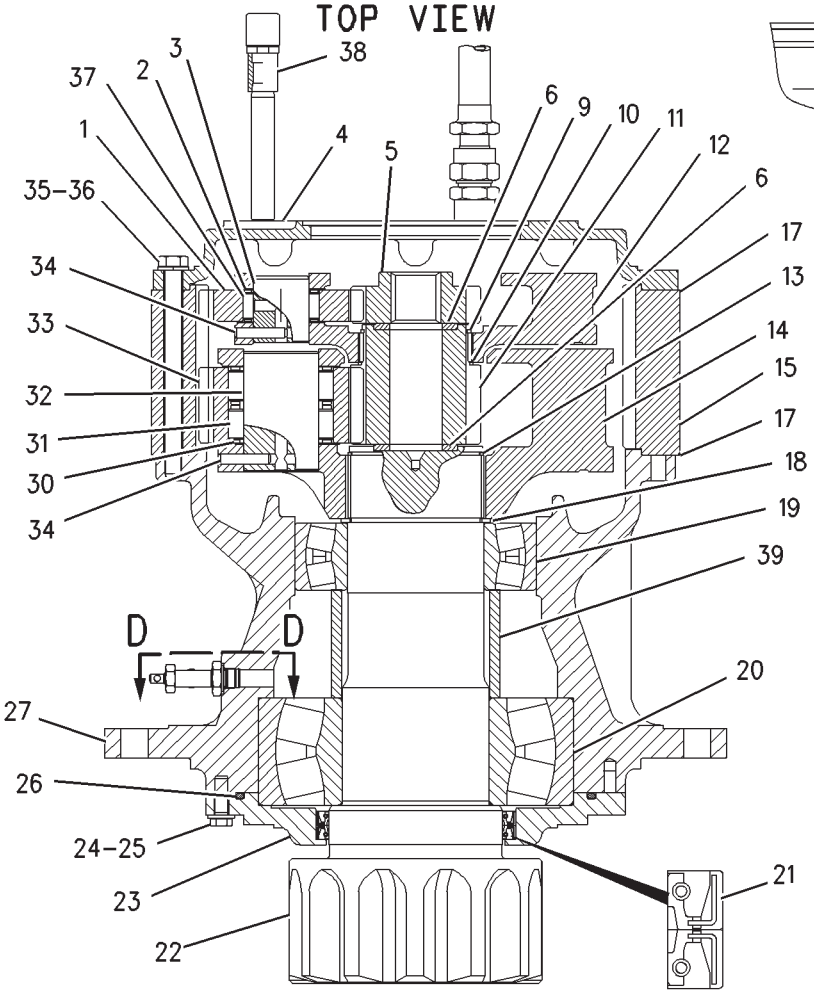

SECTION A-A

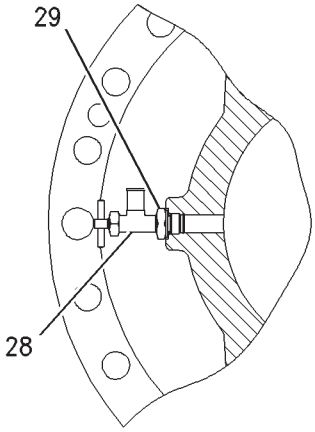

VIEW D-D

GRAPHIC #1 **<END>** g00898473

HYDRAULIC SYSTEM

148-4627 FASTENER GP-SWING & FINAL DR

S/N: RCD1-UP

PART OF 148-4628 POWER TRAIN AR

SMCS-4050, 5459 **i02777759**

NOTE	REF NO	GRAPHIC REF	PART NUMBER	QTY	PART NAME 1 2 3 4 5 6 (PRODUCT LEVEL)	SEE PAGE
M	1	1,2	**7X-2582**	48	BOLT (M30X3.5X110-MM)	
	2	1,2	**9X-8258**	48	WASHER (33X56X6-MM THK)	
M	3	2	**8T-5878**	46	BOLT (M24X3X80-MM)	
	4	2	**096-4755**	2	PIN	
B	5	2	**1U-8846**		SEALANT-GASKET	
E	6	1	**5P-0767**		HOSE (140-CM)	
E	6A	1	**5P-0767**		HOSE (70-CM)	
	7	1	**2B-7561**	4	CORK	
	8	2	**5D-1026**	2	CLAMP-BAND	
	10	1	**114-1374**	1	SUPPORT	
M	11	1	**8T-4137**	1	BOLT (M10X1.5X20-MM)	
	12	1,2	**8T-4121**	3	WASHER-HARD (11X21X2.5-MM THK)	
	13	2	**267-6787**	46	SPACER (24.5X44X14-MM THK)	
	14	2	**199-4677**	1	SUPPORT	
	15	2	**122-8705**	1	U-BOLT	
M	16	2	**096-4883**	2	LOCKNUT (M10X1.5-THD)	
M	17	2	**8T-4179**	2	BOLT (M12X1.75X20-MM)	
	18	2	**8T-4223**	2	WASHER-HARD (13.5X25.5X3-MM THK)	
	19	1	**9V-5382**	1	GROMMET	

B-USE AS REQUIRED
E-ORDER BY THE CENTIMETER
M-METRIC PART

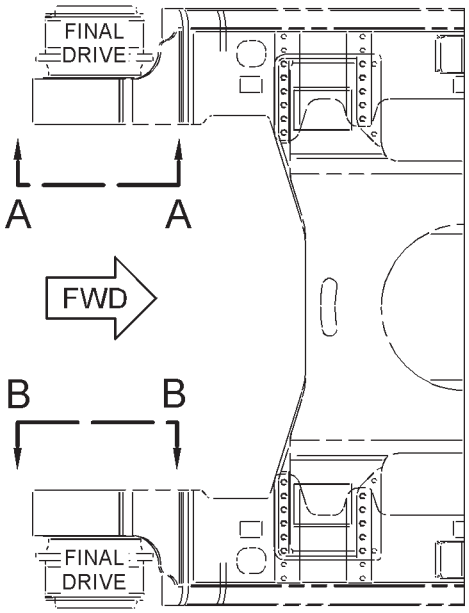

TOP VIEW

REFER TO ALL ILLUSTRATIONS OF THIS GROUP FOR AUXILIARY VIEWS

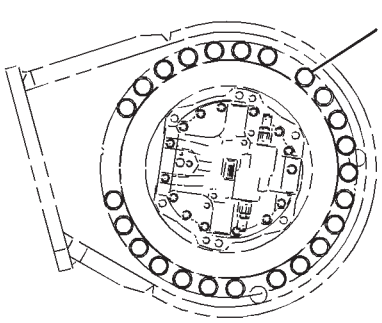

VIEW A-A

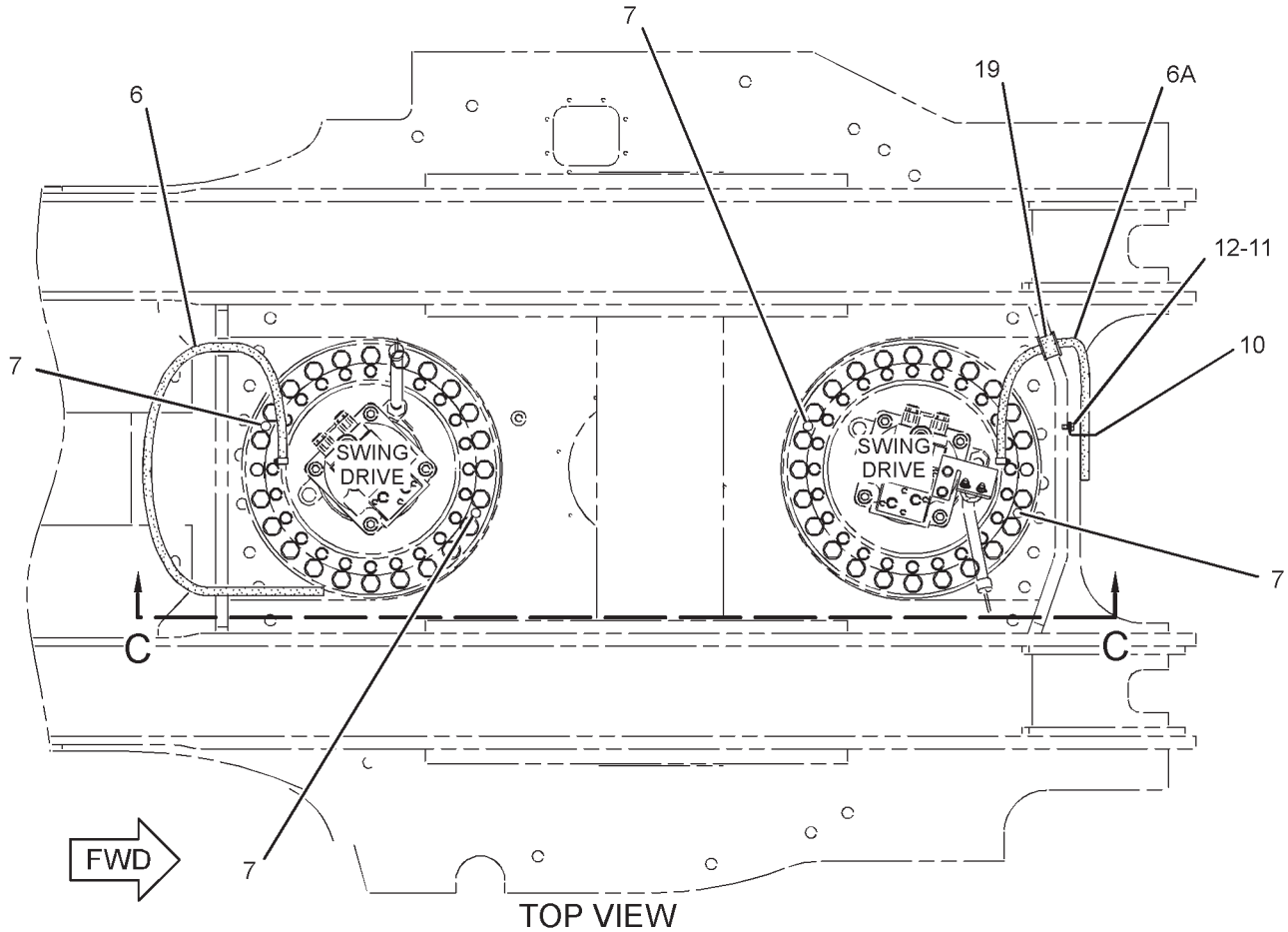

TOP VIEW

GRAPHIC #1

g01398887

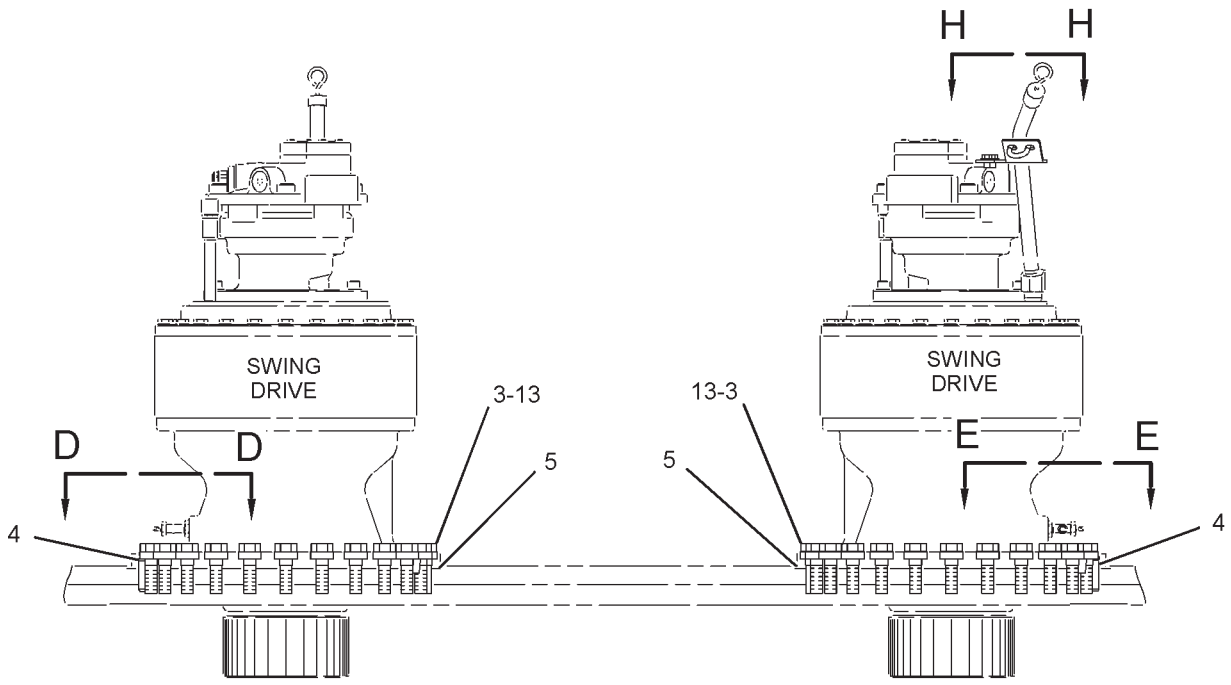

VIEW C-C

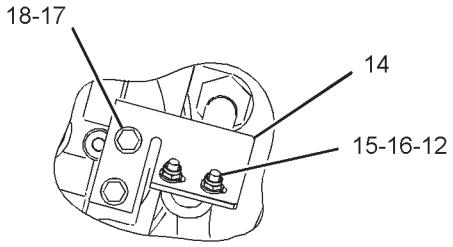

VIEW H-H

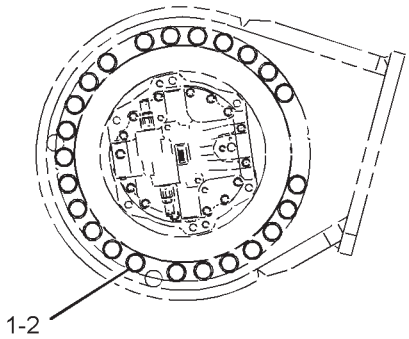

VIEW B-B

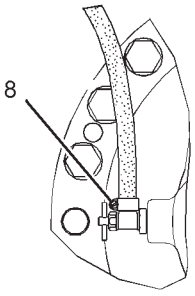

VIEW D-D

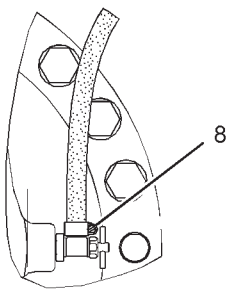

VIEW E-E

GRAPHIC #2 **<END>** g01398888

HYDRAULIC SYSTEM

201-0496 FILTER & LINES GP-HYDRAULIC–

HYDRAULIC RETURN
S/N: RCD1-UP
BIO OIL, FINE FILTRATION
PART OF 201-4923, 201-5340 HYDRAULIC AR
AN ATTACHMENT
TYPE 1

SMCS-5057, 5068 **i01734525**

NOTE	REF NO	GRAPHIC REF	PART NUMBER	QTY	PART NAME 1 2 3 4 5 6 (PRODUCT LEVEL)	SEE PAGE
M	1	1	**8T-4139**	4	BOLT (M12X1.75X30-MM)	
M	2	1	**8T-4195**	4	BOLT (M10X1.5X30-MM)	
	3	1	**8T-4121**	4	WASHER-HARD (11X21X2.5-MM THK)	
	4	1,2	*148-8365*	3	ELBOW AS	
					(EACH INCLUDES)	
		1,2	**3J-1907**	1	SEAL-O-RING	
		1,2	**6V-8398**	1	SEAL-O-RING	
		1,2	**8T-6876**	1	ELBOW	
	5	2	*148-8390*	1	ELBOW AS	
		2	**2M-9780**	1	SEAL-O-RING	
		2	**6V-8626**	1	ELBOW	
		2	**7J-9108**	1	SEAL-O-RING	
Y	6	1	*165-3888*	1	FILTER GP-OIL (BIODEGRADABLE HYDRAULIC)	515
	7	1	**8T-4223**	4	WASHER-HARD (13.5X25.5X3-MM THK)	
M	8	1	**7X-2537**	4	BOLT (M8X1.25X35-MM)	
	9	1	**8T-4224**	4	WASHER-HARD (8.8X16X2-MM THK)	
	10	1	*148-8449*	1	TEE AS-SWIVEL	
		1	**6V-9746**	2	SEAL-O-RING	
		1	**6V-9839**	1	TEE-SWIVEL	
	11	1	**201-1413**	1	SUPPORT	
	12	1	**201-1414**	1	SUPPORT AS	
I	13	2	**201-4654**	1	HOSE AS	
I	14	2	**201-4655**	1	HOSE AS	
	15	1	**7K-1181**	5	STRAP-CABLE	

I-REFER TO HYDRAULIC INFORMATION SYSTEM
M-METRIC PART
Y-SEPARATE ILLUSTRATION

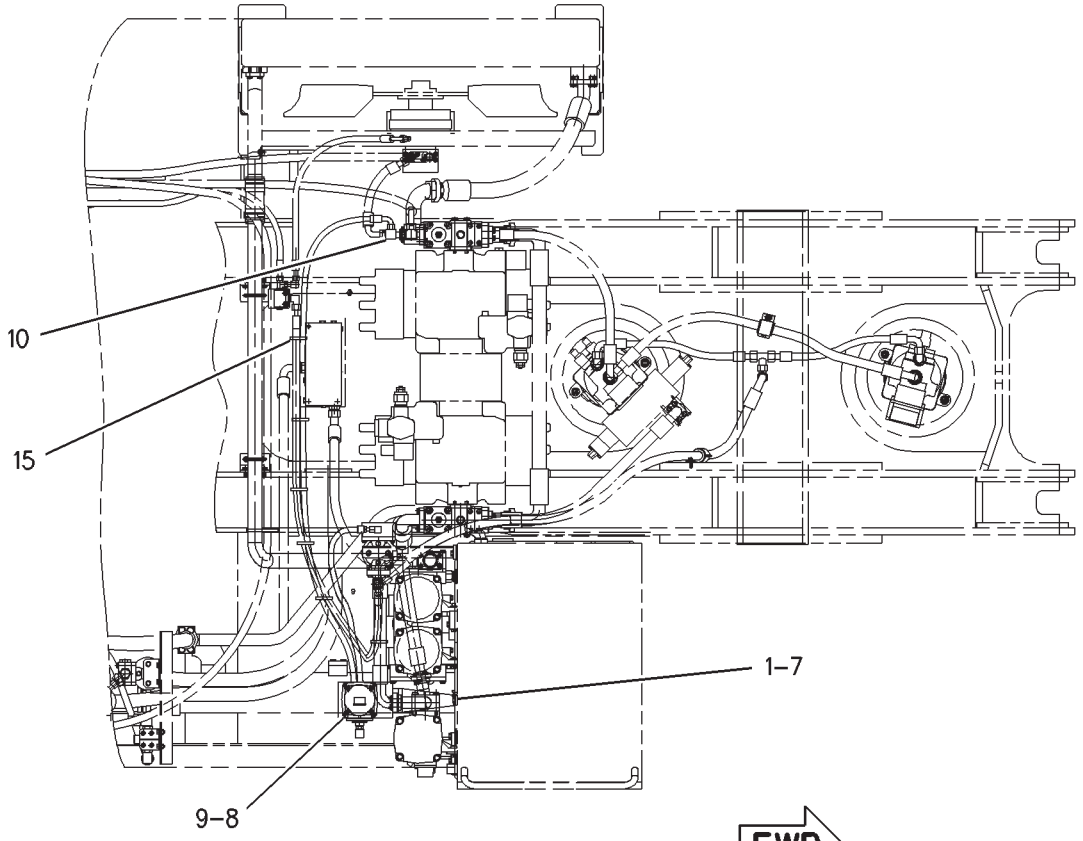

TOP VIEW

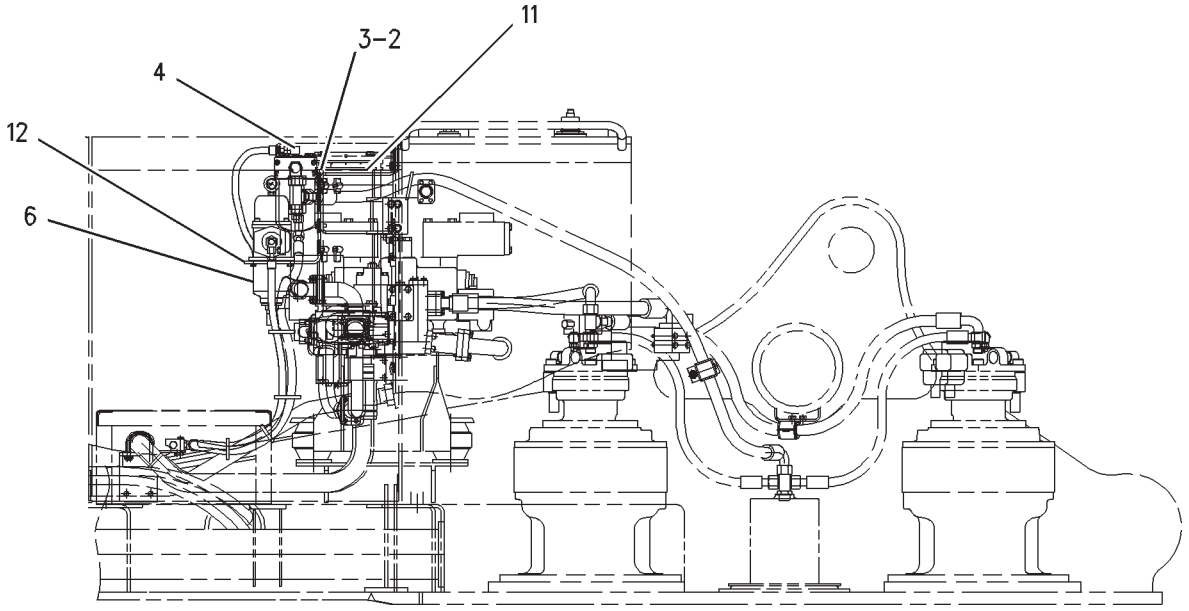

RIGHT SIDE VIEW

GRAPHIC #1 g00797688

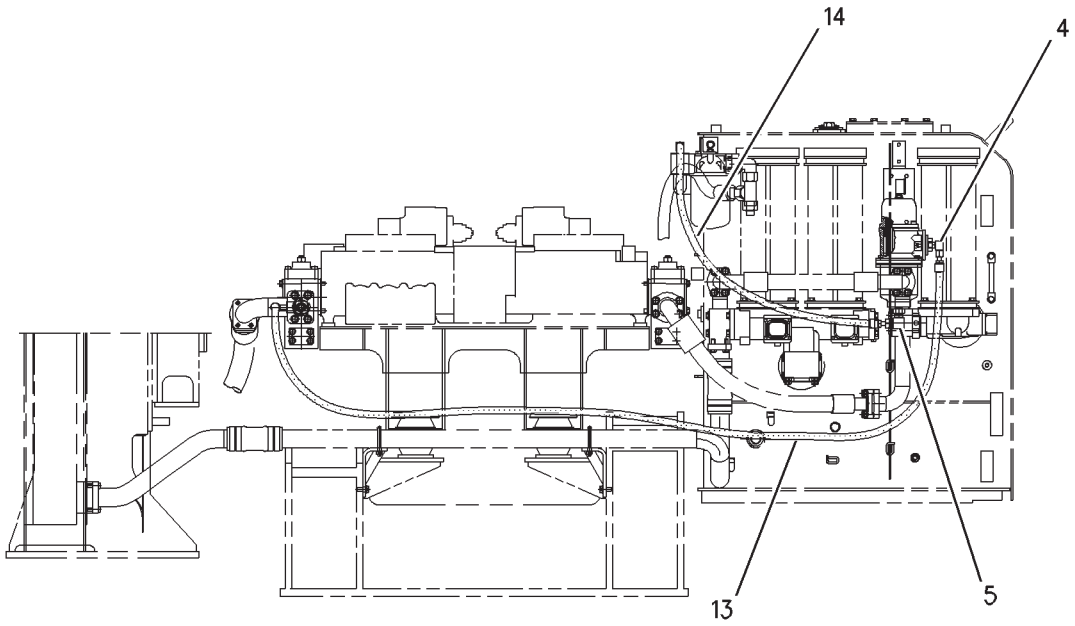

REAR VIEW

GRAPHIC #2 **<END>** g00797706

HYDRAULIC SYSTEM

201-0496 FILTER & LINES GP-HYDRAULIC–

HYDRAULIC RETURN
S/N: RCD1-UP
BIO OIL, FINE FILTRATION
PART OF 201-4923, 201-5340 HYDRAULIC AR
AN ATTACHMENT
TYPE 2

SMCS-5057, 5068 **i02375465**

NOTE	REF NO	GRAPHIC REF	PART NUMBER	QTY	PART NAME 1 2 3 4 5 6 (PRODUCT LEVEL)	SEE PAGE
M	1	1	**8T-4139**	4	BOLT (M12X1.75X30-MM)	
M	2	1	**8T-4195**	4	BOLT (M10X1.5X30-MM)	
	3	1	**8T-4121**	4	WASHER-HARD (11X21X2.5-MM THK)	
	4	1	*148-8365*	3	ELBOW AS	
					(EACH INCLUDES)	
		1	**3J-1907**	1	SEAL-O-RING	
		1	**6V-8398**	1	SEAL-O-RING	
		1	**8T-6876**	1	ELBOW	
	5	1	*148-8390*	1	ELBOW AS	
		1	**2M-9780**	1	SEAL-O-RING	
		1	**6V-8626**	1	ELBOW	
		1	**7J-9108**	1	SEAL-O-RING	
CY	6	1	**250-0729**	1	FILTER GP-OIL	525
	7	1	**8T-4223**	4	WASHER-HARD (13.5X25.5X3-MM THK)	
M	8	1	**7X-2537**	4	BOLT (M8X1.25X35-MM)	
	9	1	**8T-4224**	4	WASHER-HARD (8.8X16X2-MM THK)	
	10	1	*148-8449*	1	TEE AS-SWIVEL	
		1	**6V-9746**	2	SEAL-O-RING	
		1	**6V-9839**	1	TEE-SWIVEL	
	11	1	**201-1413**	1	SUPPORT	
	12	1	**201-1414**	1	SUPPORT AS	
I	13	1	**201-4654**	1	HOSE AS	
I	14	1	**201-4655**	1	HOSE AS	
	15	1	**7K-1181**	5	STRAP-CABLE	
C	16	1	**6V-8076**	1	ELBOW	
C	17	1	**3J-1907**	2	SEAL-O-RING	
C	18	1	**6V-3965**	1	FITTING (QUICK DISCONNECT)	
C	19	1	**6V-0852**	1	CAP-DUST	

C-CHANGE FROM PREVIOUS TYPE
I-REFER TO HYDRAULIC INFORMATION SYSTEM
M-METRIC PART
Y-SEPARATE ILLUSTRATION

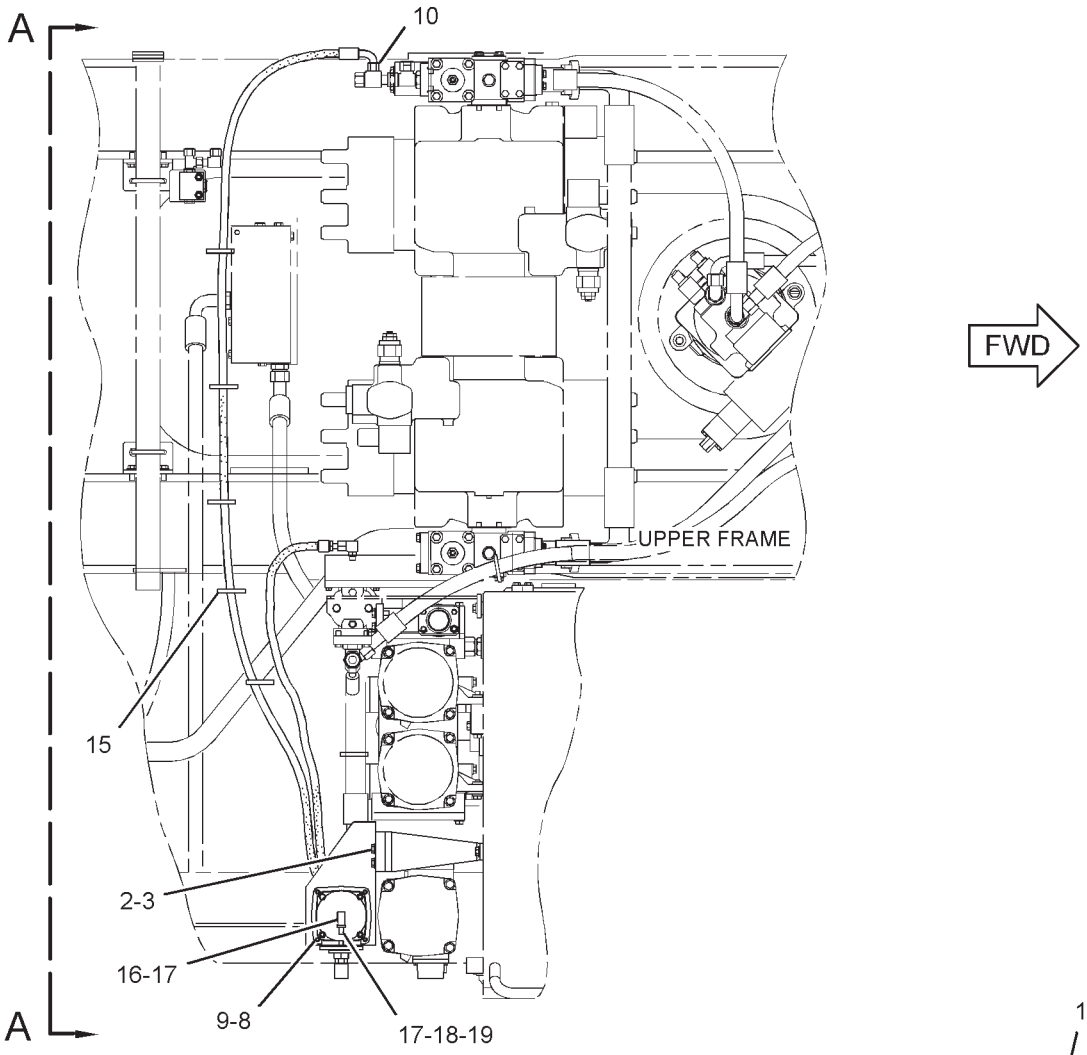

TOP VIEW

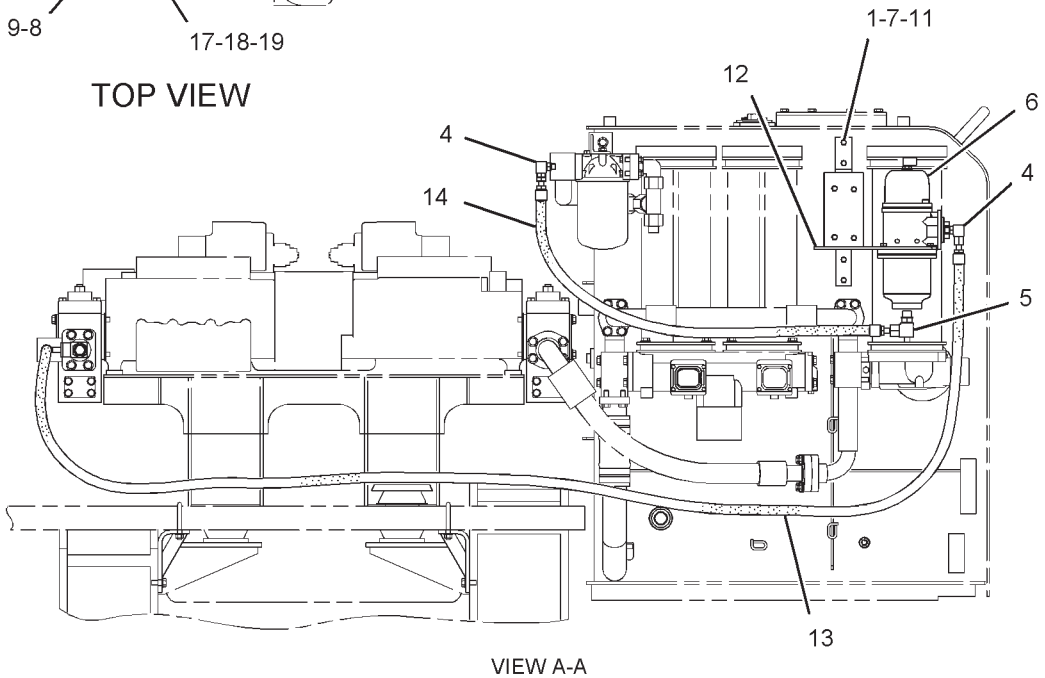

VIEW A-A

GRAPHIC #1 **<END>** g01305223

HYDRAULIC SYSTEM

6E-5534 FILTER GP-OIL–HYDRAULIC

S/N: RCD1-UP

PART OF 168-9377 LINES GP-PILOT, 201-1770 TANK & FILTER GP-HYDRAULIC

SMCS-3004, 4295, 431F, 5068, 5091, 5092 **i02636069**

NOTE	REF NO	GRAPHIC REF	PART NUMBER	QTY	PART NAME 1 2 3 4 5 6 (PRODUCT LEVEL)	SEE PAGE
	1	1	**4T-6788**	1	FILTER-OIL (ADVANCED EFFICIENCY) (HYDRAULIC)	

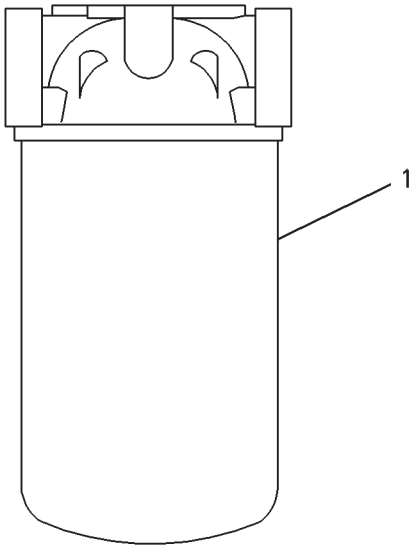

GRAPHIC #1 **<END>** g00233591

HYDRAULIC SYSTEM

126-2112 FILTER GP-OIL

S/N: RCD1-UP

FIELD REPLACEMENT FOR 188-4150—PAGE 523

SMCS-3004, 4295, 431F, 5068, 5091, 5092 **i01922160**

NOTE	REF NO	GRAPHIC REF	PART NUMBER	QTY	PART NAME 1 2 3 4 5 6 (PRODUCT LEVEL)	SEE PAGE
Y	1	1	**129-8053**	1	BASE GP-OIL FILTER (HYDRAULIC)	447
	2	1	**184-3997**	2	HOUSING GP-HYDRAULIC FILTER	
					(EACH INCLUDES)	
		1	**137-3634**	1	RING-STOP	
M		1	**143-7968**	8	SCREW-MACHINE (M4X0.7X10-MM)	
M	3	1	**8T-4184**	16	BOLT (M12X1.75X45-MM)	
	4	1	**8T-4223**	32	WASHER-HARD (13.5X25.5X3-MM THK)	
	5	1	**123-2003**	4	SEAL-O-RING	
M	6	1	**8T-0289**	8	BOLT (M5X0.8X20-MM)	
	7	1	**8T-0328**	8	WASHER-HARD (5.5X10X1-MM THK)	
	8	1	**6V-7609**	2	SEAL-O-RING	
	9	1	**129-8055**	2	FLANGE	
M	10	1	**8T-4956**	10	BOLT (M12X1.75X35-MM)	
M	11	1	**8T-4183**	6	BOLT (M12X1.75X40-MM)	
	12	1	**129-8056**	1	COVER	
	13	1	**6J-2680**	4	SEAL-O-RING	
	14	1	**143-8037**	2	INDICATOR AS	
					(EACH INCLUDES)	
		1	**137-3695**	1	FILM (RETURN FILTER RESET)	
M		1	**8T-4127**	4	SCREW-MACHINE (M5X0.8X20-MM)	
	15	1	**116-3682**	2	SEAL	
	16	1	**116-3654**	2	COVER	
CY	17	1	**173-3511**	2	FILTER GP-OIL	516
	18	1	**129-7815**	1	COVER	
M	19	1	**095-0759**	2	SCREW-MACHINE (M6X1X3.4-MM)	
	20	1	**9S-4182**	1	PLUG-O-RING	
	21	1	**3J-7354**	1	SEAL-O-RING	
	22	1	**129-8034**	2	VALVE AS-BYPASS	

C-CHANGE FROM PREVIOUS TYPE
M-METRIC PART
Y-SEPARATE ILLUSTRATION

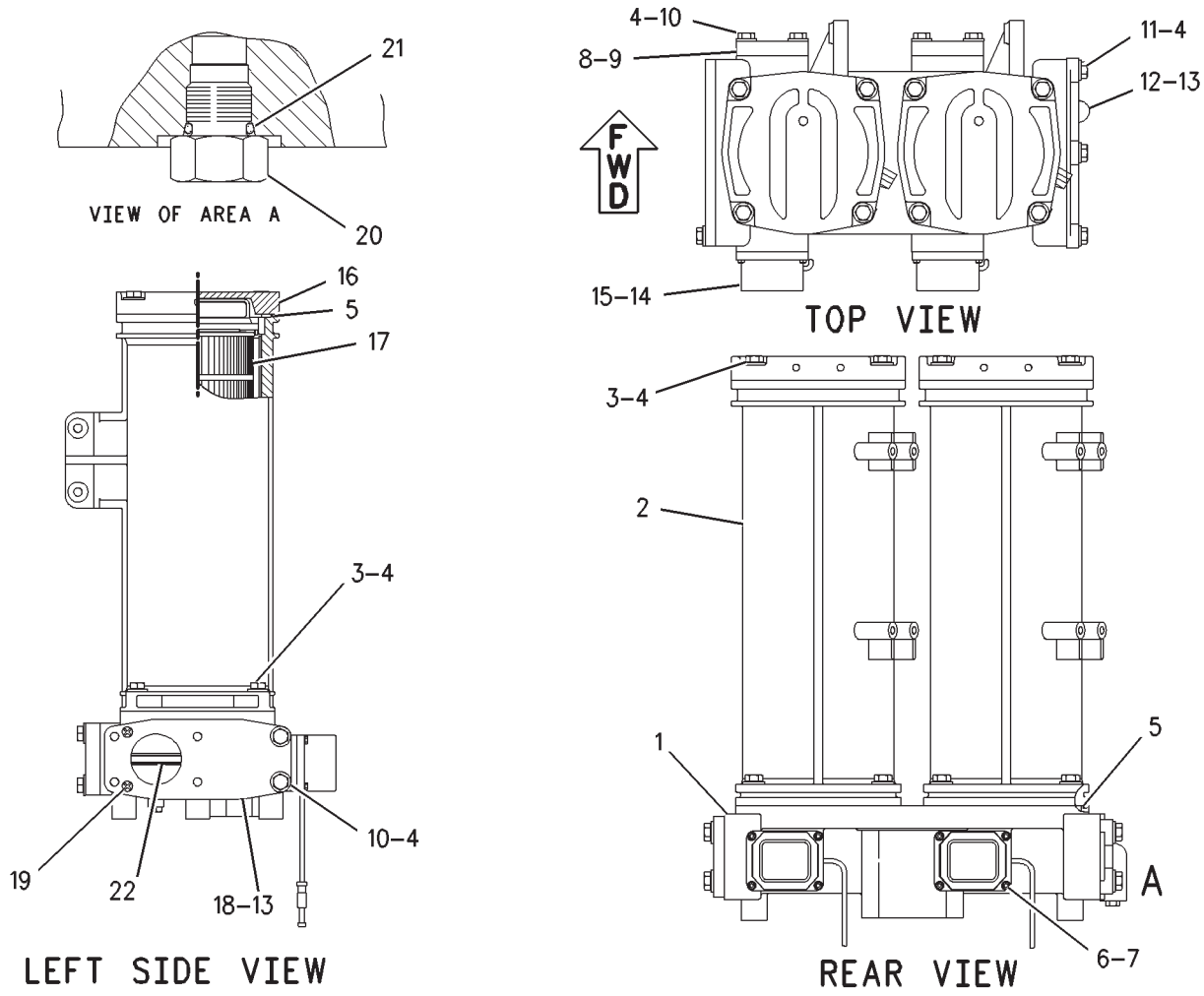

GRAPHIC #1 **<END>** g00781611

HYDRAULIC SYSTEM

165-3888 FILTER GP-OIL

S/N: RCD1-UP
FINE FILTRATION
PART OF 201-0496 FILTER & LINES GP-HYDRAULIC
AN ATTACHMENT

SMCS-3004, 4295, 431F, 5068, 5091, 5092 **i01886592**

NOTE	REF NO	GRAPHIC REF	PART NUMBER	QTY	PART NAME 1 2 3 4 5 6 (PRODUCT LEVEL)	SEE PAGE
	1	1	**146-9290**	1	FILTER ELEMENT-OIL (ULTRA HIGH EFFICIENCY)	
	2	1	**142-6791**	1	INDICATOR-RESTRICTION	
M	3	1	**105-3478**	4	BOLT-SOCKET HEAD (M10X1.5X35-MM)	
	4	1	**155-4038**	1	SEAL-O-RING	
	5	1	**155-4039**	1	SEAL-O-RING	
	6	1	**155-4040**	1	SEAL-O-RING	
	7	1	**155-4041**	1	SEAL-O-RING	

M-METRIC PART

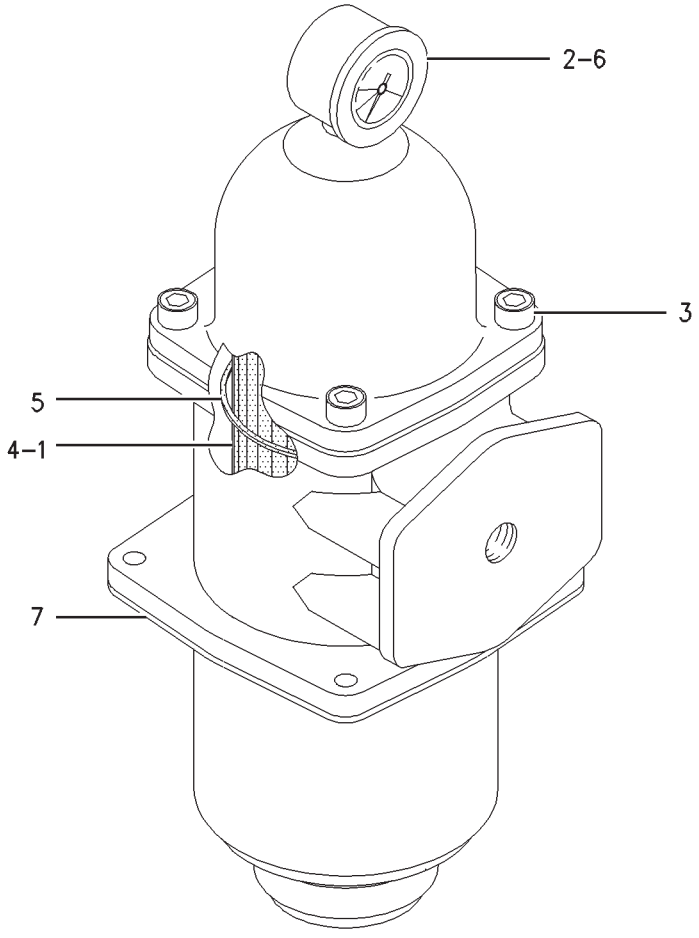

GRAPHIC #1 **<END>** g00979474

HYDRAULIC SYSTEM

173-3511 FILTER GP-OIL

S/N: RCD1-UP

PART OF 126-2112 FILTER GP-OIL

SMCS-3004, 4295, 431F, 5068, 5091, 5092 **i03603951**

NOTE	REF NO	GRAPHIC REF	PART NUMBER	QTY	PART NAME 1 2 3 4 5 6 (PRODUCT LEVEL)	SEE PAGE
	1	1	**204-2762**	1	PLATE	
JM	2	1	**173-3529**	6	BOLT (M6X1X15-MM)	
J	3	1	**3T-7528**	6	SEAL-O-RING	
	4	1	**173-3513**	1	BASE	
J	5	1	**3E-4297**	2	SEAL-O-RING	
M	6	1	**137-3626**	1	BOLT-SHOULDER (M6X1X28.75-MM)	
Z	7	1		1	SHELL AS	
	8	1	**126-2081**	1	FILTER ELEMENT AS-OIL (STANDARD EFFICIENCY) (HYDRAULIC, RETURN)	
J	9	1	**137-3623**	4	SEAL-O-RING	
J	10	1	**6V-7658**	2	SEAL-O-RING	
J	11	1	**177-2553**	1	SEAL	
J	12	1	**095-1681**	1	SEAL-O-RING	
	13	1	**173-3515**	1	RING-RETAINING	
	14	1	**173-3516**	1	HANDLE	
J	15	1	**4J-7533**	1	SEAL-O-RING	
J	16	1	**9S-4180**	1	PLUG	
JM	17	1	**137-3624**	8	SCREW (M3X0.5X5-MM)	
J	18	1	**137-3625**	2	PAD	
	19	1	**173-3517**	1	PLATE	
J	20	1	**137-3628**	1	SHIM (0.1-MM THK)	
	21	1	**173-3508**	1	FILM-INSTRUCTION (HYDRAULIC OIL RETURN FILTER)	
					ATTENTION QUANTITIES SHOWN ARE THOSE REQUIRED FOR ONE FILTER GROUP	
					VERIFY TOTAL NUMBER OF FILTER GROUPS ON MACHINE BEFORE ORDERING PARTS	
					AVAILABLE REPAIR KIT(S):	
J			**201-9299**	1	KIT-SERVICE (HYDRAULIC FILTER) (RETURN)	

J-KIT MARKED J SERVICES PARTS MARKED J
M-METRIC PART
Z-NOT SERVICED SEPARATELY

173-3511 **FILTER GP-OIL** *(contd.)* **i03603951**

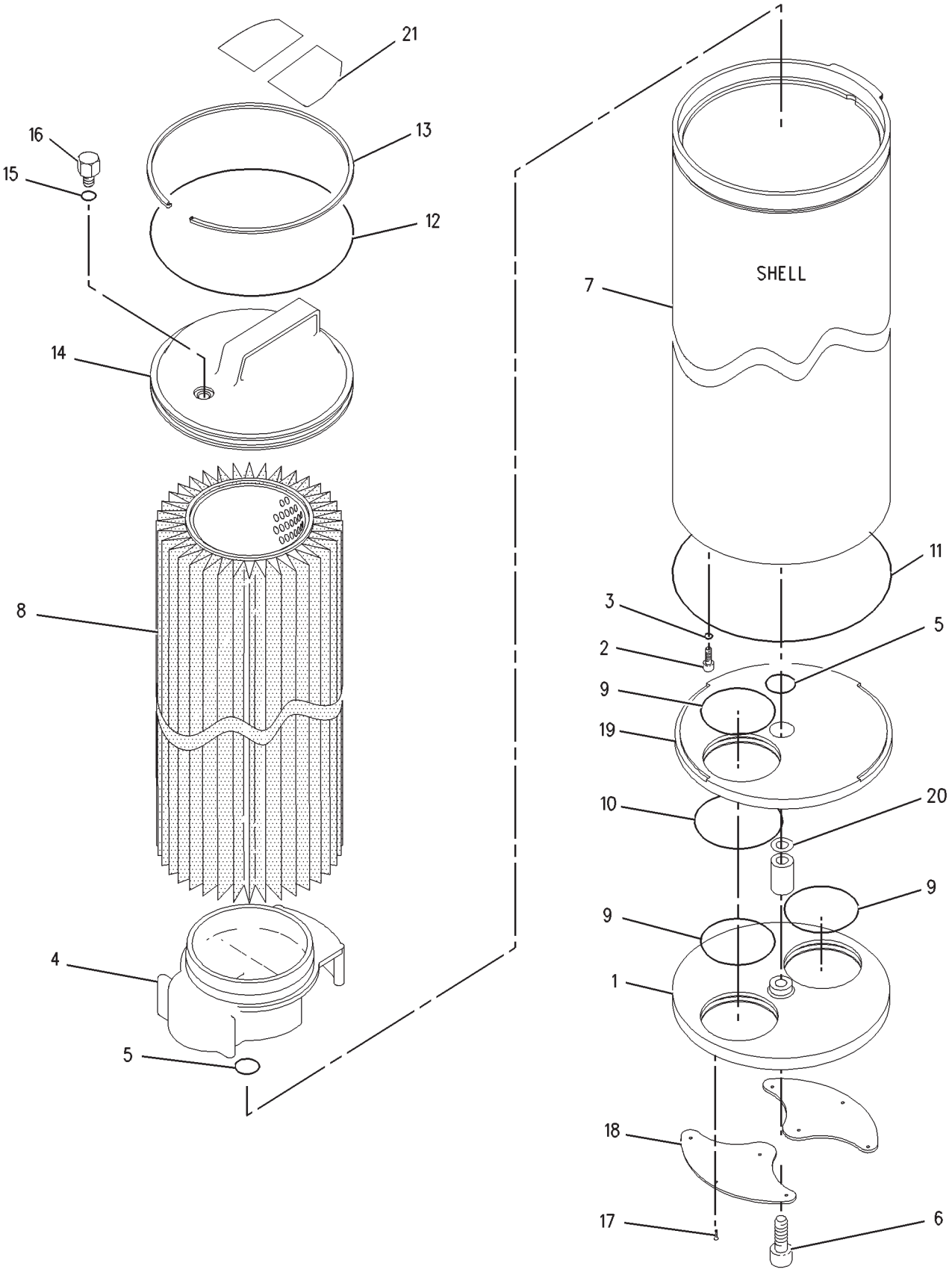

GRAPHIC #1 **<END>** g00741766

HYDRAULIC SYSTEM

185-0336 FILTER GP-OIL—HYDRAULIC

S/N: RCD1-UP

PART OF 168-9377 LINES GP-PILOT

SMCS-3004, 4295, 431F, 5068, 5091, 5092 **i02636070**

NOTE	REF NO	GRAPHIC REF	PART NUMBER	QTY	PART NAME 1 2 3 4 5 6 (PRODUCT LEVEL)	SEE PAGE
	1	1	**185-0337**	1	FILTER-OIL (ADVANCED EFFICIENCY) (HYDRAULIC)	
	2	1	**103-8236**	1	RING	

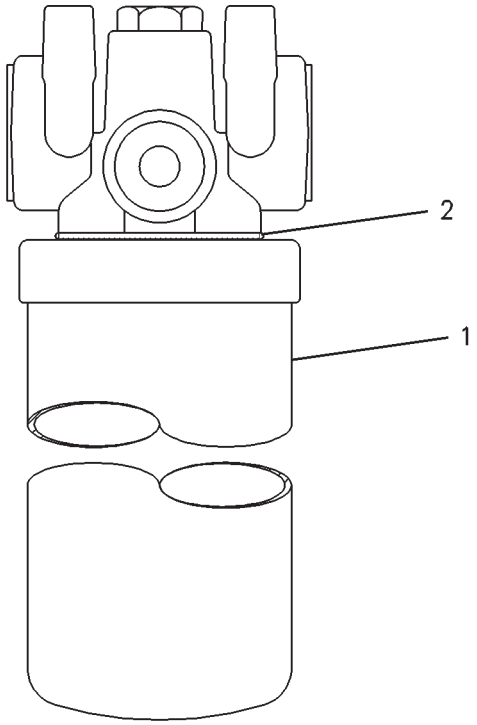

GRAPHIC #1 **<END>** g00233577

HYDRAULIC SYSTEM

188-4142 FILTER GP-OIL—HYDRAULIC RETURN

S/N: RCD1-UP

PART OF 188-4147, 188-4150 FILTER GP-OIL

SMCS-3004, 4295, 431F, 5068, 5091, 5092 **i03493360**

NOTE	REF NO	GRAPHIC REF	PART NUMBER	QTY	PART NAME 1 2 3 4 5 6 (PRODUCT LEVEL)	SEE PAGE
	1	1	**204-2762**	1	PLATE	
JM	2	1	**173-3529**	6	BOLT (M6X1X15-MM)	
J	3	1	**3T-7528**	6	SEAL-O-RING	
	4	1	**173-3513**	1	BASE	
J	5	1	**3E-4297**	2	SEAL-O-RING	
M	6	1	**137-3626**	1	BOLT-SHOULDER (M6X1X28.75-MM)	
	7	1	**188-4143**	1	FILM-INSTRUCTION (HYDRAULIC OIL RETURN FILTER)	
	8	1	**179-9806**	1	FILTER ELEMENT AS-OIL (ULTRA HIGH EFFICIENCY) (HYDRAULIC RETURN)	
J	9	1	**137-3623**	4	SEAL-O-RING	
J	10	1	**6V-7658**	2	SEAL-O-RING	
J	11	1	**177-2553**	1	SEAL	
J	12	1	**095-1681**	1	SEAL-O-RING	
	13	1	**173-3515**	1	RING-RETAINING	
	14	1	**173-3516**	1	HANDLE	
J	15	1	**4J-7533**	1	SEAL-O-RING	
J	16	1	**9S-4180**	1	PLUG	
JM	17	1	**137-3624**	8	SCREW (M3X0.5X5-MM)	
J	18	1	**137-3625**	2	PAD	
	19	1	**173-3517**	1	PLATE	
J	20	1	**137-3628**	1	SHIM (0.1-MM THK)	
					AVAILABLE REPAIR KIT(S):	
J			**201-9299**	1	KIT-SERVICE (HYDRAULIC FILTER)	

J-KIT MARKED J SERVICES PARTS MARKED J
M-METRIC PART

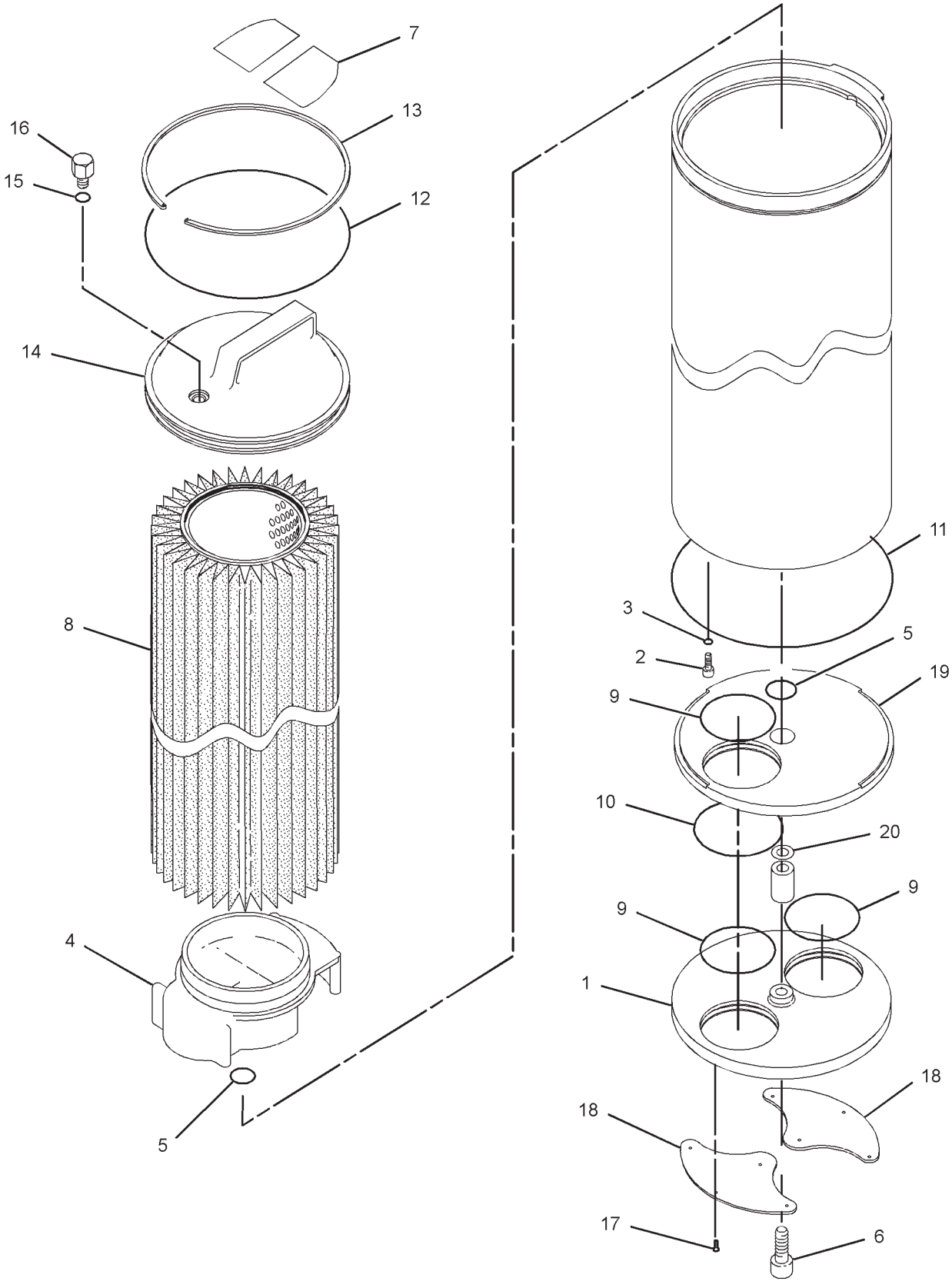

GRAPHIC #1 **<END>** g01830153

HYDRAULIC SYSTEM

188-4147 FILTER GP-OIL

S/N: RCD1-UP

PART OF 201-1770 TANK & FILTER GP-HYDRAULIC

SMCS-3004, 4295, 431F, 5068, 5091, 5092 **i01888867**

NOTE	REF NO	GRAPHIC REF	PART NUMBER	QTY	PART NAME 1 2 3 4 5 6 (PRODUCT LEVEL)	SEE PAGE
Y	1	1	**173-3503**	1	BASE GP-OIL FILTER (HYDRAULIC)	448
	2	1	**184-3997**	1	HOUSING GP-HYDRAULIC FILTER	
	3	1	**116-3654**	1	COVER	
	4	1	**123-2003**	2	SEAL-O-RING	
Y	5	1	**188-4142**	1	FILTER GP-OIL (HYDRAULIC RETURN)	519
M	6	1	**8T-4184**	8	BOLT (M12X1.75X45-MM)	
	7	1	**8T-4223**	8	WASHER-HARD (13.5X25.5X3-MM THK)	
M	8	1	**8T-0289**	4	BOLT (M5X0.8X20-MM)	
	9	1	**129-8034**	1	VALVE AS-BYPASS	
	10	1	**143-7966**	1	INDICATOR AS	
M		1	**8T-4127**	4	SCREW-MACHINE (M5X0.8X20-MM)	
		1	**137-3695**	1	FILM (RETURN FILTER RESET)	
	11	1	**159-7784**	1	SEAL-O-RING	
	12	1	**8T-0328**	4	WASHER-HARD (5.5X10X1-MM THK)	

M-METRIC PART
Y-SEPARATE ILLUSTRATION

188-4147 **FILTER GP-OIL** *(contd.)* **i01888867**

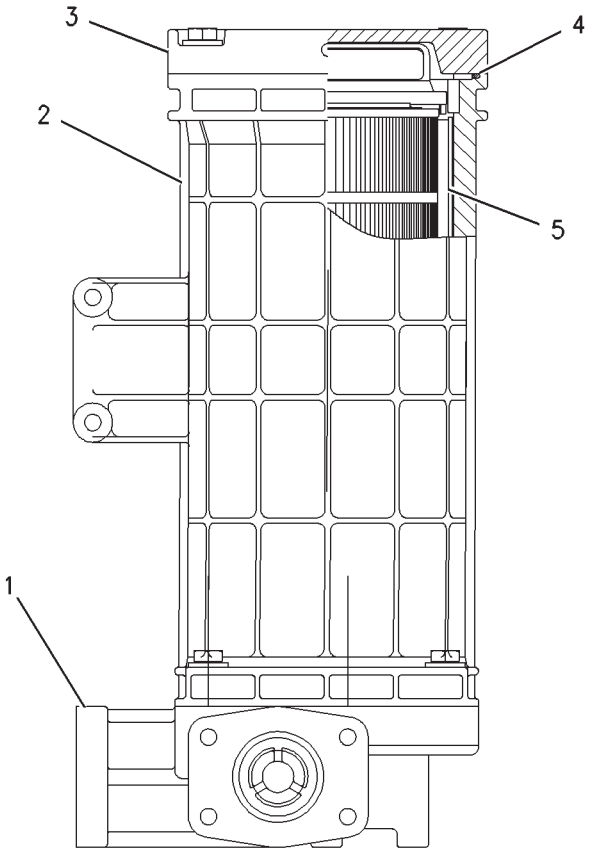

VIEW C-C

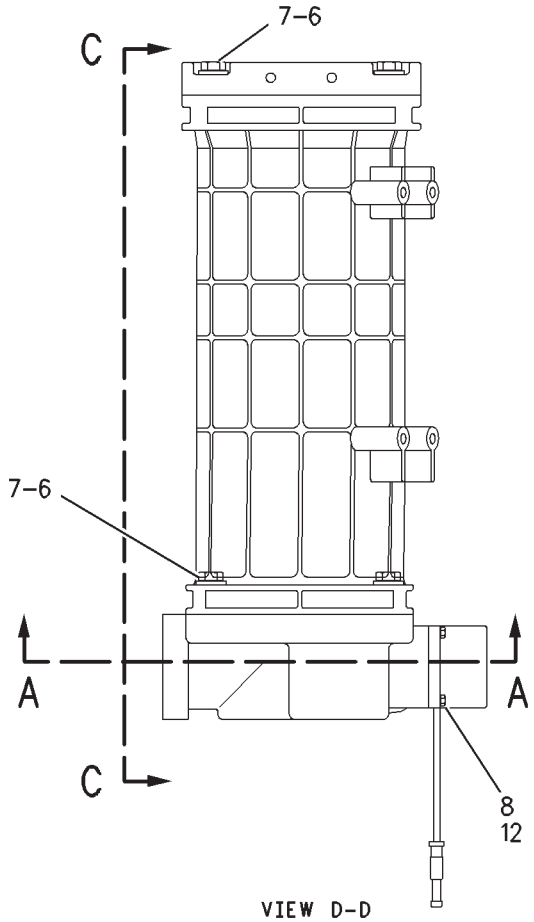

VIEW D-D

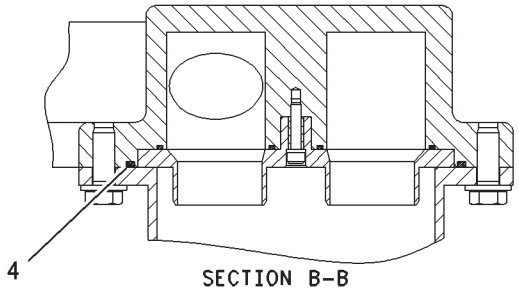

SECTION B-B

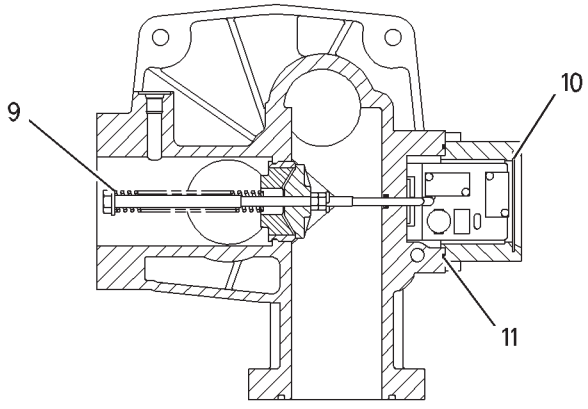

SECTION A-A

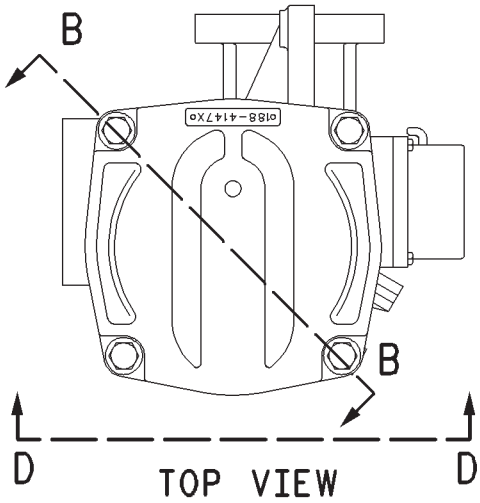

TOP VIEW

GRAPHIC #1 **<END>** g00898481

HYDRAULIC SYSTEM

188-4150 FILTER GP-OIL

S/N: RCD1-UP
PART OF 201-1770 TANK & FILTER GP-HYDRAULIC
FIELD REPLACEMENT ORDER 126-2112—PAGE 513

SMCS-3004, 4295, 431F, 5068, 5091, 5092 **i02175058**

NOTE	REF NO	GRAPHIC REF	PART NUMBER	QTY	PART NAME 1 2 3 4 5 6 (PRODUCT LEVEL)	SEE PAGE
Y	1	1	**129-8053**	1	BASE GP-OIL FILTER (HYDRAULIC)	447
	2	1	**184-3997**	2	HOUSING GP-HYDRAULIC FILTER	
					(EACH INCLUDES)	
		1	**137-3634**	1	RING-STOP	
M		1	**143-7968**	8	SCREW-MACHINE (M4X0.7X10-MM)	
M	3	1	**8T-4184**	16	BOLT (M12X1.75X45-MM)	
	4	1	**8T-4223**	32	WASHER-HARD (13.5X25.5X3-MM THK)	
	5	1	**123-2003**	4	SEAL-O-RING	
M	6	1	**8T-0289**	8	BOLT (M5X0.8X20-MM)	
	7	1	**8T-0328**	8	WASHER-HARD (5.5X10X1-MM THK)	
	8	1	**6V-7609**	2	SEAL-O-RING	
	9	1	**129-8055**	2	FLANGE	
M	10	1	**8T-4956**	10	BOLT (M12X1.75X35-MM)	
M	11	1	**8T-4183**	6	BOLT (M12X1.75X40-MM)	
	12	1	**129-8056**	1	COVER	
	13	1	**6J-2680**	4	SEAL-O-RING	
	14	1	**143-8037**	2	INDICATOR AS (RETURN FILTER RESET)	
					(EACH INCLUDES)	
M		1	**8T-4127**	4	SCREW-MACHINE (M5X0.8X20-MM)	
		1	**137-3695**	1	FILM (RETURN FILTER RESET)	
	15	1	**116-3682**	2	SEAL	
	16	1	**116-3654**	2	COVER	
Y	17	1	**188-4142**	2	FILTER GP-OIL (HYDRAULIC RETURN)	519
	18	1	**129-7815**	1	COVER	
M	19	1	**095-0759**	2	SCREW-MACHINE (M6X1X3.4-MM)	
	20	1	**9S-4182**	1	PLUG-O RING	
	21	1	**3J-7354**	1	SEAL-O-RING	
	22	1	**129-8034**	2	VALVE AS-BYPASS	

M-METRIC PART
Y-SEPARATE ILLUSTRATION

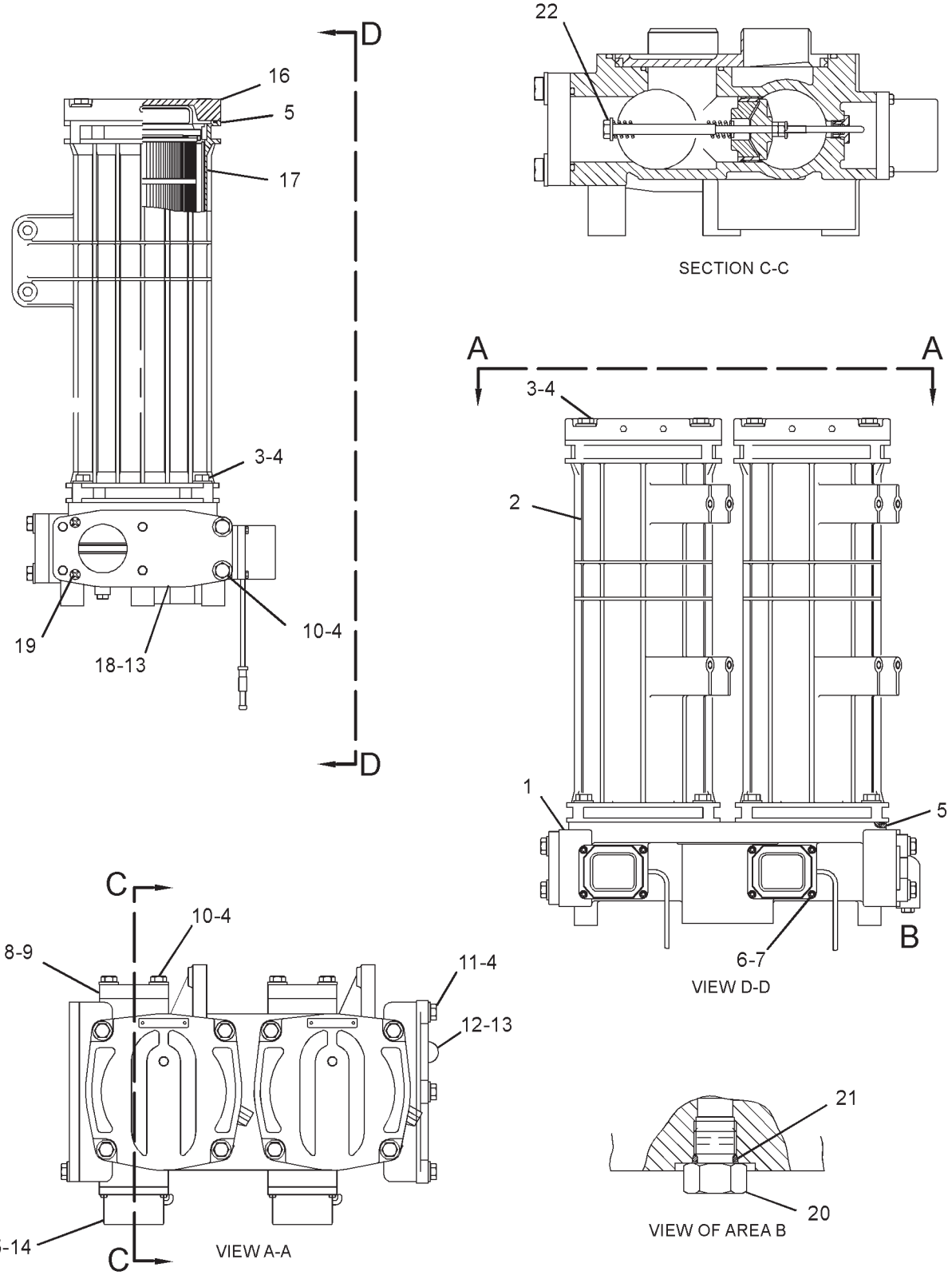

GRAPHIC #1 **<END>** g01327191

HYDRAULIC SYSTEM

250-0729 FILTER GP-OIL

S/N: RCD1-UP
PART OF 201-0496 FILTER & LINES GP-HYDRAULIC
AN ATTACHMENT

SMCS-3004, 4295, 431F, 5068, 5091, 5092 **i02956347**

NOTE	REF NO	GRAPHIC REF	PART NUMBER	QTY	PART NAME 1 2 3 4 5 6 (PRODUCT LEVEL)	SEE PAGE
	1	1	**146-9290**	1	FILTER ELEMENT-OIL (ULTRA HIGH EFFICIENCY) (HYDRAULIC)	
	2	1	**250-6967**	1	COVER	
M	3	1	**105-3484**	4	BOLT-SOCKET HEAD (M10X1.5X25-MM)	
	4	1	**155-4038**	1	SEAL-O-RING	
	5	1	**155-4039**	1	SEAL-O-RING	
	6	1	**155-4041**	1	SEAL-O-RING	

M-METRIC PART

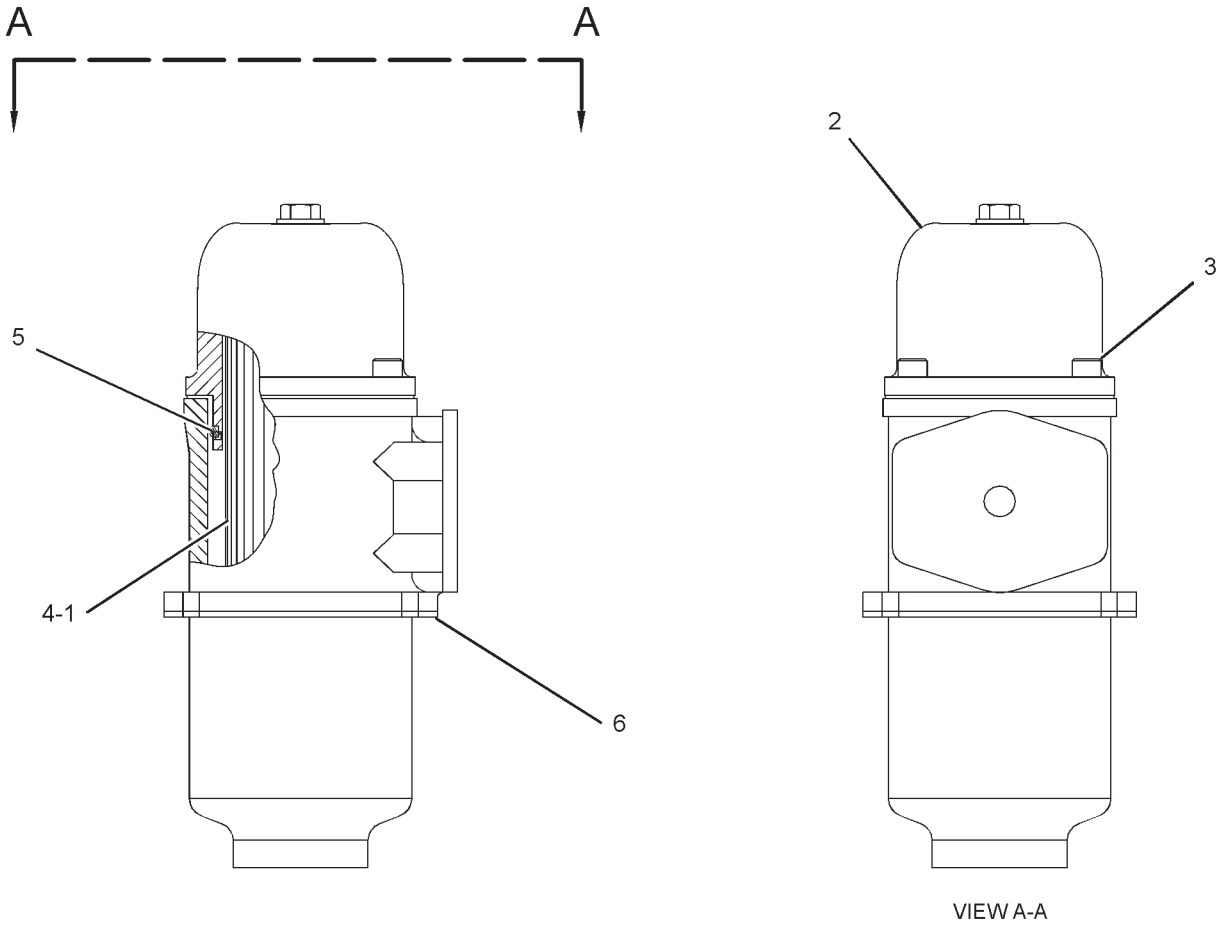

GRAPHIC #1 **<END>** g01176490

HYDRAULIC SYSTEM

227-0620 GAUGE GP-SIGHT—HYDRAULIC OIL LEVEL

S/N: RCD1-UP

PART OF 201-1770 TANK & FILTER GP-HYDRAULIC

SMCS-7479 **i02553818**

NOTE	REF NO	GRAPHIC REF	PART NUMBER	QTY	PART NAME 1 2 3 4 5 6 (PRODUCT LEVEL)	SEE PAGE
	1	1	**236-3258**	2	BLOCK	
M	2	1	**236-3259**	2	BOLT-SPECIAL	
	3	1	**236-3257**	1	PIPE	
	4	1	**095-1519**	4	SEAL-O-RING	
	5	1	**6F-4855**	4	SEAL-O-RING	

M-METRIC PART

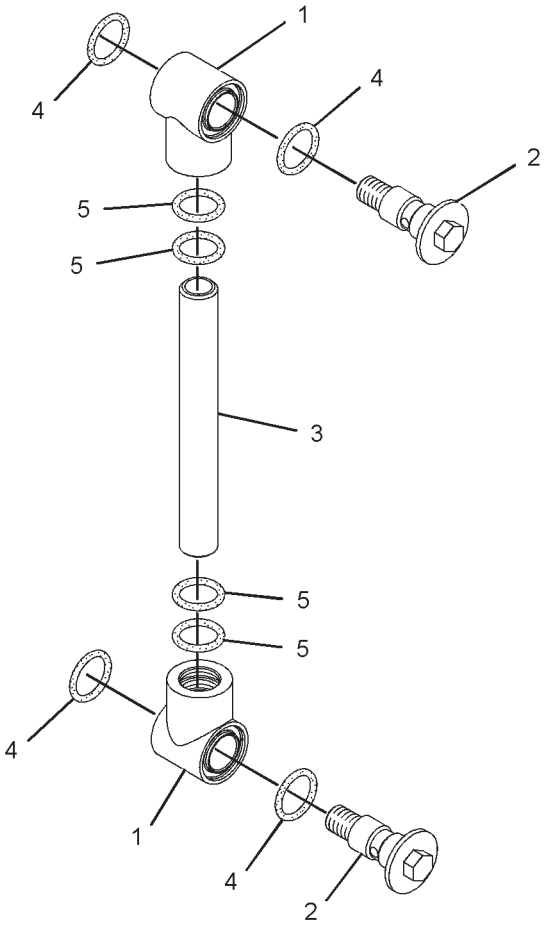

GRAPHIC #1 **<END>** g01091508

HYDRAULIC SYSTEM

252-4303 GUARD AR-CYLINDER—BUCKET

S/N: RCD1-UP
FOR USE WITH 220-2438—PAGE 914
AN ATTACHMENT

SMCS-7562 **i02956340**

NOTE	PART NUMBER	QTY	PART NAME 1 2 3 4 5 6 (PRODUCT LEVEL)	SEE PAGE
Y	*249-1149*	1	GUARD GP-CYLINDER (BUCKET)	528
Y	*249-1150*	1	LINES GP-BUCKET CYLINDER	605
Y	*249-1148*	1	LINKAGE GP	915

Y-SEPARATE ILLUSTRATION

<END>

HYDRAULIC SYSTEM

249-1149 GUARD GP-CYLINDER—BUCKET

S/N: RCD1-UP
PART OF 252-4303 GUARD AR-CYLINDER
AN ATTACHMENT

SMCS-7164 **i02656906**

NOTE	REF NO	GRAPHIC REF	PART NUMBER	QTY	PART NAME 1 2 3 4 5 6 (PRODUCT LEVEL)	SEE PAGE
	1	1	**195-5480**	2	PLATE	
	2	1	**195-5580**	1	PIN AS	
	3	1	**195-5583**	1	PIN AS	
	4	1	**251-0686**	2	PAD	
	5	1	**251-0687**	4	BAR	
	6	1	**252-9868**	2	BOSS	
	7	1	**254-1400**	1	SUPPORT AS	
	8	1	**254-1403**	1	CHANNEL AS	
	9	1	**254-1406**	1	PLATE AS	
	10	1	**254-1410**	1	PLATE AS	
	11	1	**254-1413**	2	SUPPORT	
	12	1	**254-3085**	1	PLATE AS	
M	13	1	**7X-2550**	8	BOLT (M12X1.75X110-MM)	
M	14	1	**8T-4184**	4	BOLT (M12X1.75X45-MM)	
M	15	1	**8T-4187**	6	BOLT (M20X2.5X80-MM)	
M	16	1	**8T-4140**	14	BOLT (M16X2X60-MM)	
	17	1	**8T-4223**	24	WASHER-HARD (13.5X25.5X3-MM THK)	
M	18	1	**8T-6868**	12	BOLT (M12X1.75X80-MM)	
	19	1	**9X-8257**	14	WASHER (17.5X30X3.5-MM THK)	

M-METRIC PART

249-1149 **GUARD GP-CYLINDER** *(contd.)* **i02656906**

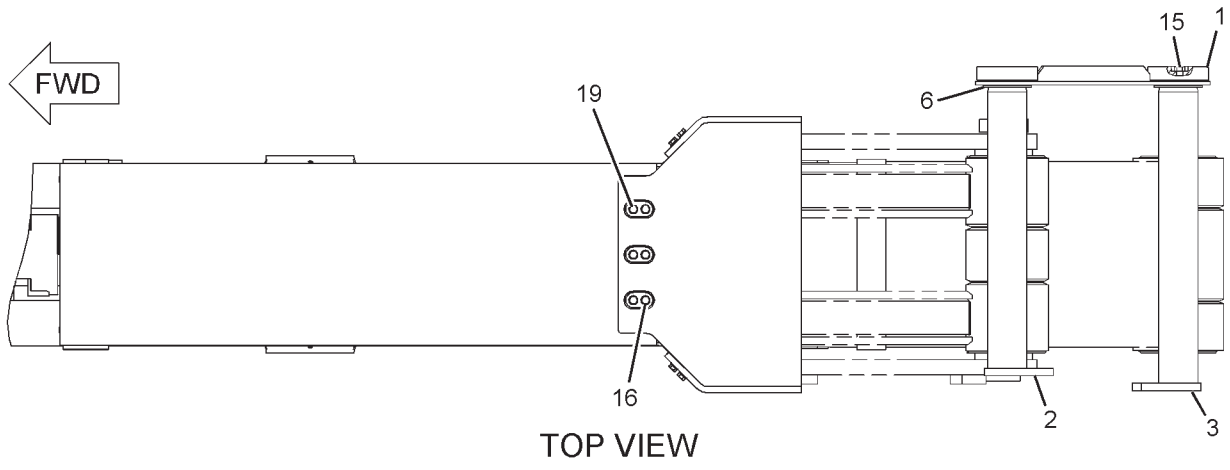

TOP VIEW

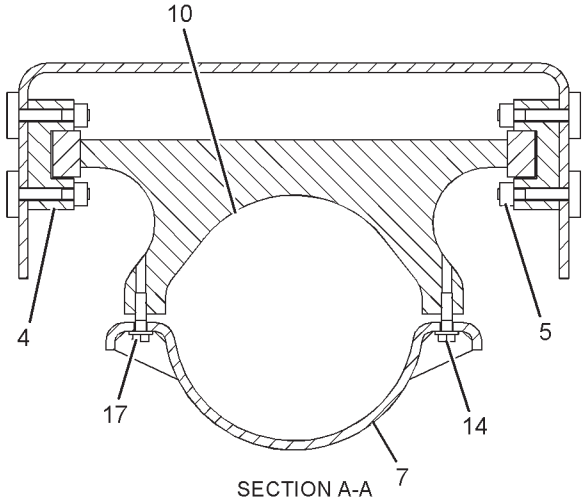

SECTION A-A

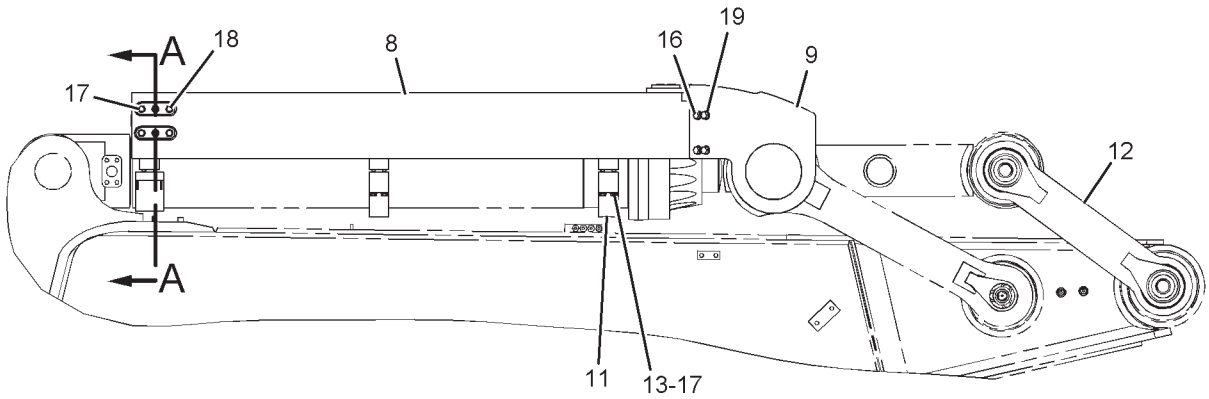

RIGHT SIDE VIEW

GRAPHIC #1 **<END>** g01129395

HYDRAULIC SYSTEM

191-5593 HEAD GP-PUMP

S/N: RCD1-UP

PART OF 155-9206, 259-0878 PUMP GP-PISTON

SMCS-3222, 5070, 5086 **i02140325**

NOTE	REF NO	GRAPHIC REF	PART NUMBER	QTY	PART NAME 1 2 3 4 5 6 (PRODUCT LEVEL)	SEE PAGE
	1	1	**087-4772**	2	PLUG-O-RING	
	2	1	**120-4394**	8	PLUG-BREAK OFF	
	3	1	**6E-3873**	1	PLUG-ORIFICE	
	4	1	**099-5845**	2	PLUG	
Z	5	1		1	BODY	
	6	1	**4H-9105**	1	SEAL-O-RING	
	7	1	**191-5595**	1	FLANGE	
M	8	1	**8T-0439**	4	BOLT-SOCKET HEAD (M16X2X30-MM)	
	9	1	**5I-4277**	1	ORIFICE	
	10	1	**5I-4341**	2	DOWEL	
	11	1	**170-9903**	1	PIN-TAPERED	
	12	1	**6E-3874**	1	BEARING	
	13	1	**165-9367**	1	VALVE	

M-METRIC PART
Z-NOT SERVICED SEPARATELY

191-5593 **HEAD GP-PUMP** *(contd.)* **i02140325**

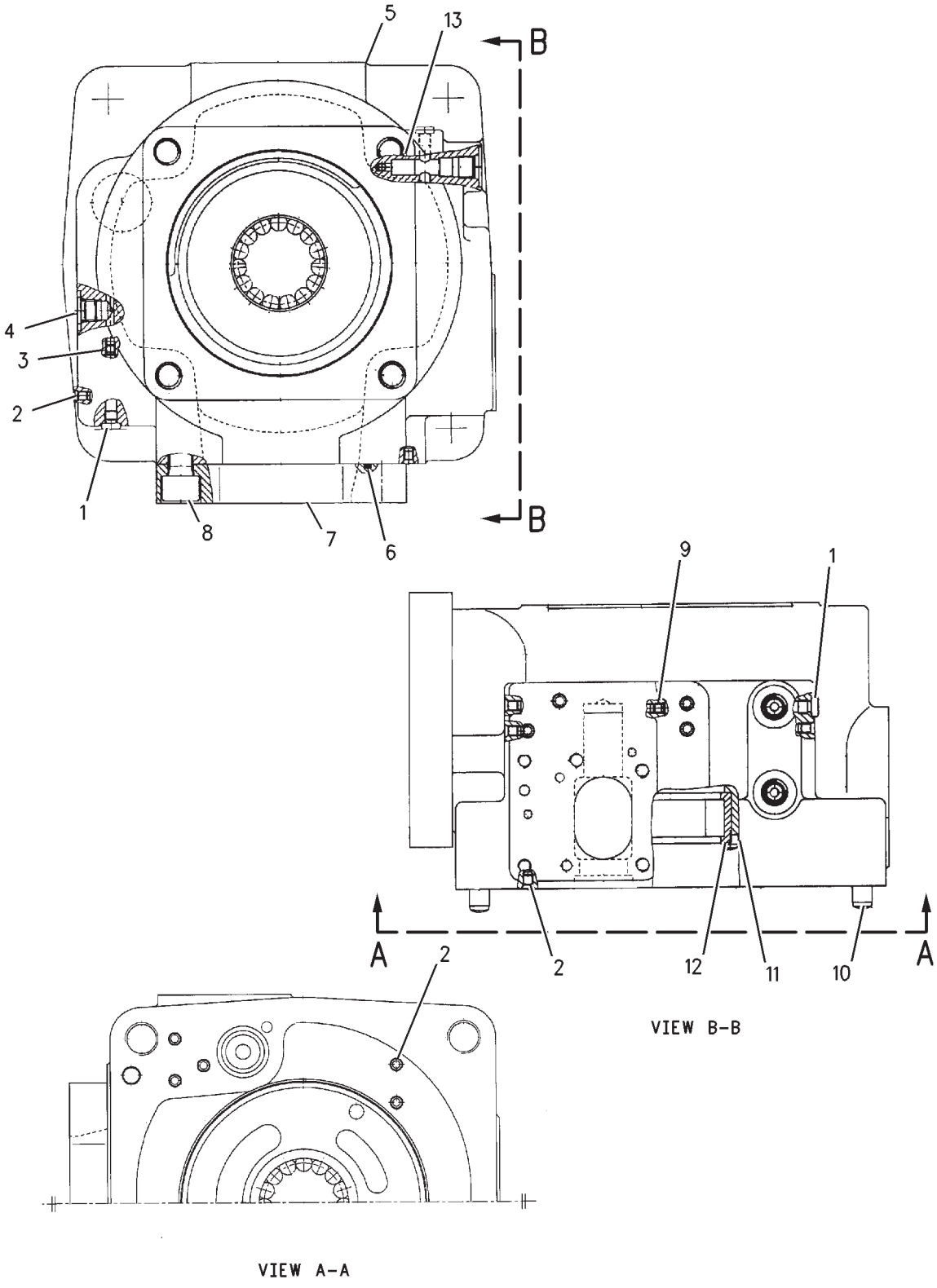

GRAPHIC #1 **<END>** g00786733

HYDRAULIC SYSTEM

201-4923 HYDRAULIC AR

S/N: RCD1-UP
BIO ESTER
AN ATTACHMENT

SMCS-5050 **i01531732**

NOTE	PART NUMBER	QTY	PART NAME 1 2 3 4 5 6 (PRODUCT LEVEL)	SEE PAGE
	141-6968	1	FILM-IDENTIFICATION (BIODEGRADABLE HYDRAULIC OIL)	
Y	*201-0496*	1	FILTER & LINES GP-HYDRAULIC (RETURN)	507

Y-SEPARATE ILLUSTRATION

<END>

HYDRAULIC SYSTEM

201-5340 HYDRAULIC AR

S/N: RCD1-UP
FINE FILTRATION
AN ATTACHMENT

SMCS-5050 **i01531583**

NOTE	PART NUMBER	QTY	PART NAME 1 2 3 4 5 6 (PRODUCT LEVEL)	SEE PAGE
Y	*201-0496*	1	FILTER & LINES GP-HYDRAULIC (RETURN)	507
Y-SEPARATE ILLUSTRATION				

<END>

HYDRAULIC SYSTEM

229-3367 HYDRAULIC AR

S/N: RCD1-UP

PART OF 229-3365 GENERAL AR

SMCS-5050 **i02312879**

NOTE	PART NUMBER	QTY	PART NAME 1 2 3 4 5 6 (PRODUCT LEVEL)	SEE PAGE
Y	*168-9374*	1	LINES GP-FRONT	609
Y	*168-9368*	1	LINES GP-MOTOR	616
Y	*168-9377*	1	LINES GP-PILOT	620
Y	*168-9376*	1	LINES GP-PUMP	636
Y	*168-9375*	1	LINES GP-RETURN & FILTER	652
Y	*168-9373*	1	LINES GP-SWING MOTOR	669
Y	*168-9372*	1	LINES GP-TRAVEL MOTOR	673
Y	*151-6645*	1	PUMP & MTG GP-MAIN HYDRAULIC (FRONT, REAR)	701
Y	*151-6647*	1	PUMP & MTG GP-HYDRAULIC (SWING, FAN, PILOT)	699
Y	*168-9369*	1	TANK & MTG GP-HYDRAULIC	733
Y	*168-9371*	1	VALVE & MTG GP-MAIN CONTROL	734
Y	**180-7882**	1	VALVE GP-MAIN CONTROL	823
			S/N: RCD1-205	
Y	**223-7750**	1	VALVE GP-MAIN CONTROL	826
			S/N: RCD206-UP	

Y-SEPARATE ILLUSTRATION

<END>

HYDRAULIC SYSTEM

274-2484 KIT-INDICATOR—HYDRAULIC OIL FILTER

S/N: RCD1-UP

FIELD INSTALLATION

SMCS-7475 **i02486487**

NOTE	PART NUMBER	QTY	PART NAME 1 2 3 4 5 6 (PRODUCT LEVEL)	SEE PAGE
M	**6V-4298**	8	BOLT (M5X0.8X16-MM)	
	242-6882	2	COVER	
	242-6883	2	GASKET	
	8T-0328	8	WASHER-HARD (5.5X10X1-MM THK)	

M-METRIC PART

<END>

HYDRAULIC SYSTEM

159-7744 LEVER GP-CONTROL

S/N: RCD1-UP

PART OF 111-6279 CONSOLE GP-OPERATOR

SMCS-4805, 5063 **i02785144**

NOTE	REF NO	GRAPHIC REF	PART NUMBER	QTY	PART NAME 1 2 3 4 5 6 (PRODUCT LEVEL)	SEE PAGE
M	1	1	**095-7930**	2	SCREW-MACHINE (M4X0.07X6-MM)	
	2	1	**121-7057**	1	KNOB (HYDRAULIC CONTROLS LOCKOUT)	
	3	1	**117-6269**	1	LEVER	
	4	1	**117-6270**	1	SUPPORT AS	
	5	1	**117-6272**	1	LEVER AS	
	6	1	**5D-4822**	3	RING-RETAINING	
	7	1	**117-6271**	1	SPRING	
	8	1	**117-6274**	1	PIN	
	9	1	**8T-4224**	2	WASHER-HARD (8.8X16X2-MM THK)	

M-METRIC PART

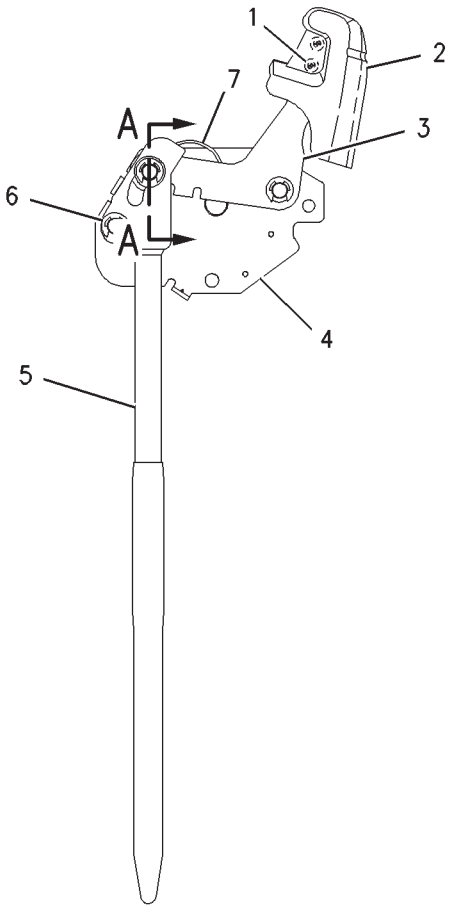

RIGHT SIDE VIEW

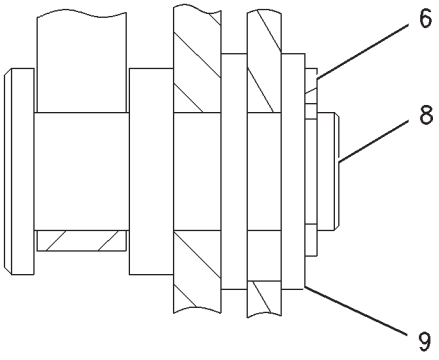

SECTION A–A

GRAPHIC #1 **<END>** g00681498

HYDRAULIC SYSTEM

153-8591 LINES GP-AUXILIARY HYDRAULIC–BOOM

S/N: RCD1-UP
FOR USE WITH 8.4-M (27.6-FT) BOOM
AN ATTACHMENT
TYPE 1

SMCS-5057 **i01886329**

NOTE	REF NO	GRAPHIC REF	PART NUMBER	QTY	PART NAME 1 2 3 4 5 6 (PRODUCT LEVEL)	SEE PAGE
	1	1	**173-8057**	1	TUBE AS	
	2	1	**173-8058**	2	TUBE AS	
	3	1	**173-8059**	2	TUBE AS	
	4	1	**187-9837**	1	TUBE AS	
	5	1	**173-8063**	1	BLOCK	
M	6	1	**8T-6385**	4	BOLT (M16X2X180-MM)	
	7	1	**173-8065**	2	PLATE AS	
	8	1	**173-8067**	4	CLIP	
	9	1	**173-8069**	2	PLATE	
	10	1	**146-1461**	4	PLATE	
	11	1	**202-7153**	2	PLATE	
	12	1	**143-4160**	26	CLIP	
M	13	1	**8T-4193**	32	BOLT (M16X2X50-MM)	
CM	14	1	**8T-4140**	24	BOLT (M16X2X60-MM)	
M	15	1	**8T-7338**	2	BOLT (M16X2X45-MM)	
	16	1	**179-5212**	8	PLATE	
M	17	1	**7X-2559**	12	BOLT (M16X2X160-MM)	
M	18	1	**7X-2555**	6	BOLT (M16X2X80-MM)	
M	19	1	**7X-2554**	10	BOLT (M16X2X70-MM)	
C	20	1	**9X-8257**	74	WASHER (17.5X30X3.5-MM THK)	
M	21	1	**8T-4132**	4	NUT (M16X2-THD)	
	22	1	**1P-3706**	4	SEAL-RECTANGULAR	
	23	1	**173-8135**	6	PLATE AS	
	24	1	**202-7152**	2	CLIP	
C	25	1	**5P-8077**	8	FLANGE-HALF	
CI	26	1	**212-5536**	2	HOSE AS	
C	27	1	**1P-3705**	4	SEAL-RECTANGULAR	
	28	1	**9F-2167**	2	SCREW-PURGE (3/8-24X1.164-IN)	
	29	1	**6H-3615**	2	PLUG-PROTECTION	

C-CHANGE FROM PREVIOUS TYPE
I-REFER TO HYDRAULIC INFORMATION SYSTEM
M-METRIC PART

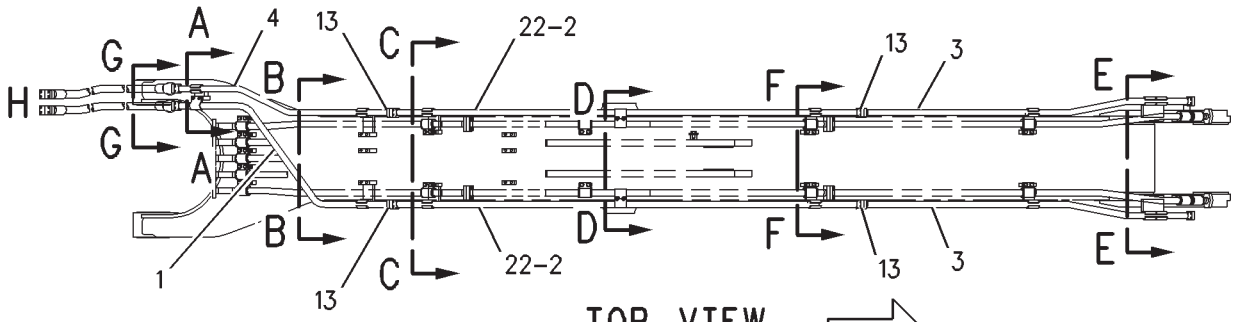

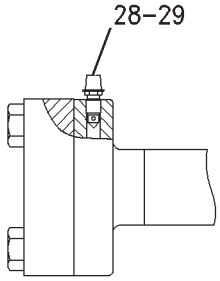

SECTION G-G

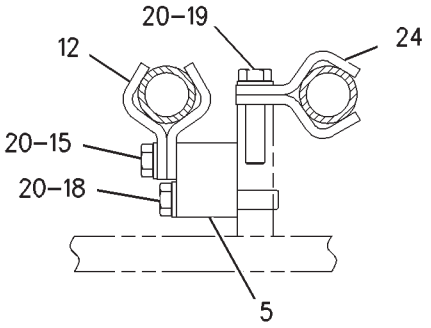

SECTION A-A

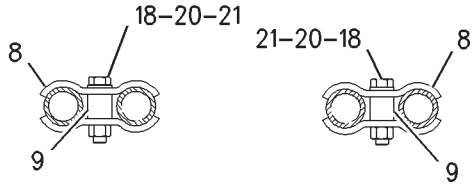

SECTION D-D

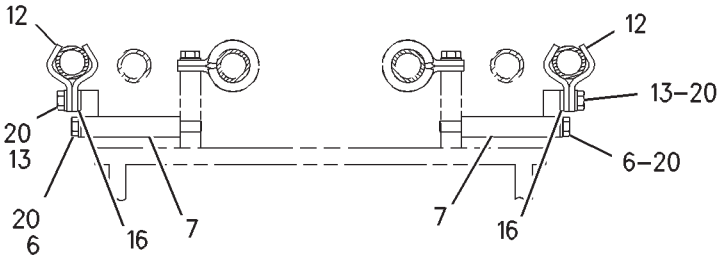

SECTION B-B

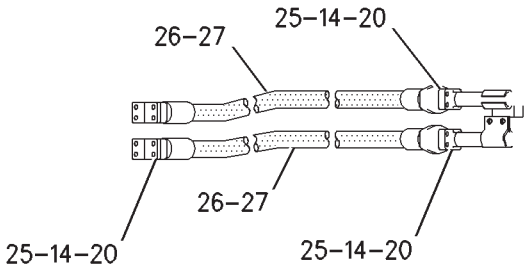

VIEW OF AREA H

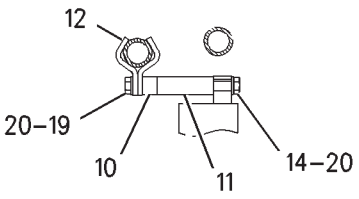

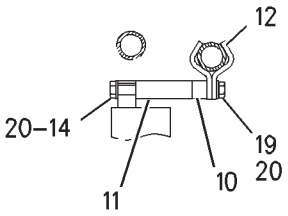

SECTION E-E

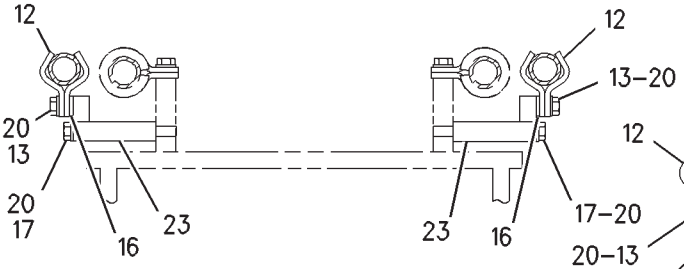

SECTION C-C

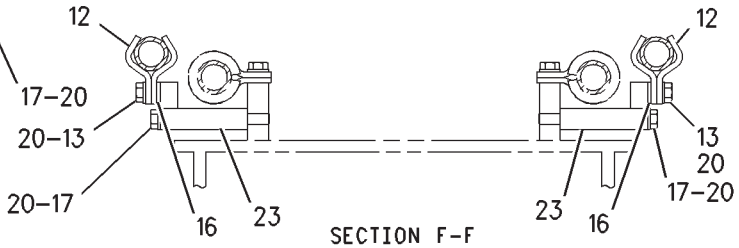

SECTION F-F

GRAPHIC #1 **<END>** g00979066

HYDRAULIC SYSTEM

153-8591 LINES GP-AUXILIARY HYDRAULIC–BOOM

S/N: RCD1-UP
FOR USE WITH 8.4-M (27.6-FT) BOOM
AN ATTACHMENT
TYPE 2

SMCS-5057 **i03384224**

NOTE	REF NO	GRAPHIC REF	PART NUMBER	QTY	PART NAME 1 2 3 4 5 6 (PRODUCT LEVEL)	SEE PAGE
	1	1	**6H-3615**	2	PLUG-PROTECTION	
	2	1	**9F-2167**	2	SCREW-PURGE (3/8-24X1.164-IN)	
C	3	1	**143-4160**	24	CLIP	
C	4	1	**146-1463**	2	CLIP	
	5	1	**173-8057**	1	TUBE AS	
	6	1	**173-8058**	2	TUBE AS	
	7	1	**173-8059**	2	TUBE AS	
	8	1	**173-8065**	2	PLATE AS	
	9	1	**173-8067**	4	CLIP	
	10	1	**173-8069**	2	PLATE	
	11	1	**153-8587**	6	PLATE AS	
	12	1	**179-5212**	8	PLATE	
	13	1	**202-7153**	2	PLATE	
I	14	1	**212-5536**	2	HOSE AS	
C	15	1	**245-2431**	1	TUBE AS	
	16	1	**146-1461**	4	PLATE	
	17	1	**1P-3705**	4	SEAL-RECTANGULAR	
	18	1	**1P-3706**	4	SEAL-RECTANGULAR	
	19	1	**5P-8077**	8	FLANGE-HALF	
M	20	1	**7X-2554**	10	BOLT (M16X2X70-MM)	
CM	21	1	**7X-2555**	4	BOLT (M16X2X80-MM)	
M	22	1	**7X-2559**	12	BOLT (M16X2X160-MM)	
M	23	1	**8T-4132**	4	NUT (M16X2-THD)	
M	24	1	**8T-4140**	24	BOLT (M16X2X60-MM)	
M	25	1	**8T-4193**	32	BOLT (M16X2X50-MM)	
M	26	1	**8T-6385**	4	BOLT (M16X2X180-MM)	
C	27	1	**9X-8257**	70	WASHER (17.5X30X3.5-MM THK)	

C-CHANGE FROM PREVIOUS TYPE
I-REFER TO HYDRAULIC INFORMATION SYSTEM
M-METRIC PART

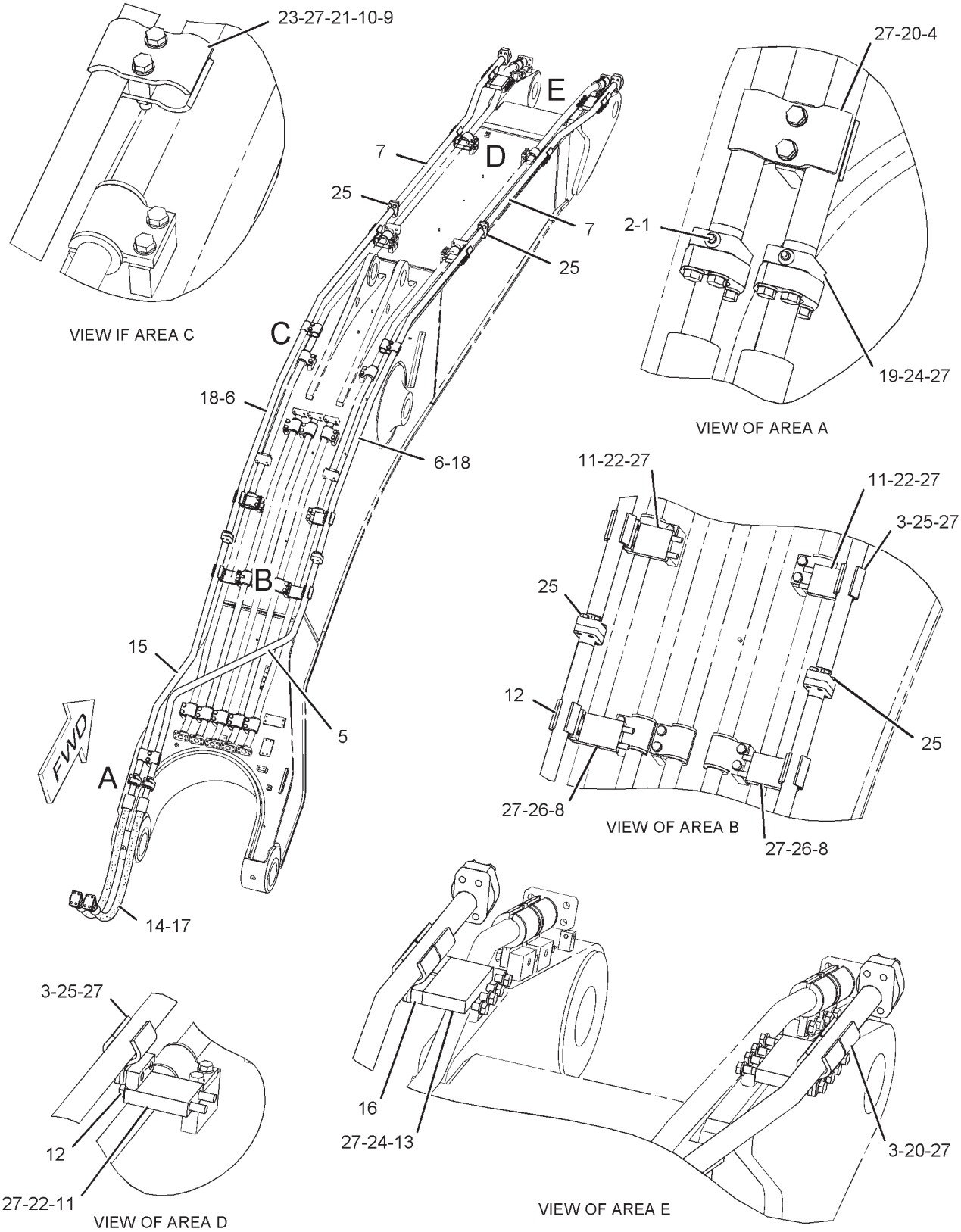

GRAPHIC #1 **<END>** g01128816

HYDRAULIC SYSTEM

179-5067 LINES GP-AUXILIARY HYDRAULIC—MASS BOOM

S/N: RCD1-UP
FOR USE WITH 7.3-M (24-FT) BOOM
AN ATTACHMENT
TYPE 1

SMCS-5057 **i01888773**

NOTE	REF NO	GRAPHIC REF	PART NUMBER	QTY	PART NAME 1 2 3 4 5 6 (PRODUCT LEVEL)	SEE PAGE
	1	1	**197-2325**	1	TUBE AS	
	2	1	**197-2326**	2	TUBE AS	
	3	1	**197-2327**	1	TUBE AS	
	4	1	**210-9684**	2	TUBE AS	
	5	1	**197-2329**	2	PLATE	
	6	1	**173-8063**	1	BLOCK	
	7	1	**173-8067**	4	CLIP	
	8	1	**173-8069**	2	PLATE	
	9	1	**173-8135**	4	PLATE AS	
	10	1	**179-5212**	4	PLATE	
	11	1	**146-1461**	4	PLATE	
	12	1	**202-7153**	2	PLATE	
	13	1	**143-4160**	22	CLIP	
M	14	1	**8T-4193**	28	BOLT (M16X2X50-MM)	
M	15	1	**7X-2554**	10	BOLT (M16X2X70-MM)	
M	16	1	**8T-7338**	2	BOLT (M16X2X45-MM)	
M	17	1	**7X-2555**	6	BOLT (M16X2X80-MM)	
M	18	1	**7X-2559**	12	BOLT (M16X2X160-MM)	
M	19	1	**8T-4140**	24	BOLT (M16X2X60-MM)	
	20	1	**9X-8257**	66	WASHER (17.5X30X3.5-MM THK)	
M	21	1	**8T-4132**	4	NUT (M16X2-THD)	
	22	1	**1P-3706**	4	SEAL-RECTANGULAR	
	23	1	**197-2338**	2	PLATE AS	
	24	1	**202-7152**	2	CLIP	
	25	1	**5P-8077**	8	FLANGE-HALF	
I	26	1	**212-5536**	2	HOSE AS	
	27	1	**1P-3705**	4	SEAL-RECTANGULAR	
	28	1	**9F-2167**	2	SCREW-PURGE (3/8-24X1.164-IN)	
	29	1	**6H-3615**	2	PLUG-PROTECTION	

I-REFER TO HYDRAULIC INFORMATION SYSTEM
M-METRIC PART

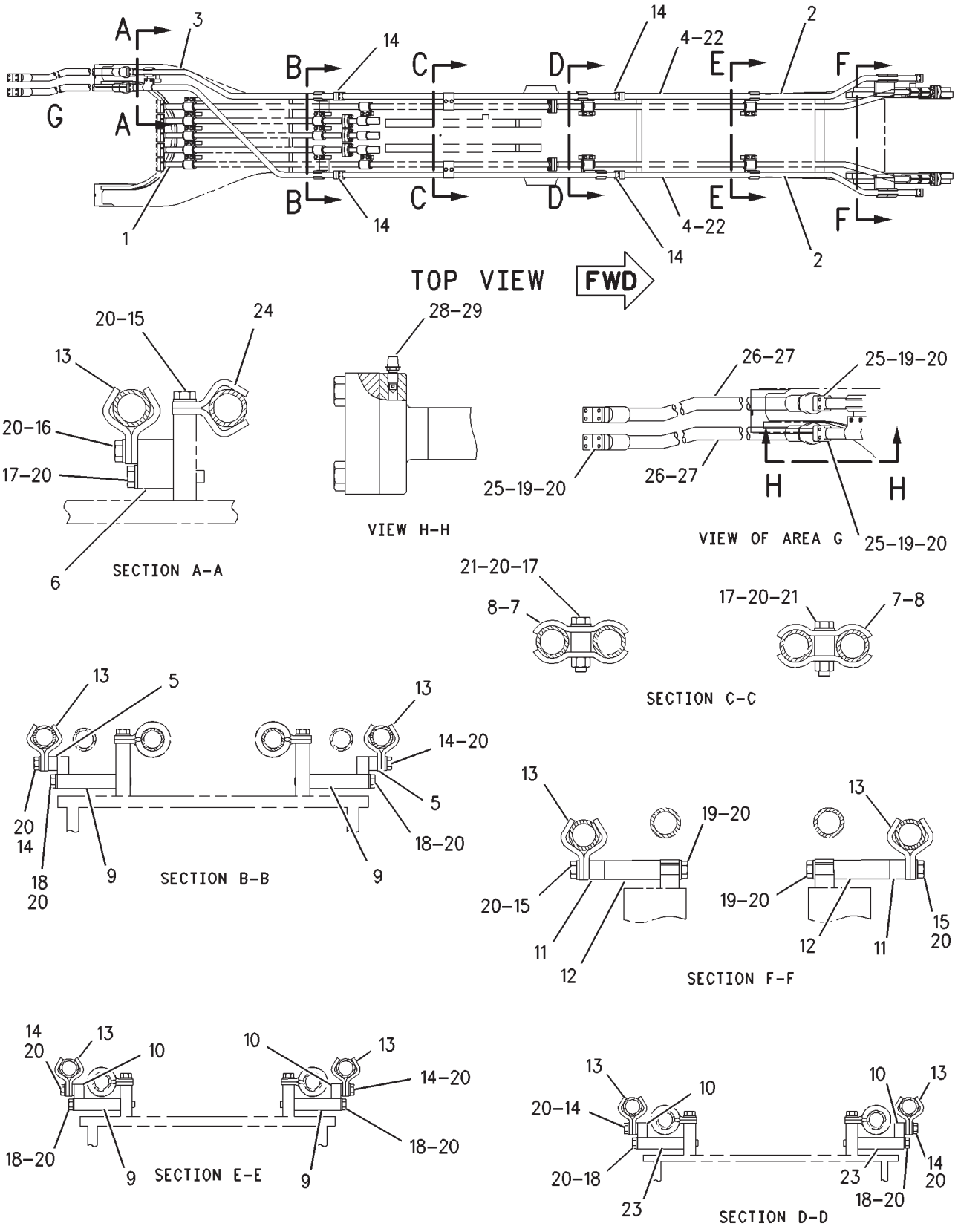

GRAPHIC #1 **<END>** g00984079

HYDRAULIC SYSTEM

179-5067 LINES GP-AUXILIARY HYDRAULIC—MASS BOOM

S/N: RCD1-UP
FOR USE WITH 7.3-M (24-FT) BOOM
AN ATTACHMENT
TYPE 2

SMCS-5057 **i03384222**

NOTE	REF NO	GRAPHIC REF	PART NUMBER	QTY	PART NAME 1 2 3 4 5 6 (PRODUCT LEVEL)	SEE PAGE
	1	1	**6H-3615**	2	PLUG-PROTECTION	
	2	1	**9F-2167**	2	SCREW-PURGE (3/8-24X1.164-IN)	
C	3	1	**143-4160**	20	CLIP	
C	4	1	**146-1463**	2	CLIP	
	5	1	**173-8067**	4	CLIP	
	6	1	**173-8069**	2	PLATE	
	7	1	**153-8587**	4	PLATE AS	
	8	1	**179-5212**	4	PLATE	
	9	1	**197-2326**	2	TUBE AS	
	10	1	**197-2329**	2	PLATE	
	11	1	**197-2338**	2	PLATE AS	
	12	1	**202-7153**	2	PLATE	
	13	1	**210-9684**	2	TUBE AS	
I	14	1	**212-5536**	2	HOSE AS	
C	15	1	**247-9081**	1	TUBE AS	
C	16	1	**247-9308**	1	TUBE AS	
	17	1	**146-1461**	4	PLATE	
	18	1	**1P-3705**	4	SEAL-RECTANGULAR	
	19	1	**1P-3706**	4	SEAL-RECTANGULAR	
	20	1	**5P-8077**	8	FLANGE-HALF	
M	21	1	**7X-2554**	10	BOLT (M16X2X70-MM)	
CM	22	1	**7X-2555**	4	BOLT (M16X2X80-MM)	
M	23	1	**7X-2559**	12	BOLT (M16X2X160-MM)	
M	24	1	**8T-4132**	4	NUT (M16X2-THD)	
M	25	1	**8T-4140**	24	BOLT (M16X2X60-MM)	
M	26	1	**8T-4193**	28	BOLT (M16X2X50-MM)	
C	27	1	**9X-8257**	62	WASHER (17.5X30X3.5-MM THK)	

C-CHANGE FROM PREVIOUS TYPE
I-REFER TO HYDRAULIC INFORMATION SYSTEM
M-METRIC PART

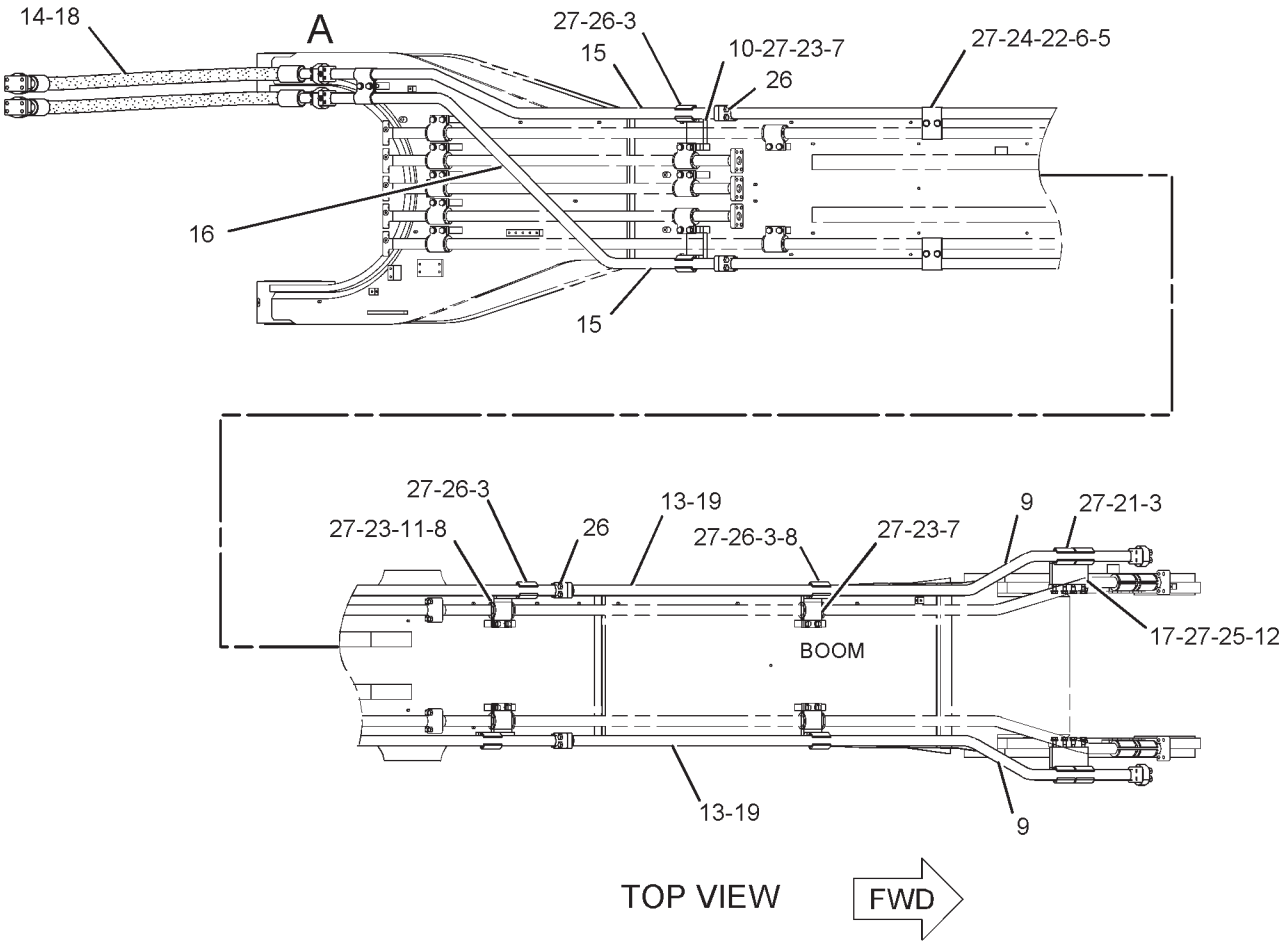

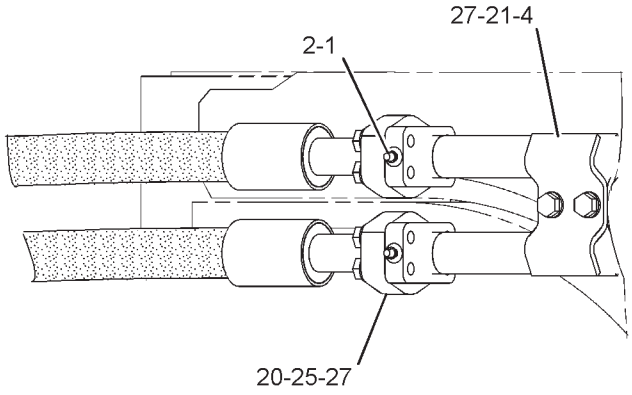

VIEW OF AREA A

GRAPHIC #1 **<END>** g01128555

HYDRAULIC SYSTEM

193-6554 LINES GP-AUXILIARY HYDRAULIC–

STICK, HIGH PRESSURE
S/N: RCD1-UP
H, HB-FAMILY
FOR USE WITH 4.4-M (14-FT) STICK
AN ATTACHMENT
TYPE 1

SMCS-5057 **i02144196**

NOTE	REF NO	GRAPHIC REF	PART NUMBER	QTY	PART NAME 1 2 3 4 5 6 (PRODUCT LEVEL)	SEE PAGE
	1	1	**230-0307**	2	TUBE AS	
I	2	1	**242-6551**	2	HOSE AS	
	3	1	**6C-6814**	2	VALVE GP-MANUAL (AUXILIARY)	
	4	1	**143-4160**	8	CLIP	
	5	1	**5P-8077**	8	FLANGE-HALF	
M	6	1	**8T-7338**	8	BOLT (M16X2X45-MM)	
M	7	1	**8T-4193**	8	BOLT (M16X2X50-MM)	
M	8	1	**7X-2557**	4	BOLT (M16X2X140-MM)	
M	9	1	**8T-4140**	16	BOLT (M16X2X60-MM)	
	10	1	**9X-8257**	28	WASHER (17.5X30X3.5-MM THK)	
	11	1	**3K-8460**	2	PLUG	
	12	1	**1J-9671**	2	SEAL-O-RING	
	13	1	**1P-3705**	4	SEAL-RECTANGULAR	
	14	1	**1P-3706**	2	SEAL-RECTANGULAR	

I-REFER TO HYDRAULIC INFORMATION SYSTEM
M-METRIC PART

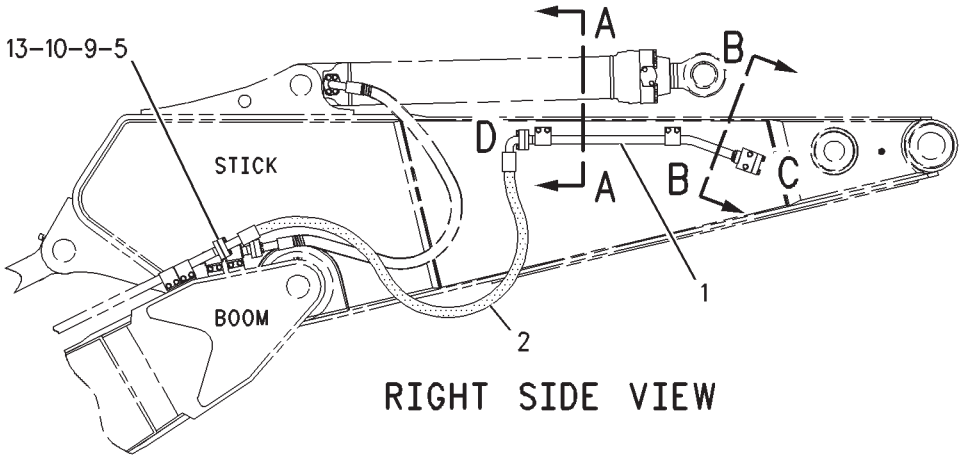

RIGHT SIDE VIEW

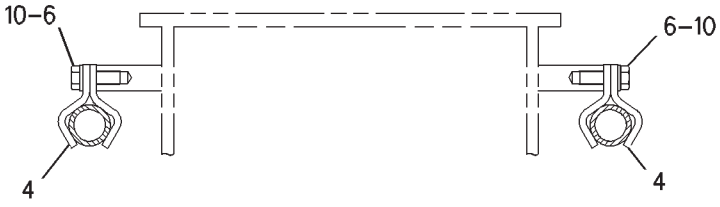

SECTION A–A

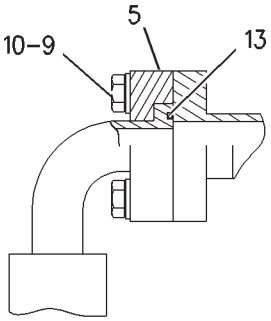

VIEW OF AREA D



SECTION B–B

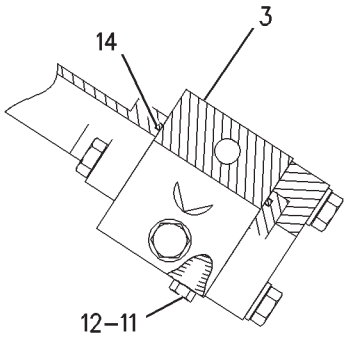

VIEW OF AREA C

GRAPHIC #1 **<END>** g00797245

HYDRAULIC SYSTEM

193-6554 LINES GP-AUXILIARY HYDRAULIC–

STICK, HIGH PRESSURE
S/N: RCD1-UP
H, HB-FAMILY
FOR USE WITH 4.4-M (14-FT) STICK
AN ATTACHMENT
TYPE 2

SMCS-5057 **i03499082**

NOTE	REF NO	GRAPHIC REF	PART NUMBER	QTY	PART NAME 1 2 3 4 5 6 (PRODUCT LEVEL)	SEE PAGE
	1	1	**230-0307**	2	TUBE AS	
I	2	1	**242-6551**	2	HOSE AS	
CY	3	1	**229-5272**	2	VALVE GP-MANUAL (AUXILIARY, SHUTOFF)	845
	4	1	**143-4160**	8	CLIP	
	5	1	**5P-8077**	8	FLANGE-HALF	
M	6	1	**8T-7338**	8	BOLT (M16X2X45-MM)	
M	7	1	**8T-4193**	8	BOLT (M16X2X50-MM)	
M	8	1	**7X-2557**	4	BOLT (M16X2X140-MM)	
M	9	1	**8T-4140**	16	BOLT (M16X2X60-MM)	
	10	1	**9X-8257**	28	WASHER (17.5X30X3.5-MM THK)	
	13	1	**1P-3705**	4	SEAL-RECTANGULAR	
	14	1	**1P-3706**	2	SEAL-RECTANGULAR	

C-CHANGE FROM PREVIOUS TYPE
I-REFER TO HYDRAULIC INFORMATION SYSTEM
M-METRIC PART
Y-SEPARATE ILLUSTRATION

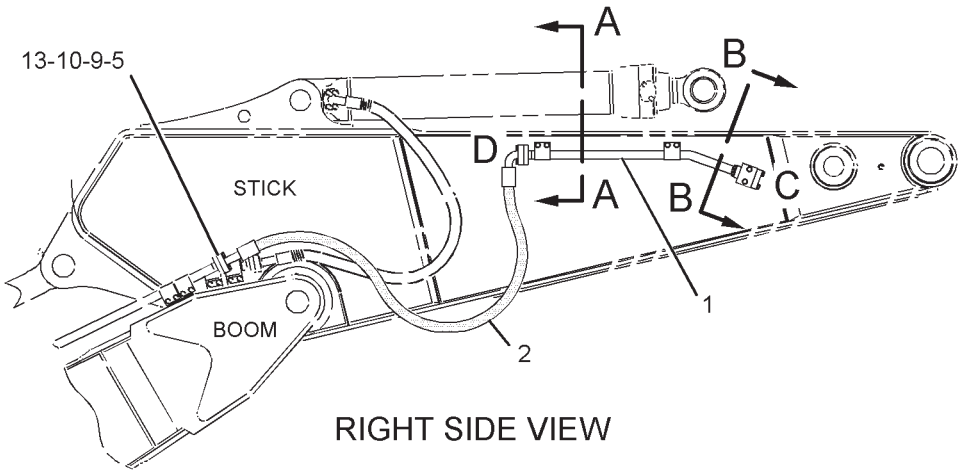

RIGHT SIDE VIEW

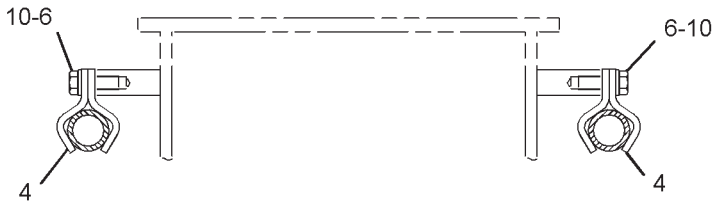

SECTION A-A

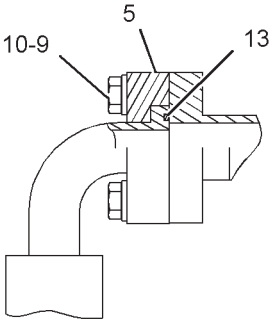

VIEW OF AREA D



SECTION B-B

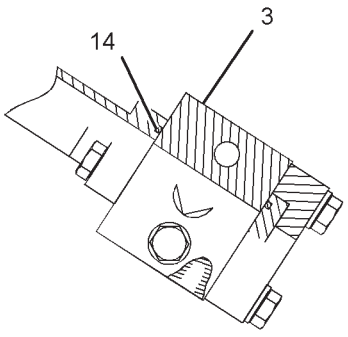

VIEW OF AREA C

GRAPHIC #1 **<END>** g01088940

HYDRAULIC SYSTEM

193-6555 LINES GP-AUXILIARY HYDRAULIC–

STICK, HIGH PRESSURE
S/N: RCD1-UP
H, HB-FAMILY
FOR USE WITH 5.5-M (18-FT) STICK
AN ATTACHMENT
TYPE 1

SMCS-5057 **i03495300**

NOTE	REF NO	GRAPHIC REF	PART NUMBER	QTY	PART NAME 1 2 3 4 5 6 (PRODUCT LEVEL)	SEE PAGE
	1	1	**230-0308**	2	TUBE AS	
I	2	1	**242-6552**	2	HOSE AS	
	3	1	**6C-6814**	2	VALVE GP-MANUAL (SHUTOFF) (AUXILIARY)	
	4	1	**143-4160**	8	CLIP	
	5	1	**5P-8077**	8	FLANGE-HALF	
M	6	1	**8T-7338**	8	BOLT (M16X2X45-MM)	
M	7	1	**8T-4193**	8	BOLT (M16X2X50-MM)	
M	8	1	**7X-2557**	4	BOLT (M16X2X140-MM)	
M	9	1	**8T-4140**	16	BOLT (M16X2X60-MM)	
	10	1	**9X-8257**	28	WASHER (17.5X30X3.5-MM THK)	
	11	1	**3K-8460**	2	PLUG	
	12	1	**1J-9671**	2	SEAL-O-RING	
	13	1	**1P-3705**	4	SEAL-RECTANGULAR	
	14	1	**1P-3706**	2	SEAL-RECTANGULAR	

I-REFER TO HYDRAULIC INFORMATION SYSTEM
M-METRIC PART

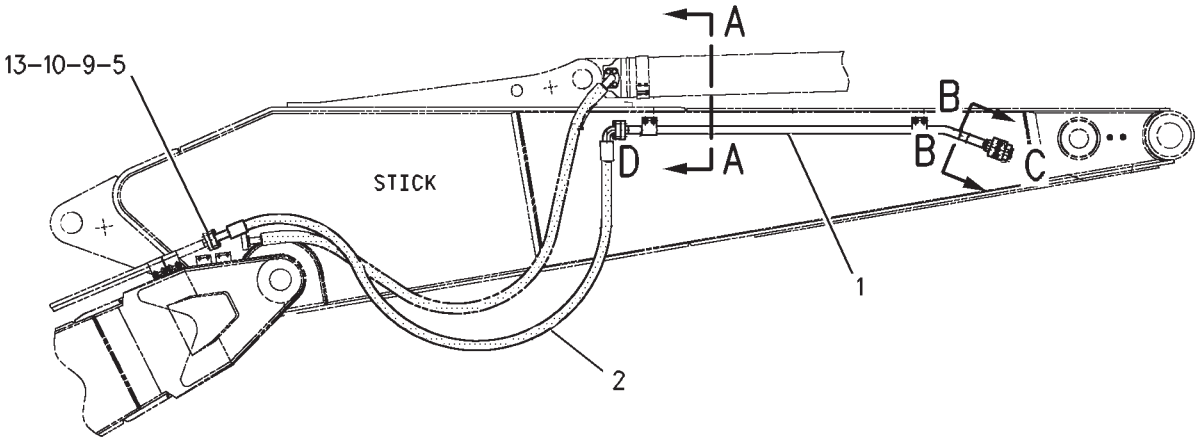

RIGHT SIDE VIEW



SECTION A-A

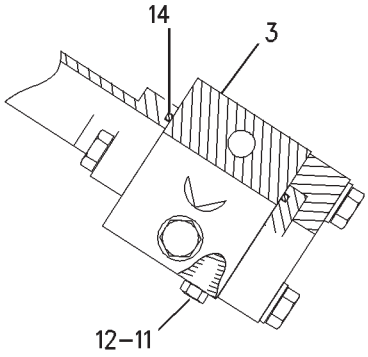

VIEW OF AREA C



SECTION B-B

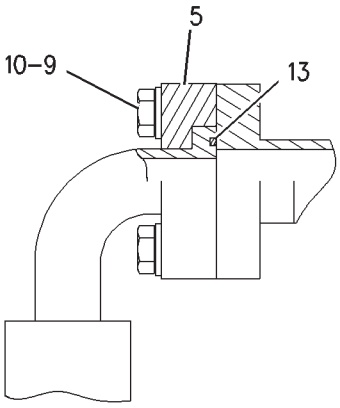

VIEW OF AREA D

GRAPHIC #1 **<END>** g00797142

HYDRAULIC SYSTEM

193-6555 LINES GP-AUXILIARY HYDRAULIC–

STICK, HIGH PRESSURE
S/N: RCD1-UP
H, HB-FAMILY
FOR USE WITH 5.5-M (18-FT) STICK
AN ATTACHMENT
TYPE 2

SMCS-5057 **i03499182**

NOTE	REF NO	GRAPHIC REF	PART NUMBER	QTY	PART NAME 1 2 3 4 5 6 (PRODUCT LEVEL)	SEE PAGE
	1	1	**230-0308**	2	TUBE AS	
I	2	1	**242-6552**	2	HOSE AS	
CY	3	1	**229-5272**	2	VALVE GP-MANUAL (AUXILIARY, SHUTOFF)	845
	4	1	**143-4160**	8	CLIP	
	5	1	**5P-8077**	8	FLANGE-HALF	
M	6	1	**8T-7338**	8	BOLT (M16X2X45-MM)	
M	7	1	**8T-4193**	8	BOLT (M16X2X50-MM)	
M	8	1	**7X-2557**	4	BOLT (M16X2X140-MM)	
M	9	1	**8T-4140**	16	BOLT (M16X2X60-MM)	
	10	1	**9X-8257**	28	WASHER (17.5X30X3.5-MM THK)	
	13	1	**1P-3705**	4	SEAL-RECTANGULAR	
	14	1	**1P-3706**	2	SEAL-RECTANGULAR	

C-CHANGE FROM PREVIOUS TYPE
I-REFER TO HYDRAULIC INFORMATION SYSTEM
M-METRIC PART
Y-SEPARATE ILLUSTRATION

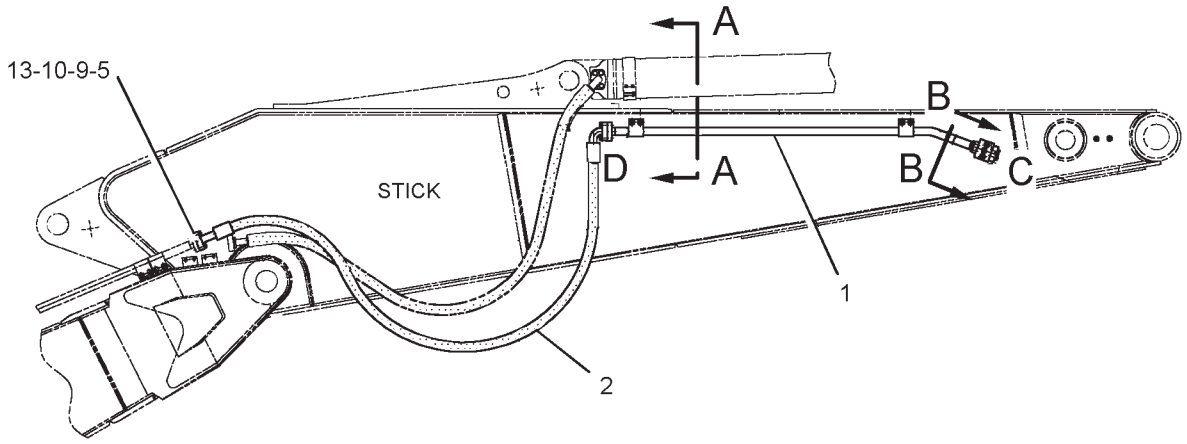

RIGHT SIDE VIEW

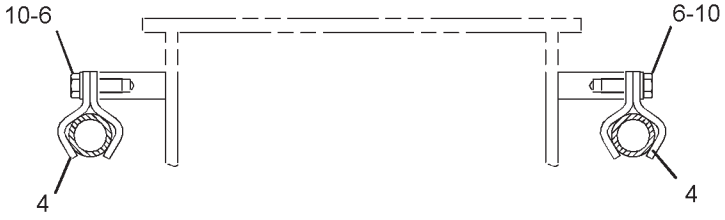

SECTION A-A

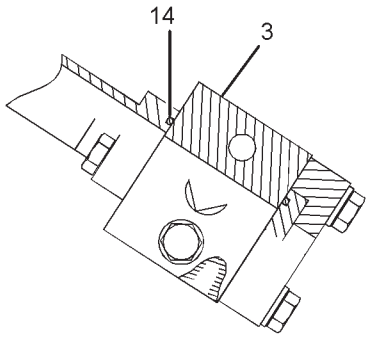

VIEW OF AREA C



SECTION B-B

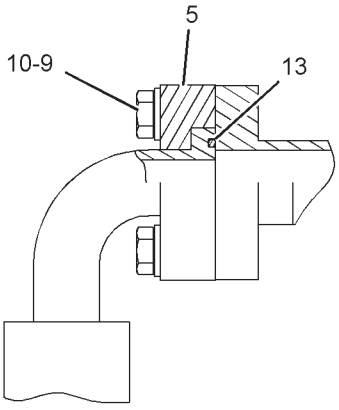

VIEW OF AREA D

GRAPHIC #1 **<END>** g01088520

HYDRAULIC SYSTEM

193-6556 LINES GP-AUXILIARY HYDRAULIC–

STICK, HIGH PRESSURE
S/N: RCD1-UP
J, JB-FAMILY
FOR USE WITH 2.9-M (9.5-FT) STICK
AN ATTACHMENT
TYPE 1

SMCS-5057 **i03495301**

NOTE	REF NO	GRAPHIC REF	PART NUMBER	QTY	PART NAME 1 2 3 4 5 6 (PRODUCT LEVEL)	SEE PAGE
	1	1	**230-0309**	2	TUBE AS	
I	2	1	**218-1230**	2	HOSE AS	
	3	1	**6C-6814**	2	VALVE GP-MANUAL (SHUTOFF) (AUXILIARY)	
	4	1	**143-4160**	4	CLIP	
	5	1	**5P-8077**	8	FLANGE-HALF	
M	6	1	**8T-7338**	4	BOLT (M16X2X45-MM)	
M	7	1	**8T-4193**	8	BOLT (M16X2X50-MM)	
M	8	1	**7X-2557**	4	BOLT (M16X2X140-MM)	
M	9	1	**8T-4140**	16	BOLT (M16X2X60-MM)	
	10	1	**9X-8257**	24	WASHER (17.5X30X3.5-MM THK)	
	11	1	**3K-8460**	2	PLUG	
	12	1	**1J-9671**	2	SEAL-O-RING	
	13	1	**1P-3705**	4	SEAL-RECTANGULAR	
	14	1	**1P-3706**	2	SEAL-RECTANGULAR	

I-REFER TO HYDRAULIC INFORMATION SYSTEM
M-METRIC PART

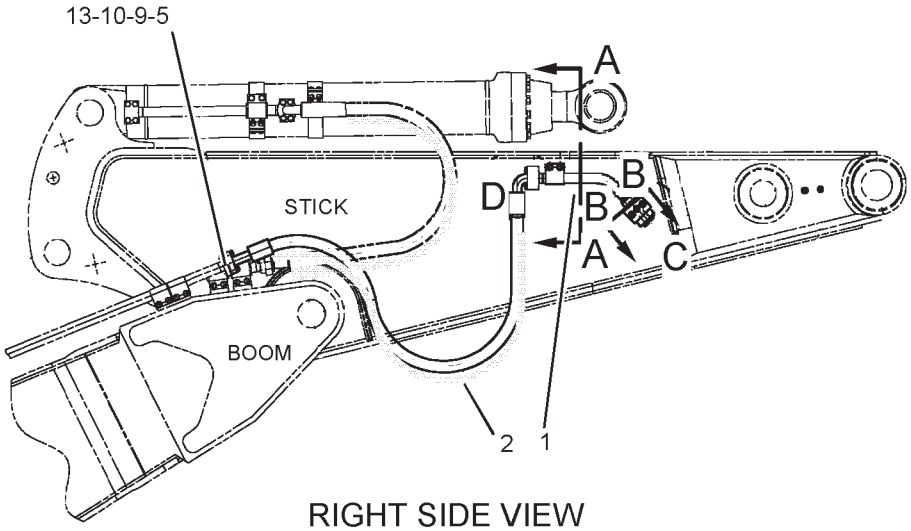

RIGHT SIDE VIEW

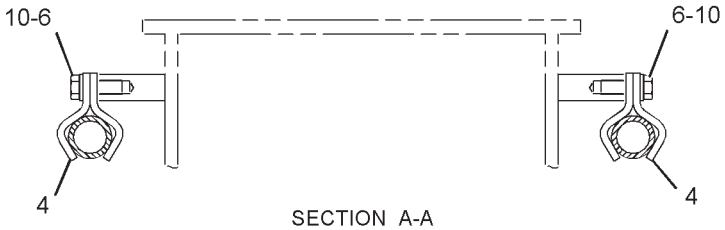

SECTION A-A

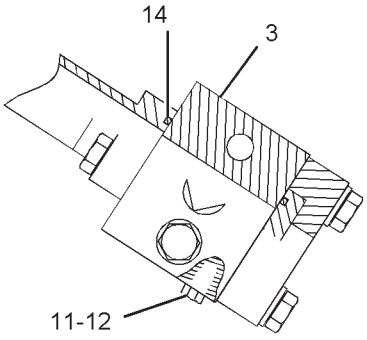

VIEW OF AREA C



SECTION B-B

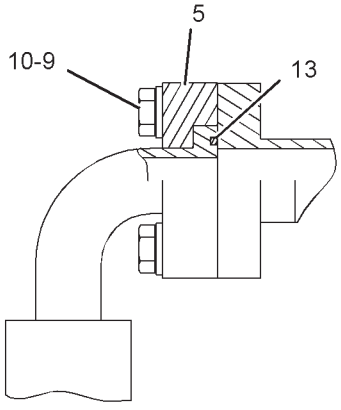

VIEW OF AREA D

GRAPHIC #1 **<END>** g01089125

HYDRAULIC SYSTEM

193-6556 LINES GP-AUXILIARY HYDRAULIC–

STICK, HIGH PRESSURE
S/N: RCD1-UP
J, JB-FAMILY
FOR USE WITH 2.9-M (9.5-FT) STICK
AN ATTACHMENT
TYPE 2

SMCS-5057 **i03499320**

NOTE	REF NO	GRAPHIC REF	PART NUMBER	QTY	PART NAME 1 2 3 4 5 6 (PRODUCT LEVEL)	SEE PAGE
	1	1	**230-0309**	2	TUBE AS	
I	2	1	**218-1230**	2	HOSE AS	
CY	3	1	**229-5272**	2	VALVE GP-MANUAL (AUXILIARY, SHUTOFF)	845
	4	1	**143-4160**	4	CLIP	
	5	1	**5P-8077**	8	FLANGE-HALF	
M	6	1	**8T-7338**	4	BOLT (M16X2X45-MM)	
M	7	1	**8T-4193**	8	BOLT (M16X2X50-MM)	
M	8	1	**7X-2557**	4	BOLT (M16X2X140-MM)	
M	9	1	**8T-4140**	16	BOLT (M16X2X60-MM)	
	10	1	**9X-8257**	24	WASHER (17.5X30X3.5-MM THK)	
	13	1	**1P-3705**	4	SEAL-RECTANGULAR	
	14	1	**1P-3706**	2	SEAL-RECTANGULAR	

C-CHANGE FROM PREVIOUS TYPE
I-REFER TO HYDRAULIC INFORMATION SYSTEM
M-METRIC PART
Y-SEPARATE ILLUSTRATION

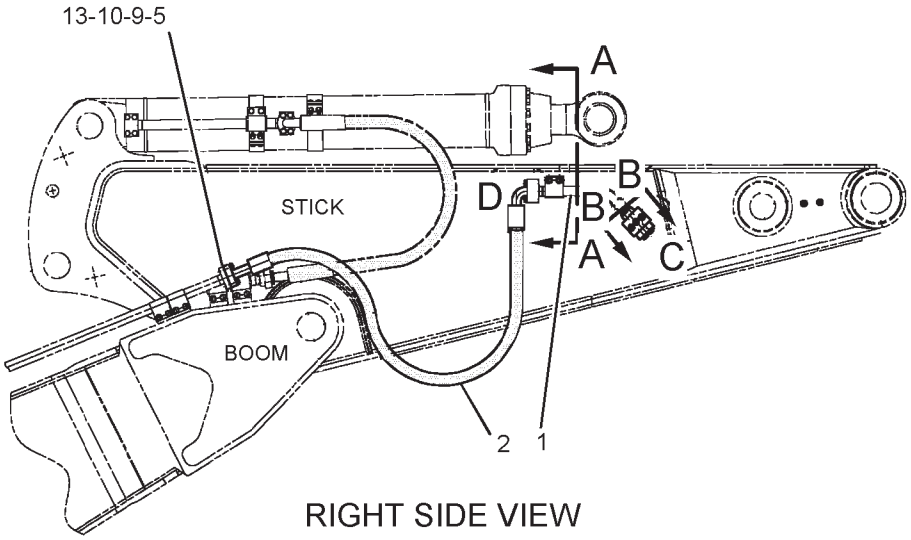

RIGHT SIDE VIEW

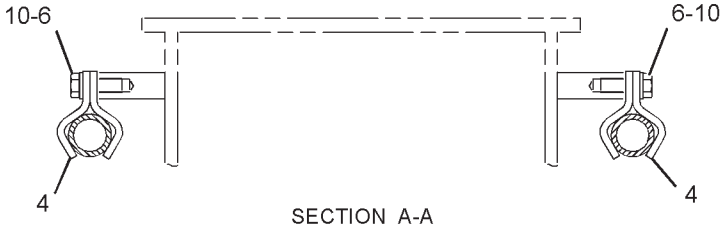

SECTION A-A

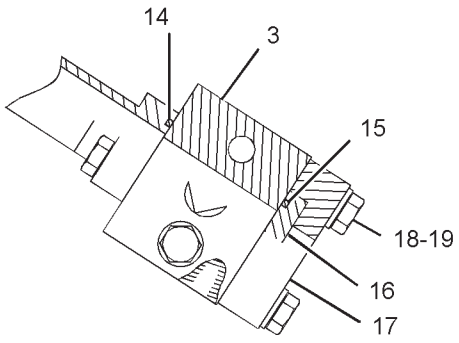

VIEW OF AREA C



SECTION B-B

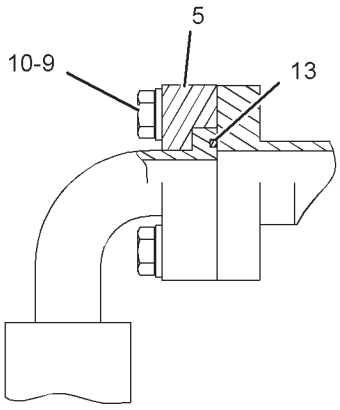

VIEW OF AREA D

GRAPHIC #1 **<END>** g01088862

HYDRAULIC SYSTEM

197-2257 LINES GP-AUXILIARY HYDRAULIC–

STICK, HIGH PRESSURE
S/N: RCD1-UP
J, JB-FAMILY
FOR USE WITH 3.4-M (11-FT) STICK
AN ATTACHMENT
TYPE 1

SMCS-5057 **i03495302**

NOTE	REF NO	GRAPHIC REF	PART NUMBER	QTY	PART NAME 1 2 3 4 5 6 (PRODUCT LEVEL)	SEE PAGE
	1	1	**230-0310**	2	TUBE AS	
I	2	1	**216-6538**	2	HOSE AS	
	3	1	**6C-6814**	2	VALVE GP-MANUAL (SHUTOFF) (AUXILIARY)	
	4	1	**143-4160**	8	CLIP	
	5	1	**5P-8077**	8	FLANGE-HALF	
M	6	1	**8T-7338**	8	BOLT (M16X2X45-MM)	
M	7	1	**8T-4193**	8	BOLT (M16X2X50-MM)	
M	8	1	**7X-2557**	4	BOLT (M16X2X140-MM)	
M	9	1	**8T-4140**	16	BOLT (M16X2X60-MM)	
	10	1	**9X-8257**	28	WASHER (17.5X30X3.5-MM THK)	
	11	1	**3K-8460**	2	PLUG	
	12	1	**1J-9671**	2	SEAL-O-RING	
	13	1	**1P-3705**	4	SEAL-RECTANGULAR	
	14	1	**1P-3706**	2	SEAL-RECTANGULAR	

I-REFER TO HYDRAULIC INFORMATION SYSTEM
M-METRIC PART

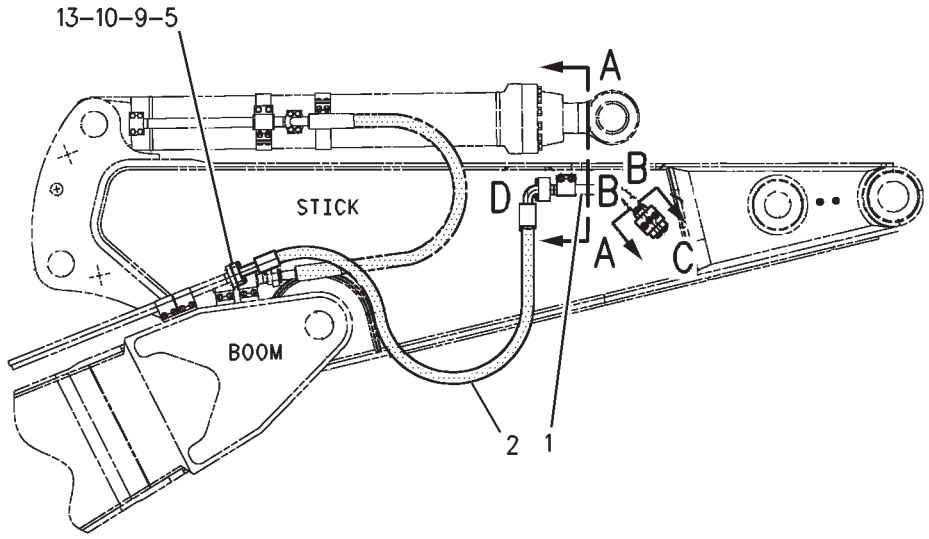

RIGHT SIDE VIEW



SECTION A–A

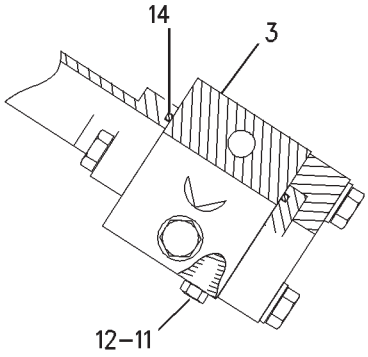

VIEW OF AREA C



SECTION B–B

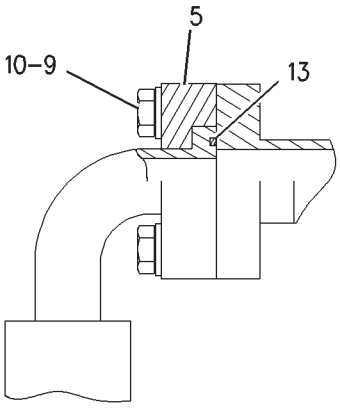

VIEW OF AREA D

GRAPHIC #1 **<END>** g00797122

HYDRAULIC SYSTEM

197-2257 LINES GP-AUXILIARY HYDRAULIC–

STICK, HIGH PRESSURE
S/N: RCD1-UP
J, JB-FAMILY
FOR USE WITH 3.4-M (11-FT) STICK
AN ATTACHMENT
TYPE 2

SMCS-5057 **i03625812**

NOTE	REF NO	GRAPHIC REF	PART NUMBER	QTY	PART NAME 1 2 3 4 5 6 (PRODUCT LEVEL)	SEE PAGE
	1	1	**230-0310**	2	TUBE AS	
I	2	1	**216-6538**	2	HOSE AS	
CY	3	1	**229-5272**	2	VALVE GP-MANUAL (AUXILIARY, SHUTOFF)	845
	4	1	**143-4160**	8	CLIP	
	5	1	**5P-8077**	8	FLANGE-HALF	
M	6	1	**8T-7338**	8	BOLT (M16X2X45-MM)	
M	7	1	**8T-4193**	8	BOLT (M16X2X50-MM)	
M	8	1	**7X-2557**	4	BOLT (M16X2X140-MM)	
M	9	1	**8T-4140**	16	BOLT (M16X2X60-MM)	
	10	1	**9X-8257**	28	WASHER (17.5X30X3.5-MM THK)	
	13	1	**1P-3705**	4	SEAL-RECTANGULAR	
	14	1	**1P-3706**	2	SEAL-RECTANGULAR	

C-CHANGE FROM PREVIOUS TYPE
I-REFER TO HYDRAULIC INFORMATION SYSTEM
M-METRIC PART
Y-SEPARATE ILLUSTRATION

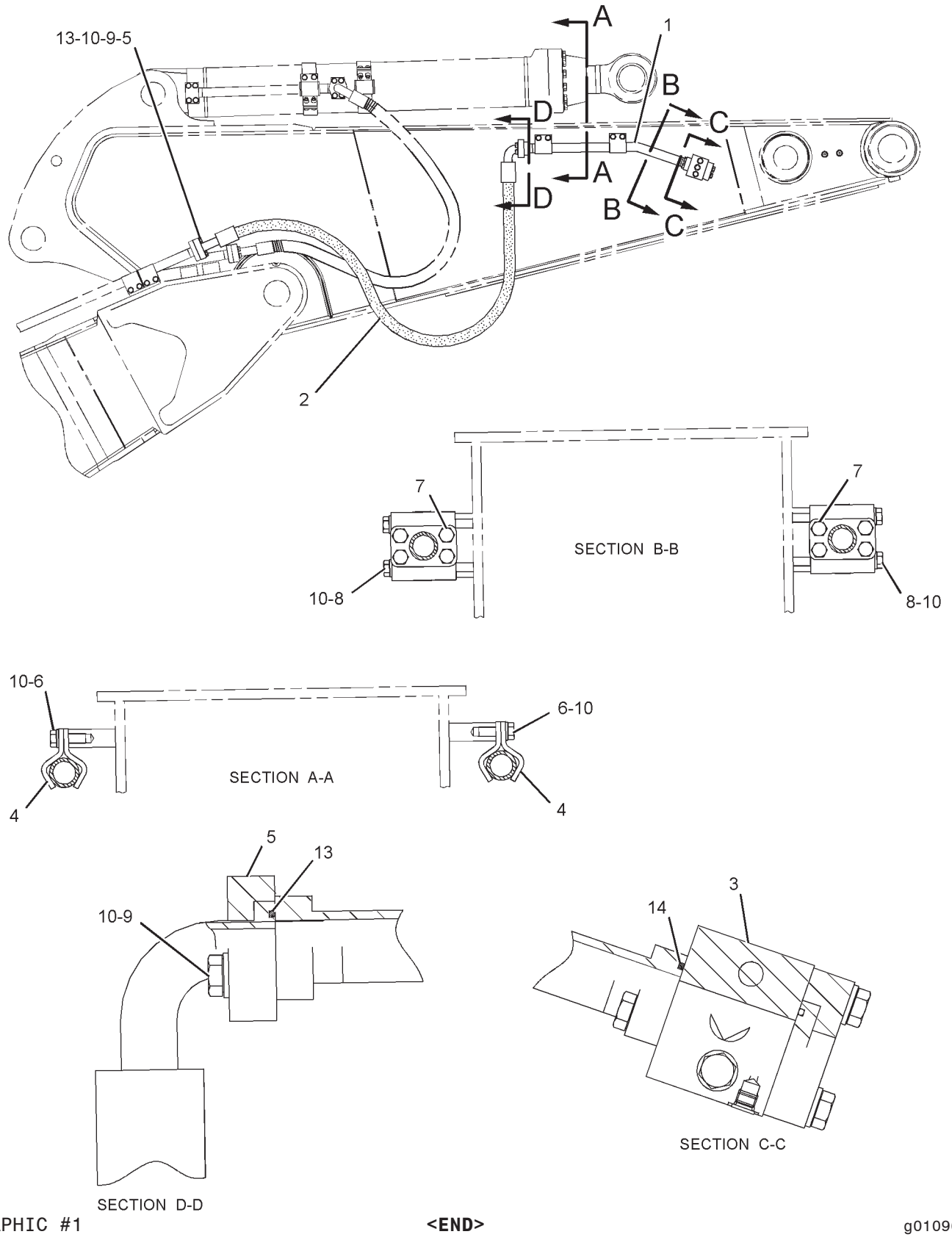

GRAPHIC #1 **<END>** g01096473

HYDRAULIC SYSTEM

207-7181 LINES GP-AUXILIARY HYDRAULIC–BOOM, MEDIUM PRESSURE

S/N: RCD1-UP

AN ATTACHMENT

SMCS-5057 **i03409702**

NOTE	REF NO	GRAPHIC REF	PART NUMBER	QTY	PART NAME 1 2 3 4 5 6 (PRODUCT LEVEL)	SEE PAGE
	1	1	**206-9665**	1	PLATE	
	2	1	**6V-1889**	8	CLIP	
M	3	1	**8T-4137**	8	BOLT (M10X1.5X20-MM)	
	4	1	**8T-4121**	8	WASHER-HARD (11X21X2.5-MM THK)	
	5	1	**132-9176**	8	PLATE	
	6	1	**206-9666**	2	PLATE	
	7	1	**9X-8257**	6	WASHER (17.5X30X3.5-MM THK)	
	8	1	**6V-8996**	4	UNION	
	9	1	**6V-9170**	4	NUT-BULKHEAD (1-14-THD)	
	10	1	**7J-9108**	4	SEAL-O-RING	
M	11	1	**8T-4175**	16	BOLT (M16X2X90-MM)	
B	12	1	**7K-1181**	40	STRAP-CABLE	
I	13	1	**207-8490**	2	HOSE AS	
I	14	1	**207-9532**	2	HOSE AS	
M	15	1	**7X-2554**	6	BOLT (M16X2X70-MM)	

B-USE AS REQUIRED
I-REFER TO HYDRAULIC INFORMATION SYSTEM
M-METRIC PART

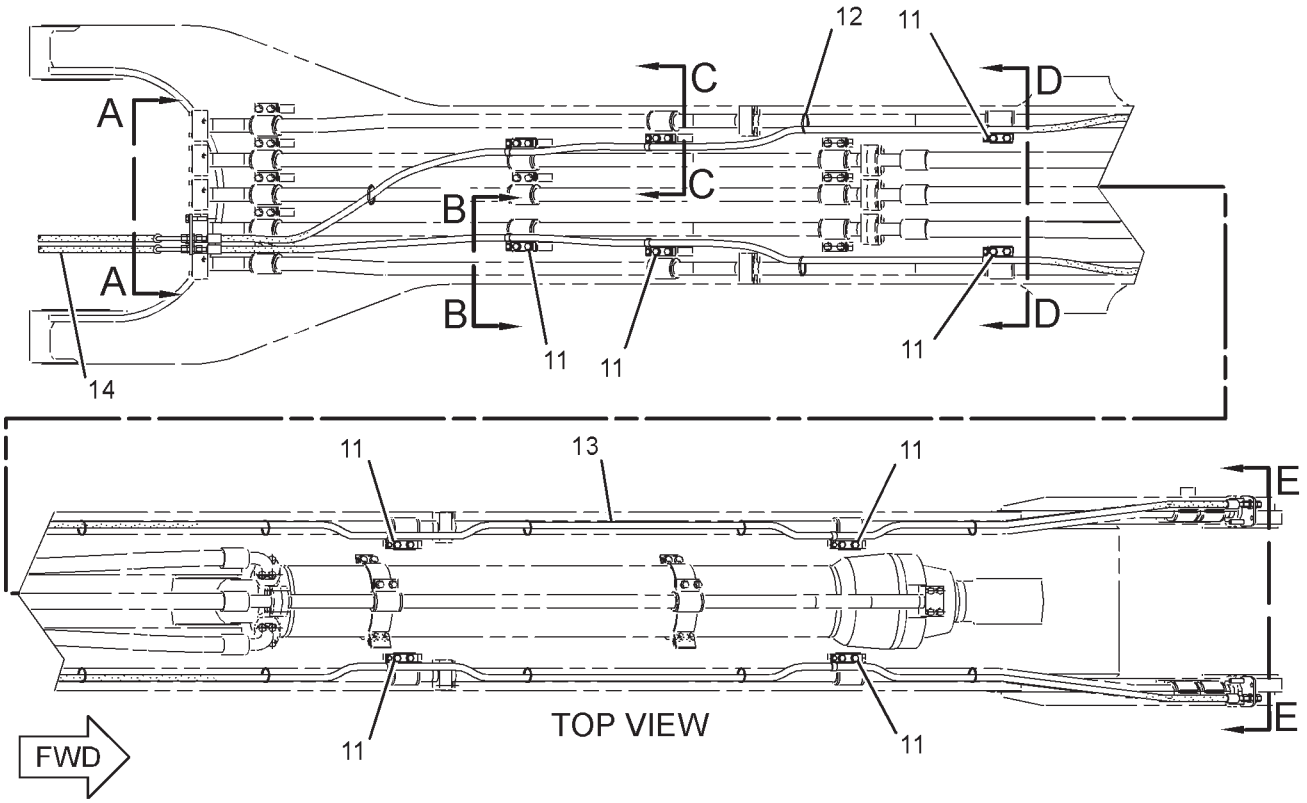

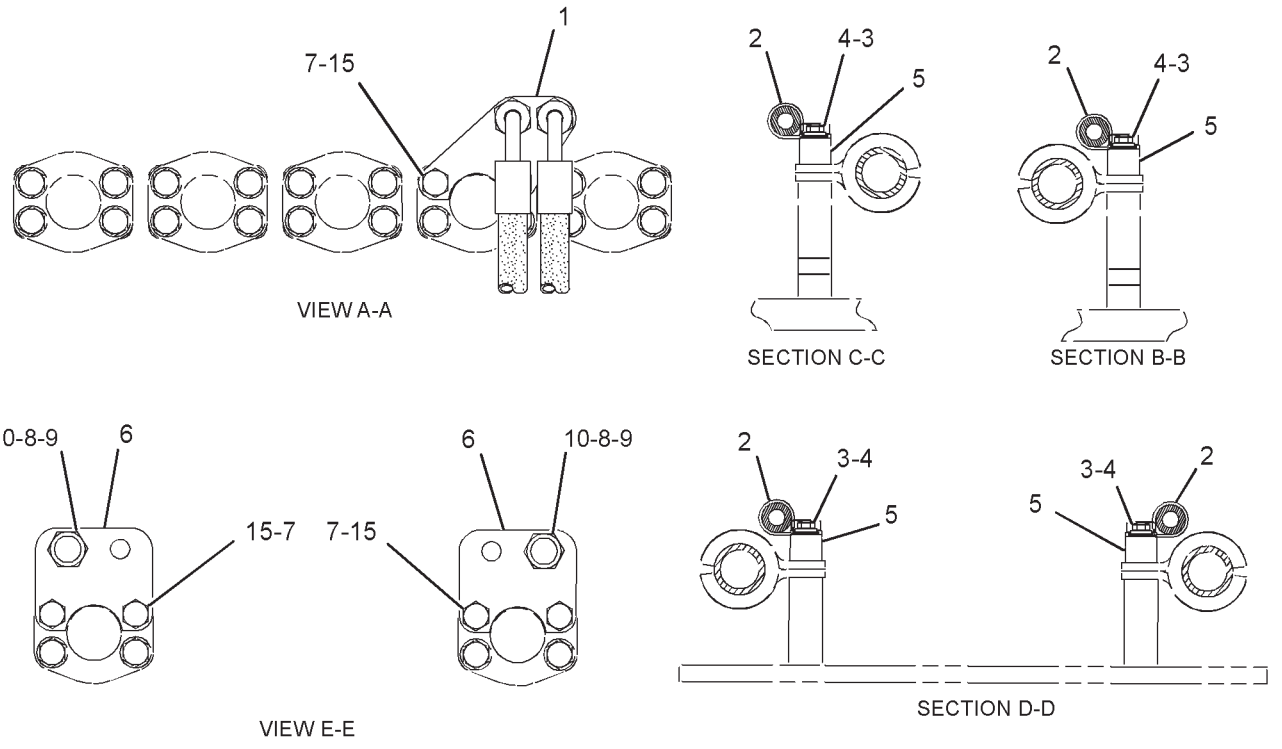

GRAPHIC #1 **<END>** g01752833

HYDRAULIC SYSTEM

207-7182 LINES GP-AUXILIARY HYDRAULIC–BOOM, MEDIUM PRESSURE

S/N: RCD1-UP

AN ATTACHMENT

SMCS-5057 **i01692089**

NOTE	REF NO	GRAPHIC REF	PART NUMBER	QTY	PART NAME 1 2 3 4 5 6 (PRODUCT LEVEL)	SEE PAGE
	1	1	**206-9665**	1	PLATE	
M	2	1	**7X-2554**	6	BOLT (M16X2X70-MM)	
	3	1	**6V-9170**	4	NUT-BULKHEAD (1-14-THD)	
	4	1	**6V-8996**	4	UNION	
	5	1	**7J-9108**	8	SEAL-O-RING	
	6	1	**8T-4121**	5	WASHER-HARD (11X21X2.5-MM THK)	
M	7	1	**8T-4137**	5	BOLT (M10X1.5X20-MM)	
	8	1	**6V-1889**	6	CLIP	
	9	1	**132-9176**	5	PLATE	
M	10	1	**8T-4175**	10	BOLT (M16X2X90-MM)	
	11	1	**206-9666**	2	PLATE	
B	12	1	**7K-1181**	30	STRAP-CABLE	
I	13	1	**208-4538**	1	HOSE AS	
I	14	1	**208-4537**	1	HOSE AS	
I	15	1	**207-9532**	2	HOSE AS	

B-USE AS REQUIRED
I-REFER TO HYDRAULIC INFORMATION SYSTEM
M-METRIC PART

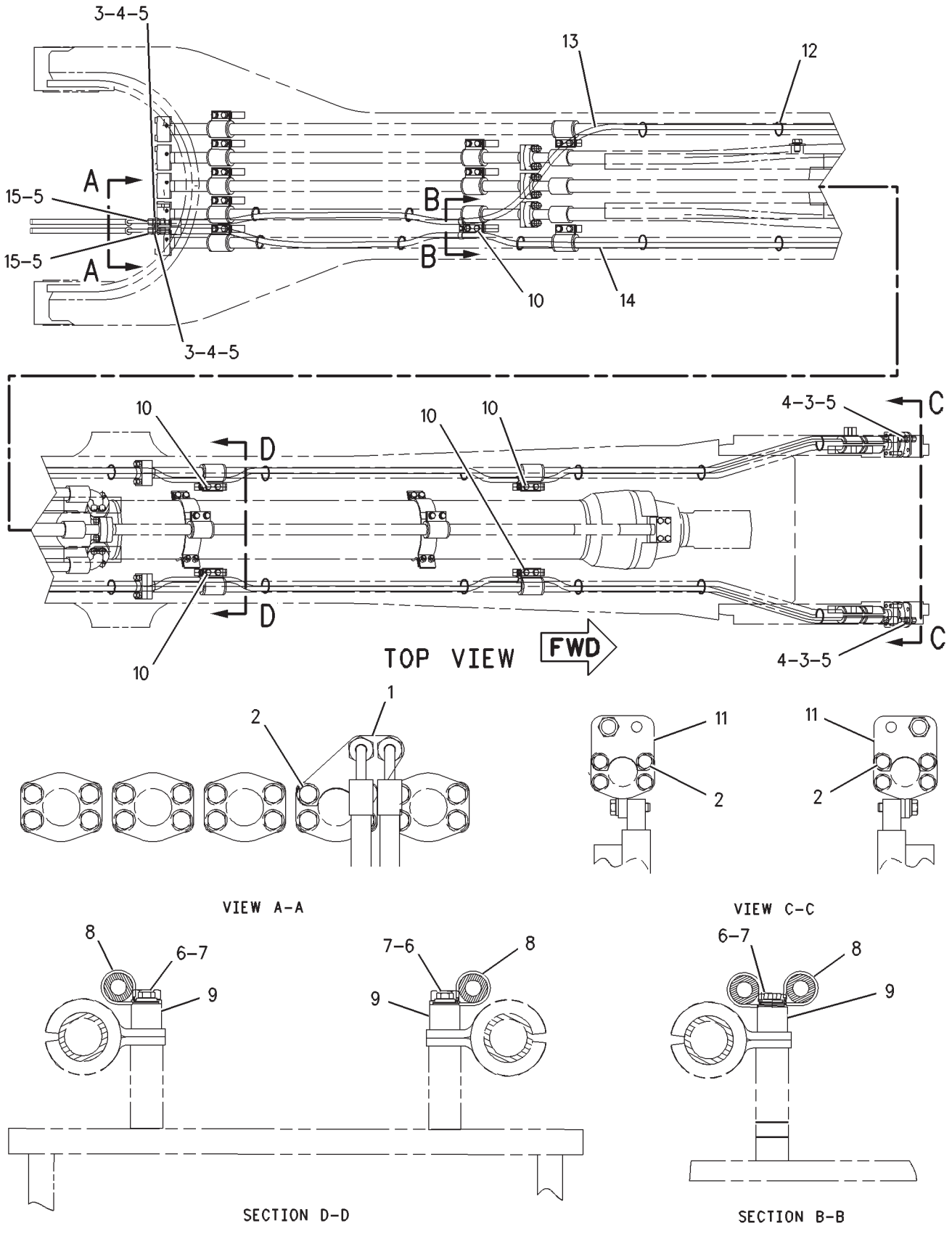

GRAPHIC #1 **<END>** g00851552

HYDRAULIC SYSTEM

208-3514 LINES GP-AUXILIARY HYDRAULIC–STICK, MEDIUM PRESSURE

S/N: RCD1-UP
H-FAMILY
FOR USE WITH 5.5-M (18-FT) STICK
AN ATTACHMENT

SMCS-5057 **i01995380**

NOTE	REF NO	GRAPHIC REF	PART NUMBER	QTY	PART NAME 1 2 3 4 5 6 (PRODUCT LEVEL)	SEE PAGE
B	1	1	**7K-1181**	10	STRAP-CABLE	
	2	1	**8T-4121**	4	WASHER-HARD (11X21X2.5-MM THK)	
	3	1	*148-8414*	2	REDUCER AS	
					(EACH INCLUDES)	
		1	**6V-8943**	1	REDUCER	
		1	**7J-9108**	1	SEAL-O-RING	
	4	1	**6V-9746**	2	SEAL-O-RING	
	5	1	**5K-9660**	4	CLIP	
M	6	1	**8T-4191**	4	BOLT (M10X1.5X16-MM)	
	7	1	*148-8322*	2	CONNECTOR AS	
					(EACH INCLUDES)	
		1	**2M-9780**	1	SEAL-O-RING	
		1	**6V-8640**	1	CONNECTOR	
		1	**6V-9746**	1	SEAL-O-RING	
	8	1	**208-1246**	2	MANIFOLD	
I	9	1	**210-2322**	2	HOSE AS	
	10	1	**207-8486**	2	TUBE AS	
	11	1	**139-6797**	1	BRACKET	
	12	1	**139-7459**	1	BRACKET	
M	13	1	**141-6348**	4	BOLT (M10X1.5X65-MM)	
	14	1	**209-4967**	1	BRACKET	
	15	1	**209-4968**	1	BRACKET	
BM	16	1	**8T-4193**	8	BOLT (M16X2X50-MM)	
BM	17	1	**7X-2553**	8	BOLT (M16X2X40-MM)	

B-USE AS REQUIRED
I-REFER TO HYDRAULIC INFORMATION SYSTEM
M-METRIC PART

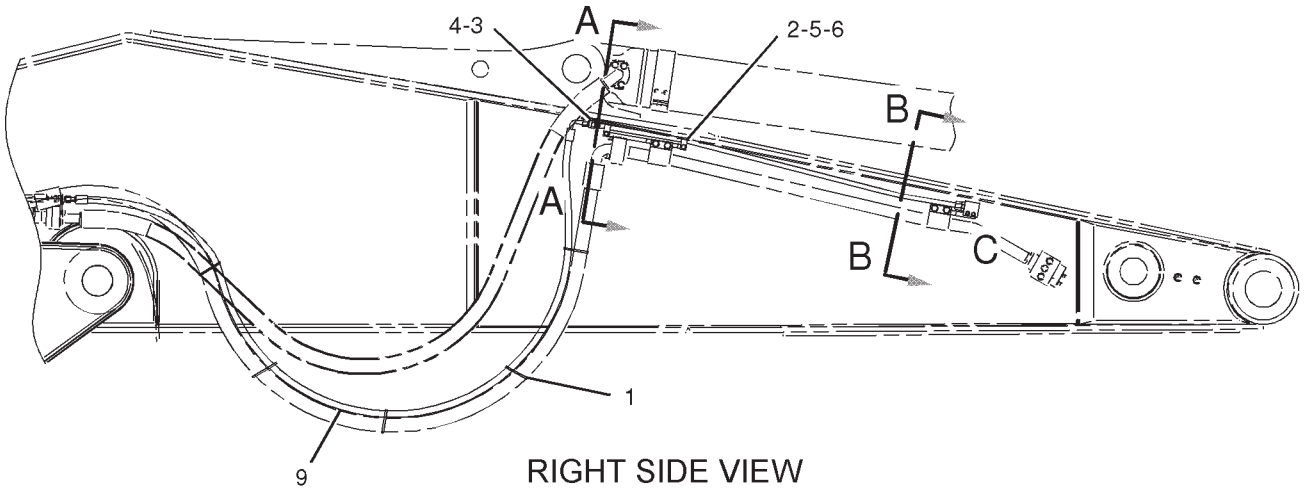

RIGHT SIDE VIEW

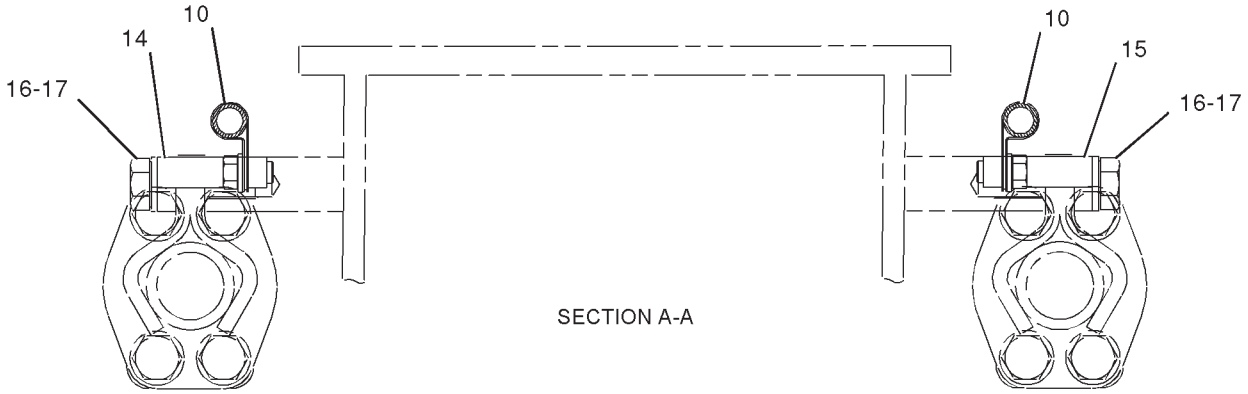

SECTION A-A

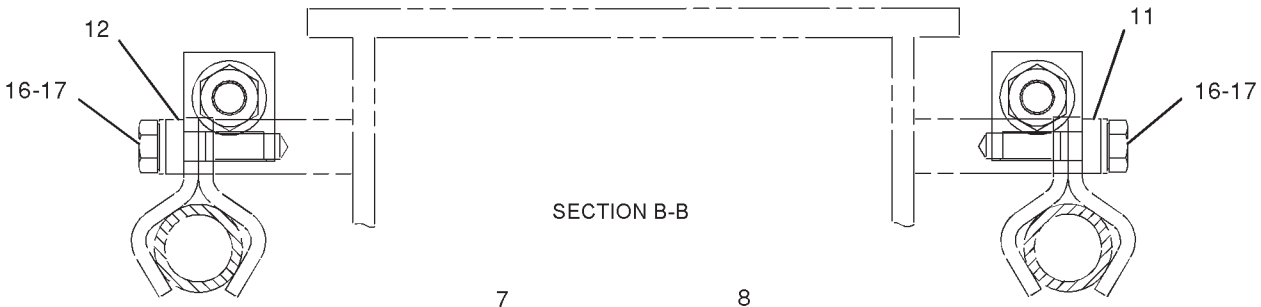

SECTION B-B

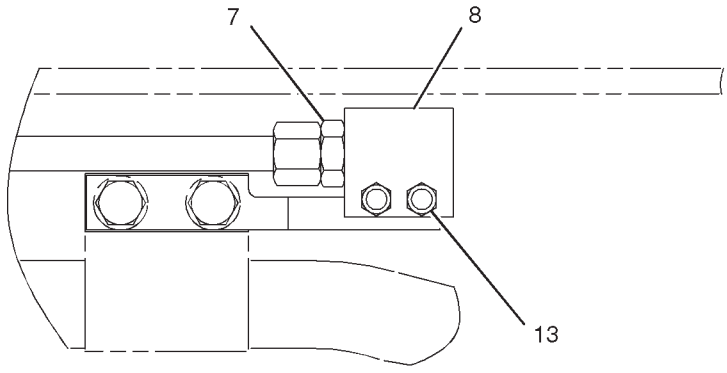

VIEW OF AREA C

GRAPHIC #1

<END>

g01045261

HYDRAULIC SYSTEM

208-3515 LINES GP-AUXILIARY HYDRAULIC–STICK, MEDIUM PRESSURE

S/N: RCD1-UP
H-FAMILY
FOR USE WITH 4.4-M (14-FT) STICK
AN ATTACHMENT

SMCS-5057 **i01995361**

NOTE	REF NO	GRAPHIC REF	PART NUMBER	QTY	PART NAME 1 2 3 4 5 6 (PRODUCT LEVEL)	SEE PAGE
B	1	1	**7K-1181**	10	STRAP-CABLE	
	2	1	**6V-9746**	2	SEAL-O-RING	
I	3	1	**208-2819**	2	HOSE AS	
	4	1	*148-8414*	2	REDUCER AS	
					(EACH INCLUDES)	
		1	**6V-8943**	1	REDUCER	
		1	**7J-9108**	1	SEAL-O-RING	
	5	1	**139-6797**	1	BRACKET	
	6	1	**139-7459**	1	BRACKET	
	7	1	**207-9588**	2	TUBE AS	
BM	8	1	**7X-2553**	8	BOLT (M16X2X40-MM)	
	9	1	**208-1246**	2	MANIFOLD	
	10	1	*148-8322*	2	CONNECTOR AS	
					(EACH INCLUDES)	
		1	**2M-9780**	1	SEAL-O-RING	
		1	**6V-8640**	1	CONNECTOR	
		1	**6V-9746**	1	SEAL-O-RING	
M	11	1	**141-6348**	4	BOLT (M10X1.5X65-MM)	
	12	1	**8T-4121**	8	WASHER-HARD (11X21X2.5-MM THK)	
BM	13	1	**8T-4193**	8	BOLT (M16X2X50-MM)	
M	14	1	**8T-4191**	4	BOLT (M10X1.5X16-MM)	
	15	1	**5K-9660**	4	CLIP	
	16	1	**209-4968**	1	BRACKET	
	17	1	**209-4967**	1	BRACKET	

B-USE AS REQUIRED
I-REFER TO HYDRAULIC INFORMATION SYSTEM
M-METRIC PART

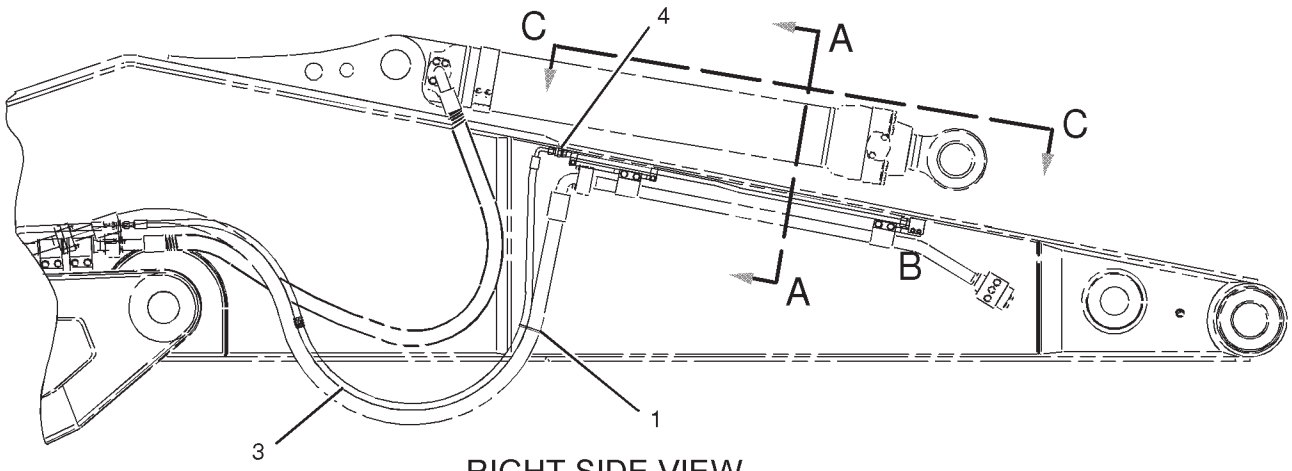

RIGHT SIDE VIEW

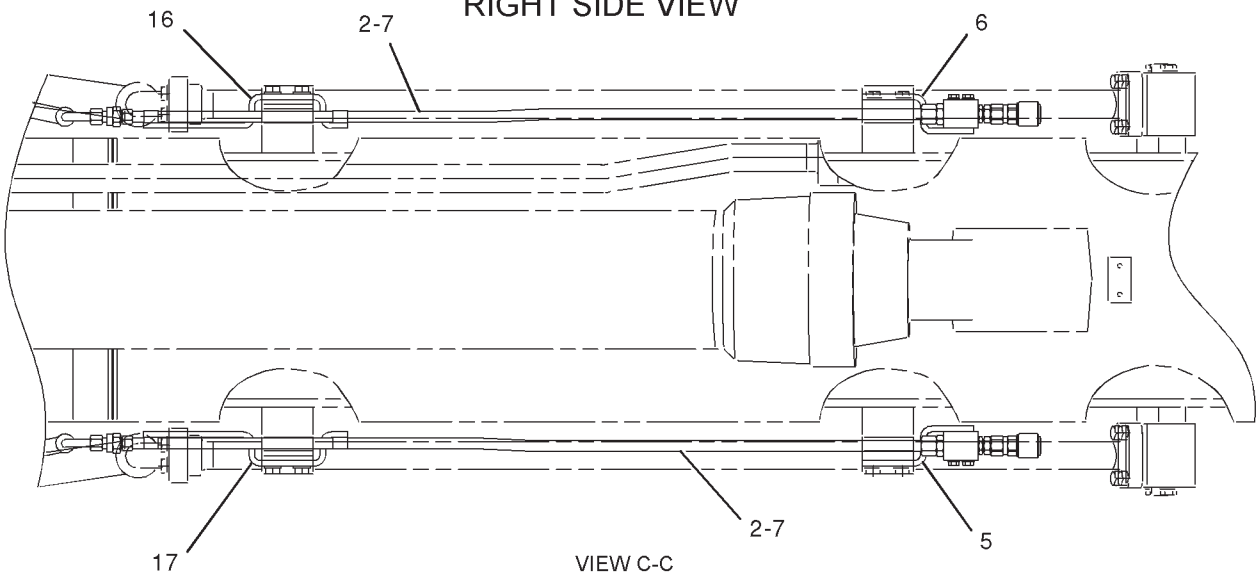

VIEW C-C

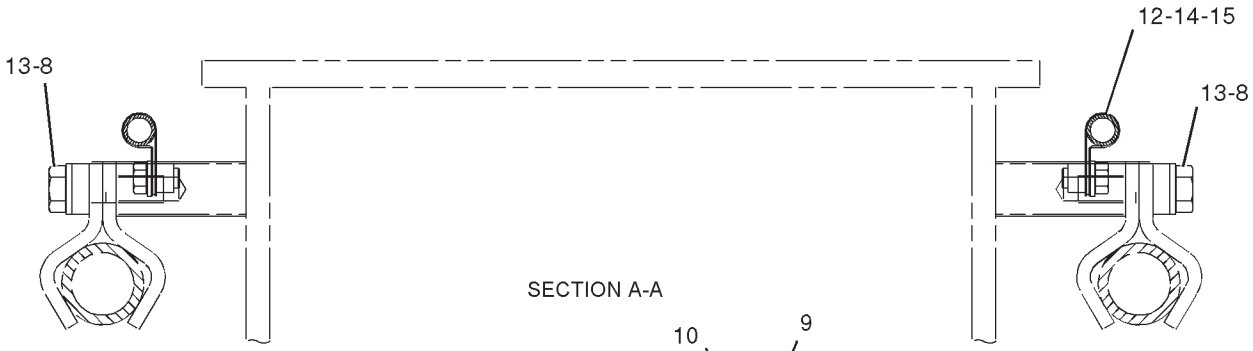

SECTION A-A

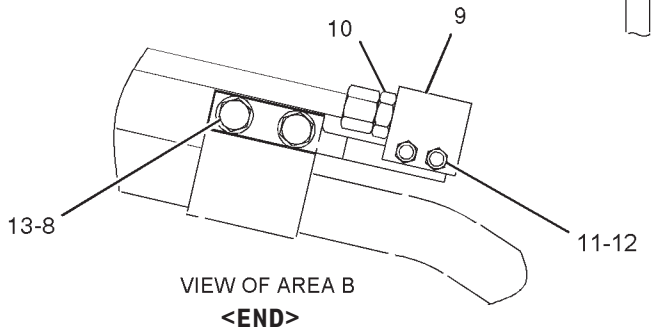

VIEW OF AREA B

GRAPHIC #1

<END>

g01044437

HYDRAULIC SYSTEM

208-3517 LINES GP-AUXILIARY HYDRAULIC–STICK, MEDIUM PRESSURE

S/N: RCD1-UP
J-FAMILY
FOR USE WITH 3.4-M (11-FT) STICK
AN ATTACHMENT

SMCS-5057 **i01995331**

NOTE	REF NO	GRAPHIC REF	PART NUMBER	QTY	PART NAME 1 2 3 4 5 6 (PRODUCT LEVEL)	SEE PAGE
B	1	1	**7K-1181**	10	STRAP-CABLE	
	2	1	*148-8414*	2	REDUCER AS	
					(EACH INCLUDES)	
		1	**6V-8943**	1	REDUCER	
		1	**7J-9108**	1	SEAL-O-RING	
	3	1	**6V-9746**	2	SEAL-O-RING	
	4	1	**8T-4121**	4	WASHER-HARD (11X21X2.5-MM THK)	
	5	1	**5K-9660**	4	CLIP	
M	6	1	**8T-4191**	4	BOLT (M10X1.5X16-MM)	
	7	1	*148-8322*	2	CONNECTOR AS	
					(EACH INCLUDES)	
		1	**2M-9780**	1	SEAL-O-RING	
		1	**6V-8640**	1	CONNECTOR	
		1	**6V-9746**	1	SEAL-O-RING	
	8	1	**208-1246**	2	MANIFOLD	
	9	1	**209-3557**	2	TUBE AS	
I	10	1	**209-3556**	2	HOSE AS	
	11	1	**139-6797**	1	BRACKET	
	12	1	**139-7459**	1	BRACKET	
M	13	1	**141-6348**	4	BOLT (M10X1.5X65-MM)	
	14	1	**188-6434**	1	BRACKET	
	15	1	**188-6435**	1	BRACKET	
M	16	1	**8T-4193**	8	BOLT (M16X2X50-MM)	
M	17	1	**7X-2553**	8	BOLT (M16X2X40-MM)	

B-USE AS REQUIRED
I-REFER TO HYDRAULIC INFORMATION SYSTEM
M-METRIC PART

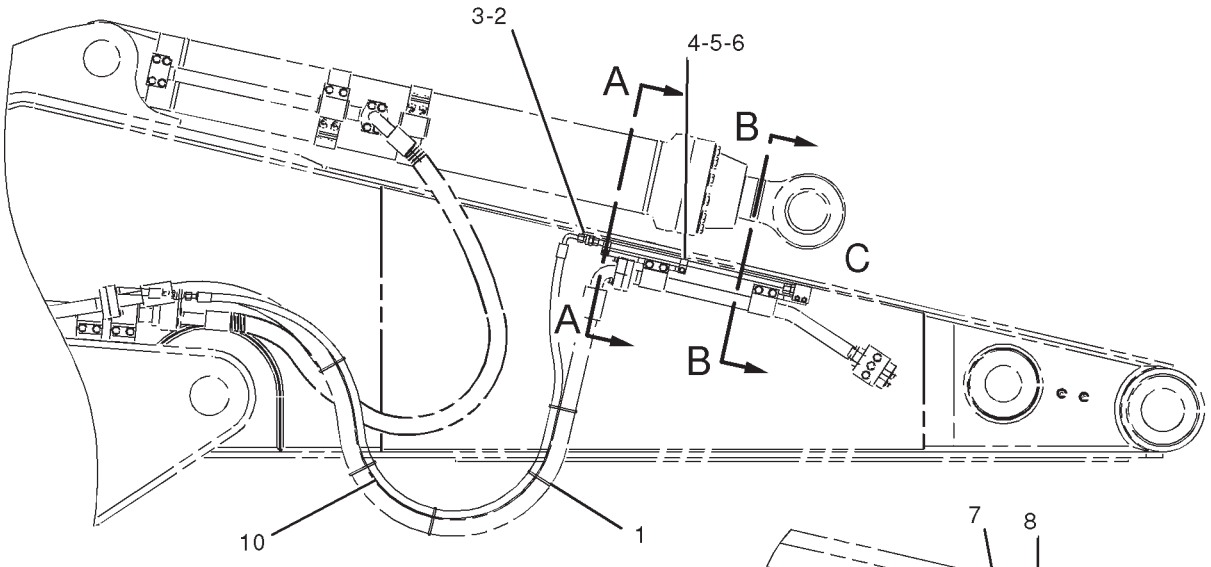

RIGHT SIDE VIEW

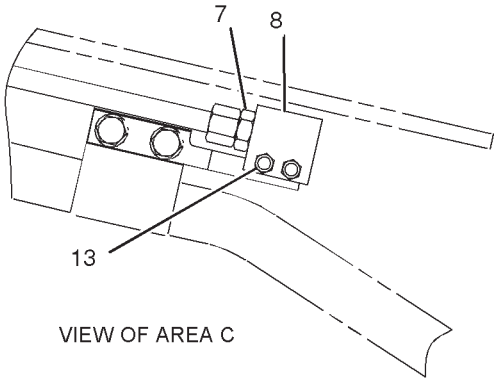

VIEW OF AREA C

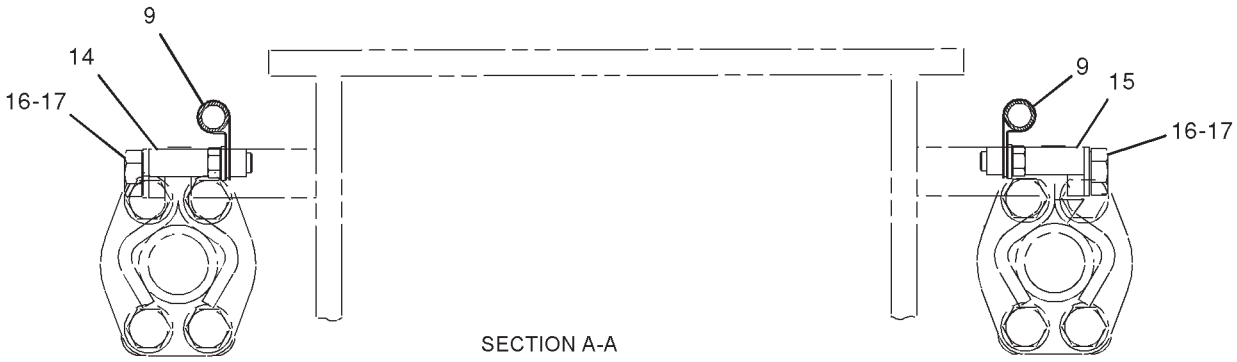

SECTION A-A

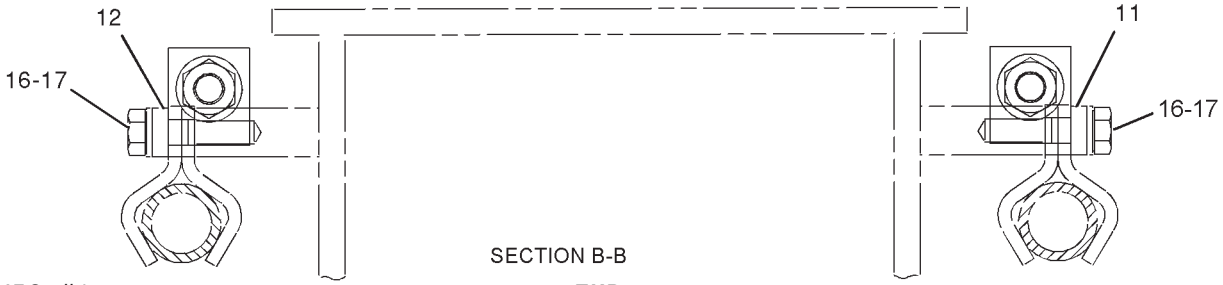

SECTION B-B

GRAPHIC #1 **<END>** g01044736

HYDRAULIC SYSTEM

208-3518 LINES GP-AUXILIARY HYDRAULIC–STICK, MEDIUM PRESSURE

S/N: RCD1-UP
J-FAMILY
FOR USE WITH 2.9-M (9.5-FT) STICK
AN ATTACHMENT

SMCS-5057 **i01995333**

NOTE	REF NO	GRAPHIC REF	PART NUMBER	QTY	PART NAME 1 2 3 4 5 6 (PRODUCT LEVEL)	SEE PAGE
	1	1	**208-1246**	2	MANIFOLD	
	2	1	**6V-9746**	2	SEAL-O-RING	
M	3	1	**8T-4132**	4	NUT (M16X2-THD)	
	4	1	*148-8414*	2	REDUCER AS	
					(EACH INCLUDES)	
		1	**6V-8943**	1	REDUCER	
		1	**7J-9108**	1	SEAL-O-RING	
M	5	1	**8T-7338**	4	BOLT (M16X2X45-MM)	
I	6	1	**208-0719**	2	HOSE AS	
	7	1	*148-8322*	2	CONNECTOR AS	
					(EACH INCLUDES)	
		1	**2M-9780**	1	SEAL-O-RING	
		1	**6V-8640**	1	CONNECTOR	
		1	**6V-9746**	1	SEAL-O-RING	
M	8	1	**141-6348**	4	BOLT (M10X1.5X65-MM)	
	9	1	**9X-8257**	8	WASHER (17.5X30X3.5-MM THK)	
M	10	1	**8T-4193**	8	BOLT (M16X2X50-MM)	
	11	1	**210-2320**	2	TUBE AS	
	12	1	**139-6797**	1	BRACKET	
	13	1	**139-7459**	1	BRACKET	
	14	1	**103-1303**	4	CLAMP-HALF	
	15	1	**209-4967**	1	BRACKET	
	16	1	**209-4968**	1	BRACKET	
	17	1	**5K-9660**	2	CLIP	
M	18	1	**7X-2621**	2	BOLT (M10X1.5X12-MM)	
	19	1	**8T-4121**	2	WASHER-HARD (11X21X2.5-MM THK)	

I-REFER TO HYDRAULIC INFORMATION SYSTEM
M-METRIC PART

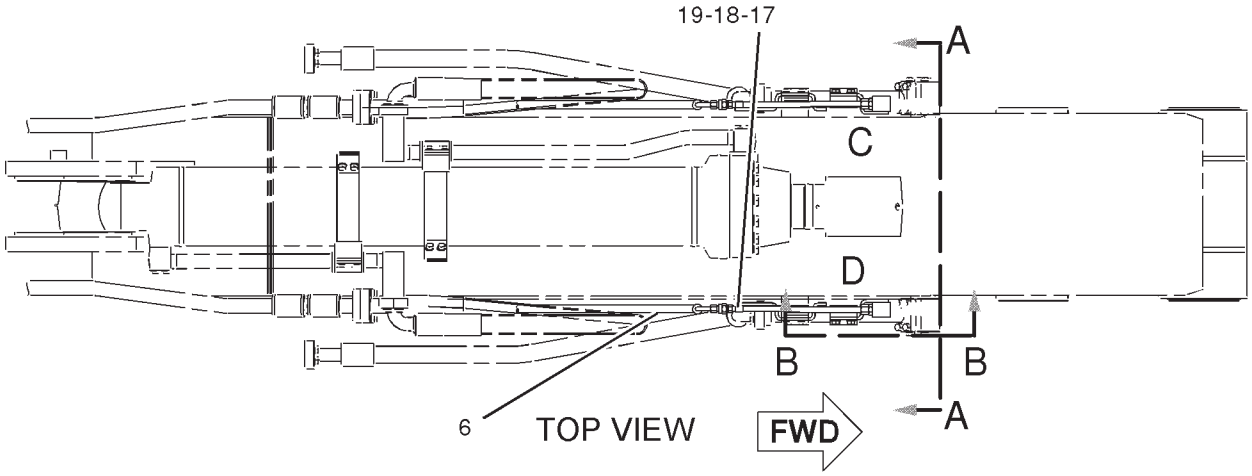

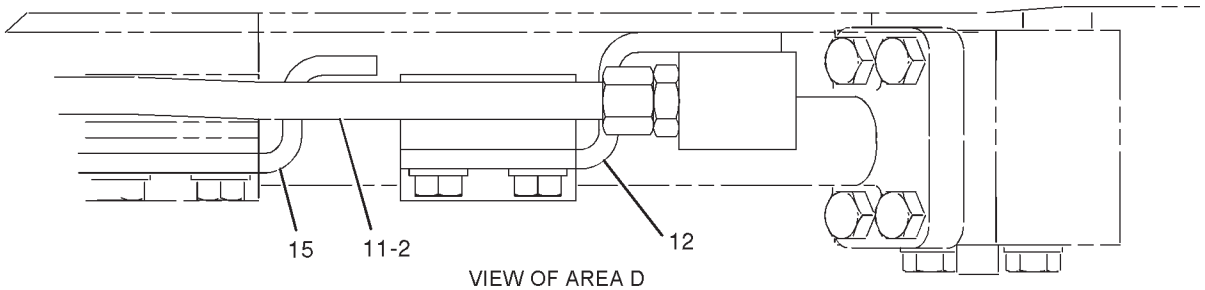

VIEW OF AREA D

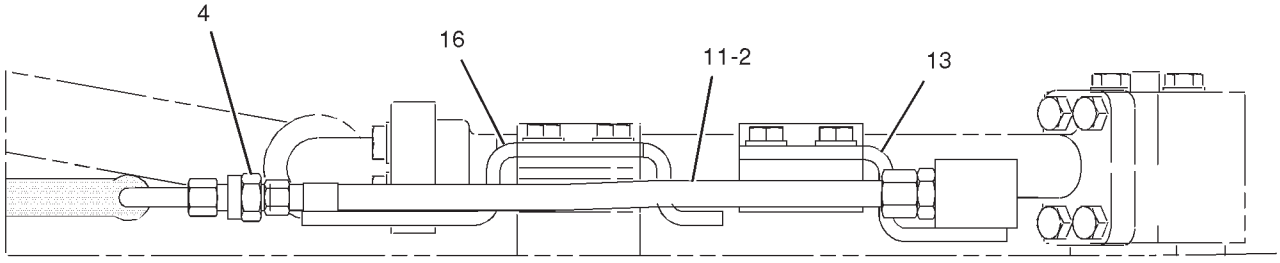

VIEW OF AREA C

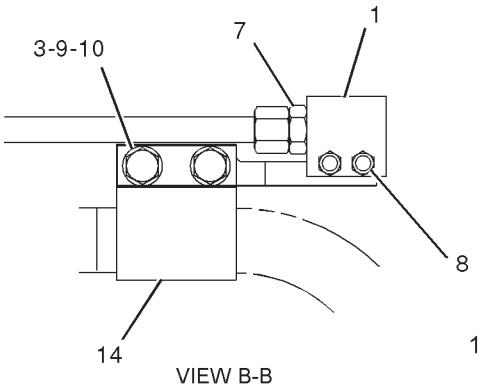

VIEW B-B

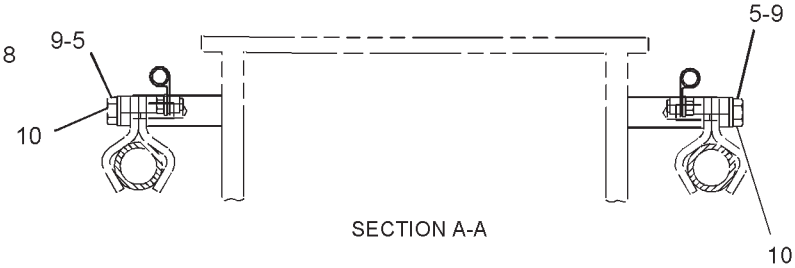

SECTION A-A

GRAPHIC #1 **<END>** g01044824

HYDRAULIC SYSTEM

255-2196 LINES GP-AUXILIARY HYDRAULIC

S/N: RCD1-UP
REACH BOOM
AN ATTACHMENT
TYPE 1

SMCS-5057 **i02386924**

NOTE	REF NO	GRAPHIC REF	PART NUMBER	QTY	PART NAME 1 2 3 4 5 6 (PRODUCT LEVEL)	SEE PAGE
	1	1	**255-4129**	1	TUBE AS	
	2	1	**255-4130**	2	TUBE AS	
	3	1	**255-4131**	2	TUBE AS	
	4	1	**255-4132**	1	TUBE AS	
	5	1	**173-8063**	1	BLOCK	
M	6	1	**8T-6385**	4	BOLT (M16X2X180-MM)	
	7	1	**173-8065**	2	PLATE AS	
	8	2	**173-8067**	4	CLIP	
	9	2	**173-8069**	2	PLATE	
	10	1,2	**173-8135**	6	PLATE AS	
	11	1,2	**179-5212**	10	PLATE	
	12	2	**146-1461**	4	PLATE	
	13	2	**202-7153**	2	PLATE	
	14	1,2	**143-4160**	30	CLIP	
	15	2	**255-4127**	2	PLATE AS	
M	16	1,2	**8T-4193**	36	BOLT (M16X2X50-MM)	
M	17	1,2	**8T-4140**	24	BOLT (M16X2X60-MM)	
M	18	1	**8T-7338**	2	BOLT (M16X2X45-MM)	
M	19	1,2	**7X-2559**	16	BOLT (M16X2X160-MM)	
M	20	1,2	**7X-2555**	6	BOLT (M16X2X80-MM)	
M	21	1,2	**7X-2554**	10	BOLT (M16X2X70-MM)	
	22	1,2	**9X-8257**	82	WASHER (17.5X30X3.5-MM THK)	
M	23	2	**8T-4132**	4	NUT (M16X2-THD)	
	24	1	**1P-3706**	4	SEAL-RECTANGULAR	
	25	1	**202-7152**	2	CLIP	
	26	1	**5P-8077**	8	FLANGE-HALF	
I	27	1	**212-5536**	2	HOSE AS	
	28	1	**1P-3705**	4	SEAL-RECTANGULAR	
	29	1	**9F-2167**	2	SCREW-PURGE (3/8-24X1.164-IN)	
	30	1	**6H-3615**	2	PLUG-PROTECTION	

I-REFER TO HYDRAULIC INFORMATION SYSTEM
M-METRIC PART

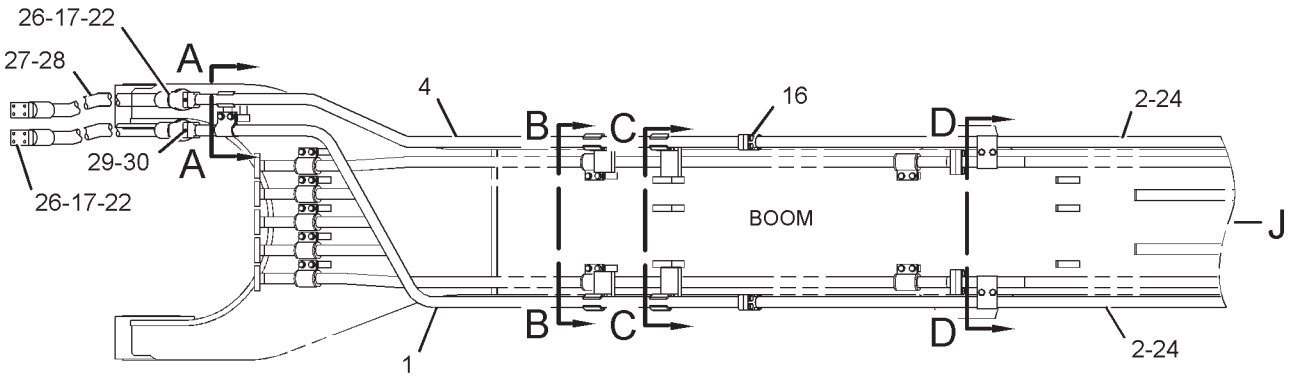

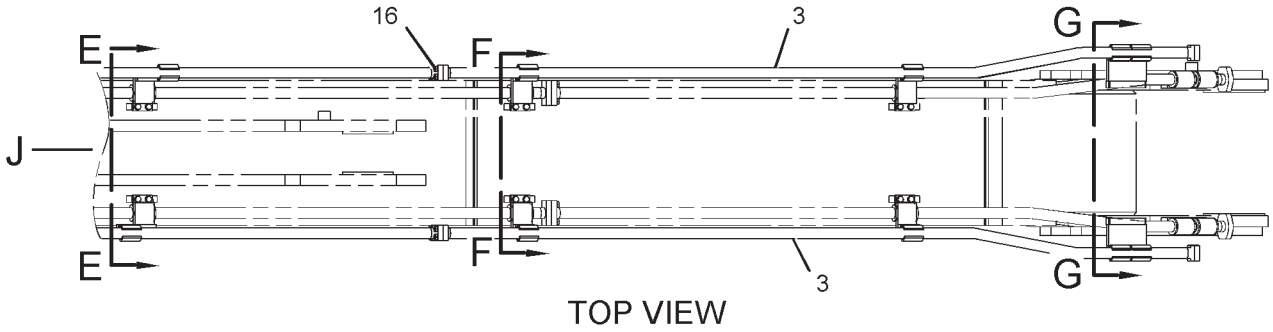

TOP VIEW

FWD

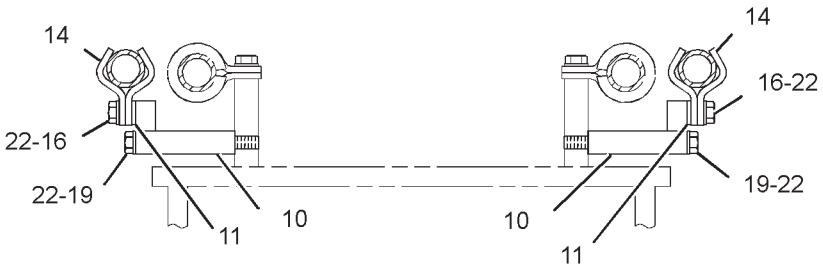

SECTION B-B

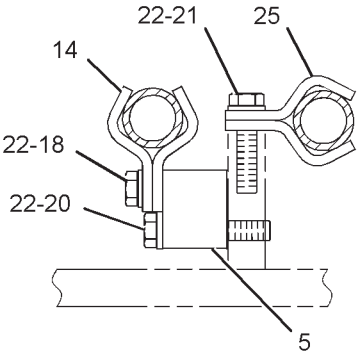

SECTION A-A

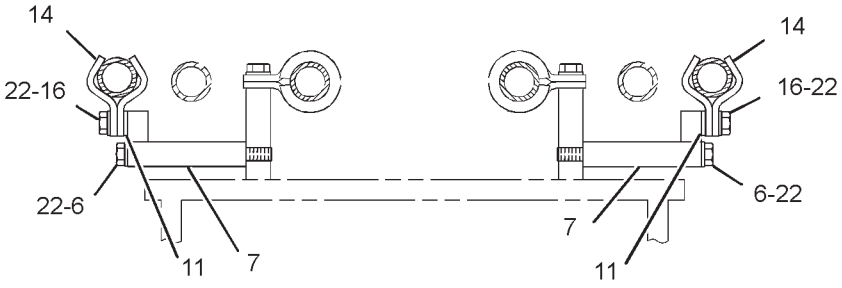

SECTION C-C

REFER TO ALL ILLUSTRATIONS OF THIS GROUP FOR AUXILIARY VIEWS

GRAPHIC #1

g01298130

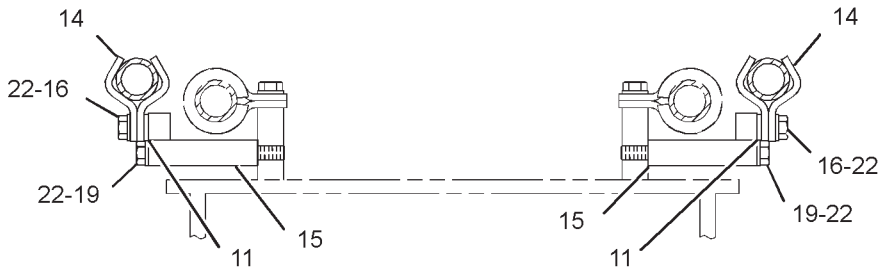

SECTION E-E

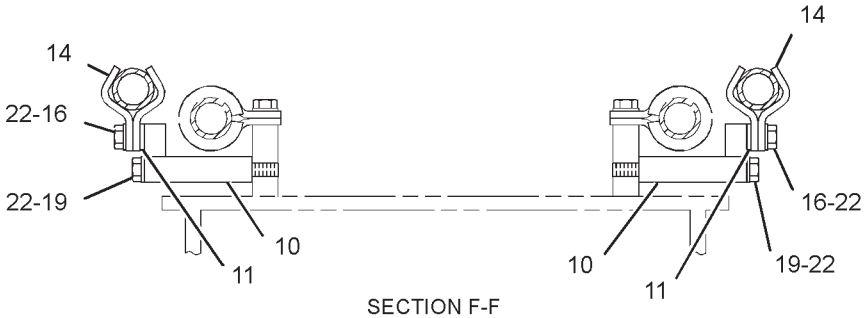

SECTION F-F

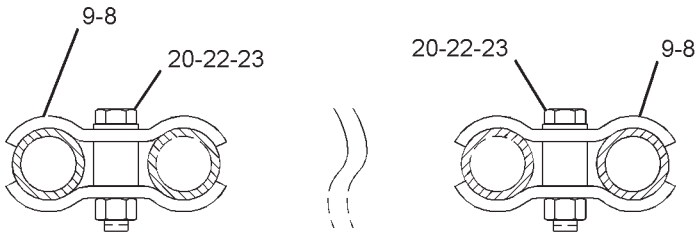

SECTION D-D

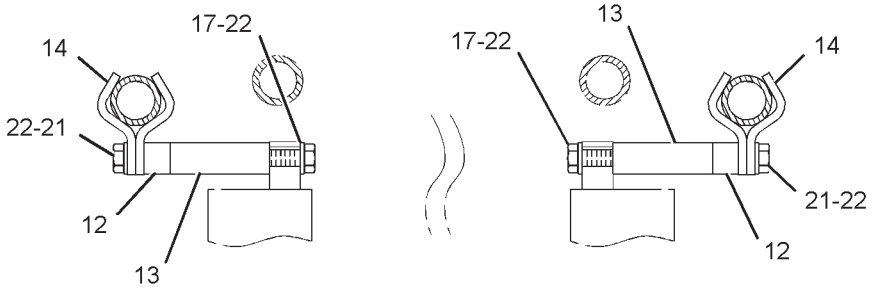

SECTION G-G

GRAPHIC #2 **<END>** g01298131

HYDRAULIC SYSTEM

255-2196 LINES GP-AUXILIARY HYDRAULIC

S/N: RCD1-UP
REACH BOOM
AN ATTACHMENT
TYPE 2

SMCS-5057 **i02386925**

NOTE	REF NO	GRAPHIC REF	PART NUMBER	QTY	PART NAME 1 2 3 4 5 6 (PRODUCT LEVEL)	SEE PAGE
	1	1	**255-4129**	1	TUBE AS	
	2	1	**255-4130**	2	TUBE AS	
	3	1	**255-4131**	2	TUBE AS	
C	4	1	**258-7784**	1	TUBE AS	
C	5	1	**146-1463**	2	CLIP	
M	6	1	**8T-6385**	4	BOLT (M16X2X180-MM)	
	7	1	**173-8065**	2	PLATE AS	
	8	2	**173-8067**	4	CLIP	
	9	2	**173-8069**	2	PLATE	
	10	1,2	**173-8135**	6	PLATE AS	
	11	1,2	**179-5212**	10	PLATE	
	12	2	**146-1461**	4	PLATE	
	13	2	**202-7153**	2	PLATE	
C	14	1,2	**143-4160**	28	CLIP	
	15	2	**255-4127**	2	PLATE AS	
M	16	1,2	**8T-4193**	36	BOLT (M16X2X50-MM)	
M	17	1,2	**8T-4140**	24	BOLT (M16X2X60-MM)	
M	19	1,2	**7X-2559**	16	BOLT (M16X2X160-MM)	
CM	20	2	**7X-2555**	4	BOLT (M16X2X80-MM)	
M	21	1,2	**7X-2554**	10	BOLT (M16X2X70-MM)	
C	22	1,2	**9X-8257**	78	WASHER (17.5X30X3.5-MM THK)	
M	23	2	**8T-4132**	4	NUT (M16X2-THD)	
	24	1	**1P-3706**	4	SEAL-RECTANGULAR	
	26	1	**5P-8077**	8	FLANGE-HALF	
I	27	1	**212-5536**	2	HOSE AS	
	28	1	**1P-3705**	4	SEAL-RECTANGULAR	
	29	1	**9F-2167**	2	SCREW-PURGE (3/8-24X1.164-IN)	
	30	1	**6H-3615**	2	PLUG-PROTECTION	

C-CHANGE FROM PREVIOUS TYPE
I-REFER TO HYDRAULIC INFORMATION SYSTEM
M-METRIC PART

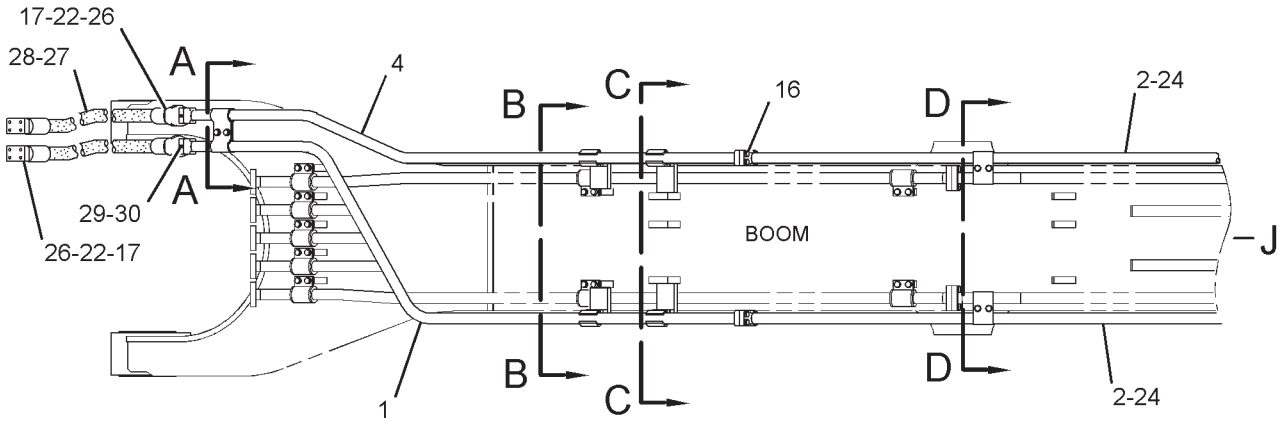

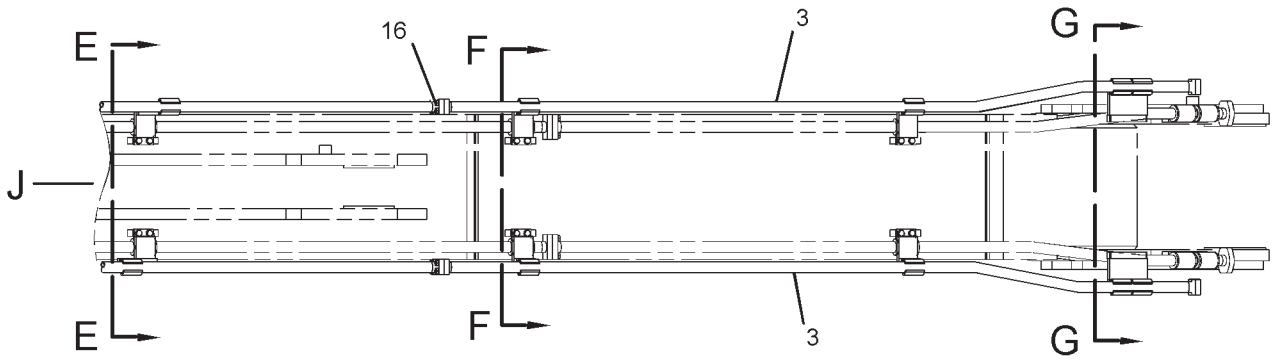

TOP VIEW

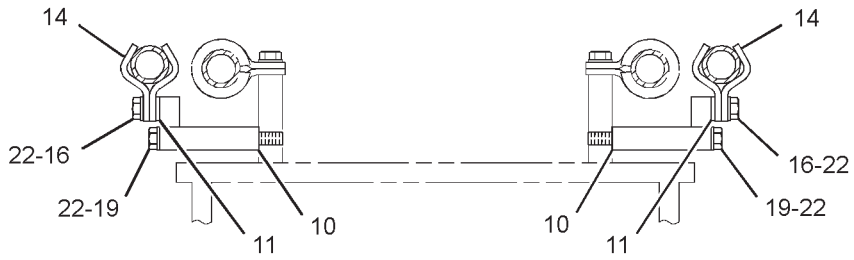

SECTION B-B

FWD

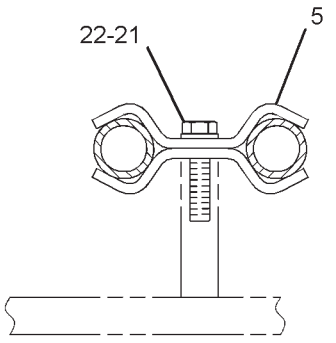

SECTION A-A

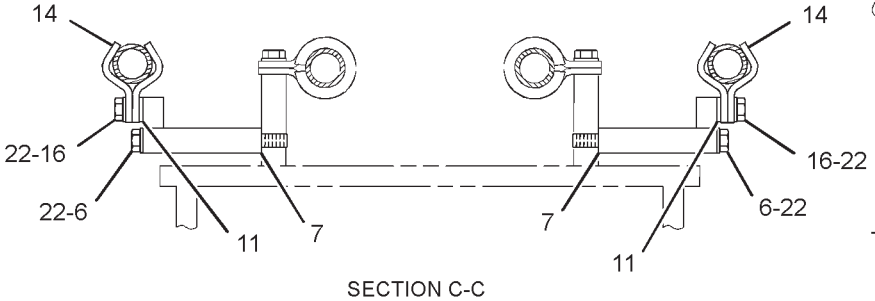

SECTION C-C

REFER TO ALL ILLUSTRATIONS OF THIS GROUP FOR AUXILIARY VIEWS

GRAPHIC #1

g01332974

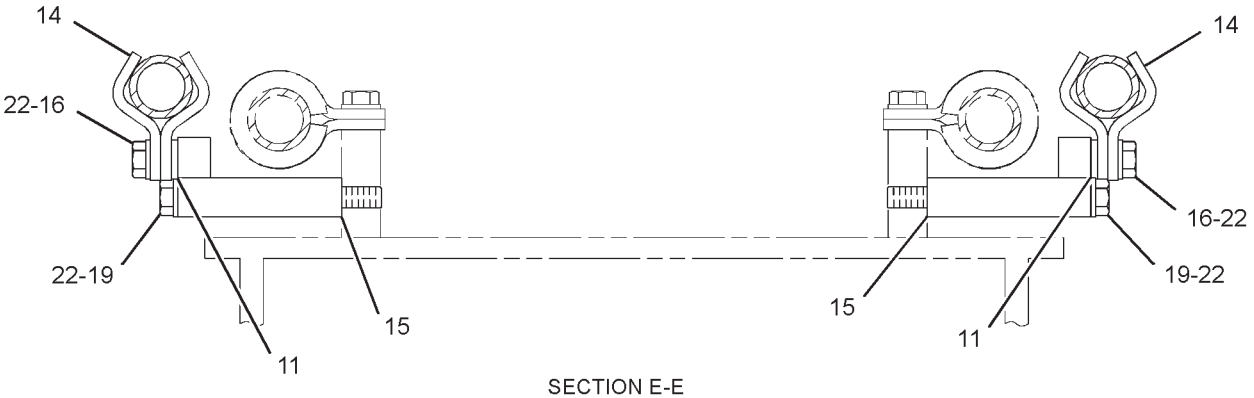

SECTION E-E

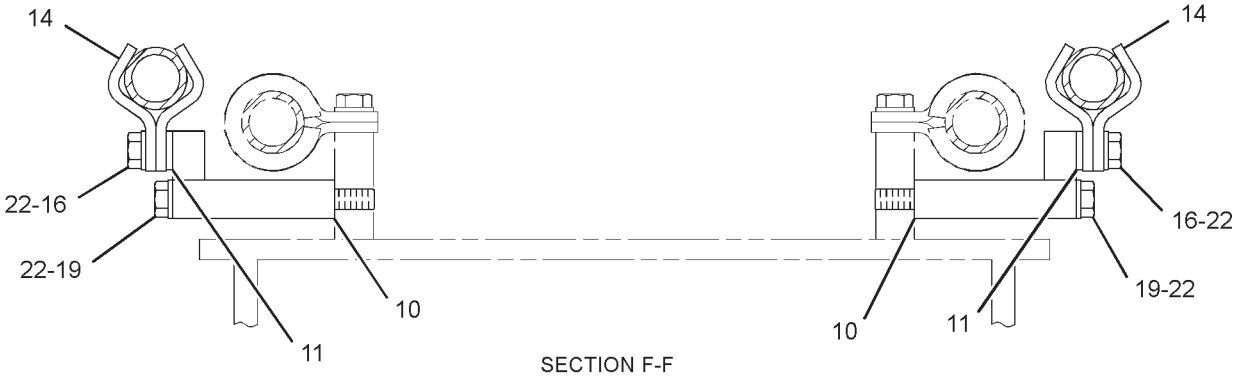

SECTION F-F

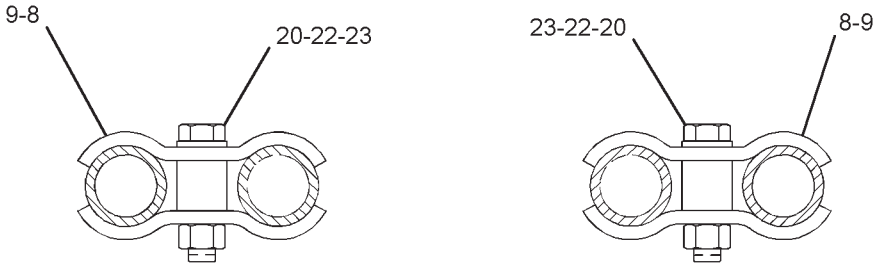

SECTION D-D

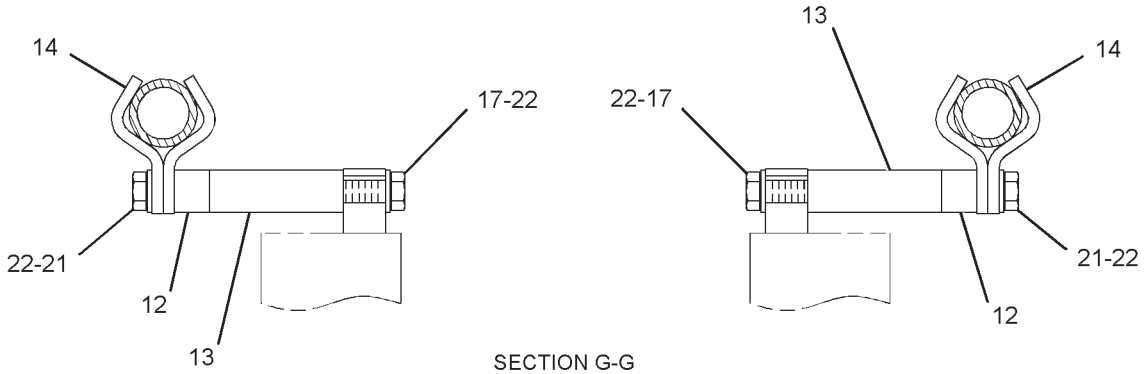

SECTION G-G

GRAPHIC #2 **<END>** g01332975

HYDRAULIC SYSTEM

168-9661 LINES GP-BOOM

S/N: RCD1-UP
PART OF 150-2804 BOOM AR
FOR USE WITH 8.4-M (27.6-FT) BOOM
AN ATTACHMENT

SMCS-5057 **i01676309**

NOTE	REF NO	GRAPHIC REF	PART NUMBER	QTY	PART NAME 1 2 3 4 5 6 (PRODUCT LEVEL)	SEE PAGE
	1	1	**173-5022**	1	TUBE AS	
	2	1	**173-5023**	1	TUBE AS	
	3	1	**173-5024**	3	TUBE AS	
	4	1	**173-5025**	2	TUBE AS	
	5	1	**1P-3705**	13	SEAL-RECTANGULAR	
	6	1	**5P-8077**	26	FLANGE-HALF	
	7	1	**9X-8257**	86	WASHER (17.5X30X3.5-MM THK)	
M	8	1	**8T-4140**	60	BOLT (M16X2X60-MM)	
I	9	1	**212-5537**	2	HOSE AS	
I	10	1	**212-5538**	1	HOSE AS	
	11	1	**173-5026**	1	TUBE AS	
	12	1	**173-5027**	1	TUBE AS	
	13	1	**1P-3706**	4	SEAL-RECTANGULAR	
M	14	1	**8T-4193**	16	BOLT (M16X2X50-MM)	
	15	1	**5P-0049**	7	COVER	
	16	1	**9F-2167**	5	SCREW-PURGE (3/8-24X1.164-IN)	
	17	1	**6H-3615**	5	PLUG-PROTECTION	
	18	1	**138-5708**	46	CLIP-HALF	
	19	1	**138-5709**	23	GROMMET	
M	20	1	**7X-2554**	38	BOLT (M16X2X70-MM)	

I-REFER TO HYDRAULIC INFORMATION SYSTEM
M-METRIC PART

168-9661 **LINES GP-BOOM** *(contd.)* **i01676309**

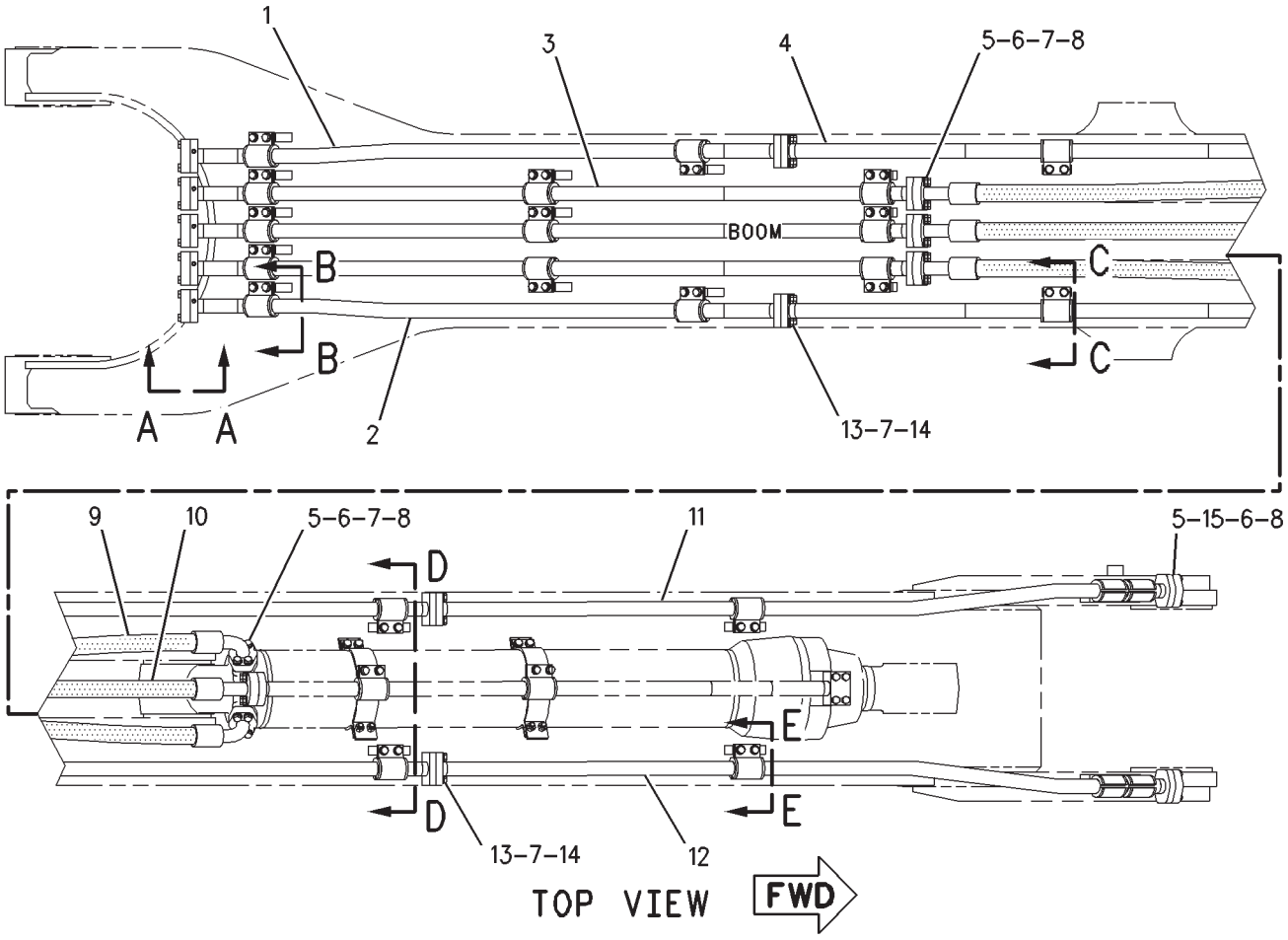

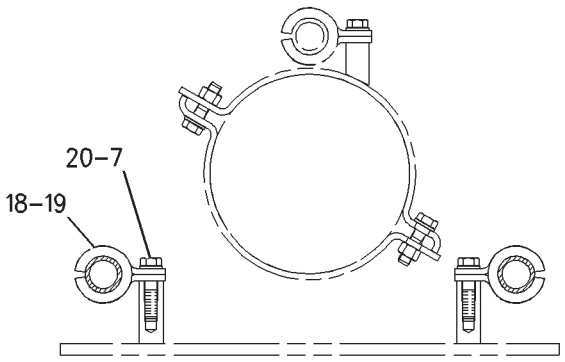

SECTION D-D

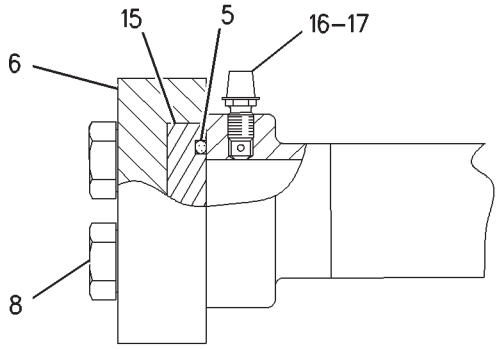

VIEW A-A

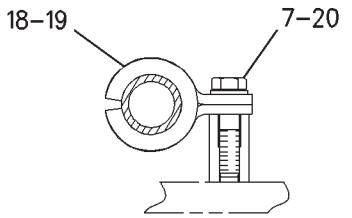

SECTION C-C

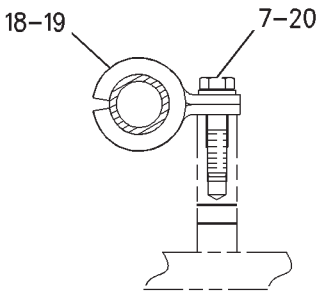

SECTION B-B

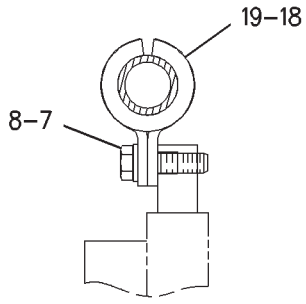

SECTION E-E

GRAPHIC #1 **<END>** g00782762

HYDRAULIC SYSTEM

168-9764 LINES GP-BOOM

S/N: RCD1-UP
PART OF 150-2803 BOOM AR-REACH
FOR USE WITH 10-M (32.8-FT) BOOM
AN ATTACHMENT

SMCS-5057 **i03071422**

NOTE	REF NO	GRAPHIC REF	PART NUMBER	QTY	PART NAME 1 2 3 4 5 6 (PRODUCT LEVEL)	SEE PAGE
	1	1	**317-4852**	1	TUBE AS	
	2	1	**317-4853**	1	TUBE AS	
	3	1	**317-4855**	3	TUBE AS	
	4	1	**317-4856**	3	TUBE AS	
	7	1	**317-4854**	2	TUBE AS	
	8	1	**1P-3705**	13	SEAL-RECTANGULAR	
	9	1	**5P-8077**	26	FLANGE-HALF	
	10	1	**9X-8257**	102	WASHER (17.5X30X3.5-MM THK)	
M	11	1	**8T-4140**	60	BOLT (M16X2X60-MM)	
I	12	1	**212-5537**	2	HOSE AS	
I	13	1	**212-5538**	1	HOSE AS	
	14	1	**317-4850**	1	TUBE AS	
	15	1	**317-4851**	1	TUBE AS	
M	16	1	**8T-4193**	28	BOLT (M16X2X50-MM)	
	17	1	**1P-3706**	7	SEAL-RECTANGULAR	
	18	1	**5P-0049**	7	COVER	
	19	1	**9F-2167**	5	SCREW-PURGE (3/8-24X1.164-IN)	
	20	1	**6H-3615**	5	PLUG-PROTECTION	
	21	1	**138-5708**	50	CLIP-HALF	
	22	1	**138-5709**	25	GROMMET	
M	23	1	**7X-2554**	42	BOLT (M16X2X70-MM)	

I-REFER TO HYDRAULIC INFORMATION SYSTEM
M-METRIC PART

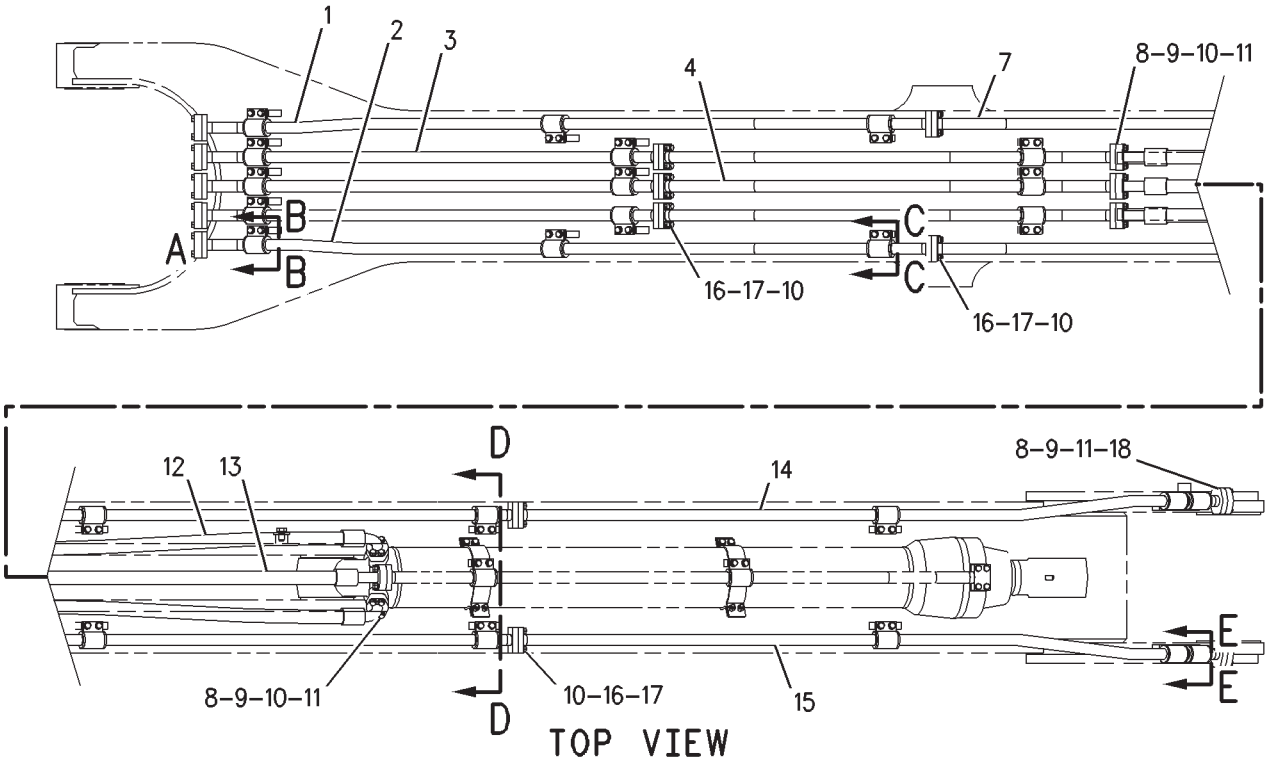

TOP VIEW

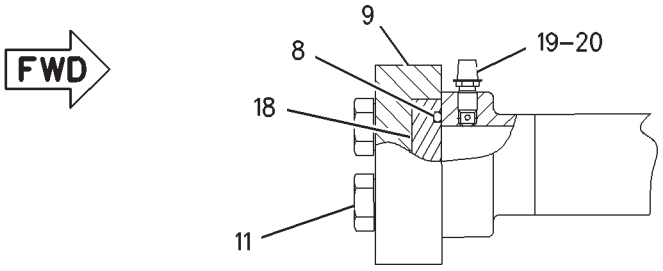

VIEW OF AREA A

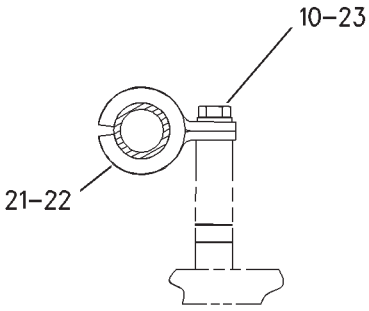

SECTION B-B

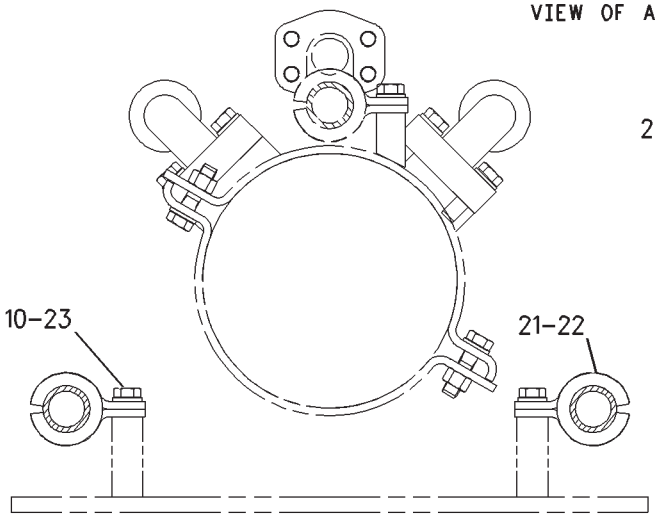

SECTION D-D

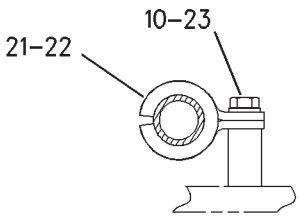

SECTION C-C

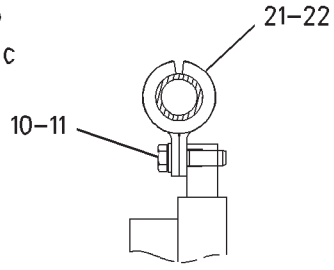

SECTION E-E

GRAPHIC #1 **<END>** g00835517

HYDRAULIC SYSTEM

173-8029 LINES GP-BOOM–STICK LOWERING CONTROL

S/N: RCD1-UP

PART OF 238-6483 VALVE AR-LOAD CONTROL, 171-0027 VALVE AR-STICK LOWERING CONT

AN ATTACHMENT

SMCS-5057 **i01888543**

NOTE	REF NO	GRAPHIC REF	PART NUMBER	QTY	PART NAME 1 2 3 4 5 6 (PRODUCT LEVEL)	SEE PAGE
	1	1	**173-8143**	1	TUBE AS	
	2	1	**173-8144**	2	PIPE AS	
	3	1	**6V-8398**	4	SEAL-O-RING	
	4	1	**179-4588**	1	SUPPORT AS	
M		1	**8T-4244**	2	NUT (M12X1.75-THD)	
	5	1	**179-4592**	1	SUPPORT AS	
M		1	**8T-4133**	1	NUT (M10X1.5-THD)	
	6	1	**179-4595**	1	PLATE	
	7	1	**202-7040**	1	HOSE AS	
	8	1	**179-4597**	2	HOSE AS	
	9	1	**179-4584**	1	PLATE	
	10	1	**7Y-4868**	3	CLIP	
	11	1	**153-8874**	1	CLIP AS	
	12	1	**093-1294**	3	CLAMP	
M	13	1	**8T-6466**	2	BOLT (M10X1.5X60-MM)	
M	14	1	**8T-4183**	2	BOLT (M12X1.75X40-MM)	
M	15	1	**8T-4910**	2	BOLT (M12X1.75X60-MM)	
M	16	1	**7X-2553**	4	BOLT (M16X2X40-MM)	
M	17	1	**7X-2556**	2	BOLT (M16X2X100-MM)	
	18	1	**8T-4121**	2	WASHER-HARD (11X21X2.5-MM THK)	
	19	1	**8T-4223**	4	WASHER-HARD (13.5X25.5X3-MM THK)	
	20	1	**9X-8257**	6	WASHER (17.5X30X3.5-MM THK)	
	21	1	**6K-0806**	6	STRAP-CABLE	
	22	1	**6V-9746**	2	SEAL-O-RING	

M-METRIC PART

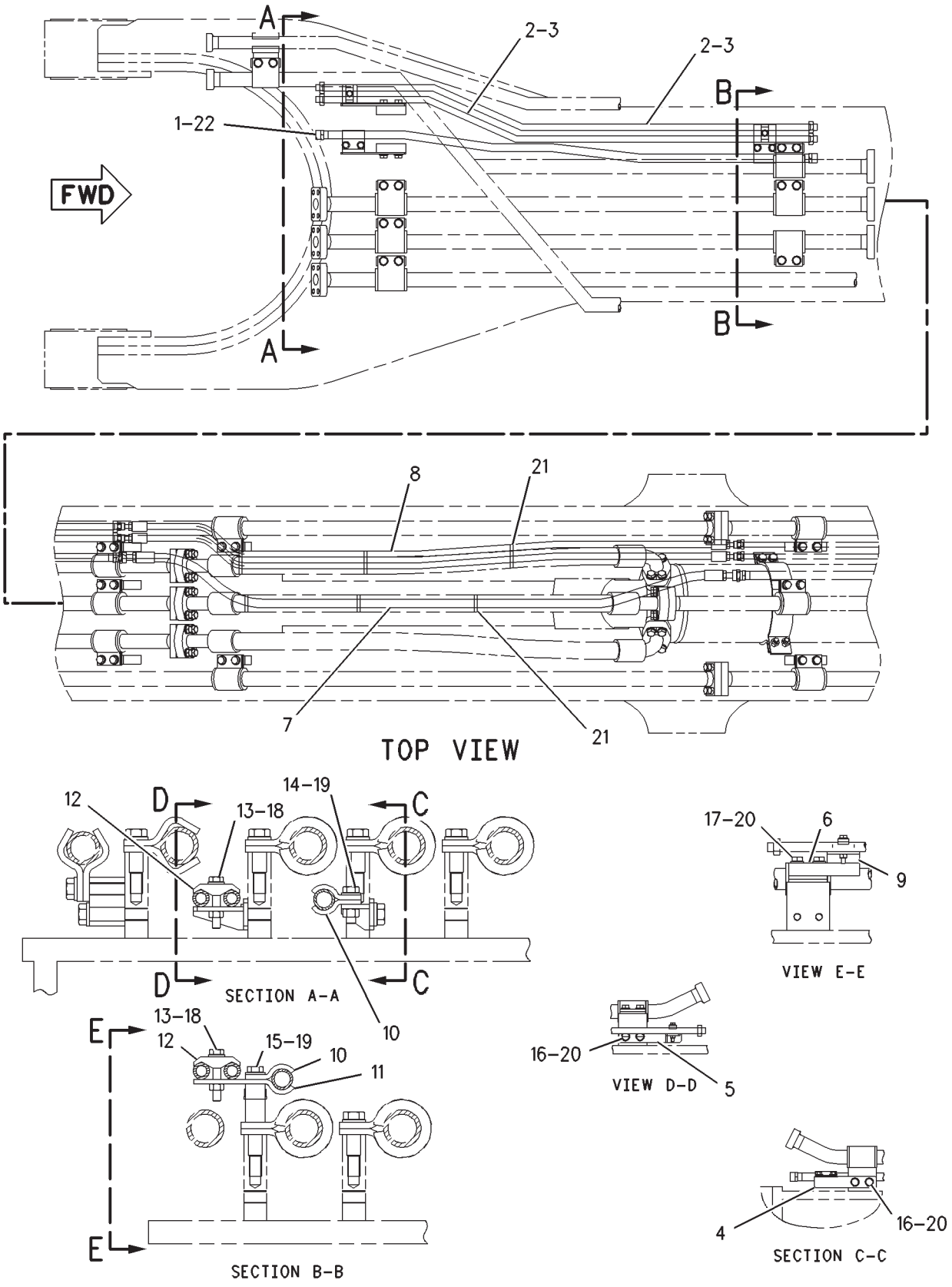

GRAPHIC #1 **<END>** g00979698

HYDRAULIC SYSTEM

176-4370 LINES GP-BOOM

S/N: RCD1-UP
PART OF 150-2805 BOOM AR-MASS
FOR USE WITH 7.3-M (24-FT) BOOM
AN ATTACHMENT

SMCS-5057 **i01678982**

NOTE	REF NO	GRAPHIC REF	PART NUMBER	QTY	PART NAME 1 2 3 4 5 6 (PRODUCT LEVEL)	SEE PAGE
	1	1	**176-4527**	2	TUBE AS	
	2	1	**087-4561**	3	TUBE AS	
	3	1	**5P-8077**	26	FLANGE-HALF	
	4	1	**9X-8257**	60	WASHER (17.5X30X3.5-MM THK)	
M	5	1	**8T-4140**	60	BOLT (M16X2X60-MM)	
I	6	1	**212-5539**	2	HOSE AS	
	7	1	**1P-3705**	13	SEAL-RECTANGULAR	
I	8	1	**212-5540**	1	HOSE AS	
	9	1	**176-4528**	1	TUBE AS	
	10	1	**176-4529**	1	TUBE AS	
	11	1	**1P-3706**	2	SEAL-RECTANGULAR	
M	12	1	**8T-4193**	8	BOLT (M16X2X50-MM)	
	13	1	**9F-2167**	5	SCREW-PURGE (3/8-24X1.164-IN)	
	14	1	**6H-3615**	5	PLUG-PROTECTION	
	15	1	**138-5708**	36	CLIP-HALF	
	16	1	**138-5709**	18	GROMMET	
M	17	1	**7X-2554**	28	BOLT (M16X2X70-MM)	
	18	1	**5P-0049**	7	COVER	

I-REFER TO HYDRAULIC INFORMATION SYSTEM
M-METRIC PART

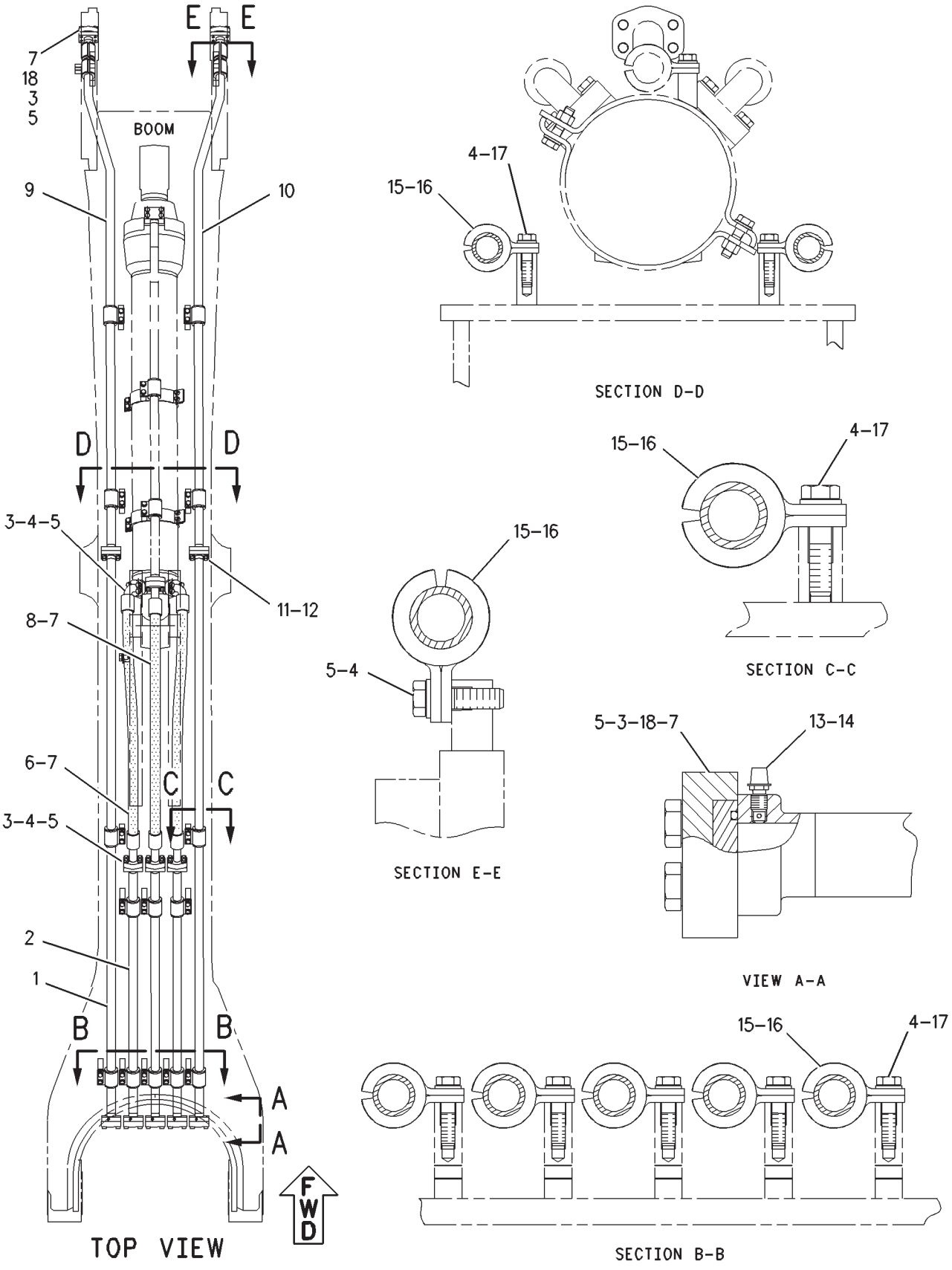

GRAPHIC #1 **<END>** g00783347

HYDRAULIC SYSTEM

202-7022 LINES GP-BOOM–STICK LOWERING CONTROL

S/N: RCD1-UP

PART OF 206-3183 VALVE AR, 238-6487 VALVE AR-LOAD CONTROL

AN ATTACHMENT

SMCS-5057 **i02373904**

NOTE	REF NO	GRAPHIC REF	PART NUMBER	QTY	PART NAME 1 2 3 4 5 6 (PRODUCT LEVEL)	SEE PAGE
	1	1	**202-7023**	1	TUBE AS	
	2	1	**202-7024**	2	TUBE AS	
I	3	1	**134-6939**	1	HOSE AS	
I	4	1	**202-7028**	2	HOSE AS	
	5	1	**179-4592**	1	SUPPORT AS	
	6	1	**179-4588**	1	SUPPORT AS	
	7	1	**179-4595**	1	PLATE	
	8	1	**179-4584**	1	PLATE	
	9	1	**093-1294**	2	CLAMP	
	10	1	**7Y-4868**	3	CLIP	
	11	1	**153-8874**	1	CLIP AS	
M	12	1	**8T-6466**	2	BOLT (M10X1.5X60-MM)	
M	13	1	**8T-4183**	2	BOLT (M12X1.75X40-MM)	
M	14	1	**8T-4910**	2	BOLT (M12X1.75X60-MM)	
M	15	1	**7X-2553**	4	BOLT (M16X2X40-MM)	
M	16	1	**7X-2556**	2	BOLT (M16X2X100-MM)	
	17	1	**8T-4121**	2	WASHER-HARD (11X21X2.5-MM THK)	
	18	1	**8T-4223**	4	WASHER-HARD (13.5X25.5X3-MM THK)	
	19	1	**9X-8257**	6	WASHER (17.5X30X3.5-MM THK)	
	20	1	**6K-0806**	6	STRAP-CABLE	
	21	1	**6V-9746**	2	SEAL-O-RING	
	22	1	**6V-8398**	4	SEAL-O-RING	

I-REFER TO HYDRAULIC INFORMATION SYSTEM
M-METRIC PART

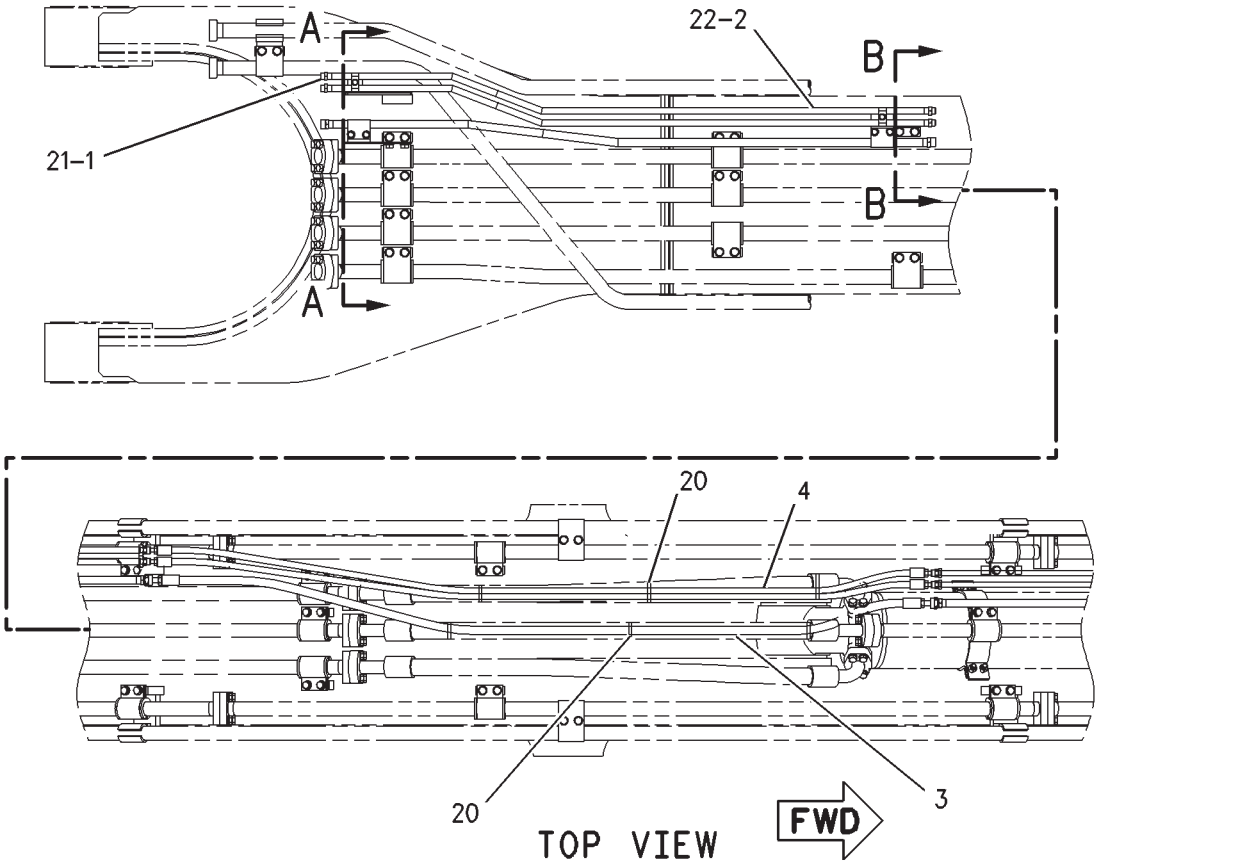

GRAPHIC #1 **<END>** g00846731

HYDRAULIC SYSTEM

212-6138 LINES GP-BOOM

S/N: RCD1-UP
BOOM LOWERING CONTROL VALVE WITH SMART BOOM
PART OF 213-4216 VALVE AR-BOOM LOWERING CONTROL
AN ATTACHMENT

SMCS-5057 **i02188727**

NOTE	REF NO	GRAPHIC REF	PART NUMBER	QTY	PART NAME 1 2 3 4 5 6 (PRODUCT LEVEL)	SEE PAGE
M	1	1	**105-3485**	8	BOLT-SOCKET HEAD (M12X1.75X60-MM)	
	2	2	**1P-3705**	4	SEAL-RECTANGULAR	
I	3	1	**207-6543**	1	HOSE AS	
I	4	2	**087-5773**	2	HOSE AS	
	5	1,2	*148-8347*	3	ELBOW AS	
					(EACH INCLUDES)	
		1,2	**3D-2824**	1	SEAL-O-RING	
		1,2	**6V-9746**	1	SEAL-O-RING	
	6	2	*148-8392*	2	ELBOW AS	
					(EACH INCLUDES)	
		2	**6V-9746**	1	SEAL-O-RING	
		2	**6V-9853**	1	ELBOW	
	7	2	*148-8336*	2	CONNECTOR AS	
					(EACH INCLUDES)	
		2	**3J-1907**	1	SEAL-O-RING	
		2	**6V-8397**	1	SEAL-O-RING	
		2	**6V-8636**	1	CONNECTOR	
	8	1,2	**173-4795**	8	SUPPORT AS	
	9	2	**176-4751**	4	SUPPORT AS	
M	10	1,2	**8T-4139**	20	BOLT (M12X1.75X30-MM)	
	11	1,2	**8T-4223**	47	WASHER-HARD (13.5X25.5X3-MM THK)	
M	12	1,2	**8T-4140**	36	BOLT (M16X2X60-MM)	
	13	1,2	**9X-8257**	38	WASHER (17.5X30X3.5-MM THK)	
	14	1	**176-4722**	2	BLOCK	
M	15	2	**8T-4194**	4	BOLT (M12X1.75X50-MM)	
	16	2	**176-4750**	1	SUPPORT AS	
	17	2	**176-4723**	1	SUPPORT AS	
Y	18	2	**171-0191**	2	VALVE GP-LOAD CONTROL (BOOM CYLINDER)	816
	19	2	**168-9352**	2	CONNECTOR	
	20	2	**3K-0360**	2	SEAL-O-RING	
	21	2	**6V-8397**	2	SEAL-O-RING	
	22	2	*148-8340*	3	CONNECTOR AS	
					(EACH INCLUDES)	
		2	**3K-0360**	1	SEAL-O-RING	
		2	**6V-8398**	1	SEAL-O-RING	
		2	**6V-8639**	1	CONNECTOR	
	23	2	*148-8374*	2	ELBOW AS	
					(EACH INCLUDES)	
		2	**3K-0360**	1	SEAL-O-RING	
		2	**6V-8397**	1	SEAL-O-RING	
		2	**6V-8723**	1	ELBOW	
	24	2	*148-8357*	1	ELBOW AS	
		2	**5K-9090**	1	SEAL-O-RING	
		2	**6V-9008**	1	ELBOW	
		2	**7M-8485**	1	SEAL-O-RING	
	25	2	*150-4037*	1	TEE AS	
		2	**6V-8398**	2	SEAL-O-RING	
		2	**6V-9844**	1	TEE-SWIVEL	
	26	2	*148-8439*	1	TEE AS	
		2	**3J-1907**	1	SEAL-O-RING	
		2	**6V-8397**	2	SEAL-O-RING	
		2	**6V-8774**	1	TEE	
M	27	2	**8T-4910**	8	BOLT (M12X1.75X60-MM)	
	28	2	**168-9619**	1	BLOCK	

212-6138 **LINES GP-BOOM** *(contd.)* **i02188727**

NOTE	REF NO	GRAPHIC REF	PART NUMBER	QTY	PART NAME 1 2 3 4 5 6 (PRODUCT LEVEL)	SEE PAGE
	29	1	*148-8327*	1	CONNECTOR AS	
		1	**3D-2824**	1	SEAL-O-RING	
		1	**6V-8637**	1	CONNECTOR	
		1	**6V-9746**	1	SEAL-O-RING	
	30	1	**176-4754**	1	SUPPORT	
M	31	1	**8T-4137**	4	BOLT (M10X1.5X20-MM)	
	32	1,2	**8T-4121**	6	WASHER-HARD (11X21X2.5-MM THK)	
I	33	1	**211-9499**	1	HOSE AS	
	34	1	**5P-8077**	2	FLANGE-HALF	
M	35	1	**8T-4176**	4	BOLT (M12X1.75X90-MM)	
	36	2	**149-6716**	1	BLOCK	
	37	1	**206-3384**	1	BLOCK	
	38	1	*164-4180*	1	PLUG AS	
		1	**7M-8485**	1	SEAL-O-RING	
		1	**9S-4181**	1	PLUG-O-RING	
	39	2	**1P-4577**	2	FLANGE-HALF	
I	40	2	**108-7381**	1	HOSE AS	
I	41	1	**202-3925**	2	HOSE AS	
	42	2	**221-8859**	1	SENSOR AS-PRESSURE (OVERLOAD WARNING DEVICE)	
		2	**171-0596**	1	RECEPTACLE AS	
		2	**144-1636**	3	PIN-CONNECTOR (14-GA TO 18-GA)	
		2	**3K-0360**	1	SEAL-O-RING	
I	43	2	**176-4757**	1	HOSE AS	
	44	2	**202-4074**	2	SUPPORT AS	
I	45	1	**207-6542**	1	HOSE AS	
	46	2	**7K-1181**	23	STRAP-CABLE	
M	47	2	**8T-4648**	8	BOLT (M12X1.75X70-MM)	
	48	2	**6W-3731**	32	SPACER (19.07X26.99X14-MM THK)	
M	49	2	**8T-4196**	4	BOLT (M10X1.5X35-MM)	
I	50	2	**211-9500**	1	HOSE AS	
	51	2	**209-8895**	1	MANIFOLD	
M	52	2	**8T-4193**	4	BOLT (M16X2X50-MM)	
	53	2	**211-8344**	1	TUBE AS	
	54	2	**1P-3706**	1	SEAL-RECTANGULAR	
Y	55	2	**215-4890**	1	VALVE GP-CHECK (BOOM FLOAT)	753
	56	2	**212-3521**	1	SUPPORT AS	
	57	2	**6V-0400**	2	FLANGE-HALF	
	58	2	**128-7514**	2	CLIP	
M	59	2	**7X-2553**	2	BOLT (M16X2X40-MM)	
	60	2	**1P-3703**	1	SEAL-RECTANGULAR	
	61	2	**4J-0520**	1	SEAL-O-RING	
	62	1	**202-9002**	1	SWITCH AS-PRESSURE (OVERLOAD WARNING DEVICE)	
		1	**102-8802**	1	KIT-RECEPTACLE (2-PIN)	
					(INCLUDES RECEPTACLE AS & WEDGE)	
		1	**186-3735**	1	PIN-CONNECTOR (16-GA TO 18-GA)	
I	63	2	**087-5760**	1	HOSE AS	
	64	2	*148-8378*	1	ELBOW AS	
		2	**3J-1907**	1	SEAL-O-RING	
		2	**6V-8397**	1	SEAL-O-RING	
		2	**6V-8724**	1	ELBOW	
	65	1	*148-8435*	1	TEE AS	
		1	**3J-1907**	1	SEAL-O-RING	
		1	**6V-8397**	2	SEAL-O-RING	
		1	**6V-8781**	1	TEE-FACE SEAL	
	66	1	**1P-3704**	4	SEAL-RECTANGULAR	
	67	2	**202-4071**	1	TUBE AS	
	68	2	**202-4072**	1	TUBE AS	
	69	1,2	**1P-5767**	8	FLANGE-HALF	
M	70	1	**8T-4184**	8	BOLT (M12X1.75X45-MM)	

212-6138 **LINES GP-BOOM** ***(contd.)*** **i02188727**

NOTE	REF NO	GRAPHIC REF	PART NUMBER	QTY	PART NAME 1 2 3 4 5 6 (PRODUCT LEVEL)	SEE PAGE
	71	1	**5P-7464**	3	CLIP (SLOT)	
	72	1	**5P-7465**	3	CLIP (TAB)	
	73	1	**6V-1249**	3	GROMMET	
M	74	1	**8T-4192**	3	BOLT (M12X1.75X25-MM)	
I	75	1	**4I-6121**	1	HOSE AS	
I	76	1	**7Y-8487**	1	HOSE AS	
	77	2	*207-7899*	1	PLUG AS	
		2	**4K-1388**	1	SEAL-O-RING	
		2	**9S-4188**	1	PLUG	

I-REFER TO HYDRAULIC INFORMATION SYSTEM
M-METRIC PART
Y-SEPARATE ILLUSTRATION

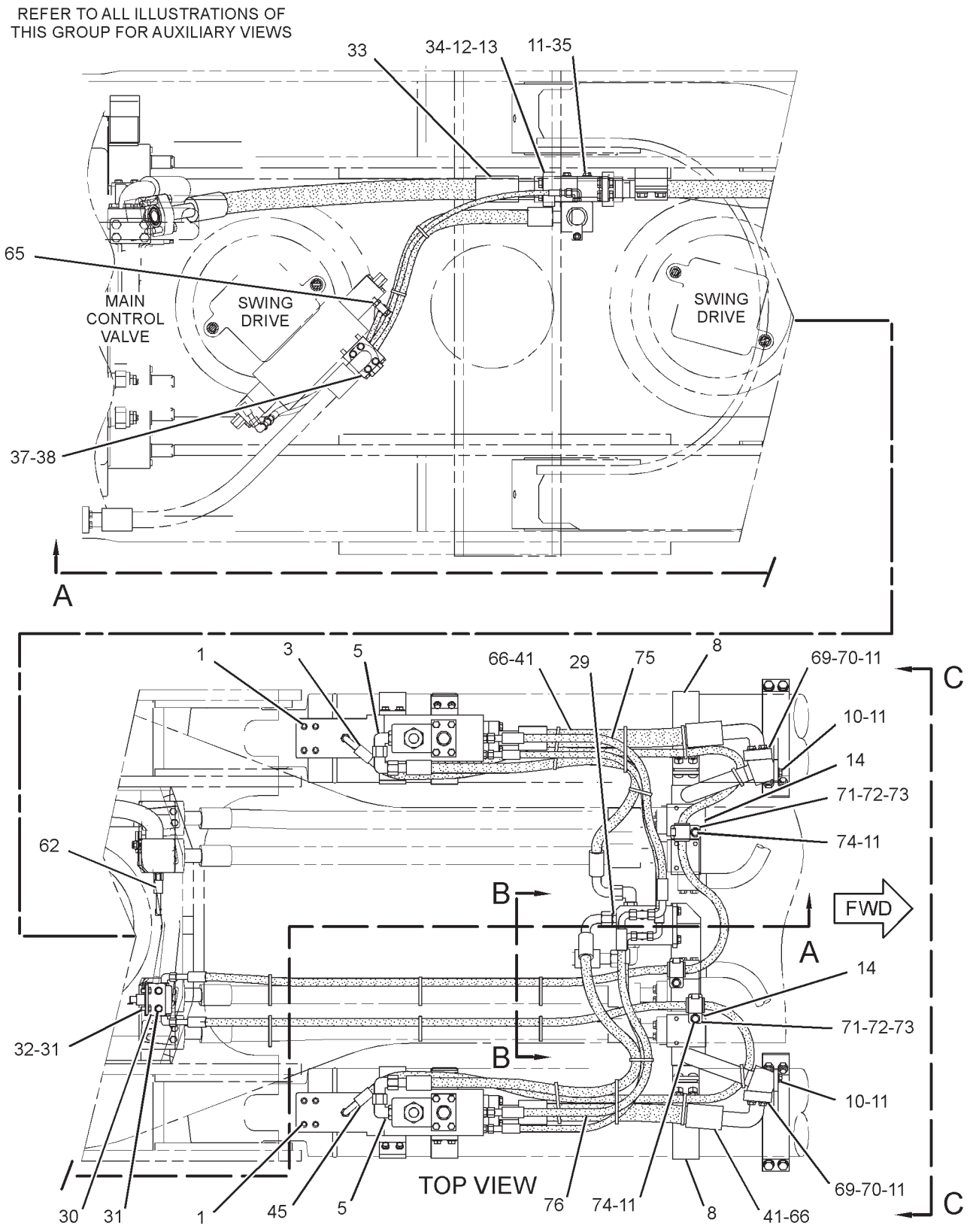

GRAPHIC #1

g01197010

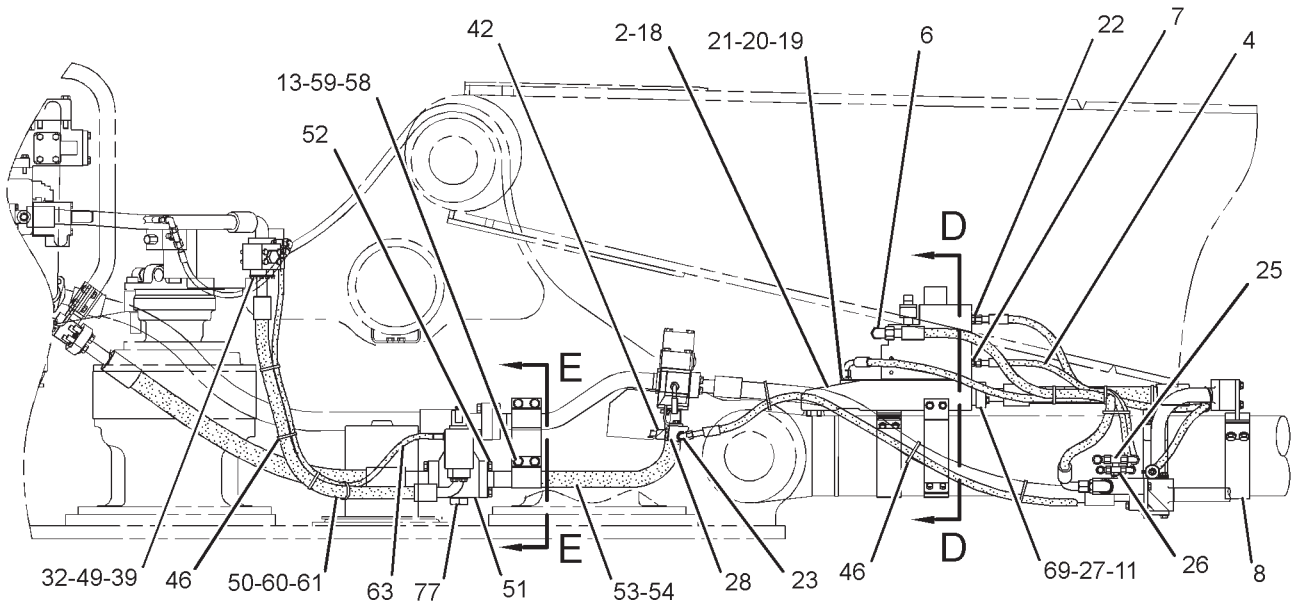

SECTION A-A

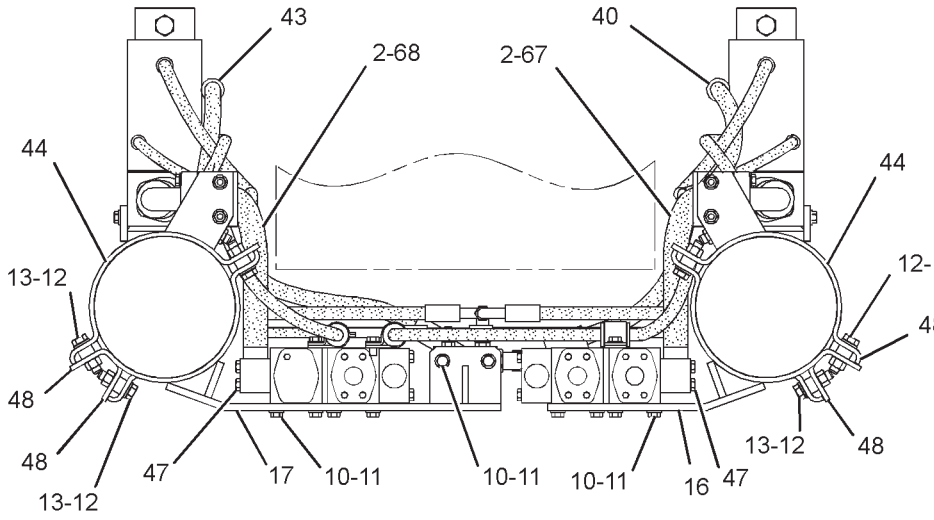

VIEW C-C

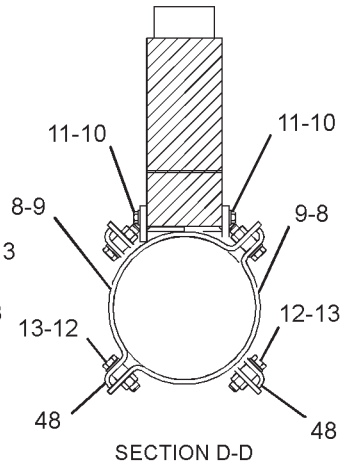

SECTION D-D

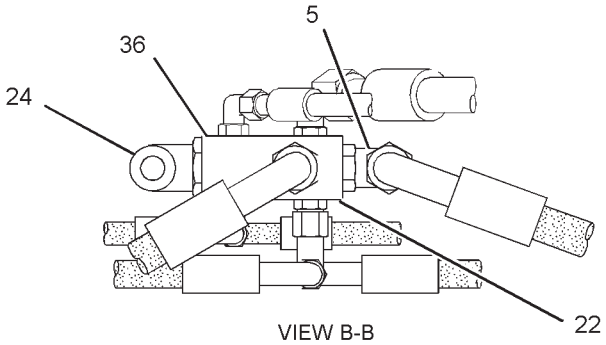

VIEW B-B

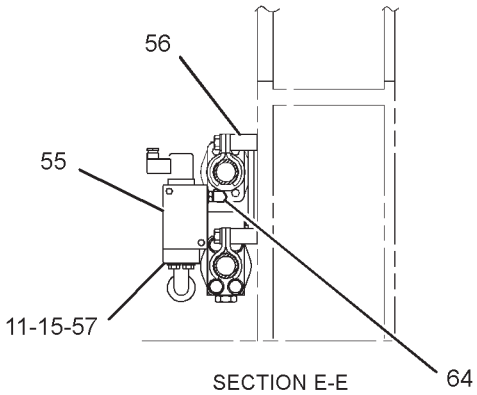

SECTION E-E

GRAPHIC #2 **<END>** g01197012

HYDRAULIC SYSTEM

252-5441 LINES GP-BOOM—MEDIUM PRESSURE

S/N: RCD1-UP
FOR USE WITH 10-M (33-FT) BOOM
AN ATTACHMENT

SMCS-5057 **i02308974**

NOTE	REF NO	GRAPHIC REF	PART NUMBER	QTY	PART NAME 1 2 3 4 5 6 (PRODUCT LEVEL)	SEE PAGE
	1	1	**206-9665**	1	PLATE	
	2	1	**6V-1889**	10	CLIP	
M	3	1	**8T-4137**	10	BOLT (M10X1.5X20-MM)	
	4	1	**8T-4121**	10	WASHER-HARD (11X21X2.5-MM THK)	
	5	1	**132-9176**	10	PLATE	
	6	1	**206-9666**	2	PLATE	
	7	1	**9X-8257**	6	WASHER (17.5X30X3.5-MM THK)	
M	8	1	**7X-2554**	6	BOLT (M16X2X70-MM)	
	9	1	**169-7409**	4	UNION AS	
					(EACH INCLUDES)	
		1	**6V-8996**	1	UNION	
		1	**7J-9108**	2	SEAL-O-RING	
	10	1	**6V-9170**	4	NUT-BULKHEAD (1-14-THD)	
I	11	1	**207-9532**	2	HOSE AS	
M	12	1	**8T-4175**	16	BOLT (M16X2X90-MM)	
I	13	1	**207-0810**	2	HOSE AS	
B	14	1	**7K-1181**	40	STRAP-CABLE	

B-USE AS REQUIRED
I-REFER TO HYDRAULIC INFORMATION SYSTEM
M-METRIC PART

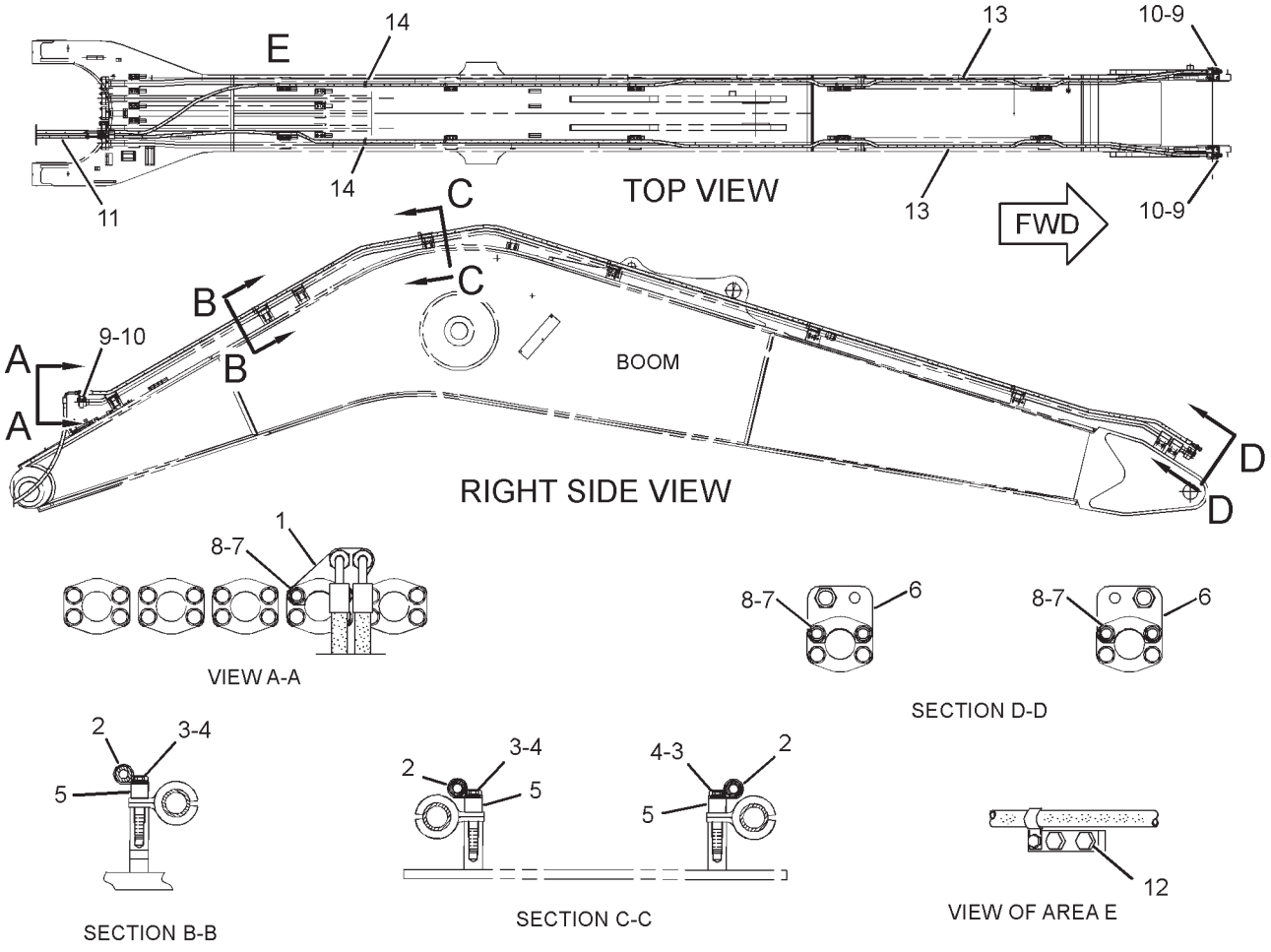

GRAPHIC #1 **<END>** g01238165

HYDRAULIC SYSTEM

168-9659 LINES GP-BOOM CYLINDER—LH

S/N: RCD1-UP
PART OF 155-9065 CYLINDER & LINES GP-BOOM
AN ATTACHMENT

SMCS-5057, 5456 **i03579520**

NOTE	REF NO	GRAPHIC REF	PART NUMBER	QTY	PART NAME 1 2 3 4 5 6 (PRODUCT LEVEL)	SEE PAGE
	1	1	**1P-3705**	4	SEAL-RECTANGULAR	
	2	1	**8T-4223**	14	WASHER-HARD (13.5X25.5X3-MM THK)	
M	3	1	**8T-6868**	8	BOLT (M12X1.75X80-MM)	
	4	1	**338-6102**	1	TUBE AS	
	5	1	**338-6106**	1	TUBE AS	
	6	1	**173-4793**	2	BLOCK	
M	7	1	**8T-4648**	8	BOLT (M12X1.75X70-MM)	
M	8	1	**8T-4956**	6	BOLT (M12X1.75X35-MM)	
	9	1	**173-4794**	1	SUPPORT AS	
	10	1	**9X-8257**	4	WASHER (17.5X30X3.5-MM THK)	
M	11	1	**8T-4140**	4	BOLT (M16X2X60-MM)	
	12	1	**173-4795**	1	SUPPORT AS	
M		1	**8T-4132**	2	NUT (M16X2-THD)	
	13	1	**6W-3731**	4	SPACER (19.07X26.99X14-MM THK)	

M-METRIC PART

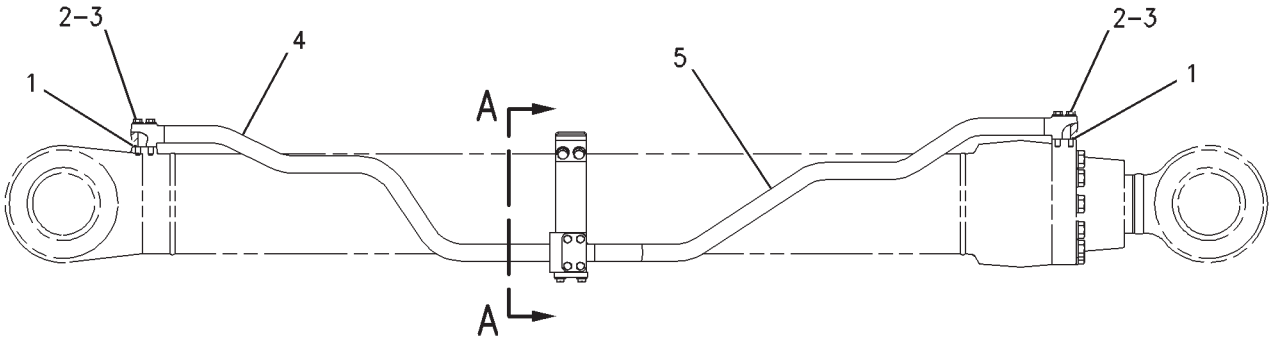

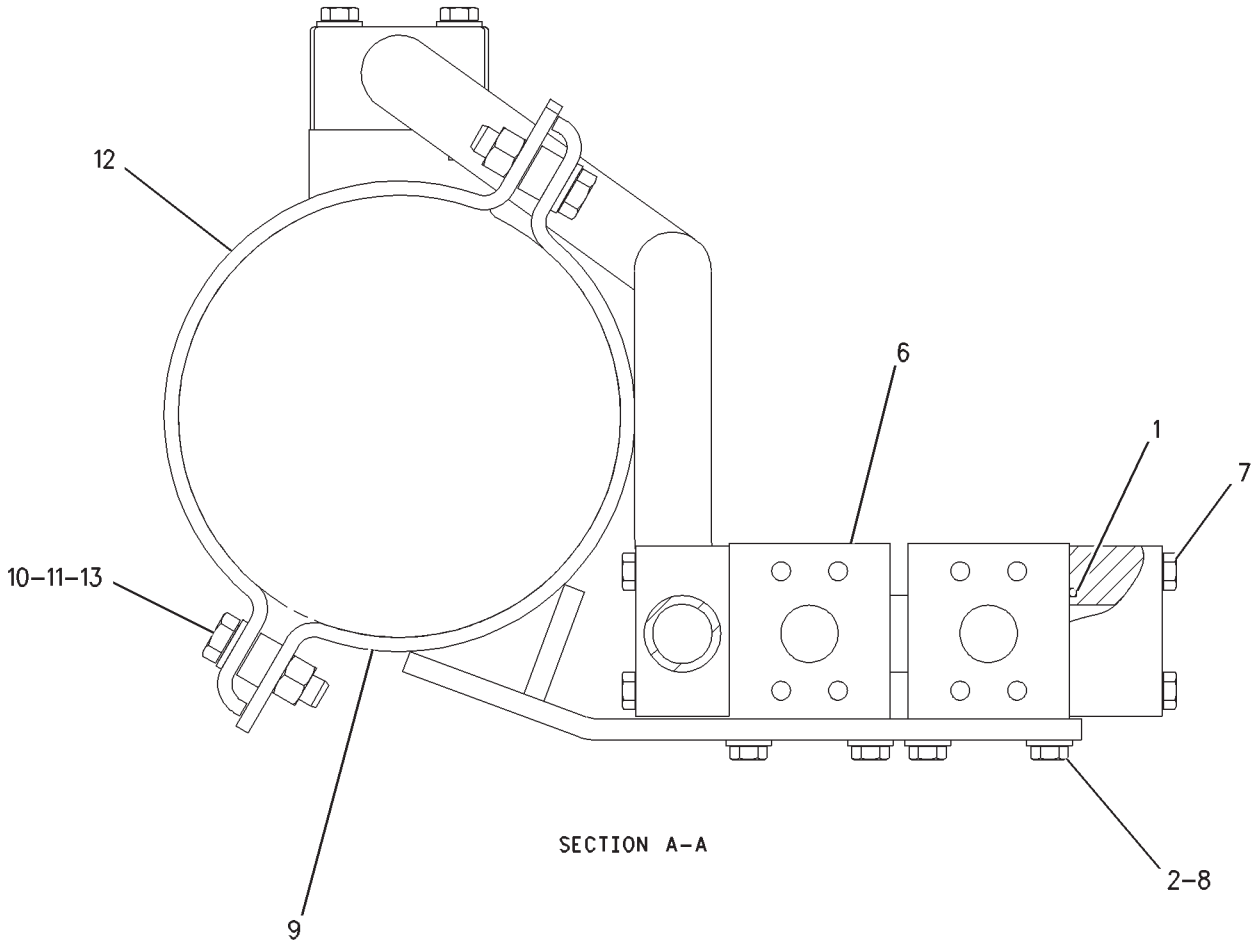

GRAPHIC #1 **<END>** g00834837

HYDRAULIC SYSTEM

168-9660 LINES GP-BOOM CYLINDER—RH

S/N: RCD1-UP
PART OF 155-9066 CYLINDER & LINES GP-BOOM
AN ATTACHMENT

SMCS-5057, 5456 **i03579521**

NOTE	REF NO	GRAPHIC REF	PART NUMBER	QTY	PART NAME 1 2 3 4 5 6 (PRODUCT LEVEL)	SEE PAGE
	1	1	**1P-3705**	4	SEAL-RECTANGULAR	
	2	1	**8T-4223**	14	WASHER-HARD (13.5X25.5X3-MM THK)	
M	3	1	**8T-6868**	8	BOLT (M12X1.75X80-MM)	
	4	1	**338-6103**	1	TUBE AS	
	5	1	**338-6107**	1	TUBE AS	
	6	1	**173-4795**	1	SUPPORT AS	
M		1	**8T-4132**	2	NUT (M16X2-THD)	
	7	1	**9X-8257**	4	WASHER (17.5X30X3.5-MM THK)	
M	8	1	**8T-4140**	4	BOLT (M16X2X60-MM)	
	9	1	**173-4794**	1	SUPPORT AS	
M	10	1	**8T-4956**	6	BOLT (M12X1.75X35-MM)	
	11	1	**173-4793**	2	BLOCK	
M	12	1	**8T-4648**	8	BOLT (M12X1.75X70-MM)	
	13	1	**6W-3731**	4	SPACER (19.07X26.99X14-MM THK)	

M-METRIC PART

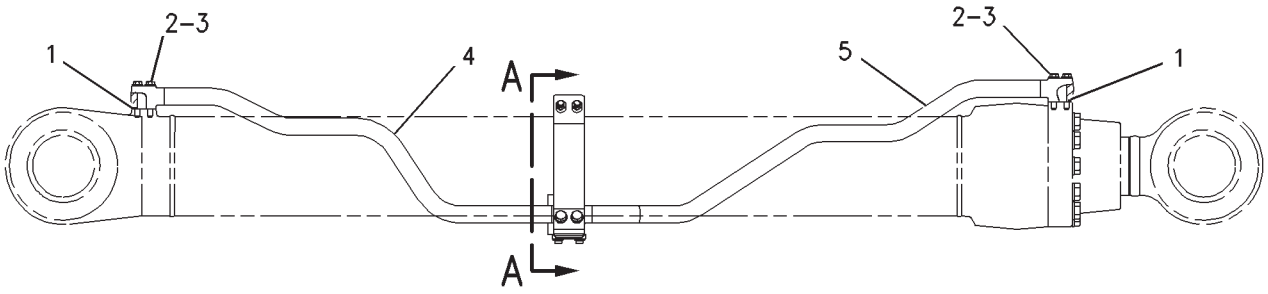

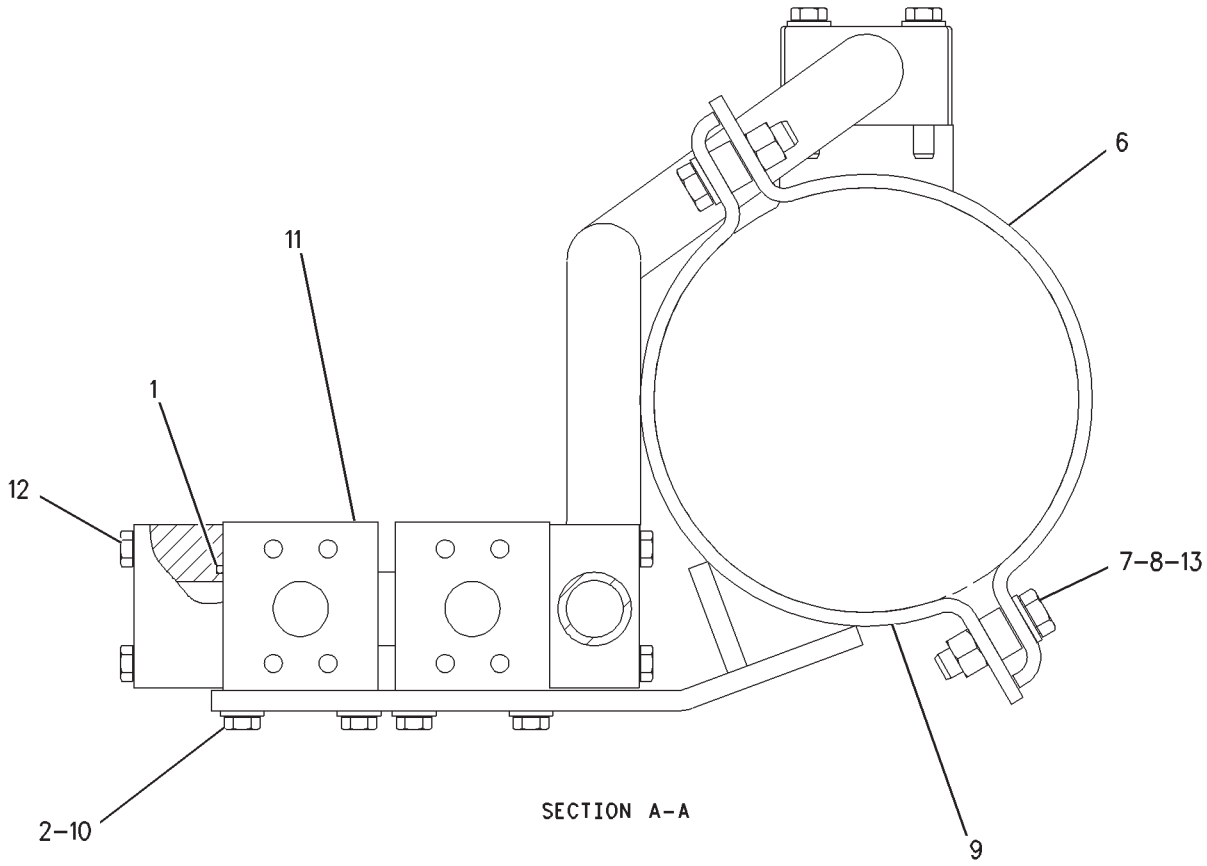

GRAPHIC #1 **<END>** g00835345

HYDRAULIC SYSTEM

176-4552 LINES GP-BOOM CYLINDER

S/N: RCD1-UP
BOOM LOWERING CONTROL
PART OF 171-0026 VALVE AR-BOOM LOWERING CONTROL
AN ATTACHMENT

SMCS-5057, 5456 **i02363256**

NOTE	REF NO	GRAPHIC REF	PART NUMBER	QTY	PART NAME 1 2 3 4 5 6 (PRODUCT LEVEL)	SEE PAGE
	1	2	**202-4071**	1	TUBE AS	
	2	1,2	**1P-3705**	4	SEAL-RECTANGULAR	
	3	2	**202-4072**	1	TUBE AS	
M	4	1	**105-3485**	8	BOLT-SOCKET HEAD (M12X1.75X60-MM)	
	5	1,2	*148-8347*	3	ELBOW AS	
					(EACH INCLUDES)	
		1,2	**3D-2824**	1	SEAL-O-RING	
		1,2	**6V-9746**	1	SEAL-O-RING	
I	6	1	**202-3925**	2	HOSE AS	
	7	1	**1P-3704**	4	SEAL-RECTANGULAR	
	8	1,2	**173-4795**	8	SUPPORT AS	
	9	2	**176-4751**	4	SUPPORT AS	
M	10	1,2	**8T-4139**	20	BOLT (M12X1.75X30-MM)	
	11	1,2	**8T-4223**	39	WASHER-HARD (13.5X25.5X3-MM THK)	
M	12	2	**8T-4140**	32	BOLT (M16X2X60-MM)	
	13	2	**9X-8257**	32	WASHER (17.5X30X3.5-MM THK)	
	14	1	**176-4722**	2	BLOCK	
M	15	1	**8T-4910**	8	BOLT (M12X1.75X60-MM)	
	16	2	**176-4750**	1	SUPPORT AS	
	17	2	**176-4723**	1	SUPPORT AS	
Y	18	1	**171-0191**	2	VALVE GP-LOAD CONTROL	816
	19	1	**168-9352**	2	CONNECTOR	
	20	1	**3K-0360**	2	SEAL-O-RING	
	21	1	**6V-8397**	2	SEAL-O-RING	
	22	1	*148-8392*	2	ELBOW AS	
					(EACH INCLUDES)	
		1	**6V-9853**	1	ELBOW	
		1	**6V-9746**	1	SEAL-O-RING	
	23	1,2	*148-8340*	3	CONNECTOR AS	
					(EACH INCLUDES)	
		1,2	**6V-8639**	1	CONNECTOR	
		1,2	**6V-8398**	1	SEAL-O-RING	
	24	2	**202-4074**	2	SUPPORT AS	
	25	1	*148-8336*	2	CONNECTOR AS	
					(EACH INCLUDES)	
		1	**6V-8636**	1	CONNECTOR	
		1	**3J-1907**	1	SEAL-O-RING	
		1	**6V-8397**	1	SEAL-O-RING	
M	26	1	**8T-4184**	8	BOLT (M12X1.75X45-MM)	
	27	1	**221-8859**	1	SENSOR AS-PRESSURE	
		1	**171-0596**	1	RECEPTACLE AS	
		1	**9X-3401**	3	PIN-CONNECTOR (16-GA TO 18-GA)	
		1	**3K-0360**	1	SEAL-O-RING	
	28	1	**168-9619**	1	BLOCK	
	29	1	*148-8374*	2	ELBOW AS	
					(EACH INCLUDES)	
		1	**6V-8723**	1	ELBOW	
		1	**3K-0360**	1	SEAL-O-RING	
		1	**6V-8397**	1	SEAL-O-RING	
	30	1	**176-4754**	1	SUPPORT	
M	31	1	**8T-4137**	4	BOLT (M10X1.5X20-MM)	
	32	1	**8T-4121**	2	WASHER-HARD (11X21X2.5-MM THK)	
	33	2	*148-8357*	1	ELBOW AS	
		2	**6V-9008**	1	ELBOW	

176-4552 **LINES GP-BOOM CYLINDER** *(contd.)* **i02363256**

NOTE	REF NO	GRAPHIC REF	PART NUMBER	QTY	PART NAME 1 2 3 4 5 6 (PRODUCT LEVEL)	SEE PAGE
		2	**5K-9090**	1	SEAL-O-RING	
		2	**7M-8485**	1	SEAL-O-RING	
	34	1	**1P-5767**	8	FLANGE-HALF	
	35	2	**6W-3731**	32	SPACER (19.07X26.99X14-MM THK)	
	36	2	**149-6716**	1	BLOCK	
	37	1	*150-4037*	1	TEE AS	
		1	**6V-9844**	1	TEE-SWIVEL	
		1	**6V-8398**	2	SEAL-O-RING	
	38	1	*148-8439*	1	TEE AS	
		1	**6V-8774**	1	TEE	
		1	**3J-1907**	1	SEAL-O-RING	
		1	**6V-8397**	2	SEAL-O-RING	
	39	1	*148-8327*	1	CONNECTOR AS	
		1	**6V-8637**	1	CONNECTOR	
		1	**3D-2824**	1	SEAL-O-RING	
		1	**6V-9746**	1	SEAL-O-RING	
I	40	2	**108-7381**	1	HOSE AS	
I	41	1	**207-6543**	1	HOSE AS	
I	42	1	**207-6542**	1	HOSE AS	
I	43	2	**176-4757**	1	HOSE AS	
I	44	1	**7Y-8487**	1	HOSE AS	
I	45	1	**087-5773**	2	HOSE AS	
	46	1	**7K-1181**	16	STRAP-CABLE	
M	47	2	**8T-4648**	8	BOLT (M12X1.75X70-MM)	
I	48	1	**4I-6121**	1	HOSE AS	
M	49	1	**8T-4192**	3	BOLT (M12X1.75X25-MM)	
	50	1	**5P-7464**	3	CLIP (SLOT)	
	51	1	**5P-7465**	3	CLIP (TAB)	
	52	1	**6V-1249**	3	GROMMET	

I-REFER TO HYDRAULIC INFORMATION SYSTEM
M-METRIC PART
Y-SEPARATE ILLUSTRATION

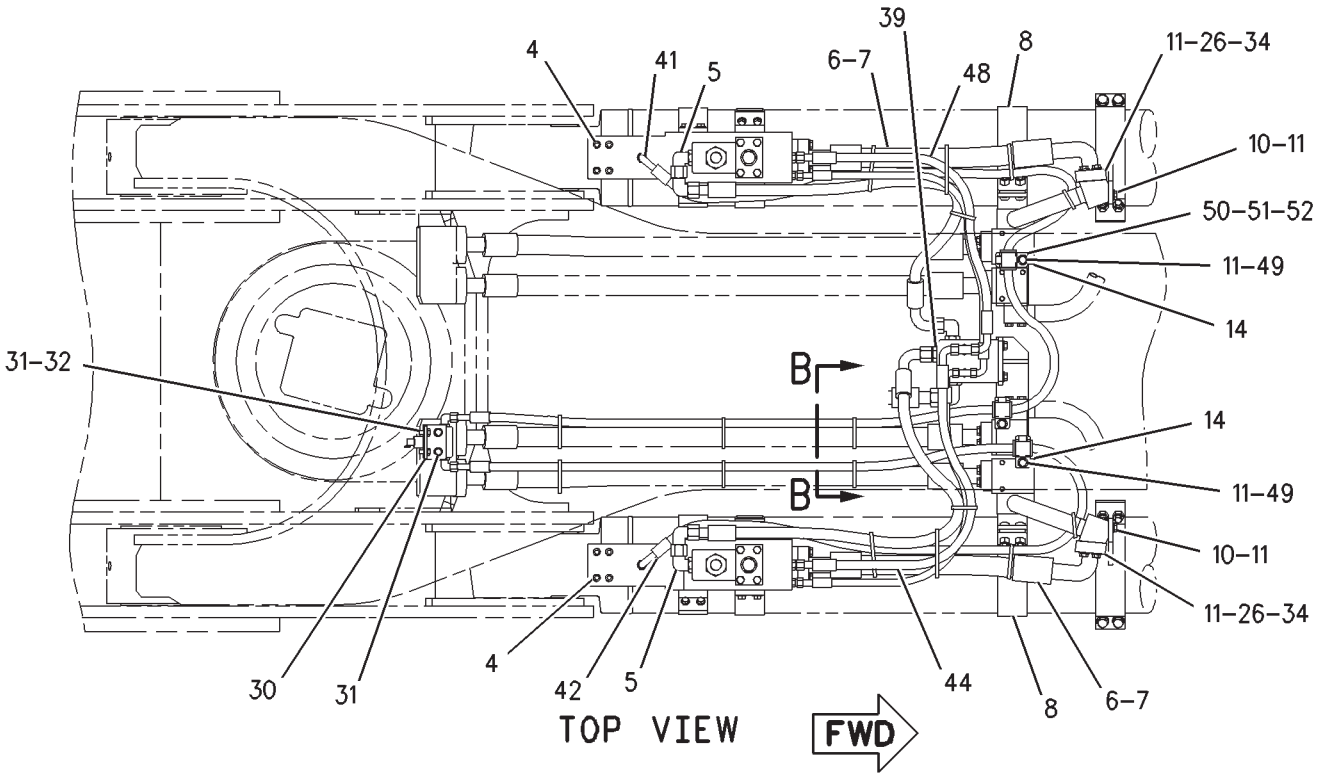

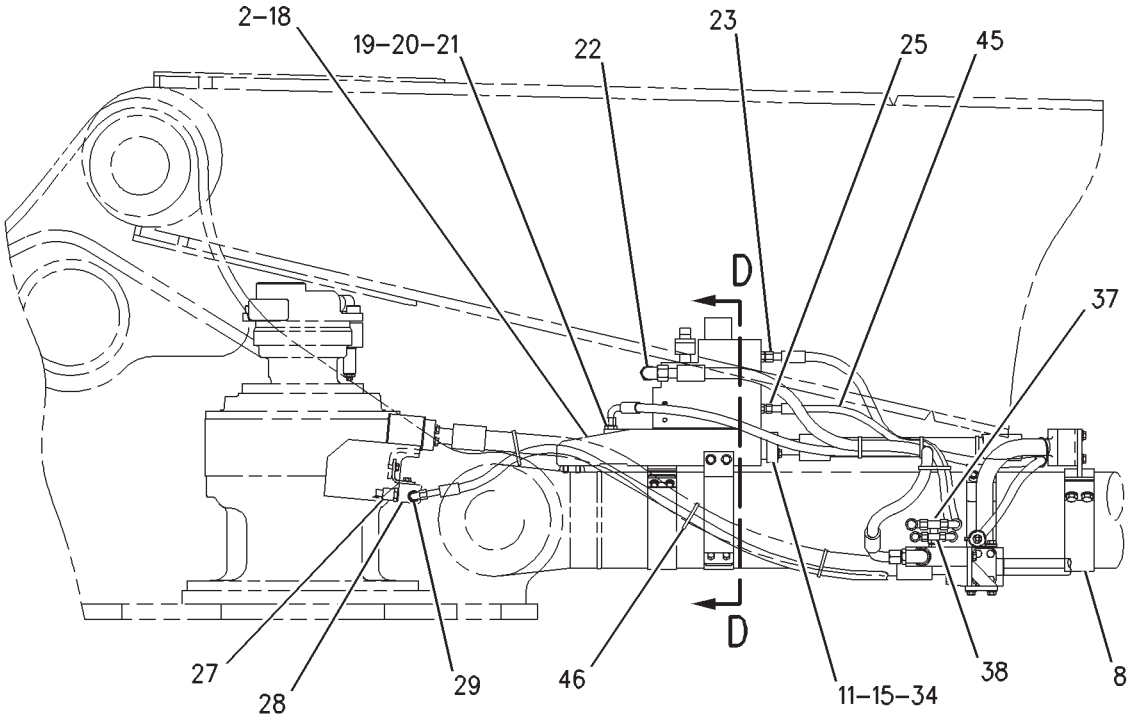

REFER TO ALL ILLUSTRATIONS OF THIS GROUP FOR AUXILIARY VIEWS

GRAPHIC #1

g00852243

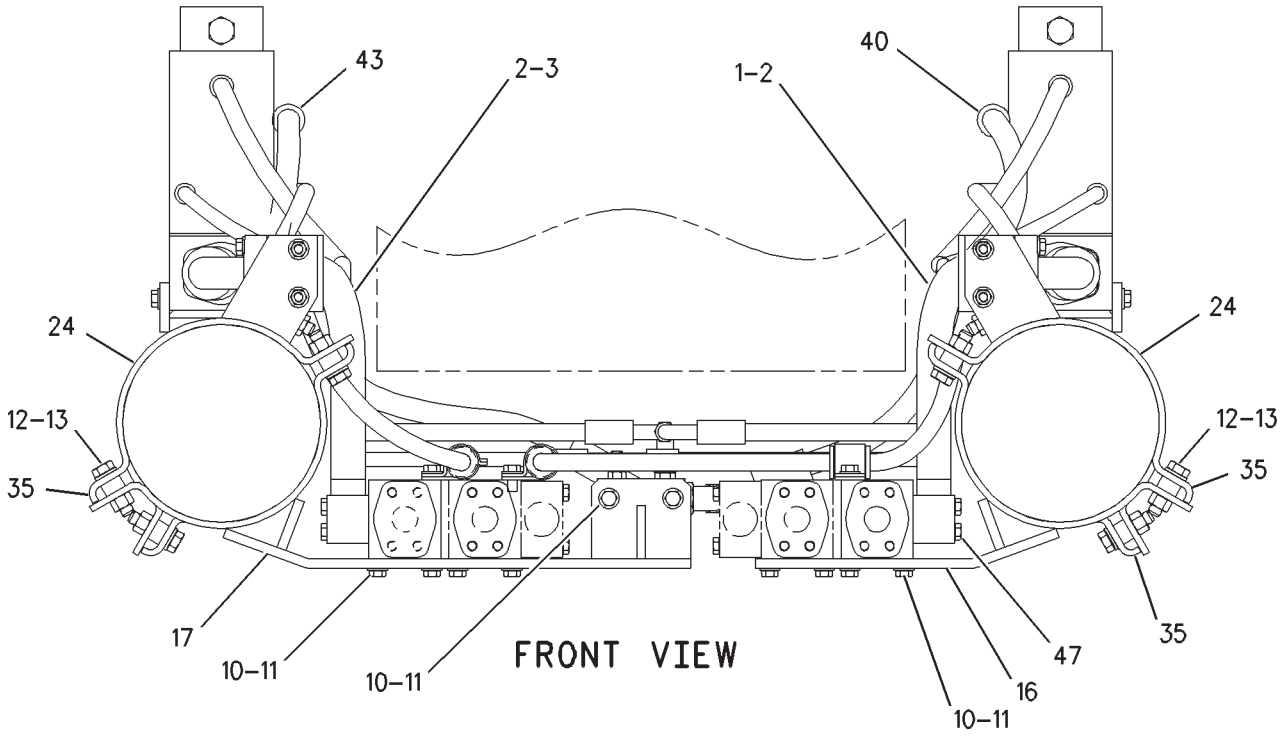

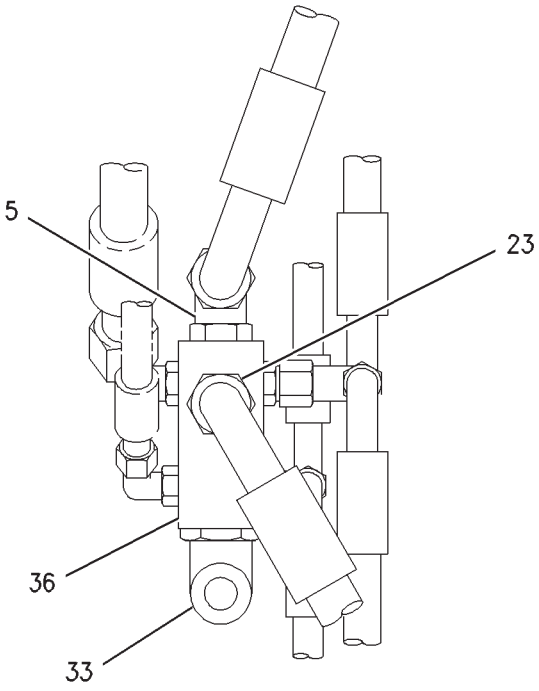

SECTION D-D

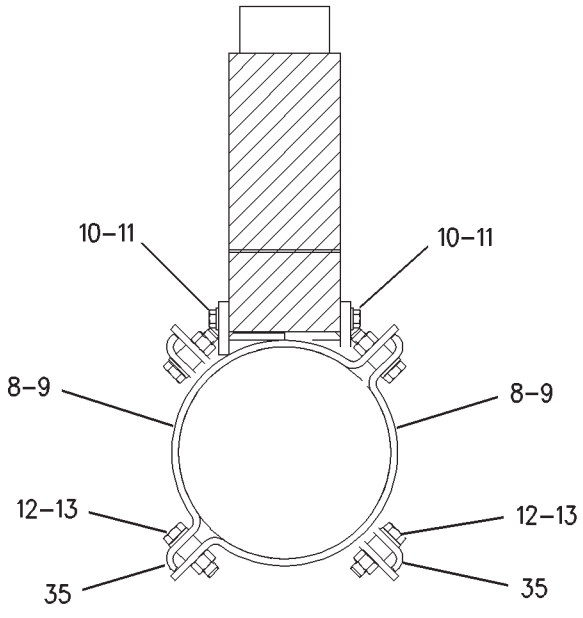

SECTION B-B

GRAPHIC #2 **<END>** g00852244

HYDRAULIC SYSTEM

168-9382 LINES GP-BUCKET CYLINDER

S/N: RCD1-UP

PART OF 155-9072, 215-9859 CYLINDER & LINES GP-BUCKET AN ATTACHMENT

SMCS-5457 **i03622938**

NOTE	REF NO	GRAPHIC REF	PART NUMBER	QTY	PART NAME 1 2 3 4 5 6 (PRODUCT LEVEL)	SEE PAGE
	1	1	**338-6174**	1	TUBE AS	
M	2	1	**7X-2556**	4	BOLT (M16X2X100-MM)	
	3	1	**1P-3706**	1	SEAL-RECTANGULAR	
	4	1	**9X-8257**	6	WASHER (17.5X30X3.5-MM THK)	
M	5	1	**8T-4140**	4	BOLT (M16X2X60-MM)	
	6	1	**138-5709**	1	GROMMET	
	7	1	**138-5708**	2	CLIP-HALF	
	8	1	**223-6882**	1	SUPPORT AS	
	9	1	**148-4778**	1	SUPPORT AS	
M	10	1	**7X-2554**	2	BOLT (M16X2X70-MM)	

M-METRIC PART

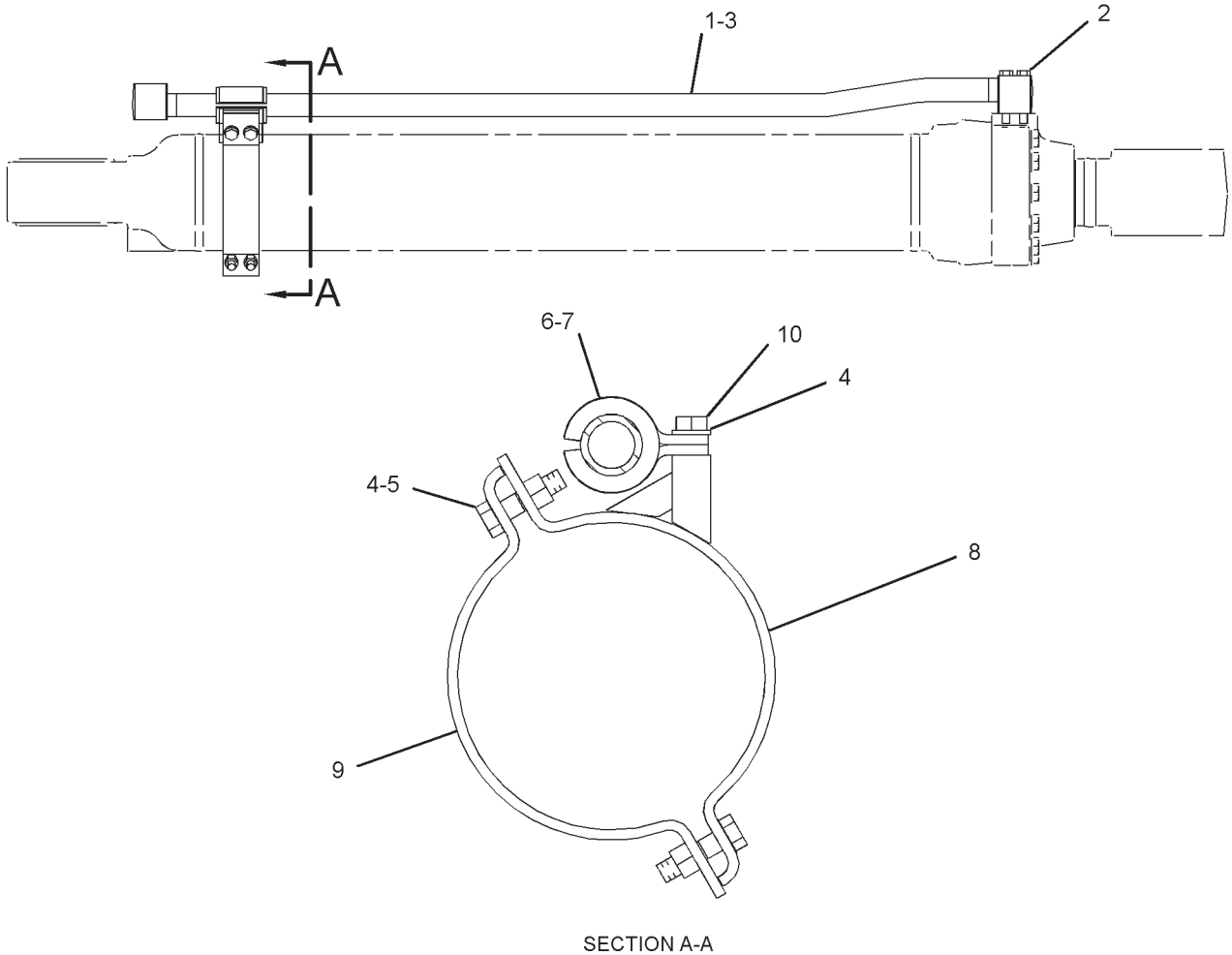

SECTION A-A

GRAPHIC #1 **<END>** g01945269

HYDRAULIC SYSTEM

168-9383 LINES GP-BUCKET CYLINDER

S/N: RCD1-UP

PART OF 155-9075, 215-9963 CYLINDER & LINES GP-BUCKET

AN ATTACHMENT

SMCS-5457 **i03622942**

NOTE	REF NO	GRAPHIC REF	PART NUMBER	QTY	PART NAME 1 2 3 4 5 6 (PRODUCT LEVEL)	SEE PAGE
	1	1	**1P-3706**	2	SEAL-RECTANGULAR	
M	2	1	**7X-2556**	8	BOLT (M16X2X100-MM)	
	3	1	**338-6111**	1	TUBE AS	
	4	1	**338-6175**	1	TUBE AS	
	5	1	**223-6879**	2	SUPPORT AS	
	6	1	**9X-8257**	12	WASHER (17.5X30X3.5-MM THK)	
M	7	1	**8T-4140**	12	BOLT (M16X2X60-MM)	
	8	1	**138-5708**	4	CLIP-HALF	
	9	1	**138-5709**	2	GROMMET	
	10	1	**173-4770**	2	SUPPORT AS	

M-METRIC PART

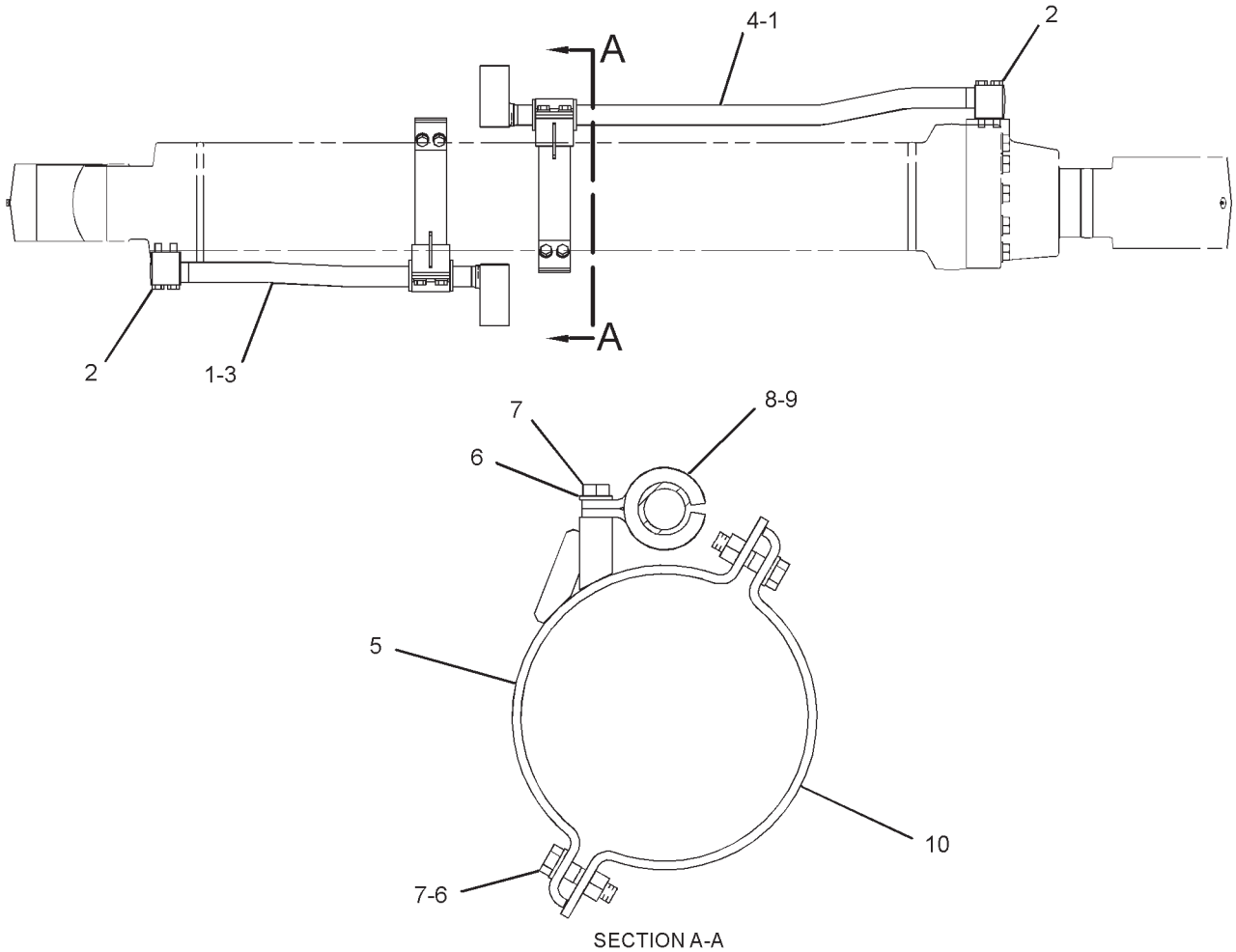

GRAPHIC #1 **<END>** g01945225

HYDRAULIC SYSTEM

249-1150 LINES GP-BUCKET CYLINDER

S/N: RCD1-UP
PART OF 252-4303 GUARD AR-CYLINDER
AN ATTACHMENT
TYPE 1

SMCS-5457 **i02229791**

NOTE	REF NO	GRAPHIC REF	PART NUMBER	QTY	PART NAME 1 2 3 4 5 6 (PRODUCT LEVEL)	SEE PAGE
	1	1	**143-4160**	2	CLIP	
	2	1	**173-4770**	1	SUPPORT AS	
	3	1	**255-3991**	1	TUBE AS	
	4	1	**258-6349**	1	SUPPORT AS	
I	5	1	**258-7922**	2	HOSE AS	
	6	1	**258-9060**	1	FLANGE	
	7	1	**1P-3705**	4	SEAL-RECTANGULAR	
	8	1	**1P-3706**	2	SEAL-RECTANGULAR	
	9	1	**5P-8077**	8	FLANGE-HALF	
	10	1	**6W-3731**	4	SPACER (19.07X26.99X14-MM THK)	
M	11	1	**7X-2556**	4	BOLT (M16X2X100-MM)	
M	12	1	**7X-2560**	4	BOLT (M16X2X220-MM)	
M	13	1	**8T-4140**	12	BOLT (M16X2X60-MM)	
M	14	1	**8T-4193**	4	BOLT (M16X2X50-MM)	
M	15	1	**8T-4779**	2	BOLT (M16X2X35-MM)	
	16	1	**9X-8257**	22	WASHER (17.5X30X3.5-MM THK)	

I-REFER TO HYDRAULIC INFORMATION SYSTEM
M-METRIC PART

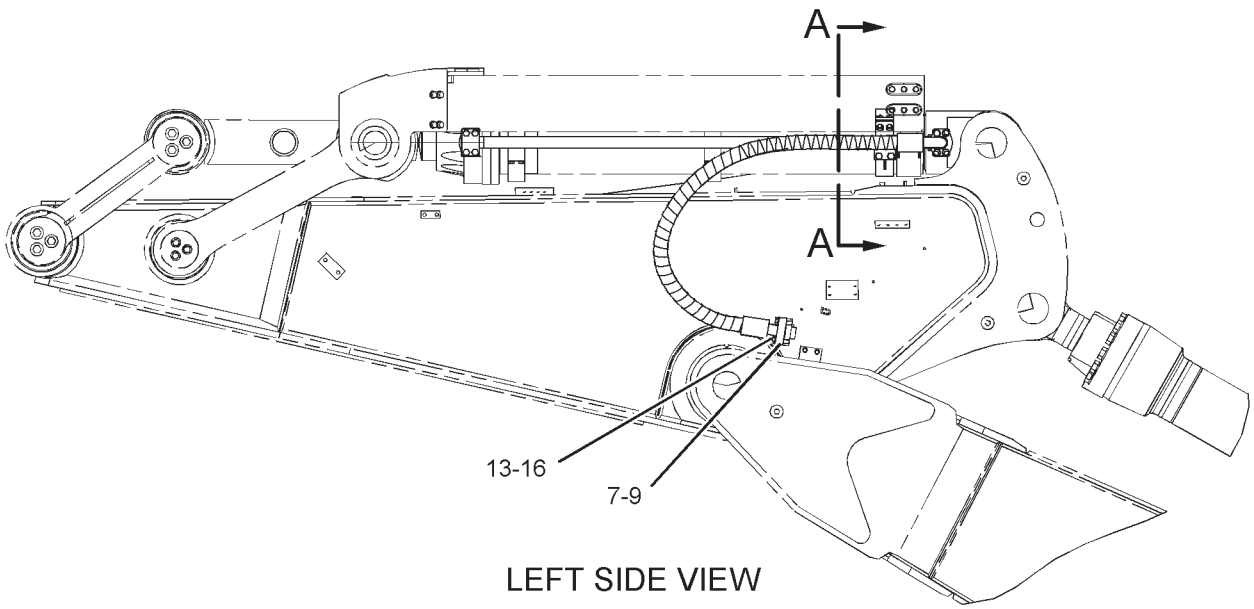

LEFT SIDE VIEW

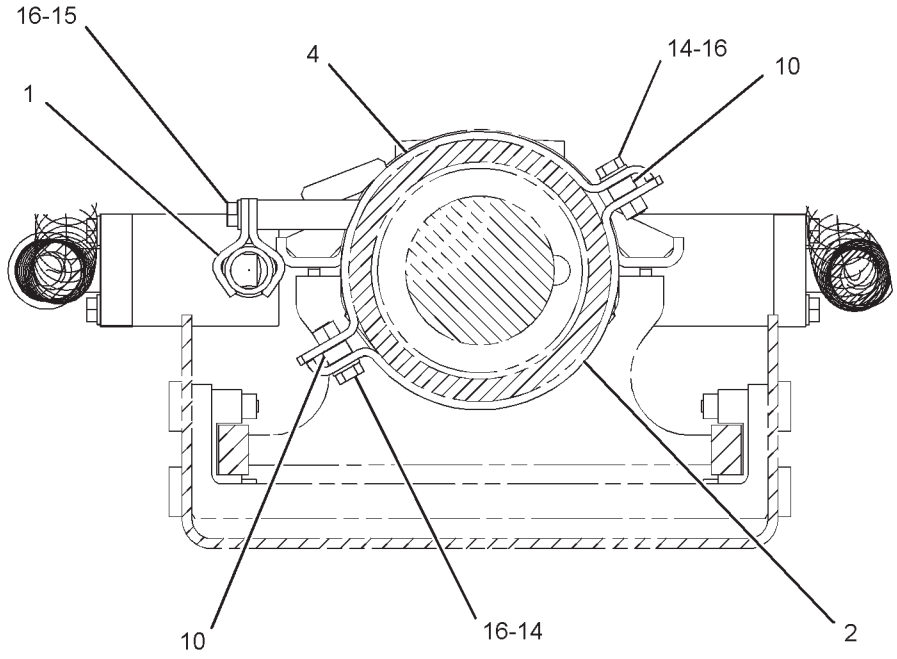

SECTION A-A

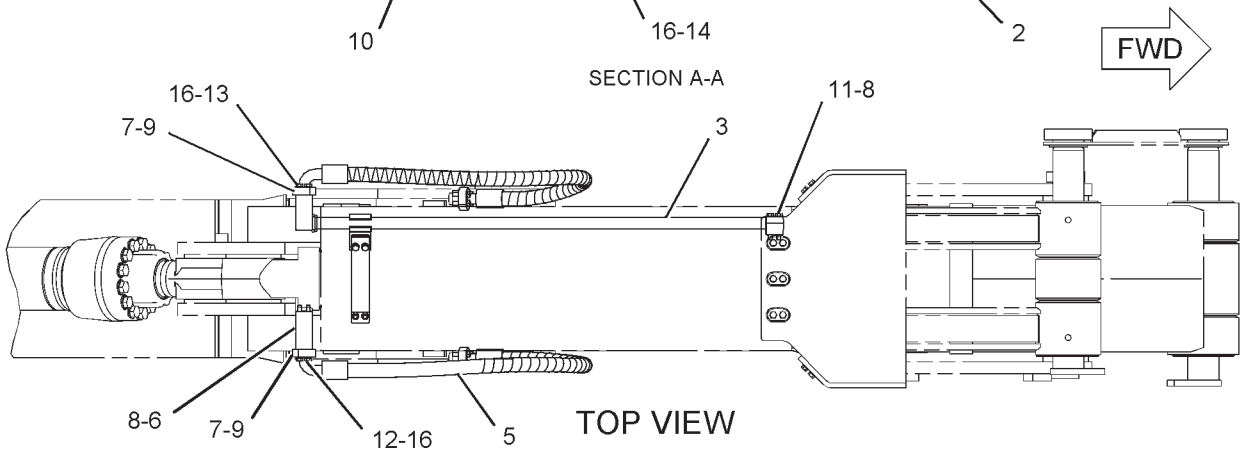

TOP VIEW

GRAPHIC #1 **<END>** g01129663

HYDRAULIC SYSTEM

249-1150 LINES GP-BUCKET CYLINDER

S/N: RCD1-UP
PART OF 252-4303 GUARD AR-CYLINDER
AN ATTACHMENT
TYPE 2

SMCS-5457 **i03096080**

NOTE	REF NO	GRAPHIC REF	PART NUMBER	QTY	PART NAME 1 2 3 4 5 6 (PRODUCT LEVEL)	SEE PAGE
	1	1	**143-4160**	2	CLIP	
	2	1	**173-4770**	1	SUPPORT AS	
	3	1	**255-3991**	1	TUBE AS	
	4	1	**258-6349**	1	SUPPORT AS	
	5	1	**258-9060**	1	FLANGE	
	6	1	**1P-3706**	2	SEAL-RECTANGULAR	
	7	1	**6W-3731**	4	SPACER (19.07X26.99X14-MM THK)	
M	8	1	**7X-2556**	4	BOLT (M16X2X100-MM)	
M	9	1	**7X-2560**	4	BOLT (M16X2X220-MM)	
M	10	1	**8T-4193**	4	BOLT (M16X2X50-MM)	
M	11	1	**8T-4779**	2	BOLT (M16X2X35-MM)	
C	12	1	**9X-8257**	6	WASHER (17.5X30X3.5-MM THK)	

C-CHANGE FROM PREVIOUS TYPE
M-METRIC PART

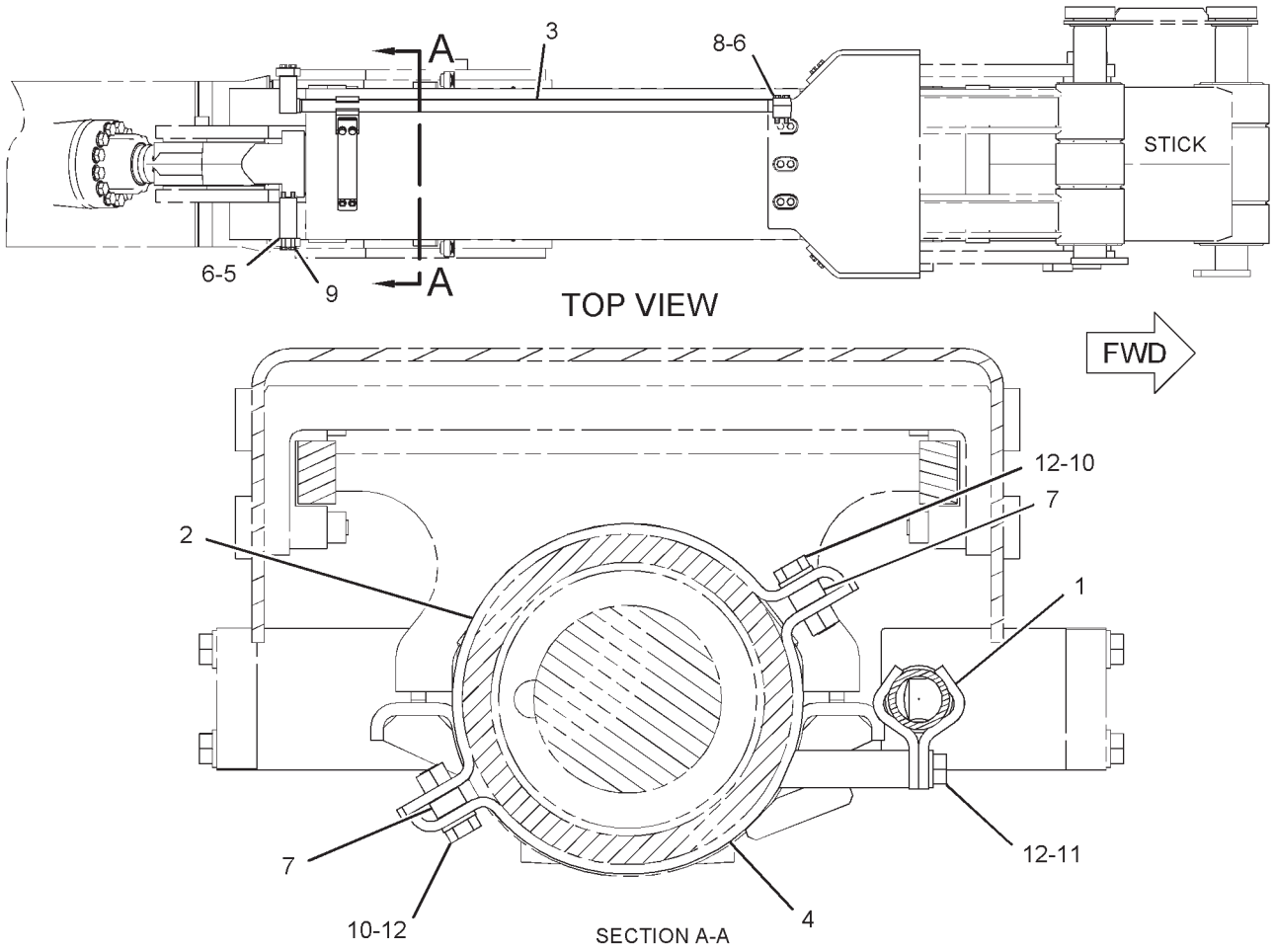

GRAPHIC #1 **<END>** g01711514

HYDRAULIC SYSTEM

249-1150 LINES GP-BUCKET CYLINDER

S/N: RCD1-UP
PART OF 252-4303 GUARD AR-CYLINDER
AN ATTACHMENT
TYPE 3

SMCS-5457 **i03432724**

NOTE	REF NO	GRAPHIC REF	PART NUMBER	QTY	PART NAME 1 2 3 4 5 6 (PRODUCT LEVEL)	SEE PAGE
	1	1	**143-4160**	2	CLIP	
	2	1	**173-4770**	1	SUPPORT AS	
	3	1	**255-3991**	1	TUBE AS	
	4	1	**258-6349**	1	SUPPORT AS	
	5	1	**258-9060**	1	FLANGE	
	6	1	**1P-3706**	2	SEAL-RECTANGULAR	
M	8	1	**7X-2556**	4	BOLT (M16X2X100-MM)	
M	9	1	**7X-2560**	4	BOLT (M16X2X220-MM)	
M	10	1	**8T-4193**	4	BOLT (M16X2X50-MM)	
M	11	1	**8T-4779**	2	BOLT (M16X2X35-MM)	
C	12	1	**9X-8257**	6	WASHER (17.5X30X3.5-MM THK)	

C-CHANGE FROM PREVIOUS TYPE
M-METRIC PART

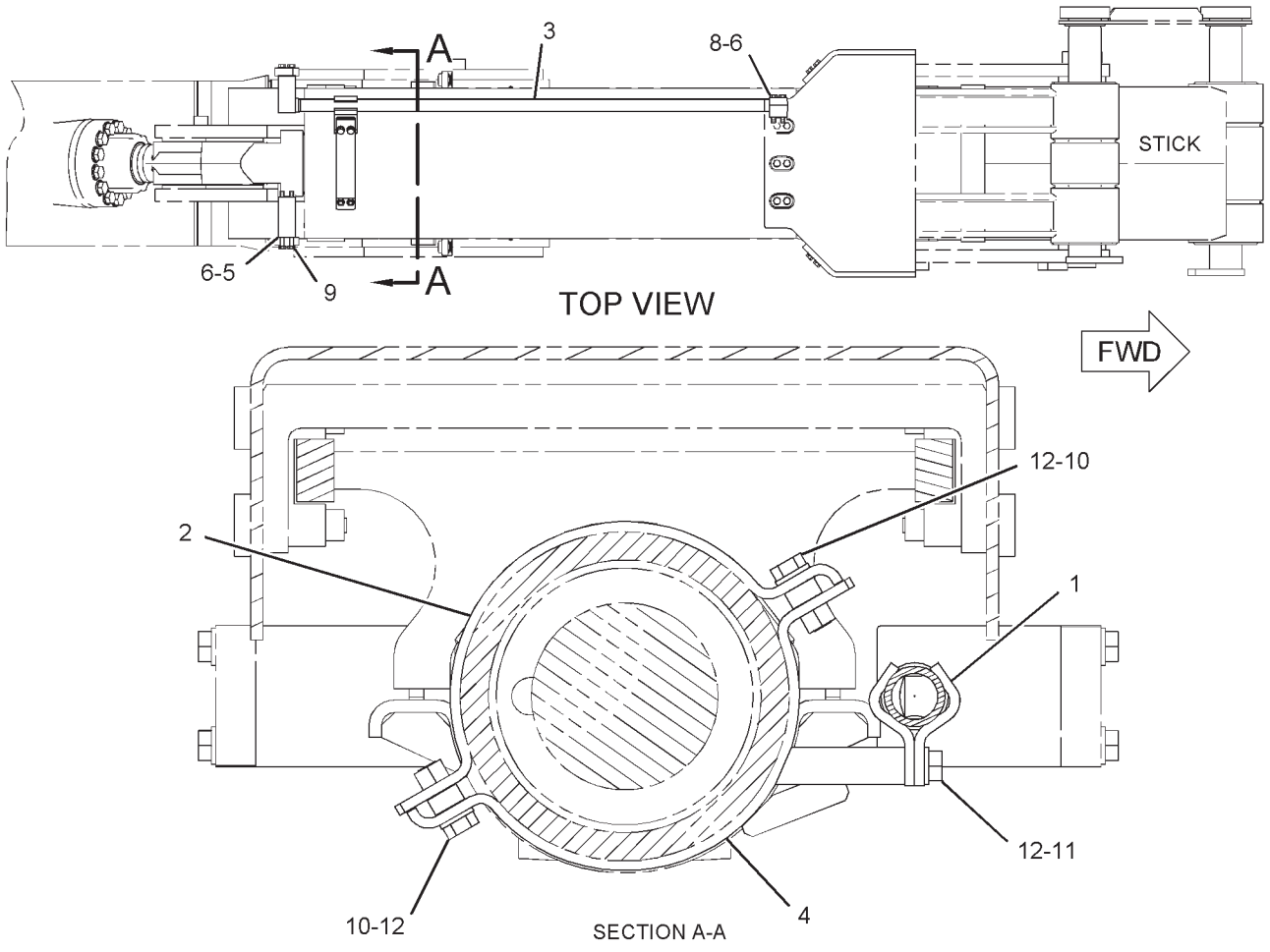

GRAPHIC #1 **<END>** g01784960

HYDRAULIC SYSTEM

168-9374 LINES GP-FRONT

S/N: RCD1-UP

PART OF 229-3367 HYDRAULIC AR

SMCS-5057 **i03143321**

NOTE	REF NO	GRAPHIC REF	PART NUMBER	QTY	PART NAME 1 2 3 4 5 6 (PRODUCT LEVEL)	SEE PAGE
	1	2	**317-4756**	1	TUBE AS	
	2	2	**317-4757**	1	TUBE AS	
	3	2	**317-4758**	1	TUBE AS	
	4	2	**317-4759**	1	TUBE AS	
	5	2	**317-4760**	1	TUBE AS	
	6	2	**317-4761**	1	TUBE AS	
	7	2	**317-4762**	1	TUBE AS	
	8	1	**317-4763**	1	TUBE AS	
	9	2	**317-4764**	1	TUBE AS	
	10	2	**317-4765**	1	TUBE AS	
	11	1	**317-4766**	1	TUBE AS	
M	12	2	**7X-2560**	4	BOLT (M16X2X220-MM)	
	13	2	**1P-3706**	7	SEAL-RECTANGULAR	
M	14	2	**7X-2555**	4	BOLT (M16X2X80-MM)	
M	15	2	**8T-4175**	10	BOLT (M16X2X90-MM)	
M	16	2	**8T-7338**	12	BOLT (M16X2X45-MM)	
M	17	1,2	**8T-4139**	15	BOLT (M12X1.75X30-MM)	
	18	1,2	**8T-4223**	49	WASHER-HARD (13.5X25.5X3-MM THK)	
	19	1	**5P-8077**	28	FLANGE-HALF	
M	20	1,2	**8T-4140**	66	BOLT (M16X2X60-MM)	
	21	1,2	**9X-8257**	72	WASHER (17.5X30X3.5-MM THK)	
I	22	1	**212-5528**	5	HOSE AS	
	23	1,2	**1P-3705**	20	SEAL-RECTANGULAR	
I	24	1	**196-0495**	4	HOSE AS	
	25	1	**1P-3704**	8	SEAL-RECTANGULAR	
	26	1	**1P-5767**	16	FLANGE-HALF	
M	27	1	**8T-4184**	32	BOLT (M12X1.75X45-MM)	
I	28	1	**218-1223**	1	HOSE AS	
I	29	1	**212-5530**	1	HOSE AS	
	30	2	**173-5054**	1	SUPPORT AS	
	31	2	**128-7514**	16	CLIP	
M	32	1,2	**8T-4956**	6	BOLT (M12X1.75X35-MM)	
M	33	1,2	**8T-4244**	8	NUT (M12X1.75-THD)	
	34	2	**7I-0011**	2	SUPPORT	
M	35	2	**8T-4183**	8	BOLT (M12X1.75X40-MM)	
	36	2	**5P-1076**	6	WASHER-HARD (13.5X30X4-MM THK)	
	37	2	**173-5063**	1	PLATE	
	38	2	**8T-4121**	1	WASHER-HARD (11X21X2.5-MM THK)	
	39	2	**173-5046**	1	BLOCK	
	40	2	**173-5048**	1	SUPPORT AS	
	41	2	**173-5049**	1	SUPPORT AS	
M	42	2	**8T-4648**	8	BOLT (M12X1.75X70-MM)	
M	43	2	**8T-5001**	8	BOLT (M12X1.75X130-MM)	
M	44	2	**8T-4779**	4	BOLT (M16X2X35-MM)	
	45	2	**4I-7822**	2	COVER	
	46	2	**173-5110**	1	SUPPORT AS	
	47	2	**173-5113**	1	SUPPORT AS	
	48	2	**6H-3615**	2	PLUG-PROTECTION	
	49	2	**9F-2167**	2	SCREW-PURGE (3/8-24X1.164-IN)	
	50	1	**6V-1572**	1	CLIP (SLOT)	
	51	1	**6V-1573**	1	CLIP (TAB)	
	52	1	**6V-1574**	1	GROMMET	
	53	2	**4I-7889**	1	SPACER (11X25X45-MM THK)	
M	54	2	**8T-5005**	1	BOLT (M10X1.5X70-MM)	

I-REFER TO HYDRAULIC INFORMATION SYSTEM
M-METRIC PART

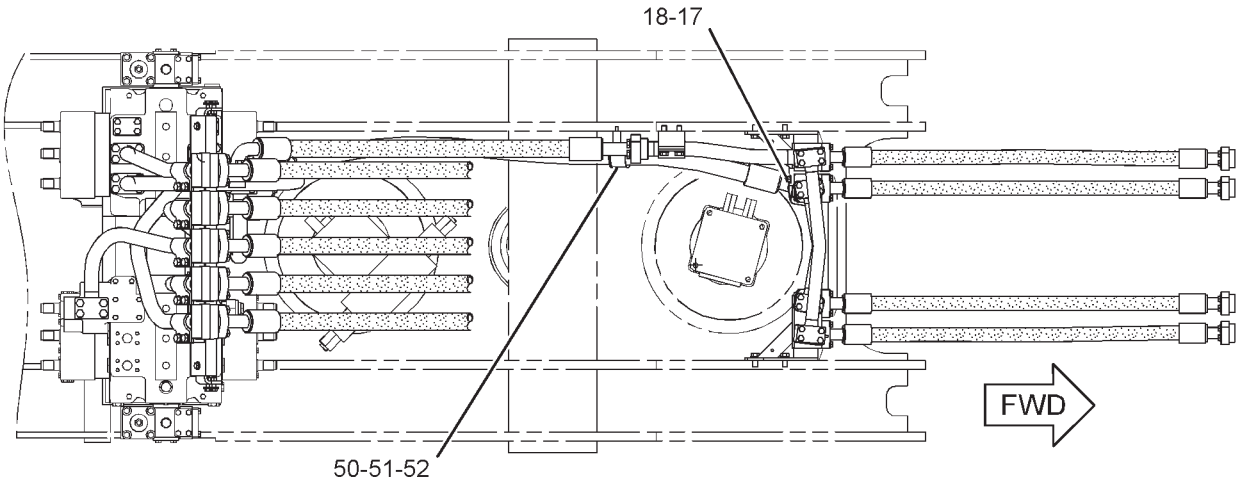

TOP VIEW

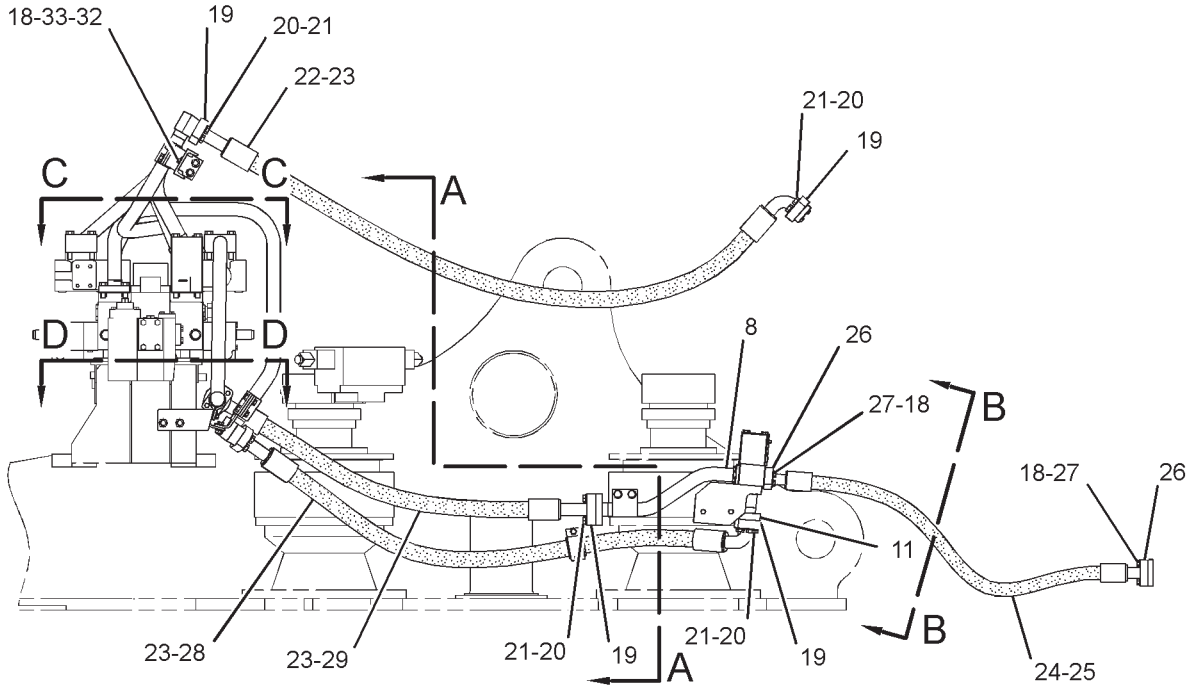

RIGHT SIDE VIEW

REFER TO ALL ILLUSTRATIONS OF
THIS GROUP FOR AUXILIARY VIEWS

GRAPHIC #1

g01699193

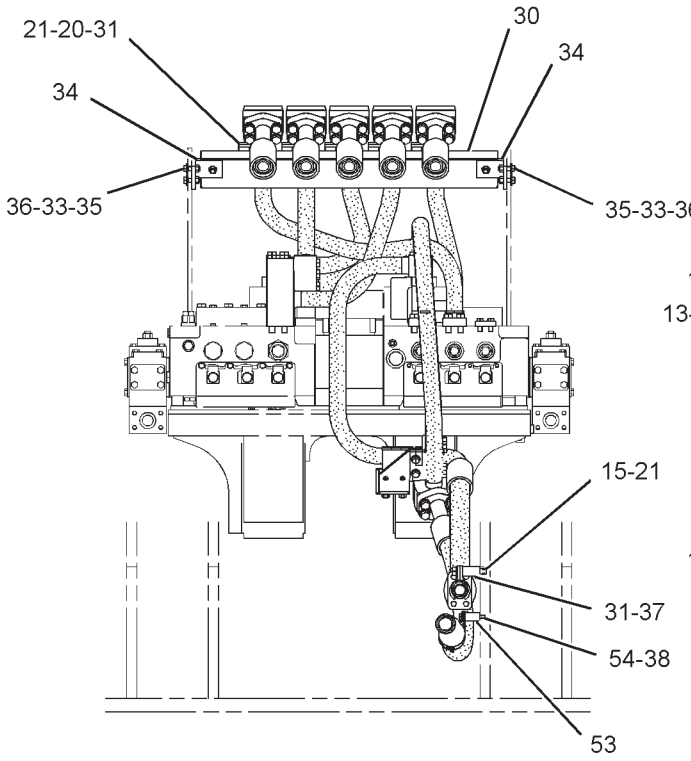

SECTION A-A

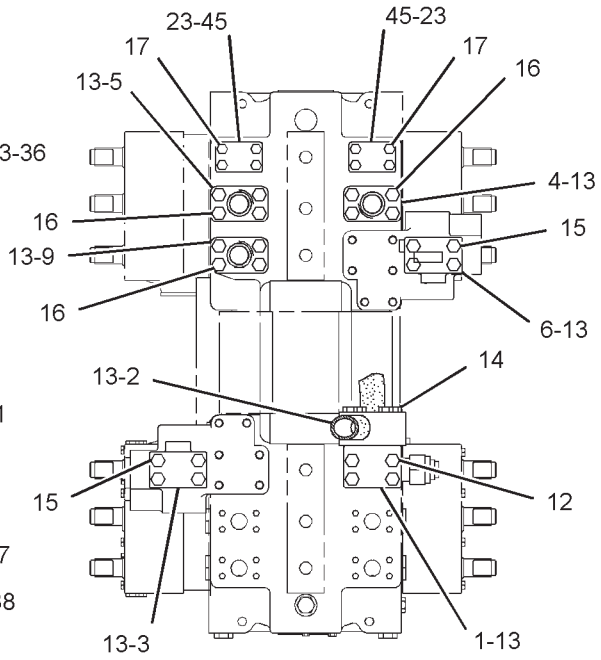

SECTION C-C

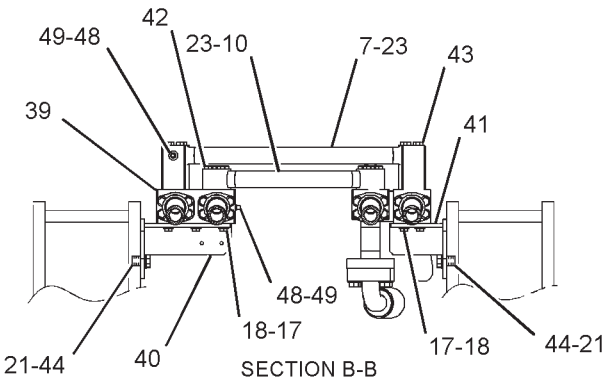

SECTION B-B

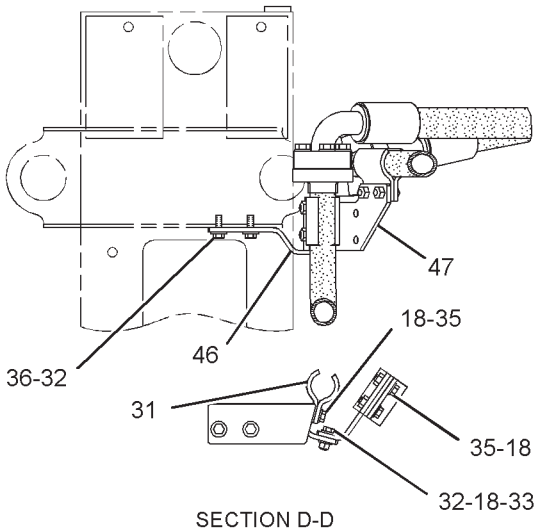

SECTION D-D

GRAPHIC #2 **<END>** g01699173

HYDRAULIC SYSTEM

168-9378 LINES GP-FRONT

S/N: RCD1-UP
PART OF 196-9815 CONTROL AR-AUXILIARY
AN ATTACHMENT

SMCS-5057 **i01888039**

NOTE	REF NO	GRAPHIC REF	PART NUMBER	QTY	PART NAME 1 2 3 4 5 6 (PRODUCT LEVEL)	SEE PAGE
	1	1	*164-5616*	1	PLUG AS	
		1	**2S-4078**	1	SEAL-O-RING	
		1	**9S-6130**	1	PLUG	
M	2	1	**8T-5041**	4	BOLT (M12X1.75X120-MM)	
	3	1	**1P-3704**	4	SEAL-RECTANGULAR	
C	4	1	**1P-3705**	6	SEAL-RECTANGULAR	
	5	1	**1P-5767**	4	FLANGE-HALF	
	6	1	**4J-0527**	1	SEAL-O-RING	
	7	1	**207-6608**	1	TUBE AS	
CM	8	1	**8T-4140**	8	BOLT (M16X2X60-MM)	
	9	1	**8T-4223**	16	WASHER-HARD (13.5X25.5X3-MM THK)	
C	10	1	**9X-8257**	8	WASHER (17.5X30X3.5-MM THK)	
	11	1	**207-6609**	1	TUBE AS	
	12	1	**176-4506**	1	TUBE AS	
	13	1	**176-4512**	1	FLANGE	
	14	1	**176-4511**	1	FLANGE	
M	15	1	**101-7402**	8	BOLT-SOCKET HEAD (M12X1.75X30-MM)	
	16	1	**176-4505**	1	TUBE AS	
	17	1	**1P-3706**	3	SEAL-RECTANGULAR	
M	18	1	**8T-5412**	4	BOLT (M12X1.75X140-MM)	
M	19	1	**8T-4648**	4	BOLT (M12X1.75X70-MM)	
M	20	1	**8T-4173**	4	BOLT (M16X2X110-MM)	
M	21	1	**8T-4175**	8	BOLT (M16X2X90-MM)	
	22	1	**176-4519**	1	SUPPORT AS	
M	23	1	**8T-7930**	8	BOLT (M12X1.75X160-MM)	
M	24	1	**8T-4137**	2	BOLT (M10X1.5X20-MM)	
	25	1	**8T-4121**	10	WASHER-HARD (11X21X2.5-MM THK)	
CI	26	1	**212-5431**	1	HOSE AS	
M	27	1	**8T-4184**	8	BOLT (M12X1.75X45-MM)	
	28	1	**176-4513**	1	SUPPORT AS	
	29	1	**128-7514**	2	CLIP	
	30	1	**124-0909**	2	CLIP	
Y	31	1	**155-4846**	2	VALVE GP-RELIEF (LINE)	860
I	32	1	**198-6363**	1	HOSE AS	
	33	1	**4J-0522**	2	SEAL-O-RING	
	34	1	**176-4524**	1	BLOCK	
M	35	1	**108-3819**	4	BOLT-SOCKET HEAD (M12X1.75X70-MM)	
	36	1	**1P-4578**	4	FLANGE-HALF	
M	37	1	**8T-4196**	8	BOLT (M10X1.5X35-MM)	
	38	1	**176-4508**	1	PLATE	
Y	39	1	*165-9579*	1	VALVE GP-RELIEF	863
Y	40	1	**175-1814**	1	VALVE GP-MANUAL (RH)	844
Y	41	1	**160-0964**	1	VALVE GP-MANUAL (LH)	843
	42	1	**176-4555**	1	TUBE AS	
M	43	1	**8T-6868**	4	BOLT (M12X1.75X80-MM)	
	44	1	*148-8408*	1	PLUG AS	
		1	**3D-2824**	1	SEAL-O-RING	
		1	**9S-4183**	1	PLUG-O-RING	
	45	1	**198-7656**	1	BLOCK	

C-CHANGE FROM PREVIOUS TYPE
I-REFER TO HYDRAULIC INFORMATION SYSTEM
M-METRIC PART
Y-SEPARATE ILLUSTRATION

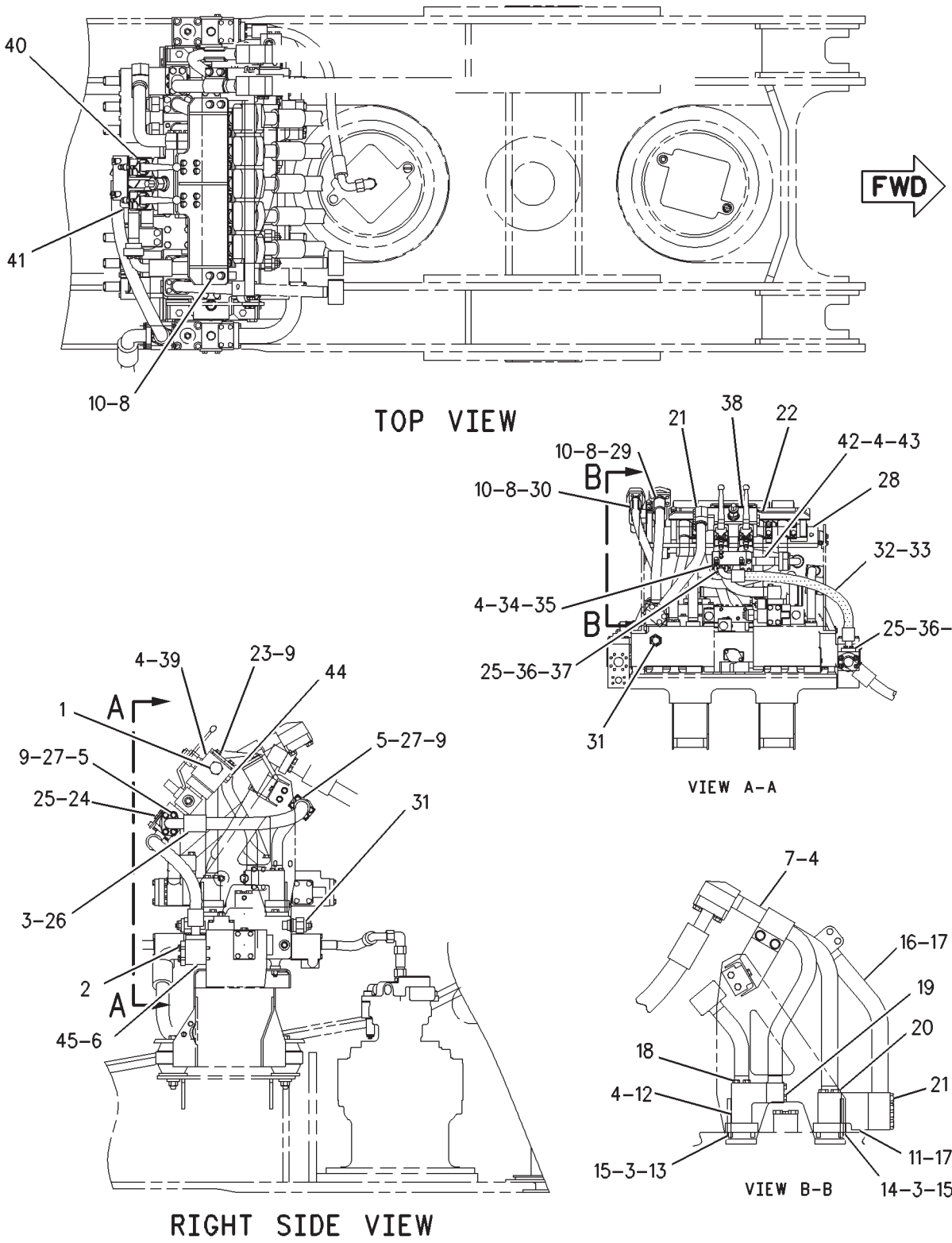

GRAPHIC #1 **<END>** g00979675

HYDRAULIC SYSTEM

176-4361 LINES GP-FRONT

S/N: RCD1-UP
SINGLE
PART OF 196-9814 CONTROL AR-AUXILIARY
AN ATTACHMENT

SMCS-5057 **i01888675**

NOTE	REF NO	GRAPHIC REF	PART NUMBER	QTY	PART NAME 1 2 3 4 5 6 (PRODUCT LEVEL)	SEE PAGE
	1	1	**4J-0527**	1	SEAL-O-RING	
	2	1	**1P-3704**	3	SEAL-RECTANGULAR	
C	3	1	**1P-3705**	3	SEAL-RECTANGULAR	
	4	1	**1P-5767**	4	FLANGE-HALF	
Z	5	1		1	BLOCK	
CM	6	1	**8T-4140**	8	BOLT (M16X2X60-MM)	
	7	1	**8T-4223**	12	WASHER-HARD (13.5X25.5X3-MM THK)	
C	8	1	**9X-8257**	8	WASHER (17.5X30X3.5-MM THK)	
	9	1	**207-6608**	1	TUBE AS	
	10	1	**176-4506**	1	TUBE AS	
	11	1	**176-4512**	1	FLANGE	
	12	1	**204-8102**	1	TUBE AS	
M	13	1	**101-7402**	4	BOLT-SOCKET HEAD (M12X1.75X30-MM)	
	14	1	**207-6611**	1	TUBE AS	
	15	1	**204-8103**	1	TUBE AS	
	16	1	**1P-3706**	2	SEAL-RECTANGULAR	
M	17	1	**8T-5412**	4	BOLT (M12X1.75X140-MM)	
M	18	1	**8T-4648**	4	BOLT (M12X1.75X70-MM)	
	19	1	*164-5616*	1	PLUG AS	
		1	**2S-4078**	1	SEAL-O-RING	
		1	**9S-6130**	1	PLUG	
M	20	1	**8T-4175**	8	BOLT (M16X2X90-MM)	
	21	1	**176-4519**	1	SUPPORT AS	
M	22	1	**8T-4956**	8	BOLT (M12X1.75X35-MM)	
M	23	1	**8T-4195**	4	BOLT (M10X1.5X30-MM)	
	24	1	**8T-4121**	8	WASHER-HARD (11X21X2.5-MM THK)	
CI	25	1	**212-5431**	1	HOSE AS	
M	26	1	**8T-4184**	8	BOLT (M12X1.75X45-MM)	
	27	1	**176-4513**	1	SUPPORT AS	
	28	1	**128-7514**	2	CLIP	
	29	1	**124-0909**	2	CLIP	
	30	1	**4J-0522**	2	SEAL-O-RING	
	31	1	**204-8105**	1	PIPE AS	
	32	1	**4J-0523**	1	SEAL-O-RING	
	33	1	**1P-4578**	4	FLANGE-HALF	
M	34	1	**8T-4196**	8	BOLT (M10X1.5X35-MM)	
	35	1	**176-4508**	1	PLATE	
Y	36	1	*165-9614*	1	VALVE GP-RELIEF	864
	37	1	*148-8408*	1	PLUG AS	
		1	**3D-2824**	1	SEAL-O-RING	
		1	**9S-4183**	1	PLUG-O-RING	
Y	38	1	**155-4846**	1	VALVE GP-RELIEF (LINE)	860
I	39	1	**198-6363**	1	HOSE AS	
M	40	1	**8T-5041**	4	BOLT (M12X1.75X120-MM)	

C-CHANGE FROM PREVIOUS TYPE
I-REFER TO HYDRAULIC INFORMATION SYSTEM
M-METRIC PART
Y-SEPARATE ILLUSTRATION
Z-NOT SERVICED SEPARATELY

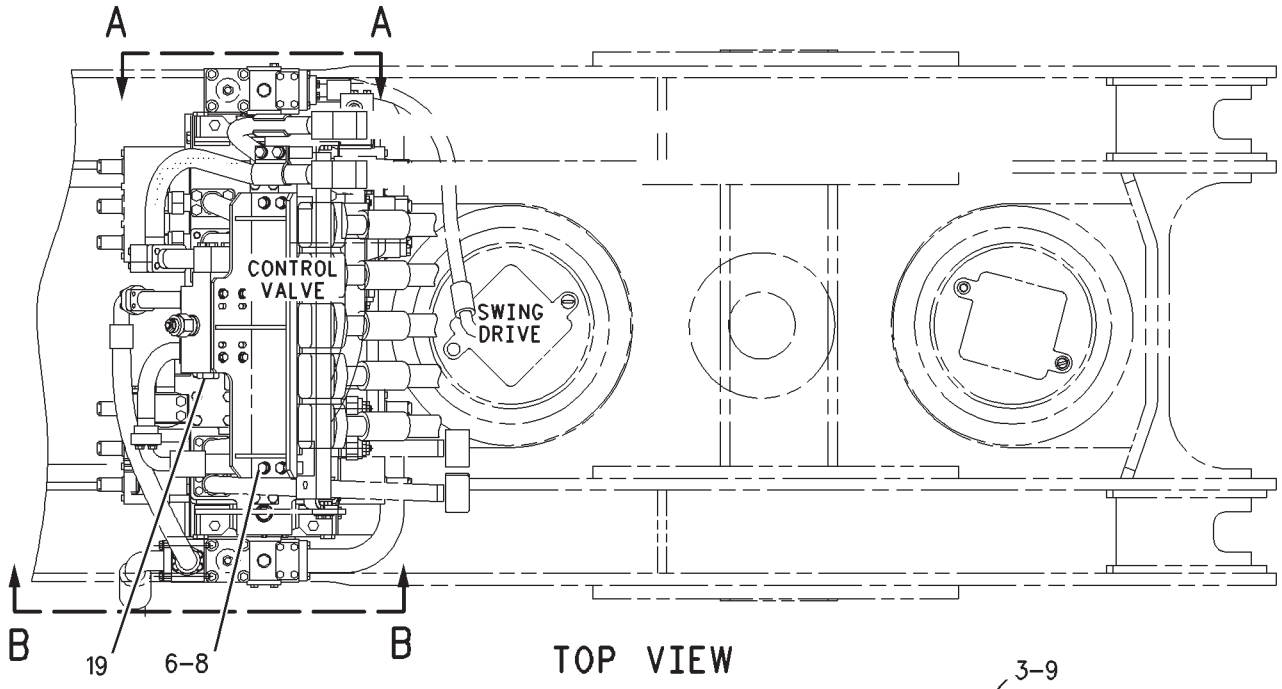

TOP VIEW

FWD

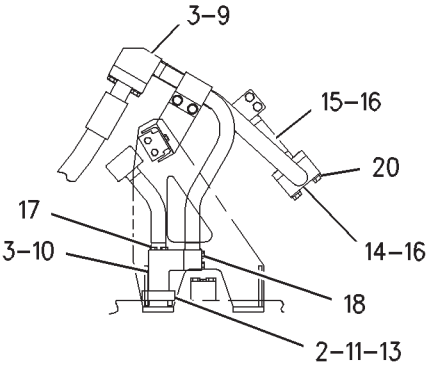

VIEW A-A

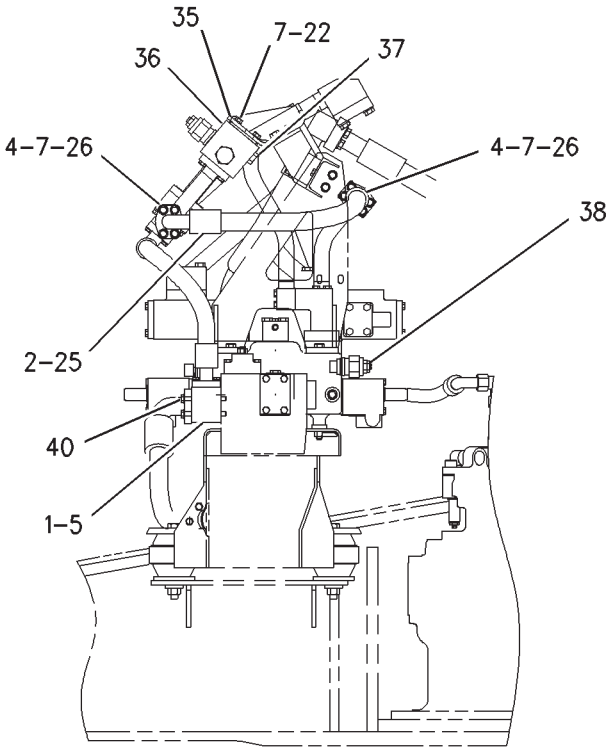

VIEW B-B

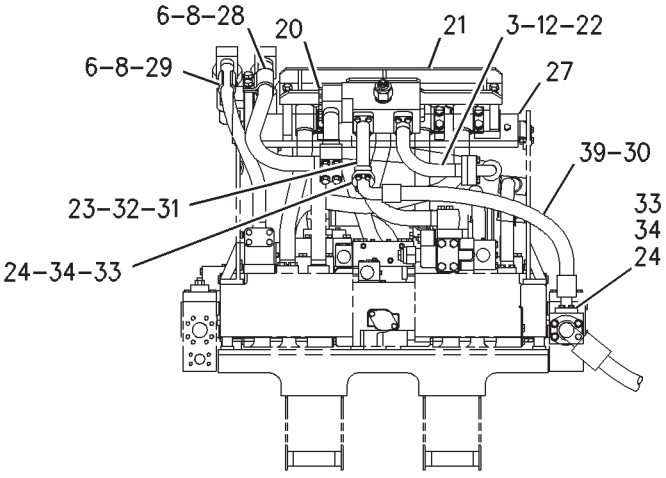

REAR VIEW

GRAPHIC #1 **<END>** g00979771

HYDRAULIC SYSTEM

168-9368 LINES GP-MOTOR

S/N: RCD1-UP

PART OF 229-3367 HYDRAULIC AR

SMCS-5057, 5058 **i02203155**

NOTE	REF NO	GRAPHIC REF	PART NUMBER	QTY	PART NAME 1 2 3 4 5 6 (PRODUCT LEVEL)	SEE PAGE
	1	2	**173-5130**	1	HOSE AS	
	2	2	**4J-0522**	2	SEAL-O-RING	
	3	2	**1P-4578**	4	FLANGE-HALF	
M	4	2	**8T-4196**	8	BOLT (M10X1.5X35-MM)	
	5	1,2	**8T-4121**	16	WASHER-HARD (11X21X2.5-MM THK)	
	6	1,2	*148-8360*	2	ELBOW AS	
					(EACH INCLUDES)	
		1,2	**6V-9182**	1	ELBOW	
		1,2	**6V-9746**	1	SEAL-O-RING	
		1,2	**7M-8485**	1	SEAL-O-RING	
	7	2	*148-8418*	1	REDUCER AS	
		2	**6V-8398**	1	SEAL-O-RING	
		2	**6V-8942**	1	REDUCER-O-RING	
I	8	2	**212-5503**	1	HOSE AS	
I	9	2	**5I-4190**	1	HOSE AS	
	10	2	**148-5055**	1	HOSE AS	
I	11	1	**108-7206**	1	HOSE AS	
I	12	1	**102-1157**	1	HOSE AS	
I	13	1	**212-5511**	1	HOSE AS	
I	14	1	**207-6206**	1	HOSE AS	
I	15	1	**7I-1090**	1	HOSE AS	
	16	1	*148-8370*	1	ELBOW AS	
		1	**6V-8398**	1	SEAL-O-RING	
		1	**6V-9851**	1	ELBOW	
	17	1	*148-8372*	1	ELBOW AS	
		1	**2M-9780**	1	SEAL-O-RING	
		1	**6V-8398**	1	SEAL-O-RING	
		1	**6V-8721**	1	ELBOW	
	18	1	**6D-4636**	1	CLIP	
M	19	1	**8T-4137**	3	BOLT (M10X1.5X20-MM)	
	20	2	*148-8345*	2	CONNECTOR AS	
					(EACH INCLUDES)	
		2	**2M-9780**	1	SEAL-O-RING	
		2	**6V-8398**	1	SEAL-O-RING	
		2	**6V-8638**	1	CONNECTOR	
	21	1	**173-5135**	1	BLOCK	
M	22	1	**8T-6466**	6	BOLT (M10X1.5X60-MM)	
	23	2	**4J-5267**	4	SEAL-O-RING	
	24	1	*148-8347*	1	ELBOW AS	
		1	**3D-2824**	1	SEAL-O-RING	
		1	**6V-9007**	1	ELBOW	
		1	**6V-9746**	1	SEAL-O-RING	
	25	2	**9X-6580**	1	NUT (1-3/16-12-THD)	
	26	2	**9X-6579**	1	NUT-ORIFICE (7/16-12-THD)	
	27	2	*150-3071*	1	REDUCER AS	
		2	**6V-8945**	1	REDUCER-O-RING	
		2	**7J-9108**	1	SEAL-O-RING	
	28	1,2	**5P-8112**	6	GROMMET	
	29	2	*197-8940*	2	CONNECTOR AS	
					(EACH INCLUDES)	
		2	**2M-9780**	1	SEAL-O-RING	
		2	**7J-9108**	1	SEAL-O-RING	
		2	**8T-1576**	1	CONNECTOR	
	30	2	*150-3035*	2	ELBOW AS	
					(EACH INCLUDES)	
		2	**6V-9746**	1	SEAL-O-RING	

168-9368 **LINES GP-MOTOR** *(contd.)* **i02203155**

NOTE	REF NO	GRAPHIC REF	PART NUMBER	QTY	PART NAME 1 2 3 4 5 6 (PRODUCT LEVEL)	SEE PAGE
		2	**8T-1718**	1	ELBOW	
	31	2	*148-8388*	3	ELBOW AS	
					(EACH INCLUDES)	
		2	**2M-9780**	1	SEAL-O-RING	
		2	**6V-8629**	1	ELBOW	
		2	**6V-9746**	1	SEAL-O-RING	
Y	32	2	**173-3429**	1	VALVE GP-CHECK (HYDRAULIC FAN MOTOR, RADIATOR)	748
M	33	2	**101-7396**	12	BOLT-SOCKET HEAD (M10X1.5X50-MM)	
	34	2	*153-6244*	2	ELBOW AS	
					(EACH INCLUDES)	
		2	**2M-9780**	1	SEAL-O-RING	
		2	**6V-9746**	1	SEAL-O-RING	
		2	**8T-5389**	1	ELBOW	
	35	2	**207-6290**	1	BLOCK	
M	36	1	**8T-4192**	1	BOLT (M12X1.75X25-MM)	
	37	1,2	**5P-7466**	6	CLIP (SLOT)	
	38	1	*148-8315*	1	CONNECTOR AS	
		1	**2M-9780**	1	SEAL-O-RING	
		1	**6V-8642**	1	CONNECTOR	
		1	**7J-9108**	1	SEAL-O-RING	
	39	1	*164-5608*	1	CONNECTOR AS	
		1	**3K-0360**	1	SEAL-O-RING	
		1	**6V-8398**	2	SEAL-O-RING	
		1	**8T-1687**	1	CONNECTOR	
Y	40	2	**147-4312**	1	VALVE GP-CHECK (HYD FAN MOTOR, HYD OIL COOLER)	747
	41	1	**204-8355**	1	BLOCK	
	42	1	**1P-3703**	1	SEAL-RECTANGULAR	
	43	1	**7K-1181**	3	STRAP-CABLE	
	44	1,2	**5P-7467**	6	CLIP (TAB)	
	45	1	**115-8645**	2	GUARD	
M	46	1	**8T-4200**	1	BOLT (M8X1.25X16-MM)	
M	47	2	**8T-5005**	4	BOLT (M10X1.5X70-MM)	
	48	2	**5P-7464**	1	CLIP (SLOT)	
	49	2	**5P-7465**	1	CLIP (TAB)	
	50	2	**6V-1249**	1	GROMMET	
	51	2	**204-8353**	2	SUPPORT AS	
M	52	2	**8T-4139**	7	BOLT (M12X1.75X30-MM)	
	53	1,2	**8T-4223**	12	WASHER-HARD (13.5X25.5X3-MM THK)	
M	54	2	**8T-4184**	1	BOLT (M12X1.75X45-MM)	
	55	2	**087-3591**	1	SPACER (15.5X30X12-MM THK)	
	56	1	*185-2271*	1	CONNECTOR AS	
		1	**3D-2824**	1	SEAL-O-RING	
		1	**6V-9746**	1	SEAL-O-RING	
		1	**8T-9023**	1	CONNECTOR-O-RING	
M	57	1	**8T-4183**	1	BOLT (M12X1.75X40-MM)	
	58	1	**207-6554**	1	PLATE	
M	59	1	**8T-4244**	1	NUT (M12X1.75-THD)	
M	60	1	**8T-4956**	1	BOLT (M12X1.75X35-MM)	
	61	1	**4J-5573**	1	SEAL-O-RING	
	62	1	*148-8340*	1	CONNECTOR AS	
		1	**3K-0360**	1	SEAL-O-RING	
		1	**6V-8398**	1	SEAL-O-RING	
		1	**6V-8639**	1	CONNECTOR	

I-REFER TO HYDRAULIC INFORMATION SYSTEM
M-METRIC PART
Y-SEPARATE ILLUSTRATION

168-9368 **LINES GP-MOTOR** *(contd.)* **i02203155**

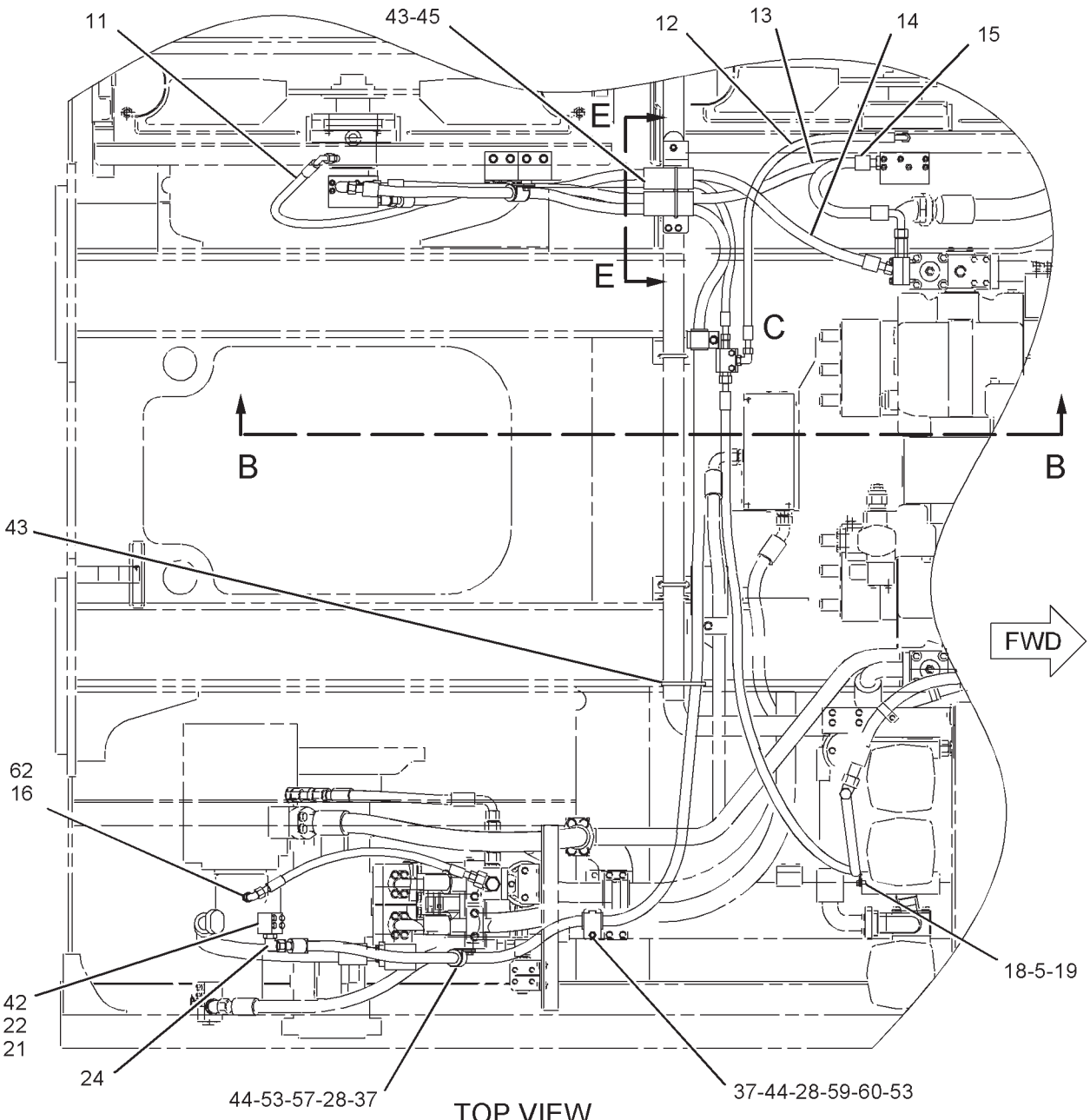

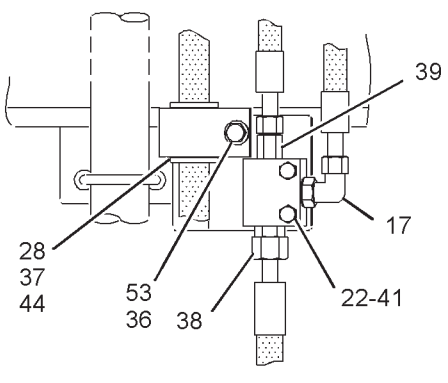

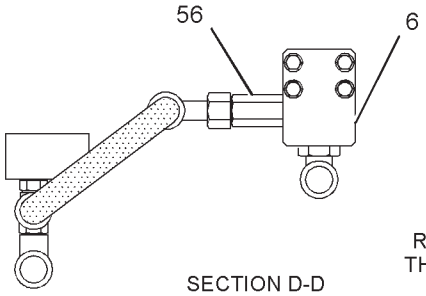

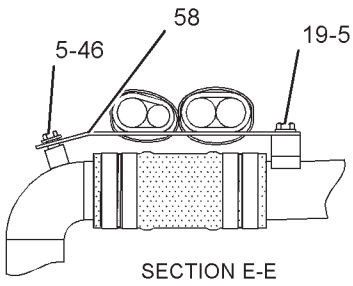

REFER TO ALL ILLUSTRATIONS OF THIS GROUP FOR AUXILIARY VIEWS

GRAPHIC #1

g01117081

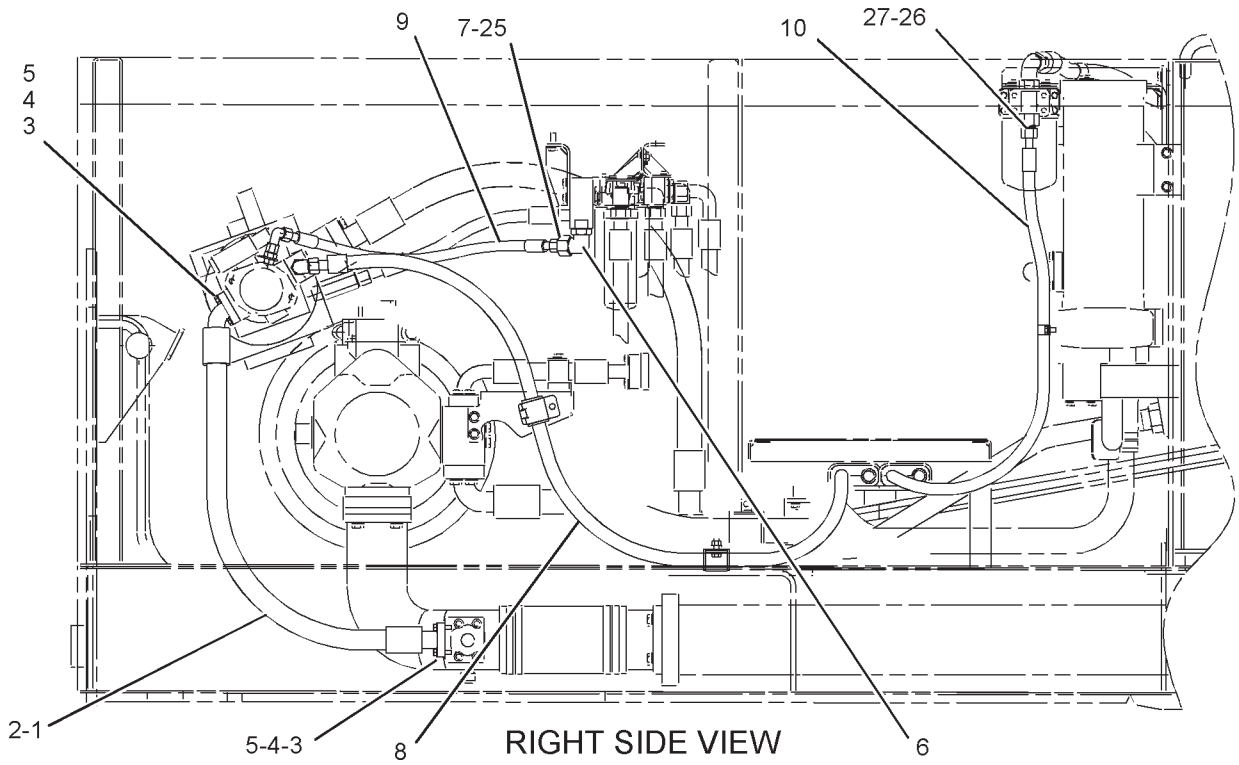

RIGHT SIDE VIEW

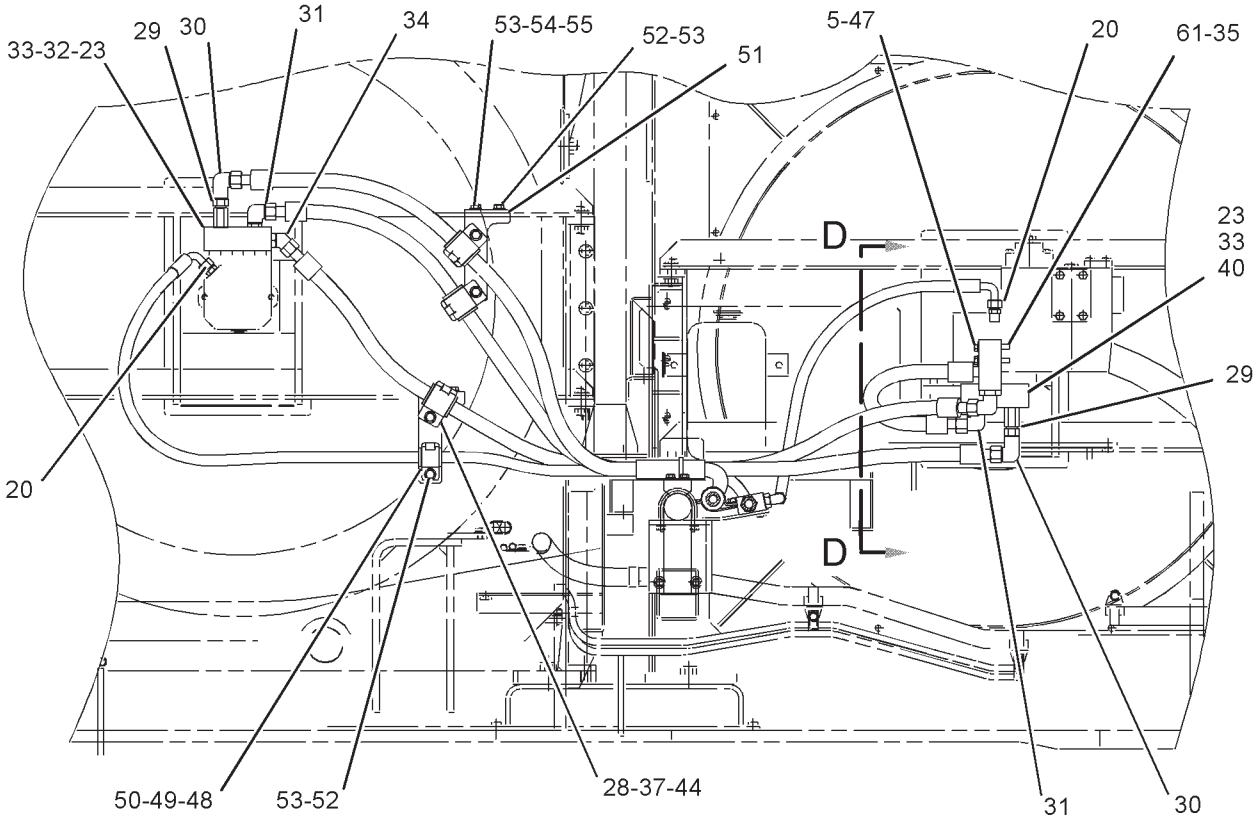

SECTION B-B

REFER TO ALL ILLUSTRATIONS OF THIS GROUP FOR AUXILIARY VIEWS

GRAPHIC #2 **<END>** g01117082

HYDRAULIC SYSTEM

168-9377 LINES GP-PILOT

S/N: RCD1-UP

PART OF 229-3367 HYDRAULIC AR

SMCS-5057, 5059 **i02395748**

NOTE	REF NO	GRAPHIC REF	PART NUMBER	QTY	PART NAME 1 2 3 4 5 6 (PRODUCT LEVEL)	SEE PAGE
	1	4	**149-6547**	1	BLOCK	
	2	4	**4J-0524**	2	SEAL-O-RING	
M	3	4	**8T-6868**	4	BOLT (M12X1.75X80-MM)	
	4	1	**204-8485**	1	SUPPORT AS	
	5	4	*148-8371*	1	ELBOW AS	
		4	**6V-8397**	1	SEAL-O-RING	
		4	**8C-8988**	1	ELBOW	
I	6	4	**7Y-4199**	1	HOSE AS	
	7	1	*202-9762*	1	CONNECTOR AS	
		1	**152-9254**	1	CONNECTOR	
		1	**6V-9746**	1	SEAL-O-RING	
		1	**7M-8485**	1	SEAL-O-RING	
	8	4	**176-4414**	1	BRACKET AS	
M	9	1,4	**8T-4136**	6	BOLT (M10X1.5X25-MM)	
	10	1,2,3,4	**8T-4121**	23	WASHER-HARD (11X21X2.5-MM THK)	
Y	11	4	**185-0336**	1	FILTER GP-OIL (HYDRAULIC)	518
M	12	4	**8T-4200**	4	BOLT (M8X1.25X16-MM)	
	13	4	**8T-4224**	8	WASHER-HARD (8.8X16X2-MM THK)	
	14	3	*148-8355*	1	ELBOW AS	
		3	**5K-9090**	1	SEAL-O-RING	
		3	**6V-9005**	1	ELBOW	
		3	**7M-8485**	1	SEAL-O-RING	
M	15	3	**8T-4137**	4	BOLT (M10X1.5X20-MM)	
	16	3	**1P-4578**	4	FLANGE-HALF	
	17	3	**4J-0522**	2	SEAL-O-RING	
M	18	3	**8T-4196**	8	BOLT (M10X1.5X35-MM)	
C	19	1,2,4	*148-8378*	15	ELBOW AS	
					(EACH INCLUDES)	
		1,2,4	**3J-1907**	1	SEAL-O-RING	
		1,2,4	**6V-8397**	1	SEAL-O-RING	
		1,2,4	**6V-8724**	1	ELBOW	
C	20	4	*164-5572*	1	UNION AS	
		4	**6V-8398**	2	SEAL-O-RING	
		4	**6V-8731**	1	UNION	
	21	1	*148-8323*	1	CONNECTOR AS	
		1	**2S-4078**	1	SEAL-O-RING	
		1	**5K-9090**	1	SEAL-O-RING	
		1	**6V-9875**	1	CONNECTOR	
	22	4	**204-8487**	1	FLANGE	
C	23	3	*164-8908*	1	CONNECTOR AS	
		3	**3K-0360**	1	SEAL-O-RING	
		3	**6V-8398**	1	SEAL-O-RING	
		3	**8T-0077**	1	CONNECTOR	
M	24	4	**8T-7547**	4	BOLT (M8X1.25X30-MM)	
I	25	1	**138-5090**	1	HOSE AS	
C	26	3,4	*148-8340*	3	CONNECTOR AS	
					(EACH INCLUDES)	
		3,4	**3K-0360**	1	SEAL-O-RING	
		3,4	**6V-8398**	1	SEAL-O-RING	
		3,4	**6V-8639**	1	CONNECTOR	
	27	1,4	*148-8317*	3	CONNECTOR AS	
					(EACH INCLUDES)	
		1,4	**3D-2824**	1	SEAL-O-RING	
		1,4	**5K-9090**	1	SEAL-O-RING	
		1,4	**6V-8714**	1	CONNECTOR	

168-9377 **LINES GP-PILOT** *(contd.)* **i02395748**

NOTE	REF NO	GRAPHIC REF	PART NUMBER	QTY	PART NAME 1 2 3 4 5 6 (PRODUCT LEVEL)	SEE PAGE
Y	28	2	**160-4138**	1	ACCUMULATOR & MTG GP-HYDRAULIC (CHARGED)	440
Y	29	4	**140-0736**	1	VALVE GP-MANIFOLD & REDUCING	841
I	30	3	**087-5771**	1	HOSE AS	
C	31	2,3	**7K-1181**	10	STRAP-CABLE	
	32	4	*148-8411*	1	PLUG AS	
		4	**3K-0360**	1	SEAL-O-RING	
		4	**9S-4185**	1	PLUG-O-RING	
	33	4	*150-3036*	1	ELBOW AS	
		4	**3J-1907**	1	SEAL-O-RING	
		4	**6V-8397**	1	SEAL-O-RING	
		4	**8T-1905**	1	ELBOW	
CM	34	1,2,3, 4	**8T-4192**	8	BOLT (M12X1.75X25-MM)	
	35	4	**5P-1076**	3	WASHER-HARD (13.5X30X4-MM THK)	
	36	1,2,3, 4	*148-8336*	8	CONNECTOR AS	
					(EACH INCLUDES)	
		1,2,3, 4	**3J-1907**	1	SEAL-O-RING	
		1,2,3, 4	**6V-8397**	1	SEAL-O-RING	
		1,2,3, 4	**6V-8636**	1	CONNECTOR	
	37	1	*148-8335*	3	CONNECTOR AS	
					(EACH INCLUDES)	
		1	**5K-9090**	1	SEAL-O-RING	
		1	**6V-8635**	1	CONNECTOR	
		1	**7M-8485**	1	SEAL-O-RING	
	38	4	*148-8362*	1	ELBOW AS	
		4	**3D-2824**	1	SEAL-O-RING	
		4	**5K-9090**	1	SEAL-O-RING	
		4	**8T-6684**	1	ELBOW	
	39	1	*164-5598*	1	PLUG AS	
		1	**7M-8485**	1	SEAL-O-RING	
		1	**8J-0426**	1	PLUG	
	40	1	**8C-3451**	1	CAP-DUST	
	41	1	*164-5590*	1	VALVE AS-FLUID SAMPLING	
		1	**3J-7354**	1	SEAL-O-RING	
		1	**8C-3446**	1	VALVE-FLUID SAMPLING	
Y	42	4	**6E-5534**	1	FILTER GP-OIL (HYDRAULIC)	512
	43	1	**148-8347**	1	ELBOW AS	
		1	**3D-2824**	1	SEAL-O-RING	
		1	**6V-9746**	1	SEAL-O-RING	
	44	1	*148-8429*	1	TEE AS	
		1	**5K-9090**	2	SEAL-O-RING	
		1	**6V-9840**	1	TEE-SWIVEL	
C	45	3	*164-6869*	1	CONNECTOR AS	
		3	**3K-0360**	1	SEAL-O-RING	
		3	**6V-8398**	1	SEAL-O-RING	
		3	**128-9001**	1	CONNECTOR-FILTER	
C	46	3	*164-5639*	1	ELBOW AS	
		3	**3K-0360**	1	SEAL-O-RING	
		3	**6V-8398**	1	SEAL-O-RING	
		3	**124-0988**	1	ELBOW-FILTER	
	47	4	*164-5628*	1	CONNECTOR AS	
		4	**3J-1907**	1	SEAL-O-RING	
		4	**6V-8397**	1	SEAL-O-RING	
		4	**107-6631**	1	CONNECTOR-FILTER	
	48	3,4	*148-8367*	3	ELBOW AS	
					(EACH INCLUDES)	

168-9377 **LINES GP-PILOT** *(contd.)* **i02395748**

NOTE	REF NO	GRAPHIC REF	PART NUMBER	QTY	PART NAME 1 2 3 4 5 6 (PRODUCT LEVEL)	SEE PAGE
		3,4	**6V-8397**	1	SEAL-O-RING	
		3,4	**6V-9850**	1	ELBOW	
C	49	1	*148-8435*	1	TEE AS	
		1	**3J-1907**	1	SEAL-O-RING	
		1	**6V-8397**	2	SEAL-O-RING	
		1	**6V-8781**	1	TEE-FACE SEAL	
	50	1,4	*148-8439*	2	TEE AS	
					(EACH INCLUDES)	
		1,4	**3J-1907**	1	SEAL-O-RING	
		1,4	**6V-8397**	2	SEAL-O-RING	
		1,4	**6V-8774**	1	TEE	
	51	1,3,4	**6V-0852**	7	CAP-DUST	
	52	1,3,4	*164-5567*	7	COUPLER AS-QUICK DISCONNECT	
					(EACH INCLUDES)	
		1,3,4	**3J-1907**	1	SEAL-O-RING	
		1,3,4	**6V-3965**	1	FITTING (QUICK DISCONNECT)	
	53	2	*148-8353*	1	ELBOW AS	
		2	**3J-1907**	1	SEAL-O-RING	
		2	**6V-8397**	1	SEAL-O-RING	
		2	**6V-9001**	1	ELBOW	
	54	1,4	**221-8859**	2	SENSOR AS-PRESSURE (IMPLEMENT/SWING)	
					(EACH INCLUDES)	
		1,4	**3K-0360**	1	SEAL-O-RING	
		1,4	**144-1636**	3	PIN-CONNECTOR (14-GA TO 18-GA)	
		1,4	**171-0596**	1	RECEPTACLE AS	
	55	1,3	*164-5547*	2	CONNECTOR AS	
					(EACH INCLUDES)	
		1,3	**3J-1907**	1	SEAL-O-RING	
		1,3	**4I-1694**	1	CONNECTOR	
	56	3	**168-9688**	1	BLOCK	
	57	3	**4J-0520**	1	SEAL-O-RING	
M	58	3	**8T-5005**	4	BOLT (M10X1.5X70-MM)	
	59	3	**4P-7582**	1	CLIP	
C	60	1	**115-8645**	2	GUARD	
	61	1	**136-0207**	4	STRAP-CABLE	
M	62	2	**7X-2621**	1	BOLT (M10X1.5X12-MM)	
C	63	2,4	*148-8364*	3	ELBOW AS	
					(EACH INCLUDES)	
		2,4	**3K-0360**	1	SEAL-O-RING	
		2,4	**6V-8398**	1	SEAL-O-RING	
		2,4	**6V-8625**	1	ELBOW	
I	64	2	**4I-0806**	1	HOSE AS	
I	65	1	**204-8481**	1	HOSE AS	
I	66	4	**087-4532**	1	HOSE AS	
I	67	3	**207-6244**	1	HOSE AS	
	68	1	*164-6874*	2	FITTING AS-ELBOW	
					(EACH INCLUDES)	
		1	**3J-1907**	1	SEAL-O-RING	
		1	**085-7356**	1	FITTING	
	69	1	*153-6236*	1	REDUCER AS	
		1	**6V-8946**	1	REDUCER	
		1	**6V-9746**	1	SEAL-O-RING	
I	70	2	**4I-5795**	1	HOSE AS	
I	71	1	**4I-7778**	1	HOSE AS	
CI	72	2	**111-6752**	1	HOSE AS	
I	73	2	**4I-6121**	1	HOSE AS	
CI	74	2	**223-7096**	1	HOSE AS	
I	75	3	**113-6666**	1	HOSE AS	
I	76	3	**204-8475**	1	HOSE AS	

168-9377 **LINES GP-PILOT** *(contd.)* **i02395748**

NOTE	REF NO	GRAPHIC REF	PART NUMBER	QTY	PART NAME 1 2 3 4 5 6 (PRODUCT LEVEL)	SEE PAGE
I	77	3	**7I-1090**	1	HOSE AS	
CI	78	1	**4I-0769**	1	HOSE AS	
I	79	4	**141-1293**	1	HOSE AS	
I	80	4	**110-5499**	1	HOSE AS	
CI	81	2	**4I-6003**	1	HOSE AS	
CI	82	2	**7I-8252**	1	HOSE AS	
I	83	3	**176-4459**	1	HOSE AS	
I	84	3	**204-8479**	1	HOSE AS	
I	85	3	**196-0590**	1	HOSE AS	
I	86	3	**204-8480**	1	HOSE AS	
C	87	1,2,3	**6V-1249**	5	GROMMET	
I	88	2	**204-8478**	1	HOSE AS	
I	89	1	**087-4531**	1	HOSE AS	
	90	2	**4I-9521**	4	BAND-MARKER (RED, L1)	
	91	2	**4I-9522**	4	BAND-MARKER (YELLOW, L2)	
	92	2,3,4	**4I-9523**	6	BAND-MARKER (BLUE, L3)	
	93	1,2	**4I-9524**	4	BAND-MARKER (BROWN, L4)	
	94	2	**4I-9525**	2	BAND-MARKER (ORANGE, R1)	
	95	4	**4I-9526**	2	BAND-MARKER (WHITE, R2)	
	96	1,3	**4I-9527**	4	BAND-MARKER (GREEN, R3)	
	97	3	**4I-9528**	4	BAND-MARKER (PURPLE, R4)	
	98	2	**4S-1936**	1	CLIP	
C	99	1,2,3	**5P-7464**	5	CLIP (SLOT)	
C	100	1,2,3	**5P-7465**	5	CLIP (TAB)	
M	101	2,3	**8T-4179**	3	BOLT (M12X1.75X20-MM)	
C	102	1,2,3, 4	**8T-4223**	18	WASHER-HARD (13.5X25.5X3-MM THK)	
	103	3	*153-6249*	1	CONNECTOR AS	
		3	**3J-1907**	1	SEAL-O-RING	
		3	**6V-8397**	1	SEAL-O-RING	
		3	**8T-8887**	1	CONNECTOR	
I	104	1,3	**207-6418**	2	HOSE AS	
M	105	2	**8T-4139**	2	BOLT (M12X1.75X30-MM)	
	106	3	**8C-8533**	2	CLIP	
I	107	2	**4I-0797**	1	HOSE AS	
	108	2	**204-8333**	1	SUPPORT AS	
	109	2	**204-8345**	1	CLAMP AS	
	110	2	**204-8339**	2	GROMMET	
	111	2	**207-6230**	2	GROMMET	
	112	2,3	**4K-8864**	3	CLIP	
M	113	2,3	**8T-4956**	3	BOLT (M12X1.75X35-MM)	
	114	1	*155-3624*	1	PLUG AS	
		1	**3J-7354**	1	SEAL-O-RING	
		1	**9S-4182**	1	PLUG-O-RING	
	115	4	**204-8482**	1	SUPPORT AS	
	116	2	**204-8340**	1	GUARD	
I	117	3	**4I-0821**	1	HOSE AS	
M	118	3	**8T-4133**	1	NUT (M10X1.5-THD)	
	119	1	*188-1035*	1	TEE AS	
		1	**3D-2824**	1	SEAL-O-RING	
		1	**5K-9090**	1	SEAL-O-RING	
		1	**6V-9746**	1	SEAL-O-RING	
		1	**8T-7520**	1	TEE	
C	120	4	*171-6728*	1	ELBOW AS	
		4	**3K-0360**	1	SEAL-O-RING	
		4	**8T-0249**	1	ELBOW	
C	121	4	*148-8433*	1	TEE AS	
		4	**6V-8397**	2	SEAL-O-RING	
		4	**6V-9836**	1	TEE-SWIVEL	
M	122	3	**8T-4244**	1	NUT (M12X1.75-THD)	

168-9377 **LINES GP-PILOT** *(contd.)* **i02395748**

NOTE	REF NO	GRAPHIC REF	PART NUMBER	QTY	PART NAME 1 2 3 4 5 6 (PRODUCT LEVEL)	SEE PAGE
M	123	3	**8T-4183**	1	BOLT (M12X1.75X40-MM)	
	124	2	**204-8342**	1	PLATE	

C-CHANGE FROM PREVIOUS TYPE
I-REFER TO HYDRAULIC INFORMATION SYSTEM
M-METRIC PART
Y-SEPARATE ILLUSTRATION

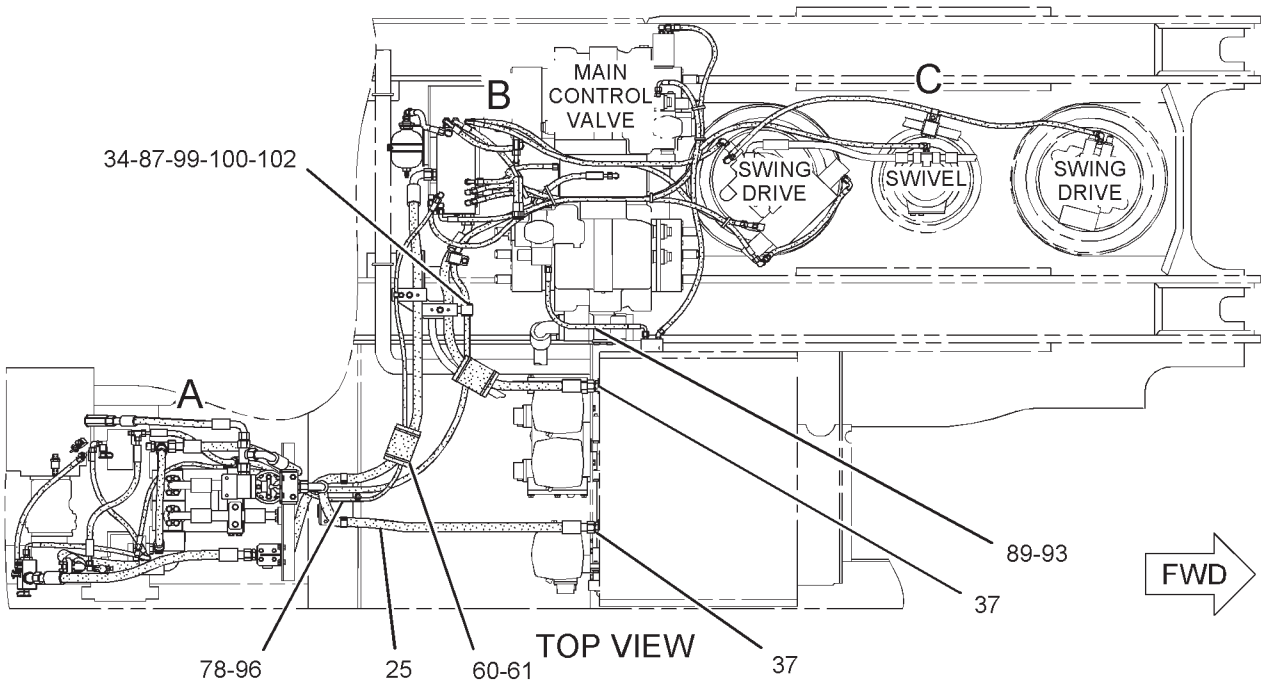

REFER TO ALL ILLUSTRATIONS OF THIS GROUP FOR AUXILIARY VIEWS

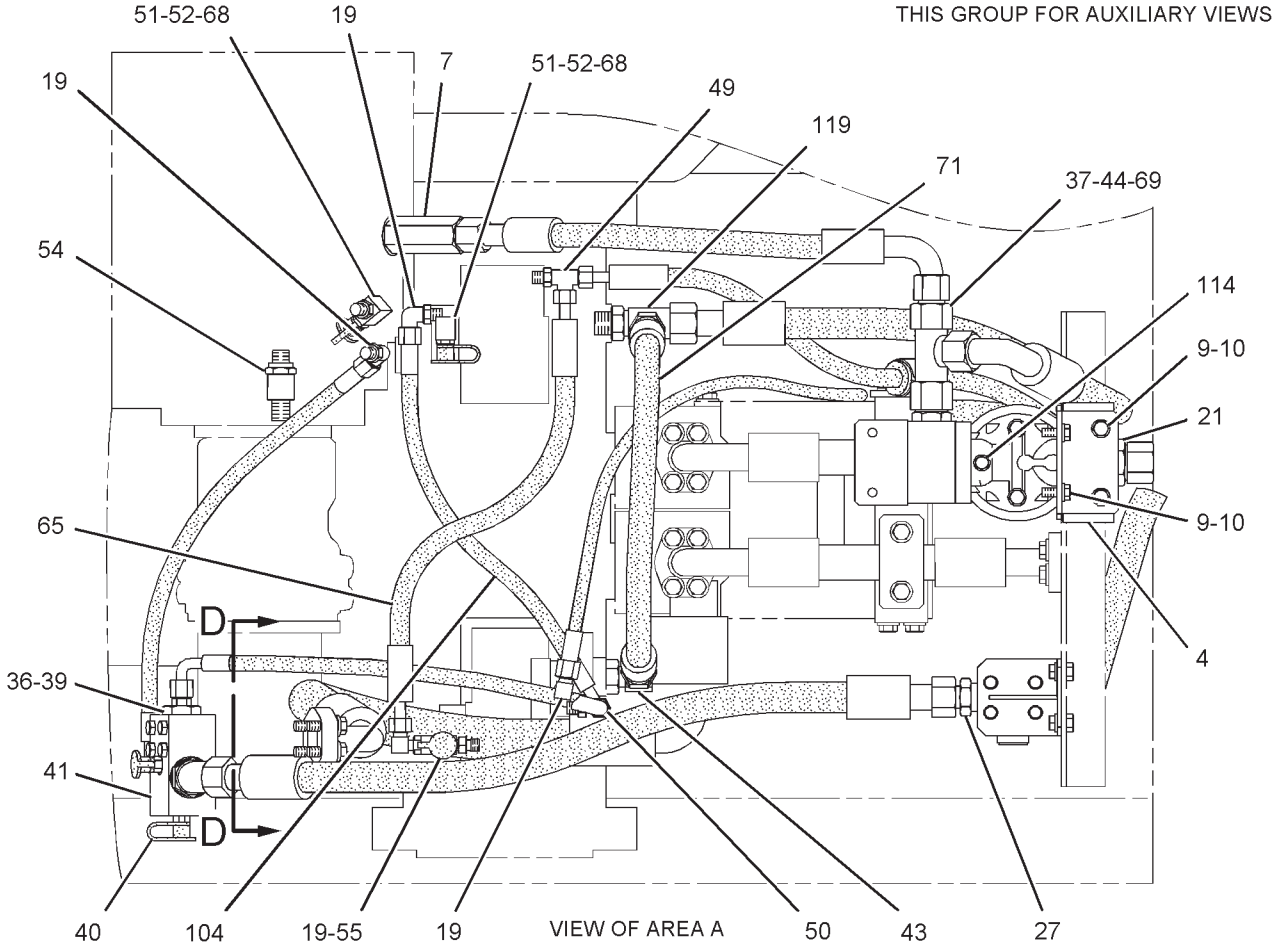

GRAPHIC #1

g01106072

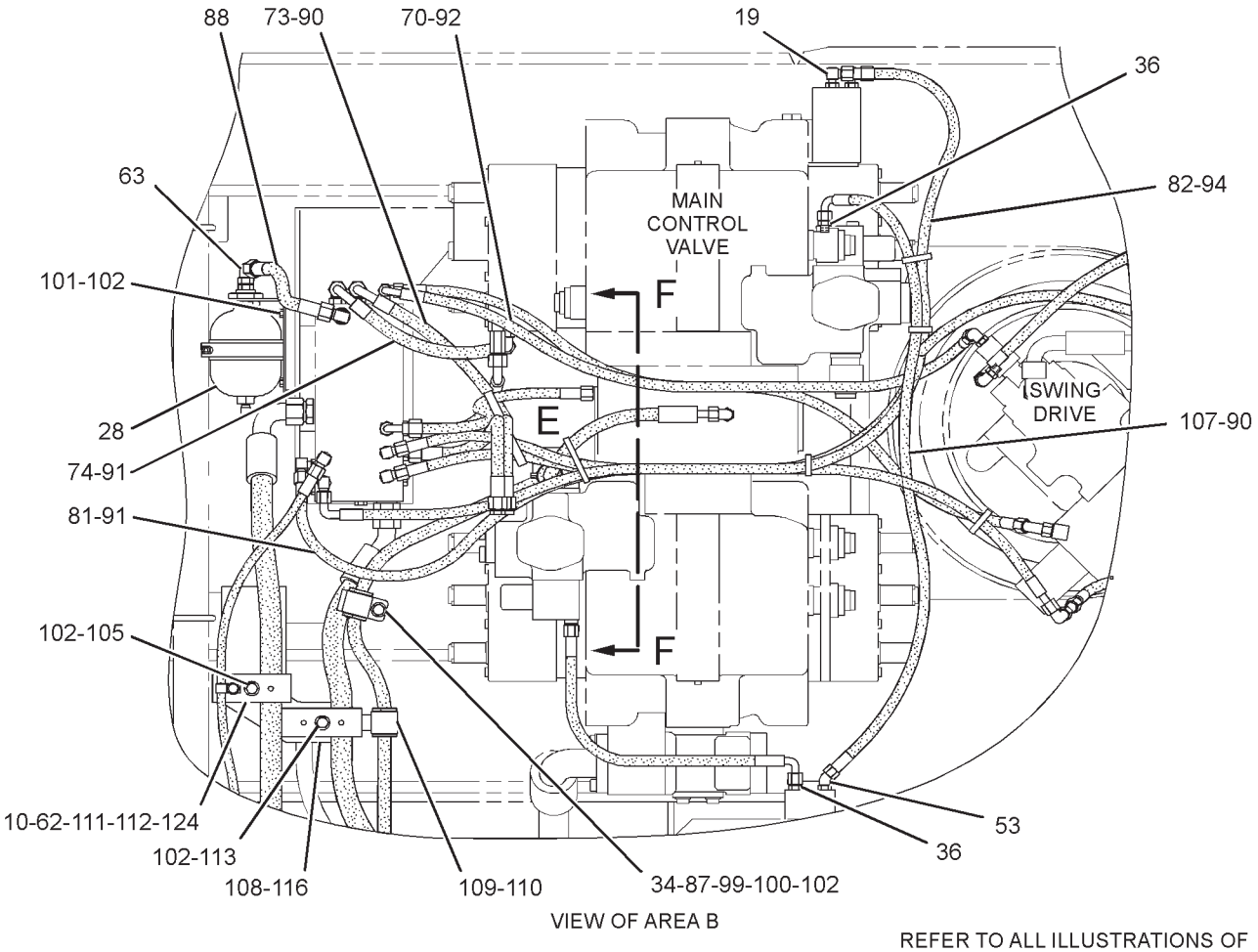

VIEW OF AREA B

REFER TO ALL ILLUSTRATIONS OF
THIS GROUP FOR AUXILIARY VIEWS

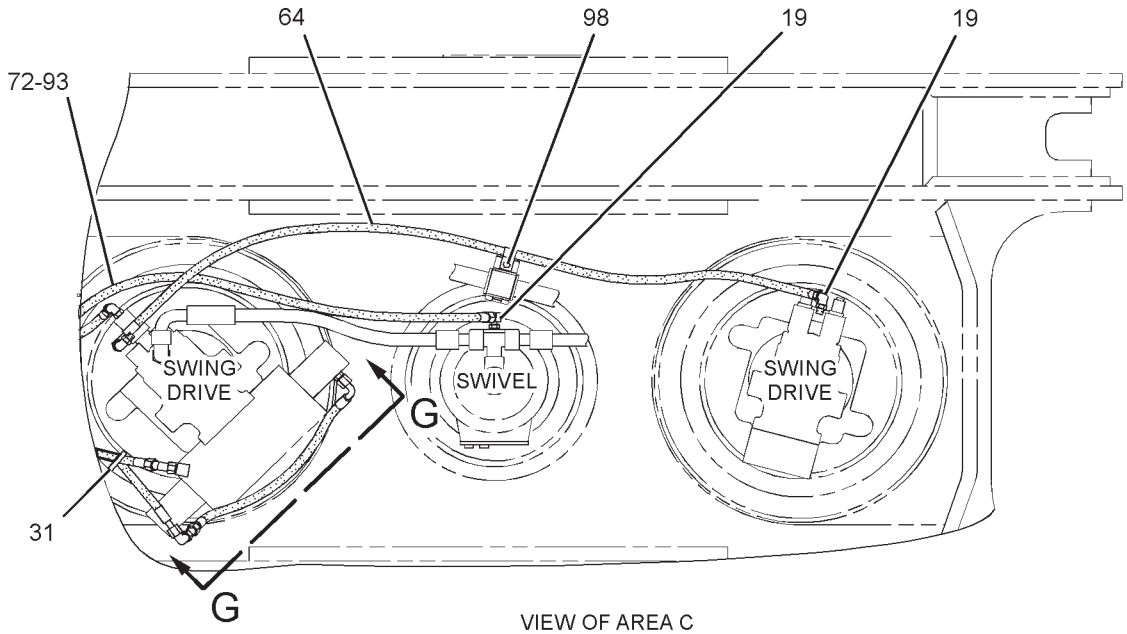

VIEW OF AREA C

GRAPHIC #2

g01262783

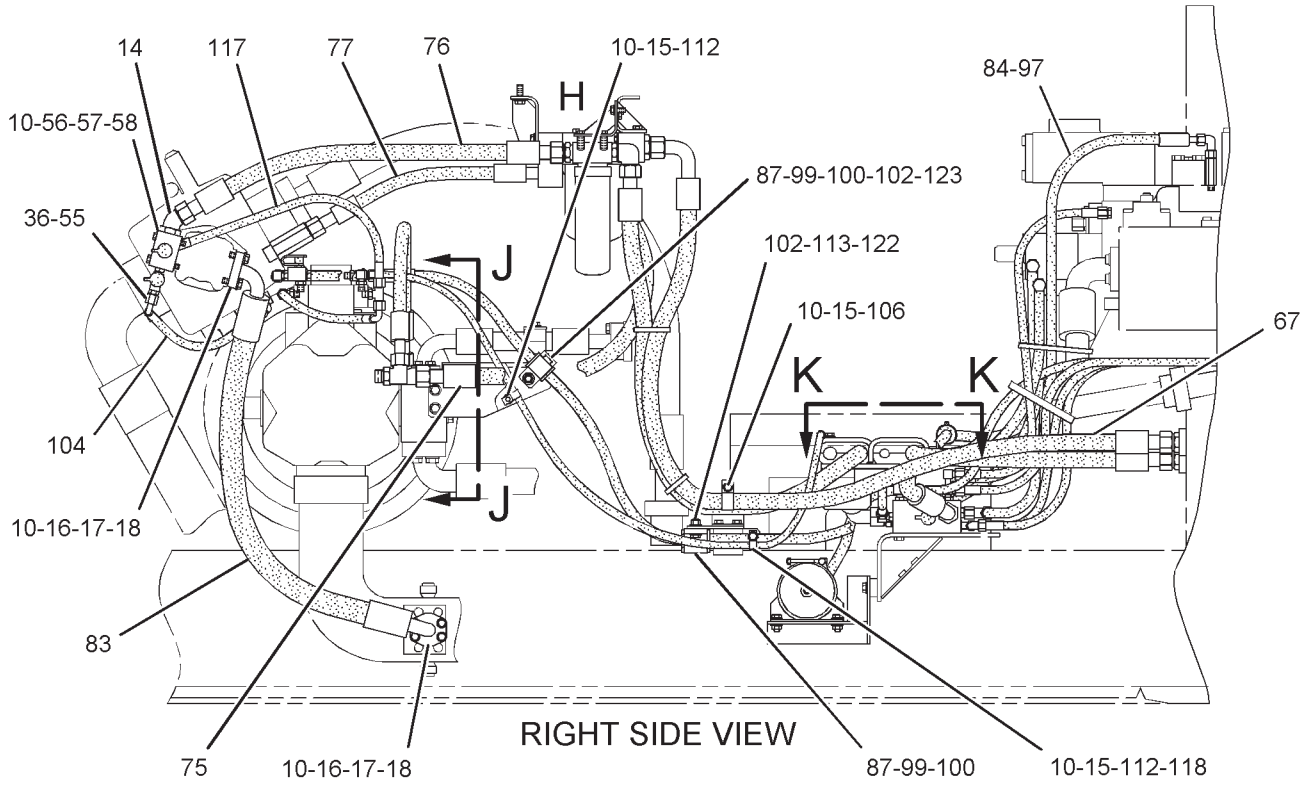

REFER TO ALL ILLUSTRATIONS OF
THIS GROUP FOR AUXILIARY VIEWS

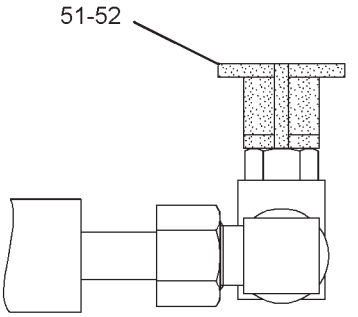

VIEW D-D

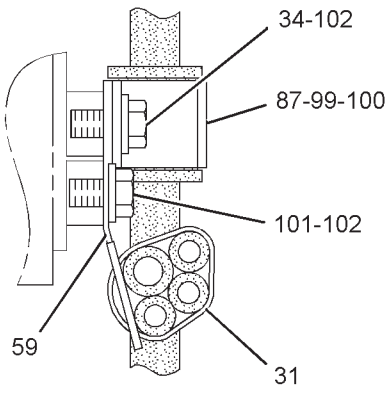

SECTION F-F

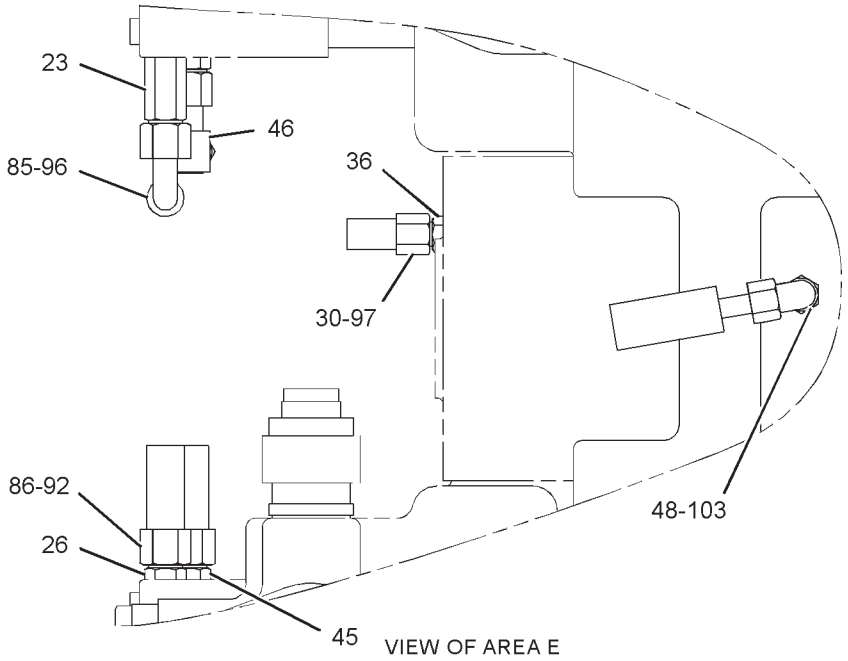

VIEW OF AREA E

GRAPHIC #3

g01106074

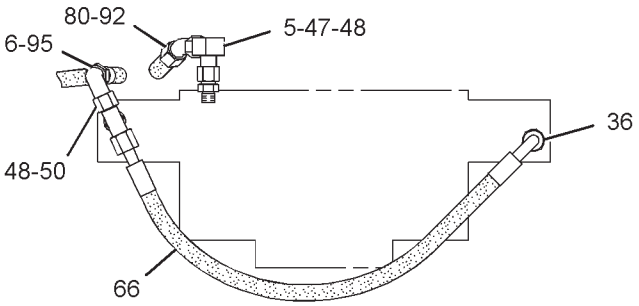

VIEW G-G

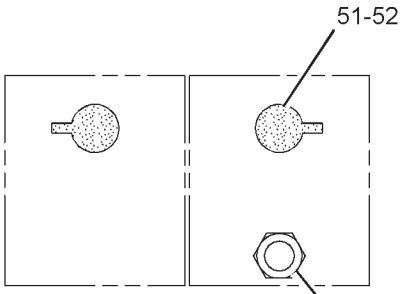

VIEW J-J

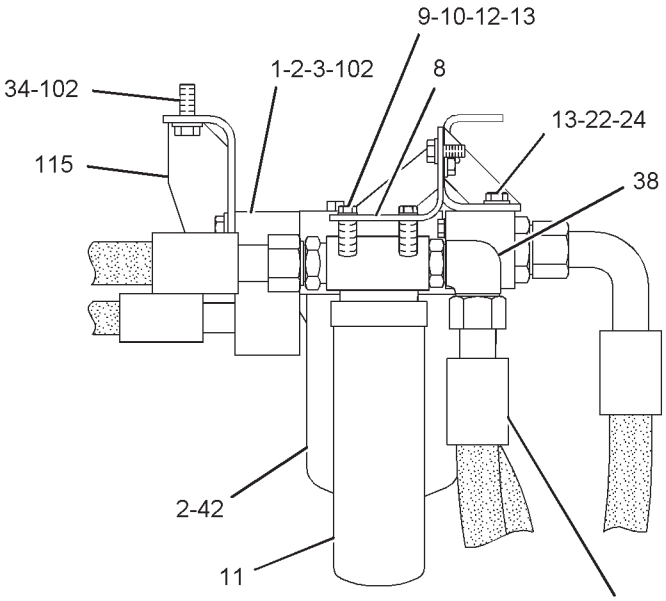

VIEW OF AREA H

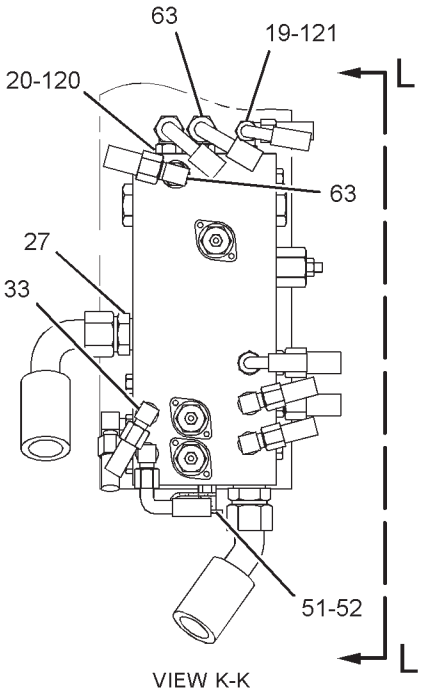

VIEW K-K

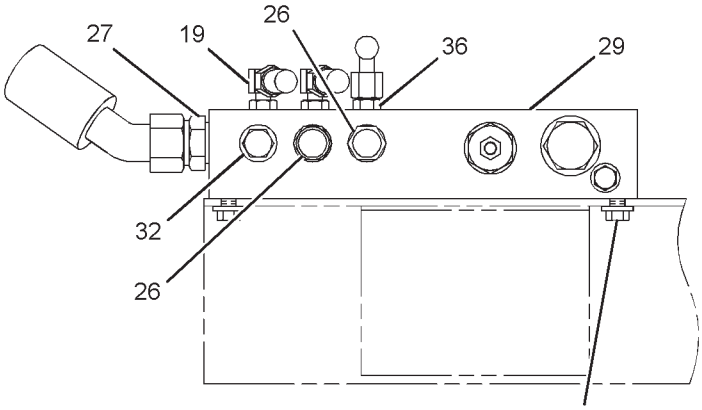

VIEW L-L 34-35

GRAPHIC #4 **<END>** g01106340

HYDRAULIC SYSTEM

176-4553 LINES GP-PILOT

S/N: RCD1-UP
BOOM LOWERING CONTROL, C-FAMILY
PART OF 171-0026, 213-4216 VALVE AR-BOOM LOWERING CONTROL
AN ATTACHMENT

SMCS-5057, 5059 **i02249313**

NOTE	REF NO	GRAPHIC REF	PART NUMBER	QTY	PART NAME 1 2 3 4 5 6 (PRODUCT LEVEL)	SEE PAGE
	1	1	*148-8335*	1	CONNECTOR AS	
		1	**5K-9090**	1	SEAL-O-RING	
		1	**6V-8635**	1	CONNECTOR	
		1	**7M-8485**	1	SEAL-O-RING	
	2	1	**171-0049**	1	HOUSING	
M	3	1	**8T-3647**	4	BOLT (M8X1.25X80-MM)	
	4	1	*148-8422*	1	TEE AS	
		1	**5K-9090**	1	SEAL-O-RING	
		1	**6V-9746**	1	SEAL-O-RING	
		1	**7M-8485**	1	SEAL-O-RING	
		1	**8T-6356**	1	TEE-O-RING PORT	
I	5	1	**179-7485**	1	HOSE AS	
I	6	1	**7Y-8309**	1	HOSE AS	
	7	1	**239-2006**	1	HOSE AS	
	8	1	**6V-1889**	2	CLIP	
M	9	1	**8T-4137**	3	BOLT (M10X1.5X20-MM)	
	10	1	**8T-4121**	4	WASHER-HARD (11X21X2.5-MM THK)	
	11	1	**8C-8533**	2	CLIP	
	12	1	*148-8359*	1	ELBOW AS	
		1	**3K-0360**	1	SEAL-O-RING	
		1	**6V-9746**	1	SEAL-O-RING	
		1	**6V-9877**	1	ELBOW	
	13	1	*148-8378*	3	ELBOW AS	
					(EACH INCLUDES)	
		1	**3J-1907**	1	SEAL-O-RING	
		1	**6V-8397**	1	SEAL-O-RING	
		1	**6V-8724**	1	ELBOW	
M	14	1	**8T-4195**	4	BOLT (M10X1.5X30-MM)	
	15	1	**7K-1181**	12	STRAP-CABLE	
Y	16	1	**171-0028**	1	VALVE GP-SOLENOID (BOOM LOAD CONTROL)	877
M	17	1	**7I-2272**	4	BOLT (M5X0.8X12-MM)	
	18	1	**125-6729**	1	COVER	
	19	1	**4J-0524**	2	SEAL-O-RING	
M	20	1	**8T-4139**	4	BOLT (M12X1.75X30-MM)	
	21	1	**176-4507**	1	PIPE AS	
	22	1	**171-0113**	1	PLUG GP-CONTROL VALVE	
		1	**4D-2297**	1	SEAL-O-RING	
		1	**4K-2039**	1	SEAL-O-RING	
		1	**5L-4758**	1	SEAL-O-RING	
		1	**095-1586**	1	SEAL-O-RING	
	23	1	*148-8407*	2	PLUG AS	
		1	**3J-1907**	1	SEAL-O-RING	
		1	**9S-4191**	1	PLUG-O-RING	
	24	1	*148-8336*	2	CONNECTOR AS	
					(EACH INCLUDES)	
		1	**3J-1907**	1	SEAL-O-RING	
		1	**6V-8397**	1	SEAL-O-RING	
		1	**6V-8636**	1	CONNECTOR	
	25	1	*148-8318*	1	CONNECTOR AS	
		1	**3K-0360**	1	SEAL-O-RING	
		1	**6V-8397**	1	SEAL-O-RING	
		1	**6V-8634**	1	CONNECTOR	
I	26	1	**4I-5906**	1	HOSE AS	
I	27	1	**4I-6027**	1	HOSE AS	

176-4553 **LINES GP-PILOT** *(contd.)* **i02249313**

NOTE	REF NO	GRAPHIC REF	PART NUMBER	QTY	PART NAME 1 2 3 4 5 6 (PRODUCT LEVEL)	SEE PAGE
	28	1	**4K-8864**	2	CLIP	
M	29	1	**7X-2621**	1	BOLT (M10X1.5X12-MM)	

I-REFER TO HYDRAULIC INFORMATION SYSTEM
M-METRIC PART
Y-SEPARATE ILLUSTRATION

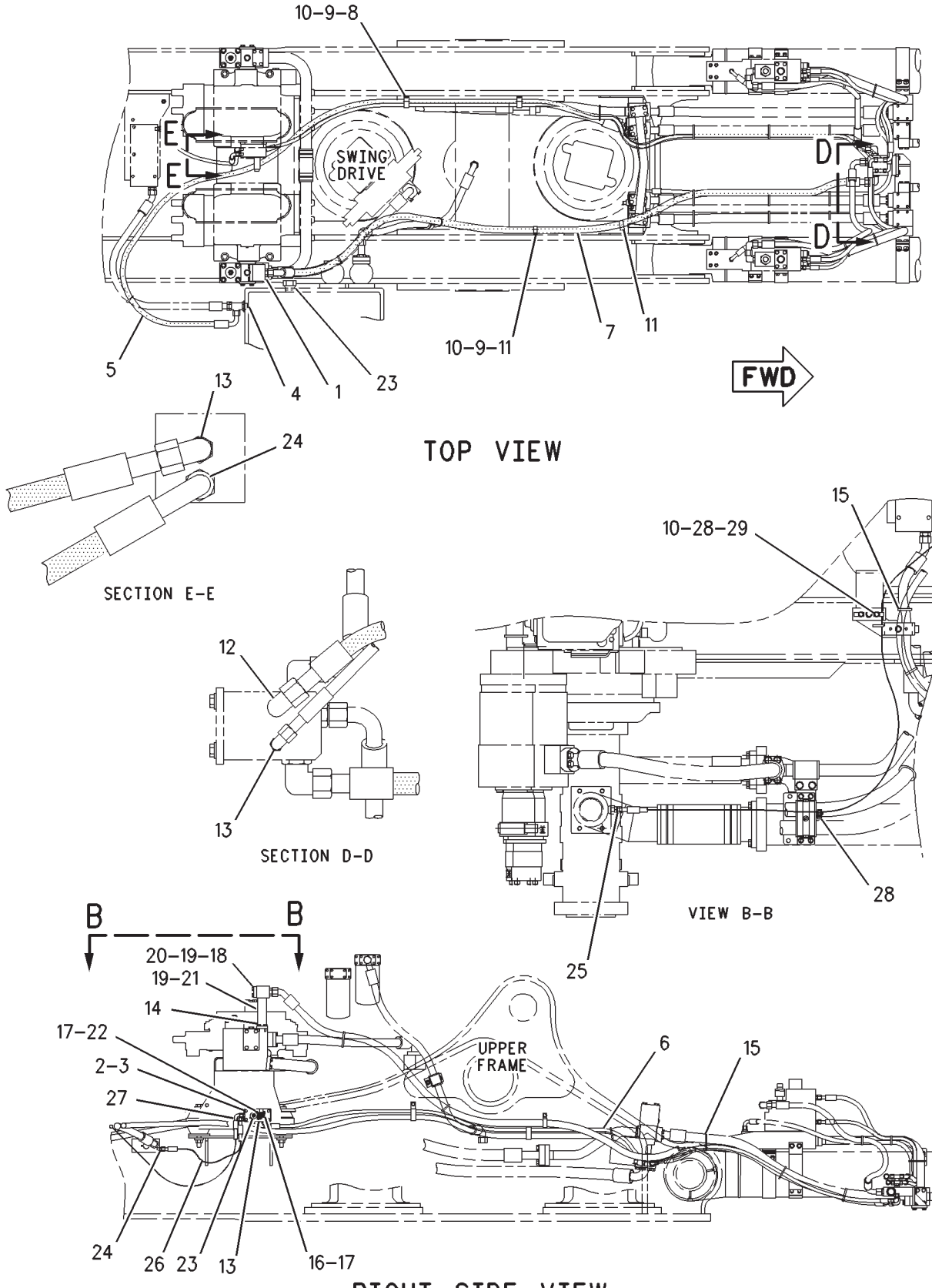

GRAPHIC #1

<END>

g00872653

HYDRAULIC SYSTEM

176-4554 LINES GP-PILOT

S/N: RCD1-UP
STICK LOWERING CONTROL
PART OF 206-3183 VALVE AR, 238-6483, 238-6487 VALVE AR-LOAD CONTROL, 171-0027 VALVE AR-STICK LOWERING CONT
AN ATTACHMENT

SMCS-5057, 5059 **i02379815**

NOTE	REF NO	GRAPHIC REF	PART NUMBER	QTY	PART NAME 1 2 3 4 5 6 (PRODUCT LEVEL)	SEE PAGE
	1	1	*148-8422*	1	TEE AS	
		1	**5K-9090**	1	SEAL-O-RING	
		1	**6V-9746**	1	SEAL-O-RING	
		1	**7M-8485**	1	SEAL-O-RING	
		1	**8T-6356**	1	TEE-O-RING PORT	
	2	1	*148-8336*	1	CONNECTOR AS	
		1	**3J-1907**	1	SEAL-O-RING	
		1	**6V-8397**	1	SEAL-O-RING	
		1	**6V-8636**	1	CONNECTOR	
	3	1	*148-8429*	1	TEE AS	
		1	**5K-9090**	2	SEAL-O-RING	
		1	**6V-9840**	1	TEE-SWIVEL	
	4	1	**9X-6579**	1	NUT-ORIFICE (7/16-12-THD)	
	5	1	*148-8392*	1	ELBOW AS	
		1	**6V-9746**	1	SEAL-O-RING	
		1	**6V-9853**	1	ELBOW	
	6	1	*148-8415*	1	REDUCER AS	
		1	**6V-8397**	1	SEAL-O-RING	
		1	**6V-8936**	1	REDUCER	
Y	7	1	**171-0028**	1	VALVE GP-SOLENOID (STICK LOAD CONTROL)	877
	8	1	*148-8412*	1	REDUCER AS	
		1	**6V-8398**	1	SEAL-O-RING	
		1	**6V-8944**	1	REDUCER-O-RING	
	9	1	**7K-1181**	5	STRAP-CABLE	
I	10	1	**4I-5792**	1	HOSE AS	
I	11	1	**179-7581**	1	HOSE AS	
	12	1	**138-5662**	1	HOSE AS	
M	13	1	**7I-2272**	2	BOLT (M5X0.8X12-MM)	
	14	1	*148-8407*	1	PLUG AS	
		1	**3J-1907**	1	SEAL-O-RING	
		1	**9S-4191**	1	PLUG-O-RING	
	15	1	**6V-8398**	1	SEAL-O-RING	

I-REFER TO HYDRAULIC INFORMATION SYSTEM
M-METRIC PART
Y-SEPARATE ILLUSTRATION

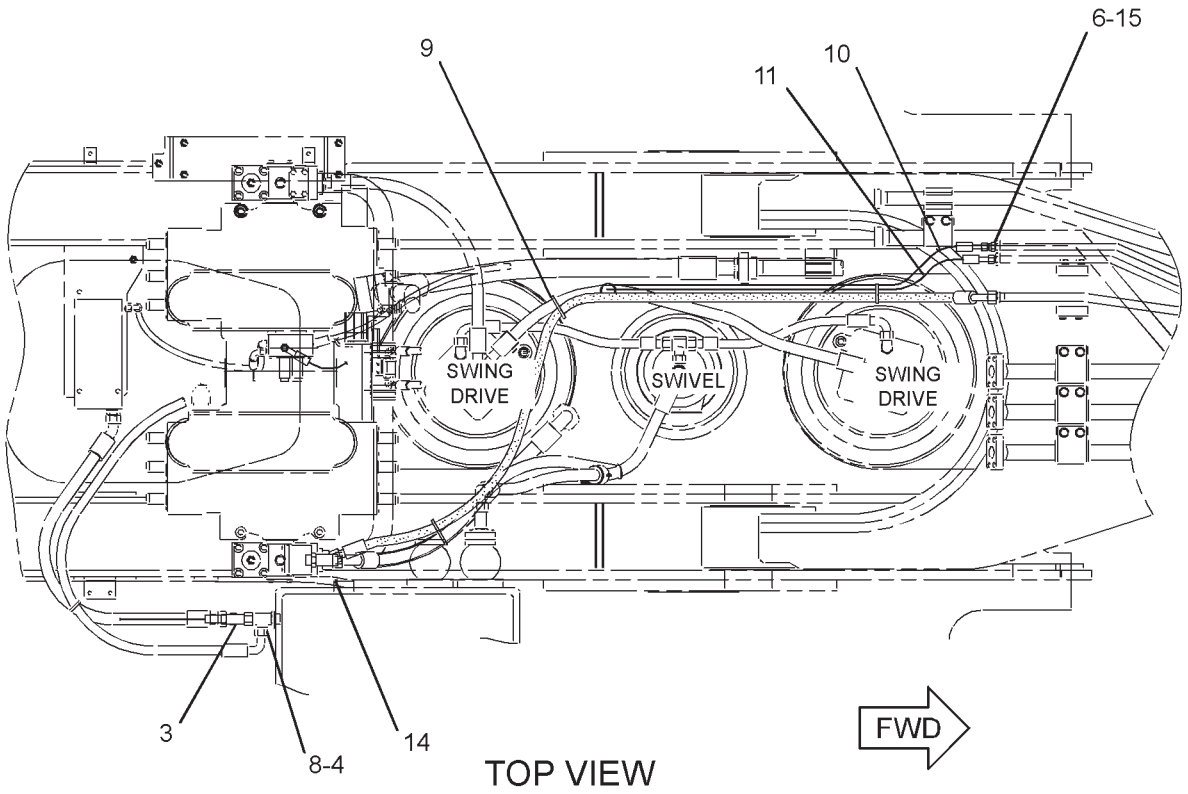

TOP VIEW

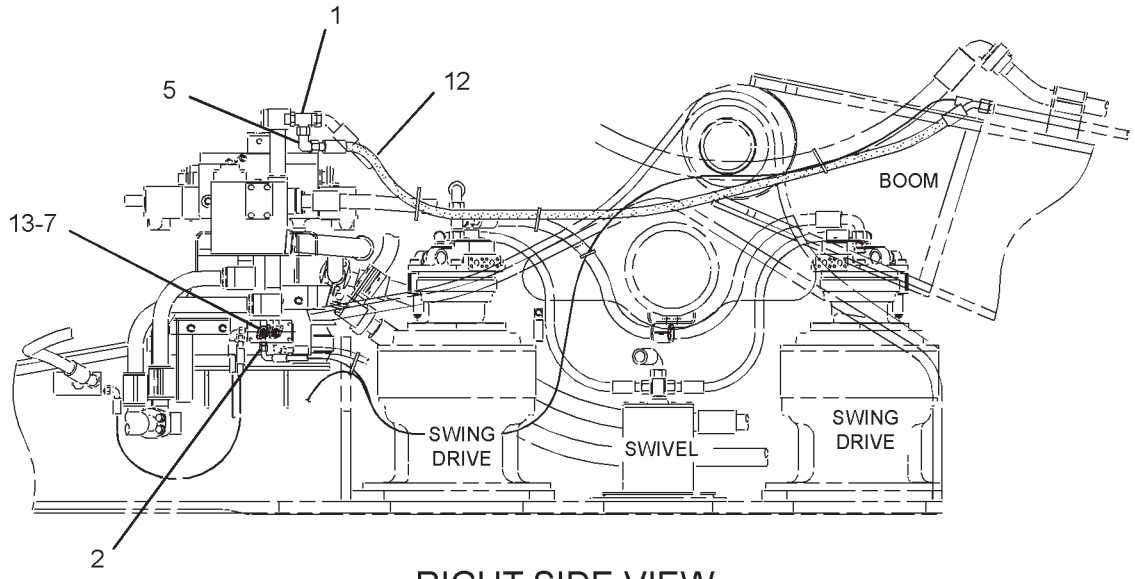

RIGHT SIDE VIEW

GRAPHIC #1 **<END>** g01295432

HYDRAULIC SYSTEM

206-4358 LINES GP-PILOT

S/N: RCD1-UP
MEDIUM PRESSURE
PART OF 196-9816 CONTROL AR-AUXILIARY
AN ATTACHMENT

SMCS-5057, 5059 **i01548792**

NOTE	REF NO	GRAPHIC REF	PART NUMBER	QTY	PART NAME 1 2 3 4 5 6 (PRODUCT LEVEL)	SEE PAGE
	1	1	**171-0049**	1	HOUSING	
M	2	1	**8T-4177**	4	BOLT (M8X1.25X90-MM)	
	3	1	**8T-4224**	4	WASHER-HARD (8.8X16X2-MM THK)	
M	4	1	**5C-7261**	4	NUT (M8X1.25-THD)	
	5	1	**188-0406**	1	SUPPORT	
M	6	1	**8T-4194**	2	BOLT (M12X1.75X50-MM)	
	7	1	*148-8378*	2	ELBOW AS	
					(EACH INCLUDES)	
		1	**3J-1907**	1	SEAL-O-RING	
		1	**6V-8397**	1	SEAL-O-RING	
		1	**6V-8724**	1	ELBOW	
	8	1	*148-8424*	2	TEE AS	
					(EACH INCLUDES)	
		1	**6V-8397**	1	SEAL-O-RING	
		1	**8T-8902**	1	TEE	
	9	1	**6V-3965**	2	FITTING (QUICK DISCONNECT)	
	10	1	**3J-1907**	2	SEAL-O-RING	
	11	1	**6V-0852**	2	CAP-DUST	
	12	1	*148-8367*	2	ELBOW AS	
					(EACH INCLUDES)	
		1	**6V-8397**	1	SEAL-O-RING	
		1	**6V-9850**	1	ELBOW	
	13	1	*148-8336*	5	CONNECTOR AS	
					(EACH INCLUDES)	
		1	**3J-1907**	1	SEAL-O-RING	
		1	**6V-8397**	1	SEAL-O-RING	
		1	**6V-8636**	1	CONNECTOR	
	14	1	*148-8318*	1	CONNECTOR AS	
		1	**3K-0360**	1	SEAL-O-RING	
		1	**6V-8397**	1	SEAL-O-RING	
		1	**6V-8634**	1	CONNECTOR	
I	15	1	**4I-0797**	2	HOSE AS	
I	16	1	**5I-8853**	1	HOSE AS	
I	17	1	**4I-0716**	1	HOSE AS	
Y	18	1	**171-0028**	2	VALVE GP-SOLENOID	877
M	19	1	**7I-2272**	4	BOLT (M5X0.8X12-MM)	

I-REFER TO HYDRAULIC INFORMATION SYSTEM
M-METRIC PART
Y-SEPARATE ILLUSTRATION

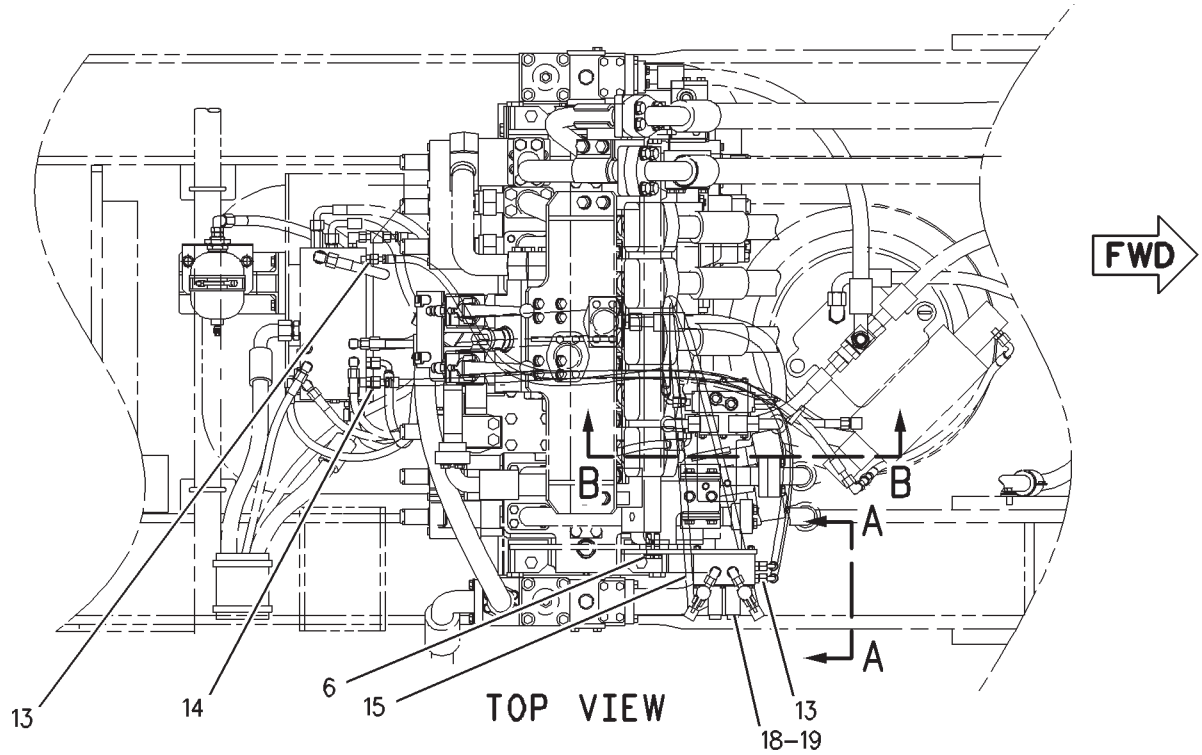

TOP VIEW

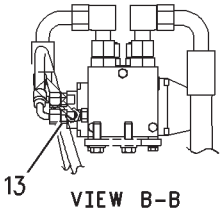

VIEW B-B

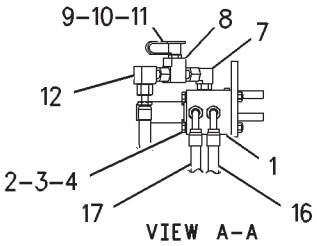

VIEW A-A

RIGHT SIDE VIEW

GRAPHIC #1 **<END>** g00805144

HYDRAULIC SYSTEM

168-9376 LINES GP-PUMP

S/N: RCD1-UP

PART OF 229-3367 HYDRAULIC AR

SMCS-5057 **i02111421**

NOTE	REF NO	GRAPHIC REF	PART NUMBER	QTY	PART NAME 1 2 3 4 5 6 (PRODUCT LEVEL)	SEE PAGE
I	1	2	**212-5534**	1	HOSE AS	
	2	1,2	**1P-3705**	11	SEAL-RECTANGULAR	
	3	1,2	**5P-8077**	22	FLANGE-HALF	
M	4	1,2	**8T-4140**	40	BOLT (M16X2X60-MM)	
	5	1,2	**9X-8257**	76	WASHER (17.5X30X3.5-MM THK)	
	6	1	**138-5708**	4	CLIP-HALF	
	7	1	**138-5709**	2	GROMMET	
	8	2	*148-8407*	1	PLUG AS	
		2	**3J-1907**	1	SEAL-O-RING	
		2	**9S-4191**	1	PLUG-O-RING	
	9	2	**204-8346**	1	CLIP AS	
	10	2	**204-8347**	1	PLATE AS	
	11	2	**207-6475**	1	GROMMET	
M	12	2	**8T-4195**	4	BOLT (M10X1.5X30-MM)	
	13	2	**8T-4121**	8	WASHER-HARD (11X21X2.5-MM THK)	
I	14	1	**212-5531**	1	HOSE AS	
M	15	1	**8T-0439**	4	BOLT-SOCKET HEAD (M16X2X30-MM)	
	16	1	**173-4945**	1	TUBE AS	
I	17	1	**207-6463**	1	HOSE AS	
	18	1	**173-4955**	1	SUPPORT AS	
M	19	1	**8T-4139**	10	BOLT (M12X1.75X30-MM)	
	20	1,2	**8T-4223**	26	WASHER-HARD (13.5X25.5X3-MM THK)	
	21	1	**2H-3934**	2	SEAL-O-RING	
	22	1	**1P-7016**	4	FLANGE-HALF	
M	23	1	**8T-4193**	6	BOLT (M16X2X50-MM)	
	24	1	**173-4974**	1	FLANGE	
	25	1	**9M-2092**	2	SEAL-O-RING	
	26	1,2	**1P-3704**	3	SEAL-RECTANGULAR	
	27	1,2	*148-8411*	7	PLUG AS	
					(EACH INCLUDES)	
		1,2	**3K-0360**	1	SEAL-O-RING	
		1,2	**9S-4185**	1	PLUG-O-RING	
	28	1	**173-4960**	1	PIPE AS	
	29	1	**9M-3786**	1	SEAL-O-RING	
	30	1	**148-4964**	1	HOSE	
	31	1	**3E-7424**	4	CLAMP-HOSE	
	32	1	**207-6467**	1	PIPE AS	
	33	1	**6F-4718**	1	SEAL-O-RING	
M	34	1	**8T-4956**	4	BOLT (M12X1.75X35-MM)	
	35	2	**173-4976**	1	BLOCK	
	36	2	**173-4977**	1	BLOCK	
I	37	2	**207-6477**	2	HOSE AS	
	38	2	**1P-3703**	4	SEAL-RECTANGULAR	
	39	2	**207-6476**	1	GROMMET	
	40	2	**150-3073**	2	PLUG AS	
	41	2	**6V-0400**	4	FLANGE-HALF	
M	42	1	**8T-4194**	4	BOLT (M12X1.75X50-MM)	
M	43	2	**8T-4184**	8	BOLT (M12X1.75X45-MM)	
M	44	1,2	**8T-2393**	12	BOLT-SOCKET HEAD (M16X2X60-MM)	
	45	1	**1P-5767**	2	FLANGE-HALF	
M	46	2	**8T-4196**	4	BOLT (M10X1.5X35-MM)	
	47	2	**187-6754**	2	PLATE	
	48	2	**199-1996**	4	GROMMET	
	49	2	**207-6464**	1	SUPPORT AS	
M	50	2	**7X-2475**	8	BOLT (M16X2X130-MM)	
I	51	2	**212-5535**	1	HOSE AS	

168-9376 **LINES GP-PUMP** *(contd.)* **i02111421**

NOTE	REF NO	GRAPHIC REF	PART NUMBER	QTY	PART NAME 1 2 3 4 5 6 (PRODUCT LEVEL)	SEE PAGE
M	52	1	**099-0169**	4	BOLT (M16X2X55-MM)	
I	53	1	**113-6518**	1	HOSE AS	
I	54	1	**212-5532**	2	HOSE AS	
	55	1	**5I-8494**	1	SUPPORT AS	
	56	1	**190-6064**	1	U-BOLT	
M	57	1	**096-4885**	2	LOCKNUT (M16X2-THD)	
	58	1	**4I-5732**	1	COVER	
	59	1	**4J-0527**	1	SEAL-O-RING	
M	60	1	**8T-7338**	4	BOLT (M16X2X45-MM)	
	61	1	**207-6507**	1	SUPPORT AS	
	62	1	**207-6506**	1	BLOCK	
	63	1	**207-6514**	4	SPACER	
M	64	1	**7X-2555**	4	BOLT (M16X2X80-MM)	
	65	2	**4I-7739**	2	FLANGE	
M	66	2	**7X-2553**	8	BOLT (M16X2X40-MM)	
	67	2	**1P-3706**	2	SEAL-RECTANGULAR	
	68	1	**227-0259**	1	BLOCK	
M	69	2	**8T-4192**	4	BOLT (M12X1.75X25-MM)	

I-REFER TO HYDRAULIC INFORMATION SYSTEM
M-METRIC PART

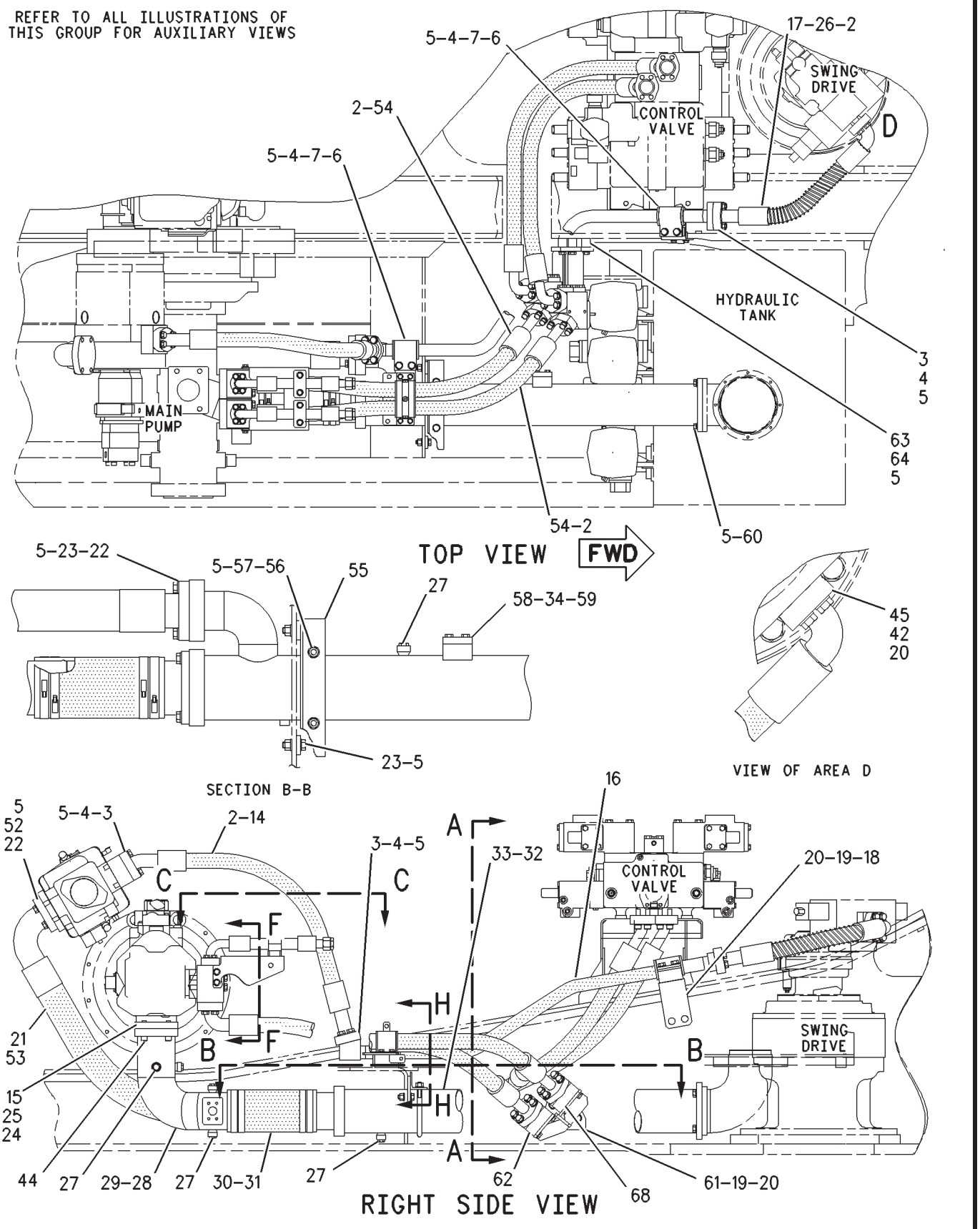

GRAPHIC #1 g01076463

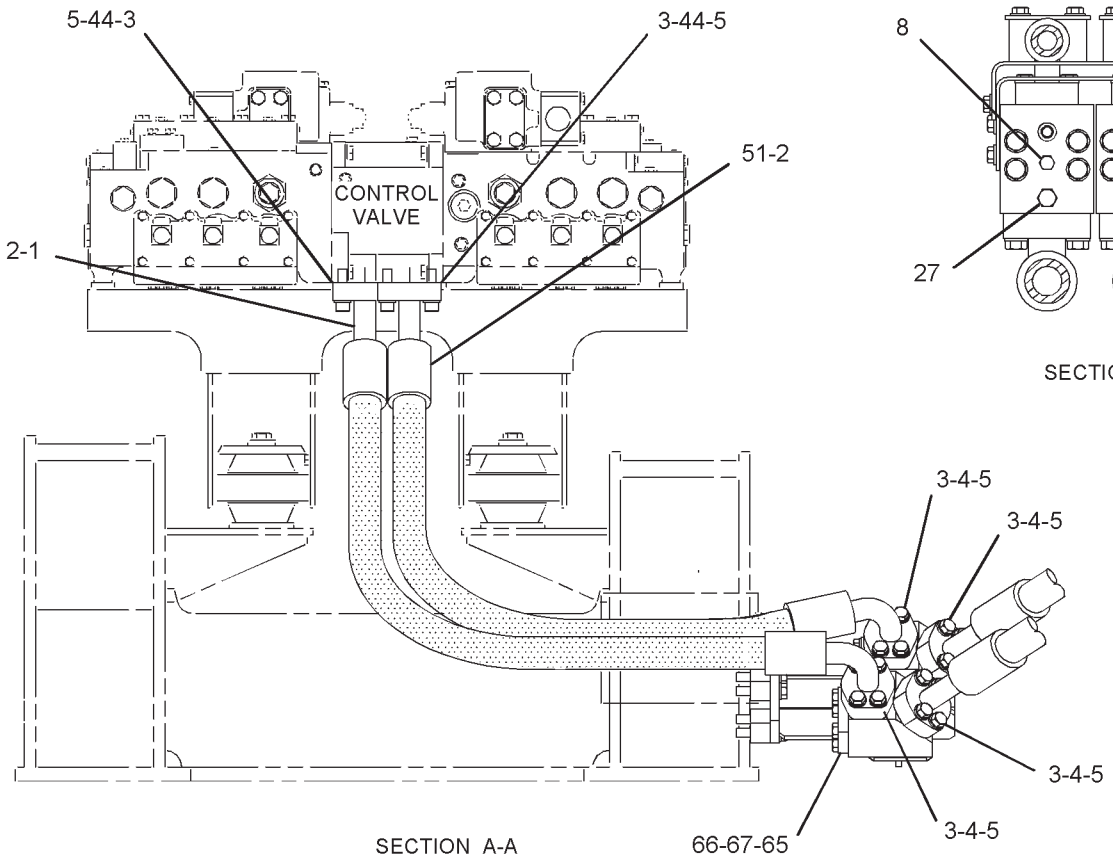

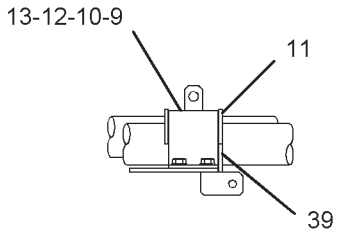

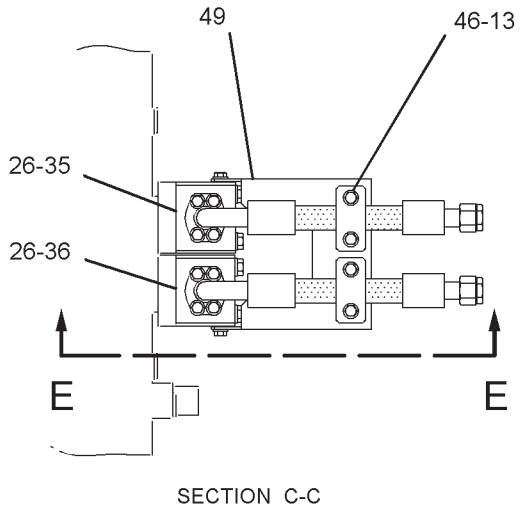

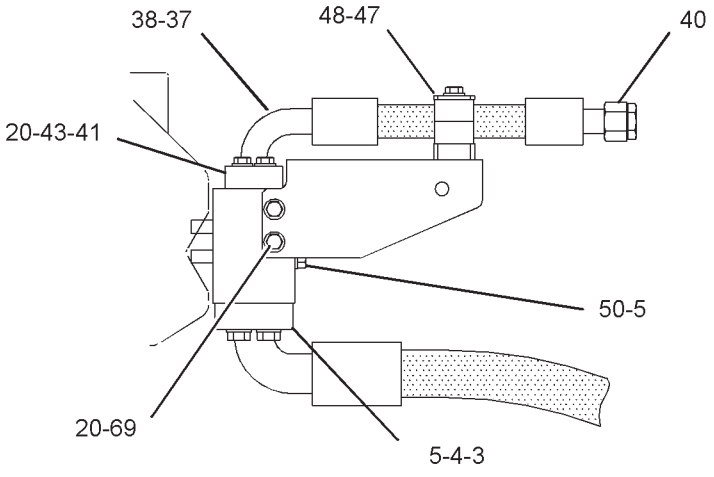

GRAPHIC #2 **<END>** g01076468

HYDRAULIC SYSTEM

168-9381 LINES GP-PUMP–SHUTOFF VALVE

S/N: RCD1-UP
AN ATTACHMENT

SMCS-5057 **i01676310**

NOTE	REF NO	GRAPHIC REF	PART NUMBER	QTY	PART NAME 1 2 3 4 5 6 (PRODUCT LEVEL)	SEE PAGE
Y	1	1	**158-8171**	1	VALVE GP-SHUTOFF (HYDRAULIC PUMP, TANK)	867
	2	1	**6F-4718**	2	SEAL-O-RING	
	3	1	**207-6482**	1	PIPE AS	
M	4	1	**8T-4175**	4	BOLT (M16X2X90-MM)	
	5	1	**9X-8257**	4	WASHER (17.5X30X3.5-MM THK)	
	6	1	*148-8411*	1	PLUG AS	
		1	**3K-0360**	1	SEAL-O-RING	
		1	**9S-4185**	1	PLUG-O-RING	

M-METRIC PART
Y-SEPARATE ILLUSTRATION

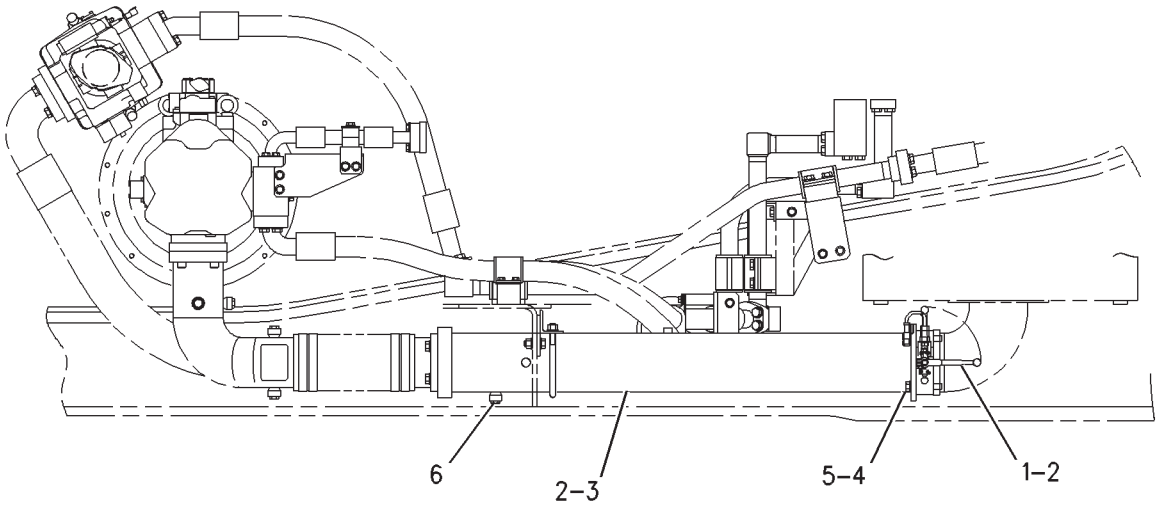

RIGHT SIDE VIEW

GRAPHIC #1 **<END>** g00865417

HYDRAULIC SYSTEM

206-4357 LINES GP-PUMP

S/N: RCD1-UP
MEDIUM PRESSURE, AUXILIARY HYDRAULIC CONTROL, LOAD SENSING
PART OF 196-9816 CONTROL AR-AUXILIARY
AN ATTACHMENT
TYPE 1

SMCS-5057 **i01889122**

NOTE	REF NO	GRAPHIC REF	PART NUMBER	QTY	PART NAME 1 2 3 4 5 6 (PRODUCT LEVEL)	SEE PAGE
	1	1	**194-1804**	1	VALVE GP-CONTROL (MEDIUM PRESSURE)	
	2	1	**235-0438**	1	PLATE	
M	3	1	**8T-4175**	4	BOLT (M16X2X90-MM)	
	4	1	**4M-6425**	4	BOLT (5/16-18X1-IN)	
	5	1	**8T-4224**	4	WASHER-HARD (8.8X16X2-MM THK)	
	6	1	*148-8315*	1	CONNECTOR AS	
		1	**2M-9780**	1	SEAL-O-RING	
		1	**6V-8642**	1	CONNECTOR	
		1	**7J-9108**	1	SEAL-O-RING	
	7	1	*148-8339*	2	CONNECTOR AS	
					(EACH INCLUDES)	
		1	**6V-8716**	1	CONNECTOR	
		1	**6V-9746**	1	SEAL-O-RING	
		1	**7M-8485**	1	SEAL-O-RING	
	8	1	*148-8392*	3	ELBOW AS	
					(EACH INCLUDES)	
		1	**6V-9746**	1	SEAL-O-RING	
		1	**6V-9853**	1	ELBOW	
I	9	1	**207-4286**	1	HOSE AS	
	10	1	*148-8429*	1	TEE AS	
		1	**5K-9090**	2	SEAL-O-RING	
		1	**6V-9840**	1	TEE-SWIVEL	
	11	1	*148-8347*	1	ELBOW AS	
		1	**3D-2824**	1	SEAL-O-RING	
		1	**6V-9007**	1	ELBOW	
		1	**6V-9746**	1	SEAL-O-RING	
M	12	1	**7X-2558**	4	BOLT (M16X2X150-MM)	
	13	1	**215-6948**	1	FLANGE	
	14	1	**1P-3706**	1	SEAL-RECTANGULAR	
	15	1	*148-8367*	1	ELBOW AS	
		1	**6V-9850**	1	ELBOW	
		1	**6V-8397**	1	SEAL-O-RING	
		1	**7X-0901**	1	ELBOW	
I	16	1	**131-2569**	1	HOSE AS	
	17	1	*153-6236*	1	REDUCER AS	
		1	**6V-8946**	1	REDUCER	
		1	**6V-9746**	1	SEAL-O-RING	
Y	18	1	**4T-1860**	1	VALVE GP-SHUTTLE	868
	19	1	*164-5589*	1	CONNECTOR AS	
		1	**3J-1907**	1	SEAL-O-RING	
		1	**6V-8397**	1	SEAL-O-RING	
		1	**8C-0597**	1	CONNECTOR	
	20	1	*148-8371*	1	ELBOW AS	
		1	**6V-8397**	1	SEAL-O-RING	
		1	**8C-8988**	1	ELBOW	
I	21	1	**9C-9603**	1	HOSE AS	
	22	1	*148-8393*	1	ELBOW AS	
		1	**6V-9852**	1	ELBOW	
		1	**7J-9108**	1	SEAL-O-RING	
	23	1	*148-8390*	1	ELBOW AS	
		1	**7J-9108**	1	SEAL-O-RING	
		1	**2M-9780**	1	SEAL-O-RING	
		1	**6V-8626**	1	ELBOW	

206-4357 **LINES GP-PUMP** *(contd.)* **i01889122**

NOTE	REF NO	GRAPHIC REF	PART NUMBER	QTY	PART NAME 1 2 3 4 5 6 (PRODUCT LEVEL)	SEE PAGE
	24	1	*148-8336*	1	CONNECTOR AS	
		1	**3J-1907**	1	SEAL-O-RING	
		1	**6V-8397**	1	SEAL-O-RING	
		1	**6V-8636**	1	CONNECTOR	
	25	1	*153-6256*	2	ELBOW AS	
					(EACH INCLUDES)	
		1	**7J-9108**	1	SEAL-O-RING	
		1	**8C-7563**	1	ELBOW	

I-REFER TO HYDRAULIC INFORMATION SYSTEM
M-METRIC PART
Y-SEPARATE ILLUSTRATION

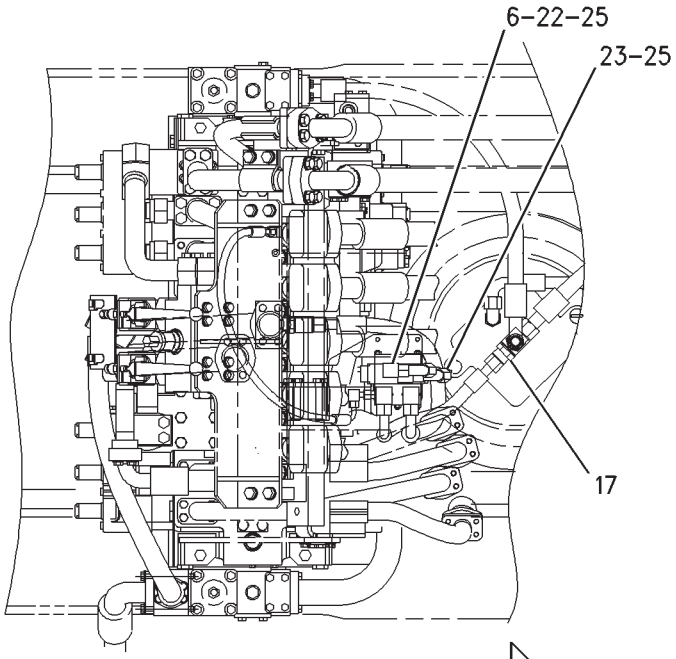

TOP VIEW

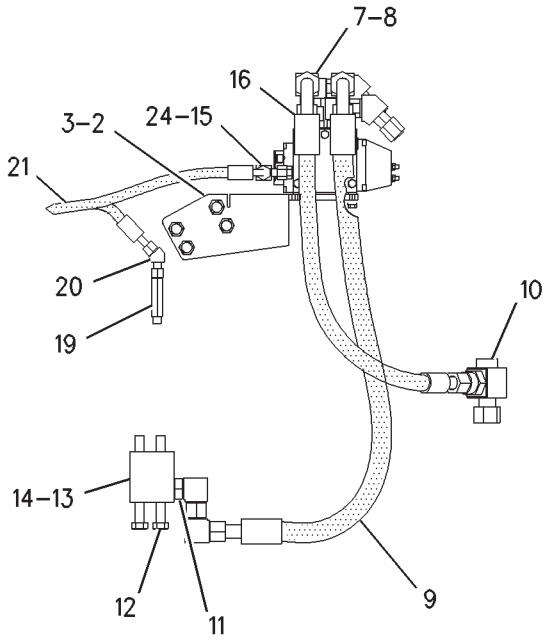

VIEW OF AREA B

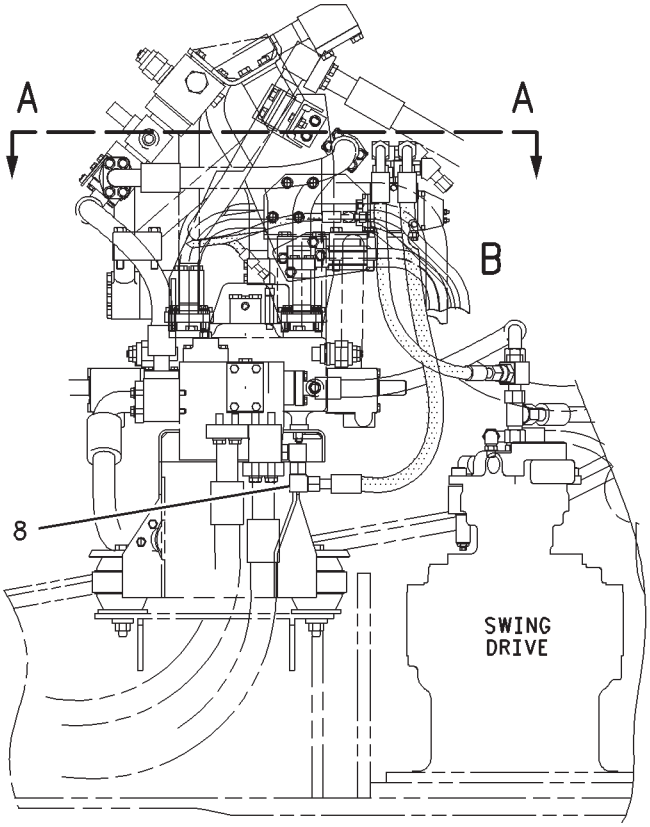

RIGHT SIDE VIEW

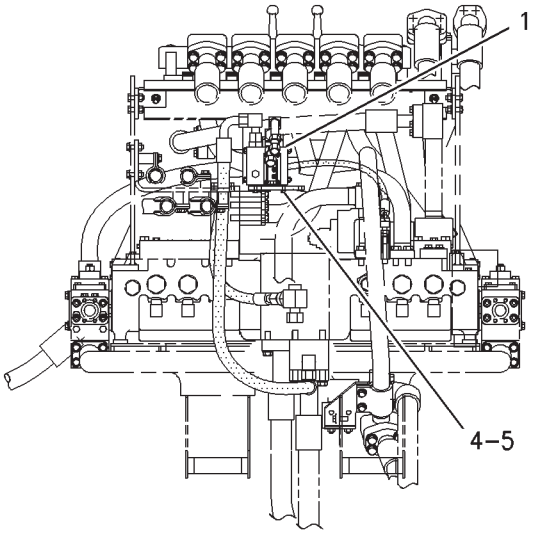

FRONT VIEW

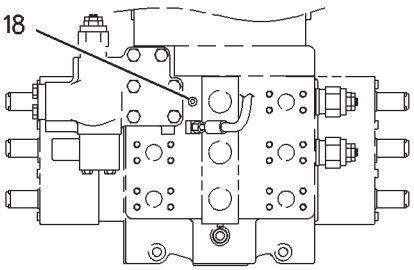

VIEW A–A

GRAPHIC #1 **<END>** g00983956

HYDRAULIC SYSTEM

206-4357 LINES GP-PUMP

S/N: RCD1-UP
MEDIUM PRESSURE, AUXILIARY HYDRAULIC CONTROL, LOAD SENSING
PART OF 196-9816 CONTROL AR-AUXILIARY
AN ATTACHMENT
TYPE 2

SMCS-5057 **i02355325**

NOTE	REF NO	GRAPHIC REF	PART NUMBER	QTY	PART NAME 1 2 3 4 5 6 (PRODUCT LEVEL)	SEE PAGE
Y	1	1	**194-1804**	1	VALVE GP-CONTROL (MEDIUM PRESSURE)	777
	2	1	**235-0438**	1	PLATE	
M	3	1	**8T-4175**	4	BOLT (M16X2X90-MM)	
	4	1	**4M-6425**	4	BOLT (5/16-18X1-IN)	
C	5	1	**8T-4224**	7	WASHER-HARD (8.8X16X2-MM THK)	
	6	1	*148-8315*	1	CONNECTOR AS	
		1	**2M-9780**	1	SEAL-O-RING	
		1	**6V-8642**	1	CONNECTOR	
		1	**7J-9108**	1	SEAL-O-RING	
	7	1	*148-8339*	2	CONNECTOR AS	
					(EACH INCLUDES)	
		1	**6V-8716**	1	CONNECTOR	
		1	**6V-9746**	1	SEAL-O-RING	
		1	**7M-8485**	1	SEAL-O-RING	
	8	1	*148-8392*	3	ELBOW AS	
					(EACH INCLUDES)	
		1	**6V-9746**	1	SEAL-O-RING	
		1	**6V-9853**	1	ELBOW	
CI	9	1	**227-0540**	1	HOSE AS	
	10	1	*148-8429*	1	TEE AS	
		1	**5K-9090**	2	SEAL-O-RING	
		1	**6V-9840**	1	TEE-SWIVEL	
	11	1	*148-8347*	1	ELBOW AS	
		1	**3D-2824**	1	SEAL-O-RING	
		1	**6V-9007**	1	ELBOW	
		1	**6V-9746**	1	SEAL-O-RING	
M	12	1	**7X-2558**	4	BOLT (M16X2X150-MM)	
	13	1	**215-6948**	1	FLANGE	
	14	1	**1P-3706**	1	SEAL-RECTANGULAR	
CI	15	1	**196-0640**	1	HOSE AS	
CI	16	1	**212-5329**	1	HOSE AS	
	17	1	*153-6236*	1	REDUCER AS	
		1	**6V-8946**	1	REDUCER	
		1	**6V-9746**	1	SEAL-O-RING	
Y	18	1	**4T-1860**	1	VALVE GP-SHUTTLE	868
	19	1	*164-5589*	1	CONNECTOR AS	
		1	**3J-1907**	1	SEAL-O-RING	
		1	**6V-8397**	1	SEAL-O-RING	
		1	**8C-0597**	1	CONNECTOR	
	20	1	*148-8371*	1	ELBOW AS	
		1	**6V-8397**	1	SEAL-O-RING	
		1	**8C-8988**	1	ELBOW	
C	21	1	**7K-1181**	1	STRAP-CABLE	
	22	1	*148-8393*	1	ELBOW AS	
		1	**6V-9852**	1	ELBOW	
		1	**7J-9108**	1	SEAL-O-RING	
	23	1	*148-8390*	1	ELBOW AS	
		1	**7J-9108**	1	SEAL-O-RING	
		1	**2M-9780**	1	SEAL-O-RING	
		1	**6V-8626**	1	ELBOW	
	24	1	*148-8336*	1	CONNECTOR AS	
		1	**3J-1907**	1	SEAL-O-RING	
		1	**6V-8397**	1	SEAL-O-RING	

206-4357 **LINES GP-PUMP** *(contd.)* **i02355325**

NOTE	REF NO	GRAPHIC REF	PART NUMBER	QTY	PART NAME 1 2 3 4 5 6 (PRODUCT LEVEL)	SEE PAGE
		1	**6V-8636**	1	CONNECTOR	
	25	1	*153-6256*	2	ELBOW AS	
					(EACH INCLUDES)	
		1	**7J-9108**	1	SEAL-O-RING	
		1	**8C-7563**	1	ELBOW	
CI	26	1	**241-5579**	1	HOSE AS	
C	27	1	**239-8193**	1	PLATE	
CM	28	1	**8T-4189**	3	BOLT (M8X1.25X20-MM)	

C-CHANGE FROM PREVIOUS TYPE
I-REFER TO HYDRAULIC INFORMATION SYSTEM
M-METRIC PART
Y-SEPARATE ILLUSTRATION

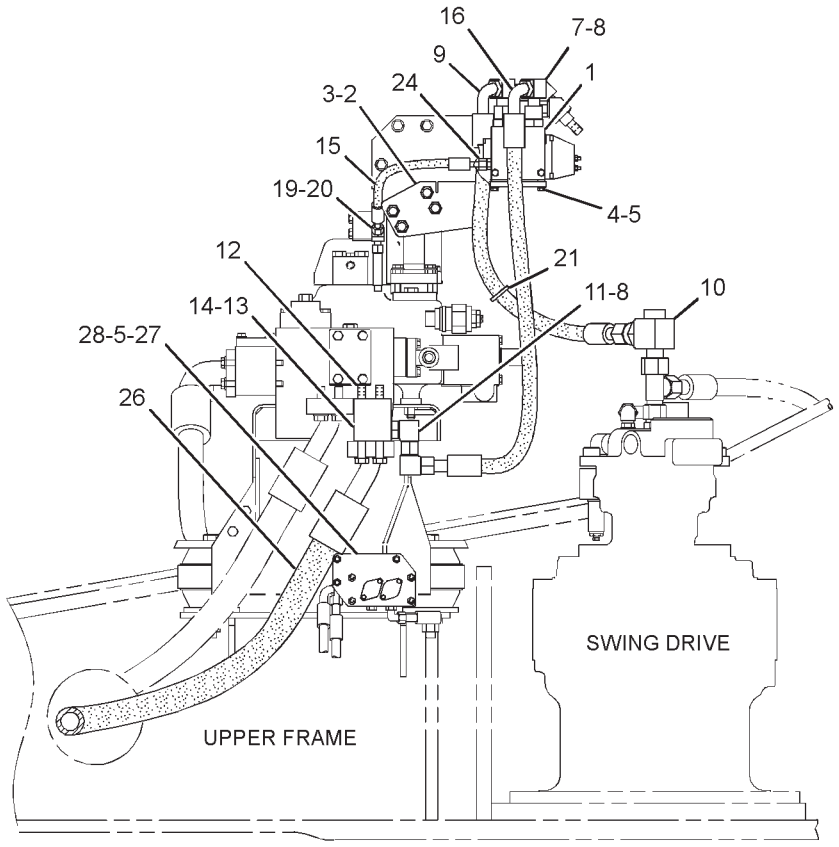

RIGHT SIDE VIEW

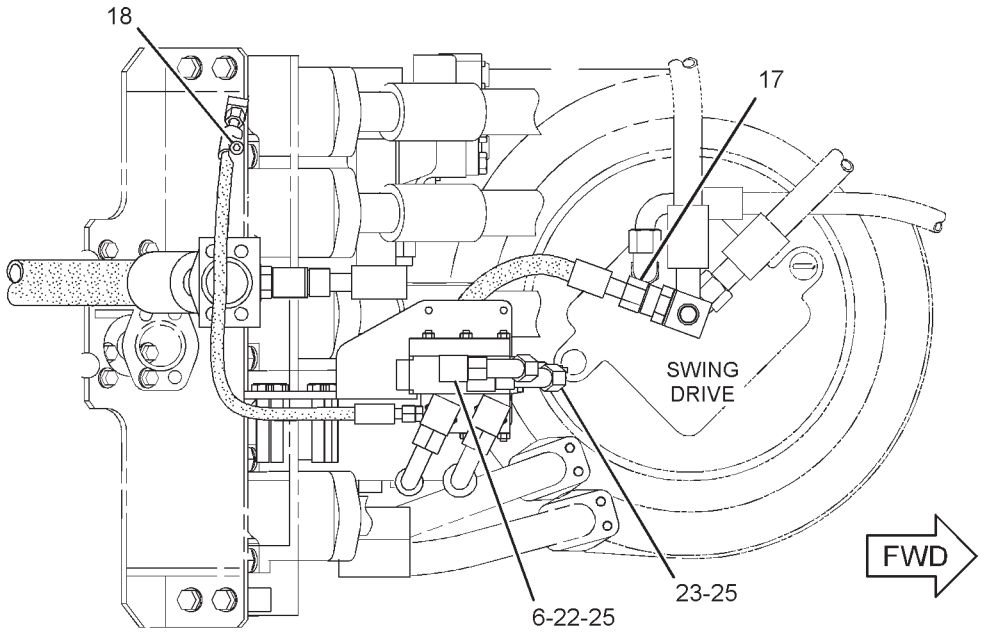

TOP VIEW

GRAPHIC #1 **<END>** g01307363

HYDRAULIC SYSTEM

168-9379 LINES GP-REAR ATTACHMENT

S/N: RCD1-UP
PART OF 157-9989 COUNTERWEIGHT AR
AN ATTACHMENT

SMCS-5409 **i02183760**

NOTE	REF NO	GRAPHIC REF	PART NUMBER	QTY	PART NAME 1 2 3 4 5 6 (PRODUCT LEVEL)	SEE PAGE
	1	2	*148-8336*	1	CONNECTOR AS	
		2	**3J-1907**	1	SEAL-O-RING	
		2	**6V-8397**	1	SEAL-O-RING	
		2	**6V-8636**	1	CONNECTOR	
I	2	1	**129-5904**	1	HOSE AS	
M	3	2	**8T-4195**	4	BOLT (M10X1.5X30-MM)	
	4	1	*148-8378*	1	ELBOW AS	
		1	**3J-1907**	1	SEAL-O-RING	
		1	**6V-8397**	1	SEAL-O-RING	
		1	**6V-8724**	1	ELBOW	
I	5	1	**176-4724**	1	HOSE AS	
I	6	1	**113-6738**	1	HOSE AS	
Y	7	1	**4T-1860**	1	VALVE GP-SHUTTLE	868
	8	1	*148-8436*	1	TEE AS	
		1	**3K-0360**	1	SEAL-O-RING	
		1	**6V-8398**	2	SEAL-O-RING	
		1	**6V-8775**	1	TEE-FACE SEAL	
	9	1	**6V-8398**	1	SEAL-O-RING	
	10	1	**1P-3704**	1	SEAL-RECTANGULAR	
I	11	1	**5I-4390**	1	HOSE AS	
	12	1	**168-9700**	1	HANDLE	
	13	1	**095-1310**	3	PIN-CLEVIS	
	14	1	**095-0840**	3	PIN-COTTER	
	15	1	**9X-8256**	3	WASHER (6.6X12X2-MM THK)	
	16	1	**087-4962**	1	LINK	
	17	1	**7Y-8165**	1	GROMMET	
	18	1	**4P-7582**	1	CLIP	
	19	1	**5P-5148**	1	STRAP-TIE	
M	20	1	**8T-4139**	5	BOLT (M12X1.75X30-MM)	
	21	1	**8T-4223**	1	WASHER-HARD (13.5X25.5X3-MM THK)	
M	22	1	**8T-4196**	8	BOLT (M10X1.5X35-MM)	
	23	1,2	**8T-4121**	14	WASHER-HARD (11X21X2.5-MM THK)	
	24	1	**148-4934**	1	HOSE AS	
	25	1	**148-4935**	1	HOSE AS	
I	26	1	**148-4933**	1	HOSE AS	
	27	2	**148-8444**	2	TEE AS-SWIVEL	
	28	1,2	*148-8372*	2	ELBOW AS	
					(EACH INCLUDES)	
		1,2	**2M-9780**	1	SEAL-O-RING	
		1,2	**6V-8398**	1	SEAL-O-RING	
		1,2	**6V-8721**	1	ELBOW	
	29	2	**148-4939**	1	SUPPORT AS	
	30	1,2	*148-8345*	3	CONNECTOR AS	
					(EACH INCLUDES)	
		1,2	**2M-9780**	1	SEAL-O-RING	
		1,2	**6V-8398**	1	SEAL-O-RING	
		1,2	**6V-8638**	1	CONNECTOR	
Y	31	2	**123-2514**	1	VALVE GP-PILOT (COUNTERWEIGHT)	846
M	32	2	**105-3483**	3	BOLT-SOCKET HEAD (M10X1.5X70-MM)	
	33	2	*148-8407*	1	PLUG AS	
		2	**3J-1907**	1	SEAL-O-RING	
		2	**9S-4191**	1	PLUG-O-RING	
	34	2	*148-8365*	1	ELBOW AS	
		2	**3J-1907**	1	SEAL-O-RING	
		2	**6V-8398**	1	SEAL-O-RING	

168-9379 **LINES GP-REAR ATTACHMENT** *(contd.)* **i02183760**

NOTE	REF NO	GRAPHIC REF	PART NUMBER	QTY	PART NAME 1 2 3 4 5 6 (PRODUCT LEVEL)	SEE PAGE
		2	**8T-6876**	1	ELBOW	
	35	1	*164-5589*	1	CONNECTOR AS	
		1	**3J-1907**	1	SEAL-O-RING	
		1	**6V-8397**	1	SEAL-O-RING	
		1	**8C-0597**	1	CONNECTOR	
	36	1	*148-8340*	1	CONNECTOR AS	
	37	1,2	**7K-1181**	3	STRAP-CABLE	
I	38	2	**199-1854**	1	HOSE AS	
	39	1	**7I-0970**	2	SUPPORT	
	40	1	**7I-0972**	2	BAR	
M	41	1	**8T-4138**	4	BOLT (M6X1X20-MM)	
	42	1	**9X-6165**	4	WASHER (6.5X22X2.5-MM THK)	
	43	1	*164-5605*	2	CONNECTOR AS	
					(EACH INCLUDES)	
		1	**3K-0360**	1	SEAL-O-RING	
		1	**6V-8397**	1	SEAL-O-RING	
		1	**8T-0076**	1	CONNECTOR	
	44	1,2	*148-8367*	3	ELBOW AS	
					(EACH INCLUDES)	
		1,2	**6V-8397**	1	SEAL-O-RING	
		1,2	**6V-9850**	1	ELBOW	
	45	1,2	*148-8364*	4	ELBOW AS	
					(EACH INCLUDES)	
		1,2	**3K-0360**	1	SEAL-O-RING	
		1,2	**6V-8398**	1	SEAL-O-RING	
		1,2	**6V-8625**	1	ELBOW	
I	46	1	**148-4943**	1	HOSE AS	
I	47	1	**168-9699**	1	HOSE AS	
	48	1	**160-0965**	2	VALVE GP-MANUAL (COUNTERWEIGHT CONTROL)	
					(EACH INCLUDES)	
		1	**162-1383**	1	KIT-SEAL	
		1	**162-9941**	1	PIN-GROOVE	
		1	**154-4981**	1	LEVER	
		1	**157-0489**	1	WASHER	
M		1	**162-1381**	1	BOLT AS	
	49	1	*148-8370*	2	ELBOW AS	
					(EACH INCLUDES)	
		1	**6V-8398**	1	SEAL-O-RING	
		1	**6V-9851**	1	ELBOW	
Y	50	1	**123-2515**	1	VALVE GP-COUNTERWEIGHT CONTROL	813
M	51	1	**6V-3938**	3	BOLT (M10X1.5X20-MM)	
	52	1	*150-4037*	1	TEE AS	
		1	**6V-8398**	2	SEAL-O-RING	
		1	**6V-9844**	1	TEE-SWIVEL	
	53	1,2	*148-8415*	2	REDUCER AS	
					(EACH INCLUDES)	
		1,2	**6V-8397**	1	SEAL-O-RING	
		1,2	**6V-8936**	1	REDUCER	
	54	1	**148-4944**	1	SUPPORT AS	
	55	2	*148-8412*	1	REDUCER AS	
		2	**6V-8398**	1	SEAL-O-RING	
		2	**6V-8944**	1	REDUCER-O-RING	
	56	2	**9X-6579**	1	NUT-ORIFICE (7/16-12-THD)	
	57	1,2	*148-8391*	2	ELBOW AS	
					(EACH INCLUDES)	
		1,2	**2S-4078**	1	SEAL-O-RING	
		1,2	**5K-9090**	1	SEAL-O-RING	
		1,2	**8T-8987**	1	ELBOW	
	58	2	*148-8361*	1	ELBOW AS	

168-9379 **LINES GP-REAR ATTACHMENT** *(contd.)* **i02183760**

NOTE	REF NO	GRAPHIC REF	PART NUMBER	QTY	PART NAME 1 2 3 4 5 6 (PRODUCT LEVEL)	SEE PAGE
		2	**3J-7354**	1	SEAL-O-RING	
		2	**6V-8397**	1	SEAL-O-RING	
		2	**6V-9200**	1	ELBOW	
I	59	2	**113-6758**	1	HOSE AS	
I	60	2	**148-4942**	1	HOSE AS	
	61	1	**176-4719**	1	FLANGE	
	62	1	**4J-0519**	1	SEAL-O-RING	
M	63	1	**8T-4198**	2	BOLT (M10X1.5X100-MM)	
	64	1	**176-4714**	1	ELBOW	
	65	1	**6V-9746**	1	SEAL-O-RING	
Y	66	1	**087-5087**	1	VALVE GP-CHECK (PILOT OPERATED)	744
	67	1	**176-4715**	1	SUPPORT AS	
	68	1	**119-2379**	1	SUPPORT AS	
	69	1	**152-9372**	1	COUPLING AS	
M	70	2	**8T-4176**	4	BOLT (M12X1.75X90-MM)	
	71	2	**1S-0994**	1	CLIP	
	72	1,2	**4K-8864**	2	CLIP	
M	73	2	**8T-4191**	1	BOLT (M10X1.5X16-MM)	
M	74	1	**7X-2621**	1	BOLT (M10X1.5X12-MM)	

I-REFER TO HYDRAULIC INFORMATION SYSTEM
M-METRIC PART
Y-SEPARATE ILLUSTRATION

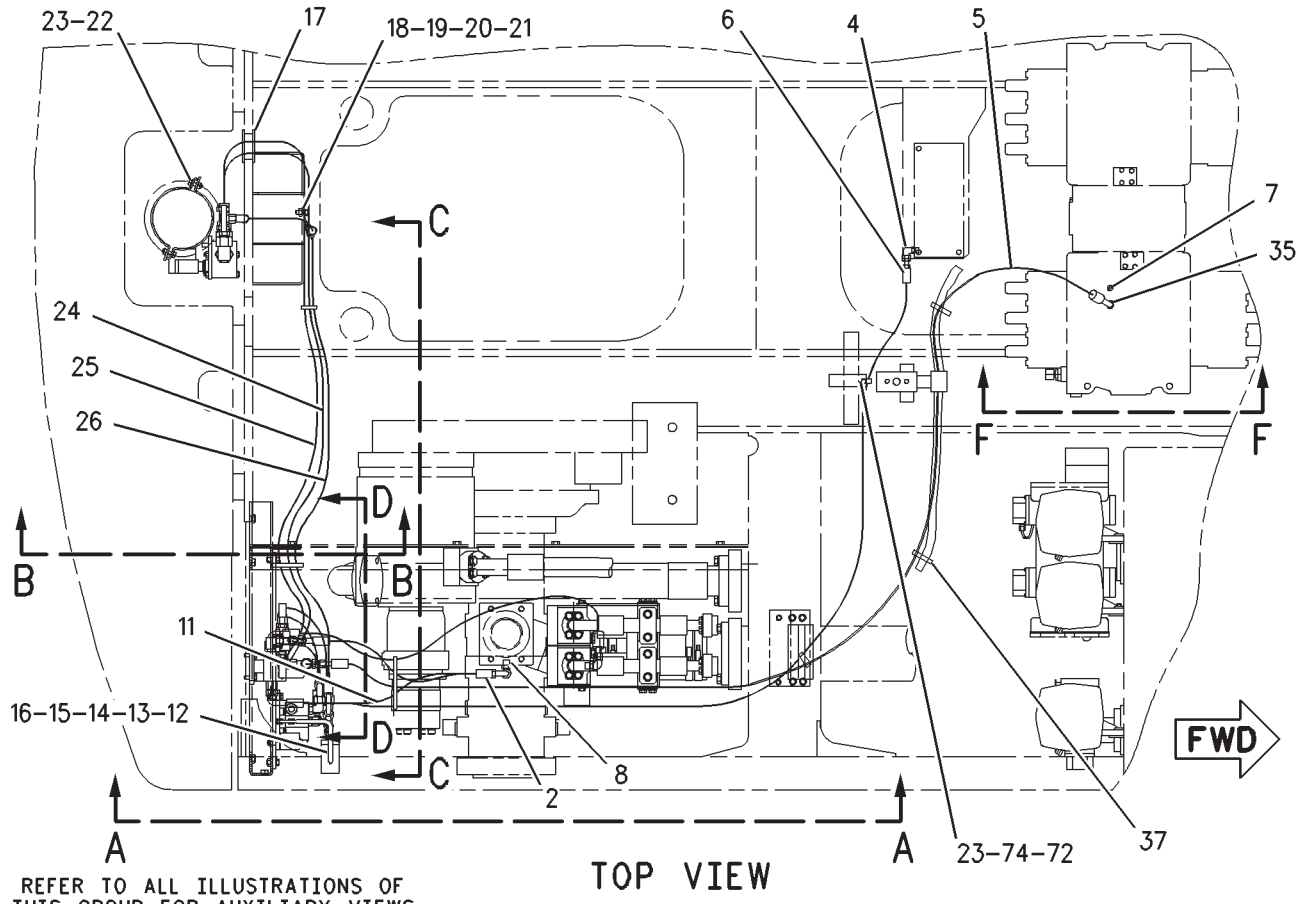

REFER TO ALL ILLUSTRATIONS OF THIS GROUP FOR AUXILIARY VIEWS

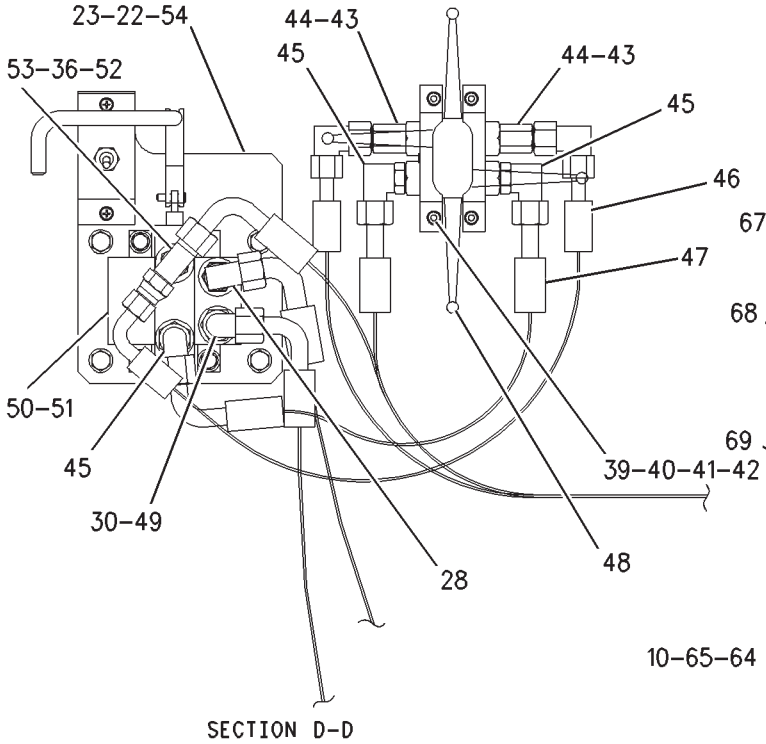

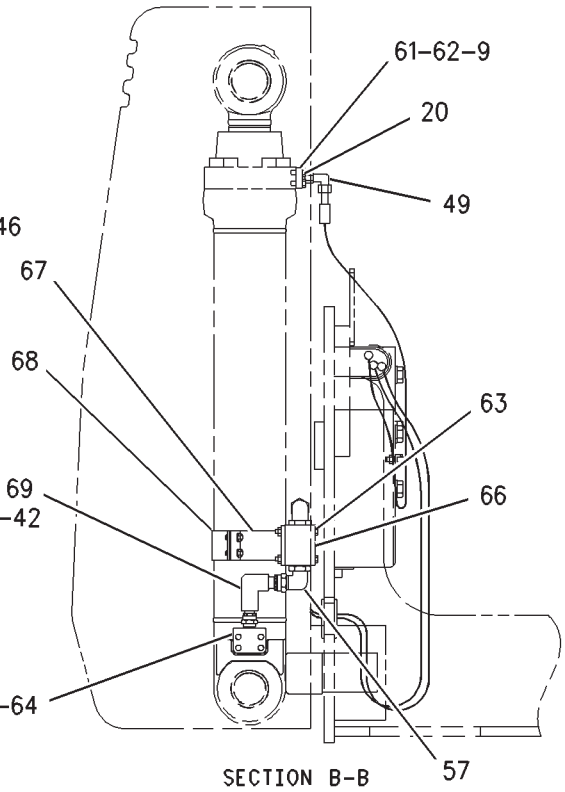

GRAPHIC #1

g00853722

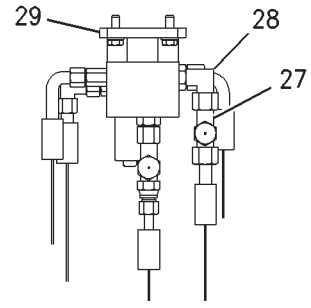

VIEW F-F

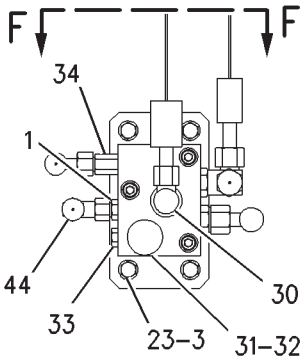

VIEW OF AREA E

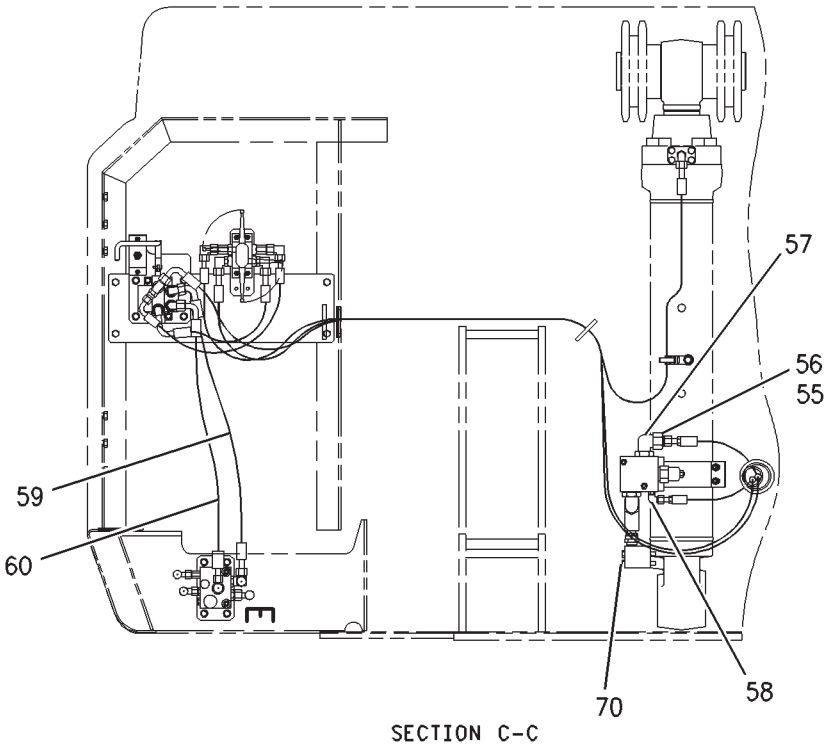

SECTION C-C

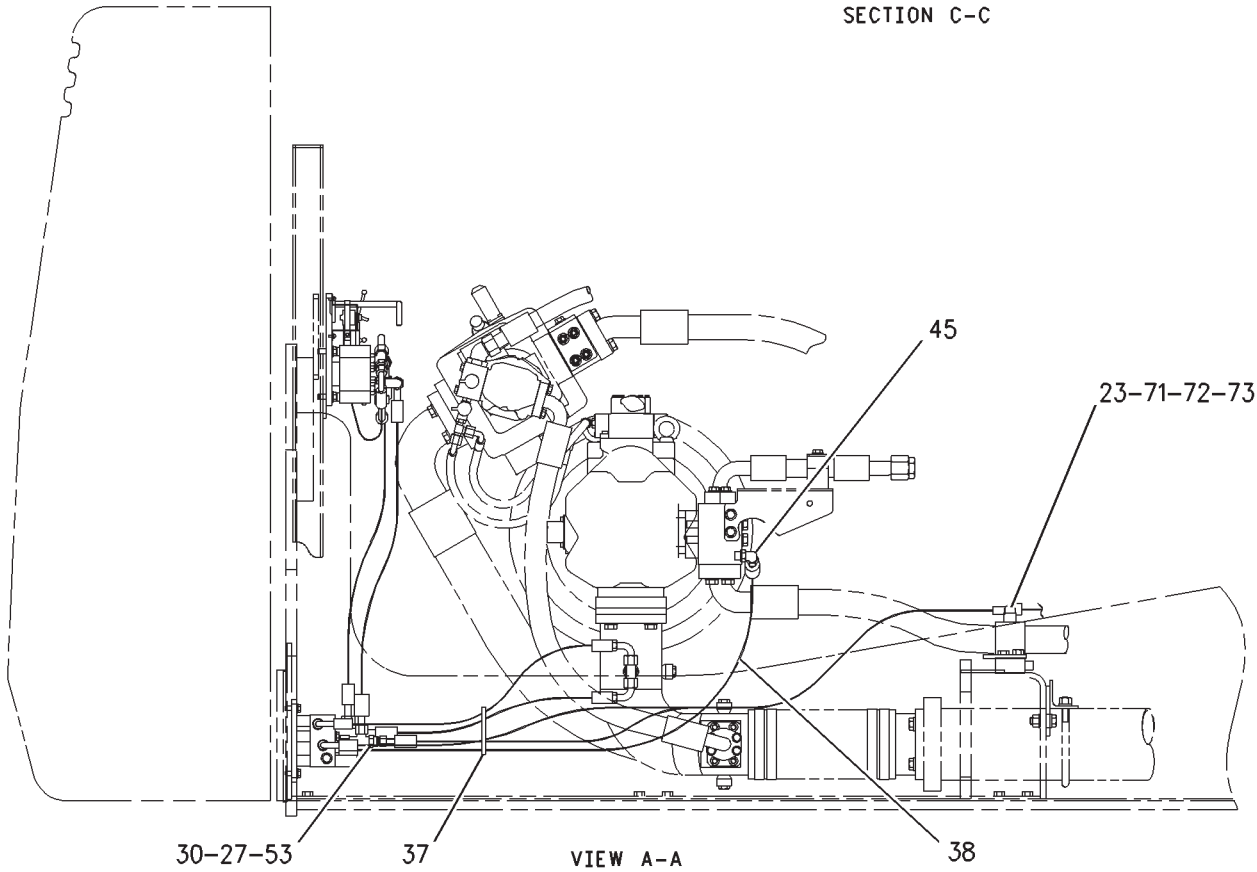

VIEW A-A

GRAPHIC #2

<END>

g00853723

HYDRAULIC SYSTEM

168-9375 LINES GP-RETURN & FILTER

S/N: RCD1-UP

PART OF 229-3367 HYDRAULIC AR

SMCS-5057 **i02188154**

NOTE	REF NO	GRAPHIC REF	PART NUMBER	QTY	PART NAME 1 2 3 4 5 6 (PRODUCT LEVEL)	SEE PAGE
	1	1	**173-4979**	1	HOSE AS	
	2	1,2	**4J-0522**	3	SEAL-O-RING	
I	3	1	**204-8271**	1	HOSE AS	
M	4	1	**8T-4139**	5	BOLT (M12X1.75X30-MM)	
	5	1,2	**8T-4223**	44	WASHER-HARD (13.5X25.5X3-MM THK)	
	6	1,2	**5P-7468**	2	CLIP (SLOT)	
	7	1,2	**5P-7469**	2	CLIP (TAB)	
	8	1,2	**8T-7087**	2	GROMMET	
I	9	1	**119-2652**	2	HOSE AS	
	10	1	*148-8359*	2	ELBOW AS	
					(EACH INCLUDES)	
		1	**3K-0360**	1	SEAL-O-RING	
		1	**6V-9746**	1	SEAL-O-RING	
		1	**6V-9877**	1	ELBOW	
M	11	1	**8T-4192**	1	BOLT (M12X1.75X25-MM)	
	12	1	**221-4967**	1	HOSE AS	
	13	1,2	*148-8335*	2	CONNECTOR AS	
					(EACH INCLUDES)	
		1,2	**5K-9090**	1	SEAL-O-RING	
		1,2	**6V-8635**	1	CONNECTOR	
		1,2	**7M-8485**	1	SEAL-O-RING	
	14	1	**204-8334**	1	SUPPORT AS	
	15	2	*164-5616*	1	PLUG AS	
		2	**2S-4078**	1	SEAL-O-RING	
		2	**9S-6130**	1	PLUG	
	16	1	*150-4033*	1	TEE AS	
		1	**6V-9746**	2	SEAL-O-RING	
		1	**6V-9846**	1	TEE-SWIVEL	
	17	2	**148-4787**	1	BLOCK	
I	18	2	**207-6272**	1	HOSE AS	
M	19	2	**8T-4198**	4	BOLT (M10X1.5X100-MM)	
	20	1	*148-8352*	1	ELBOW AS	
		1	**5K-9090**	1	SEAL-O-RING	
		1	**6V-9854**	1	ELBOW	
	21	1	**087-5729**	1	BLOCK	
	22	1	**4J-0524**	1	SEAL-O-RING	
M	23	1,2	**8T-4183**	30	BOLT (M12X1.75X40-MM)	
	24	1	**204-8290**	1	PIPE AS	
M	25	1	**7X-2549**	4	BOLT (M12X1.75X100-MM)	
	26	1,2	**6J-2680**	7	SEAL-O-RING	
	27	1	**204-8274**	1	PIPE AS	
	28	1	**204-8332**	1	SUPPORT AS	
M	29	1	**7Y-5247**	2	U-BOLT	
M	30	1	**8T-4133**	4	NUT (M10X1.5-THD)	
	31	1,2	**8T-4121**	22	WASHER-HARD (11X21X2.5-MM THK)	
I	32	2	**194-0248**	1	HOSE AS	
	33	1,2	**1P-4578**	6	FLANGE-HALF	
M	34	1,2	**8T-4196**	12	BOLT (M10X1.5X35-MM)	
	35	1,2	**227-0428**	2	HOSE	
	36	1,2	*8T-6675*	8	CLAMP-HOSE	
	37	1,2	**1P-4582**	16	FLANGE-HALF	
M	38	2	**8T-4956**	4	BOLT (M12X1.75X35-MM)	
	39	1,2	**173-4939**	2	FLANGE	
	40	1,2	**4J-0527**	17	SEAL-O-RING	
M	41	1,2	**101-7402**	12	BOLT-SOCKET HEAD (M12X1.75X30-MM)	
I	42	2	**141-1293**	1	HOSE AS	

168-9375 LINES GP-RETURN & FILTER *(contd.)* i02188154

NOTE	REF NO	GRAPHIC REF	PART NUMBER	QTY	PART NAME 1 2 3 4 5 6 (PRODUCT LEVEL)	SEE PAGE
	43	2	*148-8422*	1	TEE AS	
		2	**5K-9090**	1	SEAL-O-RING	
		2	**6V-9746**	1	SEAL-O-RING	
		2	**7M-8485**	1	SEAL-O-RING	
		2	**8T-6356**	1	TEE-O-RING PORT	
	44	2	*148-8429*	1	TEE AS	
		2	**5K-9090**	2	SEAL-O-RING	
		2	**6V-9840**	1	TEE-SWIVEL	
	45	1	**204-8304**	1	PIPE AS	
	46	1	**173-4991**	1	HOSE AS	
	47	2	**173-4929**	1	PIPE AS	
M	48	2	**7X-2550**	4	BOLT (M12X1.75X110-MM)	
Y	49	2	**201-9381**	1	VALVE GP-CHECK (RETURN THROUGH COOLER)	749
Y	50	2	**201-9382**	1	VALVE GP-CHECK (RETURN)	751
M	51	2	**8T-4136**	2	BOLT (M10X1.5X25-MM)	
	52	1	*164-6858*	1	TEE AS	
		1	**5K-9090**	2	SEAL-O-RING	
		1	**6V-8778**	1	TEE-FACE SEAL	
		1	**7M-8485**	1	SEAL-O-RING	
I	53	2	**204-8298**	1	HOSE AS	
	54	2	**8C-8533**	2	CLIP	
	55	2	**192-6815**	1	PIPE AS	
	56	1,2	**152-9521**	2	FLANGE	
	57	1,2	**152-9522**	2	COVER	
M	58	1,2	**8T-5092**	8	BOLT (M12X1.75X150-MM)	
	59	2	**204-8310**	1	PIPE AS	
M	60	1,2	**108-1781**	16	BOLT-SOCKET HEAD (M12X1.75X35-MM)	
	61	2	**7W-3447**	2	SPACER (10.2X19.05X10.2-MM THK)	
	62	1	**5P-1076**	4	WASHER-HARD (13.5X30X4-MM THK)	
	63	1,2	**212-5595**	8	SPACER (13.5X30X6-MM THK)	
	64	2	**218-1038**	1	FLANGE	
	65	1	**199-2025**	1	PIPE AS	
	66	1	**207-6553**	1	FLANGE	
	67	1,2	**7K-1181**	11	STRAP-CABLE	
	68	1	**134-6838**	2	GUARD	
	69	2	**150-3072**	2	PLUG AS	
	70	2	**6D-4246**	4	CLIP	
M	71	2	**8T-4137**	4	BOLT (M10X1.5X20-MM)	
	72	2	**212-5452**	2	HOSE AS	
	73	1,2	*148-8340*	2	CONNECTOR AS	
					(EACH INCLUDES)	
		1,2	**3K-0360**	1	SEAL-O-RING	
		1,2	**6V-8398**	1	SEAL-O-RING	
		1,2	**6V-8639**	1	CONNECTOR	
M	74	1	**8T-6868**	4	BOLT (M12X1.75X80-MM)	
	75	1	**212-5473**	1	BLOCK	
	76	1,2	**148-8364**	2	ELBOW AS	
					(EACH INCLUDES)	
		1,2	**3K-0360**	1	SEAL-O-RING	
		1,2	**6V-8398**	1	SEAL-O-RING	
		1,2	**6V-8625**	1	ELBOW	
M	77	2	**101-7398**	4	BOLT-SOCKET HEAD (M10X1.5X40-MM)	
	78	2	**218-1042**	1	HOSE AS	
Y	79	2	**215-4905**	1	ACCUMULATOR GP-HYDRAULIC (CHARGED)	441
M	80	2	**7Y-5250**	2	U-BOLT	
	81	2	**9X-8257**	4	WASHER (17.5X30X3.5-MM THK)	
M	82	2	**8T-4132**	4	NUT (M16X2-THD)	
	83	2	**218-1039**	1	SUPPORT AS	

I-REFER TO HYDRAULIC INFORMATION SYSTEM
M-METRIC PART
Y-SEPARATE ILLUSTRATION

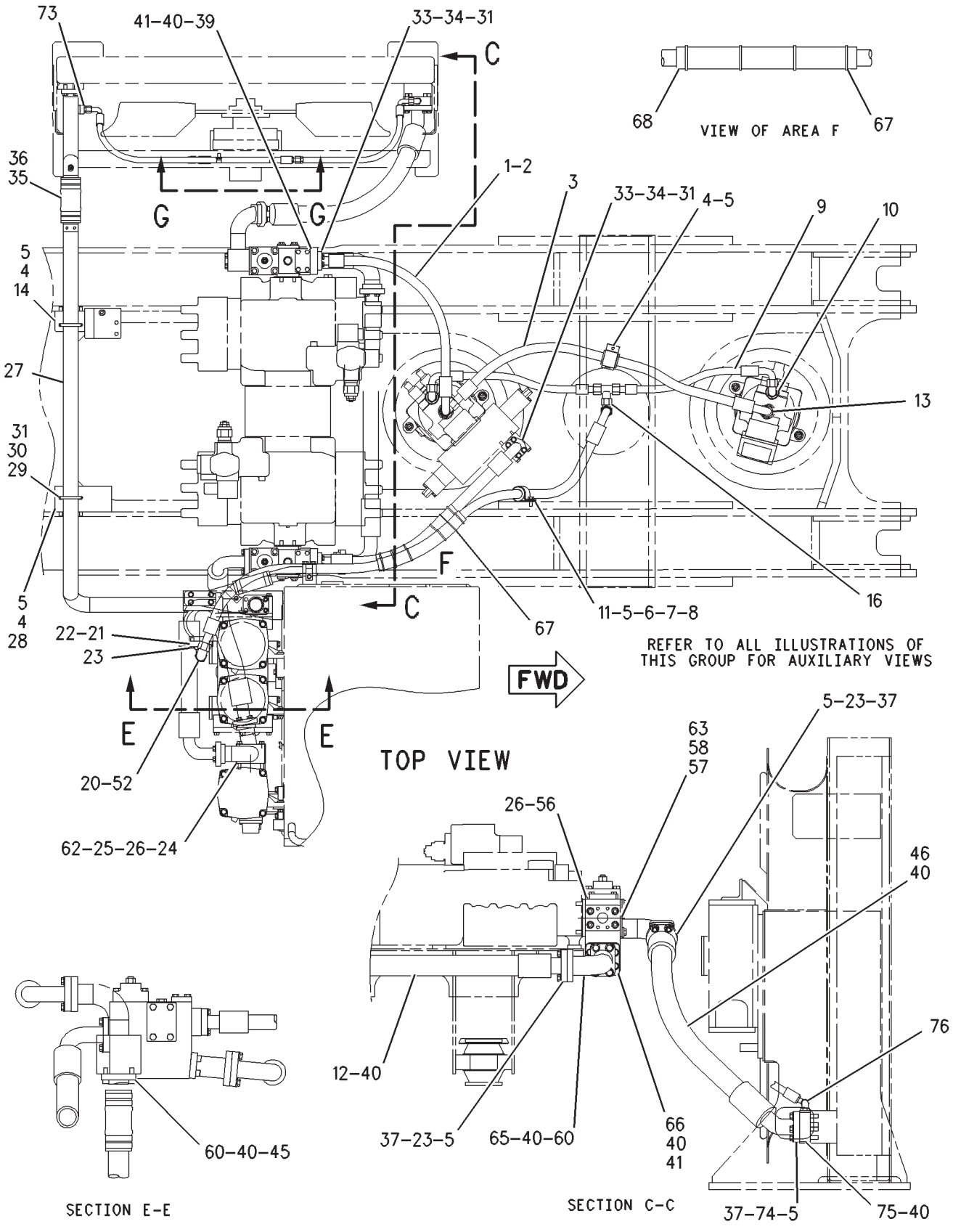

GRAPHIC #1

g00874493

168-9375 **LINES GP-RETURN & FILTER** *(contd.)* **i02188154**

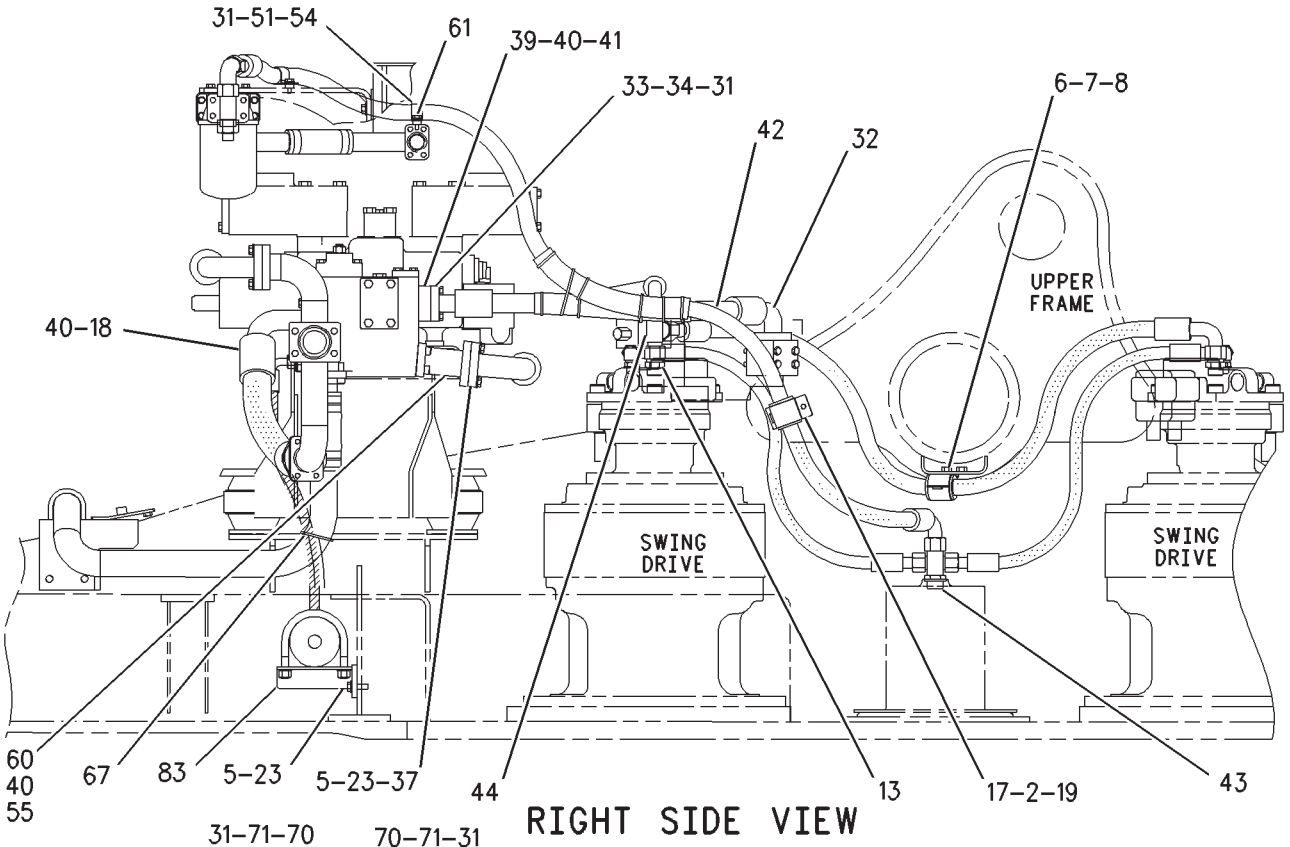

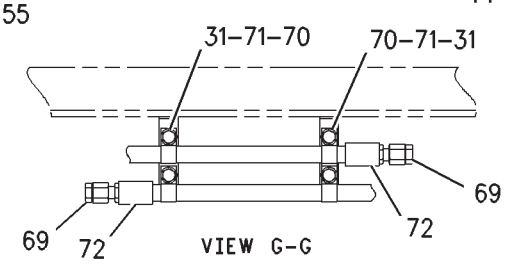

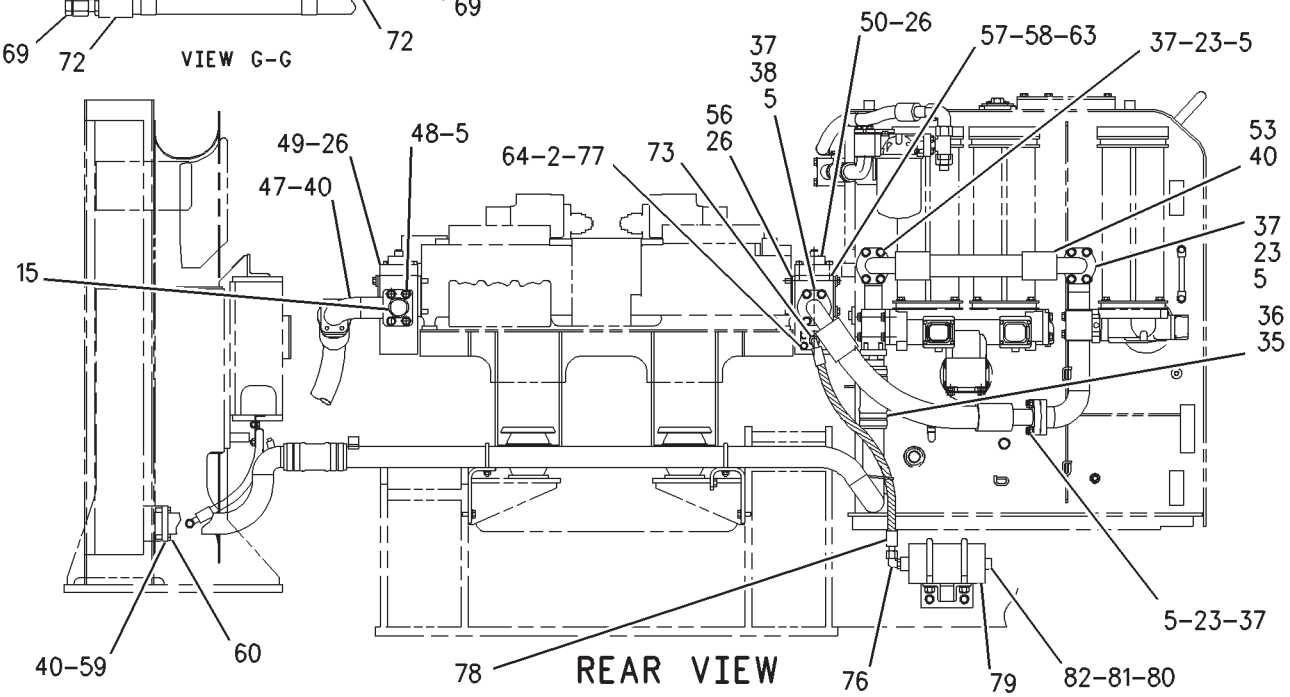

GRAPHIC #2 **<END>** g00874494

HYDRAULIC SYSTEM

173-5001 LINES GP-STICK

S/N: RCD1-UP
PART OF 150-2810 STICK AR-HOE
FOR USE WITH 3.7-M (12-FT) STICK
AN ATTACHMENT

SMCS-5057, 5458 **i01676312**

NOTE	REF NO	GRAPHIC REF	PART NUMBER	QTY	PART NAME 1 2 3 4 5 6 (PRODUCT LEVEL)	SEE PAGE
	1	1	**5P-8077**	8	FLANGE-HALF	
	2	1	**1P-3705**	4	SEAL-RECTANGULAR	
	3	1	**9X-8257**	16	WASHER (17.5X30X3.5-MM THK)	
M	4	1	**8T-4140**	12	BOLT (M16X2X60-MM)	
I	5	1	**212-5541**	2	HOSE AS	
	6	1	**4I-0924**	1	FLANGE	
M	7	1	**7X-2558**	4	BOLT (M16X2X150-MM)	
	8	1	**1P-3706**	1	SEAL-RECTANGULAR	

I-REFER TO HYDRAULIC INFORMATION SYSTEM
M-METRIC PART

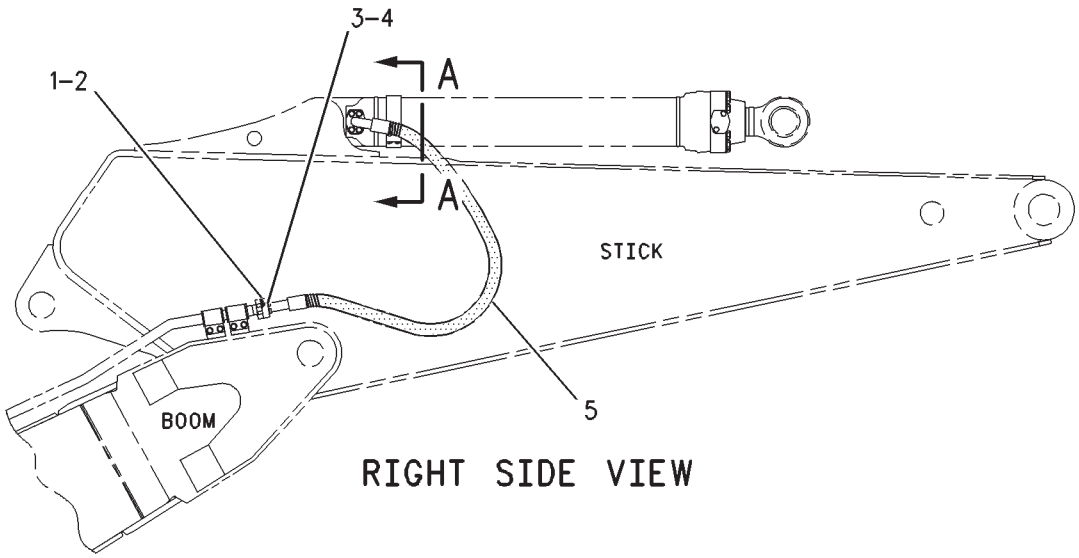

RIGHT SIDE VIEW

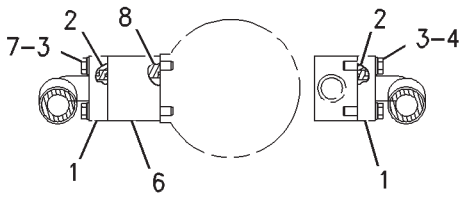

SECTION A-A

GRAPHIC #1 **<END>** g00804287

HYDRAULIC SYSTEM

173-5028 LINES GP-STICK

S/N: RCD1-UP
PART OF 150-2811 STICK AR-HOE
FOR USE WITH 3.4-M (11.2-FT) STICK
AN ATTACHMENT

SMCS-5057, 5458 **i01676311**

NOTE	REF NO	GRAPHIC REF	PART NUMBER	QTY	PART NAME 1 2 3 4 5 6 (PRODUCT LEVEL)	SEE PAGE
	1	1	**1P-3705**	4	SEAL-RECTANGULAR	
	2	1	**5P-8077**	8	FLANGE-HALF	
	3	1	**9X-8257**	16	WASHER (17.5X30X3.5-MM THK)	
M	4	1	**8T-4140**	16	BOLT (M16X2X60-MM)	
I	5	1	**212-5541**	2	HOSE AS	

I-REFER TO HYDRAULIC INFORMATION SYSTEM
M-METRIC PART

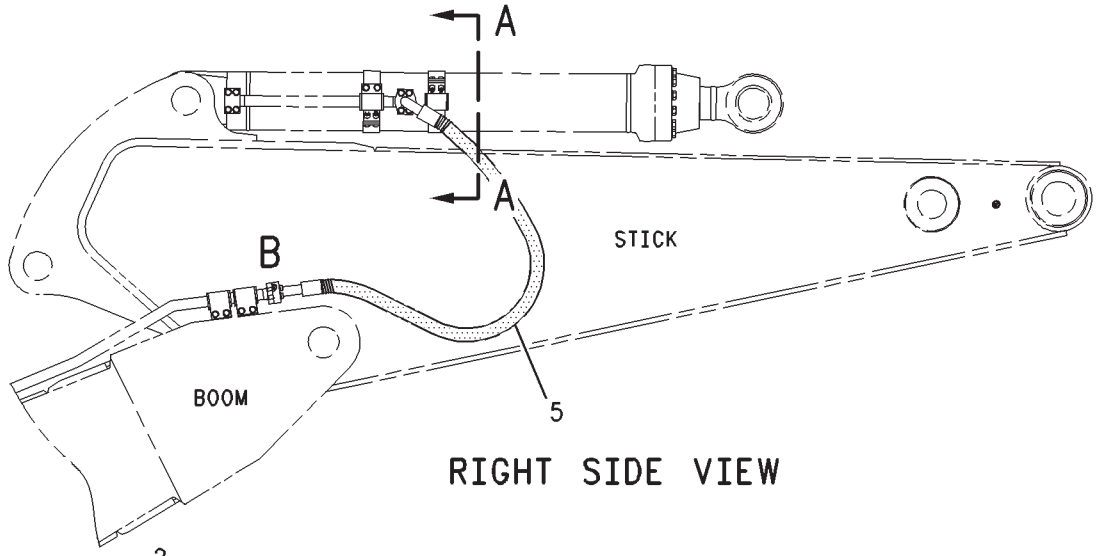

RIGHT SIDE VIEW

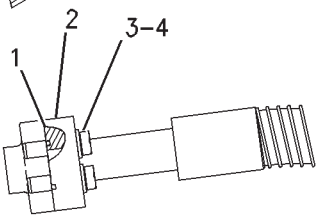

VIEW OF AREA B

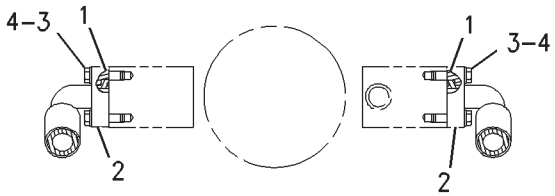

SECTION A-A

GRAPHIC #1 **<END>** g00804878

HYDRAULIC SYSTEM

176-4371 LINES GP-STICK

S/N: RCD1-UP
PART OF 150-2806 STICK AR-HOE
FOR USE WITH 5.5-M (18-FT) STICK
AN ATTACHMENT

SMCS-5057, 5458 **i01678980**

NOTE	REF NO	GRAPHIC REF	PART NUMBER	QTY	PART NAME 1 2 3 4 5 6 (PRODUCT LEVEL)	SEE PAGE
I	1	1	**212-5542**	2	HOSE AS	
	2	1	**9X-8257**	16	WASHER (17.5X30X3.5-MM THK)	
M	3	1	**8T-4140**	12	BOLT (M16X2X60-MM)	
	4	1	**1P-3705**	4	SEAL-RECTANGULAR	
	5	1	**5P-8077**	8	FLANGE-HALF	
	6	1	**4I-0924**	1	FLANGE	
M	7	1	**7X-2558**	4	BOLT (M16X2X150-MM)	
	8	1	**1P-3706**	1	SEAL-RECTANGULAR	

I-REFER TO HYDRAULIC INFORMATION SYSTEM
M-METRIC PART

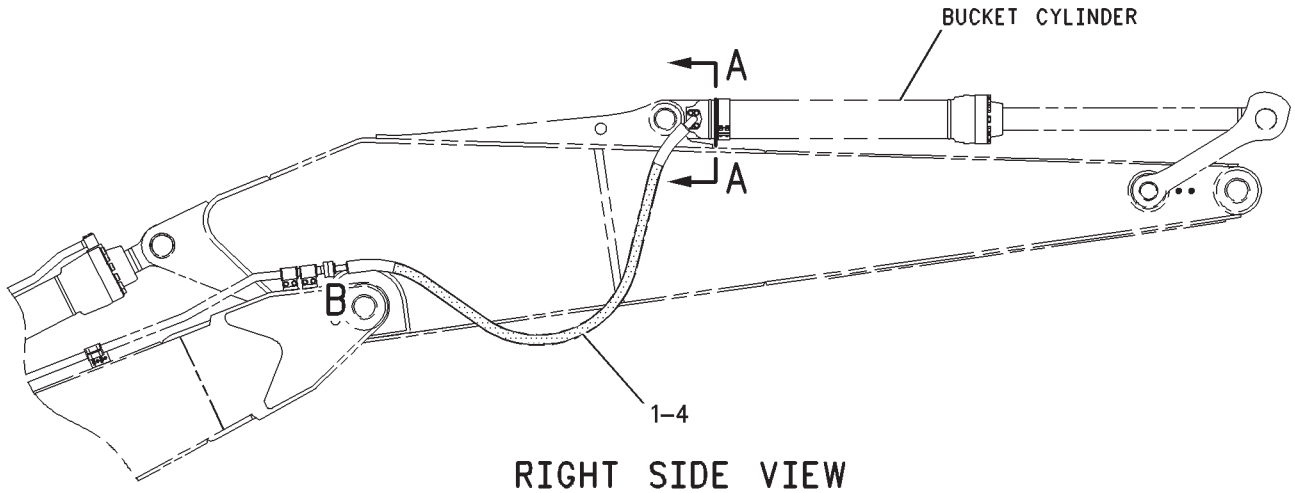

RIGHT SIDE VIEW

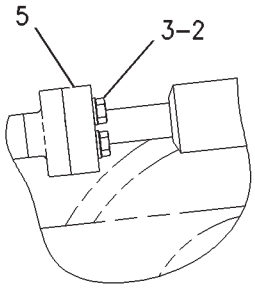

VIEW OF AREA B

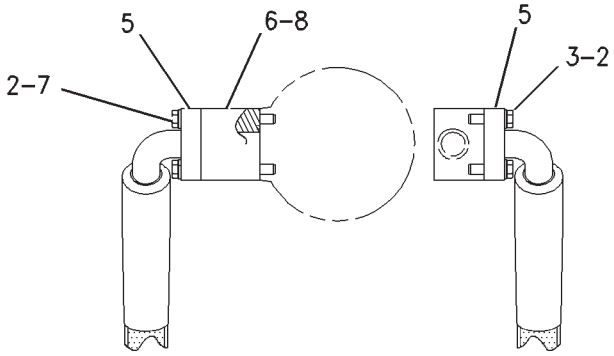

SECTION A–A

GRAPHIC #1 **<END>** g00781403

HYDRAULIC SYSTEM

176-4372 LINES GP-STICK

S/N: RCD1-UP
PART OF 150-2807 STICK AR-HOE
FOR USE WITH 4.4-M (14-FT) STICK
AN ATTACHMENT

SMCS-5057, 5458 **i01678979**

NOTE	REF NO	GRAPHIC REF	PART NUMBER	QTY	PART NAME 1 2 3 4 5 6 (PRODUCT LEVEL)	SEE PAGE
	1	1	**1P-3705**	4	SEAL-RECTANGULAR	
	2	1	**5P-8077**	8	FLANGE-HALF	
	3	1	**9X-8257**	16	WASHER (17.5X30X3.5-MM THK)	
M	4	1	**8T-4140**	12	BOLT (M16X2X60-MM)	
I	5	1	**212-5543**	2	HOSE AS	
M	6	1	**7X-2558**	4	BOLT (M16X2X150-MM)	
	7	1	**4I-0924**	1	FLANGE	
	8	1	**1P-3706**	1	SEAL-RECTANGULAR	

I-REFER TO HYDRAULIC INFORMATION SYSTEM
M-METRIC PART

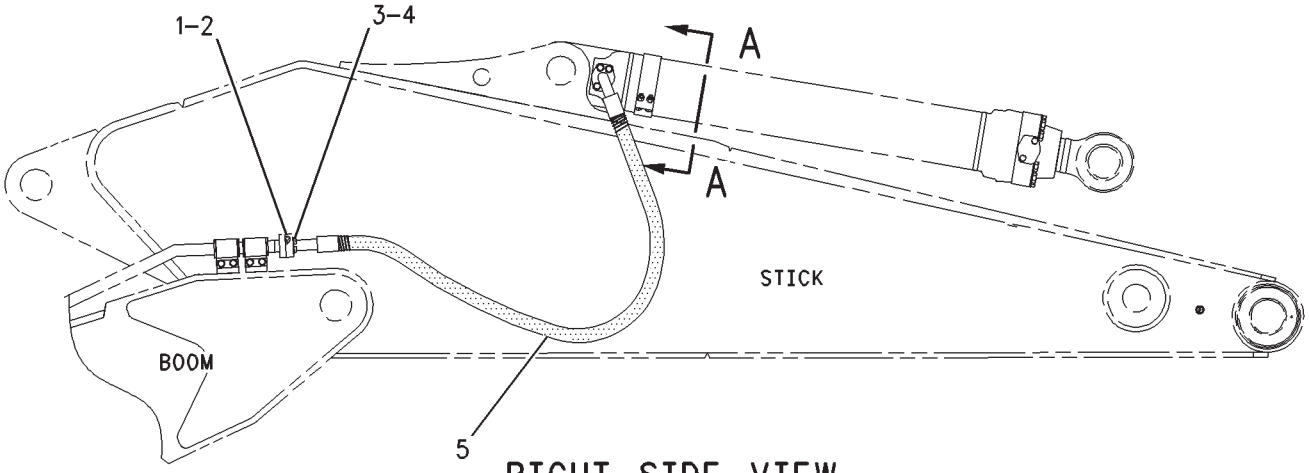

RIGHT SIDE VIEW

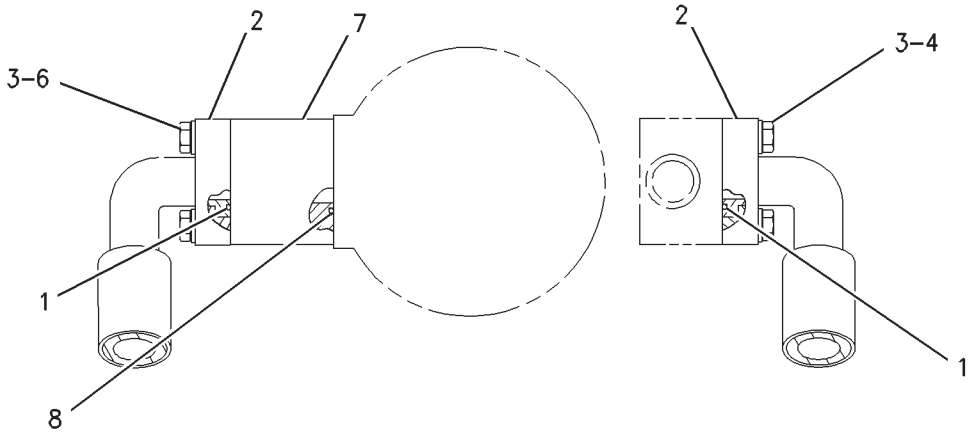

SECTION A–A

GRAPHIC #1 **<END>** g00782369

HYDRAULIC SYSTEM

176-4375 LINES GP-STICK

S/N: RCD1-UP
PART OF 250-1670 STICK AR, 150-2812 STICK AR-HOE
FOR USE WITH 2.9-M (9.5-FT) STICK
AN ATTACHMENT

SMCS-5057, 5458 **i01678977**

NOTE	REF NO	GRAPHIC REF	PART NUMBER	QTY	PART NAME 1 2 3 4 5 6 (PRODUCT LEVEL)	SEE PAGE
I	1	1	**212-5544**	2	HOSE AS	
M	2	1	**8T-4140**	16	BOLT (M16X2X60-MM)	
	3	1	**9X-8257**	16	WASHER (17.5X30X3.5-MM THK)	
	4	1	**5P-8077**	8	FLANGE-HALF	
	5	1	**1P-3705**	4	SEAL-RECTANGULAR	

I-REFER TO HYDRAULIC INFORMATION SYSTEM
M-METRIC PART

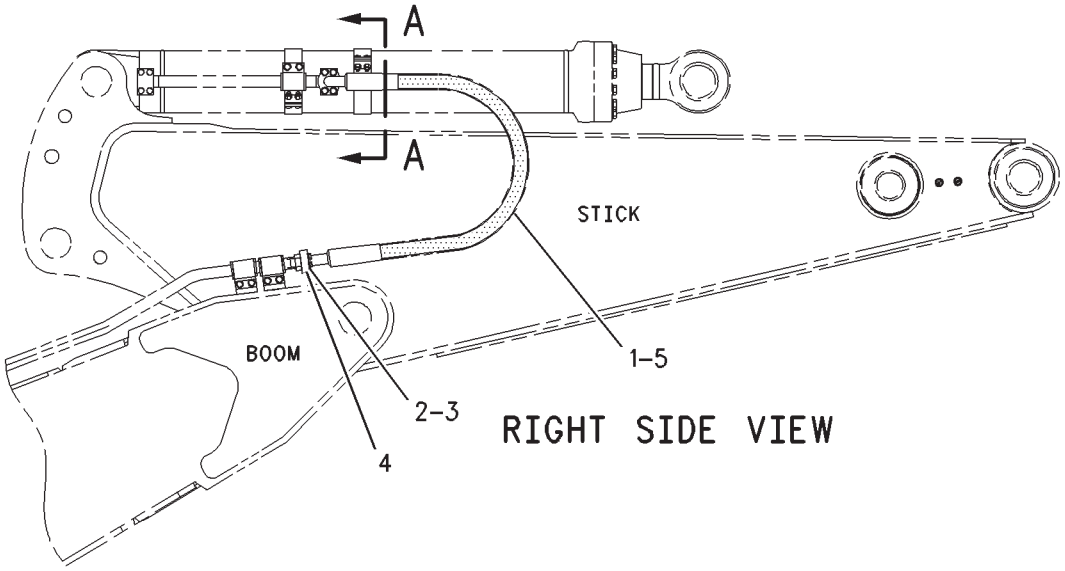

RIGHT SIDE VIEW

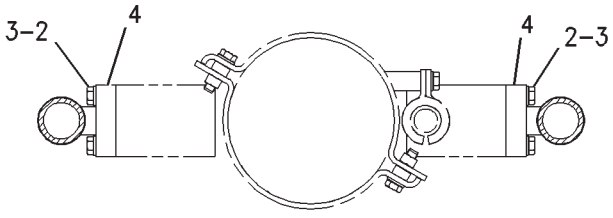

SECTION A-A

GRAPHIC #1 **<END>** g00804292

HYDRAULIC SYSTEM

207-6278 LINES GP-STICK

S/N: RCD1-UP
PART OF 228-8129 STICK AR-HOE
FOR USE WITH 3.4-M (11.2-FT) STICK
AN ATTACHMENT

SMCS-5057, 5458 **i01692039**

NOTE	REF NO	GRAPHIC REF	PART NUMBER	QTY	PART NAME 1 2 3 4 5 6 (PRODUCT LEVEL)	SEE PAGE
	1	1	**1P-3705**	4	SEAL-RECTANGULAR	
	2	1	**5P-8077**	8	FLANGE-HALF	
	3	1	**9X-8257**	16	WASHER (17.5X30X3.5-MM THK)	
M	4	1	**8T-4140**	16	BOLT (M16X2X60-MM)	
I	5	1	**212-5541**	2	HOSE AS	

I-REFER TO HYDRAULIC INFORMATION SYSTEM
M-METRIC PART

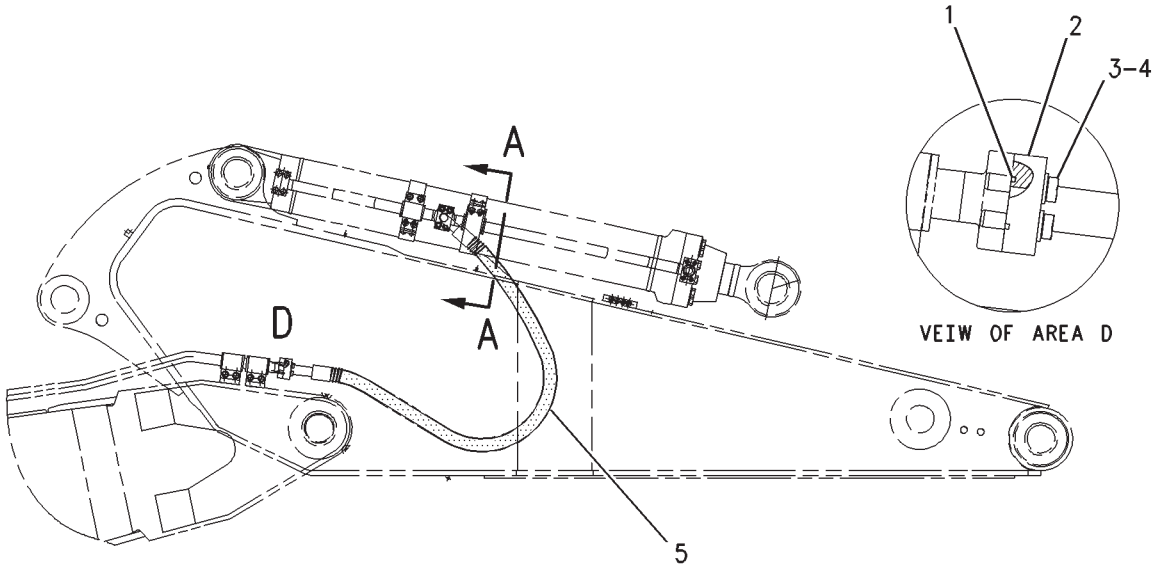

RIGHT SIDE VIEW

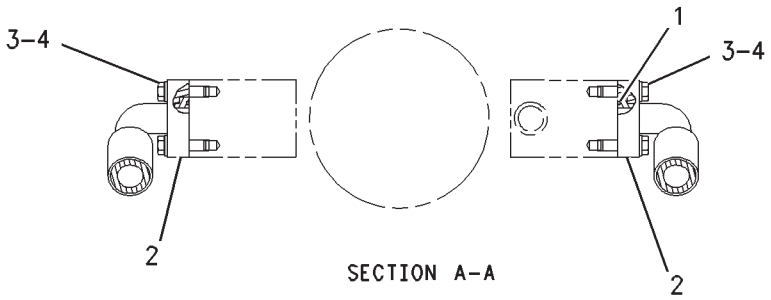

SECTION A-A

GRAPHIC #1 **<END>** g00851155

HYDRAULIC SYSTEM

208-3516 LINES GP-STICK

S/N: RCD1-UP
MEDIUM PRESSURE AHC
FOR USE WITH 150-2810—PAGE 927
AN ATTACHMENT

SMCS-5057, 5458 **i01995334**

NOTE	REF NO	GRAPHIC REF	PART NUMBER	QTY	PART NAME 1 2 3 4 5 6 (PRODUCT LEVEL)	SEE PAGE
B	1	1	**7K-1181**	10	STRAP-CABLE	
	2	1	*148-8414*	2	REDUCER AS	
					(EACH INCLUDES)	
		1	**6V-8943**	1	REDUCER	
		1	**7J-9108**	1	SEAL-O-RING	
	3	1	**6V-9746**	2	SEAL-O-RING	
	4	1	**8T-4121**	4	WASHER-HARD (11X21X2.5-MM THK)	
	5	1	**5K-9660**	4	CLIP	
M	6	1	**8T-4191**	4	BOLT (M10X1.5X16-MM)	
	7	1	*148-8322*	2	CONNECTOR AS	
					(EACH INCLUDES)	
		1	**2M-9780**	1	SEAL-O-RING	
		1	**6V-8640**	1	CONNECTOR	
		1	**6V-9746**	1	SEAL-O-RING	
	8	1	**208-1246**	2	MANIFOLD	
I	9	1	**209-3556**	2	HOSE AS	
	10	1	**210-0602**	2	TUBE AS	
	11	1	**139-6797**	1	BRACKET	
	12	1	**139-7459**	1	BRACKET	
M	13	1	**141-6348**	4	BOLT (M10X1.5X65-MM)	
	14	1	**188-6434**	1	BRACKET	
	15	1	**188-6435**	1	BRACKET	
BM	16	1	**8T-4193**	8	BOLT (M16X2X50-MM)	
BM	17	1	**7X-2553**	8	BOLT (M16X2X40-MM)	

B-USE AS REQUIRED
I-REFER TO HYDRAULIC INFORMATION SYSTEM
M-METRIC PART

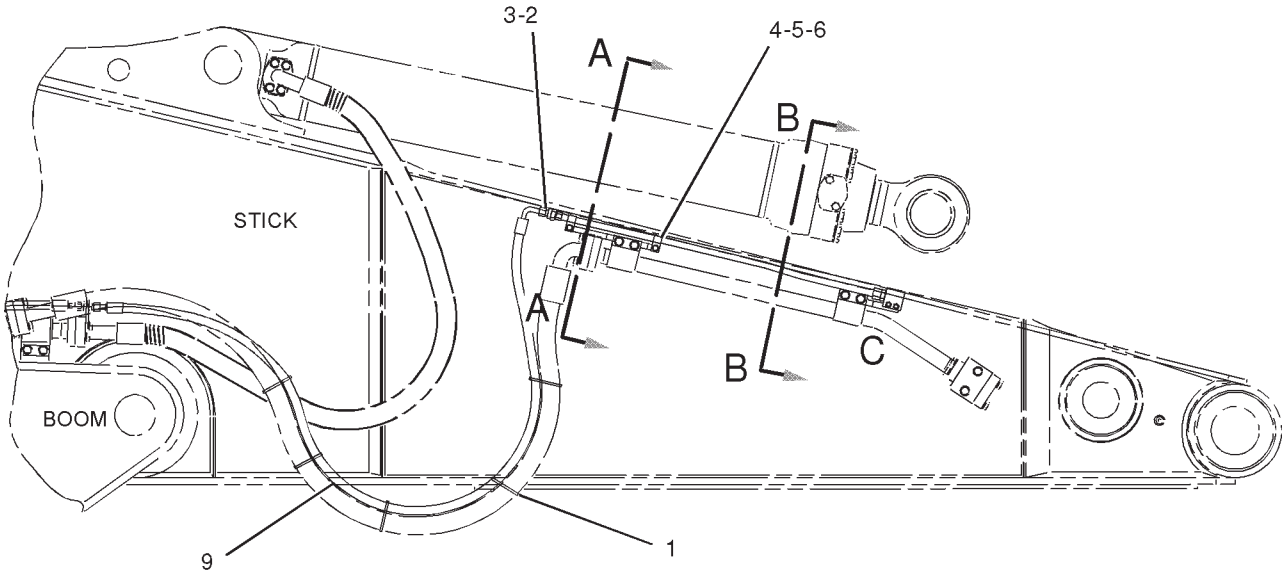

RIGHT SIDE VIEW

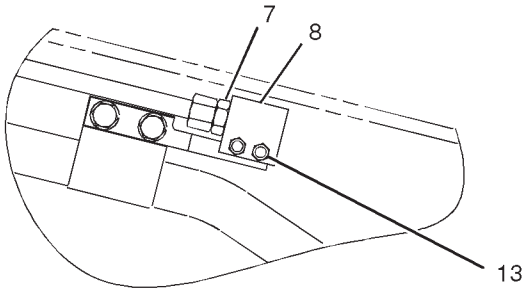

VIEW OF AREA C

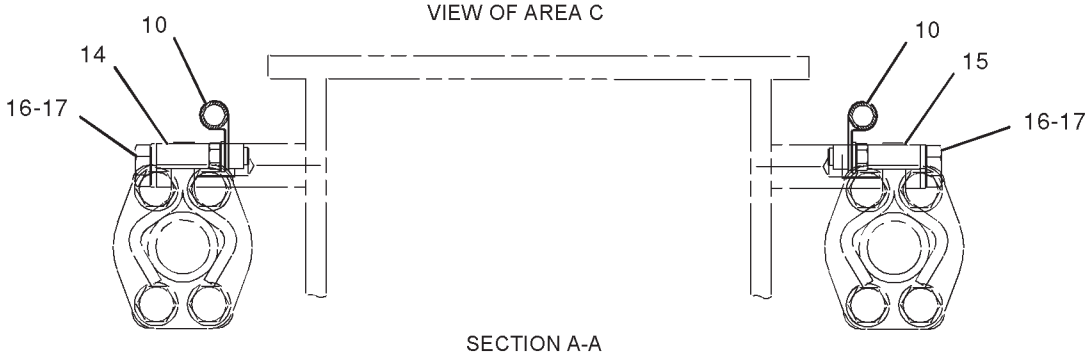

SECTION A-A

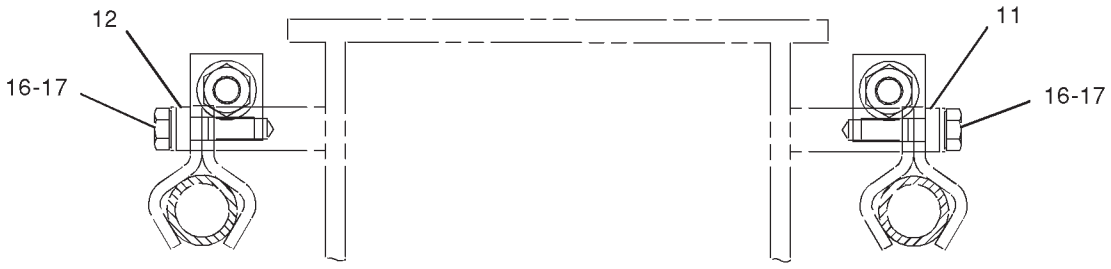

SECTION B-B

GRAPHIC #1

<END>

g01044504

HYDRAULIC SYSTEM

173-4907 LINES GP-STICK CYLINDER

S/N: RCD1-UP
PART OF 155-9069 CYLINDER & LINES GP-STICK
AN ATTACHMENT
TYPE 1

SMCS-5458 **i01535190**

NOTE	REF NO	GRAPHIC REF	PART NUMBER	QTY	PART NAME 1 2 3 4 5 6 (PRODUCT LEVEL)	SEE PAGE
	1	1	**7Y-5187**	1	TUBE AS	
M	2	1	**7X-2556**	4	BOLT (M16X2X100-MM)	
	3	1	**1P-3706**	1	SEAL-RECTANGULAR	
	4	1	**9X-8257**	12	WASHER (17.5X30X3.5-MM THK)	
M	5	1	**8T-4140**	12	BOLT (M16X2X60-MM)	
	6	1	**173-4769**	2	SUPPORT AS	
	7	1	**173-4770**	2	SUPPORT AS	
					(EACH INCLUDES)	
M		1	**8T-4132**	2	NUT (M16X2-THD)	
	8	1	**138-5709**	2	GROMMET	
	9	1	**138-5708**	4	CLIP-HALF	
	10	1	**6W-3731**	4	SPACER (19.07X26.99X14-MM THK)	

M-METRIC PART

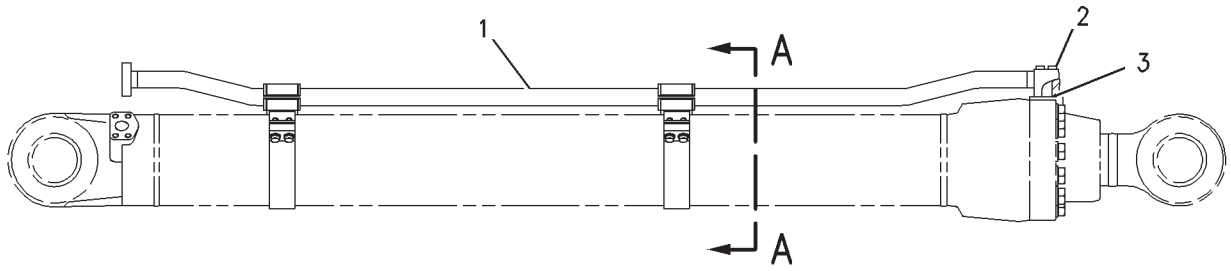

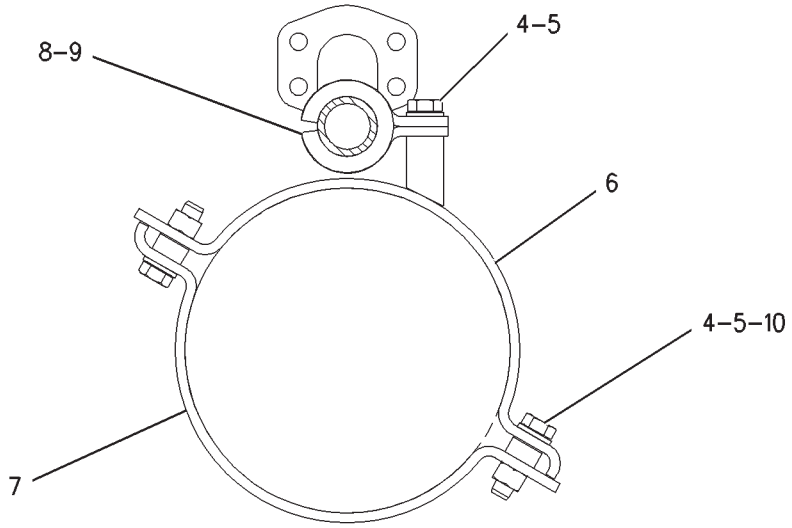

SECTION A–A

GRAPHIC #1 **<END>** g00800593

HYDRAULIC SYSTEM

173-4907 LINES GP-STICK CYLINDER

S/N: RCD1-UP
PART OF 155-9069 CYLINDER & LINES GP-STICK
AN ATTACHMENT
TYPE 2

SMCS-5458 **i03588952**

NOTE	REF NO	GRAPHIC REF	PART NUMBER	QTY	PART NAME 1 2 3 4 5 6 (PRODUCT LEVEL)	SEE PAGE
C	1	1	**338-6113**	1	TUBE AS	
M	2	1	**7X-2556**	4	BOLT (M16X2X100-MM)	
	3	1	**1P-3706**	1	SEAL-RECTANGULAR	
	4	1	**9X-8257**	12	WASHER (17.5X30X3.5-MM THK)	
M	5	1	**8T-4140**	12	BOLT (M16X2X60-MM)	
	6	1	**173-4769**	2	SUPPORT AS	
	7	1	**173-4770**	2	SUPPORT AS	
					(EACH INCLUDES)	
M		1	**8T-4132**	2	NUT (M16X2-THD)	
	8	1	**138-5709**	2	GROMMET	
	9	1	**138-5708**	4	CLIP-HALF	

C-CHANGE FROM PREVIOUS TYPE
M-METRIC PART

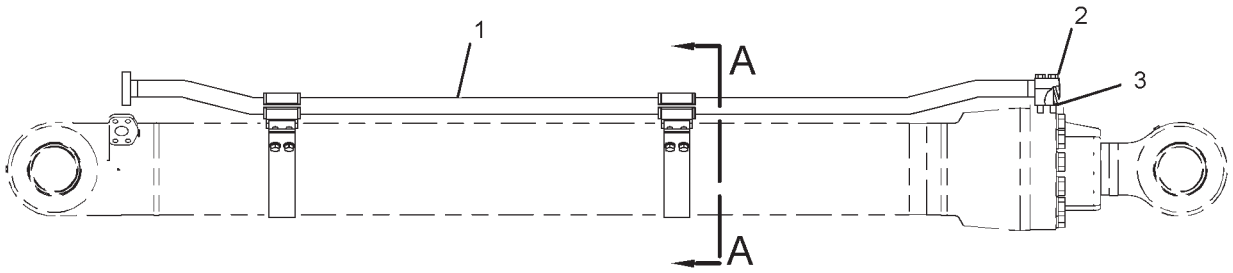

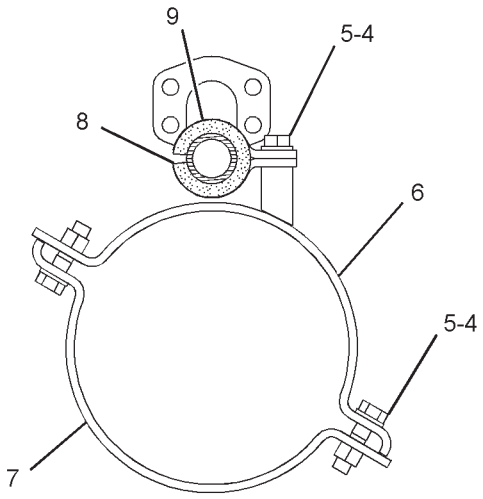

SECTION A-A

GRAPHIC #1 **<END>** g01920915

HYDRAULIC SYSTEM

173-8028 LINES GP-STICK CYLINDER—LOWERING CONTROL

S/N: RCD1-UP

PART OF 206-3183 VALVE AR, 238-6483, 238-6487 VALVE AR-LOAD CONTROL, 171-0027 VALVE AR-STICK LOWERING CONT AN ATTACHMENT

SMCS-5458 **i03511962**

NOTE	REF NO	GRAPHIC REF	PART NUMBER	QTY	PART NAME 1 2 3 4 5 6 (PRODUCT LEVEL)	SEE PAGE
	1	1	**093-1294**	2	CLAMP	
	2	1	**143-4160**	4	CLIP	
	3	1	**153-8874**	2	CLIP AS	
Y	4	1	**171-0193**	1	VALVE GP-CHECK & RELIEF (STICK LOWERING CONTROL)	754
	5	1	**173-4770**	3	SUPPORT AS	
	6	1	**173-8137**	1	TUBE AS	
	7	1	**173-8138**	1	TUBE AS	
	8	1	**173-8139**	1	PIPE AS	
	9	1	**173-8141**	1	PIPE AS	
	10	1	**179-4581**	2	SUPPORT AS	
	11	1	**179-4585**	1	SUPPORT AS	
	12	1	**179-4587**	2	PLATE	
	13	1	**193-6606**	2	PLATE	
	14	1	*148-8318*	1	CONNECTOR AS	
		1	**3K-0360**	1	SEAL-O-RING	
		1	**6V-8397**	1	SEAL-O-RING	
		1	**6V-8634**	1	CONNECTOR	
	15	1	*148-8327*	1	CONNECTOR AS	
		1	**3D-2824**	1	SEAL-O-RING	
		1	**6V-8637**	1	CONNECTOR	
		1	**6V-9746**	1	SEAL-O-RING	
	16	1	*148-8336*	1	CONNECTOR AS	
		1	**3J-1907**	1	SEAL-O-RING	
		1	**6V-8397**	1	SEAL-O-RING	
		1	**6V-8636**	1	CONNECTOR	
	17	1	**1P-3706**	2	SEAL-RECTANGULAR	
	18	1	**6V-8398**	2	SEAL-O-RING	
	19	1	**6V-9746**	1	SEAL-O-RING	
M	20	1	**7X-2557**	4	BOLT (M16X2X140-MM)	
	21	1	**7Y-4868**	2	CLIP	
	22	1	**8T-4121**	2	WASHER-HARD (11X21X2.5-MM THK)	
M	23	1	**8T-4140**	16	BOLT (M16X2X60-MM)	
M	24	1	**8T-4182**	2	BOLT (M10X1.5X45-MM)	
M	25	1	**8T-4193**	4	BOLT (M16X2X50-MM)	
	26	1	**8T-4223**	12	WASHER-HARD (13.5X25.5X3-MM THK)	
M	27	1	**8T-4910**	4	BOLT (M12X1.75X60-MM)	
M	28	1	**8T-4956**	8	BOLT (M12X1.75X35-MM)	
	29	1	**9X-8257**	16	WASHER (17.5X30X3.5-MM THK)	

M-METRIC PART
Y-SEPARATE ILLUSTRATION

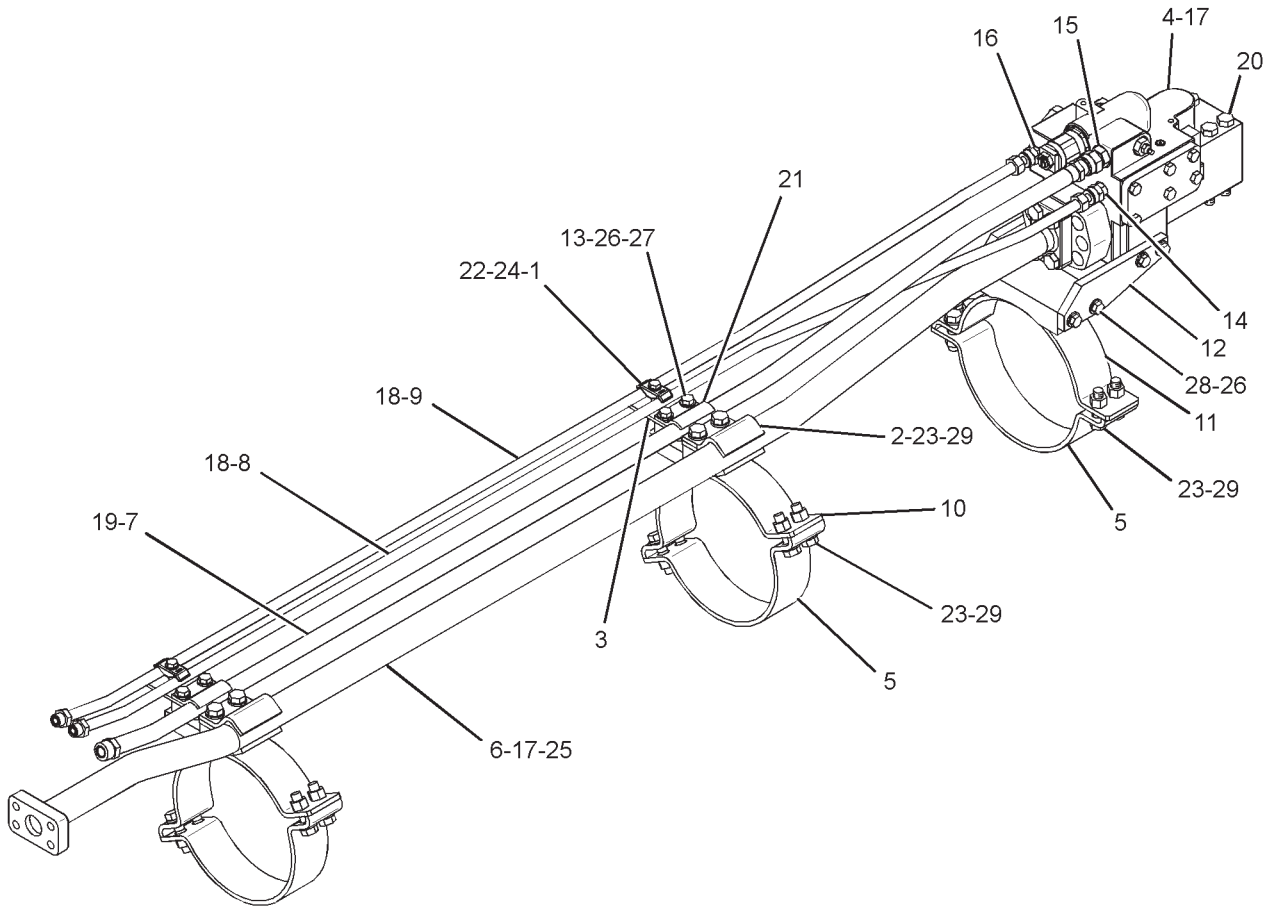

GRAPHIC #1 **<END>** g01722913

HYDRAULIC SYSTEM

168-9373 LINES GP-SWING MOTOR

S/N: RCD1-205

PART OF 229-3367 HYDRAULIC AR

SMCS-5057 **i01694107**

NOTE	REF NO	GRAPHIC REF	PART NUMBER	QTY	PART NAME 1 2 3 4 5 6 (PRODUCT LEVEL)	SEE PAGE
M	1	1	**8T-5436**	8	BOLT (M10X1.5X130-MM)	
Y	2	1	**174-1858**	1	VALVE GP-CONTROL (SWING)	775
	3	1	**4F-8946**	2	SEAL-O-RING	
	4	1	**149-6812**	2	BLOCK	
	5	1	**1P-3702**	2	SEAL-RECTANGULAR	
M	6	1	**8T-5005**	8	BOLT (M10X1.5X70-MM)	
	7	1	**8T-4121**	8	WASHER-HARD (11X21X2.5-MM THK)	
	9	1	*148-8347*	4	ELBOW AS	
					(EACH INCLUDES)	
		1	**3D-2824**	1	SEAL-O-RING	
		1	**6V-9007**	1	ELBOW	
		1	**6V-9746**	1	SEAL-O-RING	
Y	10	1	**116-3420**	1	VALVE GP-SWING CUSHION	879
	11	1	**4J-5267**	2	SEAL-O-RING	
M	12	1	**8T-4178**	6	BOLT (M10X1.5X90-MM)	
	13	1	**7G-5984**	1	CLIP (TAB)	
	14	1	**7G-5985**	1	CLIP (SLOT)	
	15	1	**6V-1876**	1	GROMMET	
M	16	1	**8T-4139**	2	BOLT (M12X1.75X30-MM)	
	17	1	**8T-4223**	2	WASHER-HARD (13.5X25.5X3-MM THK)	
I	18	1	**204-8568**	1	HOSE AS	
I	19	1	**204-8569**	1	HOSE AS	

I-REFER TO HYDRAULIC INFORMATION SYSTEM
M-METRIC PART
Y-SEPARATE ILLUSTRATION

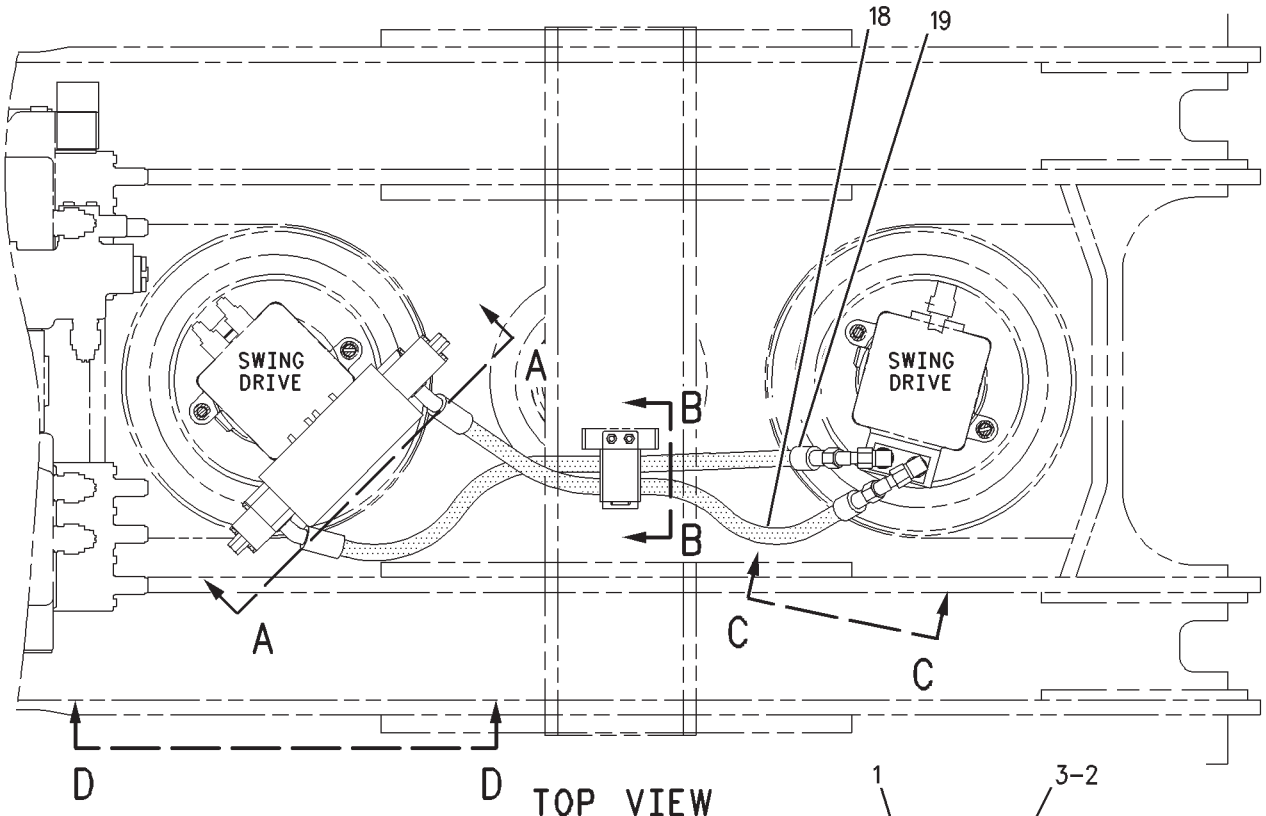

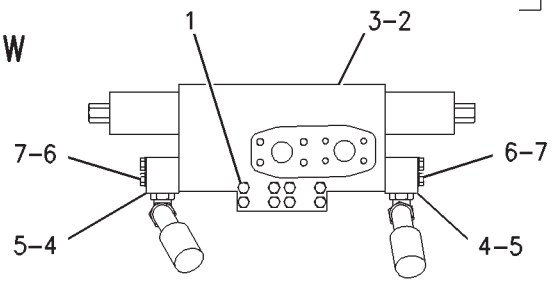

VIEW A-A

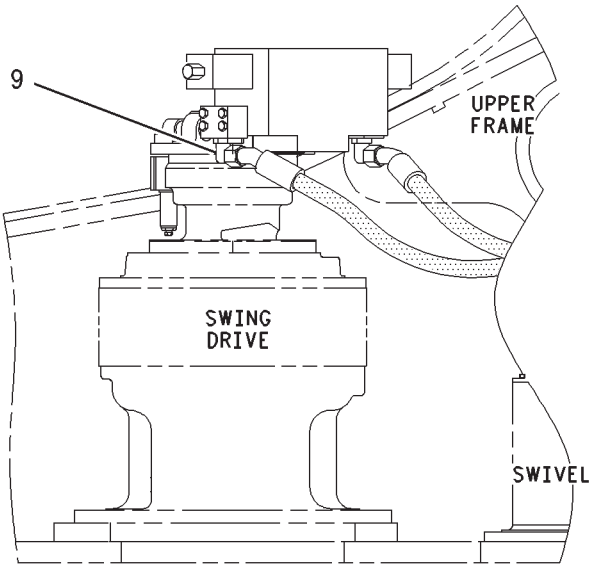

VIEW D-D

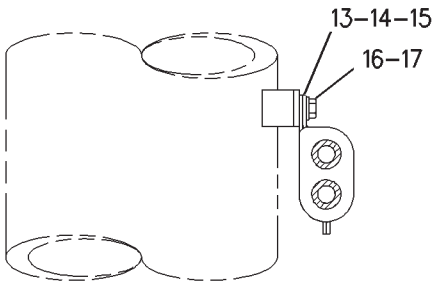

VIEW B-B

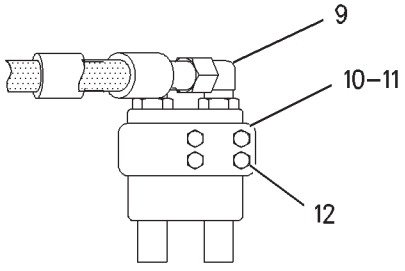

VIEW C-C

GRAPHIC #1 **<END>** g00872104

HYDRAULIC SYSTEM

168-9373 LINES GP-SWING MOTOR

S/N: RCD206-UP

PART OF 229-3367 HYDRAULIC AR

SMCS-5057 **i02127643**

NOTE	REF NO	GRAPHIC REF	PART NUMBER	QTY	PART NAME 1 2 3 4 5 6 (PRODUCT LEVEL)	SEE PAGE
C	1	1	*106-8715*	1	ELBOW AS	
		1	**3D-2824**	1	SEAL-O-RING	
		1	**6V-9746**	1	SEAL-O-RING	
		1	**8C-8400**	1	ELBOW	
Y	2	1	**116-3420**	1	VALVE GP-SWING CUSHION	879
	3	1	**149-6812**	2	BLOCK	
Y	4	1	**174-1858**	1	VALVE GP-CONTROL (SWING)	775
I	5	1	**204-8568**	1	HOSE AS	
I	6	1	**204-8569**	1	HOSE AS	
C	7	1	*148-8347*	3	ELBOW AS	
					(EACH INCLUDES)	
		1	**3D-2824**	1	SEAL-O-RING	
		1	**6V-9007**	1	ELBOW	
		1	**6V-9746**	1	SEAL-O-RING	
	8	1	**1P-3702**	2	SEAL-RECTANGULAR	
	9	1	**4F-8946**	2	SEAL-O-RING	
	10	1	**4J-5267**	2	SEAL-O-RING	
	11	1	**6V-1876**	1	GROMMET	
	12	1	**7G-5984**	1	CLIP (TAB)	
	13	1	**7G-5985**	1	CLIP (SLOT)	
	14	1	**8T-4121**	8	WASHER-HARD (11X21X2.5-MM THK)	
M	15	1	**8T-4139**	2	BOLT (M12X1.75X30-MM)	
M	16	1	**8T-4178**	6	BOLT (M10X1.5X90-MM)	
	17	1	**8T-4223**	2	WASHER-HARD (13.5X25.5X3-MM THK)	
M	18	1	**8T-5005**	8	BOLT (M10X1.5X70-MM)	
M	19	1	**8T-5436**	8	BOLT (M10X1.5X130-MM)	

C-CHANGE FROM PREVIOUS TYPE
I-REFER TO HYDRAULIC INFORMATION SYSTEM
M-METRIC PART
Y-SEPARATE ILLUSTRATION

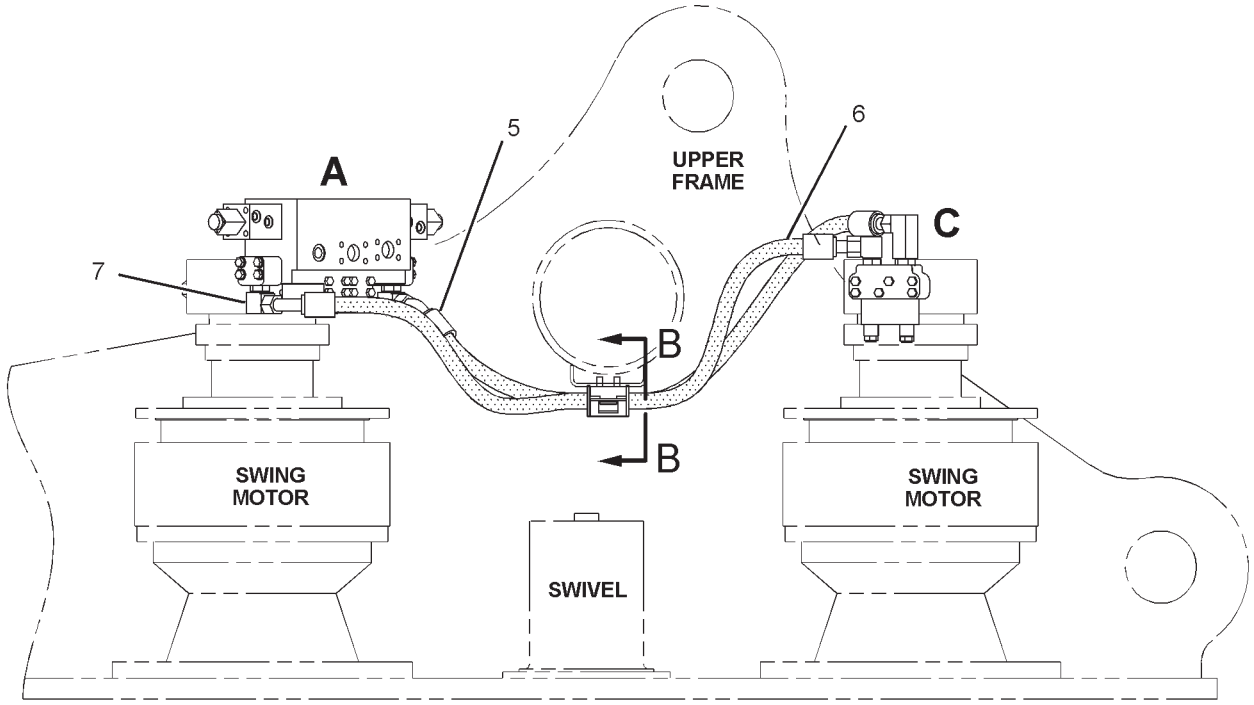

RIGHT SIDE VIEW

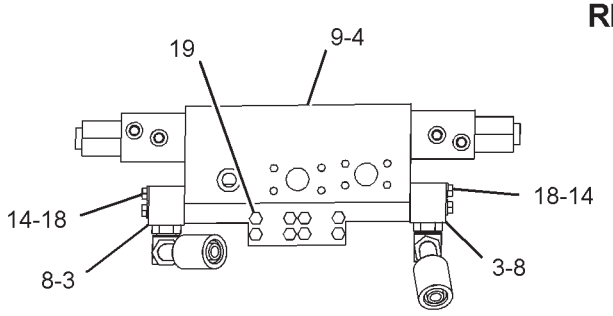

VIEW OF AREA A

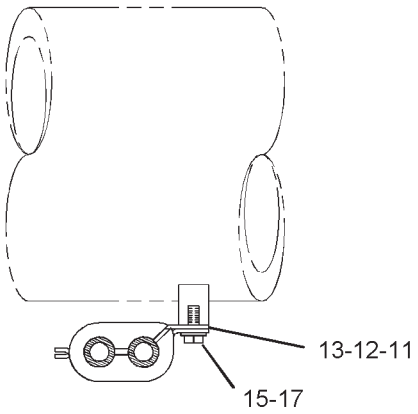

SECTION B-B

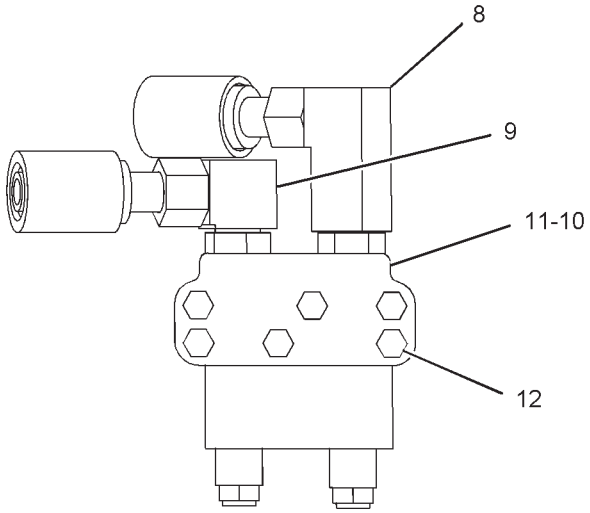

VIEW C-C

GRAPHIC #1 **<END>** g01084222

HYDRAULIC SYSTEM

168-9372 LINES GP-TRAVEL MOTOR

S/N: RCD1-UP
LONG CRAWLER
PART OF 229-3367 HYDRAULIC AR

SMCS-5057, 5058 **i02484910**

NOTE	REF NO	GRAPHIC REF	PART NUMBER	QTY	PART NAME 1 2 3 4 5 6 (PRODUCT LEVEL)	SEE PAGE
CI	1	1	**223-6662**	1	HOSE AS	
CI	2	1	**223-6663**	1	HOSE AS	
	3	1	**1P-3704**	16	SEAL-RECTANGULAR	
C	4	1	**212-5170**	1	TUBE AS	
M	5	1	**8T-4183**	20	BOLT (M12X1.75X40-MM)	
C	6	1	**1P-3705**	4	SEAL-RECTANGULAR	
C	7	1	**223-6646**	1	TUBE AS	
C	8	1	**212-5172**	1	TUBE AS	
C	9	1	**212-5171**	1	TUBE AS	
	10	1	**1P-5767**	32	FLANGE-HALF	
M	11	1	**8T-4184**	32	BOLT (M12X1.75X45-MM)	
C	12	1	**8T-4223**	78	WASHER-HARD (13.5X25.5X3-MM THK)	
Y	13	1	**156-0622**	1	SWIVEL GP	727
	14	1	**4I-1647**	1	SUPPORT AS	
	15	1	**4I-1682**	1	PLATE	
	16	1	**8T-0706**	2	RING-RETAINING	
M	17	1	**7X-2552**	5	BOLT (M16X2X30-MM)	
	18	1	**9X-8257**	5	WASHER (17.5X30X3.5-MM THK)	
B	19	1	**1U-8846**		SEALANT-GASKET	
	20	1	**227-0341**	1	SUPPORT AS	
C	21	1	**5P-0597**	4	CLAMP-HOSE	
C	22	1	**165-3350**	4	GUARD	
I	23	1	**173-5123**	2	HOSE AS	
	24	1	**173-5150**	8	CLIP	
CM	25	1	**8T-4956**	8	BOLT (M12X1.75X35-MM)	
M	26	1	**110-4821**	12	BOLT-SOCKET HEAD (M16X2X55-MM)	
CI	27	1	**223-6666**	2	HOSE AS	
CI	28	1	**266-1036**	2	HOSE AS	
	29	1	*148-8439*	1	TEE AS	
		1	**6V-8774**	1	TEE	
		1	**3J-1907**	1	SEAL-O-RING	
		1	**6V-8397**	2	SEAL-O-RING	
CI	30	1	**223-6661**	1	HOSE AS	
M	31	1	**8T-4194**	34	BOLT (M12X1.75X50-MM)	
	32	1	*148-8339*	1	CONNECTOR AS	
		1	**6V-8716**	1	CONNECTOR	
		1	**6V-9746**	1	SEAL-O-RING	
		1	**7M-8485**	1	SEAL-O-RING	
CI	33	1	**223-6664**	1	HOSE AS	
	34	1	*150-4033*	1	TEE AS	
		1	**6V-9846**	1	TEE-SWIVEL	
		1	**6V-9746**	2	SEAL-O-RING	
	35	1	**173-4946**	2	CLIP	
	36	1	**173-4947**	2	CLIP	
	37	1	**6V-1577**	2	GROMMET	
M	38	1	**8T-4136**	8	BOLT (M10X1.5X25-MM)	
	39	1	**8T-4121**	8	WASHER-HARD (11X21X2.5-MM THK)	
	40	1	**173-5120**	4	GROMMET	
	41	1	**204-8488**	2	GROMMET	
	42	1	**266-1035**	2	HOSE AS	
	43	1	*164-5615*	2	ELBOW AS	
					(EACH INCLUDES)	
		1	**8T-8986**	1	ELBOW	
		1	**4K-1388**	1	SEAL-O-RING	
		1	**5K-9090**	1	SEAL-O-RING	

168-9372 **LINES GP-TRAVEL MOTOR** *(contd.)* **i02484910**

NOTE	REF NO	GRAPHIC REF	PART NUMBER	QTY	PART NAME 1 2 3 4 5 6 (PRODUCT LEVEL)	SEE PAGE
	44	1	*153-6236*	2	REDUCER AS	
					(EACH INCLUDES)	
		1	**6V-8946**	1	REDUCER	
		1	**6V-9746**	1	SEAL-O-RING	
	45	1	*148-8336*	2	CONNECTOR AS	
					(EACH INCLUDES)	
		1	**6V-8636**	1	CONNECTOR	
		1	**3J-1907**	1	SEAL-O-RING	
		1	**6V-8397**	1	SEAL-O-RING	
Y	46	1	**155-9200**	2	VALVE GP-TRAVEL COUNTERBALANCE	880
	47	1	**7K-1181**	10	STRAP-CABLE	

B-USE AS REQUIRED
C-CHANGE FROM PREVIOUS TYPE
I-REFER TO HYDRAULIC INFORMATION SYSTEM
M-METRIC PART
Y-SEPARATE ILLUSTRATION

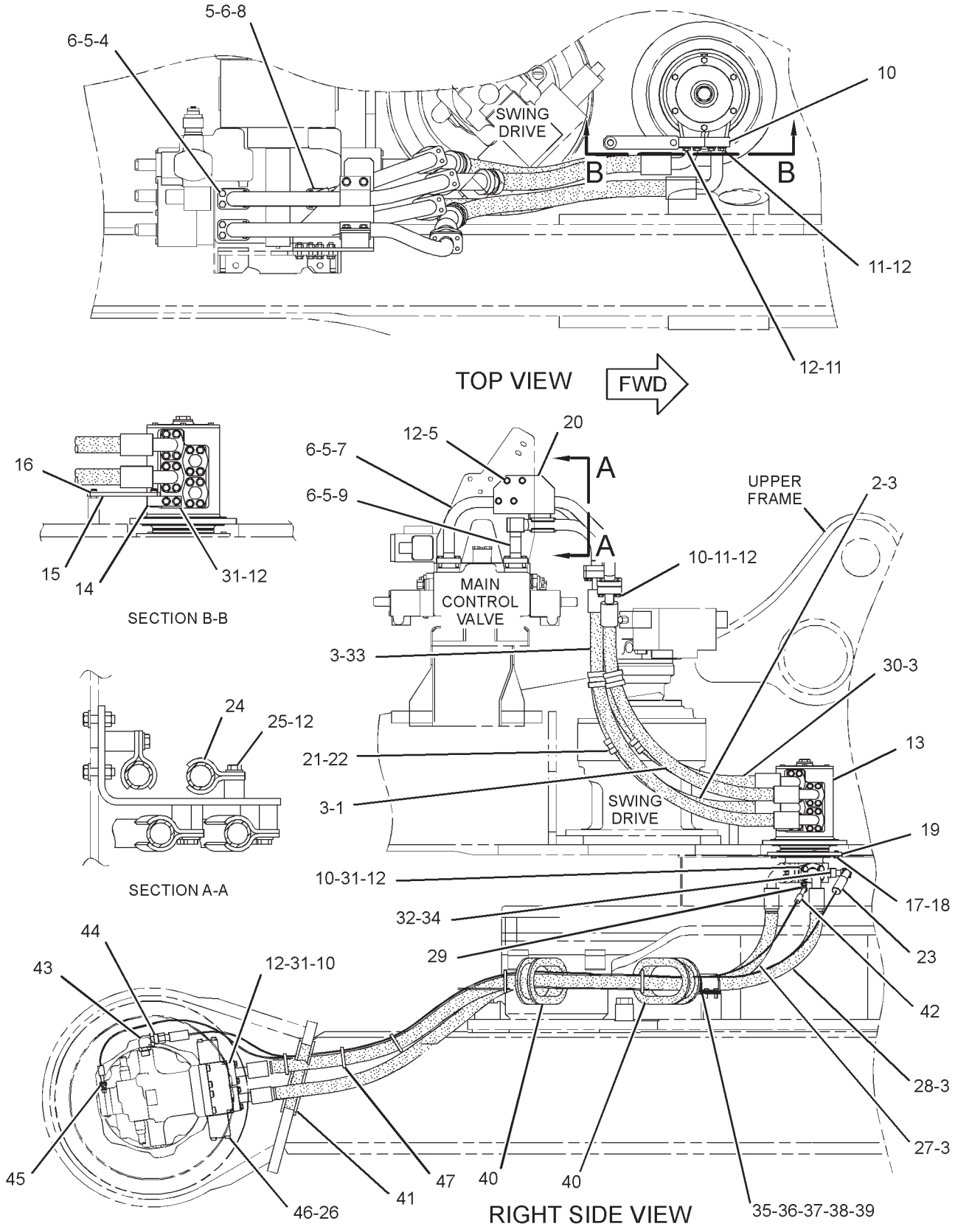

GRAPHIC #1 **<END>** g01243495

HYDRAULIC SYSTEM

154-3294 MANIFOLD & VALVE GP

S/N: RCD1-UP

PART OF 174-1827, 174-1829, 174-1846, 174-1854, 233-6969 VALVE GP-CONTROL

ALSO AN ATTACHMENT

SMCS-5264, 5479 **i01818791**

NOTE	REF NO	GRAPHIC REF	PART NUMBER	QTY	PART NAME 1 2 3 4 5 6 (PRODUCT LEVEL)	SEE PAGE
	2	1	**117-6616**	3	SPOOL-CONTROL	
	3	1	**118-5085**	3	RETAINER	
	4	1	**118-5086**	3	SPRING	
	5	1	**118-5087**	3	SPRING	
	6	1	**121-2051**	3	SPRING	
	7	1	**121-2052**	3	SPRING	
	8	1	**142-3380**	1	HOUSING	
	10	1	**077-3241**	3	SEAL-O-RING	
	11	1	**112-5874**	3	SOLENOID AS	
					(EACH INCLUDES)	
		1	**1S-9593**	2	STRAP-CABLE	
		1	**102-8802**	1	KIT-RECEPTACLE (2-PIN)	
		1	**8T-8729**	2	PIN-CONNECTOR (16-GA TO 18-GA)	
M		1	**129-3174**	4	BOLT-SOCKET HEAD (M4X0.7X60-MM)	
	12	1	**1H-5728**	3	SEAL-O-RING	
	13	1	**2D-6648**	3	RING-RETAINING	
	14	1	**3J-1907**	3	SEAL-O-RING	
	15	1	**3J-7354**	10	SEAL-O-RING	
	16	1	**3K-0360**	4	SEAL-O-RING	
	17	1	**4J-9535**	2	SEAL-O-RING	
	18	1	**9S-4182**	10	PLUG-O-RING	
	19	1	**9S-4185**	2	PLUG-O-RING	
	20	1	**9S-4191**	3	PLUG-O-RING	
	21	1	**9S-8005**	2	PLUG-O-RING	

M-METRIC PART

154-3294 MANIFOLD & VALVE GP *(contd.)* **i01818791**

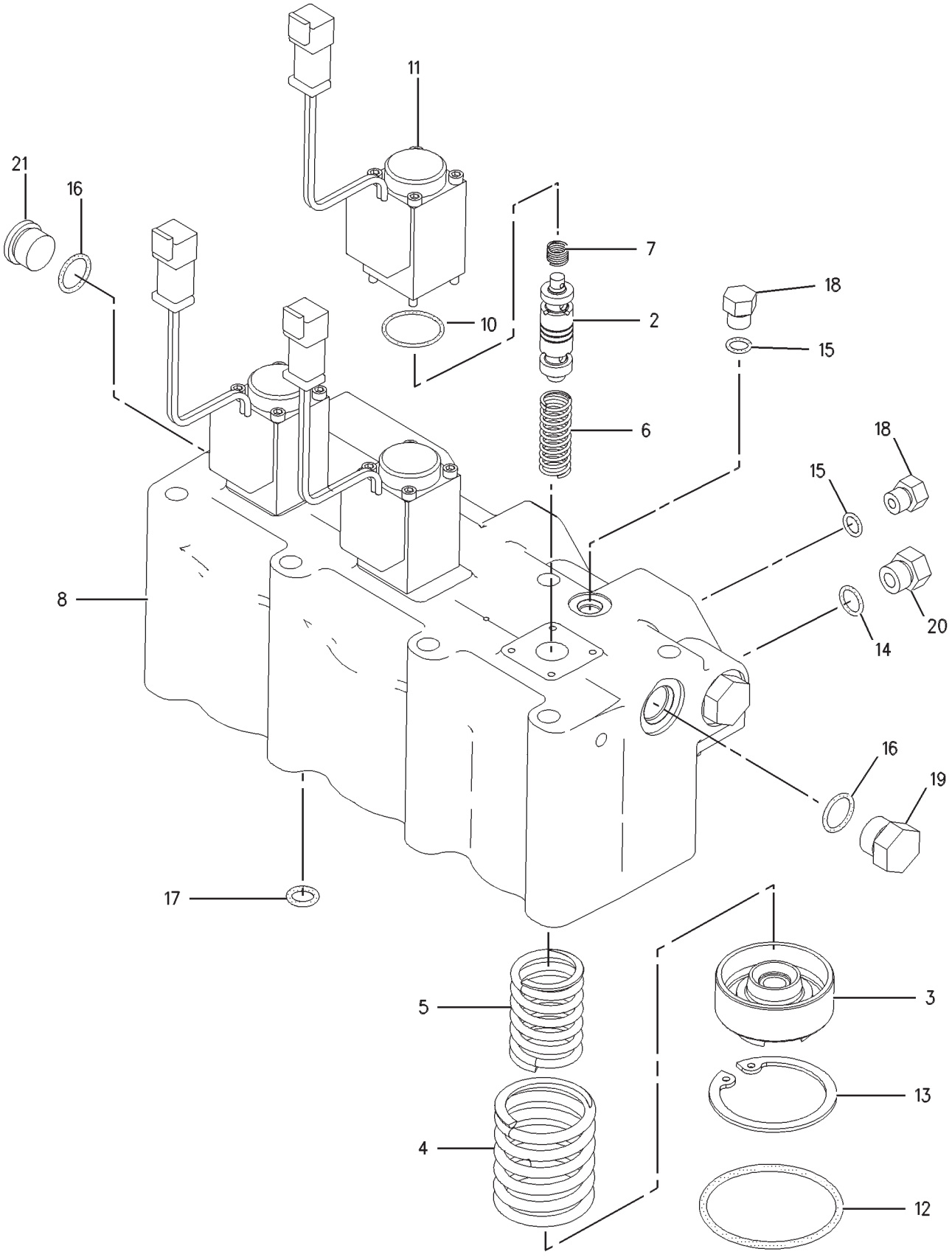

GRAPHIC #1 **<END>** g00537331

HYDRAULIC SYSTEM

154-3295 MANIFOLD & VALVE GP

S/N: RCD1-UP

PART OF 174-1827, 174-1829, 174-1846, 174-1854, 233-6969 VALVE GP-CONTROL

ALSO AN ATTACHMENT

SMCS-5264, 5479 **i01849408**

NOTE	REF NO	GRAPHIC REF	PART NUMBER	QTY	PART NAME 1 2 3 4 5 6 (PRODUCT LEVEL)	SEE PAGE
	2	1	**117-6616**	3	SPOOL-CONTROL	
	3	1	**118-5085**	3	RETAINER	
	4	1	**118-5086**	3	SPRING	
	5	1	**118-5087**	3	SPRING	
	6	1	**121-2051**	3	SPRING	
	7	1	**121-2052**	3	SPRING	
	8	1	**142-3379**	1	HOUSING	
	9	1	**077-3241**	3	SEAL-O-RING	
	10	1	**112-5874**	3	SOLENOID AS	
					(EACH INCLUDES)	
		1	**1S-9593**	2	STRAP-CABLE	
		1	**102-8802**	1	KIT-RECEPTACLE (2-PIN)	
		1	**8T-8729**	2	PIN-CONNECTOR (16-GA TO 18-GA)	
M		1	**129-3174**	4	BOLT-SOCKET HEAD (M4X0.7X60-MM)	
	12	1	**1H-5728**	3	SEAL-O-RING	
	13	1	**2D-6648**	3	RING-RETAINING	
	14	1	**3J-1907**	3	SEAL-O-RING	
	15	1	**3J-7354**	10	SEAL-O-RING	
	16	1	**3K-0360**	4	SEAL-O-RING	
	17	1	**4J-9535**	2	SEAL-O-RING	
	18	1	**9S-4182**	10	PLUG-O-RING	
	19	1	**9S-4185**	4	PLUG-O-RING	
	20	1	**9S-4191**	3	PLUG-O-RING	

M-METRIC PART

154-3295 MANIFOLD & VALVE GP *(contd.)* **i01849408**

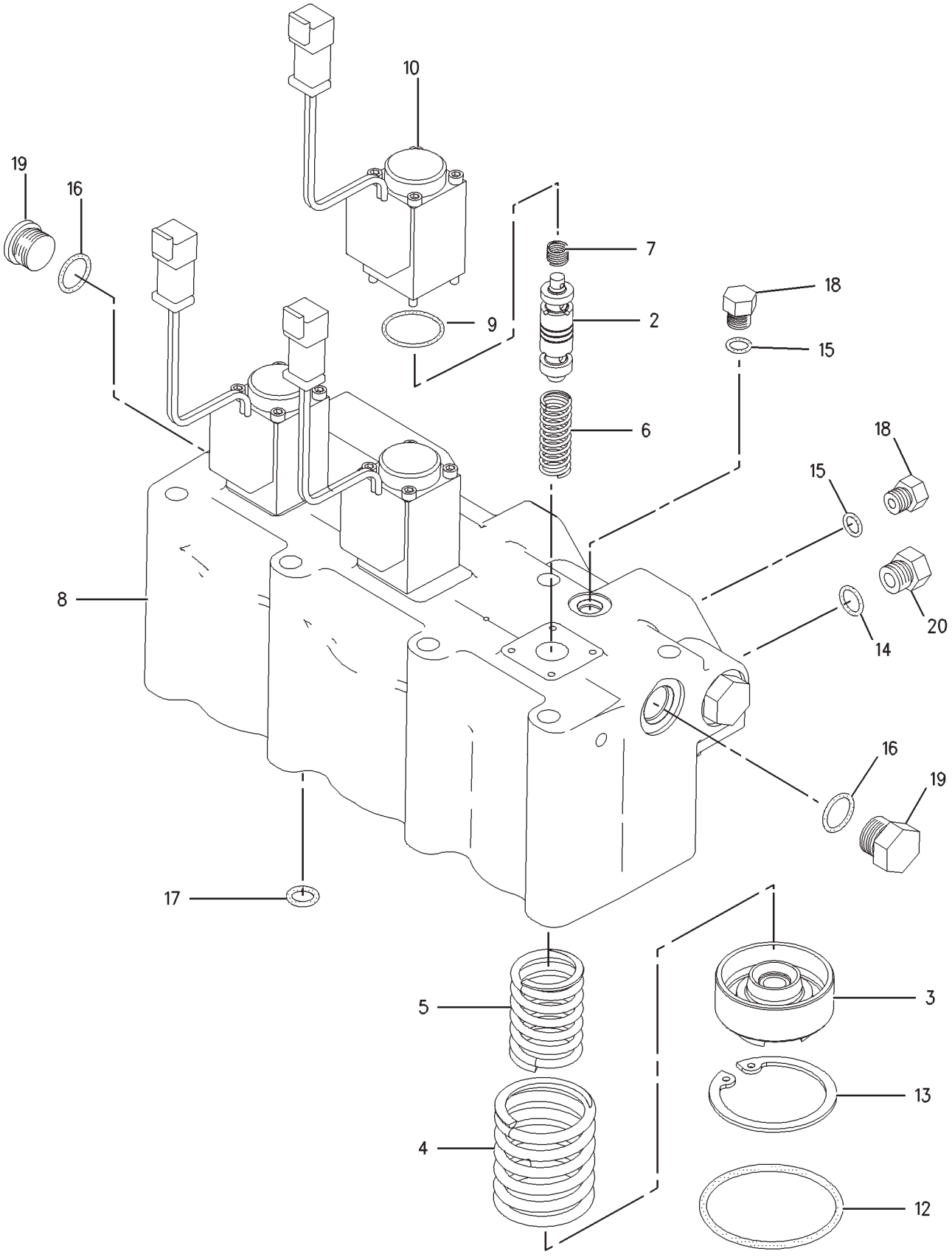

GRAPHIC #1 **<END>** g00942052

HYDRAULIC SYSTEM

194-0946 MANIFOLD & VALVE GP—MAIN CONTROL VALVE

S/N: RCD206-UP

PART OF 223-7737, 223-7738, 223-7745, 223-7746, 238-8212 VALVE GP-CONTROL

ALSO AN ATTACHMENT

SMCS-5264, 5479 **i02443464**

NOTE	REF NO	GRAPHIC REF	PART NUMBER	QTY	PART NAME 1 2 3 4 5 6 (PRODUCT LEVEL)	SEE PAGE
	1	1	*148-8407*	3	PLUG AS	
					(EACH INCLUDES)	
		1	**3J-1907**	1	SEAL-O-RING	
		1	**9S-4191**	1	PLUG-O-RING	
	2	1	**118-5085**	3	RETAINER	
	3	1	**118-5086**	3	SPRING	
	4	1	**118-5087**	3	SPRING	
	5	1	**155-2251**	3	PLATE	
Y	6	1	*156-2829*	3	SOLENOID GP	271
Z	7	1		3	SPOOL-CONTROL	
	8	1	**194-0944**	1	HOUSING	
	9	1	*148-8411*	4	PLUG AS	
					(EACH INCLUDES)	
		1	**3K-0360**	1	SEAL-O-RING	
		1	**9S-4185**	1	PLUG-O-RING	
	10	1	**030-4605**	3	SEAL-O-RING	
	11	1	**177-1403**	3	SPRING	
	12	1	**177-1405**	3	SPRING	
	13	1	**1H-5728**	3	SEAL-O-RING	
	14	1	**2D-6648**	3	RING-RETAINING	
	15	1	**3C-8388**	6	PIN-ROLL	
	16	1	**4J-9535**	2	SEAL-O-RING	
M	17	1	**8T-3998**	12	BOLT (M4X0.7X12-MM)	
	18	1	*155-3624*	10	PLUG AS	
					(EACH INCLUDES)	
		1	**3J-7354**	1	SEAL-O-RING	
		1	**9S-4182**	1	PLUG-O-RING	
	19	1	**8T-6759**	3	PLUG-PIPE	

M-METRIC PART
Y-SEPARATE ILLUSTRATION
Z-NOT SERVICED SEPARATELY

194-0946 MANIFOLD & VALVE GP *(contd.)*

i02443464

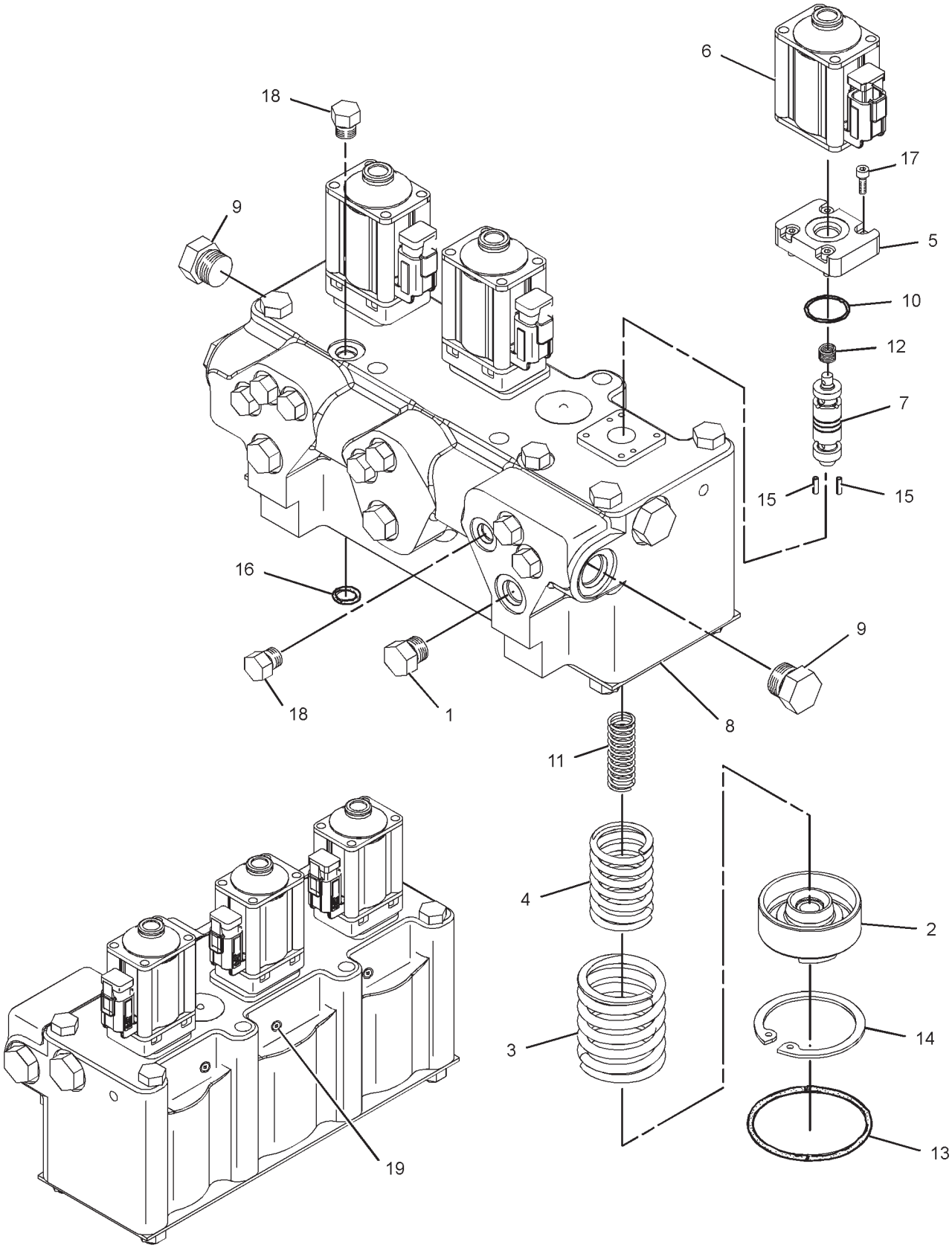

GRAPHIC #1

<END>

g01232797

HYDRAULIC SYSTEM

194-0947 MANIFOLD & VALVE GP—MAIN CONTROL VALVE

S/N: RCD206-UP

PART OF 223-7737, 223-7738, 223-7745, 223-7746, 238-8212 VALVE GP-CONTROL

ALSO AN ATTACHMENT

SMCS-5264, 5479 **i02443465**

NOTE	REF NO	GRAPHIC REF	PART NUMBER	QTY	PART NAME 1 2 3 4 5 6 (PRODUCT LEVEL)	SEE PAGE
	1	1	*148-8395*	2	PLUG AS	
					(EACH INCLUDES)	
		1	**3K-0360**	1	SEAL-O-RING	
		1	**9S-8005**	1	PLUG-O-RING	
	2	1	**118-5085**	3	RETAINER	
	3	1	**118-5086**	3	SPRING	
	4	1	**118-5087**	3	SPRING	
	5	1	**155-2251**	3	PLATE	
Y	6	1	*156-2829*	3	SOLENOID GP	271
Z	7	1		3	SPOOL-CONTROL	
	8	1	**194-0945**	1	HOUSING	
	9	1	*148-8407*	3	PLUG AS	
					(EACH INCLUDES)	
		1	**3J-1907**	1	SEAL-O-RING	
		1	**9S-4191**	1	PLUG-O-RING	
	10	1	**030-4605**	3	SEAL-O-RING	
	11	1	**177-1403**	3	SPRING	
	12	1	**177-1405**	3	SPRING	
	13	1	**1H-5728**	3	SEAL-O-RING	
	14	1	**2D-6648**	3	RING-RETAINING	
	15	1	**3C-8388**	6	PIN-ROLL	
	16	1	**4J-9535**	2	SEAL-O-RING	
M	17	1	**8T-3998**	12	BOLT (M4X0.7X12-MM)	
	18	1	*155-3624*	10	PLUG AS	
					(EACH INCLUDES)	
		1	**3J-7354**	1	SEAL-O-RING	
		1	**9S-4182**	1	PLUG-O-RING	
	19	1	*148-8411*	2	PLUG AS	
					(EACH INCLUDES)	
		1	**3K-0360**	1	SEAL-O-RING	
		1	**9S-4185**	1	PLUG-O-RING	
	20	1	**8T-6759**	3	PLUG-PIPE	

M-METRIC PART
Y-SEPARATE ILLUSTRATION
Z-NOT SERVICED SEPARATELY

194-0947 MANIFOLD & VALVE GP *(contd.)*

i02443465

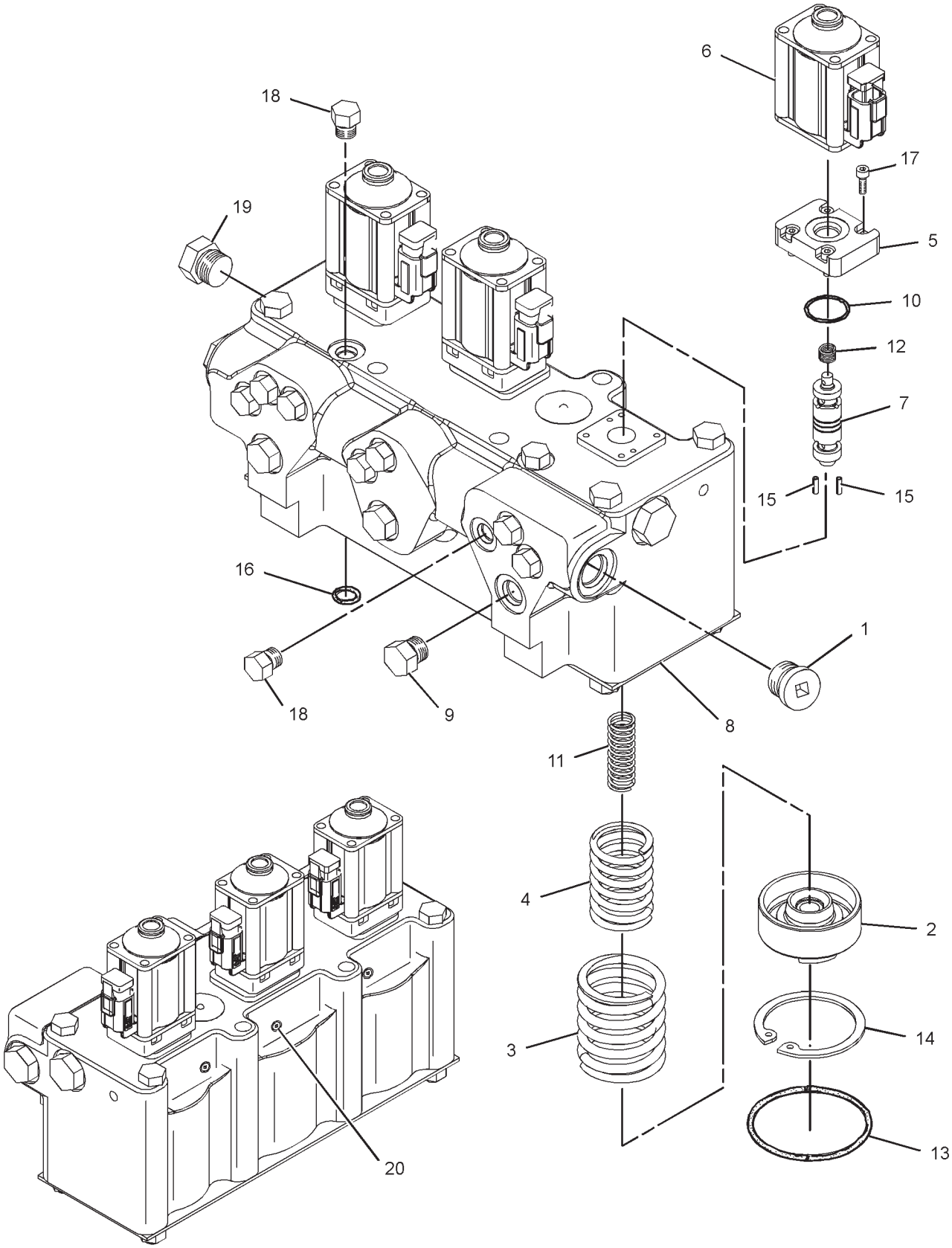

GRAPHIC #1

<END>

g01233119

HYDRAULIC SYSTEM

155-9201 MOTOR & MTG GP-SWING

S/N: RCD1-UP

PART OF 148-4597 DRIVE GP-SWING

SMCS-5058 **i01743527**

NOTE	REF NO	GRAPHIC REF	PART NUMBER	QTY	PART NAME 1 2 3 4 5 6 (PRODUCT LEVEL)	SEE PAGE
YR	1	1	**155-9202**	1	MOTOR GP-SWING	691
	2	1	**095-1687**	1	SEAL-O-RING	
	3	1	**6V-5204**	1	RING-RETAINING	
	4	1	**9X-8257**	4	WASHER (17.5X30X3.5-MM THK)	
M	5	1	**6V-8201**	4	BOLT-SOCKET HEAD (M16X2X45-MM)	

M-METRIC PART
R-REMFG PART MAY BE AVAILABLE
Y-SEPARATE ILLUSTRATION

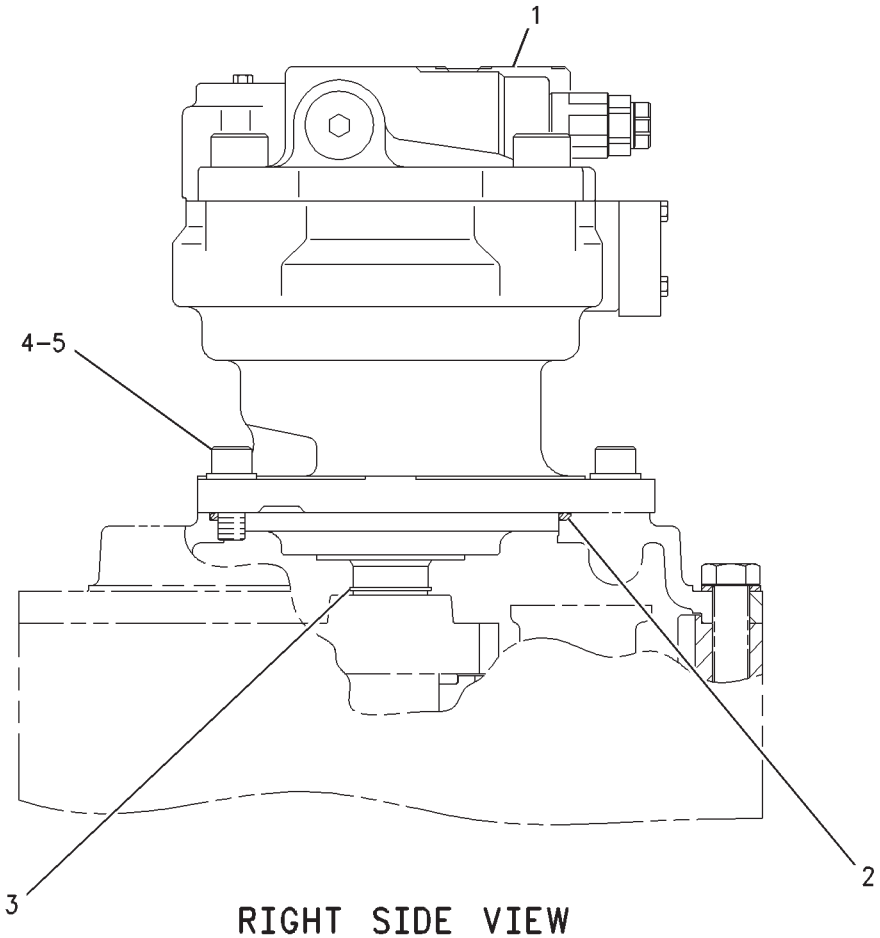

RIGHT SIDE VIEW

GRAPHIC #1 **<END>** g00892683

HYDRAULIC SYSTEM

155-9203 MOTOR & MTG GP-SWING

S/N: RCD1-UP

PART OF 148-4625 DRIVE GP-SWING

SMCS-5058 **i01743533**

NOTE	REF NO	GRAPHIC REF	PART NUMBER	QTY	PART NAME 1 2 3 4 5 6 (PRODUCT LEVEL)	SEE PAGE
YR	1	1	**155-9204**	1	MOTOR GP-SWING	692
	2	1	**095-1687**	1	SEAL-O-RING	
	3	1	**6V-5204**	1	RING-RETAINING	
	4	1	**9X-8257**	4	WASHER (17.5X30X3.5-MM THK)	
M	5	1	**6V-8201**	4	BOLT-SOCKET HEAD (M16X2X45-MM)	

M-METRIC PART
R-REMFG PART MAY BE AVAILABLE
Y-SEPARATE ILLUSTRATION

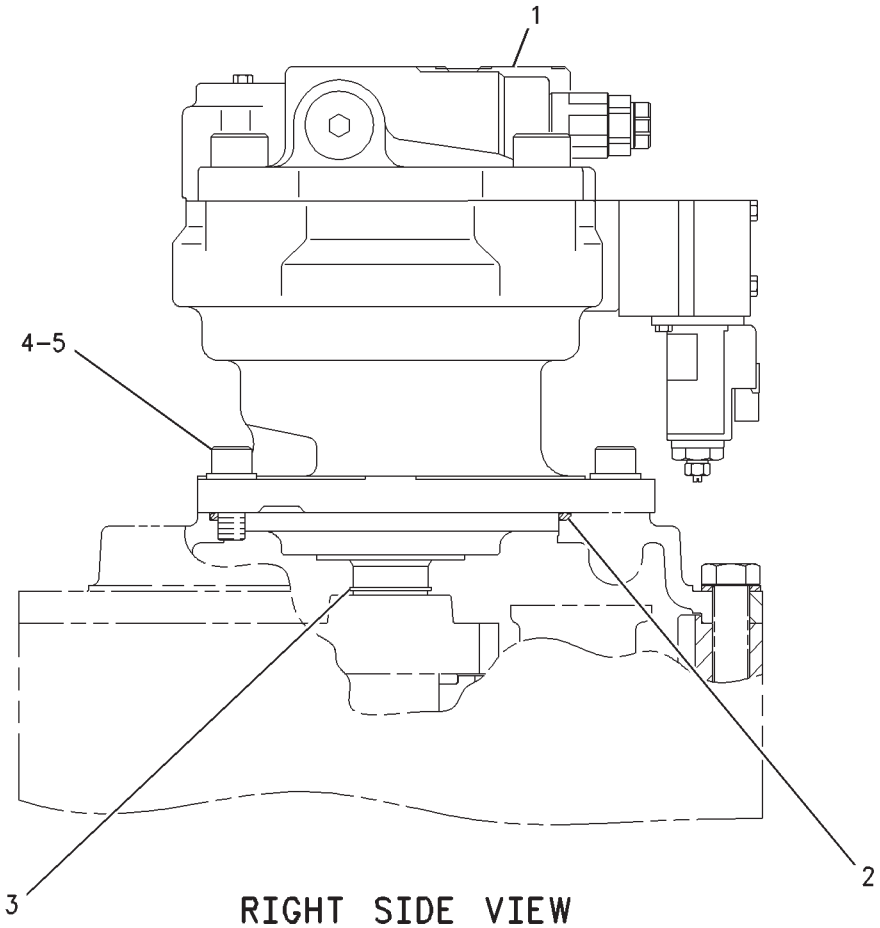

RIGHT SIDE VIEW

GRAPHIC #1 **<END>** g00892685

HYDRAULIC SYSTEM

155-9198 MOTOR & MTG GP-TRAVEL

S/N: RCD1-UP

PART OF 199-4662 DRIVE GP-FINAL

SMCS-4351 **i01886583**

NOTE	REF NO	GRAPHIC REF	PART NUMBER	QTY	PART NAME 1 2 3 4 5 6 (PRODUCT LEVEL)	SEE PAGE
Y	1	1	**209-5895**	1	MOTOR GP-TRAVEL	695
	2	1	**6D-0692**	1	SEAL-O-RING	
M	3	1	**7Y-5241**	6	BOLT-SOCKET HEAD (M20X2.5X60-MM)	

M-METRIC PART
Y-SEPARATE ILLUSTRATION

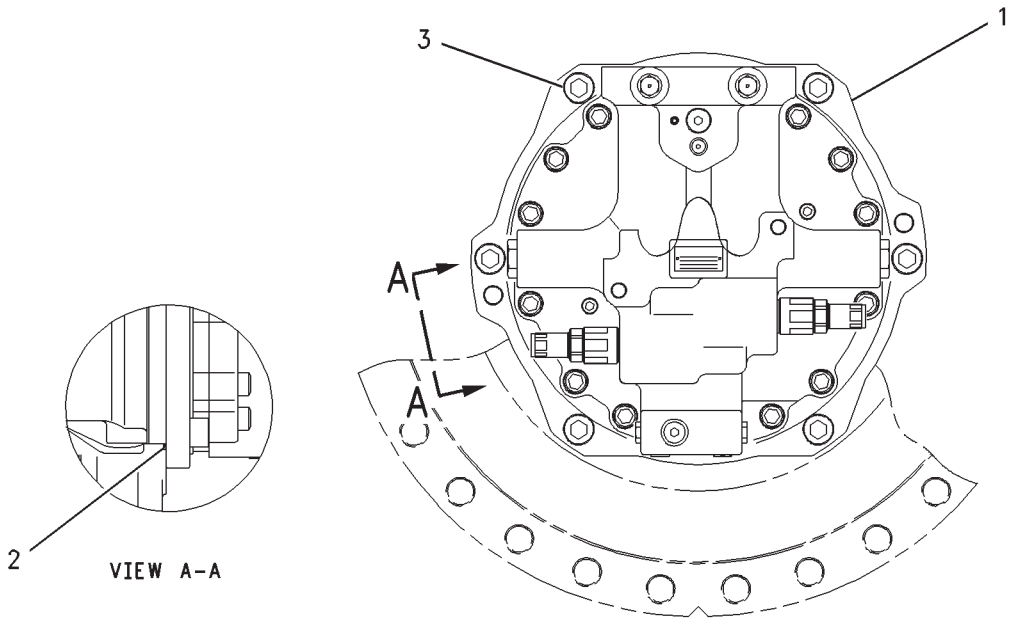

GRAPHIC #1 **<END>** g00892680

HYDRAULIC SYSTEM

200-3252 MOTOR GP-PISTON*R

S/N: RCD1-UP

PART OF 151-6654 COOLER & MTG GP-HYDRAULIC OIL

SMCS-5058 **i02237382**

NOTE	REF NO	GRAPHIC REF	PART NUMBER	QTY	PART NAME 1 2 3 4 5 6 (PRODUCT LEVEL)	SEE PAGE
	1	1	**185-0270**	1	SHAFT	
	2	1	**8C-3110**	1	RING-RETAINING	
	3	1	**185-0248**	1	SEAL-OIL	
Y	4	1	**185-0266**	1	ROTATING GP-MOTOR	715
	5	1	**127-9485**	1	SEAL-O-RING	
	6	1	**185-0268**	1	COVER	
M	7	1	**095-0673**	4	BOLT-SOCKET HEAD (M12X1.75X60-MM)	
	8	1	**188-6280**	1	DOWEL	
	9	1	**185-0267**	1	HOUSING	
	10	1	**101-2862**	2	DOWEL	
	11	1	**200-3257**	1	SWASHPLATE	
	12	1	**9S-8006**	1	PLUG-O-RING	
	13	1	**2M-9780**	1	SEAL-O-RING	
	14	1	*185-0271*	1	BEARING AS	
	14A	1	**189-4717**	1	BEARING	
	14B	1	**185-0265**	1	SHIM PACK (INCLUDES 14-SHIMS)	
	14C	1	**185-0263**	1	BEARING	
	15	1	**185-0242**	1	PLATE	

M-METRIC PART
Y-SEPARATE ILLUSTRATION

200-3252 MOTOR GP-PISTON *(contd.)* **i02237382**

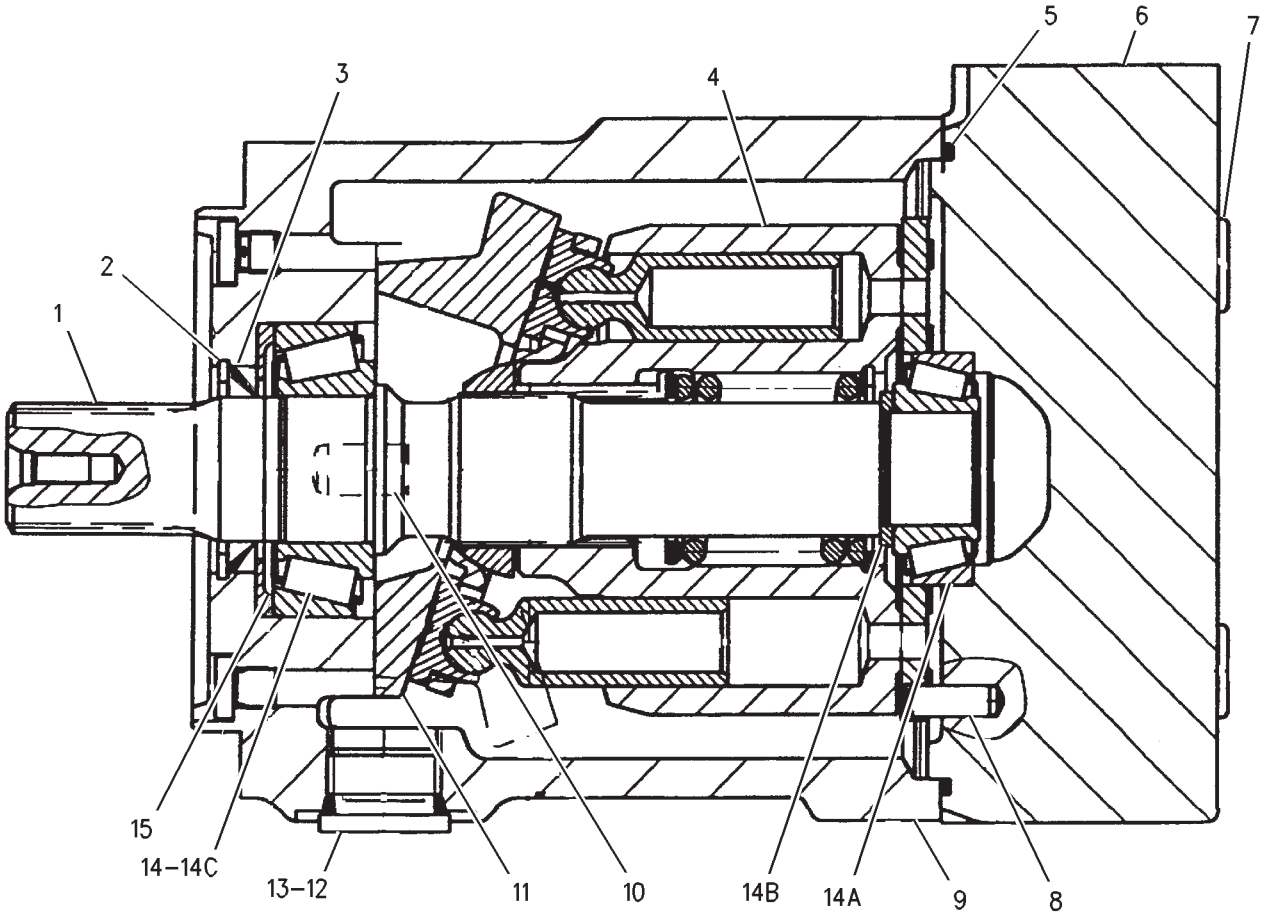

GRAPHIC #1 **<END>** g00789418

HYDRAULIC SYSTEM

209-6058 MOTOR GP-PISTON—HYDRAULIC OIL COOLER

S/N: RCD1-UP

PART OF 151-6652 FAN GP-SUCTION

SMCS-5058 **i01773737**

NOTE	REF NO	GRAPHIC REF	PART NUMBER	QTY	PART NAME 1 2 3 4 5 6 (PRODUCT LEVEL)	SEE PAGE
	1	1	**168-7319**	1	SEAL-SHAFT	
	2	1	**9S-8006**	1	PLUG-O RING	
	3	1	**2M-9780**	1	SEAL-O-RING	
	4	1	**185-0278**	1	SWASHPLATE	
	5	1	**185-0276**	1	HOUSING	
Y	6	1	**185-0275**	1	ROTATING GP-MOTOR	716
	7	1	**192-7470**	1	SEAL-O-RING	
	8	1	**185-0277**	1	COVER	
M	9	1	**095-0690**	4	BOLT-SOCKET HEAD (M14X2X60-MM)	
	10	1	**7Y-5267**	1	RING-RETAINING	
	11	1	**188-6280**	1	DOWEL	
	12	1	**101-2862**	2	DOWEL	
	13	1	**185-0295**	1	BEARING	
	14	1	**185-0296**	1	BEARING	
	15	1	**185-0297**	1	KIT-SHIM (INCLUDES 9-SHIMS)	
	16	1	**185-0280**	1	PLATE	
	17	1	**209-6063**	1	SHAFT	

M-METRIC PART
Y-SEPARATE ILLUSTRATION

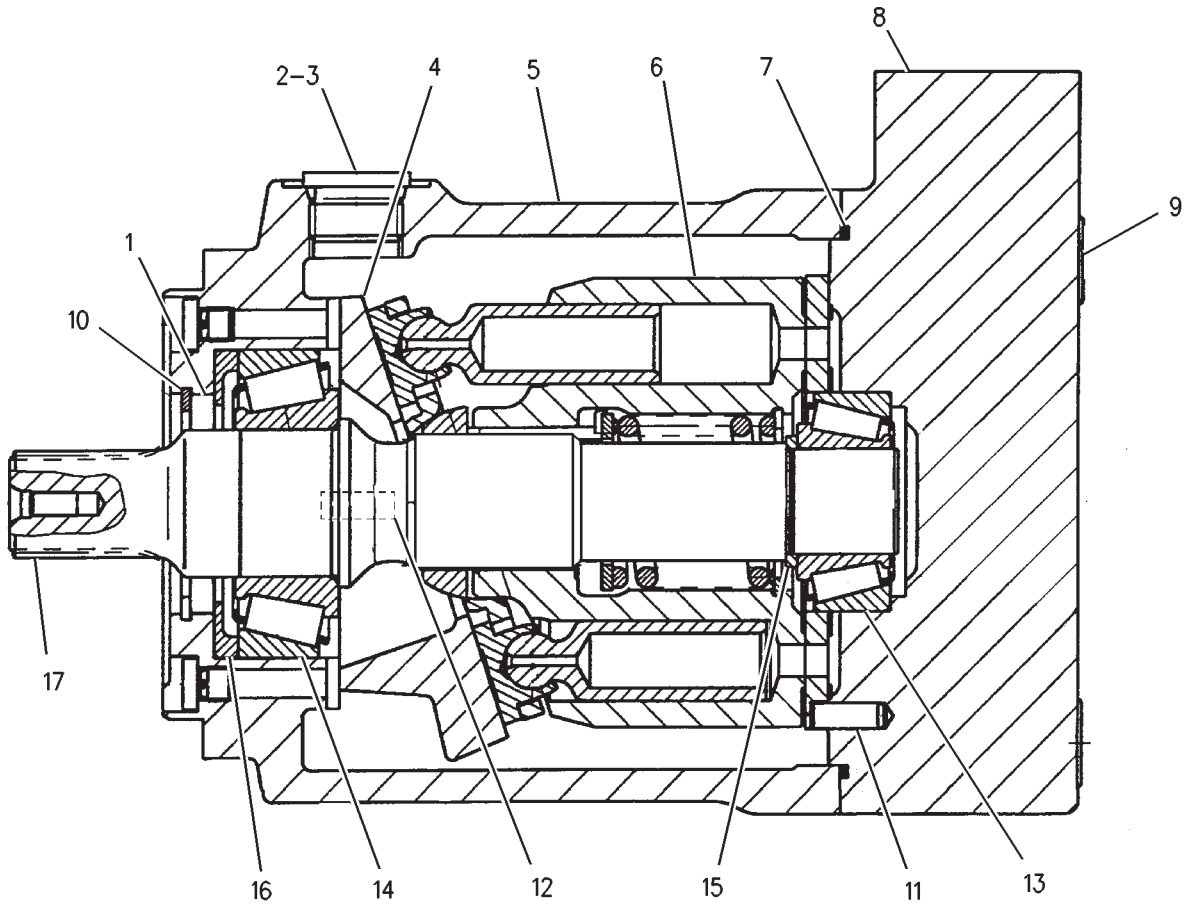

GRAPHIC #1 **<END>** g00909556

HYDRAULIC SYSTEM

247-8978 MOTOR GP-PISTON–FAN

S/N: RCD168-UP

PART OF 151-6652 FAN GP-SUCTION

SMCS-5058 **i02237598**

NOTE	REF NO	GRAPHIC REF	PART NUMBER	QTY	PART NAME 1 2 3 4 5 6 (PRODUCT LEVEL)	SEE PAGE
	1	1	**168-7319**	1	SEAL-SHAFT	
	2	1	**9S-8006**	1	PLUG-O RING	
	3	1	**2M-9780**	1	SEAL-O-RING	
	4	1	**185-0278**	1	SWASHPLATE	
	5	1	**185-0276**	1	HOUSING	
Y	6	1	**259-0816**	1	ROTATING GP-PUMP	721
	7	1	**192-7470**	1	SEAL-O-RING	
	8	1	**185-0277**	1	COVER	
M	9	1	**095-0690**	4	BOLT-SOCKET HEAD (M14X2X60-MM)	
	10	1	**7Y-5267**	1	RING-RETAINING	
	11	1	**188-6280**	1	DOWEL	
	12	1	**101-2862**	2	DOWEL	
	13	1	**185-0295**	1	BEARING	
	14	1	**185-0296**	1	BEARING	
	15	1	**185-0297**	1	KIT-SHIM (INCLUDES 9-SHIMS)	
	16	1	**185-0280**	1	PLATE	
	17	1	**209-6063**	1	SHAFT	

M-METRIC PART
Y-SEPARATE ILLUSTRATION

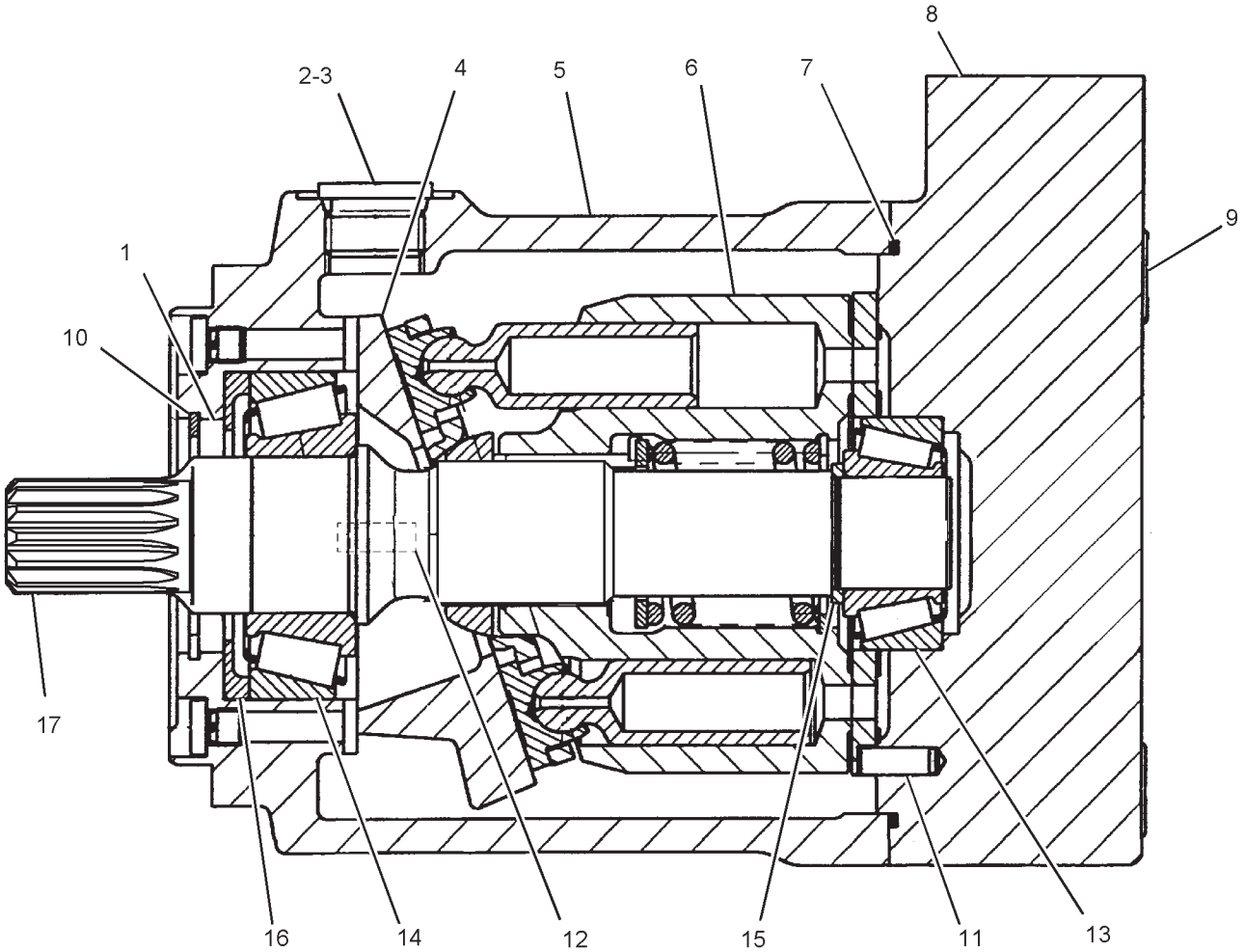

GRAPHIC #1 **<END>** g01129548

HYDRAULIC SYSTEM

155-9202 MOTOR GP-SWING*R

S/N: RCD1-UP
SLIPPER
PART OF 155-9201 MOTOR & MTG GP-SWING

SMCS-5058 **i02330392**

NOTE	REF NO	GRAPHIC REF	PART NUMBER	QTY	PART NAME 1 2 3 4 5 6 (PRODUCT LEVEL)	SEE PAGE
	1	1	**095-1573**	2	SEAL-O-RING	
	2	1	**137-3716**	1	BODY	
M	3	1	**7X-2533**	3	BOLT (M6X1X35-MM)	
	4	1	**8T-6759**	1	PLUG-PIPE	
Y	5	1	**177-2548**	1	MOTOR GP-SWING	693
Y	6	1	**177-2552**	2	VALVE GP-RELIEF	866

M-METRIC PART
Y-SEPARATE ILLUSTRATION

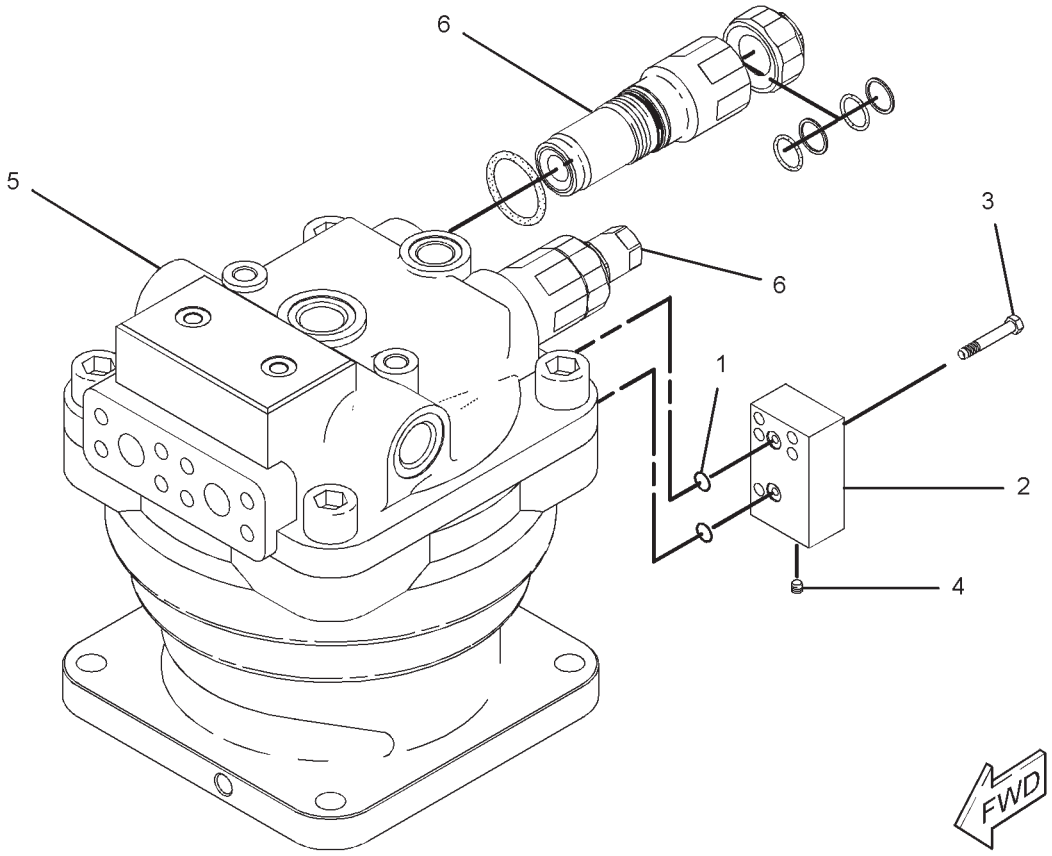

GRAPHIC #1 **<END>** g01163633

HYDRAULIC SYSTEM

155-9204 MOTOR GP-SWING*R

S/N: RCD1-UP
SLIPPER
PART OF 155-9203 MOTOR & MTG GP-SWING

SMCS-5058 **i02330395**

NOTE	REF NO	GRAPHIC REF	PART NUMBER	QTY	PART NAME 1 2 3 4 5 6 (PRODUCT LEVEL)	SEE PAGE
	1	1	**095-1574**	2	SEAL-O-RING	
Y	2	1	**137-3713**	1	VALVE GP-SOLENOID (SWING PARKING BRAKE)	874
M	3	1	**8T-6974**	3	BOLT (M6X1X80-MM)	
	4	1	**8T-6759**	1	PLUG-PIPE	
Y	5	1	**177-2548**	1	MOTOR GP-SWING	693
Y	6	1	**177-2549**	2	VALVE GP-RELIEF	865

M-METRIC PART
Y-SEPARATE ILLUSTRATION

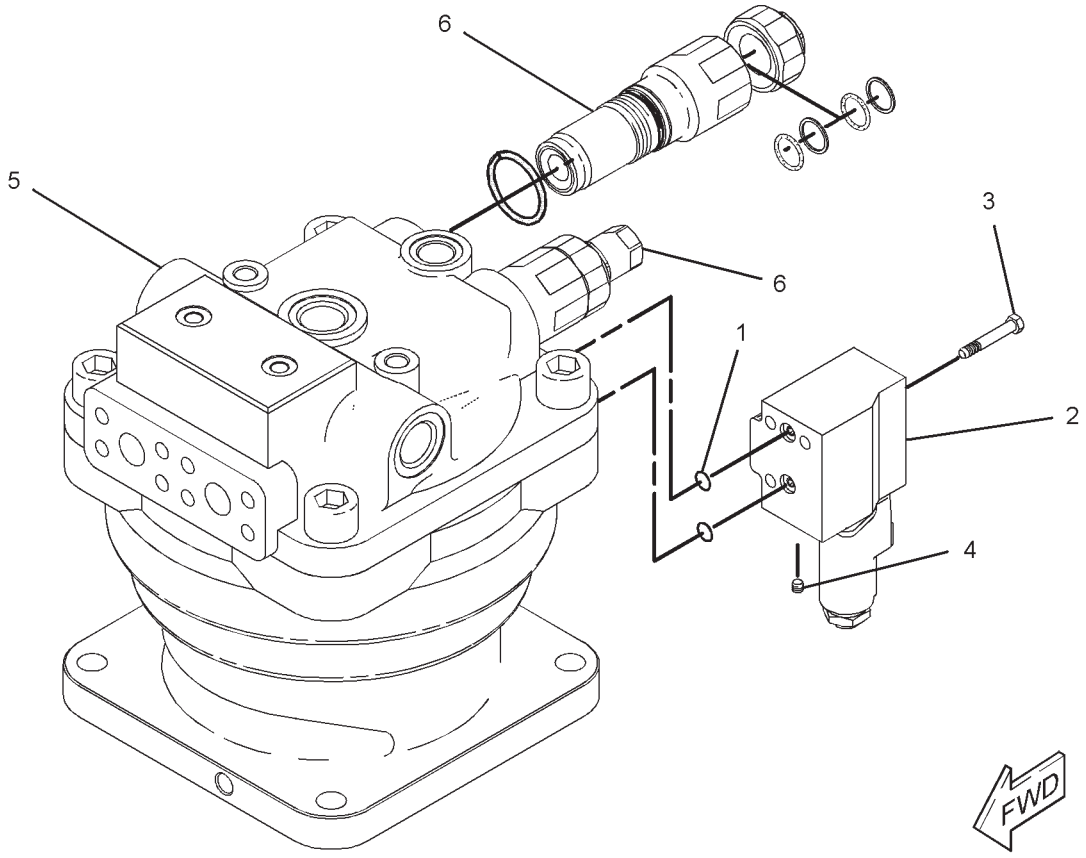

GRAPHIC #1 **<END>** g01163640

HYDRAULIC SYSTEM

177-2548 MOTOR GP-SWING

S/N: RCD1-UP

PART OF 155-9202, 155-9204 MOTOR GP-SWING

SMCS-5058 **i02330667**

NOTE	REF NO	GRAPHIC REF	PART NUMBER	QTY	PART NAME 1 2 3 4 5 6 (PRODUCT LEVEL)	SEE PAGE
	1	1	**158-8967**	1	BUSHING	
	2	1	**158-8970**	1	SPACER	
	3	1	**158-8969**	12	PIN	
	4	1	**158-8972**	1	PLATE	
	5	1	**158-8973**	1	PLATE	
	6	1	**158-9009**	1	PISTON AS	
	7	1	**158-8966**	1	BARREL	
	8	1	**158-8981**	3	PLATE-FRICTION	
	9	1	**158-8982**	4	PLATE-SEPARATOR	
J	10	1	**7Y-4277**	1	SEAL-O-RING	
J	11	1	**8F-5900**	1	SEAL-O-RING	
	12	1	**185-0325**	1	PISTON-BRAKE	
J	13	1	**158-8978**	1	SEAL-O-RING	
	14	1	**158-8971**	1	SPACER	
	15	1	**177-2550**	1	HEAD GP-MOTOR	
	16	1	**110-5525**	2	PLUG	
J	17	1	**3J-1907**	2	SEAL-O-RING	
	18	1	**8T-9598**	1	RING-RETAINING	
	19	1	**4I-5850**	1	RING	
	20	1	**7Y-4269**	1	BEARING AS-ROLLER	
	21	1	**158-8965**	3	SPACER	
	22	1	**158-8974**	1	PLATE-VALVE	
	23	1	**7Y-4291**	24	SPRING-BRAKE	
	24	1	**158-8968**	1	SPRING	
	25	1	**8T-4241**	2	RING-RETAINING	
	26	1	**158-8975**	1	BODY	
	27	1	**095-0946**	1	RING-RETAINING	
J	28	1	**158-8979**	1	SEAL-OIL	
	29	1	**158-8964**	1	SHAFT	
	30	1	**158-8976**	1	RETAINER	
	31	1	**158-8977**	1	BEARING AS	
	32	1	**095-1716**	1	SEAL-O-RING	
	33	1	**170-9985**	2	VALVE	
	34	1	**170-9996**	2	PLUG	
	35	1	**095-1600**	2	SEAL-O-RING	
	36	1	**170-9986**	2	SPRING	
M	37	1	**161-7611**	4	BOLT-SOCKET HEAD	
	38	1	**7Y-4274**	1	PLUG	
	39	1	**095-1579**	1	SEAL-O-RING	
					AVAILABLE REPAIR KIT(S):	
J			**177-2547**	1	KIT-SEAL	

J-KIT MARKED J SERVICES PARTS MARKED J
M-METRIC PART

177-2548 MOTOR GP-SWING *(contd.)*

i02330667

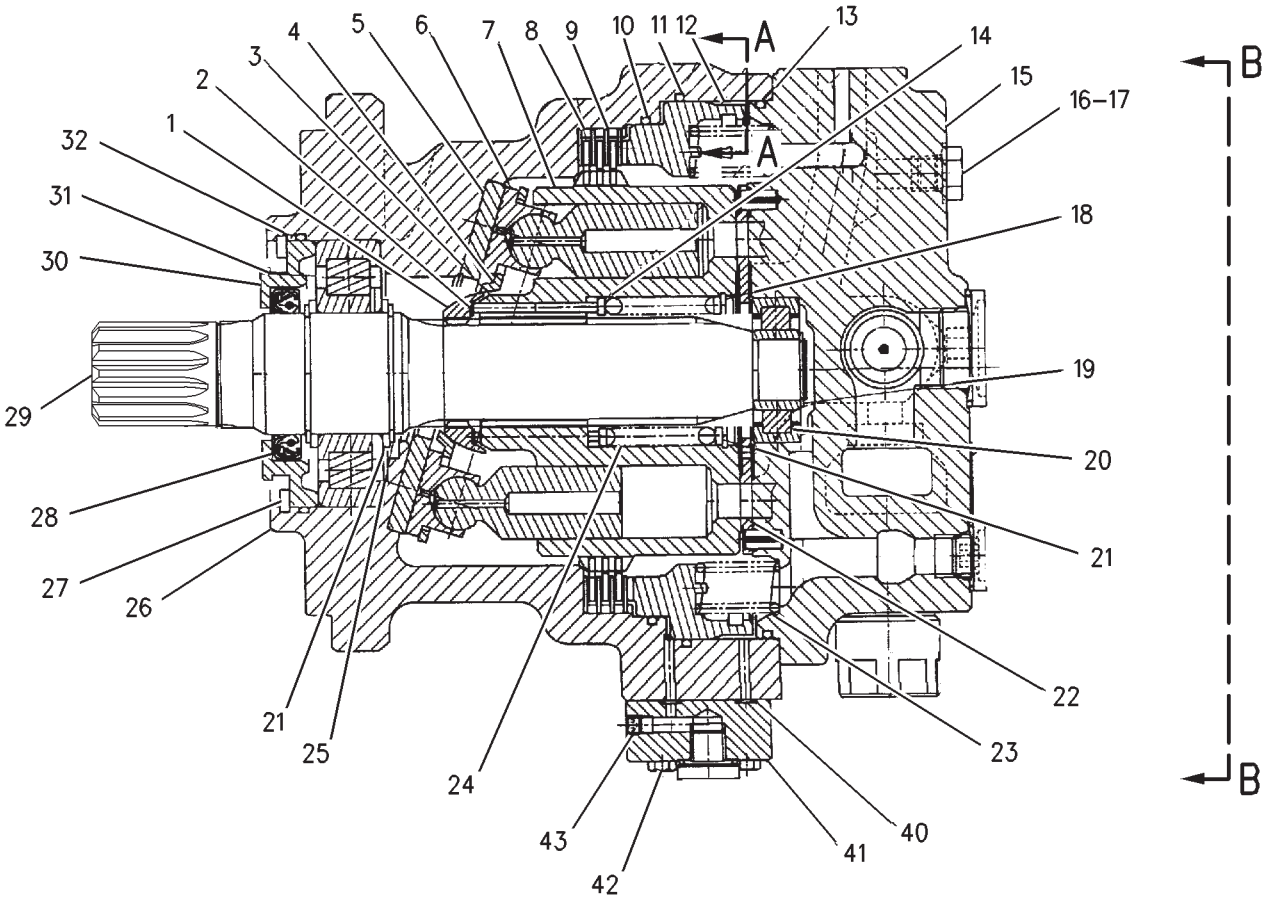

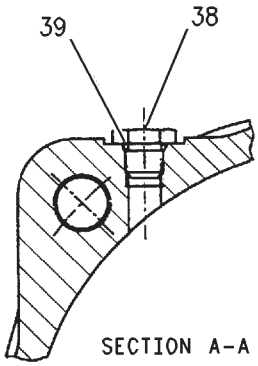

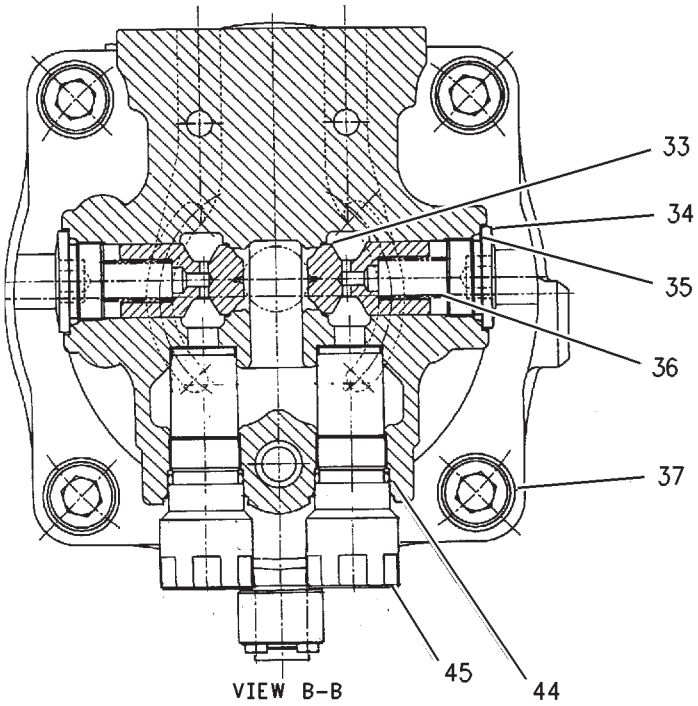

GRAPHIC #1 **<END>** g00848470

HYDRAULIC SYSTEM

209-5895 MOTOR GP-TRAVEL*R

S/N: RCD1-UP

PART OF 155-9198 MOTOR & MTG GP-TRAVEL

SMCS-4351, 5058 **i03119904**

NOTE	REF NO	GRAPHIC REF	PART NUMBER	QTY	PART NAME 1 2 3 4 5 6 (PRODUCT LEVEL)	SEE PAGE
	1	1	**191-5658**	1	PLATE	
	2	1	**191-5659**	1	PLATE	
	3	1	**295-9690**	1	PISTON AS	
	4	1	**191-5675**	1	BARREL AS	
	5	1	**191-5671**	16	SPRING	
	6	1	**191-5670**	1	PISTON-BRAKE	
J	7	1	**196-6103**	2	SEAL-O-RING	
	8	1	**095-0965**	2	PLUG	
	9	1	**4I-1022**	2	ORIFICE	
J	10	1	**3J-1907**	6	SEAL-O-RING	
	11	1	**110-5525**	6	PLUG	
	12	1	**191-5662**	1	VALVE GP-PRESSURE REDUCING (PARKING BRAKE RELEASE)	
	13	1	**191-5663**	1	COVER	
	14	1	**191-5665**	1	BEARING-NEEDLE	
	17	1	**191-5678**	1	RING-RETAINING	
	18	1	**191-5676**	1	HEAD GP-MOTOR	
		1	**5I-4168**	1	PIN	
	19	1	**1R-7037**	1	ORIFICE	
J	20	1	**095-1578**	2	SEAL-O-RING	
J	21	1	**196-6102**	1	SEAL-O-RING	
	22	1	**191-5673**	4	PLATE-FRICTION	
	23	1	**191-5672**	5	PLATE-SEPARATOR	
	24	1	**191-5657**	9	SPRING	
	25	1	**7I-8084**	12	PLUG	
	26	1	**191-5677**	1	PISTON AS	
	27	1	**8T-9044**	1	RING-RETAINING	
	28	1	**095-0930**	1	RING-RETAINING (EXTERNAL)	
	29	1	**191-5655**	1	SHAFT	
J	30	1	**191-5666**	1	SEAL-OIL	
	31	1	**191-5664**	1	BEARING-ROLLER	
	32	1	**191-5667**	2	PIVOT	
	33	1	**209-5908**	1	BODY	
	34	1	**191-5656**	1	GUIDE-BALL	
	35	1	**200-3391**	1	SWASHPLATE	
	36	1	**095-1698**	2	SEAL-O-RING	
	37	1	**5I-8770**	2	RING-BACKUP	
	38	1	**191-5654**	2	VALVE GP-RELIEF (LINE)	
	39	1	**4D-3118**	2	PLUG-PIPE	
	40	1	**9S-4188**	2	PLUG	
J	41	1	**4K-1388**	2	SEAL-O-RING	
M	42	1	**8T-0348**	12	BOLT-SOCKET HEAD (M16X2X50-MM)	
	43	1	**5I-8765**	1	STOP	
	44	1	**5H-1472**	1	BALL	
	45	1	**191-5669**	1	SEAT	
	46	1	**4I-7874**	1	SPRING	
	47	1	**191-5668**	1	SPOOL	
J	48	1	**095-1582**	2	SEAL-O-RING	
	49	1	**111-9998**	2	PLUG	
					AVAILABLE REPAIR KIT(S):	
J			**194-8258**	1	KIT-SEAL (TRAVEL MOTOR)	

J-KIT MARKED J SERVICES PARTS MARKED J
M-METRIC PART

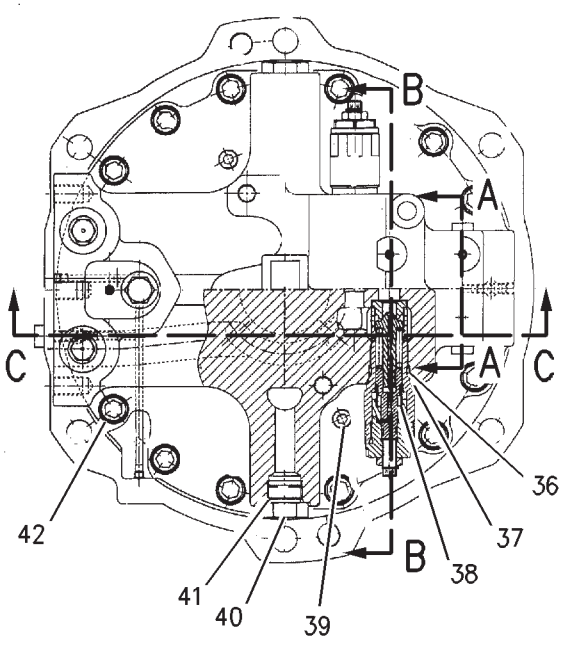

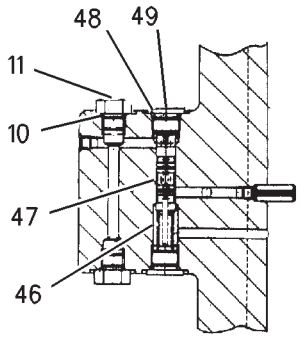

SECTION A-A

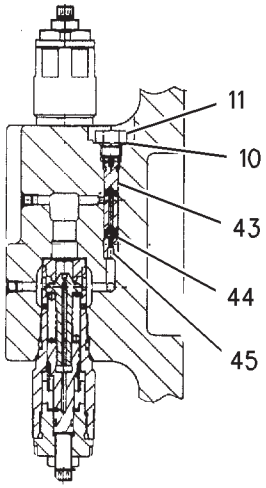

SECTION B-B

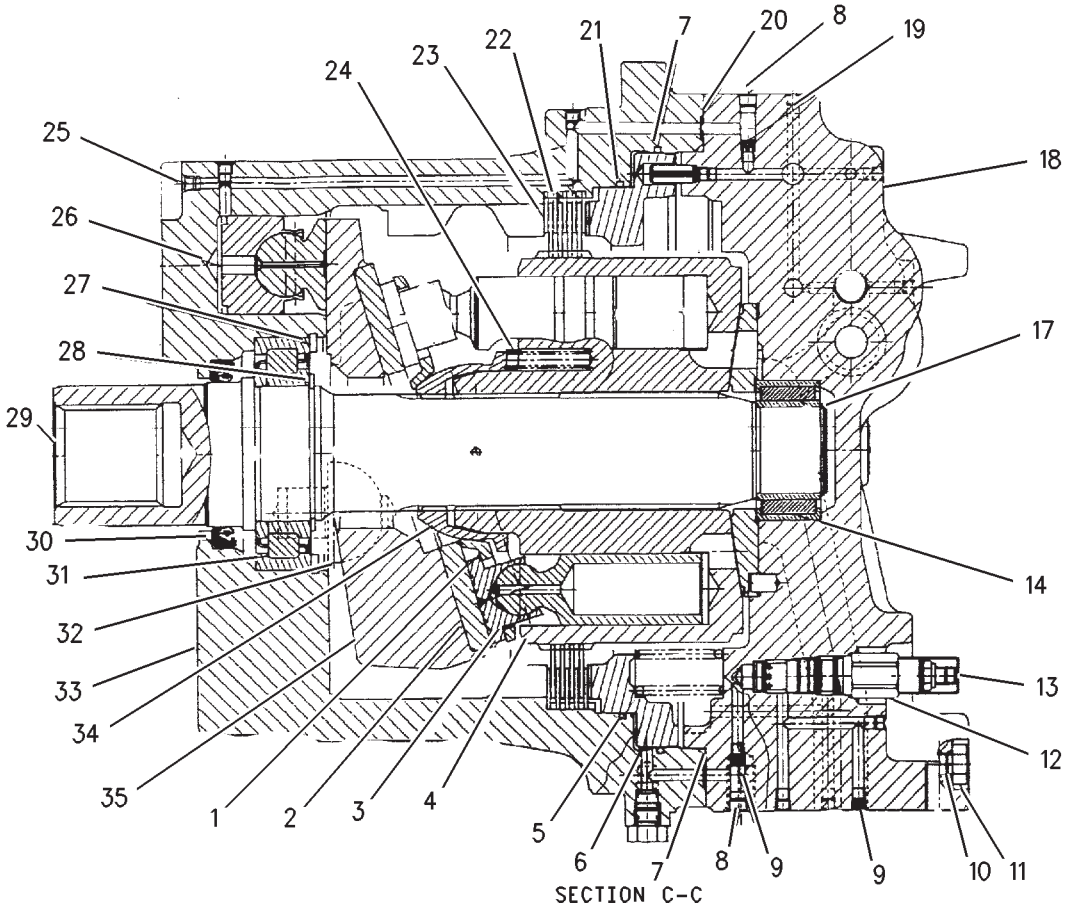

SECTION C-C

GRAPHIC #1 **<END>** g00848608

HYDRAULIC SYSTEM

197-2172 MOUNTING GP-COUNTERWEIGHT CYL

S/N: RCD1-UP
PART OF 157-9989 COUNTERWEIGHT AR
AN ATTACHMENT

SMCS-5409 **i02960267**

NOTE	REF NO	GRAPHIC REF	PART NUMBER	QTY	PART NAME 1 2 3 4 5 6 (PRODUCT LEVEL)	SEE PAGE
	1	1	**135-3924**	2	GUIDE AS	
M	2	1	**7X-2562**	4	BOLT (M20X2.5X45-MM)	
	3	1	**8T-4123**	4	WASHER (22X35X3.5-MM THK)	
M	4	1	**8T-4956**	2	BOLT (M12X1.75X35-MM)	
	5	1	**8T-4223**	2	WASHER-HARD (13.5X25.5X3-MM THK)	
	6	1	**173-8127**	1	PIN AS	
	7	1	**173-8122**	1	BRACKET AS	
M	8	1	**7X-2581**	6	BOLT (M30X3.5X100-MM)	
M	9	1	**8C-8722**	6	NUT (M30X3.5-THD)	
	10	1	**9X-8258**	6	WASHER (33X56X6-MM THK)	
M	11	1	**8T-5412**	1	BOLT (M12X1.75X140-MM)	
M	12	1	**8T-4244**	2	NUT (M12X1.75-THD)	
	13	1	**173-8130**	1	PIN	
	14	1	**173-8114**	1	BRACKET AS	
	15	1	**5R-5927**	1	WASHER (14X65X6-MM THK)	
M	16	1	**135-8575**	1	BOLT AS	
M	17	1	**8T-5878**	4	BOLT (M24X3X80-MM)	
	18	1	**8T-4167**	8	WASHER-HARD (26X44X4-MM THK)	
M	19	1	**8T-4001**	4	NUT (M24X3-THD)	
B	20	1	**121-1891**	2	SHIM (1-MM THK)	
B	21	1	**127-6680**	4	SHIM (0.5-MM THK)	
	22	1	**173-8119**	1	BAND AS	
M	23	1	**7X-2576**	4	BOLT (M24X3X70-MM)	
	24	1	**302-9275**	2	SPRING	
	25	1	**173-8113**	2	PLATE	
M	26	1	**8T-1159**	4	BOLT-SOCKET HEAD (M10X1.5X25-MM)	

B-USE AS REQUIRED
M-METRIC PART

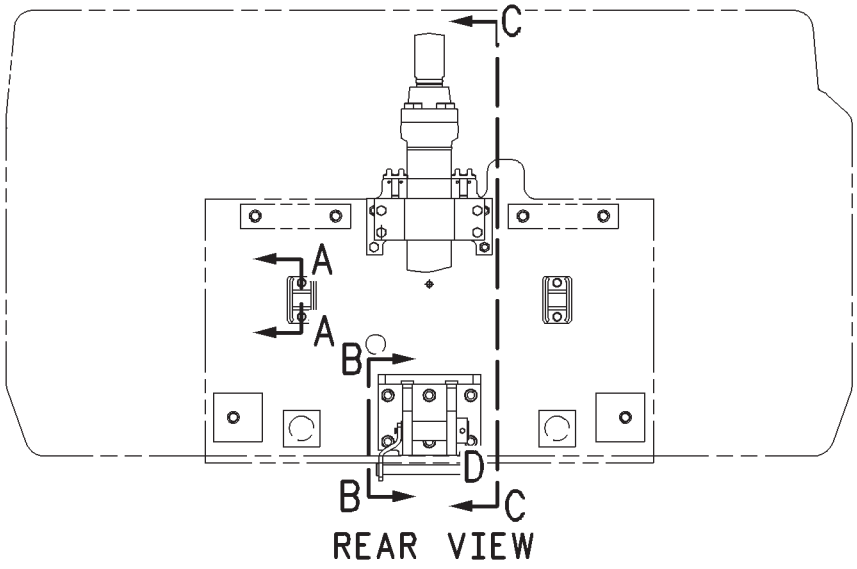

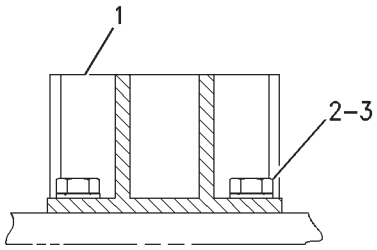

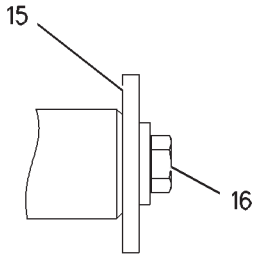

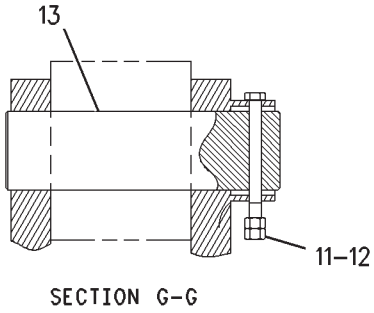

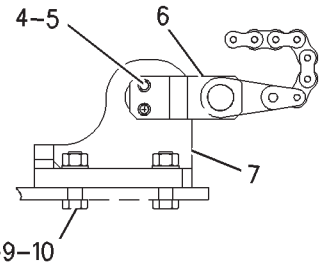

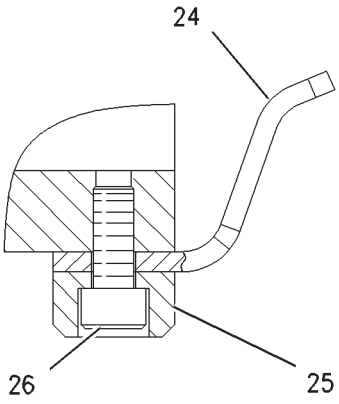

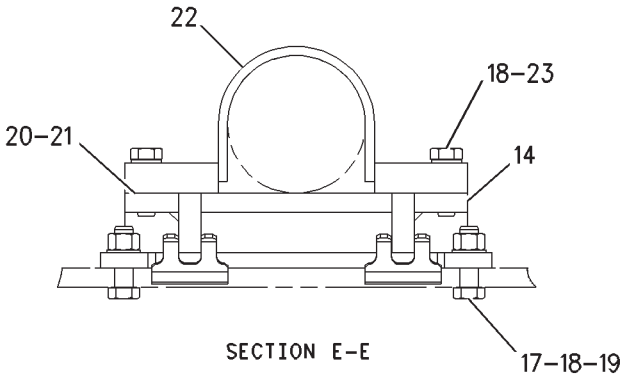

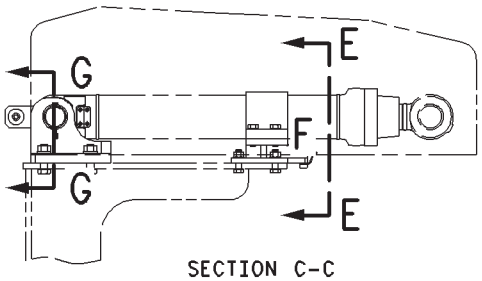

GRAPHIC #1 **<END>** g00838728

HYDRAULIC SYSTEM

151-6647 PUMP & MTG GP-HYDRAULIC

S/N: RCD1-UP
PART OF 229-3367 HYDRAULIC AR
TYPE 1

SMCS-1387, 4324, 5055, 5070, 5073, 5084 **i01734706**

NOTE	REF NO	GRAPHIC REF	PART NUMBER	QTY	PART NAME 1 2 3 4 5 6 (PRODUCT LEVEL)	SEE PAGE
Y	1	1	**155-9222**	1	PUMP GP-GEAR (PILOT)	703
YR	2	1	**170-9918**	1	PUMP GP-PISTON (FAN MOTOR)	711
YR	3	1	**155-9206**	1	PUMP GP-PISTON	709
M	4	1	**7X-2563**	4	BOLT (M20X2.5X60-MM)	
	5	1	**8T-4123**	4	WASHER (22X35X3.5-MM THK)	
M	6	1	**8T-4139**	2	BOLT (M12X1.75X30-MM)	
	7	1	**8T-4223**	4	WASHER-HARD (13.5X25.5X3-MM THK)	
M	8	1	**8T-4956**	2	BOLT (M12X1.75X35-MM)	
	9	1	**6V-7681**	1	SEAL-O-RING	

M-METRIC PART
R-REMFG PART MAY BE AVAILABLE
Y-SEPARATE ILLUSTRATION

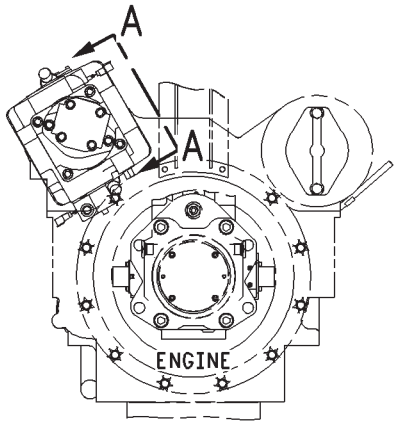

REAR VIEW

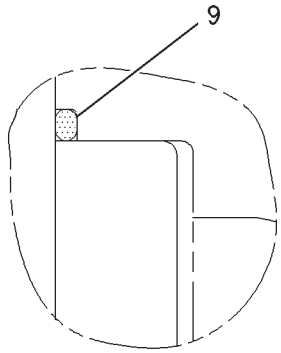

VIEW OF AREA B

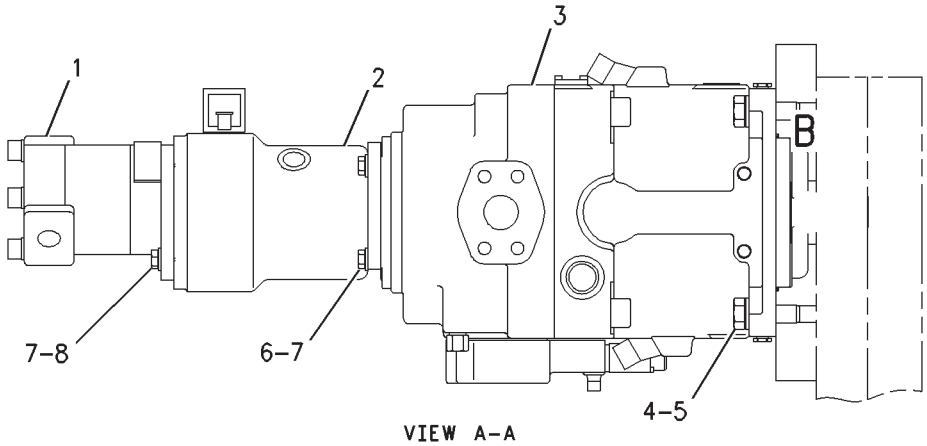

VIEW A–A

GRAPHIC #1 **<END>** g00793245

HYDRAULIC SYSTEM

151-6647 PUMP & MTG GP-HYDRAULIC

S/N: RCD1-UP
PART OF 229-3367 HYDRAULIC AR
TYPE 2

SMCS-1387, 4324, 5055, 5070, 5073, 5084 **i02577947**

NOTE	REF NO	GRAPHIC REF	PART NUMBER	QTY	PART NAME 1 2 3 4 5 6 (PRODUCT LEVEL)	SEE PAGE
Y	1	1	**155-9222**	1	PUMP GP-GEAR (PILOT)	703
YR	2	1	**170-9918**	1	PUMP GP-PISTON (FAN MOTOR)	711
CYR	3	1	**259-0878**	1	PUMP GP-PISTON	713
M	4	1	**7X-2563**	4	BOLT (M20X2.5X60-MM)	
	5	1	**8T-4123**	4	WASHER (22X35X3.5-MM THK)	
M	6	1	**8T-4139**	2	BOLT (M12X1.75X30-MM)	
	7	1	**8T-4223**	4	WASHER-HARD (13.5X25.5X3-MM THK)	
M	8	1	**8T-4956**	2	BOLT (M12X1.75X35-MM)	
	9	1	**6V-7681**	1	SEAL-O-RING	

C-CHANGE FROM PREVIOUS TYPE
M-METRIC PART
R-REMFG PART MAY BE AVAILABLE
Y-SEPARATE ILLUSTRATION

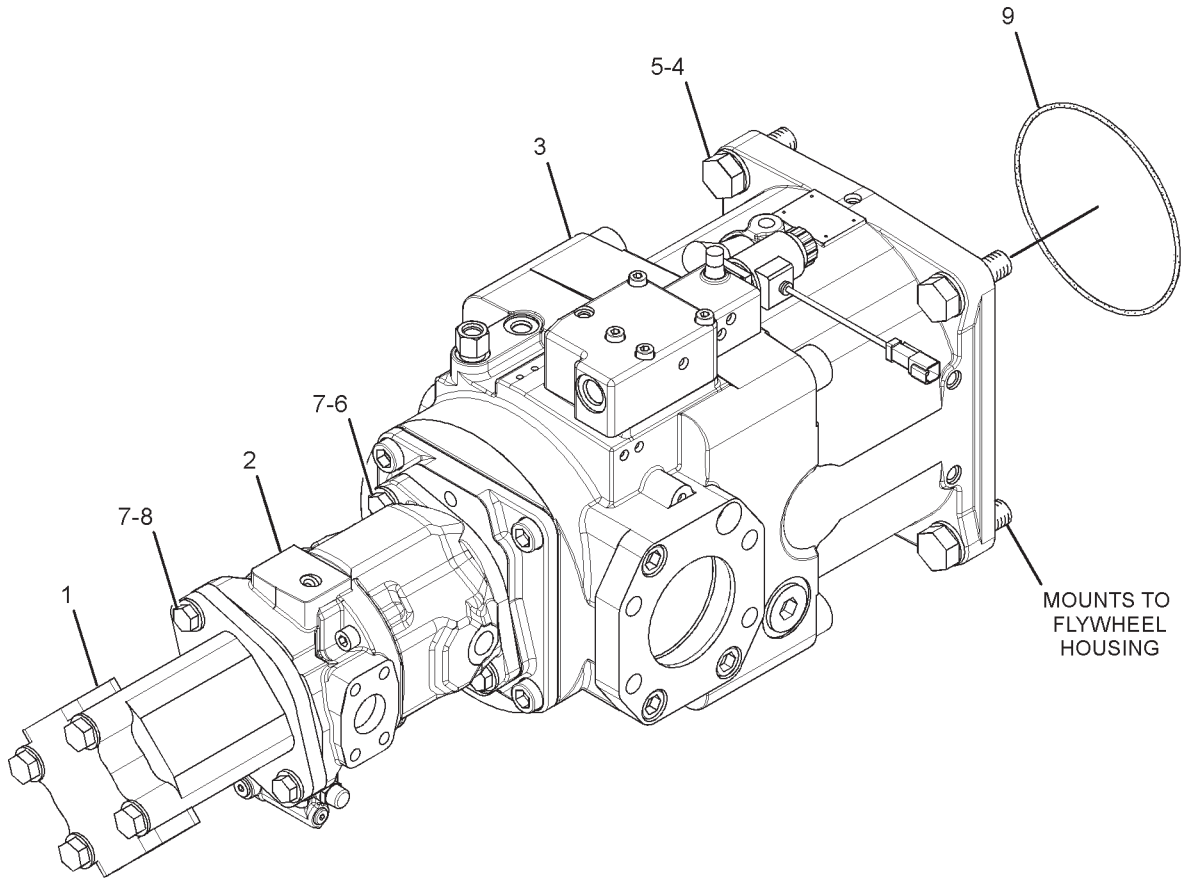

GRAPHIC #1 **<END>** g01311395

HYDRAULIC SYSTEM

151-6645 PUMP & MTG GP-MAIN HYDRAULIC

S/N: RCD1-UP

PART OF 229-3367 HYDRAULIC AR

SMCS-5070 **i02122769**

NOTE	REF NO	GRAPHIC REF	PART NUMBER	QTY	PART NAME 1 2 3 4 5 6 (PRODUCT LEVEL)	SEE PAGE
YR	1	1	**155-9205**	1	PUMP GP-MAIN HYDRAULIC	705
	2	1	**171-8982**	1	COVER	
	3	1	**8T-5360**	12	WASHER (12X22.5X2.5-MM THK)	
	4	1	**7X-0314**	10	BOLT (7/16-14X3-IN)	
Y	5	1	**151-6646**	1	COUPLING GP-PUMP	462
M	6	1	**7X-2577**	4	BOLT (M24X3X90-MM)	
	7	1	**8T-4167**	4	WASHER-HARD (26X44X4-MM THK)	
	8	1	**196-8173**	1	ELBOW	
	9	1	**196-8168**	1	TUBE AS	
	10	1	**196-8170**	1	SUPPORT AS	
	11	1	**2B-2404**	1	CLIP	
M	12	1	**8T-4200**	2	BOLT (M8X1.25X16-MM)	
	13	1	**8T-4224**	2	WASHER-HARD (8.8X16X2-MM THK)	
M	14	1	**8T-4136**	2	BOLT (M10X1.5X25-MM)	
	15	1	**8T-4121**	2	WASHER-HARD (11X21X2.5-MM THK)	
I	16	1	**2W-4332**	1	HOSE AS	
	17	1	**9M-8406**	1	CLIP	
	18	1	**7X-0316**	2	BOLT (7/16-14X3.5-IN)	
	19	1	**3P-0658**	1	SEAL-O-RING	
	20	1	**6V-5043**	1	SEAL-O-RING	
	21	1	**6V-5049**	1	SEAL-O-RING	

I-REFER TO HYDRAULIC INFORMATION SYSTEM
M-METRIC PART
R-REMFG PART MAY BE AVAILABLE
Y-SEPARATE ILLUSTRATION

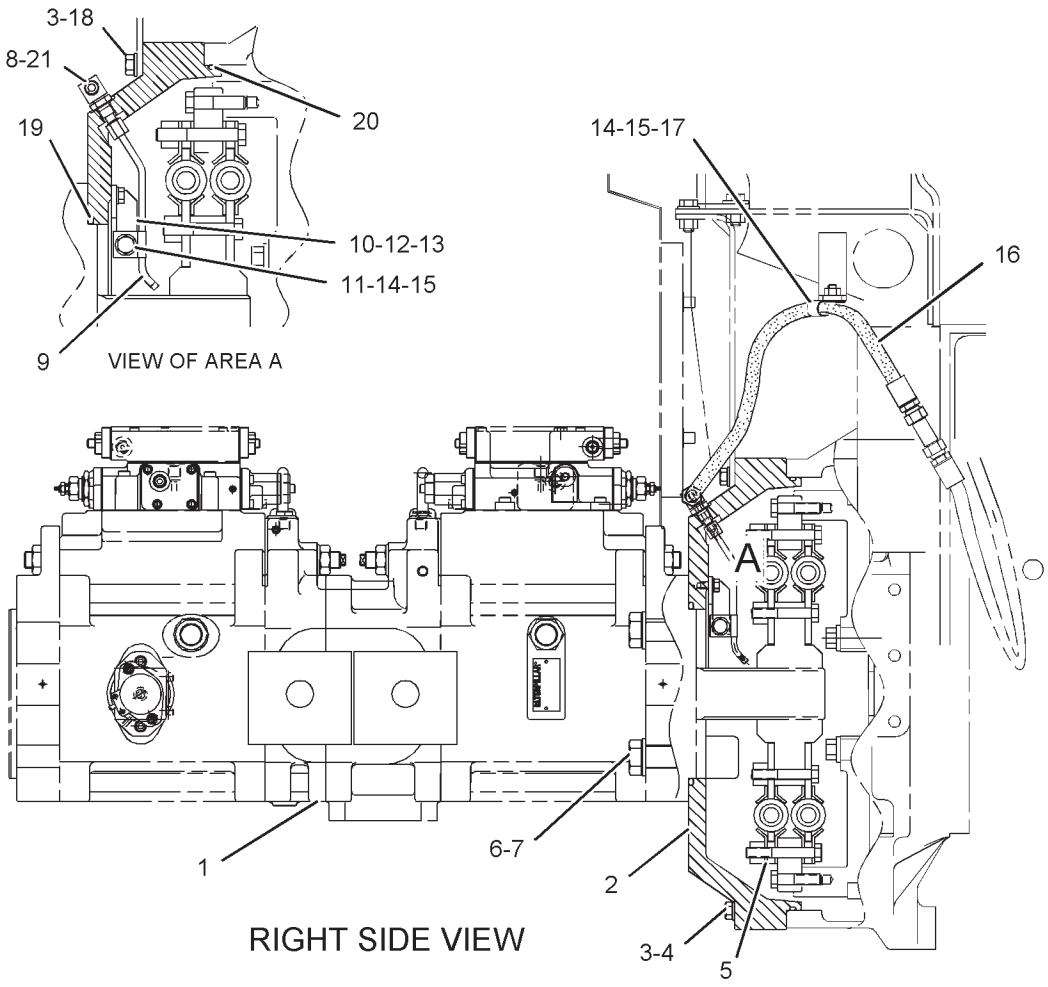

GRAPHIC #1 **<END>** g01097552

HYDRAULIC SYSTEM

155-9222 PUMP GP-GEAR–PILOT

S/N: RCD1-UP

PART OF 151-6647 PUMP & MTG GP-HYDRAULIC

SMCS-5073 **i03546604**

NOTE	PART NUMBER	QTY	PART NAME 1 2 3 4 5 6 (PRODUCT LEVEL)	SEE PAGE
Y	*155-9224*	1	PUMP GP-GEAR	704
Y-SEPARATE ILLUSTRATION				

<END>

HYDRAULIC SYSTEM

155-9224 PUMP GP-GEAR

S/N: RCD1-UP

PART OF 155-9222 PUMP GP-GEAR

SMCS-5073 **i03643767**

NOTE	REF NO	GRAPHIC REF	PART NUMBER	QTY	PART NAME 1 2 3 4 5 6 (PRODUCT LEVEL)	SEE PAGE
	1	1	**158-8937**	2	PLATE	
M	2	1	**099-0724**	4	BOLT (M14X2X145-MM)	
	3	1	**096-5867**	4	WASHER-HARD (15X28X2.5-MM THK)	
	4	1	**209-5979**	1	COVER	
	5	1	**209-5981**	1	GEAR AS	
	6	1	**158-8936**	1	FLANGE	
J	7	1	**158-8940**	1	SEAL-LIP TYPE	
J	8	1	**8C-3110**	1	RING-RETAINING	
J	9	1	**158-8938**	2	SEAL-OIL	
J	10	1	**158-8939**	2	RING-BACKUP	
					AVAILABLE REPAIR KIT(S):	
J			**209-5980**	1	KIT-SEAL (GEAR PUMP)	

J-KIT MARKED J SERVICES PART(S) MARKED J
M-METRIC PART

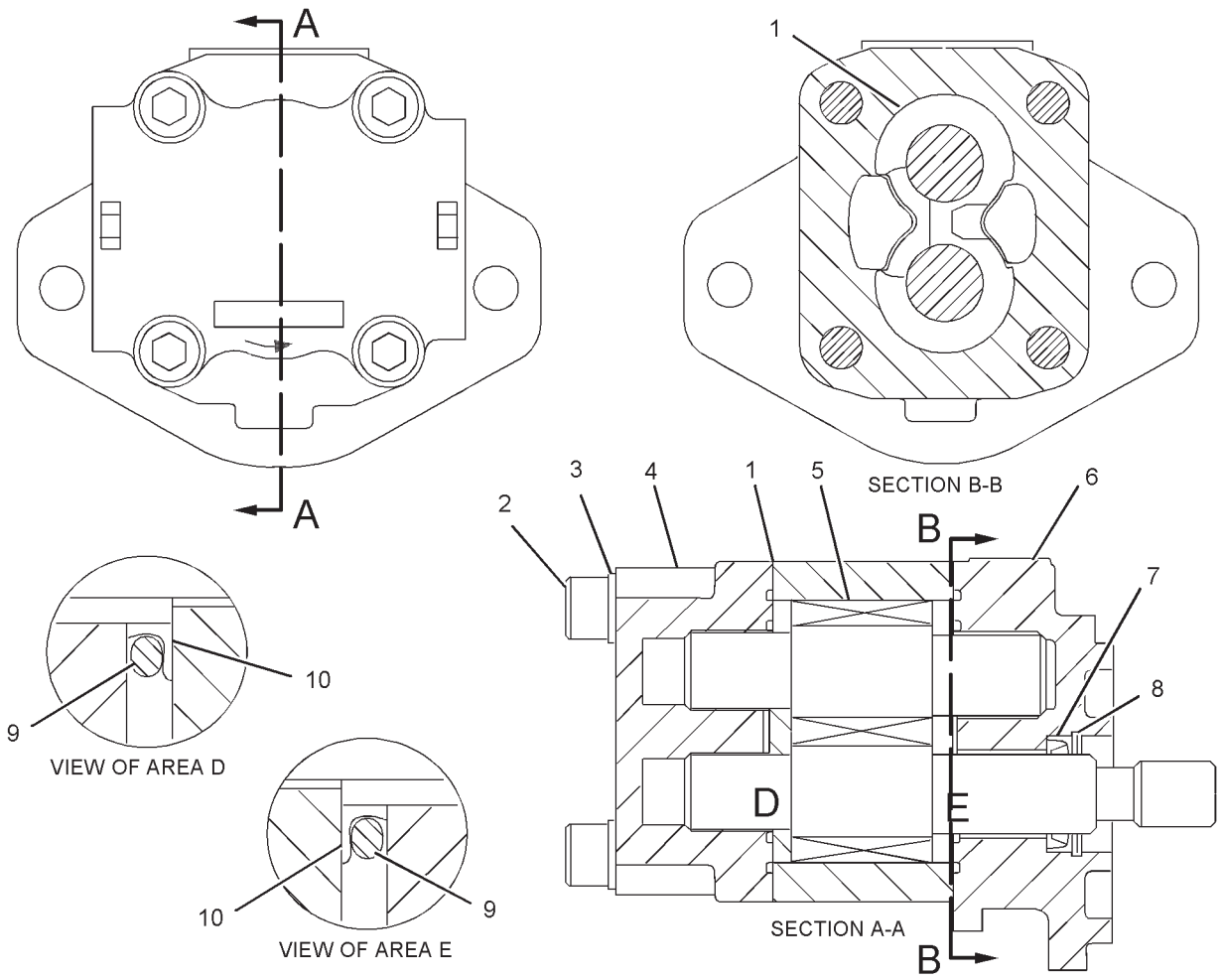

GRAPHIC #1 **<END>** g01079666

HYDRAULIC SYSTEM

155-9205 PUMP GP-MAIN HYDRAULIC*R

S/N: RCD1-UP

PART OF 151-6645 PUMP & MTG GP-MAIN HYDRAULIC

SMCS-5070 **i02570147**

NOTE	REF NO	GRAPHIC REF	PART NUMBER	QTY	PART NAME 1 2 3 4 5 6 (PRODUCT LEVEL)	SEE PAGE
Y	1	1	**200-3269**	1	PUMP GP-MAIN HYDRAULIC	707
Y	2	1	**200-3270**	2	VALVE GP-PUMP CONTROL (PRESSURE, FLOW COMPENSATOR)	852
	3	1	**204-2856**	2	FLANGE	
	4	1	**109-1296**	2	SEAL-O-RING	
M	5	1	**6V-8200**	8	BOLT-SOCKET HEAD (M12X1.75X35-MM)	

M-METRIC PART
Y-SEPARATE ILLUSTRATION

155-9205 PUMP GP-MAIN HYDRAULIC *(contd.)* i02570147

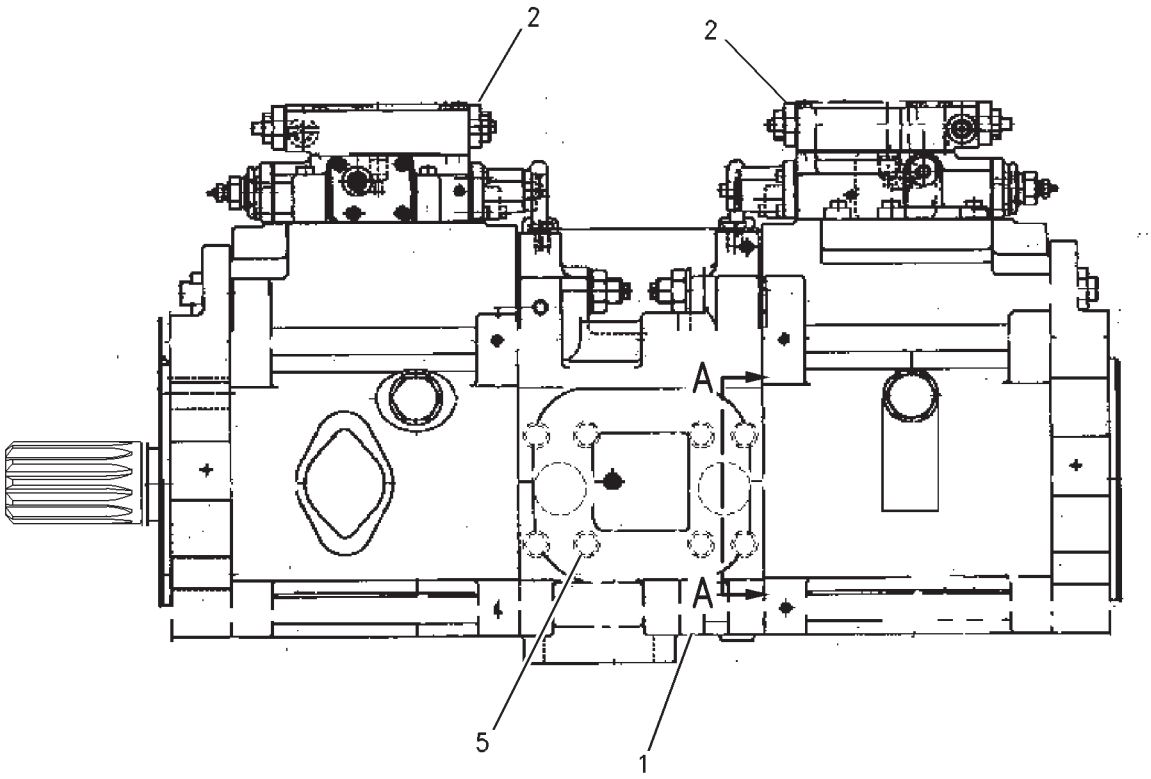

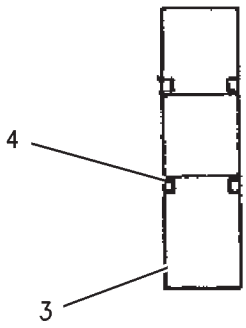

SECTION A–A

GRAPHIC #1 **<END>** g00850491

HYDRAULIC SYSTEM

200-3269 PUMP GP-MAIN HYDRAULIC

S/N: RCD1-UP

PART OF 155-9205 PUMP GP-MAIN HYDRAULIC

SMCS-5070 **i03643783**

NOTE	REF NO	GRAPHIC REF	PART NUMBER	QTY	PART NAME 1 2 3 4 5 6 (PRODUCT LEVEL)	SEE PAGE
	1	1	**200-3291**	2	STOP	
	2	1	**095-1787**	2	RING-BACKUP	
	3	1	**206-9297**	2	SEAL-O-RING	
	4	1	**200-3289**	2	PISTON	
	5	1	**200-3297**	2	PIN AS	
	6	1	**206-9285**	2	SEAL-O-RING	
	7	1	**095-1795**	2	RING-BACKUP	
	8	1	**200-3290**	2	STOP	
	9	1	**206-9290**	19	SEAL-O-RING	
M	10	1	**200-3292**	2	SETSCREW (M20X2.5X90-MM)	
	11	1	**210-0834**	1	SEAL-O-RING	
	12	1	**7Y-4274**	2	PLUG	
	13	1	**206-9292**	2	SEAL-O-RING	
M	14	1	**197-0226**	2	BOLT-SOCKET HEAD (M10X1.5X75-MM)	
	15	1	**206-9286**	1	SEAL-O-RING	
	16	1	**210-0835**	4	SEAL-O-RING	
	17	1	**295-9692**	2	PISTON AS	
	18	1	**7I-8084**	31	PLUG	
M	19	1	**160-8758**	4	BOLT-SOCKET HEAD (M10X1.5X55-MM)	
	20	1	**206-9287**	2	SEAL-O-RING	
	21	1	**200-3272**	1	SHAFT	
	22	1	**200-3285**	1	COVER	
	23	1	**7I-8177**	2	ADAPTER	
	24	1	**190-7674**	4	SEAL-O-RING	
	25	1	**200-3283**	8	WASHER	
M	26	1	**210-9434**	4	BOLT-SOCKET HEAD (M22X2.5X300-MM)	
	27	1	**200-3286**	2	HOUSING	
	28	1	**200-3294**	1	BARREL AS	
	29	1	**234-4539**	2	DOWEL	
	30	1	**200-3287**	1	COVER	
	31	1	**200-3273**	1	COUPLING	
	32	1	**200-3277**	1	PLATE	
	33	1	**200-3288**	1	COVER	
	34	1	**200-3275**	2	BEARING-NEEDLE	
	35	1	**209-5875**	8	SETSCREW	
	36	1	**200-3280**	18	SPRING	
	37	1	**200-3279**	2	GUIDE	
	38	1	**200-3278**	2	PLATE	
	39	1	**200-3281**	2	PLATE	
	40	1	**200-3296**	2	SWASHPLATE AS	
M	41	1	**210-9435**	4	BOLT-SOCKET HEAD (M22X2.5X370-MM)	
	42	1	**200-3282**	2	PLATE	
	43	1	**200-3274**	2	BEARING-ROLLER	
	44	1	**200-3276**	4	SPACER	
	45	1	**096-5516**	2	RING-RETAINING	
	46	1	**200-3298**	1	SEAL	
	47	1	**200-3271**	1	SHAFT	
	48	1	**200-3284**	1	COVER	
M	49	1	**8T-1158**	4	BOLT-SOCKET HEAD (M8X1.25X20-MM)	
	50	1	**093-1323**	2	PLUG	
	51	1	**8C-3347**	5	PIN-ROLL	
M	52	1	**096-5400**	2	SETSCREW-SOCKET (M20X2.5X50-MM)	
M	53	1	**8T-4131**	4	NUT (M20X2.5-THD)	
	54	1	**095-0965**	5	PLUG	
	55	1	**7I-8164**	4	ORIFICE	
	56	1	**200-3295**	1	BARREL AS	

M-METRIC PART

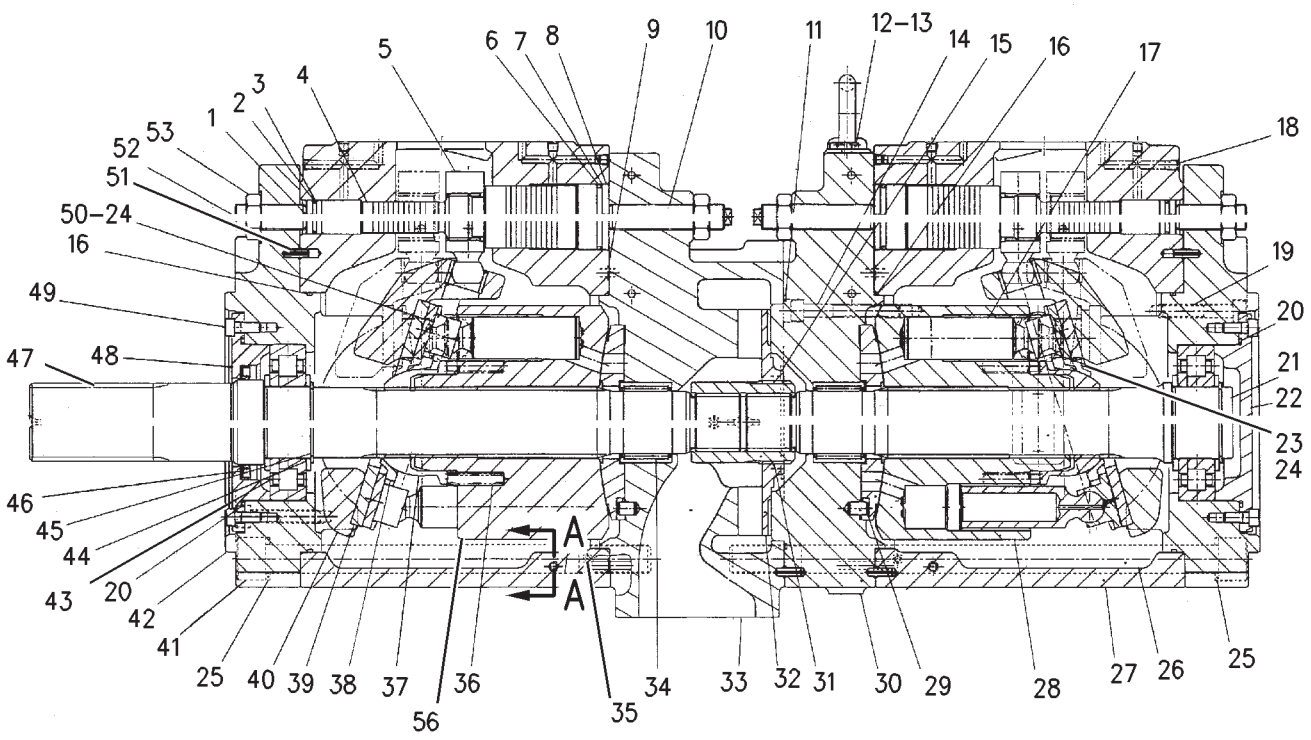

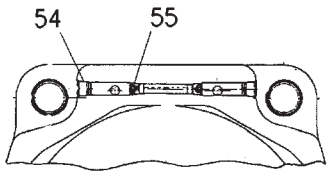

SECTION A–A

GRAPHIC #1 **<END>** g00850599

HYDRAULIC SYSTEM

155-9206 PUMP GP-PISTON*R

S/N: RCD1-UP

PART OF 151-6647 PUMP & MTG GP-HYDRAULIC

SMCS-5070 **i02154935**

NOTE	REF NO	GRAPHIC REF	PART NUMBER	QTY	PART NAME 1 2 3 4 5 6 (PRODUCT LEVEL)	SEE PAGE
	1	1	**170-9900**	2	PIN	
Y	2	1	**191-5590**	1	ROTATING GP-PUMP	720
	3	1	**170-9811**	1	BODY	
	4	1	**170-9907**	2	PLUG	
Y	5	1	**158-9103**	1	ACTUATOR GP-PUMP	445
	6	1	**145-3171**	2	LOCKNUT-SEAL	
	7	1	**145-3169**	2	PIN-THREADED	
	8	1	**5H-4909**	1	SEAL-O-RING	
Y	9	1	**191-5593**	1	HEAD GP-PUMP	530
	10	1	**096-8058**	2	RING-RETAINING	
	11	1	**191-5596**	1	COVER AS	
		1	**2H-3935**	1	SEAL-O-RING	
		1	**3K-0715**	1	SEAL-O-RING	
M		1	**8T-4944**	4	BOLT-SOCKET HEAD (M16X2X40-MM)	
		1	**135-9991**	1	COUPLING	
	12	1	**191-5598**	1	PLATE	
	13	1	*165-9351*	1	COVER AS	
		1	**4J-5268**	1	SEAL-O-RING	
M		1	**107-3786**	4	BOLT (M4X0.7X12-MM)	
Y	14	1	**158-9104**	1	ACTUATOR GP-PUMP	446
	15	1	**112-4630**	2	SCREW (1-5/16-THD)	
Y	16	1	**158-9105**	1	VALVE GP-SHUTTLE	871
Y	17	1	**165-9250**	1	VALVE GP-PUMP CONTROL (PRESSURE, FLOW COMPENSATOR)	850
	18	1	**117-5716**	4	PIN	
	19	1	**9T-3928**	4	PLUG AS	
					(EACH INCLUDES)	
		1	**187-8001**	1	SEAL	
M	20	1	**177-0359**	4	BOLT-SOCKET HEAD (M22X25X90-MM)	

M-METRIC PART
Y-SEPARATE ILLUSTRATION

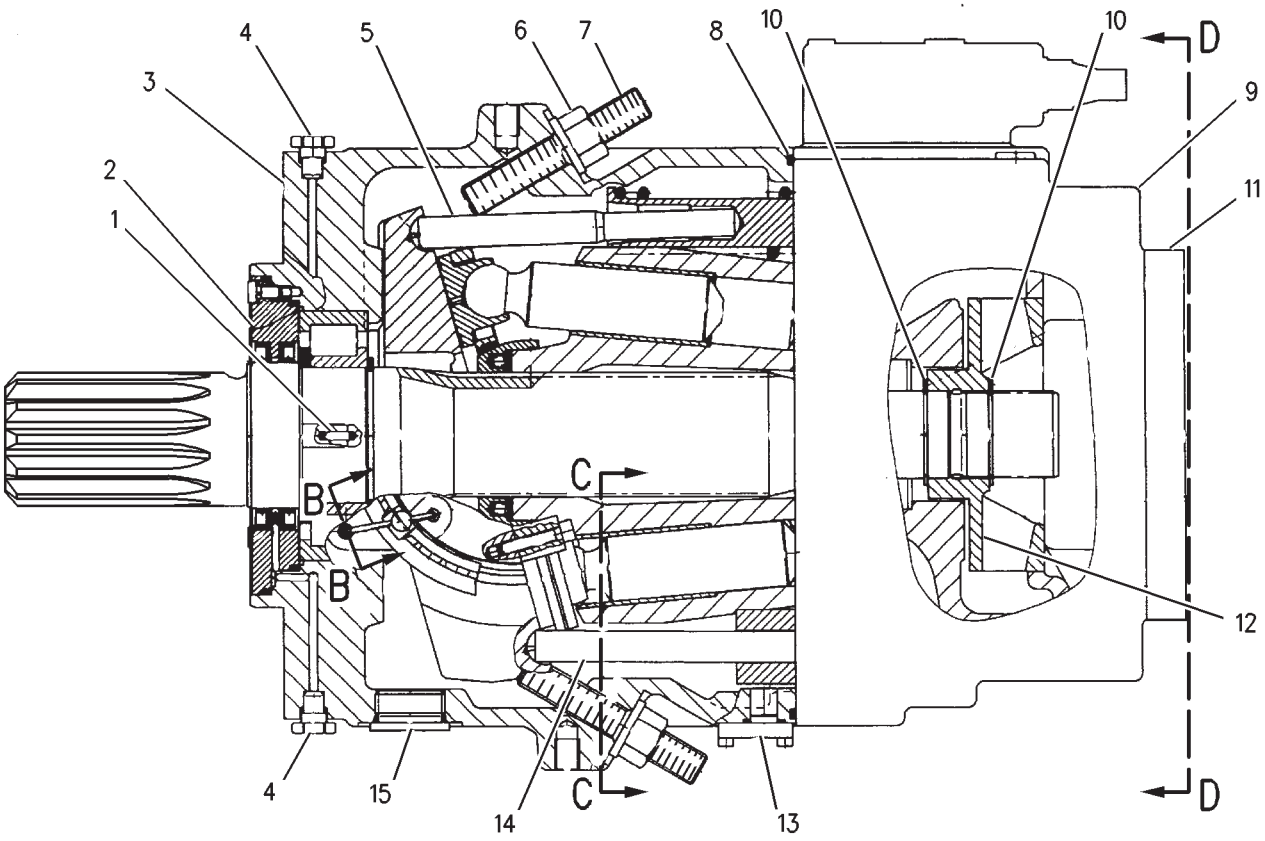

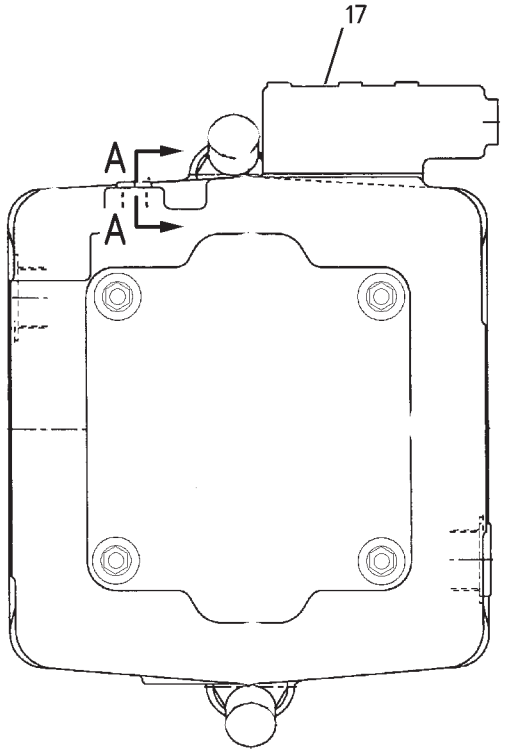

VIEW D-D

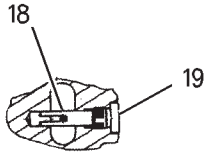

SECTION B-B

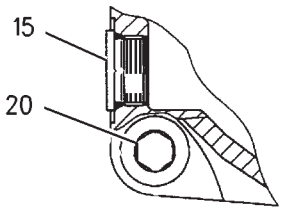

SECTION C-C

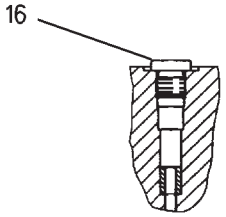

SECTION A-A

GRAPHIC #1 **<END>** g00782943

HYDRAULIC SYSTEM

170-9918 PUMP GP-PISTON–FAN MOTOR*R

S/N: RCD1-UP

PART OF 151-6647 PUMP & MTG GP-HYDRAULIC

SMCS-5070 **i03497022**

NOTE	REF NO	GRAPHIC REF	PART NUMBER	QTY	PART NAME 1 2 3 4 5 6 (PRODUCT LEVEL)	SEE PAGE
	1	1	**185-0303**	1	SEAL-OIL	
	2	1	**213-9250**	4	SEAL-O-RING	
M	3	1	**9X-6032**	4	BOLT-SOCKET HEAD (M10X1.5X30-MM)	
	4	1	**209-5985**	1	COUPLING	
	5	1	**118-3122**	1	SEAL-O-RING	
	6	1	**213-9248**	1	SEAL-O-RING	
Y	7	1	**155-9135**	1	ROTATING GP-PUMP	717
	8	1	**9S-8005**	1	PLUG-O-RING	
	9	1	**033-6028**	1	SEAL-O-RING	
	10	1	**155-9134**	2	PLATE	
	11	1	*209-5986*	1	BEARING AS	
	11A	1	**185-0305**	1	KIT-SHIM	
	11B	1	**155-9125**	1	BEARING AS-ROLLER	
	11C	1	**191-7583**	1	BEARING AS-ROLLER	
	12	1	**185-0299**	1	HOUSING	
	13	1	**194-9473**	1	RING	
	14	1	**8T-9597**	1	RING-RETAINING	
	15	1	**209-5984**	1	SHAFT	
	16	1	**155-9131**	1	SWASHPLATE	
Y	17	1	**209-5982**	1	ACTUATOR GP	444
	18	1	**209-5983**	1	COVER	
	19	1	**8T-4223**	2	WASHER-HARD (13.5X25.5X3-MM THK)	
M	20	1	**8T-3957**	2	BOLT-SOCKET HEAD (M12X1.75X30-MM)	
	21	1	**188-6280**	1	DOWEL	
Y	22	1	**209-5937**	1	VALVE GP-PUMP CONTROL (PRESSURE COMPENSATOR)	855
M	23	1	**8T-8442**	4	BOLT-SOCKET HEAD (M6X1X30-MM)	

M-METRIC PART
Y-SEPARATE ILLUSTRATION

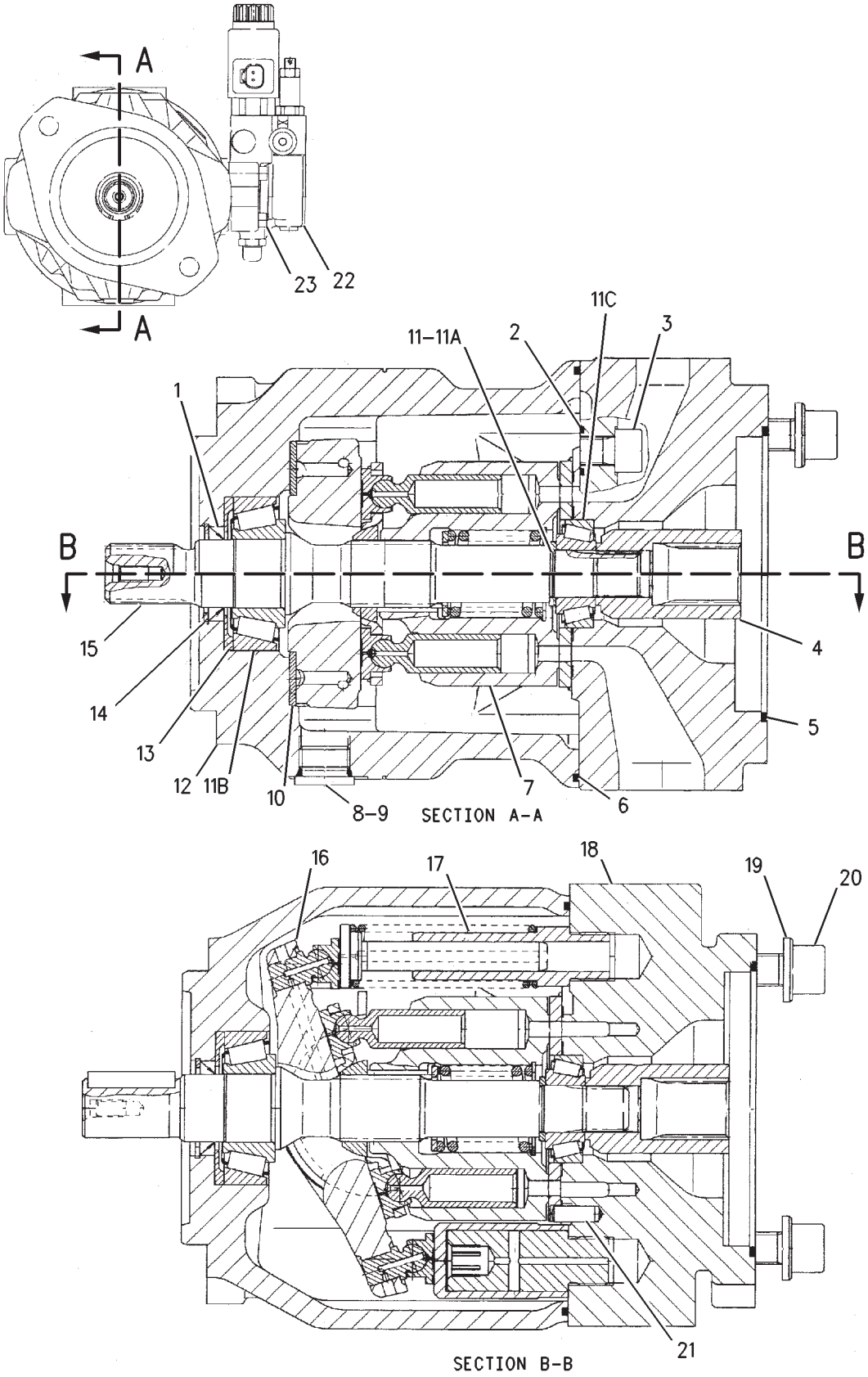

GRAPHIC #1 **<END>** g00853508

HYDRAULIC SYSTEM

259-0878 PUMP GP-PISTON*R

S/N: RCD1-UP

PART OF 151-6647 PUMP & MTG GP-HYDRAULIC

SMCS-5070 **i02578288**

NOTE	REF NO	GRAPHIC REF	PART NUMBER	QTY	PART NAME 1 2 3 4 5 6 (PRODUCT LEVEL)	SEE PAGE
	1	1	**170-9900**	2	PIN	
Y	2	1	**266-7894**	1	ROTATING GP-PUMP (PISTON)	722
	3	1	**223-7629**	1	HOUSING	
	4	1	**170-9907**	2	PLUG	
Y	5	1	**158-9103**	1	ACTUATOR GP-PUMP	445
	6	1	**145-3169**	2	PIN-THREADED	
	7	1	**145-3171**	2	LOCKNUT-SEAL	
	8	1	**234-9503**	1	SEAL-O-RING	
Y	9	1	**191-5593**	1	HEAD GP-PUMP	530
	10	1	**096-8058**	2	RING-RETAINING	
	11	1	*191-5596*	1	COVER AS	
		1	**2H-3935**	1	SEAL-O-RING	
		1	**3K-0715**	1	SEAL-O-RING	
M		1	**8T-4944**	4	BOLT-SOCKET HEAD (M16X2X40-MM)	
		1	**135-9991**	1	COUPLING	
		1	**191-5597**	1	FLANGE	
	12	1	**191-5598**	1	PLATE	
M	13	1	**177-0359**	4	BOLT-SOCKET HEAD (M22X25X90-MM)	
Y	14	1	**158-9104**	1	ACTUATOR GP-PUMP	446
	15	1	**112-4630**	2	SCREW (1-5/16-THD)	
Y	16	1	**158-9105**	1	VALVE GP-SHUTTLE	871
Y	17	1	**165-9250**	1	VALVE GP-PUMP CONTROL (PRESSURE, FLOW COMPENSATOR)	850
	18	1	**117-5716**	4	PIN	
	19	1	**9T-3928**	4	PLUG AS	
		1	**187-8001**	1	SEAL	
	20	1	**128-8981**	2	CAP (PROTECTION)	

M-METRIC PART
Y-SEPARATE ILLUSTRATION

259-0878 PUMP GP-PISTON *(contd.)* **i02578288**

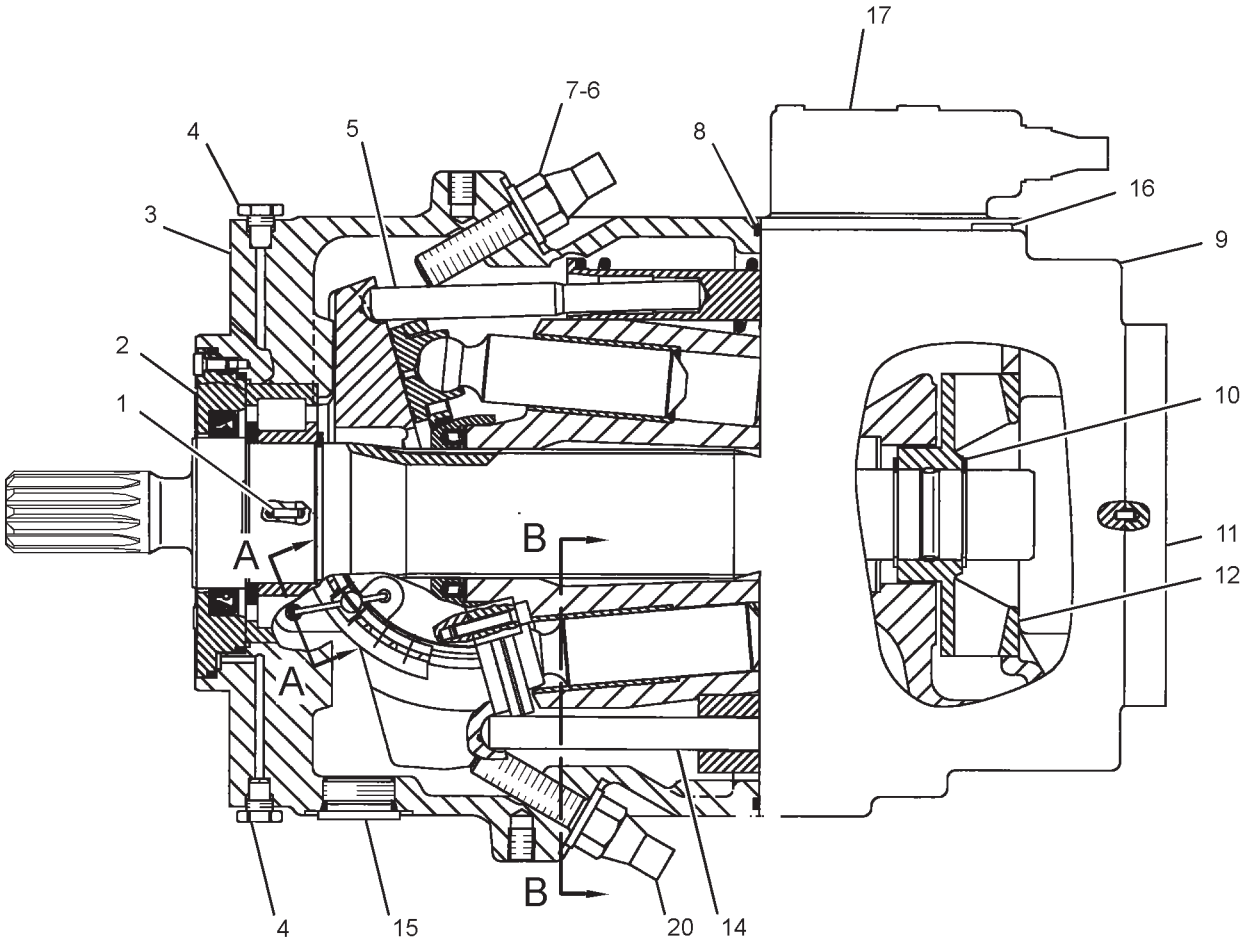

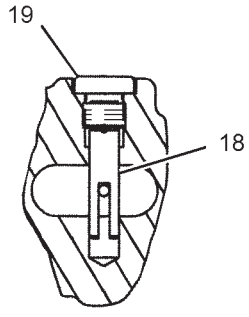

SECTION A-A

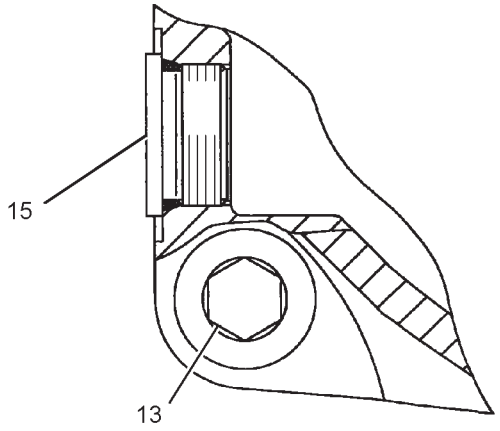

SECTION B-B

GRAPHIC #1 **<END>** g01304911

HYDRAULIC SYSTEM

185-0266 ROTATING GP-MOTOR

S/N: RCD1-UP

PART OF 200-3252 MOTOR GP-PISTON

SMCS-5058 **i01519067**

NOTE	REF NO	GRAPHIC REF	PART NUMBER	QTY	PART NAME 1 2 3 4 5 6 (PRODUCT LEVEL)	SEE PAGE
	1	1	**168-7940**	3	PIN	
	2	1	**185-0273**	1	PLATE-VALVE	
	3	1	**096-0015**	1	RING-RETAINING	
	4	1	**155-6654**	1	BARREL	
	5	1	**168-7941**	1	SPRING	
	6	1	**168-7942**	1	WASHER (36.5-MM ODX2.0-MM THK)	
	7	1	**185-0253**	1	GUIDE-BALL	
	8	1	**185-0250**	1	PISTON AS	
	9	1	**168-7944**	1	PLATE-RETRACTION	

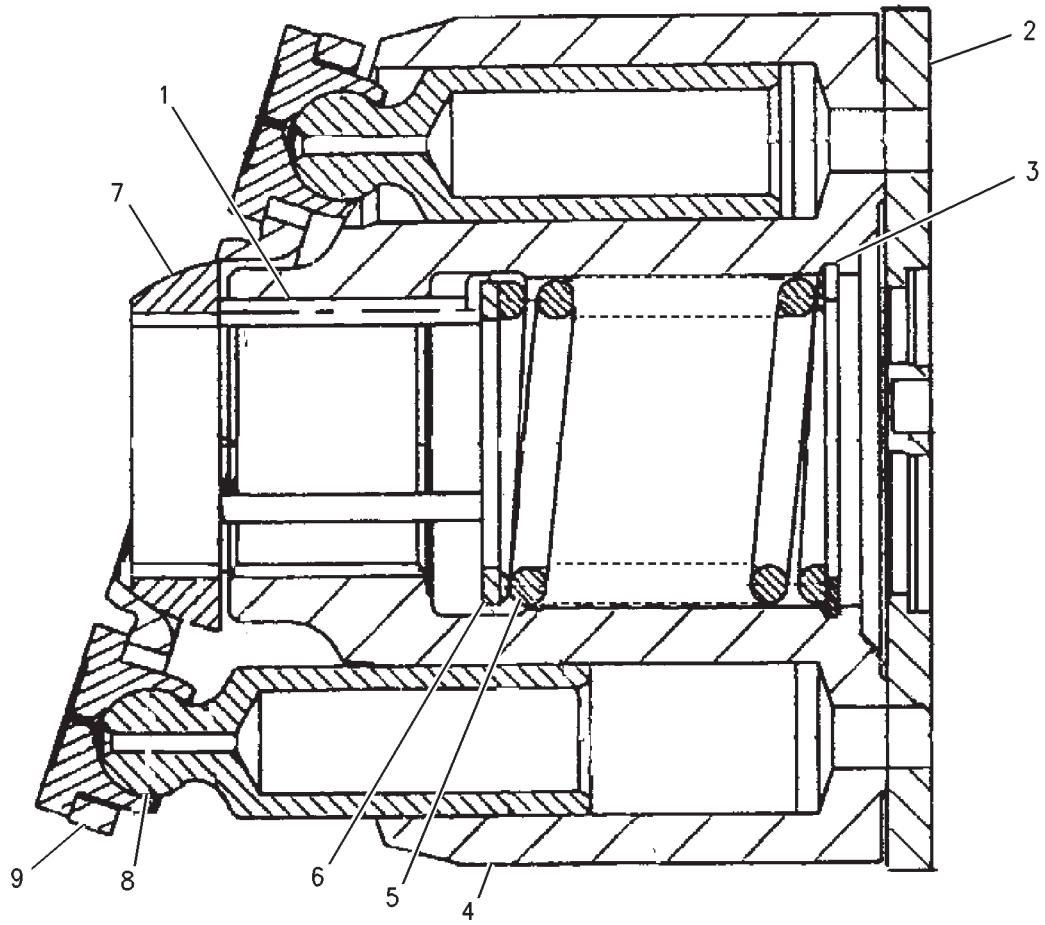

GRAPHIC #1 **<END>** g00789456

HYDRAULIC SYSTEM

185-0275 ROTATING GP-MOTOR

S/N: RCD1-UP

PART OF 209-6058 MOTOR GP-PISTON

SMCS-5058 **i01519049**

NOTE	REF NO	GRAPHIC REF	PART NUMBER	QTY	PART NAME 1 2 3 4 5 6 (PRODUCT LEVEL)	SEE PAGE
	1	1	**168-3379**	3	PIN	
	2	1	**168-3382**	1	WASHER (42-MM ODX2.7-MM THK)	
	3	1	**185-0292**	1	SPRING	
	4	1	**6V-7723**	1	RING-RETAINING	
	5	1	**185-0287**	1	PLATE-VALVE	
	6	1	**185-0289**	1	BARREL	
	7	1	**168-3384**	9	PISTON AS-PUMP	
	8	1	**168-3378**	1	BEARING-SPHERICAL	
	9	1	**168-3385**	1	PLATE-RETRACTION	

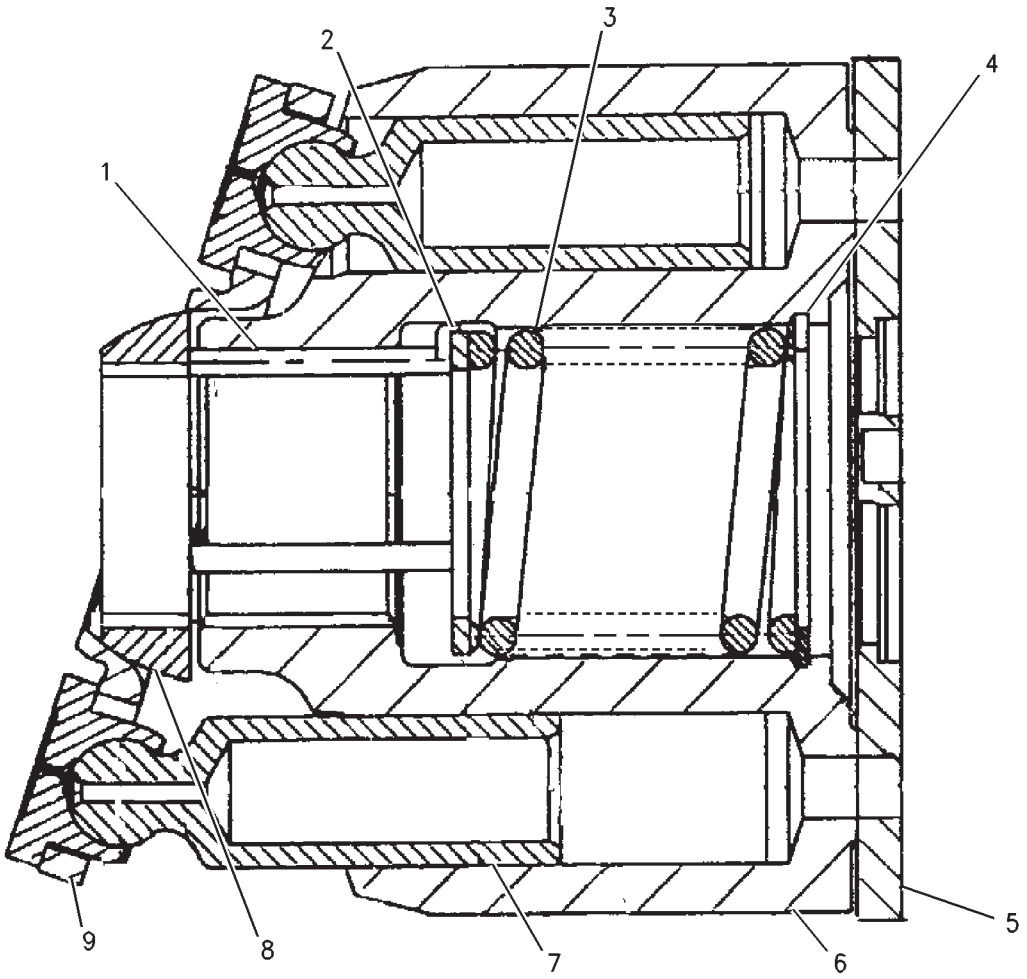

GRAPHIC #1 **<END>** g00790136

HYDRAULIC SYSTEM

155-9135 ROTATING GP-PUMP

S/N: RCD1-UP

PART OF 170-9918 PUMP GP-PISTON

SMCS-5070 **i00968552**

NOTE	REF NO	GRAPHIC REF	PART NUMBER	QTY	PART NAME 1 2 3 4 5 6 (PRODUCT LEVEL)	SEE PAGE
	1	1	**155-9137**	1	PLATE	
	2	1	**155-9149**	1	RING-RETAINING	
	3	1	**155-9136**	1	BARREL	
	4	1	**155-9117**	1	SPRING	
	5	1	**155-9119**	1	PLATE	
	6	1	**155-9118**	3	PIN	
	7	1	**155-9112**	9	PISTON AS	
	8	1	**155-9115**	1	PLATE	
	9	1	**155-9116**	1	GUIDE-BALL	

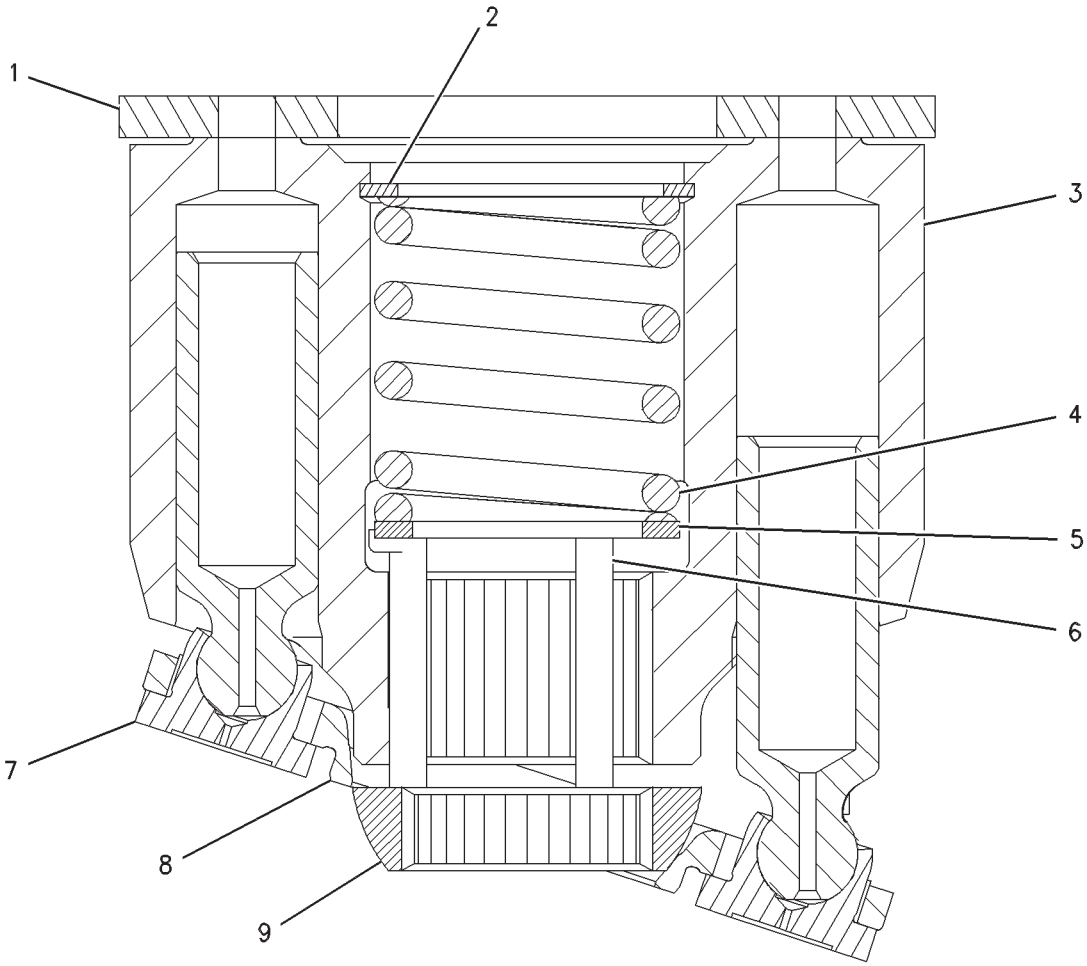

GRAPHIC #1 **<END>** g00493789

HYDRAULIC SYSTEM

165-9358 ROTATING GP-PUMP

S/N: RCD1-UP

PART OF 266-7894 ROTATING GP-PUMP

SMCS-5070 **i02466501**

NOTE	REF NO	GRAPHIC REF	PART NUMBER	QTY	PART NAME 1 2 3 4 5 6 (PRODUCT LEVEL)	SEE PAGE
	1	1	**165-9363**	20	SPRING	
	2	1	**165-9359**	1	RETAINER	
B	3	1	**165-9361**	2	SHIM (0.5-MM THK)	
B	4	1	**165-9362**	2	SHIM (0.75-MM THK)	
	5	1	**165-9360**	1	GUIDE-BALL	
	6	1	**164-8166**	1	BARREL AS	
	7	1	**259-0882**	1	PISTON AS-PUMP	

B-USE AS REQUIRED

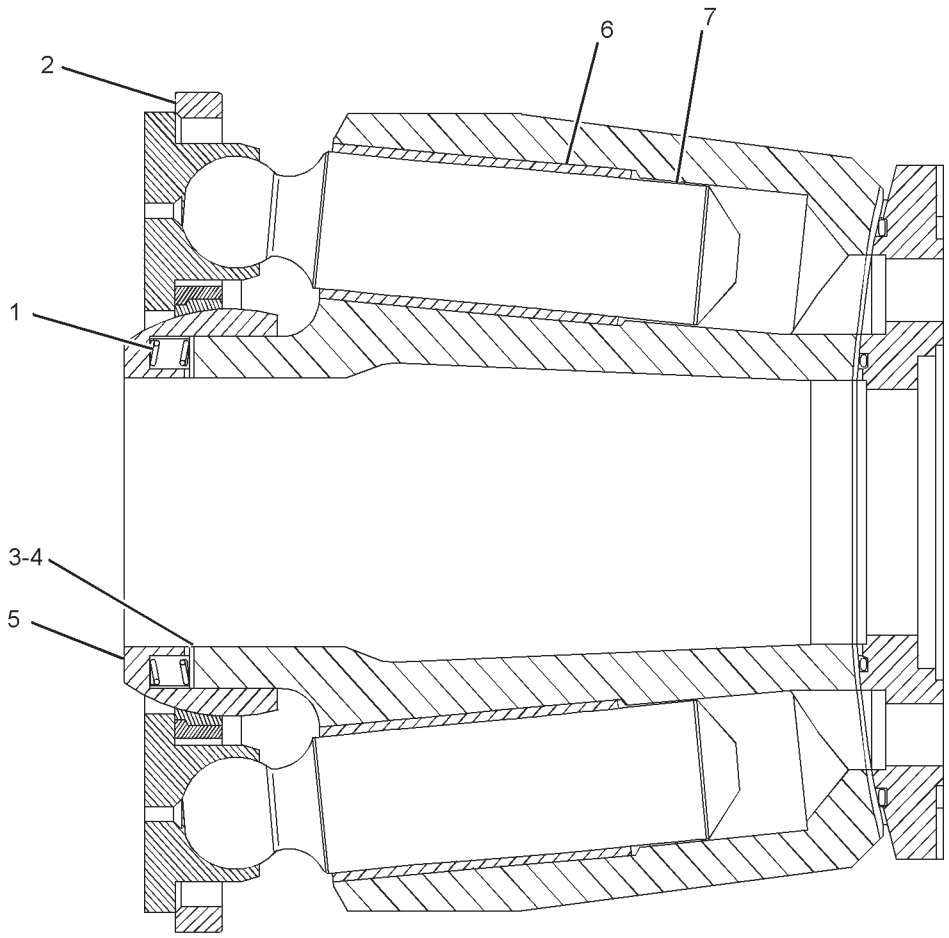

GRAPHIC #1 **<END>** g01226990

HYDRAULIC SYSTEM

170-9812 ROTATING GP-PUMP

S/N: RCD1-UP

PART OF 191-5590 ROTATING GP-PUMP

SMCS-5070 **i02147685**

NOTE	REF NO	GRAPHIC REF	PART NUMBER	QTY	PART NAME 1 2 3 4 5 6 (PRODUCT LEVEL)	SEE PAGE
	1	1	**165-9363**	1	SPRING	
	2	1	**165-9359**	1	RETAINER	
B	3	1	**165-9361**	1	SHIM (0.5-MM THK)	
B	4	1	**165-9362**	1	SHIM (0.75-MM THK)	
	5	1	**165-9360**	1	GUIDE-BALL	

B-USE AS REQUIRED

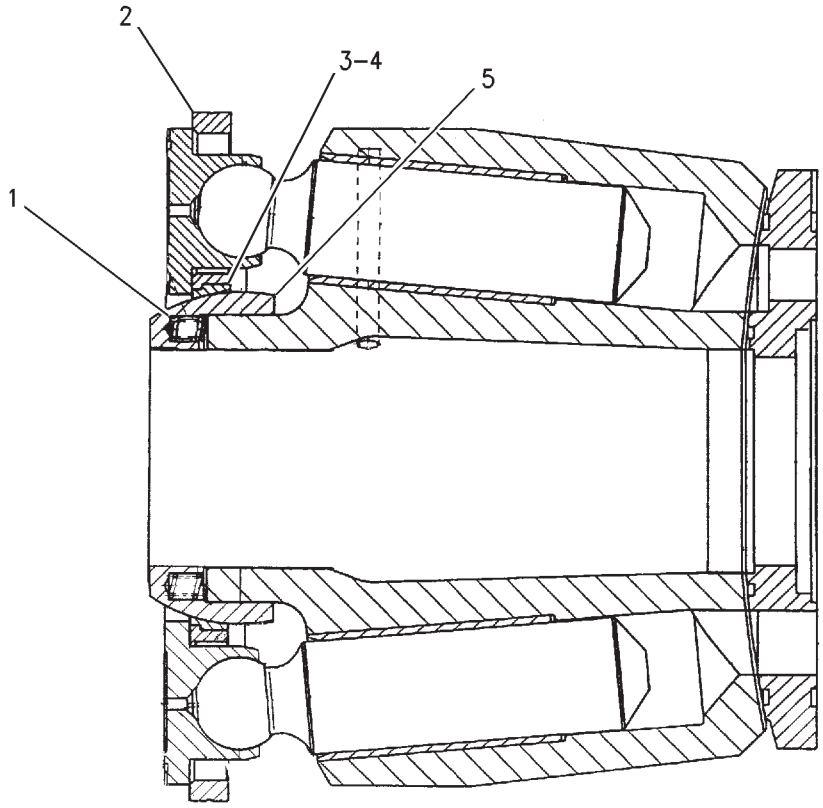

GRAPHIC #1 **<END>** g00799111

HYDRAULIC SYSTEM

191-5590 ROTATING GP-PUMP

S/N: RCD1-UP

PART OF 155-9206 PUMP GP-PISTON

SMCS-5070 **i02140329**

NOTE	REF NO	GRAPHIC REF	PART NUMBER	QTY	PART NAME 1 2 3 4 5 6 (PRODUCT LEVEL)	SEE PAGE
	1	1	**124-9849**	2	SEAL-SHAFT	
	2	1	**5H-3252**	1	SEAL-O-RING	
	3	1	**108-3566**	1	SEAL-O-RING	
	4	1	**170-9901**	1	BEARING	
	5	1	**095-0929**	1	RING-RETAINING	
Y	6	1	**170-9812**	1	ROTATING GP-PUMP	719
M	7	1	**8T-8442**	4	BOLT-SOCKET HEAD (M6X1X30-MM)	
	8	1	**165-9357**	2	RETAINER	
	9	1	**165-9356**	1	BEARING	
	10	1	**165-9354**	1	SWASHPLATE	
	11	1	**191-5592**	1	BEARING AS	
	12	1	**145-3773**	4	ROLLER	
	13	1	**6E-3840**	4	ROD	
	14	1	**4I-5956**	1	COVER	
	15	1	**4I-5957**	4	RING	
M	16	1	**8T-0267**	4	BOLT-SOCKET HEAD (M6X1X12-MM)	
	17	1	**191-5591**	1	SHAFT	

M-METRIC PART
Y-SEPARATE ILLUSTRATION

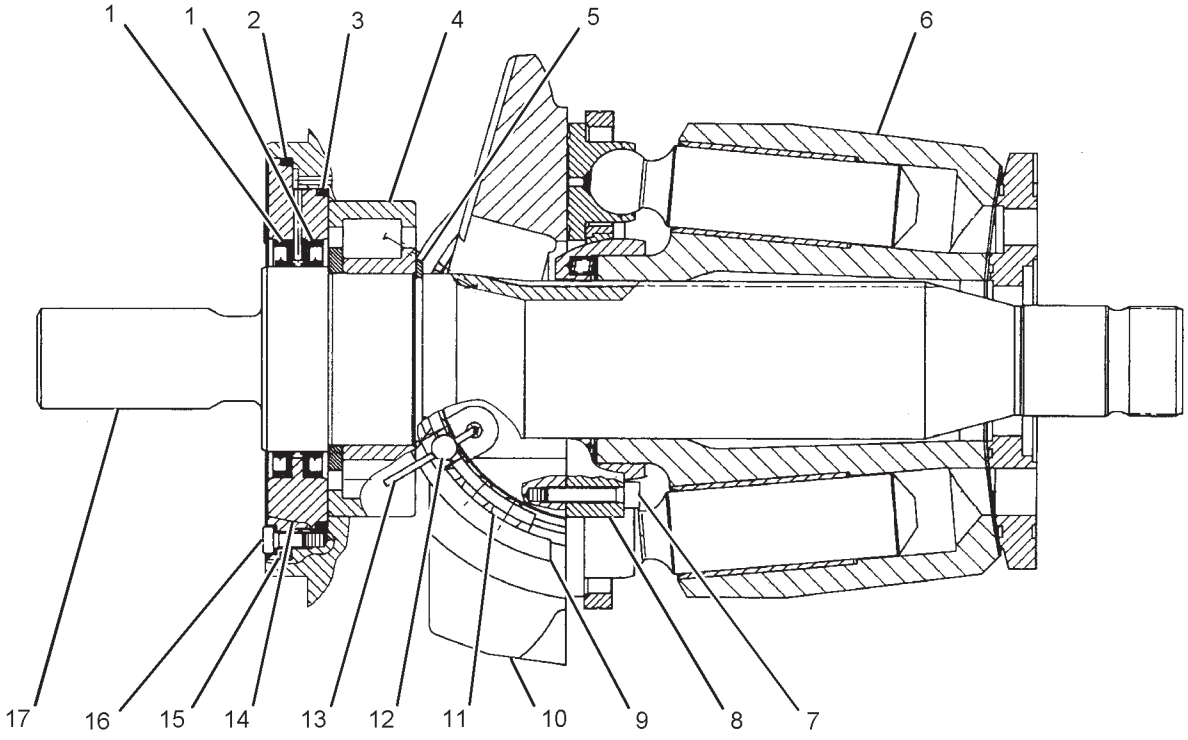

GRAPHIC #1 **<END>** g01087813

HYDRAULIC SYSTEM

259-0816 ROTATING GP-PUMP

S/N: RCD168-UP

PART OF 247-8978 MOTOR GP-PISTON

SMCS-5070 **i02364925**

NOTE	REF NO	GRAPHIC REF	PART NUMBER	QTY	PART NAME 1 2 3 4 5 6 (PRODUCT LEVEL)	SEE PAGE
	1	1	**168-3379**	3	PIN	
	2	1	**168-3382**	1	WASHER (42-MM ODX2.7-MM THK)	
	3	1	**185-0292**	1	SPRING	
	4	1	**6V-7723**	1	RING-RETAINING	
	5	1	**185-0287**	1	PLATE-VALVE	
	6	1	**185-0289**	1	BARREL	
	7	1	**259-0817**	9	PISTON AS	
	8	1	**168-3378**	1	BEARING-SPHERICAL	
	9	1	**168-3385**	1	PLATE-RETRACTION	

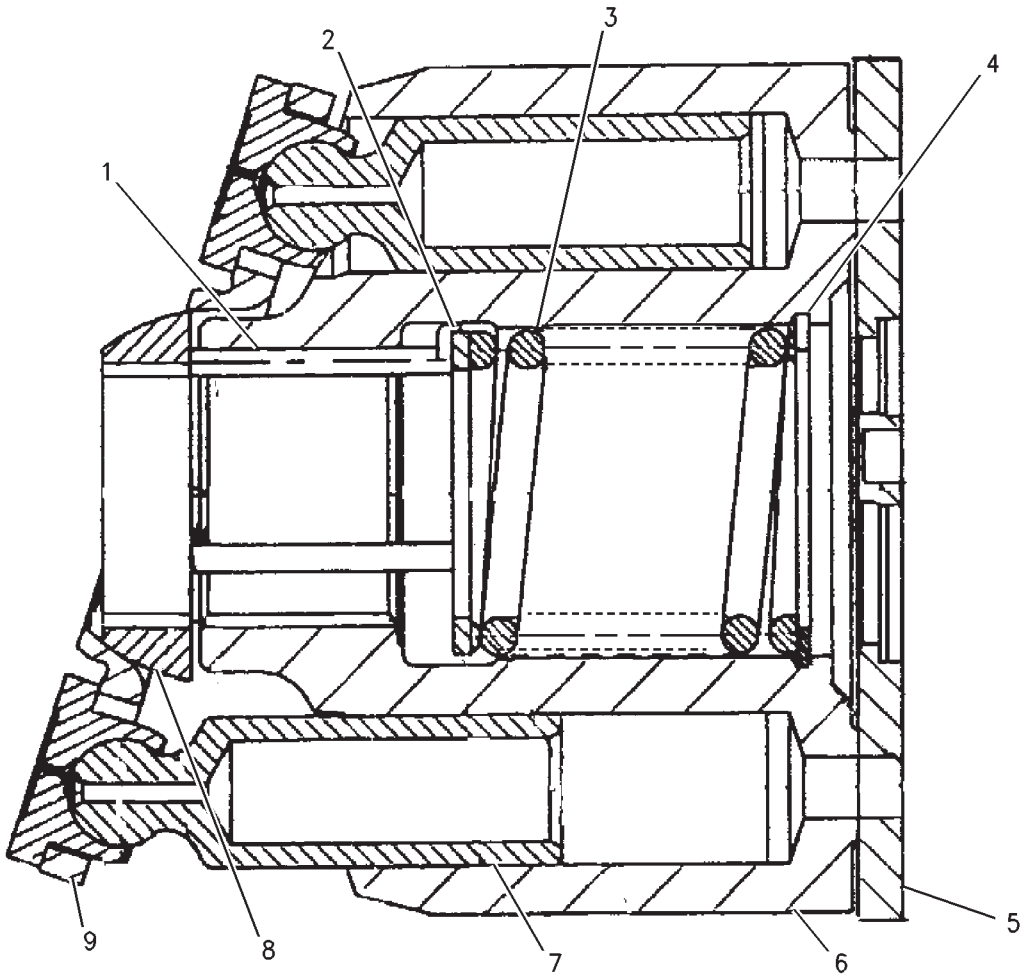

GRAPHIC #1 **<END>** g00790134

HYDRAULIC SYSTEM

266-7894 ROTATING GP-PUMP

S/N: RCD1-UP

PART OF 259-0878 PUMP GP-PISTON

SMCS-5070 **i02578300**

NOTE	REF NO	GRAPHIC REF	PART NUMBER	QTY	PART NAME 1 2 3 4 5 6 (PRODUCT LEVEL)	SEE PAGE
J	1	1	**259-0884**	1	SEAL-SHAFT	
J	2	1	**243-2737**	1	SEAL-O-RING	
J	3	1	**6V-8260**	1	SEAL-O-RING	
	4	1	**170-9901**	1	BEARING	
	5	1	**095-0929**	1	RING-RETAINING	
Y	6	1	**165-9358**	1	ROTATING GP-PUMP	718
M	7	1	**8T-8442**	4	BOLT-SOCKET HEAD (M6X1X30-MM)	
	8	1	**165-9357**	2	RETAINER	
	9	1	**165-9356**	1	BEARING	
	10	1	**165-9354**	1	SWASHPLATE	
	11	1	**191-5592**	1	BEARING AS	
	12	1	**6E-3840**	4	ROD	
J	13	1	**266-7895**	1	COVER	
J	14	1	**4I-5957**	4	RING	
JM	15	1	**8T-0267**	4	BOLT-SOCKET HEAD (M6X1X12-MM)	
	16	1	**191-5591**	1	SHAFT	
					AVAILABLE REPAIR KIT(S):	
AJ			**266-7910**	1	KIT-REPAIR (SHAFT-SEAL)	

A-NOT PART OF THIS GROUP
J-KIT MARKED J SERVICES PART(S) MARKED J
M-METRIC PART
Y-SEPARATE ILLUSTRATION

266-7894 ROTATING GP-PUMP *(contd.)* **i02578300**

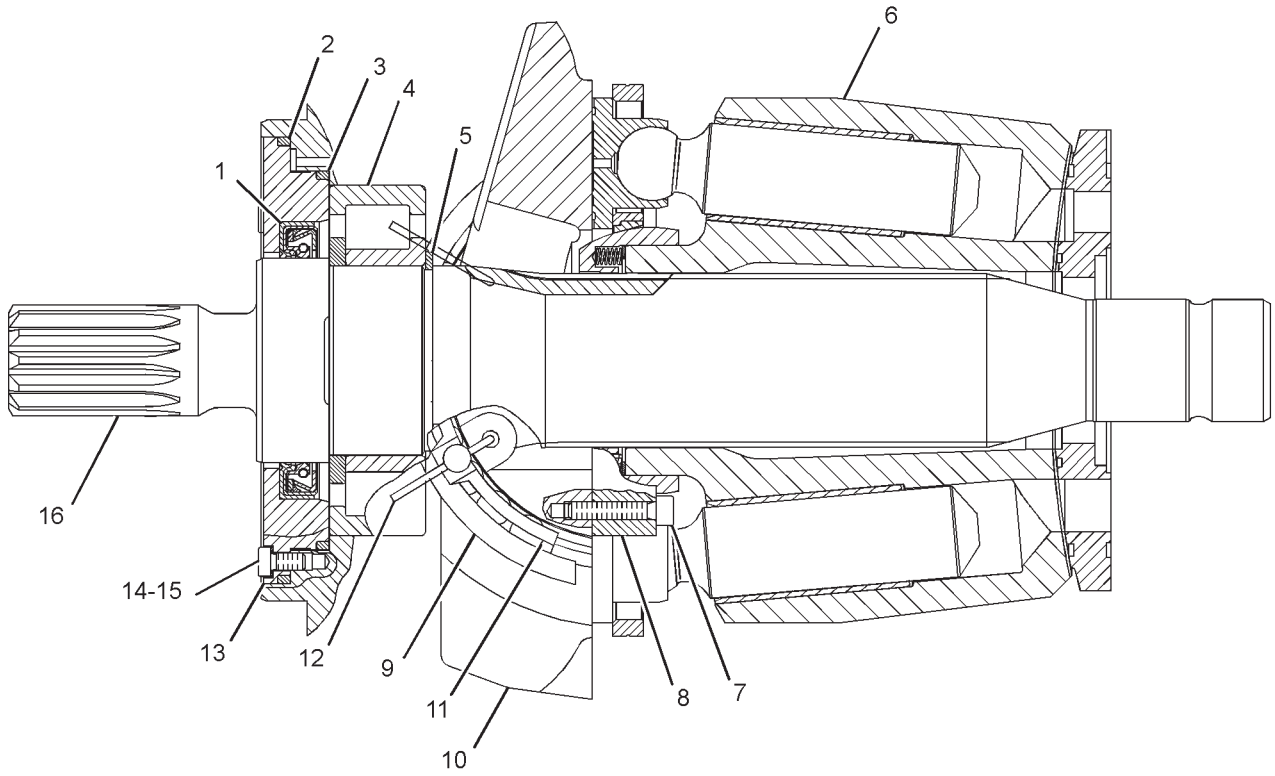

GRAPHIC #1 **<END>** g01303665

HYDRAULIC SYSTEM

7Y-4827 ROTOR GP-SWIVEL

S/N: RCD1-UP

PART OF 156-0622 SWIVEL GP

SMCS-5060 **i00624190**

NOTE	PART NUMBER	QTY	PART NAME 1 2 3 4 5 6 (PRODUCT LEVEL)	SEE PAGE
Y	*7Y-4830*	1	ROTOR GP-SWIVEL	725
			—OR—	
	7Y-4828	1	ROTOR (CAST)	

Y-SEPARATE ILLUSTRATION

<END>

HYDRAULIC SYSTEM

7Y-4830 ROTOR GP-SWIVEL

S/N: RCD1-UP

PART OF 7Y-4827 ROTOR GP-SWIVEL

SMCS-5060 **i00624206**

NOTE	REF NO	GRAPHIC REF	PART NUMBER	QTY	PART NAME 1 2 3 4 5 6 (PRODUCT LEVEL)	SEE PAGE
	1	1	**7Y-4836**	1	ROTOR	
	2	1	**7Y-4832**	1	BLOCK AS	
	3	1	**9X-8257**	5	WASHER (17.5X30X3.5-MM THK)	
M	4	1	**7X-2557**	5	BOLT (M16X2X140-MM)	
	5	1	**4J-5140**	1	SEAL-O-RING	
	6	1	**4J-0521**	5	SEAL-O-RING	

M-METRIC PART

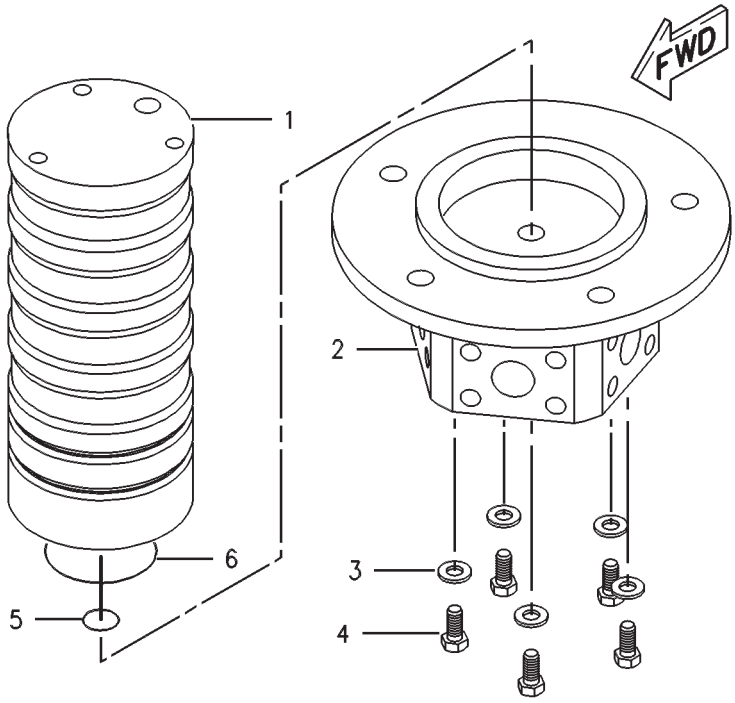

GRAPHIC #1 **<END>** g00266797

HYDRAULIC SYSTEM

155-9235 SCREEN GP-HYDRAULIC–TANK

S/N: RCD1-UP

PART OF 201-1770 TANK & FILTER GP-HYDRAULIC

SMCS-5068 **i01886586**

NOTE	REF NO	GRAPHIC REF	PART NUMBER	QTY	PART NAME 1 2 3 4 5 6 (PRODUCT LEVEL)	SEE PAGE
	1	1	**095-6641**	1	GUIDE	
	2	1	**209-6014**	1	SCREEN AS	
	3	1	**095-6639**	1	SPRING	
	4	1	**155-9236**	1	ROD	
	5	1	**5L-5032**	1	SEAL-O-RING	
M	6	1	**8T-4133**	2	NUT (M10X1.5-THD)	

M-METRIC PART

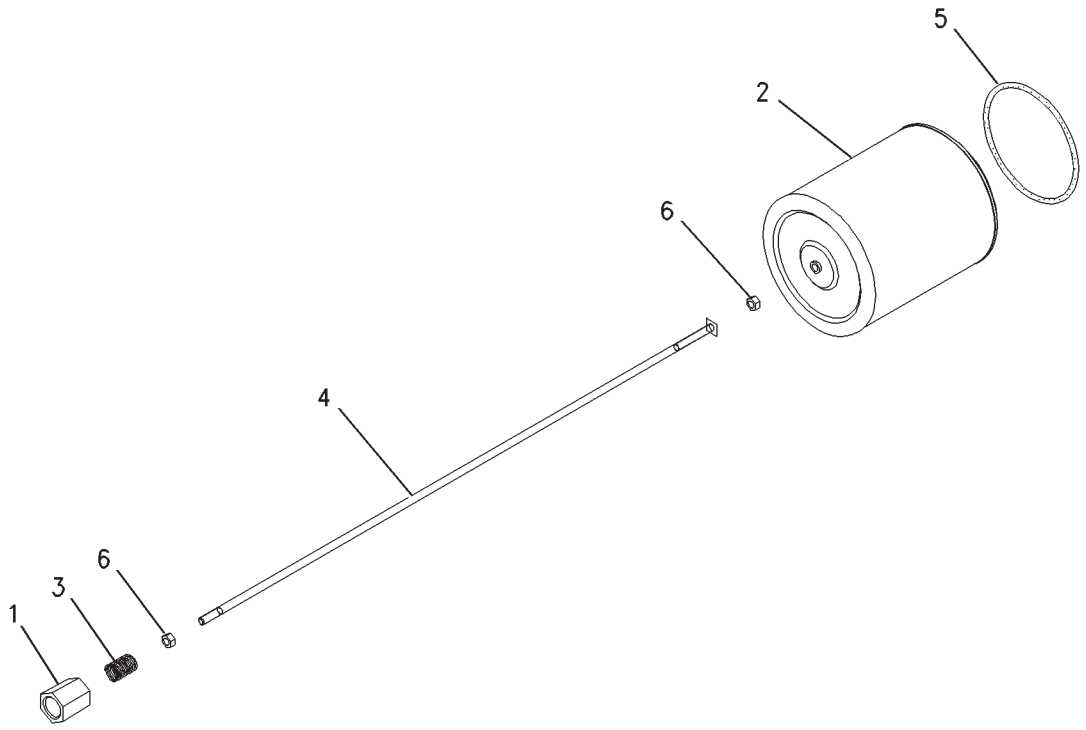

GRAPHIC #1 **<END>** g00979464

HYDRAULIC SYSTEM

156-0622 SWIVEL GP

S/N: RCD1-UP

PART OF 168-9372 LINES GP-TRAVEL MOTOR

SMCS-5060 **i03156801**

NOTE	REF NO	GRAPHIC REF	PART NUMBER	QTY	PART NAME 1 2 3 4 5 6 (PRODUCT LEVEL)	SEE PAGE
	1	1	**7Y-4837**	1	COVER	
	2	1	**7Y-4826**	1	HOUSING	
	3	1	**8T-6759**	1	PLUG-PIPE	
Y	4	1	**7Y-4827**	1	ROTOR GP-SWIVEL	724
	5	1	**095-1633**	3	SEAL-O-RING	
	6	1	**156-0619**	5	SEAL	
	7	1	**7Y-4843**	1	RETAINER	
	8	1	**095-1728**	1	SEAL-O-RING	
M	9	1	**8T-4136**	9	BOLT (M10X1.5X25-MM)	

M-METRIC PART
Y-SEPARATE ILLUSTRATION

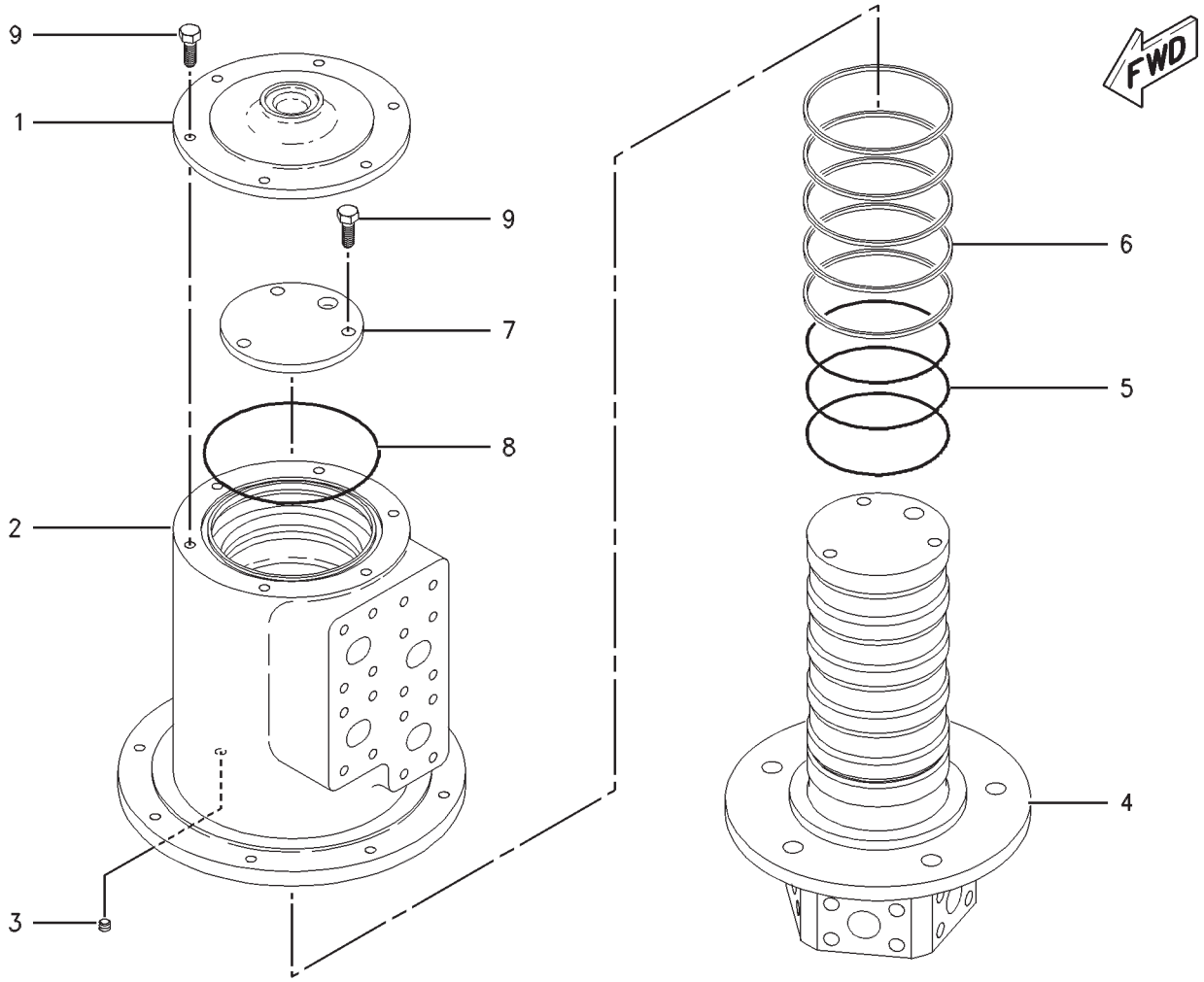

GRAPHIC #1 **<END>** g00561581

HYDRAULIC SYSTEM

201-1770 TANK & FILTER GP-HYDRAULIC

S/N: RCD1-UP

PART OF 168-9369 TANK & MTG GP-HYDRAULIC

SMCS-5056, 5068 **i02363250**

NOTE	REF NO	GRAPHIC REF	PART NUMBER	QTY	PART NAME 1 2 3 4 5 6 (PRODUCT LEVEL)	SEE PAGE
Y	1	2	**155-9235**	1	SCREEN GP-HYDRAULIC	726
	2	3	**204-8295**	1	PIPE AS	
	3	1	*201-1771*	1	TANK AS-HYDRAULIC	
Y	4	1	**227-0620**	1	GAUGE GP-SIGHT (HYDRAULIC OIL LEVEL) (HYDRAULIC OIL LEVEL)	526
	5	2	**095-1608**	1	SEAL-O-RING	
	6	1,2	**095-1735**	2	SEAL-O-RING	
Y	7	1	**102-2240**	1	SENSOR GP-TEMPERATURE (HYDRAULIC OIL)	270
	8	2	**207-6403**	1	PLUG	
Y	9	2	**188-4150**	1	FILTER GP-OIL (HYDRAULIC OIL RETURN)	523
	10	2	**213-0677**	1	SWITCH AS-LIQUID LEVEL (HYDRAULIC OIL LEVEL)	
		2	**9X-3401**	2	PIN-CONNECTOR (16-GA TO 18-GA)	
		2	**102-8802**	1	KIT-RECEPTACLE (2-PIN)	
					(RECEPTACLE KIT INCLUDES RECEPTACLE AS & WEDGE)	
Y	11	1,3	*188-4147*	1	FILTER GP-OIL (HYDRAULIC OIL RETURN)	521
	12	1	**129-7813**	1	PLATE	
	13	3	**131-9562**	1	PIPE AS	
	14	3	**212-5467**	1	BREATHER GP (HYDRAULIC TANK)	
	15	3	**1H-7339**	1	SEAL-O-RING	
	16	3	**2M-0849**	4	WASHER-HARD (13.5X25.5X5-MM THK)	
	17	2	**3D-2824**	1	SEAL-O-RING	
	18	1,2	*155-3624*	1	PLUG AS	
		1,2	**3J-7354**	1	SEAL-O-RING	
		1,2	**9S-4182**	1	PLUG-O-RING	
	19	1	**3K-0360**	1	SEAL-O-RING	
	20	2	**4I-3591**	1	FLANGE AS	
	21	3	**4J-0524**	1	SEAL-O-RING	
	22	3	**4J-0527**	1	SEAL-O-RING	
	23	3	**5P-8068**	1	SEAL-O-RING (OIL DRAIN)	
	24	2	**207-6404**	1	WASHER (49.5X60.5X1.5-MM THK)	
Y	25	3	**6E-5534**	1	FILTER GP-OIL (HYDRAULIC) (CASE DRAIN)	512
	26	3	**6I-0723**	1	PLUG-OIL DRAIN	
	27	3	**6I-0724**	1	ADAPTER-PLUG	
	28	3	**6J-2680**	3	SEAL-O-RING	
M	29	1	**7X-2550**	8	BOLT (M12X1.75X110-MM)	
	30	1	**7Y-4796**	1	COVER AS	
	31	1,2,3	**8T-4121**	20	WASHER-HARD (11X21X2.5-MM THK)	
M	32	1,2	**8T-4137**	16	BOLT (M10X1.5X20-MM)	
M	33	3	**8T-4138**	4	BOLT (M6X1X20-MM)	
M	34	3	**8T-4183**	8	BOLT (M12X1.75X40-MM)	
M	35	1	**8T-4194**	2	BOLT (M12X1.75X50-MM)	
	36	1,2,3	**8T-4223**	26	WASHER-HARD (13.5X25.5X3-MM THK)	
	37	3	**8T-4224**	4	WASHER-HARD (8.8X16X2-MM THK)	
M	38	3	**8T-4956**	6	BOLT (M12X1.75X35-MM)	
M	39	2	**8T-5041**	2	BOLT (M12X1.75X120-MM)	
	40	3	**8T-6761**	1	PLUG-PIPE	
M	41	3	**8T-7547**	4	BOLT (M8X1.25X30-MM)	
	42	1,2	*148-8407*	2	PLUG AS	
					(EACH INCLUDES)	
		1,2	**3J-1907**	1	SEAL-O-RING	
		1,2	**9S-4191**	1	PLUG-O-RING	
	43	3	**9X-8256**	4	WASHER (6.6X12X2-MM THK)	
	44	2	**202-4046**	1	PIPE AS	
	45	2	**202-3773**	1	SUPPORT AS	
M	46	2	**8T-4139**	4	BOLT (M12X1.75X30-MM)	

201-1770 TANK & FILTER GP-HYDRAULIC *(contd.)* i02363250

NOTE	REF NO	GRAPHIC REF	PART NUMBER	QTY	PART NAME 1 2 3 4 5 6 (PRODUCT LEVEL)	SEE PAGE
M	47	1	**7X-2549**	4	BOLT (M12X1.75X100-MM)	
	48	2	**4J-0522**	1	SEAL-O-RING	
M	49	3	**8T-4195**	4	BOLT (M10X1.5X30-MM)	
	50	2	**229-1021**	1	HOSE	
	51	2	**8T-6703**	2	CLAMP-HOSE	
	52	2	**223-1790**	1	PIPE AS	

M-METRIC PART
Y-SEPARATE ILLUSTRATION

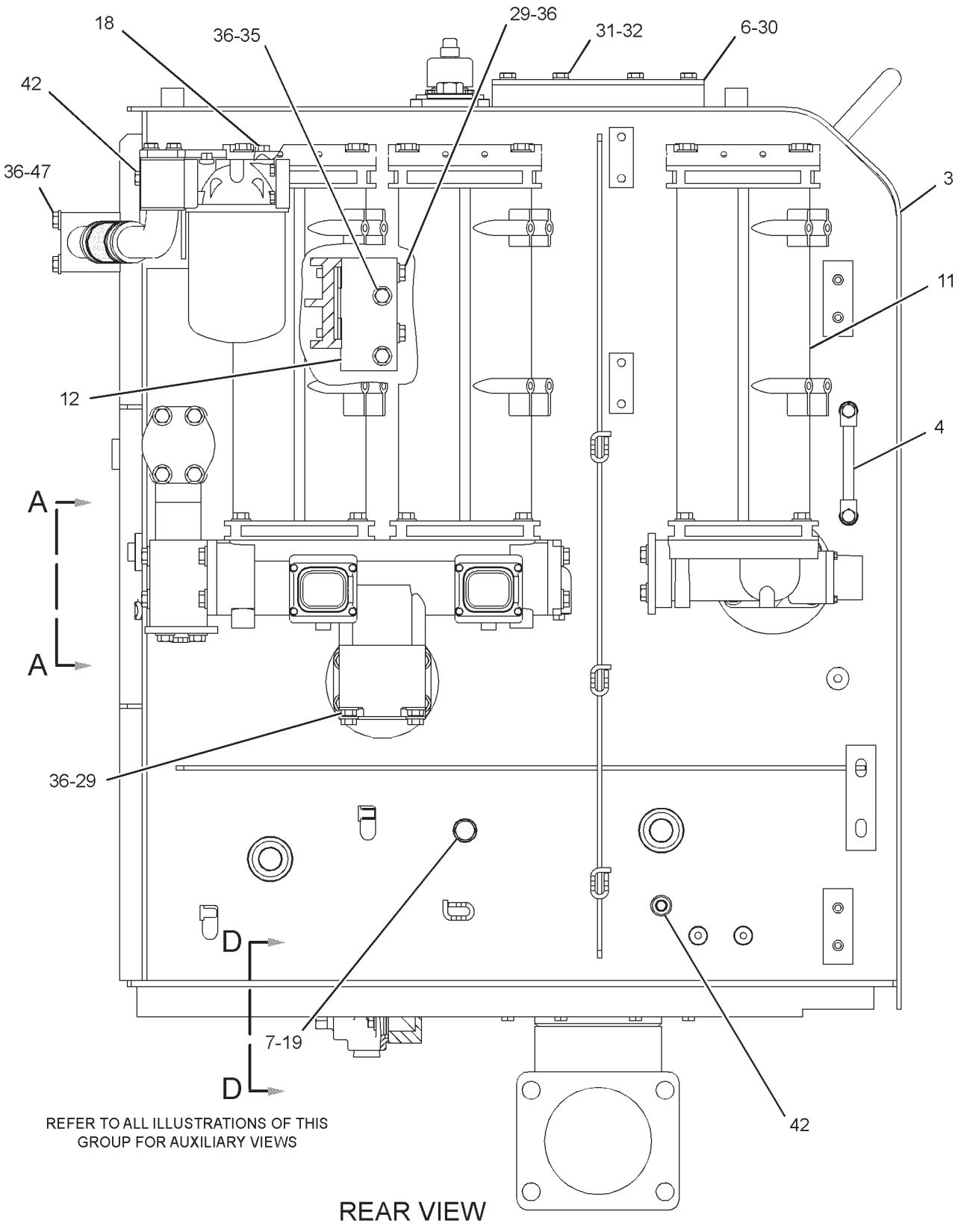

GRAPHIC #1

g01281498

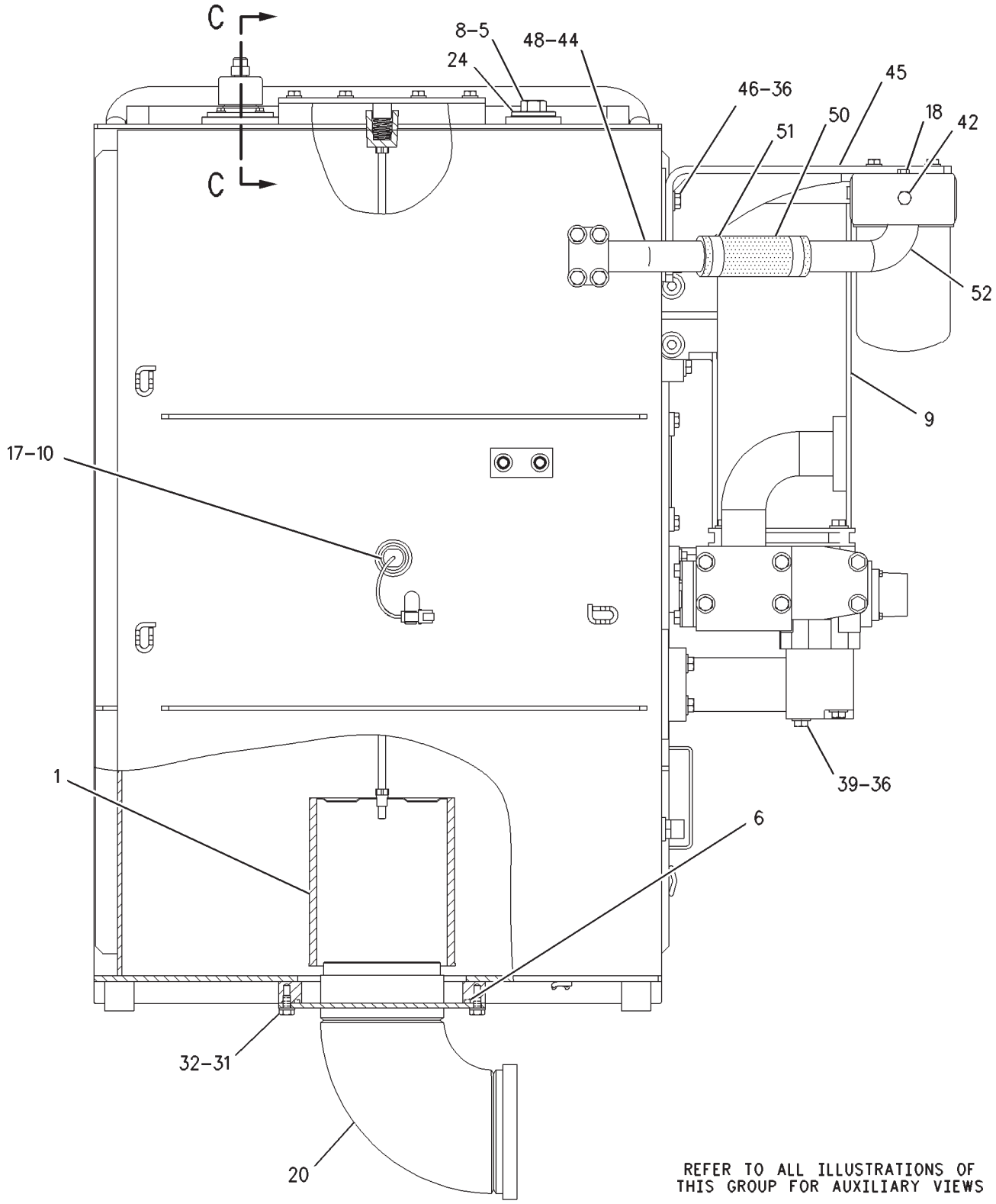

LEFT SIDE VIEW

GRAPHIC #2

g00984363

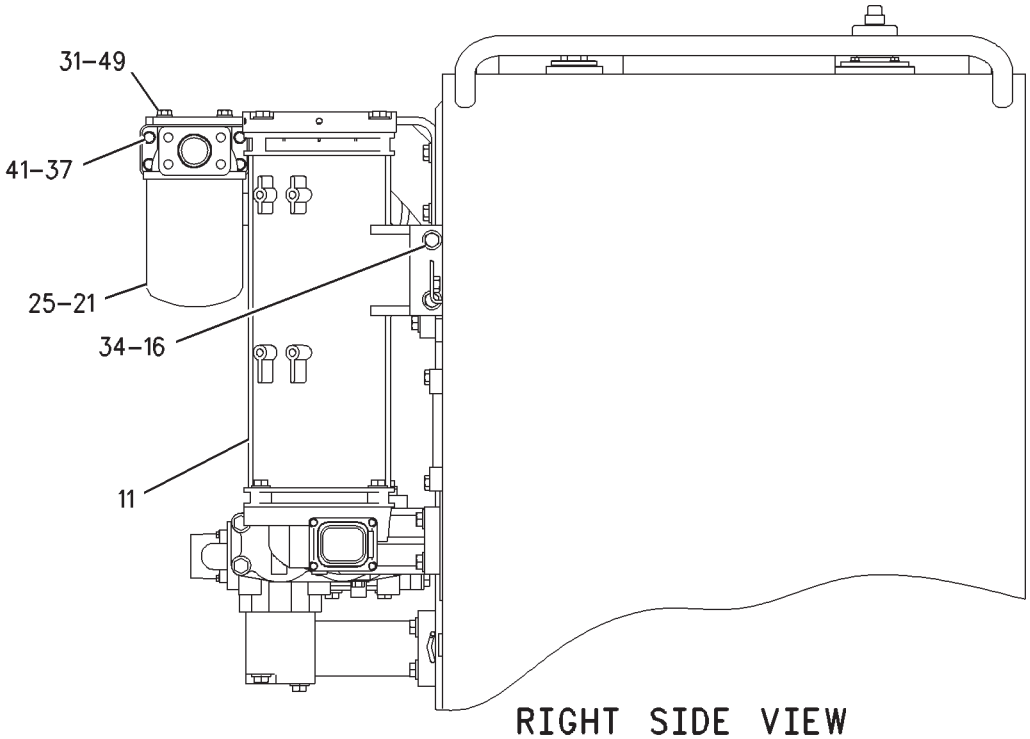

RIGHT SIDE VIEW

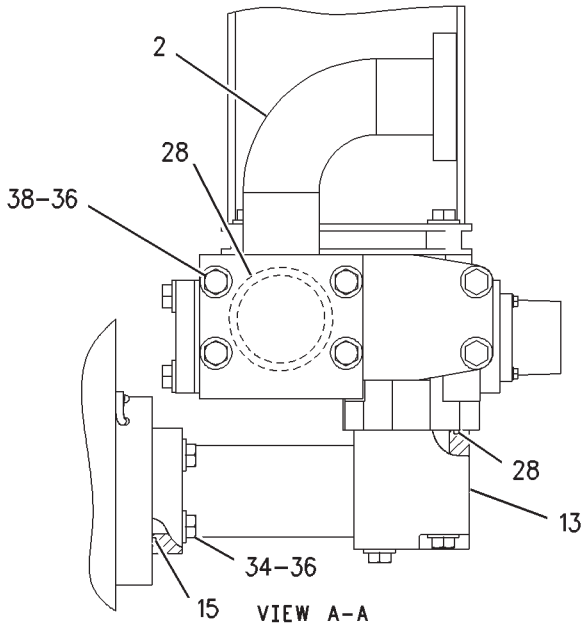

VIEW A-A

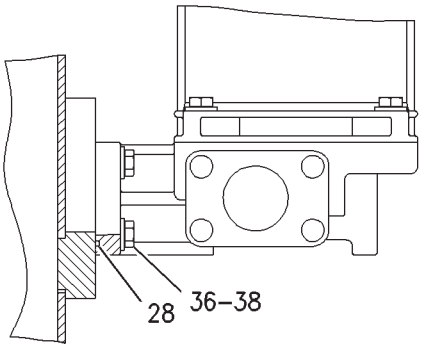

VIEW B-B

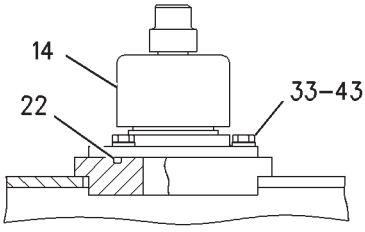

SECTION C-C

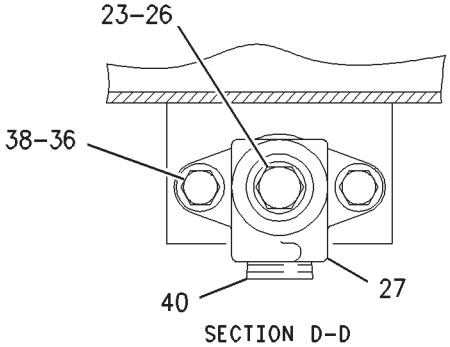

SECTION D-D

GRAPHIC #3 **<END>** g00873202

HYDRAULIC SYSTEM

168-9369 TANK & MTG GP-HYDRAULIC

S/N: RCD1-UP

PART OF 229-3367 HYDRAULIC AR

SMCS-5056 **i01632859**

NOTE	REF NO	GRAPHIC REF	PART NUMBER	QTY	PART NAME 1 2 3 4 5 6 (PRODUCT LEVEL)	SEE PAGE
	1	1	**7Y-1863**	6	SPACER	
Y	2	1	*201-1770*	1	TANK & FILTER GP-HYDRAULIC	728
B	3	1	**087-8906**	6	SHIM (2.0MM THK)	
B	4	1	**087-8907**	6	SHIM (1.0MM THK)	
B	5	1	**087-8909**	6	SHIM (0.4MM THK)	
M	6	1	**8T-4187**	6	BOLT (M20X2.5X80MM)	

B-USE AS REQUIRED
M-METRIC PART
Y-SEPARATE ILLUSTRATION

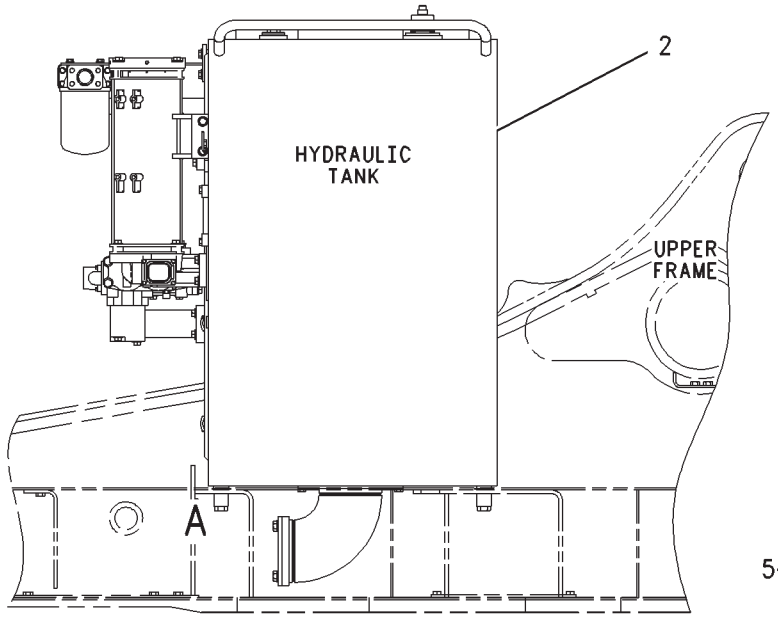

RIGHT SIDE VIEW

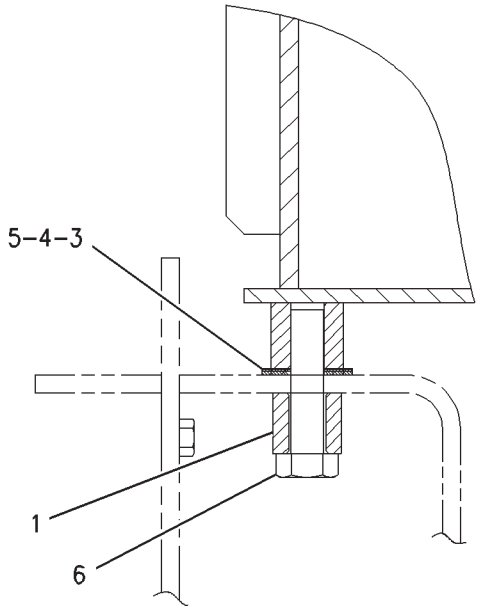

VIEW OF AREA A

GRAPHIC #1 **<END>** g00849161

HYDRAULIC SYSTEM

168-9371 VALVE & MTG GP-MAIN CONTROL

S/N: RCD1-UP

PART OF 229-3367 HYDRAULIC AR

SMCS-5051 **i01887124**

NOTE	REF NO	GRAPHIC REF	PART NUMBER	QTY	PART NAME 1 2 3 4 5 6 (PRODUCT LEVEL)	SEE PAGE
	1	1	**223-6657**	1	SUPPORT AS	
	2	1	**173-5104**	1	SUPPORT AS	
	3	1	**173-5096**	1	SUPPORT AS	
	4	1	**176-4347**	4	SUPPORT AS	
	5	1	**7I-7400**	4	COVER	
	6	1	**7X-2622**	8	WASHER (22X115X10-MM THK)	
	7	1	**7I-0985**	8	RUBBER	
	8	1	**7Y-0839**	3	SUPPORT AS	
	9	1	**6C-9149**	8	WASHER (22X50X10-MM THK)	
M	10	1	**7X-2570**	4	BOLT (M20X2.5X220-MM)	
B	11	1	**7I-0070**	12	SHIM (1.6-MM THK)	
B	12	1	**7I-0071**	12	SHIM (3-MM THK)	
B	13	1	**7I-0072**	12	SHIM (5-MM THK)	
M	14	1	**7X-2553**	1	BOLT (M16X2X40-MM)	
	15	1	**9X-8257**	5	WASHER (17.5X30X3.5-MM THK)	
M	16	1	**110-6968**	4	BOLT (M16X2X280-MM)	
	17	1	**207-6518**	1	SUPPORT AS	

B-USE AS REQUIRED
M-METRIC PART

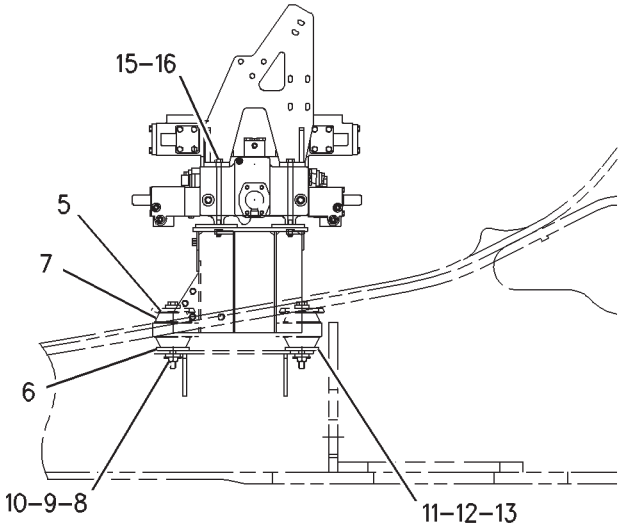

RIGHT SIDE VIEW

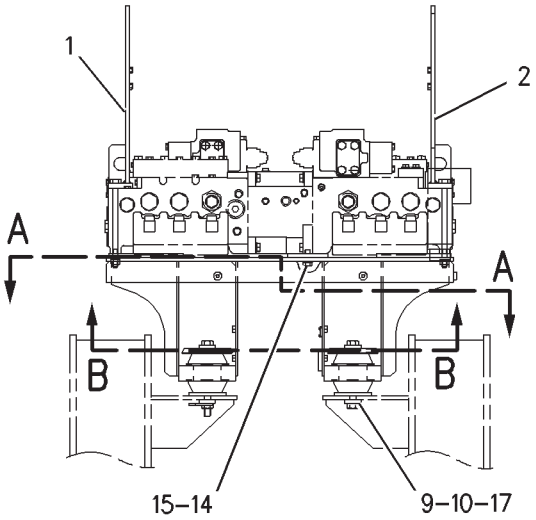

FRONT VIEW

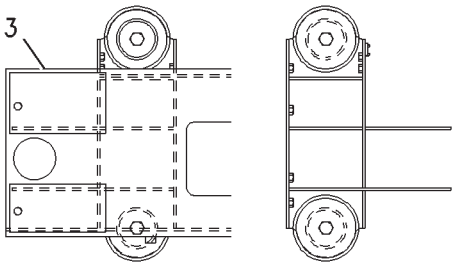

SECTION A-A

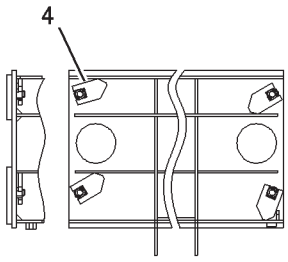

SECTION B-B

GRAPHIC #1 **<END>** g00979551

HYDRAULIC SYSTEM

206-3183 VALVE AR

S/N: RCD1-UP
AN ATTACHMENT

SMCS-5051 **i02307622**

NOTE	PART NUMBER	QTY	PART NAME 1 2 3 4 5 6 (PRODUCT LEVEL)	SEE PAGE
Y	*202-7022*	1	LINES GP-BOOM (STICK LOWERING CONTROL)	587
Y	*176-4554*	1	LINES GP-PILOT	632
Y	*173-8028*	1	LINES GP-STICK CYLINDER	667
Y	**174-1852**	1	VALVE GP-MAIN CONTROL	821
			—OR—	
Y	**223-7752**	1	VALVE GP-MAIN CONTROL	829

Y-SEPARATE ILLUSTRATION

<END>

HYDRAULIC SYSTEM

171-0026 VALVE AR-BOOM LOWERING CONTROL–

BOOM LOWERING

S/N: RCD1-UP

AN ATTACHMENT

SMCS-5147 **i02199738**

NOTE	PART NUMBER	QTY	PART NAME 1 2 3 4 5 6 (PRODUCT LEVEL)	SEE PAGE
Y	*176-4552*	1	LINES GP-BOOM CYLINDER	599
Y	*176-4553*	1	LINES GP-PILOT	629
Y	**223-7751**	1	VALVE GP	741
Y	*170-6983*	1	WIRING GP-OVERLOAD WARNING	310

Y-SEPARATE ILLUSTRATION

<END>

HYDRAULIC SYSTEM

213-4216 VALVE AR-BOOM LOWERING CONTROL

S/N: RCD1-UP
AN ATTACHMENT

SMCS-5147 **i02312874**

NOTE	PART NUMBER	QTY	PART NAME 1 2 3 4 5 6 (PRODUCT LEVEL)	SEE PAGE
Y	*208-7776*	1	CONTROL GP-JOYSTICK (RH)	1020
Y	*237-2164*	1	FILM GP	1081
Y	*212-6138*	1	LINES GP-BOOM	589
Y	*176-4553*	1	LINES GP-PILOT	629
Y	**233-6970**	1	VALVE GP-MAIN CONTROL	832
			S/N: RCD1-205	
Y	**238-8213**	1	VALVE GP-MAIN CONTROL	838
			S/N: RCD206-UP	
Y	*217-5090*	1	WIRING GP-BOOM	289
Y	*206-3479*	1	WIRING GP-CONSOLE (SMARTBOOM, RH)	299
Y	*170-6983*	1	WIRING GP-OVERLOAD WARNING	310

Y-SEPARATE ILLUSTRATION

<END>

HYDRAULIC SYSTEM

238-6483 VALVE AR-LOAD CONTROL

S/N: RCD1-UP

AN ATTACHMENT

SMCS-5067, 5117, 5147, 5811 **i02307804**

NOTE	PART NUMBER	QTY	PART NAME 1 2 3 4 5 6 (PRODUCT LEVEL)	SEE PAGE
Y	*173-8029*	1	LINES GP-BOOM	583
Y	*176-4554*	1	LINES GP-PILOT	632
Y	*173-8028*	1	LINES GP-STICK CYLINDER	667
Y	*237-9872*	1	VALVE GP-MAIN CONTROL	835

Y-SEPARATE ILLUSTRATION

<END>

HYDRAULIC SYSTEM

238-6487 VALVE AR-LOAD CONTROL

S/N: RCD1-UP
FOR USE WITH 213-4216–PAGE 737
AN ATTACHMENT

SMCS-5067, 5117, 5147, 5811 **i02307595**

NOTE	PART NUMBER	QTY	PART NAME 1 2 3 4 5 6 (PRODUCT LEVEL)	SEE PAGE
Y	*202-7022*	1	LINES GP-BOOM (STICK LOWERING CONTROL)	587
Y	*176-4554*	1	LINES GP-PILOT	632
Y	*173-8028*	1	LINES GP-STICK CYLINDER	667
Y	*237-9872*	1	VALVE GP-MAIN CONTROL	835

Y-SEPARATE ILLUSTRATION

<END>

HYDRAULIC SYSTEM

171-0027 VALVE AR-STICK LOWERING CONT

S/N: RCD1-UP
STICK LOWERING
AN ATTACHMENT

SMCS-5147 **i02199757**

NOTE	PART NUMBER	QTY	PART NAME 1 2 3 4 5 6 (PRODUCT LEVEL)	SEE PAGE
Y	*173-8029*	1	LINES GP-BOOM	583
Y	*176-4554*	1	LINES GP-PILOT	632
Y	*173-8028*	1	LINES GP-STICK CYLINDER	667
Y	**174-1852**	1	VALVE GP-MAIN CONTROL	821
			—OR—	
Y	**223-7752**	1	VALVE GP-MAIN CONTROL	829

Y-SEPARATE ILLUSTRATION

<END>

HYDRAULIC SYSTEM

223-7751 VALVE GP

S/N: RCD1-UP

PART OF 171-0026 VALVE AR-BOOM LOWERING CONTROL

AN ATTACHMENT

SMCS-5051 **i02199755**

NOTE	REF NO	GRAPHIC REF	PART NUMBER	QTY	PART NAME 1 2 3 4 5 6 (PRODUCT LEVEL)	SEE PAGE
Y	1	1	*223-7745*	1	VALVE GP-CONTROL (RH)	788
	2	1	*3J-3679*	1	PLUG AS	
		1	**1J-9671**	1	SEAL-O-RING	
		1	**9S-8003**	1	PLUG	
	4	2	**4J-9780**	1	PLUG-ORIFICE	
	5	1	**165-5623**	1	MANIFOLD-INLET	
Y	6	1	**193-1665**	1	VALVE GP-PRESSURE REDUCING	847
	7	1,2	*222-4737*	16	PLUG AS	
					(EACH INCLUDES)	
		1,2	**4J-7533**	1	SEAL-O-RING	
		1,2	**9S-4180**	1	PLUG	
Y	9	1	*223-7738*	1	VALVE GP-CONTROL (LH)	783
Y	10	2	**117-5269**	1	VALVE GP-RELIEF (LOW SIGNAL PRESSURE)	857
Y	11	2	**117-5270**	1	VALVE GP-RELIEF (HIGH SIGNAL PRESSURE)	858
	12	1	**119-2265**	1	FILTER (EDGE)	
	13	1,2	*148-8407*	4	PLUG AS	
					(EACH INCLUDES)	
		1,2	**3J-1907**	1	SEAL-O-RING	
		1,2	**9S-4191**	1	PLUG-O-RING	
	14	1	*148-8411*	1	PLUG AS	
		1	**3K-0360**	1	SEAL-O-RING	
		1	**9S-4185**	1	PLUG-O-RING	
	15	1,2	*155-3624*	4	PLUG AS	
					(EACH INCLUDES)	
		1,2	**3J-7354**	1	SEAL-O-RING	
		1,2	**9S-4182**	1	PLUG-O-RING	
Y	16	2	**171-3685**	1	VALVE GP-SOLENOID (24-VOLT) (HIGH, LOW RELIEF)	878
	17	2	**1P-3704**	1	SEAL-RECTANGULAR	
	18	1	**1P-3707**	4	SEAL-RECTANGULAR	
	19	2	**1P-5767**	2	FLANGE-HALF	
	20	1	**3J-1907**	1	SEAL-O-RING	
	21	1	**4J-0522**	4	SEAL-O-RING	
Y	22	2	**4T-1860**	1	VALVE GP-SHUTTLE (LOAD SIGNAL)	868
	23	2	**5P-0048**	1	COVER	
	24	1	**6V-5555**	5	SEAL-O-RING	
M	25	1,2	**8T-0348**	8	BOLT-SOCKET HEAD (M16X2X50-MM)	
M	26	2	**8T-4193**	2	BOLT (M16X2X50-MM)	
M	27	2	**8T-4194**	4	BOLT (M12X1.75X50-MM)	
	28	2	**8T-4223**	4	WASHER-HARD (13.5X25.5X3-MM THK)	
	29	1,2	**9X-8257**	10	WASHER (17.5X30X3.5-MM THK)	

M-METRIC PART
Y-SEPARATE ILLUSTRATION

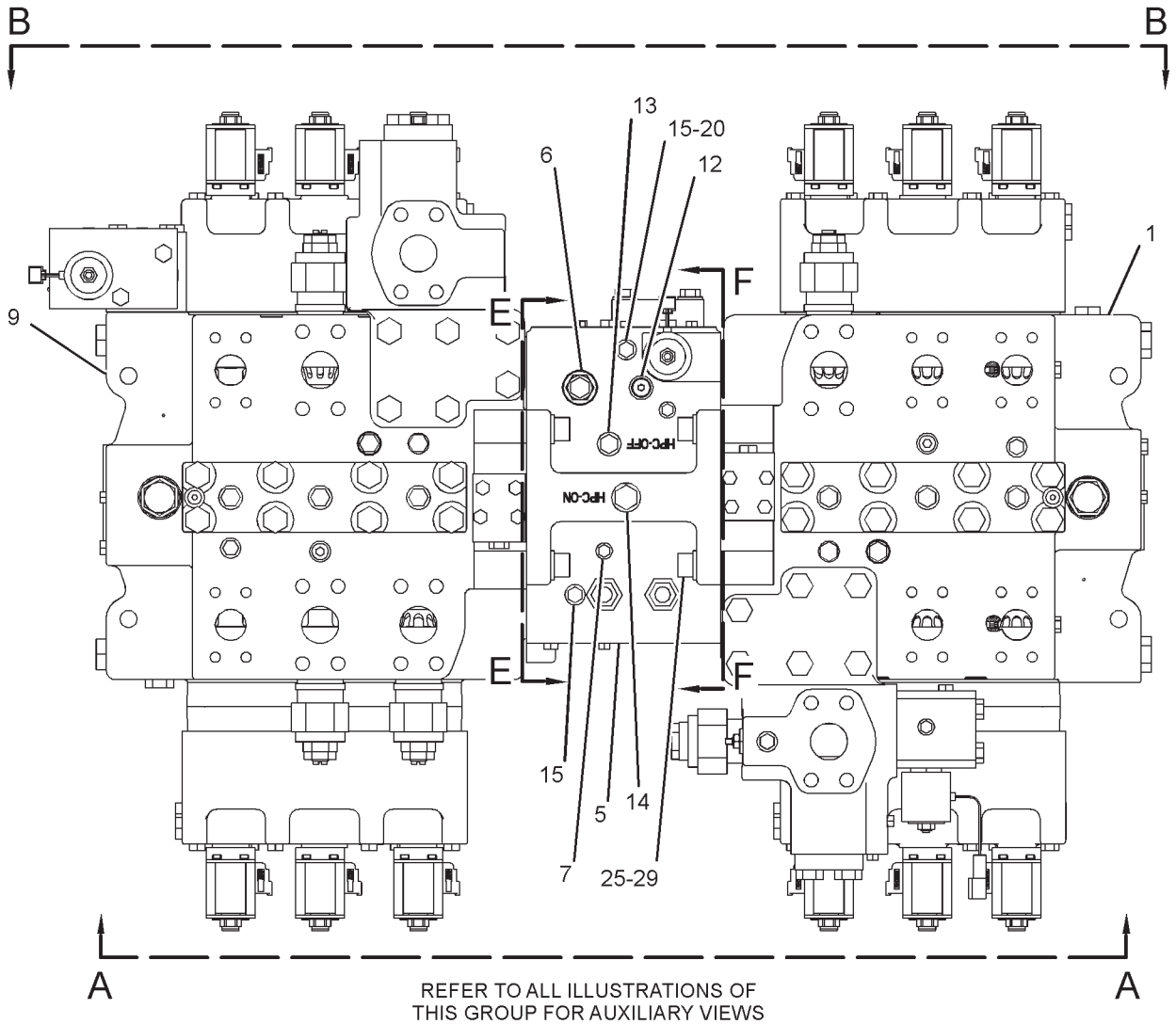

REFER TO ALL ILLUSTRATIONS OF
THIS GROUP FOR AUXILIARY VIEWS

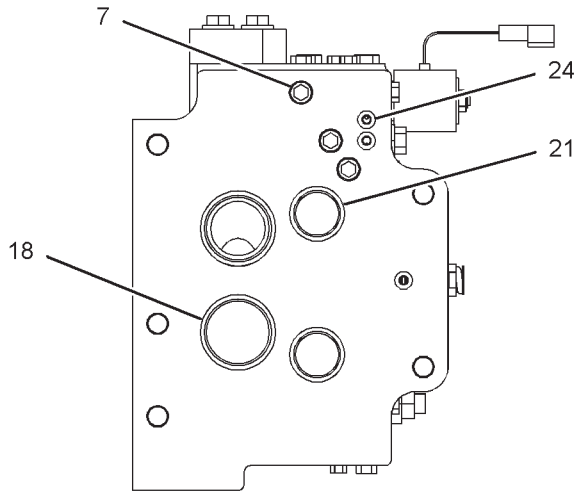

SECTION E-E

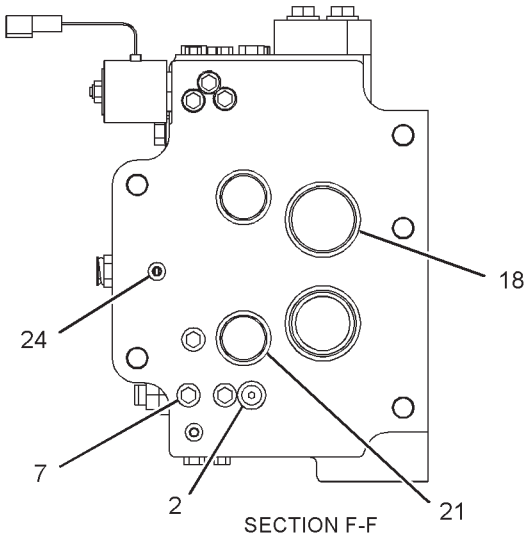

SECTION F-F

GRAPHIC #1

g01290211

223-7751 VALVE GP *(contd.)* **i02199755**

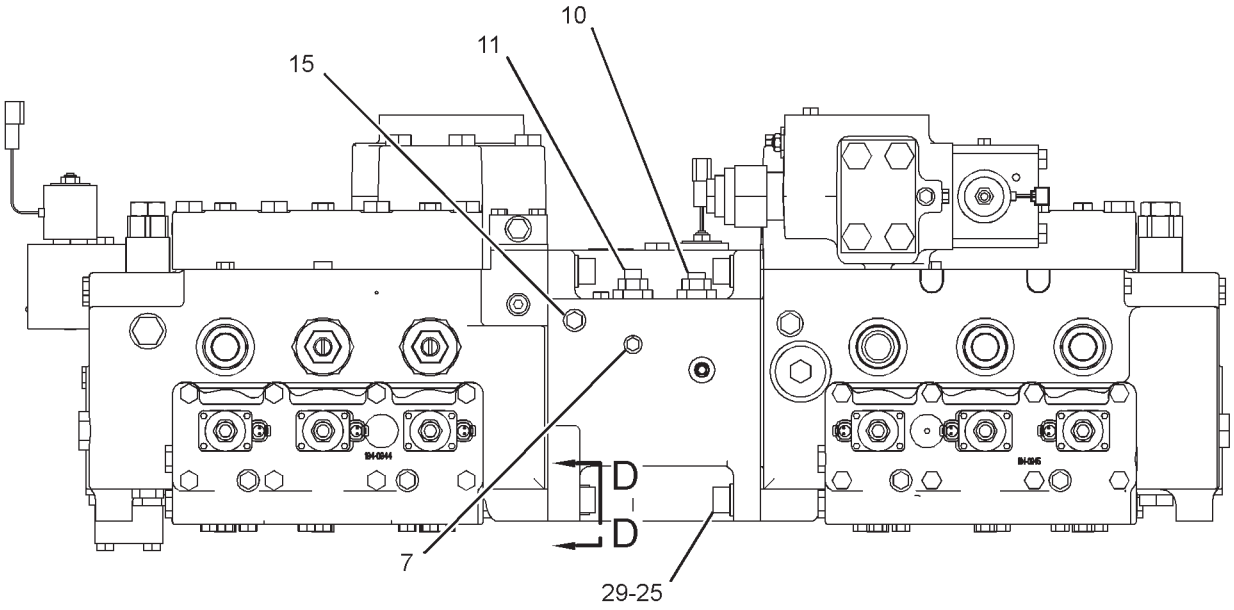

VIEW A-A

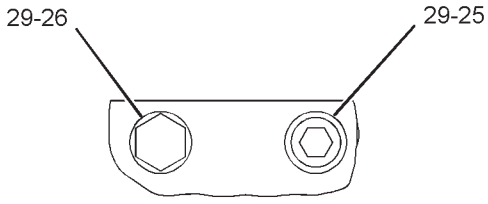

VIEW C-C

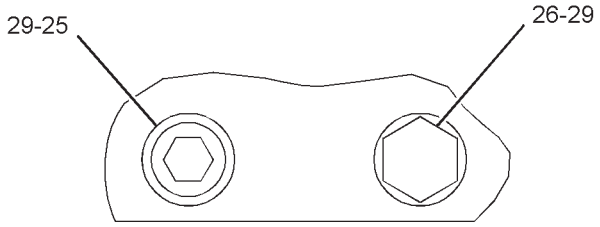

VIEW D-D

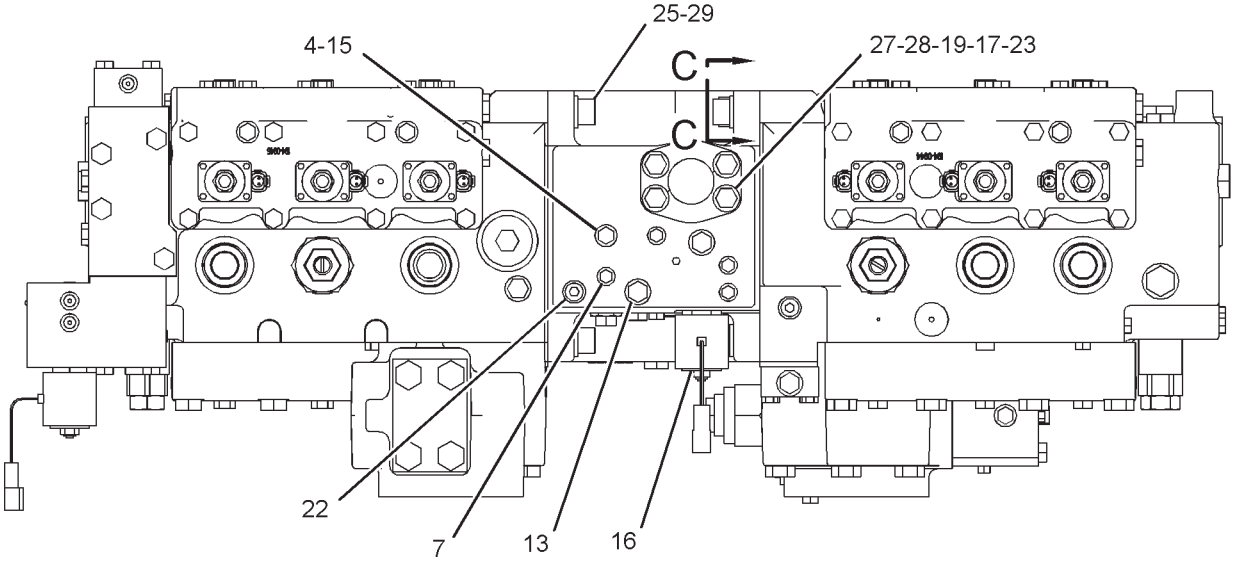

VIEW B-B

GRAPHIC #2 **<END>** g01290212

HYDRAULIC SYSTEM

087-5087 VALVE GP-CHECK

S/N: RCD1-UP
PART OF 168-9379 LINES GP-REAR ATTACHMENT
AN ATTACHMENT

SMCS-5067 **i01061891**

NOTE	REF NO	GRAPHIC REF	PART NUMBER	QTY	PART NAME 1 2 3 4 5 6 (PRODUCT LEVEL)	SEE PAGE
Y	1	1	**114-0649**	1	VALVE GP-CHECK	745
	2	1	**114-0648**	1	BODY	

Y-SEPARATE ILLUSTRATION

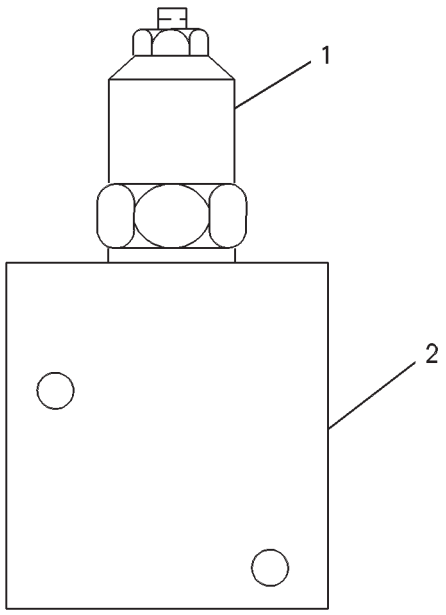

GRAPHIC #1 **<END>** g00250127

HYDRAULIC SYSTEM

114-0649 VALVE GP-CHECK

S/N: RCD1-UP
PART OF 087-5087 VALVE GP-CHECK
AN ATTACHMENT

SMCS-5067 **i00621405**

NOTE	REF NO	GRAPHIC REF	PART NUMBER	QTY	PART NAME 1 2 3 4 5 6 (PRODUCT LEVEL)	SEE PAGE
	1	1	**7M-8485**	1	SEAL-O-RING	
	2	1	**115-9865**	2	RING-BACKUP	
	3	1	**8C-3101**	1	SEAL-O-RING	
	4	1	**8C-3102**	1	SEAL-O-RING	
	5	1	**115-9864**	1	RING-BACKUP	

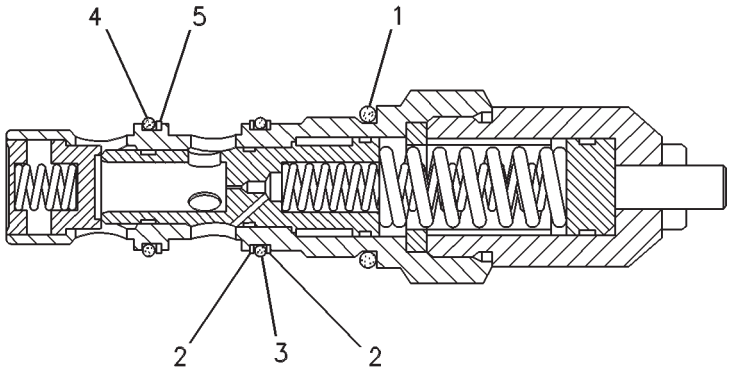

GRAPHIC #1 **<END>** g00250128

HYDRAULIC SYSTEM

127-8394 VALVE GP-CHECK

S/N: RCD1-UP

PART OF 174-1858 VALVE GP-CONTROL

SMCS-5067 **i00623260**

NOTE	REF NO	GRAPHIC REF	PART NUMBER	QTY	PART NAME 1 2 3 4 5 6 (PRODUCT LEVEL)	SEE PAGE
	1	1	**6E-5484**	1	VALVE	
	2	1	**6E-5483**	1	SEAT	
	3	1	**2K-8199**	1	SEAL-O-RING	
	4	1	**7J-7837**	1	SPRING	
	5	1	**127-8395**	2	RETAINER	

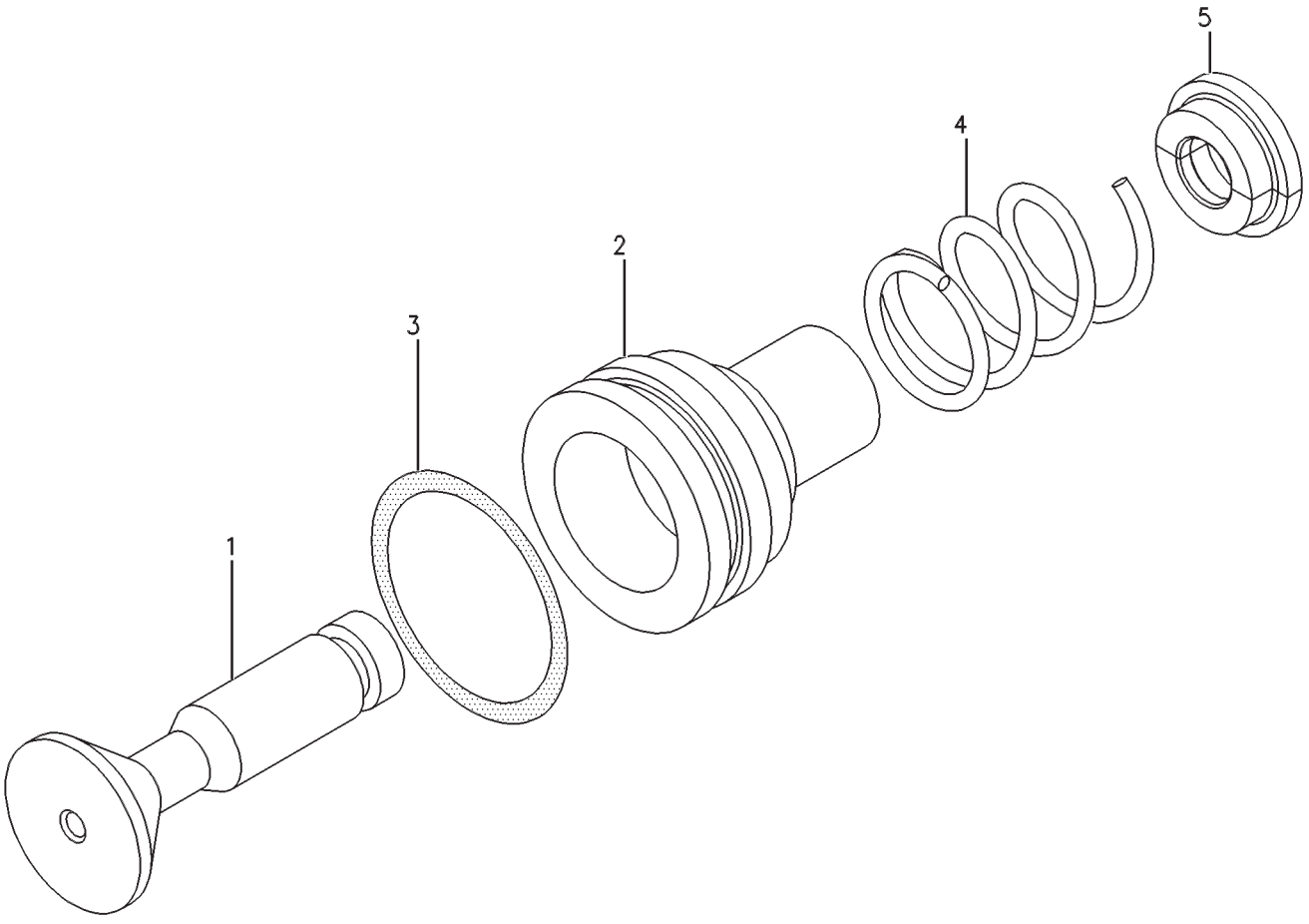

GRAPHIC #1 **<END>** g00269685

HYDRAULIC SYSTEM

147-4312 VALVE GP-CHECK

S/N: RCD1-UP

PART OF 168-9368 LINES GP-MOTOR

SMCS-5067 **i01823356**

NOTE	REF NO	GRAPHIC REF	PART NUMBER	QTY	PART NAME 1 2 3 4 5 6 (PRODUCT LEVEL)	SEE PAGE
Z	1	1		1	BODY-VALVE	
	2	1	**119-5365**	1	VALVE	
	3	1	**119-5362**	1	SPRING	
	4	1	**2M-9780**	1	SEAL-O-RING	
	5	1	**119-5364**	1	PLUG	
	6	1	**9S-4185**	2	PLUG-O-RING	
	7	1	**3K-0360**	2	SEAL-O-RING	

Z-NOT SERVICED SEPARATELY

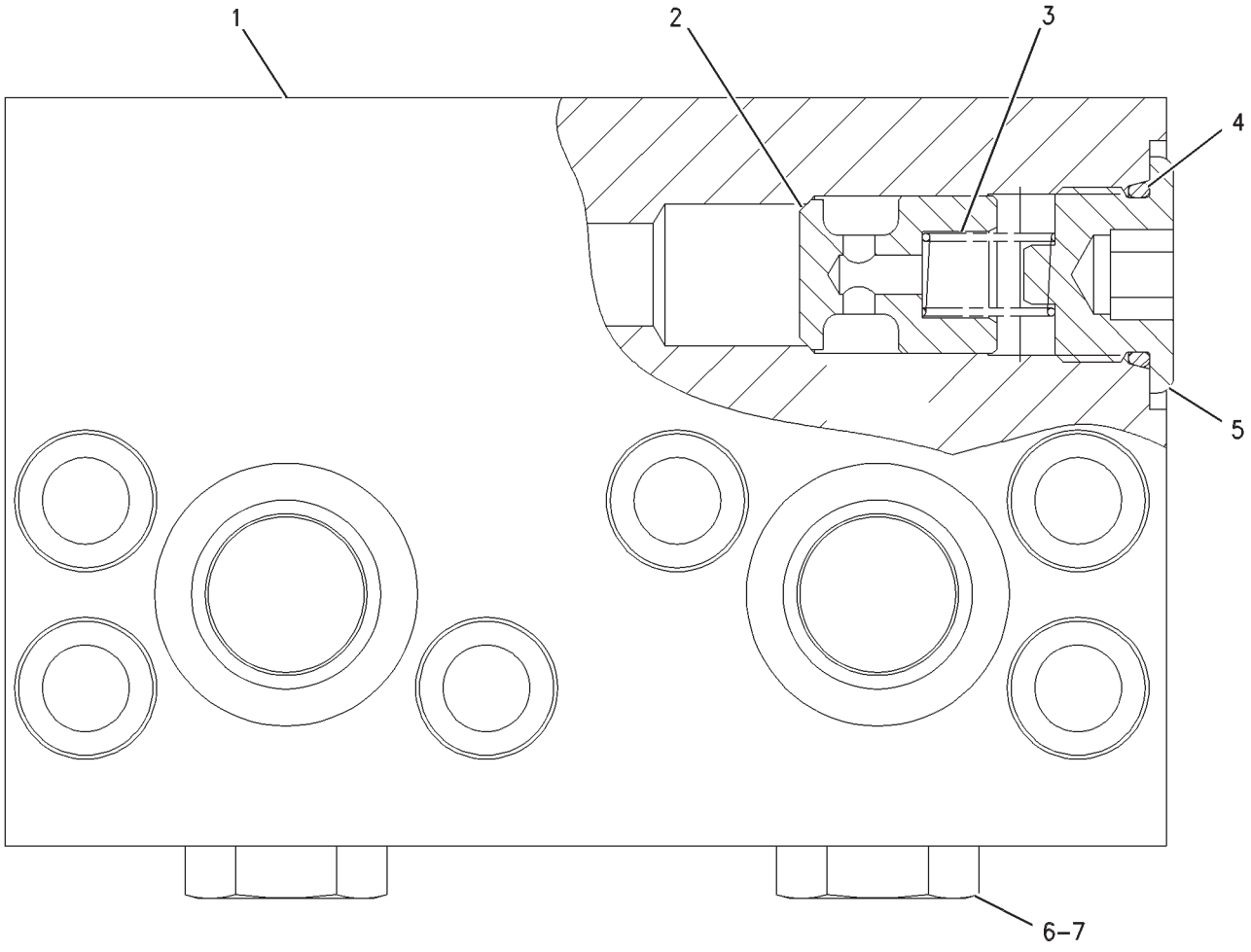

GRAPHIC #1 **<END>** g00532769

HYDRAULIC SYSTEM

173-3429 VALVE GP-CHECK

S/N: RCD1-UP

PART OF 168-9368 LINES GP-MOTOR

SMCS-5067 **i01548167**

NOTE	REF NO	GRAPHIC REF	PART NUMBER	QTY	PART NAME 1 2 3 4 5 6 (PRODUCT LEVEL)	SEE PAGE
	1	1	**173-3430**	1	BODY-VALVE	
	2	1	**119-5365**	1	VALVE	
	3	1	**119-5362**	1	SPRING	
	4	1	**2M-9780**	1	SEAL-O-RING	
	5	1	**119-5364**	1	PLUG	
	6	1	**9S-4185**	1	PLUG-O-RING	
	7	1	**3K-0360**	1	SEAL-O-RING	

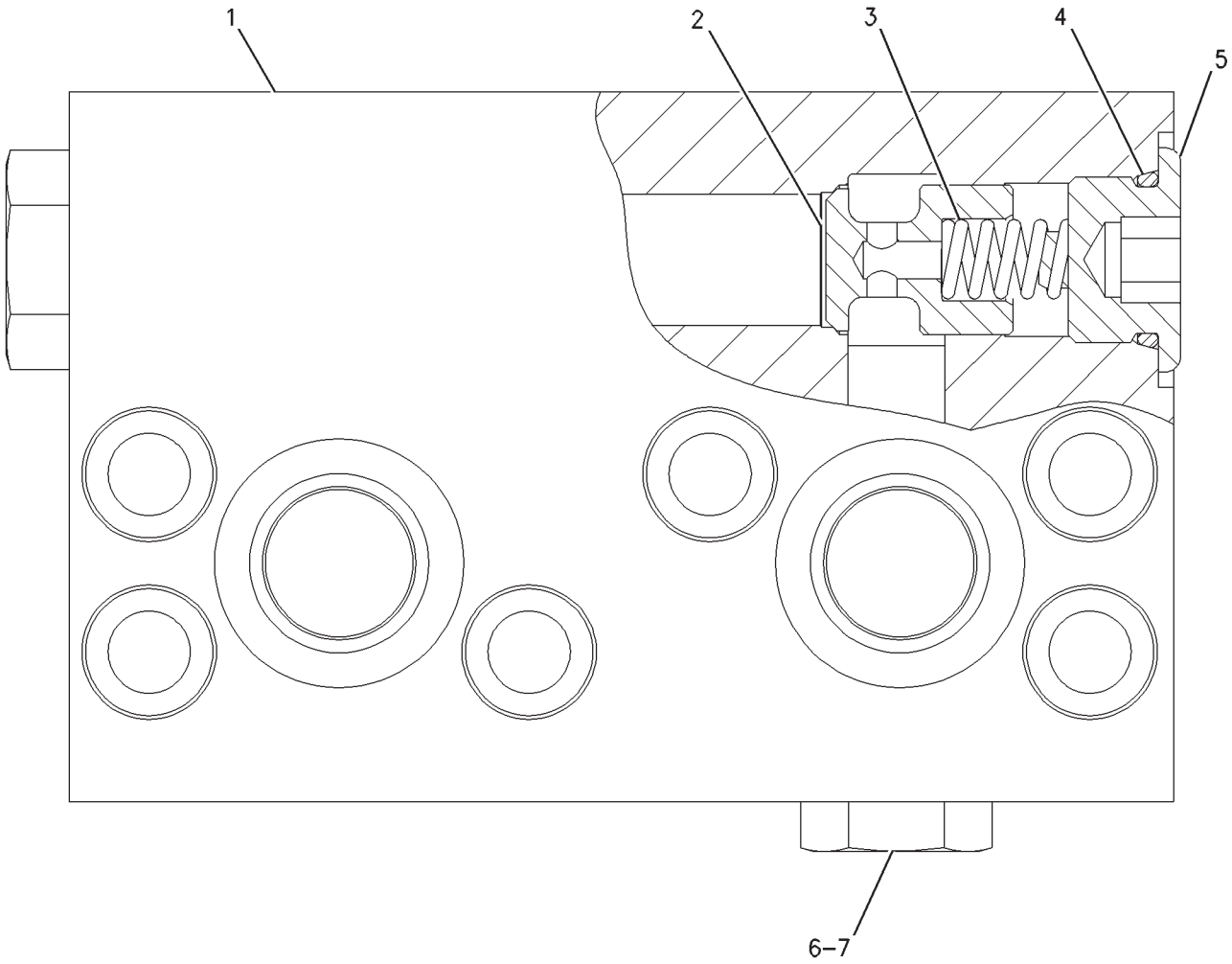

GRAPHIC #1 **<END>** g00782302

HYDRAULIC SYSTEM

201-9381 VALVE GP-CHECK

S/N: RCD1-UP

PART OF 168-9375 LINES GP-RETURN & FILTER

SMCS-5067 **i01823399**

NOTE	REF NO	GRAPHIC REF	PART NUMBER	QTY	PART NAME 1 2 3 4 5 6 (PRODUCT LEVEL)	SEE PAGE
Z	1	1		1	BODY-VALVE	
	2	1	**201-9383**	1	VALVE	
	3	1	**7I-0075**	1	SPRING	
	4	1	**201-9385**	1	STOP	
	5	1	**201-9384**	1	FLANGE	
M	6	1	**8T-4184**	4	BOLT (M12X1.75X45-MM)	
M	7	1	**185-0373**	1	SETSCREW (SOCKET)	
M	8	1	**8T-4132**	1	NUT (M16X2-THD)	
	9	1	**9S-4190**	1	PLUG-O RING	
	10	1	**158-8263**	1	COVER	
	11	1	**158-8262**	1	FLANGE	
M	12	1	**8T-4195**	4	BOLT (M10X1.5X30-MM)	
M	13	1	**8T-4956**	4	BOLT (M12X1.75X35-MM)	
	14	1	**6V-3922**	1	SEAL-O-RING	
	15	1	**6V-6707**	1	SEAL-O-RING	
	16	1	**2M-9780**	1	SEAL-O-RING	
	17	1	**4J-0524**	1	SEAL-O-RING	
	18	1	**4J-0527**	1	SEAL-O-RING	
	19	1	**185-0391**	1	WASHER (1.2-MM THK)	

M-METRIC PART
Z-NOT SERVICED SEPARATELY

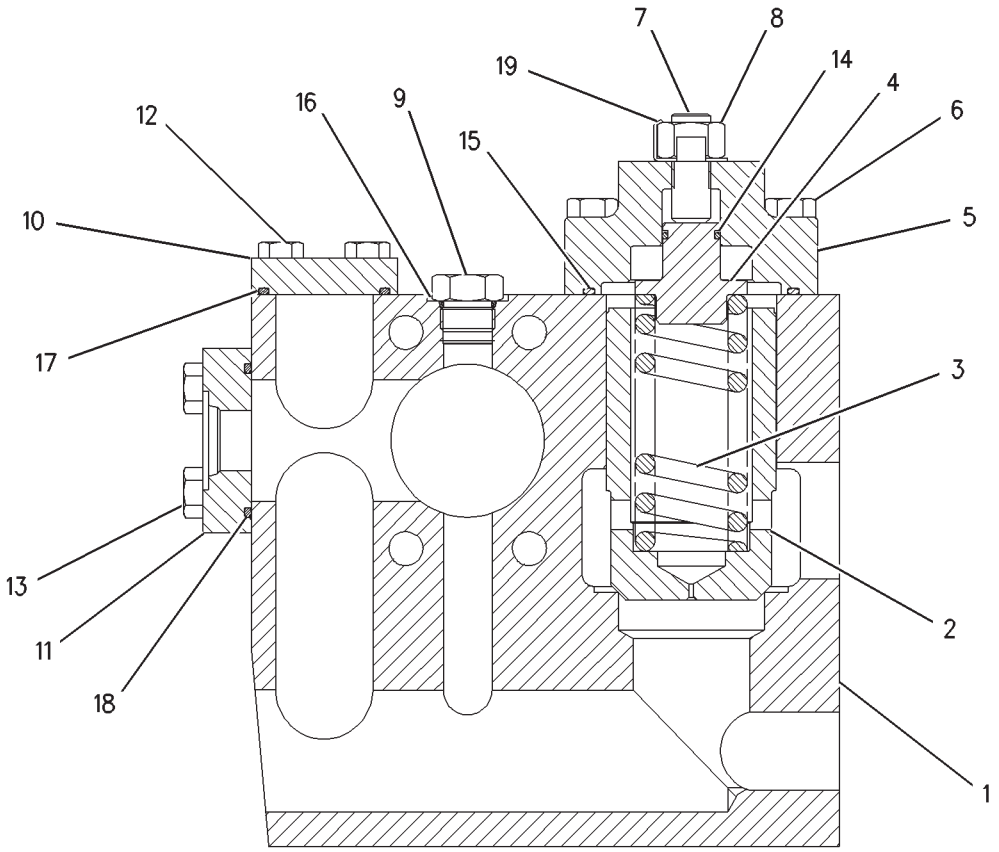

GRAPHIC #1 **<END>** g00836141

HYDRAULIC SYSTEM

201-9382 VALVE GP-CHECK

S/N: RCD1-UP

PART OF 168-9375 LINES GP-RETURN & FILTER

SMCS-5067 **i01889087**

NOTE	REF NO	GRAPHIC REF	PART NUMBER	QTY	PART NAME 1 2 3 4 5 6 (PRODUCT LEVEL)	SEE PAGE
Z	1	1		1	BODY-VALVE	
	2	1	**201-9383**	1	VALVE	
	3	1	**7I-7120**	1	SPRING	
	4	1	**4I-5734**	2	SPACER (28X45X3-MM THK)	
	5	1	**201-9386**	1	STOP	
	6	1	**201-9384**	1	FLANGE	
M	7	1	**8T-4184**	4	BOLT (M12X1.75X45-MM)	
M	8	1	**185-0373**	1	SETSCREW (SOCKET)	
M	9	1	**8T-4132**	1	NUT (M16X2-THD)	
	10	1	**9S-4190**	1	PLUG-O RING	
	11	1	**158-8263**	1	COVER	
	12	1	**158-8261**	1	COVER	
M	13	1	**8T-4195**	4	BOLT (M10X1.5X30-MM)	
M	14	1	**8T-4956**	4	BOLT (M12X1.75X35-MM)	
	15	1	**6V-3922**	1	SEAL-O-RING	
	16	1	**6V-6707**	1	SEAL-O-RING	
	17	1	**2M-9780**	1	SEAL-O-RING	
	18	1	**4J-0524**	1	SEAL-O-RING	
	19	1	**4J-0527**	1	SEAL-O-RING	
	20	1	**185-0391**	1	WASHER (1.2-MM THK)	

M-METRIC PART
Z-NOT SERVICED SEPARATELY

201-9382 VALVE GP-CHECK *(contd.)* i01889087

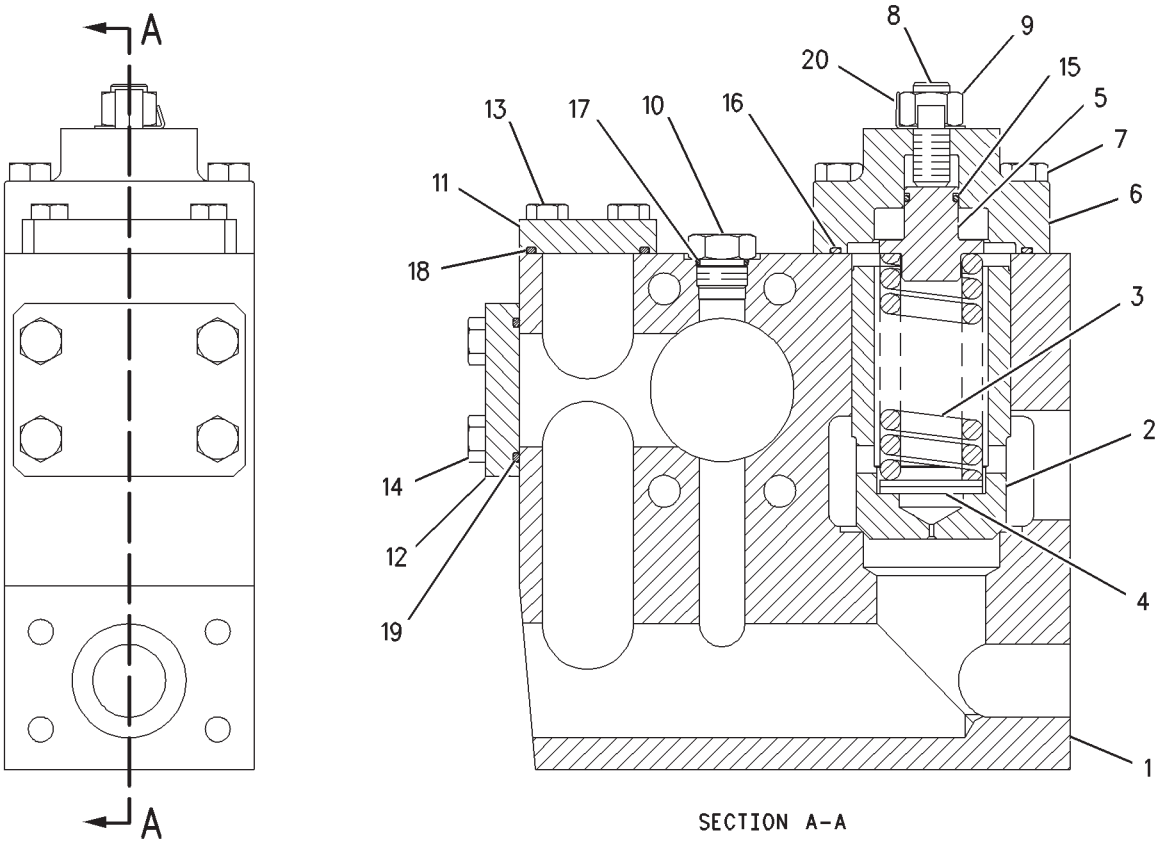

SECTION A-A

GRAPHIC #1 **<END>** g00839190

HYDRAULIC SYSTEM

215-4890 VALVE GP-CHECK

S/N: RCD1-UP
PART OF 212-6138 LINES GP-BOOM
AN ATTACHMENT

SMCS-5067 **i02302995**

NOTE	REF NO	GRAPHIC REF	PART NUMBER	QTY	PART NAME 1 2 3 4 5 6 (PRODUCT LEVEL)	SEE PAGE
	1	1	**095-1602**	1	SEAL-O-RING	
	2	1	**095-1601**	1	SEAL-O-RING	
	3	1	**095-1700**	1	SEAL-O-RING	
	4	1	**232-4113**	1	RING	
	5	1	**8T-3008**	1	RING-BACKUP	

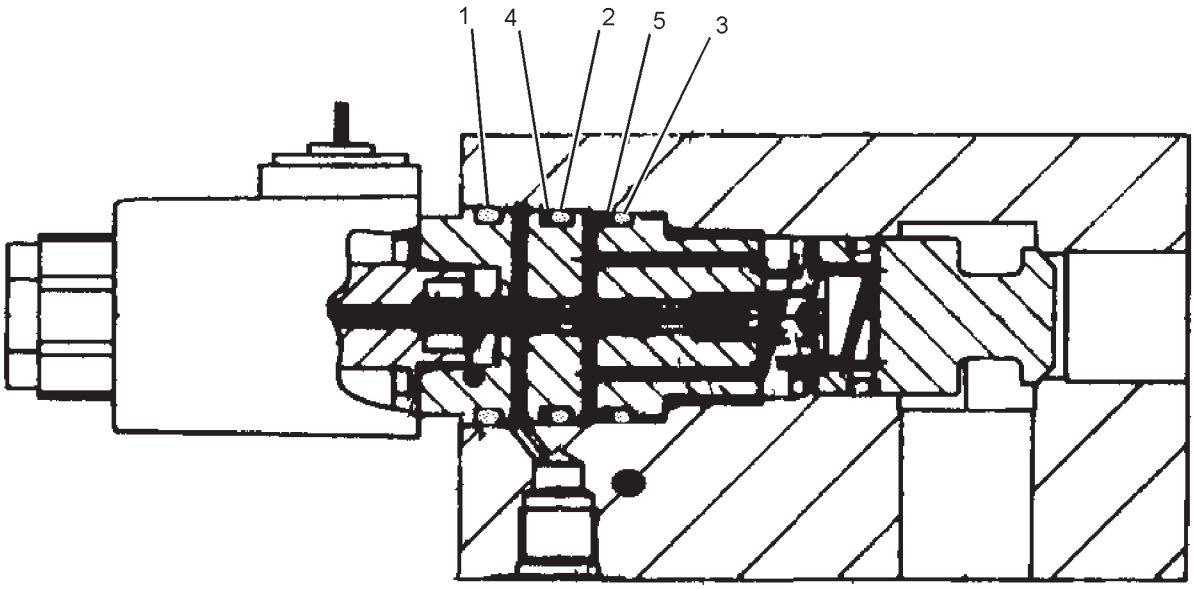

GRAPHIC #1 **<END>** g01146910

HYDRAULIC SYSTEM

171-0193 VALVE GP-CHECK & RELIEF–

STICK LOWERING CONTROL

S/N: RCD1-UP

PART OF 173-8028 LINES GP-STICK CYLINDER

AN ATTACHMENT

SMCS-5117, 5453 **i01735346**

NOTE	REF NO	GRAPHIC REF	PART NUMBER	QTY	PART NAME 1 2 3 4 5 6 (PRODUCT LEVEL)	SEE PAGE
	1	1	**171-0192**	1	VALVE GP-CONTROL	
Y	2	1	**155-4846**	1	VALVE GP-RELIEF (LINE)	860
	3	1	**165-9471**	1	COVER	
M	4	1	**8T-4139**	6	BOLT (M12X1.75X30-MM)	
	5	1	**9S-8001**	11	PLUG-O-RING	
	6	1	**4J-7533**	11	SEAL-O-RING	
	7	1	**165-9469**	1	COVER	
	8	1	**4J-0528**	1	SEAL-O-RING	
	9	1	**206-3256**	1	SPRING (52-MM OD)	
	10	1	**206-3257**	1	GUIDE	
	11	1	**096-5572**	1	SEAL-O-RING	
	12	1	**122-7774**	1	SPRING	
	13	1	**095-1599**	1	SEAL-O-RING	
	14	1	**095-1793**	1	RING-BACKUP	
	15	1	**153-5139**	1	SEAT	
	16	1	**9S-8004**	1	PLUG	
	17	1	**3J-1907**	1	SEAL-O-RING	
	18	1	**4I-8965**	1	GUIDE	
	19	1	**5I-8511**	1	SPRING	
	20	1	**9S-8005**	3	PLUG-O-RING	
	21	1	**3K-0360**	3	SEAL-O-RING	
M	22	1	**8T-0348**	6	BOLT-SOCKET HEAD (M16X2X50-MM)	
	23	1	**153-5278**	1	SEAT	
	24	1	**4B-9783**	1	BALL	
	25	1	**6J-3134**	1	SEAL-O-RING	
	26	1	**2M-9780**	1	SEAL-O-RING	
	27	1	**8J-1751**	1	PLUG	
	28	1	**9L-7712**	1	NUT (3/8-24-THD)	
	29	1	**8J-1752**	1	PLUNGER	
	30	1	**095-1616**	2	SEAL-O-RING	
	31	1	**8T-6347**	2	RING-BACKUP	
	32	1	**153-5264**	1	VALVE	
	33	1	**153-5265**	1	SPRING	
	34	1	**165-9478**	1	SEAT	
M	35	1	**8T-4195**	2	BOLT (M10X1.5X30-MM)	
B	36	1	**206-3291**	1	SHIM (0.5-MM THK)	
B	37	1	**206-3292**	1	SHIM (0.3-MM THK)	
B	38	1	**206-3293**	1	SHIM (0.1-MM THK)	

B-USE AS REQUIRED
M-METRIC PART
Y-SEPARATE ILLUSTRATION

171-0193 VALVE GP-CHECK & RELIEF *(contd.)*

i01735346

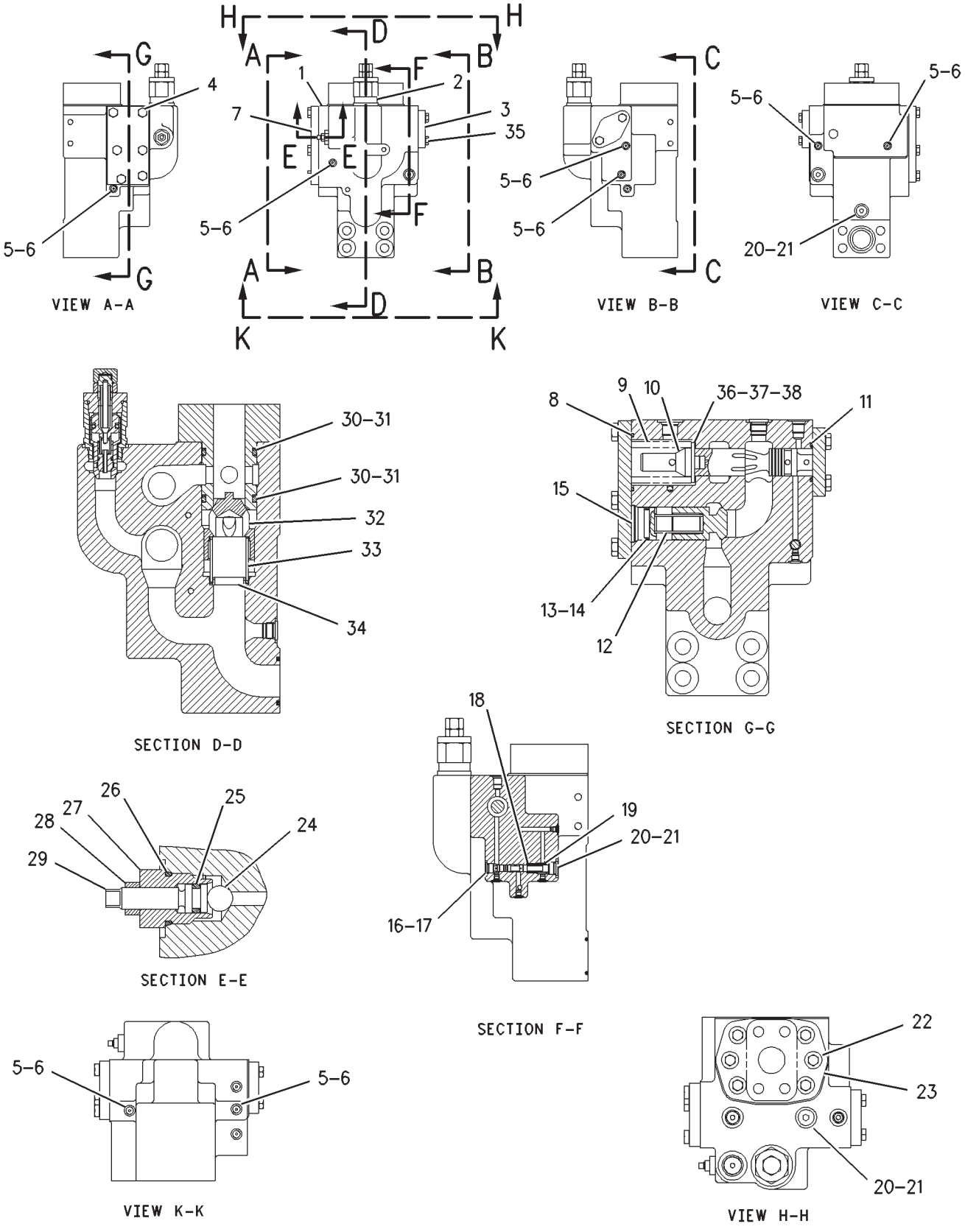

GRAPHIC #1

g00863759

HYDRAULIC SYSTEM

144-7087 VALVE GP-CONTROL—NEUTRAL BYPASS

S/N: RCD1-UP

PART OF 174-1829, 174-1846, 233-6969, 238-8212 VALVE GP-CONTROL

ALSO AN ATTACHMENT

TYPE 1

SMCS-5051 **i01823421**

NOTE	REF NO	GRAPHIC REF	PART NUMBER	QTY	PART NAME 1 2 3 4 5 6 (PRODUCT LEVEL)	SEE PAGE
	2	1	**144-7088**	1	COVER	
	3	1	**144-7092**	2	RETAINER-SPRING	
	4	1	**144-7093**	1	HOUSING-SPRING	
Z	5	1		1	VALVE-STEM	
Z	6	1		1	BODY	
	8	1	**147-2286**	1	SLEEVE	
	9	1	**161-7204**	1	SPRING	
	10	1	**008-2103**	2	SEAL-O-RING	
Y	11	1	**171-3685**	1	VALVE GP-SOLENOID (24-VOLT)	878
	12	1	**1R-5318**	1	SEAL-O-RING	
	13	1	**3J-1907**	2	SEAL-O-RING	
	14	1	**3K-4520**	5	WASHER (0.377X0.75X0.048-IN THK)	
	15	1	**3P-0760**	8	SPACER (9.53X20.62X0.25-MM THK)	
	16	1	**4J-5309**	2	SEAL-O-RING	
	17	1	**4J-7533**	5	SEAL-O-RING	
	18	1	**4J-8997**	1	SEAL-O-RING	
M	19	1	**7X-2549**	4	BOLT (M12X1.75X100-MM)	
	20	1	**7X-7729**	1	WASHER (11X25X3-MM THK)	
M	21	1	**8T-4185**	2	BOLT (M10X1.5X50-MM)	
M	22	1	**8T-4198**	2	BOLT (M10X1.5X100-MM)	
M	23	1	**8T-5005**	1	BOLT (M10X1.5X70-MM)	
	24	1	**9S-4191**	2	PLUG-O-RING	
	25	1	**9S-8001**	5	PLUG-O-RING	
	26	1	**9X-2027**	1	WASHER (11X18X2-MM THK)	

M-METRIC PART
Y-SEPARATE ILLUSTRATION
Z-NOT SERVICED SEPARATELY

144-7087 VALVE GP-CONTROL *(contd.)* **i01823421**

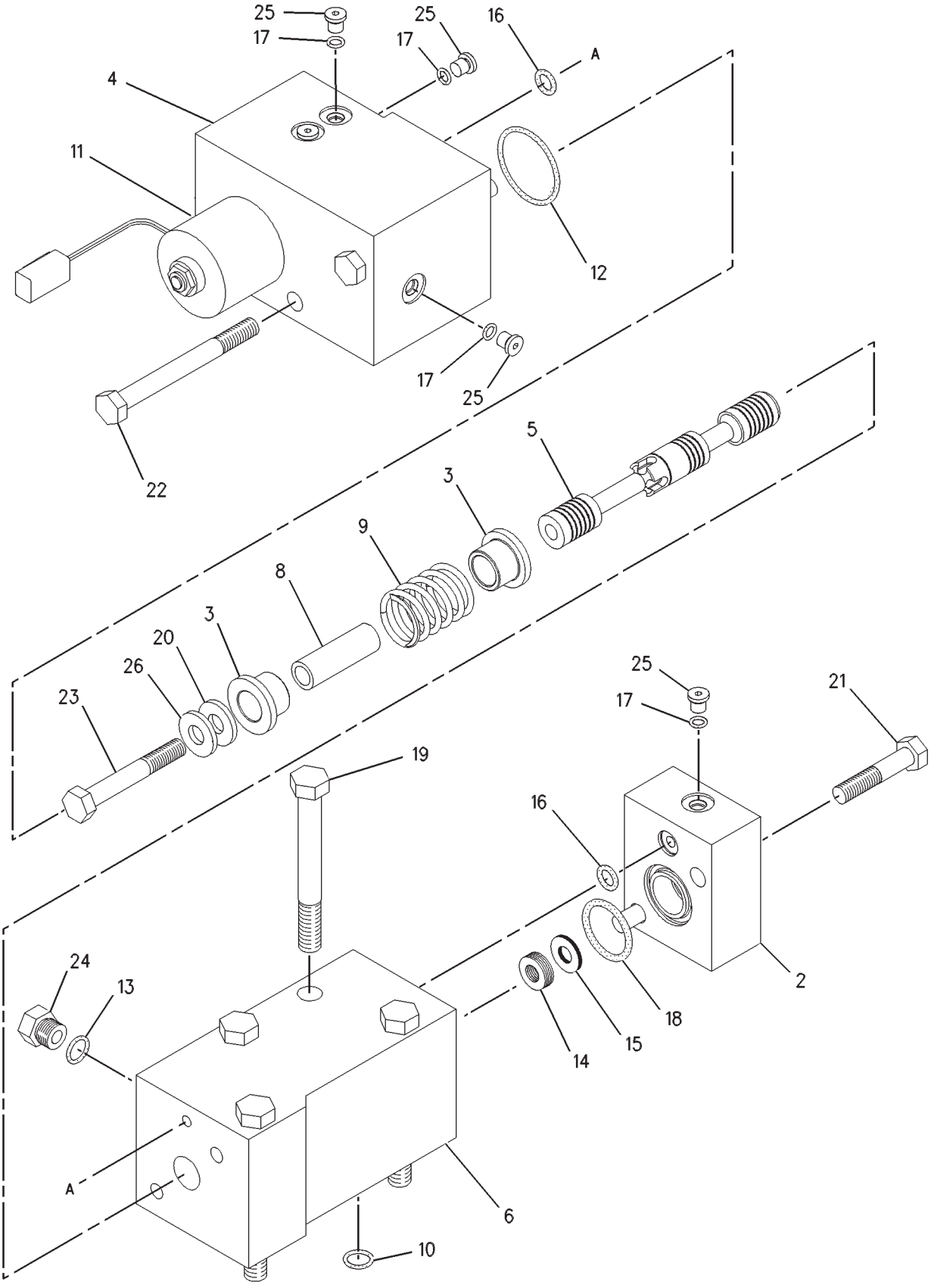

GRAPHIC #1 **<END>** g00635762

HYDRAULIC SYSTEM

144-7087 VALVE GP-CONTROL—NEUTRAL BYPASS

S/N: RCD1-UP
PART OF 174-1829, 174-1846, 223-7737, 223-7738, 233-6969, 238-8212 VALVE GP-CONTROL
ALSO AN ATTACHMENT
TYPE 2

SMCS-5051 **i02241224**

NOTE	PART NUMBER	QTY	PART NAME 1 2 3 4 5 6 (PRODUCT LEVEL)	SEE PAGE
Y	*225-6287*	1	VALVE GP-CONTROL (NEUTRAL BYPASS)	798
			-OR-	
Y	*234-6899*	1	VALVE GP-CONTROL (NEUTRAL BYPASS)	804
			—OR—	
Y	*257-7284*	1	VALVE GP-CONTROL (NEUTRAL BYPASS)	811

Y-SEPARATE ILLUSTRATION

<END>

HYDRAULIC SYSTEM

174-1827 VALVE GP-CONTROL

S/N: RCD1-205

PART OF 174-1843, 180-7882, 233-6970 VALVE GP-MAIN CONTROL

ALSO AN ATTACHMENT

SMCS-5051 **i02996297**

NOTE	REF NO	GRAPHIC REF	PART NUMBER	QTY	PART NAME 1 2 3 4 5 6 (PRODUCT LEVEL)	SEE PAGE
	1	2	**3J-7694**	1	SPRING	
	2	2	**4J-9780**	1	PLUG-ORIFICE	
	3	2	**6E-3993**	5	PLUG AS	
					(EACH INCLUDES)	
		2	**2M-9780**	1	SEAL-O-RING	
		2	**2S-4078**	1	SEAL-O-RING	
		2	**148-0767**	1	RING-SPLIT	
	4	1	*148-8409*	2	PLUG AS	
					(EACH INCLUDES)	
		1	**3D-2824**	1	SEAL-O-RING	
		1	**9S-8008**	1	PLUG-O-RING	
	5	3	**100-6211**	3	PISTON	
Y	8	1	**145-7181**	1	VALVE GP-LOAD CONTROL	814
	9	1	**146-0182**	1	BLOCK-MANIFOLD	
Y	10	1	**154-3294**	1	MANIFOLD & VALVE GP (PILOT)	676
Y	11	1	**154-3295**	1	MANIFOLD & VALVE GP (PILOT)	678
	12	1	**163-9401**	1	COVER	
	13	1	**199-9707**	1	COVER	
	14	1,3	*222-4737*	7	PLUG AS	
					(EACH INCLUDES)	
		1,3	**4J-7533**	1	SEAL-O-RING	
		1,3	**9S-4180**	1	PLUG	
	16	3	**005-8164**	1	PLUG	
	17	1	**109-8040**	2	PLUG-ORIFICE	
Y	18	2	**111-0336**	1	VALVE GP-SHUTTLE	870
Y	19	2	**144-7113**	1	VALVE GP-RELIEF (LOAD SENSING DIFF PRESSURE)	859
	20	3	*148-8405*	3	PLUG AS	
					(EACH INCLUDES)	
		3	**1J-9671**	1	SEAL-O-RING	
		3	**3K-8460**	1	PLUG	
	21	1,2	*148-8407*	7	PLUG AS	
					(EACH INCLUDES)	
		1,2	**3J-1907**	1	SEAL-O-RING	
		1,2	**9S-4191**	1	PLUG-O-RING	
	22	1	*148-8408*	1	PLUG AS	
		1	**3D-2824**	1	SEAL-O-RING	
		1	**9S-4183**	1	PLUG-O-RING	
	23	1,2	*148-8410*	2	PLUG AS	
					(EACH INCLUDES)	
		1,2	**2M-9780**	1	SEAL-O-RING	
		1,2	**9S-4190**	1	PLUG-O-RING	
Y	24	1	**160-8734**	1	VALVE GP-RELIEF (LINE)	862
	25	2	**173-3993**	2	PLUG AS	
					(EACH INCLUDES)	
		2	**4J-7533**	1	SEAL-O-RING	
		2	**9S-8001**	1	PLUG-O-RING	
	27	2	*183-7262*	1	PLUG AS	
		2	**2S-4078**	1	SEAL-O-RING	
		2	**9S-8010**	1	PLUG	
	28	1	*183-7263*	1	PLUG AS	
		1	**3J-7354**	1	SEAL-O-RING	
		1	**9S-8002**	1	PLUG-O-RING	
	29	3	**1H-5728**	3	SEAL-O-RING	
	30	2	**1P-3706**	3	SEAL-RECTANGULAR	
	31	1	**1W-6523**	4	PLUG	

174-1827 VALVE GP-CONTROL *(contd.)* i02996297

NOTE	REF NO	GRAPHIC REF	PART NUMBER	QTY	PART NAME 1 2 3 4 5 6 (PRODUCT LEVEL)	SEE PAGE
	32	3	**2D-6392**	3	SEAL-O-RING	
	33	3	**3D-2824**	1	SEAL-O-RING	
	34	2	**3F-8845**	1	SPRING	
	35	1	**3J-7354**	4	SEAL-O-RING	
	36	1	**4J-5309**	2	SEAL-O-RING	
	37	2	**4J-9535**	2	SEAL-O-RING	
Y	38	1	**4T-1860**	1	VALVE GP-SHUTTLE	868
	39	2	**5G-6401**	2	BOSS	
	40	2	**5J-5004**	3	PLUG-ORIFICE	
	41	2	**6J-7240**	2	SPRING	
	42	2	**6V-5555**	2	SEAL-O-RING	
M	43	1	**7X-2546**	8	BOLT (M10X1.5X180-MM)	
M	44	1	**7X-2555**	8	BOLT (M16X2X80-MM)	
M	45	1	**8T-4197**	4	BOLT (M8X1.25X40-MM)	
M	46	1	**8T-5436**	8	BOLT (M10X1.5X130-MM)	

M-METRIC PART
Y-SEPARATE ILLUSTRATION

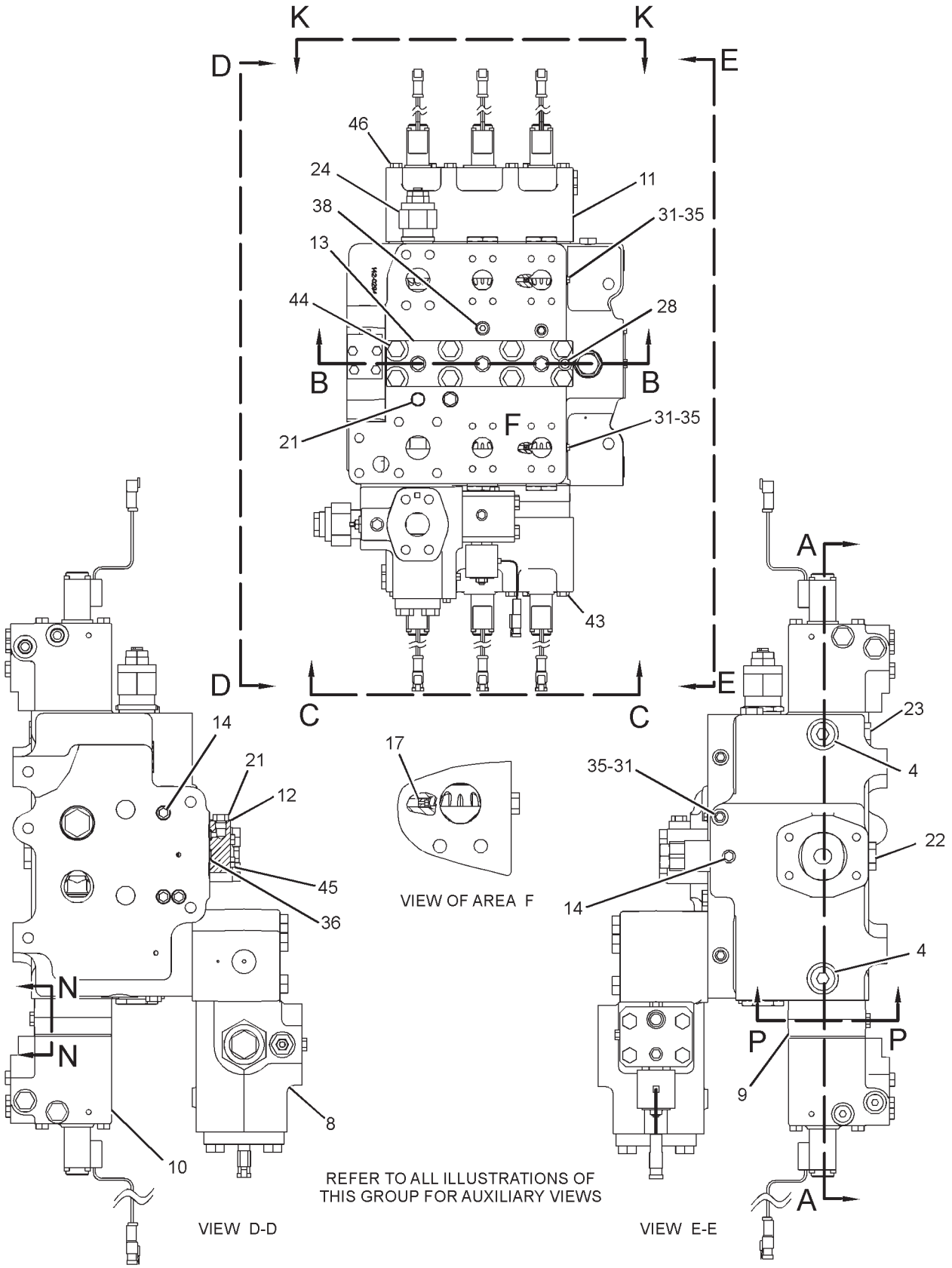

GRAPHIC #1

g01521428

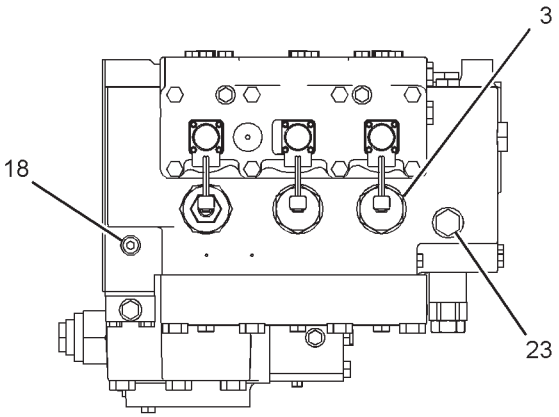

VIEW K-K

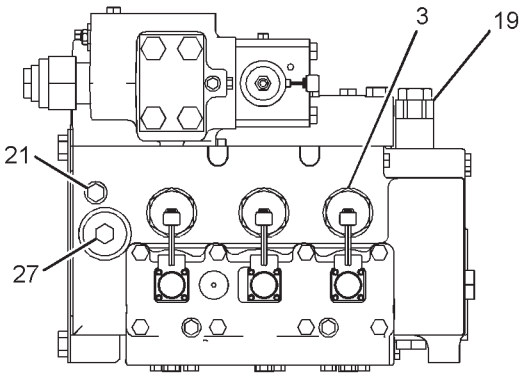

VIEW C-C

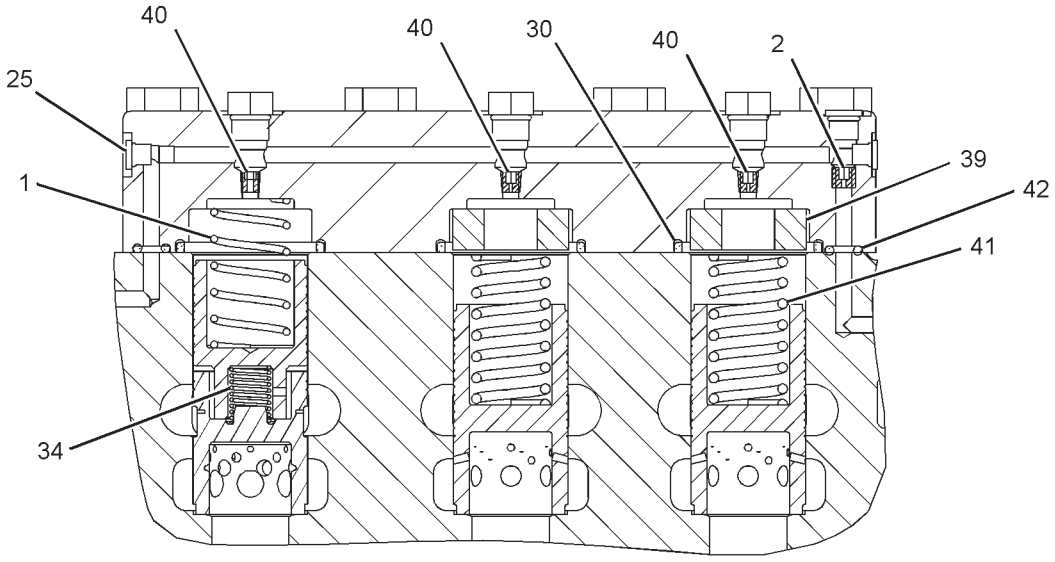

SECTION B-B

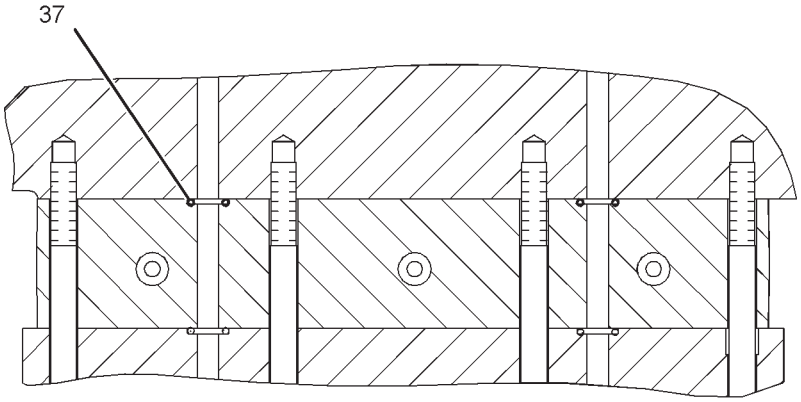

SECTION N-N

GRAPHIC #2

g01311520

174-1827 VALVE GP-CONTROL *(contd.)* i02996297

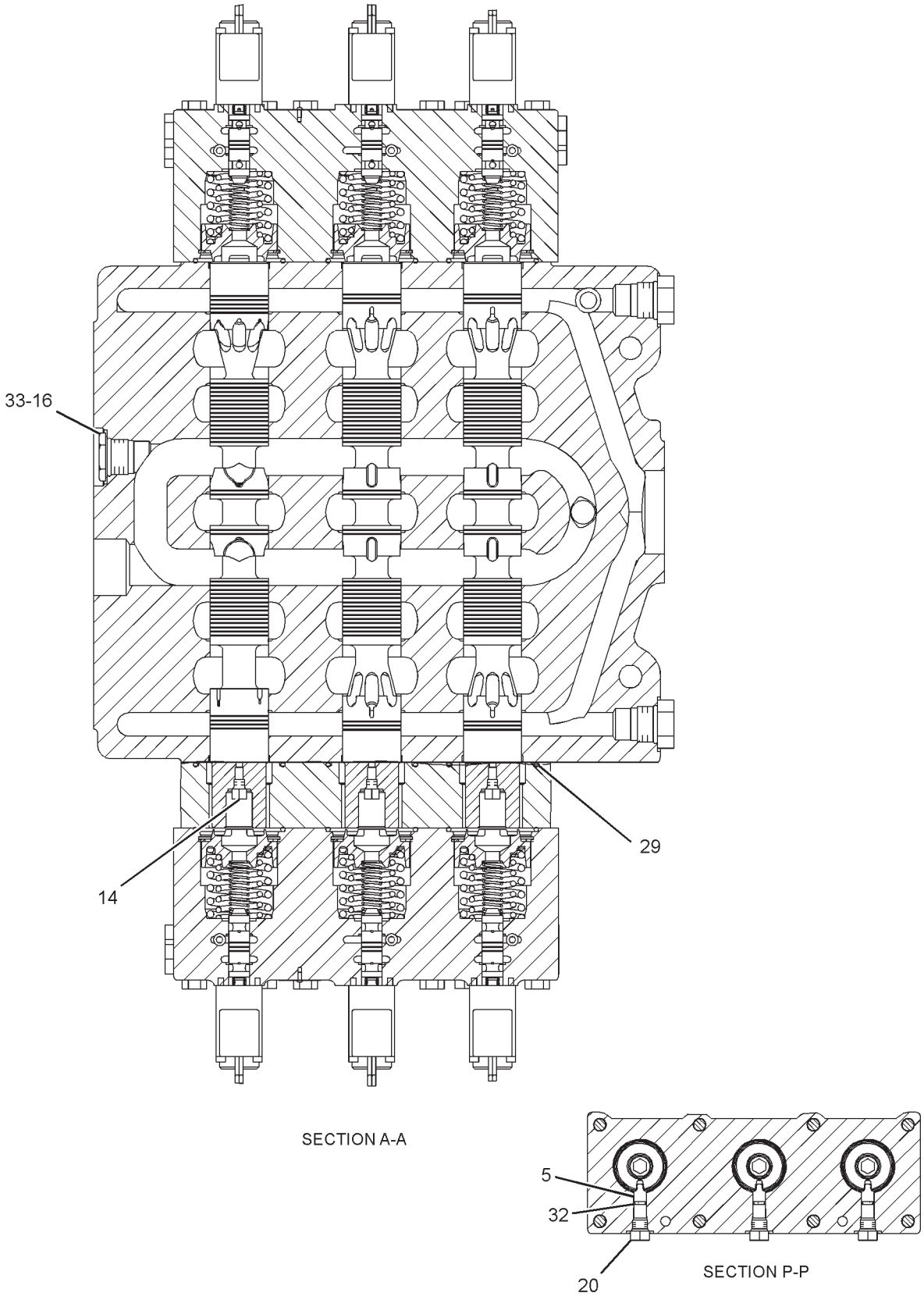

GRAPHIC #3 **<END>** g01311521

HYDRAULIC SYSTEM

174-1829 VALVE GP-CONTROL

S/N: RCD1-205

PART OF 180-7882 VALVE GP-MAIN CONTROL

SMCS-5051 **i02996285**

NOTE	REF NO	GRAPHIC REF	PART NUMBER	QTY	PART NAME 1 2 3 4 5 6 (PRODUCT LEVEL)	SEE PAGE
	1	2	**4J-9780**	1	PLUG-ORIFICE	
Y	2	1	**4T-1860**	1	VALVE GP-SHUTTLE	868
	3	1,2	**6E-3993**	3	PLUG AS	
					(EACH INCLUDES)	
		1,2	**2M-9780**	1	SEAL-O-RING	
		1,2	**2S-4078**	1	SEAL-O-RING	
		1,2	**148-0767**	1	RING-SPLIT	
Y	4	1	**6E-4429**	1	VALVE GP-SHUTTLE	869
	5	2	**6J-7240**	3	SPRING	
Y	9	1	**144-7087**	1	VALVE GP-CONTROL (NEUTRAL BYPASS)	756
Y	10	1	**145-7181**	1	VALVE GP-LOAD CONTROL	814
	11	1	**145-8747**	1	SPACER	
Y	12	1	**154-3294**	1	MANIFOLD & VALVE GP (PILOT)	676
Y	13	1	**154-3295**	1	MANIFOLD & VALVE GP (PILOT)	678
	14	1	**163-9401**	1	COVER	
	15	1	**199-9707**	1	COVER	
	16	1,2	*222-4737*	7	PLUG AS	
					(EACH INCLUDES)	
		1,2	**4J-7533**	1	SEAL-O-RING	
		1,2	**9S-4180**	1	PLUG	
	17	2	**005-8164**	1	PLUG	
	18	2	**100-6211**	3	PISTON	
Y	19	1	**144-7113**	1	VALVE GP-RELIEF (LOAD SENSING DIFF PRESSURE)	859
	20	2	*148-8405*	3	PLUG AS	
					(EACH INCLUDES)	
		2	**1J-9671**	1	SEAL-O-RING	
		2	**3K-8460**	1	PLUG	
	21	1,2	*148-8407*	7	PLUG AS	
					(EACH INCLUDES)	
		1,2	**3J-1907**	1	SEAL-O-RING	
		1,2	**9S-4191**	1	PLUG-O-RING	
	22	1	*148-8408*	1	PLUG AS	
		1	**3D-2824**	1	SEAL-O-RING	
		1	**9S-4183**	1	PLUG-O-RING	
	23	1	*148-8409*	2	PLUG AS	
					(EACH INCLUDES)	
		1	**3D-2824**	1	SEAL-O-RING	
		1	**9S-8008**	1	PLUG-O-RING	
	24	1	*148-8410*	2	PLUG AS	
					(EACH INCLUDES)	
		1	**2M-9780**	1	SEAL-O-RING	
		1	**9S-4180**	1	PLUG	
	25	1	*155-3624*	2	PLUG AS	
					(EACH INCLUDES)	
		1	**3J-7354**	1	SEAL-O-RING	
		1	**9S-4182**	1	PLUG-O-RING	
Y	26	1,2	**160-8734**	3	VALVE GP-RELIEF (LINE)	862
	27	2	*173-3993*	2	PLUG AS	
					(EACH INCLUDES)	
		2	**4J-7533**	1	SEAL-O-RING	
		2	**9S-8001**	1	PLUG-O-RING	
	31	2	*183-7262*	1	PLUG AS	
		2	**2S-4078**	1	SEAL-O-RING	
		2	**9S-8010**	1	PLUG	
	32	1	*183-7263*	1	PLUG AS	
		1	**3J-7354**	1	SEAL-O-RING	

174-1829 VALVE GP-CONTROL *(contd.)* i02996285

NOTE	REF NO	GRAPHIC REF	PART NUMBER	QTY	PART NAME 1 2 3 4 5 6 (PRODUCT LEVEL)	SEE PAGE
		1	**9S-8002**	1	PLUG-O-RING	
	33	2	**1H-5728**	3	SEAL-O-RING	
	34	2	**1P-3706**	3	SEAL-RECTANGULAR	
	35	2	**2D-6392**	3	SEAL-O-RING	
	36	2	**3D-2824**	1	SEAL-O-RING	
	37	2	**3F-8845**	3	SPRING	
	38	1	**4J-5309**	2	SEAL-O-RING	
	39	2	**4J-9535**	2	SEAL-O-RING	
	40	2	**4T-4207**	1	PLUG-ORIFICE	
	41	2	**5J-5004**	1	PLUG-ORIFICE	
	42	2	**6V-5555**	2	SEAL-O-RING	
M	43	1	**7X-2546**	8	BOLT (M10X1.5X180-MM)	
M	44	1	**7X-2555**	8	BOLT (M16X2X80-MM)	
M	45	1	**8T-4197**	4	BOLT (M8X1.25X40-MM)	
M	46	2	**8T-5436**	8	BOLT (M10X1.5X130-MM)	
	47	1,2	**9J-8126**	1	PLUG-ORIFICE	

M-METRIC PART
Y-SEPARATE ILLUSTRATION

174-1829 VALVE GP-CONTROL *(contd.)* i02996285

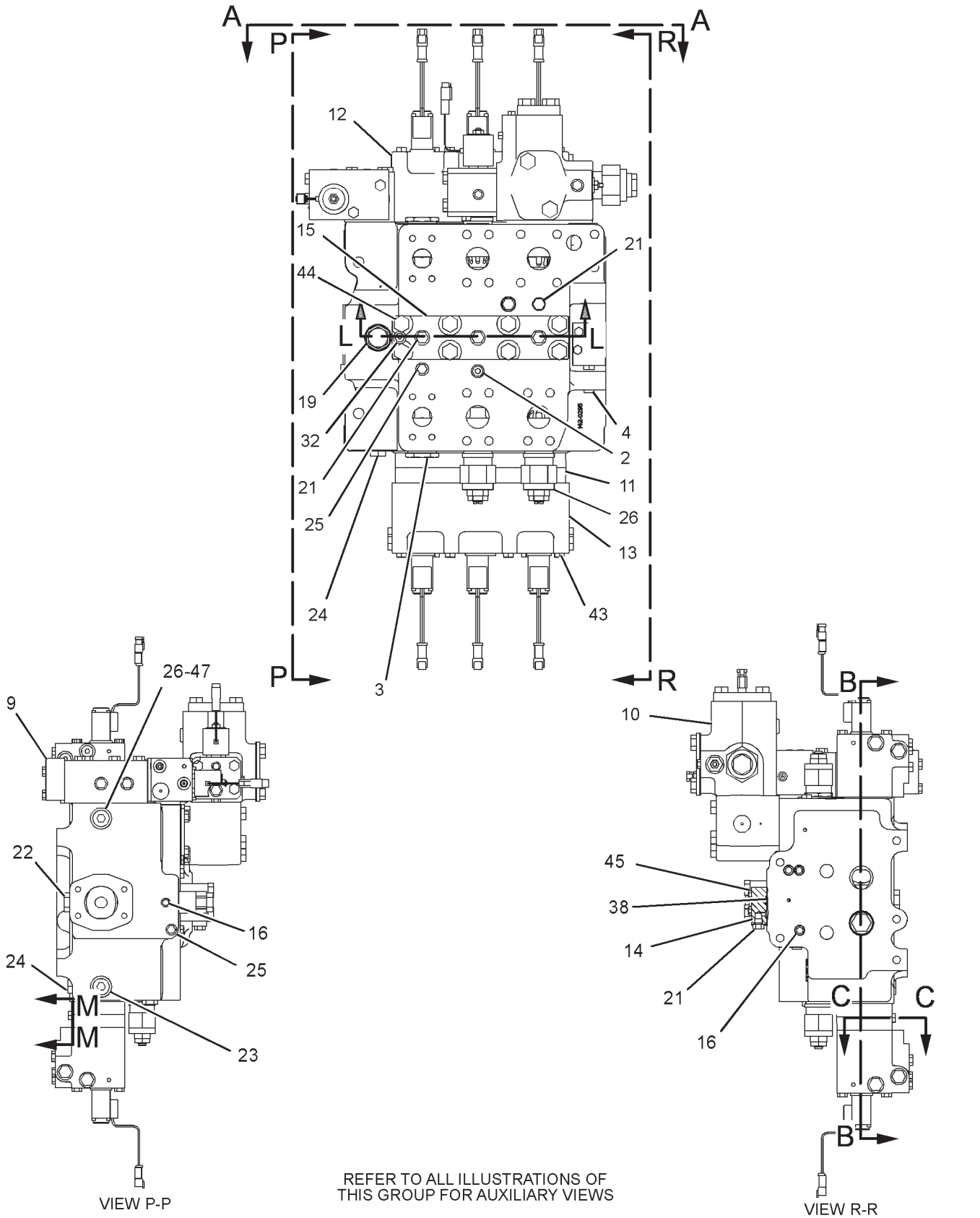

GRAPHIC #1

g01521330

174-1829 VALVE GP-CONTROL *(contd.)* i02996285

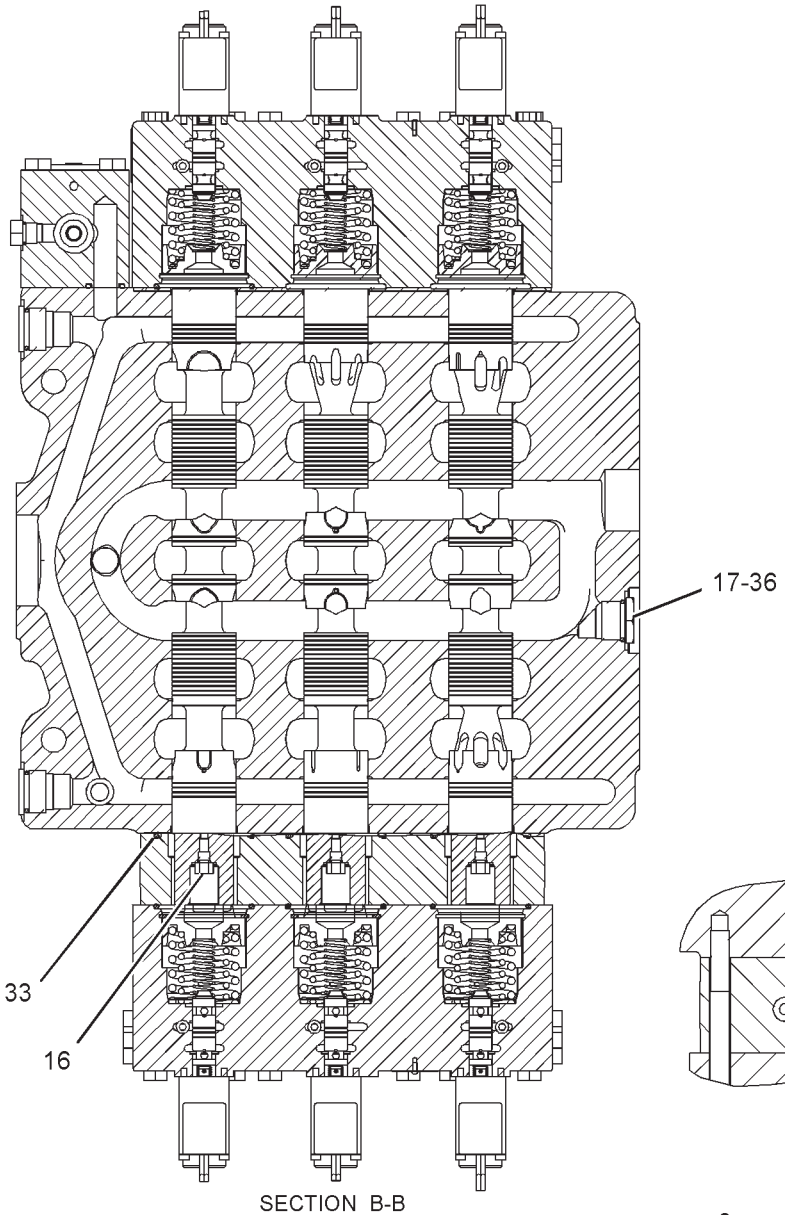

SECTION B-B

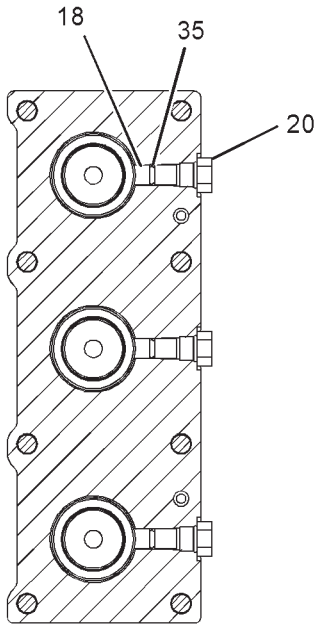

SECTION C-C

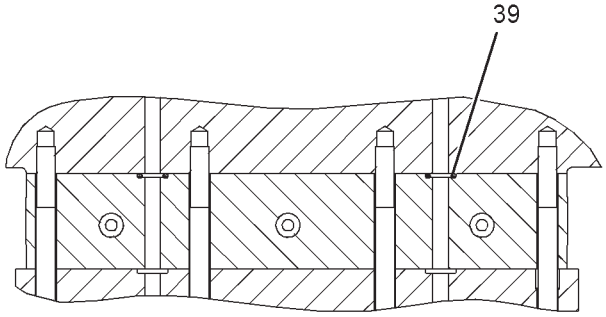

SECTION M-M

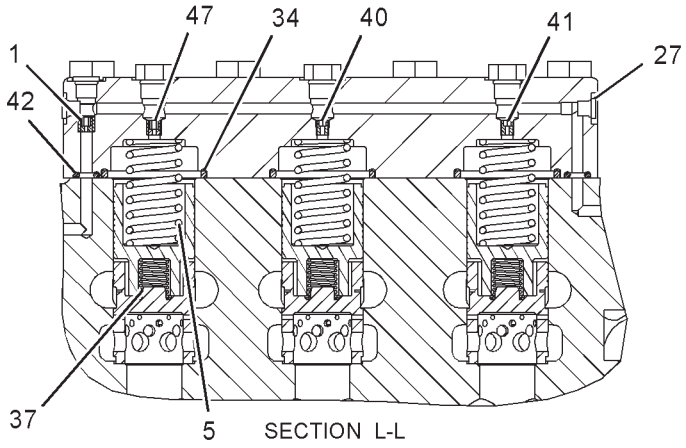

SECTION L-L

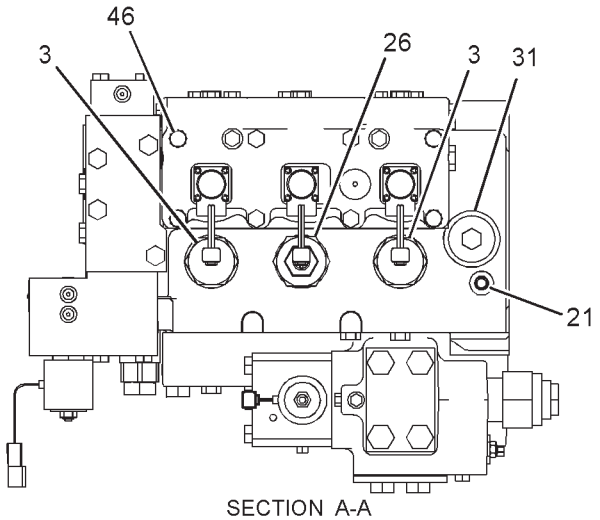

SECTION A-A

GRAPHIC #2 **<END>** g01521332

HYDRAULIC SYSTEM

174-1846 VALVE GP-CONTROL

S/N: RCD1-UP
LH
PART OF 174-1843, 174-1852 VALVE GP-MAIN CONTROL
AN ATTACHMENT

SMCS-5051 **i02996286**

NOTE	REF NO	GRAPHIC REF	PART NUMBER	QTY	PART NAME 1 2 3 4 5 6 (PRODUCT LEVEL)	SEE PAGE
	1	2	**4J-9780**	1	PLUG-ORIFICE	
Y	2	1	**4T-1860**	1	VALVE GP-SHUTTLE	868
	3	1	**6E-3993**	4	PLUG AS	
					(EACH INCLUDES)	
		1	**2M-9780**	1	SEAL-O-RING	
		1	**2S-4078**	1	SEAL-O-RING	
		1	**148-0767**	1	RING-SPLIT	
Y	4	1	**6E-4429**	1	VALVE GP-SHUTTLE	869
	5	2	**6J-7240**	3	SPRING	
Y	9	1	**144-7087**	1	VALVE GP-CONTROL (NEUTRAL BYPASS)	756
	10	1	**145-8747**	1	SPACER	
	11	1	**145-9529**	1	COVER	
Y	12	1,2	**154-3294**	1	MANIFOLD & VALVE GP (PILOT)	676
Y	13	1	**154-3295**	1	MANIFOLD & VALVE GP (PILOT)	678
	14	1	**163-9401**	1	COVER	
	17	1	**199-9707**	1	COVER	
	18	1,2	*222-4737*	7	PLUG AS	
					(EACH INCLUDES)	
		1,2	**4J-7533**	1	SEAL-O-RING	
		1,2	**9S-4180**	1	PLUG	
	19	2	**005-8164**	1	PLUG	
	20	2	**100-6211**	3	PISTON	
Y	21	1	**144-7113**	1	VALVE GP-RELIEF (LOAD SENSING DIFF PRESSURE)	859
	22	2	*148-8405*	3	PLUG AS	
					(EACH INCLUDES)	
		2	**1J-9671**	1	SEAL-O-RING	
		2	**3K-8460**	1	PLUG	
	23	1,2	*148-8407*	7	PLUG AS	
					(EACH INCLUDES)	
		1,2	**3J-1907**	1	SEAL-O-RING	
		1,2	**9S-4191**	1	PLUG-O-RING	
	24	1	*148-8408*	1	PLUG AS	
		1	**3D-2824**	1	SEAL-O-RING	
		1	**9S-4183**	1	PLUG-O-RING	
	25	1	*148-8409*	2	PLUG AS	
					(EACH INCLUDES)	
		1	**3D-2824**	1	SEAL-O-RING	
		1	**9S-8008**	1	PLUG-O-RING	
	26	1	*148-8410*	2	PLUG AS	
					(EACH INCLUDES)	
		1	**2M-9780**	1	SEAL-O-RING	
		1	**9S-4190**	1	PLUG-O-RING	
	27	1	*155-3624*	2	PLUG AS	
					(EACH INCLUDES)	
		1	**3J-7354**	1	SEAL-O-RING	
		1	**9S-4182**	1	PLUG-O-RING	
Y	28	1,2	**160-8734**	3	VALVE GP-RELIEF (LINE)	862
	29	2	*173-3993*	2	PLUG AS	
					(EACH INCLUDES)	
		2	**4J-7533**	1	SEAL-O-RING	
		2	**9S-8001**	1	PLUG-O-RING	
	32	2	*183-7262*	1	PLUG AS	
		2	**3J-7354**	1	SEAL-O-RING	
		2	**9S-8002**	1	PLUG-O-RING	

174-1846 VALVE GP-CONTROL *(contd.)* i02996286

NOTE	REF NO	GRAPHIC REF	PART NUMBER	QTY	PART NAME 1 2 3 4 5 6 (PRODUCT LEVEL)	SEE PAGE
	33	1	*183-7263*	1	PLUG AS	
		1	**3J-7354**	1	SEAL-O-RING	
		1	**9S-8002**	1	PLUG-O-RING	
	34	2	**1H-5728**	3	SEAL-O-RING	
	35	2	**1P-3705**	1	SEAL-RECTANGULAR	
	36	2	**1P-3706**	3	SEAL-RECTANGULAR	
	37	2	**2D-6392**	3	SEAL-O-RING	
	38	2	**3D-2824**	1	SEAL-O-RING	
	39	2	**3F-8845**	3	SPRING	
	40	1	**4J-5309**	2	SEAL-O-RING	
	41	1	**4J-5573**	1	SEAL-O-RING	
	42	2	**4J-9535**	2	SEAL-O-RING	
	43	2	**4T-4207**	1	PLUG-ORIFICE	
	44	1	**4T-5076**	1	RING-BACKUP	
	45	2	**5J-5004**	1	PLUG-ORIFICE	
	46	2	**6V-0357**	1	SEAL-O-RING	
	47	2	**6V-5555**	2	SEAL-O-RING	
M	48	1	**7X-2546**	8	BOLT (M10X1.5X180-MM)	
M	49	1	**7X-2553**	4	BOLT (M16X2X40-MM)	
M	50	1	**7X-2555**	8	BOLT (M16X2X80-MM)	
M	51	1	**7X-2557**	6	BOLT (M16X2X140-MM)	
M	52	1	**8T-4197**	4	BOLT (M8X1.25X40-MM)	
M	53	2	**8T-5436**	8	BOLT (M10X1.5X130-MM)	
	54	2	**9J-8126**	1	PLUG-ORIFICE	

M-METRIC PART
Y-SEPARATE ILLUSTRATION

174-1846 VALVE GP-CONTROL *(contd.)* i02996286

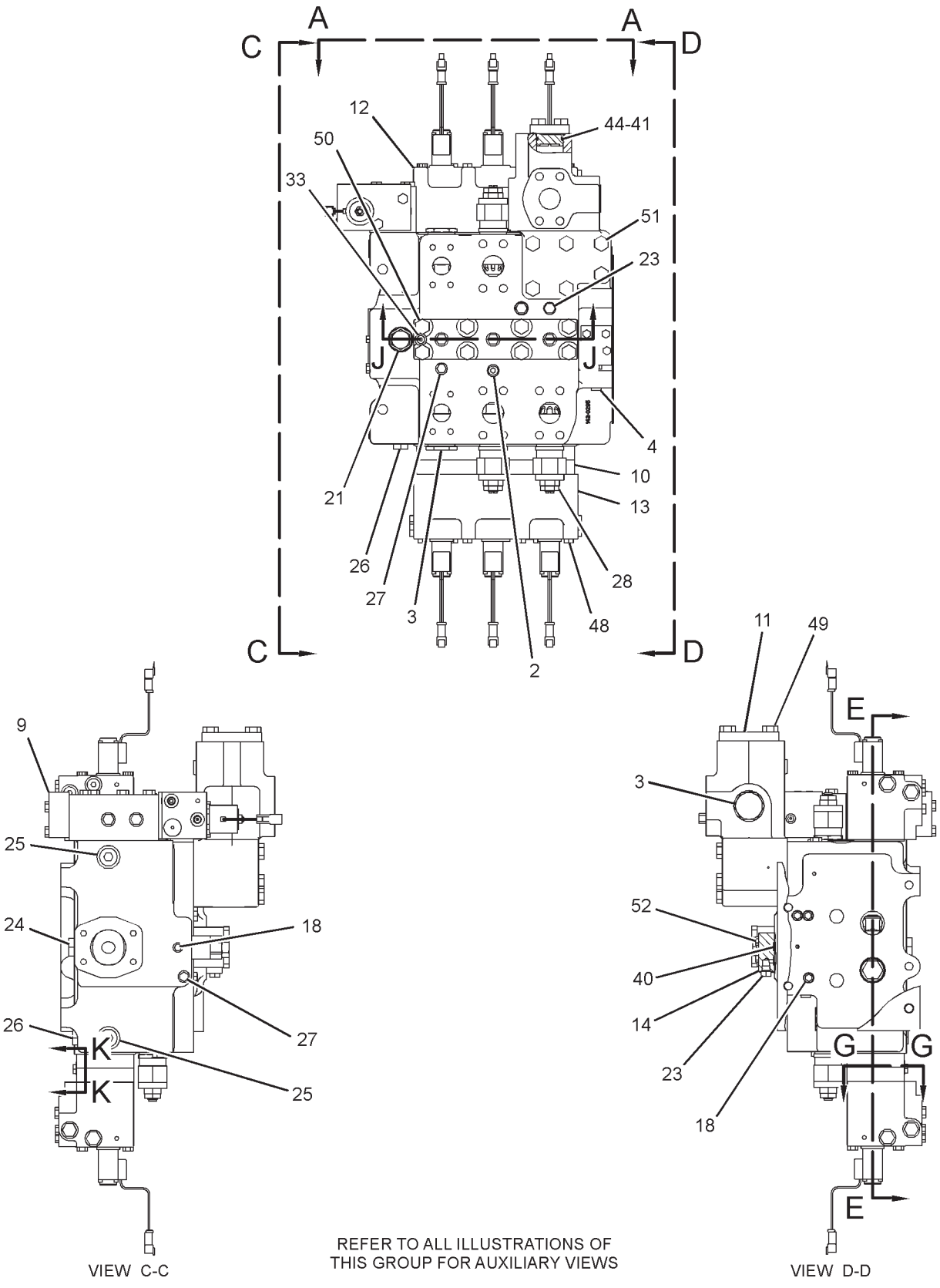

REFER TO ALL ILLUSTRATIONS OF THIS GROUP FOR AUXILIARY VIEWS

GRAPHIC #1 g01676724

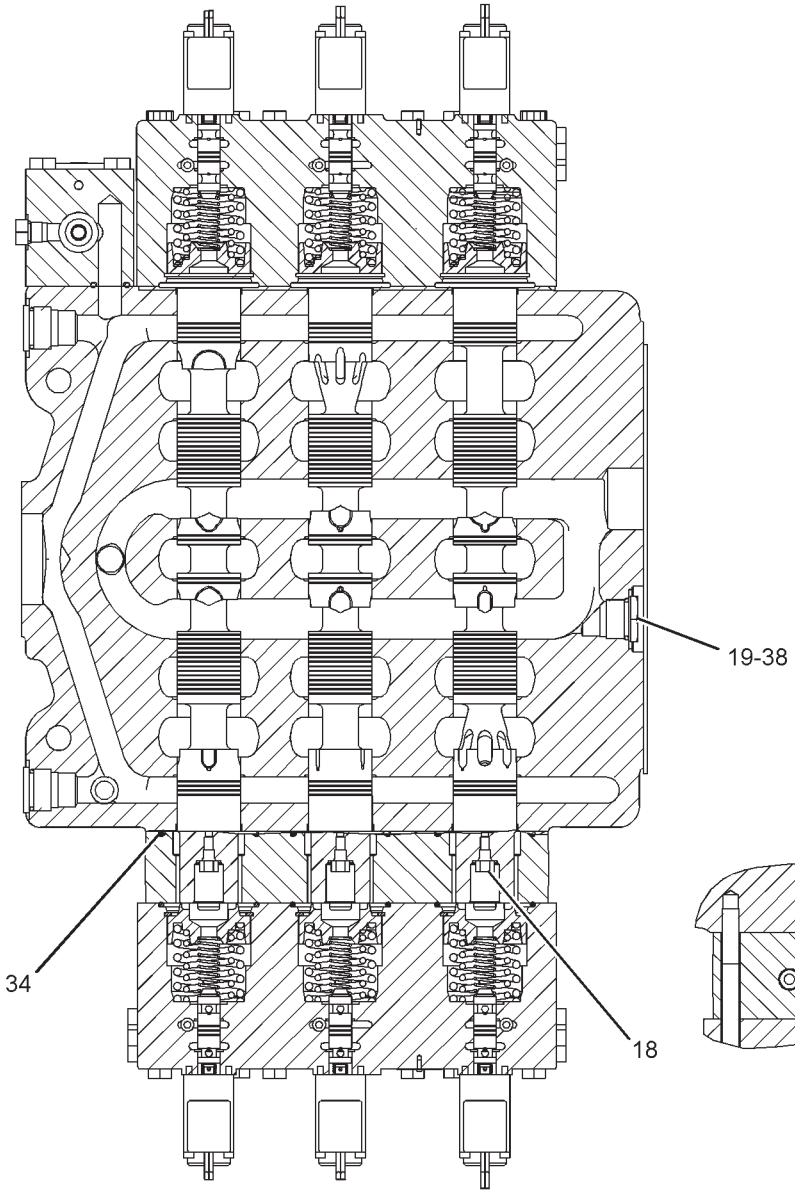

SECTION E-E

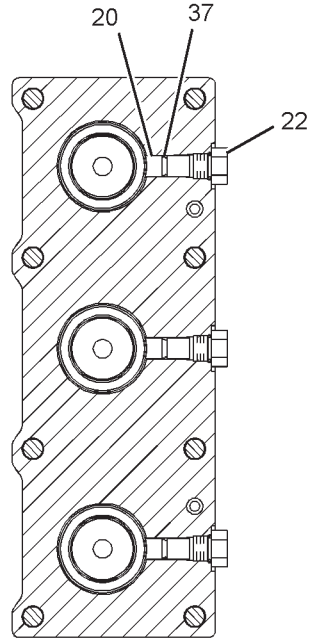

SECTION G-G

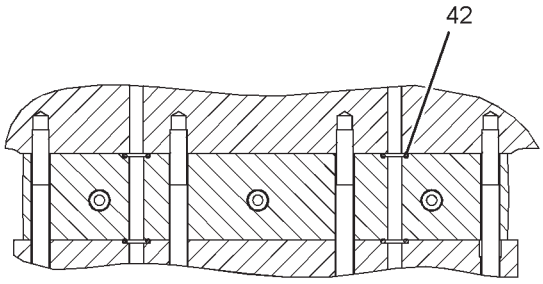

SECTION K-K

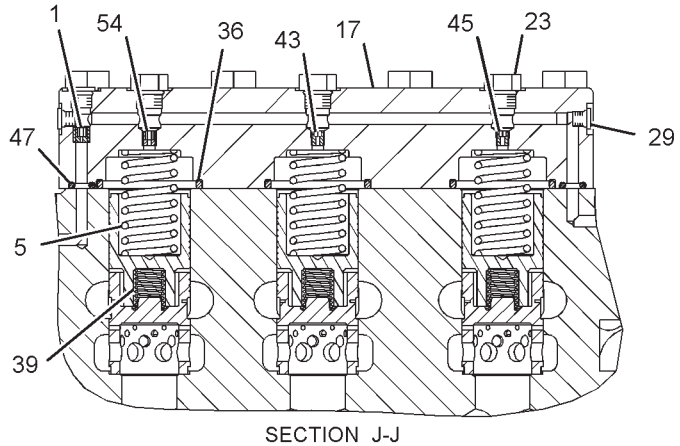

SECTION J-J

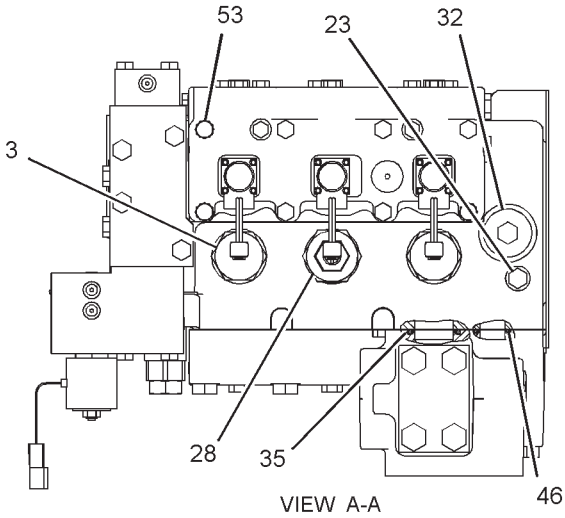

VIEW A-A

GRAPHIC #2 **<END>** g01676725

HYDRAULIC SYSTEM

174-1854 VALVE GP-CONTROL–RH

S/N: RCD1-UP
PART OF 174-1852 VALVE GP-MAIN CONTROL
AN ATTACHMENT

SMCS-5051 **i03016928**

NOTE	REF NO	GRAPHIC REF	PART NUMBER	QTY	PART NAME 1 2 3 4 5 6 (PRODUCT LEVEL)	SEE PAGE
	1	1	**3J-7694**	1	SPRING	
	2	1	**4J-9780**	1	PLUG-ORIFICE	
	3	1	**6E-3993**	6	PLUG AS	
					(EACH INCLUDES)	
		1	**2M-9780**	1	SEAL-O-RING	
		1	**2S-4078**	1	SEAL-O-RING	
		1	**148-0767**	1	RING-SPLIT	
Z	4	1		1	VALVE	
	5	1	**100-6211**	3	PISTON	
Z	6	1		1	BODY-VALVE	
Z	7	1		1	SPOOL-COMPENSATOR	
	8	1	**145-9529**	1	COVER	
	9	1	**146-0182**	1	BLOCK-MANIFOLD	
Y	10	1	**154-3294**	1	MANIFOLD & VALVE GP (PILOT)	676
Y	11	1	**154-3295**	1	MANIFOLD & VALVE GP (PILOT)	678
	12	1	**163-9401**	1	COVER	
	14	1	**199-9707**	1	COVER	
	15	1	*222-4737*	7	PLUG AS	
					(EACH INCLUDES)	
		1	**4J-7533**	1	SEAL-O-RING	
		1	**9S-4180**	1	PLUG	
Z	16	1		2	STEM-TRACK	
	17	1	**005-8164**	1	PLUG	
	18	1	**109-8040**	2	PLUG-ORIFICE	
Y	19	1	**111-0336**	1	VALVE GP-SHUTTLE	870
Y	20	1	**144-7113**	1	VALVE GP-RELIEF (LOAD SENSING DIFF PRESSURE)	859
	21	1	*148-8405*	3	PLUG AS	
					(EACH INCLUDES)	
		1	**1J-9671**	1	SEAL-O-RING	
		1	**3K-8460**	1	PLUG	
	22	1	*148-8407*	7	PLUG AS	
					(EACH INCLUDES)	
		1	**3J-1907**	1	SEAL-O-RING	
		1	**9S-4191**	1	PLUG-O-RING	
	23	1	*148-8408*	1	PLUG AS	
		1	**3D-2824**	1	SEAL-O-RING	
		1	**9S-4183**	1	PLUG-O-RING	
	24	1	*148-8410*	2	PLUG AS	
					(EACH INCLUDES)	
		1	**2M-9780**	1	SEAL-O-RING	
		1	**9S-4190**	1	PLUG-O-RING	
Y	25	1	**160-8734**	1	VALVE GP-RELIEF (LINE)	862
	26	1	*173-3993*	2	PLUG AS	
					(EACH INCLUDES)	
		1	**4J-7533**	1	SEAL-O-RING	
		1	**9S-8001**	1	PLUG-O-RING	
Z	27	1		1	STEM-STICK	
	28	1	*183-7262*	1	PLUG AS	
		1	**2S-4078**	1	SEAL-O-RING	
		1	**9S-8010**	1	PLUG	
	29	1	*183-7263*	1	PLUG AS	
		1	**3J-7354**	1	SEAL-O-RING	
		1	**9S-8002**	1	PLUG-O-RING	
	30	1	**1H-5728**	3	SEAL-O-RING	
	31	1	**1P-3705**	1	SEAL-RECTANGULAR	

174-1854 VALVE GP-CONTROL *(contd.)* i03016928

NOTE	REF NO	GRAPHIC REF	PART NUMBER	QTY	PART NAME 1 2 3 4 5 6 (PRODUCT LEVEL)	SEE PAGE
	32	1	**1P-3706**	3	SEAL-RECTANGULAR	
	33	1	**1W-6523**	4	PLUG	
	34	1	**2D-6392**	3	SEAL-O-RING	
	35	1	**3D-2824**	1	SEAL-O-RING	
	36	1	**3F-8845**	1	SPRING	
	37	1	**3J-7354**	4	SEAL-O-RING	
	38	1	**4J-5309**	2	SEAL-O-RING	
	39	1	**4J-5573**	1	SEAL-O-RING	
	40	1	**4J-9535**	2	SEAL-O-RING	
Y	41	1	**4T-1860**	1	VALVE GP-SHUTTLE	868
	42	1	**4T-5076**	1	RING-BACKUP	
	43	1	**5G-6401**	2	BOSS	
	44	1	**5J-5004**	3	PLUG-ORIFICE	
	45	1	**6J-7240**	2	SPRING	
	46	1	**6V-0357**	1	SEAL-O-RING	
	47	1	**6V-5555**	2	SEAL-O-RING	
M	48	1	**7X-2546**	8	BOLT (M10X1.5X180-MM)	
M	49	1	**7X-2553**	4	BOLT (M16X2X40-MM)	
M	50	1	**7X-2555**	8	BOLT (M16X2X80-MM)	
M	51	1	**7X-2557**	6	BOLT (M16X2X140-MM)	
M	52	1	**8T-4197**	4	BOLT (M8X1.25X40-MM)	
M	53	1	**8T-5436**	8	BOLT (M10X1.5X130-MM)	
Z	54	1		2	VALVE	
	55	1	*148-8409*	2	PLUG AS	
					(EACH INCLUDES)	
		1	**3D-2824**	1	SEAL-O-RING	
		1	**9S-8008**	1	PLUG-O-RING	

M-METRIC PART
Y-SEPARATE ILLUSTRATION
Z-NOT SERVICED SEPARATELY

174-1854 VALVE GP-CONTROL *(contd.)* i03016928

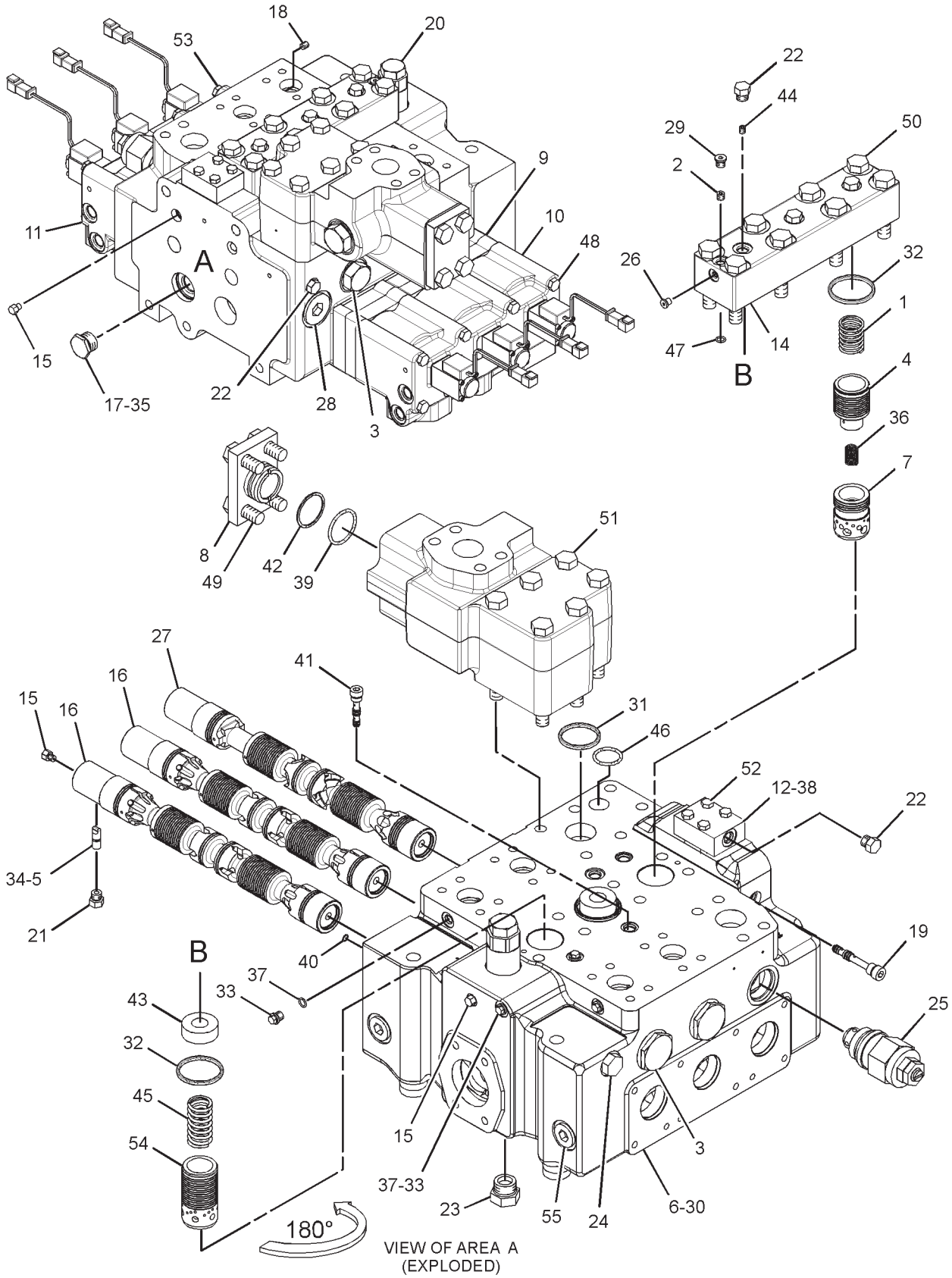

GRAPHIC #1

<END>

g01521733

HYDRAULIC SYSTEM

174-1858 VALVE GP-CONTROL

S/N: RCD1-UP

PART OF 168-9373 LINES GP-SWING MOTOR

SMCS-5051 **i01549184**

NOTE	REF NO	GRAPHIC REF	PART NUMBER	QTY	PART NAME 1 2 3 4 5 6 (PRODUCT LEVEL)	SEE PAGE
	1	1	**2S-2596**	3	SPRING	
	3	1	**9T-1614**	3	VALVE	
Y	4	1	**127-8394**	1	VALVE GP-CHECK	746
	5	1	**142-0844**	3	PLUG AS	
					(EACH INCLUDES)	
	5A	1	**4T-0987**	1	BEARING-SLEEVE	
	6	1	*144-4476*	1	BODY-VALVE	
Y	7	1	**154-6591**	2	VALVE GP-SOLENOID	875
	9	1	**148-8407**	1	PLUG AS	
	9A	1	**3J-1907**	1	SEAL-O-RING	
	9B	1	**9S-4191**	1	PLUG-O-RING	
	10	1	**148-8410**	1	PLUG AS	
	10A	1	**2M-9780**	1	SEAL-O-RING	
	10B	1	**9S-4190**	1	PLUG-O-RING	
	11	1	**173-3993**	2	PLUG AS	
					(EACH INCLUDES)	
	11A	1	**4J-7533**	1	SEAL-O-RING	
	11B	1	**9S-8001**	1	PLUG-O-RING	
	12	1	**174-1859**	1	STEM-SWING	
	13	1	**183-7263**	2	PLUG AS	
					(EACH INCLUDES)	
	13A	1	**3J-7354**	1	SEAL-O-RING	
	13B	1	**9S-8002**	1	PLUG-O-RING	
	14	1	**4F-8946**	2	SEAL-O-RING	
	15	1	**4J-2506**	1	SEAL-O-RING	
	16	1	**7M-8485**	3	SEAL-O-RING	

Y-SEPARATE ILLUSTRATION

174-1858 VALVE GP-CONTROL *(contd.)* i01549184

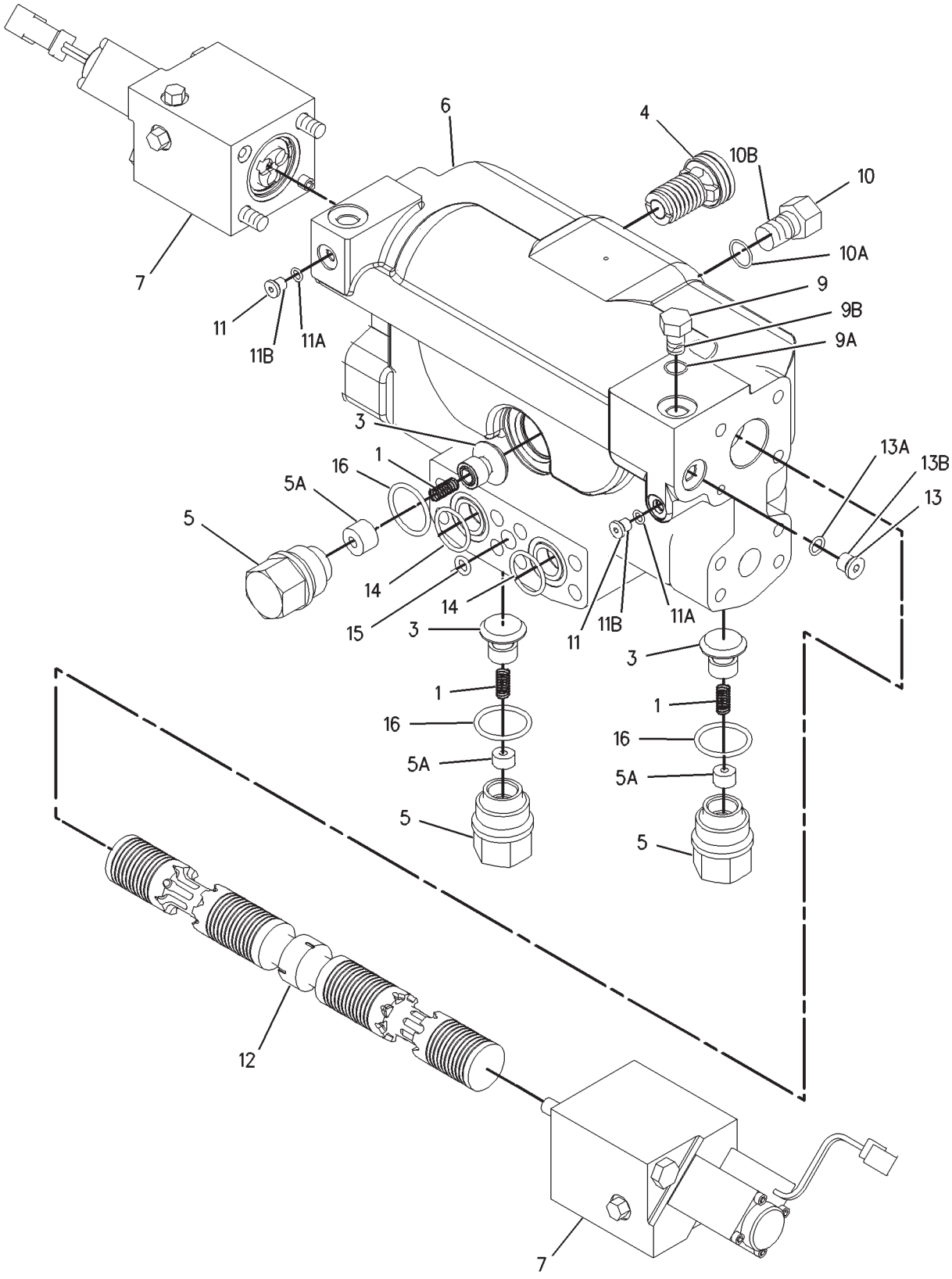

GRAPHIC #1 **<END>** g00805384

HYDRAULIC SYSTEM

194-1804 VALVE GP-CONTROL—MEDIUM PRESSURE

S/N: RCD1-UP
PART OF 206-4357 LINES GP-PUMP
AN ATTACHMENT

SMCS-5051 **i02557440**

NOTE	REF NO	GRAPHIC REF	PART NUMBER	QTY	PART NAME 1 2 3 4 5 6 (PRODUCT LEVEL)	SEE PAGE
	1	1	**261-2448**	1	VALVE AS-RELIEF	
	2	1	**261-2450**	1	COVER AS	
	3	1	**261-2452**	1	MOUNTING GP-VALVE	
	4	1	**261-2459**	1	VALVE AS-CONTROL	

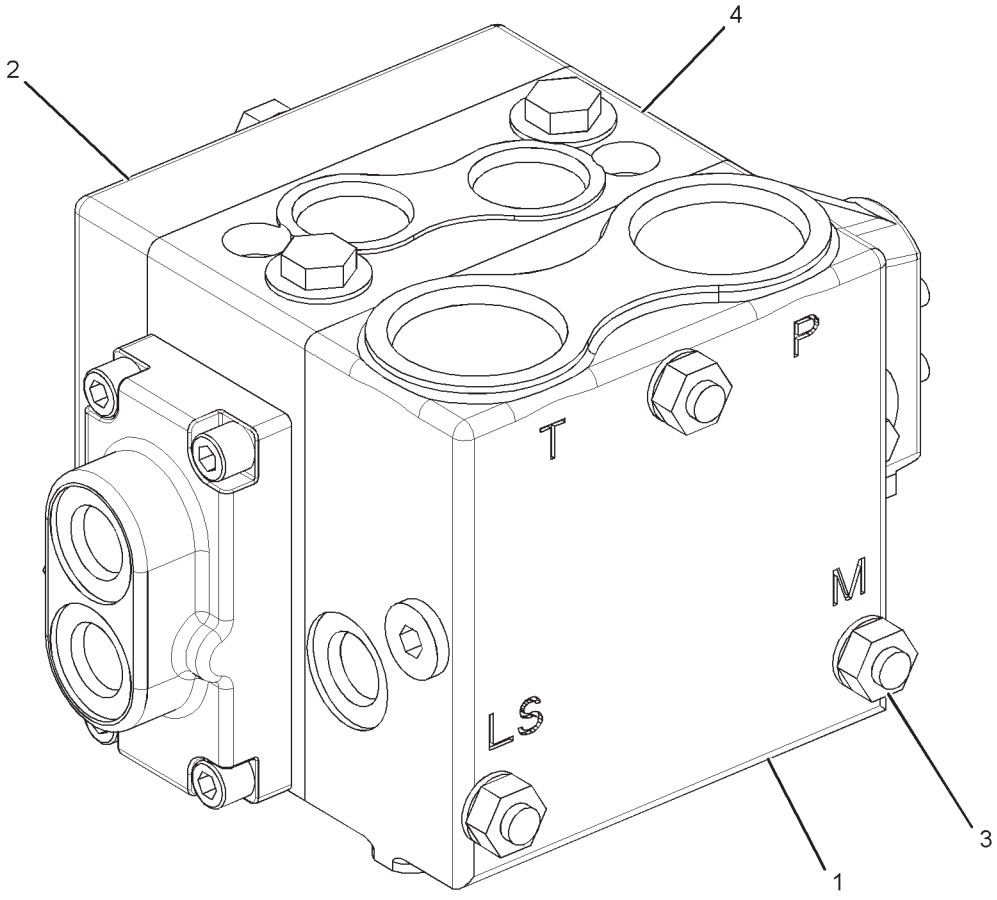

GRAPHIC #1 **<END>** g01292847

HYDRAULIC SYSTEM

223-7737 VALVE GP-CONTROL

S/N: RCD206-UP

PART OF 223-7750 VALVE GP-MAIN CONTROL

SMCS-5051 **i02984611**

NOTE	REF NO	GRAPHIC REF	PART NUMBER	QTY	PART NAME 1 2 3 4 5 6 (PRODUCT LEVEL)	SEE PAGE
	1	2	**4J-9780**	1	PLUG-ORIFICE	
Y	2	1	**4T-1860**	1	VALVE GP-SHUTTLE	868
	3	1,2	**6E-3993**	3	PLUG AS	
					(EACH INCLUDES)	
		1,2	**2M-9780**	1	SEAL-O-RING	
		1,2	**2S-4078**	1	SEAL-O-RING	
		1,2	**148-0767**	1	RING-SPLIT	
Y	4	2	**6E-4429**	1	VALVE GP-SHUTTLE	869
	5	2	**6J-7240**	3	SPRING	
Y	9	1	**144-7087**	1	VALVE GP-CONTROL (NEUTRAL BYPASS)	756
Y	10	1	**145-7181**	1	VALVE GP-LOAD CONTROL	814
	11	1	**145-8747**	1	SPACER	
	12	1	**163-9401**	1	COVER	
Y	13	1	**194-0946**	1	MANIFOLD & VALVE GP (MAIN CONTROL VALVE)	680
Y	14	1	**194-0947**	1	MANIFOLD & VALVE GP (MAIN CONTROL VALVE)	682
	15	1	**199-9707**	1	COVER	
	16	1,3	*222-4737*	7	PLUG AS	
					(EACH INCLUDES)	
		1,3	**4J-7533**	1	SEAL-O-RING	
		1,3	**9S-4180**	1	PLUG	
	17	3	**005-8164**	1	PLUG	
	18	3	**100-6211**	3	PISTON	
Y	19	2	**144-7113**	1	VALVE GP-RELIEF (LOAD SENSING DIFF PRESSURE)	859
	20	3	*148-8405*	3	PLUG AS	
					(EACH INCLUDES)	
		3	**1J-9671**	1	SEAL-O-RING	
		3	**3K-8460**	1	PLUG	
	21	1,2	*148-8407*	7	PLUG AS	
					(EACH INCLUDES)	
		1,2	**3J-1907**	1	SEAL-O-RING	
		1,2	**9S-4191**	1	PLUG-O-RING	
	22	1	*148-8408*	1	PLUG AS	
		1	**3D-2824**	1	SEAL-O-RING	
		1	**9S-4183**	1	PLUG-O-RING	
	23	1	*148-8409*	2	PLUG AS	
					(EACH INCLUDES)	
		1	**3D-2824**	1	SEAL-O-RING	
		1	**9S-8008**	1	PLUG-O-RING	
	24	1,2	*148-8410*	2	PLUG AS	
					(EACH INCLUDES)	
		1,2	**2M-9780**	1	SEAL-O-RING	
		1,2	**9S-4190**	1	PLUG-O-RING	
	25	1	*155-3624*	2	PLUG AS	
					(EACH INCLUDES)	
		1	**3J-7354**	1	SEAL-O-RING	
		1	**9S-4182**	1	PLUG-O-RING	
Y	26	1,2	**160-8734**	3	VALVE GP-RELIEF (LINE)	862
	27	2	*173-3993*	2	PLUG AS	
					(EACH INCLUDES)	
		2	**4J-7533**	1	SEAL-O-RING	
		2	**9S-8001**	1	PLUG-O-RING	
	31	2	*183-7262*	1	PLUG AS	
		2	**2S-4078**	1	SEAL-O-RING	
		2	**9S-8010**	1	PLUG	
	32	1	*183-7263*	1	PLUG AS	
		1	**3J-7354**	1	SEAL-O-RING	

223-7737 VALVE GP-CONTROL *(contd.)* i02984611

NOTE	REF NO	GRAPHIC REF	PART NUMBER	QTY	PART NAME 1 2 3 4 5 6 (PRODUCT LEVEL)	SEE PAGE
		1	**9S-8002**	1	PLUG-O-RING	
	33	3	**1H-5728**	3	SEAL-O-RING	
	34	2	**1P-3706**	3	SEAL-RECTANGULAR	
	35	3	**2D-6392**	3	SEAL-O-RING	
	36	3	**3D-2824**	1	SEAL-O-RING	
	37	2	**3F-8845**	3	SPRING	
	38	1	**4J-5309**	2	SEAL-O-RING	
	39	2	**4J-9535**	2	SEAL-O-RING	
	40	2	**4T-4207**	1	PLUG-ORIFICE	
	41	2	**5J-5004**	1	PLUG-ORIFICE	
	42	2	**6V-5555**	2	SEAL-O-RING	
M	43	2	**7X-2546**	8	BOLT (M10X1.5X180-MM)	
M	44	1	**7X-2555**	8	BOLT (M16X2X80-MM)	
M	45	1	**8T-4197**	4	BOLT (M8X1.25X40-MM)	
M	46	2	**8T-5436**	8	BOLT (M10X1.5X130-MM)	
	47	2	**9J-8126**	1	PLUG-ORIFICE	

M-METRIC PART
Y-SEPARATE ILLUSTRATION

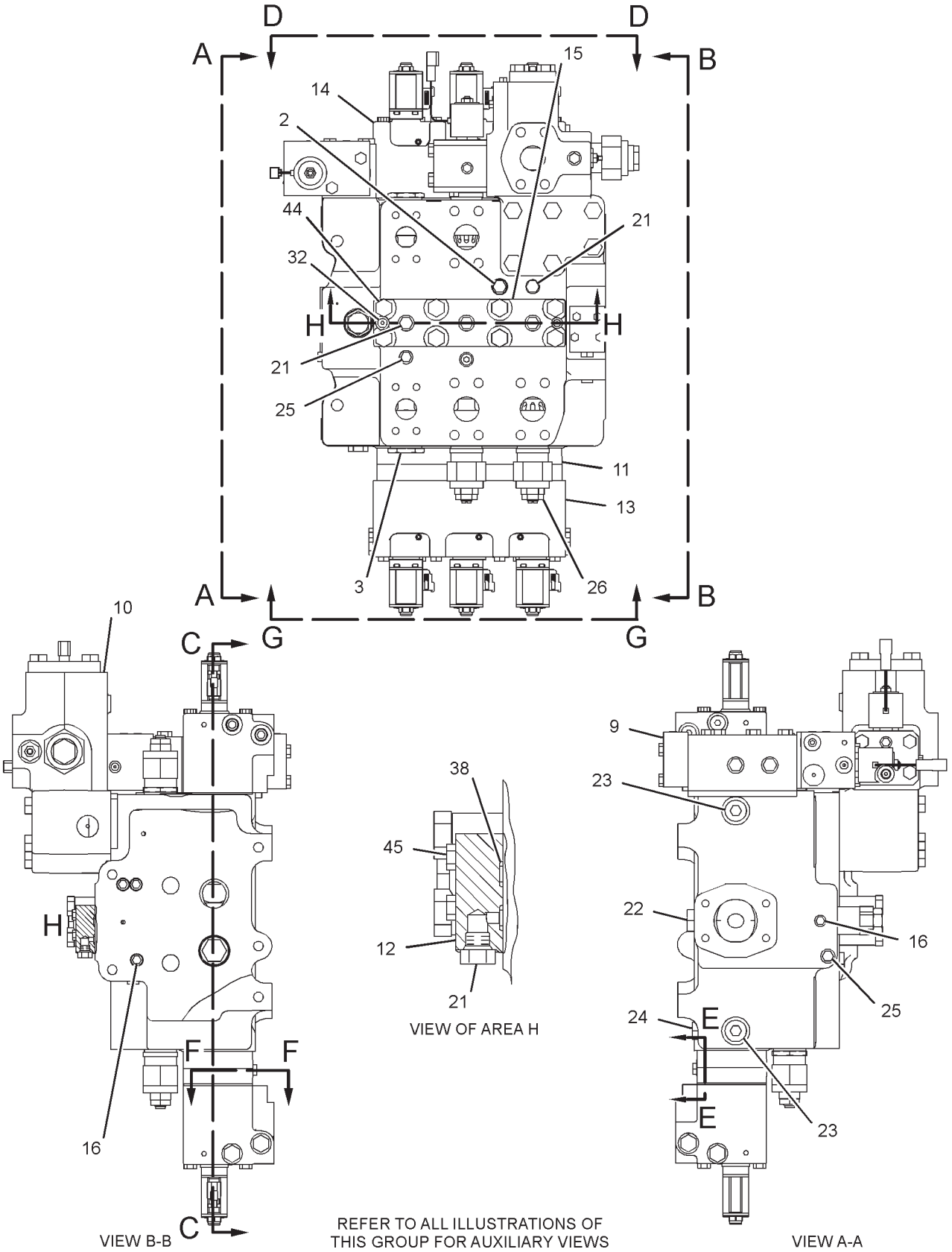

GRAPHIC #1

g01516130

223-7737 VALVE GP-CONTROL *(contd.)* **i02984611**

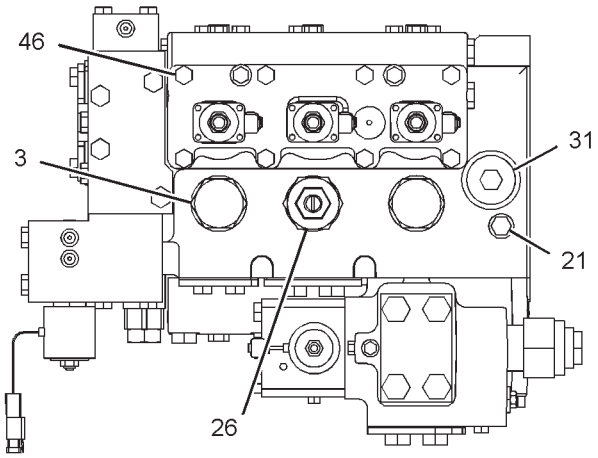

VIEW D-D

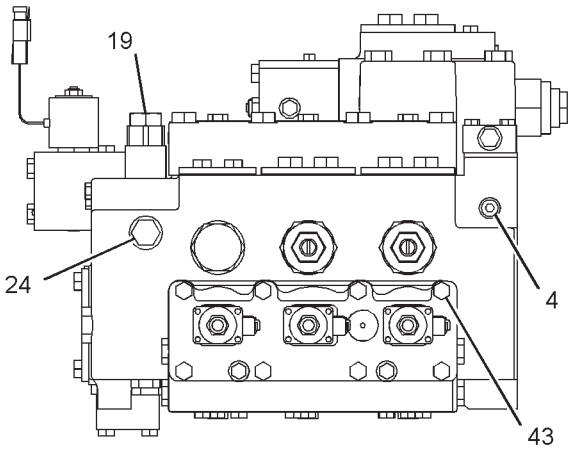

VIEW G-G

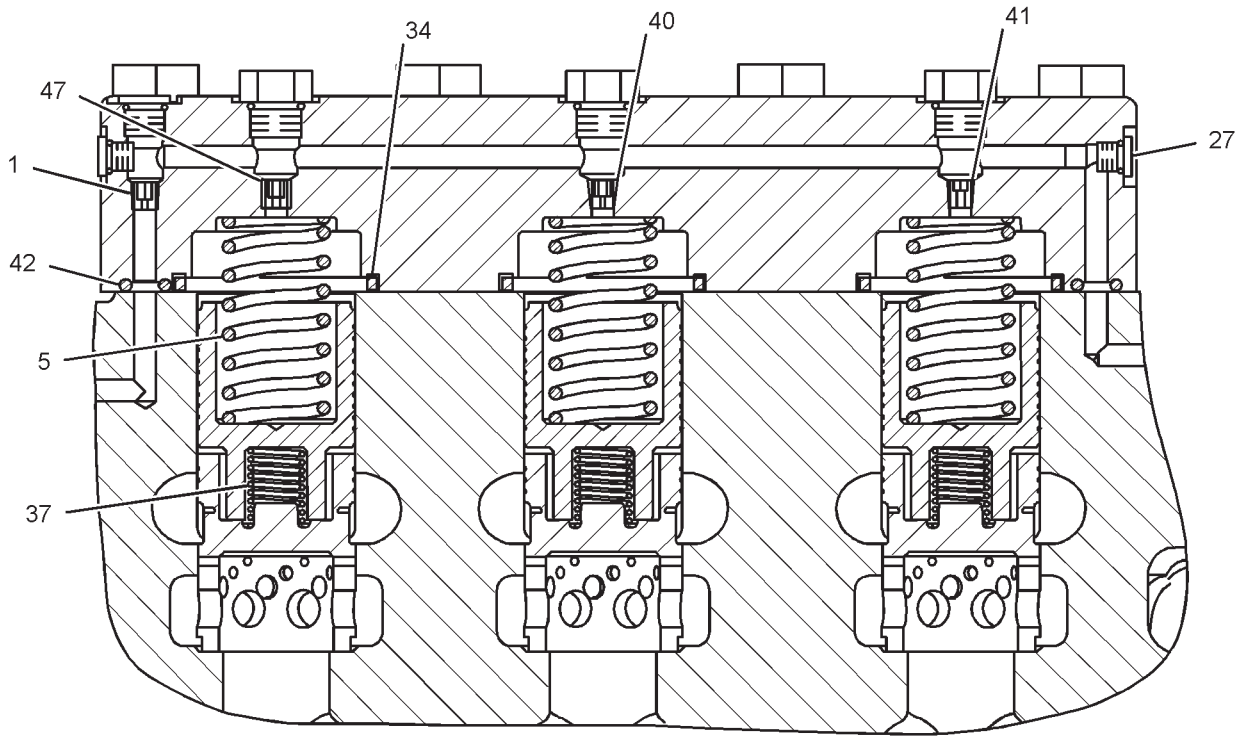

SECTION H-H

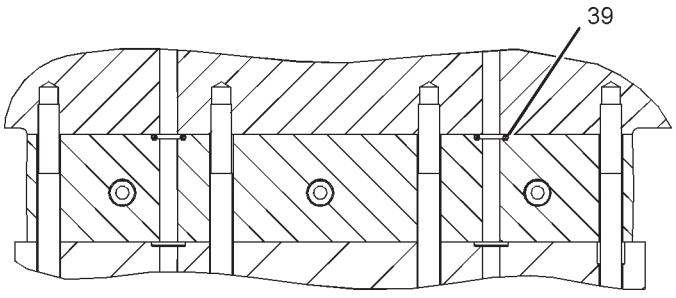

SECTION E-E

GRAPHIC #2 g01516131

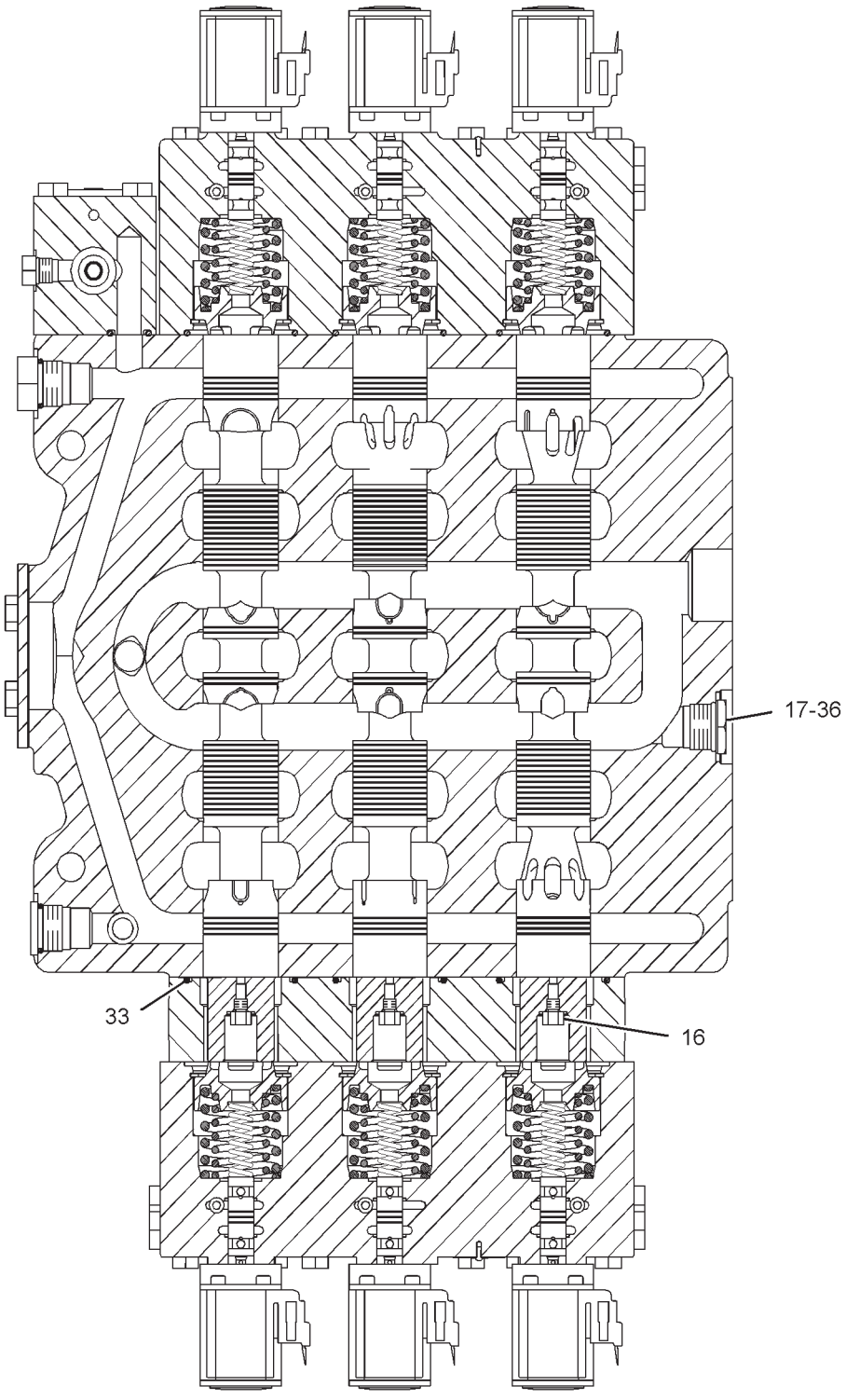

SECTION C-C

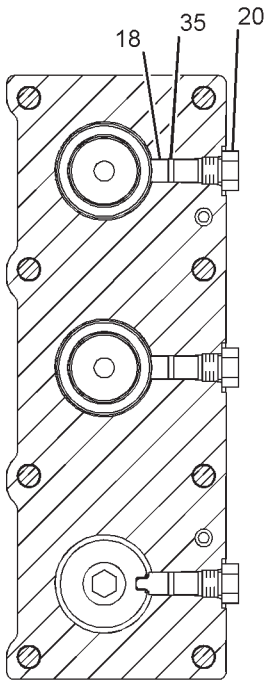

SECTION F-F

GRAPHIC #3 **<END>** g01516132

HYDRAULIC SYSTEM

223-7738 VALVE GP-CONTROL–LH

S/N: RCD1-UP

PART OF 223-7751 VALVE GP, 223-7752 VALVE GP-MAIN CONTROL

AN ATTACHMENT

SMCS-5051 **i02996290**

NOTE	REF NO	GRAPHIC REF	PART NUMBER	QTY	PART NAME 1 2 3 4 5 6 (PRODUCT LEVEL)	SEE PAGE
	1	3	**4J-9780**	1	PLUG-ORIFICE	
	2	1,2	**6E-3993**	4	PLUG AS	
					(EACH INCLUDES)	
		1,2	**2M-9780**	1	SEAL-O-RING	
		1,2	**2S-4078**	1	SEAL-O-RING	
		1,2	**148-0767**	1	RING-SPLIT	
	4	2	**100-6211**	3	PISTON	
Y	7	2	**144-7087**	1	VALVE GP-CONTROL (NEUTRAL BYPASS)	756
	8	1	**145-8747**	1	SPACER	
	9	1	**145-9529**	1	COVER	
	10	1	**163-9401**	1	COVER	
Y	13	1	**194-0946**	1	MANIFOLD & VALVE GP (MAIN CONTROL VALVE)	680
Y	14	1	**194-0947**	1	MANIFOLD & VALVE GP (MAIN CONTROL VALVE)	682
	15	1	**199-9707**	1	COVER	
	16	2	**005-8164**	1	PLUG	
Y	17	1	**144-7113**	1	VALVE GP-RELIEF (LOAD SENSING DIFF PRESSURE)	859
Y	18	1,2	**160-8734**	3	VALVE GP-RELIEF (LINE)	862
	21	2	**1H-5728**	3	SEAL-O-RING	
	22	1,2	*222-4737*	7	PLUG AS	
					(EACH INCLUDES)	
		1,2	**4J-7533**	1	SEAL-O-RING	
		1,2	**9S-4180**	1	PLUG	
	23	2	**1P-3705**	1	SEAL-RECTANGULAR	
	24	3	**1P-3706**	3	SEAL-RECTANGULAR	
	25	2	**2D-6392**	3	SEAL-O-RING	
	26	2	*148-8405*	3	PLUG AS	
					(EACH INCLUDES)	
		2	**1J-9671**	1	SEAL-O-RING	
		2	**3K-8460**	1	PLUG	
	27	1,2	*148-8407*	7	PLUG AS	
					(EACH INCLUDES)	
		1,2	**3J-1907**	1	SEAL-O-RING	
		1,2	**9S-4191**	1	PLUG-O-RING	
	28	2	**3D-2824**	1	SEAL-O-RING	
	29	3	**3F-8845**	3	SPRING	
	30	2	*148-8408*	1	PLUG AS	
		2	**3D-2824**	1	SEAL-O-RING	
		2	**9S-4183**	1	PLUG-O-RING	
	31	2	*148-8409*	2	PLUG AS	
					(EACH INCLUDES)	
		2	**3D-2824**	1	SEAL-O-RING	
		2	**9S-8008**	1	PLUG-O-RING	
	32	1,2	*148-8410*	2	PLUG AS	
					(EACH INCLUDES)	
		1,2	**2M-9780**	1	SEAL-O-RING	
		1,2	**9S-4190**	1	PLUG-O-RING	
	33	1	**4J-5309**	2	SEAL-O-RING	
	34	1	**4J-5573**	1	SEAL-O-RING	
	35	1,2	*155-3624*	2	PLUG AS	
					(EACH INCLUDES)	
		1,2	**3J-7354**	1	SEAL-O-RING	
		1,2	**9S-4182**	1	PLUG-O-RING	
	36	3	**4J-9535**	2	SEAL-O-RING	
Y	37	1	**4T-1860**	1	VALVE GP-SHUTTLE	868
	38	3	**4T-4207**	1	PLUG-ORIFICE	

223-7738 **VALVE GP-CONTROL** *(contd.)* **i02996290**

NOTE	REF NO	GRAPHIC REF	PART NUMBER	QTY	PART NAME 1 2 3 4 5 6 (PRODUCT LEVEL)	SEE PAGE
	39	1	**4T-5076**	1	RING-BACKUP	
	40	3	**5J-5004**	1	PLUG-ORIFICE	
Y	41	1	**6E-4429**	1	VALVE GP-SHUTTLE	869
	42	3	**6J-7240**	3	SPRING	
	43	2	**6V-0357**	1	SEAL-O-RING	
	44	3	**6V-5555**	2	SEAL-O-RING	
M	45	1	**7X-2546**	8	BOLT (M10X1.5X180-MM)	
M	46	1	**7X-2553**	4	BOLT (M16X2X40-MM)	
M	47	1	**7X-2555**	8	BOLT (M16X2X80-MM)	
M	48	1	**7X-2557**	6	BOLT (M16X2X140-MM)	
M	49	1	**8T-4197**	4	BOLT (M8X1.25X40-MM)	
M	50	2	**8T-5436**	8	BOLT (M10X1.5X130-MM)	
	51	3	**9J-8126**	1	PLUG-ORIFICE	
	52	3	*173-3993*	2	PLUG AS	
					(EACH INCLUDES)	
		3	**4J-7533**	1	SEAL-O-RING	
		3	**9S-8001**	1	PLUG-O-RING	
	53	2	*183-7262*	1	PLUG AS	
		2	**2S-4078**	1	SEAL-O-RING	
		2	**9S-8010**	1	PLUG	
	54	1	*183-7263*	1	PLUG AS	
		1	**3J-7354**	1	SEAL-O-RING	
		1	**9S-8002**	1	PLUG-O-RING	

M-METRIC PART
Y-SEPARATE ILLUSTRATION

REFER TO ALL ILLUSTRATIONS OF
THIS GROUP FOR AUXILIARY VIEWS

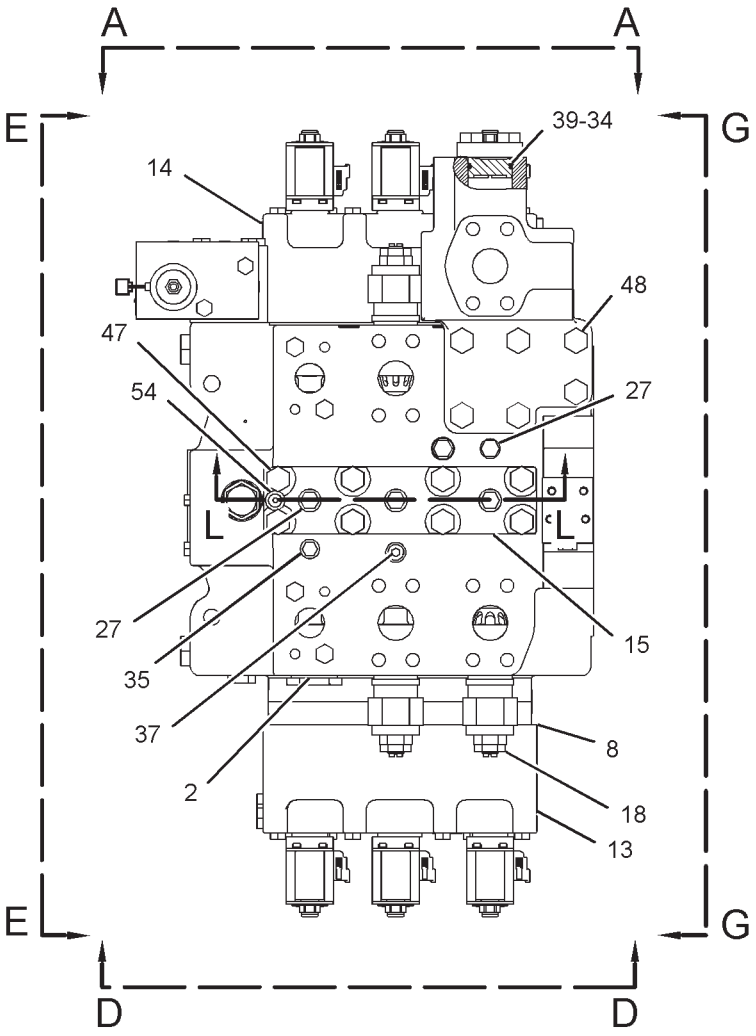

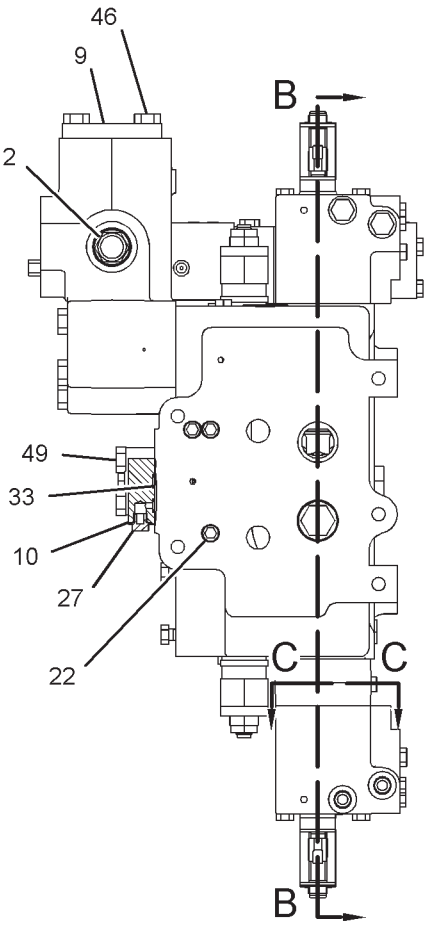

VIEW G-G

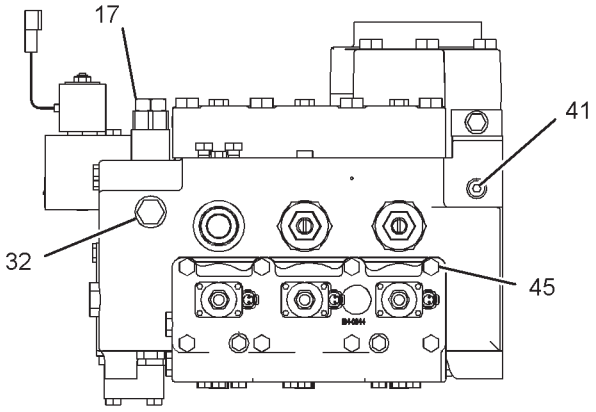

VIEW D-D

GRAPHIC #1

g01520353

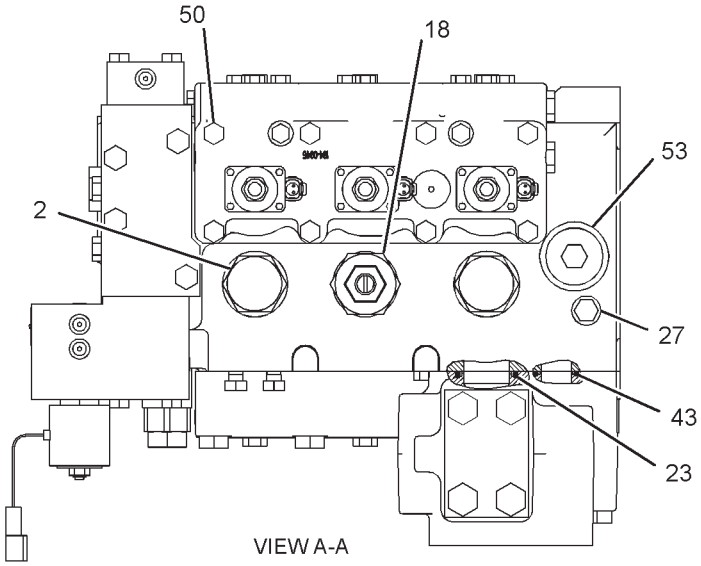

VIEW A-A

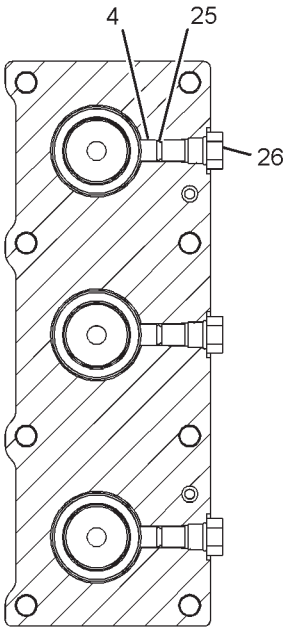

SECTION C-C

REFER TO ALL ILLUSTRATIONS OF
THIS GROUP FOR AUXILIARY VIEWS

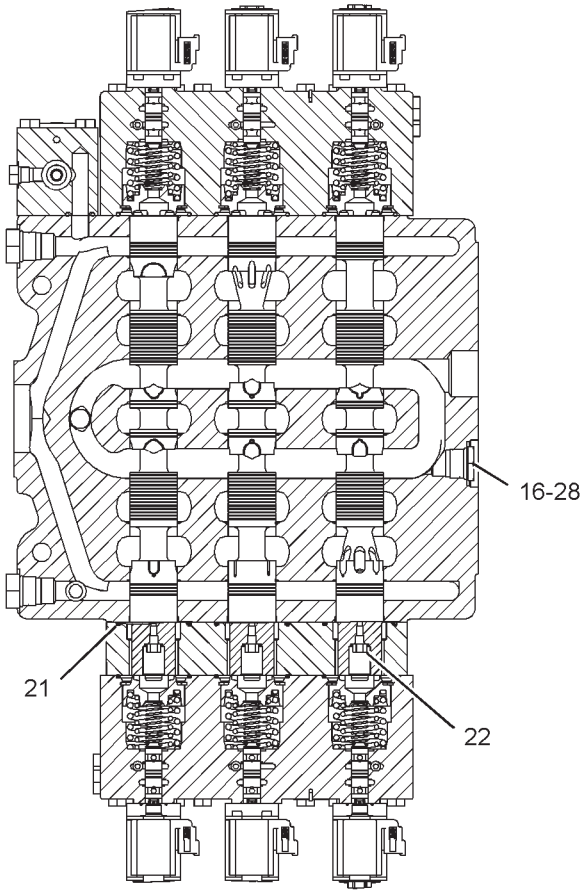

SECTION B-B

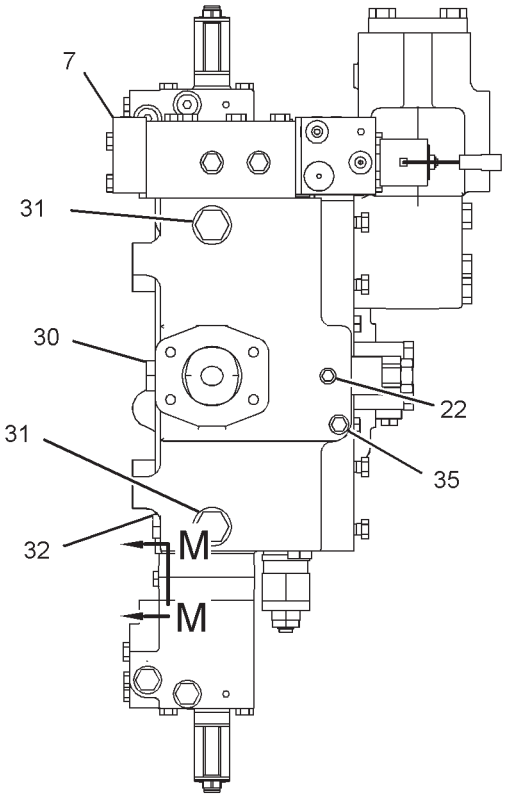

VIEW E-E

GRAPHIC #2

g01520354

223-7738 **VALVE GP-CONTROL** *(contd.)* **i02996290**

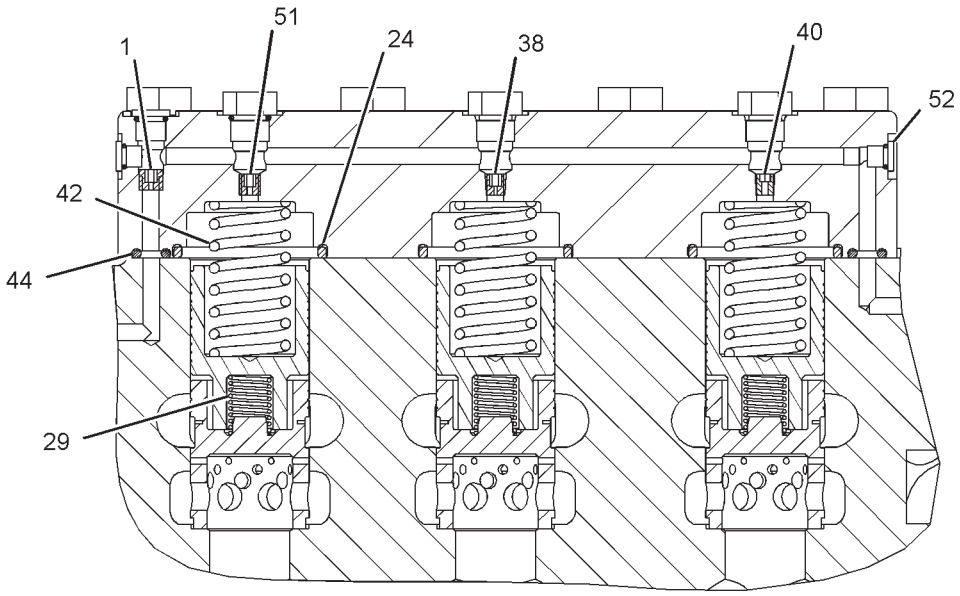

SECTION L-L

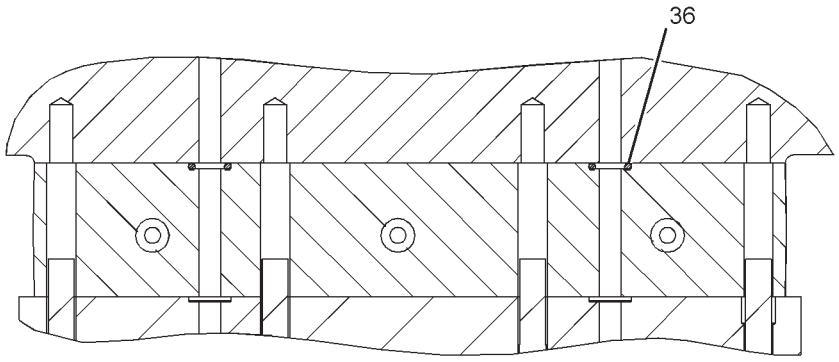

SECTION M-M

GRAPHIC #3 **<END>** g01520356

HYDRAULIC SYSTEM

223-7745 VALVE GP-CONTROL

S/N: RCD206-UP

PART OF 223-7751 VALVE GP, 223-7750, 238-8213 VALVE GP-MAIN CONTROL

ALSO AN ATTACHMENT

SMCS-5051 **i02199764**

NOTE	REF NO	GRAPHIC REF	PART NUMBER	QTY	PART NAME 1 2 3 4 5 6 (PRODUCT LEVEL)	SEE PAGE
	1	2	**3J-7694**	1	SPRING	
	2	2	**4J-9780**	1	PLUG-ORIFICE	
	3	1,2	**6E-3993**	5	PLUG AS	
					(EACH INCLUDES)	
		1,2	**2M-9780**	1	SEAL-O-RING	
		1,2	**2S-4078**	1	SEAL-O-RING	
		1,2	**148-0767**	1	RING-SPLIT	
Z	4	2		1	VALVE	
	5	3	**100-6211**	3	PISTON	
Z	6	1		1	BODY-VALVE	
Z	7	2		1	SPOOL-COMPENSATOR	
Y	8	1	**145-7181**	1	VALVE GP-LOAD CONTROL	814
	9	1	**146-0182**	1	BLOCK-MANIFOLD	
	10	1	**163-9401**	1	COVER	
Y	11	1	**194-0946**	1	MANIFOLD & VALVE GP (MAIN CONTROL VALVE)	680
Y	12	1	**194-0947**	1	MANIFOLD & VALVE GP (MAIN CONTROL VALVE)	682
	13	1	**199-9707**	1	COVER	
	14	1,3	*222-4737*	7	PLUG AS	
					(EACH INCLUDES)	
		1,3	**4J-7533**	1	SEAL-O-RING	
		1,3	**9S-4180**	1	PLUG	
Z	15	3		2	STEM-TRACK	
	16	3	**005-8164**	1	PLUG	
	17	1	**109-8040**	2	PLUG-ORIFICE	
Y	18	2	**111-0336**	1	VALVE GP-SHUTTLE	870
Y	19	1	**144-7113**	1	VALVE GP-RELIEF (LOAD SENSING DIFF PRESSURE)	859
	20	3	*148-8405*	3	PLUG AS	
					(EACH INCLUDES)	
		3	**1J-9671**	1	SEAL-O-RING	
		3	**3K-8460**	1	PLUG	
	21	1	*148-8407*	7	PLUG AS	
					(EACH INCLUDES)	
		1	**3J-1907**	1	SEAL-O-RING	
		1	**9S-4191**	1	PLUG-O-RING	
	22	1	*148-8408*	3	PLUG AS	
					(EACH INCLUDES)	
		1	**3D-2824**	1	SEAL-O-RING	
		1	**9S-4183**	1	PLUG-O-RING	
	23	1,2	*148-8410*	2	PLUG AS	
					(EACH INCLUDES)	
		1,2	**2M-9780**	1	SEAL-O-RING	
		1,2	**9S-4190**	1	PLUG-O-RING	
Y	24	1	**160-8734**	1	VALVE GP-RELIEF (LINE)	862
	25	2	*173-3993*	2	PLUG AS	
					(EACH INCLUDES)	
		2	**4J-7533**	1	SEAL-O-RING	
		2	**9S-8001**	1	PLUG-O-RING	
Z	26	3		1	STEM-STICK	
	27	1	*183-7262*	1	PLUG AS	
		1	**2S-4078**	1	SEAL-O-RING	
		1	**9S-8010**	1	PLUG	
	28	1	*183-7263*	1	PLUG AS	
		1	**3J-7354**	1	SEAL-O-RING	
		1	**9S-8002**	1	PLUG-O-RING	
	29	3	**1H-5728**	3	SEAL-O-RING	

223-7745 **VALVE GP-CONTROL** *(contd.)* **i02199764**

NOTE	REF NO	GRAPHIC REF	PART NUMBER	QTY	PART NAME 1 2 3 4 5 6 (PRODUCT LEVEL)	SEE PAGE
	30	2	**1P-3706**	3	SEAL-RECTANGULAR	
	31	1	**1W-6523**	4	PLUG	
	32	3	**2D-6392**	3	SEAL-O-RING	
	33	3	**3D-2824**	1	SEAL-O-RING	
	34	2	**3F-8845**	1	SPRING	
	35	1	**3J-7354**	4	SEAL-O-RING	
	36	1	**4J-5309**	2	SEAL-O-RING	
	37	2	**4J-9535**	2	SEAL-O-RING	
Y	38	1	**4T-1860**	1	VALVE GP-SHUTTLE	868
	39	2	**5G-6401**	2	BOSS	
	40	2	**5J-5004**	3	PLUG-ORIFICE	
	41	2	**6J-7240**	2	SPRING	
	42	2	**6V-5555**	2	SEAL-O-RING	
M	43	1	**7X-2546**	8	BOLT (M10X1.5X180-MM)	
M	44	1	**7X-2555**	8	BOLT (M16X2X80-MM)	
M	45	1	**8T-4197**	4	BOLT (M8X1.25X40-MM)	
M	46	1	**8T-5436**	8	BOLT (M10X1.5X130-MM)	
Z	47	2		2	VALVE	

M-METRIC PART
Y-SEPARATE ILLUSTRATION
Z-NOT SERVICED SEPARATELY

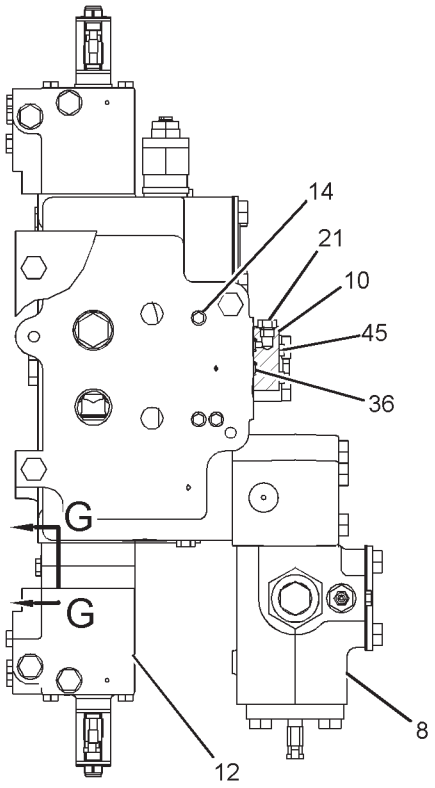

VIEW A-A

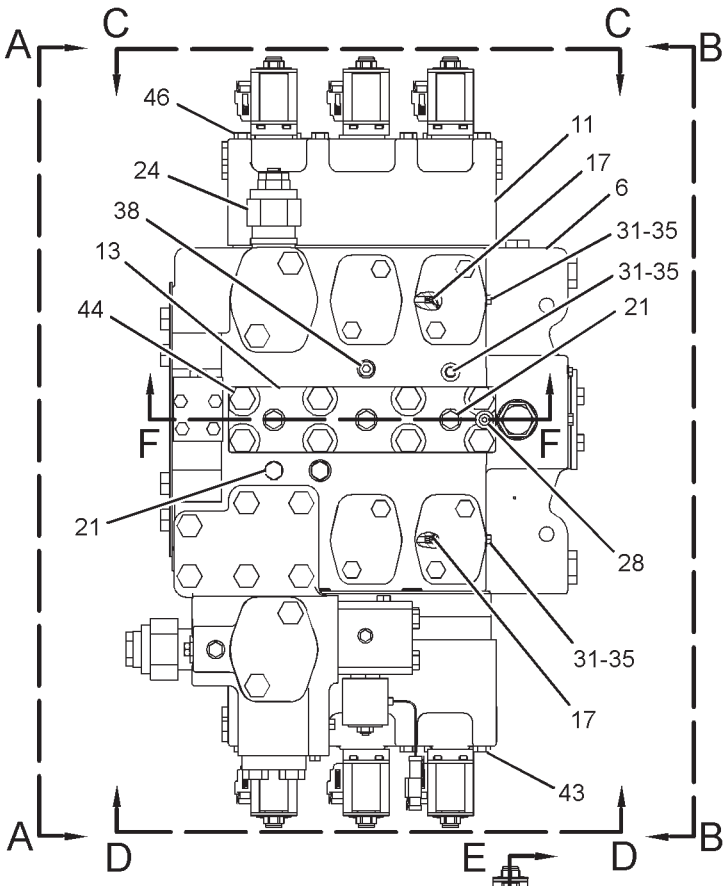

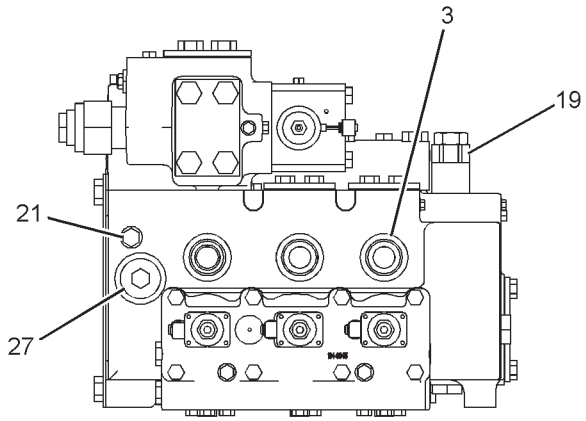

VIEW D-D

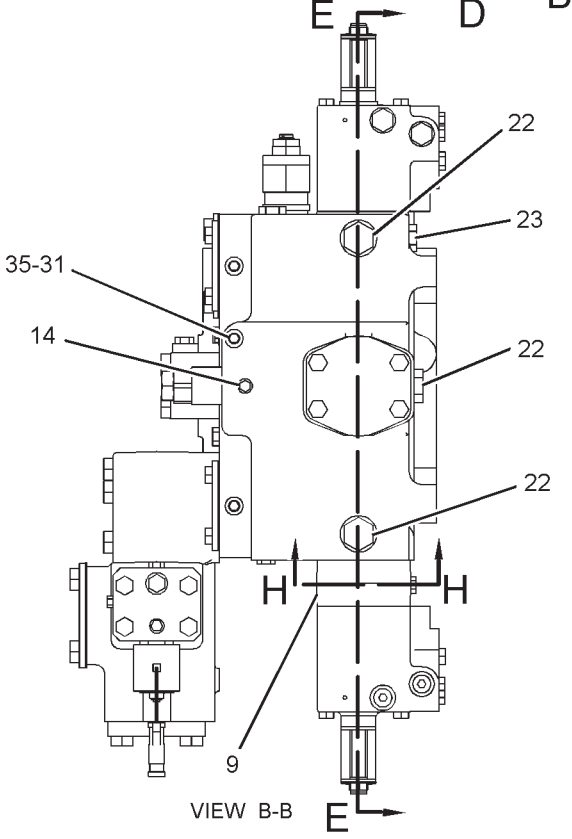

VIEW B-B

REFER TO ALL ILLUSTRATIONS OF
THIS GROUP FOR AUXILIARY VIEWS

GRAPHIC #1

g01156477

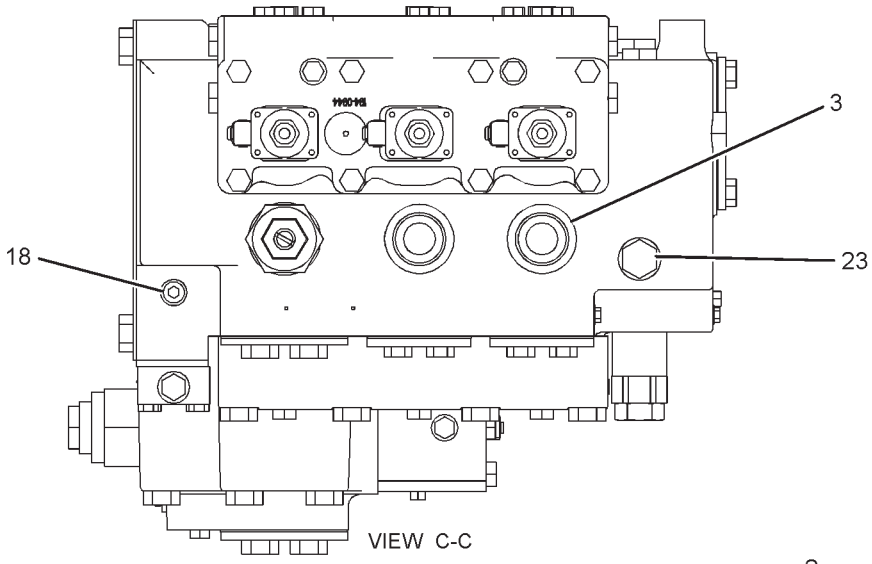

VIEW C-C

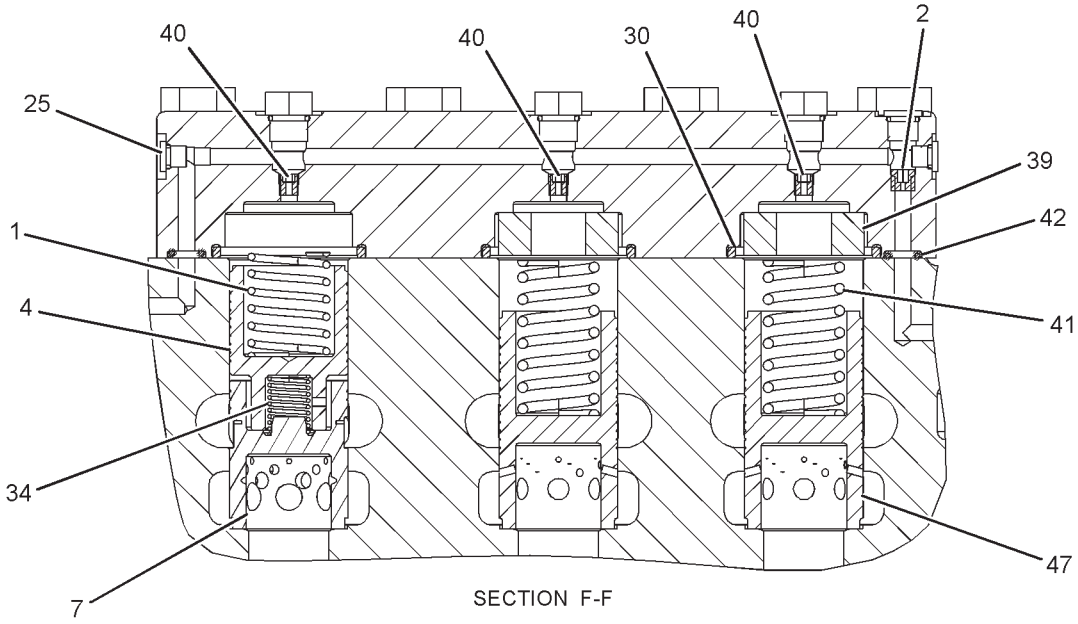

SECTION F-F

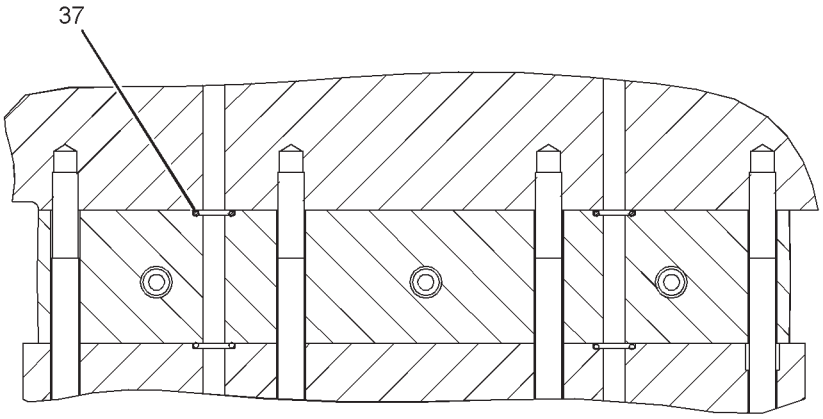

SECTION G-G

GRAPHIC #2

g01156478

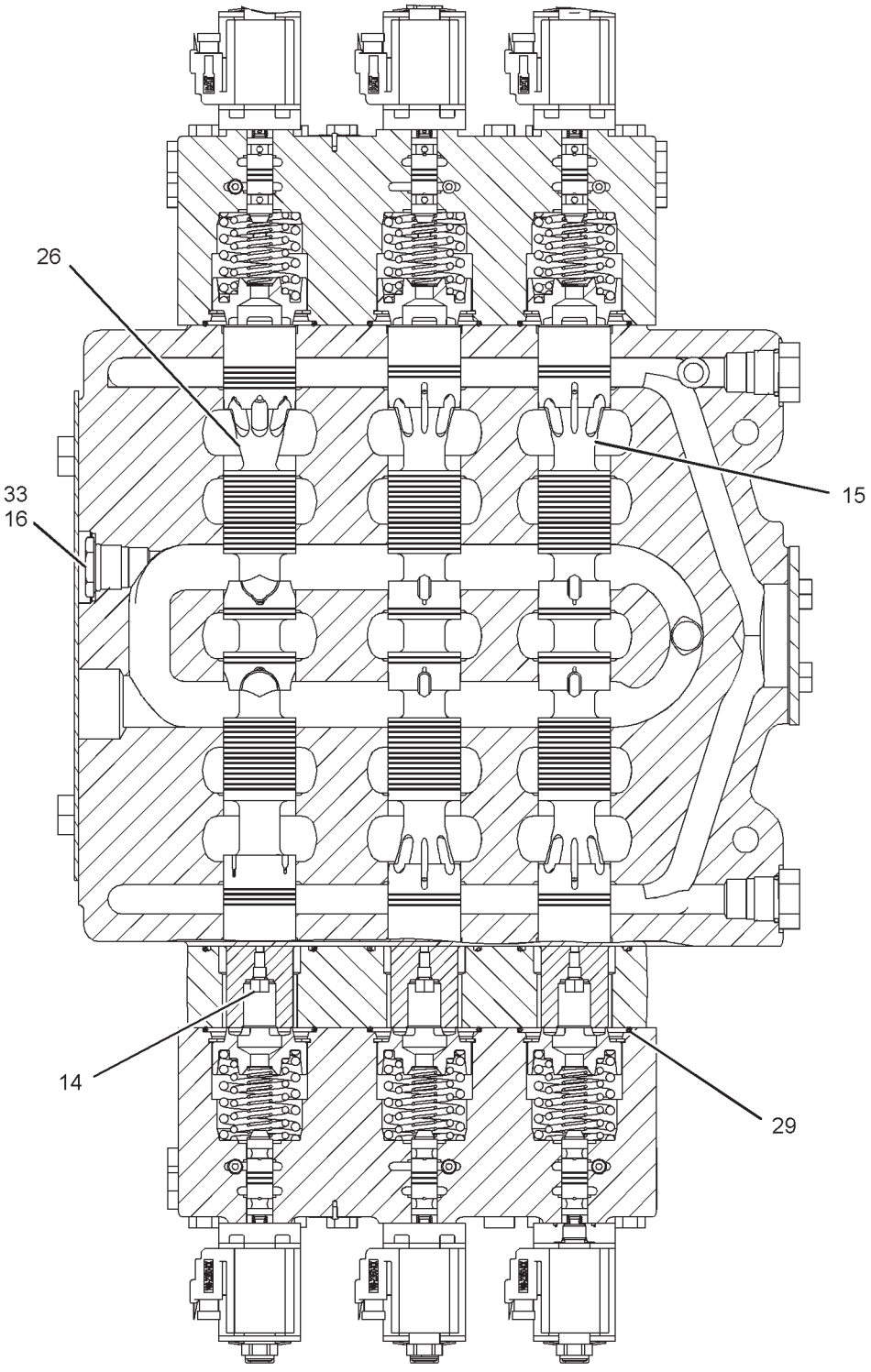

SECTION E-E

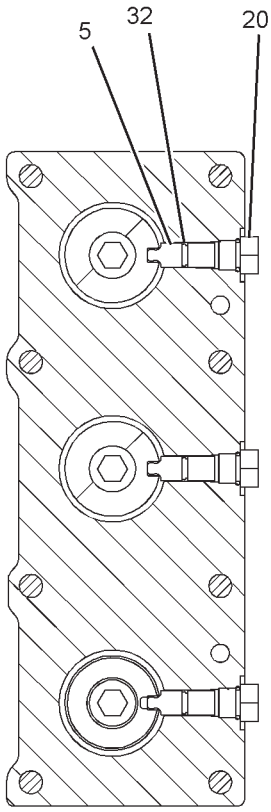

SECTION H-H

GRAPHIC #3 **<END>** g01156479

HYDRAULIC SYSTEM

223-7746 VALVE GP-CONTROL

S/N: RCD1-UP

PART OF 223-7752, 237-9872 VALVE GP-MAIN CONTROL

AN ATTACHMENT

SMCS-5051 **i02996291**

NOTE	REF NO	GRAPHIC REF	PART NUMBER	QTY	PART NAME 1 2 3 4 5 6 (PRODUCT LEVEL)	SEE PAGE
	1	2	**3J-7694**	1	SPRING	
	2	2	**4J-9780**	1	PLUG-ORIFICE	
	3	2	**6E-3993**	6	PLUG AS	
					(EACH INCLUDES)	
		2	**2M-9780**	1	SEAL-O-RING	
		2	**2S-4078**	1	SEAL-O-RING	
		2	**148-0767**	1	RING-SPLIT	
Z	4	2			VALVE	
	5	3	**100-6211**	3	PISTON	
Z	6	1			BODY-VALVE	
Z	7	2			SPOOL-COMPENSATOR	
	8	1	**145-9529**	1	COVER	
	9	1	**146-0182**	1	BLOCK-MANIFOLD	
	10	1	**163-9401**	1	COVER	
Z	11	1		1	BODY-VALVE	
Z	12	3		2	STEM-TRACK	
Y	13	1	**194-0946**	1	MANIFOLD & VALVE GP (MAIN CONTROL VALVE)	680
Y	14	1	**194-0947**	1	MANIFOLD & VALVE GP (MAIN CONTROL VALVE)	682
	15	1	**199-9707**	1	COVER	
	16	1,3	*222-4737*	7	PLUG AS	
					(EACH INCLUDES)	
		1,3	**4J-7533**	1	SEAL-O-RING	
		1,3	**9S-4180**	1	PLUG	
	17	3	**005-8164**	1	PLUG	
	18	1	**109-8040**	2	PLUG-ORIFICE	
Y	19	2	**111-0336**	1	VALVE GP-SHUTTLE	870
Y	20	2	**144-7113**	1	VALVE GP-RELIEF (LOAD SENSING DIFF PRESSURE)	859
	21	3	*148-8405*	3	PLUG AS (STICK CYLINDER)	
					(EACH INCLUDES)	
		3	**1J-9671**	1	SEAL-O-RING	
		3	**3K-8460**	1	PLUG	
	22	1,2	*148-8407*	7	PLUG AS	
					(EACH INCLUDES)	
		1,2	**3J-1907**	1	SEAL-O-RING	
		1,2	**9S-4191**	1	PLUG-O-RING	
	23	1	*148-8408*	1	PLUG AS	
		1	**3D-2824**	1	SEAL-O-RING	
		1	**9S-4183**	1	PLUG-O-RING	
	24	1,2	*148-8410*	2	PLUG AS	
					(EACH INCLUDES)	
		1,2	**2M-9780**	1	SEAL-O-RING	
		1,2	**9S-4190**	1	PLUG-O-RING	
Y	25	1	**160-8734**	1	VALVE GP-RELIEF (LINE)	862
	26	2	**173-3993**	2	PLUG AS	
					(EACH INCLUDES)	
		2	**4J-7533**		SEAL-O-RING	
		2	**9S-8001**		PLUG-O-RING	
Z	27	3		1	STEM-STICK	
	28	2	*183-7262*	1	PLUG AS	
		2	**2S-4078**		SEAL-O-RING	
		2	**9S-8010**		PLUG	
	29	1	*183-7263*	1	PLUG AS	
		1	**3J-7354**	1	SEAL-O-RING	
		1	**9S-8002**	1	PLUG-O-RING	
	30	3	**1H-5728**	3	SEAL-O-RING	

223-7746 VALVE GP-CONTROL *(contd.)* i02996291

NOTE	REF NO	GRAPHIC REF	PART NUMBER	QTY	PART NAME 1 2 3 4 5 6 (PRODUCT LEVEL)	SEE PAGE
	31	2	**1P-3705**	1	SEAL-RECTANGULAR	
	32	2	**1P-3706**	3	SEAL-RECTANGULAR	
	33	1	**1W-6523**	4	PLUG	
	34	3	**2D-6392**	3	SEAL-O-RING	
	35	3	**3D-2824**	1	SEAL-O-RING	
	36	2	**3F-8845**	1	SPRING	
	37	1	**3J-7354**	5	SEAL-O-RING	
	38	1	**4J-5309**	2	SEAL-O-RING	
	39	1	**4J-5573**	1	SEAL-O-RING	
	40	2	**4J-9535**	2	SEAL-O-RING	
Y	41	1	**4T-1860**	1	VALVE GP-SHUTTLE	868
	42	1	**4T-5076**	1	RING-BACKUP	
	43	2	**5G-6401**	2	BOSS	
	44	2	**5J-5004**	3	PLUG-ORIFICE	
	45	2	**6J-7240**	2	SPRING	
	46	2	**6V-0357**	1	SEAL-O-RING	
	47	2	**6V-5555**	2	SEAL-O-RING	
M	48	1	**7X-2546**	8	BOLT (M10X1.5X180-MM)	
M	49	1	**7X-2553**	4	BOLT (M16X2X40-MM)	
M	50	1	**7X-2555**	8	BOLT (M16X2X80-MM)	
M	51	1	**7X-2557**	6	BOLT (M16X2X140-MM)	
M	52	1	**8T-4197**	4	BOLT (M8X1.25X40-MM)	
M	53	1	**8T-5436**	8	BOLT (M10X1.5X130-MM)	
Z	54	2		2	VALVE	
	55	1	*148-8409*	2	PLUG AS	
					(EACH INCLUDES)	
		1	**3D-2824**	1	SEAL-O-RING	
		1	**9S-8008**	1	PLUG-O-RING	

M-METRIC PART
Y-SEPARATE ILLUSTRATION
Z-NOT SERVICED SEPARATELY

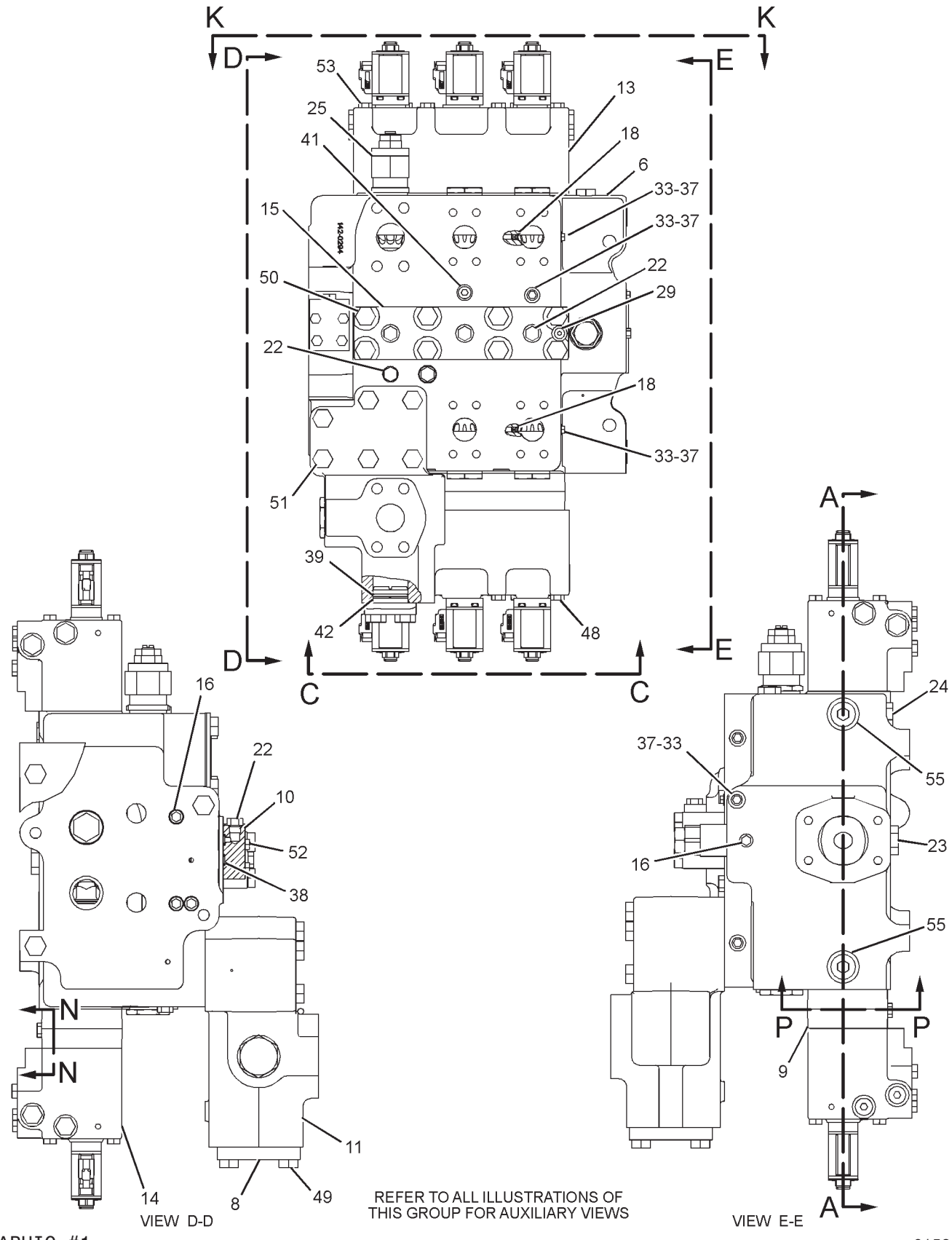

GRAPHIC #1

g01521259

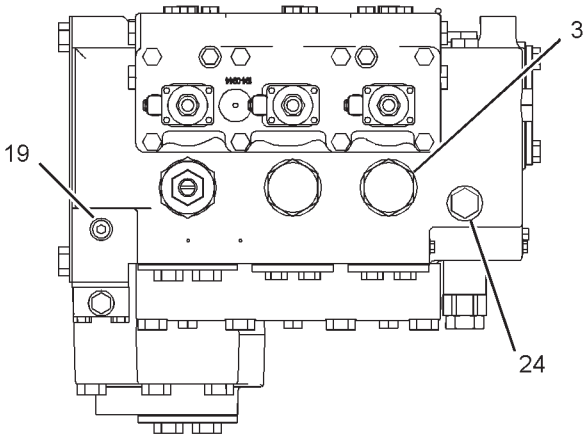

VIEW K-K

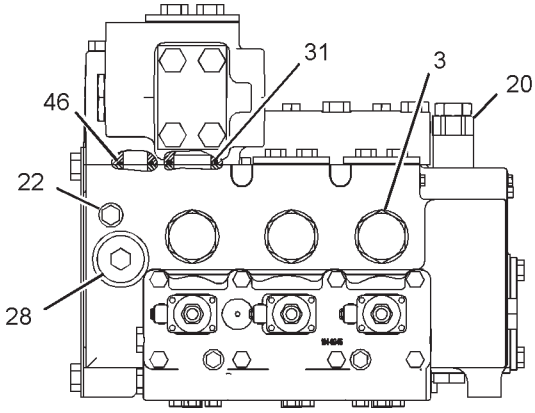

VIEW C-C

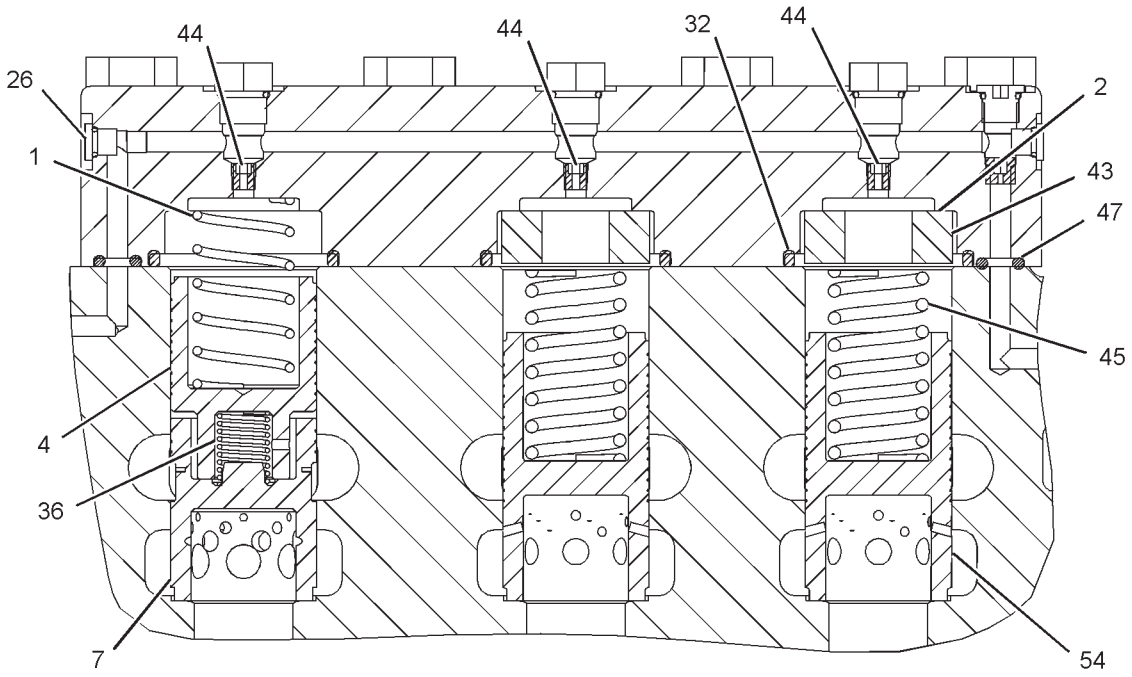

SECTION B-B

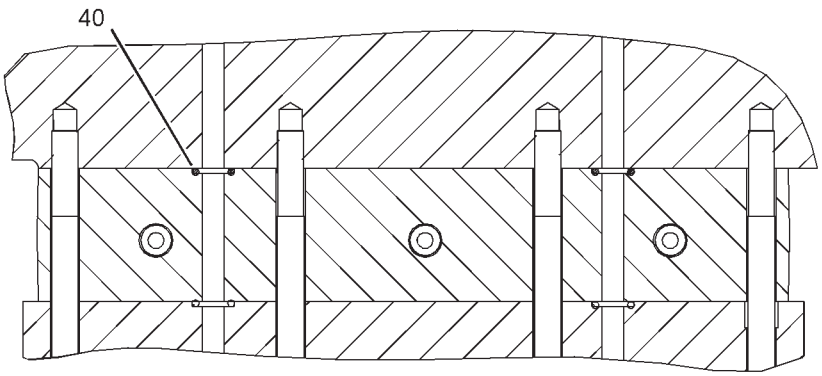

SECTION N-N

GRAPHIC #2

g01081255

223-7746 VALVE GP-CONTROL *(contd.)* **i02996291**

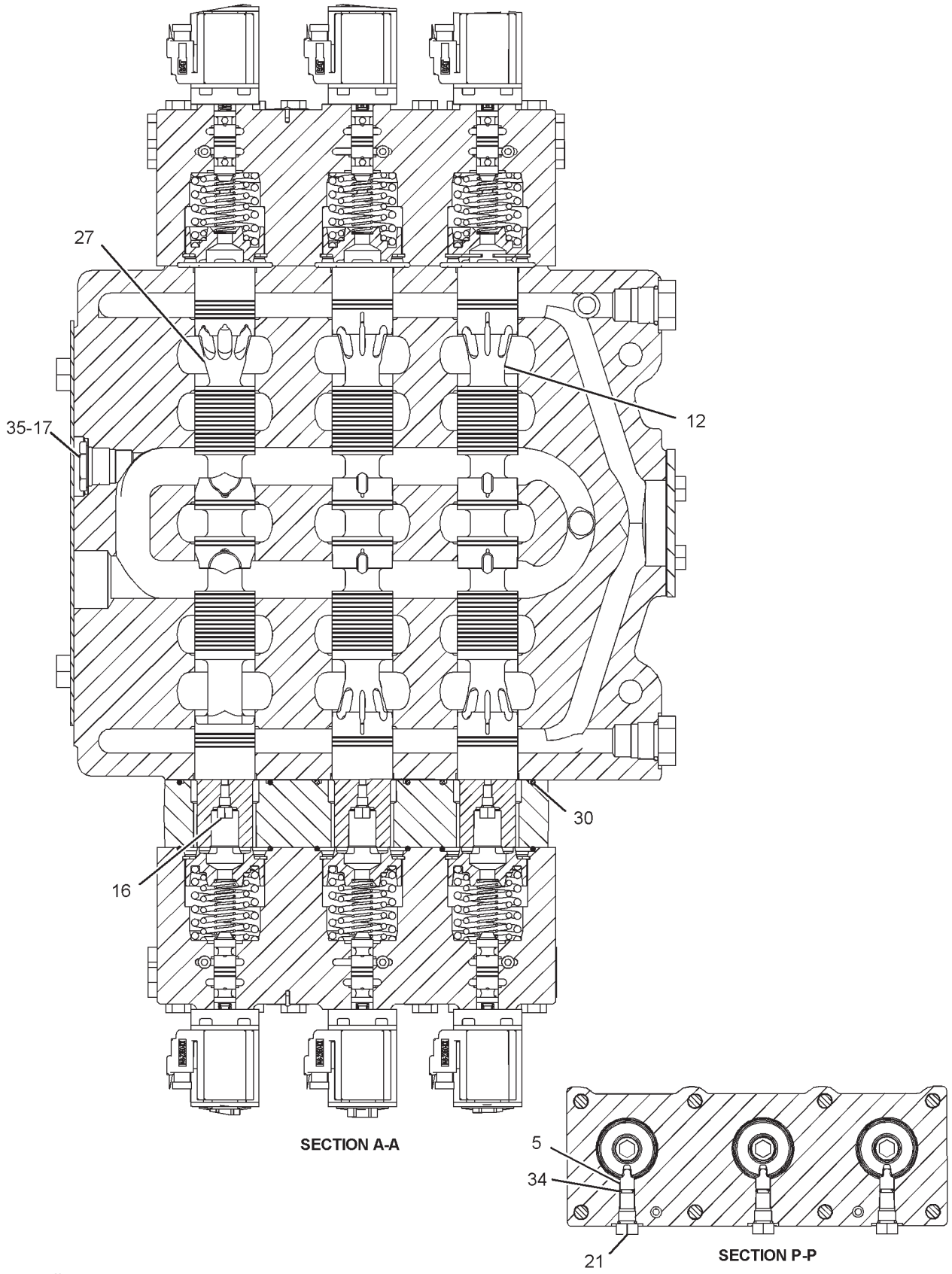

GRAPHIC #3 **<END>** g01081257

HYDRAULIC SYSTEM

225-6287 VALVE GP-CONTROL—NEUTRAL BYPASS

S/N: RCD1-UP
PART OF 144-7087 VALVE GP-CONTROL
ALSO AN ATTACHMENT

SMCS-5051 **i02111010**

NOTE	REF NO	GRAPHIC REF	PART NUMBER	QTY	PART NAME 1 2 3 4 5 6 (PRODUCT LEVEL)	SEE PAGE
	2	1	**9N-1574**	4	SHIM (0.03-IN THK)	
	3	1	**9N-1575**	4	SHIM (0.03-IN THK)	
Z	4	1		1	STEM	
	5	1	**225-6289**	1	SPRING	
Z	6	1		1	BODY	
	7	1	**225-6291**	1	PLUG	
	8	1	**225-6292**	1	GUIDE	
	9	1	**225-6293**	1	COVER	
	10	1	**225-6294**	1	RETAINER	
	12	1	**008-2103**	2	SEAL-O-RING	
	13	1	**095-1587**	1	SEAL-O-RING	
	14	1	**095-1786**	1	RING-BACKUP	
Y	15	1	**171-3685**	1	VALVE GP-SOLENOID (24-VOLT) (NEUTRAL BYPASS)	878
	16	1	**173-3993**	6	PLUG AS	
					(EACH INCLUDES)	
		1	**4J-7533**	1	SEAL-O-RING	
		1	**9S-8001**	1	PLUG-O-RING	
	17	1	**2M-9780**	1	SEAL-O-RING	
M	18	1	**7X-2549**	4	BOLT (M12X1.75X100-MM)	
M	19	1	**8T-4136**	4	BOLT (M10X1.5X25-MM)	

M-METRIC PART
Y-SEPARATE ILLUSTRATION
Z-NOT SERVICED SEPARATELY

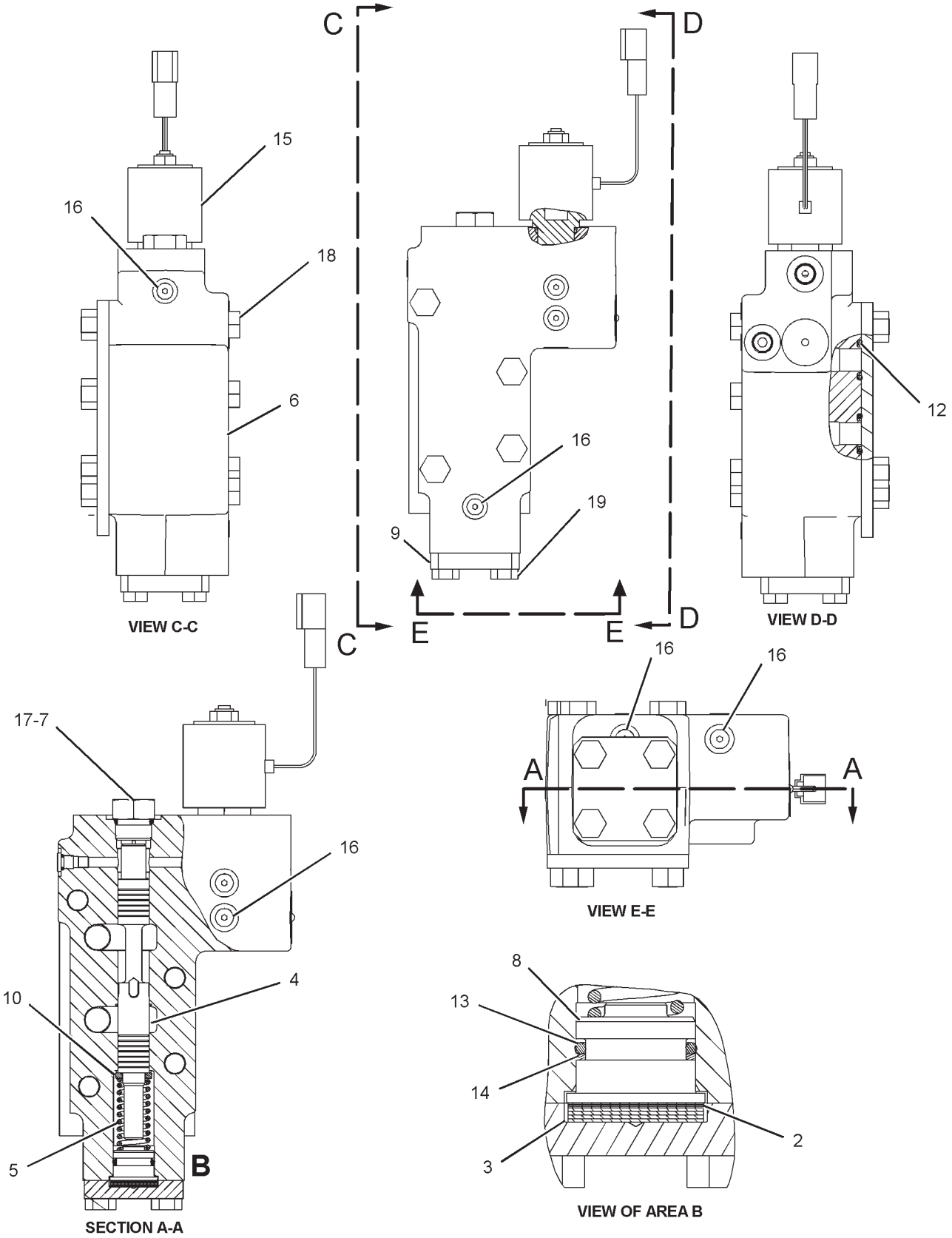

GRAPHIC #1

<END>

g01083969

HYDRAULIC SYSTEM

233-6969 VALVE GP-CONTROL

S/N: RCD1-205
PART OF 233-6970 VALVE GP-MAIN CONTROL
AN ATTACHMENT

SMCS-5051 **i02996311**

NOTE	REF NO	GRAPHIC REF	PART NUMBER	QTY	PART NAME 1 2 3 4 5 6 (PRODUCT LEVEL)	SEE PAGE
	1	2	**3F-8845**	3	SPRING	
	2	2	**4J-9780**	1	PLUG-ORIFICE	
Y	3	1	**4T-1860**	1	VALVE GP-SHUTTLE	868
	4	2	**4T-4207**	1	PLUG-ORIFICE	
	5	2	**5J-5004**	1	PLUG-ORIFICE	
	6	1,2	**6E-3993**	3	PLUG AS	
					(EACH INCLUDES)	
		1,2	**2M-9780**	1	SEAL-O-RING	
		1,2	**2S-4078**	1	SEAL-O-RING	
		1,2	**148-0767**	1	RING-SPLIT	
Y	7	1	**6E-4429**	1	VALVE GP-SHUTTLE	869
	8	2	**6J-7240**	3	SPRING	
	9	2	**9J-8126**	1	PLUG-ORIFICE	
	11	2	**005-8164**	1	PLUG	
	12	2	**100-6211**	3	PISTON	
Y	15	1	**144-7087**	1	VALVE GP-CONTROL (NEUTRAL BYPASS)	756
Y	16	1	**144-7113**	1	VALVE GP-RELIEF (LOAD SENSING DIFF PRESSURE)	859
Y	17	1	**145-7181**	1	VALVE GP-LOAD CONTROL	814
	18	1	**145-8747**	1	SPACER	
Y	19	1	**154-3294**	1	MANIFOLD & VALVE GP (PILOT)	676
Y	20	1	**154-3295**	1	MANIFOLD & VALVE GP (PILOT)	678
Y	21	1,2	**160-8734**	3	VALVE GP-RELIEF (LINE)	862
	22	1	**163-9401**	1	COVER	
	25	1	**199-9707**	1	COVER	
	26	1,2	*222-4737*	7	PLUG AS	
					(EACH INCLUDES)	
		1,2	**4J-7533**	1	SEAL-O-RING	
		1,2	**9S-4180**	1	PLUG	
	28	2	*148-8405*	3	PLUG AS	
					(EACH INCLUDES)	
		2	**1J-9671**	1	SEAL-O-RING	
		2	**3K-8460**	1	PLUG	
	29	1,2	*148-8407*	7	PLUG AS	
					(EACH INCLUDES)	
		1,2	**3J-1907**	1	SEAL-O-RING	
		1,2	**9S-4191**	1	PLUG-O-RING	
	30	1	*148-8408*	1	PLUG AS	
		1	**3D-2824**	1	SEAL-O-RING	
		1	**9S-4183**	1	PLUG-O-RING	
	31	1	*148-8409*	2	PLUG AS	
					(EACH INCLUDES)	
		1	**3D-2824**	1	SEAL-O-RING	
		1	**9S-8008**	1	PLUG-O-RING	
	32	1	*148-8410*	2	PLUG AS	
					(EACH INCLUDES)	
		1	**2M-9780**	1	SEAL-O-RING	
		1	**9S-4190**	1	PLUG-O-RING	
	33	1	*155-3624*	2	PLUG AS	
					(EACH INCLUDES)	
		1	**3J-7354**	1	SEAL-O-RING	
		1	**9S-4182**	1	PLUG-O-RING	
	34	2	*173-3993*	2	PLUG AS	
					(EACH INCLUDES)	
		2	**4J-7533**	1	SEAL-O-RING	
		2	**9S-8001**	1	PLUG-O-RING	

233-6969 VALVE GP-CONTROL *(contd.)* i02996311

NOTE	REF NO	GRAPHIC REF	PART NUMBER	QTY	PART NAME 1 2 3 4 5 6 (PRODUCT LEVEL)	SEE PAGE
	35	2	*183-7262*	1	PLUG AS	
		2	**2S-4078**	1	SEAL-O-RING	
		2	**9S-8010**	1	PLUG	
	36	1	*183-7263*	1	PLUG AS	
		1	**3J-7354**	1	SEAL-O-RING	
		1	**9S-8002**	1	PLUG-O-RING	
	37	2	**1H-5728**	3	SEAL-O-RING	
	38	2	**1P-3706**	3	SEAL-RECTANGULAR	
	39	2	**2D-6392**	3	SEAL-O-RING	
	40	2	**3D-2824**	1	SEAL-O-RING	
	41	1	**4J-5309**	2	SEAL-O-RING	
	42	2	**4J-9535**	2	SEAL-O-RING	
	43	2	**6V-5555**	2	SEAL-O-RING	
M	44	1	**7X-2546**	8	BOLT (M10X1.5X180-MM)	
M	45	1	**7X-2555**	8	BOLT (M16X2X80-MM)	
M	46	1	**8T-4197**	4	BOLT (M8X1.25X40-MM)	
M	47	2	**8T-5436**	8	BOLT (M10X1.5X130-MM)	

M-METRIC PART
Y-SEPARATE ILLUSTRATION

233-6969 VALVE GP-CONTROL *(contd.)*

i02996311

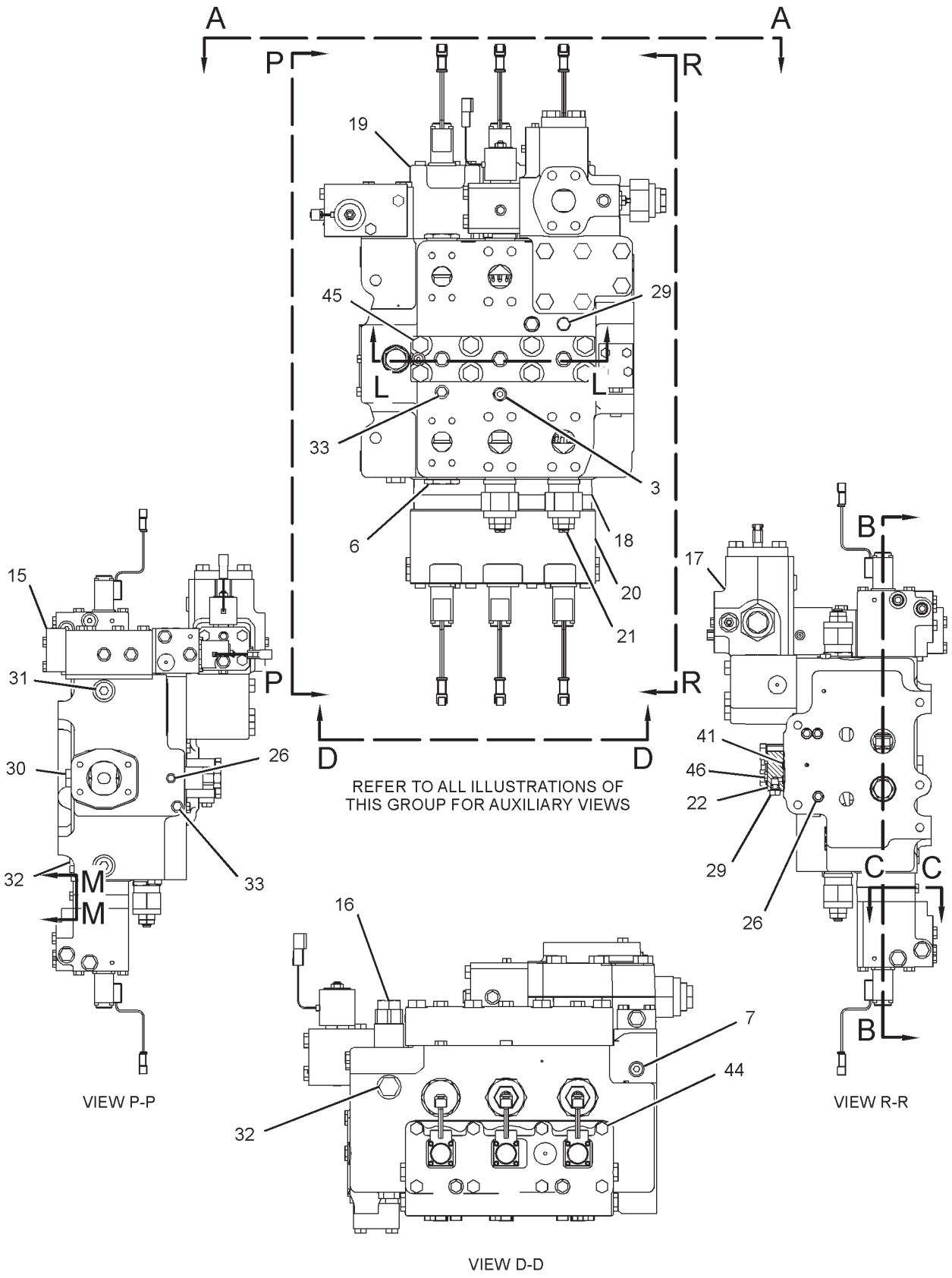

GRAPHIC #1

g01680314

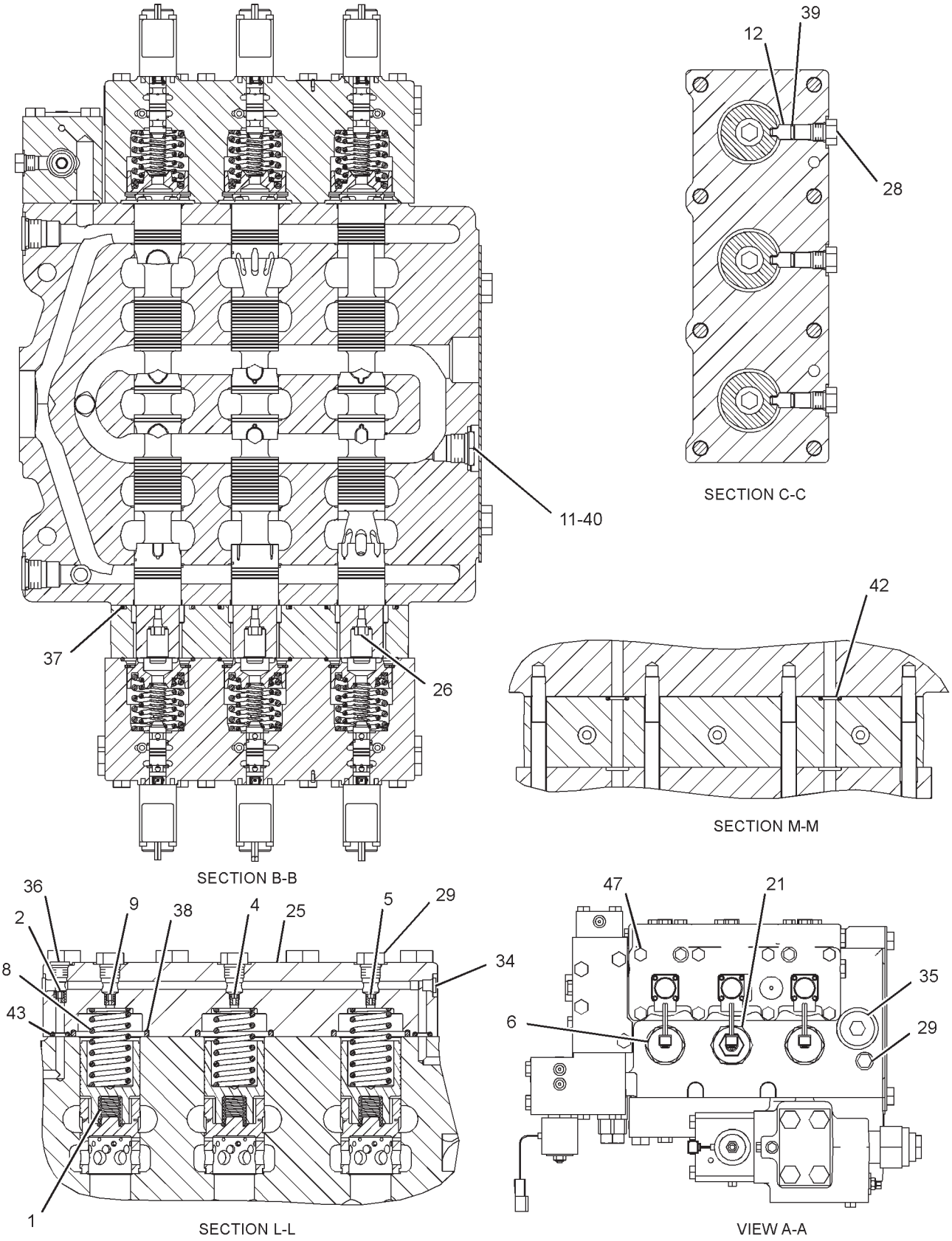

SECTION C-C

SECTION M-M

SECTION B-B

SECTION L-L

VIEW A-A

GRAPHIC #2 **<END>** g01682753

HYDRAULIC SYSTEM

234-6899 VALVE GP-CONTROL—NEUTRAL BYPASS

S/N: RCD1-UP
PART OF 144-7087 VALVE GP-CONTROL
ALSO AN ATTACHMENT

SMCS-5051 **i02111004**

NOTE	REF NO	GRAPHIC REF	PART NUMBER	QTY	PART NAME 1 2 3 4 5 6 (PRODUCT LEVEL)	SEE PAGE
	2	1	**144-7088**	1	COVER	
	3	1	**144-7092**	2	RETAINER-SPRING	
	4	1	**144-7093**	1	HOUSING-SPRING	
Z	5	1		1	VALVE-STEM	
Z	6	1		1	BODY	
	7	1	**147-2286**	1	SLEEVE	
	8	1	**161-7204**	1	SPRING	
	10	1	**008-2103**	2	SEAL-O-RING	
Y	12	1	**171-3685**	1	VALVE GP-SOLENOID (24-VOLT) (NEUTRAL BYPASS)	878
	13	1	**173-3993**	5	PLUG AS	
					(EACH INCLUDES)	
		1	**4J-7533**	1	SEAL-O-RING	
		1	**9S-8001**	1	PLUG-O-RING	
	14	1	**1R-5318**	1	SEAL-O-RING	
	15	1	**3K-4520**	5	WASHER (0.377X0.75X0.048-IN THK)	
	16	1	**3P-0760**	8	SPACER (9.53X20.62X0.25-MM THK)	
	17	1	**4J-5309**	2	SEAL-O-RING	
	18	1	**4J-8997**	1	SEAL-O-RING	
M	19	1	**7X-2549**	4	BOLT (M12X1.75X100-MM)	
	20	1	**7X-7729**	1	WASHER (11X25X3-MM THK)	
M	21	1	**8T-4185**	2	BOLT (M10X1.5X50-MM)	
M	22	1	**8T-4198**	2	BOLT (M10X1.5X100-MM)	
M	23	1	**8T-5005**	1	BOLT (M10X1.5X70-MM)	
	24	1	**9X-2027**	1	WASHER (11X18X2-MM THK)	

M-METRIC PART
Y-SEPARATE ILLUSTRATION
Z-NOT SERVICED SEPARATELY

234-6899 **VALVE GP-CONTROL** *(contd.)* **i02111004**

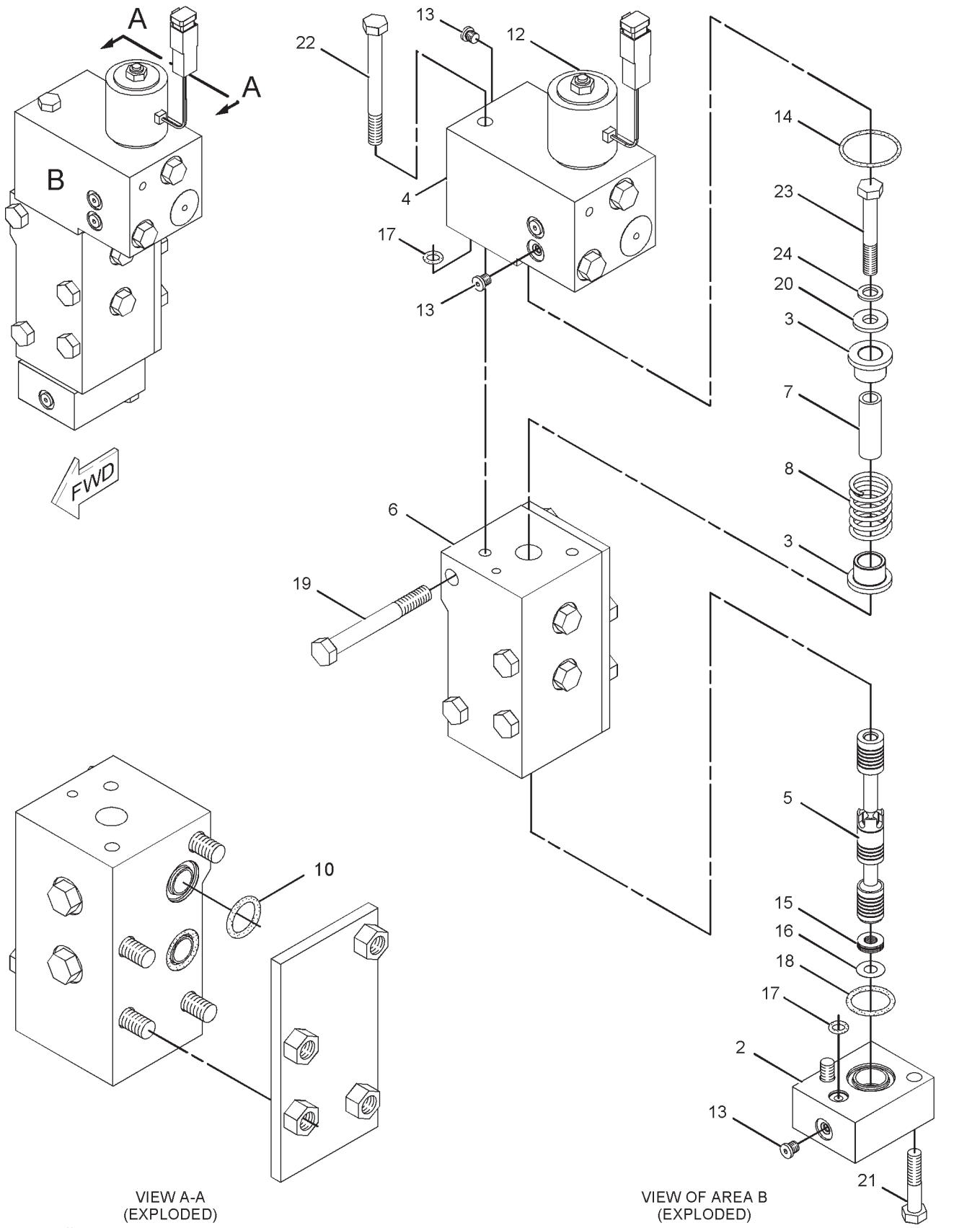

GRAPHIC #1

<END>

g01077685

HYDRAULIC SYSTEM

238-8212 VALVE GP-CONTROL

S/N: RCD1-UP
PART OF 237-9872, 238-8213 VALVE GP-MAIN CONTROL
AN ATTACHMENT

SMCS-5051 **i01947439**

NOTE	REF NO	GRAPHIC REF	PART NUMBER	QTY	PART NAME 1 2 3 4 5 6 (PRODUCT LEVEL)	SEE PAGE
	1	2	**4J-9780**	1	PLUG-ORIFICE	
	2	1,2	*6E-3993*	3	PLUG AS	
					(EACH INCLUDES)	
		1,2	**2M-9780**	1	SEAL-O-RING	
		1,2	**2S-4078**	1	SEAL-O-RING	
		1,2	**148-0767**	1	RING-SPLIT	
Z	3	2		3	VALVE	
	4	3	**100-6211**	3	PISTON	
Z	5	1		1	BODY-VALVE	
Z	6	2		3	SPOOL-COMPENSATOR	
Y	7	1	**144-7087**	1	VALVE GP-CONTROL (NEUTRAL BYPASS)	756
Y	8	1	**145-7181**	1	VALVE GP-LOAD CONTROL (BOOM DRIFT RED, LINE RLF, LWR)	814
	9	1	**145-8747**	1	SPACER	
	10	1	**163-9401**	1	COVER	
Y	11	1	**194-0946**	1	MANIFOLD & VALVE GP (MAIN CONTROL VALVE)	680
Y	12	1	**194-0947**	1	MANIFOLD & VALVE GP (MAIN CONTROL VALVE)	682
	13	1	**199-9707**	1	COVER	
	14	1,3	*222-4737*	7	PLUG AS	
					(EACH INCLUDES)	
		1,3	**4J-7533**	1	SEAL-O-RING	
		1,3	**9S-4180**	1	PLUG	
Z	15	3		1	STEM-BOOM	
	16	3	**005-8164**	1	PLUG	
Y	17	2	**144-7113**	1	VALVE GP-RELIEF (LOAD SENSING DIFF PRESSURE)	859
	18	3	*148-8405*	3	PLUG AS	
					(EACH INCLUDES)	
		3	**1J-9671**	1	SEAL-O-RING	
		3	**3K-8460**	1	PLUG	
	19	1,2	*148-8407*	7	PLUG AS	
					(EACH INCLUDES)	
		1,2	**3J-1907**	1	SEAL-O-RING	
		1,2	**9S-4191**	1	PLUG-O-RING	
	20	1	*148-8408*	3	PLUG AS	
					(EACH INCLUDES)	
		1	**3D-2824**	1	SEAL-O-RING	
		1	**9S-4183**	1	PLUG-O-RING	
	21	1,2	*148-8410*	2	PLUG AS	
					(EACH INCLUDES)	
		1,2	**9S-4190**		PLUG-O-RING	
		1,2	**2M-9780**	1	SEAL-O-RING	
	22	1	*155-3624*	2	PLUG AS	
					(EACH INCLUDES)	
		1	**3J-7354**	1	SEAL-O-RING	
		1	**9S-4182**	1	PLUG-O-RING	
Y	23	1,2	**160-8734**	3	VALVE GP-RELIEF (LINE)	862
	24	2	**173-3993**	2	PLUG AS	
					(EACH INCLUDES)	
		2	**4J-7533**	1	SEAL-O-RING	
		2	**9S-8001**	1	PLUG-O-RING	
Z	25	3		1	STEM-BUCKET	
Z	26	3		1	STEM-AUXILIARY	
	27	2	*183-7262*	1	PLUG AS	
		2	**2S-4078**	1	SEAL-O-RING	
		2	**9S-8010**	1	PLUG	

238-8212 VALVE GP-CONTROL *(contd.)* i01947439

NOTE	REF NO	GRAPHIC REF	PART NUMBER	QTY	PART NAME 1 2 3 4 5 6 (PRODUCT LEVEL)	SEE PAGE
	28	1	*183-7263*	1	PLUG AS	
		1	**3J-7354**	1	SEAL-O-RING	
		1	**9S-8002**	1	PLUG-O-RING	
	29	3	**1H-5728**	3	SEAL-O-RING	
	30	2	**1P-3706**	3	SEAL-RECTANGULAR	
	31	3	**2D-6392**	3	SEAL-O-RING	
	32	3	**3D-2824**	1	SEAL-O-RING	
	33	2	**3F-8845**	3	SPRING	
	34	1	**4J-5309**	2	SEAL-O-RING	
	35	2	**4J-9535**	2	SEAL-O-RING	
Y	36	2	**4T-1860**	1	VALVE GP-SHUTTLE	868
	37	2	**4T-4207**	1	PLUG-ORIFICE	
	38	2	**5J-5004**	1	PLUG-ORIFICE	
Y	39	2	**6E-4429**	1	VALVE GP-SHUTTLE	869
	40	2	**6J-7240**	3	SPRING	
	41	2	**6V-5555**	2	SEAL-O-RING	
M	42	2	**7X-2546**	8	BOLT (M10X1.5X180-MM)	
M	43	1	**7X-2555**	8	BOLT (M16X2X80-MM)	
M	44	1	**8T-4197**	4	BOLT (M8X1.25X40-MM)	
M	45	2	**8T-5436**	8	BOLT (M10X1.5X130-MM)	
	46	2	**9J-8126**	1	PLUG-ORIFICE	

M-METRIC PART
Y-SEPARATE ILLUSTRATION
Z-NOT SERVICED SEPARATELY

238-8212 VALVE GP-CONTROL *(contd.)* i01947439

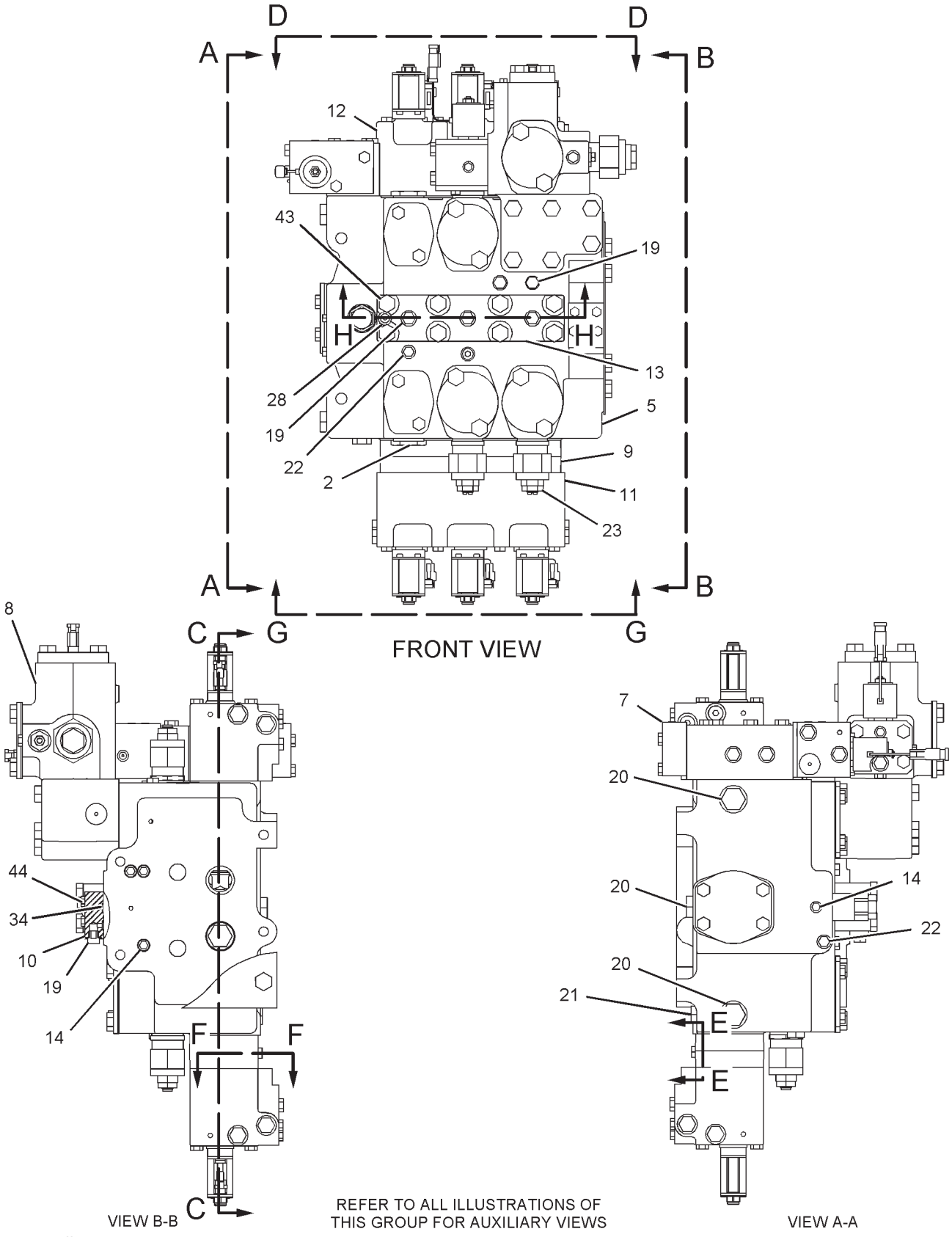

REFER TO ALL ILLUSTRATIONS OF THIS GROUP FOR AUXILIARY VIEWS

GRAPHIC #1

g01059292

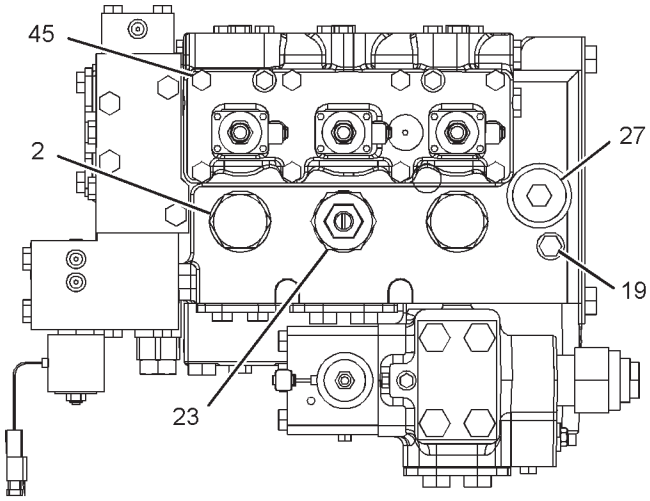

VIEW D-D

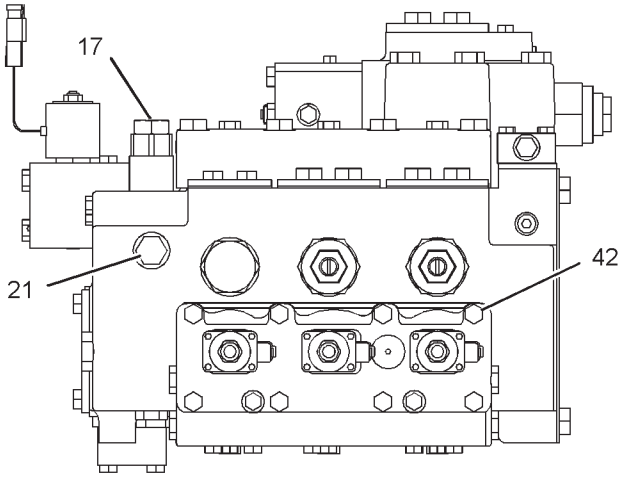

VIEW G-G

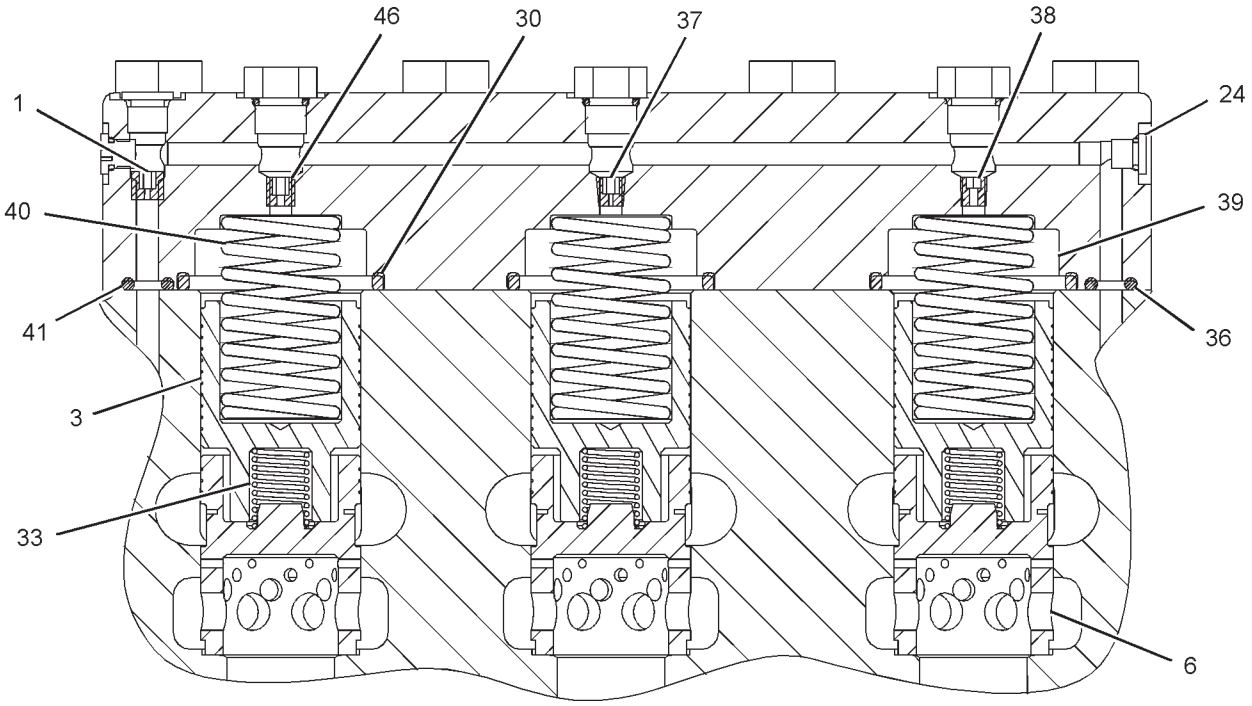

SECTION H-H

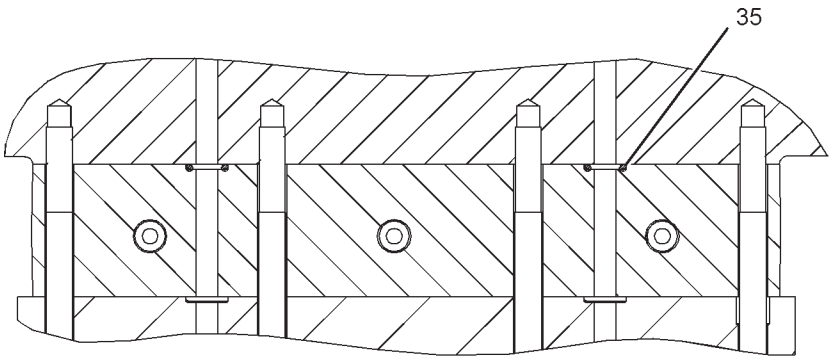

SECTION E-E

GRAPHIC #2

g01059291

238-8212 VALVE GP-CONTROL *(contd.)* i01947439

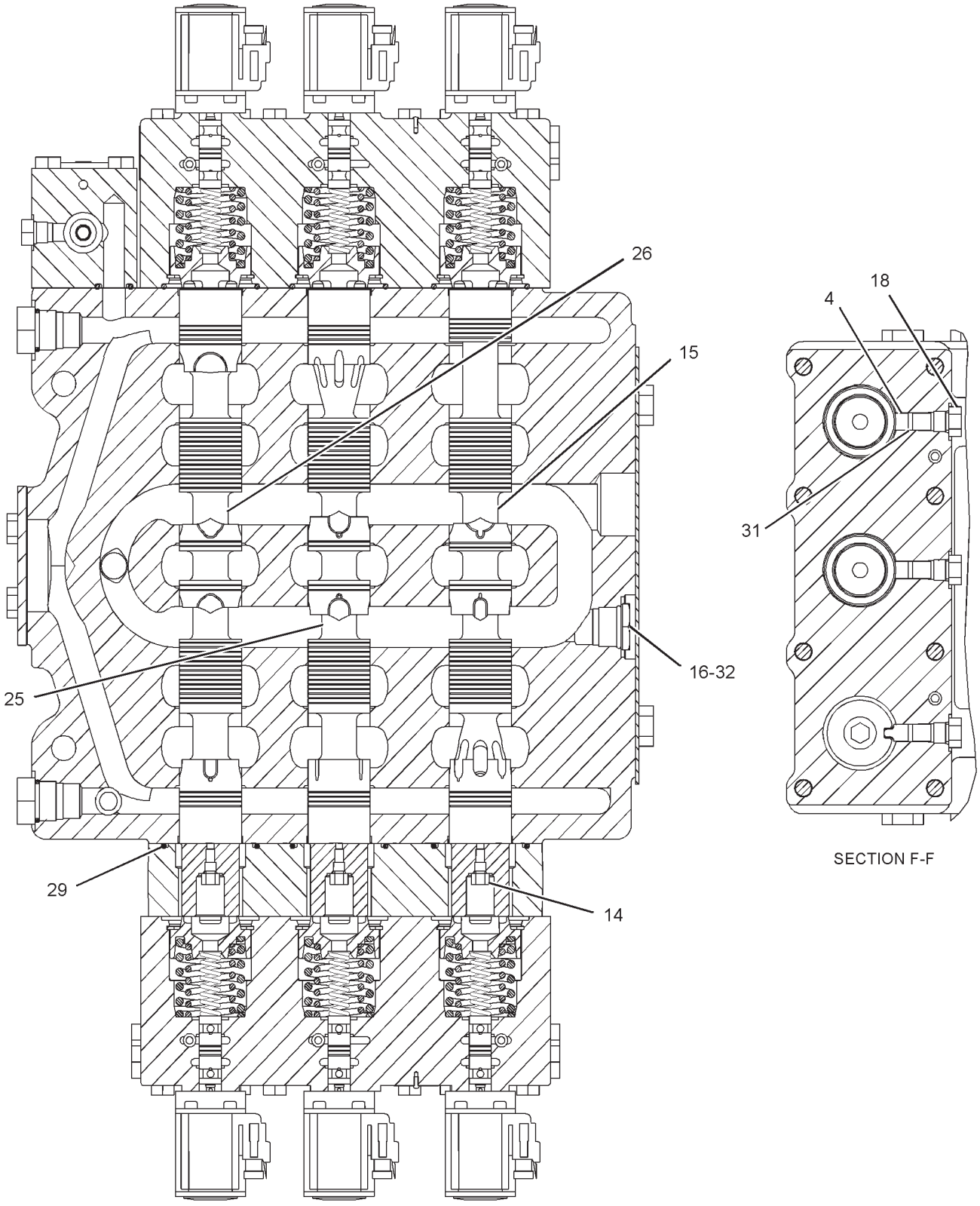

SECTION C-C

SECTION F-F

GRAPHIC #3 **<END>** g01059293

HYDRAULIC SYSTEM

257-7284 VALVE GP-CONTROL—NEUTRAL BYPASS

S/N: RCD1-UP
PART OF 144-7087 VALVE GP-CONTROL
ALSO AN ATTACHMENT

SMCS-5051 **i02293810**

NOTE	REF NO	GRAPHIC REF	PART NUMBER	QTY	PART NAME 1 2 3 4 5 6 (PRODUCT LEVEL)	SEE PAGE
B	2	1	**9N-1574**	4	SHIM (0.03-IN THK)	
B	3	1	**9N-1575**	4	SHIM (0.03-IN THK)	
Z	4	1		1	STEM	
Z	5	1		1	SPRING	
Z	6	1		1	PLUG	
Z	7	1		1	GUIDE	
Z	8	1		1	COVER	
Z	9	1		1	RETAINER	
Z	10	1		1	BODY	
	12	1	**008-2103**	2	SEAL-O-RING	
	13	1	**095-1587**	1	SEAL-O-RING	
	14	1	**095-1786**	1	RING-BACKUP	
	15	1	**162-0177**	2	PLUG AS	
					(EACH INCLUDES)	
		1	**3J-1907**	1	SEAL-O-RING	
		1	**9S-8004**	1	PLUG	
Y	16	1	**171-3685**	1	VALVE GP-SOLENOID (24-VOLT) (NEUTRAL BYPASS)	878
	17	1	**173-3993**	6	PLUG AS	
					(EACH INCLUDES)	
		1	**4J-7533**	1	SEAL-O-RING	
		1	**9S-8001**	1	PLUG-O-RING	
	18	1	**2M-9780**	1	SEAL-O-RING	
M	19	1	**7X-2549**	4	BOLT (M12X1.75X100-MM)	
M	20	1	**8T-4136**	4	BOLT (M10X1.5X25-MM)	

B-USE AS REQUIRED
M-METRIC PART
Y-SEPARATE ILLUSTRATION
Z-NOT SERVICED SEPARATELY

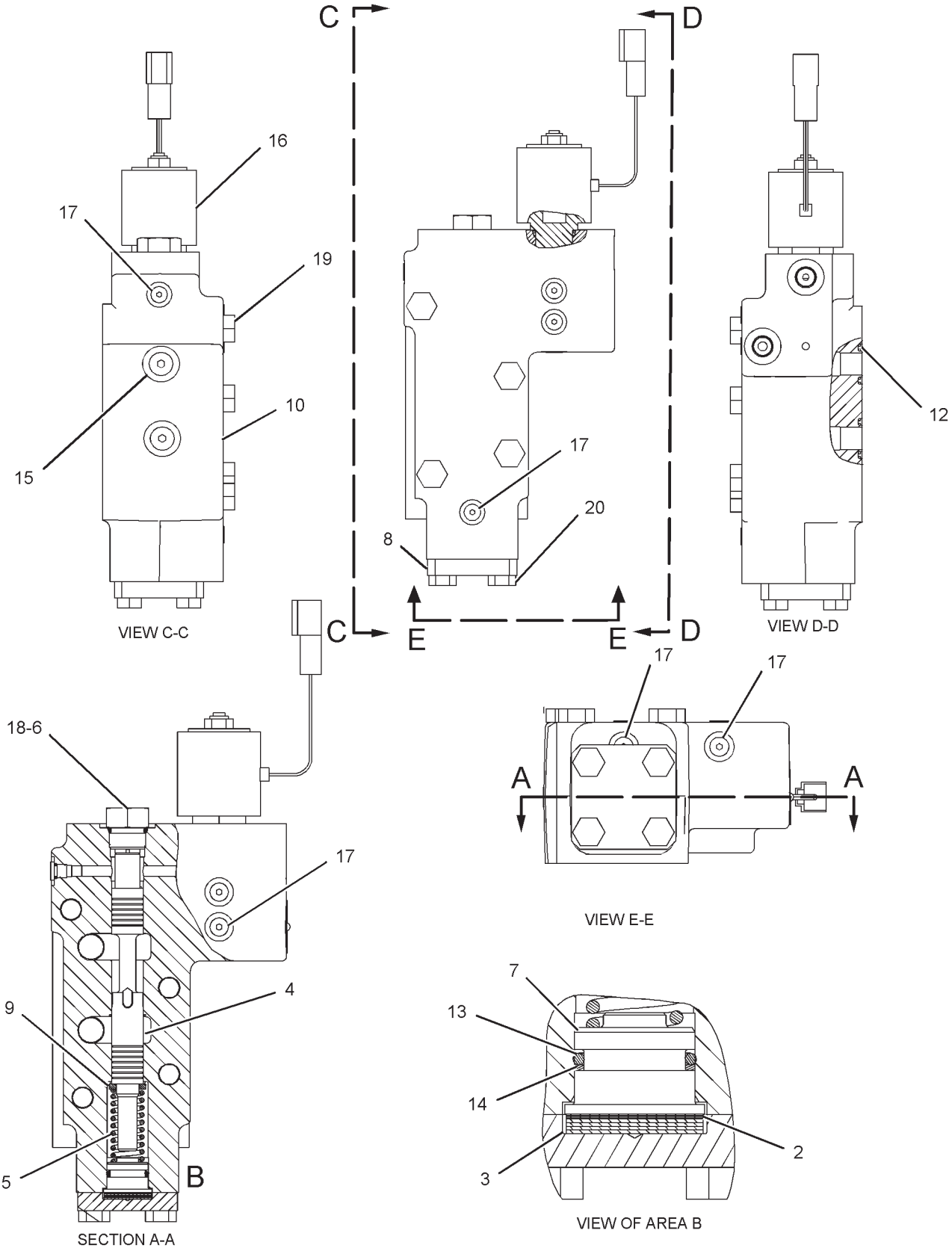

GRAPHIC #1 **<END>** g01129675

HYDRAULIC SYSTEM

123-2515 VALVE GP-COUNTERWEIGHT CONTROL

S/N: RCD1-UP
PART OF 168-9379 LINES GP-REAR ATTACHMENT
AN ATTACHMENT

SMCS-5408 **i01138473**

NOTE	REF NO	GRAPHIC REF	PART NUMBER	QTY	PART NAME 1 2 3 4 5 6 (PRODUCT LEVEL)	SEE PAGE
	1	1	**7I-0135**	2	PLUG	
	2	1	**099-3990**	1	BODY	
	3	1	**093-3093**	1	ROD	
M	4	1	**1R-6484**	2	NUT (M10X1.25-THD)	
	5	1	**093-3094**	2	ROD	
M	6	1	**095-6636**	4	NUT	
	7	1	**102-7024**	1	VALVE GP-RELIEF	
		1	**093-3328**	1	SEAL-O-RING	
		1	**095-1578**	1	SEAL-O-RING	
	8	1	**7I-0134**	2	PLUG	

M-METRIC PART

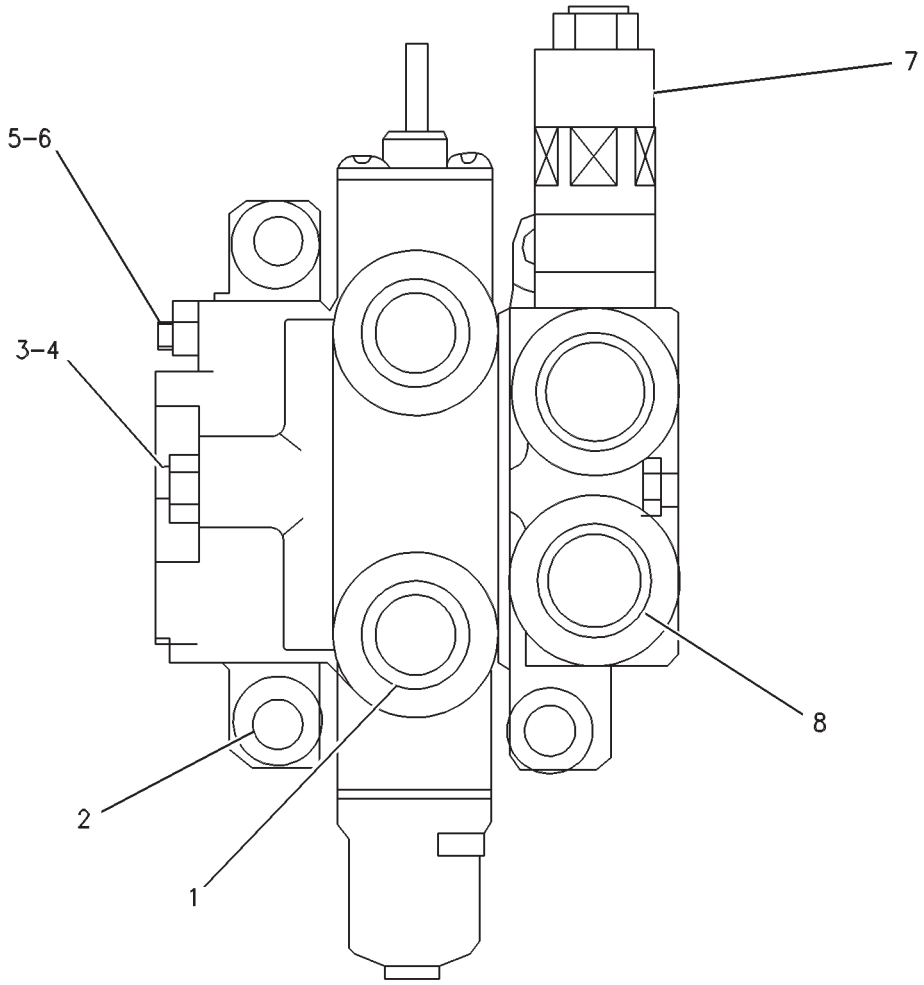

GRAPHIC #1 **<END>** g00268644

HYDRAULIC SYSTEM

145-7181 VALVE GP-LOAD CONTROL

S/N: RCD1-UP

PART OF 174-1827, 174-1829, 223-7737, 223-7745, 233-6969, 238-8212 VALVE GP-CONTROL

ALSO AN ATTACHMENT

SMCS-5067, 5117, 5147, 5811 **i03139243**

NOTE	REF NO	GRAPHIC REF	PART NUMBER	QTY	PART NAME 1 2 3 4 5 6 (PRODUCT LEVEL)	SEE PAGE
	1	1	**155-3624**	2	PLUG AS	
					(EACH INCLUDES)	
		1	**3J-7354**	1	SEAL-O-RING	
		1	**9S-4182**	1	PLUG-O-RING	
	2	1	**4I-3733**	1	SPRING	
	4	1	**7Y-4224**	1	ORIFICE	
	5	1	**8J-1751**	1	PLUG	
	6	1	**8J-1752**	1	PLUNGER	
	7	1	**9L-7712**	1	NUT (3/8-24-THD)	
	9	1	**144-7281**	1	BLOCK	
	10	1	*222-4737*	4	PLUG AS	
					(EACH INCLUDES)	
		1	**4J-7533**	1	SEAL-O-RING	
		1	**9S-4180**	1	PLUG	
	11	1	**145-9529**	1	COVER	
Y	12	1	**171-3685**	1	VALVE GP-SOLENOID (24-VOLT) (24 VDC)	878
Y	13	1	**155-4846**	1	VALVE GP-RELIEF (LINE)	860
	14	1	**1P-3705**	1	SEAL-RECTANGULAR	
	15	1	**2M-9780**	1	SEAL-O-RING	
	17	1	**4B-9783**	1	BALL	
	18	1	**4J-5309**	2	SEAL-O-RING	
	19	1	**4J-5573**	1	SEAL-O-RING	
	21	1	**4T-5076**	1	RING-BACKUP	
	22	1	**6J-3134**	1	SEAL-O-RING	
	23	1	**6V-0357**	1	SEAL-O-RING	
M	24	1	**7X-2549**	4	BOLT (M12X1.75X100-MM)	
M	25	1	**7X-2553**	4	BOLT (M16X2X40-MM)	
M	26	1	**7X-2557**	6	BOLT (M16X2X140-MM)	

PARTS SHOWN IN GRAPHIC(S) WITHOUT A REFERENCE NUMBER ARE NOT SERVICED SEPARATELY

M-METRIC PART
Y-SEPARATE ILLUSTRATION

145-7181 VALVE GP-LOAD CONTROL *(contd.)* i03139243

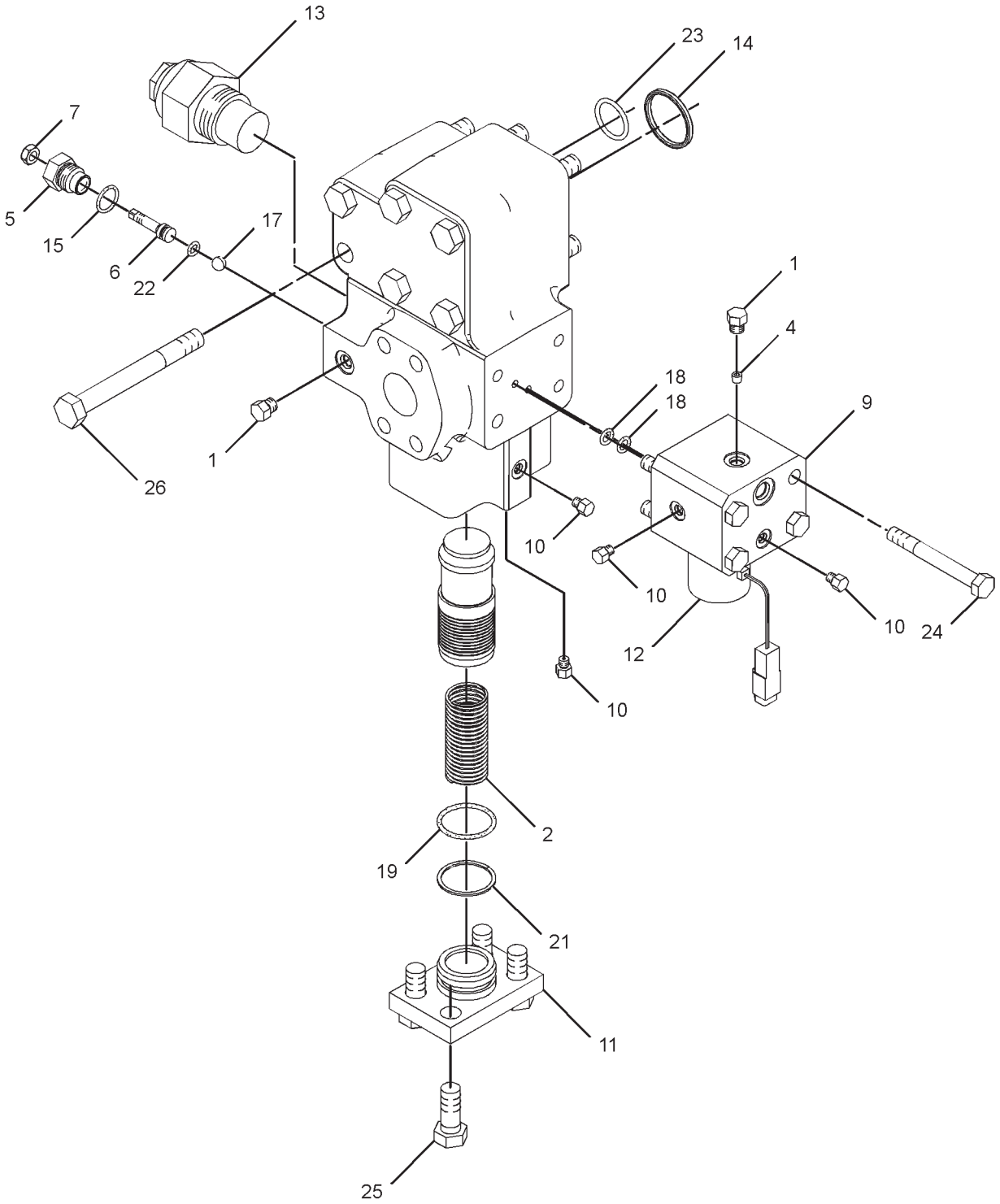

GRAPHIC #1 **<END>** g01643133

HYDRAULIC SYSTEM

171-0191 VALVE GP-LOAD CONTROL

S/N: RCD1-UP

PART OF 212-6138 LINES GP-BOOM, 176-4552 LINES GP-BOOM CYLINDER

AN ATTACHMENT

SMCS-5067, 5117, 5147, 5811 **i01695901**

NOTE	REF NO	GRAPHIC REF	PART NUMBER	QTY	PART NAME 1 2 3 4 5 6 (PRODUCT LEVEL)	SEE PAGE
	1	1	**9S-8004**	4	PLUG	
	2	1	**3J-1907**	4	SEAL-O-RING	
M	3	1	**8T-4139**	8	BOLT (M12X1.75X30-MM)	
	4	1	**158-8267**	2	COVER	
	5	1	**171-0190**	1	VALVE GP-CHECK	
		1	**171-0194**	1	STEM	
	6	1,2	**9S-8001**	9	PLUG-O-RING	
	7	1,2	**4J-7533**	9	SEAL-O-RING	
	8	1	**158-8293**	2	SPACER (14X17.2X10-MM THK)	
Y	9	1	**155-4846**	1	VALVE GP-RELIEF (LINE)	860
M	10	1	**6V-9672**	1	SCREW-MACHINE (M4X0.7X16-MM)	
	11	1	**4B-9783**	1	BALL	
	12	1	**8J-1751**	1	PLUG	
	13	1	**8J-1752**	1	PLUNGER	
	14	1	**9L-7712**	1	NUT (3/8-24-THD)	
	15	1	**2M-9780**	1	SEAL-O-RING	
	16	1	**6J-3134**	1	SEAL-O-RING	
M	17	1	**095-9804**	8	BOLT-SOCKET HEAD (M12X1.75X110-MM)	
	18	1	**9S-8005**	2	PLUG-O-RING	
	19	1	**3K-0360**	2	SEAL-O-RING	
	20	1	**4I-8965**	1	GUIDE	
	21	1	**5I-8511**	1	SPRING	
	22	2	**095-1610**	1	SEAL-O-RING	
	23	2	**215-4871**	1	GUIDE	
	24	2	**206-3256**	1	SPRING (52-MM OD)	
	25	2	**215-4870**	1	SEAT	
	26	2	**4J-0522**	2	SEAL-O-RING	
	27	2	**4J-0523**	1	SEAL-O-RING	
	28	2	**153-5140**	1	SEAT	
	29	2	**4J-5573**	1	SEAL-O-RING	
	30	2	**4T-5076**	1	RING-BACKUP	
	31	2	**095-1794**	2	RING-BACKUP	
	32	2	**095-1604**	1	SEAL-O-RING	
	33	2	**153-5141**	1	VALVE	
	34	2	**185-0416**	1	SPRING (36.5-MM OD)	
	35	2	**158-8279**	1	SEAT	
	36	2	*158-8257*	1	HOUSING	
	37	2	**153-5139**	1	SEAT	
	38	2	**095-1793**	1	RING-BACKUP	
	39	2	**095-1599**	1	SEAL-O-RING	
	40	2	**122-7774**	1	SPRING	
	41	1	**5P-6300**	2	SEAL-O-RING	
B	42	2	**206-3291**	1	SHIM (0.5-MM THK)	
B	43	2	**206-3292**	1	SHIM (0.3-MM THK)	
B	44	2	**206-3293**	1	SHIM (0.1-MM THK)	

B-USE AS REQUIRED
M-METRIC PART
Y-SEPARATE ILLUSTRATION

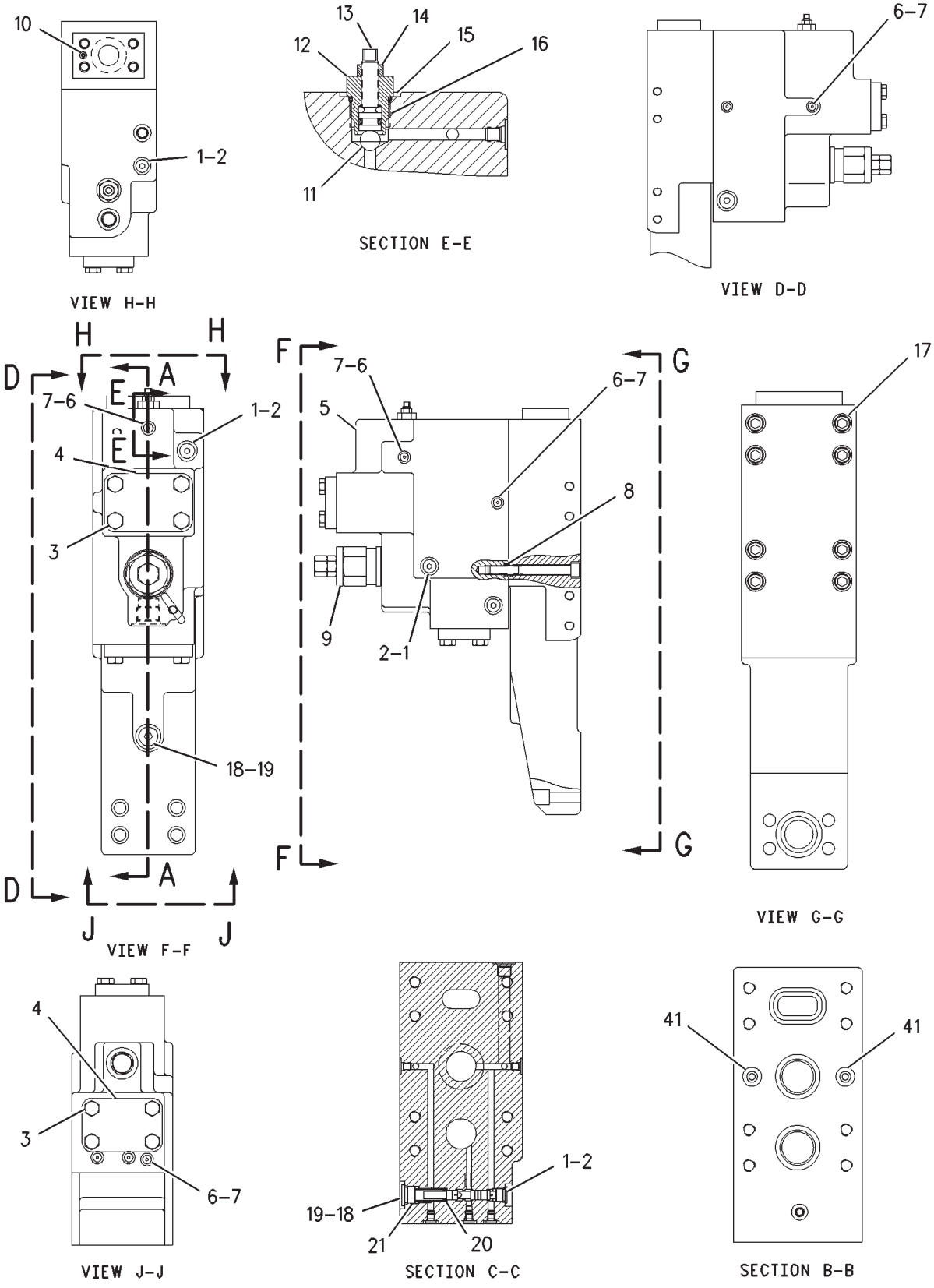

GRAPHIC #1

g00806089

171-0191 VALVE GP-LOAD CONTROL *(contd.)* i01695901

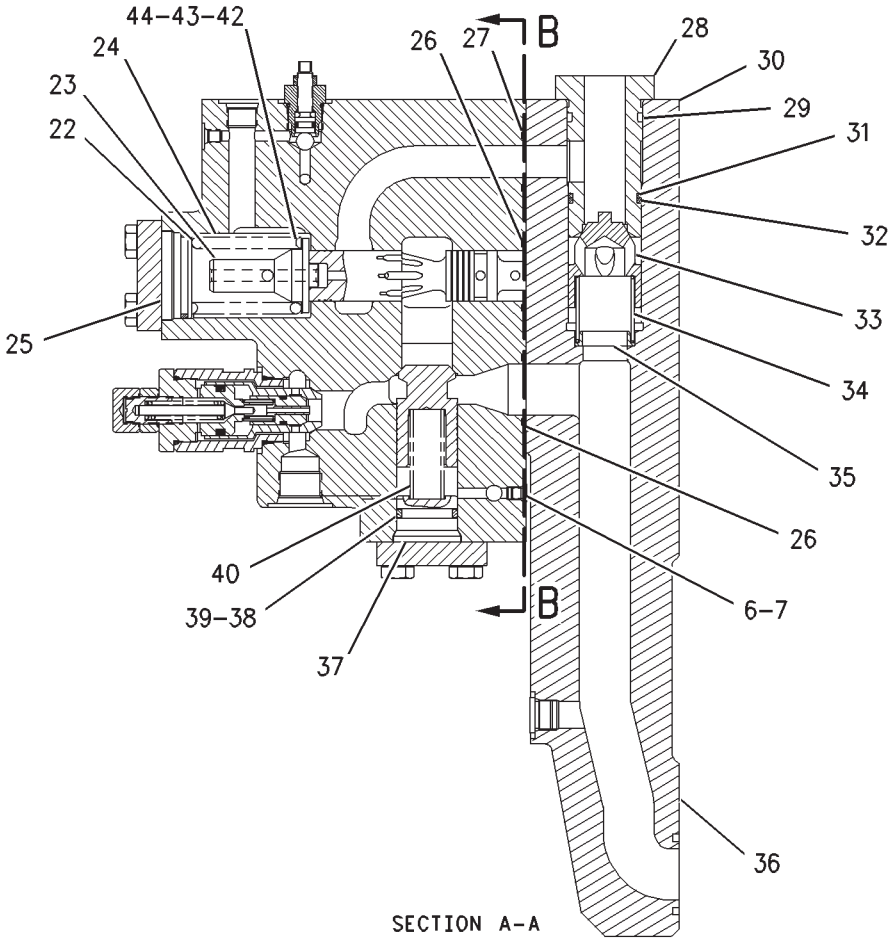

SECTION A-A

GRAPHIC #2 **<END>** g00806114

HYDRAULIC SYSTEM

174-1843 VALVE GP-MAIN CONTROL

S/N: RCD1-UP

PART OF 171-0026 VALVE AR-BOOM LOWERING CONTROL

AN ATTACHMENT

SMCS-5051 **i02171959**

NOTE	REF NO	GRAPHIC REF	PART NUMBER	QTY	PART NAME 1 2 3 4 5 6 (PRODUCT LEVEL)	SEE PAGE
Y	1	1	**174-1827**	1	VALVE GP-CONTROL (RH)	759
	3	1	**4J-9780**	1	PLUG-ORIFICE	
	4	1	**165-5623**	1	MANIFOLD-INLET	
Y	5	1	**174-1846**	1	VALVE GP-CONTROL (LH)	768
Y	7	1	**193-1665**	1	VALVE GP-PRESSURE REDUCING (SIGNAL DUPLICATION)	847
Y	8	1	**117-5269**	1	VALVE GP-RELIEF (LOW SIGNAL PRESSURE)	857
Y	9	1	**117-5270**	1	VALVE GP-RELIEF (HIGH SIGNAL PRESSURE)	858
	10	1	**119-2265**	1	FILTER (EDGE)	
Y	11	1	**171-3685**	1	VALVE GP-SOLENOID (24-VOLT) (HIGH, LOW RELIEF)	878
	12	1	*3J-3679*	1	PLUG AS	
		1	**1J-9671**	1	SEAL-O-RING	
		1	**9S-8003**	1	PLUG	
	13	1	**1P-3704**	1	SEAL-RECTANGULAR	
	14	1	**1P-3707**	4	SEAL-RECTANGULAR	
	15	1	**1P-5767**	2	FLANGE-HALF	
	16	1	**3J-1907**	1	SEAL-O-RING	
	17	1	*155-3624*	4	PLUG AS	
					(EACH INCLUDES)	
		1	**3J-7354**	1	SEAL-O-RING	
		1	**9S-4182**	1	PLUG-O-RING	
	18	1	*148-8411*	1	PLUG AS	
		1	**3K-0360**		SEAL-O-RING	
		1	**9S-4185**		PLUG-O-RING	
	19	1	**4J-0522**	4	SEAL-O-RING	
	20	1	*222-4737*	16	PLUG AS	
					(EACH INCLUDES)	
		1	**4J-7533**	1	SEAL-O-RING	
		1	**9S-4180**	1	PLUG	
Y	21	1	**4T-1860**	1	VALVE GP-SHUTTLE	868
	22	1	**5P-0048**	1	COVER	
	23	1	**6V-5555**	5	SEAL-O-RING	
M	24	1	**8T-0348**	8	BOLT-SOCKET HEAD (M16X2X50-MM)	
M	25	1	**8T-4193**	2	BOLT (M16X2X50-MM)	
M	26	1	**8T-4194**	4	BOLT (M12X1.75X50-MM)	
	27	1	**8T-4223**	4	WASHER-HARD (13.5X25.5X3-MM THK)	
	33	1	**9X-8257**	10	WASHER (17.5X30X3.5-MM THK)	
	34	1	*148-8407*	3	PLUG AS	
					(EACH INCLUDES)	
		1	**3J-1907**	1	SEAL-O-RING	
		1	**9S-4191**	1	PLUG-O-RING	

M-METRIC PART
Y-SEPARATE ILLUSTRATION

174-1843 VALVE GP-MAIN CONTROL *(contd.)* i02171959

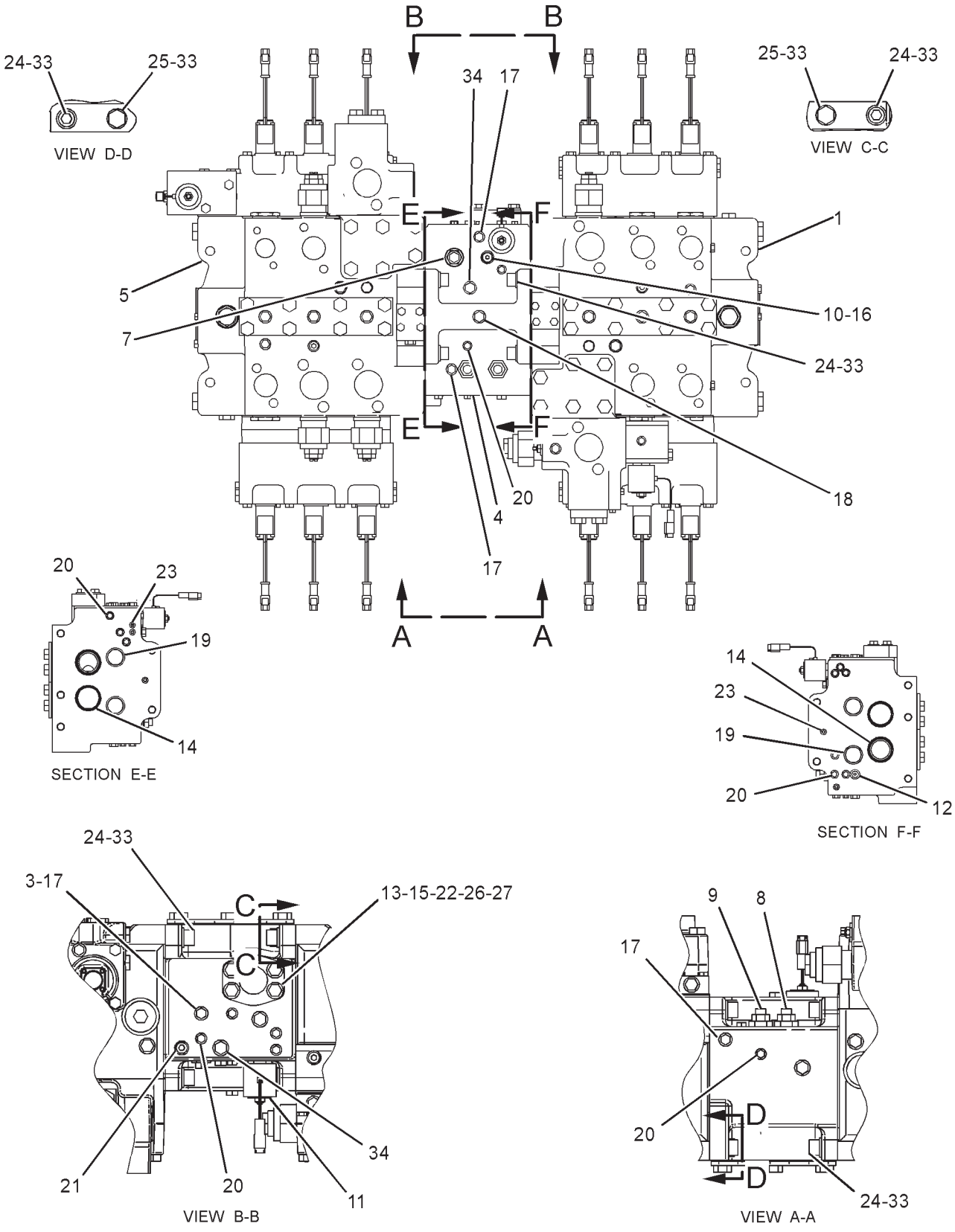

GRAPHIC #1 **<END>** g01307662

HYDRAULIC SYSTEM

174-1852 VALVE GP-MAIN CONTROL

S/N: RCD1-UP

PART OF 206-3183 VALVE AR, 171-0027 VALVE AR-STICK LOWERING CONT AN ATTACHMENT

SMCS-5051 **i02171960**

NOTE	REF NO	GRAPHIC REF	PART NUMBER	QTY	PART NAME 1 2 3 4 5 6 (PRODUCT LEVEL)	SEE PAGE
Y	1	1	**174-1854**	1	VALVE GP-CONTROL (RH)	772
	3	1	**4J-9780**	1	PLUG-ORIFICE	
	4	1	**165-5623**	1	MANIFOLD-INLET	
Y	5	1	**174-1846**	1	VALVE GP-CONTROL (LH)	768
Y	7	1	**193-1665**	1	VALVE GP-PRESSURE REDUCING (SIGNAL DUPLICATION)	847
Y	8	1	**117-5269**	1	VALVE GP-RELIEF (LOW SIGNAL PRESSURE)	857
Y	9	1	**117-5270**	1	VALVE GP-RELIEF (HIGH SIGNAL PRESSURE)	858
	10	1	**119-2265**	1	FILTER (EDGE)	
Y	11	1	**171-3685**	1	VALVE GP-SOLENOID (24-VOLT) (HIGH, LOW RELIEF)	878
	13	1	**1P-3704**	1	SEAL-RECTANGULAR	
	14	1	**1P-3707**	4	SEAL-RECTANGULAR	
	15	1	**1P-5767**	2	FLANGE-HALF	
	16	1	**3J-1907**	1	SEAL-O-RING	
	19	1	**4J-0522**	4	SEAL-O-RING	
Y	21	1	**4T-1860**	1	VALVE GP-SHUTTLE	868
	22	1	**5P-0048**	1	COVER	
	23	1	**6V-5555**	5	SEAL-O-RING	
M	24	1	**8T-0348**	8	BOLT-SOCKET HEAD (M16X2X50-MM)	
M	25	1	**8T-4193**	2	BOLT (M16X2X50-MM)	
M	26	1	**8T-4194**	4	BOLT (M12X1.75X50-MM)	
	27	1	**8T-4223**	4	WASHER-HARD (13.5X25.5X3-MM THK)	
	28	1	*222-4737*	16	PLUG AS	
					(EACH INCLUDES)	
		1	**4J-7533**	1	SEAL-O-RING	
		1	**9S-4180**	1	PLUG	
	29	1	*155-3624*	4	PLUG AS	
					(EACH INCLUDES)	
		1	**3J-7354**	1	SEAL-O-RING	
		1	**9S-4182**	1	PLUG-O-RING	
	30	1	*148-8411*	1	PLUG AS	
		1	**3K-0360**	1	SEAL-O-RING	
		1	**9S-4185**	1	PLUG-O-RING	
	31	1	*148-8407*	3	PLUG AS	
					(EACH INCLUDES)	
		1	**3J-1907**	1	SEAL-O-RING	
		1	**9S-4191**	1	PLUG-O-RING	
	32	1	*3J-3679*	1	PLUG AS	
		1	**1J-9671**	1	SEAL-O-RING	
		1	**9S-8003**	1	PLUG	
	33	1	**9X-8257**	10	WASHER (17.5X30X3.5-MM THK)	

M-METRIC PART
Y-SEPARATE ILLUSTRATION

174-1852 VALVE GP-MAIN CONTROL *(contd.)* i02171960

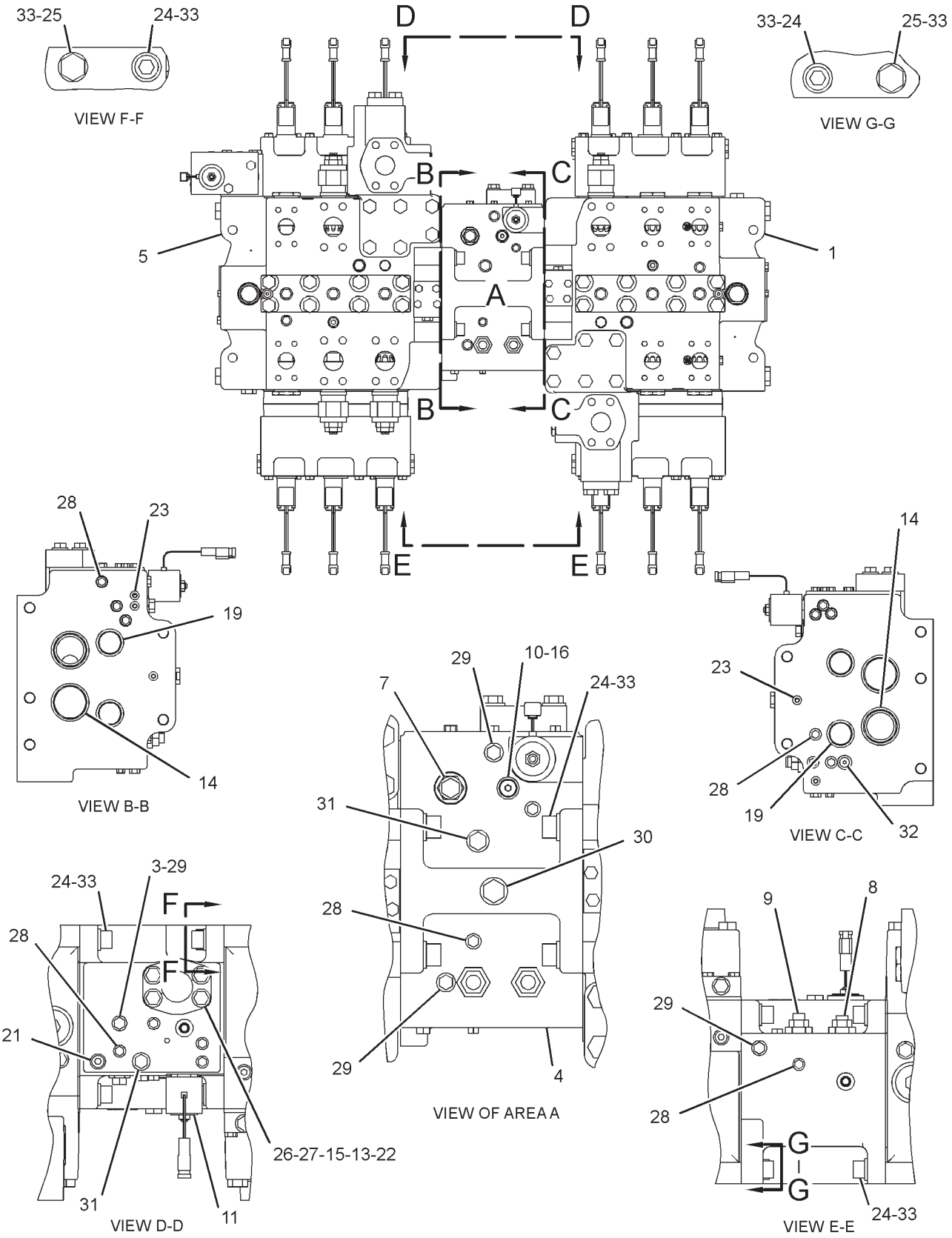

GRAPHIC #1 **<END>** g01309956

HYDRAULIC SYSTEM

180-7882 VALVE GP-MAIN CONTROL

S/N: RCD1-205

PART OF 229-3367 HYDRAULIC AR

SMCS-5051 **i02171961**

NOTE	REF NO	GRAPHIC REF	PART NUMBER	QTY	PART NAME 1 2 3 4 5 6 (PRODUCT LEVEL)	SEE PAGE
Y	1	1	**174-1827**	1	VALVE GP-CONTROL (RH)	759
	3	2	**4J-9780**	1	PLUG-ORIFICE	
	4	1	**165-5623**	1	MANIFOLD-INLET	
Y	5	1	**174-1829**	1	VALVE GP-CONTROL (LH)	764
Y	7	1	**193-1665**	1	VALVE GP-PRESSURE REDUCING	847
	8	1,2	*222-4737*	16	PLUG AS	
					(EACH INCLUDES)	
		1,2	**4J-7533**	1	SEAL-O-RING	
		1,2	**9S-4180**	1	PLUG	
Y	9	2	**117-5269**	1	VALVE GP-RELIEF	857
Y	10	2	**117-5270**	1	VALVE GP-RELIEF	858
	11	1	**119-2265**	1	FILTER (EDGE)	
	12	1,2	*148-8407*	3	PLUG AS	
					(EACH INCLUDES)	
		1,2	**3J-1907**	1	SEAL-O-RING	
		1,2	**9S-4191**	1	PLUG-O-RING	
	13	1	*148-8411*	1	PLUG AS	
		1	**3K-0360**	1	SEAL-O-RING	
		1	**9S-4185**	1	PLUG-O-RING	
	14	1,2	*155-3624*	4	PLUG AS	
					(EACH INCLUDES)	
		1,2	**3J-7354**	1	SEAL-O-RING	
		1,2	**9S-4182**	1	PLUG-O-RING	
Y	15	2	**171-3685**	1	VALVE GP-SOLENOID (24-VOLT)	878
	16	2	**1P-3704**	1	SEAL-RECTANGULAR	
	17	1	**1P-3707**	4	SEAL-RECTANGULAR	
	18	2	**1P-5767**	2	FLANGE-HALF	
	19	1	**3J-1907**	1	SEAL-O-RING	
	20	1	**4J-0522**	4	SEAL-O-RING	
Y	21	2	**4T-1860**	1	VALVE GP-SHUTTLE	868
	22	2	**5P-0048**	1	COVER	
	23	1	**6V-5555**	5	SEAL-O-RING	
M	24	2	**8T-0348**	8	BOLT-SOCKET HEAD (M16X2X50-MM)	
M	25	2	**8T-4193**	2	BOLT (M16X2X50-MM)	
M	26	2	**8T-4194**	4	BOLT (M12X1.75X50-MM)	
	27	2	**8T-4223**	4	WASHER-HARD (13.5X25.5X3-MM THK)	
	28	2	**9X-8257**	10	WASHER (17.5X30X3.5-MM THK)	

M-METRIC PART
Y-SEPARATE ILLUSTRATION

180-7882 VALVE GP-MAIN CONTROL *(contd.)* i02171961

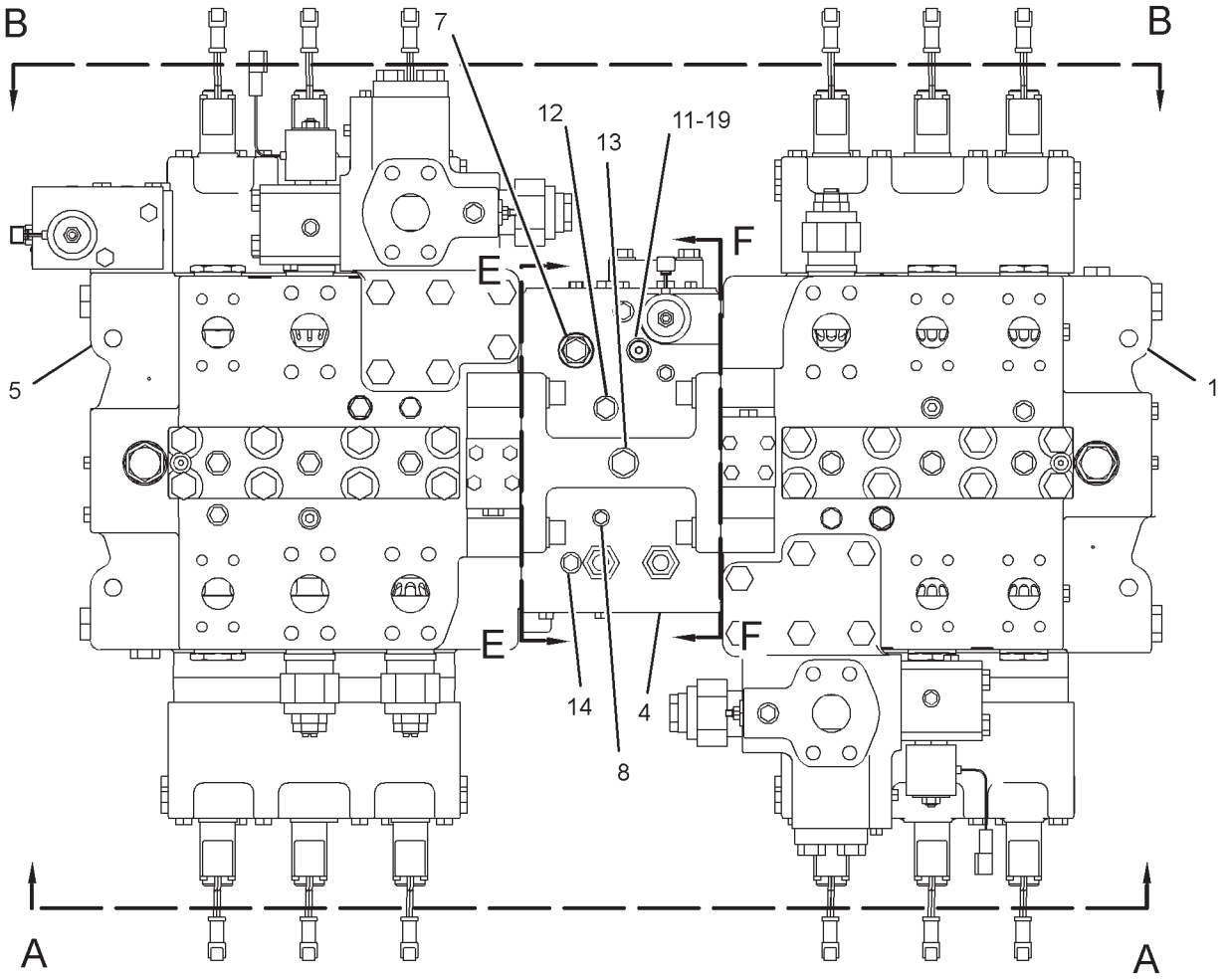

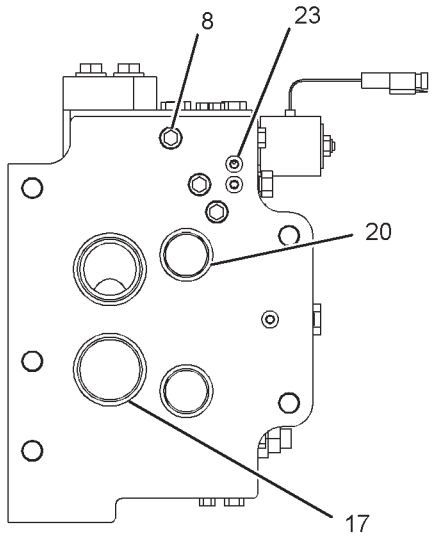

VIEW E-E

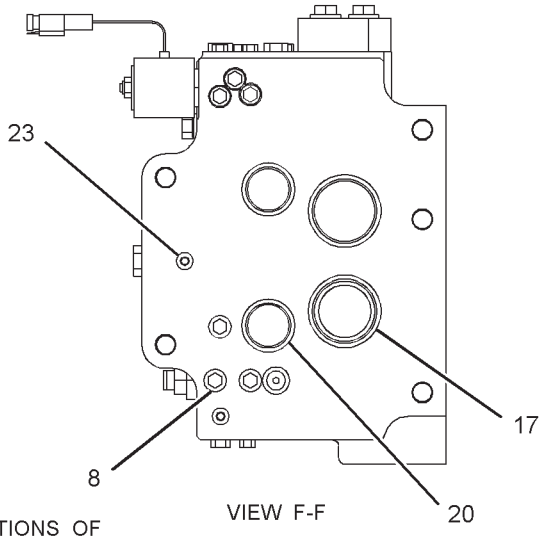

VIEW F-F

REFER TO ALL ILLUSTRATIONS OF THIS GROUP FOR AUXILIARY VIEWS

GRAPHIC #1 g01155648

180-7882 VALVE GP-MAIN CONTROL *(contd.)* **i02171961**

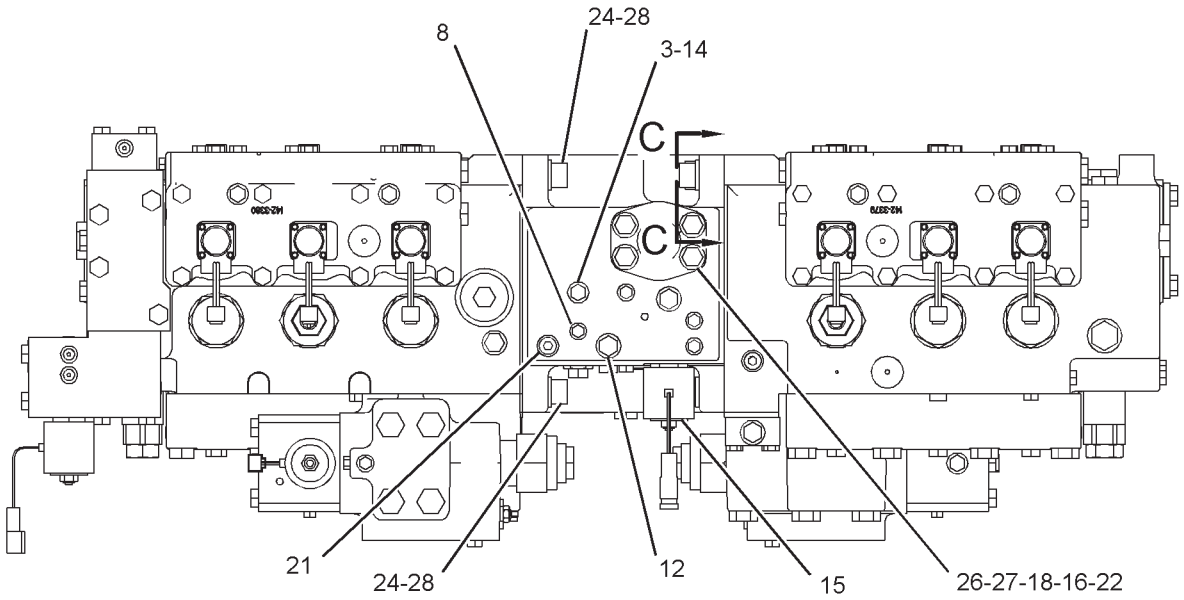

VIEW B-B

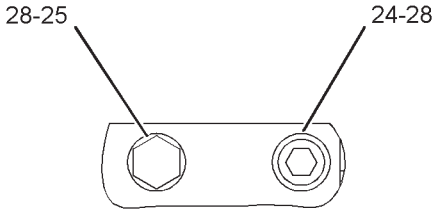

VIEW C-C

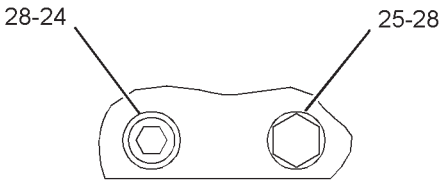

VIEW D-D

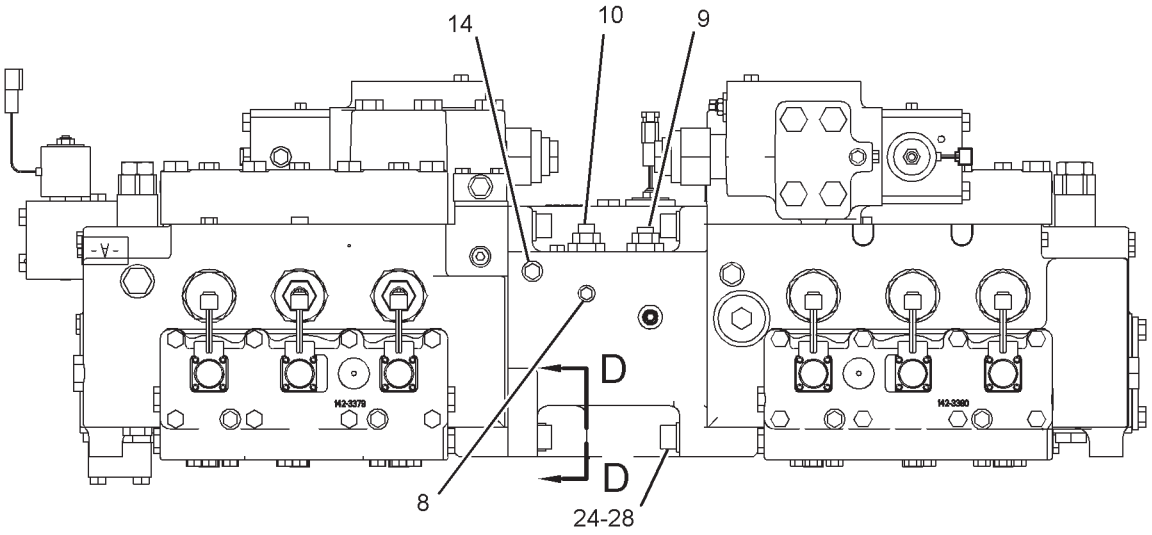

VIEW A-A

GRAPHIC #2 **<END>** g01155664

HYDRAULIC SYSTEM

223-7750 VALVE GP-MAIN CONTROL

S/N: RCD206-UP

PART OF 229-3367 HYDRAULIC AR

SMCS-5051 **i02312892**

NOTE	REF NO	GRAPHIC REF	PART NUMBER	QTY	PART NAME 1 2 3 4 5 6 (PRODUCT LEVEL)	SEE PAGE
Y	1	1	*223-7745*	1	VALVE GP-CONTROL (RH)	788
	2	1	*3J-3679*	1	PLUG AS	
		1	**1J-9671**	2	SEAL-O-RING	
		1	**9S-8003**	2	PLUG	
	4	2	**4J-9780**	1	PLUG-ORIFICE	
	5	2	**165-5623**	1	MANIFOLD-INLET	
Y	6	2	**193-1665**	1	VALVE GP-PRESSURE REDUCING	847
	7	1,2	*222-4737*	16	PLUG AS	
					(EACH INCLUDES)	
		1,2	**4J-7533**	1	SEAL-O-RING	
		1,2	**9S-4180**	1	PLUG	
Y	9	1	**223-7737**	1	VALVE GP-CONTROL	778
Y	10	2	**117-5269**	1	VALVE GP-RELIEF	857
Y	11	2	**117-5270**	1	VALVE GP-RELIEF	858
	12	1	**119-2265**	1	FILTER (EDGE)	
	13	1,2	*148-8407*	3	PLUG AS	
					(EACH INCLUDES)	
		1,2	**3J-1907**	1	SEAL-O-RING	
		1,2	**9S-4191**	1	PLUG-O-RING	
	14	1	*148-8411*	1	PLUG AS	
		1	**3K-0360**	1	SEAL-O-RING	
		1	**9S-4185**	1	PLUG-O-RING	
	15	1,2	*155-3624*	4	PLUG AS	
					(EACH INCLUDES)	
		1,2	**3J-7354**	1	SEAL-O-RING	
		1,2	**9S-4182**	1	PLUG-O-RING	
Y	16	2	**171-3685**	1	VALVE GP-SOLENOID (24-VOLT)	878
	17	2	**1P-3704**	1	SEAL-RECTANGULAR	
	18	1	**1P-3707**	4	SEAL-RECTANGULAR	
	19	2	**1P-5767**	2	FLANGE-HALF	
	20	1	**3J-1907**	1	SEAL-O-RING	
	21	1	**4J-0522**	4	SEAL-O-RING	
Y	22	2	**4T-1860**	1	VALVE GP-SHUTTLE	868
	23	2	**5P-0048**	1	COVER	
	24	1	**6V-5555**	5	SEAL-O-RING	
M	25	2	**8T-0348**	8	BOLT-SOCKET HEAD (M16X2X50-MM)	
M	26	2	**8T-4193**	2	BOLT (M16X2X50-MM)	
M	27	2	**8T-4194**	4	BOLT (M12X1.75X50-MM)	
	28	2	**8T-4223**	4	WASHER-HARD (13.5X25.5X3-MM THK)	
	29	2	**9X-8257**	10	WASHER (17.5X30X3.5-MM THK)	

M-METRIC PART
Y-SEPARATE ILLUSTRATION

223-7750 VALVE GP-MAIN CONTROL *(contd.)* **i02312892**

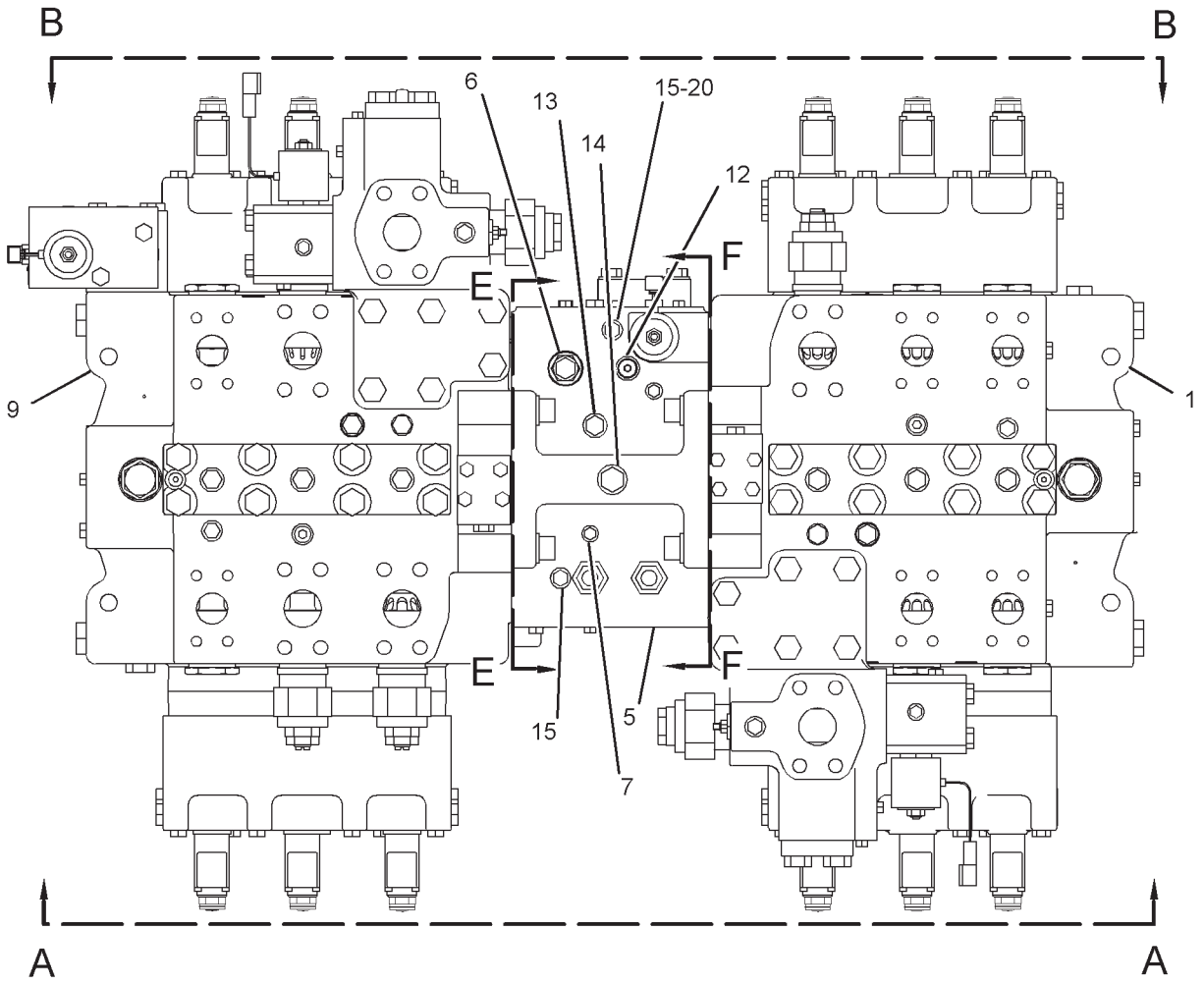

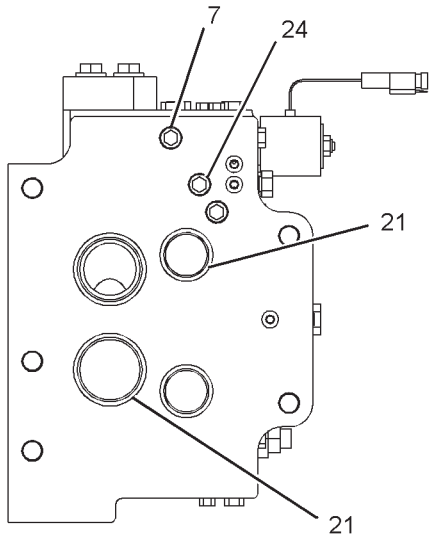

VIEW E-E

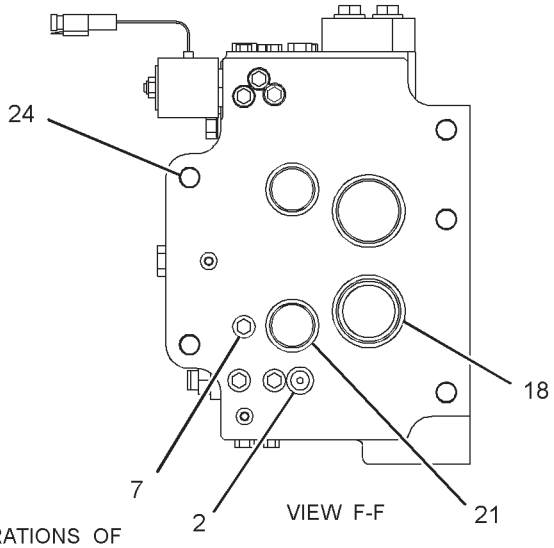

VIEW F-F

REFER TO ALL ILLUSTRATIONS OF THIS GROUP FOR AUXILIARY VIEWS

GRAPHIC #1

g01155773

223-7750 VALVE GP-MAIN CONTROL *(contd.)* i02312892

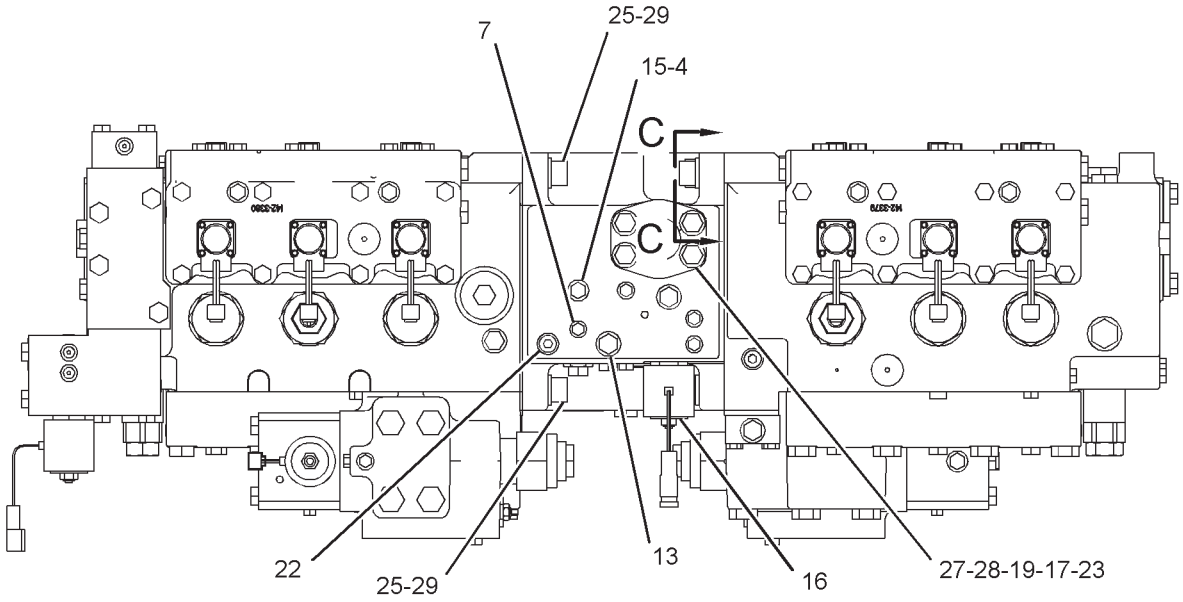

VIEW B-B

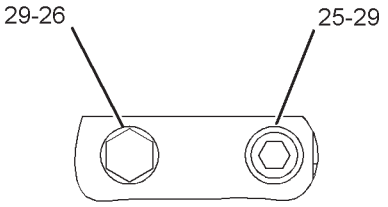

VIEW C-C

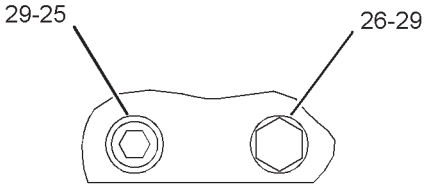

VIEW D-D

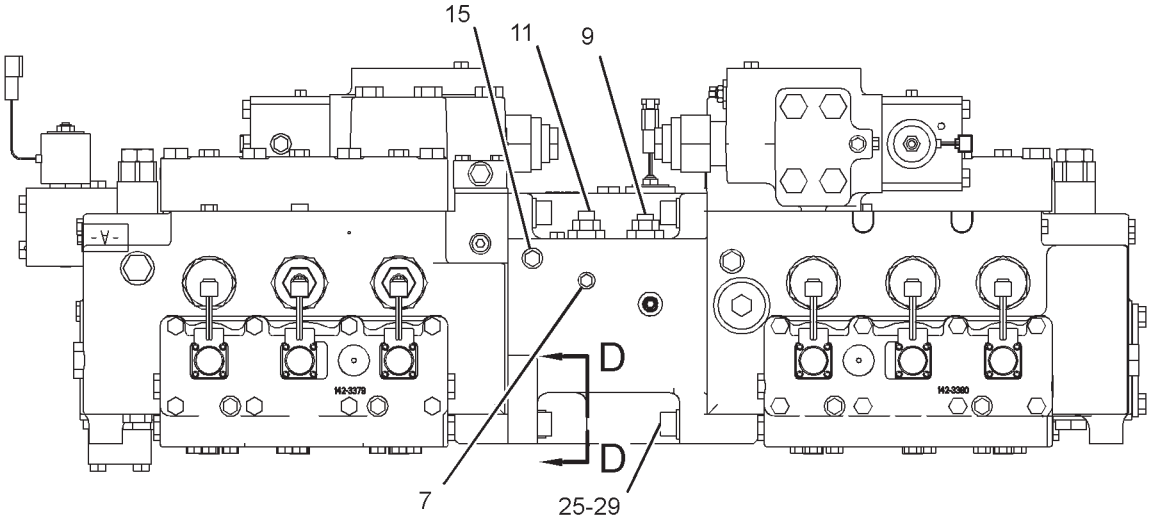

VIEW A-A

GRAPHIC #2 **<END>** g01155805

HYDRAULIC SYSTEM

223-7752 VALVE GP-MAIN CONTROL

S/N: RCD1-UP

PART OF 206-3183 VALVE AR, 171-0027 VALVE AR-STICK LOWERING CONT AN ATTACHMENT

SMCS-5051 **i02199762**

NOTE	REF NO	GRAPHIC REF	PART NUMBER	QTY	PART NAME 1 2 3 4 5 6 (PRODUCT LEVEL)	SEE PAGE
Y	1	1	**223-7746**	1	VALVE GP-CONTROL (RH)	793
	2	1	*3J-3679*	1	PLUG AS	
		1	**1J-9671**	1	SEAL-O-RING	
		1	**9S-8003**	1	PLUG	
	4	2	**4J-9780**	1	PLUG-ORIFICE	
	5	1	**165-5623**	1	MANIFOLD-INLET	
Y	6	1	**193-1665**	1	VALVE GP-PRESSURE REDUCING	847
	7	1,2	*222-4737*	16	PLUG AS	
					(EACH INCLUDES)	
		1,2	**4J-7533**	1	SEAL-O-RING	
		1,2	**9S-4180**	1	PLUG	
Y	9	1	*223-7738*	1	VALVE GP-CONTROL (LH)	783
Y	10	2	**117-5269**	1	VALVE GP-RELIEF (LOW SIGNAL PRESSURE)	857
Y	11	2	**117-5270**	1	VALVE GP-RELIEF (HIGH SIGNAL PRESSURE)	858
	12	1	**119-2265**	1	FILTER (EDGE)	
	13	1,2	*148-8407*	3	PLUG AS	
					(EACH INCLUDES)	
		1,2	**3J-1907**	1	SEAL-O-RING	
		1,2	**9S-4191**	1	PLUG-O-RING	
	14	1	*148-8411*	1	PLUG AS	
		1	**3K-0360**	1	SEAL-O-RING	
		1	**9S-4185**	1	PLUG-O-RING	
	15	1,2	*155-3624*	4	PLUG AS	
					(EACH INCLUDES)	
		1,2	**3J-7354**	1	SEAL-O-RING	
		1,2	**9S-4182**	1	PLUG-O-RING	
Y	16	2	**171-3685**	1	VALVE GP-SOLENOID (24-VOLT) (HIGH, LOW RELIEF)	878
	17	2	**1P-3704**	1	SEAL-RECTANGULAR	
	18	1	**1P-3707**	4	SEAL-RECTANGULAR	
	19	2	**1P-5767**	2	FLANGE-HALF	
	20	1	**3J-1907**	1	SEAL-O-RING	
	21	1	**4J-0522**	4	SEAL-O-RING	
Y	22	2	**4T-1860**	1	VALVE GP-SHUTTLE	868
	23	2	**5P-0048**	1	COVER	
	24	1	**6V-5555**	5	SEAL-O-RING	
M	25	1,2	**8T-0348**	8	BOLT-SOCKET HEAD (M16X2X50-MM)	
M	26	2	**8T-4193**	2	BOLT (M16X2X50-MM)	
M	27	2	**8T-4194**	4	BOLT (M12X1.75X50-MM)	
	28	2	**8T-4223**	4	WASHER-HARD (13.5X25.5X3-MM THK)	
	29	1,2	**9X-8257**	10	WASHER (17.5X30X3.5-MM THK)	

M-METRIC PART
Y-SEPARATE ILLUSTRATION

223-7752 VALVE GP-MAIN CONTROL *(contd.)* i02199762

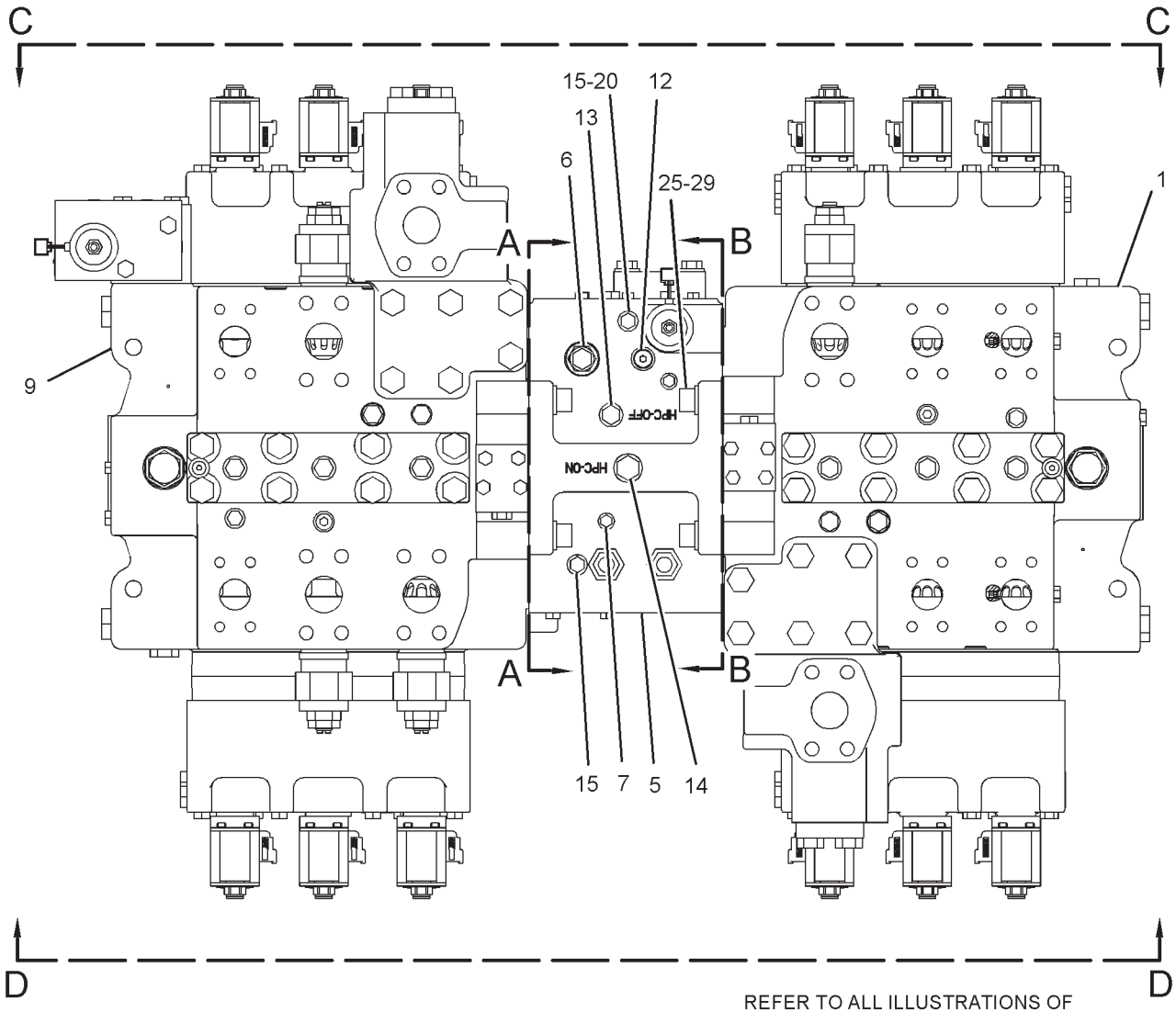

REFER TO ALL ILLUSTRATIONS OF
THIS GROUP FOR AUXILIARY VIEWS

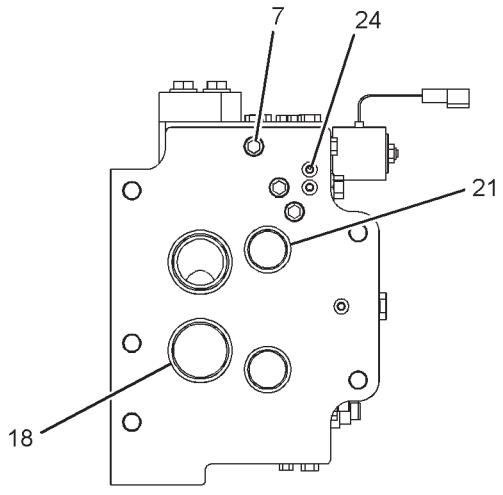

SECTION A-A

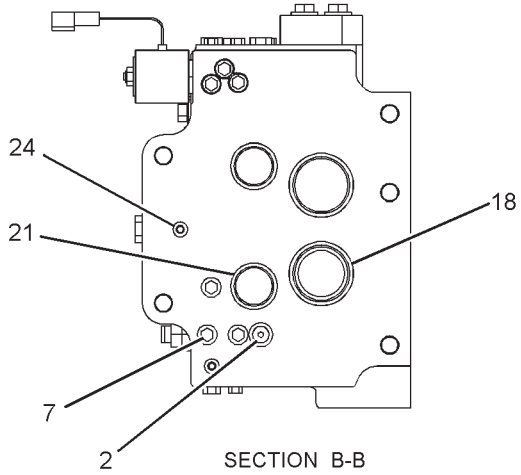

SECTION B-B

GRAPHIC #1

g01287945

223-7752 VALVE GP-MAIN CONTROL *(contd.)* **i02199762**

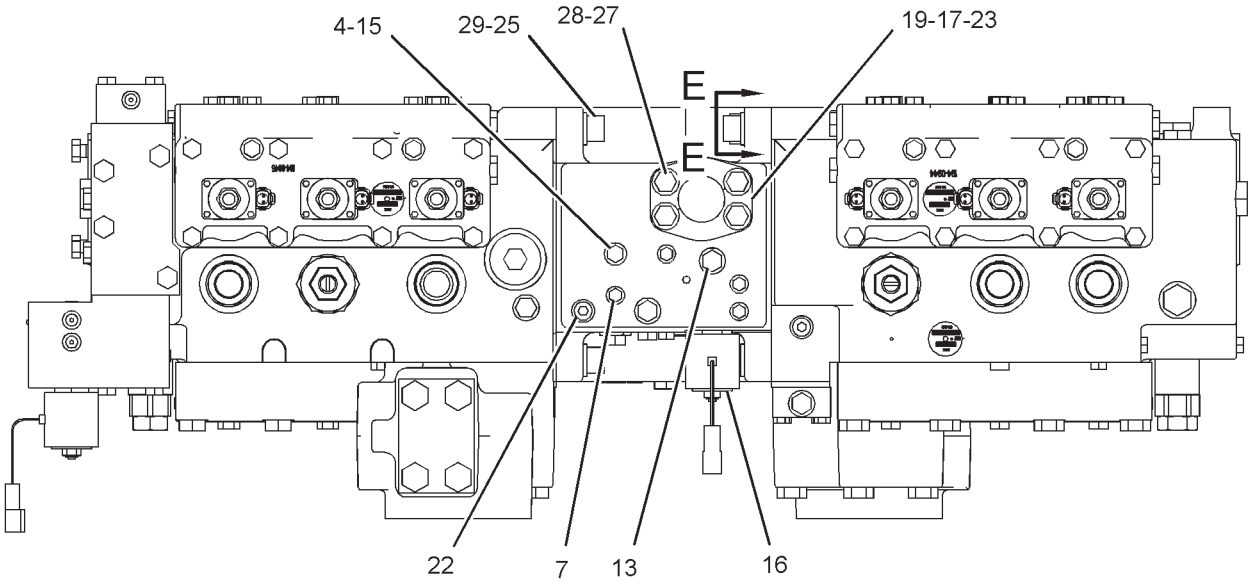

VIEW C-C

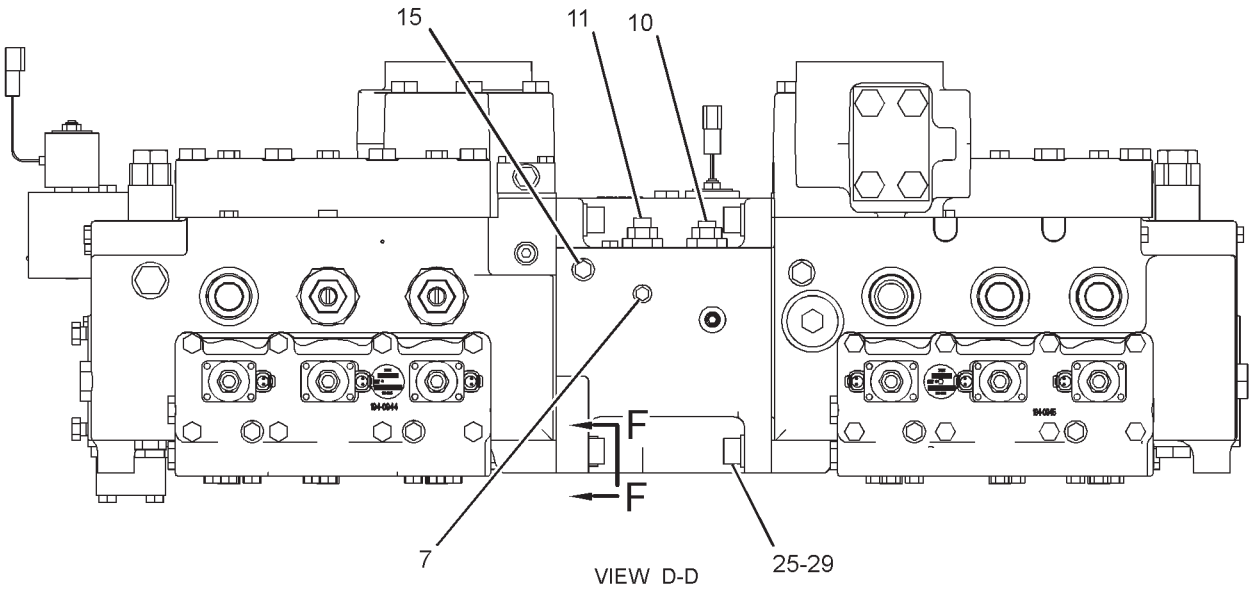

VIEW D-D

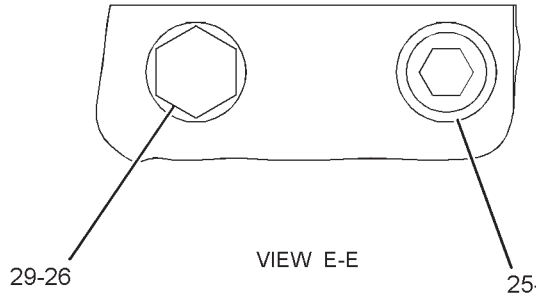

VIEW E-E

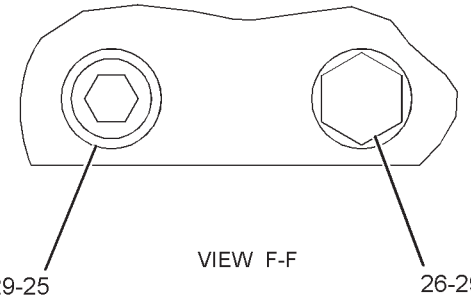

VIEW F-F

GRAPHIC #2 **<END>** g01287947

HYDRAULIC SYSTEM

233-6970 VALVE GP-MAIN CONTROL

S/N: RCD1-205
PART OF 213-4216 VALVE AR-BOOM LOWERING CONTROL
AN ATTACHMENT

SMCS-5051 **i02456899**

NOTE	REF NO	GRAPHIC REF	PART NUMBER	QTY	PART NAME 1 2 3 4 5 6 (PRODUCT LEVEL)	SEE PAGE
Y	1	1	**174-1827**	1	VALVE GP-CONTROL (RH)	759
	2	2	**9X-8257**	10	WASHER (17.5X30X3.5-MM THK)	
	3	2	**4J-9780**	1	PLUG-ORIFICE	
	4	1	**165-5623**	1	MANIFOLD-INLET	
Y	5	1	**193-1665**	1	VALVE GP-PRESSURE REDUCING	847
Y	6	1	*233-6969*	1	VALVE GP-CONTROL	800
	7	1	**9S-8003**	1	PLUG	
Y	8	2	**117-5269**	1	VALVE GP-RELIEF	857
Y	9	2	**117-5270**	1	VALVE GP-RELIEF	858
	10	1	**119-2265**	1	FILTER (EDGE)	
Y	11	2	**171-3685**	1	VALVE GP-SOLENOID (24-VOLT)	878
	12	1	**1J-9671**	1	SEAL-O-RING	
	13	2	**1P-3704**	1	SEAL-RECTANGULAR	
	14	1	**1P-3707**	4	SEAL-RECTANGULAR	
	15	2	**1P-5767**	2	FLANGE-HALF	
	16	1,2	**3J-1907**	4	SEAL-O-RING	
	17	1,2	**3J-7354**	4	SEAL-O-RING	
	18	1	**3K-0360**	1	SEAL-O-RING	
	19	1	**4J-0522**	4	SEAL-O-RING	
	20	1,2	**4J-7533**	16	SEAL-O-RING	
Y	21	2	**4T-1860**	1	VALVE GP-SHUTTLE	868
	22	2	**5P-0048**	1	COVER	
	23	1	**6V-5555**	5	SEAL-O-RING	
M	24	2	**8T-0348**	8	BOLT-SOCKET HEAD (M16X2X50-MM)	
M	25	2	**8T-4193**	2	BOLT (M16X2X50-MM)	
M	26	2	**8T-4194**	4	BOLT (M12X1.75X50-MM)	
	27	2	**8T-4223**	4	WASHER-HARD (13.5X25.5X3-MM THK)	
	28	1,2	**9S-4180**	16	PLUG	
	29	1,2	**9S-4182**	4	PLUG-O-RING	
	30	1	**9S-4185**	1	PLUG-O-RING	
	31	1,2	**9S-4191**	3	PLUG-O-RING	

M-METRIC PART
Y-SEPARATE ILLUSTRATION

233-6970 VALVE GP-MAIN CONTROL *(contd.)* **i02456899**

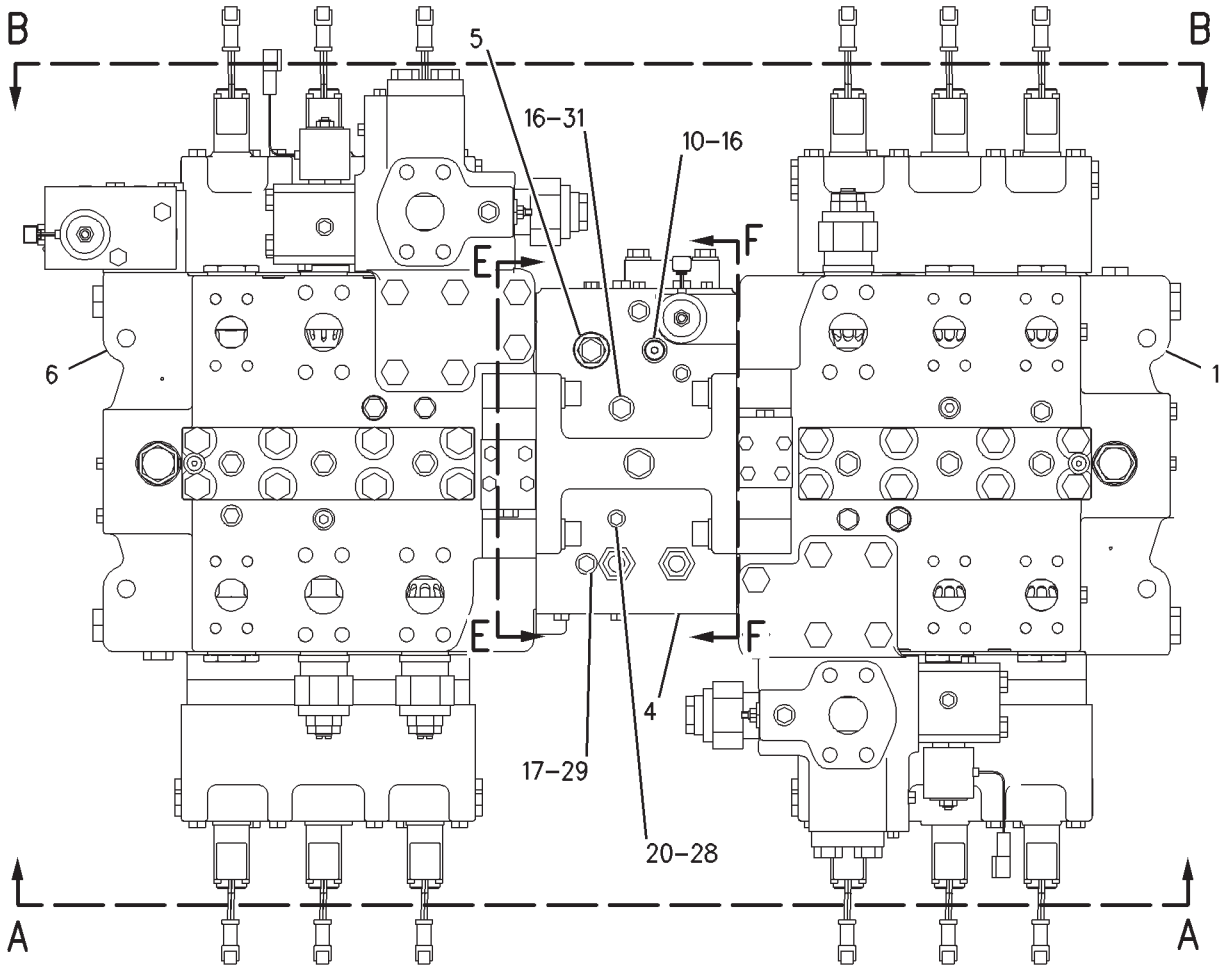

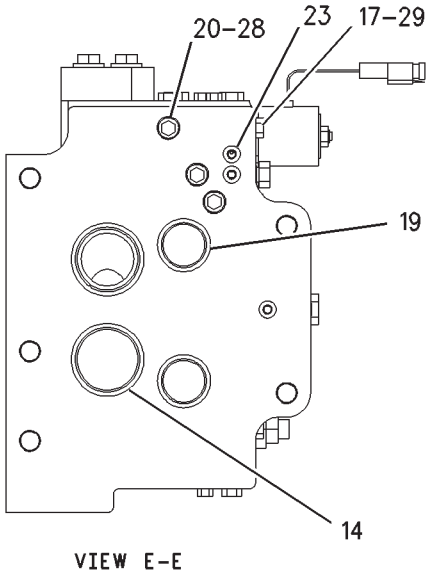

VIEW E-E

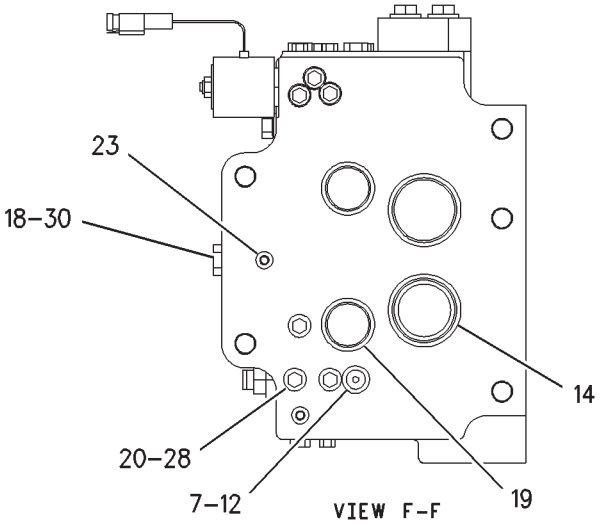

VIEW F-F

REFER TO ALL ILLUSTRATIONS OF
THIS GROUP FOR AUXILIARY VIEWS

GRAPHIC #1 g00983920

233-6970 VALVE GP-MAIN CONTROL *(contd.)* i02456899

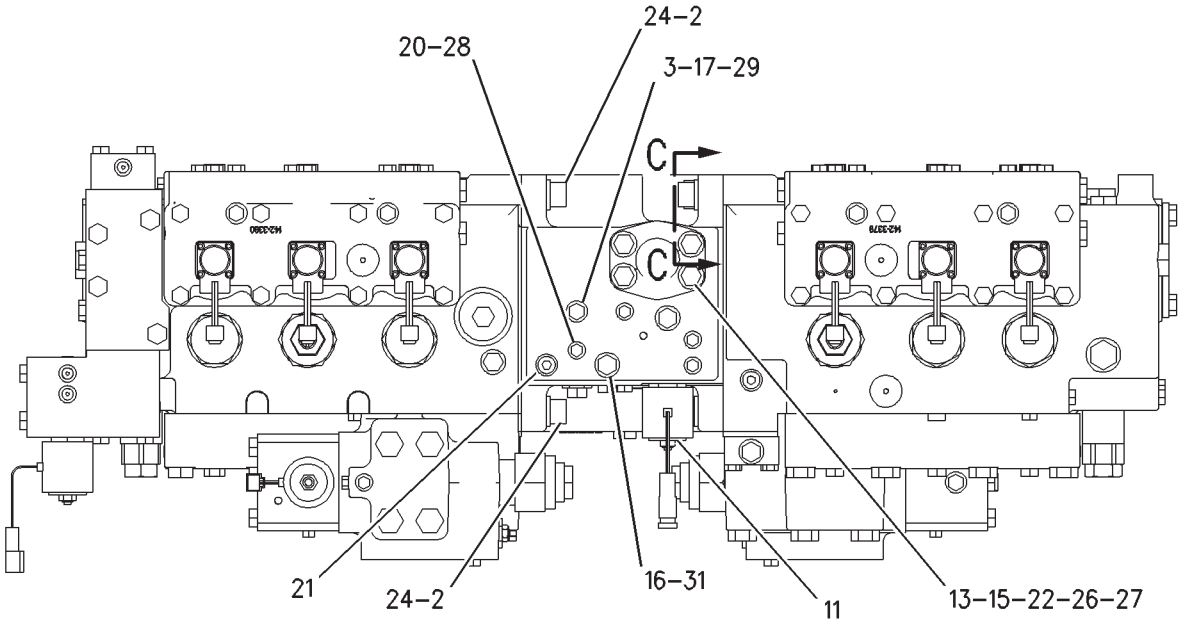

VIEW B-B

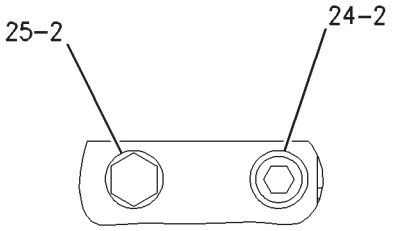

VIEW C-C

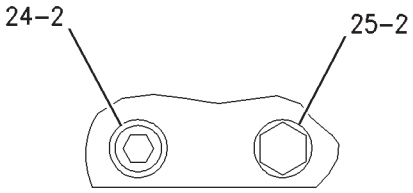

VIEW D-D

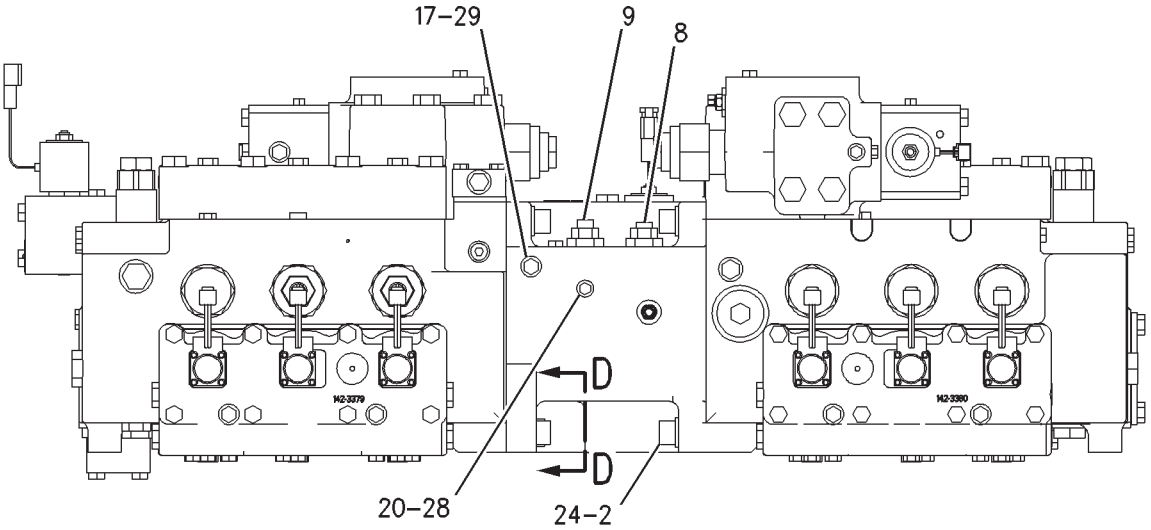

VIEW A-A

GRAPHIC #2 **<END>** g00983921

HYDRAULIC SYSTEM

237-9872 VALVE GP-MAIN CONTROL

S/N: RCD1-UP

PART OF 238-6483, 238-6487 VALVE AR-LOAD CONTROL AN ATTACHMENT

SMCS-5051 **i01947265**

NOTE	REF NO	GRAPHIC REF	PART NUMBER	QTY	PART NAME 1 2 3 4 5 6 (PRODUCT LEVEL)	SEE PAGE
Y	1	1	**223-7746**	1	VALVE GP-CONTROL (RH)	793
	2	1	*3J-3679*	1	PLUG AS	
		1	**1J-9671**	1	SEAL-O-RING	
		1	**1J-9671**	1	SEAL-O-RING	
		1	**9S-8003**	1	PLUG	
		1	**9S-8003**	1	PLUG	
	3	2	**8T-4223**	4	WASHER-HARD (13.5X25.5X3-MM THK)	
	4	2	**4J-9780**	1	PLUG-ORIFICE	
	5	1	**119-2265**	1	FILTER (EDGE)	
	6	1	**165-5623**	1	MANIFOLD-INLET	
Y	7	1	**193-1665**	1	VALVE GP-PRESSURE REDUCING (SIGNAL DUPLICATION)	847
	8	1,2	*222-4737*	16	PLUG AS	
					(EACH INCLUDES)	
		1,2	**4J-7533**	1	SEAL-O-RING	
		1,2	**9S-4180**	1	PLUG	
	9	1,2	**9X-8257**	10	WASHER (17.5X30X3.5-MM THK)	
Y	10	1	**238-8212**	1	VALVE GP-CONTROL (BOOM, BUCKET, WORK TOOL)	806
Y	11	2	**117-5269**	1	VALVE GP-RELIEF (LOW SIGNAL PRESSURE)	857
Y	12	2	**117-5270**	1	VALVE GP-RELIEF (HIGH SIGNAL PRESSURE)	858
	13	1,2	*148-8407*	3	PLUG AS	
					(EACH INCLUDES)	
		1,2	**3J-1907**	1	SEAL-O-RING	
		1,2	**9S-4191**	1	PLUG-O-RING	
	14	1	*148-8411*	4	PLUG AS	
					(EACH INCLUDES)	
		1	**3K-0360**	1	SEAL-O-RING	
		1	**9S-4185**	1	PLUG-O-RING	
	15	1,2	*155-3624*	4	PLUG AS	
					(EACH INCLUDES)	
		1,2	**3J-7354**	1	SEAL-O-RING	
		1,2	**9S-4182**	1	PLUG-O-RING	
Y	16	2	**171-3685**	1	VALVE GP-SOLENOID (24-VOLT) (HIGH, LOW RELIEF)	878
	17	2	**1P-3704**	1	SEAL-RECTANGULAR	
	18	1	**1P-3707**	4	SEAL-RECTANGULAR	
	19	2	**1P-5767**	2	FLANGE-HALF	
	20	1	**3J-1907**	1	SEAL-O-RING	
	21	1	**4J-0522**	4	SEAL-O-RING	
Y	22	2	**4T-1860**	1	VALVE GP-SHUTTLE	868
	23	2	**5P-0048**	1	COVER	
	24	1	**6V-5555**	5	SEAL-O-RING	
M	25	1,2	**8T-0348**	8	BOLT-SOCKET HEAD (M16X2X50-MM)	
M	26	2	**8T-4193**	2	BOLT (M16X2X50-MM)	
M	27	2	**8T-4194**	4	BOLT (M12X1.75X50-MM)	

M-METRIC PART
Y-SEPARATE ILLUSTRATION

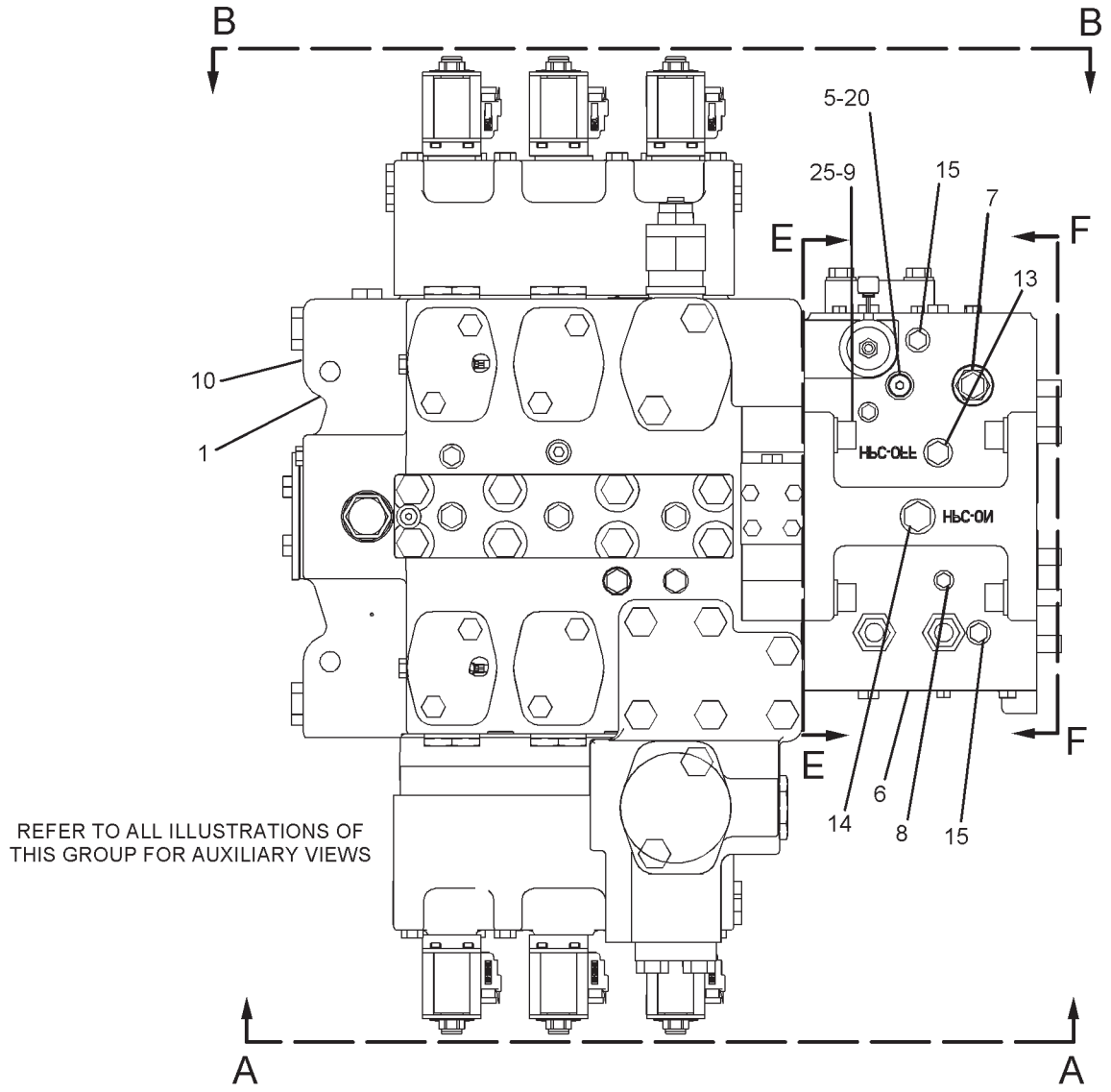

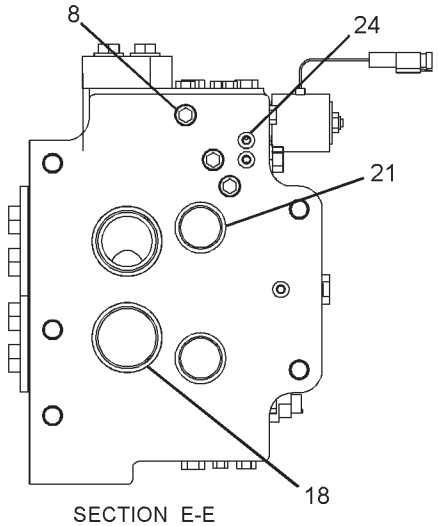

SECTION E-E

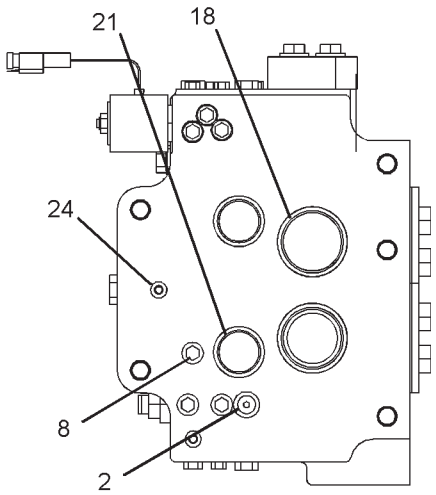

SECTION F-F

GRAPHIC #1

g01091451

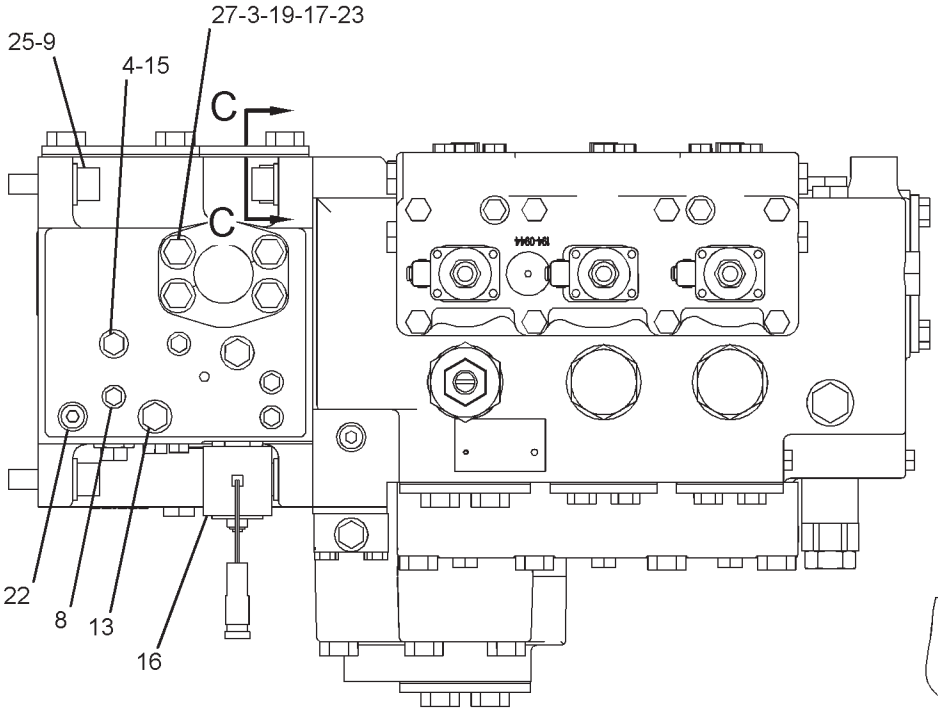

SECTION B-B

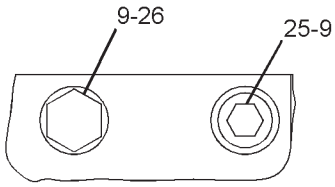

SECTION C-C

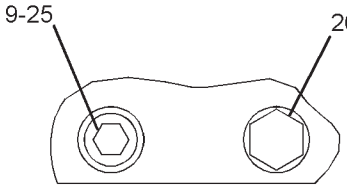

SECTION D-D

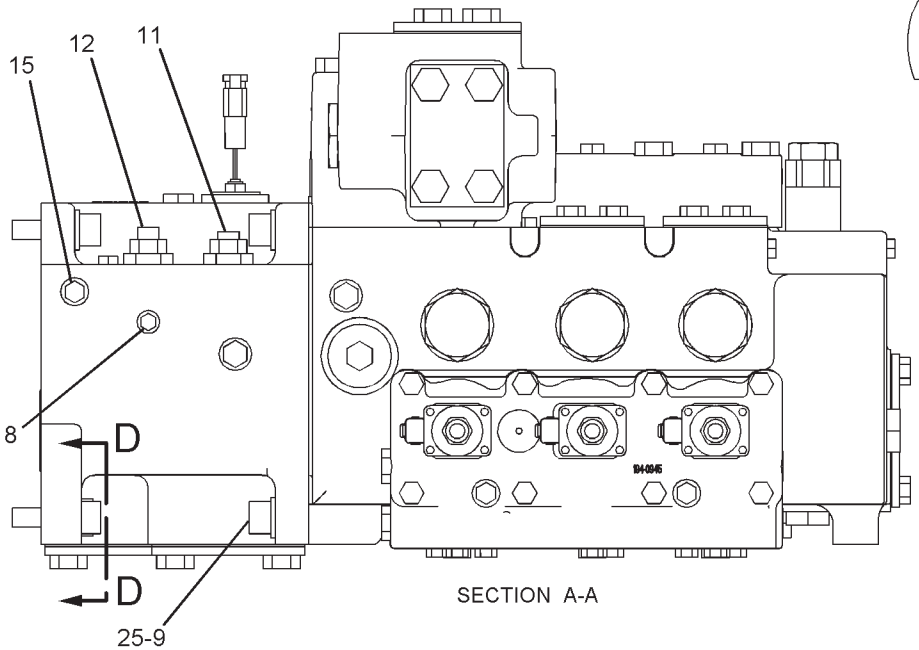

SECTION A-A

GRAPHIC #2 **<END>** g01091453

HYDRAULIC SYSTEM

238-8213 VALVE GP-MAIN CONTROL

S/N: RCD206-UP
PART OF 213-4216 VALVE AR-BOOM LOWERING CONTROL
AN ATTACHMENT

SMCS-5051 **i02312872**

NOTE	REF NO	GRAPHIC REF	PART NUMBER	QTY	PART NAME 1 2 3 4 5 6 (PRODUCT LEVEL)	SEE PAGE
Y	1	1	*223-7745*	1	VALVE GP-CONTROL (RH)	788
	2	1	*3J-3679*	1	PLUG AS	
		1	**1J-9671**	1	SEAL-O-RING	
		1	**9S-8003**	1	PLUG	
	3	1,2	**9X-8257**	10	WASHER (17.5X30X3.5-MM THK)	
	4	2	**4J-9780**	1	PLUG-ORIFICE	
	5	1	**165-5623**	1	MANIFOLD-INLET	
Y	6	1	**193-1665**	1	VALVE GP-PRESSURE REDUCING (SIGNAL DUPLICATION)	847
	7	1,2	*222-4737*	16	PLUG AS	
					(EACH INCLUDES)	
		1,2	**4J-7533**	1	SEAL-O-RING	
		1,2	**9S-4180**	1	PLUG	
	8	2	**8T-4223**	4	WASHER-HARD (13.5X25.5X3-MM THK)	
Y	9	1	**238-8212**	1	VALVE GP-CONTROL (BOOM, BUCKET, WORK TOOL)	806
Y	10	2	**117-5269**	1	VALVE GP-RELIEF (LOW SIGNAL PRESSURE)	857
Y	11	2	**117-5270**	1	VALVE GP-RELIEF (HIGH SIGNAL PRESSURE)	858
	12	1	**119-2265**	1	FILTER (EDGE)	
	13	1,2	*148-8407*	3	PLUG AS	
					(EACH INCLUDES)	
		1,2	**3J-1907**	1	SEAL-O-RING	
		1,2	**9S-4191**	1	PLUG-O-RING	
	14	1	*148-8411*	1	PLUG AS	
		1	**3K-0360**	1	SEAL-O-RING	
		1	**9S-4185**	1	PLUG-O-RING	
	15	1,2	*155-3624*	4	PLUG AS	
					(EACH INCLUDES)	
		1,2	**3J-7354**	1	SEAL-O-RING	
		1,2	**9S-4182**	1	PLUG-O-RING	
Y	16	2	**171-3685**	1	VALVE GP-SOLENOID (24-VOLT) (HIGH, LOW RELIEF)	878
	17	2	**1P-3704**	1	SEAL-RECTANGULAR	
	18	1	**1P-3707**	4	SEAL-RECTANGULAR	
	19	2	**1P-5767**	2	FLANGE-HALF	
	20	1	**3J-1907**	1	SEAL-O-RING	
	21	1	**4J-0522**	4	SEAL-O-RING	
Y	22	2	**4T-1860**	1	VALVE GP-SHUTTLE	868
	23	2	**5P-0048**	1	COVER	
	24	1	**6V-5555**	5	SEAL-O-RING	
M	25	1,2	**8T-0348**	8	BOLT-SOCKET HEAD (M16X2X50-MM)	
M	26	2	**8T-4193**	2	BOLT (M16X2X50-MM)	
M	27	2	**8T-4194**	4	BOLT (M12X1.75X50-MM)	

M-METRIC PART
Y-SEPARATE ILLUSTRATION

238-8213 VALVE GP-MAIN CONTROL *(contd.)* **i02312872**

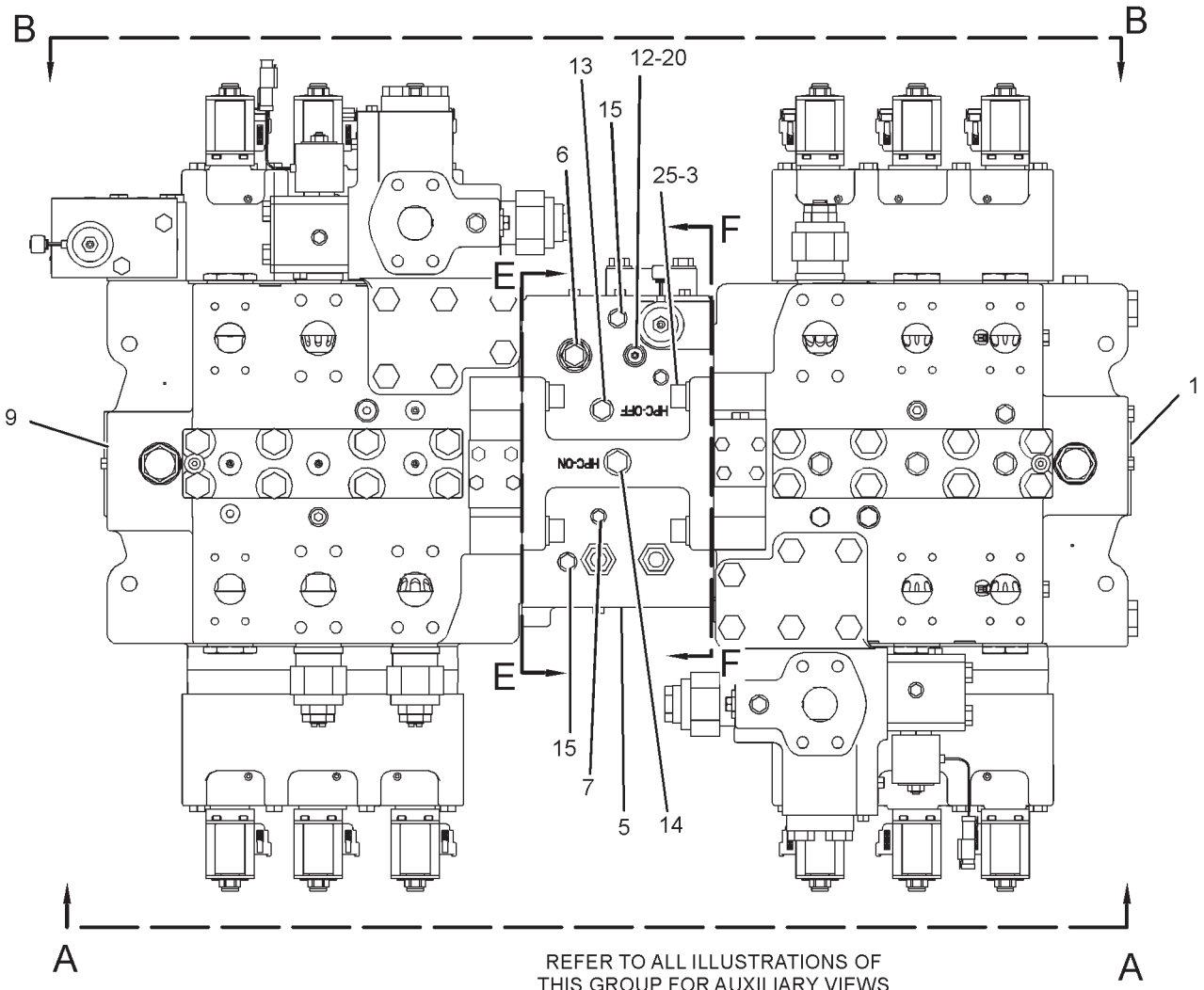

REFER TO ALL ILLUSTRATIONS OF
THIS GROUP FOR AUXILIARY VIEWS

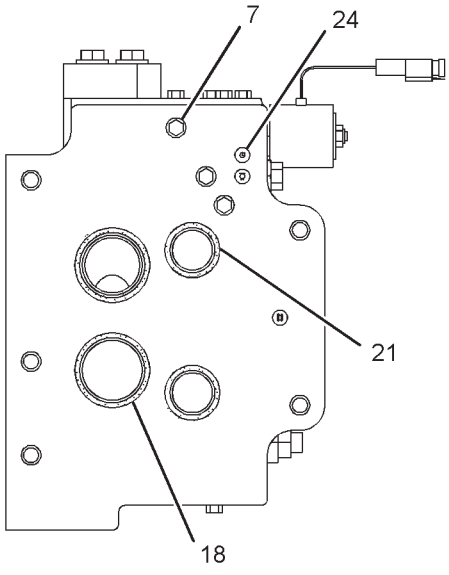

SECTION E-E

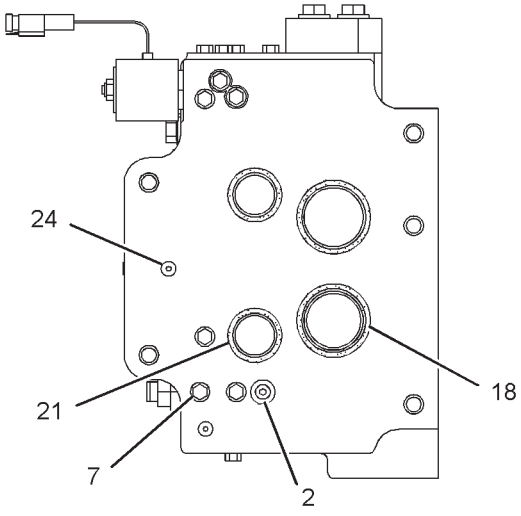

SECTION F-F

GRAPHIC #1

g01161030

238-8213 VALVE GP-MAIN CONTROL *(contd.)* i02312872

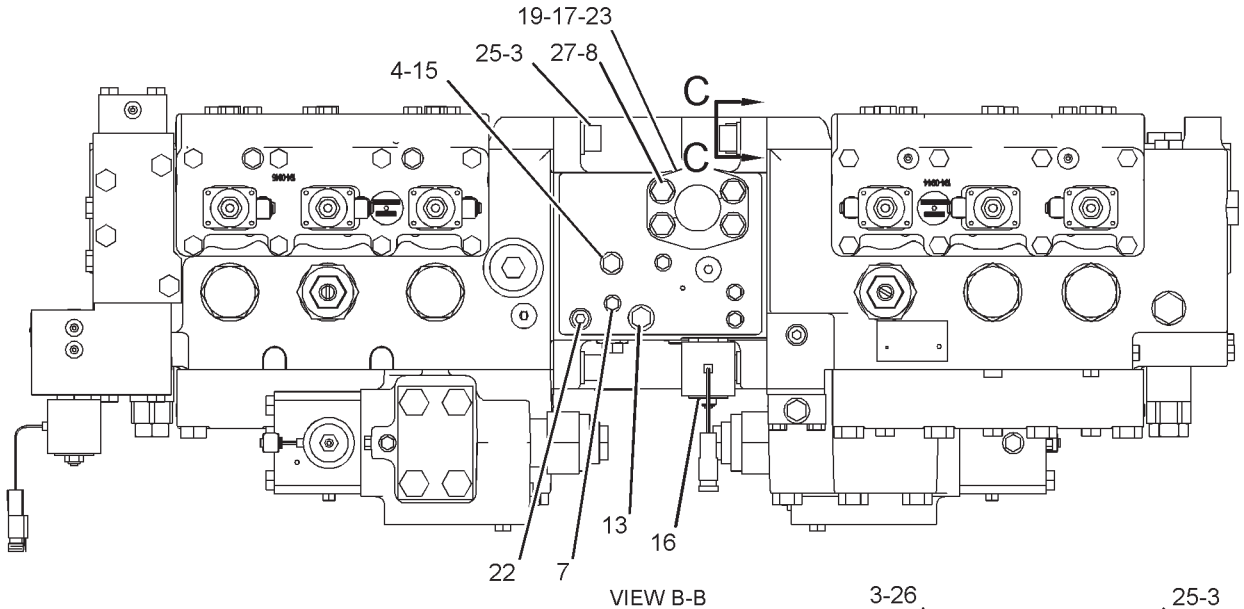

VIEW B-B

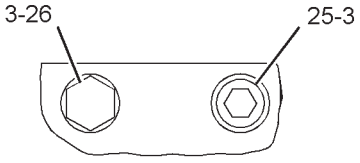

VIEW C-C

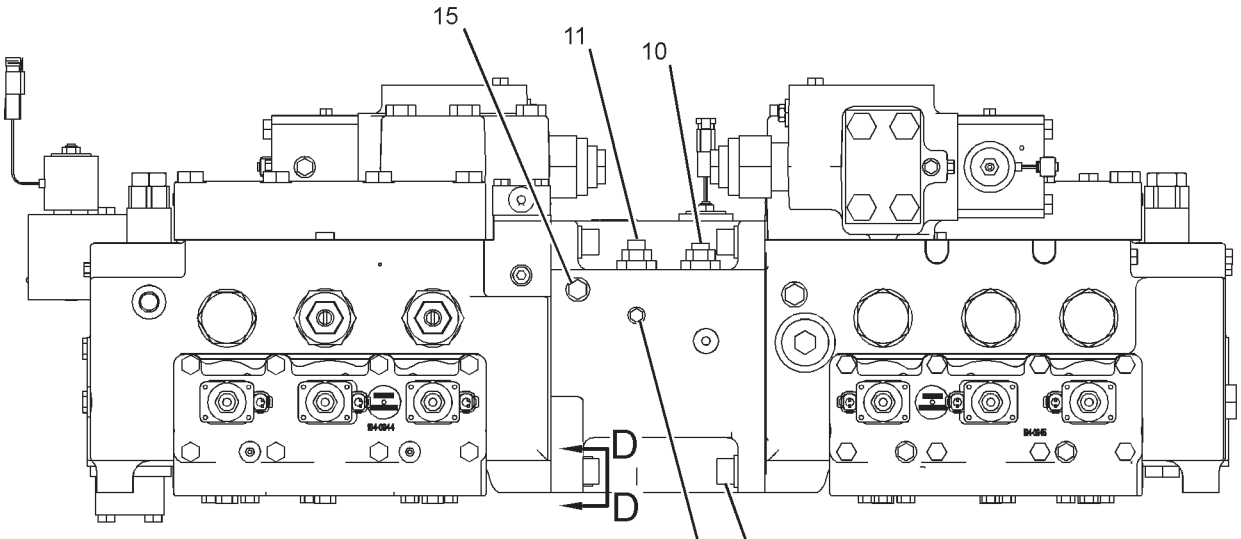

VIEW A-A

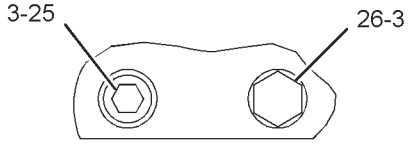

VIEW D-D

GRAPHIC #2 **<END>** g01161031

HYDRAULIC SYSTEM

140-0736 VALVE GP-MANIFOLD & REDUCING

S/N: RCD1-UP

PART OF 168-9377 LINES GP-PILOT

SMCS-3206 **i01823537**

NOTE	REF NO	GRAPHIC REF	PART NUMBER	QTY	PART NAME 1 2 3 4 5 6 (PRODUCT LEVEL)	SEE PAGE
Z	1	1		1	VALVE GP-CONTROL	
	2	1	**119-5364**	1	PLUG	
	3	1	**2M-9780**	1	SEAL-O-RING	
	4	1	**119-5362**	1	SPRING	
	5	1	**119-5365**	1	VALVE	
	6	1	**107-7068**	2	PLUG-PIPE	
	7	1	**7Y-5009**	1	CARTRIDGE	
M	8	1	**8T-4133**	1	NUT (M10X1.5-THD)	
M	9	1	**4I-8915**	1	SETSCREW-SOCKET (M10X1.5X25-MM)	
	10	1	**4I-5657**	1	PLUG	
	11	1	**095-1582**	1	SEAL-O-RING	
	12	1	**153-5187**	1	SPRING	
	13	1	**095-1592**	1	SEAL-O-RING	
	14	1	**8T-6759**	11	PLUG-PIPE	
Y	15	1	**111-9916**	1	VALVE GP-SOLENOID	872
Y	16	1	**121-1491**	2	VALVE GP-SOLENOID	873
M	17	1	**7I-2272**	6	BOLT (M5X0.8X12-MM)	
	18	1	**095-0968**	1	PLUG	
	19	1	**140-0741**	2	PLUG	
	20	1	**7M-8485**	2	SEAL-O-RING	
	21	1	**140-0742**	1	SPRING	
	27	1	**9S-4191**	3	PLUG-O-RING	
	28	1	**3J-1907**	3	SEAL-O-RING	

M-METRIC PART
Y-SEPARATE ILLUSTRATION
Z-NOT SERVICED SEPARATELY

140-0736 VALVE GP-MANIFOLD & REDUCING *(contd.)* i01823537

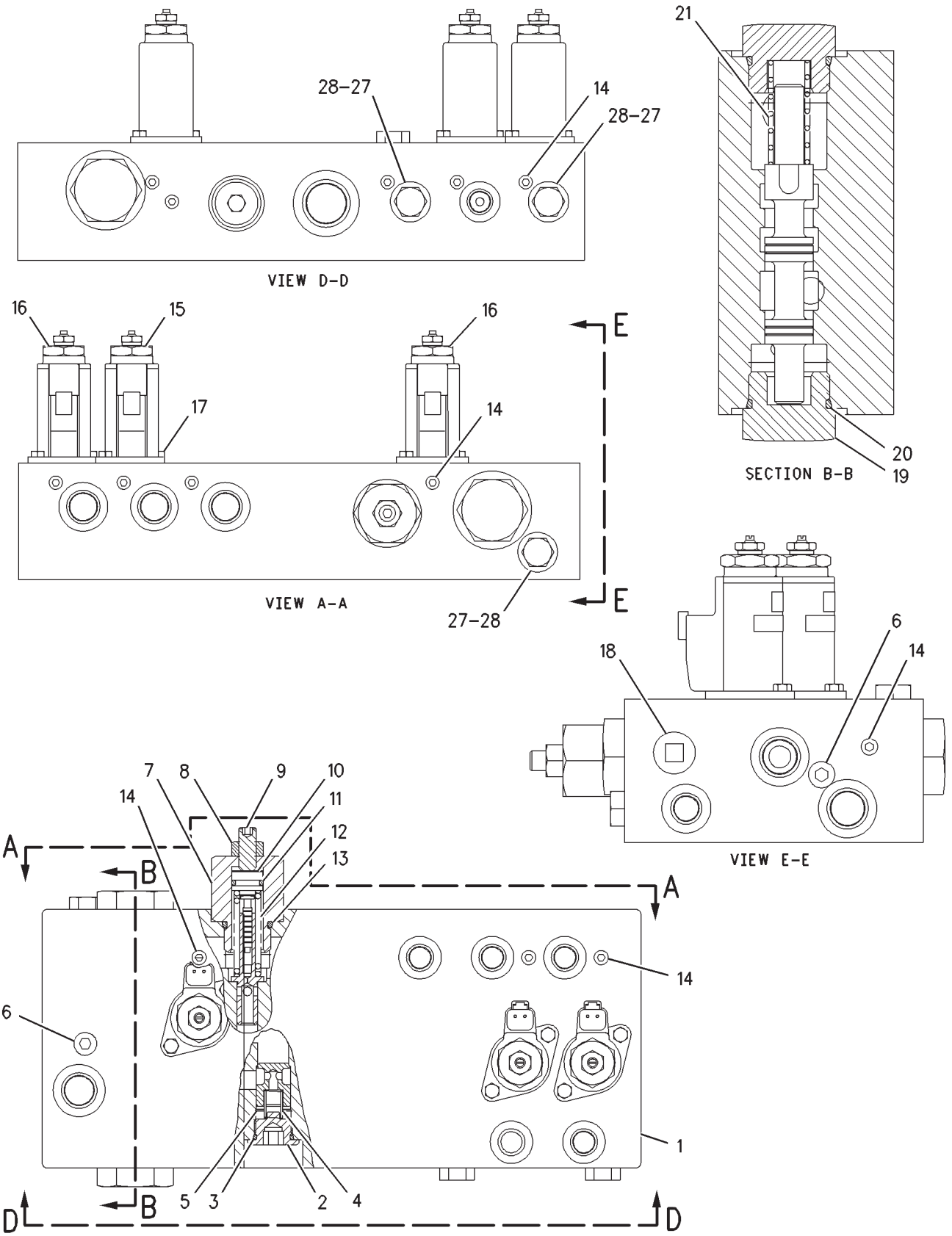

GRAPHIC #1 **<END>** g00669266

HYDRAULIC SYSTEM

160-0964 VALVE GP-MANUAL–LH

S/N: RCD1-UP
PART OF 168-9378 LINES GP-FRONT
AN ATTACHMENT

SMCS-1329, 5001, 5130 **i03071786**

NOTE	REF NO	GRAPHIC REF	PART NUMBER	QTY	PART NAME 1 2 3 4 5 6 (PRODUCT LEVEL)	SEE PAGE
	1	1	**160-9185**	1	HANDLE	
	2	1	**160-9187**	1	PLATE	
M	3	1	**7X-2536**	1	BOLT (M8X1.25X14-MM)	
	4	1	**160-9999**	2	PLATE	
	5	1	**142-1356**	1	PIN	
	6	1	**175-3796**	1	PLATE	
	7	1	**175-3797**	1	PLATE	
M	8	1	**099-2374**	2	BOLT-SOCKET HEAD (M5X0.8X12-MM)	
	9	1	**171-7085**	1	SWITCH AS-LIMIT (FLOW INDICATOR)	
		1	**186-3735**	4	PIN-CONNECTOR (16-GA TO 18-GA)	
E		1	**9X-1386**		SLEEVE (9-CM)	
		1	**102-8804**	1	KIT-RECEPTACLE (4-PIN)	
					(INCLUDES RECEPTACLE AS & WEDGE)	
					AVAILABLE REPAIR KIT(S):	
			160-9186	1	KIT-SEAL (MANUAL VALVE)	

E-ORDER BY THE CENTIMETER
M-METRIC PART

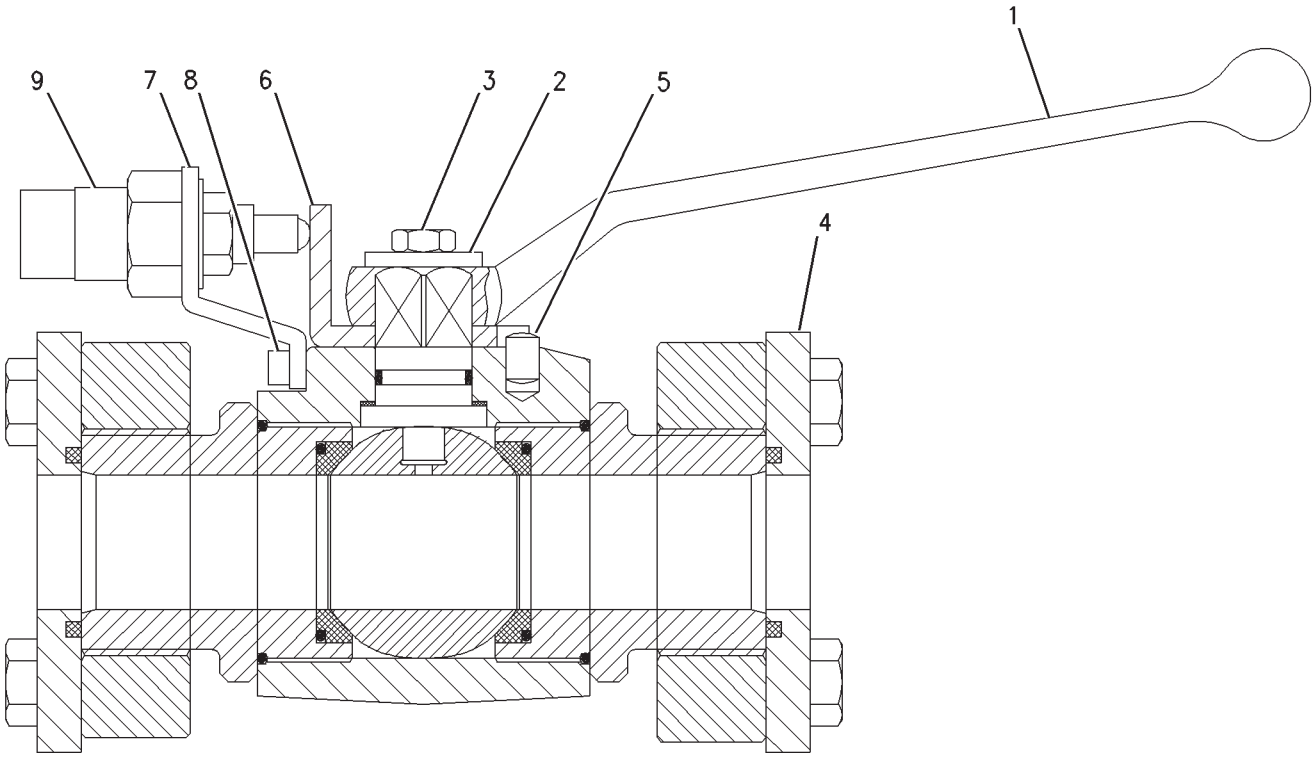

GRAPHIC #1 **<END>** g00812137

HYDRAULIC SYSTEM

175-1814 VALVE GP-MANUAL–RH

S/N: RCD1-UP
PART OF 168-9378 LINES GP-FRONT
AN ATTACHMENT

SMCS-1329, 5001, 5130 **i03071805**

NOTE	REF NO	GRAPHIC REF	PART NUMBER	QTY	PART NAME 1 2 3 4 5 6 (PRODUCT LEVEL)	SEE PAGE
	1	1	**160-9185**	1	HANDLE	
	2	1	**160-9187**	1	PLATE	
M	3	1	**7X-2536**	1	BOLT (M8X1.25X14-MM)	
	4	1	**160-9999**	2	PLATE	
	5	1	**142-1356**	1	PIN	
	6	1	**175-3800**	1	PLATE	
	7	1	**175-3797**	1	PLATE	
M	8	1	**099-2374**	2	BOLT-SOCKET HEAD (M5X0.8X12-MM)	
	9	1	**171-7085**	1	SWITCH AS-LIMIT (FLOW INDICATOR)	
		1	**186-3735**	4	PIN-CONNECTOR (16-GA TO 18-GA)	
BE		1	**9X-1386**		SLEEVE (9-CM)	
		1	**102-8804**	1	KIT-RECEPTACLE (4-PIN)	
					(INCLUDES RECEPTACLE AS & WEDGE)	
					AVAILABLE REPAIR KIT(S):	
			160-9186	1	KIT-SEAL (MANUAL VALVE)	

B-USE AS REQUIRED
E-ORDER BY THE CENTIMETER
M-METRIC PART

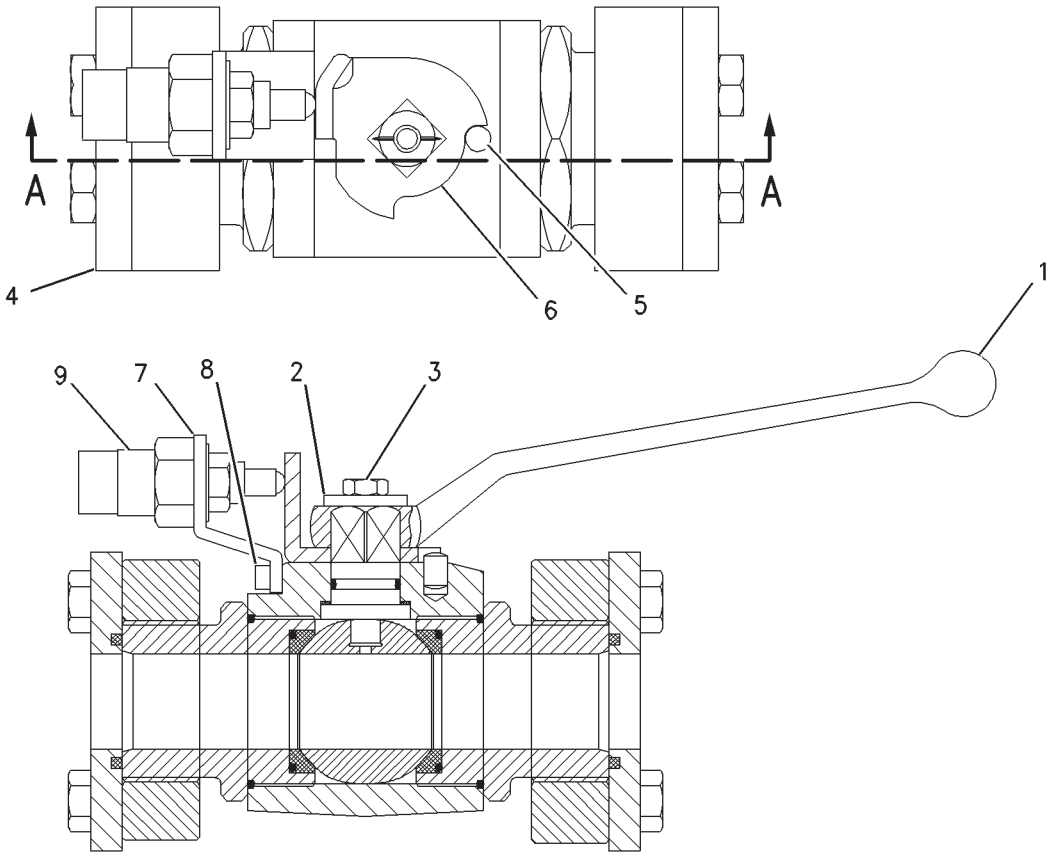

SECTION A-A

GRAPHIC #1 **<END>** g00710867

HYDRAULIC SYSTEM

229-5272 VALVE GP-MANUAL

S/N: RCD1-UP

PART OF 193-6554, 193-6555, 193-6556, 197-2257 LINES GP-AUXILIARY HYDRAULIC AN ATTACHMENT

SMCS-1329, 5001, 5130 **i02198307**

NOTE	REF NO	GRAPHIC REF	PART NUMBER	QTY	PART NAME 1 2 3 4 5 6 (PRODUCT LEVEL)	SEE PAGE
	1	1	**3J-1907**	2	SEAL-O-RING	
	2	1	**9S-8004**	2	PLUG	

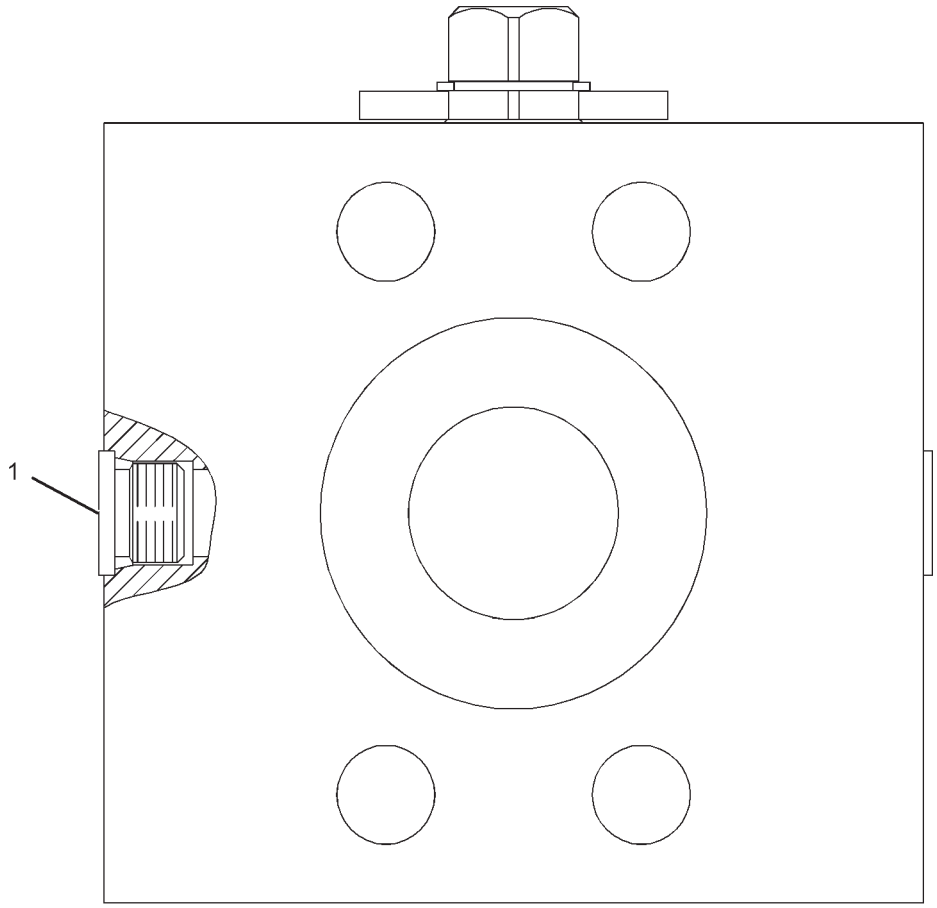

FRONT VIEW

GRAPHIC #1

<END>

g01062997

HYDRAULIC SYSTEM

123-2514 VALVE GP-PILOT–COUNTERWEIGHT

S/N: RCD1-UP
PART OF 168-9379 LINES GP-REAR ATTACHMENT
AN ATTACHMENT

SMCS-5059 **i01138427**

NOTE	REF NO	GRAPHIC REF	PART NUMBER	QTY	PART NAME 1 2 3 4 5 6 (PRODUCT LEVEL)	SEE PAGE
M	1	1	**099-0822**	2	BOLT-SOCKET HEAD (M5X0.8X10-MM)	
	2	1	**7I-9001**	1	STOP	
	3	1	**096-4509**	1	SPRING	
	4	1	**7I-2789**	1	WASHER (4.3X9X0.8-MM THK)	
	5	1	**095-1519**	1	SEAL-O-RING	
	6	1	**8T-6759**	1	PLUG-PIPE	
	7	1	**126-9992**	1	SOLENOID AS	
	8	1	**131-5894**	1	SPRING	
	9	1	**096-4514**	2	PLUG	
	10	1	**095-1582**	2	SEAL-O-RING	

M-METRIC PART

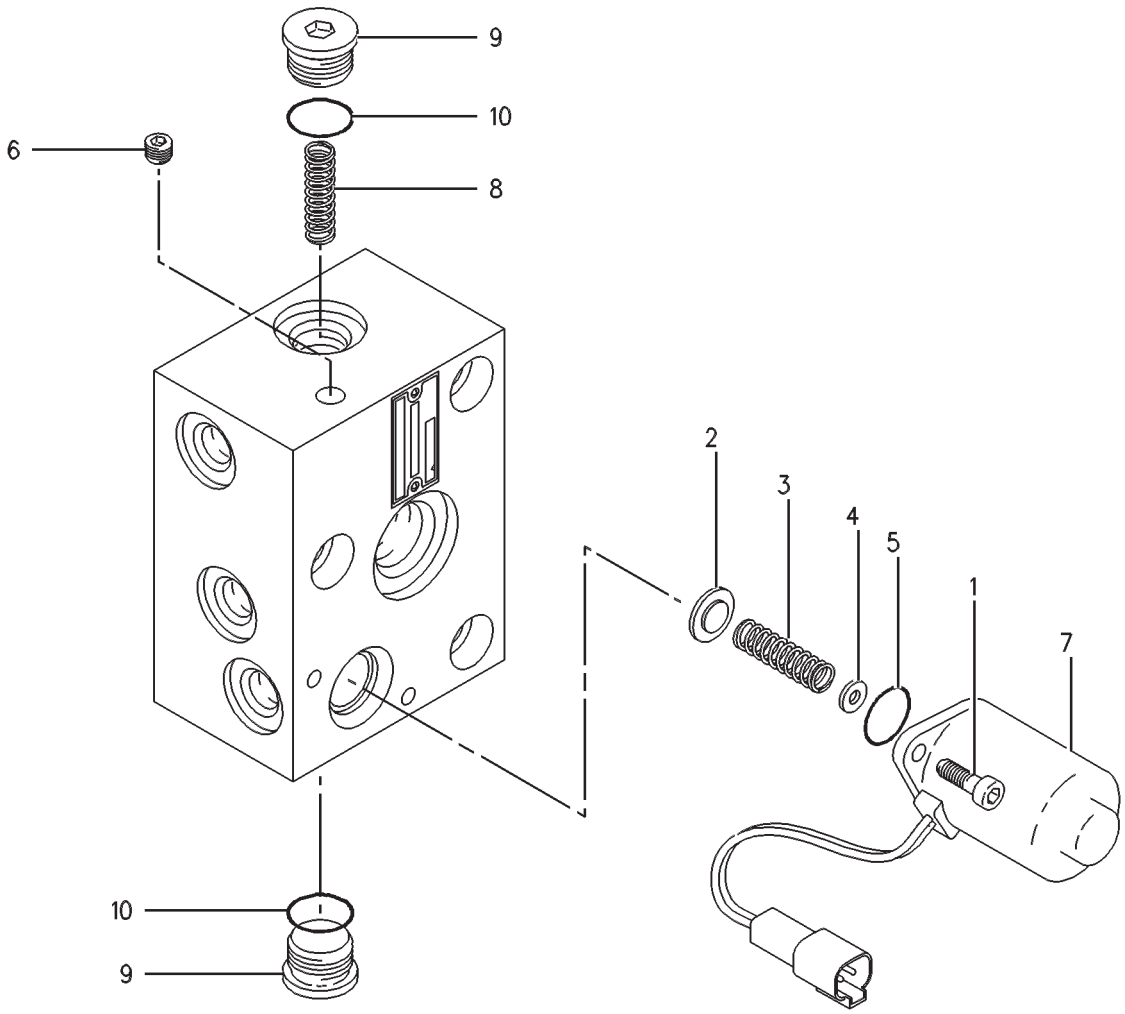

GRAPHIC #1 **<END>** g00268646

HYDRAULIC SYSTEM

193-1665 VALVE GP-PRESSURE REDUCING

S/N: RCD1-UP

PART OF 223-7751 VALVE GP, 174-1843, 174-1852, 180-7882, 223-7750, 223-7752, 233-6970, 237-9872, 238-8213 VALVE GP-MAIN CONTROL

ALSO AN ATTACHMENT

SMCS-5117 **i02778327**

NOTE	REF NO	GRAPHIC REF	PART NUMBER	QTY	PART NAME 1 2 3 4 5 6 (PRODUCT LEVEL)	SEE PAGE
	1	1	**193-1664**	1	VALVE GP-CONTROL	
	2	1	**3J-1907**	2	SEAL-O-RING	
	3	1	**4J-5268**	1	SEAL-O-RING	
	4	1	**4J-5351**	1	SEAL-O-RING	
	5	1	**301-5243**	1	RING-BACKUP	
	6	1	**5J-2974**	1	SEAL-O-RING	
	7	1	**5P-6719**	1	PLUG	
	8	1	**301-5241**	1	RING-BACKUP	
	9	1	**301-5242**	1	RING-BACKUP	

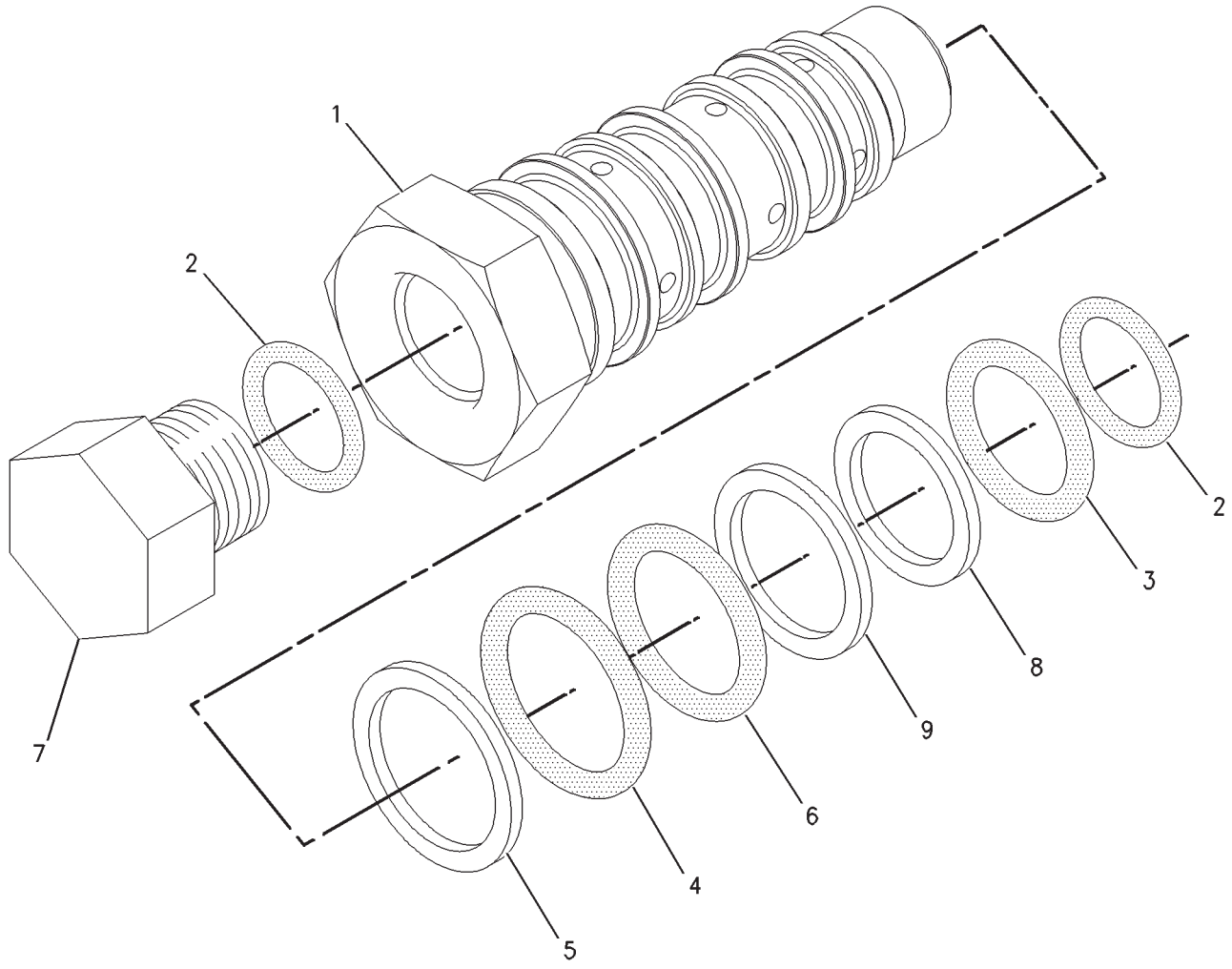

GRAPHIC #1 **<END>** g00763618

HYDRAULIC SYSTEM

111-9997 VALVE GP-PUMP CONTROL–PRESSURE COMPENSATOR

S/N: RCD1-UP

PART OF 200-3270 VALVE GP-PUMP CONTROL

SMCS-5455 **i00623656**

NOTE	REF NO	GRAPHIC REF	PART NUMBER	QTY	PART NAME 1 2 3 4 5 6 (PRODUCT LEVEL)	SEE PAGE
M	1	1	**096-2966**	2	SETSCREW-SOCKET	
M	2	1	**8T-4133**	2	NUT (M10X1.5-THD)	
	3	1	**7I-7476**	2	COVER	
	4	1	**7I-7462**	1	CASE-PISTON	
	5	1	**095-1787**	2	RING-BACKUP	
	6	1	**095-1590**	2	SEAL-O-RING	
	7	1	**095-1785**	2	RING-BACKUP	
	8	1	**095-1586**	2	SEAL-O-RING	
	9	1	**7I-7463**	1	SPRING	
	10	1	**112-0001**	1	BODY	
	11	1	**094-6452**	1	SEAT-SPRING	
	12	1	**095-1574**	5	SEAL-O-RING	
	13	1	**096-3021**	1	SEAL-O-RING	
	14	1	**107-6550**	1	SPOOL AS	
	15	1	**7I-7469**	1	CASE-PISTON	
	16	1	**7I-7475**	2	PISTON	
M	17	1	**8C-6965**	4	BOLT-SOCKET HEAD (M6X1X45-MM)	
M	18	1	**8T-1158**	4	BOLT-SOCKET HEAD (M8X1.25X20-MM)	
	19	1	**111-9999**	1	PLUG	

M-METRIC PART

111-9997 VALVE GP-PUMP CONTROL *(contd.)* **i00623656**

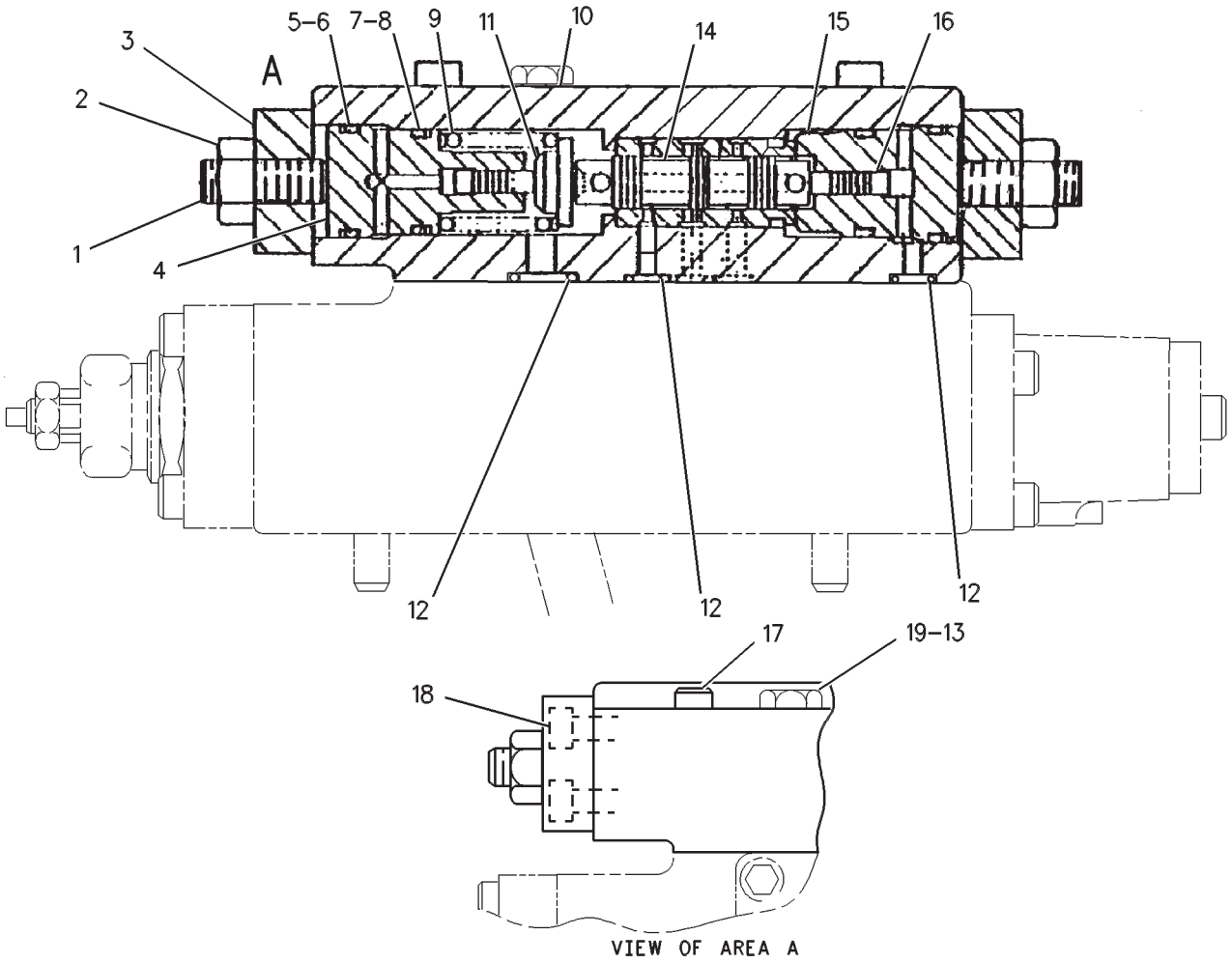

GRAPHIC #1 **<END>** g00284200

HYDRAULIC SYSTEM

165-9250 VALVE GP-PUMP CONTROL

S/N: RCD1-UP

PART OF 155-9206, 259-0878 PUMP GP-PISTON

SMCS-5455 **i01823547**

NOTE	REF NO	GRAPHIC REF	PART NUMBER	QTY	PART NAME 1 2 3 4 5 6 (PRODUCT LEVEL)	SEE PAGE
	1	1	**5P-5874**	3	SEAL-O-RING	
	2	1	**7X-0794**	2	PIN (ROLL)	
	3	1	**170-9817**	1	ROD	
	4	1	**6E-5412**	1	SEAL-O-RING	
Y	5	1	**165-9251**	1	VALVE GP-PUMP CONTROL (FLOW COMPENSATOR)	851
M	6	1	**095-0645**	5	BOLT-SOCKET HEAD (M6X1X55-MM)	
Z	7	1		1	BODY	
	8	1	**112-4629**	1	SCREW	
	9	1	**120-4394**	8	PLUG-BREAK OFF	

M-METRIC PART
Y-SEPARATE ILLUSTRATION
Z-NOT SERVICED SEPARATELY

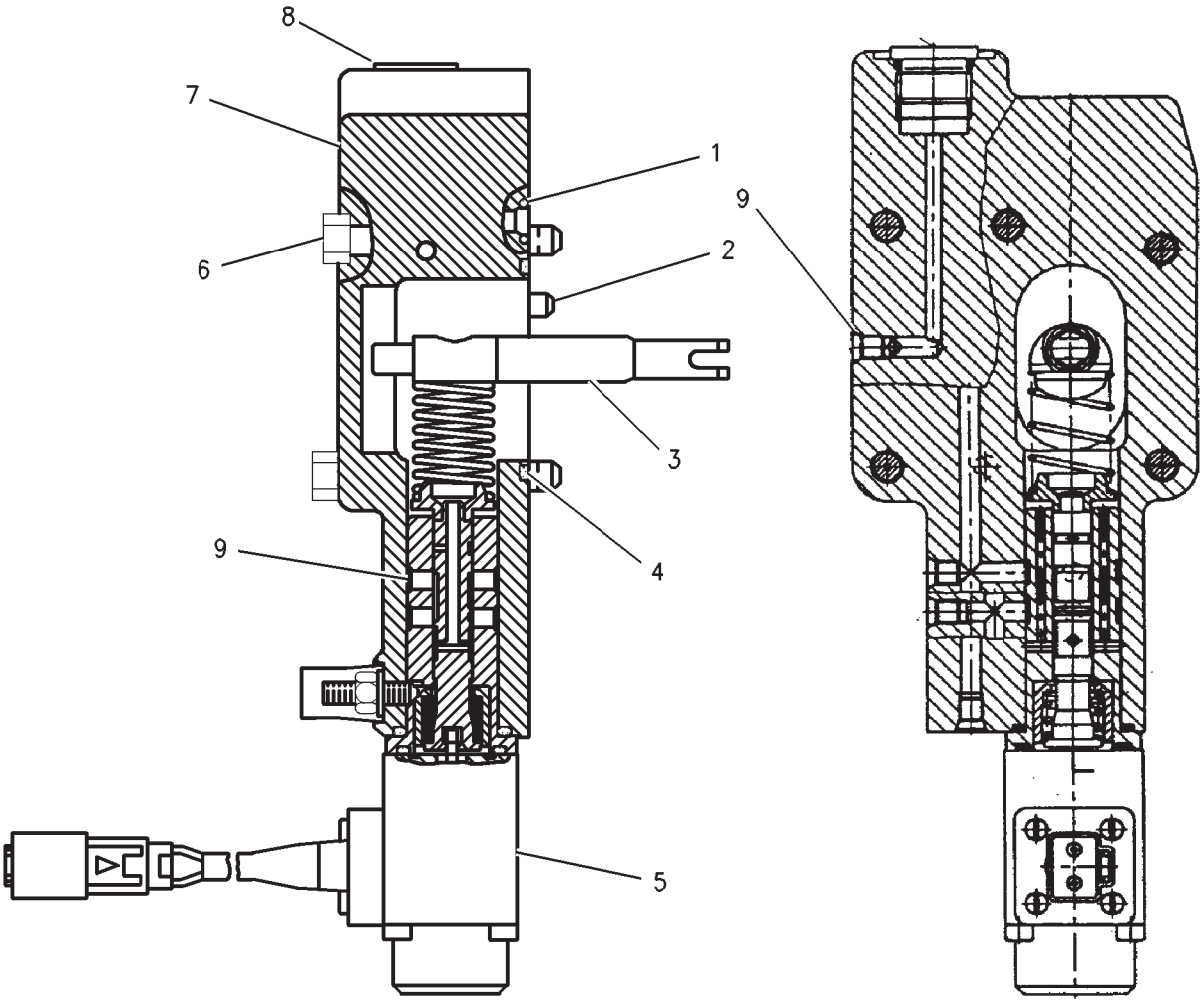

GRAPHIC #1 **<END>** g00723810

HYDRAULIC SYSTEM

165-9251 VALVE GP-PUMP CONTROL

S/N: RCD1-UP

PART OF 165-9250 VALVE GP-PUMP CONTROL

SMCS-5455 **i01471853**

NOTE	REF NO	GRAPHIC REF	PART NUMBER	QTY	PART NAME 1 2 3 4 5 6 (PRODUCT LEVEL)	SEE PAGE
	1	1	**170-9823**	1	SOLENOID GP (PROPORTIONAL)	
M		1	**154-0172**		BOLT-SOCKET HEAD (M4X0.7-THD)	
M	2	1	**177-0358**	4	BOLT-SOCKET HEAD (M4X0.7X55-MM)	
M	3	1	**170-9906**	1	SETSCREW (M6X1X25-MM)	
M	4	1	**9T-3853**	1	LOCKNUT (M6X1-THD)	
	5	1	**170-9819**	1	PISTON	
	6	1	**170-9818**	1	SLEEVE	
	7	1	**3D-4245**	1	SEAL-O-RING	
	8	1	**112-4717**	1	SEAL-O-RING	
	9	1	**170-9822**	1	SPRING	
	10	1	**170-9820**	1	BUSHING	
	11	1	**102-0811**	1	RETAINER	
	12	1	**170-9821**	1	SPRING	

M-METRIC PART

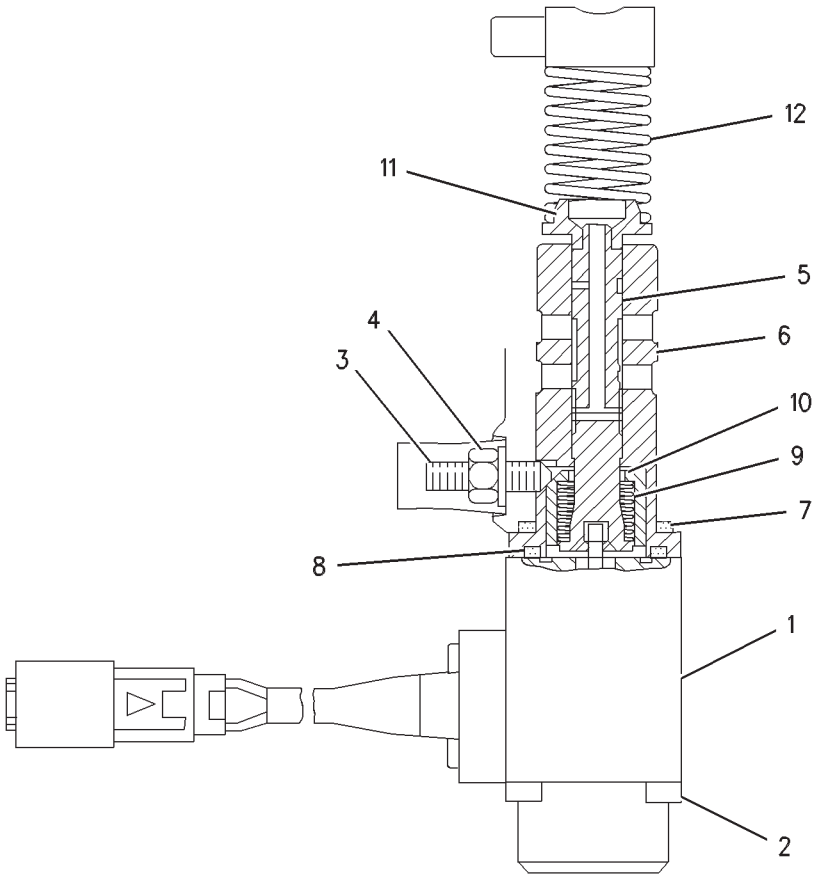

GRAPHIC #1 **<END>** g00655099

HYDRAULIC SYSTEM

200-3270 VALVE GP-PUMP CONTROL–
PRESSURE, FLOW COMPENSATOR
S/N: RCD1-UP
PART OF 155-9205 PUMP GP-MAIN HYDRAULIC

SMCS-5455 **i02570233**

NOTE	REF NO	GRAPHIC REF	PART NUMBER	QTY	PART NAME 1 2 3 4 5 6 (PRODUCT LEVEL)	SEE PAGE
Y	1	1	**111-9997**	1	VALVE GP-PUMP CONTROL (PRESSURE COMPENSATOR)	848
Y	2	1	**204-2730**	1	VALVE GP-PUMP CONTROL (FLOW COMPENSATOR)	853

Y-SEPARATE ILLUSTRATION

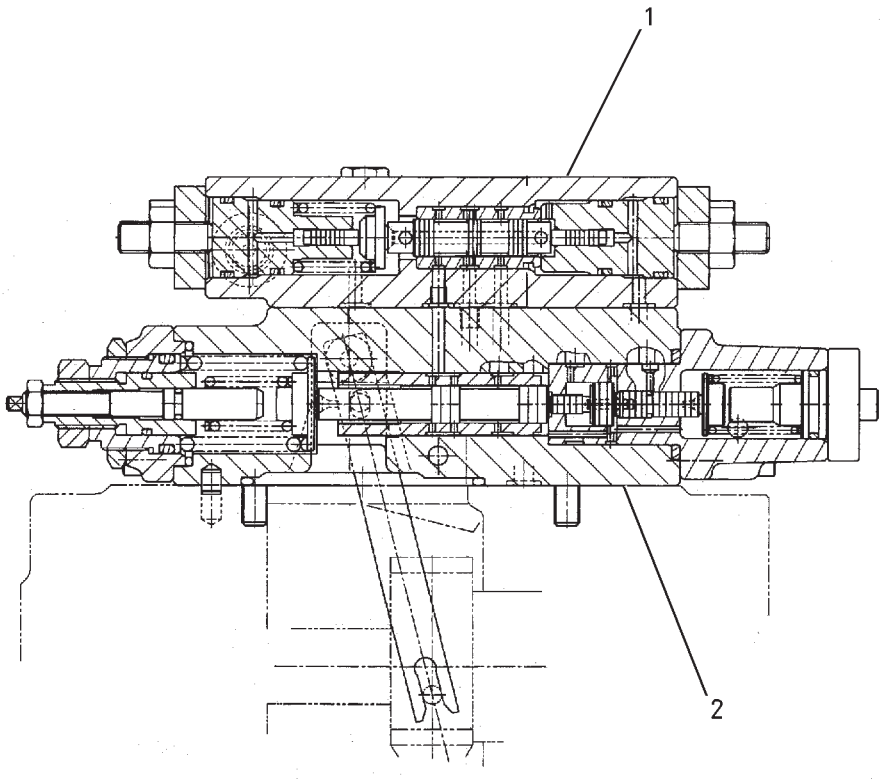

GRAPHIC #1 **<END>** g00850727

HYDRAULIC SYSTEM

204-2730 VALVE GP-PUMP CONTROL—FLOW COMPENSATOR

S/N: RCD1-UP

PART OF 200-3270 VALVE GP-PUMP CONTROL

SMCS-5455 **i02570281**

NOTE	REF NO	GRAPHIC REF	PART NUMBER	QTY	PART NAME 1 2 3 4 5 6 (PRODUCT LEVEL)	SEE PAGE
	1	1	**5I-8794**	1	SEAT-SPRING	
	2	1	**200-3299**	1	SPRING	
	3	1	**105-7331**	1	COVER	
	4	1	**206-9289**	1	SEAL-O-RING	
	5	1	**206-9294**	2	SEAL-O-RING	
	6	1	**7I-7458**	1	SCREW	
	7	1	**7I-7457**	1	SCREW	
	8	1	**7I-7453**	1	SCREW	
M	9	1	**5C-7261**	1	NUT (M8X1.25-THD)	
M	10	1	**8T-4132**	1	NUT (M16X2-THD)	
	11	1	**5I-8800**	1	LOCKNUT (M30X1.5-THD)	
	12	1	**206-9301**	1	SEAL-O-RING	
	13	1	**206-9299**	1	SEAL-O-RING	
	14	1	**112-0003**	1	BODY AS	
	15	1	**206-9298**	1	SEAL-O-RING	
	16	1	**7I-7470**	1	SPRING	
	17	1	**7I-7473**	1	COVER	
M	18	1	**8T-0269**	10	BOLT-SOCKET HEAD (M6X1X20-MM)	
	19	1	**204-2855**	1	STOP	
	20	1	**206-9295**	1	SEAL-O-RING	
	21	1	**105-7329**	1	CASE	
	22	1	**5I-8804**	1	SEAT-SPRING	
	23	1	**105-7328**	1	PISTON-COMPENSATOR	
	24	1	**8C-5899**	1	PIN-SPRING	
	25	1	**200-3302**	1	PISTON	
	26	1	**200-3301**	1	SLEEVE	
	27	1	**206-9300**	1	SEAL-O-RING	
	28	1	**200-3300**	1	SPRING	
M	29	1	**1R-5396**	5	BOLT (M6X1X35-MM)	
	30	1	**7I-7446**	1	BLOCK	
	31	1	**206-9292**	2	SEAL-O-RING	
	32	1	**7I-7447**	2	SEAT	
	33	1	**5H-1472**	2	BALL	
	34	1	**7I-7448**	1	STOP	
	35	1	**204-2733**	1	LEVER AS	
	36	1	**112-0000**	1	PLUG	
	37	1	**5I-8814**	1	RING-RETAINING	
	38	1	**111-9998**	1	PLUG	
	39	1	**206-9293**	1	SEAL-O-RING	
M	40	1	**8T-1158**	3	BOLT-SOCKET HEAD (M8X1.25X20-MM)	
	41	1	**7I-8084**	10	PLUG	
M	42	1	**3E-8025**	2	BOLT-SOCKET HEAD (M8X1.25X50-MM)	
	43	1	**206-9290**	5	SEAL-O-RING	
	44	1	**7I-7449**	1	STOP	
	45	1	**189-9763**	1	SEAL-O-RING	

M-METRIC PART

204-2730 VALVE GP-PUMP CONTROL *(contd.)* i02570281

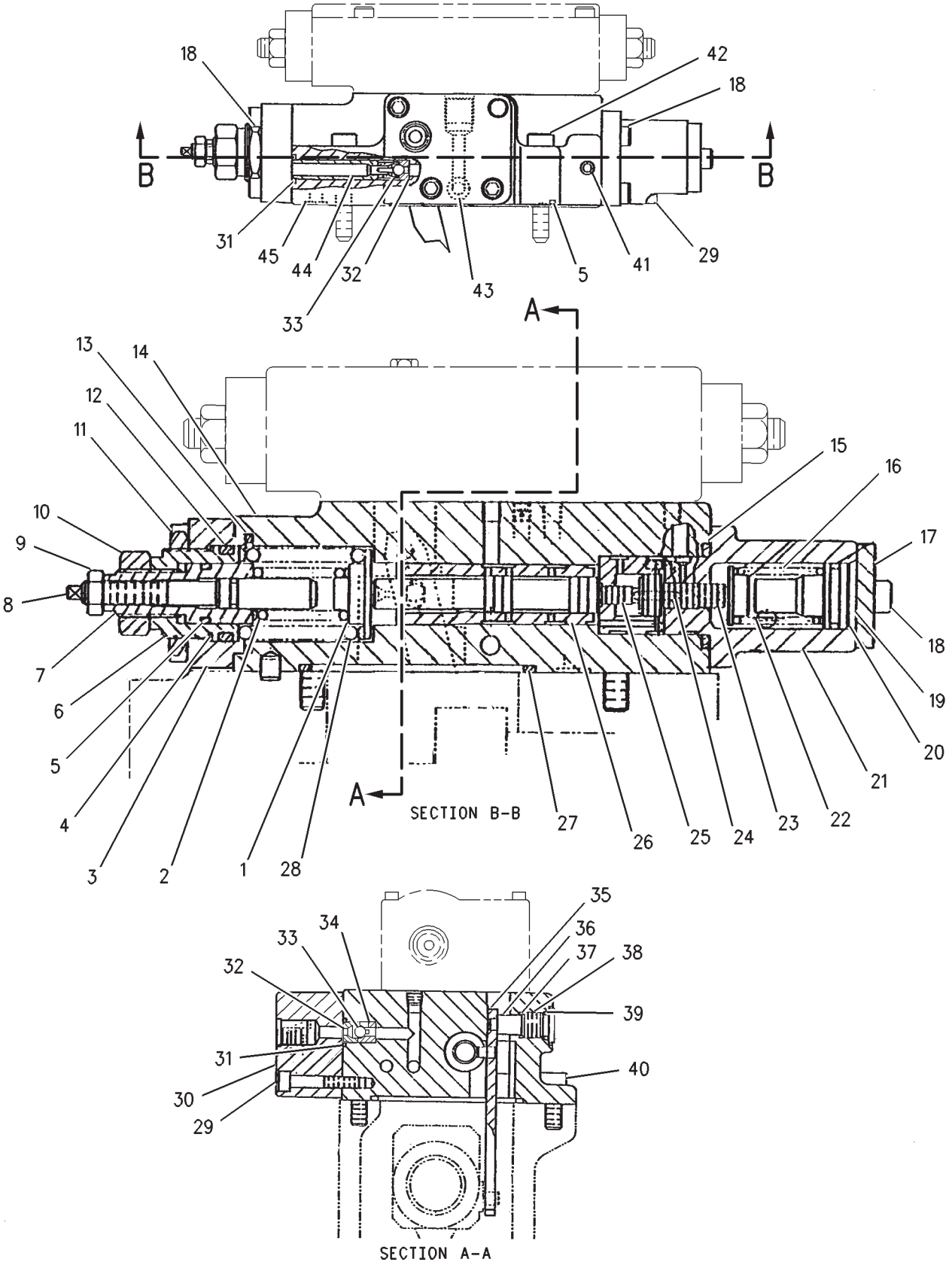

GRAPHIC #1 **<END>** g00853461

HYDRAULIC SYSTEM

209-5937 VALVE GP-PUMP CONTROL–PRESSURE COMPENSATOR

S/N: RCD1-UP

PART OF 170-9918 PUMP GP-PISTON

SMCS-5455 **i02223332**

NOTE	REF NO	GRAPHIC REF	PART NUMBER	QTY	PART NAME 1 2 3 4 5 6 (PRODUCT LEVEL)	SEE PAGE
	1	1	**209-5943**	1	CAP	
	2	1	**134-7489**	1	PLUG	
	3	1	**6E-6528**	1	SEAL	
	4	1	**033-6043**	1	SEAL-O-RING	
	5	1	**213-9244**	1	SEAL-O-RING	
	6	1	**209-6003**	1	RING	
	7	1	**209-5941**	1	PLUG	
M	8	1	**5C-7261**	1	NUT (M8X1.25-THD)	
	9	1	**209-5939**	1	VALVE GP-SOLENOID (PRESSURE COMPENSATOR, FAN PUMP)	
	10	1	**213-9242**	1	SEAL-O-RING	
	11	1	**213-9247**	1	SEAL-O-RING	
	12	1	**209-6004**	1	RING	
	13	1	**213-9243**	1	SEAL-O-RING	
	14	1	**209-5940**	1	ORIFICE	
	15	1	**213-9246**	1	SEAL-O-RING	
	16	1	**9X-7680**	3	SEAL-O-RING	
	17	1	**209-5942**	1	PLUG	
M	18	1	**5C-2890**	1	NUT (M6X1-THD)	
	19	1	**9S-8002**	2	PLUG-O-RING	
	20	1	**033-5853**	2	SEAL-O-RING	
	21	1	**209-6005**	1	RING	

M-METRIC PART

209-5937 VALVE GP-PUMP CONTROL *(contd.)* i02223332

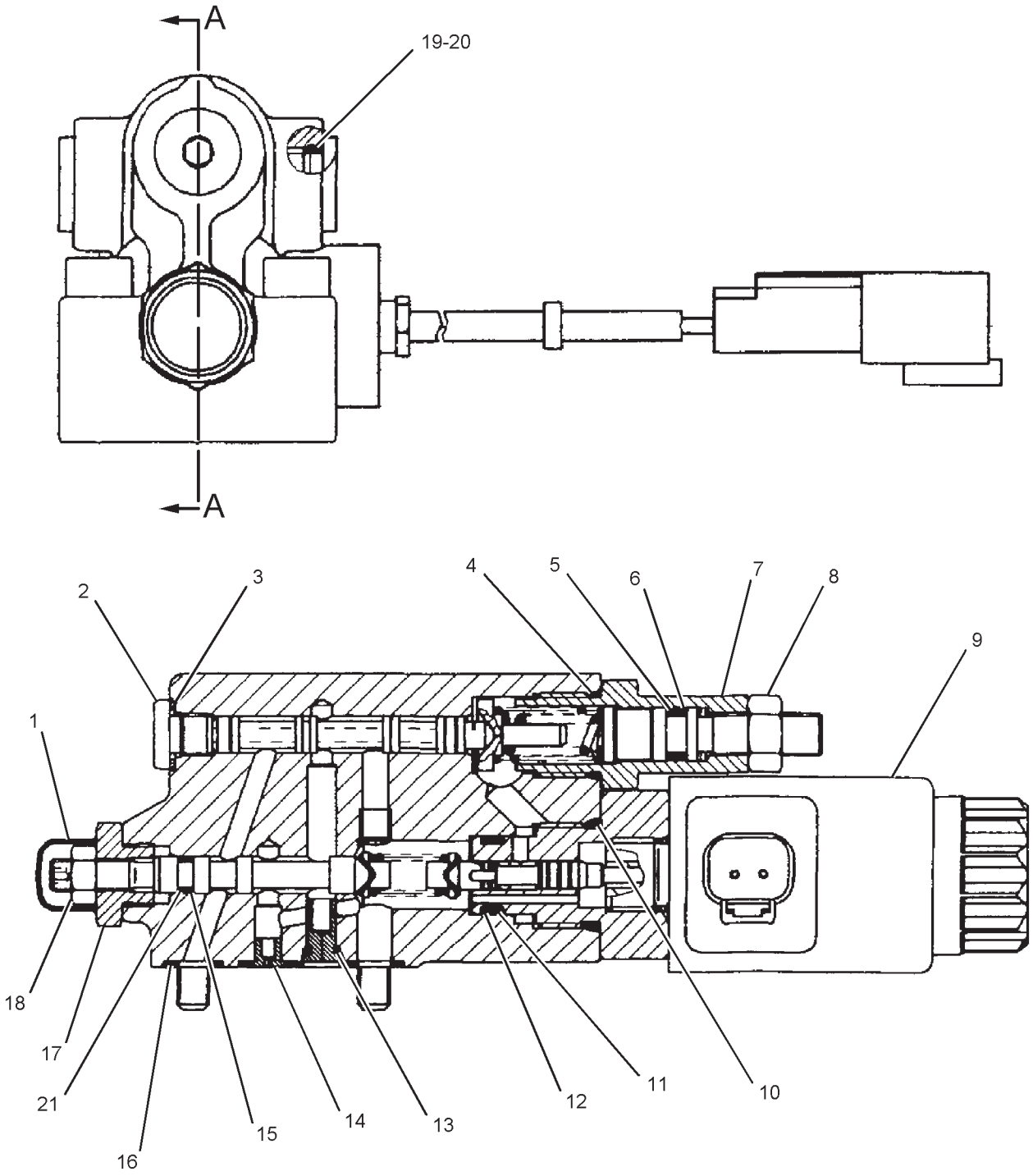

SECTION A-A

GRAPHIC #1 **<END>** g01124453

HYDRAULIC SYSTEM

117-5269 VALVE GP-RELIEF

S/N: RCD1-UP

PART OF 223-7751 VALVE GP, 174-1843, 174-1852, 180-7882, 223-7750, 223-7752, 233-6970, 237-9872, 238-8213 VALVE GP-MAIN CONTROL

ALSO AN ATTACHMENT

SMCS-5069, 5117 **i01695599**

NOTE	REF NO	GRAPHIC REF	PART NUMBER	QTY	PART NAME 1 2 3 4 5 6 (PRODUCT LEVEL)	SEE PAGE
	1	1	**9T-7202**	1	RETAINER AS	
	2	1	**9X-6395**	1	NUT (3/4-16-THD)	
	3	1	**3K-0360**	2	SEAL-O-RING	
	4	1	**9T-1670**	1	SPRING	
	5	1	**111-5754**	1	VALVE	
	6	1	**5P-3108**	1	SEAL-O-RING	
	7	1	**117-5272**	1	BODY AS	
		1	**3J-7354**	1	SEAL-O-RING	
		1	**117-5274**	1	SEAT	
		1	**115-5637**	1	SCREEN AS	
	8	1	**8J-4376**	1	SPACER (0.12-IN THK)	

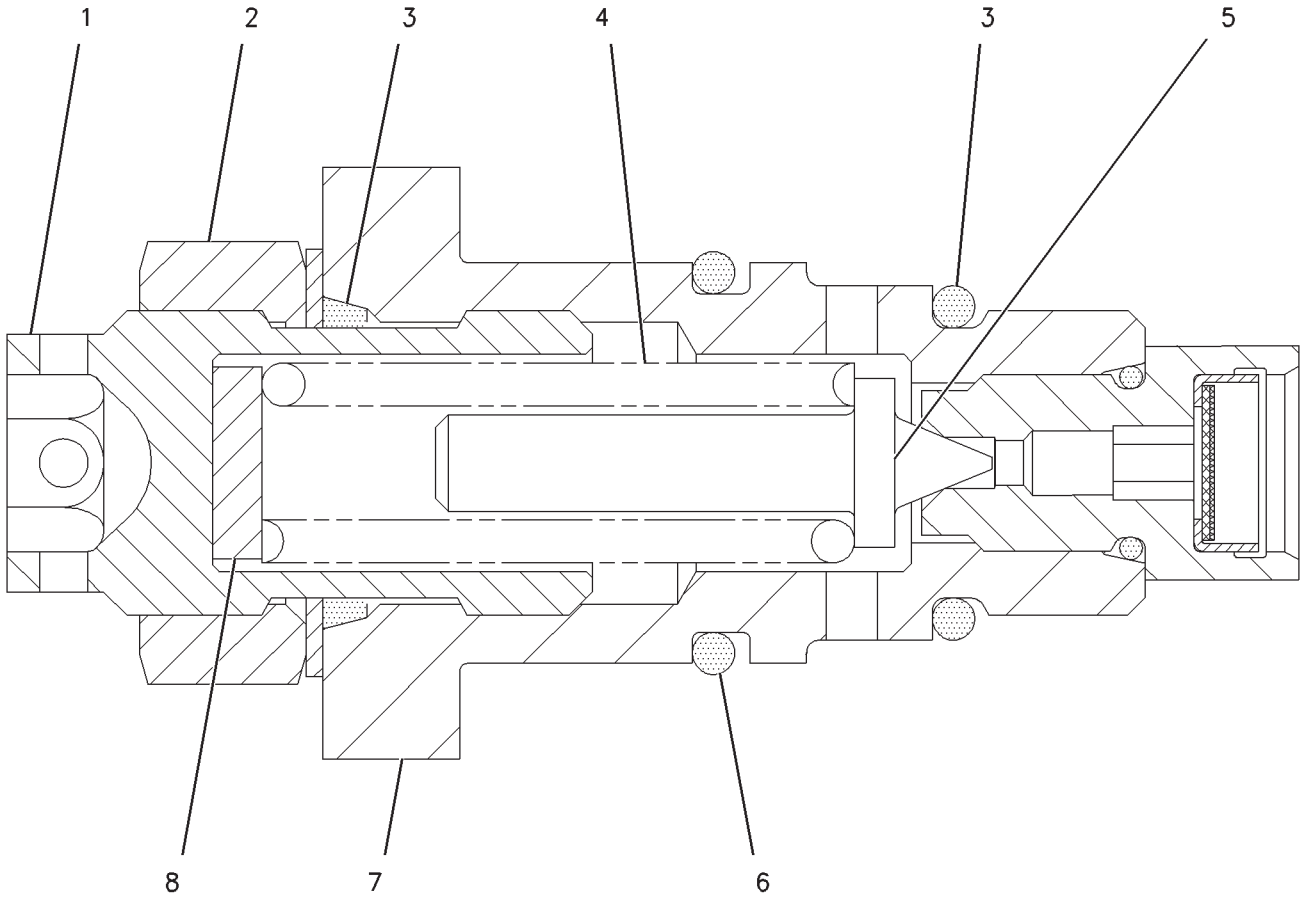

GRAPHIC #1 **<END>** g00685503

HYDRAULIC SYSTEM

117-5270 VALVE GP-RELIEF

S/N: RCD1-UP

PART OF 223-7751 VALVE GP, 174-1843, 174-1852, 180-7882, 223-7750, 223-7752, 233-6970, 237-9872, 238-8213 VALVE GP-MAIN CONTROL

ALSO AN ATTACHMENT

SMCS-5069, 5117 **i01705364**

NOTE	REF NO	GRAPHIC REF	PART NUMBER	QTY	PART NAME 1 2 3 4 5 6 (PRODUCT LEVEL)	SEE PAGE
	1	1	**9T-7202**	1	RETAINER AS	
	2	1	**9X-6395**	1	NUT (3/4-16-THD)	
	3	1	**3K-0360**	2	SEAL-O-RING	
	4	1	**9T-1670**	1	SPRING	
	5	1	**111-5754**	1	VALVE	
	6	1	**5P-3108**	1	SEAL-O-RING	
	7	1	**117-5272**	1	BODY AS	
		1	**3J-7354**	1	SEAL-O-RING	
		1	**115-5637**	1	SCREEN AS	
		1	**117-5274**	1	SEAT	
	8	1	**8J-4376**	1	SPACER (0.12-IN THK)	

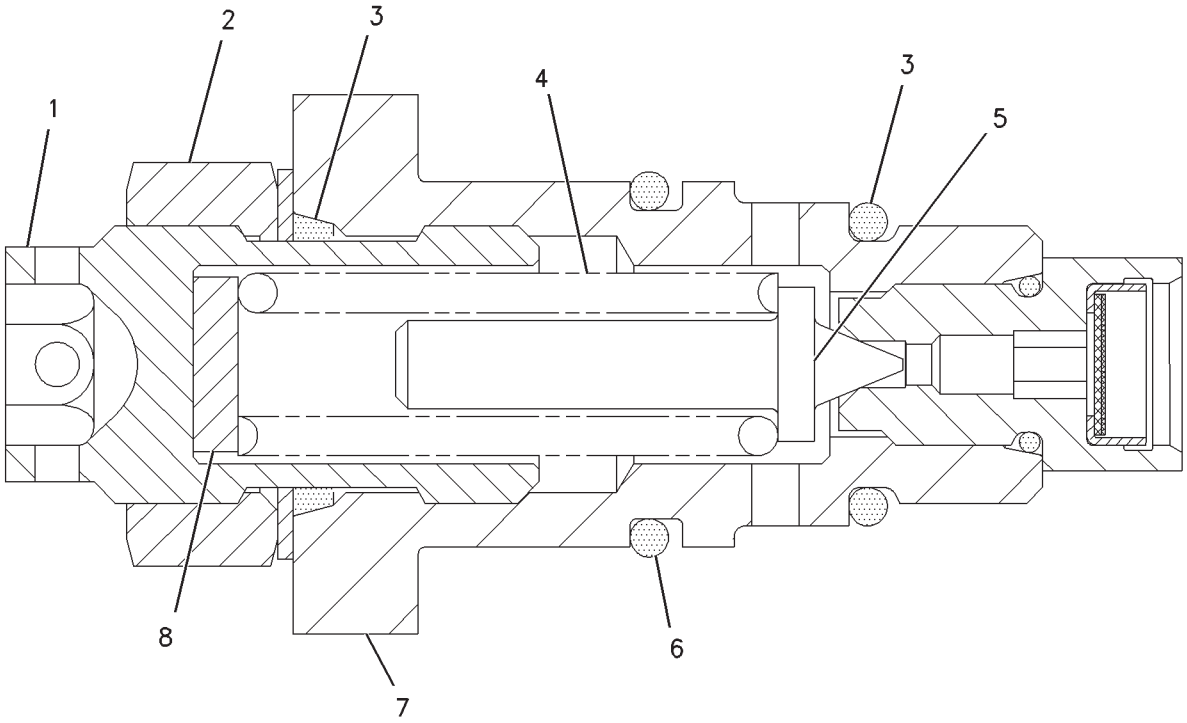

GRAPHIC #1 **<END>** g00688480

HYDRAULIC SYSTEM

144-7113 VALVE GP-RELIEF

S/N: RCD1-UP

PART OF 174-1827, 174-1829, 174-1846, 174-1854, 223-7737, 223-7738, 223-7745, 223-7746, 233-6969, 238-8212 VALVE GP-CONTROL

ALSO AN ATTACHMENT

SMCS-5069, 5117 **i01823550**

NOTE	REF NO	GRAPHIC REF	PART NUMBER	QTY	PART NAME 1 2 3 4 5 6 (PRODUCT LEVEL)	SEE PAGE
B	1	1	**152-5550**	1	SPACER (0.16-MM THK)	
	2	1	**168-5102**	1	PLUG	
	3	1	**168-5103**	1	VALVE	
Z	4	1		1	BODY	
	5	1	**168-5191**	1	SPRING	
	6	1	**170-2414**	1	RING-BACKUP	
	7	1	**170-2415**	1	RING-BACKUP	
B	8	1	**179-5857**	1	SPACER (11.12X23X0.1-MM THK)	
	9	1	**3D-2824**	1	SEAL-O-RING	
	10	1	**4J-0519**	1	SEAL-O-RING	
	11	1	**4J-0521**	1	SEAL-O-RING	
	12	1	**4K-1388**	1	SEAL-O-RING	
B	13	1	**8S-6214**	2	SPACER (11.12X23X0.4-MM THK)	

B-USE AS REQUIRED
Z-NOT SERVICED SEPARATELY

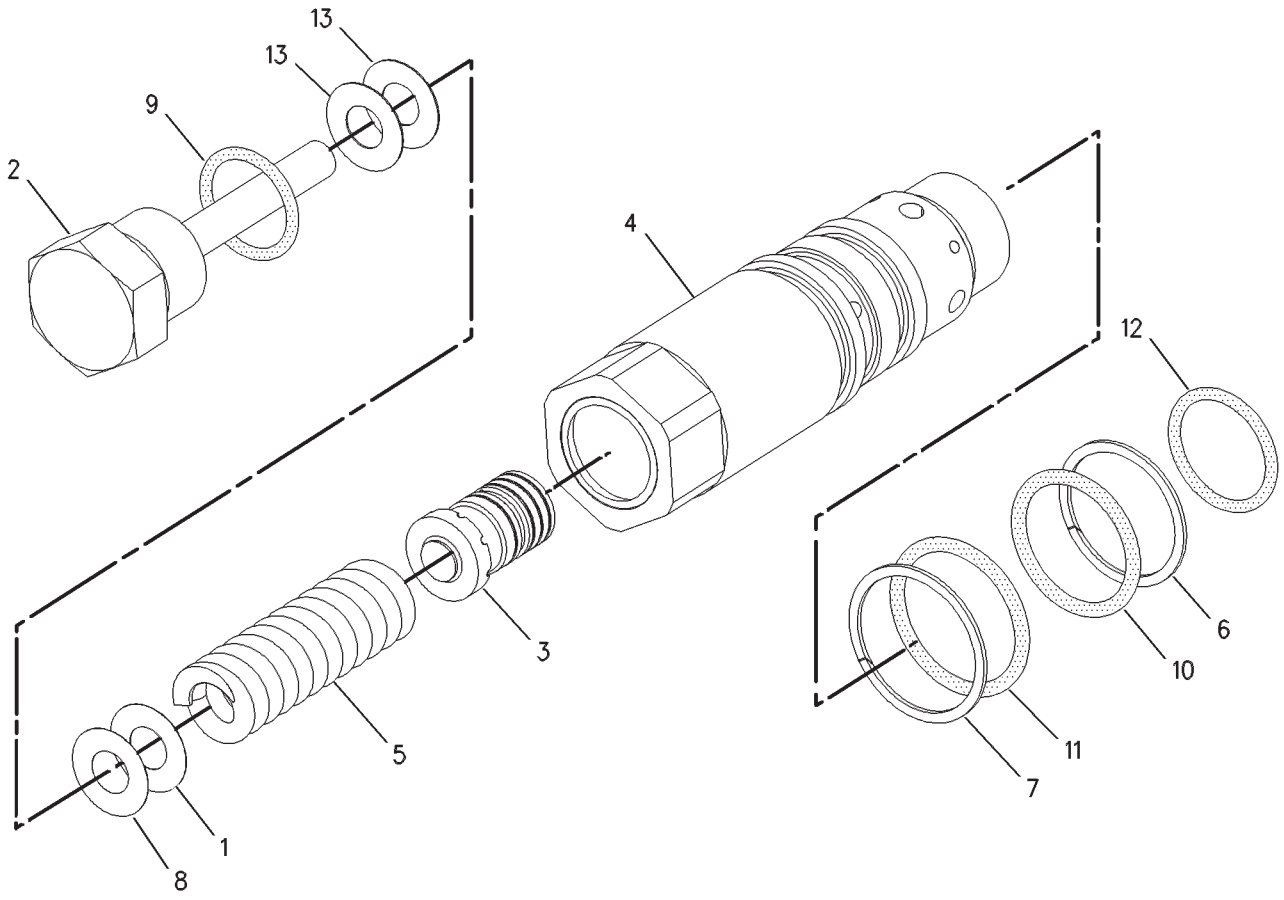

GRAPHIC #1 **<END>** g00634048

HYDRAULIC SYSTEM

155-4846 VALVE GP-RELIEF

S/N: RCD1-UP

PART OF 168-9378, 176-4361 LINES GP-FRONT, 171-0193 VALVE GP-CHECK & RELIEF, 145-7181, 171-0191 VALVE GP-LOAD CONTROL

ALSO AN ATTACHMENT

SMCS-5069, 5117 **i03591001**

NOTE	REF NO	GRAPHIC REF	PART NUMBER	QTY	PART NAME 1 2 3 4 5 6 (PRODUCT LEVEL)	SEE PAGE
	1	1	**9T-9992**	1	RING-BACKUP	
	2	1	**8T-9522**	1	SEAL-O-RING	
	3	1	**2S-4078**	2	SEAL-O-RING	
	4	1	**3P-1155**	1	SEAL-O-RING	
	5	1	**117-0775**	1	RING-BACKUP	
	6	1	**2P-2975**	1	SEAL-O-RING	
					PARTS SHOWN IN GRAPHIC(S) WITHOUT A REFERENCE NUMBER ARE NOT SERVICED SEPARATELY	

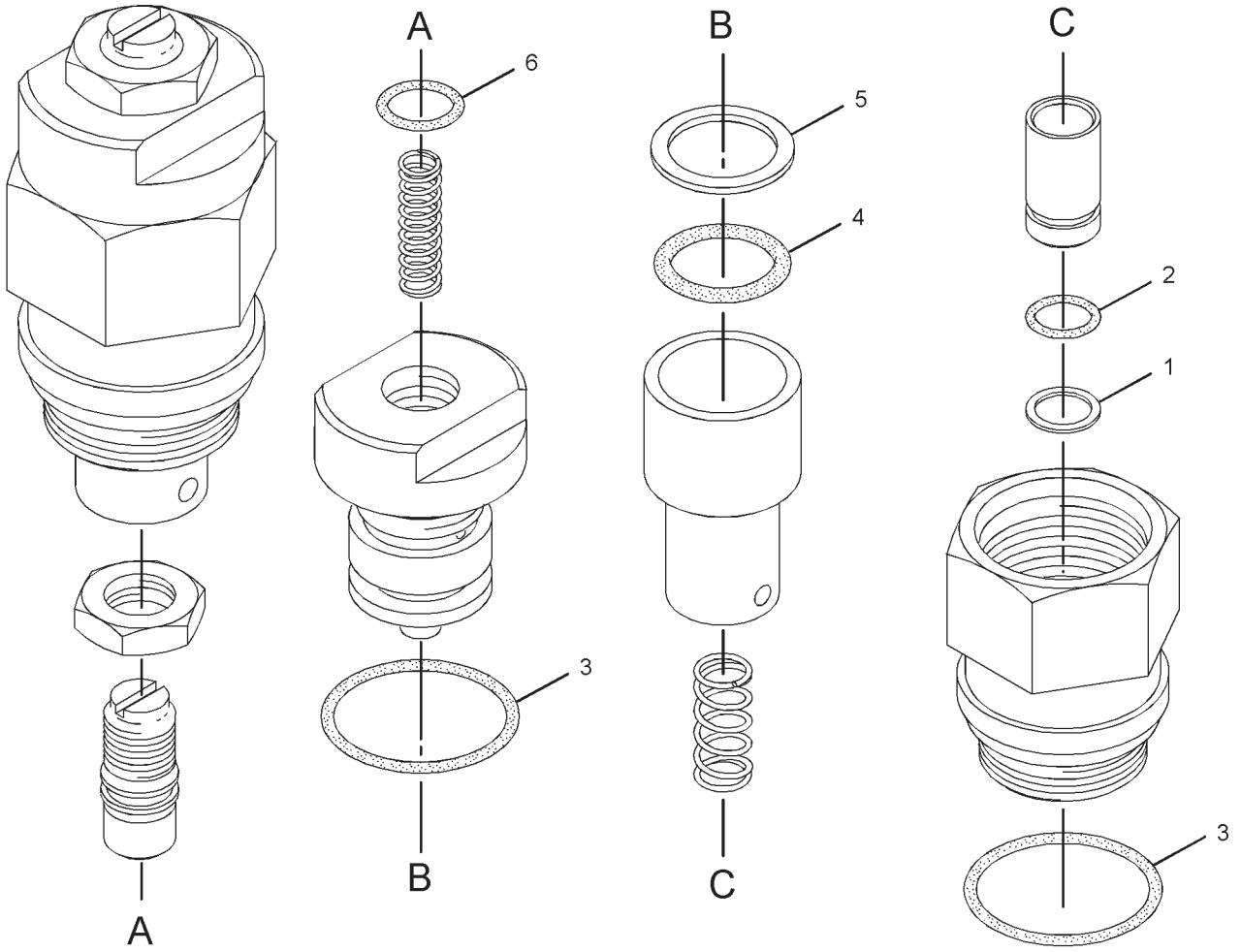

GRAPHIC #1 **<END>** g01916980

HYDRAULIC SYSTEM

155-4847 VALVE GP-RELIEF

S/N: RCD1-UP
PART OF 165-9579, 165-9614 VALVE GP-RELIEF
AN ATTACHMENT

SMCS-5069, 5117 **i03591002**

NOTE	REF NO	GRAPHIC REF	PART NUMBER	QTY	PART NAME 1 2 3 4 5 6 (PRODUCT LEVEL)	SEE PAGE
	1	1	**9T-9992**	2	RING-BACKUP	
	2	1	**8T-9522**	1	SEAL-O-RING	
	3	1	**2S-4078**	2	SEAL-O-RING	
	4	1	**3P-1155**	1	SEAL-O-RING	
	5	1	**117-0775**	2	RING-BACKUP	
	6	1	**2P-2975**	1	SEAL-O-RING	
					PARTS SHOWN IN GRAPHIC(S) WITHOUT A REFERENCE NUMBER ARE NOT SERVICED SEPARATELY	

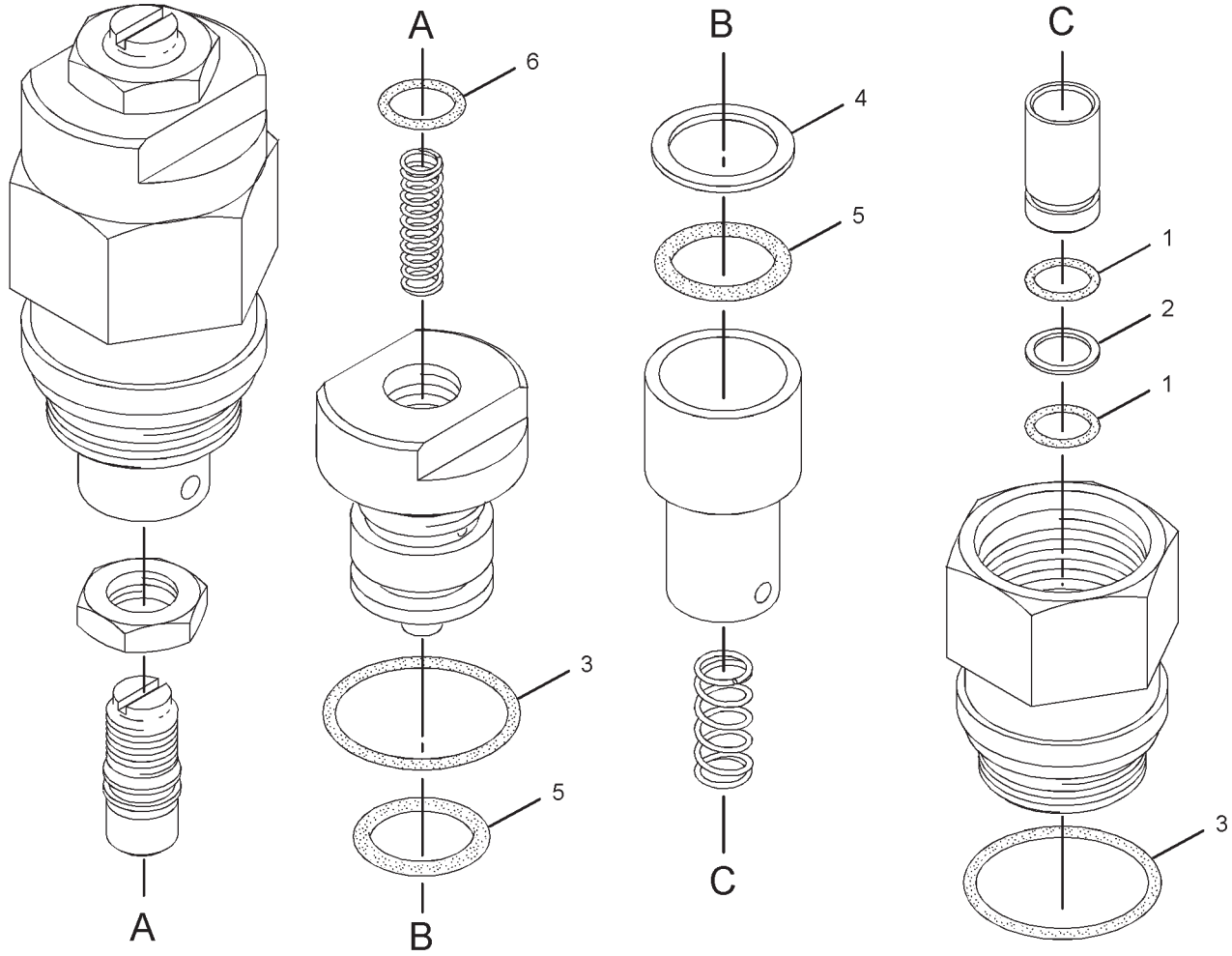

GRAPHIC #1 **<END>** g01916983

HYDRAULIC SYSTEM

160-8734 VALVE GP-RELIEF

S/N: RCD1-UP

PART OF 174-1827, 174-1829, 174-1846, 174-1854, 223-7737, 223-7738, 223-7745, 223-7746, 233-6969, 238-8212 VALVE GP-CONTROL

ALSO AN ATTACHMENT

SMCS-5069, 5117 **i03591003**

NOTE	REF NO	GRAPHIC REF	PART NUMBER	QTY	PART NAME 1 2 3 4 5 6 (PRODUCT LEVEL)	SEE PAGE
	1	1	**9T-9992**	1	RING-BACKUP	
	2	1	**8T-9522**	1	SEAL-O-RING	
	3	1	**2S-4078**	2	SEAL-O-RING	
	4	1	**3P-1155**	1	SEAL-O-RING	
	5	1	**117-0775**	1	RING-BACKUP	
	6	1	**2P-2975**	1	SEAL-O-RING	
					PARTS SHOWN IN GRAPHIC(S) WITHOUT A REFERENCE NUMBER ARE NOT SERVICED SEPARATELY	

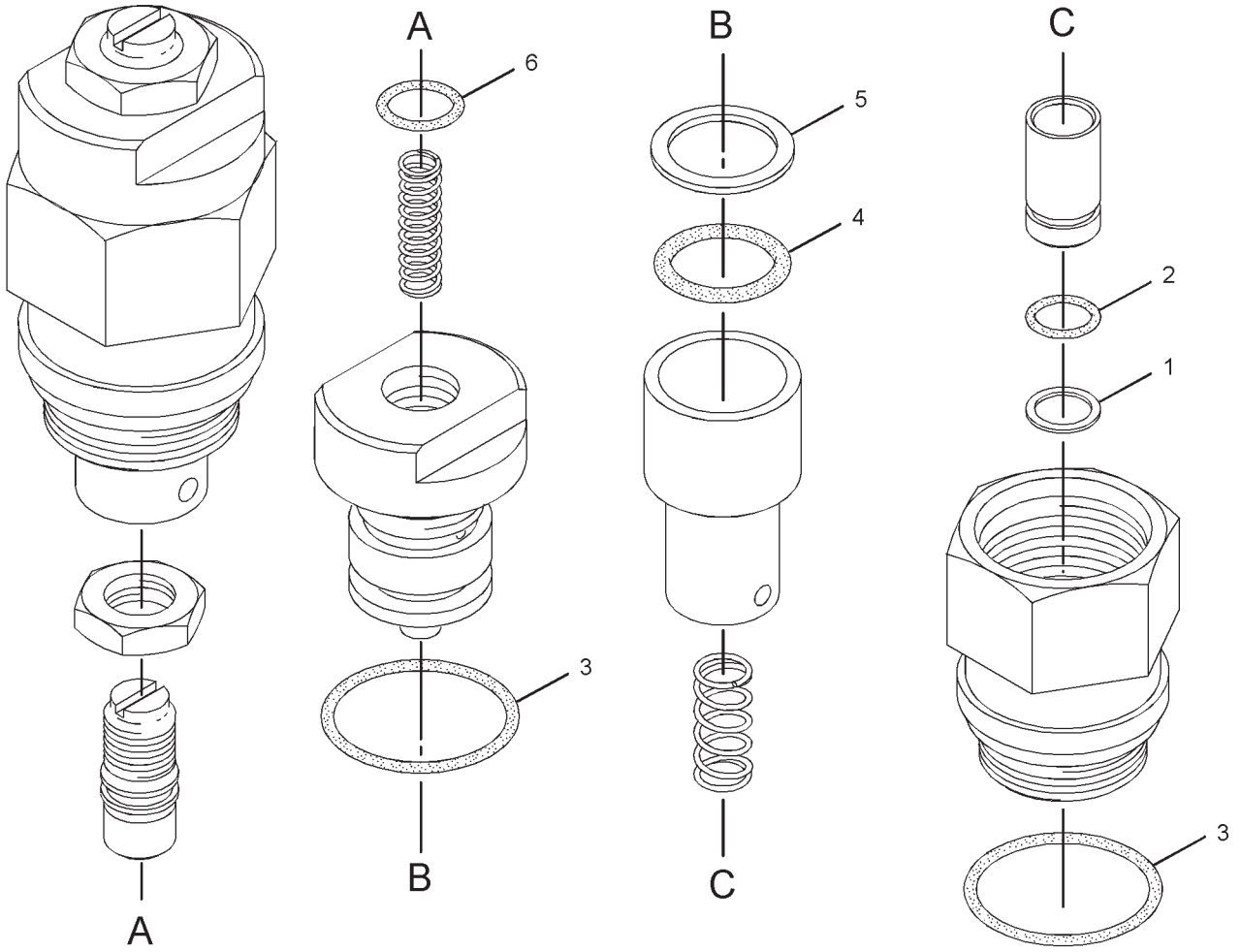

GRAPHIC #1 **<END>** g01916980

HYDRAULIC SYSTEM

165-9579 VALVE GP-RELIEF

S/N: RCD1-UP
PART OF 168-9378 LINES GP-FRONT
AN ATTACHMENT

SMCS-5069, 5117 **i01563523**

NOTE	REF NO	GRAPHIC REF	PART NUMBER	QTY	PART NAME 1 2 3 4 5 6 (PRODUCT LEVEL)	SEE PAGE
	1	1	**149-6558**	1	BLOCK	
Y	2	1	**155-4847**	1	VALVE GP-RELIEF	861

Y-SEPARATE ILLUSTRATION

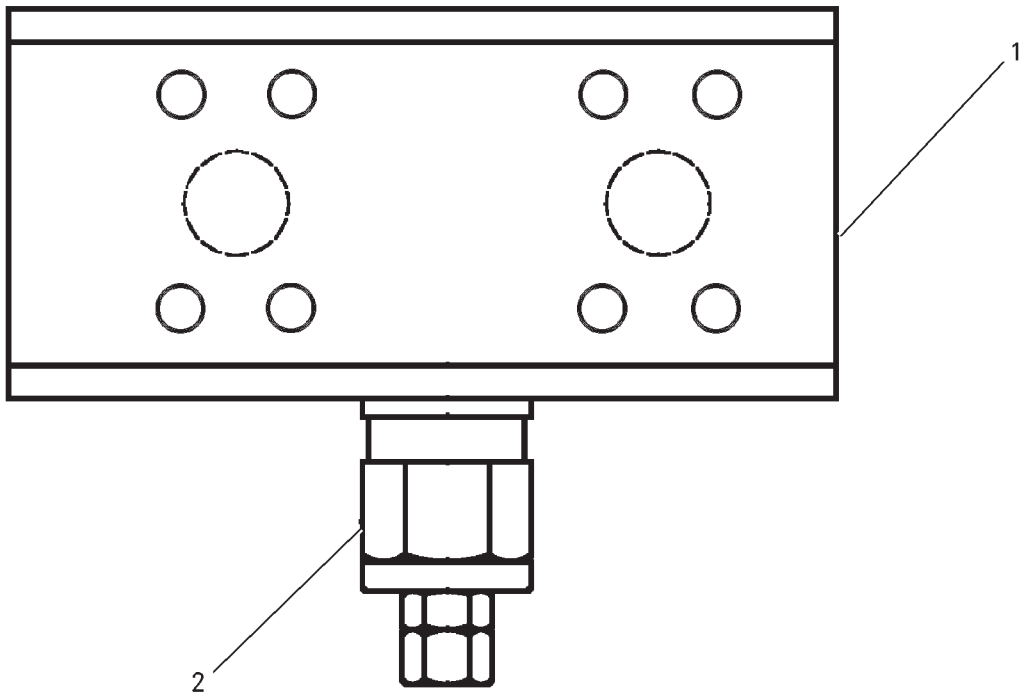

GRAPHIC #1 **<END>** g00812239

HYDRAULIC SYSTEM

165-9614 VALVE GP-RELIEF

S/N: RCD1-UP
PART OF 176-4361 LINES GP-FRONT
AN ATTACHMENT

SMCS-5069, 5117 **i01200044**

NOTE	REF NO	GRAPHIC REF	PART NUMBER	QTY	PART NAME 1 2 3 4 5 6 (PRODUCT LEVEL)	SEE PAGE
	1	1	**152-9191**	1	BLOCK	
Y	2	1	**155-4847**	1	VALVE GP-RELIEF	861

Y-SEPARATE ILLUSTRATION

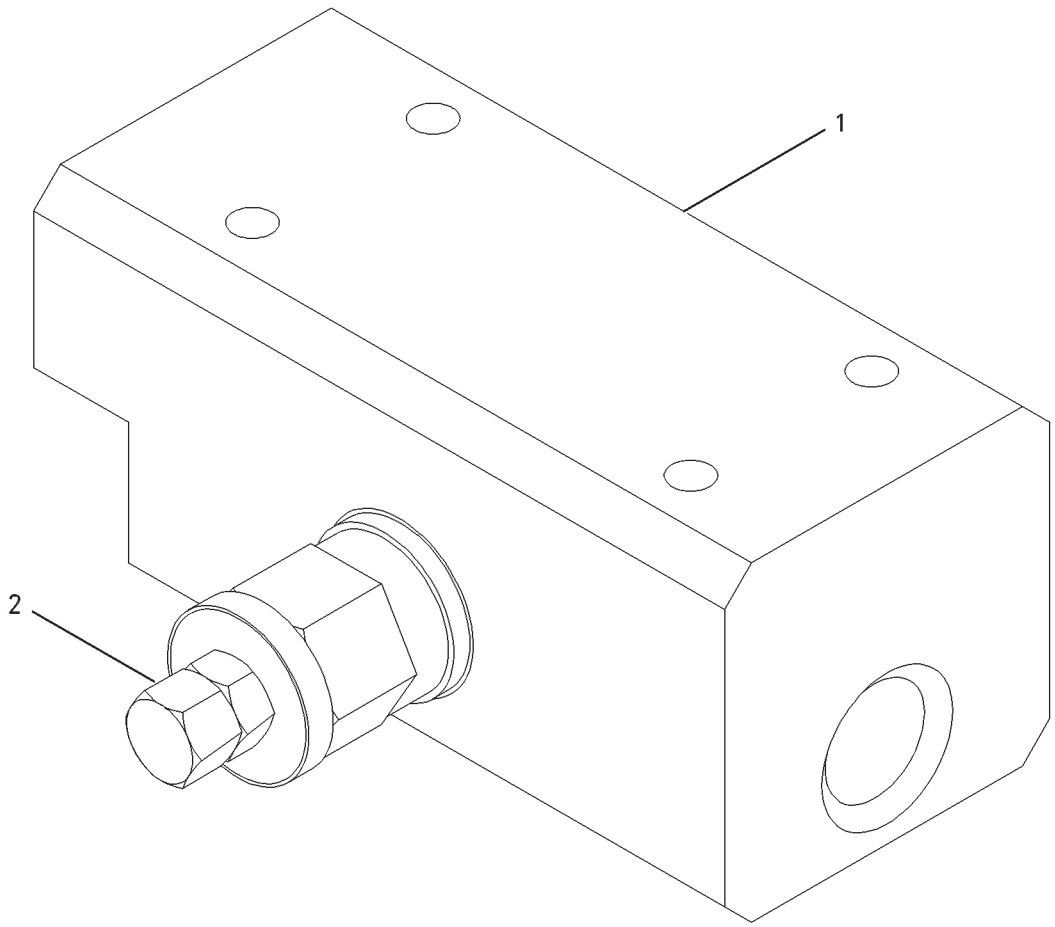

GRAPHIC #1 **<END>** g00642690

HYDRAULIC SYSTEM

177-2549 VALVE GP-RELIEF

S/N: RCD1-UP

PART OF 155-9204 MOTOR GP-SWING

SMCS-5069, 5117 **i02330663**

NOTE	REF NO	GRAPHIC REF	PART NUMBER	QTY	PART NAME 1 2 3 4 5 6 (PRODUCT LEVEL)	SEE PAGE
	1	1	**168-0765**	1	RING-BACKUP	
	2	1	**7J-9933**	1	SEAL-O-RING	
	3	1	**7I-0966**	1	RING-BACKUP	
	4	1	**6V-5556**	1	SEAL-O-RING	
	5	1	**095-1698**	1	SEAL-O-RING	

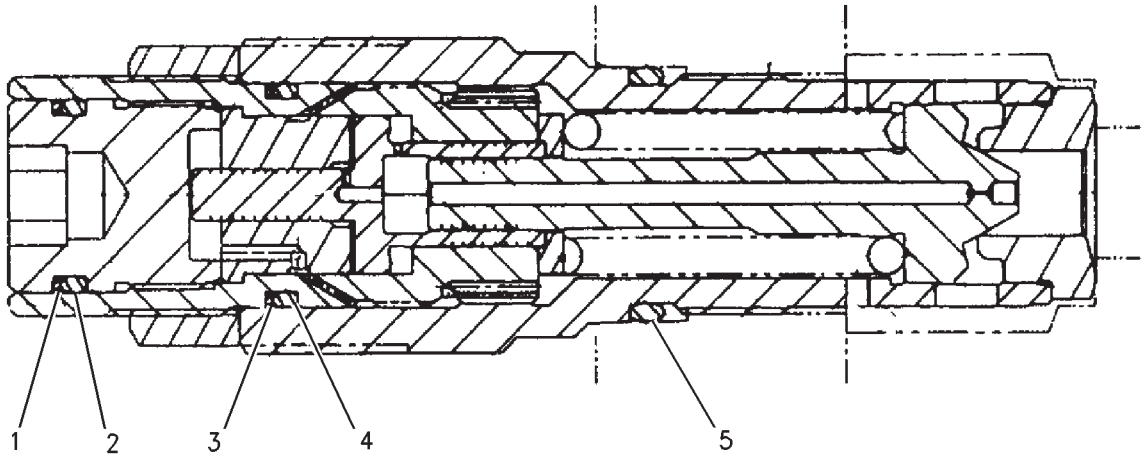

GRAPHIC #1 **<END>** g00766908

HYDRAULIC SYSTEM

177-2552 VALVE GP-RELIEF

S/N: RCD1-UP

PART OF 155-9202 MOTOR GP-SWING

SMCS-5069, 5117 **i02330661**

NOTE	REF NO	GRAPHIC REF	PART NUMBER	QTY	PART NAME 1 2 3 4 5 6 (PRODUCT LEVEL)	SEE PAGE
	1	1	**168-0765**	1	RING-BACKUP	
	2	1	**7J-9933**	1	SEAL-O-RING	
	3	1	**7I-0966**	1	RING-BACKUP	
	4	1	**6V-5556**	1	SEAL-O-RING	
	5	1	**095-1698**	1	SEAL-O-RING	

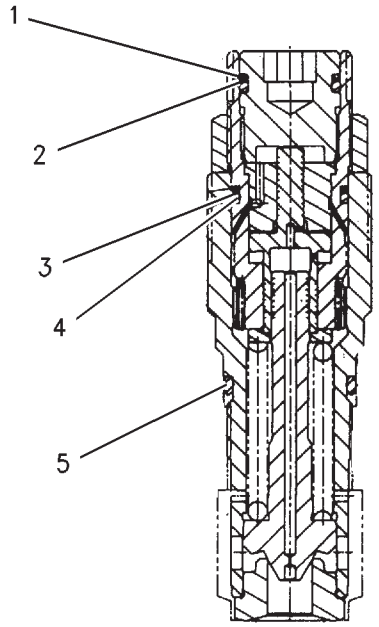

GRAPHIC #1 **<END>** g00848467

HYDRAULIC SYSTEM

158-8171 VALVE GP-SHUTOFF–HYDRAULIC PUMP, TANK

S/N: RCD1-UP
PART OF 168-9381 LINES GP-PUMP
AN ATTACHMENT

SMCS-1329 **i02960288**

NOTE	REF NO	GRAPHIC REF	PART NUMBER	QTY	PART NAME 1 2 3 4 5 6 (PRODUCT LEVEL)	SEE PAGE
	1	1	**147-4259**	1	VALVE AS	
		1	**6F-4718**	1	SEAL-O-RING	
		1	**105-1525**	1	LEVER	
M	2	1	**096-5968**	2	BOLT-SOCKET HEAD (M5X0.8X8-MM)	
	3	1	**5B-2183**	1	NUT-JAM (9/16-18-THD)	
	4	1	**8T-8614**	1	RING-LOCK	
	5	1	**111-1655**	1	BRACKET	
	6	1	**171-7085**	1	SWITCH AS-LIMIT (FLOW INDICATOR)	
		1	**3E-3377**	1	WEDGE-RECEPTACLE LOCK (4-PIN)	
		1	**8T-8729**	4	PIN-CONNECTOR	
E		1	**9X-1386**		SLEEVE (9-CM)	
		1	**102-8804**	1	KIT-RECEPTACLE (4-PIN)	
		1	**3E-3377**	1	WEDGE-RECEPTACLE LOCK (4-PIN)	

E-ORDER BY THE CENTIMETER
M-METRIC PART

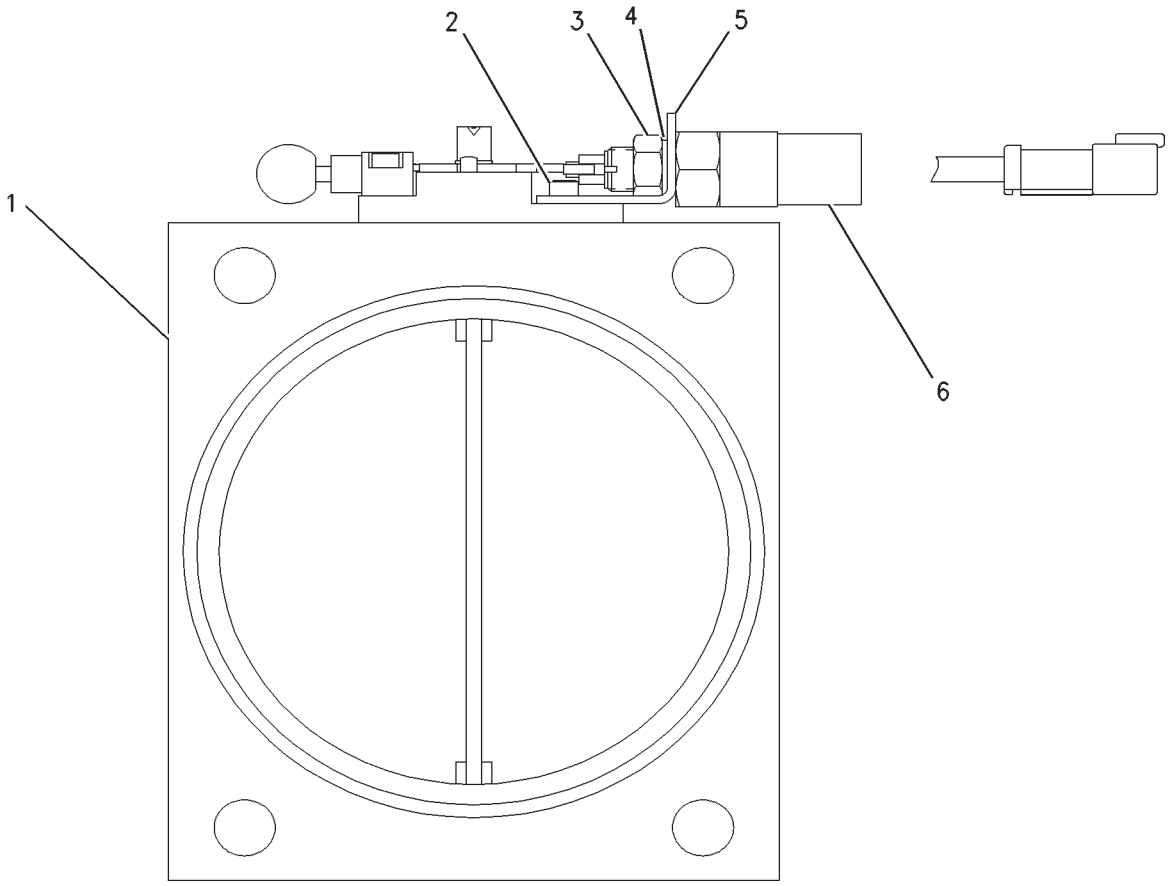

GRAPHIC #1 **<END>** g00631038

HYDRAULIC SYSTEM

4T-1860 VALVE GP-SHUTTLE

S/N: RCD1-UP

PART OF 206-4357 LINES GP-PUMP, 168-9379 LINES GP-REAR ATTACHMENT, 223-7751 VALVE GP, 174-1827, 174-1829, 174-1846, 174-1854, 223-7737, 223-7738, 223-7745, 223-7746, 233-6969, 238-8212 VALVE GP-CONTROL, 174-1843, 174-1852, 180-7882, 223-7750, 223-7752, 233-6970, 237-9872, 238-8213 VALVE GP-MAIN CONTROL

ALSO AN ATTACHMENT

SMCS-5079 **i03242612**

NOTE	REF NO	GRAPHIC REF	PART NUMBER	QTY	PART NAME 1 2 3 4 5 6 (PRODUCT LEVEL)	SEE PAGE
	1	1	**4T-0925**	1	SEAT	
	2	1	**1M-6718**	1	BALL	
Z	3	1		1	VALVE	
	4	1	**6V-5324**	1	SEAL-O-RING	
	5	1	**147-6603**	1	SEAL-O-RING	
	6	1	**3J-1907**	1	SEAL-O-RING	
	7	1	**147-6604**	2	RING-BACKUP	
	8	1	**147-6605**	2	RING-BACKUP	

Z-NOT SERVICED SEPARATELY

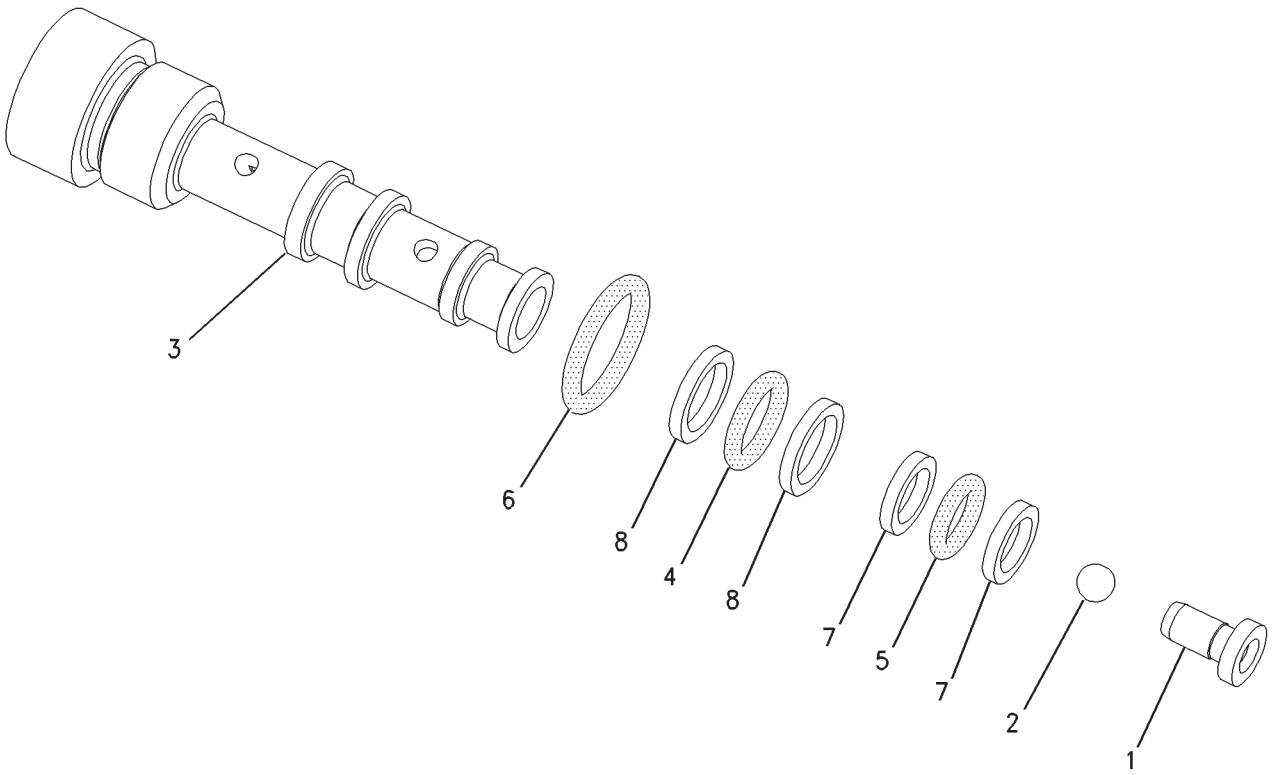

GRAPHIC #1 **<END>** g00775006

HYDRAULIC SYSTEM

6E-4429 VALVE GP-SHUTTLE

S/N: RCD1-UP

PART OF 174-1829, 174-1846, 223-7737, 223-7738, 233-6969, 238-8212 VALVE GP-CONTROL

ALSO AN ATTACHMENT

SMCS-5079 **i02353698**

NOTE	REF NO	GRAPHIC REF	PART NUMBER	QTY	PART NAME 1 2 3 4 5 6 (PRODUCT LEVEL)	SEE PAGE
	1	1	**4T-0925**	1	SEAT	
	2	1	**1M-6718**	1	BALL	
	3	1	**6E-4428**	1	VALVE	
	4	1	**3J-1907**	1	SEAL-O-RING	
	5	1	**147-6605**	2	RING-BACKUP	
	6	1	**6V-5324**	1	SEAL-O-RING	
	7	1	**147-6603**	1	SEAL-O-RING	
	8	1	**147-6604**	2	RING-BACKUP	

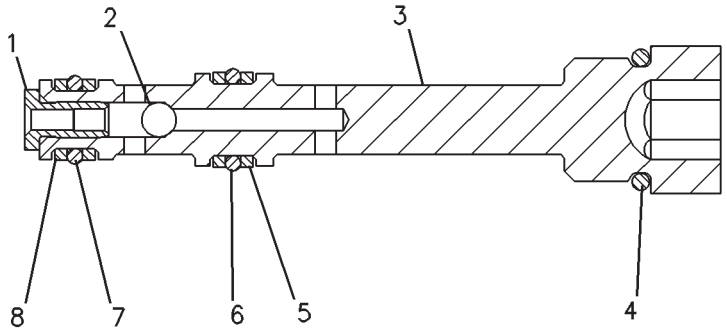

GRAPHIC #1 **<END>** g00083868

HYDRAULIC SYSTEM

111-0336 VALVE GP-SHUTTLE

S/N: RCD1-UP

PART OF 174-1827, 174-1854, 223-7745, 223-7746 VALVE GP-CONTROL

ALSO AN ATTACHMENT

SMCS-5079 **i02450276**

NOTE	REF NO	GRAPHIC REF	PART NUMBER	QTY	PART NAME 1 2 3 4 5 6 (PRODUCT LEVEL)	SEE PAGE
	1	1	**4T-0925**	1	SEAT	
	2	1	**1M-6718**	1	BALL	
	3	1	**111-0337**	1	VALVE	
	4	1	**3J-1907**	1	SEAL-O-RING	
	5	1	**147-6605**	2	RING-BACKUP	
	6	1	**6V-5324**	1	SEAL-O-RING	
	7	1	**147-6603**	1	SEAL-O-RING	
	8	1	**147-6604**	2	RING-BACKUP	

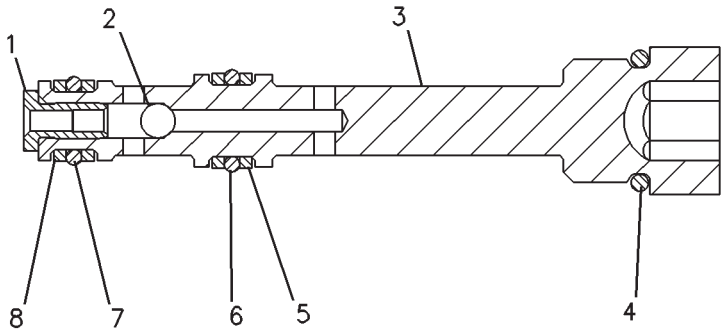

GRAPHIC #1 **<END>** g00083868

HYDRAULIC SYSTEM

158-9105 VALVE GP-SHUTTLE

S/N: RCD1-UP

PART OF 155-9206, 259-0878 PUMP GP-PISTON

SMCS-5079 **i01324722**

NOTE	REF NO	GRAPHIC REF	PART NUMBER	QTY	PART NAME 1 2 3 4 5 6 (PRODUCT LEVEL)	SEE PAGE
	1	1	**3J-1907**	1	SEAL-O-RING	
	2	1	**102-0814**	1	BUSHING	
	3	1	**138-6780**	1	VALVE-SHUTTLE	
	4	1	**165-9406**	1	ADAPTER	

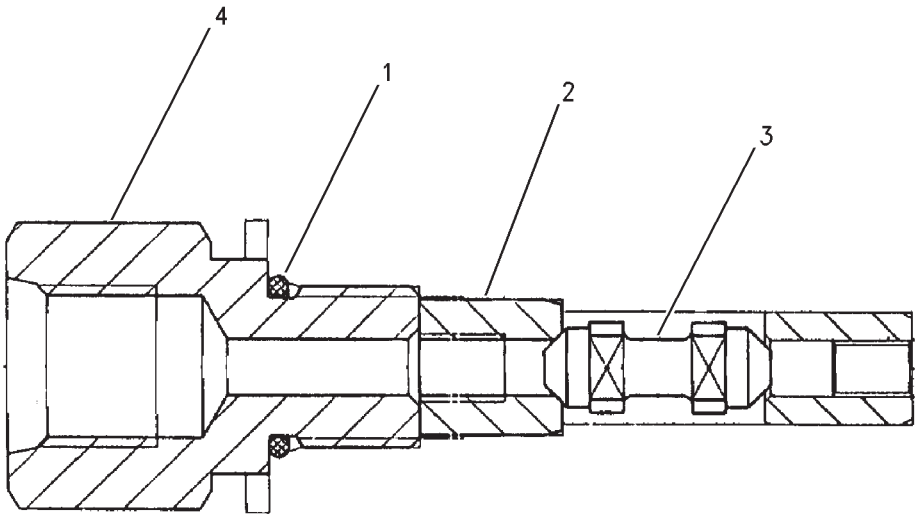

GRAPHIC #1 **<END>** g00705398

HYDRAULIC SYSTEM

111-9916 VALVE GP-SOLENOID

S/N: RCD1-UP

PART OF 140-0736 VALVE GP-MANIFOLD & REDUCING

SMCS-5479 **i02668929**

NOTE	REF NO	GRAPHIC REF	PART NUMBER	QTY	PART NAME 1 2 3 4 5 6 (PRODUCT LEVEL)	SEE PAGE
	1	1	**095-1750**	1	SEAL-O-RING	
	2	1	**6V-8398**	1	SEAL-O-RING	
	3	1	**095-1751**	1	SEAL-O-RING	
	4	1	**095-1586**	1	SEAL-O-RING	
M	5	1	**114-0623**	1	NUT AS (M6X1-THD)	

M-METRIC PART

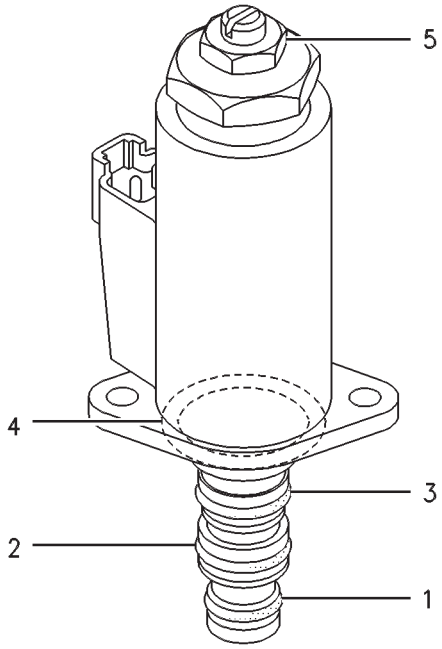

GRAPHIC #1 **<END>** g00258219

HYDRAULIC SYSTEM

121-1491 VALVE GP-SOLENOID

S/N: RCD1-UP

PART OF 140-0736 VALVE GP-MANIFOLD & REDUCING, 137-3713 VALVE GP-SOLENOID

SMCS-5479 **i02195437**

NOTE	REF NO	GRAPHIC REF	PART NUMBER	QTY	PART NAME 1 2 3 4 5 6 (PRODUCT LEVEL)	SEE PAGE
	1	1	**095-1750**	1	SEAL-O-RING	
	2	1	**6V-8398**	1	SEAL-O-RING	
	3	1	**095-1751**	1	SEAL-O-RING	
	4	1	**095-1586**	1	SEAL-O-RING	
M	5	1	**114-0623**	1	NUT AS (M6X1-THD)	

M-METRIC PART

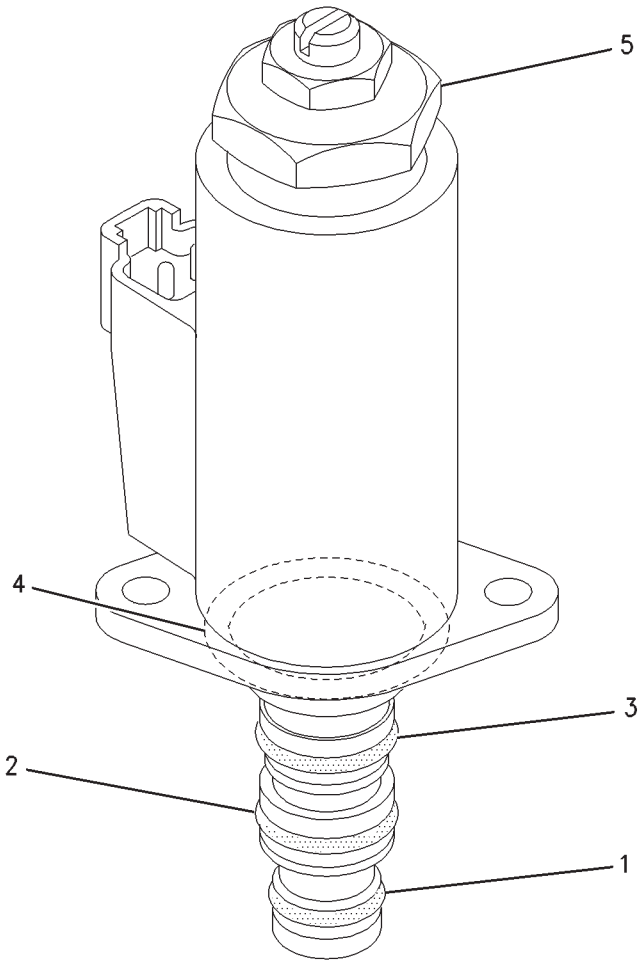

GRAPHIC #1 **<END>** g00928680

HYDRAULIC SYSTEM

137-3713 VALVE GP-SOLENOID

S/N: RCD1-UP

PART OF 155-9204 MOTOR GP-SWING

SMCS-5479 **i01036888**

NOTE	REF NO	GRAPHIC REF	PART NUMBER	QTY	PART NAME 1 2 3 4 5 6 (PRODUCT LEVEL)	SEE PAGE
Y	1	1	**121-1491**	1	VALVE GP-SOLENOID	873
M	2	1	**8T-0288**	2	BOLT (M5X0.8X12-MM)	
	3	1	**137-3639**	1	ORIFICE	
	4	1	**8T-6759**	1	PLUG-PIPE	

M-METRIC PART
Y-SEPARATE ILLUSTRATION

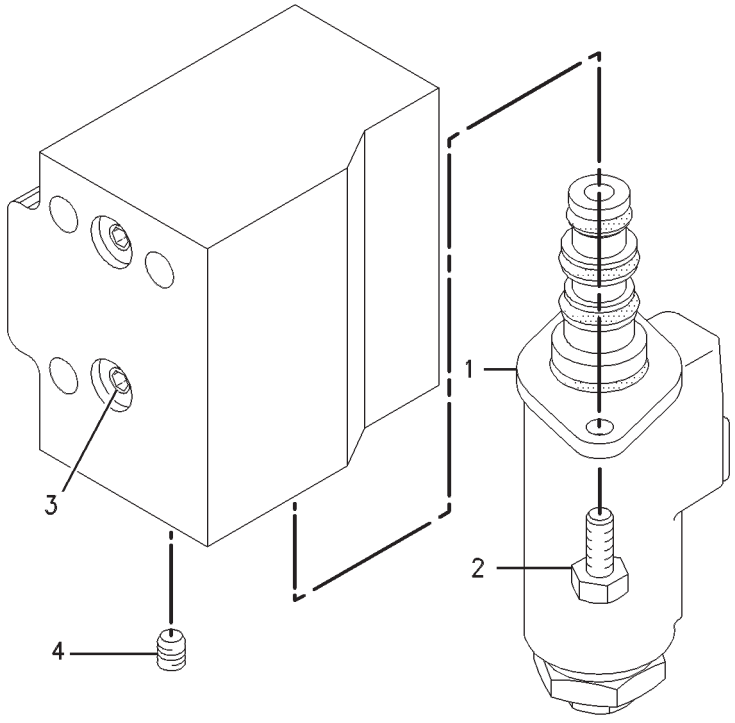

GRAPHIC #1 **<END>** g00295176

HYDRAULIC SYSTEM

154-6591 VALVE GP-SOLENOID

S/N: RCD1-UP

PART OF 174-1858 VALVE GP-CONTROL

SMCS-5479 **i01852257**

NOTE	REF NO	GRAPHIC REF	PART NUMBER	QTY	PART NAME 1 2 3 4 5 6 (PRODUCT LEVEL)	SEE PAGE
	1	1	**137-4756**	1	SPRING	
	2	1	**141-5497**	1	SPRING	
	3	1	**141-5498**	1	SPRING	
	4	1	**158-1113**	1	RING-RETAINING	
	5	1	**158-6564**	1	RETAINER	
	6	1	**159-8402**	1	SPRING	
	7	1	**077-3241**	1	SEAL-O-RING	
	8	1	**099-8111**	1	PIN-SPRING	
	9	1	**112-5874**	1	SOLENOID AS (24VDC)	
		1	**186-3735**	2	PIN-CONNECTOR (16-GA TO 18-GA)	
		1	**1S-9593**	2	STRAP-CABLE	
		1	**102-8802**	1	KIT-RECEPTACLE (2-PIN)	
					(INCLUDES RECEPTACLE AS & WEDGE)	
M		1	**129-3174**	4	BOLT-SOCKET HEAD (M4X0.7X60-MM)	
Z	10	1		1	SPOOL-CONTROL	
Z	11	1		1	HOUSING	
	12	1	**3J-1907**	1	SEAL-O-RING	
	13	1	**4J-7533**	2	SEAL-O-RING	
	14	1	**6V-5597**	1	SEAL-O-RING	
	15	1	**8J-8343**	1	SEAL-O-RING	
M	16	1	**8T-4198**	2	BOLT (M10X1.5X100-MM)	
	17	1	**9S-4180**	2	PLUG	
	18	1	**9S-4191**	1	PLUG-O-RING	

M-METRIC PART
Z-NOT SERVICED SEPARATELY

154-6591 VALVE GP-SOLENOID *(contd.)* **i01852257**

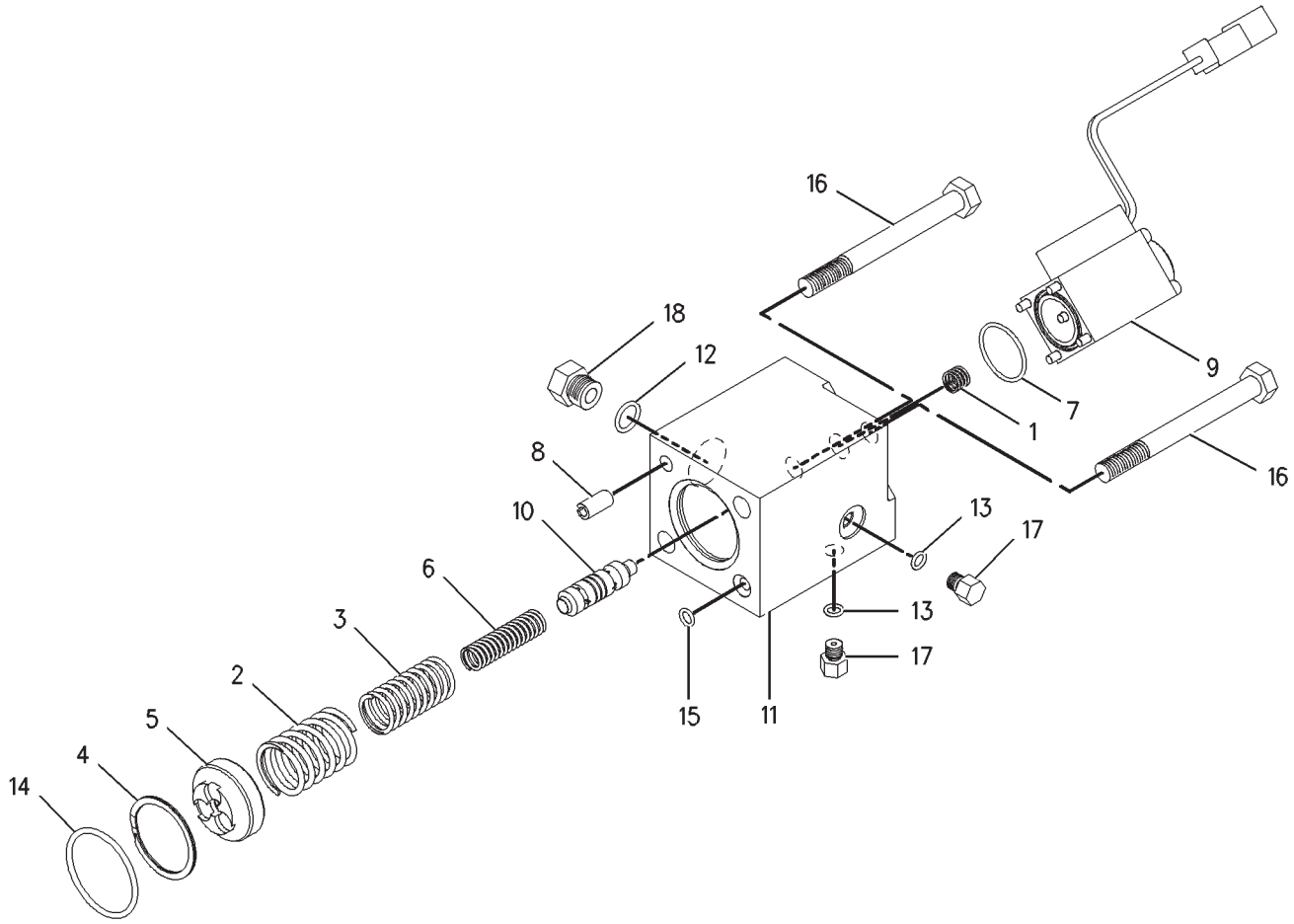

GRAPHIC #1 **<END>** g00943825

HYDRAULIC SYSTEM

171-0028 VALVE GP-SOLENOID

S/N: RCD1-UP
PART OF 176-4553, 176-4554, 206-4358 LINES GP-PILOT
AN ATTACHMENT

SMCS-5479 **i02672467**

NOTE	REF NO	GRAPHIC REF	PART NUMBER	QTY	PART NAME 1 2 3 4 5 6 (PRODUCT LEVEL)	SEE PAGE
	1	1	**6V-8398**	1	SEAL-O-RING	
	2	1	**095-1751**	1	SEAL-O-RING	
	3	1	**7J-9108**	1	SEAL-O-RING	
	4	1	**095-1586**	1	SEAL-O-RING	
M	5	1	**114-0623**	1	NUT AS (M6X1-THD)	

M-METRIC PART

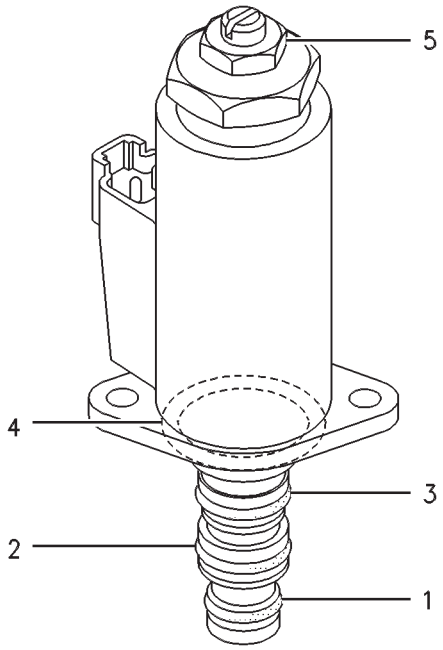

GRAPHIC #1 **<END>** g00258219

HYDRAULIC SYSTEM

171-3685 VALVE GP-SOLENOID

S/N: RCD1-UP

PART OF 223-7751 VALVE GP, 144-7087, 225-6287, 234-6899, 257-7284 VALVE GP-CONTROL, 145-7181 VALVE GP-LOAD CONTROL, 174-1843, 174-1852, 180-7882, 223-7750, 223-7752, 233-6970, 237-9872, 238-8213 VALVE GP-MAIN CONTROL
ALSO AN ATTACHMENT

SMCS-5479 **i02960144**

NOTE	REF NO	GRAPHIC REF	PART NUMBER	QTY	PART NAME 1 2 3 4 5 6 (PRODUCT LEVEL)	SEE PAGE
	1	1	**171-3684**	1	VALVE AS	
		1	**8C-9987**	1	WASHER (8.3X28X2.5-MM THK)	
		1	**111-0343**	1	LOCKNUT (5/16-18-THD)	
	2	1	**111-0343**	1	LOCKNUT (5/16-18-THD)	
	3	1	**189-0189**	1	COIL AS (24-VOLT)	
		1	**3E-3365**	1	WEDGE-RECEPTACLE LOCK (2-PIN)	
		1	**1S-9593**	2	STRAP-CABLE	
		1	**102-8802**	1	KIT-RECEPTACLE (2-PIN)	
		1	**8T-8729**	2	PIN-CONNECTOR (16-GA TO 18-GA)	
	4	1	**8C-9987**	1	WASHER (8.3X28X2.5-MM THK)	
					AVAILABLE REPAIR KIT(S):	
			160-3771	1	KIT-SEAL (SOLENOID VALVE)	

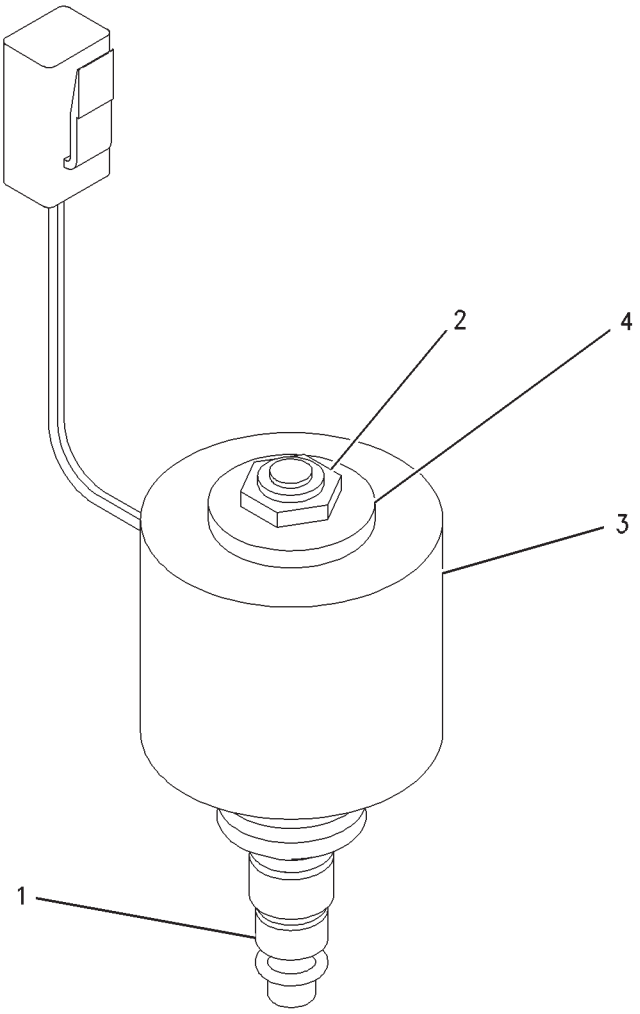

GRAPHIC #1 **<END>** g00846138

HYDRAULIC SYSTEM

116-3420 VALVE GP-SWING CUSHION–
ANTI-REACTION, FINE SWING
S/N: RCD1-UP
PART OF 168-9373 LINES GP-SWING MOTOR

SMCS-5480 **i01272314**

NOTE	REF NO	GRAPHIC REF	PART NUMBER	QTY	PART NAME 1 2 3 4 5 6 (PRODUCT LEVEL)	SEE PAGE
	1	1	**095-1576**	1	SEAL-O-RING	
	2	1	**8T-6759**	4	PLUG-PIPE	
	3	1	**095-1698**	2	SEAL-O-RING	
	4	1	**114-0550**	2	VALVE GP-RELIEF	
	5	1	**094-1902**	2	RING	
	6	1	**095-1586**	2	SEAL-O-RING	
	7	1	**095-1785**	2	RING-BACKUP	

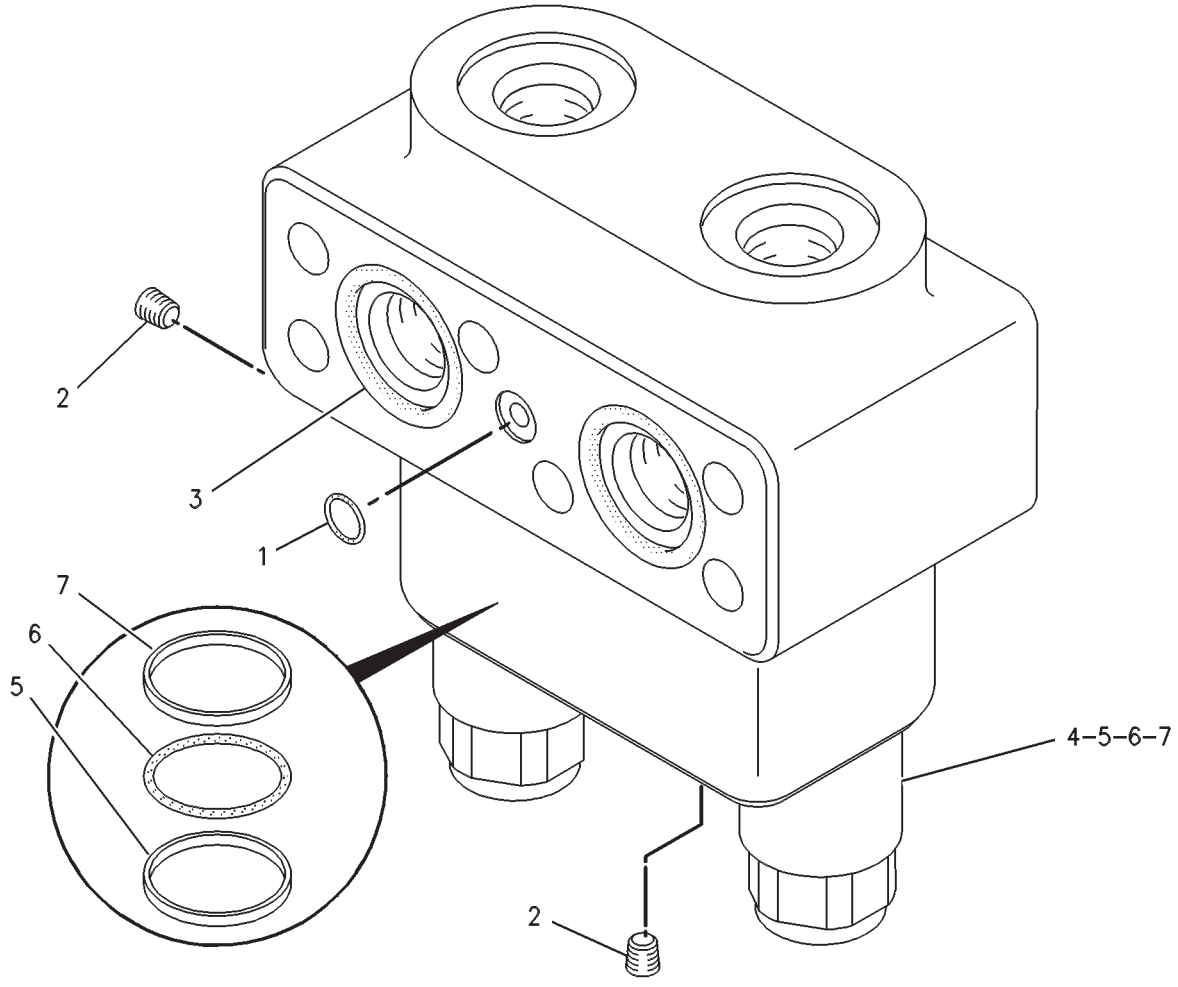

GRAPHIC #1 **<END>** g00267839

HYDRAULIC SYSTEM

155-9200 VALVE GP-TRAVEL COUNTERBALANCE

S/N: RCD1-UP

PART OF 168-9372 LINES GP-TRAVEL MOTOR

SMCS-5811 **i01528511**

NOTE	REF NO	GRAPHIC REF	PART NUMBER	QTY	PART NAME 1 2 3 4 5 6 (PRODUCT LEVEL)	SEE PAGE
	1	1	**095-1579**	1	SEAL-O-RING	
	2	1	**095-1703**	2	SEAL-O-RING	
	3	1	**095-1704**	2	SEAL-O-RING	
	4	1	**194-8402**	1	VALVE GP-CONTROL	
	5	1	**099-7951**	2	WASHER-HARD	
M	6	1	**8T-6429**	6	BOLT-SOCKET HEAD (M16X2X55-MM)	
	7	1	**7I-0965**	2	SPRING	
	8	1	**7I-0964**	2	COVER	
M	9	1	**095-0680**	8	BOLT-SOCKET HEAD (M12X1.75X105-MM)	

M-METRIC PART

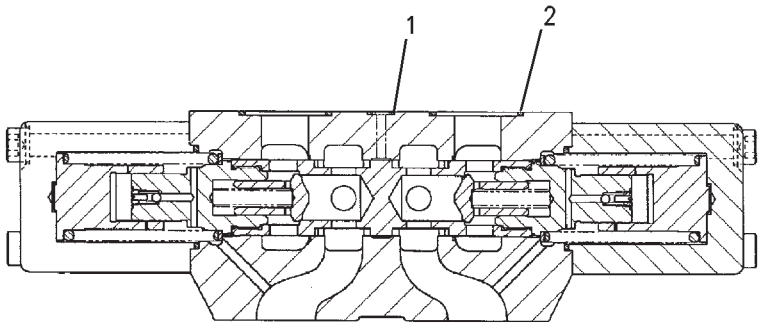

SECTION B-B

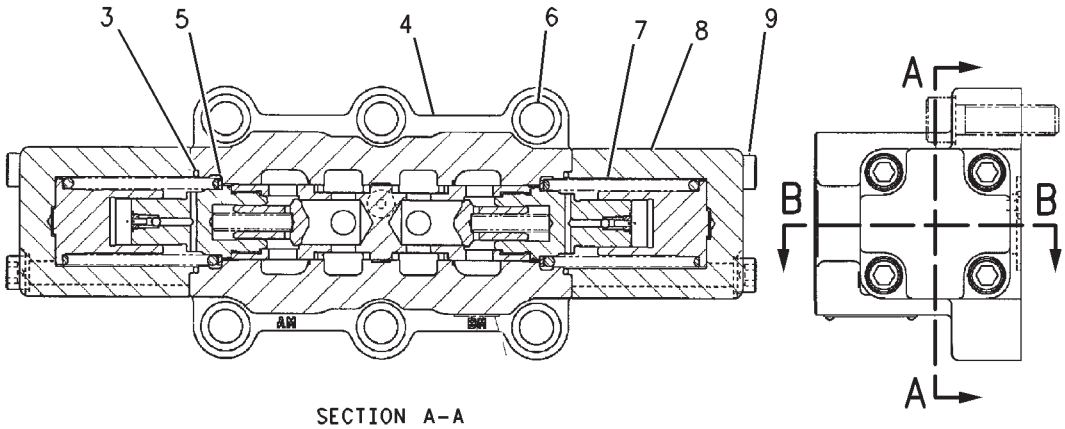

SECTION A-A

GRAPHIC #1 **<END>** g00799753

IMPLEMENTS

150-2804 BOOM AR

S/N: RCD1-UP

AN ATTACHMENT

SMCS-6000 **i01530956**

NOTE	PART NUMBER	QTY	PART NAME 1 2 3 4 5 6 (PRODUCT LEVEL)	SEE PAGE
Y	*195-5456*	1	BOOM GP	886
Y	*155-9065*	1	CYLINDER & LINES GP-BOOM	463
Y	*155-9066*	1	CYLINDER & LINES GP-BOOM	464
Y	*155-9069*	1	CYLINDER & LINES GP-STICK	469
Y	*153-2595*	1	LIGHTING GP-FLOOD	243
Y	*168-9661*	1	LINES GP-BOOM	579
Y	*172-2958*	1	LINES GP-GREASE	894

Y-SEPARATE ILLUSTRATION

<END>

IMPLEMENTS

150-2805 BOOM AR-MASS

S/N: RCD1-UP

AN ATTACHMENT

SMCS-6501, 7000 **i01530967**

NOTE	PART NUMBER	QTY	PART NAME 1 2 3 4 5 6 (PRODUCT LEVEL)	SEE PAGE
Y	*195-5459*	1	BOOM GP	890
Y	*155-9065*	1	CYLINDER & LINES GP-BOOM (LH)	463
Y	*155-9066*	1	CYLINDER & LINES GP-BOOM (RH)	464
Y	*155-9069*	1	CYLINDER & LINES GP-STICK	469
Y	*170-6915*	1	LIGHTING GP-FLOOD	247
Y	*176-4370*	1	LINES GP-BOOM	585
Y	*172-2959*	1	LINES GP-GREASE	896

Y-SEPARATE ILLUSTRATION

<END>

IMPLEMENTS

150-2803 BOOM AR-REACH

S/N: RCD1-UP

FOR USE WITH 150-2806—PAGE 925, 150-2807—PAGE 926, 150-2810—PAGE 927, 228-8129—PAGE 930

AN ATTACHMENT

SMCS-7000 **i02182463**

NOTE	PART NUMBER	QTY	PART NAME 1 2 3 4 5 6 (PRODUCT LEVEL)	SEE PAGE
Y	*167-9832*	1	BOOM GP	884
Y	*155-9065*	1	CYLINDER & LINES GP-BOOM (LH)	463
Y	*155-9066*	1	CYLINDER & LINES GP-BOOM (RH)	464
Y	*155-9069*	1	CYLINDER & LINES GP-STICK	469
Y	*170-6914*	1	LIGHTING GP-FLOOD	245
Y	*168-9764*	1	LINES GP-BOOM	581
Y	*172-2957*	1	LINES GP-GREASE	892
Y-SEPARATE ILLUSTRATION				

<END>

IMPLEMENTS

167-9832 BOOM GP

S/N: RCD1-UP
10-M (32.8-FT)
PART OF 150-2803 BOOM AR-REACH
AN ATTACHMENT

SMCS-6301, 6302, 6460, 6501, 6516, 6521, 6535, 6536 **i02100214**

NOTE	REF NO	GRAPHIC REF	PART NUMBER	QTY	PART NAME 1 2 3 4 5 6 (PRODUCT LEVEL)	SEE PAGE
	1	1	**244-4151**	1	BOOM & BEARING AS	
	1A	1	**244-4150**	2	BEARING-SLEEVE	
	2	1	**113-5950**	4	SEAL-LIP TYPE	
	3	1	**172-3052**	1	PIN	
	4	1	**172-3051**	2	PLATE	
	5	1	**123-5574**	2	SPACER (153X210X14-MM THK)	
	6	1	**8T-4167**	8	WASHER-HARD (26X44X4-MM THK)	
M	7	1	**7X-2573**	1	BOLT (M24X3X40-MM)	
	8	1	**201-2771**	2	WASHER (26X90X8-MM THK)	
	9	1	**234-3962**	1	PIN AS	
	10	1	**172-3024**	1	PIN AS	
	11	1	**7Y-9267**	2	SPACER (133X190X14-MM THK)	
B	12	1	**093-0076**	4	SHIM (1-MM THK)	
B	13	1	**093-0108**	2	SHIM (2-MM THK)	
B	14	1	**151-0653**	2	SHIM (0.5-MM THK)	
M	15	1	**8T-5379**	6	BOLT (M24X3X50-MM)	
M	16	1	**7X-2574**	1	BOLT (M24X3X45-MM)	

B-USE AS REQUIRED
M-METRIC PART

167-9832 **BOOM GP** *(contd.)* **i02100214**

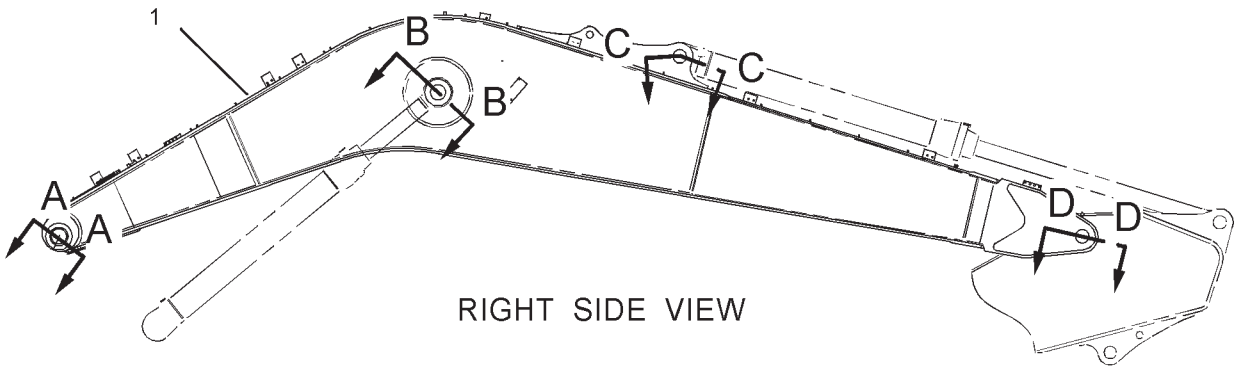

RIGHT SIDE VIEW

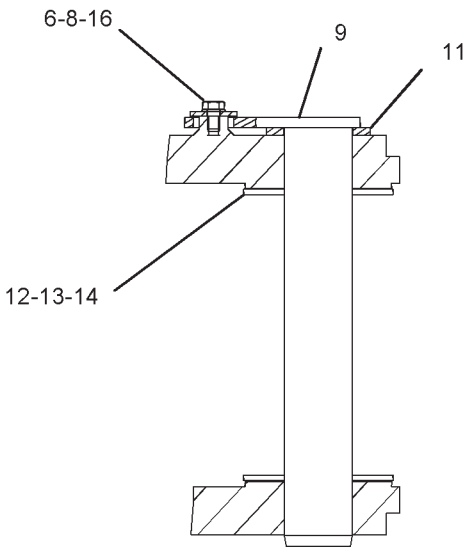

SECTION D-D

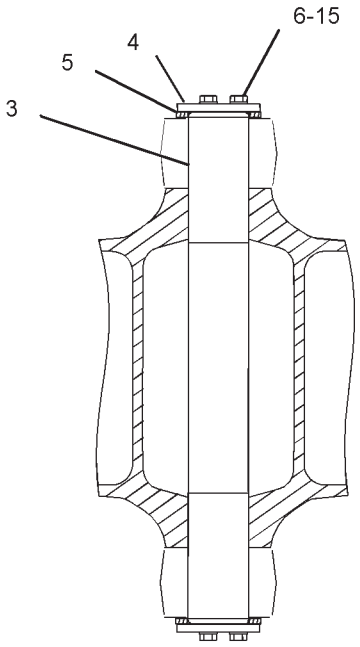

SECTION B-B

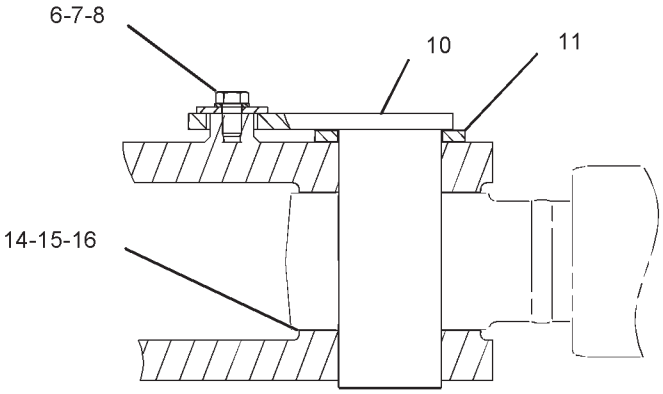

SECTION C-C

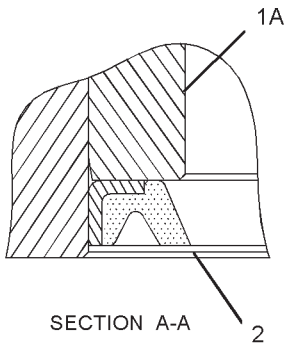

SECTION A-A

GRAPHIC #1 **<END>** g01070379

IMPLEMENTS

195-5456 BOOM GP

S/N: RCD1-UP
8.4-M (27.6-FT)
PART OF 150-2804 BOOM AR
AN ATTACHMENT
TYPE 1

SMCS-6301, 6302, 6460, 6501, 6516, 6521, 6535, 6536 **i02232681**

NOTE	REF NO	GRAPHIC REF	PART NUMBER	QTY	PART NAME 1 2 3 4 5 6 (PRODUCT LEVEL)	SEE PAGE
	1	1	**234-3986**	1	BOOM & BEARING AS	
	1A	1	**172-2856**	2	BEARING-SLEEVE	
	2	1	**113-5950**	4	SEAL-LIP TYPE	
	3	1	**172-3052**	1	PIN	
	4	1	**172-3051**	2	PLATE	
	5	1	**123-5574**	2	SPACER (153X210X14-MM THK)	
	6	1	**8T-4167**	8	WASHER-HARD (26X44X4-MM THK)	
M	7	1	**7X-2573**	1	BOLT (M24X3X40-MM)	
	8	1	**201-2771**	2	WASHER (26X90X8-MM THK)	
	9	1	**234-3962**	1	PIN AS	
	10	1	**172-3024**	1	PIN AS	
	11	1	**7Y-9267**	2	SPACER (133X190X14-MM THK)	
B	12	1	**093-0076**	4	SHIM (1-MM THK)	
B	13	1	**093-0108**	2	SHIM (2-MM THK)	
B	14	1	**151-0653**	2	SHIM (0.5-MM THK)	
M	15	1	**8T-5379**	6	BOLT (M24X3X50-MM)	
M	16	1	**7X-2574**	1	BOLT (M24X3X45-MM)	

B-USE AS REQUIRED
M-METRIC PART

195-5456 **BOOM GP** *(contd.)* **i02232681**

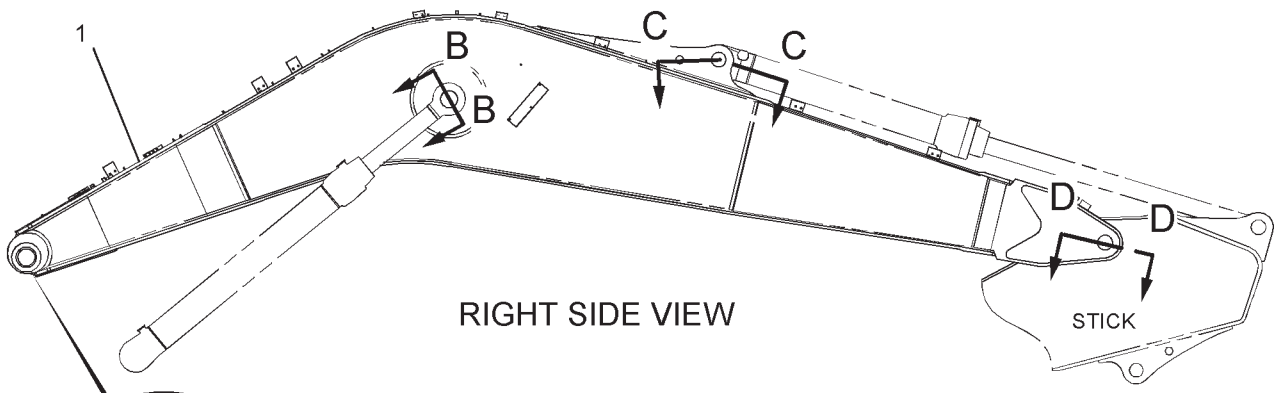

RIGHT SIDE VIEW

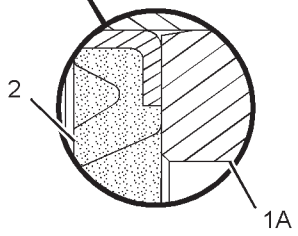

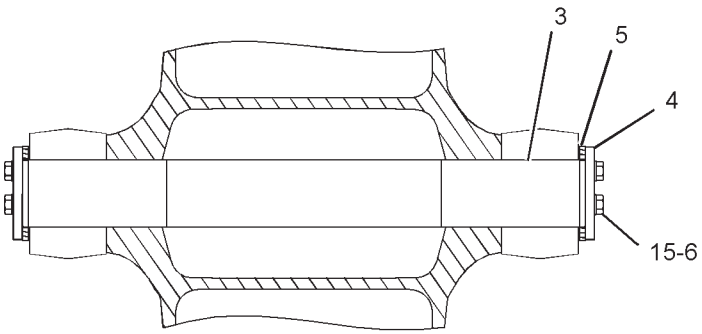

SECTION B-B

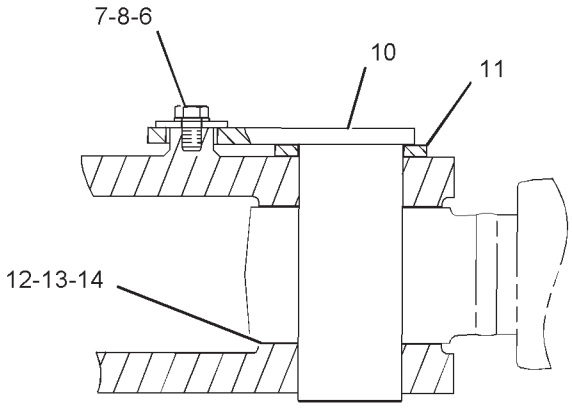

SECTION C-C

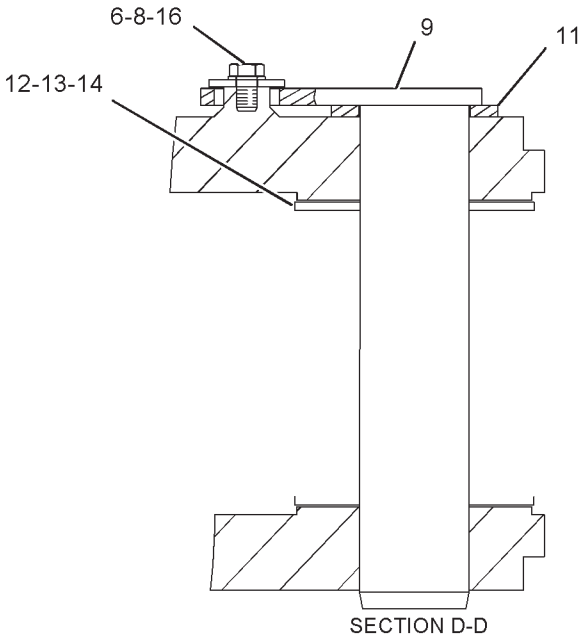

SECTION D-D

GRAPHIC #1 **<END>** g01129340

IMPLEMENTS

195-5456 BOOM GP

S/N: RCD1-UP
8.4-M (27.6-FT)
PART OF 150-2804 BOOM AR
AN ATTACHMENT
TYPE 2

SMCS-6301, 6302, 6460, 6501, 6516, 6521, 6535, 6536 **i02230309**

NOTE	REF NO	GRAPHIC REF	PART NUMBER	QTY	PART NAME 1 2 3 4 5 6 (PRODUCT LEVEL)	SEE PAGE
	1	1	**7Y-9267**	2	SPACER (133X190X14-MM THK)	
B	2	1	**093-0076**	4	SHIM (1-MM THK)	
B	3	1	**093-0108**	2	SHIM (2-MM THK)	
	4	1	**123-5574**	2	SPACER (153X210X14-MM THK)	
B	5	1	**151-0653**	2	SHIM (0.5-MM THK)	
	6	1	**172-3024**	1	PIN AS	
	7	1	**172-3051**	2	PLATE	
	8	1	**172-3052**	1	PIN	
	9	1	**201-2771**	2	WASHER (26X90X8-MM THK)	
	10	1	**234-3962**	1	PIN AS	
C	11	1	**244-4159**	1	BOOM & BEARING AS	
	11A	1	**244-4150**	2	BEARING-SLEEVE	
	12	1	**113-5950**	4	SEAL-LIP TYPE	
M	13	1	**7X-2573**	1	BOLT (M24X3X40-MM)	
M	14	1	**7X-2574**	1	BOLT (M24X3X45-MM)	
	15	1	**8T-4167**	8	WASHER-HARD (26X44X4-MM THK)	
M	16	1	**8T-5379**	6	BOLT (M24X3X50-MM)	

B-USE AS REQUIRED
C-CHANGE FROM PREVIOUS TYPE
M-METRIC PART

195-5456 **BOOM GP** ***(contd.)*** **i02230309**

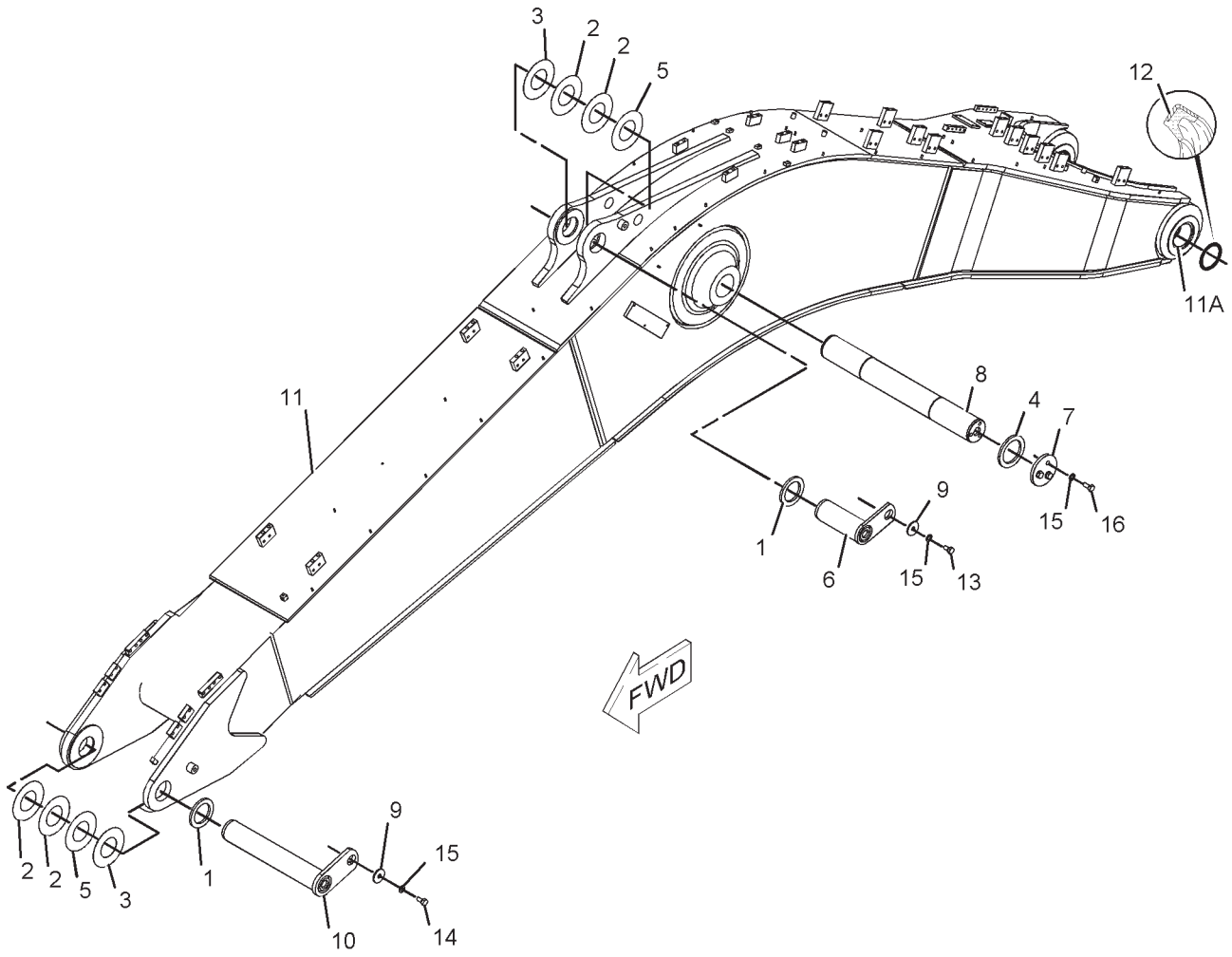

GRAPHIC #1 **<END>** g01133838

IMPLEMENTS

195-5459 BOOM GP

S/N: RCD1-UP
7.3-M (24-FT)
PART OF 150-2805 BOOM AR-MASS
AN ATTACHMENT

SMCS-6301, 6302, 6460, 6501, 6516, 6521, 6535, 6536 **i02281028**

NOTE	REF NO	GRAPHIC REF	PART NUMBER	QTY	PART NAME 1 2 3 4 5 6 (PRODUCT LEVEL)	SEE PAGE
	1	1	**244-4155**	1	BOOM & BEARING AS	
	1A	1	**244-4150**	2	BEARING-SLEEVE	
	2	1	**113-5950**	4	SEAL-LIP TYPE	
	3	1	**172-3052**	1	PIN	
	4	1	**172-3051**	2	PLATE	
	5	1	**123-5574**	2	SPACER (153X210X14-MM THK)	
	6	1	**8T-4167**	8	WASHER-HARD (26X44X4-MM THK)	
M	7	1	**7X-2573**	1	BOLT (M24X3X40-MM)	
	8	1	**201-2771**	2	WASHER (26X90X8-MM THK)	
	9	1	**234-3966**	1	PIN AS	
	10	1	**172-3024**	1	PIN AS	
	11	1	**7Y-9267**	1	SPACER (133X190X14-MM THK)	
B	12	1	**093-0076**	2	SHIM (1-MM THK)	
B	13	1	**093-0108**	1	SHIM (2-MM THK)	
B	14	1	**151-0653**	1	SHIM (0.5-MM THK)	
M	15	1	**8T-5379**	6	BOLT (M24X3X50-MM)	
B	16	1	**093-0077**	2	SHIM (1-MM THK)	
B	17	1	**158-3852**	1	SHIM (0.5-MM THK)	
B	18	1	**093-0109**	1	SHIM (2-MM THK)	
	19	1	**093-0377**	1	SPACER (143X210X14-MM THK)	
M	20	1	**7X-2574**	1	BOLT (M24X3X45-MM)	

B-USE AS REQUIRED
M-METRIC PART

195-5459 **BOOM GP** *(contd.)* **i02281028**

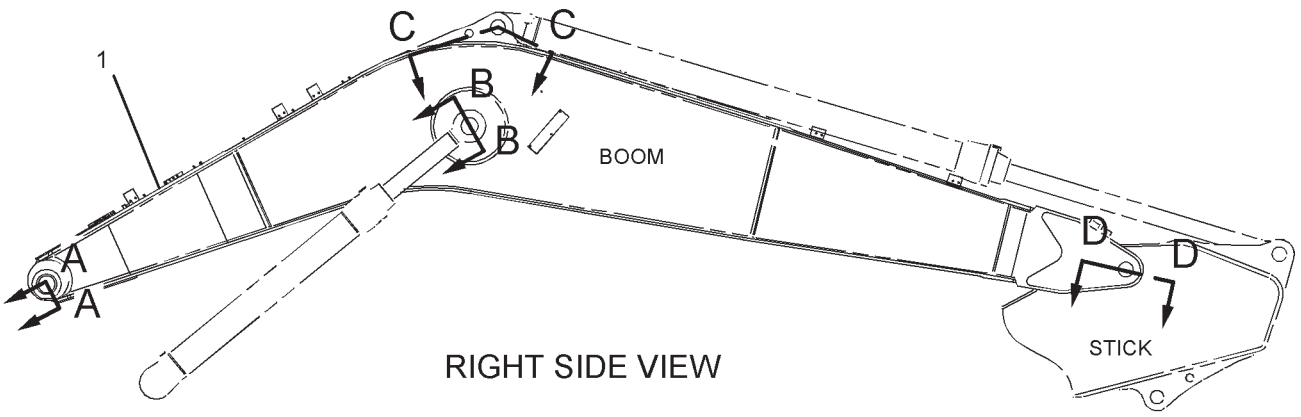

RIGHT SIDE VIEW

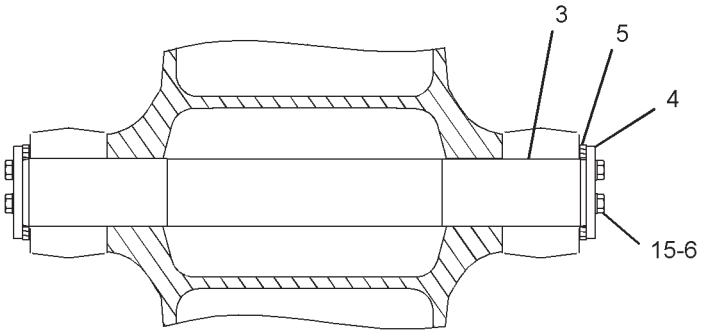

SECTION B-B

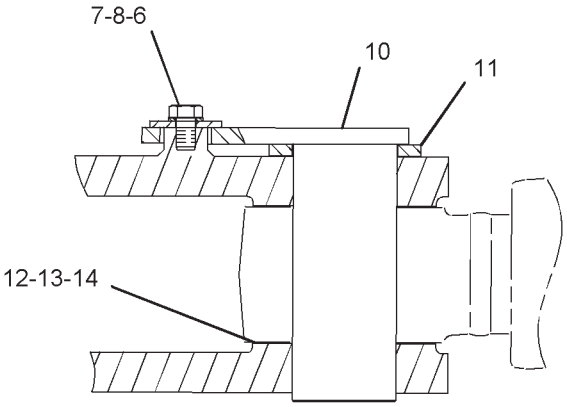

SECTION C-C

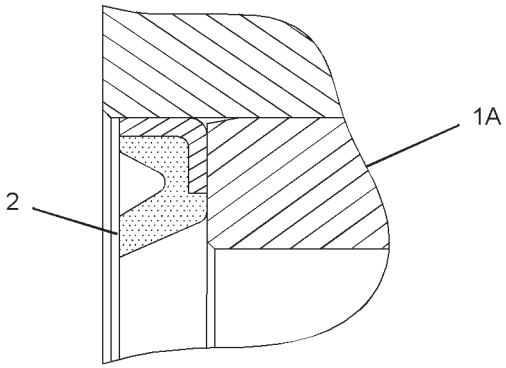

SECTION A-A

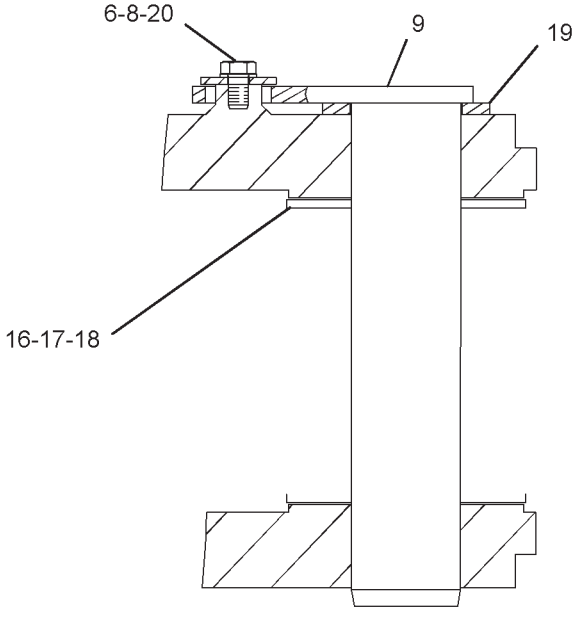

SECTION D-D

GRAPHIC #1 **<END>** g01070331

IMPLEMENTS

172-2957 LINES GP-GREASE–BOOM

S/N: RCD1-UP
PART OF 150-2803 BOOM AR-REACH
FOR USE WITH 10-M (32.8-FT) BOOM
AN ATTACHMENT

SMCS-7510 **i02100265**

NOTE	REF NO	GRAPHIC REF	PART NUMBER	QTY	PART NAME 1 2 3 4 5 6 (PRODUCT LEVEL)	SEE PAGE
	1	1	**212-2873**	1	TUBE AS	
	2	1	**6K-6967**	2	ADAPTER-PIPE	
	3	1	**176-2143**	3	TUBE AS	
	4	1	**151-0749**	1	HOSE AS	
	5	1	**184-5788**	1	HOSE AS	
	6	1	**5K-9243**	2	ELBOW-FLARED	
	7	1	**3B-8489**	9	FITTING-GREASE	
	8	1	**108-6709**	6	CONNECTOR	
	9	1	**4M-5317**	1	BUSHING-REDUCING	
	10	1	**8M-2772**	3	CLIP	
	11	1	**5P-9085**	6	CLIP	
	12	1	**141-3678**	3	PLATE	
M	13	1	**8T-4133**	12	NUT (M10X1.5-THD)	
	14	1	**8T-4121**	15	WASHER-HARD (11X21X2.5-MM THK)	
M	15	1	**8T-4191**	3	BOLT (M10X1.5X16-MM)	
	16	1	**184-5789**	1	HOSE AS	
	17	1	**6L-3616**	10	CONNECTOR	
	19	1	**8T-6764**	1	PLUG-PIPE	
	20	1	**208-2044**	1	TUBE AS	
	21	1	**212-2874**	1	TUBE AS	

M-METRIC PART

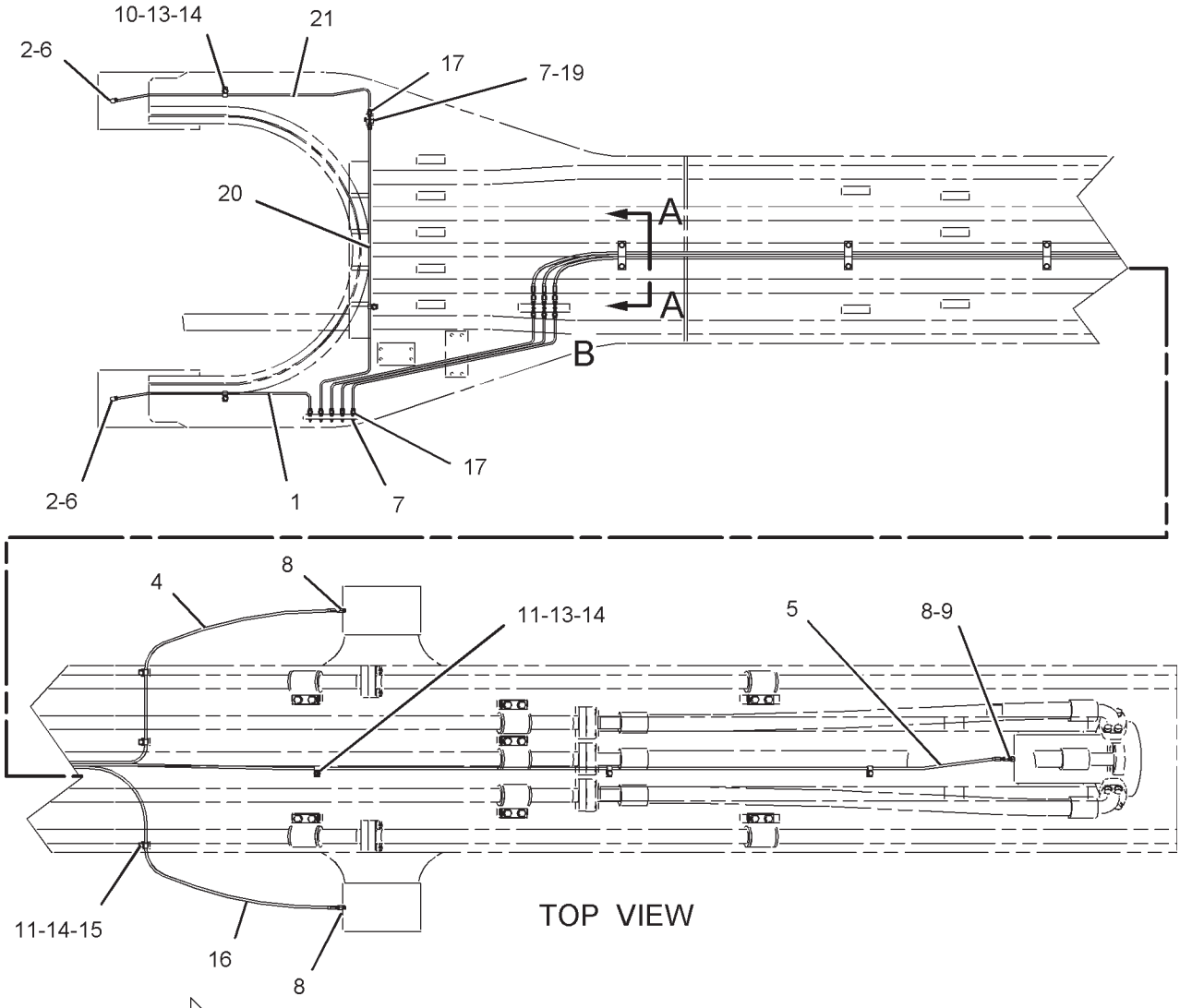

GRAPHIC #1 **<END>** g01071006

IMPLEMENTS

172-2958 LINES GP-GREASE–BOOM

S/N: RCD1-UP
PART OF 150-2804 BOOM AR
FOR USE WITH 8.4-M (27.6-FT) BOOM
AN ATTACHMENT

SMCS-7510 **i01888528**

NOTE	REF NO	GRAPHIC REF	PART NUMBER	QTY	PART NAME 1 2 3 4 5 6 (PRODUCT LEVEL)	SEE PAGE
	1	1	**212-2873**	1	TUBE AS	
	2	1	**6K-6967**	2	ADAPTER-PIPE	
	3	1	**176-2143**	3	TUBE AS	
	4	1	**137-3055**	1	HOSE AS	
	5	1	**147-3942**	1	HOSE AS	
	6	1	**5K-9243**	2	ELBOW-FLARED	
	7	1	**3B-8489**	9	FITTING-GREASE	
	8	1	**108-6709**	6	CONNECTOR	
	9	1	**4M-5317**	1	BUSHING-REDUCING	
	10	1	**8M-2772**	3	CLIP	
	11	1	**5P-9085**	5	CLIP	
	12	1	**141-3678**	3	PLATE	
M	13	1	**8T-4133**	10	NUT (M10X1.5-THD)	
	14	1	**8T-4121**	14	WASHER-HARD (11X21X2.5-MM THK)	
M	15	1	**8T-4191**	4	BOLT (M10X1.5X16-MM)	
	16	1	**151-0525**	1	HOSE AS	
	17	1	**6L-3616**	10	CONNECTOR	
	19	1	**8T-6764**	1	PLUG-PIPE	
	20	1	**208-2044**	1	TUBE AS	
	21	1	**212-2874**	1	TUBE AS	

M-METRIC PART

172-2958 **LINES GP-GREASE** *(contd.)* **i01888528**

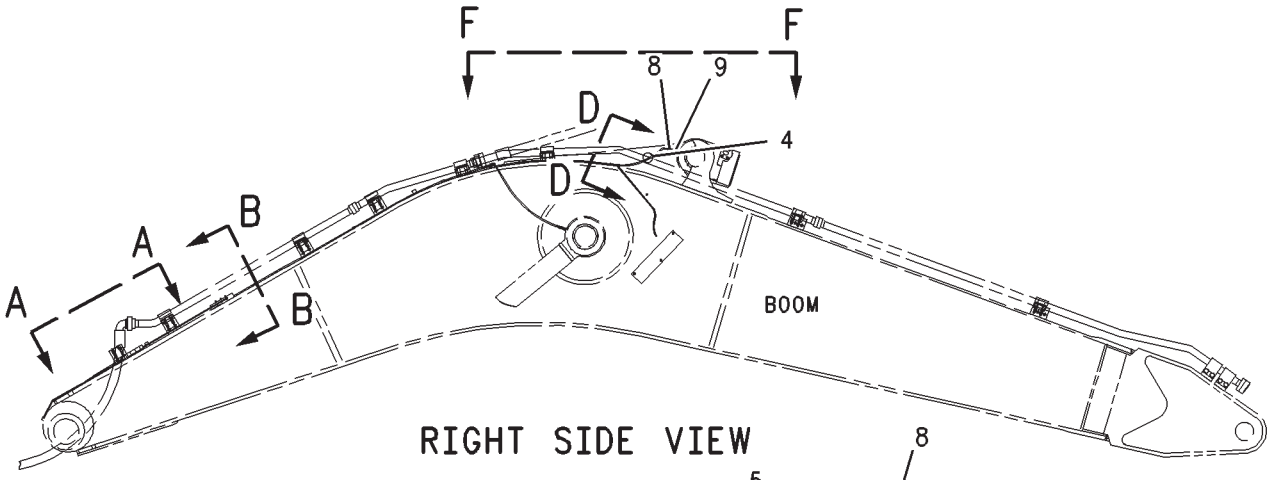

RIGHT SIDE VIEW

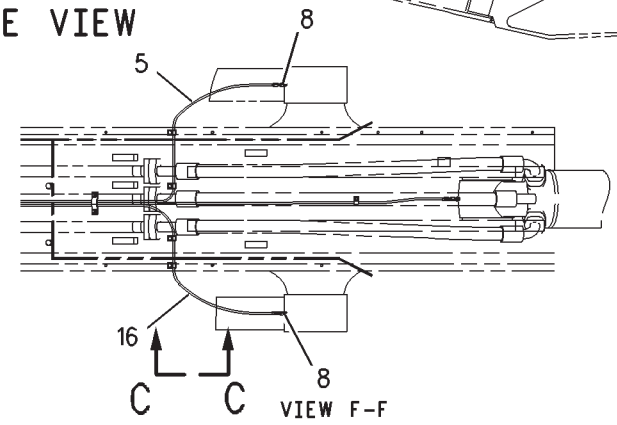

VIEW F-F

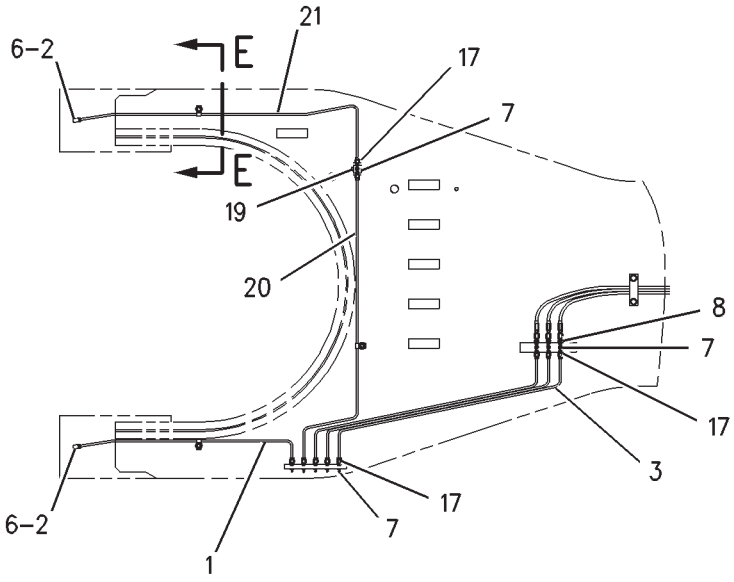

VIEW A-A

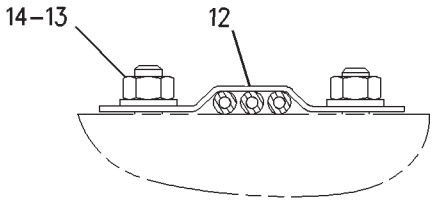

SECTION B-B

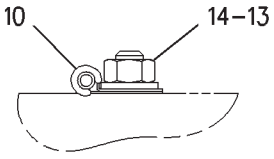

SECTION E-E

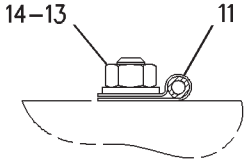

SECTION D-D

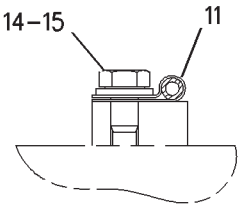

VIEW C-C

GRAPHIC #1 **<END>** g00979693

IMPLEMENTS

172-2959 LINES GP-GREASE—MASS BOOM

S/N: RCD1-UP
PART OF 150-2805 BOOM AR-MASS
FOR USE WITH 7.3-M (24-FT) BOOM
AN ATTACHMENT

SMCS-7510 **i01888534**

NOTE	REF NO	GRAPHIC REF	PART NUMBER	QTY	PART NAME 1 2 3 4 5 6 (PRODUCT LEVEL)	SEE PAGE
	1	1	**212-2873**	1	TUBE AS	
	2	1	**6K-6967**	2	ADAPTER-PIPE	
	3	1	**176-2143**	3	TUBE AS	
	4	1	**176-2306**	1	HOSE AS	
	5	1	**158-4007**	1	HOSE AS	
	6	1	**5K-9243**	2	ELBOW-FLARED	
	7	1	**3B-8489**	9	FITTING-GREASE	
	8	1	**108-6709**	4	CONNECTOR	
	9	1	**4M-5317**	1	BUSHING-REDUCING	
	10	1	**8M-2772**	3	CLIP	
	11	1	**5P-9085**	9	CLIP	
	12	1	**141-3678**	2	PLATE	
M	13	1	**8T-4133**	14	NUT (M10X1.5-THD)	
	14	1	**8T-4121**	16	WASHER-HARD (11X21X2.5-MM THK)	
M	15	1	**8T-4191**	2	BOLT (M10X1.5X16-MM)	
	16	1	**137-3055**	1	HOSE AS	
	17	1	**6L-3616**	10	CONNECTOR	
	19	1	**8T-6764**	1	PLUG-PIPE	
	20	1	**108-6717**	2	ELBOW	
	21	1	**208-2044**	1	TUBE AS	
	22	1	**212-2874**	1	TUBE AS	

M-METRIC PART

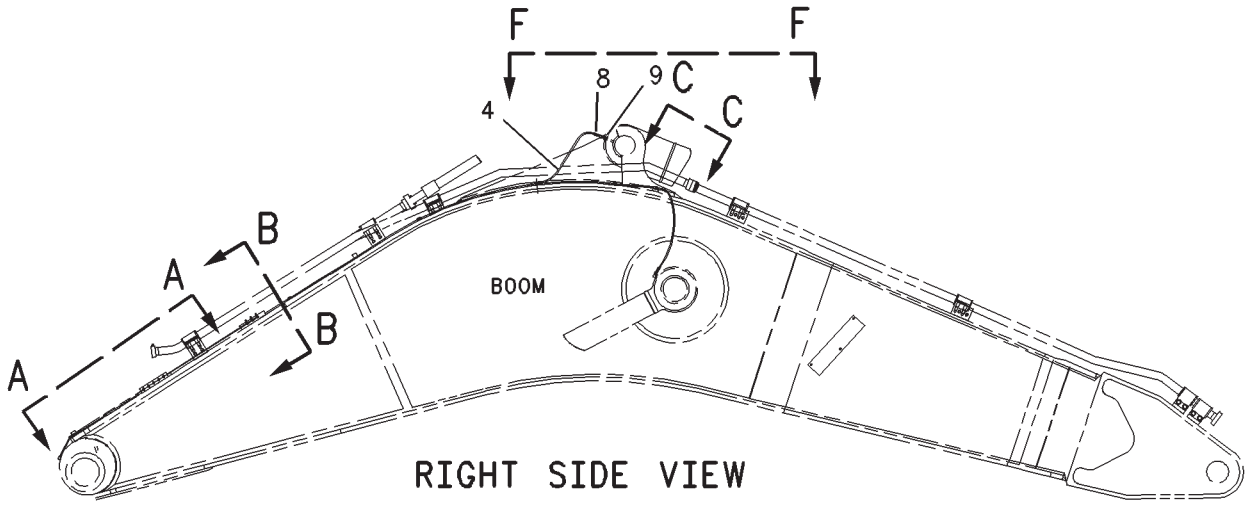

RIGHT SIDE VIEW

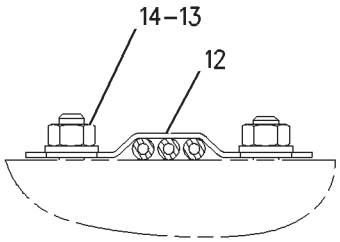

SECTION B-B

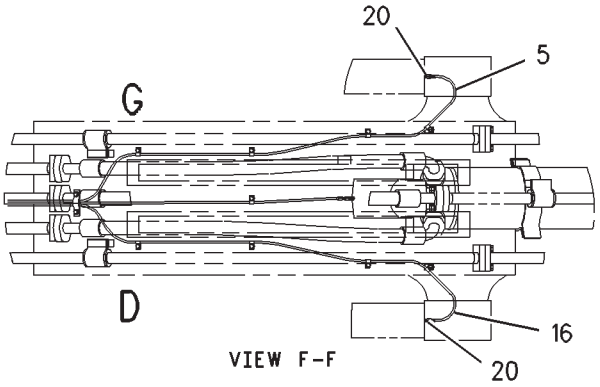

VIEW F-F

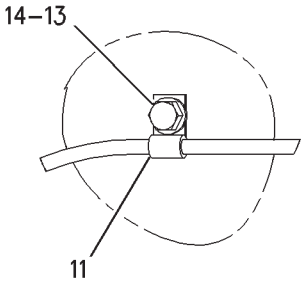

VIEW OF AREA G

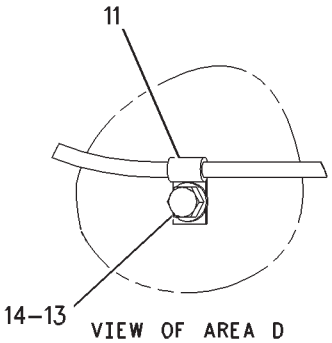

VIEW OF AREA D

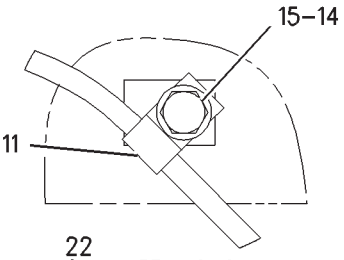

VIEW C-C

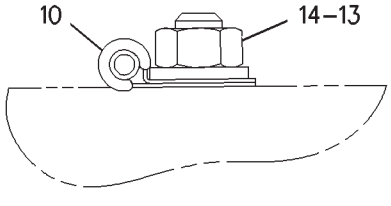

SECTION E-E

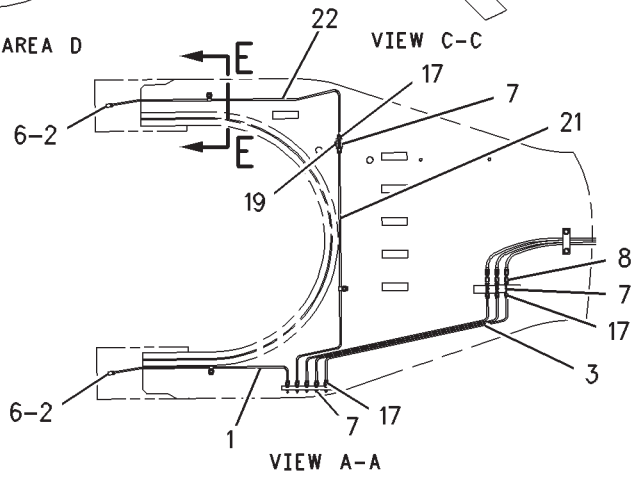

VIEW A-A

GRAPHIC #1 **<END>** g00979697

IMPLEMENTS

174-8538 LINES GP-GREASE–STICK

S/N: RCD1-UP
PART OF 150-2810 STICK AR-HOE
FOR USE WITH 3.7-M (12-FT) STICK
AN ATTACHMENT

SMCS-7510 **i01535256**

NOTE	REF NO	GRAPHIC REF	PART NUMBER	QTY	PART NAME 1 2 3 4 5 6 (PRODUCT LEVEL)	SEE PAGE
	5	1	**174-8543**	1	TUBE AS	
	8	1	**174-8546**	1	TUBE AS	
	9	1	**130-4317**	1	HOSE AS	
	10	1	**123-5592**	1	HOSE AS	
	11	1	**3B-8489**	4	FITTING-GREASE	
	12	1	**6L-3616**	6	CONNECTOR	
	13	1	**8M-2772**	5	CLIP	
	14	1	**8T-4121**	9	WASHER-HARD (11X21X2.5-MM THK)	
M	15	1	**8T-4133**	9	NUT (M10X1.5-THD)	
	16	1	**5K-9242**	7	UNION-FLARED	
	17	1	**5K-9243**	2	ELBOW-FLARED	
	18	1	**108-6709**	2	CONNECTOR	
	19	1	**4M-5317**	2	BUSHING-REDUCING	
	20	1	**141-3672**	1	ELBOW AS	
	22	1	**105-6402**	1	TUBE AS	
	23	1	**105-6403**	1	TUBE AS	
	24	1	**105-6404**	1	TUBE AS	
	25	1	**105-6405**	1	TUBE AS	
	26	1	**195-5505**	1	TUBE AS	
	27	1	**195-5508**	1	TUBE AS	
	28	1	**195-5507**	1	TUBE AS	
	29	1	**195-5506**	1	TUBE AS	
	30	1	**195-5504**	1	TUBE AS	
	31	1	**108-6717**	1	ELBOW	
	32	1	**087-5838**	2	PLATE	
	33	1	**8T-6757**	2	PLUG-PIPE	

M-METRIC PART

174-8538 **LINES GP-GREASE** *(contd.)* **i01535256**

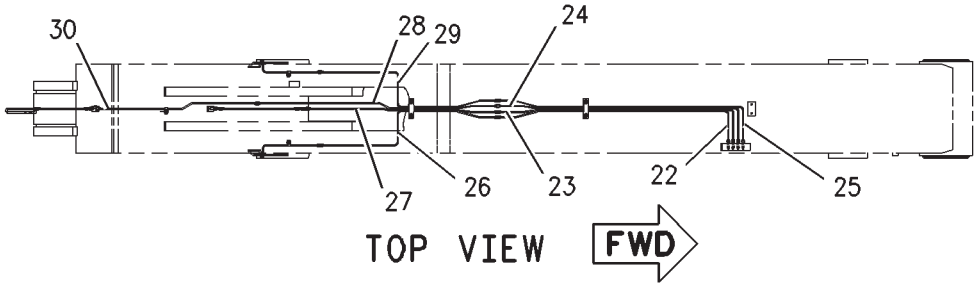

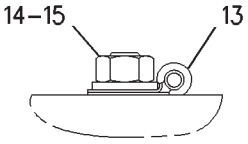

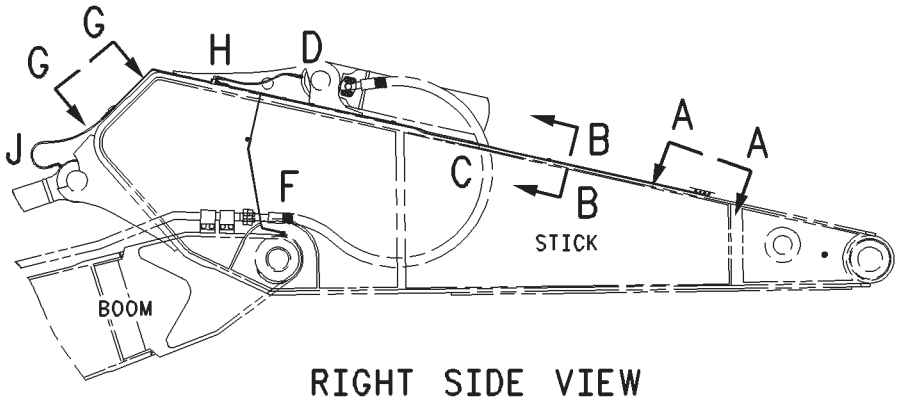

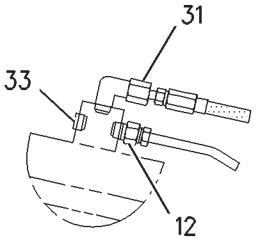

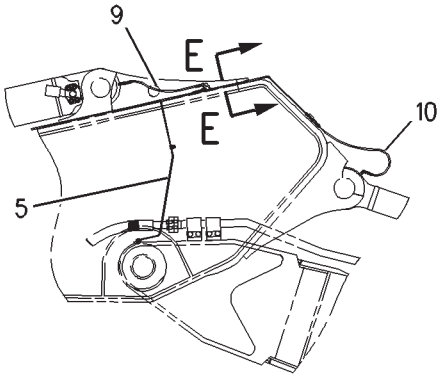

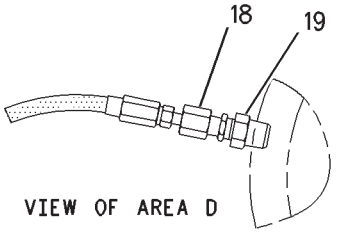

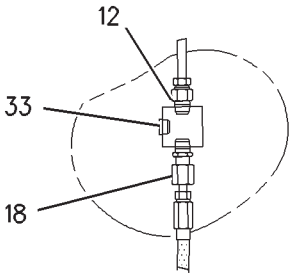

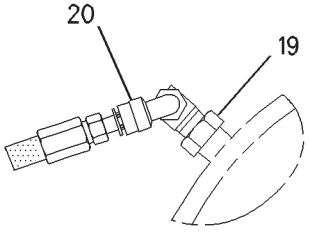

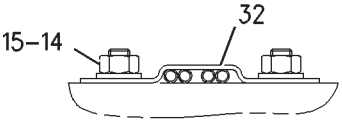

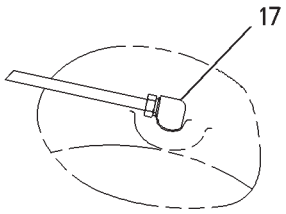

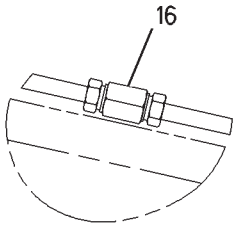

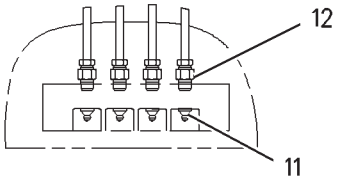

GRAPHIC #1 **<END>** g00799918

IMPLEMENTS

176-2218 LINES GP-GREASE–STICK

S/N: RCD1-UP
PART OF 150-2806 STICK AR-HOE
FOR USE WITH 5.5-M (18-FT) STICK
AN ATTACHMENT

SMCS-7510 **i01888648**

NOTE	REF NO	GRAPHIC REF	PART NUMBER	QTY	PART NAME 1 2 3 4 5 6 (PRODUCT LEVEL)	SEE PAGE
	1	1	**198-5661**	1	TUBE AS	
	2	1	**103-5281**	1	TUBE AS	
	3	1	**103-5280**	1	TUBE AS	
	4	1	**103-5279**	1	TUBE AS	
	5	1	**103-5278**	1	TUBE AS	
	6	1	**5K-9242**	9	UNION-FLARED	
	7	1	**198-5660**	1	TUBE AS	
	8	1	**198-5662**	1	TUBE AS	
	9	1	**198-5663**	1	TUBE AS	
	10	1	**198-5664**	2	TUBE AS	
	11	1	**202-2918**	1	HOSE AS	
	12	1	**6L-3616**	6	CONNECTOR	
	13	1	**151-0465**	1	HOSE AS	
	14	1	**8T-4121**	12	WASHER-HARD (11X21X2.5-MM THK)	
	15	1	**5K-2298**	1	CLIP	
	16	1	**8M-2772**	8	CLIP	
	17	1	**087-5838**	2	PLATE	
M	18	1	**8T-4133**	8	NUT (M10X1.5-THD)	
	19	1	**3B-8489**	4	FITTING-GREASE	
	20	1	**139-6647**	1	TUBE AS	
	21	1	**139-6649**	1	TUBE AS	
	22	1	**139-6650**	1	TUBE AS	
	23	1	**108-6717**	1	ELBOW	
	24	1	**8T-6757**	2	PLUG-PIPE	
	25	1	**4M-5317**	2	BUSHING-REDUCING	
	26	1	**141-3672**	1	ELBOW AS	
		1	**2D-1683**	1	FITTING	
	27	1	**108-6709**	2	CONNECTOR	
M	28	1	**8T-4191**	4	BOLT (M10X1.5X16-MM)	
	29	1	**5K-9243**	2	ELBOW-FLARED	

M-METRIC PART

176-2218 **LINES GP-GREASE** *(contd.)* **i01888648**

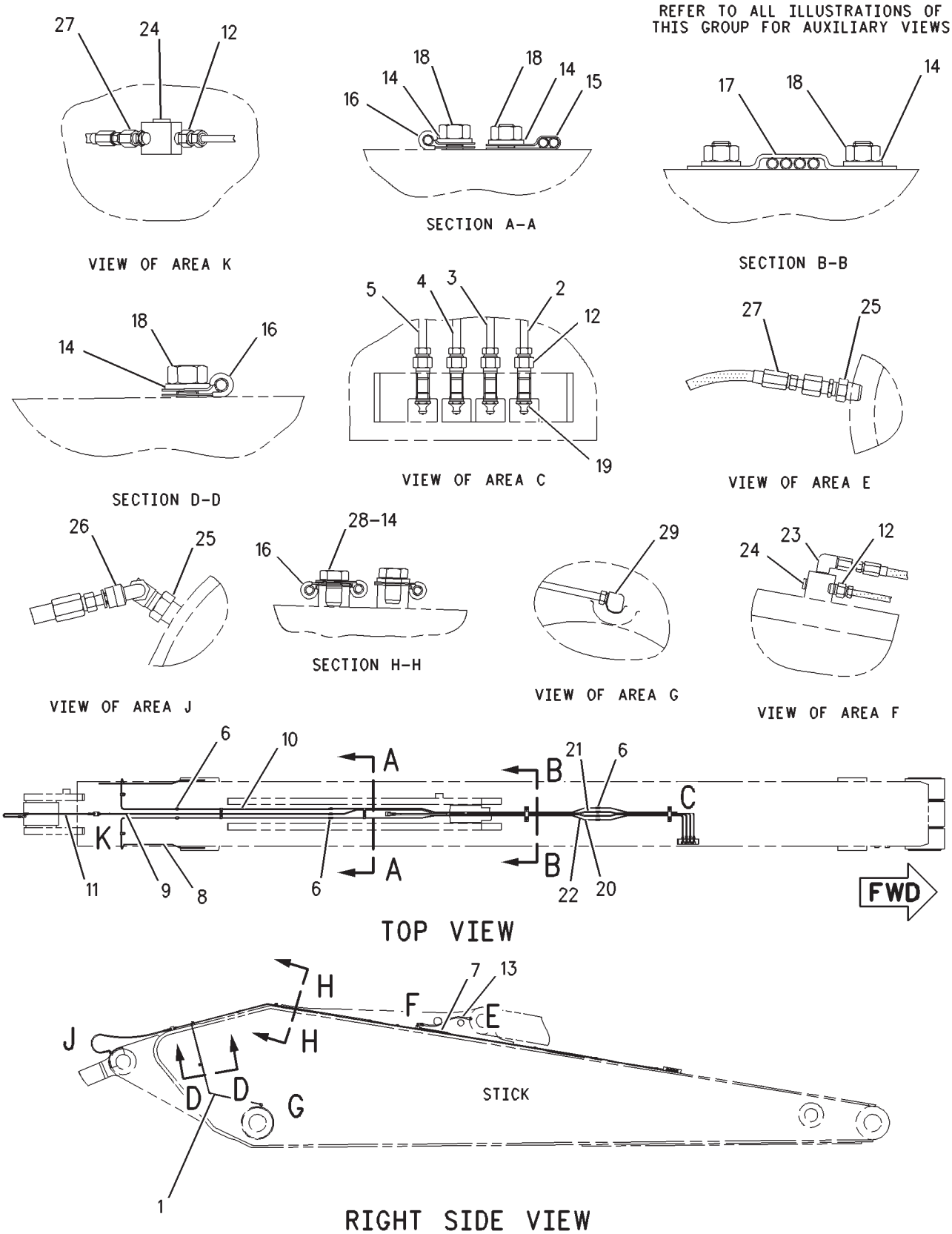

GRAPHIC #1 **<END>** g00806217

IMPLEMENTS

176-2219 LINES GP-GREASE–STICK

S/N: RCD1-UP
PART OF 150-2807 STICK AR-HOE
FOR USE WITH 4.4-M (14.4-FT) STICK
AN ATTACHMENT

SMCS-7510 **i01535368**

NOTE	REF NO	GRAPHIC REF	PART NUMBER	QTY	PART NAME 1 2 3 4 5 6 (PRODUCT LEVEL)	SEE PAGE
	1	1	**105-6405**	1	TUBE AS	
	2	1	**105-6404**	1	TUBE AS	
	3	1	**105-6402**	1	TUBE AS	
	4	1	**105-6403**	1	TUBE AS	
	5	1	**198-5640**	1	TUBE AS	
	6	1	**198-5642**	1	TUBE AS	
	7	1	**198-5641**	1	TUBE AS	
	8	1	**198-5639**	1	TUBE AS	
	9	1	**130-4317**	1	HOSE AS	
	10	1	**149-6661**	1	HOSE AS	
	11	1	**3B-8489**	4	FITTING-GREASE	
	12	1	**6L-3616**	6	CONNECTOR	
	13	1	**8M-2772**	7	CLIP	
	14	1	**8T-4121**	10	WASHER-HARD (11X21X2.5-MM THK)	
M	15	1	**8T-4133**	6	NUT (M10X1.5-THD)	
	16	1	**5K-9242**	7	UNION-FLARED	
	17	1	**5K-9243**	2	ELBOW-FLARED	
	18	1	**108-6709**	2	CONNECTOR	
	19	1	**4M-5317**	2	BUSHING-REDUCING	
	20	1	**141-3672**	1	ELBOW AS	
		1	**108-6730**	1	CONNECTOR	
		1	**141-3636**	1	ELBOW	
	21	1	**198-5645**	1	TUBE AS	
M	22	1	**8T-4191**	4	BOLT (M10X1.5X16-MM)	
	23	1	**198-5644**	1	TUBE AS	
	24	1	**8T-6757**	2	PLUG-PIPE	
	25	1	**108-6717**	1	ELBOW	
	26	1	**087-5838**	2	PLATE	
	27	1	**198-5643**	1	TUBE AS	

M-METRIC PART

176-2219 **LINES GP-GREASE** *(contd.)* **i01535368**

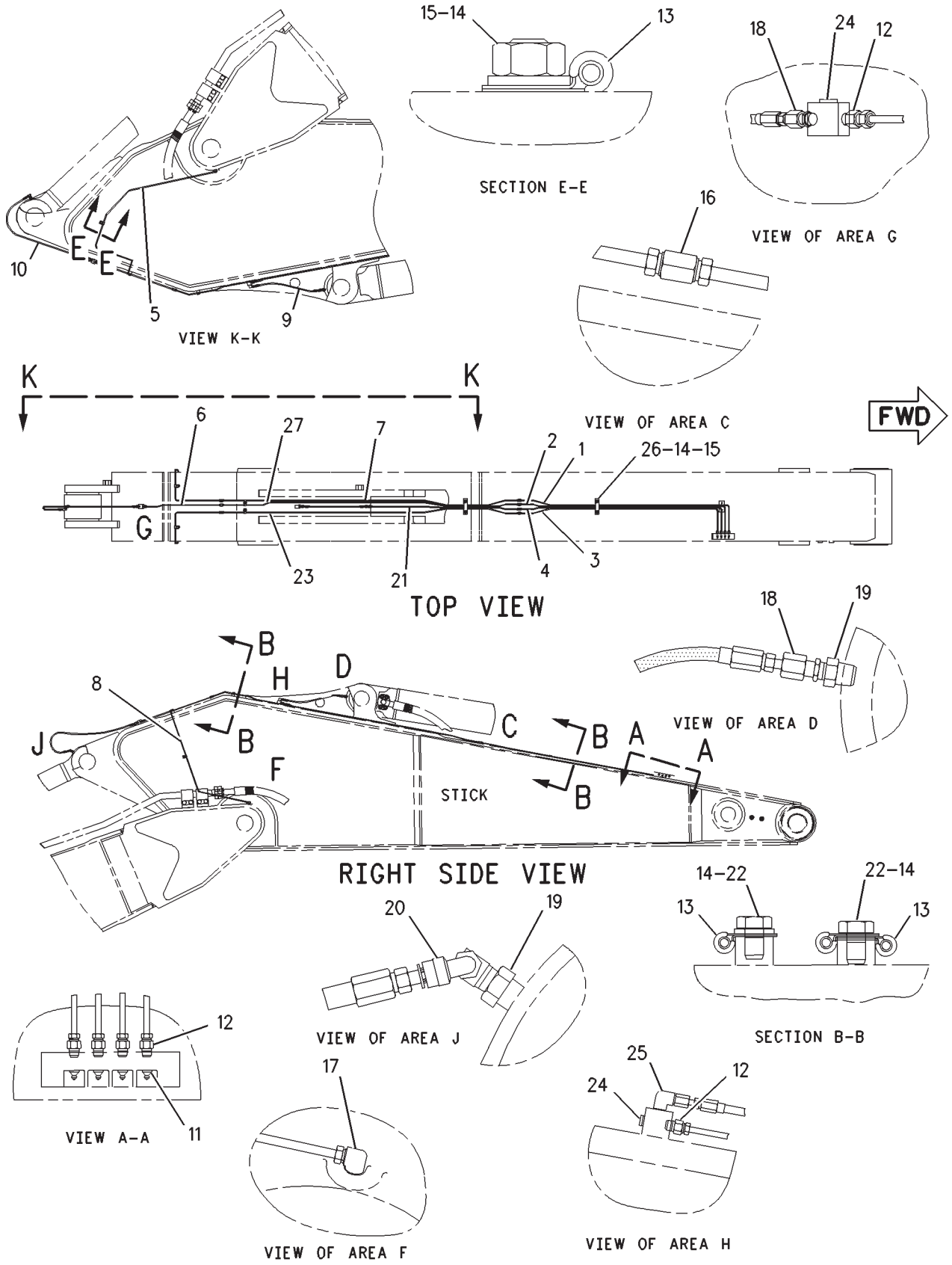

GRAPHIC #1 **<END>** g00783424

IMPLEMENTS

176-2220 LINES GP-GREASE–STICK

S/N: RCD1-UP
PART OF 150-2811 STICK AR-HOE
FOR USE WITH 3.4-M (11.2-FT) STICK
AN ATTACHMENT

SMCS-7510 **i01547815**

NOTE	REF NO	GRAPHIC REF	PART NUMBER	QTY	PART NAME 1 2 3 4 5 6 (PRODUCT LEVEL)	SEE PAGE
	1	1	**7I-6729**	1	TUBE AS	
	2	1	**7I-6730**	1	TUBE AS	
	3	1	**7I-6731**	1	TUBE AS	
	4	1	**7I-6732**	1	TUBE AS	
	5	1	**176-2301**	1	TUBE AS	
	6	1	**176-2302**	1	TUBE AS	
	7	1	**176-2303**	1	TUBE AS	
	8	1	**176-2304**	1	TUBE AS	
	9	1	**130-4317**	1	HOSE AS	
	10	1	**123-5592**	1	HOSE AS	
	11	1	**3B-8489**	4	FITTING-GREASE	
	12	1	**6L-3616**	6	CONNECTOR	
	13	1	**8M-2772**	2	CLIP	
	14	1	**8T-4121**	6	WASHER-HARD (11X21X2.5-MM THK)	
M	15	1	**8T-4133**	6	NUT (M10X1.5-THD)	
	16	1	**5K-9242**	4	UNION-FLARED	
	17	1	**5K-9243**	2	ELBOW-FLARED	
	18	1	**108-6709**	1	CONNECTOR	
	19	1	**4M-5317**	2	BUSHING-REDUCING	
	20	1	**141-3672**	1	ELBOW AS	
		1	**2D-1683**	1	FITTING	
	21	1	**108-6717**	2	ELBOW	
	22	1	**087-5838**	2	PLATE	

M-METRIC PART

176-2220 **LINES GP-GREASE** *(contd.)* **i01547815**

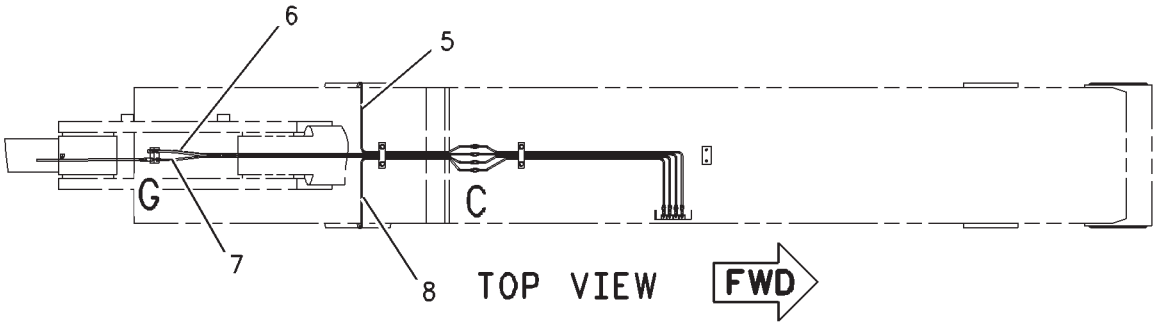

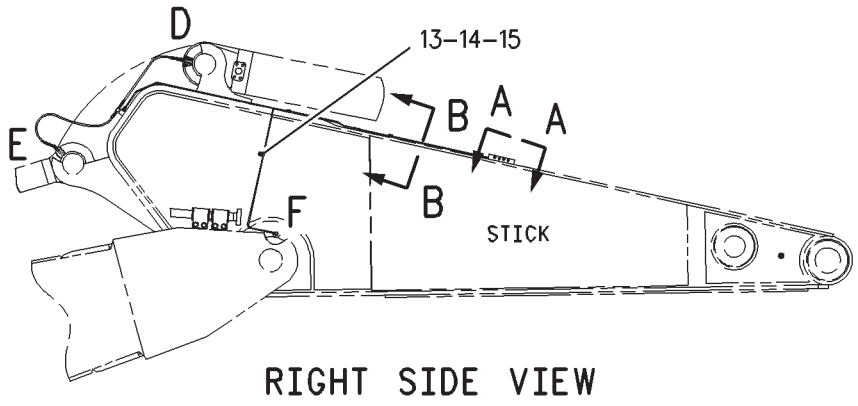

RIGHT SIDE VIEW

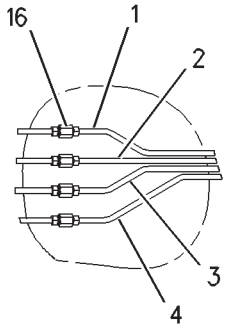

VIEW OF AREA C

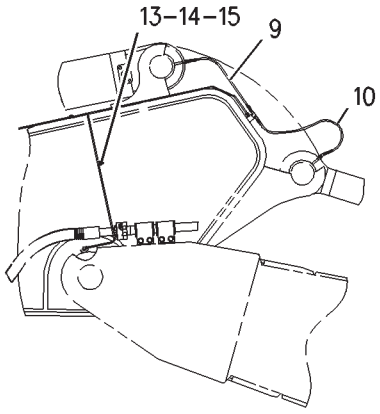

LEFT SIDE VIEW

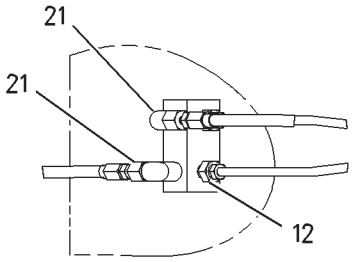

VIEW OF AREA G

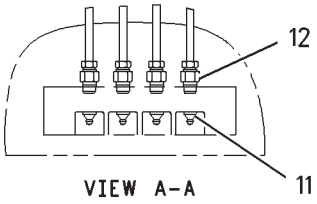

VIEW A-A

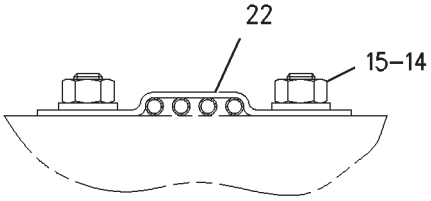

SECTION B-B

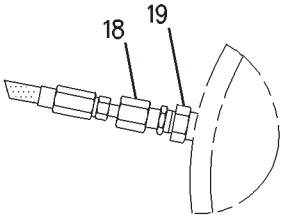

VIEW OF AREA D

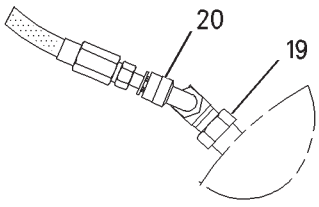

VIEW OF AREA E

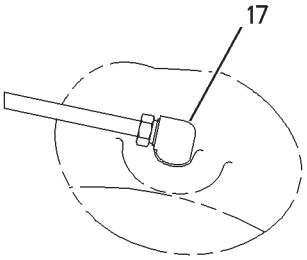

VIEW OF AREA F

GRAPHIC #1 **<END>** g00805228

IMPLEMENTS

176-2221 LINES GP-GREASE–STICK

S/N: RCD1-UP
PART OF 250-1670 STICK AR, 150-2812 STICK AR-HOE
FOR USE WITH 2.9-M (9.6-FT) STICK
AN ATTACHMENT

SMCS-7510 **i03506124**

NOTE	REF NO	GRAPHIC REF	PART NUMBER	QTY	PART NAME 1 2 3 4 5 6 (PRODUCT LEVEL)	SEE PAGE
	1	1	**201-2985**	1	TUBE AS	
	2	1	**201-2986**	1	TUBE AS	
	3	1	**201-2981**	1	TUBE AS	
	4	1	**201-2980**	1	TUBE AS	
	5	1	**201-2979**	1	TUBE AS	
	6	1	**201-2978**	1	TUBE AS	
	7	1	**151-0465**	1	HOSE AS	
	8	1	**118-6119**	1	HOSE AS	
	9	1	**108-6717**	1	ELBOW	
	10	1	**108-6709**	2	CONNECTOR	
	11	1,2	**6L-3616**	6	CONNECTOR	
	12	2	**5K-9243**	2	ELBOW-FLARED	
	13	1	**4M-5317**	2	BUSHING-REDUCING	
	14	1	**141-3672**	1	ELBOW AS	
		1	**2D-1683**	1	FITTING	
		1	**141-3636**	1	ELBOW	
	15	1,2	**8M-2772**	4	CLIP	
	16	1,2	**8T-4121**	8	WASHER-HARD (11X21X2.5-MM THK)	
M	17	1,2	**8T-4133**	6	NUT (M10X1.5-THD)	
	18	2	**087-5838**	2	PLATE	
M	19	2	**8T-4191**	2	BOLT (M10X1.5X16-MM)	
	20	2	**3B-8489**	4	FITTING-GREASE	
	21	2	**5K-9242**	2	UNION-FLARED	
J	22	2	**8T-6757**	4	PLUG-PIPE	

J-(USE WITH OPTIONAL DESIGN) (SEE GRAPHIC FOR OPTIONAL DESIGN)
M-METRIC PART

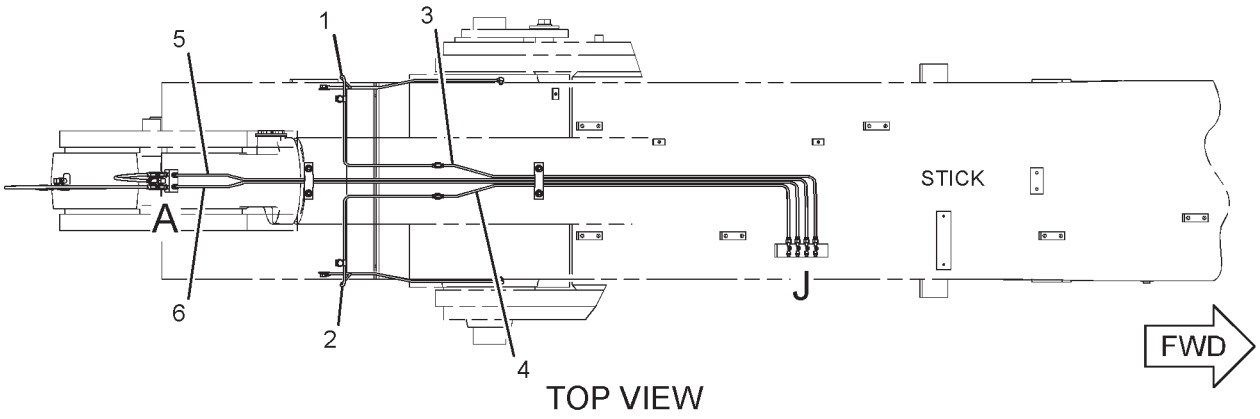

TOP VIEW

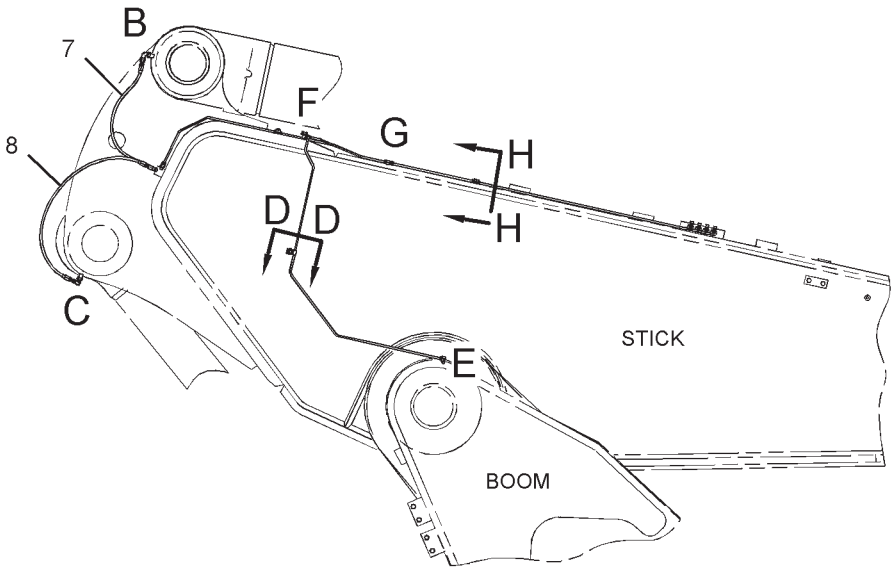

REFER TO ALL ILLUSTRATIONS OF THIS GROUP FOR AUXILIARY VIEWS

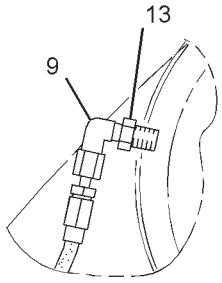

VIEW OF AREA B

RIGHT SIDE VIEW

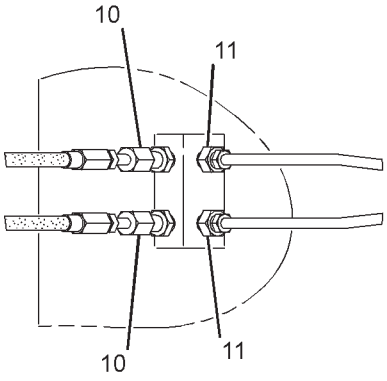

VIEW OF AREA A

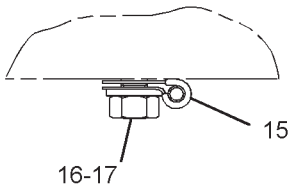

SECTION D-D

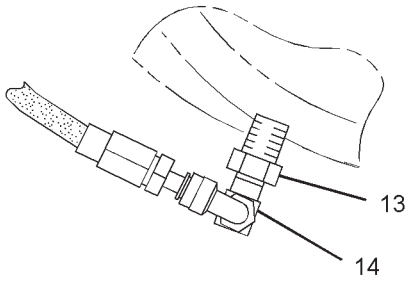

VIEW OF AREA C

GRAPHIC #1

g01847813

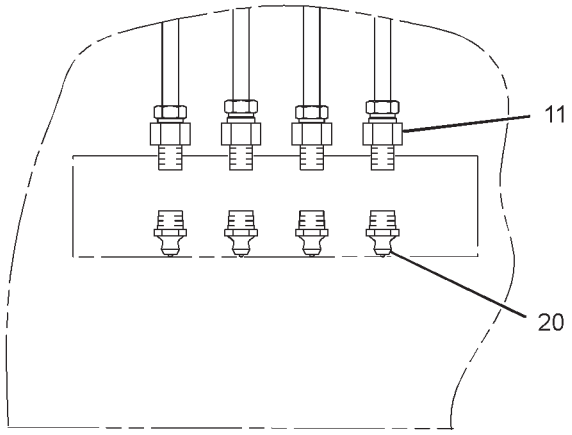

VIEW OF AREA J

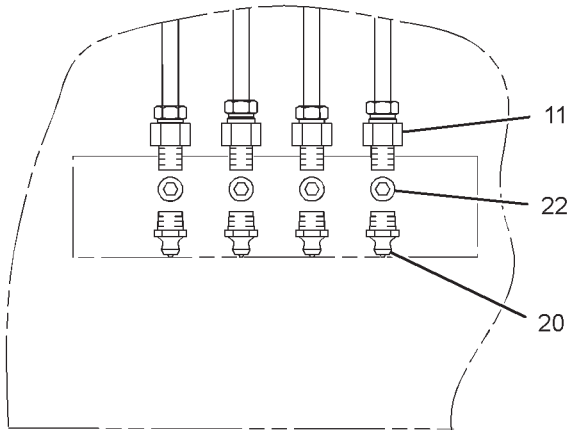

VIEW OF AREA J
(OPTIONAL DESIGN)

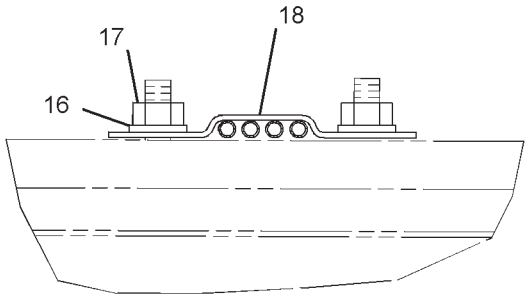

SECTION H-H

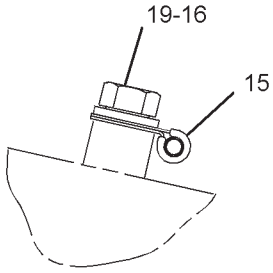

VIEW OF AREA F

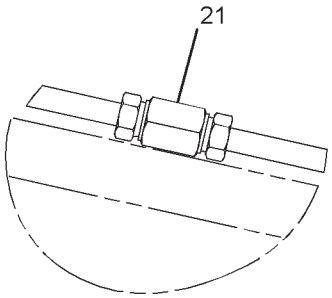

VIEW OF AREA G

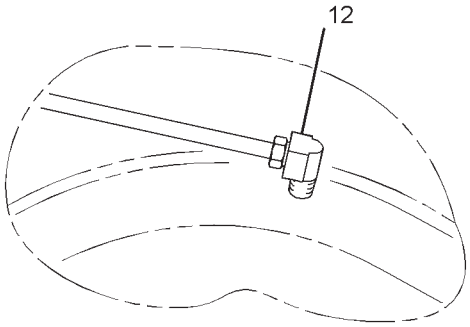

VIEW OF AREA E

GRAPHIC #2 **<END>** g01848000

IMPLEMENTS

203-7450 LINES GP-GREASE–STICK

S/N: RCD1-UP
PART OF 228-8129 STICK AR-HOE
FOR USE WITH 3.4-M (11.2-FT) STICK
AN ATTACHMENT

SMCS-7510 **i01696369**

NOTE	REF NO	GRAPHIC REF	PART NUMBER	QTY	PART NAME 1 2 3 4 5 6 (PRODUCT LEVEL)	SEE PAGE
	1	1	**7I-6729**	1	TUBE AS	
	2	1	**7I-6730**	1	TUBE AS	
	3	1	**7I-6731**	1	TUBE AS	
	4	1	**7I-6732**	1	TUBE AS	
	5	1	**208-1888**	1	TUBE AS	
	6	1	**176-2302**	1	TUBE AS	
	7	1	**176-2303**	1	TUBE AS	
	8	1	**208-1889**	1	TUBE AS	
	9	1	**130-4317**	1	HOSE AS	
	10	1	**123-5592**	1	HOSE AS	
	11	1	**3B-8489**	4	FITTING-GREASE	
	12	1	**6L-3616**	6	CONNECTOR	
	13	1	**8M-2772**	2	CLIP	
	14	1	**8T-4121**	6	WASHER-HARD (11X21X2.5-MM THK)	
M	15	1	**8T-4133**	6	NUT (M10X1.5-THD)	
	16	1	**5K-9242**	4	UNION-FLARED	
	17	1	**5K-9243**	2	ELBOW-FLARED	
	18	1	**108-6709**	1	CONNECTOR	
	19	1	**4M-5317**	2	BUSHING-REDUCING	
	20	1	**141-3672**	1	ELBOW AS	
	21	1	**108-6717**	2	ELBOW	
	22	1	**087-5838**	2	PLATE	

M-METRIC PART

203-7450 **LINES GP-GREASE** *(contd.)* **i01696369**

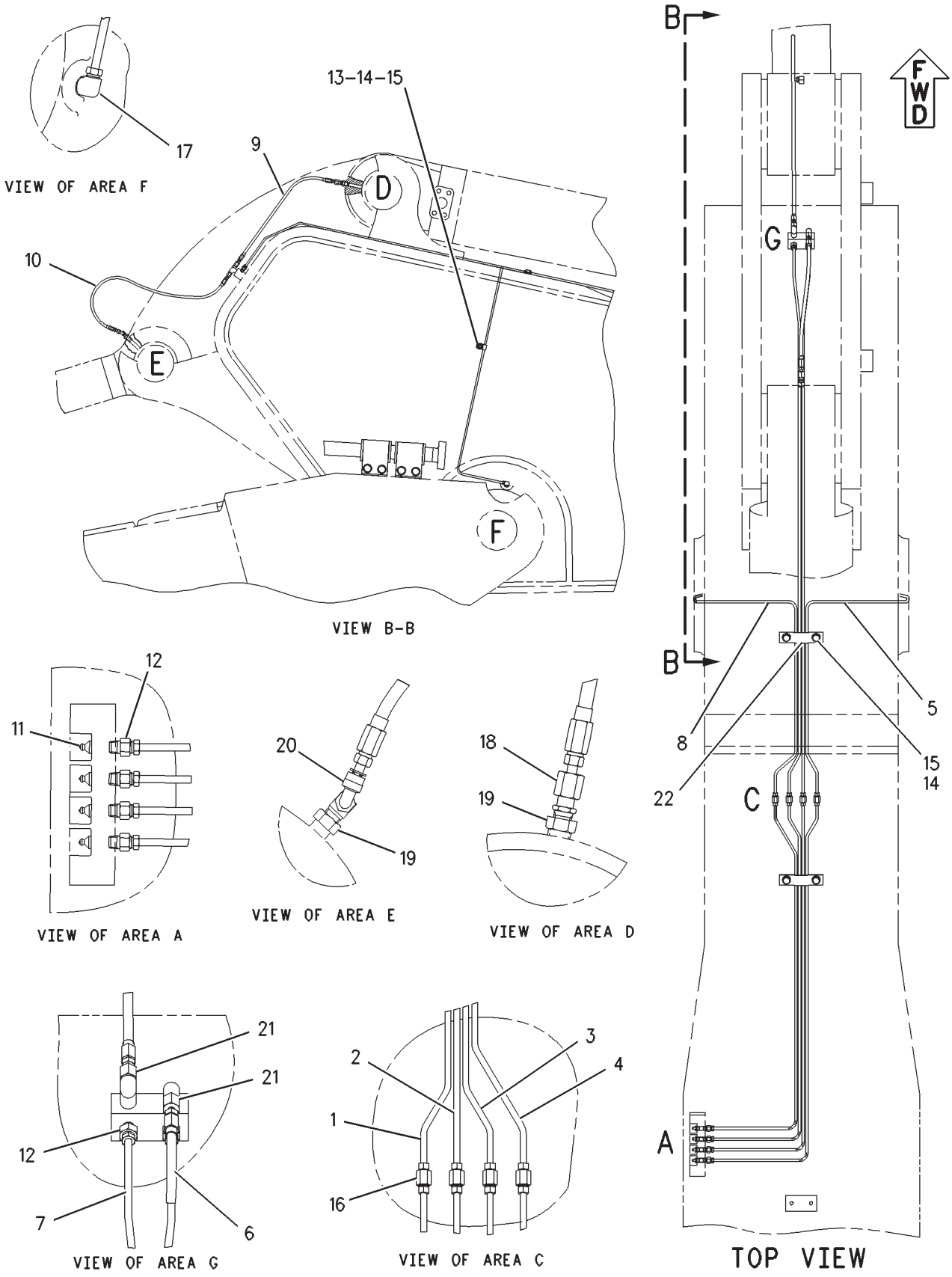

GRAPHIC #1

<END>

g00875260

IMPLEMENTS

157-9986 LINKAGE AR-BUCKET

S/N: RCD1-UP
H FAMILY
AN ATTACHMENT

SMCS-6513 **i01531051**

NOTE	PART NUMBER	QTY	PART NAME 1 2 3 4 5 6 (PRODUCT LEVEL)	SEE PAGE
Y	*155-9072*	1	CYLINDER & LINES GP-BUCKET	465
Y	*167-9837*	1	LINKAGE GP-BUCKET	916

Y-SEPARATE ILLUSTRATION

<END>

IMPLEMENTS

157-9987 LINKAGE AR-BUCKET

S/N: RCD1-UP

AN ATTACHMENT

SMCS-6513 **i01530974**

NOTE	PART NUMBER	QTY	PART NAME 1 2 3 4 5 6 (PRODUCT LEVEL)	SEE PAGE
Y	*155-9075*	1	CYLINDER & LINES GP-BUCKET	466
Y	*167-9838*	1	LINKAGE GP-BUCKET	918

Y-SEPARATE ILLUSTRATION

<END>

IMPLEMENTS

220-2423 LINKAGE AR-BUCKET—HB-FAMILY, WITHOUT HOOK

S/N: RCD1-UP

AN ATTACHMENT

SMCS-6513 **i03383880**

NOTE	PART NUMBER	QTY	PART NAME 1 2 3 4 5 6 (PRODUCT LEVEL)	SEE PAGE
Y	*155-9072*	1	CYLINDER & LINES GP-BUCKET	465
			—OR—	
Y	*215-9859*	1	CYLINDER & LINES GP-BUCKET	467
Y	*219-8353*	1	LINKAGE GP-BUCKET	920

Y-SEPARATE ILLUSTRATION

<END>

IMPLEMENTS

220-2438 LINKAGE AR-BUCKET–JB FAMILY

S/N: RCD1-UP

AN ATTACHMENT

SMCS-6513 **i02112136**

NOTE	PART NUMBER	QTY	PART NAME 1 2 3 4 5 6 (PRODUCT LEVEL)	SEE PAGE
Y	*215-9963*	1	CYLINDER & LINES GP-BUCKET	468
Y	*219-8359*	1	LINKAGE GP-BUCKET (JB-FAMILY)	922

Y-SEPARATE ILLUSTRATION

<END>

IMPLEMENTS

249-1148 LINKAGE GP

S/N: RCD1-UP
PART OF 252-4303 GUARD AR-CYLINDER
AN ATTACHMENT

SMCS-6000 **i02229758**

NOTE	REF NO	GRAPHIC REF	PART NUMBER	QTY	PART NAME 1 2 3 4 5 6 (PRODUCT LEVEL)	SEE PAGE
	1	1	**254-1393**	1	PIN AS	
	2	1	**254-1396**	1	BOSS	
	3	1	**254-1397**	1	BOSS	
	4	1	**4I-6626**	1	PIN	
M	5	1	**7Y-5265**	1	BOLT (M36X4X140-MM)	
	6	1	**8T-4123**	3	WASHER (22X35X3.5-MM THK)	
M	7	1	**8T-4187**	3	BOLT (M20X2.5X80-MM)	
	8	1	**9X-8259**	1	WASHER (39X66X6-MM THK)	

M-METRIC PART

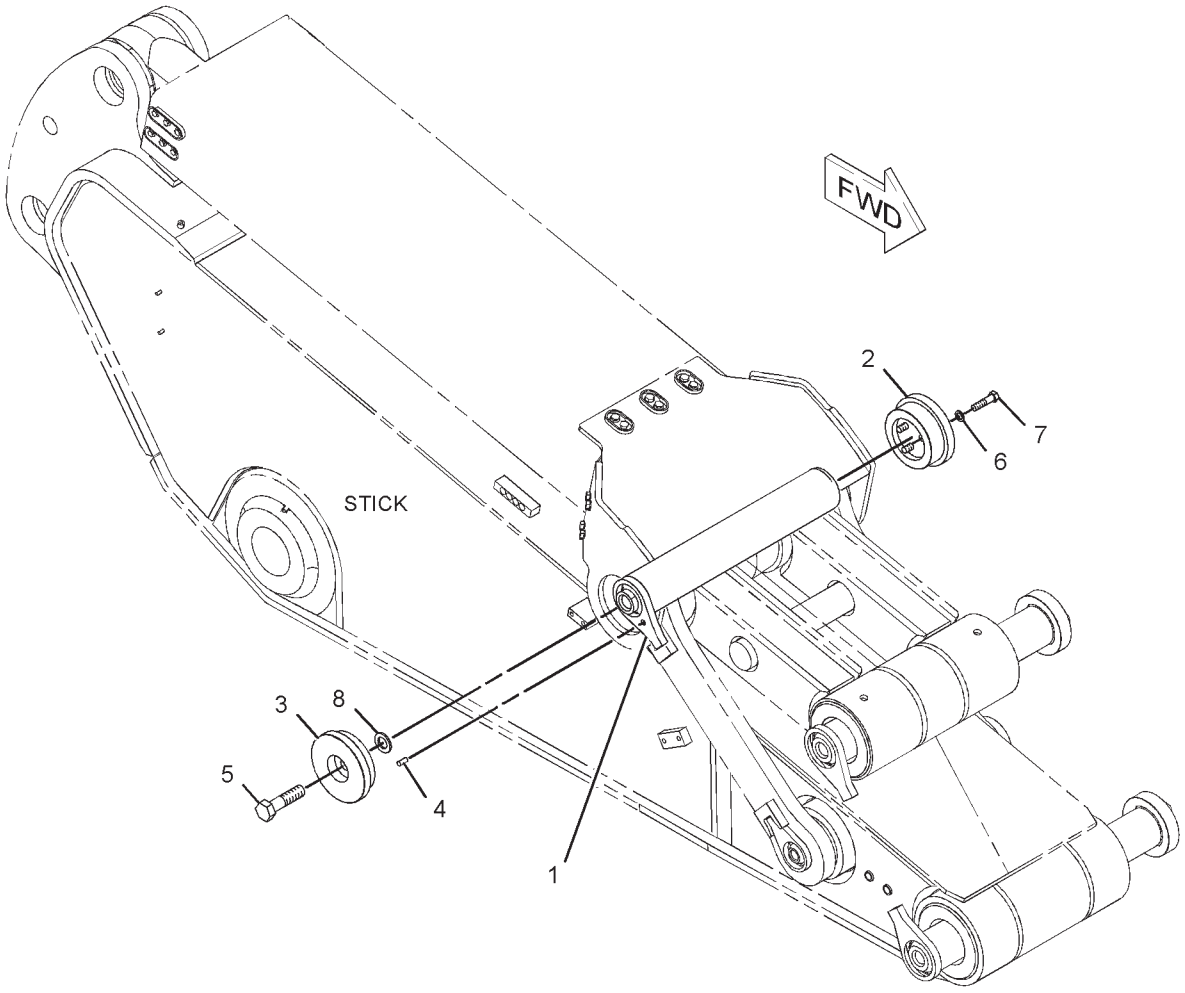

GRAPHIC #1 **<END>** g01129528

IMPLEMENTS

167-9837 LINKAGE GP-BUCKET—HB-FAMILY

S/N: RCD1-UP
PART OF 157-9986 LINKAGE AR-BUCKET
AN ATTACHMENT

SMCS-6513 **i03019229**

NOTE	REF NO	GRAPHIC REF	PART NUMBER	QTY	PART NAME 1 2 3 4 5 6 (PRODUCT LEVEL)	SEE PAGE
	1	1	**176-2267**	1	LINK AS	
	2	1	**176-2261**	1	LINK & BEARING AS	
	2A	1	**7Y-9915**	2	BEARING-SLEEVE	
	2B	1	**198-5529**	2	BEARING-SLEEVE	
	3	1	**176-2265**	1	LINK AS	
	4	1	**101-2154**	2	SEAL-O-RING	
	5	1	**198-5647**	2	SEAL-O-RING	
	6	1	**3B-8489**	4	FITTING-GREASE	
	7	1	**9X-4600**	4	SEAL-LIP TYPE	
	8	1	**9X-4599**	2	SEAL-LIP TYPE	
	9	1	**212-2896**	1	PIN AS	
	10	1	**195-5476**	1	PIN AS	
	11	1	**195-5481**	1	PIN AS	
	12	1	**195-5484**	1	PIN AS	
	13	1	**195-5479**	1	PLATE	
	14	1	**195-5480**	3	PLATE	
M	15	1	**7X-2562**	9	BOLT (M20X2.5X45-MM)	
	16	1	**8T-4123**	9	WASHER (22X35X3.5-MM THK)	
M	17	1	**7X-2553**	3	BOLT (M16X2X40-MM)	
	18	1	**9X-8257**	3	WASHER (17.5X30X3.5-MM THK)	
	19	1	**5B-0651**	1	FITTING-STRAIGHT	

M-METRIC PART

167-9837 **LINKAGE GP-BUCKET** *(contd.)* **i03019229**

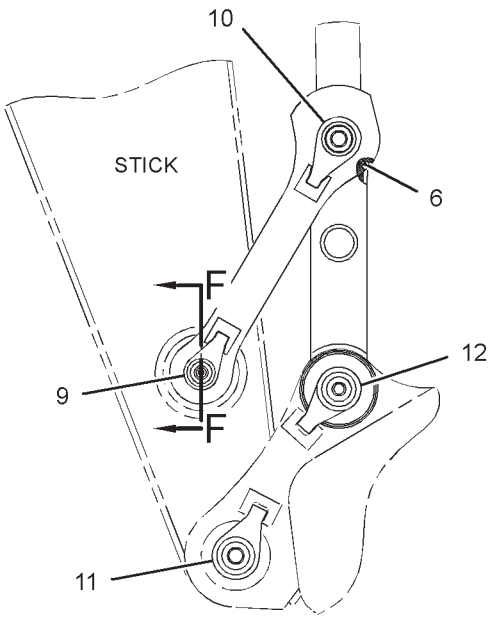

RIGHT SIDE VIEW

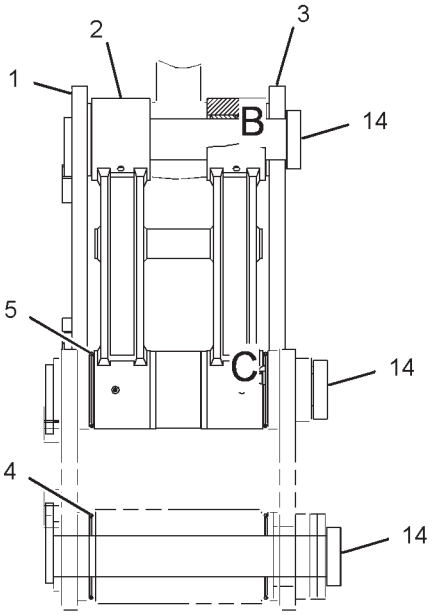

FRONT VIEW

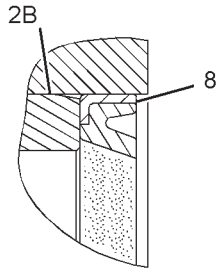

VIEW OF AREA C

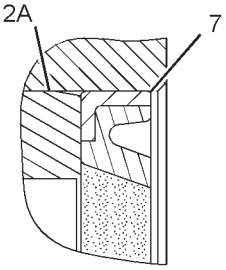

VIEW OF AREA B

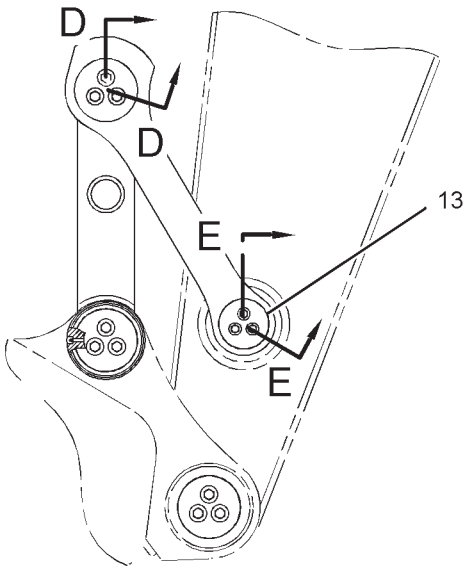

LEFT SIDE VIEW

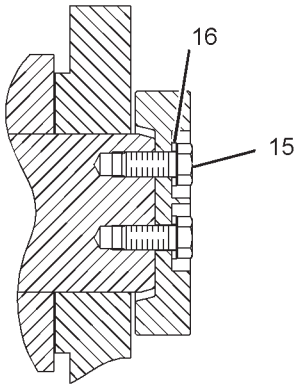

SECTION D-D

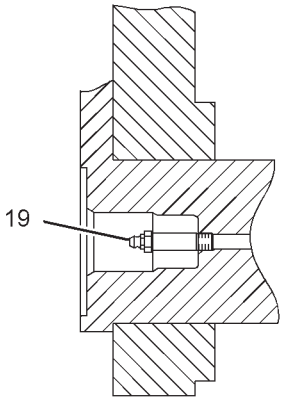

SECTION F-F

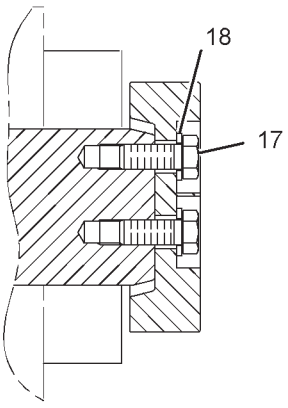

SECTION E-E

GRAPHIC #1

<END>

g01527319

IMPLEMENTS

167-9838 LINKAGE GP-BUCKET

S/N: RCD1-UP
B-FAMILY
PART OF 157-9987 LINKAGE AR-BUCKET
AN ATTACHMENT

SMCS-6513 **i01705367**

NOTE	REF NO	GRAPHIC REF	PART NUMBER	QTY	PART NAME 1 2 3 4 5 6 (PRODUCT LEVEL)	SEE PAGE
	1	1	**176-2277**	1	LINK AS	
	2	1	**176-2271**	1	LINK & BEARING AS	
	2A	1	**6I-5168**	2	BEARING-SLEEVE	
	2B	1	**7Y-3590**	2	BEARING-SLEEVE	
	3	1	**176-2275**	1	LINK AS	
	4	1	**101-2154**	4	SEAL-O-RING	
	5	1	**3B-8489**	4	FITTING-GREASE	
	6	1	**9X-4601**	4	SEAL-LIP TYPE	
	7	1	**9X-4600**	2	SEAL-LIP TYPE	
	8	1	**212-2897**	1	PIN AS	
	9	1	**195-5578**	1	PIN AS	
	10	1	**195-5583**	1	PIN AS	
	11	1	**195-5580**	1	PIN AS	
	12	1	**195-5479**	1	PLATE	
	13	1	**195-5480**	3	PLATE	
M	14	1	**7X-2562**	9	BOLT (M20X2.5X45-MM)	
	15	1	**8T-4123**	9	WASHER (22X35X3.5-MM THK)	
M	16	1	**7X-2553**	3	BOLT (M16X2X40-MM)	
	17	1	**9X-8257**	3	WASHER (17.5X30X3.5-MM THK)	
	18	1	**5B-0651**	1	FITTING-STRAIGHT	

M-METRIC PART

167-9838 **LINKAGE GP-BUCKET** *(contd.)* **i01705367**

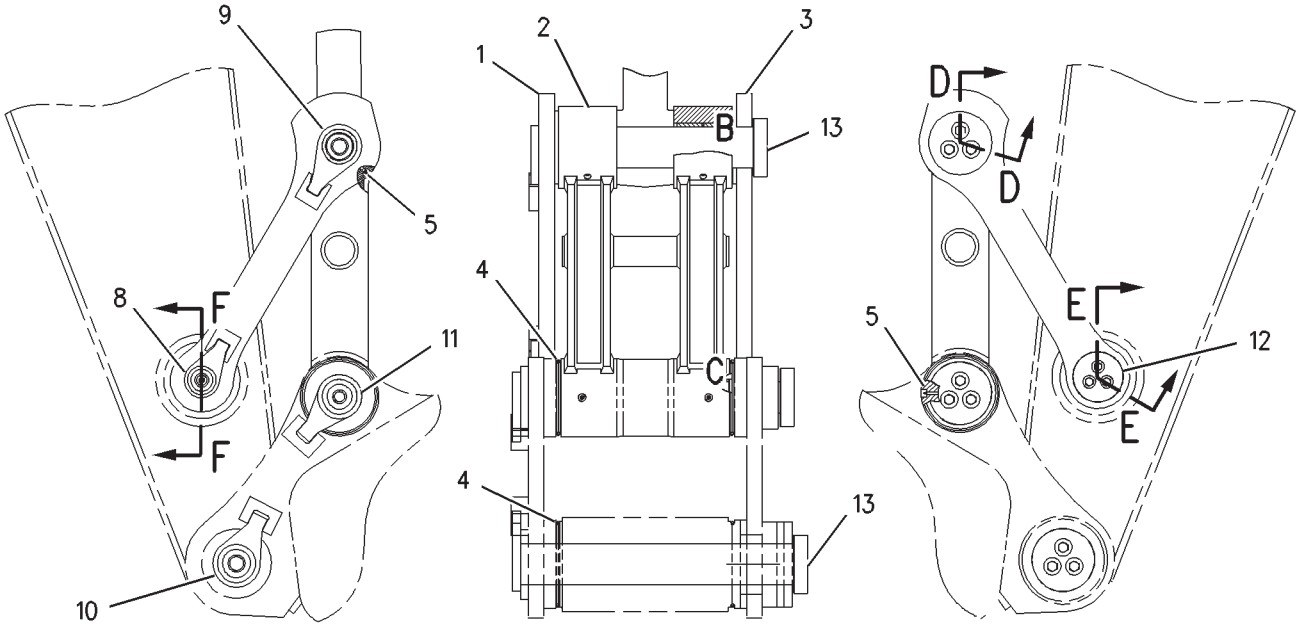

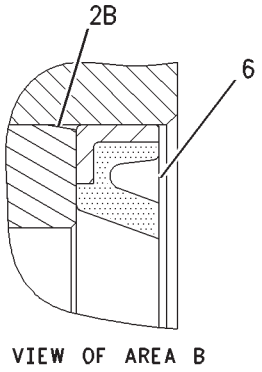

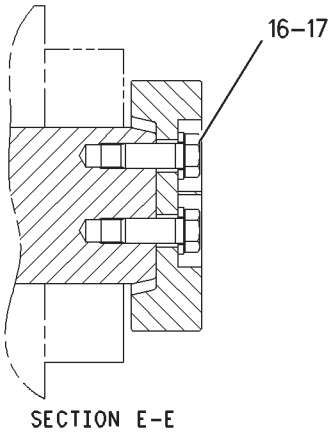

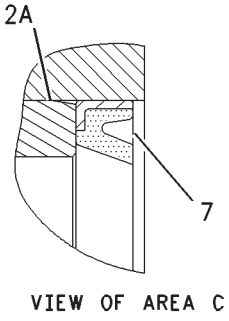

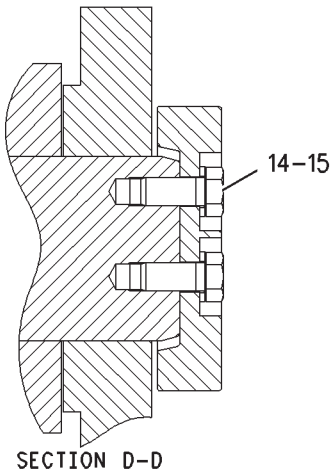

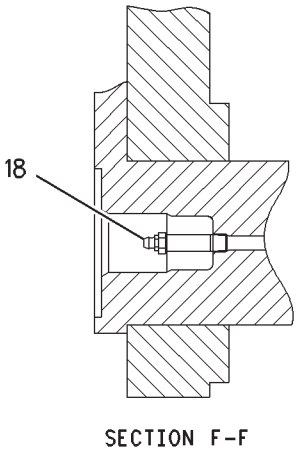

GRAPHIC #1 **<END>** g00848471

IMPLEMENTS

219-8353 LINKAGE GP-BUCKET—HB-FAMILY, WITHOUT HOOK

S/N: RCD1-UP
PART OF 220-2423 LINKAGE AR-BUCKET
AN ATTACHMENT

SMCS-6513 **i02125091**

NOTE	REF NO	GRAPHIC REF	PART NUMBER	QTY	PART NAME 1 2 3 4 5 6 (PRODUCT LEVEL)	SEE PAGE
	1	1	**176-2267**	1	LINK AS	
	2	1	**219-8354**	1	LINK & BEARING AS	
	2A	1	**7Y-9915**	2	BEARING-SLEEVE	
	2B	1	**198-5529**	2	BEARING-SLEEVE	
	3	1	**176-2265**	1	LINK AS	
	4	1	**101-2154**	2	SEAL-O-RING	
	5	1	**198-5647**	2	SEAL-O-RING	
	6	1	**3B-8489**	4	FITTING-GREASE	
	7	1	**9X-4600**	4	SEAL-LIP TYPE	
	8	1	**9X-4599**	2	SEAL-LIP TYPE	
	9	1	**212-2896**	1	PIN AS	
	10	1	**195-5476**	1	PIN AS	
	11	1	**195-5481**	1	PIN AS	
	12	1	**195-5484**	1	PIN AS	
	13	1	**195-5479**	1	PLATE	
	14	1	**195-5480**	3	PLATE	
M	15	1	**7X-2562**	9	BOLT (M20X2.5X45-MM)	
	16	1	**8T-4123**	9	WASHER (22X35X3.5-MM THK)	
M	17	1	**7X-2553**	3	BOLT (M16X2X40-MM)	
	18	1	**9X-8257**	3	WASHER (17.5X30X3.5-MM THK)	
	19	1	**5B-0651**	1	FITTING-STRAIGHT	

M-METRIC PART

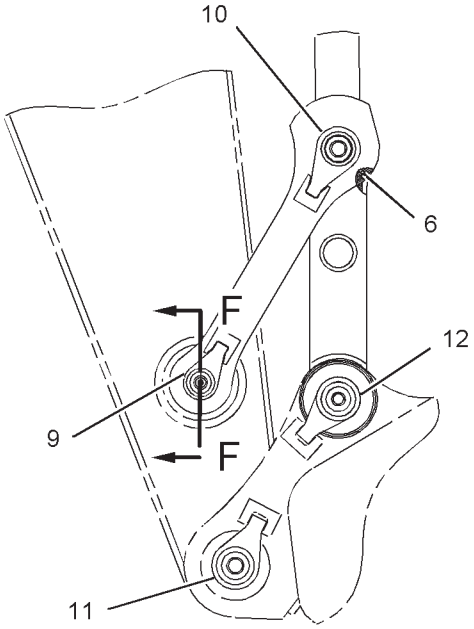

LEFT SIDE VIEW

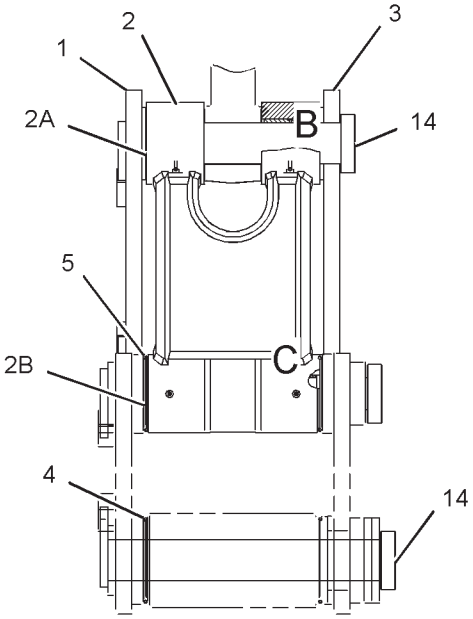

FRONT VIEW

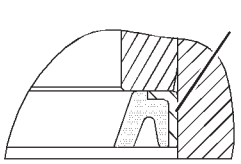

VIEW OF AREA C

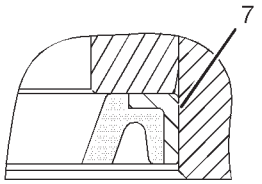

VIEW OF AREA B

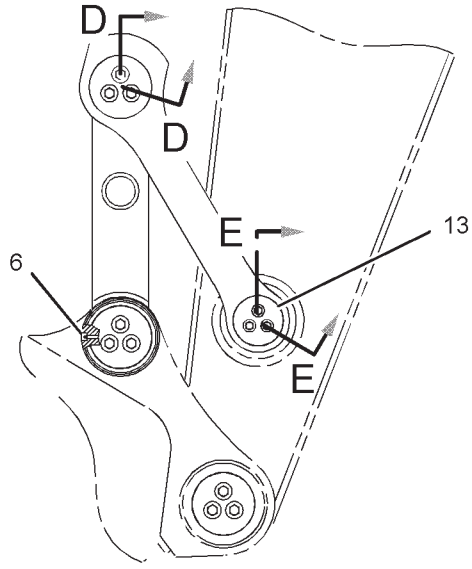

RIGHT SIDE VIEW

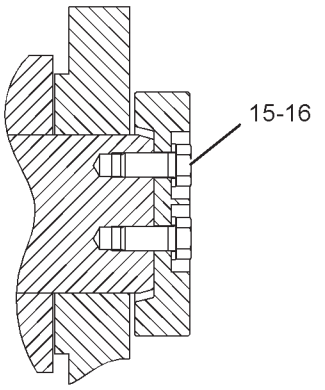

SECTION D-D

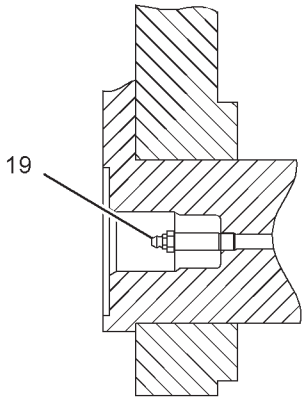

SECTION F-F

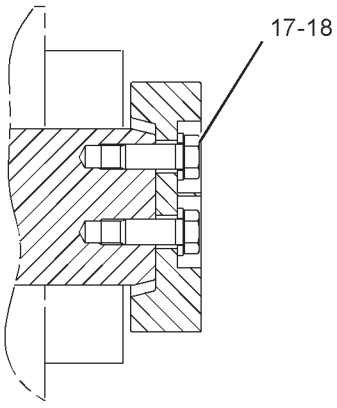

SECTION E-E

GRAPHIC #1

<END>

g01086998

IMPLEMENTS

219-8359 LINKAGE GP-BUCKET–JB-FAMILY

S/N: RCD1-UP
PART OF 220-2438 LINKAGE AR-BUCKET
AN ATTACHMENT

SMCS-6513 **i02529466**

NOTE	REF NO	GRAPHIC REF	PART NUMBER	QTY	PART NAME 1 2 3 4 5 6 (PRODUCT LEVEL)	SEE PAGE
	1	1	**3B-8489**	4	FITTING-GREASE	
	2	1	**5B-0651**	1	FITTING-STRAIGHT	
	3	1	**9X-4600**	2	SEAL-LIP TYPE	
	4	1	**9X-4601**	4	SEAL-LIP TYPE	
	5	1	**176-2275**	1	LINK AS	
	6	1	**176-2277**	1	LINK AS	
	7	1	**195-5479**	1	PLATE	
	8	1	**195-5480**	3	PLATE	
	9	1	**195-5578**	1	PIN AS	
	10	1	**195-5580**	1	PIN AS	
	11	1	**195-5583**	1	PIN AS	
	12	1	**212-2897**	1	PIN AS	
	13	1	**219-8360**	1	LINK & BEARING AS	
	13A	1	**6I-5168**	2	BEARING-SLEEVE	
	13B	1	**7Y-3590**	2	BEARING-SLEEVE	
	14	1	**101-2154**	4	SEAL-O-RING	
M	15	1	**7X-2553**	3	BOLT (M16X2X40-MM)	
M	16	1	**7X-2562**	9	BOLT (M20X2.5X45-MM)	
	17	1	**8T-4123**	9	WASHER (22X35X3.5-MM THK)	
	18	1	**9X-8257**	3	WASHER (17.5X30X3.5-MM THK)	

M-METRIC PART

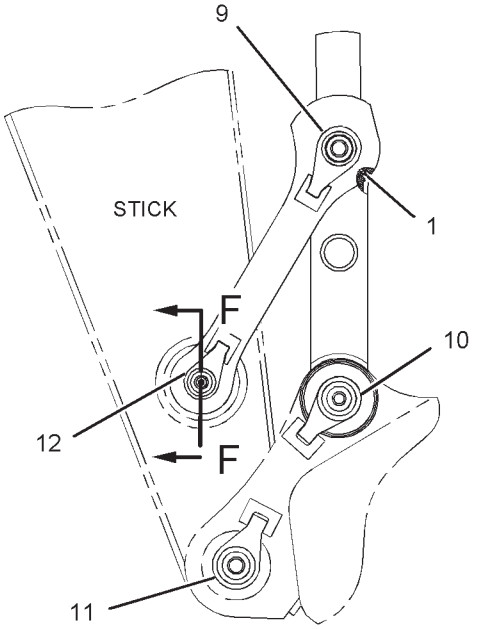

RIGHT SIDE VIEW

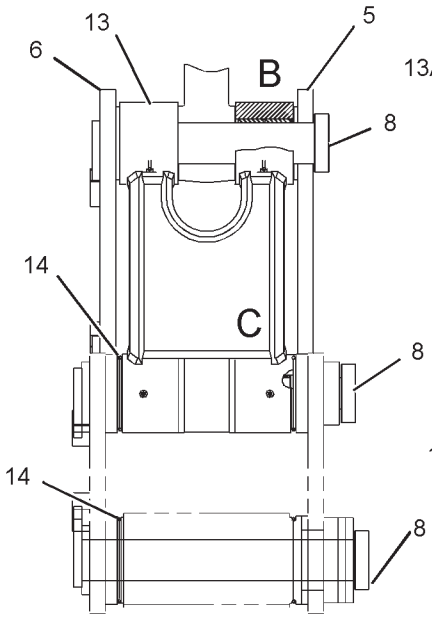

FRONT VIEW

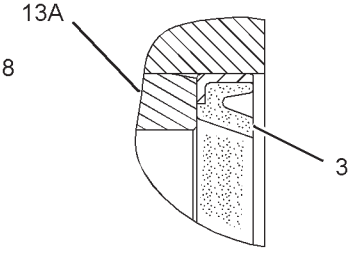

VIEW OF AREA C

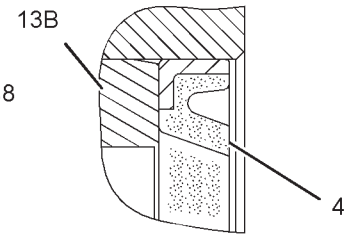

VIEW OF AREA B

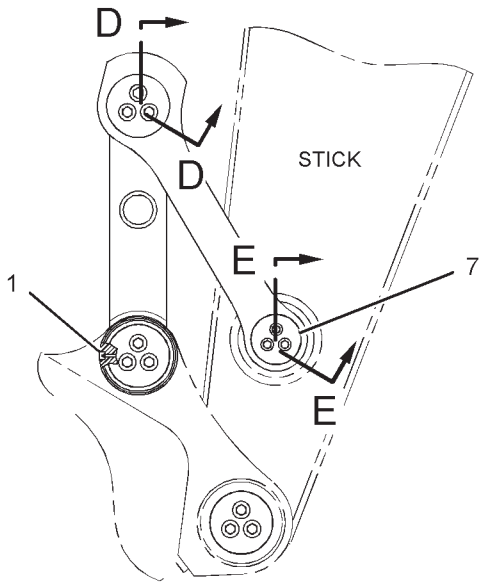

LEFT SIDE VIEW

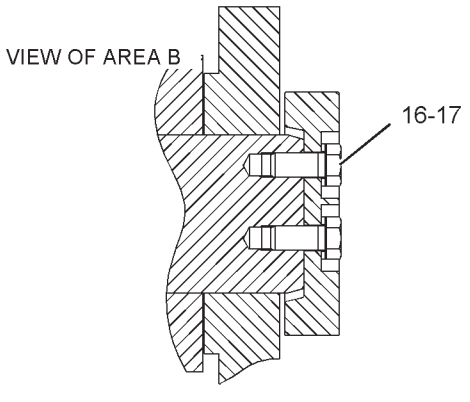

SECTION D-D

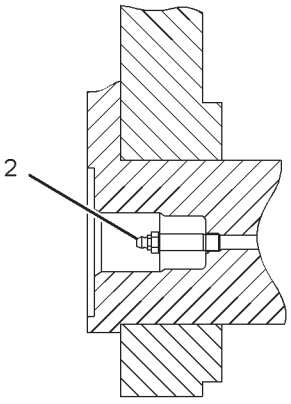

SECTION F-F

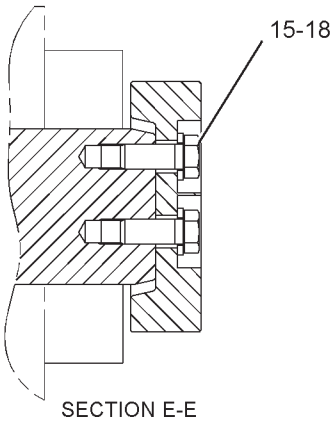

SECTION E-E

GRAPHIC #1

<END>

g01129890

IMPLEMENTS

250-1670 STICK AR—MASS

S/N: RCD1-UP
2.9-M (9.5-FT). QUARRY CONFIGURATION
FOR USE WITH 220-2438—PAGE 914
AN ATTACHMENT

SMCS-6502 **i02229972**

NOTE	PART NUMBER	QTY	PART NAME 1 2 3 4 5 6 (PRODUCT LEVEL)	SEE PAGE
Y	*176-2221*	1	LINES GP-GREASE	906
Y	*176-4375*	1	LINES GP-STICK	661
Y	*250-1669*	1	STICK GP-HOE	953

Y-SEPARATE ILLUSTRATION

<END>

IMPLEMENTS

150-2806 STICK AR-HOE—REACH

S/N: RCD1-UP
5.5-M (18-FT). HB-FAMILY
FOR USE WITH 150-2804—PAGE 881, 157-9986—PAGE 911
AN ATTACHMENT

SMCS-6502 **i03541320**

NOTE	PART NUMBER	QTY	PART NAME 1 2 3 4 5 6 (PRODUCT LEVEL)	SEE PAGE
Y	*176-2218*	1	LINES GP-GREASE	900
Y	*176-4371*	1	LINES GP-STICK	659
Y	*176-2213*	1	STICK GP-HOE	931

Y-SEPARATE ILLUSTRATION

<END>

IMPLEMENTS

150-2807 STICK AR-HOE—REACH

S/N: RCD1-UP
4.4-M (14.4-FT). HB-FAMILY
FOR USE WITH 150-2804—PAGE 881, 157-9986—PAGE 911
AN ATTACHMENT

SMCS-6502 **i01531001**

NOTE	PART NUMBER	QTY	PART NAME 1 2 3 4 5 6 (PRODUCT LEVEL)	SEE PAGE
Y	*176-2219*	1	LINES GP-GREASE	902
Y	*176-4372*	1	LINES GP-STICK	660
Y	*176-2214*	1	STICK GP-HOE	935

Y-SEPARATE ILLUSTRATION

<END>

IMPLEMENTS

150-2810 STICK AR-HOE

S/N: RCD1-UP
3.7-M (12-FT). HB-FAMILY
FOR USE WITH 150-2804—PAGE 881, 157-9986—PAGE 911
AN ATTACHMENT

SMCS-6502 **i01531011**

NOTE	PART NUMBER	QTY	PART NAME 1 2 3 4 5 6 (PRODUCT LEVEL)	SEE PAGE
Y	*174-8538*	1	LINES GP-GREASE	898
Y	*173-5001*	1	LINES GP-STICK	657
Y	*195-5462*	1	STICK GP-HOE	943

Y-SEPARATE ILLUSTRATION

<END>

IMPLEMENTS

150-2811 STICK AR-HOE—MASS

S/N: RCD1-UP
3.4-M (11.2-FT). JB-FAMILY
FOR USE WITH 150-2805—PAGE 882, 157-9987—PAGE 912
AN ATTACHMENT

SMCS-6502 **i01547806**

NOTE	PART NUMBER	QTY	PART NAME 1 2 3 4 5 6 (PRODUCT LEVEL)	SEE PAGE
Y	*176-2220*	1	LINES GP-GREASE	904
Y	*173-5028*	1	LINES GP-STICK	658
Y	*195-5465*	1	STICK GP-HOE	947

Y-SEPARATE ILLUSTRATION

<END>

IMPLEMENTS

150-2812 STICK AR-HOE—MASS

S/N: RCD1-UP
2.9-M (9.5-FT). JB-FAMILY
FOR USE WITH 150-2805—PAGE 882, 157-9987—PAGE 912
AN ATTACHMENT

SMCS-6502 **i01531021**

NOTE	PART NUMBER	QTY	PART NAME 1 2 3 4 5 6 (PRODUCT LEVEL)	SEE PAGE
Y	*176-2221*	1	LINES GP-GREASE	906
Y	*176-4375*	1	LINES GP-STICK	661
Y	*176-2217*	1	STICK GP-HOE	939

Y-SEPARATE ILLUSTRATION

<END>

IMPLEMENTS

228-8129 STICK AR-HOE

S/N: RCD1-UP
3.4-M (11.2-FT). JB-FAMILY
AN ATTACHMENT

SMCS-6502 **i01883871**

NOTE	PART NUMBER	QTY	PART NAME 1 2 3 4 5 6 (PRODUCT LEVEL)	SEE PAGE
Y	*203-7450*	1	LINES GP-GREASE	909
Y	*207-6278*	1	LINES GP-STICK	662
Y	*228-5475*	1	STICK GP-HOE	949

Y-SEPARATE ILLUSTRATION

<END>

IMPLEMENTS

176-2213 STICK GP-HOE–REACH

S/N: RCD1-UP
5.5-M (18-FT). HB FAMILY
PART OF 150-2806 STICK AR-HOE
AN ATTACHMENT
TYPE 1

SMCS-6502 **i02231898**

NOTE	REF NO	GRAPHIC REF	PART NUMBER	QTY	PART NAME 1 2 3 4 5 6 (PRODUCT LEVEL)	SEE PAGE
	1	1	**234-3992**	1	STICK & BEARING AS	
	1A	1	**7Y-9914**	2	BEARING-SLEEVE	
	1B	1	**148-3089**	2	BEARING-SLEEVE	
	1C	1	**153-1728**	2	BEARING-SLEEVE	
	2	1	**3B-8489**	2	FITTING-GREASE	
	3	1	**9X-4600**	4	SEAL-LIP TYPE	
	4	1	**9X-4597**	2	SEAL-LIP TYPE	
	5	1	**234-3970**	1	PIN AS	
	6	1	**7Y-9267**	1	SPACER (133X190X14-MM THK)	
M	7	1	**7X-2573**	1	BOLT (M24X3X40-MM)	
	8	1	**201-2771**	2	WASHER (26X90X8-MM THK)	
	9	1	**8T-4167**	2	WASHER-HARD (26X44X4-MM THK)	
B	10	1	**093-0076**	2	SHIM (1-MM THK)	
B	11	1	**093-0108**	1	SHIM (2-MM THK)	
B	12	1	**151-0653**	1	SHIM (0.5-MM THK)	
	13	1	**106-6880**	1	PIN AS	
	14	1	**093-0373**	1	SPACER (123X180X14-MM THK)	
B	15	1	**093-0074**	2	SHIM (1-MM THK)	
B	16	1	**093-0106**	1	SHIM (2-MM THK)	
B	17	1	**147-3957**	1	SHIM (0.5-MM THK)	
M	18	1	**7X-2574**	1	BOLT (M24X3X45-MM)	

B-USE AS REQUIRED
M-METRIC PART

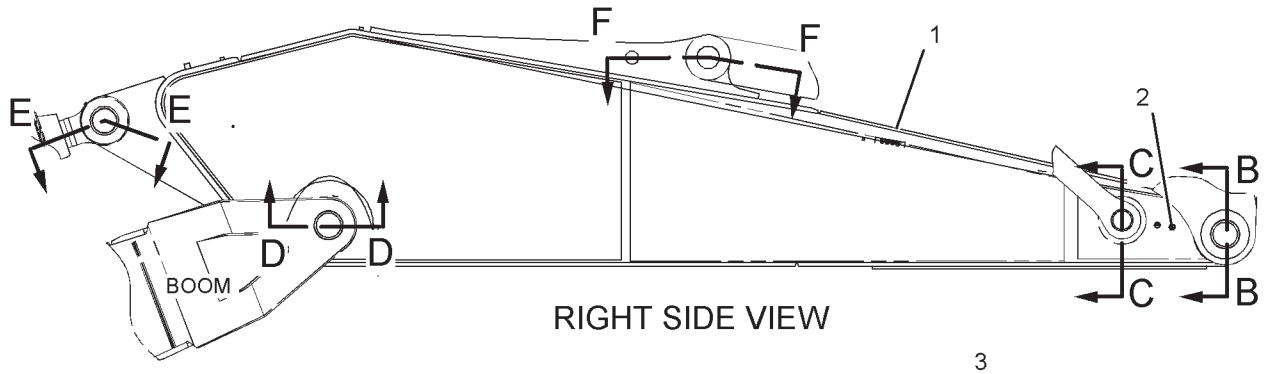

RIGHT SIDE VIEW

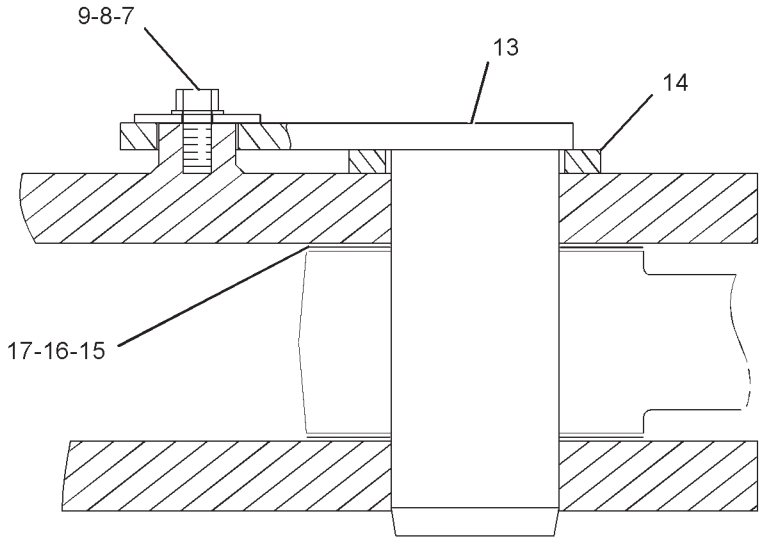

SECTION F-F

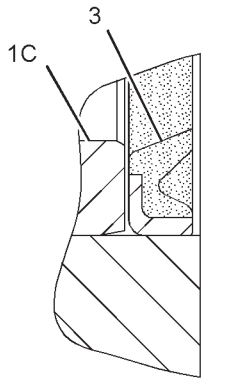

SECTION D-D

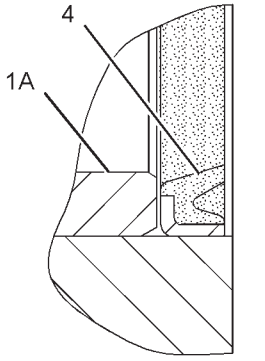

SECTION C-C

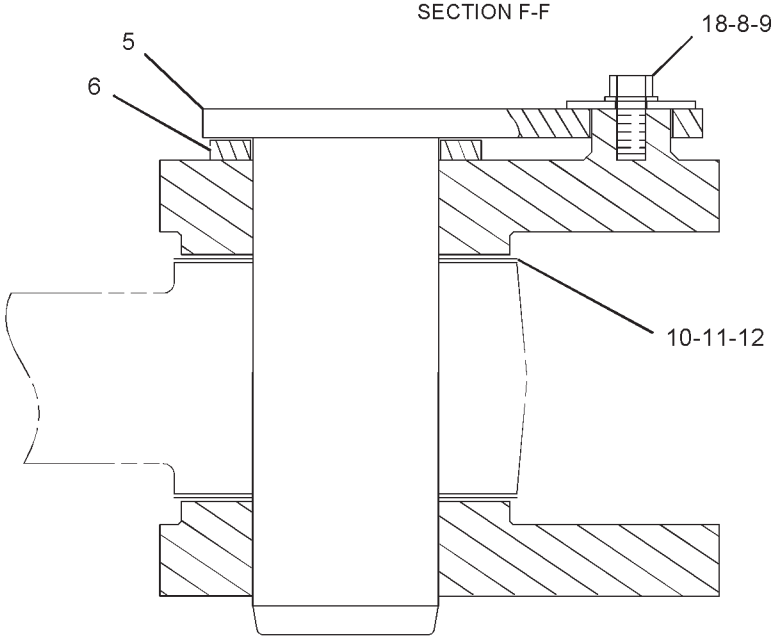

SECTION E-E

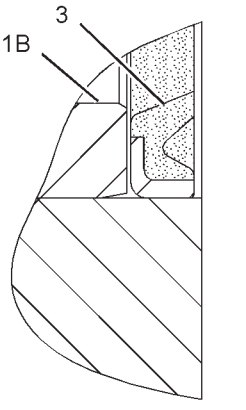

SECTION B-B

GRAPHIC #1 **<END>** g01129368

IMPLEMENTS

176-2213 STICK GP-HOE–REACH

S/N: RCD1-UP
5.5-M (18-FT). HB FAMILY
PART OF 150-2806 STICK AR-HOE
AN ATTACHMENT
TYPE 2

SMCS-6502 **i03005977**

NOTE	REF NO	GRAPHIC REF	PART NUMBER	QTY	PART NAME 1 2 3 4 5 6 (PRODUCT LEVEL)	SEE PAGE
C	1	1	**321-2073**	1	STICK & BEARING AS	
	1A	1	**7Y-9914**	2	BEARING-SLEEVE	
	1B	1	**234-3749**	4	BEARING-SLEEVE	
	2	1	**3B-8489**	2	FITTING-GREASE	
	3	1	**9X-4600**	4	SEAL-LIP TYPE	
	4	1	**9X-4597**	2	SEAL-LIP TYPE	
	5	1	**234-3970**	1	PIN AS	
	6	1	**7Y-9267**	1	SPACER (133X190X14-MM THK)	
M	7	1	**7X-2573**	1	BOLT (M24X3X40-MM)	
	8	1	**201-2771**	2	WASHER (26X90X8-MM THK)	
	9	1	**8T-4167**	2	WASHER-HARD (26X44X4-MM THK)	
B	10	1	**093-0076**	2	SHIM (1-MM THK)	
B	11	1	**093-0108**	1	SHIM (2-MM THK)	
B	12	1	**151-0653**	1	SHIM (0.5-MM THK)	
	13	1	**106-6880**	1	PIN AS	
	14	1	**093-0373**	1	SPACER (123X180X14-MM THK)	
B	15	1	**093-0074**	2	SHIM (1-MM THK)	
B	16	1	**093-0106**	1	SHIM (2-MM THK)	
B	17	1	**147-3957**	1	SHIM (0.5-MM THK)	
M	18	1	**7X-2574**	1	BOLT (M24X3X45-MM)	

B-USE AS REQUIRED
C-CHANGE FROM PREVIOUS TYPE
M-METRIC PART

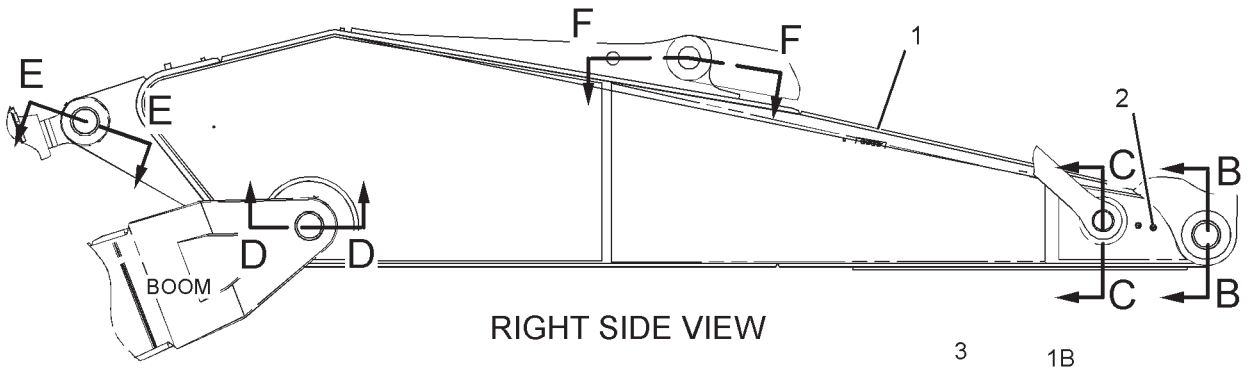

RIGHT SIDE VIEW

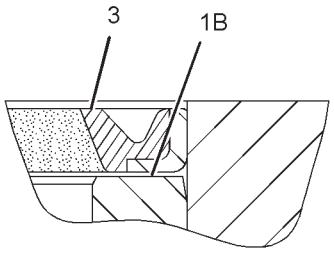

SECTION D-D

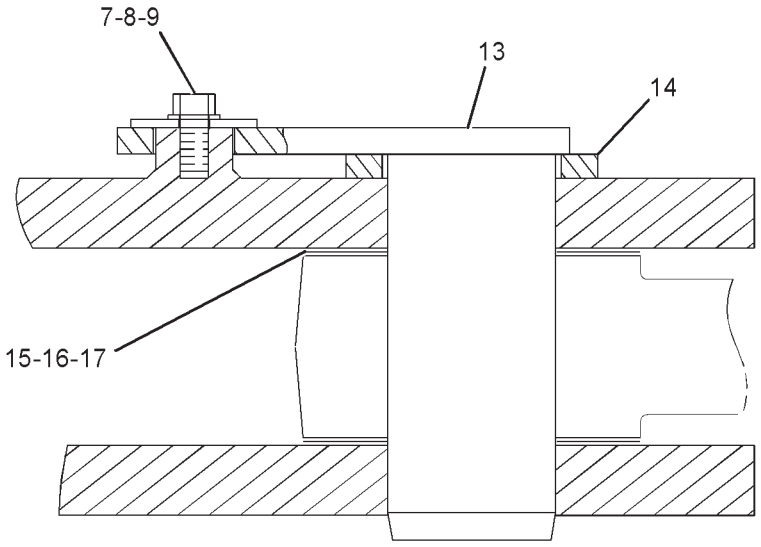

SECTION F-F

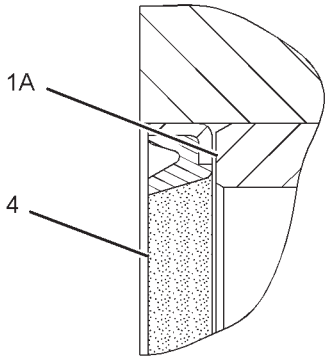

SECTION C-C

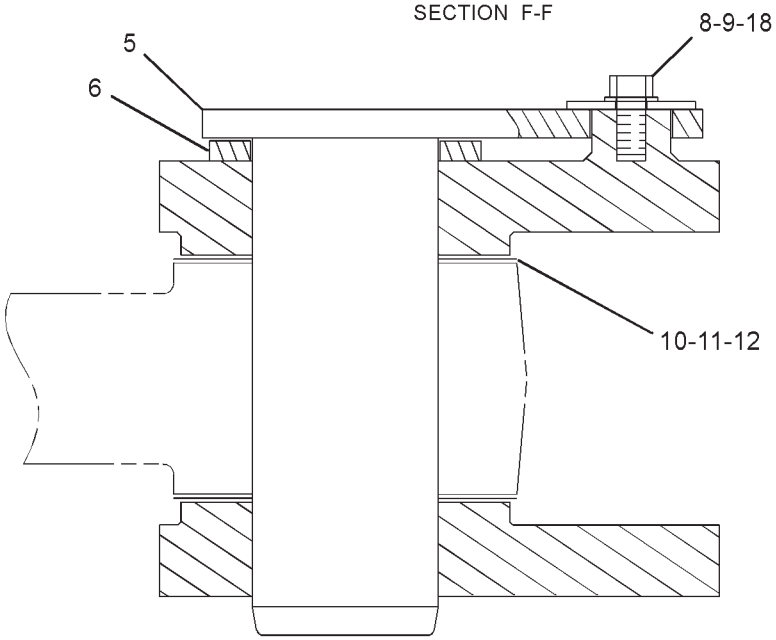

SECTION E-E

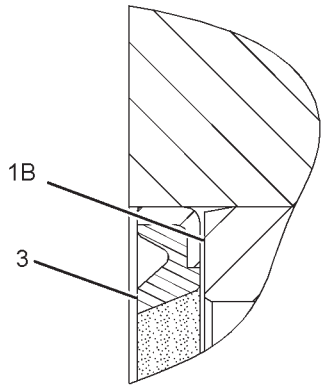

SECTION B-B

GRAPHIC #1 **<END>** g01523107

IMPLEMENTS

176-2214 STICK GP-HOE—REACH

S/N: RCD1-UP
4.4-M (14.4-FT). HB-FAMILY
PART OF 150-2807 STICK AR-HOE
AN ATTACHMENT
TYPE 1

SMCS-6502 **i03023865**

NOTE	REF NO	GRAPHIC REF	PART NUMBER	QTY	PART NAME 1 2 3 4 5 6 (PRODUCT LEVEL)	SEE PAGE
	1	1	**234-3995**	1	STICK & BEARING AS	
	1A	1	**7Y-9914**	2	BEARING-SLEEVE	
	1B	1	**148-3089**	2	BEARING-SLEEVE	
	1C	1	**153-1728**	2	BEARING-SLEEVE	
	2	1	**3B-8489**	2	FITTING-GREASE	
	3	1	**9X-4600**	4	SEAL-LIP TYPE	
	4	1	**9X-4597**	2	SEAL-LIP TYPE	
	5	1	**234-3970**	1	PIN AS	
	6	1	**7Y-9267**	1	SPACER (133X190X14-MM THK)	
M	7	1	**7X-2573**	1	BOLT (M24X3X40-MM)	
	8	1	**201-2771**	2	WASHER (26X90X8-MM THK)	
	9	1	**8T-4167**	2	WASHER-HARD (26X44X4-MM THK)	
B	10	1	**093-0076**	2	SHIM (1-MM THK)	
B	11	1	**093-0108**	1	SHIM (2-MM THK)	
B	12	1	**151-0653**	1	SHIM (0.5-MM THK)	
	13	1	**106-6880**	1	PIN AS	
	14	1	**093-0373**	1	SPACER (123X180X14-MM THK)	
B	15	1	**093-0074**	2	SHIM (1-MM THK)	
B	16	1	**093-0106**	1	SHIM (2-MM THK)	
B	17	1	**147-3957**	1	SHIM (0.5-MM THK)	
M	18	1	**7X-2574**	1	BOLT (M24X3X45-MM)	

B-USE AS REQUIRED
M-METRIC PART

176-2214 **STICK GP-HOE** *(contd.)* **i03023865**

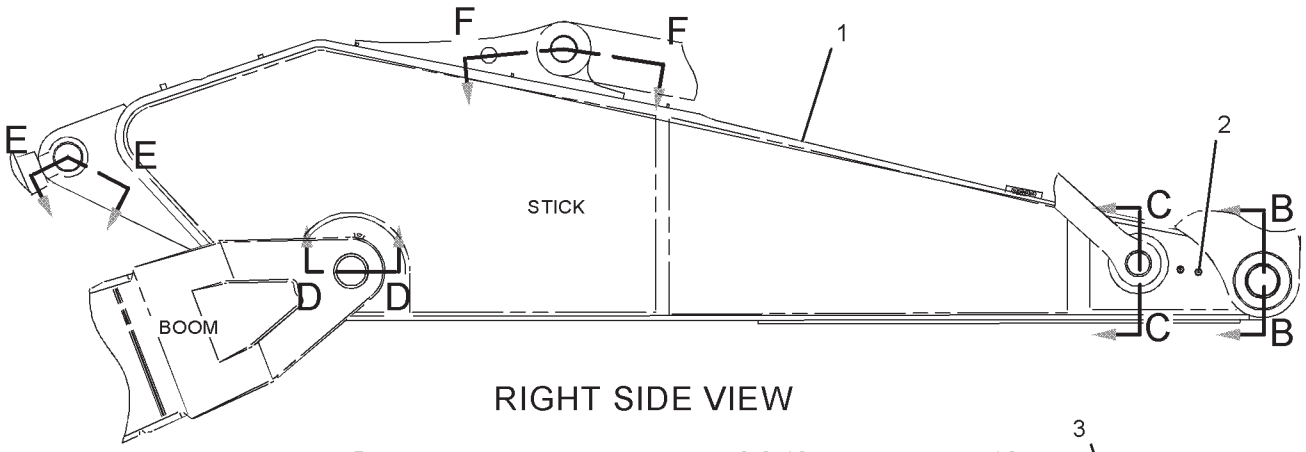

RIGHT SIDE VIEW

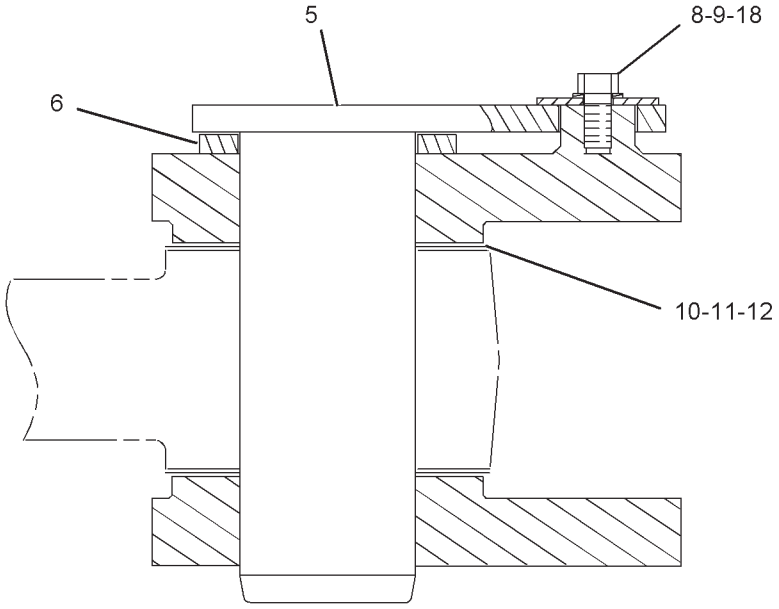

SECTION E-E

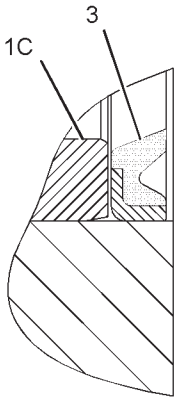

SECTION D-D

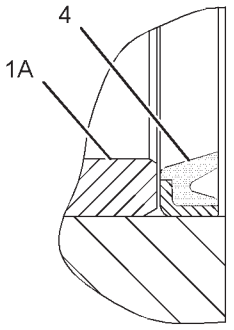

SECTION C-C

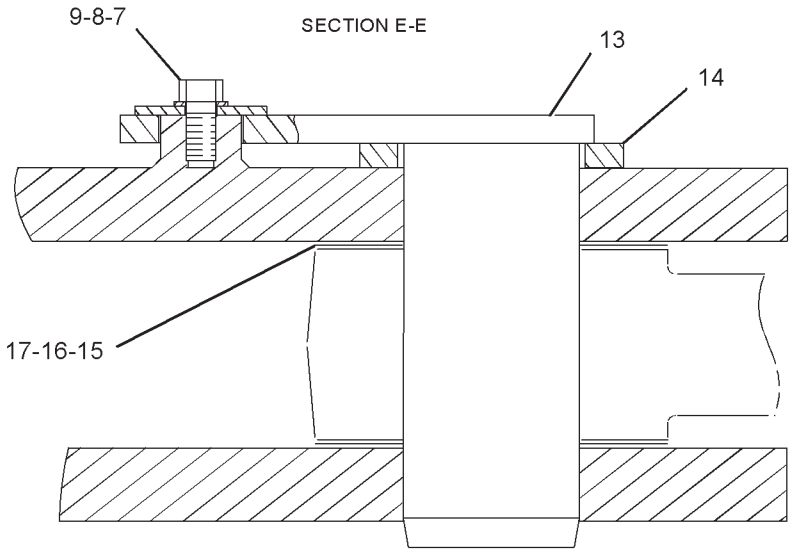

SECTION F-F

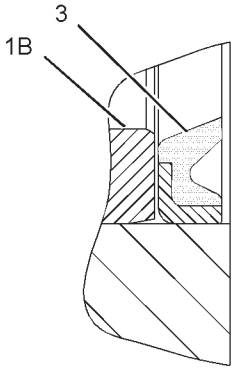

SECTION B-B

GRAPHIC #1 **<END>** g01142365

IMPLEMENTS

176-2214 STICK GP-HOE—REACH

S/N: RCD1-UP
4.4-M (14.4-FT). HB-FAMILY
PART OF 150-2807 STICK AR-HOE
AN ATTACHMENT
TYPE 2

SMCS-6502 **i03023152**

NOTE	REF NO	GRAPHIC REF	PART NUMBER	QTY	PART NAME 1 2 3 4 5 6 (PRODUCT LEVEL)	SEE PAGE
	1	1	**321-2074**	1	STICK & BEARING AS	
	1A	1	**7Y-9914**	2	BEARING-SLEEVE	
	1B	1	**234-3749**	2	BEARING-SLEEVE	
	2	1	**3B-8489**	2	FITTING-GREASE	
	3	1	**9X-4600**	4	SEAL-LIP TYPE	
	4	1	**9X-4597**	2	SEAL-LIP TYPE	
	5	1	**234-3970**	1	PIN AS	
	6	1	**7Y-9267**	1	SPACER (133X190X14-MM THK)	
M	7	1	**7X-2573**	1	BOLT (M24X3X40-MM)	
	8	1	**201-2771**	2	WASHER (26X90X8-MM THK)	
	9	1	**8T-4167**	2	WASHER-HARD (26X44X4-MM THK)	
B	10	1	**093-0076**	2	SHIM (1-MM THK)	
B	11	1	**093-0108**	1	SHIM (2-MM THK)	
B	12	1	**151-0653**	1	SHIM (0.5-MM THK)	
	13	1	**106-6880**	1	PIN AS	
	14	1	**093-0373**	1	SPACER (123X180X14-MM THK)	
B	15	1	**093-0074**	2	SHIM (1-MM THK)	
B	16	1	**093-0106**	1	SHIM (2-MM THK)	
B	17	1	**147-3957**	1	SHIM (0.5-MM THK)	
M	18	1	**7X-2574**	1	BOLT (M24X3X45-MM)	

B-USE AS REQUIRED
M-METRIC PART

176-2214 **STICK GP-HOE** *(contd.)* **i03023152**

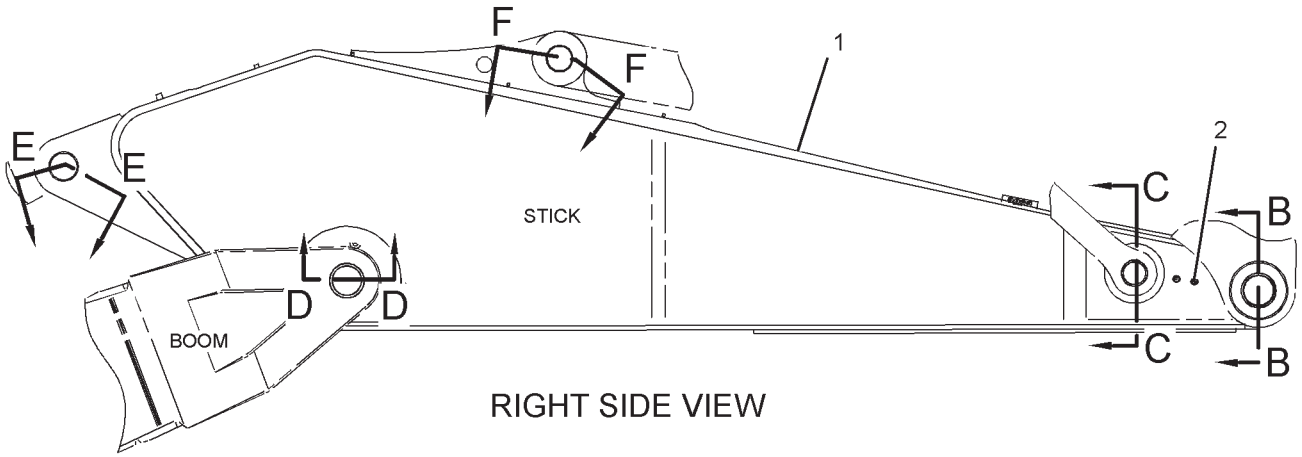

RIGHT SIDE VIEW

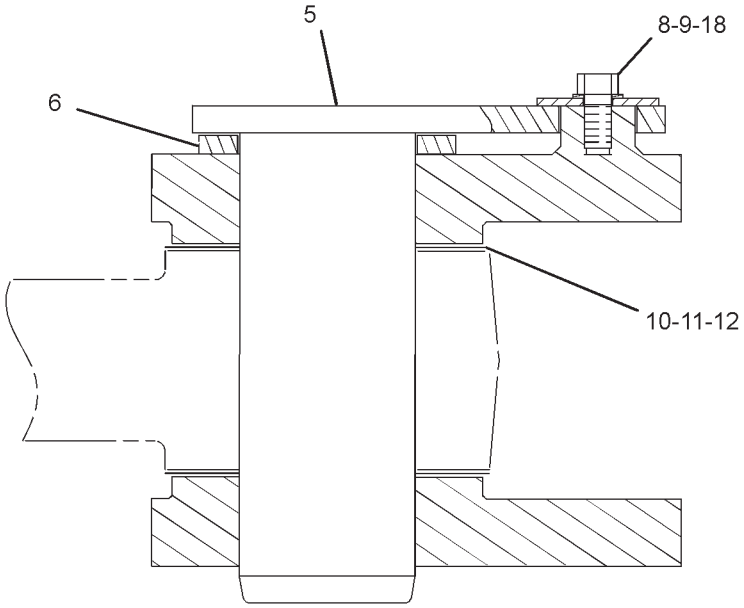

SECTION E-E

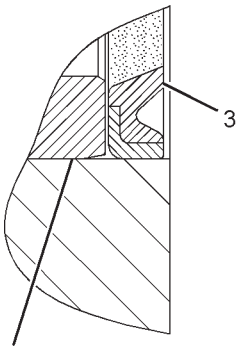

SECTION D-D

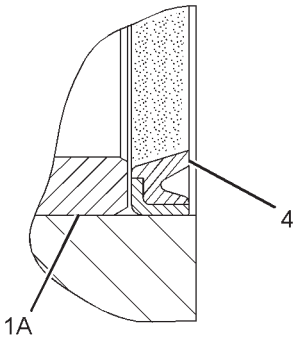

SECTION C-C

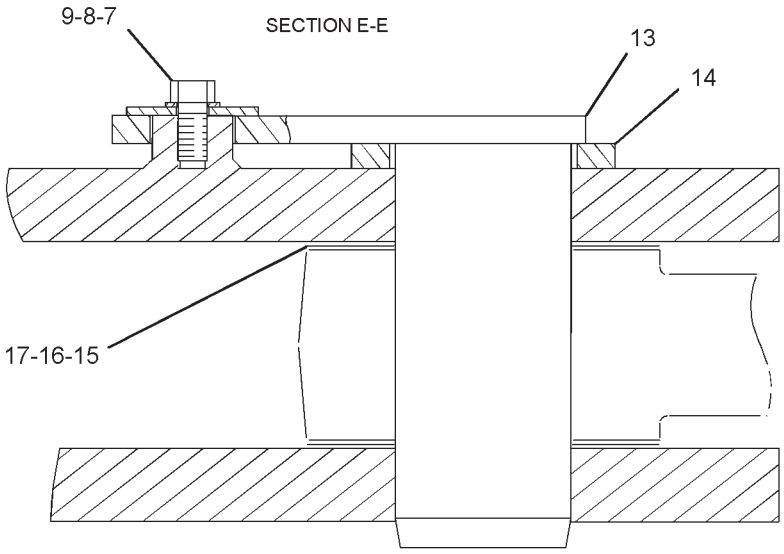

SECTION F-F

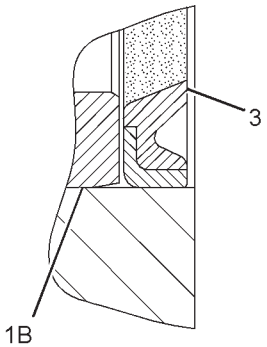

SECTION B-B

GRAPHIC #1 **<END>** g01532617

IMPLEMENTS

176-2217 STICK GP-HOE–MASS

S/N: RCD1-UP
2.9-M (9.5-FT). JB-FAMILY
PART OF 150-2812 STICK AR-HOE
AN ATTACHMENT
TYPE 1

SMCS-6502 **i02232635**

NOTE	REF NO	GRAPHIC REF	PART NUMBER	QTY	PART NAME 1 2 3 4 5 6 (PRODUCT LEVEL)	SEE PAGE
	1	1	**234-4017**	1	STICK & BEARING AS	
	1A	1	**7Y-3589**	2	BEARING-SLEEVE	
	1B	1	**153-1728**	2	BEARING-SLEEVE	
	1C	1	**172-2865**	2	BEARING-SLEEVE	
	2	1	**3B-8489**	2	FITTING-GREASE	
	3	1	**9X-4600**	2	SEAL-LIP TYPE	
	4	1	**9X-4598**	2	SEAL-LIP TYPE	
	5	1	**9X-4601**	2	SEAL-LIP TYPE	
M	6	1	**7X-2573**	1	BOLT (M24X3X40-MM)	
	7	1	**7Y-9267**	2	SPACER (133X190X14-MM THK)	
	8	1	**201-2771**	2	WASHER (26X90X8-MM THK)	
	9	1	**8T-4167**	2	WASHER-HARD (26X44X4-MM THK)	
B	10	1	**093-0076**	4	SHIM (1-MM THK)	
B	11	1	**093-0108**	2	SHIM (2-MM THK)	
B	12	1	**151-0653**	2	SHIM (0.5-MM THK)	
	13	1	**172-3024**	1	PIN AS	
	14	1	**234-3970**	1	PIN AS	
M	15	1	**7X-2574**	1	BOLT (M24X3X45-MM)	

B-USE AS REQUIRED
M-METRIC PART

176-2217 **STICK GP-HOE** *(contd.)* **i02232635**

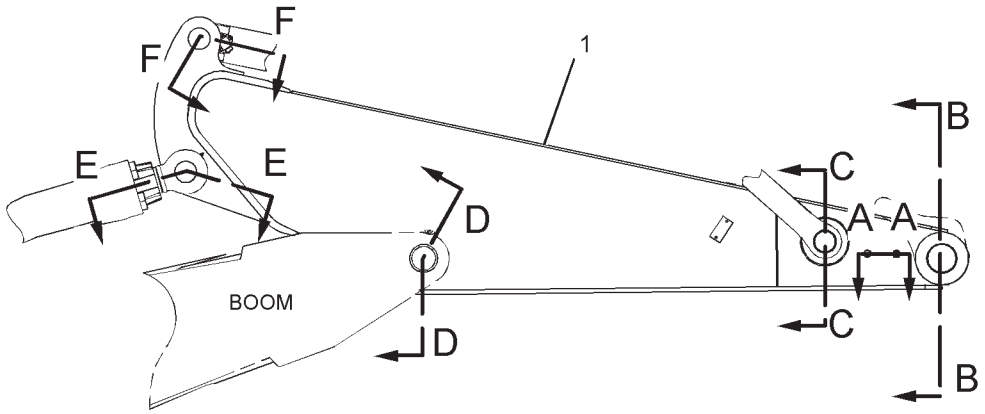

RIGHT SIDE VIEW

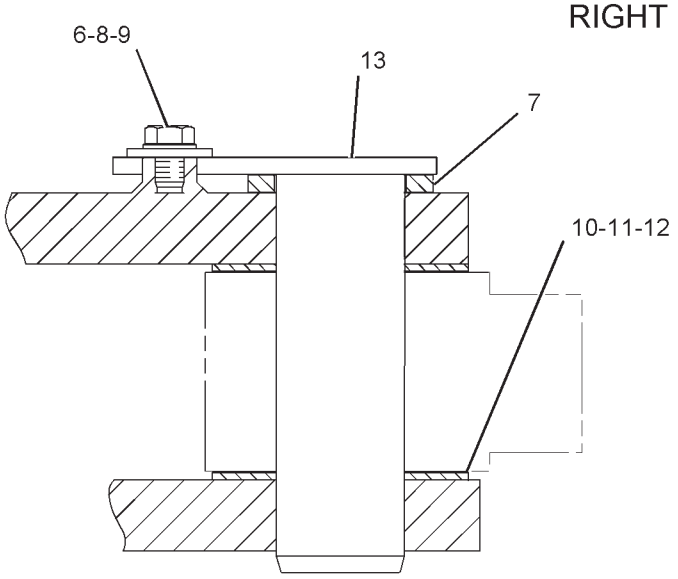

SECTION F-F

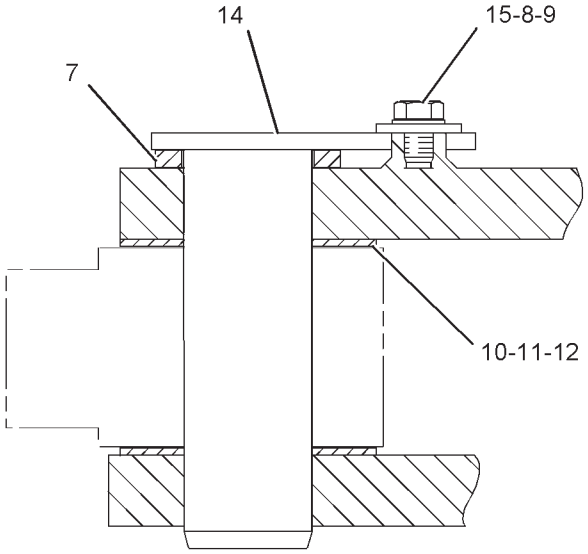

SECTION E-E

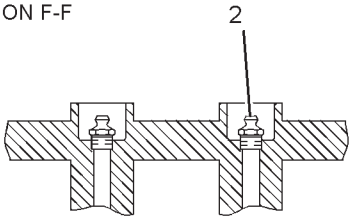

SECTION A-A

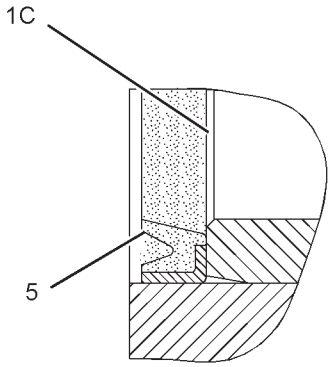

SECTION D-D

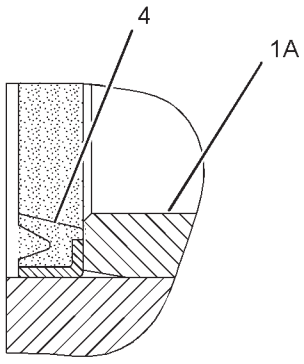

SECTION C-C

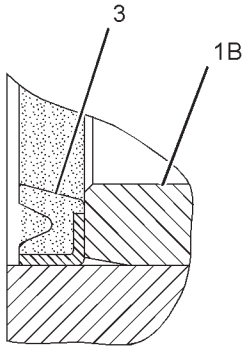

SECTION B-B

GRAPHIC #1 **<END>** g01129355

IMPLEMENTS

176-2217 STICK GP-HOE—MASS

S/N: RCD1-UP
2.9-M (9.5-FT). JB-FAMILY
PART OF 150-2812 STICK AR-HOE
AN ATTACHMENT
TYPE 2

SMCS-6502 **i02230325**

NOTE	REF NO	GRAPHIC REF	PART NUMBER	QTY	PART NAME 1 2 3 4 5 6 (PRODUCT LEVEL)	SEE PAGE
C	1	1	**244-4164**	1	STICK & BEARING AS	
	1A	1	**7Y-3589**	2	BEARING-SLEEVE	
	1B	1	**234-3749**	2	BEARING-SLEEVE	
	1C	1	**244-4149**	2	BEARING-SLEEVE	
	2	1	**3B-8489**	2	FITTING-GREASE	
	3	1	**9X-4600**	2	SEAL-LIP TYPE	
	4	1	**9X-4598**	2	SEAL-LIP TYPE	
	5	1	**9X-4601**	2	SEAL-LIP TYPE	
M	6	1	**7X-2573**	1	BOLT (M24X3X40-MM)	
	7	1	**7Y-9267**	2	SPACER (133X190X14-MM THK)	
	8	1	**201-2771**	2	WASHER (26X90X8-MM THK)	
	9	1	**8T-4167**	2	WASHER-HARD (26X44X4-MM THK)	
B	10	1	**093-0076**	4	SHIM (1-MM THK)	
B	11	1	**093-0108**	2	SHIM (2-MM THK)	
B	12	1	**151-0653**	2	SHIM (0.5-MM THK)	
	13	1	**172-3024**	1	PIN AS	
	14	1	**234-3970**	1	PIN AS	
M	15	1	**7X-2574**	1	BOLT (M24X3X45-MM)	

B-USE AS REQUIRED
C-CHANGE FROM PREVIOUS TYPE
M-METRIC PART

176-2217 **STICK GP-HOE** *(contd.)* **i02230325**

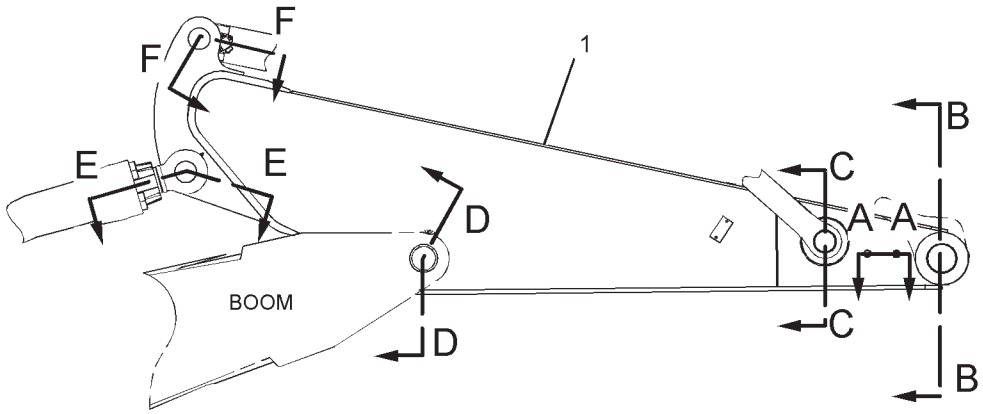

RIGHT SIDE VIEW

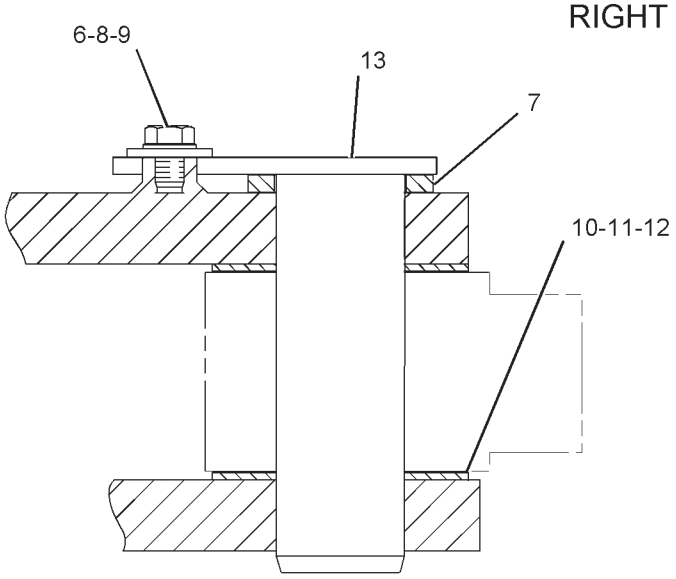

SECTION F-F

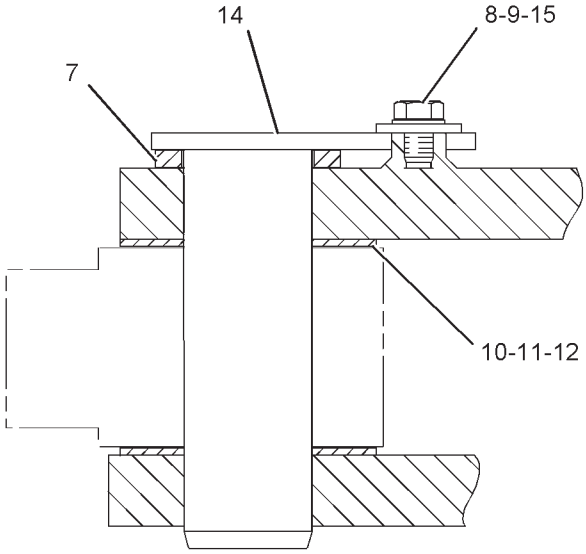

SECTION E-E

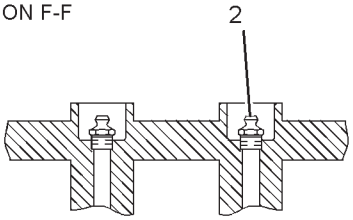

SECTION A-A

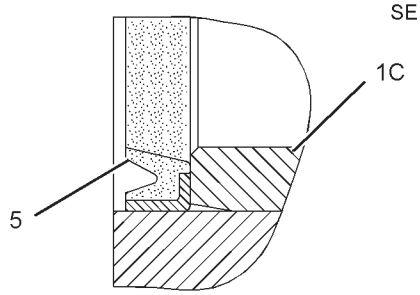

SECTION D-D

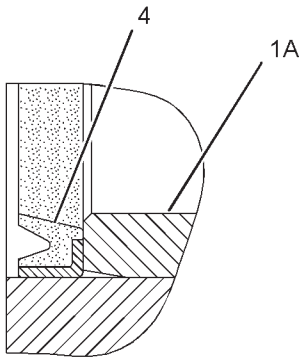

SECTION C-C

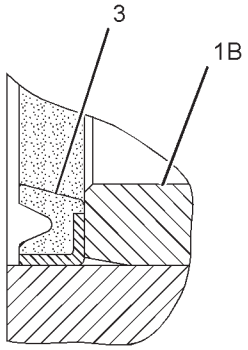

SECTION B-B

GRAPHIC #1 **<END>** g01130361

IMPLEMENTS

195-5462 STICK GP-HOE

S/N: RCD1-UP
3.7-M (12-FT). HB FAMILY
PART OF 150-2810 STICK AR-HOE
AN ATTACHMENT
TYPE 1

SMCS-6502 **i02231592**

NOTE	REF NO	GRAPHIC REF	PART NUMBER	QTY	PART NAME 1 2 3 4 5 6 (PRODUCT LEVEL)	SEE PAGE
	1	1	**234-4005**	1	STICK & BEARING AS	
	1A	1	**7Y-9914**	2	BEARING-SLEEVE	
	1B	1	**148-3089**	2	BEARING-SLEEVE	
	1C	1	**153-1728**	2	BEARING-SLEEVE	
	2	1	**3B-8489**	2	FITTING-GREASE	
	3	1	**9X-4600**	4	SEAL-LIP TYPE	
	4	1	**9X-4597**	2	SEAL-LIP TYPE	
	5	1	**234-3970**	1	PIN AS	
	6	1	**7Y-9267**	1	SPACER (133X190X14-MM THK)	
M	7	1	**7X-2573**	1	BOLT (M24X3X40-MM)	
	8	1	**201-2771**	2	WASHER (26X90X8-MM THK)	
	9	1	**8T-4167**	2	WASHER-HARD (26X44X4-MM THK)	
B	10	1	**093-0076**	2	SHIM (1-MM THK)	
B	11	1	**093-0108**	1	SHIM (2-MM THK)	
B	12	1	**151-0653**	1	SHIM (0.5-MM THK)	
	13	1	**106-6880**	1	PIN AS	
	14	1	**093-0373**	1	SPACER (123X180X14-MM THK)	
B	15	1	**093-0074**	2	SHIM (1-MM THK)	
B	16	1	**093-0106**	1	SHIM (2-MM THK)	
B	17	1	**147-3957**	1	SHIM (0.5-MM THK)	
M	18	1	**7X-2574**	1	BOLT (M24X3X45-MM)	

B-USE AS REQUIRED
M-METRIC PART

195-5462 **STICK GP-HOE** *(contd.)* **i02231592**

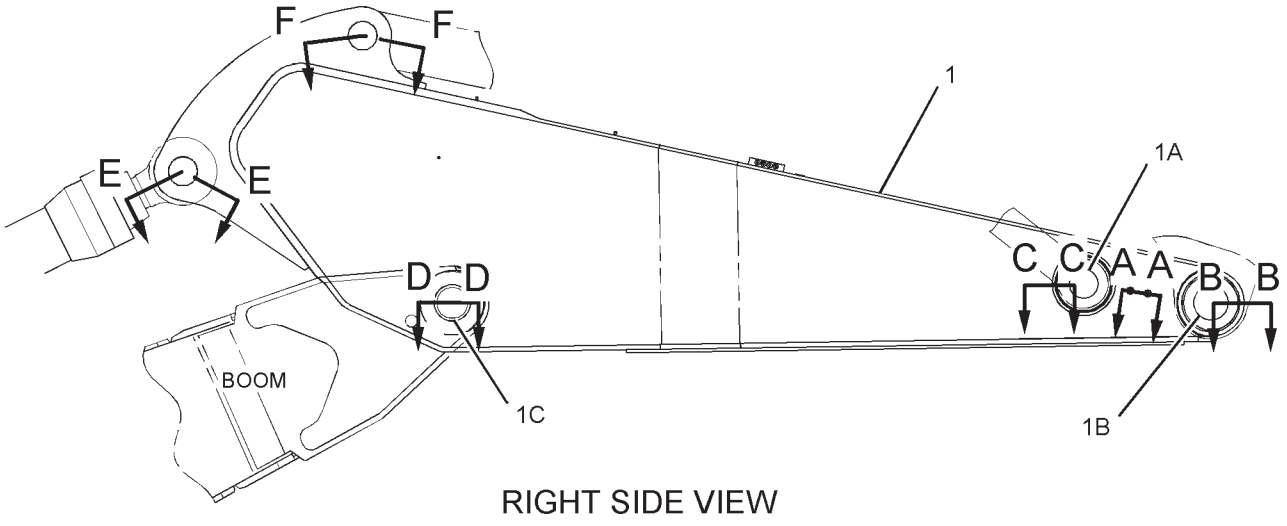

RIGHT SIDE VIEW

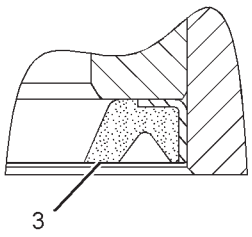

SECTION B-B

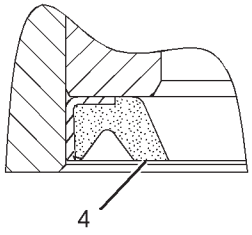

SECTION C-C

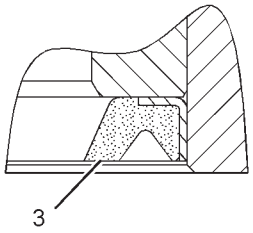

SECTION D-D

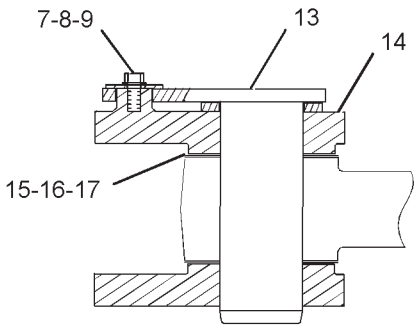

SECTION F-F

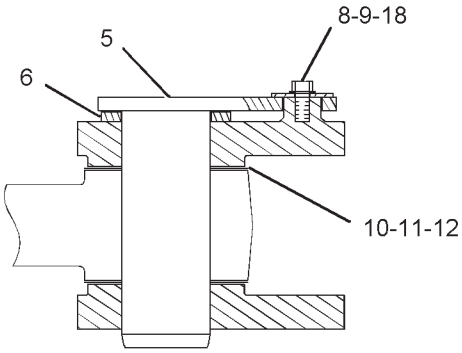

SECTION E-E

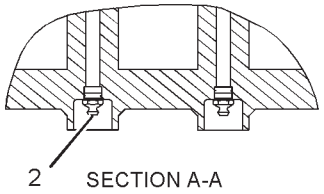

SECTION A-A

GRAPHIC #1 **<END>** g01128817

IMPLEMENTS

195-5462 STICK GP-HOE

S/N: RCD1-UP
3.7-M (12-FT). HB FAMILY
PART OF 150-2810 STICK AR-HOE
AN ATTACHMENT
TYPE 2

SMCS-6502 **i03005989**

NOTE	REF NO	GRAPHIC REF	PART NUMBER	QTY	PART NAME 1 2 3 4 5 6 (PRODUCT LEVEL)	SEE PAGE
	1	1	**7Y-9267**	1	SPACER (133X190X14-MM THK)	
	2	1	**9X-4600**	4	SEAL-LIP TYPE	
B	3	1	**093-0074**	2	SHIM (1-MM THK)	
B	4	1	**093-0076**	2	SHIM (1-MM THK)	
B	5	1	**093-0108**	1	SHIM (2-MM THK)	
	6	1	**106-6880**	1	PIN AS	
B	7	1	**151-0653**	1	SHIM (0.5-MM THK)	
	8	1	**201-2771**	2	WASHER (26X90X8-MM THK)	
	9	1	**234-3970**	1	PIN AS	
C	10	1	**321-2075**	1	STICK & BEARING AS	
	10A	1	**7Y-9914**	2	BEARING-SLEEVE	
	10B	1	**234-3749**	4	BEARING-SLEEVE	
	11	1	**9X-4597**	2	SEAL-LIP TYPE	
B	12	1	**093-0106**	1	SHIM (2-MM THK)	
	13	1	**093-0373**	1	SPACER (123X180X14-MM THK)	
B	14	1	**147-3957**	1	SHIM (0.5-MM THK)	
	15	1	**3B-8489**	2	FITTING-GREASE	
M	16	1	**7X-2573**	1	BOLT (M24X3X40-MM)	
M	17	1	**7X-2574**	1	BOLT (M24X3X45-MM)	
	18	1	**8T-4167**	2	WASHER-HARD (26X44X4-MM THK)	

B-USE AS REQUIRED
C-CHANGE FROM PREVIOUS TYPE
M-METRIC PART

195-5462 **STICK GP-HOE** *(contd.)* **i03005989**

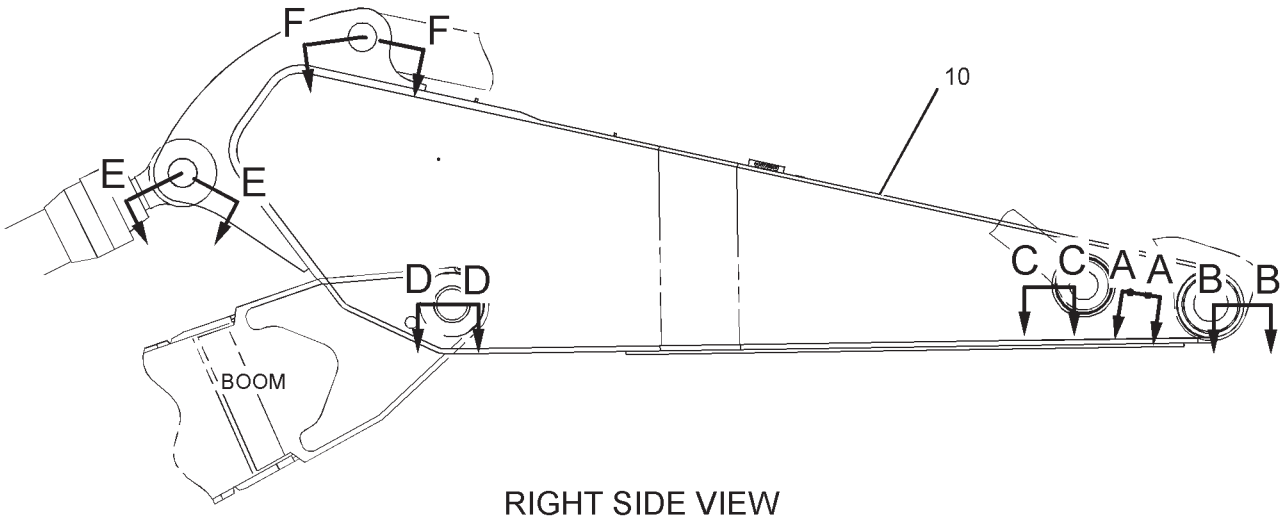

RIGHT SIDE VIEW

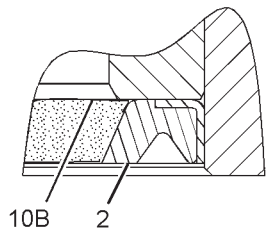

SECTION B-B

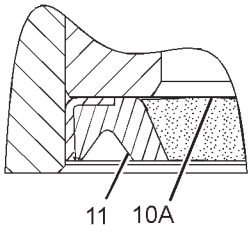

SECTION C-C

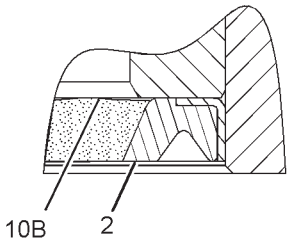

SECTION D-D

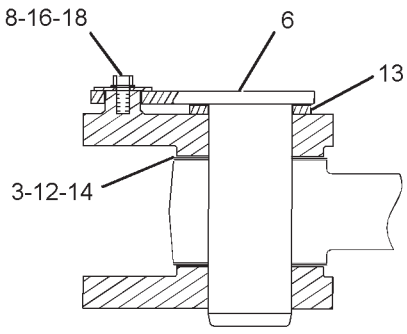

SECTION F-F

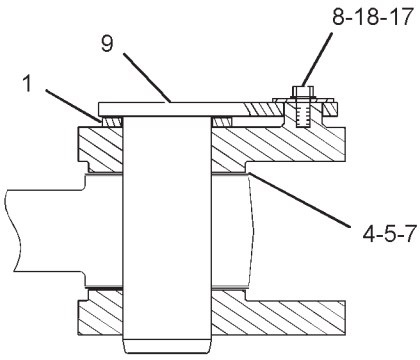

SECTION E-E

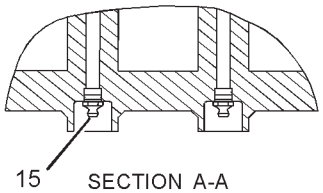

SECTION A-A

GRAPHIC #1 **<END>** g01524369

IMPLEMENTS

195-5465 STICK GP-HOE—MASS

S/N: RCD1-UP
3.4-M (11.2-FT). JB-FAMILY
PART OF 150-2811 STICK AR-HOE
AN ATTACHMENT

SMCS-6502 **i02188256**

NOTE	REF NO	GRAPHIC REF	PART NUMBER	QTY	PART NAME 1 2 3 4 5 6 (PRODUCT LEVEL)	SEE PAGE
	1	1	**244-4163**	1	STICK & BEARING AS	
	1A	1	**7Y-3589**	2	BEARING-SLEEVE	
	1B	1	**234-3749**	2	BEARING-SLEEVE	
	1C	1	**244-4149**	2	BEARING-SLEEVE	
	2	1	**3B-8489**	2	FITTING-GREASE	
	3	1	**9X-4600**	2	SEAL-LIP TYPE	
	4	1	**9X-4598**	2	SEAL-LIP TYPE	
	5	1	**9X-4601**	2	SEAL-LIP TYPE	
M	6	1	**7X-2573**	1	BOLT (M24X3X40-MM)	
	7	1	**7Y-9267**	2	SPACER (133X190X14-MM THK)	
	8	1	**201-2771**	2	WASHER (26X90X8-MM THK)	
	9	1	**8T-4167**	2	WASHER-HARD (26X44X4-MM THK)	
B	10	1	**093-0076**	4	SHIM (1-MM THK)	
B	11	1	**093-0108**	2	SHIM (2-MM THK)	
B	12	1	**151-0653**	2	SHIM (0.5-MM THK)	
	13	1	**172-3024**	1	PIN AS	
M	14	1	**7X-2574**	1	BOLT (M24X3X45-MM)	
	15	1	**234-3970**	1	PIN AS	

B-USE AS REQUIRED
M-METRIC PART

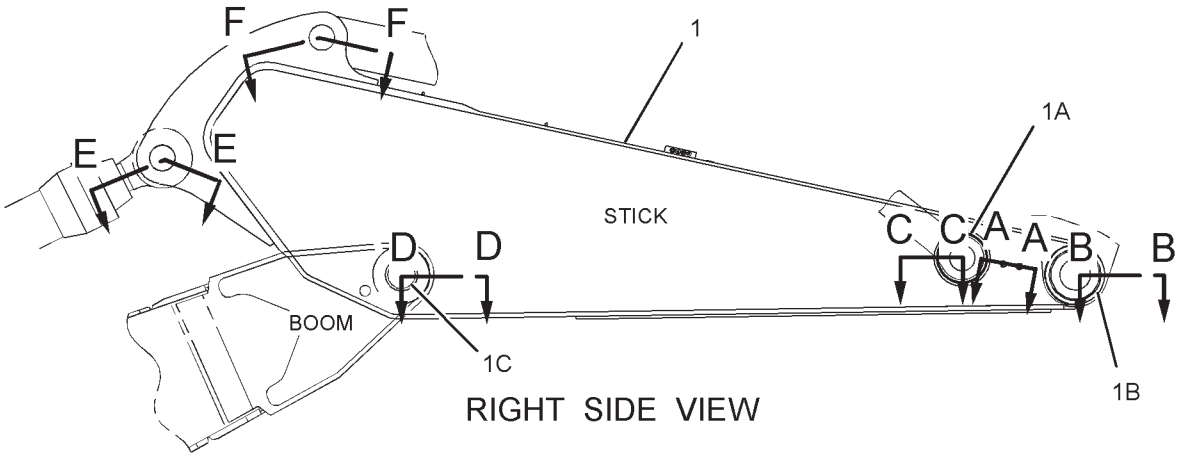

RIGHT SIDE VIEW

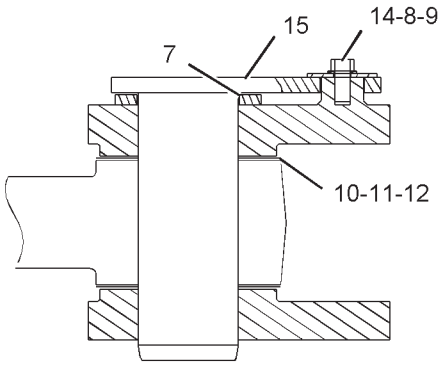

SECTION E-E

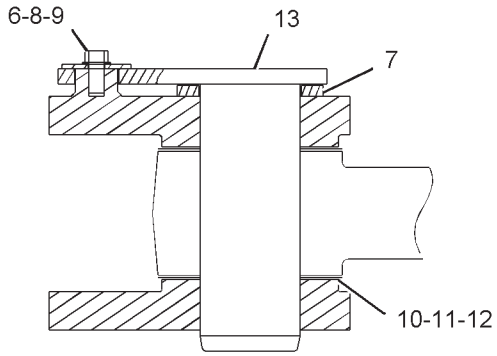

SECTION F-F

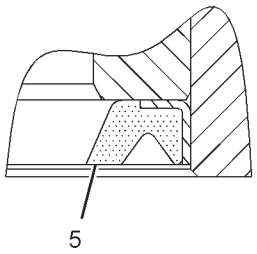

SECTION D-D

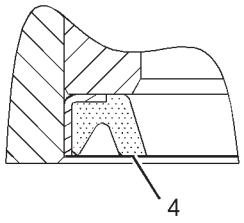

SECTION C-C

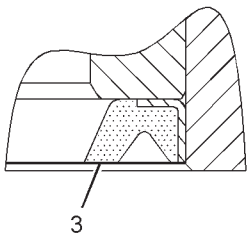

SECTION B-B

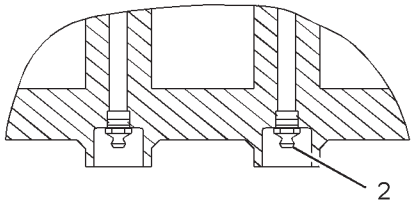

SECTION A-A

GRAPHIC #1 **<END>** g01107216

IMPLEMENTS

228-5475 STICK GP-HOE

S/N: RCD1-UP
3.4-M (11.2-FT). JB-FAMILY
PART OF 228-8129 STICK AR-HOE
AN ATTACHMENT
TYPE 1

SMCS-6502 **i02231593**

NOTE	REF NO	GRAPHIC REF	PART NUMBER	QTY	PART NAME 1 2 3 4 5 6 (PRODUCT LEVEL)	SEE PAGE
	1	1	**234-4008**	1	STICK & BEARING AS	
	1A	1	**7Y-3589**	2	BEARING-SLEEVE	
	1B	1	**153-1728**	4	BEARING-SLEEVE	
	2	1	**3B-8489**	2	FITTING-GREASE	
	3	1	**9X-4600**	4	SEAL-LIP TYPE	
	4	1	**9X-4598**	2	SEAL-LIP TYPE	
M	5	1	**7X-2573**	1	BOLT (M24X3X40-MM)	
	6	1	**7Y-9267**	2	SPACER (133X190X14-MM THK)	
	7	1	**201-2771**	2	WASHER (26X90X8-MM THK)	
B	8	1	**093-0076**	4	SHIM (1-MM THK)	
	9	1	**8T-4167**	2	WASHER-HARD (26X44X4-MM THK)	
B	10	1	**093-0108**	2	SHIM (2-MM THK)	
B	11	1	**151-0653**	2	SHIM (0.5-MM THK)	
	12	1	**172-3024**	1	PIN AS	
	13	1	**234-3970**	1	PIN AS	
M	14	1	**7X-2574**	1	BOLT (M24X3X45-MM)	

B-USE AS REQUIRED
M-METRIC PART

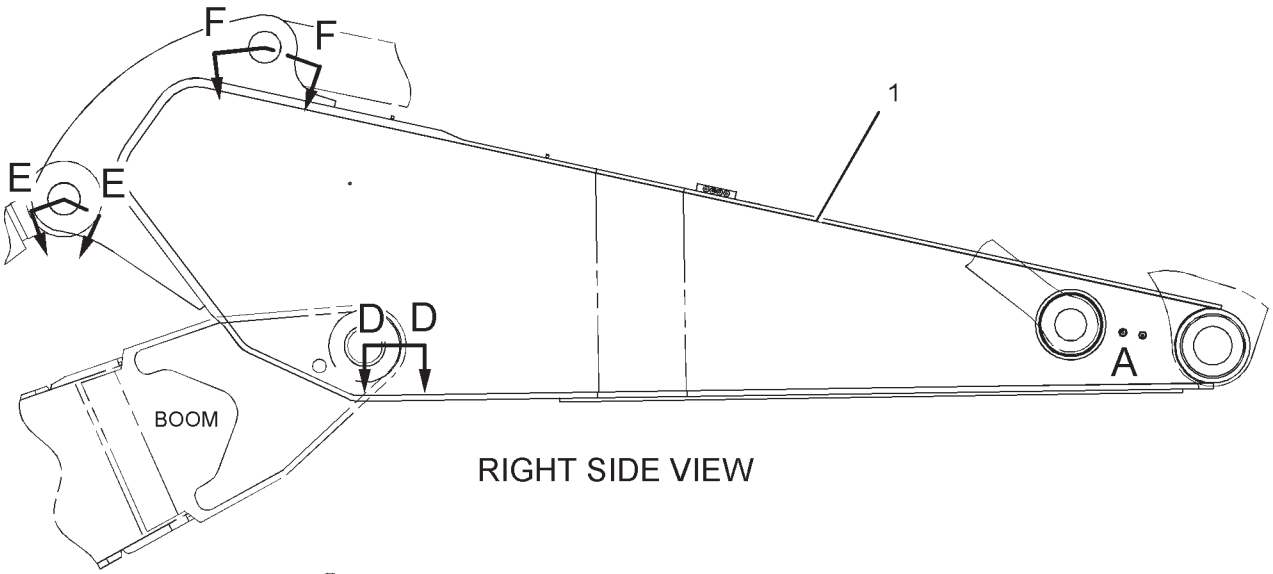

RIGHT SIDE VIEW

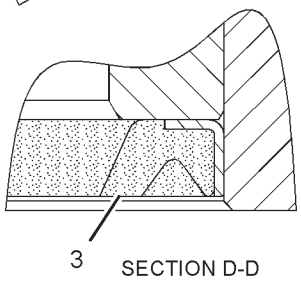

SECTION D-D

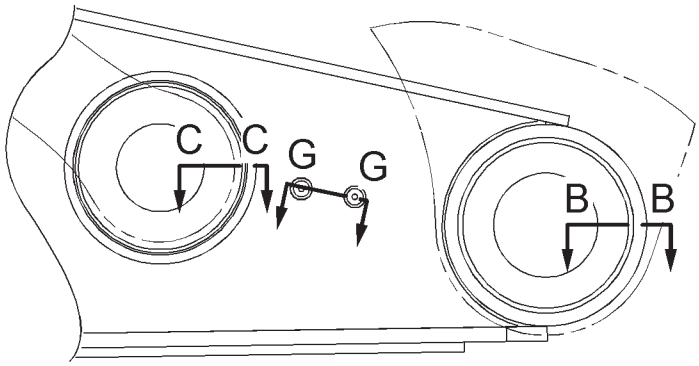

VIEW OF AREA A

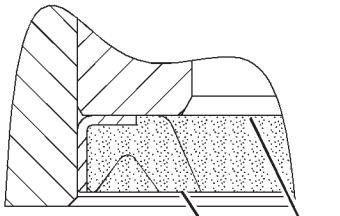

SECTION C-C

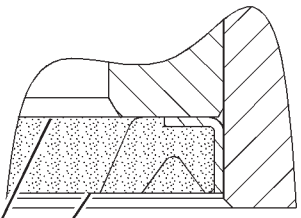

SECTION B-B

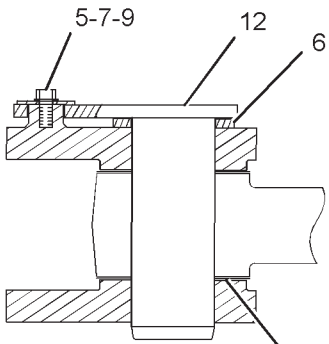

SECTION F-F

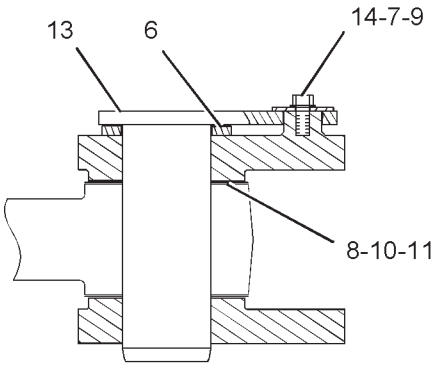

SECTION E-E

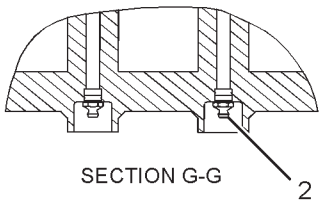

SECTION G-G

GRAPHIC #1 **<END>** g01134126

IMPLEMENTS

228-5475 STICK GP-HOE

S/N: RCD1-UP
3.4-M (11.2-FT). JB-FAMILY
PART OF 228-8129 STICK AR-HOE
AN ATTACHMENT
TYPE 2

SMCS-6502 **i02230314**

NOTE	REF NO	GRAPHIC REF	PART NUMBER	QTY	PART NAME 1 2 3 4 5 6 (PRODUCT LEVEL)	SEE PAGE
	1	1	**9X-4598**	2	SEAL-LIP TYPE	
	2	1	**9X-4600**	4	SEAL-LIP TYPE	
B	3	1	**093-0076**	4	SHIM (1-MM THK)	
B	4	1	**093-0108**	2	SHIM (2-MM THK)	
B	5	1	**151-0653**	2	SHIM (0.5-MM THK)	
	6	1	**172-3024**	1	PIN AS	
	7	1	**201-2771**	2	WASHER (26X90X8-MM THK)	
	8	1	**234-3970**	1	PIN AS	
C	9	1	**244-4160**	1	STICK & BEARING AS	
	9A	1	**7Y-3589**	2	BEARING-SLEEVE	
	9B	1	**234-3749**	4	BEARING-SLEEVE	
	10	1	**3B-8489**	2	FITTING-GREASE	
M	11	1	**7X-2573**	1	BOLT (M24X3X40-MM)	
M	12	1	**7X-2574**	1	BOLT (M24X3X45-MM)	
	13	1	**7Y-9267**	2	SPACER (133X190X14-MM THK)	
	14	1	**8T-4167**	2	WASHER-HARD (26X44X4-MM THK)	

B-USE AS REQUIRED
C-CHANGE FROM PREVIOUS TYPE
M-METRIC PART

228-5475 **STICK GP-HOE** *(contd.)* **i02230314**

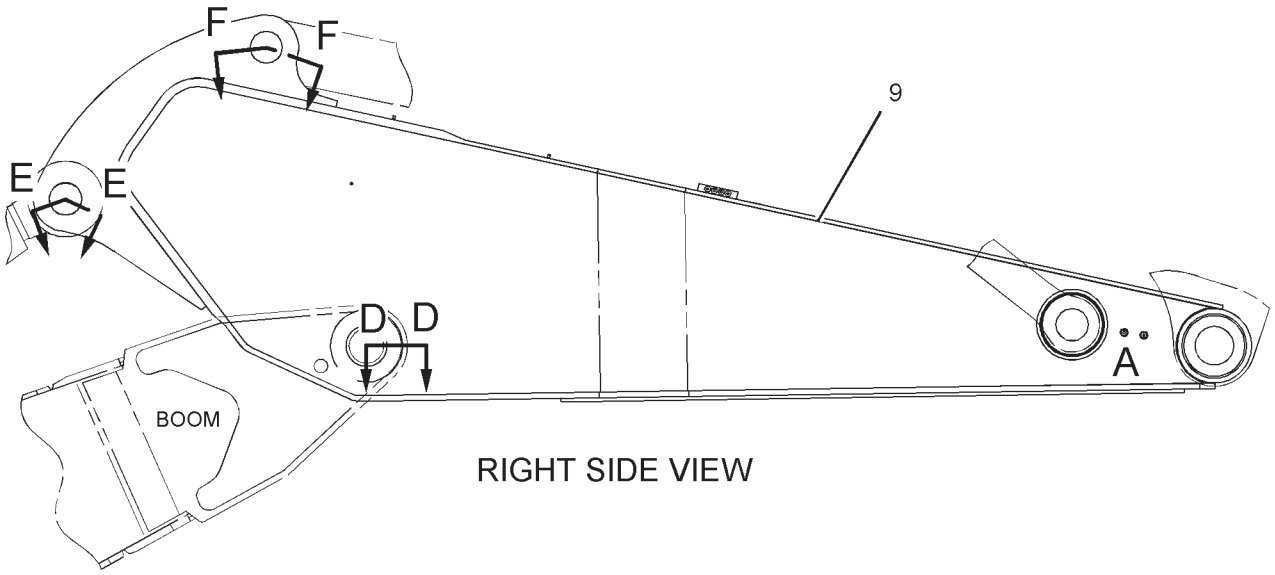

RIGHT SIDE VIEW

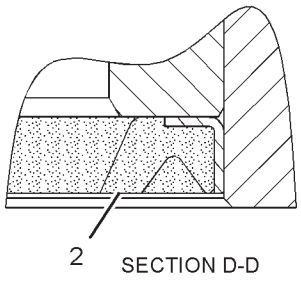

SECTION D-D

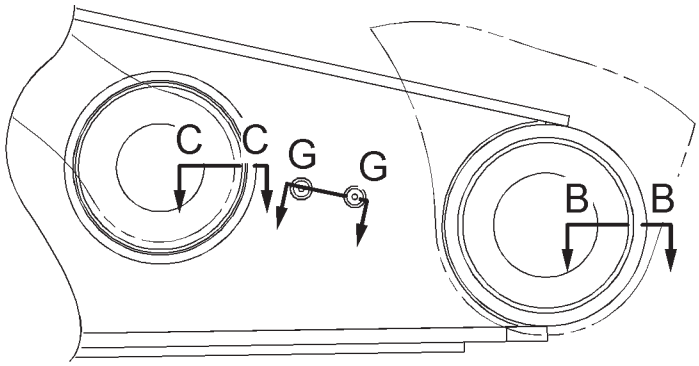

VIEW OF AREA A

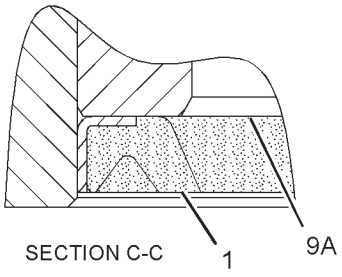

SECTION C-C

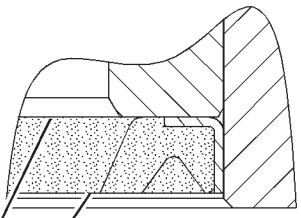

SECTION B-B

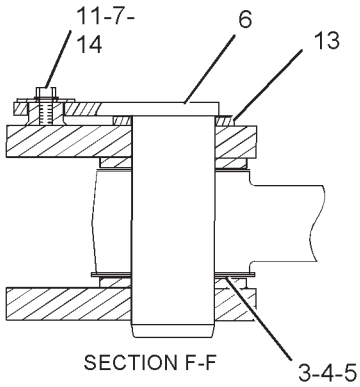

SECTION F-F

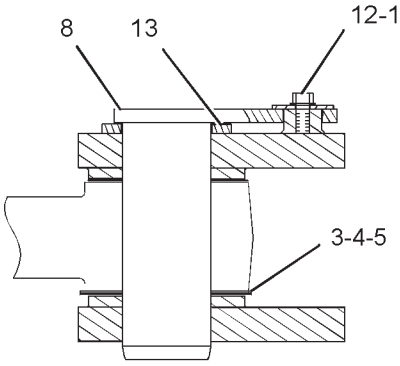

SECTION E-E

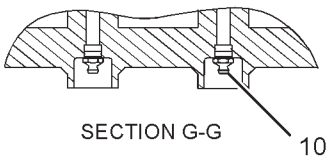

SECTION G-G

GRAPHIC #1 **<END>** g01134162

IMPLEMENTS

250-1669 STICK GP-HOE–MASS

S/N: RCD1-UP
2.9-M (9.5-FT). QUARRY CONFIGURATION, JB-FAMILY
PART OF 250-1670 STICK AR
AN ATTACHMENT

SMCS-6502 **i02230169**

NOTE	REF NO	GRAPHIC REF	PART NUMBER	QTY	PART NAME 1 2 3 4 5 6 (PRODUCT LEVEL)	SEE PAGE
	1	1	**250-1668**	1	STICK & BEARING AS	
	1A	1	**244-4149**	2	BEARING-SLEEVE	
	1B	1	**7Y-3589**	2	BEARING-SLEEVE	
	1C	1	**234-3749**	2	BEARING-SLEEVE	
	2	1	**3B-8489**	2	FITTING-GREASE	
	3	1	**9X-4600**	2	SEAL-LIP TYPE	
	4	1	**9X-4598**	2	SEAL-LIP TYPE	
	5	1	**9X-4601**	2	SEAL-LIP TYPE	
M	6	1	**7X-2573**	1	BOLT (M24X3X40-MM)	
	7	1	**7Y-9267**	2	SPACER (133X190X14-MM THK)	
	8	1	**201-2771**	2	WASHER (26X90X8-MM THK)	
	9	1	**8T-4167**	2	WASHER-HARD (26X44X4-MM THK)	
B	10	1	**093-0076**	4	SHIM (1-MM THK)	
B	11	1	**093-0108**	2	SHIM (2-MM THK)	
B	12	1	**151-0653**	2	SHIM (0.5-MM THK)	
	13	1	**172-3024**	1	PIN AS	
	14	1	**234-3970**	1	PIN AS	
M	15	1	**7X-2574**	1	BOLT (M24X3X45-MM)	

B-USE AS REQUIRED
M-METRIC PART

250-1669 **STICK GP-HOE** *(contd.)* **i02230169**

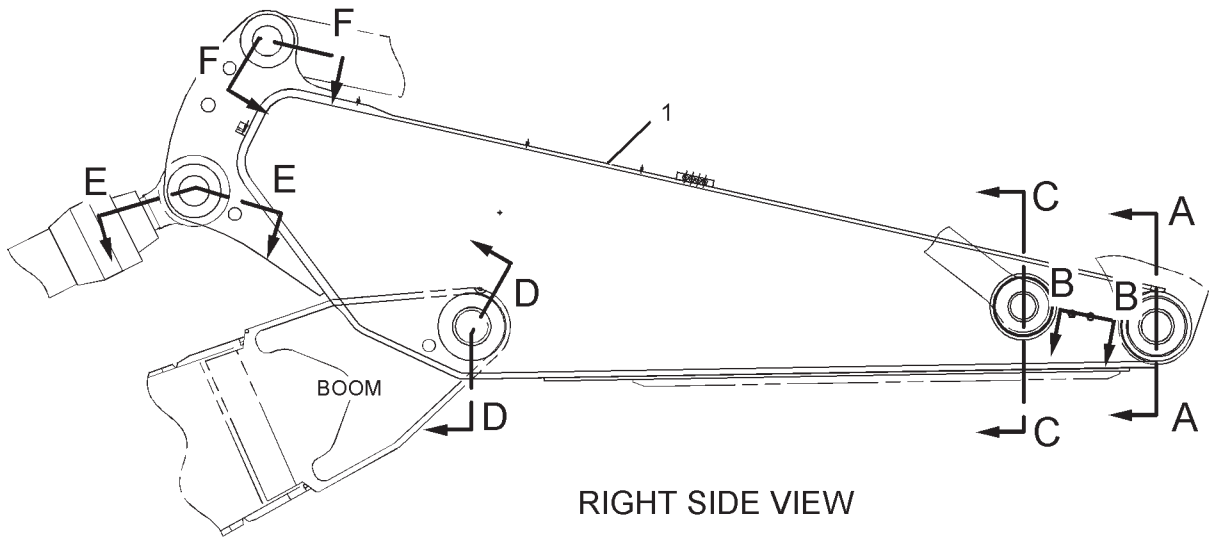

RIGHT SIDE VIEW

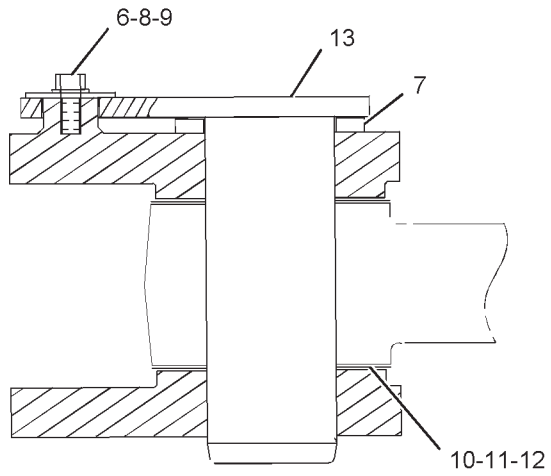

SECTION F-F

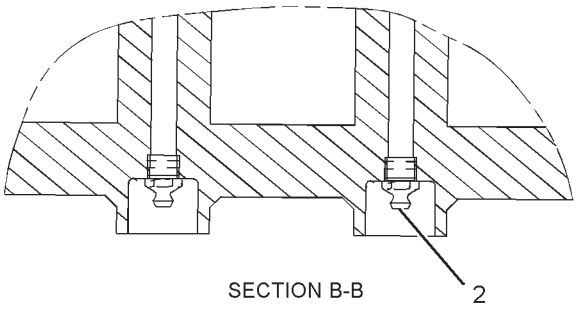

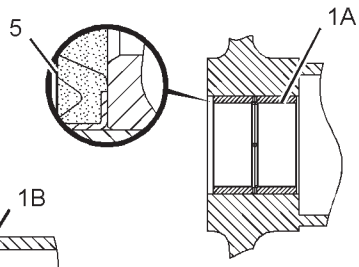

SECTION D-D

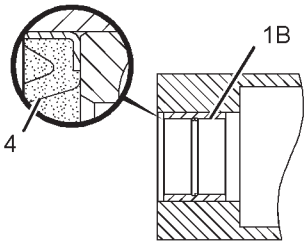

SECTION C-C

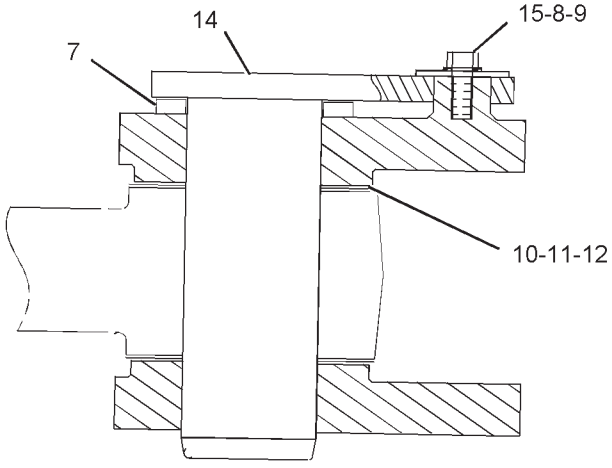

SECTION E-E

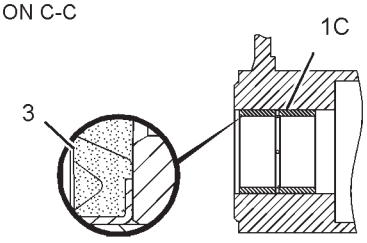

SECTION A-A

GRAPHIC #1 **<END>** g01129505

WORK TOOLS

7Y-3477 ADJUSTER GP-BUCKET—UB/WB/HB/JB-FAMILY

S/N: RCD1-UP

PART OF 203-6973, 203-6977, 203-6979, 203-6981, 203-6983, 203-6985, 203-6988, 226-6254 BUCKET & ADJUSTER GP AN ATTACHMENT

SMCS-6513, 6700 **i01826549**

NOTE	REF NO	GRAPHIC REF	PART NUMBER	QTY	PART NAME 1 2 3 4 5 6 (PRODUCT LEVEL)	SEE PAGE
B	1	1	**7Y-7830**	6	SHIM (1-MM THK)	
B	2	1	**7Y-7829**	4	SHIM (0.5-MM THK)	
	3	1	**7Y-7828**	1	PIN	
	4	1	**158-3960**	1	PLATE	
M	5	1	**7X-2563**	6	BOLT (M20X2.5X60-MM)	
	6	1	**8T-4123**	6	WASHER (22X35X3.5-MM THK)	
	7	1	**153-1731**	1	FLANGE	

B-USE AS REQUIRED
M-METRIC PART

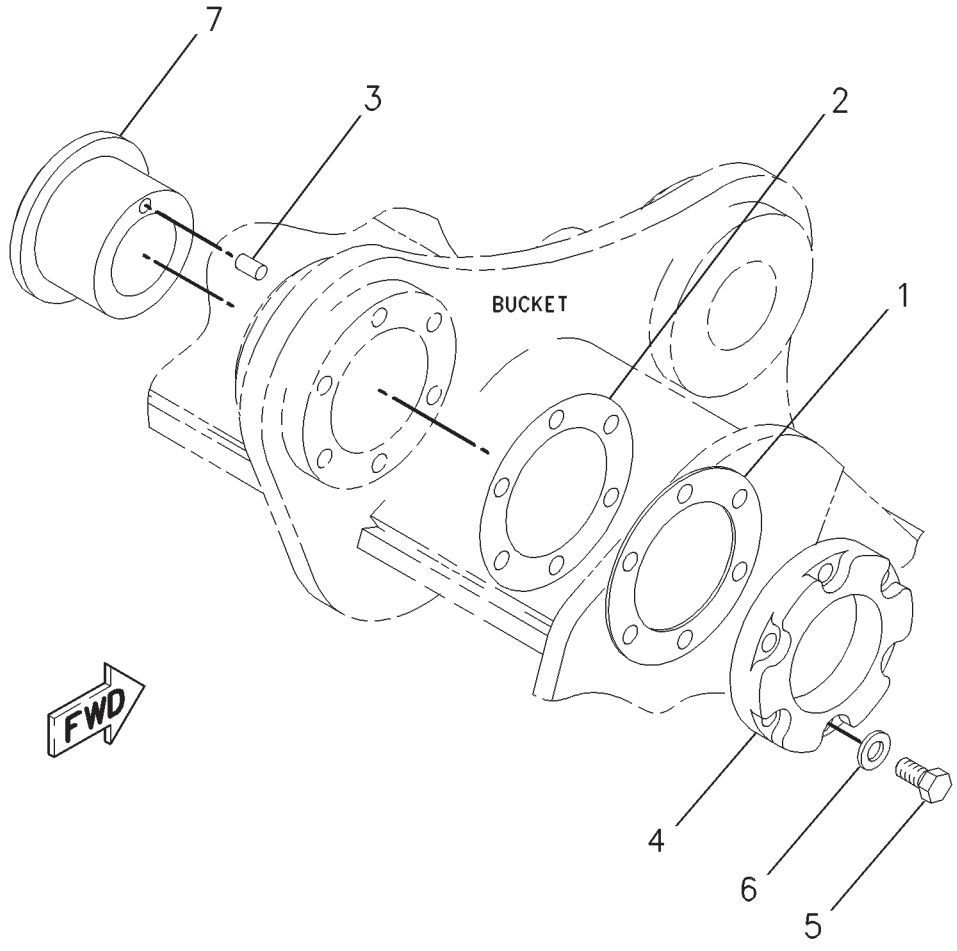

GRAPHIC #1 **<END>** g00540240

WORK TOOLS

203-6973 BUCKET & ADJUSTER GP–
HEAVY-DUTY ROCK, HB-FAMILY
S/N: RCD1-UP
1070-MM (42-IN) WIDE X 2.0-CU M (2.6-CU YD) CAPACITY
AN ATTACHMENT

SMCS-6503, 6513 **i02100325**

NOTE	PART NUMBER	QTY	PART NAME 1 2 3 4 5 6 (PRODUCT LEVEL)	SEE PAGE
Y	*7Y-3477*	1	ADJUSTER GP-BUCKET (UB/WB/HB/JB-FAMILY)	955
Y	*203-6974*	1	BUCKET AS-HEAVY DUTY ROCK	967
M	**7X-2553**	8	BOLT (M16X2X40-MM)	

M-METRIC PART
Y-SEPARATE ILLUSTRATION

<END>

WORK TOOLS

203-6977 BUCKET & ADJUSTER GP—HEAVY-DUTY ROCK

S/N: RCD1-UP
1374-MM (54-IN) WIDE X 2.7-CU M (3.6-CU YD) CAPACITY
AN ATTACHMENT

SMCS-6503, 6513 **i02156514**

NOTE	PART NUMBER	QTY	PART NAME 1 2 3 4 5 6 (PRODUCT LEVEL)	SEE PAGE
Y	*7Y-3477*	1	ADJUSTER GP-BUCKET (UB/WB/HB/JB-FAMILY)	955
Y	*203-6978*	1	BUCKET AS-HEAVY DUTY ROCK	968

Y-SEPARATE ILLUSTRATION

<END>

WORK TOOLS

203-6979 BUCKET & ADJUSTER GP–
GENERAL PURPOSE, HB-FAMILY
S/N: RCD1-UP
1374-MM (54-IN) WIDE X 2.9-CU M (3.75-CU YD) CAPACITY
AN ATTACHMENT

SMCS-6503, 6513 **i02182256**

NOTE	PART NUMBER	QTY	PART NAME 1 2 3 4 5 6 (PRODUCT LEVEL)	SEE PAGE
Y	*7Y-3477*	1	ADJUSTER GP-BUCKET (UB/WB/HB/JB-FAMILY)	955
Y	**203-6980**	1	BUCKET AS-GENERAL PURPOSE	964

Y-SEPARATE ILLUSTRATION

<END>

WORK TOOLS

203-6981 BUCKET & ADJUSTER GP

S/N: RCD1-UP
1676-MM (66-IN) WIDE X 3.5-CU M (4.6-CU YD) CAPACITY
AN ATTACHMENT

SMCS-6503, 6513 **i02252912**

NOTE	PART NUMBER	QTY	PART NAME 1 2 3 4 5 6 (PRODUCT LEVEL)	SEE PAGE
Y	*7Y-3477*	1	ADJUSTER GP-BUCKET (UB/WB/HB/JB-FAMILY)	955
Y	*203-6982*	1	BUCKET AS-HEAVY DUTY ROCK	969

Y-SEPARATE ILLUSTRATION

<END>

WORK TOOLS

203-6983 BUCKET & ADJUSTER GP–
GENERAL PURPOSE, HB-FAMILY
S/N: RCD1-UP
1678-MM (66-IN) WIDE X 3.7-CU M (4.9-CU YD) CAPACITY
AN ATTACHMENT

SMCS-6503, 6513 **i02199225**

NOTE	PART NUMBER	QTY	PART NAME 1 2 3 4 5 6 (PRODUCT LEVEL)	SEE PAGE
Y	*7Y-3477*	1	ADJUSTER GP-BUCKET (UB/WB/HB/JB-FAMILY)	955
Y	*203-6984*	1	BUCKET AS-GENERAL PURPOSE	965

Y-SEPARATE ILLUSTRATION

<END>

WORK TOOLS

203-6985 BUCKET & ADJUSTER GP—HEAVY DUTY, HB-FAMILY

S/N: RCD1-UP
1982-MM (78-IN) X 4.2-CU M (5.5-CU YD) CAPACITY
AN ATTACHMENT

SMCS-6503, 6513 **i02207012**

NOTE	PART NUMBER	QTY	PART NAME 1 2 3 4 5 6 (PRODUCT LEVEL)	SEE PAGE
Y	*7Y-3477*	1	ADJUSTER GP-BUCKET (UB/WB/HB/JB-FAMILY)	955
Y	*203-6987*	1	BUCKET AS-HEAVY DUTY ROCK	970

Y-SEPARATE ILLUSTRATION

<END>

WORK TOOLS

203-6988 BUCKET & ADJUSTER GP–
GENERAL PURPOSE, HB-FAMILY
S/N: RCD1-UP
1982-MM (78-IN) X 4.5-CU M (6-CU YD) CAPACITY
AN ATTACHMENT

SMCS-6503, 6513 **i02207127**

NOTE	PART NUMBER	QTY	PART NAME 1 2 3 4 5 6 (PRODUCT LEVEL)	SEE PAGE
Y	*7Y-3477*	1	ADJUSTER GP-BUCKET (UB/WB/HB/JB-FAMILY)	955
Y	*203-6989*	1	BUCKET AS-GENERAL PURPOSE	966

Y-SEPARATE ILLUSTRATION

<END>

WORK TOOLS

226-6254 BUCKET & ADJUSTER GP—HEAVY DUTY, JB-FAMILY

S/N: RCD1-UP
2260-MM (89-IN) WIDE X 4.6-CU M (6-CU YD) CAPACITY
AN ATTACHMENT

SMCS-6503, 6513 **i01943985**

NOTE	PART NUMBER	QTY	PART NAME 1 2 3 4 5 6 (PRODUCT LEVEL)	SEE PAGE
Y	*7Y-3477*	1	ADJUSTER GP-BUCKET (UB/WB/HB/JB-FAMILY)	955
Y	*226-6255*	1	BUCKET AS-HEAVY DUTY ROCK	971

Y-SEPARATE ILLUSTRATION

<END>

WORK TOOLS

203-6980 BUCKET AS-GENERAL PURPOSE–HB-FAMILY

S/N: RCD1-UP
1374-MM (54-IN) WIDE X 2.9-CU M (3.8-CU YD) CAPACITY.
J-600 ADAPTERS, QTY OF 4
PART OF 203-6979 BUCKET & ADJUSTER GP
AN ATTACHMENT

SMCS-6101 **i02183575**

NOTE	REF NO	GRAPHIC REF	PART NUMBER	QTY	PART NAME 1 2 3 4 5 6 (PRODUCT LEVEL)	SEE PAGE
	1	1	**206-9137**	1	PLATE-WEAR	
	2	1	**206-9141**	5	PLATE-WEAR	
	3	1	**206-9134**	1	EDGE AS	
	3A	1	**6I-6604**	2	ADAPTER-TIP (J-600, 2-STRAP, CENTER)	
	3B	1	**8P-9770**	1	PLATE	
	3C	1	**159-0605**	1	ADAPTER-TIP	
	3D	1	**159-0606**	1	ADAPTER-TIP	

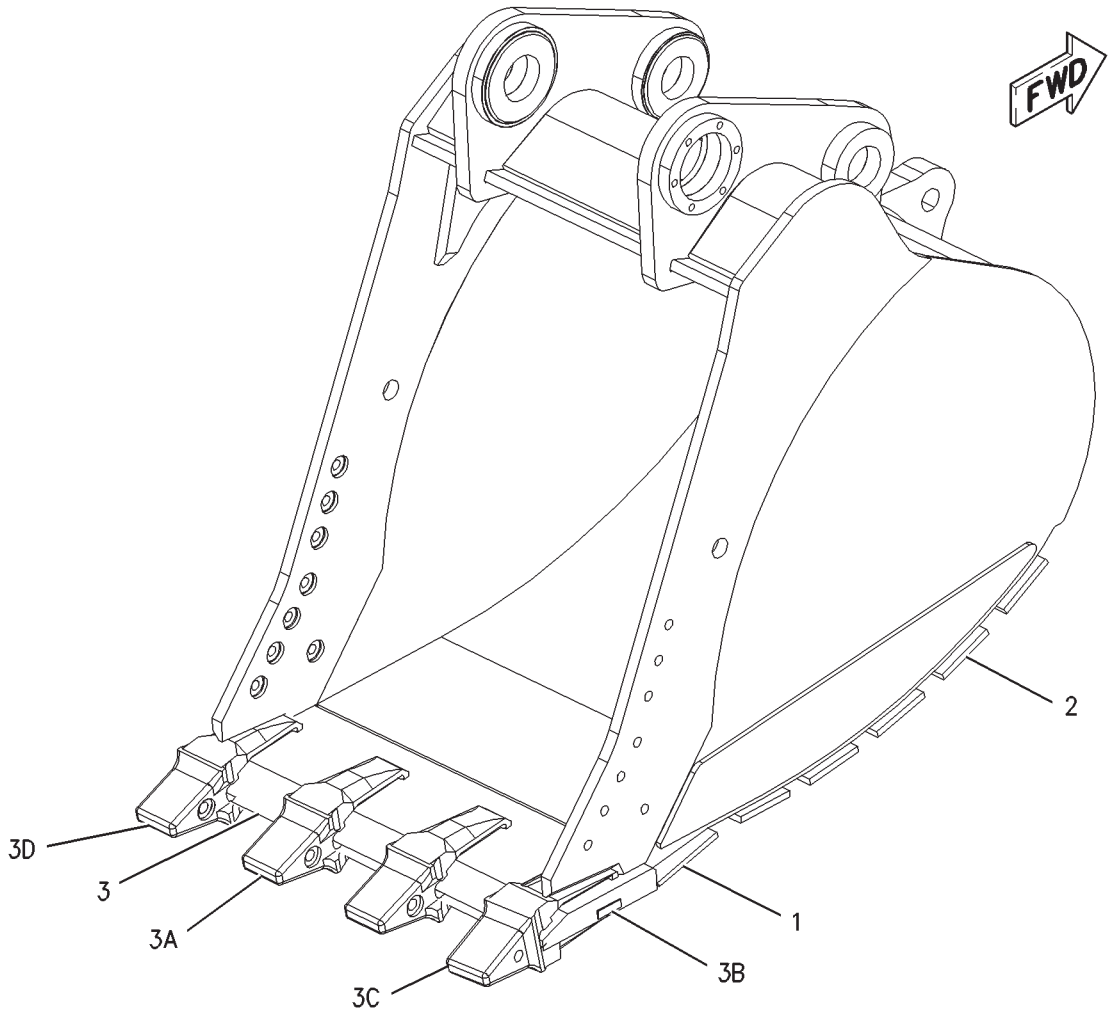

GRAPHIC #1 **<END>** g00852275

WORK TOOLS

203-6984 BUCKET AS-GENERAL PURPOSE–HB-FAMILY

S/N: RCD1-UP
1678-MM (66-IN) WIDE X 3.7-CU M (4.9-CU YD) CAPACITY.
J-600 ADAPTERS, QTY OF 4
PART OF 203-6983 BUCKET & ADJUSTER GP
AN ATTACHMENT

SMCS-6101 **i02199238**

NOTE	REF NO	GRAPHIC REF	PART NUMBER	QTY	PART NAME 1 2 3 4 5 6 (PRODUCT LEVEL)	SEE PAGE
	1	1	**206-9138**	1	PLATE-WEAR	
	2	1	**206-9142**	5	PLATE-WEAR	
	3	1	**206-9135**	1	EDGE AS	
	3A	1	**6I-6604**	2	ADAPTER-TIP (J-600, 2-STRAP, CENTER)	
	3B	1	**8P-9770**	1	PLATE	
	3C	1	**159-0605**	1	ADAPTER-TIP	
	3D	1	**159-0606**	1	ADAPTER-TIP	

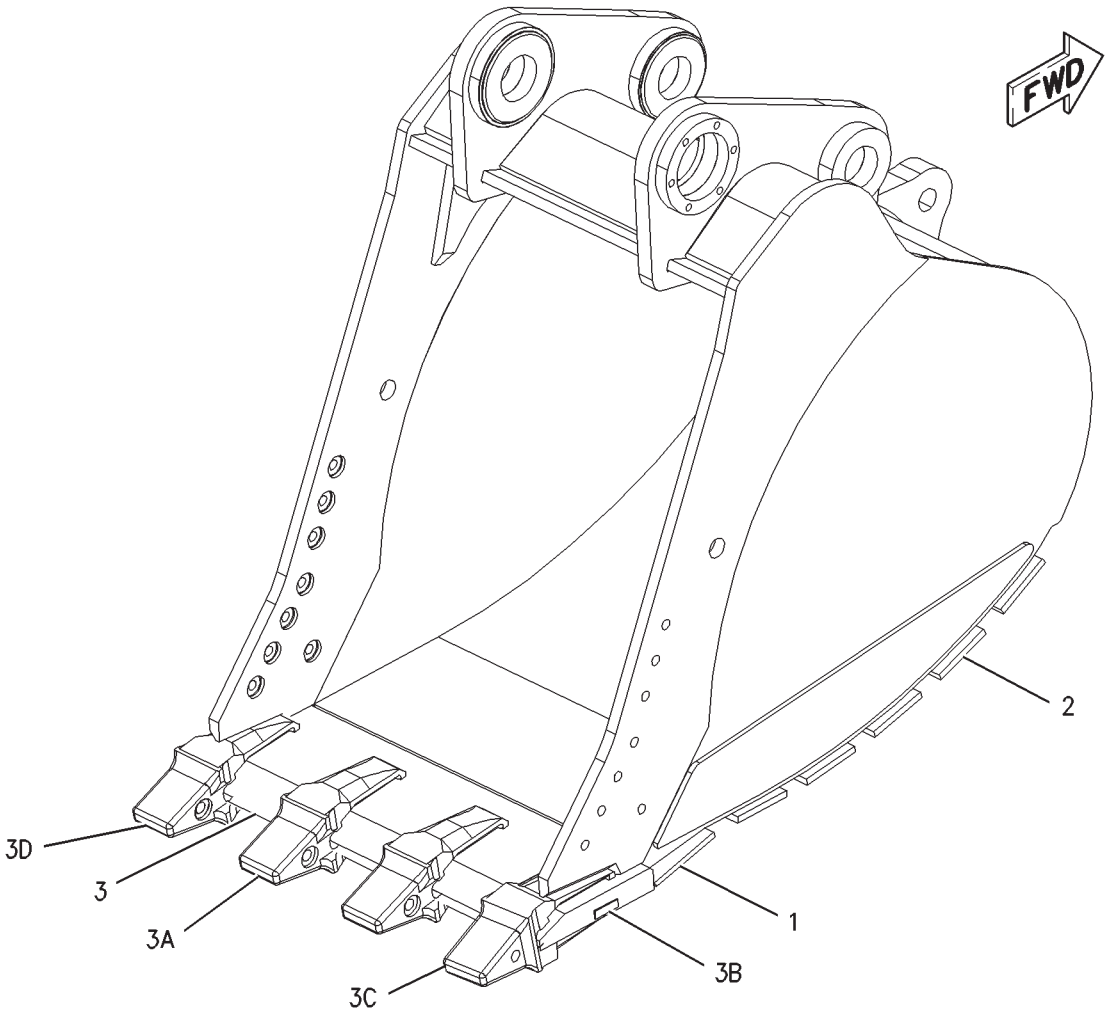

GRAPHIC #1 **<END>** g00852280

WORK TOOLS

203-6989 BUCKET AS-GENERAL PURPOSE–HB-FAMILY

S/N: RCD1-UP
1982-MM (78-IN) X 4.5-CU M (6.0-CU YD) CAPACITY, J-600 ADAPTERS, QTY OF 4
PART OF 203-6988 BUCKET & ADJUSTER GP
AN ATTACHMENT

SMCS-6101 **i02207175**

NOTE	REF NO	GRAPHIC REF	PART NUMBER	QTY	PART NAME 1 2 3 4 5 6 (PRODUCT LEVEL)	SEE PAGE
	1	1	**205-6045**	1	EDGE AS	
	1A	1	**6I-6604**	3	ADAPTER-TIP (J-600, 2-STRAP, CENTER)	
	1B	1	**8P-9770**	1	PLATE	
	1C	1	**159-0605**	1	ADAPTER-TIP	
	1D	1	**159-0606**	1	ADAPTER-TIP	
	2	1	**206-9139**	1	PLATE-WEAR	
	3	1	**206-9143**	5	PLATE-WEAR	

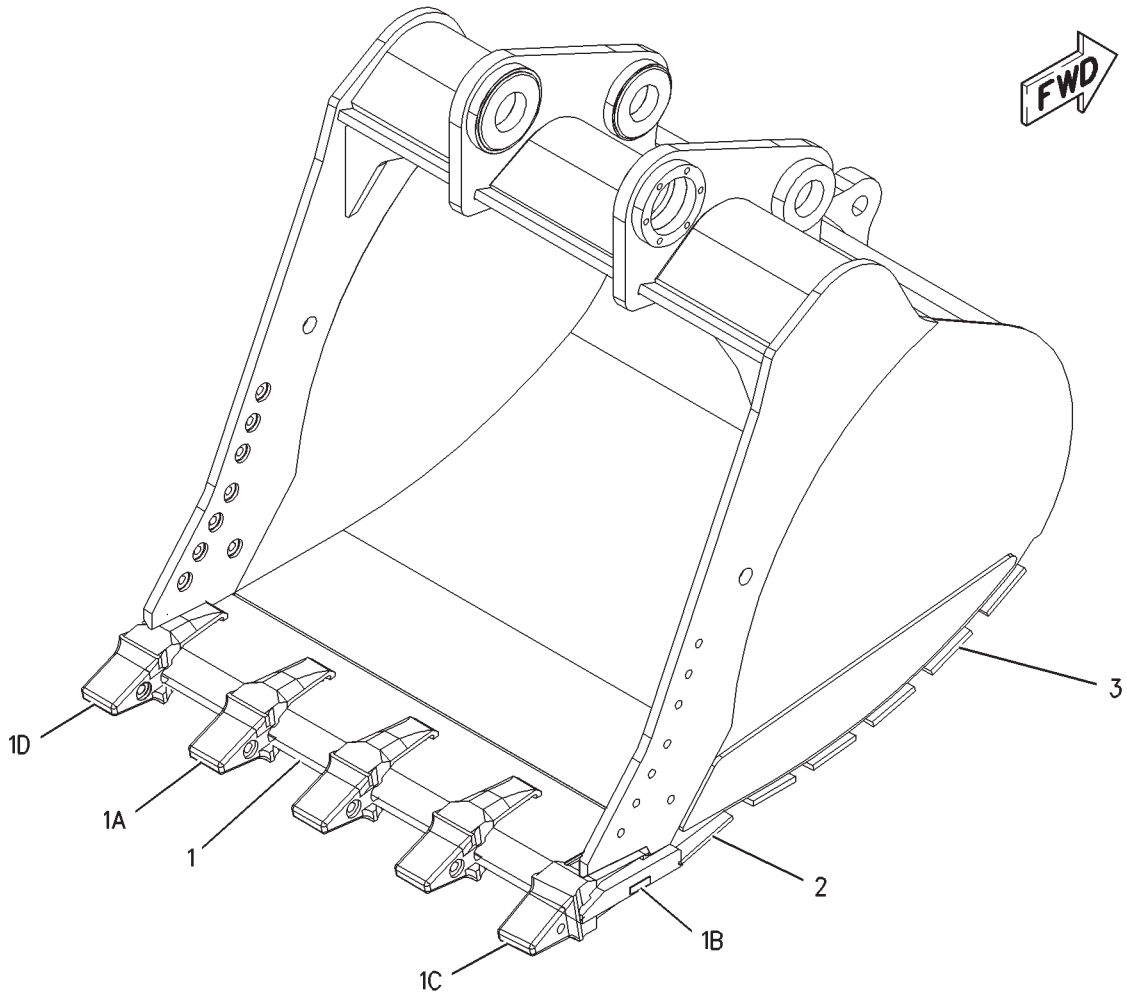

GRAPHIC #1 **<END>** g00852590

WORK TOOLS

203-6974 BUCKET AS-HEAVY DUTY ROCK–HB-FAMILY

S/N: RCD1-UP
1070-MM (42-IN) WIDE X 2-CU M (2.6-CU YD) CAPACITY. J-600 ADAPTERS, QTY OF 3
PART OF 203-6973 BUCKET & ADJUSTER GP
AN ATTACHMENT

SMCS-6102 **i02183524**

NOTE	REF NO	GRAPHIC REF	PART NUMBER	QTY	PART NAME 1 2 3 4 5 6 (PRODUCT LEVEL)	SEE PAGE
	1	1	**206-9136**	1	PLATE-WEAR	
	2	1	**209-5686**	4	PLATE-WEAR	
	3	1	**209-5688**	1	PLATE	
	4	1	**206-9133**	1	EDGE AS	
	4A	1	**6I-6604**	1	ADAPTER-TIP (J-600, 2-STRAP, CENTER)	
	4B	1	**8P-9770**	1	PLATE	
	4C	1	**159-0605**	1	ADAPTER-TIP	
	4D	1	**159-0606**	1	ADAPTER-TIP	
	5	1	**209-5687**	3	PLATE-WEAR	

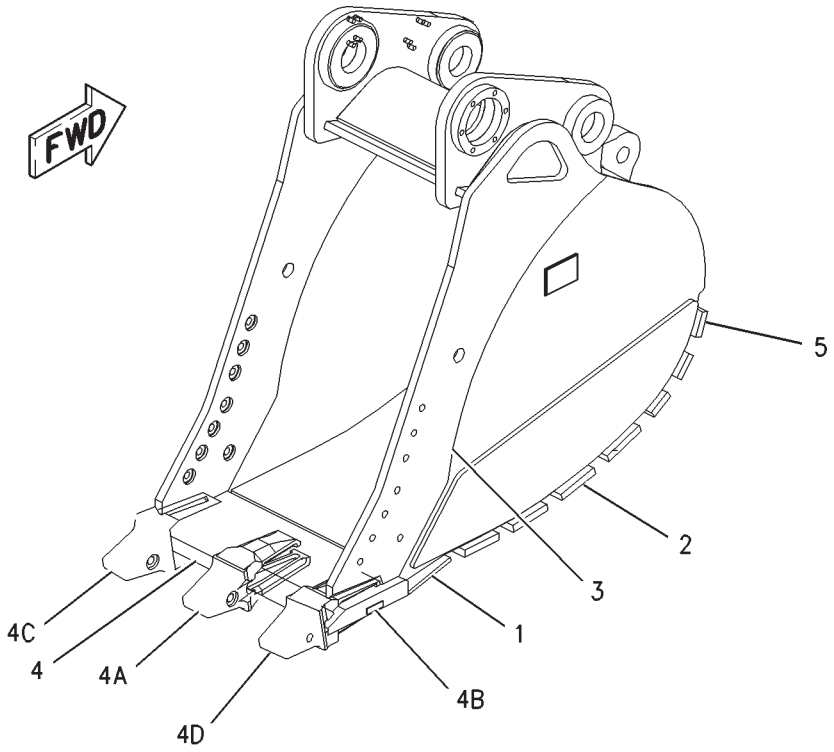

GRAPHIC #1 **<END>** g00851927

WORK TOOLS

203-6978 BUCKET AS-HEAVY DUTY ROCK

S/N: RCD1-UP
1374-MM (54-IN) WIDE X 2.7-CU M (3.6-CU YD) CAPACITY.
J-600 ADAPTERS, QTY OF 4
PART OF 203-6977 BUCKET & ADJUSTER GP
AN ATTACHMENT

SMCS-6102 **i02183520**

NOTE	REF NO	GRAPHIC REF	PART NUMBER	QTY	PART NAME 1 2 3 4 5 6 (PRODUCT LEVEL)	SEE PAGE
	1	1	**206-9137**	1	PLATE-WEAR	
	2	1	**209-5679**	4	PLATE-WEAR	
	3	1	**209-5680**	3	PLATE-WEAR	
	4	1	**206-9134**	1	EDGE AS	
	4A	1	**6I-6604**	2	ADAPTER-TIP (J-600, 2-STRAP, CENTER)	
	4B	1	**8P-9770**	1	PLATE	
	4C	1	**159-0605**	1	ADAPTER-TIP	
	4D	1	**159-0606**	1	ADAPTER-TIP	

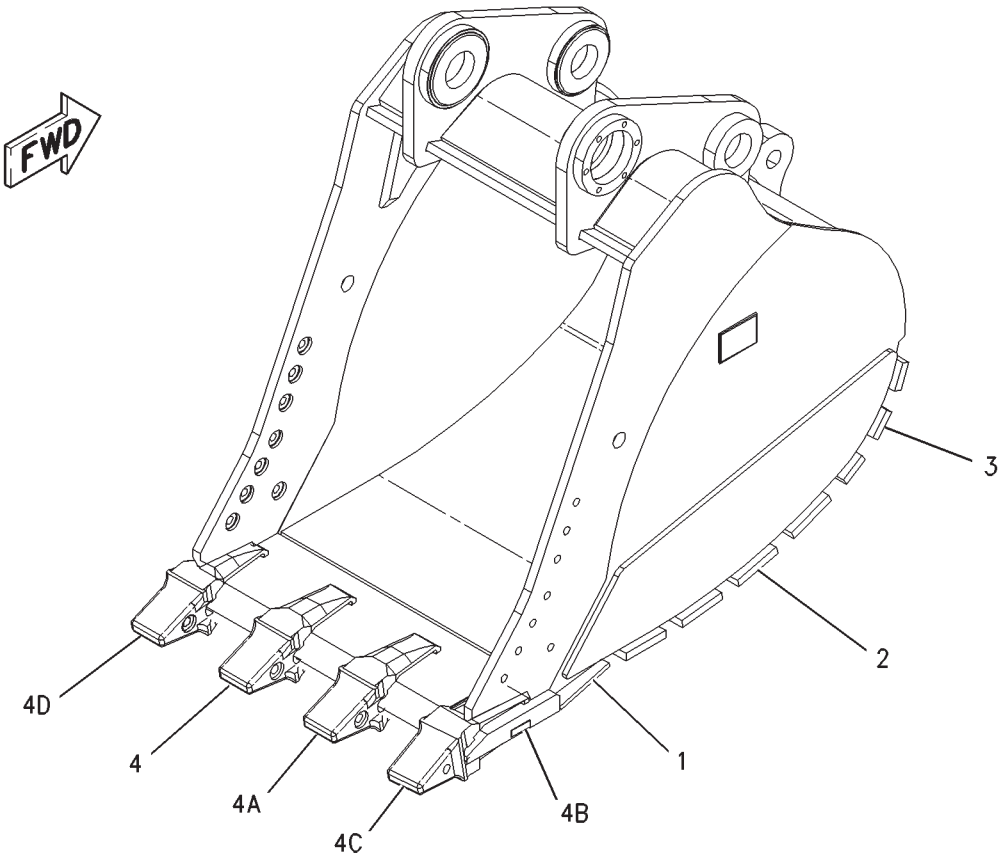

GRAPHIC #1 **<END>** g00851915

WORK TOOLS

203-6982 BUCKET AS-HEAVY DUTY ROCK

S/N: RCD1-UP
1676-MM (66-IN) WIDE X 3.5-CU M (4.6-CU YD) CAPACITY.
J-600 ADAPTERS, QTY OF 4
PART OF 203-6981 BUCKET & ADJUSTER GP
AN ATTACHMENT

SMCS-6102 **i02199199**

NOTE	REF NO	GRAPHIC REF	PART NUMBER	QTY	PART NAME 1 2 3 4 5 6 (PRODUCT LEVEL)	SEE PAGE
	1	1	**206-9135**	1	EDGE AS	
	1A	1	**6I-6604**	2	ADAPTER-TIP (J-600, 2-STRAP, CENTER)	
	1B	1	**159-0605**	1	ADAPTER-TIP	
	1C	1	**159-0606**	1	ADAPTER-TIP	
	1D	1	**8P-9770**	1	PLATE	
	2	1	**206-9138**	1	PLATE-WEAR	
	3	1	**209-5681**	4	PLATE-WEAR	
	4	1	**209-5682**	3	PLATE-WEAR	

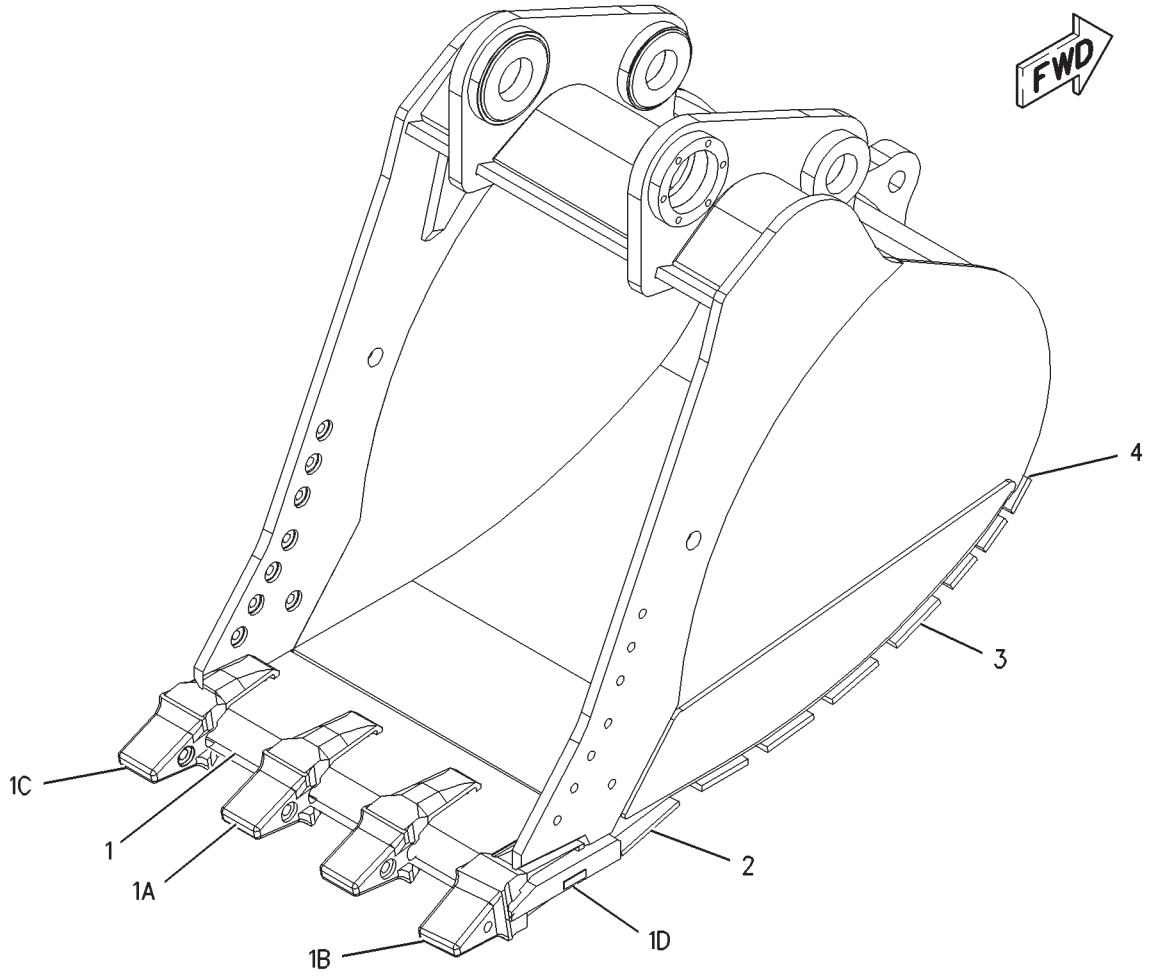

GRAPHIC #1 **<END>** g00852084

WORK TOOLS

203-6987 BUCKET AS-HEAVY DUTY ROCK–HB-FAMILY

S/N: RCD1-UP
1982-MM (78-IN) WIDE X 4.2-CU M (5.5-CU YD) CAPACITY.
J-600 ADAPTERS, QTY OF 5
PART OF 203-6985 BUCKET & ADJUSTER GP
AN ATTACHMENT

SMCS-6102 **i02207017**

NOTE	REF NO	GRAPHIC REF	PART NUMBER	QTY	PART NAME 1 2 3 4 5 6 (PRODUCT LEVEL)	SEE PAGE
	1	1	**205-6045**	1	EDGE AS	
	1A	1	**6I-6604**	3	ADAPTER-TIP (J-600, 2-STRAP, CENTER)	
	1B	1	**8P-9770**	1	PLATE	
	1C	1	**159-0605**	1	ADAPTER-TIP	
	1D	1	**159-0606**	1	ADAPTER-TIP	
	2	1	**206-9139**	1	PLATE-WEAR	
	3	1	**207-6081**	4	PLATE-WEAR	
	4	1	**207-6088**	3	PLATE-WEAR	

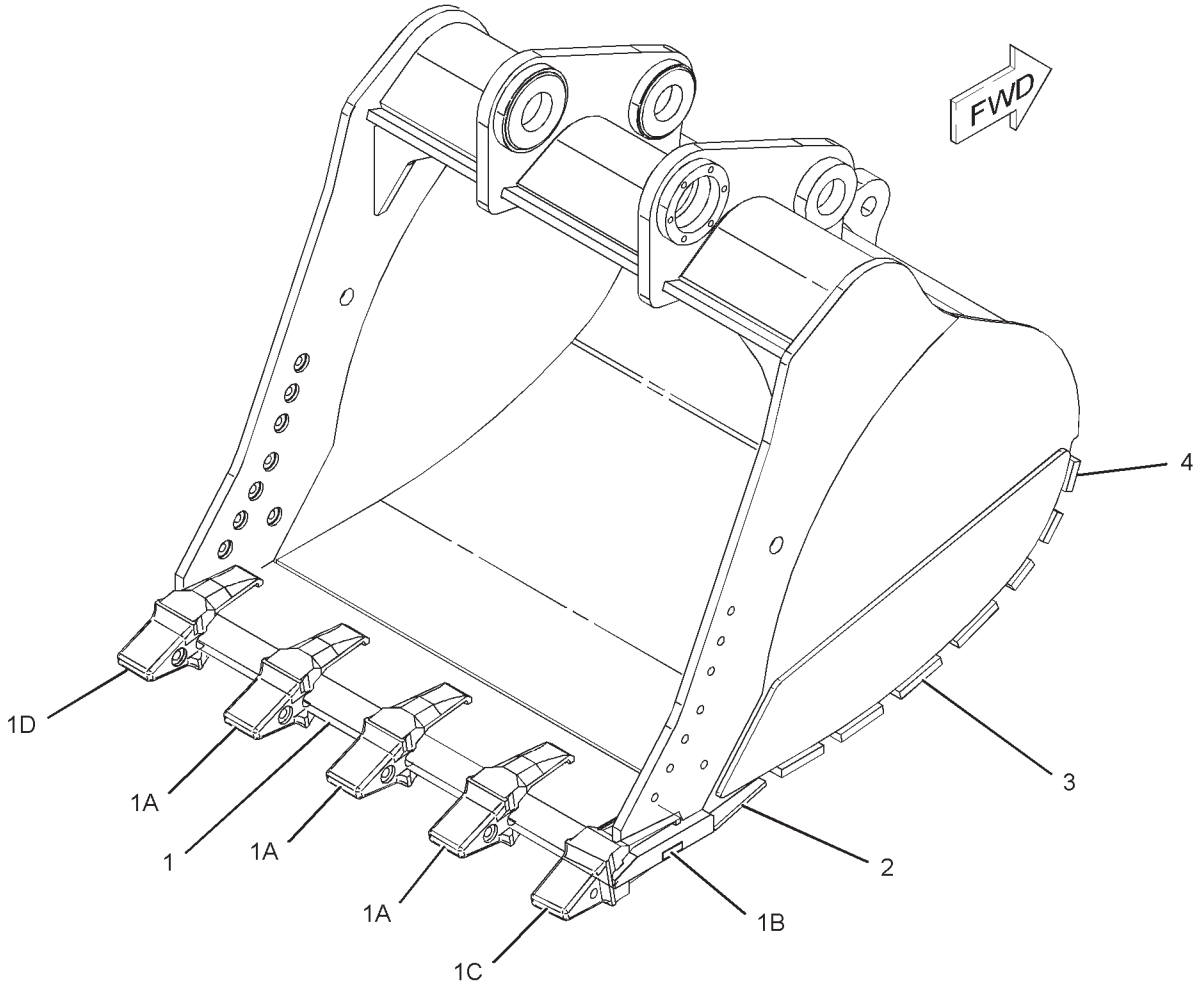

GRAPHIC #1 **<END>** g01134483

WORK TOOLS

226-6255 BUCKET AS-HEAVY DUTY ROCK–JB-FAMILY

S/N: RCD1-UP
2260-MM (89-IN) WIDE X 4.6-CU M (6-CU YD) CAPACITY. J-800 ADAPTERS, QTY OF 5
PART OF 226-6254 BUCKET & ADJUSTER GP
AN ATTACHMENT

SMCS-6102 **i02183565**

NOTE	REF NO	GRAPHIC REF	PART NUMBER	QTY	PART NAME 1 2 3 4 5 6 (PRODUCT LEVEL)	SEE PAGE
	1	1	**226-2408**	1	EDGE AS	
	1A	1	**6I-8804**	5	ADAPTER	
	1B	1	**8P-9770**	1	PLATE	
	2	1	**211-2769**	1	PLATE-REINFORCEMENT	
	3	1	**211-2770**	3	PLATE-WEAR	
	4	1	**211-2771**	3	PLATE-WEAR	

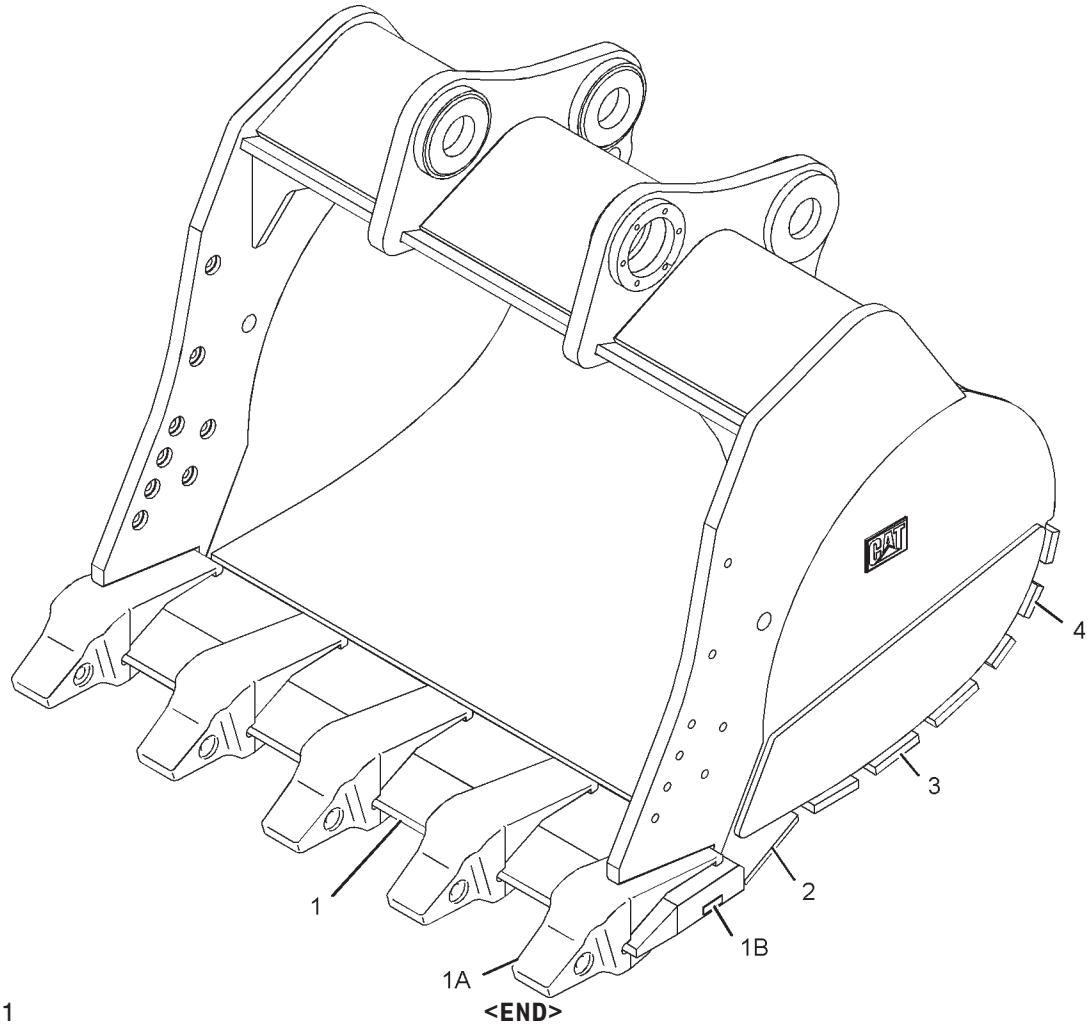

GRAPHIC #1 g01102278

<END>

WORK TOOLS

112-2491 PROTECTOR GP-SIDE BAR—BUCKET

S/N: RCD1-UP

AN ATTACHMENT

SMCS-6817 **i02113071**

NOTE	PART NUMBER	QTY	PART NAME 1 2 3 4 5 6 (PRODUCT LEVEL)	SEE PAGE
	132-1008	4	PIN	
	112-2492	2	PROTECTOR-SIDE BAR	
	132-0999	4	RETAINER AS	

<END>

WORK TOOLS

166-3511 PROTECTOR GP-SIDE BAR—BUCKET

S/N: RCD1-UP

AN ATTACHMENT

SMCS-6817 **i01218298**

NOTE	PART NUMBER	QTY	PART NAME 1 2 3 4 5 6 (PRODUCT LEVEL)	SEE PAGE
	132-0998	4	PIN-G.E.T.	
	166-2877	2	PROTECTOR-SIDEBAR	
	132-0999	4	RETAINER AS-G.E.T.	

<END>

WORK TOOLS

112-2479 SIDECUTTER GP

S/N: RCD1-UP

AN ATTACHMENT

SMCS-6813 **i02115234**

NOTE	REF NO	GRAPHIC REF	PART NUMBER	QTY	PART NAME 1 2 3 4 5 6 (PRODUCT LEVEL)	SEE PAGE
	1	1	**9X-8896**	12	BOLT (1-8X4-IN)	
	2	1	**2J-3507**	12	NUT-FULL (1-8-THD)	
	3	1	**3K-5234**	12	WASHER-HARD (28X49X6-MM THK)	
	4	1	**112-2484**	1	SIDECUTTER-LH	
	5	1	**112-2483**	1	SIDECUTTER-RH	

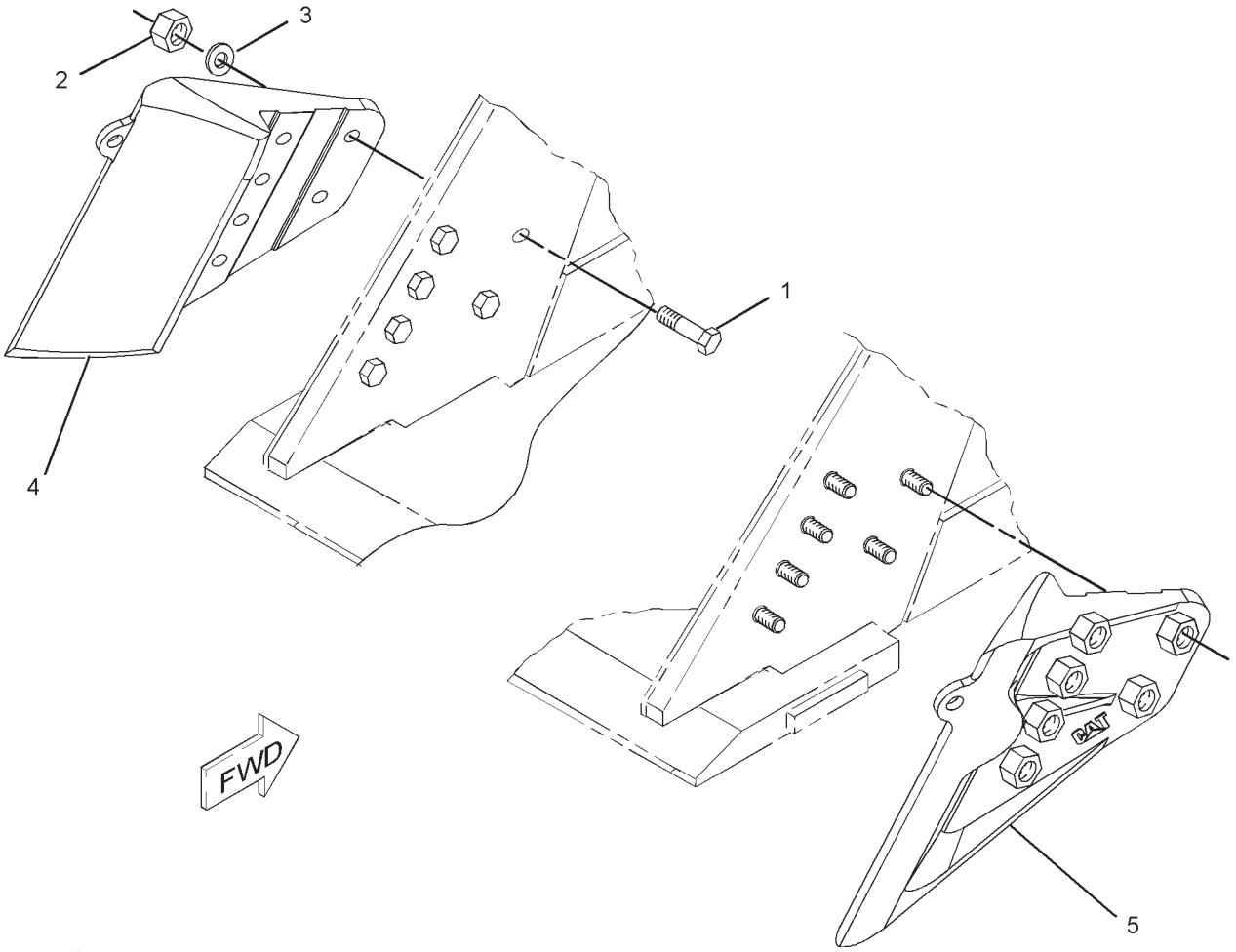

GRAPHIC #1 **<END>** g01086883

WORK TOOLS

167-3832 SIDECUTTER GP

S/N: RCD1-UP
AN ATTACHMENT

SMCS-6813 **i02954322**

NOTE	REF NO	GRAPHIC REF	PART NUMBER	QTY	PART NAME 1 2 3 4 5 6 (PRODUCT LEVEL)	SEE PAGE
	1	1	**1D-4637**	10	BOLT (1-8X3.25-IN)	
	2	1	**2J-3507**	10	NUT-FULL (1-8-THD)	
	3	1	**256-8690**	1	SIDECUTTER (RH)	
	4	1	**256-8691**	1	SIDECUTTER (LH)	
	5	1	**3K-5234**	10	WASHER-HARD (28X49X6-MM THK)	

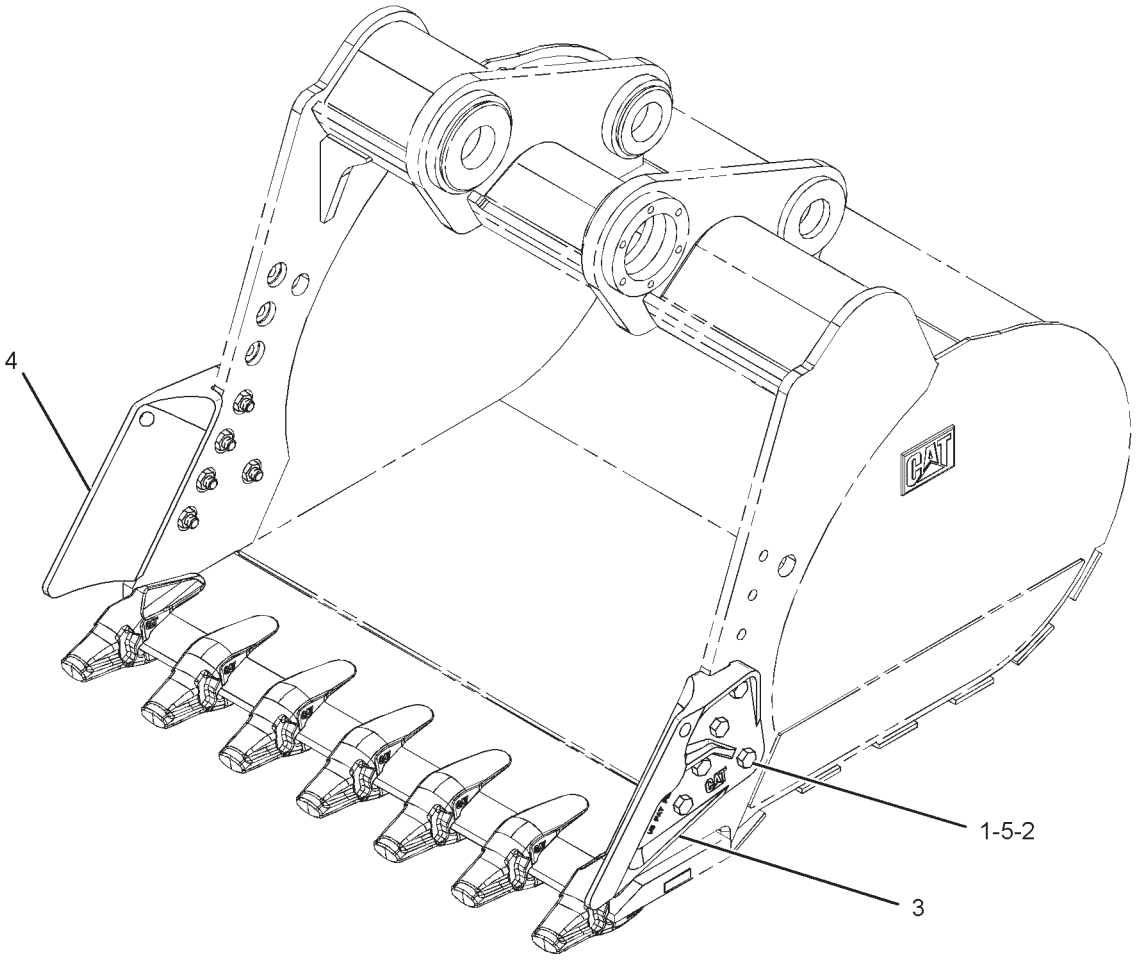

GRAPHIC #1 **<END>** g01340286

WORK TOOLS

6I-6417 TIP GP-LONG—J-600, HEAVY-DUTY

S/N: RCD1-UP

AN ATTACHMENT

SMCS-6805 **i00621169**

NOTE	REF NO	GRAPHIC REF	PART NUMBER	QTY	PART NAME 1 2 3 4 5 6 (PRODUCT LEVEL)	SEE PAGE
	1	1	**113-9608**	1	PIN (G.E.T.)	
	2	1	**113-9609**	1	RETAINER AS (G.E.T.)	
	3	1	**7Y-0602**	1	TIP-LONG (HEAVY-DUTY)	

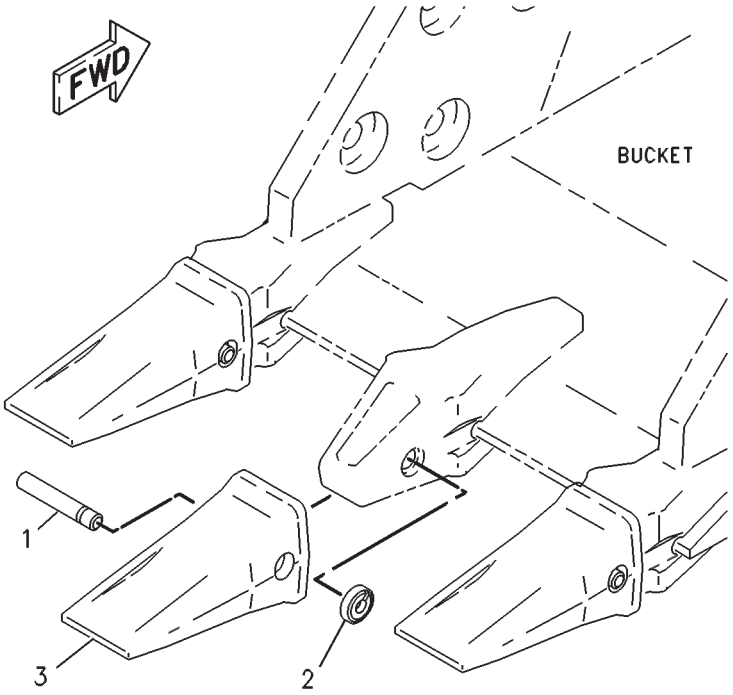

GRAPHIC #1 **<END>** g00117668

WORK TOOLS

6Y-6354 TIP GP-LONG–J-700

S/N: RCD1-UP

AN ATTACHMENT

SMCS-6805 **i02497537**

NOTE	REF NO	GRAPHIC REF	PART NUMBER	QTY	PART NAME 1 2 3 4 5 6 (PRODUCT LEVEL)	SEE PAGE
	1	1	**113-4709**	1	RETAINER AS	
	2	1	**4T-4702**	1	TIP-LONG (J-700)	
	3	1	**113-4708**	1	PIN	

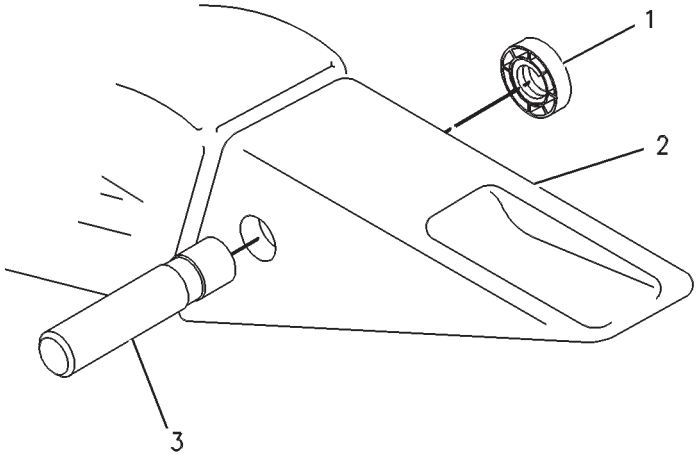

GRAPHIC #1 **<END>** g00088580

WORK TOOLS

100-5588 TIP GP-LONG—J-700, HEAVY-DUTY

S/N: RCD1-UP

AN ATTACHMENT

SMCS-6805 **i02955261**

NOTE	REF NO	GRAPHIC REF	PART NUMBER	QTY	PART NAME 1 2 3 4 5 6 (PRODUCT LEVEL)	SEE PAGE
	1	1	**113-4709**	1	RETAINER AS	
	2	1	**113-4708**	1	PIN	
	3	1	**9U-9702**	1	TIP-LONG (J-700, HEAVY-DUTY)	

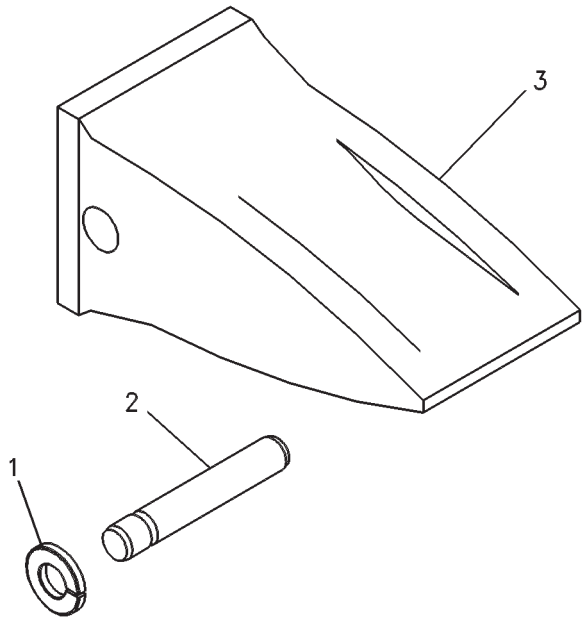

GRAPHIC #1 **<END>** g00374839

WORK TOOLS

6I-6423 TIP GP-PENETRATION–J-600

S/N: RCD1-UP

AN ATTACHMENT

SMCS-6805 **i01720263**

NOTE	REF NO	GRAPHIC REF	PART NUMBER	QTY	PART NAME 1 2 3 4 5 6 (PRODUCT LEVEL)	SEE PAGE
	1	1	**113-9608**	1	PIN (G.E.T.)	
	2	1	**7I-7609**	1	TIP-PENETRATION	
	3	1	**113-9609**	1	RETAINER AS (G.E.T.)	

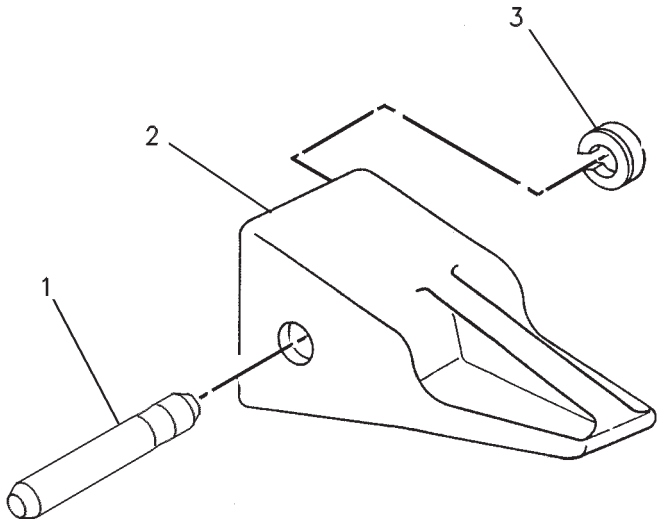

GRAPHIC #1 **<END>** g00246912

WORK TOOLS

195-9185 TIP GP-PENETRATION PLUS–J-600

S/N: RCD1-UP

AN ATTACHMENT

SMCS-6805 **i02955262**

NOTE	REF NO	GRAPHIC REF	PART NUMBER	QTY	PART NAME 1 2 3 4 5 6 (PRODUCT LEVEL)	SEE PAGE
	1	1	**113-9608**	1	PIN (G.E.T.)	
	2	1	**113-9609**	1	RETAINER AS (G.E.T.)	
	3	1	**159-0607**	1	TIP-PENETRATION	

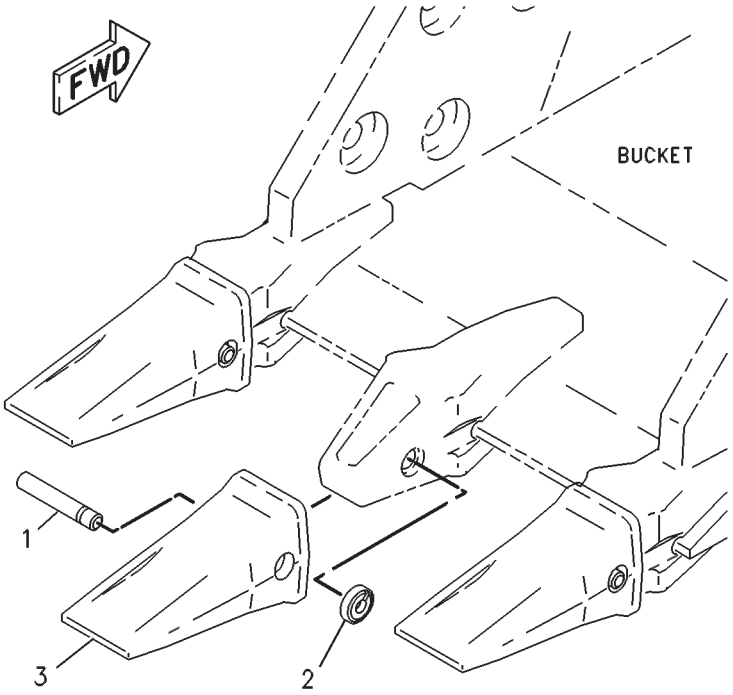

GRAPHIC #1 **<END>** g00117668

WORK TOOLS

195-9186 TIP GP-PENETRATION PLUS–J-700

S/N: RCD1-UP
AN ATTACHMENT

SMCS-6805 **i02955263**

NOTE	REF NO	GRAPHIC REF	PART NUMBER	QTY	PART NAME 1 2 3 4 5 6 (PRODUCT LEVEL)	SEE PAGE
	1	1	**113-4708**	1	PIN	
	2	1	**171-1709**	1	TIP-PENETRATION (J-700)	
	3	1	**113-4709**	1	RETAINER AS	

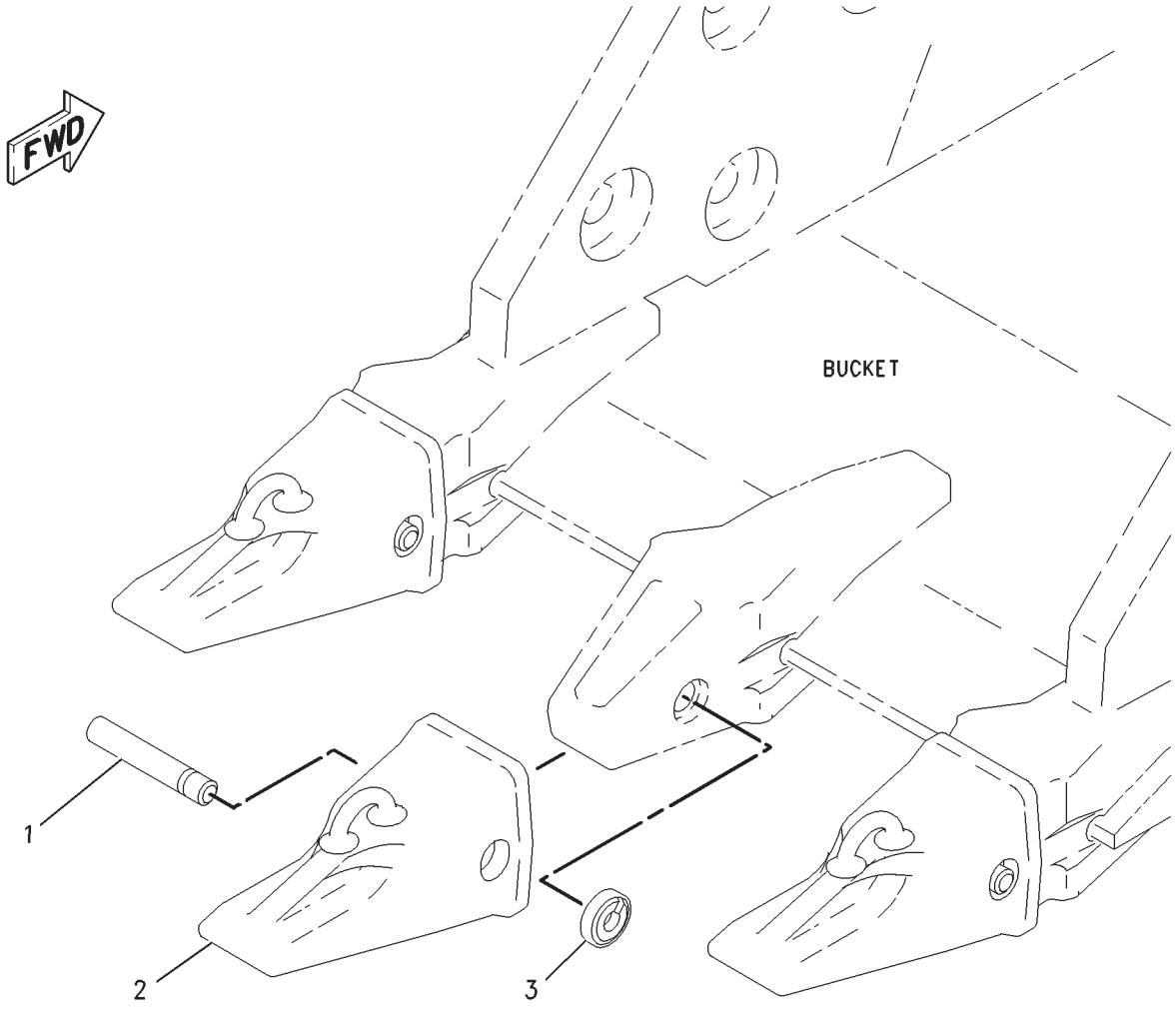

GRAPHIC #1 **<END>** g00800159

OPERATOR STATION

204-8683 AIR CONDITIONER & MOUNTING GP

S/N: RCD1-UP
PART OF 204-8690 AIR CONDITIONER AR
TYPE 1

SMCS-7320 **i01525767**

NOTE	REF NO	GRAPHIC REF	PART NUMBER	QTY	PART NAME 1 2 3 4 5 6 (PRODUCT LEVEL)	SEE PAGE
M	1	1	**8T-4137**	5	BOLT (M10X1.5X20-MM)	
	2	1	**8T-4121**	5	WASHER-HARD (11X21X2.5-MM THK)	
	3	1	**9M-7959**	2	CLAMP-HOSE	
M	4	1	**9X-2042**	4	SCREW-TRUSS HEAD (M6X1X12-MM)	
	5	1	**128-2030**	1	HARNESS AS-HEATER & AIR COND	
		1	**155-2271**	1	KIT-CONNECTING PLUG (4-PIN)	
	6	1	**147-0387**	1	SENSOR AS-TEMPERATURE (AMBIENT)	
		1	**102-8802**	1	KIT-RECEPTACLE (2-PIN)	
		1	**3E-3365**	1	WEDGE-RECEPTACLE LOCK (2-PIN)	
		1	**8T-8729**	2	PIN-CONNECTOR (16-GA TO 18-GA)	
	7	1	**4N-9170**	1	CLIP	
M	8	1	**7X-2535**	1	BOLT (M6X1X60-MM)	
	9	1	**108-0688**	1	FILTER ELEMENT-CAB AIR	
	10	1	**108-0689**	1	COVER	
	11	1	**108-0691**	2	BOOT	
	12	1	**121-3372**	1	HOSE	
	13	1	**9X-6165**	1	WASHER (6.5X22X2.5-MM THK)	
	14	1	**116-5352**	1	DUCT AS	
	15	1	**121-3374**	1	HOSE	
	16	1	**2S-3440**	2	CLAMP-HOSE	
	17	1	**119-5026**	4	SCREW-PAN HEAD (10-16X0.63-IN)	
	18	1	**150-1388**	1	CONTROL GP-AIR CONDITIONER	
Y	19	1	**152-5085**	1	AIR CONDITIONER GP	987
M	20	1	**8T-4200**	1	BOLT (M8X1.25X16-MM)	
	21	1	**8T-4224**	1	WASHER-HARD (8.8X16X2-MM THK)	
	22	1	**108-0690**	1	DUCT AS	
	23	1	**108-0692**	1	SEAL	

M-METRIC PART
Y-SEPARATE ILLUSTRATION

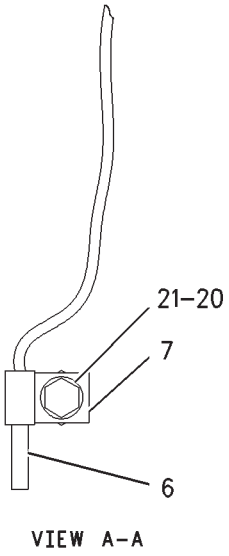

VIEW A–A

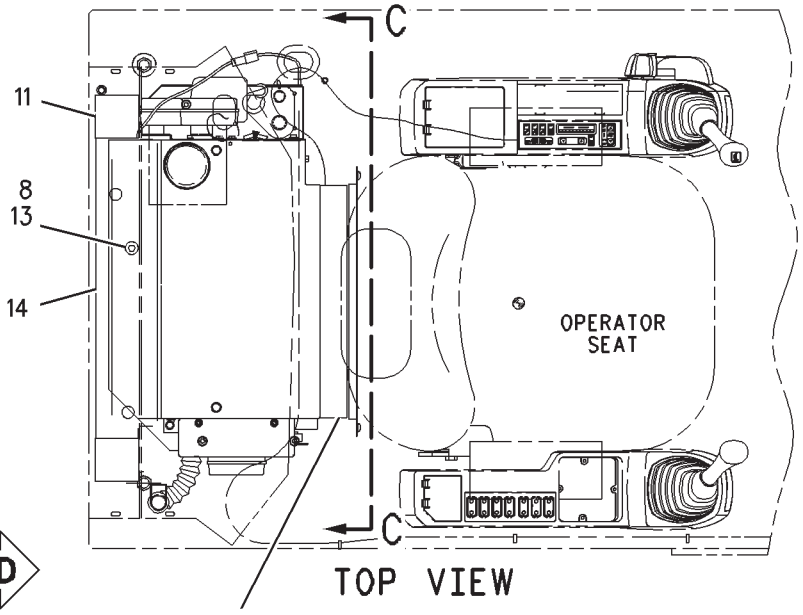

TOP VIEW

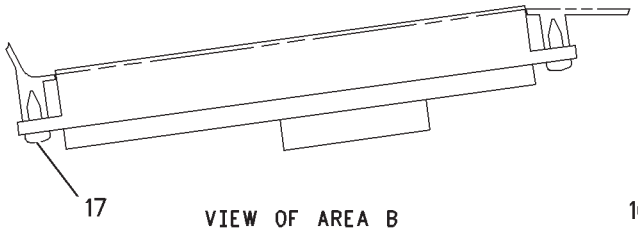

VIEW OF AREA B

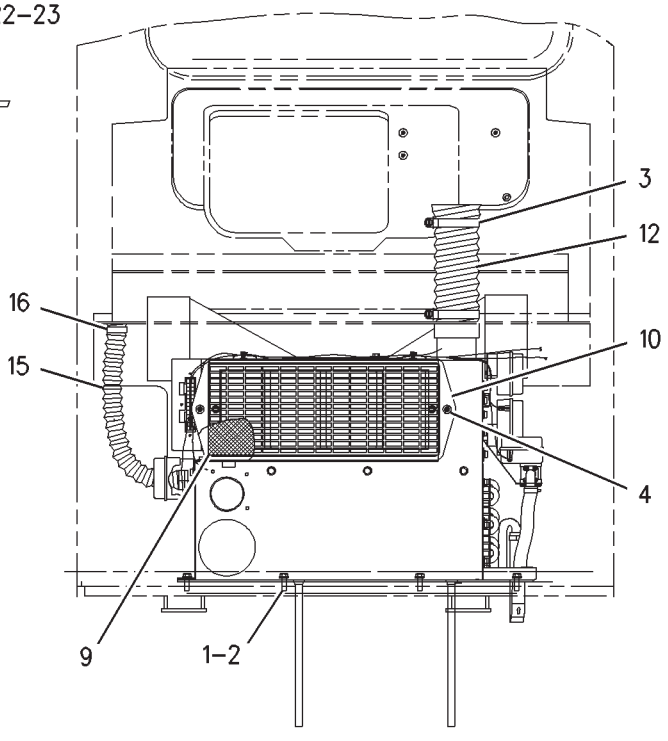

VIEW C-C

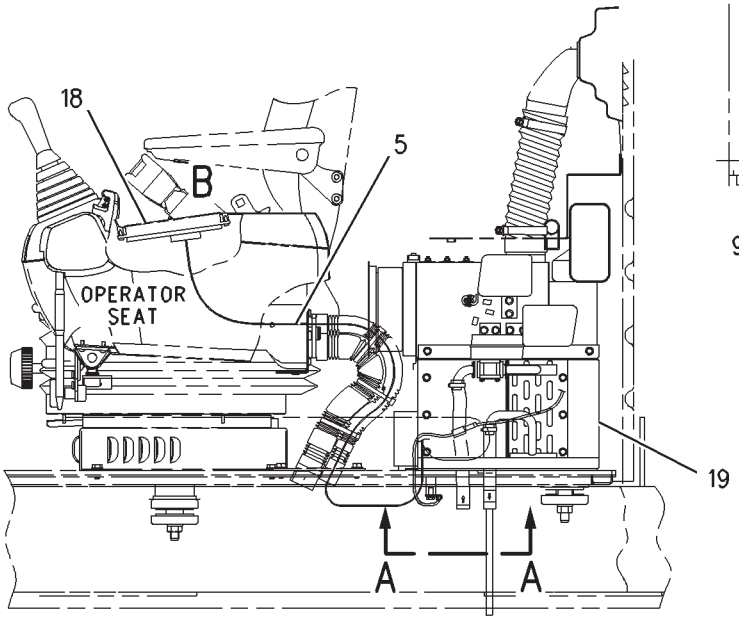

LEFT SIDE VIEW

GRAPHIC #1 **<END>** g00792878

OPERATOR STATION

204-8683 AIR CONDITIONER & MOUNTING GP

S/N: RCD1-UP
PART OF 204-8690 AIR CONDITIONER AR
TYPE 2

SMCS-7320 **i02567658**

NOTE	REF NO	GRAPHIC REF	PART NUMBER	QTY	PART NAME 1 2 3 4 5 6 (PRODUCT LEVEL)	SEE PAGE
M	1	1	**8T-4137**	5	BOLT (M10X1.5X20-MM)	
	2	1	**8T-4121**	5	WASHER-HARD (11X21X2.5-MM THK)	
	3	1	**9M-7959**	2	CLAMP-HOSE	
M	4	1	**9X-2042**	4	SCREW-TRUSS HEAD (M6X1X12-MM)	
	5	1	**128-2030**	1	HARNESS AS-HEATER & AIR COND	
		1	**155-2271**	1	KIT-CONNECTING PLUG (4-PIN)	
					(INCLUDES PLUG AS, WEDGE & INTERFACE SEAL)	
	6	1	**147-0387**	1	SENSOR AS-TEMPERATURE (AMBIENT)	
		1	**102-8802**	1	KIT-RECEPTACLE (2-PIN)	
					(INCUDES RECEPTACLE AS & WEDGE)	
		1	**186-3735**	2	PIN-CONNECTOR (16-GA TO 18-GA)	
	7	1	**4N-9170**	1	CLIP	
M	8	1	**7X-2535**	1	BOLT (M6X1X60-MM)	
	9	1	**108-0688**	1	FILTER ELEMENT-CAB AIR	
	10	1	**108-0689**	1	COVER	
	11	1	**108-0691**	2	BOOT	
	12	1	**121-3372**	1	HOSE	
	13	1	**9X-6165**	1	WASHER (6.5X22X2.5-MM THK)	
	14	1	**116-5352**	1	DUCT AS	
	15	1	**121-3374**	1	HOSE	
	16	1	**2S-3440**	2	CLAMP-HOSE	
	17	1	**119-5026**	4	SCREW-PAN HEAD (10-16X0.63-IN)	
C	18	1	**168-4605**	1	PANEL GP-CONTROL (AIR CONDITIONER)	
		1	**217-2317**	1	CONTROL GP-HEAT & AIR COND (TEMPERATURE CONTROL)	
		1	**217-2318**	2	CLIP	
CY	19	1	**220-0171**	1	AIR CONDITIONER GP	990
M	20	1	**8T-4200**	1	BOLT (M8X1.25X16-MM)	
	21	1	**8T-4224**	1	WASHER-HARD (8.8X16X2-MM THK)	
	22	1	**108-0690**	1	DUCT AS	
	23	1	**108-0692**	1	SEAL	
C	24	1	**217-2320**	2	CLIP	

C-CHANGE FROM PREVIOUS TYPE
M-METRIC PART
Y-SEPARATE ILLUSTRATION

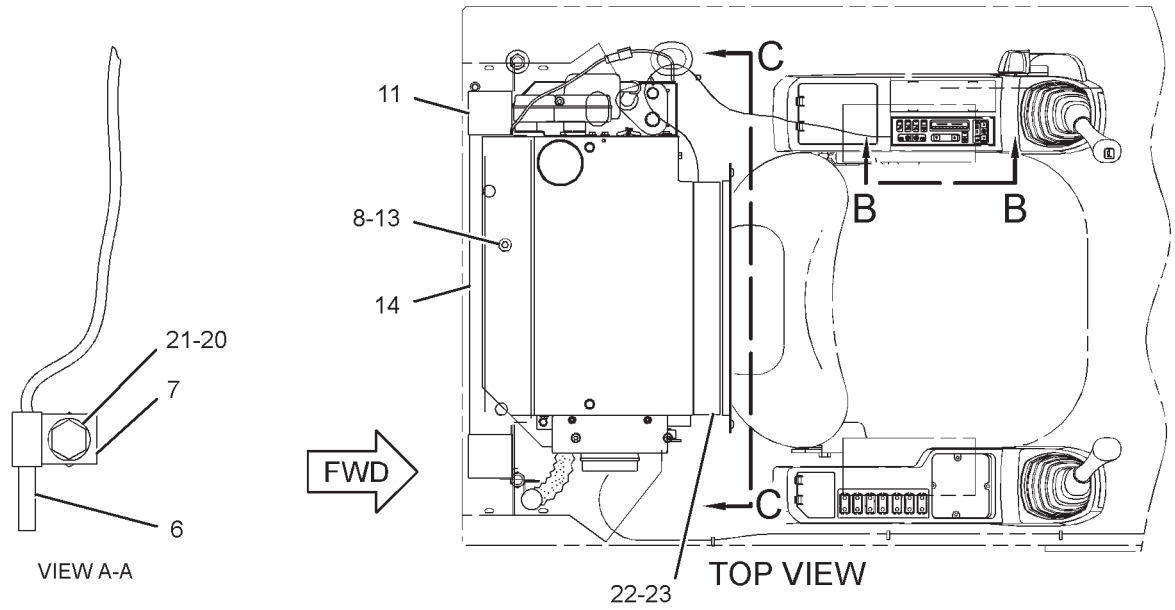

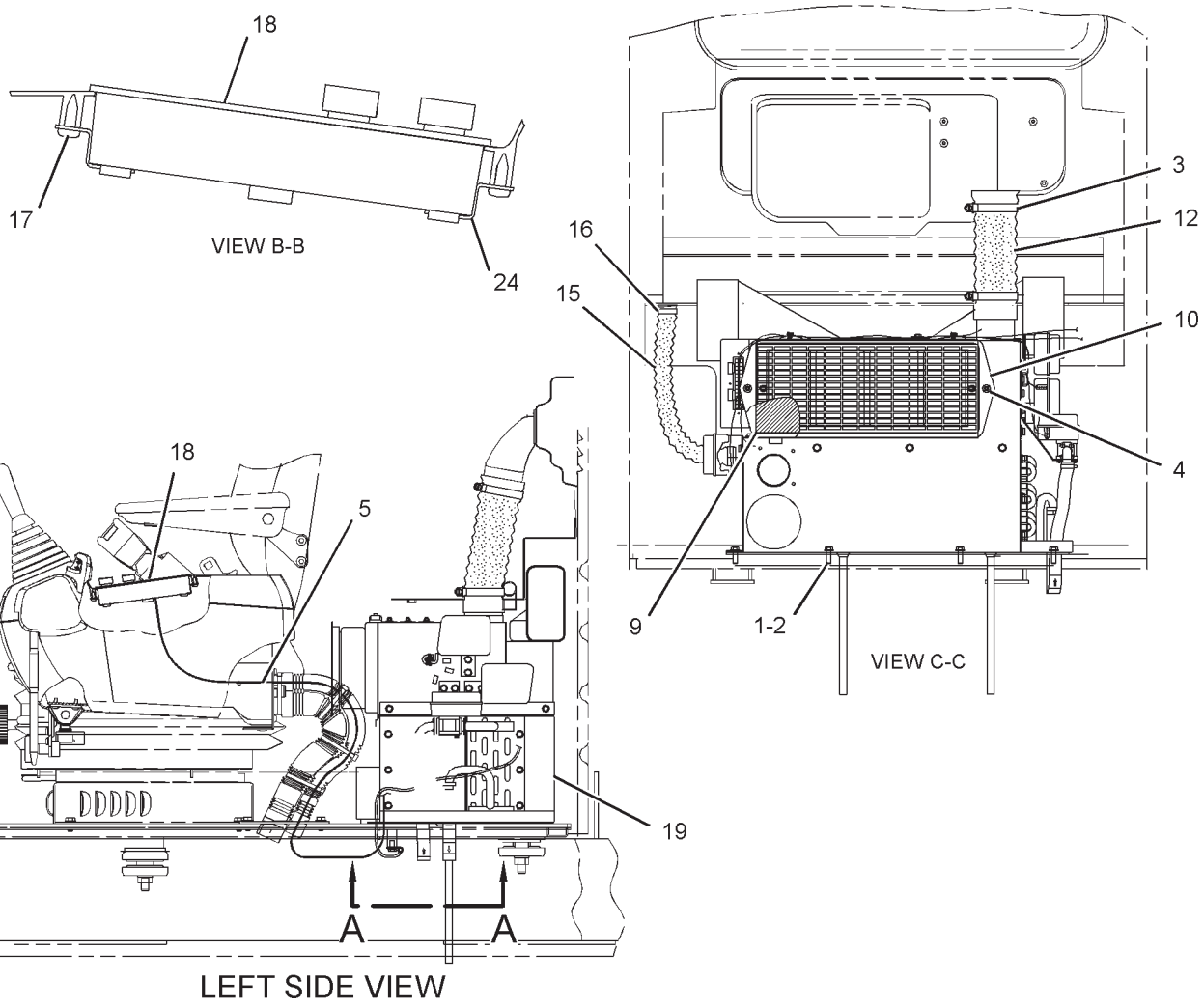

GRAPHIC #1 **<END>** g01285673

OPERATOR STATION

204-8690 AIR CONDITIONER AR

S/N: RCD1-UP

PART OF 222-3445 OPERATOR AR

SMCS-7320 **i01525494**

NOTE	PART NUMBER	QTY	PART NAME 1 2 3 4 5 6 (PRODUCT LEVEL)	SEE PAGE
Y	*204-8683*	1	AIR CONDITIONER & MOUNTING GP	982
Y	*192-2939*	1	CONDENSER & MTG GP-REFRIGERANT	1003
Y	*124-0254*	1	DUCT GP-CAB AIR	1027
Y	*159-9912*	1	DUCT GP-DEFROSTER	1028
Y	*196-3810*	1	LINES GP-AIR CONDITIONER	1040
Y	*196-3811*	1	LINES GP-HEATER	1043
	110-6393	1	PLATE-INSTRUCTION (AIR CONDITIONER)	

Y-SEPARATE ILLUSTRATION

<END>

OPERATOR STATION

152-5085 AIR CONDITIONER GP

S/N: RCD1-UP

PART OF 204-8683 AIR CONDITIONER & MOUNTING GP

SMCS-7320 **i01880109**

NOTE	REF NO	GRAPHIC REF	PART NUMBER	QTY	PART NAME 1 2 3 4 5 6 (PRODUCT LEVEL)	SEE PAGE
	1	1	**2H-3922**	1	LOCKWASHER	
	2	1	**3S-2093**	9	STRAP-CABLE	
	3	1	**4V-5091**	1	GROMMET	
	4	1	**5K-3546**	1	PLUG-BUTTON	
	5	1	**7F-2050**	1	LOCKNUT (3/4-16-THD)	
	6	1	**8C-3756**	1	FILM-IDENTIFICATION	
M	7	1	**8T-0337**	17	SCREW-MACHINE (M4X0.7X12-MM)	
M	8	1	**8T-4171**	1	BOLT (M6X1X12-MM)	
	9	1	**8T-4205**	27	WASHER-HARD (7.2X14.5X2-MM THK)	
	10	1	**9X-2185**	3	SCREW (8-15X0.44-IN)	
	11	1	**9X-8117**	2	TUBE AS	
	12	1	**100-3426**	2	WHEEL AS-BLOWER	
M	13	1	**129-3178**	1	LOCKNUT (M6X1-THD)	
	14	1	**220-1827**	3	ACTUATOR	
	15	1	**131-8438**	1	CASE AS	
	16	1	**131-8439**	1	CASE AS	
	17	1	**131-8440**	1	HOUSING AS	
	18	1	**131-8442**	2	PLATE-ORIFICE	
	19	1	**131-8443**	1	CASE AS	
	20	1	**131-8444**	1	DOOR	
	21	1	**131-8445**	1	DOOR	
	22	1	**131-8446**	1	DOOR	
	23	1	**132-4910**	1	COIL AS-EVAPORATOR	
	24	1	**133-7154**	1	BRACKET AS	
	25	1	**133-7156**	1	GASKET	
	26	1	**133-7157**	1	GASKET	
	27	1	**133-7158**	1	GASKET	
	28	1	**133-7159**	1	GASKET	
	29	1	**133-7404**	1	GASKET	
	30	1	**133-8714**	1	GROMMET	
	31	1	**133-8715**	2	GROMMET	
	32	1	**133-9014**	1	SENSOR-TEMPERATURE (EVAPORATOR)	
	33	1	**136-6505**	2	INSULATION	
	34	1	**141-3024**	1	COIL AS-HEATER	
	35	1	**141-3026**	1	BRACKET	
Y	36	1	**150-1387**	1	CONTROL GP-AIR & TEMPERATURE	1011
	37	1	**150-1390**	1	CONTROL-SPEED	
	38	1	**155-4923**	1	BRACKET	
	39	1	**155-4925**	1	BRACKET	
	40	1	**156-8315**	4	SCREW-PAN HEAD (10-16X0.5-IN)	
	41	1	**174-1486**	1	MOTOR AS-BLOWER (24-VOLT, A/C, HEATER)	
		1	**9W-0852**	2	PIN-CONNECTOR (14-GA)	
		1	**102-8802**	1	KIT-RECEPTACLE (2-PIN)	
					(INCLUDES RECEPTACLE AS & WEDGE)	
	42	1	**206-5155**	1	VALVE AS-WATER	
		1	**4B-4863**	4	WASHER (4.7X11X1.2-MM THK)	
		1	**4M-6582**	1	SEAL-O-RING	
		1	**124-0312**	4	SCREW-PAN HEAD (8-16X0.32-IN)	
	43	1	**159-7591**	2	PLATE	
	44	1	**4B-4274**	18	WASHER (5.5X13X1.2-MM THK)	
	45	1	**4M-6582**	1	SEAL-O-RING	
M	46	1	**5C-9553**	4	BOLT (M6X1X16-MM)	
M	47	1	**6V-7357**	4	BOLT (M6X1X25-MM)	
M	48	1	**8T-4138**	16	BOLT (M6X1X20-MM)	
BD	49	1	**5P-7070**		INSULATION-STRIP	
BD	50	1	**5P-0798**		SEAL	

152-5085 **AIR CONDITIONER GP** *(contd.)* **i01880109**

NOTE	REF NO	GRAPHIC REF	PART NUMBER	QTY	PART NAME 1 2 3 4 5 6 (PRODUCT LEVEL)	SEE PAGE
M	51	1	**5C-2874**	1	NUT (M5X0.8-THD)	
M	52	1	**8T-0288**	1	BOLT (M5X0.8X12-MM)	
	53	1	**096-0192**	2	LOCKWASHER	
	54	1	**124-0312**	4	SCREW-PAN HEAD (8-16X0.32-IN)	
	55	1	**4B-4863**	4	WASHER (4.7X11X1.2-MM THK)	
D	56	1	**5P-5942**		SEAL (2M)	

B-USE AS REQUIRED
D-ORDER BY THE METER
M-METRIC PART
Y-SEPARATE ILLUSTRATION

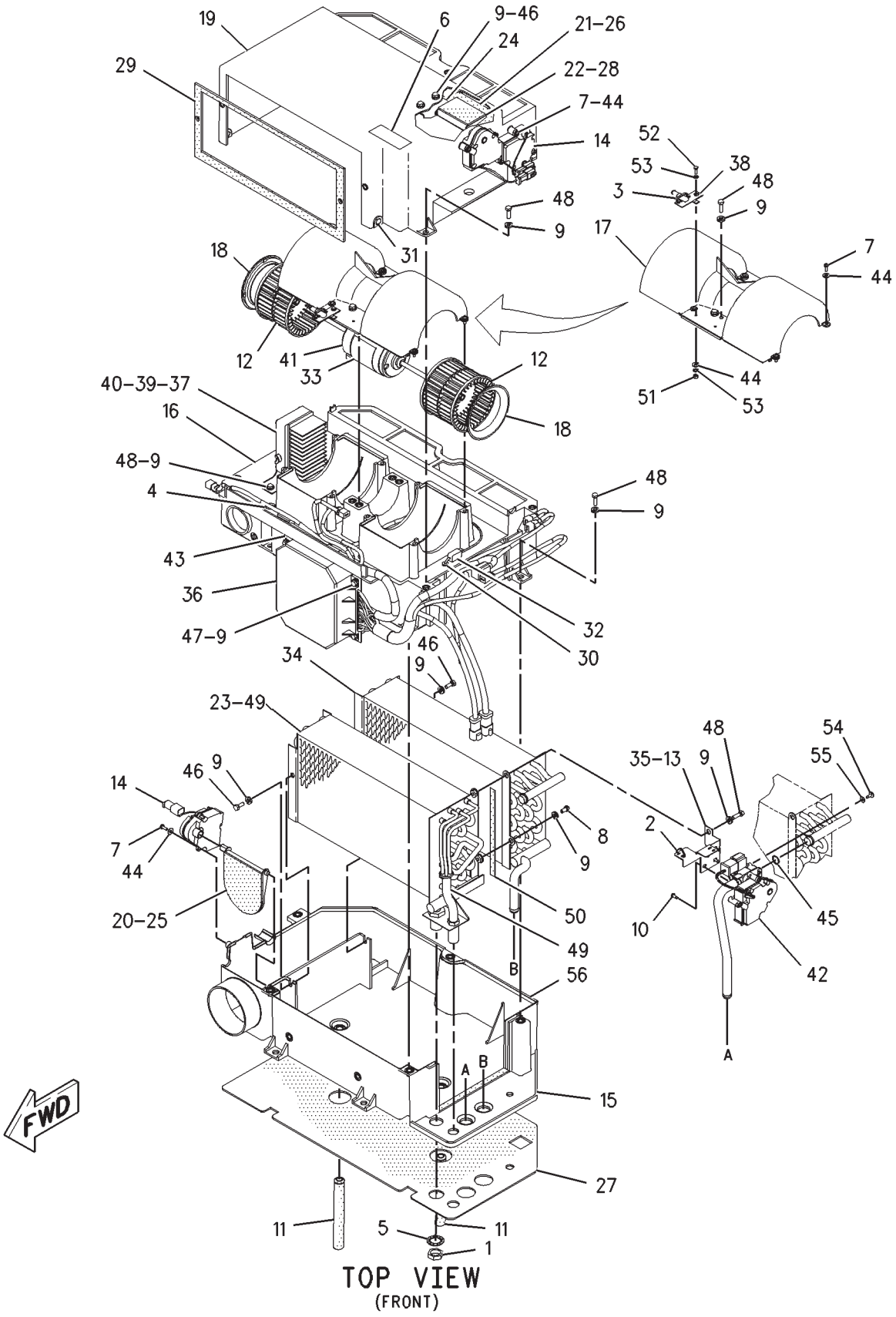

GRAPHIC #1 **<END>** g00964617

OPERATOR STATION

220-0171 AIR CONDITIONER GP

S/N: RCD1-UP

PART OF 204-8683 AIR CONDITIONER & MOUNTING GP

SMCS-7320 **i02181516**

NOTE	REF NO	GRAPHIC REF	PART NUMBER	QTY	PART NAME 1 2 3 4 5 6 (PRODUCT LEVEL)	SEE PAGE
	1	1,2	**3S-2093**	9	STRAP-CABLE	
	2	1	**7F-2050**	1	LOCKNUT (3/4-16-THD)	
	3	1	**8C-3756**	1	FILM-IDENTIFICATION (AIR CONDITIONER)	
	4	2	**9X-2185**	3	SCREW (8-15X0.44-IN)	
	5	1	**9X-8117**	2	TUBE AS	
	6	2	**100-3426**	2	WHEEL AS-BLOWER	
	7	1	**131-8438**	1	CASE AS	
	8	1	**131-8439**	1	CASE AS	
	9	2	**131-8440**	1	HOUSING AS	
	10	2	**131-8442**	2	PLATE-ORIFICE	
	11	1	**131-8443**	1	CASE AS	
	12	2	**131-8444**	1	DOOR	
	13	2	**131-8445**	1	DOOR	
	14	1	**131-8446**	1	DOOR	
	15	1	**132-4910**	1	COIL AS-EVAPORATOR	
	16	1	**133-7154**	1	BRACKET AS	
	17	2	**133-7156**	1	GASKET	
	18	2	**133-7157**	1	GASKET	
	19	1	**133-7158**	1	GASKET	
	20	1	**133-7159**	1	GASKET	
	21	1	**133-7404**	1	GASKET	
	22	2	**133-8714**	1	GROMMET	
	23	1	**133-8715**	2	GROMMET	
	24	2	**133-9014**	1	SENSOR-TEMPERATURE (A/C)	
	25	2	**136-6505**	2	INSULATION	
	26	1	**141-3024**	1	COIL AS-HEATER	
	27	2	**141-3026**	1	BRACKET	
	28	2	**155-4923**	1	BRACKET	
	29	1	**174-1486**	1	MOTOR AS-BLOWER (24-VOLT, A/C, HEATER)	
		1	**3E-3365**	1	WEDGE-RECEPTACLE LOCK (2-PIN)	
		1	**9W-0852**	2	PIN-CONNECTOR (14-GA)	
		1	**102-8802**	1	KIT-RECEPTACLE (2-PIN)	
					(INCLUDES RECEPTACLE AS & WEDGE)	
	30	1,2	**177-6727**	3	ACTUATOR	
	31	2	**204-3560**	1	CONTROL GP-AIR & TEMPERATURE	
		2	**102-8805**	1	KIT-RECEPTACLE (6-PIN)	
					(INCLUDES RECEPTACLE AS & WEDGE)	
		2	**147-0387**	3	SENSOR AS-TEMPERATURE (AMBIENT) (AIR & TEMPERATURE CONTROL)	
		2	**102-8802**	1	KIT-RECEPTACLE (2-PIN)	
					(INCLUDES RECEPTACLE AS & WEDGE)	
		2	**155-2270**	5	KIT-CONNECTING PLUG (2-PIN)	
		2	**155-2274**	1	KIT-CONNECTING PLUG (6-PIN)	
					(EACH PLUG KIT INCLUDES PLUG AS, WEDGE & INTERFACE SEAL)	
	32	2	**217-2941**	1	BRACKET AS	
	33	1	**220-1824**	1	VALVE AS-WATER (WITH MOTOR)	
		1	**4B-4863**	4	WASHER (4.7X11X1.2-MM THK)	
		1	**4M-6582**	1	SEAL-O-RING	
		1	**124-0312**	4	SCREW-PAN HEAD (8-16X0.32-IN)	
M	34	2	**129-3178**	1	LOCKNUT (M6X1-THD)	
	35	1	**2H-3922**	1	LOCKWASHER	
	36	1,2	**4B-4274**	18	WASHER (5.5X13X1.2-MM THK)	
	37	2	**4M-6582**	1	SEAL-O-RING	
	38	2	**4V-5091**	2	GROMMET	
M	39	1,2	**5C-9553**	4	BOLT (M6X1X16-MM)	

220-0171 AIR CONDITIONER GP *(contd.)* i02181516

NOTE	REF NO	GRAPHIC REF	PART NUMBER	QTY	PART NAME 1 2 3 4 5 6 (PRODUCT LEVEL)	SEE PAGE
	40	2	**5K-3546**	1	PLUG-BUTTON	
M	41	1	**6V-7357**	4	BOLT (M6X1X25-MM)	
M	42	2	**8C-8457**	2	SCREW-MACHINE (M5X0.8X14-MM)	
M	43	1,2	**8T-0337**	17	SCREW-MACHINE (M4X0.7X12-MM)	
M	44	1,2	**8T-4138**	16	BOLT (M6X1X20-MM)	
M	45	1	**8T-4171**	1	BOLT (M6X1X12-MM)	
	46	1,2	**8T-4205**	27	WASHER-HARD (7.2X14.5X2-MM THK)	
BD	47	1	**5P-7070**		INSULATION-STRIP	
BD	48	1	**5P-5637**		SEAL	
	49	2	**096-0192**	2	LOCKWASHER	
	50	2	**124-0312**	4	SCREW-PAN HEAD (8-16X0.32-IN)	
	51	2	**4B-4863**	4	WASHER (4.7X11X1.2-MM THK)	
M	52	2	**5C-2874**	1	NUT (M5X0.8-THD)	
M	53	2	**8T-0288**	1	BOLT (M5X0.8X12-MM)	
BD	54	1,2	**5P-5942**	2	SEAL	

B-USE AS REQUIRED
D-ORDER BY THE METER
M-METRIC PART

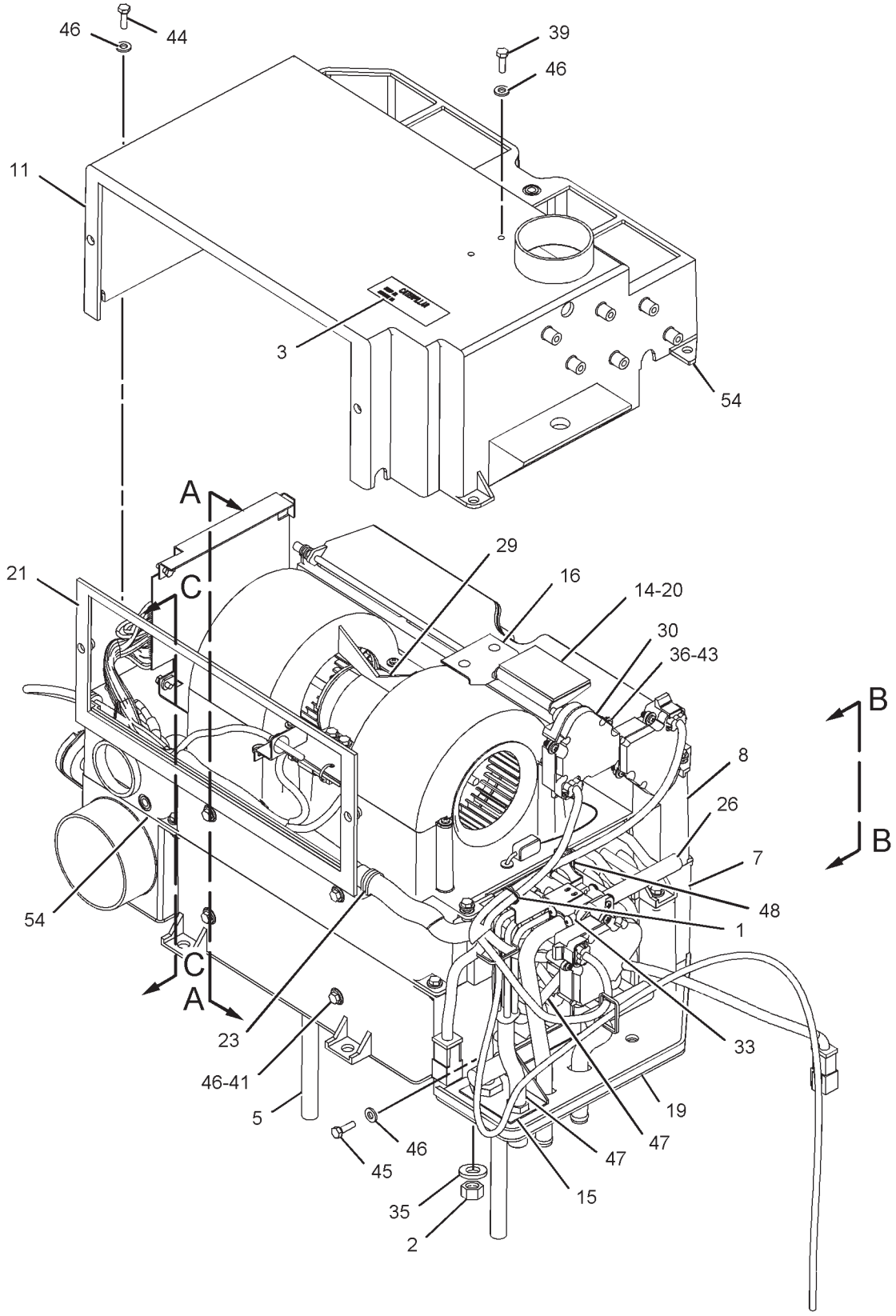

GRAPHIC #1 g01115995

220-0171 AIR CONDITIONER GP *(contd.)* i02181516

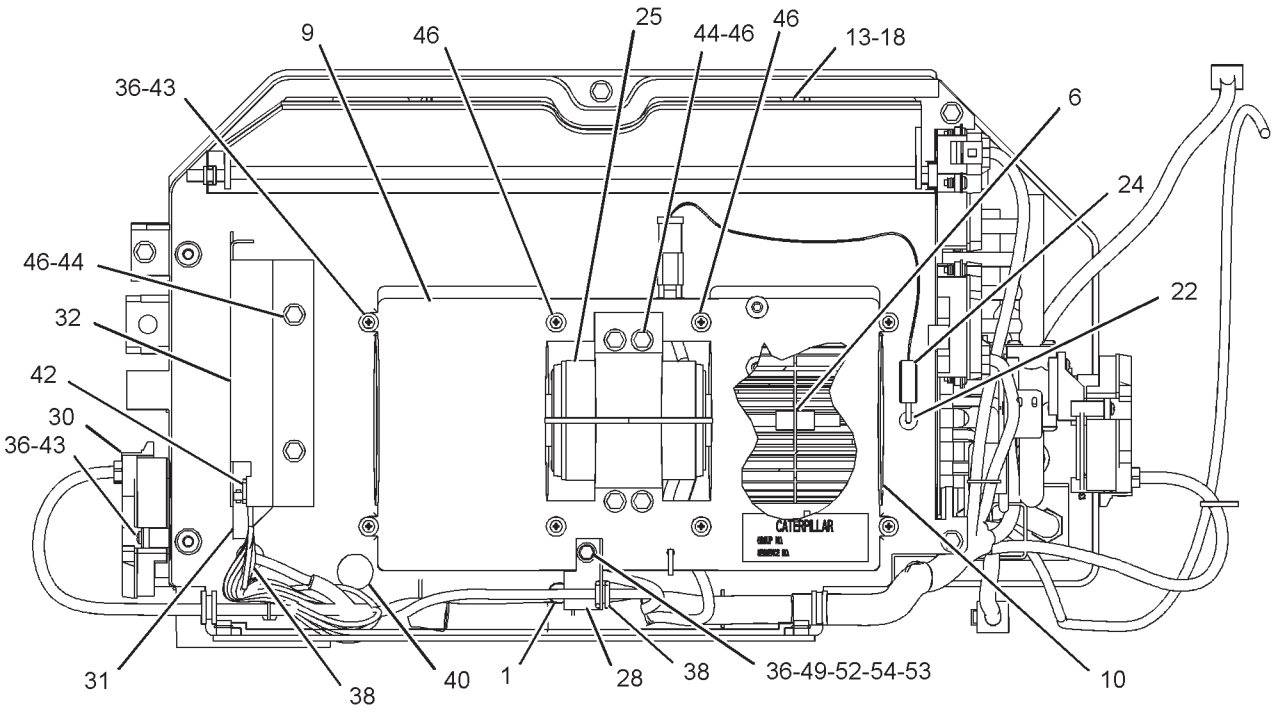

TOP VIEW
(CASE REMOVED)

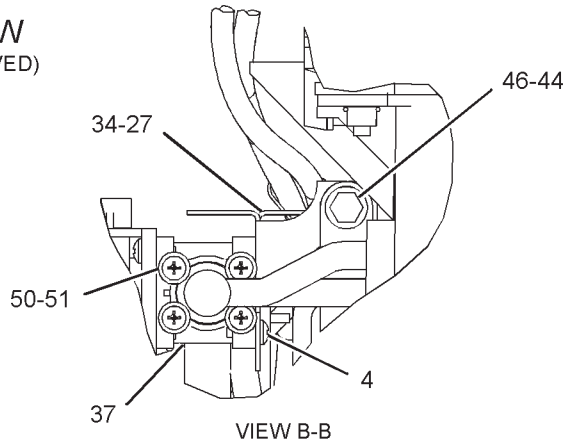

VIEW B-B

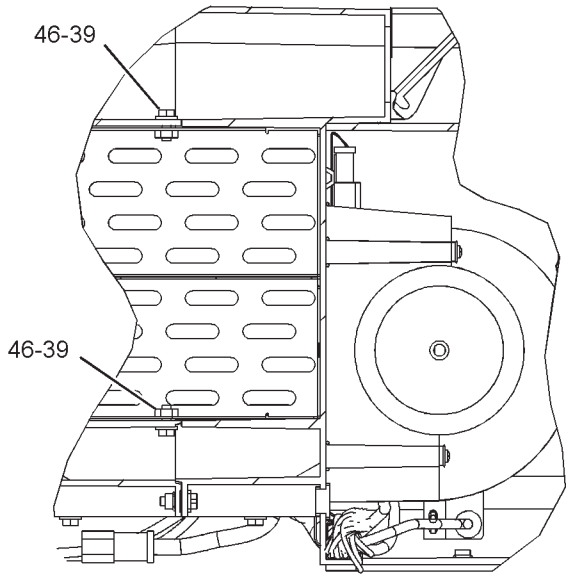

SECTION A-A

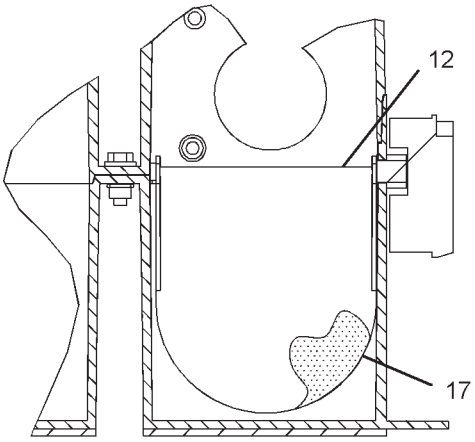

SECTION C-C

GRAPHIC #2 **<END>** g01115996

OPERATOR STATION

159-4540 BOX AS-STORAGE

S/N: RCD1-UP

PART OF 222-5138 CAB GP

SMCS-7268 **i01515264**

NOTE	REF NO	GRAPHIC REF	PART NUMBER	QTY	PART NAME 1 2 3 4 5 6 (PRODUCT LEVEL)	SEE PAGE
	1	1	**159-8300**	1	BOX AS	
	2	1	**159-8301**	1	LINER	
	3	1	**123-5047**	1	SEAL	
	4	1	**123-5046**	1	SEAL	
	5	1	**123-5045**	2	GROMMET	

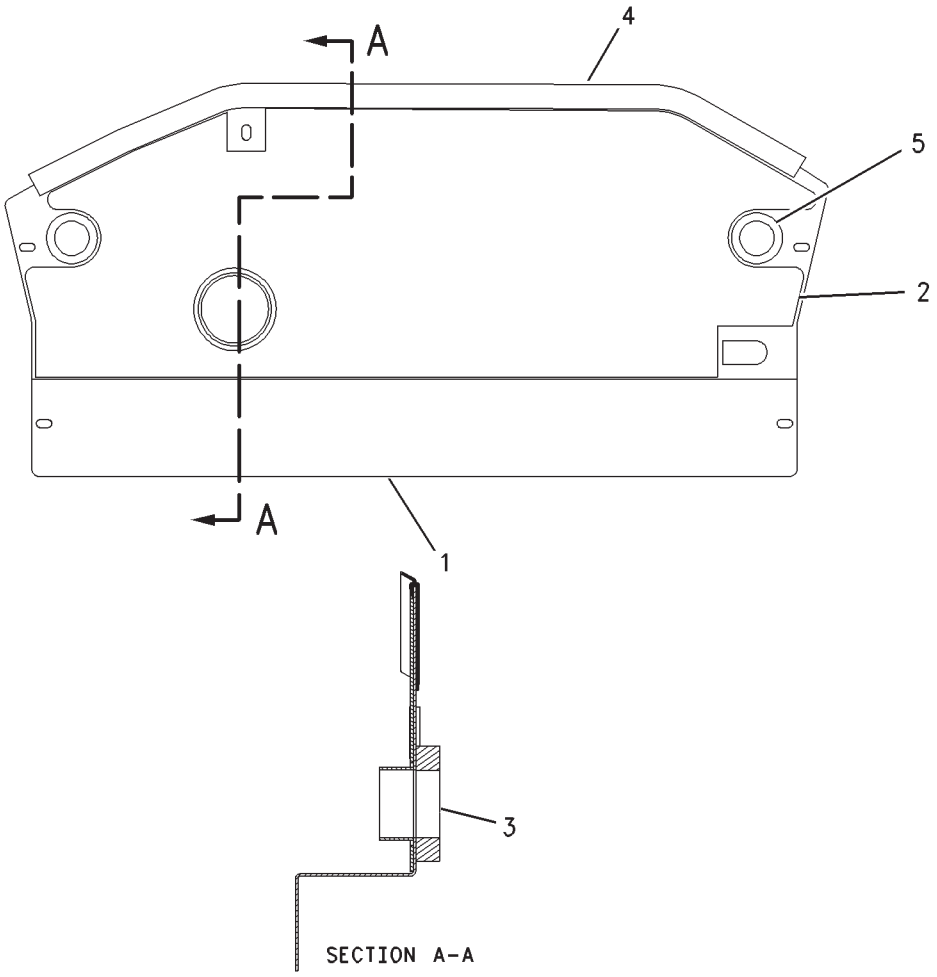

GRAPHIC #1 **<END>** g00786884

OPERATOR STATION

153-2915 CAB GP

S/N: RCD1-UP

PART OF 222-5138 CAB GP

SMCS-7301, 7325 **i01037153**

NOTE	PART NUMBER	QTY	PART NAME 1 2 3 4 5 6 (PRODUCT LEVEL)	SEE PAGE
Y	*153-2917*	1	CAB GP	996
Y	**153-2913**	1	COVER GP-WIPER MOTOR	1023
Y	*153-2916*	1	DOOR GP-CAB	1025
Y	*6C-8619*	1	LIGHTING GP-CAB	241
Y	*139-4003*	1	MONITOR & MTG GP-OPERATOR	1046
Y	*6C-8620*	1	VISOR GP-CAB	1067
Y	**122-4822**	1	WINDOW GP-FRONT	1072
Y	*153-2914*	1	WIRING GP-CAB	292
			AVAILABLE REPAIR KIT(S):	
	112-3952	1	KIT-SLOW BONDING	
	112-3953	1	KIT-SPEEDY BONDING	

Y-SEPARATE ILLUSTRATION

<END>

OPERATOR STATION

153-2917 CAB GP

S/N: RCD1-UP

PART OF 153-2915 CAB GP

SMCS-7301, 7325 **i01859524**

NOTE	REF NO	GRAPHIC REF	PART NUMBER	QTY	PART NAME 1 2 3 4 5 6 (PRODUCT LEVEL)	SEE PAGE
	1	1	**155-1166**	1	CAB AS	
	2	1	**155-1201**	1	DOOR	
M	3	1	**5C-9553**	10	BOLT (M6X1X16-MM)	
	4	1,2	**6C-9130**	17	WASHER (6X18X1-MM THK)	
	5	1	**6W-8906**	1	LATCH AS	
	6	1	**6C-9224**	2	SCREW	
	7	1	**108-8839**	1	SUPPORT-FILTER	
	8	1	**6C-9242**	1	SEAL	
	9	1	**6C-9226**	1	FILTER ELEMENT-CAB AIR	
	10	1	**162-2386**	1	GLASS	
	11	1	**162-2385**	1	GLASS	
	12	1	**132-5347**	1	GLASS	
	13	1	**162-2382**	1	GLASS	
B	14	1	**6C-4000**	4	SHIM (1-MM THK)	
	15	1	**6C-8970**	1	SEAL	
	16	1	**9X-2446**	1	FILM-IDENTIFICATION (CATERPILLAR)	
	17	1	**6C-8972**	1	HOOK	
	18	1,2	**6C-9087**	12	WASHER	
	19	1	**155-1202**	1	LINER	
	20	1	**155-1203**	1	LINER	
	21	1	**156-5426**	1	LINER	
	22	1	**135-1619**	1	LINER	
	23	1	**6C-8980**	6	NOZZLE-AIR	
M	24	2	**6V-7357**	4	BOLT (M6X1X25-MM)	
	25	1	**109-5008**	1	BUMPER-CONICAL	
	26	1	**133-7514**	1	LINER	
	27	1	**8T-4157**	1	STRIKER AS	
	28	1	**6C-9243**	1	STRIP-LOCKING	
	29	1	**5C-8310**	1	BRACKET-RING	
	30	1	**5C-8311**	1	RING	
	31	1	**8T-6842**	1	FILM-INSTRUCTION (PULL RING, ALTERNATE EXIT)	
M	32	1	**101-7396**	2	BOLT-SOCKET HEAD (M10X1.5X50-MM)	
	33	2	**6C-9252**	1	BOX-LOCK	
	34	2	**8Y-6380**	1	LATCH AS	
	35	2	**6C-8986**	2	CLIP-AXLE	
M	36	2	**8T-4189**	4	BOLT (M8X1.25X20-MM)	
	37	1	**164-4344**	8	PLUG	
	38	2	**176-6425**	1	COVER	
M	39	2	**180-1718**	7	NUT (M6X1-THD)	
M	40	2	**9X-2044**	7	SCREW-TRUSS HEAD (M6X1X16-MM)	
	41	2	**119-9425**	1	GUIDE	
M	42	2	**8T-4181**	2	BOLT (M6X1X20-MM)	
	43	2	**176-6421**	1	LEVER	
	44	1	**6C-8996**	11	CAP	
	45	1	**119-0872**	1	HANDLE AS	
	46	1	**6C-8998**	3	CAP	
	47	1	**6C-9002**	1	PLATE	
	48	1	**6C-9003**	2	STOP	
M	49	2	**117-5640**	3	NUT (M6X1-THD)	
	50	1	**6C-9181**	1	COVER	
	51	2	**095-0827**	6	LOCKWASHER	
	52	1	**5P-6872**	1	MIRROR AS	
	53	1	**6C-9132**	2	SCREW	
	54	1	**6C-9001**	1	CLAMP	
	55	1	**9X-8257**	4	WASHER (17.5X30X3.5-MM THK)	
	56	1	**6C-9241**	4	BOLT	

OPERATOR STATION

153-2917 **CAB GP** *(contd.)* **i01859524**

NOTE	REF NO	GRAPHIC REF	PART NUMBER	QTY	PART NAME 1 2 3 4 5 6 (PRODUCT LEVEL)	SEE PAGE
M	57	1	**6C-9058**	8	SCREW (M6X1X12-MM)	
M	58	1	**5C-7261**	8	NUT (M8X1.25-THD)	
	59	1	**6C-9238**	1	NUT	
	60	1,2	**6C-9078**	16	WASHER	
	61	1	**109-5005**	1	INSULATION	
	62	1	**176-6415**	1	HANDLE	
	63	1	**6C-9000**	1	SUPPORT	
	64	2	**125-8619**	2	SCREW	
	65	1	**125-9158**	1	SEAL	
	66	1	**4E-1384**	1	BUMPER-CONICAL	
	67	1	**176-6419**	1	SUPPORT-LINER	
	68	1	**156-5407**	1	SUPPORT-LINER	
	69	1	**6C-9232**	9	RIVET	
	70	1	**6C-9235**	1	PLATE-IDENTIFICATION (CAB)	
	71	1	**140-9109**	2	SUPPORT-GLASS	
M	72	1	**6C-8584**	6	SCREW (M6X1X8-MM)	
M	73	2	**4I-5049**	3	NUT-SPACER (M6X1-THD)	
	74	2	**117-5644**	2	BOOT	
M	75	2	**117-5645**	3	BOLT (M6X1X20-MM)	
	76	1	**6C-8587**	2	SEAL	
	77	1	**6C-8588**	2	STOP	
	78	1	**136-9453**	1	LINER	
	79	1	**136-9454**	1	LINER	
M	80	1	**7X-2552**	4	BOLT (M16X2X30-MM)	
	81	1	**120-5737**	4	WASHER (17.5X40X4-MM THK)	
	82	1	**119-8340**	4	SEAL	
	83	1	**6C-3982**	1	GUARD	
	84	1	**109-1267**	4	WASHER	
	85	2	**6C-9089**	3	NUT-CAP	
	86	1	**156-5405**	2	SUPPORT	
	87	1	**108-8227**	2	WASHER (FLAT)	
	88	1	**6C-9092**	2	WASHER	
	89	2	**119-9428**	1	KNOB	
	90	2	**120-4831**	1	WASHER (18.5X32X1.5-MM THK)	
	91	2	**154-4811**	1	SPACER-SPECIAL	
	92	2	**119-8353**	1	SCREW-SPECIAL	
	93	2	**154-4793**	1	SPRING	
	94	2	**176-6422**	1	ROD	
M	95	2	**5C-2890**	1	NUT (M6X1-THD)	
	96	2	**176-6418**	1	STOP	
	97	2	**176-6417**	1	CABLE	
	98	2	**176-6420**	1	SUPPORT	
	99	2	**6C-9119**	2	SCREW (M5X0.8X12-MM)	
	100	2	**180-9417**	2	NUT	
M	101	2	**9X-2480**	2	BOLT (M6X1X45-MM)	
	102	2	**180-9418**	4	CAP	

B-USE AS REQUIRED
M-METRIC PART

153-2917 **CAB GP** *(contd.)* **i01859524**

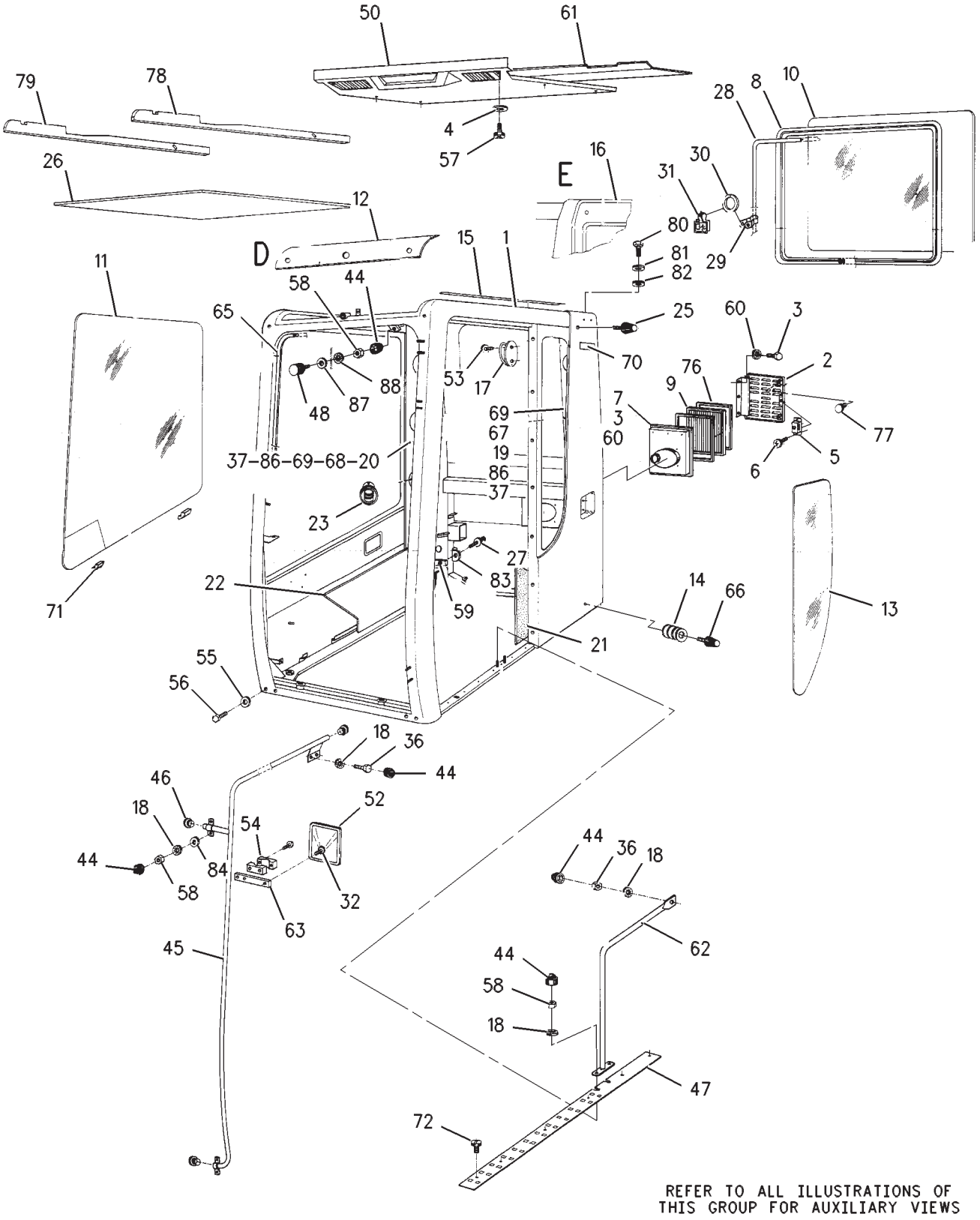

GRAPHIC #1 g00645585

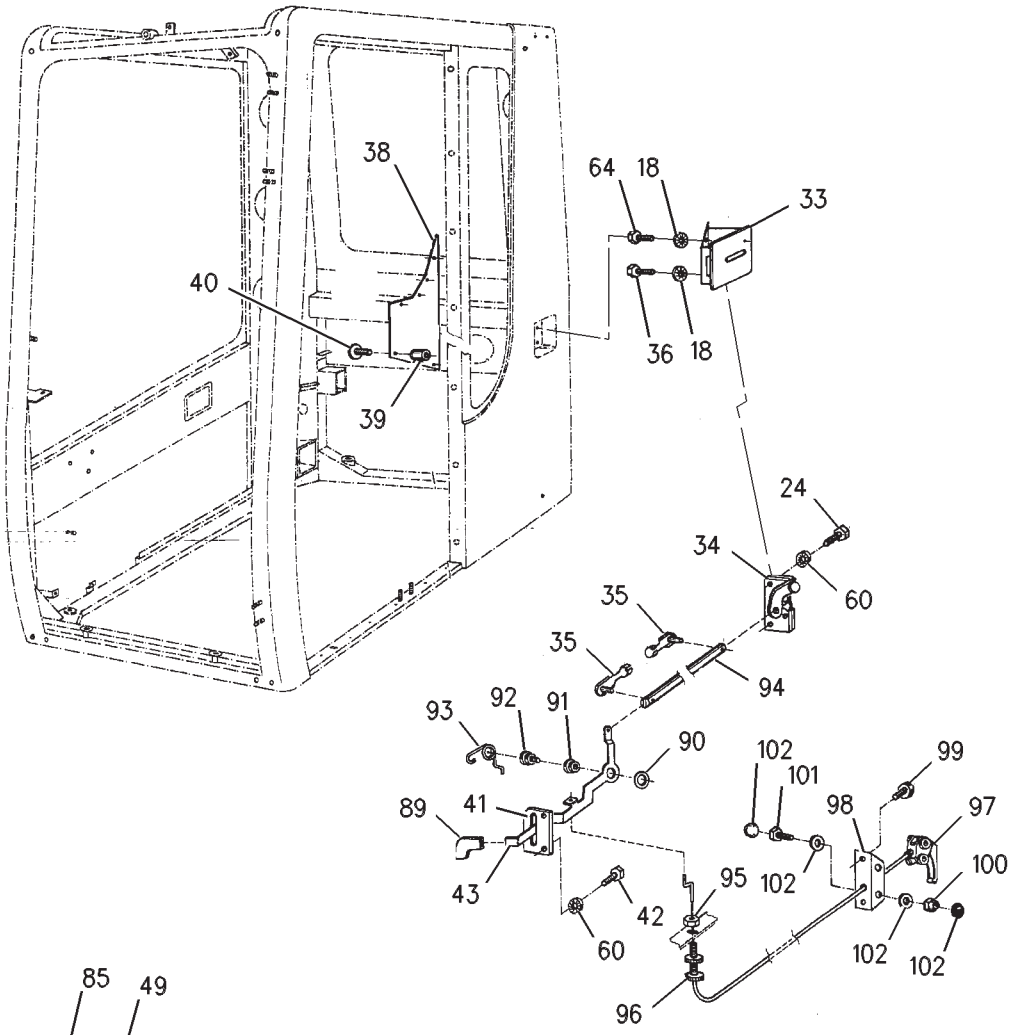

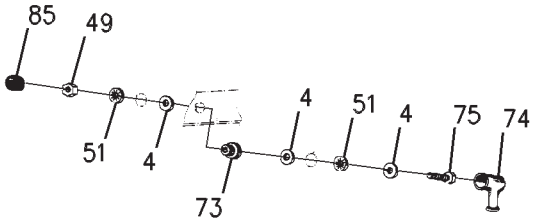

VIEW OF AREA D

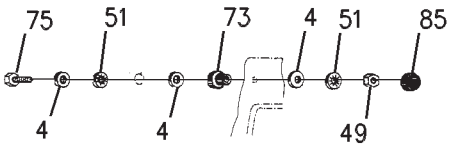

VIEW OF AREA E

GRAPHIC #2 **<END>** g00645587

OPERATOR STATION

222-5138 CAB GP

S/N: RCD1-UP

PART OF 222-3445 OPERATOR AR

SMCS-7301, 7325 **i01724901**

NOTE	PART NUMBER	QTY	PART NAME 1 2 3 4 5 6 (PRODUCT LEVEL)	SEE PAGE
M	**5C-9553**	4	BOLT (M6X1X16-MM)	
M	**7X-2550**	2	BOLT (M12X1.75X110-MM)	
M	**8T-4139**	1	BOLT (M12X1.75X30-MM)	
M	**8T-4189**	2	BOLT (M8X1.25X20-MM)	
M	**8T-5412**	2	BOLT (M12X1.75X140-MM)	
M	**8T-6868**	4	BOLT (M12X1.75X80-MM)	
Y	**159-4540**	1	BOX AS-STORAGE	994
Y	**153-2915**	1	CAB GP	995
	5P-0598	1	CLAMP-HOSE	
	159-4542	1	COVER AS	
	6I-5368	1	RUBBER-CUSHION	
	155-9943	1	COVER GP-CAB	
	159-4985	1	COVER	
	130-4765	1	COVER	
M	**5C-7261**	1	NUT (M8X1.25-THD)	
	110-4358	2	PLATE	
	155-9944	1	PLATE	
M	**9X-2616**	4	SCREW-SOCKET (M8X1.25X16-MM)	
M	**9X-2044**	4	SCREW-TRUSS HEAD (M6X1X16-MM)	
M	**9X-2046**	2	SCREW-TRUSS HEAD (M6X1X35-MM)	
	121-0987	1	SOCKET (12-VOLT, 7-AMPERE)	
	5P-1076	9	WASHER-HARD (13.5X30X4-MM THK)	
	5P-4115	4	WASHER-HARD (7.2X19X2-MM THK)	
	8T-4224	3	WASHER-HARD (8.8X16X2-MM THK)	

M-METRIC PART
Y-SEPARATE ILLUSTRATION

<END>

OPERATOR STATION

163-0872 COMPRESSOR GP-REFRIGERANT

S/N: BLC426-UP

PART OF 201-7337 COMPRESSOR GP-REFRIGERANT

SMCS-1802 **i03098363**

NOTE	REF NO	GRAPHIC REF	PART NUMBER	QTY	PART NAME 1 2 3 4 5 6 (PRODUCT LEVEL)	SEE PAGE
	1	1	**102-8802**	1	KIT-RECEPTACLE (2-PIN)	
					(INCLUDES RECEPTACLE AS & WEDGE)	
	2	1	**314-4018**	1	VALVE AS (REFRIGERANT COMPRESSOR)	
	3	1	**7T-4532**	1	PLUG AS	
	4	1	**9X-7385**	2	SEAL-O-RING	
B	5	1	**4C-2959**		OIL-AIR CONDITIONER	
	6	1	**9X-3401**	2	PIN-CONNECTOR (16-GA TO 18-GA)	

B-USE AS REQUIRED

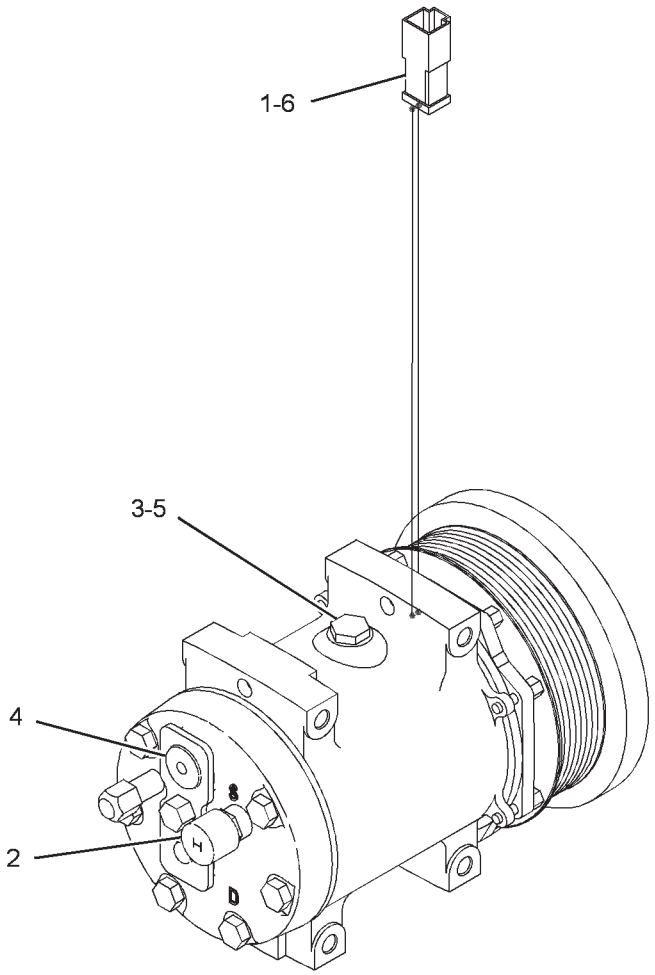

GRAPHIC #1 **<END>** g01441357

OPERATOR STATION

201-7337 COMPRESSOR GP-REFRIGERANT

S/N: BLC426-UP

PART OF 205-5858, 235-4685 ENGINE AR-COMPLETE

SMCS-1802 **i01514357**

NOTE	REF NO	GRAPHIC REF	PART NUMBER	QTY	PART NAME 1 2 3 4 5 6 (PRODUCT LEVEL)	SEE PAGE
Y	1	1	**163-0872**	1	COMPRESSOR GP-REFRIGERANT	1001
	2	1	**201-7338**	1	BRACKET	
	3	1	**0S-1590**	1	BOLT (3/8-16X2-IN)	
	4	1	**0S-1594**	2	BOLT (3/8-16X1-IN)	
	5	1	**142-3383**	1	PLATE	
	6	1	**1A-5183**	2	BOLT (3/8-16X4.75-IN)	
	7	1	**5M-2894**	4	WASHER-HARD (10.2X18.5X2.5-MM THK)	
M	8	1	**7X-2538**	4	BOLT (M8X1.25X100-MM)	
	9	1	**8T-4224**	4	WASHER-HARD (8.8X16X2-MM THK)	
	10	1	**9S-8752**	2	NUT-FULL (3/8-16-THD)	

M-METRIC PART
Y-SEPARATE ILLUSTRATION

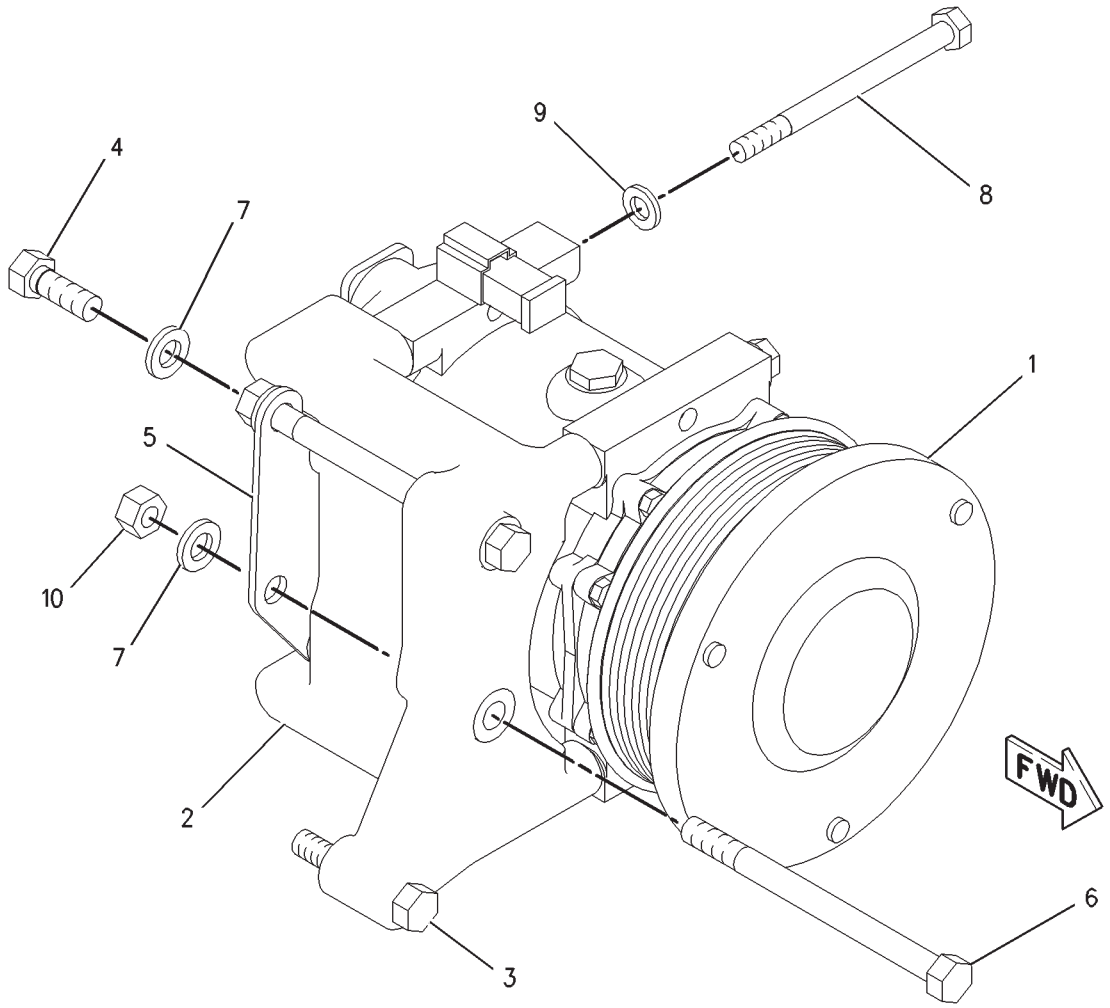

GRAPHIC #1 **<END>** g00786649

OPERATOR STATION

192-2939 CONDENSER & MTG GP-REFRIGERANT

S/N: RCD1-UP

PART OF 204-8690 AIR CONDITIONER AR

SMCS-1805 **i01743537**

NOTE	REF NO	GRAPHIC REF	PART NUMBER	QTY	PART NAME 1 2 3 4 5 6 (PRODUCT LEVEL)	SEE PAGE
	1	1	**192-2940**	1	SUPPORT AS	
M	2	1	**8T-4137**	4	BOLT (M10X1.5X20-MM)	
	3	1	**8T-4121**	4	WASHER-HARD (11X21X2.5-MM THK)	
M	4	1	**8T-4189**	4	BOLT (M8X1.25X20-MM)	
	5	1	**8T-4224**	4	WASHER-HARD (8.8X16X2-MM THK)	
	6	1	**201-0539**	1	CONDENSER AS	

M-METRIC PART

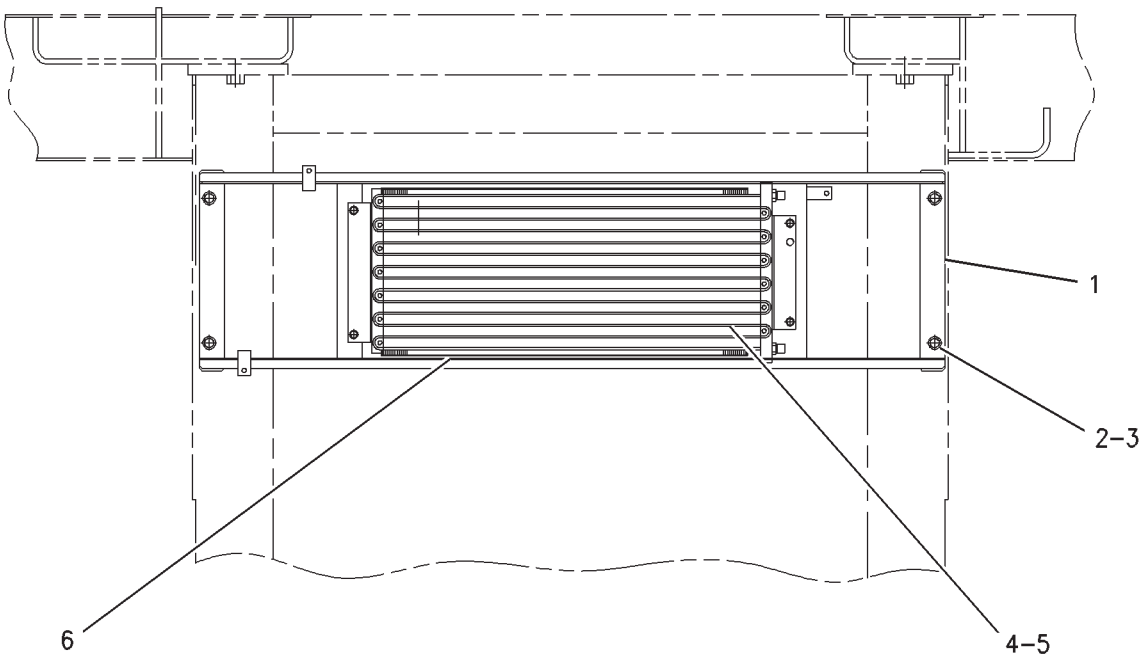

GRAPHIC #1 **<END>** g00794496

OPERATOR STATION

111-6279 CONSOLE GP-OPERATOR

S/N: RCD1-UP
PART OF 164-0536 CONSOLE GP-OPERATOR
TYPE 1

SMCS-5258 **i02785217**

NOTE	REF NO	GRAPHIC REF	PART NUMBER	QTY	PART NAME 1 2 3 4 5 6 (PRODUCT LEVEL)	SEE PAGE
	2	1	**113-4013**	1	SUPPORT	
	4	1	**117-6257**	1	SUPPORT AS	
	5	1	**113-4016**	1	COVER	
	6	1	**117-6268**	1	COVER	
	7	1	**117-6267**	1	COVER	
	8	1	**117-6273**	1	COVER	
Y	9	1	**159-7744**	1	LEVER GP-CONTROL (HYDRAULIC LOCKOUT)	536
	10	1	**119-5026**	4	SCREW-PAN HEAD (10-16X0.63-IN)	
M	13	1	**9X-2042**	6	SCREW-TRUSS HEAD (M6X1X12-MM)	
M	14	1	**5C-2890**	2	NUT (M6X1-THD)	
B	16	1	**135-2184**	1	COVER	
	17	1	**124-3932**	12	CAP	
	18	1	**135-2185**	1	PANEL	

B-USE AS REQUIRED
M-METRIC PART
Y-SEPARATE ILLUSTRATION

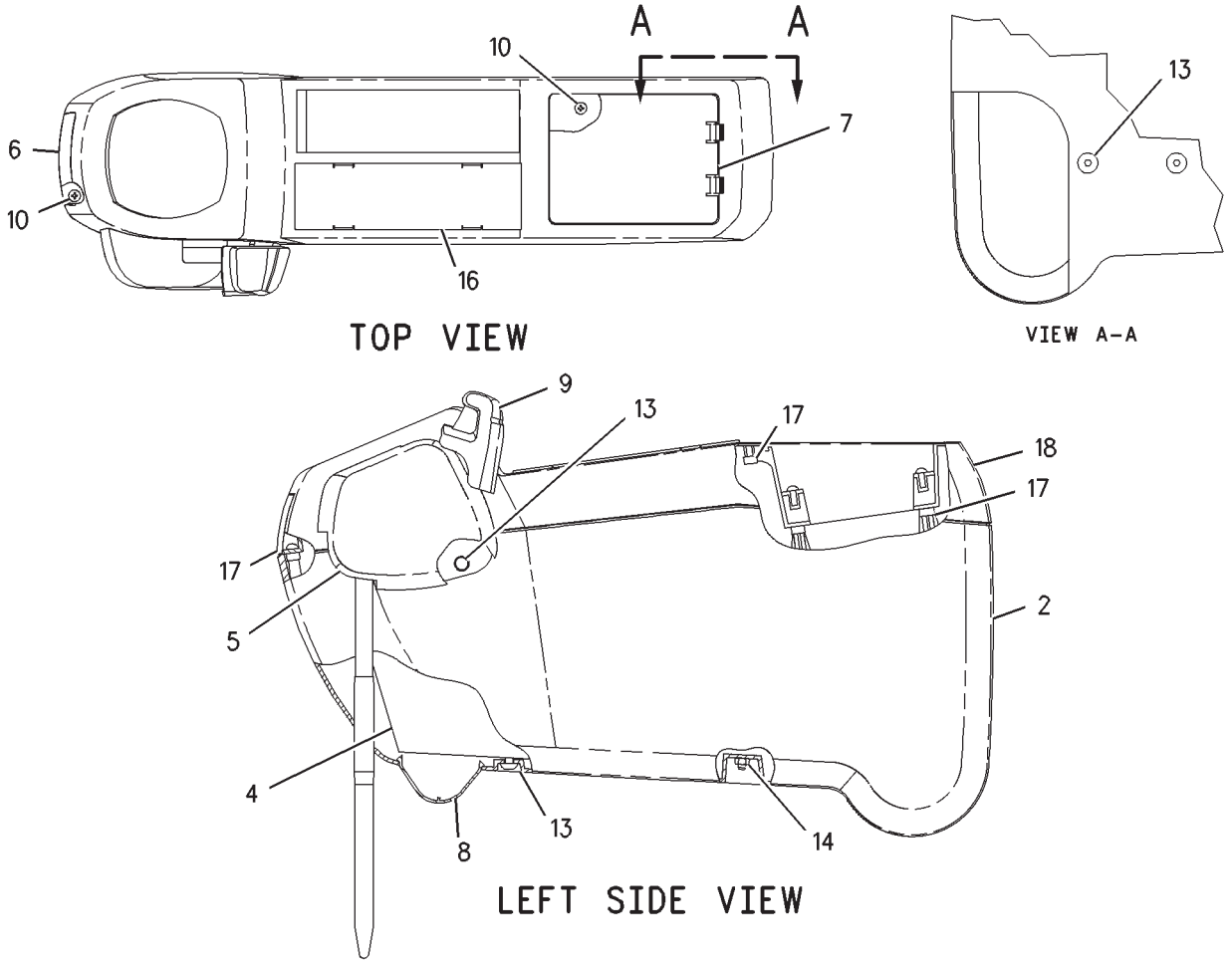

GRAPHIC #1 **<END>** g00670443

OPERATOR STATION

111-6279 CONSOLE GP-OPERATOR

S/N: RCD1-UP
PART OF 164-0536 CONSOLE GP-OPERATOR
TYPE 2

SMCS-5258 **i02853008**

NOTE	REF NO	GRAPHIC REF	PART NUMBER	QTY	PART NAME 1 2 3 4 5 6 (PRODUCT LEVEL)	SEE PAGE
C	2	1	**184-3821**	1	SUPPORT	
	4	1	**117-6257**	1	SUPPORT AS	
	5	1	**113-4016**	1	COVER	
	6	1	**117-6268**	1	COVER	
	7	1	**117-6267**	1	COVER	
	8	1	**117-6273**	1	COVER	
Y	9	1	**159-7744**	1	LEVER GP-CONTROL (HYDRAULIC LOCKOUT)	536
	10	1	**119-5026**	4	SCREW-PAN HEAD (10-16X0.63-IN)	
M	13	1	**9X-2042**	6	SCREW-TRUSS HEAD (M6X1X12-MM)	
M	14	1	**5C-2890**	2	NUT (M6X1-THD)	
B	16	1	**135-2184**	1	COVER	
	17	1	**124-3932**	12	CAP	
	18	1	**135-2185**	1	PANEL	
CM	19	1	**184-3839**	2	NUT-SPEED	
CM	20	1	**161-3729**	1	NUT-SPEED	
CM	21	1	**161-3730**	2	SCREW-TAPPING	

B-USE AS REQUIRED
C-CHANGE FROM PREVIOUS TYPE
M-METRIC PART
Y-SEPARATE ILLUSTRATION

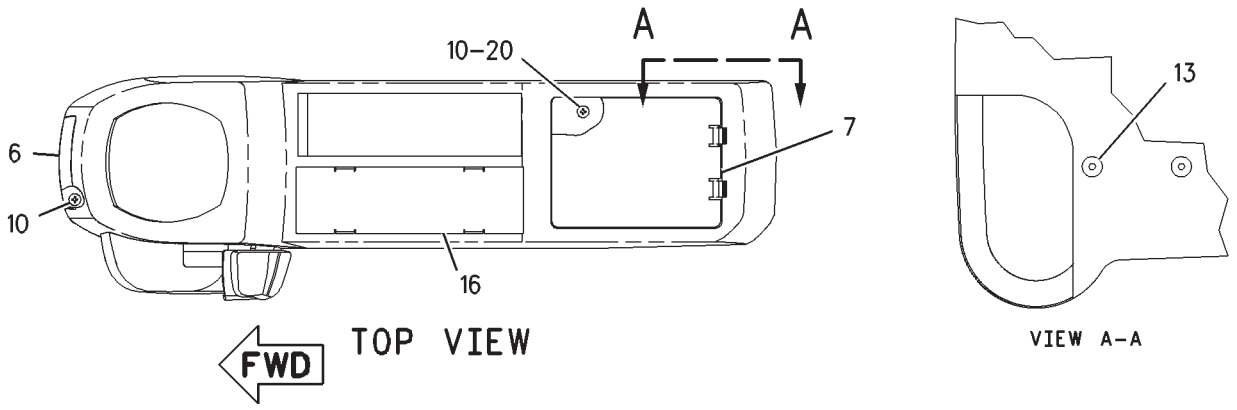

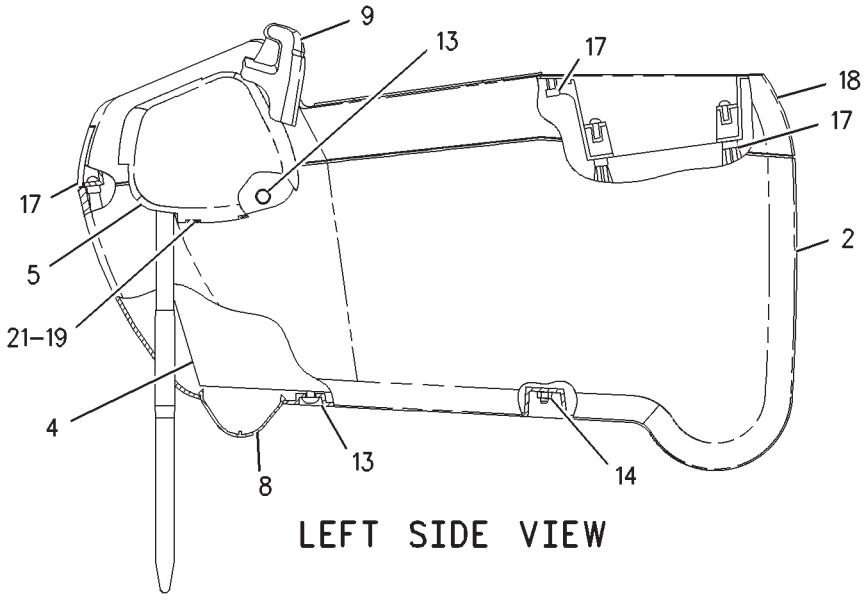

GRAPHIC #1 **<END>** g00922194

OPERATOR STATION

111-6280 CONSOLE GP-OPERATOR

S/N: RCD1-UP

PART OF 164-0536 CONSOLE GP-OPERATOR

SMCS-5258 **i01743591**

NOTE	REF NO	GRAPHIC REF	PART NUMBER	QTY	PART NAME 1 2 3 4 5 6 (PRODUCT LEVEL)	SEE PAGE
	1	1	**113-4014**	1	PANEL	
	2	1	**113-4012**	1	SUPPORT	
	3	1	**124-3932**	2	CAP	
	4	1	**117-6256**	1	SUPPORT AS	
	5	1	**117-6268**	1	COVER	
	6	1	**117-6266**	1	COVER	
	7	1	**117-6273**	1	COVER	
	8	1	**119-5026**	2	SCREW-PAN HEAD (10-16X0.63-IN)	
M	9	1	**7Y-5295**	1	SCREW-SOCKET	
	10	1	**7Y-5293**	1	NUT-SPEED	
M	11	1	**9X-2042**	6	SCREW-TRUSS HEAD (M6X1X12-MM)	
M	12	1	**5C-2890**	2	NUT (M6X1-THD)	

M-METRIC PART

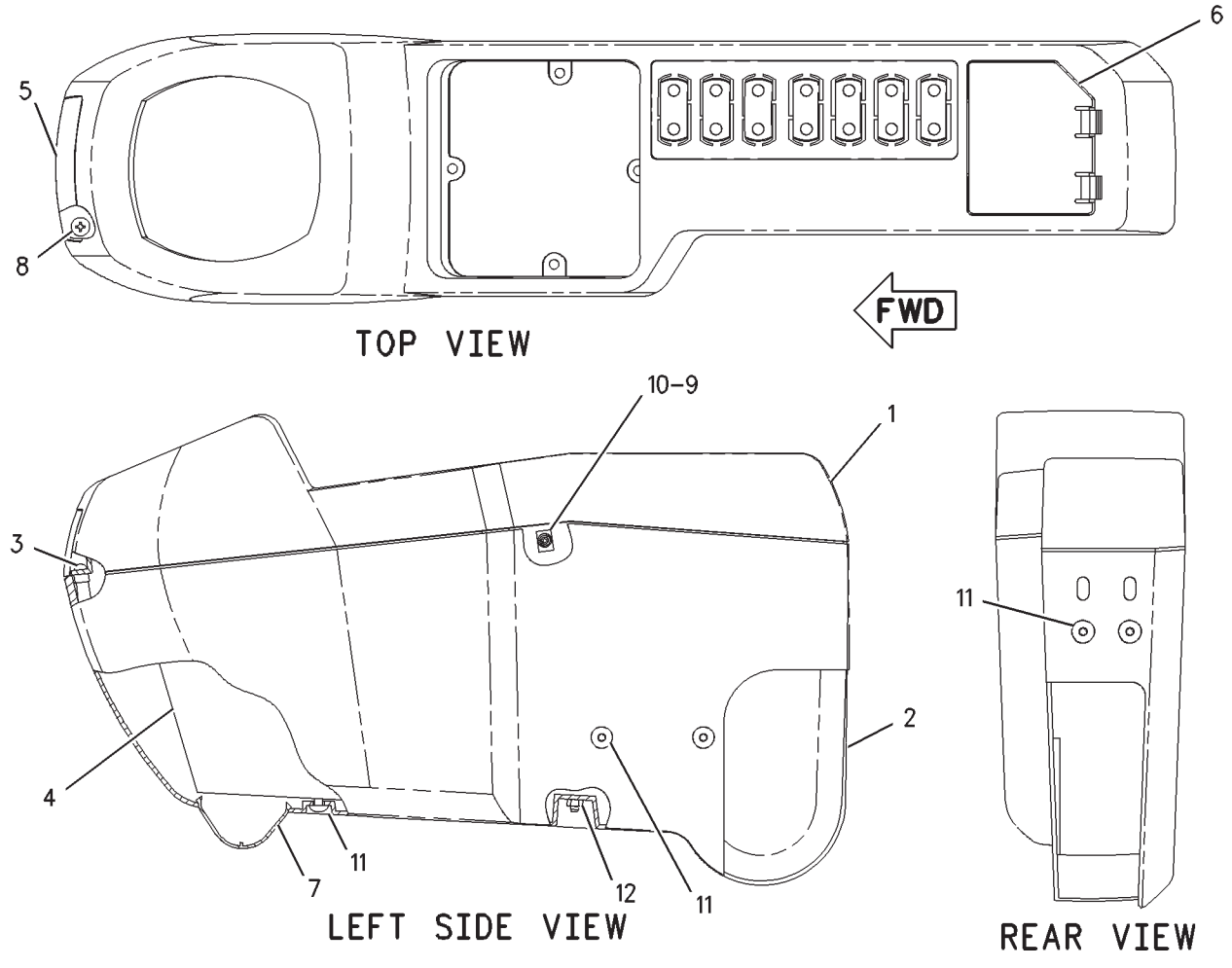

GRAPHIC #1 **<END>** g00892692

OPERATOR STATION

164-0536 CONSOLE GP-OPERATOR

S/N: RCD1-UP

PART OF 222-3445 OPERATOR AR

SMCS-5258 **i01525483**

NOTE	REF NO	GRAPHIC REF	PART NUMBER	QTY	PART NAME 1 2 3 4 5 6 (PRODUCT LEVEL)	SEE PAGE
Y	1	1	*111-6279*	1	CONSOLE GP-OPERATOR (LH)	1004
Y	2	1	*111-6280*	1	CONSOLE GP-OPERATOR (RH)	1007
	3	1	**116-1524**	1	FILM-INSTRUCTION	
	4	1	**124-4005**	4	SUPPORT	
M	5	1	**8T-4137**	8	BOLT (M10X1.5X20-MM)	
	6	1	**8T-4121**	8	WASHER-HARD (11X21X2.5-MM THK)	
M	7	1	**9X-2045**	8	SCREW-TRUSS HEAD (M6X1X20-MM)	
	8	1	**122-9622**	2	SUPPORT	
	9	1	**7K-1181**	8	STRAP-CABLE	
	10	1	**122-9618**	2	GUARD	
M	11	1	**9X-2043**	8	SCREW-TRUSS HEAD (M6X1X14-MM)	

M-METRIC PART
Y-SEPARATE ILLUSTRATION

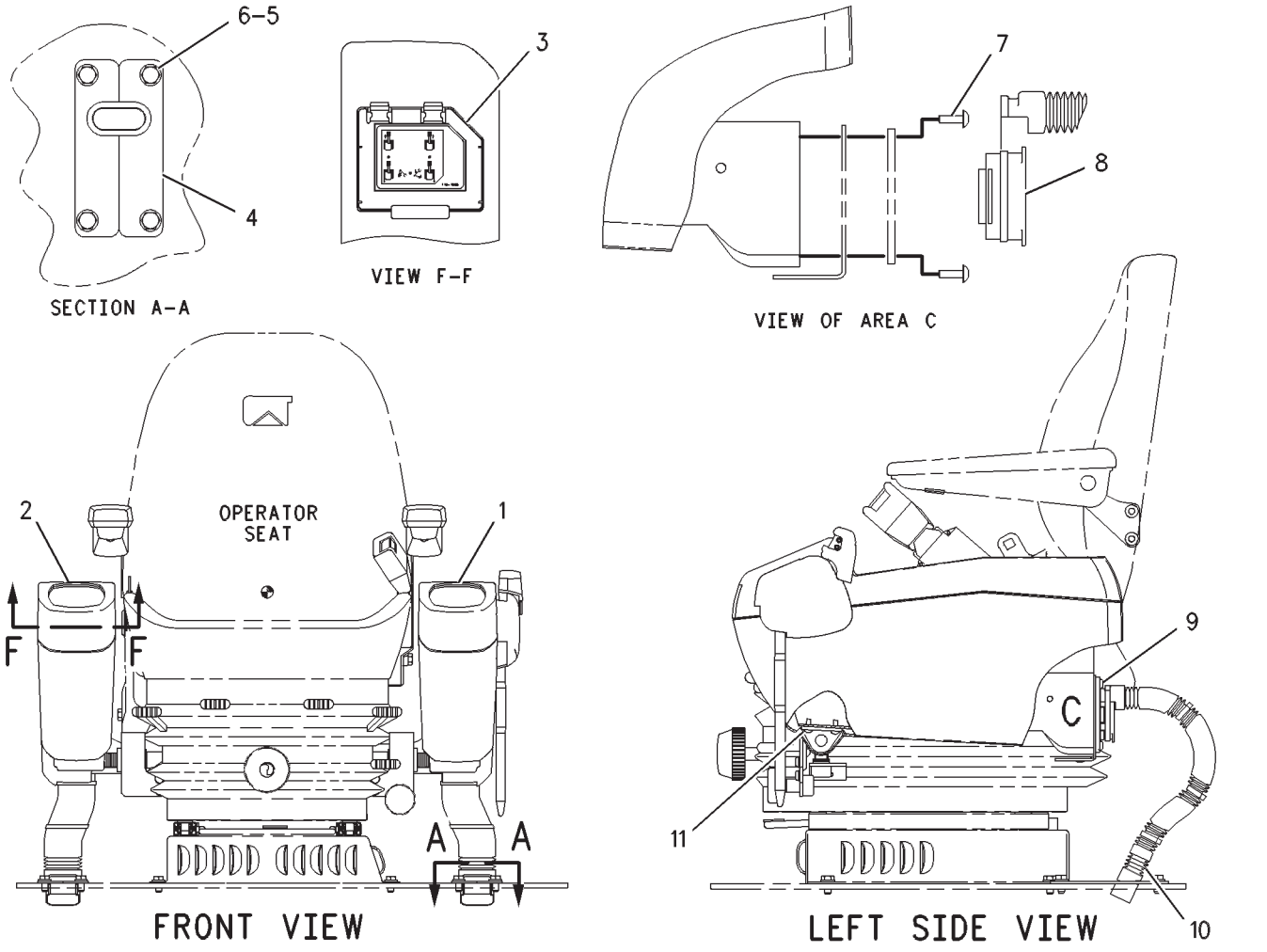

GRAPHIC #1 **<END>** g00579465

OPERATOR STATION

146-6717 CONTROL & MTG GP-JOYSTICK

S/N: RCD1-UP

PART OF 222-3445 OPERATOR AR

SMCS-5063, 5705 **i01179304**

NOTE	PART NUMBER	QTY	PART NAME 1 2 3 4 5 6 (PRODUCT LEVEL)	SEE PAGE
M	**8T-4971**	6	BOLT (M6X1.0X30MM)	
Y	*175-6496*	1	CONTROL GP-JOYSTICK (LH)	1018
Y	*175-6497*	1	CONTROL GP-JOYSTICK (RH)	1019
	9X-8256	6	WASHER (2MM THK)	

M-METRIC PART
Y-SEPARATE ILLUSTRATION

<END>

OPERATOR STATION

139-4005 CONTROL & MTG GP-PEDAL

S/N: RCD1-UP

PART OF 222-3445 OPERATOR AR

SMCS-5462 **i01738304**

NOTE	REF NO	GRAPHIC REF	PART NUMBER	QTY	PART NAME 1 2 3 4 5 6 (PRODUCT LEVEL)	SEE PAGE
M	1	1	**8T-4136**	4	BOLT (M10X1.5X25-MM)	
	2	1	**8T-4121**	4	WASHER-HARD (11X21X2.5-MM THK)	
Y	3	1	**145-3056**	1	CONTROL GP-PEDAL	1021

M-METRIC PART
Y-SEPARATE ILLUSTRATION

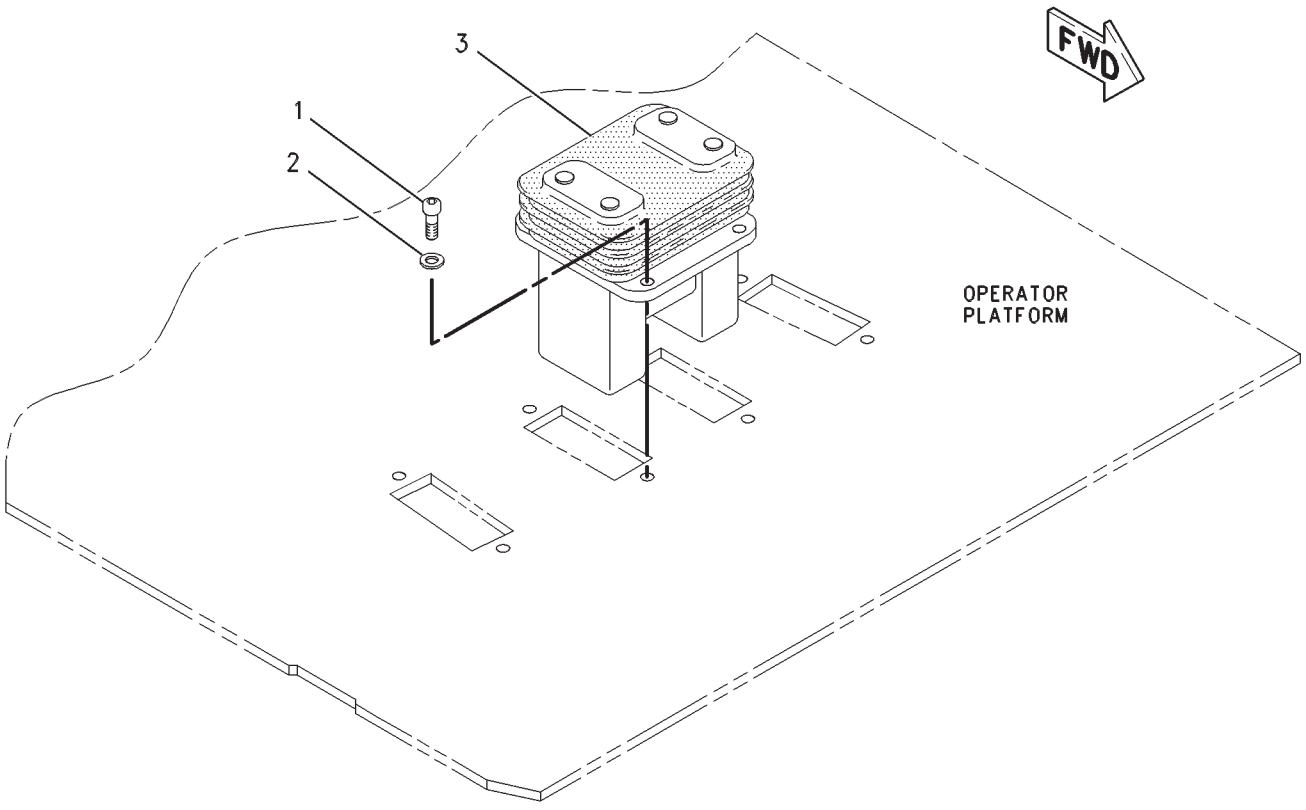

GRAPHIC #1 **<END>** g00535385

OPERATOR STATION

150-1387 CONTROL GP-AIR & TEMPERATURE

S/N: RCD1-UP

PART OF 152-5085 AIR CONDITIONER GP

FIELD REPLACEMENT ORDER 180-8007—PAGE 1014

SMCS-7451 **i02563108**

NOTE	REF NO	GRAPHIC REF	PART NUMBER	QTY	PART NAME 1 2 3 4 5 6 (PRODUCT LEVEL)	SEE PAGE
	1	1	**102-8804**	1	KIT-RECEPTACLE (4-PIN)	
	2	1	**102-8805**	1	KIT-RECEPTACLE (6-PIN)	
					(EACH INCLUDES RECEPTACLE AS & WEDGE)	
L	3	1	**155-2270**	8	KIT-CONNECTING PLUG (2-PIN)	
	4	1	**155-2274**	2	KIT-CONNECTING PLUG (6-PIN)	
					(EACH INCLUDES PLUG AS & WEDGE)	
F			**147-0387**	2	SENSOR AS-TEMPERATURE (AMBIENT) (AIR & TEMPERATURE CONTROL)	
					(EACH INCLUDES)	
F			**102-8802**	1	KIT-RECEPTACLE (2-PIN)	
					(INCLUDES RECEPTACLE AS & WEDGE)	
F			**3E-3365**	1	WEDGE-RECEPTACLE LOCK (2-PIN)	
F			**8T-8729**	2	PIN-CONNECTOR	
FL			**9W-0844**	6	SOCKET-CONNECTOR (14-GA)	
FL			**186-3736**	21	SOCKET-CONNECTOR (16-GA TO 18-GA)	
FL			**9W-0852**	2	PIN-CONNECTOR (14-GA)	

F-NOT SHOWN
L-PARTS MARKED L ARE REQUIRED FOR REPLACEMENT OF SENSOR

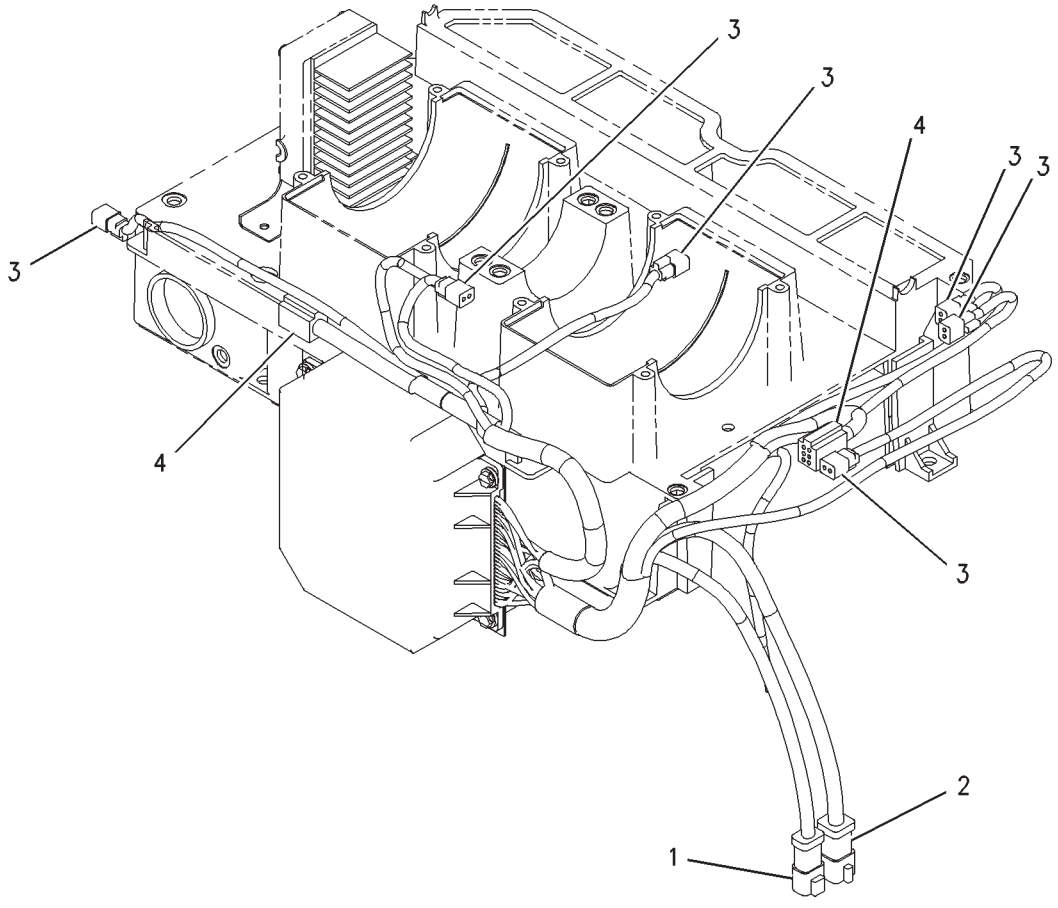

GRAPHIC #1 **<END>** g00975951

OPERATOR STATION

111-6308 CONTROL GP-HANDLE

S/N: RCD1-UP

PART OF 222-3445 OPERATOR AR

SMCS-5705 **i01036743**

NOTE	REF NO	GRAPHIC REF	PART NUMBER	QTY	PART NAME 1 2 3 4 5 6 (PRODUCT LEVEL)	SEE PAGE
	1	1	**096-6333**	1	KNOB	
	2	1	**119-6806**	1	PEDAL AS-RH	
	3	1	**119-6805**	1	PEDAL AS-LH	
	4	1	**096-6332**	1	KNOB	
	5	1	**117-6356**	2	STEP AS	
	6	1	**124-4021**	1	LEVER AS	
	7	1	**124-4025**	1	LEVER AS	
	9	1	**8T-4121**	12	WASHER-HARD (11X21X2.5-MM THK)	
M	10	1	**096-6331**	2	NUT (M12X1.75-THD)	
M	11	1	**8T-4191**	8	BOLT (M10X1.5X16-MM)	
M	12	1	**8T-4136**	4	BOLT (M10X1.5X25-MM)	
	14	1	**122-9610**	2	STEP	
	15	1	**122-9608**	1	PEDAL-RUBBER	
	16	1	**122-9609**	1	PEDAL-RUBBER	

M-METRIC PART

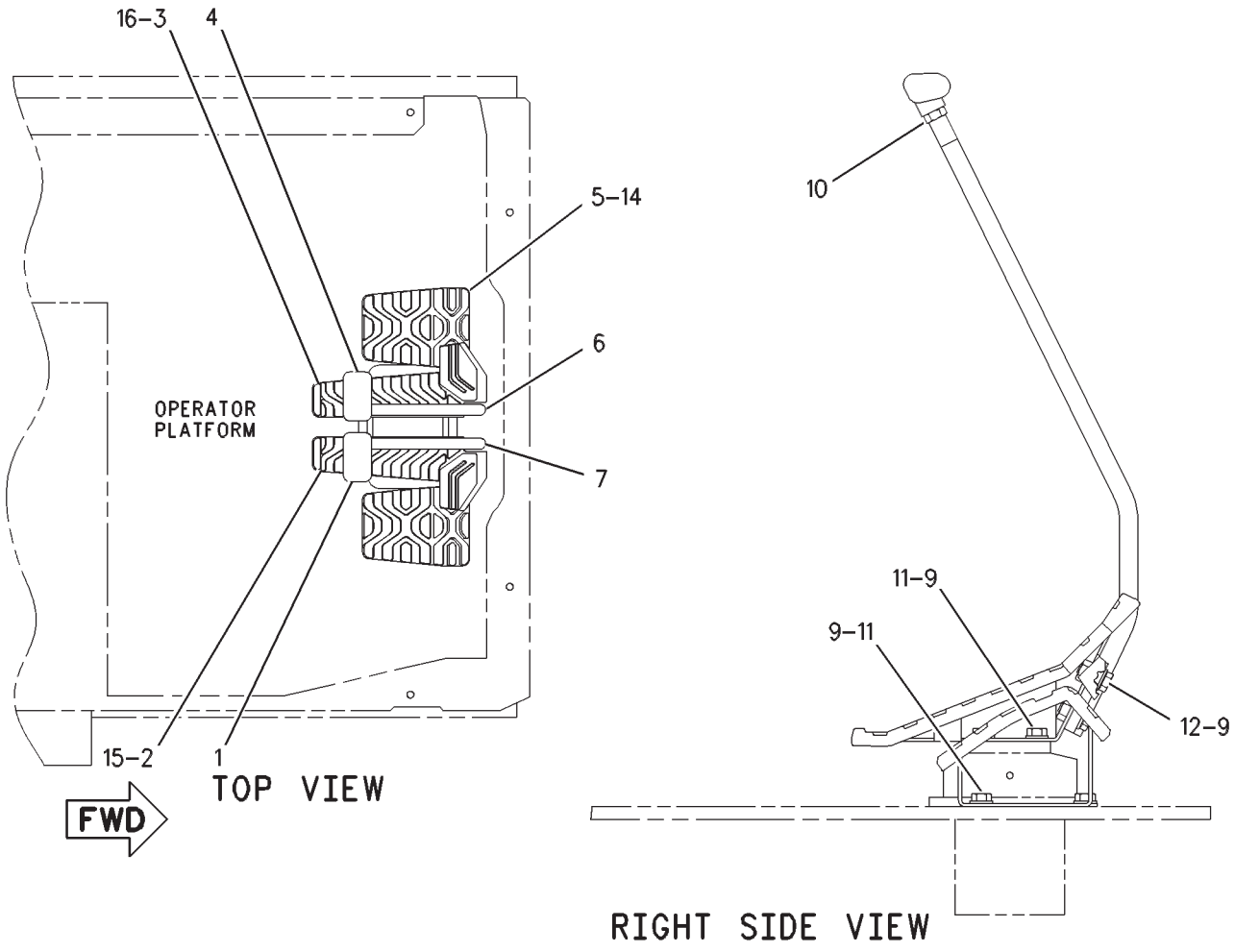

GRAPHIC #1 **<END>** g00534844

OPERATOR STATION

179-0289 CONTROL GP-HANDLE

S/N: RCD1-UP
PART OF 208-7776 CONTROL GP-JOYSTICK
AN ATTACHMENT

SMCS-5705 **i01523386**

NOTE	PART NUMBER	QTY	PART NAME 1 2 3 4 5 6 (PRODUCT LEVEL)	SEE PAGE
	162-2302	1	KIT-CAP	
	102-8802	1	KIT-RECEPTACLE (2-PIN)	
	3E-3365	1	WEDGE-RECEPTACLE LOCK (2-PIN)	
	102-8805	1	KIT-RECEPTACLE (6-PIN)	
	3E-3383	1	WEDGE-RECEPTACLE LOCK (6-PIN)	
	8T-8729	8	PIN-CONNECTOR	
			AVAILABLE REPAIR KIT(S):	
	188-2420	1	KIT-JOYSTICK	

<END>

OPERATOR STATION

180-8007 CONTROL GP-HEAT & AIR COND

S/N: RCD1-UP

SMCS-7309 **i02562798**

NOTE	REF NO	GRAPHIC REF	PART NUMBER	QTY	PART NAME 1 2 3 4 5 6 (PRODUCT LEVEL)	SEE PAGE
	1	1	**155-4923**	1	BRACKET	
	2	1	**220-1824**	1	VALVE AS-WATER (WITH MOTOR)	
		1	**4B-4863**	4	WASHER (4.7X11X1.2-MM THK)	
		1	**4M-6582**	1	SEAL-O-RING	
		1	**124-0312**	4	SCREW-PAN HEAD (8-16X0.32-IN)	
	3	1	**3S-2093**	9	STRAP-CABLE	
	4	1	**8C-3756**	1	FILM-IDENTIFICATION	
	5	1	**177-6727**	3	ACTUATOR	
	6	1	**204-3560**	1	CONTROL GP-AIR & TEMPERATURE	
		1	**9G-3695**	4	PLUG-SEAL	
		1	**102-8805**	1	KIT-RECEPTACLE (6-PIN)	
					(INCLUDES RECEPTACLE AS & WEDGE)	
		1	**147-0387**	3	SENSOR AS-TEMPERATURE (AMBIENT)	
					(EACH INCLUDES)	
		1	**102-8802**	1	KIT-RECEPTACLE (2-PIN)	
					(INCLUDES RECEPTACLE AS & WEDGE)	
		1	**186-3735**	2	PIN-CONNECTOR (16-GA TO 18-GA)	
		1	**155-2270**	5	KIT-CONNECTING PLUG (2-PIN)	
		1	**155-2274**	1	KIT-CONNECTING PLUG (6-PIN)	
					(EACH CONNECTING PLUG KIT INCLUDES PLUG AS, WEDGE)	
		1	**186-3735**	3	PIN-CONNECTOR (16-GA TO 18-GA)	
		1	**186-3736**	15	SOCKET-CONNECTOR (16-GA TO 18-GA)	
Y	7	1	**217-2317**	1	CONTROL GP-HEAT & AIR COND (TEMPERATURE CONTROL)	1016
	8	1	**217-2941**	1	BRACKET AS	
	9	1	**4V-5091**	2	GROMMET	
M	10	1	**8C-8457**	2	SCREW-MACHINE (M5X0.8X14-MM)	

M-METRIC PART
Y-SEPARATE ILLUSTRATION

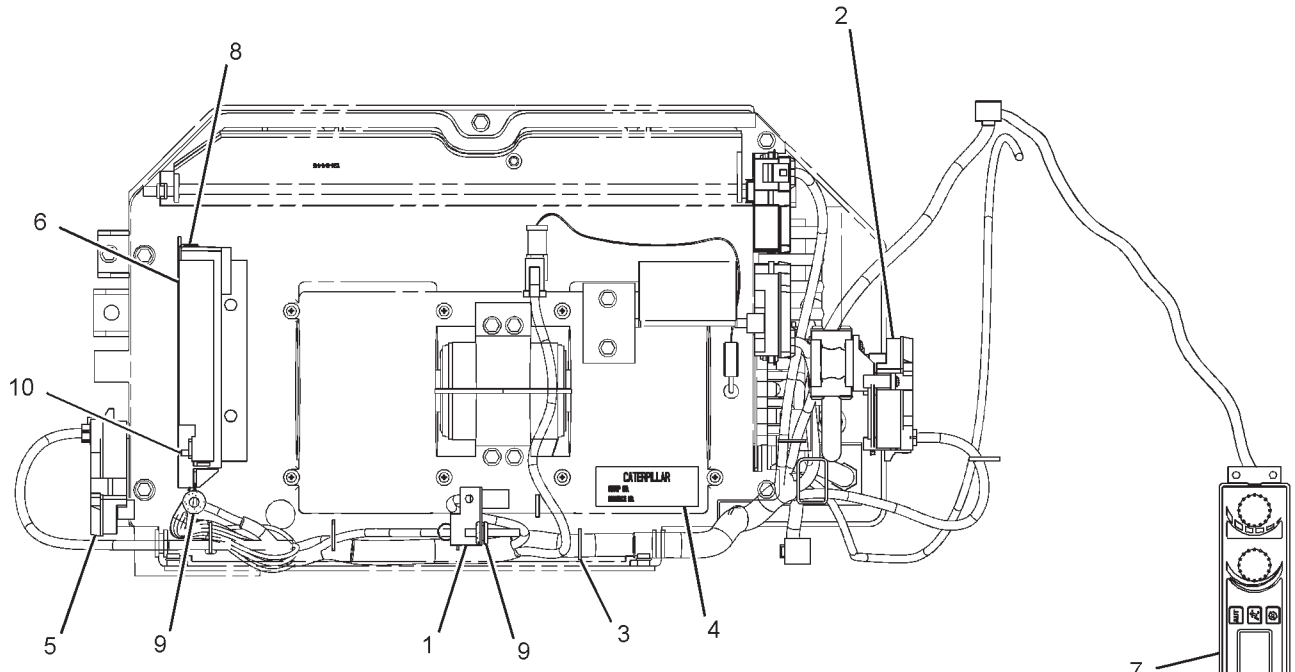

TOP VIEW



GRAPHIC #1 **<END>** g01338301

OPERATOR STATION

217-2317 CONTROL GP-HEAT & AIR COND

S/N: RCD1-UP

PART OF 180-8007 CONTROL GP-HEAT & AIR COND

SMCS-7309 **i02180816**

NOTE	REF NO	GRAPHIC REF	PART NUMBER	QTY	PART NAME 1 2 3 4 5 6 (PRODUCT LEVEL)	SEE PAGE
	1	1	**217-2320**	2	CLIP	

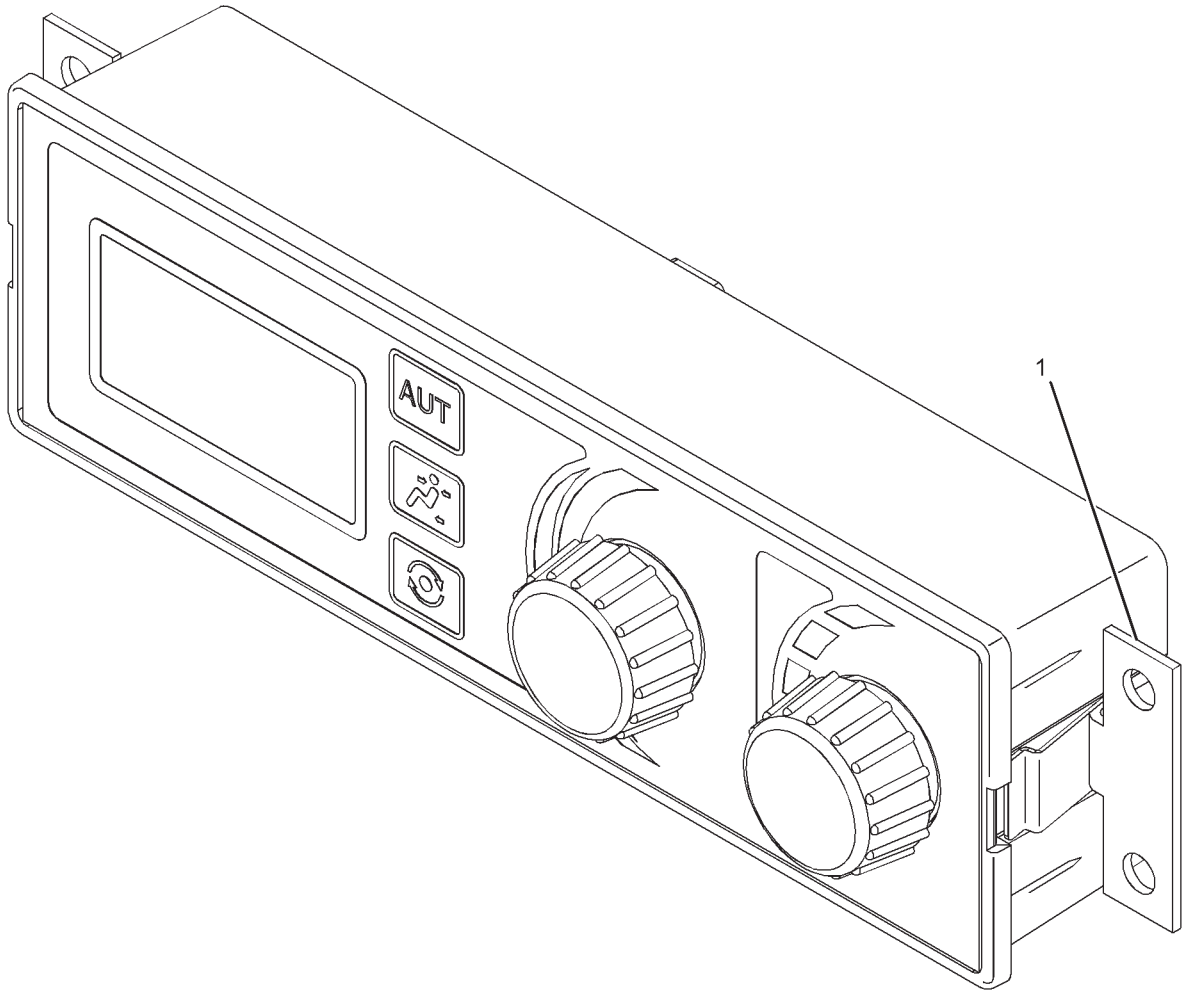

GRAPHIC #1 **<END>** g01193923

OPERATOR STATION

147-4789 CONTROL GP-HYDRAULIC PEDAL

S/N: RCD1-UP
PART OF 144-9676 PEDAL AR-THIRD
AN ATTACHMENT

SMCS-5059, 5063 **i01856933**

NOTE	REF NO	GRAPHIC REF	PART NUMBER	QTY	PART NAME 1 2 3 4 5 6 (PRODUCT LEVEL)	SEE PAGE
	1	1	**135-2274**	1	PEDAL-RUBBER	
	2	1	**156-6512**	1	PEDAL AS	
M	3	1	**8T-4191**	1	BOLT (M10X1.5X16-MM)	
	4	1	**8T-4121**	3	WASHER-HARD (11X21X2.5-MM THK)	
	5	1	**145-3059**	1	CONTROL GP-HYDRAULIC PEDAL	
		1	**8T-8729**	5	PIN-CONNECTOR	
		1	**102-8805**	1	KIT-RECEPTACLE (6-PIN)	
		1	**8T-8737**	1	PLUG-SEAL	
		1	**3E-3383**	1	WEDGE-RECEPTACLE LOCK (6-PIN)	
M	6	1	**8T-4136**	2	BOLT (M10X1.5X25-MM)	
	7	1	**8T-0114**	1	PIN-SPRING	
	8	1	**5I-7090**	1	CHAIN AS	
M	9	1	**095-0735**	2	SCREW-MACHINE (M5X0.8X8-MM)	
	10	1	**128-2173**	1	PIN	
	11	1	**156-6513**	1	SUPPORT AS	
M	12	1	**7X-2536**	2	BOLT (M8X1.25X14-MM)	
	13	1	**8T-4224**	2	WASHER-HARD (8.8X16X2-MM THK)	

M-METRIC PART

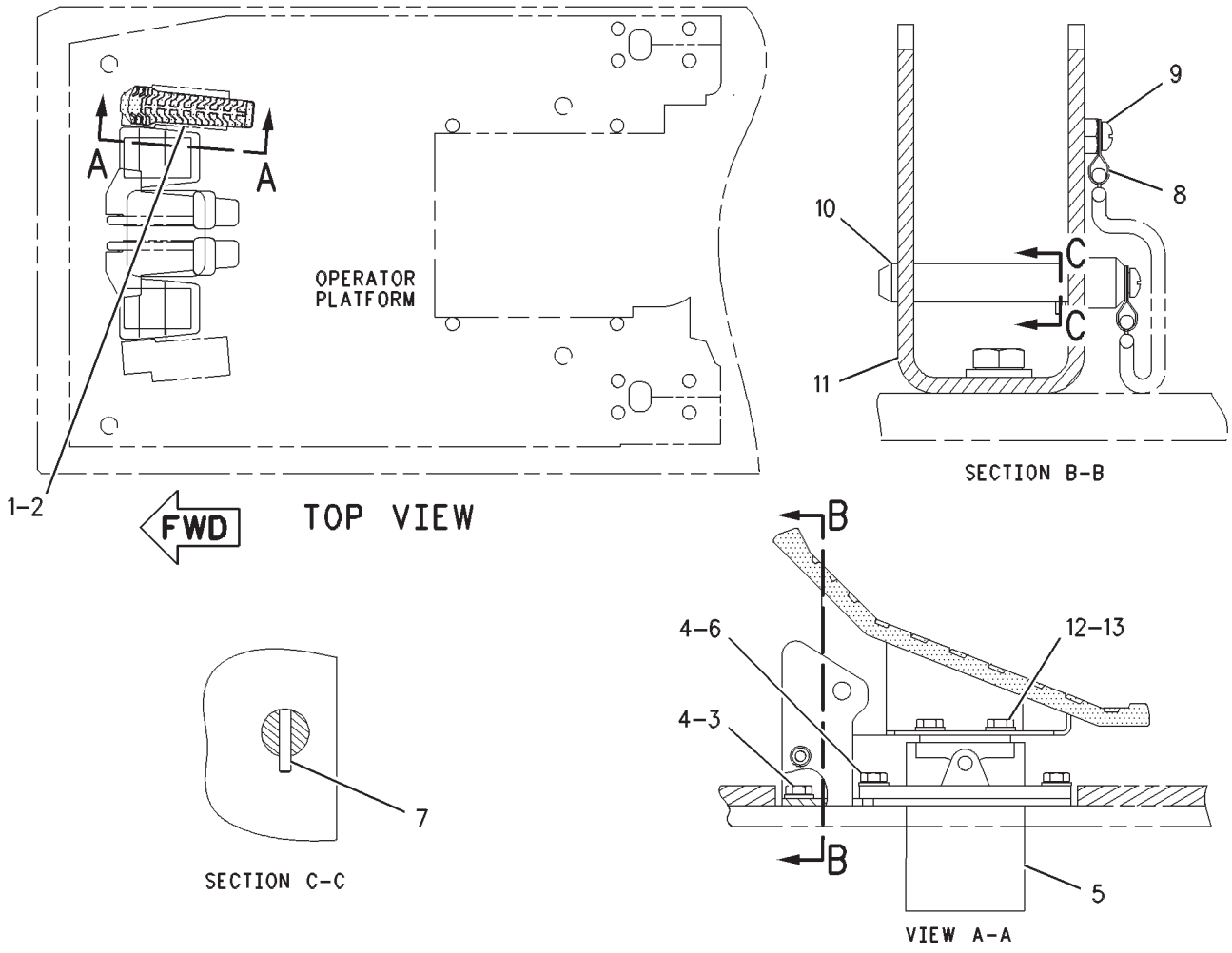

GRAPHIC #1 **<END>** g00631136

OPERATOR STATION

175-6496 CONTROL GP-JOYSTICK–LH

S/N: RCD1-UP

PART OF 146-6717 CONTROL & MTG GP-JOYSTICK

SMCS-5705 **i01178876**

NOTE	REF NO	GRAPHIC REF	PART NUMBER	QTY	PART NAME 1 2 3 4 5 6 (PRODUCT LEVEL)	SEE PAGE
	1	1	**174-9106**	1	CONTROL GP-HANDLE	
		1	**8T-8729**	6	PIN-CONNECTOR	
		1	**162-2302**	1	KIT-CAP	
		1	**102-8805**	1	KIT-RECEPTACLE (6-PIN)	
		1	**3E-3383**	1	WEDGE-RECEPTACLE LOCK (6-PIN)	
M	2	1	**7Y-8463**	1	NUT (M14X2-THD)	
	3	1	**145-3105**	1	SENSOR GP-POSITION	
		1	**9W-0852**	1	PIN-CONNECTOR (14-GA)	
		1	**3E-5180**	1	WEDGE-RECEPTACLE LOCK (12-PIN)	
		1	**8T-8737**	5	PLUG-SEAL	
		1	**102-8801**	1	KIT-RECEPTACLE (12-PIN)	
	4	1	**163-1709**	1	LEVER-LH	
	5	1	**132-7841**	1	BOOT	
	6	1	**113-2532**	1	PIN	
	7	1	**145-2474**	1	BOOT	

M-METRIC PART

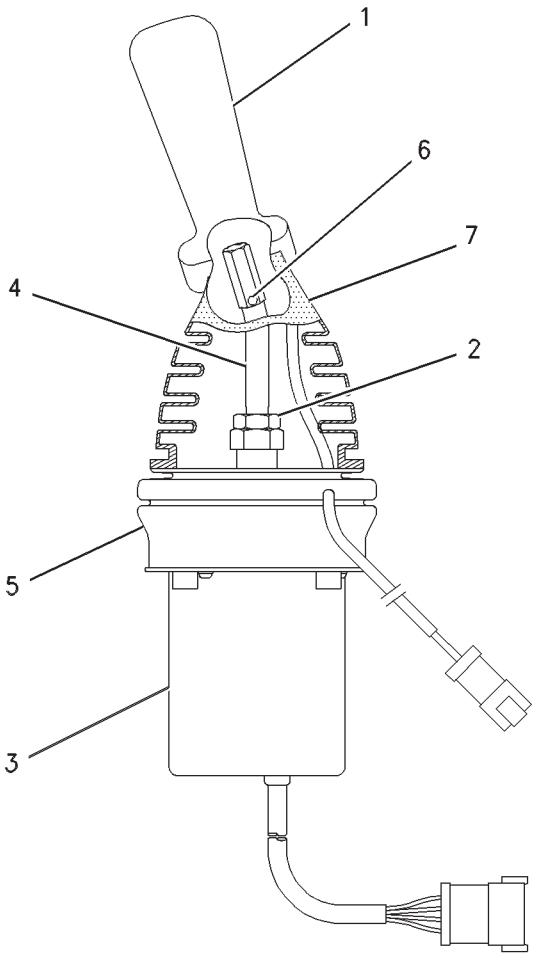

GRAPHIC #1 **<END>** g00631618

OPERATOR STATION

175-6497 CONTROL GP-JOYSTICK–RH

S/N: RCD1-UP

PART OF 146-6717 CONTROL & MTG GP-JOYSTICK

SMCS-5705 **i01178693**

NOTE	REF NO	GRAPHIC REF	PART NUMBER	QTY	PART NAME 1 2 3 4 5 6 (PRODUCT LEVEL)	SEE PAGE
	1	1	**174-9106**	1	CONTROL GP-HANDLE	
		1	**8T-8729**	6	PIN-CONNECTOR	
		1	**102-8805**	1	KIT-RECEPTACLE (6-PIN)	
		1	**3E-3383**		WEDGE-RECEPTACLE LOCK (6-PIN)	
		1	**162-2302**	1	KIT-CAP	
M	2	1	**7Y-8463**	1	NUT (M14X2-THD)	
	3	1	**163-1708**	1	LEVER-RH	
	4	1	**145-3105**	1	SENSOR GP-POSITION	
		1	**3E-5180**	1	WEDGE-RECEPTACLE LOCK (12-PIN)	
		1	**8T-8737**	5	PLUG-SEAL	
		1	**102-8801**	1	KIT-RECEPTACLE (12-PIN)	
		1	**9W-0852**	1	PIN-CONNECTOR (14-GA)	
	5	1	**145-2475**	1	BOOT	
	6	1	**113-2532**	1	PIN	
	7	1	**132-7841**	1	BOOT	

M-METRIC PART

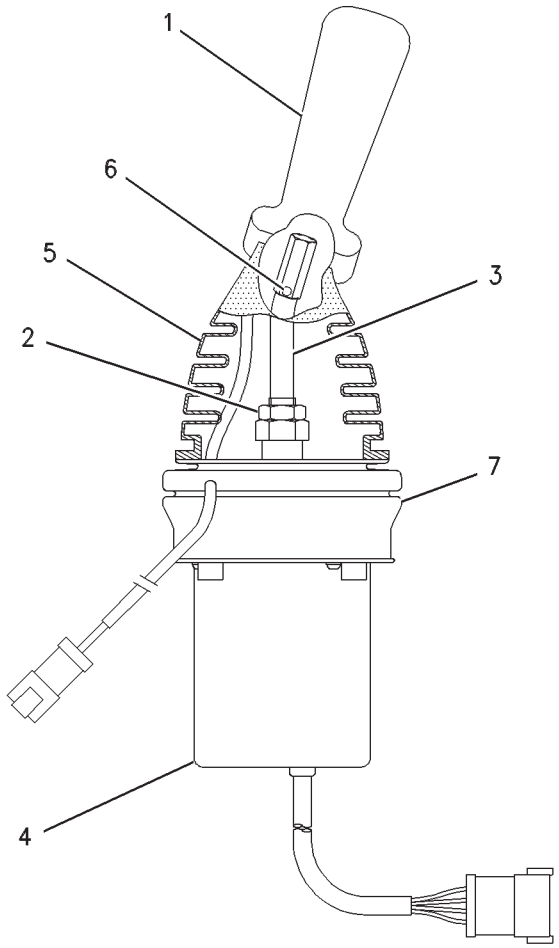

GRAPHIC #1 **<END>** g00631153

OPERATOR STATION

208-7776 CONTROL GP-JOYSTICK–RH

S/N: RCD1-UP
PART OF 213-4216 VALVE AR-BOOM LOWERING CONTROL
AN ATTACHMENT

SMCS-5705 **i01612831**

NOTE	REF NO	GRAPHIC REF	PART NUMBER	QTY	PART NAME 1 2 3 4 5 6 (PRODUCT LEVEL)	SEE PAGE
Y	1	1	**179-0289**	1	CONTROL GP-HANDLE	1013
M	2	1	**7Y-8463**	1	NUT (M14X2-THD)	
	3	1	**163-1708**	1	LEVER-RH	
	4	1	**145-3105**	1	SENSOR GP-POSITION	
		1	**3E-5180**	1	WEDGE-RECEPTACLE LOCK (12-PIN)	
		1	**8T-8737**	5	PLUG-SEAL	
		1	**102-8801**	1	KIT-RECEPTACLE (12-PIN)	
		1	**9W-0852**	7	PIN-CONNECTOR (14-GA)	
	5	1	**145-2475**	1	BOOT	
	6	1	**113-2532**	1	PIN	
	7	1	**132-7841**	1	BOOT	

M-METRIC PART
Y-SEPARATE ILLUSTRATION

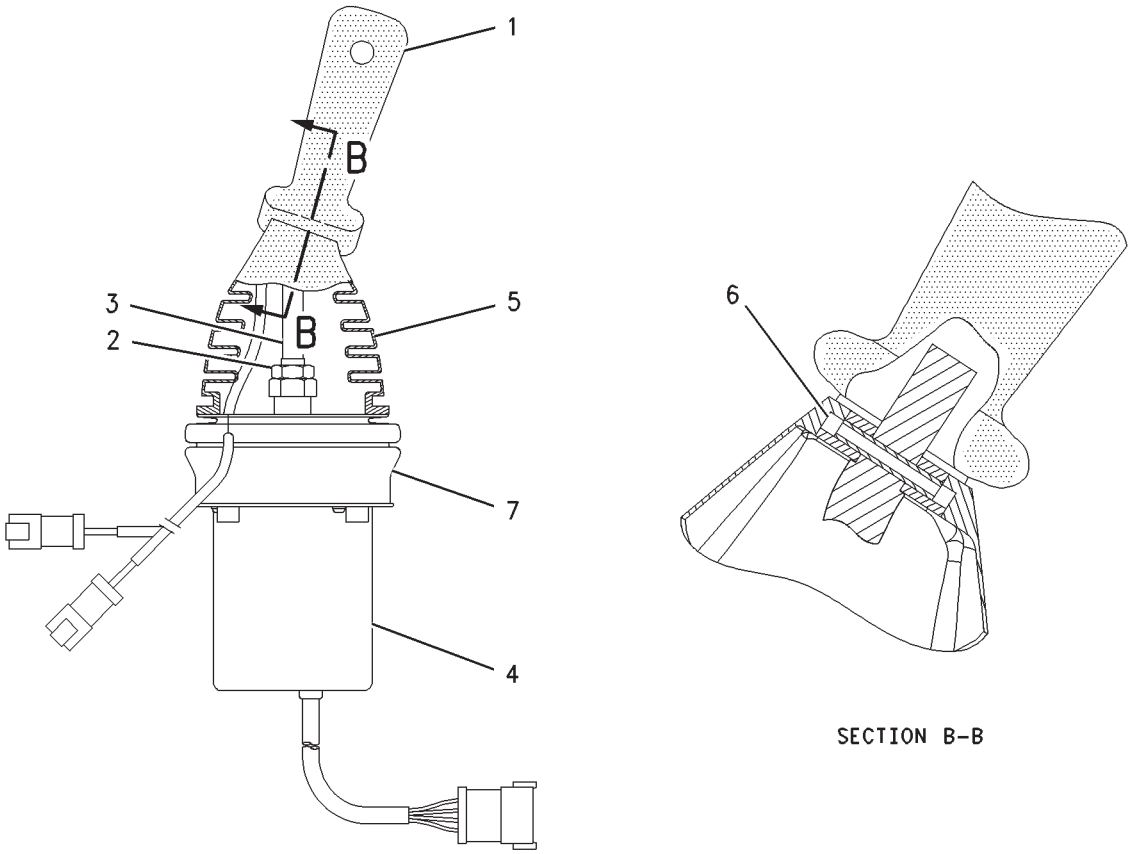

GRAPHIC #1 **<END>** g00838203

OPERATOR STATION

145-3056 CONTROL GP-PEDAL

S/N: RCD1-UP

PART OF 139-4005 CONTROL & MTG GP-PEDAL

SMCS-1435, 5702 **i01740371**

NOTE	REF NO	GRAPHIC REF	PART NUMBER	QTY	PART NAME 1 2 3 4 5 6 (PRODUCT LEVEL)	SEE PAGE
	1	1	**102-8801**	1	KIT-RECEPTACLE (12-PIN)	
					(INCLUDES RECEPTACLE AS & WEDGE)	
	2	1	**3E-5180**	1	WEDGE-RECEPTACLE LOCK (12-PIN)	
	3	1	**9W-0852**	7	PIN-CONNECTOR (14-GA)	
	4	1	**8T-8737**	5	PLUG-SEAL	
	5	1	**132-7816**	1	BOOT	

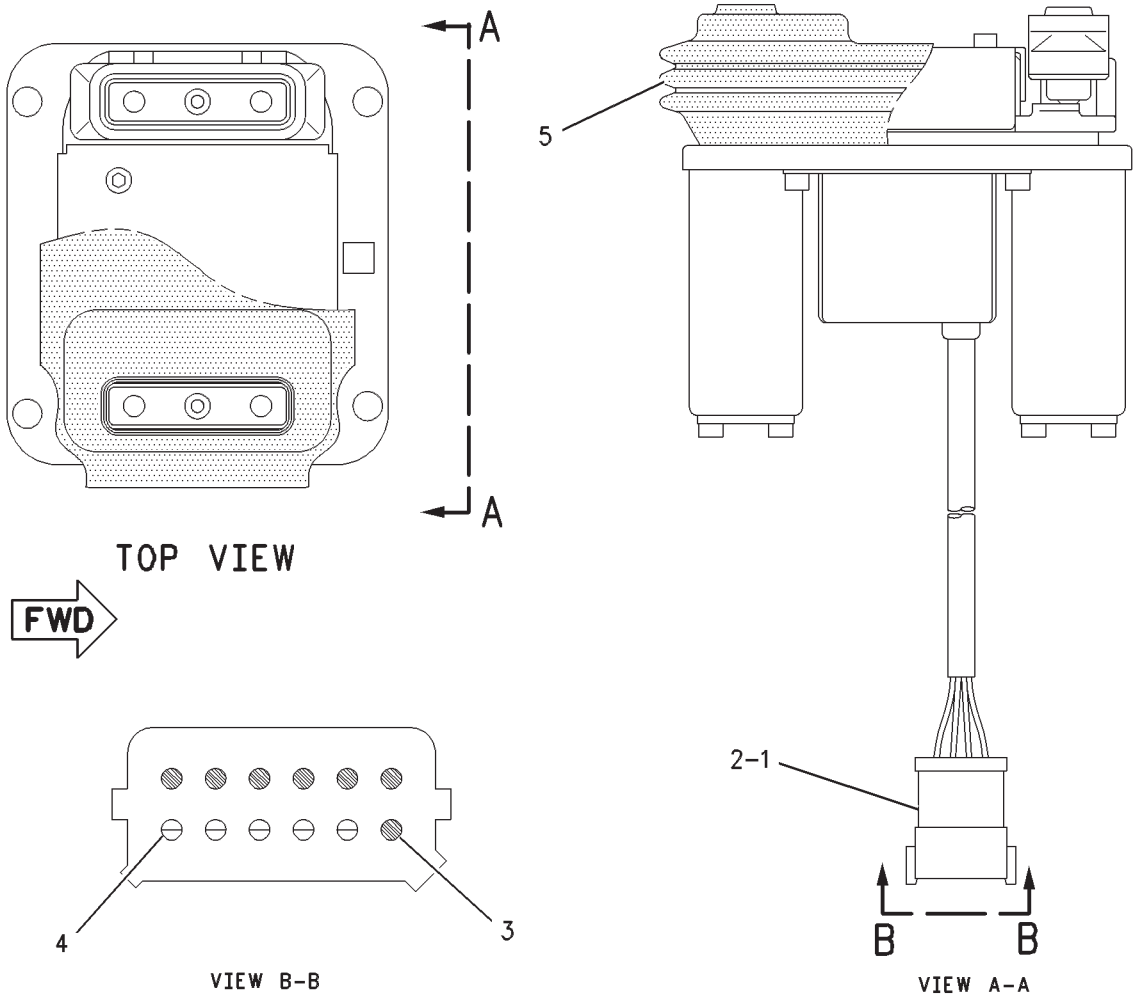

GRAPHIC #1 **<END>** g00583076

OPERATOR STATION

169-0489 CONTROL GP-UNPRGMED MONITOR*R

S/N: RCD1-UP

PART OF 171-2592 CONTROL & MTG GP-MACHINE, 221-8771, 221-8777 SERVICE GP-MONITOR

ALSO AN ATTACHMENT

SMCS-7610 **i01522823**

NOTE	REF NO	GRAPHIC REF	PART NUMBER	QTY	PART NAME 1 2 3 4 5 6 (PRODUCT LEVEL)	SEE PAGE
	1	1	**169-7194**	1	CONTROL AS	
	2	1	**184-2472**	1	SCREW-PAN HEAD (NO 8-32X9.52-MM)	
	3	1	**7X-6315**	1	STRAP AS-GROUND	
	4	1	**134-4126**	1	WASHER (4.52X8.28X0.76-MM THK)	

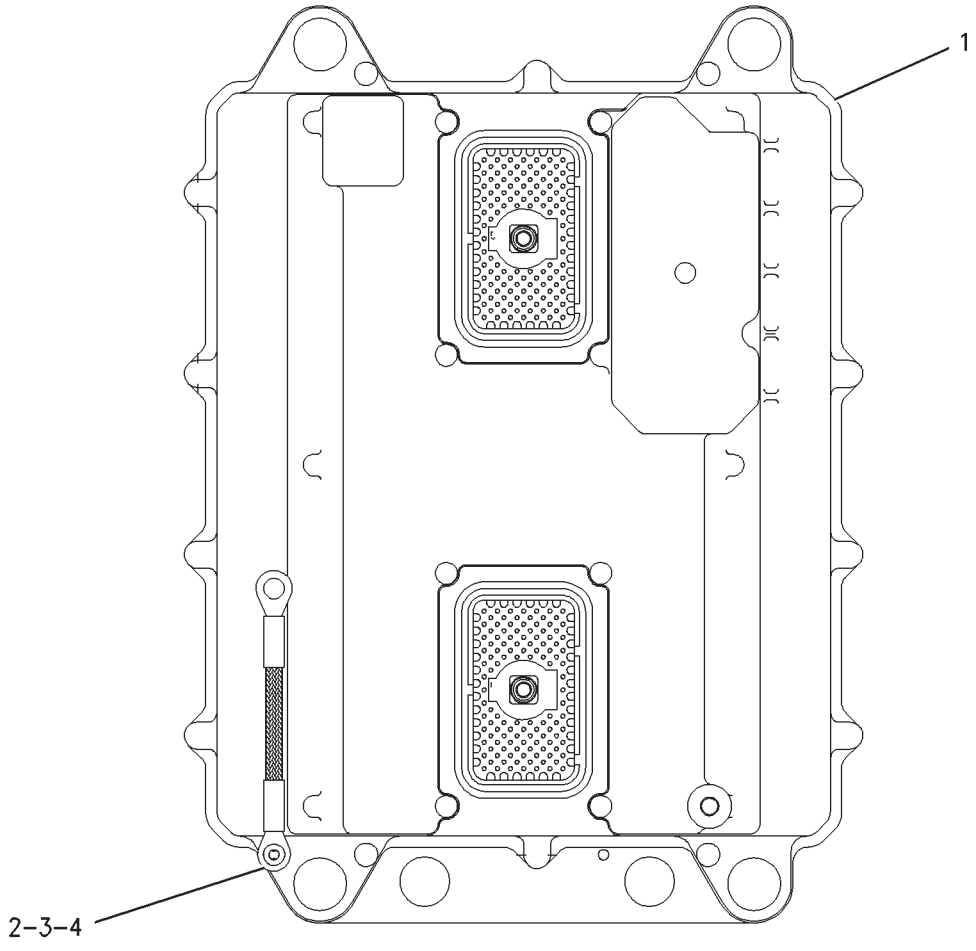

GRAPHIC #1 **<END>** g00793429

OPERATOR STATION

153-2913 COVER GP-WIPER MOTOR

S/N: RCD1-UP
UPPER
PART OF 153-2915 CAB GP

SMCS-7305 **i01827557**

NOTE	REF NO	GRAPHIC REF	PART NUMBER	QTY	PART NAME 1 2 3 4 5 6 (PRODUCT LEVEL)	SEE PAGE
	1	1	**6C-9101**	1	SUPPORT-RADIO	
M	2	1	**8T-4200**	2	BOLT (M8X1.25X16-MM)	
	3	1	**6C-9087**	4	WASHER	
	4	1	**6C-3431**	1	ANTENNA	
	5	1	**131-0327**	1	CONVERTER AS (24-VOLT)	
	6	1	**137-5310**	1	SUPPORT-WIPER	
	7	1	**131-0399**	1	MOTOR AS-WINDOW WIPER (UPPER)	
	8	1	**6C-9129**	1	BOLT (M6X1-THD)	
	9	1	**135-0429**	1	LINK AS	
	10	1	**6C-9221**	1	NUT	
	11	1	**6C-9097**	1	NUT	
	12	1	**6C-9103**	1	BOSS	
	13	1	**6C-9104**	1	CAP-WIPER	
M	14	1	**5C-9553**	7	BOLT (M6X1X16-MM)	
	15	1	**6C-9130**	1	WASHER (6X18X1-MM THK)	
	16	1	**6C-9142**	1	BLADE AS-WIPER	
M	17	1	**5C-7261**	2	NUT (M8X1.25-THD)	
	18	1	**6C-9143**	1	ARM AS	
	19	1	**6C-9125**	1	ASHTRAY AS	
	20	1	**6C-9077**	1	WASHER	
	21	1	**6C-9092**	2	WASHER	
	22	1	**6C-9199**	1	CAP	
	23	1	**137-5311**	1	SUPPORT-WIPER	
	24	1	**6C-9078**	13	WASHER	
	25	1	**6C-9089**	4	NUT-CAP	
	26	1	**109-1254**	1	NOZZLE-AIR	
	27	1	**145-3706**	1	SCREW	
	28	1	**6C-9114**	1	HOSE-WATER	
	29	1	**140-9112**	1	CLIP	
	30	1	**109-1253**	1	HOSE	
	31	1	**112-3309**	2	CLAMP	
M	32	1	**5C-2890**	7	NUT (M6X1-THD)	
	33	1	**6C-9118**	1	BRACKET	
	34	1	**6C-9119**	3	SCREW (M5X0.8X12-MM)	
	35	1	**6C-9081**	2	LOCKWASHER	
	36	1	**129-6466**	1	SWITCH AS-ROLLER	
	37	1	**109-1270**	2	GROMMET	
	38	1	**120-4825**	1	GROMMET	
	39	1	**6C-9121**	1	BRACKET AS-LAMP	
	40	1	**6C-9122**	2	LAMP (24-VOLT)	
	41	1	**156-5420**	1	SUPPORT	
M	42	1	**8T-4189**	2	BOLT (M8X1.25X20-MM)	
	43	1	**162-6968**	1	COVER	
M	44	1	**9X-2042**	4	SCREW-TRUSS HEAD (M6X1X12-MM)	
	45	1	**156-5402**	1	COVER AS	
	47	1	**6C-9127**	3	SCREW	
	48	1	**127-9838**	1	CONTROL GP-WASHER & WIPER	

M-METRIC PART

153-2913 COVER GP-WIPER MOTOR *(contd.)* i01827557

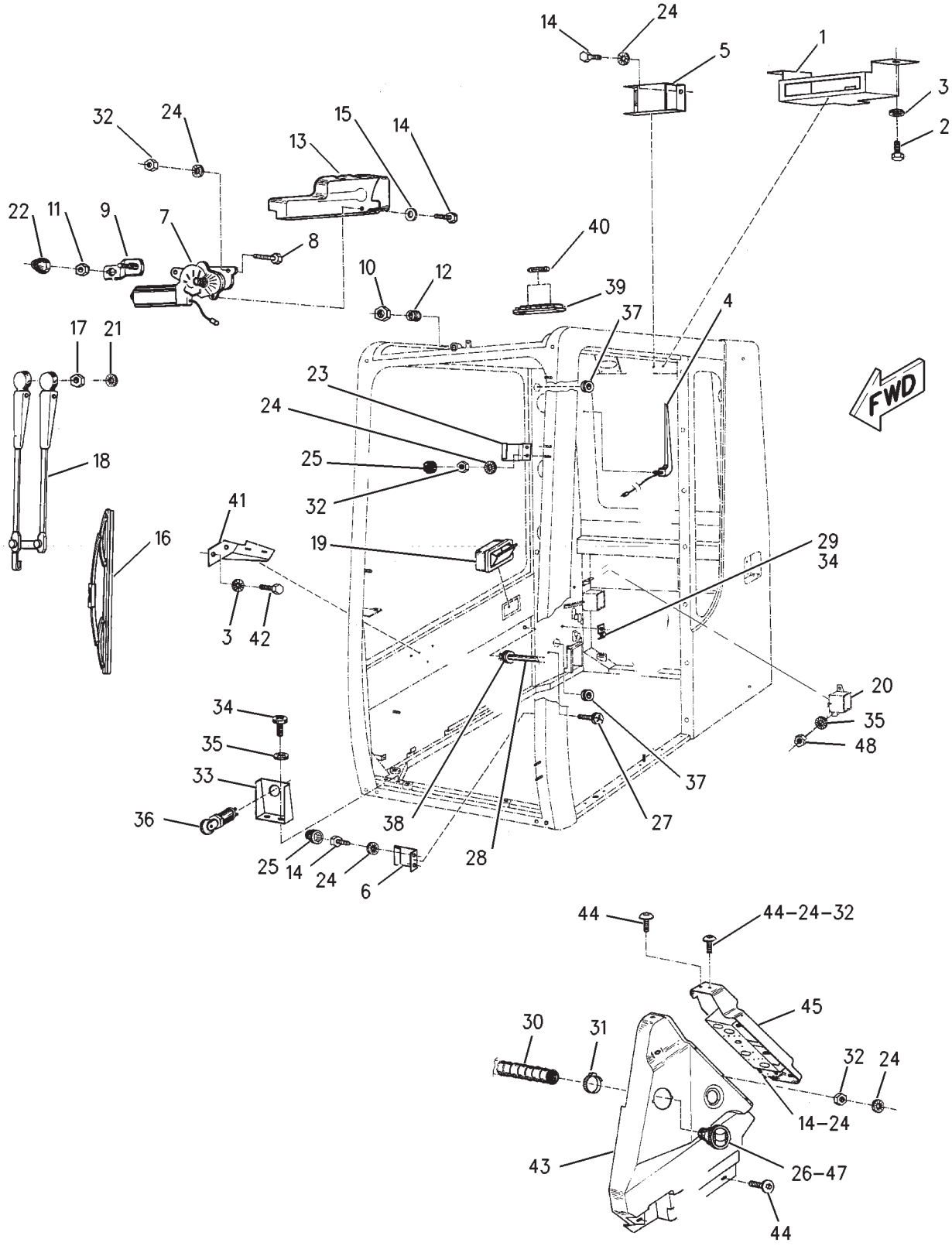

GRAPHIC #1 **<END>** g00776042

OPERATOR STATION

153-2916 DOOR GP-CAB

S/N: RCD1-UP

PART OF 153-2915 CAB GP

SMCS-7308 **i01187669**

NOTE	REF NO	GRAPHIC REF	PART NUMBER	QTY	PART NAME 1 2 3 4 5 6 (PRODUCT LEVEL)	SEE PAGE
	1	1	**110-7567**	1	DOOR AS	
Y	2	1	**133-0578**	1	WINDOW GP-DOOR	1071
	3	1	**164-6821**	1	GLASS	
M	4	1	**8T-4136**	7	BOLT (M10X1.5X25-MM)	
	5	1	**112-3502**	7	WASHER	
	6	1	**7X-2483**	1	HANDLE AS	
		1	**8Y-4501**	1	SPRING-HANDLE	
	7	1	**9B-1722**	4	SCREW (10-24X0.5-IN)	
	8	1	**6C-9081**	4	LOCKWASHER	
	9	1	**6C-9082**	1	ROD	
	10	1	**6C-8986**	2	CLIP-AXLE	
	11	1	**8Y-6376**	1	LATCH AS-DOOR	
M	12	1	**8T-4971**	4	BOLT (M6X1X30-MM)	
	13	1	**8Y-6375**	1	LINKAGE AS	
	14	1	**6C-9085**	1	COVER-LOCK	
M	15	1	**109-3570**	2	SCREW	
M	16	1	**5C-9553**	1	BOLT (M6X1X16-MM)	
	17	1	**6C-9078**	5	WASHER	
	18	1	**6C-9089**	1	NUT-CAP	
	19	1	**128-5826**	1	HANDLE AS	
M	20	1	**8T-4200**	3	BOLT (M8X1.25X16-MM)	
	21	1	**6C-9092**	3	WASHER	
	22	1	**6C-8996**	3	CAP	
E	23	1	**122-2358**		SEAL (170CM)	
	24	1	**9D-7303**	1	GROMMET	
	25	1	**6C-9095**	1	SEAL	
	26	1	**6C-9222**	1	GASKET	

E-ORDER BY THE CENTIMETER
M-METRIC PART
Y-SEPARATE ILLUSTRATION

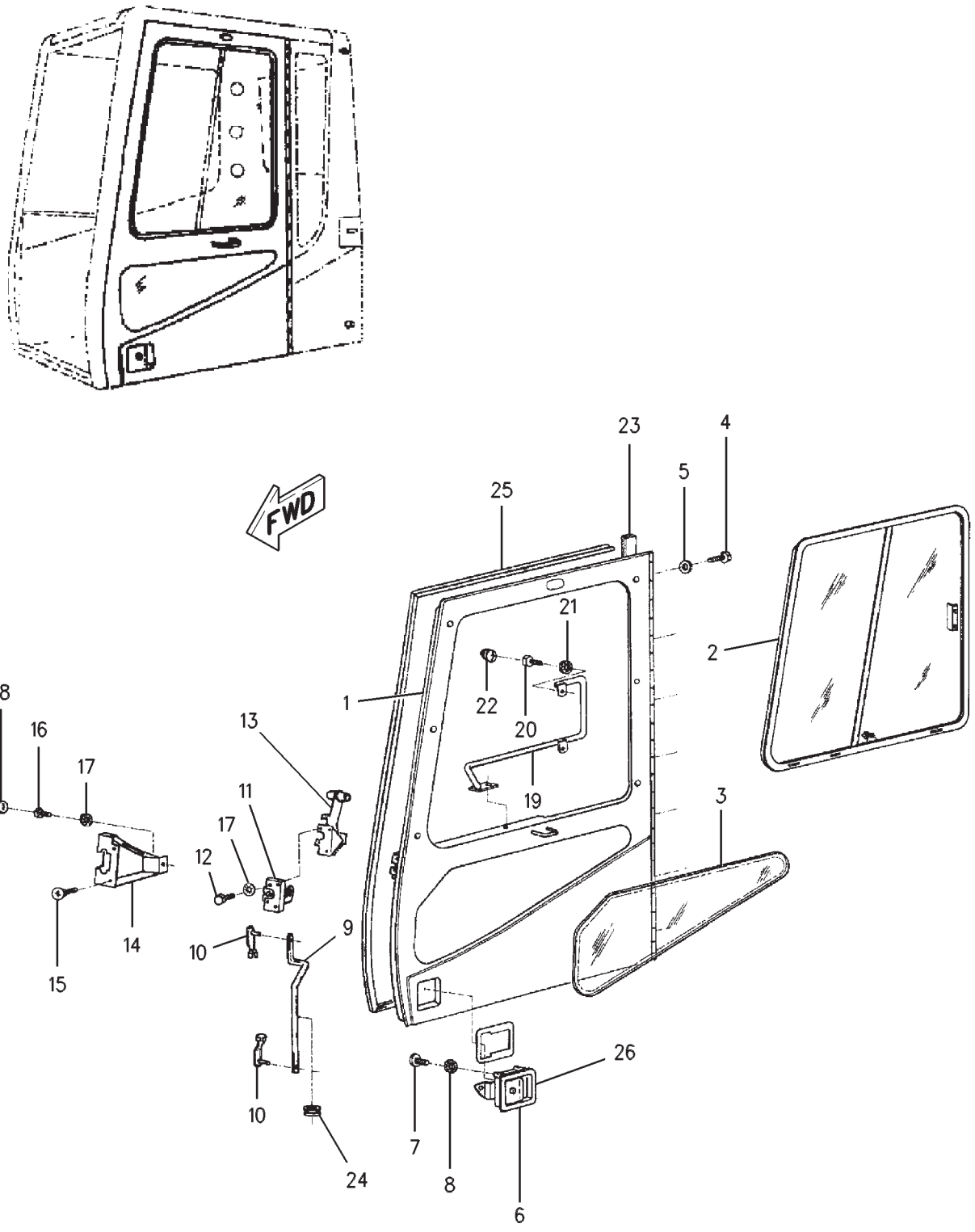

GRAPHIC #1 **<END>** g00538978

OPERATOR STATION

124-0254 DUCT GP-AIR

S/N: RCD1-UP

PART OF 204-8690 AIR CONDITIONER AR

SMCS-734D **i01037063**

NOTE	REF NO	GRAPHIC REF	PART NUMBER	QTY	PART NAME 1 2 3 4 5 6 (PRODUCT LEVEL)	SEE PAGE
	1	1	**6L-4725**	1	CLAMP-HOSE	
	2	1	**127-2394**	1	DUCT	
	3	1	**111-6389**	1	RUBBER-CUSHION	

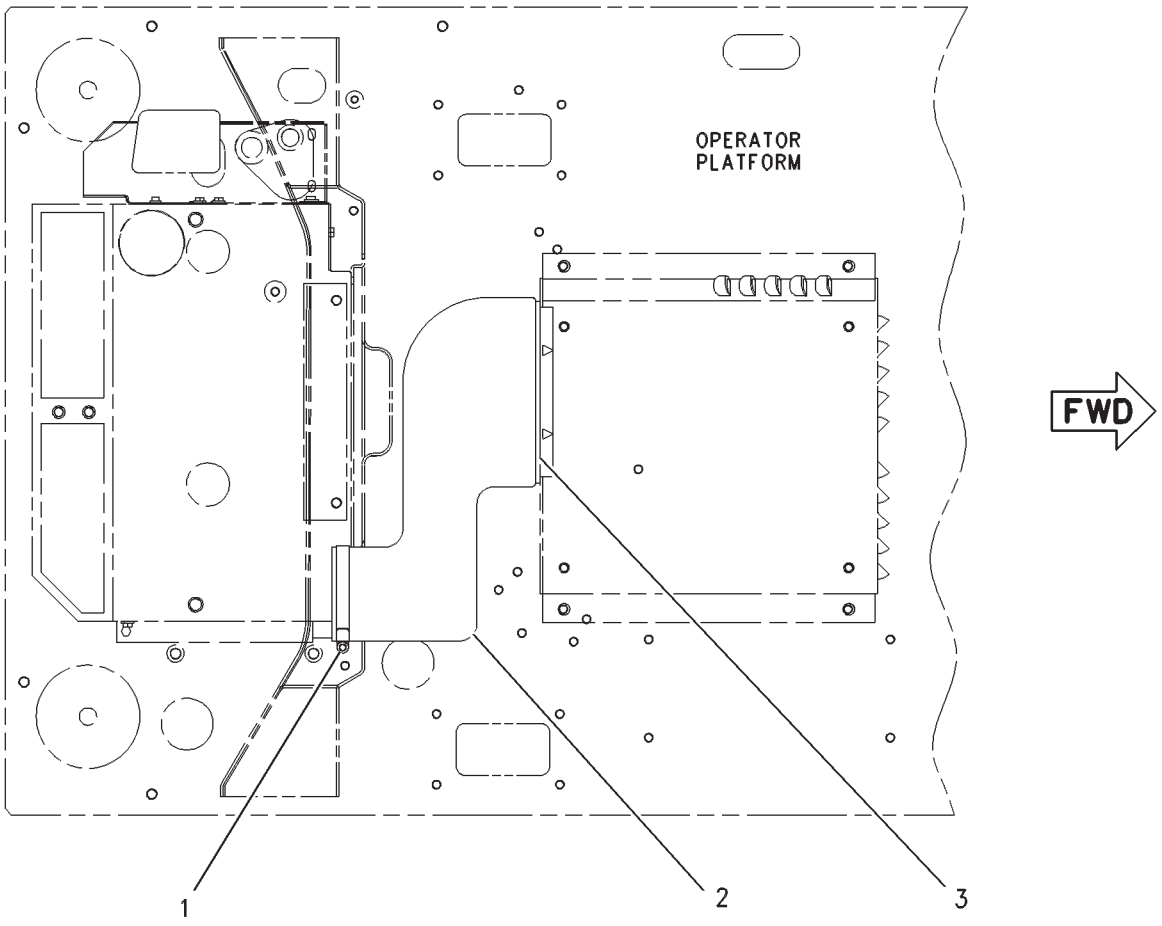

TOP VIEW

GRAPHIC #1 **<END>** g00536990

OPERATOR STATION

159-9912 DUCT GP-DEFROSTER

S/N: RCD1-UP

PART OF 204-8690 AIR CONDITIONER AR

SMCS-734D **i01088119**

NOTE	REF NO	GRAPHIC REF	PART NUMBER	QTY	PART NAME 1 2 3 4 5 6 (PRODUCT LEVEL)	SEE PAGE
	1	1	**9M-7959**	2	CLAMP-HOSE	
	2	1	**133-3666**	1	DUCT	
	3	1	**160-0629**	1	HOSE AS	
	4	1	**5P-4115**	3	WASHER-HARD (7.2X19X2-MM THK)	
M	5	1	**7X-2533**	3	BOLT (M6X1X35-MM)	
	6	1	**133-6318**	1	DUCT	
M	7	1	**9X-2042**	3	SCREW-TRUSS HEAD	

M-METRIC PART

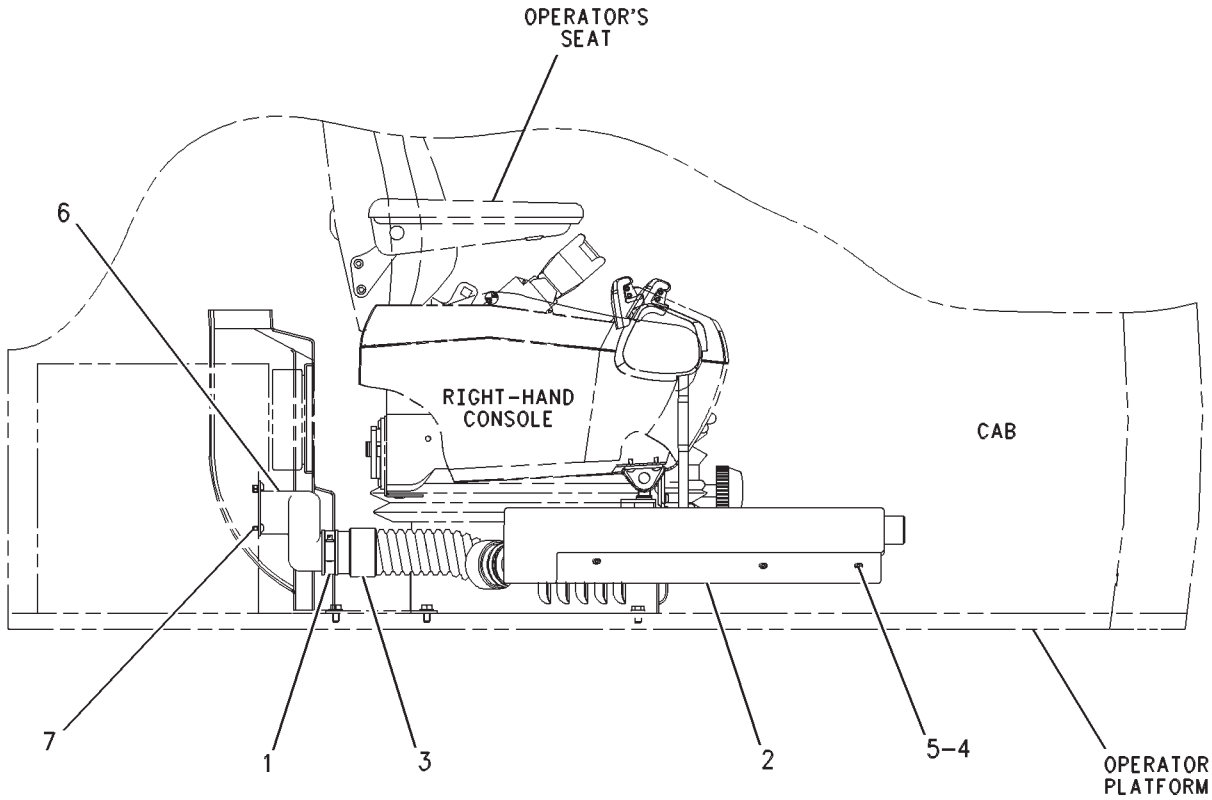

RIGHT SIDE VIEW

GRAPHIC #1 **<END>** g00536991

OPERATOR STATION

138-8278 FRAME GP-UPPER FRONT WINDOW

S/N: RCD1-UP

PART OF 137-0182 WINDOW GP-FRONT

SMCS-7340 **i02365133**

NOTE	REF NO	GRAPHIC REF	PART NUMBER	QTY	PART NAME 1 2 3 4 5 6 (PRODUCT LEVEL)	SEE PAGE
Y	1	1	**142-1250**	1	LATCH GP-FRONT WINDOW (RH)	1038
	2	1	**142-1252**	1	FRAME AS	
		1	**6C-9011**	4	RING (BEARING)	
		1	**142-1255**	1	GLASS AS	
		1	**262-7932**	1	STRIP-WEATHER	
		1	**143-0693**	4	PIN	
	3	1	**142-2961**	2	STOP-RUBBER	
Y	4	1	**142-1251**	1	LATCH GP-FRONT WINDOW (LH)	1039

Y-SEPARATE ILLUSTRATION

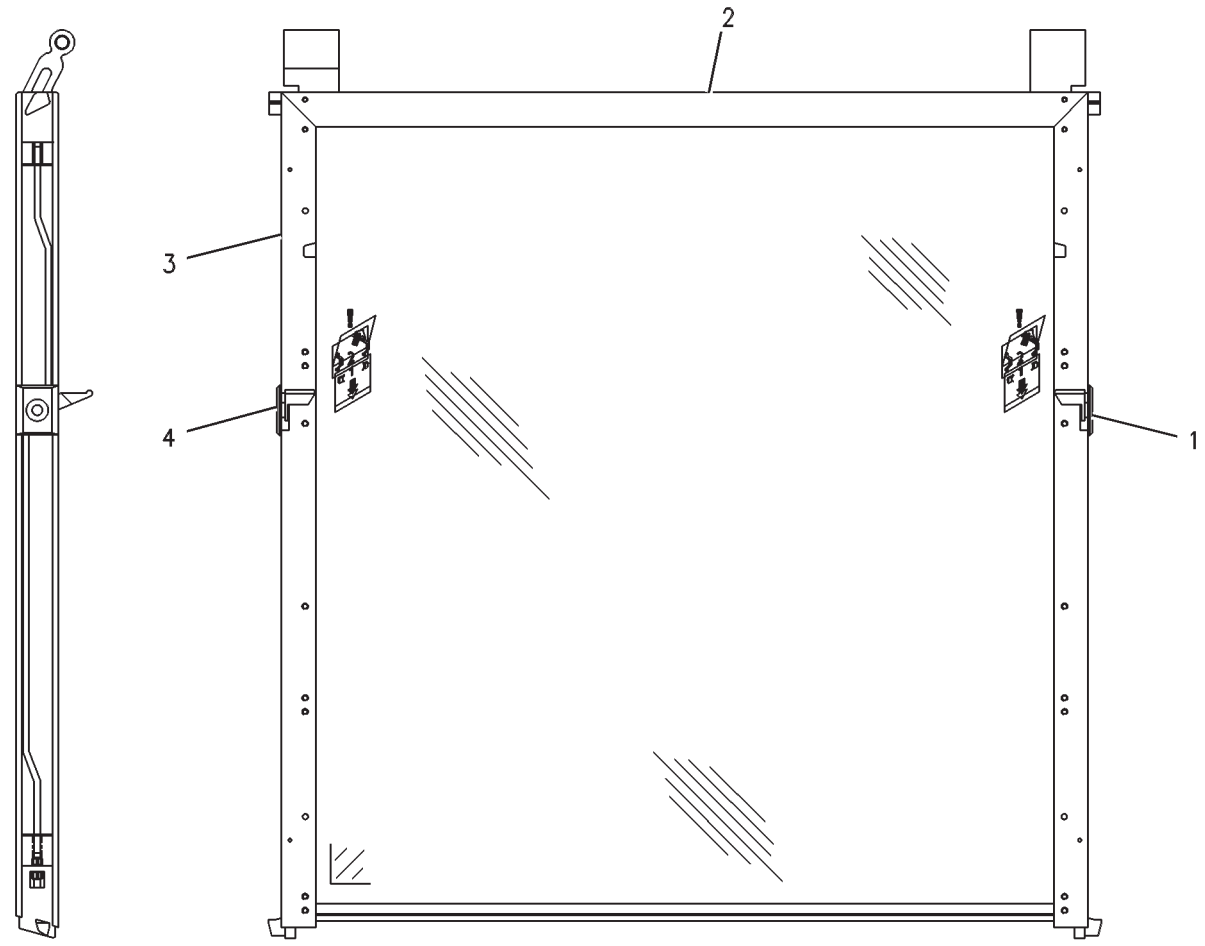

GRAPHIC #1

<END>

g00278806

OPERATOR STATION

155-1211 GUARD AR-VANDALISM

S/N: RCD1-UP

AN ATTACHMENT

SMCS-7315 **i01035593**

NOTE	PART NUMBER	QTY	PART NAME 1 2 3 4 5 6 (PRODUCT LEVEL)	SEE PAGE
Y	*148-5029*	1	STORAGE GP-VANDALISM GUARD	411
Y	*6C-8617*	1	GUARD GP-VANDALISM	1034
Y	*155-1212*	1	GUARD GP-VANDALISM	1035

Y-SEPARATE ILLUSTRATION

<END>

OPERATOR STATION

222-5140 GUARD AR-VANDALISM

S/N: RCD1-UP
PART OF 222-3445 OPERATOR AR
ALSO AN ATTACHMENT

SMCS-7315 **i01735566**

NOTE	PART NUMBER	QTY	PART NAME 1 2 3 4 5 6 (PRODUCT LEVEL)	SEE PAGE
Y	*110-4840*	1	STORAGE GP-VANDALISM GUARD	410
Y	*6C-8617*	1	GUARD GP-VANDALISM	1034
Y	*155-1212*	1	GUARD GP-VANDALISM	1035

Y-SEPARATE ILLUSTRATION

<END>

OPERATOR STATION

126-3162 GUARD GP-OVERHEAD

S/N: RCD1-UP
FOPS W/LIGHTING GP
AN ATTACHMENT

SMCS-7159 **i01349322**

NOTE	REF NO	GRAPHIC REF	PART NUMBER	QTY	PART NAME 1 2 3 4 5 6 (PRODUCT LEVEL)	SEE PAGE
	1	1	**122-9719**	1	GUARD AS-FRONT	
	2	1	**123-8305**	1	GUARD AS-TOP	
	3	1	**6C-8229**	1	SUPPORT AS	
	4	1	**9X-8257**	16	WASHER (17.5X30X3.5-MM THK)	
M	5	1	**7X-2553**	2	BOLT (M16X2X40-MM)	
	6	1	**9X-8937**	8	TACK-FASTENER	
M	7	1	**8T-6383**	4	BOLT (M16X2X200-MM)	
	8	1	**115-1624**	2	SPRING AS-GAS	
	9	1	**4E-1384**	2	BUMPER-CONICAL	
	10	1	**8T-4224**	2	WASHER-HARD (8.8X16X2-MM THK)	
B	11	1	**8T-4897**	2	WASHER (10.2X35X6-MM THK)	
M	12	1	**8T-4174**	2	BOLT (M16X2X120-MM)	
M	13	1	**096-4885**	2	LOCKNUT (M16X2-THD)	
	14	1	**137-9412**	2	BLOCK-MOUNTING	
	15	1	**6C-8373**	1	BRACKET AS (RH)	
	16	1	**6C-8378**	1	BRACKET AS (LH)	
	17	1	**6C-8379**	2	LATCH AS	
	18	1	**6C-8382**	2	SPRING-LATCH	
M	19	1	**8T-4193**	6	BOLT (M16X2X50-MM)	
M	20	1	**8T-6869**	2	BOLT (M8X1.25X60-MM)	
M	21	1	**5C-7261**	8	NUT (M8X1.25-THD)	
B	22	1	**124-8758**	1	PLATE-WARNING (FRONT GUARD)	
B	23	1	**6C-4000**	8	SHIM (1-MM THK)	
CY	24	1	**153-2524**	2	LAMP GP-FLOOD (24-VOLT)	240
	25	1	**117-7029**	1	HARNESS AS	
	26	1	**013-8502**	2	LOCKWASHER	
	27	1	**2B-8352**	4	WASHER (CONICAL)	
	28	1	**6C-9134**	1	HARNESS AS	
B	29	1	**124-8759**	1	PLATE-WARNING (TOP GUARD)	
B	30	1	**143-6410**	1	PLATE-ROPS (FRONT GUARD)	
B	31	1	**143-6423**	1	PLATE-ROPS (TOP GUARD)	

B-USE AS REQUIRED
C-CHANGE FROM PREVIOUS TYPE
M-METRIC PART
Y-SEPARATE ILLUSTRATION

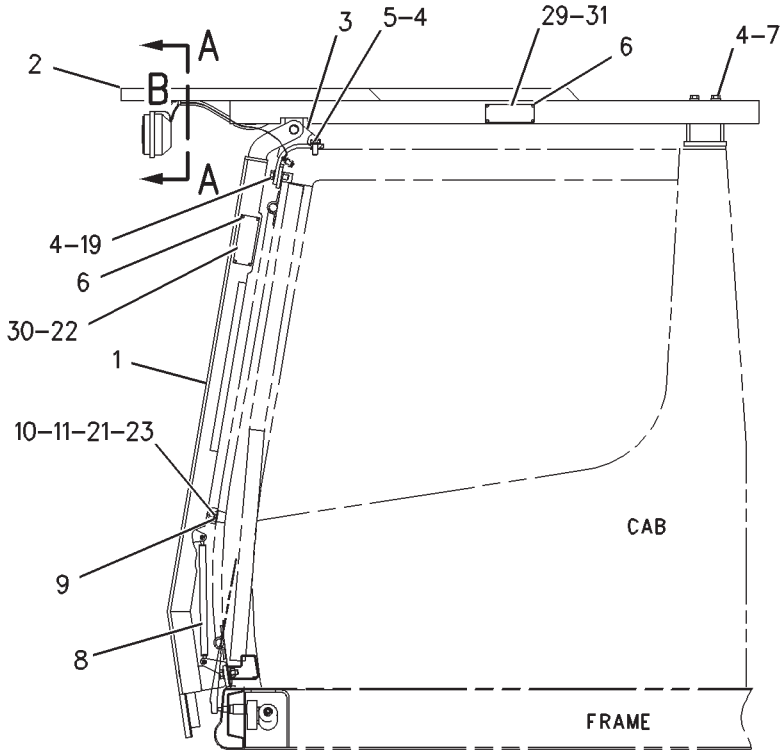

LEFT SIDE VIEW

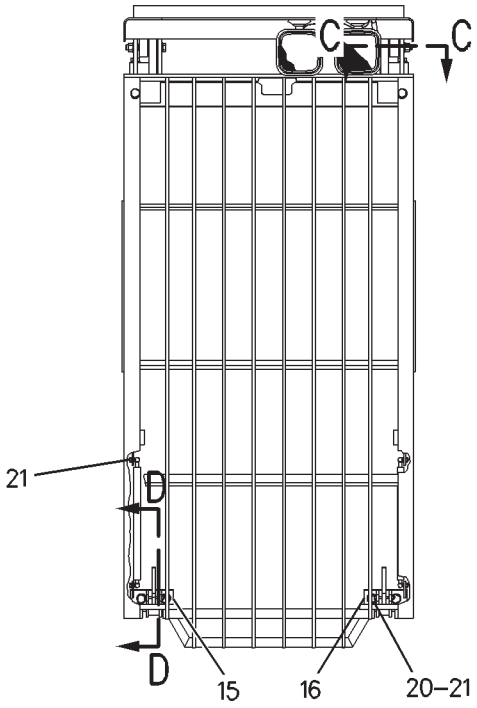

FRONT VIEW

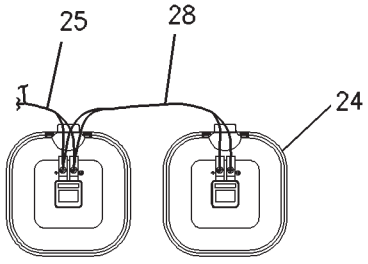

VIEW A-A

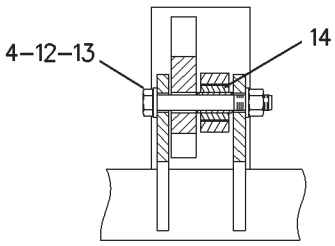

SECTION C-C

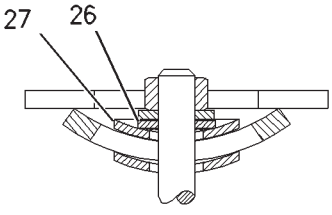

SECTION OF AREA B

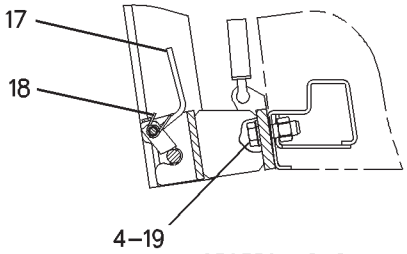

SECTION D-D

GRAPHIC #1 **<END>** g00709794

OPERATOR STATION

6C-8617 GUARD GP-VANDALISM

S/N: RCD1-UP
PART OF 155-1211, 222-5140 GUARD AR-VANDALISM
ALSO AN ATTACHMENT

SMCS-7315 **i01850111**

NOTE	REF NO	GRAPHIC REF	PART NUMBER	QTY	PART NAME 1 2 3 4 5 6 (PRODUCT LEVEL)	SEE PAGE
	1	1	**108-2960**	1	ANGLE AS (LH)	
	2	1	**108-2966**	1	ANGLE AS (RH)	
	3	1	**5G-0817**	2	BUMPER-CONICAL	
B	4	1	**6C-8787**	2	TUBE	
	5	1	**9S-1315**	2	PIN-CLEVIS	
	6	1	**6S-6646**	2	PIN-COTTER	
	7	1	**9X-8257**	4	WASHER (17.5X30X3.5-MM THK)	
M	8	1	**8T-4193**	4	BOLT (M16X2X50-MM)	
	9	1	**108-2970**	3	GUARD AS	
					(EACH INCLUDES)	
		1	**8H-2282**	2	HINGE	

B-USE AS REQUIRED
M-METRIC PART

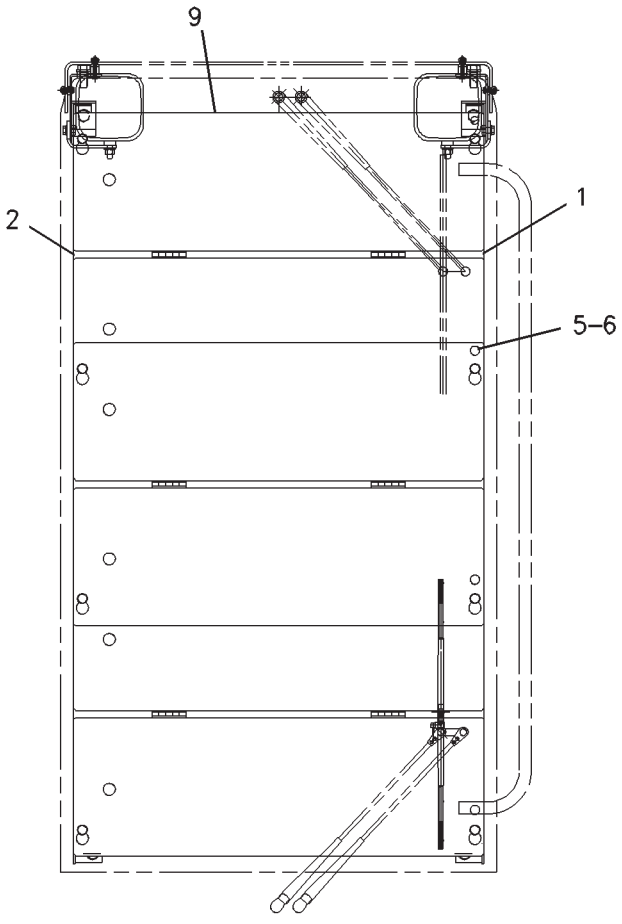

FRONT VIEW

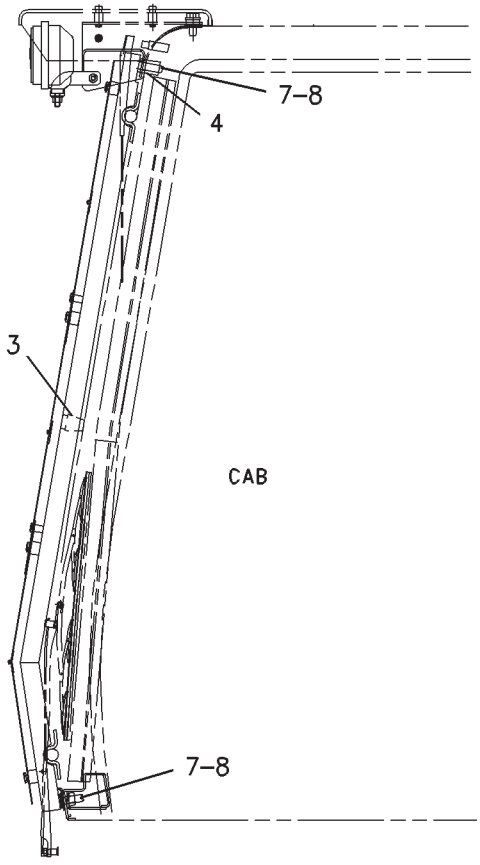

LEFT SIDE VIEW

GRAPHIC #1 **<END>** g00942411

OPERATOR STATION

155-1212 GUARD GP-VANDALISM

S/N: RCD1-UP
PART OF 155-1211, 222-5140 GUARD AR-VANDALISM
ALSO AN ATTACHMENT

SMCS-7315 **i01035585**

NOTE	REF NO	GRAPHIC REF	PART NUMBER	QTY	PART NAME 1 2 3 4 5 6 (PRODUCT LEVEL)	SEE PAGE
	1	1	**110-4833**	1	PLATE AS	
		1	**8H-2282**	2	HINGE	
	2	1	**136-3934**	1	PLATE AS	
		1	**8H-2282**	2	HINGE	
M	3	1	**8T-4200**	1	BOLT (M8X1.25X16MM)	
	4	1	**7X-0579**	1	WASHER-HARD (2.0MM THK)	

M-METRIC PART

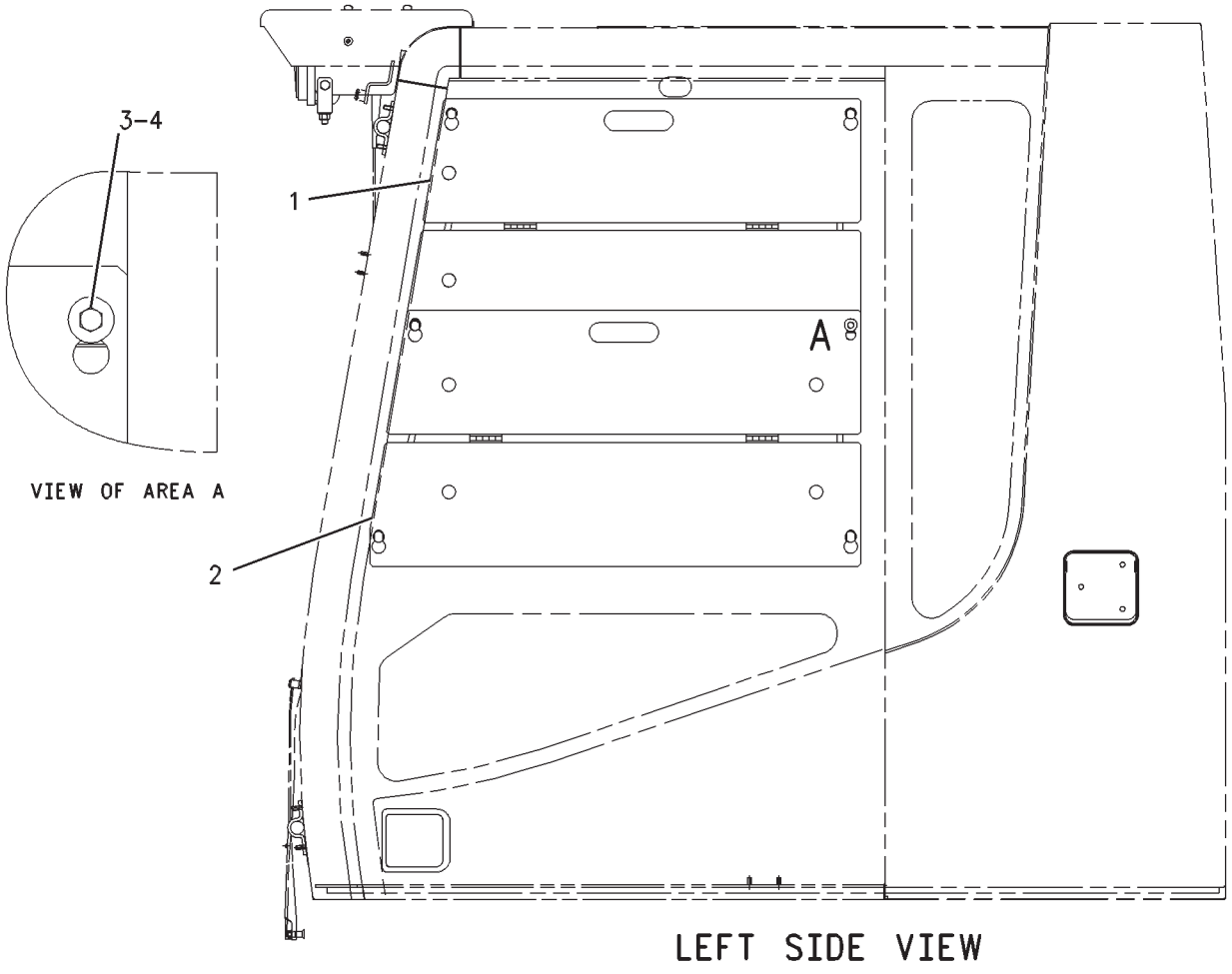

GRAPHIC #1 **<END>** g00539006

OPERATOR STATION

146-6701 HORN GP-ELECTRIC

S/N: RCD1-UP

PART OF 229-3366 CHASSIS AR

SMCS-7402 **i01040832**

NOTE	REF NO	GRAPHIC REF	PART NUMBER	QTY	PART NAME 1 2 3 4 5 6 (PRODUCT LEVEL)	SEE PAGE
	1	1	**7T-0969**	2	HORN AS (24-VOLT, LOW TONE)	
					(EACH INCLUDES)	
M		1	**8C-7581**	2	SCREW-MACHINE (M4X0.7X8-MM)	
		1	**9B-7233**	2	LOCKWASHER	
		1	**096-6166**	2	WASHER-HARD (4.5X9X1-MM THK)	
	2	1	**7T-0970**	1	HORN AS (24-VOLT, HIGH TONE)	
M		1	**8C-7581**	2	SCREW-MACHINE (M4X0.7X8-MM)	
		1	**9B-7233**	2	LOCKWASHER	
		1	**096-6166**	2	WASHER-HARD (4.5X9X1-MM THK)	
M	3	1	**8T-4189**	3	BOLT (M8X1.25X20-MM)	
	4	1	**8T-4224**	3	WASHER-HARD (8.8X16X2-MM THK)	
M	5	1	**8T-4136**	3	BOLT (M10X1.5X25-MM)	
	6	1	**8T-4121**	3	WASHER-HARD (11X21X2.5-MM THK)	
	7	1	**153-2584**	1	BRACKET AS	

M-METRIC PART

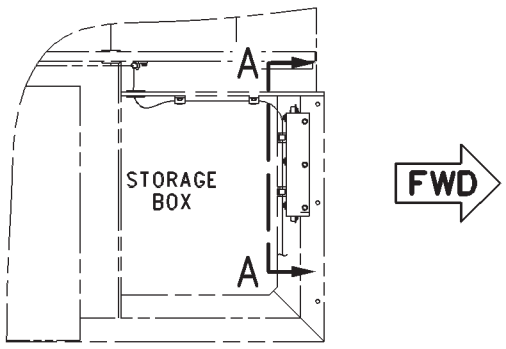

TOP VIEW

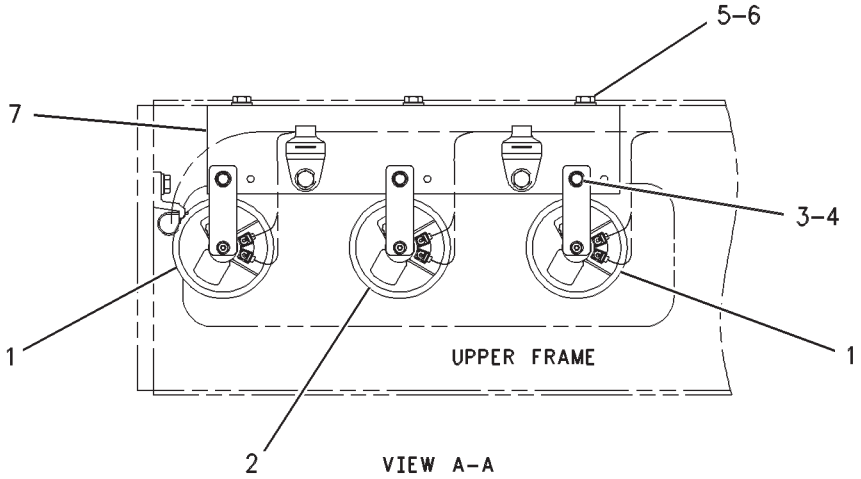

VIEW A–A

GRAPHIC #1 **<END>** g00537575

OPERATOR STATION

243-5652 INSTALLATION GP-RADIO

S/N: RCD1-UP

PART OF 229-3366 CHASSIS AR

SMCS-7338 **i02125825**

NOTE	REF NO	GRAPHIC REF	PART NUMBER	QTY	PART NAME 1 2 3 4 5 6 (PRODUCT LEVEL)	SEE PAGE
	1	1	**163-6708**	1	RADIO GP (AM/FM)	
	2	1	**8T-0328**	2	WASHER-HARD (5.5X10X1-MM THK)	
M	3	1	**095-0736**	2	SCREW-MACHINE (M5X0.8X10-MM)	
	4	1	**217-1004**	2	SPEAKER	

M-METRIC PART

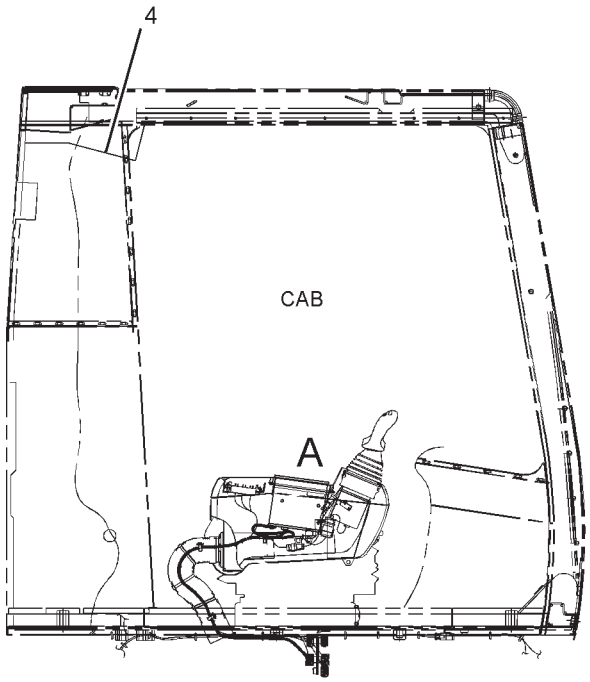

RIGHT SIDE VIEW

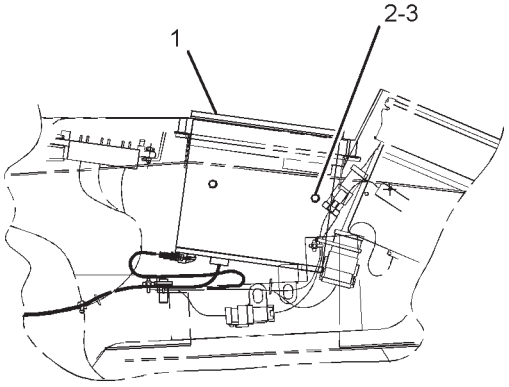

VIEW OF AREA A

GRAPHIC #1 **<END>** g01089453

OPERATOR STATION

142-1250 LATCH GP-FRONT WINDOW–RH

S/N: RCD1-UP

PART OF 138-8278 FRAME GP-UPPER FRONT WINDOW

SMCS-7340 **i00983321**

NOTE	REF NO	GRAPHIC REF	PART NUMBER	QTY	PART NAME 1 2 3 4 5 6 (PRODUCT LEVEL)	SEE PAGE
	1	1	**6C-9019**	1	LEVER-RH	
	2	1	**142-1548**	1	BLOCK-LOCKING (RH)	
	3	1	**142-1550**	2	NUT	
	4	1	**6C-9016**	2	SPRING	
	5	1	**6C-9014**	2	GUIDE-ROD	
	6	1	**142-9663**	1	ROD	
	7	1	**6C-9022**	1	SUPPORT	
	8	1	**6C-9017**	1	ROD	
	9	1	**142-1549**	1	BLOCK-LOCKING (RH)	
	10	1	**6C-9011**	1	RING (BEARING)	

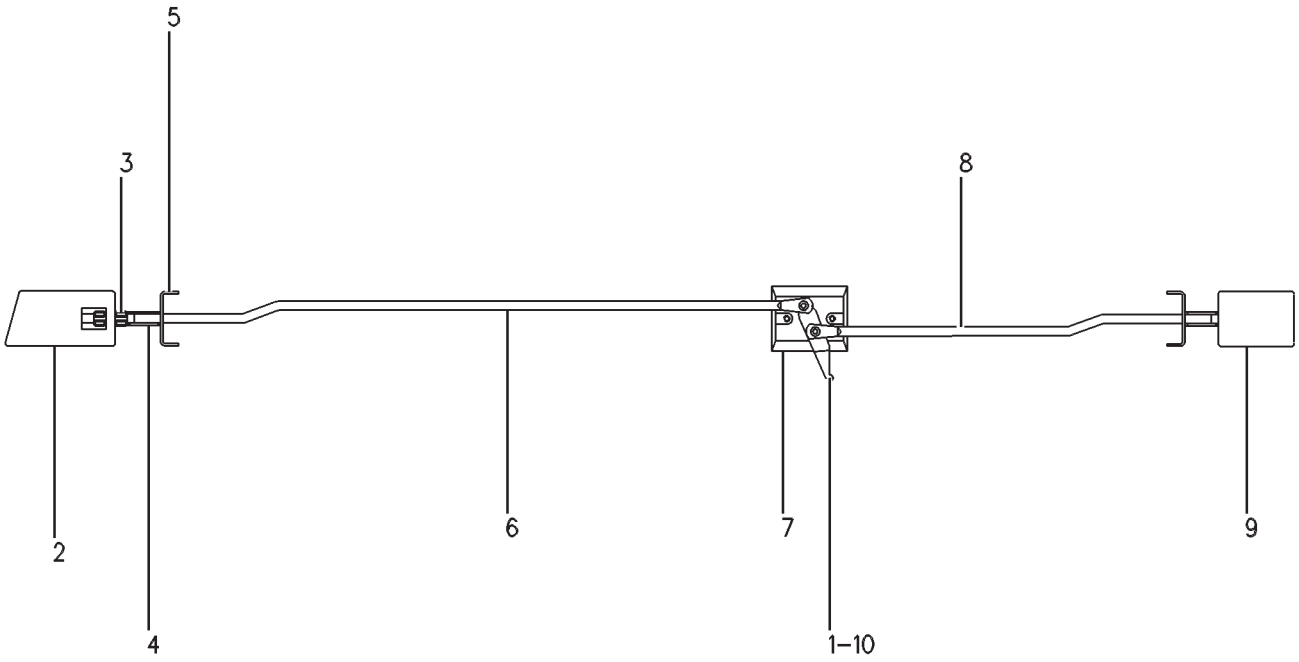

GRAPHIC #1 **<END>** g00278803

OPERATOR STATION

142-1251 LATCH GP-FRONT WINDOW–LH

S/N: RCD1-UP

PART OF 138-8278 FRAME GP-UPPER FRONT WINDOW

SMCS-7340 **i00983325**

NOTE	REF NO	GRAPHIC REF	PART NUMBER	QTY	PART NAME 1 2 3 4 5 6 (PRODUCT LEVEL)	SEE PAGE
	1	1	**6C-9018**	1	LEVER-LH	
	2	1	**142-1541**	1	BLOCK-LOCKING	
	3	1	**142-1550**	2	NUT	
	4	1	**6C-9016**	2	SPRING	
	5	1	**6C-9014**	2	GUIDE-ROD	
	6	1	**142-9663**	1	ROD	
	7	1	**6C-9022**	1	SUPPORT	
	8	1	**6C-9017**	1	ROD	
	9	1	**142-1547**	1	BLOCK-LOCKING	
	10	1	**6C-9011**	1	RING (BEARING)	

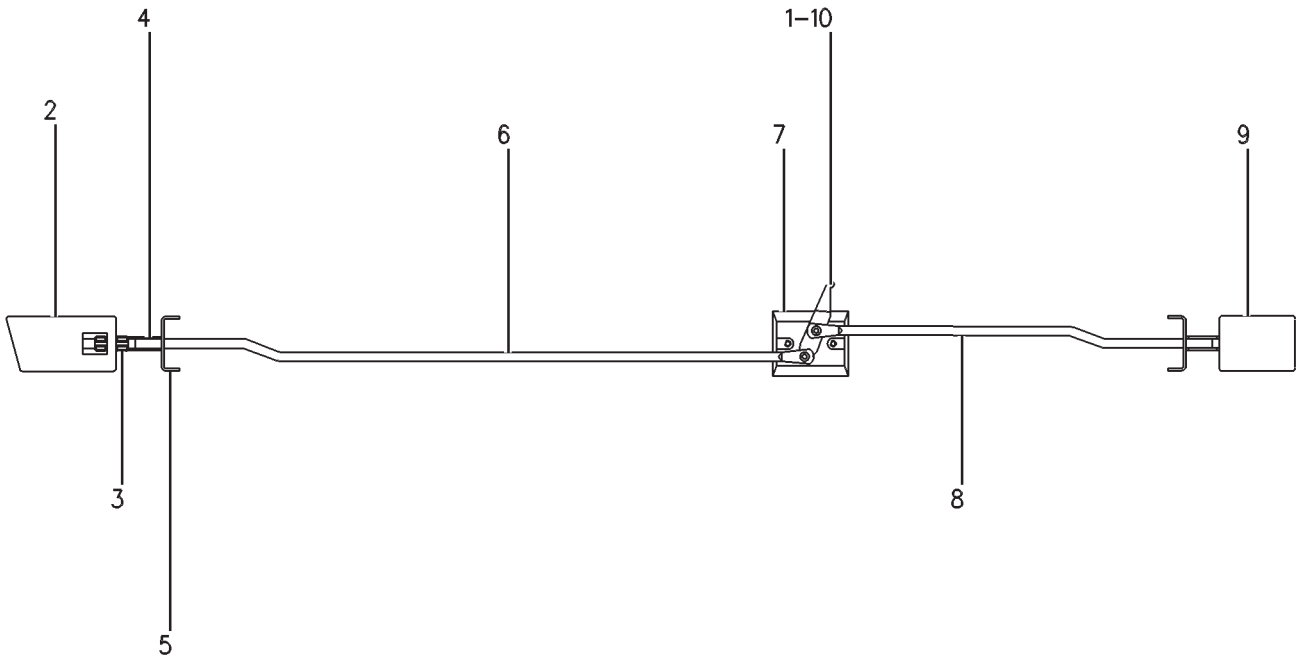

GRAPHIC #1 **<END>** g00278798

OPERATOR STATION

196-3810 LINES GP-AIR CONDITIONER

S/N: RCD1-UP

PART OF 204-8690 AIR CONDITIONER AR

SMCS-1808 **i02142192**

NOTE	REF NO	GRAPHIC REF	PART NUMBER	QTY	PART NAME 1 2 3 4 5 6 (PRODUCT LEVEL)	SEE PAGE
	1	1	**9X-7383**	2	SEAL-O-RING	
	2	1,2	**9X-7381**	2	SEAL-O-RING	
	3	1	**6D-4246**	1	CLIP	
	4	1,2	**9X-7380**	3	SEAL-O-RING	
D	5	1	**8T-6936**		SEAL (.3M)	
	6	2	**105-9411**	1	SUPPORT	
E	7	1	**145-8495**		GUARD (168-CM)	
	8	2	**7F-6998**	1	LOCKWASHER	
	9	1,2	**8T-4121**	16	WASHER-HARD (11X21X2.5-MM THK)	
M	10	1,2	**8T-4137**	14	BOLT (M10X1.5X20-MM)	
	11	1,2	**6D-1641**	15	CLIP	
M	12	2	**8T-4136**	1	BOLT (M10X1.5X25-MM)	
	13	2	**203-6354**	1	HOSE AS	
	14	2	**203-6350**	1	HOSE AS	
	15	2	**114-5333**	1	SWITCH AS-PRESSURE	
		2	**102-8802**	1	KIT-RECEPTACLE (2-PIN)	
					(INCLUDES RECEPTACLE AS & WEDGE)	
		2	**3E-3365**	1	WEDGE-RECEPTACLE LOCK (2-PIN)	
		2	**8T-8729**	2	PIN-CONNECTOR (16-GA TO 18-GA)	
	16	2	**9X-7378**	1	SEAL-O-RING	
	17	1	**186-6189**	1	ACCUMULATOR-REFRIGERANT	
	18	1	**6V-4356**	1	CLIP	
	19	1	**6V-4357**	1	CLIP	
	20	1	**125-9632**	1	ANGLE AS	
	21	1	**8T-4224**	2	WASHER-HARD (8.8X16X2-MM THK)	
M	22	1	**8T-4189**	2	BOLT (M8X1.25X20-MM)	
M	23	1	**8T-4196**	1	BOLT (M10X1.5X35-MM)	
	24	1	**5K-5338**	4	CLIP	
	25	1	**093-2064**	1	GROMMET	
I	26	2	**122-2739**	1	HOSE AS	
	27	2	**9X-7382**	1	SEAL-O-RING	
I	28	2	**203-6353**	1	HOSE AS	
M	29	2	**8T-4195**	1	BOLT (M10X1.5X30-MM)	
	30	2	**109-1634**	1	CLIP (TAB)	
	31	2	**169-7128**	1	CLIP AS (SLOT)	
	32	2	**175-7162**	1	RECEIVER GP-REFRIGERANT DRYER	
		2	**7X-2049**	1	TUBE AS-REFRIGERANT ORIFICE	
I	33	2	**203-6351**	1	HOSE AS	
	34	2	**103-6100**	2	FITTING AS-AIR CONDITIONER (QUICK DISCONNECT)	
		2	**9X-7382**	2	SEAL-O-RING	
	35	1	**207-0267**	1	GUARD	
	36	1	**8T-4222**	1	WASHER-PLATED (11X32X2.5-MM THK)	

D-ORDER BY THE METER
E-ORDER BY THE CENTIMETER
I-REFER TO HYDRAULIC INFORMATION SYSTEM
M-METRIC PART

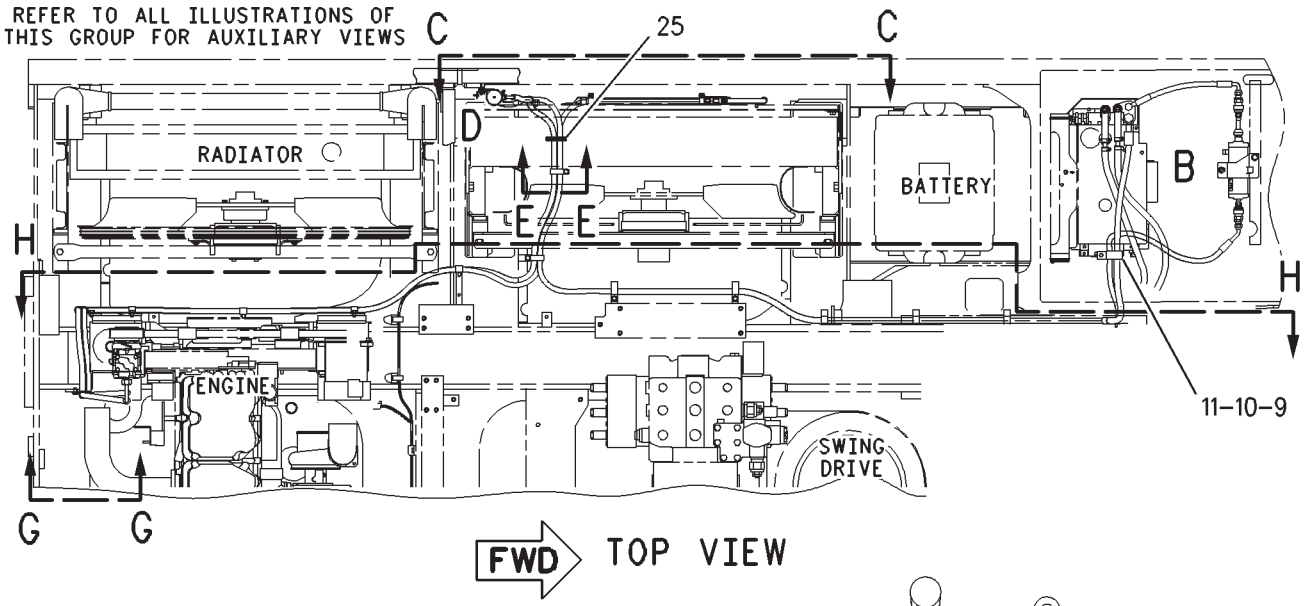

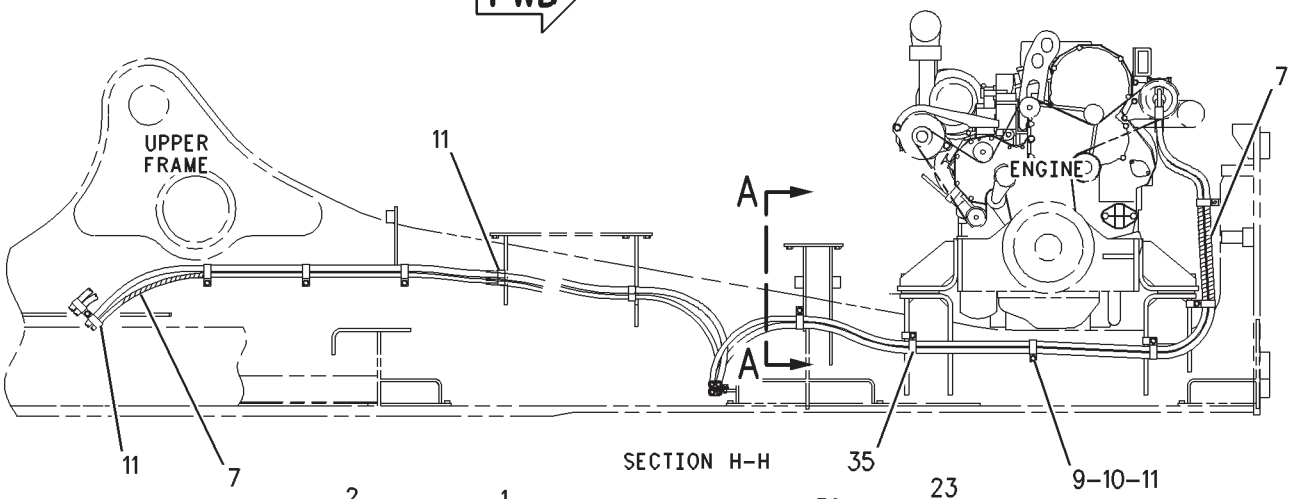

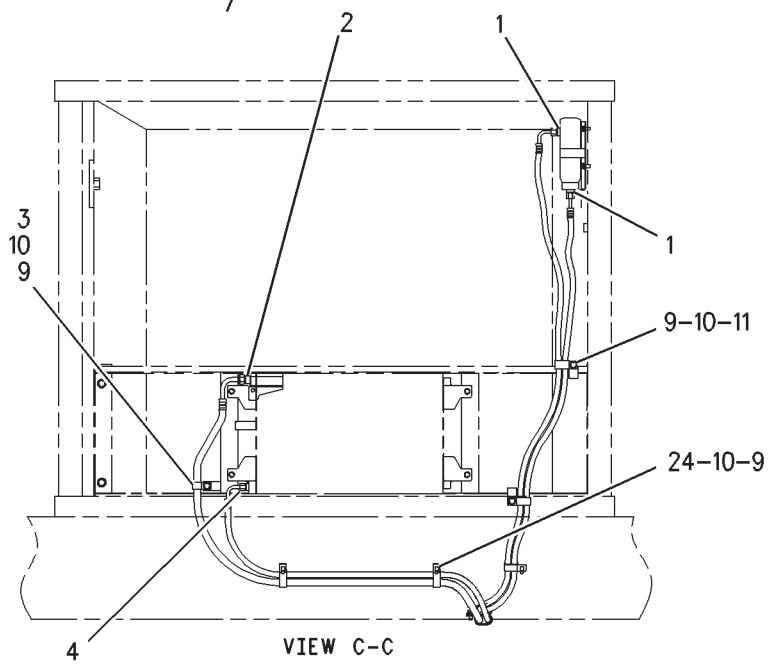

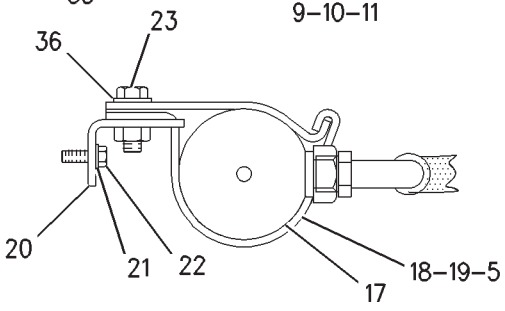

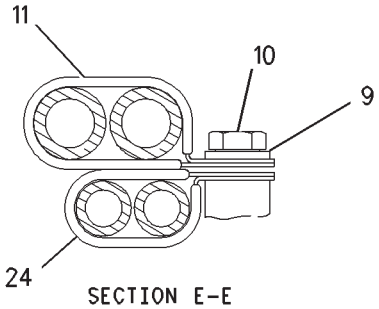

GRAPHIC #1

g00980894

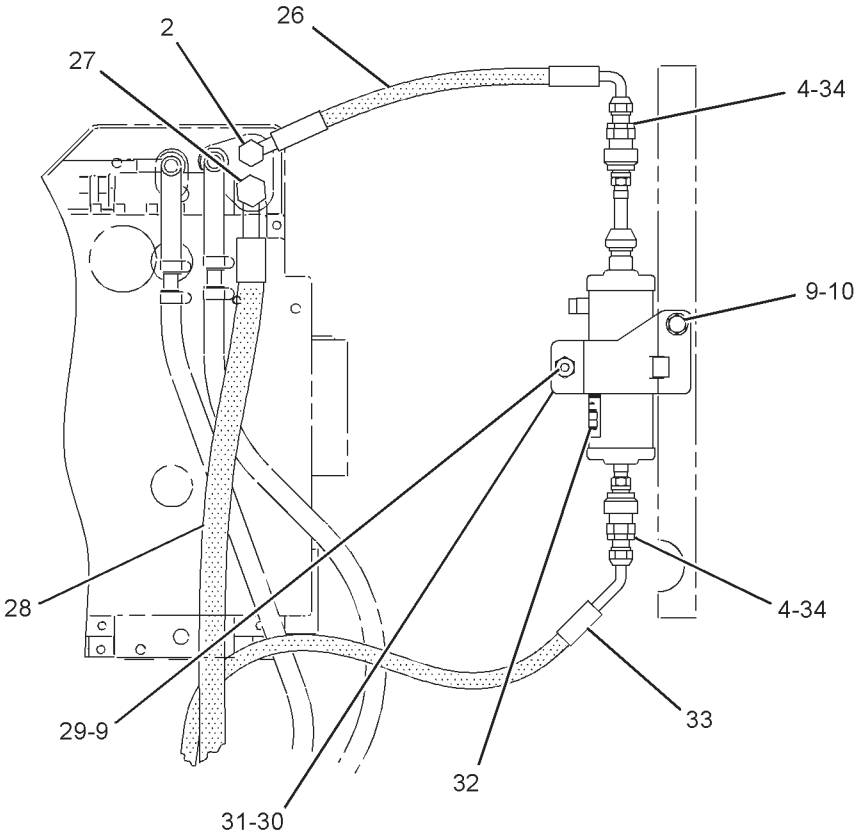

VIEW OF AREA B

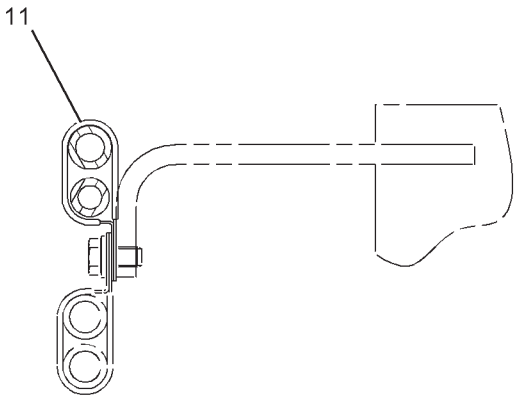

SECTION A-A

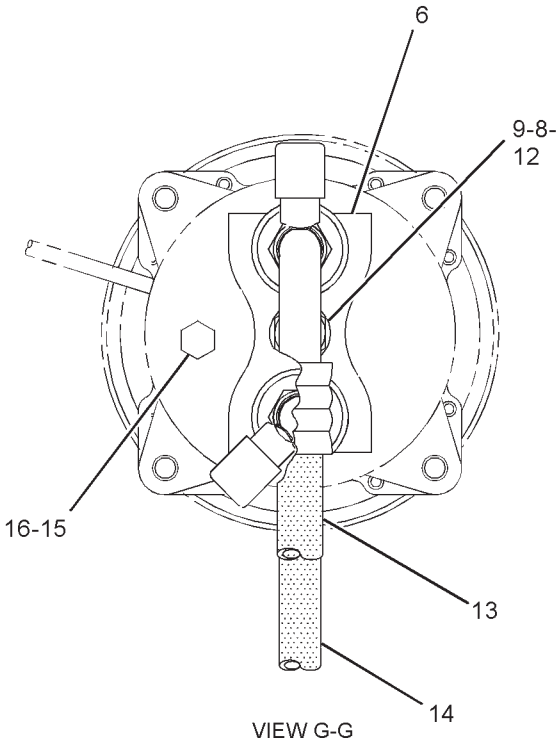

VIEW G-G

GRAPHIC #2 **<END>** g01110060

OPERATOR STATION

196-3811 LINES GP-HEATER

S/N: RCD1-UP

PART OF 204-8690 AIR CONDITIONER AR

SMCS-1812, 7304 **i01888948**

NOTE	REF NO	GRAPHIC REF	PART NUMBER	QTY	PART NAME 1 2 3 4 5 6 (PRODUCT LEVEL)	SEE PAGE
E	1	1	**5P-0767**		HOSE (515CM)	
E	1A	1	**5P-0767**		HOSE (495CM)	
	2	1	**5D-1026**	8	CLAMP-BAND	
E	3	1	**145-8495**		GUARD (36CM)	
	4	1	**6D-1641**	12	CLIP	
	5	1	**8T-4121**	7	WASHER-HARD (11X21X2.5-MM THK)	
	6	1	**6V-7238**	2	VALVE-SHUTOFF	
	7	1	**139-7235**	2	HOSE	
	8	1	**6P-8855**	2	TUBE	
M	9	1	**8T-4136**	7	BOLT (M10X1.5X25-MM)	
	10	1	**8C-6523**	2	ADAPTER	
	11	1	**3K-0360**	2	SEAL-O-RING	

E-ORDER BY THE CENTIMETER
M-METRIC PART

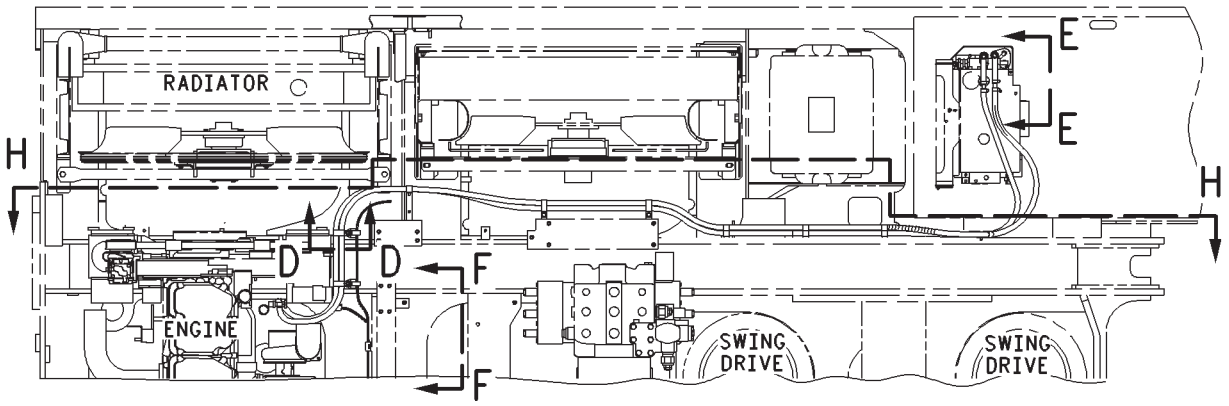

FWD TOP VIEW

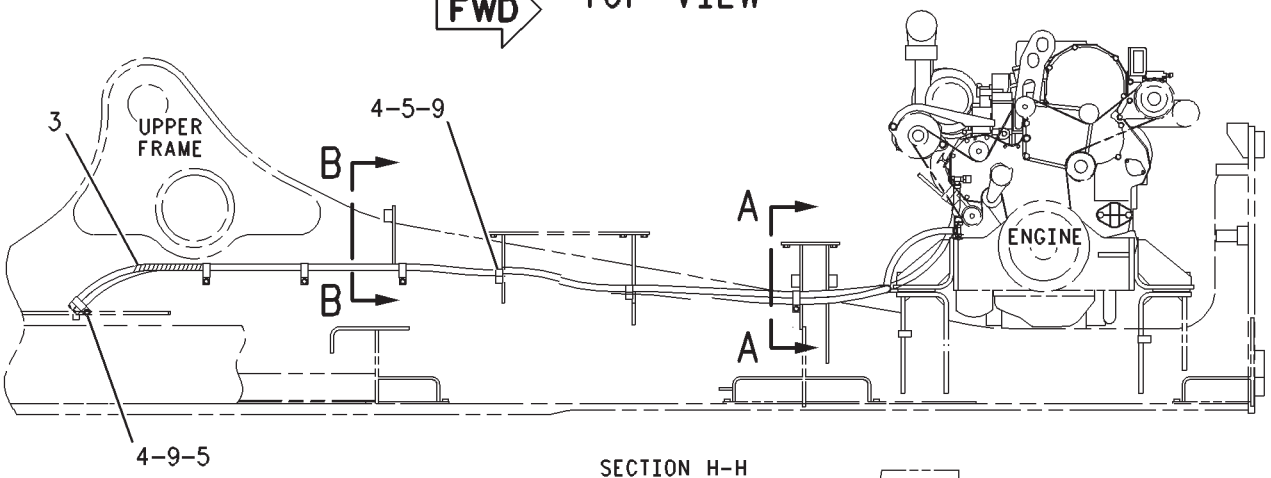

SECTION H-H

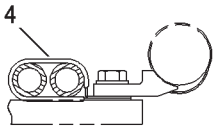

SECTION D-D

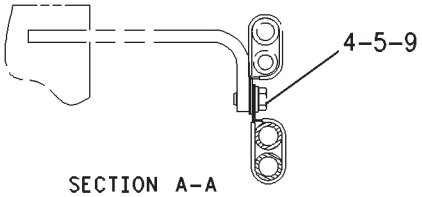

SECTION A-A

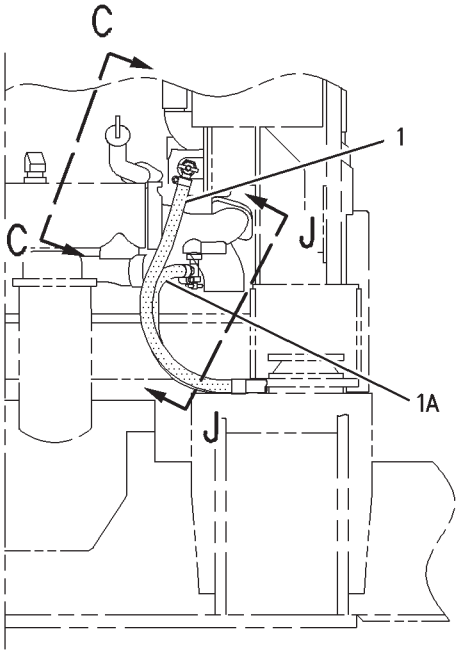

VIEW F-F

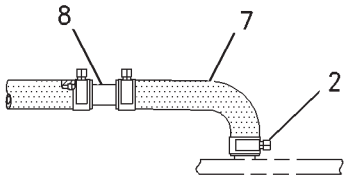

VIEW E-E

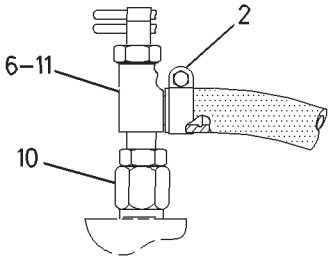

VIEW C-C

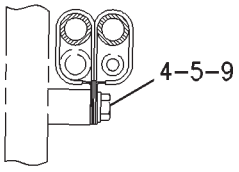

SECTION B-B

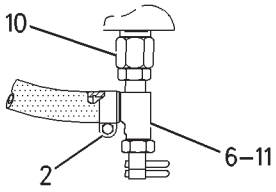

VIEW J-J

GRAPHIC #1 **<END>** g00980896

OPERATOR STATION

138-5276 MIRROR GP-REAR VIEW

S/N: RCD1-UP

PART OF 229-3366 CHASSIS AR

SMCS-7319 **i01735574**

NOTE	REF NO	GRAPHIC REF	PART NUMBER	QTY	PART NAME 1 2 3 4 5 6 (PRODUCT LEVEL)	SEE PAGE
	1	1	**5P-6879**	1	MIRROR	
	2	1	**199-0096**	1	BRACKET AS	
	3	1	**177-5627**	1	SUPPORT AS	
M	4	1	**8T-4139**	6	BOLT (M12X1.75X30-MM)	
	5	1	**5P-1076**	6	WASHER-HARD (13.5X30X4-MM THK)	
M	6	1	**8T-4195**	2	BOLT (M10X1.5X30-MM)	
	7	1	**8T-4121**	2	WASHER-HARD (11X21X2.5-MM THK)	
B	8	1	**7Y-2292**	4	WASHER (13X50X2-MM THK)	

B-USE AS REQUIRED
M-METRIC PART

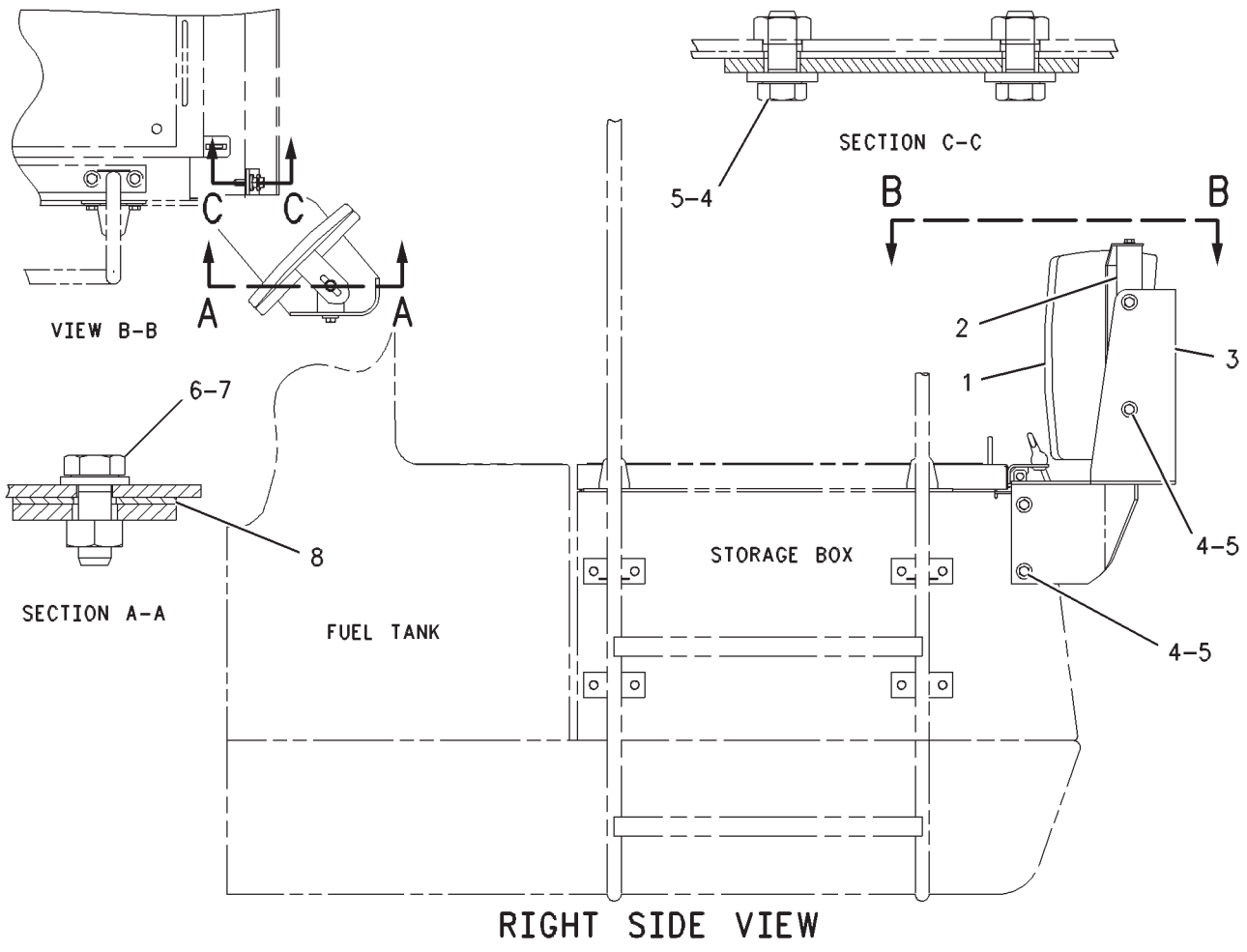

GRAPHIC #1 **<END>** g00535206

OPERATOR STATION

139-4003 MONITOR & MTG GP-OPERATOR

S/N: RCD1-UP

PART OF 153-2915 CAB GP

SMCS-7490 **i01471066**

NOTE	REF NO	GRAPHIC REF	PART NUMBER	QTY	PART NAME 1 2 3 4 5 6 (PRODUCT LEVEL)	SEE PAGE
	1	1	**3T-0304**	1	BASE AS-INDICATOR LIGHT	
		1	**6V-8374**	2	SCREW-MACHINE (6-32X0.25-IN)	
	2	1	**7N-1996**	1	LAMP (24-VOLT)	
	3	1	**6T-7058**	1	LENS (RED)	
M	4	1	**8T-4171**	8	BOLT (M6X1X12-MM)	
	5	1	**9X-8256**	8	WASHER (6.6X12X2-MM THK)	
	6	1	**166-6943**	1	MODULE GP-QUAD GAUGE	
	7	1	**148-2949**	1	MODULE GP-MESSAGE CENTER	
		1	**102-8805**	1	KIT-RECEPTACLE (6-PIN)	
		1	**102-8806**	1	KIT-RECEPTACLE (8-PIN)	
	8	1	**149-2356**	1	MODULE GP-VIDS/VIMS INTERFACE	
M	9	1	**6V-9492**	4	SCREW-MACHINE (M4X0.7X25-MM)	
	10	1	**096-6166**	4	WASHER-HARD (4.5X9X1-MM THK)	
	11	1	**9W-1494**	1	KIT-SERVICE METER (24-VOLT)	
		1	**8T-0701**	1	FILM-SERVICE METER	
	12	1	**100-5566**	2	BEZEL	
M	13	1	**6V-9673**	8	SCREW-MACHINE (M5X0.8X12-MM)	
	14	1	**8T-0328**	8	WASHER-HARD (5.5X10X1-MM THK)	

M-METRIC PART

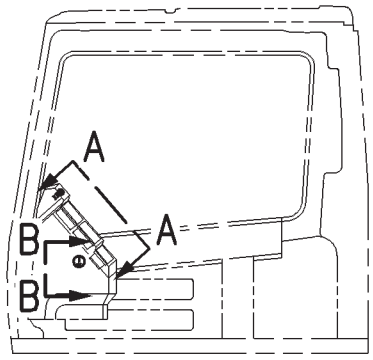

LEFT SIDE VIEW

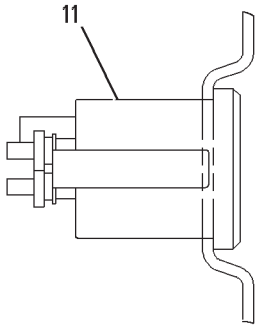

VIEW B-B

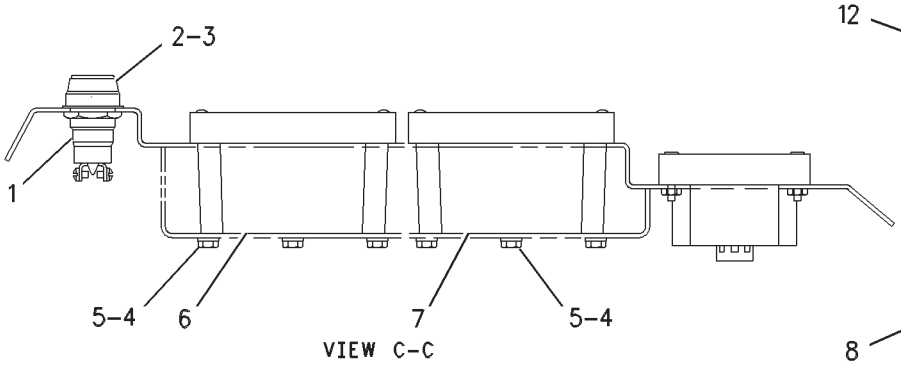

VIEW C-C

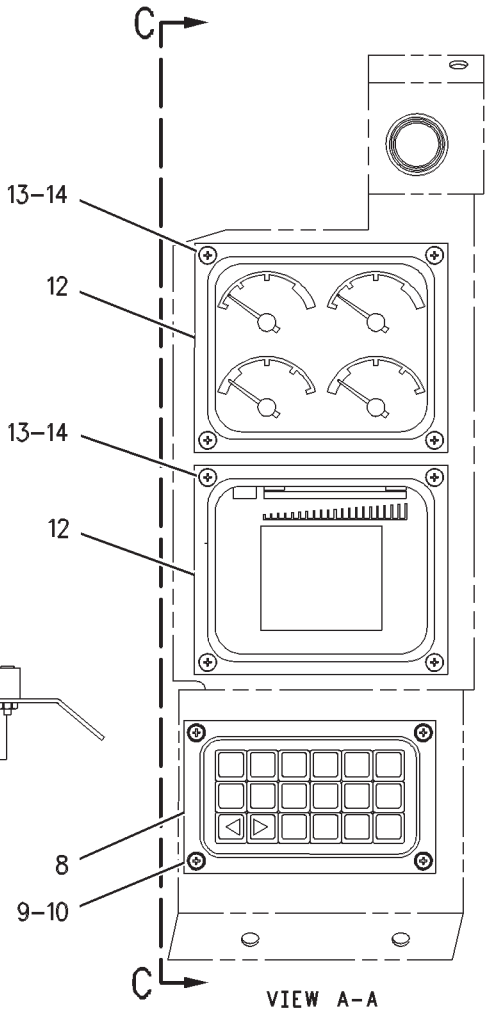

VIEW A-A

GRAPHIC #1 **<END>** g00596009

OPERATOR STATION

222-3445 OPERATOR AR

S/N: RCD1-UP

PART OF 229-3366 CHASSIS AR

SMCS-7301 **i02359944**

NOTE	PART NUMBER	QTY	PART NAME 1 2 3 4 5 6 (PRODUCT LEVEL)	SEE PAGE
Y	*204-8690*	1	AIR CONDITIONER AR	986
Y	*222-5138*	1	CAB GP	1000
Y	*164-0536*	1	CONSOLE GP-OPERATOR	1008
Y	*146-6717*	1	CONTROL & MTG GP-JOYSTICK	1009
Y	*139-4005*	1	CONTROL & MTG GP-PEDAL	1010
Y	*111-6308*	1	CONTROL GP-HANDLE	1012
Y	*153-2911*	1	PLATFORM GP-OPERATOR	1052
Y	*122-4825*	1	SEAT GP	1057
Y	*111-6281*	1	SUPPORT GP-SEAT	1060
Y	*153-2908*	1	WIPER & WASHER GP-WINDOW (LOWER)	1076
Y	*163-2152*	1	WIRING GP-CONSOLE	295
			S/N: RCD1-167	
Y	*244-6767*	1	WIRING GP-CONSOLE	302
			S/N: RCD168-UP	

Y-SEPARATE ILLUSTRATION

<END>

OPERATOR STATION

144-9676 PEDAL AR-THIRD

S/N: RCD1-UP

AN ATTACHMENT

SMCS-5059, 5462 **i01035389**

NOTE	PART NUMBER	QTY	PART NAME 1 2 3 4 5 6 (PRODUCT LEVEL)	SEE PAGE
Y	*147-4789*	1	CONTROL GP-HYDRAULIC PEDAL	1017
	127-5250	1	FILM-INSTRUCTION (TRAVEL CONTROLS)	

Y-SEPARATE ILLUSTRATION

<END>

OPERATOR STATION

222-3848 PLATFORM GP

S/N: RCD1-UP

PART OF 229-3366 CHASSIS AR

SMCS-7253 **i01889379**

NOTE	REF NO	GRAPHIC REF	PART NUMBER	QTY	PART NAME 1 2 3 4 5 6 (PRODUCT LEVEL)	SEE PAGE
M	1	1,2	*135-8573*	17	BOLT AS (M12X1.75X25-MM)	
					(EACH INCLUDES)	
		1	**5P-1076**	1	WASHER-HARD (13.5X30X4-MM THK)	
M		1	**8T-4192**	1	BOLT (M12X1.75X25-MM)	
	2	1	**175-0713**	1	COVER AS	
	3	1	**175-1014**	1	COVER AS	
	4	1	**175-1017**	1	COVER AS	
	5	1	**199-0117**	1	ROD	
	6	2	**175-0818**	1	SUPPORT GP-PLATFORM	
	7	2	**2M-5795**	1	PIN-CLEVIS	
	8	2	**3B-4607**	1	PIN-COTTER	
	9	2	**9M-3835**	1	LATCH-RUBBER	
	10	2	**175-0777**	1	SUPPORT GP-PLATFORM	
	11	2	**175-0689**	1	SUPPORT AS	
M	12	1,2	*135-8575*	22	BOLT AS (M12X1.75X30-MM)	
					(EACH INCLUDES)	
		1,2	**5P-1076**	1	WASHER-HARD (13.5X30X4-MM THK)	
M		1,2	**8T-4139**	1	BOLT (M12X1.75X30-MM)	
	13	2	**175-0691**	1	SUPPORT AS	
	14	2	**223-2862**	1	SUPPORT AS	
	15	2	**175-0684**	1	SUPPORT GP-PLATFORM	
	16	1	**5P-8502**	1	PADLOCK GP	
		1	**5P-8500**	1	KEY	
		1	**8Y-6364**	1	SLEEVE	
	17	1	**4I-2187**	1	SUPPORT AS	
	18	1	**096-3780**	1	PIN-CLEVIS	
	19	1	**095-0843**	1	PIN-COTTER	
	20	1	**8T-4224**	1	WASHER-HARD (8.8X16X2-MM THK)	
	21	1	**171-3396**	2	GROMMET	
M	22	1,2	*135-8577*	14	BOLT AS (M12X1.75X35-MM)	
					(EACH INCLUDES)	
		1,2	**5P-1076**	1	WASHER-HARD (13.5X30X4-MM THK)	
M		1,2	**8T-4956**	1	BOLT (M12X1.75X35-MM)	
	23	1	**7Y-2854**	2	SPACER (24X38X3-MM THK)	
	24	1	**7Y-2853**	2	SPACER (13X38X5-MM THK)	
	25	2	**175-0966**	1	SUPPORT AS	
	26	2	**177-5536**	1	SHEET AS	
	27	2	**175-0970**	1	SUPPORT AS	
	28	2	**175-0964**	1	SUPPORT AS	
	29	2	**175-0968**	1	SUPPORT AS	

M-METRIC PART

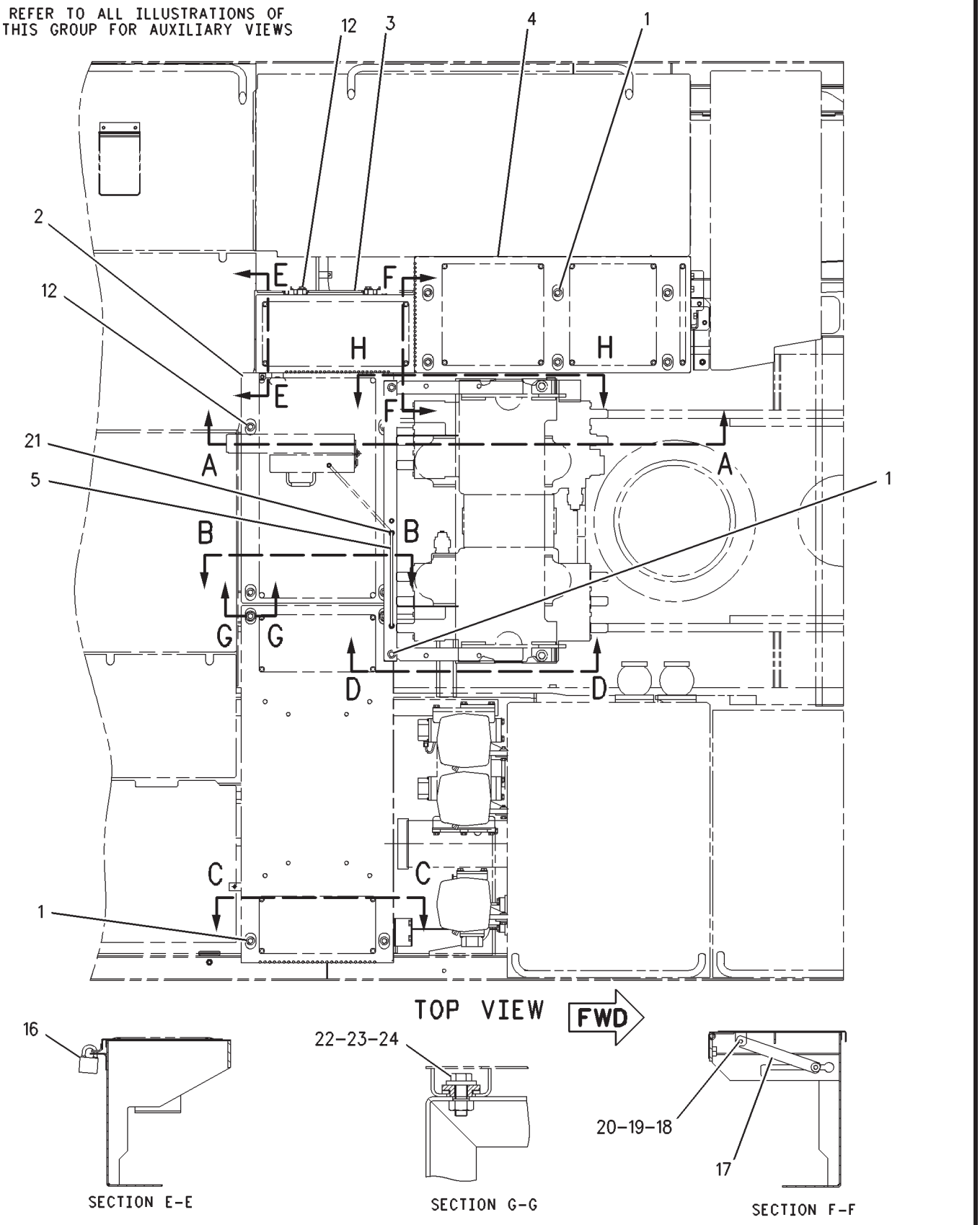

GRAPHIC #1 g00885566

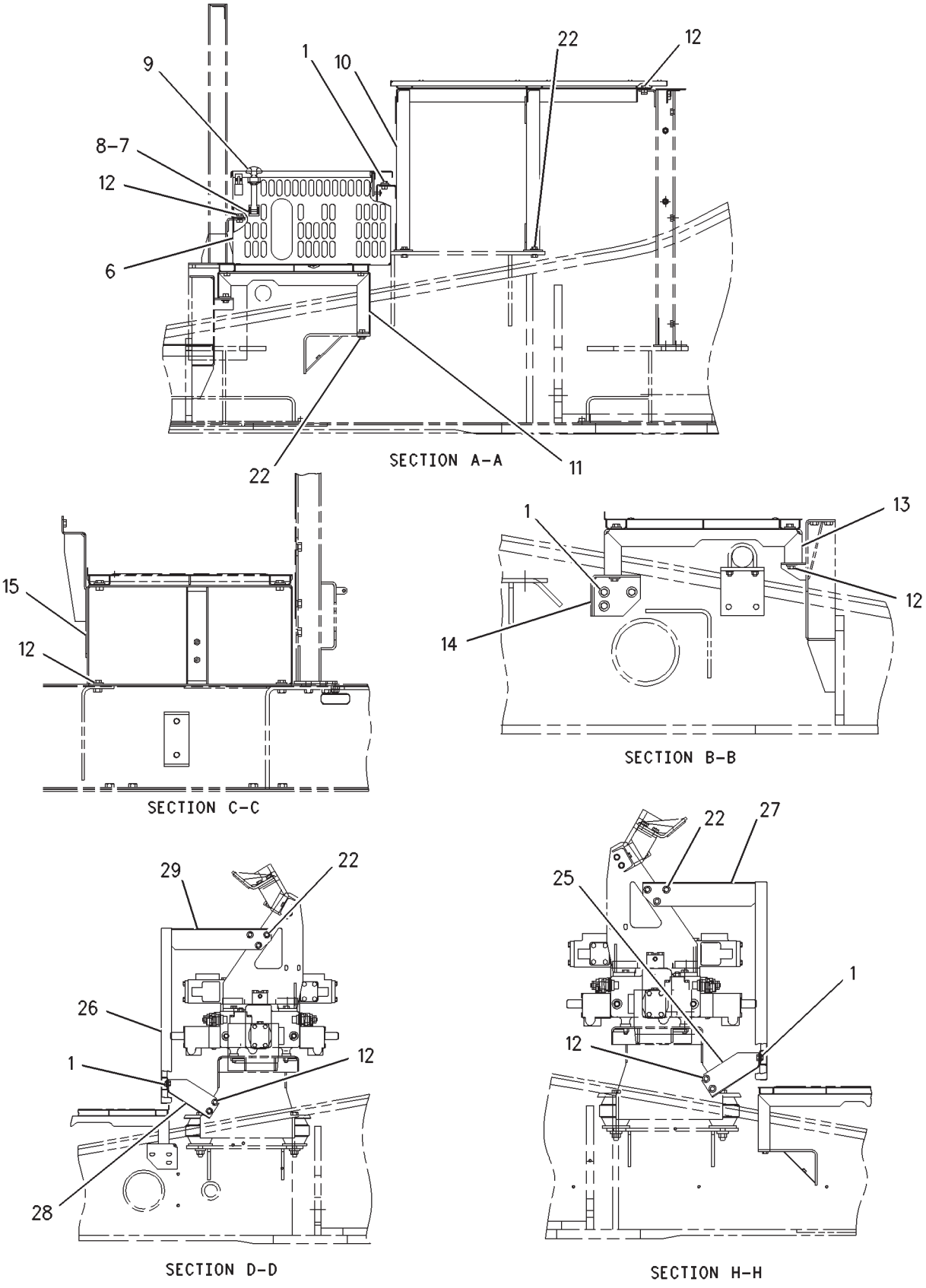

GRAPHIC #2 **<END>** g00885567

OPERATOR STATION

153-2911 PLATFORM GP-OPERATOR

S/N: RCD1-UP

PART OF 222-3445 OPERATOR AR

SMCS-7253 **i01827610**

NOTE	REF NO	GRAPHIC REF	PART NUMBER	QTY	PART NAME 1 2 3 4 5 6 (PRODUCT LEVEL)	SEE PAGE
	1	1	**153-2920**	1	PLATFORM AS	
	2	1	**9W-6582**	6	SLEEVE	
	3	1	**7X-3383**	6	WASHER (22X50X3-MM THK)	
M	4	1	**8T-4131**	6	NUT (M20X2.5-THD)	
	5	1	**9W-6584**	6	WASHER (20.5X114X10-MM THK)	
B	6	1	**7Y-9863**	12	SHIM (0.6-MM THK)	
B	7	1	**7Y-9864**	12	SHIM (1.2-MM THK)	
	8	1	**156-6204**	1	FLOOR MAT (OPERATOR PLATFORM)	
M	9	1	**8C-8478**	6	BOLT (M20X2.5X140-MM)	
	10	1	**8T-4123**	6	WASHER (22X35X3.5-MM THK)	
	14	1	**6Y-9930**	6	MOUNT AS	
	15	1	**121-7059**	1	GROMMET	
	16	1	**093-2063**	1	GROMMET	

B-USE AS REQUIRED
M-METRIC PART

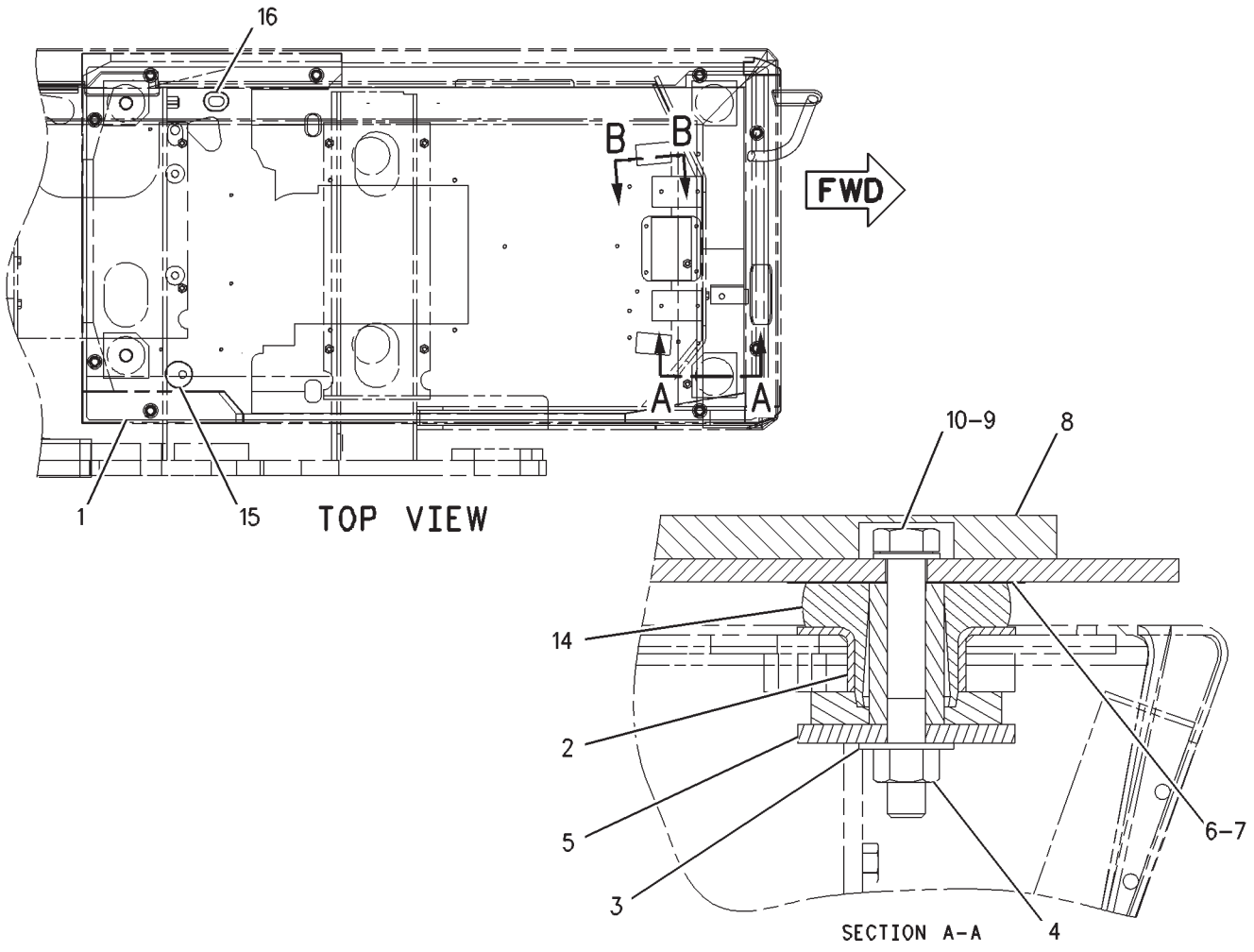

GRAPHIC #1 **<END>** g00686114

OPERATOR STATION

237-3586 SEAT AR-SUSPENSION

S/N: RCD1-UP

AN ATTACHMENT

SMCS-7324, 7336 **i02195052**

NOTE	PART NUMBER	QTY	PART NAME 1 2 3 4 5 6 (PRODUCT LEVEL)	SEE PAGE
Y	**205-7634**	1	SUSPENSION GP-SEAT (AIR)	1066
			—OR—	
Y	**188-7670**	1	SUSPENSION GP-SEAT (AIR)	1063
Y	**237-2191**	1	WIRING GP-CAB	294

Y-SEPARATE ILLUSTRATION

<END>

OPERATOR STATION

122-9625 SEAT BELT GP–RETRACTABLE, 3-IN

S/N: RCD1-UP

PART OF 122-4825 SEAT GP

SMCS-7327 **i02645235**

NOTE	REF NO	GRAPHIC REF	PART NUMBER	QTY	PART NAME 1 2 3 4 5 6 (PRODUCT LEVEL)	SEE PAGE
	1	1	**8S-4724**	1	BOLT (7/16-20X2.25-IN)	
	2	1	**9L-7816**	1	BOLT (7/16-20X1.72-IN)	
	3	1	**8S-0934**	1	LOCKNUT-FLANGE (7/16-20-THD)	

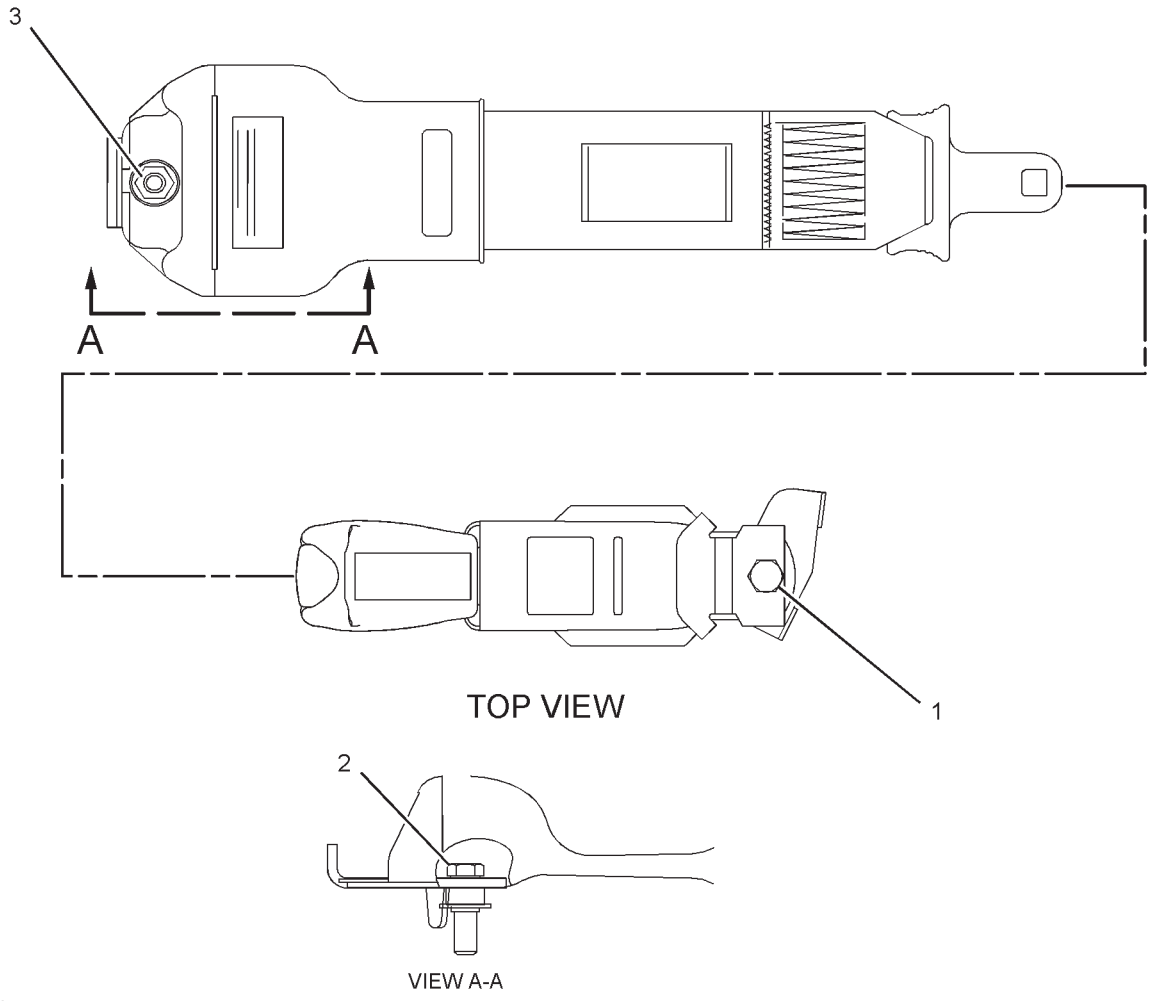

GRAPHIC #1 **<END>** g01328855

OPERATOR STATION

111-6433 SEAT GP

S/N: RCD1-UP

PART OF 122-4825 SEAT GP

SMCS-7312 **i01827714**

NOTE	REF NO	GRAPHIC REF	PART NUMBER	QTY	PART NAME 1 2 3 4 5 6 (PRODUCT LEVEL)	SEE PAGE
	1	1	**130-0326**	1	SEAT AS	
	2	1	**6I-5380**	1	KIT-FOAM BACK	
	3	1	**130-0358**	1	KIT-SUPPORT	
	4	1	**130-0324**	1	KIT-HANDLE ADJUSTER	
	5	1	**130-0330**	1	KIT-SEAT COVER	
	6	1	**8Y-6877**	1	KIT-SEAT CUSHION	
	7	1	**130-0329**	1	KIT-BACK COVER	
	8	1	**130-0334**	1	KIT-FRAME	
	9	1	**130-0347**	1	KIT-CABLE ADJUSTER	
	10	1	**133-7882**	1	KIT-ARM CUSHION (RH)	
	11	1	**133-7883**	1	KIT-ARM CUSHION (LH)	
	12	1	**130-0333**	1	KIT-HEADREST	
	13	1	**130-0337**	1	KIT-HEIGHT COVER	
	14	1	**130-0328**	1	KIT-CLIP (INCLS 25 CLIPS)	
	15	1	**130-0336**	1	KIT-HEIGHT RISER	
	16	1	**133-7884**	1	KIT-HANDLE (RH)	
	17	1	**133-7885**	1	KIT-HANDLE (LH)	
	18	1	**130-0350**	1	KIT-SUPPORT	
	19	1	**130-0348**	1	KIT-SPRING	
	20	1	**130-0338**	1	KIT-ADJUSTER	
	21	1	**130-0351**	1	KIT-CABLE ADJUSTER	
	22	1	**130-0335**	1	KIT-CONTROL	
	23	1	**130-0351**	1	KIT-CABLE ADJUSTER	
	24	1	**133-7886**	1	KIT-HANDLE	
M	25	1	**114-3350**	4	SCREW-FLAT HEAD (M8X1.25X60-MM)	

M-METRIC PART

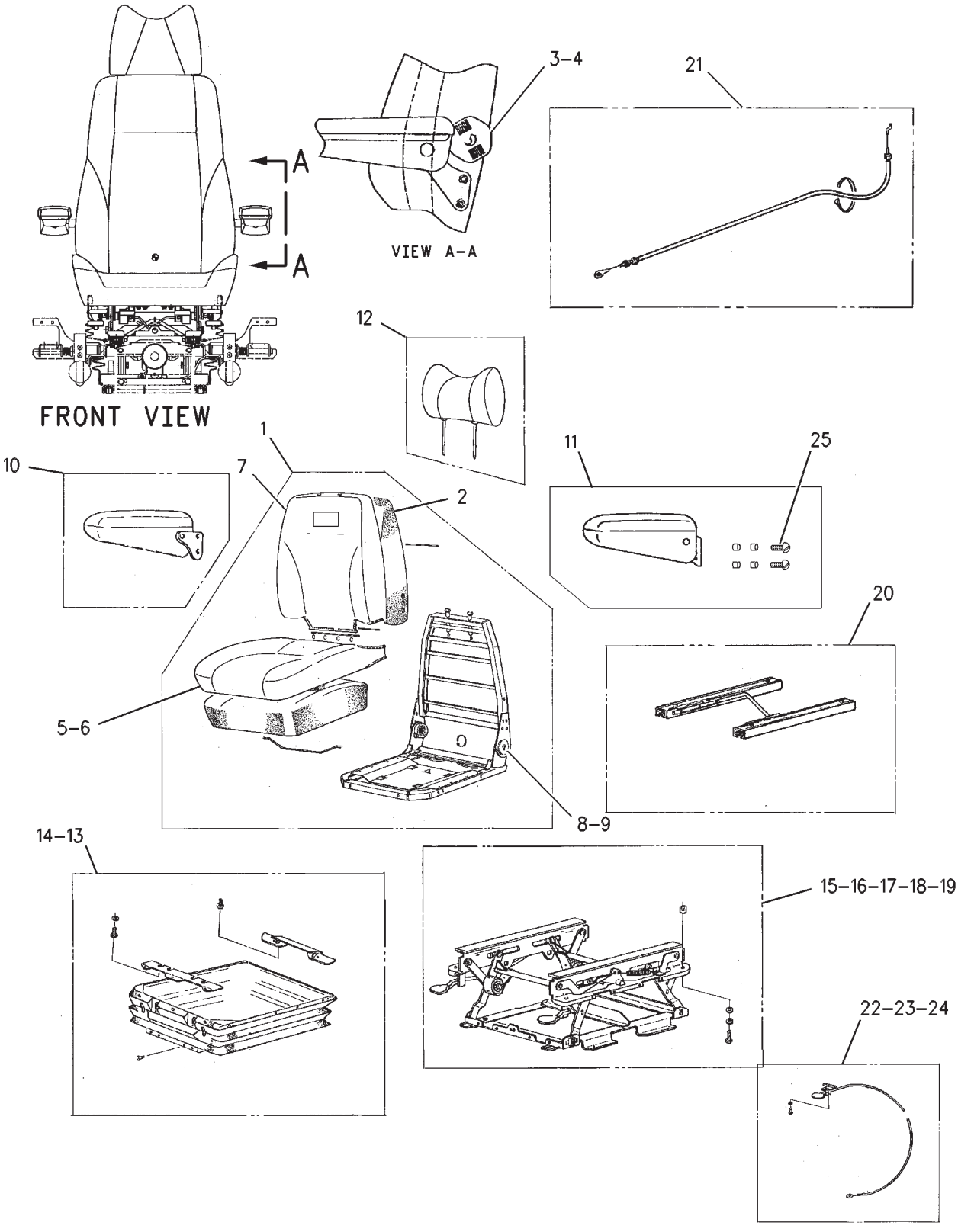

GRAPHIC #1 **<END>** g00323295

OPERATOR STATION

122-4825 SEAT GP

S/N: RCD1-UP

PART OF 222-3445 OPERATOR AR

SMCS-7312 **i01943227**

NOTE	REF NO	GRAPHIC REF	PART NUMBER	QTY	PART NAME 1 2 3 4 5 6 (PRODUCT LEVEL)	SEE PAGE
Y	1	1	**124-3926**	1	SUSPENSION GP-SEAT	1061
M	2	1	**5C-9553**	2	BOLT (M6X1X16-MM)	
M	3	1	**8T-1158**	4	BOLT-SOCKET HEAD (M8X1.25X20-MM)	
	4	1	**9X-8256**	2	WASHER (6.6X12X2-MM THK)	
	5	1	**095-0827**	2	LOCKWASHER	
M	6	1	**6V-8202**	4	BOLT-SOCKET HEAD (M8X1.25X16-MM)	
Y	7	1	**111-6433**	1	SEAT GP	1055
Y	8	1	**122-9625**	1	SEAT BELT GP	1054
AF			**5P-7958**	2	SLEEVE-CABLE SPLICE	
AF			**099-3645**	1	CABLE-LANYARD	
					(LOCATED ON BACK OF SEAT)	

A-NOT PART OF THIS GROUP
F-NOT SHOWN
M-METRIC PART
Y-SEPARATE ILLUSTRATION

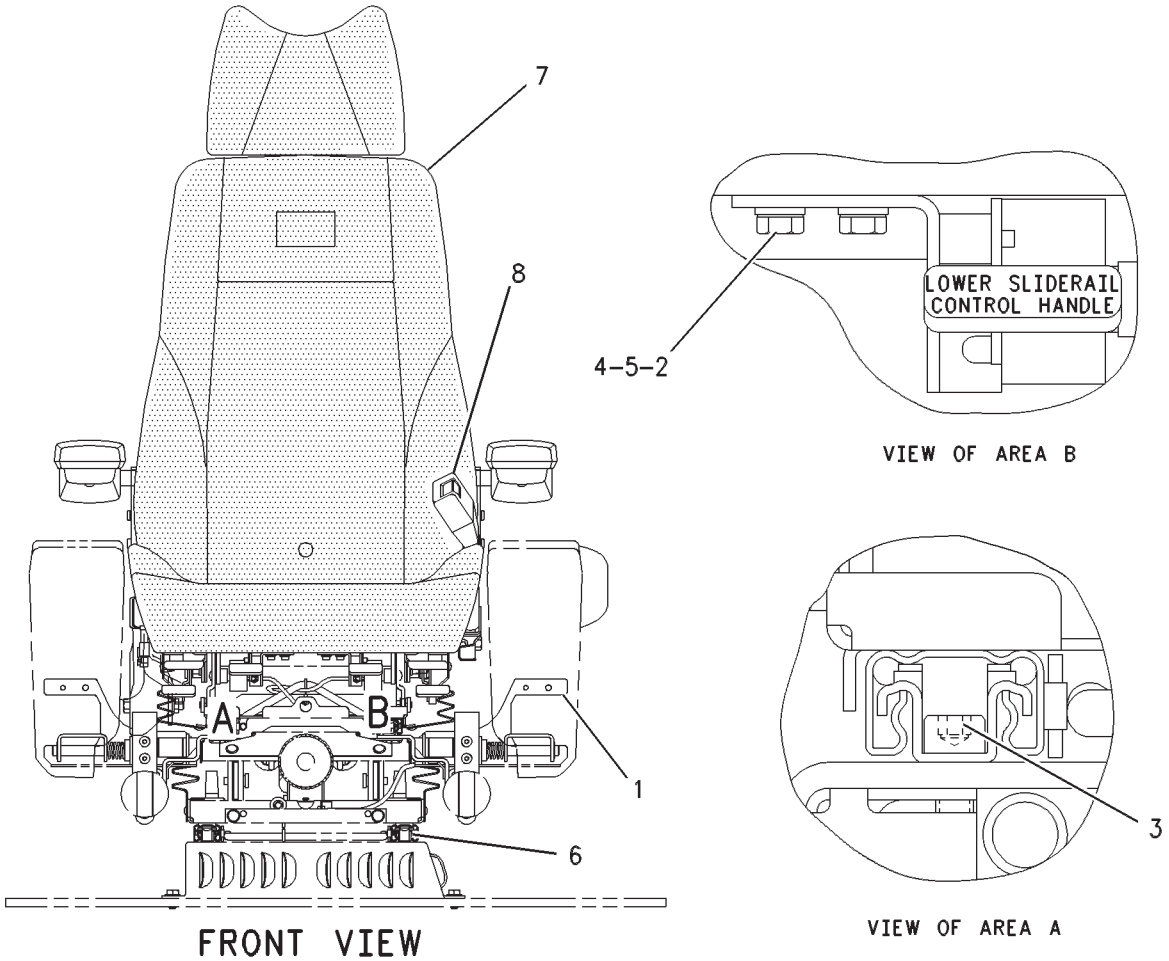

GRAPHIC #1 **<END>** g00484413

OPERATOR STATION

221-8771 SERVICE GP-MONITOR

S/N: RCD1-UP

PART OF 211-5593 ELECTRONICS GP-MONITOR

SMCS-7610 **i02112241**

NOTE	REF NO	GRAPHIC REF	PART NUMBER	QTY	PART NAME 1 2 3 4 5 6 (PRODUCT LEVEL)	SEE PAGE
YR	1	1	*169-0489*	1	CONTROL GP-UNPRGMED MONITOR (VIDS)	1022
	2	1	*221-8770*	1	SOFTWARE GP-MONITOR (VIDS)	

R-REMFG PART MAY BE AVAILABLE
Y-SEPARATE ILLUSTRATION

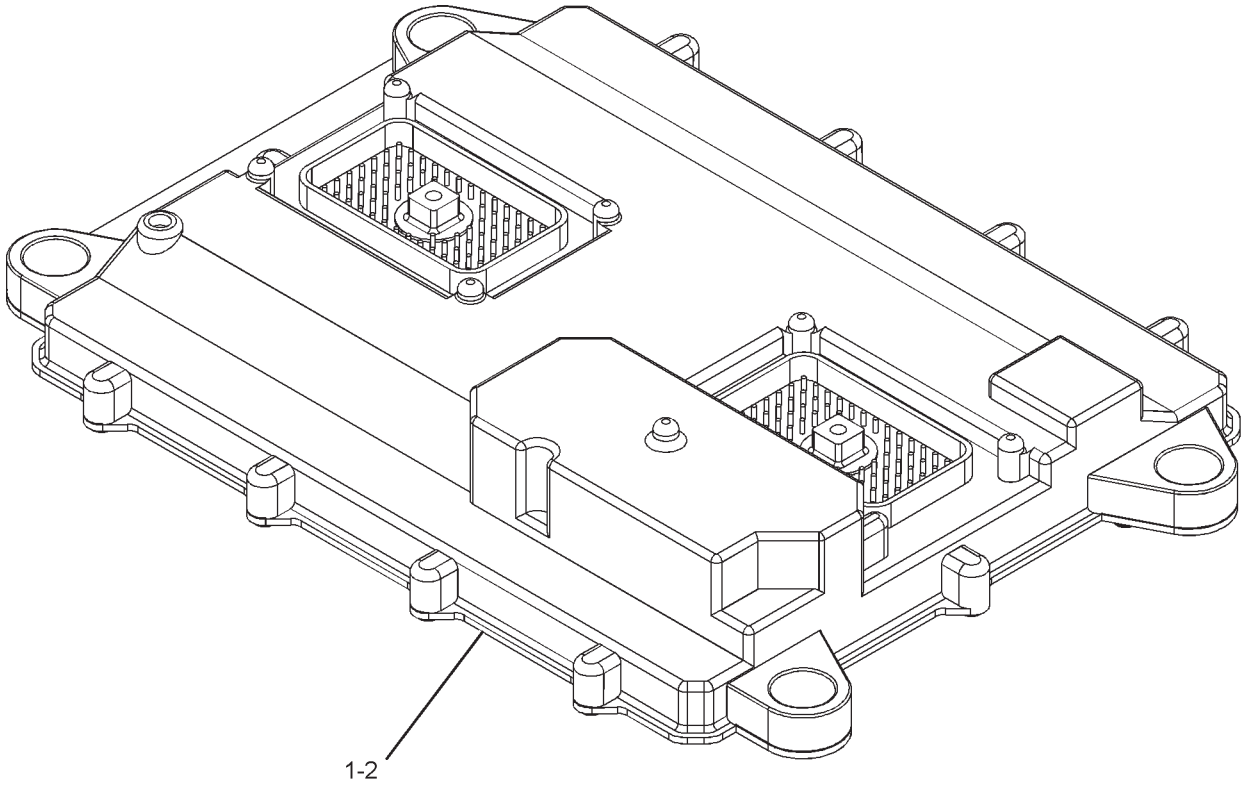

GRAPHIC #1 **<END>** g01088334

OPERATOR STATION

221-8777 SERVICE GP-MONITOR

S/N: RCD1-UP
PART OF 211-5596 ELECTRONICS GP-MONITOR
AN ATTACHMENT

SMCS-7610 **i02094291**

NOTE	REF NO	GRAPHIC REF	PART NUMBER	QTY	PART NAME 1 2 3 4 5 6 (PRODUCT LEVEL)	SEE PAGE
YR	1	1	**169-0489**	1	CONTROL GP-UNPRGMED MONITOR	1022
	2	1	**221-8776**	1	SOFTWARE GP-MONITOR	

R-REMFG PART MAY BE AVAILABLE
Y-SEPARATE ILLUSTRATION

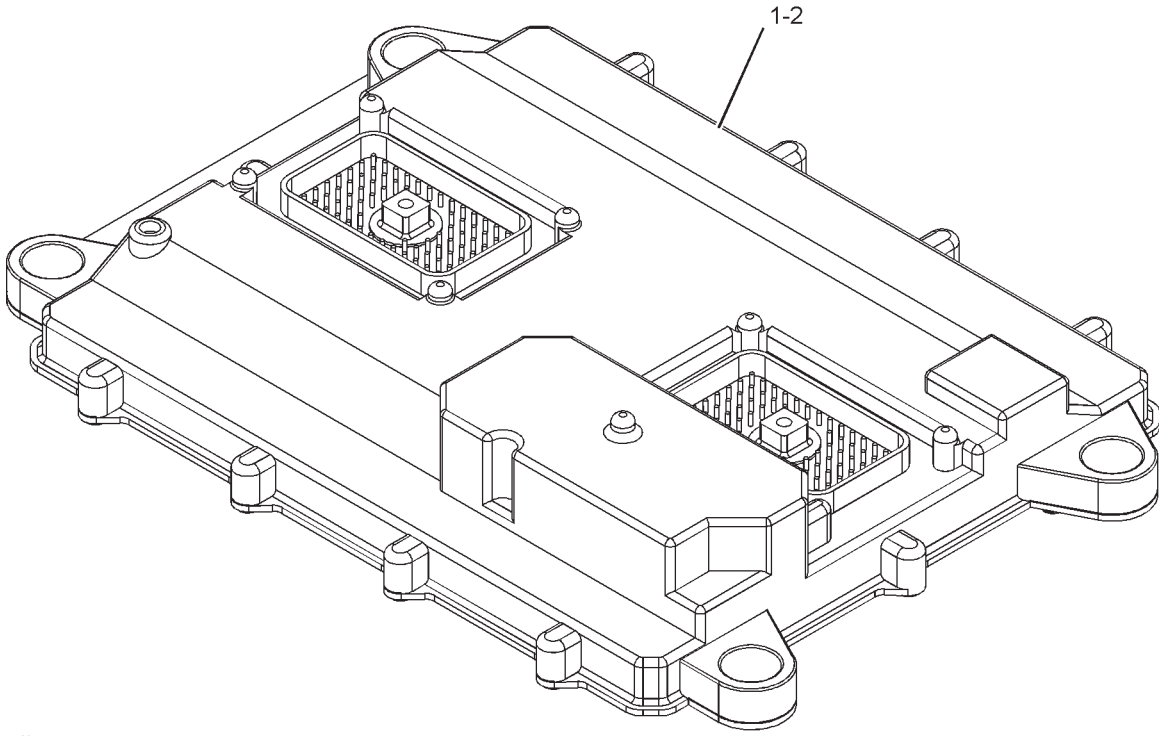

GRAPHIC #1 **<END>** g01078128

OPERATOR STATION

111-6281 SUPPORT GP-SEAT

S/N: RCD1-UP

PART OF 222-3445 OPERATOR AR

SMCS-7321 **i02148641**

NOTE	REF NO	GRAPHIC REF	PART NUMBER	QTY	PART NAME 1 2 3 4 5 6 (PRODUCT LEVEL)	SEE PAGE
	1	1	**139-7114**	1	SUPPORT AS-SEAT	
M	2	1	**8T-4191**	4	BOLT (M10X1.5X16-MM)	
	3	1	**8T-4121**	4	WASHER-HARD (11X21X2.5-MM THK)	

M-METRIC PART

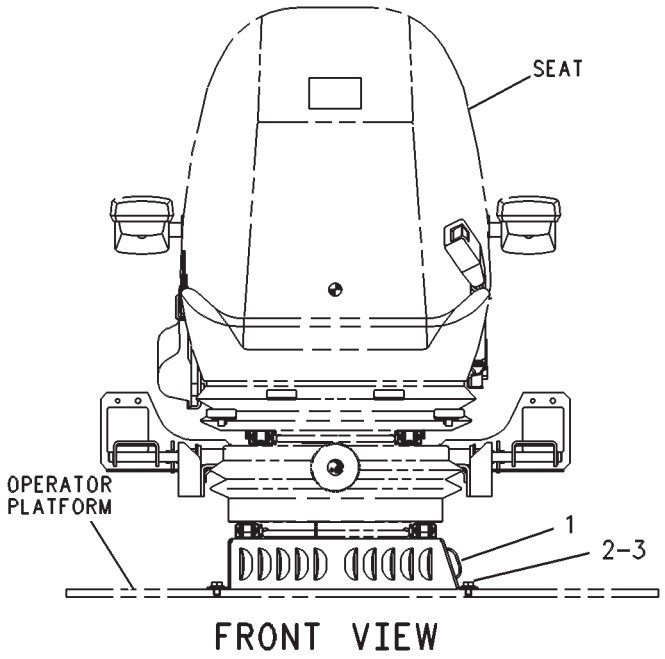

FRONT VIEW

GRAPHIC #1 **<END>** g00258192

OPERATOR STATION

124-3926 SUSPENSION GP-SEAT

S/N: RCD1-UP

PART OF 122-4825 SEAT GP

SMCS-7324 **i01827721**

NOTE	REF NO	GRAPHIC REF	PART NUMBER	QTY	PART NAME 1 2 3 4 5 6 (PRODUCT LEVEL)	SEE PAGE
	1	1	**124-4004**	2	PLATE	
	2	1	**130-0339**	1	KIT-SUSPENSION COVER	
	3	1	**130-0328**	1	KIT-CLIP (INCLS 25 CLIPS)	
	4	1	**130-0342**	1	KIT-CONTROL	
	5	1	**133-7955**	1	KIT-FASTENER	
	6	1	**147-4786**	1	KIT-CONSOLE SUPPORT	
	7	1	**147-4791**	1	KIT-CONTROL	
	8	1	**147-4792**	1	KIT-CABLE ADJUSTER	
	9	1	**133-7887**	1	KIT-HANDLE	
	10	1	**147-4787**	1	KIT-CONSOLE SUPPORT	
	11	1	**130-0343**	1	KIT-CONTROL	
	12	1	**133-7955**	1	KIT-FASTENER	
	13	1	**147-4793**	1	KIT-ADJUSTER	
	14	1	**147-4792**	1	KIT-CABLE ADJUSTER	
	15	1	**130-0340**	1	SUSPENSION AS	
	16	1	**130-0323**	1	KIT-LEVER	
	17	1	**130-0321**	1	KIT-DAMPER	
	18	1	**130-0325**	1	KIT-BEARING	
	19	1	**110-5066**	1	KIT-STOP	
	20	1	**130-0322**	1	KIT-ADJUSTER	
	21	1	**147-4869**	1	COVER	

124-3926 **SUSPENSION GP-SEAT** *(contd.)* **i01827721**

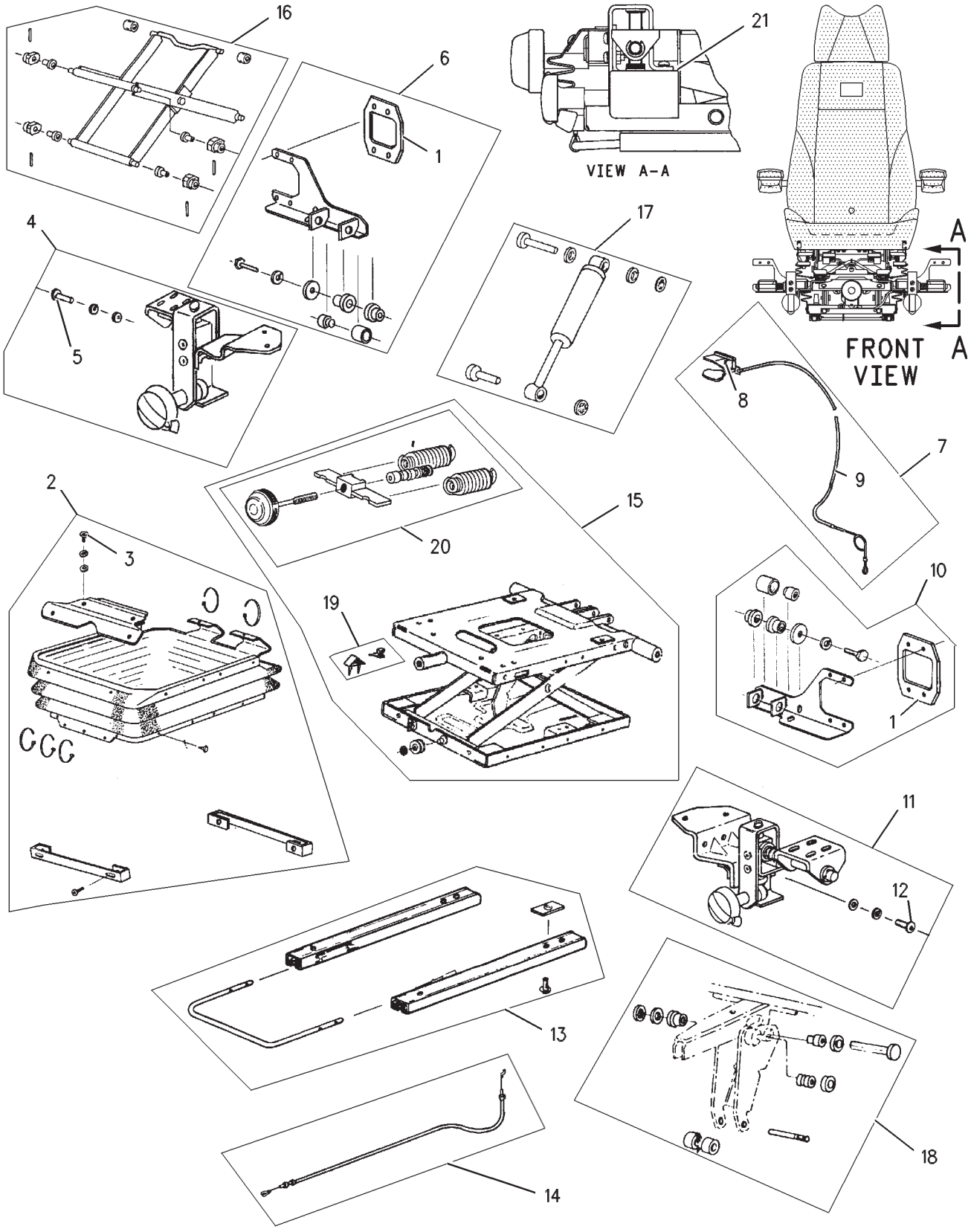

GRAPHIC #1 **<END>** g00484749

OPERATOR STATION

188-7670 SUSPENSION GP-SEAT

S/N: RCD1-UP
PART OF 237-3586 SEAT AR-SUSPENSION
AN ATTACHMENT

SMCS-7324 **i01998740**

NOTE	REF NO	GRAPHIC REF	PART NUMBER	QTY	PART NAME 1 2 3 4 5 6 (PRODUCT LEVEL)	SEE PAGE
	1	1	**155-2269**	1	PLUG AS-CONNECTOR (2-PIN)	
					(INCLUDES PLUG AS & WEDGE)	
	2	1	**186-3736**	2	SOCKET-CONNECTOR (16-GA TO 18-GA)	
	3	1	**155-2261**	1	WEDGE-PLUG LOCK (2-PIN)	
	6	1	**124-4004**	2	PLATE	
	7	2	**130-0339**	1	KIT-SUSPENSION COVER	
		2	**130-0328**	1	KIT-CLIP (INCLS 25 CLIPS)	
	8	2	**130-0342**	1	KIT-CONTROL	
		2	**133-7955**	1	KIT-FASTENER	
	9	2	**130-0343**	1	KIT-CONTROL	
		2	**133-7955**	1	KIT-FASTENER	
	10	2	**147-4791**	1	KIT-CONTROL	
		2	**133-7887**	1	KIT-HANDLE	
		2	**147-4792**	1	KIT-CABLE ADJUSTER	
	11	2	**147-4786**	1	KIT-CONSOLE SUPPORT	
	12	2	**147-4787**	1	KIT-CONSOLE SUPPORT	
	13	2	**147-4793**	1	KIT-ADJUSTER	
		2	**147-4792**	1	KIT-CABLE ADJUSTER	
	14	1	**147-4869**	1	COVER	
	15	2	**194-4281**	1	SUSPENSION AS-KIT	
	16	2	**194-4282**	1	SHOCK ABS KIT	
	17	2	**194-4283**	1	KIT-AIR SPRING	
	18	2	**194-4284**	1	COMPRESSOR KIT	
	19	2	**194-4285**	1	LINES AIR-KIT	
	20	2	**194-4286**	1	KIT-VALVE	

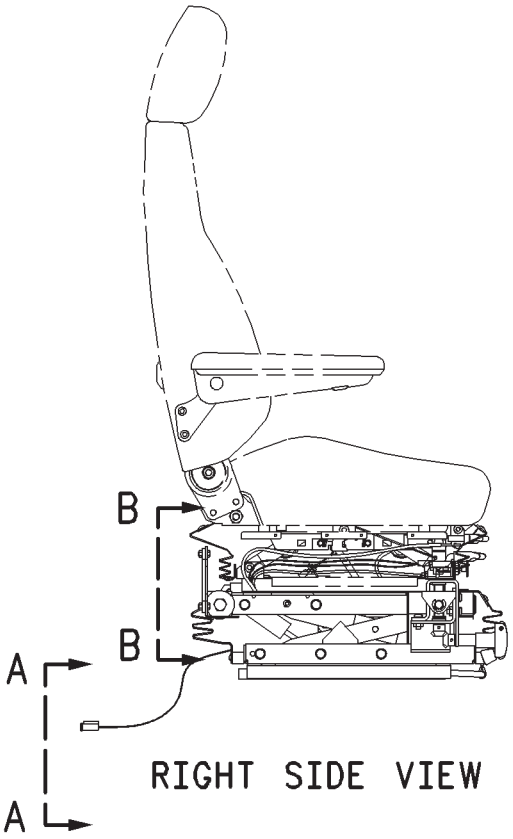

RIGHT SIDE VIEW

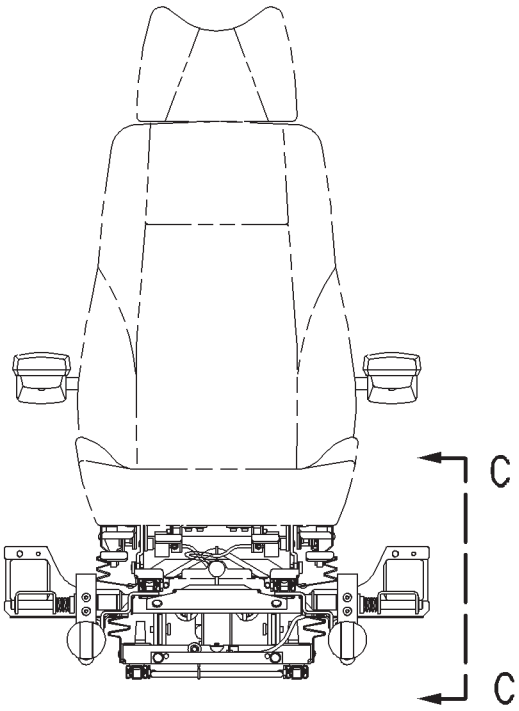

FRONT VIEW

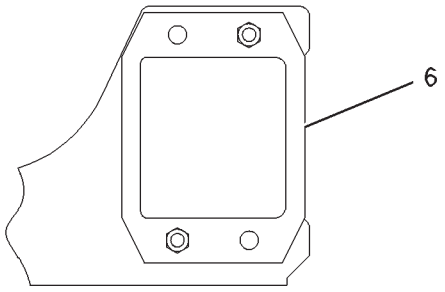

VIEW B-B

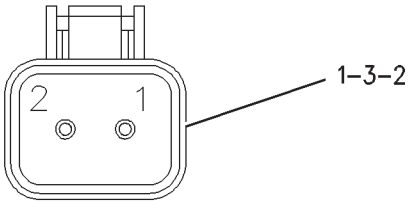

VIEW A-A

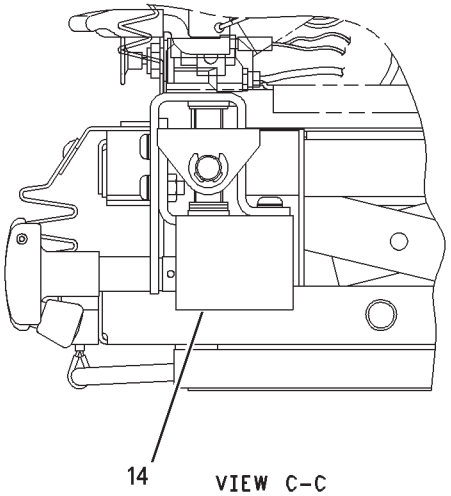

VIEW C-C

GRAPHIC #1 g00985339

188-7670 SUSPENSION GP-SEAT *(contd.)* i01998740

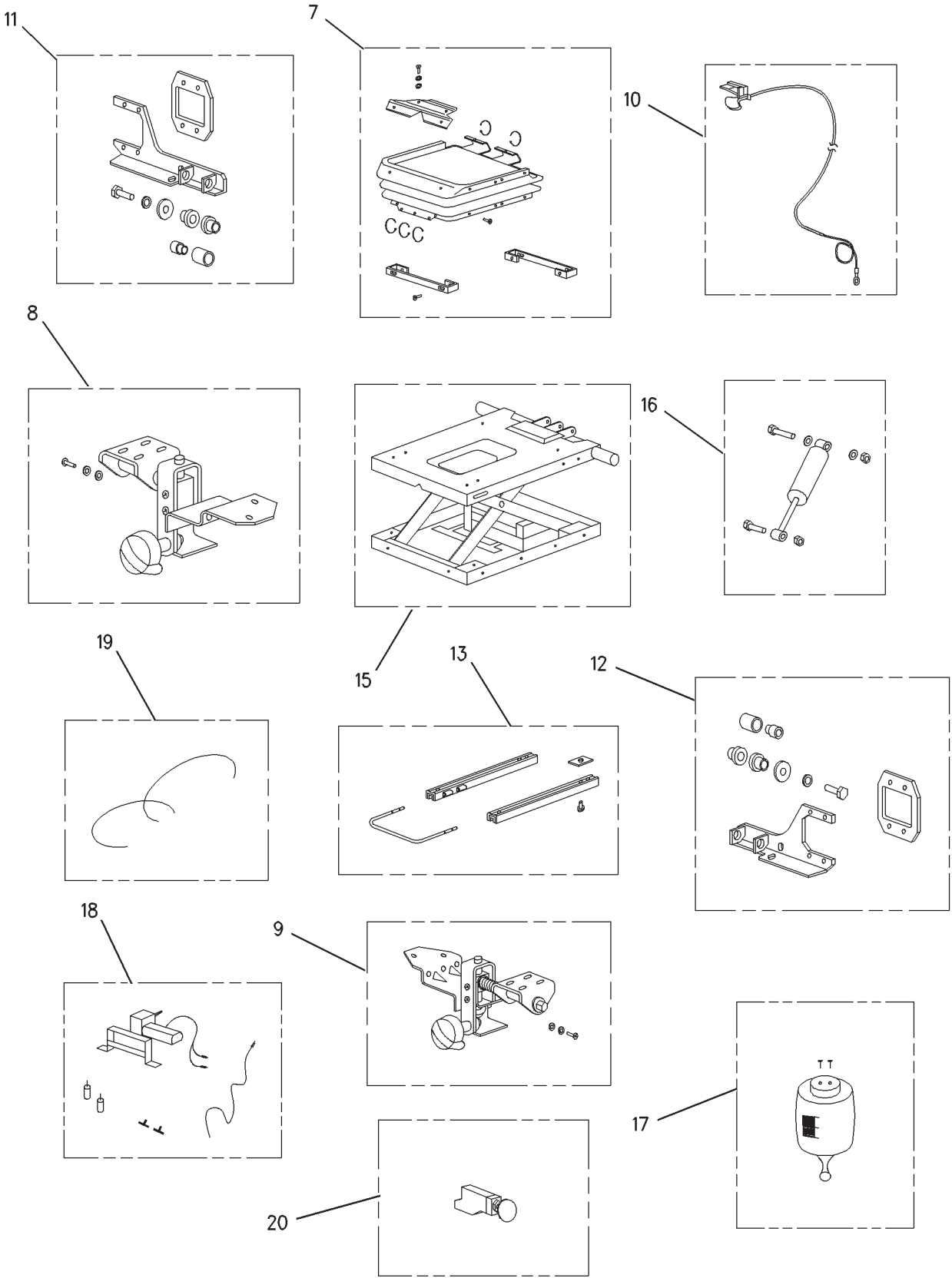

GRAPHIC #2 **<END>** g00985340

OPERATOR STATION

205-7634 SUSPENSION GP-SEAT–AIR

S/N: RCD1-UP
PART OF 237-3586 SEAT AR-SUSPENSION
AN ATTACHMENT

SMCS-7324 **i01912610**

NOTE	REF NO	GRAPHIC REF	PART NUMBER	QTY	PART NAME 1 2 3 4 5 6 (PRODUCT LEVEL)	SEE PAGE
	1	1	**155-2270**	1	KIT-CONNECTING PLUG (2-PIN)	
	2	1	**186-3736**	2	SOCKET-CONNECTOR (16-GA TO 18-GA)	
	3	1	**155-2261**	1	WEDGE-PLUG LOCK (2-PIN)	
	4	1	**178-5655**	1	KIT-SEAT ADJUSTER (UPPER)	
J	5	1	**185-8121**	1	ADJUSTER GP-SEAT (WITH MOUNT FOR CONSOLE)	
	6	1	**185-8124**	1	KIT-SEAT (HEIGHT RISER)	
	7	1	**194-4284**	1	COMPRESSOR KIT	
	8	1	**178-5656**	1	KIT-SEAT ADJUSTER (LOWER)	
	9	1	**178-5657**	1	KIT-CABLE ADJUSTER (LOWER)	
	10	1	**194-4286**	1	KIT-VALVE	
	11	1	**194-4285**	1	LINES AIR-KIT	
	12	1	**194-4283**	1	KIT-AIR SPRING	
	13	1	**178-5654**	1	COVER GP-SEAT (SUSPENSION)	
		1	**178-5647**	14	CLIP	
		1	**178-5648**	4	STRAP	
					AVAILABLE REPAIR KIT(S):	
			178-5658	1	KIT-HANDLE	

J-KIT MARKED J SERVICES PART(S) MARKED J

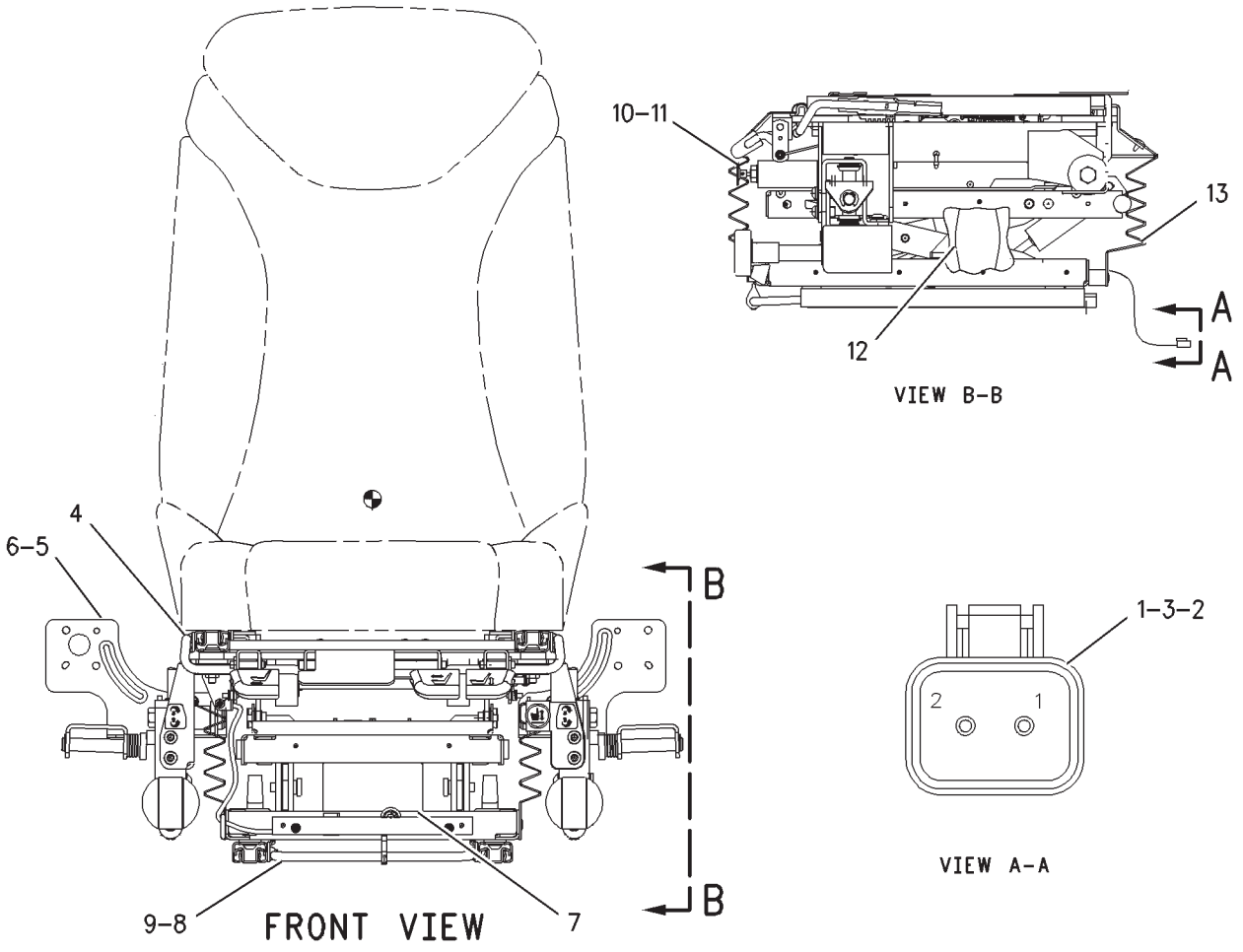

GRAPHIC #1 **<END>** g00997250

OPERATOR STATION

6C-8620 VISOR GP-CAB

S/N: RCD1-UP

PART OF 153-2915 CAB GP

SMCS-7301 **i00615095**

NOTE	REF NO	GRAPHIC REF	PART NUMBER	QTY	PART NAME 1 2 3 4 5 6 (PRODUCT LEVEL)	SEE PAGE
	1	1	**110-3678**	1	BLIND AS-ROLLER	
	2	1	**110-3688**	8	HOOK	
	3	1	**110-3690**	8	NUT	
	4	1	**110-3689**	16	SCREW	
M	5	1	**7Y-7388**	4	SCREW-BUTTON HEAD (M5X0.8X12MM)	

M-METRIC PART

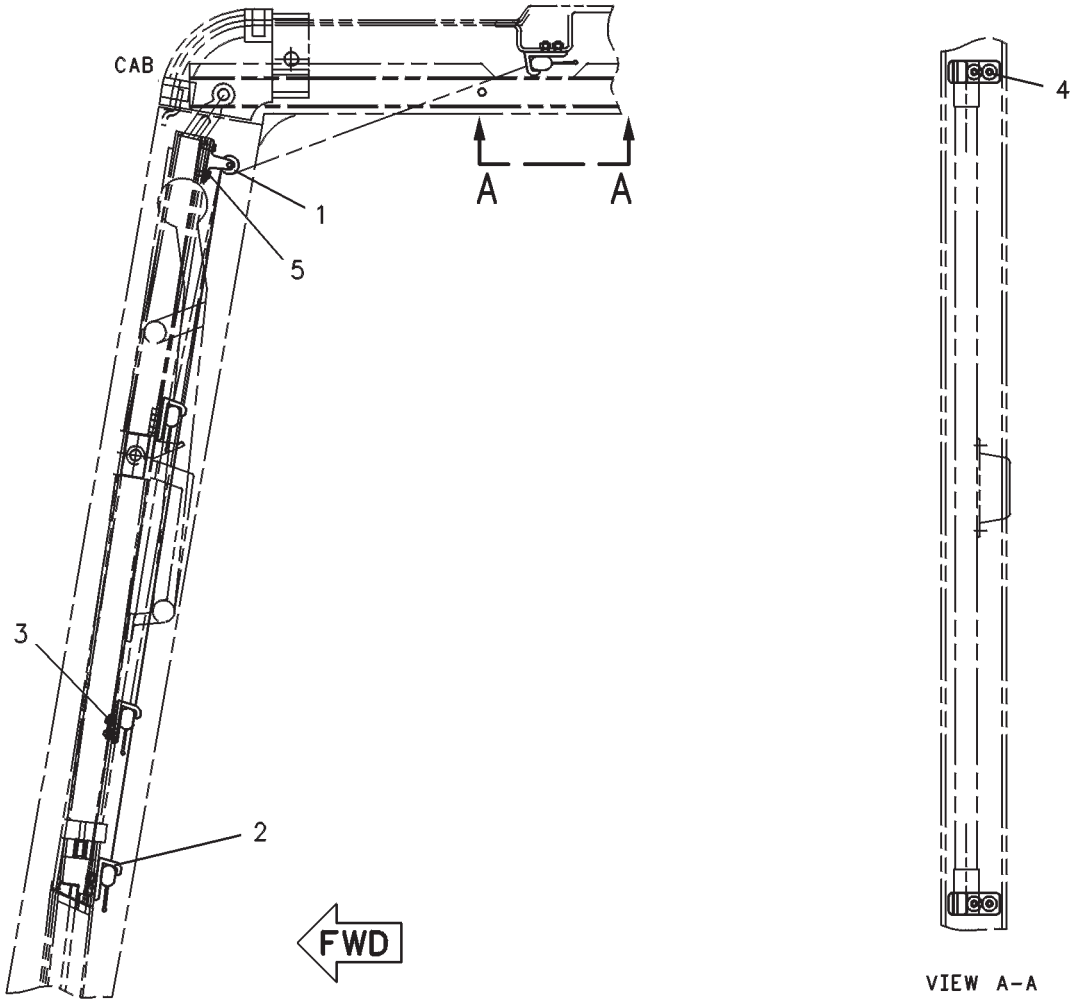

GRAPHIC #1 **<END>** g00238651

OPERATOR STATION

111-6419 WASHER GP-WINDOW

S/N: RCD1-UP

PART OF 192-3595 WASHER GP-WINDOW

SMCS-7306 **i01743552**

NOTE	REF NO	GRAPHIC REF	PART NUMBER	QTY	PART NAME 1 2 3 4 5 6 (PRODUCT LEVEL)	SEE PAGE
	1	1	**111-6420**	1	CAP	
	2	1	**8T-5914**	1	GROMMET	
	3	1	**7T-8890**	1	PUMP AS-WASHER	
	4	1	**5C-8140**	1	RESERVOIR	
	5	1	**8T-5913**	1	SCREEN-FILTER	
	6	1	**5C-8141**	1	SUPPORT AS	

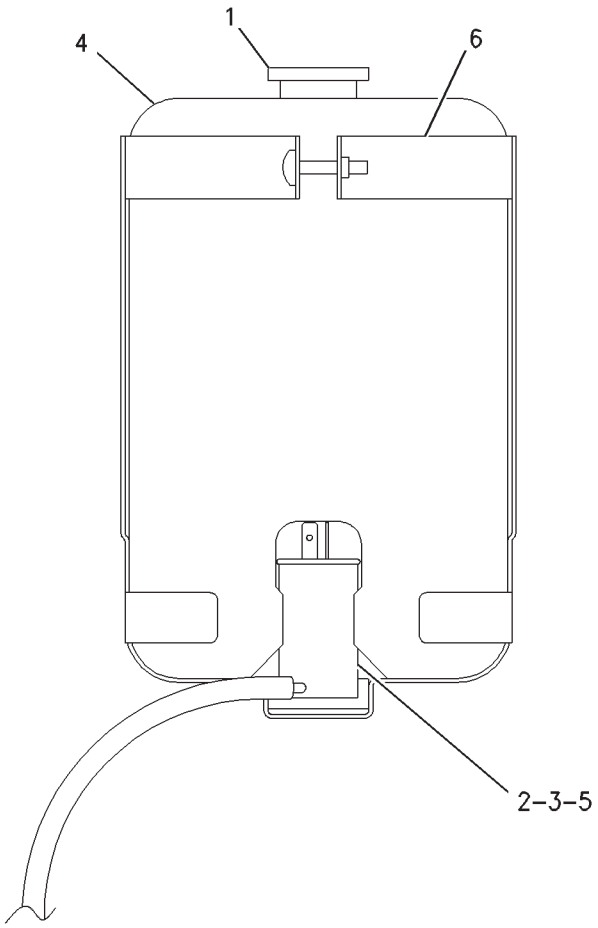

GRAPHIC #1 **<END>** g00892699

OPERATOR STATION

192-3595 WASHER GP-WINDOW

S/N: RCD1-UP

PART OF 229-3366 CHASSIS AR

SMCS-7306 **i01548346**

NOTE	REF NO	GRAPHIC REF	PART NUMBER	QTY	PART NAME 1 2 3 4 5 6 (PRODUCT LEVEL)	SEE PAGE
	1	1	**6V-3265**	1	CLIP	
M	2	1	**8T-4137**	1	BOLT (M10X1.5X20-MM)	
	3	1	**8T-4121**	1	WASHER-HARD (11X21X2.5-MM THK)	
Y	4	1	**111-6419**	1	WASHER GP-WINDOW	1068
M	5	1	**8T-4970**	2	BOLT (M6X1X14-MM)	
	6	1	**9X-8256**	2	WASHER (6.6X12X2-MM THK)	
	7	1	**7Y-3474**	2	VALVE AS-CHECK (WINDOW WASHER)	
E	8	1	**144-0195**		HOSE (270CM)	
E	8A	1	**144-0195**		HOSE (25CM)	
E	8B	1	**144-0195**		HOSE (250CM)	
	9	1	**6K-0806**	4	STRAP-CABLE	
	10	1	**7Y-7365**	1	JOINT (3-WAY)	

E-ORDER BY THE CENTIMETER
M-METRIC PART
Y-SEPARATE ILLUSTRATION

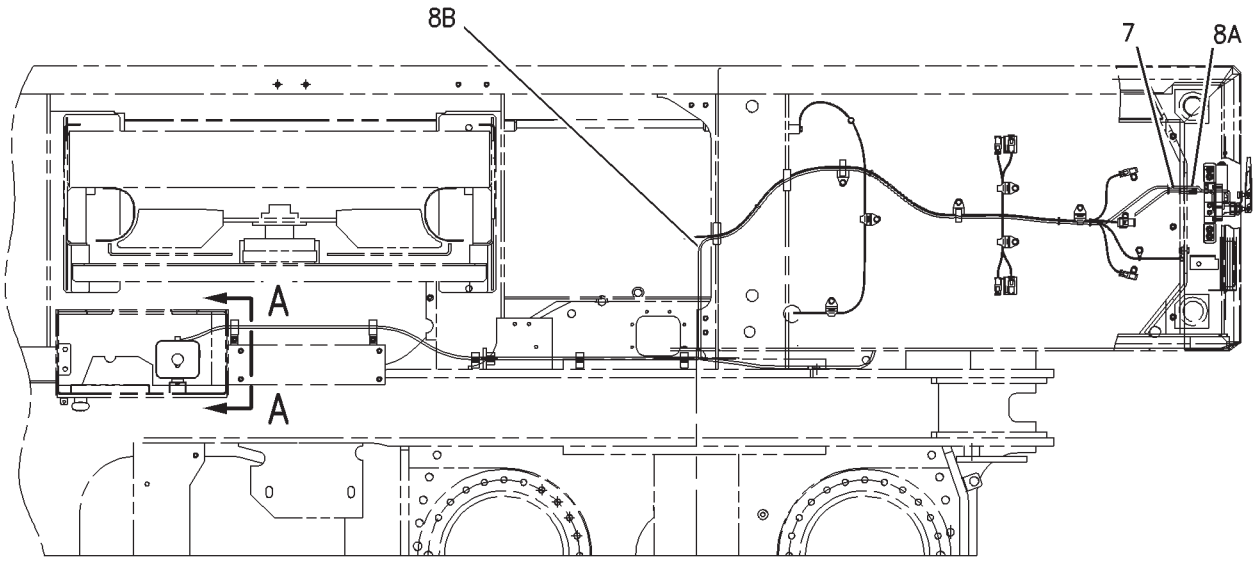

TOP VIEW

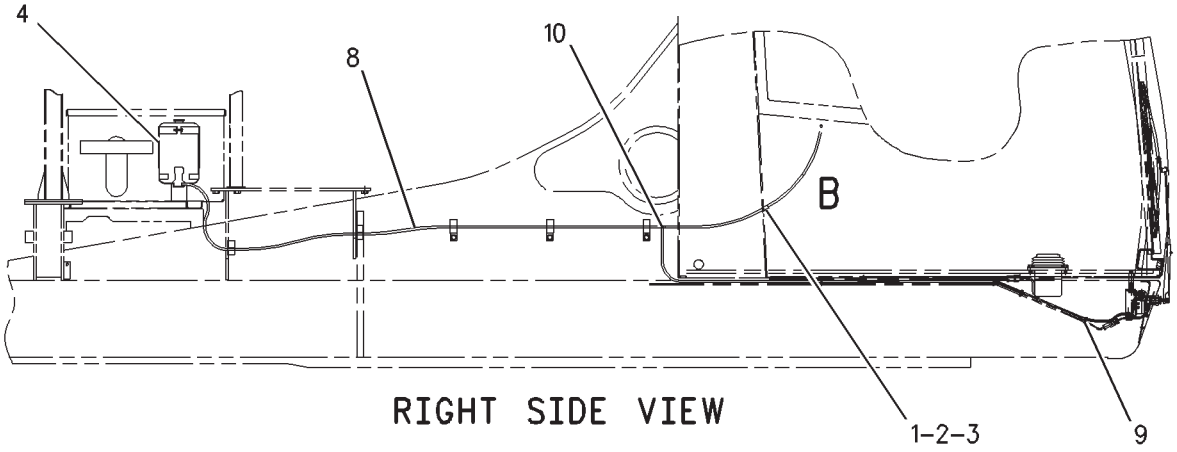

RIGHT SIDE VIEW

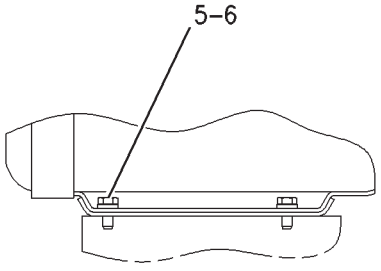

VIEW A-A

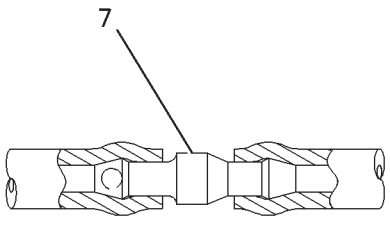

VIEW OF AREA B

GRAPHIC #1 **<END>** g00792386

OPERATOR STATION

133-0578 WINDOW GP-DOOR

S/N: RCD1-UP

PART OF 153-2916 DOOR GP-CAB

SMCS-7308, 7310 **i01827753**

NOTE	REF NO	GRAPHIC REF	PART NUMBER	QTY	PART NAME 1 2 3 4 5 6 (PRODUCT LEVEL)	SEE PAGE
	1	1	**141-6612**	1	KIT-RAIL	
	2	1	**144-7614**	1	KIT-WINDOW (FRONT)	
	3	1	**141-6595**	1	KIT-CATCH	
	4	1	**141-6603**	1	KIT-CATCH	
	5	1	**141-6609**	1	KIT-SEAL	
	6	1	**144-7615**	1	KIT-WINDOW REPAIR (REAR)	

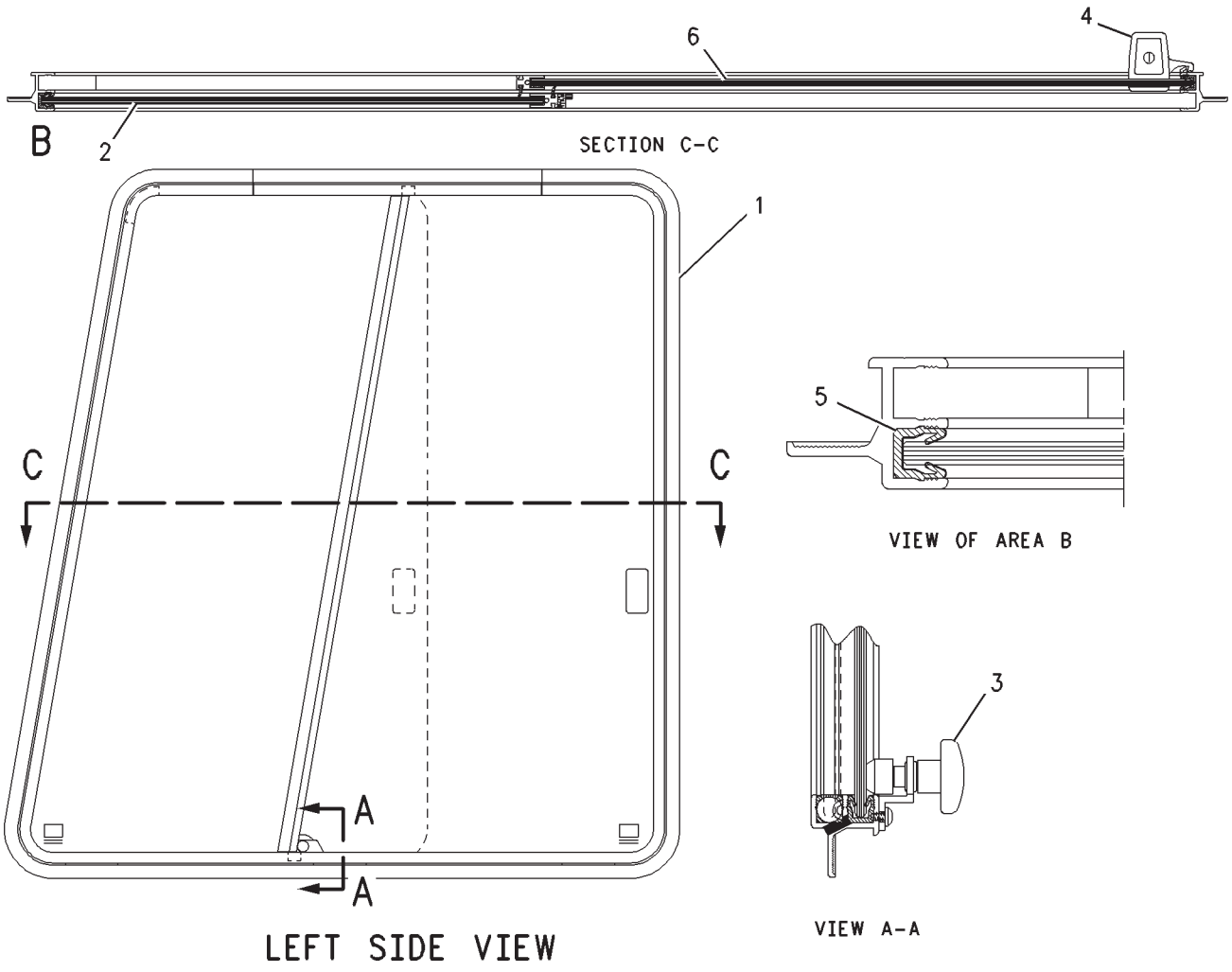

GRAPHIC #1 **<END>** g00892727

OPERATOR STATION

122-4822 WINDOW GP-FRONT

S/N: RCD1-UP

PART OF 153-2915 CAB GP

SMCS-7340 **i01858916**

NOTE	REF NO	GRAPHIC REF	PART NUMBER	QTY	PART NAME 1 2 3 4 5 6 (PRODUCT LEVEL)	SEE PAGE
Y	1	1	**137-0182**	1	WINDOW GP-FRONT	1074
	2	1	**6C-9033**	1	SUPPORT-LH	
	3	1	**6C-9034**	1	SUPPORT-RH	
	4	1	**6C-9035**	2	ROLLER	
	5	1	**112-2333**	2	BALL BEARING	
	6	1	**6C-9037**	2	CATCH	
	7	1	**6C-9038**	2	WASHER (12.2X25X1-MM THK)	
	8	1	**137-0183**	1	ROD-CONNECTING	
	9	1	**137-0184**	1	ROD-CONNECTING	
	10	1	**112-2091**	4	WASHER	
	11	1	**112-2092**	2	RING	
	12	1	**112-2093**	2	BOLT-SOCKET HEAD (M8X1.25X40-MM)	
	13	1	**6C-9043**	2	SPRING	
	14	1	**6C-9044**	2	AXLE	
	15	1	**6C-9081**	3	LOCKWASHER	
	16	1	**6C-9220**	2	CLIP	
	17	1	**6C-9047**	4	WASHER	
	18	1	**6C-9144**	2	WASHER	
IM	19	1	**6C-9048**	4	NUT (M8X1-THD)	
	20	1	**112-2334**	2	CAP	
M	21	1	**5C-7261**	2	NUT (M8X1.25-THD)	
	22	1	**6J-6478**	18	WASHER	
M	23	1	**5C-7883**	8	BOLT-SOCKET HEAD (M6X1X16-MM)	
	24	1	**6C-9119**	3	SCREW (M5X0.8X12-MM)	
	25	1	**112-2095**	2	SCREW-HEX SOCKET	
	26	1	**112-2107**	2	SPACER	
	27	1	**112-2097**	2	SCREW-HEX SOCKET	
	28	1	**112-2105**	2	RING	
M	29	1	**3T-0849**	4	BOLT-SOCKET HEAD (M6X1X25-MM)	
	30	1	**137-5506**	2	WASHER-SPRING	
	31	1	**112-2099**	2	SEAL	
	32	1	**141-4513**	2	SPACER	
M	33	1	**8T-0269**	6	BOLT-SOCKET HEAD (M6X1X20-MM)	

I-REFER TO HYDRAULIC INFORMATION SYSTEM
M-METRIC PART
Y-SEPARATE ILLUSTRATION

122-4822 WINDOW GP-FRONT *(contd.)* i01858916

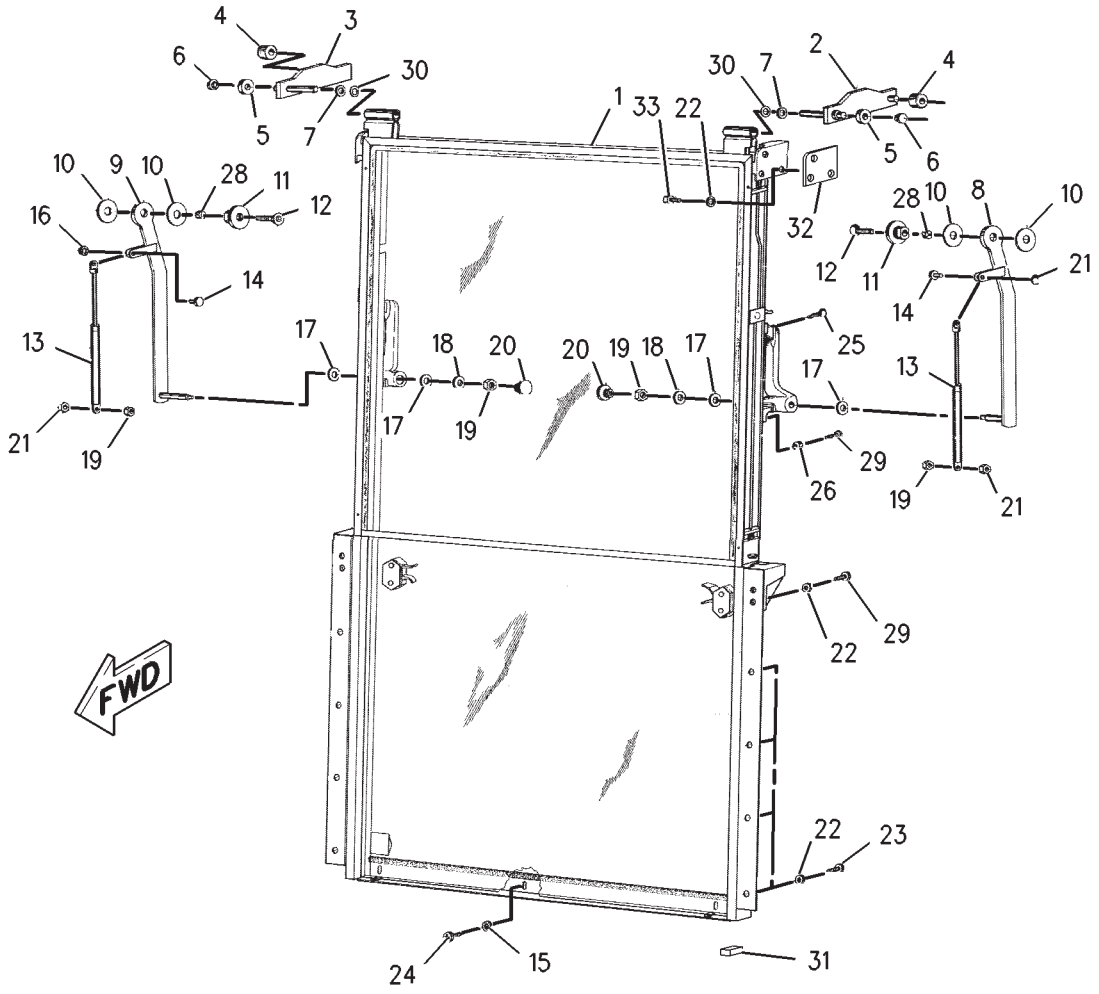

GRAPHIC #1 **<END>** g00892976

OPERATOR STATION

137-0182 WINDOW GP-FRONT

S/N: RCD1-UP

PART OF 122-4822 WINDOW GP-FRONT

SMCS-7340 **i02944630**

NOTE	REF NO	GRAPHIC REF	PART NUMBER	QTY	PART NAME 1 2 3 4 5 6 (PRODUCT LEVEL)	SEE PAGE
Y	1	1	**138-8278**	1	FRAME GP-UPPER FRONT WINDOW	1029
	2	1	**138-8277**	1	GLASS AS-SLIDING	
		1	**141-9371**	1	GLASS-SLIDING	
	2A	1	**142-0171**	1	BLOCK-RAMP	
	2B	1	**146-7744**	1	KIT-LATCH (RH)	
	2C	1	**146-7745**	1	KIT-LATCH (LH)	
	3	1	**138-8280**	1	RAIL AS-SIDE (LH)	
		1	**112-4497**	1	SEAL	
	4	1	**138-8281**	1	RAIL AS-SIDE (RH)	
		1	**112-4497**	1	SEAL	
	5	1	**138-8279**	1	RAIL AS-BOTTOM	
		1	**127-5004**	1	BRUSH-NYLON	
	6	1	**176-7185**	1	HANDLE (RH)	
	7	1	**176-7186**	1	HANDLE (LH)	
	8	1	**138-8274**	1	HOUSING-LOCK (UPPER, LH)	
	9	1	**138-8273**	1	HOUSING-LOCK (UPPER, RH)	
	10	1	**138-8275**	1	HOUSING-LOCK (LOWER, RH)	
	11	1	**138-8276**	1	HOUSING-LOCK (LOWER, LH)	

Y-SEPARATE ILLUSTRATION

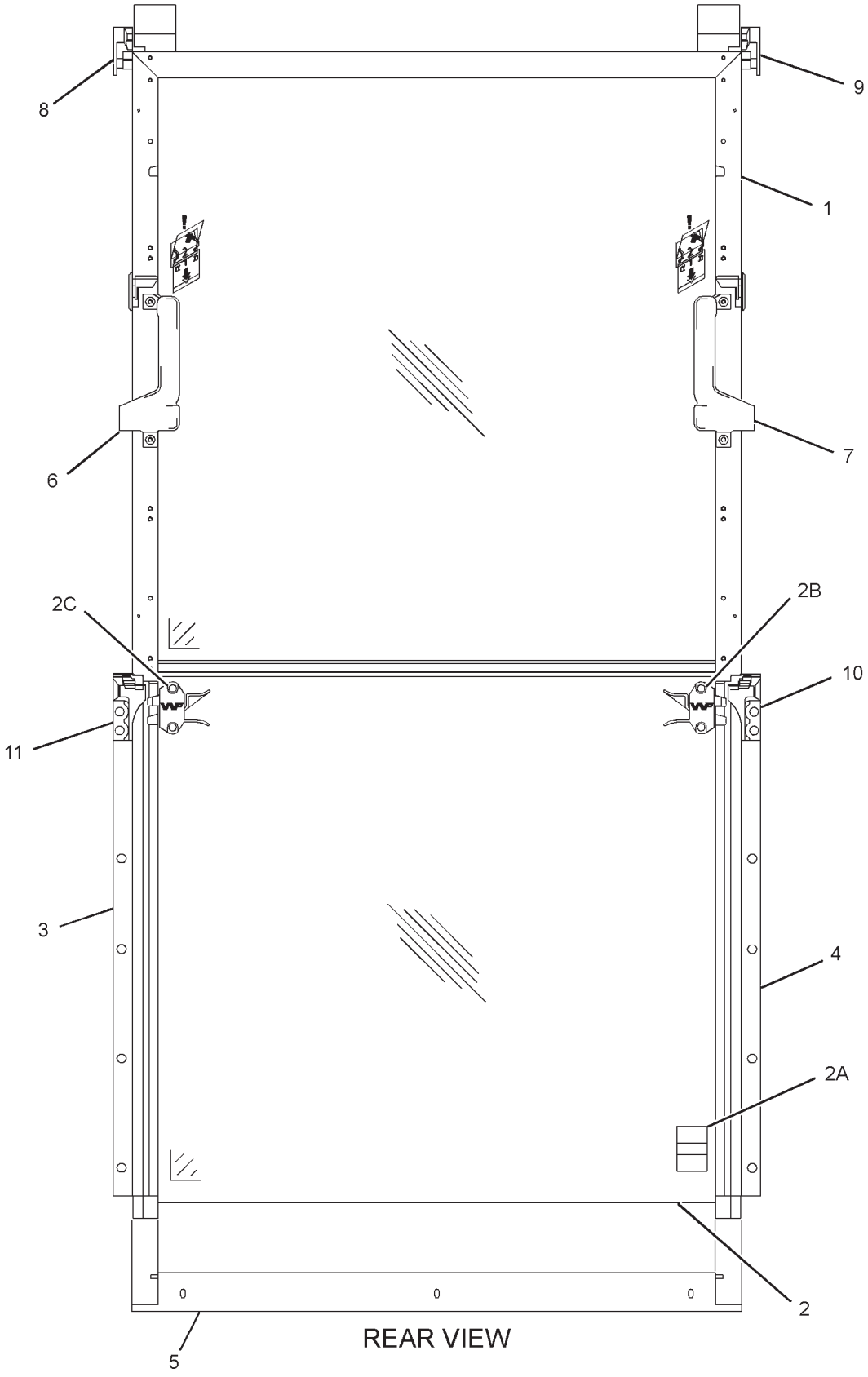

GRAPHIC #1

<END>

g01458353

OPERATOR STATION

153-2908 WIPER & WASHER GP-WINDOW—LOWER

S/N: RCD1-UP

PART OF 222-3445 OPERATOR AR

SMCS-7305, 7306 **i01253329**

NOTE	REF NO	GRAPHIC REF	PART NUMBER	QTY	PART NAME 1 2 3 4 5 6 (PRODUCT LEVEL)	SEE PAGE
	1	1	**6W-3924**	1	BLADE AS-WIPER (558-MM)	
M	2	1	**8T-4191**	4	BOLT (M10X1.5X16-MM)	
	3	1	**8T-4121**	4	WASHER-HARD (11X21X2.5-MM THK)	
	4	1	**133-2003**	1	ARM AS	
		1	**6C-9108**	1	HOSE-WATER	
		1	**6C-9109**	2	CLIP	
		1	**6C-9110**	1	ELBOW	
		1	**116-6360**	1	NOZZLE-WATER	
M	5	1	**8T-4138**	3	BOLT (M6X1X20-MM)	
	6	1	**9X-8256**	4	WASHER (6.6X12X2-MM THK)	
	7	1	**131-0398**	1	MOTOR AS-WINDOW WIPER (LOWER)	
	8	1	**6K-0806**	5	STRAP-CABLE	
	9	1	**135-0429**	1	LINK AS	
	10	1	**6C-9097**	1	NUT	
	11	1	**136-5765**	1	BOSS	
	12	1	**6C-9221**	1	NUT	
M	13	1	**5C-7261**	4	NUT (M8X1.25-THD)	
	14	1	**8T-4224**	4	WASHER-HARD (8.8X16X2-MM THK)	
	15	1	**2V-3216**	2	CLIP	
M	16	1	**5C-9553**	1	BOLT (M6X1X16-MM)	
M	17	1	**5C-2890**	1	NUT (M6X1-THD)	
M	18	1	**8T-4200**	2	BOLT (M8X1.25X16-MM)	
	19	1	**155-3746**	1	BRACKET	
	20	1	**155-3747**	1	BRACKET AS	

M-METRIC PART

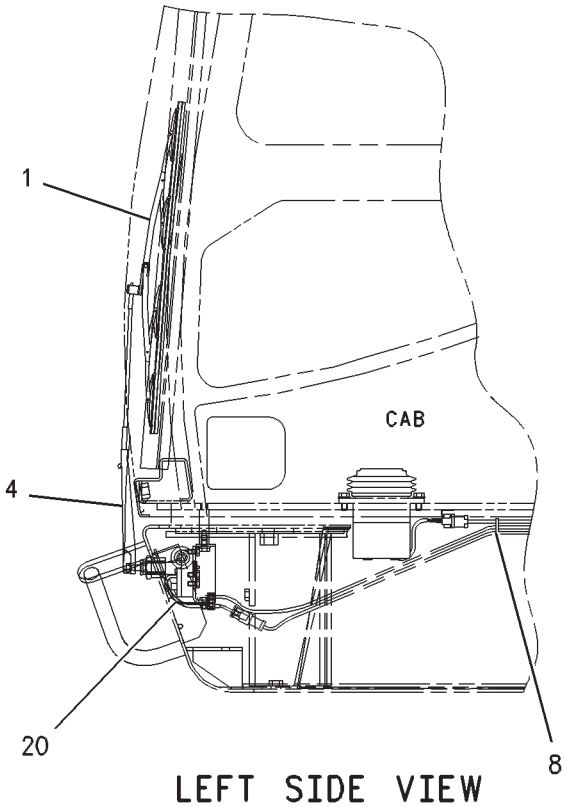

LEFT SIDE VIEW

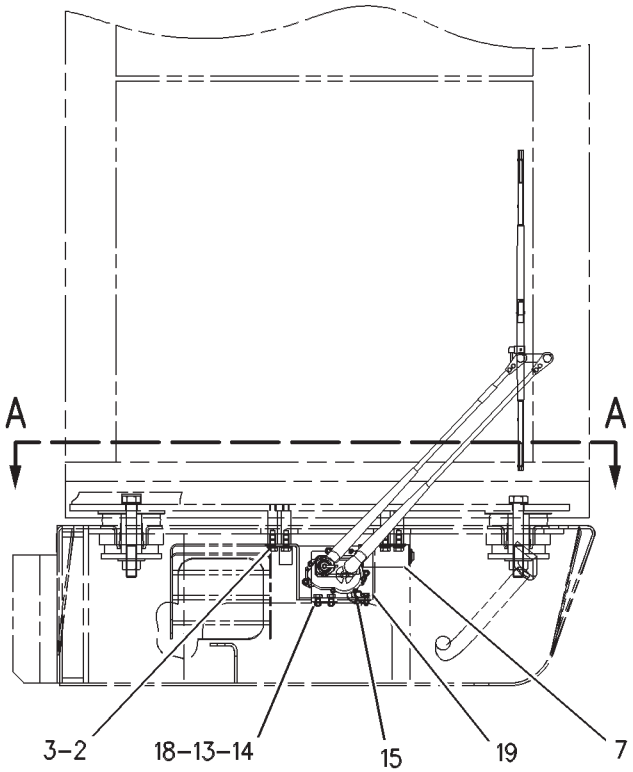

FRONT VIEW

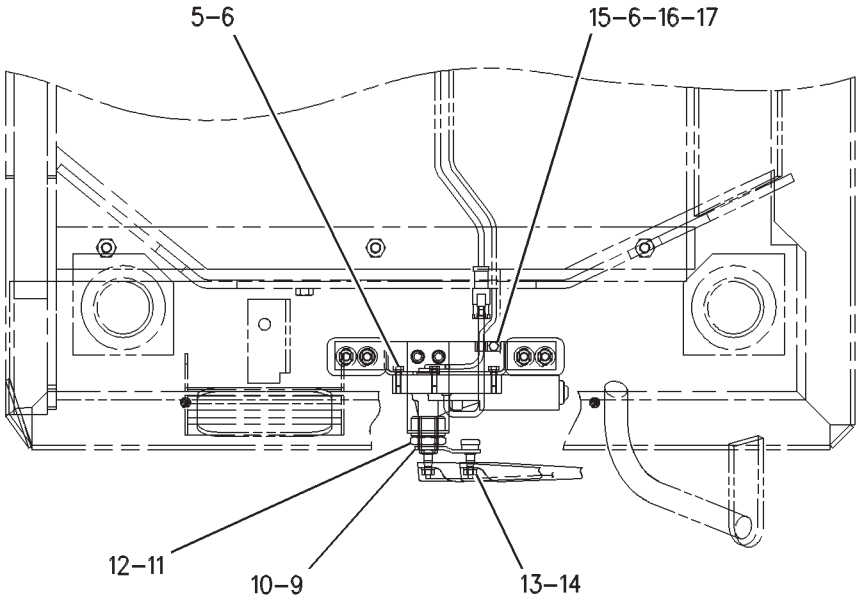

VIEW A-A

GRAPHIC #1 **<END>** g00536983

SERVICE EQUIPMENT AND SUPPLIES

152-9515 FILM GP

S/N: RCD1-UP
COMBINED FUNCTION
PART OF 196-9814, 196-9815 CONTROL AR-AUXILIARY
AN ATTACHMENT
TYPE 1

SMCS-7405, 7557 **i01199524**

NOTE	REF NO	GRAPHIC REF	PART NUMBER	QTY	PART NAME 1 2 3 4 5 6 (PRODUCT LEVEL)	SEE PAGE
	1	1	**134-5302**	1	FILM-NOTICE (HAMMER)	
	2	1	**127-5252**	1	FILM-INSTRUCTION (OPERATOR CONTROL PEDALS)	
	3	1	**175-6331**	1	FILM-INFORMATION (OPERATOR CONTROLS)	

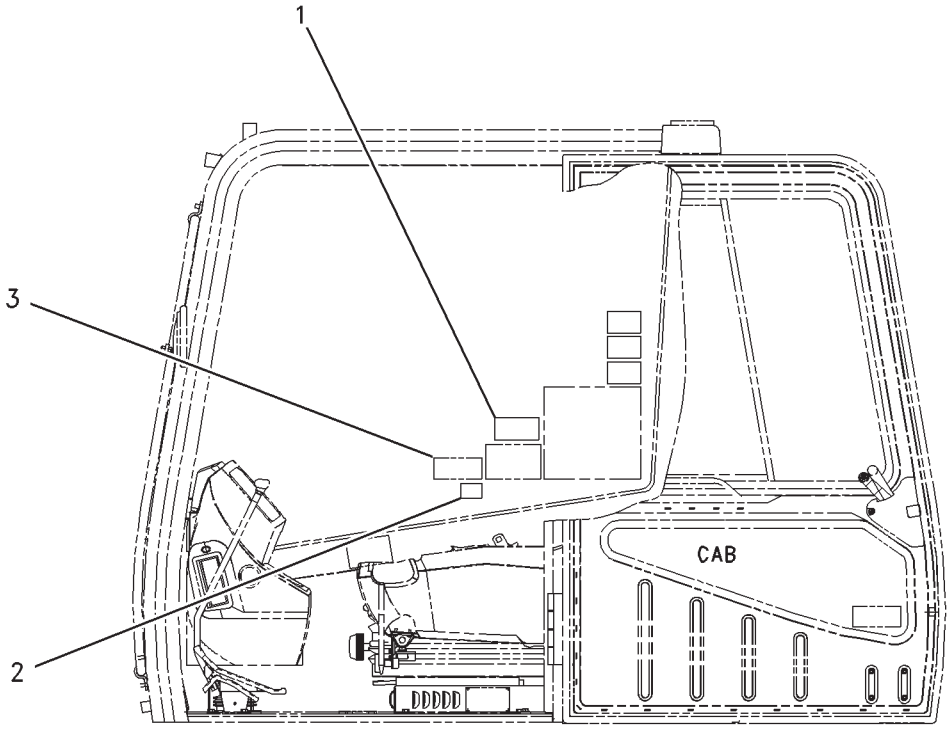

LEFT SIDE VIEW

GRAPHIC #1 **<END>** g00641846

SERVICE EQUIPMENT AND SUPPLIES

152-9515 FILM GP

S/N: RCD1-UP
COMBINED FUNCTION
PART OF 196-9814, 196-9815 CONTROL AR-AUXILIARY
AN ATTACHMENT
TYPE 2

SMCS-7405, 7557 **i02183728**

NOTE	REF NO	GRAPHIC REF	PART NUMBER	QTY	PART NAME 1 2 3 4 5 6 (PRODUCT LEVEL)	SEE PAGE
C	1	1	**250-8054**	1	FILM-NOTICE (HAMMER, READ OMM)	
	2	1	**127-5252**	1	FILM-INSTRUCTION (OPERATOR CONTROL PEDALS)	
	3	1	**175-6331**	1	FILM-INFORMATION (OPERATOR CONTROLS)	

C-CHANGE FROM PREVIOUS TYPE

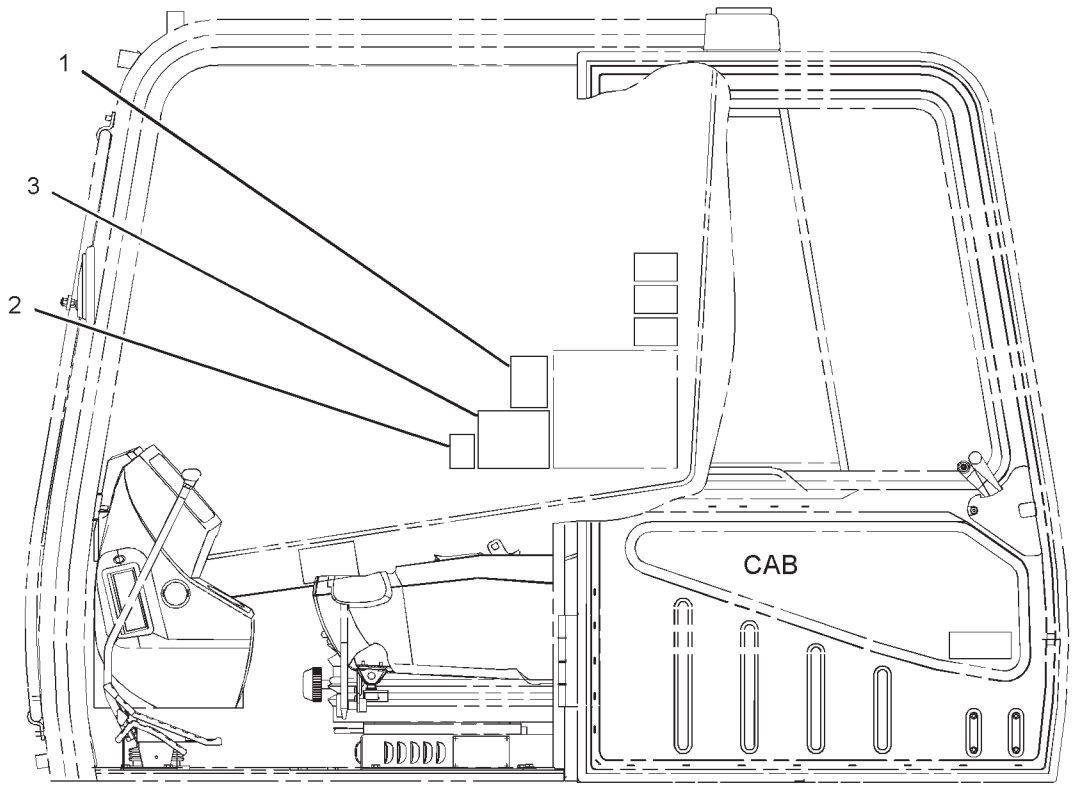

LEFT SIDE VIEW

GRAPHIC #1 **<END>** g01137713

SERVICE EQUIPMENT AND SUPPLIES

172-4955 FILM GP

S/N: RCD1-UP
PART OF 157-9989 COUNTERWEIGHT AR
AN ATTACHMENT

SMCS-7405, 7557 **i02247834**

NOTE	REF NO	GRAPHIC REF	PART NUMBER	QTY	PART NAME 1 2 3 4 5 6 (PRODUCT LEVEL)	SEE PAGE
	1	1	**250-6094**	1	FILM-WARNING (CRUSH HAZARD, READ OMM, ANSI)	
					(ALL MARKETS OUTSIDE NACD)	
					—OR—	
		1	**251-1105**	1	FILM-WARNING (CRUSH HAZARD, READ OMM, U.S.)	
					(NACD MARKET ONLY)	
E	2	1	**105-4553**		FILM-STRIPE (ACCENT RED) (308-CM)	

E-ORDER BY THE CENTIMETER

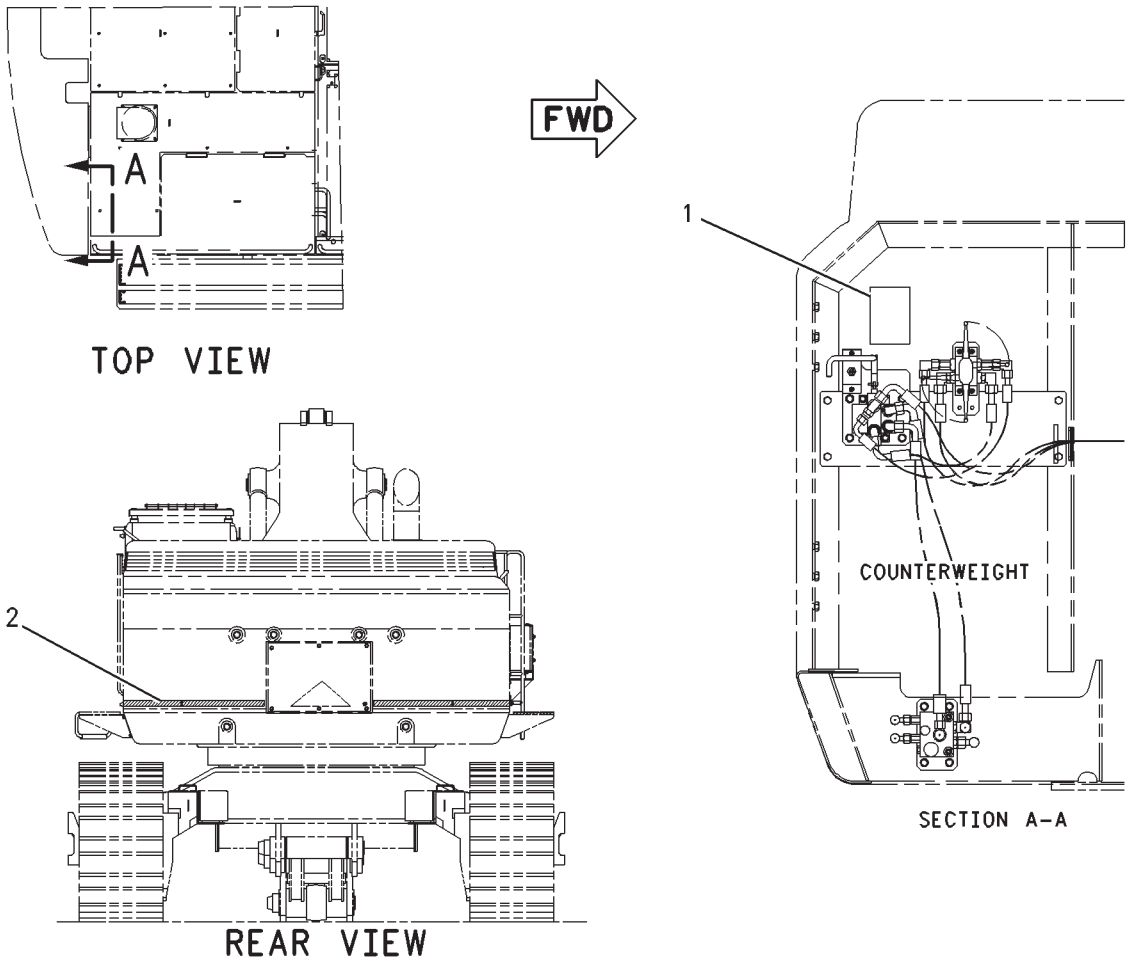

GRAPHIC #1 **<END>** g00890204

SERVICE EQUIPMENT AND SUPPLIES

237-2164 FILM GP–SMARTBOOM

S/N: RCD1-UP
PART OF 213-4216 VALVE AR-BOOM LOWERING CONTROL
AN ATTACHMENT

SMCS-7405, 7557 **i01916049**

NOTE	REF NO	GRAPHIC REF	PART NUMBER	QTY	PART NAME 1 2 3 4 5 6 (PRODUCT LEVEL)	SEE PAGE
	1	1	**193-6800**	1	FILM-WARNING (SMARTBOOM, READ OMM)	
	2	1	**236-0563**	1	FILM-IDENTIFICATION (SMARTBOOM)	

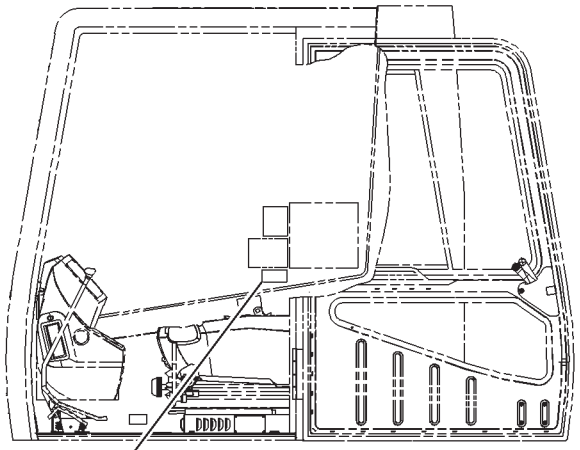

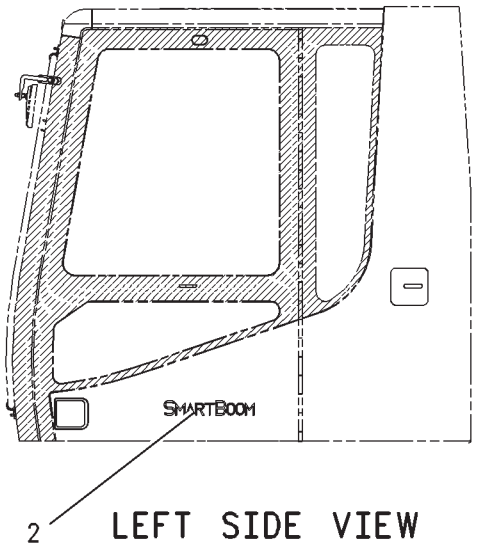

GRAPHIC #1 **<END>** g01000747

SERVICE EQUIPMENT AND SUPPLIES

222-8395 PLATE & FILM GP

S/N: RCD1-UP
FRENCH
AN ATTACHMENT

SMCS-7405, 7557 **i01718673**

NOTE	REF NO	GRAPHIC REF	PART NUMBER	QTY	PART NAME 1 2 3 4 5 6 (PRODUCT LEVEL)	SEE PAGE
	1	1	**1R-6246**	1	FILM-WARNING (TRAVEL CONTROL)	
	2	1	**4I-8459**	1	FILM-NOTICE (ENGINE START SWITCH)	
	3	1	**7Y-0032**	1	FILM-WARNING (CLEARANCE)	
	4	1	**8T-1962**	5	FILM-NOTICE (WINDOW CLEANING)	
F			**4P-8684**	1	FILM-INFORMATION (AIR CLEANER)	
F			**6V-4612**	1	FILM-WARNING (JUMP START, READ OMM)	
F			**7Y-0041**	1	FILM-INSTRUCTION (HYDRAULIC OIL LEVEL)	
F			**7Y-0039**	2	FILM-WARNING (TANK LIFTING)	
F			**8T-7829**	1	FILM-INSTRUCTION (ALTERNATE EXIT, REMOVE WINDOW)	
F			**121-4578**	4	FILM-NOTICE (CYLINDER INSTALLATION)	
F			**134-7258**	2	FILM-INFORMATION (EXTENDED LIFE COOLANT,READ OMM)	
F			**143-6411**	1	PLATE-ROPS (FRONT GUARD)	
F			**143-6424**	1	PLATE-ROPS (TOP GUARD)	
F			**167-7224**	1	FILM-WARNING (UNIVERSAL, READ OMM)	
F			**171-5378**	1	FILM-WARNING (COUNTERWEIGHT REMOVAL)	
F			**176-0459**	1	FILM-WARNING (ENGINE SPEED CONTROL)	
F			**208-1169**	1	FILM-FUSE	
F			**220-2397**	1	FILM-WARNING (ACCUMULATOR)	
F			**220-2406**	1	FILM-WARNING (ACCUMULATOR)	

F-NOT SHOWN

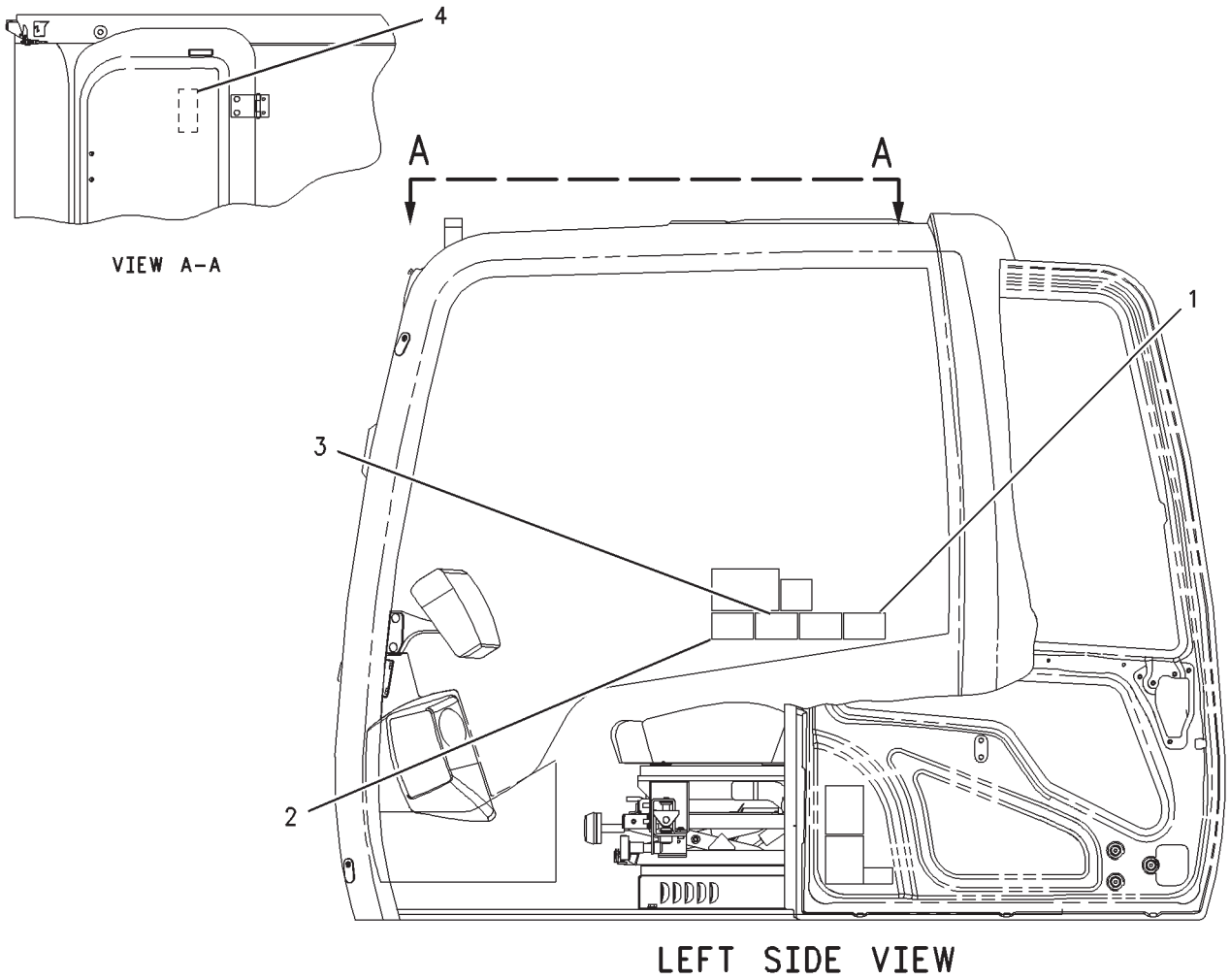

GRAPHIC #1

<END>

g00885843

SERVICE EQUIPMENT AND SUPPLIES

222-8396 PLATE & FILM GP

S/N: RCD1-UP
PORTUGUESE
AN ATTACHMENT

SMCS-7405, 7557 **i01718672**

NOTE	REF NO	GRAPHIC REF	PART NUMBER	QTY	PART NAME 1 2 3 4 5 6 (PRODUCT LEVEL)	SEE PAGE
	1	1	**8T-1964**	5	FILM-NOTICE (WINDOW CLEANING)	
	2	1	**4I-8205**	1	FILM-WARNING (CLEARANCE)	
	3	1	**4I-8204**	1	FILM-NOTICE (ENGINE START SWITCH)	
	4	1	**4I-8206**	1	FILM-WARNING (TRAVEL CONTROL)	
F			**8T-7831**	1	FILM-INSTRUCTION (ALTERNATE EXIT, REMOVE WINDOW)	
F			**4I-8215**	1	FILM-INSTRUCTION (HYDRAULIC OIL LEVEL)	
F			**4I-8216**	2	FILM-WARNING (TANK LIFTING)	
F			**4P-8685**	1	FILM-INFORMATION (AIR CLEANER)	
F			**6V-4614**	1	FILM-WARNING (JUMP START, READ OMM)	
F			**121-4580**	4	FILM-NOTICE (CYLINDER INSTALLATION)	
F			**134-7258**	2	FILM-INFORMATION (EXTENDED LIFE COOLANT,READ OMM)	
F			**143-6413**	1	PLATE-ROPS (FRONT GUARD)	
F			**143-6426**	1	PLATE-ROPS (TOP GUARD)	
F			**167-7228**	1	FILM-WARNING (UNIVERSAL, READ OMM)	
F			**171-5381**	1	FILM-WARNING (COUNTERWEIGHT REMOVAL SYSTEM)	
F			**176-0462**	1	FILM-WARNING (ENGINE SPEED CONTROL)	
F			**208-1175**	1	FILM-FUSE	
F			**220-2401**	1	FILM-WARNING (ACCUMULATOR)	
F			**220-2410**	1	FILM-WARNING (ACCUMULATOR)	

F-NOT SHOWN

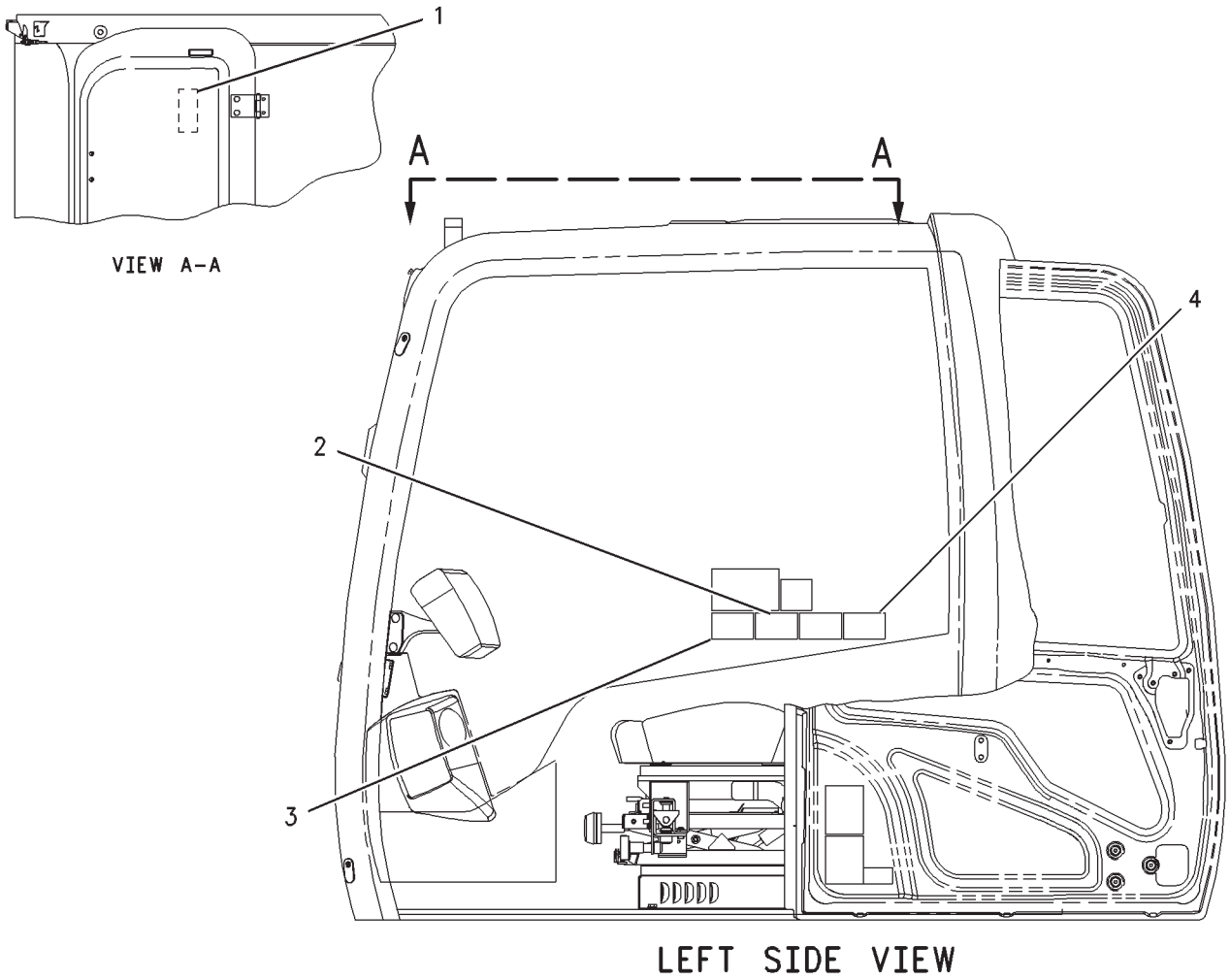

GRAPHIC #1

<END>

g00885845

SERVICE EQUIPMENT AND SUPPLIES

222-8397 PLATE & FILM GP

S/N: RCD1-UP
SPANISH
AN ATTACHMENT

SMCS-7405, 7557 **i01718668**

NOTE	REF NO	GRAPHIC REF	PART NUMBER	QTY	PART NAME 1 2 3 4 5 6 (PRODUCT LEVEL)	SEE PAGE
	1	2	**6V-4613**	1	FILM-WARNING (JUMP START, READ OMM)	
	2	1	**7Y-0026**	2	FILM-WARNING (TANK LIFTING)	
	3	2	**7Y-0028**	1	FILM-INSTRUCTION (HYDRAULIC OIL LEVEL)	
	4	1	**114-6461**	1	FILM-INFORMATION (AIR CLEANER)	
	5	2	**121-4579**	4	FILM-NOTICE (CYLINDER INSTALLATION)	
	6	1	**134-7258**	2	FILM-INFORMATION (EXTENDED LIFE COOLANT,READ OMM)	
	7	1	**1R-6247**	1	FILM-WARNING (TRAVEL CONTROL)	
	8	1	**4I-8460**	1	FILM-NOTICE (ENGINE START SWITCH)	
	9	1	**7Y-0019**	1	FILM-WARNING (CLEARANCE)	
	10	2	**8T-1963**	5	FILM-NOTICE (WINDOW CLEANING)	
	11	2	**101-2842**	1	FILM-INSTRUCTION (ALTERNATE EXIT)	
	12	2	**176-0461**	1	FILM-WARNING (ENGINE SPEED CONTROL)	
F			**143-6412**	1	PLATE-ROPS (FRONT GUARD)	
F			**143-6425**	1	PLATE-ROPS (TOP GUARD)	
F			**167-7225**	1	FILM-WARNING (UNIVERSAL, READ OMM)	
F			**171-5379**	1	FILM-WARNING (COUNTERWEIGHT REMOVAL SYSTEM)	
F			**208-1177**	1	FILM-FUSE	
F			**220-2398**	1	FILM-WARNING (ACCUMULATOR)	
F			**220-2407**	1	FILM-WARNING (ACCUMULATOR)	

F-NOT SHOWN

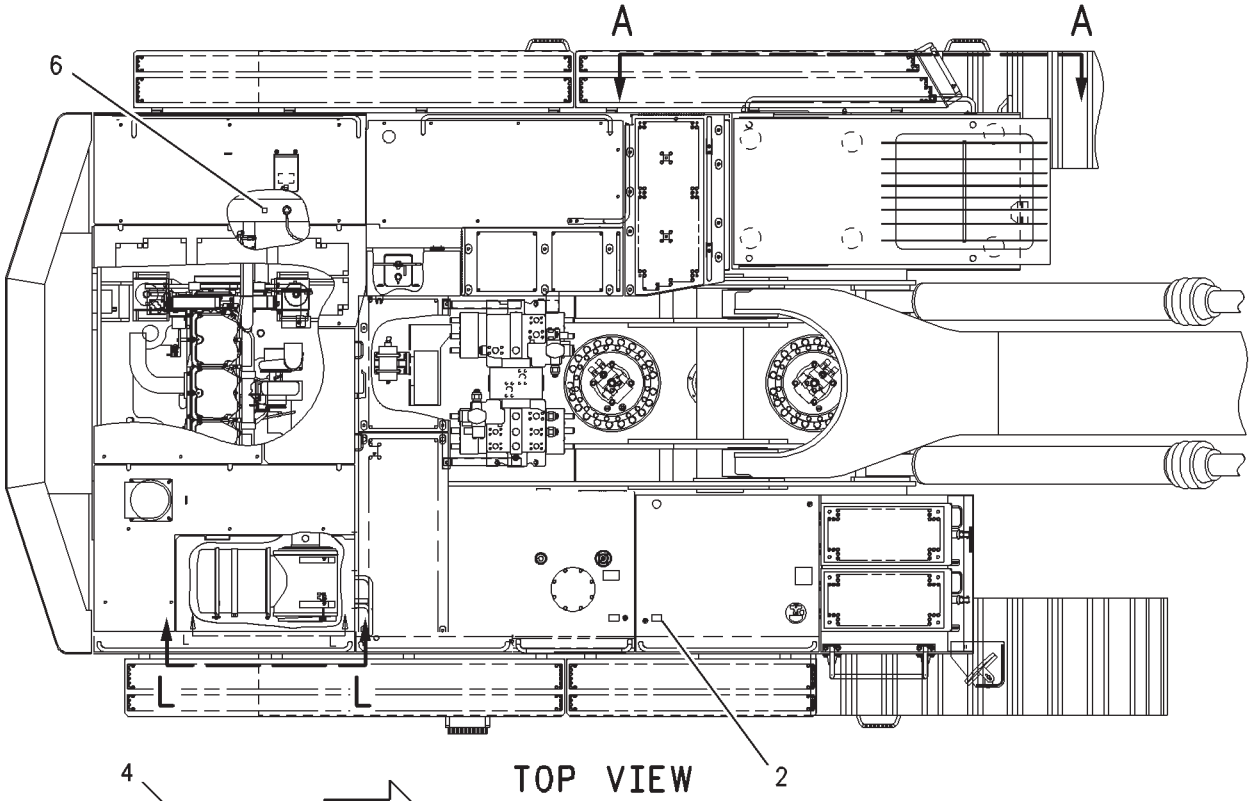

TOP VIEW

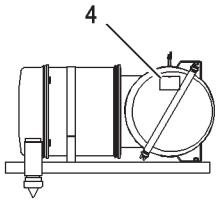

VIEW L-L

FWD

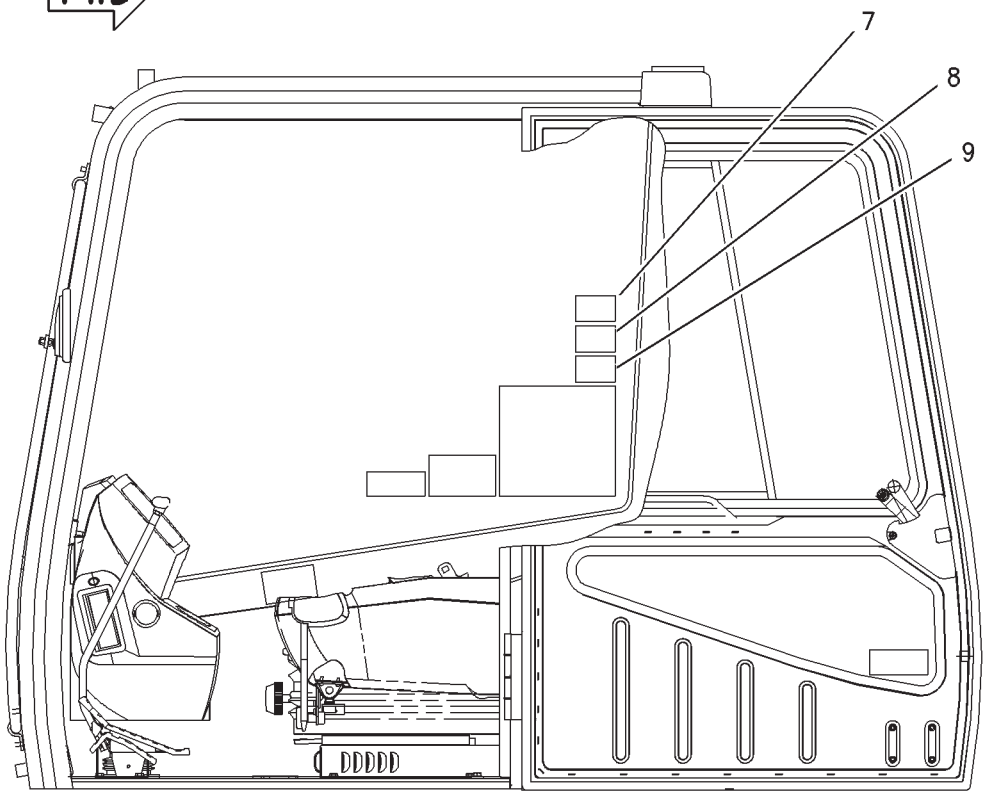

VIEW A-A

GRAPHIC #1

g00885699

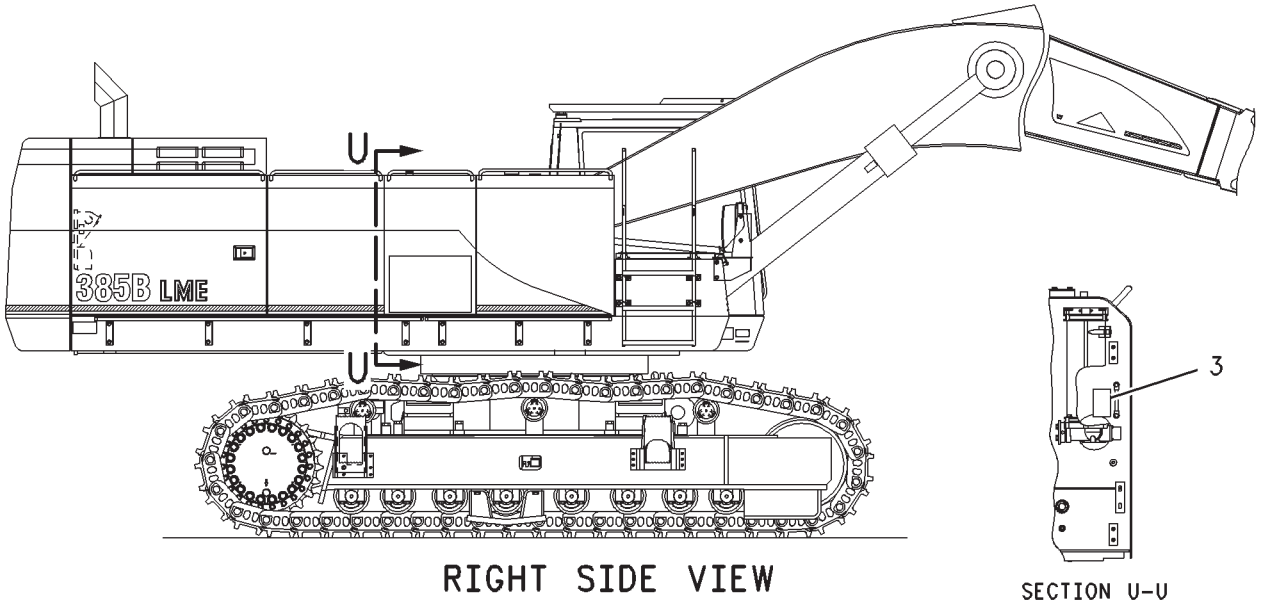

RIGHT SIDE VIEW

SECTION U-U

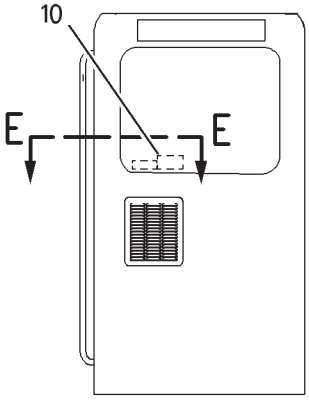

VEIW F-F

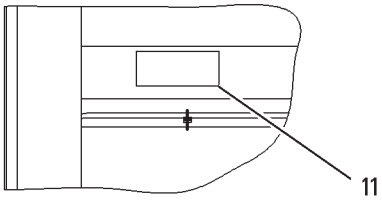

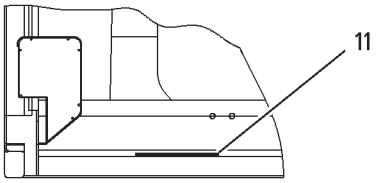

SECTION E-E

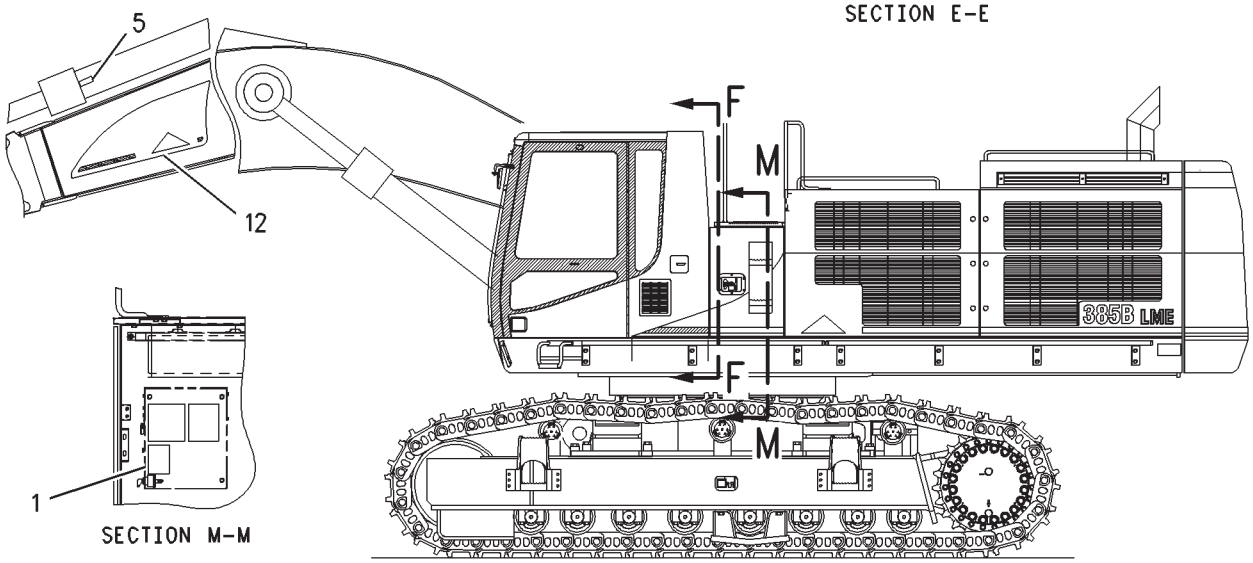

SECTION M-M

LEFT SIDE VIEW

GRAPHIC #2 **<END>** g00885645

SERVICE EQUIPMENT AND SUPPLIES

230-3392 PLATE & FILM GP

S/N: RCD1-220

PART OF 229-3366 CHASSIS AR

SMCS-7405, 7557 **i01889495**

NOTE	REF NO	GRAPHIC REF	PART NUMBER	QTY	PART NAME 1 2 3 4 5 6 (PRODUCT LEVEL)	SEE PAGE
	1	2	**152-9656**	1	FILM-WARNING (AUTO ENG SPEED CONTROL)	
	2	2	**167-7223**	1	FILM-WARNING (UNIVERSAL, READ OMM)	
	3	4	**208-1057**	1	FILM-IDENTIFICATION (FUSE PANEL)	
	4	1	**220-2405**	1	FILM-WARNING (ACCUMULATOR)	
	5	2	**134-0114**	1	FILM-INSTRUCTION (BUCKET CONTROLS)	
	6	2	**1R-6245**	1	FILM-WARNING (TRAVEL CONTROL)	
	7	4	**116-1523**	1	FILM-INSTRUCTION (SPEED CONTROL)	
	8	2	**4I-8088**	1	FILM-NOTICE (ENGINE START SWITCH)	
	9	2	**7Y-0003**	1	FILM-WARNING (CLEARANCE)	
	10	1,2,4	**8T-1915**	5	FILM-NOTICE (WINDOW CLEANING)	
	11	2	**202-2897**	1	FILM-INSTRUCTION (LIFT CAPACITY, READ OMM) (LIFT CAPACITY)	
	12	4	**101-2842**	1	FILM-INSTRUCTION (ALTERNATE EXIT)	
	13	2	**1P-2807**	4	FILM-INFORMATION (LIFT EYE LOCATION)	
	14	2	**4P-6464**	1	FILM-INFORMATION (AIR CLEANER)	
	15	3	**6V-4611**	1	FILM-WARNING (JUMP START, READ OMM)	
	16	3	**7X-7644**	4	FILM-INFORMATION (TIE-DOWN)	
	17	1	**7Y-0012**	2	FILM-WARNING (TANK LIFTING)	
	18	3	**7Y-0014**	1	FILM-INSTRUCTION (HYDRAULIC OIL LEVEL)	
	19	2	**176-0480**	1	PLATE-WARNING (HOT SURFACE)	
E	20	2,3	**105-4553**		FILM-STRIPE (ACCENT RED) (1170CM)	
	21	3	**105-7546**	1	FILM-IDENTIFICATION (CAT COUNTERWEIGHT)	
	22	3	**112-0545**	2	FILM-INSTRUCTION (TRACK GAUGE)	
	23	2	**114-4285**	1	FILM-WARNING (MAINTENANCE, REMOVE KEY)	
	24	1	**120-5107**	1	FILM-WARNING (HOT SURFACE)	
	25	2,3	**121-2602**	4	FILM-NOTICE (CYLINDER INSTALLATION)	
	26	1	**124-2456**	2	FILM-INSTRUCTION (NO STEP)	
	27	1	**134-7258**	1	FILM-INFORMATION (EXTENDED LIFE COOLANT,READ OMM)	
	28	1	**143-9536**	1	FILM-IDENTIFICATION (MIN-MAX)	
	29	1	**143-9563**	1	FILM-WARNING (HOT HYD OIL)	
	30	2	**152-9649**	2	FILM-IDENTIFICATION (CAT UPPER STRUCTURE)	
	31	2	**152-9650**	1	FILM-IDENTIFICATION (CAT BOOM, RH)	
	32	2	**152-9651**	1	FILM-IDENTIFICATION (CAT BOOM, LH)	
	33	1	**156-3849**	1	FILM-WARNING (RADIATOR)	
	34	2	**172-4950**	1	FILM-WARNING (HOT SURFACE)	
	35	2	**188-7268**	2	FILM-WARNING (MACHINE SWING, CRUSHING)	
	36	3	**190-5386**	2	FILM-STRIPE (ROUND RED REFLECTIVE)	
	37	3	**202-2894**	1	FILM-NOTICE (IMPROPER LIFTING)	
	38	2	**208-4514**	1	FILM (385B L)	
	39	2	**208-4515**	1	FILM (385B LME)	
	40	2	**213-4961**	1	FILM (385B L)	
	41	2	**213-4962**	1	FILM (385B LME)	
	42	1	**220-2383**	1	FILM-WARNING (ACCUMULATOR)	

E-ORDER BY THE CENTIMETER

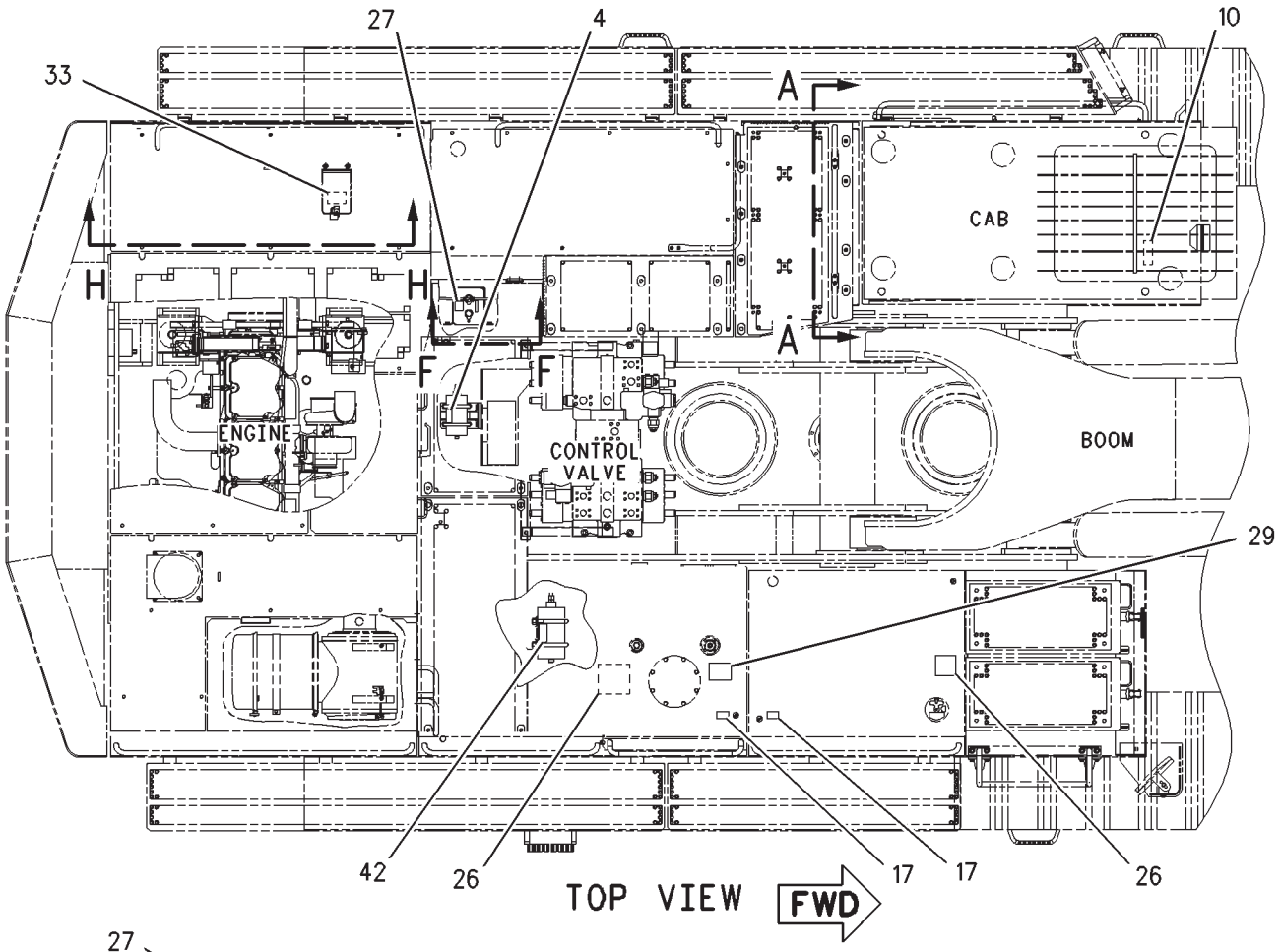

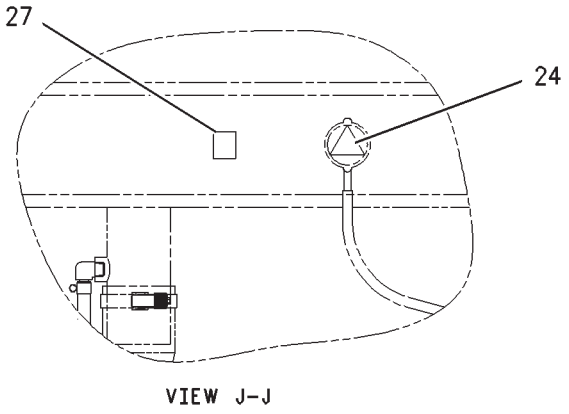

VIEW J-J

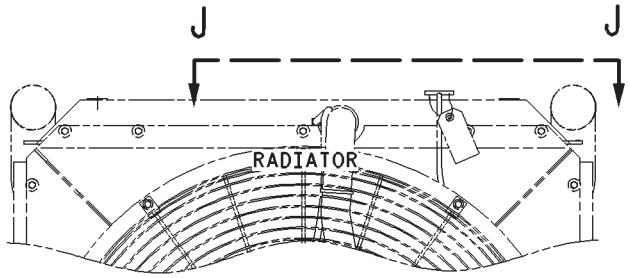

SECTION H-H

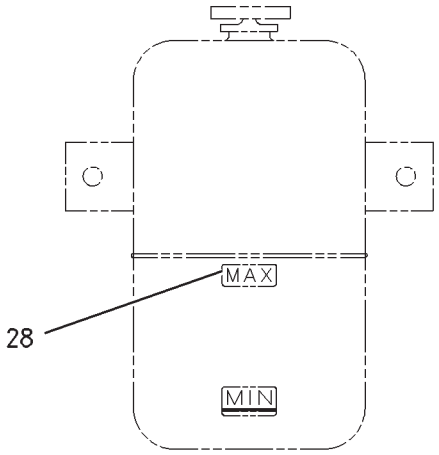

SECTION F-F

REFER TO ALL ILLUSTRATIONS OF THIS GROUP FOR AUXILIARY VIEWS

GRAPHIC #1 g00984770

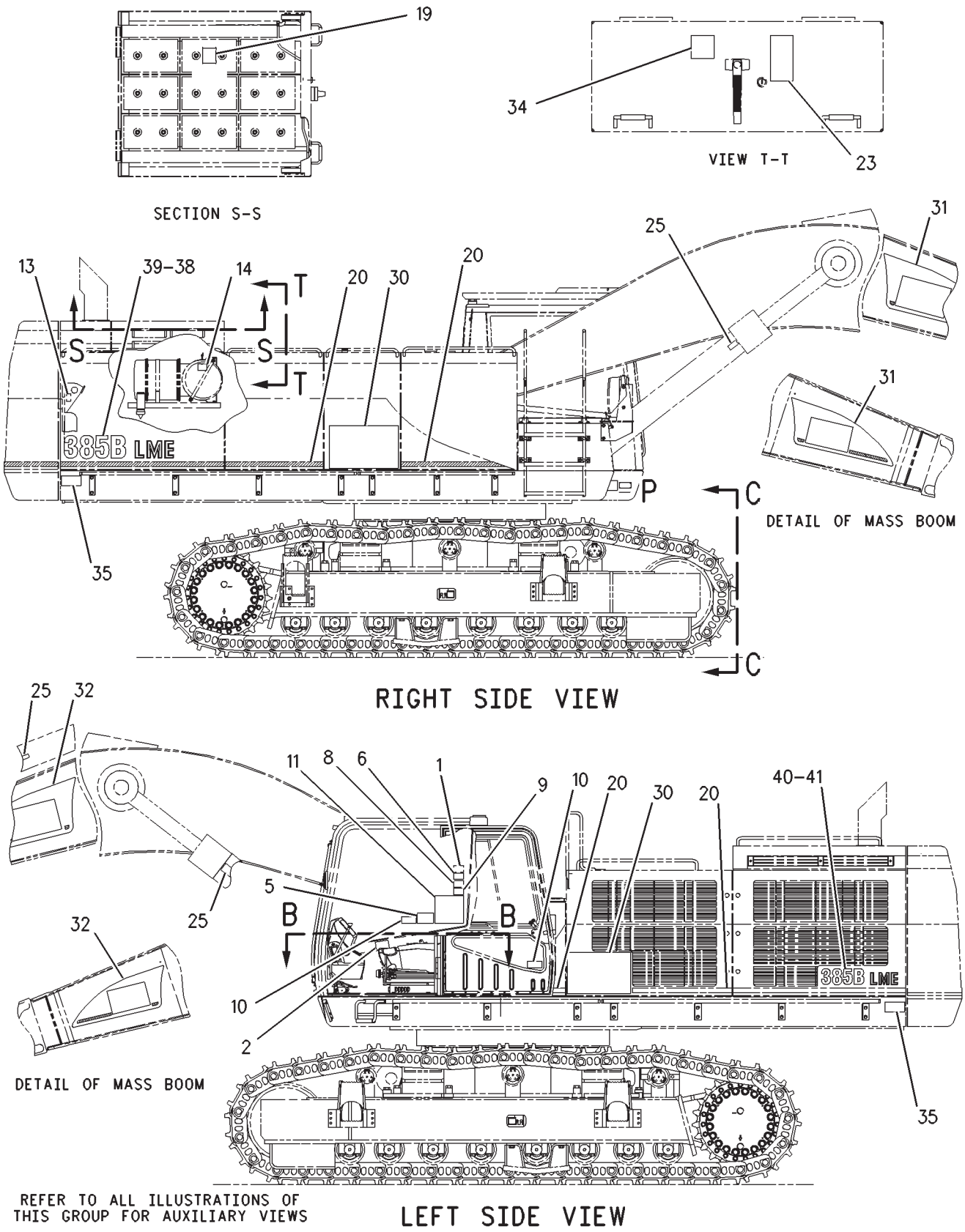

GRAPHIC #2 g00984771

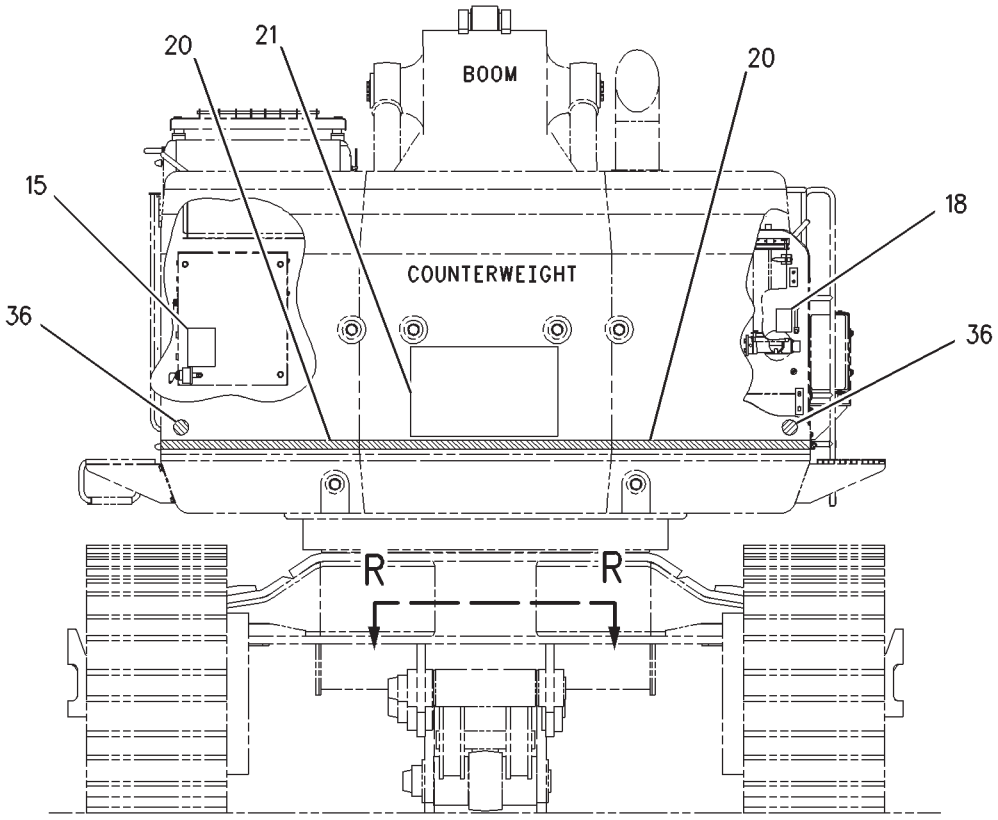

REAR VIEW

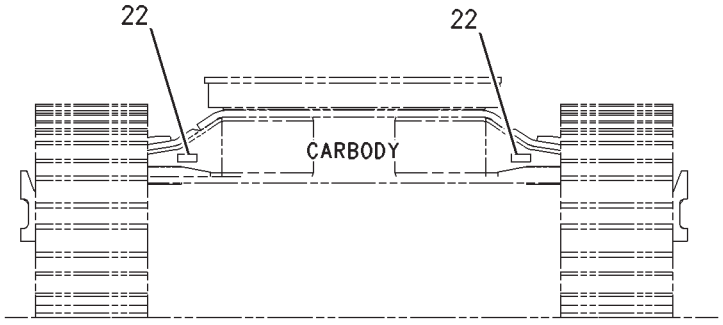

VIEW C-C

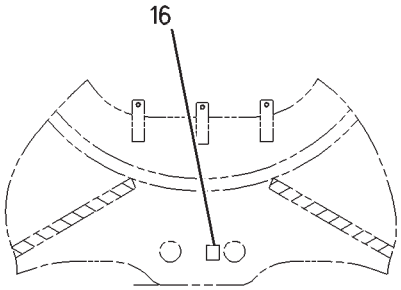

SECTION R-R

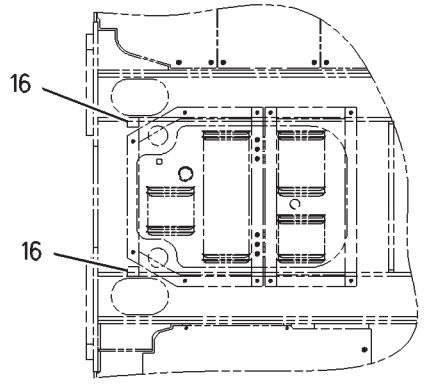

VIEW N-N

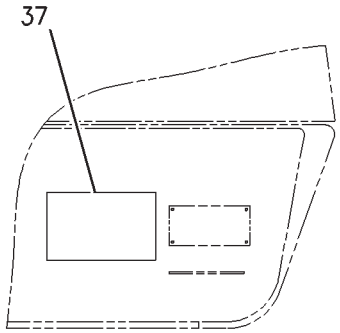

VIEW OF AREA P

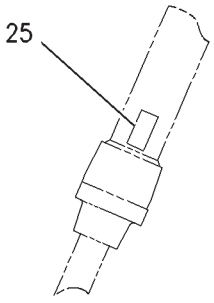

BUCKET CYLINDER

GRAPHIC #3 g00984772

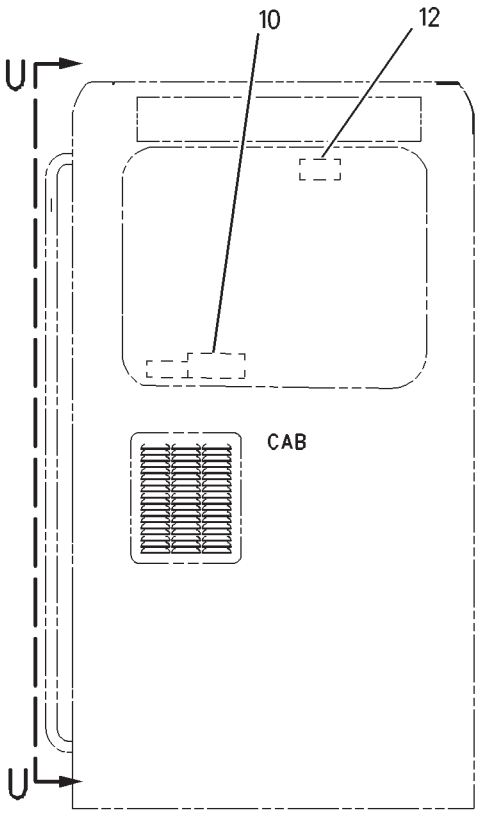

VIEW A-A

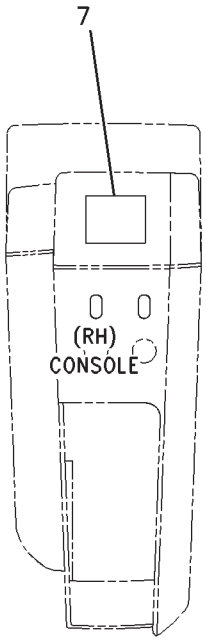

VIEW M-M

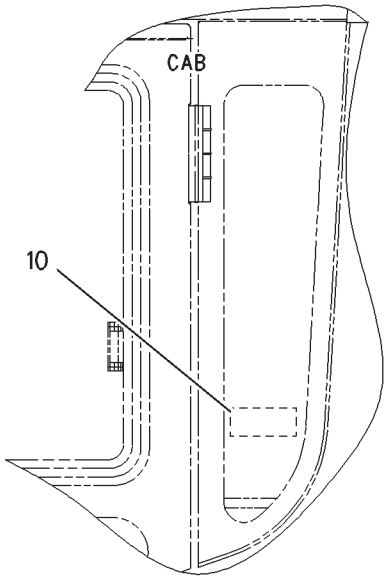

VIEW U-U

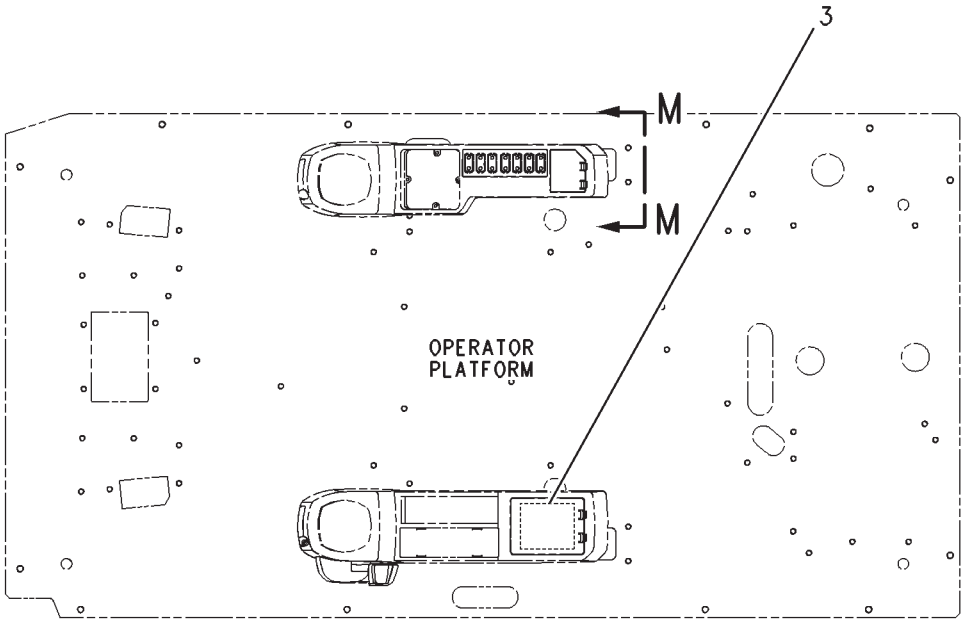

VIEW B-B

GRAPHIC #4 **<END>** g00984773

SERVICE EQUIPMENT AND SUPPLIES

253-4711 PLATE & FILM GP

S/N: RCD221-UP

PART OF 229-3366 CHASSIS AR

SMCS-7405, 7557 **i02459405**

NOTE	REF NO	GRAPHIC REF	PART NUMBER	QTY	PART NAME 1 2 3 4 5 6 (PRODUCT LEVEL)	SEE PAGE
	1	2	**239-6986**	1	PLATE-IDENTIFICATION (MACHINE)	
	2	2	**176-0480**	1	PLATE-WARNING (HOT SURFACE)	
	3	2,3	**7X-7644**	4	FILM-INFORMATION (TIE-DOWN)	
	4	4	**101-2842**	1	FILM-INSTRUCTION (ALTERNATE EXIT)	
E	5	3	**105-4553**		FILM-STRIPE (ACCENT RED) (1170-CM)	
	6	3	**105-7546**	1	FILM-IDENTIFICATION (CAT COUNTERWEIGHT)	
	7	3	**112-0545**	2	FILM-INSTRUCTION (TRACK GAUGE)	
	9	4	**116-1523**	1	FILM-INSTRUCTION (SPEED CONTROL)	
	10	1	**225-4256**	1	FILM-WARNING (HOT FLUID UNDER PRESSURE, U.S.)	
	11	1	**124-2456**	2	FILM-INSTRUCTION (NO STEP)	
	12	4	**134-0114**	1	FILM-INSTRUCTION (BUCKET CONTROLS)	
	13	1	**143-9536**	1	FILM-IDENTIFICATION (MIN-MAX)	
	14	1	**224-7830**	1	FILM-WARNING (HIGH PRESSURE, READ OMM, U.S.)	
	15	2,3	**152-9649**	2	FILM-IDENTIFICATION (CAT UPPER STRUCTURE)	
	16	2	**152-9650**	1	FILM-IDENTIFICATION (CAT BOOM, RH)	
	17	3	**152-9651**	1	FILM-IDENTIFICATION (CAT BOOM, LH)	
	19	2	**228-7315**	1	FILM-WARNING (HOT SURFACE, HANDS CLEAR, U.S.)	
	20	2	**1P-2807**	4	FILM-INFORMATION (LIFT EYE LOCATION)	
	21	2	**228-2780**	2	FILM-WARNING (MACHINE SWING, CRUSHING, U.S.)	
	22	3	**190-5386**	2	FILM-STRIPE (ROUND RED REFLECTIVE)	
	24	4	**202-2897**	1	FILM-INSTRUCTION (LIFT CAPACITY, READ OMM)	
	25	2	**208-4514**	1	FILM (385B L)	
					—OR—	
		2	**208-4515**	1	FILM (385B LME)	
	27	3	**213-4961**	1	FILM (385B L)	
					—OR—	
		3	**213-4962**	1	FILM (385B LME)	
	29	3,4	**223-9818**	5	FILM-INSTRUCTION (WINDOW CLEANING, READ OMM)	
	30	4	**253-2451**	1	FILM-IDENTIFICATION (FUSE PANEL)	
	31	4	**225-3305**	1	FILM-WARNING (UNIVERSAL, READ OMM, U.S.)	
	32	4	**228-9253**	1	FILM-WARNING (ELECTRICAL HAZARD, U.S.)	
	33	1	**242-6092**	1	FILM-WARNING (ACCUMULATOR PRESSURE)	
	34	1	**253-2454**	1	FILM-WARNING (ACCUM PRESS, READ MANUAL)	
	35	1	**229-0887**	1	FILM-INFORMATION (AIR CLEANER)	
	36	2	**242-1510**	1	FILM-INSTRUCTION (HYDRAULIC OIL CHECK)	
	37	3	**225-0313**	1	FILM-WARNING (JUMP START, READ OMM)	
	38	1	**134-7258**	2	FILM-INFORMATION (EXTENDED LIFE COOLANT,READ OMM)	
	39	4	**187-0661**	1	FILM-INSTRUCTION (ALTERNATE EXIT)	
F			**224-7717**	1	FILM-WARNING (SEAT BELT, U.S.)	
					LOCATE IN CAB	
F			**146-6747**	1	FILM-INFORMATION (24-VOLT)	
					LOCATE ON CIRCUIT BREAKER	
AF			**3N-3790**	1	PLATE-SERIAL NUMBER (ENGINE)	
					LOCATE ON LOWER RH REAR CORNER OF CYLINDER BLOCK	

A-NOT PART OF THIS GROUP
E-ORDER BY THE CENTIMETER
F-NOT SHOWN

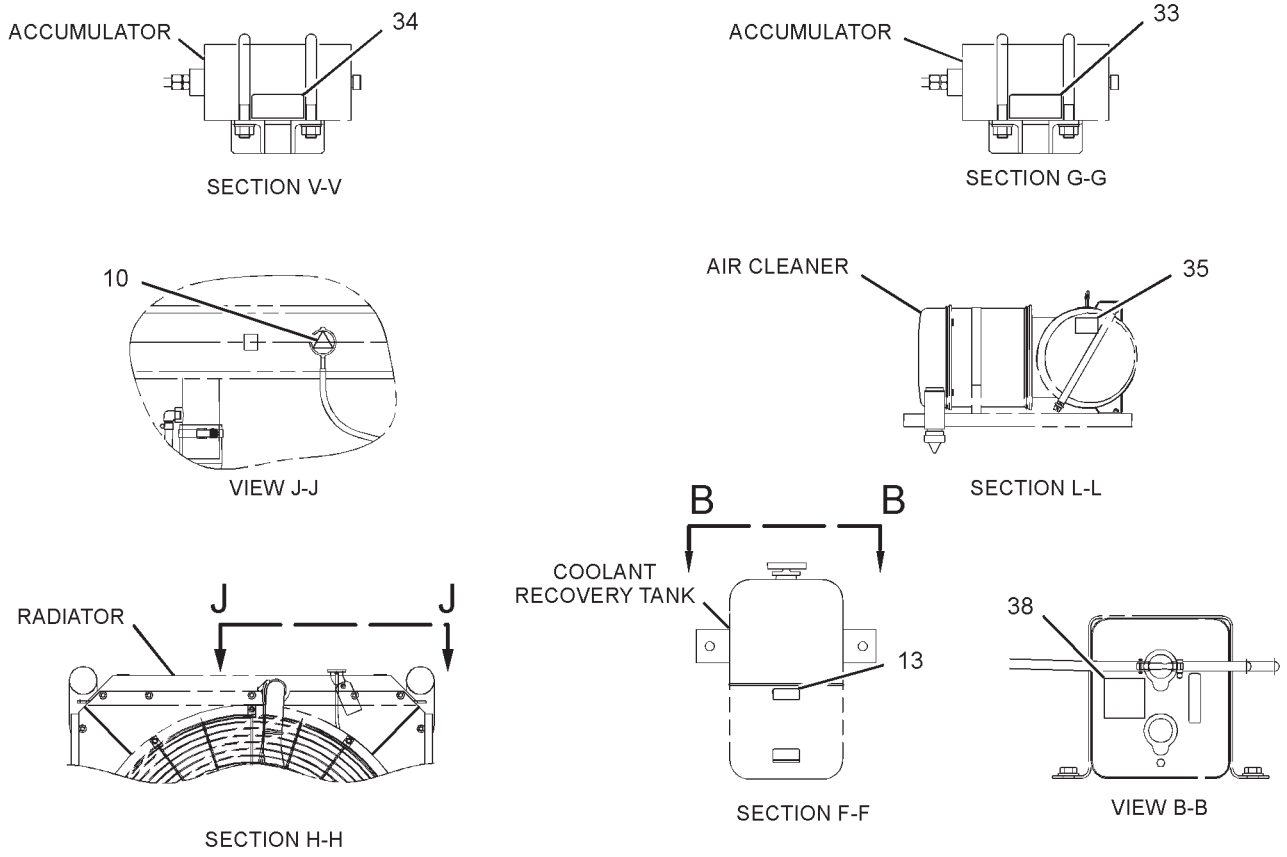

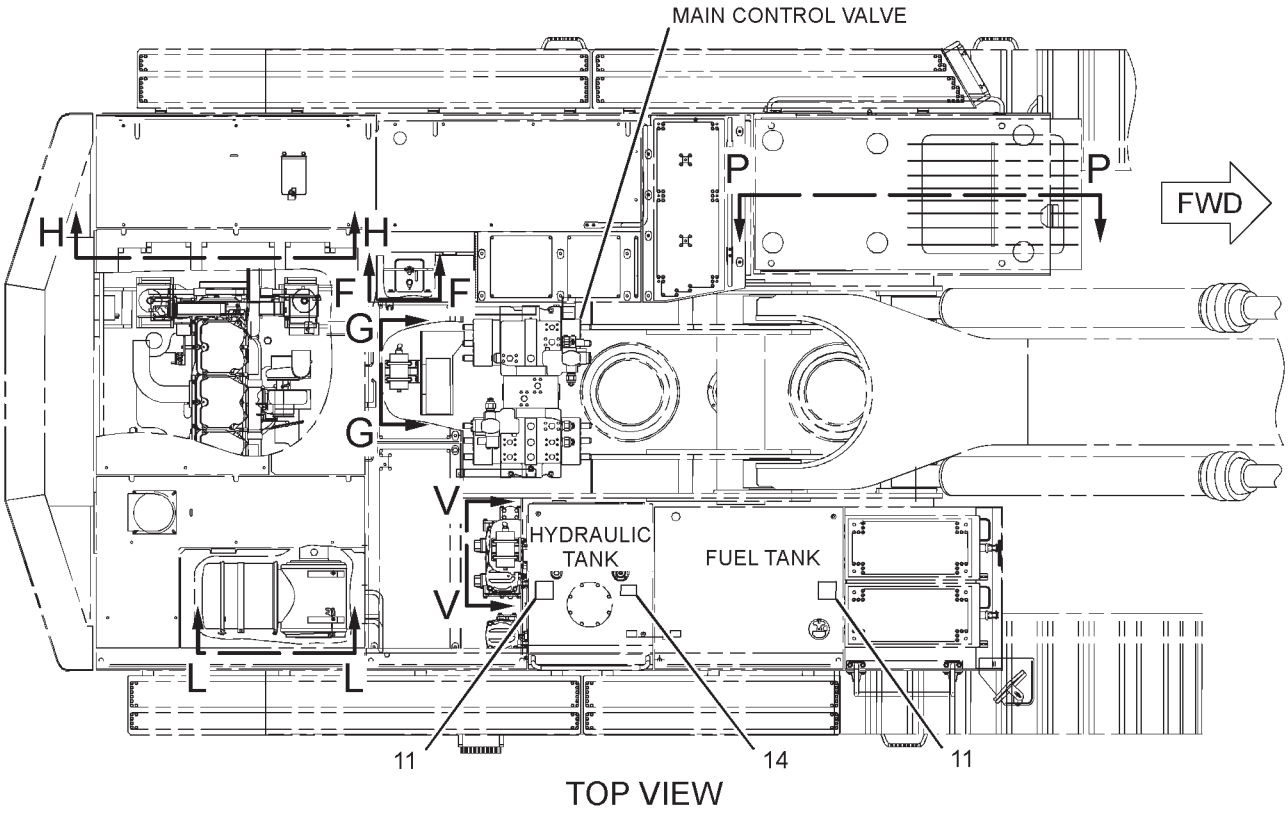

GRAPHIC #1

g01267856

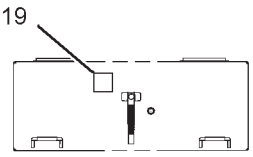

VIEW T-T

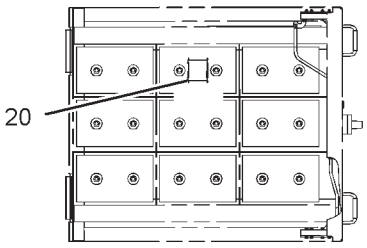

SECTION S-S

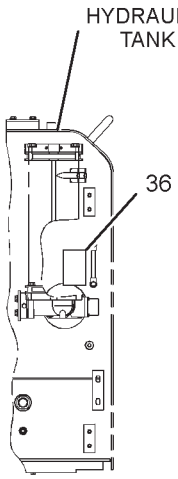

SECTION U-U

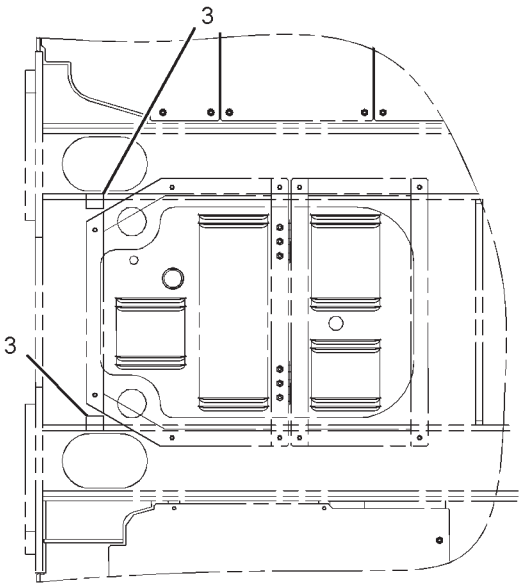

VIEW N-N

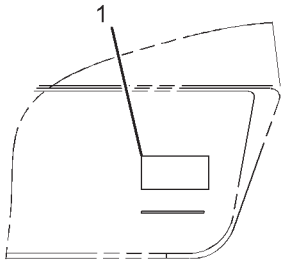

VIEW OF AREA P

REFER TO ALL ILLUSTRATIONS OF THIS GROUP FOR AUXILIARY VIEWS

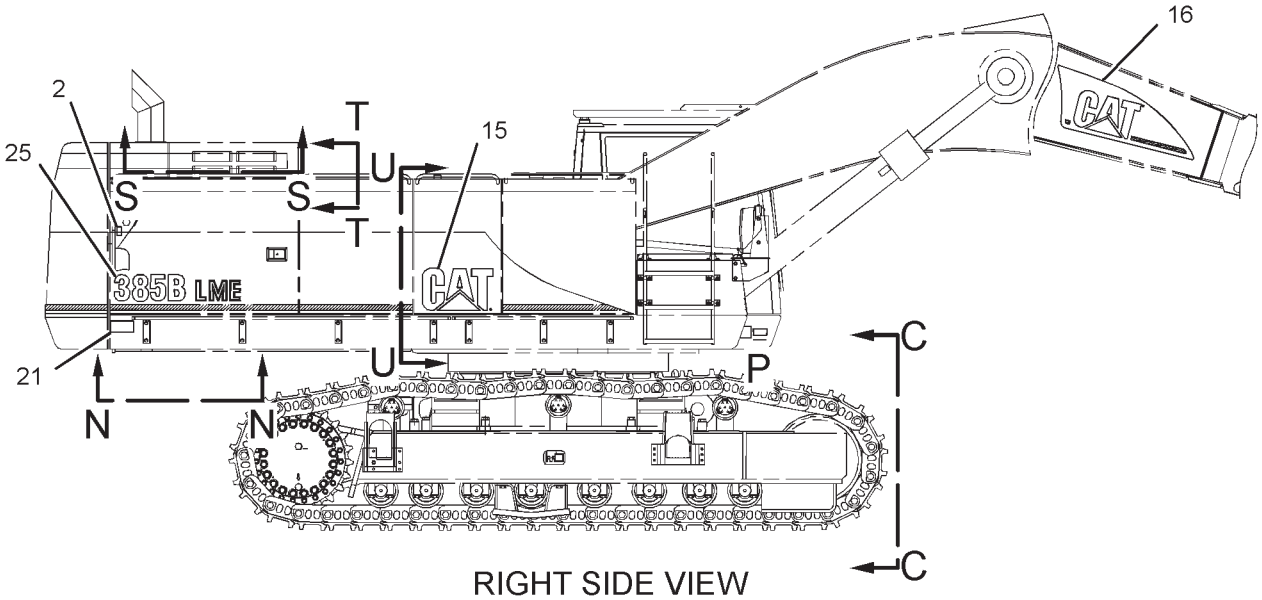

RIGHT SIDE VIEW

GRAPHIC #2

g01267859

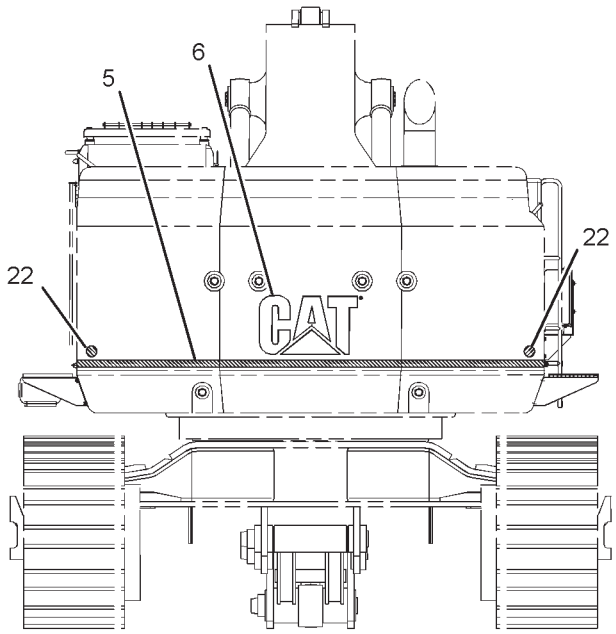

REAR VIEW

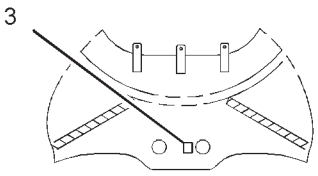

SECTION R-R

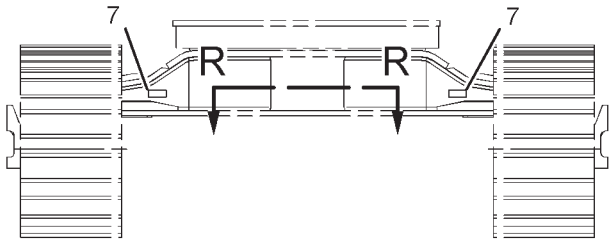

VIEW C-C

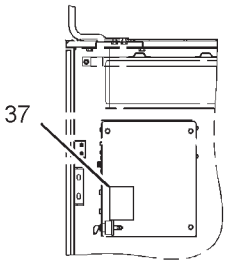

SECTION M-M

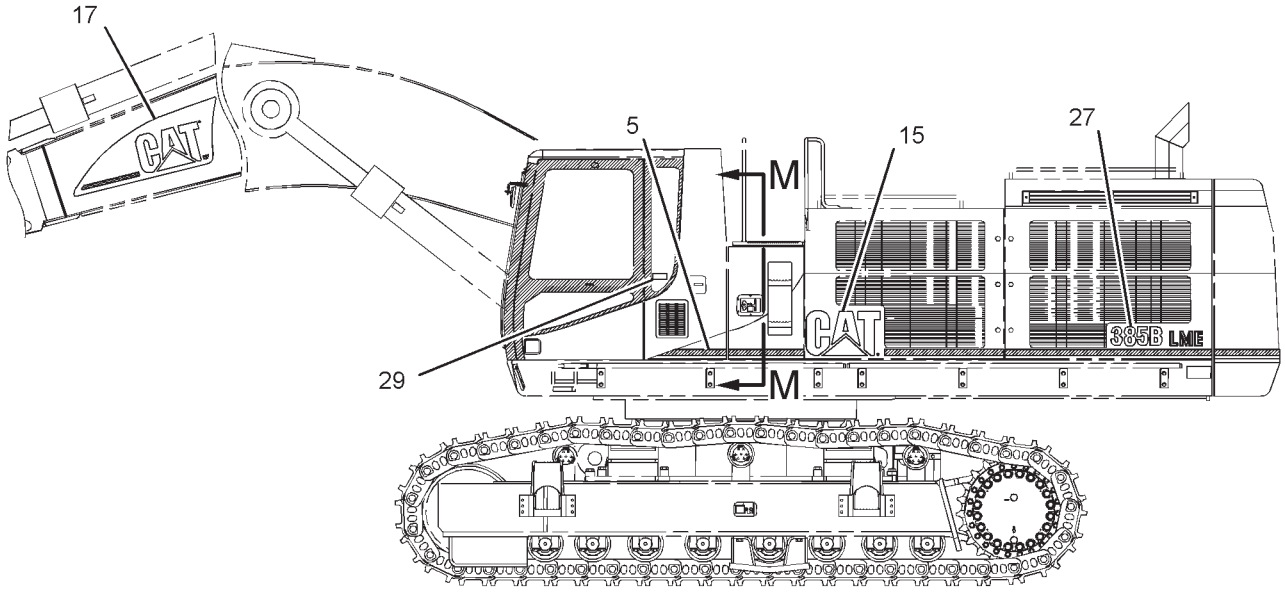

LEFT SIDE VIEW

GRAPHIC #3 g01267863

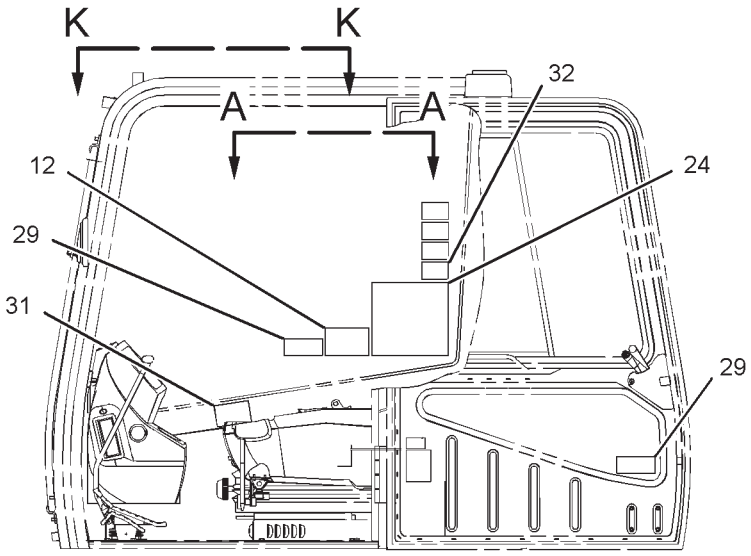

SECTION P-P

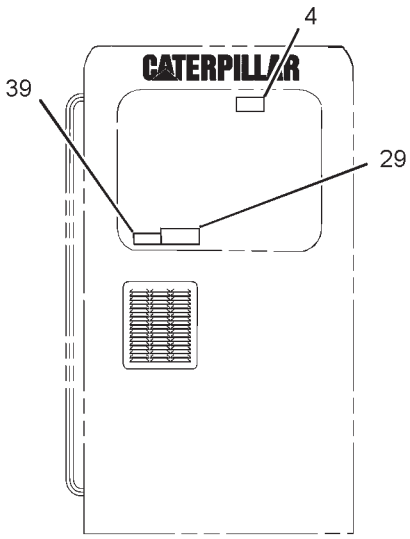

REAR VIEW
(CAB)

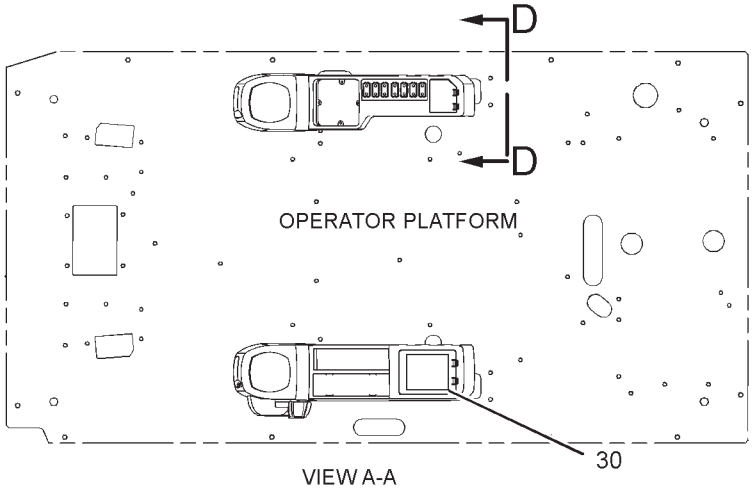

VIEW A-A

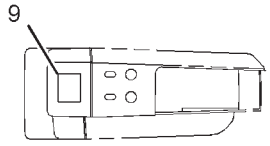

VIEW D-D

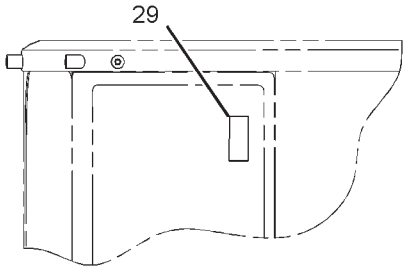

VIEW K-K

GRAPHIC #4 **<END>** g01149688

PART NUMBER INDEX

Part	Page
0	
0L-1143	89
	171
	174
0L-1351	97
	99
	203
	204
0L-1352	116
	118
0L-2070	56
	59
	102
0S-0509	307
0S-1571	49
	56
	59
	102
	171
	174
0S-1585	51
0S-1587	69
0S-1588	56
	59
	69
	87
	90
	99
	140
0S-1590	89
	97
	99
	495
	1002
0S-1591	14
	56
	59
	97
	99
	116
	120
0S-1594	13
	45
	51
	53
	62
	103
	116
	118
	139
	1002
0S-1595	63
0S-1597	281
0S-1608	91
	92
	116
0S-1619	51
	53
	91
	92
0S-1621	53
0T-0055	56
	59
0T-0102	307
0T-0573	116
	307
0T-0768	51
	53
0V-0523	47
1	
1A-1135	120
1A-1460	51
	53
	73
1A-2029	51
	53
	91
	92
	95
	96
	102
1A-5183	1002
1B-3057	118
1B-3581	272
1B-3867	10
1B-7182	120
1B-8705	49
1D-4538	227
1D-4637	975
1F-0750	97
1F-7958	15
	17
	73
1H-1023	276
	281
1H-2629	276
	281
1H-3244	201
	205
	249
1H-3338	286
1H-5728	676
	678
	680
	682
	759
	765
	769
	772
	779
	783
	788
	793
	801
	807
1H-7339	728
1H-8128	163
	193
	195
1H-8647	10
1J-9671	163
	545
	549
	553
	557
	741
	759
	764
	768
	772
	778
	783
	788
	793
	800
	806
	819
	821
	826
	829
	832
	835
	838
1K-6872	203
	204
1K-8850	385
1M-0644	106
	107
1M-6119	208
	209
	216
	217
	224
1M-6120	208
	209
	216
	217
	224
1M-6718	868
	869
	870
1M-9968	277
	282
1M-9971	276
	281
1P-1367	88
1P-2807	1089
	1094
1P-3702	669
	671
1P-3703	590
	617
	636
1P-3704	590
	599
	609
	612
	614
	636
	647
	673
	741
	819
	821
	823
	826
	829
	832
	835
	838
1P-3705	537
	539
	541
	543
	545
	547
	549
	551
	553
	555
	557
	559
	573
	576
	579
	581
	585
	589
	595
	597
	599
	605
	609
	612
	614
	636
	657
	658
	659
	660
	661
	662
	673
	769
	772
	783
	794
	814
1P-3706	537
	539
	541
	543
	545
	547
	549
	551
	553
	555
	557
	559
	573
	576
	579
	581
	585
	590
	603
	604
	605
	607
	608
	609
	612
	614
	637
	641

► **PRIMARY REFERENCE**

PART NUMBER INDEX

Part	Page	Part	Page	Part	Page	Part	Page
	644	1R-6245	1089		59		565
	657	1R-6246	1082	2B-7558	325		567
	659	1R-6247	1086	2B-7561	504		569
	660	1R-6484	813	2B-8352	1032		571
	665	1R-7037	695	2D-0388	189		616
	666	1S-0812	318	2D-1683	900		617
	667	1S-0994	649		904		641
	759	1S-4295	162		906		644
	765	1S-4445	428	2D-6392	276		647
	769	1S-4446	428		281		663
	773	1S-5485	137		760		687
	779	1S-7251	208		765		689
	783		216		769		690
	789		224		773		747
	794	1S-7252	209		779		748
	801		217		783		749
	807		224		789		751
1P-3707	741	1S-7446	276		794		754
	819		281		801		759
	821	1S-9540	24		807		764
	823		26	2D-6648	676		768
	826	1S-9593	676		678		772
	829		678		680		775
	832		875		682		778
	835		878	2D-9535	241		783
	838	1T-0720	259	2F-6678	277		788
1P-4278	121	1T-0765	188		282		793
	124	1T-0808	281	2G-8767	210		798
	128	1U-8846	55		218		800
1P-4577	590		69		410		806
1P-4578	612		321	2H-3429	276		811
	614		351		281		814
	616		353	2H-3755	56		816
	620		497		59		841
	652		499		307	2N-2765	144
1P-4582	652		502	2H-3922	284		162
1P-5767	590		504		285	2N-2766	144
	600		673		987		147
	609	1V-6341	265		990		162
	612	1W-3136	55	2H-3928	427	2P-2772	51
	614	1W-4738	51	2H-3934	636		53
	636		53	2H-3935	709	2P-2975	860
	673	1W-4746	51		713		861
	741		53	2J-3118	49		862
	819	1W-6448	56	2J-3507	974	2P-4304	88
	821		59		975	2P-5616	201
	823	1W-6523	759	2J-8163	276	2P-7214	171
	826		773		281		174
	829		789	2K-4821	205	2P-7636	177
	832		794	2K-4973	99	2P-8421	34
	835	1W-9302	21	2K-8199	746	2R-6806	171
	838			2L-6679	276		174
1P-7016	636				281	2S-1647	189
1P-7346	49			2L-8075	201		332
1P-7625	171			2M-0849	85		388
	174	2A-2814	42		728	2S-2596	775
	177		43	2M-5795	328	2S-2760	106
	181	2A-4429	38		330		107
1P-7919	104		39		333	2S-3440	189
1R-0716	91	2B-0858	34		371		982
1R-0762	167	2B-2404	272		1049		984
1R-1808	92		701	2M-9780	97	2S-3770	147
1R-5318	756	2B-2694	227		99		307
	804	2B-2695	16		507	2S-4078	193
1R-5396	853		56		510		195

2

► **PRIMARY REFERENCE**

PART NUMBER INDEX

Part	Page
	287
	612
	614
	620
	648
	652
	759
	764
	768
	772
	778
	783
	784
	788
	793
	800
	801
	806
	860
	861
	862
2S-5926	414
	415
2S-7905	107
2T-1922	118
2V-3216	1076
2V-4868	161
2W-0493	51
	53
2W-0494	51
	53
2W-0496	51
	53
2W-2021	103
2W-4332	701
3	
3B-0551	104
	193
	195
3B-0623	28
	31
	36
3B-0645	28
	31
	36
3B-1915	97
	99
	390
3B-4501	238
	239
	240
3B-4607	328
	330
	333
	371
	1049
3B-4618	371
	375
3B-7255	114
3B-8489	335
	351
	353
	355
	356
	358
	470
	471
	472
	473
	474
	487
	892
	894
	896
	898
	900
	902
	904
	906
	909
	916
	918
	920
	922
	931
	933
	935
	937
	939
	941
	943
	945
	947
	949
	951
	953
3C-8388	680
	682
3D-2824	69
	287
	589
	590
	599
	600
	612
	614
	616
	617
	620
	621
	623
	641
	644
	667
	669
	671
	728
	759
	760
	764
	765
	768
	769
	772
	773
	778
	779
3D-4245	851
3D-5102	272
3D-9143	328
	330
3E-2306	193
	195
3E-2338	321
3E-3362	69
3E-3365	69
	272
	316
	878
	982
	990
	1011
	1013
	1040
3E-3368	40
	260
	261
	262
3E-3371	34
	171
	211
	218
	270
3E-3377	867
3E-3383	296
	1013
	1017
	1018
	1019
3E-4297	516
	519
3E-4352	16
	227
	307
3E-5169	210
	218
3E-5180	1018
	1019
	1020
	1021
3E-6332	272
3E-6772	34
	40
3E-7424	636
3E-7445	96
3E-7448	24
	26
3E-7577	▶201
	203
3E-7771	277
	282
3E-8025	853
	783
	788
	789
	793
	794
	800
	801
	806
	807
	859
	851
	272
	328
	330
	193
	195
	321
	69
	69
	272
	316
	878
	982
	990
	1011
	1013
	1040
	40
	260
	261
	262
	34
	171
	211
	218
	270
	867
	296
	1013
	1017
	1018
	1019
	516
	519
	16
	227
	307
	210
	218
	1018
	1019
	1020
	1021
	272
	34
	40
	636
	96
	24
	26
	▶201
	203
	277
	282
	853
3E-8044	56
	59
3E-8048	209
	217
	249
	253
	388
3E-8320	249
	253
3E-9411	363
	413
	423
3F-0379	276
3F-1417	338
3F-6156	90
3F-8845	760
	765
	769
	773
	779
	783
	789
	794
	800
	807
3F-9556	205
3J-1907	97
	99
	193
	195
	447
	448
	449
	507
	510
	589
	590
	599
	600
	620
	621
	622
	623
	629
	632
	634
	636
	641
	642
	644
	647
	648
	667
	673
	674
	676
	678
	680
	682
	693
	695
	728
	741
	754
	756

▶ **PRIMARY REFERENCE**

PART NUMBER INDEX

Part	Page	Part	Page	Part	Page	Part	Page
	759		806	3K-5234	974		990
	764		807		975		1014
	768		814	3K-6175	16	3S-6049	208
	772		819	3K-8460	55		216
	775		821		545		224
	778		823		549	3S-6050	209
	783		826		553		217
	788		829		557		224
	793		832		759	3S-8536	338
	800		835		764	3S-9643	116
	806		838		768	3T-0304	1046
	811		857		772	3T-0849	1072
	816		858		778	3T-3418	276
	819	3J-7694	759		783		281
	821		772		788	3T-3422	276
	823		788		793		281
	826		793		800	3T-3423	276
	829	3K-0360	177		806		277
	832		181	3K-8782	392		281
	835		497	3L-3380	276		282
	838		499		281	3T-3424	276
	841		502	3L-8187	296		277
	845		589		305		281
	847		590	3M-6018	292		282
	868		599	3N-3763	277	3T-3434	276
	869		617		282		281
	870		620	3N-3790	1094	3T-4709	276
	871		621	3P-0650	91		281
	875		622		92	3T-4710	276
3J-3679	741		623	3P-0658	701		281
	819		629	3P-0760	756	3T-6354	201
	821		634		804	3T-6469	97
	826		636	3P-1155	56		99
	829		640		59	3T-6471	97
	835		647		860		99
	838		648		861	3T-7528	516
3J-7354	88		652		862		519
	513		653	3R-5818	137	3T-9494	276
	523		667	3R-8797	281		277
	621		676	3R-8801	277		281
	623		678		282		282
	649		680	3S-2093	171	3T-9524	277
	676		682		174		282
	678		728		208	3T-9525	276
	680		741		210		281
	682		747		216		
	728		748		218		
	741		754		249	**4**	
	759		816		253		
	760		819		257	4B-2043	201
	764		821		289	4B-2049	277
	768		823		292		282
	769		826		294		287
	772		829		296	4B-3388	16
	773		832		300	4B-3665	44
	775		835		303	4B-4043	51
	778		838		305		53
	783		857		307	4B-4158	414
	784		858		309		415
	788		1043		312	4B-4274	987
	789	3K-0715	709		314		990
	793		713		316	4B-4278	333
	794	3K-0835	318		318	4B-4863	987
	800	3K-4520	756		320		988
	801		804		987		990

PART NUMBER INDEX

Part	Page	Part	Page	Part	Page	Part	Page
	991	4I-5792	632	4I-8915	841		794
	1014	4I-5795	622	4I-8965	754		801
4B-5324	307	4I-5850	693		816		804
4B-9782	75	4I-5862	443	4I-9521	623		807
	77	4I-5906	629	4I-9522	623		814
	79	4I-5956	720	4I-9523	623	4J-5351	847
	81	4I-5957	720	4I-9524	623	4J-5573	617
4B-9783	754		722	4I-9525	623		769
	814	4I-6003	623	4I-9526	623		773
	816	4I-6027	629	4I-9527	623		783
4C-2959	1001	4I-6121	591	4I-9528	623		794
4D-2297	629		600	4J-0519	649		814
4D-3118	695		622		859		816
4D-3704	47	4I-6329	491	4J-0520	590	4J-7533	516
4D-7388	189		493		622		519
4E-1384	375	4I-6330	479	4J-0521	725		741
	997		483		859		754
	1032	4I-6442	481	4J-0522	612		756
4F-2294	250		485		614		759
4F-6024	51		491		616		764
	53		493		620		768
4F-7957	10	4I-6626	915		652		772
	11	4I-7739	637		729		775
4F-8946	669	4I-7778	622		741		778
	671	4I-7822	609		816		783
	775	4I-7874	695		819		784
4H-6112	499	4I-7889	177		821		788
4H-9105	431		181		823		793
	432		609		826		798
	530	4I-7924	332		829		800
4I-0240	374		342		832		804
4I-0378	193		343		835		806
	195		371		838		811
4I-0379	181		374	4J-0523	614		814
4I-0716	634		383		816		816
4I-0769	623		386	4J-0524	620		819
4I-0797	623		398		629		821
	634		399		652		823
4I-0806	622		401		728		826
4I-0821	623		402		749		829
4I-0924	657		403		751		832
	659		404	4J-0527	163		835
	660		405		612		838
4I-1022	695		406		614		875
4I-1539	443		407		637	4J-8997	756
4I-1647	673	4I-7948	342		652		804
4I-1682	673	4I-7949	342		728	4J-9535	676
4I-1694	622	4I-7973	386		749		678
4I-2187	328	4I-8019	375		751		680
	330	4I-8088	1089	4J-0528	754		682
	333	4I-8147	410	4J-2506	775		760
	1049	4I-8204	1084	4J-5140	725		765
4I-2509	345	4I-8205	1084	4J-5267	616		769
	347	4I-8206	1084		669		773
4I-2599	375	4I-8215	1084		671		779
4I-3591	728	4I-8216	1084	4J-5268	709		783
4I-3733	814	4I-8242	410		847		789
4I-5049	209	4I-8268	386	4J-5309	756		794
	217	4I-8269	386		760		801
	997	4I-8459	1082		765		807
4I-5426	208	4I-8460	1086		769	4J-9780	741
	216	4I-8578	371		773		759
4I-5657	841	4I-8587	386		779		764
4I-5732	637	4I-8594	371		783		768
4I-5734	751	4I-8595	371		789		772

► **PRIMARY REFERENCE**

PART NUMBER INDEX

Part	Page	Part	Page	Part	Page	Part	Page
	778	4N-0587	106		764		1005
	783	4N-0683	24		768		1007
	788		26		773		1023
	793	4N-0684	21		778		1076
	800		51		783	5C-5302	318
	806		53		789	5C-6074	287
	819	4N-0699	13		794	5C-6108	189
	821	4N-0913	97		800		▶287
	823	4N-0914	97		807	5C-7261	209
	826	4N-0933	51		819		217
	829	4N-1059	279		821		328
	832		280		823		330
	835	4N-1156	116		826		333
	838	4N-1230	51		829		341
4K-1388	591		53		832		375
	673	4N-1650	24		835		634
	695		26		838		853
	859	4N-2481	5		▶868		855
4K-2039	629		6	4T-4207	765		997
4K-8501	385		▶89		769		1000
4K-8864	210	4N-2514	47		779		1023
	218	4N-5339	106		783		1032
	623		107		800		1072
	630	4N-8150	88		807		1076
	649	4N-8410	97	4T-4702	977	5C-7883	1072
4K-9821	272		99	4T-5076	769	5C-8140	1068
4K-9822	272	4N-9170	351		773	5C-8141	1068
4L-2729	277		353		784	5C-8310	996
	282		982		794	5C-8311	996
4M-0189	51		984		814	5C-9553	243
	53	4P-0519	69		816		245
	108	4P-2383	119	4T-6788	512		247
	111	4P-4278	75	4V-5091	987		987
	453	4P-4279	75		990		990
	456	4P-6464	1089		1014		996
4M-1815	277	4P-6846	5	4W-5698	21		1000
4M-1827	276		6	4W-5699	21		1023
	281		▶45	4W-5700	21		1025
4M-1828	276	4P-7371	75	4W-5701	21		1057
	281	4P-7373	97	4W-9160	149		1076
4M-1829	276		99		152	5D-1026	504
4M-1831	276	4P-7377	71		155		1043
	281	4P-7581	307		158	5D-4822	536
4M-1853	276	4P-7582	622	4W-9890	13	5E-8771	49
	281		647			5F-3106	51
4M-1854	276	4P-8134	307				53
	281	4P-8684	1082	**5**		5F-4899	106
4M-1896	277	4P-8685	1084				107
	282	4P-9131	97	5B-0651	916	5G-0811	386
4M-5317	892	4P-9823	3		918	5G-0817	1034
	894		4		920	5G-6401	760
	896		▶51		922		773
	898		▶53	5B-0841	390		789
	900	4S-1936	623	5B-2183	867		794
	902	4S-6137	147	5B-9603	73	5H-1472	695
	904	4S-6818	137	5C-2874	988		853
	906	4T-0925	868		991	5H-1504	34
	909		869	5C-2889	238		40
4M-6425	641		870		239	5H-3252	720
	644	4T-0987	775		240	5H-4909	709
4M-6582	987	4T-1860	641	5C-2890	286	5H-6734	163
	990		644		391		193
	1014		647		855		195
4M-8548	73		741		997	5H-7704	139
4N-0513	106		760		1004	5I-3876	177

▶ **PRIMARY REFERENCE**

PART NUMBER INDEX

Part	Page	Part	Page	Part	Page	Part	Page
	181		902	5P-0597	673	5P-2948	272
5I-4168	695		904	5P-0598	1000	5P-3108	857
5I-4190	616		906	5P-0747	209		858
5I-4277	530		909		217	5P-3418	201
5I-4341	530	5K-9660	565		224	5P-3419	201
5I-4390	647		567	5P-0761	208	5P-4115	375
5I-4653	393		569		209		386
5I-7090	1017		571		216		1000
5I-8494	637		663		217		1028
5I-8511	754	5L-4758	447		224	5P-4116	328
	816		448	5P-0767	504		330
5I-8765	695		449		1043		333
5I-8770	695		629	5P-0798	987		341
5I-8794	853	5L-5032	726	5P-0840	24	5P-4142	49
5I-8800	853	5L-8854	144		26		97
5I-8804	853	5M-2894	13		34	5P-4255	56
5I-8814	853		14		40		59
5I-8853	634		45	5P-1046	193	5P-4924	195
5J-2974	847		51	5P-1075	104	5P-4961	121
5J-5004	760		53		209		124
	765		56		217		128
	769		59	5P-1076	108		145
	773		62		111	5P-4981	321
	779		69		121	5P-5148	647
	784		87		124	5P-5637	991
	789		89		128	5P-5649	453
	794		90		138		456
	800		91		141	5P-5678	11
	807		92		149	5P-5874	850
5J-5314	276		106		152	5P-5942	988
	281		107		155		991
5J-5793	55		116		158	5P-5998	300
5J-5794	46		118		189	5P-6027	386
5K-0430	272		139		191	5P-6298	276
5K-2298	900		140		272		281
5K-3546	987		147		326	5P-6300	816
	991		171		345	5P-6312	272
5K-5338	1040		174		347	5P-6313	272
5K-8451	183		188		366	5P-6314	272
5K-9090	589		203		371	5P-6719	847
	600		204		375	5P-6872	996
	620		259		383	5P-6879	1045
	621		307		453	5P-6882	121
	623		390		456		124
	629		495		609	5P-6994	177
	632		1002		621		181
	641	5M-3034	276		653	5P-7070	987
	644		281		1000		991
	648	5M-4454	497		1045	5P-7464	591
	652		499		1049		600
	653		502	5P-1420	121		617
	673	5P-0048	741		124		623
5K-9242	898		819		128	5P-7465	591
	900		821	5P-1442	145		600
	902		823		177		617
	904		826		181		623
	906		829		193	5P-7466	617
	909		832	5P-1838	115	5P-7467	617
5K-9243	351		835	5P-2094	101	5P-7468	652
	353		838	5P-2369	93	5P-7469	652
	892	5P-0049	579	5P-2566	203	5P-7701	88
	894		581		204	5P-7807	201
	896		585		209	5P-7814	55
	898	5P-0537	11		217	5P-7958	1057
	900	5P-0540	375	5P-2618	163	5P-8068	728

► **PRIMARY REFERENCE**

PART NUMBER INDEX

Part	Page	Part	Page	Part	Page	Part	Page
5P-8077	537		1049	6C-9018	1039	6C-9226	996
	539	5P-9085	892	6C-9019	1038	6C-9232	997
	541		894	6C-9022	1038	6C-9235	997
	543		896		1039	6C-9238	997
	545	5P-9891	414	6C-9033	1072	6C-9241	996
	547		415	6C-9034	1072	6C-9242	996
	549	5R-5927	697	6C-9035	1072	6C-9243	996
	551	5S-0003	16	6C-9037	1072	6C-9252	996
	553	5S-0581	120	6C-9038	1072	6D-0692	686
	555	5S-7349	205	6C-9043	1072	6D-1641	177
	557	5V-3854	385	6C-9044	1072		181
	559			6C-9047	1072		1040
	573			6C-9048	1072		1043
	576	**6**		6C-9058	997	6D-4244	177
	579			6C-9077	1023		181
	581	6B-6683	265	6C-9078	997	6D-4246	653
	585	6C-3431	1023		1023		1040
	590	6C-3982	997		1025	6D-4636	616
	605	6C-4000	996	6C-9081	1023	6E-0813	479
	609		1032		1025		483
	636	6C-6814	545		1072	6E-0886	481
	657		549	6C-9082	1025		485
	658		553	6C-9085	1025	6E-3840	720
	659		557	6C-9087	996		722
	660	6C-8229	1032		1023	6E-3869	445
	661	6C-8373	1032	6C-9089	997	6E-3872	446
	662	6C-8378	1032		1023	6E-3873	530
5P-8112	616	6C-8379	1032		1025	6E-3874	530
5P-8244	51	6C-8382	1032	6C-9092	997	6E-3993	759
	53	6C-8584	997		1023		764
5P-8245	15	6C-8587	997		1025		768
	17	6C-8588	997	6C-9095	1025		772
	51	6C-8617	1030	6C-9097	1023		778
	53		1031		1076		783
	55		▶1034	6C-9101	1023		788
	63	6C-8619	▶241	6C-9103	1023		793
	73		995	6C-9104	1023		800
	203	6C-8620	995	6C-9108	1076		806
	204		▶1067	6C-9109	1076	6E-4428	869
5P-8247	42	6C-8787	1034	6C-9110	1076	6E-4429	764
	43	6C-8793	241	6C-9114	1023		768
	51	6C-8795	241	6C-9118	1023		778
	53	6C-8840	241	6C-9119	997		784
	205	6C-8959	241		1023		800
	265	6C-8970	996		1072		807
	390	6C-8972	996	6C-9121	1023		▶869
5P-8309	383	6C-8980	996	6C-9122	1023	6E-5412	850
	397	6C-8986	996	6C-9125	1023	6E-5483	746
	398		1025	6C-9127	1023	6E-5484	746
	401	6C-8996	996	6C-9129	1023	6E-5534	▶512
	403		1025	6C-9130	996		621
	404	6C-8998	996		1023		728
	405	6C-9000	997	6C-9132	996	6E-6528	855
	406	6C-9001	996	6C-9134	1032	6F-0253	318
	407	6C-9002	996	6C-9142	1023	6F-4718	636
5P-8500	191	6C-9003	996	6C-9143	1023		640
	192	6C-9011	1029	6C-9144	1072		867
	288		1038	6C-9149	734	6F-4855	169
	326		1039	6C-9181	996		526
	371	6C-9014	1038	6C-9199	1023	6F-5282	85
	375		1039	6C-9220	1072	6F-7045	284
	1049	6C-9016	1038	6C-9221	1023		285
5P-8502	191		1039		1076	6G-2256	210
	326	6C-9017	1038	6C-9222	1025		217
	371		1039	6C-9224	996	6G-2263	210

▶ **PRIMARY REFERENCE**

PART NUMBER INDEX

Part	Page	Part	Page	Part	Page	Part	Page
	218		728	6S-6649	385		622
6H-0406	188	6J-3134	754	6S-6652	385		634
6H-3615	537		814	6T-0363	276	6V-4298	535
	539		816		281	6V-4356	1040
	541	6J-6478	1072	6T-0371	276	6V-4357	1040
	543	6J-7240	760		281	6V-4589	171
	573		764	6T-0372	276		198
	576		768		281	6V-4611	1089
	579		773	6T-1120	277	6V-4612	1082
	581		778	6T-3631	296	6V-4613	1086
	585		784		305	6V-4614	1084
	609		789	6T-3632	296	6V-5043	701
6I-0213	170		794		305	6V-5048	24
6I-0723	728		800	6T-3633	296		26
6I-0724	728		807		305		34
6I-0901	75	6K-0806	583	6T-3643	249		40
	77		587		253		55
6I-0928	38		1069	6T-6505	292		171
	39		1076	6T-6506	292		174
6I-1055	24	6K-3607	181	6T-7058	1046		259
	26	6K-6967	892	6V-0128	11	6V-5049	34
6I-1418	227		894	6V-0357	769		40
	228		896		773		55
6I-1458	64	6K-8420	104		784		72
	65	6K-9194	171		794		88
	66	6L-3314	137		814		171
	86	6L-3316	137	6V-0400	590		174
6I-3623	49	6L-3616	892		636		259
6I-3624	49		894	6V-0852	510		701
6I-3625	49		896		622	6V-5050	34
6I-3632	49		898		634	6V-5134	97
6I-3638	5		900	6V-0890	▶276		99
	6		902		279	6V-5204	684
	▶495		904	6V-1197	12		685
6I-3643	120		906	6V-1249	591	6V-5210	238
6I-4025	34		909		600		239
	40	6L-4725	1027		617		240
6I-4421	24	6N-1872	201		623		296
	26	6N-1931	106	6V-1322	276	6V-5266	102
6I-4575	10		107		281	6V-5324	868
6I-4581	49	6N-2343	107	6V-1572	609		869
6I-4582	49	6N-3279	276	6V-1573	609		870
6I-5168	918		281	6V-1574	609	6V-5555	741
	922	6N-3826	276	6V-1577	673		760
6I-5368	1000		281	6V-1876	669		765
6I-5380	1055	6N-9995	272		671		769
6I-5976	375	6P-1306	272	6V-1889	561		773
6I-5977	375	6P-2216	332		563		779
6I-6373	321		342		594		784
6I-6375	321		343		629		789
6I-6417	▶976		371	6V-2314	292		794
6I-6423	▶979		374	6V-2331	386		801
6I-6563	351		383	6V-2689	318		807
	353		386	6V-3251	34		819
6I-6604	964		398		72		821
	965		399	6V-3265	1069		823
	966		401	6V-3354	386		826
	967		402	6V-3677	49		829
	968		403	6V-3683	259		832
	969		404	6V-3830	69		835
	970		405		104		838
6I-8804	971		406	6V-3922	749	6V-5556	865
6J-2680	513		407		751		866
	523	6P-8855	1043	6V-3938	648	6V-5590	44
	652	6S-6646	1034	6V-3965	510	6V-5597	875

▶ **PRIMARY REFERENCE**

PART NUMBER INDEX

Part	Page
6V-5645	249
	253
6V-5839	73
6V-6317	171
	174
6V-6609	72
	115
	116
6V-6703	229
6V-6707	749
	751
6V-6777	375
6V-6887	386
6V-6923	197
	199
6V-7238	497
	499
	502
	1043
6V-7357	987
	991
	996
6V-7609	513
	523
6V-7636	386
6V-7658	447
	448
	516
	519
6V-7681	699
	700
6V-7723	716
	721
6V-7744	375
6V-8076	510
6V-8186	250
6V-8187	249
	253
6V-8188	277
	282
6V-8189	205
6V-8200	705
6V-8201	684
	685
6V-8202	1057
6V-8260	722
6V-8336	73
6V-8362	288
6V-8373	277
6V-8374	296
	305
	1046
6V-8376	249
	253
6V-8378	249
	250
	253
	318
6V-8397	589
	590
	599
	600
	620
	621
	622
	623
	629
	632
	634
	641
	642
	644
	647
	648
	649
	667
	673
	674
6V-8398	118
	507
	510
	583
	587
	589
	599
	600
	616
	617
	620
	621
	622
	632
	647
	648
	653
	667
	872
	873
	877
6V-8625	622
	648
	653
6V-8626	102
	507
	510
	641
	644
6V-8629	617
6V-8634	629
	634
	667
6V-8635	621
	629
	652
6V-8636	589
	599
	621
	629
	632
	634
	642
	645
	647
	667
	674
6V-8637	590
	600
	667
6V-8638	616
	647
6V-8639	589
	599
	617
	620
	653
6V-8640	565
	567
	569
	571
	663
6V-8642	617
	641
	644
6V-8714	620
6V-8716	641
	644
	673
6V-8721	616
	647
6V-8723	589
	599
6V-8724	590
	620
	629
	634
	647
6V-8731	620
6V-8774	589
	600
	622
	673
6V-8775	647
6V-8778	653
6V-8781	590
	622
6V-8801	307
6V-8823	386
6V-8936	632
	648
6V-8942	616
6V-8943	565
	567
	569
	571
	663
6V-8944	632
	648
6V-8945	616
6V-8946	622
	641
	644
	674
6V-8996	561
	563
	594
6V-9001	622
6V-9005	620
6V-9007	616
	641
	644
	669
	671
6V-9008	589
	599
6V-9170	561
	563
	594
6V-9182	616
6V-9200	649
6V-9492	1046
6V-9632	296
6V-9672	816
6V-9673	305
	1046
6V-9746	497
	499
	502
	507
	510
	565
	567
	569
	571
	583
	587
	589
	590
	599
	600
	616
	617
	620
	621
	622
	623
	629
	632
	641
	644
	649
	652
	653
	663
	667
	669
	671
	673
	674
6V-9836	623
6V-9839	507
	510
6V-9840	621
	632
	641
	644
	653
6V-9844	589
	600
	648
6V-9846	652
	673
6V-9850	622
	634
	641
	648
6V-9851	616
	648
6V-9852	641
	644
6V-9853	589

PART NUMBER INDEX

Part	Page
	599
	632
	641
	644
6V-9854	652
6V-9875	620
6V-9877	629
	652
6W-3731	590
	595
	597
	600
	605
	607
	665
6W-3924	1076
6W-8906	996
6Y-6354	▶977
6Y-7599	427
6Y-8127	433
6Y-8169	431
6Y-8171	431
	432
6Y-8172	431
	432
6Y-8176	431
	432
6Y-8177	431
6Y-9339	431
	432
6Y-9930	1052

7

Part	Page
7C-1445	56
	59
7C-4354	177
	181
7C-5665	139
7E-1177	71
7E-4039	114
	115
7E-4195	71
7E-4508	97
7E-4509	97
	99
7E-4661	69
7E-4875	85
7E-4876	3
	4
	▶85
7E-5142	97
	99
7E-5661	49
7E-6508	11
7E-8996	3
	4
	▶55
7F-2050	987
	990
7F-3488	277
	281
7F-3491	276
7F-3525	276
7F-6998	1040
7G-1060	312
	314
7G-5984	669
	671
7G-5985	669
	671
7H-3171	427
	431
	432
7I-0011	609
7I-0070	734
7I-0071	734
7I-0072	734
7I-0075	749
7I-0134	813
7I-0135	813
7I-0424	403
7I-0964	880
7I-0965	880
7I-0966	865
	866
7I-0970	648
7I-0972	648
7I-0985	734
7I-1090	616
	623
7I-1418	375
7I-1639	371
7I-1640	371
7I-1857	375
7I-1926	404
7I-2272	629
	632
	634
	841
7I-2789	846
7I-6729	904
	909
7I-6730	904
	909
7I-6731	904
	909
7I-6732	904
	909
7I-7120	751
7I-7400	734
7I-7446	853
7I-7447	853
7I-7448	853
7I-7449	853
7I-7453	853
7I-7457	853
7I-7458	853
7I-7462	848
7I-7463	848
7I-7469	848
7I-7470	853
7I-7473	853
7I-7475	848
7I-7476	848
7I-7609	979
7I-7611	497
	499
7I-7619	497
	499
	502
7I-7684	497
	499
	502
7I-8084	695
	707
	853
7I-8133	443
7I-8135	443
7I-8164	707
7I-8177	707
7I-8252	623
7I-9001	846
7J-7837	746
7J-9108	507
	510
	561
	563
	565
	567
	569
	571
	594
	616
	617
	641
	642
	644
	645
	663
	877
7J-9933	865
	866
7K-1181	121
	124
	128
	177
	181
	210
	218
	307
	507
	510
	561
	563
	565
	567
	569
	590
	594
	600
	617
	621
	629
	632
	644
	648
	653
	663
	674
	1008
7L-2894	276
7M-0324	276
	281
7M-0325	277
	282
7M-0326	276
	281
7M-0327	276
	281
7M-8485	321
	589
	590
	600
	616
	620
	621
	629
	632
	641
	644
	652
	653
	673
	745
	775
	841
7M-8651	277
	282
7N-0060	209
	217
	224
7N-0140	272
7N-0452	45
7N-0718	249
	253
	▶284
7N-0719	224
	▶285
7N-1996	1046
7N-2043	71
7N-2059	272
7N-2155	106
	107
7N-2156	106
	107
7N-2213	106
7N-5274	209
	217
	224
7N-5876	292
7N-7559	102
7N-7628	118
7N-7878	118
7N-8008	296
7N-8374	51
	53
7N-8875	102
7N-9023	201
7N-9194	287
7N-9801	272
7S-5005	21
7T-0969	1036
7T-0970	1036
7T-3974	276
	281

▶ **PRIMARY REFERENCE**

PART NUMBER INDEX

Part	Page
7T-4532	1001
7T-6799	288
7T-8890	1068
7T-9123	277
	282
7W-0629	137
7W-3145	139
7W-3447	653
7W-6492	15
	24
	26
7W-6528	107
7W-6529	106
7W-6534	116
7W-7141	107
7W-7142	106
7X-0289	149
	152
	155
	158
7X-0314	701
7X-0316	149
	152
	155
	158
	701
7X-0515	108
	111
	453
	456
7X-0562	277
	282
7X-0579	1035
7X-0794	850
7X-0818	228
7X-0901	641
7X-2049	1040
7X-2454	479
7X-2475	636
7X-2483	1025
7X-2489	477
7X-2533	209
	217
	375
	386
	691
	1028
7X-2535	982
	984
7X-2536	843
	844
	1017
7X-2537	507
	510
7X-2538	1002
7X-2546	760
	765
	769
	773
	779
	784
	789
	794
	801
	807
7X-2548	272
7X-2549	372
	652
	729
	756
	798
	804
	811
	814
7X-2550	528
	653
	728
	1000
7X-2552	108
	111
	417
	418
	673
	997
7X-2553	67
	241
	363
	565
	567
	569
	583
	587
	590
	637
	663
	734
	769
	773
	784
	794
	814
	916
	918
	920
	922
	956
	1032
7X-2554	537
	539
	541
	543
	561
	563
	573
	576
	579
	581
	585
	594
	603
7X-2555	537
	539
	541
	543
	573
	576
	609
	637
	760
	765
	769
	773
	784
	794
	798
	804
	811
7X-2556	583
	587
	603
	604
	605
	607
	608
	665
	666
7X-2557	545
	547
	549
	551
	553
	555
	557
	559
	667
	725
	769
	773
	784
	794
	814
7X-2558	641
	644
	657
	659
	660
7X-2559	537
	539
	541
	543
	573
	576
7X-2560	605
	607
	608
	609
7X-2562	697
	916
	918
	920
	922
7X-2563	121
	124
	128
	453
	456
	699
	700
	955
7X-2567	67
7X-2570	734
7X-2573	345
	347
	349
	350
	884
	886
	888
	890
	931
	933
	935
	937
	939
	941
	943
	945
	947
	949
	951
	953
7X-2574	347
	350
	884
	886
	888
	890
	931
	933
	935
	937
	939
	941
	943
	945
	947
	949
	951
	953
7X-2576	697
7X-2577	701
7X-2578	335
7X-2581	697
7X-2582	504
7X-2584	429
	430
7X-2619	249
	253
	375
7X-2621	571
	622
	630
	649
7X-2622	734
7X-2634	137
7X-3159	287
7X-3373	276
	281
7X-3383	1052
7X-4803	487
7X-4805	56
	59
7X-6315	229
	230
	236
	1022
7X-7644	1089
	1094
7X-7700	193

► **PRIMARY REFERENCE**

PART NUMBER INDEX

Part	Page
	195
7X-7729	108
	111
	145
	149
	152
	155
	158
	183
	375
	453
	456
	756
	804
7X-7731	116
7X-7732	24
	26
7Y-0003	1089
7Y-0012	1089
7Y-0014	1089
7Y-0019	1086
7Y-0026	1086
7Y-0028	1086
7Y-0032	1082
7Y-0039	1082
7Y-0041	1082
7Y-0602	976
7Y-0640	321
7Y-0795	321
7Y-0807	321
7Y-0808	321
7Y-0839	734
7Y-1000	417
	418
7Y-1090	321
7Y-1095	351
	353
7Y-1106	351
	353
7Y-1107	351
	353
7Y-1108	351
	353
7Y-1109	351
	353
7Y-1110	351
	353
7Y-1144	149
	152
	155
	158
7Y-1241	121
	124
	128
7Y-1275	141
7Y-1492	321
7Y-1493	321
7Y-1647	351
	353
7Y-1648	351
	353
7Y-1727	149
	152
	155
	158
7Y-1729	149
	152
	155
	158
7Y-1863	191
	733
7Y-1924	149
	152
	155
	158
7Y-1976	121
	124
	128
	131
	133
	136
7Y-2292	1045
7Y-2812	328
	330
	363
	423
7Y-2853	359
	361
	371
	1049
7Y-2854	359
	361
	366
	1049
7Y-3173	292
7Y-3281	208
	216
	333
7Y-3474	1069
7Y-3477	▶955
	956
	957
	958
	959
	960
	961
	962
	963
7Y-3589	939
	941
	947
	949
	951
	953
7Y-3590	918
	922
7Y-3610	386
7Y-4199	620
7Y-4224	814
7Y-4269	693
7Y-4274	693
	707
7Y-4277	693
7Y-4291	693
7Y-4633	414
	415
7Y-4660	489
7Y-4666	489
7Y-4669	489
7Y-4672	489
7Y-4673	489
7Y-4695	489
7Y-4796	728
7Y-4826	727
7Y-4827	▶724
	727
7Y-4828	724
7Y-4830	724
	▶725
7Y-4832	725
7Y-4836	725
7Y-4837	727
7Y-4843	727
7Y-4868	583
	587
	667
7Y-5009	841
7Y-5102	489
7Y-5187	665
7Y-5215	321
	489
7Y-5231	321
7Y-5241	686
7Y-5245	417
	418
7Y-5247	652
7Y-5250	653
7Y-5265	915
7Y-5267	689
	690
7Y-5272	447
	448
	449
7Y-5293	1007
7Y-5295	1007
7Y-5416	243
	245
	247
7Y-5458	296
7Y-5464	296
7Y-5493	300
	303
7Y-5499	249
	254
7Y-7365	1069
7Y-7388	1067
7Y-7828	955
7Y-7829	955
7Y-7830	955
7Y-8165	647
7Y-8273	243
	245
	247
7Y-8309	629
7Y-8463	1018
	1019
	1020
7Y-8487	591
	600
7Y-8876	385
7Y-8942	417
	418
7Y-8990	366
7Y-9267	884
	886
	888
	890
	931
	933
	935
	937
	939
	941
	943
	945
	947
	949
	951
	953
7Y-9863	1052
7Y-9864	1052
7Y-9914	931
	933
	935
	937
	943
	945
7Y-9915	916
	920
	8
8B-3410	104
8C-0597	641
	644
	648
8C-0624	90
8C-3089	276
	281
8C-3101	745
8C-3102	745
8C-3110	687
	704
8C-3347	707
8C-3445	88
8C-3446	88
	621
8C-3451	621
8C-3756	987
	990
	1014
8C-5230	91
	92
8C-5899	853
8C-5917	209
	217
	224
8C-6354	253
8C-6362	67
8C-6523	1043
8C-6712	88
8C-6871	118
8C-6965	848
8C-7563	642
	645
8C-7581	249
	253
	1036
8C-8400	671

▶ **PRIMARY REFERENCE**

PART NUMBER INDEX

Part	Page
8C-8457	991
	1014
8C-8478	1052
8C-8533	623
	629
	653
8C-8722	420
	697
8C-8723	419
	420
	421
	422
8C-8988	620
	641
	644
8C-9179	479
	483
8C-9182	481
	485
	491
	493
8C-9660	201
	276
	281
8C-9987	878
8D-0482	209
	217
8E-1886	428
8E-1887	428
8F-1434	201
	249
	253
	277
	282
	318
8F-5900	693
8H-2282	1034
	1035
8H-3127	11
8H-5303	284
	285
8H-5306	284
	285
8J-0426	621
8J-1751	754
	814
	816
8J-1752	754
	814
	816
8J-4351	259
8J-4376	857
	858
8J-8343	875
8J-9236	287
8K-0968	163
8L-2777	75
	77
	79
	80
	83
8L-2786	17
	34
	40
	55
	171
	174
8L-8413	46
	224
8M-0506	171
	174
8M-0547	177
	181
8M-2770	224
8M-2772	892
	894
	896
	898
	900
	902
	904
	906
	909
8M-2773	149
	152
	155
	158
	183
8M-8489	106
	107
8M-9315	55
8N-0788	118
8N-0869	208
	216
	224
8N-1725	208
	216
	224
8N-2104	97
8P-8540	243
	245
	247
8P-9770	964
	965
	966
	967
	968
	969
	970
	971
8S-0934	1054
8S-1812	287
8S-1814	287
8S-1815	287
8S-2332	279
	280
8S-4724	1054
8S-4950	171
	174
8S-6214	859
8S-9094	24
	26
8S-9191	170
8T-0076	648
8T-0077	620
8T-0114	1017
8T-0249	623
8T-0267	720
	722
8T-0269	386
	853
	1072
8T-0273	321
8T-0288	874
	988
	991
8T-0289	513
	521
	523
8T-0328	193
	195
	249
	253
	277
	282
	292
	305
	316
	318
	411
	513
	521
	523
	535
	1037
	1046
8T-0337	987
	991
8T-0348	695
	741
	754
	819
	821
	823
	826
	829
	832
	835
	838
8T-0363	481
8T-0439	530
	636
8T-0643	73
8T-0701	1046
8T-0706	673
8T-1158	707
	848
	853
	1057
8T-1159	697
8T-1482	67
8T-1576	616
8T-1578	375
8T-1687	617
8T-1718	617
8T-1905	621
8T-1915	1089
8T-1962	1082
8T-1963	1086
8T-1964	1084
8T-2393	636
8T-2501	69
	149
	152
	155
	158
	210
	218
8T-2502	104
8T-2888	386
8T-3008	753
8T-3490	121
	124
	158
8T-3597	158
8T-3612	158
8T-3647	629
8T-3957	711
8T-3998	680
	682
8T-4001	697
8T-4121	108
	111
	121
	124
	128
	131
	133
	141
	149
	152
	155
	158
	163
	165
	177
	181
	183
	189
	193
	195
	208
	216
	224
	241
	243
	245
	247
	249
	253
	272
	292
	305
	310
	312
	314
	316
	318
	328
	330
	333
	351
	353
	371
	375
	385
	388
	453
	456
	459

► **PRIMARY REFERENCE**

PART NUMBER INDEX

Part	Page
	460
	504
	507
	510
	561
	563
	565
	567
	569
	571
	583
	587
	590
	594
	599
	609
	612
	614
	616
	620
	629
	636
	647
	652
	663
	667
	669
	671
	673
	701
	728
	892
	894
	896
	898
	900
	902
	904
	906
	909
	982
	984
	1003
	1008
	1010
	1012
	1017
	1036
	1040
	1043
	1045
	1060
	1069
	1076
8T-4122	67
	241
8T-4123	121
	124
	128
	453
	456
	697
	699
	700
	915
	916
	918
	920
	922
	955
	1052
8T-4127	254
	513
	521
	523
8T-4131	335
	707
	1052
8T-4132	108
	111
	453
	456
	537
	539
	541
	543
	571
	573
	576
	595
	597
	653
	665
	666
	749
	751
	853
8T-4133	108
	111
	141
	189
	241
	243
	245
	247
	328
	330
	333
	385
	453
	456
	583
	623
	652
	726
	841
	848
	892
	894
	896
	898
	900
	902
	904
	906
	909
8T-4136	121
	124
	128
	131
	133
	141
	145
	149
	152
	155
	158
	163
	165
	183
	193
	195
	210
	218
	224
	272
	338
	351
	353
	375
	388
	453
	456
	620
	653
	673
	701
	727
	798
	811
	1010
	1012
	1017
	1025
	1036
	1040
	1043
8T-4137	108
	111
	145
	149
	152
	155
	158
	177
	181
	183
	189
	208
	216
	224
	243
	245
	247
	272
	292
	305
	310
	312
	314
	316
	318
	375
	388
	453
	456
	504
	561
	563
	590
	594
	599
	612
	616
	620
	629
	653
	728
	982
	984
	1003
	1008
	1040
	1069
8T-4138	375
	648
	728
	987
	991
	1076
8T-4139	108
	111
	131
	133
	138
	326
	335
	364
	366
	371
	383
	410
	412
	413
	453
	456
	507
	510
	589
	599
	609
	617
	623
	629
	636
	647
	652
	669
	671
	699
	700
	728
	754
	816
	1000
	1045
	1049
8T-4140	108
	111
	453

► **PRIMARY REFERENCE**

PART NUMBER INDEX

Part	Page	Part	Page	Part	Page	Part	Page
	456		939		728		896
	528		941	8T-4184	513		900
	537		943		521		902
	539		945		523		906
	541		947		528		1012
	543		949		590		1017
	545		951		599		1060
	547		953		609		1076
	549	8T-4171	316		612	8T-4192	131
	551		318		614		133
	553		386		617		141
	555		987		636		189
	557		991		673		326
	559		1046		749		366
	573	8T-4173	612		751		371
	576	8T-4174	1032	8T-4185	210		383
	579	8T-4175	561		218		591
	581		563		756		600
	585		594		804		617
	589		609	8T-4186	108		621
	595		612		111		637
	597		614		189		652
	599		640		241		1049
	603		641		453	8T-4193	537
	604		644		456		539
	605	8T-4176	590	8T-4187	191		541
	609		649		192		543
	612	8T-4177	634		528		545
	614	8T-4178	669		733		547
	636		671		915		549
	657	8T-4179	121	8T-4189	200		551
	658		124		210		553
	659		128		218		555
	660		191		272		557
	661		210		645		559
	662		218		996		565
	665		243		1000		567
	666		245		1003		569
	667		247		1023		571
8T-4141	121		410		1036		573
	124		411		1040		576
	128		504	8T-4190	412		579
8T-4157	375		623		413		581
	996	8T-4181	996	8T-4191	209		585
8T-4158	375	8T-4182	667		217		590
8T-4167	67	8T-4183	108		224		605
	335		111		243		607
	345		345		245		608
	347		347		247		636
	349		366		249		663
	350		371		253		667
	426		453		272		741
	477		456		312		819
	479		497		314		821
	481		499		316		823
	697		502		318		826
	701		513		414		829
	884		523		415		832
	886		583		565		835
	888		587		567		838
	890		609		569		1032
	931		617		649		1034
	933		624		663	8T-4194	108
	935		652		892		111
	937		673		894		364

PART NUMBER INDEX

Part	Page
	453
	456
	589
	634
	636
	673
	728
	741
	819
	821
	823
	826
	829
	832
	835
	838
8T-4195	108
	111
	142
	177
	181
	183
	208
	216
	224
	316
	318
	388
	453
	456
	459
	460
	507
	510
	614
	629
	636
	647
	729
	749
	751
	754
	1040
	1045
8T-4196	108
	111
	149
	152
	155
	158
	177
	181
	453
	456
	590
	612
	614
	616
	620
	636
	647
	652
	1040
8T-4197	760
	765
	769
	773
	779
	784
	789
	794
	801
	807
8T-4198	649
	652
	756
	804
	875
8T-4199	210
	218
	351
	353
8T-4200	386
	617
	620
	701
	982
	984
	1023
	1025
	1035
	1076
8T-4205	187
	205
	249
	253
	276
	281
	987
	991
8T-4222	121
	124
	128
	142
	453
	456
	1040
8T-4223	104
	108
	111
	121
	124
	128
	131
	133
	135
	142
	148
	149
	152
	155
	158
	163
	238
	239
	240
	243
	245
	247
	272
	335
	364
	410
	411
	412
	413
	453
	456
	497
	499
	502
	504
	507
	510
	513
	521
	523
	528
	583
	587
	589
	595
	597
	599
	609
	612
	614
	617
	623
	636
	647
	652
	667
	669
	671
	673
	697
	699
	700
	711
	728
	741
	819
	821
	823
	826
	829
	832
	835
	838
8T-4224	152
	155
	158
	187
	200
	205
	210
	218
	272
	333
	375
	386
	507
	510
	536
8T-4241	693
8T-4244	142
	149
	152
	155
	158
	238
	239
	240
	272
	371
	375
	583
	609
	617
	623
	697
8T-4648	163
	376
	590
	595
	597
	600
	609
	612
	614
8T-4779	241
	605
	607
	608
	609
8T-4835	104
	462
8T-4896	34
	40
	69
	142
	307
8T-4897	1032
8T-4908	152
	155
	158
8T-4910	583
	587
	589
	599
	667
8T-4944	709

► **PRIMARY REFERENCE**

PART NUMBER INDEX

Part	Page	Part	Page	Part	Page	Part	Page
	713		155	8T-6684	621		549
8T-4956	121		158	8T-6703	93		551
	124		701		729		553
	128	8T-5379	884	8T-6757	28		555
	131		886		31		557
	133		888		36		559
	135		890		139		571
	148	8T-5389	617		351		573
	149	8T-5412	612		353		609
	152		614		470		637
	155		697		898	8T-7520	623
	158		1000		900	8T-7547	187
	272	8T-5413	328		902		620
	326		330		906		728
	335	8T-5436	669	8T-6759	680	8T-7829	1082
	366		671		682	8T-7831	1084
	371		760		691	8T-7930	612
	513		765		692	8T-8441	431
	523		769		727		432
	595		773		841	8T-8442	711
	597		779		846		720
	609		784		874		722
	614		789		879	8T-8614	867
	617		794	8T-6761	116	8T-8729	292
	623		801		728		676
	636		807	8T-6762	116		678
	652	8T-5439	121	8T-6763	34		867
	667		124		116		878
	673		128	8T-6764	15		982
	697		453		17		1011
	699		456		892		1013
	700	8T-5878	424		894		1017
	728		425		896		1018
	749		426	8T-6765	34		1019
	751		504		140		1040
	1049		697		142	8T-8737	69
8T-4970	249	8T-5913	1068	8T-6767	15		296
	254	8T-5914	1068		17		300
	1069	8T-6347	754		114		303
8T-4971	187	8T-6356	629		115		1017
	1009		632		116		1018
	1025		653	8T-6842	996		1019
8T-4983	116	8T-6383	497	8T-6868	528		1020
8T-4985	121		499		595		1021
	124		502		597	8T-8748	318
	128		1032		612	8T-8827	216
8T-4986	142	8T-6385	537		620	8T-8887	623
8T-4988	141		539		653	8T-8902	634
8T-4989	141		573		1000	8T-8911	149
8T-5001	609		576	8T-6869	228		152
8T-5005	177	8T-6411	249		1032		155
	181		253	8T-6876	507		158
	609	8T-6412	392		510	8T-8915	165
	617	8T-6429	880		648	8T-8920	104
	622	8T-6430	121	8T-6936	1040		461
	669		124	8T-6974	692	8T-8986	673
	671		128	8T-7087	652	8T-8987	648
	756		453	8T-7338	108	8T-9023	617
	804		456		111	8T-9044	695
8T-5041	612	8T-6466	583		417	8T-9377	210
	614		587		418		218
	728		616		537	8T-9389	461
8T-5092	653	8T-6594	434		541	8T-9522	860
8T-5360	149		435		545		861
	152	8T-6675	652		547		862

PART NUMBER INDEX

Part	Page
8T-9527	495
8T-9597	711
8T-9598	693
8T-9655	227
	228
8T-9757	209
	217
	224
8V-0622	209
	217
	224
8Y-4000	375
8Y-4501	1025
8Y-6364	191
	326
	371
	1049
8Y-6375	1025
8Y-6376	1025
8Y-6380	996
8Y-6877	1055
8Y-7833	307
9	
9B-1722	1025
9B-4499	287
9B-7233	201
	249
	253
	288
	1036
9B-7237	142
9C-9603	641
9D-0630	163
9D-1058	375
	386
9D-7303	1025
9F-2167	537
	539
	541
	543
	573
	576
	579
	581
	585
	609
9F-2247	201
9F-5599	276
	281
9F-5644	284
	285
9G-0003	209
	217
	224
9G-0004	209
	217
	224
9G-0011	296
9G-3695	1014
9G-4101	276
	277
	281
	282
9G-6770	277
9G-7641	►288
	296
9G-8909	209
	217
	224
9H-1031	22
9H-3757	276
	281
9H-8260	203
	204
9J-8126	765
	769
	779
	784
	800
	807
9K-7290	55
9L-5854	22
9L-6770	201
	205
9L-7657	88
9L-7712	77
	754
	814
	816
9L-7816	1054
9L-8925	11
9M-1974	16
	56
	59
	227
	228
9M-2092	636
9M-2307	374
	383
	398
	399
	402
	404
	405
	406
	407
9M-3786	119
	636
9M-3835	328
	330
	333
	371
	1049
9M-5732	374
	383
	398
	399
	402
	404
	405
	406
	407
9M-6522	193
	195
9M-6527	120
9M-7606	276
9M-7609	276
	281
9M-7959	982
	984
	1028
9M-8406	181
	701
9M-9224	307
9N-0869	227
	228
9N-0943	201
9N-1574	798
	811
9N-1575	798
	811
9N-2038	161
9N-3388	201
9P-7121	193
9R-7941	257
9R-7980	257
9S-1315	1034
9S-2005	201
9S-2006	201
9S-2009	201
9S-2011	201
9S-2012	201
9S-2013	201
9S-2014	201
9S-2248	201
9S-2255	201
9S-2260	201
9S-2262	201
9S-2290	201
9S-2291	201
9S-2292	201
9S-2300	201
9S-2301	201
9S-2302	201
9S-2389	201
9S-2390	201
9S-2393	201
9S-2396	201
9S-2437	201
9S-2544	201
	276
	281
9S-3451	201
9S-4167	171
	174
9S-4180	516
	519
	741
	759
	764
	768
	772
	778
	783
	788
	793
	800
	806
	814
	819
	821
	823
	826
	829
	832
	835
	838
	875
9S-4181	590
9S-4182	24
	26
	55
	171
	174
	259
	513
	523
	623
	676
	678
	680
	682
	728
	741
	764
	768
	778
	783
	800
	806
	814
	819
	821
	823
	826
	829
	832
	835
	838
9S-4183	612
	614
	759
	764
	768
	772
	778
	783
	788
	793
	800
	806
9S-4185	55
	177
	181
	621
	636
	640
	676
	678
	680
	682
	741
	747
	748
	819
	821
	823

► **PRIMARY REFERENCE**

PART NUMBER INDEX

Part	Page	Part	Page	Part	Page	Part	Page
	826		756		783	9X-1386	267
	829		759		794		843
	832		764		800		844
	835		768	9S-8010	759		867
	838		772		764	9X-1813	40
9S-4188	591		775		772		171
	695		778		778		200
9S-4190	24		784		784		260
	34		788		788		261
	749		793		793		262
	751		798		801		270
	759		800		806		286
	768		804	9S-8178	192	9X-2027	756
	772		806	9S-8752	49		804
	775		811		56	9X-2038	10
	778		816		59	9X-2042	982
	783	9S-8002	171		95		984
	788		174		96		1004
	793		759		188		1005
	800		765		495		1007
	806		768		1002		1023
9S-4191	34		769	9S-9272	104		1028
	55		772	9S-9334	88	9X-2043	1008
	88		775	9S-9830	201	9X-2044	996
	171		779	9T-1614	775		1000
	174		784	9T-1670	857	9X-2045	1008
	629		788		858	9X-2046	1000
	632		793	9T-3853	851	9X-2185	987
	636		801	9T-3928	709		990
	647		807		713	9X-2205	193
	676		855	9T-7202	857		195
	678	9S-8003	741		858	9X-2446	996
	680		819	9T-8511	479	9X-2480	250
	682		821		483		997
	728		826	9T-9992	860	9X-2500	201
	741		829		861	9X-2616	1000
	756		832		862	9X-3401	193
	759		835	9U-8693	497		195
	764		838		499		267
	768	9S-8004	34		502		599
	772		40	9U-9702	978		728
	775		72	9V-3659	385		1001
	778		171	9V-5382	504	9X-3463	238
	783		174	9W-0335	292		239
	788		754	9W-0844	1011		240
	793		811	9W-0852	254	9X-3490	209
	800		816		987		217
	806		845		990	9X-3495	210
	819	9S-8005	17		1011		218
	821		55		1018	9X-3601	489
	823		72		1019	9X-4597	931
	826		676		1020		933
	829		682		1021		935
	832		711	9W-1441	300		937
	835		754		303		943
	838		816	9W-1442	300		945
	841	9S-8006	72		303	9X-4598	939
	875		687	9W-1494	1046		941
9S-6130	193		689	9W-2146	433		947
	195		690	9W-2201	431		949
	612	9S-8008	759	9W-6582	1052		951
	614		764	9W-6584	1052		953
	652		768	9W-7388	67	9X-4599	471
9S-8001	116		773	9X-0141	209		473
	754		778		217		916

PART NUMBER INDEX

Part	Page
	920
9X-4600	471
	472
	473
	474
	475
	476
	916
	918
	920
	922
	931
	933
	935
	937
	939
	941
	943
	945
	947
	949
	951
	953
9X-4601	472
	474
	918
	922
	939
	941
	947
	953
9X-4813	210
	218
9X-6032	711
9X-6165	648
	982
	984
9X-6258	307
9X-6395	857
	858
9X-6458	49
	56
	59
	95
	96
	97
	99
	102
	103
9X-6579	616
	632
	648
9X-6580	616
9X-6618	483
	485
	491
	493
9X-6654	142
9X-7317	170
9X-7378	24
	26
	1040
9X-7380	1040
9X-7381	1040
9X-7382	1040
9X-7383	1040
9X-7385	1001
9X-7418	170
9X-7419	170
9X-7430	28
	31
	36
9X-7680	855
9X-8117	987
	990
9X-8256	243
	245
	247
	249
	253
	316
	318
	375
	386
	392
	647
	728
	1009
	1046
	1057
	1069
	1076
9X-8257	67
	412
	417
	418
	497
	499
	502
	528
	537
	539
	541
	543
	545
	547
	549
	551
	553
	555
	557
	559
	561
	571
	573
	576
	579
	581
	583
	585
	587
	589
	594
	595
	597
	599
	603
	604
	605
	607
	608
	609
	612
	614
	636
	640
	653
	657
	658
	659
	660
	661
	662
	665
	666
	667
	673
	684
	685
	725
	734
	741
	819
	821
	823
	826
	829
	832
	835
	838
	916
	918
	920
	922
	996
	1032
	1034
9X-8258	321
	420
	422
	429
	430
	483
	493
	504
	697
9X-8259	915
9X-8399	485
	491
9X-8486	249
	253
	316
	318
9X-8600	193
	195
9X-8872	48
9X-8896	974
9X-8937	1032
9X-9730	209
	224
9X-9731	217
9Y-1792	106
	107
9Y-2585	116
9Y-4104	116
9Y-5373	97
	99
9Y-6054	71
9Y-8389	187
9Y-8968	144
0	
003-7764	181
005-4273	101
005-8164	759
	764
	768
	772
	778
	783
	788
	793
	800
	806
006-5707	189
008-2103	756
	798
	804
	811
008-6817	34
011-5224	116
012-0380	286
013-8502	1032
030-3978	34
030-4605	680
	682
030-7936	171
	174
030-7937	174
030-7947	171
	174
030-7955	97
	99
030-7962	171
	174
030-7972	177
	181
030-8194	97
	99
031-3185	49
031-4564	104
032-9313	75
033-5853	855
033-6028	711
033-6033	197
	199
033-6042	171
	174
033-6043	855
036-9821	276
	281
036-9823	276
045-4065	277
	282
053-0700	171
	174
061-7540	87
061-8639	75

► **PRIMARY REFERENCE**

PART NUMBER INDEX

Part	Page	Part	Page	Part	Page	Part	Page
	77		937		195	095-1602	753
	79		943		411	095-1603	389
	82		945		1037	095-1604	816
061-9413	193	093-0108	884	095-0742	250	095-1608	728
	195		886		254	095-1610	816
061-9455	56		888	095-0759	513	095-1616	754
	59		890		523	095-1633	489
067-2551	171		931	095-0827	241		727
	174		933		996	095-1681	516
077-3241	676		935		1057		519
	678		937	095-0840	391	095-1687	684
	875		939		647		685
085-7356	622		941	095-0843	328	095-1698	695
086-0507	335		943		330		865
087-3591	617		945		333		866
087-4531	623		947		375		879
087-4532	622		949		1049	095-1700	753
087-4561	585		951	095-0891	321	095-1703	880
087-4575	442		953	095-0919	393	095-1704	880
087-4576	442	093-0109	890	095-0929	720	095-1716	693
087-4577	442	093-0349	335		722	095-1728	727
087-4772	530	093-0373	931	095-0930	695	095-1731	479
087-4962	647		933	095-0946	693		483
087-5087	649		935	095-0965	695	095-1732	477
	▶744		937		707	095-1733	481
087-5729	652		943	095-0968	841		485
087-5760	590		945	095-1274	491		491
087-5771	621	093-0377	890		493		493
087-5773	589	093-0386	388	095-1310	647	095-1735	728
	600	093-0407	191	095-1314	333	095-1750	872
087-5838	898		192	095-1319	371		873
	900	093-0408	191	095-1320	371	095-1751	872
	902		192	095-1386	177		873
	904	093-1294	583		181		877
	906		587		193	095-1785	848
	909		667	095-1390	101		879
087-8906	733	093-1323	707	095-1392	141	095-1786	798
087-8907	733	093-1730	497	095-1519	169		811
087-8909	733		499		526	095-1787	707
093-0074	931		502		846		848
	933	093-2063	1052	095-1573	691	095-1793	754
	935	093-2064	328	095-1574	692		816
	937		330		848	095-1794	816
	943		1040	095-1576	879	095-1795	707
	945	093-3093	813	095-1578	695	095-2927	414
093-0076	884	093-3094	813		813		415
	886	093-3328	813	095-1579	693	095-6636	813
	888	093-5150	497		880	095-6639	726
	890		502	095-1582	695	095-6641	726
	931	094-1528	497		841	095-7424	44
	933		499		846	095-7930	536
	935		502	095-1586	629	095-9804	816
	937	094-1902	879		848	096-0015	715
	939	094-6452	848		872	096-0034	393
	941	095-0645	850		873	096-0061	183
	943	095-0673	687		877	096-0192	988
	945	095-0680	880		879		991
	947	095-0690	689	095-1587	798	096-0854	487
	949		690		811	096-1441	497
	951	095-0728	249	095-1590	848		499
	953		254	095-1592	841		502
093-0077	890	095-0735	249	095-1599	754	096-2320	375
093-0106	931		254		816	096-2323	410
	933		1017	095-1600	693	096-2966	848
	935	095-0736	193	095-1601	753	096-3021	848

▶ **PRIMARY REFERENCE**

PART NUMBER INDEX

Part	Page
096-3216	321
096-3780	328
	330
	1049
096-3872	376
	383
096-4035	131
	133
	136
096-4509	846
096-4514	846
096-4755	504
096-4879	335
096-4883	504
096-4884	376
096-4885	637
	1032
096-5400	707
096-5516	707
096-5572	754
096-5863	210
	218
096-5867	704
096-5962	209
	217
	249
	253
	300
	303
	388
096-5968	867
096-6166	249
	253
	296
	1036
	1046
096-6331	1012
096-6332	1012
096-6333	1012
096-8058	709
	713
099-0001	131
	133
	136
099-0169	637
099-0492	375
	386
099-0724	704
099-0822	846
099-2374	843
	844
099-3645	1057
099-3990	813
099-5194	321
	497
	499
	502
099-5845	530
099-7951	880
099-8111	875
099-8112	426

1

Part	Page
100-3426	987
	990
100-3866	363
	423
100-4265	3
	4
	▶188
100-5072	170
100-5218	11
100-5219	11
100-5566	1046
100-5588	▶978
100-5725	34
	40
100-6211	759
	764
	768
	772
	778
	783
	788
	793
	800
	806
100-6531	201
100-6532	201
100-6656	201
100-6657	201
100-6658	201
100-7399	24
	26
100-9347	3
	4
	▶119
101-2154	916
	918
	920
	922
101-2160	420
	422
101-2842	1086
	1089
	1094
101-2862	687
	689
	690
101-3120	56
	59
101-3125	140
	142
101-4000	209
101-7354	147
101-7396	617
	996
101-7398	653
101-7402	612
	614
	652
101-8468	49
101-9848	342
	343
	403
102-0786	479
	483
102-0811	851
102-0814	871
102-0883	427
102-1157	616
102-2240	116
	171
	174
	▶270
	728
102-5758	121
	124
	128
102-5861	49
102-6229	38
102-7024	813
102-7664	3
	4
	▶259
102-8015	250
	254
102-8608	147
102-8801	208
	209
	210
	216
	217
	218
	249
	253
	292
	296
	300
	303
	312
	314
	1018
	1019
	1020
	1021
102-8802	69
	193
	195
	200
	208
	210
	216
	218
	249
	253
	254
	267
	269
	272
	286
	289
	292
	294
	296
	300
	303
	307
	312
	314
	316
	318
	590
	676
	678
	728
	875
	878
	982
	984
	987
	990
	1001
	1011
	1013
	1014
	1040
102-8803	34
	171
	208
	210
	216
	218
	270
	300
	303
	305
	307
	309
	310
	312
	314
	320
102-8804	208
	210
	216
	218
	243
	247
	303
	312
	314
	843
	844
	867
	1011
102-8805	208
	209
	210
	216
	217
	218
	243
	245
	247
	289
	296
	312
	314
	990
	1011
	1013
	1014
	1017
	1018
	1019

▶ **PRIMARY REFERENCE**

PART NUMBER INDEX

Part	Page
	1046
102-8806	210
	218
	292
	294
	296
	300
	303
	312
	314
	1046
102-8807	296
102-8812	307
102-8813	307
102-8817	307
102-9089	12
103-0126	48
103-1303	571
103-2556	189
103-4656	171
	174
103-4669	171
	174
103-4672	188
103-5240	363
103-5241	363
103-5242	363
103-5278	900
103-5279	900
103-5280	900
103-5281	900
103-6045	16
103-6100	1040
103-8236	518
103-8361	481
103-8364	481
	485
	491
	493
104-3173	141
104-6202	390
104-8147	417
	418
104-8583	116
104-8584	116
104-8585	116
104-8586	63
104-9270	77
105-1525	867
105-3478	515
105-3481	374
105-3482	375
105-3483	647
105-3484	163
	525
105-3485	589
	599
105-3487	375
105-4553	1080
	1089
	1094
105-4728	279
	280
105-4729	3
	4
	▶279
	▶280
105-6402	898
	902
105-6403	898
	902
105-6404	898
	902
105-6405	898
	902
105-6701	189
105-6836	375
105-6837	375
105-6838	375
105-6855	344
	374
105-6971	393
105-6972	393
105-6973	393
105-6974	393
105-6975	393
105-6976	393
105-6977	393
105-6979	393
105-6980	393
105-6981	393
105-6982	393
105-6983	393
105-6984	393
105-6985	393
105-6986	393
105-6988	▶389
	392
105-6989	389
105-6990	389
105-6991	▶391
	392
105-6992	391
105-6993	391
105-6994	392
105-6995	392
105-6996	392
105-6997	392
105-6999	392
105-7328	853
105-7329	853
105-7331	853
105-7546	1089
	1094
105-9411	1040
105-9983	250
	254
105-9985	250
	254
106-0107	296
106-0210	296
106-0211	296
106-1792	147
106-3544	102
106-3969	137
106-3973	137
106-5673	34
	40
106-6880	931
	933
	935
	937
	943
	945
106-8715	671
107-0583	49
107-3786	709
107-3953	429
	430
107-5769	188
107-6550	848
107-6631	621
107-6736	3
	4
	▶13
107-7068	841
107-8618	34
	40
	210
	218
107-9711	417
	418
108-0688	982
	984
108-0689	982
	984
108-0690	982
	984
108-0691	982
	984
108-0692	982
	984
108-1781	653
108-2960	1034
108-2966	1034
108-2970	1034
108-3566	720
108-3612	147
108-3819	612
108-5914	55
108-6635	392
108-6636	392
108-6638	392
108-6639	393
108-6640	391
108-6642	392
108-6671	392
108-6672	393
108-6709	892
	894
	896
	898
	900
	902
	904
	906
	909
108-6717	896
	898
	900
	902
	904
	906
	909
108-6730	902
108-7206	616
108-7303	209
	217
	312
	314
108-7381	590
	600
108-7930	120
108-8227	997
108-8839	996
109-0072	97
	99
109-0076	97
	99
109-0077	116
	119
109-0078	97
	99
109-0093	116
109-1253	1023
109-1254	1023
109-1267	997
109-1270	1023
109-1296	705
109-1634	1040
109-1657	3
	4
	▶46
109-3570	1025
109-5005	997
109-5008	996
109-5839	69
109-5840	69
109-7423	3
	4
	▶14
109-7424	14
109-7425	14
109-8040	759
	772
	788
	793
109-9985	62
109-9997	3
	▶114
110-2220	22
110-3678	1067
110-3688	1067
110-3689	1067
110-3690	1067
110-4358	1000
110-4821	673
110-4833	1035
110-4840	▶410
	1031
110-4841	410
110-4843	410
110-4845	410
110-5066	1061
110-5499	623
110-5525	693
	695
110-6393	986
110-6844	307
110-6845	307

▶ **PRIMARY REFERENCE**

PART NUMBER INDEX

Part	Page	Part	Page	Part	Page	Part	Page
110-6846	307	111-6308	▶1012	113-4013	1004	115-9864	745
110-6968	734		1047	113-4014	1007	115-9865	745
110-7149	497	111-6389	1027	113-4016	1004	116-0081	209
	499	111-6419	▶1068		1005		217
	502		1069	113-4708	977	116-0082	296
110-7183	356	111-6420	1068		978		300
110-7567	1025	111-6433	▶1055		981		303
110-7884	296		1057	113-4709	977	116-0095	316
110-8213	307	111-6752	622		978		318
111-0336	759	111-9916	841		981	116-0096	318
	772		▶872	113-5950	470	116-0097	316
	788	111-9997	▶848		884		318
	793		852		886	116-0098	318
	▶870	111-9998	695		888	116-0118	208
111-0337	870		853		890		216
111-0343	878	111-9999	848	113-6518	637		243
111-1655	867	112-0000	853	113-6666	622		245
111-2088	3	112-0001	848	113-6738	647		247
	4	112-0003	853	113-6758	649		305
	▶62	112-0540	389	113-9608	976		312
111-4376	137	112-0541	391		979		314
111-4719	250	112-0542	392		980		316
	254	112-0543	392	113-9609	976		318
111-4784	272	112-0545	1089		979	116-0126	318
111-4799	300		1094		980	116-0128	185
	303	112-0557	393	114-0421	296		300
111-4812	300	112-2091	1072		305		303
	303	112-2092	1072	114-0550	879	116-0173	272
111-4836	209	112-2093	1072	114-0623	872		310
	217	112-2095	1072		873	116-0174	272
	243	112-2097	1072		877		310
	245	112-2099	1072	114-0648	744	116-0229	312
	247	112-2105	1072	114-0649	744		314
	305	112-2107	1072		▶745	116-1523	1089
	310	112-2333	1072	114-0760	489		1094
	312	112-2334	1072	114-1322	497	116-1524	1008
	314	112-2418	3		499	116-1655	411
	316		4		502	116-3046	51
	318		▶63	114-1374	504	116-3420	669
111-4837	208	112-2479	▶974	114-1541	321		671
	216	112-2483	974	114-1904	3		▶879
	224	112-2484	974		4	116-3513	479
	243	112-2491	▶972		▶139	116-3516	481
	245	112-2492	972	114-2687	97		485
	247	112-3309	1023		99		491
111-4838	208	112-3502	1025		102		493
	216	112-3952	995	114-3350	1055	116-3518	491
	312	112-3953	995	114-4285	1089		493
	314	112-4497	1074	114-4427	24	116-3519	491
111-4839	208	112-4550	34	114-5333	1040		493
	216		211	114-6461	1086	116-3654	513
	312		219	114-8234	497		521
	314	112-4629	850		502		523
111-4846	300	112-4630	709	115-1624	1032	116-3682	513
	303		713	115-2670	345		523
111-4871	292	112-4717	851		347	116-5352	982
111-5754	857	112-5874	676		349		984
	858		678		350	116-6360	1076
111-6279	▶1004		875	115-3055	227	117-0218	15
	▶1005	112-9217	49		▶229		17
	1008	113-0308	296	115-5637	857	117-0219	15
111-6280	▶1007	113-2532	1018		858		17
	1008		1019	115-7087	161	117-0775	860
111-6281	1047		1020	115-8645	617		861
	▶1060	113-4012	1007		622		862

▶ **PRIMARY REFERENCE**

PART NUMBER INDEX

Part	Page
117-1385	56
117-5269	741
	819
	821
	823
	826
	829
	832
	835
	838
	▶857
117-5270	741
	819
	821
	823
	826
	829
	832
	835
	838
	▶858
117-5272	857
	858
117-5274	857
	858
117-5640	996
117-5644	997
117-5645	997
117-5716	709
	713
117-6256	1007
117-6257	1004
	1005
117-6266	1007
117-6267	1004
	1005
117-6268	1004
	1005
	1007
117-6269	536
117-6270	536
117-6271	536
117-6272	536
117-6273	1004
	1005
	1007
117-6274	536
117-6356	1012
117-6616	676
	678
117-7028	241
117-7029	1032
117-8557	49
117-8801	49
118-3122	711
118-5068	95
	96
118-5085	676
	678
	680
	682
118-5086	676
	678
	680
	682
118-5087	676
	678
	680
	682
118-6083	389
118-6084	389
118-6085	389
118-6119	906
119-0036	12
119-0872	996
119-2265	741
	819
	821
	823
	826
	829
	832
	835
	838
119-2379	649
119-2652	652
119-5026	296
	300
	303
	982
	984
	1004
	1005
	1007
119-5362	747
	748
	841
119-5364	747
	748
	841
119-5365	747
	748
	841
119-6805	1012
119-6806	1012
119-8340	997
119-8353	997
119-9425	996
119-9428	997
120-4394	530
	850
120-4825	1023
120-4831	997
120-5107	1089
120-5114	189
120-5737	997
120-9027	300
	303
120-9243	56
	59
121-0987	1000
121-1022	253
	318
121-1038	185
	300
	318
121-1039	185
121-1044	210
	218
121-1049	296
121-1160	296
121-1491	841
	▶873
	874
121-1891	697
121-2051	676
	678
121-2052	676
	678
121-2602	1089
121-3372	982
	984
121-3374	982
	984
121-4578	1082
121-4579	1086
121-4580	1084
121-7057	536
121-7059	1052
122-0447	28
	31
	36
122-1248	5
	6
	▶11
122-1472	11
122-1486	11
122-2358	1025
122-2739	1040
122-3772	119
122-4021	189
122-4049	375
122-4822	995
	▶1072
122-4825	1047
	▶1057
122-5260	386
122-7375	28
	31
	36
122-7774	754
	816
122-8612	28
	31
	36
122-8705	504
122-9608	1012
122-9609	1012
122-9610	1012
122-9618	1008
122-9622	1008
122-9625	▶1054
	1057
122-9719	1032
123-0791	73
123-2003	513
	521
	523
123-2514	647
	▶846
123-2515	648
	▶813
123-3202	11
123-5045	994
123-5046	994
123-5047	994
123-5362	345
	347
	349
	350
123-5364	345
	347
	349
	350
123-5574	345
	347
	349
	350
	884
	886
	888
	890
123-5592	898
	904
	909
123-8305	1032
124-0254	986
	▶1027
124-0312	987
	988
	990
	991
	1014
124-0909	612
	614
124-0988	621
124-1854	34
124-1855	34
	40
124-2456	1089
	1094
124-3926	1057
	▶1061
124-3932	1004
	1005
	1007
124-4004	1061
	1063
124-4005	1008
124-4021	1012
124-4025	1012
124-8758	1032
124-8759	1032
124-9108	209
	217
124-9849	720
125-0434	116
125-1302	249
	253
	▶286
125-4726	296
	300
	303
125-5032	140
125-6533	277
125-6535	277
	282
125-6536	277
	282
125-6537	277

▶ **PRIMARY REFERENCE**

PART NUMBER INDEX

Part	Page	Part	Page	Part	Page	Part	Page
	282		493	130-4765	1000	133-5673	168
125-6729	629	128-9265	489	131-0327	1023	133-6318	1028
125-8619	997	129-0375	168	131-0398	1076	133-7023	73
125-9158	997	129-3174	676	131-0399	1023	133-7154	987
125-9632	1040		678	131-2569	641		990
126-1756	49		875	131-3717	22	133-7156	987
126-1757	56	129-3178	987	131-3957	375		990
	59		990	131-4770	137	133-7157	987
126-1767	267	129-5427	56	131-5894	846		990
126-2081	516		59	131-7123	49	133-7158	987
126-2112	▶513	129-5428	56	131-8438	987		990
126-3162	▶1032		59		990	133-7159	987
126-4935	116	129-5429	165	131-8439	987		990
126-6367	345	129-5904	647		990	133-7404	987
	347	129-6466	1023	131-8440	987		990
126-7574	229	129-7813	728		990	133-7514	996
126-9992	846	129-7815	513	131-8442	987	133-7882	1055
127-2394	1027		523		990	133-7883	1055
127-5004	1074	129-8034	513	131-8443	987	133-7884	1055
127-5250	1048		521		990	133-7885	1055
127-5252	1078		523	131-8444	987	133-7886	1055
	1079	129-8053	▶447		990	133-7887	1061
127-5447	97		513	131-8445	987		1063
127-5483	216		523		990	133-7955	1061
127-5484	208	129-8055	513	131-8446	987		1063
127-5485	208		523		990	133-8714	987
	216	129-8056	513	131-8847	149		990
127-5486	209		523		152	133-8715	987
	217	129-9452	147		155		990
127-6680	697	129-9907	120		158	133-9014	987
127-8394	▶746	130-0321	1061	131-9562	728		990
	775	130-0322	1061	132-0998	973	133-9906	10
127-8395	746	130-0323	1061	132-0999	972	133-9907	▶10
127-9039	3	130-0324	1055		973		495
	▶140	130-0325	1061	132-1008	972	134-0114	1089
127-9485	687	130-0326	1055	132-1805	209		1094
127-9838	1023	130-0328	1055		217	134-3071	5
128-0317	120		1061	132-1817	249		6
128-1471	3		1063		254		▶71
	4	130-0329	1055	132-1828	310	134-3196	165
	▶167	130-0330	1055	132-1829	292	134-3297	300
128-2030	982	130-0333	1055	132-1854	305		303
	984	130-0334	1055	132-4910	987	134-3351	250
128-2173	1017	130-0335	1055		990		254
128-2659	49	130-0336	1055	132-5347	996	134-3379	233
128-2922	120	130-0337	1055	132-6881	22	134-4126	230
128-5826	1025	130-0338	1055	132-7816	1021		236
128-7514	590	130-0339	1061	132-7841	1018		1022
	609		1063		1019	134-5302	1078
	612	130-0340	1061		1020	134-6838	653
	614	130-0342	1061	132-9176	561	134-6939	587
128-8510	5		1063		563	134-7258	1082
	6	130-0343	1061		594		1084
	▶170		1063	132-9770	56		1086
128-8853	49	130-0347	1055		59		1089
128-8981	713	130-0348	1055	133-0125	116		1094
128-9001	621	130-0350	1055	133-0260	268	134-7489	855
128-9170	497	130-0351	1055	133-0261	269	135-0429	1023
	499	130-0358	1055	133-0578	1025		1076
	502	130-4317	898		▶1071	135-1619	996
128-9261	479		902	133-2003	1076	135-2184	1004
	483		904	133-3666	1028		1005
128-9262	481		909	133-5671	▶168	135-2185	1004
	485	130-4698	49		177		1005
	491	130-4701	49		181	135-2274	1017

▶ **PRIMARY REFERENCE**

PART NUMBER INDEX

Part	Page
135-3924	697
135-4918	120
135-4925	119
	▶120
135-4928	120
135-6531	5
	▶34
135-6552	3
	4
	▶147
135-8572	191
	192
	193
	195
	375
135-8573	189
	332
	340
	366
	371
	374
	383
	1049
135-8574	376
135-8575	359
	361
	366
	371
	374
	383
	697
	1049
135-8577	359
	361
	366
	371
	1049
135-8578	366
	371
135-8888	386
135-9991	709
	713
136-0207	622
136-1107	120
136-2442	414
136-2443	414
	415
136-2444	414
	415
136-2445	414
	415
136-3742	120
136-3934	1035
136-4055	249
	254
136-4182	108
	111
	453
	456
136-4301	171
	174
136-4303	69
136-4731	300
136-5765	1076
136-6505	987
	990
136-7226	102
136-7227	102
136-9453	997
136-9454	997
137-0182	1072
	▶1074
137-0183	1072
137-0184	1072
137-2255	328
	330
	333
	341
137-3055	894
	896
137-3623	516
	519
137-3624	516
	519
137-3625	516
	519
137-3626	447
	448
	449
	516
	519
137-3628	447
	448
	449
	516
	519
137-3630	447
137-3631	447
	448
	449
137-3632	447
137-3634	513
	523
137-3639	874
137-3695	513
	521
	523
137-3713	692
	▶874
137-3716	691
137-3749	44
137-3751	44
137-4367	168
137-4550	161
137-4756	875
137-5103	144
137-5310	1023
137-5311	1023
137-5506	1072
137-5920	21
137-5921	5
	6
	▶49
137-7298	5
	6
	▶21
137-8471	5
	6
	▶24
137-9412	1032
138-5090	620
138-5135	296
138-5276	1
	▶1045
138-5471	383
138-5506	408
138-5600	385
138-5662	632
138-5690	359
	361
138-5708	579
	581
	585
	603
	604
	636
	665
	666
138-5709	579
	581
	585
	603
	604
	636
	665
	666
138-5717	412
138-6744	120
138-6780	871
138-8273	1074
138-8274	1074
138-8275	1074
138-8276	1074
138-8277	1074
138-8278	▶1029
	1074
138-8279	1074
138-8280	1074
138-8281	1074
139-4003	995
	▶1046
139-4005	▶1010
	1047
139-4724	249
	253
	316
	318
139-5345	300
	303
139-6647	900
139-6649	900
139-6650	900
139-6797	565
	567
	569
	571
	663
139-7114	1060
139-7235	1043
139-7459	565
	567
	569
	571
	663
139-8505	71
139-8733	108
	111
	453
	456
139-8753	108
	111
	453
139-8873	67
139-8877	453
	456
139-8878	108
	111
140-0736	621
	▶841
140-0741	841
140-0742	841
140-9109	997
140-9112	1023
141-0284	168
141-1060	165
141-1293	623
	652
141-3024	987
	990
141-3026	987
	990
141-3636	902
	906
141-3672	898
	900
	902
	904
	906
	909
141-3678	892
	894
	896
141-4513	1072
141-5497	875
141-5498	875
141-6348	565
	567
	569
	571
	663
141-6460	372
141-6595	1071
141-6603	1071
141-6609	1071
141-6612	1071
141-6968	532
141-9371	1074
142-0171	1074
142-0844	775
142-1250	1029
	▶1038
142-1251	1029
	▶1039
142-1252	1029
142-1255	1029
142-1356	843
	844
142-1541	1039
142-1547	1039
142-1548	1038

▶ **PRIMARY REFERENCE**

PART NUMBER INDEX

Part	Page
142-1549	1038
142-1550	1038
	1039
142-2329	24
	26
142-2961	1029
142-3379	678
142-3380	676
142-3383	1002
142-5867	84
142-6217	22
142-6791	515
142-8393	56
	▶263
142-8394	56
	▶264
142-9663	1038
	1039
143-0693	1029
143-4160	537
	539
	541
	543
	545
	547
	549
	551
	553
	555
	557
	559
	573
	576
	605
	607
	608
	667
143-6410	1032
143-6411	1082
143-6412	1086
143-6413	1084
143-6423	1032
143-6424	1082
143-6425	1086
143-6426	1084
143-7966	521
143-7968	513
	523
143-8037	513
	523
143-9536	1089
	1094
143-9563	1089
144-0195	1069
144-0367	121
	124
	128
144-1636	69
	590
	622
144-4476	775
144-6284	227
144-7087	▶756
	▶758
	764
	768
	778
	783
	800
	806
144-7088	756
	804
144-7092	756
	804
144-7093	756
	804
144-7113	759
	764
	768
	772
	778
	783
	788
	793
	800
	806
	▶859
144-7281	814
144-7614	1071
144-7615	1071
144-9676	▶1048
145-0487	228
145-2474	1018
145-2475	1019
	1020
145-2970	325
145-3009	▶424
	▶425
	426
145-3011	424
	▶434
145-3013	416
	▶429
	▶430
145-3014	324
	▶325
145-3015	416
	▶426
145-3056	1010
	▶1021
145-3059	1017
145-3084	249
	254
145-3105	1018
	1019
	1020
145-3169	709
	713
145-3171	709
	713
145-3706	1023
145-3773	720
145-3849	116
145-3850	307
145-5181	104
145-7181	759
	764
	778
	788
	800
	806
	▶814
145-8495	1040
	1043
145-8503	107
145-8747	764
	768
	778
	783
	800
	806
145-9325	42
145-9331	73
145-9529	768
	772
	783
	793
	814
146-0182	759
	772
	788
	793
146-1335	335
146-1336	335
146-1346	335
146-1461	537
	539
	541
	543
	573
	576
146-1463	539
	543
	576
146-2601	16
146-3728	271
146-4700	417
	418
146-4952	375
146-6701	1
	▶1036
146-6717	▶1009
	1047
146-6747	1094
146-7744	1074
146-7745	1074
146-8438	16
146-9290	515
	525
147-0387	982
	984
	990
	1011
	1014
147-1445	312
	314
147-1730	71
147-2001	417
	418
147-2286	756
	804
147-3396	171
147-3801	56
	59
147-3942	894
147-3957	931
	▶933
	935
	937
	943
	945
147-4259	867
147-4312	617
	▶747
147-4786	1061
	1063
147-4787	1061
	1063
147-4789	▶1017
	1048
147-4791	1061
	1063
147-4792	1061
	1063
147-4793	1061
	1063
147-4869	1061
	1063
147-5737	479
147-5738	479
	483
147-5739	479
147-5771	479
	483
147-5776	479
	483
147-6603	868
	869
	870
147-6604	868
	869
	870
147-6605	868
	869
	870
147-6982	67
147-6983	67
147-7142	142
148-0767	759
	764
	768
	772
	778
	783
	788
	793
	800
	806
148-1335	171
148-2350	271
148-2949	1046
148-3089	931
	935
	943
148-3111	419
	420
	421
	422
148-4575	321
148-4579	321

▶ **PRIMARY REFERENCE**

PART NUMBER INDEX

Part	Page
148-4580	321
148-4582	321
148-4585	321
148-4597	324
	▶496
148-4598	496
	▶497
	▶499
148-4600	497
	499
	502
148-4601	497
	499
	502
148-4602	497
	499
	502
148-4603	497
	499
	502
148-4604	497
	499
	502
148-4607	497
	499
	502
148-4608	497
	499
	502
148-4609	497
	499
	502
148-4611	497
	499
	502
148-4616	321
148-4617	321
148-4625	324
	▶501
148-4626	501
	▶502
148-4627	324
	▶504
148-4628	2
	▶324
148-4650	▶351
	▶353
	416
148-4685	355
	358
148-4778	603
148-4787	652
148-4933	647
148-4934	647
148-4935	647
148-4939	647
148-4942	649
148-4943	648
148-4944	648
148-4964	636
148-4977	364
148-4993	333
148-4997	333
148-5029	▶411
	1030
148-5055	616
148-5063	374
148-7482	6
	▶64
	▶65
	▶66
148-8315	617
	641
	644
148-8317	620
148-8318	629
	634
	667
148-8322	565
	567
	569
	571
	663
148-8323	620
148-8327	590
	600
	667
148-8335	621
	629
	652
148-8336	589
	599
	621
	629
	632
	634
	642
	644
	647
	667
	674
148-8339	641
	644
	673
148-8340	589
	599
	617
	620
	648
	653
148-8345	616
	647
148-8347	589
	599
	616
	621
	641
	644
	669
	671
148-8352	652
148-8353	622
148-8355	620
148-8357	589
	599
148-8359	629
	652
148-8360	616
148-8361	648
148-8362	621
148-8364	622
	648
	653
148-8365	507
	510
	647
148-8367	621
	634
	641
	648
148-8370	616
	648
148-8371	620
	641
	644
148-8372	616
	647
148-8374	589
	599
148-8378	590
	620
	629
	634
	647
148-8388	617
148-8390	507
	510
	641
	644
148-8391	648
148-8392	589
	599
	632
	641
	644
148-8393	641
	644
148-8395	682
148-8405	759
	764
	768
	772
	778
	783
	788
	793
	800
148-8407	629
	632
	636
	647
	680
	682
	728
	741
	759
	764
	768
	772
	775
	778
	783
	788
	793
	800
	806
148-8408	612
	614
	759
	764
	768
	772
	778
	783
	788
	793
	800
	806
148-8409	759
	764
	768
	773
	778
	783
	794
	800
148-8410	759
	764
	768
	772
	775
	778
	783
	788
	793
	800
	806
148-8411	621
	636
	640
	680
	682
	741
	819
	821
	823
	826
	829
	835
	838
148-8412	632
	648
148-8414	565
	567
	569
	571
	663
148-8415	632
	648
148-8418	616
148-8422	629
	632

▶ **PRIMARY REFERENCE**

PART NUMBER INDEX

Part	Page
	653
148-8424	634
148-8429	621
	632
	641
	644
	653
148-8433	623
148-8435	590
	622
148-8436	647
148-8439	589
	600
	622
	673
148-8444	647
148-8449	507
	510
149-2356	1046
149-5017	316
149-5050	316
	318
149-5058	250
	254
149-5068	250
	254
149-6547	620
149-6558	863
149-6661	902
149-6716	590
	600
149-6812	669
	671
149-7378	18
150-1387	987
	▶1011
150-1388	982
150-1390	987
150-2557	18
150-2803	▶883
150-2804	▶881
150-2805	▶882
150-2806	▶925
150-2807	▶926
150-2810	▶927
150-2811	▶928
150-2812	▶929
150-3035	616
150-3036	621
150-3071	616
150-3072	653
150-3073	636
150-3135	▶18
	20
150-3344	3
	▶15
150-4033	652
	673
150-4037	589
	600
	648
150-4278	3
	4
	▶16
150-5870	44
150-6966	249
	253
150-6967	249
	253
150-6970	249
	253
150-6971	316
	318
150-6972	316
	318
150-7033	1
	▶242
151-0465	900
	906
151-0525	894
151-0653	884
	886
	888
	890
	931
	933
	935
	937
	939
	941
	943
	945
	947
	949
	951
	953
151-0749	892
151-2099	228
	▶230
151-2106	230
151-2898	73
151-2900	73
151-5925	71
151-5966	49
151-6641	145
151-6645	534
	▶701
151-6646	▶462
	701
151-6647	534
	▶699
	▶700
151-6651	9
	▶121
	▶124
151-6652	8
	9
151-6654	8
	9
	▶108
	▶111
151-6655	8
	9
	▶138
151-6656	8
	9
	▶141
151-6657	8
	9
	▶148
151-6658	▶137
	148
151-6660	8
	9
	▶67
151-6661	8
	9
	▶145
151-6662	8
	9
	▶101
151-6663	8
	9
	▶142
151-6665	8
	9
	▶272
151-9360	249
	254
152-5085	982
	▶987
152-5550	859
152-7582	30
	36
152-9191	864
152-9254	620
152-9372	649
152-9515	450
	451
	▶1078
	▶1079
152-9521	653
152-9522	653
152-9560	189
152-9562	189
152-9604	▶388
152-9605	388
152-9610	388
	▶393
152-9616	388
152-9617	388
152-9643	316
	318
152-9649	1089
	1094
152-9650	1089
	1094
152-9651	1089
	1094
152-9656	1089
153-1025	56
	59
153-1256	120
153-1728	931
	935
	939
	943
	949
153-1731	955
153-2447	210
	218
153-2450	210
153-2451	210
153-2475	210
	218
153-2521	▶238
	241
	242
	243
	245
	247
153-2523	▶239
	242
153-2524	▶240
	243
	245
	247
	1032
153-2584	1036
153-2595	▶243
	881
153-2908	1047
	▶1076
153-2911	1047
	▶1052
153-2913	995
	▶1023
153-2914	▶292
	995
153-2915	▶995
	1000
153-2916	995
	▶1025
153-2917	995
	▶996
153-2920	1052
153-4101	71
153-5139	754
	816
153-5140	816
153-5141	816
153-5187	841
153-5264	754
153-5265	754
153-5278	754
153-6236	622
	641
	644
	674
153-6244	617
153-6249	623
153-6256	642
	645
153-6680	87
153-7023	38
	39
153-7024	38
	39
153-8587	539
	543
153-8591	▶537
	▶539
153-8874	583
	587
	667
153-9653	34
154-0172	851

▶ **PRIMARY REFERENCE**

PART NUMBER INDEX

Part	Page
154-3294	▶676
	759
	764
	768
	772
	800
154-3295	▶678
	759
	764
	768
	772
	800
154-4133	271
154-4793	997
154-4811	997
154-4981	648
154-6591	775
	▶875
154-9024	116
155-1166	996
155-1201	996
155-1202	996
155-1203	996
155-1211	▶1030
155-1212	1030
	1031
	▶1035
155-2251	680
	682
155-2255	208
	210
	216
	218
	249
	253
	296
	300
	303
	307
	312
	314
155-2260	40
	208
	210
	216
	218
	260
	261
	262
	300
	303
	307
	310
	312
	314
155-2261	1063
	1066
155-2265	208
	210
	216
	218
	294
	296
	300
	312
	314
155-2269	1063
155-2270	69
	208
	209
	210
	216
	217
	218
	249
	253
	269
	289
	296
	300
	303
	305
	307
	309
	312
	314
	318
	990
	1011
	1014
	1066
155-2271	210
	218
	243
	247
	249
	253
	300
	312
	314
	320
	982
	984
155-2272	303
155-2274	208
	209
	210
	216
	217
	218
	296
	300
	303
	312
	314
	990
	1011
	1014
155-2629	168
155-3624	623
	680
	682
	728
	741
	764
	768
	778
	783
	800
	806
	814
	819
	821
	823
	826
	829
	835
	838
155-3629	56
	59
155-3746	1076
155-3747	1076
155-4038	515
	525
155-4039	515
	525
155-4040	515
155-4041	515
	525
155-4846	612
	614
	754
	814
	816
	▶860
155-4847	▶861
	863
	864
155-4923	987
	990
	1014
155-4925	987
155-6634	42
	43
155-6654	715
155-9065	▶463
	881
	882
	883
155-9066	▶464
	881
	882
	883
155-9067	463
	464
	▶470
155-9068	470
	▶477
155-9069	▶469
	881
	882
	883
155-9070	469
	▶475
	▶476
155-9071	475
	▶491
155-9072	▶465
	911
	913
155-9073	465
	▶471
155-9074	471
	▶479
155-9075	▶466
	912
155-9076	466
	▶472
155-9077	472
	▶481
155-9087	477
155-9092	477
155-9093	477
155-9094	477
155-9095	477
155-9096	477
155-9097	477
155-9098	477
155-9099	477
155-9100	477
155-9103	477
155-9112	717
155-9115	717
155-9116	717
155-9117	717
155-9118	717
155-9119	717
155-9125	711
155-9131	711
155-9134	711
155-9135	711
	▶717
155-9136	717
155-9137	717
155-9139	444
155-9141	444
155-9142	444
155-9143	444
155-9149	717
155-9153	491
155-9157	481
	485
	491
	493
155-9162	479
155-9171	481
	485
155-9196	337
	▶487
155-9197	487
	▶489
155-9198	323
	▶686
155-9200	674
	▶880
155-9201	496
	▶684
155-9202	684
	▶691
155-9203	501
	▶685
155-9204	685
	▶692
155-9205	701
	▶705
155-9206	699
	▶709
155-9222	699
	700
	▶703

▶ **PRIMARY REFERENCE**

PART NUMBER INDEX

Part	Page
155-9224	703
	▶704
155-9235	▶726
	728
155-9236	726
155-9820	56
	59
155-9943	1000
155-9944	1000
156-0619	727
156-0622	673
	▶727
156-2829	▶271
	680
	682
156-3849	1089
156-5402	1023
156-5405	997
156-5407	997
156-5420	1023
156-5426	996
156-5783	171
	▶197
156-6204	1052
156-6512	1017
156-6513	1017
156-8315	987
157-0489	648
157-0670	116
157-1206	168
157-4822	209
	217
	224
157-9986	▶911
157-9987	▶912
157-9989	▶337
158-0005	▶436
158-0077	250
	254
158-1113	875
158-3416	49
158-3852	890
158-3896	337
	▶345
	▶347
158-3960	955
158-4007	896
158-6564	875
158-8171	640
	▶867
158-8257	816
158-8261	751
158-8262	749
158-8263	749
	751
158-8267	816
158-8279	816
158-8293	816
158-8936	704
158-8937	704
158-8938	704
158-8939	704
158-8940	704
158-8964	693
158-8965	693
158-8966	693
158-8967	693
158-8968	693
158-8969	693
158-8970	693
158-8971	693
158-8972	693
158-8973	693
158-8974	693
158-8975	693
158-8976	693
158-8977	693
158-8978	693
158-8979	693
158-8981	693
158-8982	693
158-9009	693
158-9103	▶445
	709
	713
158-9104	▶446
	709
	713
158-9105	709
	713
	▶871
159-0605	964
	965
	966
	967
	968
	969
	970
159-0606	964
	965
	966
	967
	968
	969
	970
159-0607	980
159-3956	3
	4
	▶116
159-4540	▶994
	1000
159-4542	1000
159-4985	1000
159-5810	3
	▶5
159-7591	987
159-7744	▶536
	1004
	1005
159-7784	521
159-8300	994
159-8301	994
159-8402	875
159-9322	208
	216
	312
	314
159-9912	986
	▶1028
160-0629	1028
160-0964	612
	▶843
160-0965	648
160-3771	878
160-4138	▶440
	621
160-5024	250
160-5945	121
	124
	128
160-6894	3
	4
	▶97
	▶99
160-7689	312
	314
160-7690	208
	216
160-8184	51
	53
160-8734	759
	764
	768
	772
	778
	783
	788
	793
	800
	806
	▶862
160-8758	707
160-9185	843
	844
160-9186	843
	844
160-9187	843
	844
160-9999	843
	844
161-1309	440
161-3115	209
	217
161-3117	209
	217
161-3128	249
	253
	289
161-3729	1005
161-3730	1005
161-3972	307
161-6876	440
161-6879	440
161-6880	440
161-6958	161
161-6960	161
161-6963	161
161-7204	756
	804
161-7228	56
	59
161-7611	693
162-0177	811
162-0342	411
162-0343	411
162-1381	648
162-1383	648
162-2302	1013
	1018
	1019
162-2382	996
162-2385	996
162-2386	996
162-2679	106
162-2682	106
162-6208	137
162-6356	108
	111
162-6357	108
	111
	453
	456
162-6968	1023
162-9175	77
162-9941	648
163-0872	▶1001
	1002
163-1708	1019
	1020
163-1709	1018
163-2152	▶295
	1047
163-2478	39
163-6082	321
163-6083	321
163-6649	250
	254
163-6650	250
	254
163-6708	1037
163-6712	249
163-6713	250
163-9361	90
163-9385	116
163-9401	759
	764
	768
	772
	778
	783
	788
	793
	800
	806
164-0536	▶1008
	1047
164-3417	193
	195
164-4180	590
164-4344	996
164-5547	622
164-5567	622
164-5572	620
164-5589	641
	644
	648
164-5590	621
164-5598	621
164-5605	648
164-5608	617

▶ **PRIMARY REFERENCE**

PART NUMBER INDEX

Part	Page
164-5615	673
164-5616	612
	614
	652
164-5628	621
164-5639	621
164-6821	1025
164-6858	653
164-6869	621
164-6874	622
164-8166	718
164-8237	2
	▶231
164-8239	231
	▶233
164-8908	620
165-2827	396
165-2881	193
165-3010	375
	386
165-3350	673
165-3888	507
	▶515
165-3930	55
165-3932	55
165-3936	55
165-4026	250
	316
165-4962	▶185
	189
165-5623	741
	819
	821
	823
	826
	829
	832
	835
	838
165-6170	95
	96
165-9250	709
	713
	▶850
165-9251	850
	▶851
165-9290	489
165-9294	479
	483
165-9295	477
165-9296	485
	491
	493
165-9351	709
165-9354	720
	722
165-9356	720
	722
165-9357	720
	722
165-9358	▶718
	722
165-9359	718
	719
165-9360	718
	719
165-9361	718
	719
165-9362	718
	719
165-9363	718
	719
165-9367	530
165-9395	445
165-9396	445
165-9397	445
165-9398	445
165-9399	445
165-9400	445
165-9401	446
165-9402	446
165-9403	446
165-9404	446
165-9405	446
165-9406	871
165-9469	754
165-9471	754
165-9478	754
165-9579	612
	▶863
165-9614	614
	▶864
166-1321	3
	4
	▶73
166-1323	73
166-1324	73
166-1325	3
	4
	▶203
	▶204
166-1326	203
	204
166-2854	171
	174
166-2877	973
166-2903	31
	36
166-2904	28
	31
	36
166-3511	▶973
166-6358	73
166-6693	259
166-6943	1046
166-9144	56
	59
167-0642	30
	36
167-0643	30
	36
167-2496	481
167-3542	299
167-3543	299
167-3593	209
	217
	250
	254
167-3628	208
	216
167-3832	▶975
167-7223	1089
167-7224	1082
167-7225	1086
167-7228	1084
167-8081	22
167-8083	22
167-9270	161
167-9832	883
	▶884
167-9837	911
	▶916
167-9838	912
	▶918
167-9842	416
	▶423
168-0765	865
	866
168-1710	337
	▶338
168-1716	1
	▶359
168-1717	1
	▶366
168-1718	1
	▶364
168-1721	1
	▶412
	▶413
168-3378	716
	721
168-3379	716
	721
168-3382	716
	721
168-3384	716
168-3385	716
	721
168-4605	984
168-5102	859
168-5103	859
168-5191	859
168-6733	434
	435
168-6734	434
	435
168-6738	434
	435
168-6739	434
168-6740	434
	435
168-6741	434
	435
168-6742	434
	435
168-6743	▶414
	426
168-6744	414
	415
168-6745	414
	415
168-6747	426
168-7246	71
168-7319	689
	690
168-7940	715
168-7941	715
168-7942	715
168-7944	715
168-9352	589
	599
168-9368	534
	▶616
168-9369	534
	▶733
168-9371	534
	▶734
168-9372	534
	▶673
168-9373	534
	▶669
	▶671
168-9374	534
	▶609
168-9375	534
	▶652
168-9376	534
	▶636
168-9377	534
	▶620
168-9378	451
	▶612
168-9379	337
	▶647
168-9381	▶640
168-9382	465
	467
	▶603
168-9383	466
	468
	▶604
168-9619	589
	599
168-9659	463
	▶595
168-9660	464
	▶597
168-9661	▶579
	881
168-9688	622
168-9699	648
168-9700	647
168-9764	▶581
	883
169-0489	228
	▶1022
	1058
	1059
169-6285	5
	6
169-7128	1040
169-7194	1022
169-7409	594
170-2414	859
170-2415	859
170-2512	209
	217
170-2789	405
170-2807	1
	▶326

▶ **PRIMARY REFERENCE**

PART NUMBER INDEX

Part	Page
170-2808	326
	▶333
170-2809	333
170-2892	412
170-2896	412
170-2904	338
170-2942	359
	361
170-2943	359
	361
170-2946	359
	361
170-2947	359
	361
170-2948	359
	361
170-2949	359
	361
170-2950	359
	361
170-2951	359
	361
170-2956	359
	361
170-2977	338
	339
170-2999	412
	413
170-3026	177
	181
170-3562	3
	4
	▶103
170-4737	30
	36
170-4738	30
	36
170-4860	116
170-6854	▶305
	337
170-6914	▶245
	883
170-6915	▶247
	882
170-6965	224
170-6966	224
170-6970	249
170-6971	210
	218
170-6976	208
	216
170-6977	209
	217
170-6979	1
	▶200
170-6980	186
	▶316
	▶318
170-6983	▶310
	736
	737
170-6984	310
170-6986	305
170-6990	247
170-6991	▶320
170-6992	320
170-6993	238
	239
	240
170-7471	359
	361
170-8661	77
170-9304	249
170-9306	249
	253
170-9307	249
	253
170-9328	209
	217
170-9334	210
	218
170-9341	245
170-9417	238
	239
	240
170-9418	238
	239
	240
170-9811	709
170-9812	▶719
	720
170-9817	850
170-9818	851
170-9819	851
170-9820	851
170-9821	851
170-9822	851
170-9823	851
170-9851	479
	483
170-9852	477
170-9853	481
	485
	491
	493
170-9864	489
170-9900	709
	713
170-9901	720
	722
170-9903	530
170-9906	851
170-9907	709
	713
170-9910	491
170-9912	479
170-9914	481
170-9918	699
	700
	▶711
170-9985	693
170-9986	693
170-9996	693
171-0026	▶736
171-0027	▶740
171-0028	629
	632
	634
	▶877
171-0049	629
	634
171-0113	629
171-0190	816
171-0191	589
	599
	▶816
171-0192	754
171-0193	667
	▶754
171-0194	816
171-0596	590
	599
	622
171-1709	981
171-2210	249
	253
171-2592	1
	▶228
171-2659	231
	▶232
171-3370	121
	124
171-3396	1049
171-3684	878
171-3685	741
	756
	798
	804
	811
	814
	819
	821
	823
	826
	829
	832
	835
	838
	▶878
171-4364	118
171-5349	267
171-5378	1082
171-5379	1086
171-5381	1084
171-5811	432
171-5825	427
171-6728	623
171-7085	843
	844
	867
171-8706	321
171-8707	321
171-8963	3
	4
	▶265
171-8982	701
171-8983	108
	111
171-8989	108
	111
171-8991	108
	111
	453
	456
171-8995	108
	111
	453
	456
171-8996	108
	111
171-9002	121
	124
	128
	453
	456
171-9003	121
	124
	128
	453
	456
171-9004	121
	124
	128
171-9005	453
	456
171-9015	121
	124
	128
171-9016	121
	124
	128
171-9017	141
171-9018	141
171-9019	141
171-9025	142
171-9026	142
171-9027	142
171-9030	142
171-9032	142
171-9038	138
171-9042	149
171-9046	149
	152
	155
	158
171-9049	149
	152
	155
	158
171-9053	149
	152
	155
	158
171-9054	67
171-9057	67
171-9074	145
171-9075	183
171-9078	8
	9
	▶183
171-9079	183
171-9131	272
171-9133	272
171-9413	497
	499
	502
172-0285	56
	59
172-2848	481

▶ **PRIMARY REFERENCE**

PART NUMBER INDEX

Part	Page
	485
	491
	493
172-2856	886
172-2865	939
172-2871	417
	418
172-2954	▶363
	416
172-2955	363
172-2957	883
	▶892
172-2958	881
	▶894
172-2959	882
	▶896
172-2997	477
172-3001	416
	▶419
172-3024	884
	886
	888
	890
	939
	941
	947
	949
	951
	953
172-3051	884
	886
	888
	890
172-3052	884
	886
	888
	890
172-3087	▶417
172-3088	417
	439
172-3089	417
	418
172-3112	417
	418
172-3113	417
	418
172-3918	477
172-4294	3
	4
	▶307
172-4849	56
	59
172-4850	3
	4
	▶56
	▶59
172-4950	1089
172-4955	337
	▶1080
172-5241	56
	59
172-6090	390
172-6091	3
	4
	▶390
172-6764	3
	4
	▶42
	▶43
172-8027	19
172-8827	97
	99
173-0004	3
	4
	▶171
	▶174
173-1498	73
173-1500	73
173-2390	19
173-3363	489
173-3366	485
	491
	493
173-3414	481
	485
	491
	493
173-3429	617
	▶748
173-3430	748
173-3503	▶448
	▶449
	521
173-3504	448
173-3505	448
	449
173-3506	448
	449
173-3508	516
173-3511	513
	▶516
173-3513	516
	519
173-3515	516
	519
173-3516	516
	519
173-3517	516
	519
173-3529	516
	519
173-3993	759
	764
	768
	772
	775
	778
	784
	788
	793
	798
	800
	804
	806
	811
173-4769	665
	666
173-4770	604
	605
	607
	608
	665
	666
	667
173-4793	595
	597
173-4794	595
	597
173-4795	589
	595
	597
	599
173-4907	469
	▶665
	▶666
173-4929	653
173-4939	652
173-4945	636
173-4946	673
173-4947	673
173-4955	636
173-4960	636
173-4974	636
173-4976	636
173-4977	636
173-4979	652
173-4991	653
173-5001	▶657
	927
173-5022	579
173-5023	579
173-5024	579
173-5025	579
173-5026	579
173-5027	579
173-5028	▶658
	928
173-5046	609
173-5048	609
173-5049	609
173-5054	609
173-5063	609
173-5096	734
173-5104	734
173-5110	609
173-5113	609
173-5120	673
173-5123	673
173-5130	616
173-5135	616
173-5150	673
173-8028	▶667
	735
	738
	739
	740
173-8029	▶583
	738
	740
173-8057	537
	539
173-8058	537
	539
173-8059	537
	539
173-8063	537
	541
	573
173-8065	537
	539
	573
	576
173-8067	537
	539
	541
	543
	573
	576
173-8069	537
	539
	541
	543
	573
	576
173-8094	335
173-8095	335
173-8096	335
173-8097	335
173-8099	335
173-8102	335
173-8103	335
173-8104	335
173-8106	335
173-8113	697
173-8114	697
173-8119	697
173-8122	697
173-8127	697
173-8130	697
173-8135	537
	541
	573
	576
173-8137	667
173-8138	667
173-8139	667
173-8141	667
173-8143	583
173-8144	583
174-0213	▶437
	439
174-0214	416
	436
	▶438
174-0216	▶428
	437
	438
174-0217	428
174-0218	428
174-0219	428
174-0220	428
174-0221	437
	438
174-0222	437
	438
174-0225	437
174-0226	438
174-1486	987
	990
174-1827	▶759

▶ **PRIMARY REFERENCE**

PART NUMBER INDEX

Part	Page	Part	Page	Part	Page	Part	Page
	819	175-0790	395	175-3721	53		920
	823	175-0791	366	175-3796	843	176-2271	918
	832	175-0801	366	175-3797	843	176-2275	918
174-1829	▶764	175-0803	366		844		922
	823	175-0808	409	175-3800	844	176-2277	918
174-1843	▶819	175-0809	366	175-6331	1078		922
174-1846	▶768	175-0811	366		1079	176-2301	904
	819	175-0818	1049	175-6496	1009	176-2302	904
	821	175-0830	374		▶1018		909
174-1852	735		▶396	175-6497	1009	176-2303	904
	740	175-0832	396		▶1019		909
	▶821	175-0837	366	175-7162	1040	176-2304	904
174-1854	▶772	175-0843	409	175-7523	38	176-2306	896
	821	175-0874	408	175-7526	38	176-3241	431
174-1858	669	175-0876	374	175-7900	433	176-4347	734
	671		▶397	176-0433	189	176-4361	450
	▶775	175-0883	375	176-0436	189		▶614
174-1859	775	175-0884	375	176-0459	1082	176-4370	▶585
174-7791	238	175-0889	374	176-0461	1086		882
	239	175-0897	397	176-0462	1084	176-4371	▶659
	240	175-0898	374	176-0480	1089		925
174-8331	420	175-0902	366		1094	176-4372	▶660
174-8332	420	175-0907	401	176-0490	189		926
174-8345	345	175-0911	402	176-1363	88	176-4375	▶661
	349	175-0912	402	176-1777	292		924
174-8353	417	175-0913	374	176-1778	292		929
174-8354	345		▶398	176-2108	419	176-4414	620
	347	175-0916	398		421	176-4459	623
	349	175-0917	398	176-2143	892	176-4505	612
	350	175-0934	406		894	176-4506	612
174-8499	▶420		407		896		614
174-8502	420	175-0961	408	176-2146	420	176-4507	629
	422		409		422	176-4508	612
174-8503	420	175-0962	408	176-2149	423		614
	422	175-0964	1049	176-2150	423	176-4511	612
174-8538	▶898	175-0966	1049	176-2157	423	176-4512	612
	927	175-0968	1049	176-2158	423		614
174-8543	898	175-0970	1049	176-2159	423	176-4513	612
174-8546	898	175-0976	374	176-2162	423		614
174-9106	1018		▶399	176-2163	423	176-4519	612
	1019	175-0977	399	176-2164	423		614
175-0640	337	175-0978	399	176-2165	423	176-4524	612
	▶383	175-0981	374	176-2166	423	176-4527	585
175-0673	366	175-0983	374	176-2213	925	176-4528	585
175-0675	366	175-0985	397		▶931	176-4529	585
175-0677	366	175-0989	374		▶933	176-4552	▶599
175-0681	366	175-0991	374	176-2214	926		736
175-0684	1049	175-0999	374		▶935	176-4553	▶629
175-0689	1049	175-1001	374		▶937		736
175-0691	1049	175-1004	374	176-2217	929		737
175-0696	366	175-1005	374		▶939	176-4554	▶632
175-0713	1049	175-1008	374		▶941		735
175-0724	366	175-1014	1049	176-2218	▶900		738
175-0733	366	175-1017	1049		925		739
175-0745	366	175-1024	376	176-2219	▶902		740
175-0749	366	175-1029	374		926	176-4555	612
175-0751	366	175-1030	374	176-2220	▶904	176-4714	649
175-0754	366	175-1033	341		928	176-4715	649
175-0757	366	175-1367	227	176-2221	▶906	176-4719	649
175-0764	366	175-1814	612		924	176-4722	589
175-0777	1049		▶844		929		599
175-0786	374	175-3274	429	176-2261	916	176-4723	589
	▶395		▶431	176-2265	916		599
175-0788	395	175-3617	30		920	176-4724	647
175-0789	395		36	176-2267	916	176-4750	589

▶ **PRIMARY REFERENCE**

PART NUMBER INDEX

Part	Page	Part	Page	Part	Page	Part	Page
	599	177-5635	385		587		801
176-4751	589	177-5636	385	179-4597	583		807
	599	177-5637	385	179-5067	▶541	183-7547	77
176-4754	590	177-5638	385		▶543	184-2472	230
	599	177-5647	371	179-5212	537		236
176-4757	590	177-5652	371		539		1022
	600	177-5653	371		541	184-3821	1005
176-5332	433	177-5654	371		543	184-3839	1005
176-5334	433	177-5655	371		573	184-3997	513
176-6415	997	177-5663	371		576		521
176-6417	997		▶386	179-5857	859		523
176-6418	997	177-5664	386	179-7485	629	184-5788	892
176-6419	997	177-5666	386	179-7581	632	184-5789	892
176-6420	997	177-5673	371	179-9806	519	184-8258	343
176-6421	996	177-5683	371	180-0398	3	184-8261	341
176-6422	997	177-5695	386		4	184-8262	374
176-6425	996	177-5697	386		▶227	184-8347	177
176-7185	1074	177-5699	386	180-1718	996		181
176-7186	1074	177-5701	375	180-3038	233	184-8528	1
176-7524	420	177-5715	332	180-3861	238		▶191
	422	177-5716	332		239		▶192
176-9918	▶36	177-5719	332		240	184-8880	374
	38	177-5732	401	180-5734	24	184-8884	374
177-0358	851	177-5853	374	180-6812	338		▶400
177-0359	709	177-5854	374	180-6828	393	184-8885	400
	713	177-5857	374	180-6854	186	184-8886	400
177-1403	680	177-5860	385		▶189	184-9085	340
	682	177-5885	375	180-6894	▶186	184-9091	▶341
177-1405	680	177-5889	383	180-7882	534		374
	682	177-5892	383		▶823	184-9102	397
177-2547	693	177-5894	383	180-8007	▶1014	184-9103	397
177-2548	691	177-5895	383	180-9340	260	184-9122	1
	692	177-5896	383		261		▶371
	▶693	177-6632	257		262	184-9124	1
177-2549	692	177-6727	990	180-9417	997		▶339
	▶865		1014	180-9418	997	185-0242	687
177-2550	693	177-7710	233	183-1065	193	185-0248	687
177-2552	691	177-9953	204		195	185-0250	715
	▶866		▶205	183-2823	187	185-0253	715
177-2553	516	178-3325	90	183-2824	171	185-0263	687
	519	178-3326	3		174	185-0265	687
177-2619	447		4		▶187	185-0266	687
	449		▶90	183-3408	40		▶715
177-4152	11	178-5647	1066		72	185-0267	687
177-5536	1049	178-5648	1066	183-5296	34	185-0268	687
177-5539	375	178-5654	1066		▶38	185-0270	687
177-5540	375	178-5655	1066	183-7262	759	185-0271	687
177-5575	371	178-5656	1066		764	185-0273	715
177-5580	▶344	178-5657	1066		768	185-0275	689
	375	178-5658	1066		772		▶716
177-5581	344	178-7291	433		778	185-0276	689
177-5582	344	178-7292	433		784		690
177-5583	344	178-7540	433		788	185-0277	689
177-5584	344	179-0289	▶1013		793		690
177-5586	344		1020		801	185-0278	689
177-5587	344	179-4581	667		806		690
177-5588	344	179-4584	583	183-7263	759	185-0280	689
177-5597	371		587		764		690
177-5598	371	179-4585	667		769	185-0287	716
	383	179-4587	667		772		721
177-5601	375	179-4588	583		775	185-0289	716
177-5627	1045		587		778		721
177-5632	333	179-4592	583		784	185-0292	716
177-5634	371		587		788		721
	▶385	179-4595	583		793	185-0295	689

▶ **PRIMARY REFERENCE**

PART NUMBER INDEX

Part	Page	Part	Page	Part	Page	Part	Page
	690	186-5655	▶421	188-9429	268		722
185-0296	689	186-6189	1040	189-0189	878	191-5593	▶530
	690	187-0661	1094	189-0852	269		709
185-0297	689	187-1325	19	189-3987	421		713
	690	187-1326	▶19	189-4717	687	191-5595	530
185-0299	711		20	189-5746	265	191-5596	709
185-0303	711	187-1327	3		▶267		713
185-0305	711		4	189-9763	853	191-5597	713
185-0325	693		▶20	190-0649	73	191-5598	709
185-0336	▶518	187-1679	193	190-2470	95		713
	620		195		96	191-5619	489
185-0337	518	187-2034	201	190-2471	3	191-5654	695
185-0373	749	187-3476	93		4	191-5655	695
	751	187-3477	3		▶94	191-5656	695
185-0391	749		4	190-2472	3	191-5657	695
	751		▶93		4	191-5658	695
185-0416	816	187-6659	3		▶95	191-5659	695
185-2271	617		4		▶96	191-5662	695
185-2638	205		▶102	190-5386	1089	191-5663	695
185-2639	205	187-6662	3		1094	191-5664	695
185-2643	205		4	190-6064	637	191-5665	695
185-2644	205		▶118	190-6820	338	191-5666	695
185-2645	205	187-6754	636		339	191-5667	695
185-2647	205	187-8001	709	190-6829	364	191-5668	695
185-2648	205		713	190-6910	364	191-5669	695
185-2650	205	187-8194	51	190-6914	375	191-5670	695
185-2651	205		53	190-6915	375	191-5671	695
185-2653	205	187-8202	51	190-6916	375	191-5672	695
185-2654	205		53	190-6919	366	191-5673	695
185-2655	205	187-8229	51		371	191-5675	695
185-2658	205		53	190-6993	366	191-5676	695
185-5065	429	187-8230	51	190-6996	366	191-5677	695
	430		53	190-6999	366	191-5678	695
	▶433	187-9837	537		371	191-5704	491
185-5093	433	188-0208	69	190-7001	375		493
185-8121	1066	188-0210	69	190-7003	402	191-6147	3
185-8124	1066	188-0406	634	190-7006	398		4
185-9208	296	188-1035	623	190-7007	398		▶144
185-9699	5	188-2103	321	190-7014	371	191-7583	711
	6	188-2420	1013	190-7017	371	191-7584	444
	▶12	188-4142	▶519	190-7018	371	192-2939	986
186-0684	171		521	190-7075	404		▶1003
	174		523	190-7212	339	192-2940	1003
186-0685	171	188-4143	519	190-7674	707	192-3595	1
	174	188-4147	▶521	191-2508	321		▶1069
186-2001	38		728	191-2511	497	192-4151	75
	39	188-4150	▶523		499		77
186-3735	34		728		502		79
	211	188-4192	477	191-2513	497		82
	218	188-4216	489		499	192-5462	102
	270	188-4217	489		502	192-5464	102
	272	188-4218	489	191-2514	497	192-5466	118
	286	188-4224	489		499	192-6815	653
	590	188-5095	163		502	192-7470	689
	843	188-6280	687	191-2524	497		690
	844		689		499	192-8215	77
	875		690		502	192-8810	71
	984		711	191-2525	497	193-1598	163
	1014	188-6434	569		499	193-1664	847
186-3736	1011		663		502	193-1665	741
	1014	188-6435	569	191-5590	709		819
	1063		663		▶720		821
	1066	188-7268	1089	191-5591	720		823
186-4639	299	188-7670	1053		722		826
186-5479	436		▶1063	191-5592	720		829

▶ **PRIMARY REFERENCE**

PART NUMBER INDEX

Part	Page
	832
	835
	838
	▶847
193-3476	210
	218
193-6554	▶545
	▶547
193-6555	▶549
	▶551
193-6556	▶553
	▶555
193-6606	667
193-6800	1081
193-9419	359
	361
193-9421	359
	361
193-9623	383
194-0248	652
194-0944	680
194-0945	682
194-0946	▶680
	778
	783
	788
	793
	806
194-0947	▶682
	778
	783
	788
	793
	806
194-1155	427
194-1156	427
194-1157	424
	425
	▶427
194-1162	427
194-1804	641
	644
	▶777
194-4281	1063
194-4282	1063
194-4283	1063
	1066
194-4284	1063
	1066
194-4285	1063
	1066
194-4286	1063
	1066
194-5226	40
194-5227	40
194-6722	259
	▶260
194-6724	34
	40
	▶261
194-6725	24
	26
	▶262
194-7097	3
	4
	▶47
194-7914	161
194-7915	161
194-7923	▶161
	162
194-8124	34
	40
194-8258	695
194-8402	880
194-9473	711
195-0313	47
195-0980	135
195-5456	881
	▶886
	▶888
195-5459	882
	▶890
195-5462	927
	▶943
	▶945
195-5465	928
	▶947
195-5476	916
	920
195-5479	916
	918
	920
	922
195-5480	528
	916
	918
	920
	922
195-5481	916
	920
195-5484	916
	920
195-5493	1
	▶349
	▶350
195-5504	898
195-5505	898
195-5506	898
195-5507	898
195-5508	898
195-5578	918
	922
195-5580	528
	918
	922
195-5583	528
	918
	922
195-9185	▶980
195-9186	▶981
196-0495	609
196-0590	623
196-0640	644
196-3810	986
	▶1040
196-3811	986
	▶1043
196-5069	75
	77
	79
	82
196-5070	75
	77
	79
	82
196-6102	695
196-6103	695
196-8085	131
	133
196-8088	131
	133
196-8089	131
	133
196-8090	131
	133
196-8102	121
	124
	128
196-8104	121
	124
	128
196-8133	▶461
	462
196-8136	459
196-8137	459
	460
196-8138	459
196-8168	701
196-8170	701
196-8173	701
196-8182	8
	▶128
196-8202	149
	152
196-9814	▶450
196-9815	▶451
196-9816	451
	▶452
197-0226	707
197-0868	5
	6
	▶162
197-2172	337
	▶697
197-2173	▶335
	337
197-2257	▶557
	▶559
197-2325	541
197-2326	541
	543
197-2327	541
197-2329	541
	543
197-2338	541
	543
197-4357	209
	217
197-8940	616
198-1508	5
	6
	▶106
	▶107
198-5510	418
198-5529	916
	920
198-5639	902
198-5640	902
198-5641	902
198-5642	902
198-5643	902
198-5644	902
198-5645	902
198-5647	916
	920
198-5660	900
198-5661	900
198-5662	900
198-5663	900
198-5664	900
198-6363	612
	614
198-7070	209
	217
	224
198-7656	612
198-9898	64
	▶75
199-0071	1
	▶340
199-0087	399
199-0096	1045
199-0117	1049
199-1854	648
199-1996	636
199-2025	653
199-4491	351
	▶355
199-4492	355
	▶356
	357
199-4493	355
199-4496	497
	499
	502
199-4498	351
199-4499	351
199-4501	325
	351
	353
199-4502	351
	353
199-4533	321
199-4545	321
199-4546	321
199-4553	321
199-4554	353
199-4555	353
199-4609	321
199-4611	321
199-4650	321
199-4661	▶321
	323
199-4662	▶323
	324
199-4663	321
199-4665	321
199-4666	321
199-4669	321
199-4670	321

▶ **PRIMARY REFERENCE**

PART NUMBER INDEX

Part	Page
199-4671	321
199-4672	497
	499
	502
199-4674	502
199-4677	504
199-4678	497
	499
199-4680	497
	499
199-4681	502
199-4688	321
199-4689	321
199-4690	321
199-7891	205
199-8436	205
199-9707	759
	764
	768
	772
	778
	783
	788
	793
	800
	806
2	
200-0653	3
	4
	▶91
	▶92
200-0654	▶87
	91
	92
200-0655	87
	▶88
200-3252	453
	456
	▶687
200-3257	687
200-3269	705
	▶707
200-3270	705
	▶852
200-3271	707
200-3272	707
200-3273	707
200-3274	707
200-3275	707
200-3276	707
200-3277	707
200-3278	707
200-3279	707
200-3280	707
200-3281	707
200-3282	707
200-3283	707
200-3284	707
200-3285	707
200-3286	707
200-3287	707
200-3288	707
200-3289	707
200-3290	707
200-3291	707
200-3292	707
200-3294	707
200-3295	707
200-3296	707
200-3297	707
200-3298	707
200-3299	853
200-3300	853
200-3301	853
200-3302	853
200-3311	44
200-3313	▶44
	108
	111
	453
	456
200-3391	695
200-3543	393
200-3544	393
200-3545	393
200-4926	349
201-0496	▶507
	▶510
	532
	533
201-0539	1003
201-1413	507
	510
201-1414	507
	510
201-1704	325
201-1770	▶728
	733
201-1771	728
201-2771	345
	347
	349
	350
	884
	886
	888
	890
	931
	933
	935
	937
	939
	941
	943
	945
	947
	949
	951
	953
201-2978	906
201-2979	906
201-2980	906
201-2981	906
201-2985	906
201-2986	906
201-3736	141
201-3738	141
201-3785	453
	456
201-3825	▶104
201-3826	104
201-4654	507
	510
201-4655	507
	510
201-4923	▶532
201-5340	▶533
201-6615	59
	▶268
201-6617	59
	▶269
201-7337	3
	4
	▶1002
201-7338	1002
201-9299	516
	519
201-9381	653
	▶749
201-9382	653
	▶751
201-9383	749
	751
201-9384	749
	751
201-9385	749
201-9386	751
202-1255	▶22
	24
	26
202-2894	1089
202-2897	1089
	1094
202-2918	900
202-2964	388
202-2977	388
	▶392
202-2978	392
202-3572	107
202-3773	728
202-3925	590
	599
202-4046	728
202-4071	590
	599
202-4072	590
	599
202-4074	590
	599
202-4902	427
202-7022	▶587
	735
	739
202-7023	587
202-7024	587
202-7028	587
202-7040	583
202-7152	537
	541
	573
202-7153	537
	539
	541
	543
	573
	576
202-9002	590
202-9762	620
203-3940	59
203-4862	427
203-4880	374
	▶401
203-5006	374
203-5095	177
	181
203-5096	▶342
	374
203-5097	342
203-5098	342
203-5099	342
203-5101	▶343
	374
203-5105	177
	181
203-5161	343
203-5162	343
203-5179	366
203-5194	366
203-5208	339
203-5209	339
203-6240	374
203-6247	374
203-6350	1040
203-6351	1040
203-6353	1040
203-6354	1040
203-6973	▶956
203-6974	956
	▶967
203-6977	▶957
203-6978	957
	▶968
203-6979	▶958
203-6980	958
	▶964
203-6981	▶959
203-6982	959
	▶969
203-6983	▶960
203-6984	960
	▶965
203-6985	▶961
203-6987	961
	▶970
203-6988	▶962
203-6989	962
	▶966
203-7450	▶909
	930
203-7577	207
	▶312
	▶314
203-8822	75
203-8824	75
	79
204-0920	121
	124

▶ **PRIMARY REFERENCE**

PART NUMBER INDEX

Part	Page	Part	Page	Part	Page	Part	Page
204-1073	453	204-8485	620	206-5155	987	207-6476	636
	456	204-8487	620	206-9133	967	207-6477	636
204-1611	121	204-8488	673	206-9134	964	207-6482	640
	124	204-8568	669		968	207-6506	637
204-1771	209		671	206-9135	965	207-6507	637
	217	204-8569	669		969	207-6514	637
204-1779	210		671	206-9136	967	207-6518	734
	218	204-8683	▶982	206-9137	964	207-6542	590
204-1795	210		▶984		968		600
	218		986	206-9138	965	207-6543	589
204-1807	210	204-8690	▶986		969		600
	218		1047	206-9139	966	207-6553	653
204-1938	249	205-1428	209		970	207-6554	617
	253		217	206-9141	964	207-6608	612
204-1939	▶249	205-5858	▶3	206-9142	965		614
	▶253		7	206-9143	966	207-6609	612
	257	205-6045	966	206-9285	707	207-6611	614
204-1940	1		970	206-9286	707	207-7181	▶561
	▶207	205-6666	272	206-9287	707	207-7182	▶563
204-1948	210	205-6716	149	206-9289	853	207-7899	591
	218		152	206-9290	707	207-8486	565
204-2114	▶48		155		853	207-8490	561
	49		158	206-9292	707	207-9532	561
204-2726	477	205-6823	272		853		563
204-2730	852	205-6824	272	206-9293	853		594
	▶853	205-6829	8	206-9294	853	207-9588	567
204-2733	853		9	206-9295	853	208-0719	571
204-2762	516		▶165	206-9297	707	208-1057	1089
	519	205-6830	165	206-9298	853	208-1169	1082
204-2763	449	205-6833	165	206-9299	853	208-1175	1084
204-2855	853	205-6911	2	206-9300	853	208-1177	1086
204-2856	705		▶7	206-9301	853	208-1246	565
204-3410	366	205-6912	7	206-9665	561		567
204-3560	990		▶149		563		569
	1014		▶152		594		571
204-4154	207		▶155	206-9666	561		663
	▶208		▶158		563	208-1888	909
	▶216	205-7634	1053		594	208-1889	909
204-8102	614		▶1066	207-0267	1040	208-2044	892
204-8103	614	205-9714	208	207-0810	594		894
204-8105	614		216	207-4095	296		896
204-8271	652	205-9743	128	207-4286	641	208-2676	309
204-8274	652	206-3183	▶735	207-4918	351	208-2819	567
204-8290	652	206-3256	754		353	208-2820	5
204-8295	728		816	207-4919	417		▶86
204-8298	653	206-3257	754		418	208-3514	▶565
204-8304	653	206-3291	754	207-5244	▶77	208-3515	▶567
204-8310	653		816		86	208-3516	▶663
204-8332	652	206-3292	754	207-5248	75	208-3517	▶569
204-8333	623		816	207-6081	970	208-3518	▶571
204-8334	652	206-3293	754	207-6088	970	208-4037	177
204-8339	623		816	207-6206	616		181
204-8340	623	206-3382	295	207-6230	623	208-4100	8
204-8342	624		▶296	207-6244	622		9
204-8345	623		302	207-6272	652		▶177
204-8346	636	206-3384	590	207-6278	▶662	208-4146	366
204-8347	636	206-3479	▶299		930	208-4148	366
204-8353	617		737	207-6290	617	208-4149	366
204-8355	617	206-4357	452	207-6403	728	208-4150	366
204-8475	622		▶641	207-6404	728	208-4151	366
204-8478	623		▶644	207-6418	623	208-4152	366
204-8479	623	206-4358	452	207-6463	636	208-4153	366
204-8480	623		▶634	207-6464	636	208-4154	366
204-8481	622	206-4359	▶309	207-6467	636	208-4156	376
204-8482	623		452	207-6475	636	208-4157	376

▶ **PRIMARY REFERENCE**

PART NUMBER INDEX

Part	Page
208-4158	366
208-4160	376
208-4360	177
	181
208-4449	376
208-4452	376
208-4514	1089
	1094
208-4515	1089
	1094
208-4537	563
208-4538	563
208-7776	737
	▶1020
209-3556	569
	663
209-3557	569
209-3967	289
209-4967	565
	567
	571
209-4968	565
	567
	571
209-5679	968
209-5680	968
209-5681	969
209-5682	969
209-5686	967
209-5687	967
209-5688	967
209-5875	707
209-5895	686
	▶695
209-5908	695
209-5937	711
	▶855
209-5939	855
209-5940	855
209-5941	855
209-5942	855
209-5943	855
209-5979	704
209-5980	704
209-5981	704
209-5982	▶444
	711
209-5983	711
209-5984	711
209-5985	711
209-5986	711
209-6003	855
209-6004	855
209-6005	855
209-6014	726
209-6024	483
209-6025	483
209-6026	483
209-6036	467
	▶473
209-6037	473
	▶483
209-6038	483
209-6043	483
209-6058	108
209-6063	689
209-8895	590
210-0602	663
210-0834	707
210-0835	707
210-2320	571
210-2322	565
210-7989	127
	▶131
210-7992	131
	133
210-7993	131
	133
210-7994	131
	133
210-7995	131
	133
	136
210-7996	121
	124
	▶133
210-7997	133
210-8004	459
210-8025	▶127
	128
210-8026	127
	▶135
210-8027	135
	▶136
210-8030	131
	136
210-8078	131
	133
	136
210-8081	459
	460
210-8103	453
	▶459
210-8104	459
210-8157	456
	▶460
210-9434	707
210-9435	707
210-9684	541
	543
211-2769	971
211-2770	971
211-2771	971
211-3025	170
211-3122	39
211-3123	39
211-5237	118
211-5593	231
	▶234
211-5594	▶235
211-5595	▶236
211-5596	▶237
211-7754	118
211-8344	590
211-9499	590
211-9500	590
212-2873	892
	894
	896
212-2874	892
	894
	896
212-2896	916
	920
212-2897	918
	922
212-3521	590
212-5170	673
212-5171	673
212-5172	673
212-5329	644
212-5431	612
	614
212-5452	653
212-5467	728
212-5473	653
212-5503	616
212-5511	616
212-5528	609
212-5530	609
212-5531	636
212-5532	637
212-5534	636
212-5535	636
212-5536	537
	539
	541
	543
	573
	576
212-5537	579
	581
212-5538	579
	581
212-5539	585
212-5540	585
212-5541	657
	658
	662
212-5542	659
212-5543	660
212-5544	661
212-5595	653
212-6138	▶589
	737
212-8525	461
212-8526	461
212-8527	461
212-8528	461
212-8529	461
212-8530	461
212-8531	461
212-9450	229
213-0677	69
	728
213-0772	254
	318
213-4216	▶737
213-4961	1089
	1094
213-4962	1089
	1094
213-9100	200
213-9242	855
213-9243	855
213-9244	855
213-9246	855
213-9247	855
213-9248	711
213-9250	711
214-7568	271
214-7915	211
	219
214-8011	376
	▶402
214-8014	367
214-8019	366
214-8020	177
	181
214-8021	177
	181
214-8031	409
214-8033	▶328
	▶330
	332
214-8034	328
	330
214-8035	328
214-8038	328
214-8310	376
214-8378	376
	▶403
214-8381	376
	▶404
214-8382	404
214-8383	376
	▶405
214-8386	383
	405
214-8387	376
	▶406
214-8388	406
214-8389	376
	▶407
214-8392	407
214-9384	209
	217
215-4870	816
215-4871	816
215-4890	590
	▶753
215-4905	▶441
	653
215-4906	441
	▶442
215-4907	441
	▶443
215-6948	641
	644
215-7902	300
	303
215-9859	▶467
	913
215-9864	481
	485
	491
	493

▶ **PRIMARY REFERENCE**

PART NUMBER INDEX

Part	Page
215-9963	▶468
	914
215-9964	468
	▶474
215-9965	474
	▶485
215-9966	485
215-9972	481
	485
	491
	493
215-9995	479
	483
216-0000	481
	485
	491
	493
216-0009	479
	483
216-0010	477
216-0011	481
	485
	491
	493
216-3205	312
	314
216-5582	28
	31
	36
216-6538	557
	559
216-6790	295
	▶300
217-0751	28
	31
	36
217-0752	28
	31
	36
217-1004	1037
217-2317	984
	1014
	▶1016
217-2318	984
217-2320	984
	1016
217-2817	345
217-2941	990
	1014
217-2970	209
	217
	▶257
217-5087	289
217-5090	▶289
	737
217-5449	149
	152
	155
	158
217-5450	461
217-5451	461
217-5459	149
	152
	155
	158
217-5703	163
218-1038	653
218-1039	653
218-1042	653
218-1223	609
218-1230	553
	555
218-7644	383
218-7647	383
218-7649	383
218-7650	383
218-7758	374
	▶408
218-7761	376
	▶409
218-7945	191
	▶193
219-1494	3
	4
	▶69
219-1495	69
219-1496	69
219-7477	43
219-8353	913
	▶920
219-8354	920
219-8359	914
	▶922
219-8360	922
220-0171	984
	▶990
220-1824	990
	1014
220-1827	987
220-2383	1089
220-2397	1082
220-2398	1086
220-2401	1084
220-2405	1089
220-2406	1082
220-2407	1086
220-2410	1084
220-2421	163
220-2422	▶163
220-2423	▶913
220-2438	▶914
220-4843	▶8
220-8536	374
220-8537	374
221-2683	189
221-2685	189
221-2687	326
221-2688	326
221-2689	326
221-2690	326
221-4967	652
221-7693	163
221-8770	234
	1058
221-8771	234
	▶1058
221-8774	236
221-8775	236
221-8776	237
	1059
221-8777	237
	▶1059
221-8859	590
	599
	622
222-3445	1
	▶1047
222-3562	1
	▶275
222-3563	▶224
	275
222-3564	275
	▶332
222-3847	1
	▶374
222-3848	1
	▶1049
222-4737	741
	759
	764
	768
	772
	778
	783
	788
	793
	800
	806
	814
	819
	821
	823
	826
	829
	835
	838
222-5138	▶1000
	1047
222-5140	▶1031
222-8210	104
222-8259	149
	152
	155
222-8263	149
222-8267	149
	152
	155
222-8275	149
	152
	155
	158
222-8395	▶1082
222-8396	▶1084
222-8397	▶1086
223-1790	729
223-2244	208
223-2862	1049
223-3095	▶169
	193
	195
223-6646	673
223-6656	374
223-6657	734
223-6661	673
223-6662	673
223-6663	673
223-6664	673
223-6666	673
223-6879	604
223-6882	603
223-7096	622
223-7263	▶28
	31
223-7629	713
223-7737	▶778
	826
223-7738	741
	▶783
	829
223-7745	741
	▶788
	826
	838
223-7746	▶793
	829
223-7750	534
	▶826
223-7751	736
	▶741
223-7752	735
	740
	▶829
223-9055	73
223-9250	▶39
	40
223-9818	1094
224-3983	28
224-5122	40
224-7717	1094
224-7830	1094
225-0313	1094
225-3305	1094
225-4256	1094
225-6287	758
	▶798
225-6289	798
225-6291	798
225-6292	798
225-6293	798
225-6294	798
226-2408	971
226-5561	28
226-6254	▶963
226-6255	963
	▶971
227-0259	637
227-0341	673
227-0428	652
227-0540	644
227-0620	▶526
	728
227-1204	26
227-3814	43
227-4239	31
	36
227-6077	358
227-6098	353
	▶357
227-6099	357

▶ **PRIMARY REFERENCE**

PART NUMBER INDEX

Part	Page	Part	Page	Part	Page	Part	Page
	▶358	233-6742	174	236-6886	350		947
227-6177	321		▶198	236-6887	347		953
227-6178	321	233-6969	▶800	237-1962	280	244-4150	884
227-6179	321		832		▶281		888
227-6180	321	233-6970	737	237-2164	737		890
227-6215	499		▶832		▶1081	244-4151	884
227-6221	499	233-8719	314	237-2191	▶294	244-4155	890
227-8090	312	233-8749	312		1053	244-4159	888
228-2780	1094	234-3749	933	237-2193	294	244-4160	951
228-5475	930		937	237-3586	▶1053	244-4163	947
	▶949		941	237-8526	169	244-4164	941
	▶951		945	237-8771	192	244-4258	477
228-7315	1094		947		▶195	244-6767	▶302
228-8129	▶930		951	237-8773	1		1047
228-9253	1094		953		▶361	244-8555	302
229-0887	1094	234-3956	347	237-8812	9		▶303
229-1021	729		350		▶181	245-2431	539
229-3365	▶2	234-3962	884	237-9872	738	245-9206	124
229-3366	▶1		886		739		128
	2		888		▶835	246-2641	192
229-3367	2	234-3966	890	238-1507	210		332
	▶534	234-3970	931		218		375
229-3368	2		933	238-2077	318	247-5159	235
	▶416		935	238-6483	▶738	247-5160	235
229-5272	547		937	238-6487	▶739	247-8978	111
	551		939	238-8212	▶806		▶690
	555		941		835	247-9081	543
	559		943		838	247-9308	543
	▶845		945	238-8213	737	248-5513	116
230-0307	545		947		▶838	248-6268	171
	547		949	239-2006	629		174
230-0308	549		951	239-4379	425	248-7179	414
	551		953		▶435		415
230-0309	553	234-3986	886	239-4380	435	249-1148	527
	555	234-3992	931	239-5838	174		▶915
230-0310	557	234-3995	935	239-6986	1094	249-1149	527
	559	234-4005	943	239-8193	645		▶528
230-2780	121	234-4008	949	241-5579	645	249-1150	527
230-2894	142	234-4017	939	241-6186	40		▶605
230-2895	142	234-4539	707	242-1510	1094		▶607
230-2925	460	234-5985	6	242-4066	430		▶608
230-2926	460		▶40		▶432	249-5631	6
230-2927	460	234-5986	4	242-4067	432		▶26
230-3392	1		▶72	242-4070	432	250-0466	24
	▶1089	234-6899	758	242-5914	2		26
231-1733	253		▶804		▶9	250-0729	510
231-1734	253	234-8937	53	242-6092	1094		▶525
231-1738	254	234-9503	713	242-6551	545	250-1668	953
231-1739	254	235-0438	641		547	250-1669	924
231-6864	497		644	242-6552	549		▶953
	502	235-1587	107		551	250-1670	▶924
231-6969	497	235-3469	4	242-6882	535	250-6094	1080
	502		▶6	242-6883	535	250-6967	525
231-9920	243	235-4685	▶4	242-8160	▶422	250-8054	1079
232-0253	75		7	242-9537	18	251-0686	528
232-4113	753	235-6472	4	243-0943	▶30	251-0687	528
233-1292	152		▶115		31	251-1105	1080
	155	235-8025	4	243-1159	18	251-8649	216
	158		▶17	243-2737	722	251-9347	330
233-1312	152	236-0563	1081	243-5652	1	251-9349	330
	155	236-3257	526		▶1037	252-4303	▶527
	158	236-3258	169	243-5653	303	252-5441	▶594
233-1314	152		526	243-6741	▶31	252-9868	528
	155	236-3259	169		39	253-1752	21
	158		526	244-4149	941	253-2111	253

▶ **PRIMARY REFERENCE**

PART NUMBER INDEX

Part	Page
253-2304	416
	▶418
253-2305	▶439
253-2451	1094
253-2454	1094
253-4711	1
	▶1094
254-1393	915
254-1396	915
254-1397	915
254-1400	528
254-1403	528
254-1406	528
254-1410	528
254-1413	528
254-2999	423
254-3000	423
254-3085	528
254-6081	79
255-2196	▶573
	▶576
255-3991	605
	607
	608
255-4127	573
	576
255-4129	573
	576
255-4130	573
	576
255-4131	573
	576
255-4132	573
256-8690	975
256-8691	975
257-7284	758
	▶811
258-6349	605
	607
	608
258-7784	576
258-7922	605
258-8721	75
	79
	80
	83
258-9060	605
	607
	608
259-0816	690
	▶721
259-0817	721
259-0871	476
	▶493
259-0872	493
259-0878	700
	▶713
259-0882	718
259-0884	722
261-2448	777
261-2450	777
261-2452	777
261-2459	777
261-3429	28
	36
261-3430	28
	36
262-1684	155
	158
262-6073	11
262-7932	1029
263-4920	28
264-4501	96
266-1035	673
266-1036	673
266-6038	26
266-7894	713
	▶722
266-7895	722
266-7910	722
267-6785	499
267-6787	504
274-2484	▶535
274-4491	79
	80
	83
276-5317	75
	79
	80
	83
277-3076	71
278-1365	79
	82
278-1585	332
278-1931	65
	▶79
281-2725	198
	▶199
281-3516	460
281-3517	460
283-6093	493
284-6039	71
287-0140	158
287-0141	158
287-0151	158
288-4883	28
288-4884	28
292-9782	99
292-9783	99
293-7098	413
293-7103	413
295-9690	695
295-9692	707
297-9154	▶415
297-9158	415
301-5241	847
301-5242	847
301-5243	847
301-9823	386
302-9275	697
303-9933	195
303-9937	195
306-3998	281
307-8322	79
	81
310-9508	104
314-3063	28
314-3064	28
314-3065	28
314-3066	28
314-3067	28
314-3068	28
314-3069	28
314-4018	1001
316-6864	188
317-4756	609
317-4757	609
317-4758	609
317-4759	609
317-4760	609
317-4761	609
317-4762	609
317-4763	609
317-4764	609
317-4765	609
317-4766	609
317-4850	581
317-4851	581
317-4852	581
317-4853	581
317-4854	581
317-4855	581
317-4856	581
317-8766	21
318-2082	282
319-4277	232
319-4278	232
319-7401	21
	▶84
320-2677	432
320-2796	▶80
	81
320-2797	80
321-2073	933
321-2074	937
321-2075	945
322-8719	477
328-4237	66
	▶81
328-4238	81
	▶82
328-4239	81
	▶83
328-4240	83
328-5573	71
332-7308	12
338-6102	595
338-6103	597
338-6106	595
338-6107	597
338-6111	604
338-6113	666
338-6174	603
338-6175	604

3

▶ PRIMARY REFERENCE



© 2009 CATERPILLAR
ALL RIGHTS
RESERVED

CAT, CATERPILLAR, THEIR RESPECTIVE LOGOS, “CATERPILLAR YELLOW” AND THE POWER EDGE TRADE DRESS, AS WELL AS CORPORATE AND PRODUCT IDENTITY USED HEREIN, ARE TRADEMARKS OF CATERPILLAR AND MAY NOT BE USED WITHOUT PERMISSION.

PRINTED IN
U.S.A.