CATERPILLAR®

SEBP5236
August 2010

RUTHZIL TRATOR COMERCIAL DE PEÇAS LTDA 11 97083-6812 ROLANDO CITRANGULO

Parts Manual

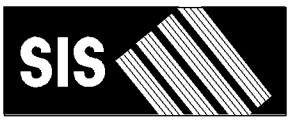

See "General Information" for New Parts Manual Features.

390D L Excavator

WAP1-Up (Machine)
RHX7868-Up (Engine)

Powered By C18 Engine

Product and Dealer Information

Note: For product identification plate locations, see the section “Product Identification Information” in the Operation and Maintenance Manual.

Delivery Date: _____

Product Information

Model: _____

Product Identification Number: _____

Engine Serial Number: _____

Transmission Serial Number: _____

Generator Serial Number: _____

Attachment Serial Numbers: _____

Attachment Information: _____

Customer Equipment Number: _____

Dealer Equipment Number: _____

Dealer Information

Name: _____ Branch: _____

Address: _____

_____

_____

	Dealer Contact	Phone Number	Hours
Sales:	_____	_____	_____
Parts:	_____	_____	_____
Service:	_____	_____	_____

MEMORANDA

TABLE OF CONTENTS

Name	Page
GENERAL INFORMATION	A6
REPAIR ALTERNATIVES	A9
SUPPLEMENTAL COOLANT ADDITIVES	A10
MAINTENANCE PARTS	A11
INDEX	A14
MACHINE ARRANGEMENT	1
CHASSIS AR	1
DISTRIBUTION AR	1
GENERAL AR	2
OPTION AR-CAB	2
OPTION AR-COLD WEATHER	3
OPTION AR-COUPLER	4
OPTION AR-HYDRAULIC	5
SPECIAL AR	6
ENGINE ARRANGEMENT	8
ENGINE AR	8
ENGINE AR-COMPLETE	9
ENGINE AR-CORE	11
INSTALLATION AR-ENGINE	12
BASIC ENGINE	13
ADAPTER GP-PUMP DRIVE	13
BASE GP-VALVE COVER & INJ HARN	14
CAMSHAFT GP	15
COVER GP-CYLINDER BLOCK	16
COVER GP-FRONT HOUSING	18
COVER GP-VALVE MECHANISM	20
CRANKSHAFT GP	23
CYLINDER BLOCK AS	24
CYLINDER BLOCK GP	26
CYLINDER HEAD AS	28
CYLINDER HEAD GP	30
DAMPER & PULLEY GP	34
DRIVE GP-FAN	35
FASTENER GP-FRONT HOUSING	36
FASTENER GP-VALVE MECHANISM	38
FLYWHEEL GP	39
GEAR GP-CAMSHAFT	40
GEAR GP-FRONT	41
GEAR GP-REAR	44
HOUSING GP-FLYWHEEL	46
HOUSING GP-FRONT	48
LIFTING GP-ENGINE	51
MECHANISM GP-FUEL PUMP & VALVE	53
MOUNTING GP-ALTERNATOR & COMPR	54
MOUNTING GP-ENGINE	55
PAN GP-OIL	57
PANEL GP-SOUND SUPPRESSION	59
PISTON & ROD GP	61
PLATE AS-FRONT HOUSING	62
PLUG GP-CYLINDER BLOCK	63
PLUG GP-CYLINDER HEAD	65
PULLEY GP	66
ROCKER ARM GP	67
SEAL GP-CRANKSHAFT	70
SUPPORT GP-ENGINE	71
LUBRICATION SYSTEM	73
BASE GP-OIL FILTER	73
BREATHER GP	75
FASTENER GP-OIL PUMP MOUNTING	76
FILLER GP-ENGINE OIL	77
FILTER GP-ENGINE OIL	79
FUMES DISPOSAL GP	81
GAUGE AS-OIL LEVEL (DIPSTICK)	82
GUIDE GP-OIL LEVEL GAUGE	83
LINES GP-ENGINE OIL	84
LINES GP-ENGINE OIL DRAIN	86
LINES GP-TURBOCHARGER OIL	87
MOUNTING GP-OIL LEVEL GAUGE	88
OIL CHANGE GP-HIGH SPEED	89
PUMP GP-ENGINE OIL	91
VALVE GP-FLUID SAMPLING	92
COOLING SYSTEM	94
FAN GP-SUCTION	94
LINES GP-TURBOCHARGER WATER	96
LINES GP-WATER	98
PUMP GP-WATER	102
RADIATOR & AFTERCOOLER GP	104
RADIATOR GP	107
SCREEN GP-RADIATOR	111
AIR INLET AND EXHAUST SYSTEM	113
AIR CLEANER GP	113
EXTENSION GP-EXHAUST	115
LINES GP-AIR	116
LINES GP-MUFFLER DRAIN	121
MANIFOLD GP-EXHAUST	122
MUFFLER GP	123
TURBOCHARGER GP	126
FUEL SYSTEM	128
ADAPTER GP-FAST FILL FUEL	128
COOLER GP-FUEL	130
FASTENER GP-FUEL LINES	131
FILTER & LINES GP-FUEL	132
FILTER GP-FUEL	136
FILTER GP-WATER SEP & FUEL	138
LINES GP-FUEL	139
MANIFOLD GP-FUEL	142
PUMP & MOTOR GP-REFUELING	143

TABLE OF CONTENTS

Name	Page
PUMP AR-FUEL TRANSFER	144
PUMP GP-FUEL INJECTION	145
PUMP GP-FUEL PRIMING	146
PUMP GP-FUEL TRANSFER	147
REGULATOR GP-FUEL PRESSURE	150
TANK & MTG GP-FUEL	151
TANK GP-FUEL	152
VALVE GP-CHECK	154
VALVE GP-FUEL BYPASS	155
ELECTRICAL AND STARTING SYSTEM	156
ALARM GP	156
ALARM GP-TRAVEL	157
ALTERNATOR GP-CHARGING	158
BATTERY & WIRING GP	161
BLOCK GP-JUNCTION	177
CAMERA & MOUNTING GP	179
CAMERA AR	181
CAMERA GP	182
CONNECTION GP-ELECTRICAL	183
CONTROL & MTG GP-COMMUNICATION	184
CONTROL & MTG GP-ENGINE ELEK	187
CONTROL & MTG GP-MACHINE	188
ELECTRONICS GP-COMMUNICATION	191
ELECTRONICS GP-MACHINE	191
ELECTRONICS GP-MONITOR	192
FASTENER GP-WIRING HARNESS	193
HARNESS AS-WIRING	194
INSTALLATION AR-COMMUNICATION	194
LAMP GP-FLOOD	195
LIGHTING GP-CHASSIS	201
LIGHTING GP-FLOOD	202
MOUNTING GP-CAMERA	219
MOUNTING GP-SENSOR	222
PANEL GP-CIRCUIT BREAKER	224
PANEL GP-SWITCH	230
PLUG GP-CONNECTOR	232
SENSOR & MTG GP-POSITION	233
SENSOR GP-ENGINE	235
SENSOR GP-FUEL LEVEL	237
SENSOR GP-LIQUID LEVEL	238
SENSOR GP-MACHINE LEVEL	239
SENSOR GP-POSITION	241
SENSOR GP-PRESSURE	243
SENSOR GP-SPEED	246
SENSOR GP-TEMPERATURE	251
SOLENOID GP	253
STARTING AID GP-ETHER	254
STARTING AR-COLD WEATHER	256
STARTING MOTOR GP-ELECTRIC	257
SWITCH GP-DISCONNECT	261
SWITCH GP-MAGNETIC	262
SWITCH GP-POSITION	263
SWITCH GP-PRESSURE	264
SWITCH GP-PUSH BUTTON	265
SWITCH GP-ROTARY	267
SWITCH GP-START	268
SWITCH GP-TOGGLE	269
VALVE GP-ETHER STARTING	271
WIRING GP-AUX START RECEPTACLE	272
WIRING GP-AUXILIARY CONTROL	274
WIRING GP-CAB	275
WIRING GP-CAMERA	282
WIRING GP-CHASSIS	286
WIRING GP-COMMUNICATION	295
WIRING GP-CONSOLE	297
WIRING GP-CONVERTER	303
WIRING GP-COUNTERWEIGHT	307
WIRING GP-ELECTRONIC CONTROL	309
WIRING GP-FAN	312
WIRING GP-GRADE CONTROL	313
WIRING GP-MONITOR	322
WIRING GP-PLATFORM	323
WIRING GP-QUICK COUPLER	325
WIRING GP-REFUELING PUMP	327
POWER TRAIN	329
DRIVE GP-FINAL	329
POWER TRAIN AR	334
SPROCKET GP	335
FRAME AND BODY	336
BOX & MOUNTING GP	336
BOX GP-BATTERY	339
BOX GP-STORAGE	340
CHAIN GP-COUNTERWEIGHT	341
COUNTERWEIGHT & MOUNTING GP	343
COUNTERWEIGHT AR	345
COUNTERWEIGHT GP	346
COVER AS-SOUND SUPPRESSION	347
COVER GP-ACCESS	348
COVER GP-CONTROL VALVE	350
COVER GP-SOUND SUPPRESSION	353
DOOR AS-ACCESS	354
DOOR GP-ACCESS	356
FRAME GP-UPPER	359
GEAR & BEARING GP-SWING	364
GUARD GP-BOTTOM	370
GUARD GP-SWIVEL	372
HANDRAIL GP	373
HOOD & GUARD GP	376
HOOD AS	387
HOOD GP	388
HOOD GP-ENGINE	393
PANEL GP-SOUND SUPPRESSION	394
SHEET AS-SOUND SUPPRESSION	406
STORAGE GP-VANDALISM GUARD	425

TABLE OF CONTENTS

Name	Page
SUPPORT AS-SOUND SUPPRESSION	426
SUPPORT AS-ENCLOSURE	427
SUPPORT GP-HOOD	430
WALKWAY GP	436
UNDERCARRIAGE	438
ADJUSTMENT GP-HYDRAULIC TRACK	438
FRAME AR-UNDERCARRIAGE	439
FRAME GP-UNDERCARRIAGE	440
GUARD GP-TRACK GUIDE	442
GUARD GP-TRAVEL MOTOR	448
IDLER GP-FRONT	449
LINK AS-TRACK	453
ROLLER AR-TRACK & CARRIER	454
ROLLER GP-TRACK CARRIER	455
ROLLER GP-TRACK-SINGLE FLANGE	456
SPACER GP-UNDERCARRIAGE	457
SPRING GP-RECOIL	458
TRACK GP	459
HYDRAULIC SYSTEM	461
ACCUMULATOR GP	461
ACCUMULATOR GP-HYDRAULIC	462
ACTUATOR GP	466
ACTUATOR GP-PUMP	467
BASE GP-OIL FILTER	469
CONTROL AR-AUXILIARY	471
CONTROL AR-COUPLER	473
CONTROL AR-FAN	473
COOLER & MTG GP-HYDRAULIC OIL	474
COOLER GP-HYDRAULIC OIL	477
COUPLING GP-FLEXIBLE	478
COUPLING GP-PUMP	479
COVER GP-PUMP	480
CYLINDER & LINES GP-BOOM	481
CYLINDER & LINES GP-BUCKET	481
CYLINDER & LINES GP-STICK	482
CYLINDER & SEAL GP-BOOM	483
CYLINDER & SEAL GP-BUCKET	484
CYLINDER & SEAL GP-HYDRAULIC	487
CYLINDER GP-BOOM	489
CYLINDER GP-BUCKET	493
CYLINDER GP-COUNTERWEIGHT	499
CYLINDER GP-COUPLER	503
CYLINDER GP-STICK	504
DRIVE GP-PUMP	506
DRIVE GP-SWING	507
FASTENER GP-SWING & FINAL DR	513
FILTER & LINES GP-HYDRAULIC	516
FILTER AR	518
FILTER GP-OIL	519
GAUGE GP-SIGHT	528
HEAD GP-PUMP	529
HYDRAULIC AR	531
LINES GP-AUXILIARY HYDRAULIC	532
LINES GP-BOOM	543
LINES GP-BOOM CYLINDER	551
LINES GP-BUCKET CYLINDER	556
LINES GP-CONNECTING	559
LINES GP-COUPLER	560
LINES GP-FRONT	570
LINES GP-HYDRAULIC FAN	588
LINES GP-MOTOR	591
LINES GP-PILOT	595
LINES GP-PUMP	609
LINES GP-REAR ATTACHMENT	613
LINES GP-RETURN & FILTER	618
LINES GP-STICK	623
LINES GP-STICK CYLINDER	627
LINES GP-SWING MOTOR	630
LINES GP-SWIVEL & TRAVEL MOTOR	632
MANIFOLD & VALVE GP	636
MOTOR & MTG GP-HYDRAULIC FAN	642
MOTOR & MTG GP-SWING	643
MOTOR & MTG GP-TRAVEL	645
MOTOR GP-PISTON	646
MOTOR GP-SWING	653
MOTOR GP-TRAVEL	655
MOUNTING GP-COUNTERWEIGHT CYL	657
MOUNTING GP-MAIN CONTROL VALVE	659
PLUG GP-CONTROL VALVE	661
PUMP & MTG GP-HYDRAULIC	662
PUMP & MTG GP-MAIN HYDRAULIC	663
PUMP GP-GEAR	665
PUMP GP-PISTON	667
ROTATING GP-MOTOR	675
ROTATING GP-PUMP	676
SCREEN GP-HYDRAULIC	680
SWIVEL GP	681
TANK & FILTER GP-HYDRAULIC	682
TANK & MTG GP-HYDRAULIC	686
VALVE AR-BOOM LOWERING CONTROL	687
VALVE AR-LOAD CONTROL	687
VALVE GP-CHECK	688
VALVE GP-CHECK & RELIEF	697
VALVE GP-CONTROL	699
VALVE GP-COUNTERWEIGHT CONTROL	726
VALVE GP-FLOW CONTROL	727
VALVE GP-LOAD CONTROL	728
VALVE GP-MAIN CONTROL	736
VALVE GP-MANIFOLD & REDUCING	742
VALVE GP-MANUAL	744
VALVE GP-PILOT	747
VALVE GP-PRESSURE REDUCING	748

TABLE OF CONTENTS

Name	Page
VALVE GP-PUMP CONTROL	749
VALVE GP-COMPENSATING	756
VALVE GP-RELIEF	757
VALVE GP-SHUTTLE	767
VALVE GP-SOLENOID	771
VALVE GP-SWING CUSHION	778
VALVE GP-TRAVEL COUNTERBALANCE	779
IMPLEMENTS	780
BOOM AR	780
BOOM AR-MASS	780
BOOM AR-REACH	781
BOOM GP	782
GUARD GP-CYLINDER	791
GUARD GP-SENSOR	793
LINES GP-GREASE	794
LINKAGE AR-BUCKET	811
LINKAGE GP-BUCKET	817
STICK AR-HOE	823
STICK GP-HOE	826
WORK TOOLS	840
ADJUSTER GP-BUCKET	840
BUCKET & ADJUSTER GP	842
BUCKET AS-EXTREME SERVICE ROCK	855
BUCKET AS-GENERAL PURPOSE	857
BUCKET AS-HEAVY DUTY	870
BUCKET AS-SEVERE SERVICE ROCK	873
BUCKET GP-SEVERE SERVICE ROCK	883
COUPLER AR-QUICK	885
HOOK GP-LIFTING	890
LOCK GP-QUICK COUPLER	891
PROTECTOR GP-BUCKET	892
PROTECTOR GP-SIDE BAR	893
SIDECUTTER GP	896
TIP AS-ABRASION	898
TIP AS-HEAVY PENETRATION	899
TIP AS-PENETRATION PLUS	901
TIP GP-BUCKET	902
TIP GP-DOUBLE SPIKE	903
TIP GP-EXTRA-DUTY	905
TIP GP-GENERAL PURPOSE	906
TIP GP-PENETRATION	908
TIP GP-PENETRATION PLUS	910
TIP GP-SPIKE	912
TIP GP-WIDE	914
YOKE GP-LIFTING	916
OPERATOR STATION	917
AIR CONDITIONER & MOUNTING GP	917
AIR CONDITIONER AR	921
AIR CONDITIONER GP	922
ARMREST GP	926
BRACKET GP-MOUNTING	928
CAB AR	929
CAB GP	933
COIL GP-EVAPORATOR	937
COMPRESSOR & MTG GP-REFRIG	941
CONDENSER & MTG GP-REFRIGERANT	942
CONDENSER GP-REFRIGERANT	943
CONSOLE GP-OPERATOR	944
CONTROL & MTG GP-JOYSTICK	950
CONTROL & MTG GP-PEDAL	954
CONTROL GP-HANDLE	956
CONTROL GP-HEAT & AIR COND	963
CONTROL GP-HYDRAULIC PEDAL	964
CONTROL GP-PEDAL	965
CONTROL GP-TRAVEL	967
COVER GP-CAB	969
COVER GP-STORAGE	973
DOOR & MTG GP-CAB	974
DOOR GP-CAB	975
DUCT GP-CAB AIR	981
FLOOR MAT GP	983
GUARD AR-OVERHEAD	984
GUARD AR-VANDALISM	985
GUARD GP-FRONT WINDOW	985
GUARD GP-OVERHEAD	986
GUARD GP-VANDALISM	987
GUARD GP-WINDOW	990
HORN GP-ELECTRIC	994
HOUSING GP-AIR CONDITIONER	995
INSTALLATION AR-RADIO	996
INSTALLATION GP-RADIO	997
KIT-SEAT SUSPENSION	999
LEVER GP-CAB DOOR	1001
LINES GP-AIR CONDITIONER	1002
LITERATURE GP	1005
MIRROR GP-REAR VIEW	1006
MONITOR & MTG GP-OPERATOR	1008
MONITOR GP-OPERATOR	1009
MOUNTING GP-ANTENNA	1011
MOUNTING GP-CAB	1016
MOUNTING GP-DISPLAY	1017
MOUNTING GP-PLATFORM	1019
OPERATOR AR	1021
PARTS AR-CAB	1022
PEDAL AR-THIRD	1024
PLATFORM GP	1025
PLATFORM GP-OPERATOR	1028
RADIO GP	1029
RADIO GP-COMMUNICATION	1030
SCREEN GP-SUN	1031
SEAT & MOUNTING GP	1032
SEAT BELT GP	1035
SEAT GP	1036

TABLE OF CONTENTS

Name	Page	Name	Page
SEAT GP-SUSPENSION	1038		
SUPPORT GP-SEAT	1041		
SUSPENSION GP-SEAT	1042		
TRIM GP-CAB	1044		
WASHER GP-WINDOW	1047		
WINDOW GP-CAB	1049		
WINDOW GP-DOOR	1060		
WIPER & WINDOW AR-CAB	1062		
WIPER GP-WINDOW	1064		
SERVICE EQUIPMENT AND SUPPLIES	1069		
FILM GP	1069		
PLATE & FILM GP	1079		
PART NUMBER INDEX	B1		

GENERAL INFORMATION

1. MACHINE IDENTIFICATION

Caterpillar machines are identified by Product Identification Numbers (PIN). Some components included in a machine may be identified by Serial Numbers (S/N). Typical components that will be serialized include engines, transmissions, bulldozers, and rippers. The machine and engine are further identified by arrangement numbers and in some cases modification numbers. These numbers are shown on the product identification plate(s) and on the master plate in the operator's compartment.

Caterpillar dealers need all of these numbers to determine accurate parts identification.

SIS *New Feature*

Effective First Quarter 2001 the Caterpillar Product Identification Number (PIN) changed from 8 to 17 characters. In an effort to provide uniform equipment identification, Caterpillar and other construction equipment manufacturers are moving to comply with the latest version of the product identification numbering standard. Non-road machine PINs are defined by ISO 10261. The new PIN format will apply to all Caterpillar machines and generator sets. The PIN plates and frame marking will display the 17 character PIN. The new format will look like the following:

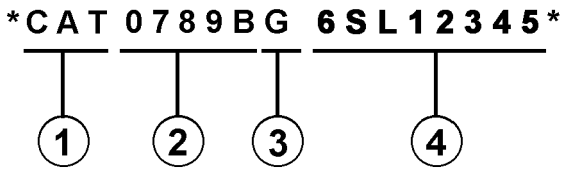

Where:

1. Caterpillar's World Manufacturing Code (characters 1-3)

2. Machine Descriptor (characters 4-8)

3. Check Character (character 9)

4. Machine Indicator Section (MIS) or Product Sequence Number (characters 10-17). These were previously referred to as the Serial Number.

Machines and generator sets produced before First Quarter 2001 will maintain their 8 character PIN format.

Components such as engines, transmissions, axles, etc. and work tools will continue to use an 8 character Serial Number (S/N).

2. ORDERING PARTS

⚠ WARNING

When replacement parts are required for this product Caterpillar recommends using Caterpillar replacement parts or parts with equivalent specifications including, but not limited to, physical dimensions, type, strength and material.

Failure to heed this warning can lead to premature failures, product damage, personal injury or death.

Quality Caterpillar replacement parts are available from Caterpillar dealers throughout the world. Their parts inventories are up to date and include all parts normally required to protect your investment in Caterpillar machines. Dealers may offer repair kits or remanufactured parts to allow selection of the most effective repair alternative for a particular situation. When ordering parts, your order should specify the quantity, part number, part name, and the serial number/product identification number of the machine for which the parts are needed.

3. PARTS MANUAL ORGANIZATION

Product information in this manual is presented as "information elements" that represent all of the components for the specific model. Engine Arrangement and Seat Group are examples of information elements. The information elements are organized alphabetically by part name and secondarily by part number within each major section of the manual.

4. TABLE OF CONTENTS

A table of contents (TOC) is found at the beginning of the manual. The TOC lists each section of the manual with a complete list of all information elements organized as they appear in the manual. Page numbers are provided for quick reference to detailed parts identification illustrations and serviceable consist lists.

5. MAINTENANCE PARTS INDEX

The Maintenance Parts Index, located near the beginning of the manual, references most frequently used maintenance part numbers, providing description, quantity, usage and page number. This information is organized alphabetically by part description.

GENERAL INFORMATION

6. INDEX

The index located near the front of the manual is an alphabetical listing of all information elements included in the manual. Page numbers are provided for quick reference to detailed parts identification illustrations and serviceable consist lists.

7. PART NUMBER INDEX

A numerical index listing all part numbers and the corresponding page number(s) appears at the back of the manual.

8. CAPTIONS

Captions located at the beginning of each information element identify the part number and part name along with additional descriptive information. PIN and S/N information found in each caption should be used to select correct information for a specific machine. Field replacement options, identification of optional attachment components, and where used ("part of") information is also provided.

The first line of a caption is shown in larger type font to indicate the beginning of an information element. Captions for additional pages that may be required to illustrate an information element will be shown in standard type font and will include the term *(contd.)* .

9. NON-SERVICED PARTS

In some instances it is necessary to display non-serviced parts that are a link to a lower level serviceable consist lists. These non-serviced part numbers are shown in *italic* type indicating that they are not available.

10. PARTS LIST REFERENCE NUMBERS

Numbers shown in the Ref No column correspond to numbers used in the associated graphic(s). An alphabetic suffix may be added to a reference number to identify lower level consist items. Numbers shown in the Graphic Ref column refer to the graphic number identifier displayed in the lower left corner of each illustration. The Graphic Ref number may be used in combination with the item Ref No to determine the correct part number. There may be intentional omission of a Ref No in a consist list as information is updated to reflect the latest serviceable part numbers.

11. INDENTED PART NAMES

When a part name is indented in a parts list, it is part of (included in) the group or assembly under which it is indented.

12. ILLUSTRATION REFERENCE LETTERS

When necessary, illustrations contain reference letters (A, B, C etc.) that are intended to track lines and harnesses from one point to another. They are also used to show where to reconnect illustrations that have been separated.

13. ABBREVIATIONS AND SYMBOLS

O.D. – Outside Diameter
I.D. – Inside Diameter
A – Not Part Of This Group
B – Use As Required
C – Change From Previous Type
D – Order By The Meter
E – Order By The Centimeter
F – Not Shown
G – Order By The Inch
I – Refer To Hydraulic Information System
M – Metric Part
R – Remfg Part May Be Available
Y – Separate Illustration
Z – Not Serviced Separately

SIS *New Feature*

14. DESCRIPTION OF TYPE CHANGES

Type - A type is defined as any configuration change that requires an additional Information Element for an Arrangement, Group, or Assembly. If serial number breaks for types are not available, a type # (Type 1, Type 2, etc.) will be displayed in the caption. These "type" changes are identified with a "C" note (change from previous type) in the Parts List. Only the "types" that apply to this Parts Manual will be included. Additional types may exist causing "C" notes to appear on an Information Element when no other types are shown.

15.<END>

This symbol indicates the end of an information element.

NOTE:

Continuing improvement and advancement of product design may cause changes to your machine which may not be included in this publication. Whenever a question arises regarding your Caterpillar product or this publication, please consult your Caterpillar dealer for the latest available information.

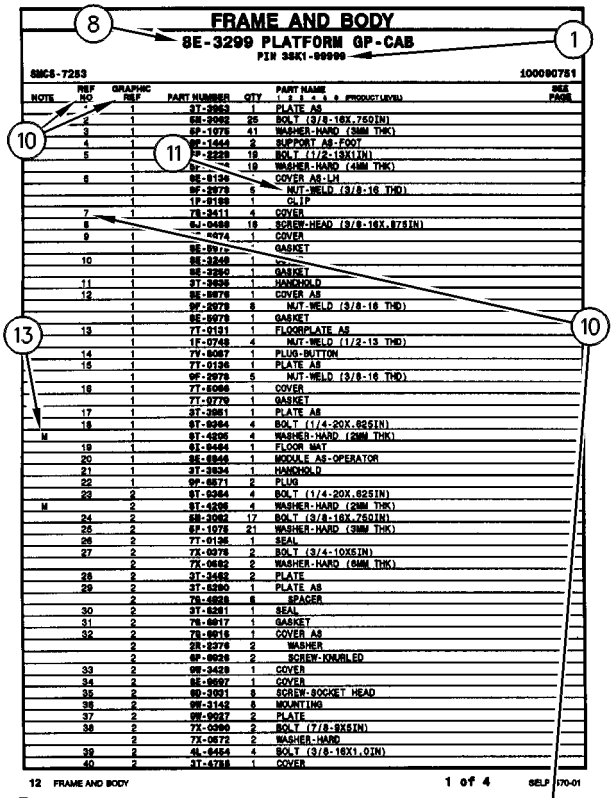

FRAME AND BODY

8E-3299 PLATFORM GP-CAB

PIN 3SK1-99999

SMCS-7283 100090751

NOTE	REF NO	GRAPHIC REF	PART NUMBER	QTY	PART NAME (1 2 3 4 5 6 PRODUCT LEVEL)	SEE PAGE
		1	3T-3863	1	PLATE AS	
	2	1	6B-3062	25	BOLT (3/8-16X.750IN)	
	3	1	6P-1075	41	WASHER-HARD (3MM THK)	
	4	1	9F-1444	2	SUPPORT AS-FOOT	
	5	1	7B-2229	19	BOLT (1/2-13X1IN)	
		1	6V-[illegible]	19	WASHER-HARD (4MM THK)	
	6	1	8E-8136		COVER AS-LH	
		1	9F-2979	6	NUT-WELD (3/8-16 THD)	
		1	1P-8169	1	CLIP	
	7	1	7B-2611	4	COVER	
	8	1	6J-0489	19	SCREW-HEAD (3/8-16X.875IN)	
	9	1	[illegible]474	1	COVER	
		1	8E-89[illegible]		GASKET	
	10	1	8E-3249	1	[illegible]	
		1	8E-3250	1	GASKET	
	11	1	3T-3835	1	HANDHOLD	
	12	1	8E-8078	1	COVER AS	
		1	9F-2979	6	NUT-WELD (3/8-16 THD)	
		1	8E-8079	1	GASKET	
	13	1	7T-0131	1	FLOORPLATE AS	
		1	1F-0749	4	NUT-WELD (1/2-13 THD)	
	14	1	7Y-8087	1	PLUG-BUTTON	
	15	1	7T-0136	1	PLATE AS	
		1	9F-2978	5	NUT-WELD (3/8-16 THD)	
	16	1	7T-8088	1	COVER	
		1	7T-0779	1	GASKET	
	17	1	3T-3861	1	PLATE AS	
	18	1	6T-8994	4	BOLT (1/4-20X.625IN)	
M		1	6T-4295	4	WASHER-HARD (2MM THK)	
	19	1	6I-0484	1	FLOOR MAT	
	20	1	8E-8848	1	MODULE AS-OPERATOR	
	21	1	3T-3834	1	HANDHOLD	
	22	1	9F-8871	2	PLUG	
	23	2	6T-0994	4	BOLT (1/4-20X.625IN)	
M		2	6T-4295	4	WASHER-HARD (2MM THK)	
	24	2	6B-3062	17	BOLT (3/8-16X.750IN)	
	25	2	6P-1075	21	WASHER-HARD (3MM THK)	
	26	2	7T-0135	1	SEAL	
	27	2	7X-0378	2	BOLT (3/4-10X5IN)	
		2	7X-0682	2	WASHER-HARD (6MM THK)	
	28	2	3T-3482	2	PLATE	
	29	2	3T-8280	1	PLATE AS	
		2	7S-4828	6	SPACER	
	30	2	3T-8281	1	SEAL	
	31	2	7S-8017	1	GASKET	
	32	2	7S-8018	1	COVER AS	
		2	2R-2378	2	WASHER	
		2	6P-8928	2	SCREW-KNURLED	
	33	2	9S-3429	1	COVER	
	34	2	8E-8007	1	COVER	
	35	2	6D-3031	8	SCREW-SOCKET HEAD	
	36	2	9F-3142	8	MOUNTING	
	37	2	9W-9937	2	PLATE	
	38	2	7X-0390	2	BOLT (7/8-9X5IN)	
		2	7X-0672	2	WASHER-HARD	
	39	2	4L-8454	4	BOLT (3/8-16X1.0IN)	
	40	2	3T-8788	1	COVER	

12 FRAME AND BODY 1 of 4 SELP4570-01

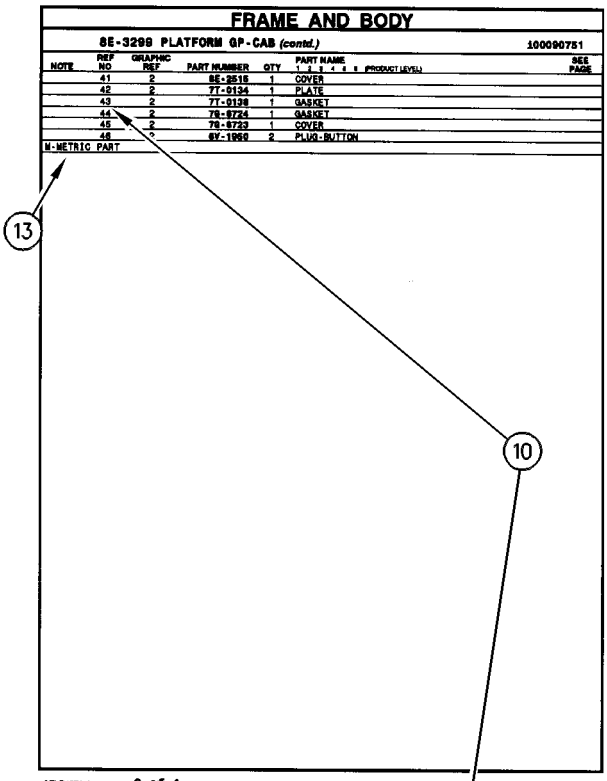

FRAME AND BODY

8E-3299 PLATFORM GP-CAB (contd.) 100090751

NOTE	REF NO	GRAPHIC REF	PART NUMBER	QTY	PART NAME (1 2 3 4 5 6 PRODUCT LEVEL)	SEE PAGE
	41	2	8E-8516	1	COVER	
	42	2	7T-0134	1	PLATE	
	43	2	7T-0138	1	GASKET	
	44	2	7S-8724	1	GASKET	
	45	2	7S-8723	1	COVER	
	46	2	6V-1969	2	PLUG-BUTTON	

M-METRIC PART

SELP4570-01 2 of 4 FRAME AND BODY 13

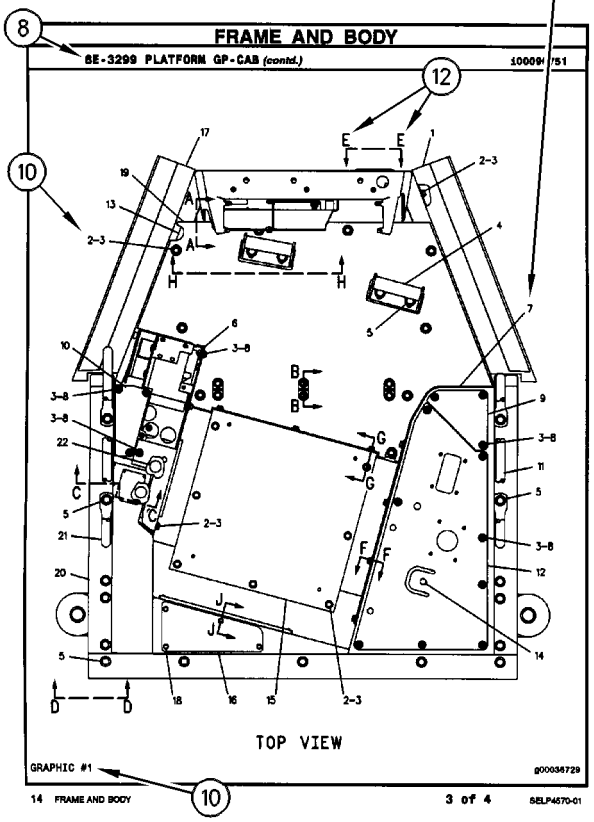

FRAME AND BODY

8E-3299 PLATFORM GP-CAB (contd.) 100090751

14 FRAME AND BODY 3 of 4 SELP4570-01

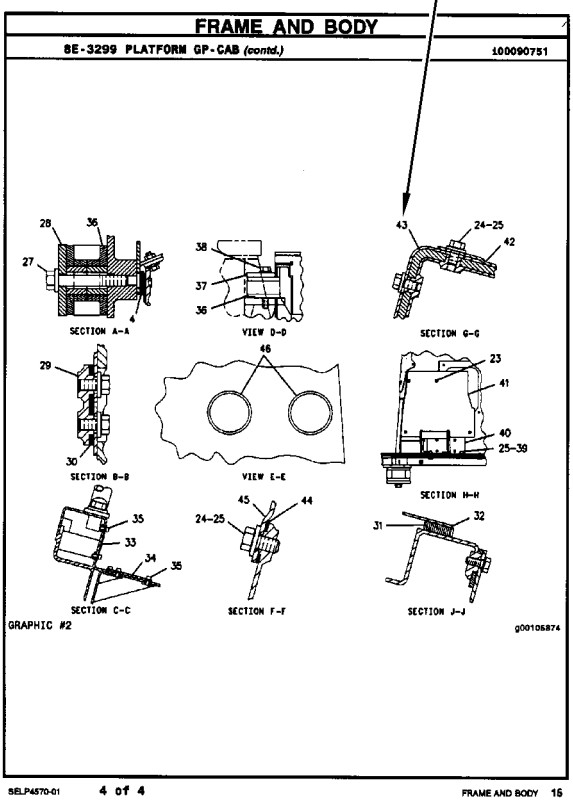

FRAME AND BODY

8E-3299 PLATFORM GP-CAB (contd.) 100090751

SELP4570-01 4 of 4 FRAME AND BODY 15

REPAIR ALTERNATIVES

REMANUFACTURED COMPONENTS

As an option when making repairs consider Caterpillar Remanufactured Components. Components that are available through the Caterpillar Remanufactured Program are identified three ways in the parts book:

- with the letter R in the note field of the parts list
- with an R* at the beginning of the first line of the caption
- with an *R at the end of the first line of the caption

Typical components included in the Remanufacturing Program include:

ALTERNATORS
CONNECTING RODS
CRANKSHAFTS - UNDERSIZE
CRANKSHAFTS - UPGRADE TO NEW
CYLINDER HEADS
ELECTRONIC CONTROL MODULES (ECM)
ELECTRONIC SENSORS
FUEL INJECTORS
FUEL NOZZLES
FUEL PUMPS
GOVERNORS
OIL PUMPS
PISTONS
SHORT BLOCKS
STARTERS
TURBOCHARGERS - COMPLETE
TURBOCHARGER CARTRIDGES
WATER PUMPS

Caterpillar Remanufactured engines for many engine arrangements are also available.

SUPPLEMENTAL COOLANT ADDITIVES

CUSTOMER BENEFITS:

Protects against cavitation, foam, erosion, corrosion, and scale buildup in cooling systems.

- Provides measured coolant conditioner.

DESCRIPTION:

Additives deplete from the coolant with normal operation. For this reason, Supplemental Coolant Additives (SCA) must be added to all heavy duty coolants at regular intervals. In addition, when not using a fully formulated, pre-charged antifreeze, like Caterpillar's DEAC, an initial charge of SCA must be added to the cooling system. The amount of SCA added to the system is dependent on the capacity of the system.

The SCA for initial fill is provided as a liquid. SCA's for maintenance intervals are available in liquid form and as a spin-on element. (No Spin-on available for 3600 Family of Engines)

NOTE:

The amount of SCA added at initial fill is not the same as the amount added at maintenance intervals.

The coolant additive elements can be used with any ethylene or propylene glycol type antifreeze which meets ASTM D4985 or ASTM D5345 Specifications.

NOTE:

For use with standard heavy duty coolant only, not for use with Extended Life Coolant.

PARTS NEEDED:

Cooling System Capacity		Liquid SCA at Initial Fill	Liquid SCA at Maintenance*	Spin-on SCA Maintenance Element*
Liters	Gallons			
22-30	(6-8)	3P-2044 (1)	6V-3542 (1)	111-2370 (1)
30-38	(8-10)	3P-2044 (1) 6V-3542 (1)	111-2372 (1)	111-2369 (1)
38-49	(10-13)	3P-2044 (1) 8T-1589 (1)	111-2372 (1)	111-2369 (1)
49-64	(13-17)	3P-2044 (2)	8T-1589 (1)	9N-3368 (1)
64-83	(17-22)	3P-2044 (2) 8T-1589 (1)	111-2372 (1) 6V-3542 (1)	111-2371 (1)
83-114	(22-30)	3P-2044 (3) 8T-1589 (1)	3P-2044 (1)	9N-3718 (1)
114-163	(30-43)	3P-2044 (5)	3P-2044 (1) 6V-3542 (1)	111-2371 (2)
163-242	(43-64)	3P-2044 (8)	3P-2044 (2)	9N-3718 (2)

** Normal maintenance period is 250 hrs. See your Operation and Maintenance Manual for complete coolant maintenance instructions.*

( ) Indicates quantity required.

MAINTENANCE PARTS

DESCRIPTION	PART NUMBER	QTY	WHERE USED	PAGE
AIR INLET AND EXHAUST SYSTEM				
FILTER ELEMENT AS-AIR (PRIMARY) (STANDARD EFFICIENCY)	106-3969	1	AIR CLEANER GP	114
FILTER ELEMENT AS-AIR (PRIMARY) (ULTRA HIGH EFFICIENCY)	132-7168	1	AIR CLEANER GP	114
FILTER ELEMENT AS-AIR (SECONDARY)	106-3973	1	AIR CLEANER GP	114
BASIC ENGINE				
BELT-SERPENTINE	243-1276	1	PULLEY GP	66
PLUG-DRAIN (ENGINE OIL PAN)	109-5839	1	PAN GP-OIL	57
SEAL-VALVE COVER	242-9537	1	COVER GP-VALVE MECHANISM	20
		1	COVER GP-VALVE MECHANISM	21
COOLING SYSTEM				
CAP AS (COOLANT FILL)	204-0920	1	RADIATOR & AFTERCOOLER GP	105
CAP AS (COOLANT OVERFLOW)	171-3370	1	RADIATOR & AFTERCOOLER GP	105
CAP-RADIATOR	099-0001	1	RADIATOR GP	107
		1	RADIATOR GP	110
GASKET-REGULATOR (HOUSING)	139-3550	1	LINES GP-WATER	98
		1	LINES GP-WATER	100
HOSE-RADIATOR (LOWER)	171-9016	1	RADIATOR & AFTERCOOLER GP	105
HOSE-RADIATOR (UPPER)	230-2800	1	RADIATOR & AFTERCOOLER GP	105
REGULATOR-TEMPERATURE (92-DEG C) (COOLANT)	248-5513	2	LINES GP-WATER	98
SCREEN AS-RADIATOR	230-2831	1	SCREEN GP-RADIATOR	111
SCREEN AS-RADIATOR (DOOR FRONT, LH)	281-3564	1	SCREEN GP-RADIATOR	112
SCREEN AS-RADIATOR (DOOR FRONT, RH)	281-3565	1	SCREEN GP-RADIATOR	112
SCREEN AS-RADIATOR (DOOR REAR, LH)	281-3567	1	SCREEN GP-RADIATOR	112
SCREEN AS-RADIATOR (DOOR REAR, RH)	281-3566	1	SCREEN GP-RADIATOR	112
SCREEN AS-RADIATOR (UPPER)	230-2831	1	SCREEN GP-RADIATOR	112

MAINTENANCE PARTS

DESCRIPTION	PART NUMBER	QTY	WHERE USED	PAGE
ELECTRICAL AND STARTING SYSTEM				
BATTERY (12-VOLT, 1400-CCA)	153-5710	2	BATTERY & WIRING GP	161
		2	BATTERY & WIRING GP	173
CIRCUIT BREAKER AS (105-AMPERE)	171-2212	1	PANEL GP-CIRCUIT BREAKER	224
CIRCUIT BREAKER AS (80-AMPERE)	171-2210	1	PANEL GP-CIRCUIT BREAKER	224
FILTER (ETHER START)	358-4889	1	VALVE GP-ETHER STARTING	271
FUSE (10-AMPERE)	113-8490	21	PANEL GP-CIRCUIT BREAKER	224
FUSE (15-AMPERE)	113-8491	11	PANEL GP-CIRCUIT BREAKER	224
		1	WIRING GP-GRADE CONTROL	317
FUSE (30-AMPERE)	124-3548	2	PANEL GP-CIRCUIT BREAKER	224
FUSE (5-AMPERE)	141-2759	4	PANEL GP-CIRCUIT BREAKER	224
KEY (BATTERY DISCONNECT)	8H-5306	1	SWITCH GP-DISCONNECT	261
LAMP (24-VOLT)	6C-9122	2	WIRING GP-CAB	275
LAMP (24-VOLT, HID)	290-8160	1	LAMP GP-FLOOD	199
		1	LAMP GP-FLOOD	200
LAMP AS (24-VOLT, 3-WATT)	170-9324	1	PANEL GP-SWITCH	230
LAMP-HALOGEN (24-VOLT, 70-WATT)	9X-3463	1	LAMP GP-FLOOD	195
		1	LAMP GP-FLOOD	196
		1	LAMP GP-FLOOD	197
		1	LAMP GP-FLOOD	198
FUEL SYSTEM				
CAP AS-FILLER (FUEL TANK)	7X-7700	1	TANK GP-FUEL	152
FILTER AS-WATER SEP & FUEL	326-1643	1	FILTER GP-WATER SEP & FUEL	138
FILTER-FUEL (ADVANCED EFFICIENCY)	1R-0755	1	FILTER GP-FUEL	136
GASKET (PRIMING PUMP/COVER)	9Y-8389	1	PUMP GP-FUEL PRIMING	146
STRAINER AS-FUEL	229-1860	1	PUMP GP-FUEL TRANSFER	148
STRAINER AS-FUEL (FLOAT GAUGE)	303-9933	1	TANK GP-FUEL	152
HYDRAULIC SYSTEM				
BREATHER (SWING DRIVE)	4H-6112	1	DRIVE GP-SWING	507
		1	DRIVE GP-SWING	509
BREATHER AS (SWING DRIVE)	227-6221	1	DRIVE GP-SWING	507
		1	DRIVE GP-SWING	509
BREATHER GP (HYDRAULIC TANK)	212-5467	1	TANK & FILTER GP-HYDRAULIC	682
FILTER (EDGE)	119-2265	1	VALVE GP-MAIN CONTROL	736
		1	VALVE GP-MAIN CONTROL	739
FILTER ELEMENT AS-OIL (ULTRA HIGH EFFICIENCY) (HYDRAULIC RETURN)	179-9806	1	FILTER GP-OIL	521
FILTER ELEMENT-OIL (ULTRA HIGH EFFICIENCY) (HYDRAULIC)	146-9290	1	FILTER GP-OIL	527
FILTER-OIL (ADVANCED EFFICIENCY) (HYDRAULIC)	185-0337	1	FILTER GP-OIL	520
	4T-6788	1	FILTER GP-OIL	519
PLUG-OIL DRAIN (HYDRAULIC TANK)	6I-0723	1	TANK & FILTER GP-HYDRAULIC	682
SCREEN AS	209-6014	1	SCREEN GP-HYDRAULIC	680

MAINTENANCE PARTS

DESCRIPTION	PART NUMBER	QTY	WHERE USED	PAGE
LUBRICATION SYSTEM				
BREATHER AS (CRANKCASE)	162-2266	1	BREATHER GP	75
CAP AS	9S-9272	1	OIL CHANGE GP-HIGH SPEED	89
CAP AS-ENGINE OIL FILLER	163-9361	1	FILLER GP-ENGINE OIL	77
FILTER-ENGINE OIL (ADVANCED EFFICIENCY)	1R-1808	1	FILTER GP-ENGINE OIL	80
SCREEN AS (ENGINE OIL)	3T-6471	1	LINES GP-ENGINE OIL	84
MACHINE ARRANGEMENT				
SEAT BELT GP (RETRACTABLE, 76-MM)	305-0466	1	OPTION AR-CAB	2
		1	OPTION AR-CAB	3
OPERATOR STATION				
BLADE AS-WIPER (280-MM) (LOWER)	292-6567	1	WIPER GP-WINDOW	1068
BLADE AS-WIPER (600-MM) (LOWER)	6V-6864	1	WIPER GP-WINDOW	1064
BLADE AS-WIPER (700-MM) (UPPER)	6V-7419	1	WIPER GP-WINDOW	1064
BLADE AS-WIPER (900-MM) (UPPER)	248-7990	1	WIPER GP-WINDOW	1068
CAP AS (WINDOW WASHER)	178-5431	1	WASHER GP-WINDOW	1047
DRYER-REFRIGERANT (RECEIVER)	176-1902	1	LINES GP-AIR CONDITIONER	1002
FILTER ELEMENT-CAB AIR	245-7823	1	AIR CONDITIONER GP	922
		1	AIR CONDITIONER GP	924
	4I-1278	1	CAB GP	933
FILTER GP-AIR (AIR CONDITIONER)	293-1137	1	AIR CONDITIONER GP	922
SEAT BELT GP (RETRACTABLE, 76-MM)	327-6540	1	SEAT BELT GP	1035

INDEX

Name	Page
A	
ACCUMULATOR GP–CHARGED	461
ACCUMULATOR GP-HYDRAULIC–CHARGED	462, 463, 464
ACCUMULATOR GP-HYDRAULIC–UNCHARGED	465
ACTUATOR GP	466
ACTUATOR GP-PUMP	467, 468
ADAPTER GP-FAST FILL FUEL	128
ADAPTER GP-PUMP DRIVE	13
ADJUSTER GP-BUCKET–JC-FAMILY	841
ADJUSTER GP-BUCKET–UB/WB/HB/JB-FAMILY	840
ADJUSTMENT GP-HYDRAULIC TRACK	438
AFTERCOOLER AS	107
AIR CLEANER GP	113, 114
AIR CONDITIONER & MOUNTING GP	917, 919
AIR CONDITIONER AR	921
AIR CONDITIONER GP	922, 924
ALARM GP (BACKUP)	157
ALARM GP–FAULT	156
ALARM GP-TRAVEL–BACKUP	157
ALTERNATOR GP-CHARGING	158, 160
ARMREST GP–LH	927
ARMREST GP–RH	926
B	
BASE GP-OIL FILTER–ENGINE	73, 74
BASE GP-OIL FILTER–HYDRAULIC	469, 470
BASE GP-VALVE COVER & INJ HARN	14
BATTERY & WIRING GP	161
BATTERY & WIRING GP–COLD WEATHER	173
BATTERY (12-VOLT, 1400-CCA)	161, 173
BELT-SERPENTINE	66
BLADE AS-WIPER (280-MM) (LOWER)	1068
BLADE AS-WIPER (600-MM) (LOWER)	1064
BLADE AS-WIPER (700-MM) (UPPER)	1064
BLADE AS-WIPER (900-MM) (UPPER)	1068
BLOCK AS-JUNCTION (BATTERY)	177, 178
BLOCK GP-JUNCTION–BATTERY	177, 178
BOOM AR	780
BOOM AR-MASS	780
BOOM AR-MASS–ACCUGRADE	780
BOOM AR-REACH	781
BOOM GP	782, 784
BOOM GP–ACCUGRADE	788
BOOM GP–AUXILIARY	786
BOX & MOUNTING GP	336
BOX & MOUNTING GP–COLD WEATHER	338
BOX GP-BATTERY	339
BOX GP-STORAGE	340
BRACKET GP-MOUNTING–WIPER SWITCH	928
BREATHER (SWING DRIVE)	507, 509
BREATHER AS (CRANKCASE)	75
BREATHER AS (SWING DRIVE)	507, 509
BREATHER GP (HYDRAULIC TANK)	682
BREATHER GP–CRANKCASE	75
BUCKET & ADJUSTER GP–EXTREME SERVICE ROCK, JC-FAMILY	849, 850
BUCKET & ADJUSTER GP–GENERAL PURPOSE, HB2 FAMILY	853
BUCKET & ADJUSTER GP–GENERAL PURPOSE, HB2-FAMILY	842, 843, 853, 854
BUCKET & ADJUSTER GP–GENERAL PURPOSE, JC-FAMILY	845
BUCKET & ADJUSTER GP–HEAVY-DUTY, JC-FAMILY	846
BUCKET & ADJUSTER GP–SEVERE SERVICE ROCK, HB2-FAMILY	843, 844
BUCKET & ADJUSTER GP–SEVERE SERVICE ROCK, JC-FAMILY	847, 848, 851, 852
BUCKET AS-EXTREME SERVICE ROCK–JC-FAMILY	855, 856
BUCKET AS-GENERAL PURPOSE–HB2-FAMILY	859, 860, 861, 862, 863, 864, 865, 867, 868, 869

INDEX

Name	Page
BUCKET AS-GENERAL PURPOSE–JC-FAMILY	857, 858, 866
BUCKET AS-HEAVY DUTY–JC-FAMILY	870, 871, 872
BUCKET AS-SEVERE SERVICE ROCK–HB2-FAMILY	879, 880, 881, 882
BUCKET AS-SEVERE SERVICE ROCK–JC-FAMILY	873, 874, 875, 876, 877, 878
BUCKET GP-SEVERE SERVICE ROCK–JC-FAMILY	883, 884
C	
CAB AR	929, 930, 932
CAB GP–EXTERIOR	933
CAMERA & MOUNTING GP–WORK AREA VISUAL SYSTEM, REAR	179
CAMERA AR–WORK AREA VISUAL SYSTEM	181
CAMERA AR–WORK AREA VISUAL SYSTEM, REAR	181
CAMERA GP–WORK AREA VISUAL SYSTEM, REAR	182
CAMSHAFT GP	15
CAP AS	89
CAP AS (COOLANT FILL)	105
CAP AS (COOLANT OVERFLOW)	105
CAP AS (WINDOW WASHER)	1047
CAP AS-ENGINE OIL FILLER	77
CAP AS-FILLER (FUEL TANK)	152
CAP-RADIATOR	107, 110
CARTRIDGE GP-TURBOCHARGER	127
CHAIN GP-COUNTERWEIGHT	341
CHASSIS AR	1
CIRCUIT BREAKER AS (105-AMPERE)	224
CIRCUIT BREAKER AS (80-AMPERE)	224
COIL GP-EVAPORATOR	937, 939
COMPRESSOR & MTG GP-REFRIG	941
CONDENSER & MTG GP-REFRIGERANT	942
CONDENSER GP-REFRIGERANT	943
CONNECTION GP-ELECTRICAL	183
CONSOLE GP-OPERATOR	944
CONSOLE GP-OPERATOR–LH	948
CONSOLE GP-OPERATOR–RH	946
CONTROL & MTG GP-COMMUNICATION–PRODUCT LINK 121SR	184
CONTROL & MTG GP-COMMUNICATION–PRODUCT LINK 321SR	186
CONTROL & MTG GP-ENGINE ELEK	187
CONTROL & MTG GP-JOYSTICK–1-SWITCH	950
CONTROL & MTG GP-JOYSTICK–3-BUTTON, TRIGGER SWITCH	952, 953
CONTROL & MTG GP-JOYSTICK–WITH THUMB SWITCHES	951
CONTROL & MTG GP-MACHINE	188, 189
CONTROL & MTG GP-PEDAL–LH	955
CONTROL & MTG GP-PEDAL–TRAVEL	954
CONTROL AR-AUXILIARY–1-SWITCH, JOYSTICK	471
CONTROL AR-AUXILIARY–COMBINED, WITHOUT THIRD PEDAL	472
CONTROL AR-AUXILIARY–JOYSTICK MODULATION SWITCH	472
CONTROL AR-AUXILIARY–JOYSTICK, 4-BUTTON	472
CONTROL AR-AUXILIARY–PEDAL, LH	471
CONTROL AR-AUXILIARY–SYSTEM 1, 1-WAY, 1-PUMP	471
CONTROL AR-COUPLER–UNIVERSAL	473
CONTROL AR-FAN–REVERSING	473
CONTROL GP-HANDLE–JOYSTICK, LH	956, 959, 961
CONTROL GP-HANDLE–JOYSTICK, RH	957, 958, 960
CONTROL GP-HANDLE–LH	962
CONTROL GP-HEAT & AIR COND–AIR INLET	963
CONTROL GP-HYDRAULIC PEDAL	964
CONTROL GP-JOYSTICK (POSITION SENSOR)	950, 951, 952
CONTROL GP-PEDAL–ELECTRIC	966
CONTROL GP-PEDAL–TRAVEL	965
CONTROL GP-TRAVEL–LEVERS, PEDALS	967
CONTROL GP-UNPROGRAMMED	189
CONTROL GP-UNPROGRAMMED (ENGINE)	187
CONTROL GP-WIPER	276
CONVERTER-POWER (24-VOLT TO 12-VOLT)	303, 304, 997

INDEX

Name	Page
COOLER & MTG GP-HYDRAULIC OIL	474
COOLER GP-FUEL	130
COOLER GP-HYDRAULIC OIL	477
CORE AS (ENGINE OIL COOLER)	98
	100
CORE AS-FUEL COOLER	130
CORE AS-HEATER	922
	924
CORE AS-OIL COOLER (HYDRAULIC)	477
COUNTERWEIGHT & MOUNTING GP	343
	344
COUNTERWEIGHT AR	345
COUNTERWEIGHT GP	346
COUPLER AR-QUICK	887
	888
	889
COUPLER AR-QUICK–HYDRAULIC	885
	886
COUPLING GP-FLEXIBLE	478
COUPLING GP-PUMP	479
COVER AS-SOUND SUPPRESSION–ENGINE	347
COVER GP-ACCESS–RADIATOR	348
COVER GP-CAB–EXTERIOR, LH	972
COVER GP-CAB–INTERIOR, FRONT	970
COVER GP-CAB–REAR	969
COVER GP-CONSOLE	970
COVER GP-CONTROL VALVE	350
	351
	352
COVER GP-CYLINDER BLOCK	16
	17
COVER GP-FRONT HOUSING	18
	19
COVER GP-PUMP	480
COVER GP-SOUND SUPPRESSION	353
COVER GP-STORAGE–CAB, REAR	973
COVER GP-VALVE MECHANISM	20
	21
	22
CRANKSHAFT GP	23
CYLINDER & LINES GP-BOOM–LH	481
CYLINDER & LINES GP-BOOM–RH	481
CYLINDER & LINES GP-BUCKET	481
	482
CYLINDER & LINES GP-STICK	482
CYLINDER & SEAL GP-BOOM	483
CYLINDER & SEAL GP-BUCKET	484
	485
	486
CYLINDER & SEAL GP-HYDRAULIC	487
	488
CYLINDER BLOCK AS	24
	25
CYLINDER BLOCK GP	26
CYLINDER GP-BOOM	489
	491
CYLINDER GP-BUCKET	493
	495
	497
CYLINDER GP-COUNTERWEIGHT	499
	501
CYLINDER GP-COUPLER	503
CYLINDER GP-STICK	504
CYLINDER HEAD AS	28
CYLINDER HEAD GP	30
	32

D

DAMPER & PULLEY GP	34
DISTRIBUTION AR	1
	2
DOOR & MTG GP-CAB	974
DOOR AS-ACCESS–PUMP COMPARTMENT	354
	355
DOOR GP-ACCESS–ENGINE COMPARTMENT	356
	358
DOOR GP-ACCESS–HYDRAULIC OIL COOLER, RADIATOR	357
DOOR GP-CAB	975
	976
	979
DRIVE GP-FAN	35
DRIVE GP-FINAL–WITH MOTOR	333
DRIVE GP-FINAL–WITH MOTOR, SPROCKET	332
DRIVE GP-FINAL–WITHOUT MOTOR	329
DRIVE GP-PUMP	506
DRIVE GP-SWING–WITH MOTOR, FRONT	512
DRIVE GP-SWING–WITH MOTOR, REAR	511
DRIVE GP-SWING–WITHOUT MOTOR, FRONT	507
DRIVE GP-SWING–WITHOUT MOTOR, REAR	509
DRYER-REFRIGERANT (RECEIVER)	1002
DUCT GP-CAB AIR	981

E

ELECTRONICS GP-COMMUNICATION–PRODUCT LINK 300	191
ELECTRONICS GP-MACHINE	191
ELECTRONICS GP-MACHINE–ELECTRONIC CONTROL MODULE	191
ELECTRONICS GP-MONITOR	192
ENGINE AR	8
ENGINE AR-COMPLETE	9
ENGINE AR-CORE	11

INDEX

Name	Page
EXTENSION GP-EXHAUST	115

F

Name	Page
FAN GP-SUCTION	94
FASTENER GP-CYLINDER HEAD	32
FASTENER GP-FRONT HOUSING	36, 37
FASTENER GP-FUEL LINES	131
FASTENER GP-OIL PUMP MOUNTING	76
FASTENER GP-SWING & FINAL DR	513
FASTENER GP-VALVE MECHANISM	38
FASTENER GP-WIRING HARNESS–JOYSTICK	193
FILLER GP-ENGINE OIL	77
FILM GP	1074
FILM GP–COUNTERWEIGHT REMOVAL	1069
FILM GP–LIFTING, READ OMM	1078
FILM GP–OPERATOR CONTROLS, HAMMER	1072, 1076, 1077
FILM GP–OVERLOAD WARNING DEVICE	1075
FILM GP–QUICK COUPLER	1071
FILM GP–REVERSING FAN	1070
FILM GP–WORK AREA VISUAL SYSTEM, REAR	1073
FILM-IDENTIFICATION (BIODEGRADABLE HYDRAULIC OIL)	1079
FILM-IDENTIFICATION (FUEL)	1080
FILM-IDENTIFICATION (SMARTBOOM)	1075
FILM-INFORMATION (24-VOLT)	1080
FILM-INFORMATION (PRODUCT LINK, READ OMM)	184
FILM-INFORMATION (READ OMM)	1078
FILM-INSTRUCTION (HYDRAULIC OIL RETURN FILTER)	521
FILM-INSTRUCTION (NO STEP)	1080
FILM-INSTRUCTION (OPERATOR CONTROLS)	471
FILM-INSTRUCTION (REFUELING PUMP)	148
FILM-INSTRUCTION (TRAVEL CONTROLS)	1024
FILM-NOTICE (LIFT EYE LOCATION)	886
FILM-WARNING (BOOM FLOAT)	1075
FILM-WARNING (CRUSH HAZARD, READ OMM)	1078
FILM-WARNING (DO NOT OPERATE, READ OMM)	888, 889
FILM-WARNING (FRONT GUARD, READ OMM)	990
FILM-WARNING (LIFTING, READ OMM)	1078
FILM-WARNING (NO WELD, NO DRILL, READ OMM)	986
FILM-WARNING (PRODUCT LINK RADIO, INTL)	184
FILM-WARNING (PRODUCT LINK RADIO, U.S.)	184
FILM-WARNING (READ OMM)	886
FILM-WARNING (TIPPING HAZARD, READ OMM)	1075, 1078
FILM-WARNING (TOP GUARD, READ OMM)	986
FILTER & LINES GP-FUEL	132
FILTER & LINES GP-HYDRAULIC–FINE FILTRATION	516
FILTER (EDGE)	736, 739
FILTER (ETHER START)	271
FILTER AR–FINE FILTRATION	518
FILTER AS-WATER SEP & FUEL	138
FILTER ELEMENT AS-AIR (PRIMARY) (STANDARD EFFICIENCY)	114
FILTER ELEMENT AS-AIR (PRIMARY) (ULTRA HIGH EFFICIENCY)	114
FILTER ELEMENT AS-AIR (SECONDARY)	114
FILTER ELEMENT AS-OIL (ULTRA HIGH EFFICIENCY) (HYDRAULIC RETURN)	521
FILTER ELEMENT-CAB AIR	922, 924, 933
FILTER ELEMENT-OIL (ULTRA HIGH EFFICIENCY) (HYDRAULIC)	527
FILTER GP-AIR (AIR CONDITIONER)	922
FILTER GP-ENGINE OIL	79, 80
FILTER GP-FUEL	136
FILTER GP-OIL–HYDRAULIC	519, 520, 523, 525, 527
FILTER GP-OIL–HYDRAULIC RETURN	521
FILTER GP-WATER SEP & FUEL	138
FILTER-ENGINE OIL (ADVANCED EFFICIENCY)	80
FILTER-FUEL (ADVANCED EFFICIENCY)	136
FILTER-OIL (ADVANCED EFFICIENCY) (HYDRAULIC)	519, 520
FINAL DRIVE GP	329, 332, 333
FLOOR MAT	1019
FLOOR MAT GP–ACCUGRADE READY	983
FLYWHEEL GP	39
FRAME AR-UNDERCARRIAGE	439
FRAME GP-UNDERCARRIAGE	440
FRAME GP-UPPER	359, 361

INDEX

Name	Page
FUMES DISPOSAL GP	81
FUSE (10-AMPERE)	224
FUSE (15-AMPERE)	224
	317
FUSE (30-AMPERE)	224
FUSE (5-AMPERE)	224
G	
GASKET (PRIMING PUMP/COVER)	146
GASKET-REGULATOR (HOUSING)	98
	100
GAUGE AS-OIL LEVEL (DIPSTICK) (ENGINE)	9
GAUGE AS-OIL LEVEL (DIPSTICK)–ENGINE	82
GAUGE GP-SIGHT–HYDRAULIC OIL LEVEL	528
GAUGE-OIL LEVEL (SWING DRIVE)	507
	509
GEAR & BEARING GP-SWING	364
	365
	366
	367
GEAR GP-CAMSHAFT	40
GEAR GP-FRONT	41
GEAR GP-REAR	44
GENERAL AR	2
GUARD AR-OVERHEAD	984
GUARD AR-OVERHEAD–WINDOW	984
GUARD AR-VANDALISM–CAB	985
GUARD GP-BOTTOM	370
GUARD GP-CYLINDER	791
GUARD GP-FRONT WINDOW	985
GUARD GP-OVERHEAD	986
GUARD GP-SENSOR	793
GUARD GP-SWIVEL	372
GUARD GP-TRACK GUIDE–CENTER	442
GUARD GP-TRACK GUIDE–FRONT, CENTER, REAR	444
GUARD GP-TRACK GUIDE–FULL LENGTH	446
GUARD GP-TRAVEL MOTOR	448
GUARD GP-VANDALISM–CAB	987
	989
GUARD GP-WINDOW	984
	990
	992
GUIDE GP-OIL LEVEL GAUGE	83
H	
HANDRAIL GP	374
HANDRAIL GP–CAB	373
HARNESS AS (BOOM)	203
HARNESS AS-CAB	304
	325
HARNESS AS-CHASSIS	163
	164
	165
	288
	307
	317
HARNESS AS-CONSOLE	298
	301
HARNESS AS-CONSOLE (RH)	230
HARNESS AS-CONTROL	286
HARNESS AS-CONTROL (DISPLAY, GPS RADIO)	317
HARNESS AS-CONTROL (GRADE CONTROL)	315
HARNESS AS-CONTROL (PRODUCT LINK)	295
HARNESS AS-ENGINE	162
	310
HARNESS AS-ENGINE (UNIT INJECTOR)	14
HARNESS AS-FRONT	313
HARNESS AS-HEATER & AIR COND	917
	922
	924
HARNESS AS-HEATER & AIR COND (AIR CONDITIONER, LOW SIDE)	919
HARNESS AS-HEATER & AIR COND (CONTROL PANEL SWITCHES)	917
	919
HARNESS AS-LIGHTING	161
	208
	209
	210
	211
	214
	216
	280
HARNESS AS-LIGHTING (BOOM)	202
HARNESS AS-LIGHTING (BOOM, RH)	204
HARNESS AS-LIGHTING (CAB GUARD)	207
HARNESS AS-MONITOR	278
HARNESS AS-OPERATOR CONTROLS	297
HARNESS AS-PANEL	224
HARNESS AS-PLATFORM	323
	325
HARNESS AS-PUMP	161
HARNESS AS-PUMP (REFUELING)	327
HARNESS AS-RADIO	997
HARNESS AS-SENSOR (GRADE CONTROL)	317
HARNESS AS-SENSOR (SMARTBOOM)	280
HARNESS AS-SOLENOID	165
HARNESS AS-SWITCH	162
	165
HARNESS AS-SWITCH (BACKUP)	278
HARNESS AS-SWITCH (FLOW CONTROL)	274
HARNESS AS-SWITCH (REFUELING PUMP, START)	265
HARNESS AS-SWITCH (REFUELING PUMP, STOP)	266

INDEX

Name	Page
HARNESS AS-WIRING (CAB)	325
HARNESS AS-WIRING (CAMERA)	282
	322
HARNESS AS-WIRING (HORN)	994
HARNESS AS-WIRING (MONITOR)	322
HARNESS AS-WIRING (REVERSIBLE FAN)	312
HARNESS AS-WIRING– POWER CONVERTER	194
HEAD GP-MOTOR	655
HEAD GP-PUMP	529
HOOD & GUARD GP–ACCUGRADE READY	377
HOOD & GUARD GP–COVERS, DOORS	380
HOOD & GUARD GP–ENGINE HOOD	378
HOOD & GUARD GP–HIGH AMBIENT	376
HOOD & GUARD GP–PUMP COMPARTMENT	384
HOOD AS	387
HOOD GP– COUNTERWEIGHT REMOVAL SYSTEM	388
HOOD GP–RADIATOR	391
HOOD GP-ENGINE	393
HOOK GP-LIFTING	890
HORN GP-ELECTRIC	994
HOSE-RADIATOR (LOWER)	105
HOSE-RADIATOR (UPPER)	105
HOUSING GP-AIR CONDITIONER–INLET AIR	995
HOUSING GP-FLYWHEEL	46
	47
HOUSING GP-FRONT	48
	50
HYDRAULIC AR	531

I

IDLER GP-FRONT	449
IDLER GP-FRONT–HEAVY DUTY	450
IDLER GP-FRONT–LH	452
IDLER GP-FRONT–RH	451
INDICATOR AS (HYDRAULIC RETURN FILTER)	523
INDICATOR AS-AIR FILTER CHANGE (AIR RESTRICTION)	114
INSTALLATION AR-COMMUNICATION– PRODUCT LINK 321SR	194
INSTALLATION AR-ENGINE	12
INSTALLATION AR-RADIO–2-WAY	996
INSTALLATION GP-RADIO	997

K

KEY (BATTERY DISCONNECT)	261
KIT-SEAT SUSPENSION–AIR	1000
KIT-SEAT SUSPENSION–MECHANICAL	999

L

LAMP (24-VOLT)	275
LAMP (24-VOLT, HID)	199
	200
LAMP AS (24-VOLT, 3-WATT)	230
LAMP GP-FLOOD	195
	196
	197
	198
	199
	200
LAMP-HALOGEN (24-VOLT, 70-WATT)	195
	196
	197
	198
LEVER GP-CAB DOOR	1001
LIFTING GP-ENGINE	51
	52
LIGHTING GP-CHASSIS–FRONT	201
LIGHTING GP-FLOOD–BOOM	202
	204
	214
	216
LIGHTING GP-FLOOD–BOOM, RH	211
LIGHTING GP-FLOOD–CAB	206
	208
	210
LIGHTING GP-FLOOD–CAB GUARD	207
	209
LIGHTING GP-FLOOD–MASS BOOM	203
LINES GP-AIR	118
LINES GP-AIR– AFTERCOOLER TO TURBOCHARGER	117
LINES GP-AIR– AIR CLEANER, ALT, TURBOCHARGER	119
LINES GP-AIR CONDITIONER	1002
LINES GP-AIR–TURBOCHARGER OUTLET	116
LINES GP-AUXILIARY HYDRAULIC–BOOM	536
	538
LINES GP-AUXILIARY HYDRAULIC– MASS BOOM	540
LINES GP-AUXILIARY HYDRAULIC– STICK, HIGH PRESSURE	532
	533
	534
	535
LINES GP-BOOM	543
	545
	547
LINES GP-BOOM CYLINDER– BOOM LOWERING CONTROL	551
LINES GP-BOOM CYLINDER–LH	554
LINES GP-BOOM CYLINDER–RH	555

INDEX

Name	Page
LINES GP-BOOM–STICK LOWERING CONTROL VALVE	549
LINES GP-BUCKET CYLINDER	556, 557, 558
LINES GP-CONNECTING	559
LINES GP-COUPLER–BOOM	561
LINES GP-COUPLER–HB-FAMILY	563, 567
LINES GP-COUPLER–JB-FAMILY	560, 566
LINES GP-COUPLER–MASS BOOM	564
LINES GP-COUPLER–REACH BOOM	568
LINES GP-ENGINE OIL	84
LINES GP-ENGINE OIL DRAIN	86
LINES GP-FRONT	578
LINES GP-FRONT–1-WAY, 2-WAY FLOW	585
LINES GP-FRONT–SMART BOOM	570
LINES GP-FRONT–SYSTEM 1, 1-WAY, 1-PUMP	581
LINES GP-FRONT–UNIVERSAL QUICK COUPLER	572
LINES GP-FUEL	139
LINES GP-GREASE–BOOM	794, 796
LINES GP-GREASE–MASS BOOM	798
LINES GP-GREASE–STICK	800, 802, 805, 807, 809
LINES GP-HYDRAULIC FAN–REVERSING	588
LINES GP-MOTOR	591
LINES GP-MUFFLER DRAIN	121
LINES GP-PILOT	595
LINES GP-PILOT–BOOM LOWERING CONTROL	604
LINES GP-PILOT–STICK LOWERING CONTROL	607
LINES GP-PUMP	609
LINES GP-REAR ATTACHMENT	613
LINES GP-RETURN & FILTER	618
LINES GP-STICK	623, 624, 625, 626
LINES GP-STICK CYLINDER	627
LINES GP-STICK CYLINDER–LOWERING CONTROL	628
LINES GP-SWING MOTOR	630
LINES GP-SWIVEL & TRAVEL MOTOR	632
LINES GP-TURBOCHARGER OIL	87
LINES GP-TURBOCHARGER WATER	96
LINES GP-WATER	98, 100
LINK AS-TRACK	453
LINKAGE AR-BUCKET–HB2-FAMILY, WITH LIFTING EYE	811
LINKAGE AR-BUCKET–HB2-FAMILY, WITHOUT LIFT EYE	811
LINKAGE AR-BUCKET–JC-FAMILY	812, 814, 816
LINKAGE AR-BUCKET–JC-FAMILY, WITH LIFTING EYE	811
LINKAGE AR-BUCKET–JC-FAMILY, WITHOUT LIFTING EYE	811
LINKAGE GP-BUCKET–HB2-FAMILY	817, 819
LINKAGE GP-BUCKET–JC-FAMILY	821
LITERATURE GP	1005
LOCK GP-QUICK COUPLER–HYDRAULIC	891

M

MANIFOLD & VALVE GP	640
MANIFOLD & VALVE GP–MAIN CONTROL VALVE	636, 638
MANIFOLD GP-EXHAUST	122
MANIFOLD GP-FUEL	139, 142
MECHANISM GP-FUEL PUMP & VALVE	53
MIRROR GP-REAR VIEW	1006, 1007
MONITOR & MTG GP-OPERATOR	1008
MONITOR GP-OPERATOR	1009, 1010
MOTOR & MTG GP-HYDRAULIC FAN–REVERSING	642
MOTOR & MTG GP-SWING–FRONT	644
MOTOR & MTG GP-SWING–REAR	643
MOTOR & MTG GP-TRAVEL	645
MOTOR GP-PISTON	646
MOTOR GP-PISTON–FAN	650
MOTOR GP-PISTON–HYDRAULIC FAN	648
MOTOR GP-PISTON–SWING	651
MOTOR GP-SWING–FRONT	654
MOTOR GP-SWING–REAR	653
MOTOR GP-TRAVEL	655
MOUNTING GP-ALTERNATOR & COMPR	54
MOUNTING GP-ANTENNA–ACCUGRADE READY	1011
MOUNTING GP-ANTENNA–COMMUNICATION RADIO	1013
MOUNTING GP-ANTENNA–PRODUCT LINK	1014
MOUNTING GP-CAB–REAR	1016
MOUNTING GP-CAMERA–BOOM	221
MOUNTING GP-CAMERA–COUNTERWEIGHT	219

INDEX

Name	Page
MOUNTING GP-CAMERA–MIRROR, RH	220
MOUNTING GP-COUNTERWEIGHT CYL	657
MOUNTING GP-DISPLAY–WORK AREA VISUAL SYSTEM	1017
MOUNTING GP-ENGINE	55
MOUNTING GP-MAIN CONTROL VALVE	659
MOUNTING GP-OIL LEVEL GAUGE	88
MOUNTING GP-PLATFORM	1019
MOUNTING GP-SENSOR–ATMOSPHERIC, ENGINE OIL	222
MOUNTING GP-SENSOR–TILT	223
MUFFLER GP	123

O

Name	Page
OIL CHANGE GP-HIGH SPEED	89
OPERATOR AR	1021
OPTION AR-CAB	2 3
OPTION AR-COLD WEATHER	3
OPTION AR-COUPLER	4 5
OPTION AR-HYDRAULIC	5 6

P

Name	Page
PADLOCK GP	151 336 338 378 1025
PAN GP-OIL–ENGINE	57
PANEL GP-CIRCUIT BREAKER	224
PANEL GP-FUSE	225
PANEL GP-SOUND SUPPRESSION	59 60 396 397 398
PANEL GP-SOUND SUPPRESSION–FRONT HOUSING	399
PANEL GP-SOUND SUPPRESSION–PUMP COMPARTMENT	394 400 402 404
PANEL GP-SWITCH–ENGINE SPEED, START	230
PARTS AR-CAB	1022 1023
PEDAL AR-THIRD	1024
PISTON & ROD GP	61
PLATE & FILM GP	1080
PLATE & FILM GP–BIODEGRADABLE HYDRAULIC OIL	1079
PLATE AS-FRONT HOUSING	62
PLATE-INFORMATION	888
PLATFORM GP	1025
PLATFORM GP-OPERATOR	1028
PLUG GP-CONNECTOR–ENGINE HARNESS, PROTECTIVE COVER	232
PLUG GP-CONTROL VALVE	661
PLUG GP-CYLINDER BLOCK	63 64
PLUG GP-CYLINDER HEAD	65
PLUG-DRAIN (ENGINE OIL PAN)	57
PLUG-OIL DRAIN (HYDRAULIC TANK)	682
POWER TRAIN AR	334
PROTECTOR GP-BUCKET	892
PROTECTOR GP-SIDE BAR–BUCKET	893 894 895
PULLEY GP	66
PUMP & MOTOR GP-REFUELING	143
PUMP & MTG GP-HYDRAULIC	662
PUMP & MTG GP-MAIN HYDRAULIC	663
PUMP AR-FUEL TRANSFER–REFUELING	144
PUMP GP-ENGINE OIL	91
PUMP GP-FUEL INJECTION	145
PUMP GP-FUEL PRIMING–MANUAL	146
PUMP GP-FUEL TRANSFER	147
PUMP GP-FUEL TRANSFER–REFUELING	148
PUMP GP-GEAR	666
PUMP GP-GEAR–PILOT	665
PUMP GP-PISTON	669 671 673
PUMP GP-PISTON–FAN MOTOR	667
PUMP GP-WATER	102 103

R

Name	Page
RADIATOR & AFTERCOOLER GP	104 105
RADIATOR GP	107 109 110
RADIO GP–AM/FM	1029
RADIO GP-COMMUNICATION–PRODUCT LINK 121SR	1030
REGULATOR AS-VOLTAGE (24-VOLT) (ALTERNATOR)	158
REGULATOR GP-FUEL PRESSURE	150
REGULATOR-TEMPERATURE (92-DEG C) (COOLANT)	98 100
RELAY (24-VOLT)	224
RELAY (24-VOLT) (QUICK COUPLER LOCK 1)	288
RELAY (24-VOLT) (QUICK COUPLER LOCK 2)	288

INDEX

Name	Page
RELAY (24-VOLT) (QUICK COUPLER LOCK ON)	288
RELAY (24-VOLT) (QUICK COUPLER LOCK PRIORITY)	288
RELAY (24-VOLT) (REFUELING PUMP, START)	327
RELAY (24-VOLT) (REFUELING PUMP, STOP)	327
RELAY (24-VOLT) (SMARTBOOM)	291
RELAY (BLOWER)	963
	995
RELAY (COMPRESSOR CLUTCH)	963
	995
RELAY (CONDENSER)	995
RELAY (CONDENSER, HIGH)	995
ROCKER ARM GP	67
	68
	69
ROLLER AR-TRACK & CARRIER	454
ROLLER GP-TRACK CARRIER	455
ROLLER GP-TRACK-SINGLE FLANGE	456
ROTATING GP-MOTOR	675
ROTATING GP-PUMP	676
	677
	678
	679

S

SCREEN AS	680
SCREEN AS (ENGINE OIL)	84
SCREEN AS-RADIATOR	111
SCREEN AS-RADIATOR (DOOR FRONT, LH)	112
SCREEN AS-RADIATOR (DOOR FRONT, RH)	112
SCREEN AS-RADIATOR (DOOR REAR, LH)	112
SCREEN AS-RADIATOR (DOOR REAR, RH)	112
SCREEN AS-RADIATOR (UPPER)	112
SCREEN GP-HYDRAULIC–TANK	680
SCREEN GP-RADIATOR	111
SCREEN GP-RADIATOR–REVERSING FAN	112
SCREEN GP-SUN	1031
SEAL GP-CRANKSHAFT	70
SEAL-VALVE COVER	20
	21
SEAT & MOUNTING GP–HIGH BACK, TILT	1032
	1033
SEAT & MOUNTING GP–HIGH BACK, WITH HEATER	1034
SEAT BELT GP (RETRACTABLE, 76-MM)	2
	3
	1035
SEAT BELT GP–RETRACTABLE, 76-MM	1035
SEAT GP (HIGH BACK, TILT)	1038
	1039
SEAT GP (HIGH BACK, WITH HEATER)	1040
SEAT GP–HIGH BACK, TILT	1036
SEAT GP–HIGH BACK, WITH HEATER	1037
SEAT GP-SUSPENSION–HIGH BACK, TILT	1038
	1039
SEAT GP-SUSPENSION–HIGH BACK, WITH HEATER	1040
SENDER AS-TEMPERATURE (HYDRAULIC OIL)	682
SENSOR & MTG GP-POSITION–STICK	233
SENSOR AS-LIQUID LEVEL (FUEL)	152
SENSOR AS-LIQUID LEVEL (WATER IN FUEL)	238
SENSOR AS-POSITION (LIFT, TILT)	241
SENSOR AS-PRESSURE (BOOM LOWER)	551
SENSOR AS-PRESSURE (LOAD SENSING)	596
SENSOR AS-PRESSURE (MAIN PUMP)	596
SENSOR AS-PRESSURE (OVERLOAD WARNING)	578
SENSOR AS-PRESSURE (SWING PUMP)	596
SENSOR AS-TEMPERATURE	251
	252
SENSOR AS-TEMPERATURE (AIR)	963
	995
SENSOR AS-TEMPERATURE (AMBIENT AIR TEMP)	922
SENSOR AS-TEMPERATURE (AMBIENT AIR)	924
SENSOR AS-TEMPERATURE (COOLANT)	922
	924
SENSOR GP-ENGINE	9
	235
SENSOR GP-FUEL LEVEL	237
SENSOR GP-FUEL LEVEL (WATER SEPARATOR)	1
SENSOR GP-LIQUID LEVEL	238
SENSOR GP-MACHINE LEVEL	239
	240
SENSOR GP-POSITION	241
	493
SENSOR GP-POSITION (JOYSTICK)	953
SENSOR GP-POSITION (STICK)	233
SENSOR GP-POSITION–STICK	242
SENSOR GP-PRESSURE	243
	244
	245
SENSOR GP-PRESSURE (ENGINE OIL)	136
	235
SENSOR GP-SPEED	246
	248
	249
	250
SENSOR GP-SPEED (CAM GEAR)	250
SENSOR GP-SPEED (ENGINE)	246
SENSOR GP-SPEED (SECONDARY, TIMING)	235
SENSOR GP-SPEED (TIMING, CRANKSHAFT)	235
SENSOR GP-TEMPERATURE	251

INDEX

Name	Page
	252
SENSOR GP-TEMPERATURE (COOLANT)	235
SENSOR GP-TEMPERATURE (FUEL)	136
SENSOR GP-TEMPERATURE (INTAKE AIR MANIFOLD)	235
SENSOR-PRESSURE	244
SENSOR-TEMPERATURE (AMBIENT AIR)	917
	919
SHEET AS-SOUND SUPPRESSION	406
	407
	409
	410
	411
	412
	413
	414
	415
	416
	417
	418
	419
	420
	422
	423
SHEET AS-SOUND SUPPRESSION–RADIATOR	408
SIDECUTTER GP	896
	897
SOFTWARE GP-COMMUNICATION	191
SOFTWARE GP-COMMUNICATION (PRODUCT LINK 121SR)	1030
SOFTWARE GP-MACHINE	191
SOFTWARE GP-MONITOR	192
	1010
SOLENOID AS	727
SOLENOID AS-STARTING MOTOR (24-VOLT)	258
SOLENOID GP	253
SPACER GP-UNDERCARRIAGE	457
SPECIAL AR–ACCUGRADE	7
SPECIAL AR–JC-FAMILY	6
SPRING AS-GAS	1055
SPRING GP-RECOIL	458
SPROCKET GP	335
STARTING AID GP-ETHER	254
STARTING AR-COLD WEATHER	256
STARTING MOTOR GP-ELECTRIC	257
	260
STICK AR-HOE	823
STICK AR-HOE–MASS	824
	825
STICK AR-HOE–REACH	823
STICK AR-HOE–REACH, ACCUGRADE READY	824
	825
STICK GP-HOE	828
	830
STICK GP-HOE–MASS	831
	833
	834
STICK GP-HOE–REACH	826
STICK GP-HOE–REACH, ACCUGRADE READY	836
	838
STORAGE GP-VANDALISM GUARD	425
STRAINER AS-FUEL	148
STRAINER AS-FUEL (FLOAT GAUGE)	152
SUPPORT AS-ENCLOSURE	427
	428
	429
SUPPORT AS-SOUND SUPPRESSION	426
SUPPORT GP-ENGINE	71
	72
SUPPORT GP-HOOD	430
	433
	434
SUPPORT GP-SEAT	1041
SUSPENSION GP-SEAT (AIR)	1039
	1040
SUSPENSION GP-SEAT (MECHANICAL)	1038
SUSPENSION GP-SEAT–AIR	1043
SUSPENSION GP-SEAT–MECHANICAL	1042
SWITCH AS (WIPER CUT-OUT)	1051
SWITCH AS-LIMIT (FLOW INDICATOR)	744
	745
SWITCH AS-LIMIT (NEUTRAL START)	263
SWITCH AS-LIQUID LEVEL (ENGINE OIL)	57
SWITCH AS-LIQUID LEVEL (FUEL TANK SHUTOFF)	148
SWITCH AS-LIQUID LEVEL (LOW HYDRAULIC OIL)	682
SWITCH AS-MAGNETIC (24-VOLT) (MAIN RELAY)	224
SWITCH AS-MAGNETIC (24-VOLT) (REFUELING POWER RELAY)	327
SWITCH AS-PRESSURE (BOOM LOWERING)	570
SWITCH AS-PRESSURE (REFRIGERANT)	1002
SWITCH AS-PUSH BUTTON (HORN)	956
SWITCH AS-PUSH BUTTON (MANUAL LOW IDLE)	957
SWITCH AS-PUSH BUTTON (REFUELING PUMP, START)	265
SWITCH AS-ROCKER (BOOM FLOAT)	280
SWITCH AS-ROCKER (HEATED SEAT)	1034
SWITCH AS-ROCKER (OVERLOAD WARNING)	280
SWITCH AS-ROCKER (RADIO MUTE)	997
SWITCH AS-TOGGLE (BACKUP BOOM)	298
SWITCH AS-TOGGLE (BACKUP GOVERNOR)	301

INDEX

Name	Page
SWITCH AS-TOGGLE (COUNTERWEIGHT REMOVAL)	307
SWITCH AS-TOGGLE (MANUAL ENGINE SPEED CONTROL)	298, 301
SWITCH GP-DISCONNECT–BATTERY	261
SWITCH GP-MAGNETIC–START RELAY	262
SWITCH GP-POSITION–HYDRAULIC LOCKOUT	263
SWITCH GP-PRESSURE	264
SWITCH GP-PUSH BUTTON (REFUELING PUMP, STOP)	266
SWITCH GP-PUSH BUTTON–REFUELING PUMP, START	265
SWITCH GP-PUSH BUTTON–REFUELING PUMP, STOP	266
SWITCH GP-PUSHBUTTON (REFUELING PUMP, START)	265
SWITCH GP-ROTARY–THROTTLE POSITION	267
SWITCH GP-START–ENGINE, KEY	268
SWITCH GP-TOGGLE (QUICK COUPLER)	325
SWITCH GP-TOGGLE (SECONDARY SHUTDOWN)	161
SWITCH GP-TOGGLE–FUEL PRIMING PUMP ON, OFF	269
SWITCH GP-TOGGLE–SECONDARY SHUTDOWN	270
SWITCH-LEVEL (TILT)	240
SWITCH-PUSH BUTTON (REFUELING PUMP, STOP)	266
SWIVEL GP	681

T

Name	Page
TANK & FILTER GP-HYDRAULIC	682
TANK & MTG GP-FUEL	151
TANK & MTG GP-HYDRAULIC	686
TANK GP-FUEL	152
TIMER AS (TIME DELAY LIGHTING)	224
TIP AS-ABRASION–J-800, HEAVY-DUTY	898
TIP AS-HEAVY PENETRATION–J-800	899
TIP AS-HEAVY PENETRATION–J-800, HEAVY-DUTY	900
TIP AS-PENETRATION PLUS–J-800	901
TIP GP-BUCKET–K-150, HEAVY-DUTY	902
TIP GP-DOUBLE SPIKE–K-150	903
TIP GP-DOUBLE SPIKE–K-170	904
TIP GP-EXTRA-DUTY–K-170	905
TIP GP-GENERAL PURPOSE–K-150	906
TIP GP-GENERAL PURPOSE–K-170	907
TIP GP-PENETRATION–K-150	908
TIP GP-PENETRATION–K-170	909
TIP GP-PENETRATION PLUS–K-150	910
TIP GP-PENETRATION PLUS–K-170	911
TIP GP-SPIKE–K-150	912
TIP GP-SPIKE–K-170	913
TIP GP-WIDE–K-150	914
TIP GP-WIDE–K-170	915
TRACK GP–2-REQUIRED, HEAVY-DUTY	459, 460
TRIM GP-CAB–INTERIOR, REAR	1044
TURBOCHARGER GP	126, 127

V

Name	Page
VALVE AR-BOOM LOWERING CONTROL–BOOM FLOAT	687
VALVE AR-LOAD CONTROL–STICK LOWERING CONTROL VALVE	687
VALVE GP (FLOW COMPENSATOR)	711, 715, 720
VALVE GP-CHECK	688, 689, 690, 691, 692, 694, 696
VALVE GP-CHECK & RELIEF–STICK LOWERING CONTROL VALVE	697
VALVE GP-CHECK (PILOT OPERATED)	734
VALVE GP-CHECK–FUEL	154
VALVE GP-COMPENSATING	756
VALVE GP-CONTROL	709, 711, 715, 720, 748
VALVE GP-CONTROL–NEUTRAL BYPASS	699, 700, 703, 707
VALVE GP-CONTROL–QUICK COUPLER	724
VALVE GP-CONTROL–REVERSE FLOW FAN	702
VALVE GP-CONTROL–REVERSIBLE FAN	710
VALVE GP-CONTROL–SWING	705
VALVE GP-COUNTERWEIGHT CONTROL	726
VALVE GP-ETHER STARTING	271
VALVE GP-FLOW CONTROL	727
VALVE GP-FLUID SAMPLING	92, 93
VALVE GP-FUEL BYPASS–FILTER	155
VALVE GP-LOAD CONTROL	731
VALVE GP-LOAD CONTROL–BOOM	734
VALVE GP-LOAD CONTROL–BOOM LOWERING, REGENERATION	728
VALVE GP-MAIN CONTROL	736

INDEX

Name	Page
	739
VALVE GP-MANIFOLD & REDUCING	742
VALVE GP-MANUAL–BOOM LOWER	746
VALVE GP-MANUAL–LH	744
VALVE GP-MANUAL–RH	745
VALVE GP-PILOT–COUNTERWEIGHT	747
VALVE GP-PRESSURE REDUCING	748
VALVE GP-PRESSURE REDUCING (PARKING BRAKE RELEASE)	655
VALVE GP-PUMP CONTROL– FLOW COMPENSATOR	752
VALVE GP-PUMP CONTROL– PRESSURE COMPENSATOR	749
	754
VALVE GP-PUMP CONTROL– PRESSURE, FLOW COMPENSATOR	751
VALVE GP-RELIEF	726
	757
	758
	759
	760
	761
	762
	763
	764
	765
	766
VALVE GP-RELIEF (LINE)	655
	702
VALVE GP-RELIEF (LINE) (REVERSIBLE FAN)	710
VALVE GP-SHUTTLE	767
	768
	769
	770
VALVE GP-SOLENOID	604
	771
	772
	773
	774
	775
	776
	777
VALVE GP-SOLENOID (24-VOLT)	736
	777
VALVE GP-SOLENOID (24-VOLT) (HYDRAULIC PUMP CONTROL)	739
VALVE GP-SOLENOID (24-VOLT) (NEUTRAL BYPASS)	700
	703
	707
VALVE GP-SOLENOID (BOOM FLOAT)	728
	731
VALVE GP-SOLENOID (FAN PUMP)	754
VALVE GP-SOLENOID (HYDRAULIC LOCK)	742
VALVE GP-SOLENOID (POWER SHIFT PRESSURE)	742
VALVE GP-SOLENOID (QUICK COUPLER, LOCK, UNLOCK)	724
VALVE GP-SOLENOID (REVERSING FAN)	588
VALVE GP-SOLENOID (STICK LOWERING CONTROL)	607
VALVE GP-SOLENOID (SWING PARKING BRAKE)	653
VALVE GP-SOLENOID (TRAVEL SPEED)	742
VALVE GP-SOLENOID (UNIVERSAL QUICK COUPLER)	572
VALVE GP-SWING CUSHION– ANTI-REACTION, FINE SWING	778
VALVE GP-TRAVEL COUNTERBALANCE	779

W

WALKWAY GP	436
WASHER GP-WINDOW	1047
WINDOW GP-CAB– FRONT WINDOW, 1-PIECE	1049
WINDOW GP-CAB– FRONT WINDOW, 70/30-SPLIT	1051
	1053
	1055
WINDOW GP-CAB– REAR, SIDE, TOP WINDOWS	1057
	1058
	1059
WINDOW GP-DOOR	1060
WIPER & WINDOW AR-CAB– FRONT WINDOW, 1-PIECE	1062
WIPER & WINDOW AR-CAB– FRONT WINDOW, 70/30-SPLIT	1063
WIPER GP-WINDOW– FRONT WINDOW, 1-PIECE	1064
WIPER GP-WINDOW– FRONT WINDOW, 70/30-SPLIT	1066
	1068
WIRING GP-AUX START RECEPTACLE– JUMP START	272
WIRING GP-AUXILIARY CONTROL– FLOW CONTROL	274
WIRING GP-CAB	275
WIRING GP-CAB–ACCUGRADE	278
WIRING GP-CAB– OVERLOAD WARNING DEVICE	280
WIRING GP-CAMERA–CAB	282
WIRING GP-CAMERA–CHASSIS	283
WIRING GP-CHASSIS– AUXILIARY, COMBINED FUNCTION	286
WIRING GP-CHASSIS–BOOM FLOAT	291
WIRING GP-CHASSIS– COMMUNICATION RADIO	293

INDEX

Name	Page	Name	Page
WIRING GP-CHASSIS– UNIVERSAL QUICK COUPLER	288		
WIRING GP-COMMUNICATION– PRODUCT LINK 321SR	295		
WIRING GP-CONSOLE	300		
WIRING GP-CONSOLE–LH	298		
WIRING GP-CONSOLE–RH	297		
	301		
WIRING GP-CONVERTER	303		
	306		
WIRING GP-CONVERTER– COMMUNICATION RADIO	304		
WIRING GP-COUNTERWEIGHT– COUNTERWEIGHT REMOVAL	307		
WIRING GP-ELECTRONIC CONTROL	310		
WIRING GP-ELECTRONIC CONTROL– FOOT SWITCH, LH	309		
WIRING GP-FAN–REVERSING	312		
WIRING GP-GRADE CONTROL– ACCUGRADE	317		
WIRING GP-GRADE CONTROL– ACCUGRADE, BOOM	313		
WIRING GP-GRADE CONTROL– ACCUGRADE, STICK	315		
WIRING GP-MONITOR– WORK AREA VISUAL SYSTEM, REAR	322		
WIRING GP-PLATFORM	323		
WIRING GP-QUICK COUPLER	325		
WIRING GP-REFUELING PUMP	327		

Y

YOKE GP-LIFTING 916

MACHINE ARRANGEMENT

294-1237 CHASSIS AR

S/N: WAP1-UP

PART OF 294-1203 GENERAL AR

SMCS-7000 **i03998602**

NOTE	PART NUMBER	QTY	PART NAME 1 2 3 4 5 6 (PRODUCT LEVEL)	SEE PAGE
Y	*299-2635*	1	BATTERY & WIRING GP	161
Y	*333-5261*	1	BOX & MOUNTING GP	336
Y	*290-9395*	1	CONTROL & MTG GP-MACHINE	188
Y	*324-4132*	1	COOLER GP-FUEL	130
Y	*333-5022*	1	COUNTERWEIGHT & MOUNTING GP	343
Y	*362-4374*	1	COVER GP-CONTROL VALVE	351
Y	*308-8763*	1	FRAME GP-UPPER	359
Y	*313-8053*	1	GUARD GP-BOTTOM	370
Y	*313-7900*	1	HANDRAIL GP	374
Y	*313-7848*	1	HOOD & GUARD GP (ENGINE HOOD) (ENGINE HOOD)	378
Y	*313-8122*	1	HOOD & GUARD GP (COVERS, DOORS)	380
Y	*327-3172*	1	HOOD & GUARD GP (PUMP COMPARTMENT)	384
Y	*267-7860*	1	HORN GP-ELECTRIC	994
Y	*150-7033*	1	LIGHTING GP-CHASSIS (FRONT)	201
Y	*225-5759*	1	LINES GP-AIR CONDITIONER	1002
Y	*307-8145*	1	LINES GP-FUEL	132
Y	*7Y-0059*	1	LITERATURE GP	1005
Y	*223-3074*	1	MIRROR GP-REAR VIEW	1006
Y	*245-7811*	1	MOUNTING GP-PLATFORM	1019
Y	*342-3451*	1	OPERATOR AR	1021
Y	*294-1245*	1	PLATE & FILM GP	1080
Y	*304-0052*	1	PLATFORM GP	1025
Y	*239-6472*	1	SENSOR GP-FUEL LEVEL (WATER SEPARATOR)	237
Y	*298-3136*	1	SUPPORT GP-HOOD	430
Y	*313-8267*	1	TANK & MTG GP-FUEL	151
Y	*307-7994*	1	WALKWAY GP	436
Y	*225-5753*	1	WASHER GP-WINDOW	1047

Y-SEPARATE ILLUSTRATION

<END>

340-4055 DISTRIBUTION AR

S/N: WAP1-UP

AN ATTACHMENT

SMCS-7000 **i03916478**

NOTE	PART NUMBER	QTY	PART NAME 1 2 3 4 5 6 (PRODUCT LEVEL)	SEE PAGE
Y	*308-7022*	1	CAB AR	932
Y	*352-6876*	1	CONTROL AR-AUXILIARY	472
Y	*340-4002*	1	OPTION AR-CAB	2

Y-SEPARATE ILLUSTRATION

<END>

MACHINE ARRANGEMENT

340-4057 DISTRIBUTION AR

S/N: WAP1-UP
AN ATTACHMENT

SMCS-7000 **i03915557**

NOTE	PART NUMBER	QTY	PART NAME 1 2 3 4 5 6 (PRODUCT LEVEL)	SEE PAGE
Y	*308-7022*	1	CAB AR	932
Y	*352-6876*	1	CONTROL AR-AUXILIARY	472
Y	*340-4004*	1	OPTION AR-CAB	3

Y-SEPARATE ILLUSTRATION

<END>

294-1203 GENERAL AR

S/N: WAP1-UP

SMCS-7000 **i03901107**

NOTE	PART NUMBER	QTY	PART NAME 1 2 3 4 5 6 (PRODUCT LEVEL)	SEE PAGE
Y	*294-1237*	1	CHASSIS AR	1
Y	*290-9398*	1	ELECTRONICS GP-MACHINE	191
Y	*221-8861*	1	ELECTRONICS GP-MONITOR	192
Y	*255-2882*	1	ENGINE AR	8
Y	*294-1302*	1	FRAME AR-UNDERCARRIAGE	439
Y	*297-0223*	1	HYDRAULIC AR	531
Y	*310-9678*	1	INSTALLATION AR-ENGINE	12
Y	*227-6129*	1	POWER TRAIN AR	334

Y-SEPARATE ILLUSTRATION

<END>

340-4002 OPTION AR-CAB

S/N: WAP1-UP
PART OF 340-4055 DISTRIBUTION AR
AN ATTACHMENT

SMCS-7000 **i03832373**

NOTE	PART NUMBER	QTY	PART NAME 1 2 3 4 5 6 (PRODUCT LEVEL)	SEE PAGE
Y	*229-9079*	1	AIR CONDITIONER AR	921
Y	**234-6500**	1	COVER GP-STORAGE (CAB, REAR)	973
Y	*251-0542*	1	PANEL GP-SWITCH (ENGINE SPEED, START)	230
Y	*327-6503*	1	SEAT & MOUNTING GP (HIGH BACK, WITH HEATER)	1034
Y	*305-0466*	1	SEAT BELT GP (RETRACTABLE, 76-MM)	1035
Y	*249-7113*	1	WIPER & WINDOW AR-CAB (FRONT WINDOW, 70/30-SPLIT)	1063
Y	*350-8247*	1	WIRING GP-CONVERTER (12-VOLT, 10-AMPERE) (POWER SUPPLY)	306

Y-SEPARATE ILLUSTRATION

<END>

MACHINE ARRANGEMENT

340-4003 OPTION AR-CAB

S/N: WAP1-UP
AN ATTACHMENT

SMCS-7000 **i03832729**

NOTE	PART NUMBER	QTY	PART NAME 1 2 3 4 5 6 (PRODUCT LEVEL)	SEE PAGE
Y	*229-9079*	1	AIR CONDITIONER AR	921
Y	**234-6500**	1	COVER GP-STORAGE (CAB, REAR)	973
Y	*251-0542*	1	PANEL GP-SWITCH (ENGINE SPEED, START)	230
Y	*327-6503*	1	SEAT & MOUNTING GP (HIGH BACK, WITH HEATER)	1034
Y	*305-0466*	1	SEAT BELT GP (RETRACTABLE, 76-MM)	1035
Y	*249-2759*	1	WIPER & WINDOW AR-CAB (FRONT WINDOW, 1-PIECE)	1062
Y	*350-8247*	1	WIRING GP-CONVERTER (12-VOLT, 10-AMPERE) (POWER SUPPLY)	306

Y-SEPARATE ILLUSTRATION

<END>

340-4004 OPTION AR-CAB

S/N: WAP1-UP
PART OF 340-4057 DISTRIBUTION AR
AN ATTACHMENT

SMCS-7000 **i03832749**

NOTE	PART NUMBER	QTY	PART NAME 1 2 3 4 5 6 (PRODUCT LEVEL)	SEE PAGE
Y	*229-9079*	1	AIR CONDITIONER AR	921
Y	**234-6500**	1	COVER GP-STORAGE (CAB, REAR)	973
Y	*251-0542*	1	PANEL GP-SWITCH (ENGINE SPEED, START)	230
Y	*327-6501*	1	SEAT & MOUNTING GP (HIGH BACK, TILT)	1032
Y	*305-0466*	1	SEAT BELT GP (RETRACTABLE, 76-MM)	1035
Y	*249-7113*	1	WIPER & WINDOW AR-CAB (FRONT WINDOW, 70/30-SPLIT)	1063
Y	*350-8247*	1	WIRING GP-CONVERTER (12-VOLT, 10-AMPERE) (POWER SUPPLY)	306

Y-SEPARATE ILLUSTRATION

<END>

340-4074 OPTION AR-COLD WEATHER

S/N: WAP1-UP
AN ATTACHMENT

SMCS-7000 **i03910518**

NOTE	PART NUMBER	QTY	PART NAME 1 2 3 4 5 6 (PRODUCT LEVEL)	SEE PAGE
Y	*319-9235*	1	STARTING AR-COLD WEATHER	256
Y	*328-0106*	1	WIRING GP-AUX START RECEPTACLE (JUMP START)	272

Y-SEPARATE ILLUSTRATION

<END>

MACHINE ARRANGEMENT

340-4068 OPTION AR-COUPLER

S/N: WAP1-UP

AN ATTACHMENT

SMCS-7000 **i03910580**

NOTE	PART NUMBER	QTY	PART NAME 1 2 3 4 5 6 (PRODUCT LEVEL)	SEE PAGE
Y	*335-4949*	1	LINES GP-COUPLER (MASS BOOM)	564
Y	*339-0732*	1	LINES GP-COUPLER (STICK)	566

Y-SEPARATE ILLUSTRATION

<END>

340-4070 OPTION AR-COUPLER

S/N: WAP1-UP

AN ATTACHMENT

SMCS-7000 **i03910307**

NOTE	PART NUMBER	QTY	PART NAME 1 2 3 4 5 6 (PRODUCT LEVEL)	SEE PAGE
Y	*277-0906*	1	LINES GP-COUPLER (STICK)	560
Y	*334-2212*	1	LINES GP-COUPLER (BOOM)	561

Y-SEPARATE ILLUSTRATION

<END>

340-4071 OPTION AR-COUPLER

S/N: WAP1-UP

AN ATTACHMENT

SMCS-7000 **i03910226**

NOTE	PART NUMBER	QTY	PART NAME 1 2 3 4 5 6 (PRODUCT LEVEL)	SEE PAGE
Y	*334-2212*	1	LINES GP-COUPLER	561
Y	*335-4903*	1	LINES GP-COUPLER	563

Y-SEPARATE ILLUSTRATION

<END>

340-4072 OPTION AR-COUPLER

S/N: WAP1-UP

AN ATTACHMENT

SMCS-7000 **i03910305**

NOTE	PART NUMBER	QTY	PART NAME 1 2 3 4 5 6 (PRODUCT LEVEL)	SEE PAGE
Y	*355-7865*	1	LINES GP-COUPLER (REACH BOOM)	568
Y	*335-4903*	1	LINES GP-COUPLER (STICK)	563

Y-SEPARATE ILLUSTRATION

<END>

MACHINE ARRANGEMENT

340-4073 OPTION AR-COUPLER

S/N: WAP1-UP

AN ATTACHMENT

SMCS-7000 **i03910272**

NOTE	PART NUMBER	QTY	PART NAME 1 2 3 4 5 6 (PRODUCT LEVEL)	SEE PAGE
Y	*355-7865*	1	LINES GP-COUPLER	568
Y	*344-4370*	1	LINES GP-COUPLER	567

Y-SEPARATE ILLUSTRATION

<END>

340-4062 OPTION AR-HYDRAULIC

S/N: WAP1-UP

AN ATTACHMENT

SMCS-7000 **i03991150**

NOTE	PART NUMBER	QTY	PART NAME 1 2 3 4 5 6 (PRODUCT LEVEL)	SEE PAGE
Y	*359-8633*	1	LINES GP-AUXILIARY HYDRAULIC (MASS BOOM)	540
Y	*352-6794*	1	LINES GP-AUXILIARY HYDRAULIC (STICK, HIGH PRESSURE)	535

Y-SEPARATE ILLUSTRATION

<END>

340-4063 OPTION AR-HYDRAULIC

S/N: WAP1-UP

AN ATTACHMENT

SMCS-7000 **i03992129**

NOTE	PART NUMBER	QTY	PART NAME 1 2 3 4 5 6 (PRODUCT LEVEL)	SEE PAGE
Y	*359-8633*	1	LINES GP-AUXILIARY HYDRAULIC (MASS BOOM)	540
Y	*352-6793*	1	LINES GP-AUXILIARY HYDRAULIC (STICK, HIGH PRESSURE)	534

Y-SEPARATE ILLUSTRATION

<END>

340-4064 OPTION AR-HYDRAULIC

S/N: WAP1-UP

AN ATTACHMENT

SMCS-7000 **i03992130**

NOTE	PART NUMBER	QTY	PART NAME 1 2 3 4 5 6 (PRODUCT LEVEL)	SEE PAGE
Y	*359-8632*	1	LINES GP-AUXILIARY HYDRAULIC (BOOM)	538
Y	*352-6793*	1	LINES GP-AUXILIARY HYDRAULIC (STICK, HIGH PRESSURE)	534

Y-SEPARATE ILLUSTRATION

<END>

MACHINE ARRANGEMENT

340-4065 OPTION AR-HYDRAULIC

S/N: WAP1-UP
AN ATTACHMENT

SMCS-7000 **i03992131**

NOTE	PART NUMBER	QTY	PART NAME 1 2 3 4 5 6 (PRODUCT LEVEL)	SEE PAGE
Y	*359-8632*	1	LINES GP-AUXILIARY HYDRAULIC (BOOM)	538
Y	*352-6791*	1	LINES GP-AUXILIARY HYDRAULIC (STICK, HIGH PRESSURE)	533

Y-SEPARATE ILLUSTRATION

<END>

340-4066 OPTION AR-HYDRAULIC

S/N: WAP1-UP
AN ATTACHMENT

SMCS-7000 **i03992252**

NOTE	PART NUMBER	QTY	PART NAME 1 2 3 4 5 6 (PRODUCT LEVEL)	SEE PAGE
Y	*359-8631*	1	LINES GP-AUXILIARY HYDRAULIC (REACH BOOM)	536
Y	*352-6791*	1	LINES GP-AUXILIARY HYDRAULIC (STICK, HIGH PRESSURE)	533

Y-SEPARATE ILLUSTRATION

<END>

340-4067 OPTION AR-HYDRAULIC

S/N: WAP1-UP
AN ATTACHMENT

SMCS-7000 **i03991092**

NOTE	PART NUMBER	QTY	PART NAME 1 2 3 4 5 6 (PRODUCT LEVEL)	SEE PAGE
Y	*359-8631*	1	LINES GP-AUXILIARY HYDRAULIC (REACH BOOM)	536
Y	*352-6790*	1	LINES GP-AUXILIARY HYDRAULIC (STICK, HIGH PRESSURE)	532

Y-SEPARATE ILLUSTRATION

<END>

319-9239 SPECIAL AR—JC-FAMILY

S/N: WAP1-UP
EXTREME SERVICE
AN ATTACHMENT

SMCS-7000 **i03921089**

NOTE	PART NUMBER	QTY	PART NAME 1 2 3 4 5 6 (PRODUCT LEVEL)	SEE PAGE
Y	*319-9241*	1	LINKAGE AR-BUCKET	816
Y	*319-9240*	1	STICK AR-HOE	825

Y-SEPARATE ILLUSTRATION

<END>

MACHINE ARRANGEMENT

340-3996 SPECIAL AR—ACCUGRADE

S/N: WAP1-UP

FOR USE WITH 319-9211—PAGE 780, 319-9212—PAGE 824, 319-9213—PAGE 825. CANNOT BE USED WITH 319-9186—PAGE 181

AN ATTACHMENT

SMCS-7000 **i03917095**

NOTE	PART NUMBER	QTY	PART NAME 1 2 3 4 5 6 (PRODUCT LEVEL)	SEE PAGE
Y	*354-6068*	1	CYLINDER & LINES GP-BUCKET	481
Y	*273-5358*	1	FLOOR MAT GP (ACCUGRADE READY)	983
Y	*342-1910*	1	GUARD GP-CYLINDER	791
Y	*307-8001*	1	HOOD & GUARD GP	377
Y	*270-5603*	1	MOUNTING GP-ANTENNA (ACCUGRADE)	1011
Y	*349-5418*	1	MOUNTING GP-SENSOR	223
Y	*299-2999*	1	WIRING GP-CAB (ACCUGRADE)	278
Y	*299-3002*	1	WIRING GP-GRADE CONTROL (ACCUGRADE, BOOM)	313
Y	*299-3005*	1	WIRING GP-GRADE CONTROL (ACCUGRADE, STICK)	315
Y	*342-2947*	1	WIRING GP-GRADE CONTROL (ACCUGRADE, CHASSIS)	317

Y-SEPARATE ILLUSTRATION

<END>

ENGINE ARRANGEMENT

255-2882 ENGINE AR

S/N: WAP1-UP

PART OF 294-1203 GENERAL AR

SMCS-1000 **i03649761**

NOTE	PART NUMBER	QTY	PART NAME 1 2 3 4 5 6 (PRODUCT LEVEL)	SEE PAGE
CY	**286-9798**	1	ENGINE AR-COMPLETE	9
Y	*222-8255*	1	MUFFLER GP	123

C-CHANGE FROM PREVIOUS TYPE
Y-SEPARATE ILLUSTRATION

ENGINE ARRANGEMENT

286-9798 ENGINE AR-COMPLETE

S/N: RHX9087-UP

PART OF 255-2882 ENGINE AR

SMCS-1000 **i04020203**

NOTE	PART NUMBER	QTY	PART NAME 1 2 3 4 5 6 (PRODUCT LEVEL)	SEE PAGE
Y	*235-2471*	1	ALTERNATOR GP-CHARGING	160
Y	*275-6470*	1	COMPRESSOR & MTG GP-REFRIG	941
Y	*126-7631*	1	CONNECTION GP-ELECTRICAL	183
Y	*229-5509*	1	CONTROL & MTG GP-ENGINE ELEK	187
Y	*107-6736*	1	COVER GP-CYLINDER BLOCK (TURBOCHARGER DRAIN COVER)	16
Y	*229-5519*	1	COVER GP-CYLINDER BLOCK	17
Y	*120-9847*	1	COVER GP-FRONT HOUSING	18
Y	*159-6159*	1	COVER GP-FRONT HOUSING (CAM, IDLER GEAR)	19
Y	*246-5628*	1	COVER GP-VALVE MECHANISM	22
Y	*212-2113*	1	DAMPER & PULLEY GP	34
Y	*6I-3638*	1	DRIVE GP-PUMP	506
Y	*241-5933*	1	ENGINE AR-CORE	11
Y	*4P-6846*	1	FASTENER GP-FRONT HOUSING	36
Y	*221-1428*	1	FASTENER GP-FRONT HOUSING	37
Y	*4N-2481*	1	FASTENER GP-OIL PUMP MOUNTING	76
Y	*246-9906*	1	FILLER GP-ENGINE OIL	77
Y	*231-2215*	1	FILTER GP-ENGINE OIL	80
Y	*356-1879*	1	FILTER GP-FUEL	136
Y	*194-7097*	1	FLYWHEEL GP	39
Y	*241-6326*	1	FUMES DISPOSAL GP	81
Y	**275-6596**	1	GAUGE AS-OIL LEVEL (DIPSTICK) (ENGINE)	82
Y	*4P-9823*	1	GEAR GP-REAR	44
Y	*190-2472*	1	GUIDE GP-OIL LEVEL GAUGE	83
Y	*7E-8996*	1	HOUSING GP-FLYWHEEL	46
Y	*241-0164*	1	HOUSING GP-FRONT	48
Y	*111-2088*	1	LIFTING GP-ENGINE (REAR)	51
Y	*112-2418*	1	LIFTING GP-ENGINE (FRONT)	52
Y	*126-0081*	1	LINES GP-AIR (TURBOCHARGER OUTLET)	116
Y	*263-1129*	1	LINES GP-AIR	118
Y	*160-6894*	1	LINES GP-ENGINE OIL	84
Y	*246-4785*	1	LINES GP-FUEL	139
Y	*220-3490*	1	LINES GP-TURBOCHARGER OIL	87
Y	*220-3493*	1	LINES GP-TURBOCHARGER WATER	96
Y	*228-4224*	1	LINES GP-WATER	98
Y	*220-6372*	1	MANIFOLD GP-EXHAUST	122
Y	*227-3503*	1	MOUNTING GP-ALTERNATOR & COMPR	54
Y	*170-3562*	1	MOUNTING GP-OIL LEVEL GAUGE	88
Y	*197-7415*	1	MOUNTING GP-SENSOR (ATMOSPHERIC, ENGINE OIL)	222
Y	*271-5761*	1	PAN GP-OIL	57
Y	*238-6802*	1	PANEL GP-SOUND SUPPRESSION	59
Y	*246-5984*	1	PANEL GP-SOUND SUPPRESSION	399
Y	*235-8200*	1	PLUG GP-CONNECTOR (ENGINE HARNESS, PROT COVER)	232
Y	*229-6709*	1	PLUG GP-CYLINDER BLOCK (OIL GALLERY)	63
Y	*282-3645*	1	PLUG GP-CYLINDER HEAD	65
Y	*221-3705*	1	PULLEY GP	66
YR	**198-1508**	1	PUMP GP-ENGINE OIL	91
Y	*100-4265*	1	PUMP GP-FUEL TRANSFER	147
Y	*280-8039*	1	PUMP GP-WATER	102
Y	*354-0041*	1	SENSOR GP-ENGINE	235
Y	*171-8963*	1	SENSOR GP-SPEED	246
Y	*331-6081*	1	STARTING MOTOR GP-ELECTRIC	260
Y	*227-9495*	1	SUPPORT GP-ENGINE (BRACE)	71
Y	*290-9021*	1	SUPPORT GP-ENGINE (FRONT)	72
Y	*220-6060*	1	TURBOCHARGER GP	126

ENGINE ARRANGEMENT

286-9798 ENGINE AR-COMPLETE *(contd.)* i04020203

NOTE	PART NUMBER	QTY	PART NAME 1 2 3 4 5 6 (PRODUCT LEVEL)	SEE PAGE
Y	*235-5942*	1	VALVE GP-FLUID SAMPLING	92
Y	*356-1797*	1	WIRING GP-ELECTRONIC CONTROL	310
	268-3700	1	ELECTRONICS GP-ENGINE RATINGS	
			PLEASE USE THE GASKET KIT LINK IN SIS OR CONTACT YOUR LOCAL DEALER FOR THE LATEST GASKET KIT INFORMATION	

R-REMFG PART MAY BE AVAILABLE
Y-SEPARATE ILLUSTRATION

ENGINE ARRANGEMENT

241-5933 ENGINE AR-CORE

S/N: RHX7868-UP

PART OF 286-9798 ENGINE AR-COMPLETE

SMCS-1000 **i03046307**

NOTE	PART NUMBER	QTY	PART NAME 1 2 3 4 5 6 (PRODUCT LEVEL)	SEE PAGE
Y	*278-5662*	1	BASE GP-VALVE COVER & INJ HARN	14
Y	*234-7935*	1	CAMSHAFT GP	15
Y	*223-9732*	1	CRANKSHAFT GP	23
Y	*261-0191*	1	CYLINDER BLOCK GP	26
Y	*274-1953*	1	CYLINDER HEAD GP	32
Y	*109-1657*	1	FASTENER GP-VALVE MECHANISM	38
Y	*207-0449*	1	GEAR GP-FRONT	41
Y	*220-1441*	6	PISTON & ROD GP	61
Y	*235-1402*	6	PUMP GP-FUEL INJECTION	145
Y	*190-0009*	1	MECHANISM GP-FUEL PUMP & VALVE	53

Y-SEPARATE ILLUSTRATION

ENGINE ARRANGEMENT

310-9678 INSTALLATION AR-ENGINE

S/N: WAP1-UP

PART OF 294-1203 GENERAL AR

SMCS-1000 **i03904129**

NOTE	PART NUMBER	QTY	PART NAME 1 2 3 4 5 6 (PRODUCT LEVEL)	SEE PAGE
Y	*233-1186*	1	AIR CLEANER GP	113
Y	*229-9014*	1	CONDENSER & MTG GP-REFRIGERANT	942
Y	*305-7590*	1	COOLER & MTG GP-HYDRAULIC OIL	474
Y	*222-8334*	1	EXTENSION GP-EXHAUST	115
Y	*281-3647*	1	FAN GP-SUCTION	94
Y	*222-8323*	1	FASTENER GP-FUEL LINES	131
Y	*210-8155*	1	LINES GP-AIR (AFTERCOOLER TO TURBOCHARGER)	117
Y	*324-4197*	1	LINES GP-AIR (AIR CLEANER, ALT, TURBOCHARGER)	119
Y	*151-6662*	1	LINES GP-ENGINE OIL DRAIN	86
Y	*222-8321*	1	LINES GP-MUFFLER DRAIN	121
Y	*287-0203*	1	MOUNTING GP-ENGINE	55
Y	*230-2825*	1	RADIATOR & AFTERCOOLER GP	105

Y-SEPARATE ILLUSTRATION

BASIC ENGINE

133-9907 ADAPTER GP-PUMP DRIVE

S/N: RHX7868-UP

PART OF 6I-3638 DRIVE GP-PUMP

SMCS-1313, 3108 **i01514868**

NOTE	REF NO	GRAPHIC REF	PART NUMBER	QTY	PART NAME 1 2 3 4 5 6 (PRODUCT LEVEL)	SEE PAGE
	1	1	**1B-3867**	2	BALL BEARING	
	2	1	**4F-7957**	3	BOLT (1/4-20X0.875 IN)	
	3	1	**6I-4575**	1	GEAR (34 TEETH)	
	4	1	**9X-2038**	3	WASHER (7X19X2MM THK)	
	5	1	**133-9906**	1	ADAPTER	
	6	1	**1H-8647**	1	RING-SNAP	

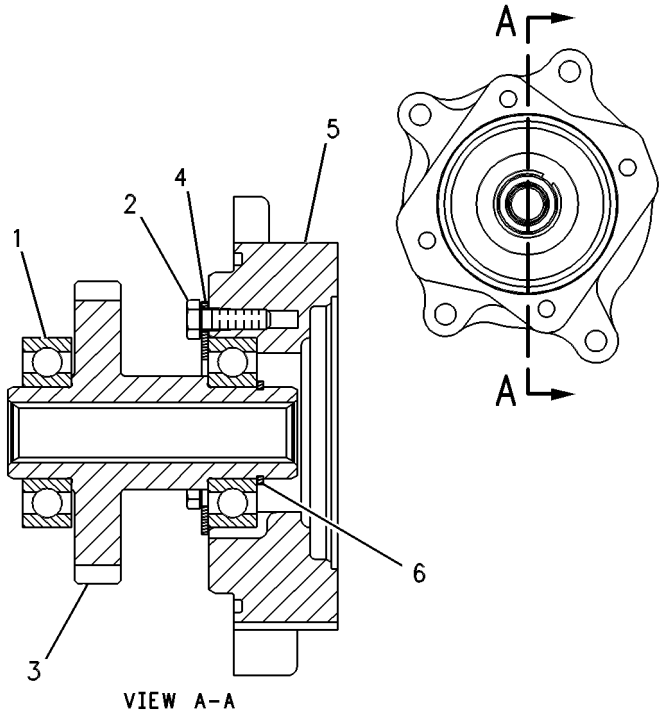

GRAPHIC #1 **<END>** g00263602

BASIC ENGINE

278-5662 BASE GP-VALVE COVER & INJ HARN

S/N: RHX7868-UP

PART OF 241-5933 ENGINE AR-CORE

SMCS-1120, 1408 **i03799402**

NOTE	REF NO	GRAPHIC REF	PART NUMBER	QTY	PART NAME 1 2 3 4 5 6 (PRODUCT LEVEL)	SEE PAGE
	1	1	**123-3202**	3	STRAP-CABLE	
	2	1	**6V-0128**	1	SEAL-CONNECTOR	
	3	1	**7E-6508**	6	CAP AS	
	4	1	**9L-8925**	14	BOLT (5/16-18X1.25-IN)	
	5	1	**122-1472**	1	BOLT (5/16-18X2.36-IN)	
C	6	1	**289-8215**	1	BASE-VALVE MECHANISM COVER	
	7	1	**343-9866**	1	HARNESS AS-ENGINE (UNIT INJECTOR)	
		1	**103-8134**	1	KIT-RECEPTACLE (12-PIN)	
		1	**102-8801**	1	KIT-RECEPTACLE (12-PIN)	
					(EACH KIT INCLUDES RECEPTACLE AS & WEDGE)	
		1	**7E-6513**	6	CONNECTOR AS	
		1	**8T-8737**	3	PLUG-SEAL	
		1	**180-9339**	9	PIN-CONNECTOR (14-GA TO 18-GA)	
	8	1	**326-4512**	6	MOUNTING-CABLE TIE	
C	9	1	**272-0390**	1	SEAL	
	10	1	**4F-7957**	2	BOLT (1/4-20X0.875-IN)	
	11	1	**5P-0537**	2	WASHER-HARD (7.2X14.5X2-MM THK)	

C-CHANGE FROM PREVIOUS TYPE

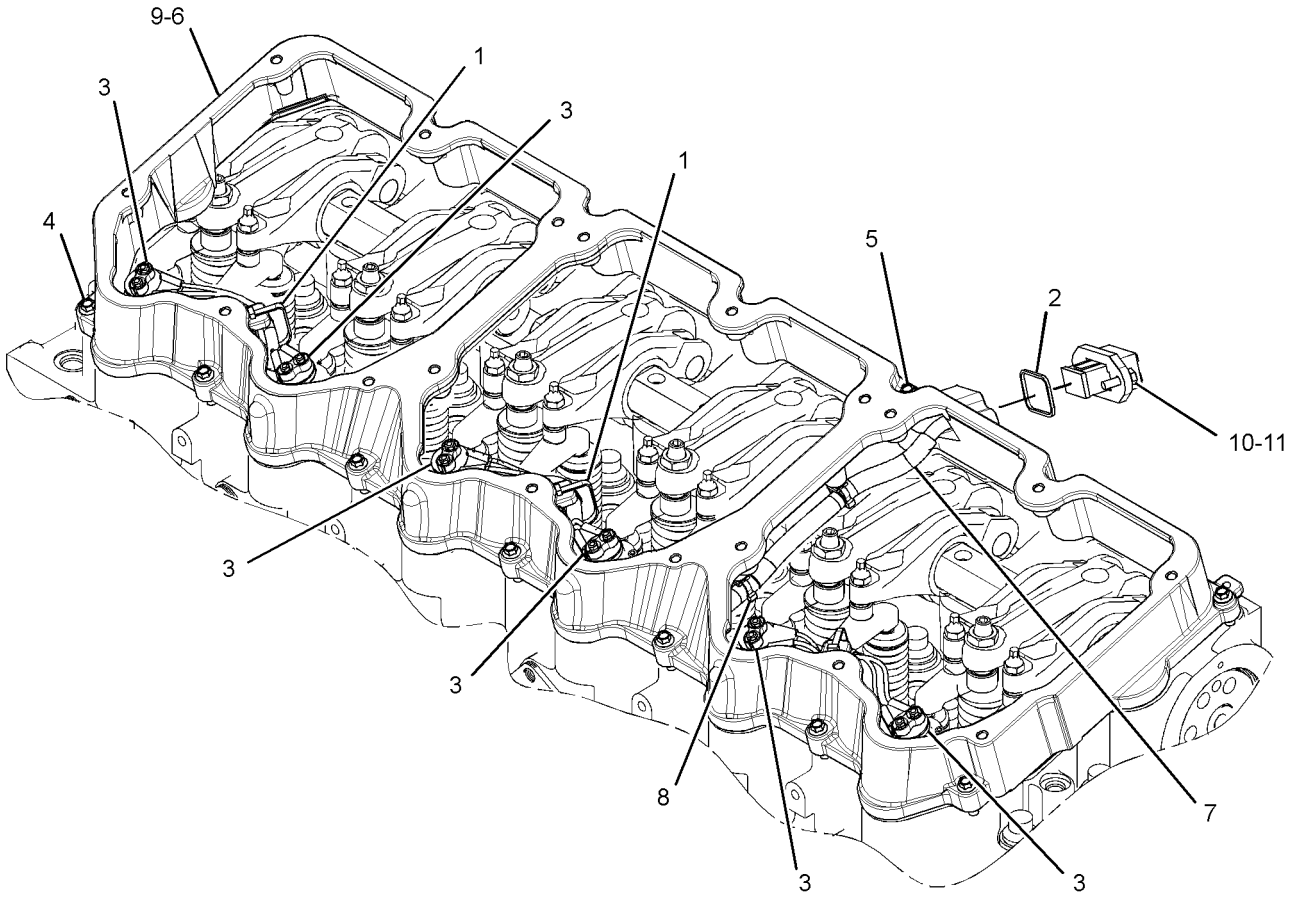

GRAPHIC #1 **<END>** g02060774

BASIC ENGINE

234-7935 CAMSHAFT GP

S/N: RHX7868-UP

PART OF 241-5933 ENGINE AR-CORE

SMCS-1210 **i03768572**

NOTE	REF NO	GRAPHIC REF	PART NUMBER	QTY	PART NAME 1 2 3 4 5 6 (PRODUCT LEVEL)	SEE PAGE
	1	1	**6V-1197**	1	SEAL-O-RING	
	2	1	**102-9089**	1	COVER	
	3	1	**119-0036**	3	SCREW-FLAT HEAD (5/16-18X0.875-IN)	
R	4	1	**332-7298**	1	CAMSHAFT	

R-REMFG PART MAY BE AVAILABLE

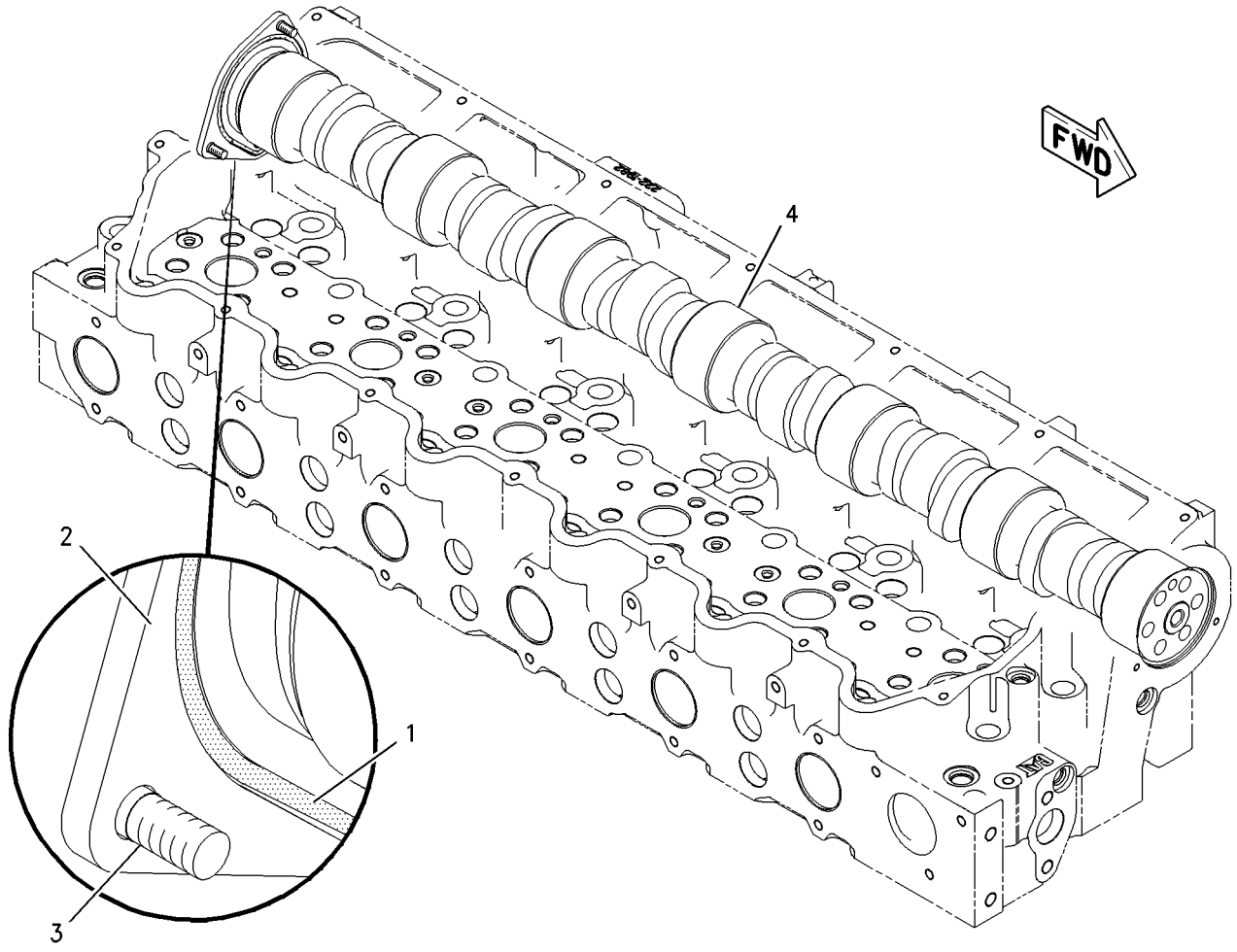

GRAPHIC #1 **<END>** g01002422

BASIC ENGINE

107-6736 COVER GP-CYLINDER BLOCK

S/N: RHX7868-UP

PART OF 286-9798 ENGINE AR-COMPLETE

SMCS-1201 **i01516054**

NOTE	REF NO	GRAPHIC REF	PART NUMBER	QTY	PART NAME 1 2 3 4 5 6 (PRODUCT LEVEL)	SEE PAGE
	1	1	**0S-1594**	2	BOLT (3/8-16X1 IN)	
	2	1	**5M-2894**	2	WASHER-HARD (10.2X18.5X2.5MM THK)	
	3	1	**4W-9890**	1	COVER	
	4	1	**4N-0699**	1	GASKET	

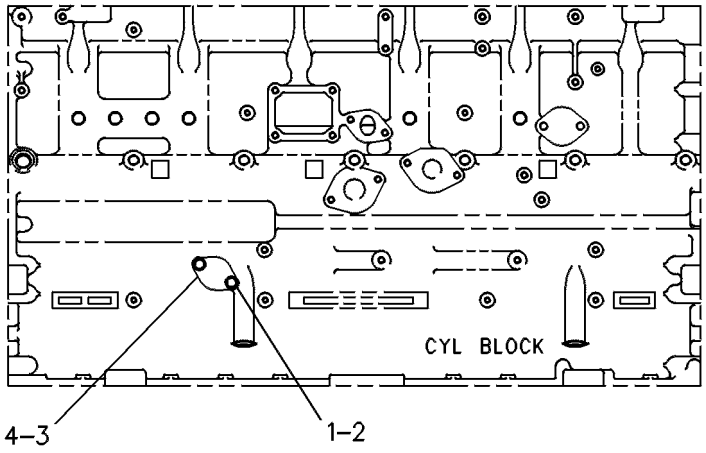

LEFT SIDE VIEW

GRAPHIC #1 **<END>** g00244599

BASIC ENGINE

229-5519 COVER GP-CYLINDER BLOCK

S/N: RHX7868-UP

PART OF 286-9798 ENGINE AR-COMPLETE

SMCS-1201 **i03892715**

NOTE	REF NO	GRAPHIC REF	PART NUMBER	QTY	PART NAME 1 2 3 4 5 6 (PRODUCT LEVEL)	SEE PAGE
C	1	1	**285-0823**	1	COVER	
	2	1	**117-8801**	1	SEAL-O-RING	
	3	1	**1F-7958**	3	NUT-FULL (1/2-13-THD)	
C	4	1	*307-2671*	1	PLUG AS	
		1	**9S-8002**	1	PLUG-O-RING	
		1	**214-7566**	1	SEAL-O-RING	
	5	1	*307-2673*	1	PLUG AS	
		1	**9S-8005**	1	PLUG-O-RING	
		1	**238-5080**	1	SEAL-O-RING	
	6	1	*353-5126*	1	PLUG AS	
		1	**6V-6609**	1	SEAL-O-RING	
		1	**9S-8005**	1	PLUG-O-RING	
	7	1	**5P-8245**	3	WASHER-HARD (13.5X25.5X3-MM THK)	

C-CHANGE FROM PREVIOUS TYPE

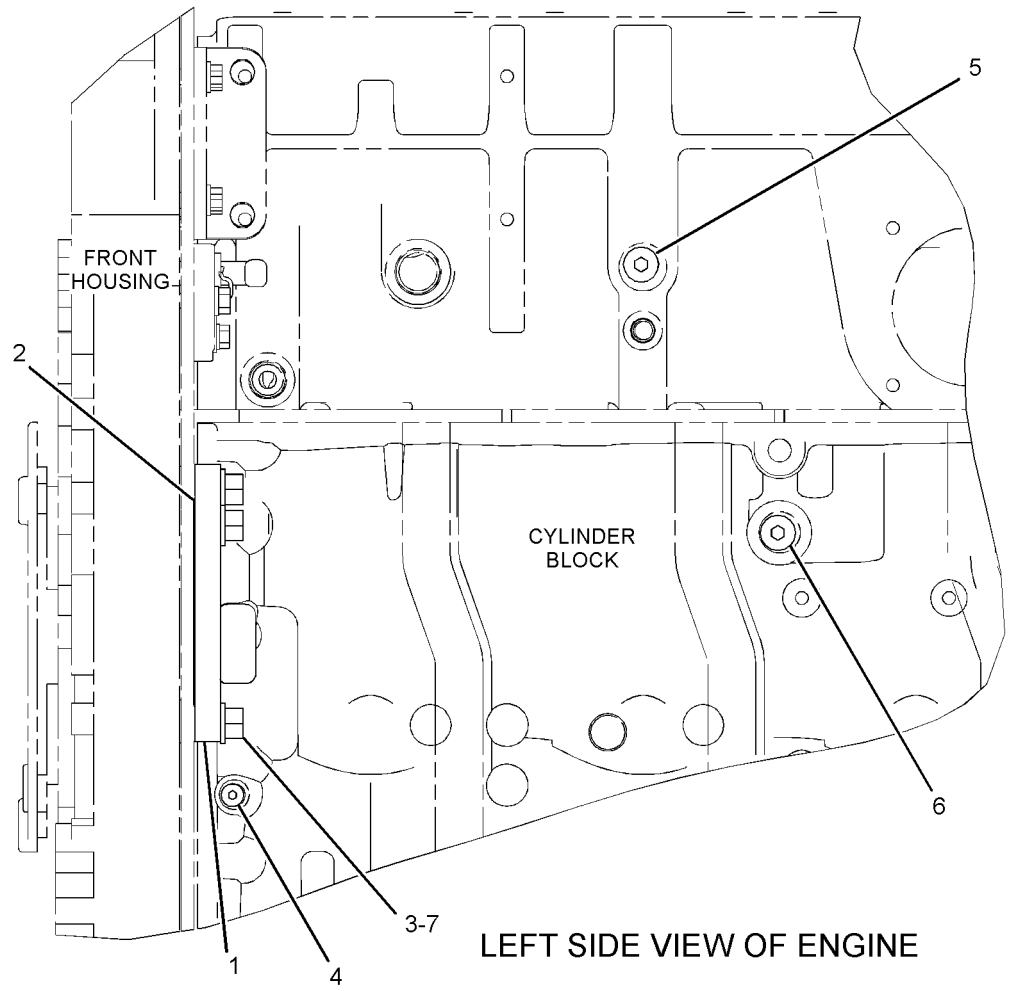

LEFT SIDE VIEW OF ENGINE

GRAPHIC #1 **<END>** g02139704

BASIC ENGINE

120-9847 COVER GP-FRONT HOUSING

S/N: RHX7868-UP

PART OF 286-9798 ENGINE AR-COMPLETE

SMCS-1150 **i02099526**

NOTE	REF NO	GRAPHIC REF	PART NUMBER	QTY	PART NAME 1 2 3 4 5 6 (PRODUCT LEVEL)	SEE PAGE
	1	1	**7C-1445**	1	COVER	
	2	1	**2B-2695**	2	BOLT (5/16-18X0.875-IN)	
	3	1	**9M-1974**	2	WASHER-HARD (8.8X16X2-MM THK)	
	4	1	**061-9455**	1	SEAL-O-RING	

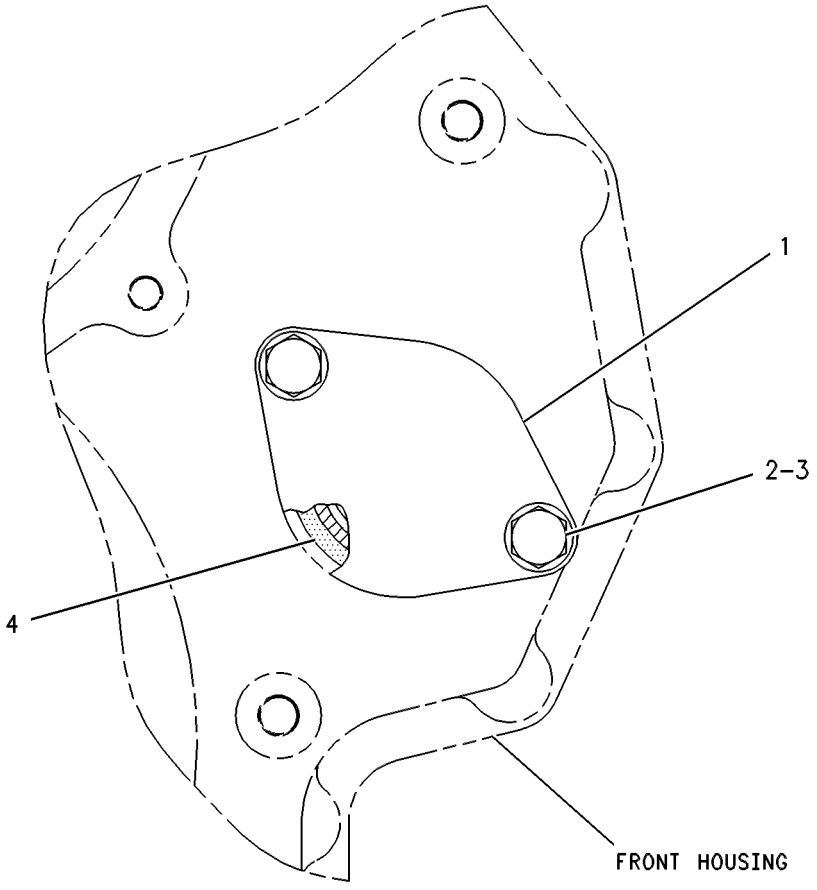

GRAPHIC #1 **<END>** g00252251

BASIC ENGINE

159-6159 COVER GP-FRONT HOUSING

S/N: RHX7868-UP
CAM AND IDLER GEAR ACCESS
PART OF 286-9798 ENGINE AR-COMPLETE

SMCS-1150 **i03784811**

NOTE	REF NO	GRAPHIC REF	PART NUMBER	QTY	PART NAME 1 2 3 4 5 6 (PRODUCT LEVEL)	SEE PAGE
	1	1	**297-1813**	12	SCREW-HEAD (5/16-18X1-IN)	
	2	1	**175-1367**	2	SPACER (8.8X16X10-MM THK) (MARKED X)	
	3	1	**209-3569**	1	COVER GP-FRONT HOUSING	
		1	**160-7271**	1	SEAL	
	4	1	**031-4155**	2	LOCKNUT (5/16-18-THD) (MARKED X)	
	5	1	**175-1366**	2	STUD (MARKED X)	
	6	1	**238-5078**	2	SEAL-O-RING (MARKED X)	

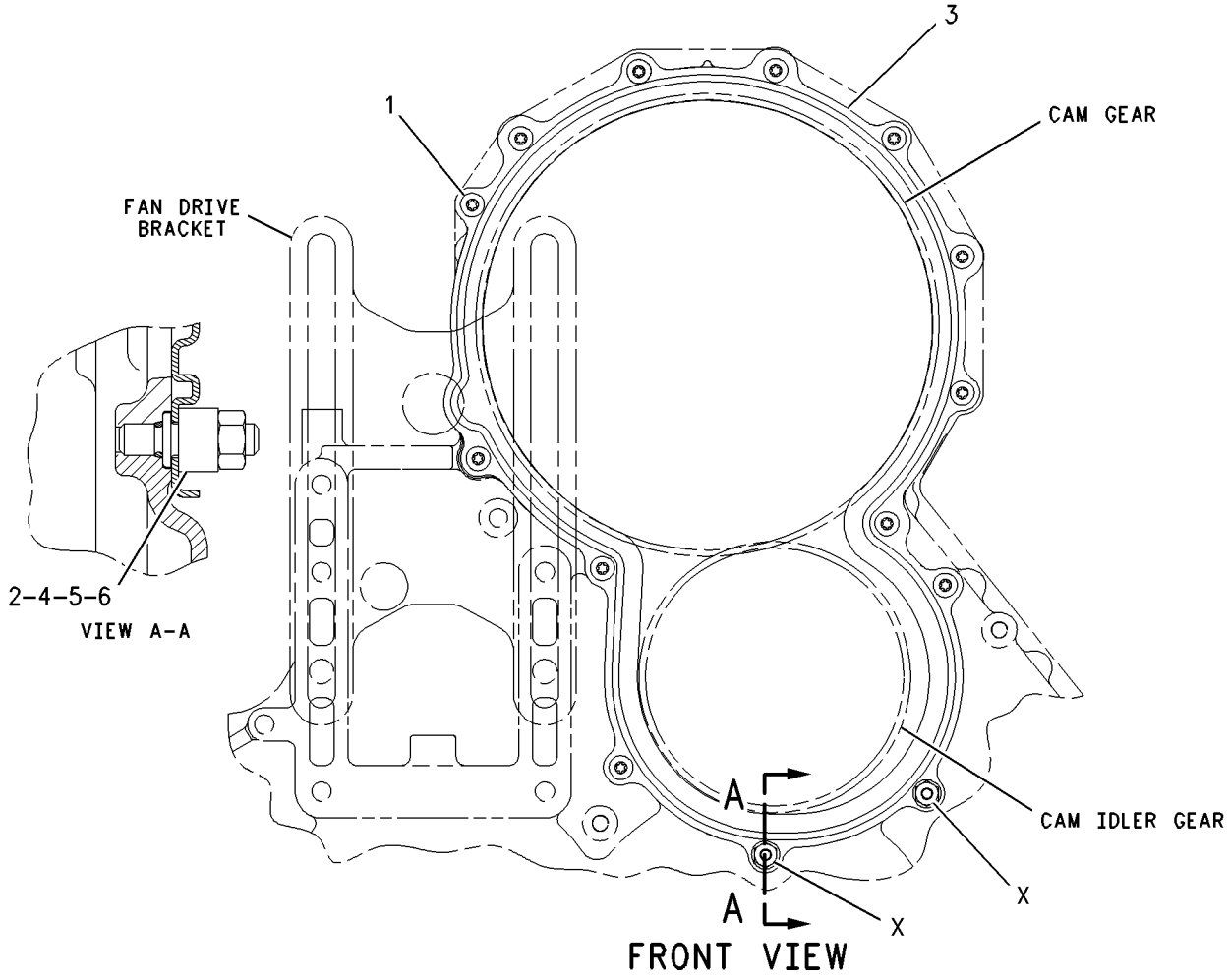

GRAPHIC #1 **<END>** g00631258

BASIC ENGINE

150-3135 COVER GP-VALVE MECHANISM

S/N: RHX8292-UP

PART OF 246-5628 COVER GP-VALVE MECHANISM

SMCS-1107 **i02405247**

NOTE	REF NO	GRAPHIC REF	PART NUMBER	QTY	PART NAME 1 2 3 4 5 6 (PRODUCT LEVEL)	SEE PAGE
	1	1	**150-2557**	1	COVER-VALVE MECH	
	2	1	**242-9537**	1	SEAL-VALVE COVER	
	3	1	**243-1159**	6	FASTENER AS	
					(EACH INCLUDES)	
		1	**149-7378**	1	GROMMET	

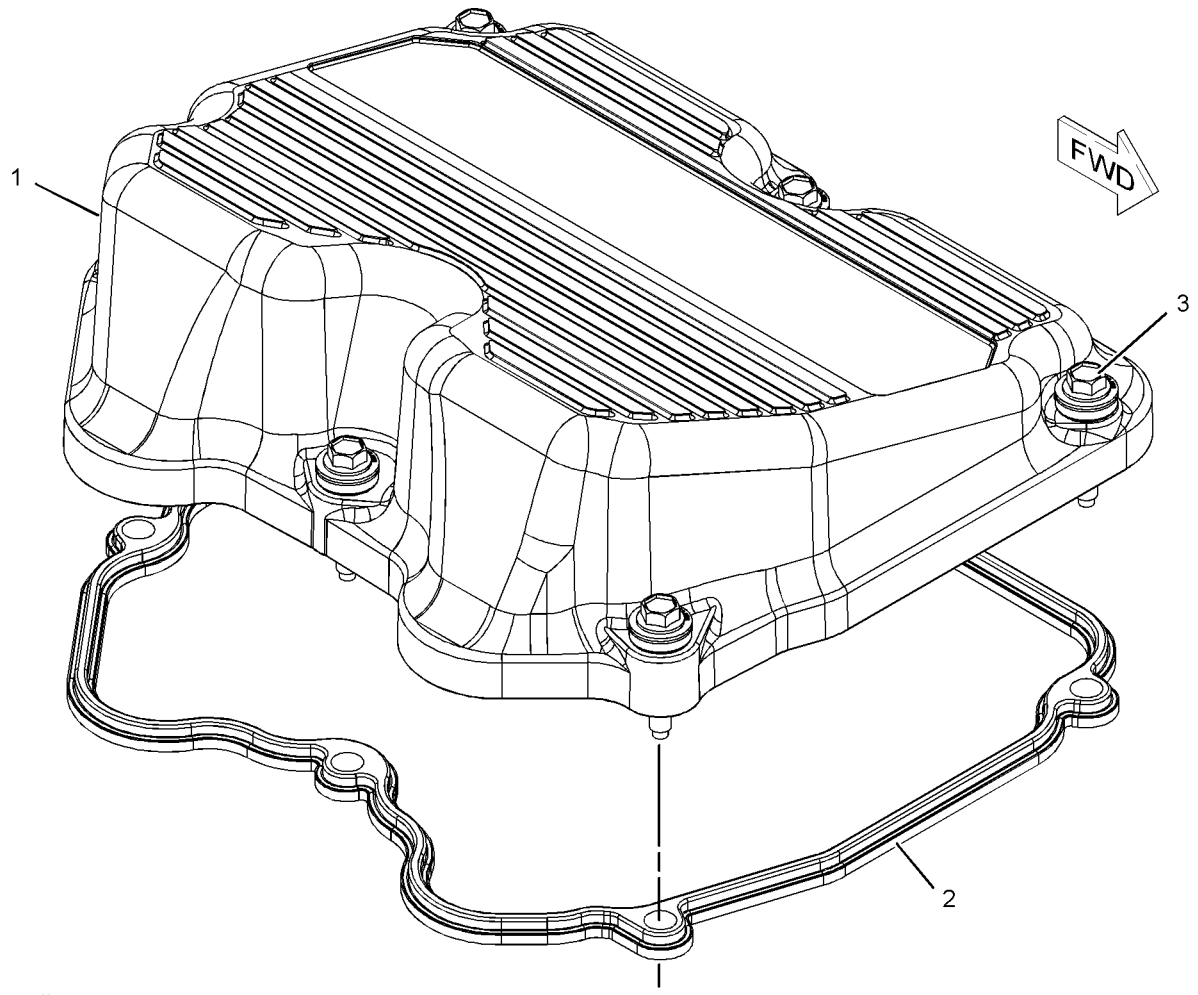

GRAPHIC #1 **<END>** g01055147

160-7452 COVER GP-VALVE MECHANISM

S/N: RHX8292-UP

PART OF 246-5628 COVER GP-VALVE MECHANISM

SMCS-1107 **i03905241**

NOTE	REF NO	GRAPHIC REF	PART NUMBER	QTY	PART NAME 1 2 3 4 5 6 (PRODUCT LEVEL)	SEE PAGE
	1	1	**150-3136**	1	COVER AS-VALVE MECHANISM	
	1A	1	**6V-5100**	1	SEAL-O-RING	
	1B	1	**7C-6514**	1	ADAPTER	
	2	1	**243-1159**	6	FASTENER AS	
					(EACH INCLUDES)	
		1	**149-7378**	1	GROMMET	
	3	1	**242-9537**	1	SEAL-VALVE COVER	

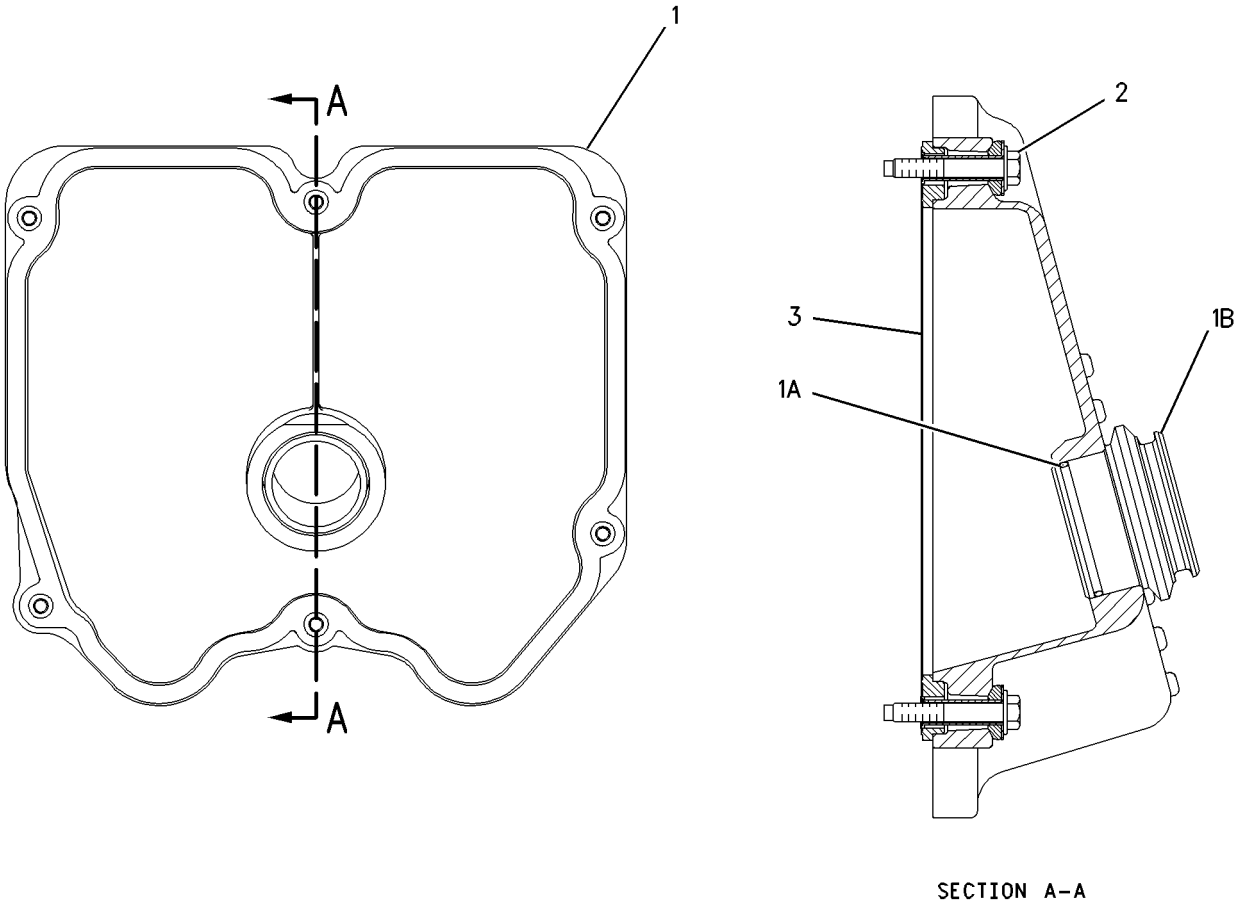

SECTION A–A

GRAPHIC #1 **<END>** g00632472

BASIC ENGINE

246-5628 COVER GP-VALVE MECHANISM

S/N: RHX8292-UP
DOES NOT HAVE AN OIL FILL
PART OF 286-9798 ENGINE AR-COMPLETE

SMCS-1107 **i03654000**

NOTE	REF NO	GRAPHIC REF	PART NUMBER	QTY	PART NAME 1 2 3 4 5 6 (PRODUCT LEVEL)	SEE PAGE
CY	1	1	*150-3135*	2	COVER GP-VALVE MECHANISM	20
CY	2	1	*160-7452*	1	COVER GP-VALVE MECHANISM	21

C-CHANGE FROM PREVIOUS TYPE
Y-SEPARATE ILLUSTRATION

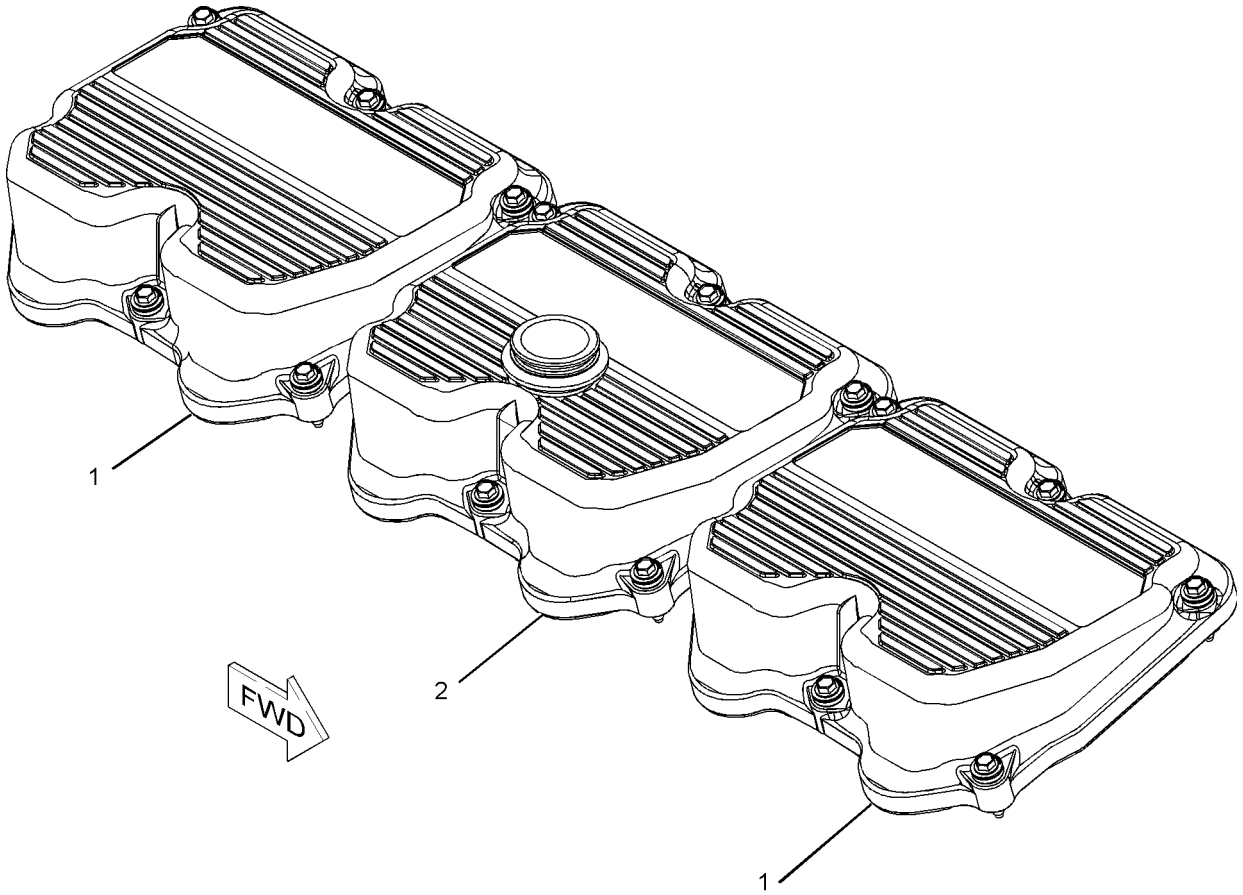

GRAPHIC #1 **<END>** g01070635

BASIC ENGINE

223-9732 CRANKSHAFT GP

S/N: RHX7868-UP

PART OF 241-5933 ENGINE AR-CORE

SMCS-1202 **i03593392**

NOTE	REF NO	GRAPHIC REF	PART NUMBER	QTY	PART NAME 1 2 3 4 5 6 (PRODUCT LEVEL)	SEE PAGE
J	1	1	**253-1752**	2	PLATE-THRUST	
Y	2	1	*319-7401*	1	SEAL GP-CRANKSHAFT (FRONT)	70
R	3	1	**189-4918**	1	CRANKSHAFT AS	
	3A	1	**4N-0684**	1	DOWEL	
	3B	1	**7S-5005**	1	DOWEL	
	3C	1	**187-8981**	1	GEAR-CRANKSHAFT (80-TEETH)	
J	4	1	**317-8766**	7	BEARING-MAIN (STANDARD)	
AB		1	**4W-5698**		BEARING-MAIN (0.63-MM US)	
AB		1	**4W-5699**		BEARING-MAIN (1.27-MM US)	
AB		1	**4W-5700**		BEARING-MAIN (0.63-MM OS)	
AB		1	**4W-5701**		BEARING-MAIN (0.63-MM OS, 0.63-MM US)	
					AVAILABLE REPAIR KIT(S):	
AJ			**243-6718**		KIT-CRANKSHAFT BEARING (STANDARD)	
					(INCLUDES A COMPLETE SET OF MAIN BEARINGS AND THRUST PLATES)	

A-NOT PART OF THIS GROUP
B-USE AS REQUIRED
J-KIT MARKED J INCLUDES PARTS MARKED J
R-REMFG PART MAY BE AVAILABLE
Y-SEPARATE ILLUSTRATION

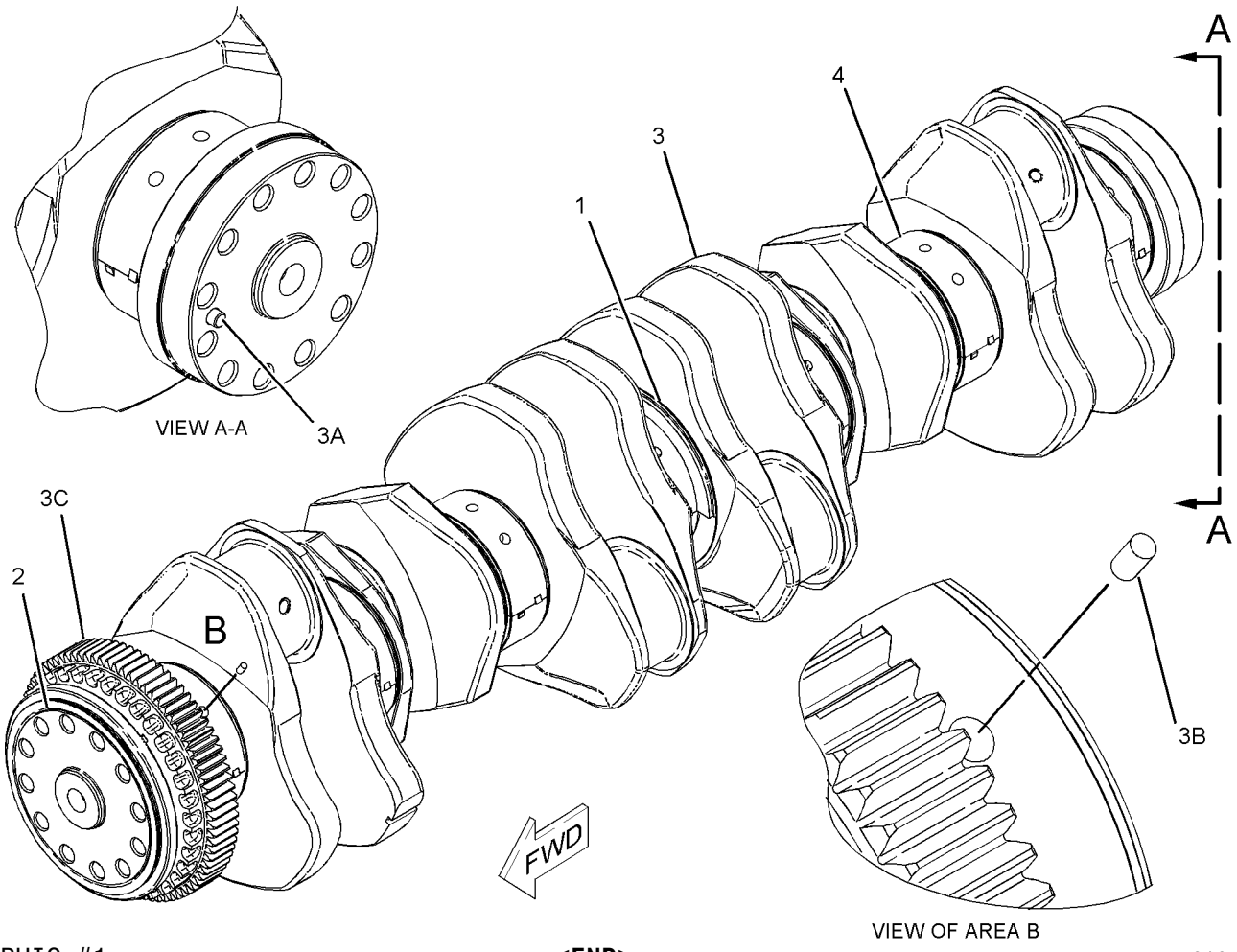

GRAPHIC #1 **<END>** g01070662

BASIC ENGINE

267-4631 CYLINDER BLOCK AS*R

S/N: RHX7868-UP

PART OF 323-8451 CYLINDER BLOCK AS

SMCS-1201 **i03625755**

NOTE	REF NO	GRAPHIC REF	PART NUMBER	QTY	PART NAME 1 2 3 4 5 6 (PRODUCT LEVEL)	SEE PAGE
	1	1	**167-8081**	7	CAP-CRANKSHAFT BEARING	
	2	1	**3P-1323**	14	BOLT-BEARING CAP (7/8-14X7.75-IN)	
	3	1	**9H-1031**	14	WASHER-HARD (24X41.5X6-MM THK)	

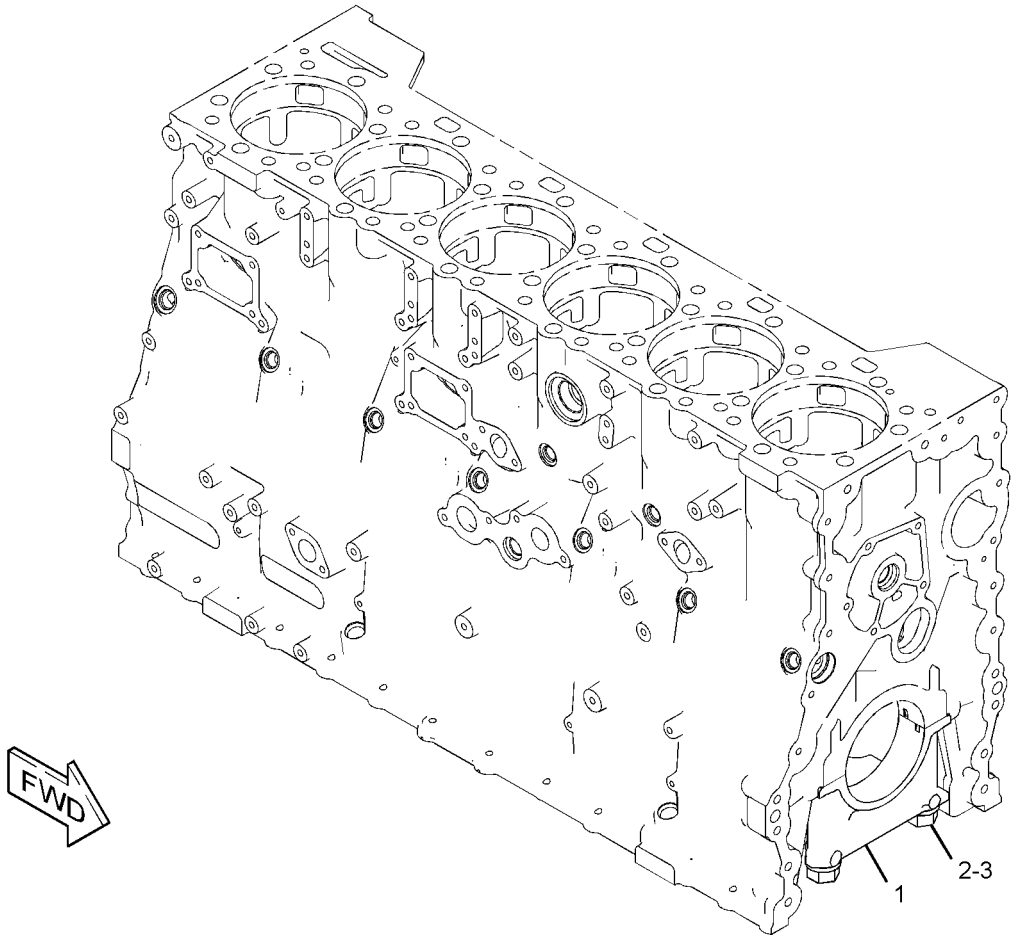

GRAPHIC #1 **<END>** g01177294

323-8451 CYLINDER BLOCK AS

S/N: RHX7868-UP

PART OF 261-0191 CYLINDER BLOCK GP

SMCS-1201 **i03148603**

NOTE	REF NO	GRAPHIC REF	PART NUMBER	QTY	PART NAME 1 2 3 4 5 6 (PRODUCT LEVEL)	SEE PAGE
	1	1	**155-0809**	6	SEAL-LINER	
	2	1	**155-2793**	12	SEAL-LINER	
Y	3	1	**267-4631**	1	CYLINDER BLOCK AS	24
	4	1	**322-1126**	6	LINER-CYLINDER	
	5	1	**9L-5854**	6	BAND-FILLER (130.2-MM ID)	

Y-SEPARATE ILLUSTRATION

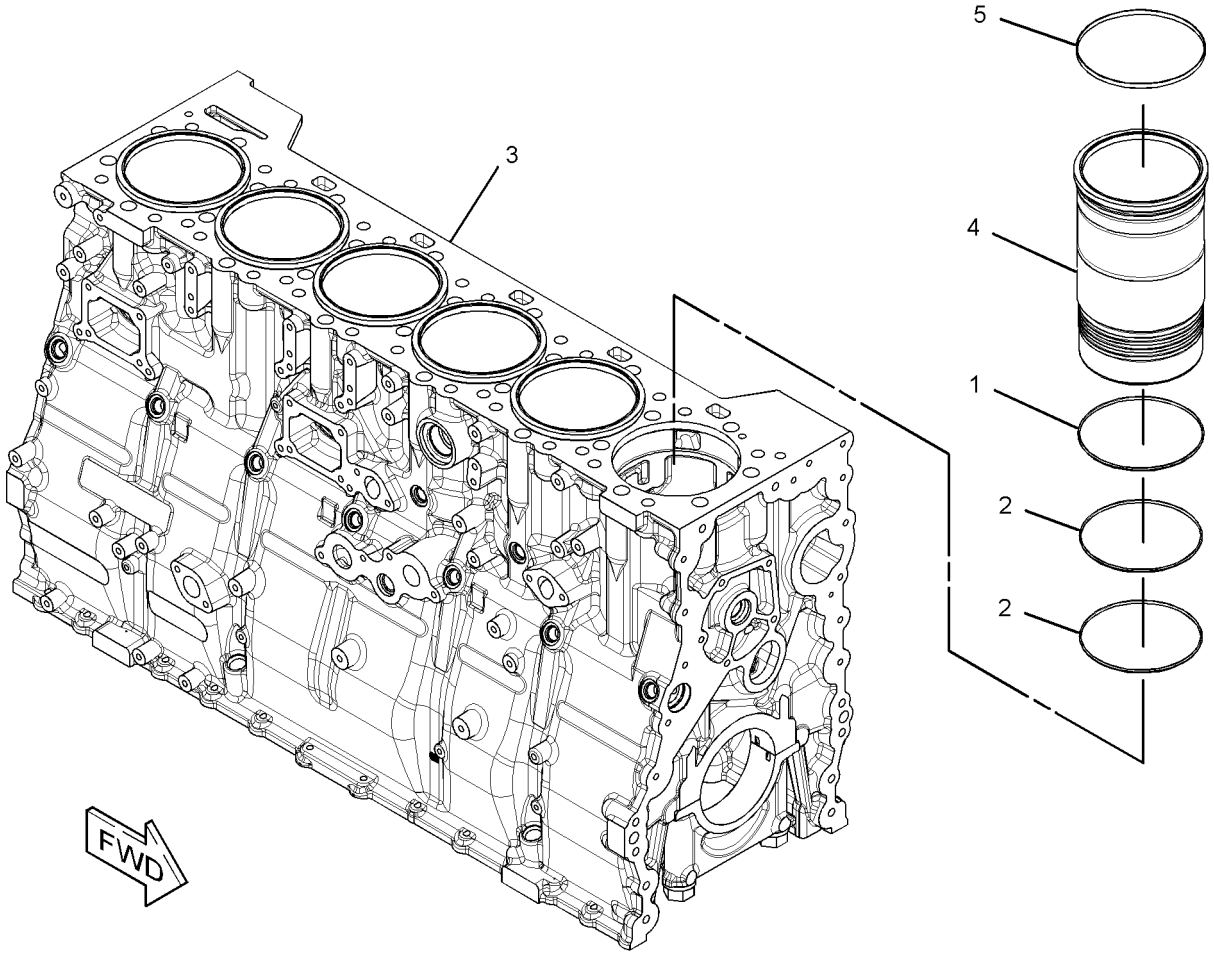

GRAPHIC #1 **<END>** g01620021

BASIC ENGINE

261-0191 CYLINDER BLOCK GP

S/N: RHX7868-UP

PART OF 241-5933 ENGINE AR-CORE

SMCS-1201 **i03833975**

NOTE	REF NO	GRAPHIC REF	PART NUMBER	QTY	PART NAME 1 2 3 4 5 6 (PRODUCT LEVEL)	SEE PAGE
	1	1	**1S-9540**	1	DOWEL	
	2	1	**4N-1650**	1	DOWEL	
	3	1	**6I-1055**	1	DOWEL	
	4	1	**6I-4421**	1	PLATE-SPACER	
	5	1	**142-2329**	1	SEAL	
C	6	1	*309-5131*	1	PLUG AS	
		1	**238-5081**	1	SEAL-O-RING	
		1	**9S-8006**	1	PLUG-O-RING	
	7	1	**227-1204**	1	GASKET	
	8	1	**250-0466**	2	SEAL-O-RING	
CY	9	1	*323-8451*	1	CYLINDER BLOCK AS	25
CY	10	1	*305-9196*	1	PLUG GP-CYLINDER BLOCK	64
	11	1	**100-7399**	2	PLUG	
	12	1	**4N-0683**	4	DOWEL	
	13	1	**5P-0840**	1	SEAL-O-RING	

C-CHANGE FROM PREVIOUS TYPE
Y-SEPARATE ILLUSTRATION

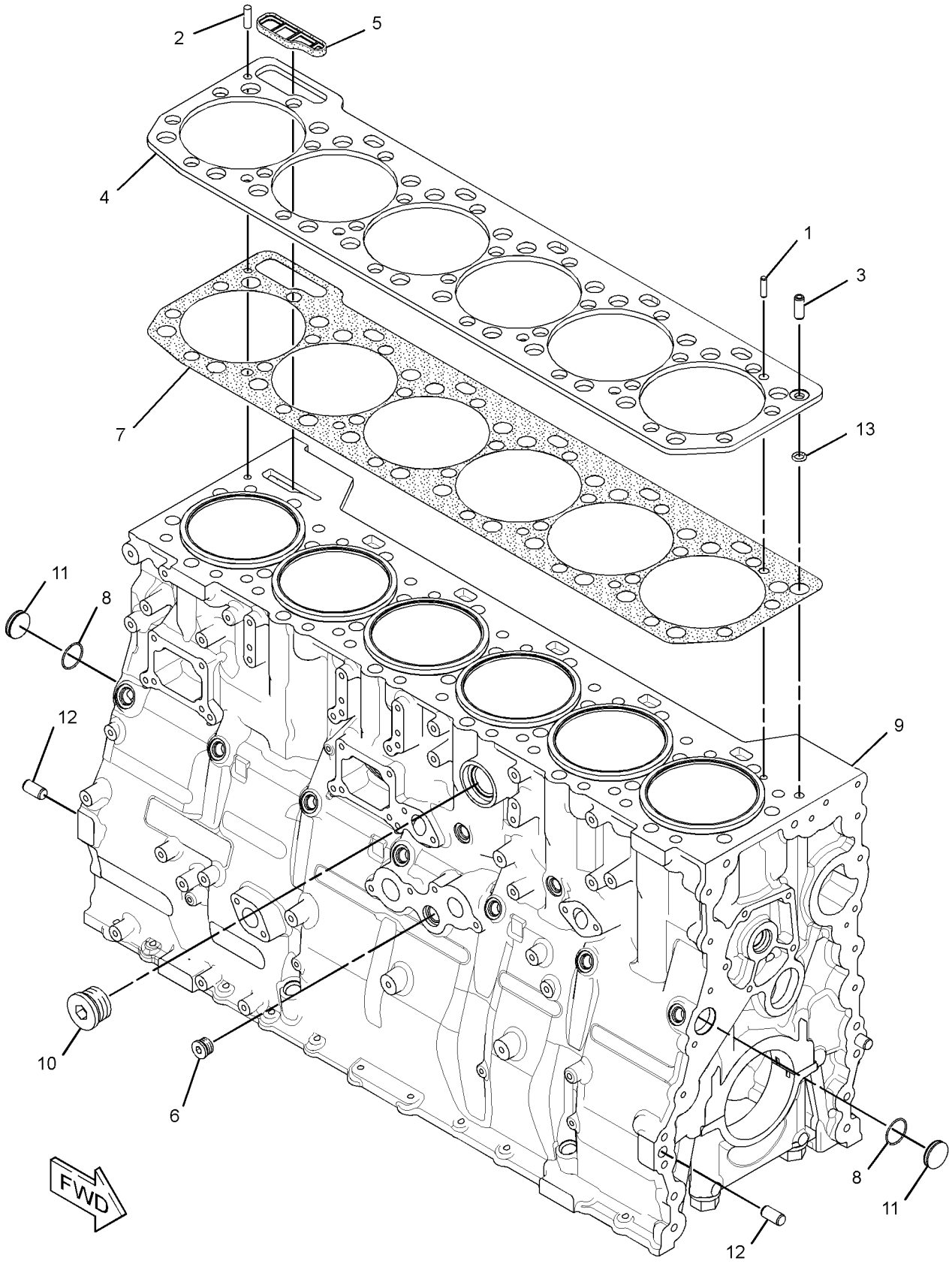

GRAPHIC #1 **<END>** g01347328

BASIC ENGINE

281-1640 CYLINDER HEAD AS

S/N: RHX7868-UP

PART OF 263-5055 CYLINDER HEAD GP

SMCS-1100 **i03905229**

NOTE	REF NO	GRAPHIC REF	PART NUMBER	QTY	PART NAME 1 2 3 4 5 6 (PRODUCT LEVEL)	SEE PAGE
	1	1	**122-7375**	24	GUIDE-VALVE (STANDARD)	
AB		1	**122-0447**		GUIDE-VALVE (0.51-MM OS)	
AB		1	**122-8612**		GUIDE-VALVE (0.13-MM OS)	
	2	1	**216-5582**	7	BUSHING (STANDARD)	
AB		1	**217-0751**		BUSHING (0.25-MM OS)	
AB		1	**217-0752**		BUSHING (0.762-MM OS)	
AB		1	**261-3429**		BUSHING (1.778-MM OS)	
AB		1	**261-3430**		BUSHING (1.27-MM OS)	
	3	1	**226-5561**	12	INSERT-VALVE (EXHAUST) (STANDARD)	
AB		1	**288-4883**		INSERT-VALVE (0.51-MM OS, EXHAUST)	
AB		1	**288-4884**		INSERT-VALVE (0.76-MM OS, EXHAUST)	
	4	1	**263-4920**	6	SLEEVE-INJECTOR (INLET)	
	6	1	**280-3979**	12	INSERT-VALVE (INLET) (STANDARD)	
AB		1	**288-4881**		INSERT-VALVE (INLET) (0.51-MM OS)	
AB		1	**288-4882**		INSERT-VALVE (0.76-MM OS, INLET)	
	7	1	**166-2904**	12	SEAL-O-RING	
	8	1	**3B-0623**	17	PLUG-CUP	
	9	1	**3B-0645**	20	PLUG-CUP	
	10	1	**8T-6757**	3	PLUG-PIPE	
	11	1	**9X-7430**	6	SEAL-O-RING	

A-NOT PART OF THIS GROUP
B-USE AS REQUIRED

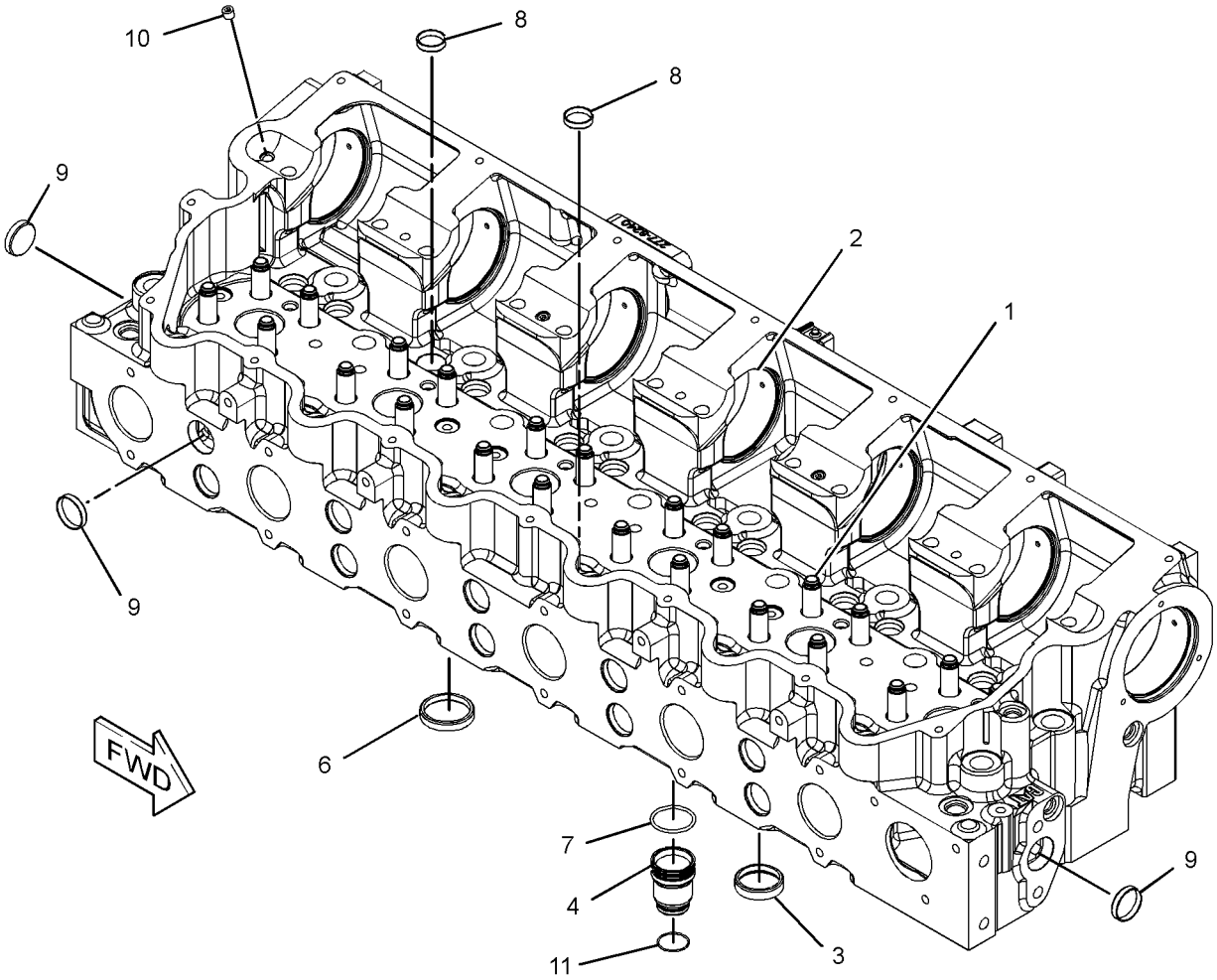

GRAPHIC #1 **<END>** g01207161

BASIC ENGINE

263-5055 CYLINDER HEAD GP*R

S/N: RHX7868-UP

PART OF 274-1953 CYLINDER HEAD GP

SMCS-1100 **i02857220**

NOTE	REF NO	GRAPHIC REF	PART NUMBER	QTY	PART NAME 1 2 3 4 5 6 (PRODUCT LEVEL)	SEE PAGE
	1	1	**2A-4429**	48	LOCK-RETAINER	
	2	1	**6I-0928**	24	WASHER-SPECIAL	
	3	1	**163-2478**	24	SEAL-VALVE STEM	
	4	1	**247-9908**	24	SPRING-VALVE (OUTER)	
Y	5	1	**281-1640**	1	CYLINDER HEAD AS	28
	6	1	**153-7024**	12	VALVE-EXHAUST	
	7	1	**186-2001**	24	ROTOCOIL AS	
	8	1	**211-3122**	24	SPRING-VALVE (INNER)	
	9	1	**236-5605**	12	VALVE-INLET	

Y-SEPARATE ILLUSTRATION

263-5055 **CYLINDER HEAD GP** *(contd.)* **i02857220**

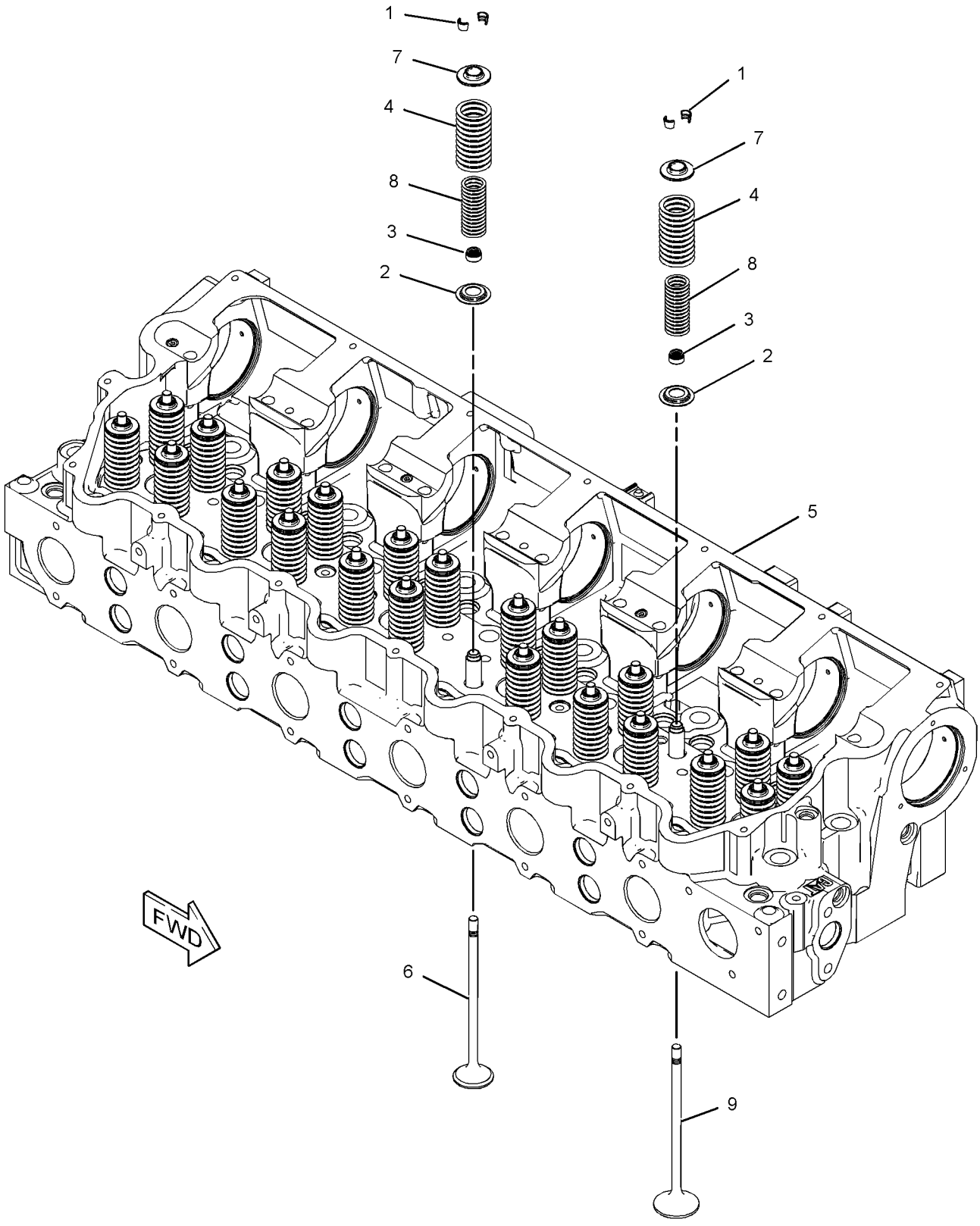

GRAPHIC #1 **<END>** g01207023

BASIC ENGINE

274-1953 CYLINDER HEAD GP

S/N: RHX7868-UP

PART OF 241-5933 ENGINE AR-CORE

SMCS-1100 **i03785474**

NOTE	REF NO	GRAPHIC REF	PART NUMBER	QTY	PART NAME 1 2 3 4 5 6 (PRODUCT LEVEL)	SEE PAGE
	1	1	**3E-6772**	24	SEAL	
	2	1	*6I-4025*	16	FASTENER GP-CYLINDER HEAD	
					(EACH INCLUDES)	
		1	**5H-1504**	1	WASHER-HARD (20X33.5X5-MM THK)	
		1	**124-1855**	1	BOLT-12 POINT HEAD (3/4-16X7.638-IN)	
	3	1	*106-5673*	10	FASTENER GP-CYLINDER HEAD	
					(EACH INCLUDES)	
		1	**5H-1504**	1	WASHER-HARD (20X33.5X5-MM THK)	
		1	**124-1854**	1	BOLT-12 POINT HEAD (3/4-16X8.5-IN)	
YR	4	1	*263-5055*	1	CYLINDER HEAD GP	30
	5	1	**281-8261**	6	SLEEVE AS-EXHAUST	
	6	1	**224-5122**	1	GASKET (CYLINDER HEAD)	
	7	1	**5P-0840**	1	SEAL-O-RING	
	8	1	**183-3407**	3	PLUG AS	
					(EACH INCLUDES)	
		1	**214-7568**	1	SEAL-O-RING	
		1	**9S-8004**	1	PLUG-O-RING	

R-REMFG PART MAY BE AVAILABLE
Y-SEPARATE ILLUSTRATION

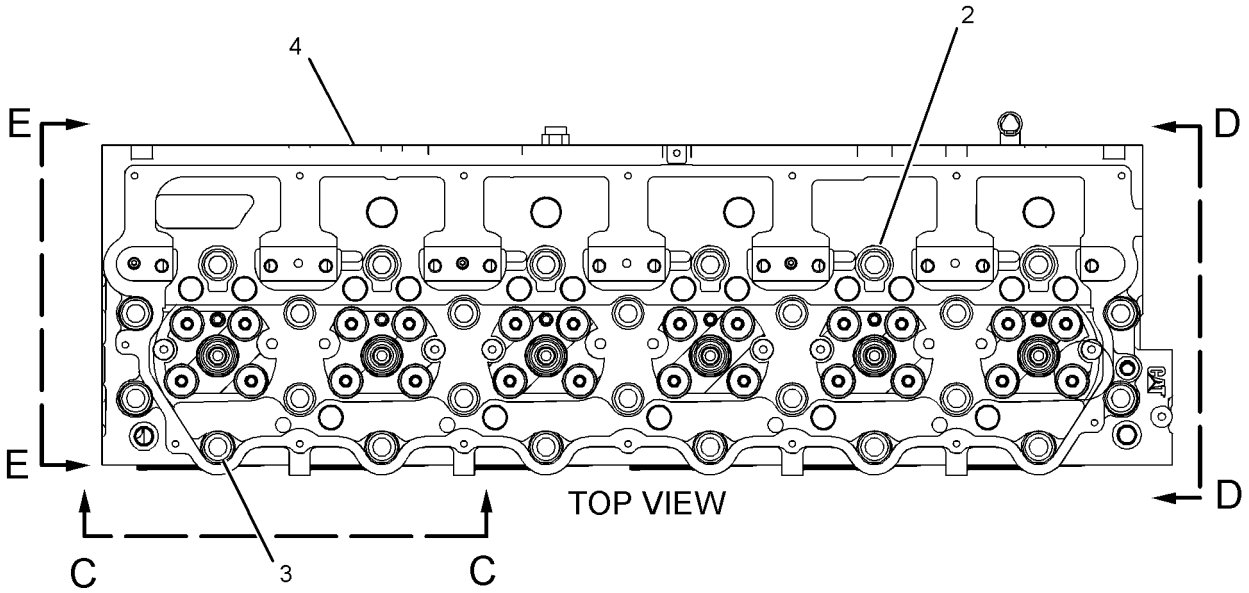

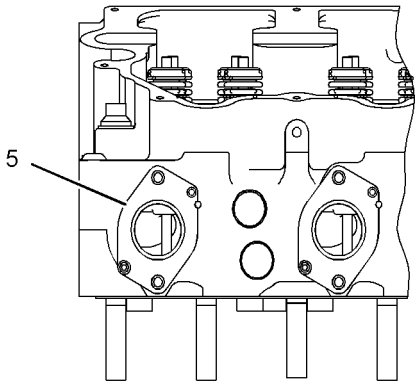

VIEW C-C

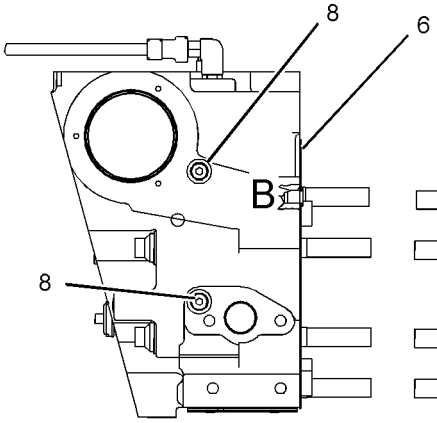

VIEW D-D

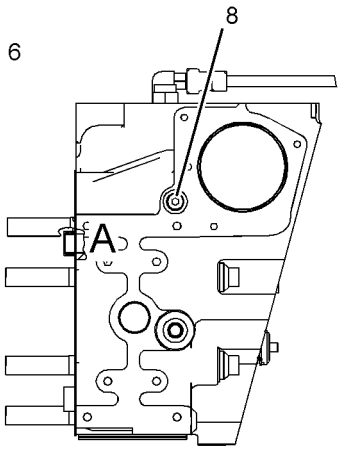

VIEW E-E

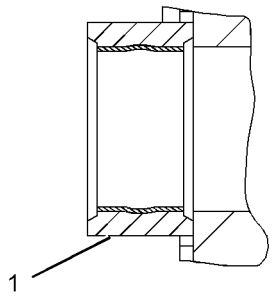

VIEW OF AREA A

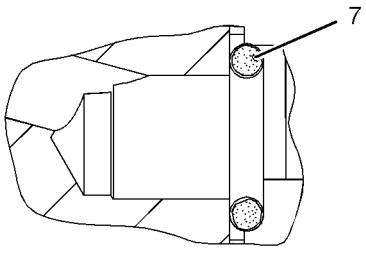

VIEW OF AREA B

GRAPHIC #1 **<END>** g01648636

BASIC ENGINE

212-2113 DAMPER & PULLEY GP

S/N: RHX7868-UP
8 GROOVE, 241.3MM DIAMETER PULLEY
PART OF 286-9798 ENGINE AR-COMPLETE

SMCS-1205 **i03191284**

NOTE	REF NO	GRAPHIC REF	PART NUMBER	QTY	PART NAME 1 2 3 4 5 6 (PRODUCT LEVEL)	SEE PAGE
	1	1	**6N-7654**	1	SPACER (6.312X8.18X0.312-IN THK)	
R	2	1	**167-8130**	1	DAMPER AS	
	3	1	**212-2086**	1	PULLEY-CRANKSHAFT (8 GROOVES)	
	4	1	**0S-1585**	12	BOLT (1/2-13X1.5-IN)	
	5	1	**1B-3623**	6	BOLT (5/8-18X7-IN)	

R-REMFG PART MAY BE AVAILABLE

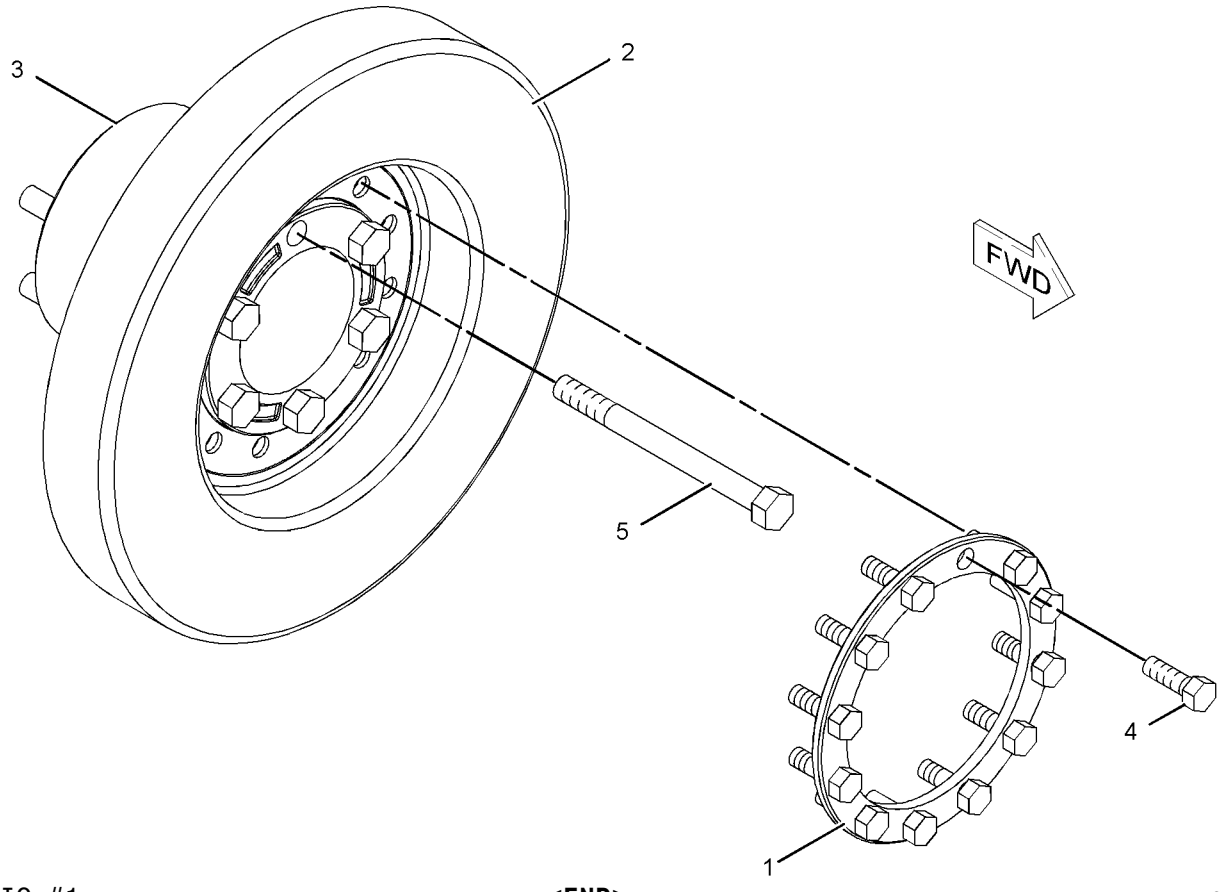

GRAPHIC #1 **<END>** g01033610

BASIC ENGINE

315-4365 DRIVE GP-FAN

S/N: WAP1-UP

PART OF 305-7590 COOLER & MTG GP-HYDRAULIC OIL, 281-3647 FAN GP-SUCTION

SMCS-1359 **i02939961**

NOTE	REF NO	GRAPHIC REF	PART NUMBER	QTY	PART NAME 1 2 3 4 5 6 (PRODUCT LEVEL)	SEE PAGE
	1	1	**4B-3665**	2	BALL BEARING	
	2	1	**095-7424**	1	RING-RETAINING	
	3	1	**137-3749**	2	SPACER (45X53X10-MM THK)	
	4	1	**315-4366**	1	SHAFT	
	5	1	**315-4367**	1	SEAL-LIP TYPE	
	6	1	**315-4368**	1	HOUSING	
	7	1	**6V-5590**	2	RING-RETAINING	

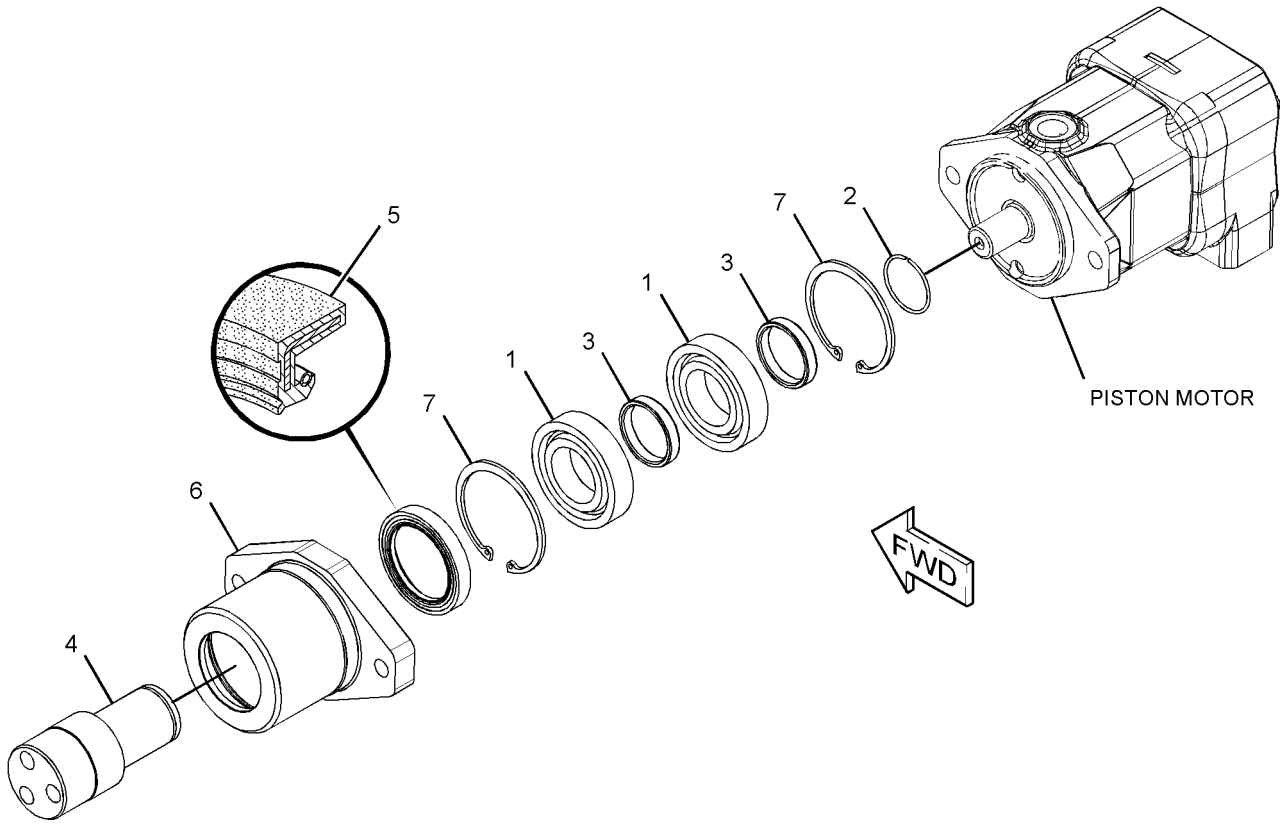

GRAPHIC #1 **<END>** g01456902

BASIC ENGINE

4P-6846 FASTENER GP-FRONT HOUSING

S/N: RHX7868-UP

PART OF 286-9798 ENGINE AR-COMPLETE

SMCS-1162 **i01494962**

NOTE	REF NO	GRAPHIC REF	PART NUMBER	QTY	PART NAME 1 2 3 4 5 6 (PRODUCT LEVEL)	SEE PAGE
	1	1	**7N-0452**	1	PLATE	
	2	1	**0S-1594**	2	BOLT (3/8-16X1-IN)	
	3	1	**5M-2894**	2	WASHER-HARD (10.2X18.5X2.5-MM THK)	

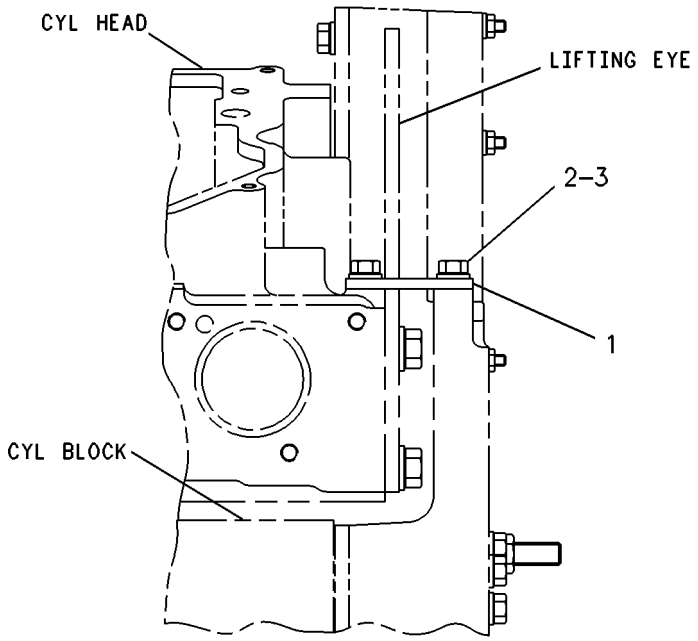

RIGHT SIDE VIEW

GRAPHIC #1 **<END>** g00231021

221-1428 FASTENER GP-FRONT HOUSING

S/N: RHX7868-UP

PART OF 286-9798 ENGINE AR-COMPLETE

SMCS-1162 **i02103151**

NOTE	REF NO	GRAPHIC REF	PART NUMBER	QTY	PART NAME 1 2 3 4 5 6 (PRODUCT LEVEL)	SEE PAGE
	1	1	**149-5268**	1	STUD-TAPERLOCK	
	2	1	**1F-7958**	2	NUT-FULL (1/2-13-THD)	
	3	1	**4M-8547**	1	STUD-TAPERLOCK	
	4	1	**5P-8245**	2	WASHER-HARD (13.5X25.5X3-MM THK)	

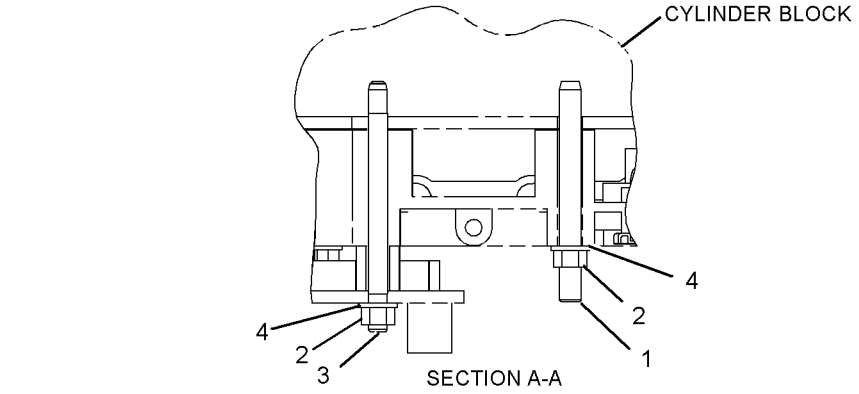

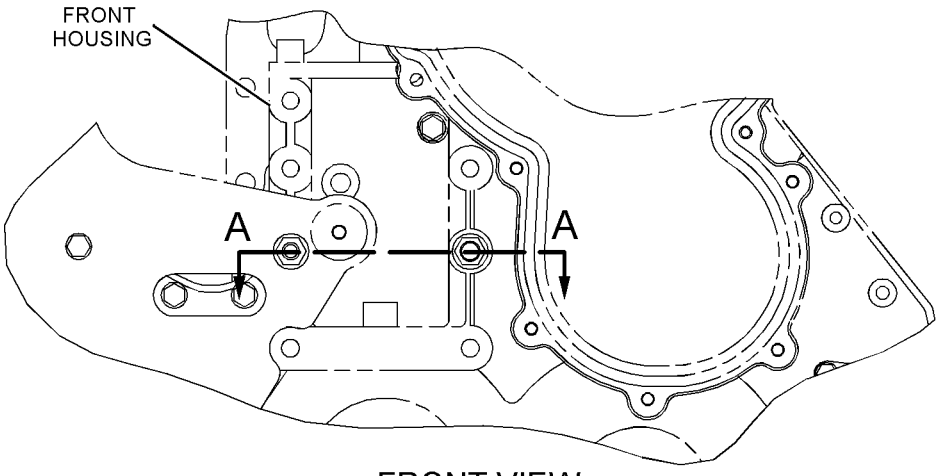

FRONT VIEW

GRAPHIC #1

<END>

g01021070

BASIC ENGINE

109-1657 FASTENER GP-VALVE MECHANISM

S/N: RHX7868-UP
PART OF 241-5933 ENGINE AR-CORE
CANNOT BE USED WITH JAKE BRAKE

SMCS-1107 **i04016404**

NOTE	REF NO	GRAPHIC REF	PART NUMBER	QTY	PART NAME 1 2 3 4 5 6 (PRODUCT LEVEL)	SEE PAGE
	1	1	**8L-8413**	6	STRAP-CABLE	
	2	1	**356-5212**	12	BOLT-12 POINT HEAD	
	3	1	**3H-7654**	12	WASHER-HARD (13.5X22.5X3.0-MM THK)	

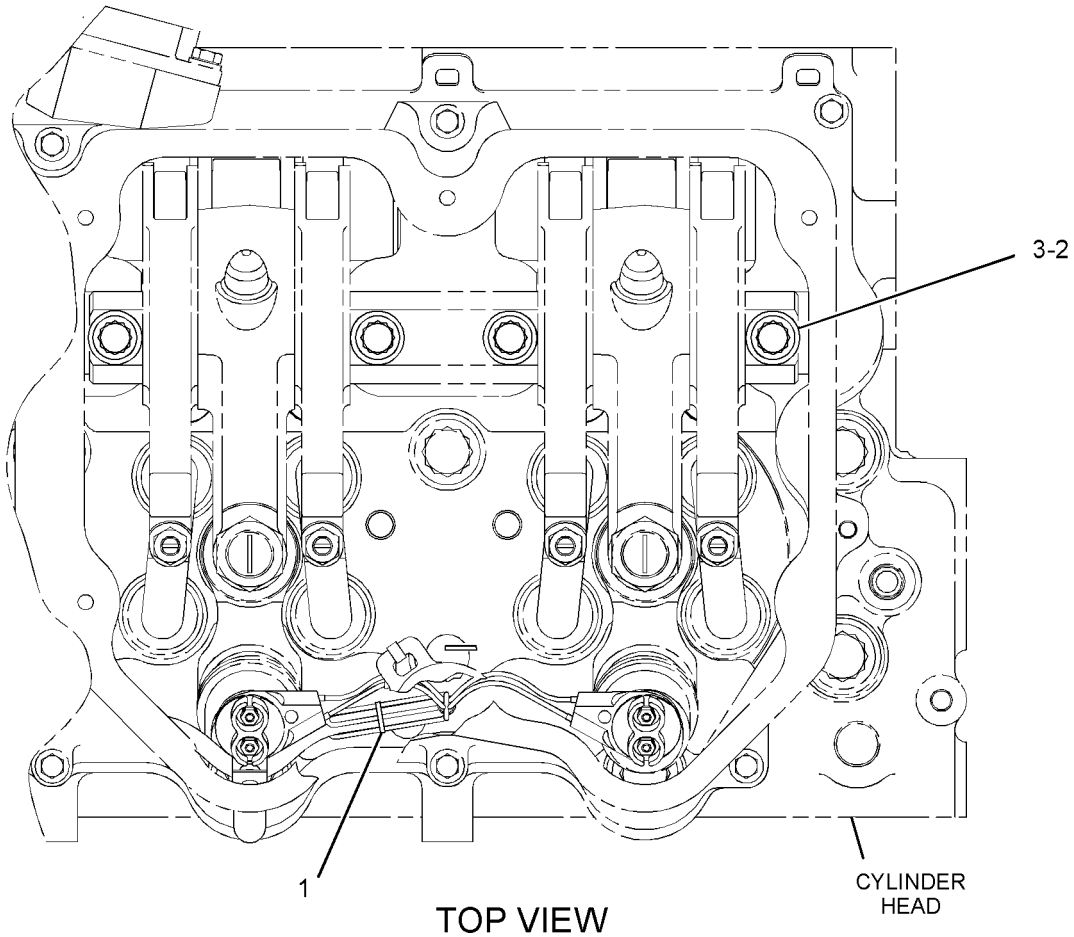

TOP VIEW

GRAPHIC #1 **<END>** g02173777

BASIC ENGINE

194-7097 FLYWHEEL GP

S/N: RHX7868-UP

PART OF 286-9798 ENGINE AR-COMPLETE

SMCS-1156 **i01518226**

NOTE	REF NO	GRAPHIC REF	PART NUMBER	QTY	PART NAME 1 2 3 4 5 6 (PRODUCT LEVEL)	SEE PAGE
	1	1	**195-0313**	1	FLYWHEEL AS	
	1A	1	**4N-2514**	1	GEAR (113 TEETH)	
	2	1	**0V-0523**	12	BOLT (5/8-18X4.25IN)	
	3	1	**4D-3704**	12	WASHER-HARD (17X30X5MM THK)	

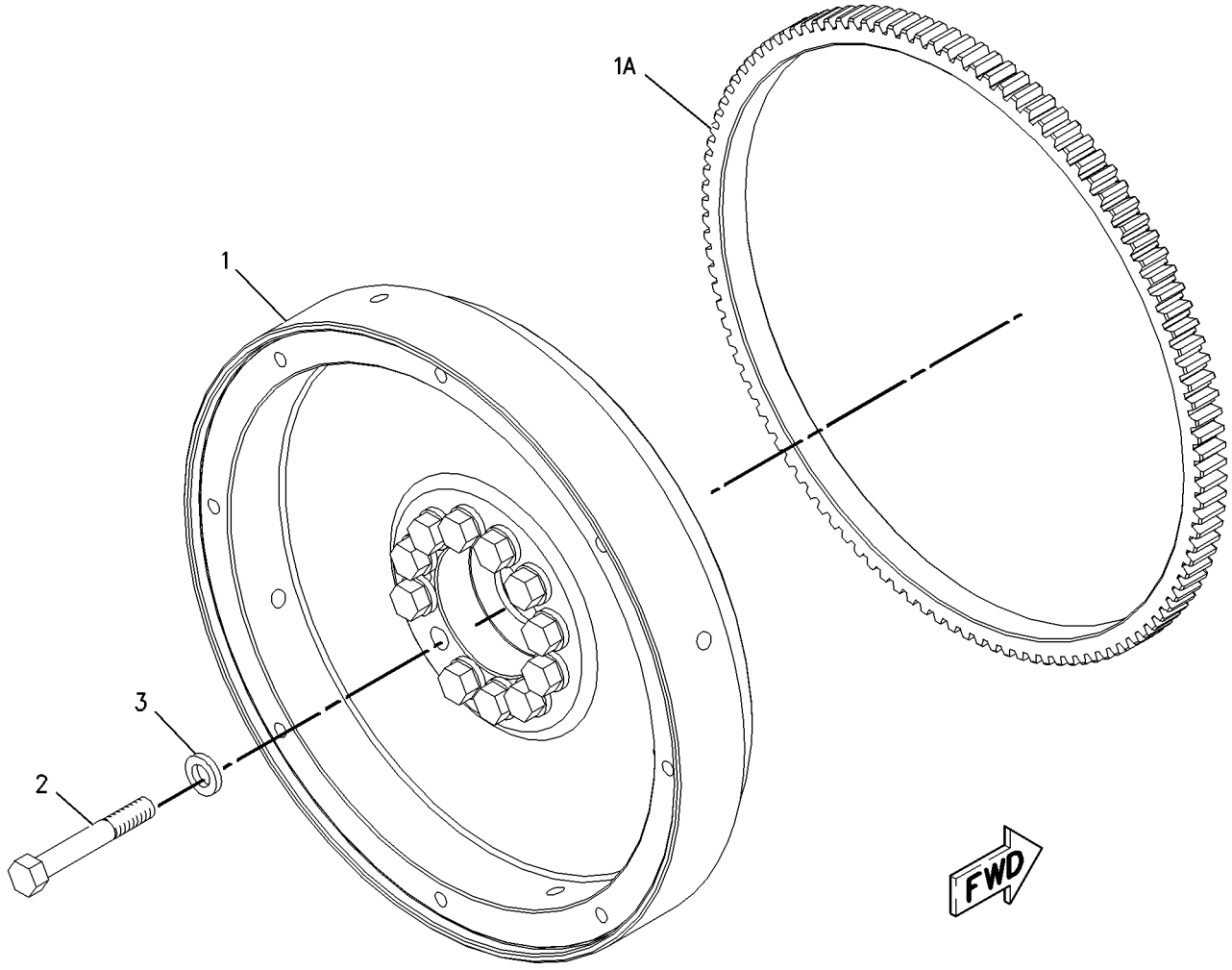

GRAPHIC #1 **<END>** g00788986

BASIC ENGINE

204-9316 GEAR GP-CAMSHAFT

S/N: RHX7868-UP

PART OF 207-0449 GEAR GP-FRONT

SMCS-1206, 1212 **i02677335**

NOTE	REF NO	GRAPHIC REF	PART NUMBER	QTY	PART NAME 1 2 3 4 5 6 (PRODUCT LEVEL)	SEE PAGE
	1	1	**9X-8872**	16	BOLT-LOCKING (3/8-16X0.875-IN)	
	2	1	**103-0126**	1	DOWEL	

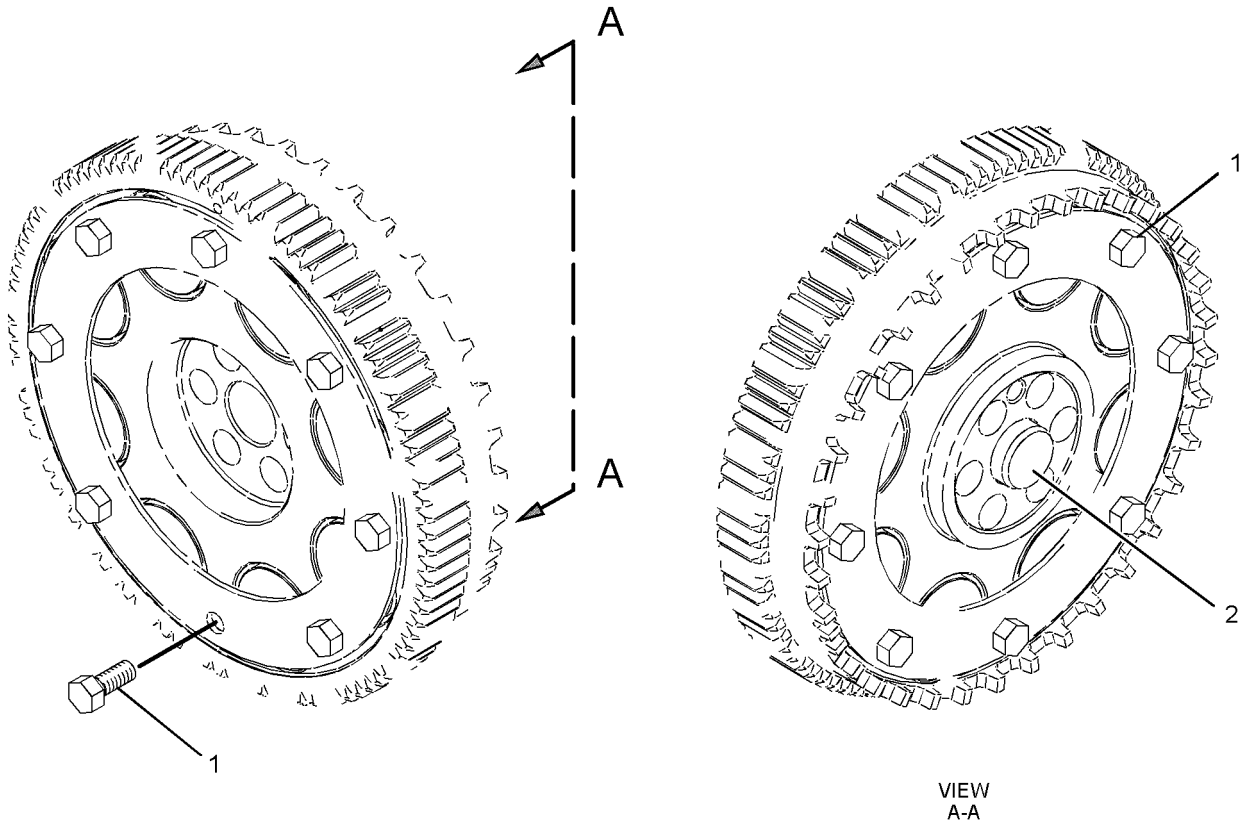

GRAPHIC #1 **<END>** g01345309

BASIC ENGINE

207-0449 GEAR GP-FRONT

S/N: RHX7868-UP

PART OF 241-5933 ENGINE AR-CORE

SMCS-1151, 1162, 1206 **i02957508**

NOTE	REF NO	GRAPHIC REF	PART NUMBER	QTY	PART NAME 1 2 3 4 5 6 (PRODUCT LEVEL)	SEE PAGE
	1	2	**0S-1571**	1	BOLT (3/8-16X1.75-IN)	
	2	2	**2J-3118**	5	BOLT-LOCKING (3/8-16X1.25-IN)	
	3	1	**5P-4142**	2	BOLT-LOCKING (3/8-16X1.5-IN)	
	4	2	**1B-8705**	1	KEY-WOODRUFF	
	5	2	**1P-7346**	1	WASHER-HARD (10.2X35X6-MM THK)	
	6	1	**126-1756**	10	BOLT-LOCKING (5/16-18X0.875-IN)	
	7	2	**112-9217**	1	PLATE-THRUST	
	8	2	**130-4701**	1	GEAR AS (56-TEETH)	
		2	**130-4698**	1	BEARING-SLEEVE	
	9	2	**151-5966**	1	SHAFT AS-STUB	
		2	**6I-3623**	1	DOWEL	
	10	1	**6I-3624**	2	PLATE-THRUST	
	11	2	**6I-3625**	1	GEAR AS (71-TEETH)	
		2	**101-8468**	1	BEARING-SLEEVE	
Y	12	2	**204-9316**	1	GEAR GP-CAMSHAFT (96-TEETH)	40
	13	2	**197-4971**	1	SHAFT-STUB	
	14	2	**158-3416**	1	SHAFT-STUB	
	15	1	**031-3185**	6	BOLT-12 POINT HEAD (5/8-11X3-IN)	
	16	2	**149-9110**	1	GEAR-OIL PUMP DRIVE (69-TEETH)	
	17	1,2	**9S-8752**	10	NUT-FULL (3/8-16-THD)	
	18	1,2	**9X-6458**	12	WASHER-HARD (10.2X22.5X3-MM THK)	
	19	1	**117-8801**	1	SEAL-O-RING	
	20	1	**5E-8771**	1	SEAL-O-RING	
	21	2	**159-1533**	1	PLATE-SEALING	
	22	2	**159-8524**	1	ADAPTER AS	
		2	**6V-3677**	1	DOWEL	
	23	2	**102-5861**	1	PLATE-THRUST	
	24	1	**107-0583**	3	BOLT-LOCKING (1/4-20X0.87-IN)	
	25	2	**187-8979**	1	GEAR AS (105, 63-TEETH)	
		2	**1B-8705**	1	KEY-WOODRUFF	
		2	**6I-4582**	1	GEAR (63-TEETH) (SMALL CLUSTER)	
		2	**128-2661**	1	BEARING-SLEEVE	
		2	**187-8980**	1	GEAR (105-TEETH) (LARGE CLUSTER)	

Y-SEPARATE ILLUSTRATION

207-0449 **GEAR GP-FRONT** *(contd.)* **i02957508**

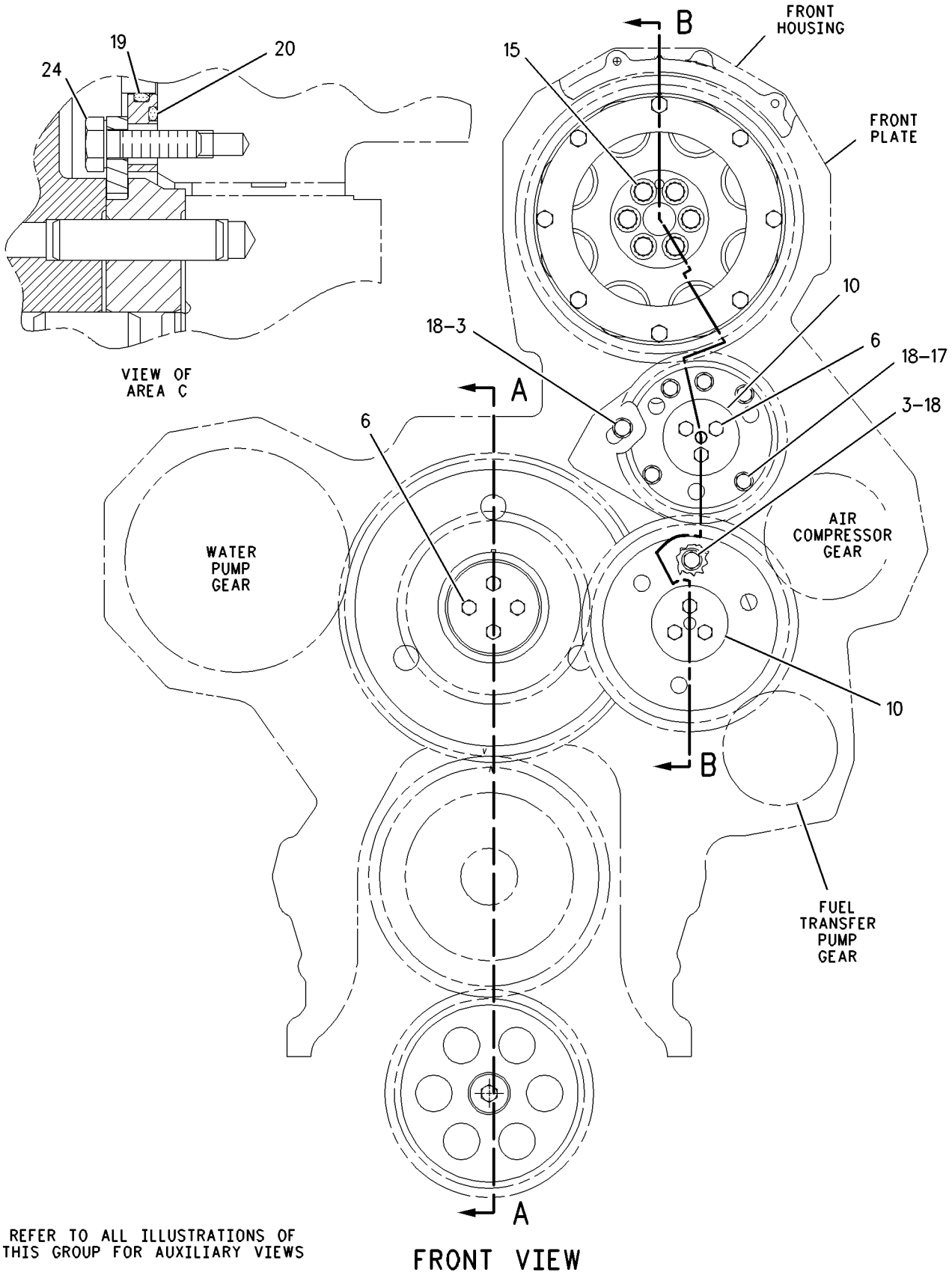

GRAPHIC #1 g00809001

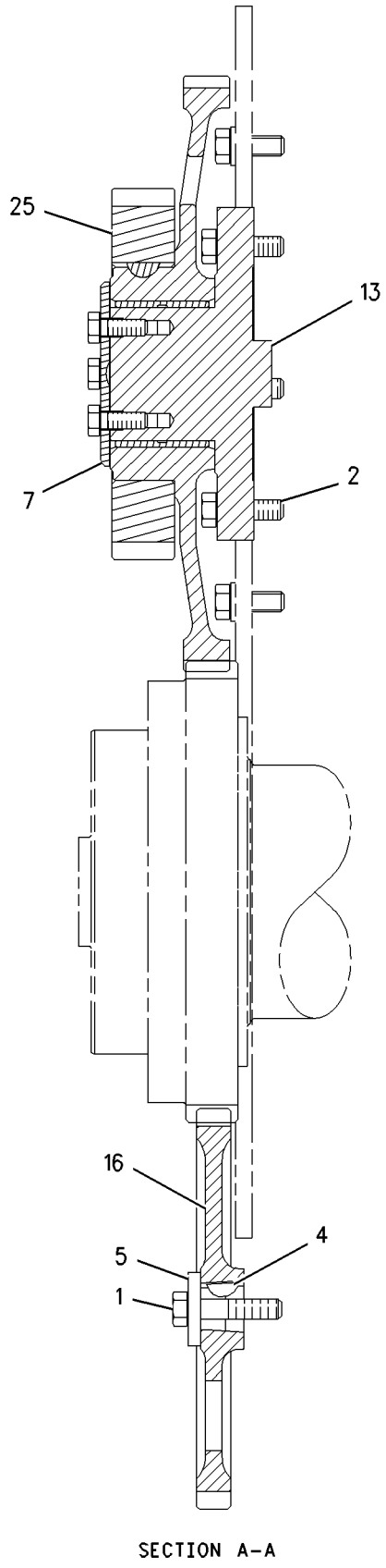

SECTION A-A

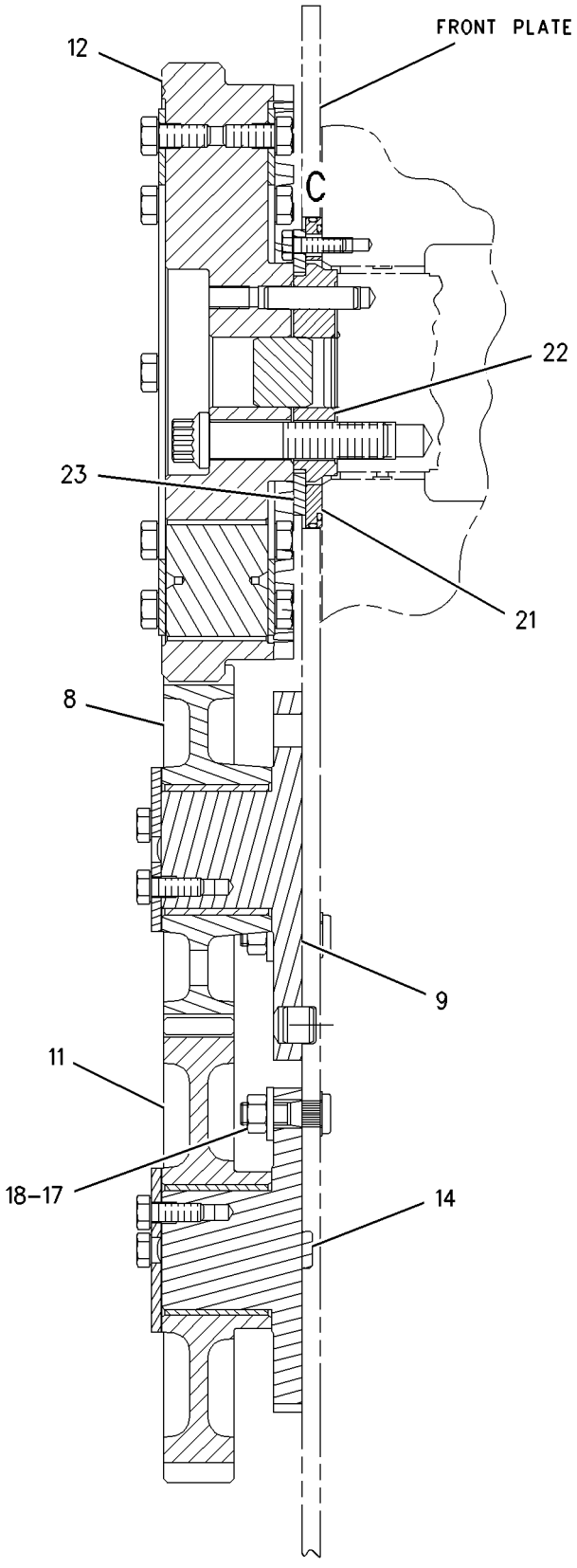

SECTION B-B

GRAPHIC #2 **<END>** g00809003

BASIC ENGINE

4P-9823 GEAR GP-REAR

S/N: RHX7868-UP

PART OF 286-9798 ENGINE AR-COMPLETE

SMCS-1204 **i03874061**

NOTE	REF NO	GRAPHIC REF	PART NUMBER	QTY	PART NAME 1 2 3 4 5 6 (PRODUCT LEVEL)	SEE PAGE
	1	1	**187-8230**	1	ADAPTER AS	
	2	1	**160-8184**	1	BEARING-SLEEVE	
	3	1	**187-8202**	1	GEAR AS-DRIVE (64-TEETH)	
	4	1	**4F-6024**	1	PIN	
	5	1	**4N-1230**	2	SEAL-O-RING	
	6	1	**1A-2029**	6	BOLT (3/8-16X1.125-IN)	
	7	1	**187-8229**	1	ADAPTER AS	
	8	1	**160-8184**	1	BEARING-SLEEVE	
	9	1	**187-8194**	1	GEAR AS-DRIVE (64-TEETH)	
	10	1	**4F-6024**	1	PIN	
	11	1	**2W-0494**	1	GEAR AS-IDLER (64-TEETH)	
	12	1	**1W-4738**	1	BEARING-SLEEVE	
	13	1	**2W-0493**	1	GEAR AS-IDLER (74-TEETH)	
	14	1	**1W-4738**	1	BEARING-SLEEVE	
	15	1	**1W-4746**	2	RETAINER-GEAR	
	16	1	**1A-1460**	6	BOLT (1/2-13X2-IN)	
	17	1	**2W-0496**	1	GEAR AS-CRANKSHAFT (68-TEETH)	
	18	1	**4N-0684**	1	DOWEL	
	19	1	**5M-2894**	8	WASHER-HARD (10.2X18.5X2.5-MM THK)	
	20	1	**0T-0768**	6	BOLT (7/16-14X1.75-IN)	
	21	1	**5P-8244**	6	WASHER-HARD (12X22.5X2.5-MM THK)	
	22	1	**4B-4043**	4	BOLT (5/8-11X1.375-IN)	
	23	1	**5P-8247**	4	WASHER-HARD (17X32X3.5-MM THK)	
	24	1	**7N-8374**	2	COVER-PUMP	
	25	1	**9X-7371**	2	SEAL-O-RING	
	26	1	**4M-0189**	1	SEAL-O-RING	
C	27	1	**175-3721**	1	COVER	
C	28	1	**0S-1621**	2	BOLT (1/2-13X1-IN)	
	29	1	**5P-8245**	2	WASHER-HARD (13.5X25.5X3-MM THK)	
	30	1	**0S-1619**	1	BOLT (3/8-16X3-IN)	
	31	1	**2P-2772**	1	COVER	
	32	1	**234-8937**	1	SEAL-INTEGRAL	
	33	1	**0S-1594**	1	BOLT (3/8-16X1-IN)	

C-CHANGE FROM PREVIOUS TYPE

4P-9823 **GEAR GP-REAR** ***(contd.)*** **i03874061**

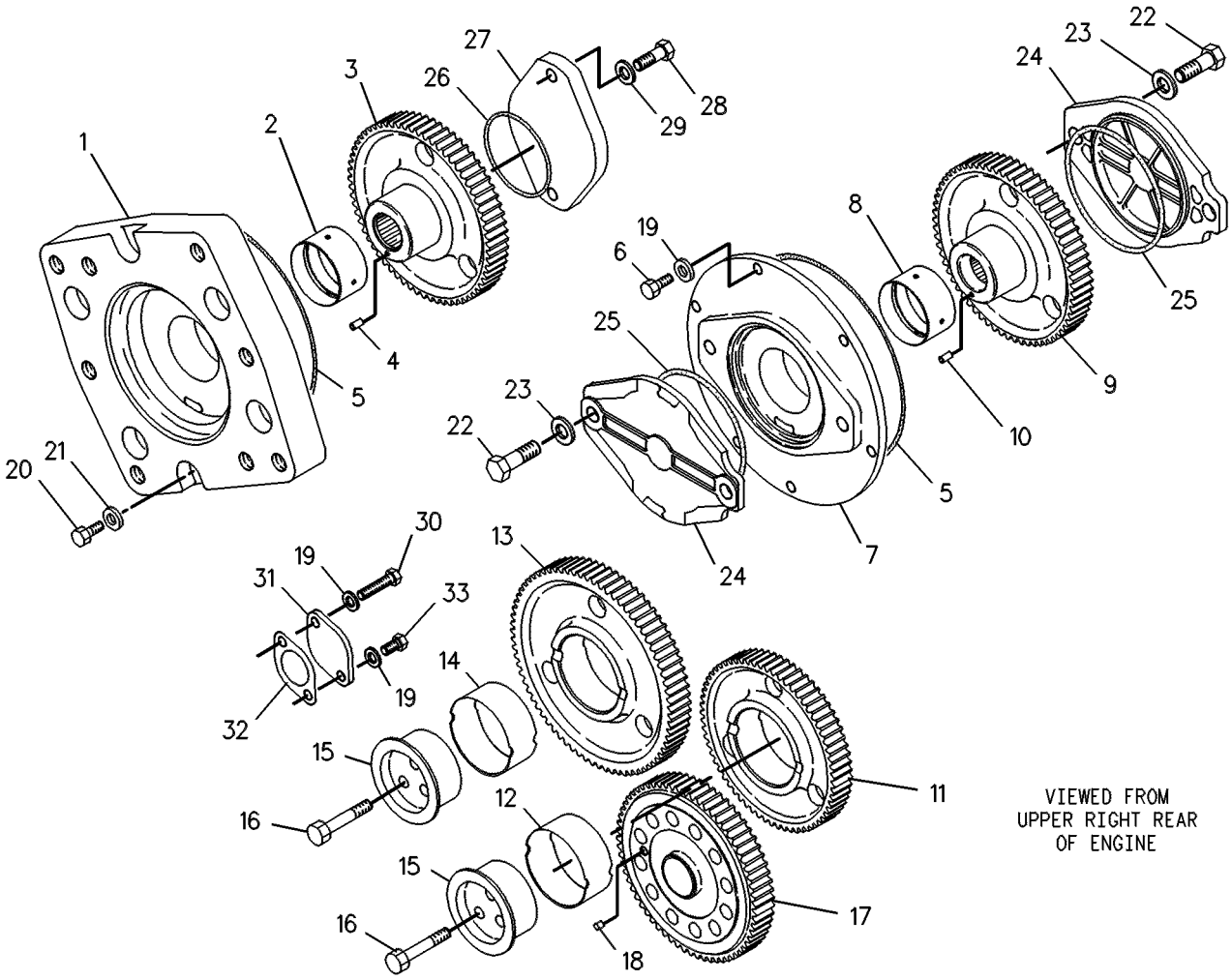

GRAPHIC #1 **<END>** g00239603

BASIC ENGINE

7E-8996 HOUSING GP-FLYWHEEL

S/N: RHX7868-UP

PART OF 286-9798 ENGINE AR-COMPLETE

SMCS-1157 **i04008973**

NOTE	REF NO	GRAPHIC REF	PART NUMBER	QTY	PART NAME 1 2 3 4 5 6 (PRODUCT LEVEL)	SEE PAGE
CY	1	1	**351-0059**	1	HOUSING GP-FLYWHEEL	47
	2	1	**165-3930**	6	BOLT (3/8-16X1.625-IN)	
	3	1	**165-3932**	6	BOLT (3/8-16X2-IN)	
	4	1	**165-3936**	1	BOLT (3/8-16X4.5-IN)	
C	5	1	*307-2673*	1	PLUG AS	
		1	**9S-8005**	1	PLUG-O-RING	
		1	**238-5080**	1	SEAL-O-RING	
	6	1	**5J-5793**	1	BOLT-12 POINT HEAD (1/2-13X1.75-IN)	
	7	1	**5P-8245**	9	WASHER-HARD (13.5X25.5X3-MM THK)	
	8	1	**9K-7290**	8	BOLT-12 POINT HEAD (1/2-13X3.25-IN)	
B	9	1	**8C-8422**		SEALANT	

B-USE AS REQUIRED
C-CHANGE FROM PREVIOUS TYPE
Y-SEPARATE ILLUSTRATION

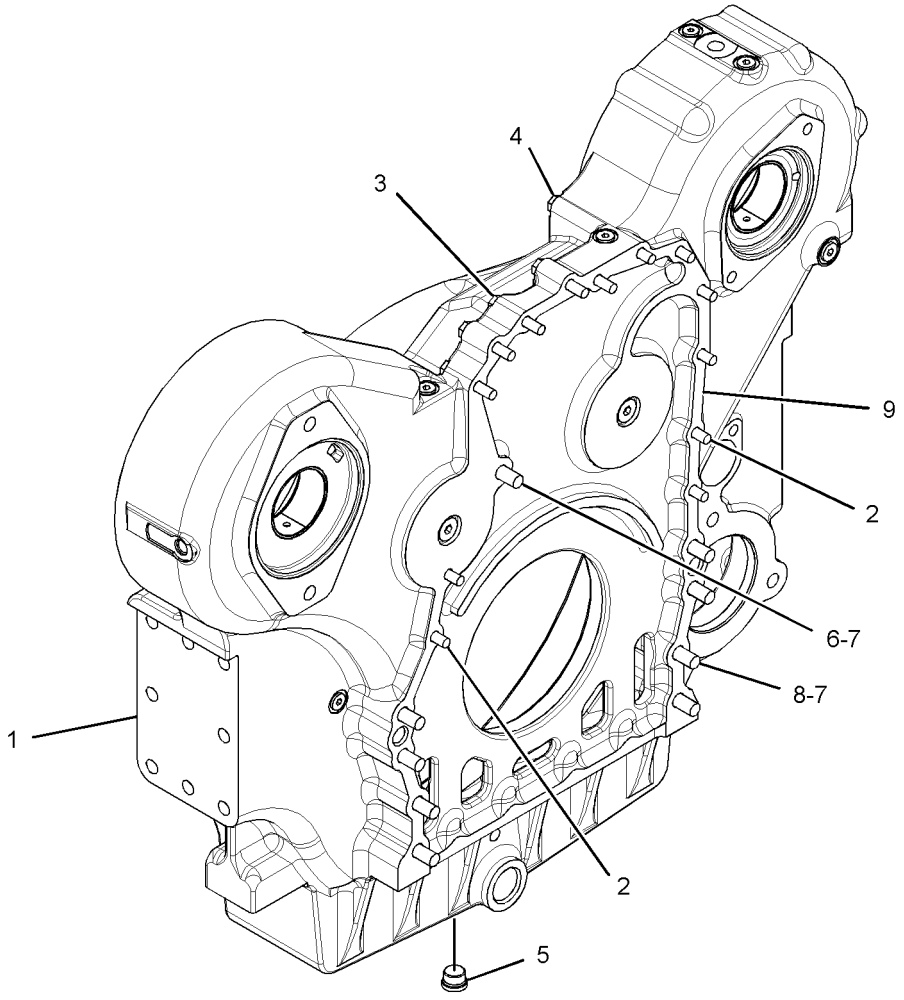

GRAPHIC #1 **<END>** g02196114

BASIC ENGINE

351-0059 HOUSING GP-FLYWHEEL

S/N: RHX7868-UP

PART OF 7E-8996 HOUSING GP-FLYWHEEL

SMCS-1157 **i04008998**

NOTE	REF NO	GRAPHIC REF	PART NUMBER	QTY	PART NAME 1 2 3 4 5 6 (PRODUCT LEVEL)	SEE PAGE
	1	1	**108-5914**	1	HOUSING AS (FLYWHEEL)	
	1A	1	**1W-3136**	1	BAFFLE	
	1B	1	**8M-9315**	2	BUSHING	
	2	1	*183-3407*	1	PLUG AS	
		1	**9S-8004**	1	PLUG-O-RING	
		1	**214-7568**	1	SEAL-O-RING	
	3	1	*307-2671*	1	PLUG AS	
		1	**9S-8002**	1	PLUG-O-RING	
		1	**214-7566**	1	SEAL-O-RING	
	4	1	*307-2673*	3	PLUG AS	
					(EACH INCLUDES)	
		1	**9S-8005**	1	PLUG-O-RING	
		1	**238-5080**	1	SEAL-O-RING	
	5	1	*321-8642*	5	PLUG AS	
					(EACH INCLUDES)	
		1	**9S-8003**	1	PLUG	
		1	**214-7567**	1	SEAL-O-RING	

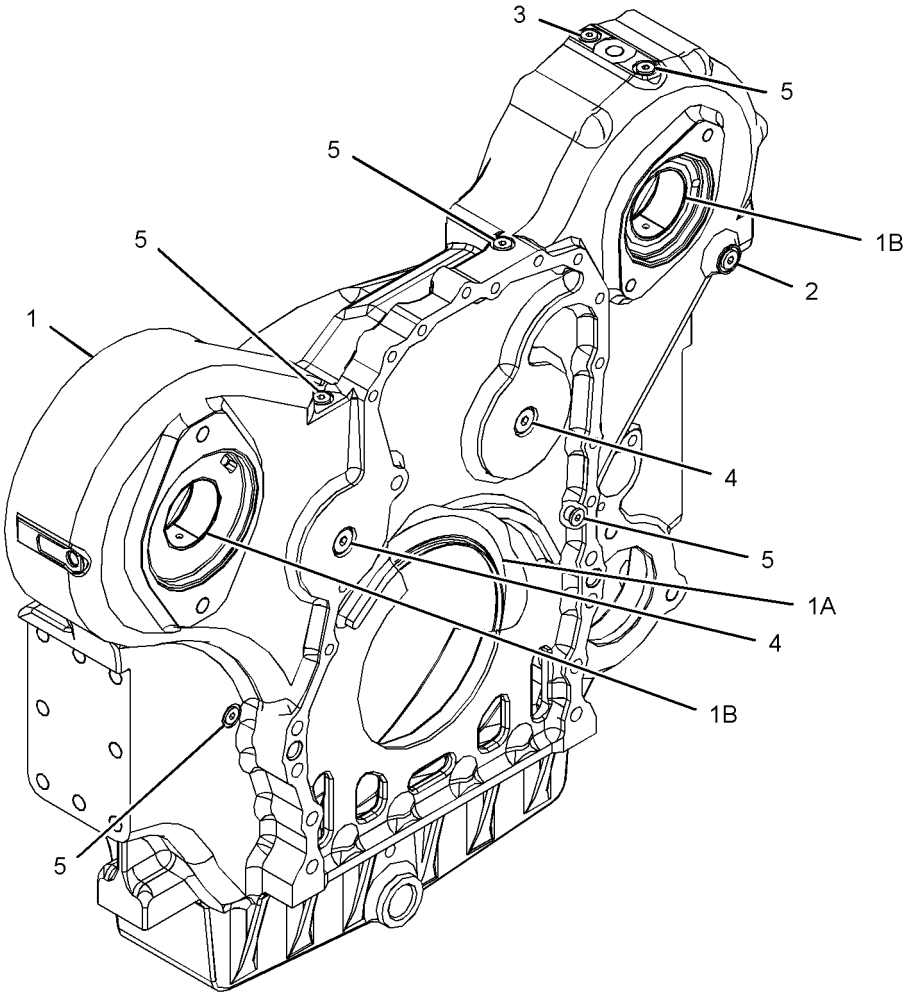

GRAPHIC #1 **<END>** g02195213

BASIC ENGINE

241-0164 HOUSING GP-FRONT

S/N: RHX7868-UP

PART OF 286-9798 ENGINE AR-COMPLETE

SMCS-1151, 1162, 1206 **i03893085**

NOTE	REF NO	GRAPHIC REF	PART NUMBER	QTY	PART NAME 1 2 3 4 5 6 (PRODUCT LEVEL)	SEE PAGE
	1	1	**155-9524**	1	SEAL-INTEGRAL	
	2	1	**166-9144**	1	GASKET	
Y	3	1	**241-0478**	1	HOUSING GP-FRONT	50
Y	4	1	*353-9982*	1	PLATE AS-FRONT HOUSING	62
	5	1	**0L-2070**	1	BOLT (3/8-16X2.25-IN)	
	6	1	**0S-1588**	10	BOLT (3/8-16X1.25-IN)	
	7	1	**0T-0055**	1	BOLT (3/8-16X4.25-IN)	
	8	1	**5M-2894**	21	WASHER-HARD (10.2X18.5X2.5-MM THK)	
	9	1	**5P-4255**	8	BOLT-LOCKING (3/8-16X1-IN)	
	10	1	**9S-8752**	1	NUT-FULL (3/8-16-THD)	

Y-SEPARATE ILLUSTRATION

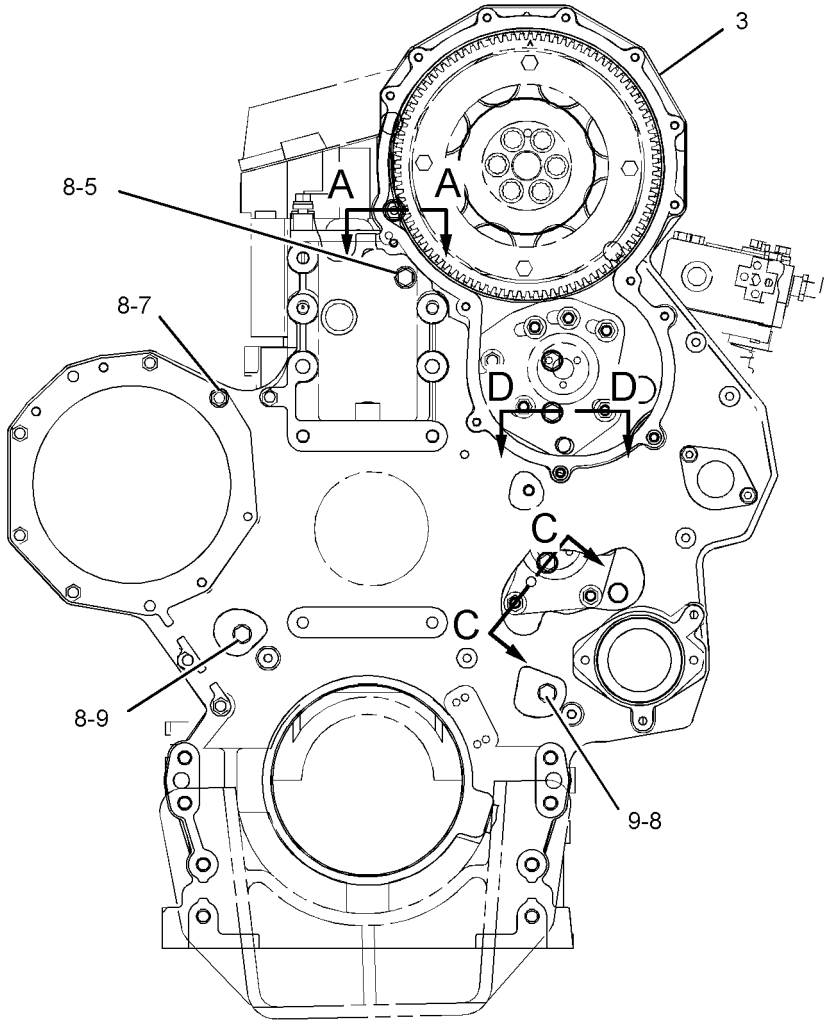

FRONT VIEW

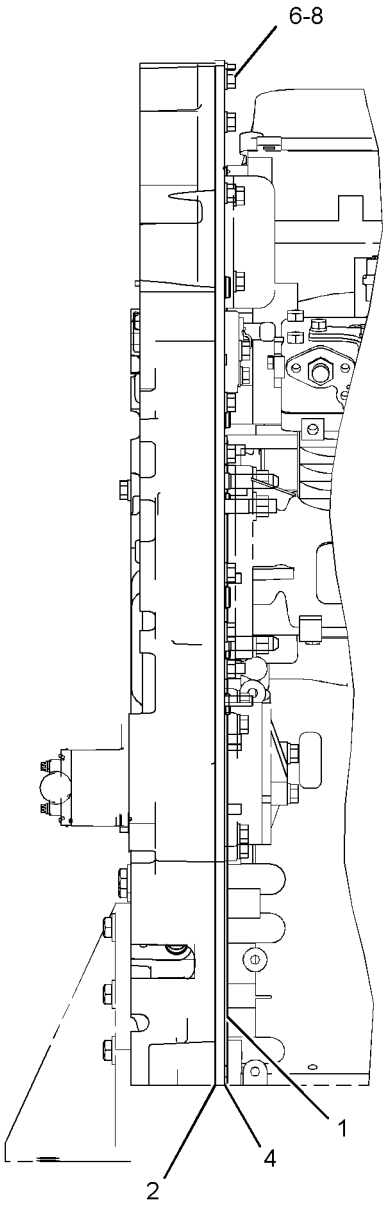

LEFT SIDE VIEW

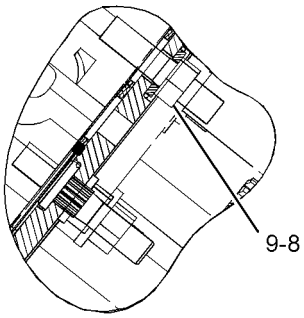

SECTION C-C

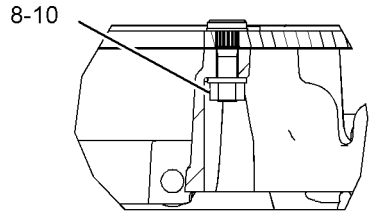

SECTION A-A

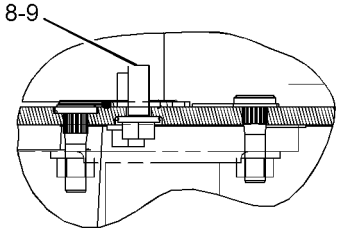

SECTION D-D

GRAPHIC #1 **<END>** g02140213

BASIC ENGINE

241-0478 HOUSING GP-FRONT

S/N: RHX7868-UP

PART OF 241-0164 HOUSING GP-FRONT

SMCS-1151, 1162, 1206 **i02100846**

NOTE	REF NO	GRAPHIC REF	PART NUMBER	QTY	PART NAME 1 2 3 4 5 6 (PRODUCT LEVEL)	SEE PAGE
	1	1	**187-5420**	1	HOUSING-FRONT	
	2	1	**3E-8044**	1	STUD (1/2-13X2.95-IN)	

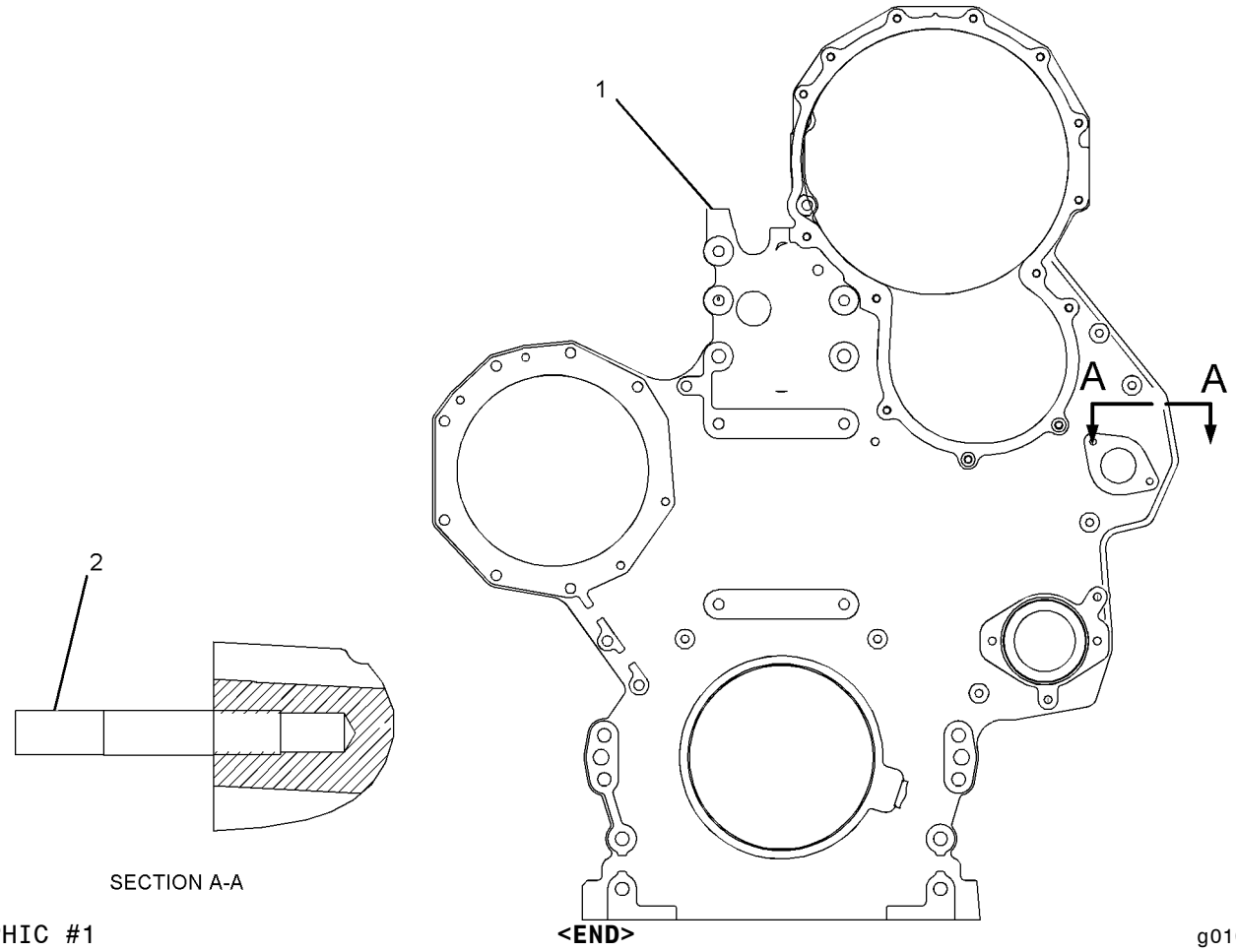

GRAPHIC #1 **<END>** g01071877

BASIC ENGINE

111-2088 LIFTING GP-ENGINE

S/N: RHX7868-UP
REAR, LOW PROFILE LIFTING EYE
PART OF 286-9798 ENGINE AR-COMPLETE

SMCS-1122 **i01503053**

NOTE	REF NO	GRAPHIC REF	PART NUMBER	QTY	PART NAME 1 2 3 4 5 6 (PRODUCT LEVEL)	SEE PAGE
	1	1	**109-9985**	1	EYE-LIFTING	
	2	1	**0S-1594**	8	BOLT (3/8-16X1 IN)	
	3	1	**5M-2894**	8	WASHER-HARD (10.2X18.5X2.5MM THK)	

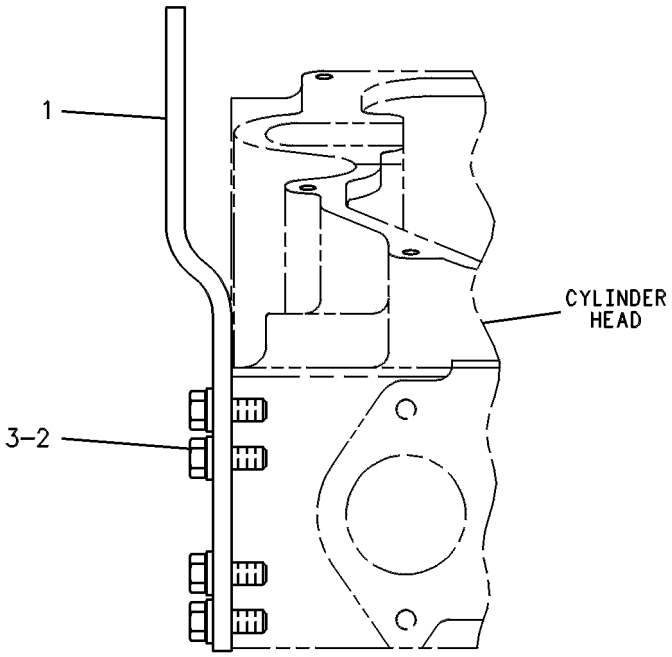

GRAPHIC #1 **<END>** g00238183

BASIC ENGINE

112-2418 LIFTING GP-ENGINE

S/N: RHX7868-UP

PART OF 286-9798 ENGINE AR-COMPLETE

SMCS-1122 **i01516137**

NOTE	REF NO	GRAPHIC REF	PART NUMBER	QTY	PART NAME 1 2 3 4 5 6 (PRODUCT LEVEL)	SEE PAGE
	1	1	**104-8586**	1	EYE-LIFTING	
	2	1	**0S-1595**	4	BOLT (1/2-13X1.25-IN)	
	3	1	**5P-8245**	4	WASHER-HARD (13.5X25.5X3-MM THK)	

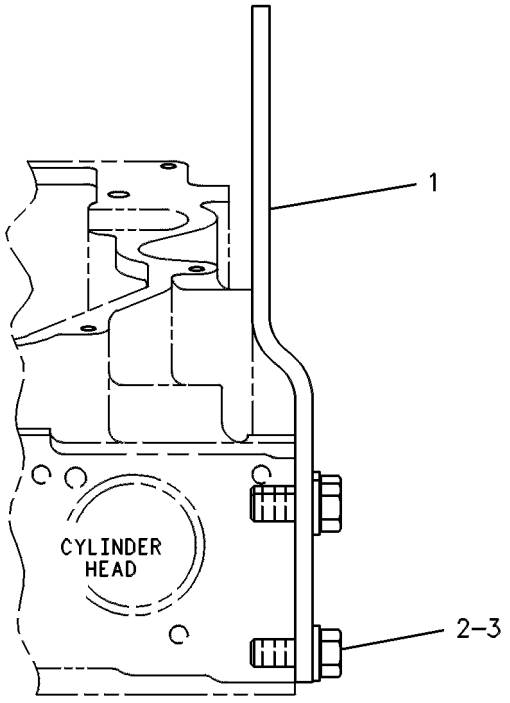

GRAPHIC #1 **<END>** g00238168

BASIC ENGINE

190-0009 MECHANISM GP-FUEL PUMP & VALVE

S/N: RHX7868-UP

PART OF 241-5933 ENGINE AR-CORE

SMCS-1102 **i03690828**

NOTE	REF NO	GRAPHIC REF	PART NUMBER	QTY	PART NAME 1 2 3 4 5 6 (PRODUCT LEVEL)	SEE PAGE
CY	1	1	*328-4236*	3	ROCKER ARM GP	68
	2	1	**348-7743**	12	BRIDGE-VALVE	

C-CHANGE FROM PREVIOUS TYPE
Y-SEPARATE ILLUSTRATION

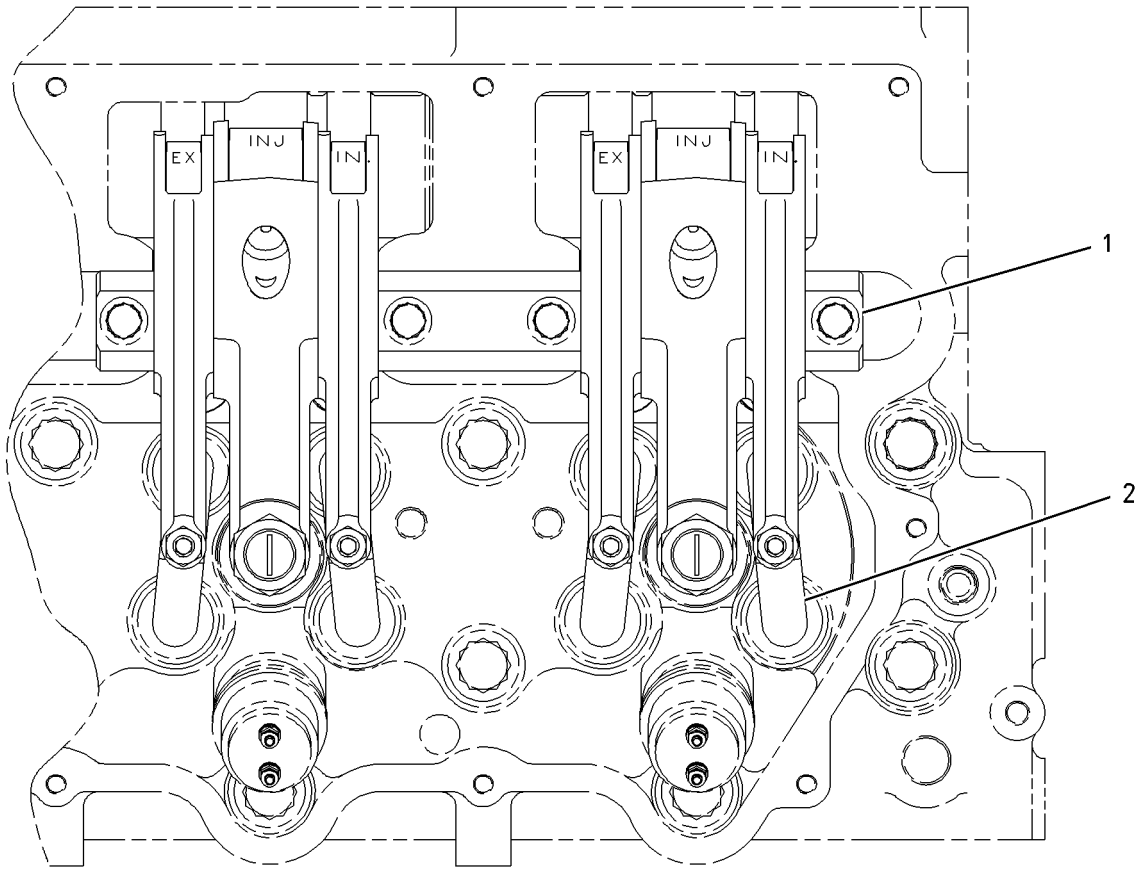

TOP VIEW

GRAPHIC #1 **<END>** g00814910

BASIC ENGINE

227-3503 MOUNTING GP-ALTERNATOR & COMPR

S/N: RHX7868-UP

PART OF 286-9798 ENGINE AR-COMPLETE

SMCS-1405, 1802 **i02520789**

NOTE	REF NO	GRAPHIC REF	PART NUMBER	QTY	PART NAME 1 2 3 4 5 6 (PRODUCT LEVEL)	SEE PAGE
	1	1	**238-5436**	1	BRACKET	
	2	1	**238-8643**	1	BRACKET	
	3	1	**0L-2070**	1	BOLT (3/8-16X2.25-IN)	
	4	1	**5F-4899**	4	BOLT (3/8-16X5.5-IN)	
	5	1	**5M-2894**	5	WASHER-HARD (10.2X18.5X2.5-MM THK)	
	6	1	**8T-4121**	3	WASHER-HARD (11X21X2.5-MM THK)	
CM	7	1	**8T-4186**	3	BOLT (M10X1.5X40-MM)	

C-CHANGE FROM PREVIOUS TYPE
M-METRIC PART

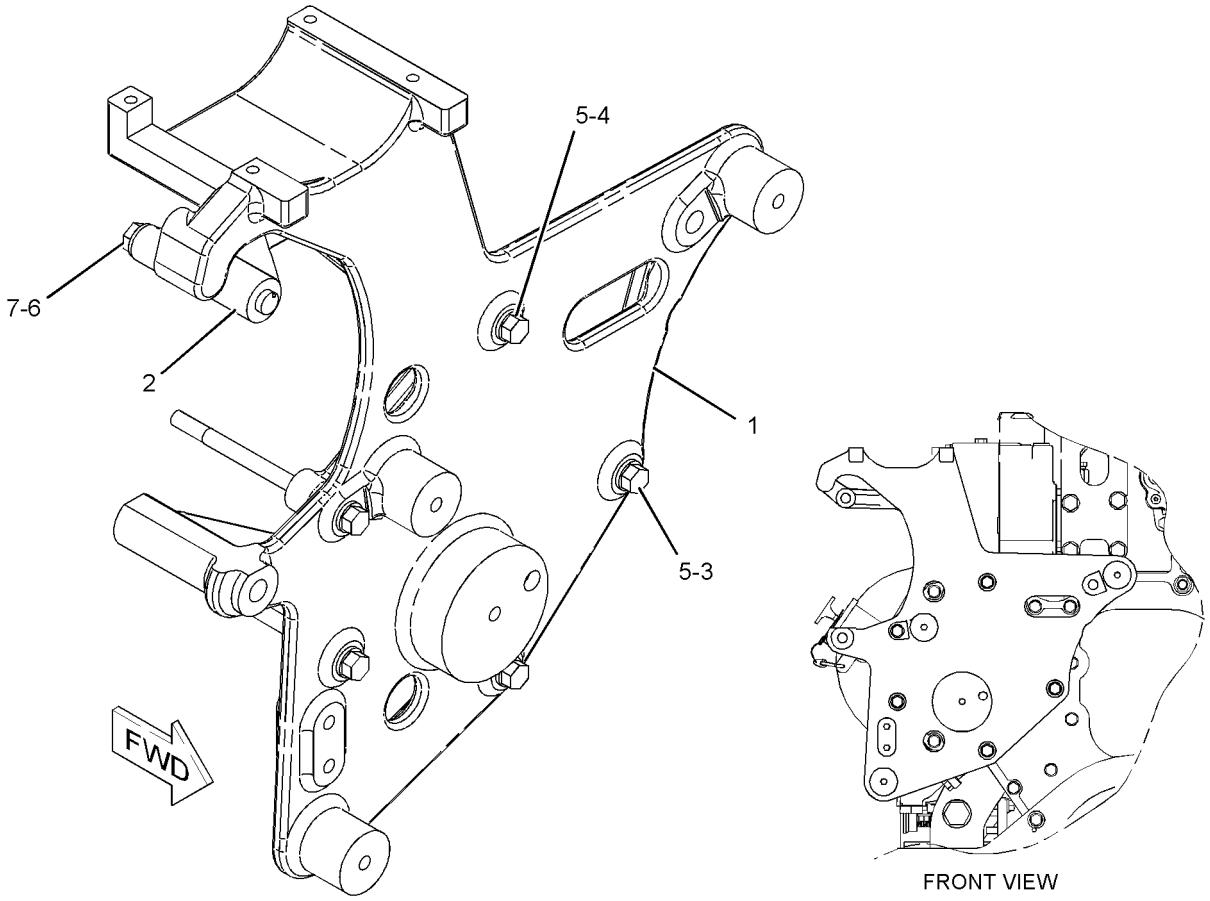

GRAPHIC #1 **<END>** g01309366

BASIC ENGINE

287-0203 MOUNTING GP-ENGINE

S/N: WAP1-UP

PART OF 310-9678 INSTALLATION AR-ENGINE

SMCS-1152 **i02861954**

NOTE	REF NO	GRAPHIC REF	PART NUMBER	QTY	PART NAME 1 2 3 4 5 6 (PRODUCT LEVEL)	SEE PAGE
	1	1	**9W-7388**	6	WASHER (26X144X12-MM THK)	
M	2	1	**139-8873**	6	SUPPORT AS	
	3	1	**147-6982**	6	MOUNT-FLEXIBLE	
	4	1	**147-6983**	6	MOUNT-FLEXIBLE	
	5	1	**171-9057**	2	BRACKET AS	
	6	1	**287-0204**	2	BRACKET AS	
M	7	1	**7X-2567**	6	BOLT (M24X3X160-MM)	
	8	1	**8C-6362**	8	BOLT (5/8-11X2.75-IN)	
	9	1	**8T-1482**	6	WASHER-HARD (26X50X8-MM THK)	
	10	1	**8T-4122**	16	WASHER-HARD (17X32X3.5-MM THK)	
	11	1	**8T-4167**	6	WASHER-HARD (26X44X4-MM THK)	
	12	1	**8T-9393**	8	BOLT (5/8-11X1.5-IN)	

M-METRIC PART

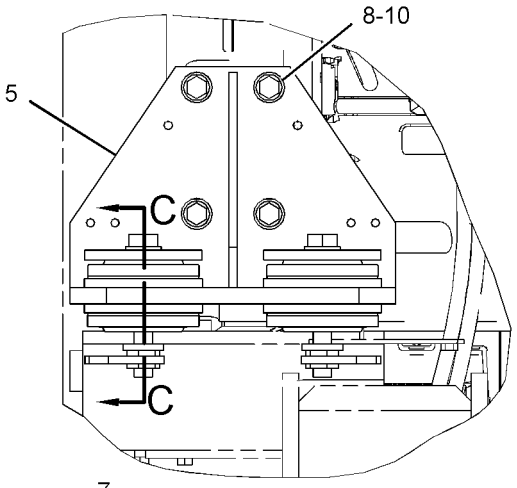

VIEW OF AREA A

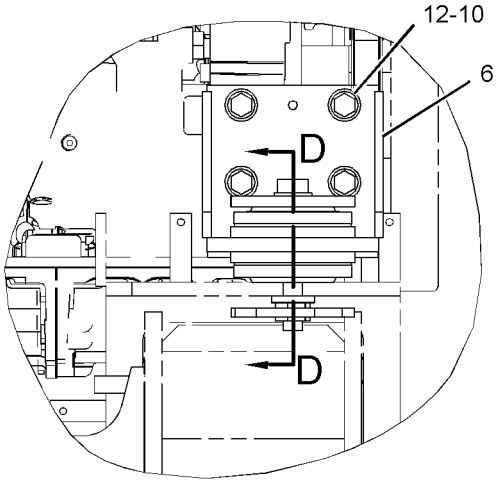

VIEW OF AREA B

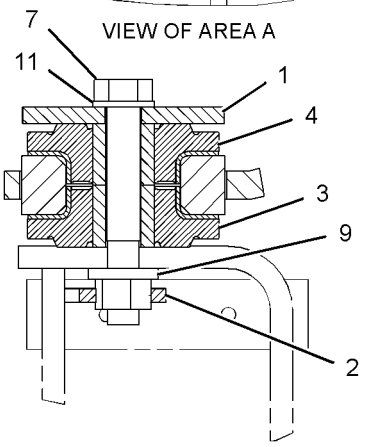

SECTION C-C

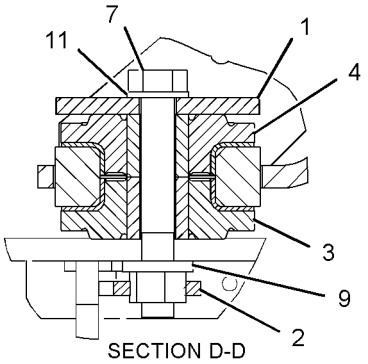

SECTION D-D

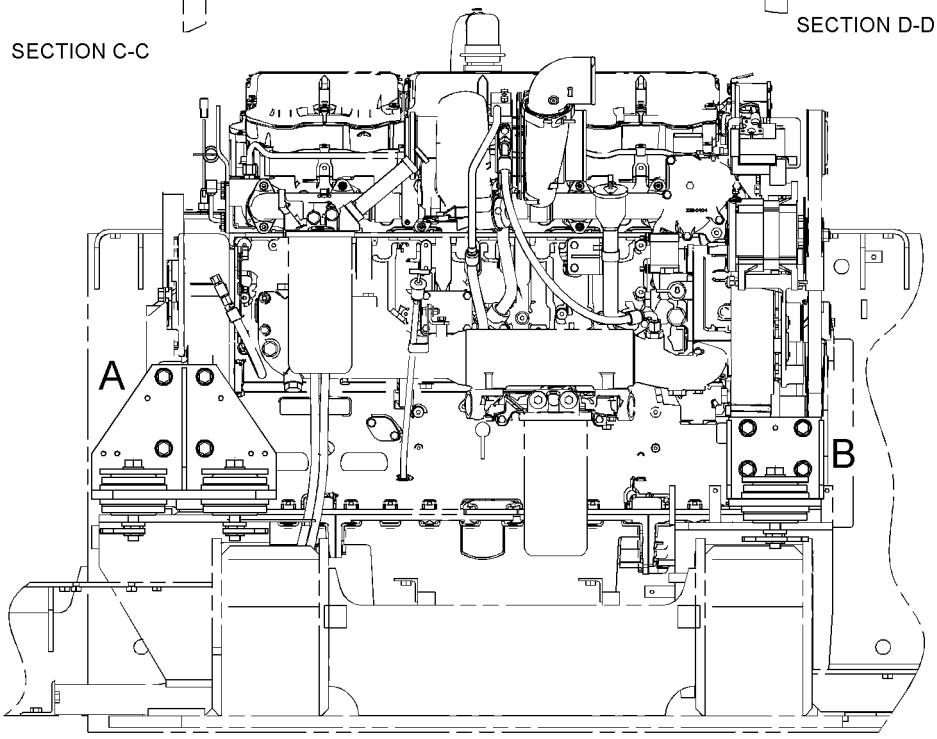

FRONT VIEW

GRAPHIC #1 **<END>** g01436431

BASIC ENGINE

271-5761 PAN GP-OIL–ENGINE

S/N: RHX7868-UP

PART OF 286-9798 ENGINE AR-COMPLETE

SMCS-1302 **i03818556**

NOTE	REF NO	GRAPHIC REF	PART NUMBER	QTY	PART NAME 1 2 3 4 5 6 (PRODUCT LEVEL)	SEE PAGE
	1	1	**7E-4661**	1	PLATE	
	2	1	**8T-4896**	40	WASHER-HARD (10.2X18.5X2.5-MM THK)	
	3	1	**188-0210**	2	GASKET	
	4	1	**213-0677**	1	SWITCH AS-LIQUID LEVEL (ENGINE OIL)	
		1	**102-8802**	1	KIT-RECEPTACLE (2-PIN)	
					(INCLUDES RECEPTACLE AS & WEDGE)	
		1	**144-1636**	2	PIN-CONNECTOR (14-GA TO 18-GA)	
	5	1	**271-4068**	1	PAN-OIL	
	6	1	**0S-1587**	2	BOLT (1/2-13X1.75-IN)	
	7	1	**0S-1588**	3	BOLT (3/8-16X1.25-IN)	
	8	1	**238-5082**	1	SEAL-O-RING	
	9	1	**4P-0519**	1	ADAPTER AS-DRAIN	
	9A	1	**109-5839**	1	PLUG-DRAIN (ENGINE OIL PAN)	
	9B	1	**109-5840**	1	ADAPTER-PLUG	
	10	1	**5M-2894**	3	WASHER-HARD (10.2X18.5X2.5-MM THK)	
	11	1	**0S-1571**	40	BOLT (3/8-16X1.75-IN)	
	12	1	**6V-3830**	1	SEAL-O-RING	

271-5761 **PAN GP-OIL** *(contd.)* **i03818556**

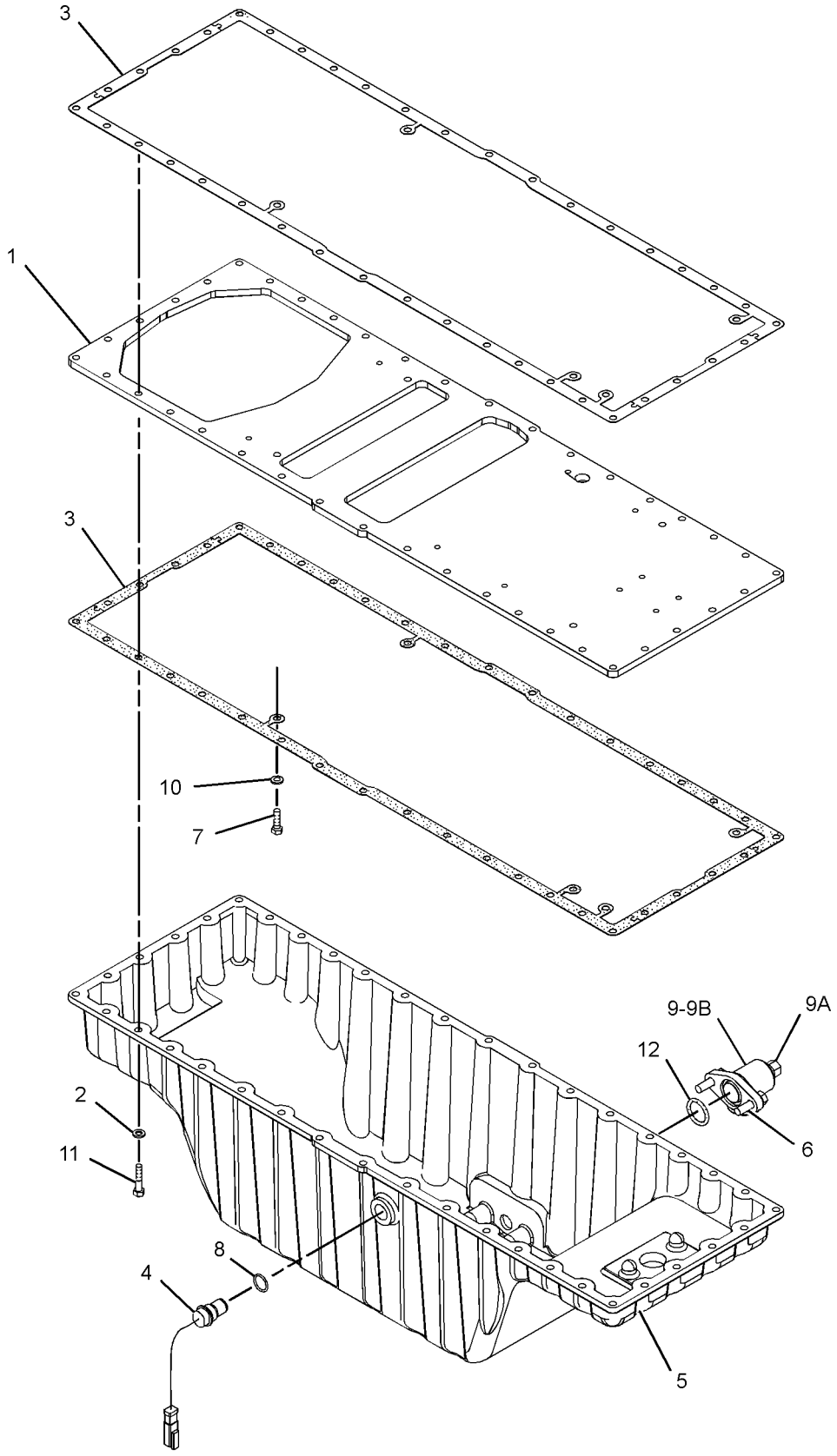

GRAPHIC #1 **<END>** g02049883

BASIC ENGINE

238-6802 PANEL GP-SOUND SUPPRESSION

S/N: RHX7868-UP

PART OF 286-9798 ENGINE AR-COMPLETE

SMCS-1801 **i02100292**

NOTE	REF NO	GRAPHIC REF	PART NUMBER	QTY	PART NAME 1 2 3 4 5 6 (PRODUCT LEVEL)	SEE PAGE
	1	1	**238-6801**	1	PANEL AS-SOUND SUPPRESSION	
	2	1	**0S-1588**	3	BOLT (3/8-16X1.25-IN)	
	3	1	**5M-2894**	3	WASHER-HARD (10.2X18.5X2.5-MM THK)	

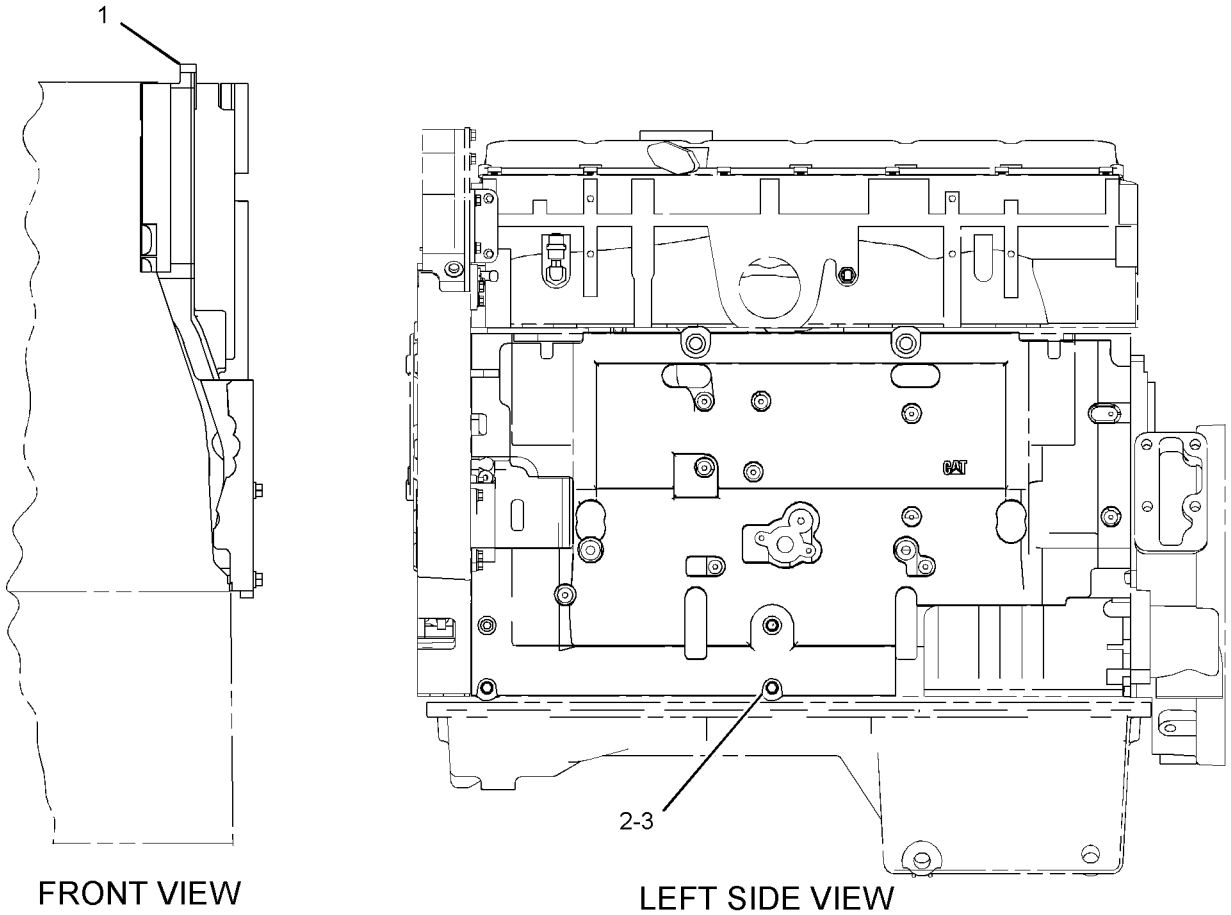

FRONT VIEW

LEFT SIDE VIEW

GRAPHIC #1

<END>

g01070865

BASIC ENGINE

244-8005 PANEL GP-SOUND SUPPRESSION

S/N: WAP1-UP

PART OF 313-8122 HOOD & GUARD GP

SMCS-1801 **i02578021**

NOTE	REF NO	GRAPHIC REF	PART NUMBER	QTY	PART NAME 1 2 3 4 5 6 (PRODUCT LEVEL)	SEE PAGE
	1		**165-2827**	2	LINER	
	2		**244-8006**	2	LINER	

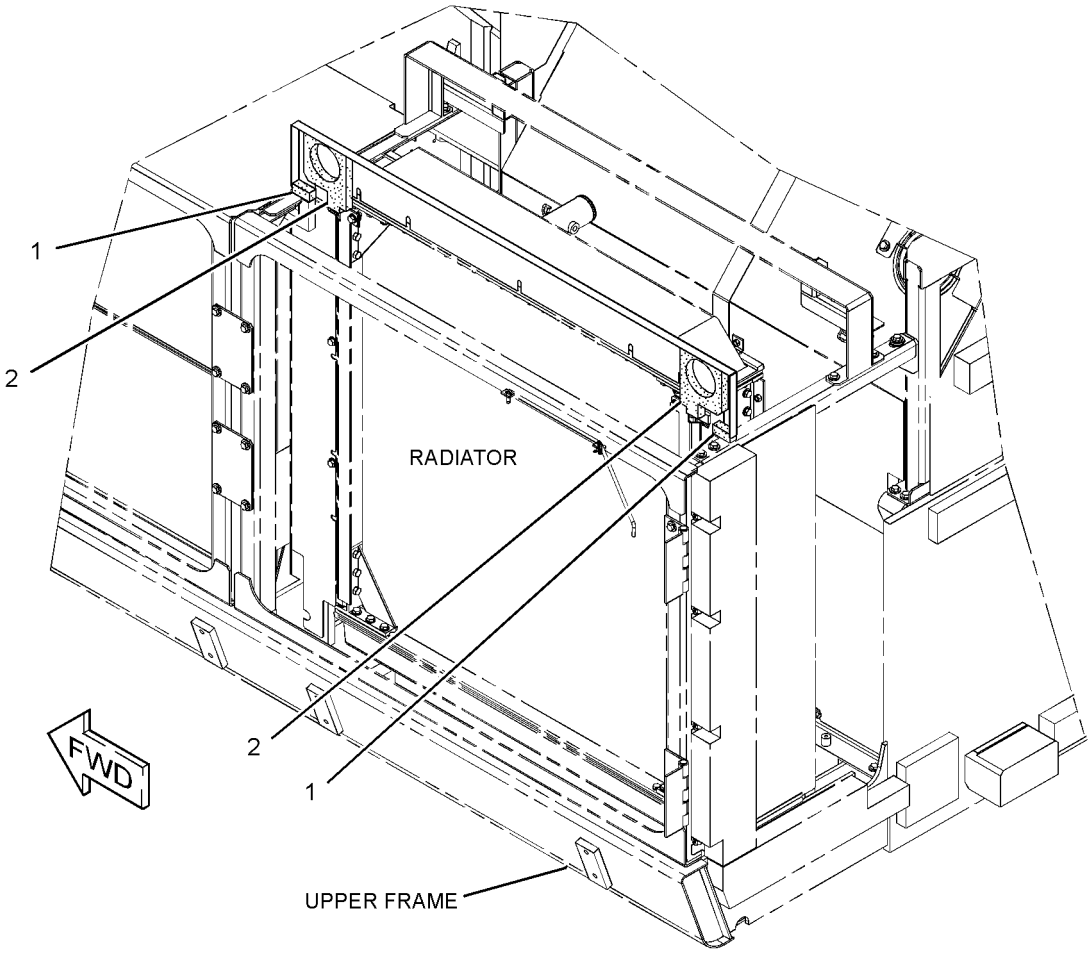

GRAPHIC #1 **<END>** g01357212

BASIC ENGINE

220-1441 PISTON & ROD GP

S/N: RHX7868-UP
COMBUSTION RATIO 18:1
PART OF 241-5933 ENGINE AR-CORE

SMCS-1225 **i03595723**

NOTE	REF NO	GRAPHIC REF	PART NUMBER	QTY	PART NAME 1 2 3 4 5 6 (PRODUCT LEVEL)	SEE PAGE
	1	1	**151-5925**	1	BOLT (7/16-14-THD)	
	2	1	**318-3150**	1	PIN-PISTON	
	3	1	**238-2707**	1	RING-PISTON (INTERMEDIATE)	
	4	1	**246-5659**	1	RING-PISTON (OIL CONTROL)	
	5	1	**274-8359**	1	TUBE AS	
R	6	1	**329-4511**	1	BODY AS-PISTON	
	7	1	**223-9159**	1	RING-PISTON-TOP	
R	8	1	**224-3245**	1	ROD AS	
	8A	1	**219-4458**	2	PIN-DOWEL	
	8B	1	**213-3217**	4	BOLT (M11X1.25X84-MM)	
	8C	1	**229-6259**	1	BEARING	
	9	1	**224-3246**	1	BEARING-CONNECTING ROD (STANDARD)	
AB		1	**232-3235**		BEARING-CONNECTING ROD (0.64-MM US)	
AB		1	**232-3236**		BEARING-CONNECTING ROD (1.27-MM US)	
	10	1	**230-2569**	2	RETAINER-PIN	

A-NOT PART OF THIS GROUP
B-USE AS REQUIRED
R-REMFG PART MAY BE AVAILABLE

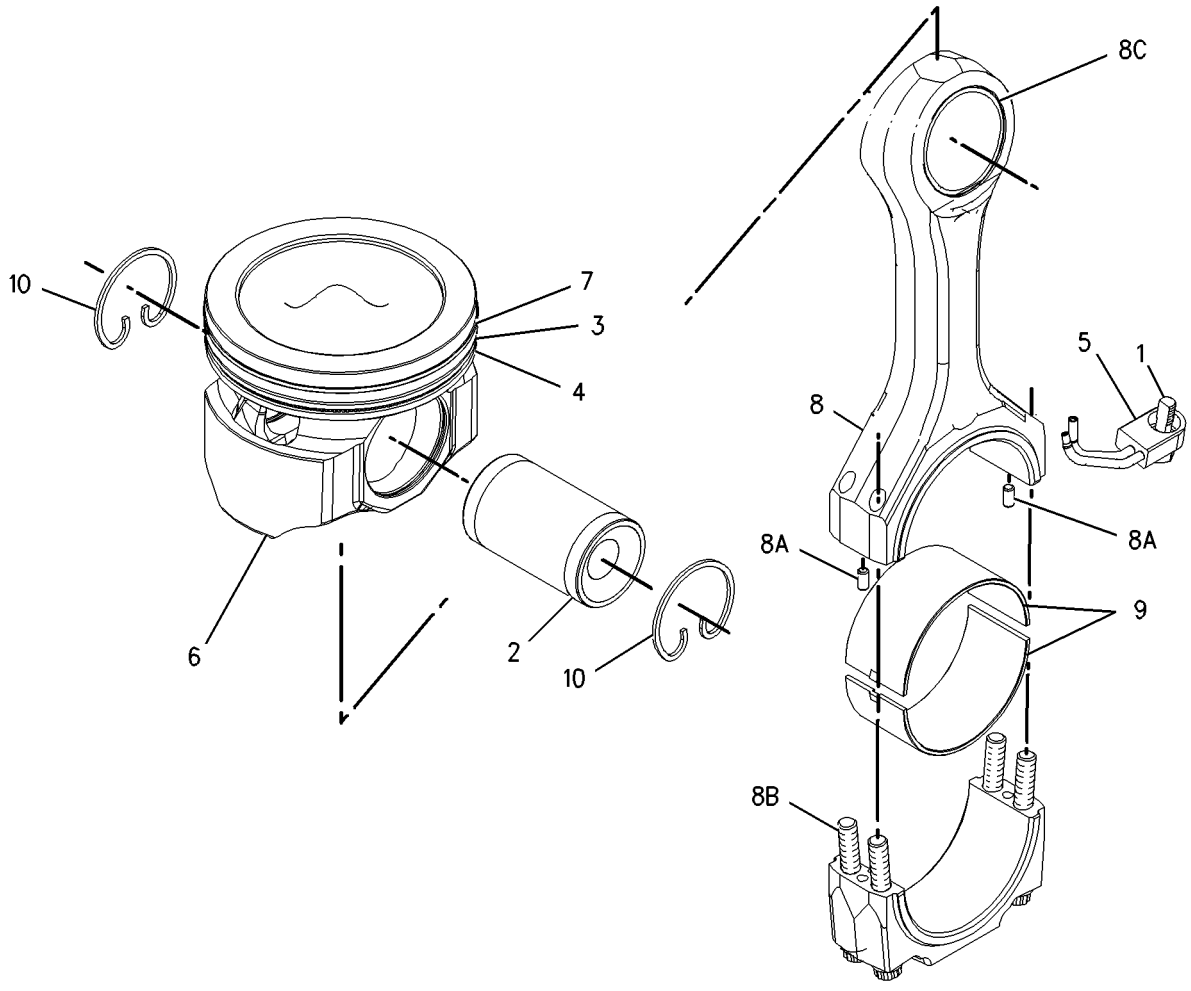

GRAPHIC #1 **<END>** g01002106

BASIC ENGINE

353-9982 PLATE AS-FRONT HOUSING

S/N: RHX7868-UP

PART OF 241-0164 HOUSING GP-FRONT

SMCS-1151, 1162 **i03896289**

NOTE	REF NO	GRAPHIC REF	PART NUMBER	QTY	PART NAME 1 2 3 4 5 6 (PRODUCT LEVEL)	SEE PAGE
	1	1	**126-1757**	9	WASHER (10.85X19.3X1.27-MM THK)	
	2	1	**129-5427**	2	WASHER-SPECIAL (SEALING)	
	3	1	**129-5428**	12	STUD (BRAKE)	
	4	1	**223-0533**	1	PLATE	
	5	1	**334-6832**	2	STUD-SPECIAL (BRAKE)	

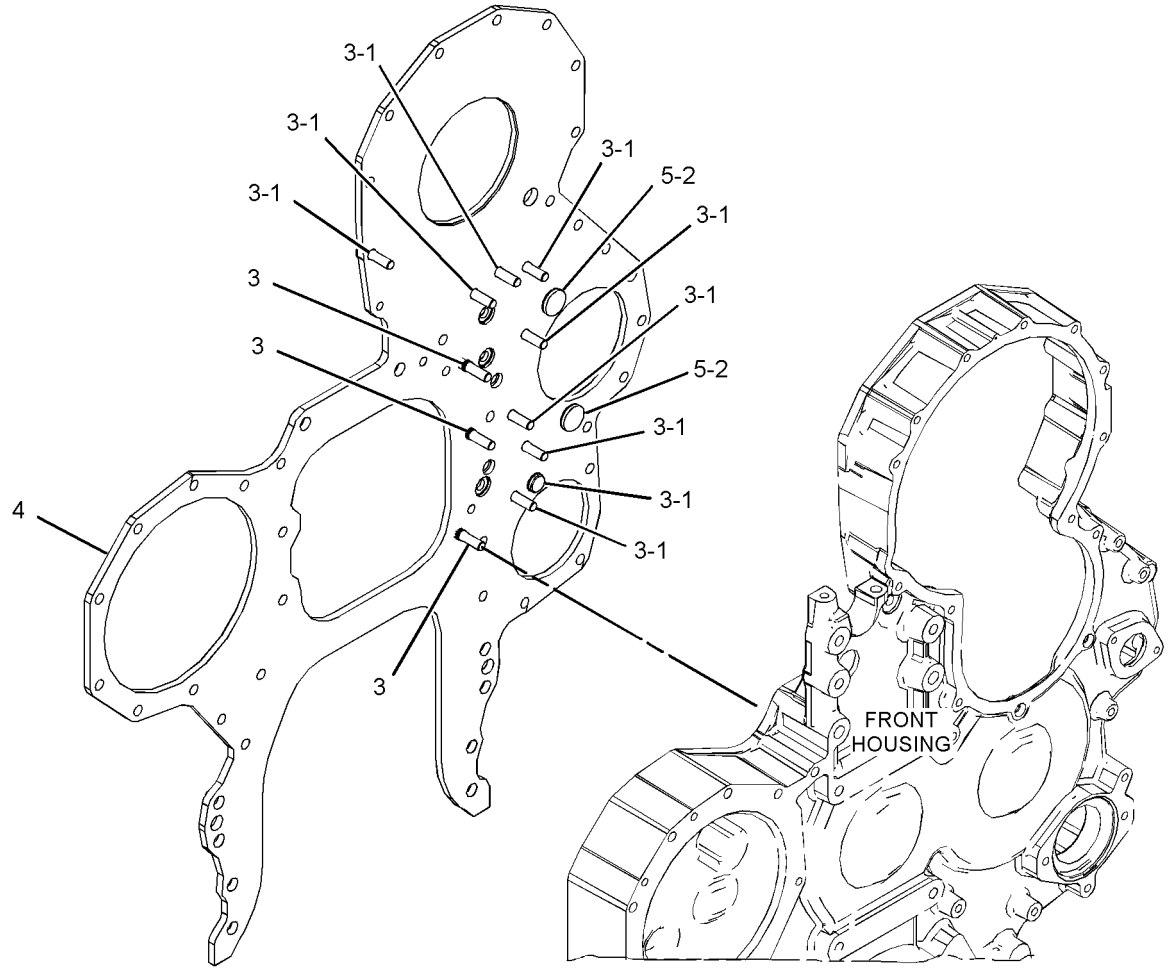

GRAPHIC #1 **<END>** g02129274

229-6709 PLUG GP-CYLINDER BLOCK

S/N: RHX7868-UP

PART OF 286-9798 ENGINE AR-COMPLETE

SMCS-1201 **i03965143**

NOTE	REF NO	GRAPHIC REF	PART NUMBER	QTY	PART NAME 1 2 3 4 5 6 (PRODUCT LEVEL)	SEE PAGE
	1	1	*353-5126*	2	PLUG AS	
					(EACH INCLUDES)	
		1	**9S-8005**	1	PLUG-O-RING	
	1A	1	**6V-6609**	1	SEAL-O-RING	
C	2	1	*307-2671*	1	PLUG AS	
		1	**9S-8002**	1	PLUG-O-RING	
		1	**214-7566**	1	SEAL-O-RING	
	3	1	*307-2673*	5	PLUG AS	
					(EACH INCLUDES)	
		1	**9S-8005**	1	PLUG-O-RING	
	3A	1	**238-5080**	1	SEAL-O-RING	

C-CHANGE FROM PREVIOUS TYPE

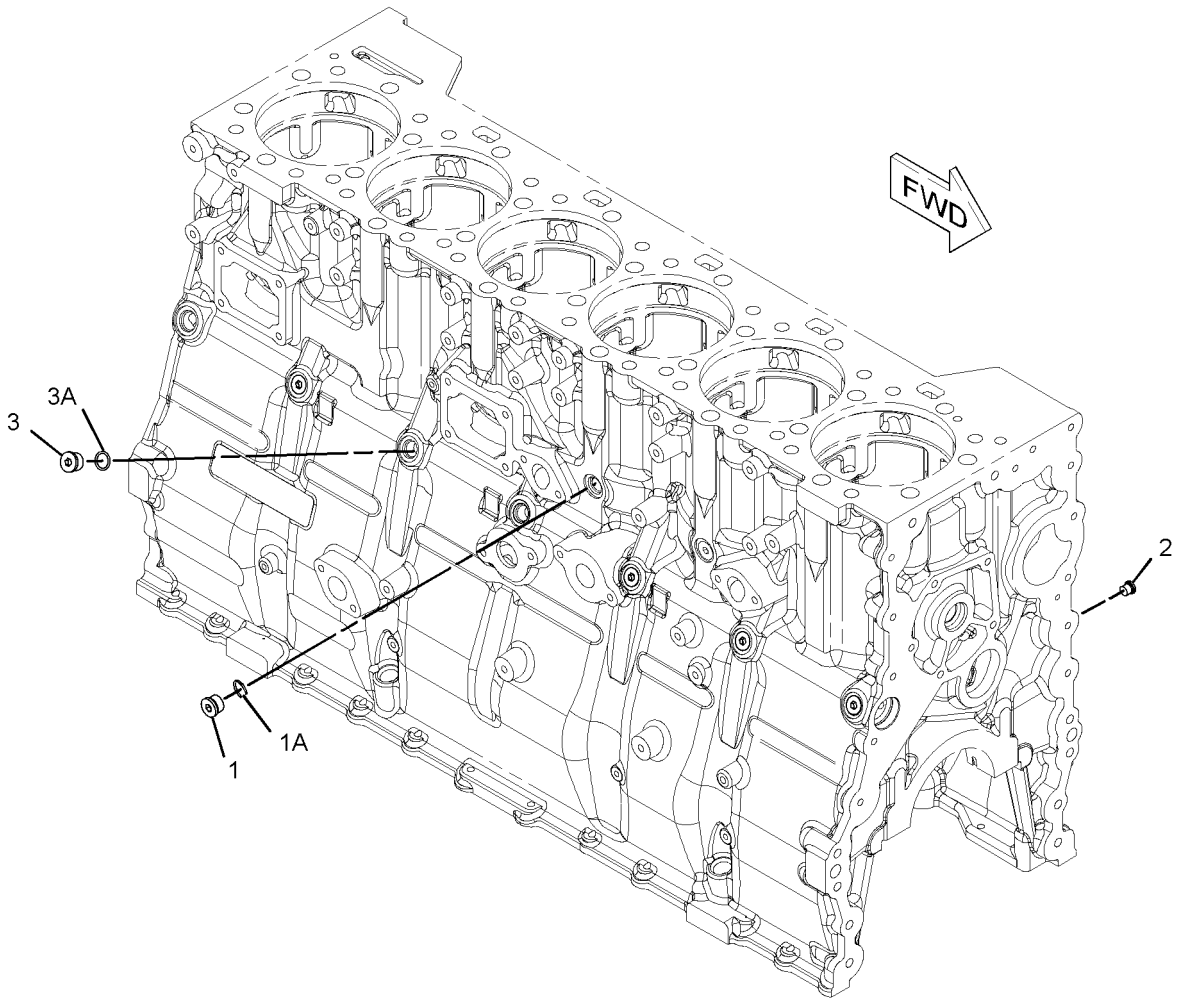

GRAPHIC #1 **<END>** g02161664

BASIC ENGINE

305-9196 PLUG GP-CYLINDER BLOCK

S/N: RHX7868-UP

PART OF 261-0191 CYLINDER BLOCK GP

SMCS-1201 **i02680408**

NOTE	REF NO	GRAPHIC REF	PART NUMBER	QTY	PART NAME 1 2 3 4 5 6 (PRODUCT LEVEL)	SEE PAGE
	1	1	**6V-5065**	1	SEAL-O-RING	
	2	1	**9S-8010**	1	PLUG	

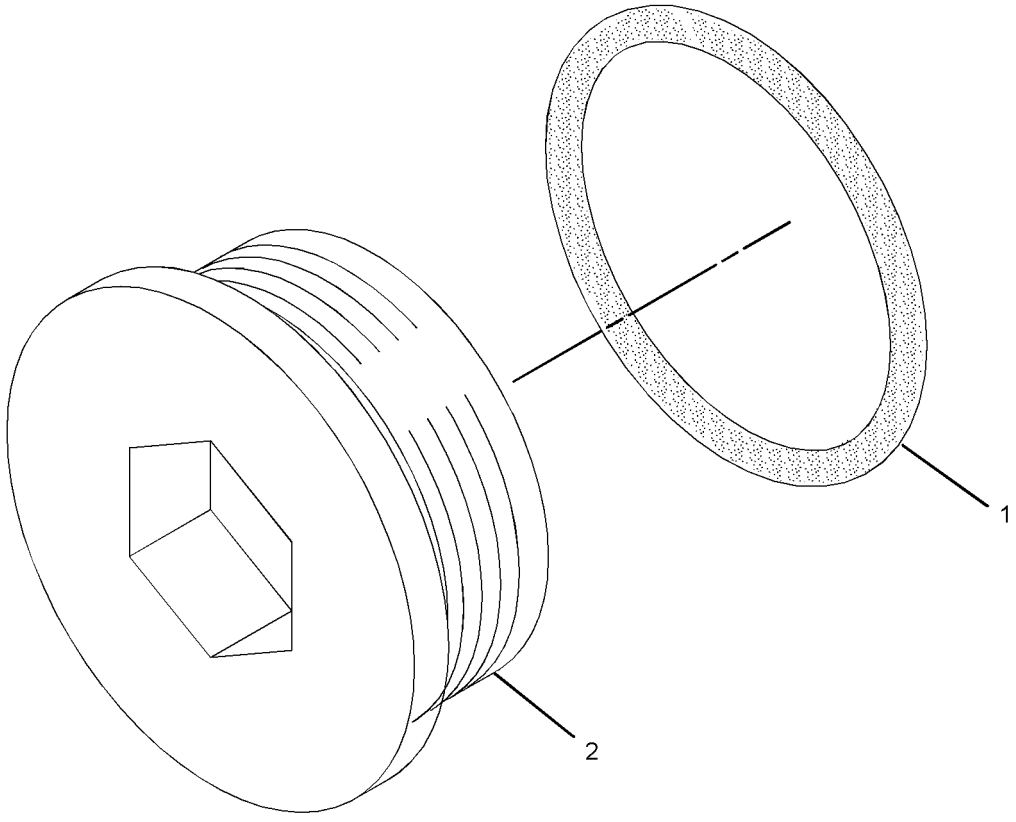

GRAPHIC #1 **<END>** g01347363

BASIC ENGINE

282-3645 PLUG GP-CYLINDER HEAD

S/N: RHX7868-UP

PART OF 286-9798 ENGINE AR-COMPLETE

SMCS-1100 **i04016369**

NOTE	REF NO	GRAPHIC REF	PART NUMBER	QTY	PART NAME 1 2 3 4 5 6 (PRODUCT LEVEL)	SEE PAGE
	1	1	*353-5125*	1	PLUG AS	
		1	**6V-3251**	1	SEAL-O-RING	
		1	**9S-8006**	1	PLUG-O-RING	
	2	1	*353-5126*	1	PLUG AS	
		1	**6V-6609**	1	SEAL-O-RING	
		1	**9S-8005**	1	PLUG-O-RING	
	3	1	*183-3407*	4	PLUG AS	
					(EACH INCLUDES)	
		1	**9S-8004**	1	PLUG-O-RING	
		1	**214-7568**	1	SEAL-O-RING	

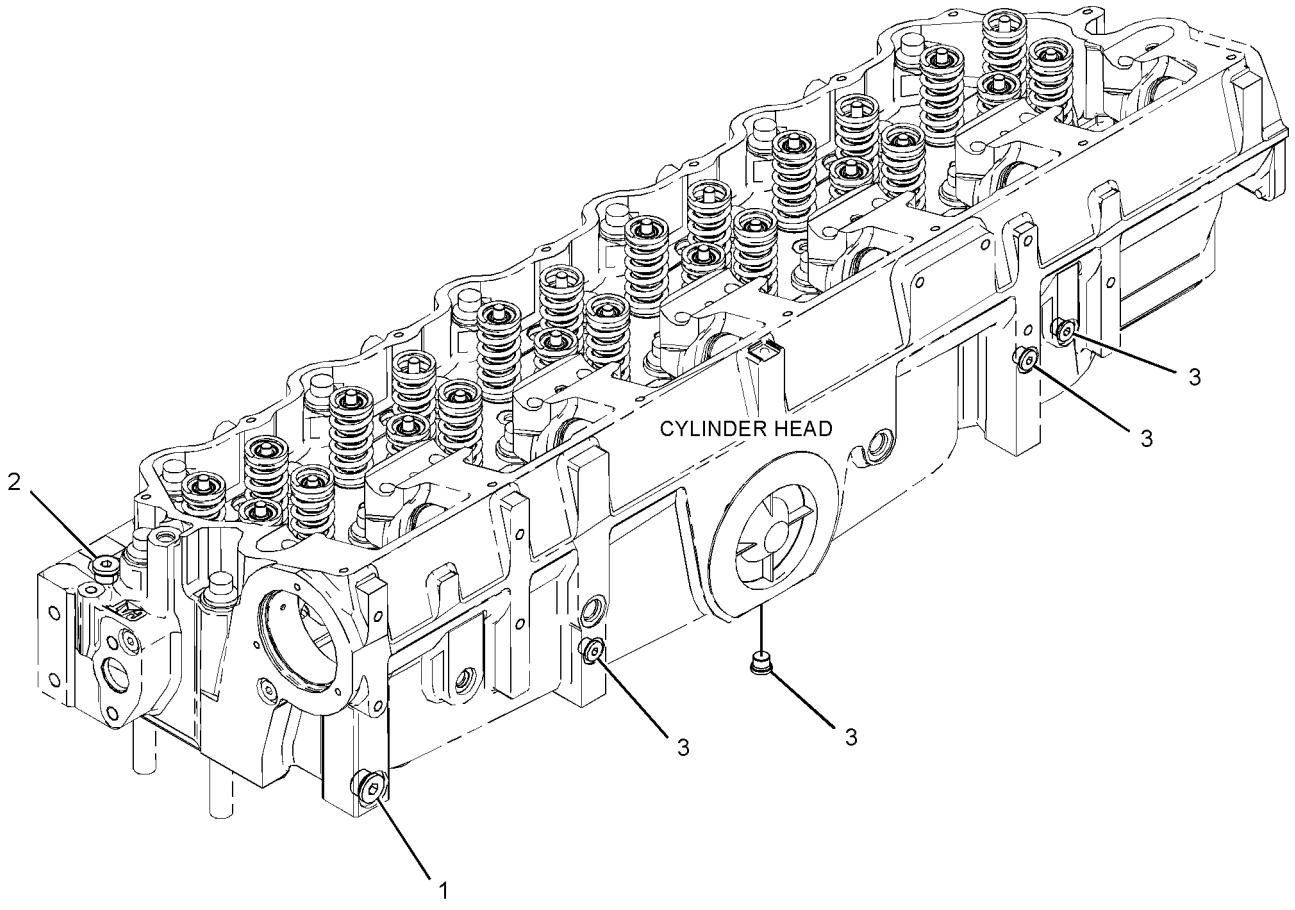

GRAPHIC #1 **<END>** g02190693

BASIC ENGINE

221-3705 PULLEY GP

S/N: RHX7868-UP

PART OF 286-9798 ENGINE AR-COMPLETE

SMCS-1205, 1207, 1358, 1384, 1425 **i02881499**

NOTE	REF NO	GRAPHIC REF	PART NUMBER	QTY	PART NAME 1 2 3 4 5 6 (PRODUCT LEVEL)	SEE PAGE
	1	1	**123-0791**	1	PULLEY (8-GROOVE)	
	2	1	**133-7023**	1	PULLEY AS-IDLER	
	2A	1	**151-2898**	1	SPACER (10.4X38.1X20-MM THK)	
M	2B	1	**151-2900**	1	BOLT (M10X1.5X54.25-MM)	
	2C	1	**166-6358**	1	COVER-DUST	
	3	1	**289-6304**	2	PULLEY AS-IDLER	
					(EACH INCLUDES)	
M	3A	1	**151-2900**	1	BOLT (M10X1.5X54.25-MM)	
	3B	1	**166-6358**	1	COVER-DUST	
	4	1	**200-2279**	1	BELT TENSIONER	
	5	1	**243-1276**	1	BELT-SERPENTINE	
	6	1	**8T-4121**	1	WASHER-HARD (11X21X2.5-MM THK)	
M	7	1	**8T-4172**	1	BOLT (M10X1.5X80-MM)	

M-METRIC PART

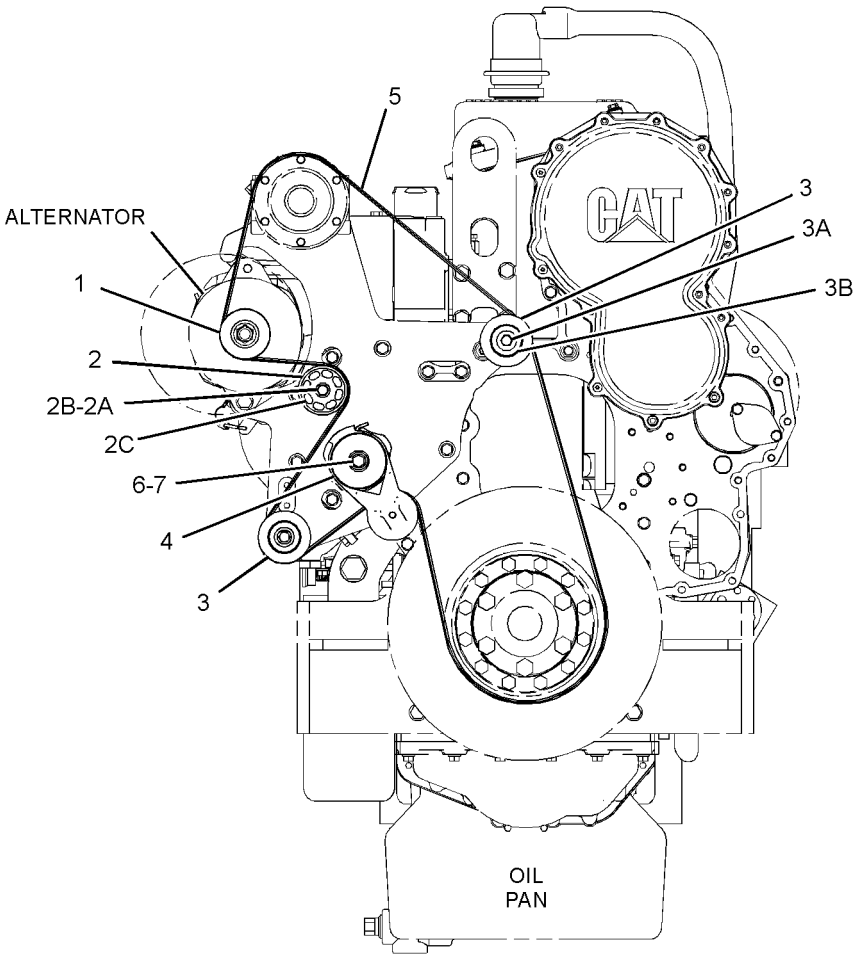

FRONT VIEW OF ENGINE

GRAPHIC #1 **<END>** g01435857

BASIC ENGINE

320-2796 ROCKER ARM GP*R

S/N: RHX7868-UP

PART OF 328-4236 ROCKER ARM GP

SMCS-1123 **i03326363**

NOTE	REF NO	GRAPHIC REF	PART NUMBER	QTY	PART NAME 1 2 3 4 5 6 (PRODUCT LEVEL)	SEE PAGE
	1	1	**258-8721**	1	BUTTON	
	2	1	**274-4491**	1	SCREW-ARM ADJUSTMENT (3/8-24X1.20-IN)	
	3	1	**276-5317**	1	NUT (3/8-24-THD)	
R	4	1	**320-2797**	1	ROCKER ARM AS	
	5	1	**8L-2777**	1	SEAL-O-RING	

R-REMFG PART MAY BE AVAILABLE

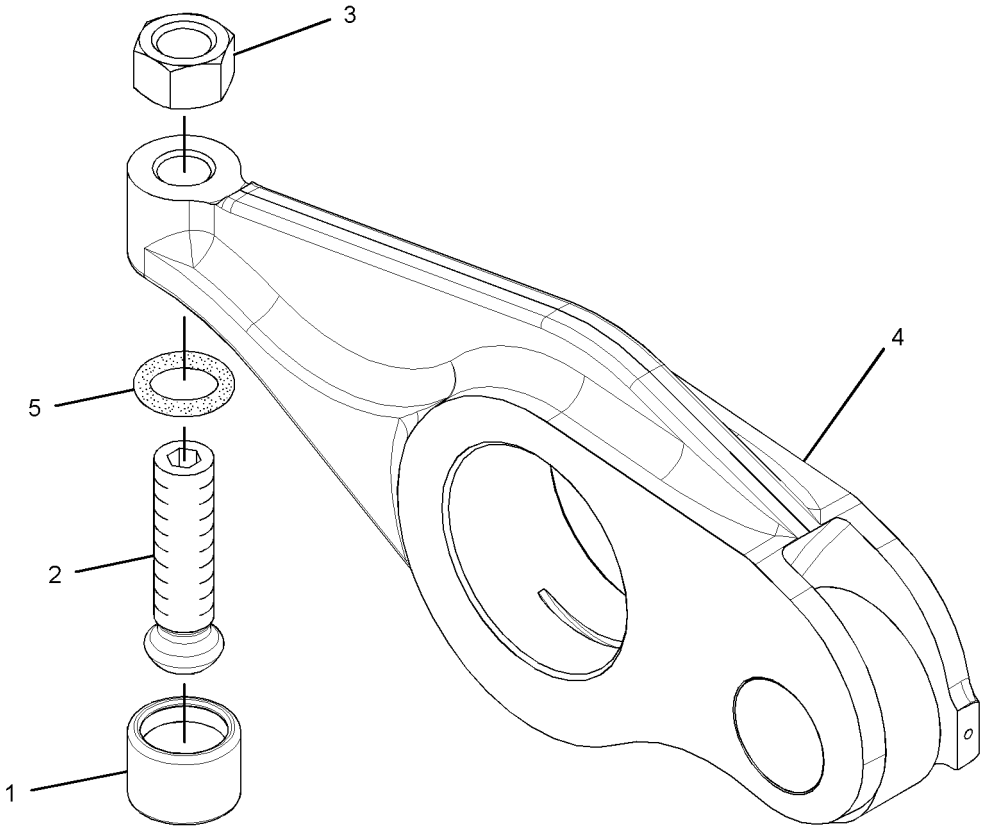

GRAPHIC #1 **<END>** g01526902

BASIC ENGINE

328-4236 ROCKER ARM GP

S/N: RHX7868-UP

PART OF 190-0009 MECHANISM GP-FUEL PUMP & VALVE

SMCS-1123 **i03837675**

NOTE	REF NO	GRAPHIC REF	PART NUMBER	QTY	PART NAME 1 2 3 4 5 6 (PRODUCT LEVEL)	SEE PAGE
	1	1	**307-8322**	1	SHAFT AS-ROCKER ARM	
		1	**4B-9782**	2	BALL	
YR	2	1	*320-2796*	2	ROCKER ARM GP (INTAKE)	67
YR	2A	1	*320-2796*	2	ROCKER ARM GP (EXHAUST)	67
YR	3	1	*328-4238*	2	ROCKER ARM GP (UNIT INJECTOR)	69

R-REMFG PART MAY BE AVAILABLE
Y-SEPARATE ILLUSTRATION

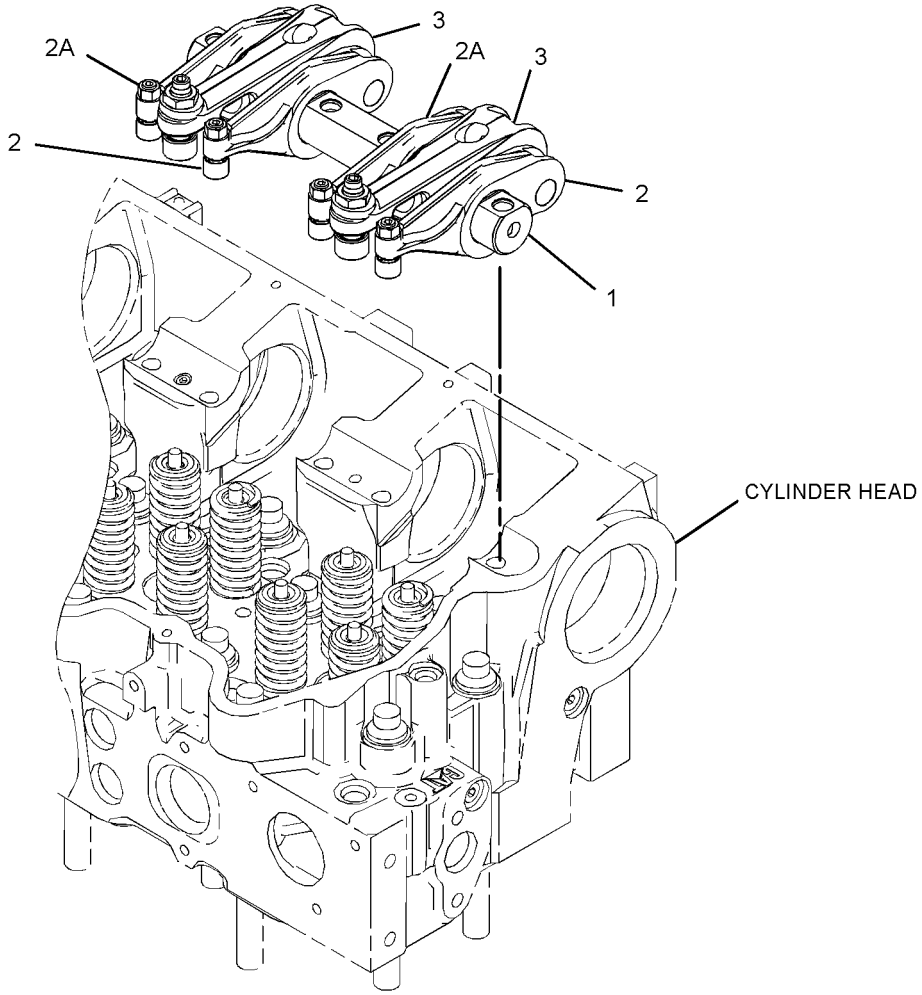

GRAPHIC #1 **<END>** g02086418

328-4238 ROCKER ARM GP*R

S/N: RHX7868-UP

PART OF 328-4236 ROCKER ARM GP

SMCS-1123 **i03326323**

NOTE	REF NO	GRAPHIC REF	PART NUMBER	QTY	PART NAME 1 2 3 4 5 6 (PRODUCT LEVEL)	SEE PAGE
	1	1	**192-4151**	1	BUTTON	
	2	1	**196-5069**	1	SCREW-ARM ADJUSTMENT (9/16-18X2-IN)	
	3	1	**196-5070**	1	NUT-JAM (9/16-18-THD)	
R	4	1	**278-1365**	1	ROCKER ARM AS	
	5	1	**061-8639**	1	SEAL-O-RING	

R-REMFG PART MAY BE AVAILABLE

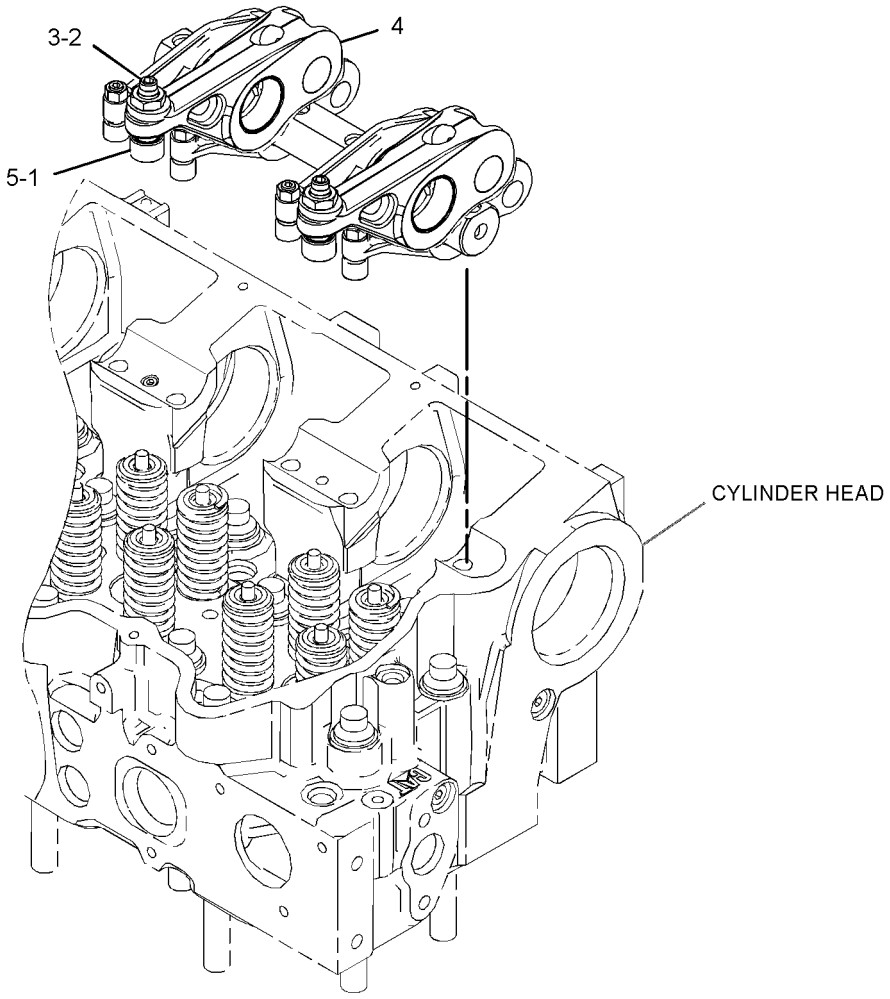

GRAPHIC #1 **<END>** g01707153

BASIC ENGINE

319-7401 SEAL GP-CRANKSHAFT

S/N: RHX7868-UP

PART OF 223-9732 CRANKSHAFT GP

SMCS-1160, 1161 **i03191287**

NOTE	REF NO	GRAPHIC REF	PART NUMBER	QTY	PART NAME 1 2 3 4 5 6 (PRODUCT LEVEL)	SEE PAGE
	1	1	**142-5867**	1	SEAL-CRANKSHAFT (FRONT)	

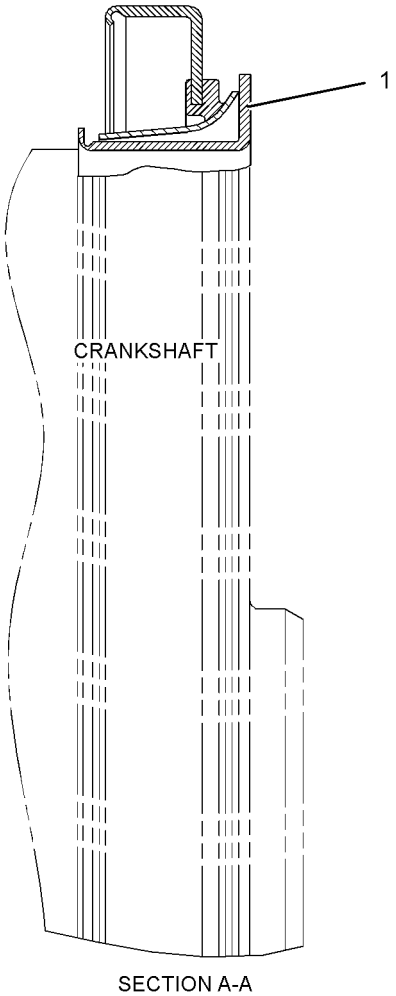

SECTION A-A

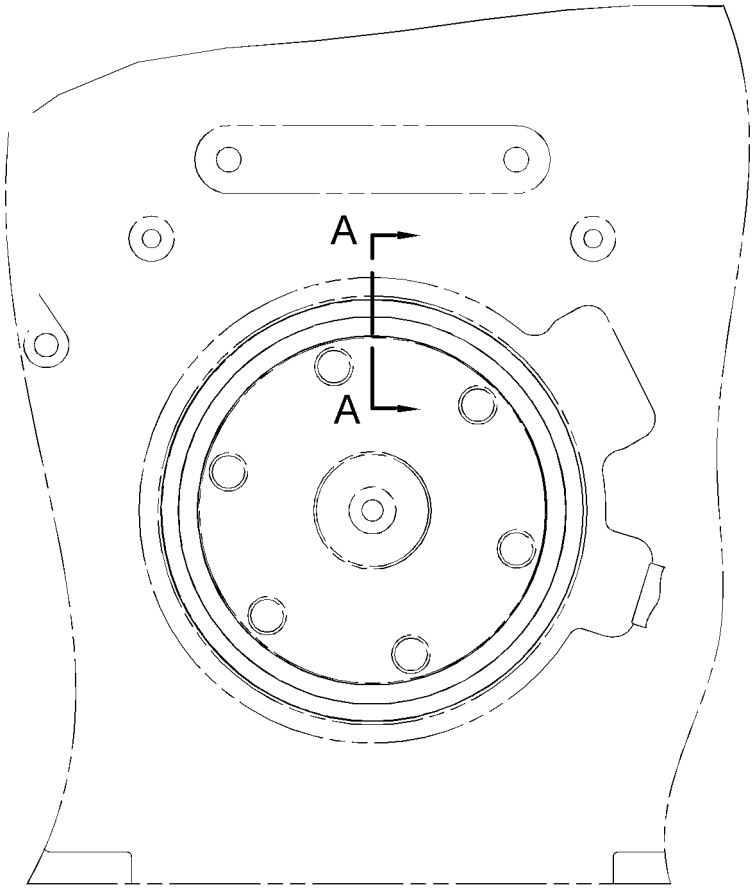

FRONT VIEW OF ENGINE

GRAPHIC #1

<END>

g01516169

BASIC ENGINE

227-9495 SUPPORT GP-ENGINE

S/N: RHX7953-UP
FRONT PLATE TO CYLINDER HEAD
PART OF 286-9798 ENGINE AR-COMPLETE

SMCS-1152, 1153, 1154 **i03449243**

NOTE	REF NO	GRAPHIC REF	PART NUMBER	QTY	PART NAME 1 2 3 4 5 6 (PRODUCT LEVEL)	SEE PAGE
	1	1	**6I-3968**	1	BRACKET-SUPPORT	
	2	1	**0S-1591**	2	BOLT (3/8-16X1.5-IN)	
	3	1	**5M-2894**	2	WASHER-HARD (10.2X18.5X2.5-MM THK)	

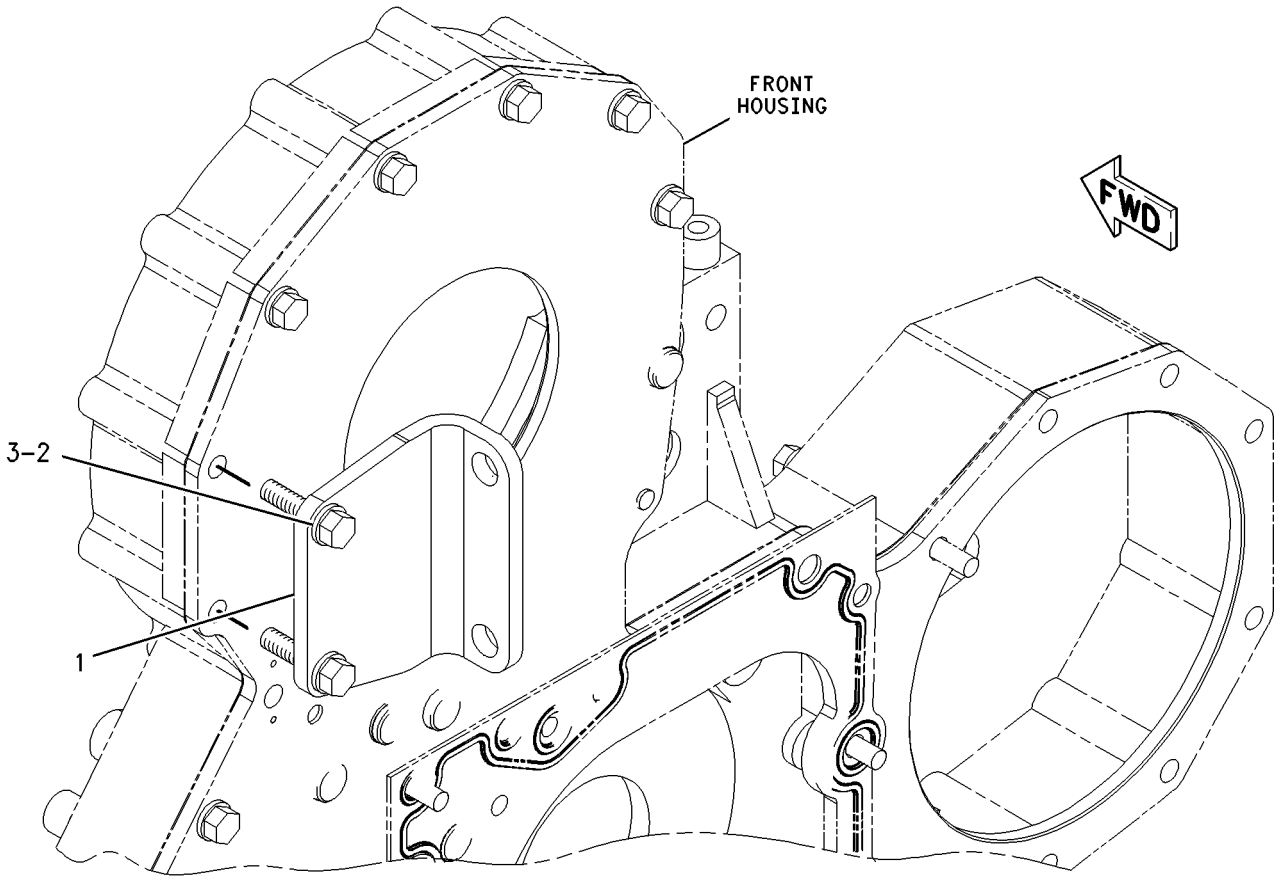

GRAPHIC #1 **<END>** g00999807

BASIC ENGINE

290-9021 SUPPORT GP-ENGINE

S/N: RHX7868-UP

PART OF 286-9798 ENGINE AR-COMPLETE

SMCS-1152, 1153, 1154 **i02598570**

NOTE	REF NO	GRAPHIC REF	PART NUMBER	QTY	PART NAME 1 2 3 4 5 6 (PRODUCT LEVEL)	SEE PAGE
	1	1	**6F-5282**	8	BOLT (1/2-13X5.25-IN)	
	2	1	**290-9020**	1	SUPPORT AS	
	3	1	**2M-0849**	8	WASHER-HARD (13.5X25.5X5-MM THK)	

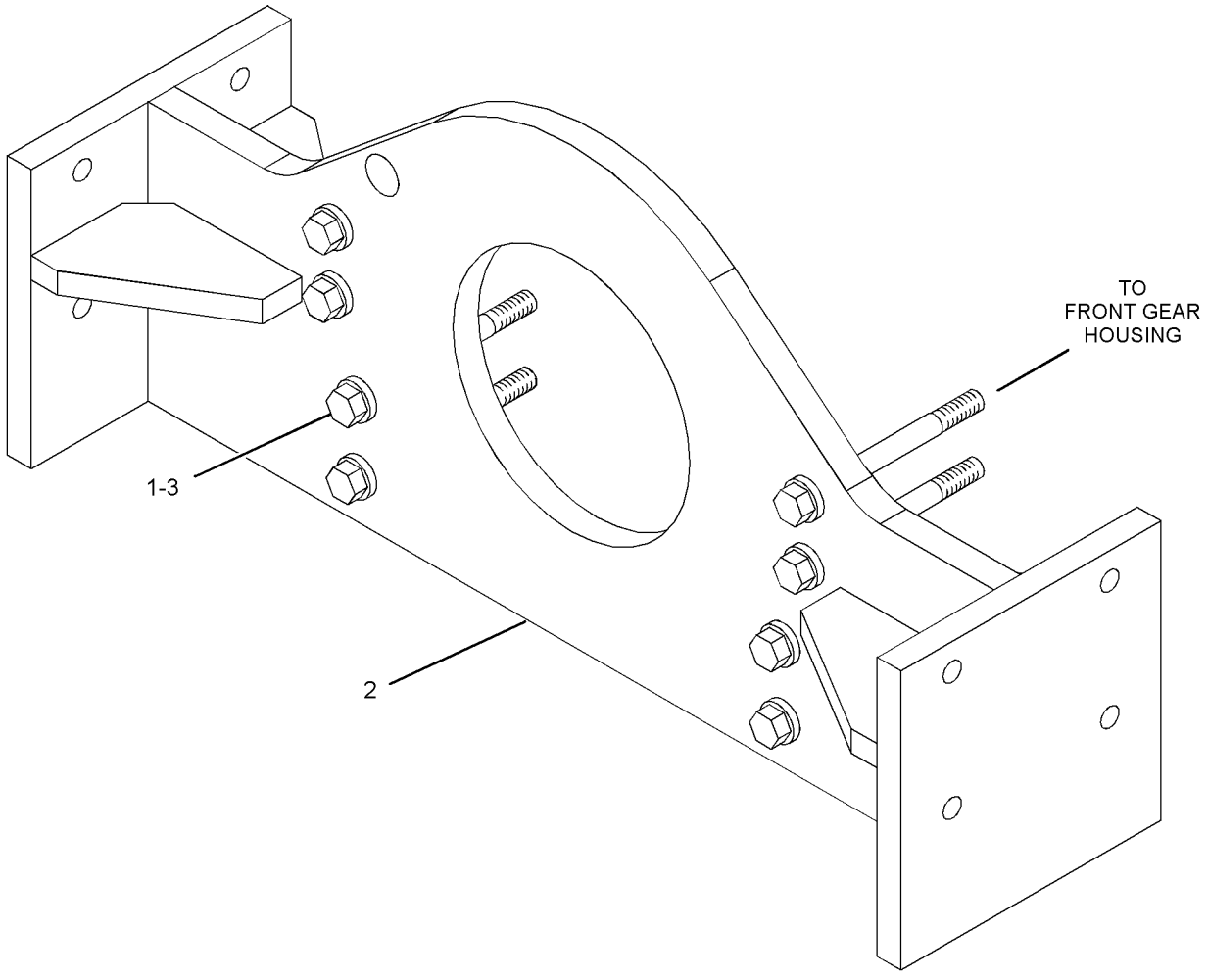

GRAPHIC #1 **<END>** g01301875

LUBRICATION SYSTEM

176-1363 BASE GP-OIL FILTER–ENGINE

S/N: RHX7868-UP

PART OF 200-0655 BASE GP-OIL FILTER

SMCS-1306 **i03973191**

NOTE	REF NO	GRAPHIC REF	PART NUMBER	QTY	PART NAME 1 2 3 4 5 6 (PRODUCT LEVEL)	SEE PAGE
	1	1	**2P-4304**	1	STUD-HOLLOW	
	2	1	**9L-7657**	2	PLUG-CUP	

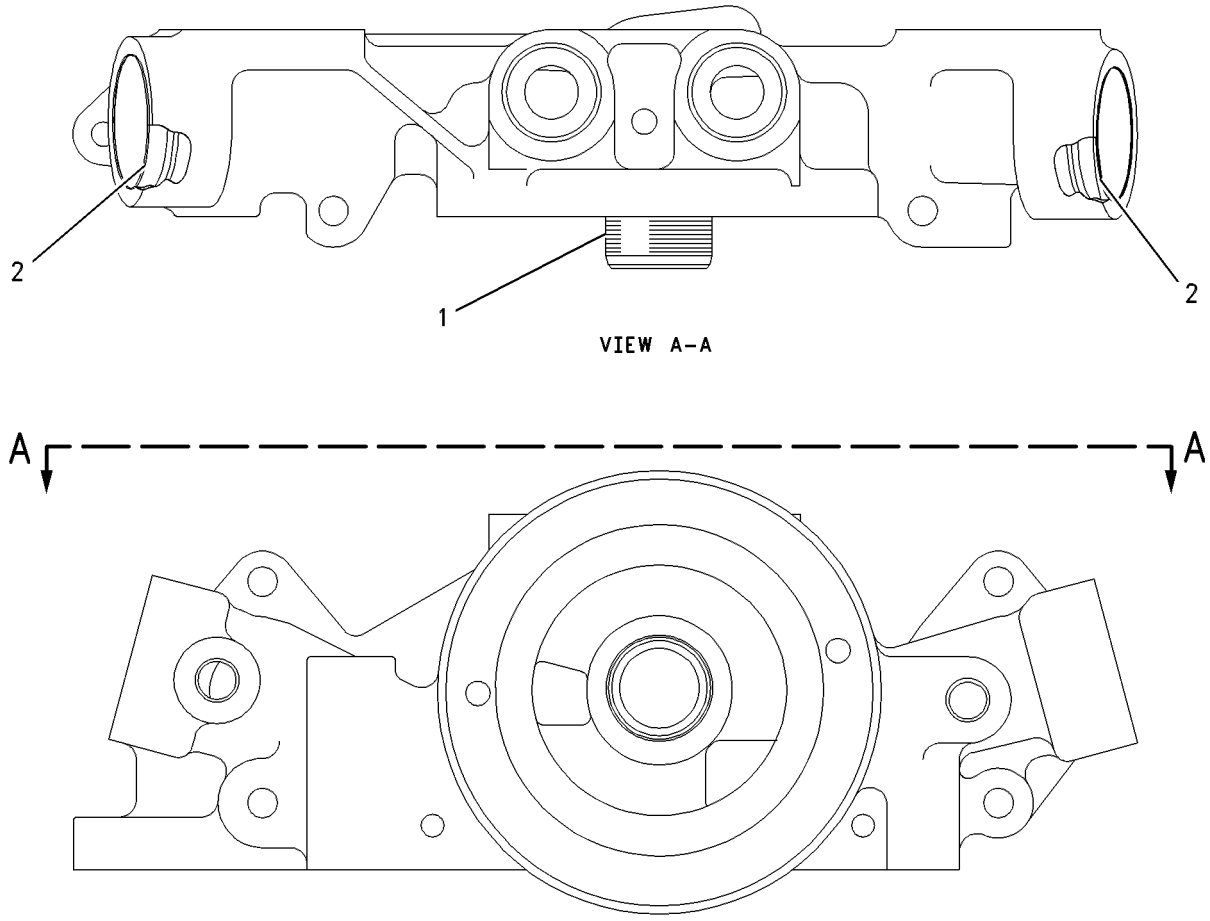

VIEW A–A

GRAPHIC #1 **<END>** g00638223

LUBRICATION SYSTEM

200-0655 BASE GP-OIL FILTER—ENGINE

S/N: RHX7868-UP

PART OF 231-2214 FILTER GP-ENGINE OIL

SMCS-1306 **i03897891**

NOTE	REF NO	GRAPHIC REF	PART NUMBER	QTY	PART NAME 1 2 3 4 5 6 (PRODUCT LEVEL)	SEE PAGE
	1	1	**4N-8150**	2	SPRING	
	2	1	**8C-3445**	1	CAP-DUST	
	3	1	**9M-0853**	2	PLUNGER-VALVE	
Y	4	1	**176-1363**	1	BASE GP-OIL FILTER	73
	5	1	*183-3407*	1	PLUG AS	
		1	**9S-8004**	1	PLUG-O-RING	
	5A	1	**214-7568**	1	SEAL-O-RING	
	6	1	*319-6234*	2	PLUG AS	
					(EACH INCLUDES)	
		1	**9S-9334**	1	PLUG-O-RING	
	6A	1	**238-5084**	1	SEAL-O-RING	
	7	1	**321-8649**	1	VALVE AS-FLUID SAMPLING	
		1	**8C-3446**	1	VALVE-FLUID SAMPLING	
	7A	1	**214-7566**	1	SEAL-O-RING	
	8	1	*330-9764*	1	ELBOW AS	
		1	**8C-6712**	1	ELBOW	
	8A	1	**214-7568**	1	SEAL-O-RING	

Y-SEPARATE ILLUSTRATION

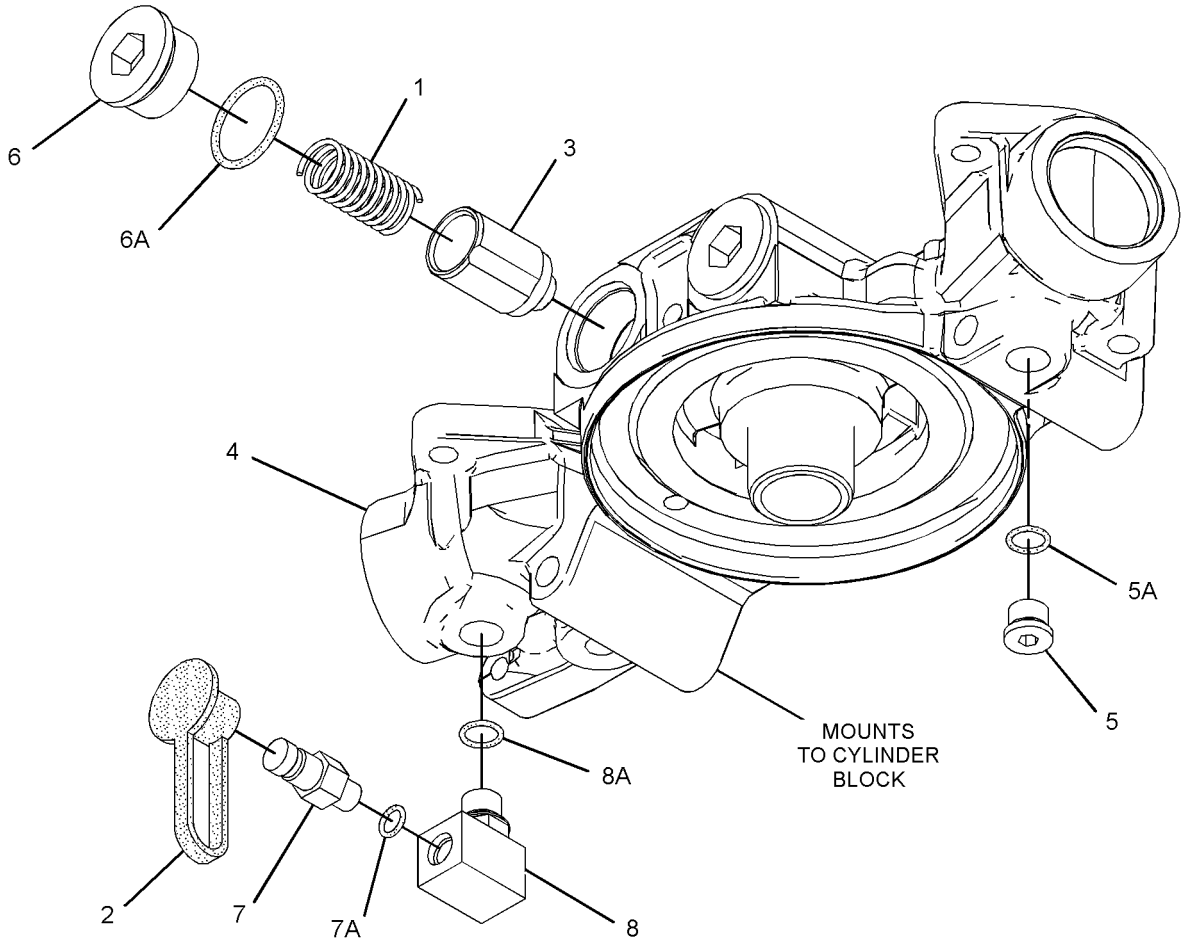

GRAPHIC #1 **<END>** g02177269

234-2916 BREATHER GP–CRANKCASE

S/N: RHX7868-UP

PART OF 241-6326 FUMES DISPOSAL GP

SMCS-1317 **i03823169**

NOTE	REF NO	GRAPHIC REF	PART NUMBER	QTY	PART NAME 1 2 3 4 5 6 (PRODUCT LEVEL)	SEE PAGE
	1	1	**2N-8109**	1	CLAMP (V-BAND)	
	2	1	**162-2266**	1	BREATHER AS (CRANKCASE)	
	3	1	**6V-3831**	1	SEAL-O-RING	

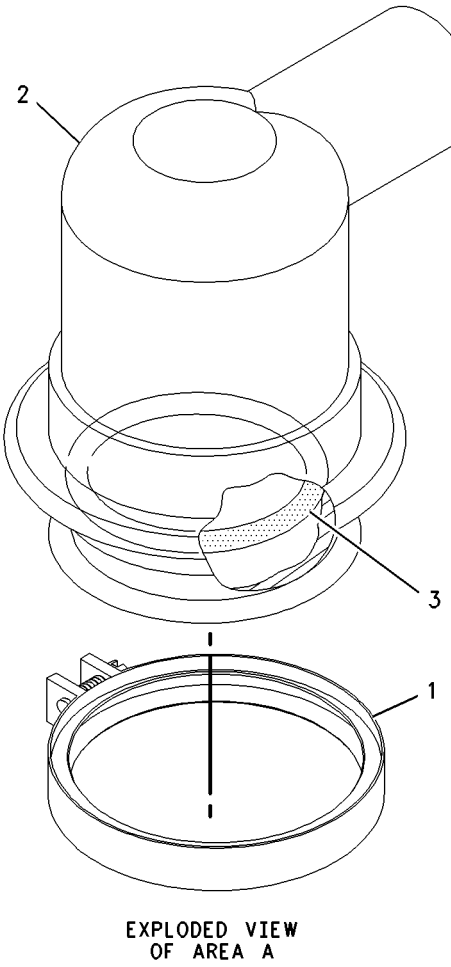

EXPLODED VIEW
OF AREA A

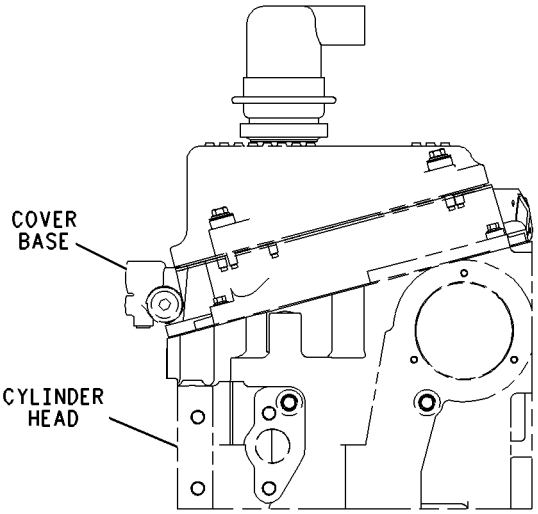

FRONT VIEW
(TYPICAL INSTALLATION)

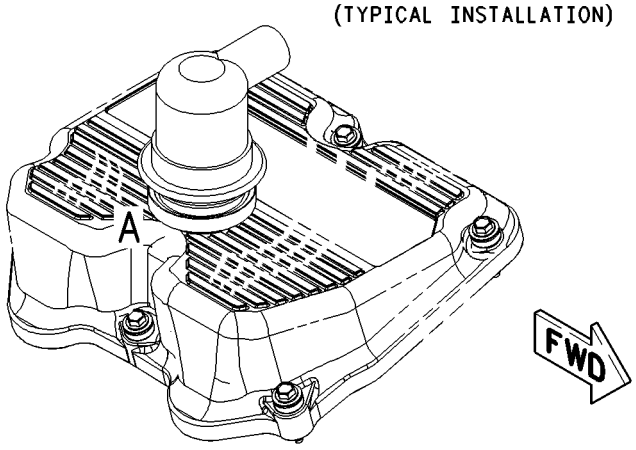

GRAPHIC #1 **<END>** g00990942

LUBRICATION SYSTEM

4N-2481 FASTENER GP-OIL PUMP MOUNTING

S/N: RHX7868-UP

PART OF 286-9798 ENGINE AR-COMPLETE

SMCS-1304 **i01742917**

NOTE	REF NO	GRAPHIC REF	PART NUMBER	QTY	PART NAME 1 2 3 4 5 6 (PRODUCT LEVEL)	SEE PAGE
	1	1	**0L-1143**	2	BOLT (3/8-16X2.50 IN)	
	2	1	**0S-1590**	1	BOLT (3/8-16X2 IN)	
	3	1	**5M-2894**	3	WASHER-HARD (10.2X18.5X2.5MM THK)	

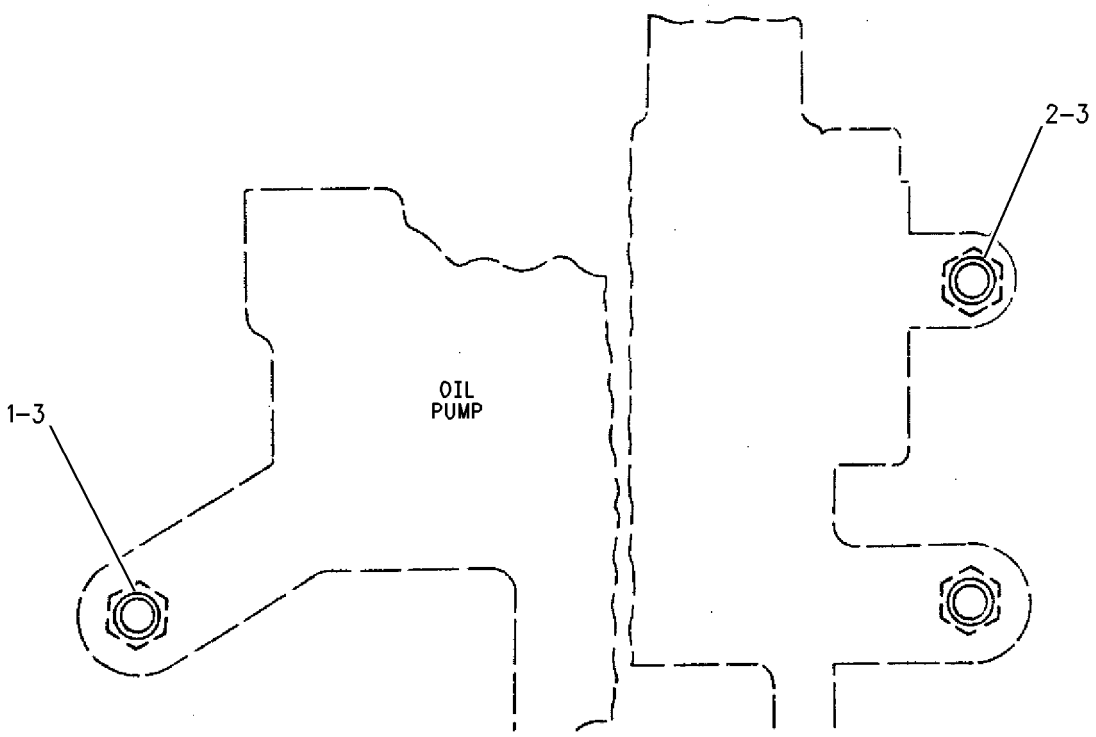

GRAPHIC #1 **<END>** g00892415

LUBRICATION SYSTEM

246-9906 FILLER GP-ENGINE OIL

S/N: RHX7868-UP
FRONT, RIGHT HAND CYLINDER BLOCK
PART OF 286-9798 ENGINE AR-COMPLETE

SMCS-1316 **i03898833**

NOTE	REF NO	GRAPHIC REF	PART NUMBER	QTY	PART NAME 1 2 3 4 5 6 (PRODUCT LEVEL)	SEE PAGE
	1	1	**3F-6156**	1	HOOK	
	2	1	**9M-2904**	2	CLAMP-HOSE	
	3	1	**163-9361**	1	CAP AS-ENGINE OIL FILLER	
	4	1	**246-1235**	1	BRACKET AS	
		1	**1F-0750**	1	NUT-WELD (3/8-16-THD)	
	5	1	**261-4176**	1	TUBE AS	
	6	1	**261-4178**	1	TUBE AS	
	7	1	**0S-1588**	2	BOLT (3/8-16X1.25-IN)	
	8	1	**0S-1594**	4	BOLT (3/8-16X1-IN)	
	9	1	**4K-8380**	1	HOSE	
	11	1	**5M-2894**	6	WASHER-HARD (10.2X18.5X2.5-MM THK)	
	12	1	**210-9246**	1	SEAL-O-RING	

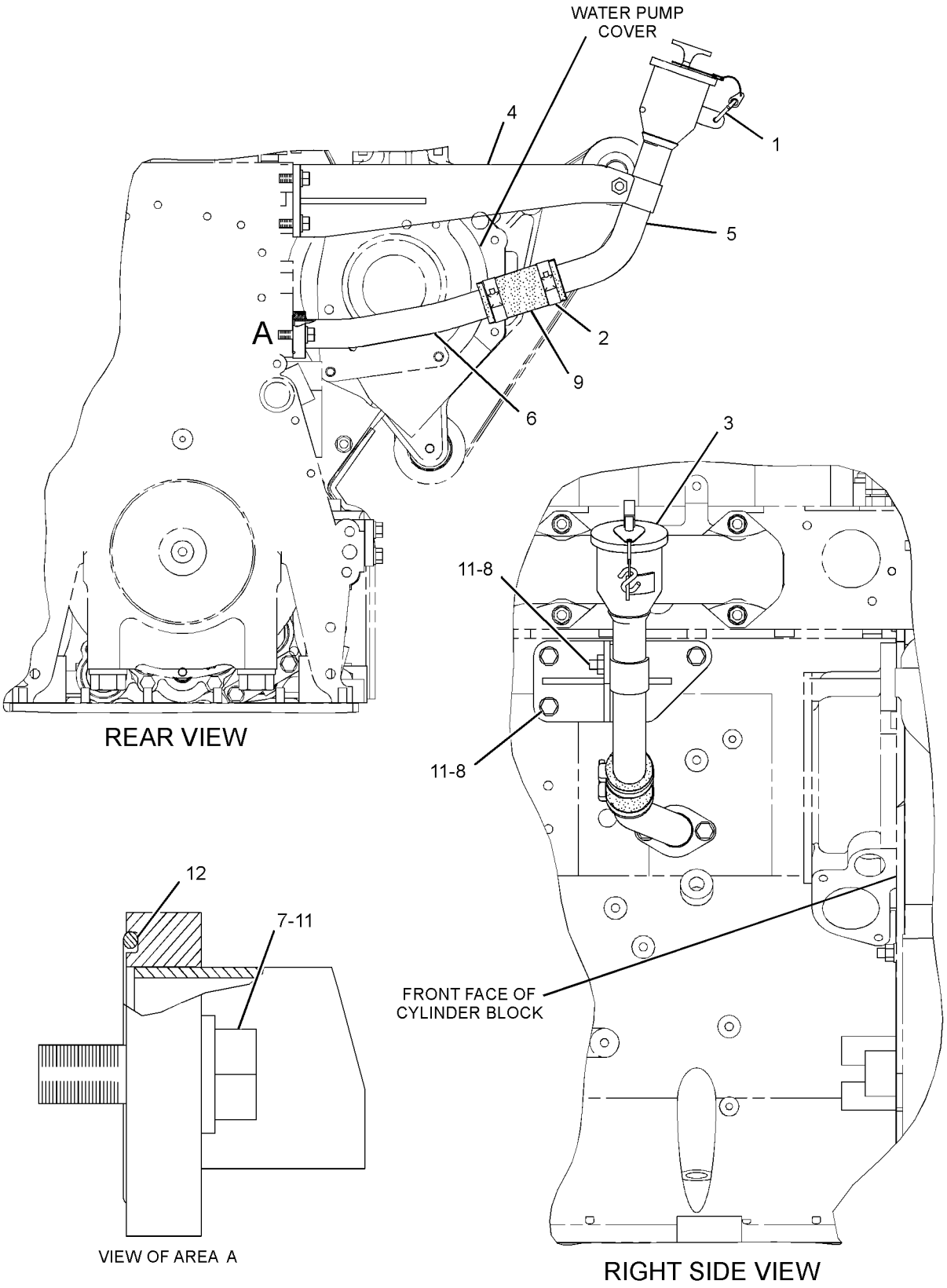

GRAPHIC #1 **<END>** g02142336

231-2214 FILTER GP-ENGINE OIL

S/N: RHX7868-UP

PART OF 231-2215 FILTER GP-ENGINE OIL

SMCS-1308 **i02497556**

NOTE	REF NO	GRAPHIC REF	PART NUMBER	QTY	PART NAME 1 2 3 4 5 6 (PRODUCT LEVEL)	SEE PAGE
Y	1	1	*200-0655*	1	BASE GP-OIL FILTER (ENGINE)	74
	2	1	**200-4246**	1	ELBOW	
	3	1	**061-7540**	2	SEAL-O-RING	
	4	1	**0S-1588**	4	BOLT (3/8-16X1.25-IN)	
	5	1	**5M-2894**	4	WASHER-HARD (10.2X18.5X2.5-MM THK)	

Y-SEPARATE ILLUSTRATION

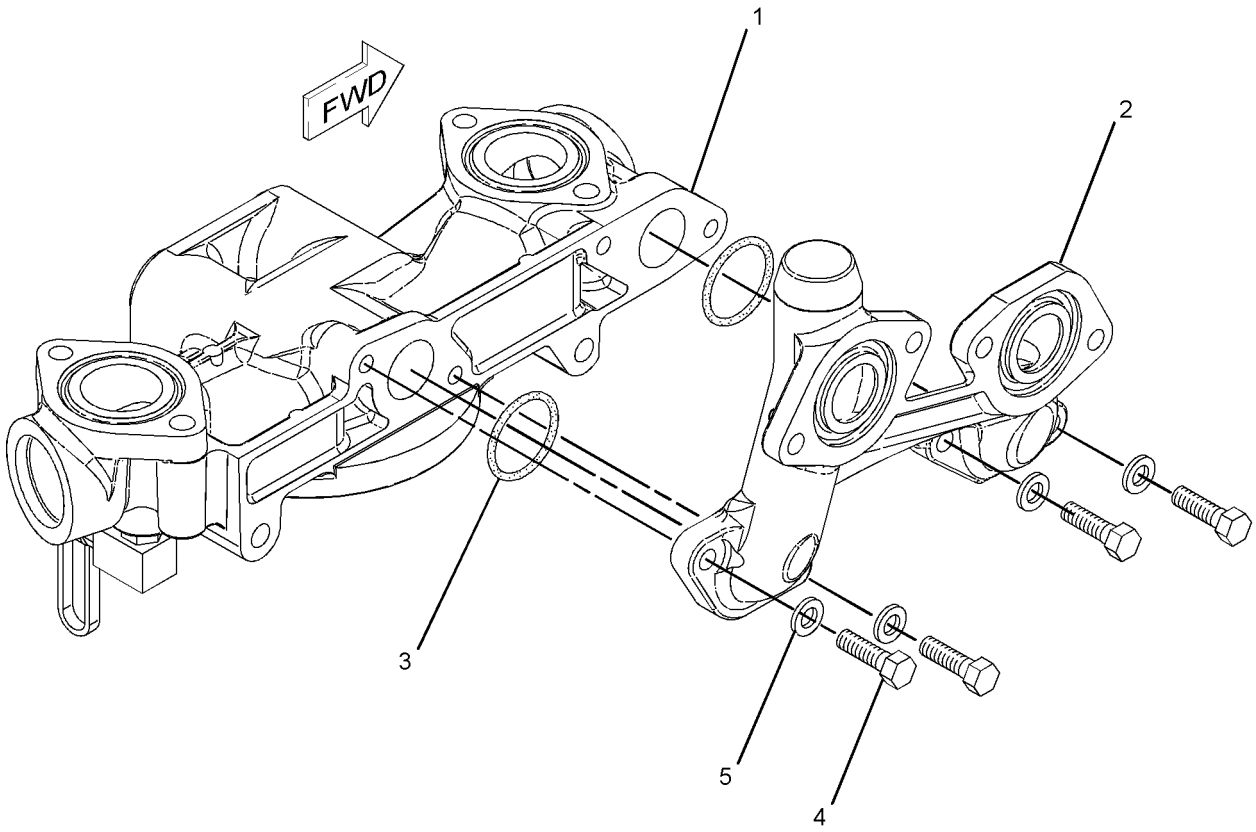

GRAPHIC #1 **<END>** g01071812

LUBRICATION SYSTEM

231-2215 FILTER GP-ENGINE OIL

S/N: RHX7868-UP

PART OF 286-9798 ENGINE AR-COMPLETE

SMCS-1308 **i03874399**

NOTE	REF NO	GRAPHIC REF	PART NUMBER	QTY	PART NAME 1 2 3 4 5 6 (PRODUCT LEVEL)	SEE PAGE
Y	1	1	*231-2214*	1	FILTER GP-ENGINE OIL	79
	2	1	**0S-1608**	2	BOLT (3/8-16X3.75-IN)	
	3	1	**0S-1619**	2	BOLT (3/8-16X3-IN)	
	4	1	**1A-2029**	6	BOLT (3/8-16X1.125-IN)	
C	5	1	**1R-1808**	1	FILTER-ENGINE OIL (ADVANCED EFFICIENCY)	
	6	1	**113-5304**	2	SEAL-O-RING	
	7	1	**5M-2894**	10	WASHER-HARD (10.2X18.5X2.5-MM THK)	
	8	1	**8C-5230**	2	SEAL-O-RING	

C-CHANGE FROM PREVIOUS TYPE
Y-SEPARATE ILLUSTRATION

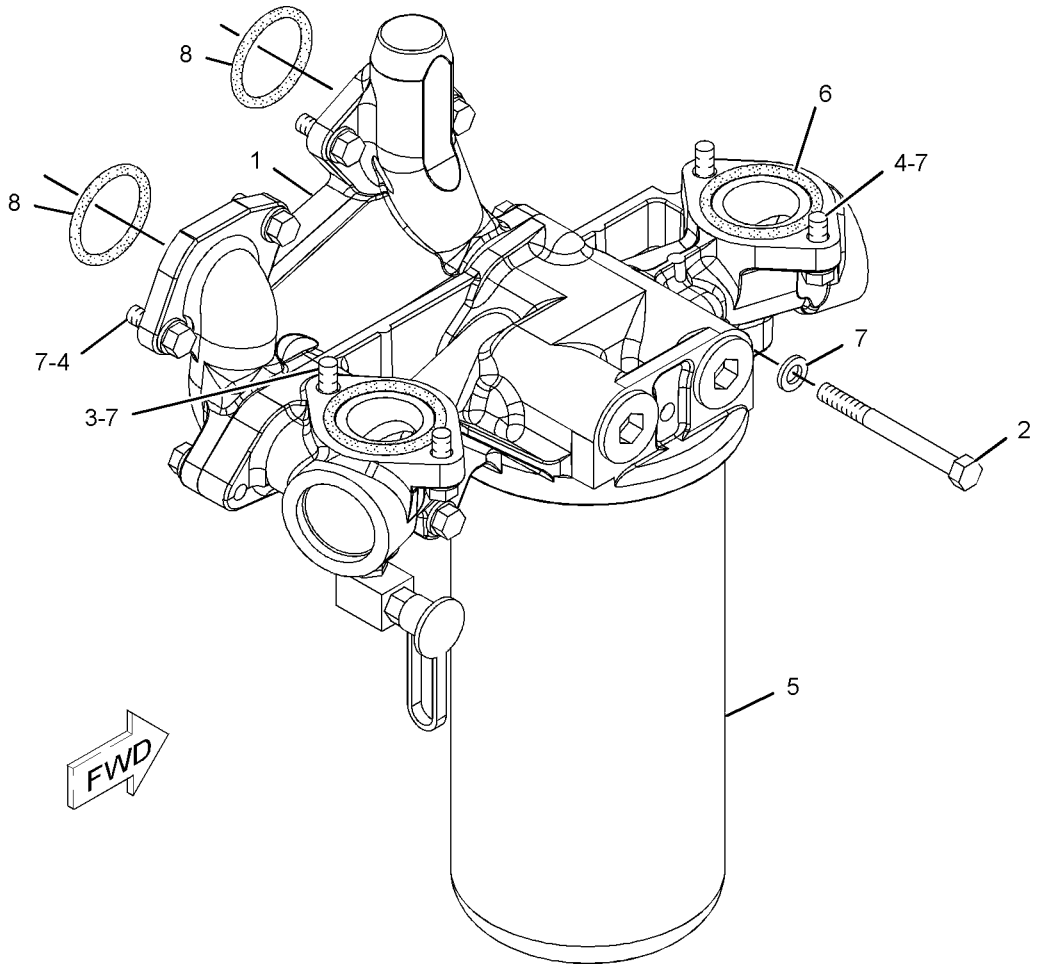

GRAPHIC #1 **<END>** g01071814

LUBRICATION SYSTEM

241-6326 FUMES DISPOSAL GP

S/N: RHX7868-UP
MID CANISTER
PART OF 286-9798 ENGINE AR-COMPLETE

SMCS-1317 **i03963790**

NOTE	REF NO	GRAPHIC REF	PART NUMBER	QTY	PART NAME 1 2 3 4 5 6 (PRODUCT LEVEL)	SEE PAGE
	1	1	**9G-8140**	1	SPACER (10.5X25X15-MM THK)	
	2	1	**9M-2904**	1	CLAMP-HOSE	
Y	3	1	*234-2916*	1	BREATHER GP (CRANKCASE)	75
	4	1	**236-9863**	1	HOSE-DISPOSAL (FUMES)	
	5	1	**0S-1588**	2	BOLT (3/8-16X1.25-IN)	
	6	1	**0S-1590**	1	BOLT (3/8-16X2-IN)	
	7	1	**2S-2053**	2	CLIP	
	8	1	**5M-2894**	3	WASHER-HARD (10.2X18.5X2.5-MM THK)	

Y-SEPARATE ILLUSTRATION

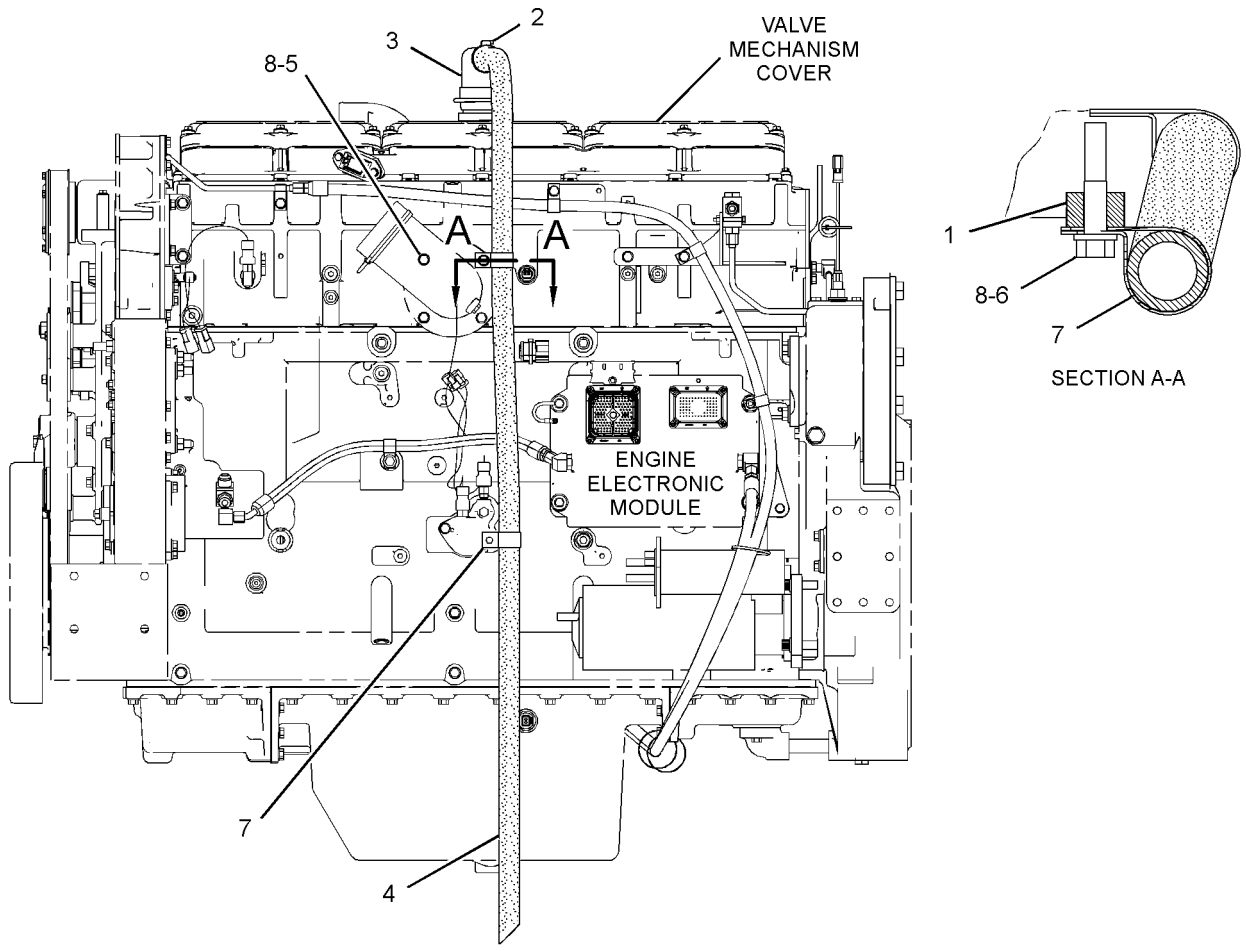

LEFT SIDE VIEW OF ENGINE

GRAPHIC #1 **<END>** g02176239

LUBRICATION SYSTEM

275-6596 GAUGE AS-OIL LEVEL (DIPSTICK)—ENGINE

S/N: RHX7868-UP

PART OF 286-9798 ENGINE AR-COMPLETE

SMCS-1326 **i02472385**

NOTE	REF NO	GRAPHIC REF	PART NUMBER	QTY	PART NAME 1 2 3 4 5 6 (PRODUCT LEVEL)	SEE PAGE
					(NO SERVICED PARTS)	

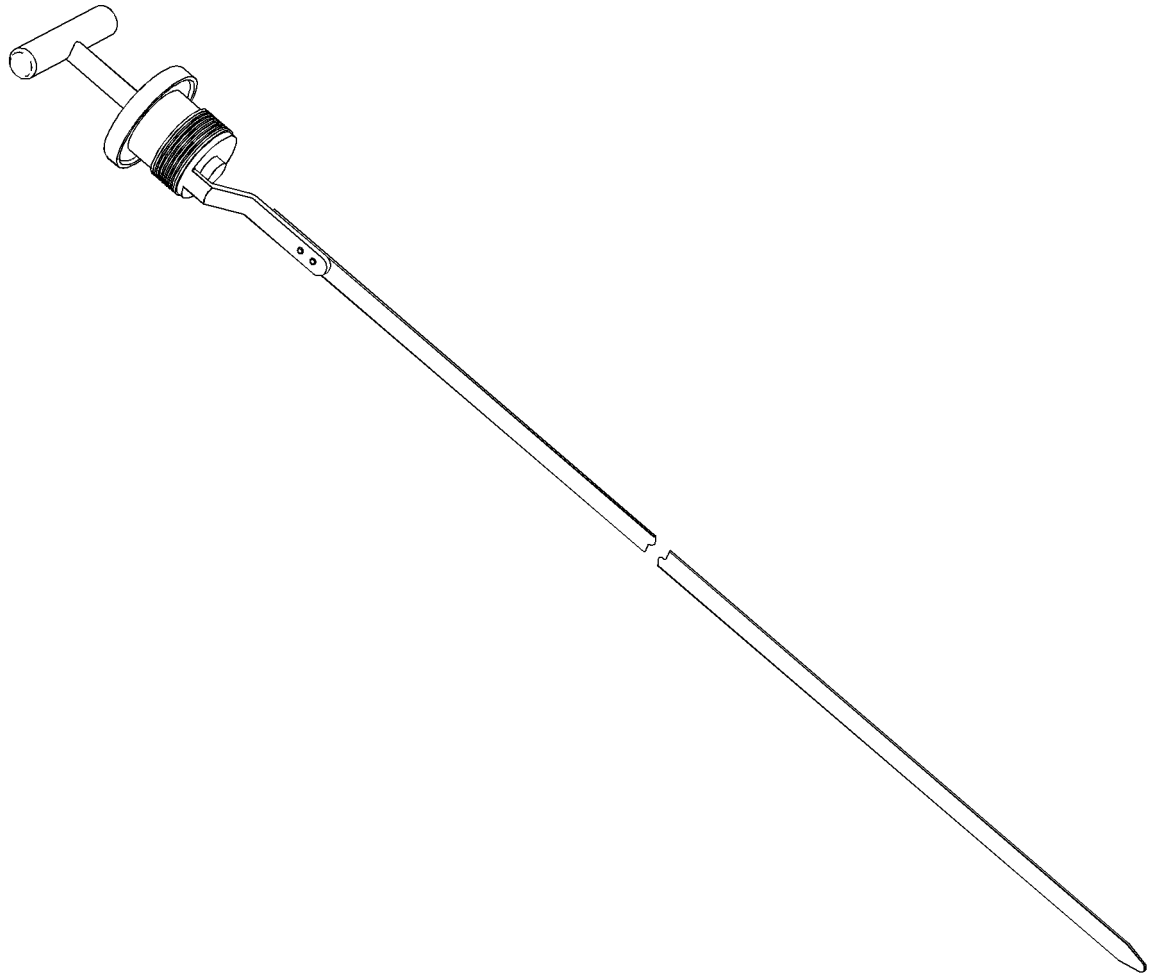

GRAPHIC #1 **<END>** g01234193

190-2472 GUIDE GP-OIL LEVEL GAUGE

S/N: RHX7868-UP

PART OF 286-9798 ENGINE AR-COMPLETE

SMCS-1326 **i02410090**

NOTE	REF NO	GRAPHIC REF	PART NUMBER	QTY	PART NAME 1 2 3 4 5 6 (PRODUCT LEVEL)	SEE PAGE
C	1	1	**3E-7445**	1	CLAMP-HOSE	
J	2	1	**165-6170**	3	PLUG	
	3	1	**190-2470**	1	TUBE AS-GUIDE	
C	4		**264-4501**	1	LOCK AS	
	5	1	**118-5068**	1	SEAL-O-RING	
	6	1	**1A-2029**	1	BOLT (3/8-16X1.125-IN)	
	7	1	**9S-8752**	1	NUT-FULL (3/8-16-THD)	
	8	1	**9X-6458**	2	WASHER-HARD (10.2X22.5X3-MM THK)	

C-CHANGE FROM PREVIOUS TYPE
J-USE TO PLUG OPTIONAL DIPSTICK LOCATIONS

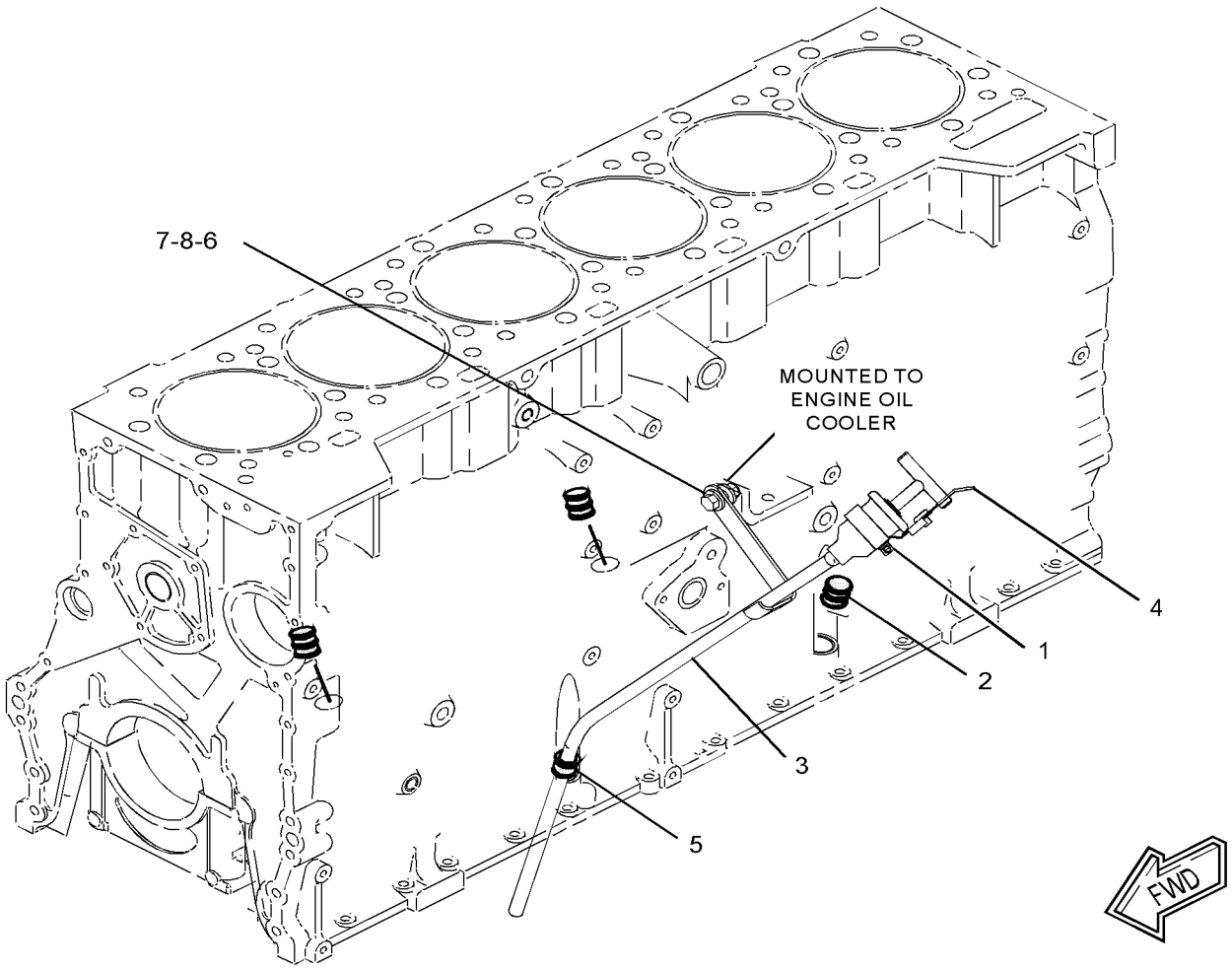

GRAPHIC #1 **<END>** g01219914

LUBRICATION SYSTEM

160-6894 LINES GP-ENGINE OIL

S/N: RHX7868-UP

PART OF 286-9798 ENGINE AR-COMPLETE

SMCS-1307 **i03905718**

NOTE	REF NO	GRAPHIC REF	PART NUMBER	QTY	PART NAME 1 2 3 4 5 6 (PRODUCT LEVEL)	SEE PAGE
	1	1	**3T-6471**	1	SCREEN AS (ENGINE OIL)	
		1	**3T-6469**	1	WASHER (19X26X1.6-MM THK)	
	2	1	**4N-8410**	1	TUBE-COOLER BYPASS	
	3	1	**4P-7373**	1	TUBE AS	
	4	1	**7E-4509**	1	TUBE AS	
	5	1	**7E-5142**	1	CONNECTOR	
	7	1	**9Y-5373**	1	ELBOW	
I	8	1	**172-8827**	1	HOSE AS	
C	9	1	**292-9782**	1	BRACKET	
C	10	1	**292-9783**	1	TUBE AS	
	11	1	**030-7955**	1	TEE-FLARED	
	12	1	**030-8194**	1	CONNECTOR	
	13	1	**0L-1351**	1	BOLT (3/8-16X0.875-IN)	
	14	1	**0S-1588**	2	BOLT (3/8-16X1.25-IN)	
	15	1	**0S-1590**	4	BOLT (3/8-16X2-IN)	
	16	1	**0S-1591**	2	BOLT (3/8-16X1.5-IN)	
	17	1	**5P-5846**	1	SEAL-O-RING	
	18	1	**109-0076**	1	SEAL-O-RING	
	19	1	**5P-8068**	2	SEAL-O-RING	
	20	1	**114-2687**	3	SEAL-O-RING	
C	21	1	**2K-4973**	2	LOCKNUT (3/8-16-THD)	
	22	1	**238-5081**	1	SEAL-O-RING	
	23	1	**3B-1915**	2	BOLT (3/8-16X1.375-IN)	
	24	1	**214-7568**	1	SEAL-O-RING	
	25	1	**6V-5134**	1	SEAL-O-RING	
C	26	1	**9X-6458**	5	WASHER-HARD (10.2X22.5X3-MM THK)	

C-CHANGE FROM PREVIOUS TYPE
I-REFER TO HYDRAULIC INFORMATION SYSTEM

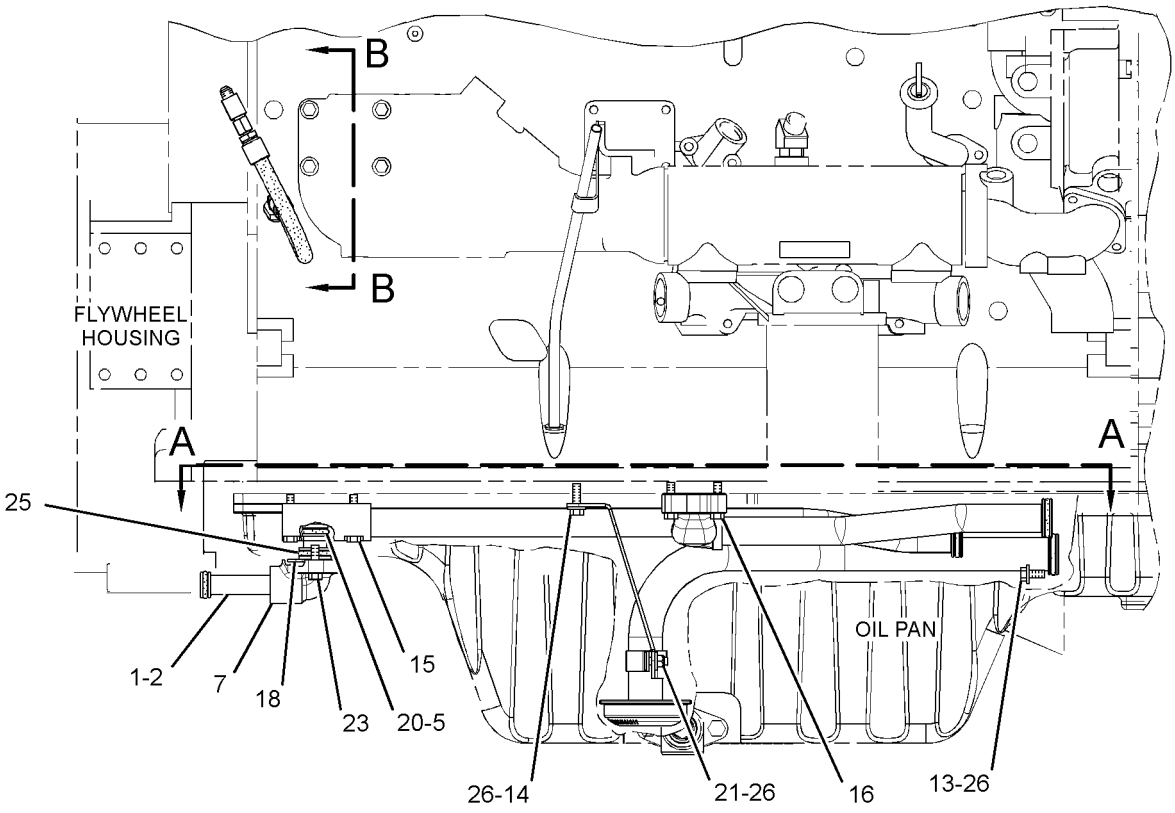

RIGHT SIDE VIEW OF ENGINE

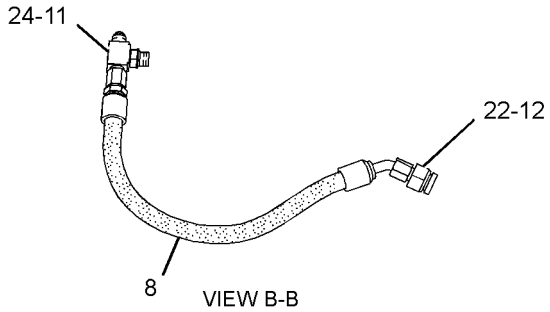

VIEW B-B

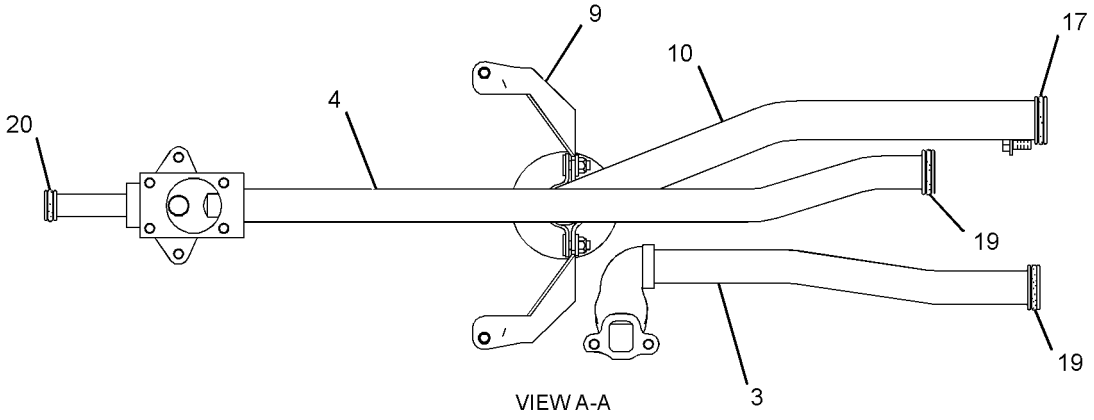

VIEW A-A

GRAPHIC #1 **<END>** g01699361

LUBRICATION SYSTEM

151-6662 LINES GP-ENGINE OIL DRAIN

S/N: WAP1-UP

PART OF 310-9678 INSTALLATION AR-ENGINE

SMCS-1307 **i02951725**

NOTE	REF NO	GRAPHIC REF	PART NUMBER	QTY	PART NAME 1 2 3 4 5 6 (PRODUCT LEVEL)	SEE PAGE
	1	1	**005-4273**	1	CONNECTOR-HOSE	
	2	1	**095-1390**	1	CLAMP-HOSE	
E	3	1	**5P-2094**		HOSE (20-CM)	

E-ORDER BY THE CENTIMETER

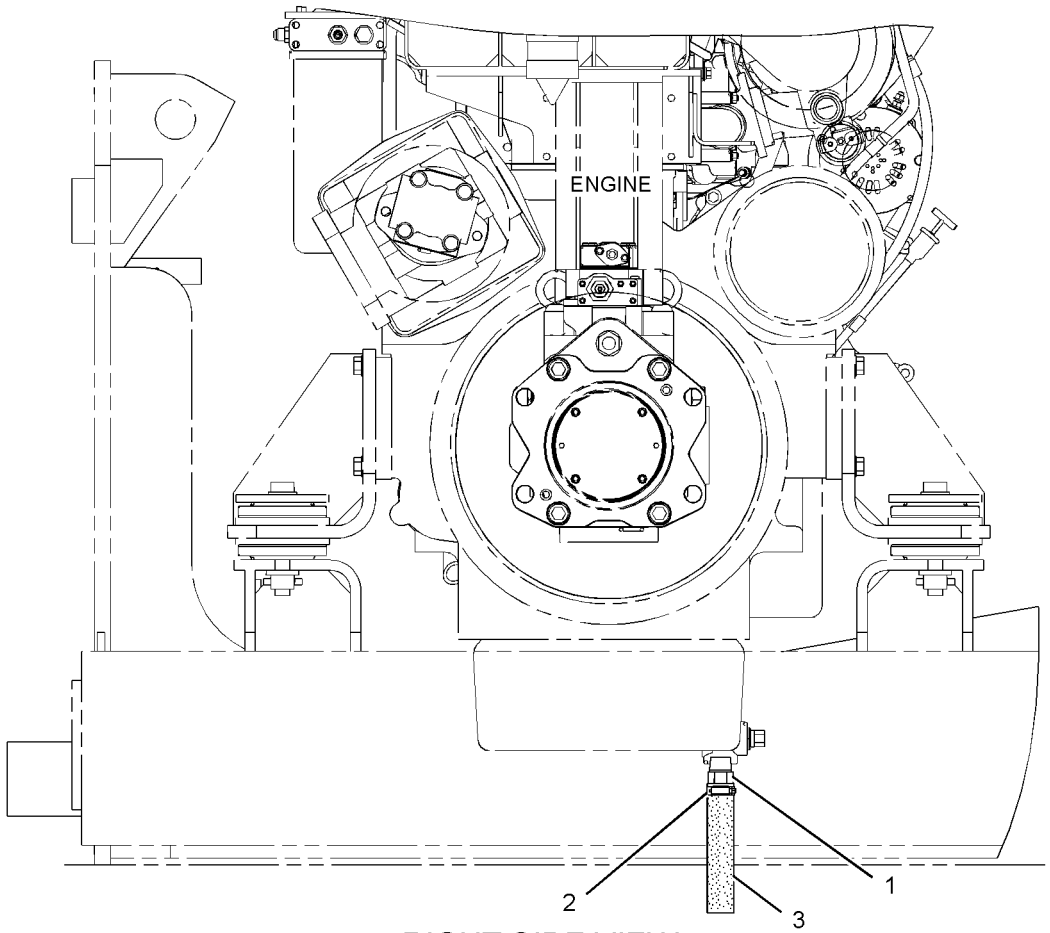

RIGHT SIDE VIEW

GRAPHIC #1 **<END>** g01109818

LUBRICATION SYSTEM

220-3490 LINES GP-TURBOCHARGER OIL

S/N: RHX7868-UP

PART OF 286-9798 ENGINE AR-COMPLETE

SMCS-1052 **i03964857**

NOTE	REF NO	GRAPHIC REF	PART NUMBER	QTY	PART NAME 1 2 3 4 5 6 (PRODUCT LEVEL)	SEE PAGE
	1	1	**7N-7559**	1	GASKET	
	2	1	**106-3544**	1	ELBOW	
	3	1	**225-8569**	1	TUBE AS	
	4	1	**242-3375**	1	HOSE AS	
	5	1	**0L-2070**	2	BOLT (3/8-16X2.25-IN)	
	6	1	**114-2687**	1	SEAL-O-RING	
C	7	1	**4P-4460**	1	GASKET	
	8	1	**5M-2894**	6	WASHER-HARD (10.2X18.5X2.5-MM THK)	
	9	1	**5S-7383**	4	BOLT (3/8-16X1.75-IN)	
	10	1	**6V-5266**	1	SEAL-O-RING	
	11	1	**230-3775**	1	SEAL-O-RING	
	12	1	**6V-8634**	1	CONNECTOR	
	13	1	**238-5080**	1	SEAL-O-RING	

C-CHANGE FROM PREVIOUS TYPE

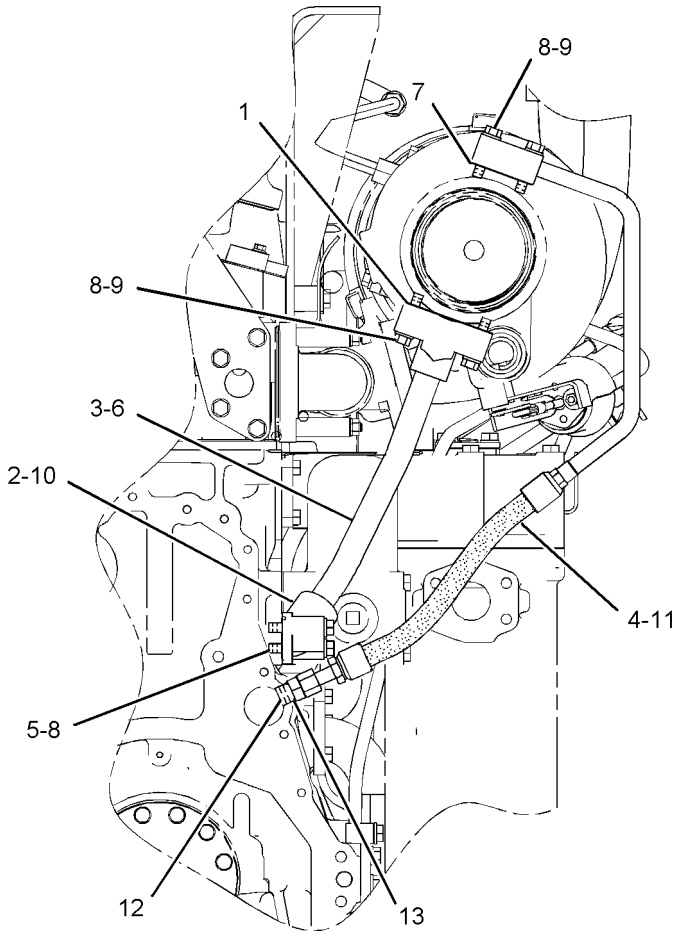

REAR VIEW

GRAPHIC #1

<END>

g01071754

LUBRICATION SYSTEM

170-3562 MOUNTING GP-OIL LEVEL GAUGE

S/N: RHX7868-UP

PART OF 286-9798 ENGINE AR-COMPLETE

SMCS-1326 **i01516693**

NOTE	REF NO	GRAPHIC REF	PART NUMBER	QTY	PART NAME 1 2 3 4 5 6 (PRODUCT LEVEL)	SEE PAGE
	1	1	**2W-2021**	1	BRACKET	
	2	1	**0S-1594**	1	BOLT (3/8-16X1 IN)	
	3	1	**9X-6458**	1	WASHER-HARD (10.2X22.5X3MM THK)	

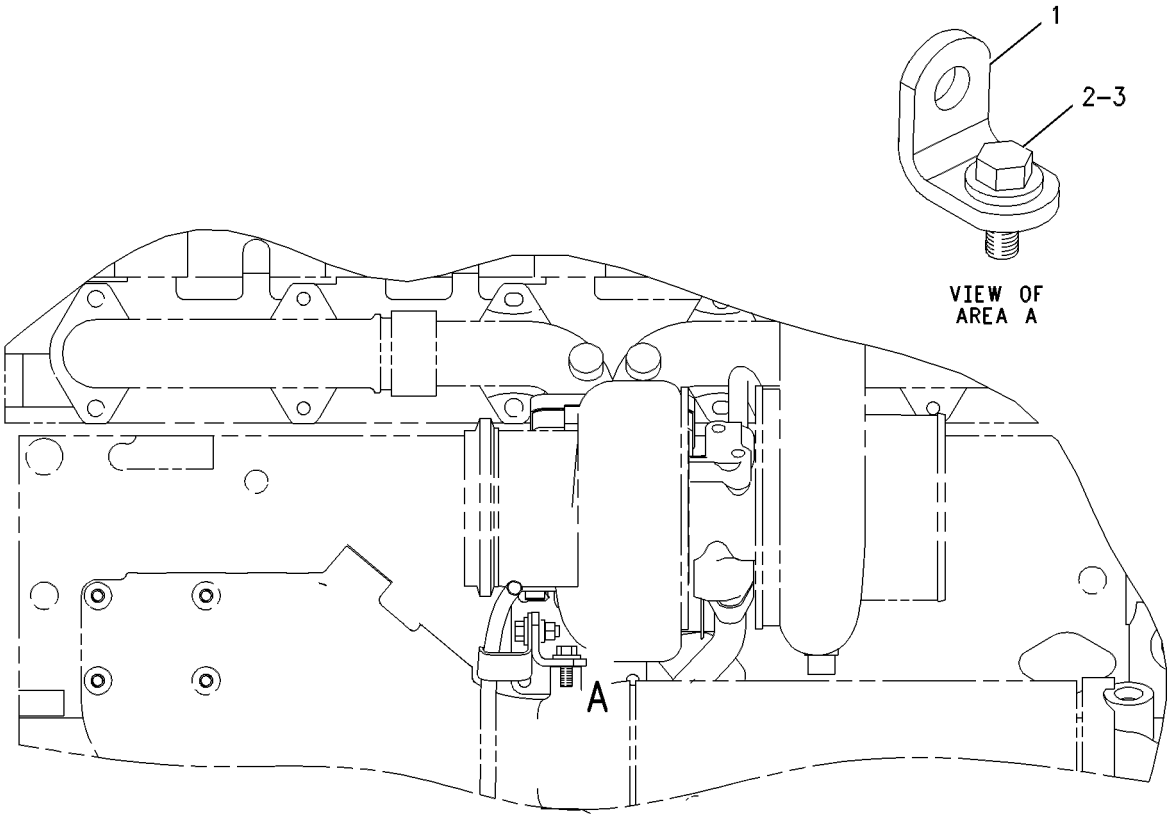

RIGHT SIDE VIEW

GRAPHIC #1 **<END>** g00601288

LUBRICATION SYSTEM

201-3825 OIL CHANGE GP-HIGH SPEED

S/N: WAP1-UP

AN ATTACHMENT

SMCS-1325 **i03539804**

NOTE	REF NO	GRAPHIC REF	PART NUMBER	QTY	PART NAME 1 2 3 4 5 6 (PRODUCT LEVEL)	SEE PAGE
	1	1	**201-3826**	1	SUPPORT AS	
	2	1	**9S-9272**	1	CAP AS	
	3	1	**1P-7919**	1	COUPLER-MALE	
	4	1	**6K-8420**	1	LOCKNUT (1-1/16-12-THD)	
I	5	1	**031-4564**	1	HOSE AS	
	6	1	**3B-0551**	1	PLUG-PIPE	
	7	1	**5P-1075**	1	WASHER-HARD (10.2X22.5X3-MM THK)	
	8	1	**8T-2502**	2	BOLT (3/8-16X1.125-IN)	
	9	1	**6V-3830**	1	SEAL-O-RING	
	10	1	**310-9508**	1	ADAPTER	
	11	1	**8T-4835**	1	BOLT (1/2-13X2-IN)	
	12	1	**8T-4223**	1	WASHER-HARD (13.5X25.5X3-MM THK)	
	13	1	**8B-3410**	1	GASKET	
	14	1	**222-8210**	1	CONNECTOR	
	15	1	**8T-8920**	1	BOLT (1/2-13X3.25-IN)	
	16	1	**145-5181**	1	SPACER (13.5X25X12-MM THK)	

I-REFER TO HYDRAULIC INFORMATION SYSTEM

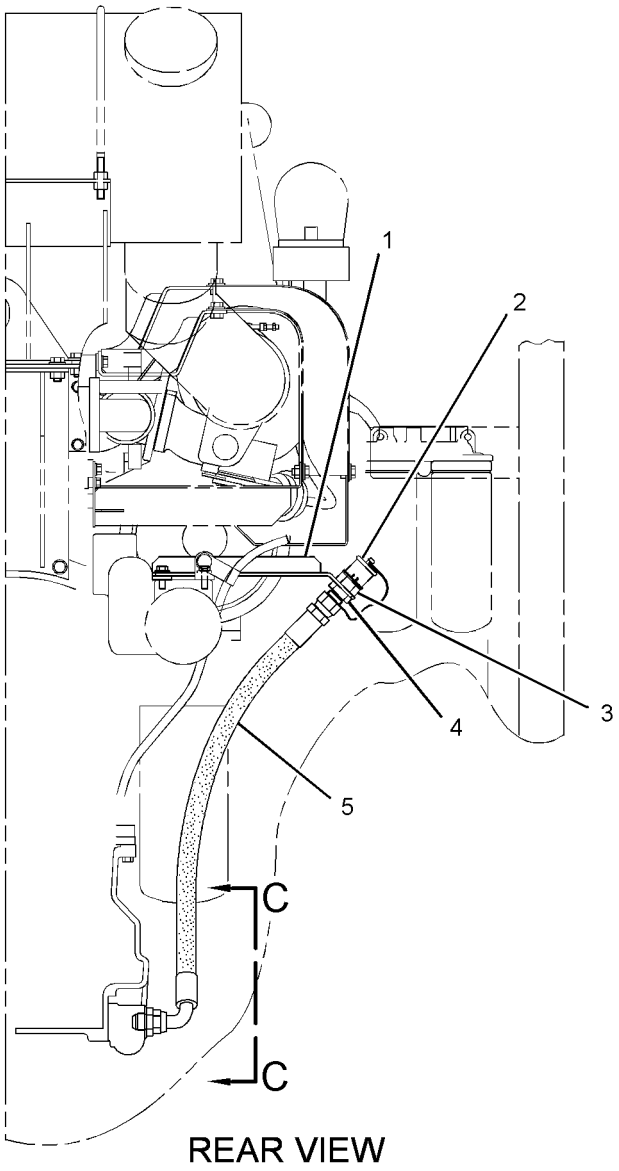

REAR VIEW

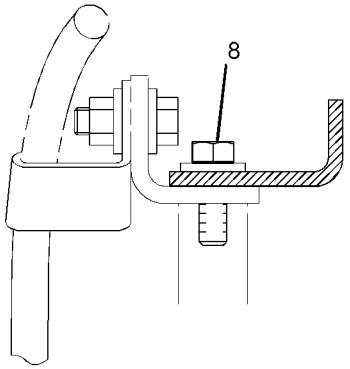

SECTION B-B

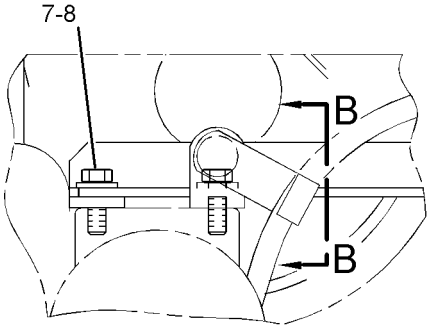

VIEW OF AREA A

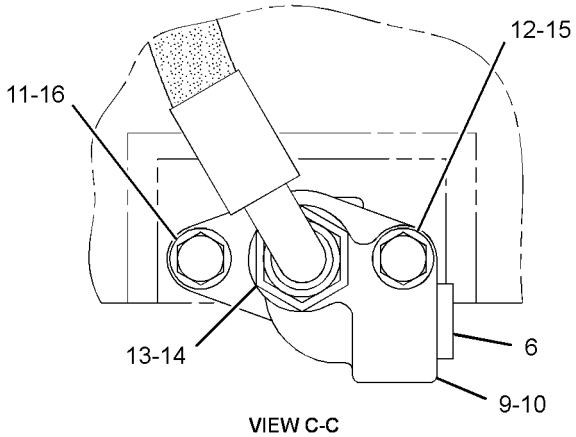

VIEW C-C

GRAPHIC #1 **<END>** g01869685

LUBRICATION SYSTEM

198-1508 PUMP GP-ENGINE OIL*R

S/N: RHX7868-UP

PART OF 286-9798 ENGINE AR-COMPLETE

SMCS-1304, 1315 **i03645793**

NOTE	REF NO	GRAPHIC REF	PART NUMBER	QTY	PART NAME 1 2 3 4 5 6 (PRODUCT LEVEL)	SEE PAGE
	1	1	**2S-2760**	1	SPRING	
	2	1	**4N-5339**	1	SPACER AS-OIL PUMP	
		1	**7N-2155**	2	BEARING-SLEEVE	
	3	1	**6N-1931**	1	PLUNGER	
	4	1	**6N-2343**	1	BODY AS-PUMP	
	5	1	**7W-6528**	1	GEAR-PUMP (8-TEETH)	
	6	1	**7W-7141**	1	GEAR-PUMP (8-TEETH)	
	7	1	**9Y-1792**	1	RETAINER	
	8	1	**145-8503**	1	SHAFT AS-IDLER	
	9	1	**202-3572**	1	SHAFT AS-DRIVE	
	10	1	**235-1587**	1	BODY AS	
	10A	1	**8M-8489**	2	DOWEL	
	10B	1	**2S-7905**	1	PLUG-PIPE	
	10C	1	**7N-2156**	2	BEARING-SLEEVE	
	11	1	**1M-0644**	2	BOLT (3/8-16X2.25-IN)	
	13	1	**5F-4899**	4	BOLT (3/8-16X5.5-IN)	
	14	1	**5M-2894**	2	WASHER-HARD (10.2X18.5X2.5-MM THK)	

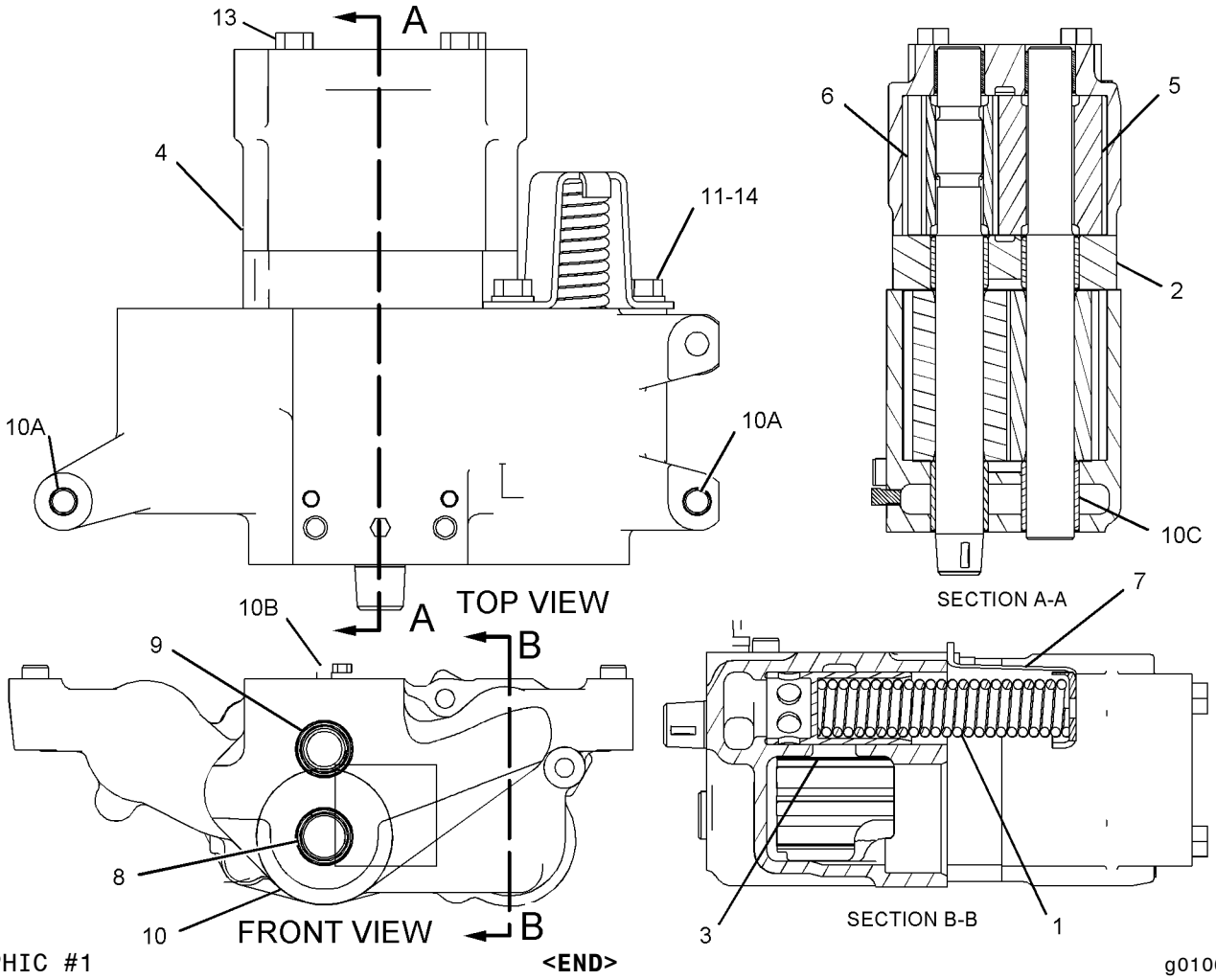

GRAPHIC #1 **<END>** g01066706

LUBRICATION SYSTEM

235-5942 VALVE GP-FLUID SAMPLING

S/N: RHX7868-9114

PART OF 286-9798 ENGINE AR-COMPLETE

SMCS-7542 **i03643885**

NOTE	REF NO	GRAPHIC REF	PART NUMBER	QTY	PART NAME 1 2 3 4 5 6 (PRODUCT LEVEL)	SEE PAGE
	1	1	**6P-4975**	1	ADAPTER	
	2	1	**157-0670**	1	CAP-DUST	
	3	1	*155-3624*	1	PLUG AS	
		1	**3J-7354**	1	SEAL-O-RING	
		1	**9S-4182**	1	PLUG-O-RING	
	4	1	*217-9060*	1	VALVE AS-FLUID SAMPLING (ENGINE OIL)	
		1	**3J-7354**	1	SEAL-O-RING	
		1	**154-9023**	1	VALVE-SAMPLING	
	5	1	**3D-2824**	1	SEAL-O-RING	

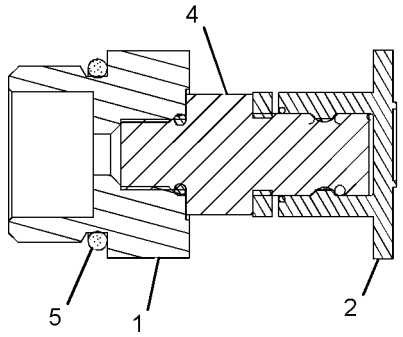

SECTION A-A

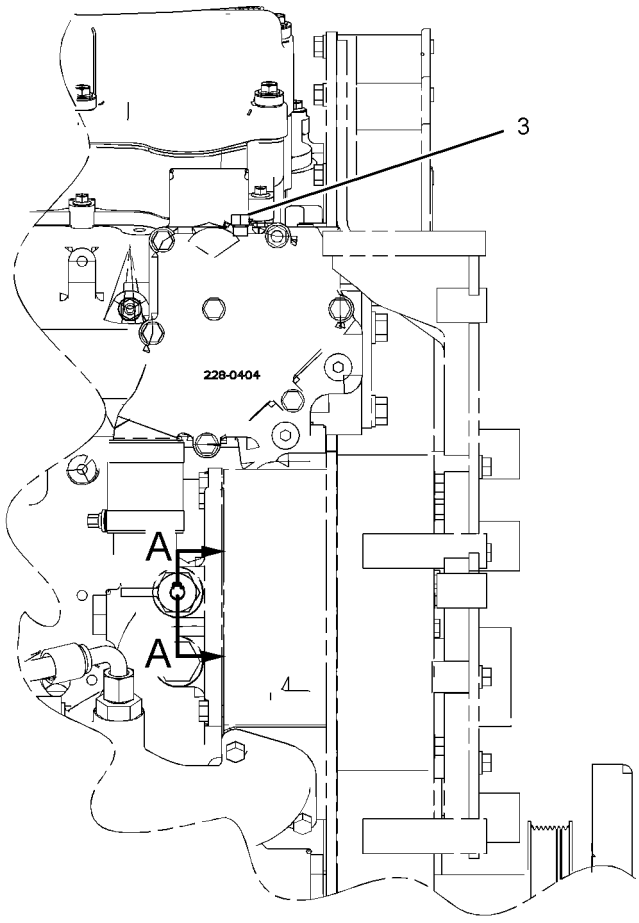

RIGHT SIDE VIEW

GRAPHIC #1 **<END>** g01071771

235-5942 VALVE GP-FLUID SAMPLING

S/N: RHX9115-UP

PART OF 286-9798 ENGINE AR-COMPLETE

SMCS-7542 **i04002074**

NOTE	REF NO	GRAPHIC REF	PART NUMBER	QTY	PART NAME 1 2 3 4 5 6 (PRODUCT LEVEL)	SEE PAGE
	1	1	**6P-4975**	1	ADAPTER	
	2	1	**157-0670**	1	CAP-DUST	
C	3	1	*307-2671*	1	PLUG AS	
		1	**214-7566**	1	SEAL-O-RING	
		1	**9S-8002**	1	PLUG-O-RING	
	4	1	*217-9060*	1	VALVE AS-FLUID SAMPLING	
		1	**3J-7354**	1	SEAL-O-RING	
		1	**154-9023**	1	VALVE-SAMPLING	
C	5	1	**6V-5063**	1	SEAL-O-RING	

C-CHANGE FROM PREVIOUS TYPE

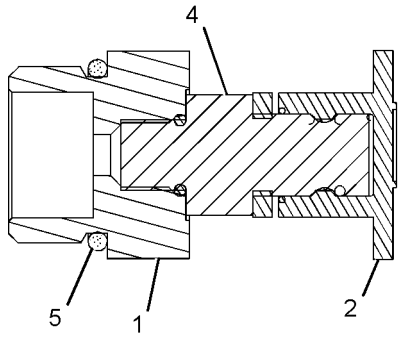

SECTION A-A

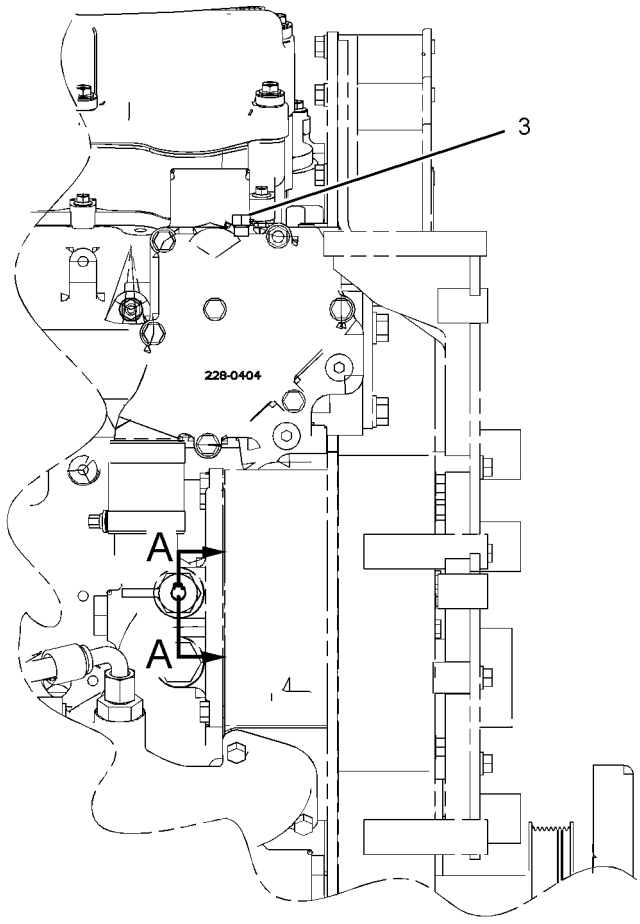

RIGHT SIDE VIEW

GRAPHIC #1 **<END>** g01071771

COOLING SYSTEM

281-3647 FAN GP-SUCTION

S/N: WAP1-UP

PART OF 310-9678 INSTALLATION AR-ENGINE

SMCS-1356 **i03904212**

NOTE	REF NO	GRAPHIC REF	PART NUMBER	QTY	PART NAME 1 2 3 4 5 6 (PRODUCT LEVEL)	SEE PAGE
	1	1	**139-8878**	1	SPIDER AS (8-BLADE)	
	2	1	**162-6356**	2	GUARD AS	
	3	1	**162-6357**	2	PLATE	
	4	1	**171-8991**	1	SUPPORT AS-FAN (LH)	
	5	1	**171-8995**	1	SUPPORT AS-FAN (RH)	
	6	1	**230-2802**	1	SUPPORT AS	
YR	7	1	**247-8978**	1	MOTOR GP-PISTON (FAN)	650
	8	1	**281-3614**	1	SUPPORT AS-FAN (LH)	
	9	1	**281-3646**	1	ADAPTER-FAN	
Y	10	1	*315-4365*	1	DRIVE GP-FAN (MODULATING)	35
	11	1	**326-3900**	1	SUPPORT AS-FAN (RH)	
M	12	1	**136-4182**	2	BOLT (M16X2X100-MM)	
	13	1	**4M-0189**	1	SEAL-O-RING	
	14	1	**5P-1076**	6	WASHER-HARD (13.5X30X4-MM THK)	
	15	1	**7X-0515**	8	WASHER-HARD (17X35X5-MM THK)	
	16	1	**7X-0595**	14	WASHER-HARD (17X30X8-MM THK)	
M	17	1	**7X-2553**	6	BOLT (M16X2X40-MM)	
	18	1	**7X-7729**	20	WASHER (11X25X3-MM THK)	
	19	1	**8T-4121**	8	WASHER-HARD (11X21X2.5-MM THK)	
M	20	1	**8T-4132**	6	NUT (M16X2-THD)	
M	21	1	**8T-4133**	2	NUT (M10X1.5-THD)	
M	22	1	**8T-4137**	6	BOLT (M10X1.5X20-MM)	
M	23	1	**8T-4140**	4	BOLT (M16X2X60-MM)	
M	24	1	**8T-4183**	6	BOLT (M12X1.75X40-MM)	
M	25	1	**8T-4186**	2	BOLT (M10X1.5X40-MM)	
M	26	1	**8T-4194**	2	BOLT (M12X1.75X50-MM)	
M	27	1	**8T-4195**	10	BOLT (M10X1.5X30-MM)	
M	28	1	**8T-4196**	8	BOLT (M10X1.5X35-MM)	
	29	1	**8T-4223**	2	WASHER-HARD (13.5X25.5X3-MM THK)	
M	30	1	**8T-4779**	3	BOLT (M16X2X35-MM)	
M	31	1	**8T-7338**	8	BOLT (M16X2X45-MM)	
	32	1	**9X-8257**	3	WASHER (17.5X30X3.5-MM THK)	

M-METRIC PART
R-REMFG PART MAY BE AVAILABLE
Y-SEPARATE ILLUSTRATION

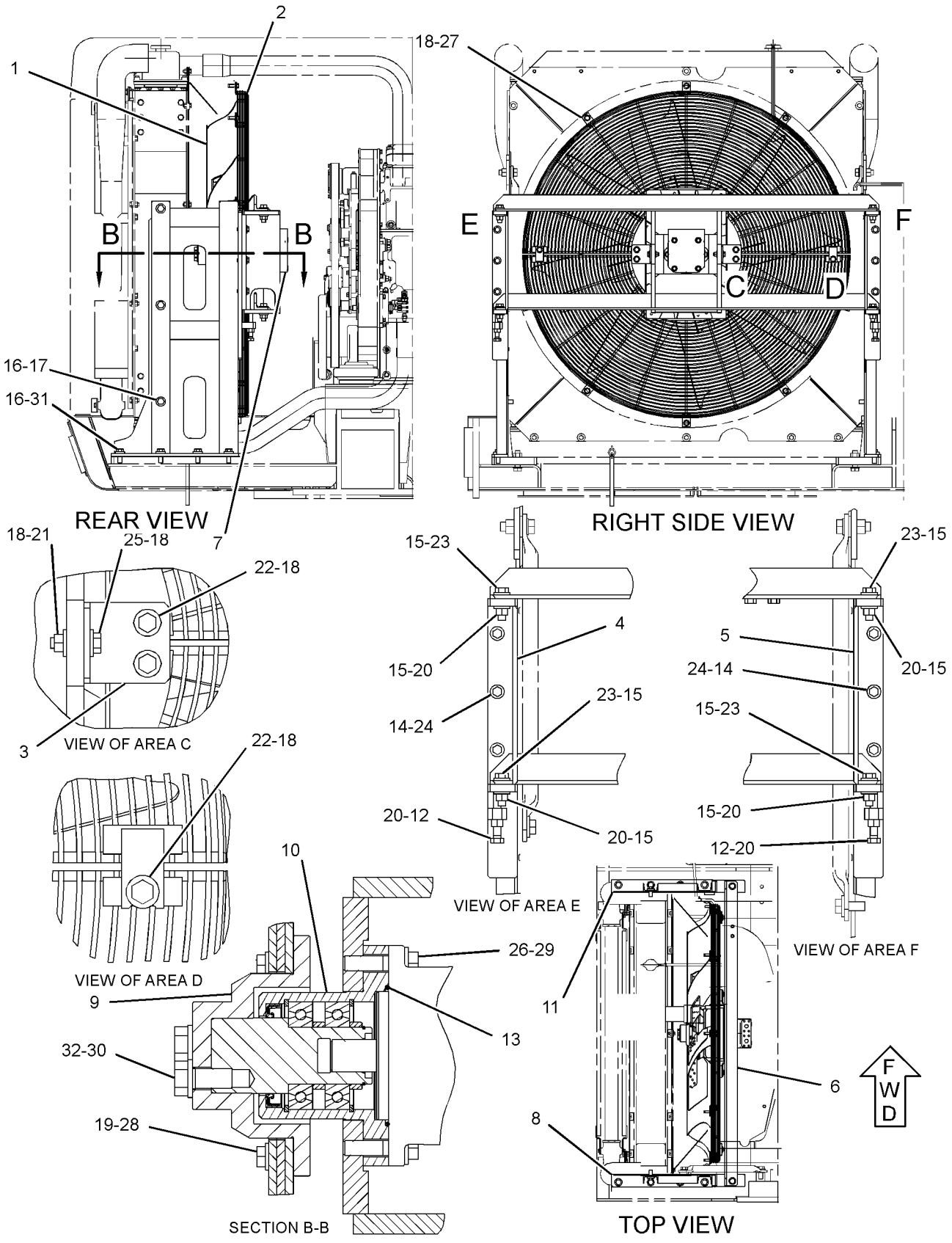

GRAPHIC #1 **<END>** g02162036

COOLING SYSTEM

220-3493 LINES GP-TURBOCHARGER WATER

S/N: RHX7868-UP
CENTER SECTION
PART OF 286-9798 ENGINE AR-COMPLETE

SMCS-1052 **i04000653**

NOTE	REF NO	GRAPHIC REF	PART NUMBER	QTY	PART NAME 1 2 3 4 5 6 (PRODUCT LEVEL)	SEE PAGE
	1	1	**241-3283**	4	GASKET	
	2	1	**7N-7878**	2	PLATE-COVER	
	3	1	**8N-0788**	1	COVER	
	4	1	**6Y-1352**	1	SPACER (10.5X20X27-MM THK)	
	5	1	**335-4198**	1	HOSE AS	
	6	1	**220-3496**	1	TUBE AS (DRAIN) (53-CM)	
	7	1	**0S-1571**	1	BOLT (3/8-16X1.75-IN)	
	8	1	**0S-1591**	8	BOLT (3/8-16X1.5-IN)	
	9	1	**1B-3057**	1	CLIP	
	12	1	**5M-2894**	1	WASHER-HARD (10.2X18.5X2.5-MM THK)	
	14	1	*319-6215*	1	CONNECTOR AS	
		1	**6V-8633**	1	CONNECTOR	
		1	**238-5082**	1	SEAL-O-RING	
		1	**228-7090**	1	SEAL-O-RING	
	15	1	*319-6217*	1	CONNECTOR AS	
		1	**6V-8639**	1	CONNECTOR	
		1	**228-7090**	1	SEAL-O-RING	
		1	**238-5080**	1	SEAL-O-RING	
	16	1	*352-6496*	1	ADAPTER AS	
		1	**8C-6871**	1	CONNECTOR	
		1	**228-7090**	1	SEAL-O-RING	
	17	1	**1L-5081**	8	SPACER (0.41X0.75X0.56-IN THK)	

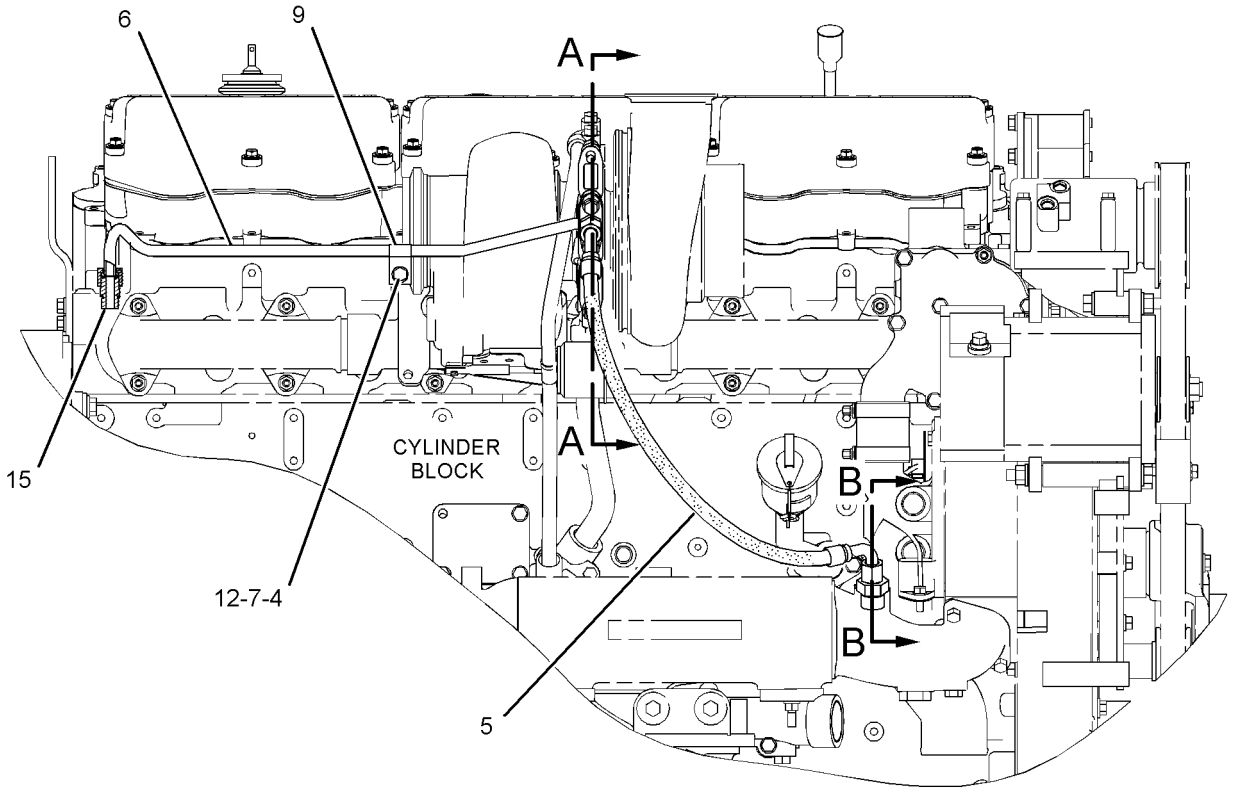

RIGHT SIDE VIEW OF ENGINE

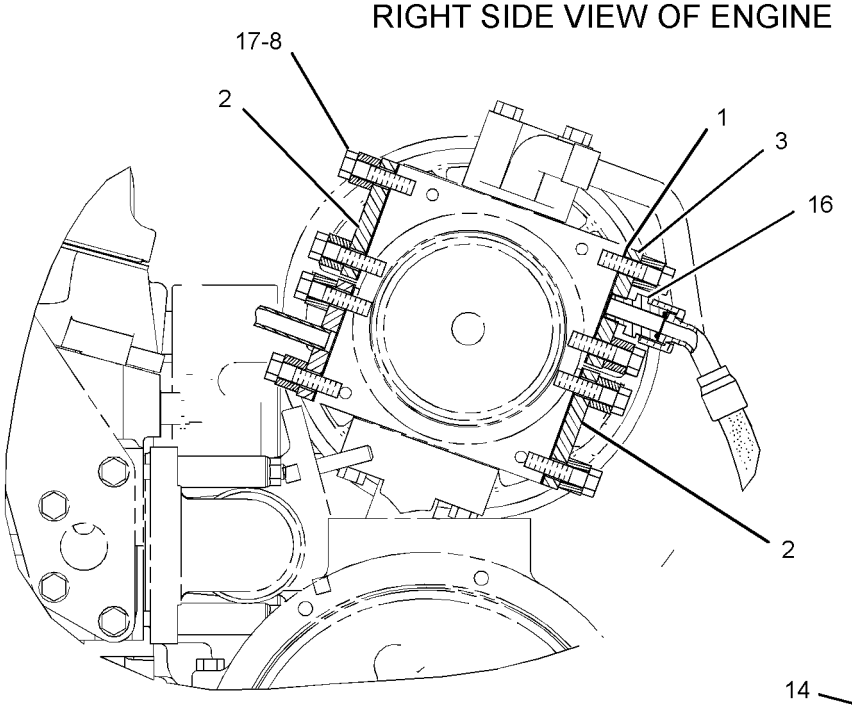

SECTION A-A

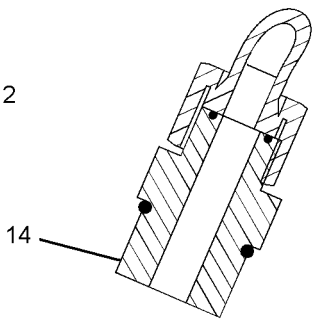

SECTION B-B

GRAPHIC #1 **<END>** g02186133

COOLING SYSTEM

228-4224 LINES GP-WATER

S/N: RHX7868-9114

PART OF 286-9798 ENGINE AR-COMPLETE

SMCS-1355, 1380 **i03339380**

NOTE	REF NO	GRAPHIC REF	PART NUMBER	QTY	PART NAME 1 2 3 4 5 6 (PRODUCT LEVEL)	SEE PAGE
	1	1	**3S-9643**	2	SEAL-LIP TYPE (TEMPERATURE REGULATOR HOUSING)	
	2	1	**4N-1156**	1	GASKET-REGULATOR COVER (TEMPERATURE REGULATOR HOUSING)	
	3	1	**248-5513**	2	REGULATOR-TEMPERATURE (92-DEG C) (COOLANT)	
	4	1	**8T-6703**	2	CLAMP-HOSE	
	5	1	**125-0434**	1	SEAL-INTEGRAL	
	6	1	**126-4935**	2	SEAL-INTEGRAL	
	7	1	**139-3550**	1	GASKET-REGULATOR (HOUSING)	
	8	1	**145-3849**	1	COVER	
	9	1	**197-8006**	1	SEAL-O-RING	
	10	1	**223-4746**	1	BONNET-OUTLET	
R	11	1	**223-7962**	1	CORE AS (ENGINE OIL COOLER)	
	12	1	**223-9257**	1	HOSE	
	13	1	**329-9776**	1	HOUSING-REGULATOR	
	14	1	**229-2282**	1	BONNET-OIL COOLER	
	15	1	**239-6304**	1	MANIFOLD-HOUSING	
	16	1	**244-6835**	1	COVER-WATER PUMP	
	17	1	**0L-1352**	2	BOLT (3/8-16X3.25-IN)	
	19	1	**0S-1594**	10	BOLT (3/8-16X1-IN)	
	20	1	**0T-0065**	3	BOLT (3/8-16X3.5-IN)	
	21	1	**109-0077**	2	SEAL-O-RING	
	22	1	**143-9393**	1	STUD	
	23	1	**147-0323**	2	STUD (3/8-16X3.25-IN)	
	24	1	*148-8407*	2	PLUG AS	
					(EACH INCLUDES)	
		1	**3J-1907**	1	SEAL-O-RING	
		1	**9S-4191**	1	PLUG-O-RING	
	25	1	*148-8408*	8	PLUG AS	
					(EACH INCLUDES)	
		1	**3D-2824**	1	SEAL-O-RING	
		1	**9S-4183**	1	PLUG-O-RING	
	26	1	*148-8411*	2	PLUG AS	
					(EACH INCLUDES)	
		1	**3K-0360**	1	SEAL-O-RING	
		1	**9S-4185**	1	PLUG-O-RING	
	27	1	*207-7899*	2	PLUG AS	
					(EACH INCLUDES)	
		1	**4K-1388**	1	SEAL-O-RING	
		1	**9S-4188**	1	PLUG	
	29	1	**3K-0360**	1	SEAL-O-RING	
	30	1	**4F-0411**	3	BOLT (3/8-16X6.5-IN)	
	31	1	**5M-2894**	11	WASHER-HARD (10.2X18.5X2.5-MM THK)	
	33	1	*148-8410*	2	PLUG AS	
					(EACH INCLUDES)	
		1	**9S-4190**	1	PLUG-O-RING	
	33A	1	**2M-9780**	1	SEAL-O-RING	
C	34	1	*148-8395*	3	PLUG AS	
					(EACH INCLUDES)	
		1	**9S-8005**	1	PLUG-O-RING	
	34A	1	**3K-0360**	1	SEAL-O-RING	
	35	1	*183-7263*	1	PLUG AS	
		1	**9S-8002**	1	PLUG-O-RING	
		1	**3J-7354**	1	SEAL-O-RING	
C	36	1	**268-1616**	1	ADAPTER	
C	37	1	*3J-3679*	1	PLUG AS	
	37A	1	**1J-9671**	1	SEAL-O-RING	
	37B	1	**9S-8003**	1	PLUG	

228-4224 **LINES GP-WATER** *(contd.)* **i03339380**

C-CHANGE FROM PREVIOUS TYPE
R-REMFG PART MAY BE AVAILABLE

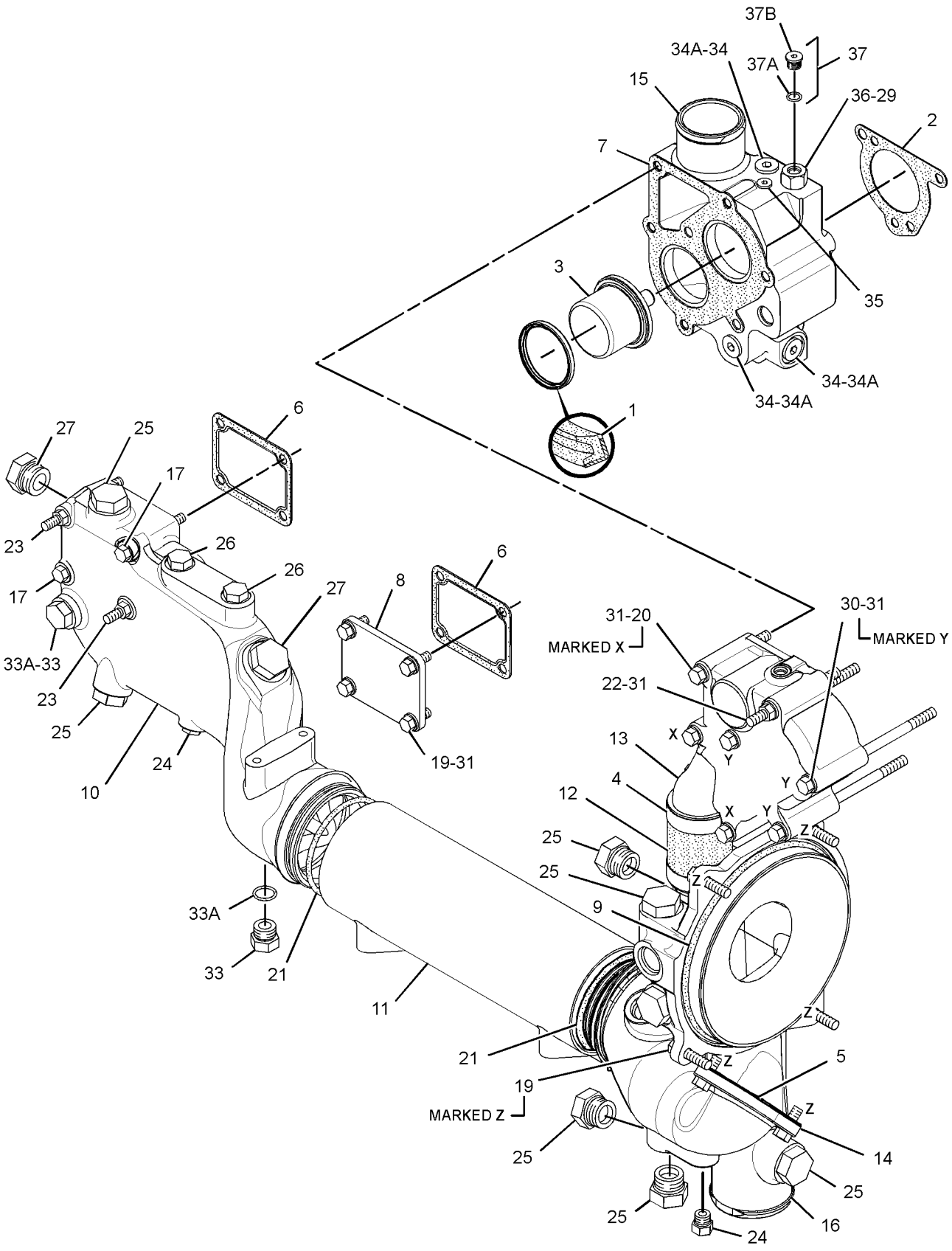

GRAPHIC #1 **<END>** g01435829

COOLING SYSTEM

228-4224 LINES GP-WATER

S/N: RHX9115-UP

PART OF 286-9798 ENGINE AR-COMPLETE

SMCS-1355, 1380 **i03965050**

NOTE	REF NO	GRAPHIC REF	PART NUMBER	QTY	PART NAME 1 2 3 4 5 6 (PRODUCT LEVEL)	SEE PAGE
	1	1	**3S-9643**	2	SEAL-LIP TYPE (TEMPERATURE REGULATOR HOUSING)	
	2	1	**4N-1156**	1	GASKET-REGULATOR COVER (TEMPERATURE REGULATOR HOUSING)	
	3	1	**125-0434**	1	SEAL-INTEGRAL	
	4	1	**126-4935**	2	SEAL-INTEGRAL	
	5	1	**139-3550**	1	GASKET-REGULATOR (HOUSING)	
	6	1	**197-8006**	1	SEAL-O-RING	
	7	1	**223-4746**	1	BONNET-OUTLET	
R	8	1	**223-7962**	1	CORE AS (ENGINE OIL COOLER)	
	9	1	**223-9257**	1	HOSE	
	10	1	**329-9776**	1	HOUSING-REGULATOR	
	11	1	**229-2282**	1	BONNET-OIL COOLER	
	12	1	**239-6304**	1	MANIFOLD-HOUSING	
	13	1	**244-6835**	1	COVER-WATER PUMP	
	14	1	**248-5513**	2	REGULATOR-TEMPERATURE (92-DEG C) (COOLANT)	
	15	1	**268-1616**	1	ADAPTER	
C	16	1	*315-9859*	8	PLUG AS	
					(EACH INCLUDES)	
		1	**238-5082**	1	SEAL-O-RING	
		1	**9S-8008**	1	PLUG-O-RING	
	17	1	**0L-1352**	2	BOLT (3/8-16X3.25-IN)	
	18	1	**0S-1594**	10	BOLT (3/8-16X1-IN)	
	19	1	**0T-0065**	3	BOLT (3/8-16X3.5-IN)	
	20	1	**109-0077**	2	SEAL-O-RING	
	21	1	**143-9393**	1	STUD	
	22	1	**145-3849**	1	COVER	
	23	1	**147-0323**	2	STUD (3/8-16X3.25-IN)	
C	24	1	*183-3407*	2	PLUG AS	
					(EACH INCLUDES)	
		1	**214-7568**	1	SEAL-O-RING	
		1	**9S-8004**	1	PLUG-O-RING	
C	25	1	*307-2671*	1	PLUG AS	
		1	**9S-8002**	1	PLUG-O-RING	
		1	**214-7566**	1	SEAL-O-RING	
C	26	1	*307-2673*	5	PLUG AS	
					(EACH INCLUDES)	
	26A	1	**238-5080**	1	SEAL-O-RING	
		1	**9S-8005**	1	PLUG-O-RING	
C	27	1	*309-5131*	2	PLUG AS	
					(EACH INCLUDES)	
		1	**9S-8006**	1	PLUG-O-RING	
	27A	1	**238-5081**	1	SEAL-O-RING	
C	28	1	*321-8642*	1	PLUG AS	
	28A	1	**214-7567**	1	SEAL-O-RING	
	28B	1	**9S-8003**	1	PLUG	
	29	1	**4F-0411**	3	BOLT (3/8-16X6.5-IN)	
	30	1	**5M-2894**	11	WASHER-HARD (10.2X18.5X2.5-MM THK)	
C	31	1	**6V-1903**	2	SEAL-O-RING	
C	32	1	**6V-6609**	1	SEAL-O-RING	
	33	1	**8T-6703**	2	CLAMP-HOSE	
C	34	1	**9S-8009**	2	PLUG-O-RING	

C-CHANGE FROM PREVIOUS TYPE
R-REMFG PART MAY BE AVAILABLE

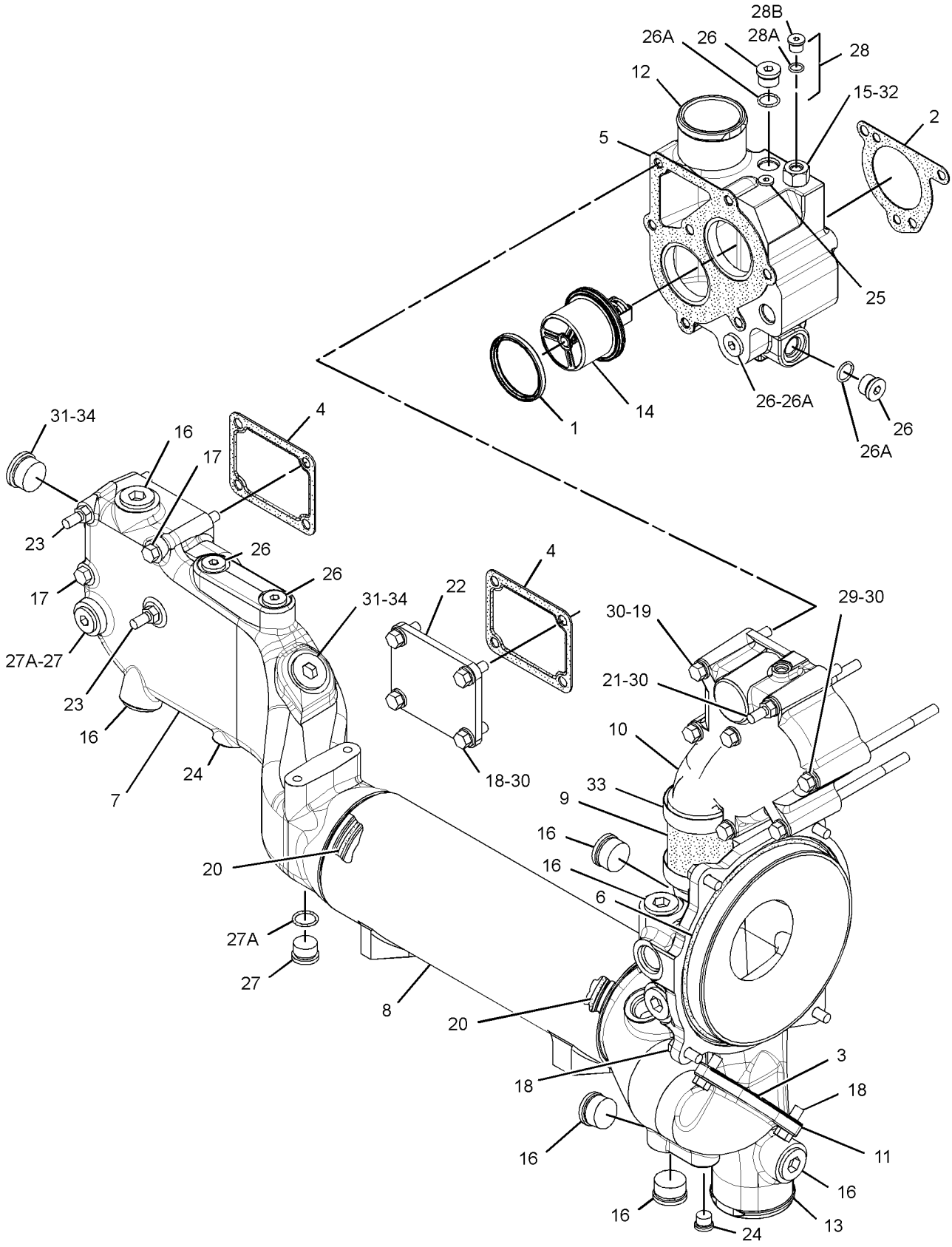

GRAPHIC #1 **<END>** g02176366

COOLING SYSTEM

280-8039 PUMP GP-WATER

S/N: RHX7953-UP

PART OF 286-9798 ENGINE AR-COMPLETE

SMCS-1361 **i03854429**

NOTE	REF NO	GRAPHIC REF	PART NUMBER	QTY	PART NAME 1 2 3 4 5 6 (PRODUCT LEVEL)	SEE PAGE
Y	1	1	**336-2213**	1	PUMP GP-WATER	103
	2	1	**122-3772**	1	SEAL-O-RING (WATER PUMP)	

Y-SEPARATE ILLUSTRATION

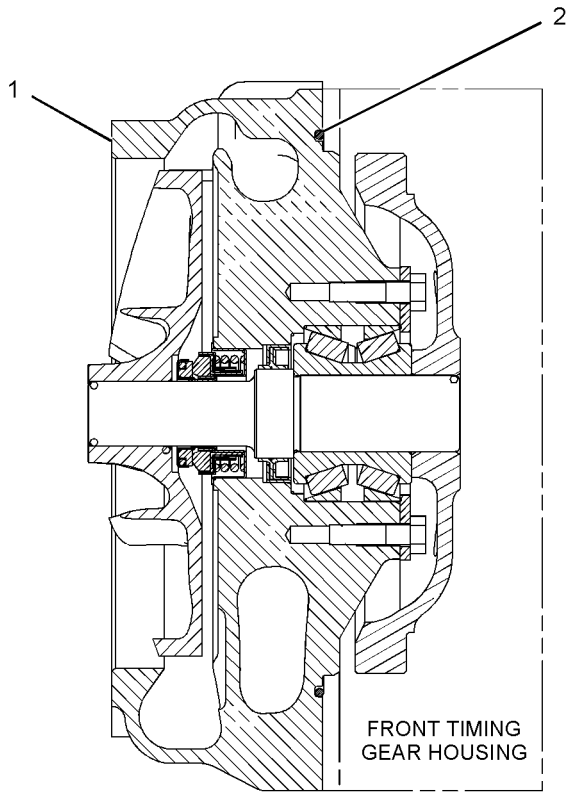

GRAPHIC #1 **<END>** g01147605

COOLING SYSTEM

336-2213 PUMP GP-WATER

S/N: RHX7953-UP

PART OF 280-8039 PUMP GP-WATER

SMCS-1361 **i03812273**

NOTE	REF NO	GRAPHIC REF	PART NUMBER	QTY	PART NAME 1 2 3 4 5 6 (PRODUCT LEVEL)	SEE PAGE
	1	1	**108-7930**	1	BEARING AS-ROLLER	
	2	1	**315-6645**	1	PLUG-FELT	
	3	1	**136-1107**	1	RETAINER	
	4	1	**153-1256**	1	SEAL-LIP TYPE	
	5	1	**195-0319**	1	GEAR (74-TEETH)	
	6	1	**203-3831**	1	PLUG-CUP	
	7	1	**1B-7182**	4	BOLT (5/16-18X1.25-IN)	
	8	1	**246-3129**	1	IMPELLER-PUMP	
	9	1	**246-3130**	1	SHAFT-WATER PUMP	
	10	1	**303-8698**	1	HOUSING AS-PUMP	
	10A	1	**6V-5048**	1	SEAL-O-RING	
	10B	1	**9S-8002**	1	PLUG-O-RING	

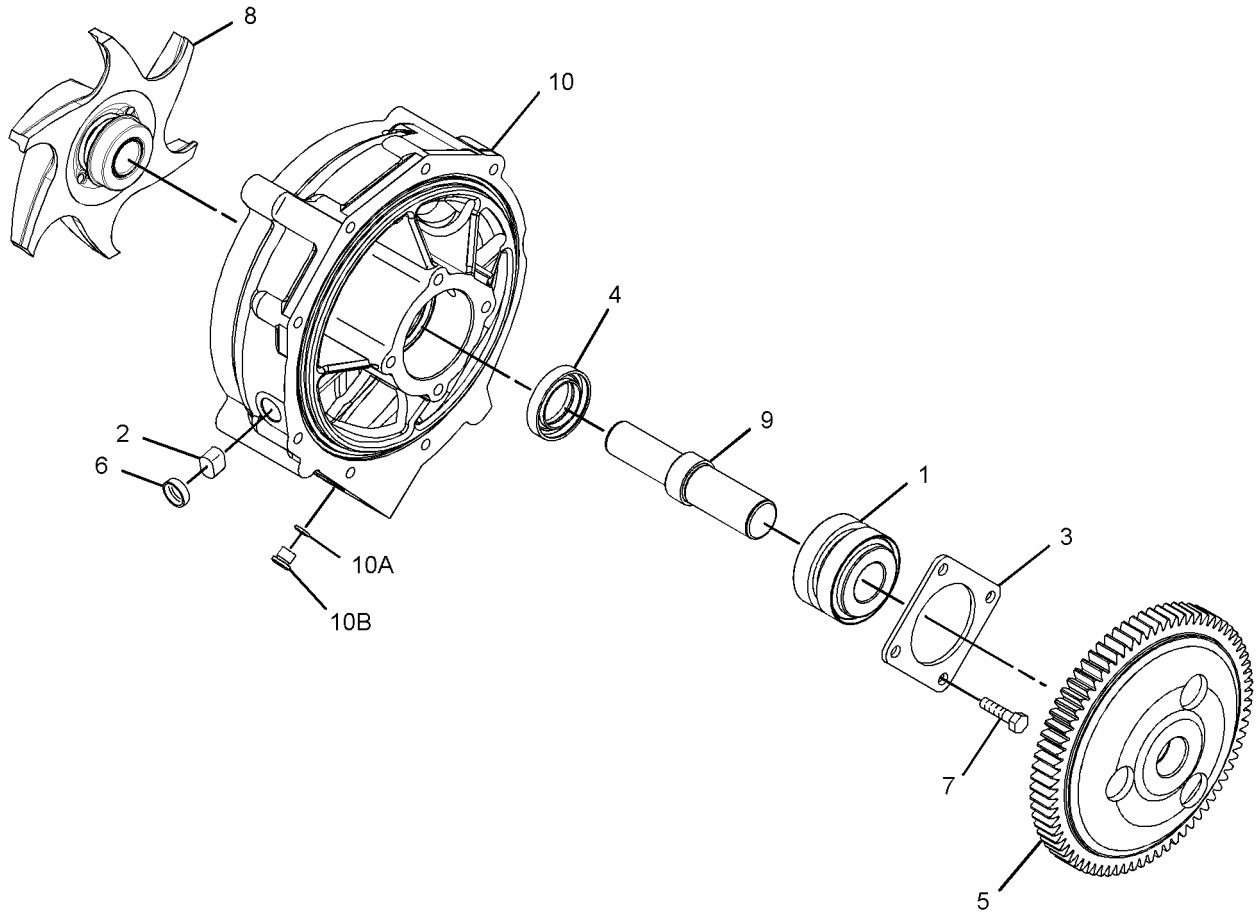

GRAPHIC #1 **<END>** g02067794

COOLING SYSTEM

210-8025 RADIATOR & AFTERCOOLER GP

S/N: WAP1-UP

PART OF 230-2825 RADIATOR & AFTERCOOLER GP

SMCS-1063, 1353 **i02163168**

NOTE	PART NUMBER	QTY	PART NAME 1 2 3 4 5 6 (PRODUCT LEVEL)	SEE PAGE
Y	**210-7989**	1	RADIATOR GP	107
			—OR—	
Y	**210-8026**	1	RADIATOR GP	109

Y-SEPARATE ILLUSTRATION

<END>

COOLING SYSTEM

230-2825 RADIATOR & AFTERCOOLER GP

S/N: WAP1-UP

PART OF 310-9678 INSTALLATION AR-ENGINE

SMCS-1063, 1353 **i04024900**

NOTE	REF NO	GRAPHIC REF	PART NUMBER	QTY	PART NAME 1 2 3 4 5 6 (PRODUCT LEVEL)	SEE PAGE
	1	1	**5P-4961**	2	CLAMP-HOSE	
	2	1	**7I-2673**	2	STRAP-CABLE	
	3	1	**7K-1181**	3	STRAP-CABLE	
	4	1	**8T-4985**	3	CLAMP-HOSE	
C	5	1	**151-1975**	1	CONNECTOR	
	6	1	**144-0367**	1	CLAMP-HOSE	
	7	1	**160-5945**	1	ELBOW	
	8	1	**171-9003**	1	BRACE	
	9	1	**171-9004**	1	SHROUD AS	
	10	1	**171-9016**	1	HOSE-RADIATOR (LOWER)	
	11	1	**196-8102**	1	BAND AS	
	12	1	**196-8104**	1	SUPPORT AS	
	13	1	**204-1611**	3	STRAP-CABLE	
Y	14	1	**210-8025**	1	RADIATOR & AFTERCOOLER GP	104
	15	1	**230-2800**	1	HOSE-RADIATOR (UPPER)	
	16	1	**245-9206**	1	TANK AS-EXPANSION (INCLUDES COOLANT LEVEL SWITCH)	
		1	**171-3370**	1	CAP AS (COOLANT OVERFLOW)	
		1	**204-0920**	1	CAP AS (COOLANT FILL)	
	17	1	**245-9309**	1	BRACE	
	18	1	**1P-4278**	1	CLAMP-HOSE	
	19	1	**5P-1076**	2	WASHER-HARD (13.5X30X4-MM THK)	
M	20	1	**7X-2563**	2	BOLT (M20X2.5X60-MM)	
	21	1	**7Y-1241**	1	BAND	
	22	1	**8T-4121**	2	WASHER-HARD (11X21X2.5-MM THK)	
	23	1	**8T-4123**	6	WASHER (22X35X3.5-MM THK)	
M	24	1	**8T-4136**	16	BOLT (M10X1.5X25-MM)	
M	25	1	**8T-4141**	4	BOLT (M20X2.5X70-MM)	
M	26	1	**8T-4179**	2	BOLT (M12X1.75X20-MM)	
	27	1	**8T-4222**	14	WASHER-PLATED (11X32X2.5-MM THK)	
	28	1	**8T-4223**	2	WASHER-HARD (13.5X25.5X3-MM THK)	
M	29	1	**8T-4956**	2	BOLT (M12X1.75X35-MM)	
	30	1	**8T-5439**	4	WASHER-HARD (21.5X45X6-MM THK)	
M	31	1	**8T-6430**	2	BOLT (M20X2.5X50-MM)	
CE	32	1	**5P-1420**		HOSE (130-CM)	
E	33	1	**7Y-1976**		HOSE-WATER (110-CM)	
D	34	1	**5P-6882**		SEAL (1.3-M)	
C	35	1	**1J-9671**	1	SEAL-O-RING	

C-CHANGE FROM PREVIOUS TYPE
D-ORDER BY THE METER
E-ORDER BY THE CENTIMETER
M-METRIC PART
Y-SEPARATE ILLUSTRATION

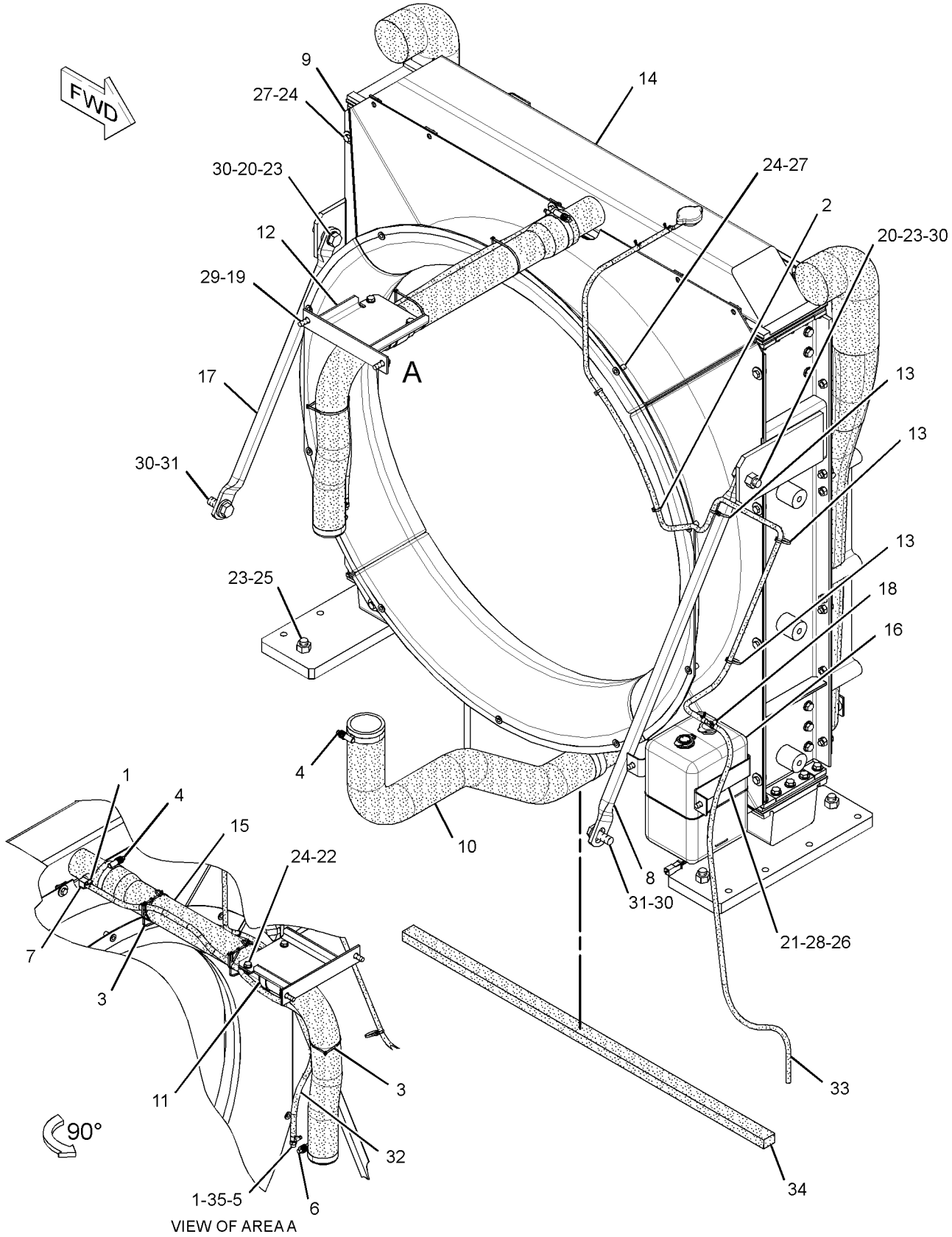

GRAPHIC #1 **<END>** g01370936

COOLING SYSTEM

210-7989 RADIATOR GP

S/N: WAP1-UP

PART OF 210-8025 RADIATOR & AFTERCOOLER GP

SMCS-1353 **i02429331**

NOTE	REF NO	GRAPHIC REF	PART NUMBER	QTY	PART NAME 1 2 3 4 5 6 (PRODUCT LEVEL)	SEE PAGE
	1	1	**210-8030**	1	RADIATOR AS	
	2	1	**099-0001**	1	CAP-RADIATOR	
	3	1	**210-7994**	1	DRAIN AS	
	4	1	**210-7995**	1	HOSE-WATER	
E	5	1	**7Y-1976**		HOSE-WATER (190-CM)	
	6	1	**096-4035**	2	CLIP	
	7	1	**196-8085**	1	AFTERCOOLER AS	
M	8	1	**8T-4136**	6	BOLT (M10X1.5X25-MM)	
	9	1	**8T-4121**	6	WASHER-HARD (11X21X2.5-MM THK)	
	10	1	**196-8090**	3	PLATE	
	11	1	**210-7993**	1	PLATE	
	12	1	**210-7992**	1	PLATE	
M	13	1	**8T-4139**	8	BOLT (M12X1.75X30-MM)	
	14	1	**8T-4223**	16	WASHER-HARD (13.5X25.5X3-MM THK)	
M	15	1	**8T-4192**	4	BOLT (M12X1.75X25-MM)	
M	16	1	**8T-4956**	4	BOLT (M12X1.75X35-MM)	
	17	1	**196-8088**	4	SEAL	
	18	1	**196-8089**	4	BOSS	
	19	1	**210-8078**	2	GASKET	

E-ORDER BY THE CENTIMETER
M-METRIC PART

210-7989 **RADIATOR GP** *(contd.)* **i02429331**

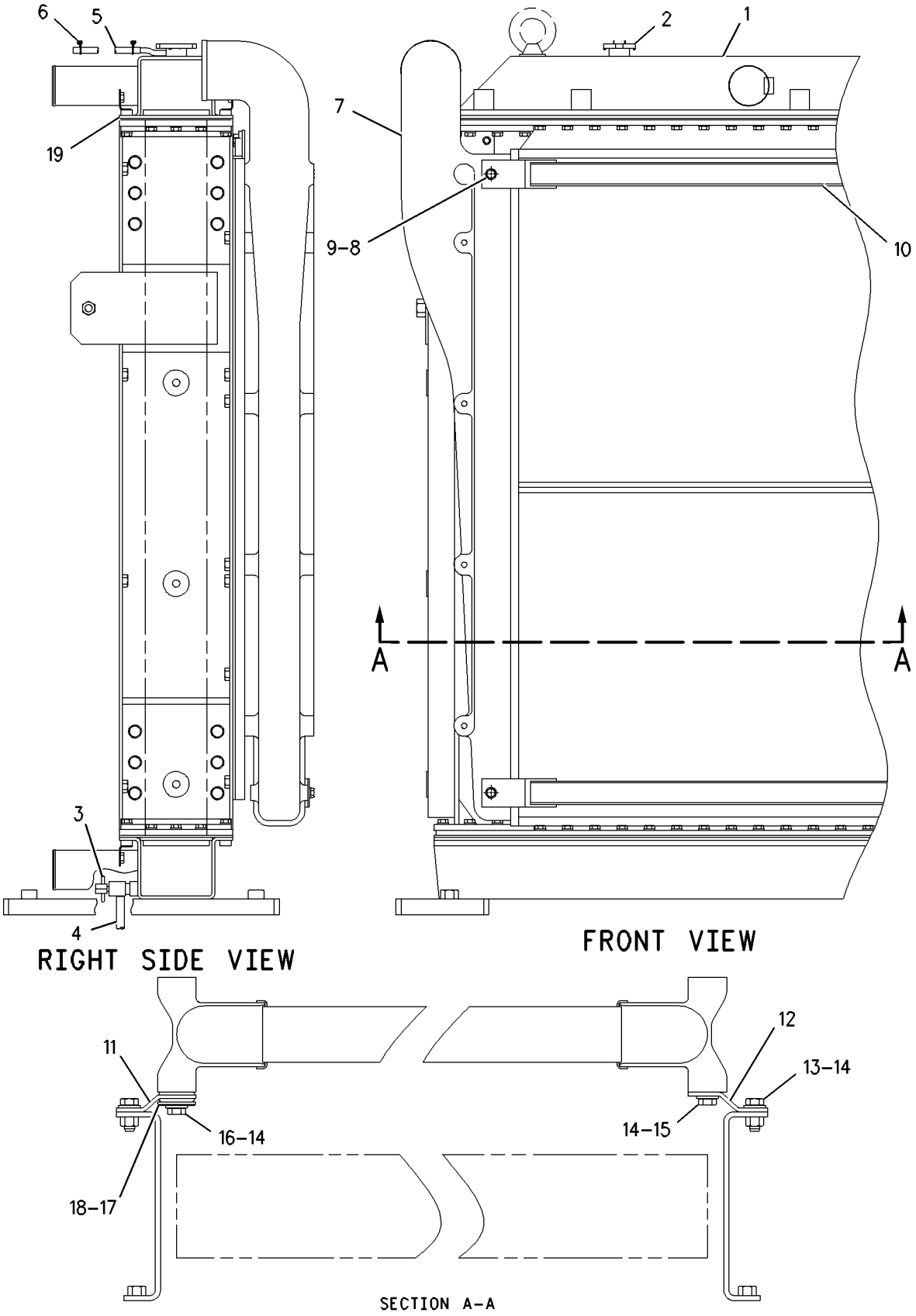

GRAPHIC #1 **<END>** g00941311

COOLING SYSTEM

210-8026 RADIATOR GP

S/N: WAP1-UP

PART OF 210-8025 RADIATOR & AFTERCOOLER GP

SMCS-1353 **i02163397**

NOTE	REF NO	GRAPHIC REF	PART NUMBER	QTY	PART NAME 1 2 3 4 5 6 (PRODUCT LEVEL)	SEE PAGE
Y	1	1	**210-8027**	1	RADIATOR GP	110
	2	1	**195-0980**	1	CORE AS	
M	3	1	**8T-4956**	8	BOLT (M12X1.75X35-MM)	
	4	1	**8T-4223**	8	WASHER-HARD (13.5X25.5X3-MM THK)	

M-METRIC PART
Y-SEPARATE ILLUSTRATION

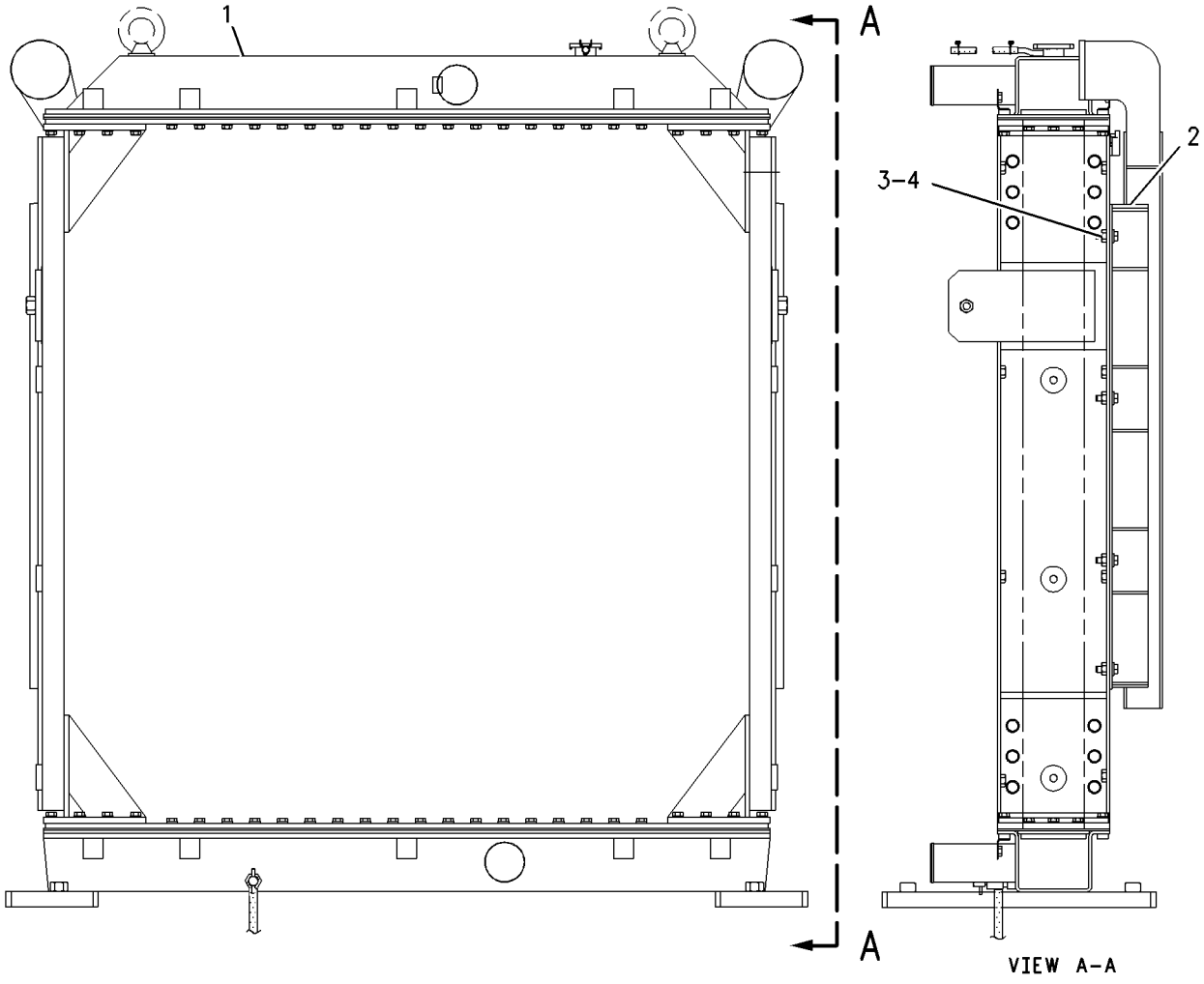

GRAPHIC #1 **<END>** g00942342

COOLING SYSTEM

210-8027 RADIATOR GP

S/N: WAP1-UP

PART OF 210-8026 RADIATOR GP

SMCS-1353 **i02284253**

NOTE	REF NO	GRAPHIC REF	PART NUMBER	QTY	PART NAME 1 2 3 4 5 6 (PRODUCT LEVEL)	SEE PAGE
	1	1	**210-8030**	1	RADIATOR AS	
	2	1	**099-0001**	1	CAP-RADIATOR	
E	3	1	**7Y-1976**		HOSE-WATER (190-CM)	
	4	1	**096-4035**	2	CLIP	
	5	1	**210-7994**	1	DRAIN AS	
	6	1	**210-7995**	1	HOSE-WATER	
	7	1	**210-8078**	2	GASKET	

E-ORDER BY THE CENTIMETER

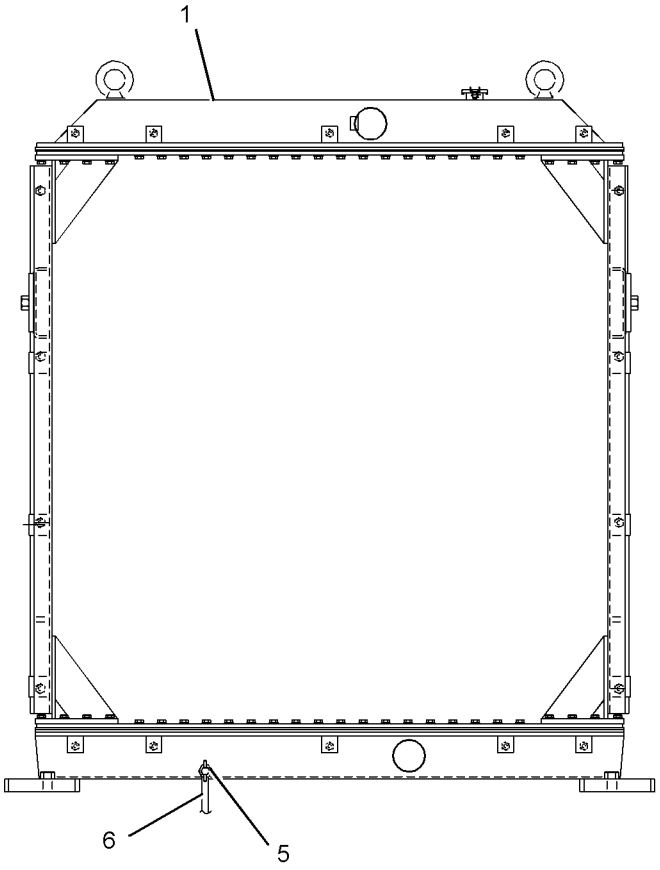

REAR VIEW

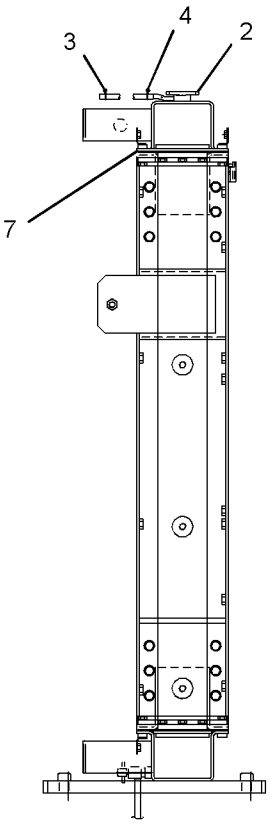

RIGHT SIDE VIEW

GRAPHIC #1 **<END>** g01097592

COOLING SYSTEM

230-2826 SCREEN GP-RADIATOR

S/N: WAP1-UP

AN ATTACHMENT

SMCS-7272 **i02497553**

NOTE	REF NO	GRAPHIC REF	PART NUMBER	QTY	PART NAME 1 2 3 4 5 6 (PRODUCT LEVEL)	SEE PAGE
	1	1	**230-2812**	2	SCREEN AS-RADIATOR	
	2	1	**230-2813**	2	SCREEN AS-RADIATOR	
	3	1	**230-2831**	1	SCREEN AS-RADIATOR	
M	4	1	**8T-4192**	8	BOLT (M12X1.75X25-MM)	
	5	1	**8T-4223**	8	WASHER-HARD (13.5X25.5X3-MM THK)	

M-METRIC PART

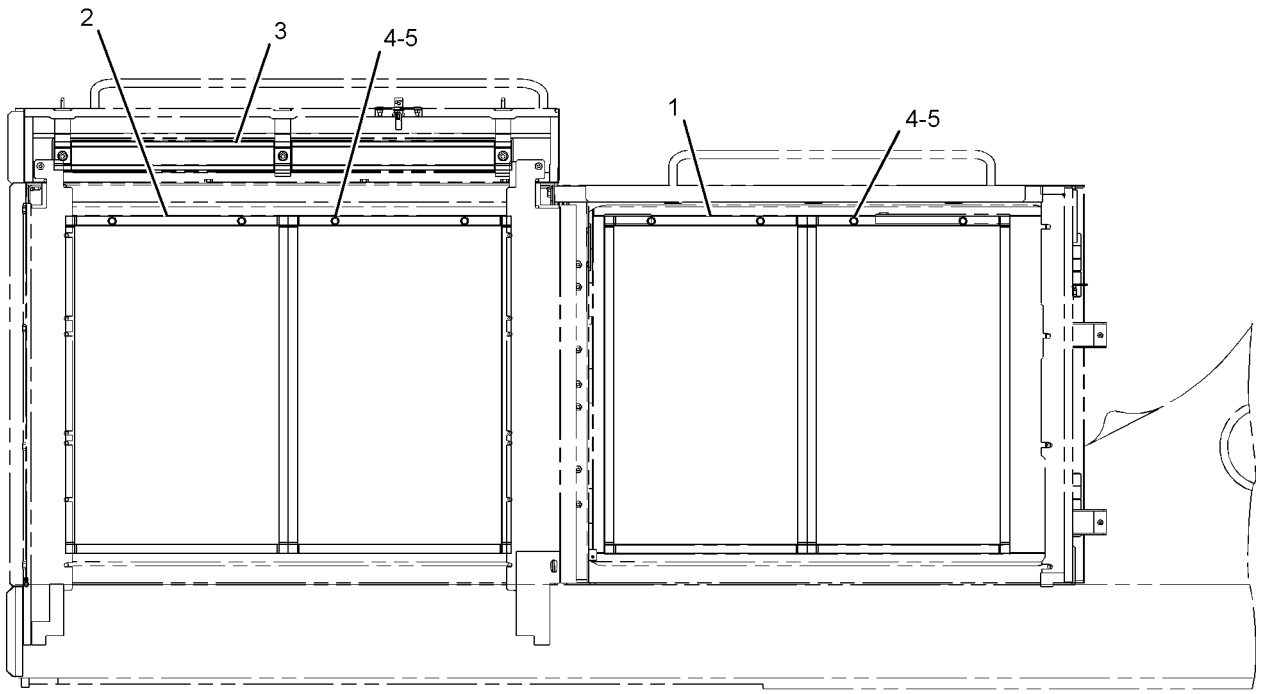

RIGHT SIDE VIEW

GRAPHIC #1

<END>

g01083705

COOLING SYSTEM

245-9239 SCREEN GP-RADIATOR—REVERSING FAN

S/N: WAP1-UP
PART OF 319-9265 CONTROL AR-FAN
AN ATTACHMENT

SMCS-7272 **i03064345**

NOTE	REF NO	GRAPHIC REF	PART NUMBER	QTY	PART NAME 1 2 3 4 5 6 (PRODUCT LEVEL)	SEE PAGE
M	1	1	**135-8573**	16	BOLT AS	
	2	1	**230-2831**	1	SCREEN AS-RADIATOR (UPPER)	
	3	1	**281-3564**	1	SCREEN AS-RADIATOR (DOOR FRONT, LH)	
	4	1	**281-3565**	1	SCREEN AS-RADIATOR (DOOR FRONT, RH)	
	5	1	**281-3566**	1	SCREEN AS-RADIATOR (DOOR REAR, RH)	
	6	1	**281-3567**	1	SCREEN AS-RADIATOR (DOOR REAR, LH)	

M-METRIC PART

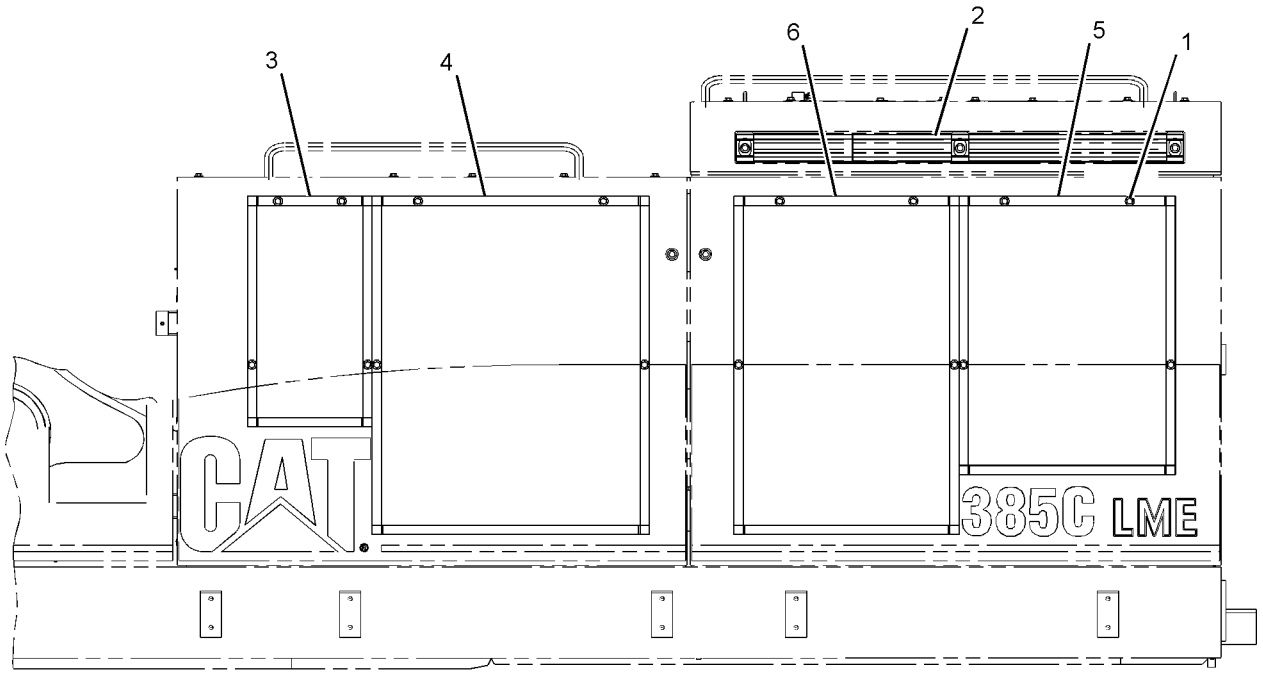

LEFT SIDE VIEW

GRAPHIC #1 **<END>** g01086892

AIR INLET AND EXHAUST SYSTEM

233-1186 AIR CLEANER GP

S/N: WAP1-UP

PART OF 310-9678 INSTALLATION AR-ENGINE

SMCS-1051, 1054 **i03135599**

NOTE	REF NO	GRAPHIC REF	PART NUMBER	QTY	PART NAME 1 2 3 4 5 6 (PRODUCT LEVEL)	SEE PAGE
CY	1	1	*310-9590*	1	AIR CLEANER GP	114
	2	1	**8T-4223**	4	WASHER-HARD (13.5X25.5X3-MM THK)	
M	3	1	**8T-4956**	4	BOLT (M12X1.75X35-MM)	

C-CHANGE FROM PREVIOUS TYPE
M-METRIC PART
Y-SEPARATE ILLUSTRATION

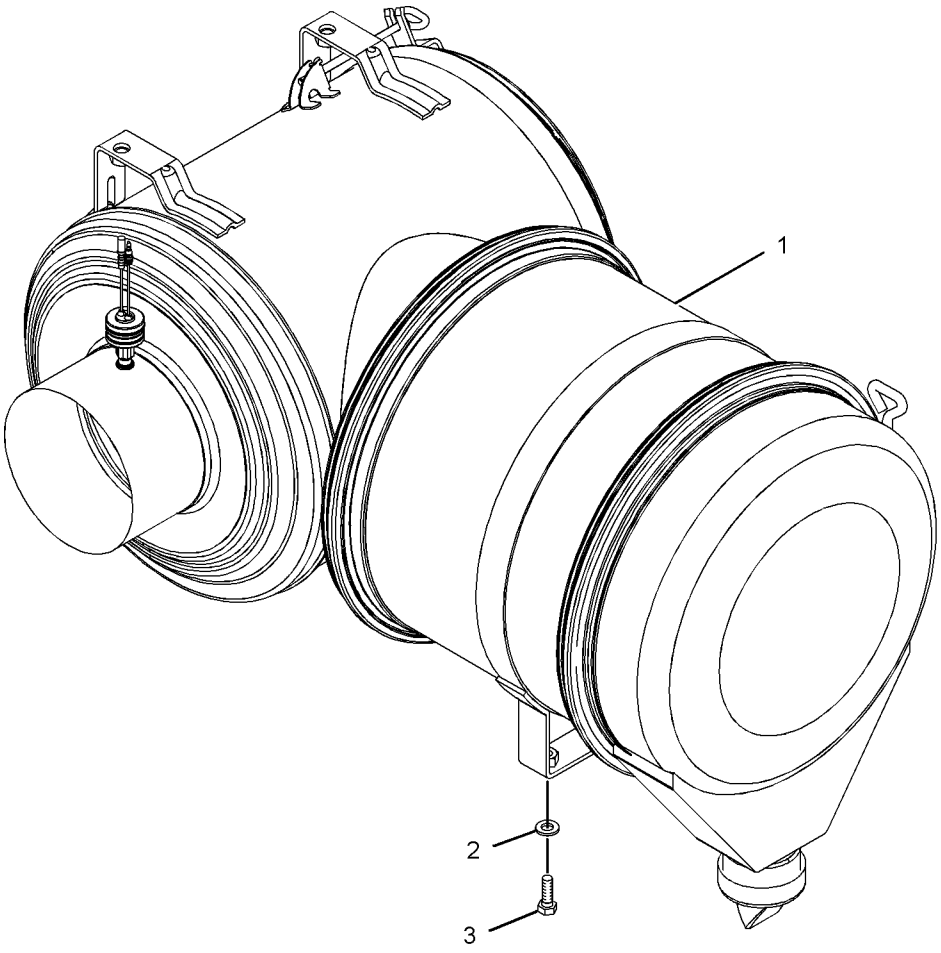

GRAPHIC #1 **<END>** g01087231

AIR INLET AND EXHAUST SYSTEM

310-9590 AIR CLEANER GP

S/N: WAP1-UP

PART OF 233-1186 AIR CLEANER GP

SMCS-1051, 1054 **i03960255**

NOTE	REF NO	GRAPHIC REF	PART NUMBER	QTY	PART NAME 1 2 3 4 5 6 (PRODUCT LEVEL)	SEE PAGE
	1	1	**106-3969**	1	FILTER ELEMENT AS-AIR (PRIMARY) (STANDARD EFFICIENCY)	
					-OR-	
		1	**132-7168**	1	FILTER ELEMENT AS-AIR (PRIMARY) (ULTRA HIGH EFFICIENCY)	
	2	1	**106-3973**	1	FILTER ELEMENT AS-AIR (SECONDARY)	
	3	1	**1S-5485**	1	VALVE-AIR CLEANER DUST	
	4	1	**3R-5818**	1	BODY AS	
	5	1	**6N-6460**	2	ROD AS	
	6	1	**6L-3314**	1	CLAMP AS (UPPER)	
	7	1	**6L-3316**	1	CLAMP AS (LOWER)	
	8	1	**7W-0629**	1	ADAPTER AS-FILTER	
	9	1	**310-9602**	1	COVER AS	
E		1	**7X-2634**		SEAL (130-CM)	
	10	1	**131-4770**	1	CUP AS	
	11	1	**162-6208**	1	INDICATOR AS-AIR FILTER CHANGE (AIR RESTRICTION)	
	12	1	**324-4181**	2	SPACER (9X22.3X28-MM THK)	

E-ORDER BY THE CENTIMETER

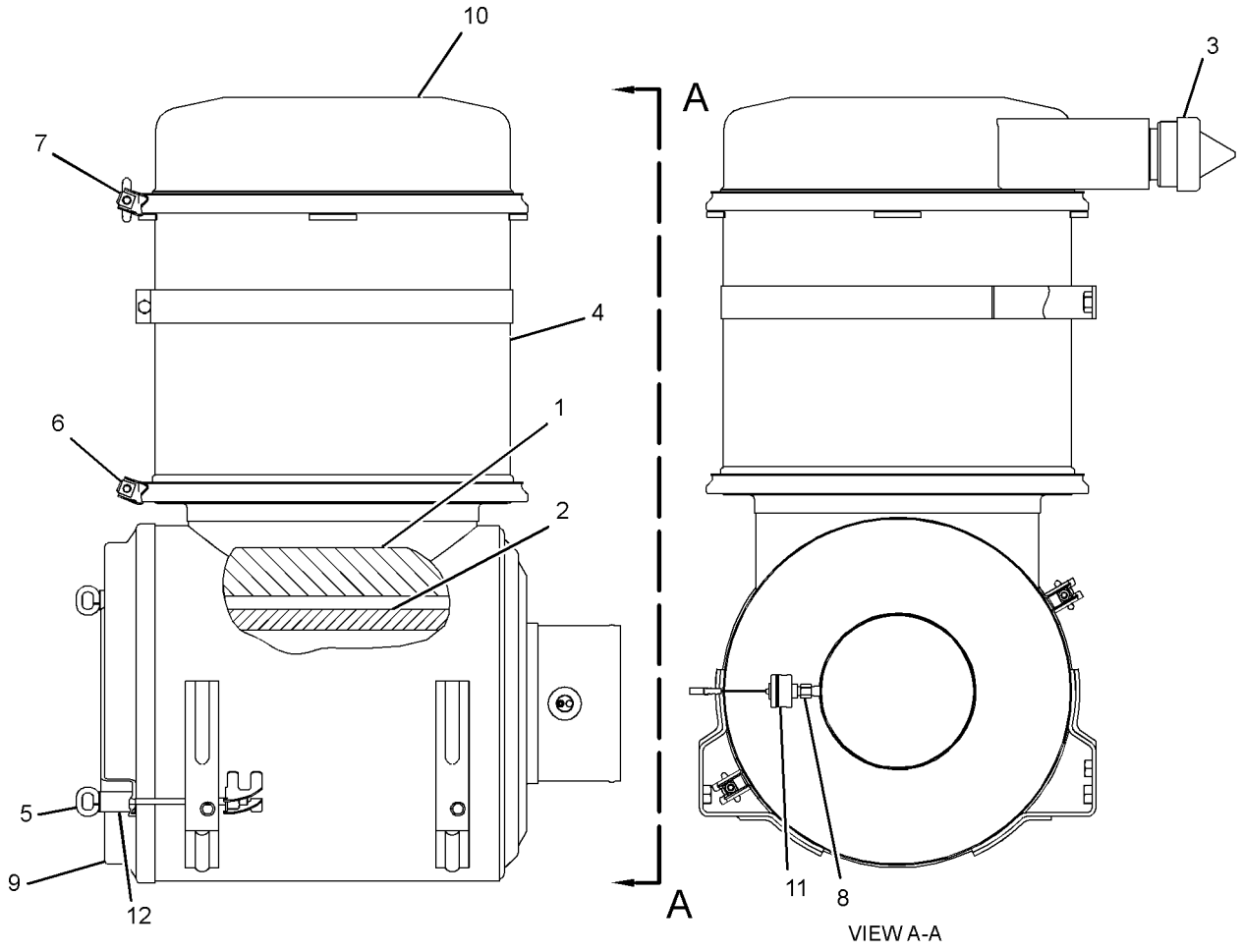

GRAPHIC #1 **<END>** g02172359

AIR INLET AND EXHAUST SYSTEM

222-8334 EXTENSION GP-EXHAUST

S/N: WAP1-UP

PART OF 310-9678 INSTALLATION AR-ENGINE

SMCS-1061 **i02214567**

NOTE	REF NO	GRAPHIC REF	PART NUMBER	QTY	PART NAME 1 2 3 4 5 6 (PRODUCT LEVEL)	SEE PAGE
	1	1	**255-2901**	1	TUBE AS	
	2	1	**5P-1076**	4	WASHER-HARD (13.5X30X4-MM THK)	
M	3	1	**8T-4139**	4	BOLT (M12X1.75X30-MM)	

M-METRIC PART

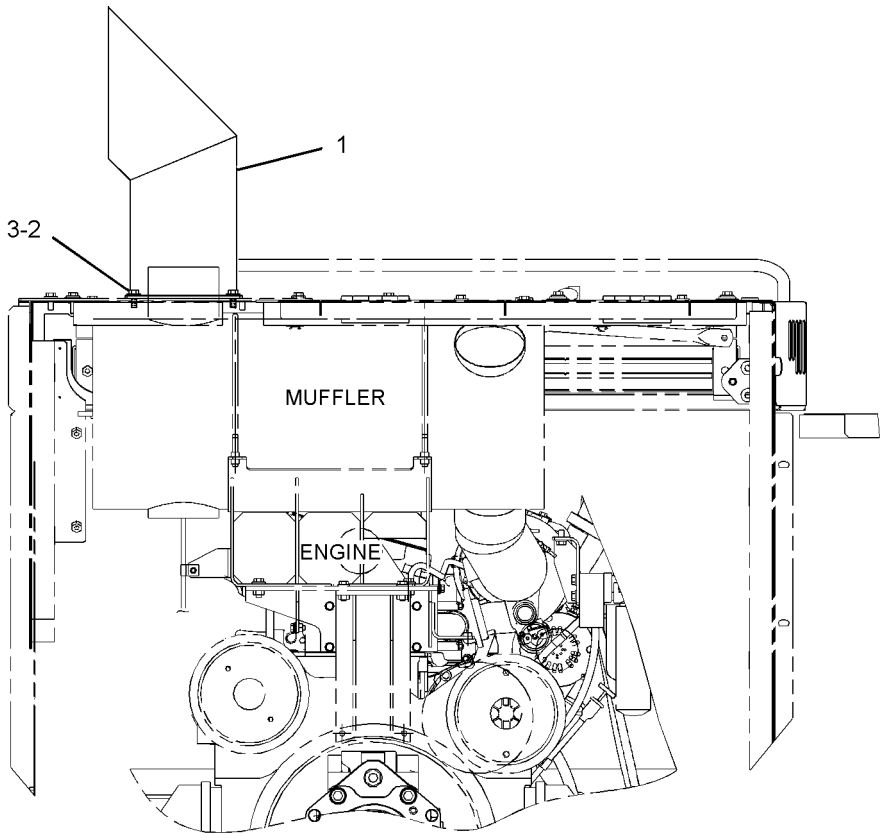

RIGHT SIDE VIEW

GRAPHIC #1 **<END>** g01072395

AIR INLET AND EXHAUST SYSTEM

126-0081 LINES GP-AIR—TURBOCHARGER OUTLET

S/N: RHX7868-UP
90-DEG OUTLET ELBOW
PART OF 286-9798 ENGINE AR-COMPLETE

SMCS-1071 **i04016270**

NOTE	REF NO	GRAPHIC REF	PART NUMBER	QTY	PART NAME 1 2 3 4 5 6 (PRODUCT LEVEL)	SEE PAGE
	1	1	**127-0929**	1	CLAMP	
C	2	1	**217-8946**	1	ELBOW	
C	3	1	*307-2671*	1	PLUG AS	
	3A	1	**214-7566**	1	SEAL-O-RING	
		1	**9S-8002**	1	PLUG-O-RING	
	4	1	**8C-3089**	1	SEAL-O-RING	

C-CHANGE FROM PREVIOUS TYPE

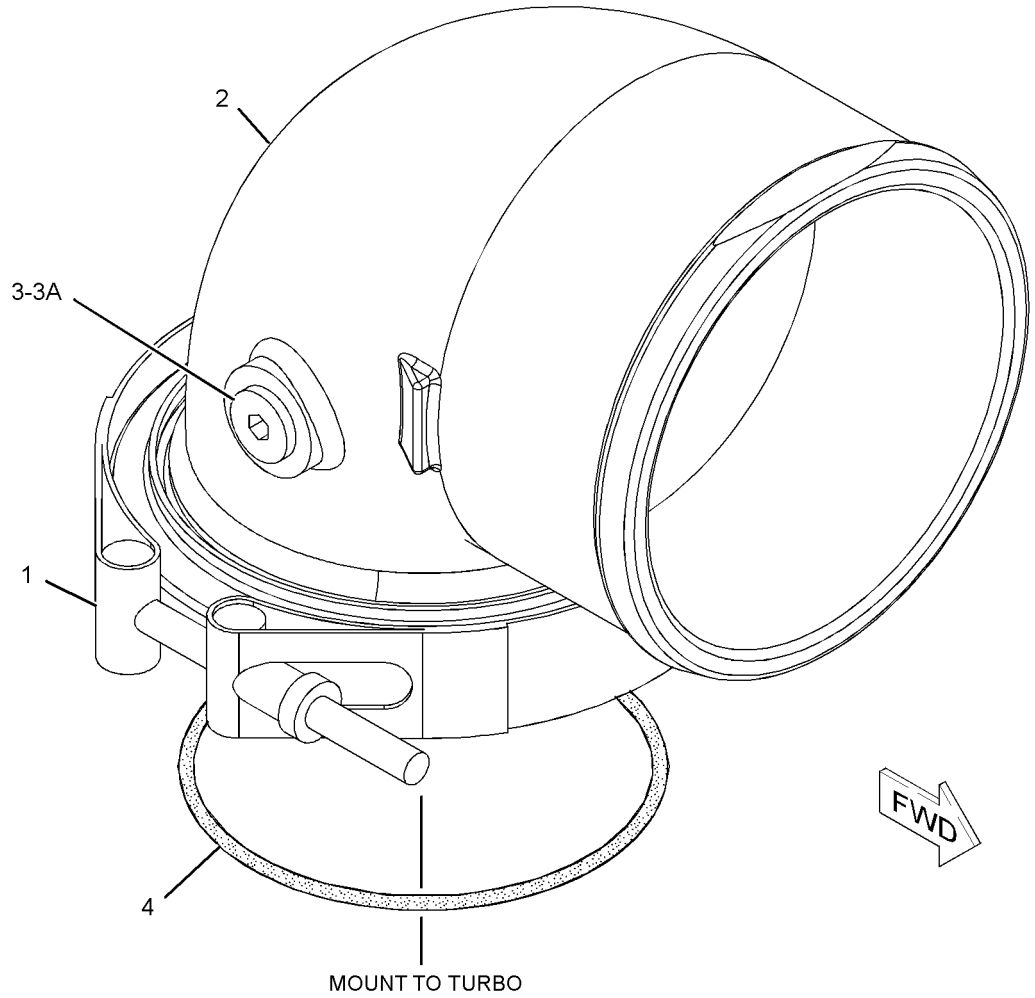

GRAPHIC #1 **<END>** g01154678

AIR INLET AND EXHAUST SYSTEM

210-8155 LINES GP-AIR—AFTERCOOLER TO TURBOCHARGER

S/N: WAP1-UP

PART OF 310-9678 INSTALLATION AR-ENGINE

SMCS-1071 **i02136677**

NOTE	REF NO	GRAPHIC REF	PART NUMBER	QTY	PART NAME 1 2 3 4 5 6 (PRODUCT LEVEL)	SEE PAGE
	1	1	**8T-4986**	12	CLAMP-HOSE	
	2	1	**9X-6654**	4	CLAMP-HOSE	
	3	1	**210-8165**	1	HOSE	
	4	1	**230-2806**	1	TUBE AS	
	5	1	**230-2808**	1	TUBE AS	
	6	1	**230-2810**	1	HOSE	
	7	1	**230-2811**	1	HOSE	
	8	1	**230-2895**	1	HOSE	
	9	1	**147-7142**	2	U-BOLT	
M	10	1	**8T-4195**	4	BOLT (M10X1.5X30-MM)	
	11	1	**8T-4222**	4	WASHER-PLATED (11X32X2.5-MM THK)	
	12	1	**8T-4223**	4	WASHER-HARD (13.5X25.5X3-MM THK)	
M	13	1	**8T-4244**	8	NUT (M12X1.75-THD)	

M-METRIC PART

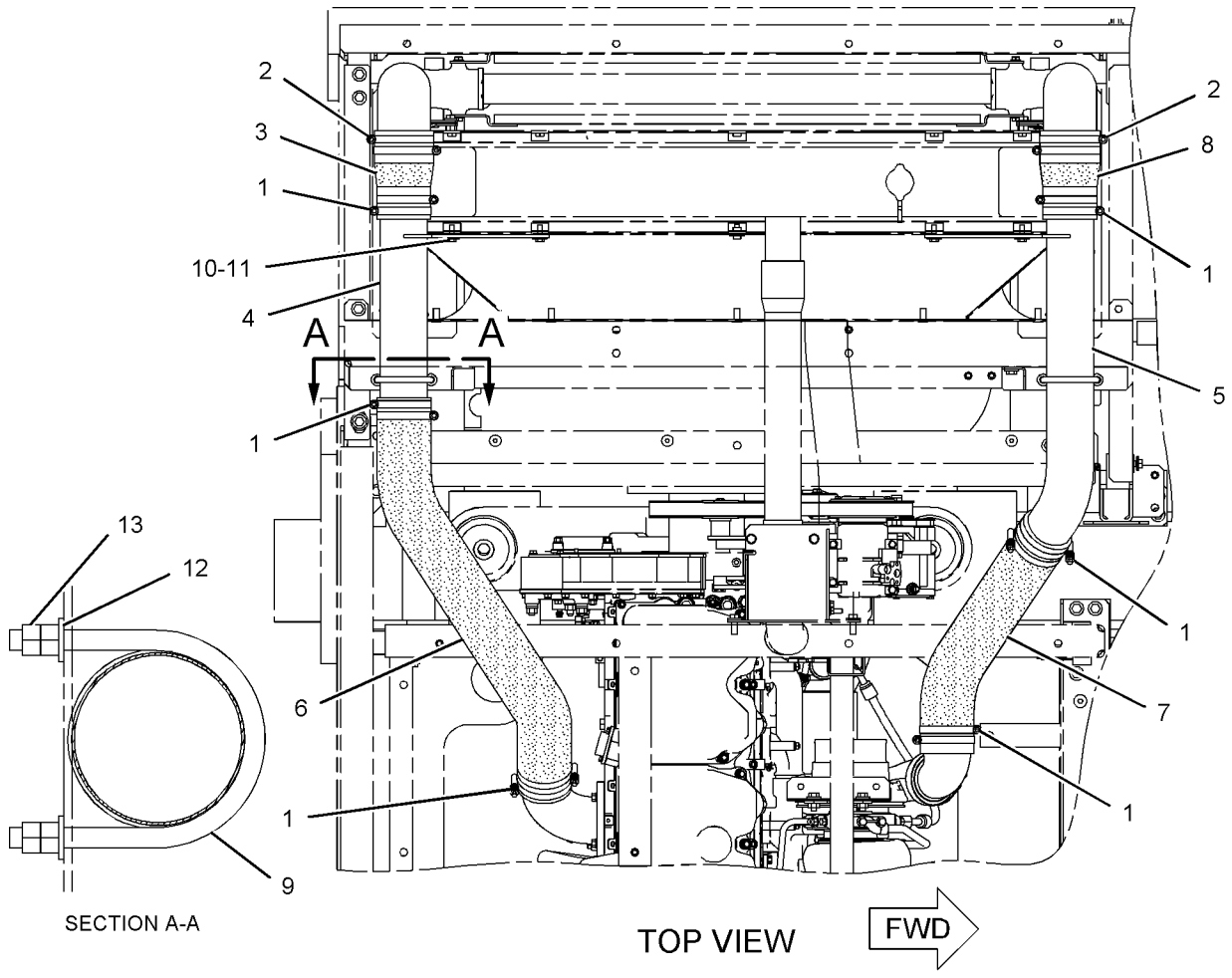

GRAPHIC #1 **<END>** g01086133

AIR INLET AND EXHAUST SYSTEM

263-1129 LINES GP-AIR

S/N: RHX7868-UP

PART OF 286-9798 ENGINE AR-COMPLETE

SMCS-1071 **i02593495**

NOTE	REF NO	GRAPHIC REF	PART NUMBER	QTY	PART NAME 1 2 3 4 5 6 (PRODUCT LEVEL)	SEE PAGE
C	1	1	**0S-1588**	1	BOLT (3/8-16X1.25-IN)	
C	2	1	**5M-2894**	1	WASHER-HARD (10.2X18.5X2.5-MM THK)	
	3	1	**8T-6765**	1	PLUG-PIPE	
	4	1	**101-3125**	1	GASKET (AIR INLET MANIFOLD)	
	5	1	**125-5032**	1	ELBOW	

C-CHANGE FROM PREVIOUS TYPE

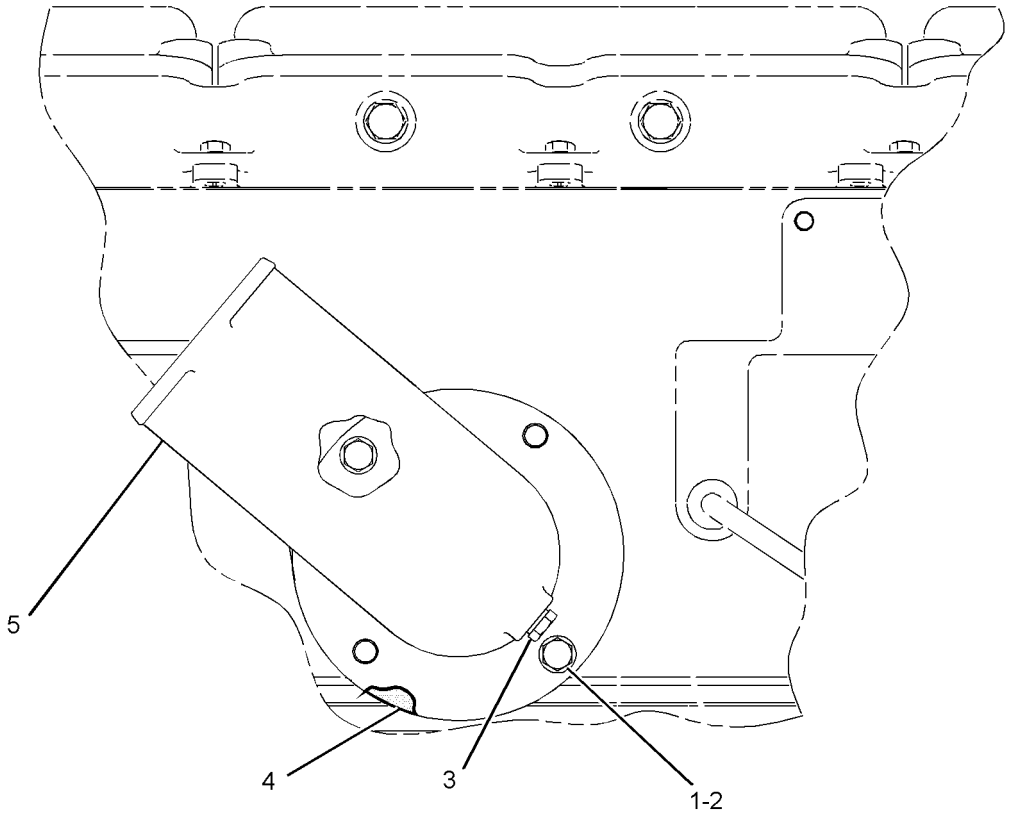

LEFT
SIDE
VIEW

GRAPHIC #1 **<END>** g01298049

AIR INLET AND EXHAUST SYSTEM

324-4197 LINES GP-AIR—AIR CLEANER, ALT, TURBOCHARGER

S/N: WAP1-UP

PART OF 310-9678 INSTALLATION AR-ENGINE

SMCS-1071 **i04024908**

NOTE	REF NO	GRAPHIC REF	PART NUMBER	QTY	PART NAME 1 2 3 4 5 6 (PRODUCT LEVEL)	SEE PAGE
	1	1	**6V-3582**	2	CLAMP-HOSE	
	2	1	**8T-4984**	2	CLAMP-HOSE	
	3	1	**8T-4988**	3	CLAMP-HOSE	
	4	1	**171-9017**	1	HOSE	
	5	1	**171-9018**	1	HOSE	
	6	1	**233-1143**	1	TUBE AS	
	7	1	**239-6460**	1	TUBE AS	
	8	1	**239-6639**	1	TUBE AS	
	9	1	**239-6640**	1	SCREEN AS	
	10	1	**239-6641**	1	HOSE	
	11	1	**239-7853**	1	GUARD	
	12	1	**324-4152**	1	HOSE	
	13	1	**7X-7729**	4	WASHER (11X25X3-MM THK)	
	14	1	**7Y-1275**	2	U-BOLT	
	15	1	**8T-4121**	6	WASHER-HARD (11X21X2.5-MM THK)	
M	16	1	**8T-4133**	8	NUT (M10X1.5-THD)	
M	17	1	**8T-4136**	2	BOLT (M10X1.5X25-MM)	
M	18	1	**8T-4195**	4	BOLT (M10X1.5X30-MM)	
	19	1	**8T-4989**	1	CLAMP-HOSE	

M-METRIC PART

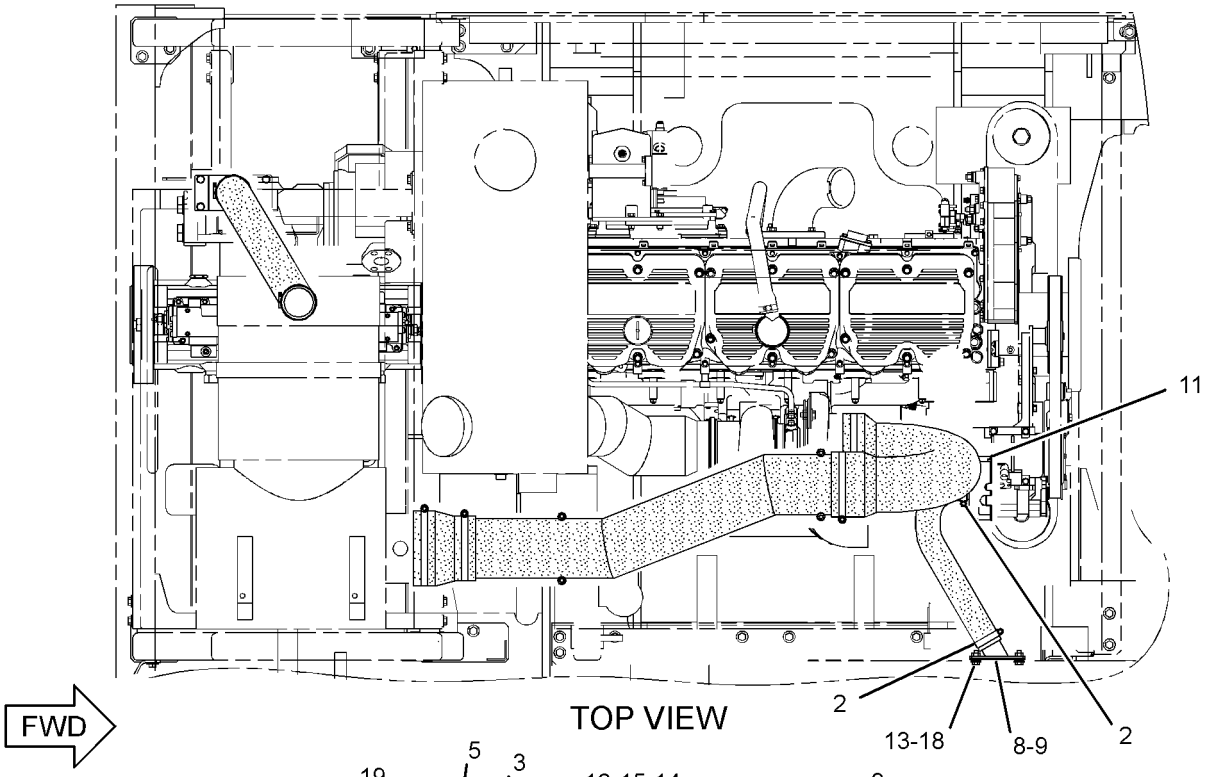

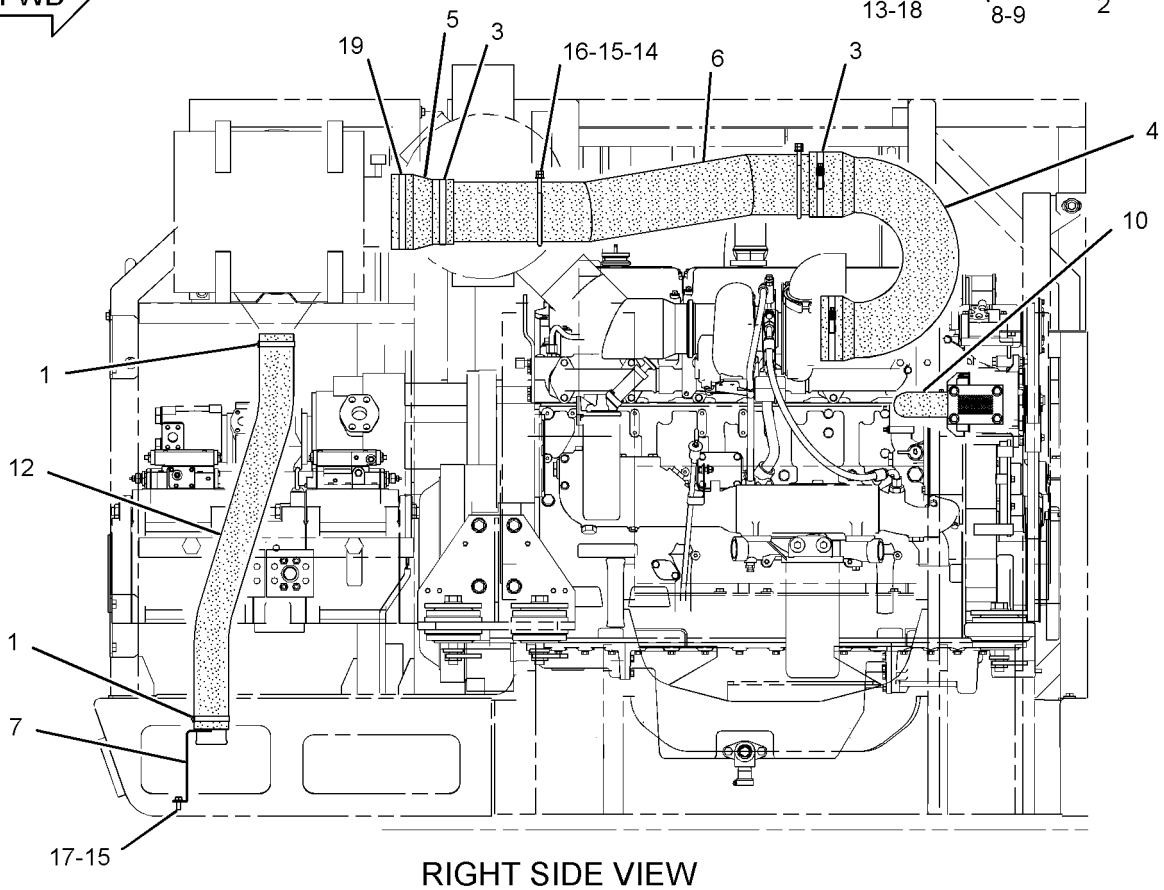

GRAPHIC #1

<END>

g02129996

222-8321 LINES GP-MUFFLER DRAIN

S/N: WAP1-UP

PART OF 310-9678 INSTALLATION AR-ENGINE

SMCS-1062 **i02136717**

NOTE	REF NO	GRAPHIC REF	PART NUMBER	QTY	PART NAME 1 2 3 4 5 6 (PRODUCT LEVEL)	SEE PAGE
	1	1	**7K-1181**	2	STRAP-CABLE	
	2	1	**151-6641**	2	CLIP	
	3	1	**239-6638**	1	TUBE AS	
	4	1	**5P-4961**	1	CLAMP-HOSE	
	5	1	**7X-7729**	2	WASHER (11X25X3-MM THK)	
M	6	1	**8T-4136**	1	BOLT (M10X1.5X25-MM)	
M	7	1	**8T-4137**	1	BOLT (M10X1.5X20-MM)	
E	8	1	**5P-1442**		HOSE (72-CM)	

E-ORDER BY THE CENTIMETER
M-METRIC PART

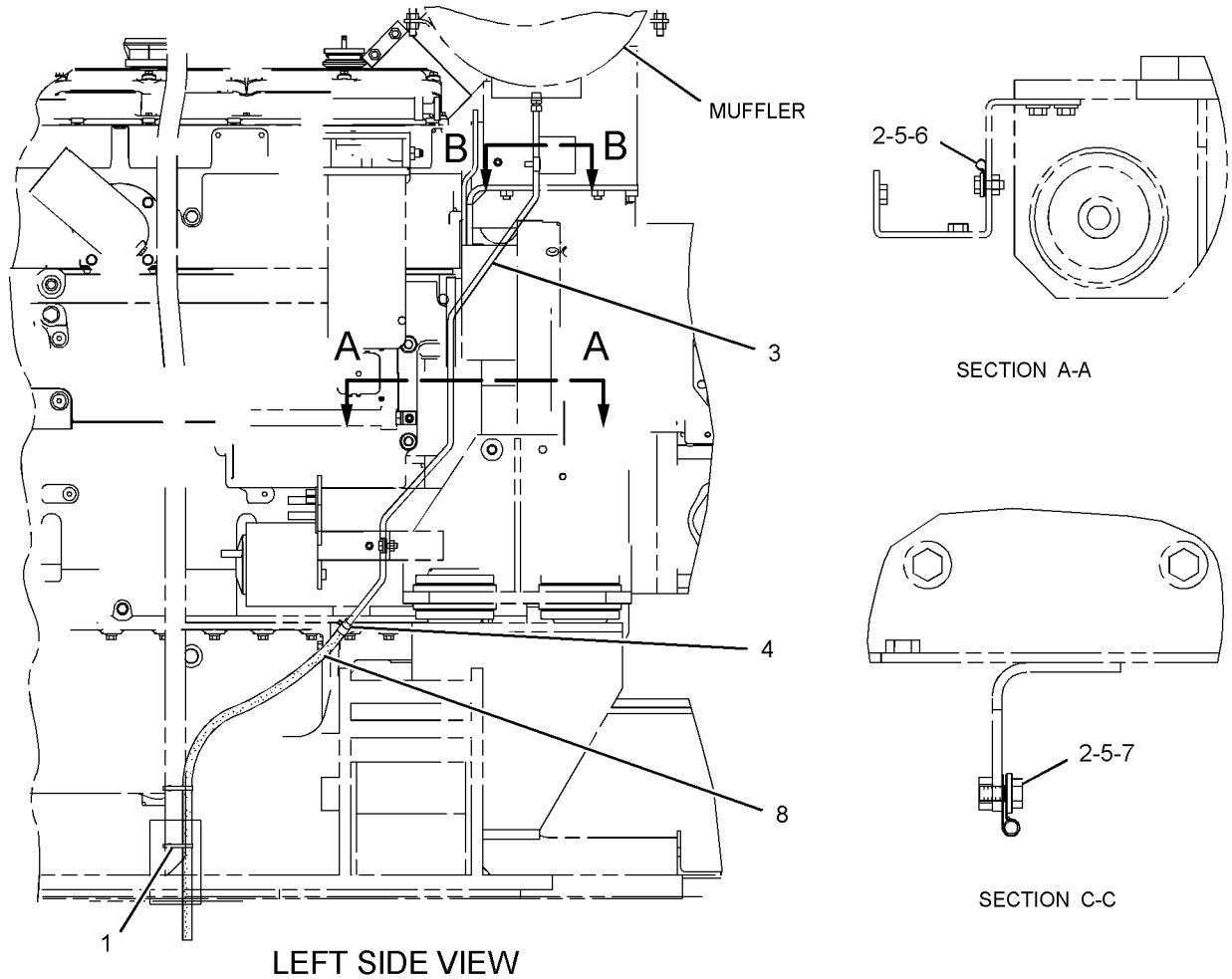

LEFT SIDE VIEW

GRAPHIC #1 **<END>** g01086717

AIR INLET AND EXHAUST SYSTEM

220-6372 MANIFOLD GP-EXHAUST

S/N: RHX7868-UP

PART OF 286-9798 ENGINE AR-COMPLETE

SMCS-1059 **i03785273**

NOTE	REF NO	GRAPHIC REF	PART NUMBER	QTY	PART NAME 1 2 3 4 5 6 (PRODUCT LEVEL)	SEE PAGE
	1	1	**313-9550**	4	STUD-TAPERLOCK (3/8-16X2.165-IN) (HIGH TEMPERATURE)	
	2	1	**106-1792**	12	STUD-TAPERLOCK (3/8-16X4-IN) (HIGH TEMPERATURE)	
	3	1	**108-3612**	12	SPACER (11.13X19.05X53-MM THK)	
	4	1	**133-3359**	2	MANIFOLD-EXHAUST (END)	
	5	1	**221-1426**	1	MANIFOLD-EXHAUST (CENTER)	
	6	1	**2N-2766**	12	LOCKNUT (3/8-16-THD)	

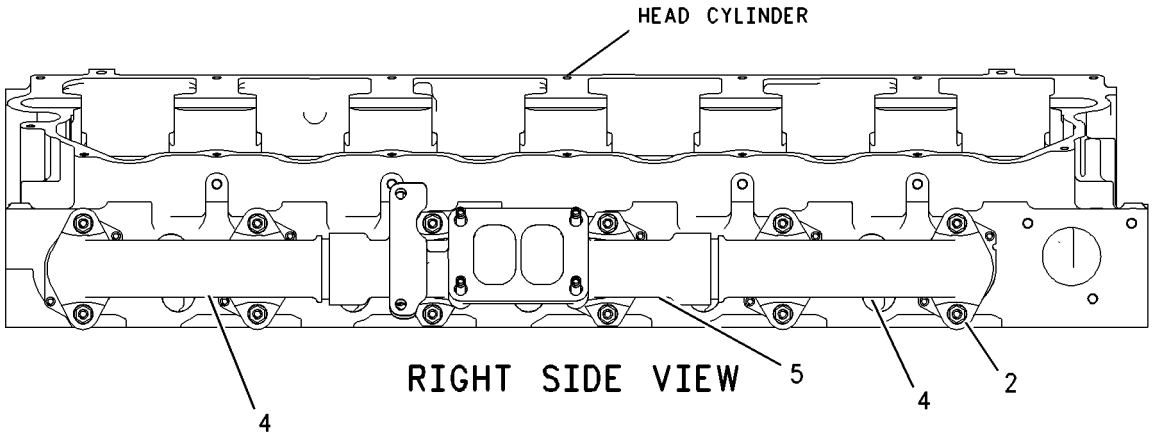

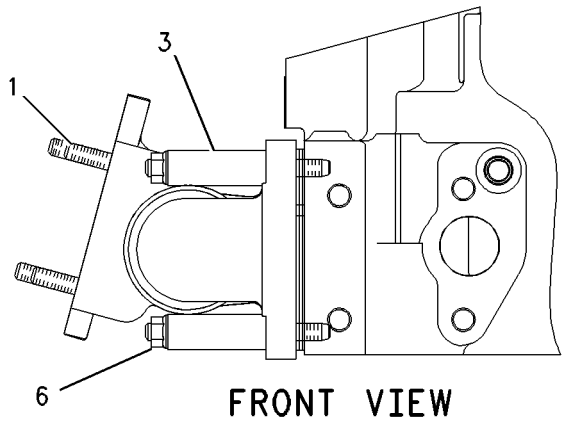

GRAPHIC #1 **<END>** g01002978

AIR INLET AND EXHAUST SYSTEM

222-8255 MUFFLER GP

S/N: WAP1-UP

PART OF 255-2882 ENGINE AR

SMCS-1062 **i03915138**

NOTE	REF NO	GRAPHIC REF	PART NUMBER	QTY	PART NAME 1 2 3 4 5 6 (PRODUCT LEVEL)	SEE PAGE
	1	2	**4W-9160**	1	CLAMP-V BAND	
	2	1	**171-9049**	1	BRACKET AS	
	3	1	**205-6716**	7	SPACER (10.5X20X19-MM THK)	
	4	1	**217-5449**	2	SPACER (10.5X20X29-MM THK)	
	5	1	**233-1184**	1	BRACKET AS	
	6	1	**233-1188**	2	U-BOLT	
	7	1	**324-4083**	1	MUFFLER AS	
	8	1	**233-1190**	1	TUBE AS	
C	9	1	**324-4085**	1	PLATE	
C	10	1	**327-7250**	1	PLATE	
	11	1	**255-2918**	1	SUPPORT AS	
C	12	1	**324-4098**	1	COVER AS	
	13	1	**289-2492**	1	CLAMP-MUFFLER	
	14	1	**310-9760**	1	PLATE AS	
	15	1	**310-9504**	1	PLATE	
C	16	2	**324-4100**	1	BRACKET AS	
	17	1	**8X-1386**	1	SPACER (12.2X23X22-MM THK)	
	18	1,2	**4L-9337**	3	BOLT (3/8-16X1.5-IN)	
	19	1	**5P-1076**	4	WASHER-HARD (13.5X30X4-MM THK)	
	20	1,2	**5P-4115**	8	WASHER-HARD (7.2X19X2-MM THK)	
	21	1,2	**5P-4116**	5	WASHER-HARD (8.8X20.5X2-MM THK)	
	22	2	**100-3237**	1	GROMMET	
M	23	2	**6V-7357**	1	BOLT (M6X1X25-MM)	
CM	24	1	**5C-9553**	4	BOLT (M6X1X16-MM)	
	25	1,2	**7X-0289**	3	BOLT (3/8-16X1.875-IN)	
	26	1	**8T-2501**	7	BOLT (3/8-16X2-IN)	
	27	2	**8T-4121**	1	WASHER-HARD (11X21X2.5-MM THK)	
M	28	2	**8T-4136**	1	BOLT (M10X1.5X25-MM)	
CM	29	2	**8T-4189**	2	BOLT (M8X1.25X20-MM)	
	30	2	**8T-4223**	2	WASHER-HARD (13.5X25.5X3-MM THK)	
C	31	1	**9X-8256**	4	WASHER (6.6X12X2-MM THK)	
M	32	1	**8T-4244**	8	NUT (M12X1.75-THD)	
	33	1,2	**8T-4896**	4	WASHER-HARD (10.2X18.5X2.5-MM THK)	
M	34	1,2	**8T-4956**	6	BOLT (M12X1.75X35-MM)	
M	35	1	**8T-4908**	3	BOLT (M8X1.25X25-MM)	
M	36	1	**8T-4138**	7	BOLT (M6X1X20-MM)	
	37	2	**5I-8748**	1	SPACER (11X18X5-MM THK)	
	38	2	**8T-1887**	1	CLIP (SLOT)	
	39	2	**8T-1888**	1	CLIP (TAB)	

C-CHANGE FROM PREVIOUS TYPE
M-METRIC PART

222-8255 **MUFFLER GP** *(contd.)* **i03915138**

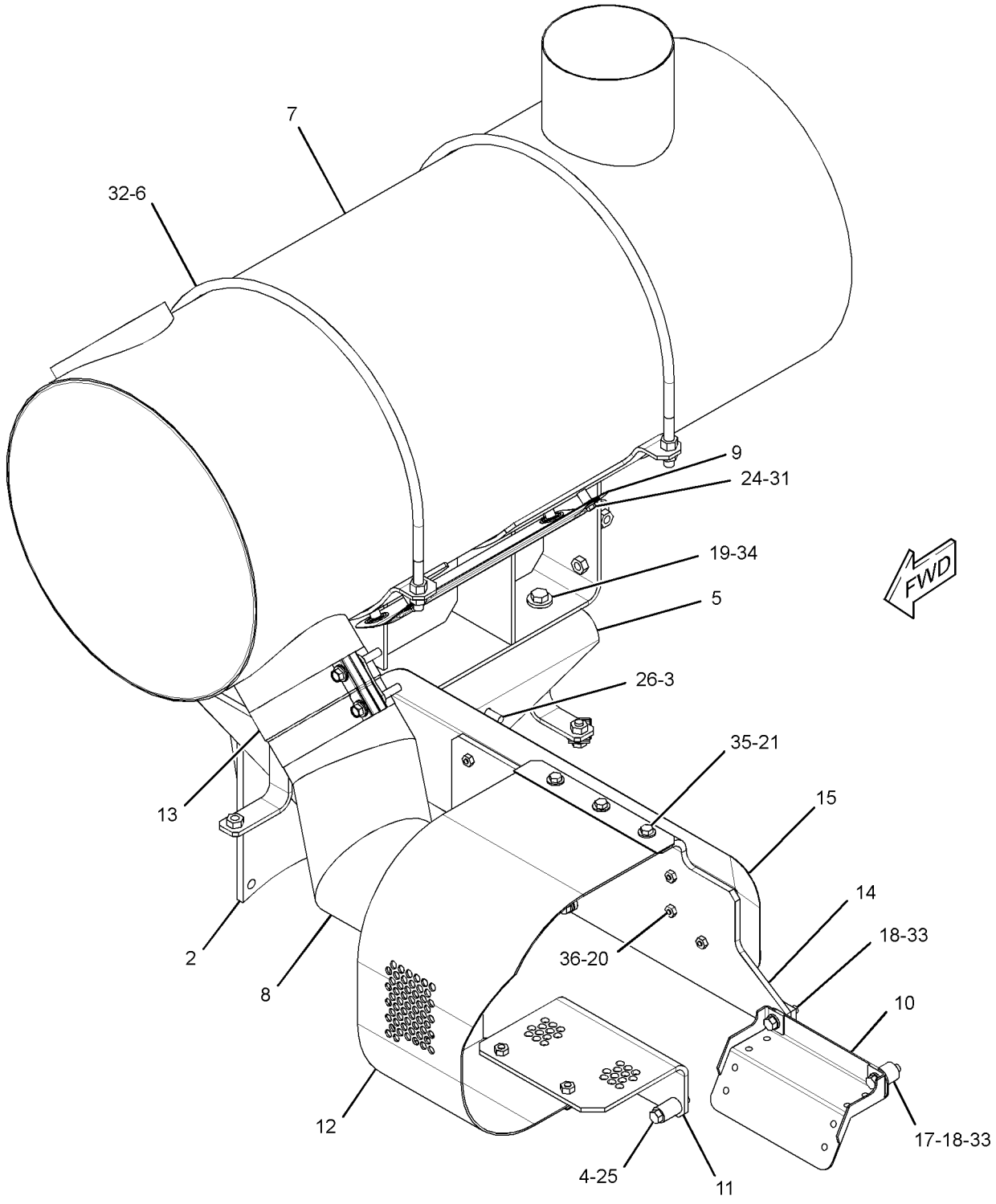

GRAPHIC #1 g02174331

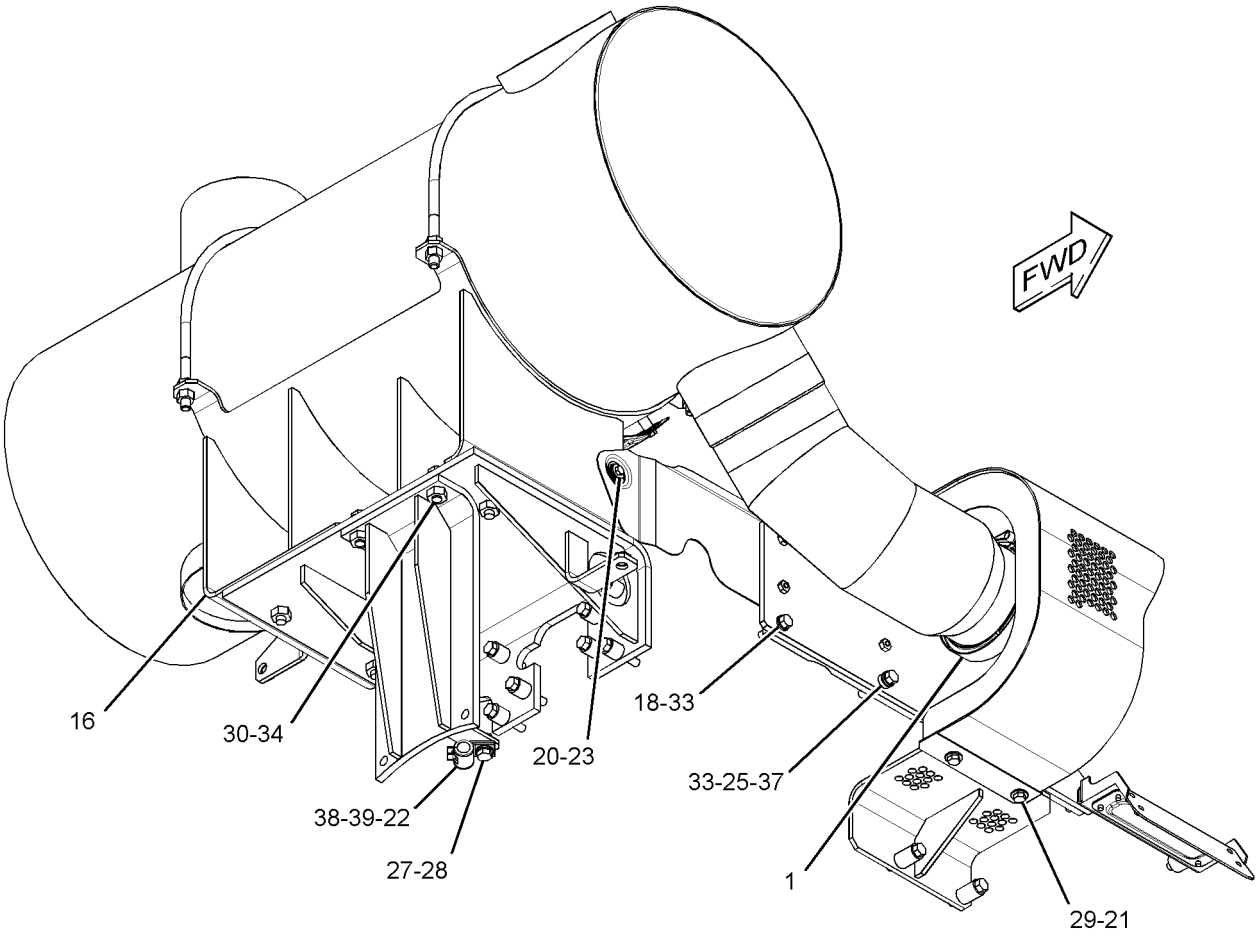

GRAPHIC #2 **<END>** g02174334

AIR INLET AND EXHAUST SYSTEM

220-6060 TURBOCHARGER GP

S/N: RHX7868-UP
WATER COOLED CENTER SECTION
PART OF 286-9798 ENGINE AR-COMPLETE
FOR USE WITH ACERT LOW HORSE POWER APPLICATION

SMCS-1052, 1053 **i03816330**

NOTE	REF NO	GRAPHIC REF	PART NUMBER	QTY	PART NAME 1 2 3 4 5 6 (PRODUCT LEVEL)	SEE PAGE
	1	1	**1S-4295**	1	GASKET (TURBOCHARGER)	
	2	1	**2N-2766**	4	LOCKNUT (3/8-16-THD)	
CYR	3	1	**296-7635**	1	TURBOCHARGER GP	127

C-CHANGE FROM PREVIOUS TYPE
R-REMFG PART MAY BE AVAILABLE
Y-SEPARATE ILLUSTRATION

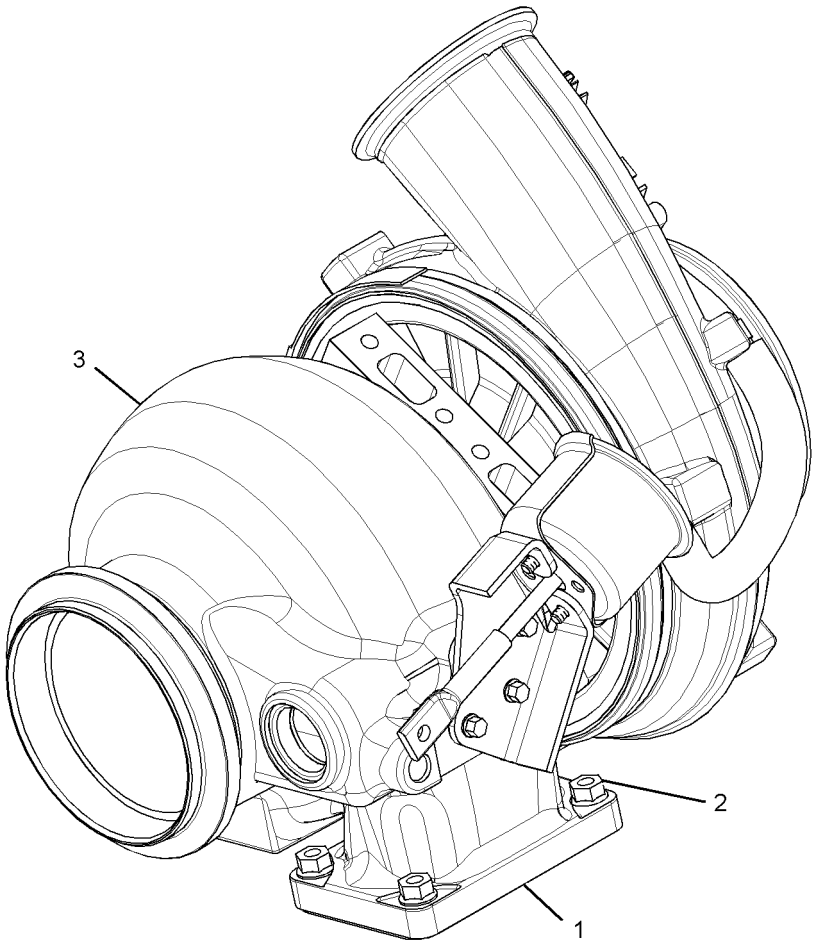

GRAPHIC #1 **<END>** g01697714

AIR INLET AND EXHAUST SYSTEM

296-7635 TURBOCHARGER GP*R

S/N: RHX7868-UP

PART OF 220-6060 TURBOCHARGER GP

SMCS-1052, 1053 **i02902548**

NOTE	REF NO	GRAPHIC REF	PART NUMBER	QTY	PART NAME 1 2 3 4 5 6 (PRODUCT LEVEL)	SEE PAGE
	1	1	**9N-2038**	1	CLAMP AS-TURBINE	
		1	**7M-9918**	1	LOCKNUT (1/4-28-THD)	
	2	1	**161-6958**	1	CLIP-HOSE	
	3	1	**161-6963**	2	CLAMP	
	4	1	**268-2960**	1	CLAMP AS (COMPRESSOR)	
		1	**7M-9918**	1	LOCKNUT (1/4-28-THD)	
	5	1	**302-1410**	1	CARTRIDGE GP-TURBOCHARGER	
	6	1	**115-7087**	1	BOLT (M6X0.04X10.4-MM)	
E	7	1	**242-3360**		HOSE (40-CM)	
E	8	1	**258-4524**		SLEEVE (19-CM)	

E-ORDER BY THE CENTIMETER

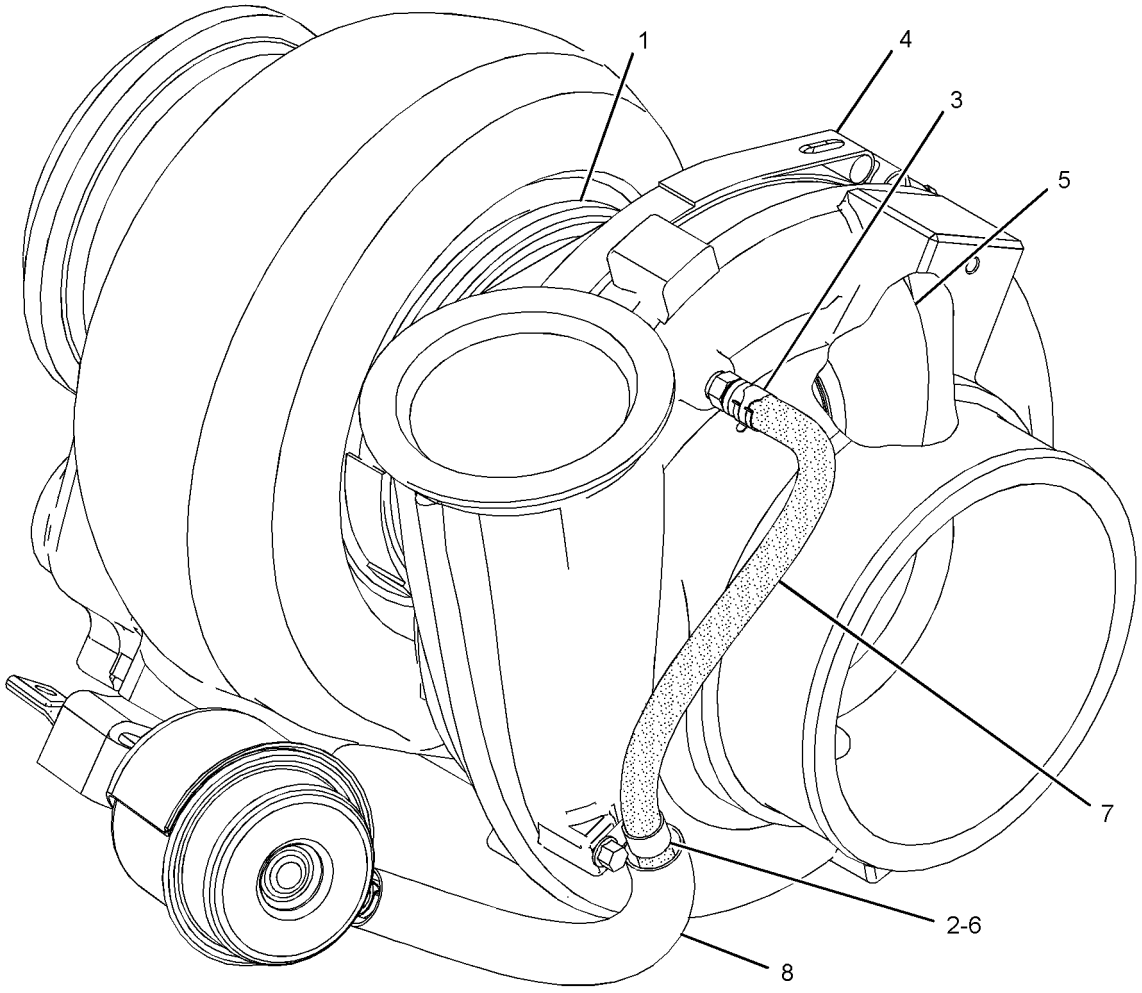

GRAPHIC #1 **<END>** g01445457

FUEL SYSTEM

220-2422 ADAPTER GP-FAST FILL FUEL

S/N: WAP1-UP

AN ATTACHMENT

SMCS-1710 **i02492639**

NOTE	REF NO	GRAPHIC REF	PART NUMBER	QTY	PART NAME 1 2 3 4 5 6 (PRODUCT LEVEL)	SEE PAGE
	1	1	**188-5095**	1	VENT AS	
	2	1	**221-7693**	1	VALVE (FAST FILL FUEL)	
	3	1	**5P-2618**	1	CONNECTOR	
	4	1	**8K-0968**	1	ELBOW	
	5	1	**217-5703**	1	RECEIVER (FAST FILL FUEL)	
	6	1	**9D-0630**	1	CAP-DUST	
	7	1	**220-2421**	1	HOSE AS	
	8	1	**1H-8128**	1	SEAL-O-RING	
	9	1	**5H-6734**	1	SEAL-O-RING	
	10	1	**1J-9671**	2	SEAL-O-RING	
	11	1	**8T-4121**	12	WASHER-HARD (11X21X2.5-MM THK)	
M	12	1	**105-3484**	6	BOLT-SOCKET HEAD (M10X1.5X25-MM)	
M	13	1	**8T-4136**	6	BOLT (M10X1.5X25-MM)	
	14	1	**193-1598**	1	ELBOW	
M	15	1	**8T-4648**	4	BOLT (M12X1.75X70-MM)	
	16	1	**8T-4223**	4	WASHER-HARD (13.5X25.5X3-MM THK)	
	17	1	**4J-0527**	1	SEAL-O-RING	

M-METRIC PART

220-2422 **ADAPTER GP-FAST FILL FUEL** *(contd.)* **i02492639**

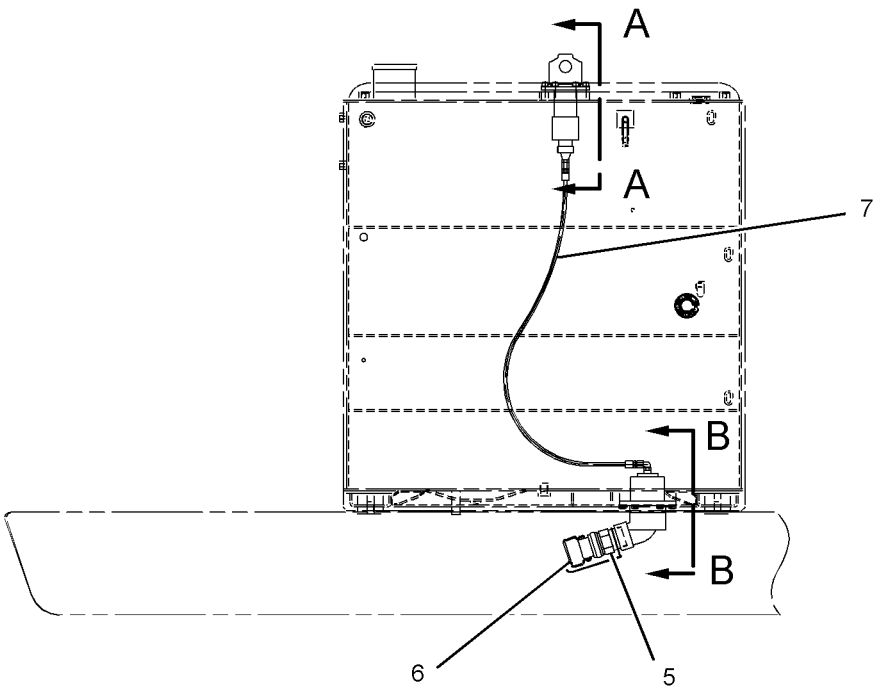

LEFT SIDE VIEW

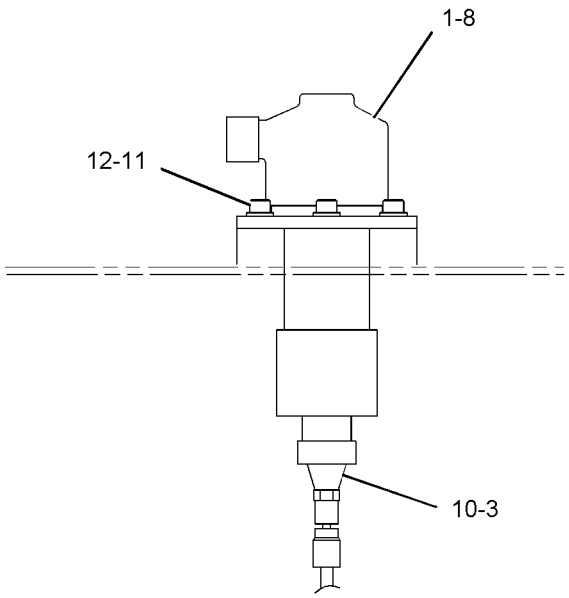

VIEW A-A

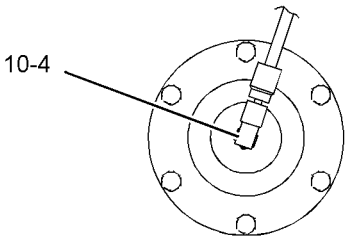

VIEW C-C

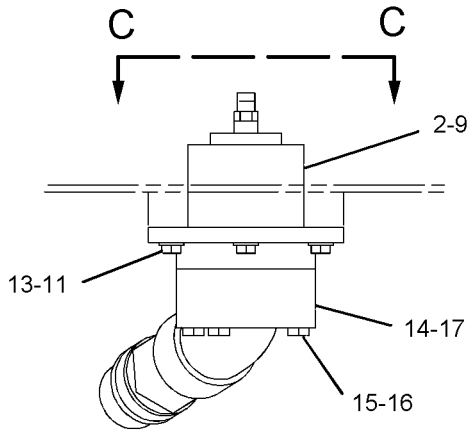

VIEW B-B

GRAPHIC #1 **<END>** g01130300

FUEL SYSTEM

324-4132 COOLER GP-FUEL

S/N: WAP1-UP

PART OF 294-1237 CHASSIS AR

SMCS-1712 **i03903850**

NOTE	REF NO	GRAPHIC REF	PART NUMBER	QTY	PART NAME 1 2 3 4 5 6 (PRODUCT LEVEL)	SEE PAGE
	1	1	**129-5429**	1	CORE AS-FUEL COOLER	
	2	1	**141-1060**	8	MOUNT-ISOLATION	
	3	1	**205-6833**	2	SUPPORT AS	
	4	1	**324-4133**	1	SUPPORT AS	
	5	1	**134-3196**	4	WASHER (10.2X39.6X2.3-MM THK)	
	6	1	**8T-4121**	8	WASHER-HARD (11X21X2.5-MM THK)	
M	7	1	**8T-4136**	8	BOLT (M10X1.5X25-MM)	
	8	1	**8T-8915**	4	BOLT (3/8-16X3.25-IN)	

M-METRIC PART

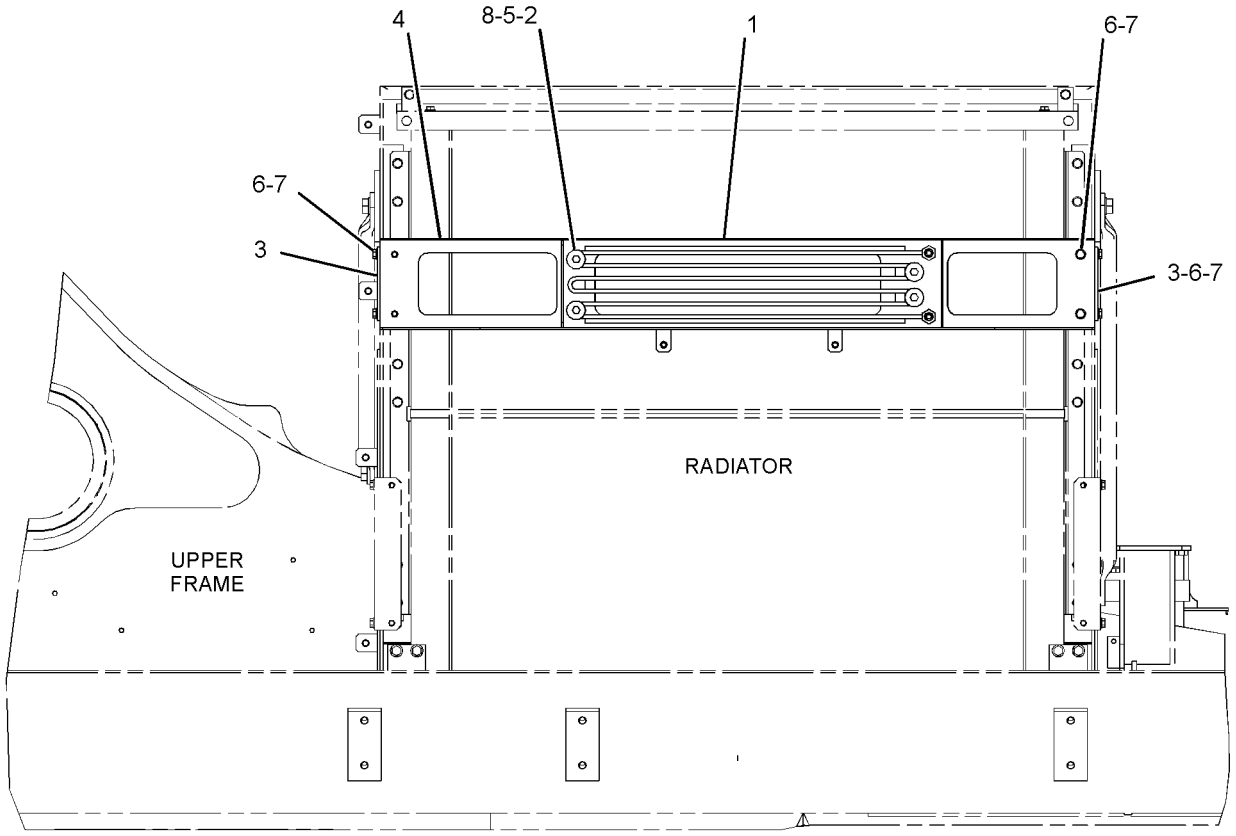

LEFT SIDE VIEW

GRAPHIC #1 **<END>** g02157200

222-8323 FASTENER GP-FUEL LINES

S/N: WAP1-UP

PART OF 310-9678 INSTALLATION AR-ENGINE

SMCS-1252, 1274 **i04016309**

NOTE	REF NO	GRAPHIC REF	PART NUMBER	QTY	PART NAME 1 2 3 4 5 6 (PRODUCT LEVEL)	SEE PAGE
	1	1	**3S-2093**	1	STRAP-CABLE	
	2	1	**171-9075**	1	SUPPORT AS	
	3	1	**171-9079**	2	SUPPORT AS	
	4	1	**275-1442**	4	CLIP (TAB)	
	5	1	**275-1443**	4	CLIP (SLOT)	
	6	1	**327-7248**	4	CUSHION	
	7	1	**1M-3381**	1	SPACER (0.438X0.75X1-IN THK)	
	8	1	**8T-4121**	12	WASHER-HARD (11X21X2.5-MM THK)	
M	9	1	**8T-4136**	5	BOLT (M10X1.5X25-MM)	
M	10	1	**8T-4137**	4	BOLT (M10X1.5X20-MM)	
M	11	1	**8T-4185**	1	BOLT (M10X1.5X50-MM)	
M	12	1	**8T-4196**	2	BOLT (M10X1.5X35-MM)	

M-METRIC PART

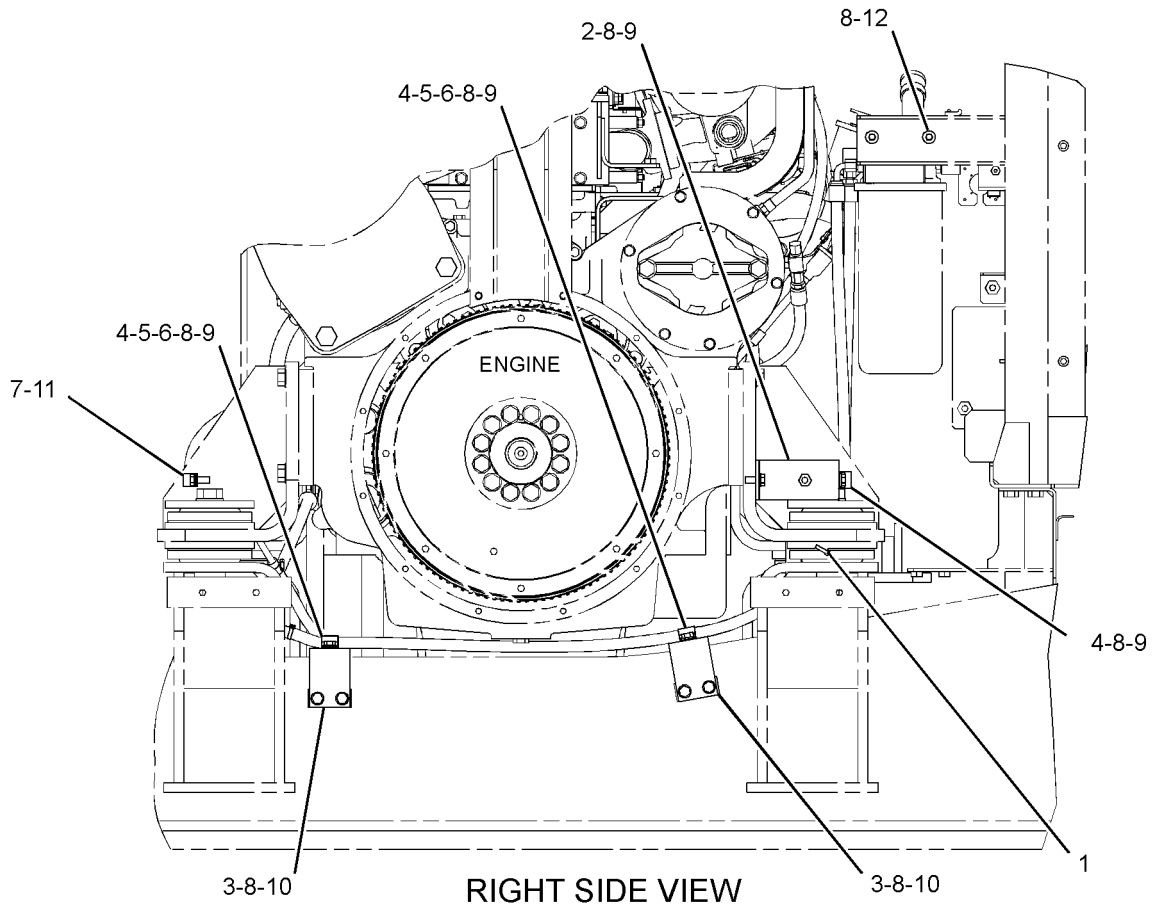

GRAPHIC #1 **<END>** g02187374

FUEL SYSTEM

307-8145 FILTER & LINES GP-FUEL

S/N: WAP1-UP

PART OF 294-1237 CHASSIS AR

SMCS-1261, 1274 **i04027741**

NOTE	REF NO	GRAPHIC REF	PART NUMBER	QTY	PART NAME 1 2 3 4 5 6 (PRODUCT LEVEL)	SEE PAGE
	1	2	**4I-0379**	1	VALVE-MANUAL (DRAIN, FUEL TANK)	
	2	3	**4I-7889**	1	SPACER (11X25X45-MM THK)	
	3	2	**8T-9655**	6	MOUNT-ISOLATION	
	4	2	**003-7764**	2	END-HOSE	
	5	2	**095-1386**	3	CLAMP-HOSE	
	6	2	**156-2525**	1	VALVE GP-SHUTOFF	
	7	3	**170-3026**	2	GROMMET	
	8	1	**184-8347**	1	GUARD	
	9	2	**190-8970**	1	PUMP AS-FUEL PRIMING	
	10	2	**191-1782**	1	SPACER (8.5X12.7X38.2-MM THK)	
	11	2	**191-1783**	2	SPACER (8.5X12.7X87.3-MM THK)	
	12	2	**203-5105**	1	SHEET AS	
Y	13	2	*212-9580*	1	FILTER GP-WATER SEP & FUEL	138
	14	2	**264-9971**	1	HOSE	
I	15	2	**307-8141**	1	HOSE AS	
I	16	2	**307-8142**	1	HOSE AS	
	17	3	*339-7151*	2	ELBOW AS	
					(EACH INCLUDES)	
		3	**6V-8398**	1	SEAL-O-RING	
		3	**339-7152**	1	ELBOW	
I	18	3	**339-7153**	1	HOSE AS	
I	19	2	**339-7154**	1	HOSE AS	
I	20	3	**339-7155**	1	HOSE AS	
	21	3	*148-8444*	1	TEE AS-SWIVEL	
		3	**6V-8398**	2	SEAL-O-RING	
		3	**6V-9837**	1	TEE-SWIVEL	
	22	3	**149-7738**	2	CLIP	
	23	3	*150-3072*	1	PLUG AS	
		3	**6V-8398**	1	SEAL-O-RING	
		3	**6V-9509**	1	PLUG (13/16-16-THD)	
	24	2	*164-5619*	2	PLUG AS	
					(EACH INCLUDES)	
		2	**2M-9780**	1	SEAL-O-RING	
		2	**9S-8006**	1	PLUG-O-RING	
	25	3	**228-2775**	8	CLIP	
	26	2	**2M-9780**	2	SEAL-O-RING	
	27	2	**2P-1292**	1	CONNECTOR-PORT	
	28	2	**2P-7636**	1	CONNECTOR	
	29	2	**3K-0360**	3	SEAL-O-RING	
	30	3	**4D-7388**	4	CLIP	
	31	2,3	**5I-3876**	4	GROMMET	
	32	2,3	**6D-1641**	2	CLIP	
	33	2,3	**6D-4244**	11	CLIP	
	34	2,3	**6D-4247**	11	CLIP	
	35	2,3	**6D-4636**	5	CLIP	
	36	2	**6V-7420**	1	ADAPTER	
	37	2	**7X-0579**	3	WASHER-HARD (8.8X25.5X2-MM THK)	
M	38	2	**7X-2539**	2	BOLT (M8X1.25X110-MM)	
	39	2	**8T-0119**	1	ELBOW	
	40	2,3	**8T-4121**	47	WASHER-HARD (11X21X2.5-MM THK)	
M	41	2,3	**8T-4137**	40	BOLT (M10X1.5X20-MM)	
M	42	2	**8T-4191**	3	BOLT (M10X1.5X16-MM)	
M	43	3	**8T-4195**	3	BOLT (M10X1.5X30-MM)	
M	44	3	**8T-5005**	1	BOLT (M10X1.5X70-MM)	
M	45	2	**8T-6869**	1	BOLT (M8X1.25X60-MM)	
	46	2	**9M-8406**	3	CLIP	

307-8145 **FILTER & LINES GP-FUEL** *(contd.)* **i04027741**

NOTE	REF NO	GRAPHIC REF	PART NUMBER	QTY	PART NAME 1 2 3 4 5 6 (PRODUCT LEVEL)	SEE PAGE
E	47	2	**5P-1442**		HOSE (38-CM EACH)	

E-ORDER BY THE CENTIMETER
I-REFER TO HYDRAULIC INFORMATION SYSTEM
M-METRIC PART
Y-SEPARATE ILLUSTRATION

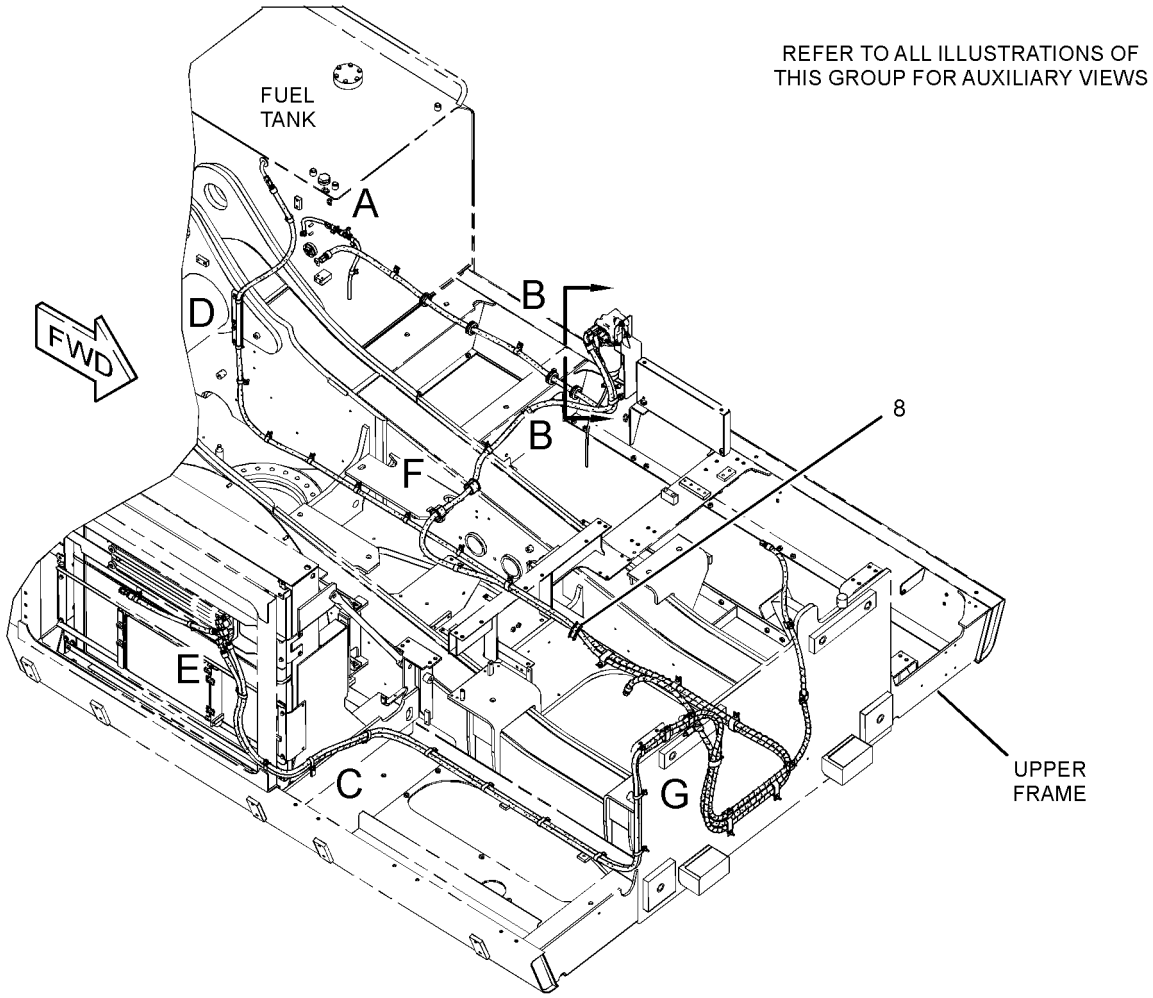

GRAPHIC #1 g02159793

307-8145 **FILTER & LINES GP-FUEL** *(contd.)* **i04027741**

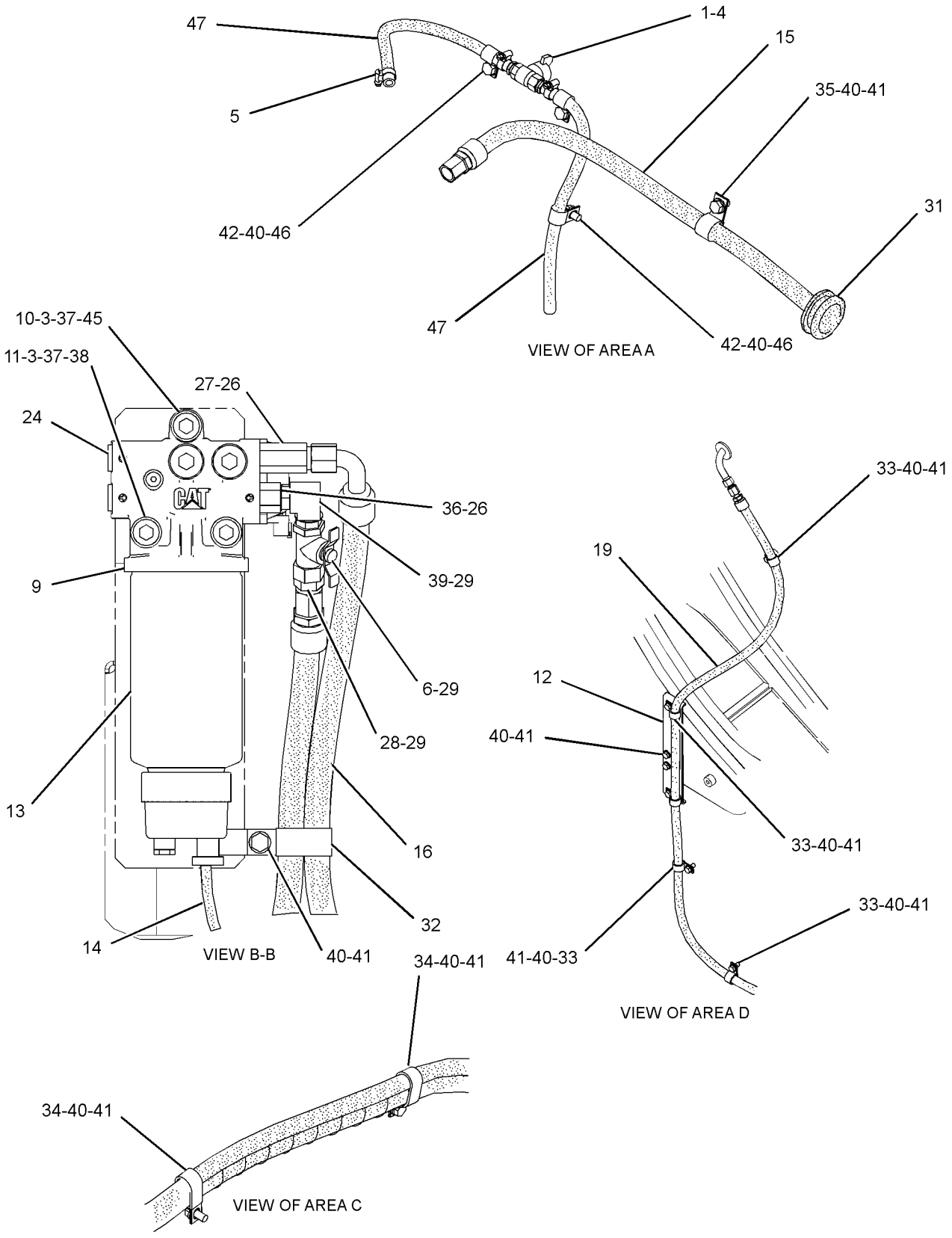

GRAPHIC #2 g02161119

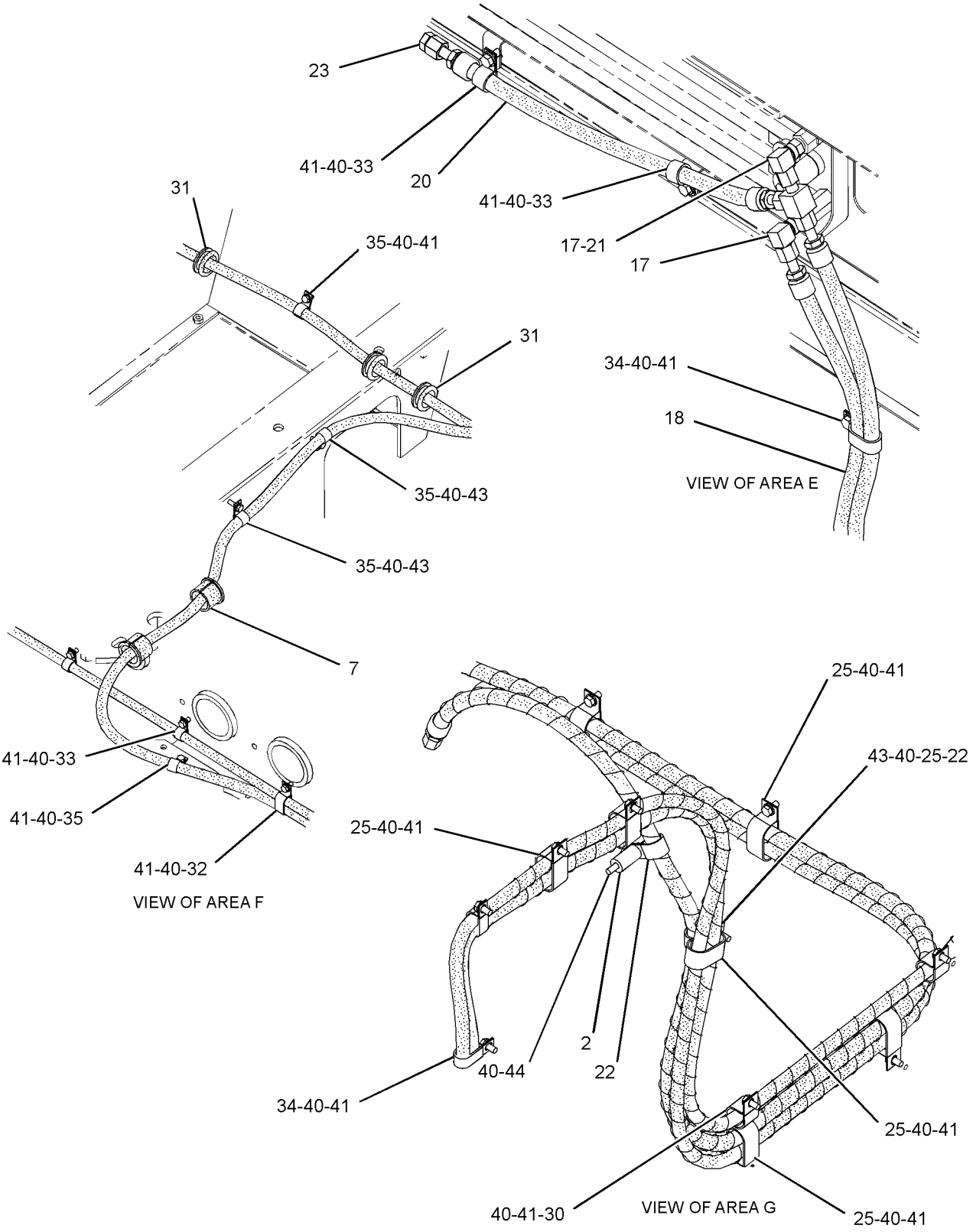

GRAPHIC #3 **<END>** g02159858

FUEL SYSTEM

356-1879 FILTER GP-FUEL

S/N: RHX9087-UP

PART OF 286-9798 ENGINE AR-COMPLETE

SMCS-1261 **i04015820**

NOTE	REF NO	GRAPHIC REF	PART NUMBER	QTY	PART NAME 1 2 3 4 5 6 (PRODUCT LEVEL)	SEE PAGE
	1	1	**6N-1127**	1	SHIELD	
	2	1	**6V-0852**	1	CAP-DUST	
Y	3	1	**139-6873**	1	VALVE GP-FUEL BYPASS (FILTER)	155
Y	4	1	*183-2824*	1	PUMP GP-FUEL PRIMING (MANUAL)	146
Y	5	1	*234-5013*	1	SENSOR GP-TEMPERATURE (FUEL)	252
	6	1	**237-9311**	1	BASE AS	
		1	**237-9323**	1	STUD	
M	7	1	**6V-3822**	2	BOLT (M10X1.5X35-MM)	
Y	8	1	**275-1253**	1	SWITCH GP-PRESSURE (DIFFERENTIAL)	264
Y	9	1	*276-9067*	1	SENSOR GP-PRESSURE (ENGINE OIL)	245
	10	1	**6V-5839**	2	WASHER (11X21X2.5-MM THK)	
	11	1	**7F-9090**	2	SCREW-DRIVE (8X0.375-IN)	
	12	1	**134-6852**	1	CONNECTOR	
	13	1	*164-5567*	1	COUPLER AS-QUICK DISCONNECT (MALE)	
		1	**6V-3965**	1	FITTING (QUICK DISCONNECT)	
		1	**214-7568**	1	SEAL-O-RING	
	14	1	**1R-0755**	1	FILTER-FUEL (ADVANCED EFFICIENCY)	
	15	1	**238-5080**	1	SEAL-O-RING	
	16	1	**238-5081**	1	SEAL-O-RING	
	17	1	*307-2673*	1	PLUG AS	
		1	**9S-8005**	1	PLUG-O-RING	
		1	**238-5080**	1	SEAL-O-RING	
	18	1	*321-8671*	1	CONNECTOR AS	
		1	**030-8188**	1	CONNECTOR	
		1	**238-5080**	1	SEAL-O-RING	
	19	1	*330-9732*	1	ADAPTER AS	
		1	**5P-6944**	1	ADAPTER	
		1	**238-5080**	1	SEAL-O-RING	
	20	1	*335-3976*	1	ELBOW AS	
		1	**8T-0119**	1	ELBOW	
		1	**238-5080**	1	SEAL-O-RING	
	21	1	*353-5102*	1	FITTING AS-ELBOW	
		1	**005-4362**	1	ELBOW	
		1	**238-5080**	1	SEAL-O-RING	

M-METRIC PART
Y-SEPARATE ILLUSTRATION

356-1879 **FILTER GP-FUEL** *(contd.)* **i04015820**

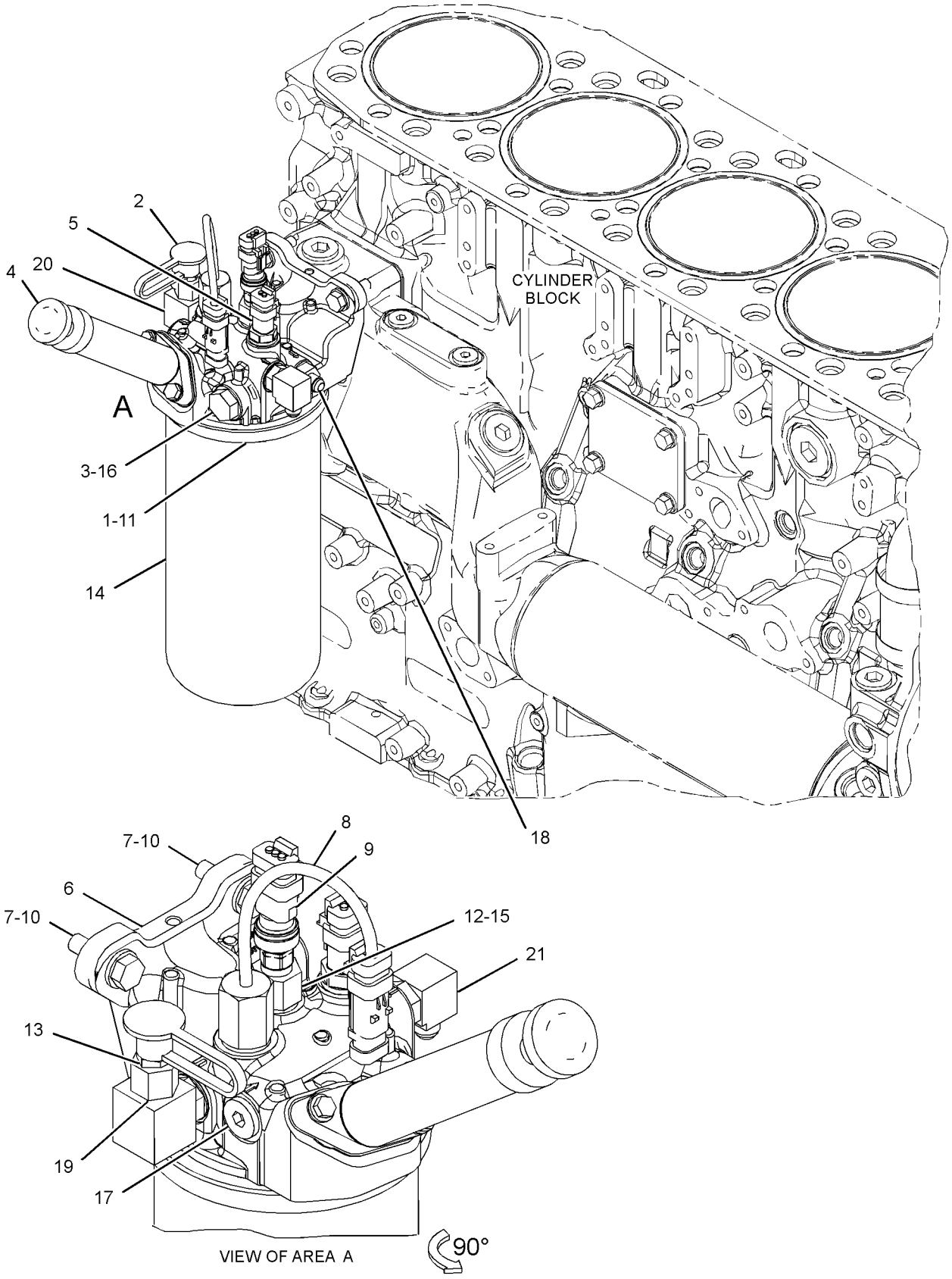

GRAPHIC #1 **<END>** g02190736

FUEL SYSTEM

212-9580 FILTER GP-WATER SEP & FUEL

S/N: WAP1-UP

PART OF 307-8145 FILTER & LINES GP-FUEL

SMCS-1261, 1263 **i03620163**

NOTE	REF NO	GRAPHIC REF	PART NUMBER	QTY	PART NAME 1 2 3 4 5 6 (PRODUCT LEVEL)	SEE PAGE
	1	1	**326-1643**	1	FILTER AS-WATER SEP & FUEL	
	1A	1	**220-8678**	1	SEAL-RING (FUEL FILTER)	
	2	1	**343-5527**	1	BOWL AS	
	2A	1	**3J-1907**	1	SEAL-O-RING	
	2B	1	**5F-9144**	1	SEAL-O-RING	
	2C	1	**8F-7219**	1	SEAL-O-RING	
	2D	1	**9S-8004**	1	PLUG-O-RING	

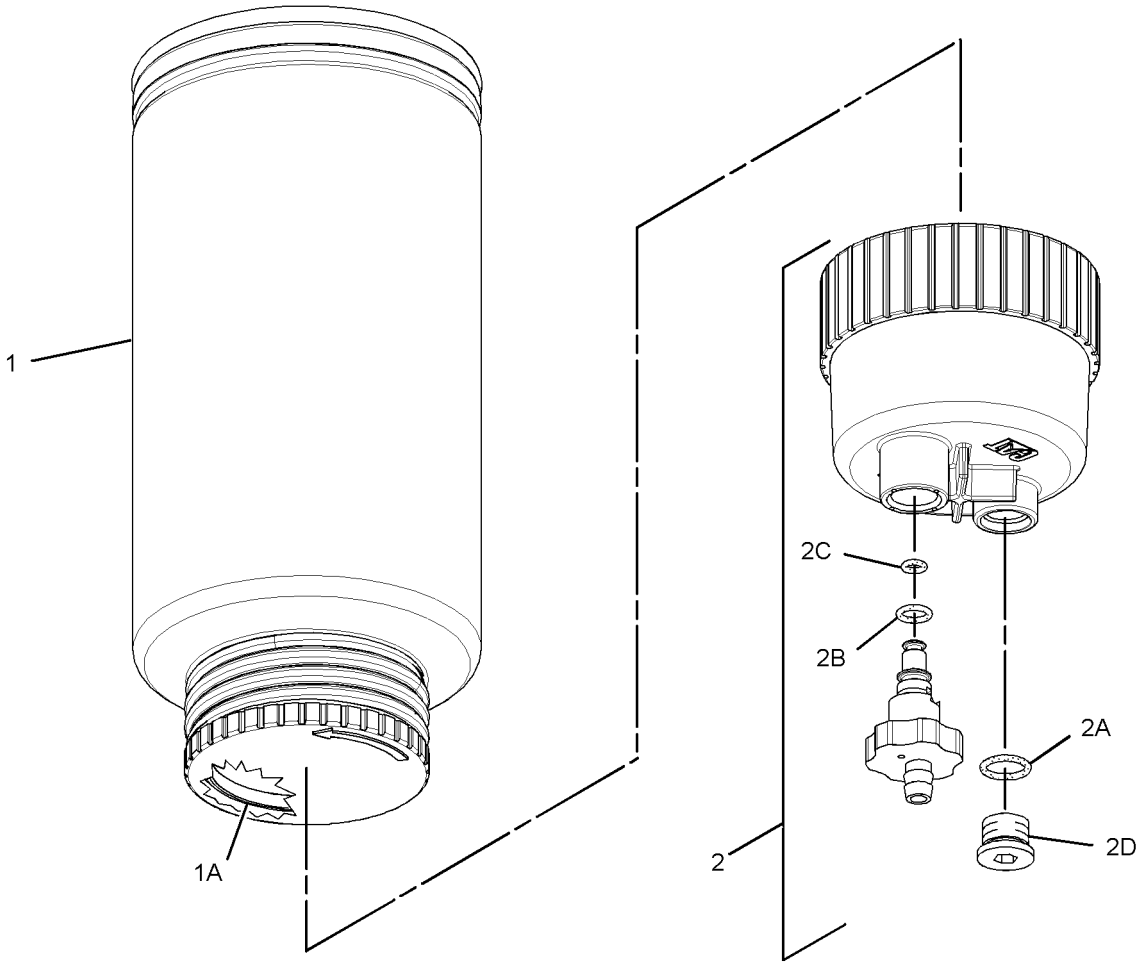

GRAPHIC #1 **<END>** g01944750

FUEL SYSTEM

246-4785 LINES GP-FUEL

S/N: RHX7868-UP

PART OF 286-9798 ENGINE AR-COMPLETE

SMCS-1274 **i03964849**

NOTE	REF NO	GRAPHIC REF	PART NUMBER	QTY	PART NAME 1 2 3 4 5 6 (PRODUCT LEVEL)	SEE PAGE
	1	1	**1M-3381**	1	SPACER (0.438X0.75X1-IN THK)	
C	2	1	**3S-2093**	3	STRAP-CABLE	
C	3	1	**5I-3190**	1	FITTING	
C	4	1	**6V-0852**	1	CAP-DUST	
C	5	1	**168-8974**	1	TUBE AS (FUEL SUPPLY)	
	6	1	*191-7805*	1	ELBOW AS	
		1	**030-7947**	1	ELBOW	
		1	**214-7568**	1	SEAL-O-RING	
CY	7	1	*193-7404*	1	MANIFOLD GP-FUEL	142
C	8	1	**204-1807**	1	BRACKET AS	
Y	9	1	**235-6387**	1	REGULATOR GP-FUEL PRESSURE	150
C	10	1	**341-0826**	1	BRACKET AS	
	11	1	**347-9361**	1	BRACKET AS	
	12	1	**0L-1571**	1	BOLT	
C	13	1	**0S-1591**	1	BOLT (3/8-16X1.5-IN)	
	14	1	**0S-1594**	3	BOLT (3/8-16X1-IN)	
C	15	1	**0S-1619**	2	BOLT (3/8-16X3-IN)	
C	16	1	*164-5567*	1	COUPLER AS-QUICK DISCONNECT (MALE)	
		1	**6V-3965**	1	FITTING (QUICK DISCONNECT)	
		1	**214-7568**	1	SEAL-O-RING	
	17	1	**1P-7625**	1	ELBOW	
	18	1	**238-5080**	1	SEAL-O-RING	
C	19	1	**2L-1701**	1	BOLT (5/8-18X1.5-IN)	
	20	1	*307-9615*	1	ADAPTER AS	
		1	**8M-0505**	1	CONNECTOR	
		1	**238-5080**	1	SEAL-O-RING	
C	21	1	*313-9614*	1	ADAPTER AS	
		1	**2R-6806**	1	CONNECTOR-O-RING	
		1	**214-7568**	1	SEAL-O-RING	
	22	1	*321-8671*	1	CONNECTOR AS	
		1	**030-8188**	1	CONNECTOR	
		1	**238-5080**	1	SEAL-O-RING	
	23	1	*353-5102*	1	FITTING-ELBOW	
		1	**005-4362**	1	ELBOW	
		1	**238-5080**	1	SEAL-O-RING	
	24	1	*353-5103*	1	ADAPTER AS	
		1	**030-7942**	1	ELBOW	
		1	**214-7568**	1	SEAL-O-RING	
	25	1	*353-5108*	1	ELBOW AS	
		1	**2P-7214**	1	ELBOW	
		1	**214-7568**	1	SEAL-O-RING	
C	26	1	*353-5111*	1	ADAPTER AS	
		1	**7D-9984**	1	ELBOW	
		1	**238-5080**	1	SEAL-O-RING	
C	27	1	**3E-4353**	3	WASHER-HARD (11X25X3-MM THK)	
C	28	1	**4P-7582**	1	CLIP	
C	29	1	**5M-2894**	6	WASHER-HARD (10.2X18.5X2.5-MM THK)	
C	30	1	**5P-8247**	1	WASHER-HARD (17X32X3.5-MM THK)	
M	31	1	**6V-1820**	1	BOLT (M10X1.5X30-MM)	
CM	32	1	**6V-4248**	1	BOLT (M10X1.5X25-MM)	
C	33	1	**7V-6571**	3	GROMMET	
M	34	1	**8T-0275**	2	BOLT (M6X1X50-MM)	
C	35	1	**8T-1889**	3	CLIP (SLOT)	
C	36	1	**8T-1890**	3	CLIP (TAB)	
	37	1	**9X-6458**	1	WASHER-HARD (10.2X22.5X3-MM THK)	
	38	1	**9X-8267**	2	WASHER (6.6X12X2-MM THK)	

246-4785 **LINES GP-FUEL** *(contd.)* **i03964849**

NOTE	REF NO	GRAPHIC REF	PART NUMBER	QTY	PART NAME 1 2 3 4 5 6 (PRODUCT LEVEL)	SEE PAGE
CI	39	1	**335-4225**	1	HOSE AS	
I	40	1	**245-7560**	1	HOSE AS	
I	41	1	**235-2470**	1	HOSE AS	
I	42	1	**237-2706**	1	HOSE AS	

C-CHANGE FROM PREVIOUS TYPE
I-REFER TO HYDRAULIC INFORMATION SYSTEM
M-METRIC PART
Y-SEPARATE ILLUSTRATION

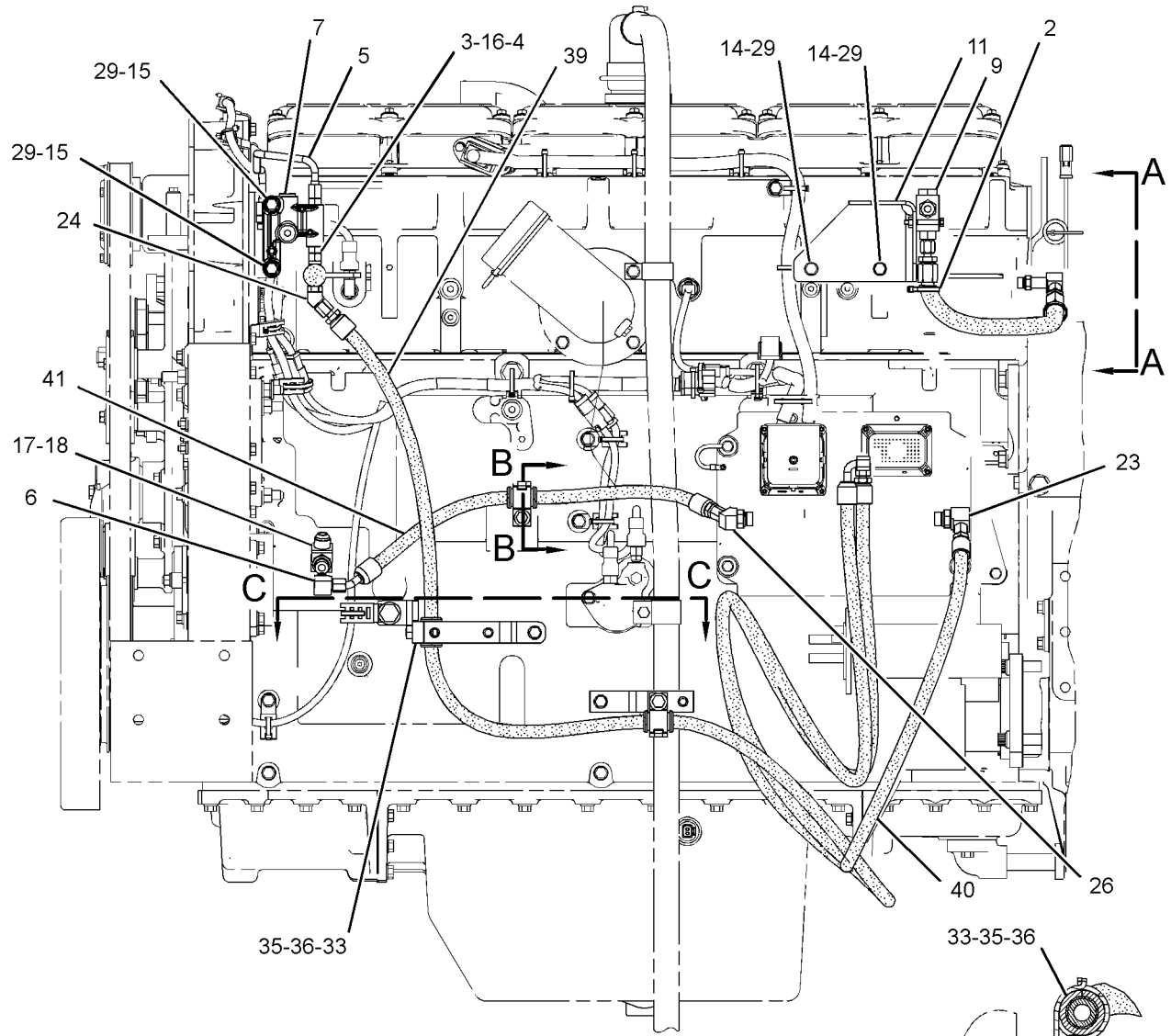

LEFT SIDE VIEW OF ENGINE

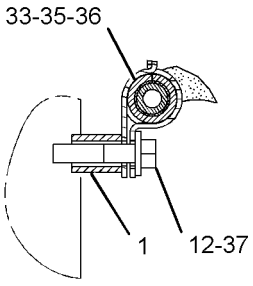

SECTION B-B

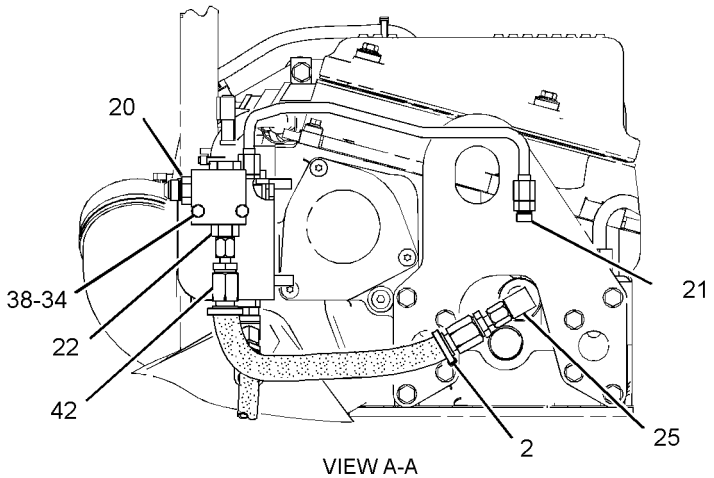

VIEW A-A

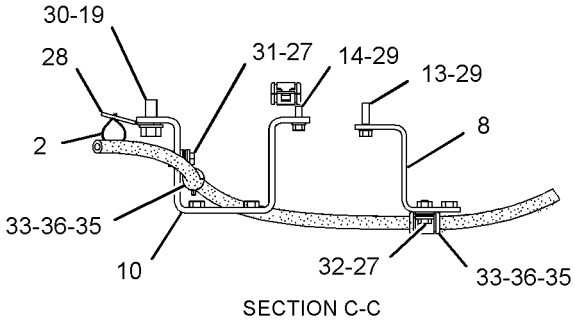

SECTION C-C

GRAPHIC #1 **<END>** g02176289

FUEL SYSTEM

193-7404 MANIFOLD GP-FUEL

S/N: RHX7868-UP

PART OF 246-4785 LINES GP-FUEL

SMCS-1274 **i04000713**

NOTE	REF NO	GRAPHIC REF	PART NUMBER	QTY	PART NAME 1 2 3 4 5 6 (PRODUCT LEVEL)	SEE PAGE
	1	1	**168-0300**	1	MANIFOLD	
	2	1	**313-9614**	2	ADAPTER AS	
					(EACH INCLUDES)	
		1	**2R-6806**	1	CONNECTOR-O-RING	
		1	**214-7568**	1	SEAL-O-RING	
	3	1	**353-5126**	2	PLUG AS	
					(EACH INCLUDES)	
		1	**6V-6609**	1	SEAL-O-RING	
		1	**9S-8005**	1	PLUG-O-RING	

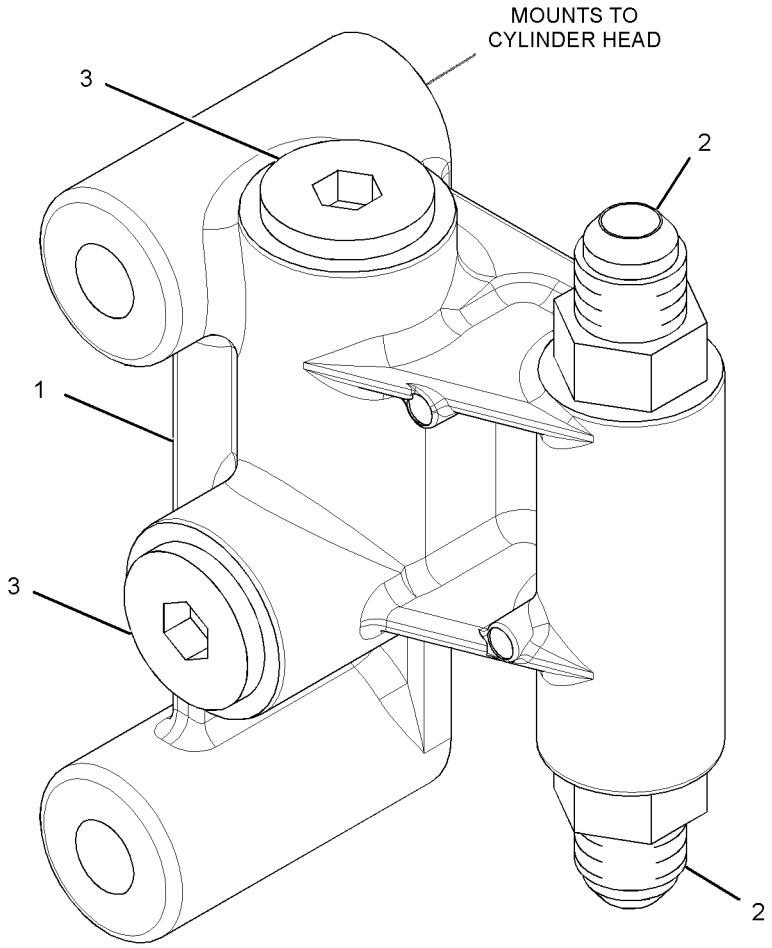

GRAPHIC #1 **<END>** g02184395

165-4962 PUMP & MOTOR GP-REFUELING

S/N: WAP1-UP
PART OF 245-5555 PUMP GP-FUEL TRANSFER
AN ATTACHMENT

SMCS-1295 **i01251933**

NOTE	REF NO	GRAPHIC REF	PART NUMBER	QTY	PART NAME 1 2 3 4 5 6 (PRODUCT LEVEL)	SEE PAGE
	1	1	**121-1038**	1	HOUSING-RECEPTACLE	
	2	1	**116-0128**	1	SEAL	
	3	1	**121-1039**	2	TERMINAL (MALE)	

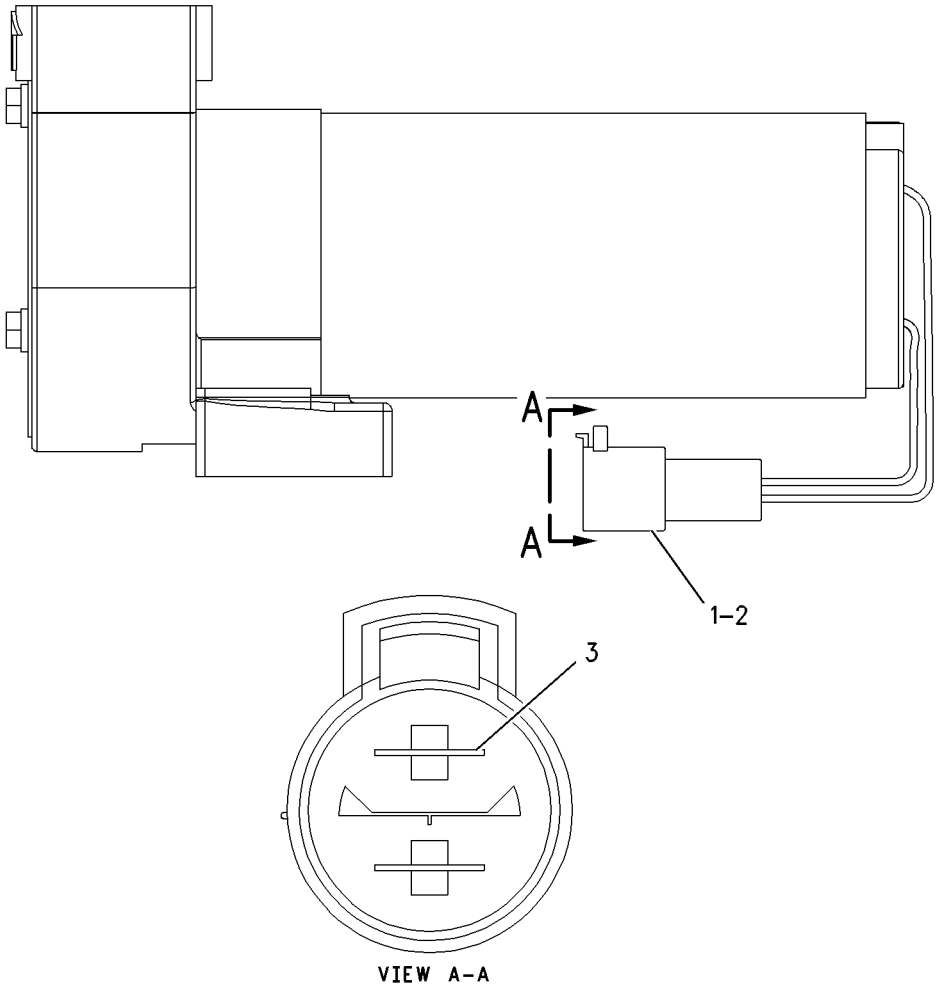

GRAPHIC #1 **<END>** g00676516

228-8218 PUMP AR-FUEL TRANSFER–REFUELING

S/N: WAP1-UP

AN ATTACHMENT

SMCS-1256 **i02226296**

NOTE	PART NUMBER	QTY	PART NAME 1 2 3 4 5 6 (PRODUCT LEVEL)	SEE PAGE
Y	*245-5555*	1	PUMP GP-FUEL TRANSFER	148
Y	*238-1636*	1	WIRING GP-REFUELING PUMP	327

Y-SEPARATE ILLUSTRATION

<END>

235-1402 PUMP GP-FUEL INJECTION

S/N: RHX7868-UP

PART OF 241-5933 ENGINE AR-CORE

SMCS-1251, 1290 **i02199972**

NOTE	REF NO	GRAPHIC REF	PART NUMBER	QTY	PART NAME 1 2 3 4 5 6 (PRODUCT LEVEL)	SEE PAGE
	1	1	**6I-0213**	1	CLAMP	
	2	1	**100-5072**	1	SPACER (9.8X15.85X37.6-MM THK)	
R	3	1	**253-0616**	1	INJECTOR GP-FUEL	
	3A	1	**230-3728**	1	SEAL-O-RING (32.99MM ID)	
	3B	1	**230-3775**	1	SEAL-O-RING (36.09MM ID)	
	3C	1	**9X-7317**	1	SEAL-O-RING (9.6MM ID)	
	4	1	**8S-9191**	1	BOLT (3/8-16X4-IN)	

R-REMFG PART MAY BE AVAILABLE

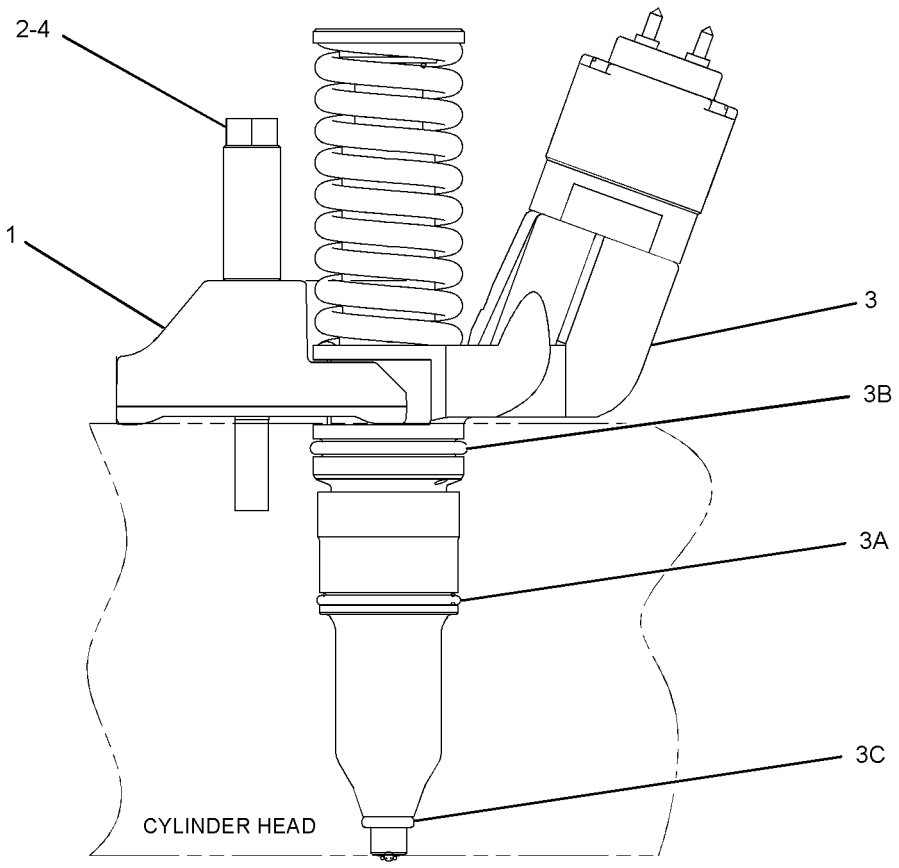

GRAPHIC #1 **<END>** g01111489

FUEL SYSTEM

183-2824 PUMP GP-FUEL PRIMING–MANUAL

S/N: RHX9087-UP

PART OF 356-1879 FILTER GP-FUEL

SMCS-1258 **i03899311**

NOTE	REF NO	GRAPHIC REF	PART NUMBER	QTY	PART NAME 1 2 3 4 5 6 (PRODUCT LEVEL)	SEE PAGE
	1	1	**9Y-8389**	1	GASKET (PRIMING PUMP/COVER)	
	2	1	**183-2823**	1	PUMP AS-FUEL PRIMING	
	3	1	**8T-4205**	1	WASHER-HARD (7.2X14.5X2-MM THK)	
	4	1	**8T-4224**	1	WASHER-HARD (8.8X16X2-MM THK)	
M	5	1	**8T-4971**	1	BOLT (M6X1X30-MM)	
M	6	1	**8T-7547**	1	BOLT (M8X1.25X30-MM)	

M-METRIC PART

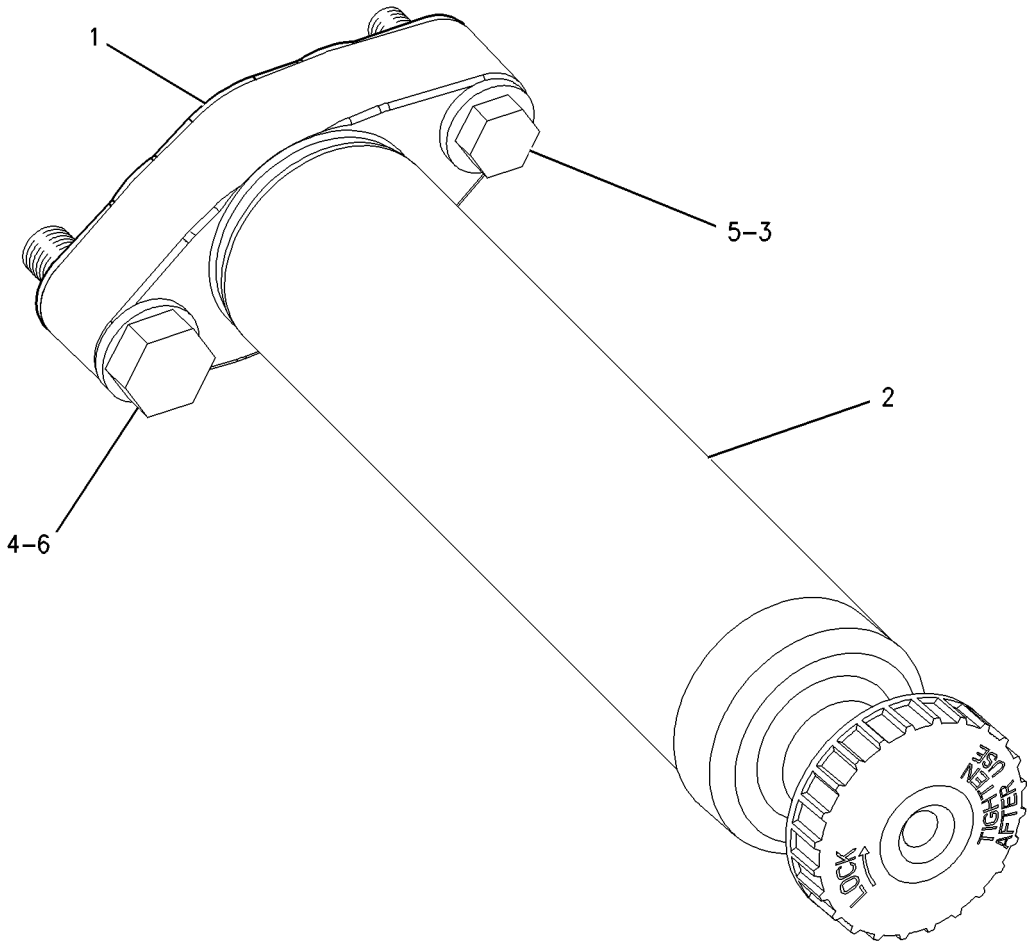

GRAPHIC #1 **<END>** g00671515

FUEL SYSTEM

100-4265 PUMP GP-FUEL TRANSFER

S/N: RHX7868-UP

PART OF 286-9798 ENGINE AR-COMPLETE

SMCS-1256 **i03905187**

NOTE	REF NO	GRAPHIC REF	PART NUMBER	QTY	PART NAME 1 2 3 4 5 6 (PRODUCT LEVEL)	SEE PAGE
	1	1	**103-4672**	1	COVER (HYDRAULIC PUMP DRIVE)	
JR	2	1	**316-6864**	1	PUMP GP-FUEL TRANSFER	
	3	1	**107-5769**	2	SEAL-O-RING	
	4	1	**1T-0765**	2	BOLT (3/8-16X1-IN)	
	5	1	**5M-2894**	2	WASHER-HARD (10.2X18.5X2.5-MM THK)	
	6	1	**6H-0406**	2	STUD-TAPERLOCK (3/8-16X1.968-IN)	
	7	1	**9S-8752**	2	NUT-FULL (3/8-16-THD)	
					AVAILABLE REPAIR KIT(S):	
J			**339-4983**	1	KIT-SPRING	

J-KIT MARKED J SERVICES PART MARKED J
R-REMFG PART MAY BE AVAILABLE

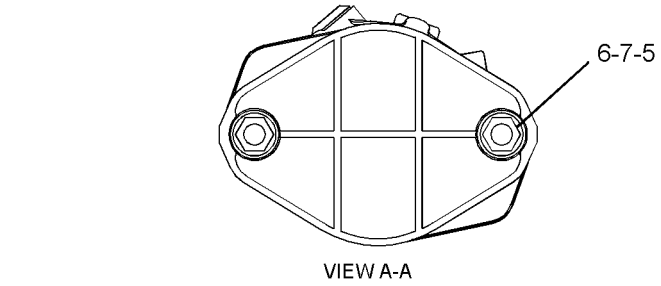

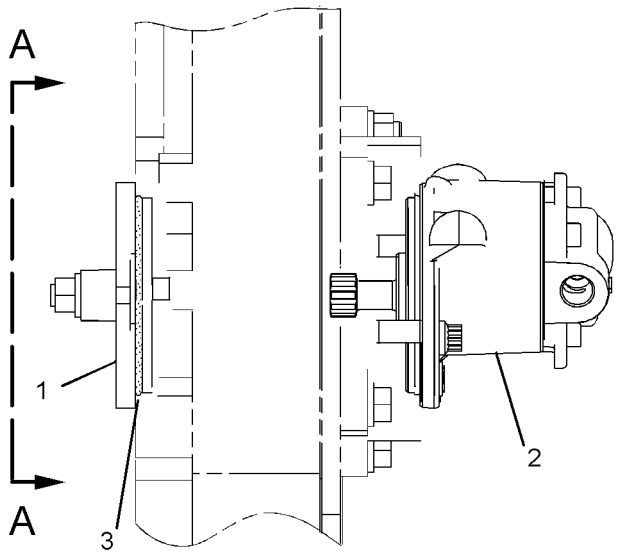

LEFT SIDE VIEW

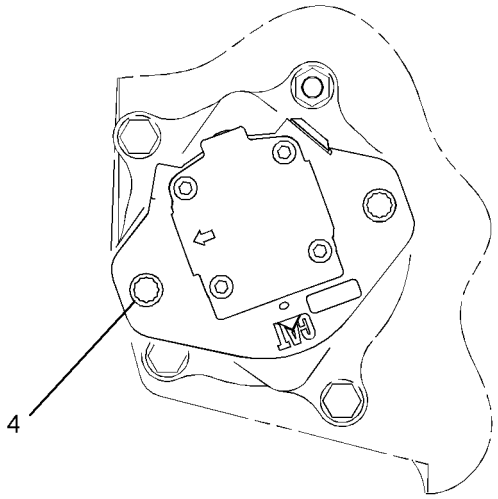

REAR VIEW

GRAPHIC #1 **<END>** g01261844

FUEL SYSTEM

245-5555 PUMP GP-FUEL TRANSFER–REFUELING

S/N: WAP1-UP

PART OF 228-8218 PUMP AR-FUEL TRANSFER

AN ATTACHMENT

SMCS-1256 **i03928849**

NOTE	REF NO	GRAPHIC REF	PART NUMBER	QTY	PART NAME 1 2 3 4 5 6 (PRODUCT LEVEL)	SEE PAGE
C	1	1	**312-2645**	1	SWITCH AS-LIQUID LEVEL (FUEL TANK SHUTOFF)	
		1	**2S-4078**	1	SEAL-O-RING	
		1	**186-3735**	2	PIN-CONNECTOR (16-GA TO 18-GA)	
		1	**243-4505**	1	RECEPTACLE AS-CONNECTOR (2-PIN)	
	2	1	**7K-1181**	1	STRAP-CABLE	
	3	1	**9M-7958**	4	CLAMP-HOSE	
	4	1	**229-1861**	3	CONNECTOR-HOSE	
	5	1	**120-5114**	1	FILM-INSTRUCTION (REFUELING PUMP)	
	6	1	**122-4021**	1	COVER	
M	7	1	**135-8573**	9	BOLT AS	
	8	1	**152-9560**	1	SHEET	
Y	9	1	**165-4962**	1	PUMP & MOTOR GP-REFUELING	143
	10	1	**176-0433**	1	COVER	
	11	1	**176-0436**	1	SHEET AS	
D		1	**5P-9205**		SEAL (0.1-M)	
	12	1	**229-1860**	1	STRAINER AS-FUEL	
	13	1	**221-2683**	1	SHEET AS	
	14	1	**221-2685**	1	SHEET AS	
	15	1	**228-8255**	1	BRACKET AS	
	16	1	**006-5707**	2	ELBOW-PIPE	
	17	1	**2D-0388**	1	GROMMET	
	18	1	**2S-1647**	2	GROMMET	
	19	1	**139-1398**	3	CLIP	
	20	1	**8T-4121**	5	WASHER-HARD (11X21X2.5-MM THK)	
M	21	1	**8T-4133**	1	NUT (M10X1.5-THD)	
M	22	1	**8T-4137**	2	BOLT (M10X1.5X20-MM)	
M	23	1	**8T-4186**	2	BOLT (M10X1.5X40-MM)	
E	24	1	**229-1857**		HOSE (400-CM)	
E	24A	1	**229-1857**		HOSE (240-CM)	

C-CHANGE FROM PREVIOUS TYPE
D-ORDER BY THE METER
E-ORDER BY THE CENTIMETER
M-METRIC PART
Y-SEPARATE ILLUSTRATION

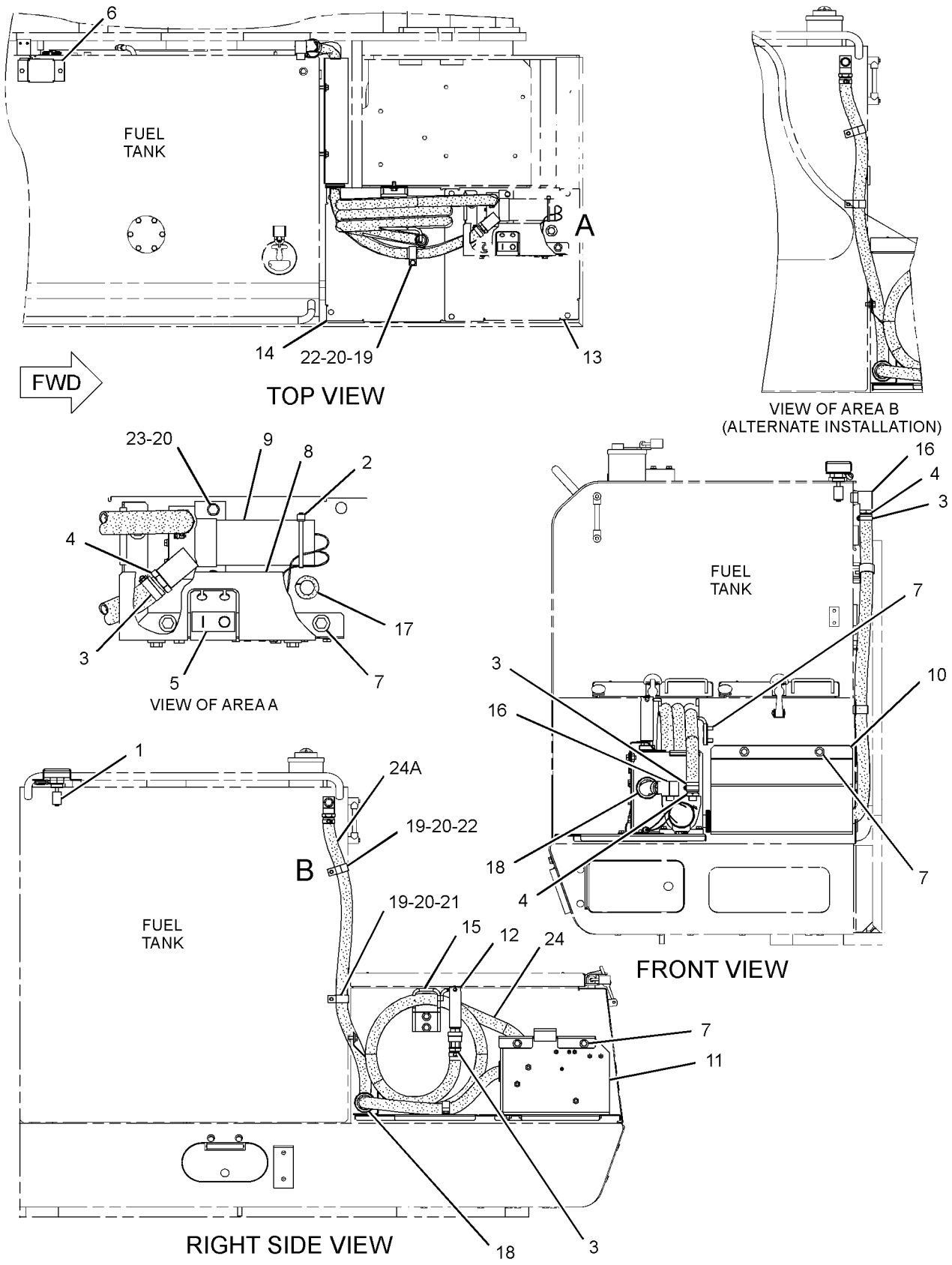

GRAPHIC #1 **<END>** g02165044

FUEL SYSTEM

235-6387 REGULATOR GP-FUEL PRESSURE

S/N: RHX7868-UP

PART OF 246-4785 LINES GP-FUEL

SMCS-1715 **i02449291**

NOTE	REF NO	GRAPHIC REF	PART NUMBER	QTY	PART NAME 1 2 3 4 5 6 (PRODUCT LEVEL)	SEE PAGE
Y	1	1	**281-2725**	1	VALVE GP-CHECK (FUEL)	154
	2	1	**6V-4589**	1	SEAL-O-RING	

Y-SEPARATE ILLUSTRATION

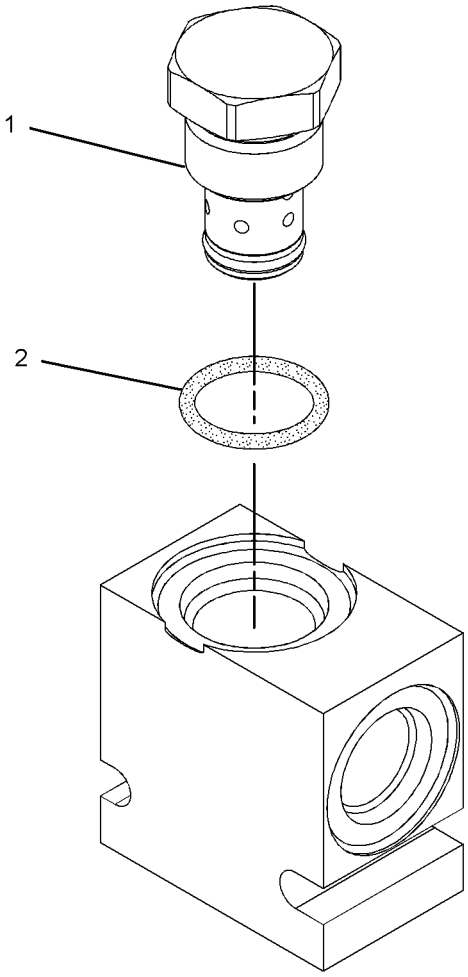

GRAPHIC #1 **<END>** g01126512

FUEL SYSTEM

313-8267 TANK & MTG GP-FUEL

S/N: WAP1-UP

PART OF 294-1237 CHASSIS AR

SMCS-1273 **i03903832**

NOTE	REF NO	GRAPHIC REF	PART NUMBER	QTY	PART NAME 1 2 3 4 5 6 (PRODUCT LEVEL)	SEE PAGE
	1	1	**246-2641**	1	PADLOCK GP	
		1	**5P-8500**	1	KEY	
	2	1	**9S-8178**	6	SPACER (0.891X1.625X1.5-IN THK)	
M	3	1	**135-8572**	2	BOLT AS	
Y	4	1	**313-8088**	1	TANK GP-FUEL	152
M	5	1	**8T-4187**	6	BOLT (M20X2.5X80-MM)	
B	6	1	**093-0407**	6	SHIM (0.4-MM THK)	
B	7	1	**093-0408**	6	SHIM (1-MM THK)	

B-USE AS REQUIRED
M-METRIC PART
Y-SEPARATE ILLUSTRATION

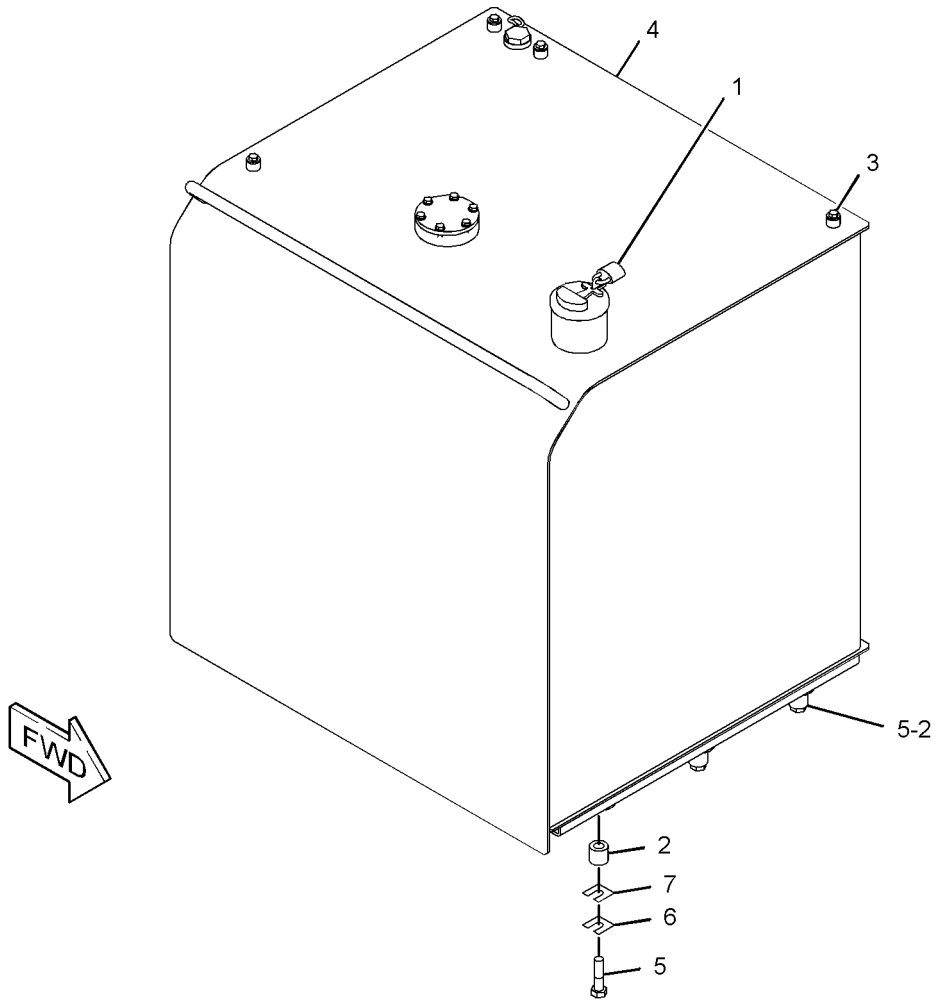

GRAPHIC #1 **<END>** g02157187

FUEL SYSTEM

313-8088 TANK GP-FUEL

S/N: WAP1-UP
1240-L (328-US GAL)
PART OF 313-8267 TANK & MTG GP-FUEL

SMCS-1273 **i04024912**

NOTE	REF NO	GRAPHIC REF	PART NUMBER	QTY	PART NAME 1 2 3 4 5 6 (PRODUCT LEVEL)	SEE PAGE
	1	1	**341-3684**	1	SENSOR AS-LIQUID LEVEL (FUEL)	
		1	**9X-3401**	2	PIN-CONNECTOR (16-GA TO 18-GA)	
		1	**102-8802**	1	KIT-RECEPTACLE (2-PIN)	
	2	1	**3E-2306**	1	VALVE AS (FUEL DRAIN)	
	3	1	**4I-0378**	1	GASKET-RUBBER	
	4	1	**5P-4924**	1	ELBOW	
	5	1	**7X-7700**	1	CAP AS-FILLER (FUEL TANK)	
		1	**9X-2205**	1	KIT-CAP FILTER (FUEL TANK)	
					(INCLUDES FILTER AS, SCREWS, GASKETS & VALVE	
		1	**9X-8600**	1	SEAL-O-RING	
	6	1	**061-9413**	1	CONNECTOR	
M	7	1	**135-8572**	2	BOLT AS	
	8	1	**164-3417**	1	COVER	
	9	1	**187-1679**	1	COVER	
J	10	1	**303-9933**	1	STRAINER AS-FUEL (FLOAT GAUGE)	
M	12	1	**095-0736**	5	SCREW-MACHINE (M5X0.8X10-MM)	
	13	1	**1H-8128**	1	SEAL-O-RING	
	14	1	**2S-4078**	1	SEAL-O-RING	
	15	1	**3B-0551**	1	PLUG-PIPE	
	16	1	**3J-1907**	1	SEAL-O-RING	
	17	1	**5H-6734**	1	SEAL-O-RING	
	18	1	**8T-0328**	5	WASHER-HARD (5.5X10X1-MM THK)	
	19	1	**8T-4121**	12	WASHER-HARD (11X21X2.5-MM THK)	
M	20	1	**8T-4136**	12	BOLT (M10X1.5X25-MM)	
	21	1	**9M-6522**	1	CONNECTOR	
	22	1	**9S-6130**	1	PLUG	
					AVAILABLE REPAIR KIT(S):	
J			**303-9937**		KIT-GAUGE (FUEL STRAINER)	
					(INCLUDES STOPPER & GAUGE)	

J-KIT MARKED J SERVICES PART(S) MARKED J
M-METRIC PART

313-8088 TANK GP-FUEL *(contd.)* **i04024912**

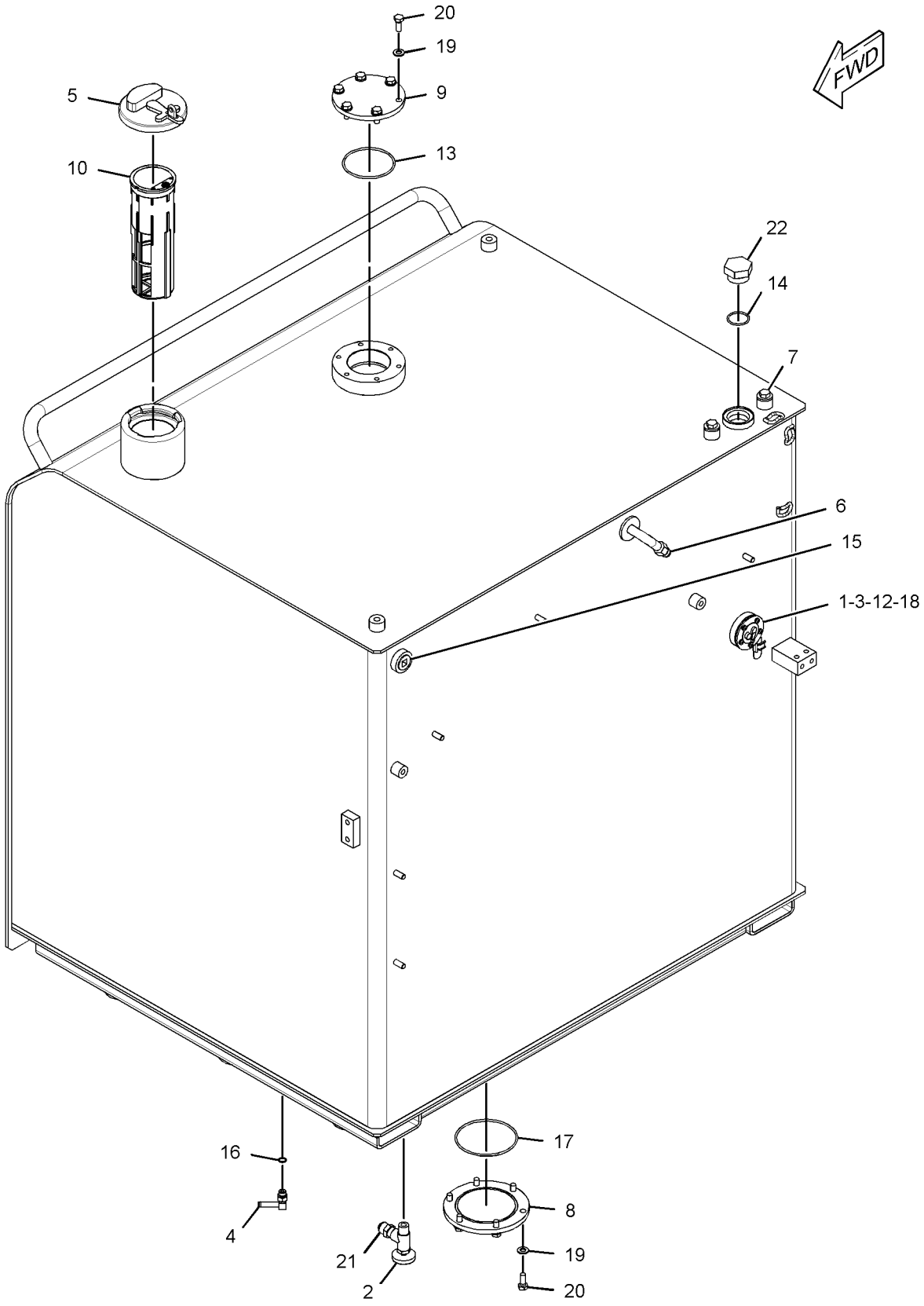

GRAPHIC #1 **<END>** g02157426

281-2725 VALVE GP-CHECK–FUEL

S/N: RHX7868-UP

PART OF 235-6387 REGULATOR GP-FUEL PRESSURE

SMCS-1251 **i02447467**

NOTE	REF NO	GRAPHIC REF	PART NUMBER	QTY	PART NAME 1 2 3 4 5 6 (PRODUCT LEVEL)	SEE PAGE
	1	1	**6V-6923**	1	RING-BACKUP	
	2	1	**033-6033**	1	SEAL-O-RING	

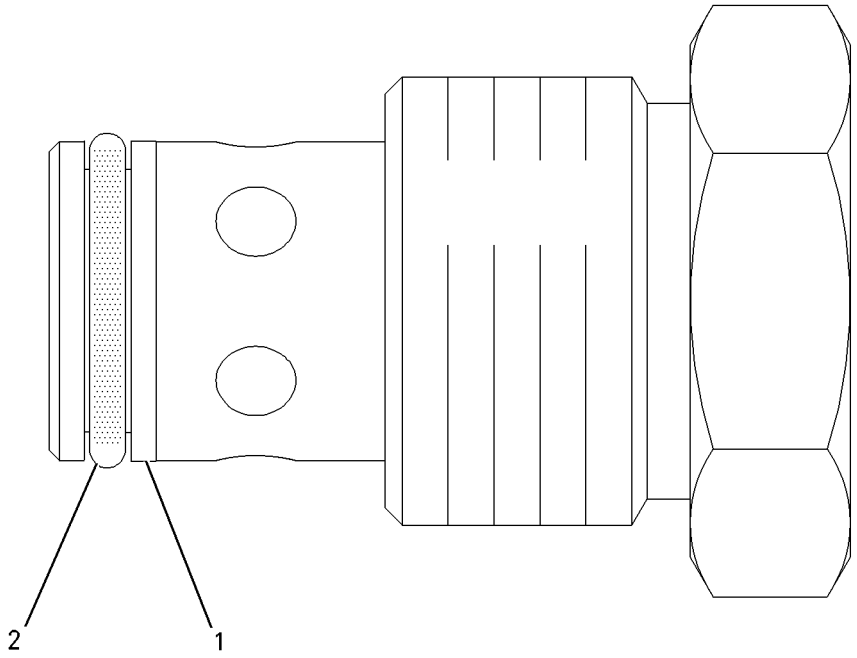

GRAPHIC #1 **<END>** g00864141

139-6873 VALVE GP-FUEL BYPASS–FILTER

S/N: RHX9087-UP

PART OF 356-1879 FILTER GP-FUEL

SMCS-1250, 1261, 1715 **i02100587**

NOTE	REF NO	GRAPHIC REF	PART NUMBER	QTY	PART NAME 1 2 3 4 5 6 (PRODUCT LEVEL)	SEE PAGE
	1	1	**9X-7737**	1	SEAL-O-RING	

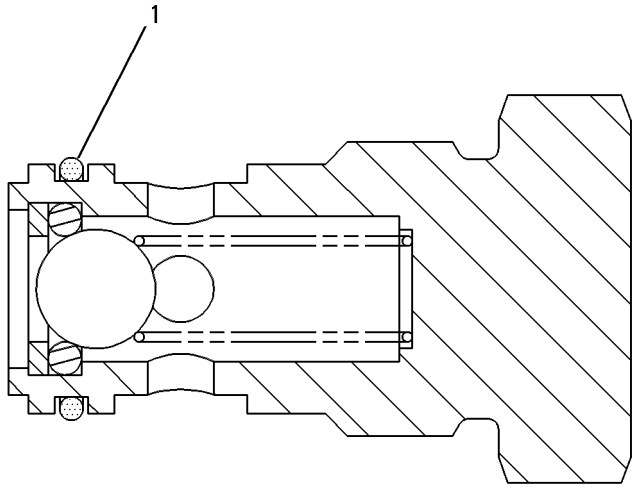

GRAPHIC #1 **<END>** g00266124

132-1829 ALARM GP–FAULT

S/N: WAP1-UP
24-VOLT
PART OF 299-2628 WIRING GP-CAB

SMCS-7400, 7402, 7407 **i01454019**

NOTE	REF NO	GRAPHIC REF	PART NUMBER	QTY	PART NAME 1 2 3 4 5 6 (PRODUCT LEVEL)	SEE PAGE
	1	1	**102-8802**	1	KIT-RECEPTACLE (2-PIN)	
					(INCLUDES RECEPTACLE AS & WEDGE)	
	2	1	**186-3735**	2	PIN-CONNECTOR (16-GA TO 18-GA)	

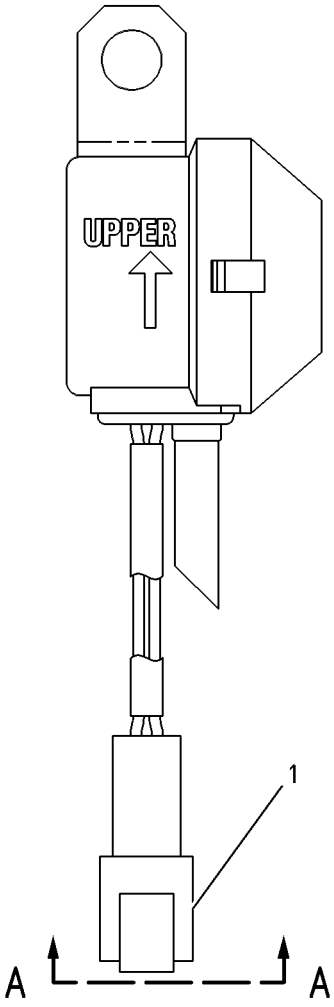

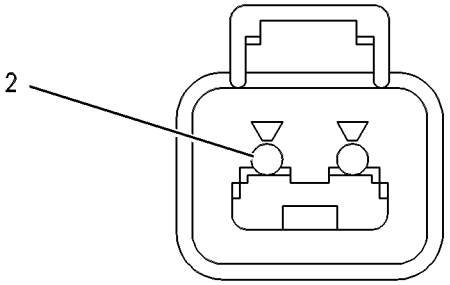

VIEW A–A

GRAPHIC #1 **<END>** g00272185

231-1771 ALARM GP-TRAVEL–BACKUP

S/N: WAP1-UP

AN ATTACHMENT

SMCS-7429 **i03267821**

NOTE	REF NO	GRAPHIC REF	PART NUMBER	QTY	PART NAME 1 2 3 4 5 6 (PRODUCT LEVEL)	SEE PAGE
	1	1	**213-9100**	1	ALARM GP (BACKUP)	
		1	**102-8802**	1	KIT-RECEPTACLE (2-PIN)	
					(INCLUDES RECEPTACLE AS & WEDGE)	
		1	**186-3735**	2	PIN-CONNECTOR (16-GA TO 18-GA)	
E		1	**9X-1813**		SLEEVE (29-CM)	
M	2	1	**8T-4189**	2	BOLT (M8X1.25X20-MM)	
	3	1	**5P-4116**	2	WASHER-HARD (8.8X20.5X2-MM THK)	

E-ORDER BY THE CENTIMETER
M-METRIC PART

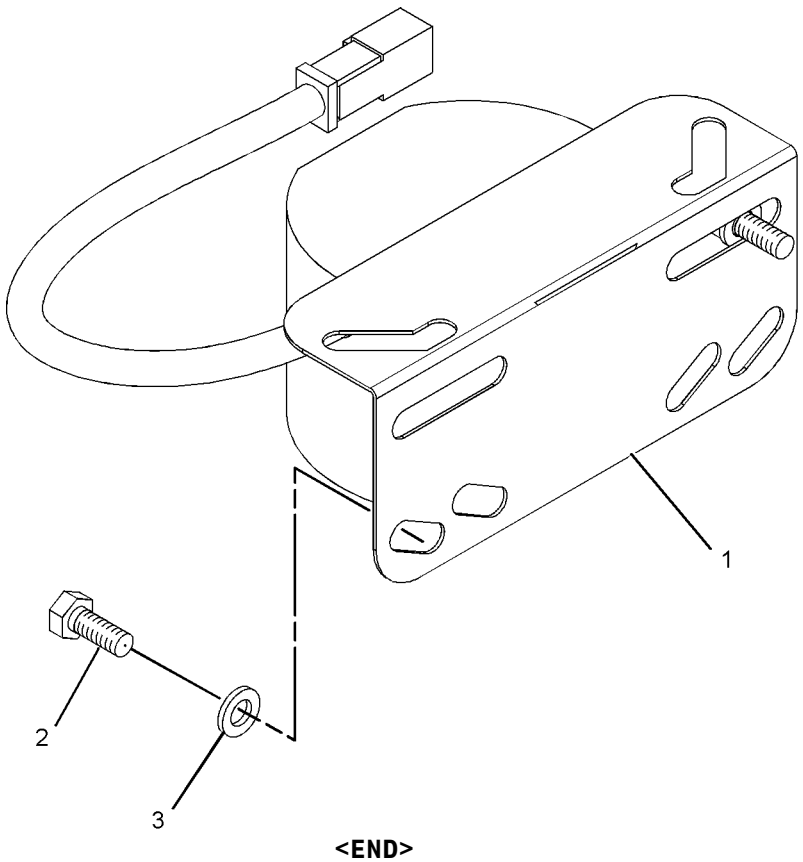

GRAPHIC #1 **<END>** g01071794

177-9953 ALTERNATOR GP-CHARGING*R

S/N: RHX7868-UP
24-VOLT, 80-AMPERE
PART OF 235-2471 ALTERNATOR GP-CHARGING

SMCS-1405 **i02703713**

NOTE	REF NO	GRAPHIC REF	PART NUMBER	QTY	PART NAME 1 2 3 4 5 6 (PRODUCT LEVEL)	SEE PAGE
	1	1	**185-2653**	1	FRAME	
	2	1	**5S-7349**	1	BOLT (1/4-20X0.5-IN)	
	3	1	**185-2639**	1	FAN AS	
	4	1	**1H-3244**	1	LOCKWASHER	
	5	1	**185-2645**	1	FRAME	
	6	1	**2K-4821**	1	LOCKNUT (5/8-18-THD)	
	7	1	**5P-8247**	1	WASHER-HARD (17X32X3.5-MM THK)	
	8	1	**185-2651**	1	COVER	
	9	1	**8T-4205**	1	WASHER-HARD (7.2X14.5X2-MM THK)	
	10	1	**185-2647**	1	GROMMET	
	11	1	**9L-6770**	1	CAP-DUST	
	12	1	**185-2643**	1	STATOR AS	
	13	1	**185-2638**	2	COLLAR	
	14	1	**185-2654**	1	PLATE	
	15	1	**185-2650**	1	ROTOR AS	
	16	1	**185-2644**	1	COIL AS	
	17	1	**185-2648**	1	REGULATOR AS-VOLTAGE (24-VOLT) (ALTERNATOR)	
J	18	1	**6V-8189**	1	NUT (5/16-18-THD)	
J	19	1	**8T-4224**	1	WASHER-HARD (8.8X16X2-MM THK)	
J	20	1	**3F-9556**	1	LOCKWASHER	
					AVAILABLE REPAIR KIT(S):	
J			**199-7891**		KIT-TERMINAL (ALTERNATOR)	
					(INCLUDES INSULATORS, WASHERS, NUT, STEP NUT)	
			185-2655		KIT-BEARING (ALTERNATOR)	
					(INCLUDES 2 BEARINGS)	
			199-8436		KIT-TERMINAL (ALTERNATOR)	
					(INCLUDES HOLDER AS, PLATE, INSULATOR, PIN, BOLT, GROMMET, NUT)	
			185-2658		KIT-HARDWARE (ALTERNATOR)	
					(INCLUDES BOLTS)	

J-KIT MARKED J AVAILABLE FOR PARTS MARKED J

177-9953 ALTERNATOR GP-CHARGING *(contd.)* i02703713

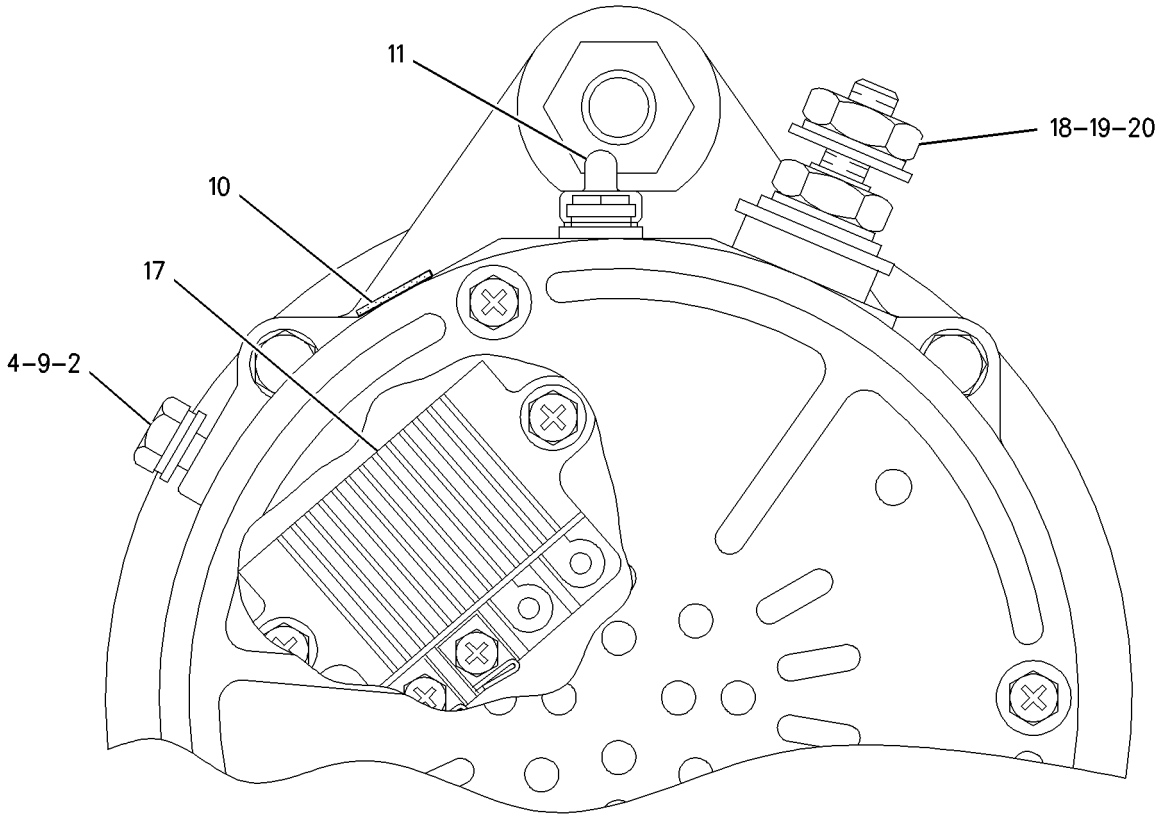

VIEW A–A

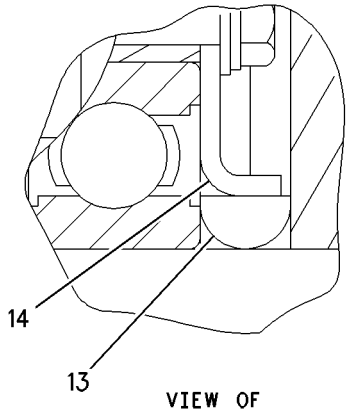

VIEW OF AREA B

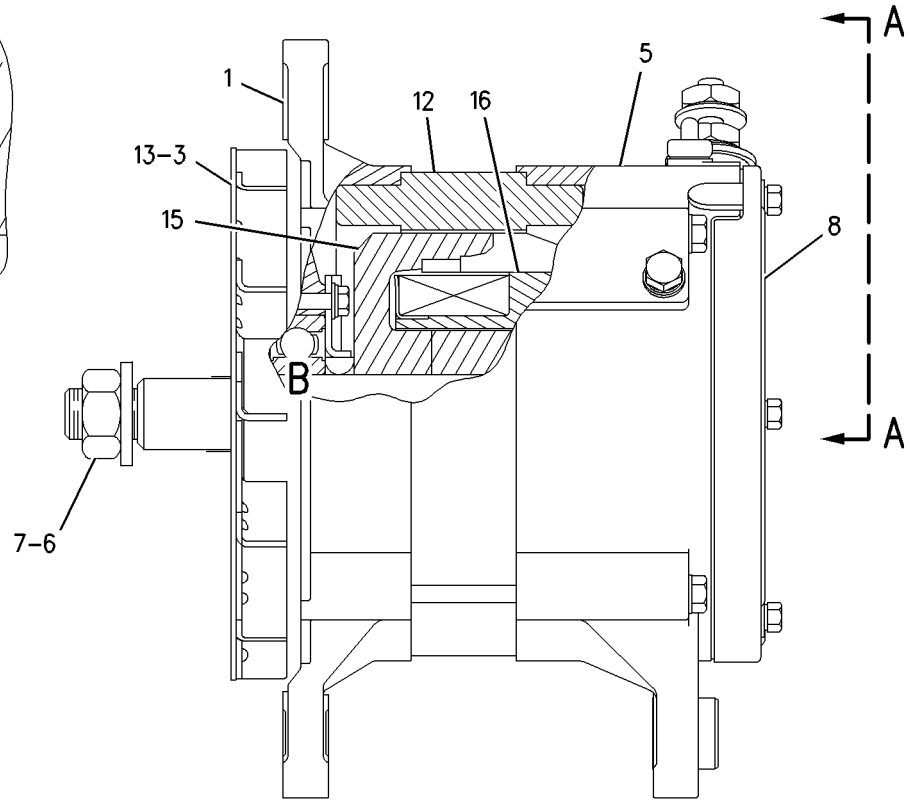

GRAPHIC #1 **<END>** g00795850

ELECTRICAL AND STARTING SYSTEM

235-2471 ALTERNATOR GP-CHARGING

S/N: RHX8937-UP
24-VOLT, 80-AMPERE
PART OF 286-9798 ENGINE AR-COMPLETE

SMCS-1405 **i03962852**

NOTE	REF NO	GRAPHIC REF	PART NUMBER	QTY	PART NAME 1 2 3 4 5 6 (PRODUCT LEVEL)	SEE PAGE
YR	1	1	**177-9953**	1	ALTERNATOR GP-CHARGING (24-VOLT, 80-AMPERE)	158
	2	1	**1F-7958**	1	NUT-FULL (1/2-13-THD)	
	3	1	**9H-8260**	1	BOLT (1/2-13X6.25-IN)	
	4	1	**5P-8245**	3	WASHER-HARD (13.5X25.5X3-MM THK)	
	5	1	**0V-0375**	1	BOLT (1/2-13X3.25-IN)	

R-REMFG PART MAY BE AVAILABLE
Y-SEPARATE ILLUSTRATION

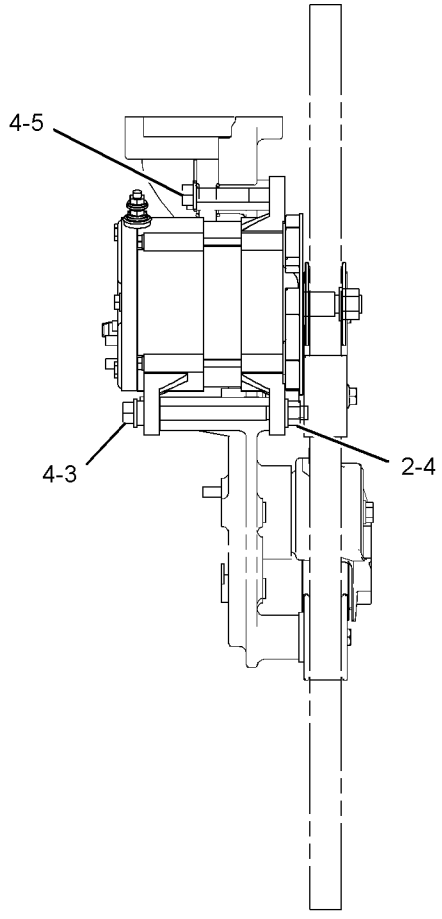

RIGHT SIDE VIEW

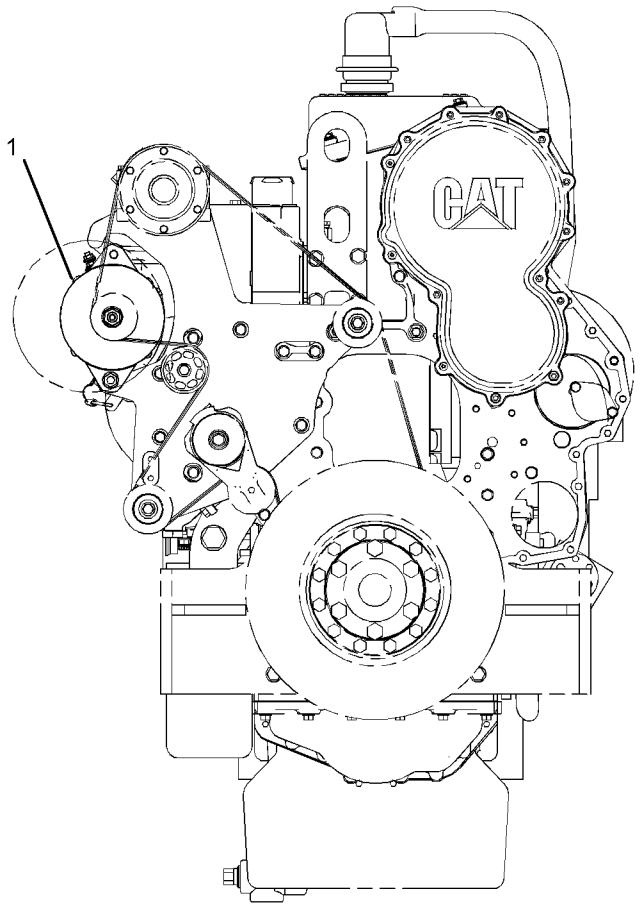

FRONT VIEW

GRAPHIC #1 **<END>** g01070125

ELECTRICAL AND STARTING SYSTEM

299-2635 BATTERY & WIRING GP

S/N: WAP1-UP

PART OF 294-1237 CHASSIS AR

SMCS-1401, 1402, 1408 **i04027839**

NOTE	REF NO	GRAPHIC REF	PART NUMBER	QTY	PART NAME 1 2 3 4 5 6 (PRODUCT LEVEL)	SEE PAGE
	1	3,4,5	**2G-8767**	7	WASHER (10.5X60X3-MM THK)	
	2	1	**3E-5169**	1	GUARD-SWITCH	
	3	1,2,3, 4,5,6	**3S-2093**	57	STRAP-CABLE	
	4	2	**4E-2289**	1	ANGLE AS	
		2	**7T-2035**	1	ANGLE	
M	5	5	**4I-5049**	1	NUT-SPACER (M6X1-THD)	
	6	3,4,5	**6G-2256**	6	CLAMP	
	7	3,4,5, 6	**6G-2263**	7	SPACER (10.5X19X28.5-MM THK)	
	8	1,2,3, 4,5,6	**7K-1181**	23	STRAP-CABLE	
	9	5	**8D-0482**	1	GROMMET	
Y	10	5	**9W-0742**	1	BLOCK GP-JUNCTION (BATTERY)	177
	11	1	**096-0679**	2	GROMMET	
	12	4	**096-5863**	1	GROMMET	
	13	2,3,4, 5,6	**111-4836**	13	CLIP	
	14	1,2,3, 4,5,6	**111-4837**	48	CLIP	
	15	1,3,4, 5	**111-4838**	19	CLIP	
	16	1,3,4, 5	**111-4839**	19	STRAP	
	17	1,2,3, 4,5,6	**116-0118**	18	CLIP	
	18	5	**124-9108**	2	ROD	
	19	5	**132-1806**	1	STRAP AS-GROUND	
	20	2,3	**153-2447**	3	BRACKET AS	
	21	2	**153-2451**	1	BRACKET AS	
	22	4	**153-2475**	1	BRACKET AS	
	23	5	**153-5710**	2	BATTERY (12-VOLT, 1400-CCA)	
M	24	5	**157-4822**	2	BOLT (M10X1.5X250-MM)	
	25	5	**161-3115**	1	COVER	
	26	5	**161-3117**	1	KNOB AS	
M		5	**7X-2533**	1	BOLT (M6X1X35-MM)	
		5	**161-3116**	1	KNOB	
Y	27	6	**165-5970**	1	SWITCH GP-TOGGLE (FUEL PRIMING PUMP ON, OFF)	269
	28	3	**167-3593**	1	STRAP	
Y	29	1	**170-2512**	1	SWITCH GP-TOGGLE (SECONDARY SHUTDOWN)	270
	30	3	**170-6977**	1	BRACKET AS	
	31	5	**170-9328**	1	STRAP AS-GROUND	
	32	5	**193-3476**	1	BRACKET AS	
	33	5	**198-7070**	1	SUPPORT AS	
	34	2,3,6	**204-1611**	6	STRAP-CABLE	
	35	1	**204-1771**	1	PLATE	
	36	1	**234-1190**	1	BRACKET	
	37	4	**238-2393**	1	HARNESS AS-LIGHTING	
		4	**9W-0852**	3	PIN-CONNECTOR (14-GA TO 16-GA)	
		4	**9W-0844**	3	SOCKET-CONNECTOR (14-GA)	
		4	**230-4013**	1	PLUG AS-CONNECTOR (3-PIN)	
		4	**264-7030**	1	SEAL-CONNECTOR	
		4	**243-4506**	1	RECEPTACLE AS-CONNECTOR (3-PIN)	
	38	3	**238-2420**	1	HARNESS AS-PUMP	
		3	**8T-8729**	2	PIN-CONNECTOR (16-GA TO 18-GA)	
		3	**8T-8737**	1	PLUG-SEAL	
		3	**243-4506**	1	RECEPTACLE AS-CONNECTOR (3-PIN)	

299-2635 BATTERY & WIRING GP *(contd.)* i04027839

NOTE	REF NO	GRAPHIC REF	PART NUMBER	QTY	PART NAME 1 2 3 4 5 6 (PRODUCT LEVEL)	SEE PAGE
	39	2,4,6	**238-2474**	4	BRACKET AS	
	40	5	**251-0524**	1	SUPPORT AS	
Y	41	5	*299-2627*	1	PANEL GP-CIRCUIT BREAKER	224
	42	6	**299-3064**	1	HARNESS AS-SWITCH	
		6	**102-8804**	1	KIT-RECEPTACLE (4-PIN)	
					(INCLUDES RECEPTACLE AS & WEDGE)	
		6	**8T-8729**	1	PIN-CONNECTOR (16-GA TO 18-GA)	
		6	**8T-8730**	1	SOCKET-CONNECTOR (16-GA TO 18-GA)	
		6	**8T-8737**	8	PLUG-SEAL	
		6	**9W-0852**	4	PIN-CONNECTOR (14-GA TO 16-GA)	
		6	**9W-0844**	4	SOCKET-CONNECTOR (14-GA)	
E		6	**125-7875**		TUBE-HEAT SHRINK (7.44-MM DIA) (5-CM)	
		6	**9X-3402**	6	SOCKET-CONNECTOR (16-GA TO 18-GA)	
		6	**2L-8075**	2	TERMINAL-RING (14-GA TO 16-GA, NO. 8 SCREW)	
		6	**9X-3401**	5	PIN-CONNECTOR (16-GA TO 18-GA)	
		6	**155-2270**	3	KIT-CONNECTING PLUG (2-PIN)	
		6	**155-2271**	1	KIT-CONNECTING PLUG (4-PIN)	
		6	**155-2260**	1	KIT-CONNECTING PLUG (3-PIN)	
					(EACH PLUG KIT INCLUDES PLUG AS, WEDGE, & INTERFACE SEAL)	
		6	**243-4510**	1	RECEPTACLE AS-CONNECTOR (12-PIN)	
	43	4	**299-3065**	1	BRACKET AS	
	44	5	**328-0219**	1	HARNESS AS-ENGINE	
		5	**102-8806**	1	KIT-RECEPTACLE (8-PIN)	
		5	**3S-2093**	1	STRAP-CABLE	
		5	**8N-1544**	1	PIN-CONNECTOR (8-GA)	
		5	**8T-8737**	56	PLUG-SEAL	
		5	**9W-0852**	3	PIN-CONNECTOR (14-GA TO 16-GA)	
E		5	**119-3662**		TUBE-HEAT SHRINK (10.85-MM DIA) (13-CM)	
		5	**9X-3402**	26	SOCKET-CONNECTOR (16-GA TO 18-GA)	
		5	**126-1768**	6	SOCKET-CONNECTOR (14-GA)	
		5	**127-5486**	1	RECEPTACLE AS-CONNECTOR (1-PIN)	
		5	**2L-8049**	1	TERMINAL-RING (6-GA, NO. 10 SCREW)	
					—OR—	
		5	**2L-8057**	1	TERMINAL-RING (8-GA, NO. 10 SCREW)	
		5	**9X-3401**	15	PIN-CONNECTOR (16-GA TO 18-GA)	
		5	**155-2270**	2	KIT-CONNECTING PLUG (2-PIN)	
					(EACH INCLUDES PLUG AS, WEDGE & INTERFACE SEAL)	
		5	**159-9322**	1	SEAL-O-RING	
		5	**230-4009**	1	PLUG AS-CONNECTOR (12-PIN)	
		5	**264-7034**	1	SEAL-CONNECTOR	
		5	**243-4510**	1	RECEPTACLE AS-CONNECTOR (12-PIN)	
	45	2	**328-0310**	1	BRACKET AS	
	46	2	**328-0312**	1	BRACKET AS	
	47	5	**328-0324**	1	CABLE AS	
		5	**1S-7251**	2	TERMINAL-CABLE (00-GA, 1/2-IN SCREW)	
		5	**8N-0869**	1	COVER-TERMINAL (RED) (STARTING MOTOR)	
E		5	**159-8049**		CABLE (00-GA, RED) (534-CM)	
		5	**301-0091**	1	COVER-TERMINAL (RED)	
	48	5	**328-0325**	1	CABLE AS	
		5	**1S-7251**	1	TERMINAL-CABLE (00-GA, 1/2-IN SCREW)	
		5	**8N-0869**	1	COVER-TERMINAL (RED) (TERMINAL BLOCK)	
		5	**030-1706**	1	TERMINAL-RING (00-GA, 1/4-IN SCREW)	
E		5	**159-8049**		CABLE (00-GA, RED) (135-CM)	
		5	**301-0091**	1	COVER-TERMINAL (RED) (DISCONNECT SWITCH)	
	49	5	**328-0326**	1	CABLE AS	
		5	**1S-7251**	1	TERMINAL-CABLE (00-GA, 1/2-IN SCREW)	
		5	**8N-1725**	1	COVER AS-TERMINAL (RED) (BATTERY POSITIVE)	
		5	**8L-8413**	1	STRAP-CABLE	

299-2635 **BATTERY & WIRING GP** *(contd.)* **i04027839**

NOTE	REF NO	GRAPHIC REF	PART NUMBER	QTY	PART NAME 1 2 3 4 5 6 (PRODUCT LEVEL)	SEE PAGE
		5	**3S-6049**	1	TERMINAL AS-BATTERY (POSITIVE)	
		5	**1M-6119**	1	BOLT (5/16-18X1.375-IN)	
		5	**1M-6120**	1	NUT (5/16-18-THD)	
E		5	**159-8049**		CABLE (00-GA, RED) (131-CM)	
		5	**301-0091**	1	COVER-TERMINAL (RED)	
	50	3	**328-0327**	1	BRACKET AS	
	51	5	**328-0330**	1	CABLE AS	
		5	**1S-7252**	1	TERMINAL-CABLE (00-GA, 3/8-IN SCREW)	
		5	**7N-5274**		COVER-TERMINAL (BLACK) (BATTERY NEGATIVE)	
		5	**8L-8413**	1	STRAP-CABLE	
		5	**9G-8909**	1	COVER-TERMINAL (BLACK) (DISCONNECT SWITCH)	
		5	**3S-6050**	1	TERMINAL AS-BATTERY (NEGATIVE)	
		5	**1M-6119**	1	BOLT (5/16-18X1.375-IN)	
		5	**1M-6120**	1	NUT (5/16-18-THD)	
E		5	**159-8050**		CABLE (00-GA, BLACK) (36-CM)	
	52	5	**328-0333**	1	CABLE AS	
		5	**9G-0003**	1	COVER AS-TERMINAL (BLACK)	
		5	**8L-8413**	1	STRAP-CABLE	
		5	**9G-0004**	1	COVER AS-TERMINAL (RED)	
		5	**8L-8413**	1	STRAP-CABLE	
		5	**8C-5917**	1	TERMINAL AS-BATTERY (POSITIVE)	
		5	**1M-6119**	1	BOLT (5/16-18X1.375-IN)	
		5	**1M-6120**		NUT (5/16-18-THD)	
		5	**8T-9757**	1	TERMINAL AS-BATTERY (NEGATIVE)	
		5	**1M-6119**	1	BOLT (5/16-18X1.375-IN)	
		5	**1M-6120**	1	NUT (5/16-18-THD)	
E		5	**159-8049**		CABLE (00-GA, RED) (15-CM)	
	53	5	**342-3153**	1	BRACKET	
	54	4	**350-8108**	1	HARNESS AS-CHASSIS	
		4	**102-8802**	1	KIT-RECEPTACLE (2-PIN)	
		4	**102-8803**	3	KIT-RECEPTACLE (3-PIN)	
					(EACH RECEPTACLE KIT INCLUDES RECEPTACLE AS & WEDGE)	
		4	**8T-8729**	6	PIN-CONNECTOR (16-GA TO 18-GA)	
		4	**8T-8730**	8	SOCKET-CONNECTOR (16-GA TO 18-GA)	
		4	**3S-2093**	9	STRAP-CABLE	
		4	**3T-4688**	1	TERMINAL-RING (4-GA, 7/16-IN SCREW)	
		4	**9X-0196**	1	WIRE AS	
		4	**8C-6354**	1	CAP-RECEPTACLE	
		4	**8N-1545**	1	SOCKET-CONNECTOR (8-GA)	
		4	**8T-8737**	81	PLUG-SEAL	
		4	**8T-8827**	1	BOOT (RED)	
		4	**9W-1951**	1	RECEPTACLE-CONNECTOR (9-PIN)	
		4	**9X-4998**	1	SOCKET (14-GA TO 16-GA)	
		4	**9W-0852**	11	PIN-CONNECTOR (14-GA TO 16-GA)	
		4	**9W-0844**	26	SOCKET-CONNECTOR (14-GA)	
		4	**116-0126**	1	HOUSING-PLUG	
		4	**116-0128**	1	SEAL	
		4	**116-0255**	2	TERMINAL-BLADE (10-GA TO 20-GA)	
E		4	**119-3662**		TUBE-HEAT SHRINK (10.85-MM DIA) (33-CM)	
E		4	**125-7874**		TUBE-HEAT SHRINK (5.72-MM DIA) (95-CM)	
E		4	**125-7875**		TUBE-HEAT SHRINK (7.44-MM DIA) (50-CM)	
		4	**9X-3402**	135	SOCKET-CONNECTOR (16-GA TO 18-GA)	
		4	**126-1768**	5	SOCKET-CONNECTOR (14-GA)	
		4	**127-5485**	1	PLUG AS-CONNECTOR (1-PIN)	
		4	**9G-4343**	2	TERMINAL-RING (4-GA, 1/4-IN SCREW)	
		4	**9G-4336**	1	TERMINAL-RING (4-GA)	
		4	**2L-8050**	1	TERMINAL-RING (6-GA, 1/4-IN SCREW)	
		4	**2L-8067**	1	TERMINAL-RING (10-GA TO 12-GA, 1/4-IN SCREW)	

299-2635 **BATTERY & WIRING GP** *(contd.)* **i04027839**

NOTE	REF NO	GRAPHIC REF	PART NUMBER	QTY	PART NAME 1 2 3 4 5 6 (PRODUCT LEVEL)	SEE PAGE
		4	**2L-8069**	7	TERMINAL-RING (2-GA TO 10-GA, 3/8-IN SCREW)	
		4	**176-9299**	3	KIT-RECEPTACLE (3-PIN)	
					(INCLUDES RECEPTACLE AS & WEDGE)	
		4	**9X-3401**	121	PIN-CONNECTOR (16-GA TO 18-GA)	
		4	**155-2270**	2	KIT-CONNECTING PLUG (2-PIN)	
					(EACH INCLUDES RECEPTACLE AS & WEDGE)	
		4	**163-6637**	1	RECEPTACLE AS-CONNECTOR (54-PIN, BLACK)	
		4	**170-9479**	1	PLUG AS-CONNECTOR (54-PIN, BLACK)	
		4	**170-9480**	1	PLUG AS-CONNECTOR (54-PIN, BROWN)	
		4	**174-3016**	3	PLUG AS-CONNECTOR (3-PIN)	
		4	**230-4009**	5	PLUG AS-CONNECTOR (12-PIN)	
					(EACH INCLUDES)	
		4	**264-7034**	1	SEAL-CONNECTOR	
		4	**230-4011**	1	PLUG AS-CONNECTOR (2-PIN)	
		4	**264-7029**	1	SEAL-CONNECTOR	
		4	**230-4013**	2	PLUG AS-CONNECTOR (3-PIN)	
					(EACH INCLUDES)	
		4	**264-7030**	1	SEAL-CONNECTOR	
		4	**230-5010**	2	PLUG AS-CONNECTOR (6-PIN)	
					(EACH INCLUDES)	
		4	**264-7032**	1	SEAL-CONNECTOR	
		4	**231-2295**	1	PLUG AS-CONNECTOR (8-PIN)	
		4	**264-7033**	1	SEAL-CONNECTOR	
		4	**239-7356**	1	PLUG AS-CONNECTOR (12-PIN)	
		4	**264-7034**	1	SEAL-CONNECTOR	
		4	**243-4506**	1	RECEPTACLE AS-CONNECTOR (3-PIN)	
		4	**243-4508**	2	RECEPTACLE AS-CONNECTOR (6-PIN)	
		4	**243-4509**	1	RECEPTACLE AS-CONNECTOR (8-PIN)	
		4	**243-4510**	7	RECEPTACLE AS-CONNECTOR (12-PIN)	
	55	2	**350-8109**	1	HARNESS AS-CHASSIS	
		2	**102-8802**	3	KIT-RECEPTACLE (2-PIN)	
					(EACH INCLUDES RECEPTACLE AS & WEDGE)	
		2	**8T-8729**	1	PIN-CONNECTOR (16-GA TO 18-GA)	
		2	**8T-8730**	44	SOCKET-CONNECTOR (16-GA TO 18-GA)	
		2	**3S-2093**	15	STRAP-CABLE	
		2	**8T-8737**	17	PLUG-SEAL	
		2	**9W-0852**	3	PIN-CONNECTOR (14-GA TO 16-GA)	
		2	**9W-0844**	5	SOCKET-CONNECTOR (14-GA)	
E		2	**119-3662**		TUBE-HEAT SHRINK (10.85-MM DIA) (7-CM)	
E		2	**125-7874**		TUBE-HEAT SHRINK (5.72-MM DIA) (30-CM)	
E		2	**125-7875**		TUBE-HEAT SHRINK (7.44-MM DIA) (20-CM)	
		2	**9X-3402**	33	SOCKET-CONNECTOR (16-GA TO 18-GA)	
		2	**9X-3401**	9	PIN-CONNECTOR (16-GA TO 18-GA)	
		2	**155-2270**	21	KIT-CONNECTING PLUG (2-PIN)	
		2	**155-2260**	1	KIT-CONNECTING PLUG (3-PIN)	
					(EACH PLUG KIT INCLUDES PLUG AS, WEDGE & INTERFACE SEAL)	
		2	**230-4009**	2	PLUG AS-CONNECTOR (12-PIN)	
					(EACH INCLUDES)	
		2	**264-7034**	1	SEAL-CONNECTOR	
		2	**230-4011**	1	PLUG AS-CONNECTOR (2-PIN)	
		2	**264-7029**	1	SEAL-CONNECTOR	
		2	**230-4013**	2	PLUG AS-CONNECTOR (3-PIN)	
					(EACH INCLUDES)	
		2	**264-7030**	1	SEAL-CONNECTOR	
		2	**230-5010**	1	PLUG AS-CONNECTOR (6-PIN)	
		2	**264-7032**	1	SEAL-CONNECTOR	
		2	**243-4505**	1	RECEPTACLE AS-CONNECTOR (2-PIN)	
		2	**243-4506**	3	RECEPTACLE AS-CONNECTOR (3-PIN)	
		2	**243-5010**	1	CONVERSION AR-SECONDARY STEER	

299-2635 **BATTERY & WIRING GP** *(contd.)* **i04027839**

NOTE	REF NO	GRAPHIC REF	PART NUMBER	QTY	PART NAME 1 2 3 4 5 6 (PRODUCT LEVEL)	SEE PAGE
	56	1	**350-8110**	1	HARNESS AS-SWITCH	
		1	**8T-8729**	5	PIN-CONNECTOR (16-GA TO 18-GA)	
		1	**8T-8730**	5	SOCKET-CONNECTOR (16-GA TO 18-GA)	
		1	**8T-8737**	6	PLUG-SEAL	
		1	**9W-0852**	3	PIN-CONNECTOR (14-GA TO 16-GA)	
		1	**9W-0844**	3	SOCKET-CONNECTOR (14-GA)	
		1	**9X-3402**	1	SOCKET-CONNECTOR (16-GA TO 18-GA)	
		1	**9X-3401**	1	PIN-CONNECTOR (16-GA TO 18-GA)	
		1	**239-7356**	1	PLUG AS-CONNECTOR (12-PIN)	
		1	**264-7034**	1	SEAL-CONNECTOR	
		1	**272-5000**	1	RECEPTACLE AS-CONNECTOR (12-PIN)	
	57	2	**350-8119**	1	HARNESS AS-SOLENOID	
		2	**8T-8729**	5	PIN-CONNECTOR (16-GA TO 18-GA)	
		2	**8T-8730**	6	SOCKET-CONNECTOR (16-GA TO 18-GA)	
		2	**8T-8737**	1	PLUG-SEAL	
E		2	**103-2529**		HOSE (54-CM)	
E		2	**125-7874**		TUBE-HEAT SHRINK (5.72-MM DIA) (5-CM)	
E		2	**133-7442**		HOSE (65-CM)	
		2	**155-2270**	3	KIT-CONNECTING PLUG (2-PIN)	
					(EACH INCLUDES PLUG AS, WEDGE & INTERFACE SEAL)	
		2	**243-4508**	1	RECEPTACLE AS-CONNECTOR (6-PIN)	
	58	1	**350-8457**	1	HARNESS AS-CHASSIS	
		1	**8T-8729**	1	PIN-CONNECTOR (16-GA TO 18-GA)	
		1	**8T-8730**	19	SOCKET-CONNECTOR (16-GA TO 18-GA)	
		1	**3S-2093**	4	STRAP-CABLE	
		1	**7Y-3962**	1	TERMINAL-BULLET (MALE)	
		1	**7Y-3963**	1	TERMINAL-BULLET (FEMALE)	
		1	**8T-8737**	8	PLUG-SEAL	
		1	**9X-4813**	1	RECEPTACLE AS-CONNECTOR (3-PIN)	
		1	**100-5805**	1	CAP-RECEPTACLE	
		1	**9W-0852**	10	PIN-CONNECTOR (14-GA TO 16-GA)	
		1	**9W-0844**	6	SOCKET-CONNECTOR (14-GA)	
		1	**116-0126**	1	HOUSING-PLUG	
		1	**116-0128**	3	SEAL	
		1	**116-0255**	2	TERMINAL-BLADE (10-GA TO 20-GA)	
E		1	**119-3662**		TUBE-HEAT SHRINK (10.85-MM DIA) (7-CM)	
		1	**121-1038**	2	HOUSING-RECEPTACLE	
		1	**121-1039**	2	TERMINAL (MALE)	
E		1	**125-7874**		TUBE-HEAT SHRINK (5.72-MM DIA) (10-CM)	
E		1	**125-7875**		TUBE-HEAT SHRINK (7.44-MM DIA) (15-CM)	
		1	**9X-3402**	38	SOCKET-CONNECTOR (16-GA TO 18-GA)	
		1	**2L-8065**	1	TERMINAL-RING (10-GA TO 12-GA, NO. 8 SCREW)	
		1	**2L-8075**	1	TERMINAL-RING (14-GA TO 16-GA, NO. 8 SCREW)	
		1	**9X-3401**	10	PIN-CONNECTOR (16-GA TO 18-GA)	
		1	**155-2270**	3	KIT-CONNECTING PLUG (2-PIN)	
		1	**155-2260**	1	KIT-CONNECTING PLUG (3-PIN)	
					(EACH PLUG KIT INCLUDES PLUG AS, WEDGE & INTERFACE SEAL)	
		1	**230-4009**	2	PLUG AS-CONNECTOR (12-PIN)	
					(EACH INCLUDES)	
		1	**264-7034**	1	SEAL-CONNECTOR	
		1	**230-4011**	6	PLUG AS-CONNECTOR (2-PIN)	
					(EACH INCLUDES)	
		1	**264-7029**	1	SEAL-CONNECTOR	
		1	**230-4013**	3	PLUG AS-CONNECTOR (3-PIN)	
					(EACH INCLUDES)	
		1	**264-7030**	1	SEAL-CONNECTOR	
		1	**231-2295**	1	PLUG AS-CONNECTOR (8-PIN)	
		1	**264-7033**	1	SEAL-CONNECTOR	

299-2635 **BATTERY & WIRING GP** *(contd.)* **i04027839**

NOTE	REF NO	GRAPHIC REF	PART NUMBER	QTY	PART NAME 1 2 3 4 5 6 (PRODUCT LEVEL)	SEE PAGE
		1	**237-0227**	1	PLUG AS-CONNECTOR (3-PIN)	
		1	**264-7030**	1	SEAL-CONNECTOR	
		1	**243-4505**	2	RECEPTACLE AS-CONNECTOR (2-PIN)	
		1	**243-4509**	1	RECEPTACLE AS-CONNECTOR (8-PIN)	
		1	**243-4510**	1	RECEPTACLE AS-CONNECTOR (12-PIN)	
	59	3	**096-5962**	4	WASHER-HARD (3.4X7X0.8-MM THK)	
	60	6	**132-5789**	1	CLIP	
M	61	3	**3E-8048**	4	SCREW-MACHINE (M3X0.5X6-MM)	
	62	2	**4I-5426**	1	GROMMET	
	63	3	**4P-7428**	1	CLIP	
	64	3,4	**4P-7581**	2	CLIP	
M	65	5	**5C-7261**	2	NUT (M8X1.25-THD)	
M	66	1	**5C-7883**	4	BOLT-SOCKET HEAD (M6X1X16-MM)	
	67	5	**5M-3062**	1	BOLT (3/8-16X0.75-IN)	
	68	5	**5P-1075**	2	WASHER-HARD (10.2X22.5X3-MM THK)	
	69	2,3,4, 6	**5P-4116**	6	WASHER-HARD (8.8X20.5X2-MM THK)	
M	70	1	**7X-2621**	2	BOLT (M10X1.5X12-MM)	
	71	1,2,3, 4,5,6	**8T-4121**	116	WASHER-HARD (11X21X2.5-MM THK)	
M	72	1,2,3, 4	**8T-4136**	10	BOLT (M10X1.5X25-MM)	
M	73	1,2,3, 4,5,6	**8T-4137**	75	BOLT (M10X1.5X20-MM)	
M	74	6	**8T-4182**	1	BOLT (M10X1.5X45-MM)	
M	75	3,4,5	**8T-4185**	6	BOLT (M10X1.5X50-MM)	
M	76	2,4,6	**8T-4189**	4	BOLT (M8X1.25X20-MM)	
M	77	2,3,4, 5,6	**8T-4191**	16	BOLT (M10X1.5X16-MM)	
M	78	1,5,6	**8T-4195**	10	BOLT (M10X1.5X30-MM)	
M	79	2,3,4, 6	**8T-4199**	7	BOLT (M8X1.25X12-MM)	
	80	2,4,6	**8T-4224**	5	WASHER-HARD (8.8X16X2-MM THK)	
	81	5	**8T-4896**	1	WASHER-HARD (10.2X18.5X2.5-MM THK)	
	82	5	**9X-8256**	4	WASHER (6.6X12X2-MM THK)	

E-ORDER BY THE CENTIMETER
M-METRIC PART
Y-SEPARATE ILLUSTRATION

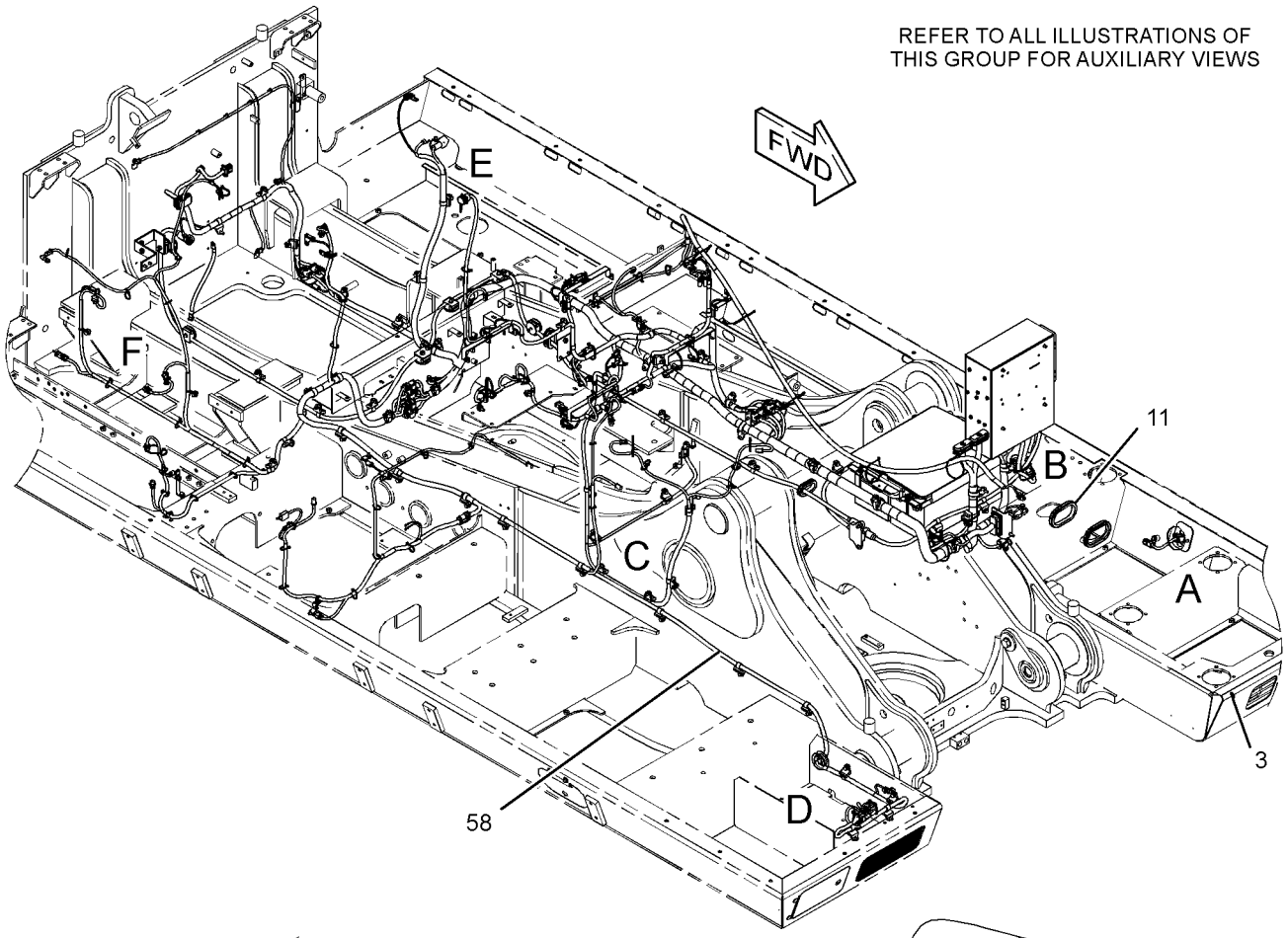

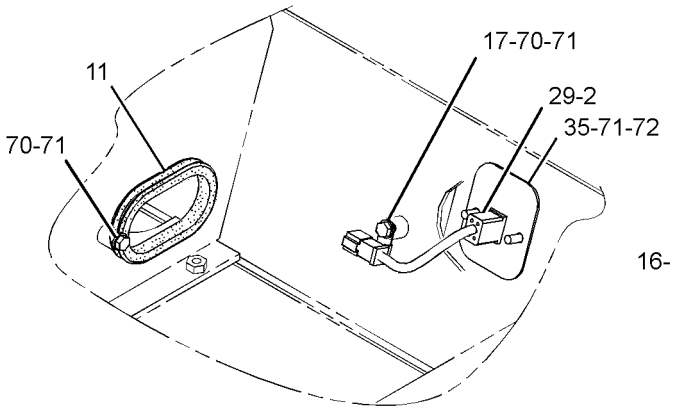

VIEW OF AREA A

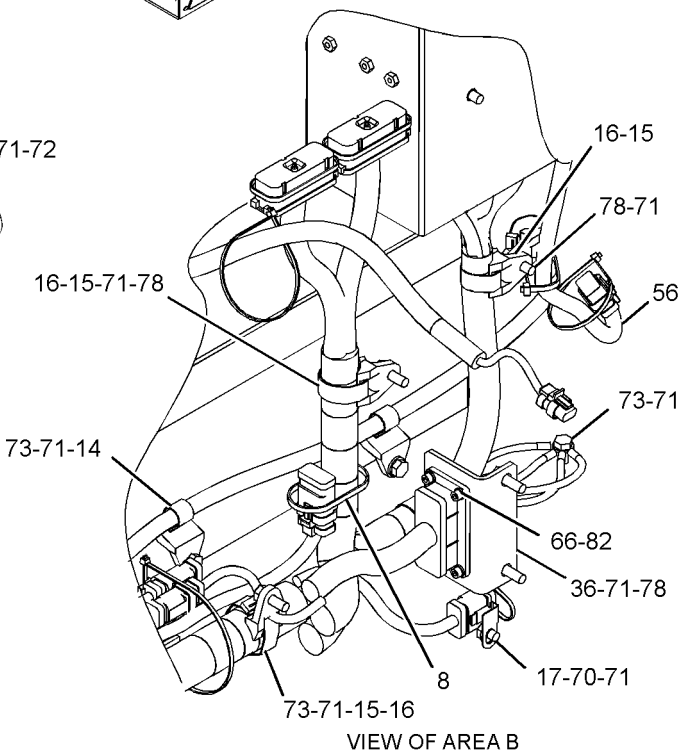

VIEW OF AREA B

GRAPHIC #1 g02168678

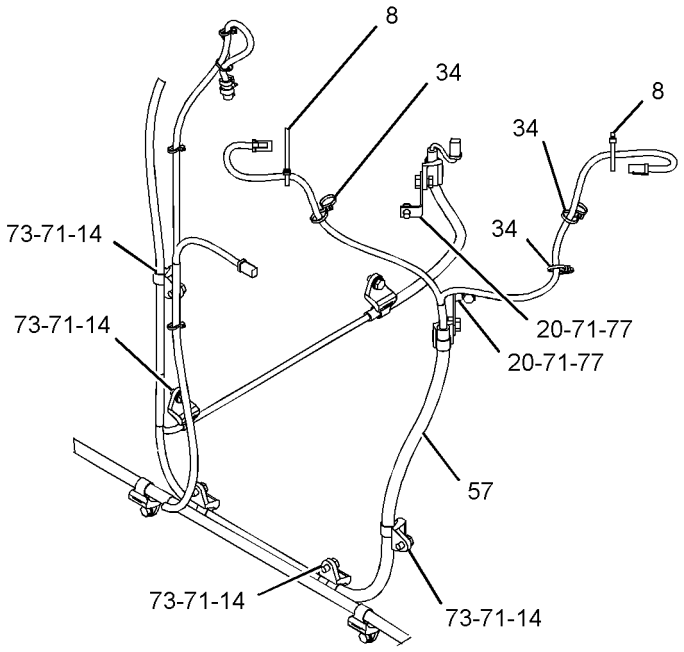

VIEW OF AREA C

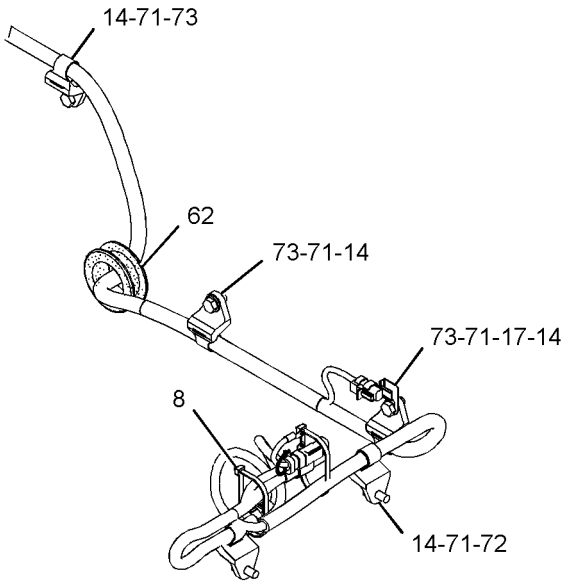

VIEW OF AREA D

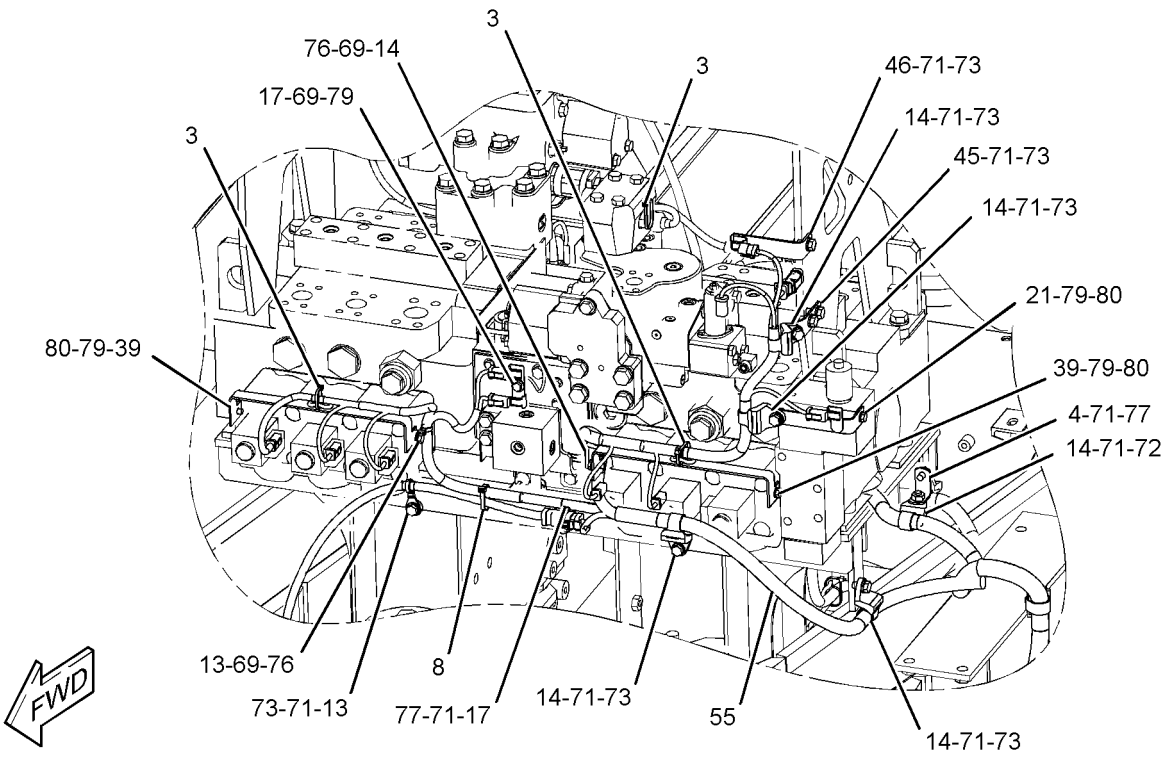

GRAPHIC #2 g02168679

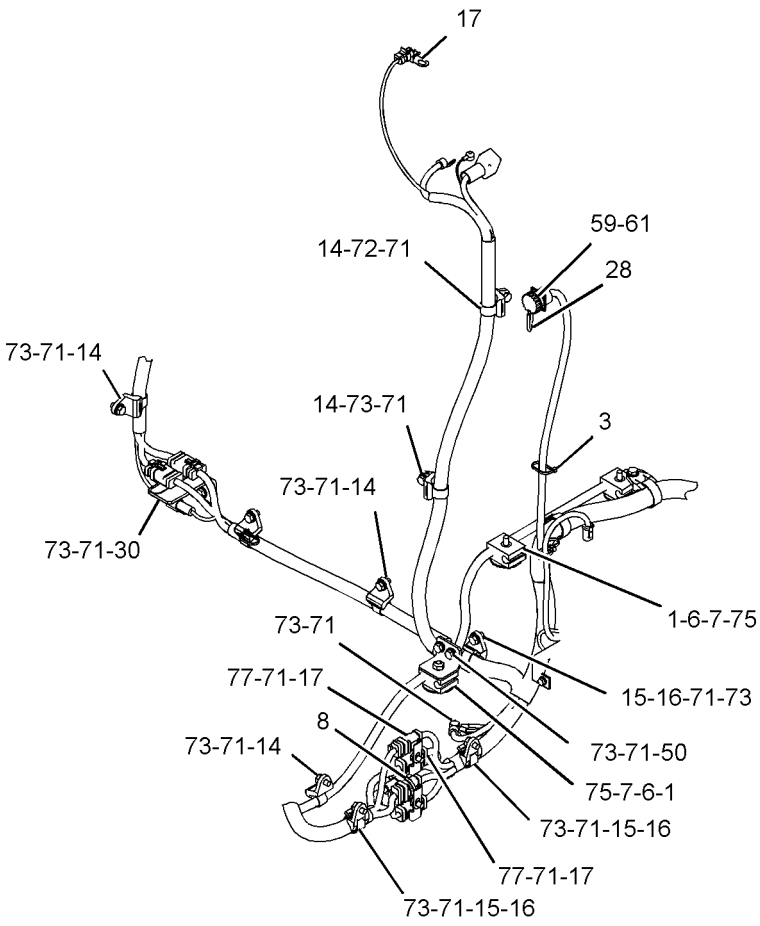

VIEW OF AREA E

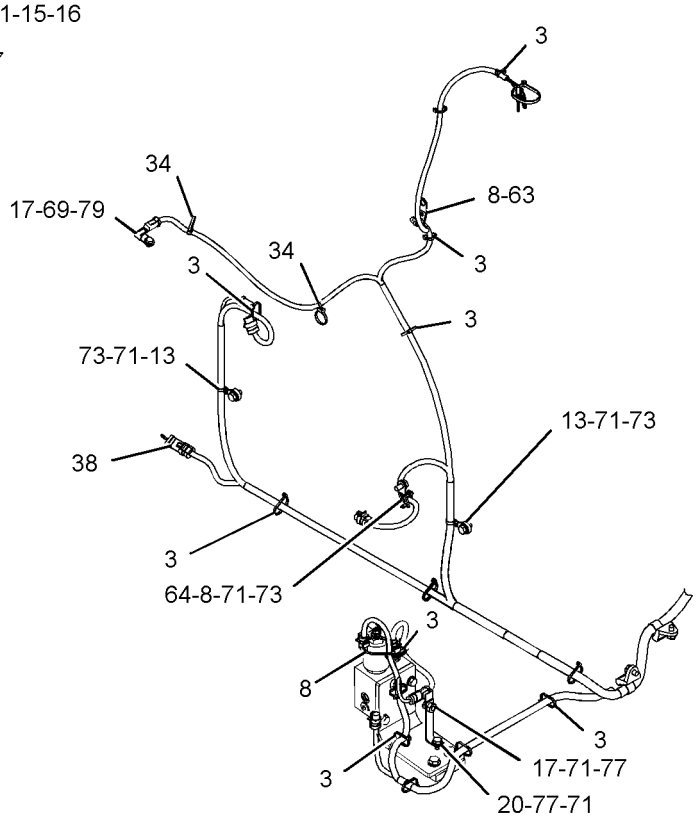

VIEW OF AREA F

GRAPHIC #3

g02168680

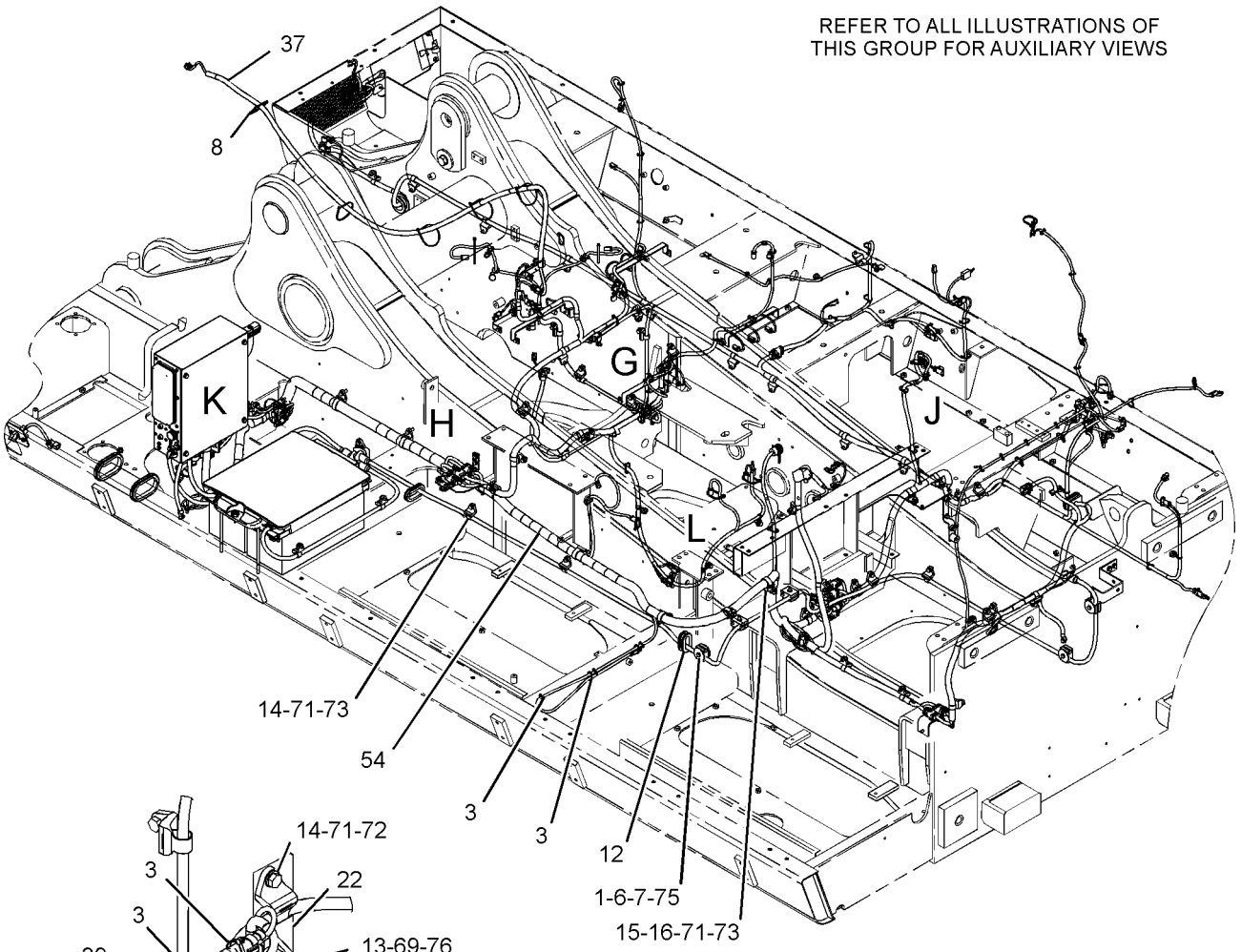

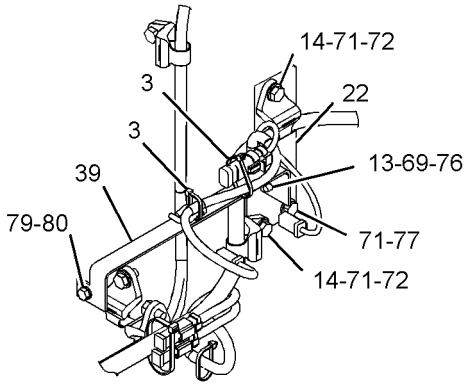

VIEW OF AREA G

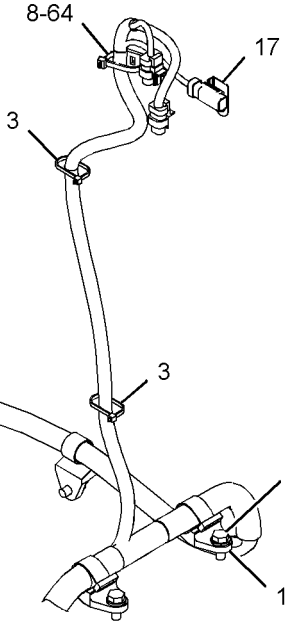

VIEW OF AREA J

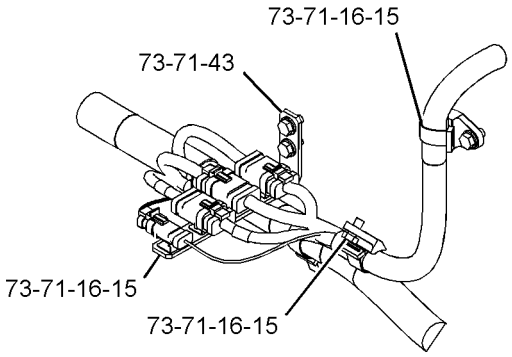

VIEW OF AREA H

GRAPHIC #4 g02168681

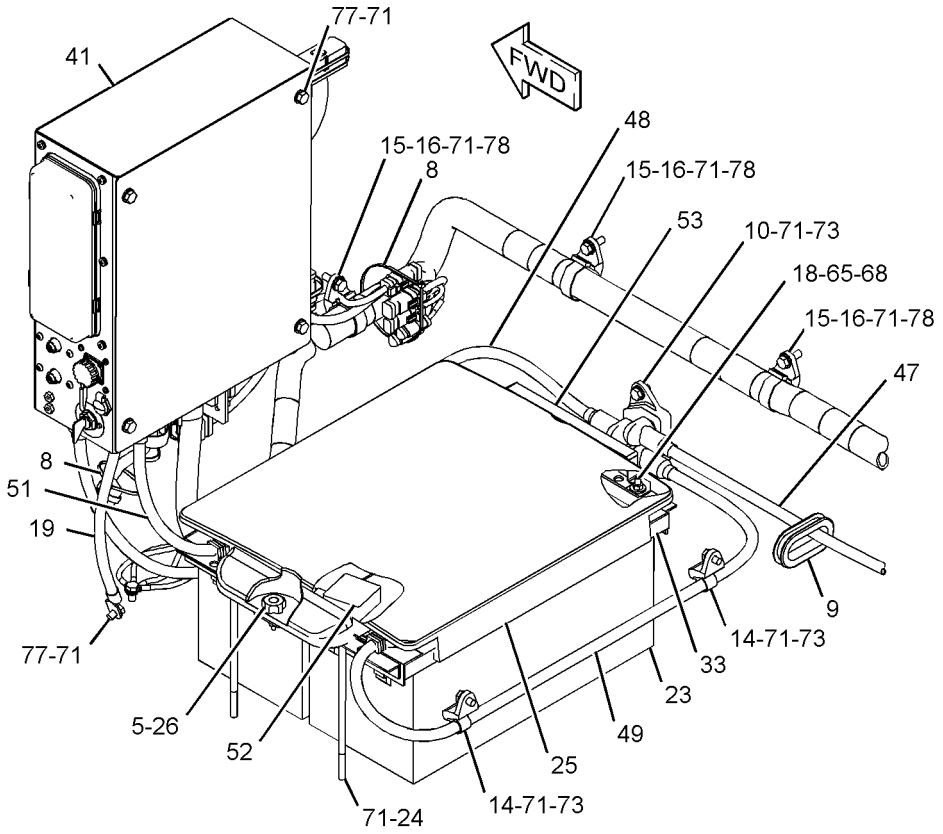

VIEW OF AREA K

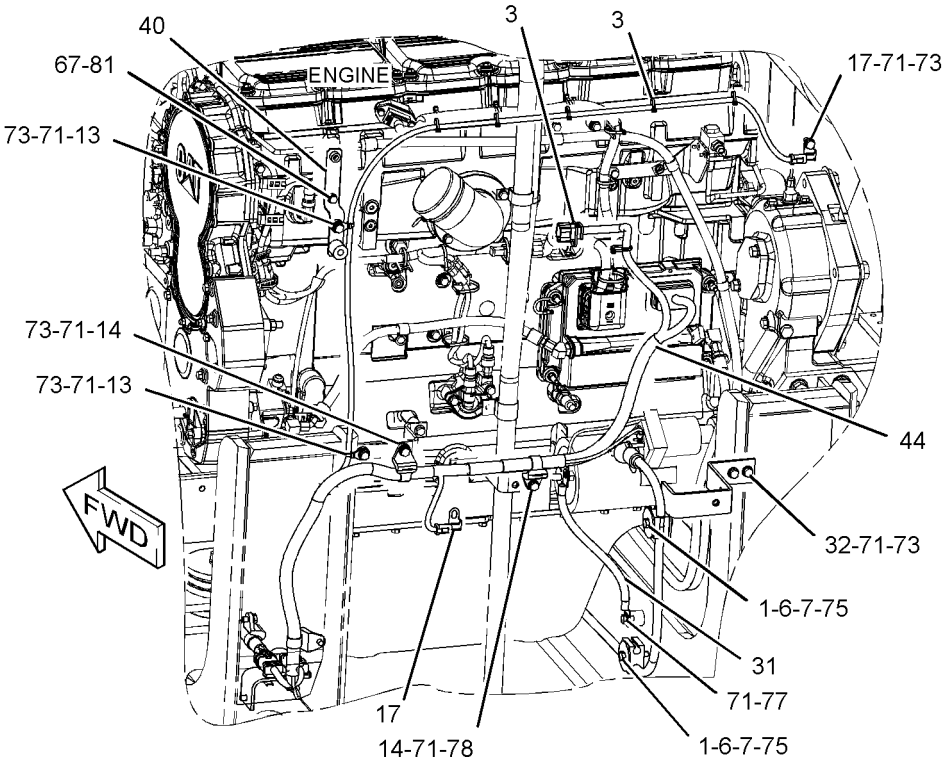

GRAPHIC #5 g02168682

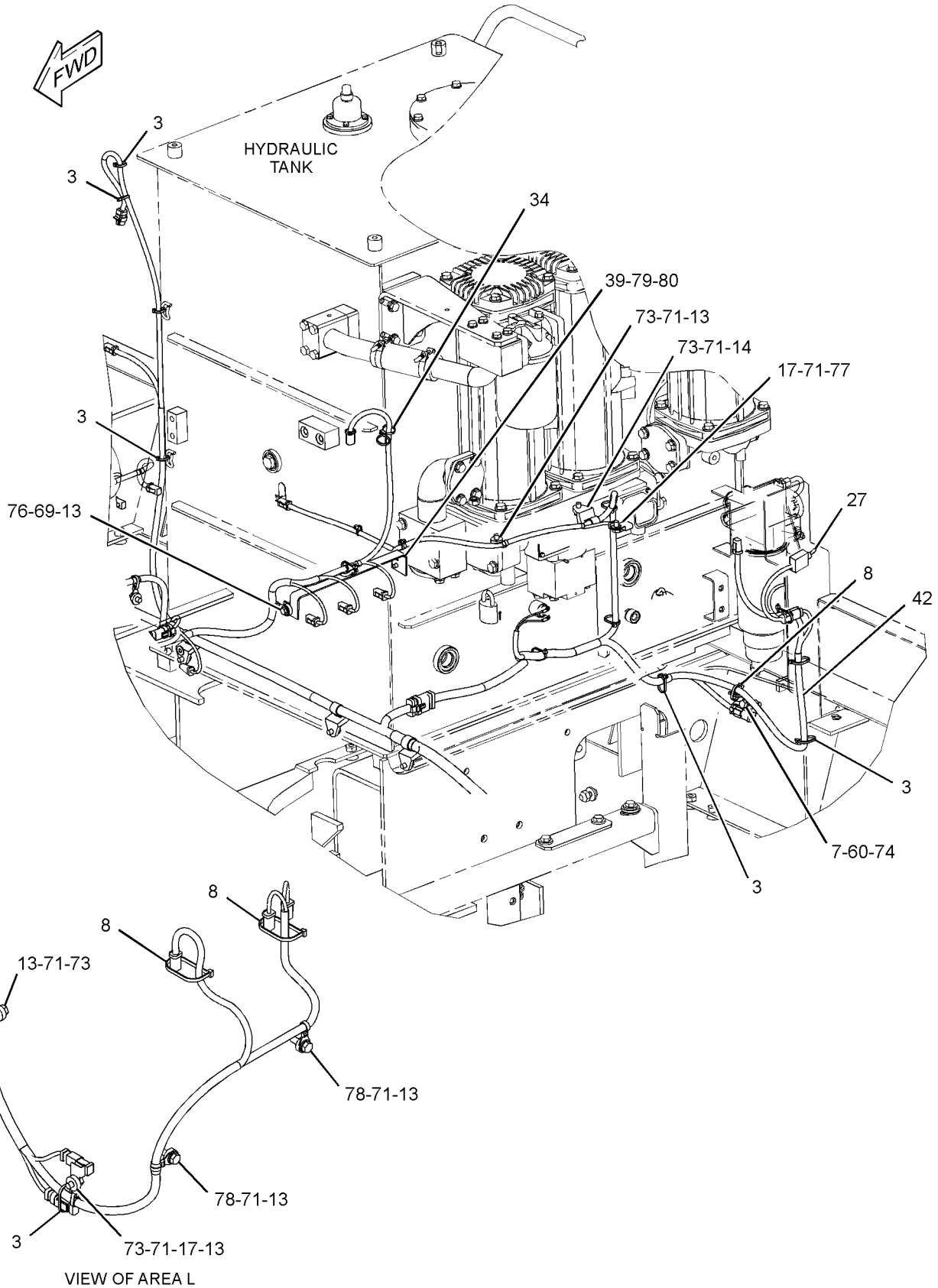

GRAPHIC #6 **<END>** g02168683

ELECTRICAL AND STARTING SYSTEM

328-0110 BATTERY & WIRING GP–COLD WEATHER

S/N: WAP1-UP
PART OF 319-9235 STARTING AR-COLD WEATHER
AN ATTACHMENT

SMCS-1401, 1402, 1408 **i03910526**

NOTE	REF NO	GRAPHIC REF	PART NUMBER	QTY	PART NAME 1 2 3 4 5 6 (PRODUCT LEVEL)	SEE PAGE
	1	2	**2G-8767**	6	WASHER (10.5X60X3-MM THK)	
	2	3	**3S-2093**	1	STRAP-CABLE	
	3	2	**6G-2256**	3	CLAMP	
	4	2	**6G-2263**	3	SPACER (10.5X19X28.5-MM THK)	
	5	3	**7K-1181**	2	STRAP-CABLE	
	6	3	**111-4836**	1	CLIP	
	7	2,3	**111-4837**	12	CLIP	
	8	3	**153-5710**	2	BATTERY (12-VOLT, 1400-CCA)	
M	9	3	**157-4822**	4	BOLT (M10X1.5X250-MM)	
	10	3	**198-7070**	1	SUPPORT AS	
	11	2	**204-1673**	4	STRAP-CABLE	
	12	3	**328-0333**	1	CABLE AS	
		3	**9G-0003**	1	COVER AS-TERMINAL (BLACK)	
		3	**8L-8413**	1	STRAP-CABLE	
		3	**9G-0004**	1	COVER AS-TERMINAL (RED)	
		3	**8L-8413**	1	STRAP-CABLE	
		3	**8C-5917**	1	TERMINAL AS-BATTERY (POSITIVE)	
		3	**1M-6119**	1	BOLT (5/16-18X1.375-IN)	
		3	**1M-6120**	1	NUT (5/16-18-THD)	
		3	**8T-9757**	1	TERMINAL AS-BATTERY (NEGATIVE)	
		3	**1M-6119**	1	BOLT (5/16-18X1.375-IN)	
		3	**1M-6120**	1	NUT (5/16-18-THD)	
E		3	**159-8049**		CABLE (00-GA, RED) (15-CM)	
	13	2	**328-0335**	1	CABLE AS	
		2	**1S-7251**	1	TERMINAL-CABLE (00-GA, 1/2-IN SCREW)	
D		2	**6V-2722**	1	TUBE-HEAT SHRINK (0.1-M)	
		2	**8N-1725**	1	COVER AS-TERMINAL (RED)	
		2	**8L-8413**	1	STRAP-CABLE	
		2	**3S-6049**	1	TERMINAL AS-BATTERY (POSITIVE)	
		2	**1M-6119**	1	BOLT (5/16-18X1.375-IN)	
		2	**1M-6120**	1	NUT (5/16-18-THD)	
E		2	**159-8049**		CABLE (00-GA, RED) (287-CM)	
	14	2	**328-0336**	1	CABLE AS	
		2	**1S-7251**	1	TERMINAL-CABLE (00-GA, 1/2-IN SCREW)	
		2	**7N-5274**	1	COVER-TERMINAL (BLACK) (BATTERY)	
		2	**8L-8413**	1	STRAP-CABLE	
		2	**9G-8909**	1	COVER-TERMINAL (BLACK) (JUNCTION BLOCK)	
		2	**3S-6050**	1	TERMINAL AS-BATTERY (NEGATIVE)	
		2	**1M-6119**	1	BOLT (5/16-18X1.375-IN)	
		2	**1M-6120**	1	NUT (5/16-18-THD)	
		2	**159-8050**		CABLE (00-GA, BLACK) (620-CM)	
	15	2	**328-0338**	1	CABLE AS	
		2	**1S-7251**	1	TERMINAL-CABLE (00-GA, 1/2-IN SCREW)	
		2	**7N-5274**	1	COVER-TERMINAL (BLACK) (BATTERY)	
		2	**8L-8413**	1	STRAP-CABLE	
		2	**9G-8909**	1	COVER-TERMINAL (BLACK) (JUNCTION BLOCK)	
		2	**3S-6050**	1	TERMINAL AS-BATTERY (NEGATIVE)	
		2	**1M-6119**	1	BOLT (5/16-18X1.375-IN)	
		2	**1M-6120**	1	NUT (5/16-18-THD)	
E		2	**159-8050**		CABLE (00-GA, BLACK) (27-CM)	
	16	2	**328-0339**	1	CABLE AS	
		2	**1S-7251**	1	TERMINAL-CABLE (00-GA, 1/2-IN SCREW)	
		2	**1S-7252**	1	TERMINAL-CABLE (00-GA, 3/8-IN SCREW)	
		2	**9G-8909**	1	COVER-TERMINAL (BLACK)	
		2	**159-8050**	44	CABLE (00-GA, BLACK)	

ELECTRICAL AND STARTING SYSTEM

328-0110 **BATTERY & WIRING GP** *(contd.)* **i03910526**

NOTE	REF NO	GRAPHIC REF	PART NUMBER	QTY	PART NAME 1 2 3 4 5 6 (PRODUCT LEVEL)	SEE PAGE
Y	17	2	**124-5815**	1	BLOCK GP-JUNCTION	178
	18	3	**4P-7428**	2	CLIP	
	19	2,3	**8T-4121**	11	WASHER-HARD (11X21X2.5-MM THK)	
M	20	2,3	**8T-4136**	6	BOLT (M10X1.5X25-MM)	
M	21	3	**8T-4137**	1	BOLT (M10X1.5X20-MM)	
M	22	2	**8T-4185**	3	BOLT (M10X1.5X50-MM)	
M	23	2	**8T-4195**	8	BOLT (M10X1.5X30-MM)	

D-ORDER BY THE METER
E-ORDER BY THE CENTIMETER
M-METRIC PART
Y-SEPARATE ILLUSTRATION

REFER TO ALL ILLUSTRATIONS OF
THIS GROUP FOR AUXILIARY VIEWS

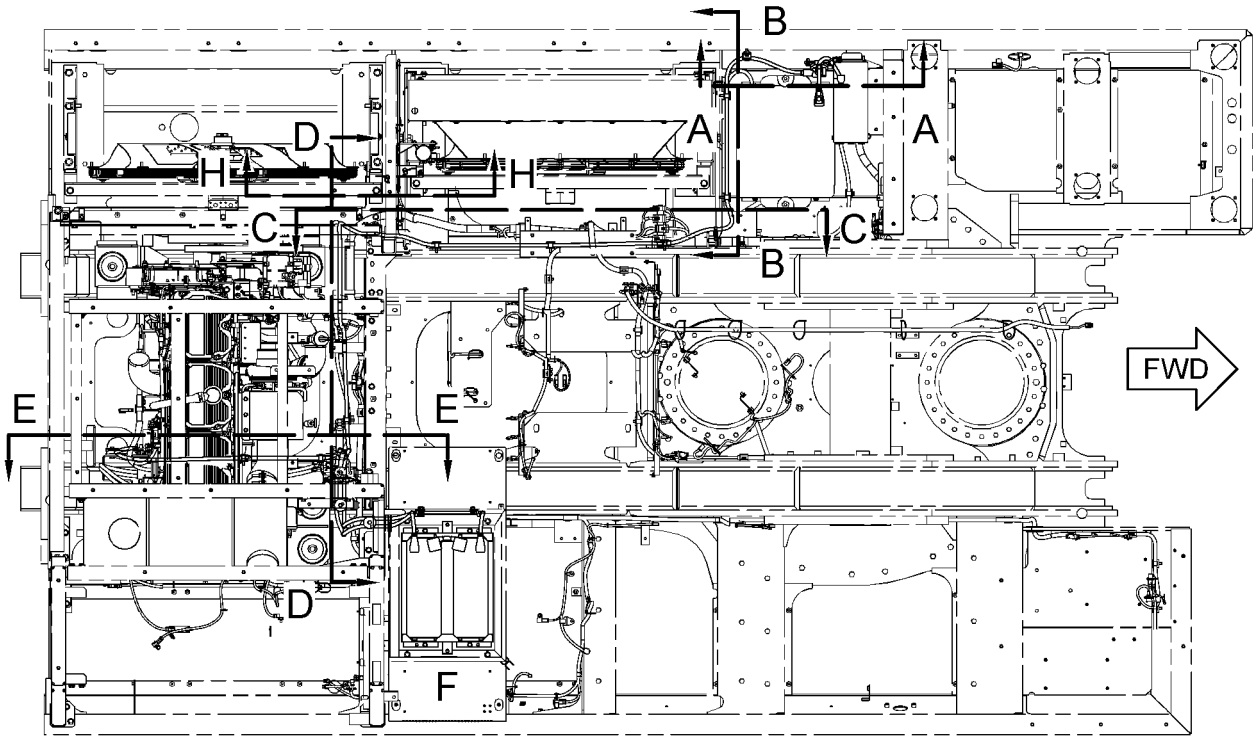

TOP VIEW

GRAPHIC #1 g02157176

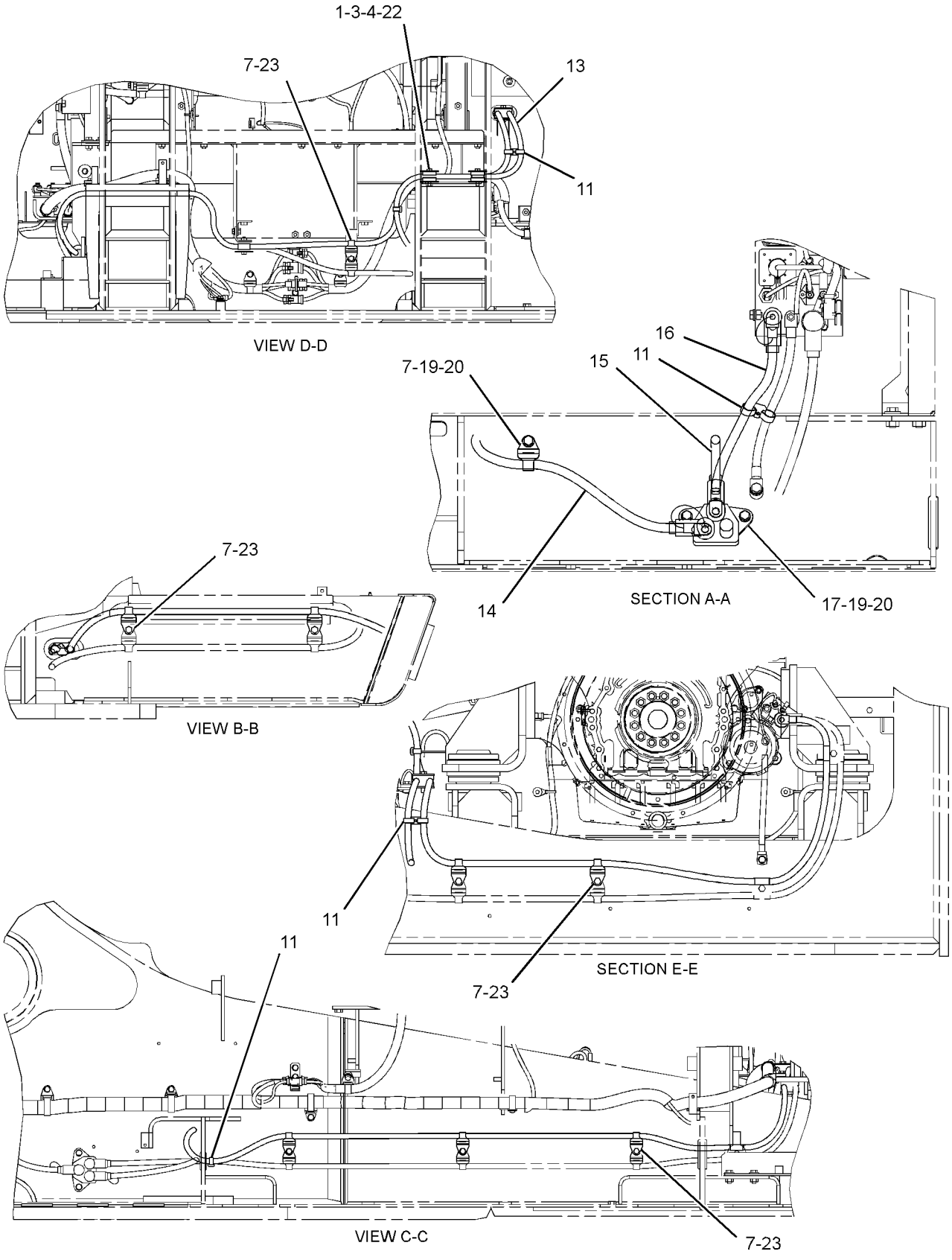

GRAPHIC #2 g02157236

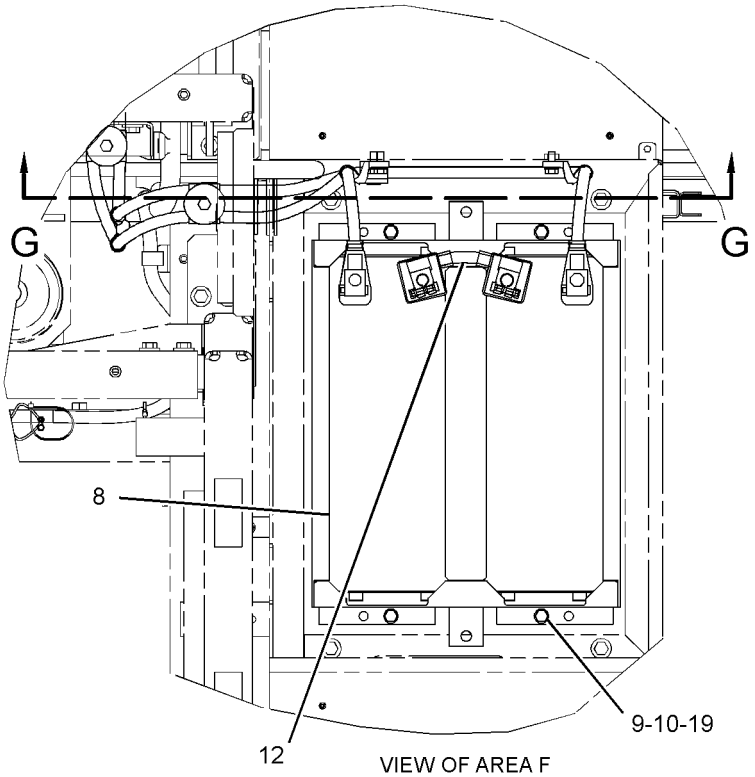

VIEW OF AREA F

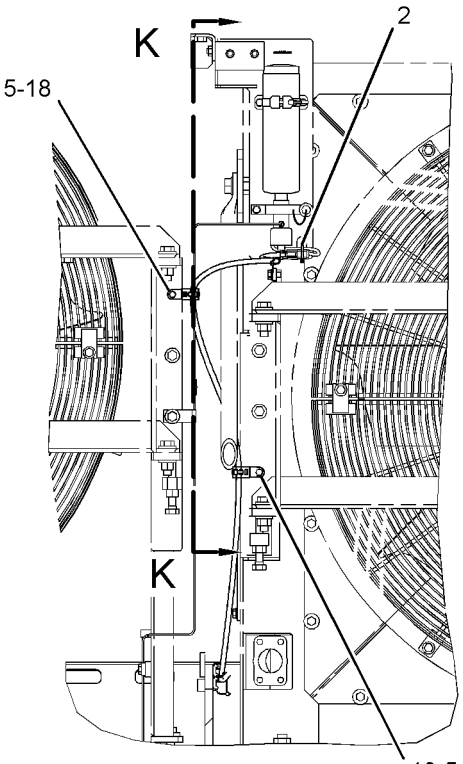

VIEW H-H

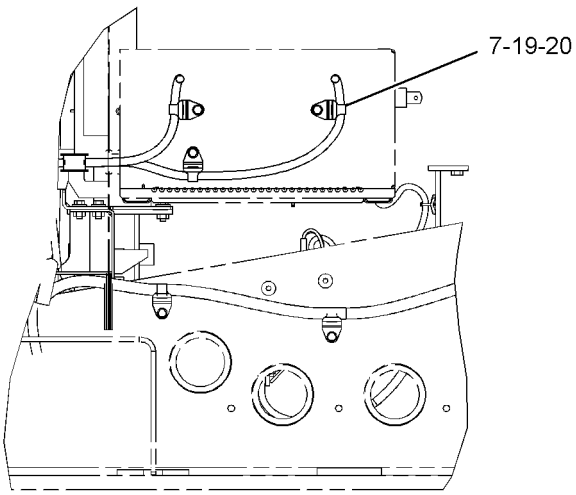

SECTION G-G

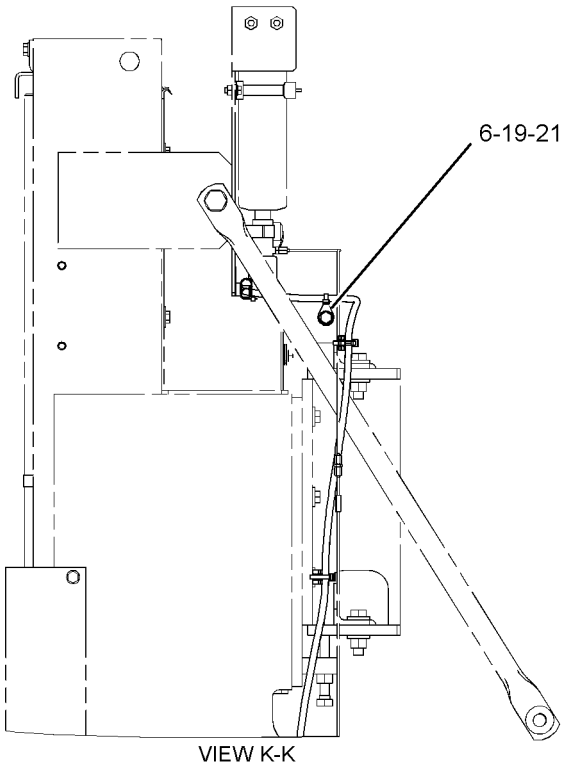

VIEW K-K

GRAPHIC #3 **<END>** g02157277

9W-0742 BLOCK GP-JUNCTION–BATTERY

S/N: WAP1-UP
PART OF 299-2635 BATTERY & WIRING GP, 328-0106 WIRING GP-AUX START RECEPTACLE
ALSO AN ATTACHMENT

SMCS-7426 **i01863967**

NOTE	REF NO	GRAPHIC REF	PART NUMBER	QTY	PART NAME 1 2 3 4 5 6 (PRODUCT LEVEL)	SEE PAGE
	1	1	**8C-6358**	1	BLOCK AS-JUNCTION (BATTERY)	
	1A	1	**8T-3519**	3	BOLT-BRONZE (1/2-13X2-IN)	
BD	2	1	**6V-2722**		TUBE-HEAT SHRINK	
	3	1	**7F-0560**	6	WASHER (0.516X0.938X0.101-IN THK)	
	4	1	**8T-3518**	6	NUT-FULL (1/2-13-THD)	

B-USE AS REQUIRED
D-ORDER BY THE METER

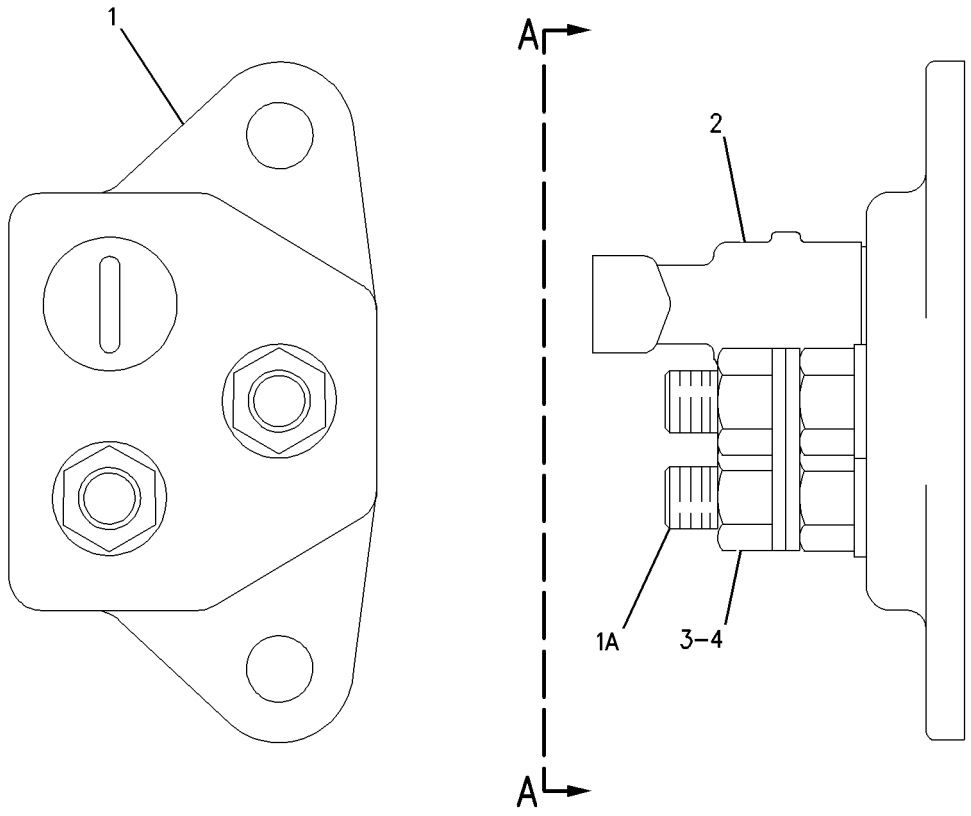

VIEW A-A

GRAPHIC #1 **<END>** g00650721

ELECTRICAL AND STARTING SYSTEM

124-5815 BLOCK GP-JUNCTION–BATTERY

S/N: WAP1-UP
PART OF 328-0110 BATTERY & WIRING GP
AN ATTACHMENT

SMCS-7426 **i03910530**

NOTE	REF NO	GRAPHIC REF	PART NUMBER	QTY	PART NAME 1 2 3 4 5 6 (PRODUCT LEVEL)	SEE PAGE
	1	1	**8C-6358**	1	BLOCK AS-JUNCTION (BATTERY)	
		1	**1D-5117**	3	NUT-JAM (1/2-13-THD)	
		1	**8T-3519**	3	BOLT-BRONZE (1/2-13X2-IN)	
	2	1	**7F-0560**	6	WASHER (0.516X0.938X0.101-IN THK)	
D	3	1	**6V-2722**	1	TUBE-HEAT SHRINK (0.1-M)	
	4	1	**8T-3518**	6	NUT-FULL (1/2-13-THD)	

D-ORDER BY THE METER

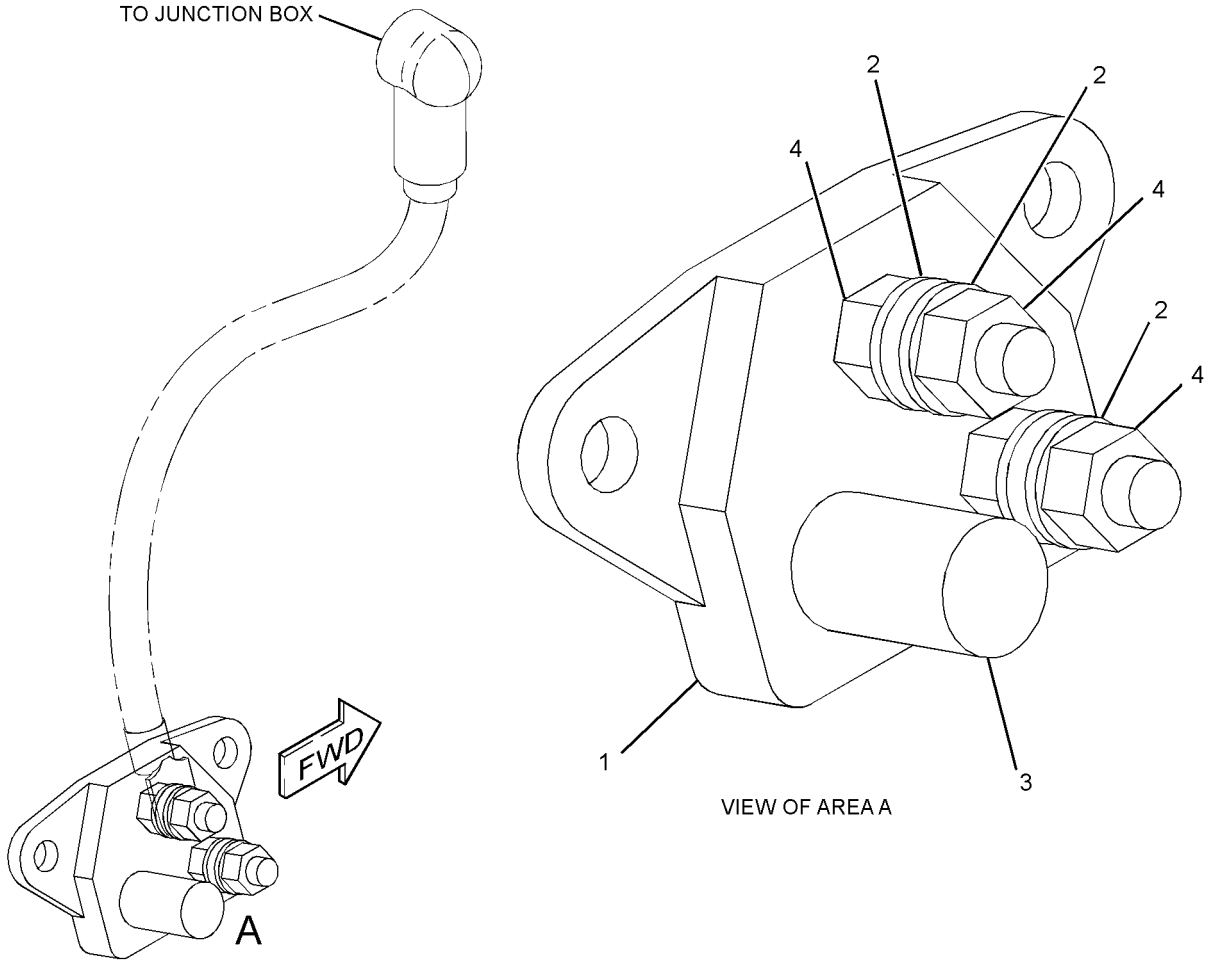

GRAPHIC #1 **<END>** g02157150

313-7833 CAMERA & MOUNTING GP–

WORK AREA VISUAL SYSTEM, REAR

S/N: WAP1-UP

PART OF 307-7757 MOUNTING GP-CAMERA

AN ATTACHMENT

SMCS-7348 **i03825909**

NOTE	REF NO	GRAPHIC REF	PART NUMBER	QTY	PART NAME 1 2 3 4 5 6 (PRODUCT LEVEL)	SEE PAGE
	1	1	**3S-2093**	1	STRAP-CABLE	
Y	2	1	**336-6684**	1	CAMERA GP (12-VOLT, 24-VOLT)	182
	3	1	**320-5392**	1	BRACKET AS	
M	4	1	**5C-9553**	2	BOLT (M6X1X16-MM)	
	5	1	**9X-8256**	2	WASHER (6.6X12X2-MM THK)	

M-METRIC PART
Y-SEPARATE ILLUSTRATION

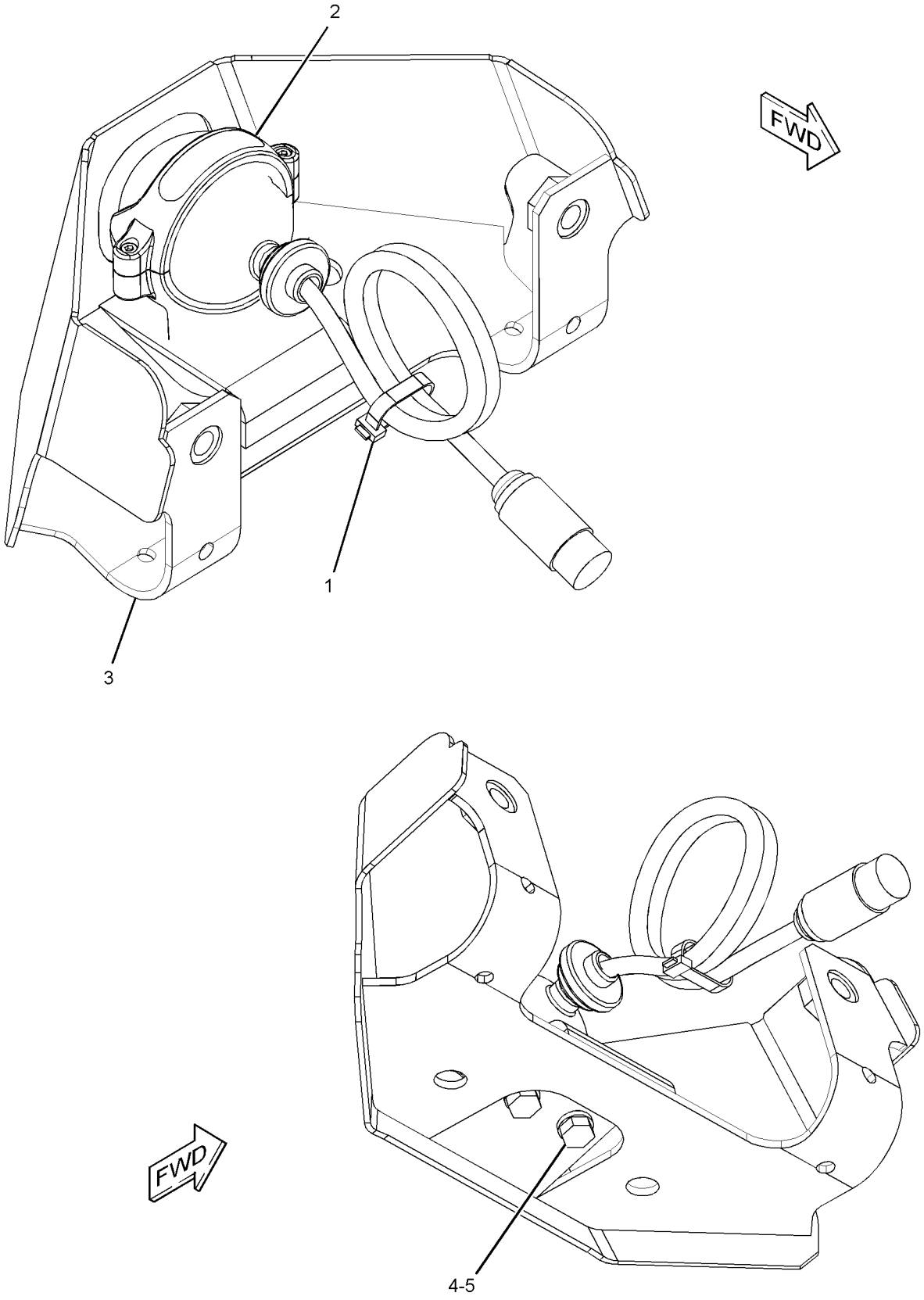

GRAPHIC #1 **<END>** g02034396

319-9186 CAMERA AR—WORK AREA VISUAL SYSTEM

S/N: WAP1-UP

AN ATTACHMENT

SMCS-7348 **i04028615**

NOTE	PART NUMBER	QTY	PART NAME 1 2 3 4 5 6 (PRODUCT LEVEL)	SEE PAGE
Y	*273-5358*	1	FLOOR MAT GP (ACCUGRADE READY)	983
Y	*320-5621*	1	MOUNTING GP-CAMERA (MIRROR, RH)	220
Y	*328-0107*	1	MOUNTING GP-CAMERA (WORK AREA VISUAL SYSTEM, BOOM)	221
Y	*309-5805*	1	MOUNTING GP-DISPLAY (WORK AREA VISUAL SYSTEM)	1017
Y	*299-3016*	1	WIRING GP-CAMERA (WORK AREA VISUAL SYSTEM)	282

Y-SEPARATE ILLUSTRATION

<END>

340-4025 CAMERA AR—WORK AREA VISUAL SYSTEM, REAR

S/N: WAP1-UP

AN ATTACHMENT

SMCS-7348 **i03914052**

NOTE	PART NUMBER	QTY	PART NAME 1 2 3 4 5 6 (PRODUCT LEVEL)	SEE PAGE
Y	*303-2787*	1	FILM GP (WORK AREA VISUAL SYSTEM, REAR)	1073
Y	*307-7757*	1	MOUNTING GP-CAMERA (COUNTERWEIGHT)	219
Y	*350-8107*	1	WIRING GP-CAMERA (WORK AREA VISUAL SYSTEM, REAR)	283
Y	*299-2943*	1	WIRING GP-MONITOR (WORK AREA VISUAL SYSTEM, REAR)	322

Y-SEPARATE ILLUSTRATION

<END>

336-6684 CAMERA GP—WORK AREA VISUAL SYSTEM, REAR

S/N: WAP1-UP
12-VOLT/24-VOLT
PART OF 313-7833 CAMERA & MOUNTING GP
AN ATTACHMENT

SMCS-7348 **i03836469**

NOTE	REF NO	GRAPHIC REF	PART NUMBER	QTY	PART NAME 1 2 3 4 5 6 (PRODUCT LEVEL)	SEE PAGE
					AVAILABLE REPAIR KIT(S):	
			251-4162	1	KIT-BRACKET (CAMERA)	
					(INCLUDES BRACKET, BOLTS, LOCK NUTS, GASKET & ALLEN KEY)	

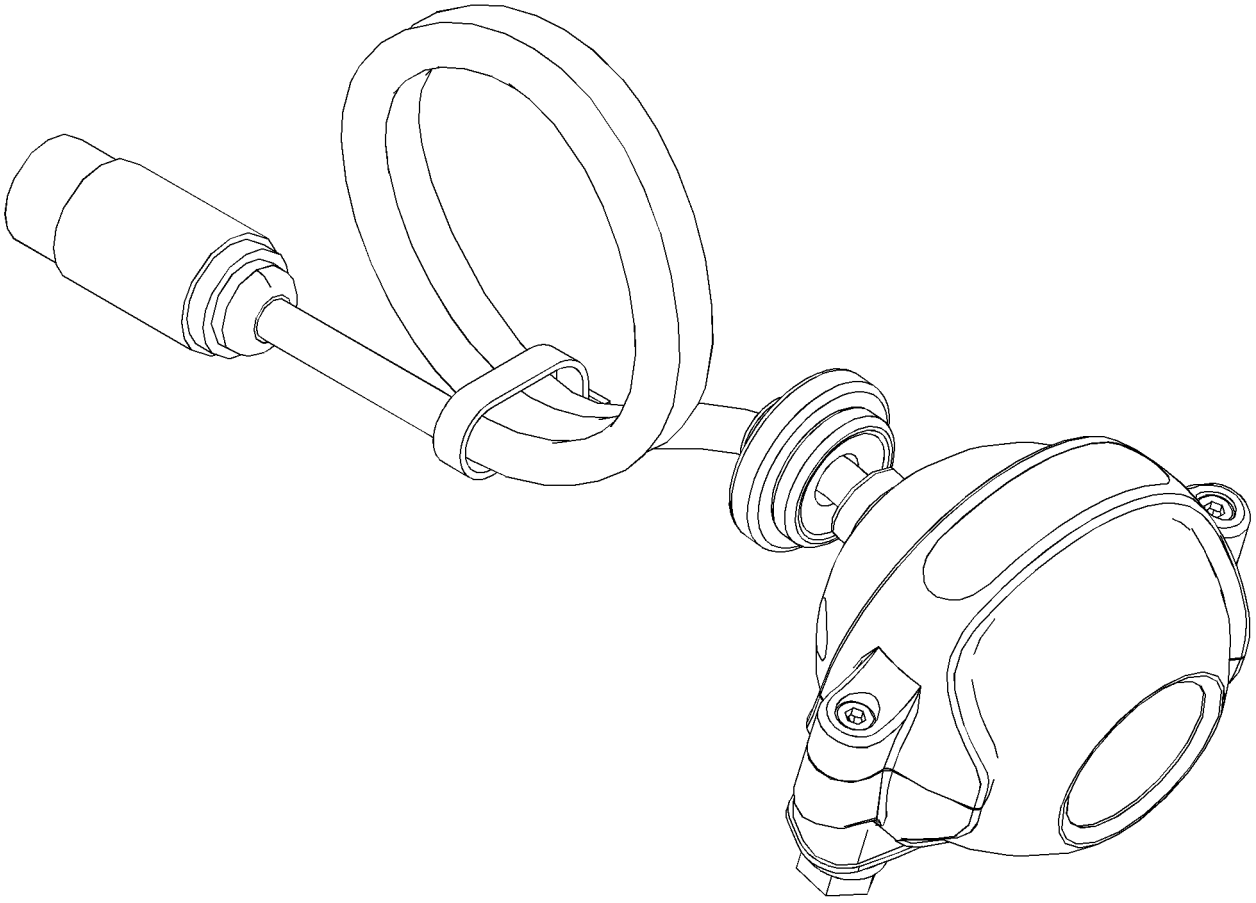

GRAPHIC #1 **<END>** g02034339

126-7631 CONNECTION GP-ELECTRICAL

S/N: RHX7868-UP
PART OF 286-9798 ENGINE AR-COMPLETE
FOR USE WITH BLOCK SOUND PANEL

SMCS-1408, 7553 **i03905699**

NOTE	REF NO	GRAPHIC REF	PART NUMBER	QTY	PART NAME 1 2 3 4 5 6 (PRODUCT LEVEL)	SEE PAGE
	1	1	**126-8449**	1	STUD (3/8-16, 5/8-18X3.1-IN)	
	2	1	**8T-4896**	2	WASHER-HARD (10.2X18.5X2.5-MM THK)	
	3	1	**6V-8801**	1	NUT (3/8-16-THD)	
	4	1	**9M-7783**	1	SPACER (0.65X1.188X0.81-IN THK)	
	5	1	**5P-8247**	1	WASHER-HARD (17X32X3.5-MM THK)	

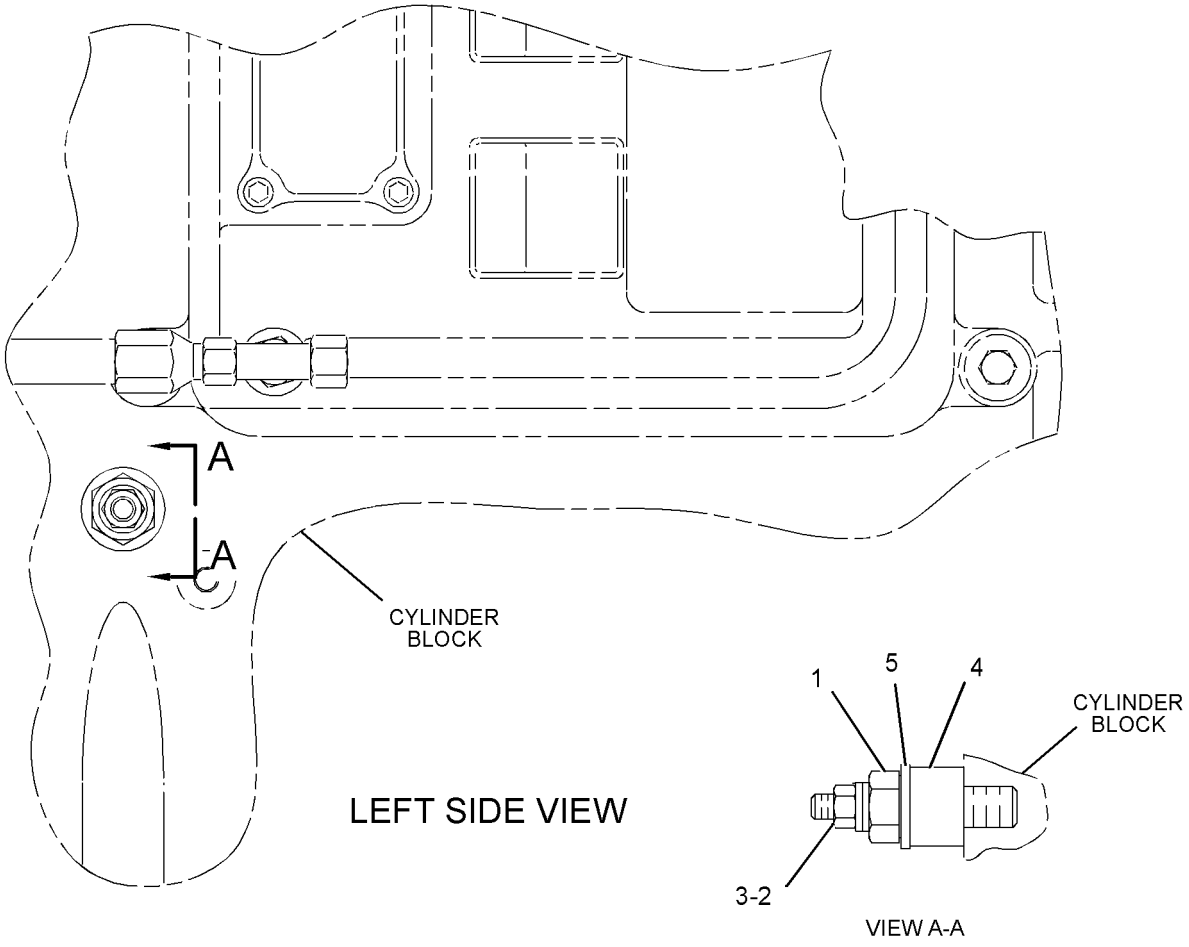

GRAPHIC #1 **<END>** g01380369

309-5845 CONTROL & MTG GP-COMMUNICATION–

PRODUCT LINK 121SR

S/N: WAP1-UP

PART OF 303-2647 INSTALLATION AR-COMMUNICATION

AN ATTACHMENT

SMCS-7606 **i03925290**

NOTE	REF NO	GRAPHIC REF	PART NUMBER	QTY	PART NAME 1 2 3 4 5 6 (PRODUCT LEVEL)	SEE PAGE
	1	2	**3S-2093**	11	STRAP-CABLE	
CY	2	2	**336-3545**	1	RADIO GP-COMMUNICATION (PRODUCT LINK 121SR)	1030
	3	2	**111-4836**	1	CLIP	
	4	2	**8T-4121**	1	WASHER-HARD (11X21X2.5-MM THK)	
M	5	2	**8T-4137**	1	BOLT (M10X1.5X20-MM)	
M	6	2	**8T-4138**	4	BOLT (M6X1X20-MM)	
	7	2	**9X-8256**	4	WASHER (6.6X12X2-MM THK)	
	8	1	**230-1340**	1	FILM-WARNING (PRODUCT LINK RADIO, U.S.)	
					–OR–	
		1	**230-1341**	1	FILM-WARNING (PRODUCT LINK RADIO, INTL)	
B	10	2	**091-9035**	1	SPACER (11X25X20-MM THK)	
	11	1	**307-0047**	1	FILM-INFORMATION (PRODUCT LINK, READ OMM)	

B-USE AS REQUIRED
C-CHANGE FROM PREVIOUS TYPE
M-METRIC PART
Y-SEPARATE ILLUSTRATION

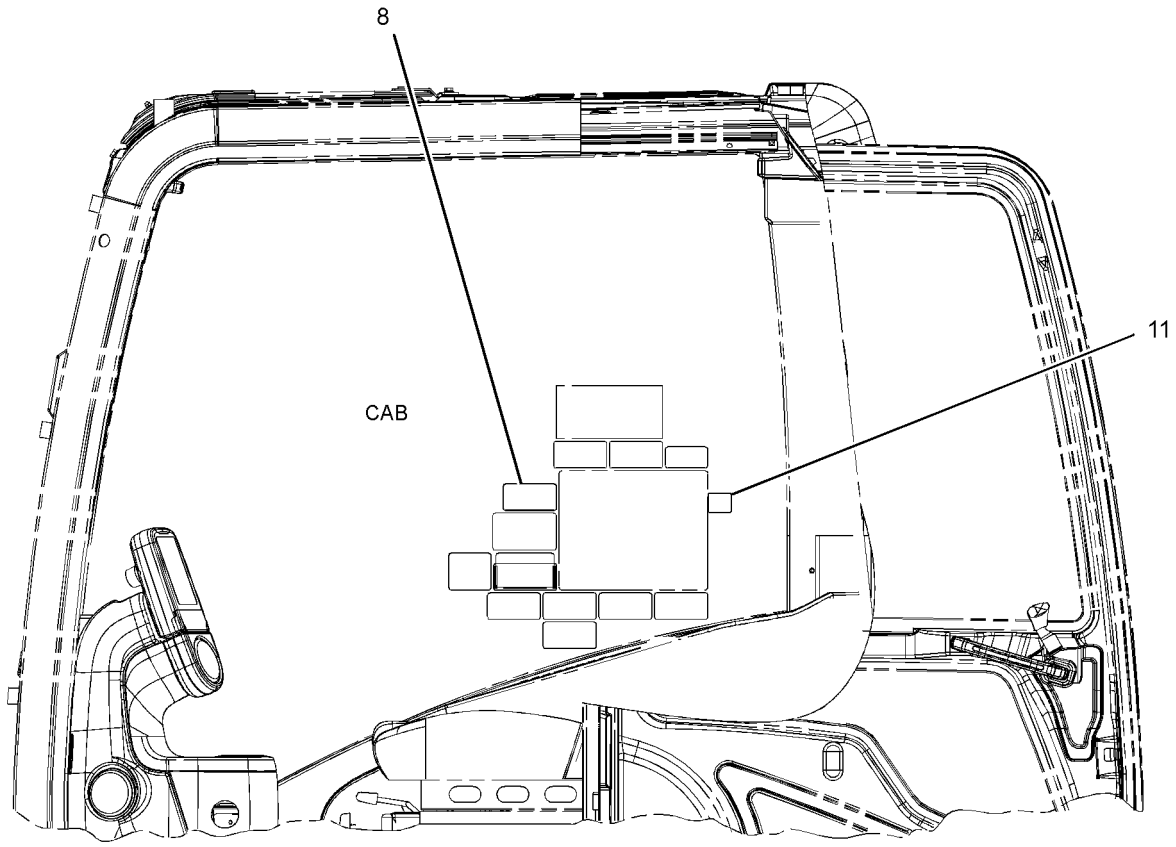

LEFT SIDE VIEW

GRAPHIC #1 g01773274

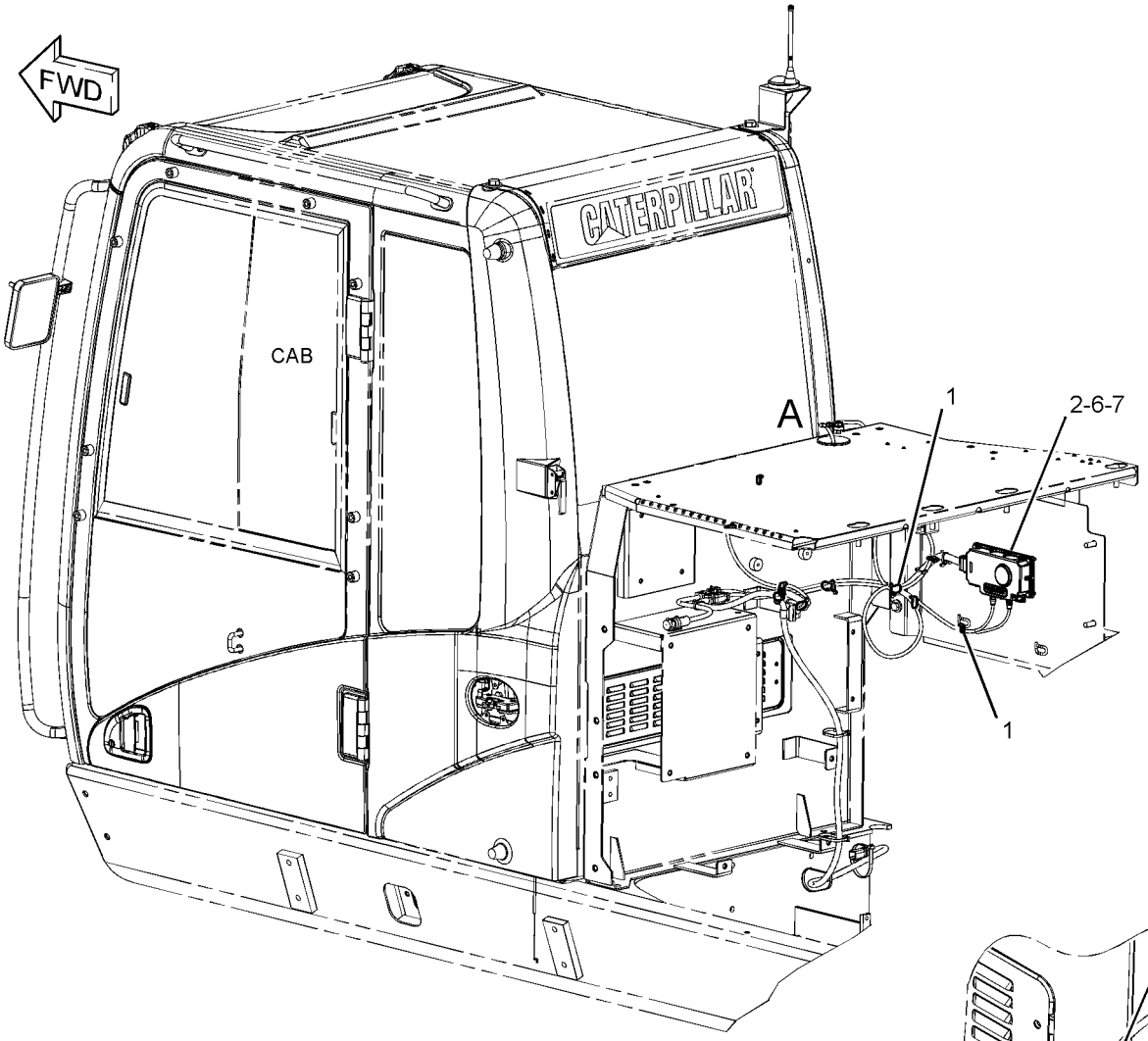

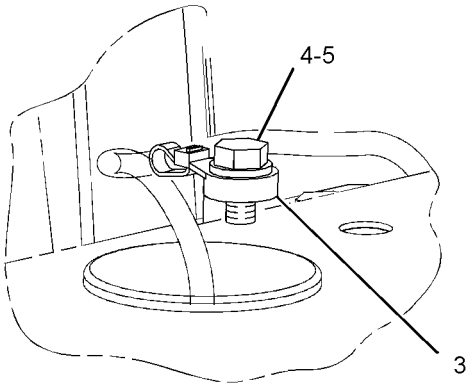

VIEW OF AREA A

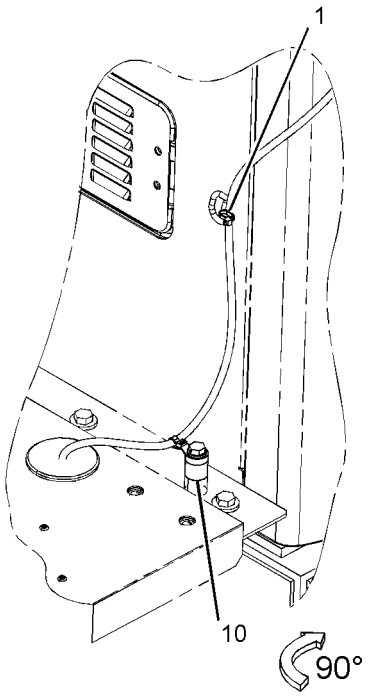

VIEW OF AREA A
(HIGH CAB FOR FRONT SHOVEL)

GRAPHIC #2 **<END>** g01785654

309-5846 CONTROL & MTG GP-COMMUNICATION–

PRODUCT LINK 321SR

S/N: WAP1-UP

PART OF 303-2647 INSTALLATION AR-COMMUNICATION

AN ATTACHMENT

SMCS-7606 **i02984062**

NOTE	REF NO	GRAPHIC REF	PART NUMBER	QTY	PART NAME 1 2 3 4 5 6 (PRODUCT LEVEL)	SEE PAGE
	1	1	**8C-5608**	4	SPACER (6.5X9.5X25.4-MM THK)	
	2	1	**9X-9896**	8	MOUNT (ISOLATION)	
Y	3	1	*262-1421*	1	ELECTRONICS GP-COMMUNICATION (PRODUCT LINK 300)	191
M	4	1	**8C-8451**	4	BOLT (M6X1X40-MM)	
	5	1	**9X-6165**	4	WASHER (6.5X22X2.5-MM THK)	

M-METRIC PART
Y-SEPARATE ILLUSTRATION

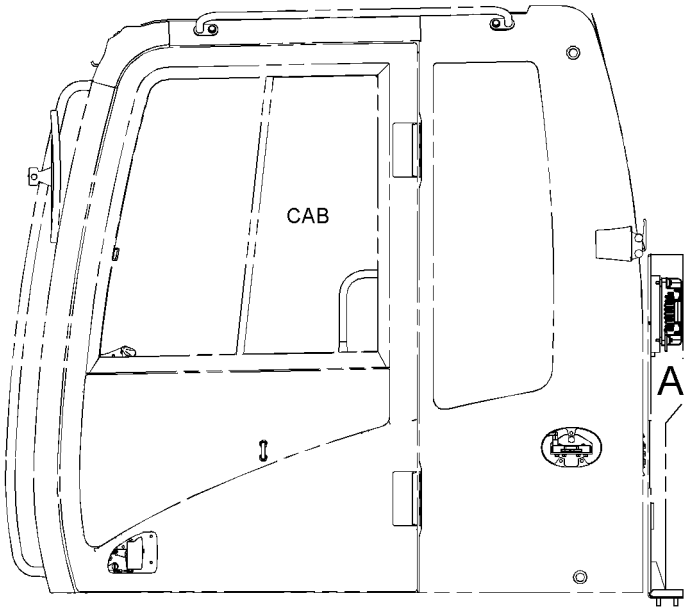

LEFT SIDE VIEW

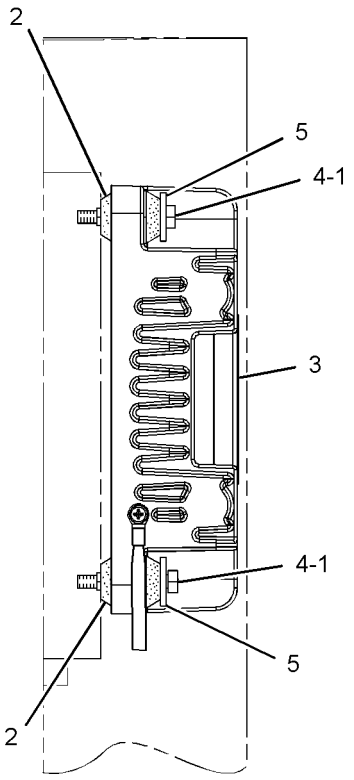

VIEW OF AREA A

GRAPHIC #1 **<END>** g01515283

229-5509 CONTROL & MTG GP-ENGINE ELEK

S/N: RHX7868-UP
ADEM-IV, FUEL COOLED
PART OF 286-9798 ENGINE AR-COMPLETE

SMCS-1901 **i03905717**

NOTE	REF NO	GRAPHIC REF	PART NUMBER	QTY	PART NAME 1 2 3 4 5 6 (PRODUCT LEVEL)	SEE PAGE
	1	1	**6I-1418**	4	SPACER (8.2X12.7X28.7-MM THK)	
	2	1	**8T-9655**	8	MOUNT-ISOLATION	
	4	1	**155-0696**	1	SUPPORT AS	
	4A	1	**5L-3708**	1	STUD-TAPERLOCK (5/16-18X1.28-IN)	
	5	1	**155-0698**	1	SUPPORT AS	
	5A	1	**5L-3708**	1	STUD-TAPERLOCK (5/16-18X1.28-IN)	
	7	1	**161-7419**	4	STUD	
CR	8	1	**262-2879**	1	CONTROL GP-UNPROGRAMMED (ENGINE)	
	9	1	**233-0891**	1	BRACKET AS	
M	9A	1	**232-1693**	1	BOLT-FLANGE HEAD (M6X1X35-MM)	
	10	1	**2B-2695**	3	BOLT (5/16-18X0.875-IN)	
	11	1	**7X-0613**	4	WASHER-HARD (8.8X25.5X5-MM THK)	
	12	1	**9M-1974**	7	WASHER-HARD (8.8X16X2-MM THK)	
	13	1	**9N-0869**	4	WASHER-HARD (8.8X25.5X2-MM THK)	

C-CHANGE FROM PREVIOUS TYPE
M-METRIC PART
R-REMFG PART MAY BE AVAILABLE

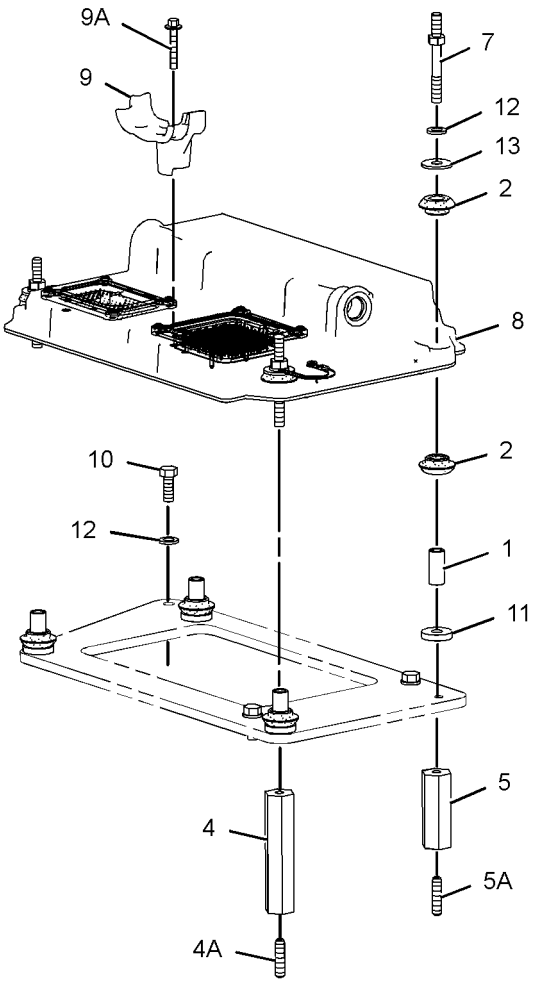

GRAPHIC #1 **<END>** g01386928

ELECTRICAL AND STARTING SYSTEM

290-9395 CONTROL & MTG GP-MACHINE

S/N: WAP1-UP

PART OF 294-1237 CHASSIS AR

SMCS-1931, 7600 **i03655947**

NOTE	REF NO	GRAPHIC REF	PART NUMBER	QTY	PART NAME 1 2 3 4 5 6 (PRODUCT LEVEL)	SEE PAGE
	1	1	**290-9479**	1	CONTROL GP-MACHINE	
M	2	1	**9X-2480**	4	BOLT (M6X1X45-MM)	
	3	1	**9X-8256**	4	WASHER (6.6X12X2-MM THK)	

M-METRIC PART

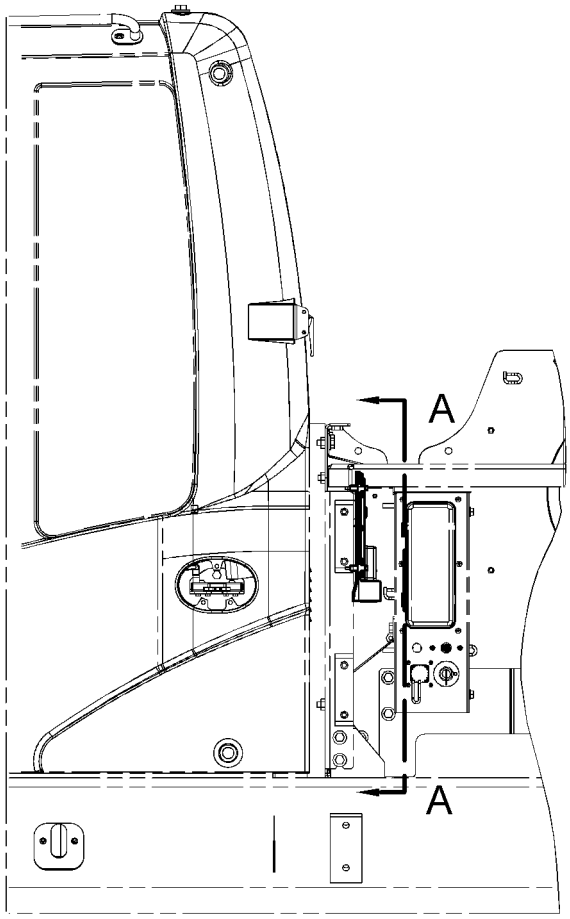

LEFT SIDE VIEW

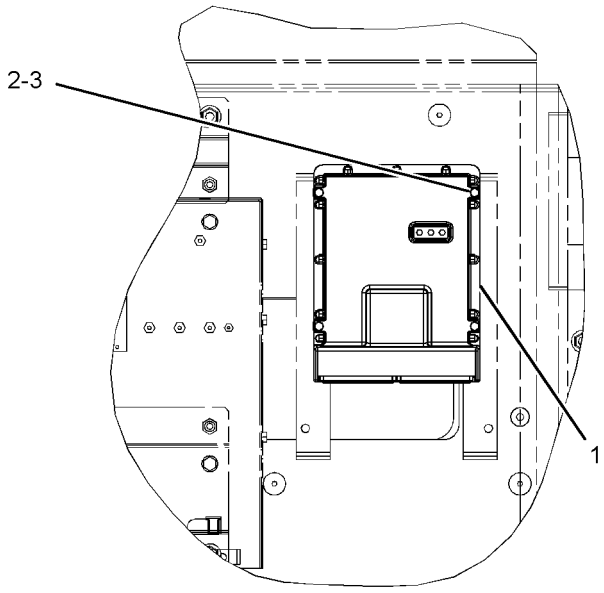

VIEW A-A

GRAPHIC #1 **<END>** g02049353

290-9517 CONTROL & MTG GP-MACHINE

S/N: WAP1-UP

PART OF 310-0005, 310-0006 CONTROL AR-AUXILIARY

AN ATTACHMENT

SMCS-1931, 7600 **i03602441**

NOTE	REF NO	GRAPHIC REF	PART NUMBER	QTY	PART NAME 1 2 3 4 5 6 (PRODUCT LEVEL)	SEE PAGE
	1	1	**171-2584**	1	BRACKET AS	
	2	1	**221-8874**	1	CONTROL GP-UNPROGRAMMED	
M	3	1	**7X-2536**	2	BOLT (M8X1.25X14-MM)	
M	4	1	**7X-2538**	2	BOLT (M8X1.25X100-MM)	
	5	1	**8T-4224**	4	WASHER-HARD (8.8X16X2-MM THK)	
M	6	1	**9X-2480**	4	BOLT (M6X1X45-MM)	
	7	1	**9X-8256**	4	WASHER (6.6X12X2-MM THK)	

M-METRIC PART

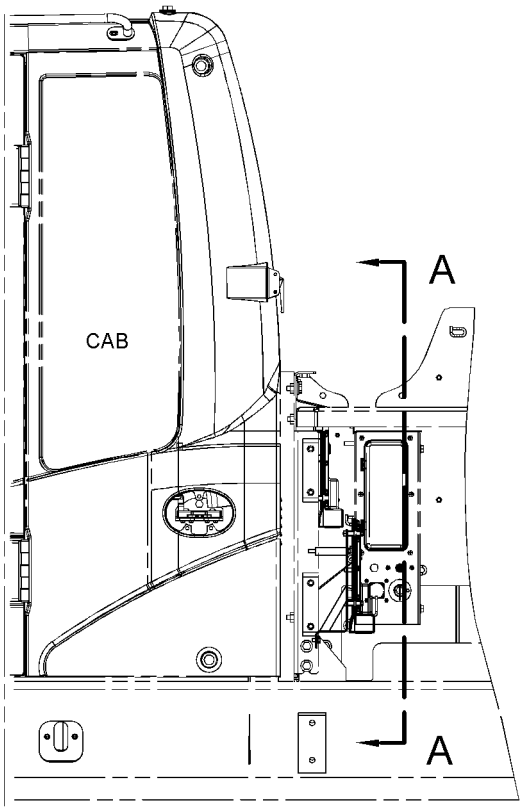

LEFT SIDE VIEW

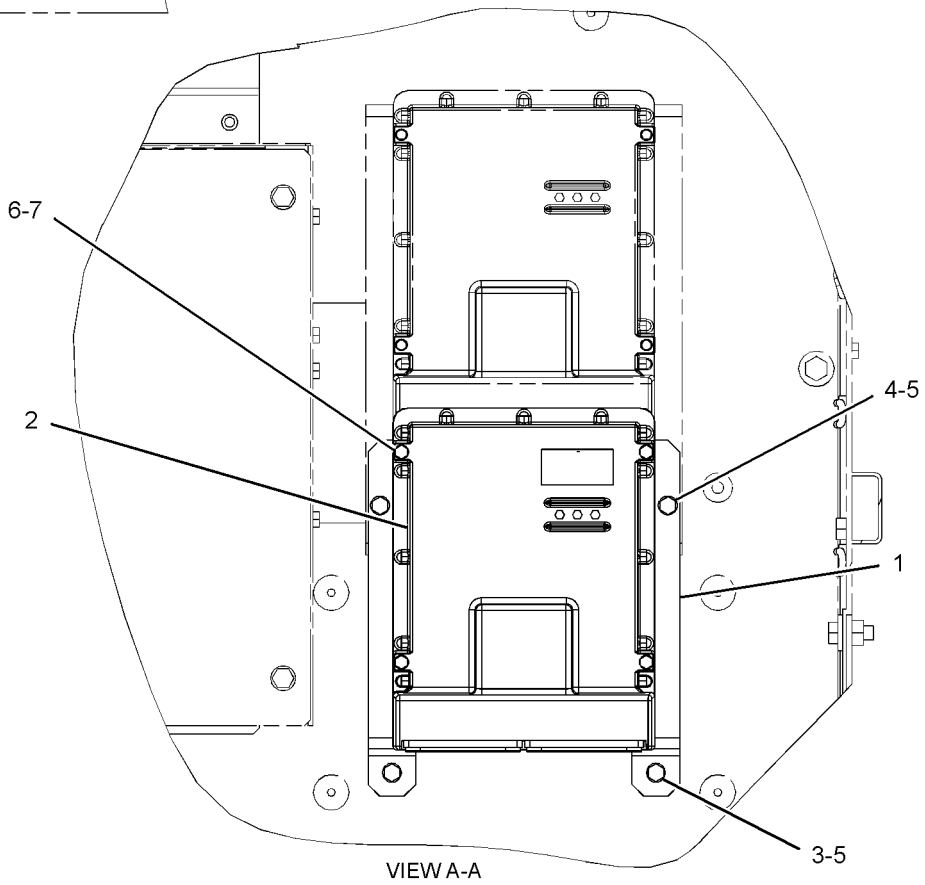

VIEW A-A

GRAPHIC #1 **<END>** g01943376

ELECTRICAL AND STARTING SYSTEM

262-1421 ELECTRONICS GP-COMMUNICATION–

PRODUCT LINK 300

S/N: WAP1-UP

PART OF 309-5846 CONTROL & MTG GP-COMMUNICATION

AN ATTACHMENT

SMCS-7606, 7610, 7620 **i03907267**

NOTE	PART NUMBER	QTY	PART NAME 1 2 3 4 5 6 (PRODUCT LEVEL)	SEE PAGE
	355-5105	1	SOFTWARE GP-COMMUNICATION	
			-OR-	
	355-9764	1	SERVICE GP-COMMUNICATION	
			(OPTIONAL SERVICE REPLACEMENT)(INCLUDES CONTROL GP & SOFTWARE)	

<END>

290-9398 ELECTRONICS GP-MACHINE–

ELECTRONIC CONTROL MODULE

S/N: WAP1-UP

PART OF 294-1203 GENERAL AR

SMCS-7610, 7620 **i03902110**

NOTE	PART NUMBER	QTY	PART NAME 1 2 3 4 5 6 (PRODUCT LEVEL)	SEE PAGE
	290-9528	1	SOFTWARE GP-MACHINE	
			–OR–	
	290-9529	1	SERVICE GP-MACHINE	
			(OPTIONAL SERVICE REPLACEMENT) (INCLUDES CONTROL GP & SOFTWARE)	

<END>

290-9518 ELECTRONICS GP-MACHINE

S/N: WAP1-UP

PART OF 310-0005, 310-0006 CONTROL AR-AUXILIARY

AN ATTACHMENT

SMCS-7610, 7620 **i03602420**

NOTE	PART NUMBER	QTY	PART NAME 1 2 3 4 5 6 (PRODUCT LEVEL)	SEE PAGE
	290-9519	1	SOFTWARE GP-MACHINE	
			–OR–	
	290-9520	1	SERVICE GP-MACHINE	
			(OPTIONAL SERVICE REPLACEMENT) (INCLUDES CONTROL GP & SOFTWARE)	

<END>

ELECTRICAL AND STARTING SYSTEM

221-8861 ELECTRONICS GP-MONITOR

S/N: WAP1-UP

PART OF 294-1203 GENERAL AR

SMCS-7490, 7601, 7610, 7620 **i03901153**

NOTE	PART NUMBER	QTY	PART NAME 1 2 3 4 5 6 (PRODUCT LEVEL)	SEE PAGE
	349-5410	1	SOFTWARE GP-MONITOR	
			—OR—	
Y	**349-5408**	1	MONITOR GP-OPERATOR	1010
			(OPTIONAL SERVICE REPLACEMENT)(INCLUDES MONITOR GP & SOFTWARE)	
Y-SEPARATE ILLUSTRATION				

<END>

259-5295 FASTENER GP-WIRING HARNESS–JOYSTICK

S/N: WAP1-UP
PART OF 352-6875, 352-6876 CONTROL AR-AUXILIARY
AN ATTACHMENT

SMCS-1408, 7553 **i04007679**

NOTE	REF NO	GRAPHIC REF	PART NUMBER	QTY	PART NAME 1 2 3 4 5 6 (PRODUCT LEVEL)	SEE PAGE
	1	1	3S-2093	2	STRAP - CABLE	

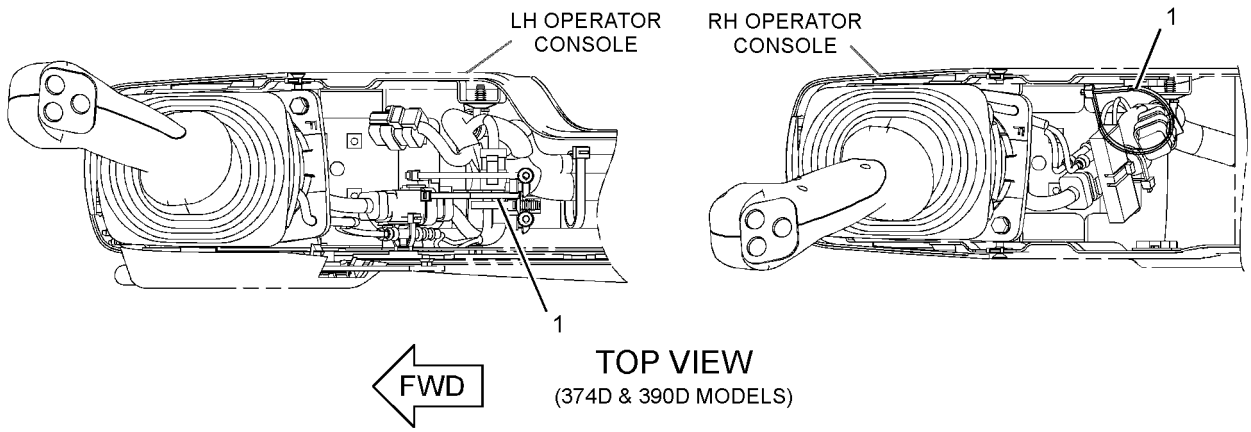

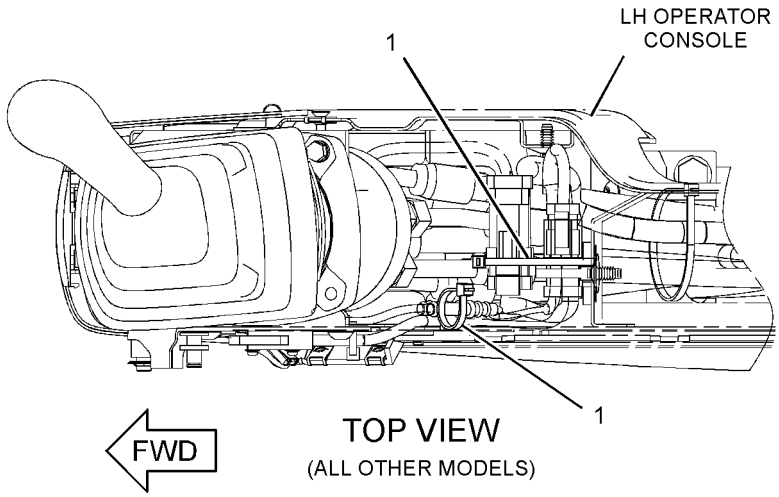

GRAPHIC #1 **<END>** g02181157

335-2081 HARNESS AS-WIRING—POWER CONVERTER

S/N: WAP1-UP

FOR USE WITH 131-0327 CONVERTER AS, 283-2783 CONVERTER-POWER

FIELD INSTALLATION

SMCS-1408 **i03483783**

NOTE	PART NUMBER	QTY	PART NAME 1 2 3 4 5 6 (PRODUCT LEVEL)	SEE PAGE
	102-8806	1	KIT-RECEPTACLE (8-PIN)	
			(INCLUDES RECEPTACLE AS AND WEDGE)	
	186-3735	6	PIN-CONNECTOR (16-GA TO 18-GA)	
	230-5010	1	PLUG AS-CONNECTOR (6-PIN)	
	264-7032	1	SEAL-CONNECTOR	
	8T-8737	2	PLUG-SEAL	
	186-3736	5	SOCKET-CONNECTOR (16-GA TO 18-GA)	
	9W-0844	1	SOCKET-CONNECTOR (14-GA)	
	3E-3389	1	WEDGE-RECEPTACLE LOCK (8-PIN)	
D	**5P-5677**		WIRE (18-GA, BLACK) (1.0-M)	
D	**5P-5623**		WIRE-ELECTRICAL (16-GA, BLACK) (0.2-M)	

D-ORDER BY THE METER

<END>

303-2647 INSTALLATION AR-COMMUNICATION—

PRODUCT LINK 321SR

S/N: WAP1-UP

AN ATTACHMENT

SMCS-7606 **i04024923**

NOTE	PART NUMBER	QTY	PART NAME 1 2 3 4 5 6 (PRODUCT LEVEL)	SEE PAGE
Y	*309-5845*	1	CONTROL & MTG GP-COMMUNICATION (PRODUCT LINK 121SR)	184
Y	*309-5846*	1	CONTROL & MTG GP-COMMUNICATION (PRODUCT LINK 321SR)	186
Y	*309-5852*	1	MOUNTING GP-ANTENNA (PRODUCT LINK)	1014
Y	*299-3012*	1	WIRING GP-COMMUNICATION (PRODUCT LINK 321SR)	295

Y-SEPARATE ILLUSTRATION

<END>

ELECTRICAL AND STARTING SYSTEM

153-2521 LAMP GP-FLOOD

S/N: WAP1-UP
24-VOLT
PART OF 150-7033 LIGHTING GP-CHASSIS, 238-1610, 238-1612, 238-2173 LIGHTING GP-FLOOD
ALSO AN ATTACHMENT

SMCS-1434 **i03626397**

NOTE	REF NO	GRAPHIC REF	PART NUMBER	QTY	PART NAME 1 2 3 4 5 6 (PRODUCT LEVEL)	SEE PAGE
M	1	1	**6V-5210**	2	SCREW-MACHINE (M4X0.7X10-MM)	
	2	1	**3B-4501**	2	LOCKWASHER	
	3	1	**9X-3463**	1	LAMP-HALOGEN (24-VOLT, 70-WATT)	
	4	1	**8T-4223**	1	WASHER-HARD (13.5X25.5X3-MM THK)	
M	5	1	**8T-4244**	1	NUT (M12X1.75-THD)	
M	6	1	**174-7791**	1	SCREW-TAPPING	
	7	1	**5C-2889**	1	LOCKWASHER	
	8	1	**170-6993**	1	COVER	
M	9	1	**180-3861**	4	SCREW-TAPPING	
	10	1	**170-9417**	1	LENS AS (FLOOD)	
	11	1	**170-9418**	1	BAND	

M-METRIC PART

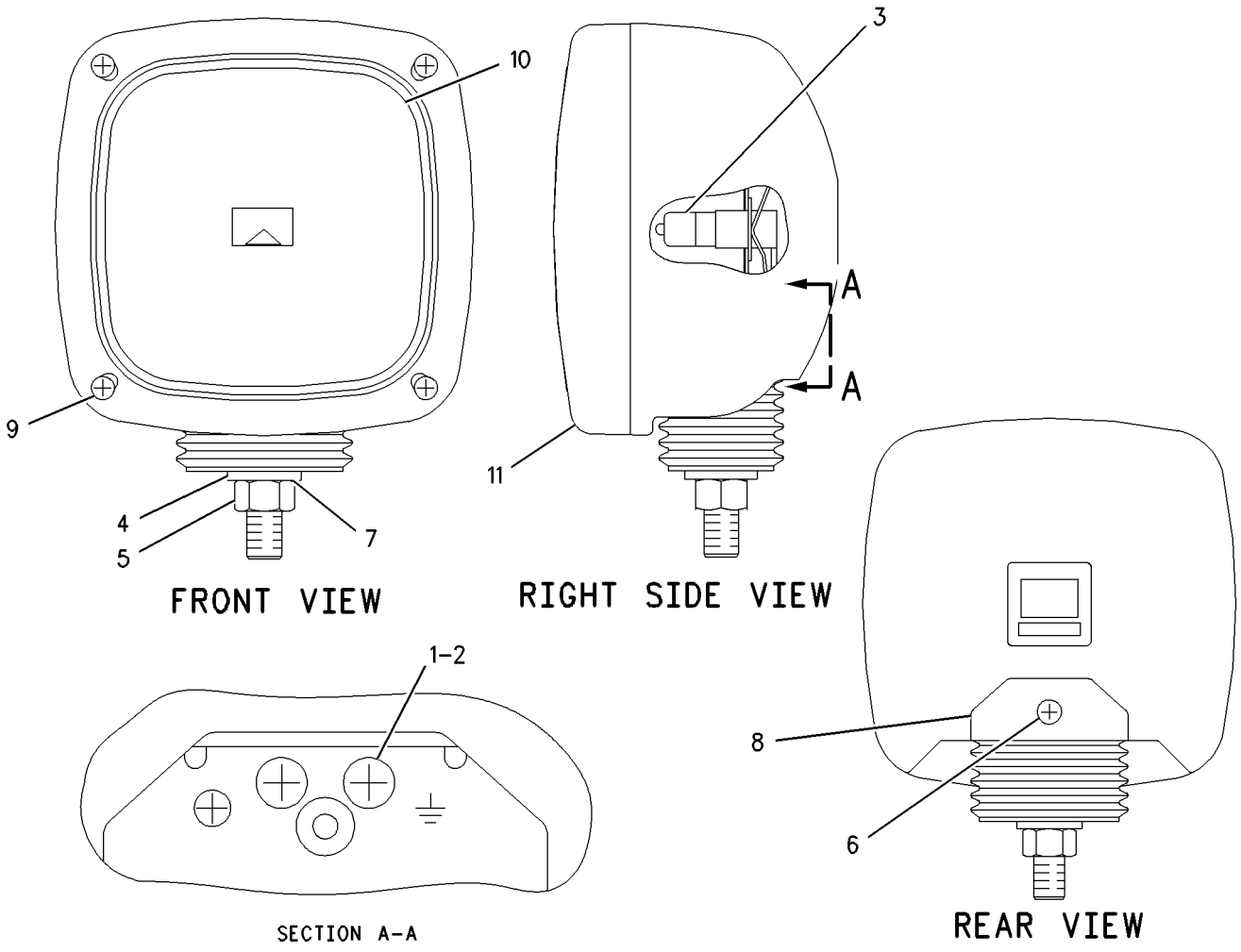

GRAPHIC #1 **<END>** g00646000

ELECTRICAL AND STARTING SYSTEM

153-2523 LAMP GP-FLOOD

S/N: WAP1-UP
24-VOLT
PART OF 150-7033 LIGHTING GP-CHASSIS

SMCS-1434 **i02635978**

NOTE	REF NO	GRAPHIC REF	PART NUMBER	QTY	PART NAME 1 2 3 4 5 6 (PRODUCT LEVEL)	SEE PAGE
M	1	1	**6V-5210**	2	SCREW-MACHINE (M4X0.7X10-MM)	
	2	1	**3B-4501**	2	LOCKWASHER	
	3	1	**9X-3463**	1	LAMP-HALOGEN (24-VOLT, 70-WATT)	
	4	1	**8T-4223**	1	WASHER-HARD (13.5X25.5X3-MM THK)	
M	5	1	**8T-4244**	1	NUT (M12X1.75-THD)	
M	6	1	**174-7791**	1	SCREW-TAPPING	
	7	1	**5C-2889**	1	LOCKWASHER	
	8	1	**170-6993**	1	COVER	
	9	1	**170-9417**	1	LENS AS (FLOOD)	
M	10	1	**180-3861**	4	SCREW-TAPPING	
	11	1	**170-9418**	1	BAND	

M-METRIC PART

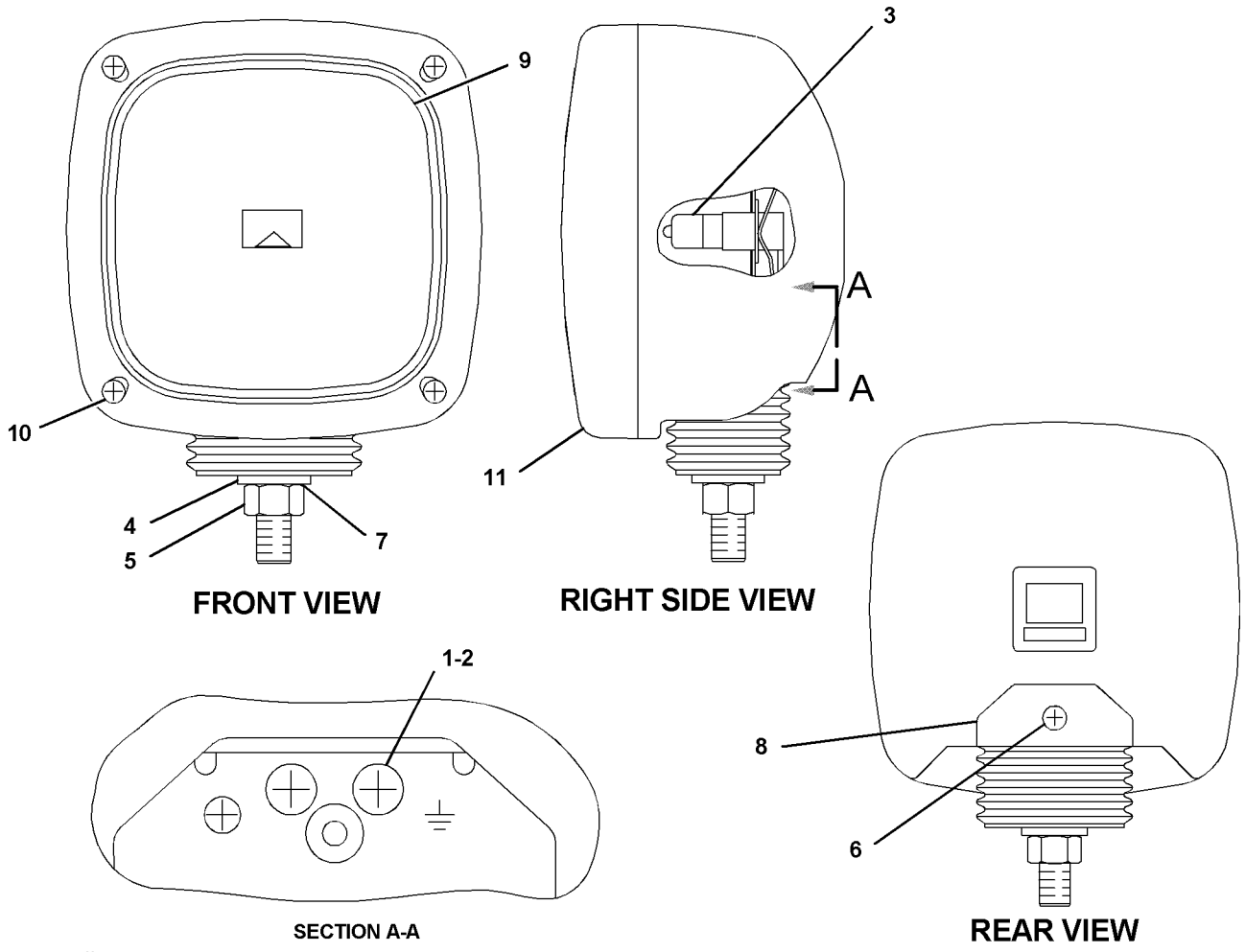

GRAPHIC #1 **<END>** g01084899

ELECTRICAL AND STARTING SYSTEM

167-3441 LAMP GP-FLOOD

S/N: WAP1-UP
24-VOLT
PART OF 252-1241, 252-1242, 259-8120 LIGHTING GP-FLOOD
AN ATTACHMENT

SMCS-1434 **i02635981**

NOTE	REF NO	GRAPHIC REF	PART NUMBER	QTY	PART NAME 1 2 3 4 5 6 (PRODUCT LEVEL)	SEE PAGE
	1	1	**9X-3463**	1	LAMP-HALOGEN (24-VOLT, 70-WATT)	

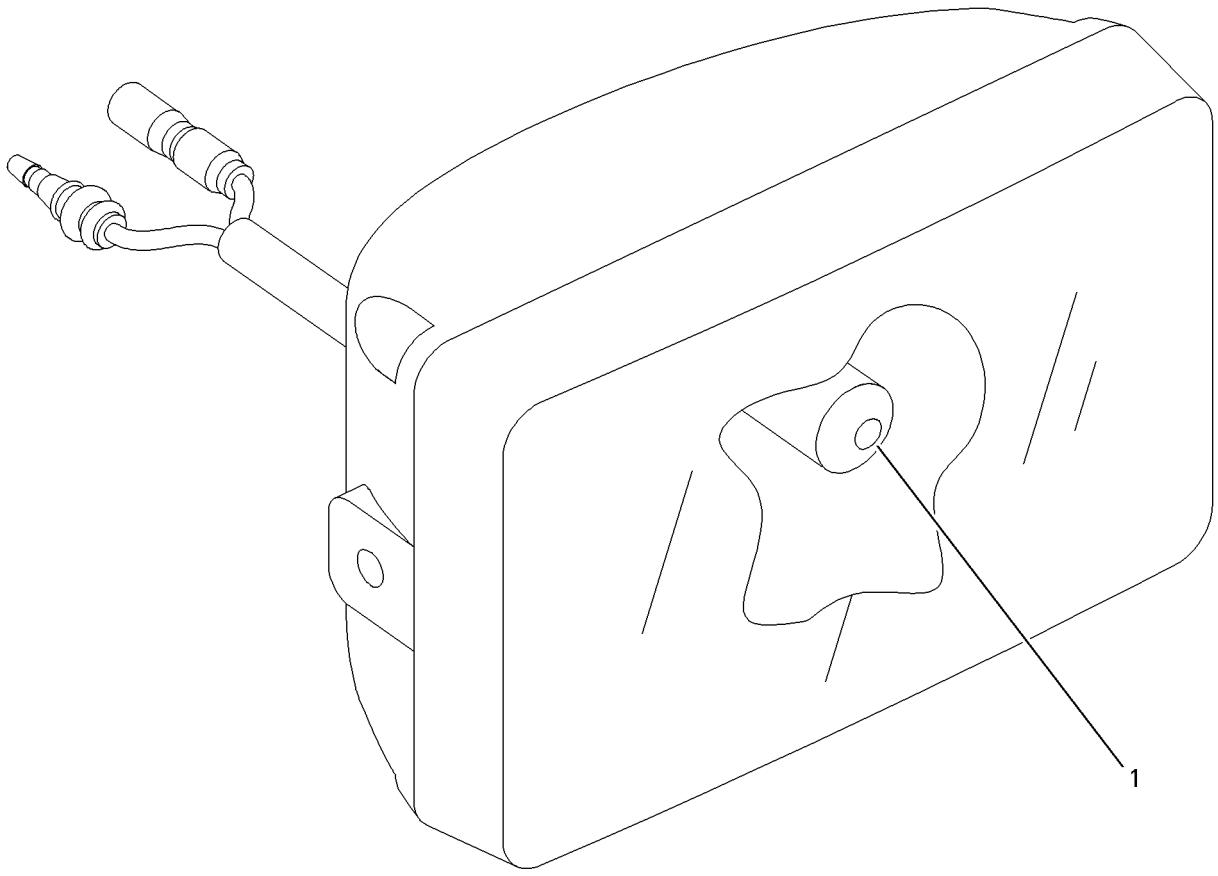

GRAPHIC #1 **<END>** g00692317

167-3587 LAMP GP-FLOOD

S/N: WAP1-UP
24-VOLT
PART OF 238-1610, 238-1612, 238-2173 LIGHTING GP-FLOOD
AN ATTACHMENT

SMCS-1434 **i02098999**

NOTE	REF NO	GRAPHIC REF	PART NUMBER	QTY	PART NAME 1 2 3 4 5 6 (PRODUCT LEVEL)	SEE PAGE
M	1	1	**6V-5210**	2	SCREW-MACHINE (M4X0.7X10-MM)	
	2	1	**3B-4501**	2	LOCKWASHER	
	3	1	**9X-3463**	1	LAMP-HALOGEN (24-VOLT, 70-WATT)	
	4	1	**8T-4223**	1	WASHER-HARD (13.5X25.5X3-MM THK)	
M	5	1	**8T-4244**	1	NUT (M12X1.75-THD)	
	6	1	**5C-2889**	1	LOCKWASHER	
M	7	1	**180-3861**	4	SCREW-TAPPING	
	8	1	**170-9417**	1	LENS AS	
	9	1	**170-9418**	1	BAND	

M-METRIC PART

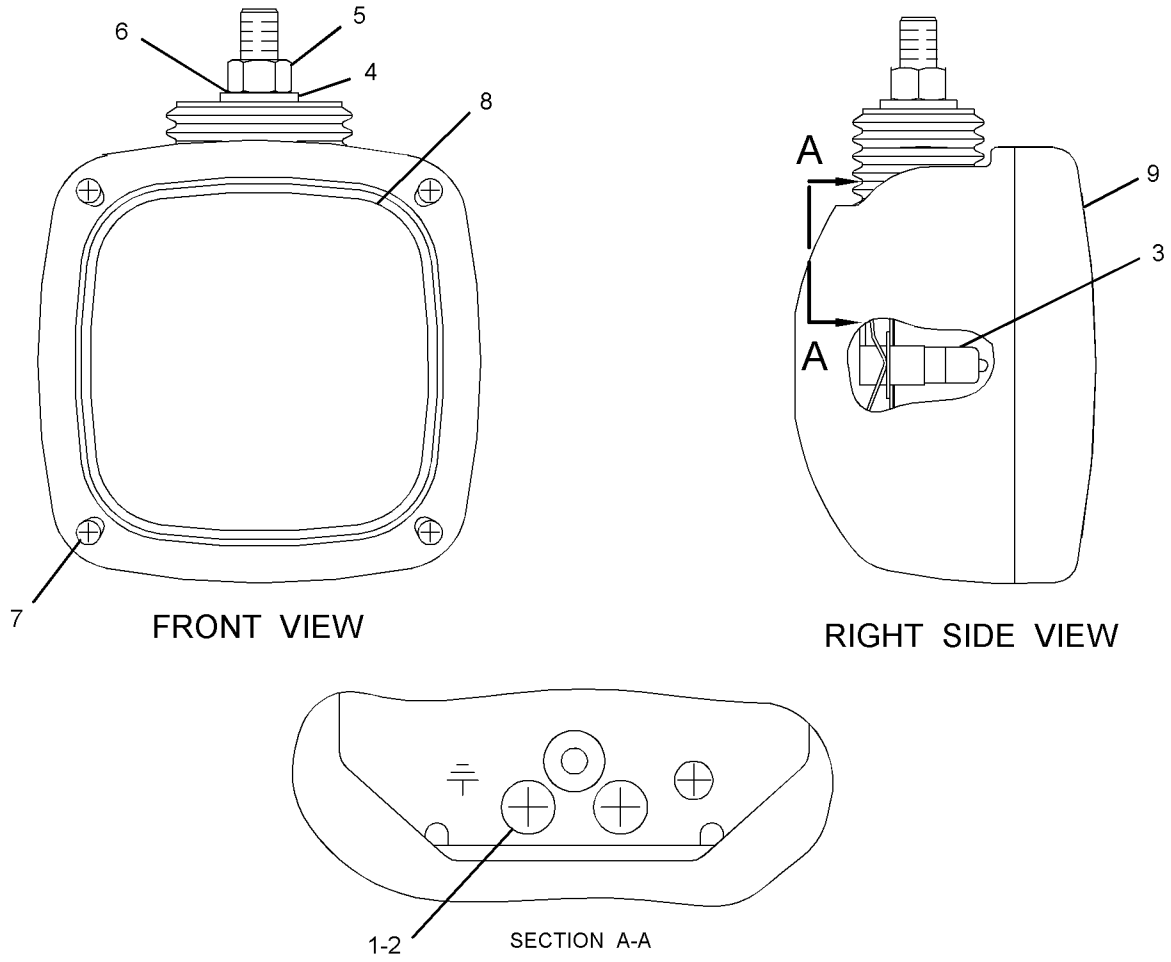

GRAPHIC #1

<END>

g01070195

332-9402 LAMP GP-FLOOD

S/N: WAP1-UP
24-VOLT, 35-WATT, HID
PART OF 299-2939, 299-2948, 299-3014, 299-3015 LIGHTING GP-FLOOD
AN ATTACHMENT

SMCS-1434 **i03909132**

NOTE	REF NO	GRAPHIC REF	PART NUMBER	QTY	PART NAME 1 2 3 4 5 6 (PRODUCT LEVEL)	SEE PAGE
	1	1	**277-3082**	1	LENS AS	
	2	1	**290-8160**	1	LAMP (24-VOLT, HID)	
M	3	1	**8T-4186**	1	BOLT (M10X1.5X40-MM)	
	4	1	**8T-4121**	1	WASHER-HARD (11X21X2.5-MM THK)	
M	5	1	**120-9027**	4	SCREW-PAN HEAD (M3X0.5X16-MM)	
M	6	1	**5P-8347**	2	BOLT (M8X1.25X70-MM)	
M	7	1	**6V-9189**	2	LOCKNUT (M8X1.25-THD)	
	8	1	**290-8996**	1	BRACKET	
	9	1	**229-9974**	1	BEZEL	
	10	1	**319-7384**	1	BALLAST AS (24-VOLT, 35-WATT, HID)	

M-METRIC PART

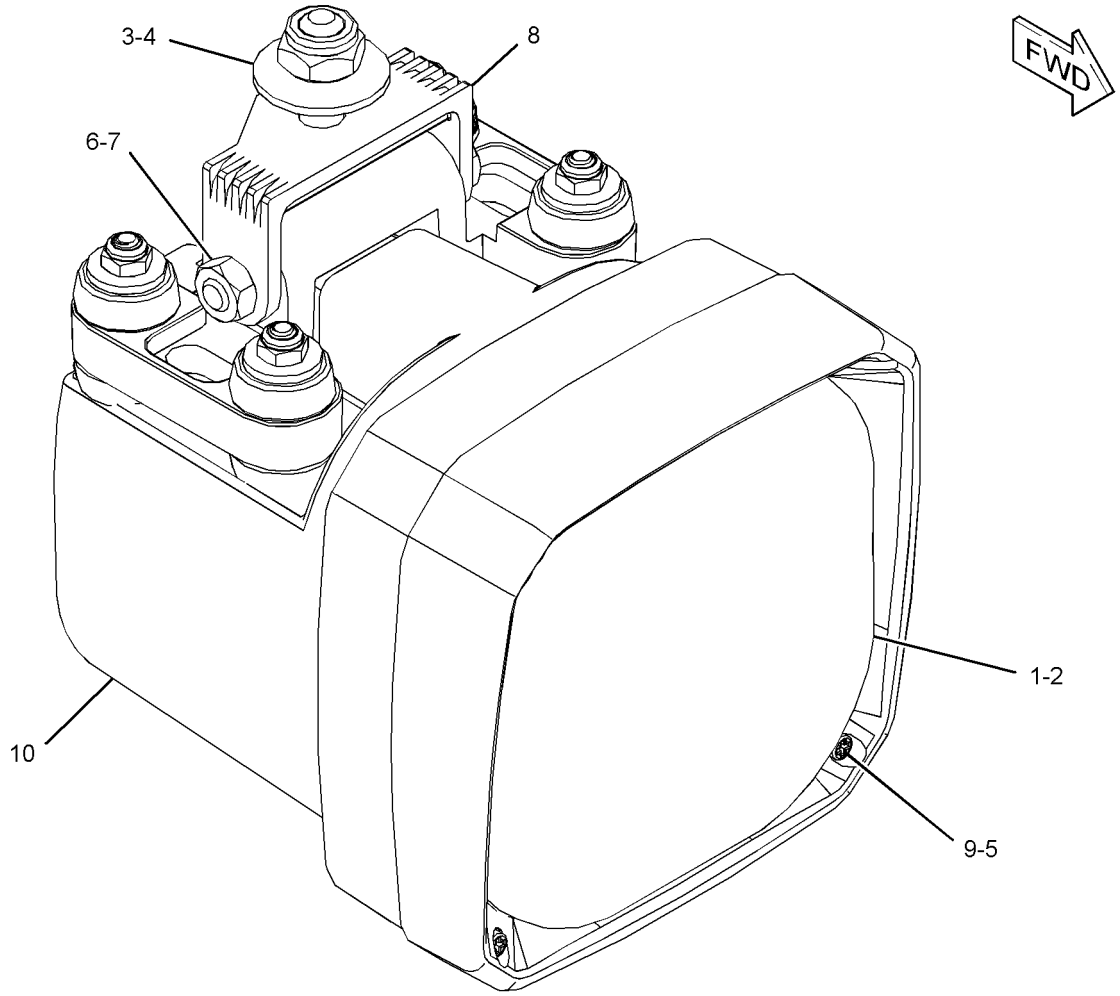

GRAPHIC #1 **<END>** g02059738

ELECTRICAL AND STARTING SYSTEM

347-9427 LAMP GP-FLOOD

S/N: WAP1-UP
24-VOLT, 35-WATT, HID
PART OF 299-2940, 299-2948, 299-3014, 299-3015 LIGHTING GP-FLOOD
AN ATTACHMENT

SMCS-1434 **i03877418**

NOTE	REF NO	GRAPHIC REF	PART NUMBER	QTY	PART NAME 1 2 3 4 5 6 (PRODUCT LEVEL)	SEE PAGE
	1	1	**277-3082**	1	LENS AS	
	2	1	**290-8160**	1	LAMP (24-VOLT, HID)	
M	3	1	**8T-4186**	1	BOLT (M10X1.5X40-MM)	
	4	1	**8T-4121**	1	WASHER-HARD (11X21X2.5-MM THK)	
M	5	1	**120-9027**	4	SCREW-PAN HEAD (M3X0.5X16-MM)	
M	6	1	**5P-8347**	2	BOLT (M8X1.25X70-MM)	
M	7	1	**6V-9189**	2	LOCKNUT (M8X1.25-THD)	
	8	1	**290-8996**	1	BRACKET	
	9	1	**229-9974**	1	BEZEL	
	10	1	**319-7384**	1	BALLAST AS (24-VOLT, 35-WATT, HID)	

M-METRIC PART

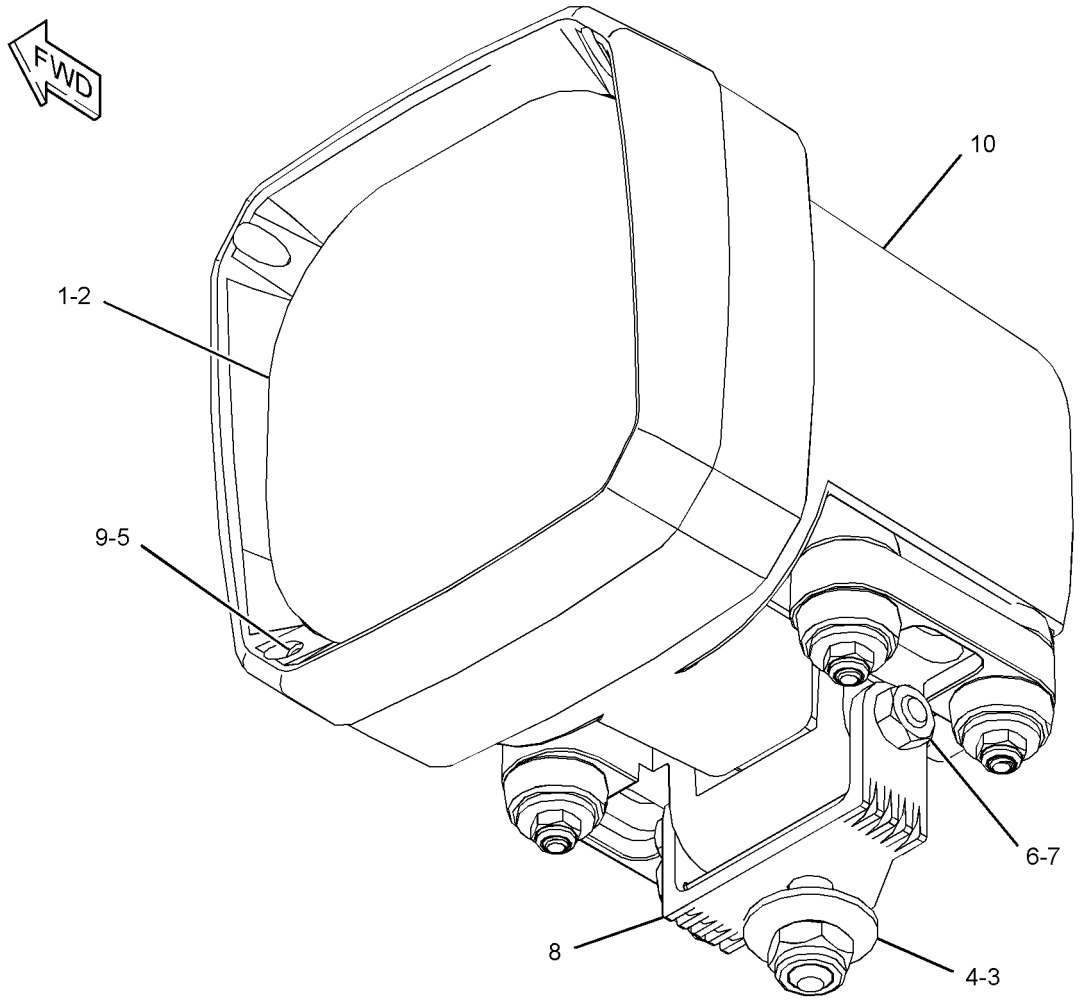

GRAPHIC #1 **<END>** g02059593

150-7033 LIGHTING GP-CHASSIS–FRONT

S/N: WAP1-UP
24-VOLT
PART OF 294-1237 CHASSIS AR

SMCS-1429 **i03626167**

NOTE	REF NO	GRAPHIC REF	PART NUMBER	QTY	PART NAME 1 2 3 4 5 6 (PRODUCT LEVEL)	SEE PAGE
Y	1	1	**153-2521**	1	LAMP GP-FLOOD (24-VOLT) (LH)	195
Y	2	1	**153-2523**	1	LAMP GP-FLOOD (24-VOLT) (RH)	196

Y-SEPARATE ILLUSTRATION

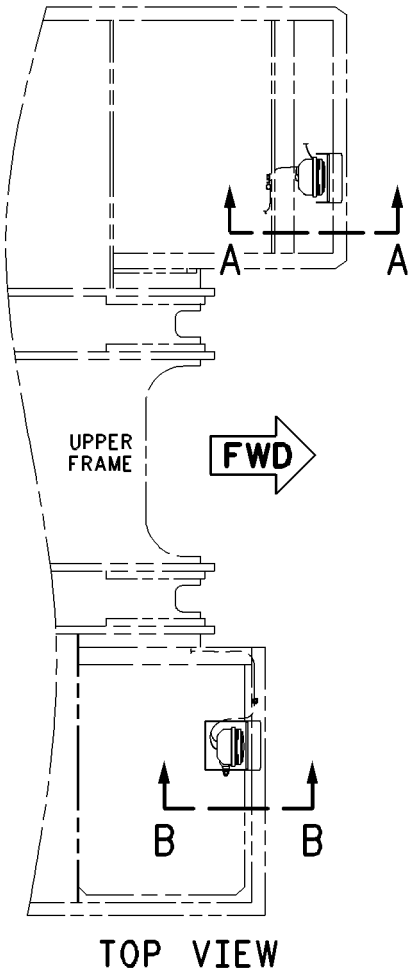

TOP VIEW

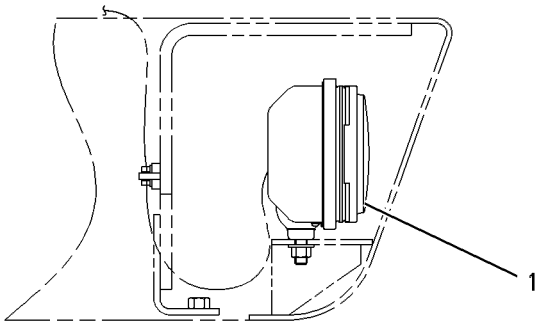

VIEW A-A

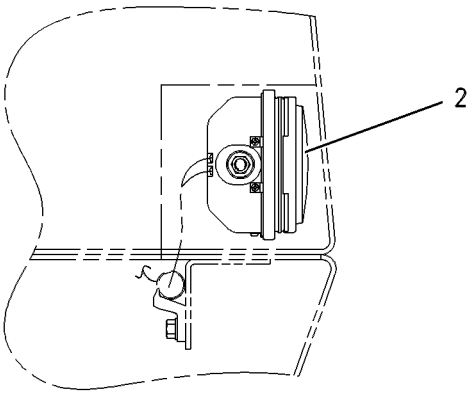

VIEW B-B

GRAPHIC #1 **<END>** g00530517

ELECTRICAL AND STARTING SYSTEM

238-1610 LIGHTING GP-FLOOD–BOOM

S/N: WAP1-UP
PART OF 303-2689 BOOM AR, 319-9211 BOOM AR-MASS
AN ATTACHMENT

SMCS-1434 **i02951923**

NOTE	REF NO	GRAPHIC REF	PART NUMBER	QTY	PART NAME 1 2 3 4 5 6 (PRODUCT LEVEL)	SEE PAGE
	1	1	**7Y-5416**	2	SHEET	
	2	1	**7Y-8273**	2	BRACKET AS	
	3	1	**116-0118**	1	CLIP	
Y	4	1	**153-2521**	2	LAMP GP-FLOOD (24-VOLT)	195
Y	5	1	**167-3587**	2	LAMP GP-FLOOD (24-VOLT)	198
	6	1	**238-1611**	1	HARNESS AS-LIGHTING (BOOM)	
		1	**243-4506**	1	RECEPTACLE AS-CONNECTOR (3-PIN)	
	7	1	**111-4836**	17	CLIP	
	8	1	**111-4837**	1	CLIP	
M	9	1	**5C-9553**	12	BOLT (M6X1X16-MM)	
	10	1	**8P-8540**	2	GROMMET	
	11	1	**8T-4121**	19	WASHER-HARD (11X21X2.5-MM THK)	
M	12	1	**8T-4133**	15	NUT (M10X1.5-THD)	
M	13	1	**8T-4137**	3	BOLT (M10X1.5X20-MM)	
M	14	1	**8T-4179**	6	BOLT (M12X1.75X20-MM)	
M	15	1	**8T-4191**	1	BOLT (M10X1.5X16-MM)	
	16	1	**8T-4223**	6	WASHER-HARD (13.5X25.5X3-MM THK)	
	17	1	**9X-8256**	12	WASHER (6.6X12X2-MM THK)	

M-METRIC PART
Y-SEPARATE ILLUSTRATION

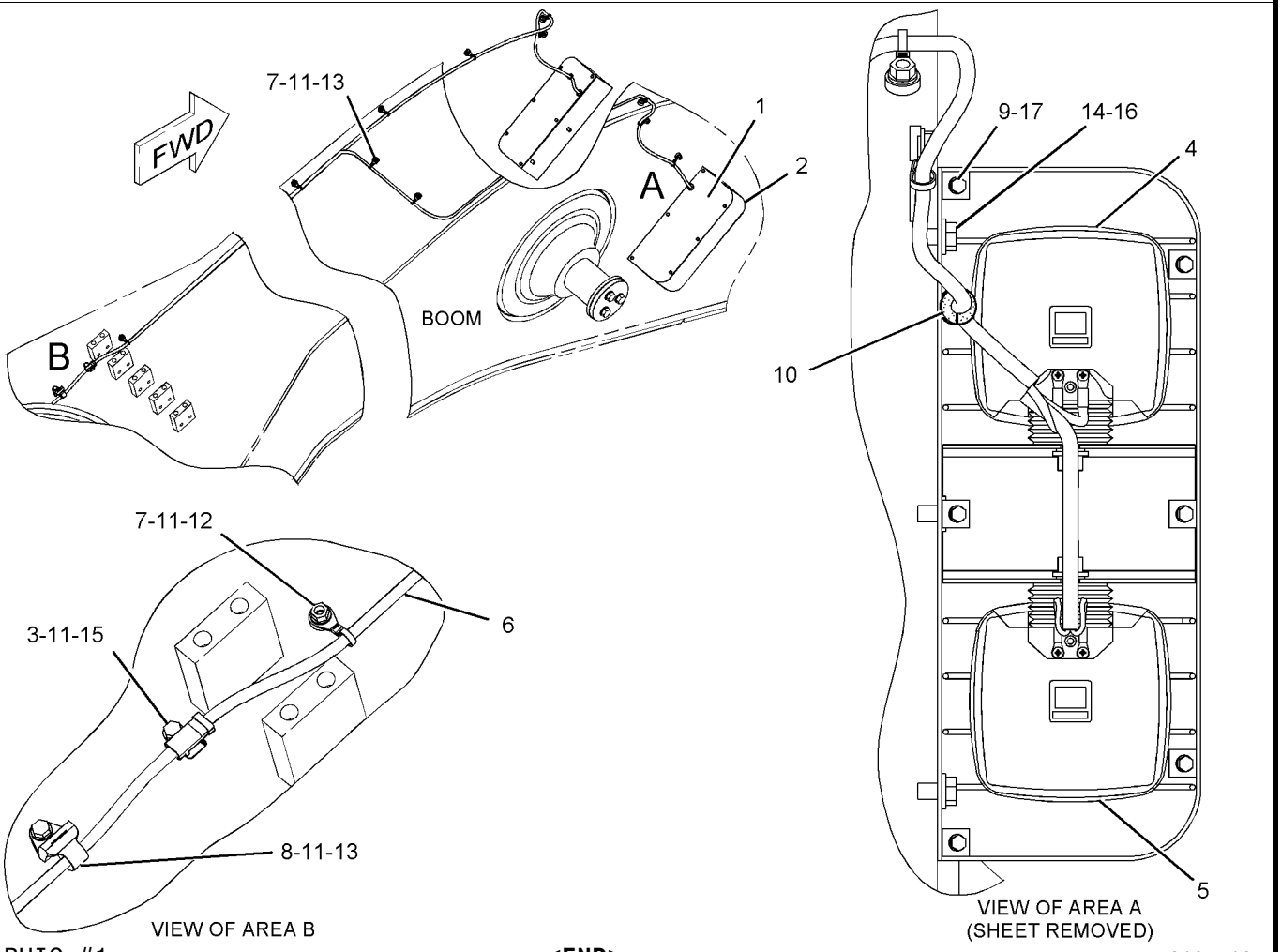

GRAPHIC #1 **<END>** g01074104

238-1612 LIGHTING GP-FLOOD–MASS BOOM

S/N: WAP1-UP
PART OF 303-2690 BOOM AR-MASS
AN ATTACHMENT

SMCS-1434 **i02951926**

NOTE	REF NO	GRAPHIC REF	PART NUMBER	QTY	PART NAME 1 2 3 4 5 6 (PRODUCT LEVEL)	SEE PAGE
	1	1	**7Y-5416**	2	SHEET	
	2	1	**7Y-8273**	2	BRACKET AS	
	3	1	**111-4836**	21	CLIP	
	4	1	**116-0118**	1	CLIP	
Y	5	1	**153-2521**	2	LAMP GP-FLOOD (24-VOLT)	195
Y	6	1	**167-3587**	2	LAMP GP-FLOOD (24-VOLT)	198
	7	1	**238-1613**	1	HARNESS AS (BOOM)	
		1	**243-4506**	1	RECEPTACLE AS-CONNECTOR (3-PIN)	
	8	1	**111-4837**	1	CLIP	
M	9	1	**5C-9553**	12	BOLT (M6X1X16-MM)	
	10	1	**8P-8540**	2	GROMMET	
	11	1	**8T-4121**	23	WASHER-HARD (11X21X2.5-MM THK)	
M	12	1	**8T-4133**	19	NUT (M10X1.5-THD)	
M	13	1	**8T-4137**	3	BOLT (M10X1.5X20-MM)	
M	14	1	**8T-4179**	6	BOLT (M12X1.75X20-MM)	
M	15	1	**8T-4191**	1	BOLT (M10X1.5X16-MM)	
	16	1	**8T-4223**	6	WASHER-HARD (13.5X25.5X3-MM THK)	
	17	1	**9X-8256**	12	WASHER (6.6X12X2-MM THK)	

M-METRIC PART
Y-SEPARATE ILLUSTRATION

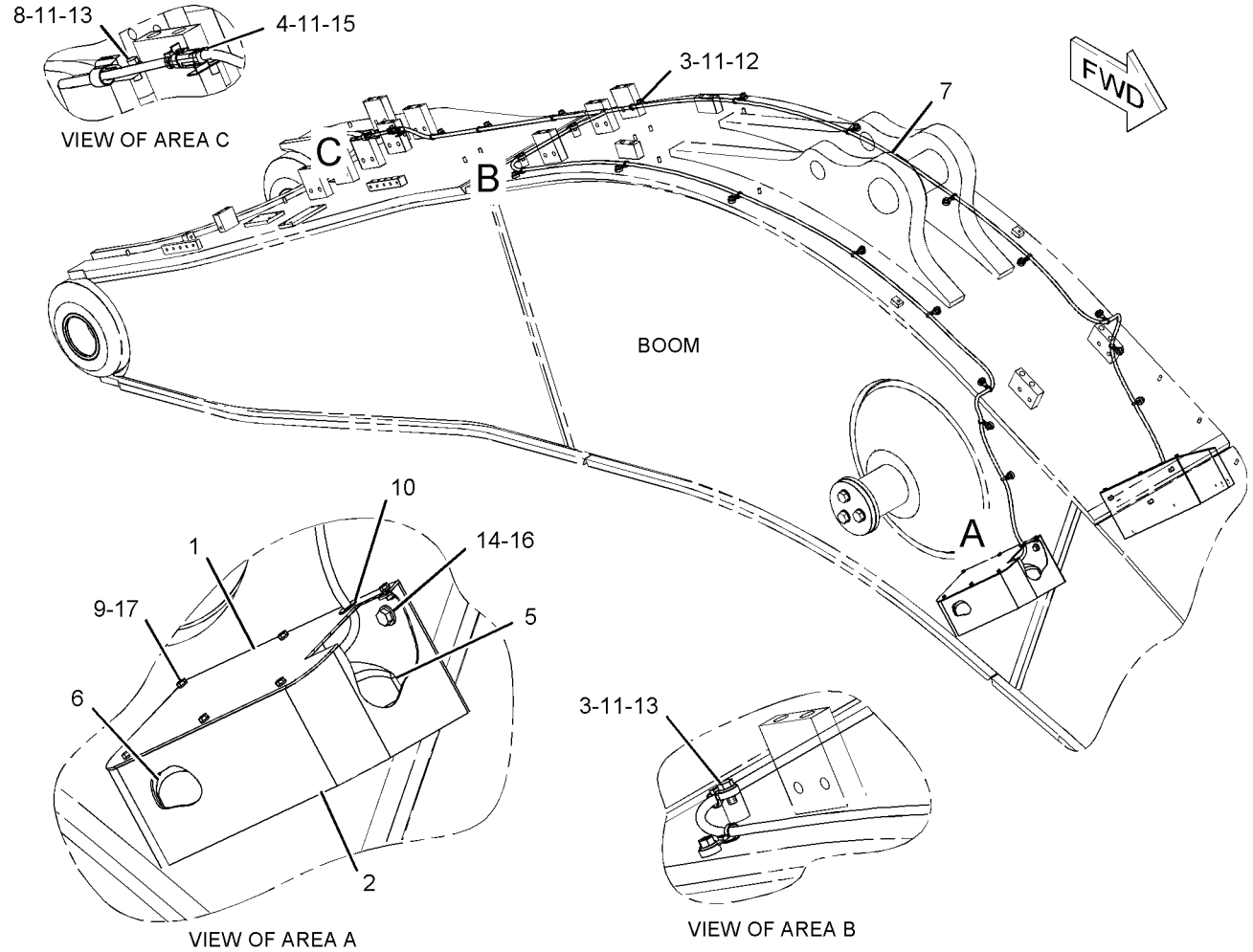

GRAPHIC #1 **<END>** g01073437

238-2173 LIGHTING GP-FLOOD–BOOM

S/N: WAP1-UP
PART OF 303-2688 BOOM AR-REACH
AN ATTACHMENT

SMCS-1434 **i02495278**

NOTE	REF NO	GRAPHIC REF	PART NUMBER	QTY	PART NAME 1 2 3 4 5 6 (PRODUCT LEVEL)	SEE PAGE
	1	1	**7Y-5416**	2	SHEET	
	2	1	**7Y-8273**	2	BRACKET AS	
					(EACH INCLUDES)	
M		1	**6V-9632**	6	NUT-WELD (M6X1-THD)	
	3	1	**111-4836**	15	CLIP	
	4	1	**116-0118**	1	CLIP	
Y	5	1	**153-2521**	2	LAMP GP-FLOOD (24-VOLT)	195
Y	6	1	**167-3587**	2	LAMP GP-FLOOD (24-VOLT)	198
	7	1	**238-2174**	1	HARNESS AS-LIGHTING (BOOM, RH)	
		1	**243-4506**	1	RECEPTACLE AS-CONNECTOR (3-PIN)	
	8	1	**111-4837**	1	CLIP	
M	9	1	**5C-9553**	12	BOLT (M6X1X16-MM)	
	10	1	**8P-8540**	2	GROMMET	
	11	1	**8T-4121**	17	WASHER-HARD (11X21X2.5-MM THK)	
M	12	1	**8T-4133**	13	NUT (M10X1.5-THD)	
M	13	1	**8T-4137**	3	BOLT (M10X1.5X20-MM)	
M	14	1	**8T-4179**	6	BOLT (M12X1.75X20-MM)	
M	15	1	**8T-4191**	1	BOLT (M10X1.5X16-MM)	
	16	1	**8T-4223**	6	WASHER-HARD (13.5X25.5X3-MM THK)	
	17	1	**9X-8256**	12	WASHER (6.6X12X2-MM THK)	

M-METRIC PART
Y-SEPARATE ILLUSTRATION

238-2173 **LIGHTING GP-FLOOD** *(contd.)* **i02495278**

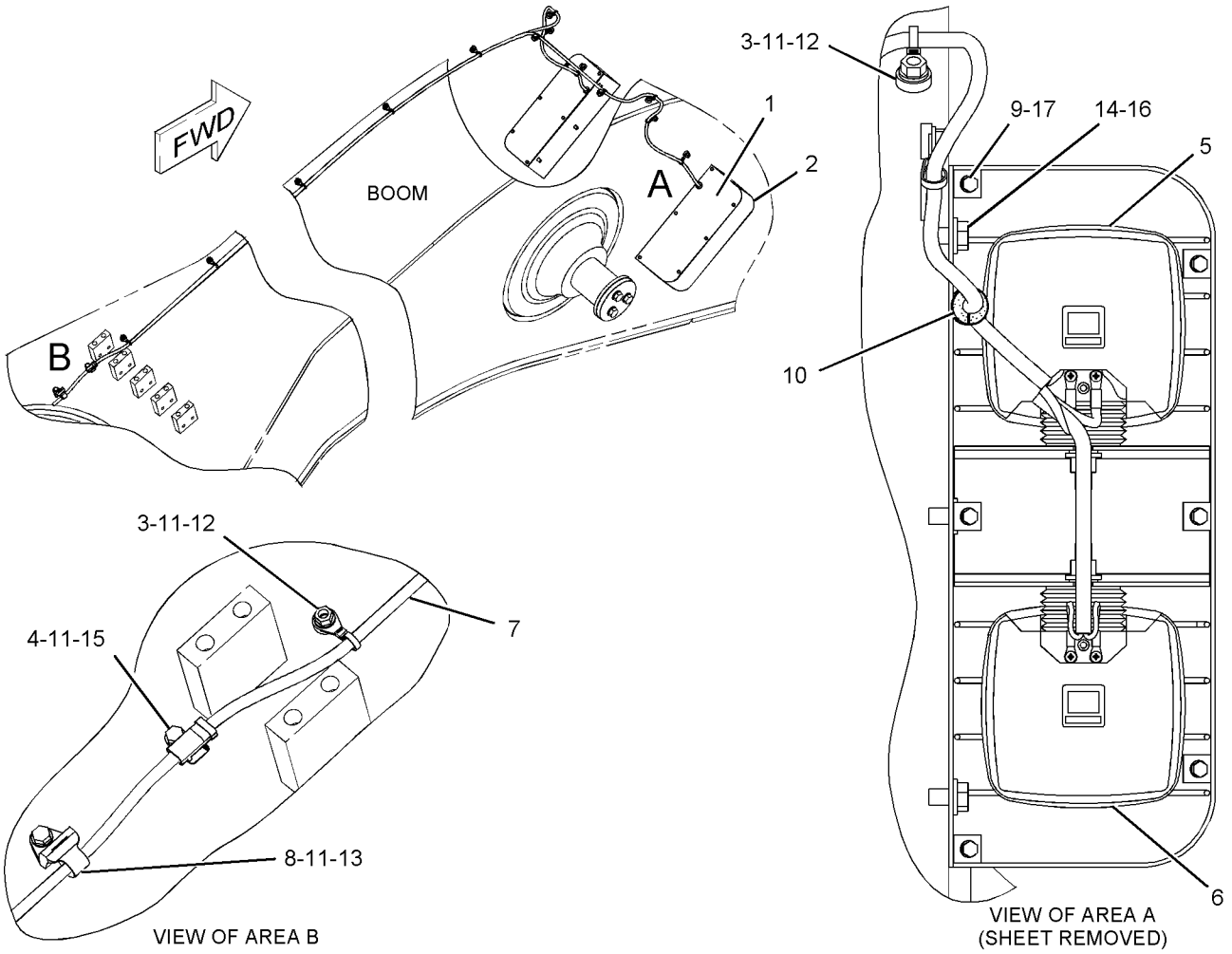

GRAPHIC #1 **<END>** g01073922

ELECTRICAL AND STARTING SYSTEM

252-1241 LIGHTING GP-FLOOD—CAB

S/N: WAP1-UP
PART OF 249-7107 PARTS AR-CAB
AN ATTACHMENT

SMCS-1434 **i03496020**

NOTE	REF NO	GRAPHIC REF	PART NUMBER	QTY	PART NAME 1 2 3 4 5 6 (PRODUCT LEVEL)	SEE PAGE
	1	1	**120-5737**	2	WASHER (17.5X40X4-MM THK)	
Y	2	1	**167-3441**	2	LAMP GP-FLOOD (24-VOLT) (CAB GUARD)	197
	3	1	**217-2543**	1	COVER (LH)	
	4	1	**217-2544**	1	COVER (RH)	
	5	1	**255-9075**	1	BRACKET AS (LH)	
M		1	**180-1718**	3	NUT (M6X1-THD)	
	6	1	**255-9074**	1	BRACKET AS (RH)	
M		1	**180-1718**	3	NUT (M6X1-THD)	
	7	1	**120-5738**	2	WASHER-RUBBER (14.5X40X2-MM THK)	
	8	1	**8T-4122**	4	WASHER-HARD (17X32X3.5-MM THK)	
M	9	1	**8T-4190**	6	BOLT (M16X2X25-MM)	
M	10	1	**8T-4970**	4	BOLT (M6X1X14-MM)	
M	11	1	**095-0742**	6	SCREW-MACHINE (M6X1X16-MM)	
	12	1	**9X-8256**	10	WASHER (6.6X12X2-MM THK)	

M-METRIC PART
Y-SEPARATE ILLUSTRATION

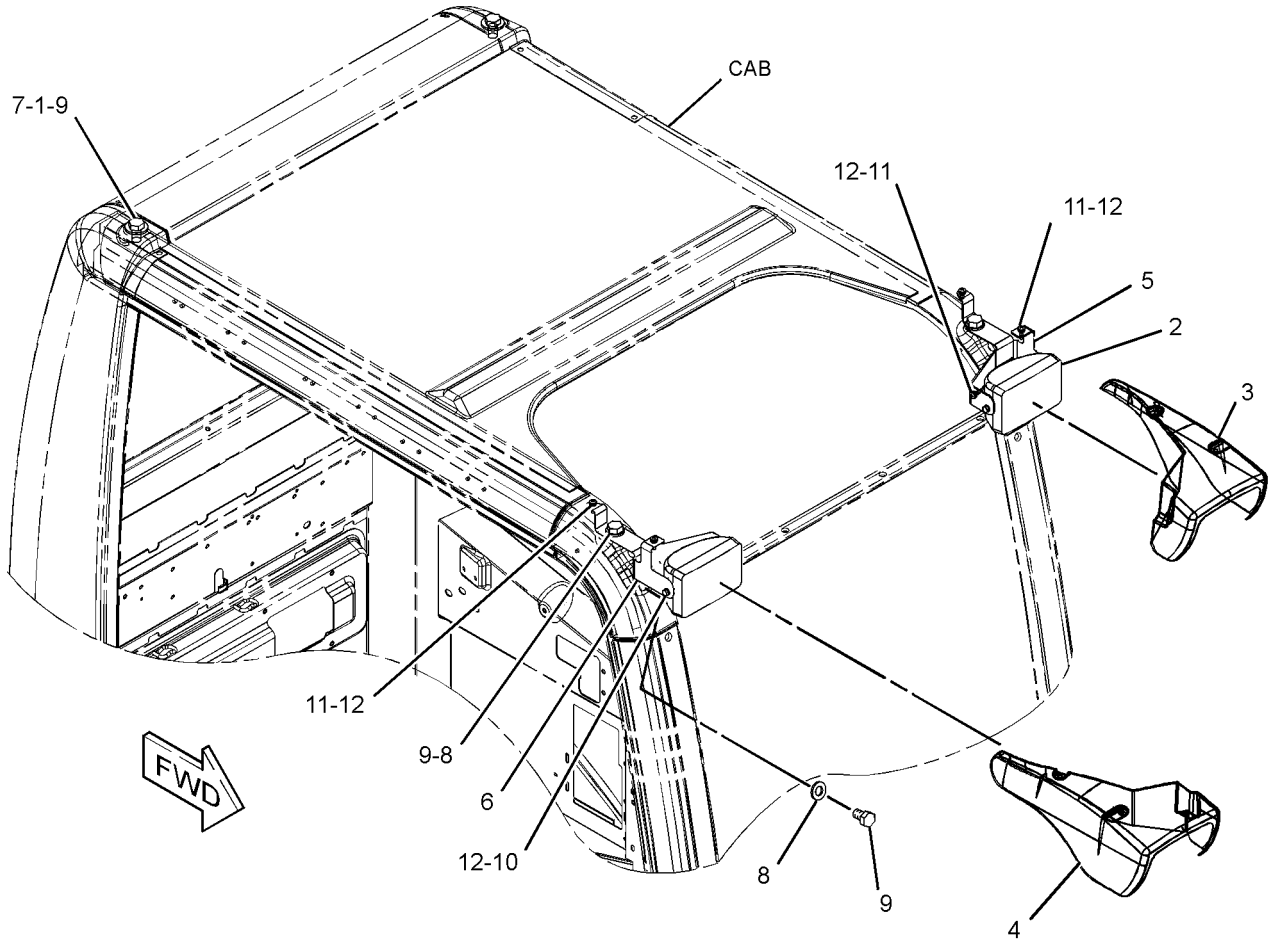

GRAPHIC #1 **<END>** g01214088

252-1242 LIGHTING GP-FLOOD–CAB GUARD

S/N: WAP1-UP
PART OF 249-7109, 250-0712 GUARD AR-OVERHEAD
AN ATTACHMENT

SMCS-1434 **i03962049**

NOTE	REF NO	GRAPHIC REF	PART NUMBER	QTY	PART NAME 1 2 3 4 5 6 (PRODUCT LEVEL)	SEE PAGE
Y	1	1	**167-3441**	2	LAMP GP-FLOOD (24-VOLT)	197
	2	1	**198-1659**	2	SUPPORT	
	3	1	**198-6223**	2	HARNESS AS-LIGHTING (CAB GUARD)	
M	4	1	**8T-4136**	2	BOLT (M10X1.5X25-MM)	
M	5	1	**8T-4970**	4	BOLT (M6X1X14-MM)	
M	6	1	**8T-4133**	2	NUT (M10X1.5-THD)	
	7	1	**8T-4121**	4	WASHER-HARD (11X21X2.5-MM THK)	
	8	1	**9X-8256**	4	WASHER (6.6X12X2-MM THK)	
M	9	1	**142-8545**	2	BOLT (M16X2X20-MM)	
	10	1	**7K-1181**	4	STRAP-CABLE	
	11	1	**9H-1024**	2	WASHER-HARD (17X30X6-MM THK)	

M-METRIC PART
Y-SEPARATE ILLUSTRATION

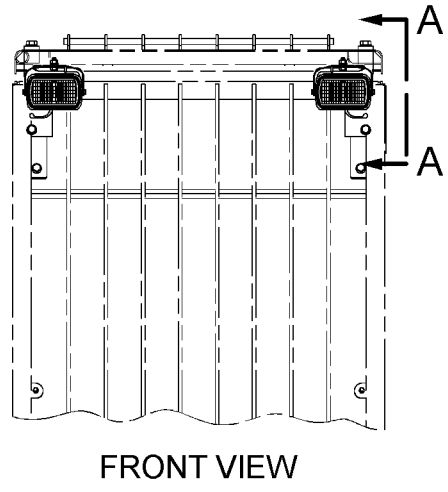

FRONT VIEW

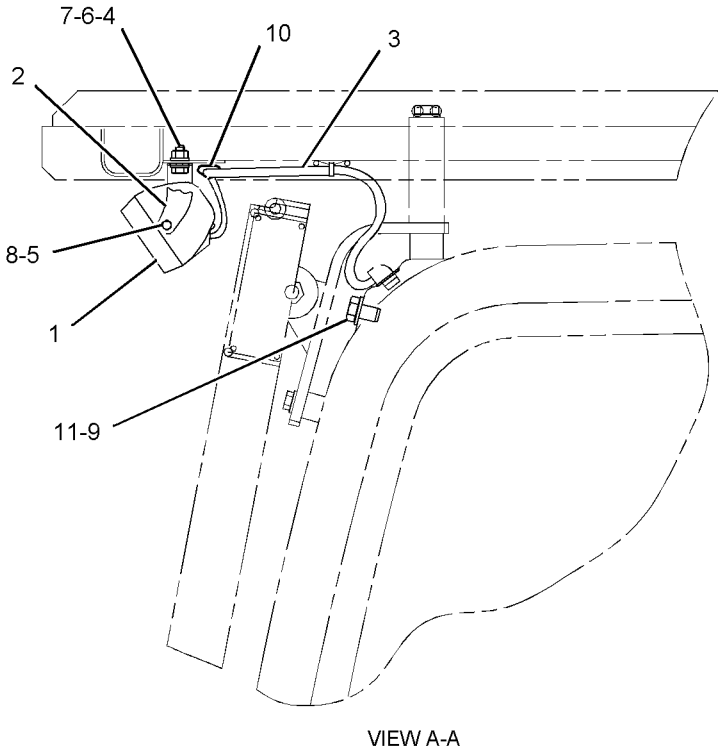

VIEW A-A

GRAPHIC #1 **<END>** g01087554

259-8120 LIGHTING GP-FLOOD–CAB

S/N: WAP1-UP
PART OF 259-8009 GUARD GP-FRONT WINDOW
AN ATTACHMENT

SMCS-1434 **i03126189**

NOTE	REF NO	GRAPHIC REF	PART NUMBER	QTY	PART NAME 1 2 3 4 5 6 (PRODUCT LEVEL)	SEE PAGE
	1	1	**163-6795**	2	STRAP-CABLE	
Y	2	1	**167-3441**	2	LAMP GP-FLOOD (24-VOLT) (CAB)	197
	3	1	**170-9295**	2	HARNESS AS-LIGHTING	
	4	1	**198-1659**	2	SUPPORT	
	5	1	**8T-4121**	4	WASHER-HARD (11X21X2.5-MM THK)	
M	6	1	**8T-4133**	2	NUT (M10X1.5-THD)	
M	7	1	**8T-4137**	2	BOLT (M10X1.5X20-MM)	
M	8	1	**8T-6412**	4	SCREW-MACHINE (M6X1X20-MM)	
	9	1	**9X-8256**	4	WASHER (6.6X12X2-MM THK)	

M-METRIC PART
Y-SEPARATE ILLUSTRATION

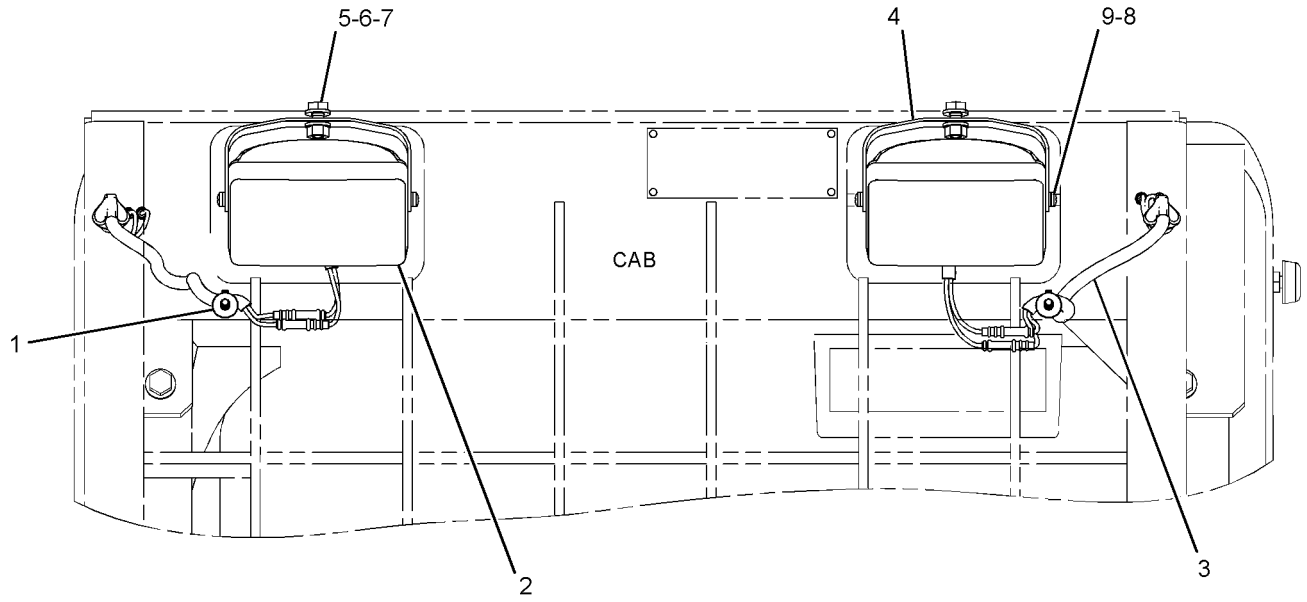

FRONT VIEW

GRAPHIC #1 **<END>** g01648673

ELECTRICAL AND STARTING SYSTEM

299-2939 LIGHTING GP-FLOOD—CAB GUARD

S/N: WAP1-UP
PART OF 330-3028 GUARD AR-OVERHEAD
AN ATTACHMENT

SMCS-1434 **i03919711**

NOTE	REF NO	GRAPHIC REF	PART NUMBER	QTY	PART NAME 1 2 3 4 5 6 (PRODUCT LEVEL)	SEE PAGE
C	1	1	**3S-2093**	4	STRAP-CABLE	
CY	3	1	**332-9402**	2	LAMP GP-FLOOD (24-VOLT, 35-WATT, HID)	199
C	4	1	**350-8358**	2	HARNESS AS-LIGHTING	
					(EACH INCLUDES)	
		1	**7Y-3962**	1	TERMINAL-BULLET (MALE)	
		1	**7Y-3963**	1	TERMINAL-BULLET (FEMALE)	
		1	**9W-0844**	2	SOCKET-CONNECTOR (14-GA)	
		1	**155-2270**	1	KIT-CONNECTING PLUG (2-PIN)	
					(INCLUDES PLUG AS, WEDGE, & INTERFACE SEAL)	
	5	1	**306-8572**	2	BRACKET AS	
	6	1	**319-1434**	2	BRACKET	
	7	1	**8T-4121**	16	WASHER-HARD (11X21X2.5-MM THK)	
M	8	1	**8T-4133**	4	NUT (M10X1.5-THD)	
M	9	1	**8T-4137**	8	BOLT (M10X1.5X20-MM)	
M	10	1	**8T-4196**	4	BOLT (M10X1.5X35-MM)	

C-CHANGE FROM PREVIOUS TYPE
M-METRIC PART
Y-SEPARATE ILLUSTRATION

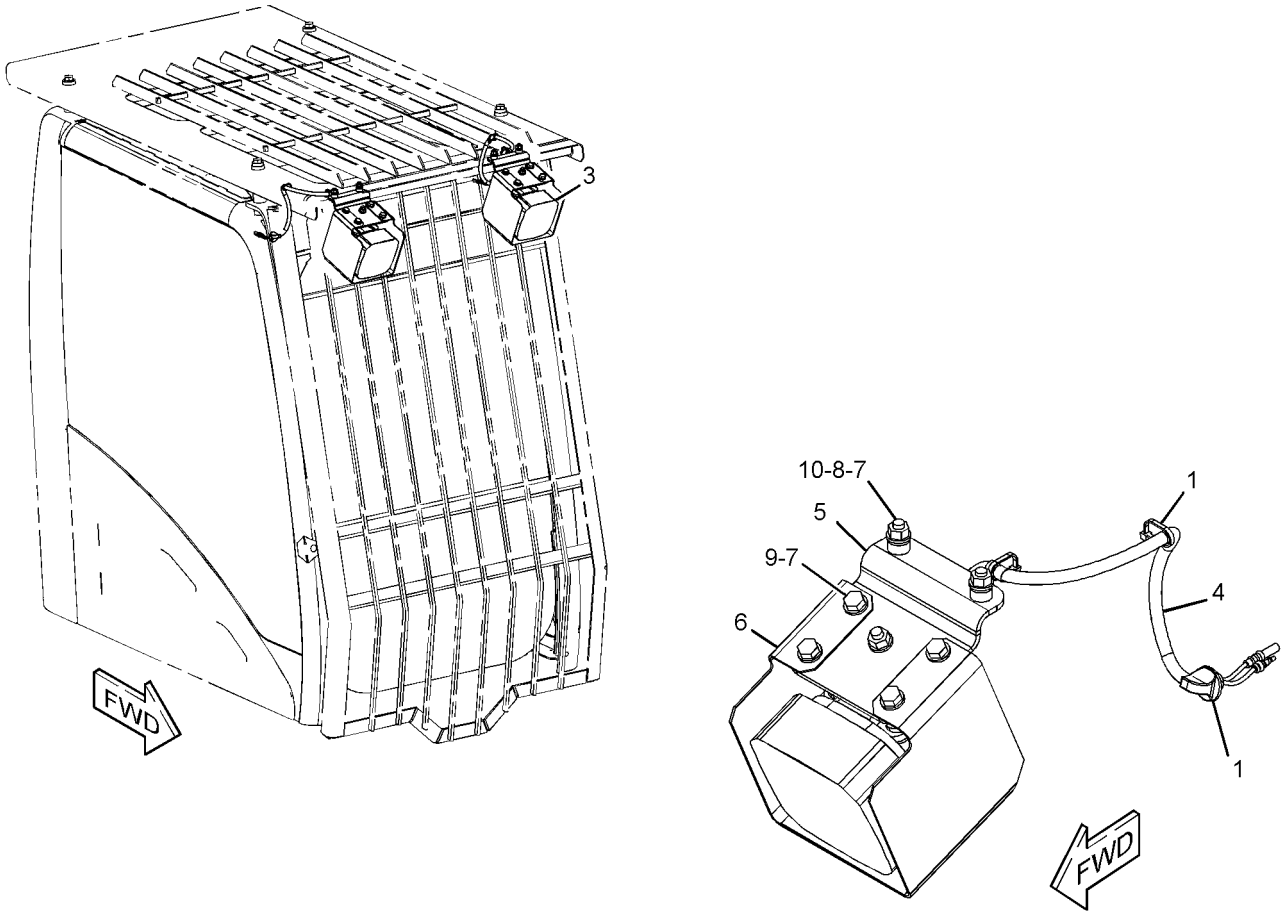

GRAPHIC #1 **<END>** g02160713

299-2940 LIGHTING GP-FLOOD–CAB

S/N: WAP1-UP
PART OF 330-3027 PARTS AR-CAB
AN ATTACHMENT

SMCS-1434 **i03919771**

NOTE	REF NO	GRAPHIC REF	PART NUMBER	QTY	PART NAME 1 2 3 4 5 6 (PRODUCT LEVEL)	SEE PAGE
	1	1	**3S-2093**	4	STRAP-CABLE	
	2	1	**8T-4122**	4	WASHER-HARD (17X32X3.5-MM THK)	
M	3	1	**8T-4190**	4	BOLT (M16X2X25-MM)	
CY	4	1	**347-9427**	2	LAMP GP-FLOOD (24-VOLT, 35-WATT, HID)	200
C	5	1	**350-8359**	1	BRACKET AS	
C	6	1	**350-8360**	1	BRACKET AS	
C	7	1	**306-8571**	2	HARNESS AS-LIGHTING	
					(EACH INCLUDES)	
		1	**7Y-3962**	1	TERMINAL-BULLET (MALE)	
		1	**7Y-3963**	1	TERMINAL-BULLET (FEMALE)	
		1	**9W-0844**	2	SOCKET-CONNECTOR (14-GA)	
		1	**155-2270**	1	KIT-CONNECTING PLUG (2-PIN)	
					(INCLUDES PLUG AS, WEDGE, & INTERFACE SEAL)	

C-CHANGE FROM PREVIOUS TYPE
M-METRIC PART
Y-SEPARATE ILLUSTRATION

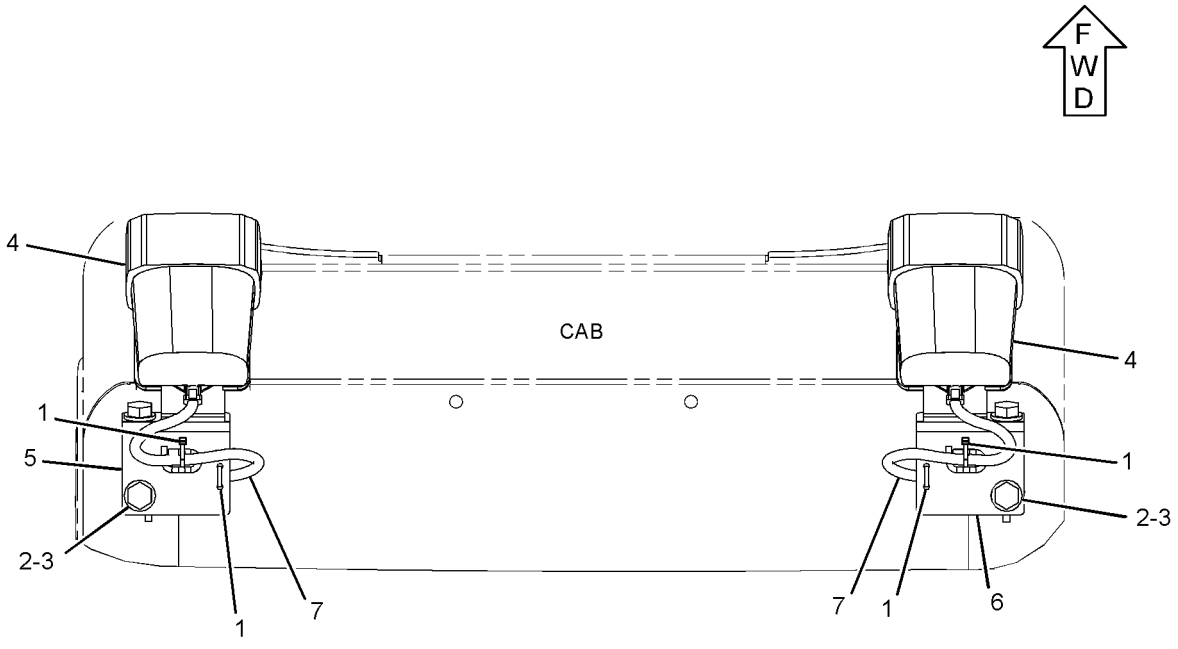

TOP VIEW

GRAPHIC #1 **<END>** g02157938

ELECTRICAL AND STARTING SYSTEM

299-2948 LIGHTING GP-FLOOD—BOOM, RH

S/N: WAP1-UP

FOR USE WITH 303-2688—PAGE 781. CANNOT BE USED WITH 303-2689—PAGE 780, 303-2690—PAGE 780

AN ATTACHMENT

SMCS-1434 **i03909115**

NOTE	REF NO	GRAPHIC REF	PART NUMBER	QTY	PART NAME 1 2 3 4 5 6 (PRODUCT LEVEL)	SEE PAGE
	1	1	**3S-2093**	2	STRAP-CABLE	
	2	1,2	**111-4836**	15	CLIP	
	3	2	**111-4837**	1	CLIP	
	4	2	**116-0118**	1	CLIP	
	5	1	**306-8328**	2	BRACKET AS	
	6	1	**306-8332**	2	SHEET	
Y	7	1	**332-9402**	2	LAMP GP-FLOOD (24-VOLT, 35-WATT, HID)	199
Y	8	1	**347-9427**	2	LAMP GP-FLOOD (24-VOLT, 35-WATT, HID)	200
	9	1	**350-8410**	1	HARNESS AS-LIGHTING	
		1	**9W-0852**	3	PIN-CONNECTOR (14-GA TO 16-GA)	
		1	**9W-0844**	8	SOCKET-CONNECTOR (14-GA)	
BE		1	**119-3662**		TUBE-HEAT SHRINK (10.85-MM DIA)	
BE		1	**125-7875**		TUBE-HEAT SHRINK (7.44-MM DIA)	
		1	**155-2270**	4	KIT-CONNECTING PLUG (2-PIN)	
					(EACH PLUG KIT INCLUDES PLUG AS, WEDGE & INTERFACE SEAL)	
		1	**243-4506**	1	RECEPTACLE AS-CONNECTOR (3-PIN)	
M	10	1	**5C-9553**	12	BOLT (M6X1X16-MM)	
	11	1	**8P-8540**	2	GROMMET	
	12	1,2	**8T-4121**	17	WASHER-HARD (11X21X2.5-MM THK)	
M	13	1,2	**8T-4133**	13	NUT (M10X1.5-THD)	
M	14	2	**8T-4137**	3	BOLT (M10X1.5X20-MM)	
M	15	1	**8T-4179**	6	BOLT (M12X1.75X20-MM)	
M	16	2	**8T-4191**	1	BOLT (M10X1.5X16-MM)	
	17	1	**8T-4223**	6	WASHER-HARD (13.5X25.5X3-MM THK)	
	18	1	**9X-8256**	12	WASHER (6.6X12X2-MM THK)	

B-USE AS REQUIRED
E-ORDER BY THE CENTIMETER
M-METRIC PART
Y-SEPARATE ILLUSTRATION

REFER TO ALL ILLUSTRATIONS OF
THIS GROUP FOR AUXILIARY VIEWS

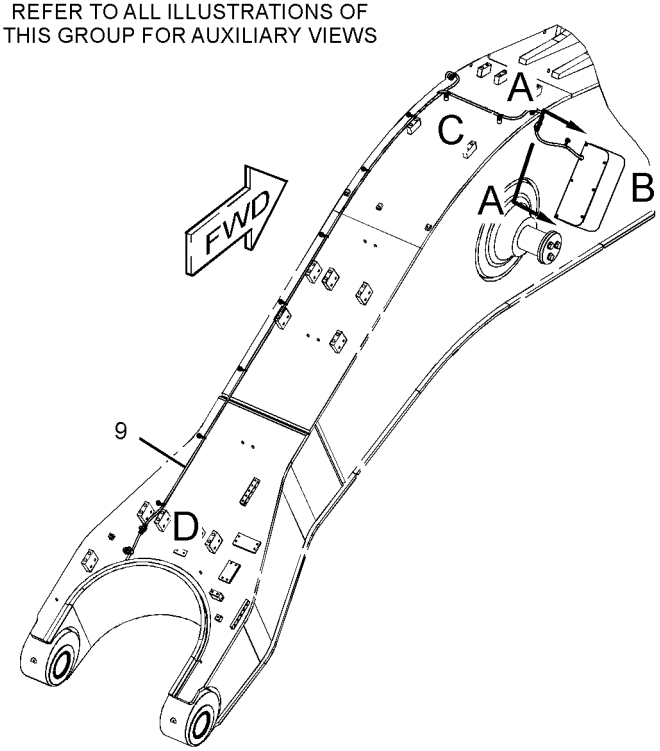

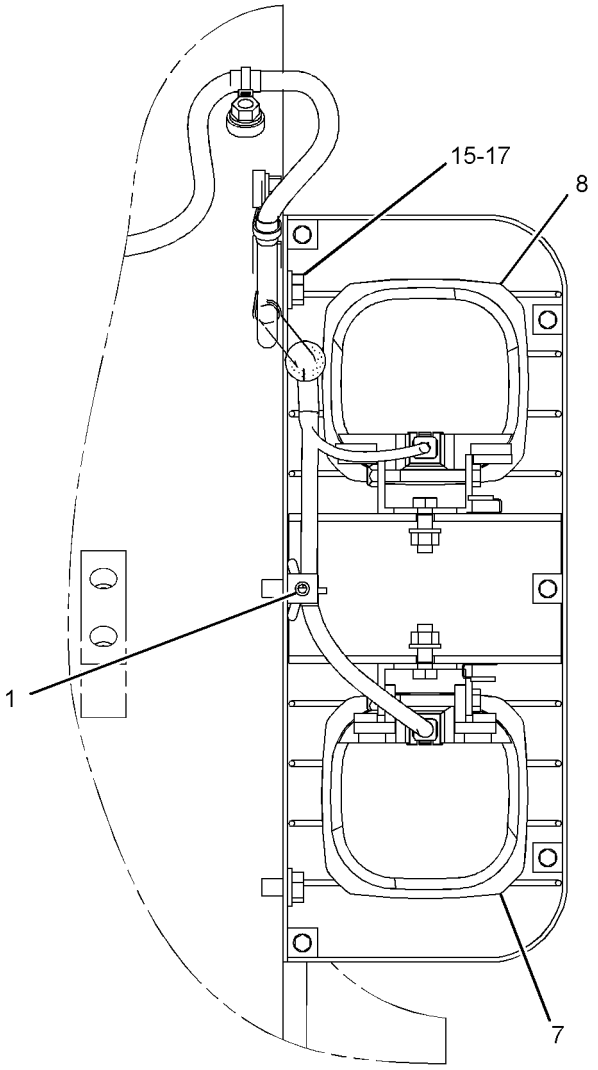

VIEW A-A
(SHEET REMOVED FOR CLARITY)

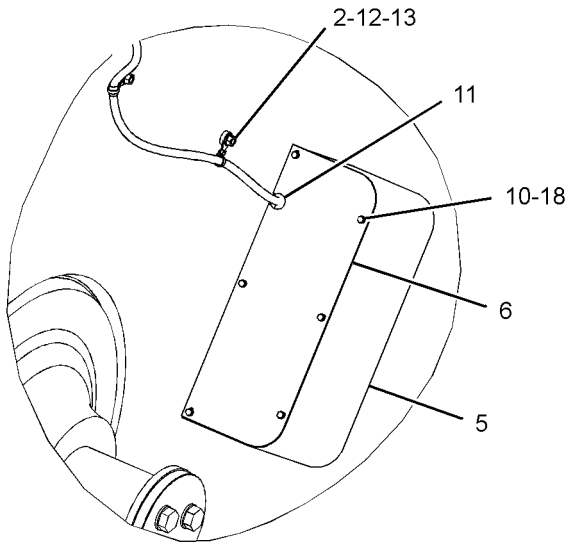

VIEW OF AREA B

GRAPHIC #1 g02177819

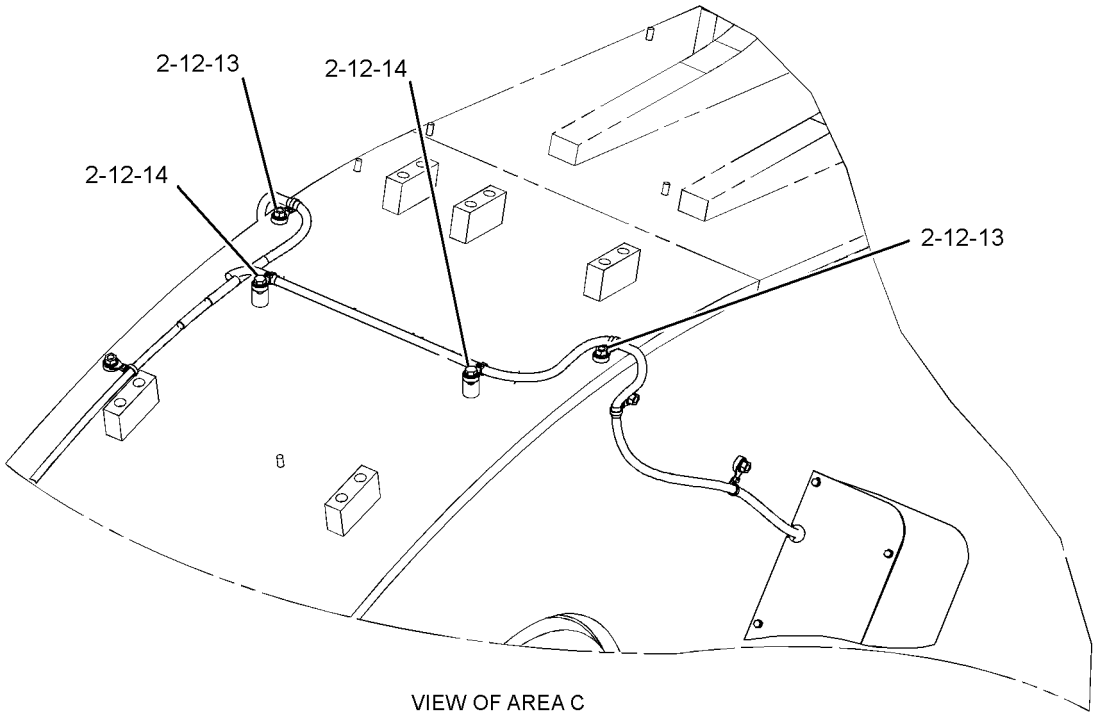

VIEW OF AREA C

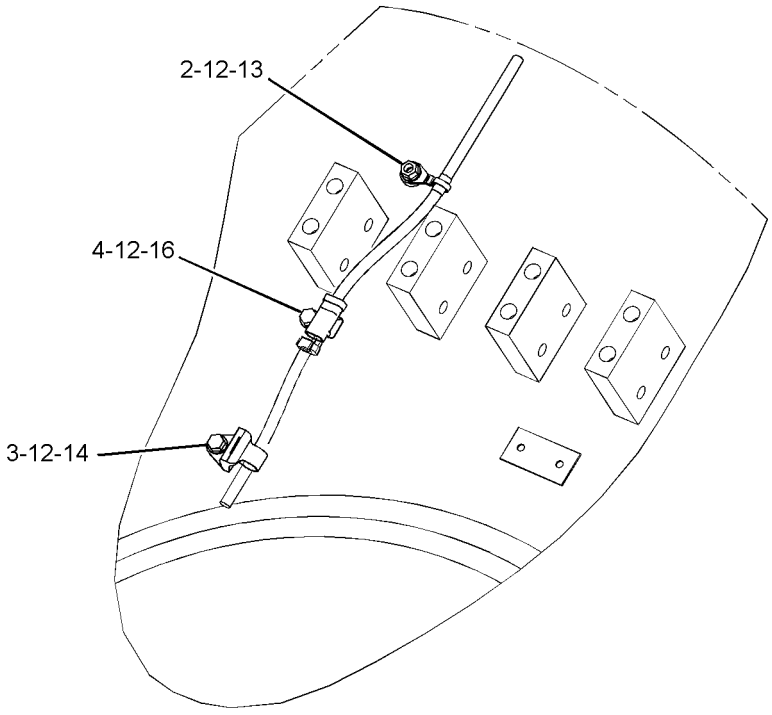

VIEW OF AREA D

GRAPHIC #2 **<END>** g02177863

ELECTRICAL AND STARTING SYSTEM

299-3014 LIGHTING GP-FLOOD—BOOM

S/N: WAP1-UP

FOR USE WITH 303-2690—PAGE 780. CANNOT BE USED WITH 303-2688—PAGE 781, 303-2689—PAGE 780

AN ATTACHMENT

SMCS-1434 **i03909165**

NOTE	REF NO	GRAPHIC REF	PART NUMBER	QTY	PART NAME 1 2 3 4 5 6 (PRODUCT LEVEL)	SEE PAGE
	1	1	**3S-2093**	2	STRAP-CABLE	
	2	1	**111-4836**	21	CLIP	
	3	1	**111-4837**	1	CLIP	
	4	1	**116-0118**	1	CLIP	
	5	1	**306-8328**	2	BRACKET AS	
	6	1	**306-8332**	2	SHEET	
Y	7	1	**332-9402**	2	LAMP GP-FLOOD (24-VOLT, 35-WATT, HID)	199
Y	8	1	**347-9427**	2	LAMP GP-FLOOD (24-VOLT, 35-WATT, HID)	200
	9	1	**350-8411**	1	HARNESS AS-LIGHTING	
		1	**9W-0852**	3	PIN-CONNECTOR (14-GA TO 16-GA)	
		1	**9W-0844**	8	SOCKET-CONNECTOR (14-GA)	
E		1	**119-3662**		TUBE-HEAT SHRINK (10.85-MM DIA) ((7-CM))	
E		1	**125-7875**		TUBE-HEAT SHRINK (7.44-MM DIA) ((10-CM))	
		1	**155-2270**	4	KIT-CONNECTING PLUG (2-PIN)	
					(EACH INCLUDES PLUG AS, WEDGE & INTERFACE SEAL)	
		1	**243-4506**	1	RECEPTACLE AS-CONNECTOR (3-PIN)	
M	10	1	**5C-9553**	12	BOLT (M6X1X16-MM)	
	11	1	**8P-8540**	2	GROMMET	
	12	1	**8T-4121**	23	WASHER-HARD (11X21X2.5-MM THK)	
M	13	1	**8T-4133**	19	NUT (M10X1.5-THD)	
M	14	1	**8T-4137**	3	BOLT (M10X1.5X20-MM)	
M	15	1	**8T-4179**	6	BOLT (M12X1.75X20-MM)	
M	16	1	**8T-4191**	1	BOLT (M10X1.5X16-MM)	
	17	1	**8T-4223**	6	WASHER-HARD (13.5X25.5X3-MM THK)	
	18	1	**9X-8256**	12	WASHER (6.6X12X2-MM THK)	

E-ORDER BY THE CENTIMETER
M-METRIC PART
Y-SEPARATE ILLUSTRATION

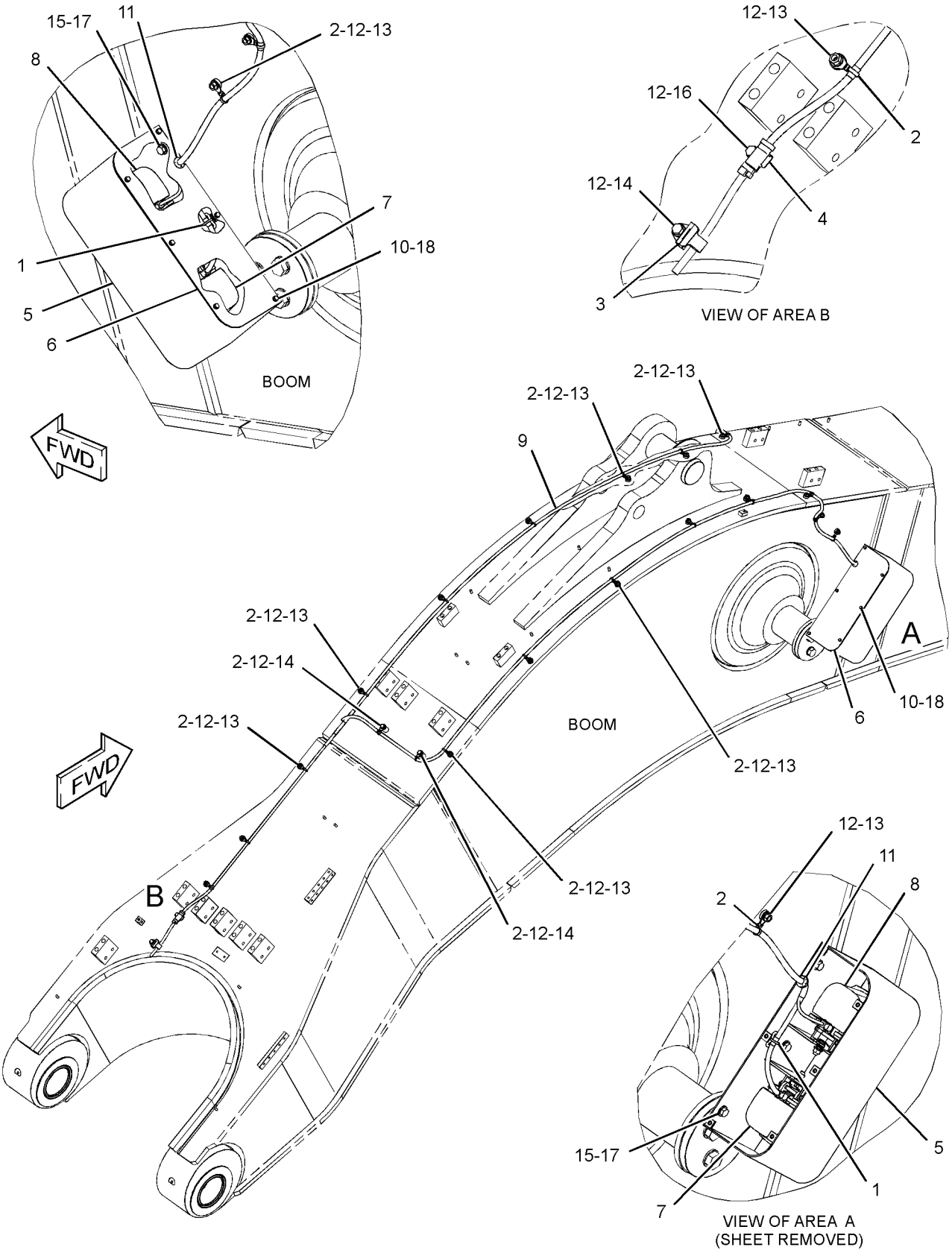

GRAPHIC #1 **<END>** g02177873

ELECTRICAL AND STARTING SYSTEM

299-3015 LIGHTING GP-FLOOD—BOOM

S/N: WAP1-UP

FOR USE WITH 303-2689—PAGE 780. CANNOT BE USED WITH 303-2688—PAGE 781, 303-2690—PAGE 780

AN ATTACHMENT

SMCS-1434 **i03909176**

NOTE	REF NO	GRAPHIC REF	PART NUMBER	QTY	PART NAME 1 2 3 4 5 6 (PRODUCT LEVEL)	SEE PAGE
	1	1	**3S-2093**	2	STRAP-CABLE	
	2	1,2	**111-4836**	17	CLIP	
	3	1	**111-4837**	1	CLIP	
	4	1	**116-0118**	1	CLIP	
	5	2	**306-8328**	2	BRACKET AS	
	6	2	**306-8332**	2	SHEET	
Y	7	1	**332-9402**	2	LAMP GP-FLOOD (24-VOLT, 35-WATT, HID)	199
Y	8	1	**347-9427**	2	LAMP GP-FLOOD (24-VOLT, 35-WATT, HID)	200
	9	1	**350-8412**	1	HARNESS AS-LIGHTING	
		1	**9W-0852**	3	PIN-CONNECTOR (14-GA TO 16-GA)	
		1	**9W-0844**	8	SOCKET-CONNECTOR (14-GA)	
BE		1	**119-3662**		TUBE-HEAT SHRINK (10.85-MM DIA)	
BE		1	**125-7875**		TUBE-HEAT SHRINK (7.44-MM DIA)	
		1	**155-2270**	4	KIT-CONNECTING PLUG (2-PIN)	
					(EACH PLUG KIT INCLUDES PLUG AS, WEDGE& INTERFACE SEAL)	
		1	**243-4506**	1	RECEPTACLE AS-CONNECTOR (3-PIN)	
M	10	2	**5C-9553**	12	BOLT (M6X1X16-MM)	
	11	2	**8P-8540**	2	GROMMET	
	12	1,2	**8T-4121**	19	WASHER-HARD (11X21X2.5-MM THK)	
M	13	1,2	**8T-4133**	15	NUT (M10X1.5-THD)	
M	14	1,2	**8T-4137**	3	BOLT (M10X1.5X20-MM)	
M	15	1	**8T-4179**	6	BOLT (M12X1.75X20-MM)	
M	16	1	**8T-4191**	1	BOLT (M10X1.5X16-MM)	
	17	1	**8T-4223**	6	WASHER-HARD (13.5X25.5X3-MM THK)	
	18	2	**9X-8256**	12	WASHER (6.6X12X2-MM THK)	

B-USE AS REQUIRED
E-ORDER BY THE CENTIMETER
M-METRIC PART
Y-SEPARATE ILLUSTRATION

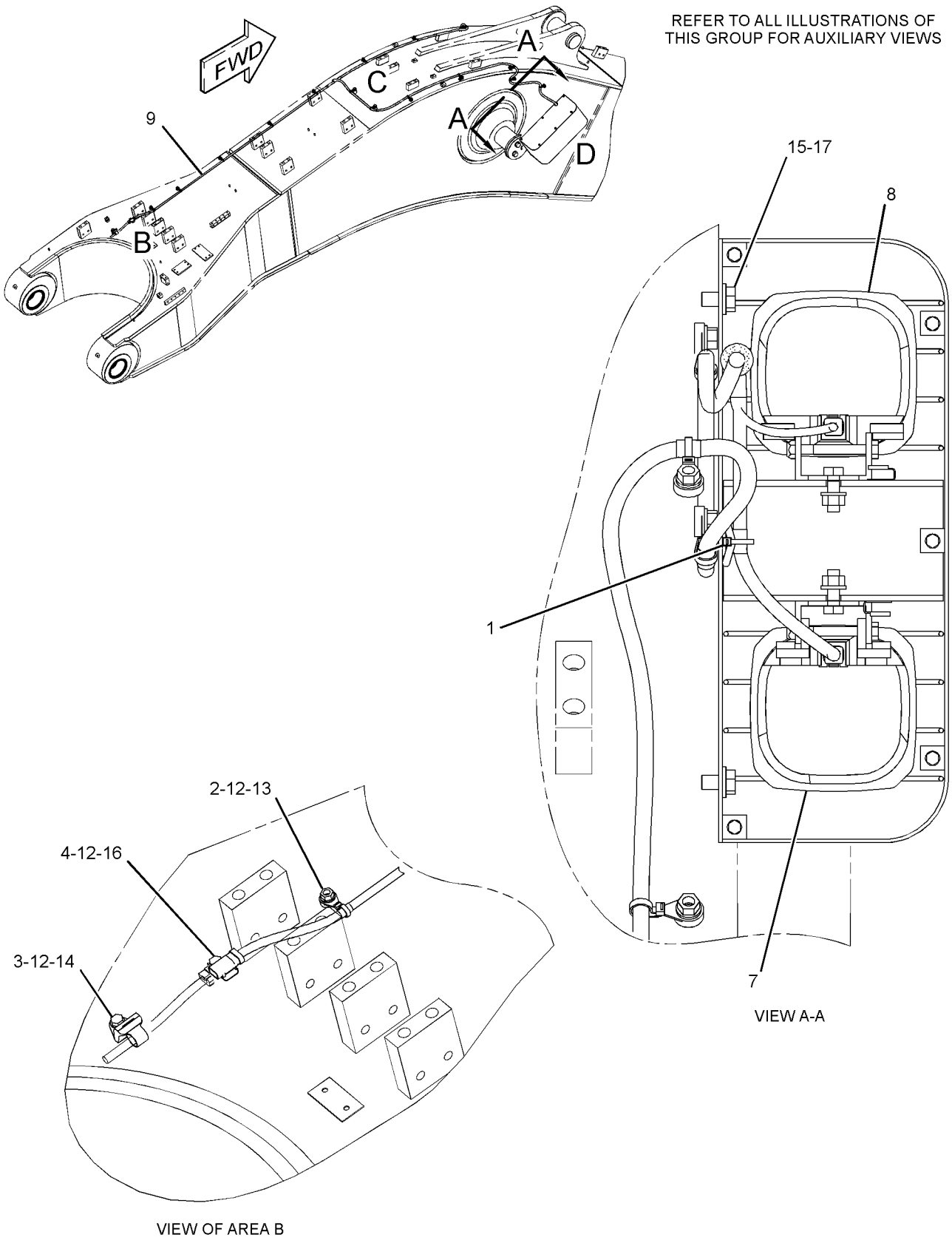

GRAPHIC #1 g02177913

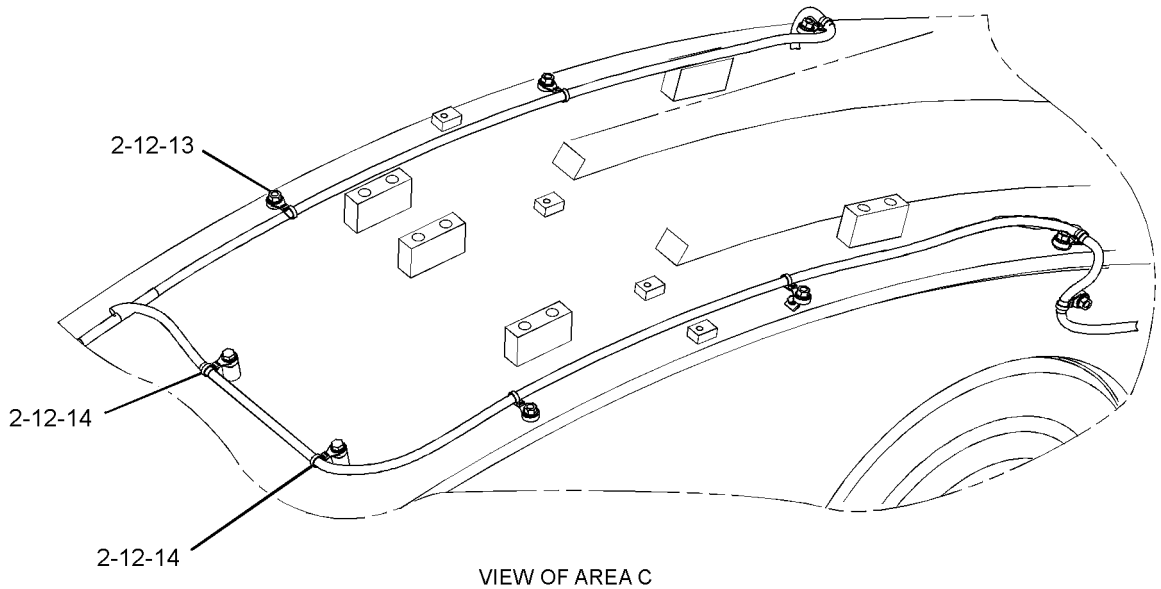

VIEW OF AREA C

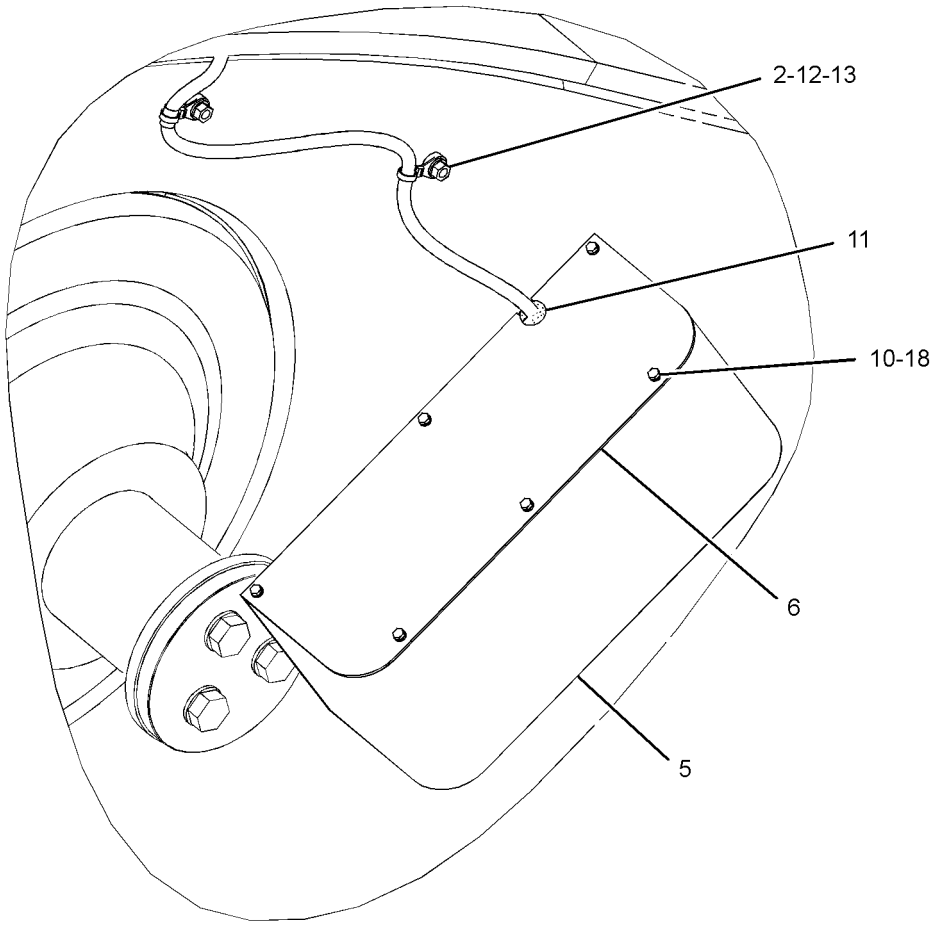

VIEW OF AREA D

GRAPHIC #2 **<END>** g02177948

307-7757 MOUNTING GP-CAMERA–COUNTERWEIGHT

S/N: WAP1-UP
PART OF 340-4025 CAMERA AR
AN ATTACHMENT

SMCS-7348 **i02977442**

NOTE	REF NO	GRAPHIC REF	PART NUMBER	QTY	PART NAME 1 2 3 4 5 6 (PRODUCT LEVEL)	SEE PAGE
Y	1	1	*313-7833*	1	CAMERA & MOUNTING GP (WORK AREA VISUAL SYSTEM, REAR)	179
	2	1	**320-5396**	1	COVER	
	3	1	**8T-4121**	4	WASHER-HARD (11X21X2.5-MM THK)	
M	4	1	**8T-4137**	4	BOLT (M10X1.5X20-MM)	

M-METRIC PART
Y-SEPARATE ILLUSTRATION

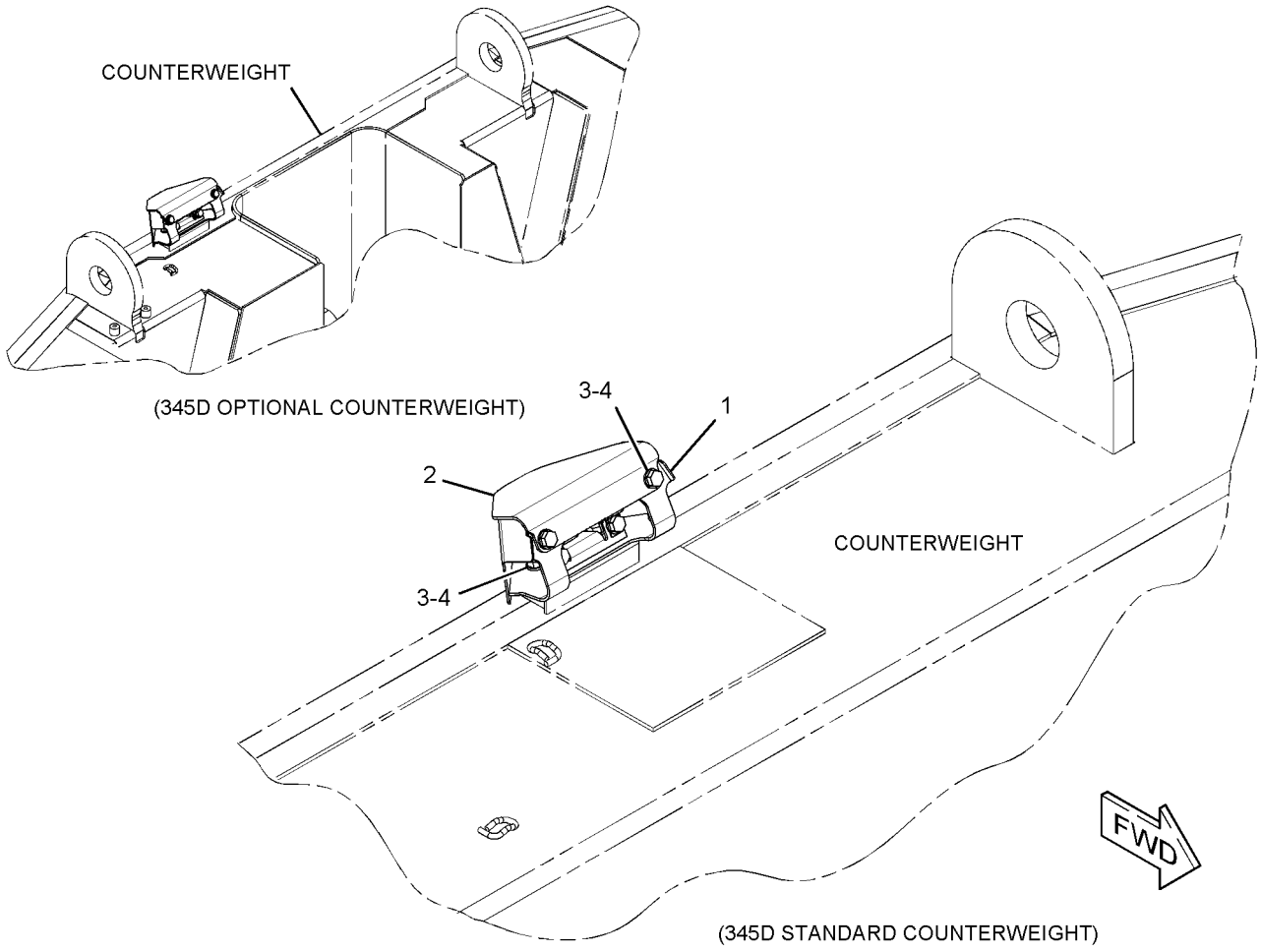

GRAPHIC #1 **<END>** g01461067

ELECTRICAL AND STARTING SYSTEM

320-5621 MOUNTING GP-CAMERA–MIRROR, RH

S/N: WAP1-UP
PART OF 319-9186 CAMERA AR
AN ATTACHMENT

SMCS-7348 **i03656959**

NOTE	REF NO	GRAPHIC REF	PART NUMBER	QTY	PART NAME 1 2 3 4 5 6 (PRODUCT LEVEL)	SEE PAGE
	1	1	**327-3087**	1	BRACKET	

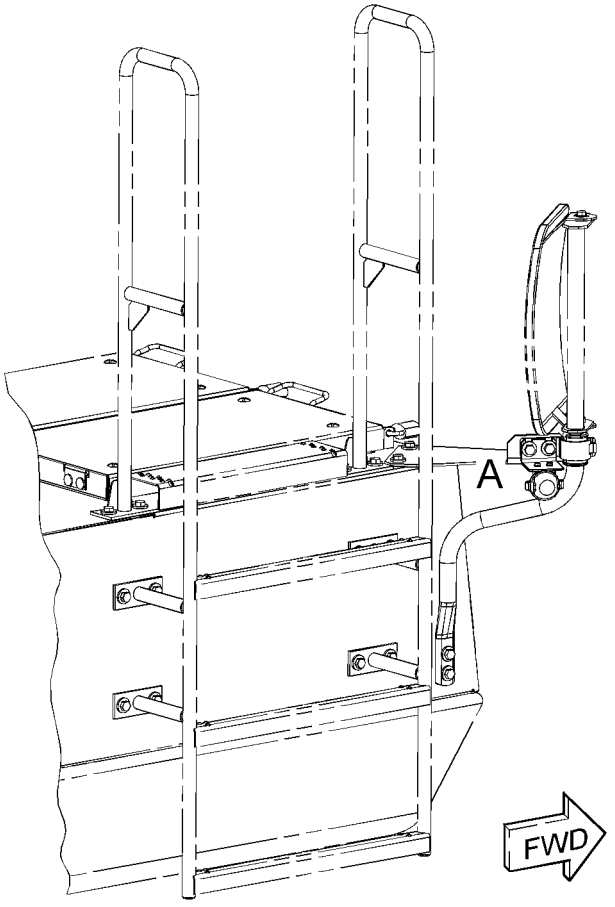

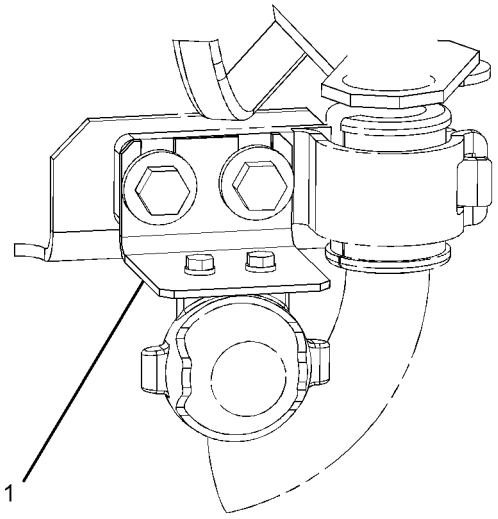

VIEW OF AREA A

GRAPHIC #1 **<END>** g02046973

328-0107 MOUNTING GP-CAMERA–BOOM

S/N: WAP1-UP
PART OF 319-9186 CAMERA AR
AN ATTACHMENT

SMCS-7348 **i04025019**

NOTE	REF NO	GRAPHIC REF	PART NUMBER	QTY	PART NAME 1 2 3 4 5 6 (PRODUCT LEVEL)	SEE PAGE
	1	1	**336-5959**	1	BRACKET	
M	2	1	**8T-4139**	3	BOLT (M12X1.75X30-MM)	

M-METRIC PART

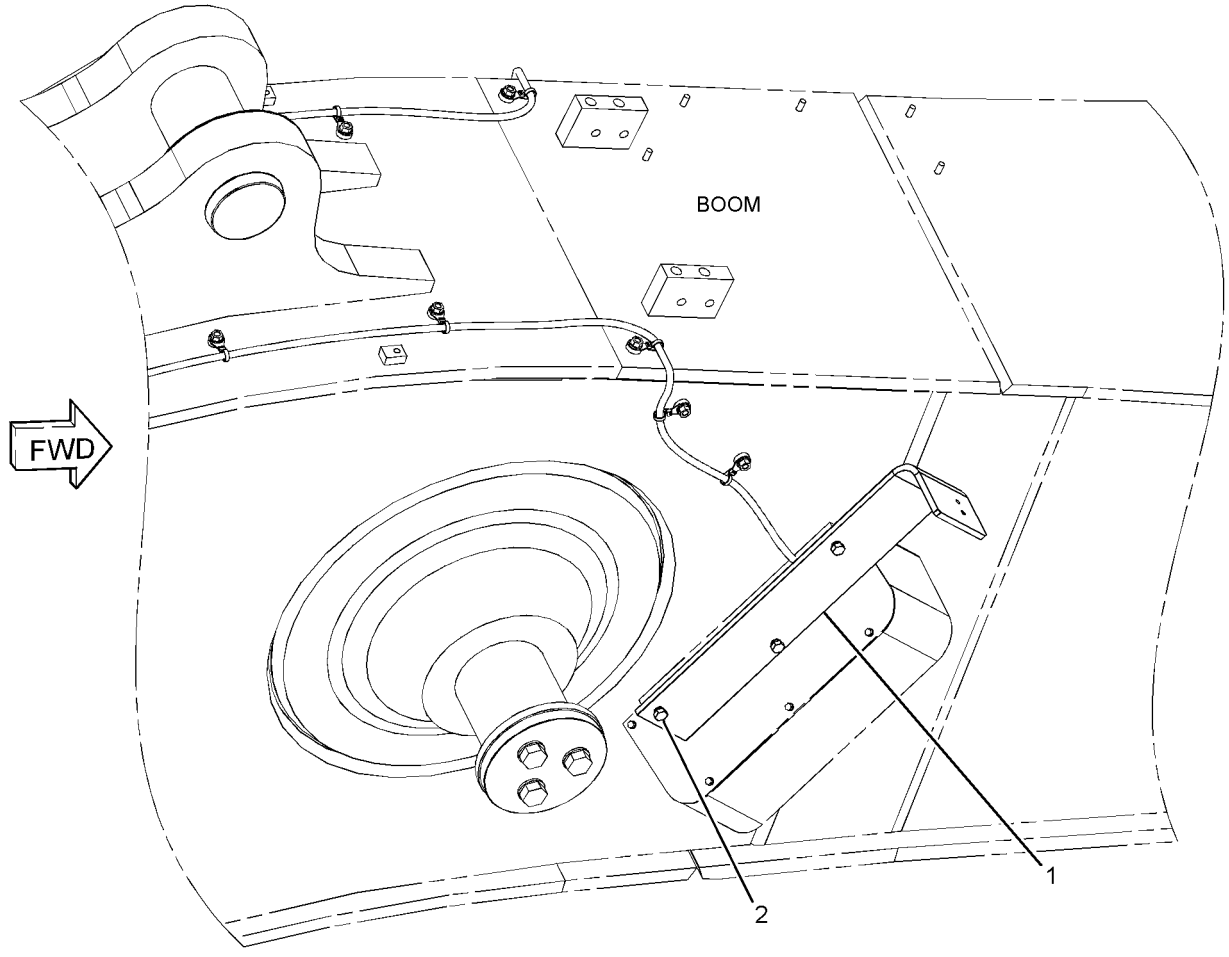

GRAPHIC #1 **<END>** g02207173

197-7415 MOUNTING GP-SENSOR–ATMOSPHERIC, ENGINE OIL

S/N: RHX7868-UP

PART OF 286-9798 ENGINE AR-COMPLETE

SMCS-1439, 1923, 1924 **i03767891**

NOTE	REF NO	GRAPHIC REF	PART NUMBER	QTY	PART NAME 1 2 3 4 5 6 (PRODUCT LEVEL)	SEE PAGE
	1	1	**166-6693**	1	ADAPTER	
	2	1	**1T-0720**	2	BOLT-12 POINT HEAD (3/8-16X1.25-IN)	
	3	1	**5M-2894**	2	WASHER-HARD (10.2X18.5X2.5-MM THK)	
	4	1	**6V-3683**	1	SEAL-O-RING	
	5	1	*307-2671*	1	PLUG AS	
	5A	1	**214-7566**	1	SEAL-O-RING	
		1	**9S-8002**	1	PLUG-O-RING	
	6	1	**8J-4351**	1	SEAL-O-RING	

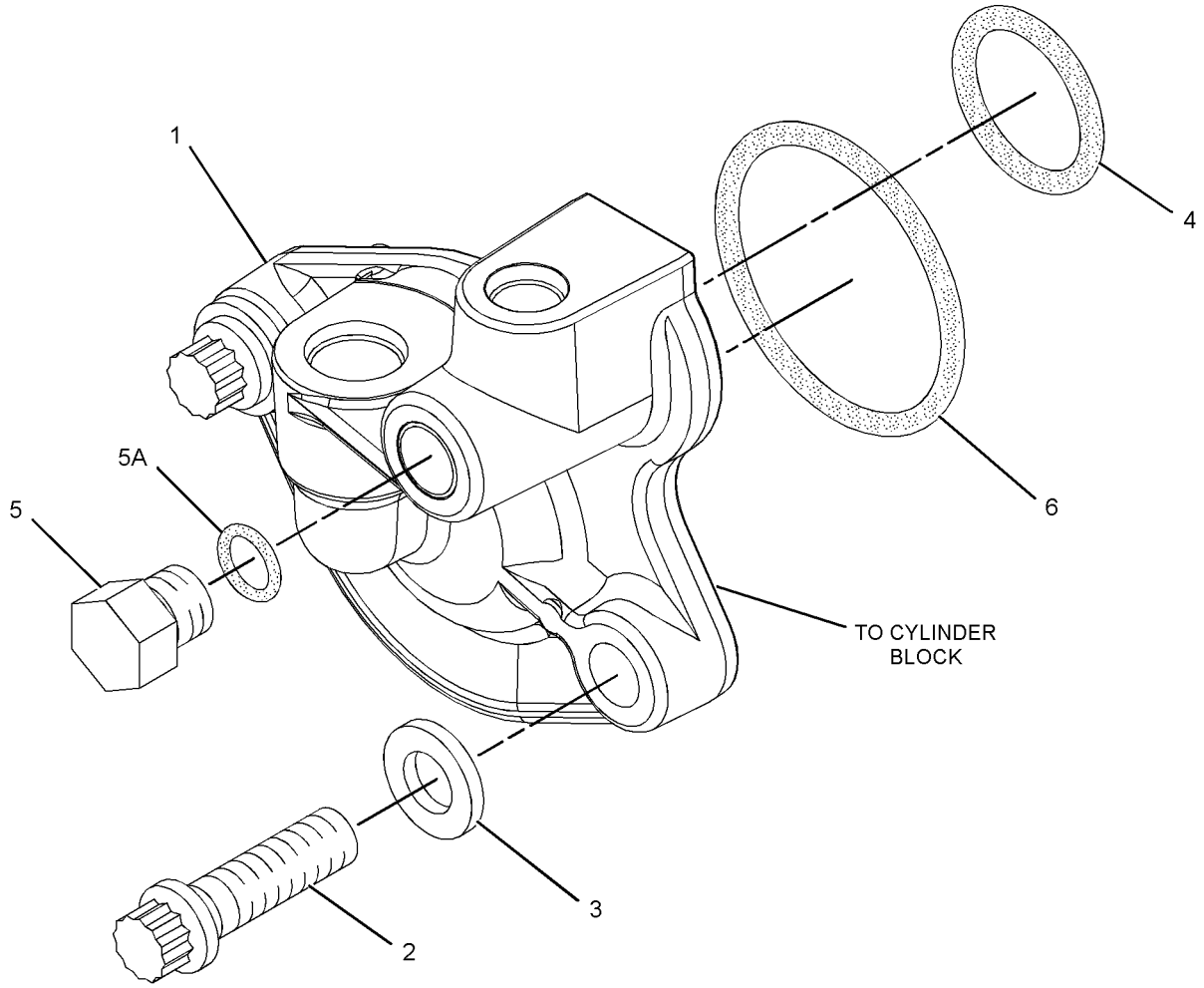

GRAPHIC #1 **<END>** g02032475

349-5418 MOUNTING GP-SENSOR–TILT

S/N: WAP1-UP
PART OF 340-3996 SPECIAL AR
AN ATTACHMENT

SMCS-1439, 1923, 1924 **i03917711**

NOTE	REF NO	GRAPHIC REF	PART NUMBER	QTY	PART NAME 1 2 3 4 5 6 (PRODUCT LEVEL)	SEE PAGE
	1	1	**349-5419**	1	BRACKET AS	
M	2	1	**8T-4139**	3	BOLT (M12X1.75X30-MM)	
	3	1	**8T-4223**	3	WASHER-HARD (13.5X25.5X3-MM THK)	

M-METRIC PART

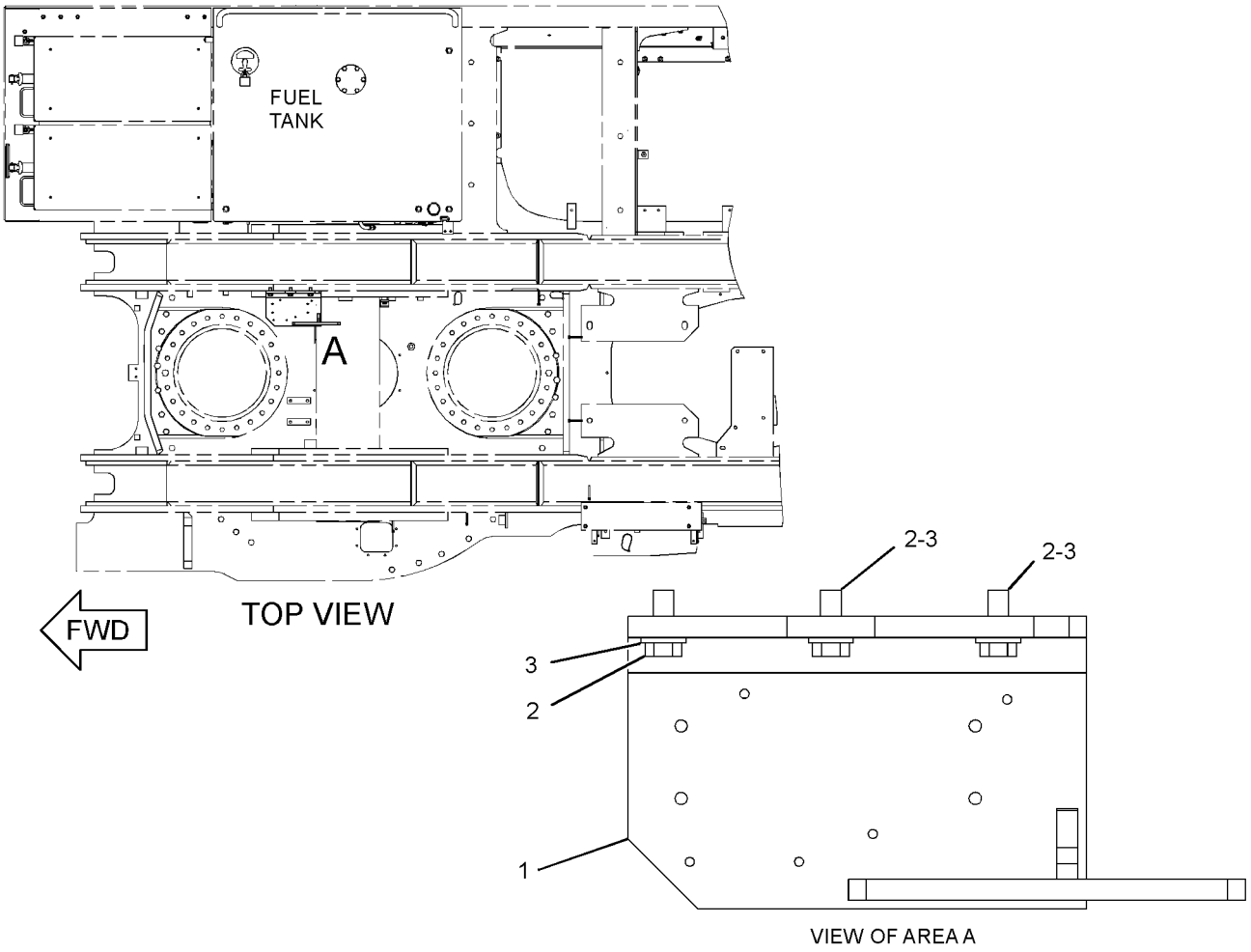

GRAPHIC #1 **<END>** g02161975

ELECTRICAL AND STARTING SYSTEM

299-2627 PANEL GP-CIRCUIT BREAKER

S/N: WAP1-UP

PART OF 299-2635 BATTERY & WIRING GP

SMCS-1417 **i03656427**

NOTE	REF NO	GRAPHIC REF	PART NUMBER	QTY	PART NAME 1 2 3 4 5 6 (PRODUCT LEVEL)	SEE PAGE
	1	1	**3E-8320**	1	PLATE-INSTRUCTION (BATTERY)	
	2	2	**3S-2093**	9	STRAP-CABLE	
	3	2	**7I-2673**	1	STRAP-CABLE	
Y	4	1	**7N-0719**	1	SWITCH GP-DISCONNECT (BATTERY)	261
	5	3	**7Y-5499**	1	BLOCK AS-TERMINAL	
	6	4	**9G-8451**	1	BLOCK AS	
		4	**1H-3244**	1	LOCKWASHER	
		4	**4B-4276**	2	WASHER (7X16X1.6-MM THK)	
		4	**4L-7124**	1	BOLT (1/4-20X1.25-IN)	
		4	**6V-8185**	2	NUT (1/4-20-THD)	
	7	1	**9R-7941**	1	SOCKET AS	
		1	**9R-7980**	1	COVER	
	8	2,3	**105-9983**	2	CLIP	
	9	4	**105-9986**	2	CLIP	
	10	4	**106-0193**	1	RESISTOR AS	
	11	3	**113-8490**	21	FUSE (10-AMPERE)	
	12	3	**113-8491**	11	FUSE (15-AMPERE)	
	13	3	**124-3548**	2	FUSE (30-AMPERE)	
Y	14	3	**125-1302**	1	SWITCH GP-MAGNETIC (24-VOLT) (START RELAY)	262
	15	4	**136-4055**	1	STRIP	
	16	3	**141-2759**	4	FUSE (5-AMPERE)	
	17	3	**145-3084**	1	RESISTOR AS	
	18	2	**149-5050**	1	RELAY (24-VOLT)	
	19	3	**151-9360**	2	RESISTOR AS	
					(EACH INCLUDES)	
		3	**102-8802**	1	KIT-RECEPTACLE (2-PIN)	
					(INCLUDES RECEPTACLE AS & WEDGE)	
		3	**9W-0852**	2	PIN-CONNECTOR (14-GA TO 16-GA)	
	20	3	**161-3128**	8	RELAY (24-VOLT)	
	21	2	**163-6704**	1	TIMER AS (TIME DELAY LIGHTING)	
		2	**102-8802**	1	KIT-RECEPTACLE (2-PIN)	
		2	**102-8803**	1	KIT-RECEPTACLE (3-PIN)	
					(EACH RECEPTACLE AS INCLUDES RECEPTACLE AS & WEDGE)	
		2	**186-3735**	5	PIN-CONNECTOR (16-GA TO 18-GA)	
	22	1	**167-3593**	1	STRAP	
	23	3	**170-6888**	1	PULLER-FUSE	
	24	1	**171-2210**	1	CIRCUIT BREAKER AS (80-AMPERE)	
		1	**6V-8187**	2	NUT (1/4-28-THD)	
		1	**8T-4205**	2	WASHER-HARD (7.2X14.5X2-MM THK)	
		1	**253-2111**	2	LOCKWASHER	
	25	1	**171-2212**	1	CIRCUIT BREAKER AS (105-AMPERE)	
		1	**6V-8187**	2	NUT (1/4-28-THD)	
		1	**8T-4205**	2	WASHER-HARD (7.2X14.5X2-MM THK)	
		1	**1H-3244**	2	LOCKWASHER	
	26	4	**213-0772**	1	SWITCH AS-MAGNETIC (24-VOLT) (MAIN RELAY)	
	27	3	**234-1194**	1	WIRE AS	
	28	4	**234-1196**	1	WIRE AS	
	29	3	**234-1198**	1	WIRE AS	
	30	3	**234-1199**	1	WIRE AS	
	31	4	**238-2392**	2	BAR-BUS	
	32	2	**238-2526**	1	COVER	
	33	1	**328-0213**	1	BRACKET AS	
	34	4	**328-0307**	1	WIRE AS	
	35	4	**328-0308**	1	WIRE AS	
	36	2	**342-2890**	1	HARNESS AS-PANEL	

299-2627 **PANEL GP-CIRCUIT BREAKER** *(contd.)* **i03656427**

NOTE	REF NO	GRAPHIC REF	PART NUMBER	QTY	PART NAME 1 2 3 4 5 6 (PRODUCT LEVEL)	SEE PAGE
		2	**8T-8729**	5	PIN-CONNECTOR (16-GA TO 18-GA)	
		2	**8T-8730**	15	SOCKET-CONNECTOR (16-GA TO 18-GA)	
		2	**3S-2093**	43	STRAP-CABLE	
		2	**9X-0196**	1	WIRE AS	
		2	**7Y-3951**	31	TERMINAL-BLADE (14-GA) (FEMALE)	
		2	**7Y-3952**	16	PLUG-CONNECTOR (2-PIN)	
		2	**7Y-3963**	7	TERMINAL-BULLET (FEMALE)	
		2	**7Y-3993**	1	TERMINAL-BLADE (12-GA) (FEMALE)	
		2	**8C-6354**	1	CAP-RECEPTACLE	
		2	**8T-8737**	8	PLUG-SEAL	
		2	**9W-1951**	1	RECEPTACLE-CONNECTOR (9-PIN)	
		2	**9W-0852**	13	PIN-CONNECTOR (14-GA TO 16-GA)	
		2	**9W-0844**	24	SOCKET-CONNECTOR (14-GA)	
BE		2	**119-3662**		TUBE-HEAT SHRINK (10.85-MM DIA)	
		2	**121-1022**	16	DIODE	
BE		2	**125-7875**		TUBE-HEAT SHRINK (7.44-MM DIA)	
		2	**9X-3402**	7	SOCKET-CONNECTOR (16-GA TO 18-GA)	
		2	**2L-8065**	3	TERMINAL-RING (10-GA TO 12-GA, NO. 8 SCREW)	
		2	**2L-8066**	1	TERMINAL-RING (10-GA TO 12-GA, NO. 10 SCREW)	
		2	**2L-8067**	4	TERMINAL-RING (10-GA TO 12-GA, 1/4-IN SCREW)	
		2	**2L-8075**	1	TERMINAL-RING (14-GA TO 16-GA, NO. 8 SCREW)	
		2	**2L-8076**	13	TERMINAL-RING (14-GA TO 16-GA, NO. 10 SCREW)	
		2	**9X-3401**	24	PIN-CONNECTOR (16-GA TO 18-GA)	
		2	**149-5051**	10	CONNECTOR-RECEPTACLE	
		2	**149-5069**	12	TERMINAL-BLADE (14-GA TO 20-GA) (FEMALE)	
		2	**149-5070**	20	TERMINAL-BLADE (16-GA TO 20-GA) (FEMALE)	
		2	**149-5071**	8	TERMINAL-BLADE (12-GA TO 14-GA) (FEMALE)	
		2	**155-2260**	1	KIT-CONNECTING PLUG (3-PIN)	
		2	**155-2270**	4	KIT-CONNECTING PLUG (2-PIN)	
					(EACH PLUG KIT INCLUDES PLUG AS, WEDGE, & INTERFACE SEAL)	
		2	**170-6890**	10	TERMINAL-BLADE (14-GA)	
		2	**170-6891**	18	TERMINAL-BLADE (16-GA TO 18-GA)	
		2	**183-1000**	1	PANEL GP-FUSE	
		2	**230-4009**	2	PLUG AS-CONNECTOR (12-PIN)	
					(EACH INCLUDES)	
		2	**264-7034**	1	SEAL-CONNECTOR	
		2	**230-4011**	1	PLUG AS-CONNECTOR (2-PIN)	
		2	**264-7029**	1	SEAL-CONNECTOR	
		2	**239-7356**	1	PLUG AS-CONNECTOR (12-PIN)	
		2	**264-7034**	1	SEAL-CONNECTOR	
		2	**243-4505**	1	RECEPTACLE AS-CONNECTOR (2-PIN)	
		2	**243-4510**	2	RECEPTACLE AS-CONNECTOR (12-PIN)	
		2	**272-5000**	1	RECEPTACLE AS-CONNECTOR (12-PIN)	
M	37	3,4	**095-0735**	14	SCREW-MACHINE (M5X0.8X8-MM)	
M	38	4	**096-4833**	2	BOLT-SOCKET HEAD (M5X0.8X20-MM)	
	39	1	**096-5962**	4	WASHER-HARD (3.4X7X0.8-MM THK)	
	40	1,2,3,4	**096-6166**	8	WASHER-HARD (4.5X9X1-MM THK)	
	41	1	**111-4874**	1	COVER	
M	42	1	**3E-8048**	4	SCREW-MACHINE (M3X0.5X6-MM)	
	43	1	**6V-5645**	4	SCREW-MACHINE (10-32X0.87-IN)	
M	44	2,3,4	**7X-2619**	5	BOLT (M6X1X10-MM)	
M	45	1,2,3,4	**8C-7581**	8	SCREW-MACHINE (M4X0.7X8-MM)	
	46	1,3,4	**8T-0328**	20	WASHER-HARD (5.5X10X1-MM THK)	
	47	2	**8T-4121**	4	WASHER-HARD (11X21X2.5-MM THK)	

299-2627 **PANEL GP-CIRCUIT BREAKER** *(contd.)* **i03656427**

NOTE	REF NO	GRAPHIC REF	PART NUMBER	QTY	PART NAME 1 2 3 4 5 6 (PRODUCT LEVEL)	SEE PAGE
M	48	3	**8T-4171**	6	BOLT (M6X1X12-MM)	
M	49	2	**8T-4191**	4	BOLT (M10X1.5X16-MM)	
M	50	2,4	**8T-4970**	4	BOLT (M6X1X14-MM)	
M	51	1,2,3	**8T-6411**	12	SCREW-MACHINE (M6X1X12-MM)	
	52	1,2,3, 4	**9X-8256**	27	WASHER (6.6X12X2-MM THK)	

B-USE AS REQUIRED
E-ORDER BY THE CENTIMETER
M-METRIC PART
Y-SEPARATE ILLUSTRATION

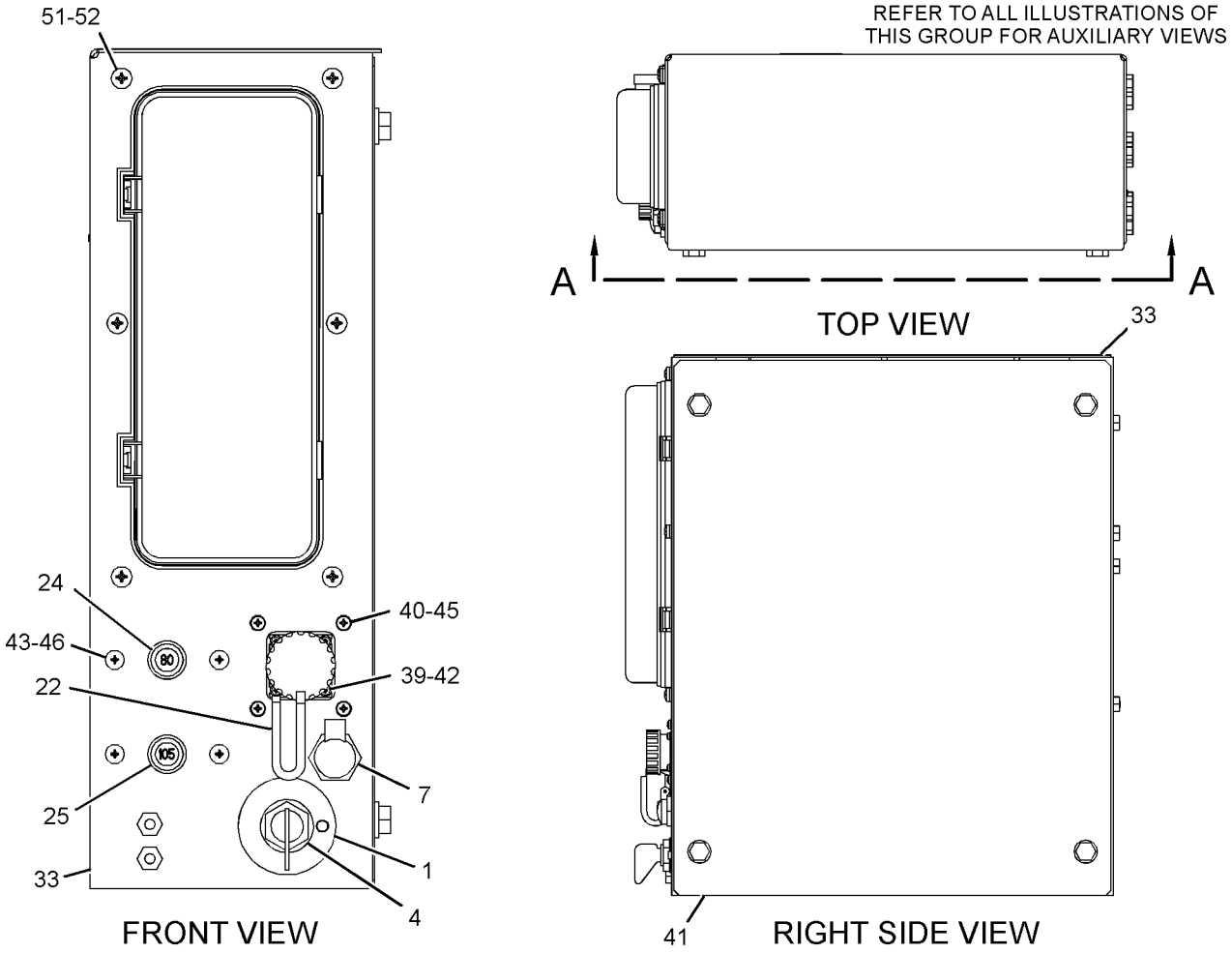

GRAPHIC #1 g02093855

REFER TO ALL ILLUSTRATIONS OF
THIS GROUP FOR AUXILIARY VIEWS

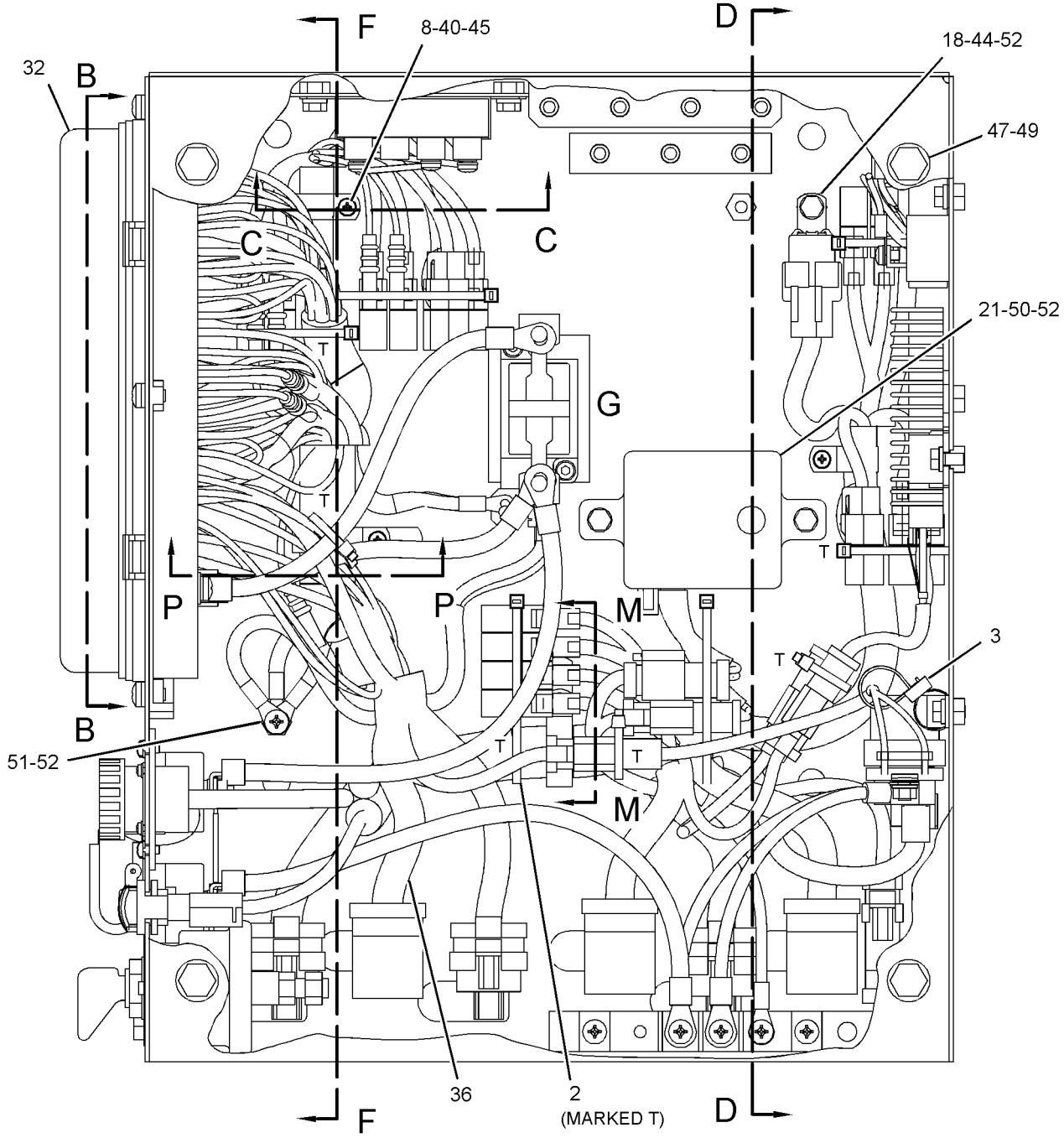

VIEW A-A
(COVER REMOVED)

GRAPHIC #2

g02093856

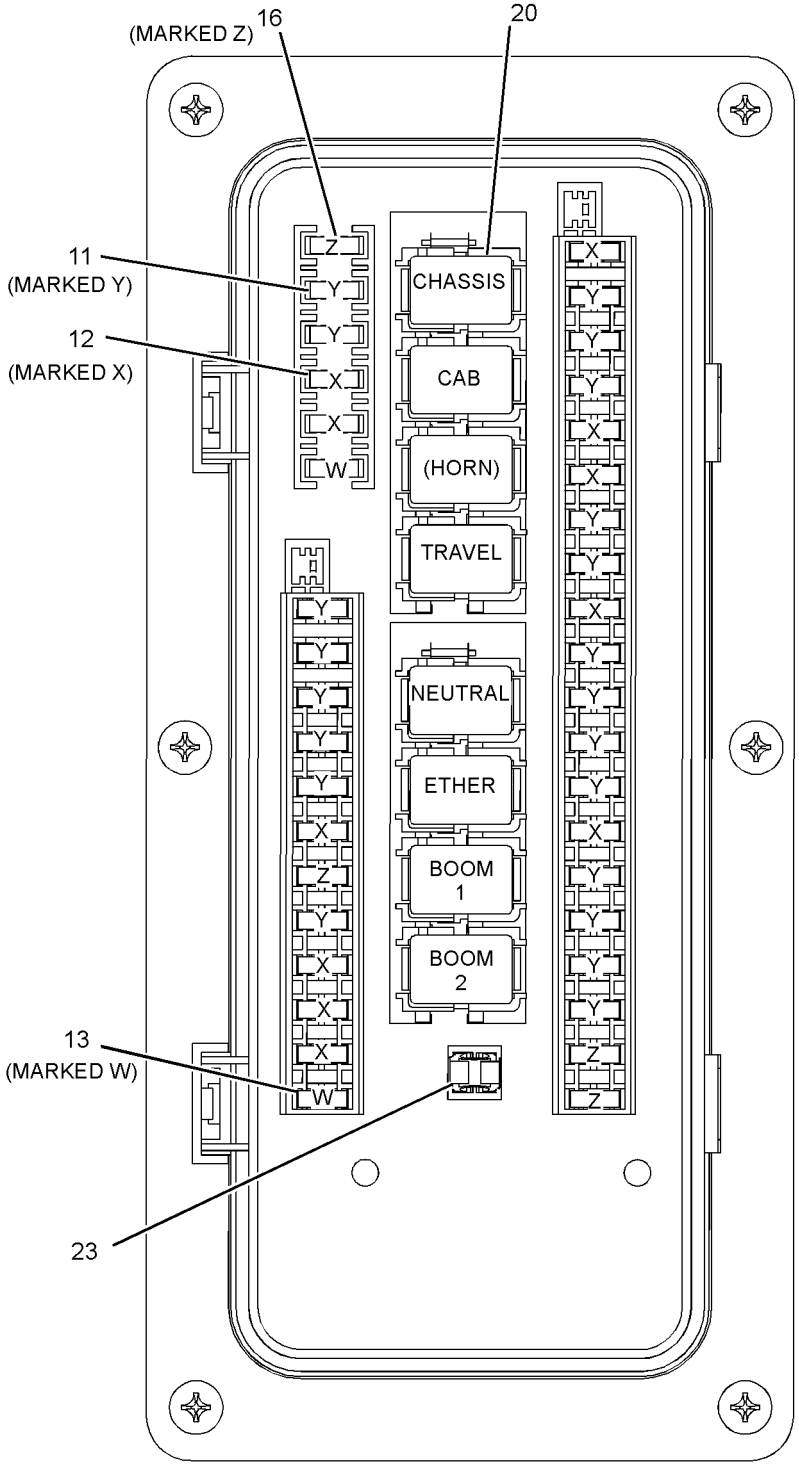

SECTION B-B

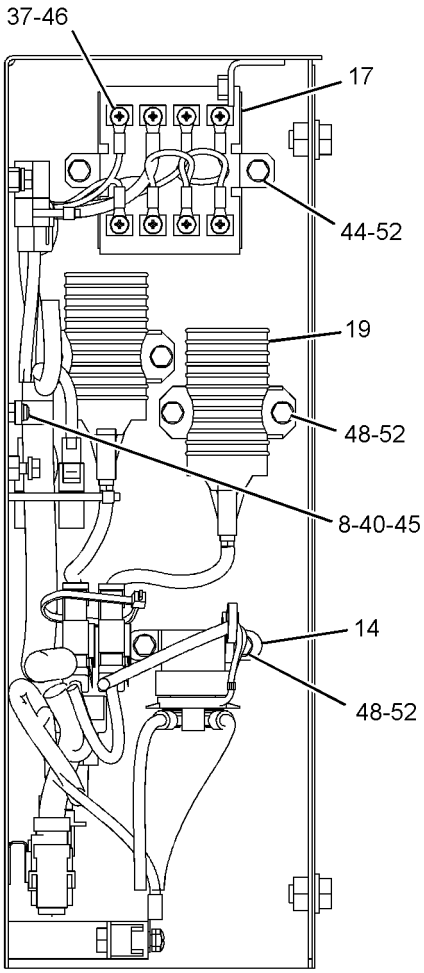

SECTION D-D

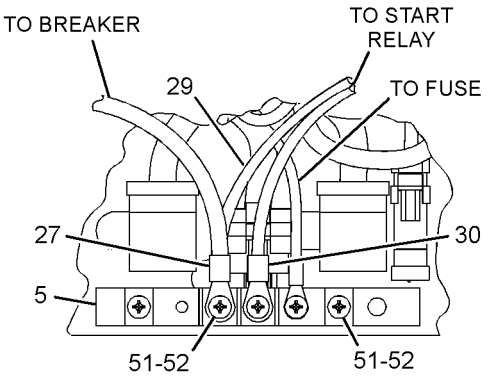

VIEW OF AREA E

GRAPHIC #3 g02093857

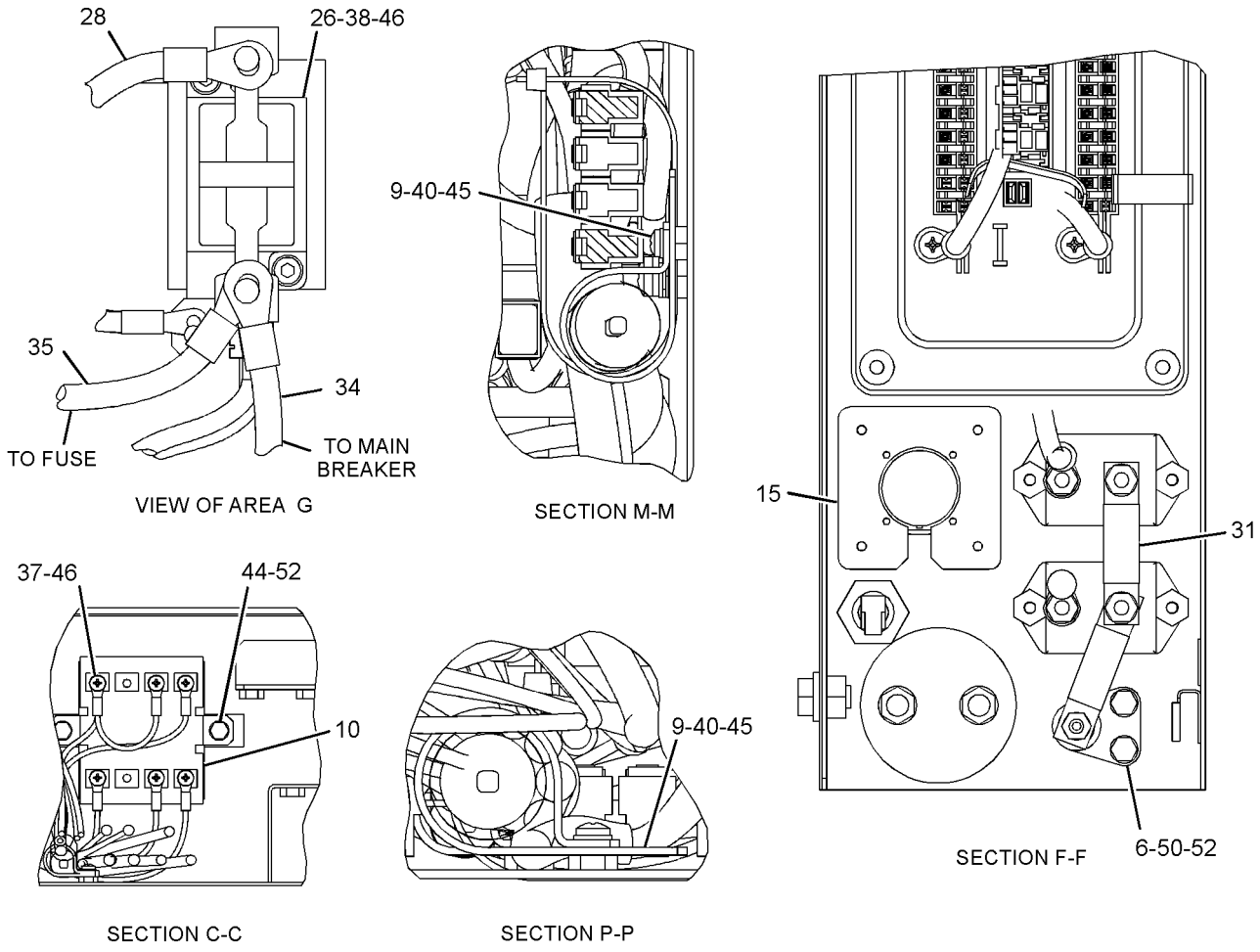

GRAPHIC #4

<END>

g02093858

ELECTRICAL AND STARTING SYSTEM

251-0542 PANEL GP-SWITCH—ENGINE SPEED, START

S/N: WAP1-UP

PART OF 340-4002, 340-4003, 340-4004 OPTION AR-CAB

AN ATTACHMENT

SMCS-1408, 1429, 7332, 7451 **i03631049**

NOTE	REF NO	GRAPHIC REF	PART NUMBER	QTY	PART NAME 1 2 3 4 5 6 (PRODUCT LEVEL)	SEE PAGE
	1	1	**3S-2093**	4	STRAP-CABLE	
Y	2	1	**9G-7641**	1	SWITCH GP-START (ENGINE, KEY)	268
CY	3	1	**319-4420**	1	SWITCH GP-ROTARY (THROTTLE POSITION)	267
	4	1	**170-9324**	1	LAMP AS (24-VOLT, 3-WATT)	
	5	1	**185-9208**	1	KNOB AS (THROTTLE POSITION)	
	6	1	**234-1156**	1	COVER	
	7	1	**234-1158**	1	COVER	
	8	1	**267-7976**	1	PANEL	
C	9	1	**328-0021**	1	HARNESS AS-CONSOLE (RH)	
		1	**102-8802**	1	KIT-RECEPTACLE (2-PIN)	
					(INCLUDES RECEPTACLE AS & WEDGE)	
		1	**3S-2093**	3	STRAP-CABLE	
		1	**7Y-3951**	2	TERMINAL-BLADE (14-GA)	
		1	**7Y-3952**	1	CONNECTOR-PLUG (2-PIN)	
		1	**7Y-3962**	1	TERMINAL-BULLET (MALE)	
		1	**7Y-3963**	1	TERMINAL-BULLET (FEMALE)	
		1	**8T-8737**	3	PLUG-SEAL	
		1	**121-1168**	1	CONNECTOR-RECEPTACLE	
		1	**121-1173**	14	TERMINAL (MALE)	
		1	**9X-3402**	7	SOCKET-CONNECTOR (16-GA TO 18-GA)	
					—OR—	
		1	**126-1768**	7	SOCKET-CONNECTOR (14-GA)	
		1	**2L-8075**	4	TERMINAL-RING (14-GA TO 16-GA, NO. 8 SCREW)	
		1	**153-2540**	10	TERMINAL (FEMALE)	
		1	**153-2541**	1	CONNECTOR-PLUG	
		1	**155-2270**	1	KIT-CONNECTING PLUG (2-PIN)	
					(INCLUDES PLUG AS, WEDGE, & INTERFACE SEAL)	
		1	**230-5010**	1	PLUG AS-CONNECTOR (6-PIN)	
		1	**238-2366**	7	TERMINAL (MALE)	
	10	1	**096-6166**	4	WASHER-HARD (4.5X9X1-MM THK)	
	11	1	**119-5026**	4	SCREW-PAN HEAD (10-16X0.63-IN)	
M	12	1	**6V-9491**	4	SCREW-MACHINE (M4X0.7X20-MM)	

C-CHANGE FROM PREVIOUS TYPE
M-METRIC PART
Y-SEPARATE ILLUSTRATION

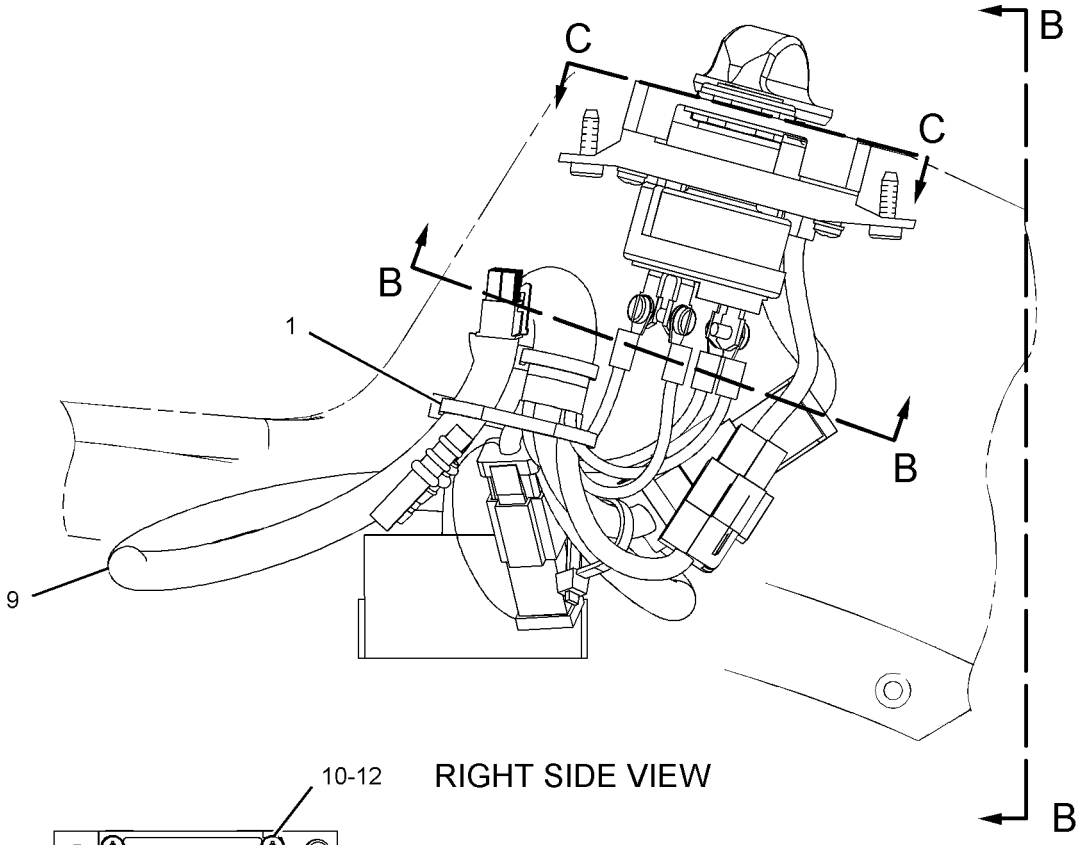

RIGHT SIDE VIEW

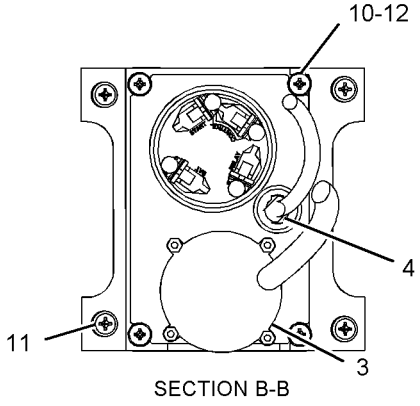

SECTION B-B

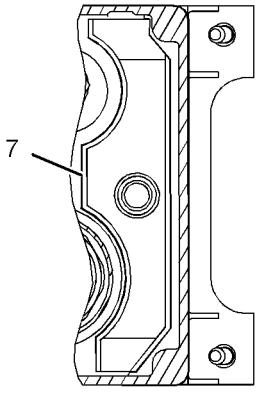

VIEW C-C

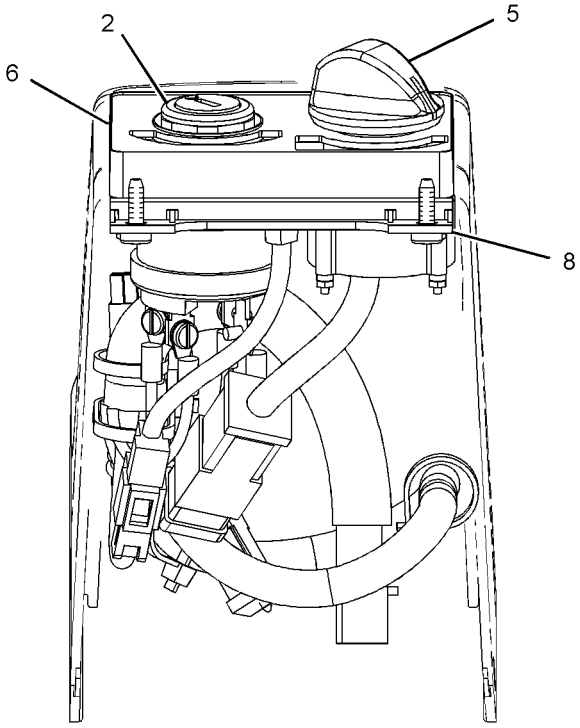

VIEW B-B

GRAPHIC #1 **<END>** g01112022

235-8200 PLUG GP-CONNECTOR–
ENGINE HARNESS, PROTECTIVE COVER
S/N: RHX7868-UP
PART OF 286-9798 ENGINE AR-COMPLETE

SMCS-1403, 1408 **i02951918**

NOTE	REF NO	GRAPHIC REF	PART NUMBER	QTY	PART NAME 1 2 3 4 5 6 (PRODUCT LEVEL)	SEE PAGE
	1	1	**246-9353**	1	PLUG AS	
	1A	1	**8T-8737**	8	PLUG-SEAL	
	1B	1	**102-8806**	1	KIT-RECEPTACLE (8-PIN)	
					(INCLUDES RECEPTACLE AS & WEDGE)	
	2	1	**3S-2093**	1	STRAP-CABLE	

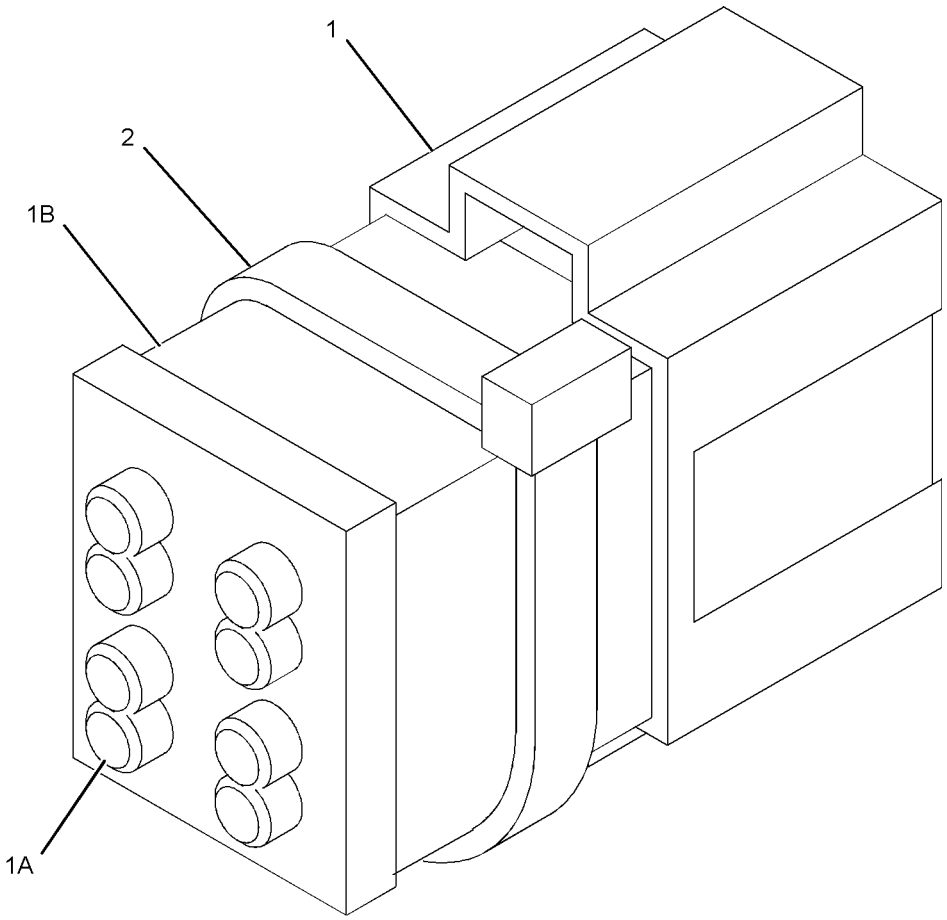

GRAPHIC #1 **<END>** g01105455

ELECTRICAL AND STARTING SYSTEM

297-4518 SENSOR & MTG GP-POSITION–STICK

S/N: WAP1-UP
PART OF 319-9211 BOOM AR-MASS
AN ATTACHMENT

SMCS-5736 **i03921790**

NOTE	REF NO	GRAPHIC REF	PART NUMBER	QTY	PART NAME 1 2 3 4 5 6 (PRODUCT LEVEL)	SEE PAGE
Y	1	1	**169-0417**	1	SENSOR GP-POSITION (STICK)	241
	2	1	**297-4530**	1	LEVER AS	
	3	1	**309-5694**	1	PLATE	
	4	1	**309-5695**	1	ROD AS	
M		1	**8T-4133**	1	NUT (M10X1.5-THD)	
M		1	**9X-2065**	1	NUT (M10X1.5-THD, LH)	
	5	1	**309-5733**	1	ROLLER	
	6	1	**309-5734**	1	SPACER (10.8X17.3X12-MM THK)	
M	7	1	**131-3983**	4	BOLT-SOCKET HEAD (M8X1.25X35-MM)	
M	8	1	**8C-8451**	2	BOLT (M6X1X40-MM)	
M	9	1	**8T-1160**	1	BOLT-SOCKET HEAD (M10X1.5X50-MM)	
	10	1	**8T-4121**	4	WASHER-HARD (11X21X2.5-MM THK)	
M	11	1	**8T-4195**	1	BOLT (M10X1.5X30-MM)	
	12	1	**8T-4224**	4	WASHER-HARD (8.8X16X2-MM THK)	
	13	1	**9X-8256**	2	WASHER (6.6X12X2-MM THK)	

M-METRIC PART
Y-SEPARATE ILLUSTRATION

297-4518 **SENSOR & MTG GP-POSITION** *(contd.)* **i03921790**

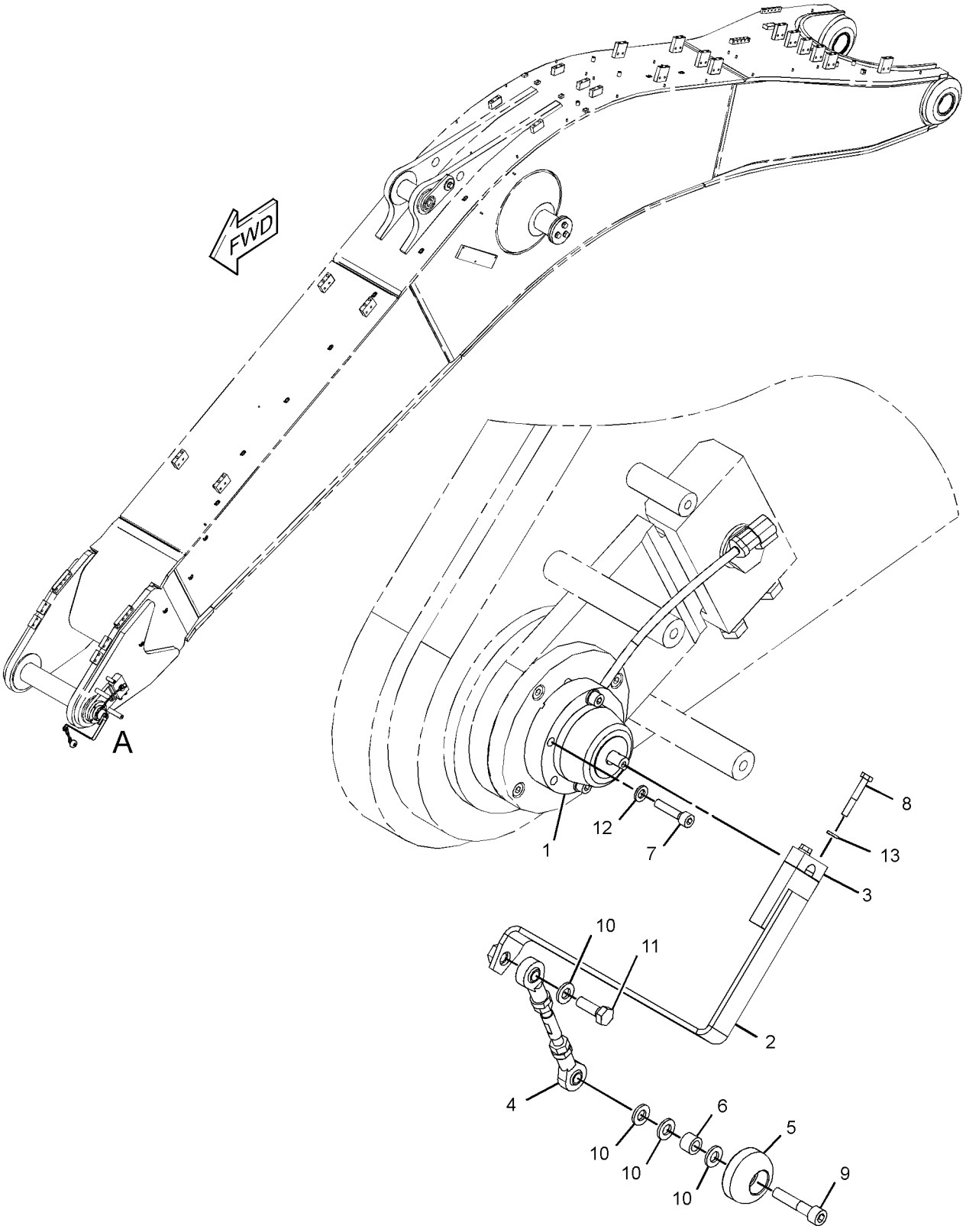

VIEW OF AREA A
(EXPLODED)

GRAPHIC #1 **<END>** g02155704

354-0041 SENSOR GP-ENGINE

S/N: RHX9087-UP

PART OF 286-9798 ENGINE AR-COMPLETE

SMCS-1000, 1906, 1907, 1924, 7422 **i04003053**

NOTE	REF NO	GRAPHIC REF	PART NUMBER	QTY	PART NAME 1 2 3 4 5 6 (PRODUCT LEVEL)	SEE PAGE
	1	1	**132-9770**	1	SPACER AS	
		1	**1W-6448**	2	DOWEL	
Y	2	1	*214-2484*	1	SENSOR GP-SPEED (TIMING, CRANKSHAFT)	249
Y	3	1	*234-5012*	1	SENSOR GP-TEMPERATURE (COOLANT)	251
Y	4	1	*234-5013*	1	SENSOR GP-TEMPERATURE (INTAKE AIR MANIFOLD)	252
Y	5	1	*249-0096*	1	SENSOR GP-PRESSURE (INTAKE MANIFOLD AIR)	243
Y	6	1	*276-8548*	1	SENSOR GP-PRESSURE (ATMOSPHERIC AIR)	244
Y	7	1	*276-9067*	1	SENSOR GP-PRESSURE (ENGINE OIL)	245
Y	8	1	*300-9806*	1	SENSOR GP-SPEED (SECONDARY, TIMING)	250
	9	1	**0S-1591**	1	BOLT (3/8-16X1.5-IN)	
	10	1	**214-7566**	1	SEAL-O-RING	
	11	1	**214-7568**	1	SEAL-O-RING	
	12	1	**241-6217**	1	ELBOW	
	13	1	**2H-3755**	2	BOLT (5/16-18X0.43-IN)	
	14	1	**3P-1155**	1	SEAL-O-RING	
	15	1	**5M-2894**	1	WASHER-HARD (10.2X18.5X2.5-MM THK)	
	16	1	**9M-1974**	2	WASHER-HARD (8.8X16X2-MM THK)	
	17	1	**9X-0262**	1	ADAPTER	

Y-SEPARATE ILLUSTRATION

354-0041 **SENSOR GP-ENGINE** *(contd.)* **i04003053**

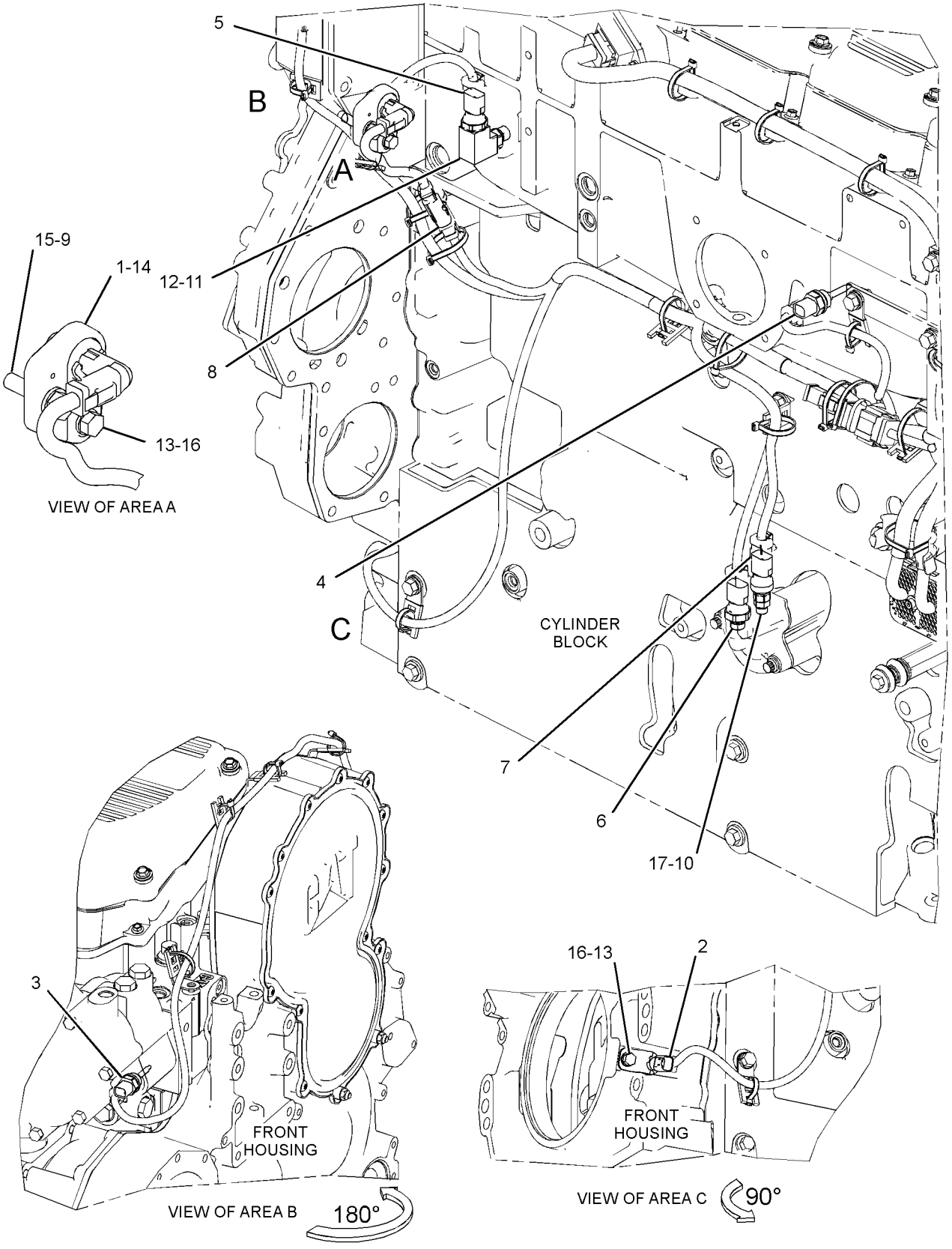

GRAPHIC #1 **<END>** g02129225

ELECTRICAL AND STARTING SYSTEM

239-6472 SENSOR GP-FUEL LEVEL

S/N: WAP1-UP

PART OF 294-1237 CHASSIS AR

SMCS-7422, 7481 **i04025333**

NOTE	REF NO	GRAPHIC REF	PART NUMBER	QTY	PART NAME 1 2 3 4 5 6 (PRODUCT LEVEL)	SEE PAGE
	1	1	**096-0061**	2	STRAP-CABLE	
	2	1	**116-0118**	1	CLIP	
Y	3	1	**178-2345**	1	SENSOR GP-LIQUID LEVEL (WATER IN FUEL)	238
	4	1	**6V-5049**	1	SEAL-O-RING	
	5	1	**8T-4121**	2	WASHER-HARD (11X21X2.5-MM THK)	
M	6	1	**8T-4137**	2	BOLT (M10X1.5X20-MM)	

M-METRIC PART
Y-SEPARATE ILLUSTRATION

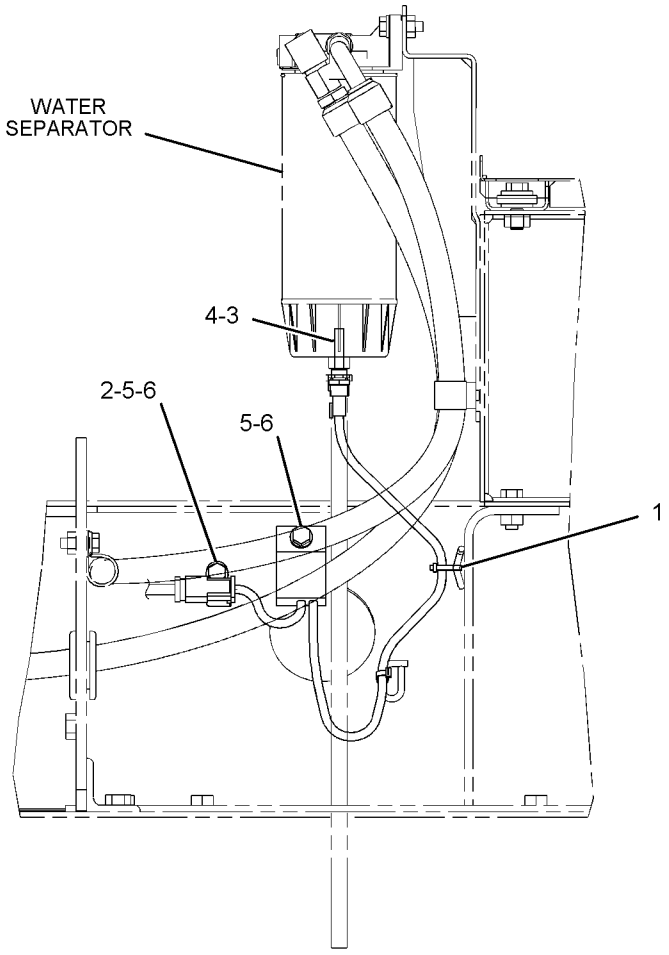

LEFT SIDE VIEW

GRAPHIC #1

<END>

g01085473

178-2345 SENSOR GP-LIQUID LEVEL

S/N: WAP1-UP

PART OF 239-6472 SENSOR GP-FUEL LEVEL

SMCS-7422 **i04025334**

NOTE	REF NO	GRAPHIC REF	PART NUMBER	QTY	PART NAME 1 2 3 4 5 6 (PRODUCT LEVEL)	SEE PAGE
	1	1	**178-2334**	1	PROBE AS-LIQUID LEVEL (WATER IN FUEL)	
		1	**3J-1907**	1	SEAL-O-RING	
	2	1	**178-2335**	1	SENSOR AS-LIQUID LEVEL (WATER IN FUEL)	
		1	**102-8804**	1	KIT-RECEPTACLE (4-PIN)	
					(INCLUDES RECEPTACLE AS & WEDGE)	
		1	**155-2270**	1	KIT-CONNECTING PLUG (2-PIN)	
					(INCLUDES PLUG AS, WEDGE & INTERFACE SEAL)	
		1	**186-3735**	4	PIN-CONNECTOR (16-GA TO 18-GA)	
		1	**186-3736**	2	SOCKET-CONNECTOR (16-GA TO 18-GA)	

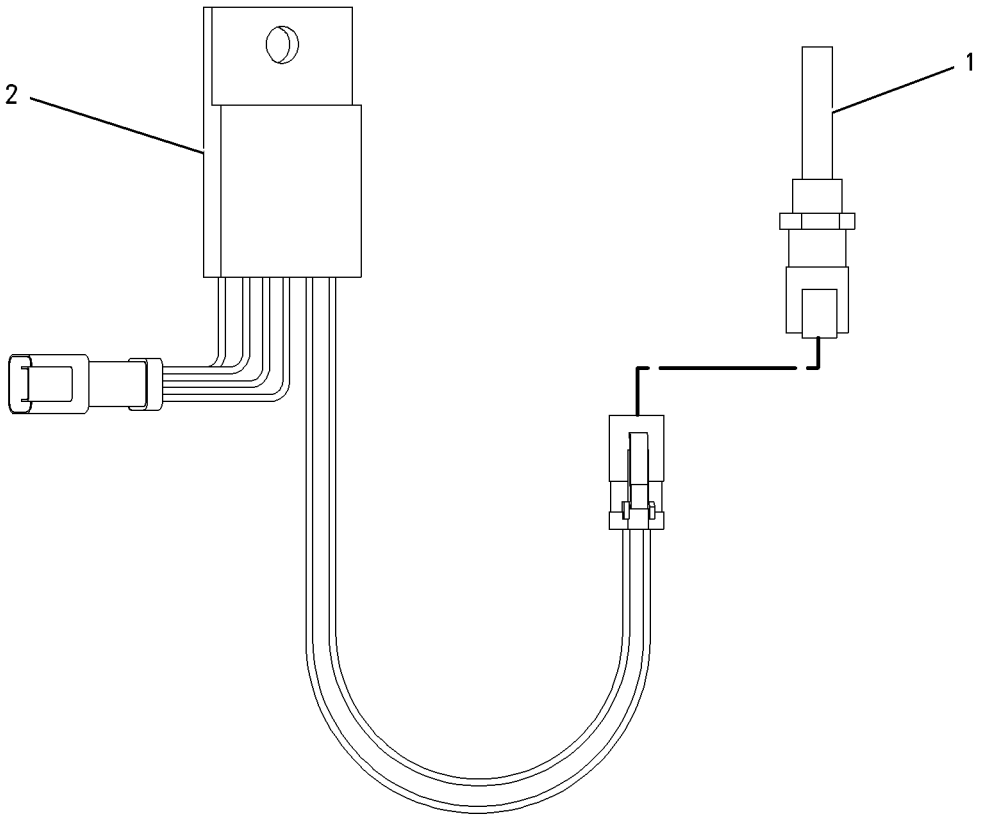

GRAPHIC #1 **<END>** g00816289

ELECTRICAL AND STARTING SYSTEM

360-6361 SENSOR GP-MACHINE LEVEL

S/N: WAP1-UP

AN ATTACHMENT

SMCS-5953 **i04028614**

NOTE	PART NUMBER	QTY	PART NAME 1 2 3 4 5 6 (PRODUCT LEVEL)	SEE PAGE
Y	*346-4595*	1	FILM GP (LIFTING, READ OMM)	1078
Y	*360-9895*	1	SENSOR GP-MACHINE LEVEL	240

Y-SEPARATE ILLUSTRATION

<END>

ELECTRICAL AND STARTING SYSTEM

360-9895 SENSOR GP-MACHINE LEVEL

S/N: WAP1-UP

PART OF 360-6361 SENSOR GP-MACHINE LEVEL

AN ATTACHMENT

SMCS-5953 **i03909226**

NOTE	REF NO	GRAPHIC REF	PART NUMBER	QTY	PART NAME 1 2 3 4 5 6 (PRODUCT LEVEL)	SEE PAGE
M	1	1	**128-2135**	1	SCREW-TRUSS HEAD (M6X1X13-MM)	
	2	1	**164-0646**	1	CUP	
	3	1	**186-3792**	1	SWITCH-LEVEL (TILT)	
	4	1	**257-2943**	1	PLATE	

M-METRIC PART

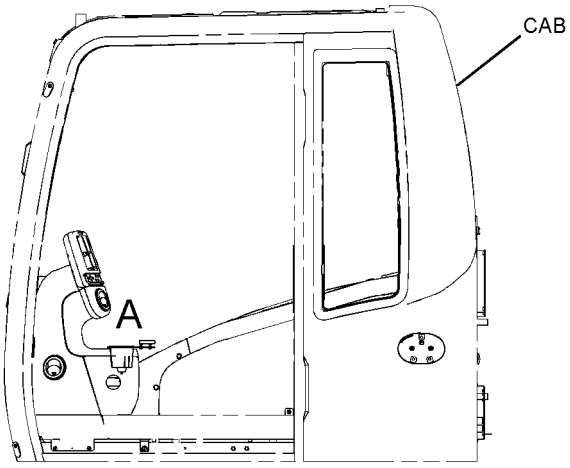

LEFT SIDE VIEW

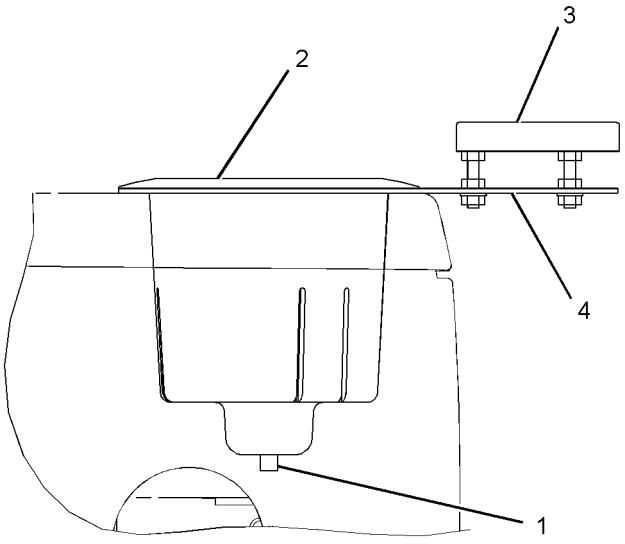

VIEW OF AREA A

GRAPHIC #1 **<END>** g02151412

169-0417 SENSOR GP-POSITION

S/N: WAP1-UP
PART OF 297-4518 SENSOR & MTG GP-POSITION
FIELD REPLACEMENT ORDER 266-2337—PAGE 242
AN ATTACHMENT

SMCS-5737 **i02481734**

NOTE	REF NO	GRAPHIC REF	PART NUMBER	QTY	PART NAME 1 2 3 4 5 6 (PRODUCT LEVEL)	SEE PAGE
	1	1	*169-0418*	1	SENSOR AS-POSITION (LIFT, TILT)	
M		1	**6V-9671**	4	SCREW-MACHINE (M3X0.5X12-MM)	
		1	**172-1483**	4	SPACER	
		1	**191-9253**	4	WASHER	
	2	1	**102-8803**	1	KIT-RECEPTACLE (3-PIN)	
					(INCLUDES RECEPTACLE AS & WEDGE)	
	3	1	**9X-3401**	3	PIN-CONNECTOR (16-GA TO 18-GA)	
	4	1	**3E-3371**	1	WEDGE-RECEPTACLE LOCK (3-PIN)	
E	5	1	**119-3662**		TUBE-HEAT SHRINK (10.85-MM DIA) (5CM)	
E	6	1	**9X-1813**		SLEEVE (17CM)	
	7	1	**172-1482**	1	CLAMP	
M	8	1	**3E-8048**	2	SCREW-MACHINE (M3X0.5X6-MM)	

E-ORDER BY THE CENTIMETER
M-METRIC PART

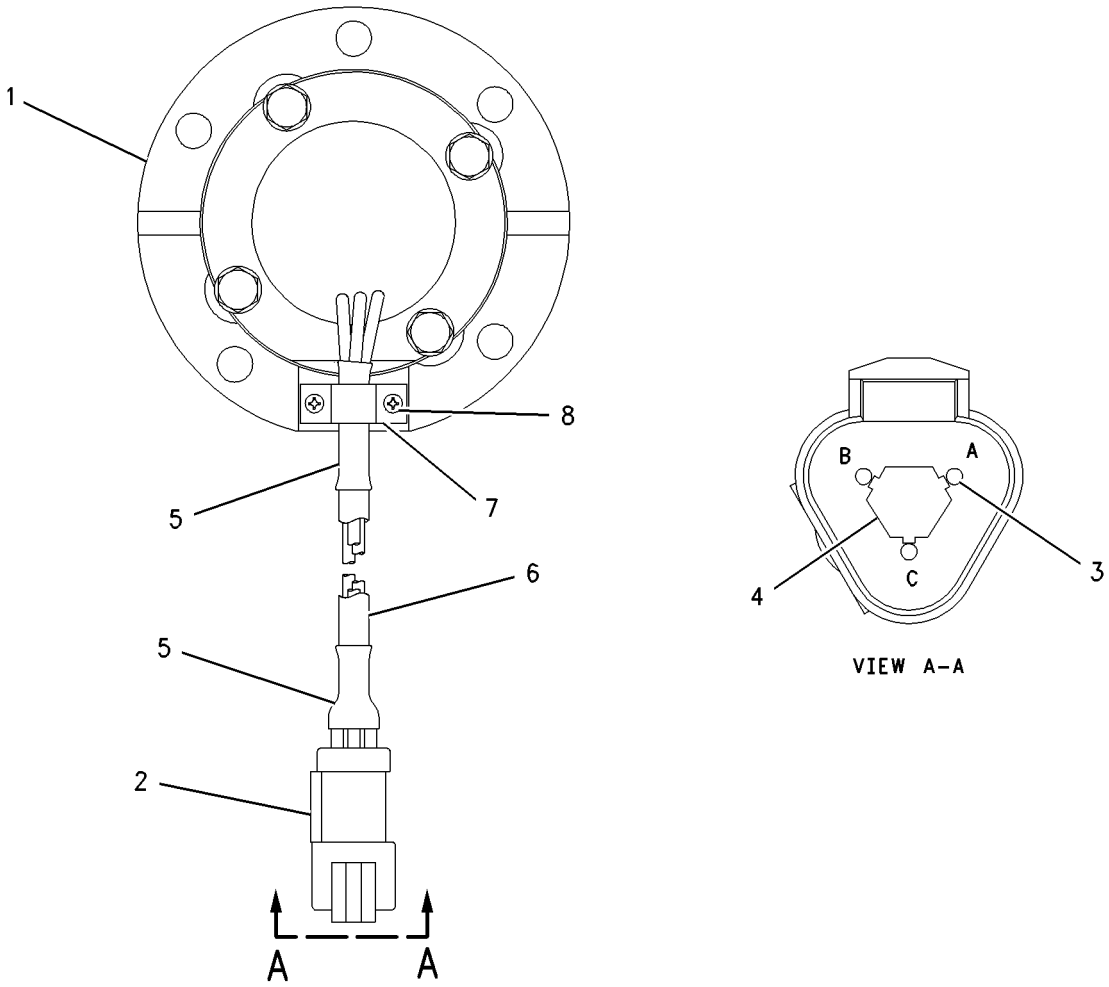

GRAPHIC #1 **<END>** g00744970

266-2337 SENSOR GP-POSITION–STICK

S/N: WAP1-UP

FIELD REPLACEMENT FOR 169-0417–PAGE 241

SMCS-5737 **i03641780**

NOTE	REF NO	GRAPHIC REF	PART NUMBER	QTY	PART NAME 1 2 3 4 5 6 (PRODUCT LEVEL)	SEE PAGE
	1	1	**102-8803**	1	KIT-RECEPTACLE (3-PIN)	
					(INCLUDES RECEPTACLE AS & WEDGE)	
	2	1	**9X-3401**	3	PIN-CONNECTOR (16-GA TO 18-GA)	
					–OR–	
		1	**126-1767**	3	PIN-CONNECTOR (14-GA)	
E	3	1	**9X-1813**		SLEEVE (17-CM)	

E-ORDER BY THE CENTIMETER

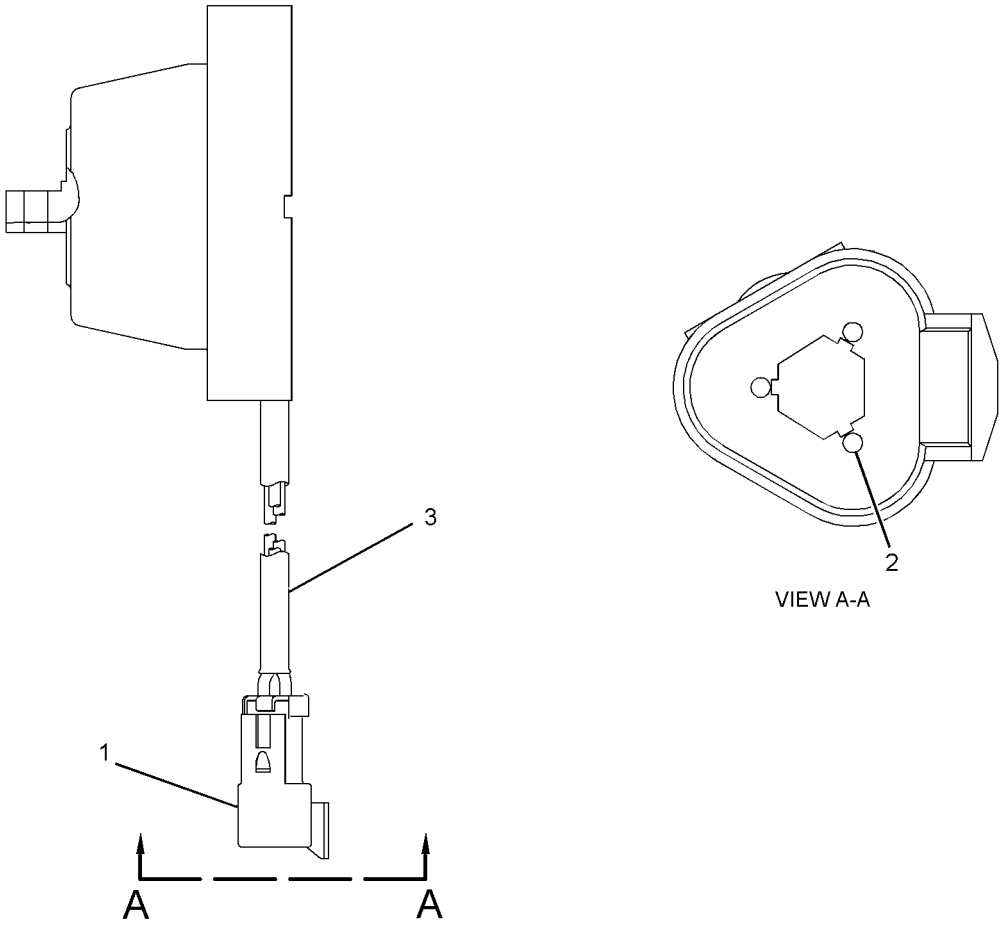

GRAPHIC #1 **<END>** g01954240

249-0096 SENSOR GP-PRESSURE

S/N: RHX9087-UP

PART OF 354-0041 SENSOR GP-ENGINE

SMCS-1439, 1916, 1917, 1923, 1924 **i04003065**

NOTE	REF NO	GRAPHIC REF	PART NUMBER	QTY	PART NAME 1 2 3 4 5 6 (PRODUCT LEVEL)	SEE PAGE
	1	1	**274-6718**	1	SENSOR GP-PRESSURE	
	2	1	**214-7566**	1	SEAL-O-RING	

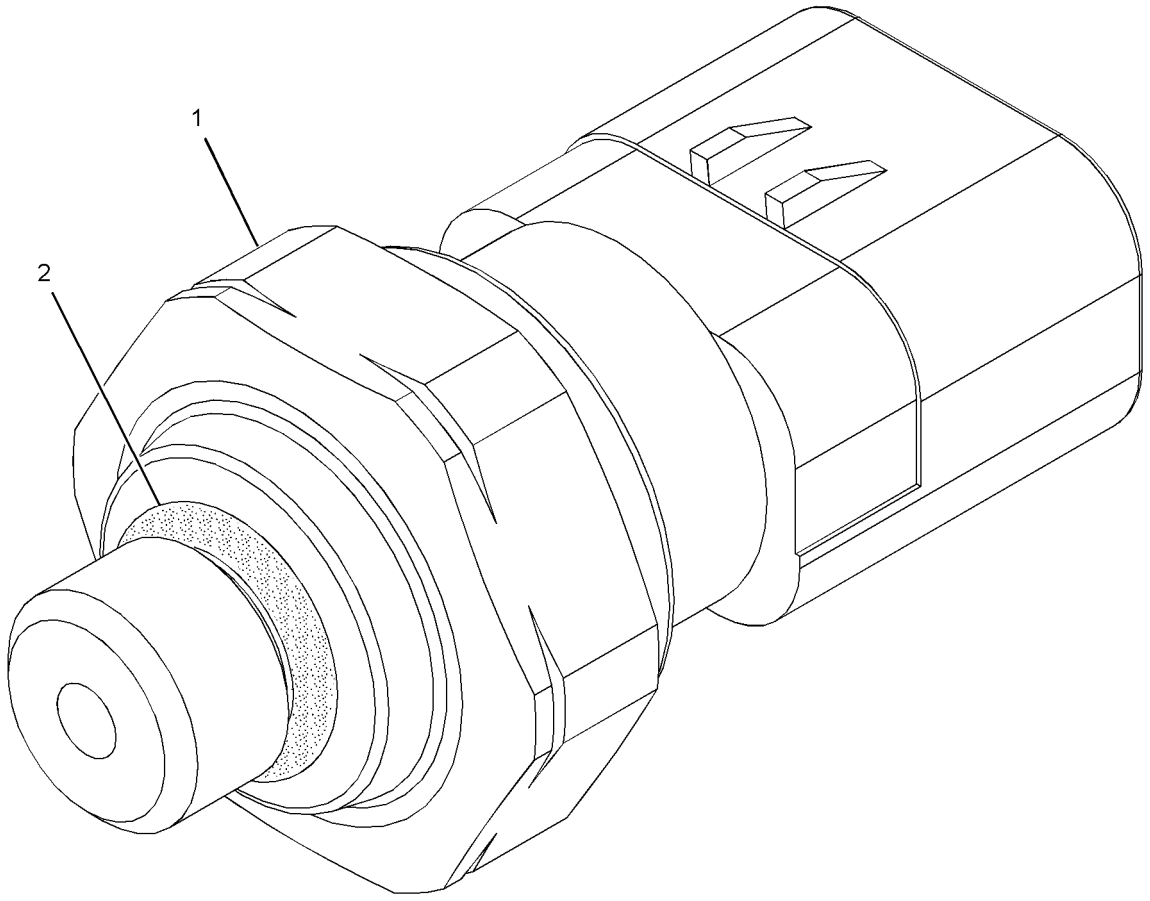

GRAPHIC #1 **<END>** g01224445

276-8548 SENSOR GP-PRESSURE

S/N: RHX9087-UP

PART OF 354-0041 SENSOR GP-ENGINE

SMCS-1439, 1916, 1917, 1923, 1924 **i03784733**

NOTE	REF NO	GRAPHIC REF	PART NUMBER	QTY	PART NAME 1 2 3 4 5 6 (PRODUCT LEVEL)	SEE PAGE
	1	1	**274-6717**	1	SENSOR-PRESSURE	
	2	1	**214-7568**	1	SEAL-O-RING	

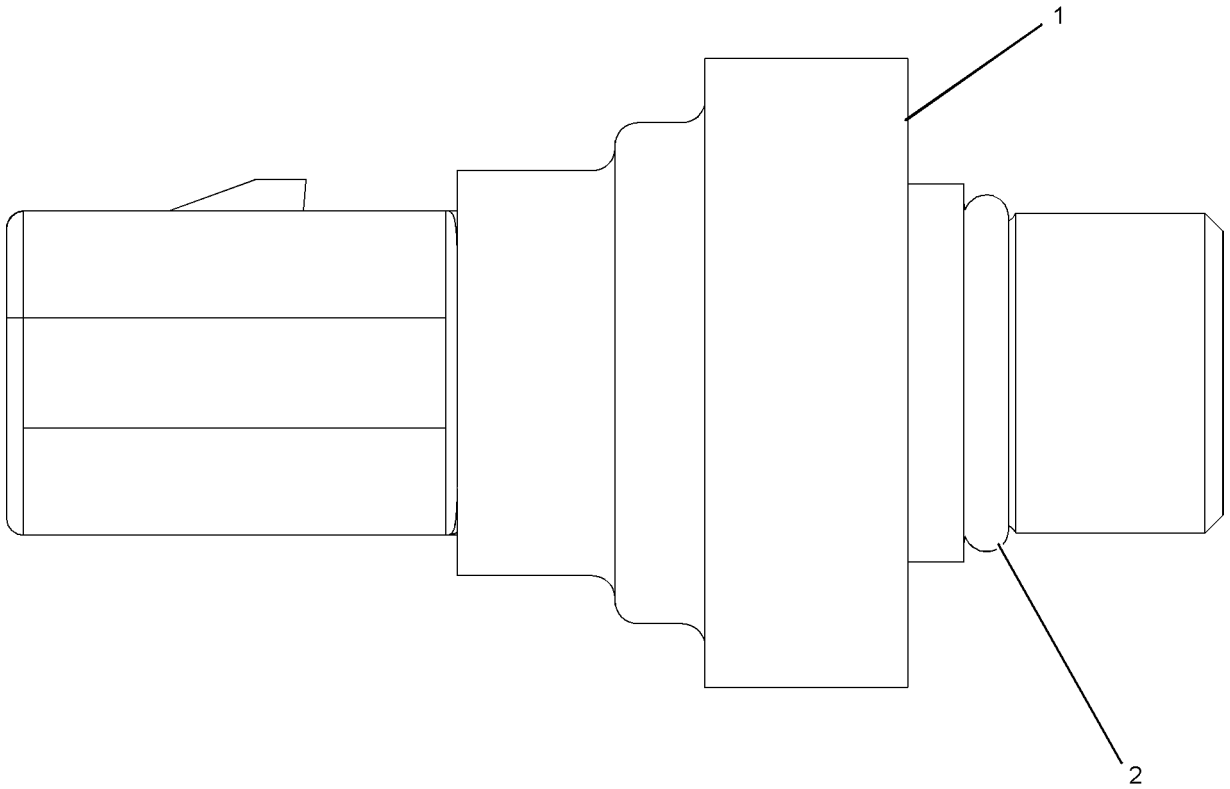

GRAPHIC #1 **<END>** g01064278

ELECTRICAL AND STARTING SYSTEM

276-9067 SENSOR GP-PRESSURE

S/N: RHX9087-UP

PART OF 356-1879 FILTER GP-FUEL, 354-0041 SENSOR GP-ENGINE

SMCS-1439, 1916, 1917, 1923, 1924 **i03920341**

NOTE	REF NO	GRAPHIC REF	PART NUMBER	QTY	PART NAME 1 2 3 4 5 6 (PRODUCT LEVEL)	SEE PAGE
	1	1	**274-6719**	1	SENSOR GP-PRESSURE	
		1	**3J-7354**	1	SEAL-O-RING	
		1	**237-0227**	1	PLUG AS-CONNECTOR (3-PIN)	
	2	1	**214-7566**	1	SEAL-O-RING	

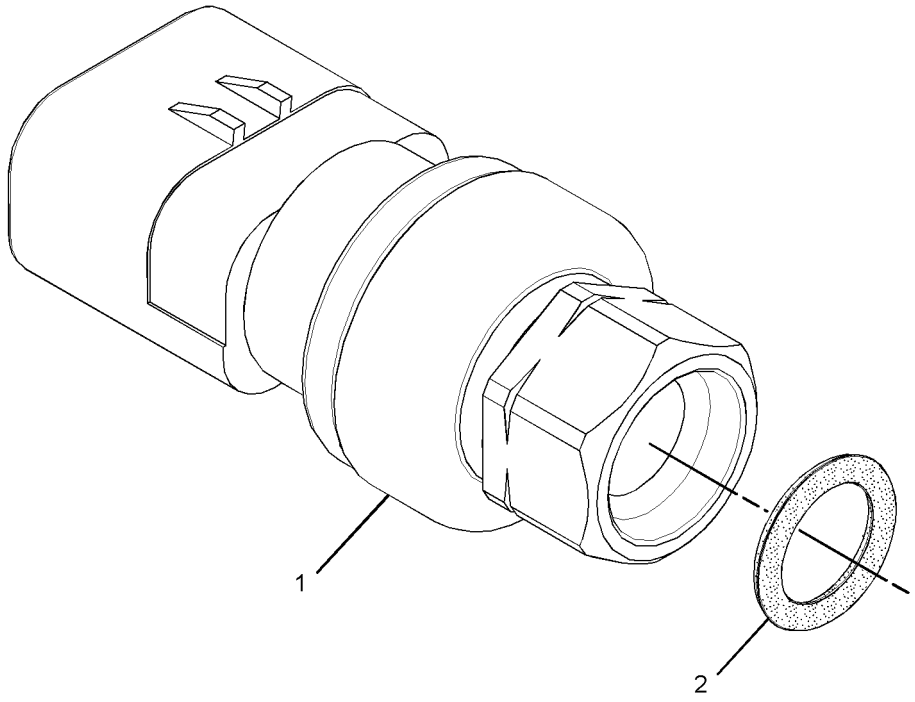

GRAPHIC #1 **<END>** g01994176

ELECTRICAL AND STARTING SYSTEM

171-8963 SENSOR GP-SPEED

S/N: RHX7868-UP

PART OF 286-9798 ENGINE AR-COMPLETE

SMCS-1907, 1912, 4803, 7493 **i01833134**

NOTE	REF NO	GRAPHIC REF	PART NUMBER	QTY	PART NAME 1 2 3 4 5 6 (PRODUCT LEVEL)	SEE PAGE
	1	1	**1V-6341**	1	SEAL	
	3	1	**6B-6683**	1	NUT (5/8-18-THD)	
Y	4	1	**189-5746**	1	SENSOR GP-SPEED (ENGINE)	248
	5	1	**5P-8247**	1	WASHER-HARD (17X32X3.5-MM THK)	

Y-SEPARATE ILLUSTRATION

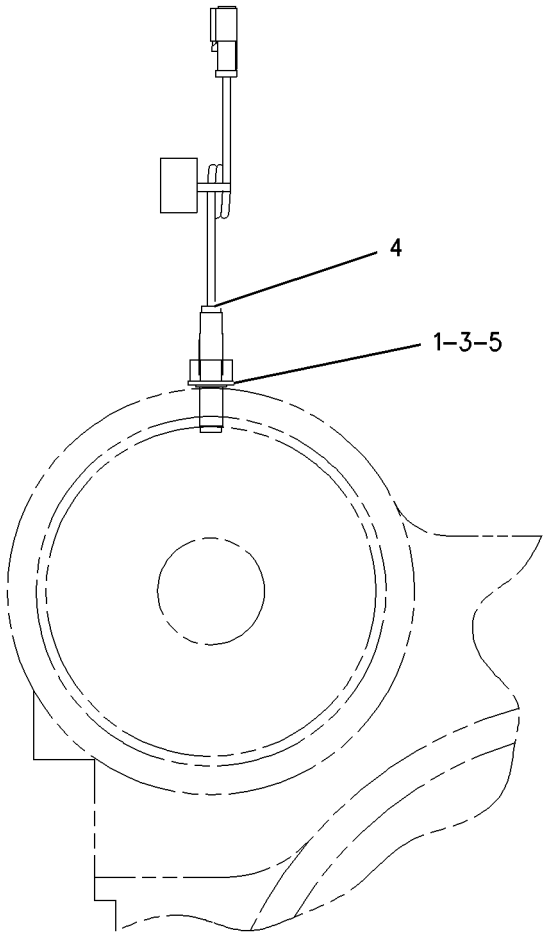

REAR VIEW

GRAPHIC #1 g00936444

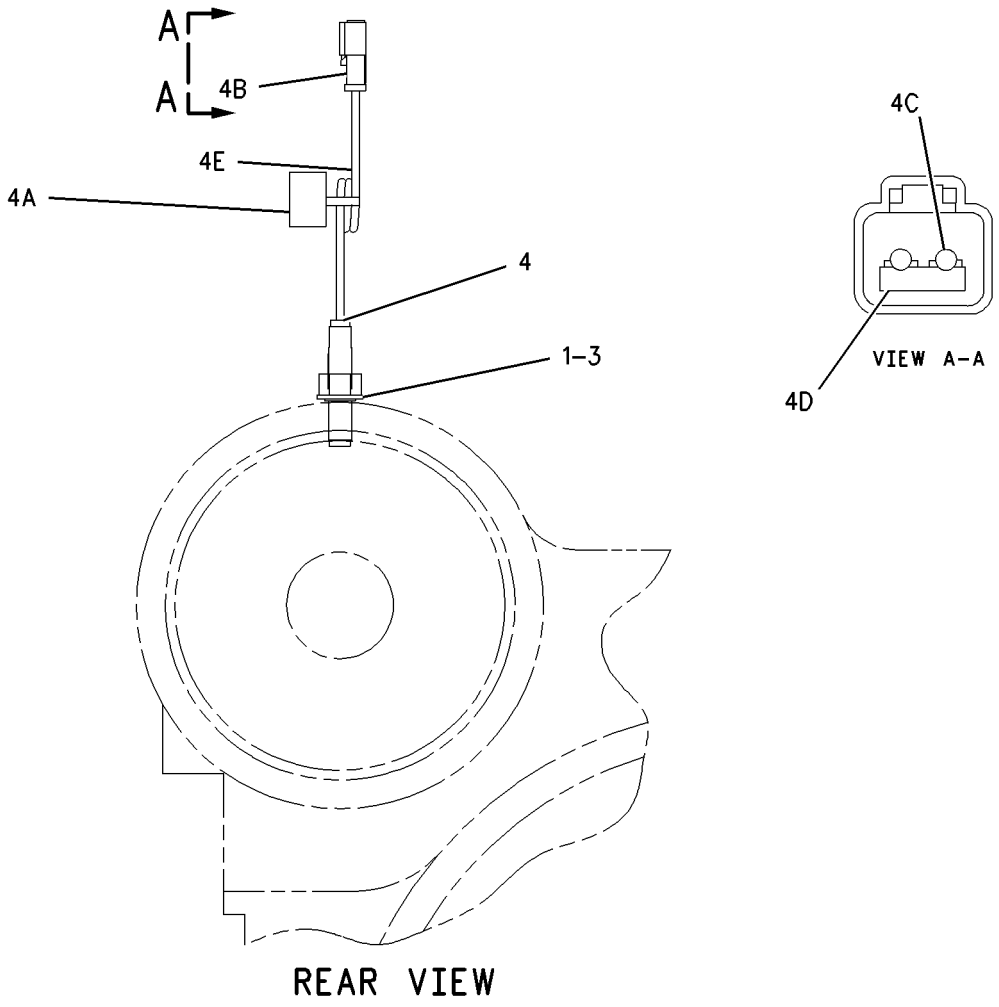

GRAPHIC #2 **<END>** g00790511

189-5746 SENSOR GP-SPEED

S/N: RHX7868-UP

PART OF 171-8963 SENSOR GP-SPEED

SMCS-1907, 1912, 4803, 7493 **i03286575**

NOTE	REF NO	GRAPHIC REF	PART NUMBER	QTY	PART NAME 1 2 3 4 5 6 (PRODUCT LEVEL)	SEE PAGE
	1	1	**171-5349**	1	STRAP-MARKER	
	2	1	**102-8802**	1	KIT-RECEPTACLE (2-PIN)	
					(INCLUDES RECEPTACLE AS & WEDGE)	
	3	1	**9X-3401**	2	PIN-CONNECTOR (16-GA TO 18-GA)	
					—OR—	
		1	**126-1767**	2	PIN-CONNECTOR (14-GA)	
E	4	1	**9X-1386**		SLEEVE (14-CM)	

E-ORDER BY THE CENTIMETER

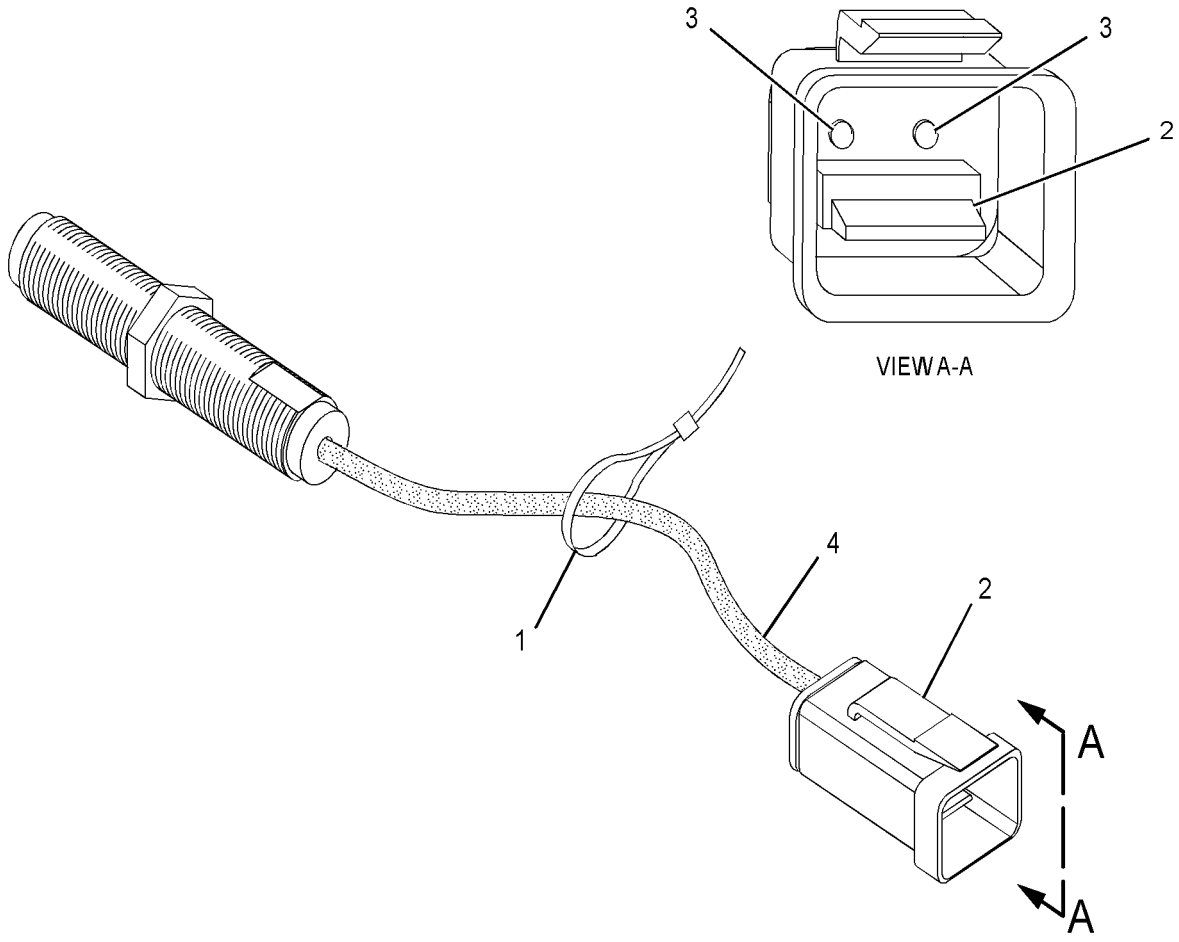

GRAPHIC #1 **<END>** g01353977

214-2484 SENSOR GP-SPEED

S/N: RHX9087-UP

PART OF 354-0041 SENSOR GP-ENGINE

SMCS-1907, 1912, 4803, 7493 **i03319929**

NOTE	REF NO	GRAPHIC REF	PART NUMBER	QTY	PART NAME 1 2 3 4 5 6 (PRODUCT LEVEL)	SEE PAGE
	1	1	**228-4947**	1	SEAL-O-RING	
	2	1	**191-8303**	1	SENSOR GP-SPEED	
		1	**137-6645**	1	PAD (CONNECTOR)	

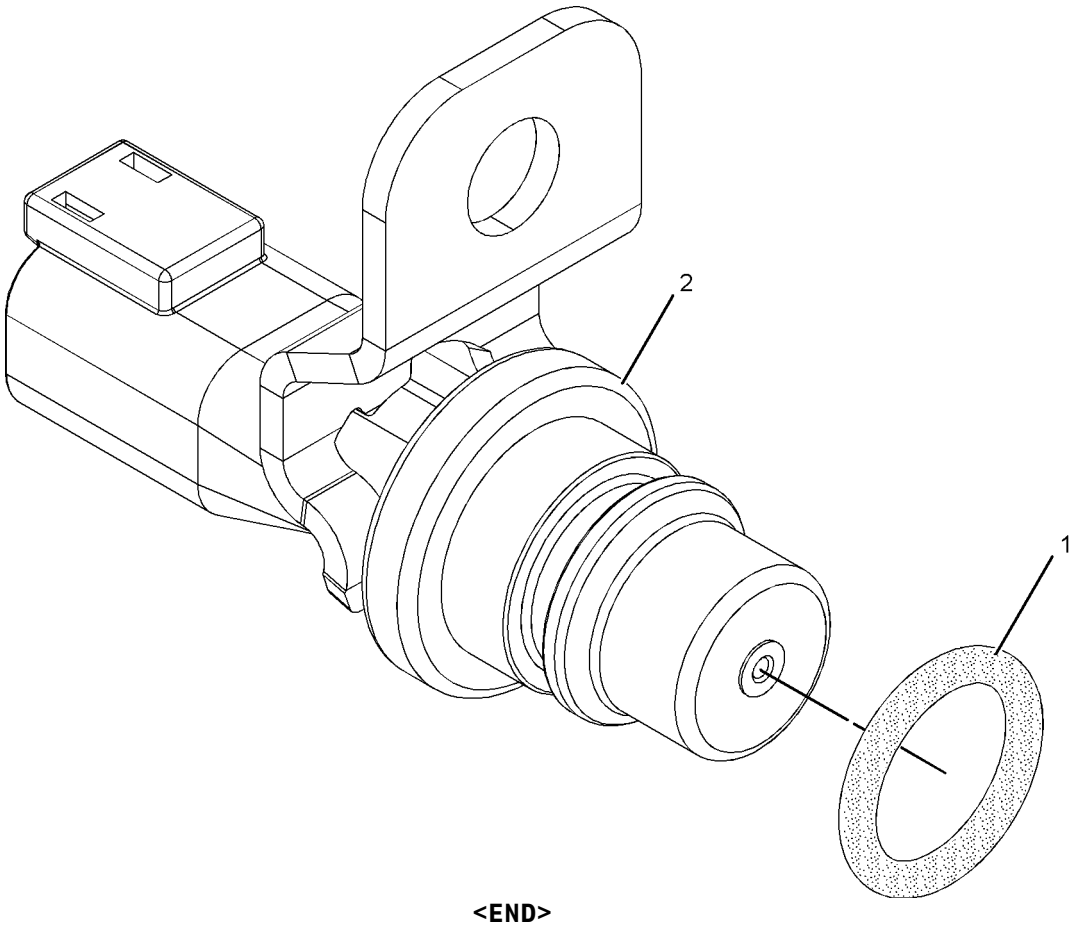

GRAPHIC #1 **<END>** g01021497

ELECTRICAL AND STARTING SYSTEM

300-9806 SENSOR GP-SPEED

S/N: RHX9087-UP

PART OF 354-0041 SENSOR GP-ENGINE

SMCS-1907, 1912, 4803, 7493 **i04003066**

NOTE	REF NO	GRAPHIC REF	PART NUMBER	QTY	PART NAME 1 2 3 4 5 6 (PRODUCT LEVEL)	SEE PAGE
	1	1	**228-4947**	1	SEAL-O-RING	
	2	1	**279-9829**	1	SENSOR GP-SPEED (CAM GEAR)	

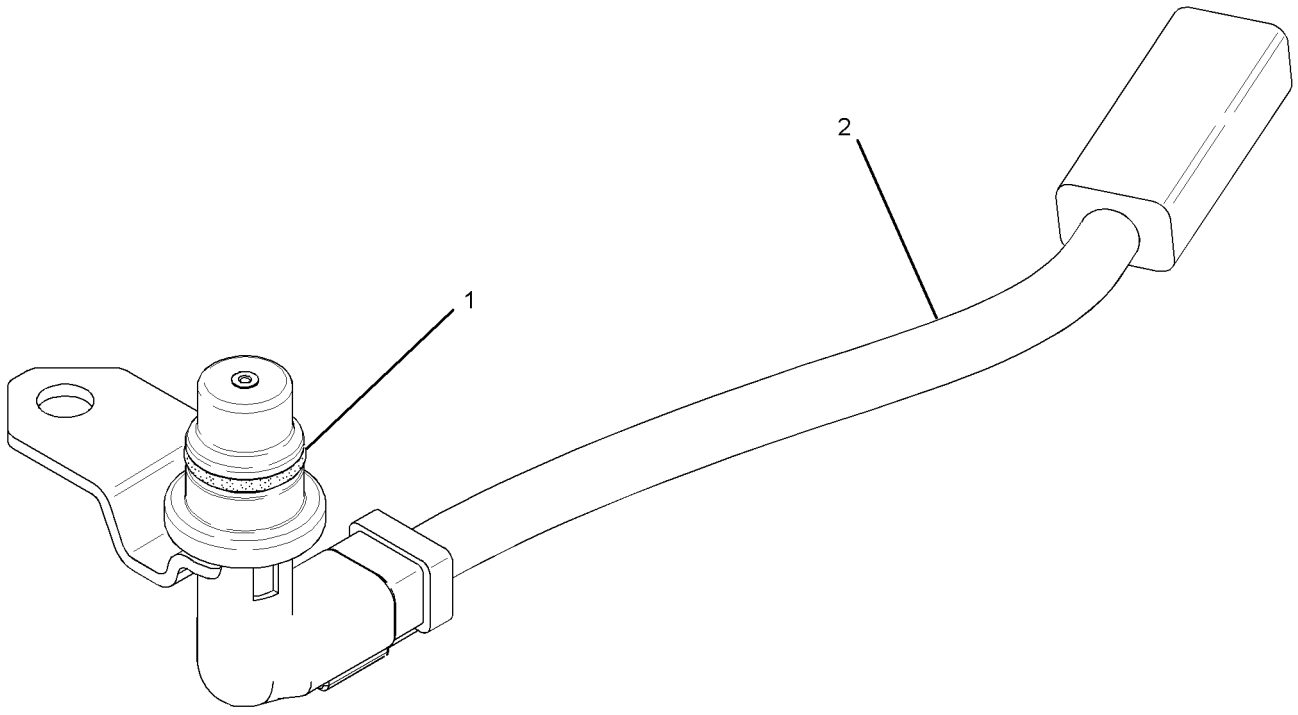

GRAPHIC #1 **<END>** g01333640

234-5012 SENSOR GP-TEMPERATURE

S/N: RHX9087-UP
AMPSEAL CONNECTOR
PART OF 354-0041 SENSOR GP-ENGINE

SMCS-1906, 1921, 1922, 1928, 1929, 3290, 7344 **i03863329**

NOTE	REF NO	GRAPHIC REF	PART NUMBER	QTY	PART NAME 1 2 3 4 5 6 (PRODUCT LEVEL)	SEE PAGE
	1	1	**256-6453**	1	SENSOR AS-TEMPERATURE	
	2	1	**6V-6609**	1	SEAL-O-RING	

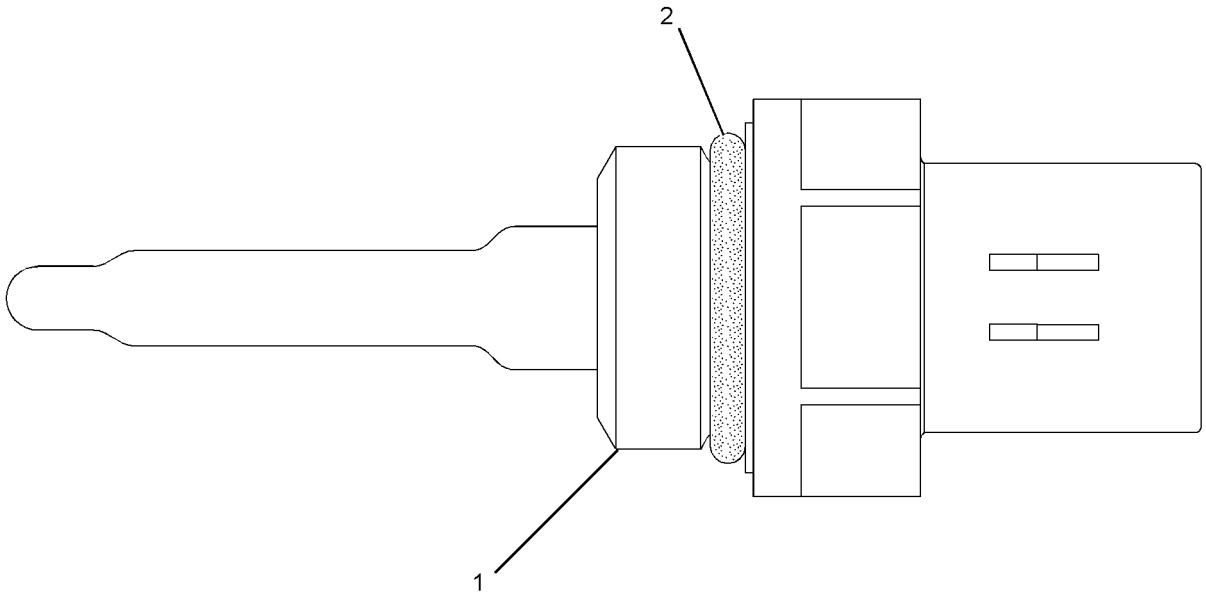

GRAPHIC #1 **<END>** g01164284

234-5013 SENSOR GP-TEMPERATURE

S/N: RHX9087-UP

PART OF 356-1879 FILTER GP-FUEL, 354-0041 SENSOR GP-ENGINE

SMCS-1906, 1921, 1922, 1928, 1929, 3290, 7344 **i03863330**

NOTE	REF NO	GRAPHIC REF	PART NUMBER	QTY	PART NAME 1 2 3 4 5 6 (PRODUCT LEVEL)	SEE PAGE
	1	1	**256-6453**	1	SENSOR AS-TEMPERATURE	
	2	1	**238-5080**	1	SEAL-O-RING	

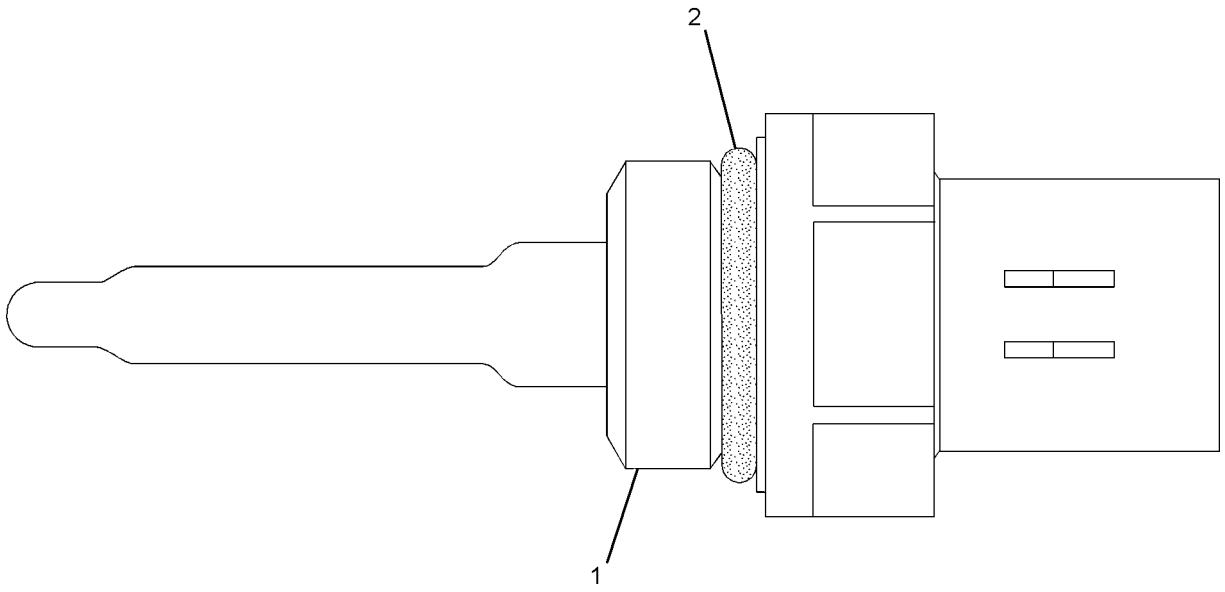

GRAPHIC #1 **<END>** g01164268

156-2829 SOLENOID GP

S/N: WAP1-UP
PART OF 194-0946, 194-0947, 224-6809 MANIFOLD & VALVE GP
ALSO AN ATTACHMENT

SMCS-1426, 1467, 7499 **i03491580**

NOTE	REF NO	GRAPHIC REF	PART NUMBER	QTY	PART NAME 1 2 3 4 5 6 (PRODUCT LEVEL)	SEE PAGE
	1	1	**146-3728**	1	WASHER-SPRING	
	2	1	**148-2350**	1	COIL AS	
	3	1	**154-4133**	1	CARTRIDGE AS	
		1	**214-7568**	2	SEAL-O-RING	

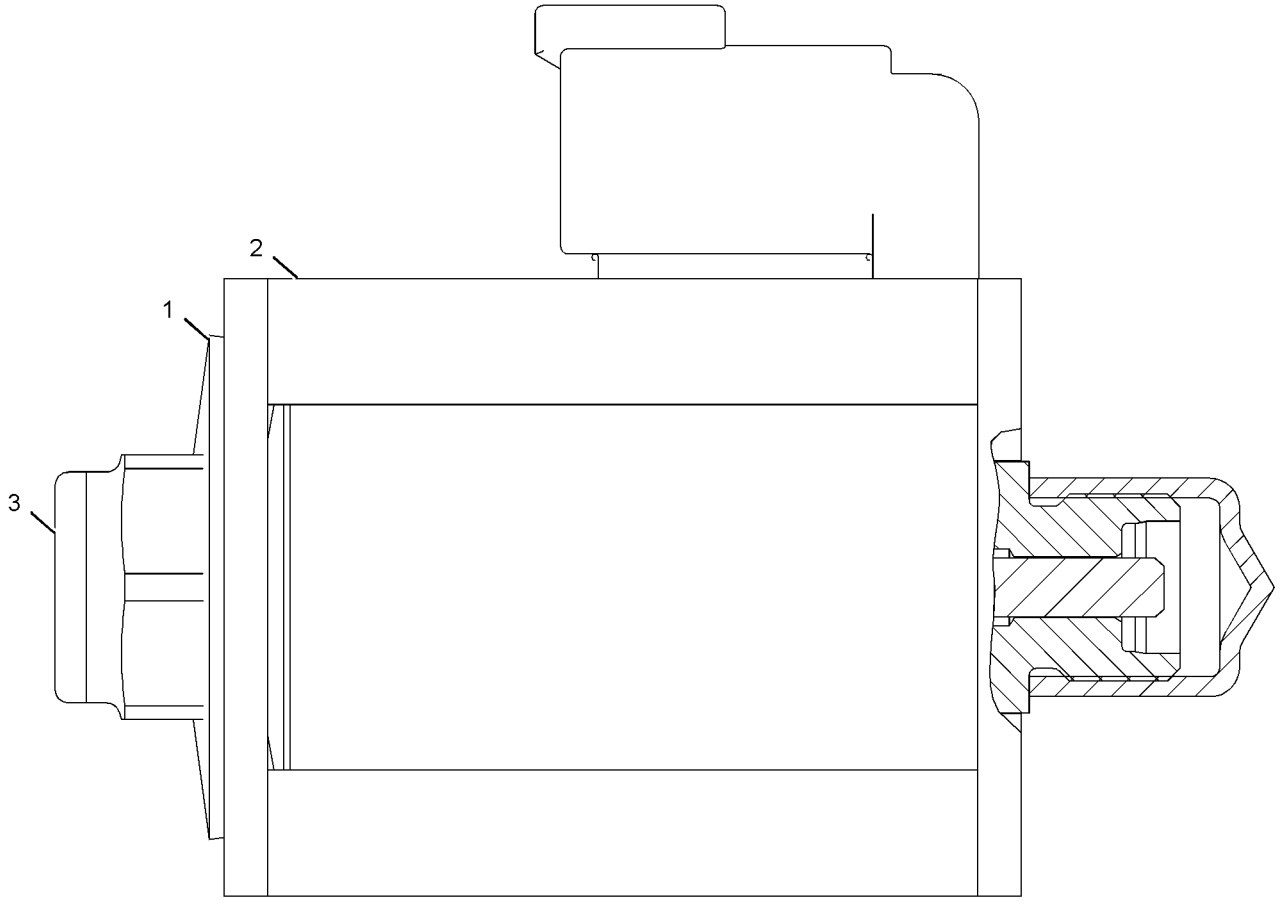

GRAPHIC #1 **<END>** g01118096

ELECTRICAL AND STARTING SYSTEM

324-4087 STARTING AID GP-ETHER

S/N: WAP1-UP
PART OF 319-9235 STARTING AR-COLD WEATHER
AN ATTACHMENT

SMCS-1456 **i03910523**

NOTE	REF NO	GRAPHIC REF	PART NUMBER	QTY	PART NAME 1 2 3 4 5 6 (PRODUCT LEVEL)	SEE PAGE
	1	1	**3S-2093**	1	STRAP-CABLE	
	2	1	**5P-6312**	2	UNION	
	3	1	**5P-6313**	5	NUT (5/16-24-THD)	
	4	1	**5P-6314**	5	SLEEVE	
	5	1	**7N-0140**	1	TUBE AS-COIL	
	6	1	**7N-2059**	1	CLAMP AS	
	7	1	**230-1434**	1	FITTING AS	
		1	**236-4545**	1	NUT-SLEEVE (5/16-24-THD)	
	8	1	**233-1250**	1	TUBE	
Y	9	1	**239-1134**	1	VALVE GP-ETHER STARTING (24-VOLT)	271
	10	1	**239-6673**	1	TUBE	
	11	1	**280-2562**	1	ATOMIZER AS-ETHER	
		1	**236-4545**		NUT-SLEEVE (5/16-24-THD)	
	12	1	**324-4088**	1	PLATE AS	
	13	1	**324-4091**	1	TUBE	
	14	1	**324-4196**	1	TUBE	
	15	1	**1B-3581**	2	CLIP	
	16	1	**2B-2404**	1	CLIP	
	17	1	**3B-6768**	1	BUSHING-REDUCER	
	18	1	**3D-5102**	8	GROMMET	
	19	1	**5K-0430**	5	CLIP	
	20	1	**5P-1076**	1	WASHER-HARD (13.5X30X4-MM THK)	
	21	1	**6P-1306**	1	GROMMET	
M	22	1	**7X-2548**	2	BOLT (M12X1.75X16-MM)	
	23	1	**8T-4121**	3	WASHER-HARD (11X21X2.5-MM THK)	
M	24	1	**8T-4179**	1	BOLT (M12X1.75X20-MM)	
M	25	1	**8T-4191**	1	BOLT (M10X1.5X16-MM)	
M	26	1	**8T-4195**	2	BOLT (M10X1.5X30-MM)	
	27	1	**8T-4223**	4	WASHER-HARD (13.5X25.5X3-MM THK)	
	28	1	**8T-4224**	4	WASHER-HARD (8.8X16X2-MM THK)	
M	29	1	**8T-4244**	1	NUT (M12X1.75-THD)	
M	30	1	**8T-4908**	4	BOLT (M8X1.25X25-MM)	
M	31	1	**8T-4956**	1	BOLT (M12X1.75X35-MM)	

M-METRIC PART
Y-SEPARATE ILLUSTRATION

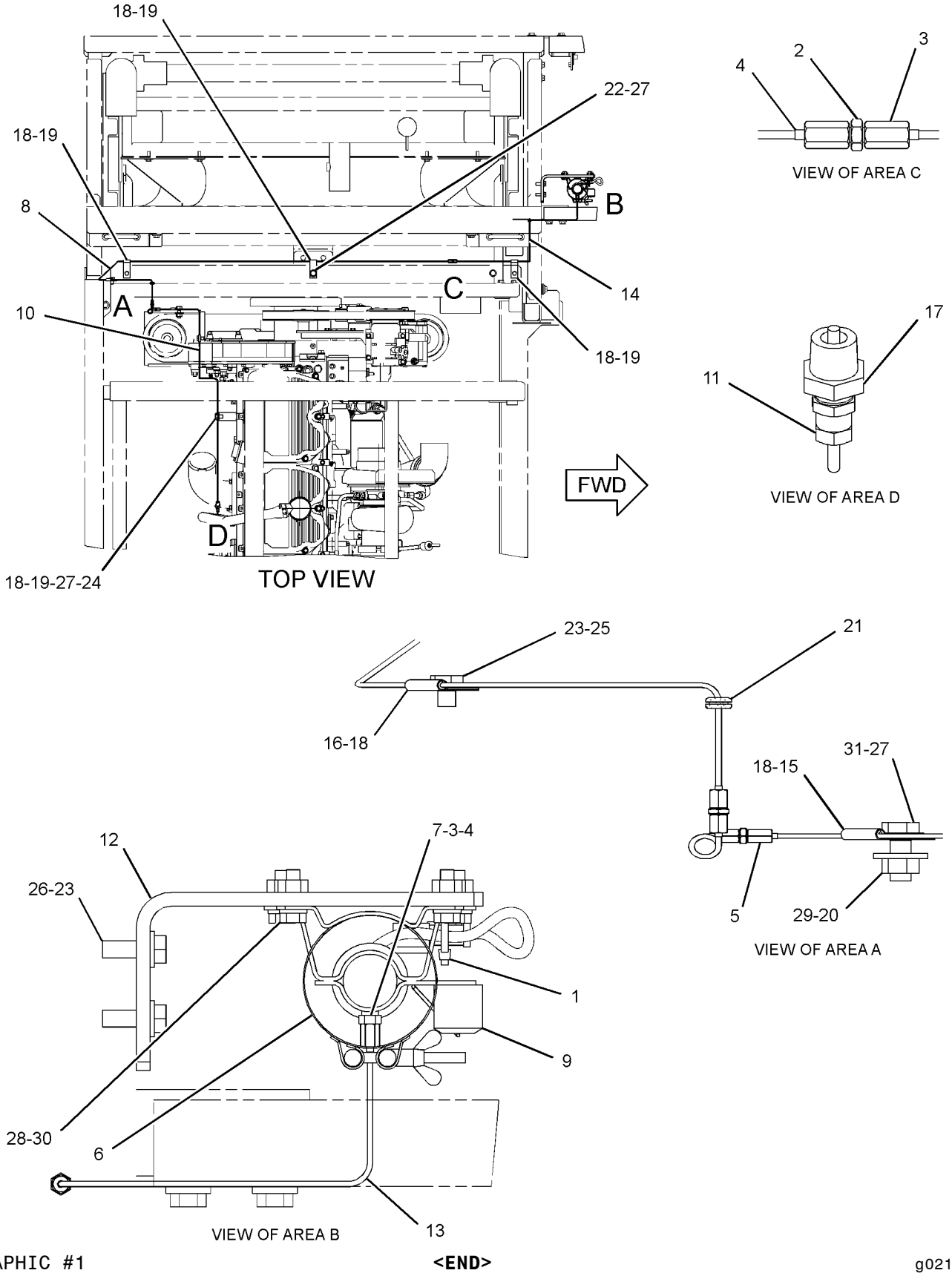

GRAPHIC #1 **<END>** g02160833

ELECTRICAL AND STARTING SYSTEM

319-9235 STARTING AR-COLD WEATHER

S/N: WAP1-UP
PART OF 340-4074 OPTION AR-COLD WEATHER
AN ATTACHMENT

SMCS-1450 **i03910519**

NOTE	PART NUMBER	QTY	PART NAME 1 2 3 4 5 6 (PRODUCT LEVEL)	SEE PAGE
Y	*328-0110*	1	BATTERY & WIRING GP (COLD WEATHER)	173
Y	*333-5319*	1	BOX & MOUNTING GP (COLD WEATHER)	338
Y	*324-4087*	1	STARTING AID GP-ETHER	254

Y-SEPARATE ILLUSTRATION

<END>

ELECTRICAL AND STARTING SYSTEM

272-7123 STARTING MOTOR GP-ELECTRIC

S/N: RHX7953-UP

24 VOLT

PART OF 331-6081 STARTING MOTOR GP-ELECTRIC

SMCS-1453 **i02968255**

NOTE	REF NO	GRAPHIC REF	PART NUMBER	QTY	PART NAME 1 2 3 4 5 6 (PRODUCT LEVEL)	SEE PAGE
	1	1	**7M-0326**	1	CONNECTOR	
	2	1	**9H-3757**	2	WASHER (0.516X1X0.094-IN THK)	
	3	1	**1S-7446**	3	SCREW-MACHINE (8-32X0.437-IN)	
	4	1	**8C-9660**	3	WASHER (4.6X7.9X0.8-MM THK)	
	5	1	**9S-2544**	9	SCREW-HEX HEAD (8-32X11.13-MM)	
	6	1	**7M-0327**	1	WASHER-THRUST (17.4X25.4X1.6-MM THK)	
	7	1	**3T-3418**	1	FRAME AS-END	
		1	**3T-3423**	1	CUP	
		1	**3T-3424**	1	PLUG-FELT	
		1	**9G-4101**	1	BUSHING-END	
	8	1	**3T-9525**	1	PLATE AS-BRUSH	
	8A	1	**6T-0371**	1	INSULATOR	
	8B	1	**5P-6298**	12	SCREW-MACHINE (10-32X0.5-IN)	
		1	**9F-5599**	12	LOCKWASHER	
	8C	1	**7F-3525**	6	WASHER-BUSHING (0.207X0.39X0.09-IN THK)	
	8D	1	**6T-0372**	1	PLATE	
	8E	1	**3T-4709**	3	PLATE	
	8F	1	**2L-6679**	3	PLATE-INSULATOR	
	8G	1	**3T-4710**	3	PLATE	
	8H	1	**6T-0363**	6	HOLDER AS-BRUSH	
					(EACH INCLUDES)	
	8J	1	**3T-9494**	1	SPRING	
	9	1	**7F-3491**	2	WASHER (0.516X1X0.094-IN THK)	
	10	1	**3T-3422**	1	WIRE AS	
	11	1	**2J-8163**	2	SEAL-O-RING	
	12	1	**7X-3373**	1	BOLT (5/16-18X0.88-IN)	
	13	1	**5J-5314**	5	BOLT (5/16-18X1.5-IN)	
	14	1	**3L-3380**	1	BUSHING-TERMINAL	
	15	1	**036-9821**	1	WASHER	
	16	1	**4M-1828**	1	RETAINER-SPRING	
	17	1	**306-3998**	1	BOOT-RUBBER	
	18	1	**9M-7609**	1	SPRING (SHIFT LEVER)	
	19	1	**4M-1827**	1	RETAINER-SPRING	
	20	1	**8C-3089**	1	SEAL-O-RING	
	21	1	**4M-1853**	1	LEVER AS-SHIFT	
	22	1	**5M-3034**	1	LOCKNUT (5/16-24-THD)	
	23	1	**7L-2894**	4	GASKET	
	24	1	**4M-1831**	4	PLUG-LEVER HOUSING	
	25	1	**4M-1854**	1	SHAFT-LEVER	
	26	1	**1H-1023**	1	SEAL-O-RING	
	27	1	**2D-6392**	1	SEAL-O-RING	
	28	1	**272-7152**	1	HOUSING AS-DRIVE	
	29	1	**6N-3826**	1	DRIVE AS-MOTOR	
	30	1	**2H-3429**	2	RING-RETAINING	
	31	1	**6V-1322**	4	BOLT (1/4-20X0.375-IN)	
	32	1	**8T-4205**	4	WASHER-HARD (7.2X14.5X2-MM THK)	
	33	1	**6N-3279**	1	INSULATOR	
	34	1	**036-9823**	13	BOLT (1/4-28X1-IN)	
	35	1	**1M-9971**	1	SPACER (0.835X1.72X0.188-IN THK)	
	36	1	**1H-2629**	3	STRIP-INSULATION	
	37	1	**7M-0324**	1	COIL AS-FIELD	
	38	1	**3R-8797**	12	SCREW & WASHER AS (3/8-24X0.72-IN)	
	39	1	**7F-3488**	6	SHOE-POLE	
	40	1	**7M-8651**	1	ARMATURE AS	
	41	1	**7M-0325**	1	INSULATOR	

272-7123 STARTING MOTOR GP-ELECTRIC *(contd.)* i02968255

NOTE	REF NO	GRAPHIC REF	PART NUMBER	QTY	PART NAME 1 2 3 4 5 6 (PRODUCT LEVEL)	SEE PAGE
	42	1	**3T-9524**	6	BRUSH AS	
	43	1	**3N-3763**	1	KIT-TERMINAL (STARTING MOTOR)	
					(INCLUDES INSULATOR, BUSHINGS, AND WASHER)	
	44	1	**125-6537**	1	INSULATOR	
	45	1	**3R-8801**	1	CLAMP	
	46	1	**8F-1434**	2	LOCKWASHER	
	47	1	**6V-8188**	6	NUT (1/2-13-THD)	
	48	1	**7X-0562**	6	WASHER-HARD (13.5X19X0.8-MM THK)	
	49	1	**4B-2049**	6	NUT (10-32-THD)	
	50	1	**8T-0328**	10	WASHER-HARD (5.5X10X1-MM THK)	
	51	1	**3T-9494**	6	SPRING	
	52	1	**3E-7771**	1	HOUSING AS (STARTING MOTOR)	
	53	1	**9G-4101**	1	BUSHING-END	
	54	1	**3T-3424**	3	PLUG-FELT	
	55	1	**3T-3423**	3	CUP	
	56	1	**1M-9968**	1	BUSHING	
	57	1	**2F-6678**	1	SEAL-LIP TYPE	
	58	1	**4L-2729**	1	WASHER (0.844X1.9X0.188-IN THK)	
	59	1	**4M-1896**	1	BUSHING-TERMINAL	
	60	1	**045-4065**	4	SCREW-MACHINE (10-32X0.75-IN)	
	61	1	**125-6535**	1	COVER-STARTING MOTOR	
	62	1	**7T-9123**	1	GASKET-PLATE	
	63	1	**318-2082**	1	SOLENOID AS-STARTING MOTOR (24-VOLT)	
	64	1	**125-6536**	1	TERMINAL AS	

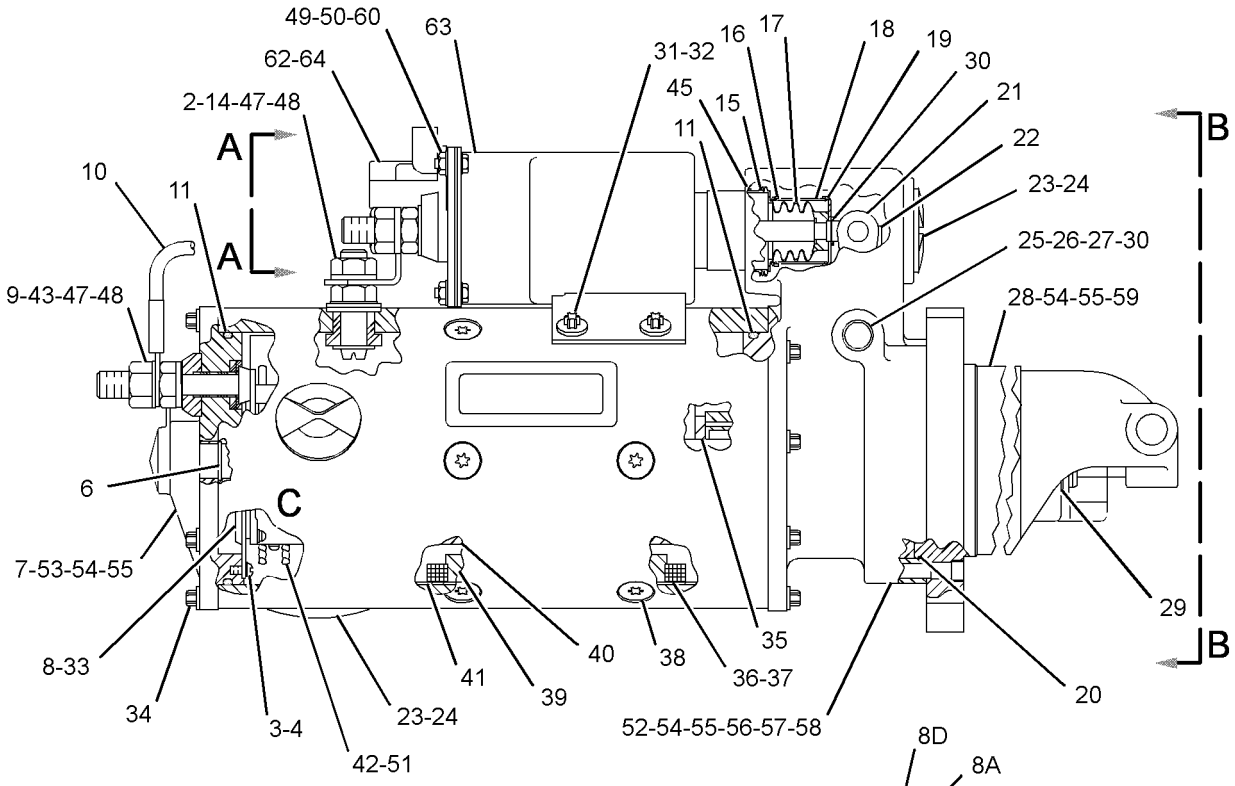

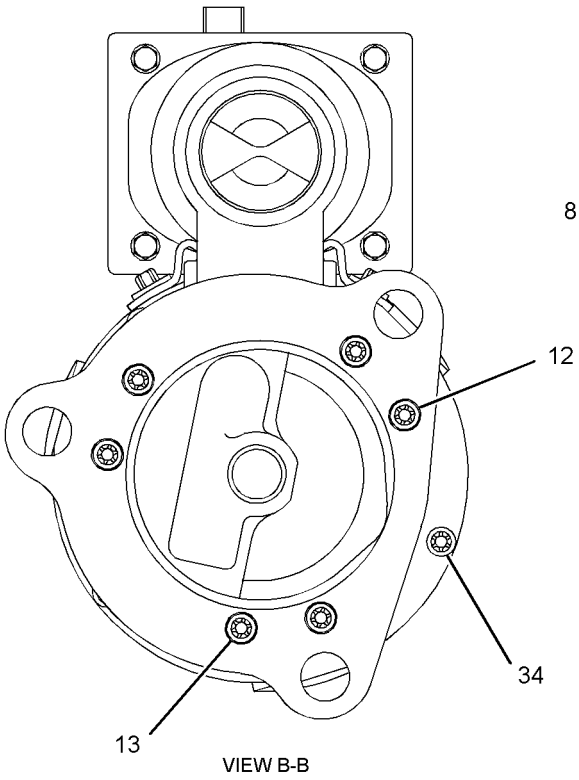

VIEW B-B

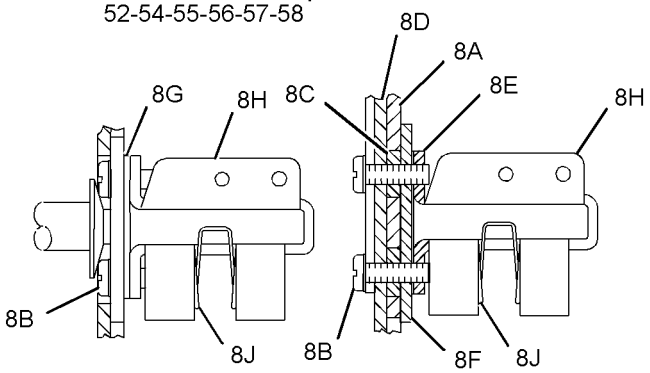

VIEW OF AREA C

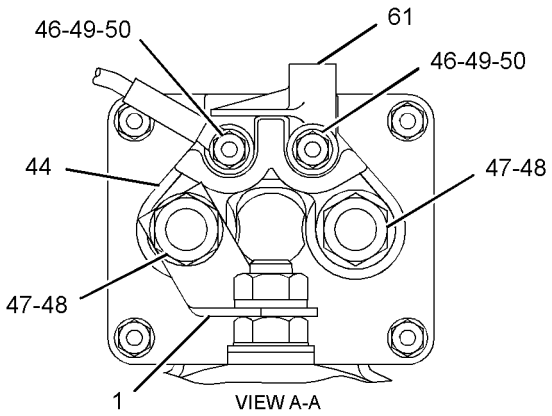

VIEW A-A

GRAPHIC #1 **<END>** g01181840

ELECTRICAL AND STARTING SYSTEM

331-6081 STARTING MOTOR GP-ELECTRIC

S/N: RHX7953-UP

PART OF 286-9798 ENGINE AR-COMPLETE

SMCS-1453 **i03909164**

NOTE	REF NO	GRAPHIC REF	PART NUMBER	QTY	PART NAME 1 2 3 4 5 6 (PRODUCT LEVEL)	SEE PAGE
	1	1	**8Y-9603**	1	CABLE AS-STARTING MOTOR	
		1	**1S-7251**	1	TERMINAL-CABLE (00-GA, 1/2-IN SCREW)	
		1	**1S-7252**	1	TERMINAL-CABLE (00-GA, 3/8-IN SCREW)	
E		1	**5P-0747**		CABLE (00-GA, BLACK) (28-CM)	
Y	2	1	**272-7123**	1	STARTING MOTOR GP-ELECTRIC (24-VOLT)	257
	3	1	**303-2004**	1	GASKET	
	4	1	**176-2543**	3	BOLT-12 POINT HEAD (5/8-11X1.75-IN)	

E-ORDER BY THE CENTIMETER
Y-SEPARATE ILLUSTRATION

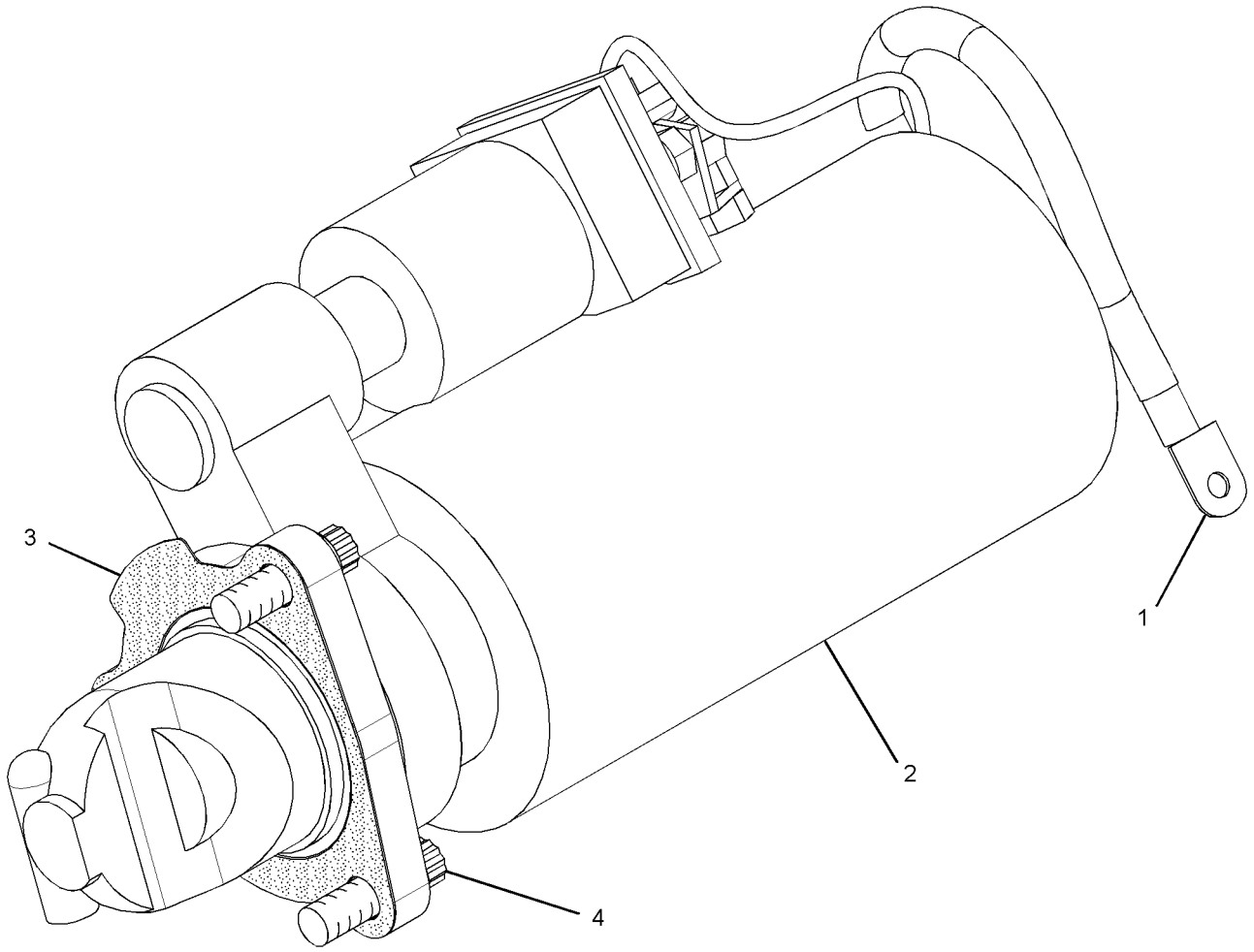

GRAPHIC #1 **<END>** g01797093

7N-0719 SWITCH GP-DISCONNECT–BATTERY

S/N: WAP1-UP

PART OF 299-2627 PANEL GP-CIRCUIT BREAKER

SMCS-1411 **i02490079**

NOTE	REF NO	GRAPHIC REF	PART NUMBER	QTY	PART NAME 1 2 3 4 5 6 (PRODUCT LEVEL)	SEE PAGE
	1	1	**8H-5306**	1	KEY (BATTERY DISCONNECT)	
	2	1	**8H-5303**	1	NUT (3/4-16-THD)	
	3	1	**2H-3922**	2	LOCKWASHER	
	4	1	**9F-5644**	2	LOCKWASHER	
	5	1	**6F-7045**	2	NUT-FULL (3/8-24-THD)	

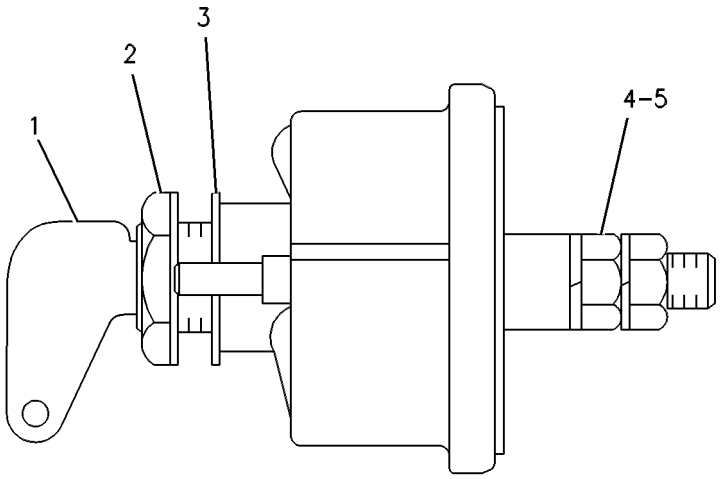

GRAPHIC #1 **<END>** g00272142

125-1302 SWITCH GP-MAGNETIC–START RELAY

S/N: WAP1-UP
24-VOLT
PART OF 299-2627 PANEL GP-CIRCUIT BREAKER

SMCS-7499 **i03276825**

NOTE	REF NO	GRAPHIC REF	PART NUMBER	QTY	PART NAME 1 2 3 4 5 6 (PRODUCT LEVEL)	SEE PAGE
	1	1	**102-8802**	1	KIT-RECEPTACLE (2-PIN)	
					(INCLUDES RECEPTACLE AS & WEDGE)	
	2	1	**186-3735**	2	PIN-CONNECTOR (16-GA TO 18-GA)	
	3	1	**1H-3338**	2	LOCKWASHER (EXTERNAL TOOTH)	
	4	1	**012-0380**	2	LOCKWASHER	
M	5	1	**5C-2890**	2	NUT (M6X1-THD)	
E	6	1	**9X-1813**		SLEEVE (16-CM)	

E-ORDER BY THE CENTIMETER
M-METRIC PART

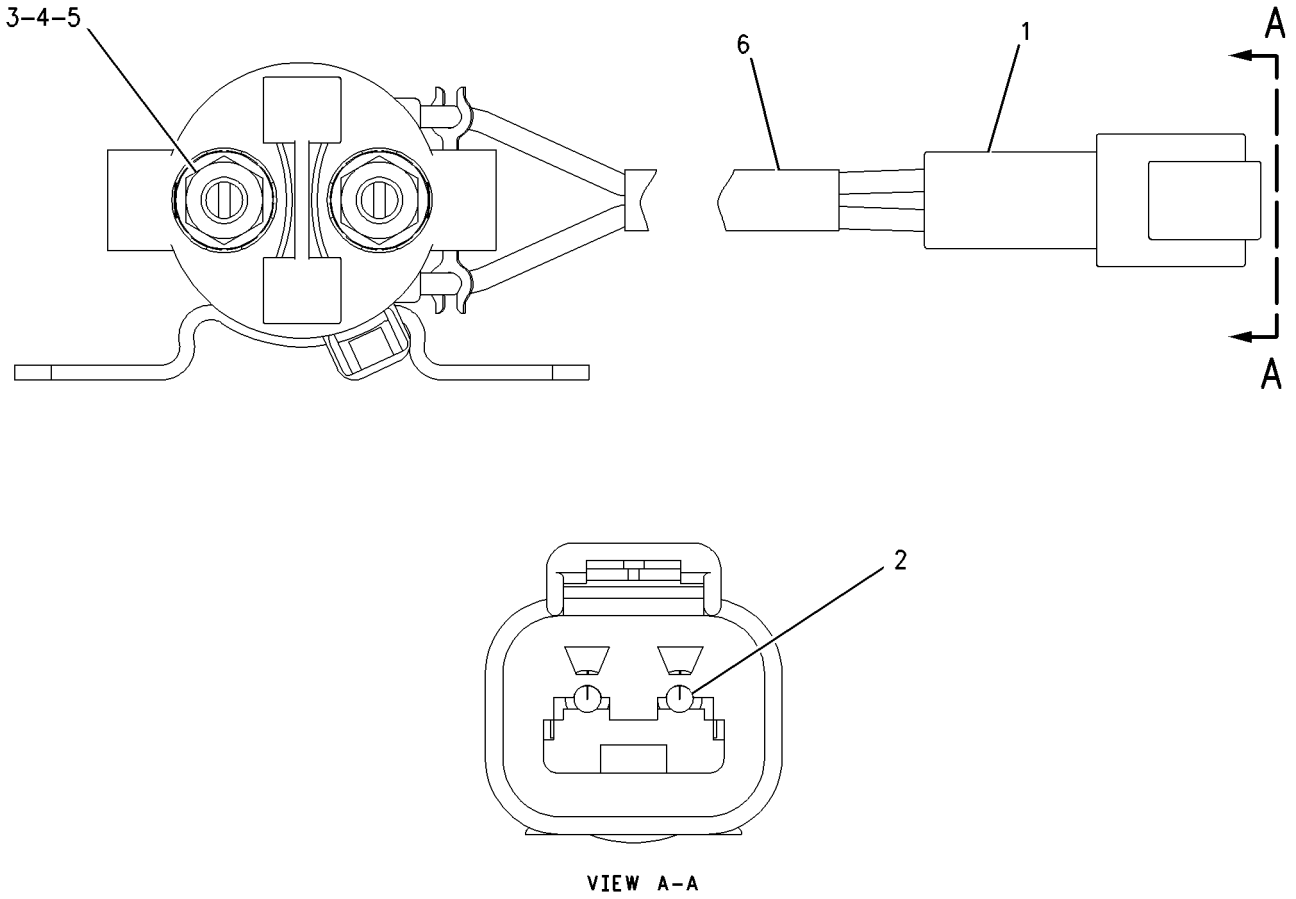

GRAPHIC #1 **<END>** g00988004

ELECTRICAL AND STARTING SYSTEM

234-6613 SWITCH GP-POSITION—HYDRAULIC LOCKOUT

S/N: WAP1-UP

PART OF 259-7349 CONSOLE GP-OPERATOR

SMCS-1408, 1435 **i03496041**

NOTE	REF NO	GRAPHIC REF	PART NUMBER	QTY	PART NAME 1 2 3 4 5 6 (PRODUCT LEVEL)	SEE PAGE
	1	1	**3S-2093**	1	STRAP-CABLE	
	2	1	**4I-3038**	2	WASHER (3.3X8X0.5-MM THK)	
	3	1	**111-4799**	1	SWITCH AS-LIMIT (NEUTRAL START)	
		1	**102-8803**	1	KIT-RECEPTACLE (3-PIN)	
					(INCLUDES RECEPTACLE AS & WEDGE)	
		1	**186-3735**	3	PIN-CONNECTOR (16-GA TO 18-GA)	
D		1	**5P-5998**		TUBE (0.3-M)	
M	4	1	**185-8286**	2	SCREW-MACHINE (M4X0.7X8-MM)	
	5	1	**234-6615**	1	KNOB	
	6	1	**087-4683**	2	LOCKWASHER	
M	7	1	**120-9027**	2	SCREW-PAN HEAD (M3X0.5X16-MM)	

D-ORDER BY THE METER
M-METRIC PART

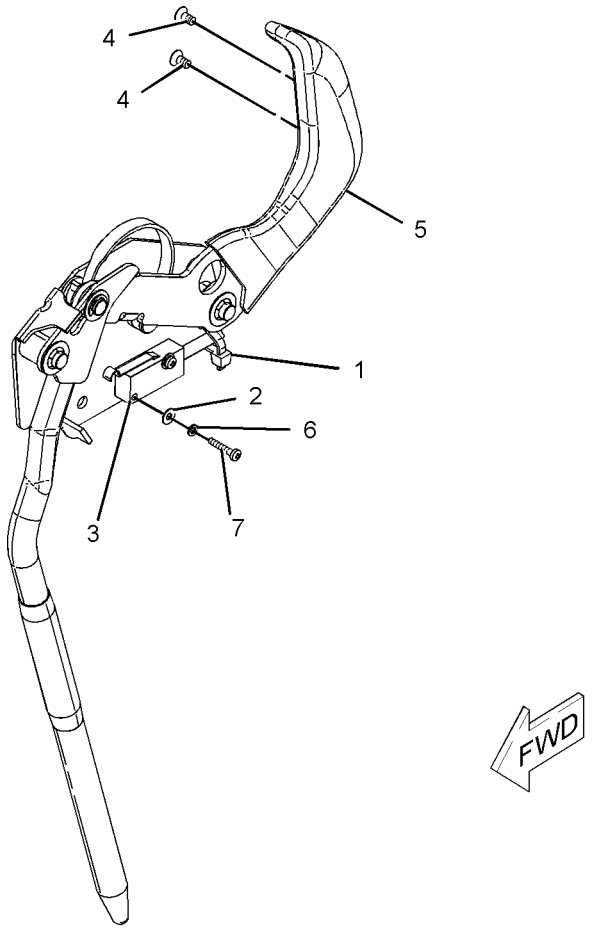

GRAPHIC #1 **<END>** g01076610

ELECTRICAL AND STARTING SYSTEM

275-1253 SWITCH GP-PRESSURE

S/N: RHX9087-UP

PART OF 356-1879 FILTER GP-FUEL

SMCS-1435 **i03525029**

NOTE	REF NO	GRAPHIC REF	PART NUMBER	QTY	PART NAME 1 2 3 4 5 6 (PRODUCT LEVEL)	SEE PAGE
	1	1	**230-4011**	1	PLUG AS-CONNECTOR (2-PIN)	
		1	**264-7029**	1	SEAL-CONNECTOR	
E	2	1	**9X-1813**		SLEEVE (14-CM)	
	3	1	**6V-4589**	1	SEAL-O-RING	
	4	1	**9X-7737**	1	SEAL-O-RING	
	5	1	**9X-3401**	2	PIN-CONNECTOR (16-GA TO 18-GA)	

E-ORDER BY THE CENTIMETER

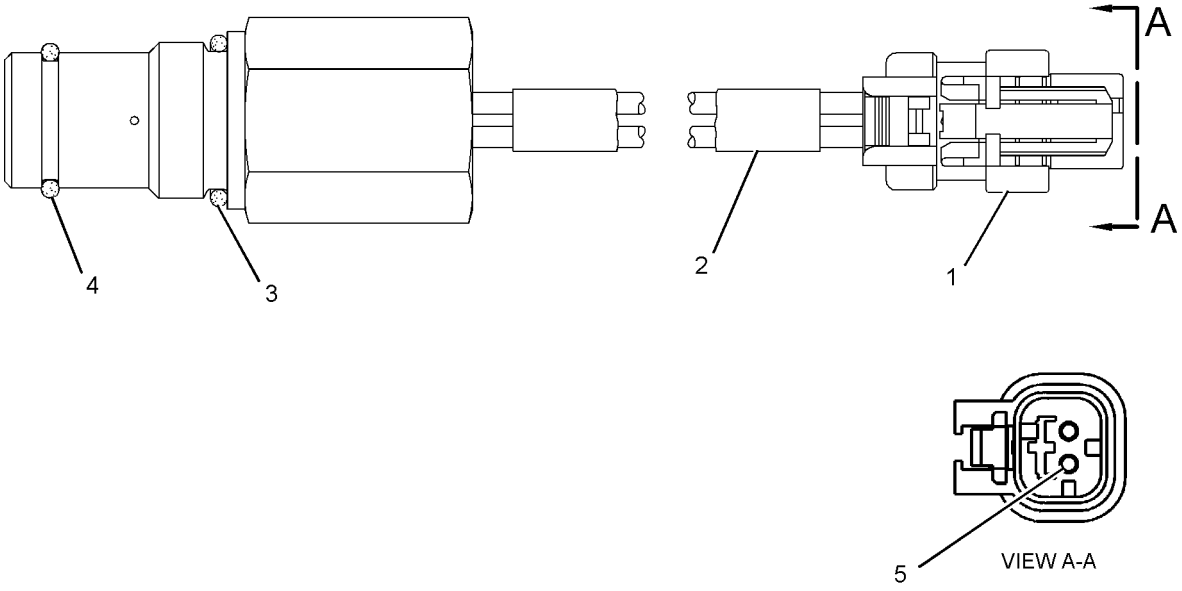

GRAPHIC #1 **<END>** g01238534

238-1594 SWITCH GP-PUSH BUTTON—REFUELING PUMP, START

S/N: WAP1-UP
PART OF 238-1636 WIRING GP-REFUELING PUMP
AN ATTACHMENT

SMCS-1435, 7332 **i03883474**

NOTE	REF NO	GRAPHIC REF	PART NUMBER	QTY	PART NAME 1 2 3 4 5 6 (PRODUCT LEVEL)	SEE PAGE
	1	1	**6T-9442**	1	SWITCH GP-PUSHBUTTON (REFUELING PUMP, START)	
		1	**1S-0812**	2	SCREW-TAPPING	
		1	**3K-0835**	1	NUT (5/8-24-THD)	
		1	**6F-0253**	1	LOCKWASHER	
		1	**8T-8748**	1	ADAPTER-MOUNT	
		1	**9W-0625**	1	SWITCH AS-PUSH BUTTON (REFUELING PUMP, START)	
	2	1	**238-1595**	1	HARNESS AS-SWITCH (REFUELING PUMP, START)	
		1	**186-3735**	2	PIN-CONNECTOR (16-GA TO 18-GA)	
		1	**243-4505**	1	RECEPTACLE AS-CONNECTOR (2-PIN)	
BCE	3	1	**125-7875**		TUBE-HEAT SHRINK (7.44-MM DIA)	

B-USE AS REQUIRED
C-CHANGE FROM PREVIOUS TYPE
E-ORDER BY THE CENTIMETER

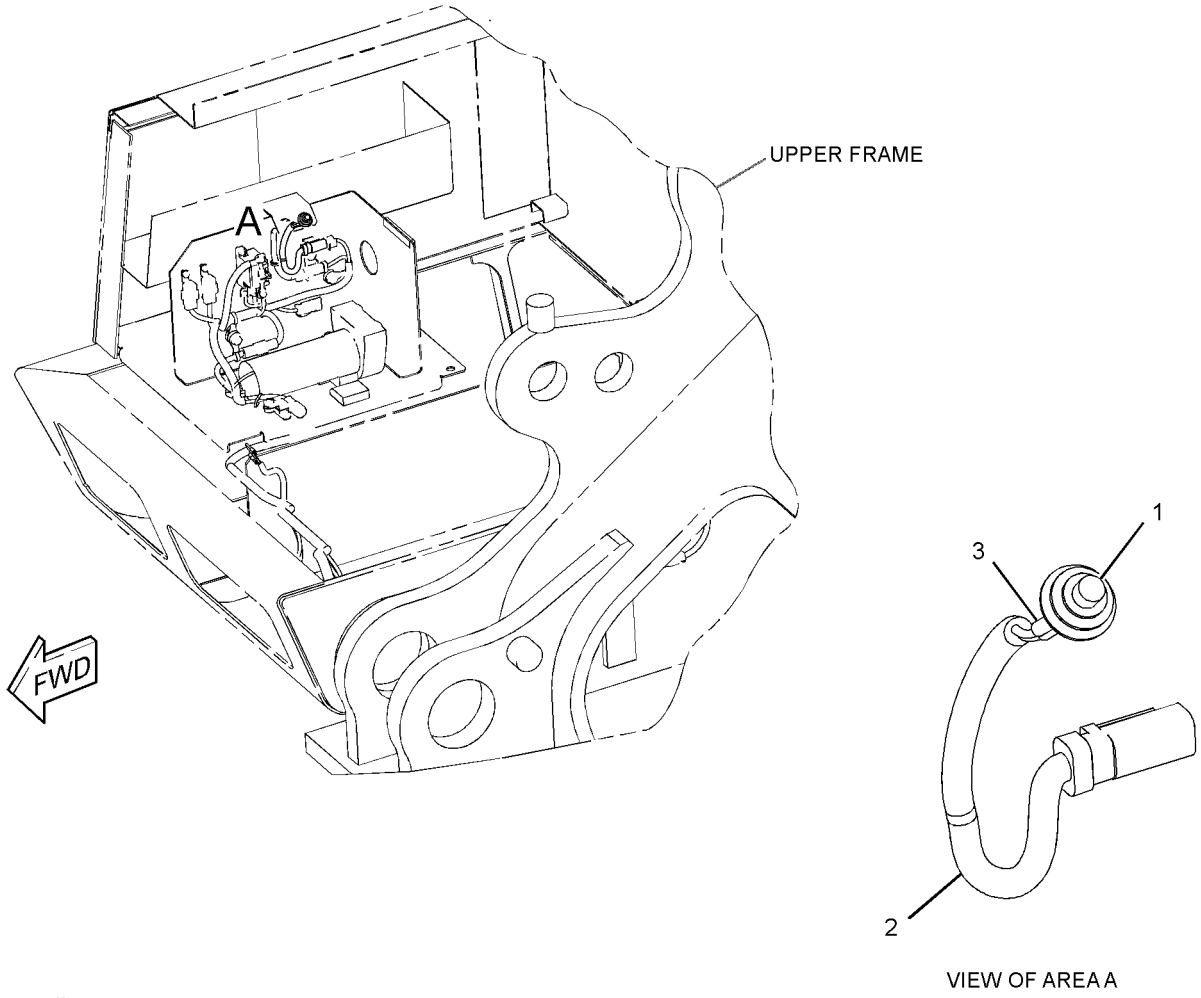

GRAPHIC #1 **<END>** g01560235

238-1596 SWITCH GP-PUSH BUTTON—REFUELING PUMP, STOP

S/N: WAP1-UP
PART OF 238-1636 WIRING GP-REFUELING PUMP
AN ATTACHMENT

SMCS-1435, 7332 **i03883475**

NOTE	REF NO	GRAPHIC REF	PART NUMBER	QTY	PART NAME 1 2 3 4 5 6 (PRODUCT LEVEL)	SEE PAGE
	1	1	*9X-4184*	1	SWITCH GP-PUSH BUTTON (REFUELING PUMP, STOP)	
		1	**1S-0812**	2	SCREW-TAPPING	
		1	**3E-7389**	1	SWITCH-PUSH BUTTON (REFUELING PUMP, STOP)	
		1	**3K-0835**	1	NUT (5/8-24-THD)	
		1	**6F-0253**	1	LOCKWASHER	
		1	**8T-8748**	1	ADAPTER-MOUNT	
	2	1	**238-1597**	1	HARNESS AS-SWITCH (REFUELING PUMP, STOP)	
		1	**8T-8730**	2	SOCKET-CONNECTOR (16-GA TO 18-GA)	
		1	**230-4011**	1	PLUG AS-CONNECTOR (2-PIN)	
		1	**264-7029**	1	SEAL-CONNECTOR	
BE	3	1	**125-7875**		TUBE-HEAT SHRINK (7.44-MM DIA)	

B-USE AS REQUIRED
E-ORDER BY THE CENTIMETER

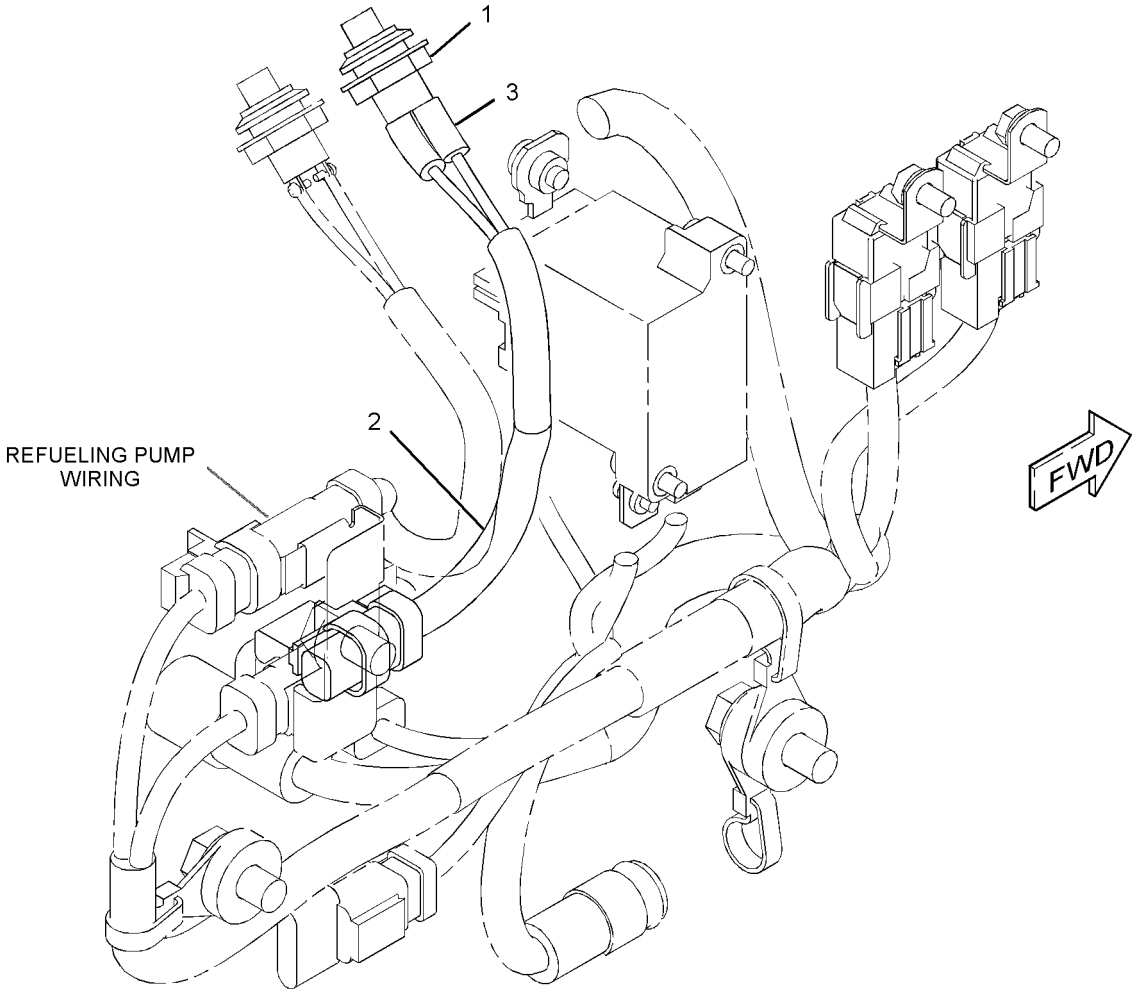

GRAPHIC #1 **<END>** g01560319

319-4420 SWITCH GP-ROTARY–THROTTLE POSITION

S/N: WAP1-UP
PART OF 251-0542 PANEL GP-SWITCH
AN ATTACHMENT

SMCS-7332 **i03401061**

NOTE	REF NO	GRAPHIC REF	PART NUMBER	QTY	PART NAME 1 2 3 4 5 6 (PRODUCT LEVEL)	SEE PAGE
	1	1	**243-4508**	1	RECEPTACLE AS-CONNECTOR (6-PIN)	
	2	1	**9X-3401**	5	PIN-CONNECTOR (16-GA TO 18-GA)	
					–OR–	
		1	**126-1767**	5	PIN-CONNECTOR (14-GA)	
	3	1	**8T-8737**	1	PLUG-SEAL	
M	4	1	**7Y-5458**	1	NUT (M12X1-THD)	
	5	1	**7Y-5464**	1	WASHER (12.2X15.4X0.5-MM THK)	
	6	1	**106-0210**	1	SEAL	

M-METRIC PART

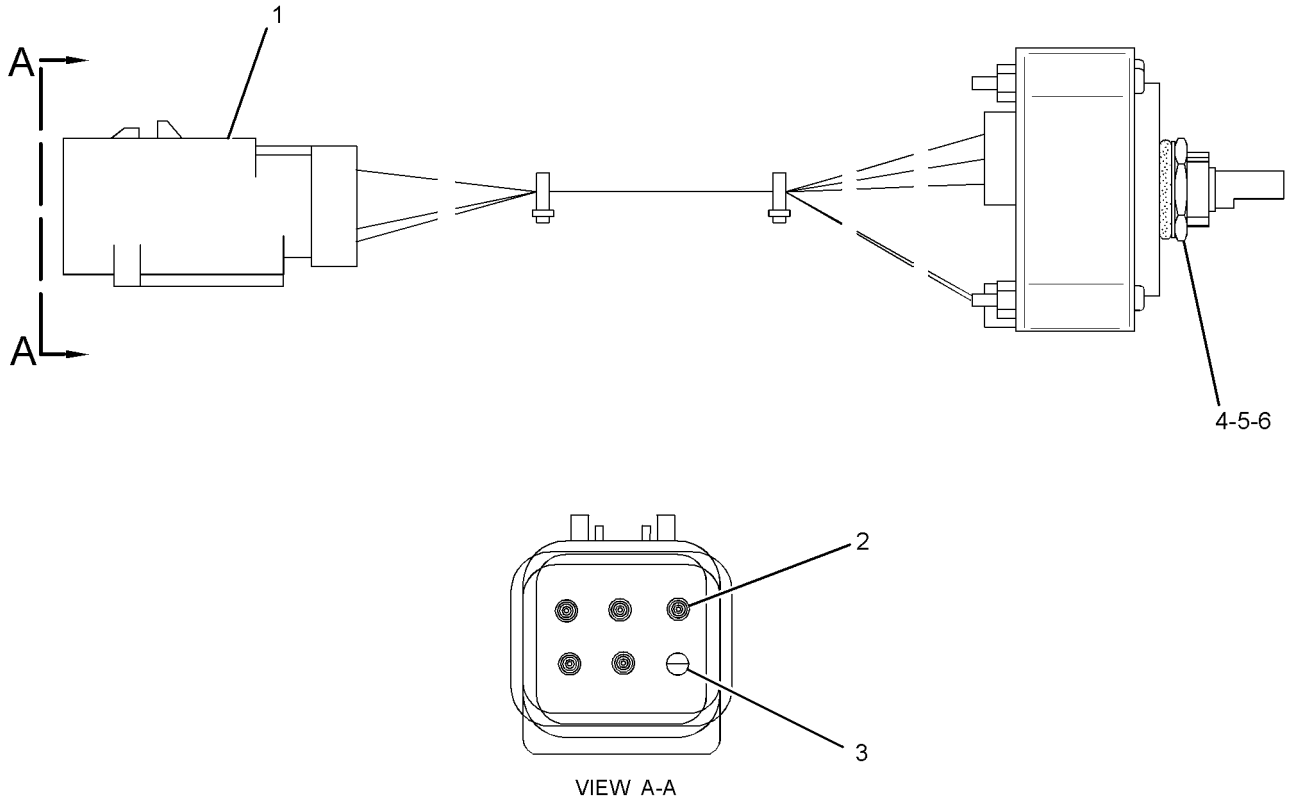

GRAPHIC #1 **<END>** g01588034

9G-7641 SWITCH GP-START–ENGINE, KEY

S/N: WAP1-UP
PART OF 251-0542 PANEL GP-SWITCH
AN ATTACHMENT

SMCS-1416 **i01943219**

NOTE	REF NO	GRAPHIC REF	PART NUMBER	QTY	PART NAME 1 2 3 4 5 6 (PRODUCT LEVEL)	SEE PAGE
	1	1	**6V-8362**	4	SCREW-MACHINE (8-32X0.31-IN)	
	2	1	**9B-7233**	4	LOCKWASHER	
	3	1	**7T-6799**	1	NUT-MOUNTING (1-32-THD)	
AF			**5P-8500**	1	KEY (IGNITION)	

A-NOT PART OF THIS GROUP
F-NOT SHOWN

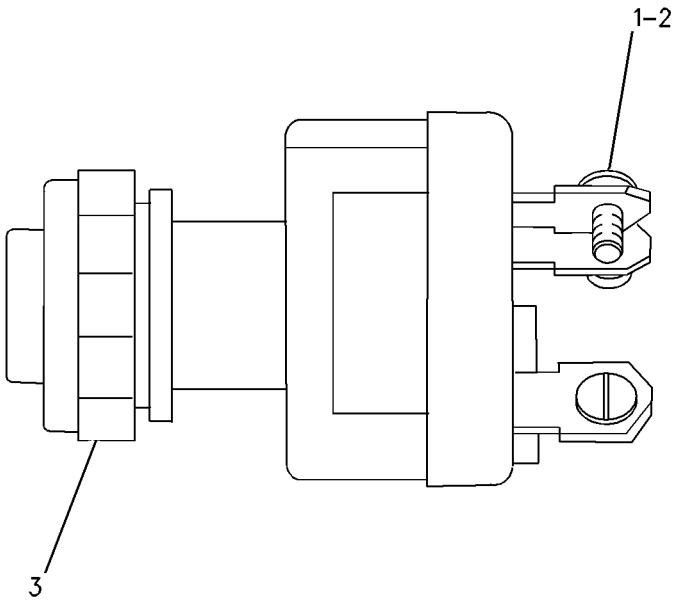

GRAPHIC #1 **<END>** g00699802

165-5970 SWITCH GP-TOGGLE–FUEL PRIMING PUMP ON, OFF

S/N: WAP1-UP

PART OF 299-2635 BATTERY & WIRING GP

SMCS-7332 **i02409114**

NOTE	REF NO	GRAPHIC REF	PART NUMBER	QTY	PART NAME 1 2 3 4 5 6 (PRODUCT LEVEL)	SEE PAGE
	1	1	**6T-3631**	2	NUT-HEX (15/32-32-THD)	
	2	1	**6T-3632**	1	LOCKWASHER	
	3	1	**6T-3633**	1	RING-LOCKING	
	4	1	**102-8803**	1	KIT-RECEPTACLE (3-PIN)	
					(INCLUDES RECEPTACLE AS & WEDGE)	
	5	1	**186-3735**	3	PIN-CONNECTOR (16-GA TO 18-GA)	

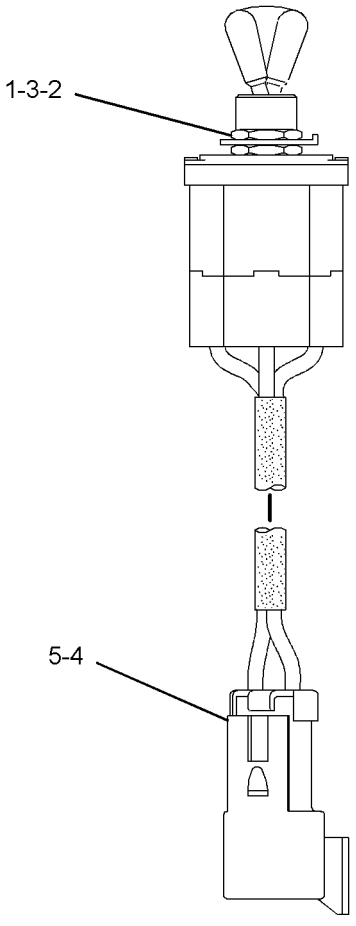

GRAPHIC #1 **<END>** g01203825

170-2512 SWITCH GP-TOGGLE–SECONDARY SHUTDOWN

S/N: WAP1-UP

PART OF 299-2635 BATTERY & WIRING GP

SMCS-7332 **i03493400**

NOTE	REF NO	GRAPHIC REF	PART NUMBER	QTY	PART NAME 1 2 3 4 5 6 (PRODUCT LEVEL)	SEE PAGE
	1	1	**6T-3631**	2	NUT-HEX (15/32-32-THD)	
	2	1	**6T-3632**	1	LOCKWASHER	
	3	1	**6T-3633**	1	RING-LOCKING	
	4	1	**102-8805**	1	KIT-RECEPTACLE (6-PIN)	
					(INCLUDES RECEPTACLE AS & WEDGE)	
	5	1	**186-3735**	6	PIN-CONNECTOR (16-GA TO 18-GA)	

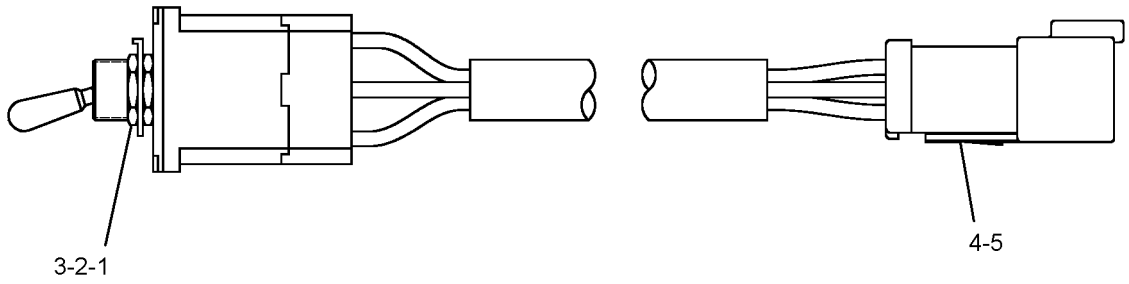

GRAPHIC #1 **<END>** g01814901

239-1134 VALVE GP-ETHER STARTING

S/N: WAP1-UP
24-VOLT
PART OF 324-4087 STARTING AID GP-ETHER
AN ATTACHMENT

SMCS-1456 **i03909933**

NOTE	REF NO	GRAPHIC REF	PART NUMBER	QTY	PART NAME 1 2 3 4 5 6 (PRODUCT LEVEL)	SEE PAGE
	1	1	**7N-9801**	1	GASKET	
	2	1	**102-8802**	1	KIT-RECEPTACLE (2-PIN)	
					(INCLUDES RECEPTACLE AS & WEDGE)	
	3	1	**8T-8729**	2	PIN-CONNECTOR (16-GA TO 18-GA)	
	4	1	**358-4889**	1	FILTER (ETHER START)	

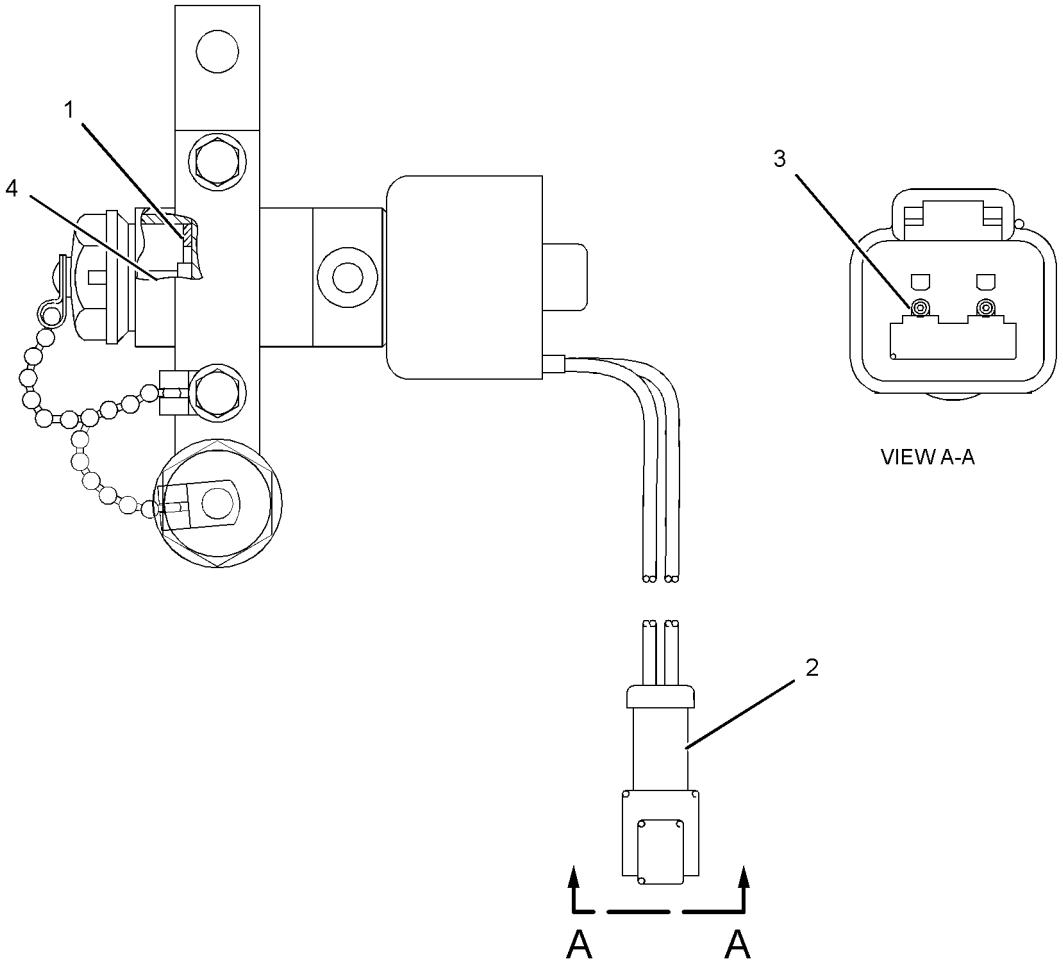

GRAPHIC #1 **<END>** g02138138

328-0106 WIRING GP-AUX START RECEPTACLE–JUMP START

S/N: WAP1-UP
PART OF 340-4074 OPTION AR-COLD WEATHER
AN ATTACHMENT

SMCS-1408, 1463 **i03910537**

NOTE	REF NO	GRAPHIC REF	PART NUMBER	QTY	PART NAME 1 2 3 4 5 6 (PRODUCT LEVEL)	SEE PAGE
	1	1	**8S-2634**	1	COVER AS	
	2	1	**9G-8909**	1	COVER-TERMINAL (BLACK)	
	3	1	**111-4837**	2	CLIP	
	4	1	**146-6747**	1	FILM-INFORMATION (24-VOLT)	
	5	1	**204-1673**	2	STRAP-CABLE	
	6	1	**209-1317**	1	RECEPTACLE AS	
		1	**1S-7251**	2	TERMINAL-CABLE (00-GA, 1/2-IN SCREW)	
D		1	**6V-2722**		TUBE-HEAT SHRINK (0.1-M)	
E		1	**159-8049**		CABLE (00-GA, RED) (145-CM)	
E		1	**159-8050**		CABLE (00-GA, BLACK) (65-CM)	
	7	1	**238-1499**	1	BRACKET	
	8	1	**328-0338**	1	CABLE AS	
		1	**1S-7251**	1	TERMINAL-CABLE (00-GA, 1/2-IN SCREW)	
		1	**7N-5274**	1	COVER-TERMINAL (BLACK) (BATTERY POSITIVE)	
		1	**8L-8413**	1	STRAP-CABLE	
		1	**9G-8909**	1	COVER-TERMINAL (BLACK) (JUNCTION BLOCK)	
		1	**3S-6050**	1	TERMINAL AS-BATTERY (NEGATIVE)	
		1	**1M-6119**	1	BOLT (5/16-18X1.375-IN)	
		1	**1M-6120**	1	NUT (5/16-18-THD)	
E		1	**159-8050**		CABLE (00-GA, BLACK) (27-CM)	
	9	1	**328-0339**	1	CABLE AS	
		1	**1S-7251**	1	TERMINAL-CABLE (00-GA, 1/2-IN SCREW)	
		1	**1S-7252**	1	TERMINAL-CABLE (00-GA, 3/8-IN SCREW)	
		1	**9G-8909**	1	COVER-TERMINAL (BLACK)	
E		1	**159-8050**		CABLE (00-GA, BLACK) (44-CM)	
M	10	1	**5C-7261**	4	NUT (M8X1.25-THD)	
	11	1	**8T-4121**	4	WASHER-HARD (11X21X2.5-MM THK)	
M	12	1	**8T-4136**	2	BOLT (M10X1.5X25-MM)	
M	13	1	**8T-4191**	2	BOLT (M10X1.5X16-MM)	
M	14	1	**8T-4195**	2	BOLT (M10X1.5X30-MM)	
	15	1	**8T-4224**	8	WASHER-HARD (8.8X16X2-MM THK)	
M	16	1	**8T-4908**	4	BOLT (M8X1.25X25-MM)	
Y	17	1	**9W-0742**	1	BLOCK GP-JUNCTION (BATTERY)	177

D-ORDER BY THE METER
E-ORDER BY THE CENTIMETER
M-METRIC PART
Y-SEPARATE ILLUSTRATION

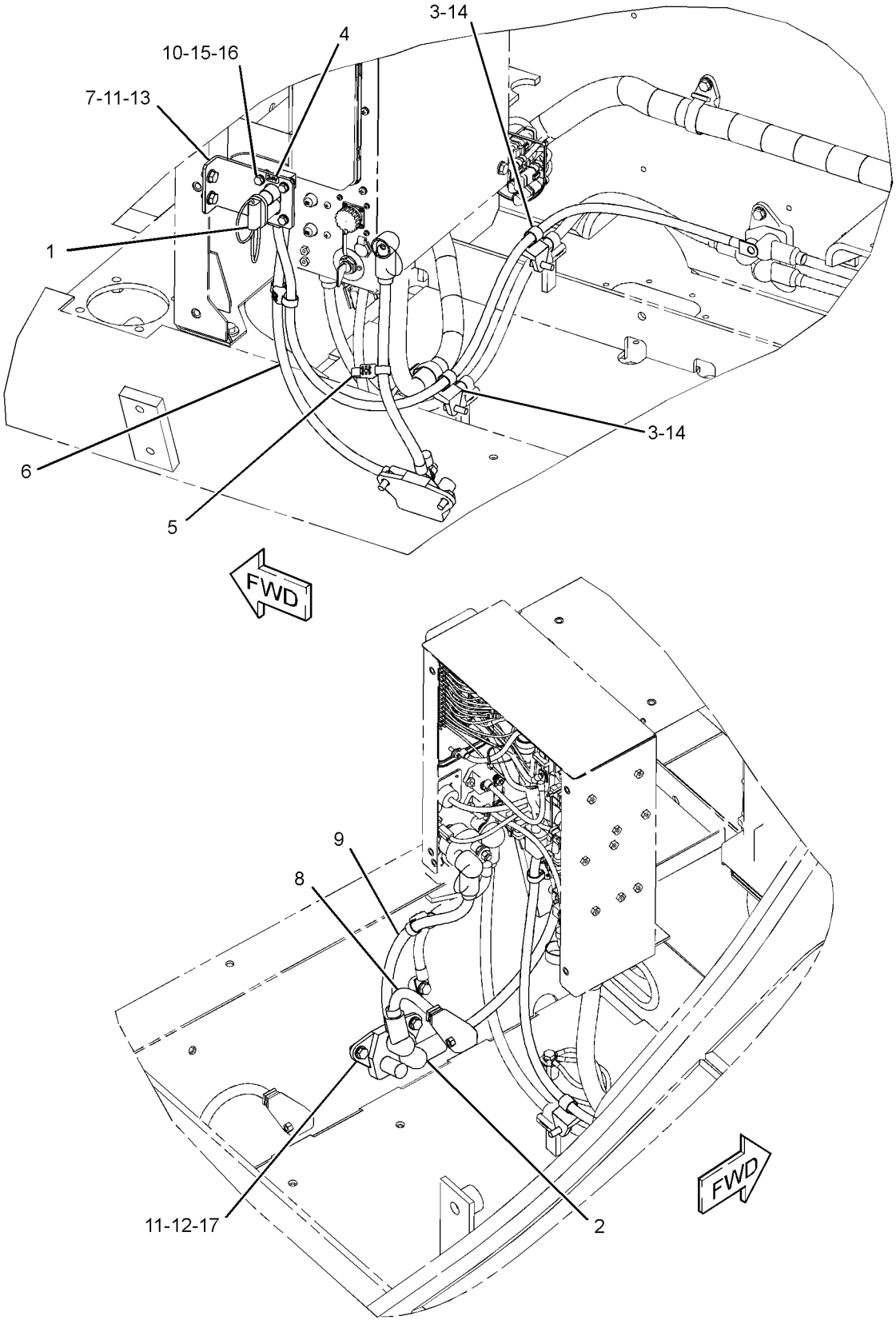

GRAPHIC #1 **<END>** g02156887

238-2184 WIRING GP-AUXILIARY CONTROL—FLOW CONTROL

S/N: WAP1-UP
PART OF 310-0006 CONTROL AR-AUXILIARY
AN ATTACHMENT

SMCS-1408 **i03809842**

NOTE	REF NO	GRAPHIC REF	PART NUMBER	QTY	PART NAME 1 2 3 4 5 6 (PRODUCT LEVEL)	SEE PAGE
	1	1	**3S-2093**	1	STRAP-CABLE	
C	2	1	**7K-1181**	1	STRAP-CABLE	
	3	1	**238-2323**	1	HARNESS AS-SWITCH (FLOW CONTROL)	
		1	**9X-3401**	3	PIN-CONNECTOR (16-GA TO 18-GA)	
		1	**8T-8730**	4	SOCKET-CONNECTOR (16-GA TO 18-GA)	
BE		1	**125-7875**		TUBE-HEAT SHRINK (7.44-MM DIA)	
		1	**8T-8737**	4	PLUG-SEAL	
		1	**155-2271**	2	KIT-CONNECTING PLUG (4-PIN)	
					(EACH INCLUDES PLUG AS, WEDGE, & INTERFACE SEAL)	
		1	**243-4506**	1	RECEPTACLE AS-CONNECTOR (3-PIN)	
	4	1	**238-2337**	1	BRACKET AS	
C	5	1	**4P-7581**	1	CLIP	

B-USE AS REQUIRED
C-CHANGE FROM PREVIOUS TYPE
E-ORDER BY THE CENTIMETER

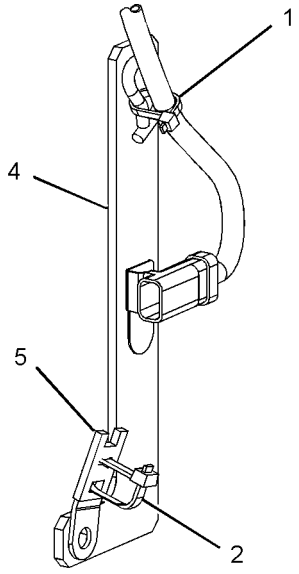

VIEW OF AREA A

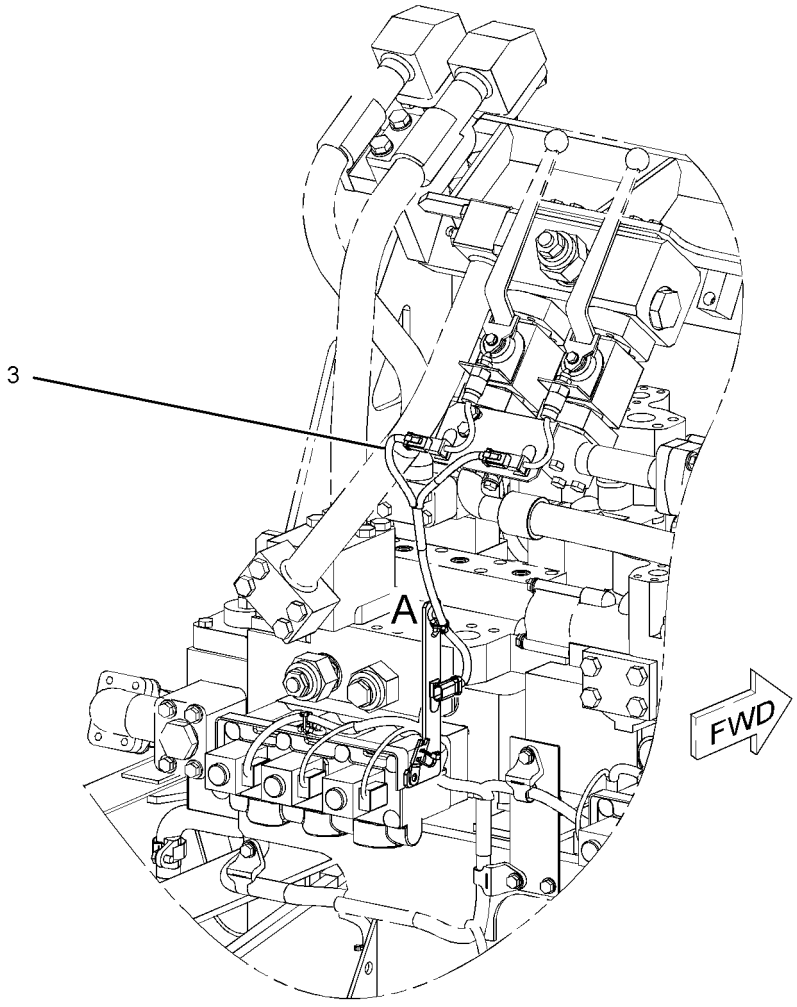

GRAPHIC #1 **<END>** g02071260

ELECTRICAL AND STARTING SYSTEM

299-2628 WIRING GP-CAB

S/N: WAP1-UP

PART OF 342-3451 OPERATOR AR

SMCS-1408, 7301 **i03900396**

NOTE	REF NO	GRAPHIC REF	PART NUMBER	QTY	PART NAME 1 2 3 4 5 6 (PRODUCT LEVEL)	SEE PAGE
	1	1	**3S-2093**	8	STRAP-CABLE	
M	2	1	**6C-9058**	3	SCREW (M6X1X12-MM)	
	3	1	**6C-9081**	2	LOCKWASHER	
	4	1	**6C-9121**	1	BRACKET AS-LAMP	
	5	1	**6C-9122**	2	LAMP (24-VOLT)	
M	6	1	**6V-4298**	2	BOLT (M5X0.8X16-MM)	
	7	1	**120-4779**	8	HOOK	
Y	8	1	**132-1829**	1	ALARM GP (24-VOLT) (FAULT)	156
	9	1	**301-7292**	1	KIT-SERVICE METER	
					(INCLUDES METER & FILM)	
	10	1	**167-3593**	1	STRAP	
	11	1	**214-8889**	2	SPEAKER	
	12	1	**220-6420**	8	SCREW	
	13	1	**234-1097**	1	BRACKET	
	15	1	**259-5022**	1	ANTENNA AS	
		1	**259-5081**	1	ROD	
		1	**259-5082**	1	CABLE AS	
	16	1	**350-8248**	1	HARNESS AS-CAB	
		1	**102-8803**	2	KIT-RECEPTACLE (3-PIN)	
					(EACH INCLUDES RECEPTACLE AS & WEDGE)	
		1	**8T-8730**	4	SOCKET-CONNECTOR (16-GA TO 18-GA)	
		1	**3S-2093**	73	STRAP-CABLE	
		1	**6T-6506**	2	TERMINAL-BLADE (14-GA TO 18-GA)	
		1	**7N-7221**	2	TERMINAL-BLADE (18-GA TO 22-GA)	
		1	**7Y-3962**	2	TERMINAL-BULLET (MALE)	
		1	**7Y-3693**	5	ANGLE	
		1	**8C-6354**	1	CAP-RECEPTACLE	
		1	**8T-8737**	16	PLUG-SEAL	
		1	**3M-6018**	1	TERMINAL	
		1	**9W-1951**	1	RECEPTACLE-CONNECTOR (9-PIN)	
		1	**5P-2957**	2	TERMINAL-BLADE (14-GA TO 16-GA)	
					—OR—	
		1	**5P-5602**	2	TERMINAL-BLADE (18-GA TO 22-GA)	
		1	**102-7964**	1	PLUG-CONNECTOR (16-PIN)	
		1	**102-7965**	49	TERMINAL (FEMALE)	
		1	**111-4815**	1	PLUG-CONNECTOR (7-PIN)	
BE		1	**119-3662**		TUBE-HEAT SHRINK (10.85-MM DIA)	
		1	**121-1168**	1	CONNECTOR-RECEPTACLE	
		1	**121-1173**	6	TERMINAL (MALE)	
		1	**125-4838**	1	WEDGE-PLUG LOCK (7-PIN)	
		1	**125-4841**	1	WEDGE-PLUG LOCK (21-PIN)	
BE		1	**125-7874**		TUBE-HEAT SHRINK (5.72-MM DIA)	
BE		1	**125-7875**		TUBE-HEAT SHRINK (7.44-MM DIA)	
		1	**9X-3402**	15	SOCKET-CONNECTOR (16-GA TO 18-GA)	
		1	**2L-8066**	2	TERMINAL-RING (10-GA TO 12-GA, NO. 10 SCREW)	
		1	**2L-8067**	3	TERMINAL-RING (10-GA TO 12-GA, 1/4-IN SCREW)	
		1	**2L-8075**	7	TERMINAL-RING (14-GA TO 16-GA, NO. 8 SCREW)	
		1	**176-9299**	2	KIT-RECEPTACLE (3-PIN)	
					(EACH RECEPTACLE KIT INCLUDES RECEPTACLE AS & WEDGE)	
		1	**9X-3401**	10	PIN-CONNECTOR (16-GA TO 18-GA)	
		1	**153-2602**	3	RECEPTACLE-CONNECTOR (1-PIN)	
		1	**153-2631**	3	TERMINAL (FEMALE)	

299-2628 **WIRING GP-CAB** *(contd.)* **i03900396**

NOTE	REF NO	GRAPHIC REF	PART NUMBER	QTY	PART NAME 1 2 3 4 5 6 (PRODUCT LEVEL)	SEE PAGE
		1	**155-2270**	1	KIT-CONNECTING PLUG (2-PIN)	
					(INCLUDES PLUG AS, WEDGE & INTERFACE SEAL)	
		1	**163-6659**	1	CONNECTOR-PLUG	
		1	**163-6699**	1	CONNECTOR-PLUG	
		1	**163-6790**	20	TERMINAL (FEMALE)	
		1	**163-6803**	5	PLUG-CONNECTOR (5-PIN)	
		1	**167-3487**	5	WEDGE-PLUG LOCK (5-PIN)	
		1	**174-3016**	2	PLUG AS-CONNECTOR (3-PIN)	
		1	**230-4009**	1	PLUG AS-CONNECTOR (12-PIN)	
		1	**264-7034**	1	SEAL-CONNECTOR	
		1	**230-4011**	1	PLUG AS-CONNECTOR (2-PIN)	
		1	**264-7029**	1	SEAL-CONNECTOR	
		1	**238-2363**	6	TERMINAL (FEMALE)	
		1	**238-2366**	12	TERMINAL (MALE)	
		1	**239-7356**	1	PLUG AS-CONNECTOR (12-PIN)	
		1	**264-7034**	1	SEAL-CONNECTOR	
		1	**243-4505**	1	RECEPTACLE AS-CONNECTOR (2-PIN)	
		1	**349-5084**	3	TERMINAL-BLADE	
		1	**349-5085**	3	RECEPTACLE AS-CONNECTOR	
	17	1	**328-0651**	1	CONTROL GP-WIPER	
	18	1	**338-6833**	1	PANEL AS-CONTROL	
	19	1	**096-5962**	3	WASHER-HARD (3.4X7X0.8-MM THK)	
	20	1	**096-6166**	1	WASHER-HARD (4.5X9X1-MM THK)	
	21	1	**132-5789**	2	CLIP	
M	22	1	**150-6256**	3	BOLT-SOCKET HEAD (M3X0.5X12-MM)	
M	23	1	**6V-9673**	1	SCREW-MACHINE (M5X0.8X12-MM)	
	24	1	**8T-0328**	1	WASHER-HARD (5.5X10X1-MM THK)	
M	25	1	**8T-0337**	1	SCREW-MACHINE (M4X0.7X12-MM)	
	26	1	**9W-0335**	1	LIGHTER AS-CIGAR (24-VOLT)	
M	27	1	**9X-2042**	3	SCREW-TRUSS HEAD (M6X1X12-MM)	
	28	1	**9X-8256**	3	WASHER (6.6X12X2-MM THK)	
	29	1	**7K-1181**	2	STRAP-CABLE	

B-USE AS REQUIRED
E-ORDER BY THE CENTIMETER
M-METRIC PART
Y-SEPARATE ILLUSTRATION

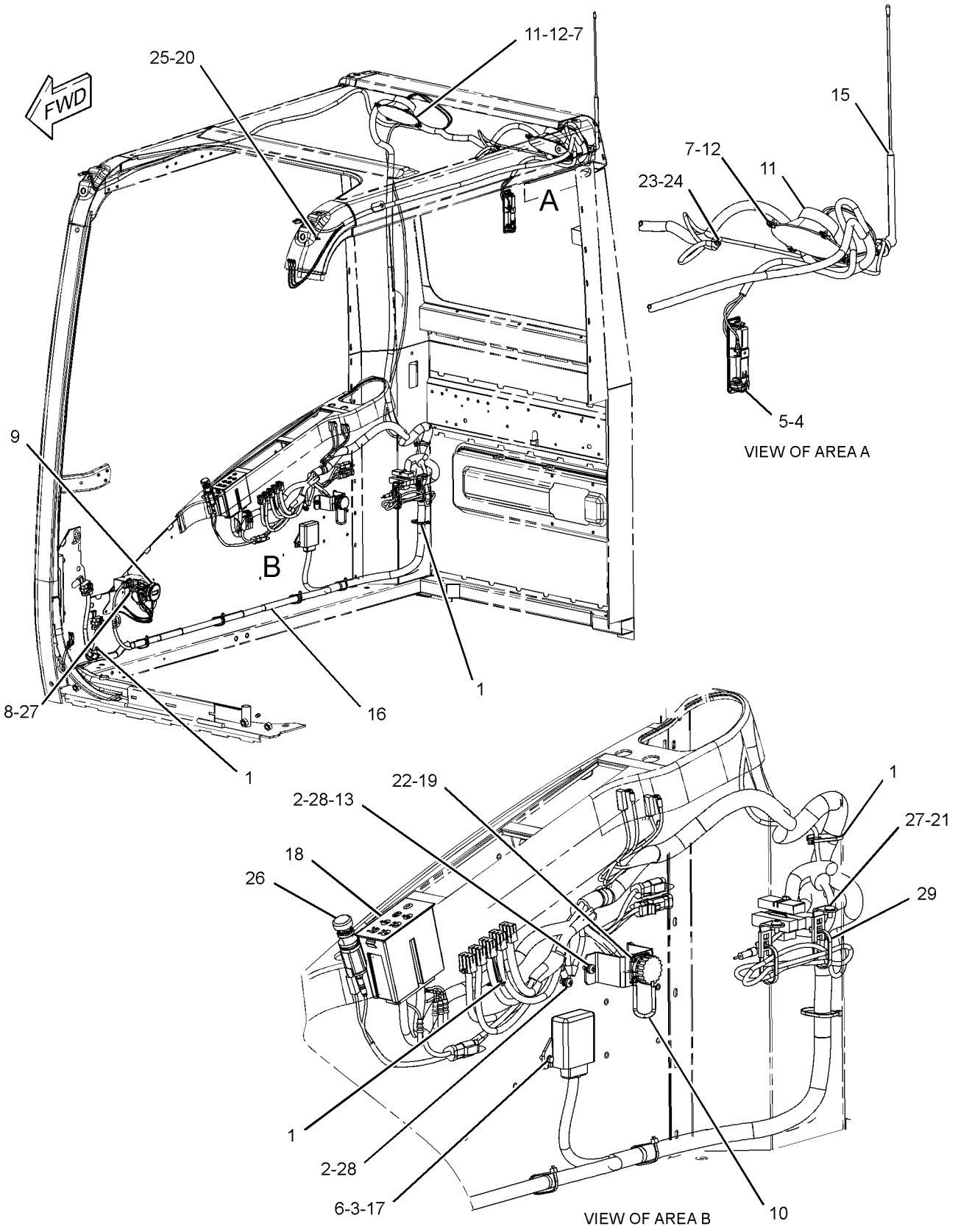

GRAPHIC #1 **<END>** g02145376

299-2999 WIRING GP-CAB–ACCUGRADE

S/N: WAP1-UP
PART OF 340-3996 SPECIAL AR
AN ATTACHMENT

SMCS-1408, 7301 **i03917290**

NOTE	REF NO	GRAPHIC REF	PART NUMBER	QTY	PART NAME 1 2 3 4 5 6 (PRODUCT LEVEL)	SEE PAGE
	1	1	**3S-2093**	2	STRAP-CABLE	
	2	1	**7K-1181**	15	STRAP-CABLE	
	3	1	**342-2925**	1	HARNESS AS-MONITOR	
		1	**102-8803**	2	KIT-RECEPTACLE (3-PIN)	
					(EACH INCLUDES RECEPTACLE AS & WEDGE)	
		1	**8T-8729**	2	PIN-CONNECTOR (16-GA TO 18-GA)	
		1	**8T-8730**	2	SOCKET-CONNECTOR (16-GA TO 18-GA)	
		1	**3S-2093**	1	STRAP-CABLE	
		1	**8L-8413**	2	STRAP-CABLE	
		1	**8T-8737**	18	PLUG-SEAL	
		1	**9W-0852**	3	PIN-CONNECTOR (14-GA TO 16-GA)	
		1	**9W-0844**	1	SOCKET-CONNECTOR (14-GA)	
BE		1	**125-7874**		TUBE-HEAT SHRINK (5.72-MM DIA)	
BE		1	**125-7875**		TUBE-HEAT SHRINK (7.44-MM DIA)	
		1	**9X-3402**	11	SOCKET-CONNECTOR (16-GA TO 18-GA)	
		1	**176-9299**	2	KIT-RECEPTACLE (3-PIN)	
					(EACH INCLUDES RECEPTACLE AS & WEDGE)	
		1	**9X-3401**	13	PIN-CONNECTOR (16-GA TO 18-GA)	
		1	**174-3016**	2	PLUG AS-CONNECTOR (3-PIN)	
		1	**230-5008**	3	PLUG AS-CONNECTOR (4-PIN)	
					(EACH INCLUDES)	
		1	**264-7031**	1	SEAL-CONNECTOR	
		1	**230-5010**	1	PLUG AS-CONNECTOR (6-PIN)	
		1	**264-7032**	1	SEAL-CONNECTOR	
		1	**243-4505**	1	RECEPTACLE AS-CONNECTOR (2-PIN)	
		1	**243-4507**	3	RECEPTACLE AS-CONNECTOR (4-PIN)	
		1	**243-4510**	1	RECEPTACLE AS-CONNECTOR (12-PIN)	
		1	**243-5362**	1	CAP-DUST	
		1	**248-5358**	1	PLUG AS-CONNECTOR (39-PIN)	
		1	**253-2695**	1	PLUG AS-CONNECTOR	
		1	**287-8404**	1	CAP AS-DUST	
	4	1	**342-2926**	1	HARNESS AS-SWITCH (BACKUP)	
		1	**8T-8729**	2	PIN-CONNECTOR (16-GA TO 18-GA)	
		1	**3S-2093**	4	STRAP-CABLE	
		1	**8T-8737**	2	PLUG-SEAL	
		1	**9W-0852**	1	PIN-CONNECTOR (14-GA TO 16-GA)	
		1	**9X-3402**	2	SOCKET-CONNECTOR (16-GA TO 18-GA)	
		1	**2L-8077**	1	TERMINAL-RING (14-GA TO 16-GA, 1/4-IN SCREW)	
		1	**9X-3401**	2	PIN-CONNECTOR (16-GA TO 18-GA)	
		1	**155-2260**	1	KIT-CONNECTING PLUG (3-PIN)	
					(INCLUDES PLUG AS, WEDGE, & INTERFACE SEAL)	
		1	**243-4508**	1	RECEPTACLE AS-CONNECTOR (6-PIN)	

B-USE AS REQUIRED
E-ORDER BY THE CENTIMETER

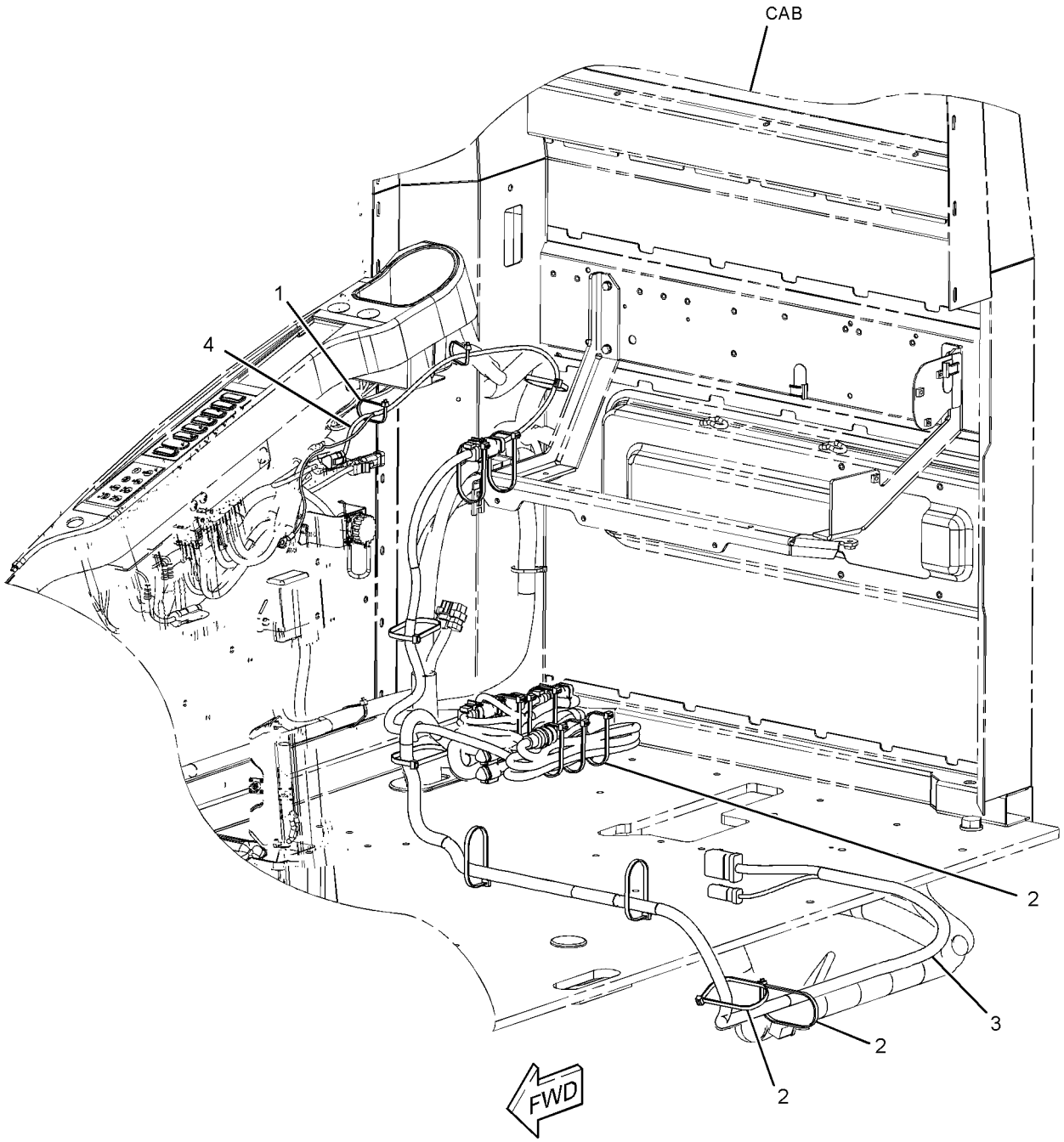

GRAPHIC #1 **<END>** g02162168

328-0102 WIRING GP-CAB—OVERLOAD WARNING DEVICE

S/N: WAP1-UP

PART OF 297-0421 VALVE AR-BOOM LOWERING CONTROL AN ATTACHMENT

SMCS-1408, 7301 **i03790671**

NOTE	REF NO	GRAPHIC REF	PART NUMBER	QTY	PART NAME 1 2 3 4 5 6 (PRODUCT LEVEL)	SEE PAGE
	1	1	**7K-1181**	11	STRAP-CABLE	
	2	1	**238-2214**	1	SWITCH AS-ROCKER (BOOM FLOAT)	
		1	**167-3542**	1	RECEPTACLE-CONNECTOR (5-PIN)	
		1	**167-3543**	5	TERMINAL (MALE)	
	3	1	**328-0028**	1	SWITCH AS-ROCKER (OVERLOAD WARNING)	
		1	**167-3542**	1	RECEPTACLE-CONNECTOR (5-PIN)	
		1	**167-3543**	4	TERMINAL (MALE)	
	4	1	**342-2939**	1	HARNESS AS-SENSOR (SMARTBOOM)	
		1	**8T-8729**	4	PIN-CONNECTOR (16-GA TO 18-GA)	
		1	**8T-8730**	5	SOCKET-CONNECTOR (16-GA TO 18-GA)	
		1	**155-2260**	1	KIT-CONNECTING PLUG (3-PIN)	
		1	**155-2270**	1	KIT-CONNECTING PLUG (2-PIN)	
					(EACH PLUG KIT INCLUDES PLUG AS, WEDGE, & INTERFACE SEAL)	
		1	**243-4507**	1	RECEPTACLE AS-CONNECTOR (4-PIN)	
	5	1	**342-2940**	1	HARNESS AS-LIGHTING	
		1	**102-8803**	1	KIT-RECEPTACLE (3-PIN)	
					(INCLUDES RECEPTACLE AS & WEDGE)	
		1	**8T-8729**	3	PIN-CONNECTOR (16-GA TO 18-GA)	
		1	**102-7965**	9	TERMINAL (FEMALE)	
		1	**163-6803**	2	PLUG-CONNECTOR (5-PIN)	
		1	**167-3542**	1	RECEPTACLE-CONNECTOR (5-PIN)	
		1	**167-3543**	4	TERMINAL (MALE)	
		1	**167-3487**	2	WEDGE-PLUG LOCK (5-PIN)	

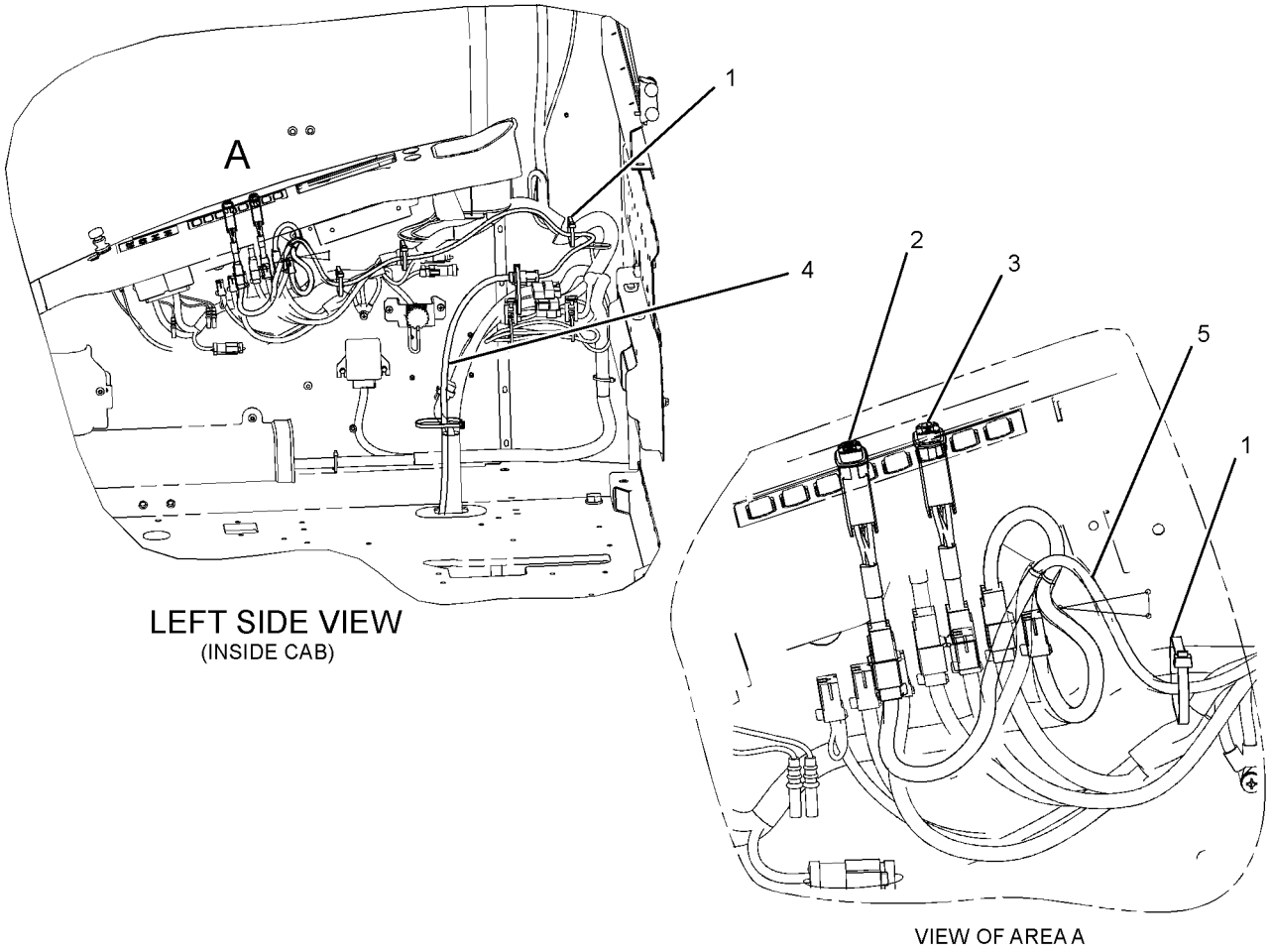

LEFT SIDE VIEW
(INSIDE CAB)

VIEW OF AREA A

GRAPHIC #1 **<END>** g02073726

299-3016 WIRING GP-CAMERA–CAB

S/N: WAP1-UP
PART OF 319-9186 CAMERA AR
AN ATTACHMENT

SMCS-1408, 7348 **i03656976**

NOTE	REF NO	GRAPHIC REF	PART NUMBER	QTY	PART NAME 1 2 3 4 5 6 (PRODUCT LEVEL)	SEE PAGE
	1	1	**7K-1181**	7	STRAP-CABLE	
	2	1	**306-8588**	1	HARNESS AS-WIRING (CAMERA)	
		1	**102-8805**	1	KIT-RECEPTACLE (6-PIN)	
					(INCLUDES RECEPTACLE AS & WEDGE)	
		1	**8T-8729**	2	PIN-CONNECTOR (16-GA TO 18-GA)	
		1	**7Y-3962**	1	TERMINAL-BULLET (MALE)	
		1	**8T-8737**	10	PLUG-SEAL	
		1	**2L-8077**	1	TERMINAL-RING (14-GA TO 16-GA, 1/4-IN SCREW)	
		1	**155-2274**	1	KIT-CONNECTING PLUG (6-PIN)	
					(INCLUDES PLUG AS, WEDGE, & INTERFACE SEAL)	

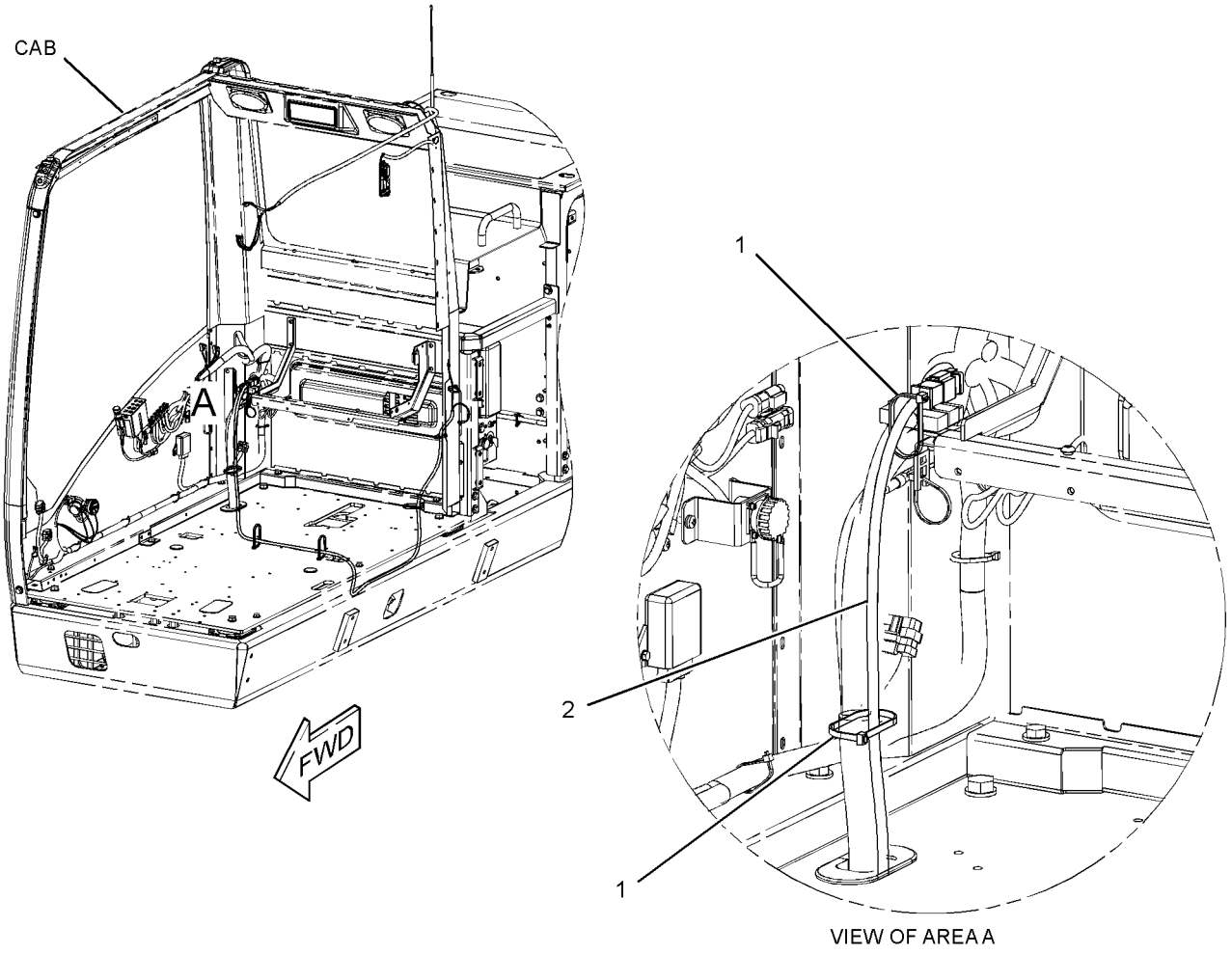

GRAPHIC #1 **<END>** g02050256

ELECTRICAL AND STARTING SYSTEM

350-8107 WIRING GP-CAMERA–CHASSIS

S/N: WAP1-UP
PART OF 340-4025 CAMERA AR
AN ATTACHMENT

SMCS-1408, 7348 **i04025391**

NOTE	REF NO	GRAPHIC REF	PART NUMBER	QTY	PART NAME 1 2 3 4 5 6 (PRODUCT LEVEL)	SEE PAGE
	1	1,2	**3S-2093**	12	STRAP-CABLE	
	2	2	**7I-2673**	1	STRAP-CABLE	
	3	1,2	**7K-1181**	14	STRAP-CABLE	
	4	1,2	**111-4836**	8	CLIP	
	5	1	**135-8965**	1	GROMMET	
	6	2	**251-4169**	1	CABLE AS-COAXIAL (11-M)	
	7	1	**261-3223**	1	CABLE AS-COAXIAL (3-M)	
	8	2	**002-9372**	1	CLIP	
	9	1	**132-5789**	1	CLIP	
	10	2	**4P-7428**	1	CLIP	
	11	1,2	**8T-4121**	10	WASHER-HARD (11X21X2.5-MM THK)	
M	12	1,2	**8T-4137**	10	BOLT (M10X1.5X20-MM)	
D	13	2	**6V-5819**		CONDUIT-FLEXIBLE (2.7-M)	

D-ORDER BY THE METER
M-METRIC PART

350-8107 **WIRING GP-CAMERA** ***(contd.)*** **i04025391**

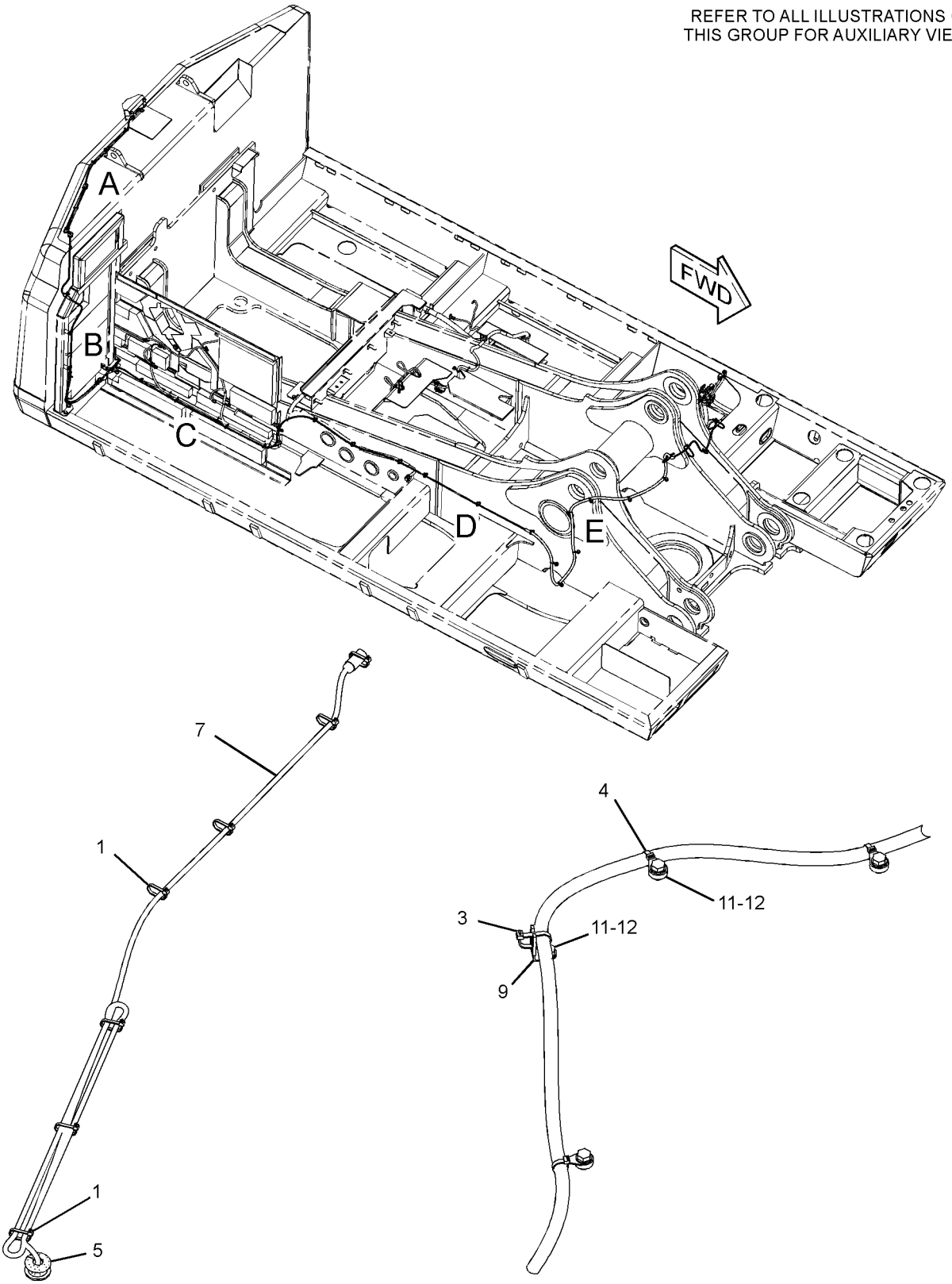

VIEW OF AREA A

VIEW OF AREA E

GRAPHIC #1 g02181073

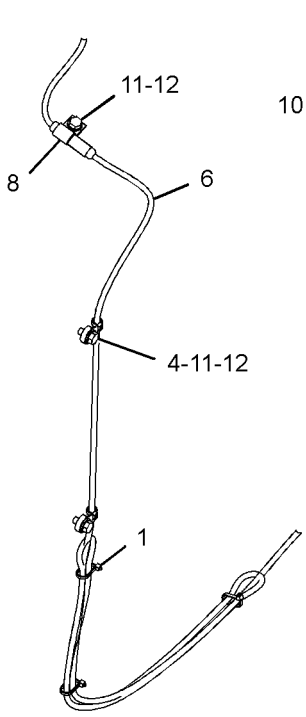

VIEW OF AREA B

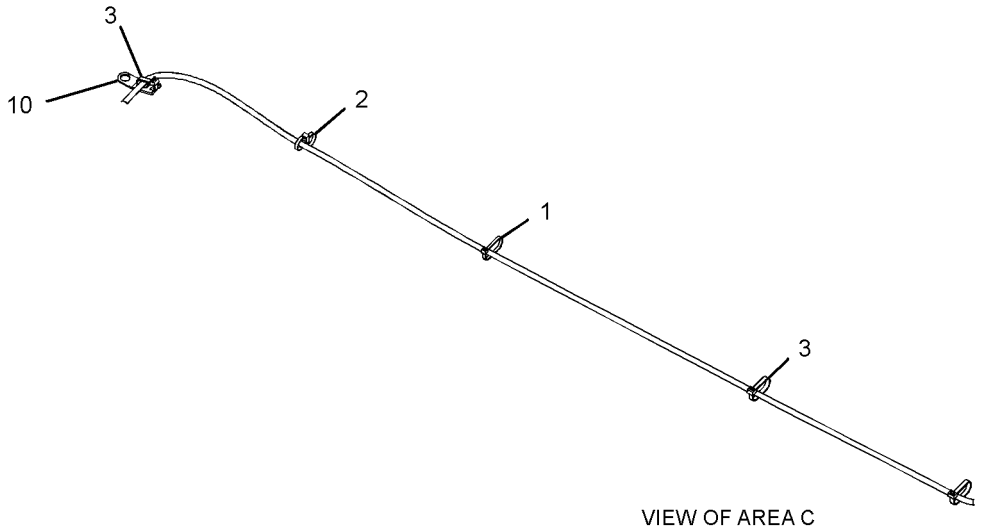

VIEW OF AREA C

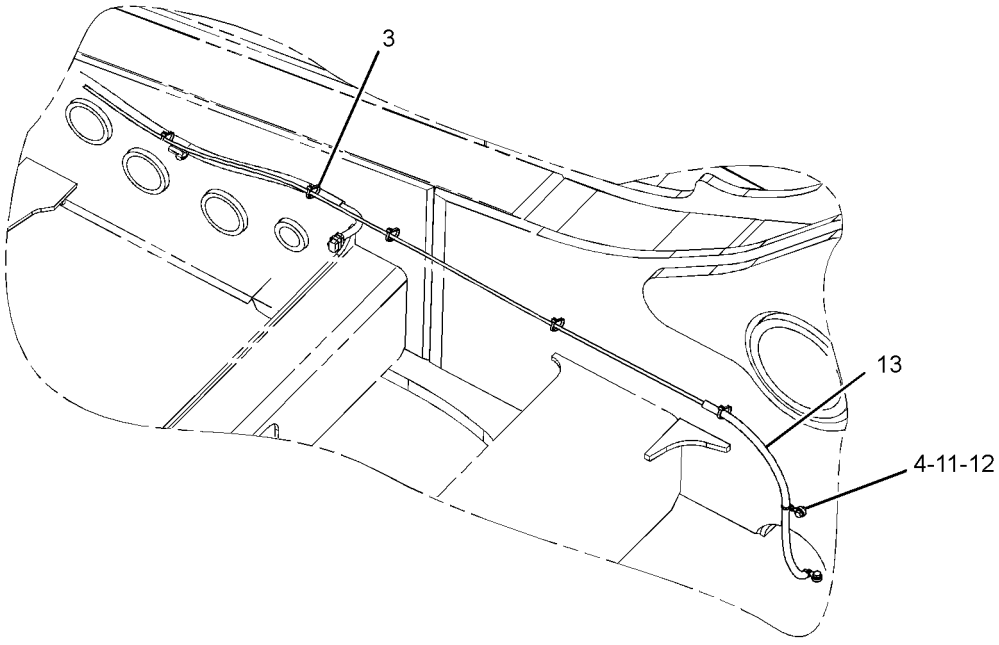

VIEW OF AREA D

GRAPHIC #2 **<END>** g02181734

299-2937 WIRING GP-CHASSIS—AUXILIARY, COMBINED FUNCTION

S/N: WAP1-UP

PART OF 310-0005, 310-0006 CONTROL AR-AUXILIARY

AN ATTACHMENT

SMCS-1408 **i03910302**

NOTE	REF NO	GRAPHIC REF	PART NUMBER	QTY	PART NAME 1 2 3 4 5 6 (PRODUCT LEVEL)	SEE PAGE
	1	1	**3S-2093**	9	STRAP-CABLE	
	2	1	**7K-1181**	8	STRAP-CABLE	
	3	1	**306-8326**	1	HARNESS AS-CONTROL	
		1	**102-8803**	2	KIT-RECEPTACLE (3-PIN)	
					(EACH KIT INCLUDES RECEPTACLE AS & WEDGE)	
		1	**8T-8730**	4	SOCKET-CONNECTOR (16-GA TO 18-GA)	
		1	**8T-8737**	100	PLUG-SEAL	
		1	**9W-0852**	2	PIN-CONNECTOR (14-GA TO 16-GA)	
BE		1	**119-3662**		TUBE-HEAT SHRINK (10.85-MM DIA)	
BE		1	**125-7874**		TUBE-HEAT SHRINK (5.72-MM DIA)	
		1	**9X-3402**	14	SOCKET-CONNECTOR (16-GA TO 18-GA)	
		1	**126-1767**	1	PIN-CONNECTOR (14-GA TO 16-GA)	
		1	**176-9299**	2	KIT-RECEPTACLE (3-PIN)	
					(EACH KIT INCLUDES RECEPTACLE AS & WEDGE)	
		1	**9X-3401**	6	PIN-CONNECTOR (16-GA TO 18-GA)	
		1	**153-2620**	1	PLUG AS-CONNECTOR (54-PIN, BLACK)	
		1	**163-6759**	1	SEAL	
		1	**153-2630**	1	PLUG AS-CONNECTOR (54-PIN, BROWN)	
		1	**163-6759**	1	SEAL	
		1	**155-2270**	2	KIT-CONNECTING PLUG (2-PIN)	
		1	**174-0503**	1	KIT-CONNECTING PLUG (3-PIN)	
		1	**155-2260**	1	KIT-CONNECTING PLUG (3-PIN)	
					(EACH PLUG KIT INCLUDES PLUG AS, WEDGE & INTERFACE SEAL))	
		1	**174-3016**	2	PLUG AS-CONNECTOR (3-PIN)	
		1	**243-4508**	1	RECEPTACLE AS-CONNECTOR (6-PIN)	

B-USE AS REQUIRED
E-ORDER BY THE CENTIMETER

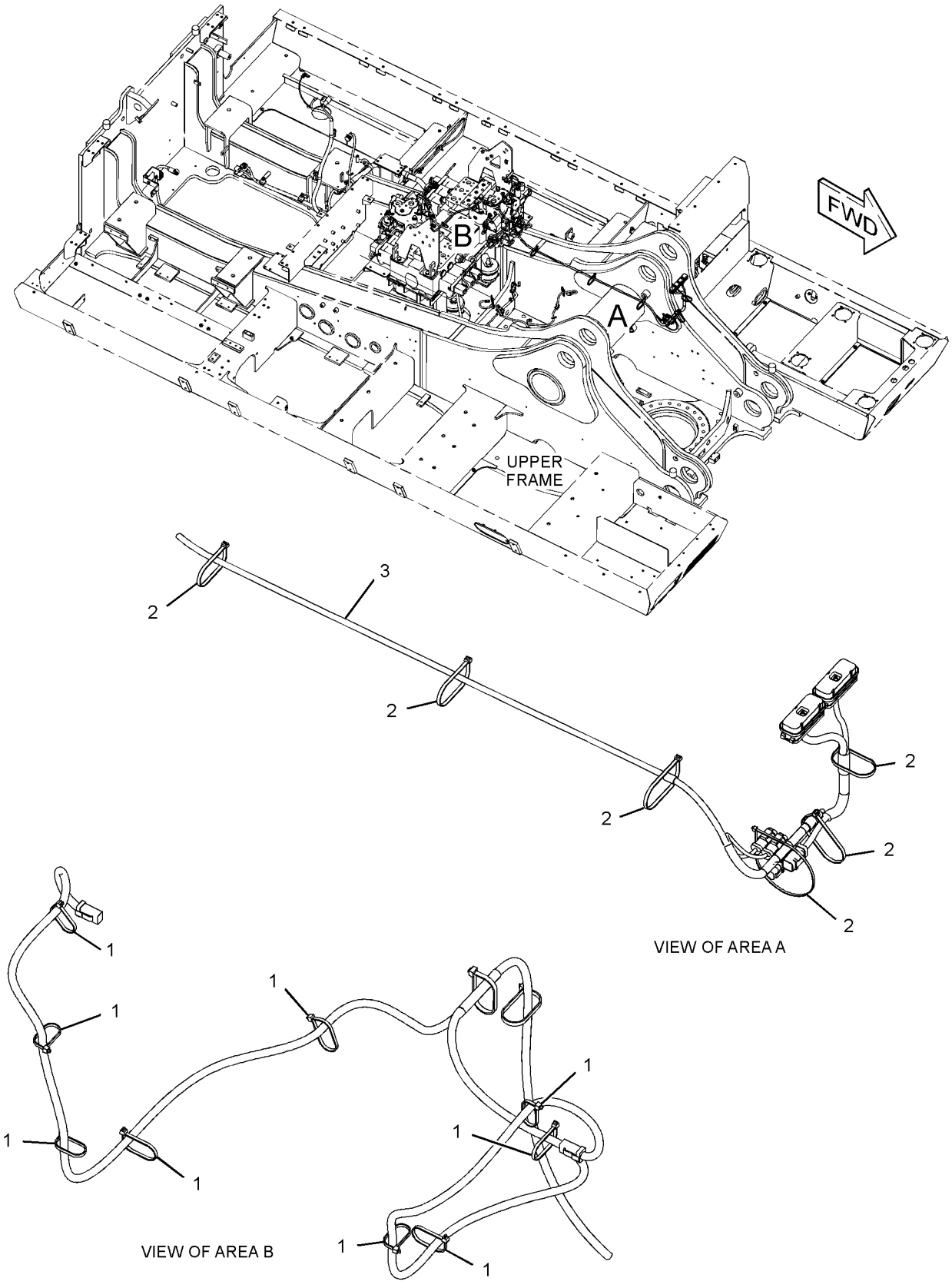

GRAPHIC #1 **<END>** g02174874

ELECTRICAL AND STARTING SYSTEM

299-2945 WIRING GP-CHASSIS—UNIVERSAL QUICK COUPLER

S/N: WAP1-UP
PART OF 302-9443 CONTROL AR-COUPLER
AN ATTACHMENT

SMCS-1408 **i03909308**

NOTE	REF NO	GRAPHIC REF	PART NUMBER	QTY	PART NAME 1 2 3 4 5 6 (PRODUCT LEVEL)	SEE PAGE
	1	1,2	**3S-2093**	23	STRAP-CABLE	
	2	1,2	**7K-1181**	27	STRAP-CABLE	
	3	1	**111-4836**	1	CLIP	
	4	2	**116-0118**	1	CLIP	
	5	2	**149-5050**	1	RELAY (24-VOLT) (QUICK COUPLER LOCK ON)	
	5A	2	**149-5050**	1	RELAY (24-VOLT) (QUICK COUPLER LOCK PRIORITY)	
	5B	2	**149-5050**	1	RELAY (24-VOLT) (QUICK COUPLER LOCK 2)	
	5C	2	**149-5050**	1	RELAY (24-VOLT) (QUICK COUPLER LOCK 1)	
	6	1	**204-1611**	1	STRAP-CABLE	
	7	2	**350-8496**	1	HARNESS AS-CHASSIS	
		2	**102-8802**	1	KIT-RECEPTACLE (2-PIN)	
					(INCLUDES RECEPTACLE AS & WEDGE)	
		2	**8T-8729**	2	PIN-CONNECTOR (16-GA TO 18-GA)	
		2	**8T-8730**	4	SOCKET-CONNECTOR (16-GA TO 18-GA)	
		2	**3S-2093**	5	STRAP-CABLE	
		2	**7Y-3962**	1	TERMINAL-BULLET (MALE)	
		2	**9W-0852**	4	PIN-CONNECTOR (14-GA TO 16-GA)	
		2	**9W-0844**	5	SOCKET-CONNECTOR (14-GA)	
BE		2	**125-7874**		TUBE-HEAT SHRINK (5.72-MM DIA)	
BE		2	**125-7875**		TUBE-HEAT SHRINK (7.44-MM DIA)	
		2	**2L-8079**	1	TERMINAL-RING (14-GA TO 16-GA, 3/8-IN SCREW)	
		2	**149-5051**	4	CONNECTOR-RECEPTACLE	
		2	**149-5069**	7	TERMINAL-BLADE (14-GA TO 20-GA)	
		2	**149-5070**	9	TERMINAL-BLADE (16-GA TO 20-GA)	
		2	**155-2270**	3	KIT-CONNECTING PLUG (2-PIN)	
					(EACH KIT INCLUDES PLUG AS, WEDGE & INTERFACE SEAL)	
		2	**243-4507**	1	RECEPTACLE AS-CONNECTOR (4-PIN)	
	8	1	**132-5789**	1	CLIP	
	9	1	**8T-4121**	2	WASHER-HARD (11X21X2.5-MM THK)	
M	10	1	**8T-4137**	1	BOLT (M10X1.5X20-MM)	
M	11	1	**8T-4191**	1	BOLT (M10X1.5X16-MM)	
M	12	2	**8T-4970**	2	BOLT (M6X1X14-MM)	
	13	2	**9X-8256**	2	WASHER (6.6X12X2-MM THK)	

B-USE AS REQUIRED
E-ORDER BY THE CENTIMETER
M-METRIC PART

REFER TO ALL ILLUSTRATIONS OF
THIS GROUP FOR AUXILIARY VIEWS

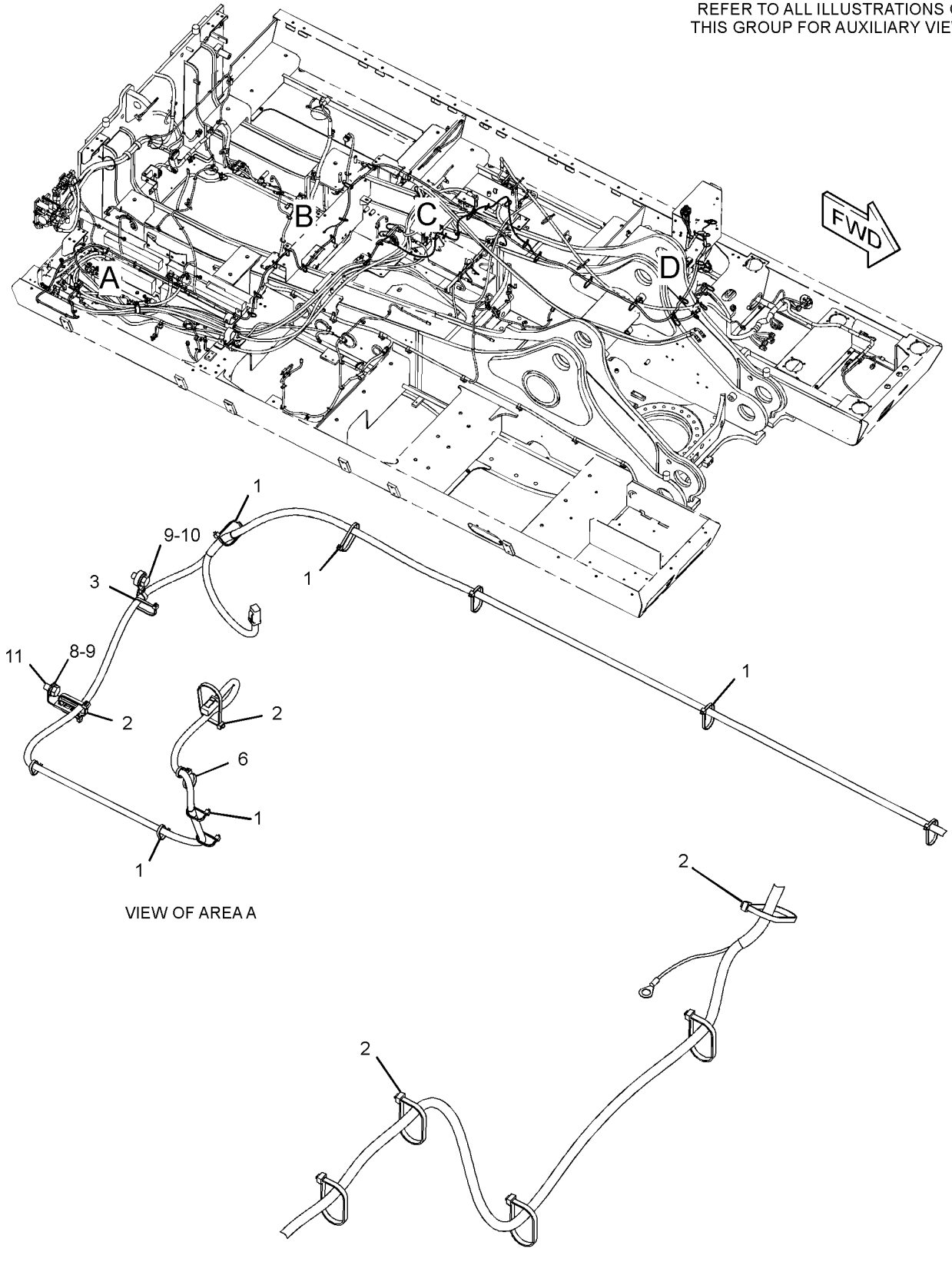

GRAPHIC #1 g02177435

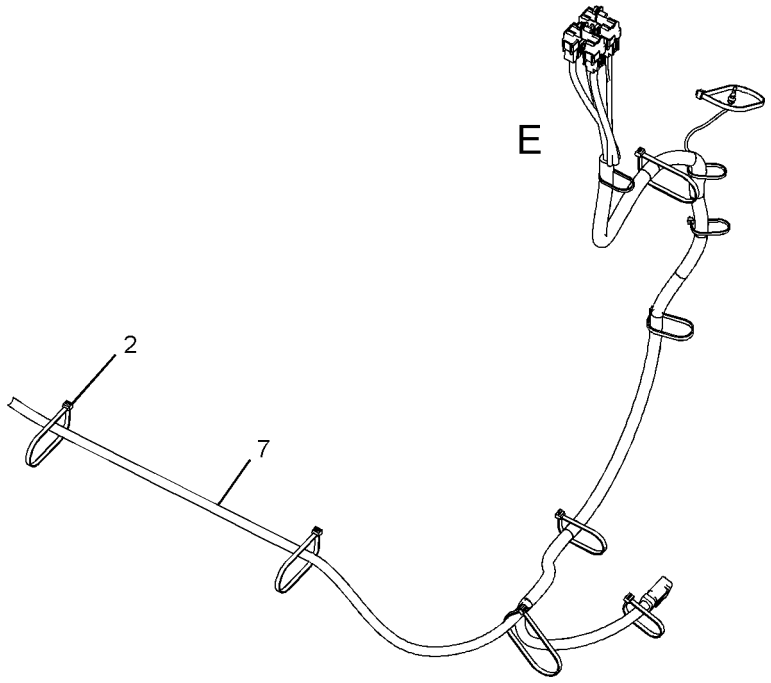

VIEW OF AREA D

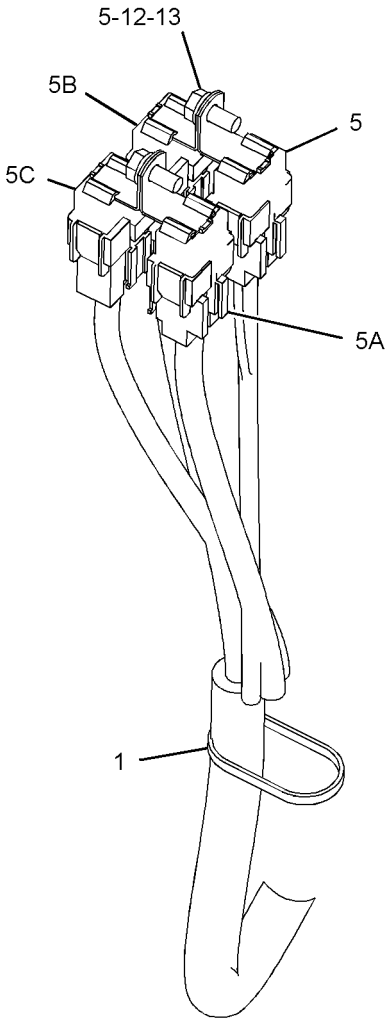

VIEW OF AREA E

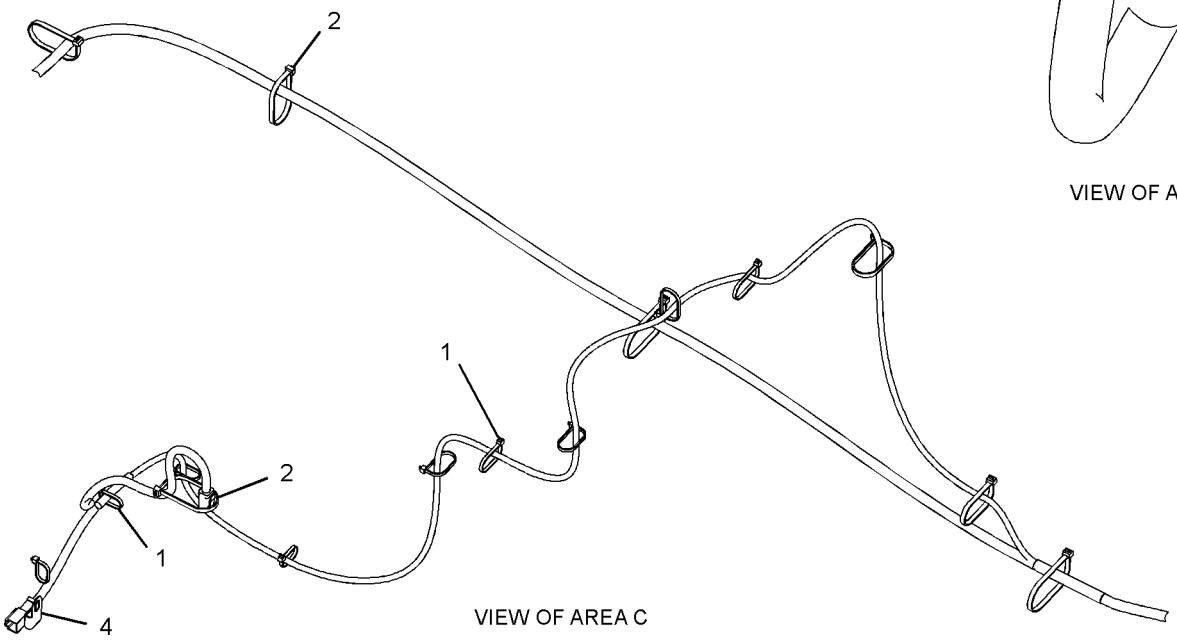

VIEW OF AREA C

GRAPHIC #2 **<END>** g02177710

ELECTRICAL AND STARTING SYSTEM

299-3009 WIRING GP-CHASSIS—BOOM FLOAT

S/N: WAP1-UP
PART OF 297-0421 VALVE AR-BOOM LOWERING CONTROL
AN ATTACHMENT

SMCS-1408 **i03907437**

NOTE	REF NO	GRAPHIC REF	PART NUMBER	QTY	PART NAME 1 2 3 4 5 6 (PRODUCT LEVEL)	SEE PAGE
	1	1	**3S-2093**	19	STRAP-CABLE	
	2	1	**7K-1181**	11	STRAP-CABLE	
	3	1	**111-4836**	5	CLIP	
	4	1	**116-0118**	3	CLIP	
	5	1	**149-5050**	1	RELAY (24-VOLT) (SMARTBOOM)	
	6	1	**153-2447**	1	BRACKET AS	
	7	1	**204-1611**	3	STRAP-CABLE	
	8	1	**328-0404**	1	BRACKET AS	
	9	1	**350-8118**	1	HARNESS AS-CHASSIS	
		1	**8T-8729**	3	PIN-CONNECTOR (16-GA TO 18-GA)	
		1	**8T-8730**	5	SOCKET-CONNECTOR (16-GA TO 18-GA)	
		1	**3S-2093**	2	STRAP-CABLE	
		1	**8T-8737**	1	PLUG-SEAL	
		1	**9X-3402**	2	SOCKET-CONNECTOR (16-GA TO 18-GA)	
		1	**9X-3401**	2	PIN-CONNECTOR (16-GA TO 18-GA)	
		1	**155-2270**	2	KIT-CONNECTING PLUG (2-PIN)	
		1	**155-2260**	1	KIT-CONNECTING PLUG (3-PIN)	
					(EACH PLUG KIT INCLUDES PLUG AS, WEDGE & INTERFACE SEAL)	
		1	**243-4508**	1	RECEPTACLE AS-CONNECTOR (6-PIN)	
	10	1	**350-8124**	1	HARNESS AS-PANEL	
		1	**102-8803**	1	KIT-RECEPTACLE (3-PIN)	
					(INCLUDES RECEPTACLE AS & WEDGE)	
		1	**8T-8729**	1	PIN-CONNECTOR (16-GA TO 18-GA)	
		1	**8T-8730**	7	SOCKET-CONNECTOR (16-GA TO 18-GA)	
		1	**3S-2093**	3	STRAP-CABLE	
		1	**7Y-3951**	2	TERMINAL-BLADE (14-GA)	
		1	**7Y-3952**	1	PLUG-CONNECTOR (2-PIN)	
		1	**8T-8737**	1	PLUG-SEAL	
		1	**121-1022**	1	DIODE	
BE		1	**125-7874**		TUBE-HEAT SHRINK (5.72-MM DIA)	
		1	**9X-3402**	3	SOCKET-CONNECTOR (16-GA TO 18-GA)	
		1	**2L-8077**	1	TERMINAL-RING (14-GA TO 16-GA, 1/4-IN SCREW)	
		1	**9X-3401**	2	PIN-CONNECTOR (16-GA TO 18-GA)	
		1	**149-5051**	1	CONNECTOR-RECEPTACLE	
		1	**149-5069**	1	TERMINAL-BLADE (14-GA TO 20-GA)	
		1	**149-5070**	3	TERMINAL-BLADE (16-GA TO 20-GA)	
		1	**170-6891**	1	TERMINAL-BLADE (16-GA TO 18-GA)	
		1	**230-5008**	1	PLUG AS-CONNECTOR (4-PIN)	
		1	**264-7031**	1	SEAL-CONNECTOR	
		1	**230-5010**	1	PLUG AS-CONNECTOR (6-PIN)	
		1	**264-7032**	1	SEAL-CONNECTOR	
	11	1	**4P-7429**	1	CLIP	
M	12	1	**7X-2548**	1	BOLT (M12X1.75X16-MM)	
M	13	1	**7X-2619**	1	BOLT (M6X1X10-MM)	
	14	1	**8T-4121**	6	WASHER-HARD (11X21X2.5-MM THK)	
M	15	1	**8T-4136**	1	BOLT (M10X1.5X25-MM)	
M	16	1	**8T-4137**	4	BOLT (M10X1.5X20-MM)	
M	17	1	**8T-4191**	1	BOLT (M10X1.5X16-MM)	
	18	1	**8T-4223**	1	WASHER-HARD (13.5X25.5X3-MM THK)	
	19	1	**9X-8256**	1	WASHER (6.6X12X2-MM THK)	

B-USE AS REQUIRED
E-ORDER BY THE CENTIMETER
M-METRIC PART

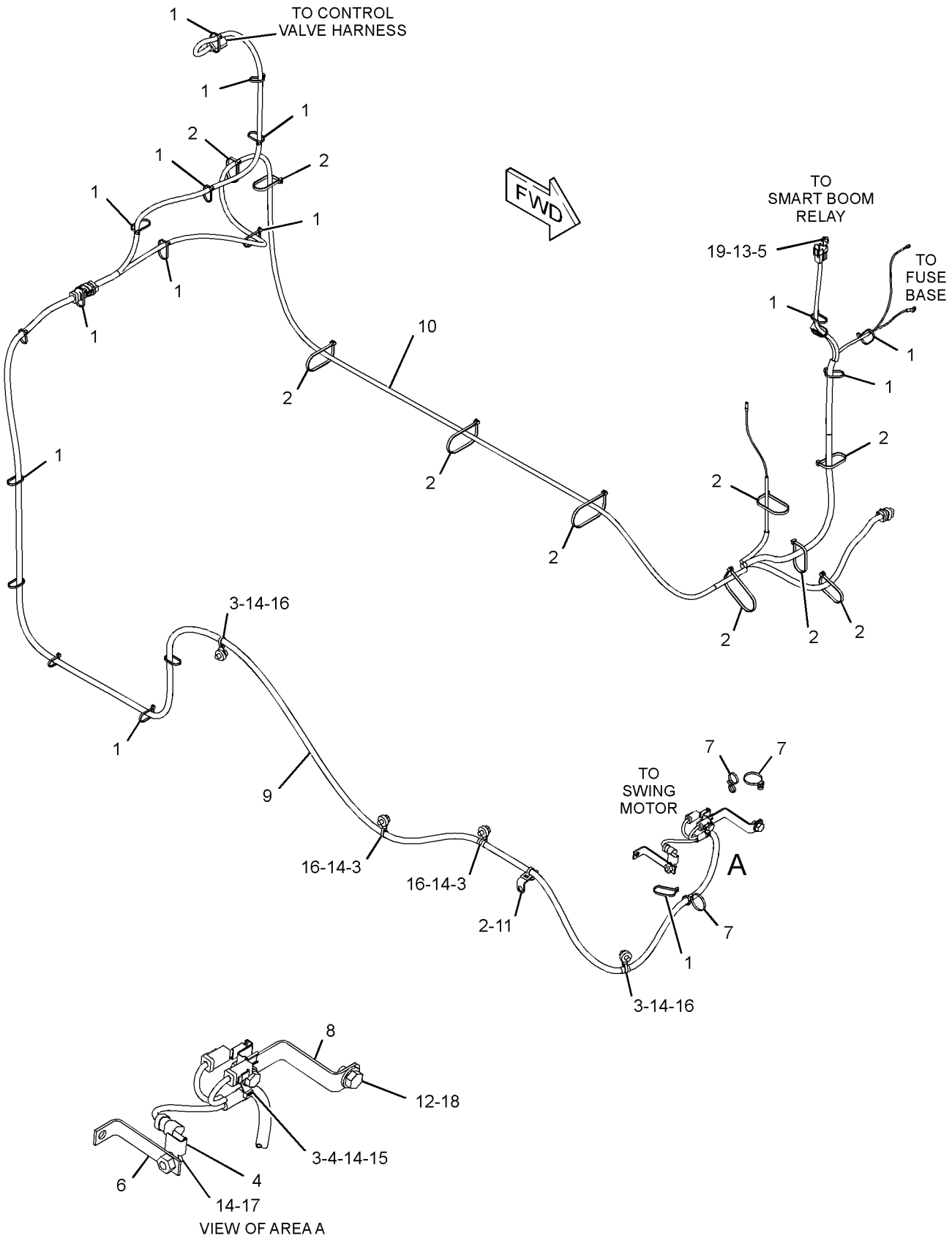

GRAPHIC #1 **<END>** g02182256

342-2933 WIRING GP-CHASSIS–COMMUNICATION RADIO

S/N: WAP1-UP
PART OF 319-9188 INSTALLATION AR-RADIO
AN ATTACHMENT

SMCS-1408 **i03910958**

NOTE	REF NO	GRAPHIC REF	PART NUMBER	QTY	PART NAME 1 2 3 4 5 6 (PRODUCT LEVEL)	SEE PAGE
	1	1	**3S-2093**	11	STRAP-CABLE	
	2	1	**7K-1181**	6	STRAP-CABLE	
	3	1	**306-8640**	2	CABLE AS	
	4	1	**4P-7581**	1	CLIP	
	5	1	**8T-4121**	1	WASHER-HARD (11X21X2.5-MM THK)	
M	6	1	**8T-4191**	1	BOLT (M10X1.5X16-MM)	

M-METRIC PART

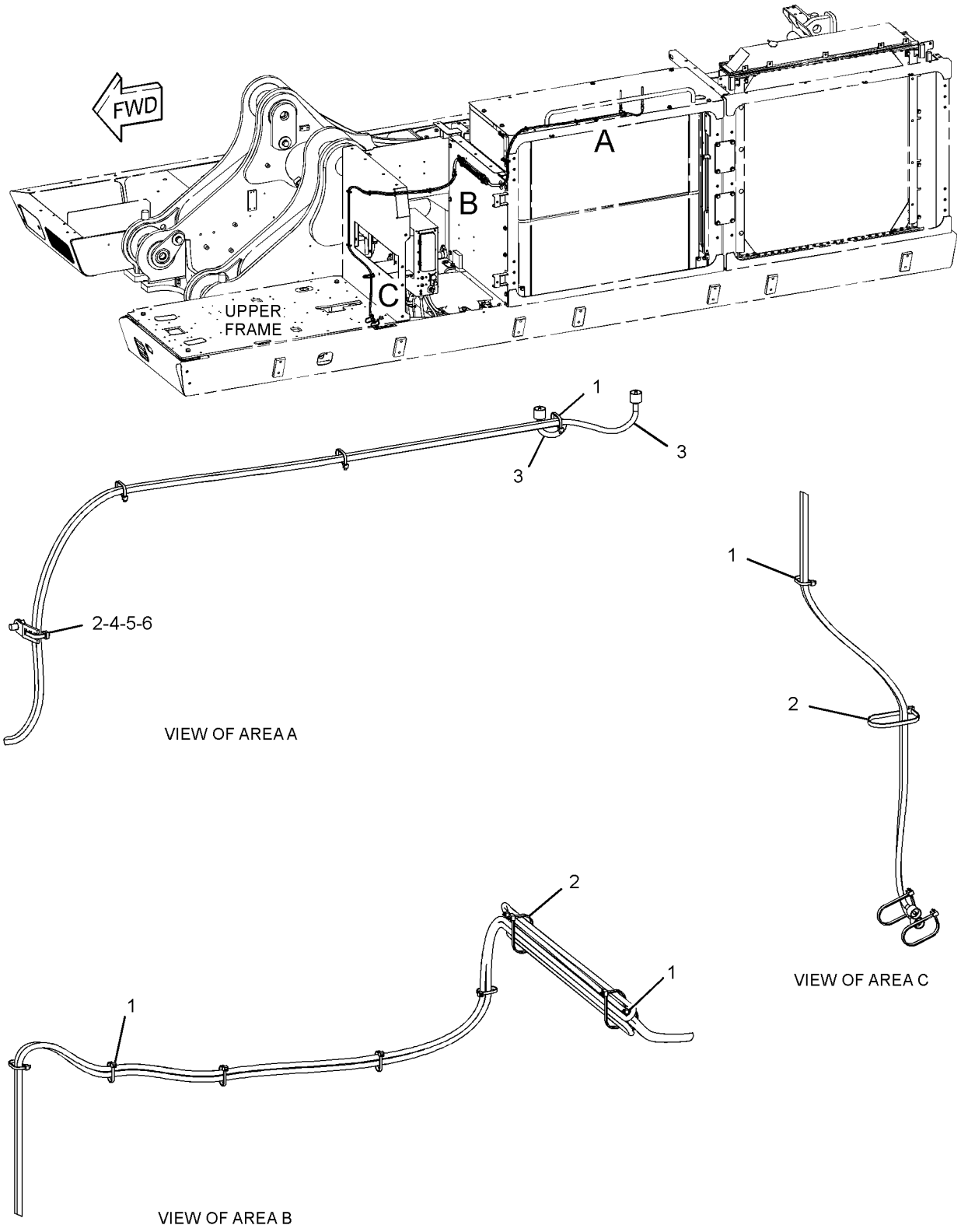

GRAPHIC #1 **<END>** g02175672

299-3012 WIRING GP-COMMUNICATION—PRODUCT LINK 321SR

S/N: WAP1-UP

PART OF 303-2647 INSTALLATION AR-COMMUNICATION

AN ATTACHMENT

SMCS-1408 **i03910020**

NOTE	REF NO	GRAPHIC REF	PART NUMBER	QTY	PART NAME 1 2 3 4 5 6 (PRODUCT LEVEL)	SEE PAGE
	1	1	**7K-1181**	9	STRAP-CABLE	
	2	1	**9X-3495**	1	CLIP AS	
	3	1	**111-4837**	1	CLIP	
	4	1	**299-3050**	1	HARNESS AS-CONTROL (PRODUCT LINK)	
		1	**8T-8729**	1	PIN-CONNECTOR (16-GA TO 18-GA)	
		1	**3S-2093**	3	STRAP-CABLE	
		1	**8T-8731**	1	PLUG-CONNECTOR (3-PIN)	
		1	**8T-8732**	1	RECEPTACLE-CONNECTOR (3-PIN)	
		1	**8T-8737**	62	PLUG-SEAL	
		1	**9W-0852**	1	PIN-CONNECTOR (14-GA TO 16-GA)	
E		1	**125-7874**		TUBE-HEAT SHRINK (5.72-MM DIA) (15-CM)	
E		1	**125-7875**		TUBE-HEAT SHRINK (7.44-MM DIA) (5-CM)	
		1	**9X-3402**	23	SOCKET-CONNECTOR (16-GA TO 18-GA)	
		1	**126-1774**	1	COVER-CONNECTOR	
		1	**2L-8077**	1	TERMINAL-RING (14-GA TO 16-GA, 1/4-IN SCREW)	
		1	**9X-3401**	7	PIN-CONNECTOR (16-GA TO 18-GA)	
		1	**155-2255**	1	KIT-CONNECTING PLUG (12-PIN)	
					(INCLUDES PLUG AS, WEDGE & INTERFACE SEAL)	
		1	**160-7690**	1	PLUG AS-CONNECTOR (70-PIN)	
		1	**159-9322**	1	SEAL-O-RING	
		1	**243-4508**	1	RECEPTACLE AS-CONNECTOR (6-PIN)	
	5	1	**132-5789**	1	CLIP	
	6	1	**8T-4121**	2	WASHER-HARD (11X21X2.5-MM THK)	
M	7	1	**8T-4137**	2	BOLT (M10X1.5X20-MM)	

E-ORDER BY THE CENTIMETER
M-METRIC PART

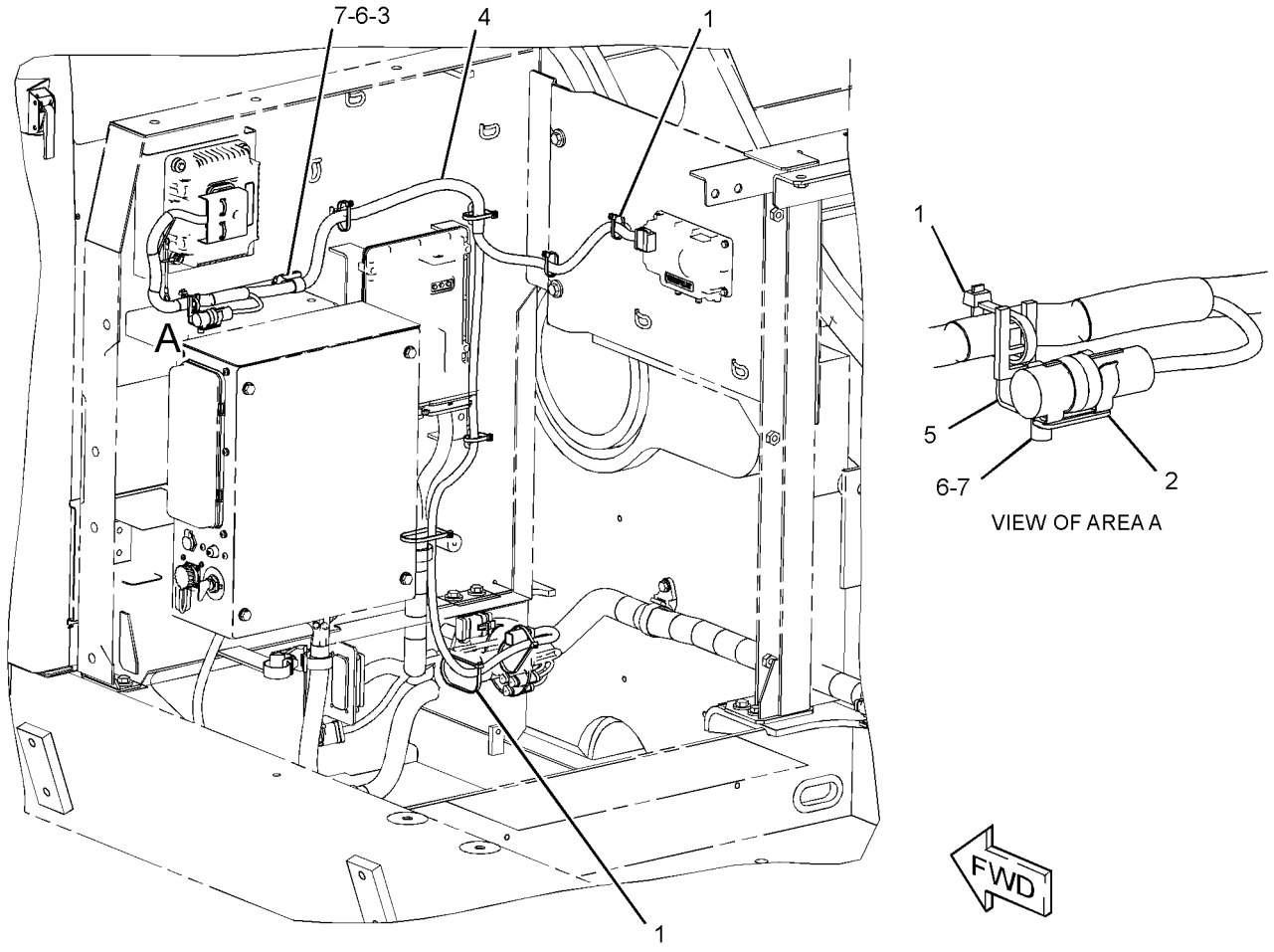

GRAPHIC #1 **<END>** g02182134

250-0103 WIRING GP-CONSOLE–RH

S/N: WAP1-UP
PART OF 297-0421 VALVE AR-BOOM LOWERING CONTROL
AN ATTACHMENT

SMCS-1408 **i02118337**

NOTE	REF NO	GRAPHIC REF	PART NUMBER	QTY	PART NAME 1 2 3 4 5 6 (PRODUCT LEVEL)	SEE PAGE
	1	1	**250-0091**	1	HARNESS AS-OPERATOR CONTROLS	
		1	**102-8802**	1	KIT-RECEPTACLE (2-PIN)	
					(INCLUDES RECEPTACLE AS & WEDGE)	
		1	**8T-8737**	2	PLUG-SEAL	
		1	**239-7352**	1	PLUG AS-CONNECTOR (6-PIN)	
		1	**247-2693**	1	RECEPTACLE AS-CONNECTOR (6-PIN)	
	2	1	**3S-2093**	4	STRAP-CABLE	

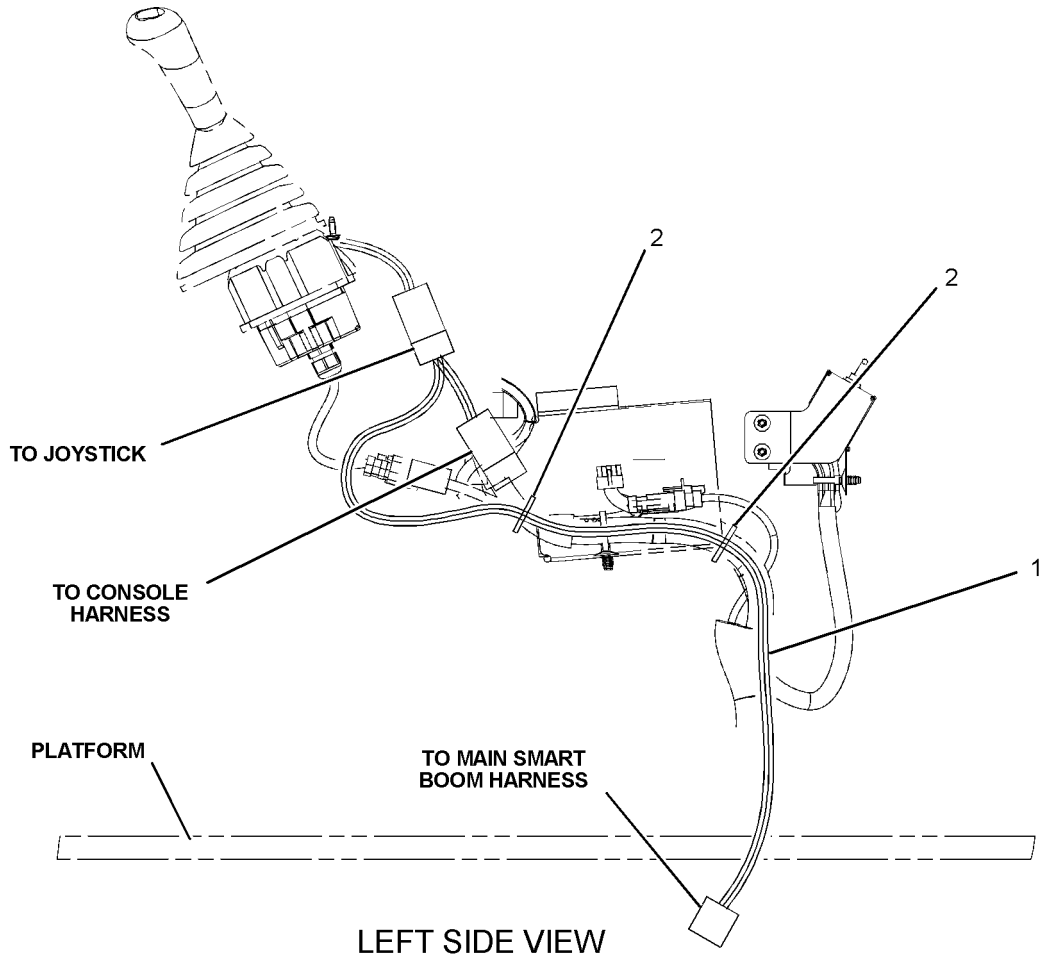

LEFT SIDE VIEW

GRAPHIC #1 **<END>** g01087340

299-2754 WIRING GP-CONSOLE–LH

S/N: WAP1-UP

PART OF 342-2887 WIRING GP-CONSOLE

SMCS-1408 **i03656513**

NOTE	REF NO	GRAPHIC REF	PART NUMBER	QTY	PART NAME 1 2 3 4 5 6 (PRODUCT LEVEL)	SEE PAGE
	1	1	**3S-2093**	2	STRAP-CABLE	
	2	1	**7I-2673**	1	STRAP-CABLE	
	3	1	**7K-1181**	7	STRAP-CABLE	
	4	1	**163-6711**	1	SWITCH AS-TOGGLE (MANUAL ENGINE SPEED CONTROL)	
	5	1	**163-6795**	3	STRAP-CABLE	
	6	1	**176-1913**	1	GUARD	
	7	1	**234-1112**	1	BRACKET	
	8	1	**234-1155**	1	SWITCH AS-TOGGLE (BACKUP BOOM)	
	9	1	**238-1641**	1	BRACKET AS	
	10	1	**251-0605**	1	BRACKET	
	11	1	**306-8534**	1	HARNESS AS-CONSOLE	
		1	**8T-8729**	3	PIN-CONNECTOR (16-GA TO 18-GA)	
		1	**8T-8730**	4	SOCKET-CONNECTOR (16-GA TO 18-GA)	
		1	**3S-2093**	7	STRAP-CABLE	
		1	**7Y-3963**	2	TERMINAL-BULLET (FEMALE)	
		1	**8T-8737**	13	PLUG-SEAL	
		1	**9W-0852**	3	PIN-CONNECTOR (14-GA TO 16-GA)	
		1	**9W-0844**	8	SOCKET-CONNECTOR (14-GA)	
BE		1	**125-7874**		TUBE-HEAT SHRINK (5.72-MM DIA)	
BE		1	**128-7875**		PLATE & FILM GP	
		1	**9X-3402**	11	SOCKET-CONNECTOR (16-GA TO 18-GA)	
		1	**2L-8074**	8	TERMINAL-RING (14-GA TO 16-GA, NO. 6 SCREW)	
		1	**9X-3401**	6	PIN-CONNECTOR (16-GA TO 18-GA)	
		1	**155-2260**	1	KIT-CONNECTING PLUG (3-PIN)	
					(INCLUDES PLUG KIT, WEDGE & INTERFACE SEAL)	
		1	**230-4009**	1	PLUG AS-CONNECTOR (12-PIN)	
		1	**264-7034**	1	SEAL-CONNECTOR	
		1	**230-4011**	1	PLUG AS-CONNECTOR (2-PIN)	
		1	**264-7029**	1	SEAL-CONNECTOR	
		1	**230-5010**	1	PLUG AS-CONNECTOR (6-PIN)	
		1	**264-7032**	1	SEAL-CONNECTOR	
		1	**239-7352**	1	PLUG AS-CONNECTOR (6-PIN)	
		1	**264-7032**	1	SEAL-CONNECTOR	
		1	**243-4505**	1	RECEPTACLE AS-CONNECTOR (2-PIN)	
		1	**243-4510**	1	RECEPTACLE AS-CONNECTOR (12-PIN)	
		1	**247-2693**	1	RECEPTACLE AS-CONNECTOR (6-PIN)	
M	12	1	**9X-2042**	3	SCREW-TRUSS HEAD (M6X1X12-MM)	
M	13	1	**9X-2044**	2	SCREW-TRUSS HEAD (M6X1X16-MM)	
	14	1	**9X-8256**	1	WASHER (6.6X12X2-MM THK)	

B-USE AS REQUIRED
E-ORDER BY THE CENTIMETER
M-METRIC PART

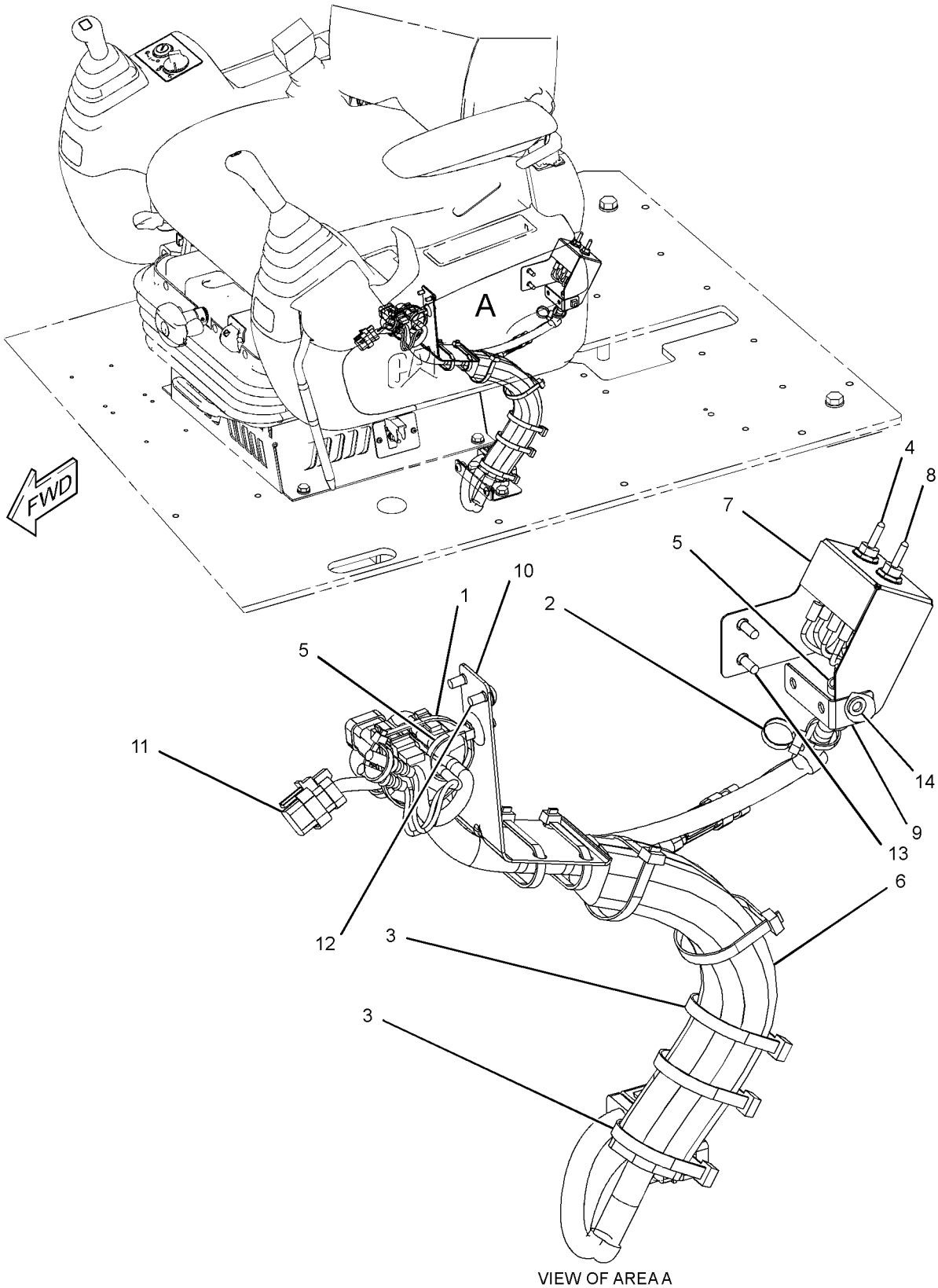

VIEW OF AREA A

GRAPHIC #1 **<END>** g02121776

342-2887 WIRING GP-CONSOLE

S/N: WAP1-UP

PART OF 342-3451 OPERATOR AR

SMCS-1408 **i03656509**

NOTE	PART NUMBER	QTY	PART NAME 1 2 3 4 5 6 (PRODUCT LEVEL)	SEE PAGE
Y	*299-2754*	1	WIRING GP-CONSOLE (LH)	298
Y	*342-2888*	1	WIRING GP-CONSOLE (RH)	301

Y-SEPARATE ILLUSTRATION

<END>

342-2888 WIRING GP-CONSOLE—RH

S/N: WAP1-UP

PART OF 342-2887 WIRING GP-CONSOLE

SMCS-1408 **i03900375**

NOTE	REF NO	GRAPHIC REF	PART NUMBER	QTY	PART NAME 1 2 3 4 5 6 (PRODUCT LEVEL)	SEE PAGE
	1	1	**3S-2093**	3	STRAP-CABLE	
	2	1	**7K-1181**	2	STRAP-CABLE	
	3	1	**163-6711**	2	SWITCH AS-TOGGLE (MANUAL ENGINE SPEED CONTROL)	
	4	1	**163-6795**	2	STRAP-CABLE	
	5	1	**251-0602**	1	BRACKET	
	6	1	**251-0606**	1	BRACKET AS	
	7	1	**283-3074**	1	SWITCH AS-TOGGLE (BACKUP GOVERNOR)	
	8	1	**342-2889**	1	HARNESS AS-CONSOLE	
		1	**8T-8729**	2	PIN-CONNECTOR (16-GA TO 18-GA)	
		1	**8T-8730**	8	SOCKET-CONNECTOR (16-GA TO 18-GA)	
		1	**3S-2093**	9	STRAP-CABLE	
		1	**7Y-3963**	2	TERMINAL-BULLET (FEMALE)	
		1	**8T-8737**	11	PLUG-SEAL	
		1	**102-7964**	1	PLUG-CONNECTOR (16-PIN)	
		1	**102-7965**	14	TERMINAL (FEMALE)	
		1	**9W-0852**	3	PIN-CONNECTOR (14-GA TO 16-GA)	
		1	**9W-0844**	6	SOCKET-CONNECTOR (14-GA)	
		1	**125-4841**	1	WEDGE-PLUG LOCK (21-PIN)	
BE		1	**125-7874**		TUBE-HEAT SHRINK (5.72-MM DIA)	
BE		1	**125-7875**		TUBE-HEAT SHRINK (7.44-MM DIA)	
		1	**9X-3402**	17	SOCKET-CONNECTOR (16-GA TO 18-GA)	
		1	**2L-8064**	1	TERMINAL-RING (10-GA TO 12-GA, NO. 6 SCREW)	
		1	**2L-8074**	2	TERMINAL-RING (14-GA TO 16-GA, NO. 6 SCREW)	
		1	**5P-2766**	12	TERMINAL-RING (18-GA TO 22-GA, NO. 6 SCREW)	
		1	**9X-3401**	15	PIN-CONNECTOR (16-GA TO 18-GA)	
		1	**230-4009**	1	PLUG AS-CONNECTOR (12-PIN)	
		1	**264-7034**	1	SEAL-CONNECTOR	
		1	**230-4011**	1	PLUG AS-CONNECTOR (2-PIN)	
		1	**264-7029**	1	SEAL-CONNECTOR	
		1	**230-5010**	1	PLUG AS-CONNECTOR (6-PIN)	
		1	**264-7032**	1	SEAL-CONNECTOR	
		1	**231-2295**	1	PLUG AS-CONNECTOR (8-PIN)	
		1	**264-7033**	1	SEAL-CONNECTOR	
		1	**238-2363**	5	TERMINAL (FEMALE)	
		1	**239-7352**	1	PLUG AS-CONNECTOR (6-PIN)	
		1	**264-7032**	1	SEAL-CONNECTOR	
		1	**243-4505**	1	RECEPTACLE AS-CONNECTOR (2-PIN)	
		1	**243-4509**	1	RECEPTACLE AS-CONNECTOR (8-PIN)	
		1	**243-4510**	1	RECEPTACLE AS-CONNECTOR (12-PIN)	
		1	**247-2693**	1	RECEPTACLE AS-CONNECTOR (6-PIN)	
M	9	1	**9X-2042**	5	SCREW-TRUSS HEAD (M6X1X12-MM)	
E	10	1	**8C-5063**		CONDUIT-FLEXIBLE (10-CM)	

B-USE AS REQUIRED
E-ORDER BY THE CENTIMETER
M-METRIC PART

342-2888 **WIRING GP-CONSOLE** *(contd.)* **i03900375**

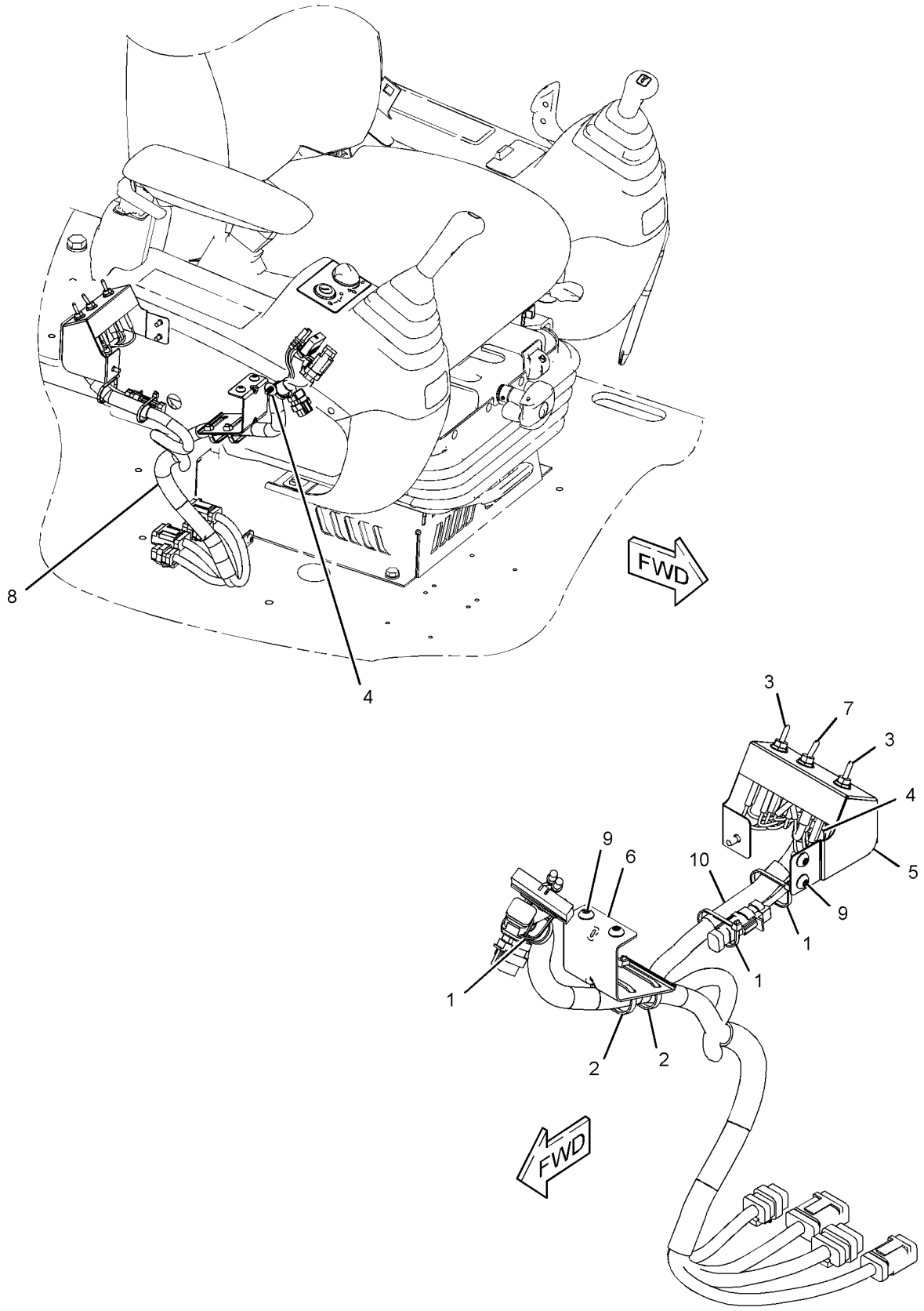

GRAPHIC #1 **<END>** g02145523

231-1767 WIRING GP-CONVERTER

S/N: WAP1-UP
12-VOLT, 7-AMPERE (X2) POWER SUPPLY
AN ATTACHMENT

SMCS-1421 **i02672607**

NOTE	REF NO	GRAPHIC REF	PART NUMBER	QTY	PART NAME 1 2 3 4 5 6 (PRODUCT LEVEL)	SEE PAGE
	1	1	**121-0987**	2	SOCKET-AUXILIARY POWER (12-VOLT, 7-AMPERE)	
C	2	1	**283-2783**	2	CONVERTER-POWER (24-VOLT TO 12-VOLT)	
M	3	1	**5C-9553**	8	BOLT (M6X1X16-MM)	
	4	1	**9X-8256**	8	WASHER (6.6X12X2-MM THK)	

C-CHANGE FROM PREVIOUS TYPE
M-METRIC PART

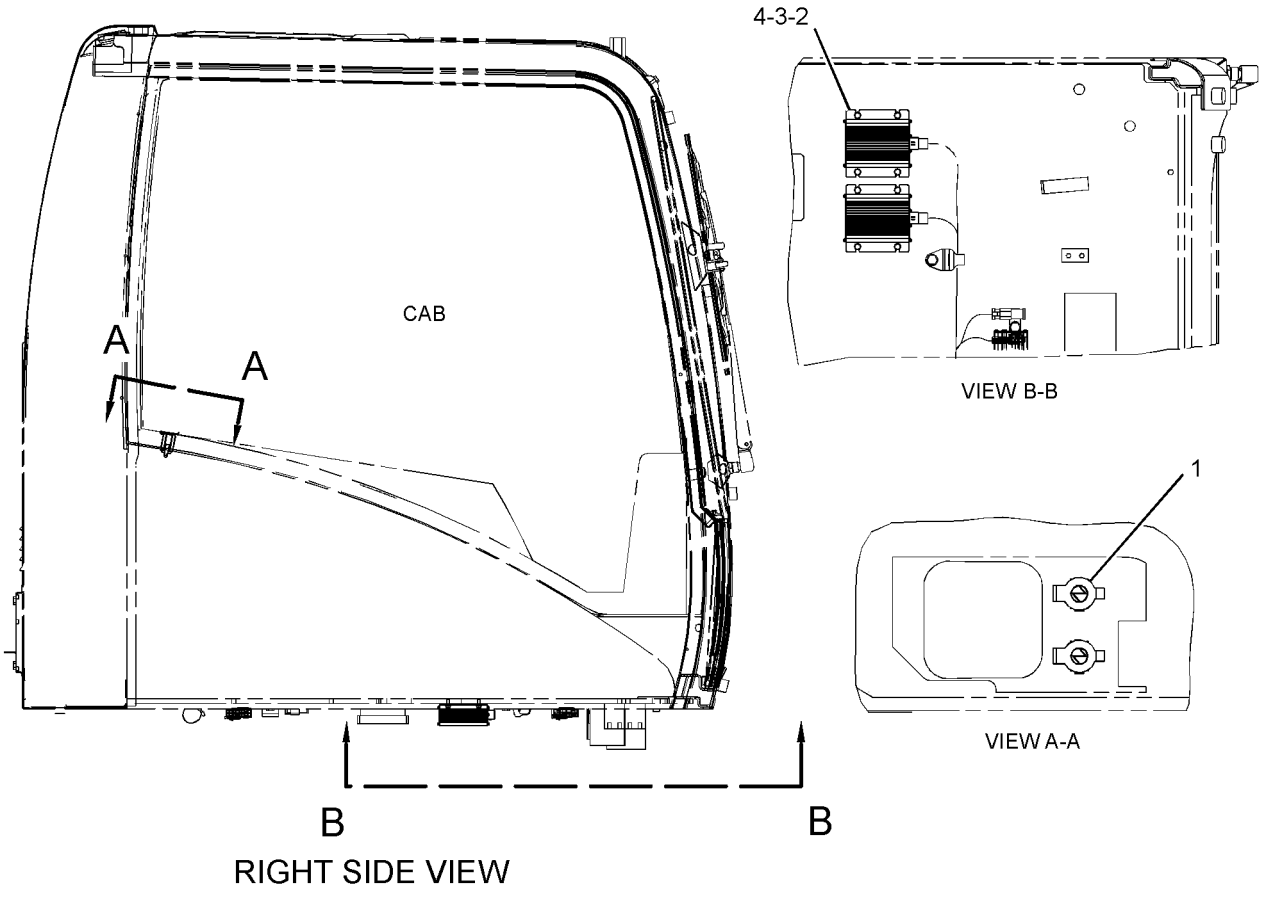

GRAPHIC #1 **<END>** g01355574

ELECTRICAL AND STARTING SYSTEM

299-2636 WIRING GP-CONVERTER—COMMUNICATION RADIO

S/N: WAP1-UP
PART OF 319-9188 INSTALLATION AR-RADIO
AN ATTACHMENT

SMCS-1421 **i03877620**

NOTE	REF NO	GRAPHIC REF	PART NUMBER	QTY	PART NAME 1 2 3 4 5 6 (PRODUCT LEVEL)	SEE PAGE
	1	1	**3S-2093**	3	STRAP-CABLE	
	2	1	**7K-1181**	11	STRAP-CABLE	
	3	1	**306-8641**	2	CABLE AS	
	4	1	**342-2936**	1	HARNESS AS-CAB	
		1	**102-8804**	2	KIT-RECEPTACLE (4-PIN)	
					(EACH INCLUDES RECEPTACLE AS & WEDGE)	
		1	**3S-2093**	13	STRAP-CABLE	
		1	**8T-8737**	12	PLUG-SEAL	
		1	**9W-0852**	2	PIN-CONNECTOR (14-GA TO 16-GA)	
		1	**9W-0844**	10	SOCKET-CONNECTOR (14-GA)	
BE		1	**125-7875**		TUBE-HEAT SHRINK (7.44-MM DIA)	
		1	**2L-8077**	1	TERMINAL-RING (14-GA TO 16-GA, 1/4-IN SCREW)	
		1	**155-2271**	2	KIT-CONNECTING PLUG (4-PIN)	
					(EACH INCLUDES PLUG AS, WEDGE & INTERFACE SEAL)	
		1	**230-5010**	1	PLUG AS-CONNECTOR (6-PIN)	
		1	**264-7032**	1	SEAL-CONNECTOR	
		1	**243-4505**	1	RECEPTACLE AS-CONNECTOR (2-PIN)	
	5	1	**283-2783**	1	CONVERTER-POWER (24-VOLT TO 12-VOLT)	
M	6	1	**5C-9553**	4	BOLT (M6X1X16-MM)	
	7	1	**9X-8256**	4	WASHER (6.6X12X2-MM THK)	
	8	1	**342-2937**	1	HARNESS AS-CAB	
		1	**7Y-3962**	2	TERMINAL-BULLET (MALE)	
		1	**9W-0844**	2	SOCKET-CONNECTOR (14-GA)	
		1	**230-4011**	1	PLUG AS-CONNECTOR (2-PIN)	
		1	**264-7029**	1	SEAL-CONNECTOR	

B-USE AS REQUIRED
E-ORDER BY THE CENTIMETER
M-METRIC PART

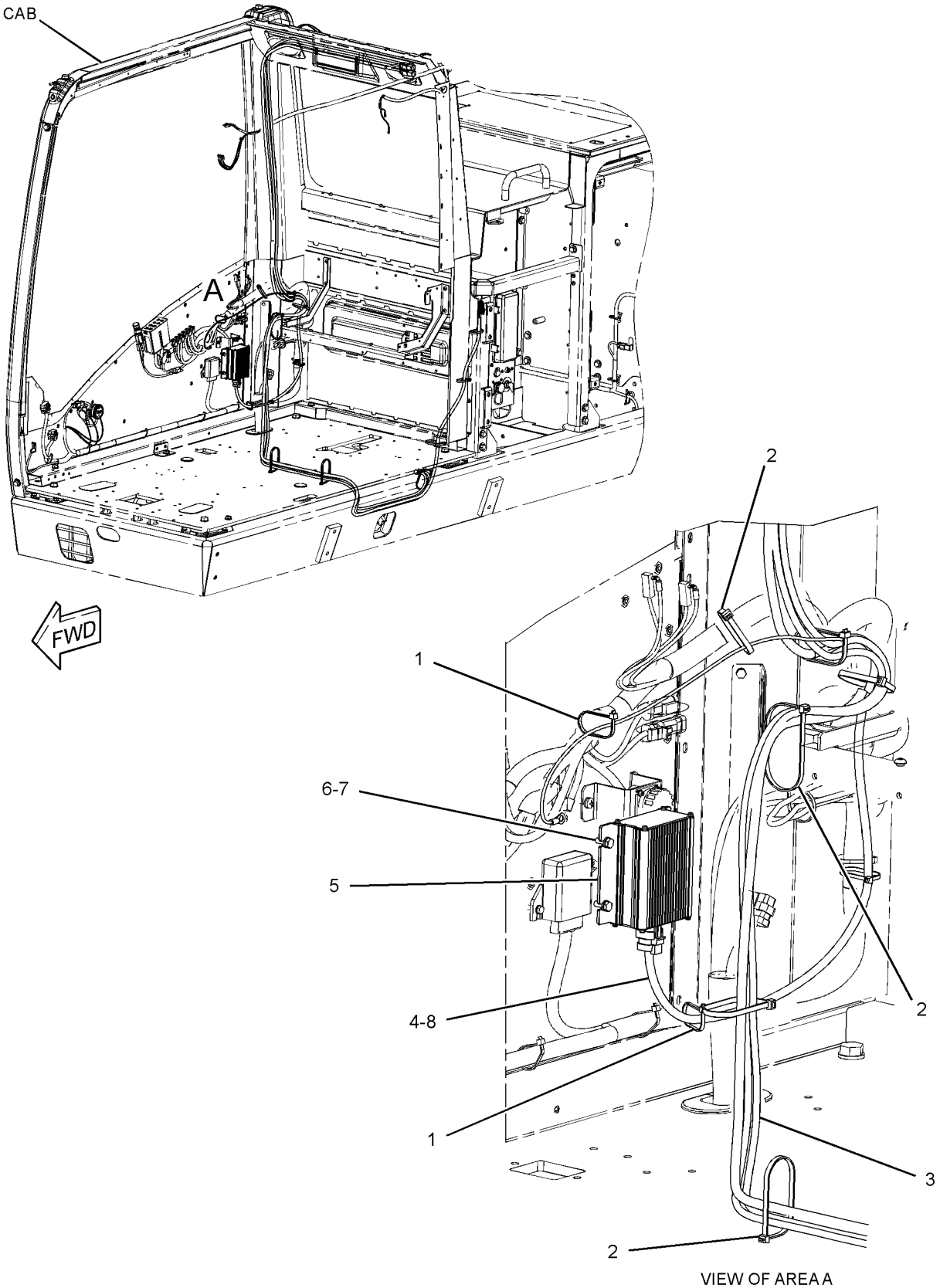

VIEW OF AREA A

GRAPHIC #1 **<END>** g02125053

ELECTRICAL AND STARTING SYSTEM

350-8247 WIRING GP-CONVERTER

S/N: WAP1-UP
12-VOLT, 10- AMPERE POWER SUPPLY
PART OF 340-4002, 340-4003, 340-4004 OPTION AR-CAB
AN ATTACHMENT

SMCS-1421 **i03832527**

NOTE	REF NO	GRAPHIC REF	PART NUMBER	QTY	PART NAME 1 2 3 4 5 6 (PRODUCT LEVEL)	SEE PAGE
	1	1	**324-5770**	1	POWER SUPPLY (24-VOLT TO 12-VOLT)	
	2	1	**324-5771**	2	SOCKET-AUXILIARY POWER (12-VOLT)	
M	3	1	**5C-9553**	4	BOLT (M6X1X16-MM)	
	4	1	**9X-8256**	4	WASHER (6.6X12X2-MM THK)	

M-METRIC PART

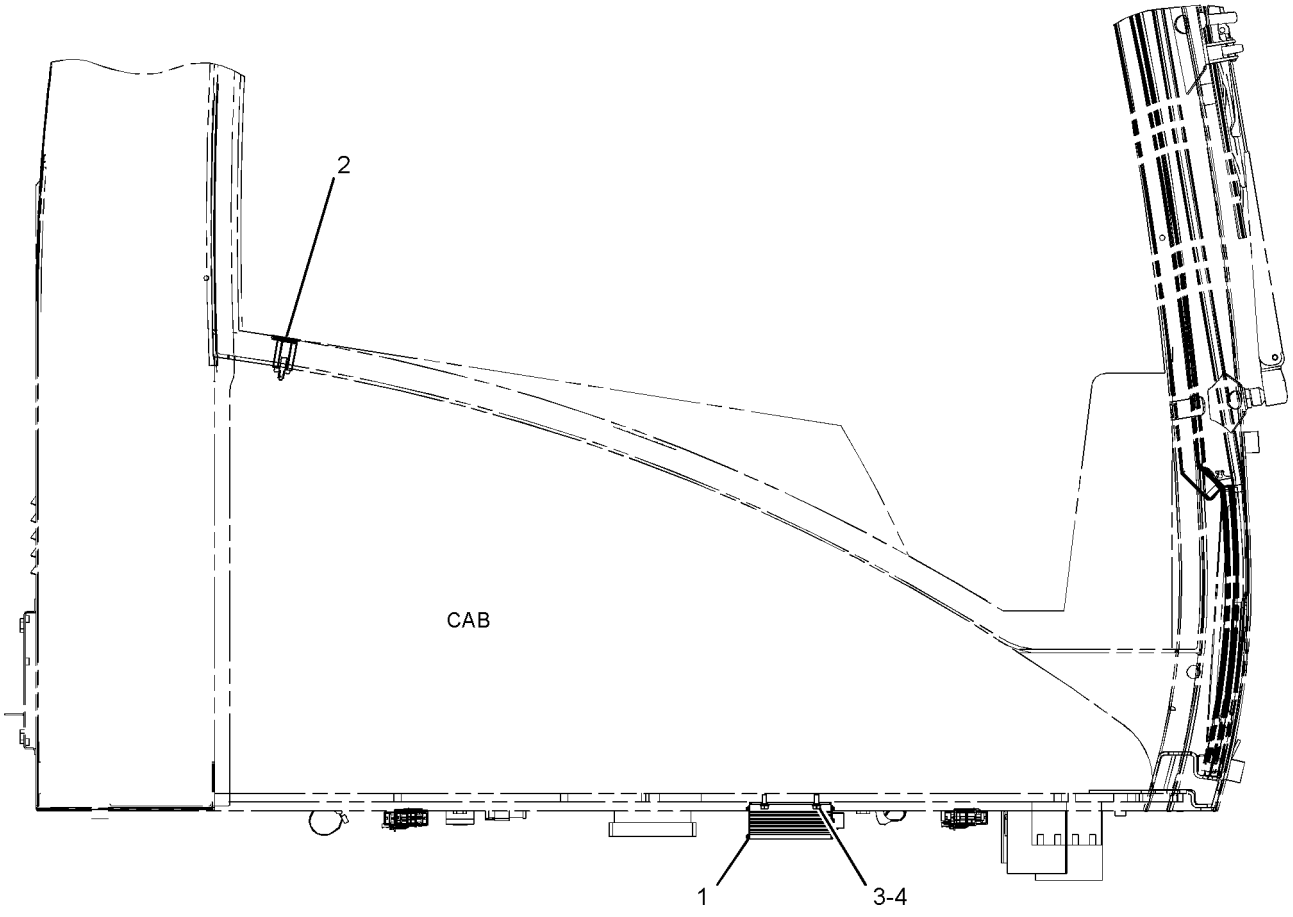

RIGHT SIDE VIEW

GRAPHIC #1 **<END>** g02132883

238-1548 WIRING GP-COUNTERWEIGHT–

COUNTERWEIGHT REMOVAL

S/N: WAP1-UP

PART OF 294-1295 COUNTERWEIGHT AR

AN ATTACHMENT

SMCS-7056 **i02951746**

NOTE	REF NO	GRAPHIC REF	PART NUMBER	QTY	PART NAME 1 2 3 4 5 6 (PRODUCT LEVEL)	SEE PAGE
	1	1	**3S-2093**	5	STRAP-CABLE	
	2	1	**7K-1181**	1	STRAP-CABLE	
	3	1	**111-4836**	2	CLIP	
	4	1	**116-0118**	1	CLIP	
	5	1	**132-1854**	1	BRACKET	
	6	1	**238-1549**	1	HARNESS AS-CHASSIS	
		1	**155-2270**	1	KIT-CONNECTING PLUG (2-PIN)	
					(INCLUDES PLUG AS, WEDGE & INTERFACE SEAL)	
		1	**243-4506**	1	RECEPTACLE AS-CONNECTOR (3-PIN)	
	7	1	**114-0421**	1	SWITCH AS-TOGGLE (COUNTERWEIGHT REMOVAL)	
		1	**3L-8187**	12	LOCKWASHER	
		1	**6T-3631**	2	NUT-HEX (15/32-32-THD)	
		1	**6T-3632**	1	LOCKWASHER	
		1	**6T-3633**	1	RING-LOCKING	
		1	**6V-8374**	12	SCREW-MACHINE (6-32X0.25-IN)	
M	8	1	**6V-9673**	2	SCREW-MACHINE (M5X0.8X12-MM)	
	9	1	**8T-0328**	2	WASHER-HARD (5.5X10X1-MM THK)	
	10	1	**8T-4121**	2	WASHER-HARD (11X21X2.5-MM THK)	
M	11	1	**8T-4137**	2	BOLT (M10X1.5X20-MM)	

M-METRIC PART

238-1548 **WIRING GP-COUNTERWEIGHT** *(contd.)* **i02951746**

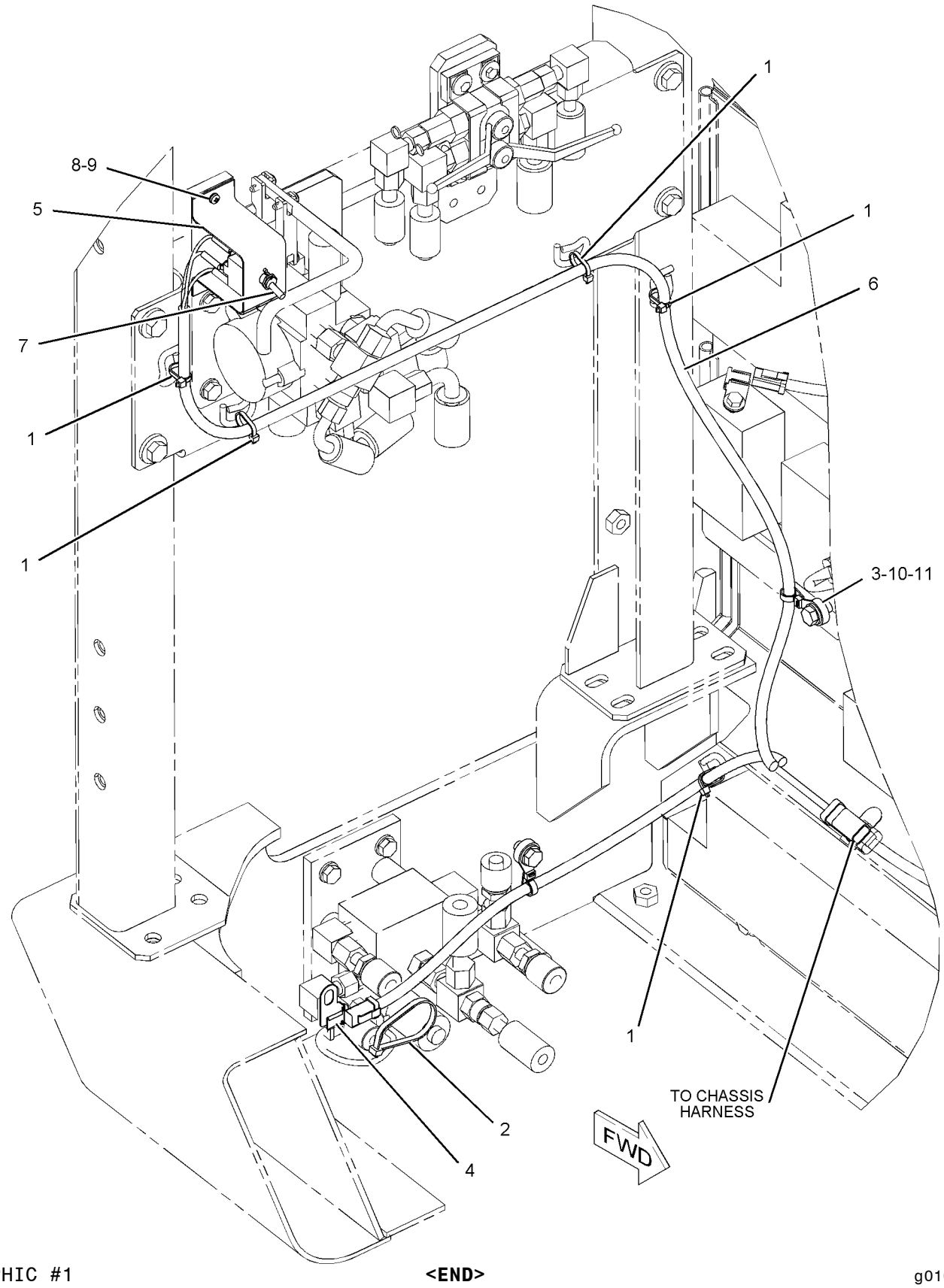

GRAPHIC #1 **<END>** g01086175

306-8555 WIRING GP-ELECTRONIC CONTROL–

FOOT SWITCH, LH
S/N: WAP1-UP
PART OF 310-0001 CONTROL AR-AUXILIARY
AN ATTACHMENT

SMCS-1408 **i03790451**

NOTE	REF NO	GRAPHIC REF	PART NUMBER	QTY	PART NAME 1 2 3 4 5 6 (PRODUCT LEVEL)	SEE PAGE
	1	1	**116-0118**	1	CLIP	
M	2	1	**7X-2621**	1	BOLT (M10X1.5X12-MM)	
	3	1	**8T-4121**	1	WASHER-HARD (11X21X2.5-MM THK)	

M-METRIC PART

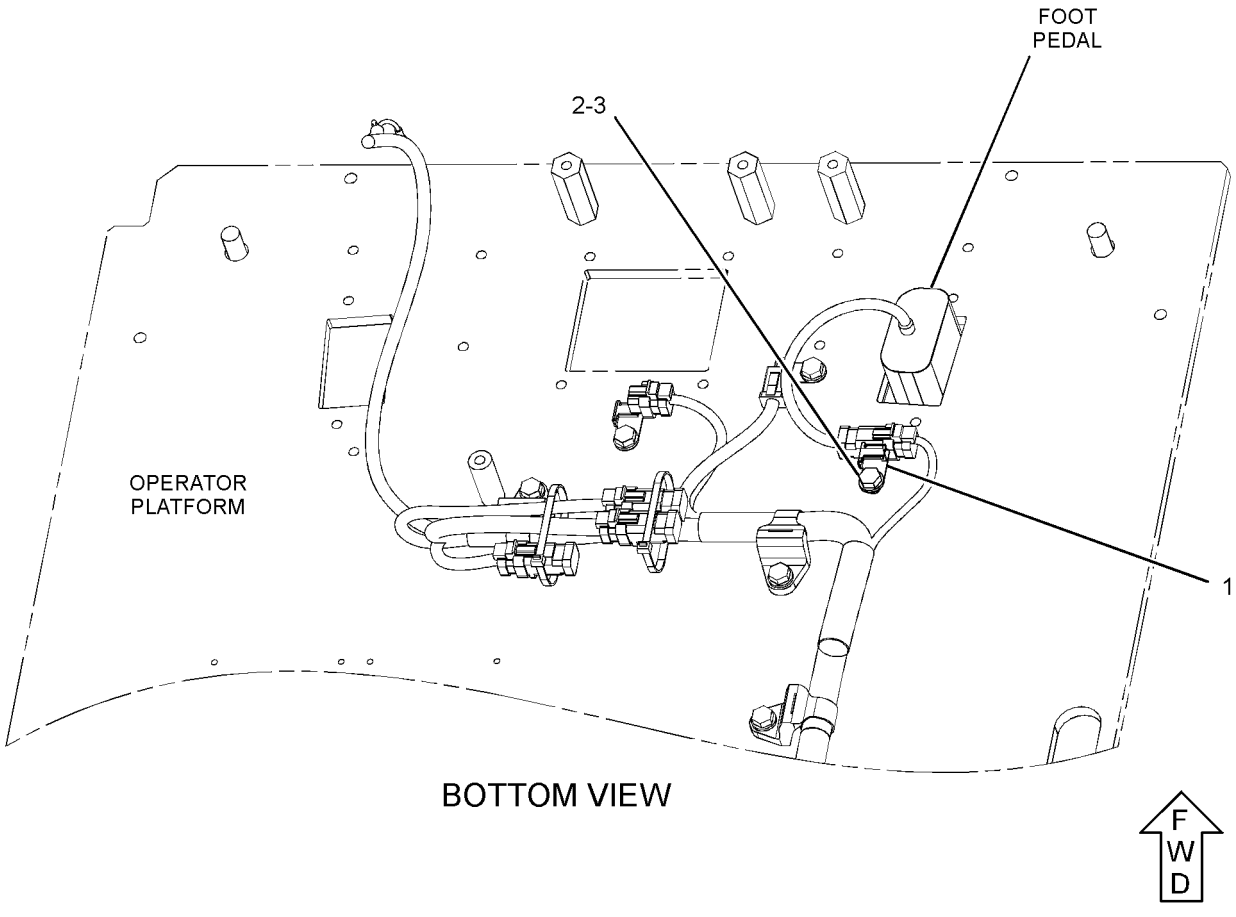

GRAPHIC #1 **<END>** g02061356

356-1797 WIRING GP-ELECTRONIC CONTROL

S/N: RHX9087-UP

PART OF 286-9798 ENGINE AR-COMPLETE

SMCS-1408 **i04015846**

NOTE	REF NO	GRAPHIC REF	PART NUMBER	QTY	PART NAME 1 2 3 4 5 6 (PRODUCT LEVEL)	SEE PAGE
	1	1	**3S-2093**	22	STRAP-CABLE	
	2	1	**101-3120**	1	SPACER (10.5X25X20-MM THK)	
	3	1	**354-0049**	1	HARNESS AS-ENGINE	
		1	**102-8802**	1	KIT-RECEPTACLE (2-PIN)	
					(INCLUDES RECEPTACLE AS & WEDGE)	
		1	**3S-2093**	1	STRAP-CABLE	
		1	**8T-8737**	93	PLUG-SEAL	
E		1	**125-7875**		TUBE-HEAT SHRINK (7.44-MM DIA) (15-CM)	
		1	**9X-3402**	1	SOCKET-CONNECTOR (16-GA TO 18-GA)	
					—OR—	
		1	**126-1768**	1	SOCKET-CONNECTOR (14-GA)	
		1	**155-2255**	1	KIT-CONNECTING PLUG (12-PIN)	
		1	**155-2270**	1	KIT-CONNECTING PLUG (2-PIN)	
		1	**155-2265**	1	KIT-CONNECTING PLUG (8-PIN)	
					(EACH INCLUDES PLUG AS, WEDGE, & INTERFACE SEAL)	
		1	**211-6807**	1	COVER (CONNECTOR)	
		1	**230-4011**	3	PLUG AS-CONNECTOR (2-PIN)	
					(EACH INCLUDES)	
		1	**264-7029**	1	SEAL-CONNECTOR	
		1	**230-4013**	1	PLUG AS-CONNECTOR (3-PIN)	
		1	**264-7030**	1	SEAL-CONNECTOR	
		1	**237-0227**	2	PLUG AS-CONNECTOR (3-PIN)	
					(EACH INCLUDES)	
		1	**264-7030**	1	SEAL-CONNECTOR	
		1	**264-5732**	1	PLUG AS-CONNECTOR (12O-PIN)	
		1	**288-7324**	1	SEAL-CONNECTOR	
E		1	**289-5150**		SLEEVE (9-CM)	
	4	1	**0S-0509**	1	BOLT (3/8-16X0.75-IN)	
	5	1	**0S-1571**	1	BOLT (3/8-16X1.75-IN)	
	6	1	**0S-1576**	2	BOLT (5/8-18X2-IN)	
	7	1	**104-6202**	2	CLIP	
	8	1	**132-5789**	2	CLIP	
	9	1	**1A-4273**	1	BOLT (5/8-18X1.25-IN)	
	10	1	**3B-1915**	1	BOLT (3/8-16X1.375-IN)	
	11	1	**4P-7429**	1	CLIP	
	12	1	**4P-7581**	2	CLIP	
	13	1	**4P-7582**	1	CLIP	
	14	1	**4P-8134**	8	CLIP	
	15	1	**5M-2894**	3	WASHER-HARD (10.2X18.5X2.5-MM THK)	
	16	1	**5P-8247**	3	WASHER-HARD (17X32X3.5-MM THK)	
	17	1	**8T-4223**	1	WASHER-HARD (13.5X25.5X3-MM THK)	

E-ORDER BY THE CENTIMETER

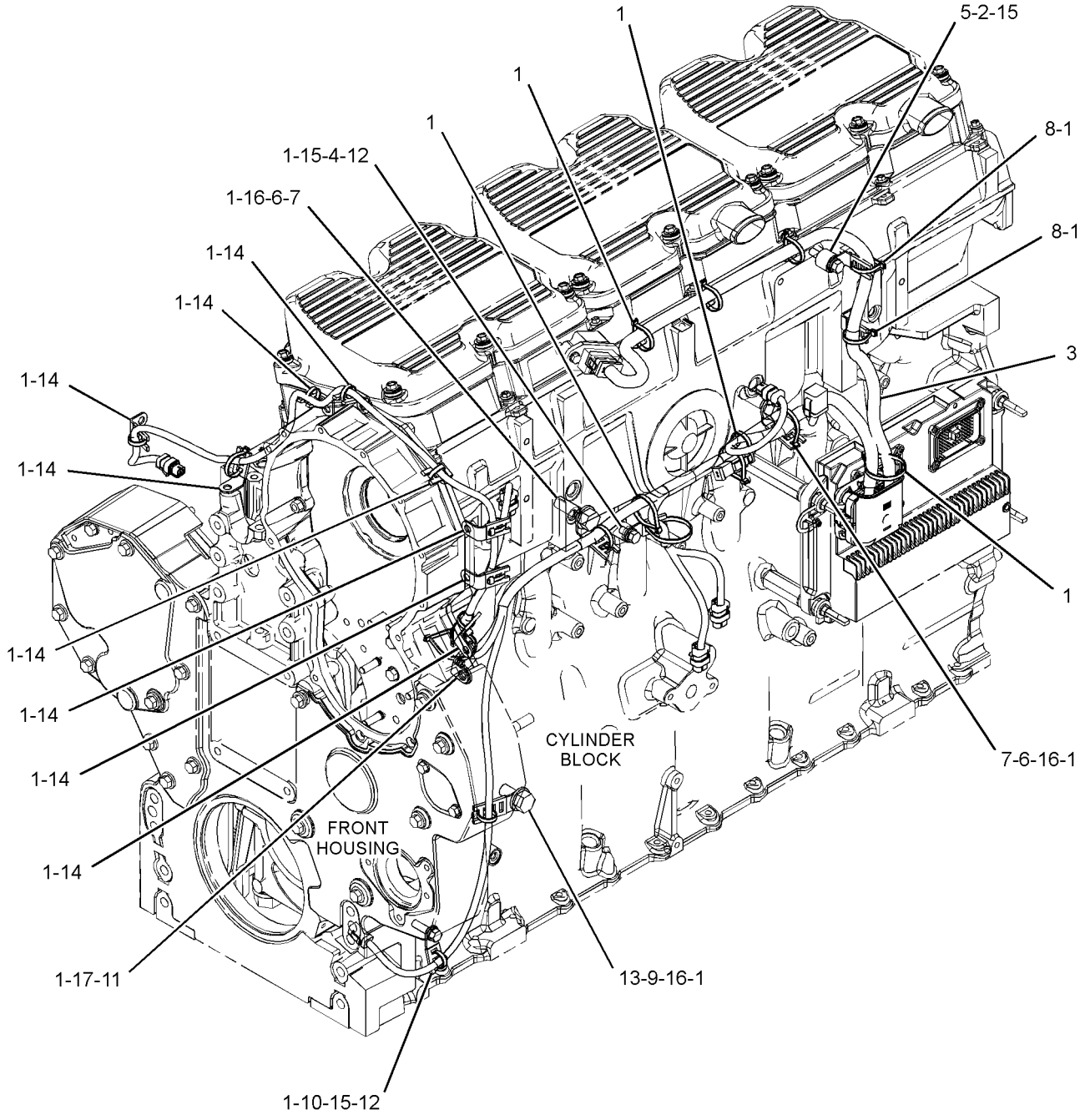

GRAPHIC #1 **<END>** g02190873

299-3017 WIRING GP-FAN–REVERSING

S/N: WAP1-UP
PART OF 319-9265 CONTROL AR-FAN
AN ATTACHMENT

SMCS-1408 **i03913225**

NOTE	REF NO	GRAPHIC REF	PART NUMBER	QTY	PART NAME 1 2 3 4 5 6 (PRODUCT LEVEL)	SEE PAGE
	1	1	**3S-2093**	5	STRAP-CABLE	
	2	1	**7I-2673**	2	STRAP-CABLE	
	3	1	**7K-1181**	2	STRAP-CABLE	
	4	1	**328-0163**	1	HARNESS AS-WIRING (REVERSIBLE FAN)	
		1	**9X-3402**	2	SOCKET-CONNECTOR (16-GA TO 18-GA)	
		1	**9X-3401**	2	PIN-CONNECTOR (16-GA TO 18-GA)	
		1	**155-2270**	1	KIT-CONNECTING PLUG (2-PIN)	
					(INCLUDES PLUG AS, WEDGE & INTERFACE SEAL)	
		1	**243-4505**	1	RECEPTACLE AS-CONNECTOR (2-PIN)	
	5	1	**4P-7429**	1	CLIP	

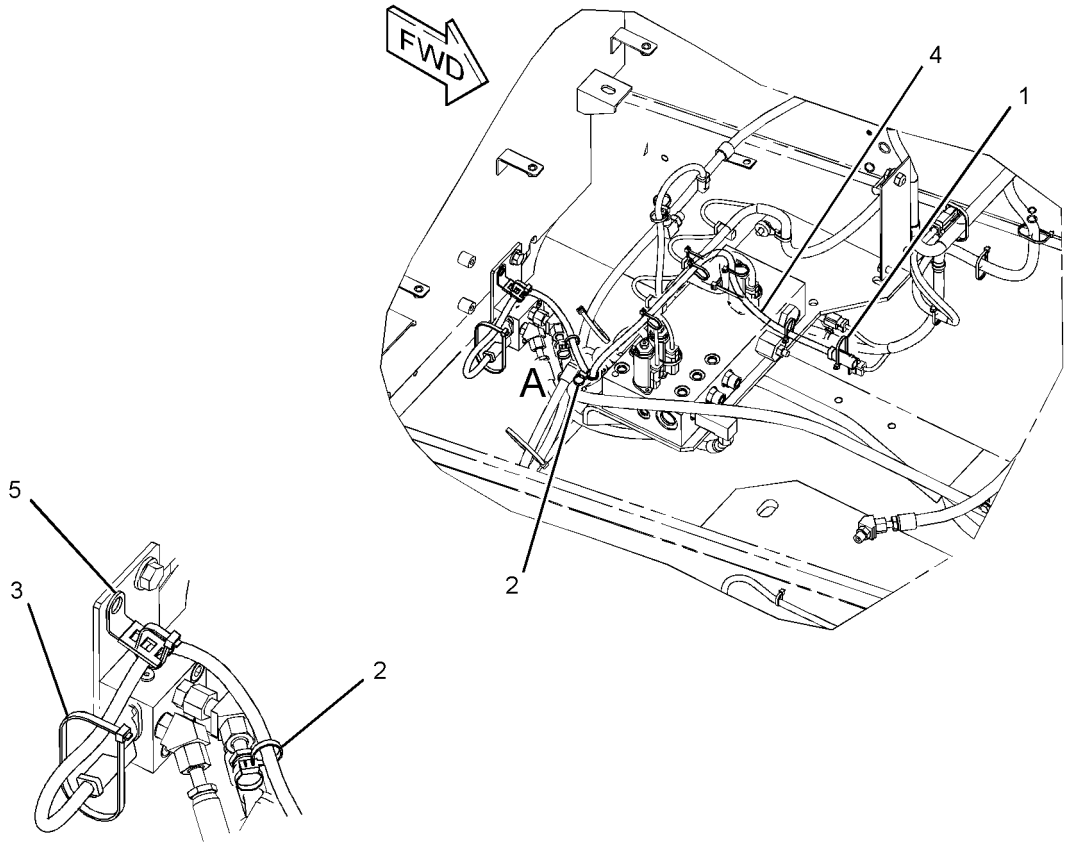

VIEW OF AREA A

GRAPHIC #1 **<END>** g02174995

299-3002 WIRING GP-GRADE CONTROL—ACCUGRADE, BOOM

S/N: WAP1-UP
PART OF 340-3996 SPECIAL AR
AN ATTACHMENT

SMCS-1408, 7220 **i03917435**

NOTE	REF NO	GRAPHIC REF	PART NUMBER	QTY	PART NAME 1 2 3 4 5 6 (PRODUCT LEVEL)	SEE PAGE
	1	1	**3S-2093**	21	STRAP-CABLE	
	2	1	**7K-1181**	4	STRAP-CABLE	
	3	1	**095-1392**	2	CLAMP-HOSE	
	4	1	**095-9785**	1	CLAMP-HOSE	
	5	1	**111-4836**	1	CLIP	
	6	1	**111-4837**	1	CLIP	
	7	1	**111-4838**	3	CLIP	
	8	1	**116-0118**	1	CLIP	
	9	1	**204-1611**	9	STRAP-CABLE	
	10	1	**336-6350**	1	HARNESS AS-FRONT	
		1	**8T-8737**	3	PLUG-SEAL	
		1	**9X-3402**	12	SOCKET-CONNECTOR (16-GA TO 18-GA)	
		1	**9X-3401**	12	PIN-CONNECTOR (16-GA TO 18-GA)	
		1	**155-2260**	1	KIT-CONNECTING PLUG (3-PIN)	
					(INCLUDES PLUG AS, WEDGE & INTERFACE SEAL)	
		1	**230-4009**	1	PLUG AS-CONNECTOR (12-PIN)	
		1	**264-7034**	1	SEAL-CONNECTOR	
		1	**243-4510**	1	RECEPTACLE AS-CONNECTOR (12-PIN)	
E		1	**262-8088**		HOSE (352-CM)	
	11	1	**132-5789**	2	CLIP	
	12	1	**4S-1962**	3	CLIP	
	13	1	**8T-4121**	7	WASHER-HARD (11X21X2.5-MM THK)	
M	14	1	**8T-4133**	4	NUT (M10X1.5-THD)	
M	15	1	**8T-4191**	3	BOLT (M10X1.5X16-MM)	
M	16	1	**8T-4195**	3	BOLT (M10X1.5X30-MM)	

E-ORDER BY THE CENTIMETER
M-METRIC PART

299-3002 **WIRING GP-GRADE CONTROL** *(contd.)* **i03917435**

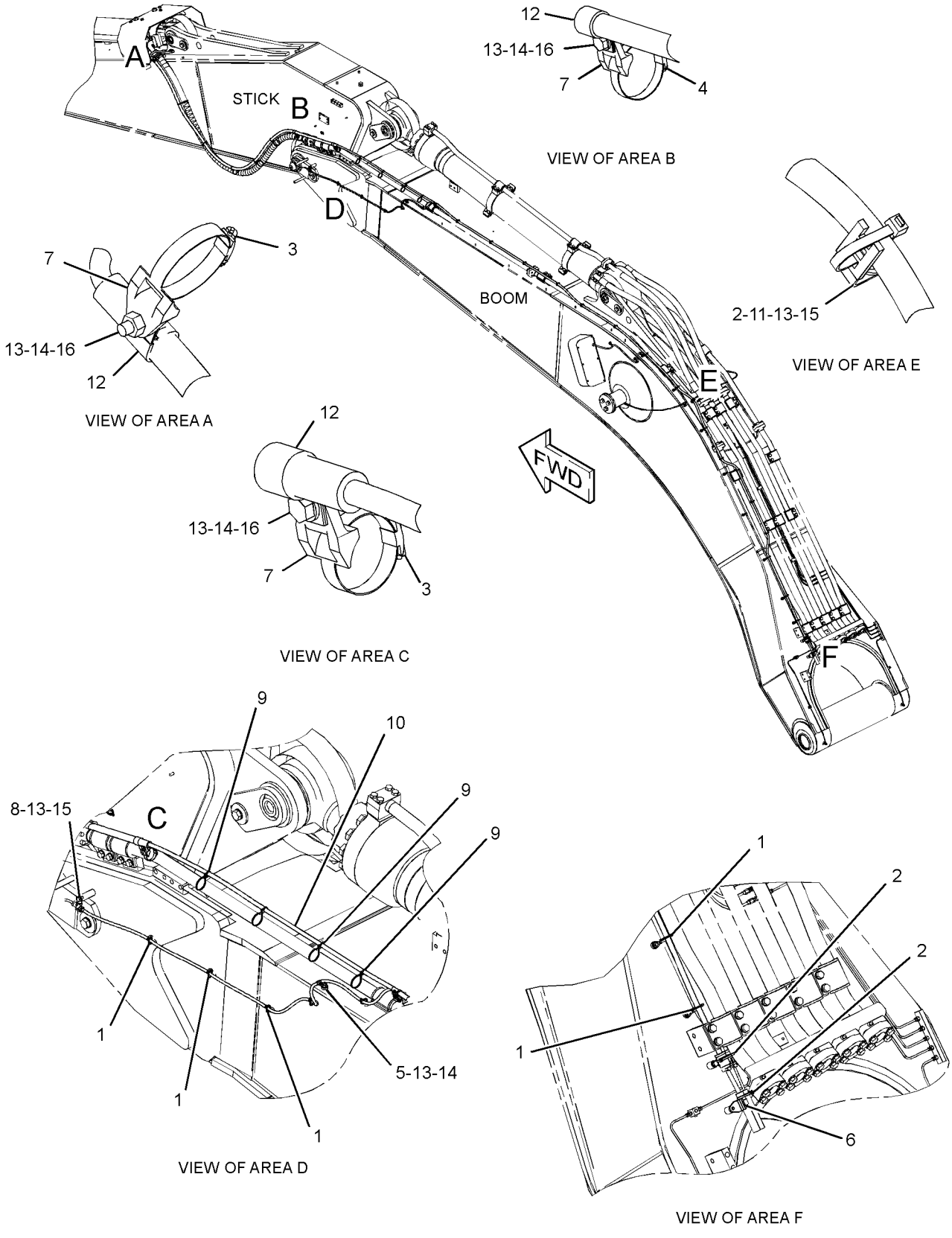

GRAPHIC #1 **<END>** g02166215

ELECTRICAL AND STARTING SYSTEM

299-3005 WIRING GP-GRADE CONTROL–ACCUGRADE, STICK

S/N: WAP1-UP
PART OF 340-3996 SPECIAL AR
AN ATTACHMENT

SMCS-1408, 7220 **i03917453**

NOTE	REF NO	GRAPHIC REF	PART NUMBER	QTY	PART NAME 1 2 3 4 5 6 (PRODUCT LEVEL)	SEE PAGE
	1	1	**3S-2093**	6	STRAP-CABLE	
	2	1	**7K-1181**	4	STRAP-CABLE	
	3	1	**116-0118**	1	CLIP	
	4	1	**204-1611**	1	STRAP-CABLE	
	5	1	**342-2823**	1	HARNESS AS-CONTROL (GRADE CONTROL)	
		1	**8L-8413**	1	STRAP-CABLE	
		1	**8T-8737**	4	PLUG-SEAL	
BE		1	**125-7874**		TUBE-HEAT SHRINK (5.72-MM DIA)	
		1	**9X-3402**	3	SOCKET-CONNECTOR (16-GA TO 18-GA)	
		1	**9X-3401**	9	PIN-CONNECTOR (16-GA TO 18-GA)	
		1	**155-2271**	1	KIT-CONNECTING PLUG (4-PIN)	
					(INCLUDES PLUG AS, WEDGE & INTERFACE SEAL)	
		1	**243-4510**	1	RECEPTACLE AS-CONNECTOR (12-PIN)	
		1	**243-5362**	1	CAP-DUST	
		1	**253-2695**	1	PLUG AS-CONNECTOR	
	6	1	**132-5789**	3	CLIP	
	7	1	**4P-7582**	1	CLIP	
	8	1	**8T-4121**	3	WASHER-HARD (11X21X2.5-MM THK)	
M	9	1	**8T-4137**	3	BOLT (M10X1.5X20-MM)	

B-USE AS REQUIRED
E-ORDER BY THE CENTIMETER
M-METRIC PART

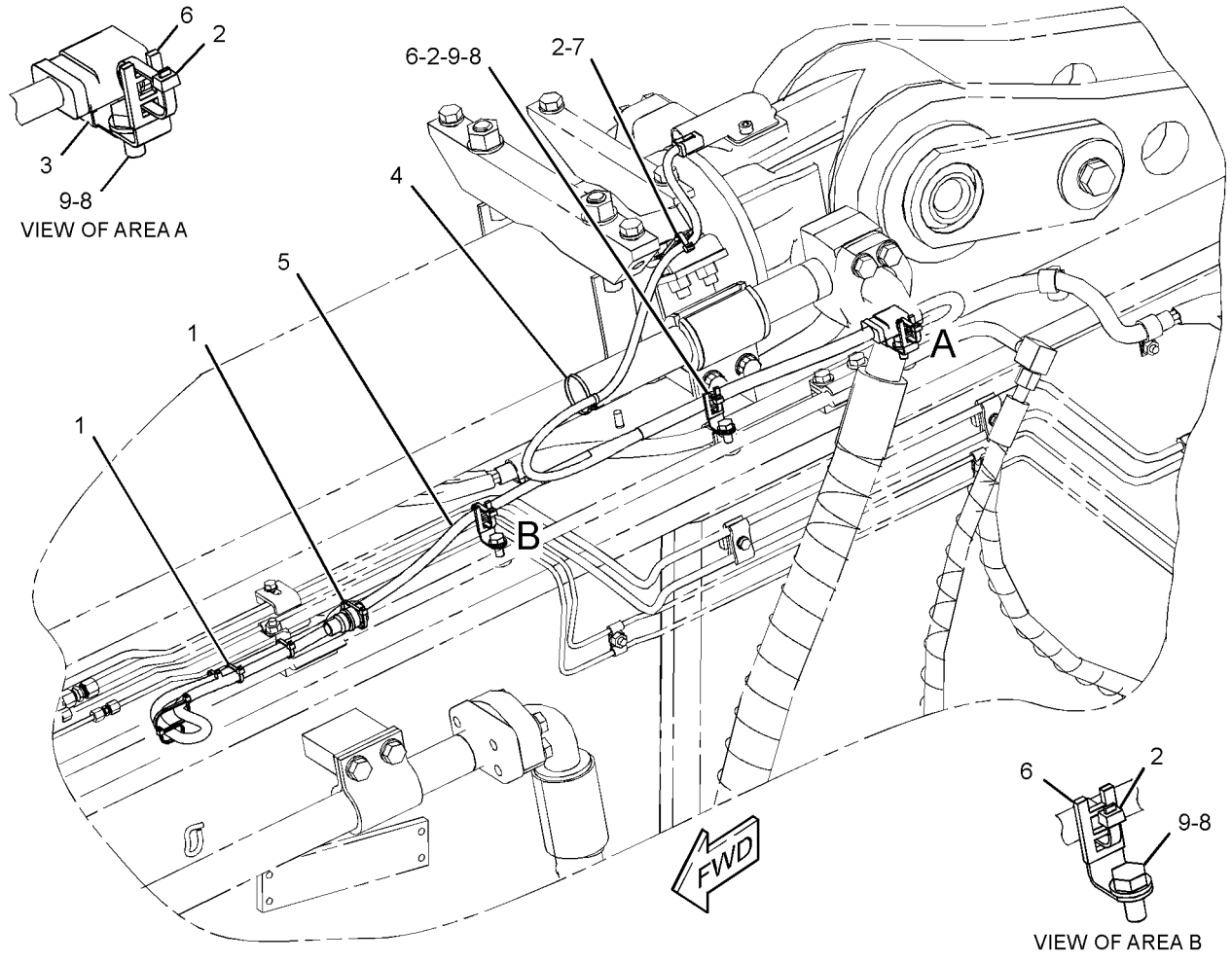

GRAPHIC #1 **<END>** g02162793

342-2947 WIRING GP-GRADE CONTROL–ACCUGRADE

S/N: WAP1-UP
PART OF 340-3996 SPECIAL AR
AN ATTACHMENT

SMCS-1408, 7220 **i03917669**

NOTE	REF NO	GRAPHIC REF	PART NUMBER	QTY	PART NAME 1 2 3 4 5 6 (PRODUCT LEVEL)	SEE PAGE
	1	2	**4I-7889**	1	SPACER (11X25X45-MM THK)	
	2	1,2,3	**7K-1181**	64	STRAP-CABLE	
	3	2	**111-4836**	2	CLIP	
	4	2	**111-4837**	2	CLIP	
	5	2	**113-8491**	1	FUSE (15-AMPERE)	
	6	2	**116-0118**	1	CLIP	
	7	1,3	**204-1611**	15	STRAP-CABLE	
	8	2	**275-6842**	1	HARNESS AS-CONTROL (DISPLAY, GPS RADIO)	
		2	**8T-8737**	6	PLUG-SEAL	
		2	**9X-3401**	6	PIN-CONNECTOR (16-GA TO 18-GA)	
		2	**167-8987**	1	PLUG AS-CONNECTOR (8-PIN)	
		2	**243-4510**	1	RECEPTACLE AS-CONNECTOR (12-PIN)	
	9	2	**336-6335**	1	BRACKET AS	
	10	3	**342-2822**	1	HARNESS AS-SENSOR (GRADE CONTROL)	
		3	**9X-3402**	12	SOCKET-CONNECTOR (16-GA TO 18-GA)	
		3	**9X-3401**	12	PIN-CONNECTOR (16-GA TO 18-GA)	
		3	**230-4009**	1	PLUG AS-CONNECTOR (12-PIN)	
		3	**264-7034**	1	SEAL-CONNECTOR	
		3	**243-4510**	1	RECEPTACLE AS-CONNECTOR (12-PIN)	
E		3	**262-8088**		HOSE (271-CM)	
	11	2	**350-8154**	1	HARNESS AS-CHASSIS	
		2	**102-8803**	2	KIT-RECEPTACLE (3-PIN)	
					(EACH INCLUDES RECEPTACLE AS & WEDGE)	
		2	**8T-8729**	1	PIN-CONNECTOR (16-GA TO 18-GA)	
		2	**8T-8730**	2	SOCKET-CONNECTOR (16-GA TO 18-GA)	
		2	**3R-9965**	1	PLUG AS-CONNECTOR (8-PIN)	
		2	**3S-2093**	4	STRAP-CABLE	
		2	**6D-5257**	1	PLUG AS-CONNECTOR (8-PIN)	
		2	**7Y-3962**	1	TERMINAL-BULLET (MALE)	
		2	**8L-8413**	4	STRAP-CABLE	
		2	**8T-8737**	58	PLUG-SEAL	
		2	**9X-4385**	1	PLUG AS-CONNECTOR (6-PIN)	
		2	**104-6871**	2	CAP-DUST	
		2	**9W-0852**	1	PIN-CONNECTOR (14-GA TO 16-GA)	
		2	**9W-0844**	3	SOCKET-CONNECTOR (14-GA)	
BE		2	**119-3662**		TUBE-HEAT SHRINK (10.85-MM DIA)	
BE		2	**125-7874**		TUBE-HEAT SHRINK (5.72-MM DIA)	
BE		2	**125-7875**		TUBE-HEAT SHRINK (7.44-MM DIA)	
		2	**9X-3402**	36	SOCKET-CONNECTOR (16-GA TO 18-GA)	
		2	**2L-8079**	2	TERMINAL-RING (14-GA TO 16-GA, 3/8-IN SCREW)	
		2	**176-9299**	2	KIT-RECEPTACLE (3-PIN)	
					(EACH INCLUDES RECEPTACLE AS & WEDGE)	
		2	**9X-3401**	22	PIN-CONNECTOR (16-GA TO 18-GA)	
		2	**155-2271**	1	KIT-CONNECTING PLUG (4-PIN)	
		2	**174-0503**	1	KIT-CONNECTING PLUG (3-PIN)	
		2	**155-2260**	1	KIT-CONNECTING PLUG (3-PIN)	
					(EACH PLUG KIT INCLUDES PLUG AS, WEDGE & INTERFACE SEAL)	
		2	**170-6891**	1	TERMINAL-BLADE (16-GA TO 18-GA)	
		2	**174-3016**	2	PLUG AS-CONNECTOR (3-PIN)	
		2	**230-4009**	5	PLUG AS-CONNECTOR (12-PIN)	
					(EACH INCLUDES)	
		2	**264-7034**	1	SEAL-CONNECTOR	
		2	**230-4011**	1	PLUG AS-CONNECTOR (2-PIN)	

342-2947 **WIRING GP-GRADE CONTROL** *(contd.)* **i03917669**

NOTE	REF NO	GRAPHIC REF	PART NUMBER	QTY	PART NAME 1 2 3 4 5 6 (PRODUCT LEVEL)	SEE PAGE
		2	**264-7029**	1	SEAL-CONNECTOR	
		2	**243-4510**	4	RECEPTACLE AS-CONNECTOR (12-PIN)	
		2	**243-5362**	2	CAP-DUST	
		2	**253-2695**	1	PLUG AS-CONNECTOR	
	12	3	**093-2064**	1	GROMMET	
	13	3	**2S-1647**	1	GROMMET	
	14	1	**4P-7428**	1	CLIP	
	15	3	**4P-7581**	2	CLIP	
	16	3	**4P-7582**	2	CLIP	
M	17	1	**7X-2548**	1	BOLT (M12X1.75X16-MM)	
	18	2,3	**8T-4121**	9	WASHER-HARD (11X21X2.5-MM THK)	
M	19	2	**8T-4136**	1	BOLT (M10X1.5X25-MM)	
M	20	2,3	**8T-4137**	3	BOLT (M10X1.5X20-MM)	
M	21	2,3	**8T-4191**	4	BOLT (M10X1.5X16-MM)	
	22	1	**8T-4223**	1	WASHER-HARD (13.5X25.5X3-MM THK)	
M	23	2	**8T-5005**	1	BOLT (M10X1.5X70-MM)	

B-USE AS REQUIRED
E-ORDER BY THE CENTIMETER
M-METRIC PART

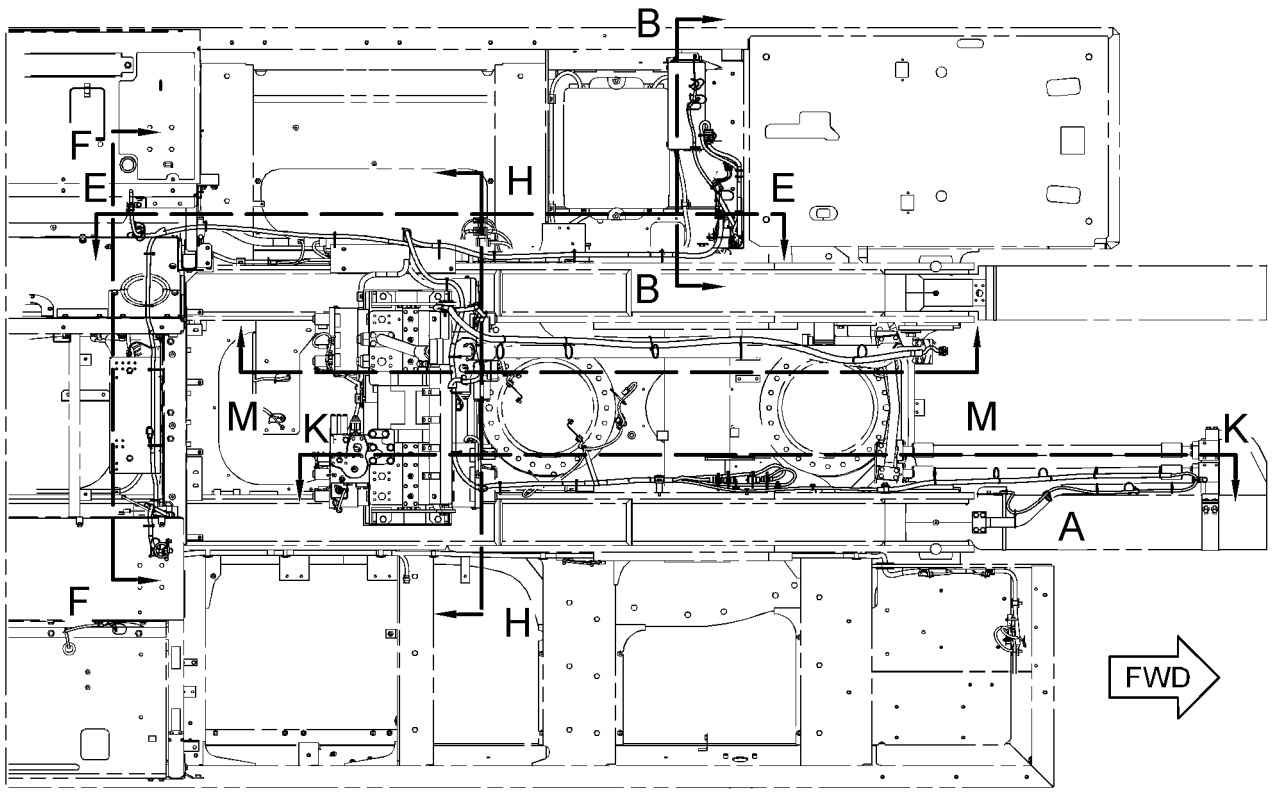

TOP VIEW

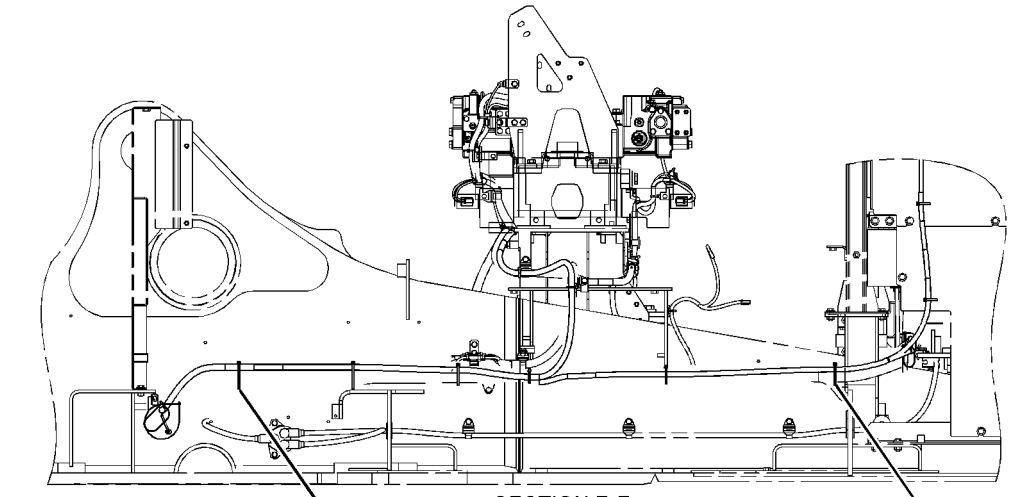

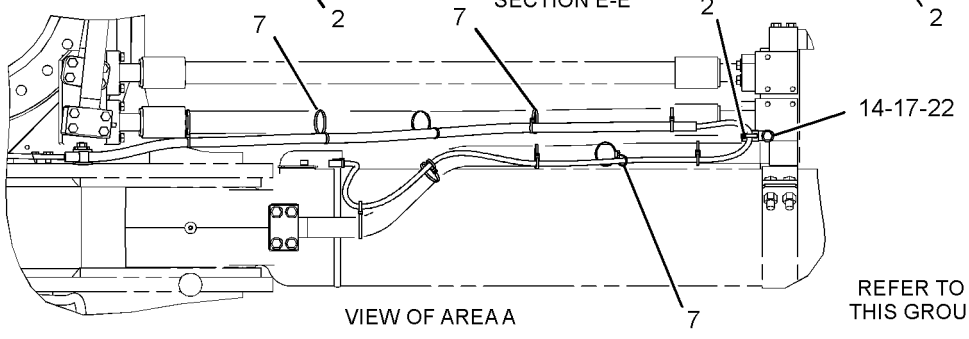

VIEW OF AREA A

REFER TO ALL ILLUSTRATIONS OF THIS GROUP FOR AUXILIARY VIEWS

GRAPHIC #1

g02173964

342-2947 **WIRING GP-GRADE CONTROL** *(contd.)* **i03917669**

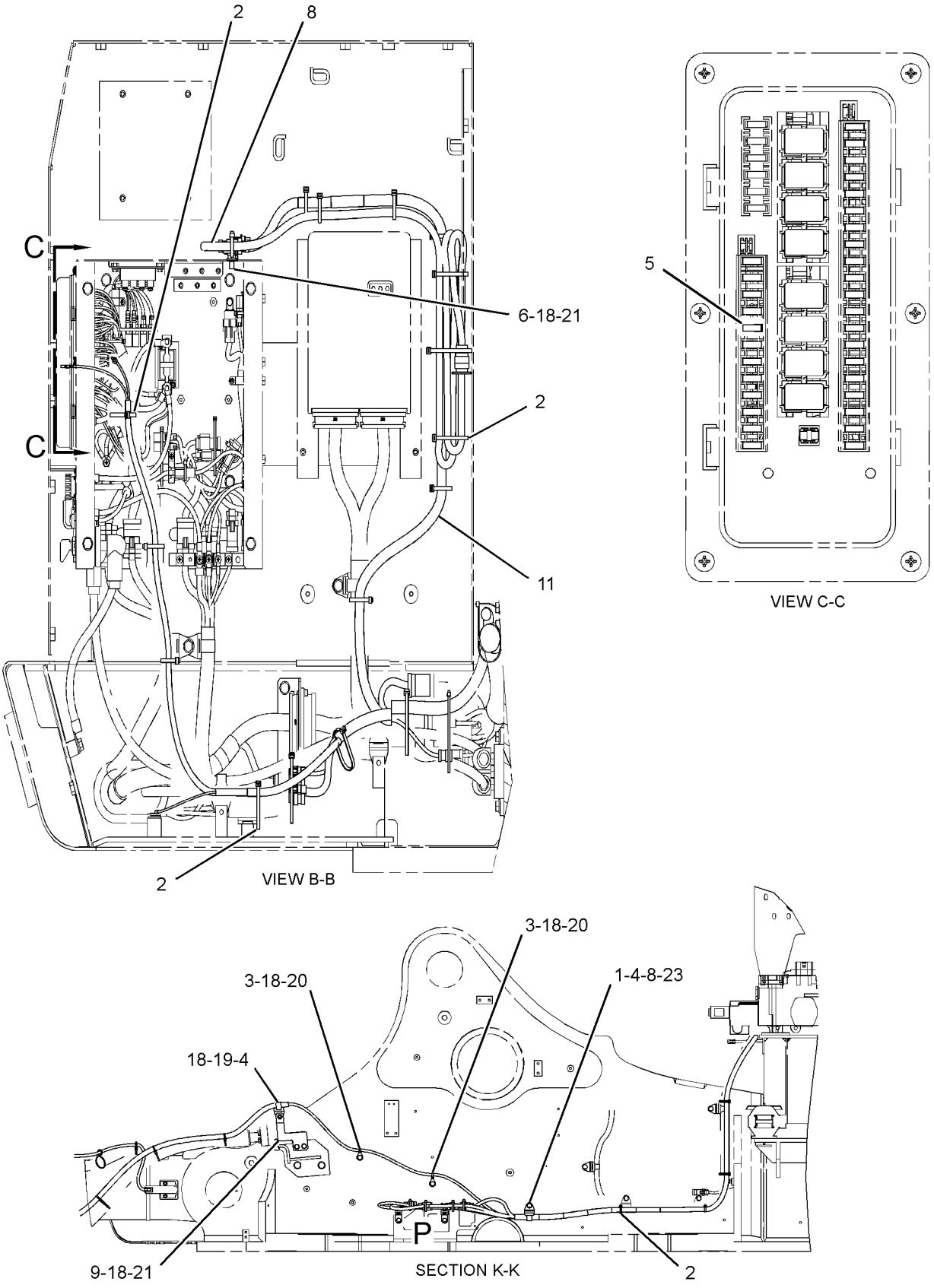

GRAPHIC #2 g02174026

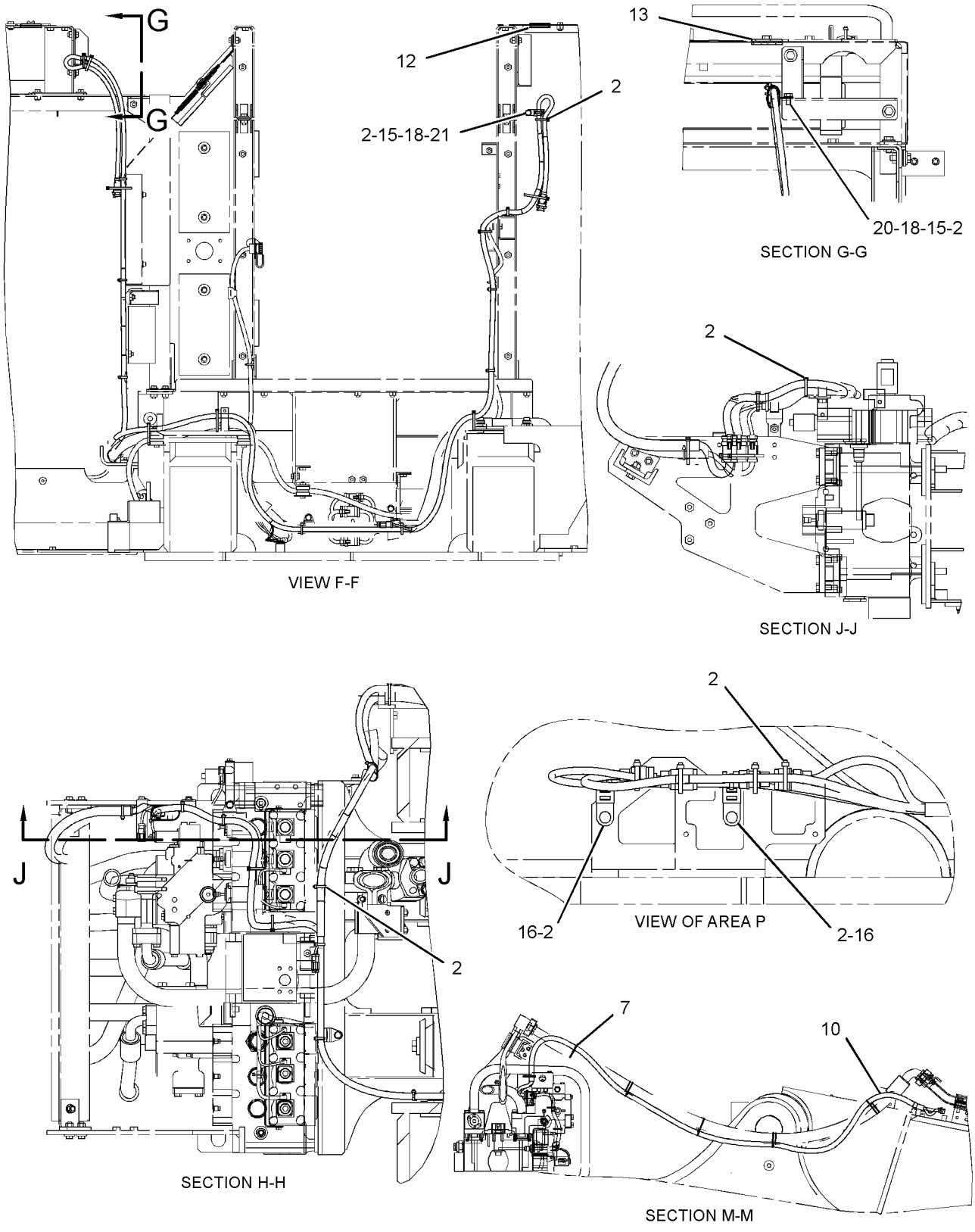

GRAPHIC #3 **<END>** g02174074

299-2943 WIRING GP-MONITOR–

WORK AREA VISUAL SYSTEM, REAR

S/N: WAP1-UP

PART OF 340-4025 CAMERA AR

AN ATTACHMENT

SMCS-1408 **i03775664**

NOTE	REF NO	GRAPHIC REF	PART NUMBER	QTY	PART NAME 1 2 3 4 5 6 (PRODUCT LEVEL)	SEE PAGE
	1	1	**3S-2093**	14	STRAP-CABLE	
	2	1	**7K-1181**	11	STRAP-CABLE	
	3	1	**342-2934**	1	HARNESS AS-WIRING (CAMERA)	
		1	**3S-2093**	3	STRAP-CABLE	
		1	**7Y-3962**	1	TERMINAL-BULLET (MALE)	
BE		1	**119-3662**		TUBE-HEAT SHRINK (10.85-MM DIA)	
BE		1	**125-7874**		TUBE-HEAT SHRINK (5.72-MM DIA)	
		1	**9X-3402**	2	SOCKET-CONNECTOR (16-GA TO 18-GA)	
		1	**2L-8079**	1	TERMINAL-RING (14-GA TO 16-GA, 3/8-IN SCREW)	
		1	**230-4011**	1	PLUG AS-CONNECTOR (2-PIN)	
		1	**264-7029**	1	SEAL-CONNECTOR	
	4	1	**342-2935**	1	HARNESS AS-WIRING (MONITOR)	

B-USE AS REQUIRED
E-ORDER BY THE CENTIMETER

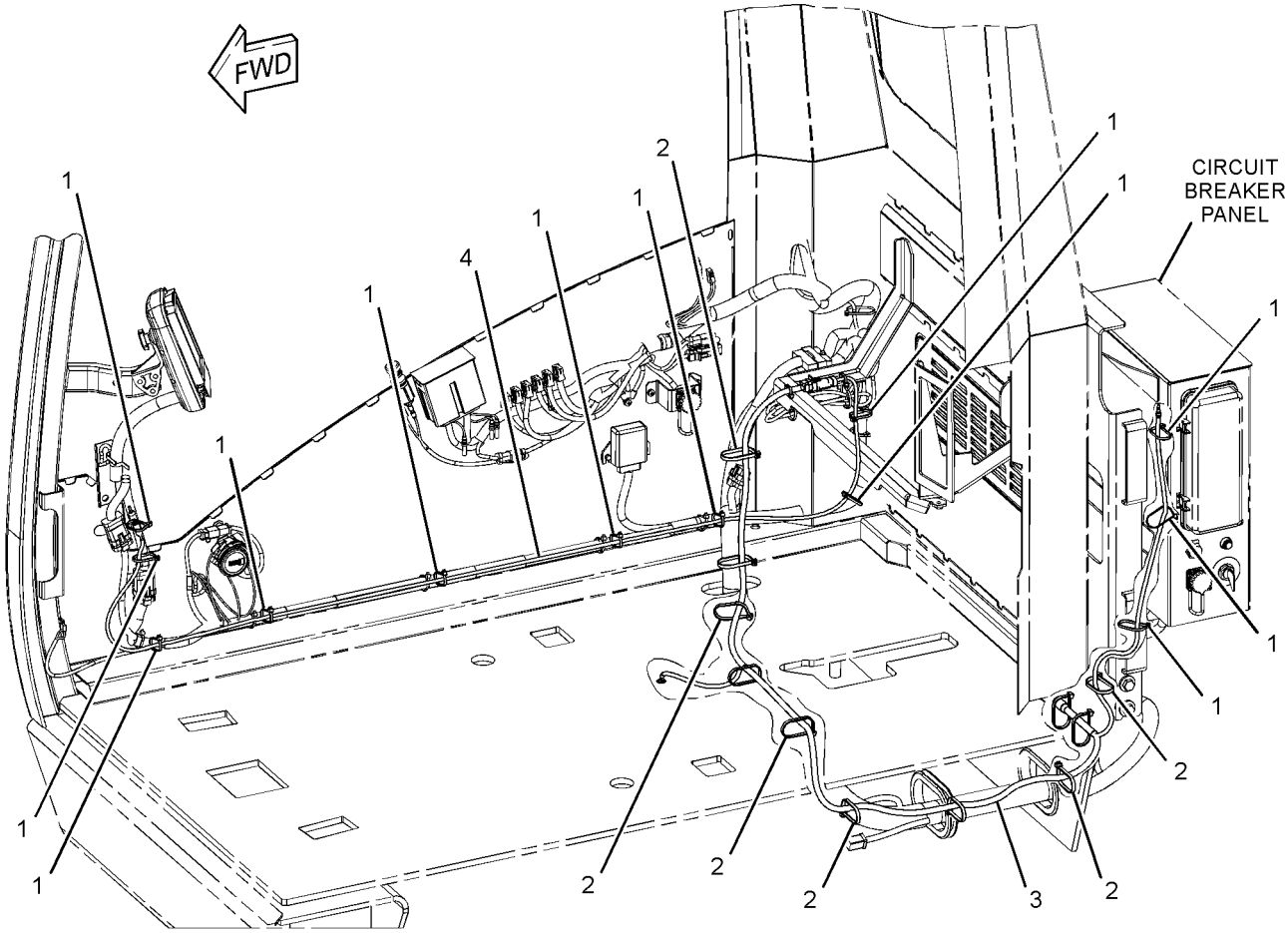

GRAPHIC #1 **<END>** g02126605

ELECTRICAL AND STARTING SYSTEM

299-2629 WIRING GP-PLATFORM

S/N: WAP1-UP

PART OF 342-3451 OPERATOR AR

SMCS-1408 **i03656502**

NOTE	REF NO	GRAPHIC REF	PART NUMBER	QTY	PART NAME 1 2 3 4 5 6 (PRODUCT LEVEL)	SEE PAGE
	1	1	**7G-1060**	1	STRAP AS-GROUND	
	2	1	**7K-1181**	3	STRAP-CABLE	
	3	1	**111-4837**	4	CLIP	
	4	1	**111-4838**	2	CLIP	
	5	1	**111-4839**	2	STRAP	
	6	1	**116-0118**	8	CLIP	
	7	1	**342-2886**	1	HARNESS AS-PLATFORM	
		1	**8T-8729**	14	PIN-CONNECTOR (16-GA TO 18-GA)	
		1	**8T-8730**	12	SOCKET-CONNECTOR (16-GA TO 18-GA)	
		1	**3S-2093**	12	STRAP-CABLE	
		1	**8T-8737**	53	PLUG-SEAL	
		1	**102-7964**	1	PLUG-CONNECTOR (16-PIN)	
		1	**102-7965**	6	TERMINAL (FEMALE)	
		1	**9W-0852**	23	PIN-CONNECTOR (14-GA TO 16-GA)	
		1	**9W-0844**	42	SOCKET-CONNECTOR (14-GA)	
BE		1	**119-3662**		TUBE-HEAT SHRINK (10.85-MM DIA)	
		1	**121-1168**	1	CONNECTOR-RECEPTACLE	
		1	**121-1173**	21	TERMINAL (MALE)	
		1	**125-4841**	1	WEDGE-PLUG LOCK (21-PIN)	
BE		1	**125-7875**		TUBE-HEAT SHRINK (7.44-MM DIA)	
		1	**9X-3402**	86	SOCKET-CONNECTOR (16-GA TO 18-GA)	
		1	**2L-8069**	5	TERMINAL-RING (2-GA TO 10-GA, 3/8-IN SCREW)	
		1	**2L-8075**	2	TERMINAL-RING (14-GA TO 16-GA, NO. 8 SCREW)	
		1	**9X-3401**	12	PIN-CONNECTOR (16-GA TO 18-GA)	
		1	**153-2620**	1	PLUG AS-CONNECTOR (54-PIN, BLACK)	
		1	**155-2271**	1	KIT-CONNECTING PLUG (4-PIN)	
		1	**155-2274**	1	KIT-CONNECTING PLUG (6-PIN)	
					(EACH PLUG KIT INCLUDES PLUG AS, WEDGE & INTERFACE SEAL)	
		1	**230-4009**	5	PLUG AS-CONNECTOR (12-PIN)	
		1	**230-5010**	2	PLUG AS-CONNECTOR (6-PIN)	
		1	**231-2295**	1	PLUG AS-CONNECTOR (8-PIN)	
		1	**238-2363**	12	TERMINAL (FEMALE)	
		1	**238-2366**	5	TERMINAL (MALE)	
		1	**239-7352**	3	PLUG AS-CONNECTOR (6-PIN)	
		1	**243-4508**	2	RECEPTACLE AS-CONNECTOR (6-PIN)	
		1	**243-4509**	1	RECEPTACLE AS-CONNECTOR (8-PIN)	
		1	**243-4510**	3	RECEPTACLE AS-CONNECTOR (12-PIN)	
		1	**247-2693**	2	RECEPTACLE AS-CONNECTOR (6-PIN)	
		1	**272-5000**	1	RECEPTACLE AS-CONNECTOR (12-PIN)	
M	8	1	**7X-2621**	6	BOLT (M10X1.5X12-MM)	
	9	1	**8T-4121**	13	WASHER-HARD (11X21X2.5-MM THK)	
M	10	1	**8T-4137**	6	BOLT (M10X1.5X20-MM)	
M	11	1	**8T-4191**	1	BOLT (M10X1.5X16-MM)	

B-USE AS REQUIRED
E-ORDER BY THE CENTIMETER
M-METRIC PART

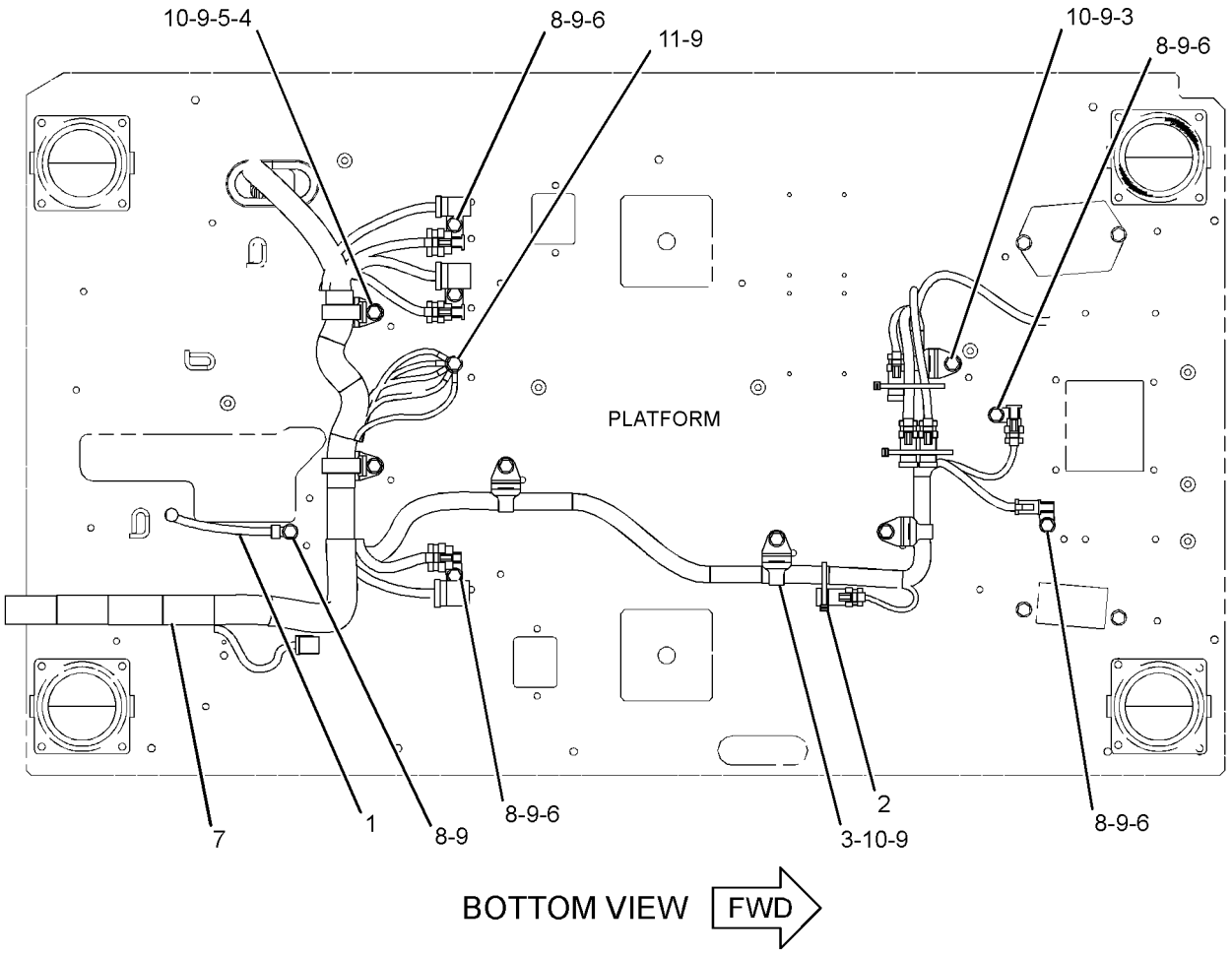

GRAPHIC #1 **<END>** g02123016

ELECTRICAL AND STARTING SYSTEM

306-8538 WIRING GP-QUICK COUPLER

S/N: WAP1-UP
PART OF 302-9443 CONTROL AR-COUPLER
AN ATTACHMENT

SMCS-1408, 6129 **i03785269**

NOTE	REF NO	GRAPHIC REF	PART NUMBER	QTY	PART NAME 1 2 3 4 5 6 (PRODUCT LEVEL)	SEE PAGE
	1	1	**7K-1181**	9	STRAP-CABLE	
	2	1	**259-4884**	1	BRACKET AS	
	3	1	**259-7220**	1	COVER	
	4	1	*267-7671*	1	SWITCH GP-TOGGLE (QUICK COUPLER)	
		1	**3L-8187**	6	LOCKWASHER	
		1	**6T-3631**	2	NUT-HEX (15/32-32-THD)	
		1	**6T-3632**	1	LOCKWASHER	
		1	**6T-3633**	1	RING-LOCKING	
		1	**6V-8374**	6	SCREW-MACHINE (6-32X0.25-IN)	
		1	**267-7672**	1	HARNESS AS-WIRING (CAB)	
		1	**3S-2093**	1	STRAP-CABLE	
		1	**121-1173**	3	TERMINAL (MALE)	
		1	**9X-8081**	1	TERMINAL-RING (10-GA TO 12-GA, NO. 6 SCREW)	
		1	**5P-2321**	1	TERMINAL-FORK (14-GA TO 16-GA, NO. 6 SCREW)	
		1	**167-3542**	1	RECEPTACLE-CONNECTOR (5-PIN)	
	5	1	**342-2931**	1	HARNESS AS-CAB	
		1	**3S-2093**	5	STRAP-CABLE	
		1	**7Y-3962**	1	TERMINAL-BULLET (MALE)	
		1	**102-7965**	3	TERMINAL (FEMALE)	
		1	**9W-0844**	4	SOCKET-CONNECTOR (14-GA)	
BE		1	**125-7875**		TUBE-HEAT SHRINK (7.44-MM DIA) (5-CM)	
		1	**163-6803**	1	PLUG-CONNECTOR (5-PIN)	
		1	**167-3487**	1	WEDGE-PLUG LOCK (5-PIN)	
		1	**230-5008**	1	PLUG AS-CONNECTOR (4-PIN)	
		1	**264-7031**	1	SEAL-CONNECTOR	
	6	1	**342-2932**	1	HARNESS AS-PLATFORM	
		1	**9W-0852**	4	PIN-CONNECTOR (14-GA TO 16-GA)	
		1	**9W-0844**	4	SOCKET-CONNECTOR (14-GA)	
		1	**230-5008**	1	PLUG AS-CONNECTOR (4-PIN)	
		1	**264-7031**	1	SEAL-CONNECTOR	
		1	**243-4507**	1	RECEPTACLE AS-CONNECTOR (4-PIN)	
M	7	1	**9X-2042**	3	SCREW-TRUSS HEAD (M6X1X12-MM)	

B-USE AS REQUIRED
E-ORDER BY THE CENTIMETER
M-METRIC PART

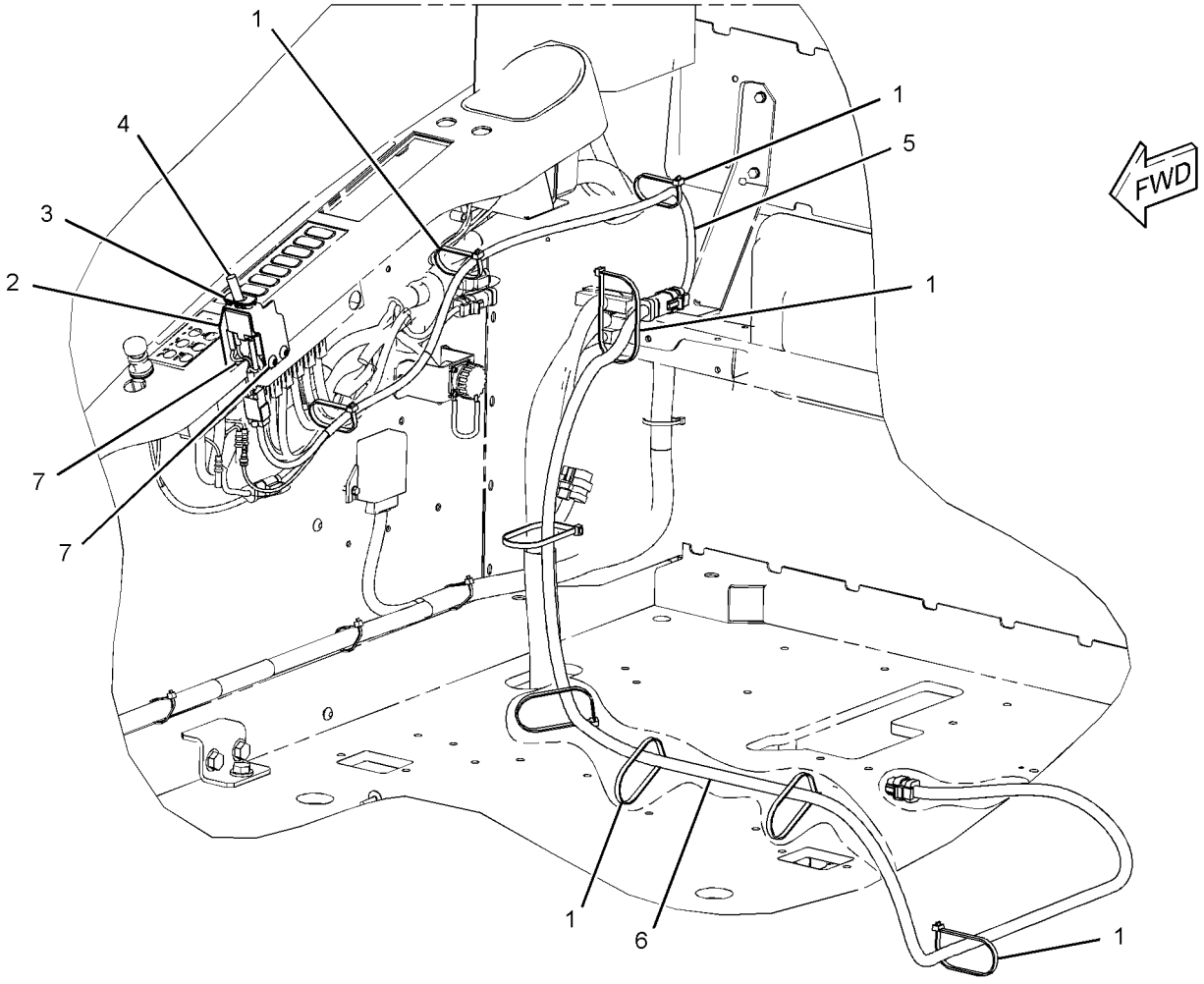

GRAPHIC #1 **<END>** g02126344

238-1636 WIRING GP-REFUELING PUMP

S/N: WAP1-UP
PART OF 228-8218 PUMP AR-FUEL TRANSFER
AN ATTACHMENT

SMCS-1408 **i03330544**

NOTE	REF NO	GRAPHIC REF	PART NUMBER	QTY	PART NAME 1 2 3 4 5 6 (PRODUCT LEVEL)	SEE PAGE
	1	1	**3S-2093**	3	STRAP-CABLE	
	2	1	**111-4836**	3	CLIP	
	3	1	**116-0118**	3	CLIP	
	4	1	**149-5050**	1	RELAY (24-VOLT) (REFUELING PUMP, START)	
	4A	1	**149-5050**	1	RELAY (24-VOLT) (REFUELING PUMP, STOP)	
	5	1	**213-0772**	1	SWITCH AS-MAGNETIC (24-VOLT) (REFUELING POWER RELAY)	
Y	6	1	**238-1594**	1	SWITCH GP-PUSH BUTTON (REFUELING PUMP, START)	265
Y	7	1	**238-1596**	1	SWITCH GP-PUSH BUTTON (REFUELING PUMP, STOP)	266
	8	1	**238-1637**	1	HARNESS AS-PUMP (REFUELING)	
		1	**3S-2093**	2	STRAP-CABLE	
		1	**102-8802**	1	KIT-RECEPTACLE (2-PIN)	
					(INCLUDES RECEPTACLE AS & WEDGE)	
		1	**155-2270**	1	KIT-CONNECTING PLUG (2-PIN)	
					(INCLUDES PLUG AS, WEDGE & INTERFACE SEAL)	
		1	**197-4385**	1	DIODE	
		1	**230-4011**	1	PLUG AS-CONNECTOR (2-PIN)	
		1	**243-4505**	2	RECEPTACLE AS-CONNECTOR (2-PIN)	
	9	1	**8T-0328**	2	WASHER-HARD (5.5X10X1-MM THK)	
	10	1	**8T-4121**	4	WASHER-HARD (11X21X2.5-MM THK)	
M	11	1	**8T-4127**	2	SCREW-MACHINE (M5X0.8X20-MM)	
M	12	1	**8T-4137**	1	BOLT (M10X1.5X20-MM)	
M	13	1	**8T-4171**	2	BOLT (M6X1X12-MM)	
M	14	1	**8T-4191**	2	BOLT (M10X1.5X16-MM)	
M	15	1	**8T-4195**	1	BOLT (M10X1.5X30-MM)	
	16	1	**9X-8256**	2	WASHER (6.6X12X2-MM THK)	

M-METRIC PART
Y-SEPARATE ILLUSTRATION

238-1636 **WIRING GP-REFUELING PUMP** ***(contd.)*** **i03330544**

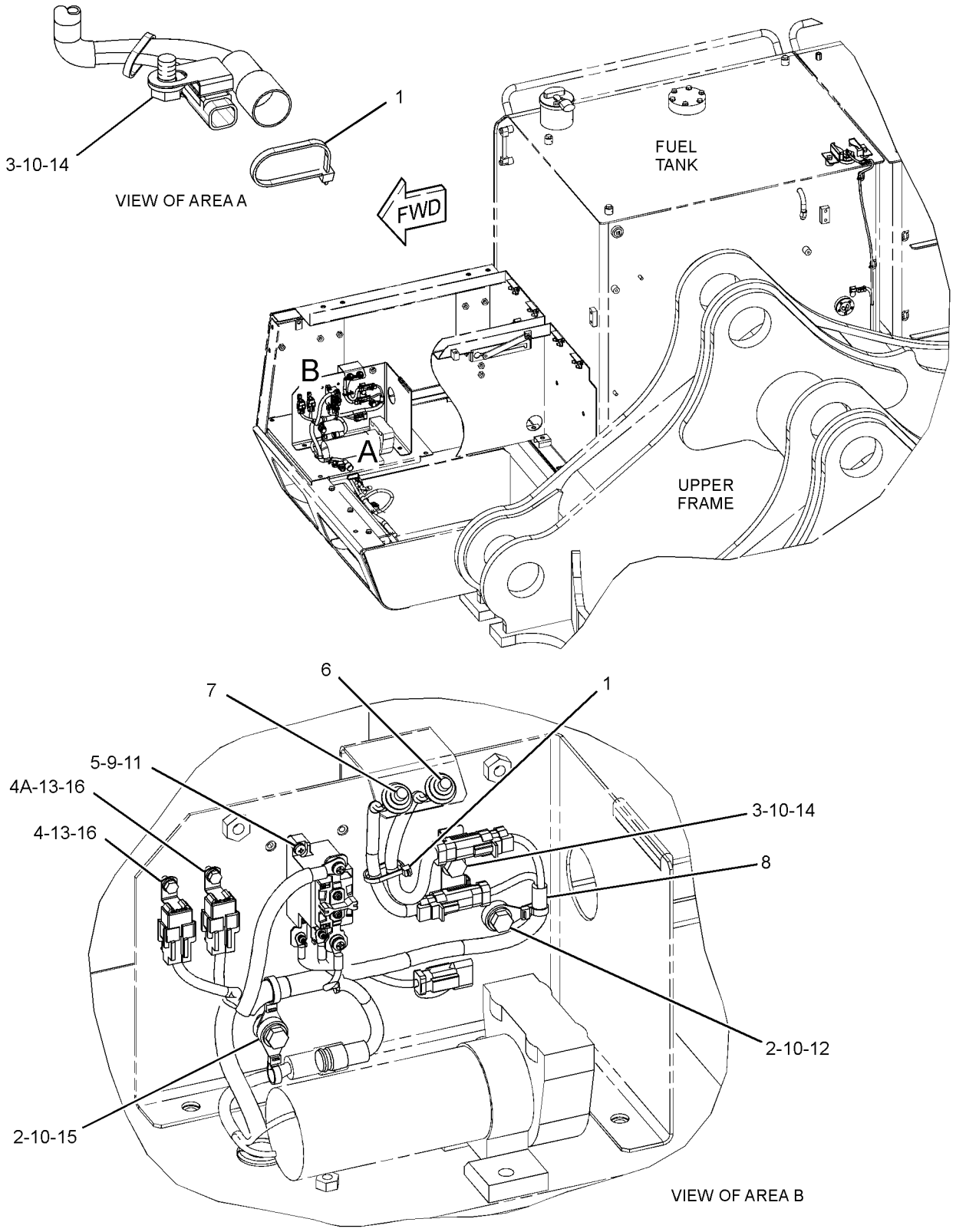

GRAPHIC #1 **<END>** g01712239

POWER TRAIN

333-2897 DRIVE GP-FINAL—WITHOUT MOTOR

S/N: WAP1-UP

PART OF 353-0590 DRIVE GP-FINAL

SMCS-4050 **i04003573**

NOTE	REF NO	GRAPHIC REF	PART NUMBER	QTY	PART NAME 1 2 3 4 5 6 (PRODUCT LEVEL)	SEE PAGE
	1	1	**3E-2338**	2	PLUG-PIPE (FINAL DRIVE, OIL DRAIN, FILL)	
B	2	2	**6I-6373**	1	SHIM (1.2-MM THK)	
B		1	**6I-6375**	1	SHIM (1.4-MM THK)	
B		1	**7Y-0807**	1	SHIM (1.6-MM THK)	
B		1	**227-6177**	1	SHIM (0.3-MM THK)	
B		1	**227-6178**	1	SHIM (0.6-MM THK)	
B		1	**227-6179**	1	SHIM (0.6-MM THK)	
B		1	**227-6180**	1	SHIM (0.8-MM THK)	
	4	1	**7M-8485**	2	SEAL-O-RING	
B	6	2	**7Y-0808**	1	SHIM (1.6-MM THK)	
	7	2	**7Y-1090**	1	GEAR-RING (66-TEETH)	
	8	2	**7Y-1493**	1	SPACER (8.7X50X14-MM THK)	
	9	2	**114-1541**	6	PIN-DOWEL	
	10	2	**148-4575**	3	GEAR-PLANETARY (31-TEETH)	
	11	2	**148-4579**	1	GEAR-SUN (22-TEETH)	
	12	2	**148-4580**	1	GEAR-RING (101-TEETH)	
	13	2	**148-4582**	1	HOUSING	
	14	2	**148-4585**	1	GEAR-COUPLING (95-TEETH)	
	15	2	**148-4616**	1	GEAR-SUN (37-TEETH)	
	16	2	**148-4617**	1	RING-RETAINING	
	17	2	**163-6082**	1	CONE	
	18	2	**163-6083**	1	CUP	
	19	2	**171-8706**	1	CONE	
	20	2	**171-8707**	1	CUP	
	21	2	**188-2103**	1	SEAL GP	
	22	2	**191-2508**	1	SPACER (231X261X10-MM THK)	
	23	2	**199-4533**	4	GEAR-PLANETARY (21-TEETH)	
	24	2	**199-4545**	1	GEAR-SUN (21-TEETH)	
	25	2	**199-4546**	3	GEAR-PLANETARY (22-TEETH)	
	26	2	**199-4609**	8	BEARING AS (CAGED ROLLER)	
	27	2	**199-4611**	14	WASHER (79.3X134X3-MM THK)	
	28	2	**199-4650**	1	CARRIER-PLANETARY	
	29	2	**199-4663**	1	COVER-HOUSING	
	30	2	**199-4665**	1	CARRIER-PLANETARY	
	31	2	**199-4666**	1	CARRIER-PLANETARY	
	32	2	**199-4669**	3	BEARING AS (CAGED ROLLER)	
	33	2	**199-4670**	3	BEARING AS (CAGED ROLLER)	
	34	2	**199-4671**	6	WASHER (49.3X84X1-MM THK)	
	35	2	**199-4688**	3	SHAFT-PLANETARY	
	36	2	**199-4689**	3	SHAFT-PLANETARY	
	37	2	**199-4690**	4	SHAFT-PLANETARY	
	42	2	**333-2898**	1	HOUSING-MOTOR	
	43	2	**095-0891**	3	PIN-SPRING	
M	44	1	**096-3216**	2	SETSCREW-SOCKET (M12X1.75X12-MM)	
	45	2	**099-5194**	7	PIN-SPRING	
	46	2	**5P-4981**	1	RING-RETAINING	
	47	2	**7Y-0640**	1	SEAL-O-RING	
	48	2	**7Y-0795**	1	SPACER (115X145.1X25.5-MM THK)	
	49	2	**7Y-1492**	1	SPACER (67X101.1X10-MM THK)	
M	50	1	**7Y-5215**	22	BOLT-SOCKET HEAD (M24X3X90-MM)	
M	51	1	**7Y-5231**	20	BOLT (M30X3.5X260-MM)	
M	52	2	**8T-0273**	16	BOLT-SOCKET HEAD (M12X1.75X40-MM)	
	53	1	**9X-8258**	20	WASHER (33X56X6-MM THK)	
B	54	2	**1U-8846**		SEALANT-GASKET	

B-USE AS REQUIRED
M-METRIC PART

333-2897 DRIVE GP-FINAL *(contd.)* **i04003573**

REFER TO ALL ILLUSTRATIONS OF
THIS GROUP FOR AUXILIARY VIEWS

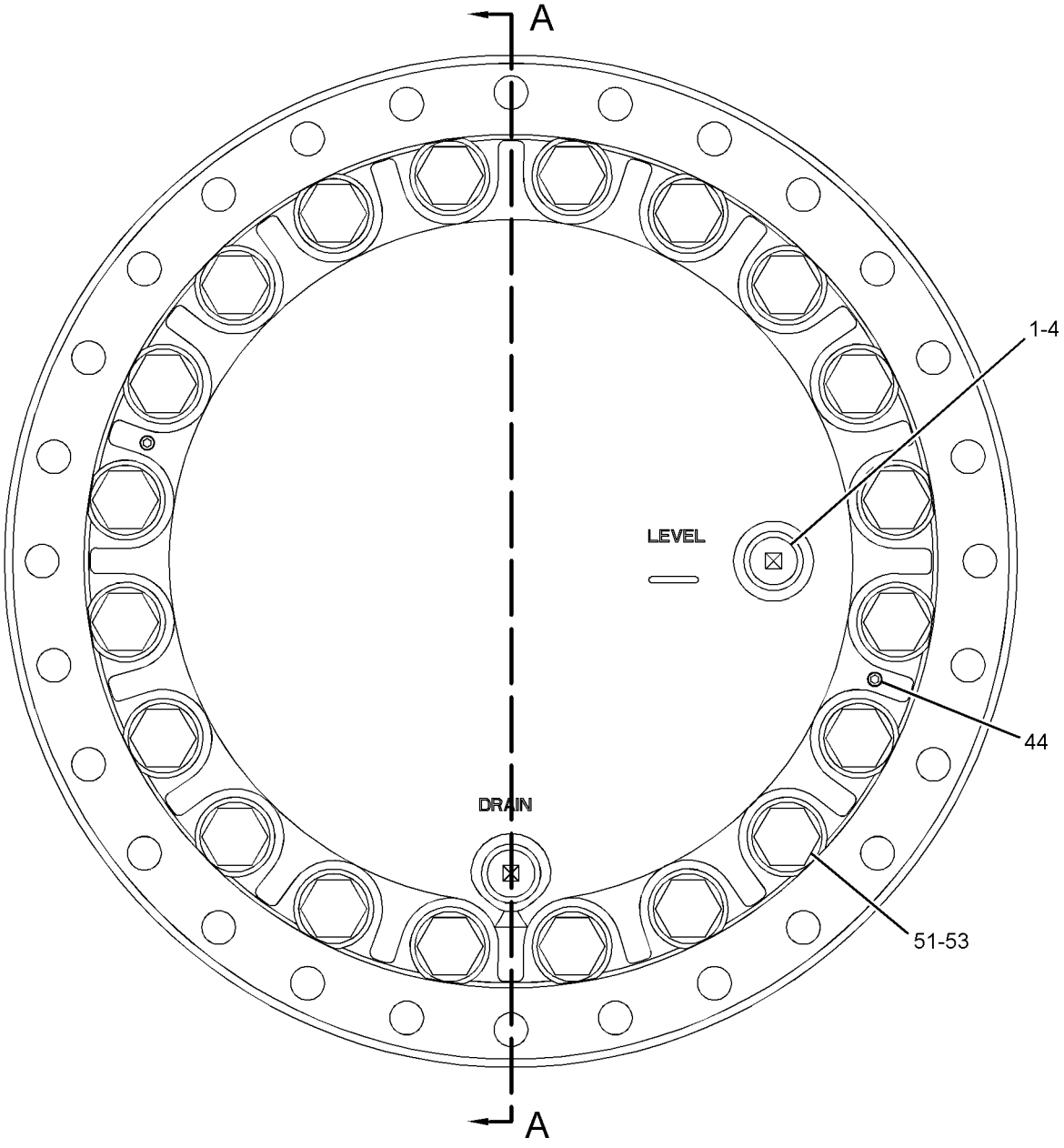

GRAPHIC #1 g02192046

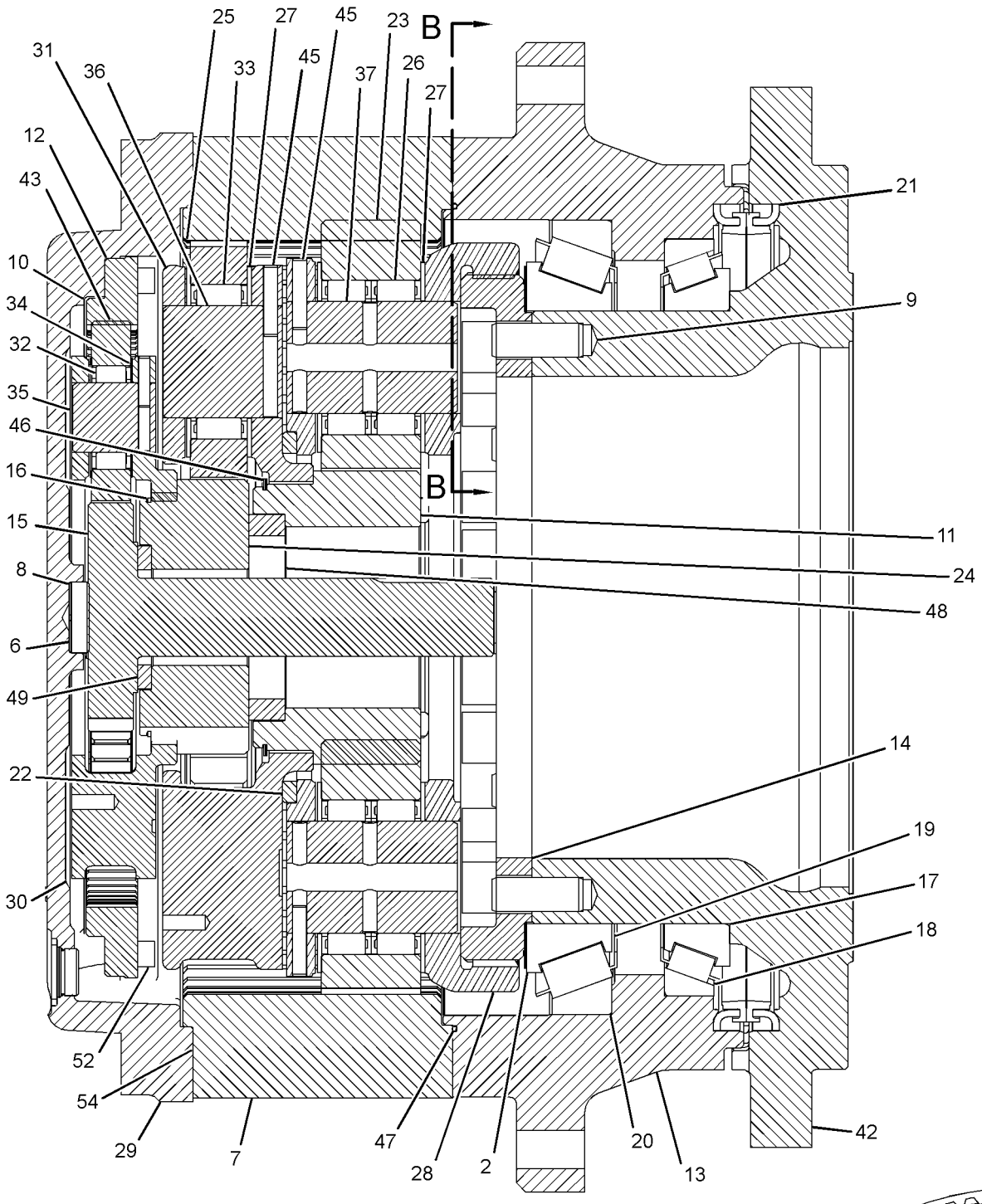

SECTION A-A

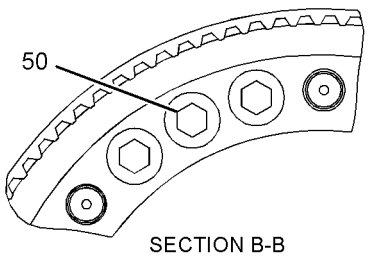

SECTION B-B

GRAPHIC #2 **<END>** g02192554

353-0589 DRIVE GP-FINAL–WITH MOTOR, SPROCKET

S/N: WAP1-UP

PART OF 227-6129 POWER TRAIN AR

SMCS-4050 **i04003523**

NOTE	REF NO	GRAPHIC REF	PART NUMBER	QTY	PART NAME 1 2 3 4 5 6 (PRODUCT LEVEL)	SEE PAGE
Y	1	1	*145-3014*	1	SPROCKET GP	335
Y	2	1	*353-0590*	1	DRIVE GP-FINAL (WITH MOTOR)	333

Y-SEPARATE ILLUSTRATION

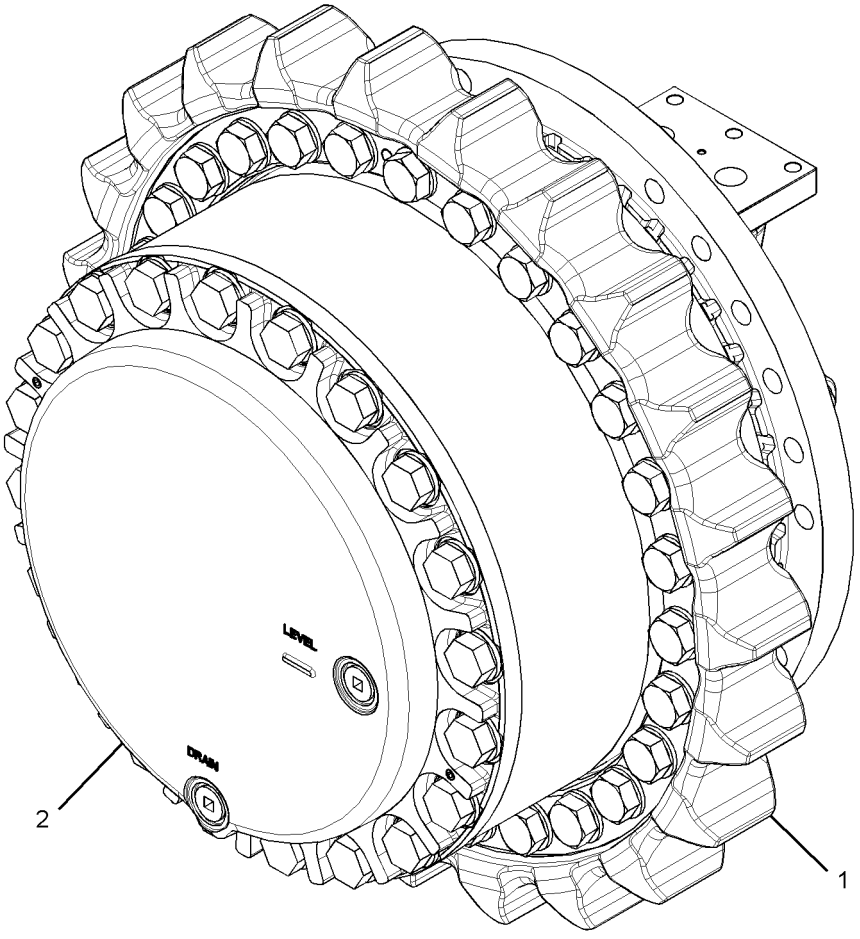

GRAPHIC #1 **<END>** g02190775

353-0590 DRIVE GP-FINAL—WITH MOTOR

S/N: WAP1-UP

PART OF 353-0589 DRIVE GP-FINAL

SMCS-4050 **i04003548**

NOTE	REF NO	GRAPHIC REF	PART NUMBER	QTY	PART NAME 1 2 3 4 5 6 (PRODUCT LEVEL)	SEE PAGE
Y	1	1	**333-2897**	1	DRIVE GP-FINAL	329
Y	2	1	*155-9198*	1	MOTOR & MTG GP-TRAVEL	645

Y-SEPARATE ILLUSTRATION

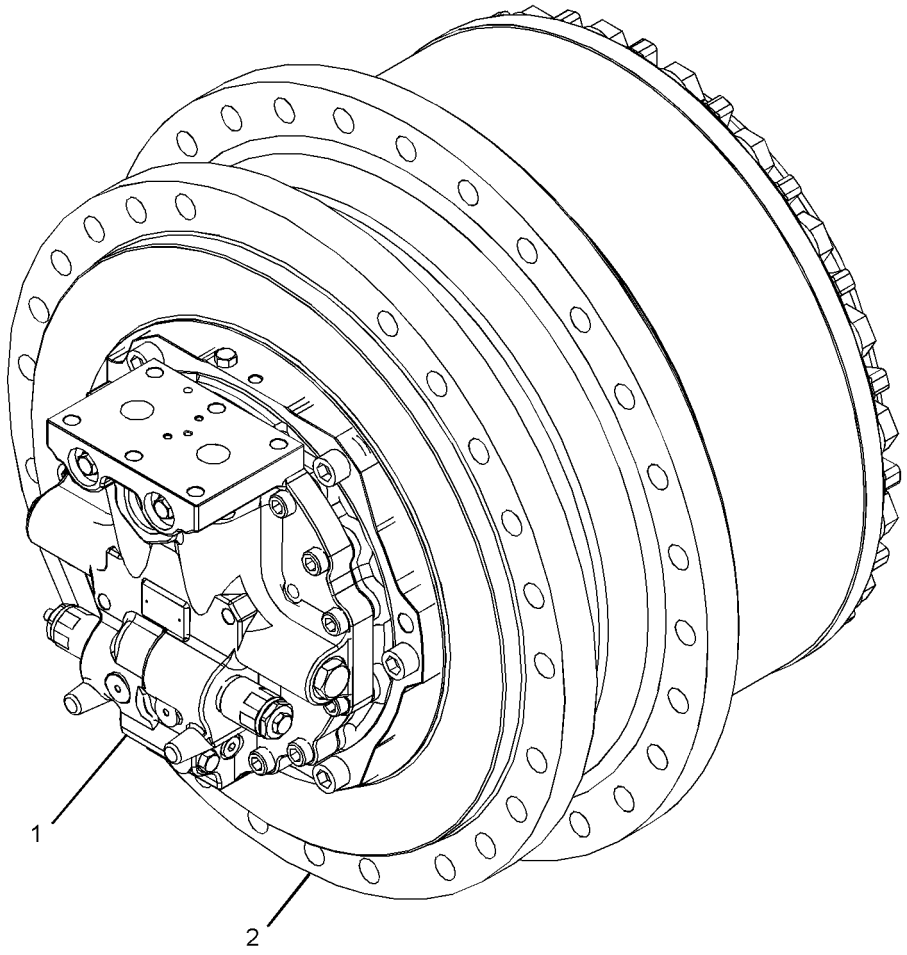

GRAPHIC #1 **<END>** g02190377

POWER TRAIN

227-6129 POWER TRAIN AR

S/N: WAP1-UP

PART OF 294-1203 GENERAL AR

SMCS-3000, 4000 **i04003500**

NOTE	PART NUMBER	QTY	PART NAME 1 2 3 4 5 6 (PRODUCT LEVEL)	SEE PAGE
Y	*353-0589*	2	DRIVE GP-FINAL (WITH MOTOR, SPROCKET)	332
Y	*227-6130*	1	DRIVE GP-SWING (WITH MOTOR, REAR)	511
Y	*227-6131*	1	DRIVE GP-SWING (WITH MOTOR, FRONT)	512
Y	*148-4627*	1	FASTENER GP-SWING & FINAL DR	513

Y-SEPARATE ILLUSTRATION

<END>

145-3014 SPROCKET GP

S/N: WAP1-UP

PART OF 353-0589 DRIVE GP-FINAL

SMCS-4164 **i01632844**

NOTE	REF NO	GRAPHIC REF	PART NUMBER	QTY	PART NAME 1 2 3 4 5 6 (PRODUCT LEVEL)	SEE PAGE
	1	1	**2B-7558**	2	CORK	
M	2	1	**145-2970**	28	BOLT	
	3	1	**199-4501**	28	SPACER (31.5X56X5-MM THK)	
	4	1	**201-1704**	1	SPROCKET	

M-METRIC PART

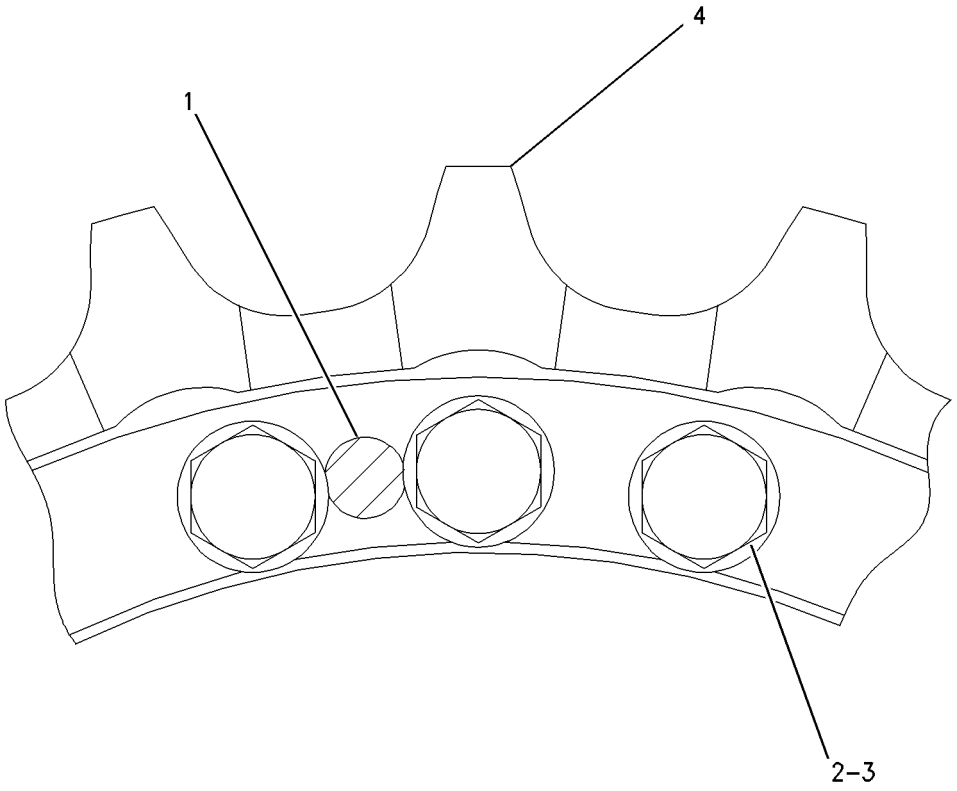

GRAPHIC #1 **<END>** g00792573

FRAME AND BODY

333-5261 BOX & MOUNTING GP

S/N: WAP1-UP

PART OF 294-1237 CHASSIS AR

SMCS-7268 **i03903973**

NOTE	REF NO	GRAPHIC REF	PART NUMBER	QTY	PART NAME 1 2 3 4 5 6 (PRODUCT LEVEL)	SEE PAGE
	1	1	**246-2641**	2	PADLOCK GP	
					(EACH INCLUDES)	
		1	**5P-8500**	1	KEY	
	2	1	**221-2687**	1	SHEET	
	3	1	**221-2688**	1	SHEET	
	4	1	**221-2689**	1	SHEET	
	5	1	**221-2690**	1	SHEET AS	
Y	6	1	*333-5262*	1	BOX GP-STORAGE	340
	7	1	**5P-1076**	19	WASHER-HARD (13.5X30X4-MM THK)	
M	8	1	**8T-4139**	12	BOLT (M12X1.75X30-MM)	
M	9	1	**8T-4192**	5	BOLT (M12X1.75X25-MM)	
M	10	1	**8T-4956**	2	BOLT (M12X1.75X35-MM)	

M-METRIC PART
Y-SEPARATE ILLUSTRATION

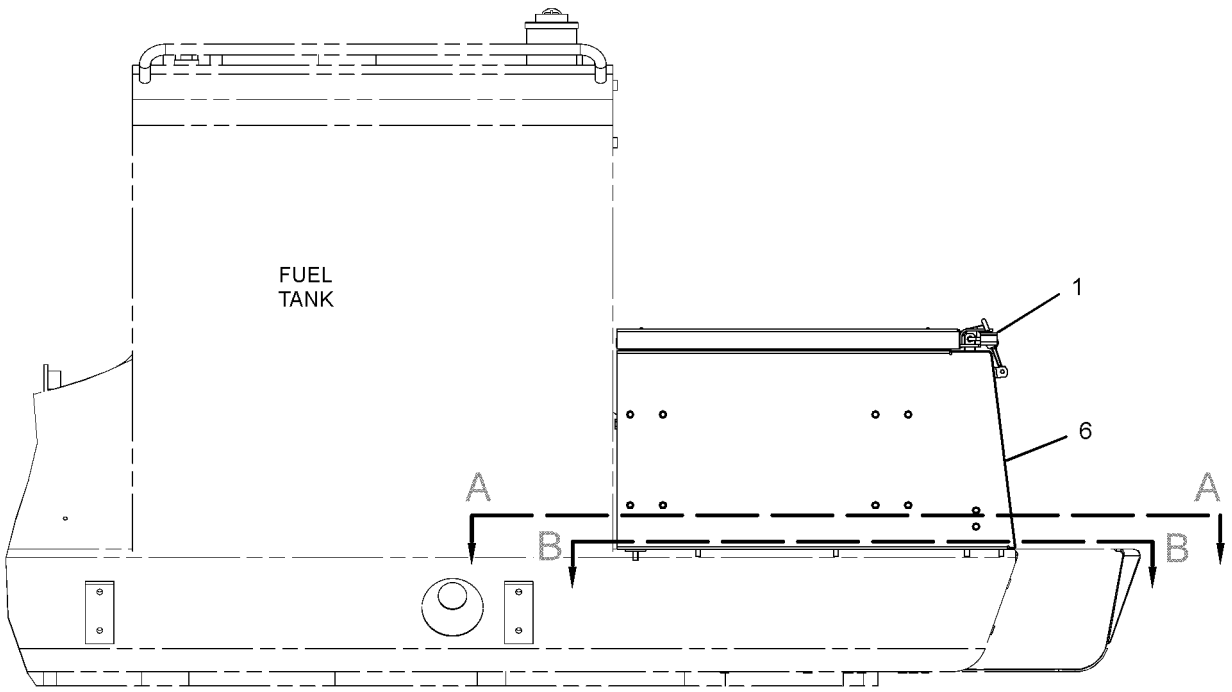

RIGHT SIDE VIEW

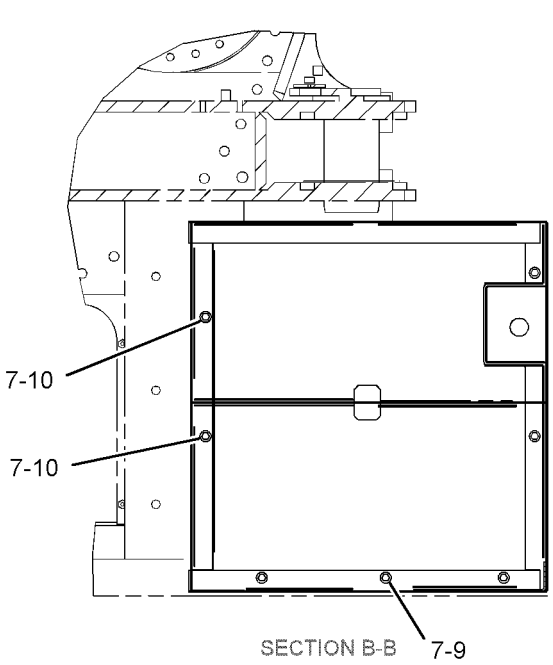

SECTION B-B

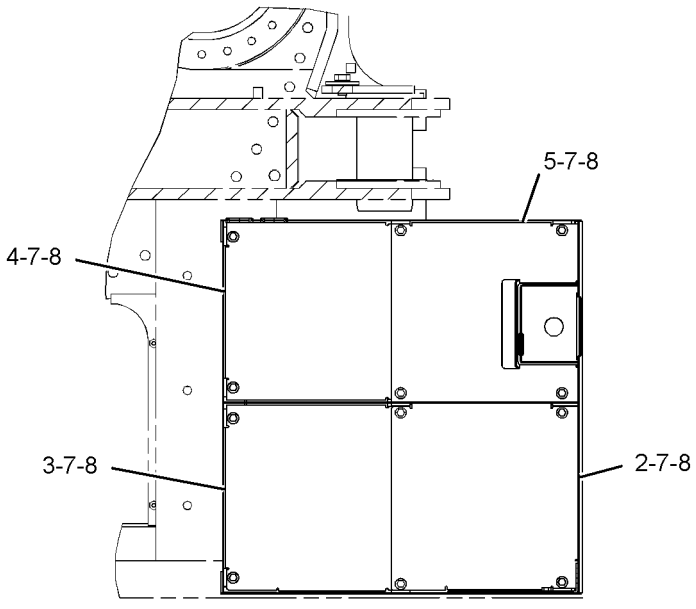

SECTION A-A

GRAPHIC #1 **<END>** g02160859

333-5319 BOX & MOUNTING GP—COLD WEATHER

S/N: WAP1-UP
PART OF 319-9235 STARTING AR-COLD WEATHER
AN ATTACHMENT

SMCS-7268 **i03910534**

NOTE	REF NO	GRAPHIC REF	PART NUMBER	QTY	PART NAME 1 2 3 4 5 6 (PRODUCT LEVEL)	SEE PAGE
	1	1	**246-2641**	1	PADLOCK GP	
		1	**5P-8500**	1	KEY	
M	2	1	**135-8573**	4	BOLT AS	
	3	1	**236-9624**	1	COVER AS	
Y	4	1	**333-5320**	1	SHEET AS-SOUND SUPPRESSION	417
Y	5	1	*336-1665*	1	BOX GP-BATTERY	339

M-METRIC PART
Y-SEPARATE ILLUSTRATION

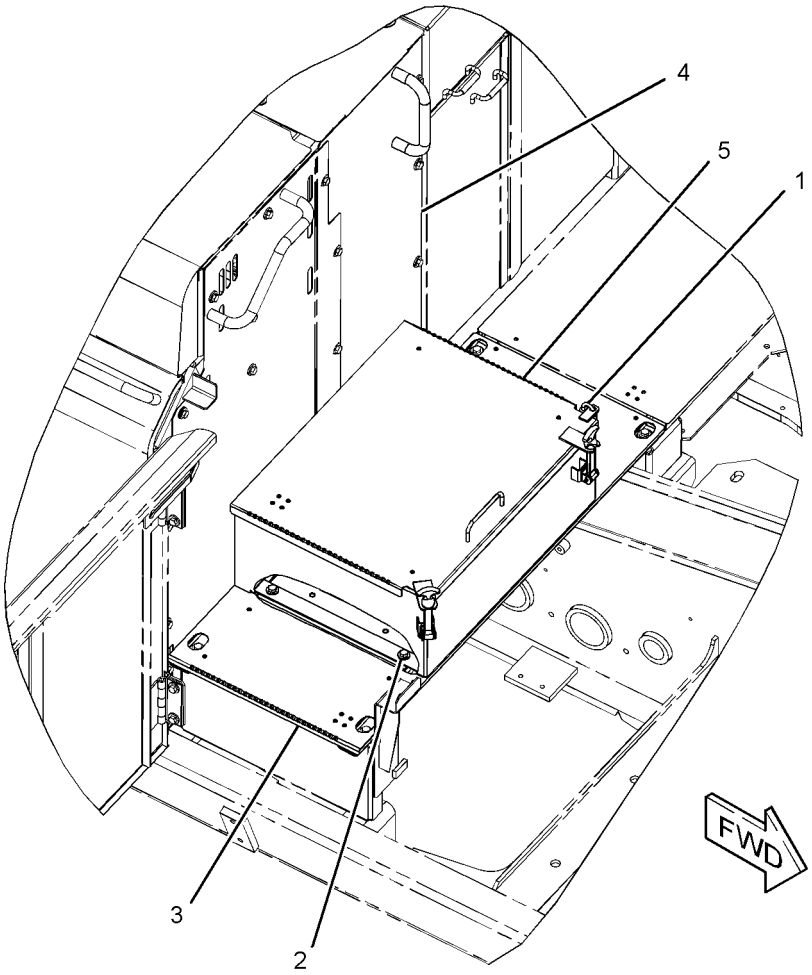

GRAPHIC #1 **<END>** g02151197

336-1665 BOX GP-BATTERY

S/N: WAP1-UP
PART OF 333-5319 BOX & MOUNTING GP
AN ATTACHMENT

SMCS-7257 **i03429981**

NOTE	REF NO	GRAPHIC REF	PART NUMBER	QTY	PART NAME 1 2 3 4 5 6 (PRODUCT LEVEL)	SEE PAGE
	1	1	**4I-2187**	1	SUPPORT AS	
		1	**4B-4278**	1	WASHER (10.2X20.5X1.6-MM THK)	
	2	1	**9M-3835**	2	LATCH-RUBBER	
	3	1	**093-2064**	1	GROMMET	
	4	1	**336-1666**	1	COVER AS-ACCESS	
	4A	1	**3D-9143**	2	HINGE-BUTT	
	4B	1	**7Y-2812**	1	HANDLE	
M	4C	1	**8T-5413**	4	STUD-WELD (M10X1.5X25-MM OAL)	
	5	1	**336-1667**	1	BOX AS-BATTERY	
		1	**6S-6652**	1	PLATE	
	6	1	**095-0843**	1	PIN-COTTER	
	7	1	**096-3780**	1	PIN-CLEVIS	
	8	1	**2M-5795**	2	PIN-CLEVIS	
	9	1	**3B-4607**	2	PIN-COTTER	
	10	1	**8T-4121**	4	WASHER-HARD (11X21X2.5-MM THK)	
M	11	1	**8T-4133**	4	NUT (M10X1.5-THD)	

M-METRIC PART

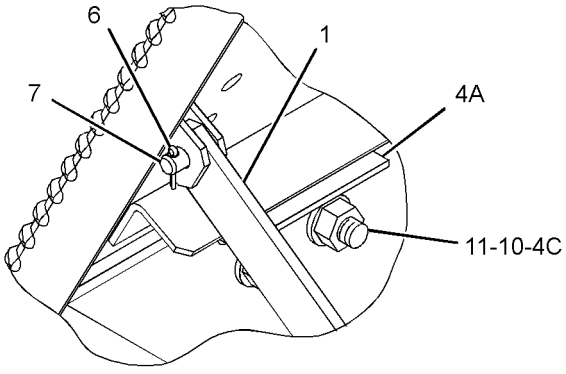

VIEW OF AREA A

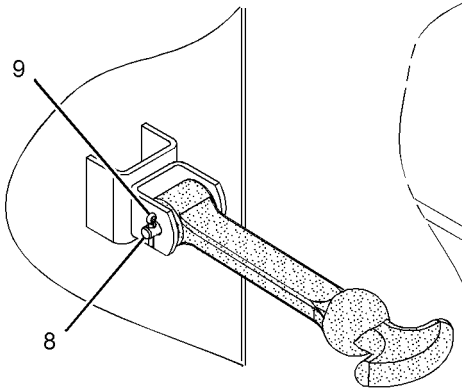

VIEW OF AREA B

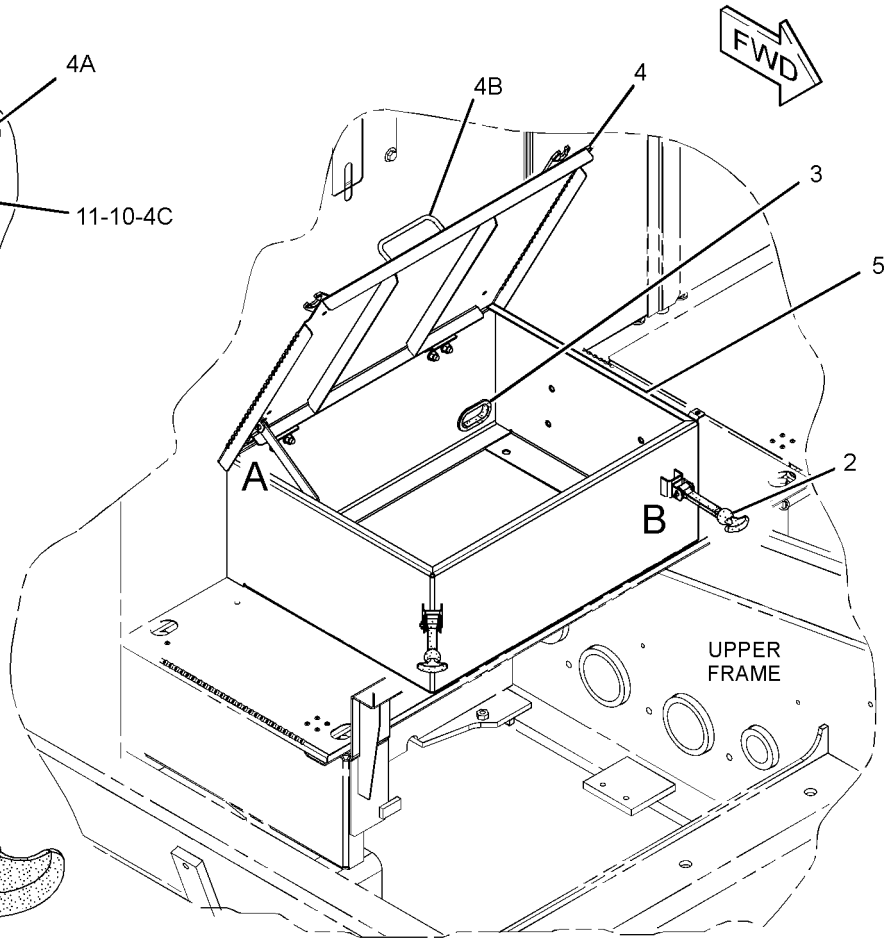

GRAPHIC #1 **<END>** g01790033

FRAME AND BODY

333-5262 BOX GP-STORAGE

S/N: WAP1-UP

PART OF 333-5261 BOX & MOUNTING GP

SMCS-7268 **i03903993**

NOTE	REF NO	GRAPHIC REF	PART NUMBER	QTY	PART NAME 1 2 3 4 5 6 (PRODUCT LEVEL)	SEE PAGE
	1	1	**4I-2187**	2	SUPPORT AS	
	2	1	**9M-3835**	2	LATCH-RUBBER	
	3	1	**177-5632**	2	GROMMET	
	4	1	**259-3505**	2	DOOR AS	
					(EACH INCLUDES)	
	4A	1	**3D-9143**	2	HINGE-BUTT	
	5	1	**333-5263**	1	BOX AS-STORAGE	
	6	1	**095-0843**	2	PIN-COTTER	
	7	1	**095-1314**	2	PIN-CLEVIS	
	8	1	**2M-5795**	2	PIN-CLEVIS	
	9	1	**3B-4607**	2	PIN-COTTER	
	10	1	**7Y-3281**	1	GROMMET	
	11	1	**8T-4121**	8	WASHER-HARD (11X21X2.5-MM THK)	
M	12	1	**8T-4133**	8	NUT (M10X1.5-THD)	
	13	1	**8T-4224**	4	WASHER-HARD (8.8X16X2-MM THK)	

M-METRIC PART

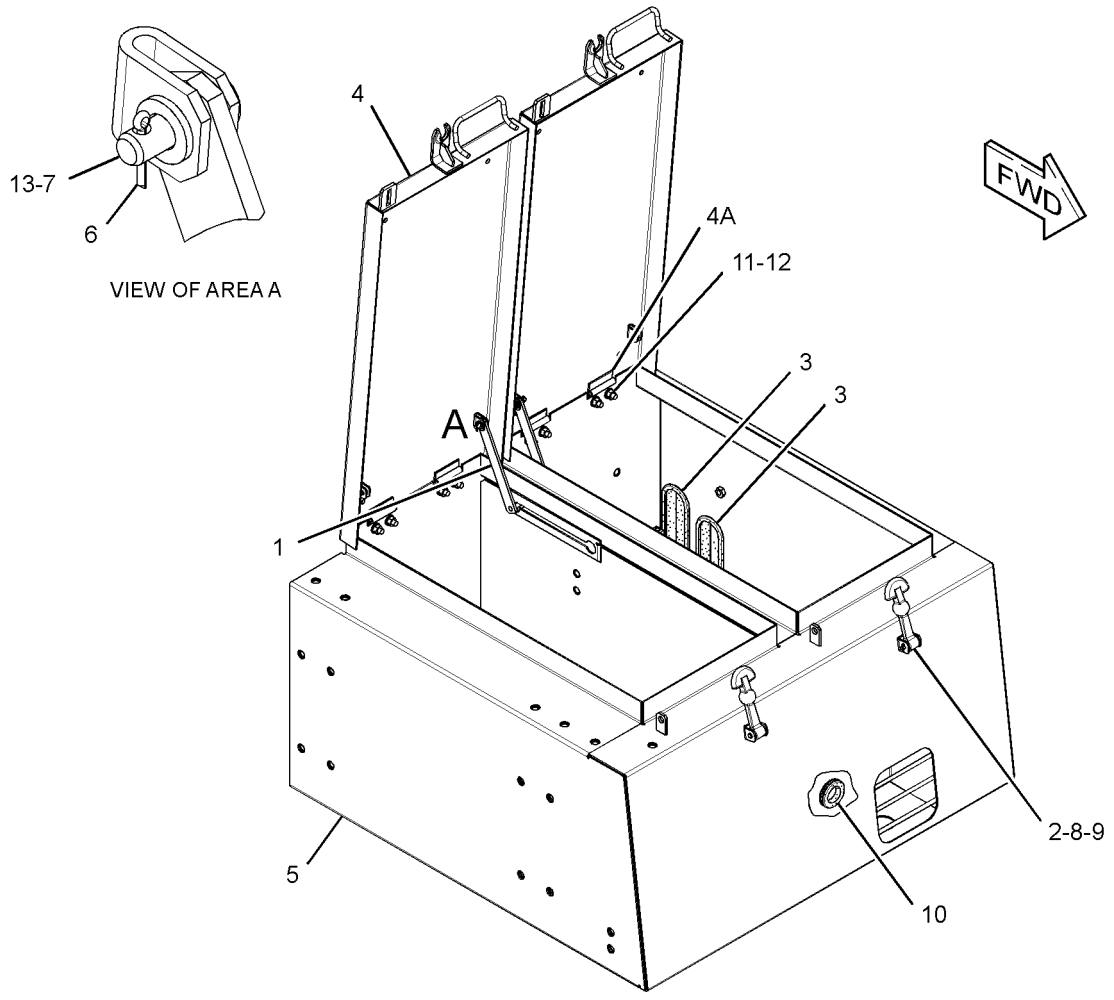

GRAPHIC #1 **<END>** g02161957

197-2173 CHAIN GP-COUNTERWEIGHT

S/N: WAP1-UP
PART OF 294-1295 COUNTERWEIGHT AR
AN ATTACHMENT

SMCS-6404, 7056 **i04025395**

NOTE	REF NO	GRAPHIC REF	PART NUMBER	QTY	PART NAME 1 2 3 4 5 6 (PRODUCT LEVEL)	SEE PAGE
	1	1	**173-8097**	2	CHAIN AS	
	2	1	**173-8099**	1	CASE AS	
	3	1	**146-1335**	2	SPACER	
M	4	1	**7X-2578**	2	BOLT (M24X3X200-MM)	
	5	1	**8T-4167**	2	WASHER-HARD (26X44X4-MM THK)	
	6	1	**146-1336**	2	PIN	
M	7	1	**096-4879**	2	NUT (M36X4-THD)	
	8	1	**086-0507**	2	PIN	
	9	1	**173-8103**	1	PLATE	
M	10	1	**8T-4139**	3	BOLT (M12X1.75X30-MM)	
	11	1	**8T-4223**	7	WASHER-HARD (13.5X25.5X3-MM THK)	
	12	1	**173-8102**	1	PIN	
	13	1	**173-8094**	2	SPROCKET AS	
					(EACH INCLUDES)	
		1	**173-8095**	1	BUSHING	
		1	**3B-8485**	1	FITTING-GREASE	
		1	**173-8096**	1	SPROCKET	
	14	1	**173-8104**	1	GUIDE AS	
M	15	1	**8T-4956**	4	BOLT (M12X1.75X35-MM)	
	16	1	**173-8106**	1	SUPPORT	
M	17	1	*146-1346*	2	PIN	
M	18	1	**8T-4131**	2	NUT (M20X2.5-THD)	
	19	1	**093-0349**	2	WASHER (22X60X6-MM THK)	

M-METRIC PART

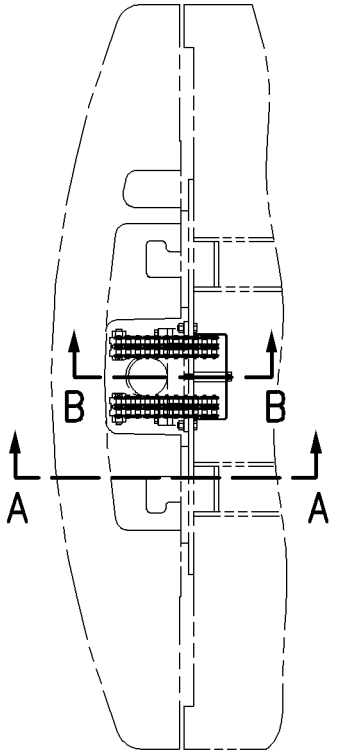

TOP VIEW

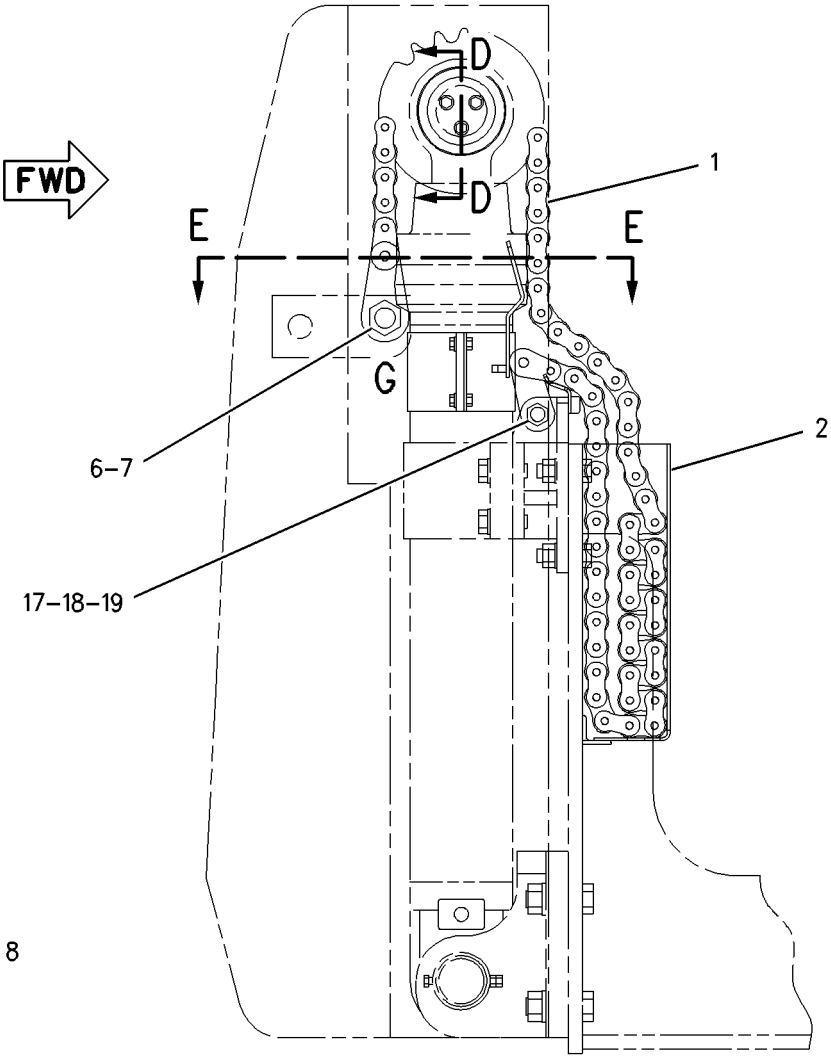

SECTION A-A

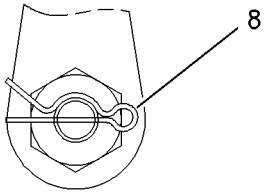

VIEW OF AREA G

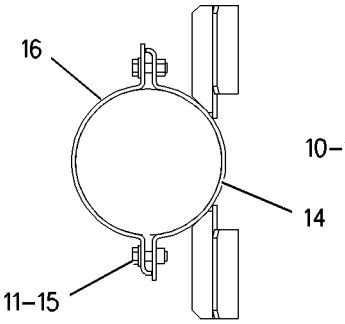

SECTION E-E

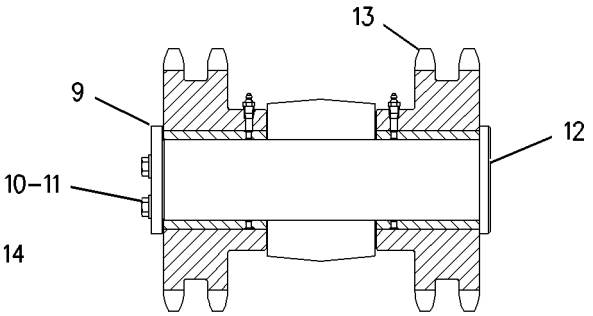

SECTION D-D

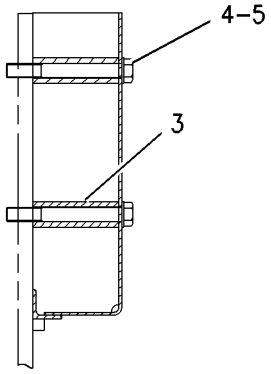

SECTION B-B

GRAPHIC #1 **<END>** g00838522

333-5022 COUNTERWEIGHT & MOUNTING GP

S/N: WAP1-UP

PART OF 294-1237 CHASSIS AR

SMCS-7056 **i03903932**

NOTE	REF NO	GRAPHIC REF	PART NUMBER	QTY	PART NAME 1 2 3 4 5 6 (PRODUCT LEVEL)	SEE PAGE
Y	1	1	*333-5026*	1	COUNTERWEIGHT GP	346
	2	1	**170-2977**	6	SPACER (39X100X50-MM THK)	
M	3	1	**127-7678**	6	BOLT (M36X4X603-MM)	
	4	1	**3D-9428**	1	CLIP	
	5	1	**259-6227**	1	ROD	
M	6	1	**135-8573**	10	BOLT AS	
	7	1	**259-3525**	1	COVER AS-ACCESS	
	7A	1	**259-3680**	1	HINGE	
	8	1	**259-3943**	1	RETAINER-ROD (RUBBER)	

M-METRIC PART
Y-SEPARATE ILLUSTRATION

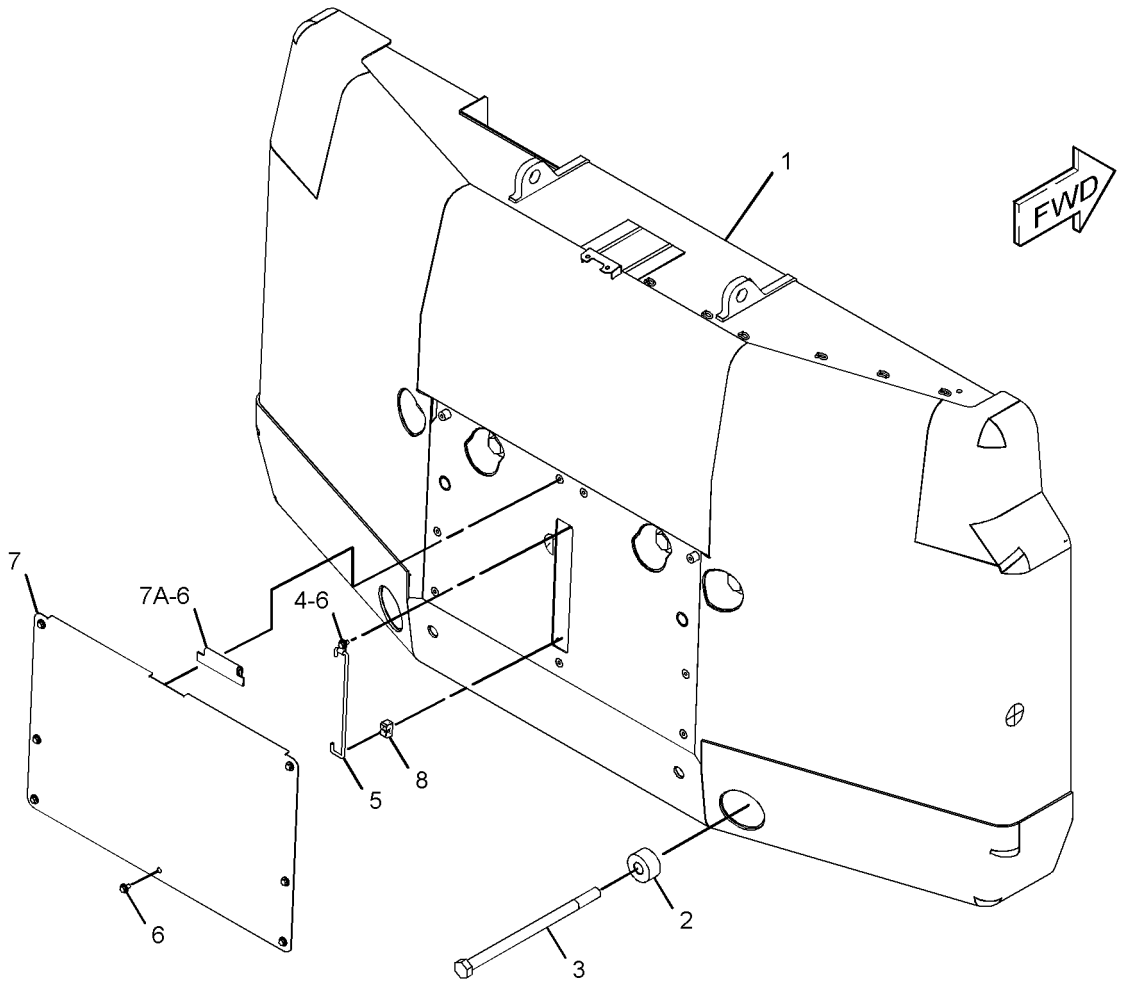

GRAPHIC #1 **<END>** g02157174

FRAME AND BODY

333-5130 COUNTERWEIGHT & MOUNTING GP

S/N: WAP1-UP
12410-KG (27360-LB)
PART OF 294-1295 COUNTERWEIGHT AR
AN ATTACHMENT

SMCS-7056 **i03907291**

NOTE	REF NO	GRAPHIC REF	PART NUMBER	QTY	PART NAME 1 2 3 4 5 6 (PRODUCT LEVEL)	SEE PAGE
	1	1	**333-5131**	1	COUNTERWEIGHT AS	
	2	1	**170-2977**	6	SPACER (39X100X50-MM THK)	
M	3	1	**127-7678**	6	BOLT (M36X4X603-MM)	
	4	1	**3D-9428**	1	CLIP	
M	5	1	**135-8573**	10	BOLT AS	
	6	1	**259-3943**	1	RETAINER-ROD (RUBBER)	
	7	1	**259-6227**	1	ROD	
	8	1	**259-3525**	1	COVER AS-ACCESS	
	8A	1	**259-3680**	1	HINGE	

M-METRIC PART

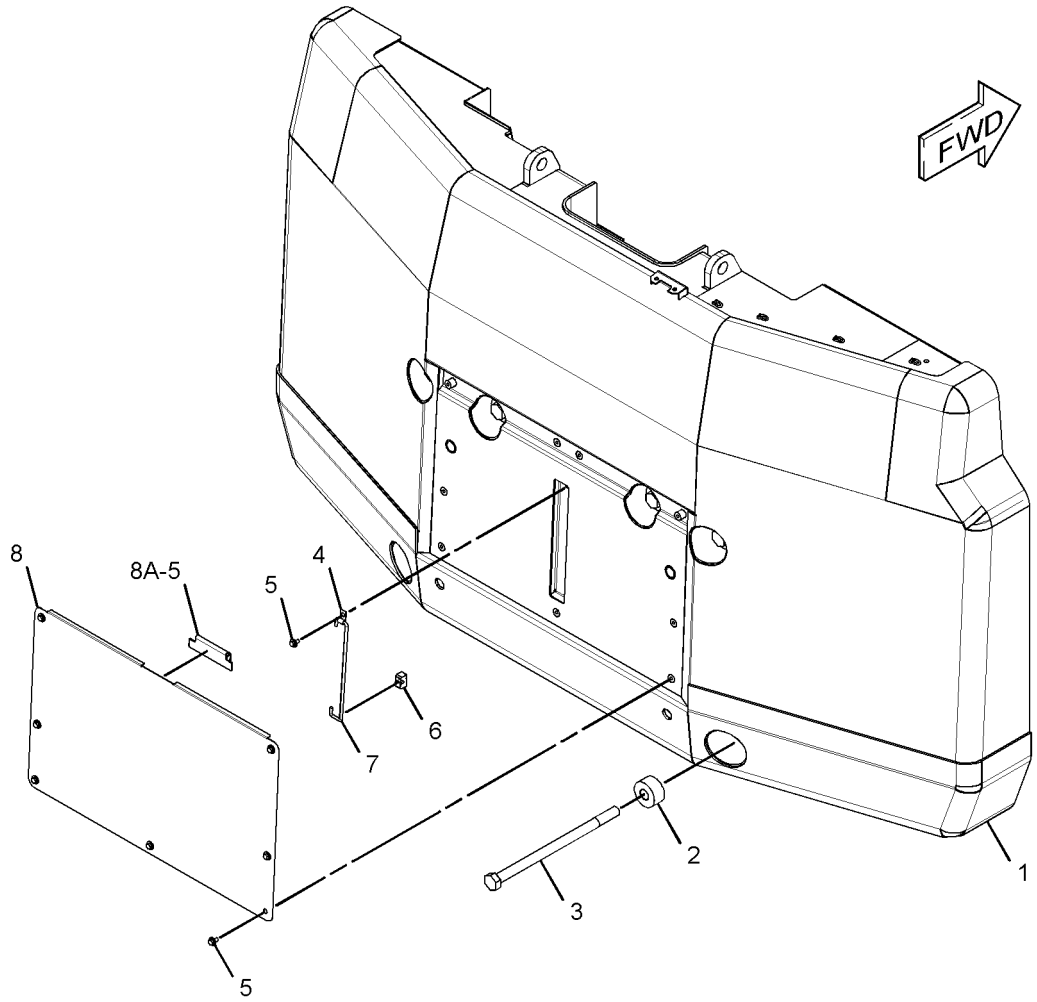

GRAPHIC #1 **<END>** g02179976

FRAME AND BODY

294-1295 COUNTERWEIGHT AR

S/N: WAP1-UP

AN ATTACHMENT

SMCS-7056 **i03907277**

NOTE	PART NUMBER	QTY	PART NAME 1 2 3 4 5 6 (PRODUCT LEVEL)	SEE PAGE
Y	*197-2173*	1	CHAIN GP-COUNTERWEIGHT	341
Y	*333-5130*	1	COUNTERWEIGHT & MOUNTING GP	344
Y	*155-9196*	1	CYLINDER GP-COUNTERWEIGHT	499
Y	*245-5554*	1	FILM GP (COUNTERWEIGHT REMOVAL)	1069
Y	*308-8766*	1	FRAME GP-UPPER	361
Y	*327-3173*	1	HOOD GP (COUNTERWEIGHT REMOVAL)	388
Y	*296-7115*	1	LINES GP-REAR ATTACHMENT	613
Y	*197-2172*	1	MOUNTING GP-COUNTERWEIGHT CYL	657
Y	*238-1548*	1	WIRING GP-COUNTERWEIGHT (COUNTERWEIGHT REMOVAL)	307

Y-SEPARATE ILLUSTRATION

<END>

FRAME AND BODY

333-5026 COUNTERWEIGHT GP

S/N: WAP1-UP
12350-KG (27170-LB)
PART OF 333-5022 COUNTERWEIGHT & MOUNTING GP

SMCS-7056 **i03903955**

NOTE	REF NO	GRAPHIC REF	PART NUMBER	QTY	PART NAME 1 2 3 4 5 6 (PRODUCT LEVEL)	SEE PAGE
	1	1	**333-5027**	1	COUNTERWEIGHT AS	
	2	1	**203-5209**	1	LINER	

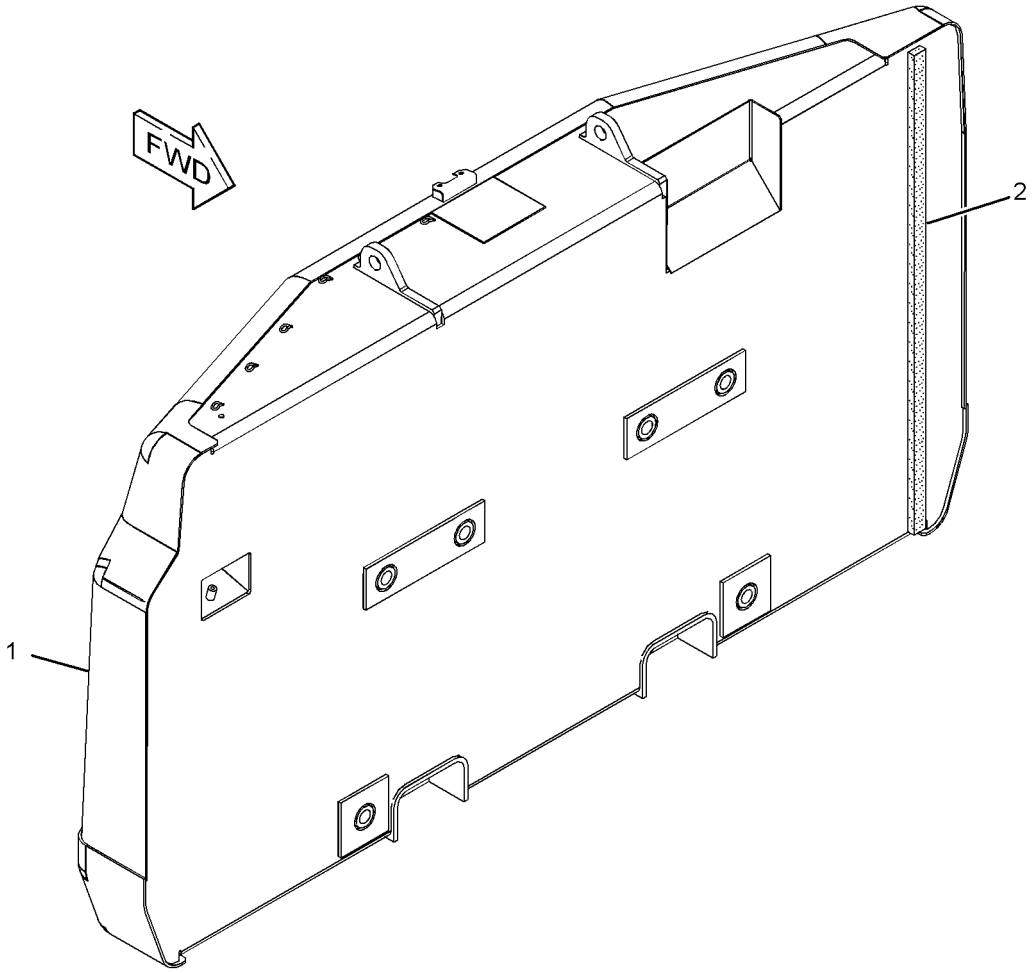

GRAPHIC #1 **<END>** g02153673

FRAME AND BODY

307-7890 COVER AS-SOUND SUPPRESSION—ENGINE

S/N: WAP1-UP

PART OF 327-3172 HOOD & GUARD GP

SMCS-7253, 7263, 7276, 795C **i03079419**

NOTE	REF NO	GRAPHIC REF	PART NUMBER	QTY	PART NAME 1 2 3 4 5 6 (PRODUCT LEVEL)	SEE PAGE
	1	1	**177-5654**	1	INSULATION	
	2	1	**177-5655**	1	INSULATION	
	3	1	**244-8155**	1	LINER	

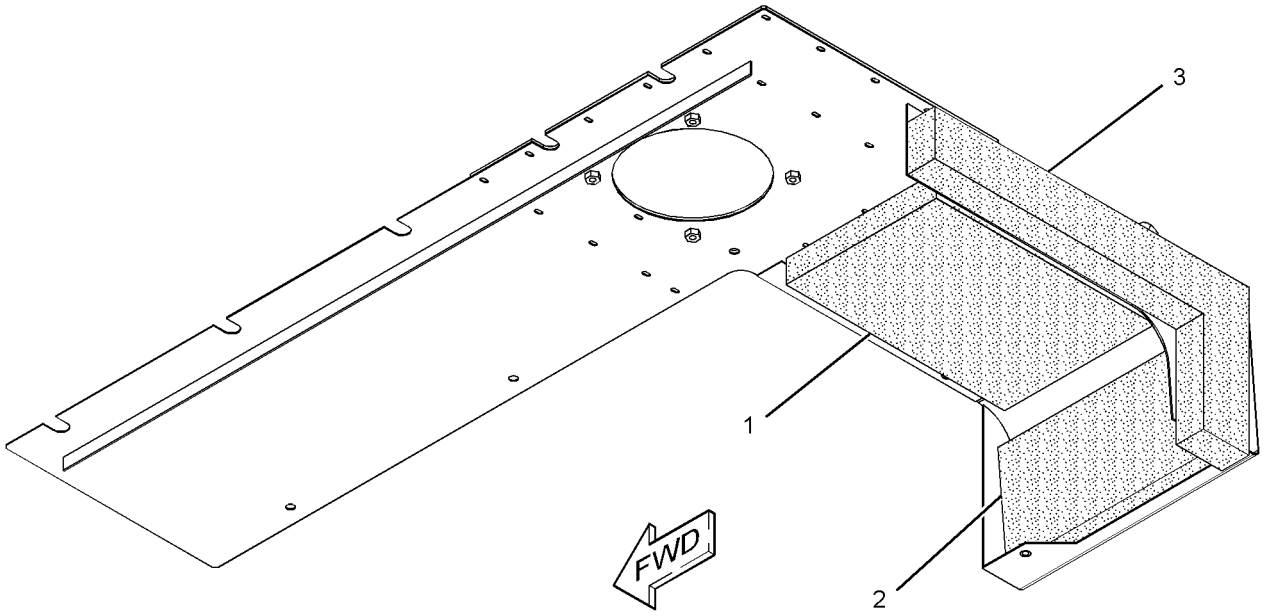

GRAPHIC #1 **<END>** g01575173

FRAME AND BODY

313-7896 COVER GP-ACCESS—RADIATOR

S/N: WAP1-UP

PART OF 313-7848 HOOD & GUARD GP

SMCS-726A **i03903278**

NOTE	REF NO	GRAPHIC REF	PART NUMBER	QTY	PART NAME 1 2 3 4 5 6 (PRODUCT LEVEL)	SEE PAGE
	1	1	**1K-8850**	1	SPRING	
	2	1	**5V-3854**	1	BUMPER	
	3	1	**7Y-8876**	1	DOOR AS	
	3A	1	**9V-3659**	1	HINGE	
M	4	1	**135-8573**	4	BOLT AS	
	5	1	**177-5637**	2	LINER	
	6	1	**244-8158**	1	LINER	
	7	1	**244-8159**	2	SHEET	
	8	1	**244-8160**	1	LINER	
	9	1	**313-7897**	1	HOOD AS	
	10	1	**8T-4121**	2	WASHER-HARD (11X21X2.5-MM THK)	
M	11	1	**8T-4133**	2	NUT (M10X1.5-THD)	

M-METRIC PART

313-7896 COVER GP-ACCESS *(contd.)* **i03903278**

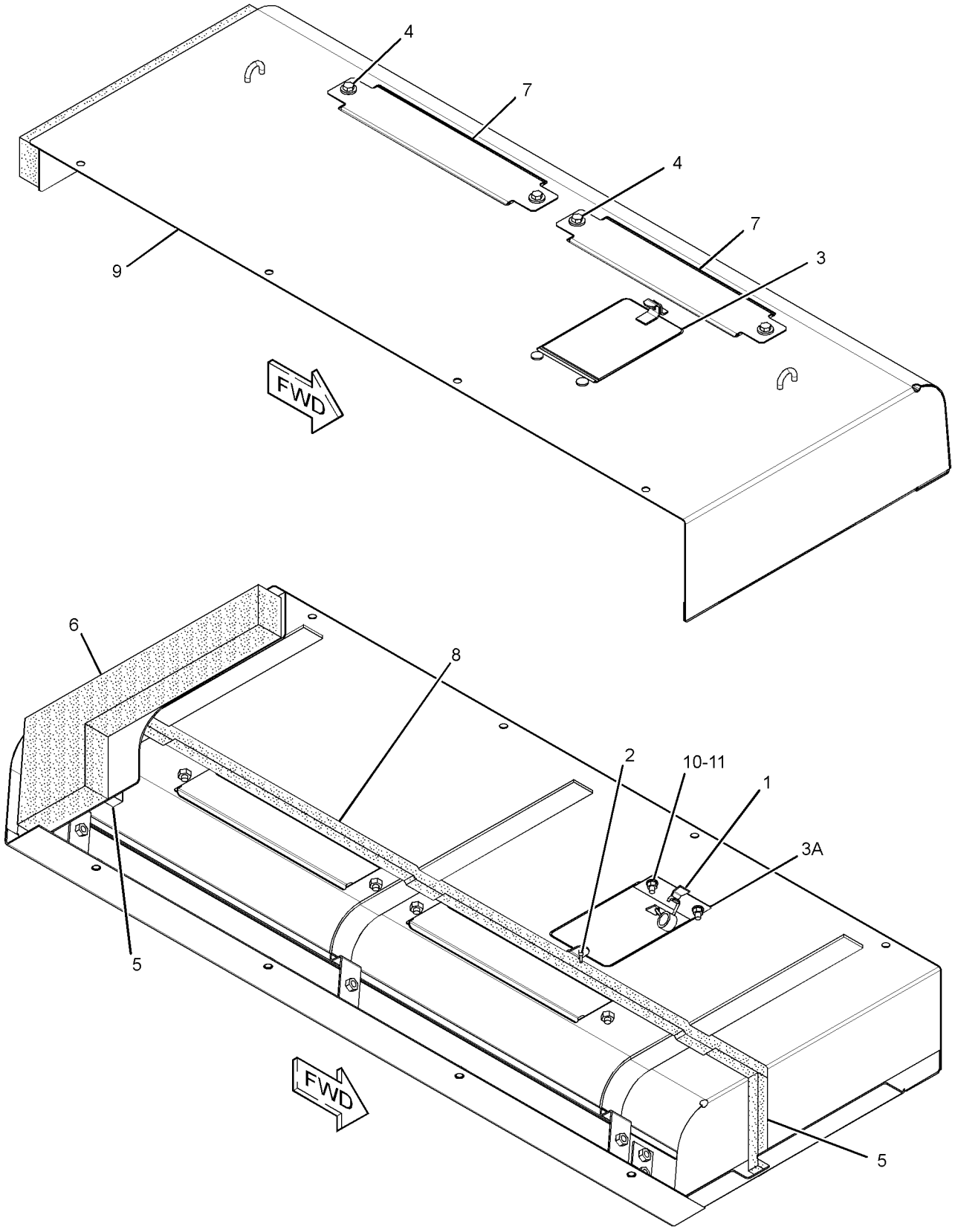

GRAPHIC #1 **<END>** g02157909

FRAME AND BODY

199-0071 COVER GP-CONTROL VALVE

S/N: WAP1-UP
PART OF 302-9443 CONTROL AR-COUPLER
AN ATTACHMENT

SMCS-7150 **i03612070**

NOTE	REF NO	GRAPHIC REF	PART NUMBER	QTY	PART NAME 1 2 3 4 5 6 (PRODUCT LEVEL)	SEE PAGE
M	1	1	**135-8573**	5	BOLT AS	
	2	1	**184-9085**	1	COVER AS	

M-METRIC PART

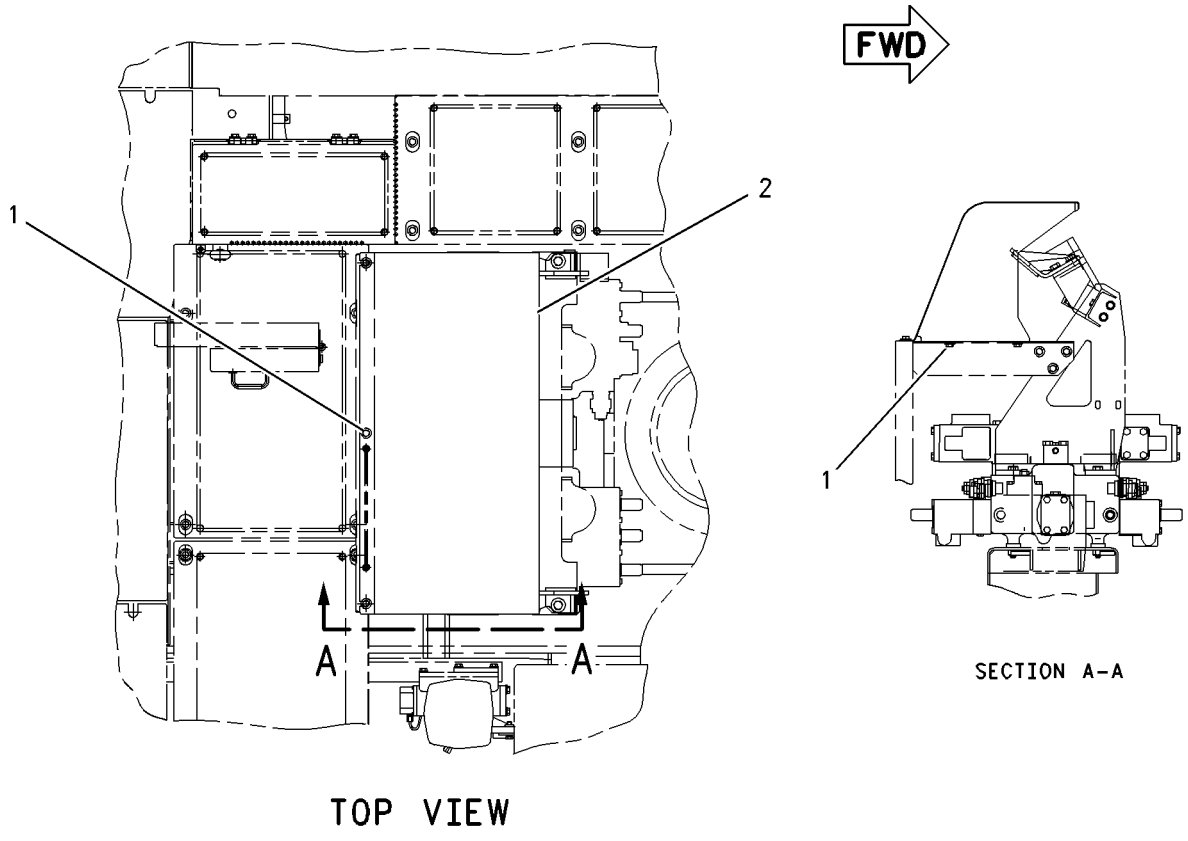

TOP VIEW

GRAPHIC #1 **<END>** g00795605

FRAME AND BODY

362-4374 COVER GP-CONTROL VALVE

S/N: WAP1-UP

PART OF 294-1237 CHASSIS AR

SMCS-7150 **i03998556**

NOTE	REF NO	GRAPHIC REF	PART NUMBER	QTY	PART NAME 1 2 3 4 5 6 (PRODUCT LEVEL)	SEE PAGE
M	1	1	**135-8575**	5	BOLT AS	
	2	1	**362-4375**	1	COVER AS	

M-METRIC PART

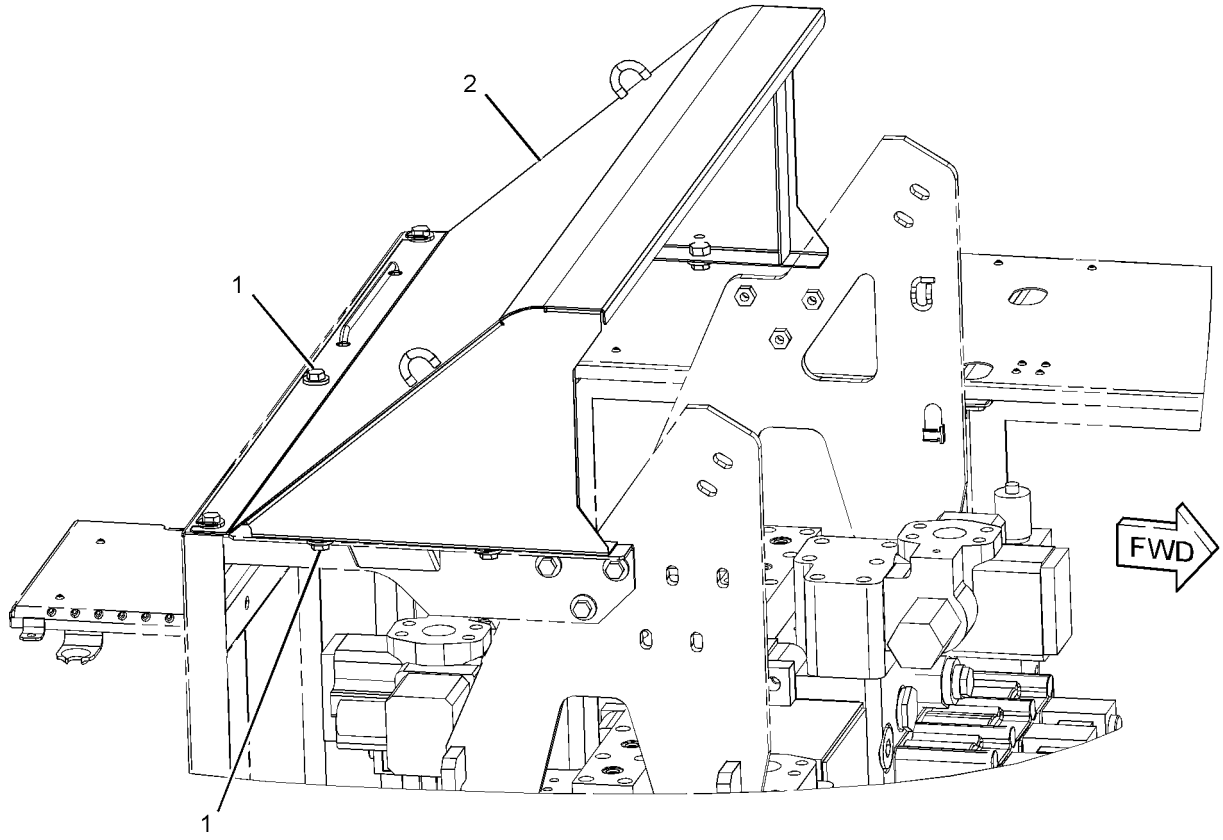

GRAPHIC #1 **<END>** g02177027

362-4377 COVER GP-CONTROL VALVE

S/N: WAP1-UP
PART OF 310-0005, 310-0006 CONTROL AR-AUXILIARY
AN ATTACHMENT

SMCS-7150 **i03998608**

NOTE	REF NO	GRAPHIC REF	PART NUMBER	QTY	PART NAME 1 2 3 4 5 6 (PRODUCT LEVEL)	SEE PAGE
M	1	1	**135-8575**	5	BOLT AS	
	2	1	**362-4378**	1	COVER AS	

M-METRIC PART

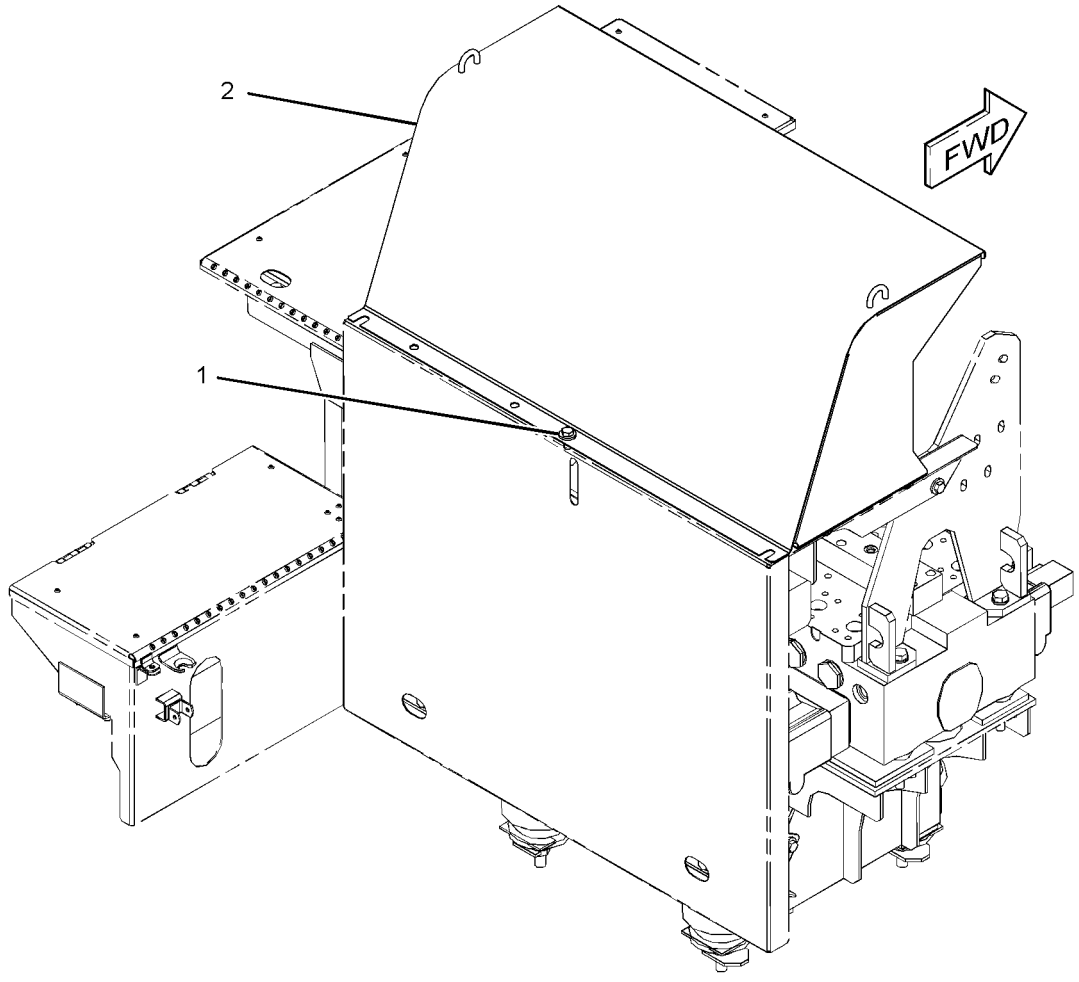

GRAPHIC #1 **<END>** g02176772

FRAME AND BODY

307-7905 COVER GP-SOUND SUPPRESSION

S/N: WAP1-UP
PART OF 307-8001 HOOD & GUARD GP
AN ATTACHMENT

SMCS-1801, 7251 **i03133502**

NOTE	REF NO	GRAPHIC REF	PART NUMBER	QTY	PART NAME 1 2 3 4 5 6 (PRODUCT LEVEL)	SEE PAGE
	1	1	**177-5654**	1	INSULATION	
	2	1	**177-5655**	1	INSULATION	
	3	1	**244-8155**	1	LINER	

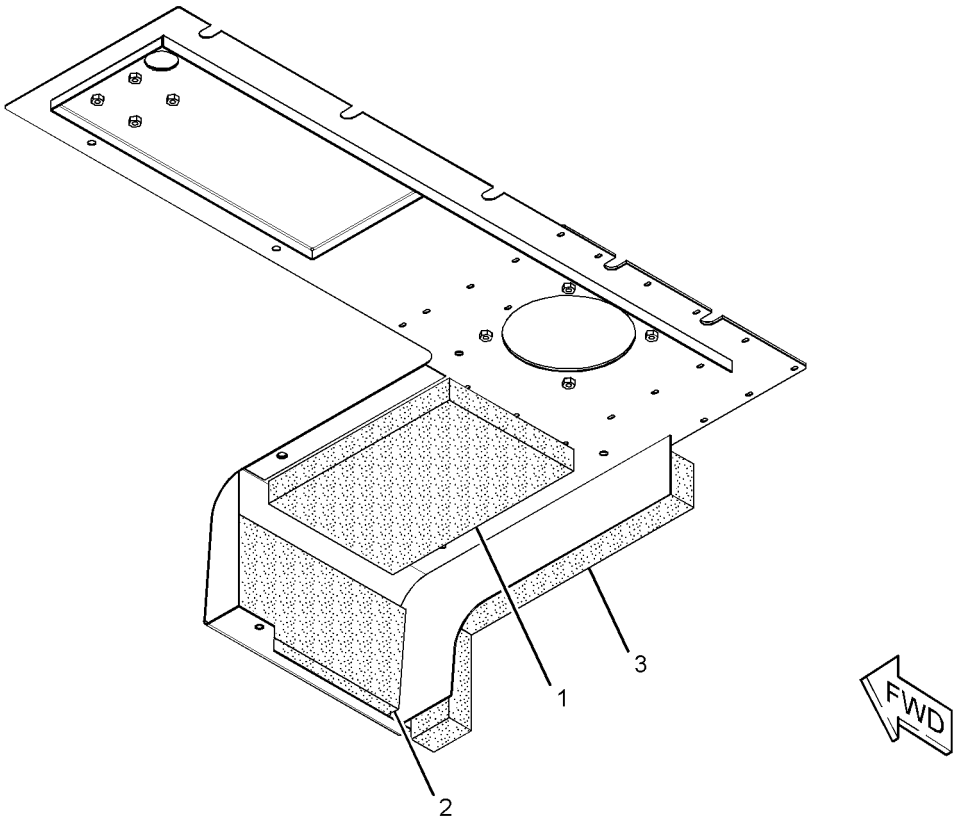

GRAPHIC #1 **<END>** g01676774

FRAME AND BODY

303-9677 DOOR AS-ACCESS—PUMP COMPARTMENT

S/N: WAP1-UP

PART OF 327-3172 HOOD & GUARD GP

SMCS-7273 **i03908961**

NOTE	REF NO	GRAPHIC REF	PART NUMBER	QTY	PART NAME 1 2 3 4 5 6 (PRODUCT LEVEL)	SEE PAGE
	1	1	**177-5582**	3	INSULATION	
	2	1	**177-5583**	1	INSULATION	
	3	1	**349-0173**	1	LINER	
	4	1	**177-5587**	1	LINER	
	5	1	**244-8027**	1	LINER	
	6	1	**244-8028**	1	INSULATION	
	7	1	**244-8029**	2	INSULATION	
	8	1	**244-8031**	1	INSULATION	
	9	1	**244-8032**	1	INSULATION	
	10	1	**244-8033**	2	INSULATION	
	11	1	**244-8034**	1	INSULATION	
	12	1	**244-8035**	2	INSULATION	
	13	1	**244-8176**	1	INSULATION	
	14	1	**244-8177**	1	INSULATION	
	15	1	*303-9678*	1	DOOR AS-ACCESS	
	15A	1	**105-6855**	2	HINGE	

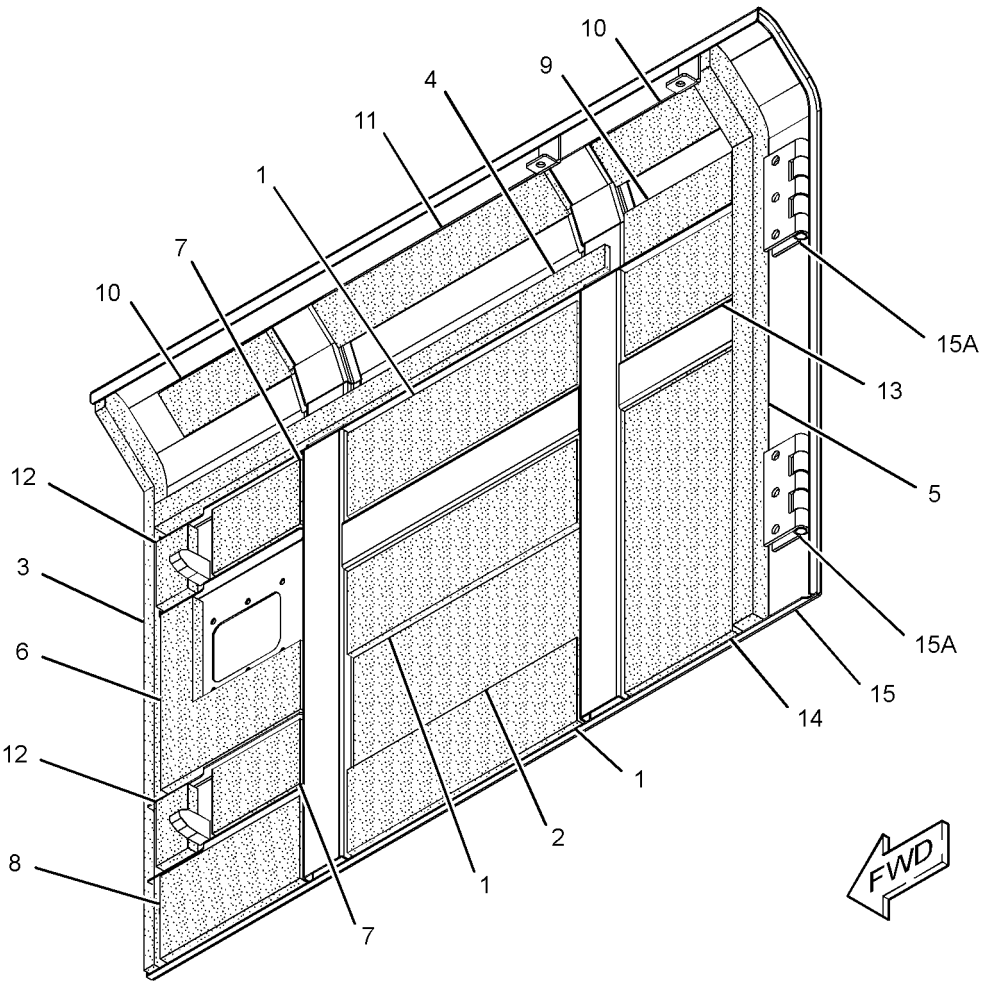

GRAPHIC #1 **<END>** g01574134

303-9679 DOOR AS-ACCESS—PUMP COMPARTMENT

S/N: WAP1-UP
PART OF 327-3173 HOOD GP
AN ATTACHMENT

SMCS-7273 **i04000501**

NOTE	REF NO	GRAPHIC REF	PART NUMBER	QTY	PART NAME 1 2 3 4 5 6 (PRODUCT LEVEL)	SEE PAGE
	1	1	**349-0173**	1	LINER	
	2	1	**177-5587**	1	LINER	
	3	1	**105-6855**	2	HINGE	

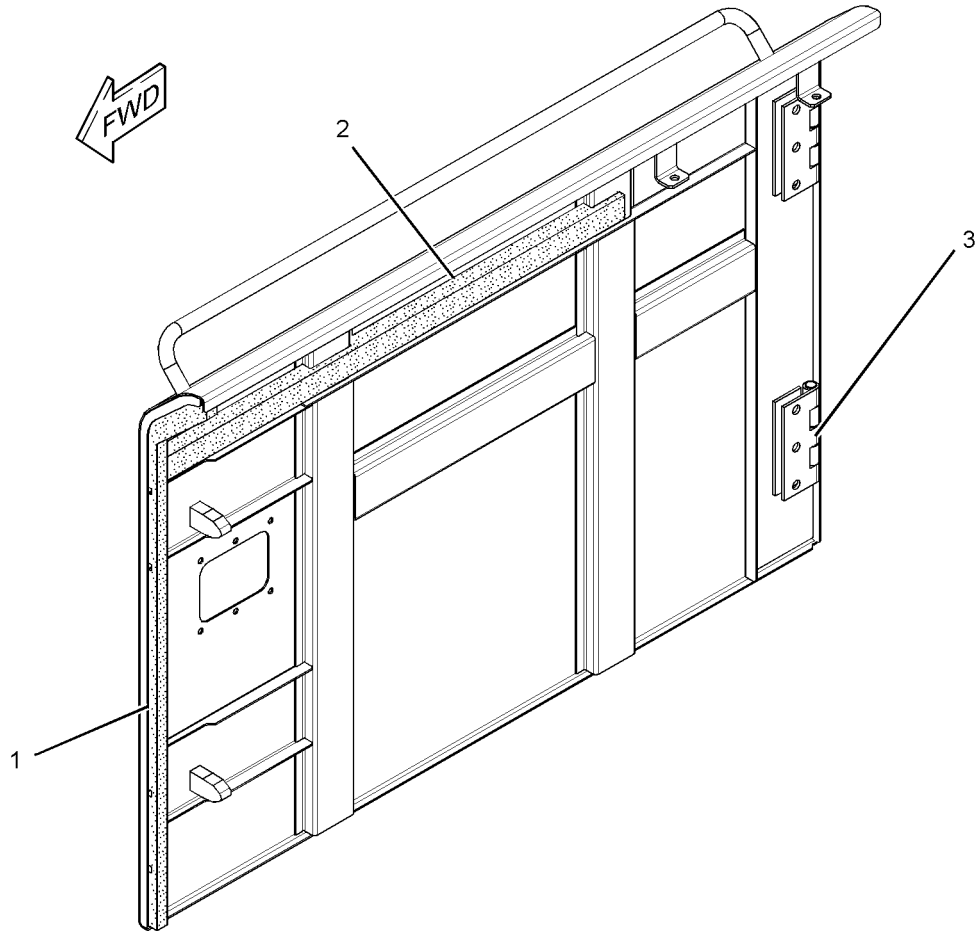

GRAPHIC #1 **<END>** g02188874

FRAME AND BODY

236-9345 DOOR GP-ACCESS—ENGINE COMPARTMENT

S/N: WAP1-UP

PART OF 313-8122 HOOD & GUARD GP

SMCS-7273 **i03627043**

NOTE	REF NO	GRAPHIC REF	PART NUMBER	QTY	PART NAME 1 2 3 4 5 6 (PRODUCT LEVEL)	SEE PAGE
	1	1	**4I-7924**	4	WASHER (4.5X40X1.2-MM THK)	
	2	1	**6P-2216**	4	CAP	
	3	1	**184-8258**	1	SHEET-RUBBER	
	4	1	**203-5161**	1	INSULATION	
	5	1	**203-5162**	1	INSULATION	
	6	1	**146-4936**	1	HANDLE AS	
D	7	1	**101-9848**		SEAL (0.4-M)	

D-ORDER BY THE METER

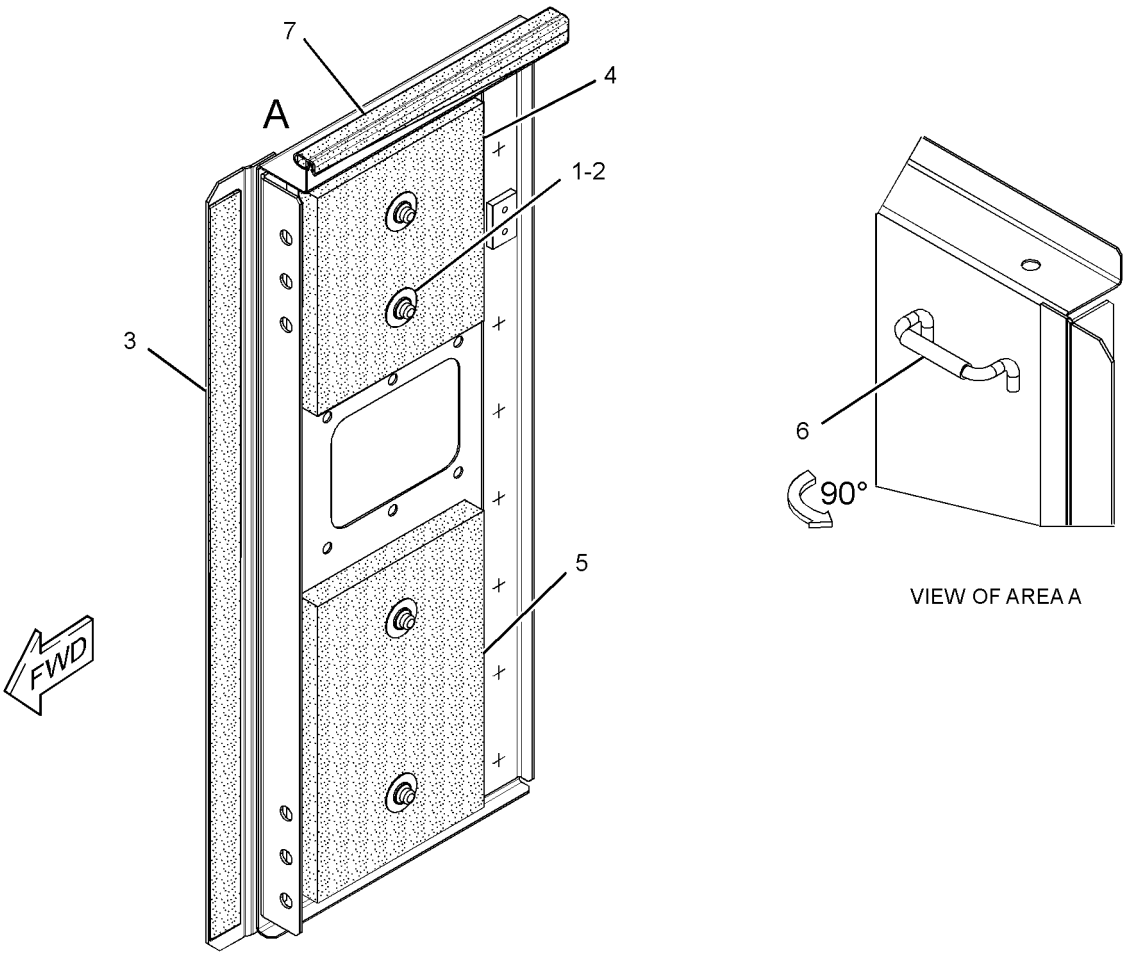

VIEW OF AREA A

GRAPHIC #1 **<END>** g01943295

248-9358 DOOR GP-ACCESS—HYDRAULIC OIL COOLER, RADIATOR

S/N: WAP1-UP
PART OF 319-9265 CONTROL AR-FAN
AN ATTACHMENT

SMCS-7273 **i03584002**

NOTE	REF NO	GRAPHIC REF	PART NUMBER	QTY	PART NAME 1 2 3 4 5 6 (PRODUCT LEVEL)	SEE PAGE
C	1	1	**339-7476**	1	DOOR AS-ACCESS (FUEL CLR, HYD CLR, RFGT COND)	
C	2	1	**339-7477**	1	DOOR AS-ACCESS (RADIATOR)	
					(EACH DOOR AS-ACCESS INCLUDES)	
		1	**105-6855**	2	HINGE	

C-CHANGE FROM PREVIOUS TYPE

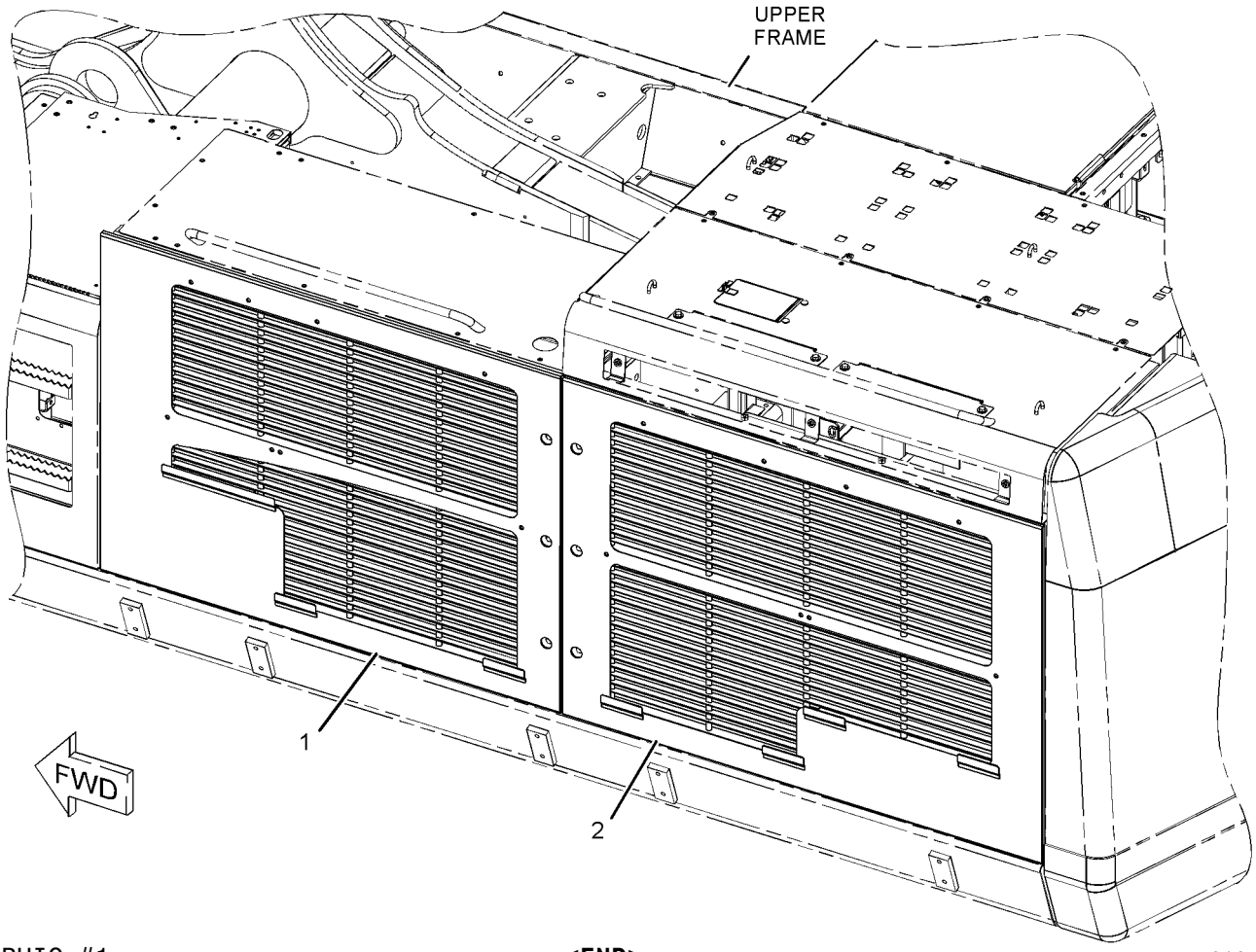

GRAPHIC #1 **<END>** g01074153

FRAME AND BODY

313-7890 DOOR GP-ACCESS—ENGINE COMPARTMENT

S/N: WAP1-UP

PART OF 313-8122 HOOD & GUARD GP

SMCS-7273 **i03799623**

NOTE	REF NO	GRAPHIC REF	PART NUMBER	QTY	PART NAME 1 2 3 4 5 6 (PRODUCT LEVEL)	SEE PAGE
	1	1	**4I-7924**	7	WASHER (4.5X40X1.2-MM THK)	
	2	1	**6P-2216**	7	CAP	
	3	1	*313-7891*	1	DOOR AS-ACCESS	
	3A	1	**4I-7948**	2	HINGE AS	
	3B	1	**4I-7949**	2	HINGE	
	4	1	**313-7893**	1	INSULATION	
D	5	1	**101-9848**		SEAL (0.5-M)	

D-ORDER BY THE METER

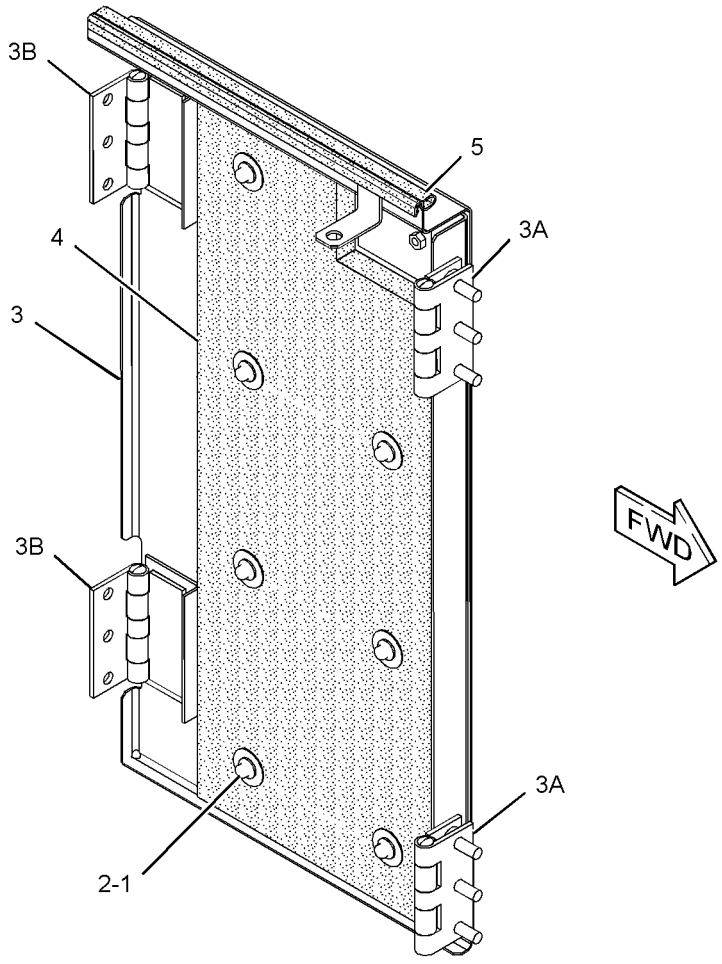

GRAPHIC #1 **<END>** g02109693

FRAME AND BODY

308-8763 FRAME GP-UPPER

S/N: WAP1-UP

PART OF 294-1237 CHASSIS AR

SMCS-7051 **i04025396**

NOTE	REF NO	GRAPHIC REF	PART NUMBER	QTY	PART NAME 1 2 3 4 5 6 (PRODUCT LEVEL)	SEE PAGE
	1	1	**1K-8850**	2	SPRING	
	2	1	**5V-3854**	2	BUMPER	
	3	1	**087-3765**	1	DOOR AS	
		1	**4K-8501**	2	CLIP	
	3A	1	**9V-3659**	1	HINGE	
	4	1	**115-2670**	2	PIN AS	
B	5	1	**123-5362**	4	SHIM (1-MM THK)	
B	6	1	**123-5364**	4	SHIM (2-MM THK)	
	7	1	**123-5574**	4	SPACER (153X210X14-MM THK)	
B	8	1	**174-8354**	8	SHIM (0.5-MM THK)	
	9	1	**201-2771**	4	WASHER (26X90X8-MM THK)	
	10	1	**254-2869**	1	DOOR AS	
		1	**4K-8501**	2	CLIP	
	10A	1	**254-2870**	1	HINGE AS	
	11	1	**308-8764**	1	FRAME AS-UPPER	
	11A	1	**151-0474**	1	BOSS	
	12	1	**330-2775**	2	PIN AS	
M	13	1	**7X-2573**	2	BOLT (M24X3X40-MM)	
M	14	1	**7X-2574**	2	BOLT (M24X3X45-MM)	
	15	1	**8T-4121**	2	WASHER-HARD (11X21X2.5-MM THK)	
M	16	1	**8T-4133**	2	NUT (M10X1.5-THD)	
	17	1	**8T-4167**	4	WASHER-HARD (26X44X4-MM THK)	
M	18	1	**8T-4192**	2	BOLT (M12X1.75X25-MM)	
	19	1	**8T-4223**	2	WASHER-HARD (13.5X25.5X3-MM THK)	
M	20	1	**8T-5413**	2	STUD-WELD (M10X1.5X25-MM OAL)	
					THE FOLLOWING REPAIR PARTS ARE AVAILABLE FOR REPAIR OF DAMAGED SKIRTS	
					AVAILABLE REPAIR KIT(S):	
			184-5719	1	PLATE-SKIRT (1100-MM)	
			184-5720	1	PLATE-SKIRT (2000-MM)	

B-USE AS REQUIRED
M-METRIC PART

308-8763 **FRAME GP-UPPER** *(contd.)* **i04025396**

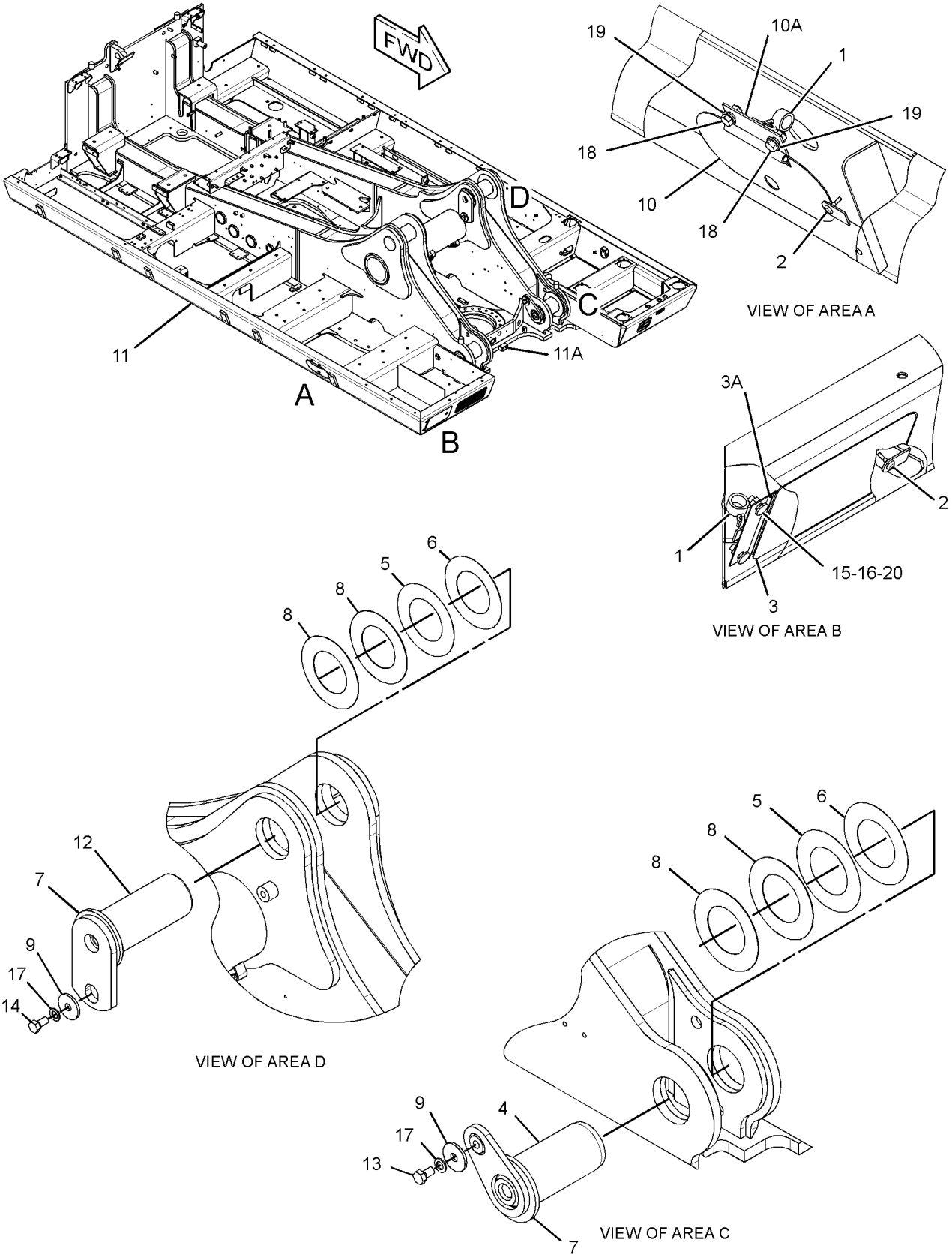

GRAPHIC #1 **<END>** g02158835

308-8766 FRAME GP-UPPER

S/N: WAP1-UP
PART OF 294-1295 COUNTERWEIGHT AR
AN ATTACHMENT

SMCS-7051 **i03907298**

NOTE	REF NO	GRAPHIC REF	PART NUMBER	QTY	PART NAME 1 2 3 4 5 6 (PRODUCT LEVEL)	SEE PAGE
	1	1	**1K-8850**	2	SPRING	
	2	2	**4I-2509**	2	PLATE-END	
	3	1	**5V-3854**	2	BUMPER	
	4	1	**087-3765**	1	DOOR AS	
		1	**4K-8501**	2	CLIP	
	4A	1	**9V-3659**	1	HINGE	
	5	2	**115-2670**	2	PIN AS	
B	6	2	**123-5362**	4	SHIM (1-MM THK)	
B	7	2	**123-5364**	4	SHIM (2-MM THK)	
	8	2	**123-5574**	4	SPACER (153X210X14-MM THK)	
	9	2	**126-6367**	2	SUPPORT	
B	10	2	**174-8354**	8	SHIM (0.5-MM THK)	
	11	2	**201-2771**	4	WASHER (26X90X8-MM THK)	
	12	1	**254-2869**	1	DOOR AS	
		1	**4K-8501**	2	CLIP	
	12A	1	**254-2870**	1	HINGE AS	
	13	1	**308-8767**	1	FRAME AS-UPPER	
	13A	1	**151-0474**	1	BOSS	
	14	2	**330-2775**	2	PIN AS	
	15	2	**5P-1076**	8	WASHER-HARD (13.5X30X4-MM THK)	
M	16	2	**7X-2573**	2	BOLT (M24X3X40-MM)	
M	17	2	**7X-2574**	2	BOLT (M24X3X45-MM)	
	18	1	**8T-4121**	2	WASHER-HARD (11X21X2.5-MM THK)	
M	19	1	**8T-4133**	2	NUT (M10X1.5-THD)	
	20	2	**8T-4167**	4	WASHER-HARD (26X44X4-MM THK)	
M	21	2	**8T-4183**	8	BOLT (M12X1.75X40-MM)	
M	22	1	**8T-4192**	2	BOLT (M12X1.75X25-MM)	
	23	1	**8T-4223**	2	WASHER-HARD (13.5X25.5X3-MM THK)	
M	24	1	**8T-5413**	2	STUD-WELD (M10X1.5X25-MM OAL)	
					THE FOLLOWING REPAIR PARTS ARE AVAILABLE FOR REPAIR OF DAMAGED SKIRTS	
					AVAILABLE REPAIR KIT(S):	
			184-5719	1	PLATE-SKIRT (1100-MM)	
			184-5720	1	PLATE-SKIRT (2000-MM)	

B-USE AS REQUIRED
M-METRIC PART

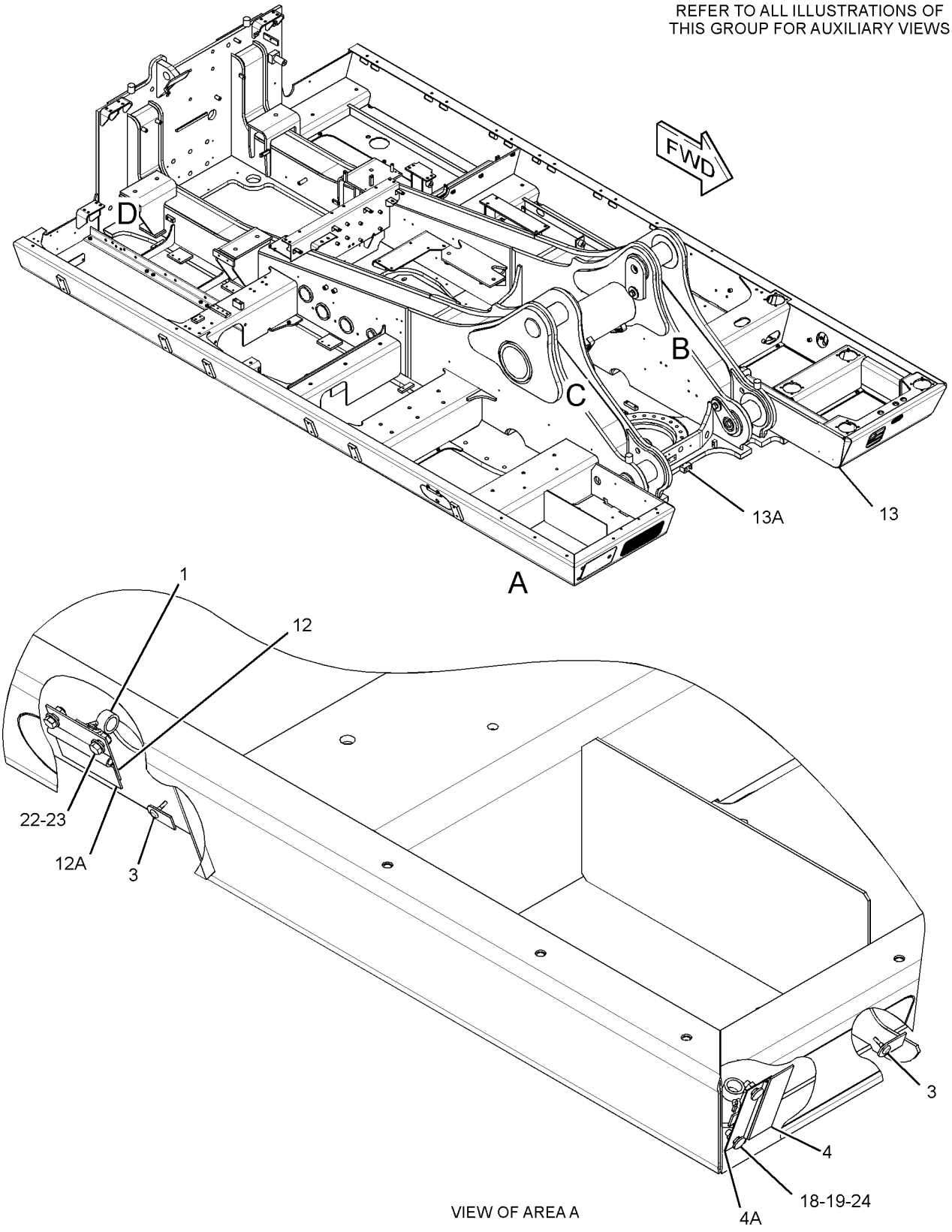

GRAPHIC #1 g02182273

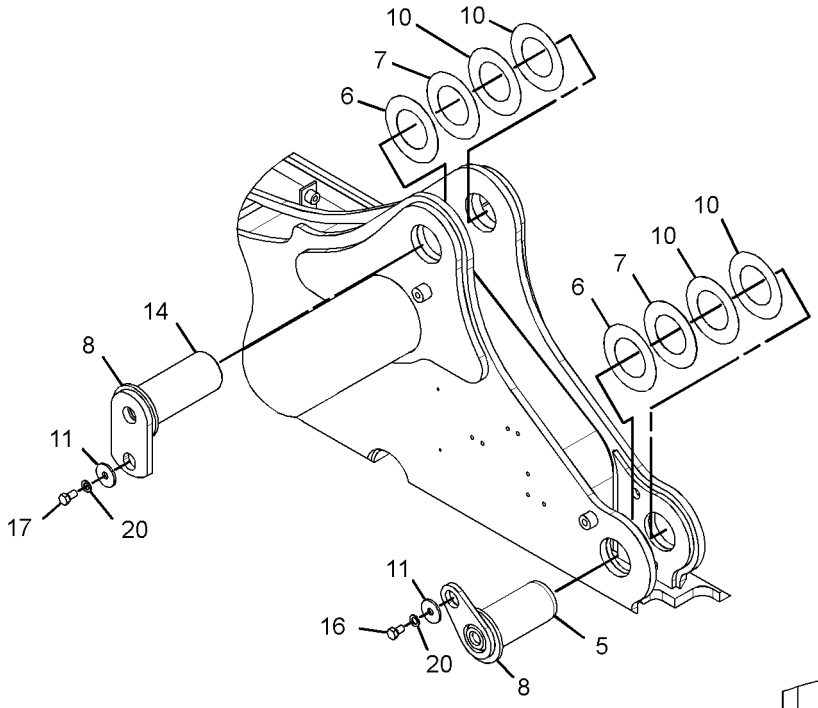

VIEW OF AREA B

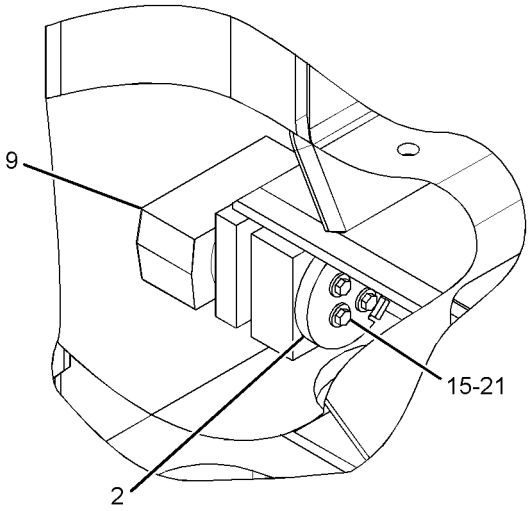

VIEW OF AREA D

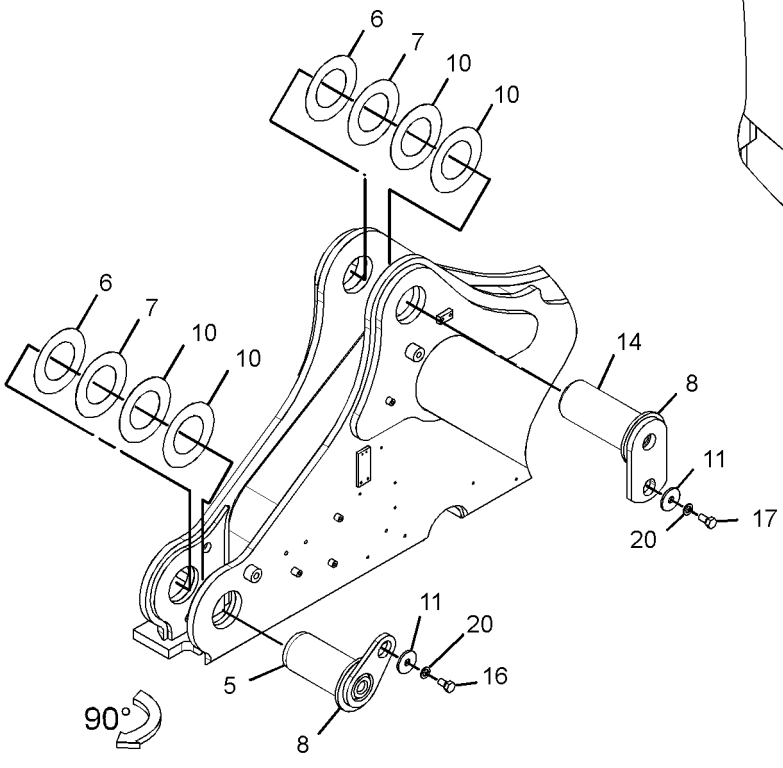

VIEW OF AREA C

GRAPHIC #2 **<END>** g02182955

FRAME AND BODY

199-4492 GEAR & BEARING GP-SWING

S/N: WAP1-UP

PART OF 227-6098 GEAR & BEARING GP-SWING

SMCS-7063 **i02951745**

NOTE	REF NO	GRAPHIC REF	PART NUMBER	QTY	PART NAME 1 2 3 4 5 6 (PRODUCT LEVEL)	SEE PAGE
BE	1	1	**110-7183**		SEAL	
	2	1	**3B-8489**	1	FITTING-GREASE	

B-USE AS REQUIRED
E-ORDER BY THE CENTIMETER

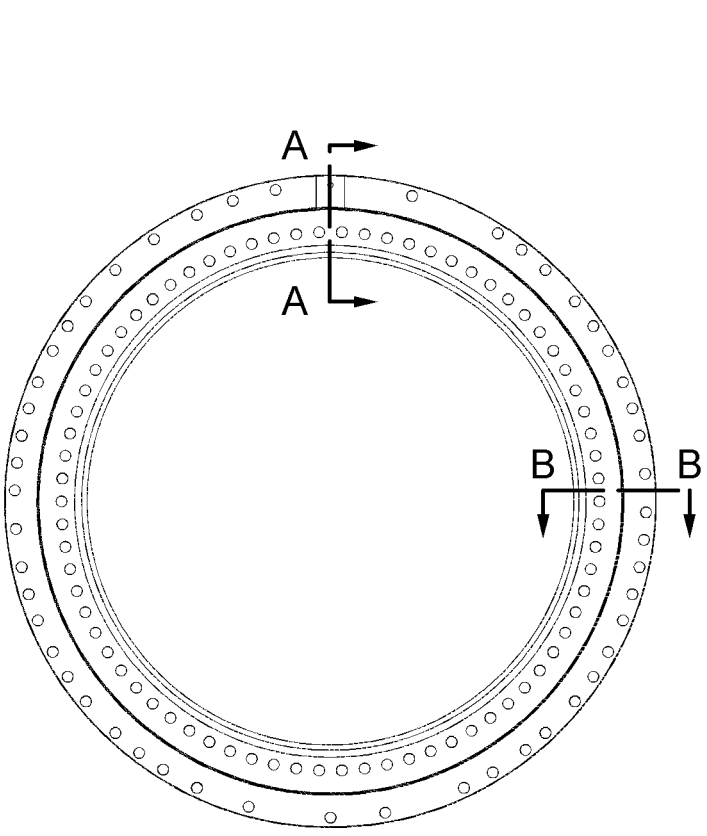

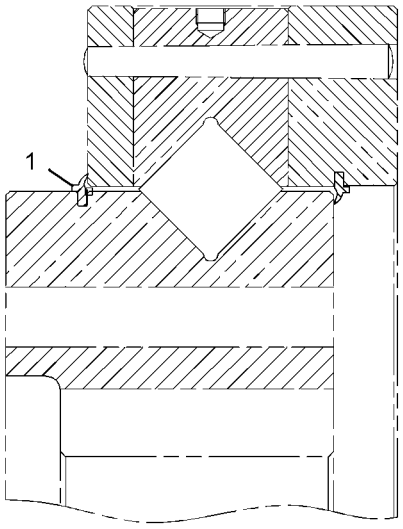

SECTION A-A

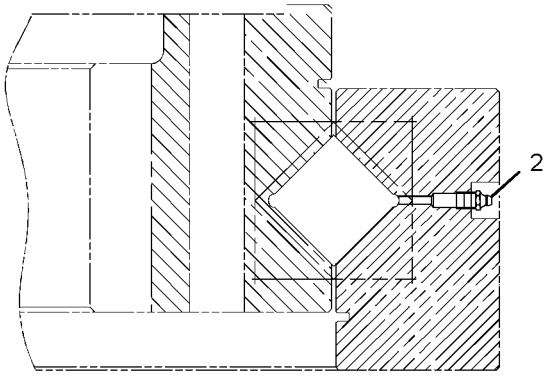

SECTION B-B

GRAPHIC #1 **<END>** g01113556

FRAME AND BODY

227-6098 GEAR & BEARING GP-SWING

S/N: WAP1-UP

PART OF 296-6177 GEAR & BEARING GP-SWING

SMCS-7063 **i03639920**

NOTE	PART NUMBER	QTY	PART NAME 1 2 3 4 5 6 (PRODUCT LEVEL)	SEE PAGE
Y	*227-6099*	1	GEAR & BEARING GP-SWING (90-BEARING)	366
			—OR—	
Y	*199-4492*	1	GEAR & BEARING GP-SWING (84-BEARING)	364

Y-SEPARATE ILLUSTRATION

<END>

FRAME AND BODY

227-6099 GEAR & BEARING GP-SWING

S/N: WAP1-UP

PART OF 227-6098 GEAR & BEARING GP-SWING

SMCS-7063 **i04025477**

NOTE	REF NO	GRAPHIC REF	PART NUMBER	QTY	PART NAME 1 2 3 4 5 6 (PRODUCT LEVEL)	SEE PAGE
Z	1	1		1	RACE AS-OUTER	
Z	2	1		1	RACE-BEARING	
Z	3	1		90	ROLLER	
Z	4	1		68	SEPARATOR	
Z	5	1		22	SEPARATOR	
	6	1	**227-6077**	1	SEAL-DUST	
	7	1	**3B-8489**	1	FITTING-GREASE	
E	8	1	**148-4685**		SEAL (537-CM)	

E-ORDER BY THE CENTIMETER
Z-NOT SERVICED SEPARATELY

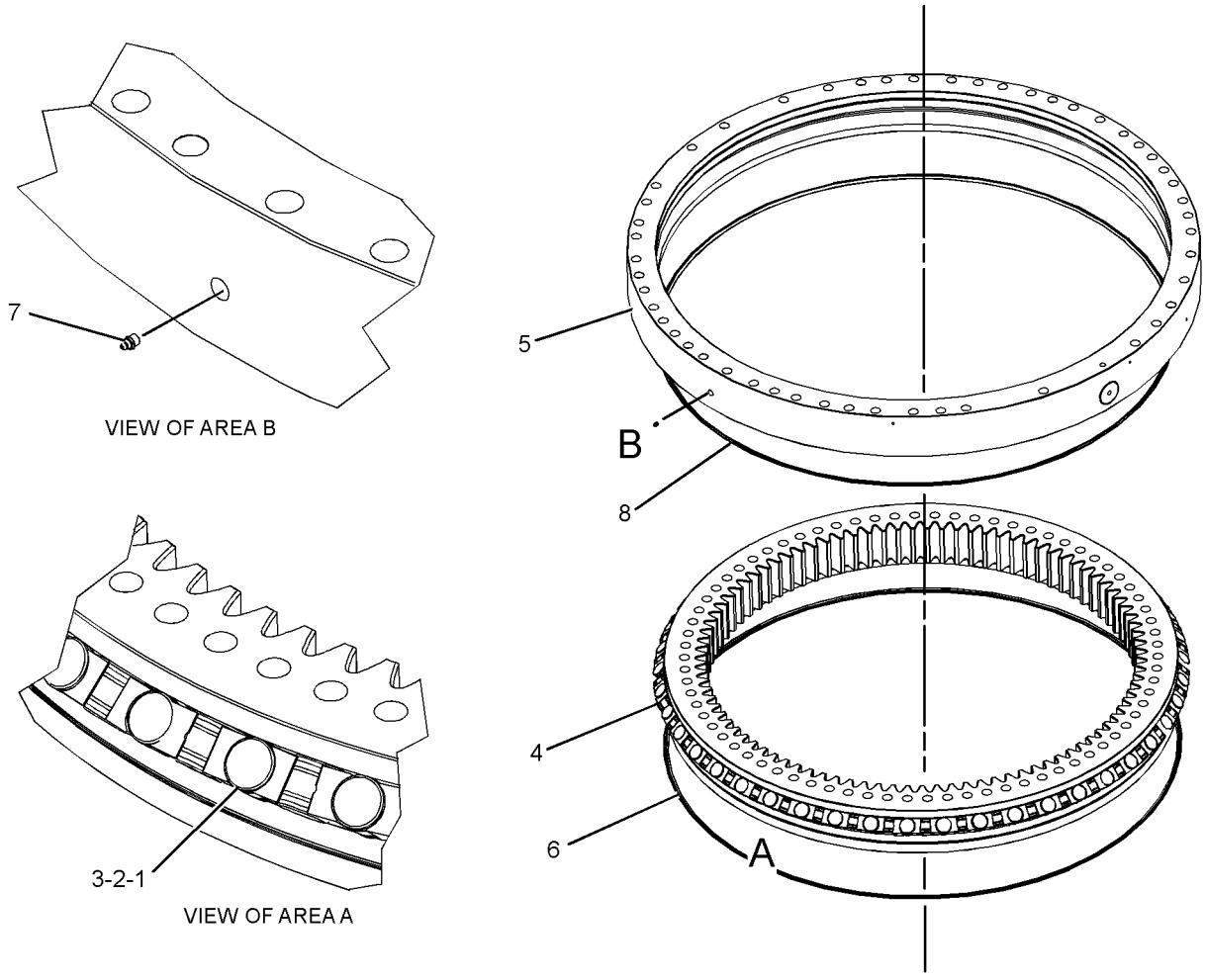

GRAPHIC #1 **<END>** g02207993

FRAME AND BODY

296-6177 GEAR & BEARING GP-SWING

S/N: WAP1-UP

PART OF 294-1302 FRAME AR-UNDERCARRIAGE

SMCS-7063 **i03904108**

NOTE	REF NO	GRAPHIC REF	PART NUMBER	QTY	PART NAME 1 2 3 4 5 6 (PRODUCT LEVEL)	SEE PAGE
	1	1	**3B-8489**	2	FITTING-GREASE	
	2	1	**5K-9243**	4	ELBOW-FLARED	
	3	2	**6I-6563**	21	CORK	
	4	1	**7Y-1109**	1	STRIP	
	5	1	**7Y-1110**	1	GASKET	
	6	2	**7Y-1647**	1	GASKET	
	7	2	**199-4500**	48	BOLT-SPECIAL	
	8	2	**199-4501**	122	SPACER (31.5X56X5-MM THK)	
	9	2	**199-4502**	74	BOLT (M30X3.5X235-MM)	
	10	1	**199-4554**	1	TUBE AS (RH)	
	11	1	**199-4555**	1	TUBE AS (LH)	
Y	12	2	**227-6098**	1	GEAR & BEARING GP-SWING	365
	13	2	**296-6211**	1	RETAINER	
	14	2	**296-6212**	1	BOOT AS	
	15	2	**296-6213**	1	RETAINER	
	16	2	**4N-9170**	4	CLIP	
	17	2	**7Y-1095**	2	DOWEL	
	18	2	**7Y-1648**	1	STRIP	
	19	1,2	**8T-4121**	28	WASHER-HARD (11X21X2.5-MM THK)	
M	20	1,2	**8T-4136**	28	BOLT (M10X1.5X25-MM)	
M	21	2	**8T-4199**	4	BOLT (M8X1.25X12-MM)	
	22	1	**8T-6757**	2	PLUG-PIPE	
B	23	2	**1U-8846**		SEALANT-GASKET	

B-USE AS REQUIRED
M-METRIC PART
Y-SEPARATE ILLUSTRATION

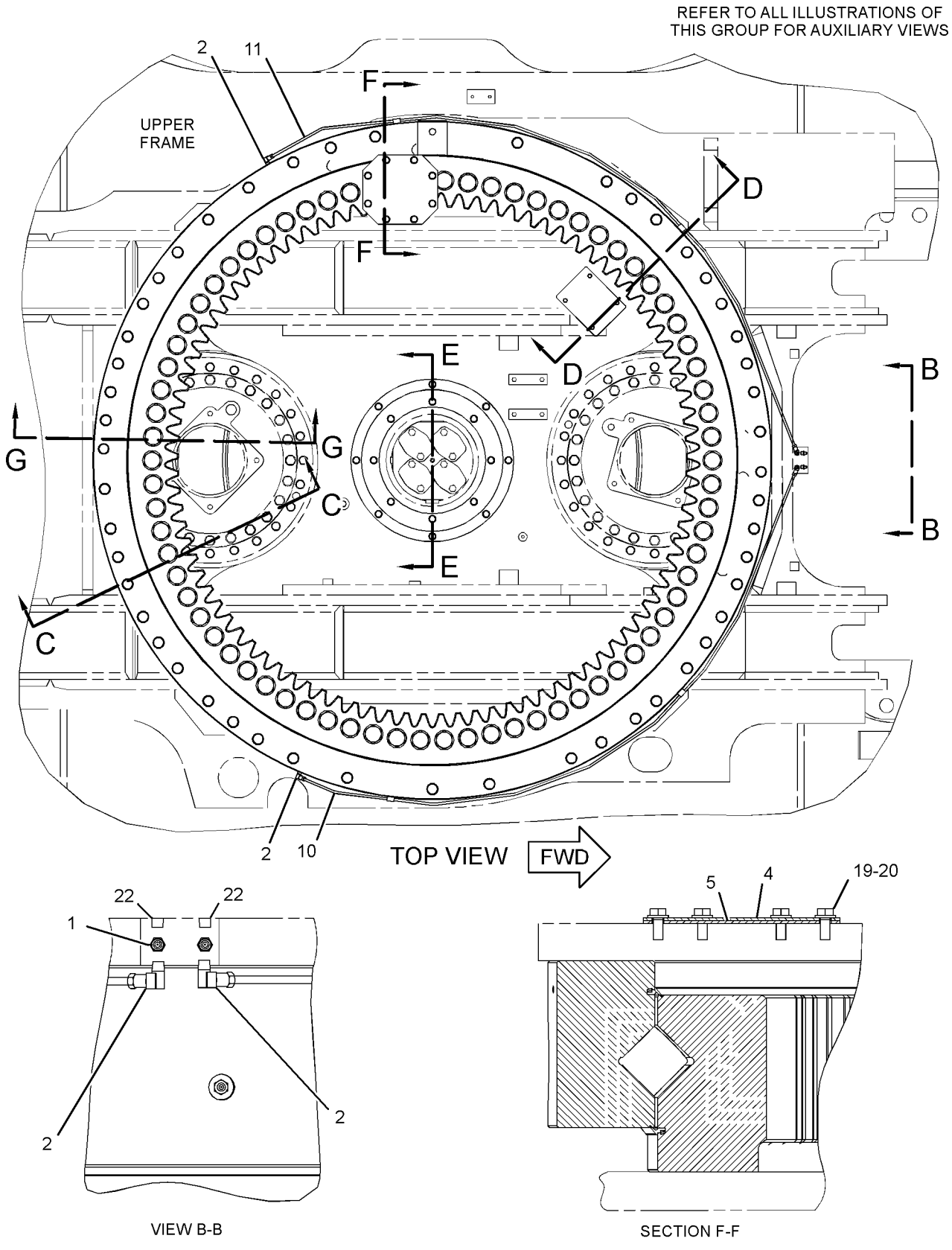

GRAPHIC #1 g02163767

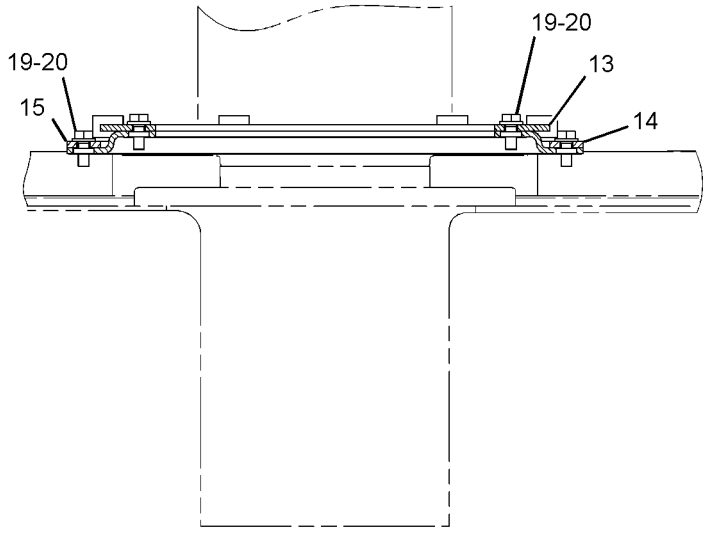

SECTION E-E

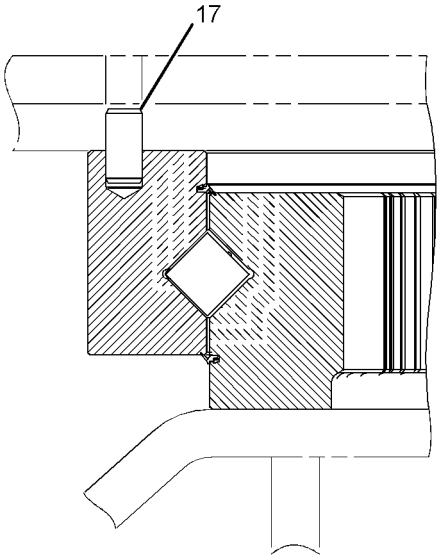

SECTION G-G

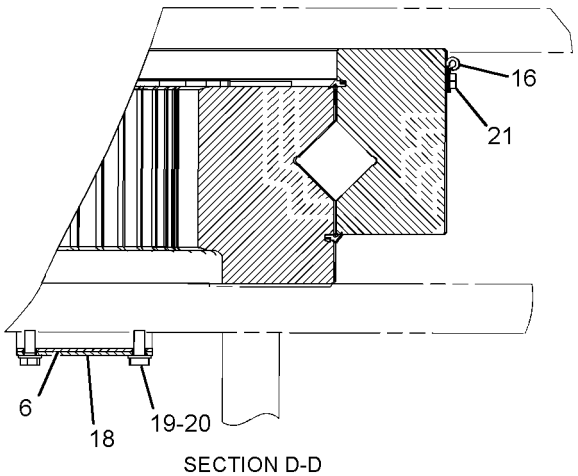

SECTION D-D

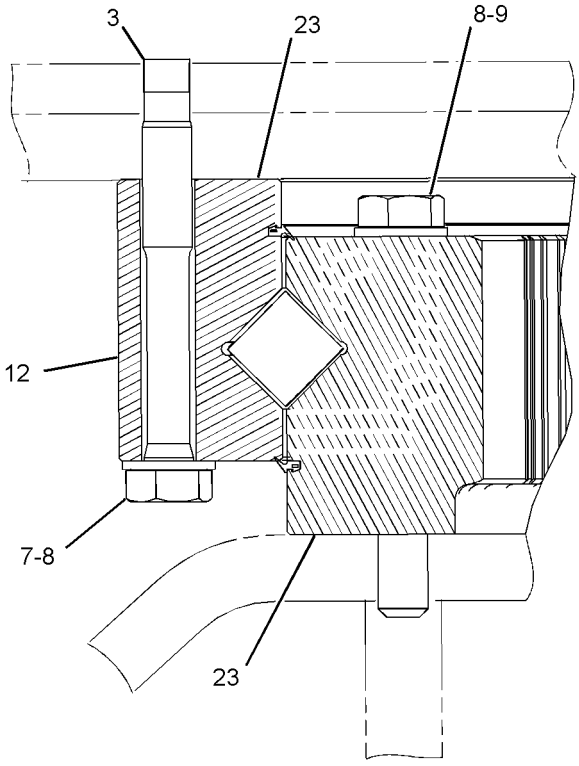

SECTION C-C

GRAPHIC #2 **<END>** g02163822

FRAME AND BODY

313-8053 GUARD GP-BOTTOM

S/N: WAP1-UP

PART OF 294-1237 CHASSIS AR

SMCS-7153 **i03903302**

NOTE	REF NO	GRAPHIC REF	PART NUMBER	QTY	PART NAME 1 2 3 4 5 6 (PRODUCT LEVEL)	SEE PAGE
	1	1	**7Y-2853**	20	SPACER (13X38X5-MM THK)	
M	2	1	**135-8575**	52	BOLT AS	
M	3	1	**135-8576**	10	BOLT AS-LOCKING (M12X1.75X30-MM)	
M	4	1	**135-8577**	20	BOLT AS	
	5	1	**170-2942**	1	SHEET	
	6	1	**170-2943**	1	SHEET	
	7	1	**170-2946**	1	SHEET	
	8	1	**170-2947**	2	SHEET	
	9	1	**170-2948**	2	SHEET	
	10	1	**170-2949**	1	SHEET	
	11	1	**193-9421**	1	SHEET AS	
	12	1	**236-9610**	1	SHEET	
	13	1	**236-9611**	1	SHEET	
	14	1	**236-9612**	1	SHEET	
	15	1	**250-5093**	1	SHEET AS	
	16	1	**313-8055**	1	SHEET AS	
	17	1	**313-8092**	1	SHEET AS	
	18	1	**7Y-2854**	2	SPACER (24X38X3-MM THK)	

M-METRIC PART

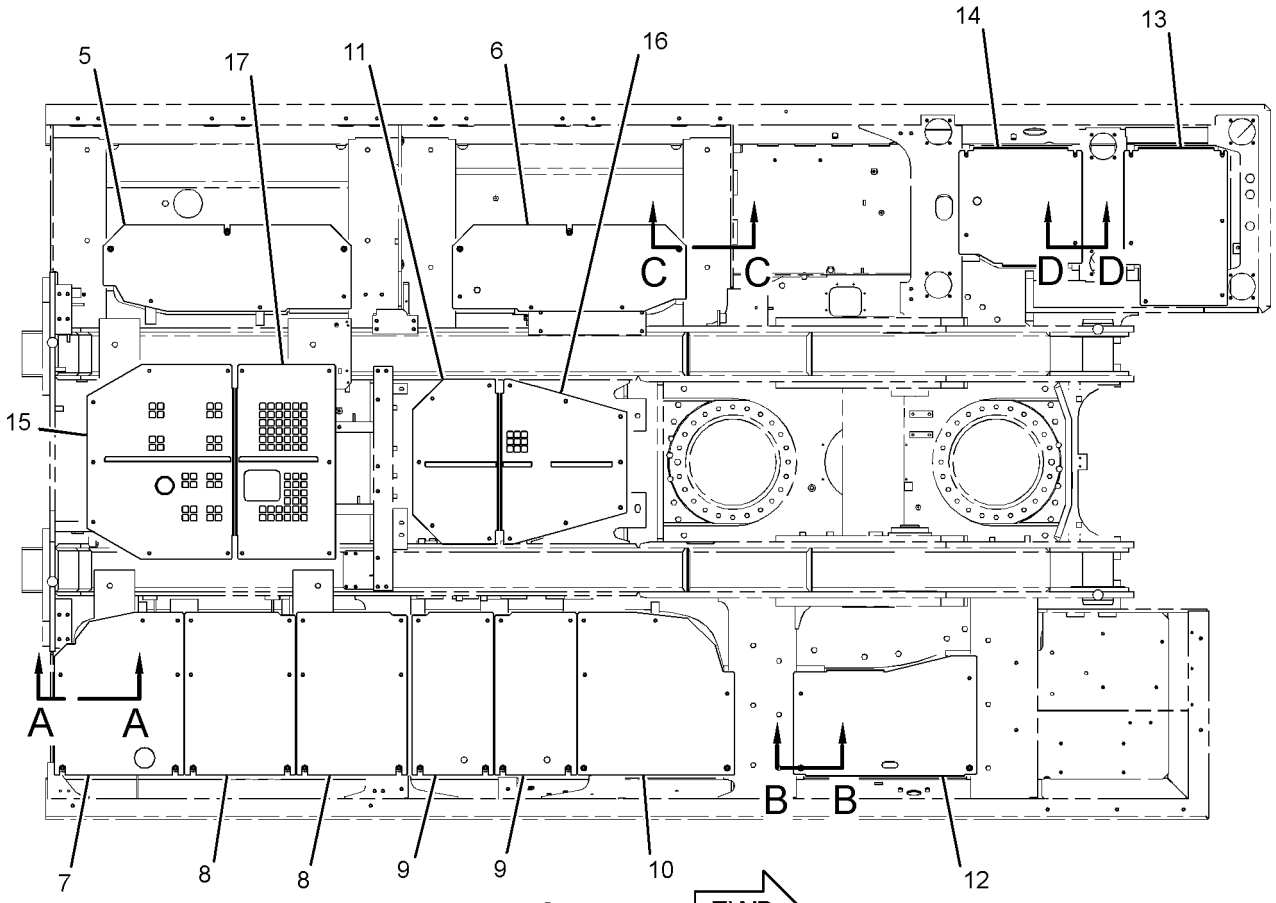

TOP VIEW FWD

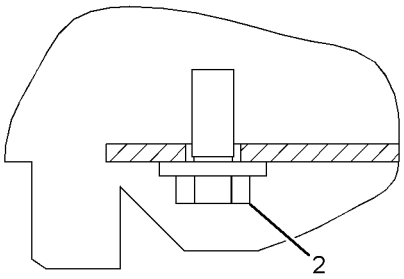

SECTION A-A

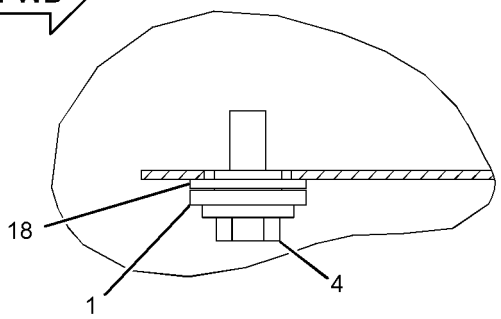

SECTION B-B

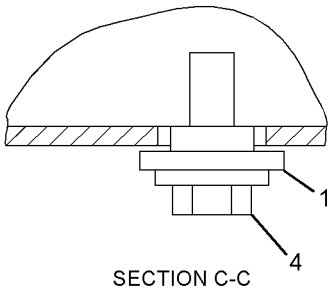

SECTION C-C

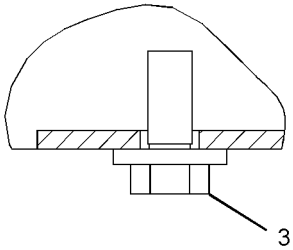

SECTION D-D

GRAPHIC #1 **<END>** g02158459

FRAME AND BODY

284-7282 GUARD GP-SWIVEL

S/N: WAP1-UP

PART OF 294-1302 FRAME AR-UNDERCARRIAGE

SMCS-7183 **i02657175**

NOTE	REF NO	GRAPHIC REF	PART NUMBER	QTY	PART NAME 1 2 3 4 5 6 (PRODUCT LEVEL)	SEE PAGE
	1	1	**284-7283**	2	COVER AS	
					(EACH INCLUDES)	
M		1	**8T-4132**	4	NUT (M16X2-THD)	
	2	1	**284-7284**	1	COVER AS	
M	3	1	**100-4982**	8	BOLT-SELF-LOCKING (M16X2X45-MM)	
	4	1	**9X-8257**	8	WASHER (17.5X30X3.5-MM THK)	

M-METRIC PART

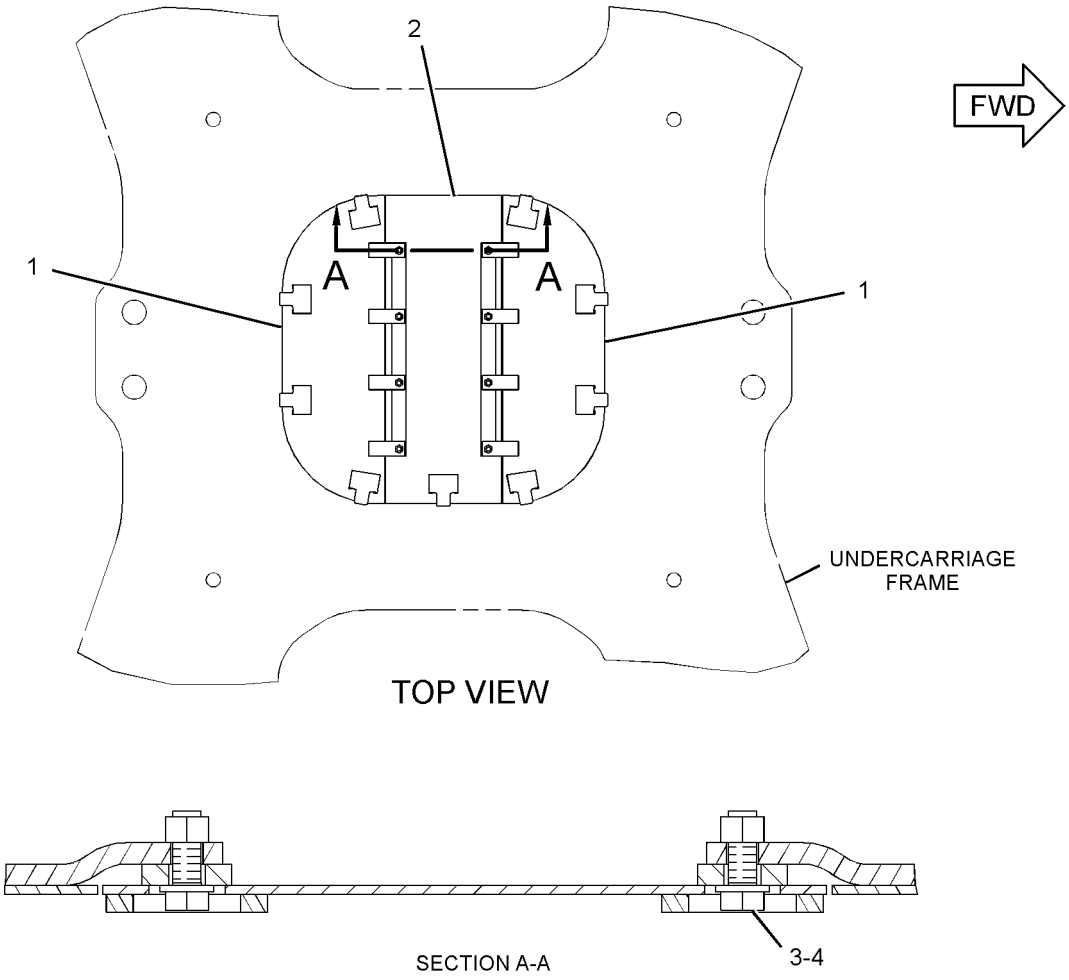

GRAPHIC #1

<END>

g01347879

249-7108 HANDRAIL GP–CAB

S/N: WAP1-UP

PART OF 249-7109 GUARD AR-OVERHEAD, 249-7107, 330-3027 PARTS AR-CAB

AN ATTACHMENT

SMCS-7256 **i03179229**

NOTE	REF NO	GRAPHIC REF	PART NUMBER	QTY	PART NAME 1 2 3 4 5 6 (PRODUCT LEVEL)	SEE PAGE
C	1	1	**331-7263**	1	HANDRAIL AS	
	2	1	**229-8062**	4	SEAL	
M	3	1	**8T-4179**	4	BOLT (M12X1.75X20-MM)	
M	4	1	**8T-4192**	1	BOLT (M12X1.75X25-MM)	
	5	1	**8T-4223**	6	WASHER-HARD (13.5X25.5X3-MM THK)	
M	6	1	**8T-4956**	1	BOLT (M12X1.75X35-MM)	
					(USE WITH CAB AS WITHOUT WELDED BOSSES)	
					–OR–	
M		1	**8T-4192**	1	BOLT (M12X1.75X25-MM)	
					(USE WITH CAB AS WITH WELDED BOSSES)	

C-CHANGE FROM PREVIOUS TYPE
M-METRIC PART

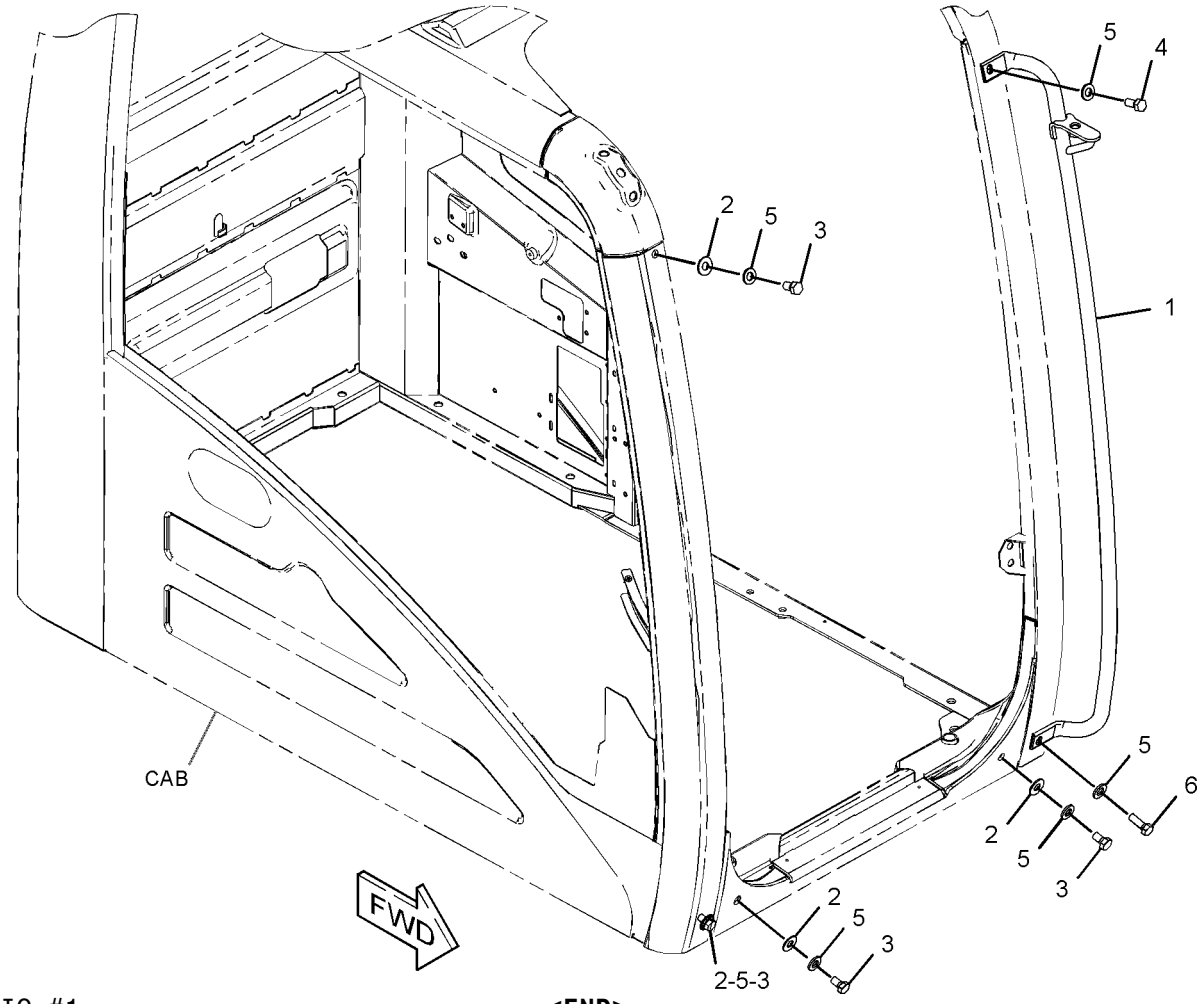

GRAPHIC #1 **<END>** g01625684

FRAME AND BODY

313-7900 HANDRAIL GP

S/N: WAP1-UP

PART OF 294-1237 CHASSIS AR

SMCS-7256 **i03903282**

NOTE	REF NO	GRAPHIC REF	PART NUMBER	QTY	PART NAME 1 2 3 4 5 6 (PRODUCT LEVEL)	SEE PAGE
M	1	1	**135-8573**	2	BOLT AS	
M	2	1	**135-8577**	14	BOLT AS	
	3	1	**148-4977**	1	HANDRAIL AS	
	4	1	**236-9605**	1	HANDRAIL AS	
	5	1	**241-1920**	1	HANDRAIL AS	
	6	1	**307-8008**	1	HANDRAIL AS	
M	7	1	**8T-4139**	12	BOLT (M12X1.75X30-MM)	
	8	1	**8T-4223**	12	WASHER-HARD (13.5X25.5X3-MM THK)	

M-METRIC PART

313-7900 **HANDRAIL GP** *(contd.)* **i03903282**

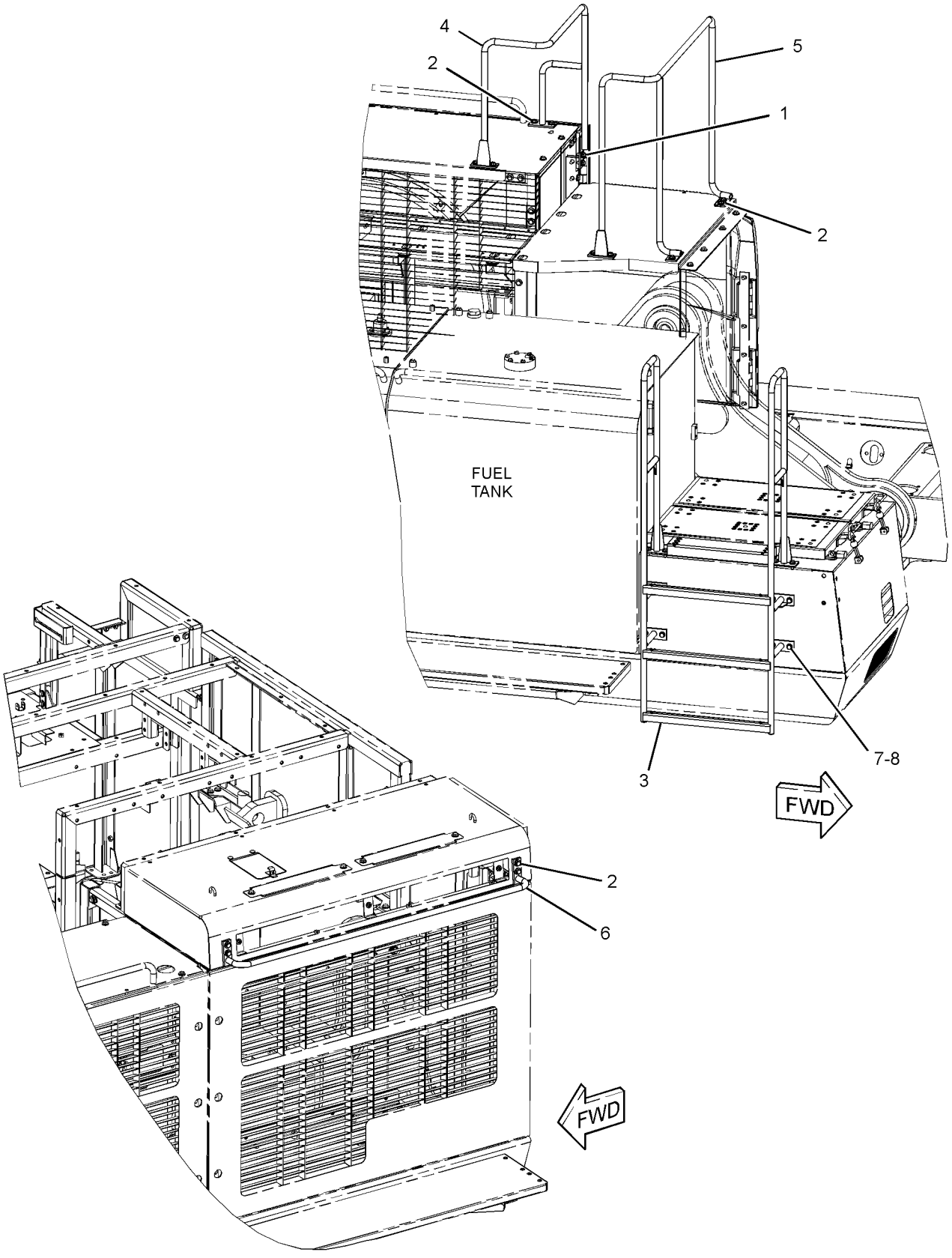

GRAPHIC #1 **<END>** g02154647

FRAME AND BODY

285-7945 HOOD & GUARD GP—HIGH AMBIENT

S/N: WAP1-UP
AN ATTACHMENT

SMCS-7251, 7276 **i03144562**

NOTE	REF NO	GRAPHIC REF	PART NUMBER	QTY	PART NAME 1 2 3 4 5 6 (PRODUCT LEVEL)	SEE PAGE
M	1	1	**135-8572**	22	BOLT AS	
M	2	1	**135-8573**	4	BOLT AS	
	3	1	**276-9217**	1	COVER	
	4	1	**276-9221**	1	COVER	
	5	1	**284-0057**	1	SHEET AS	
	6	1	**284-0062**	1	SHEET	
Y	7	1	**313-8284**	1	HOOD AS	387
	8	1	**313-8286**	1	HOOD AS	
		1	**146-4936**	2	HANDLE AS	
		1	**165-3010**	2	HINGE	

M-METRIC PART
Y-SEPARATE ILLUSTRATION

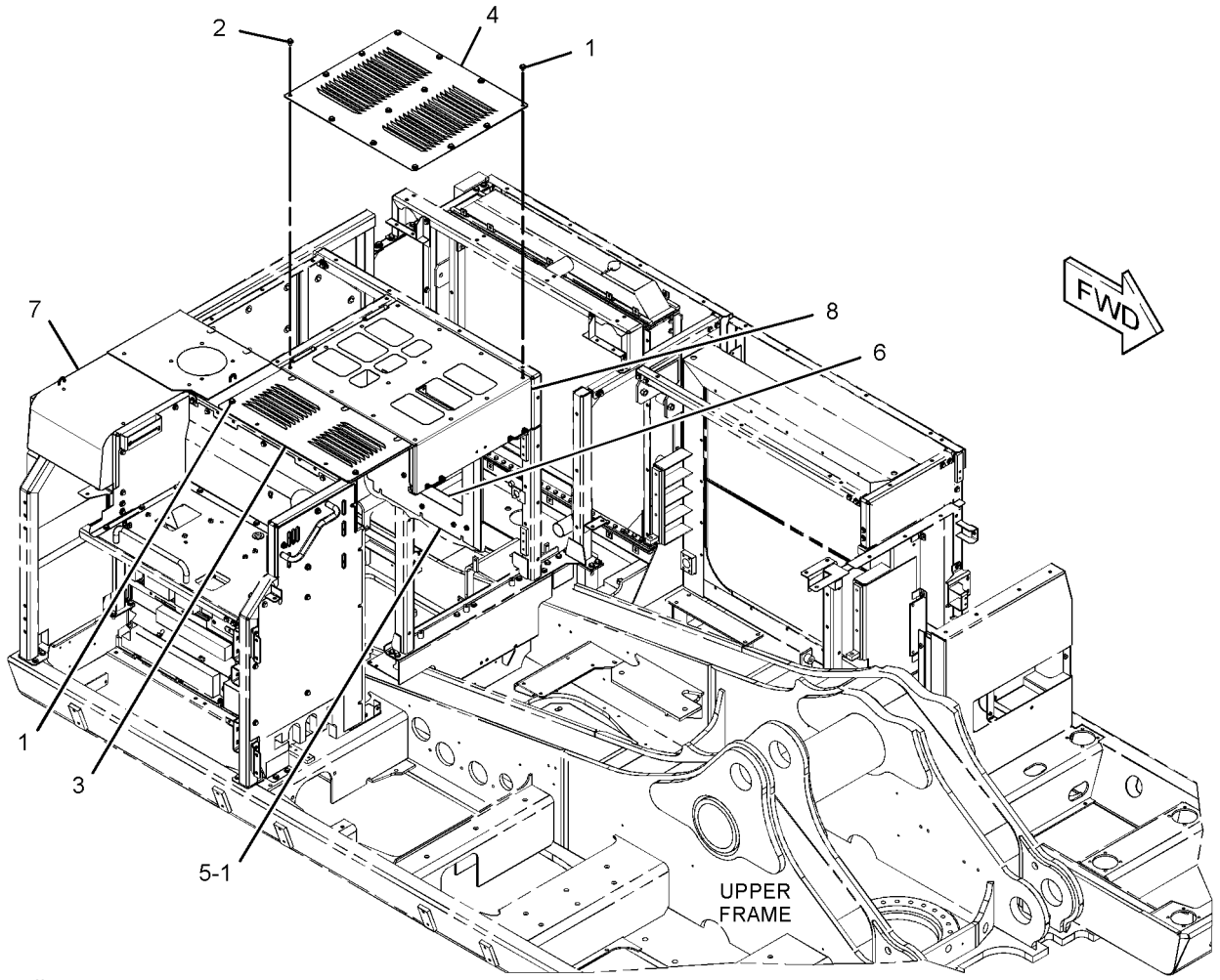

GRAPHIC #1 **<END>** g01705077

FRAME AND BODY

307-8001 HOOD & GUARD GP–ACCUGRADE READY

S/N: WAP1-UP
PART OF 340-3996 SPECIAL AR
AN ATTACHMENT

SMCS-7251, 7276 **i03917472**

NOTE	REF NO	GRAPHIC REF	PART NUMBER	QTY	PART NAME 1 2 3 4 5 6 (PRODUCT LEVEL)	SEE PAGE
Y	1	1	**307-7905**	1	COVER GP-SOUND SUPPRESSION	353
Y	2	1	*333-5220*	1	HOOD GP	391
M	3	1	**8T-4179**	8	BOLT (M12X1.75X20-MM)	

M-METRIC PART
Y-SEPARATE ILLUSTRATION

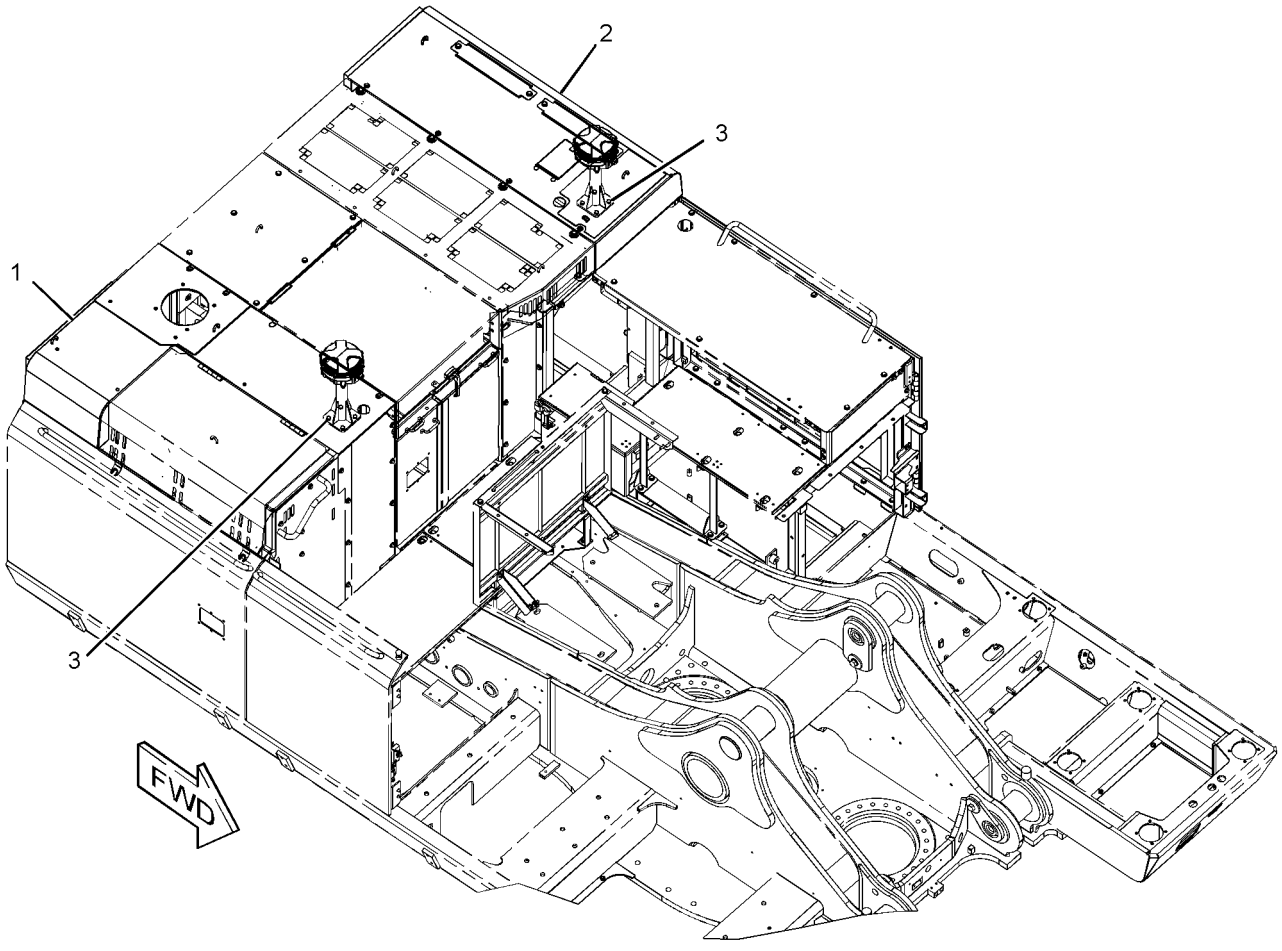

GRAPHIC #1 **<END>** g02160906

FRAME AND BODY

313-7848 HOOD & GUARD GP—ENGINE HOOD

S/N: WAP1-UP

PART OF 294-1237 CHASSIS AR

SMCS-7251, 7276 **i03903257**

NOTE	REF NO	GRAPHIC REF	PART NUMBER	QTY	PART NAME 1 2 3 4 5 6 (PRODUCT LEVEL)	SEE PAGE
	1	1	**4I-0117**	1	FASTENER	
	2	1	**4I-0118**	1	HOOK AS	
	3	1	**4I-1205**	2	BUMPER	
	4	1	**246-2641**	1	PADLOCK GP	
		1	**5P-8500**	1	KEY	
	5	1	**7Y-2853**	4	SPACER (13X38X5-MM THK)	
	6	1	**9M-3835**	2	LATCH-RUBBER	
M	7	1	**135-8573**	11	BOLT AS	
M	8	1	**135-8575**	20	BOLT AS	
M	9	1	**135-8577**	4	BOLT AS	
	10	1	**177-5575**	1	SUPPORT	
	11	1	**190-7014**	4	SUPPORT AS	
	12	1	**190-7017**	1	SPRING	
	13	1	**190-7018**	1	SPRING	
	14	1	**307-7830**	1	SUPPORT AS	
E		1	**221-9784**		TUBE-HEAT SHRINK (31.8-MM DIA) (29-CM)	
	15	1	**307-7895**	1	GRILL AS	
Y	16	1	**307-8017**	1	HOOD GP-ENGINE	393
Y	17	1	**313-7896**	1	COVER GP-ACCESS	348
	18	1	**313-7906**	1	SHEET AS	
	19	1	**313-7915**	1	SHEET AS	
	20	1	**353-6501**	1	COVER AS	
		1	**177-5674**	1	LINER	
	21	1	**095-0843**	2	PIN-COTTER	
	22	1	**095-1319**	3	PIN-CLEVIS	
	23	1	**095-1320**	1	PIN-CLEVIS	
	24	1	**3B-4618**	4	PIN-COTTER	
	25	1	**2M-5795**	2	PIN-CLEVIS	
	26	1	**5P-1076**	4	WASHER-HARD (13.5X30X4-MM THK)	
M	27	1	**7X-2549**	4	BOLT (M12X1.75X100-MM)	
	28	1	**7Y-2854**	4	SPACER (24X38X3-MM THK)	
	29	1	**8T-4121**	12	WASHER-HARD (11X21X2.5-MM THK)	
M	30	1	**8T-4133**	2	NUT (M10X1.5-THD)	
	31	1	**8T-4224**	4	WASHER-HARD (8.8X16X2-MM THK)	
M	32	1	**8T-4908**	4	BOLT (M8X1.25X25-MM)	

E-ORDER BY THE CENTIMETER
M-METRIC PART
Y-SEPARATE ILLUSTRATION

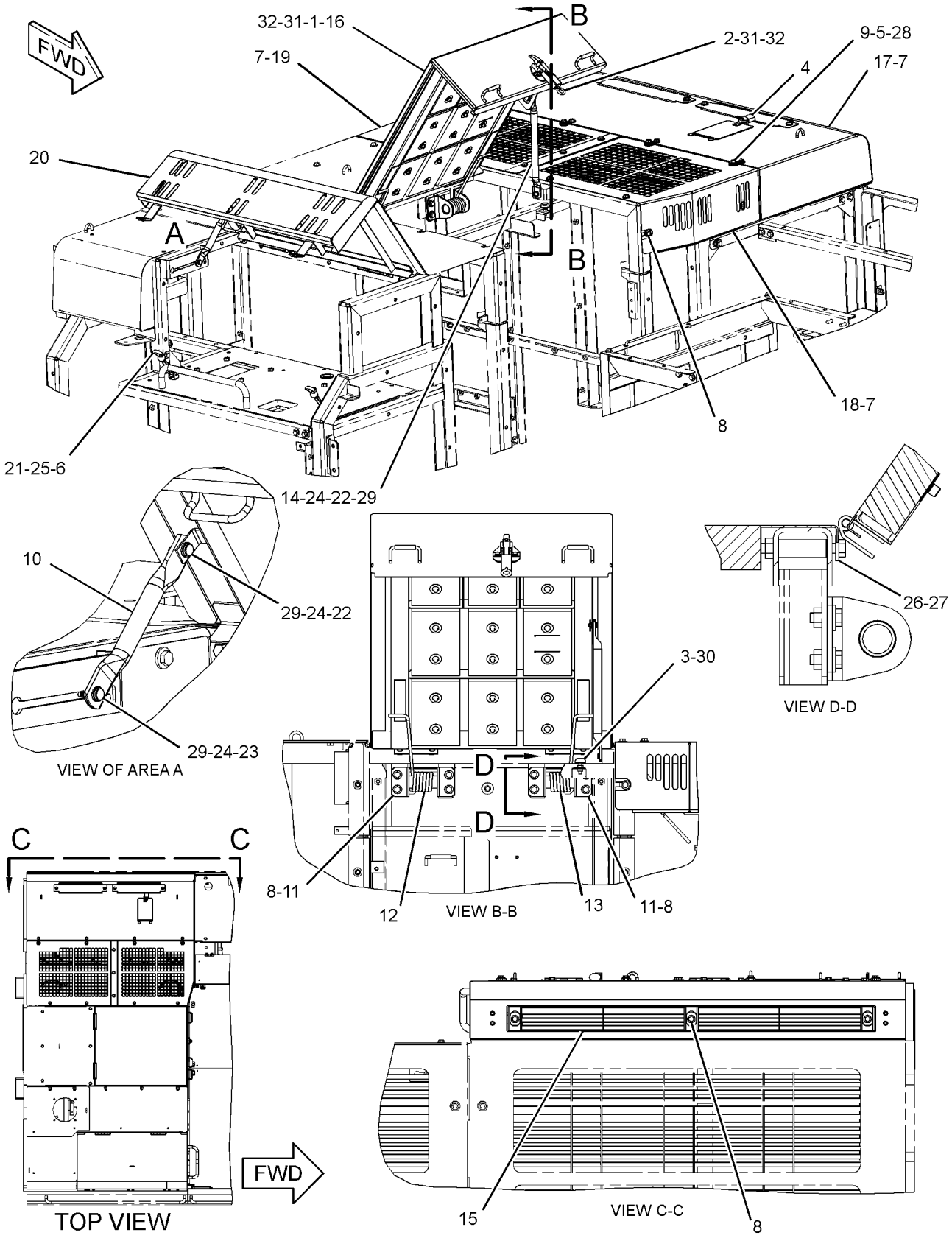

GRAPHIC #1 **<END>** g02158941

FRAME AND BODY

313-8122 HOOD & GUARD GP–COVERS, DOORS

S/N: WAP1-UP

PART OF 294-1237 CHASSIS AR

SMCS-7251, 7276 **i04025479**

NOTE	REF NO	GRAPHIC REF	PART NUMBER	QTY	PART NAME 1 2 3 4 5 6 (PRODUCT LEVEL)	SEE PAGE
	1	1,2	**4I-1205**	6	BUMPER	
	2	1,2	**4I-2599**	4	SOCKET	
	3	1	**4I-8019**	1	SUPPORT	
B	4	2	**6I-5976**	2	SHIM (1-MM THK)	
B	5	2	**6I-5977**	2	SHIM (2-MM THK)	
	6	2	**6V-6777**	1	LATCH AS-DOOR	
	7	2	**7I-1418**	1	SUPPORT AS	
	8	2	**8T-4157**	1	STRIKER AS	
		2	**8T-4158**	1	WASHER-SPECIAL (CONICAL)	
	9	2	**9D-1058**	1	SPRING	
	10	2	**096-2320**	1	KNOB	
	11	2	**105-6836**	2	SUPPORT AS	
					(EACH INCLUDES)	
		2	**105-6838**	1	LINER	
M	12	2	**135-8572**	6	BOLT AS	
M	13	1,2	**135-8573**	58	BOLT AS	
M	14	1,2	**135-8575**	49	BOLT AS	
M	15	2	**135-8577**	4	BOLT AS	
	16	2	**146-4952**	1	STOP	
Y	17	1	**175-0786**	1	SHEET AS-SOUND SUPPRESSION	406
	18	2	**177-5701**	1	ROD	
	19	2	**190-7001**	1	SUPPORT AS	
	20	1,2	**214-8310**	4	PLATE	
Y	21	1	**218-7758**	1	SHEET AS-SOUND SUPPRESSION	408
Y	22	1	**218-7761**	1	SHEET AS-SOUND SUPPRESSION	409
	23	2	**236-9283**	1	PANEL GP-SOUND SUPPRESSION	
		2	**4I-7924**	4	WASHER (4.5X40X1.2-MM THK)	
		2	**6P-2216**	4	CAP	
		2	**250-5132**	2	INSULATION	
Y	24	2	**236-9345**	1	DOOR GP-ACCESS (ENGINE COMPARTMENT)	356
	25	1,2	**236-9349**	4	SHEET AS	
	26	2	**237-8843**	1	PANEL GP-SOUND SUPPRESSION	
		2	**4I-7924**	4	WASHER (4.5X40X1.2-MM THK)	
D		2	**5P-8309**		SEAL (0.4-M)	
		2	**6P-2216**	4	CAP	
		2	**244-8167**	1	INSULATION	
	27	1	**237-8845**	1	PANEL GP-SOUND SUPPRESSION	
		1	**4I-7924**	6	WASHER (4.5X40X1.2-MM THK)	
		1	**6P-2216**	6	CAP	
		1	**244-8168**	1	INSULATION	
	28	2	**244-8002**	1	COVER AS	
Y	29	1	**244-8005**	1	PANEL GP-SOUND SUPPRESSION	60
	30	1	**244-8036**	1	SHEET AS	
D		1	**5P-8309**		SEAL (0.4-M)	
D		1	**101-9848**		SEAL (0.2-M)	
	31	1	**244-8049**	1	SHEET AS	
D		1	**5P-8309**		SEAL (0.6-M)	
	32	1	**244-8091**	1	ROD AS	
Y	33	1	**250-5118**	1	SHEET AS-SOUND SUPPRESSION	415
	34	2	**250-5119**	1	SHEET AS	
		2	**250-5114**	1	LINER	
Y	35	1	**250-5120**	1	SUPPORT AS-ENCLOSURE	428
	36	1,2	**256-1730**	3	SHEET AS	
		1,2	**256-1732**	1	SHEET-RUBBER	
	37	1	**283-4046**	3	ROD	
	38	1	**303-9672**	1	DOOR AS-ACCESS (BATTERY)	

313-8122 **HOOD & GUARD GP** *(contd.)* **i04025479**

NOTE	REF NO	GRAPHIC REF	PART NUMBER	QTY	PART NAME 1 2 3 4 5 6 (PRODUCT LEVEL)	SEE PAGE
	38A	1	**165-3010**	2	HINGE	
	39	1	**303-9673**	1	DOOR AS-ACCESS (FUEL CLR, HYD CLR, RFGT COND)	
	39A	1	**105-6855**	2	HINGE	
	40	1	**303-9674**	1	DOOR AS-ACCESS (RADIATOR, ATAAC)	
	40A	1	**105-6855**	2	HINGE	
	41	1	**303-9676**	1	DOOR AS-ACCESS (FUEL SEPARATOR, AUX BATTERY)	
	41A	1	**165-3010**	2	HINGE	
J	42	1,2	**307-7655**	2	LOCK AS	
	43	2	**307-7881**	1	SHEET AS	
		2	**4I-7924**	4	WASHER (4.5X40X1.2-MM THK)	
D		2	**5P-8309**		SEAL (0.2-M)	
		2	**6P-2216**	4	CAP	
		2	**175-0995**	1	INSULATION	
Y	44	2	**313-7890**	1	DOOR GP-ACCESS (ENGINE COMPARTMENT)	358
	45	1	**313-8123**	1	COVER AS	
		1	**175-1024**	1	LINER	
Y	46	1	**336-1653**	1	SHEET AS-SOUND SUPPRESSION	418
	47	2	**336-1655**	1	SHEET AS-SOUND SUPPRESSION	
		2	**4I-7924**	6	WASHER (4.5X40X1.2-MM THK)	
		2	**6P-2216**	6	CAP	
		2	**236-9288**	1	INSULATION	
Y	48	1	**336-1657**	1	SHEET AS-SOUND SUPPRESSION	419
	49	2	**336-1669**	1	SHEET	
	50	2	**095-0843**	1	PIN-COTTER	
	51	1	**3B-4618**	5	PIN-COTTER	
M	52	1,2	**096-4882**	12	LOCKNUT (M8X1.25-THD)	
M	53	2	**099-0492**	4	LOCKNUT (M6X1-THD)	
M	54	2	**105-3487**	2	BOLT-SOCKET HEAD (M6X1X20-MM)	
	55	1,2	**5P-1076**	14	WASHER-HARD (13.5X30X4-MM THK)	
	56	1,2	**5P-4115**	12	WASHER-HARD (7.2X19X2-MM THK)	
M	57	2	**7X-2533**	4	BOLT (M6X1X35-MM)	
M	58	1	**7X-2619**	2	BOLT (M6X1X10-MM)	
	59	2	**7X-7729**	4	WASHER (11X25X3-MM THK)	
	60	1	**8T-4121**	10	WASHER-HARD (11X21X2.5-MM THK)	
M	61	1,2	**8T-4133**	6	NUT (M10X1.5-THD)	
M	62	1,2	**8T-4137**	9	BOLT (M10X1.5X20-MM)	
M	63	1,2	**8T-4138**	8	BOLT (M6X1X20-MM)	
	64	1,2	**8T-4224**	12	WASHER-HARD (8.8X16X2-MM THK)	
M	65	2	**8T-4244**	6	NUT (M12X1.75-THD)	
M	66	1,2	**8T-4648**	6	BOLT (M12X1.75X70-MM)	
M	67	2	**8T-4910**	2	BOLT (M12X1.75X60-MM)	
	68	1,2	**9X-8256**	5	WASHER (6.6X12X2-MM THK)	

B-USE AS REQUIRED
D-ORDER BY THE METER
J-REQUIRES CORPORATE KEY
M-METRIC PART
Y-SEPARATE ILLUSTRATION

313-8122 **HOOD & GUARD GP** *(contd.)* **i04025479**

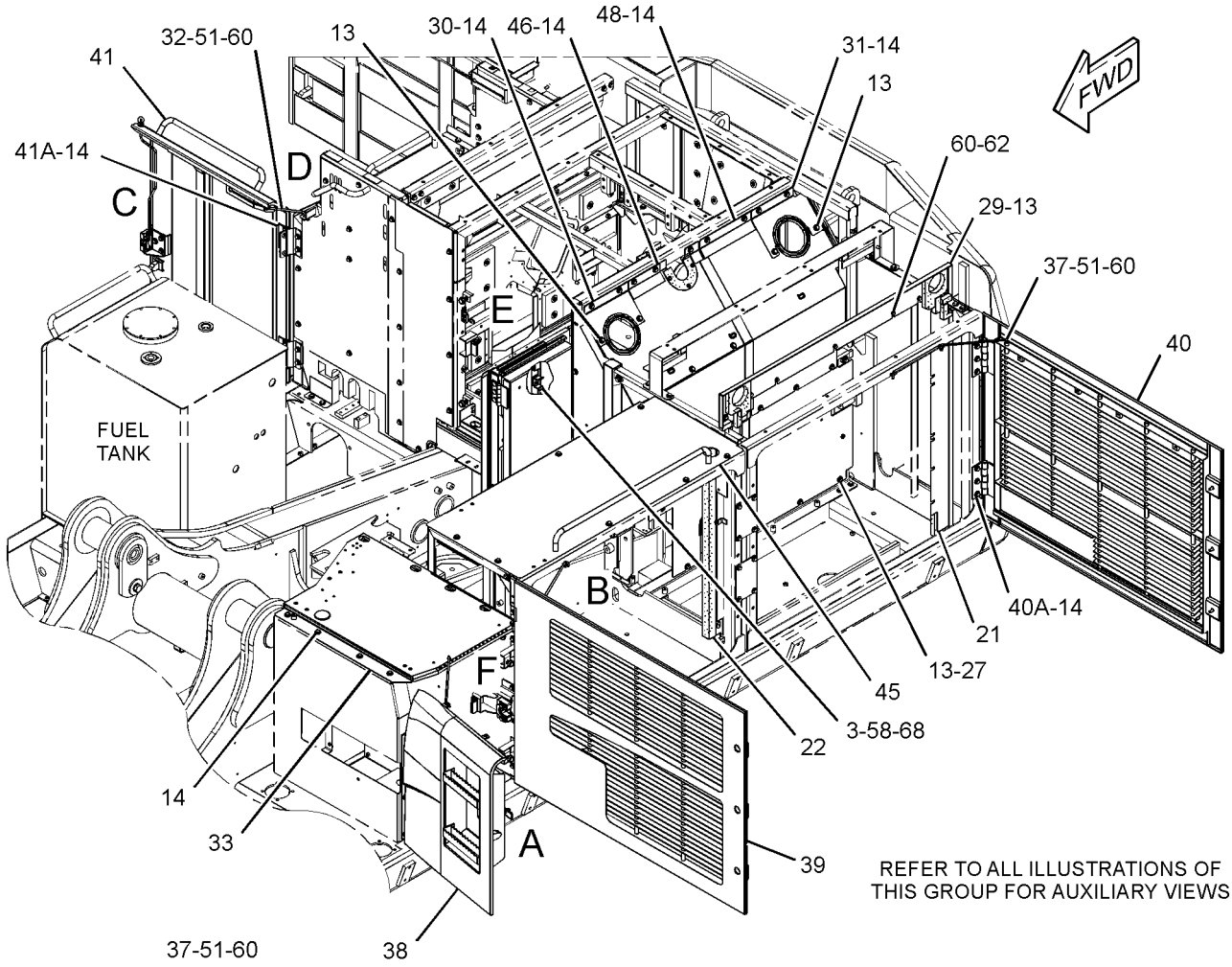

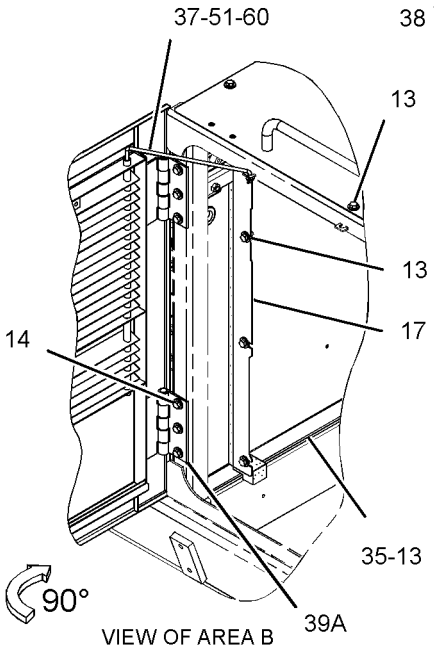

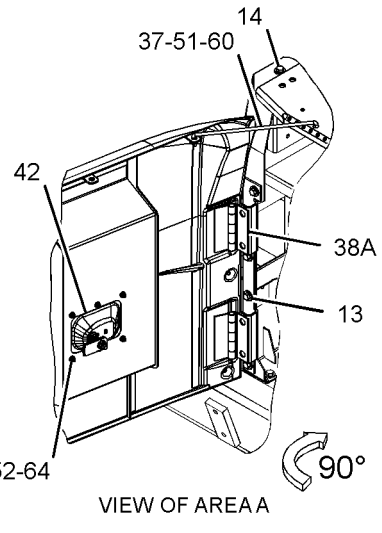

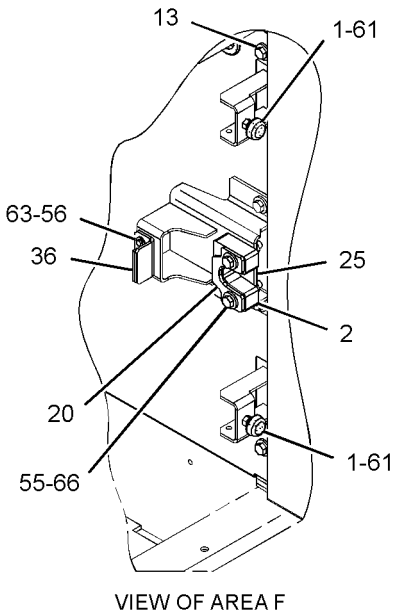

GRAPHIC #1

g02162754

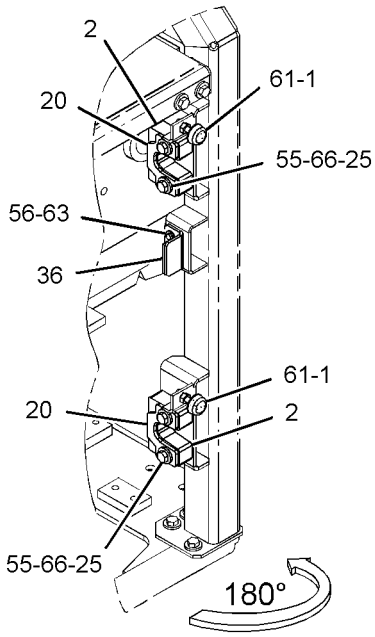

VIEW OF AREA D

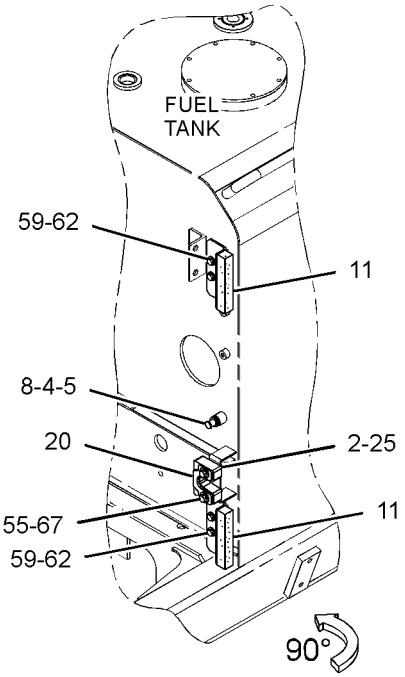

VIEW OF AREA G

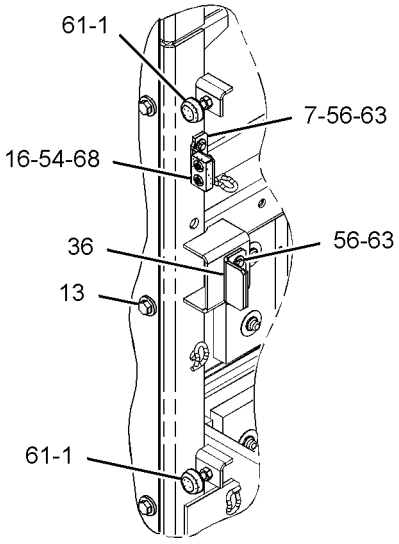

VIEW OF AREA E

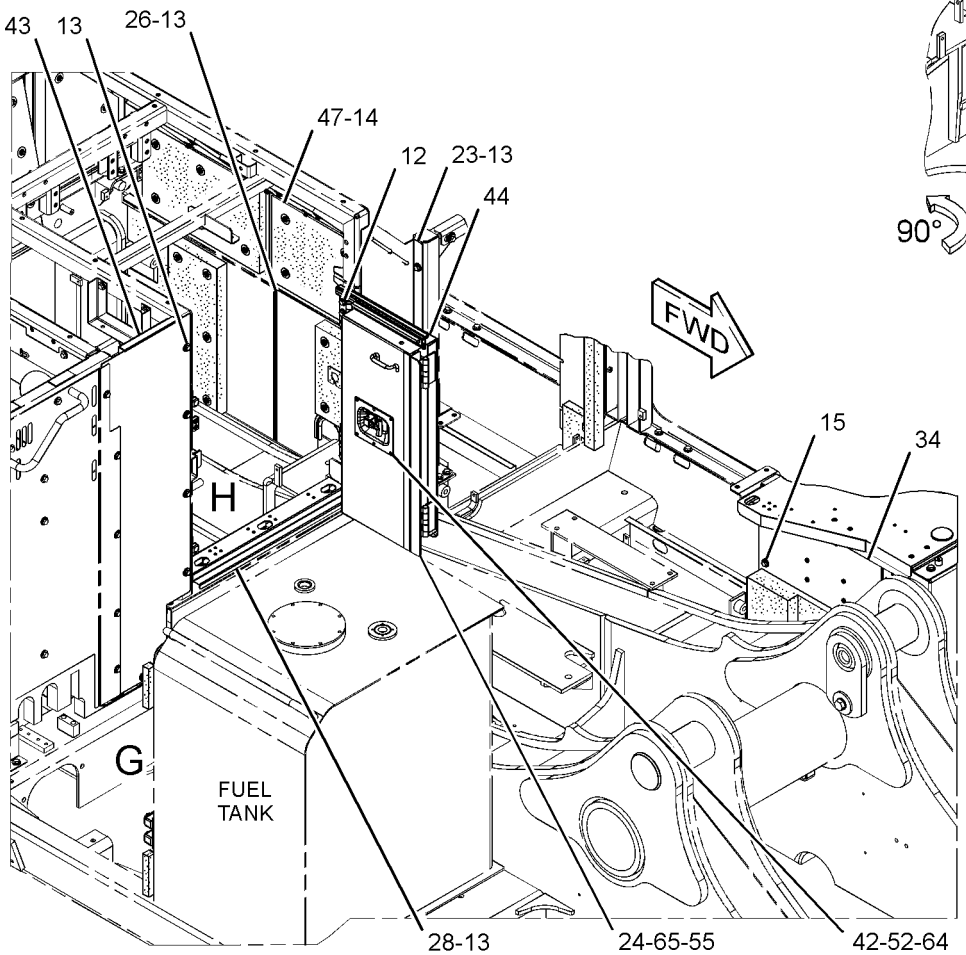

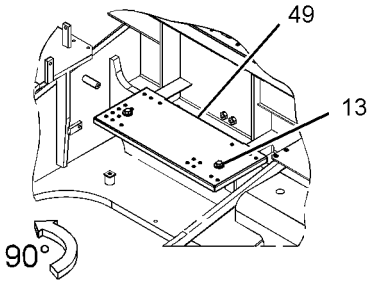

VIEW OF AREA H

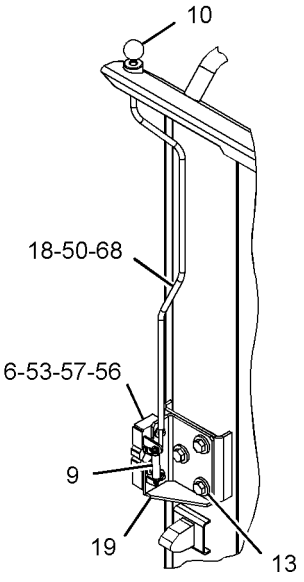

VIEW OF AREA C

GRAPHIC #2 **<END>** g02162773

FRAME AND BODY

327-3172 HOOD & GUARD GP–PUMP COMPARTMENT

S/N: WAP1-UP

PART OF 294-1237 CHASSIS AR

SMCS-7251, 7276 **i03909107**

NOTE	REF NO	GRAPHIC REF	PART NUMBER	QTY	PART NAME 1 2 3 4 5 6 (PRODUCT LEVEL)	SEE PAGE
	1	2	**7Y-2853**	9	SPACER (13X38X5-MM THK)	
M	2	1,2	**135-8573**	44	BOLT AS	
M	3	2	**135-8574**	10	BOLT AS	
M	4	1,2	**135-8575**	16	BOLT AS	
M	5	2	**135-8577**	9	BOLT AS	
M	6	2	**135-8578**	2	BOLT AS	
	7	2	**190-6919**	2	SPACER (24X38X16.5-MM THK)	
	8	2	**7Y-2854**	11	SPACER (24X38X3-MM THK)	
Y	9	1	**236-9255**	1	SHEET AS-SOUND SUPPRESSION	410
Y	10	2	**236-9266**	1	PANEL GP-SOUND SUPPRESSION	394
CY	11	2	**356-9038**	1	SHEET AS-SOUND SUPPRESSION	420
CY	12	1	**356-9044**	1	SHEET AS-SOUND SUPPRESSION	423
	13	1	**244-7972**	1	SHEET AS	
		1	**244-7973**	1	LINER	
	14	1	**244-7976**	1	SHEET AS	
		1	**244-7977**	1	LINER	
	15	1	**244-8088**	1	LINER	
	16	1	**244-8089**	1	LINER	
	17	1	**244-8090**	1	LINER	
Y	18	1	**244-8093**	1	SHEET AS-SOUND SUPPRESSION	412
Y	19	1	**244-8095**	1	SHEET AS-SOUND SUPPRESSION	413
Y	20	2	**244-8104**	1	SHEET AS-SOUND SUPPRESSION	414
Y	21	2	**244-8108**	1	PANEL GP-SOUND SUPPRESSION	398
	22	1	**259-3727**	1	SHEET AS	
D		1	**5P-8309**		SEAL (0.3-M)	
		1	**244-7997**	1	LINER	
	23	2	**283-4046**	1	ROD	
Y	24	1	**303-9677**	1	DOOR AS-ACCESS (PUMP COMPARTMENT)	354
J	25	1	**307-7655**	1	LOCK AS	
CY	26	1	**356-9042**	1	SHEET AS-SOUND SUPPRESSION	422
	27	1	**307-7888**	1	SHEET AS	
		1	**4I-7924**	6	WASHER (4.5X40X1.2-MM THK)	
		1	**6P-2216**	6	CAP	
		1	**177-5598**	1	INSULATION	
Y	28	1	**307-7890**	1	COVER AS-SOUND SUPPRESSION	347
	29	1	**327-3175**	1	SHEET AS-SOUND SUPPRESSION	
		1	**244-8000**	1	INSULATION	
	30	2	**3B-4618**	1	PIN-COTTER	
M	31	1	**096-4882**	6	LOCKNUT (M8X1.25-THD)	
	32	2	**8T-4121**	1	WASHER-HARD (11X21X2.5-MM THK)	
	33	1	**8T-4224**	6	WASHER-HARD (8.8X16X2-MM THK)	

C-CHANGE FROM PREVIOUS TYPE
D-ORDER BY THE METER
J-REQUIRES CORPORATE KEY
M-METRIC PART
Y-SEPARATE ILLUSTRATION

REFER TO ALL ILLUSTRATIONS OF
THIS GROUP FOR AUXILIARY VIEWS

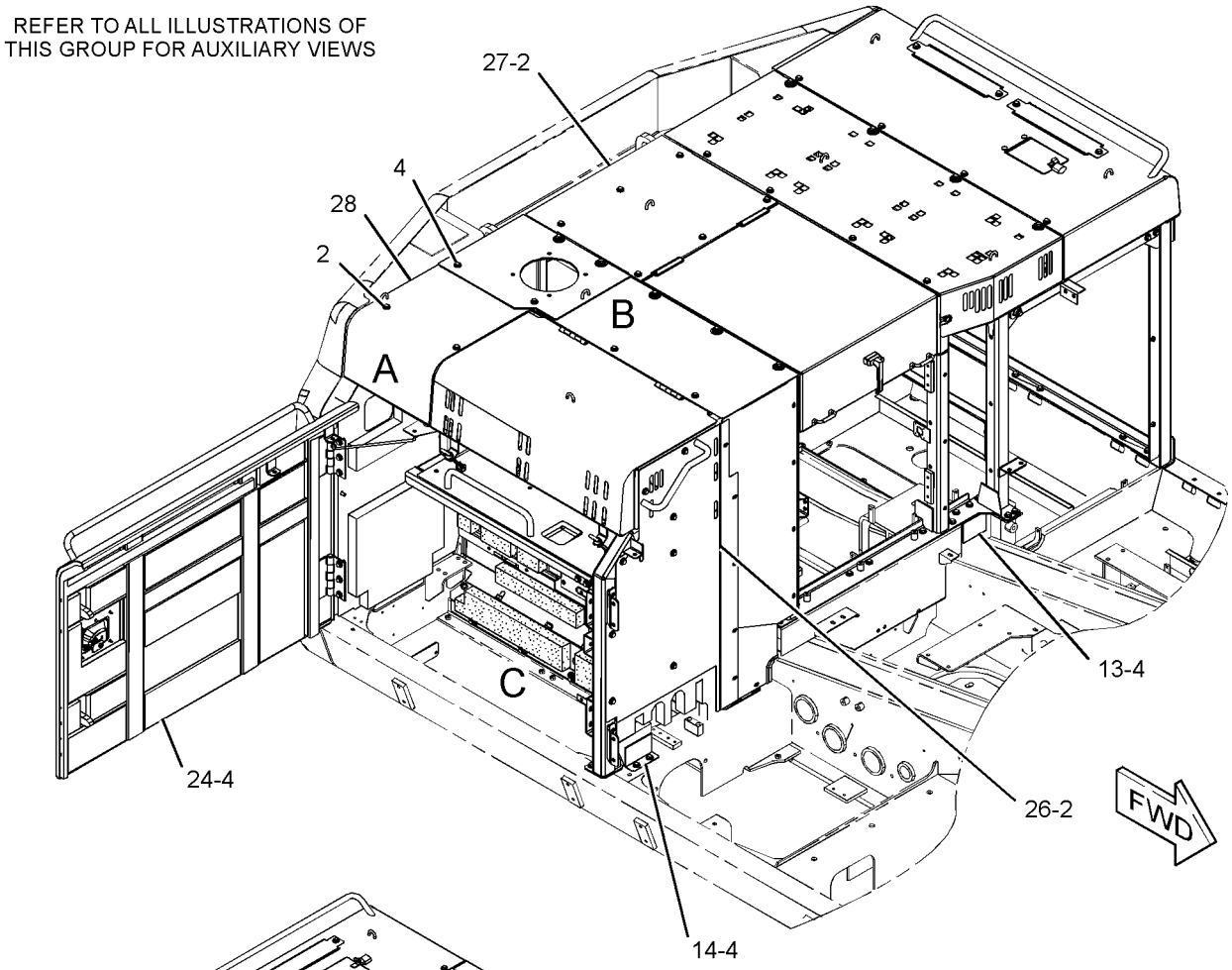

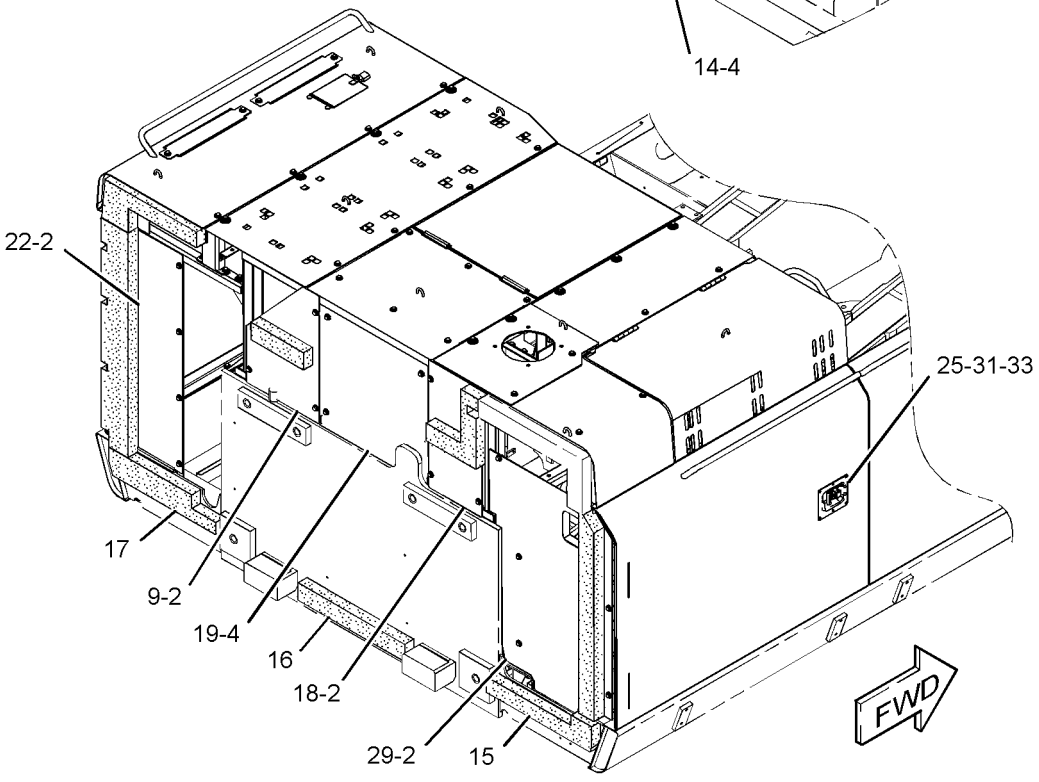

GRAPHIC #1 g02102383

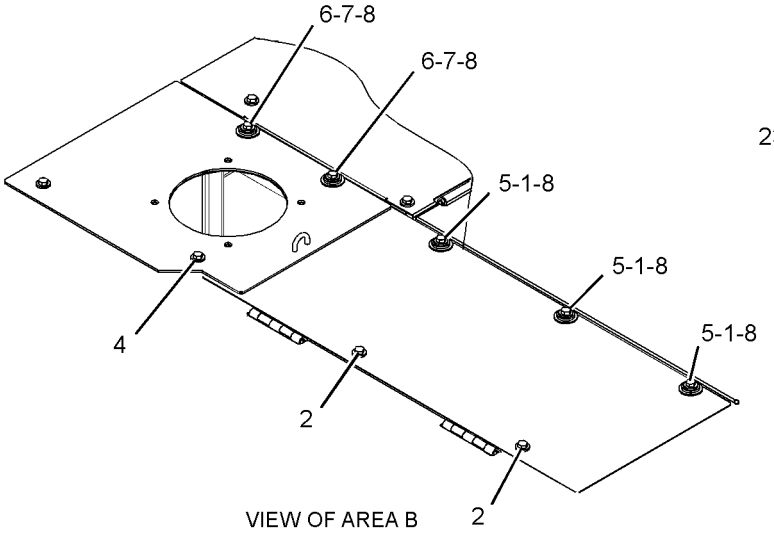

VIEW OF AREA B

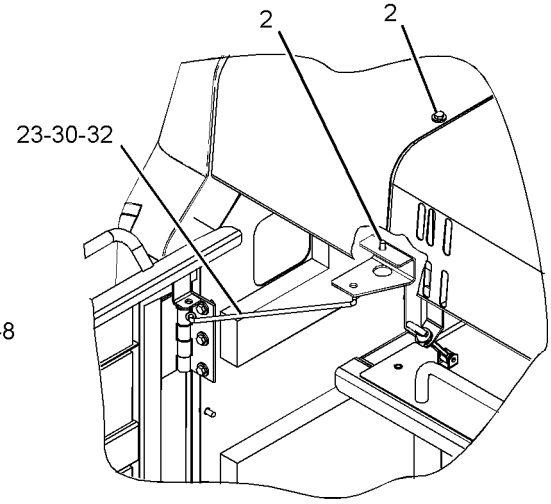

VIEW OF AREA A

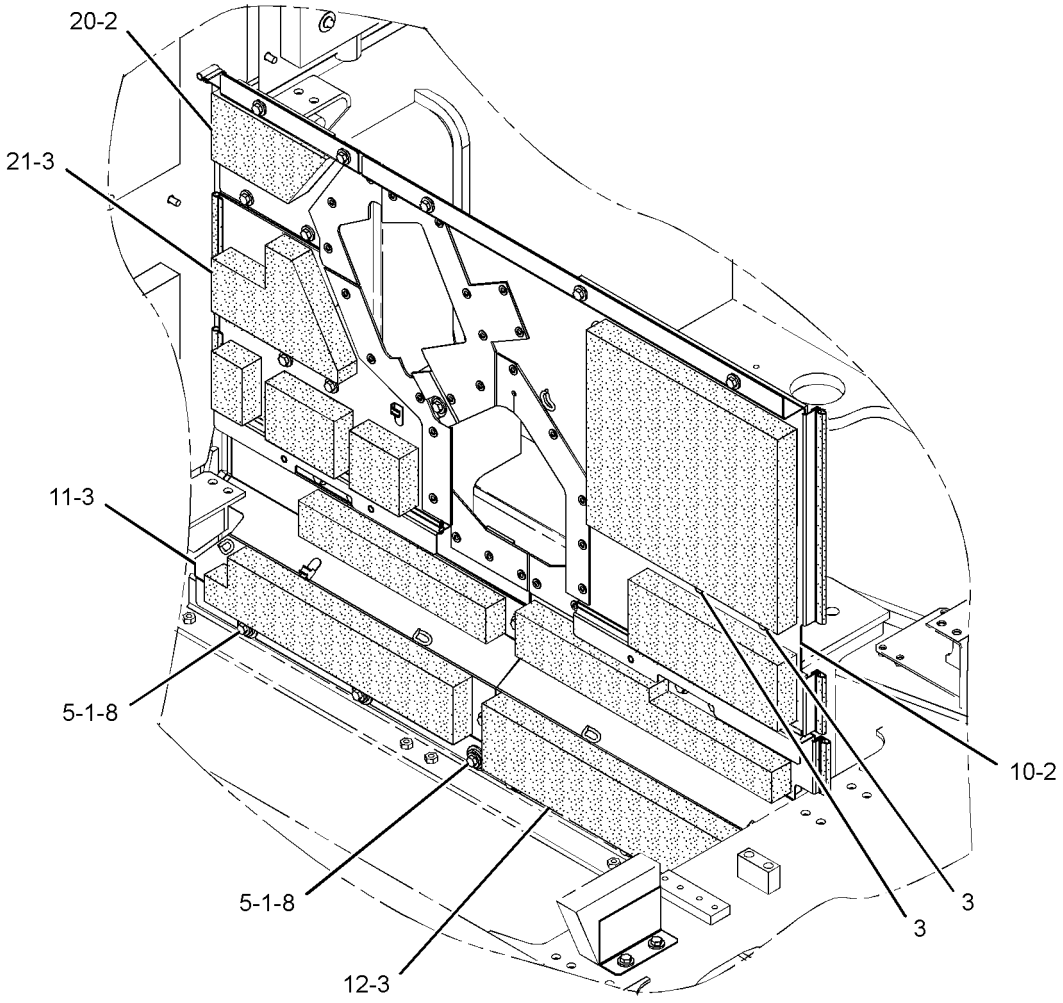

VIEW OF AREA C
(PARTS REMOVED FOR CLARITY)

GRAPHIC #2 **<END>** g02102384

FRAME AND BODY

313-8284 HOOD AS

S/N: WAP1-UP
PART OF 285-7945 HOOD & GUARD GP
AN ATTACHMENT

SMCS-7251 **i03144568**

NOTE	REF NO	GRAPHIC REF	PART NUMBER	QTY	PART NAME 1 2 3 4 5 6 (PRODUCT LEVEL)	SEE PAGE
	1	1	**177-5654**	1	INSULATION	
	2	1	**177-5655**	1	INSULATION	
	3	1	**244-8155**	1	LINER	

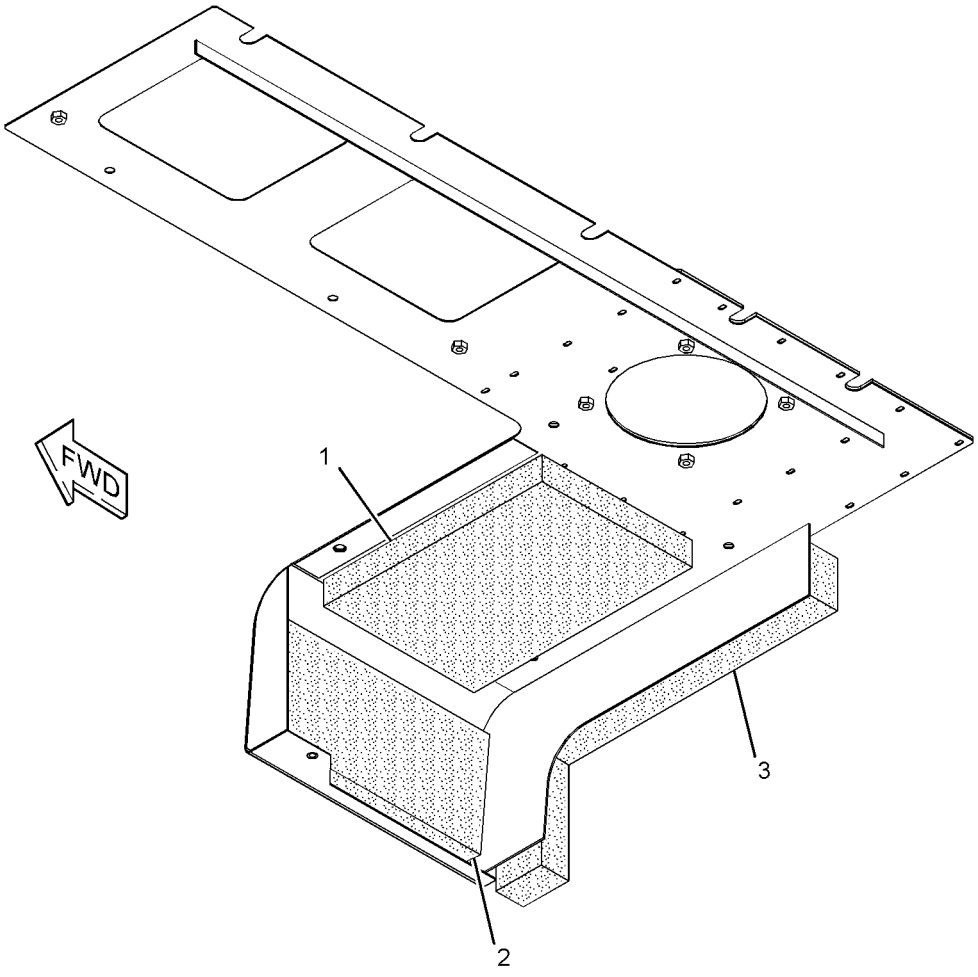

GRAPHIC #1 **<END>** g01708523

327-3173 HOOD GP—COUNTERWEIGHT REMOVAL SYSTEM

S/N: WAP1-UP
PART OF 294-1295 COUNTERWEIGHT AR
AN ATTACHMENT

SMCS-7251 **i04025549**

NOTE	REF NO	GRAPHIC REF	PART NUMBER	QTY	PART NAME 1 2 3 4 5 6 (PRODUCT LEVEL)	SEE PAGE
	1	1	**7Y-2853**	9	SPACER (13X38X5-MM THK)	
	2	1	**122-4120**	1	ROD	
M	3	1	**135-8572**	3	BOLT AS	
M	4	1	**135-8573**	56	BOLT AS	
M	5	1	**135-8574**	10	BOLT AS	
M	6	1	**135-8575**	19	BOLT AS	
M	7	1	**135-8577**	16	BOLT AS	
M	8	1	**135-8578**	2	BOLT AS	
	9	1	**177-5857**	1	LINER AS	
	10	1	**177-5892**	1	SUPPORT AS	
Y	11	1	**177-5894**	1	SHEET AS-SOUND SUPPRESSION	407
	12	1	**190-6919**	2	SPACER (24X38X16.5-MM THK)	
	13	1	**193-9623**	1	SHEET AS	
		1	**4I-7924**	6	WASHER (4.5X40X1.2-MM THK)	
		1	**6P-2216**	6	CAP	
		1	**177-5598**	1	INSULATION	
B	14	1	**208-4149**	1	SHIM (0.2-MM THK)	
B	15	1	**208-4150**	2	SHIM (1-MM THK)	
B	16	1	**208-4151**	2	SHIM (0.5-MM THK)	
B	17	1	**208-4152**	2	SHIM (0.2-MM THK)	
B	18	1	**208-4153**	1	SHIM (0.5-MM THK)	
B	19	1	**208-4154**	2	SHIM (1-MM THK)	
	20	1	**218-7647**	1	SHEET AS	
		1	**218-7649**	1	LINER	
	21	1	**218-7650**	1	SHEET AS	
		1	**218-7649**	1	LINER	
	22	1	**236-9259**	1	SHEET	
	23	1	**236-9404**	1	HOOD AS	
Y	24	1	**237-8518**	1	PANEL GP-SOUND SUPPRESSION	396
Y	25	1	**237-8522**	1	PANEL GP-SOUND SUPPRESSION	397
	26	1	**250-5404**	1	SHEET AS	
		1	**4I-7924**	4	WASHER (4.5X40X1.2-MM THK)	
		1	**6P-2216**	4	CAP	
		1	**236-9256**	1	INSULATION	
	27	1	**250-5405**	1	SHEET AS	
		1	**4I-7924**	4	WASHER (4.5X40X1.2-MM THK)	
		1	**6P-2216**	4	CAP	
		1	**175-1005**	1	INSULATION	
Y	28	1	**250-5406**	1	PANEL GP-SOUND SUPPRESSION (PUMP COMPARTMENT)	400
Y	29	1	**250-5407**	1	PANEL GP-SOUND SUPPRESSION (PUMP COMPARTMENT)	402
Y	30	1	**250-5408**	1	PANEL GP-SOUND SUPPRESSION (PUMP COMPARTMENT)	404
Y	31	1	**250-5410**	1	SHEET AS-SOUND SUPPRESSION	416
	32	1	**259-3726**	1	SHEET AS	
D		1	**5P-8309**		SEAL (0.3-M)	
		1	**177-5854**	1	LINER AS	
Y	33	1	**303-9679**	1	DOOR AS-ACCESS (PUMP COMPARTMENT)	355
J	34	1	**307-7655**	1	LOCK AS	
	35	1	**307-7884**	1	SHEET AS	
	36	1	**327-3176**	1	SHEET	
	37	1	**336-1668**	1	SUPPORT AS	
	38	1	**3B-4618**	1	PIN-COTTER	
M	39	1	**096-4882**	6	LOCKNUT (M8X1.25-THD)	
	40	1	**7Y-2854**	11	SPACER (24X38X3-MM THK)	
	41	1	**8T-4121**	1	WASHER-HARD (11X21X2.5-MM THK)	
	42	1	**8T-4224**	6	WASHER-HARD (8.8X16X2-MM THK)	

B-USE AS REQUIRED
D-ORDER BY THE METER
J-REQUIRES CORPORATE KEY
M-METRIC PART
Y-SEPARATE ILLUSTRATION

327-3173 **HOOD GP** *(contd.)* **i04025549**

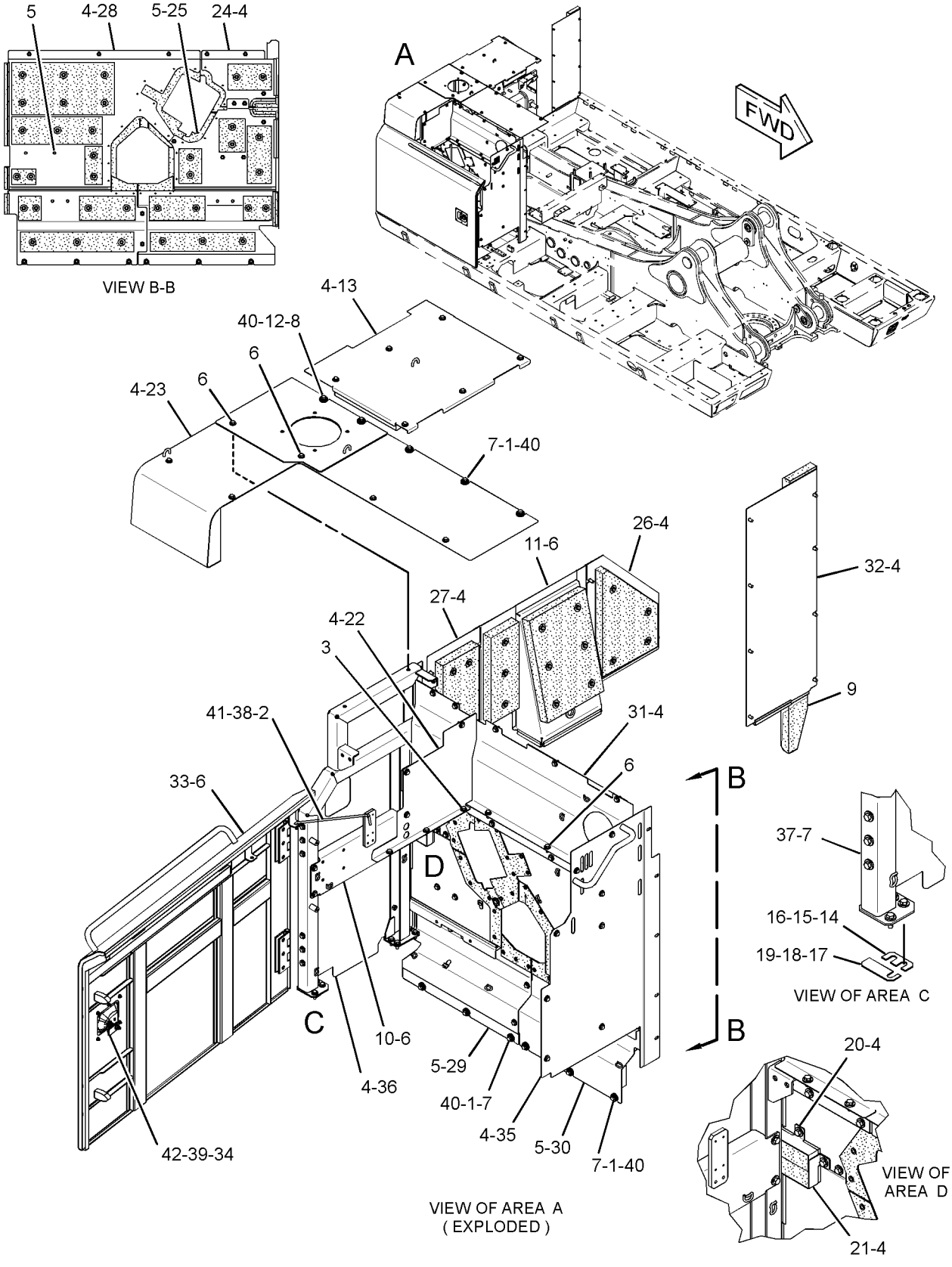

GRAPHIC #1 **<END>** g02181496

333-5220 HOOD GP–RADIATOR

S/N: WAP1-UP
PART OF 307-8001 HOOD & GUARD GP
AN ATTACHMENT

SMCS-7251 **i03917592**

NOTE	REF NO	GRAPHIC REF	PART NUMBER	QTY	PART NAME 1 2 3 4 5 6 (PRODUCT LEVEL)	SEE PAGE
	1	1	**1K-8850**	1	SPRING	
	2	1	**5V-3854**	1	BUMPER	
	3	1	**7Y-8876**	1	DOOR AS	
	3A	1	**9V-3659**	1	HINGE	
M	4	1	**135-8573**	4	BOLT AS	
	5	1	**177-5637**	2	LINER	
	6	1	**244-8158**	1	LINER	
	7	1	**244-8159**	2	SHEET	
	8	1	**244-8160**	1	LINER	
	9	1	**333-5221**	1	HOOD AS	
	10	1	**8T-4121**	2	WASHER-HARD (11X21X2.5-MM THK)	
M	11	1	**8T-4133**	2	NUT (M10X1.5-THD)	

M-METRIC PART

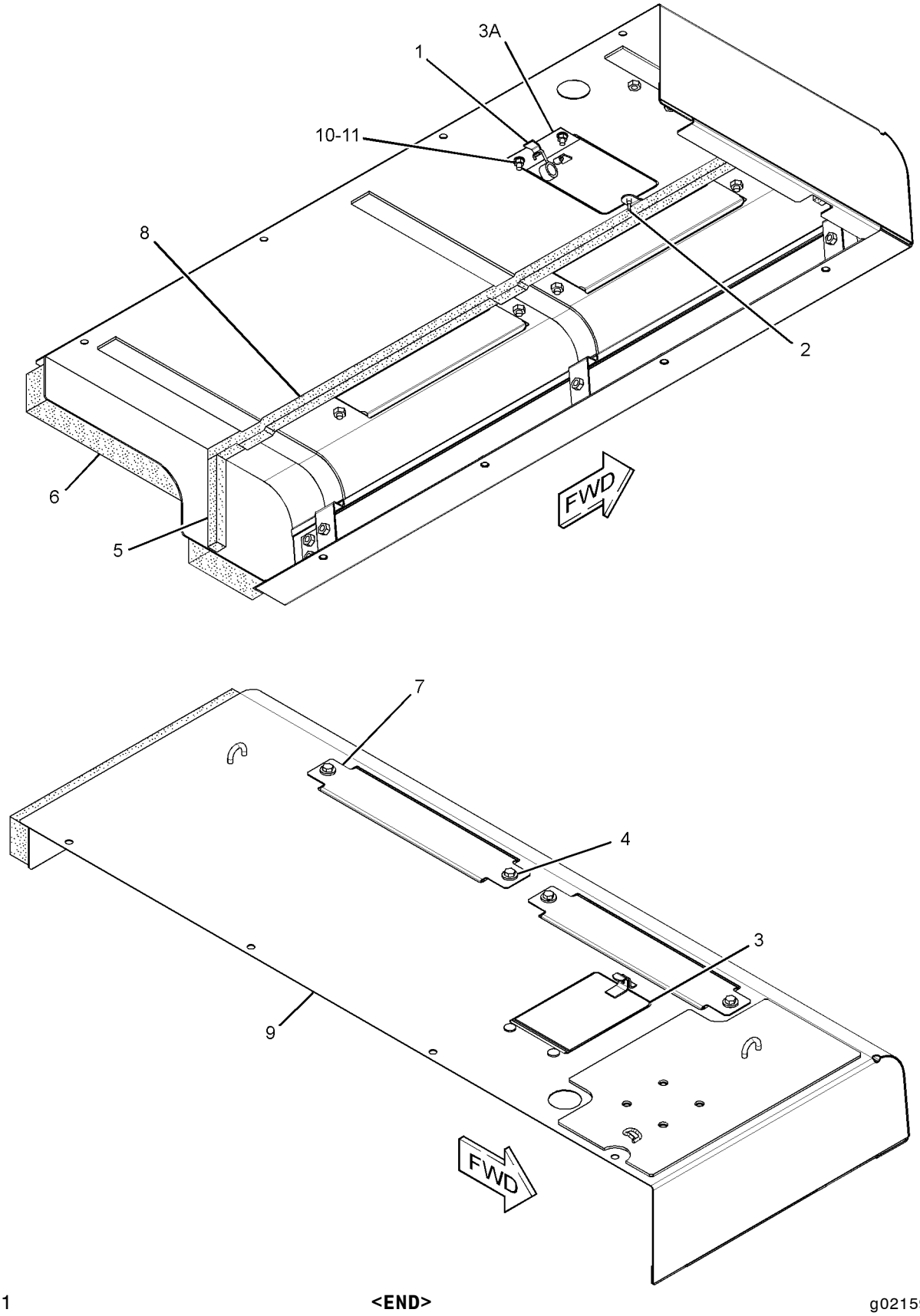

GRAPHIC #1 **<END>** g02159836

FRAME AND BODY

307-8017 HOOD GP-ENGINE

S/N: WAP1-UP

PART OF 313-7848 HOOD & GUARD GP

SMCS-7251 **i03645032**

NOTE	REF NO	GRAPHIC REF	PART NUMBER	QTY	PART NAME 1 2 3 4 5 6 (PRODUCT LEVEL)	SEE PAGE
	1	1	**4I-7924**	18	WASHER (4.5X40X1.2-MM THK)	
	2	1	**6P-2216**	18	CAP	
	3	1	**177-5664**	9	INSULATION	
	4	1	**146-4936**	2	HANDLE AS	
	5	1	**165-3010**	2	HINGE	

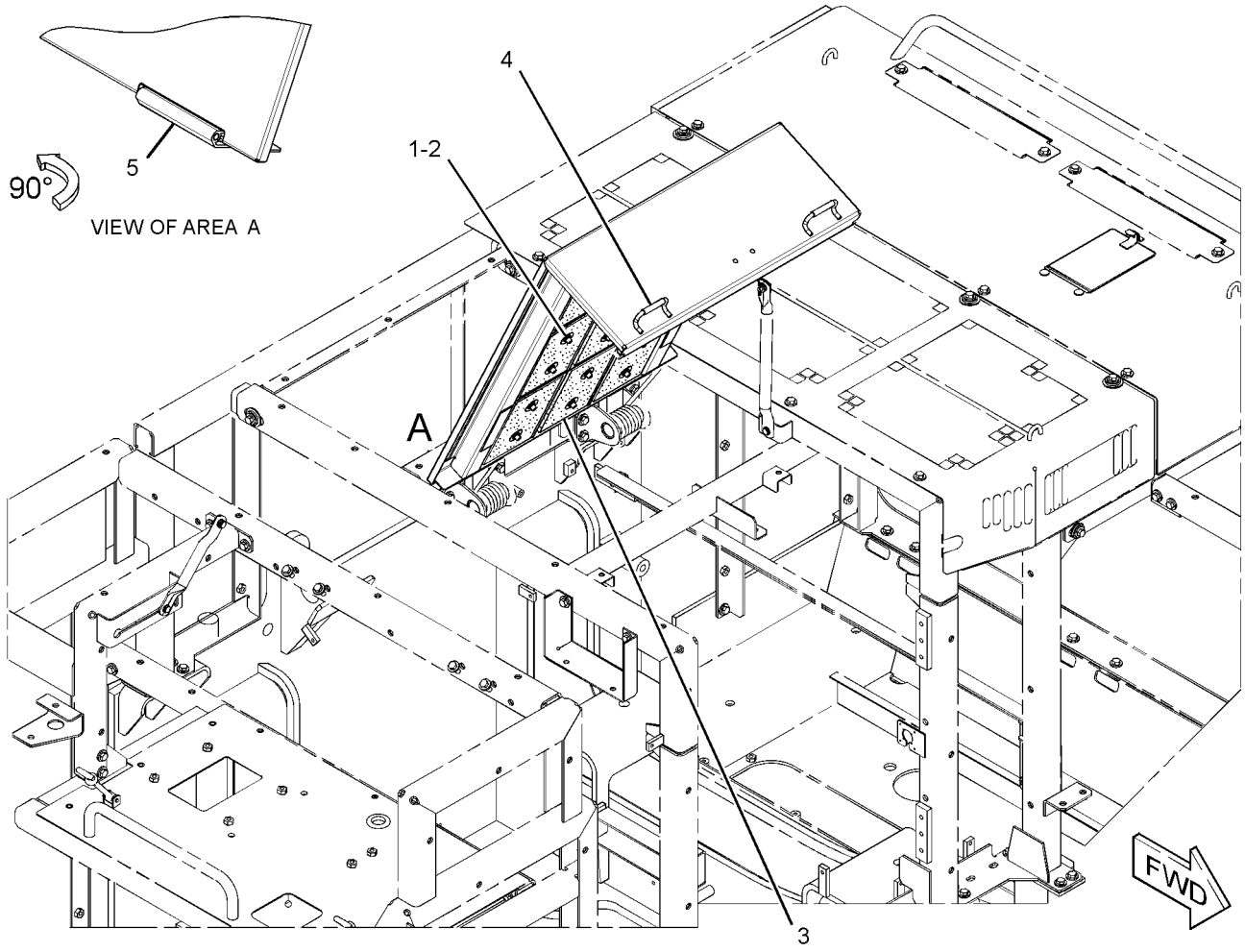

GRAPHIC #1 **<END>** g01955721

FRAME AND BODY

236-9266 PANEL GP-SOUND SUPPRESSION—PUMP COMPARTMENT

S/N: WAP1-UP

PART OF 327-3172 HOOD & GUARD GP

SMCS-1801, 7076, 7261 **i03493625**

NOTE	REF NO	GRAPHIC REF	PART NUMBER	QTY	PART NAME 1 2 3 4 5 6 (PRODUCT LEVEL)	SEE PAGE
	1	1	**4I-7924**	13	WASHER (4.5X40X1.2-MM THK)	
	2	1	**6P-2216**	13	CAP	
	3	1	**9M-5732**	13	RIVET-POP	
	4	1	**236-9267**	1	SHEET-RUBBER	
Z	5	1		1	SHEET AS	
	6	1	**244-8082**	1	SHEET-RUBBER	
	7	1	**244-8083**	1	INSULATION	
	8	1	**244-8084**	1	INSULATION	
	9	1	**244-8085**	1	INSULATION	
	10	1	**244-8086**	1	INSULATION	
	11	1	**244-8087**	1	INSULATION	
	12	1	**244-8166**	1	INSULATION	
	13	1	**9M-2307**	13	WASHER (5.2X19X2-MM THK)	
D	14	1	**5P-8309**		SEAL (0.6-M)	
D	15	1	**101-9848**		SEAL (0.5-M)	
D	15A	1	**101-9848**		SEAL (0.2-M)	

D-ORDER BY THE METER
Z-NOT SERVICED SEPARATELY

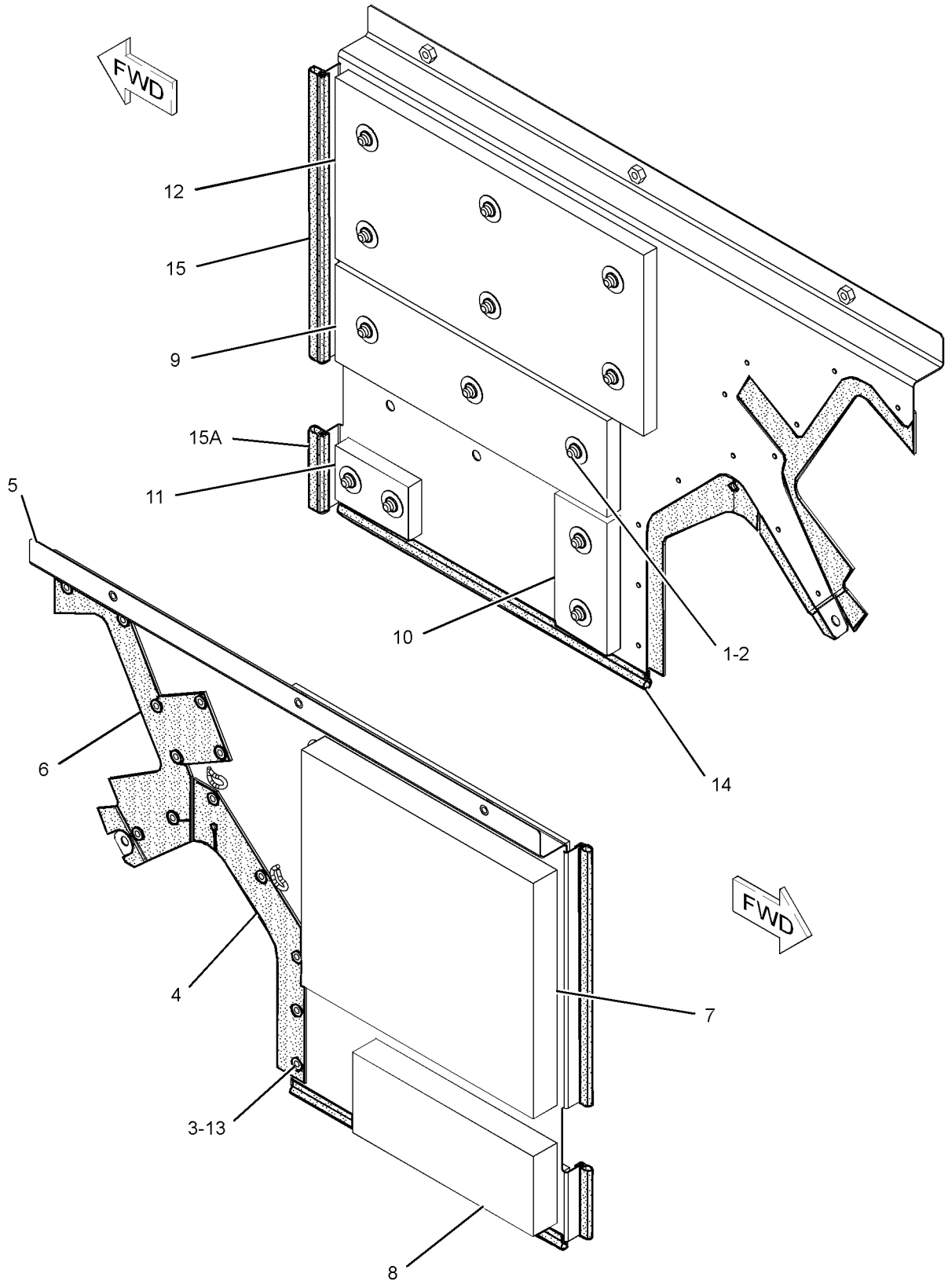

GRAPHIC #1 **<END>** g01830475

237-8518 PANEL GP-SOUND SUPPRESSION

S/N: WAP1-UP
PART OF 327-3173 HOOD GP
AN ATTACHMENT

SMCS-1801, 7076, 7261 **i03493701**

NOTE	REF NO	GRAPHIC REF	PART NUMBER	QTY	PART NAME 1 2 3 4 5 6 (PRODUCT LEVEL)	SEE PAGE
	1	1	**4I-7924**	2	WASHER (4.5X40X1.2-MM THK)	
	2	1	**6P-2216**	2	CAP	
	3	1	**9M-5732**	4	RIVET-POP	
	4	1	**138-5471**	1	INSULATION	
	5	1	**237-8519**	1	SHEET-RUBBER	
Z	6	1		1	SHEET AS	
	8	1	**9M-2307**	4	WASHER (5.2X19X2-MM THK)	
D	9	1	**5P-8309**		SEAL (0.3-M)	
D	9A	1	**5P-8309**		SEAL (0.2-M)	

D-ORDER BY THE METER
Z-NOT SERVICED SEPARATELY

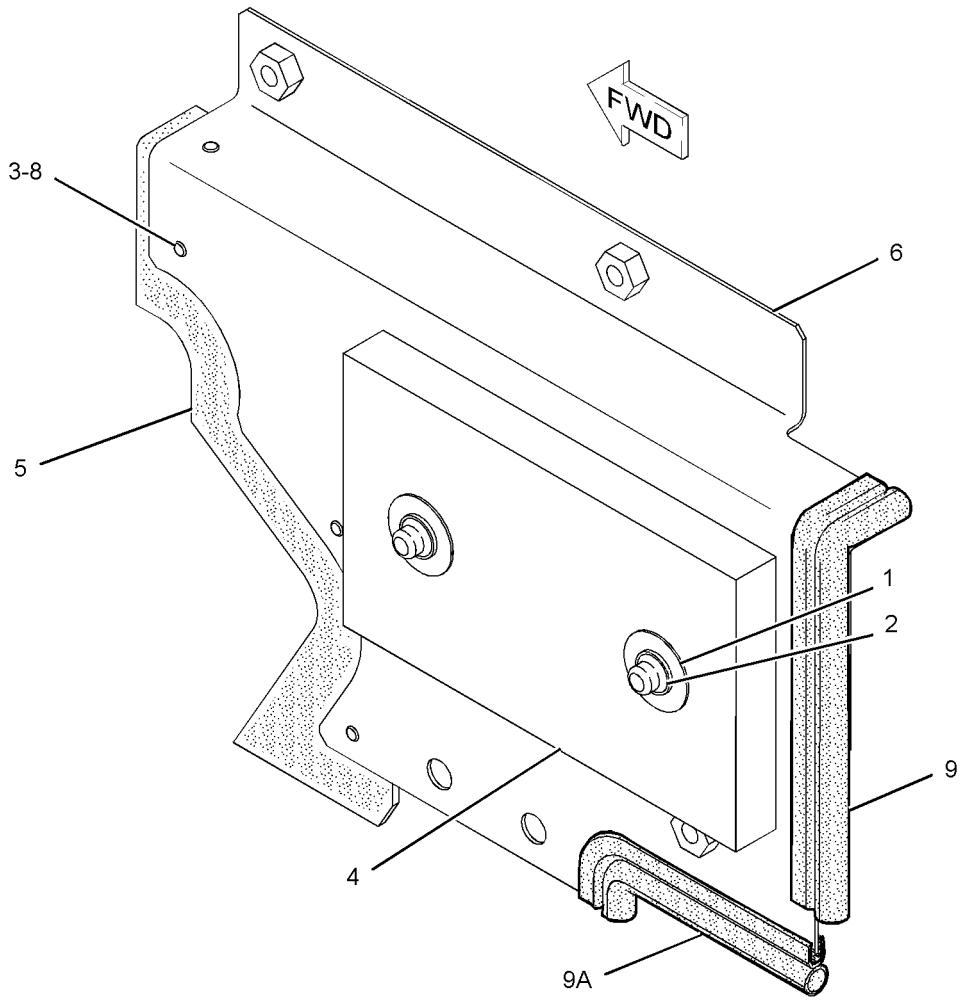

GRAPHIC #1 **<END>** g01830483

237-8522 PANEL GP-SOUND SUPPRESSION

S/N: WAP1-UP
PART OF 327-3173 HOOD GP
AN ATTACHMENT

SMCS-1801, 7076, 7261 **i03499055**

NOTE	REF NO	GRAPHIC REF	PART NUMBER	QTY	PART NAME 1 2 3 4 5 6 (PRODUCT LEVEL)	SEE PAGE
	1	1	**4I-7924**	6	WASHER (4.5X40X1.2-MM THK)	
	2	1	**6P-2216**	6	CAP	
	3	1	**9M-5732**	5	RIVET-POP	
	4	1	**237-8523**	1	SHEET-RUBBER	
Z	5	1		1	SHEET AS	
	6	1	**244-8068**	1	INSULATION	
	7	1	**244-8069**	1	INSULATION	
	8	1	**244-8070**	1	INSULATION	
	9	1	**9M-2307**	5	WASHER (5.2X19X2-MM THK)	
D	10	1	**5P-8309**		SEAL (0.16-M)	
D	10A	1	**5P-8309**		SEAL (0.22-M)	
D	10B	1	**5P-8309**		SEAL (0.58-M)	

D-ORDER BY THE METER
Z-NOT SERVICED SEPARATELY

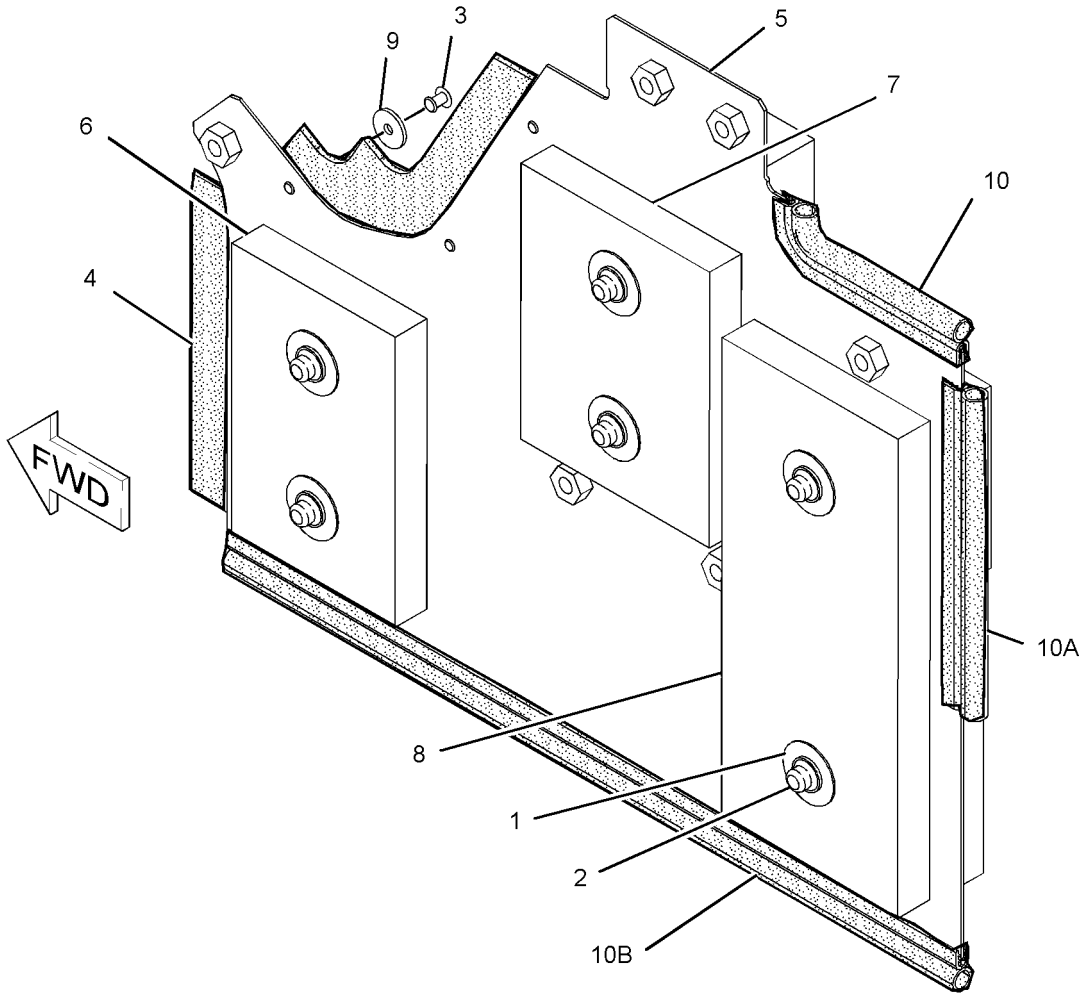

GRAPHIC #1 **<END>** g01835274

FRAME AND BODY

244-8108 PANEL GP-SOUND SUPPRESSION

S/N: WAP1-UP

PART OF 327-3172 HOOD & GUARD GP

SMCS-1801, 7076, 7261 **i03494061**

NOTE	REF NO	GRAPHIC REF	PART NUMBER	QTY	PART NAME 1 2 3 4 5 6 (PRODUCT LEVEL)	SEE PAGE
	1	1	**4I-7924**	6	WASHER (4.5X40X1.2-MM THK)	
	2	1	**6P-2216**	6	CAP	
	3	1	**9M-5732**	5	RIVET-POP	
	4	1	**237-8523**	1	SHEET-RUBBER	
	5	1	**244-8066**	1	INSULATION	
	6	1	**244-8067**	1	INSULATION	
	7	1	**244-8068**	1	INSULATION	
	8	1	**244-8069**	1	INSULATION	
	9	1	**244-8070**	1	INSULATION	
Z	10	1		1	SHEET AS	
	11	1	**244-8170**	1	INSULATION	
	12	1	**244-8171**	1	INSULATION	
	13	1	**9M-2307**	5	WASHER (5.2X19X2-MM THK)	
BD	14	1	**5P-8309**		SEAL	

B-USE AS REQUIRED
D-ORDER BY THE METER
Z-NOT SERVICED SEPARATELY

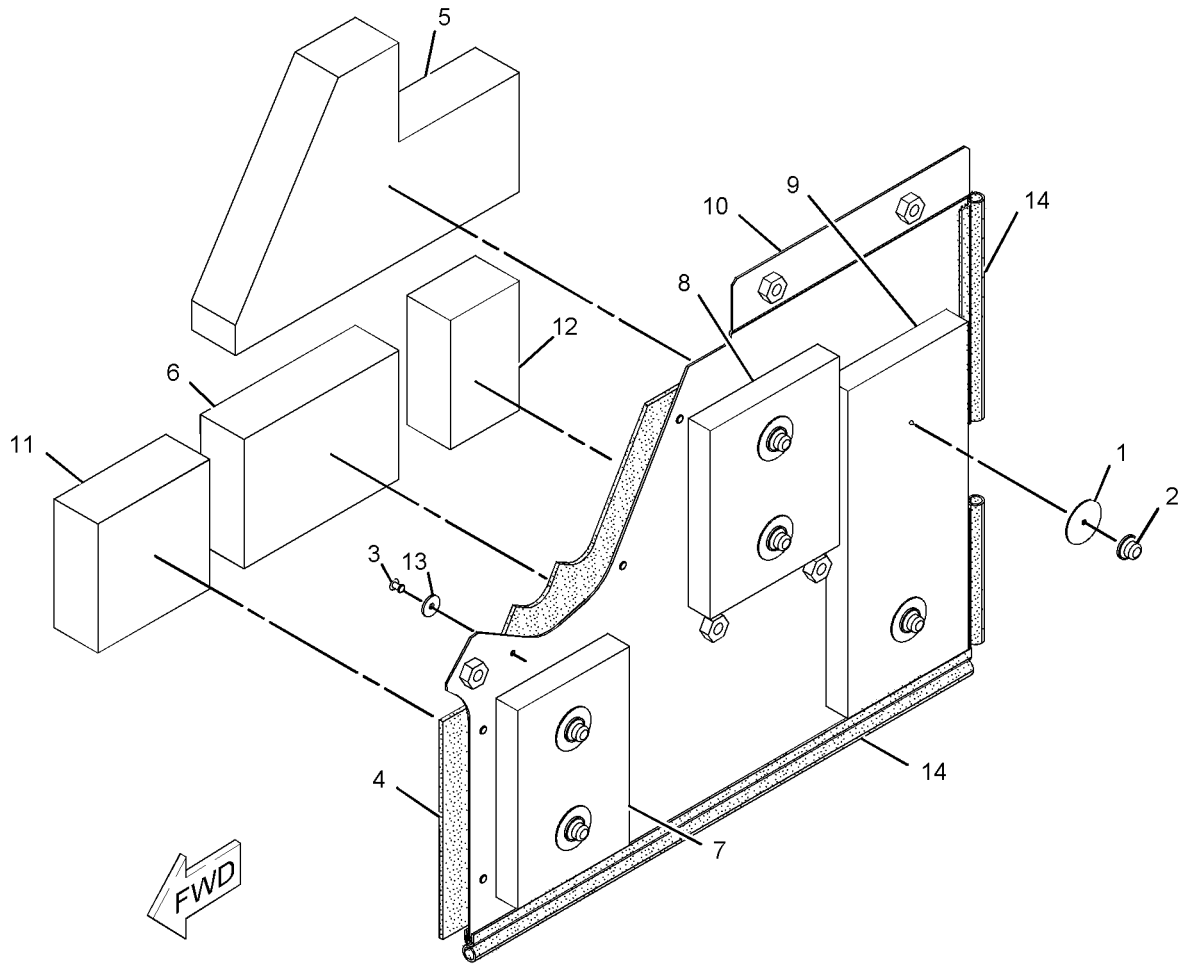

GRAPHIC #1 **<END>** g01128747

246-5984 PANEL GP-SOUND SUPPRESSION–FRONT HOUSING

S/N: RHX7868-UP

PART OF 286-9798 ENGINE AR-COMPLETE

SMCS-1801, 7076, 7261 **i02219315**

NOTE	REF NO	GRAPHIC REF	PART NUMBER	QTY	PART NAME 1 2 3 4 5 6 (PRODUCT LEVEL)	SEE PAGE
	1	1	**237-4332**	1	COVER AS	
	2	1	**0S-1591**	3	BOLT (3/8-16X1.5-IN)	
	3	1	**0T-0055**	3	BOLT (3/8-16X4.25-IN)	
	4	1	**1A-2029**	2	BOLT (3/8-16X1.125-IN)	
	5	1	**1A-5964**	2	BOLT (3/8-16X4.5-IN)	
	6	1	**5M-2894**	4	WASHER-HARD (10.2X18.5X2.5-MM THK)	
	7	1	**9S-8752**	1	NUT-FULL (3/8-16-THD)	
	8	1	**9X-6458**	7	WASHER-HARD (10.2X22.5X3-MM THK)	

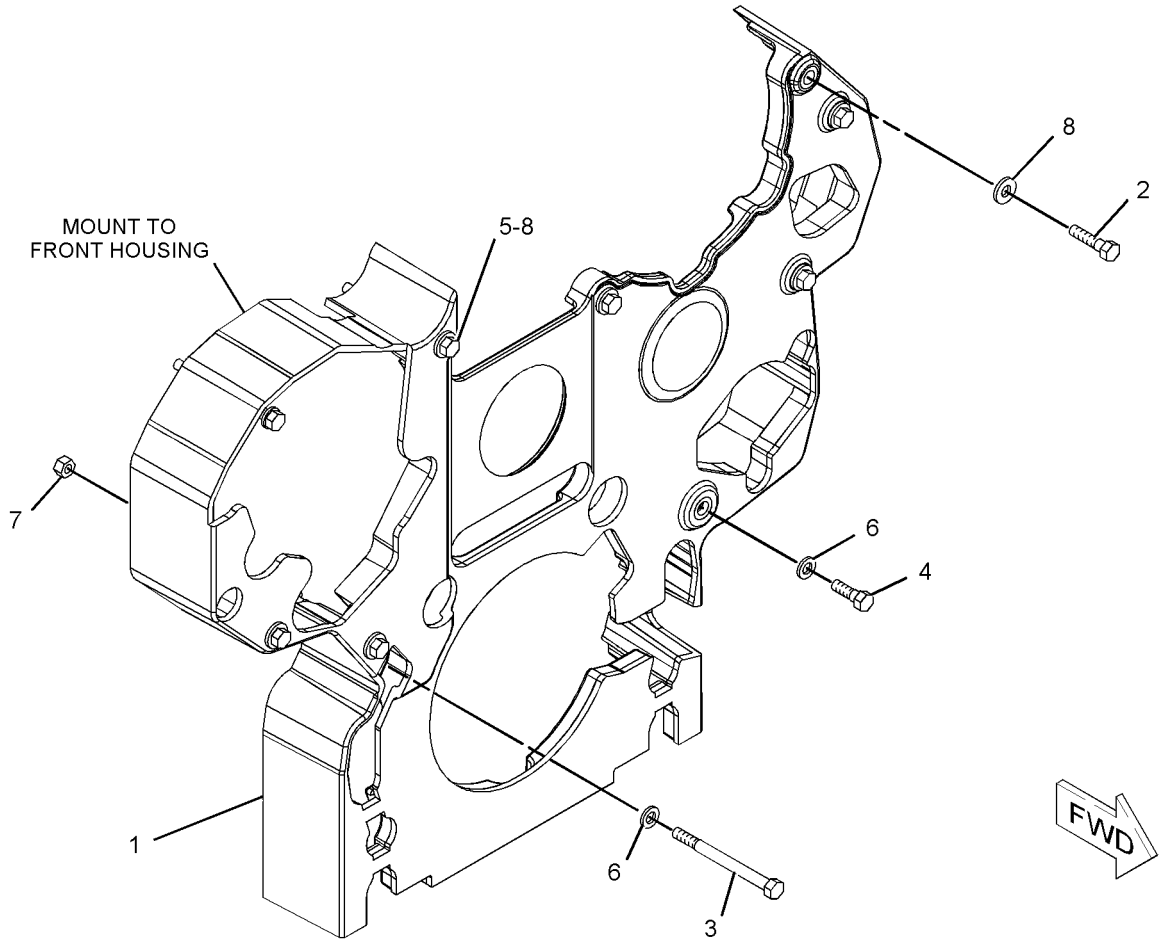

GRAPHIC #1 **<END>** g01126959

FRAME AND BODY

250-5406 PANEL GP-SOUND SUPPRESSION—PUMP COMPARTMENT

S/N: WAP1-UP
PART OF 327-3173 HOOD GP
AN ATTACHMENT

SMCS-1801, 7076, 7261 **i03493960**

NOTE	REF NO	GRAPHIC REF	PART NUMBER	QTY	PART NAME 1 2 3 4 5 6 (PRODUCT LEVEL)	SEE PAGE
	1	1	**4I-7924**	13	WASHER (4.5X40X1.2-MM THK)	
	2	1	**6P-2216**	13	CAP	
	3	1	**9M-5732**	13	RIVET-POP	
	4	1	**236-9267**	1	SHEET-RUBBER	
Z	5	1		1	SHEET AS	
	6	1	**244-8082**	1	SHEET-RUBBER	
	7	1	**244-8085**	1	INSULATION	
	8	1	**244-8086**	1	INSULATION	
	9	1	**244-8087**	1	INSULATION	
	10	1	**244-8166**	1	INSULATION	
	11	1	**9M-2307**	13	WASHER (5.2X19X2-MM THK)	
D	12	1	**5P-8309**		SEAL (0.59-M)	
D	13	1	**101-9848**		SEAL (0.48-M)	
D	13A	1	**101-9848**		SEAL (0.13-M)	

D-ORDER BY THE METER
Z-NOT SERVICED SEPARATELY

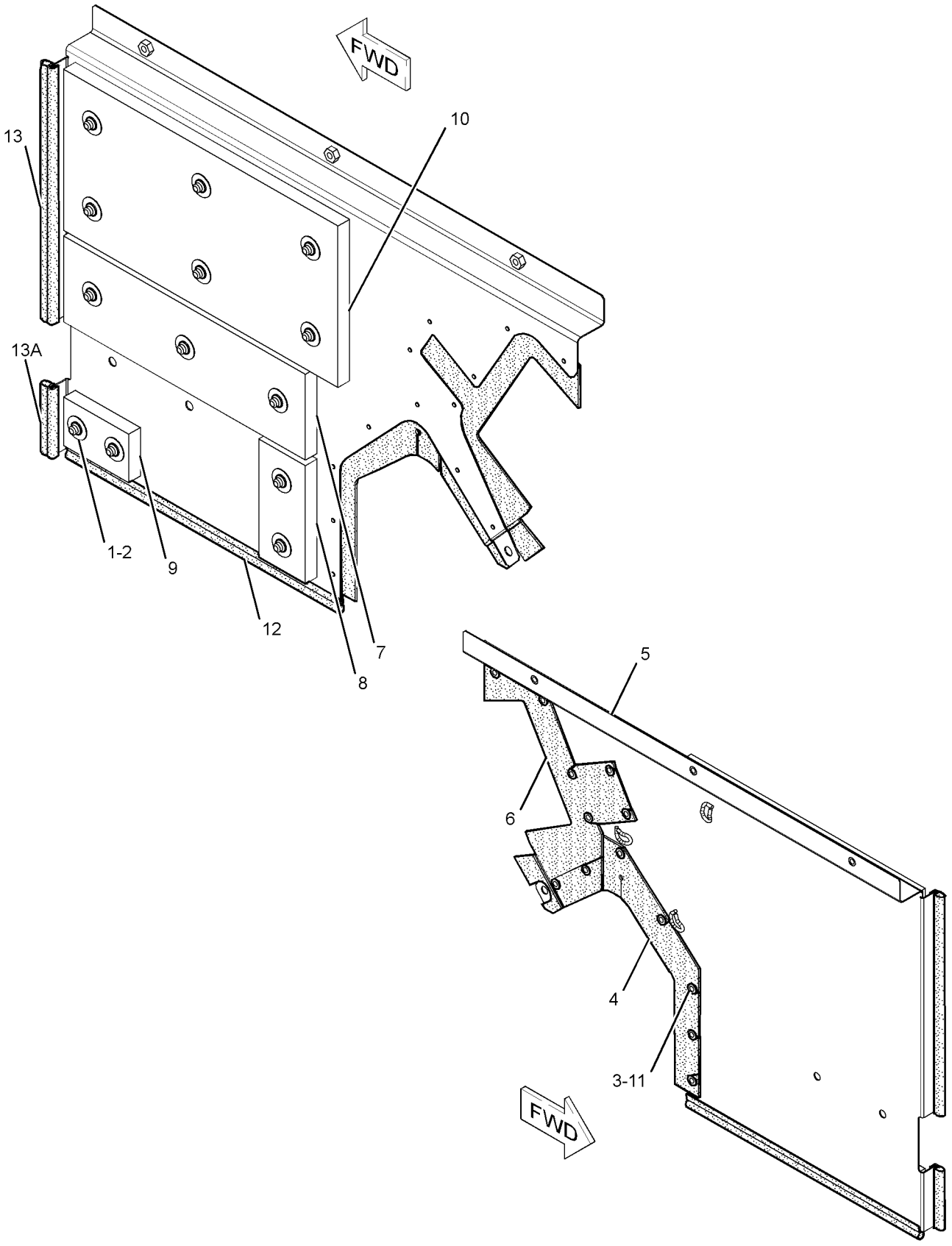

GRAPHIC #1 **<END>** g01830698

FRAME AND BODY

250-5407 PANEL GP-SOUND SUPPRESSION—PUMP COMPARTMENT

S/N: WAP1-UP
PART OF 327-3173 HOOD GP
AN ATTACHMENT

SMCS-1801, 7076, 7261 **i03612571**

NOTE	REF NO	GRAPHIC REF	PART NUMBER	QTY	PART NAME 1 2 3 4 5 6 (PRODUCT LEVEL)	SEE PAGE
	1	1	**4I-7924**	7	WASHER (4.5X40X1.2-MM THK)	
	2	1	**6P-2216**	7	CAP	
	3	1	**9M-5732**	3	RIVET-POP	
	4	1	**236-9271**	1	LINER	
	5	1	**236-9272**	1	SHEET-RUBBER	
Z	6	1		1	SHEET AS	
	7	1	**244-8077**	1	INSULATION	
	8	1	**244-8078**	1	INSULATION	
	9	1	**9M-2307**	3	WASHER (5.2X19X2-MM THK)	
D	10	1	**5P-8309**		SEAL (0.3-M)	

D-ORDER BY THE METER
Z-NOT SERVICED SEPARATELY

250-5407 **PANEL GP-SOUND SUPPRESSION** *(contd.)* **i03612571**

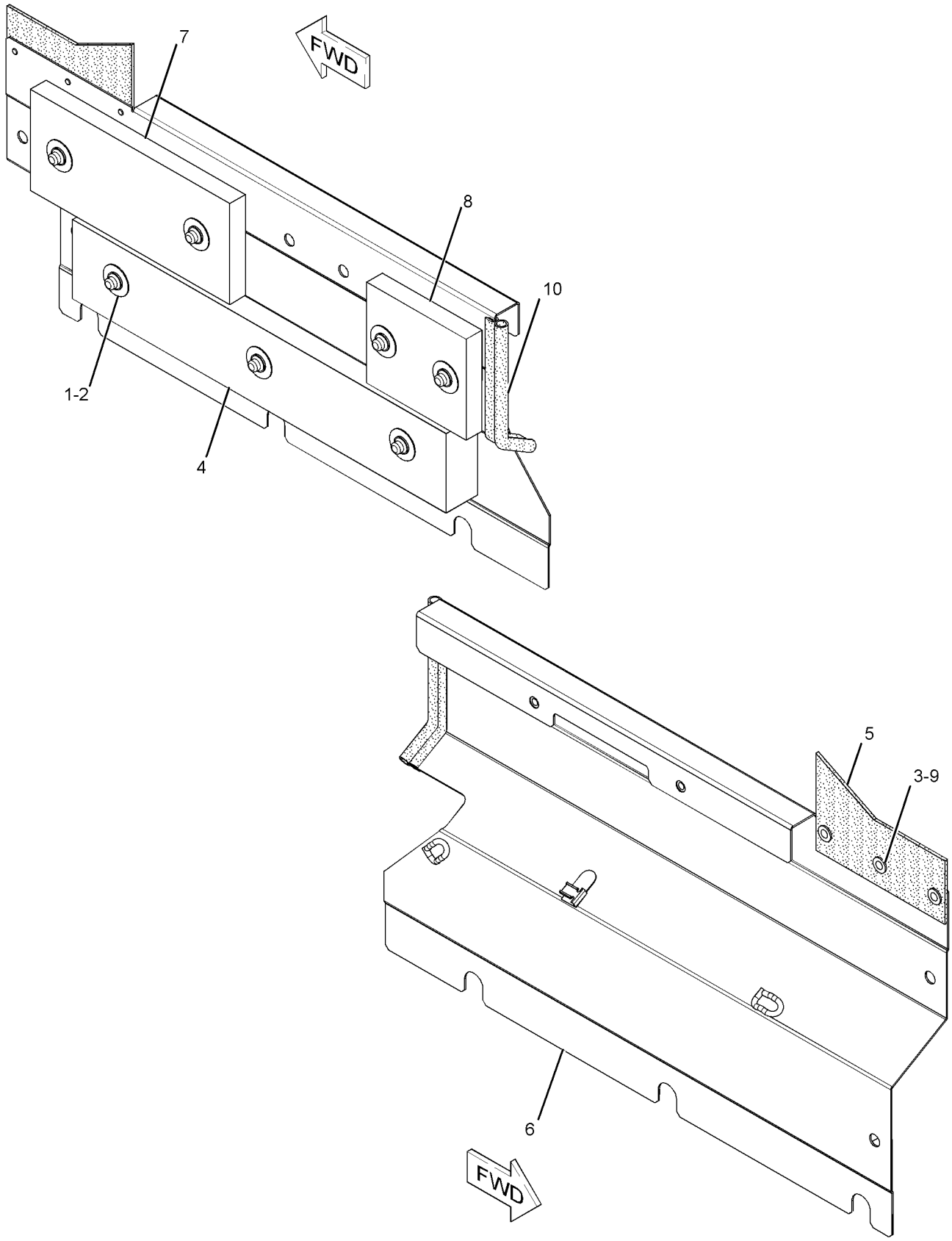

GRAPHIC #1 **<END>** g01129599

FRAME AND BODY

250-5408 PANEL GP-SOUND SUPPRESSION—PUMP COMPARTMENT

S/N: WAP1-UP
PART OF 327-3173 HOOD GP
AN ATTACHMENT

SMCS-1801, 7076, 7261 **i03627045**

NOTE	REF NO	GRAPHIC REF	PART NUMBER	QTY	PART NAME 1 2 3 4 5 6 (PRODUCT LEVEL)	SEE PAGE
	1	1	**4I-7924**	7	WASHER (4.5X40X1.2-MM THK)	
	2	1	**6P-2216**	7	CAP	
	3	1	**9M-5732**	2	RIVET-POP	
	4	1	**236-9277**	1	LINER	
	5	1	**236-9278**	1	SHEET-RUBBER	
Z	6	1		1	SHEET AS	
	7	1	**244-8077**	1	INSULATION	
	8	1	**244-8081**	1	INSULATION	
	9	1	**9M-2307**	2	WASHER (5.2X19X2-MM THK)	
D	10	1	**101-9848**		SEAL (0.2-M)	

D-ORDER BY THE METER
Z-NOT SERVICED SEPARATELY

250-5408 **PANEL GP-SOUND SUPPRESSION** *(contd.)* **i03627045**

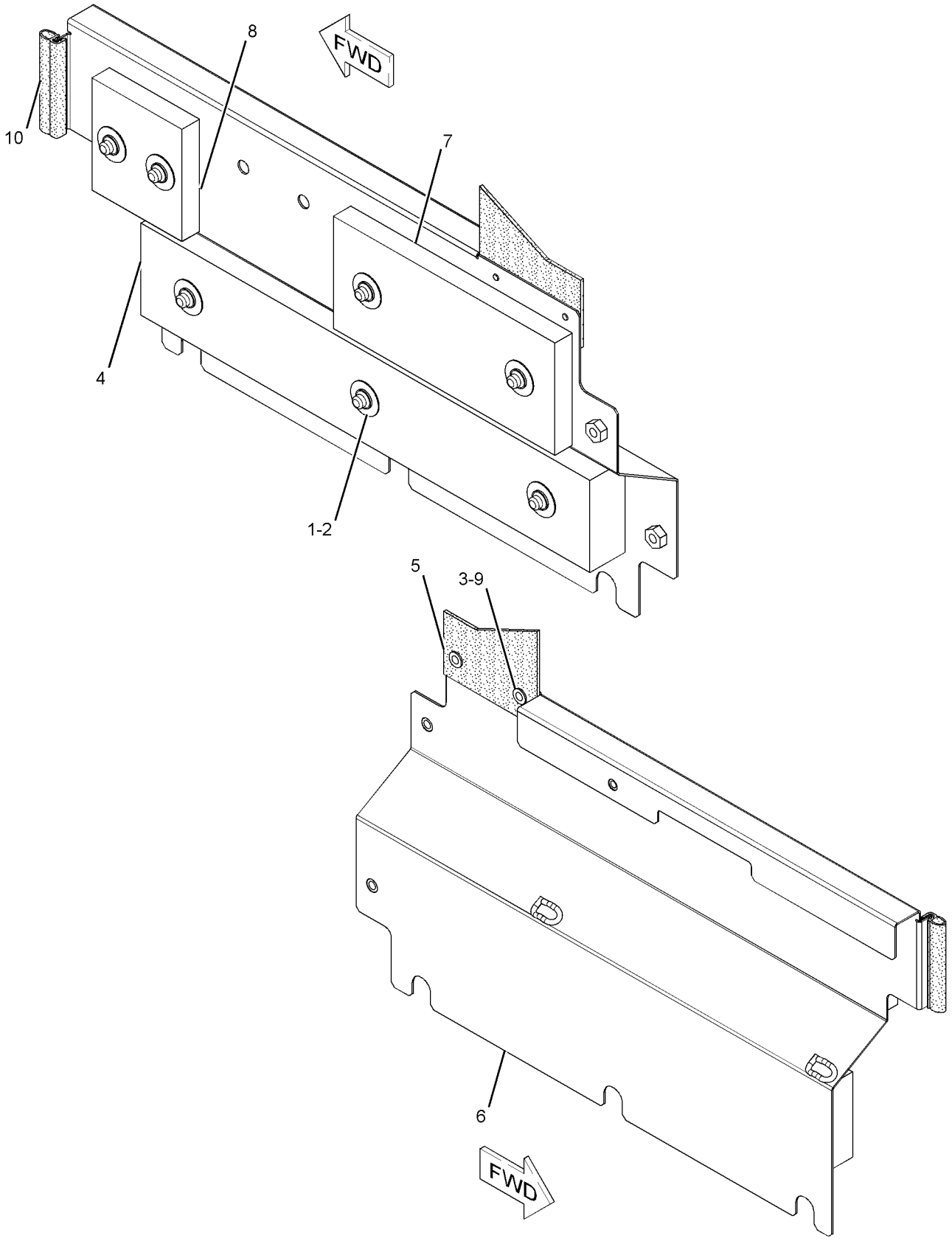

GRAPHIC #1 **<END>** g01129598

FRAME AND BODY

175-0786 SHEET AS-SOUND SUPPRESSION

S/N: WAP1-UP

PART OF 313-8122 HOOD & GUARD GP

SMCS-1801, 7076, 7251, 7267 **i02395993**

NOTE	REF NO	GRAPHIC REF	PART NUMBER	QTY	PART NAME 1 2 3 4 5 6 (PRODUCT LEVEL)	SEE PAGE
	1	1	**175-0788**	1	LINER	
	2	1	**175-0790**	1	LINER	
Z	3	1		1	SHEET	
	4	1	**175-0789**	1	LINER	

Z-NOT SERVICED SEPARATELY

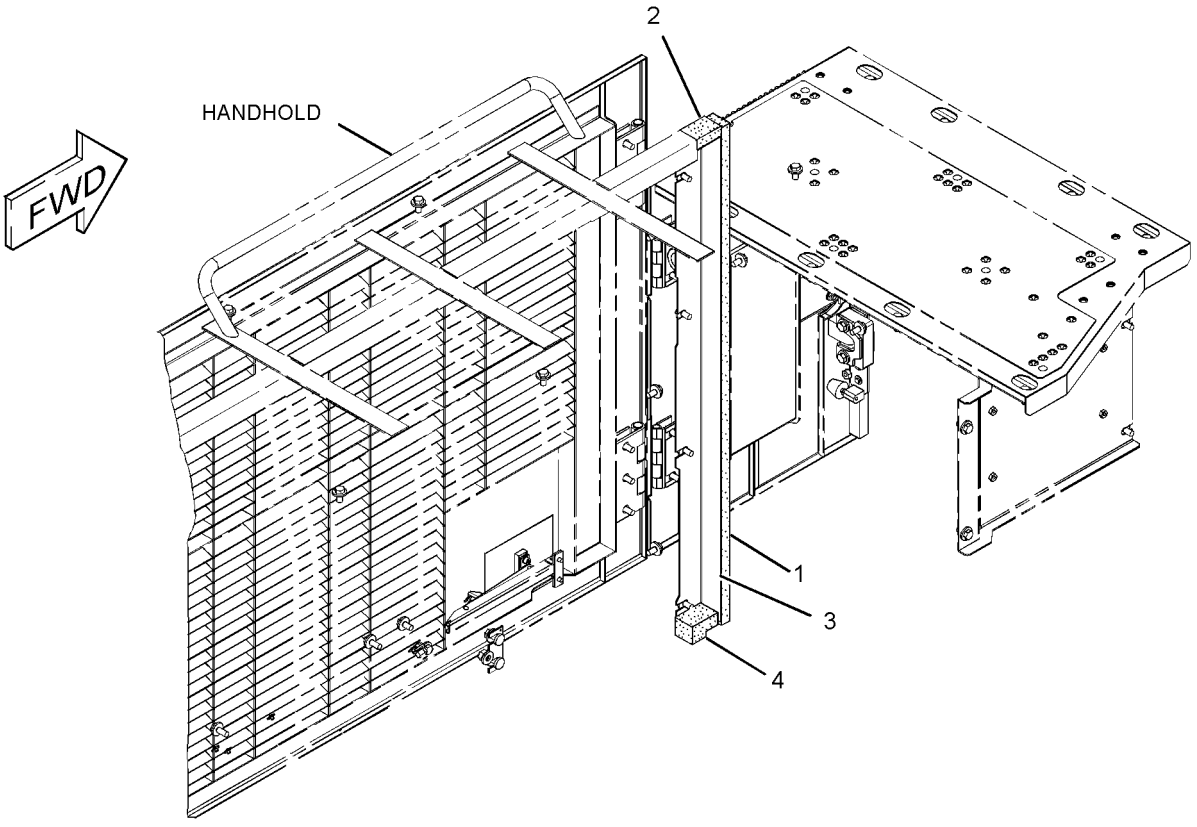

GRAPHIC #1 **<END>** g01300938

177-5894 SHEET AS-SOUND SUPPRESSION

S/N: WAP1-UP
PART OF 327-3173 HOOD GP
AN ATTACHMENT

SMCS-1801, 7076, 7251, 7267 **i02856265**

NOTE	REF NO	GRAPHIC REF	PART NUMBER	QTY	PART NAME 1 2 3 4 5 6 (PRODUCT LEVEL)	SEE PAGE
	1	1	**177-5896**	1	INSULATION	
D	2	1	**5P-8309**		SEAL (1-M)	
	3	1	**177-5898**	1	SHEET AS	
	4	1	**177-5895**	1	INSULATION	
	5	1	**6P-2216**	9	CAP	
	6	1	**4I-7924**	9	WASHER (4.5X40X1.2-MM THK)	
	7	1	**096-3872**	1	GROMMET	

D-ORDER BY THE METER

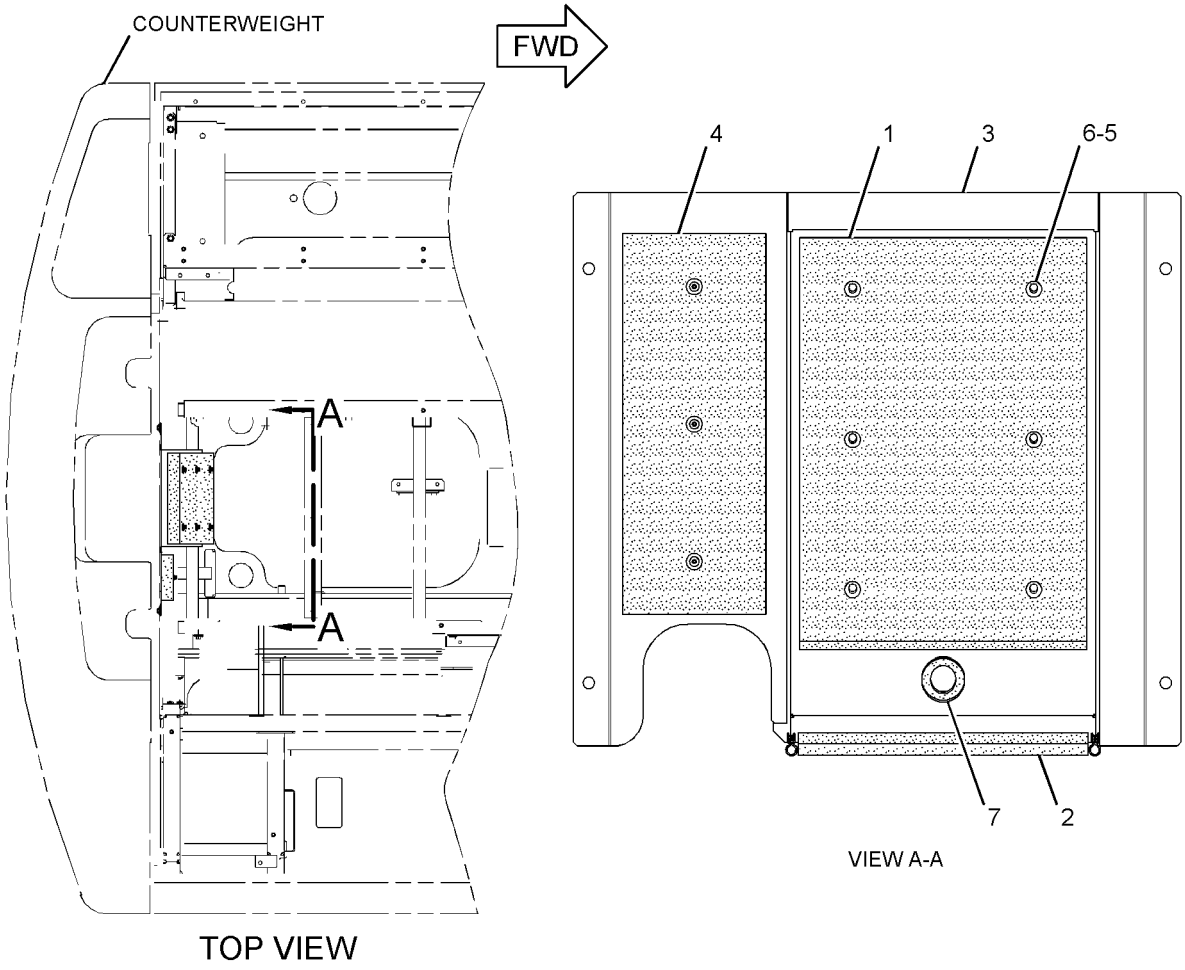

GRAPHIC #1 **<END>** g01307505

FRAME AND BODY

218-7758 SHEET AS-SOUND SUPPRESSION–RADIATOR

S/N: WAP1-UP

PART OF 313-8122 HOOD & GUARD GP

SMCS-1801, 7076, 7251, 7267 **i02395964**

NOTE	REF NO	GRAPHIC REF	PART NUMBER	QTY	PART NAME 1 2 3 4 5 6 (PRODUCT LEVEL)	SEE PAGE
	1	1	**175-0874**	1	LINER	
	2	1	**138-5506**	1	LINER	
	3	1	**175-0962**	1	LINER	
	4	1	**175-0961**	1	LINER	

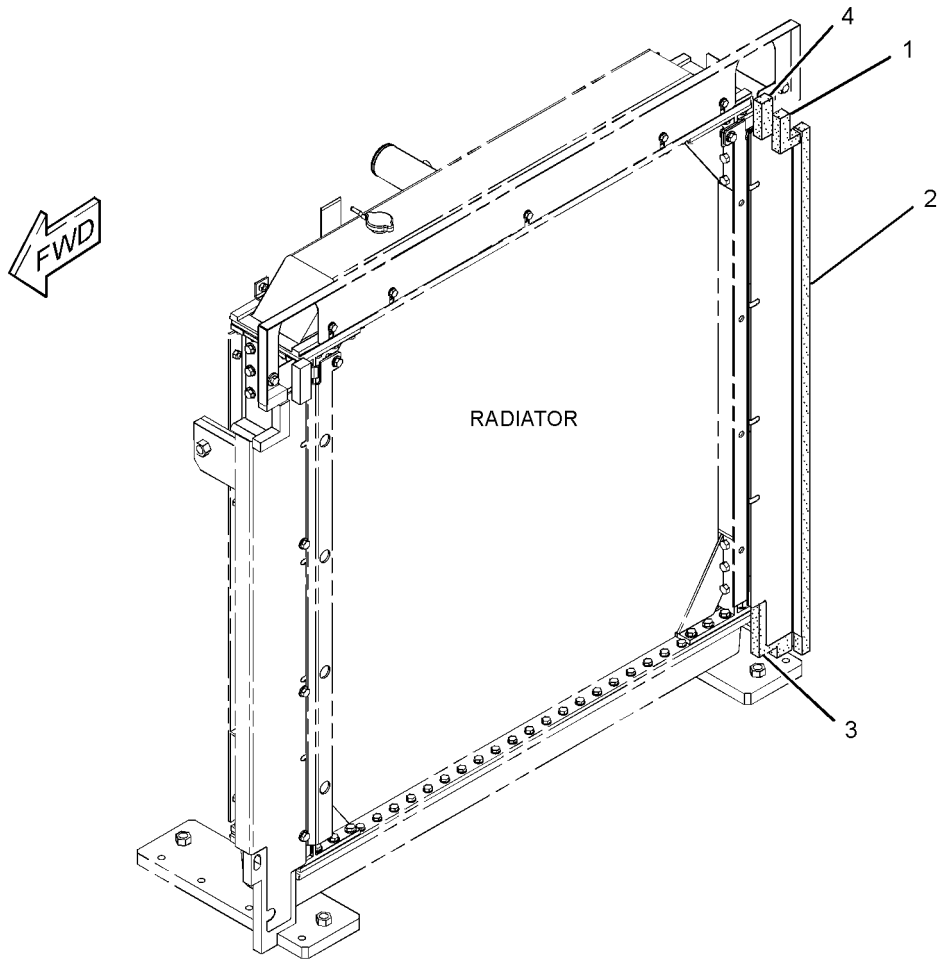

GRAPHIC #1 **<END>** g01351408

218-7761 SHEET AS-SOUND SUPPRESSION

S/N: WAP1-UP

PART OF 313-8122 HOOD & GUARD GP

SMCS-1801, 7076, 7251, 7267 **i02395971**

NOTE	REF NO	GRAPHIC REF	PART NUMBER	QTY	PART NAME 1 2 3 4 5 6 (PRODUCT LEVEL)	SEE PAGE
Z	1	1		1	SHEET AS	
	2	1	**175-0808**	1	LINER	
	3	1	**214-8031**	1	LINER	
	4	1	**175-0843**	1	LINER	
	5	1	**175-0961**	1	LINER	

Z-NOT SERVICED SEPARATELY

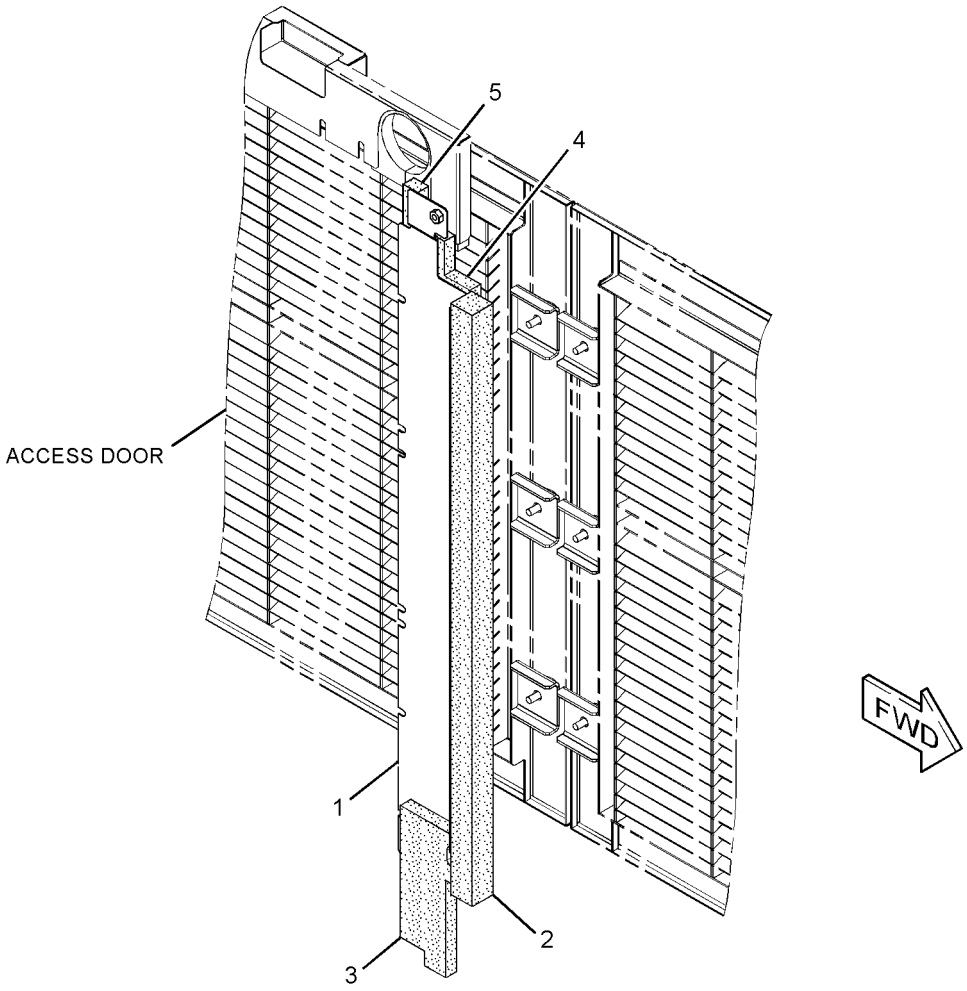

GRAPHIC #1 **<END>** g01293030

FRAME AND BODY

236-9255 SHEET AS-SOUND SUPPRESSION

S/N: WAP1-UP

PART OF 327-3172 HOOD & GUARD GP

SMCS-1801, 7076, 7251, 7267 **i02578117**

NOTE	REF NO	GRAPHIC REF	PART NUMBER	QTY	PART NAME 1 2 3 4 5 6 (PRODUCT LEVEL)	SEE PAGE
	1	1	**4I-7924**	4	WASHER (4.5X40X1.2-MM THK)	
	2	1	**6P-2216**	4	CAP	
	3	1	**236-9256**	1	INSULATION	
	4	1	**244-8097**	1	LINER	

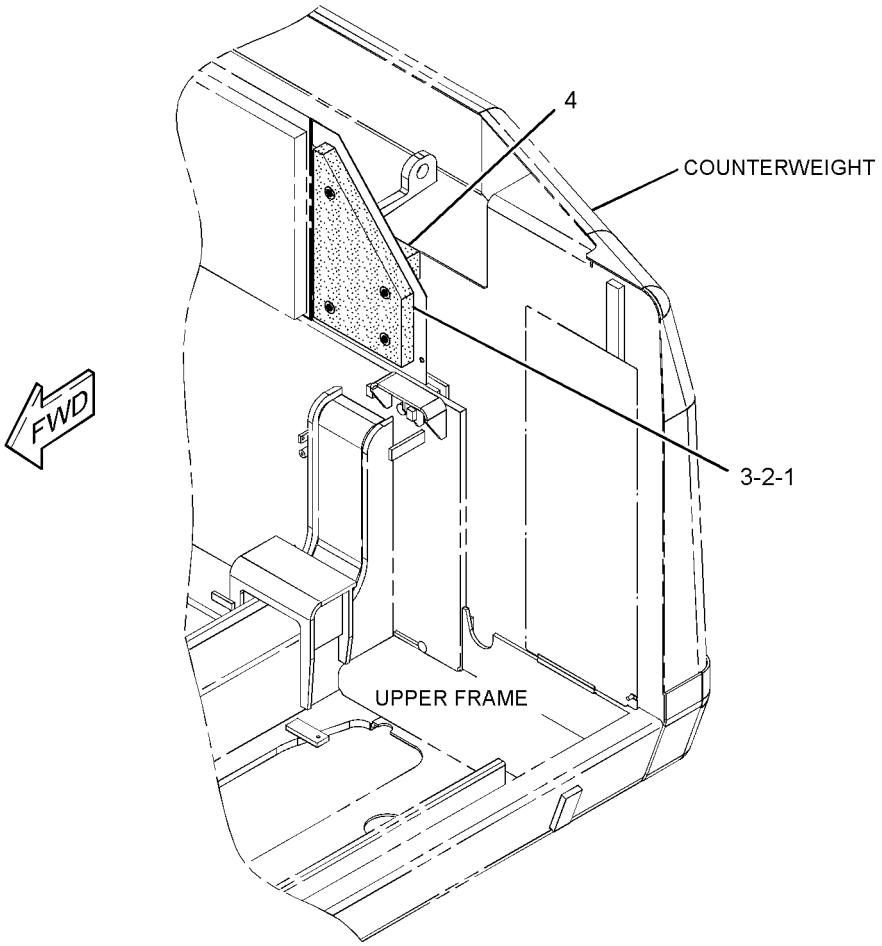

GRAPHIC #1 **<END>** g01357216

FRAME AND BODY

244-8011 SHEET AS-SOUND SUPPRESSION

S/N: WAP1-UP

PART OF 327-3168 SUPPORT GP-HOOD

SMCS-1801, 7076, 7251, 7267 **i02624950**

NOTE	REF NO	GRAPHIC REF	PART NUMBER	QTY	PART NAME 1 2 3 4 5 6 (PRODUCT LEVEL)	SEE PAGE
	1	1	**4I-7924**	5	WASHER (4.5X40X1.2-MM THK)	
	2	1	**6P-2216**	5	CAP	
Z	3	1		1	SHEET AS	
	4	1	**244-8012**	1	INSULATION	
	5	1	**244-8025**	1	INSULATION	
	6	1	**244-8026**	3	INSULATION	

Z-NOT SERVICED SEPARATELY

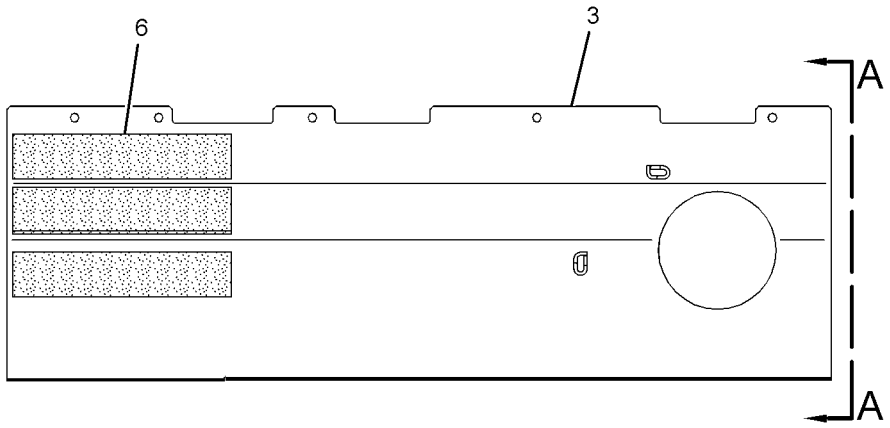

RIGHT SIDE VIEW

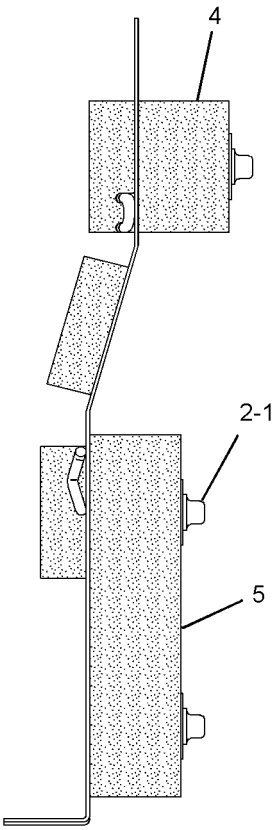

VIEW A-A

GRAPHIC #1 **<END>** g01316545

FRAME AND BODY

244-8093 SHEET AS-SOUND SUPPRESSION

S/N: WAP1-UP

PART OF 327-3172 HOOD & GUARD GP

SMCS-1801, 7076, 7251, 7267 **i02578184**

NOTE	REF NO	GRAPHIC REF	PART NUMBER	QTY	PART NAME 1 2 3 4 5 6 (PRODUCT LEVEL)	SEE PAGE
	1	1	**4I-7924**	4	WASHER (4.5X40X1.2-MM THK)	
	2	1	**6P-2216**	4	CAP	
	3	1	**175-1005**	1	INSULATION	
	4	1	**244-8094**	1	LINER	

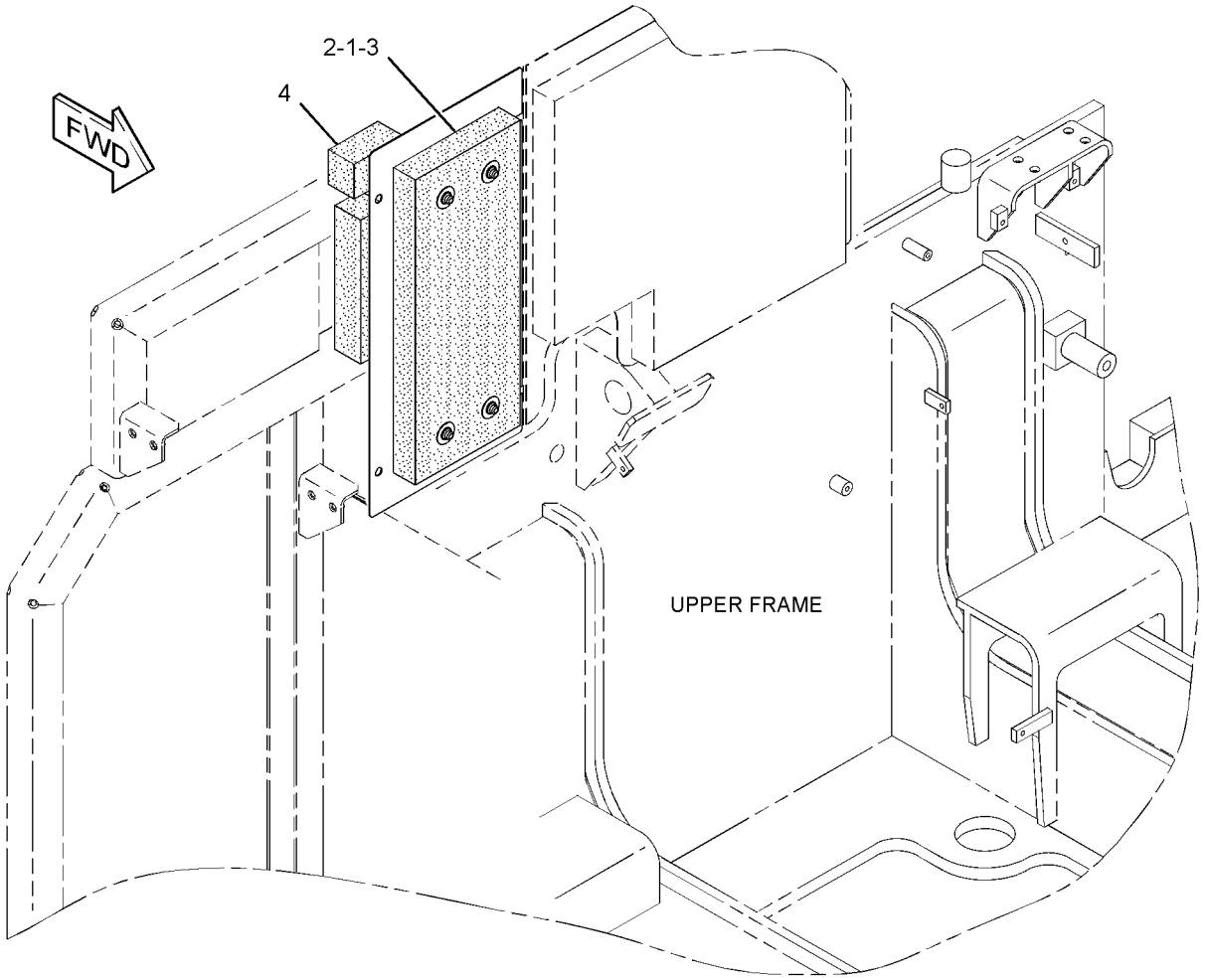

GRAPHIC #1 **<END>** g01356676

FRAME AND BODY

244-8095 SHEET AS-SOUND SUPPRESSION

S/N: WAP1-UP

PART OF 327-3172 HOOD & GUARD GP

SMCS-1801, 7076, 7251, 7267 **i02578118**

NOTE	REF NO	GRAPHIC REF	PART NUMBER	QTY	PART NAME 1 2 3 4 5 6 (PRODUCT LEVEL)	SEE PAGE
	1	1	**4I-7924**	9	WASHER (4.5X40X1.2-MM THK)	
	2	1	**6P-2216**	9	CAP	
	3	1	**175-1001**	1	INSULATION	
	4	1	**244-8096**	1	LINER	

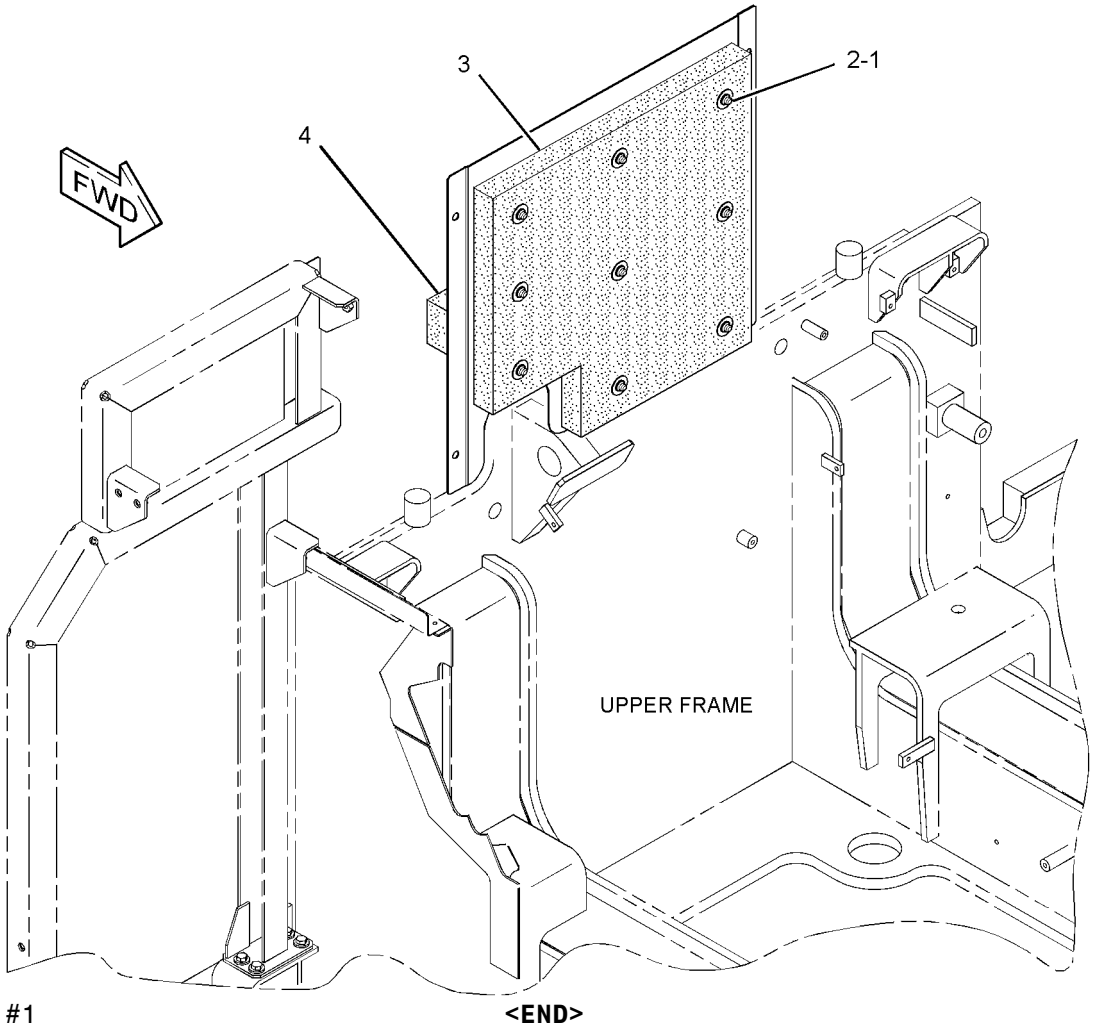

GRAPHIC #1 **<END>** g01357202

FRAME AND BODY

244-8104 SHEET AS-SOUND SUPPRESSION

S/N: WAP1-UP

PART OF 327-3172 HOOD & GUARD GP

SMCS-1801, 7076, 7251, 7267 **i03612601**

NOTE	REF NO	GRAPHIC REF	PART NUMBER	QTY	PART NAME 1 2 3 4 5 6 (PRODUCT LEVEL)	SEE PAGE
	1	1	**4I-7924**	2	WASHER (4.5X40X1.2-MM THK)	
	2	1	**6P-2216**	2	CAP	
	3	1	**9M-5732**	4	RIVET-POP	
	4	1	**138-5471**	1	INSULATION	
	5	1	**237-8519**	1	SHEET-RUBBER	
	6	1	**244-8071**	1	INSULATION	
Z	7	1		1	SHEET AS	
	8	1	**9M-2307**	4	WASHER (5.2X19X2-MM THK)	
D	9	1	**5P-8309**		SEAL (0.3-M)	

D-ORDER BY THE METER
Z-NOT SERVICED SEPARATELY

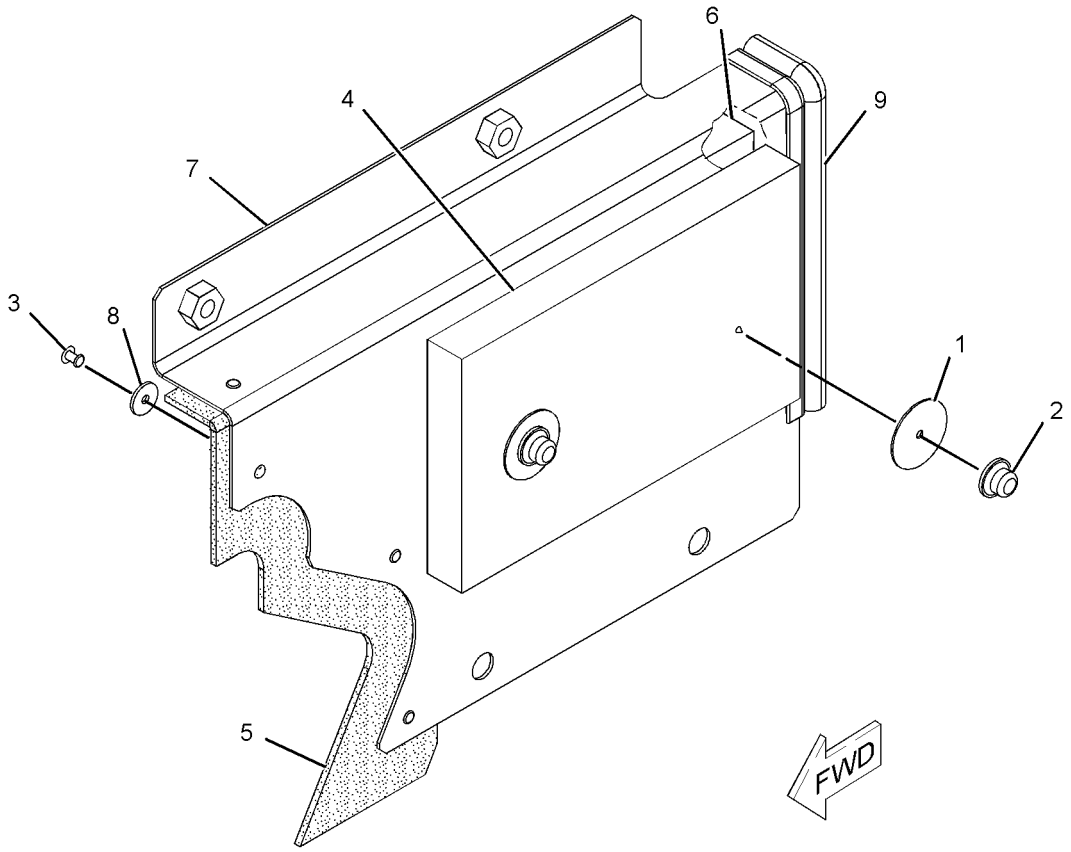

GRAPHIC #1 **<END>** g01128600

FRAME AND BODY

250-5118 SHEET AS-SOUND SUPPRESSION

S/N: WAP1-UP

PART OF 313-8122 HOOD & GUARD GP

SMCS-1801, 7076, 7251, 7267 **i02578020**

NOTE	REF NO	GRAPHIC REF	PART NUMBER	QTY	PART NAME 1 2 3 4 5 6 (PRODUCT LEVEL)	SEE PAGE
Z	1	1		1	SHEET AS	
	2	1	**250-5115**	1	LINER	
	3	1	**250-5116**	1	LINER	
	4	1	**099-4674**	1	GROMMET	

Z-NOT SERVICED SEPARATELY

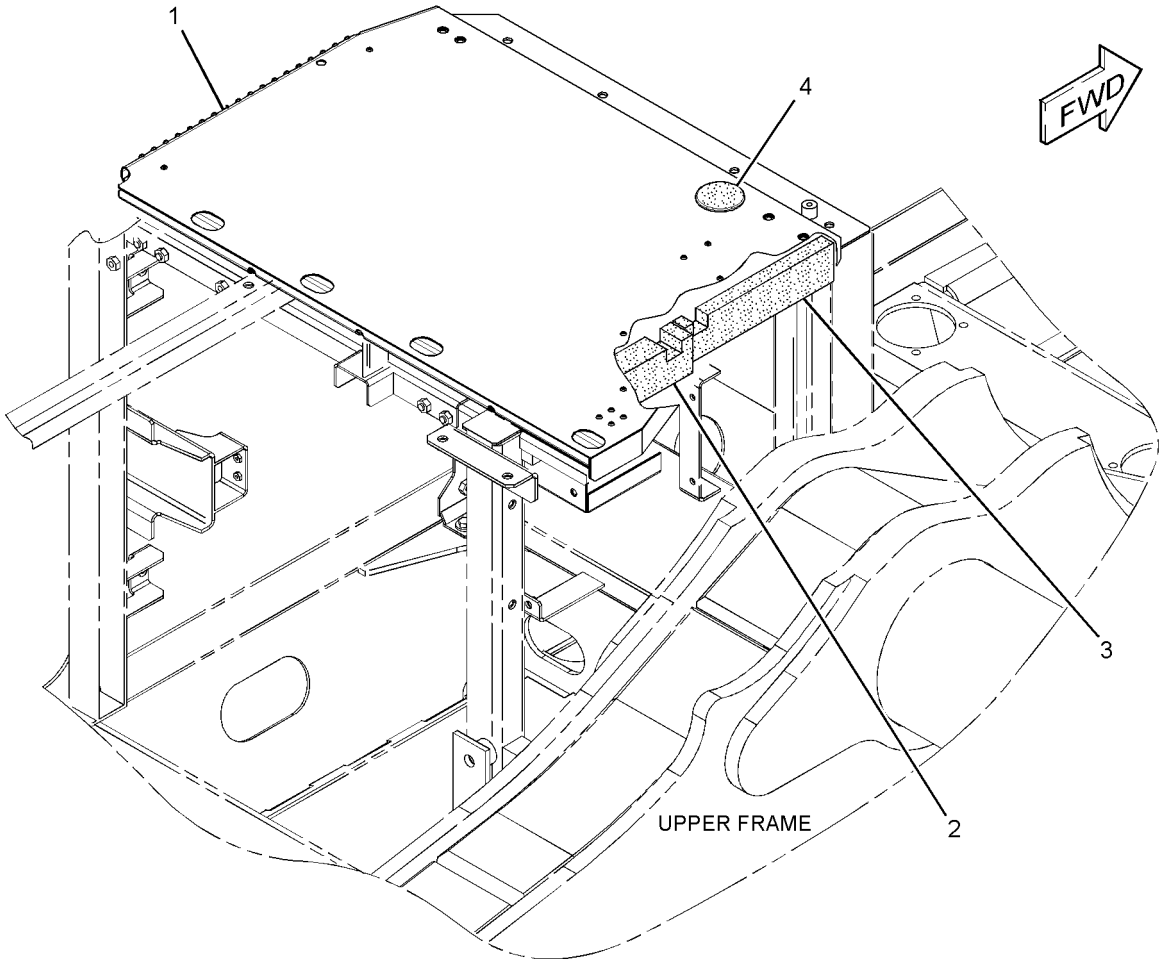

GRAPHIC #1 **<END>** g01303816

FRAME AND BODY

250-5410 SHEET AS-SOUND SUPPRESSION

S/N: WAP1-UP
PART OF 327-3173 HOOD GP
AN ATTACHMENT

SMCS-1801, 7076, 7251, 7267 **i02856277**

NOTE	REF NO	GRAPHIC REF	PART NUMBER	QTY	PART NAME 1 2 3 4 5 6 (PRODUCT LEVEL)	SEE PAGE
	1	1	**4I-7924**	5	WASHER (4.5X40X1.2-MM THK)	
	2	1	**6P-2216**	5	CAP	
	4	1	**244-8012**	1	INSULATION	
	5	1	**244-8025**	1	INSULATION	

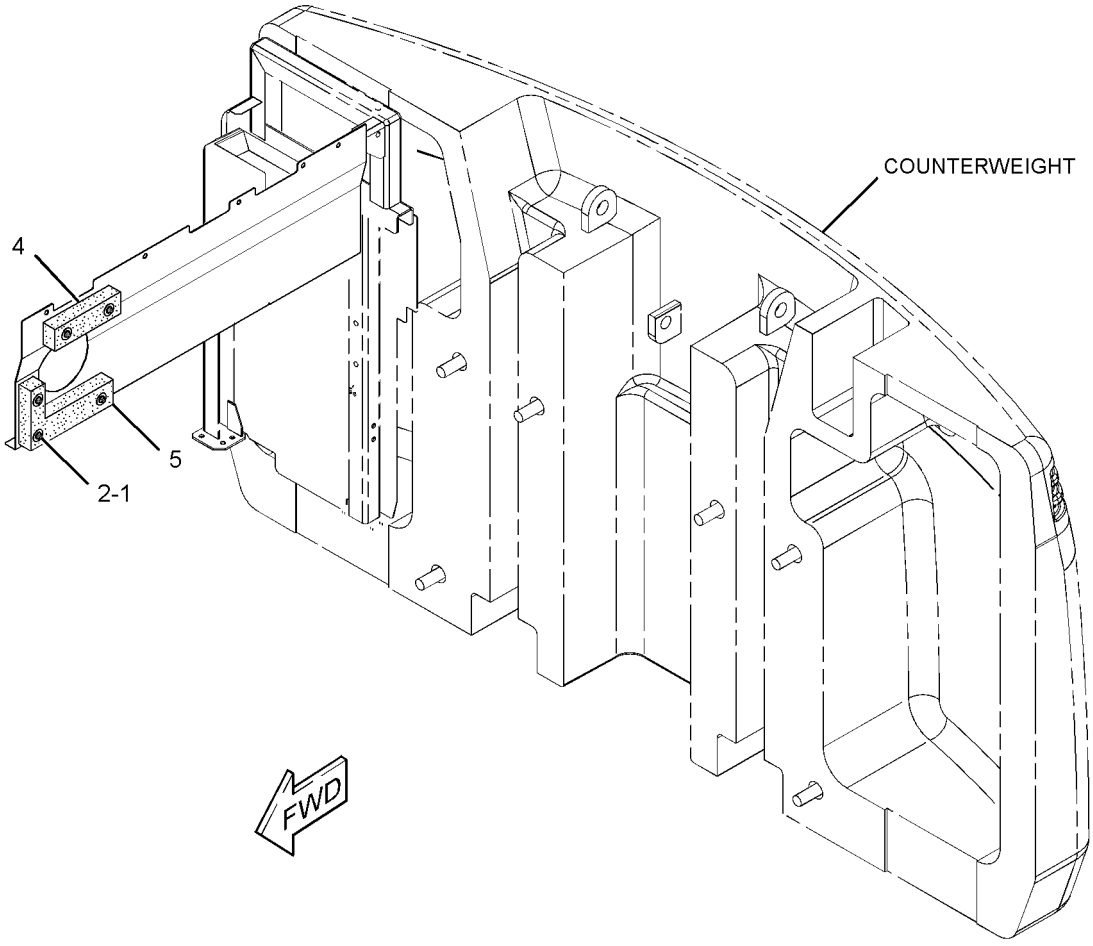

GRAPHIC #1 **<END>** g01426208

FRAME AND BODY

333-5320 SHEET AS-SOUND SUPPRESSION

S/N: WAP1-UP
PART OF 333-5319 BOX & MOUNTING GP
AN ATTACHMENT

SMCS-1801, 7076, 7251, 7267 **i03911031**

NOTE	REF NO	GRAPHIC REF	PART NUMBER	QTY	PART NAME 1 2 3 4 5 6 (PRODUCT LEVEL)	SEE PAGE
	1	1	**2S-1647**	1	GROMMET	
	2	1	**4I-7924**	4	WASHER (4.5X40X1.2-MM THK)	
	3	1	**6P-2216**	4	CAP	
	4	1	**177-5716**	1	INSULATION	
D	5	1	**5P-8309**		SEAL (0.2-M)	

D-ORDER BY THE METER

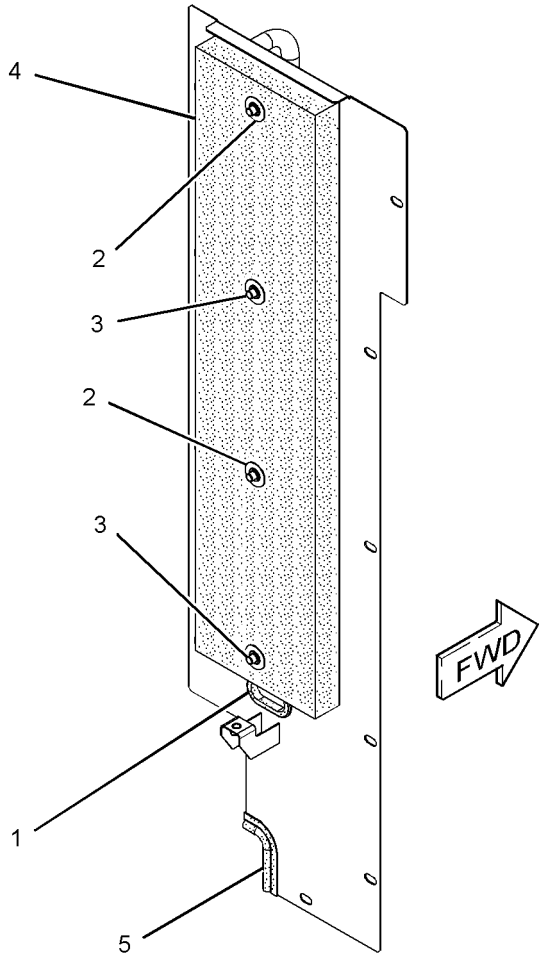

GRAPHIC #1 **<END>** g02156561

FRAME AND BODY

336-1653 SHEET AS-SOUND SUPPRESSION

S/N: WAP1-UP

PART OF 313-8122 HOOD & GUARD GP

SMCS-1801, 7076, 7251, 7267 **i03903814**

NOTE	REF NO	GRAPHIC REF	PART NUMBER	QTY	PART NAME 1 2 3 4 5 6 (PRODUCT LEVEL)	SEE PAGE
	1	1	**4I-7924**	6	WASHER (4.5X40X1.2-MM THK)	
	2	1	**6P-2216**	6	CAP	
	3	1	**9M-5732**	3	RIVET-POP	
	4	1	**190-7006**	1	SHEET-RUBBER	
	5	1	**236-9287**	1	INSULATION	
D	6	1	**101-9848**		SEAL (0.2-M)	
	7	1	**9M-2307**	3	WASHER (5.2X19X2-MM THK)	
D	8	1	**5P-8309**		SEAL (0.4-M)	

D-ORDER BY THE METER

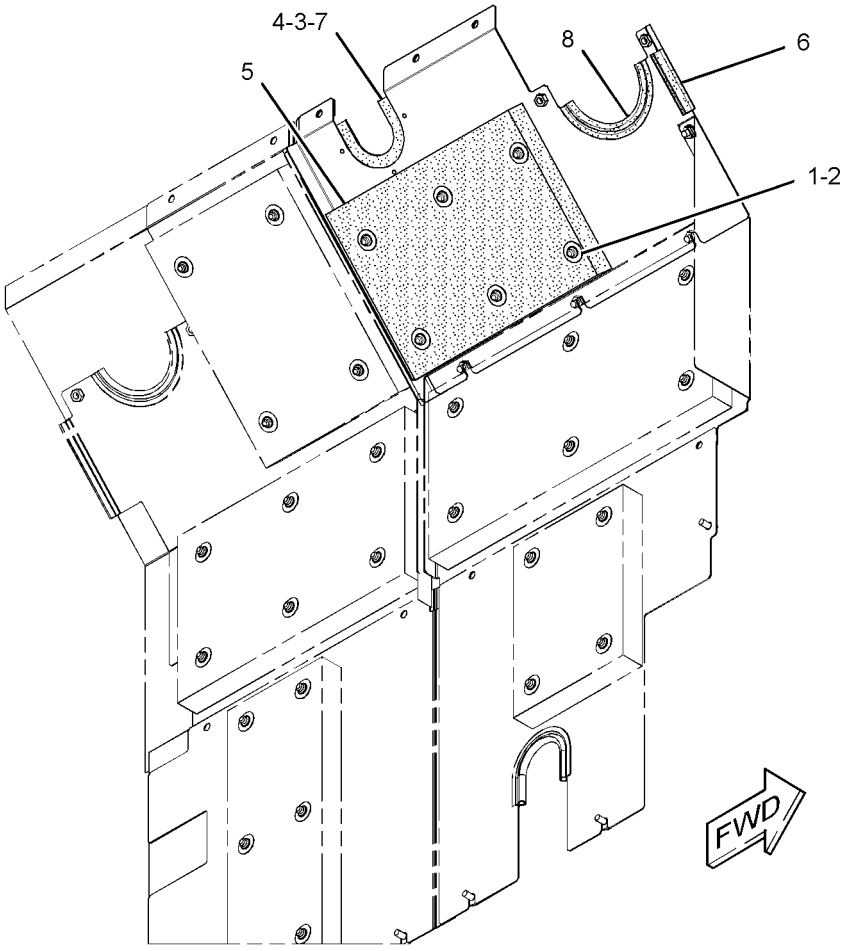

GRAPHIC #1

<END>

g02161964

336-1657 SHEET AS-SOUND SUPPRESSION

S/N: WAP1-UP

PART OF 313-8122 HOOD & GUARD GP

SMCS-1801, 7076, 7251, 7267 **i03903816**

NOTE	REF NO	GRAPHIC REF	PART NUMBER	QTY	PART NAME 1 2 3 4 5 6 (PRODUCT LEVEL)	SEE PAGE
	1	1	**4I-7924**	10	WASHER (4.5X40X1.2-MM THK)	
	2	1	**6P-2216**	10	CAP	
	3	1	**236-9294**	1	INSULATION	
	4	1	**236-9295**	1	INSULATION	
	5	1	**5P-8309**		SEAL (0.4-M)	
	5A	1	**5P-8309**		SEAL (0.2-M)	

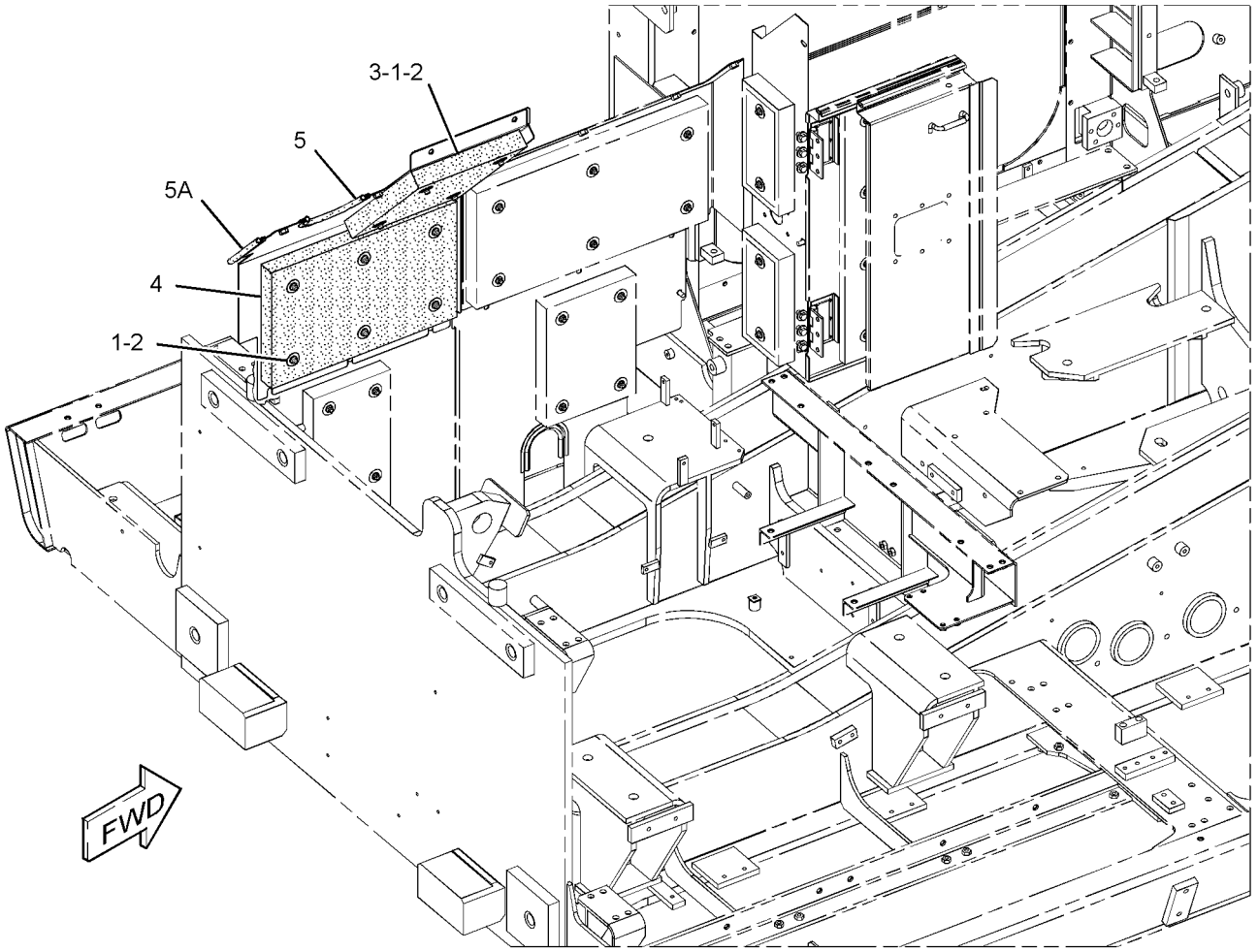

GRAPHIC #1 **<END>** g02161963

FRAME AND BODY

356-9038 SHEET AS-SOUND SUPPRESSION

S/N: WAP1-UP

PART OF 327-3172 HOOD & GUARD GP

SMCS-1801, 7076, 7251, 7267 **i03909112**

NOTE	REF NO	GRAPHIC REF	PART NUMBER	QTY	PART NAME 1 2 3 4 5 6 (PRODUCT LEVEL)	SEE PAGE
	1	1	**4I-7924**	7	WASHER (4.5X40X1.2-MM THK)	
	2	1	**6P-2216**	7	CAP	
	3	1	**9M-5732**	3	RIVET-POP	
	4	1	**236-9271**	1	LINER	
	5	1	**236-9272**	1	SHEET-RUBBER	
	6	1	**244-8075**	1	INSULATION	
	7	1	**244-8076**	1	INSULATION	
	8	1	**244-8077**	1	INSULATION	
	9	1	**244-8078**	1	INSULATION	
D	10	1	**5P-8309**	1	SEAL (0.3-M)	
	11	1	**9M-2307**	3	WASHER (5.2X19X2-MM THK)	

D-ORDER BY THE METER

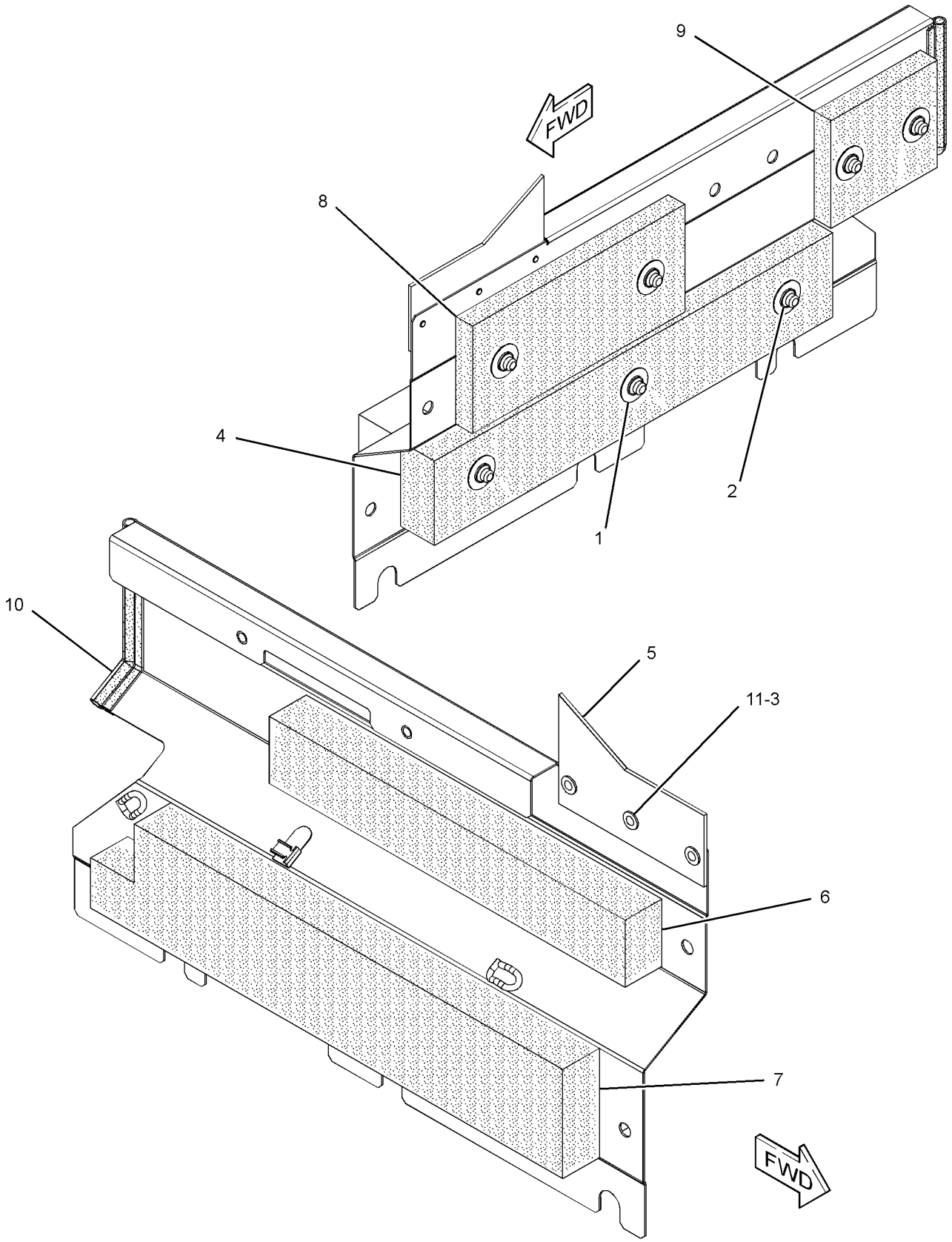

GRAPHIC #1 **<END>** g02151365

FRAME AND BODY

356-9042 SHEET AS-SOUND SUPPRESSION

S/N: WAP1-UP

PART OF 327-3172 HOOD & GUARD GP

SMCS-1801, 7076, 7251, 7267 **i03909136**

NOTE	REF NO	GRAPHIC REF	PART NUMBER	QTY	PART NAME 1 2 3 4 5 6 (PRODUCT LEVEL)	SEE PAGE
	1	1	**244-8009**	1	INSULATION	
	2	1	**307-7884**	1	SHEET AS	
	3	1	**356-9043**	1	INSULATION	

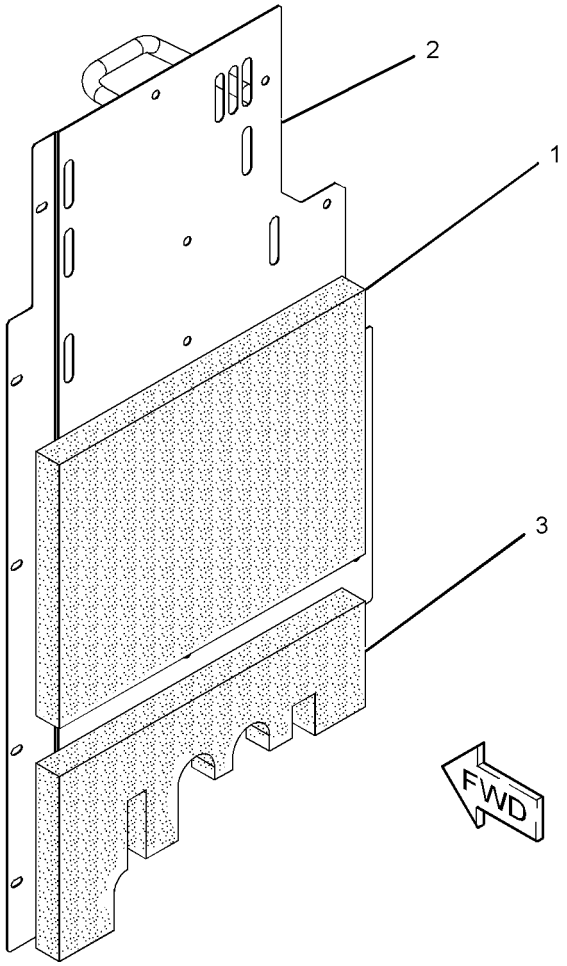

GRAPHIC #1 **<END>** g02156399

FRAME AND BODY

356-9044 SHEET AS-SOUND SUPPRESSION

S/N: WAP1-UP

PART OF 327-3172 HOOD & GUARD GP

SMCS-1801, 7076, 7251, 7267 **i03909138**

NOTE	REF NO	GRAPHIC REF	PART NUMBER	QTY	PART NAME 1 2 3 4 5 6 (PRODUCT LEVEL)	SEE PAGE
	1	1	**4I-7924**	7	WASHER (4.5X40X1.2-MM THK)	
	2	1	**6P-2216**	7	CAP	
	3	1	**9M-5732**	2	RIVET-POP	
	4	1	**236-9277**	1	LINER	
	5	1	**236-9278**	1	SHEET-RUBBER	
	6	1	**244-8077**	1	INSULATION	
	7	1	**244-8079**	1	INSULATION	
	8	1	**244-8080**	1	INSULATION	
	9	1	**244-8081**	1	INSULATION	
D	10	1	**101-9848**	1	SEAL (0.2-M)	
	11	1	**9M-2307**	2	WASHER (5.2X19X2-MM THK)	

D-ORDER BY THE METER

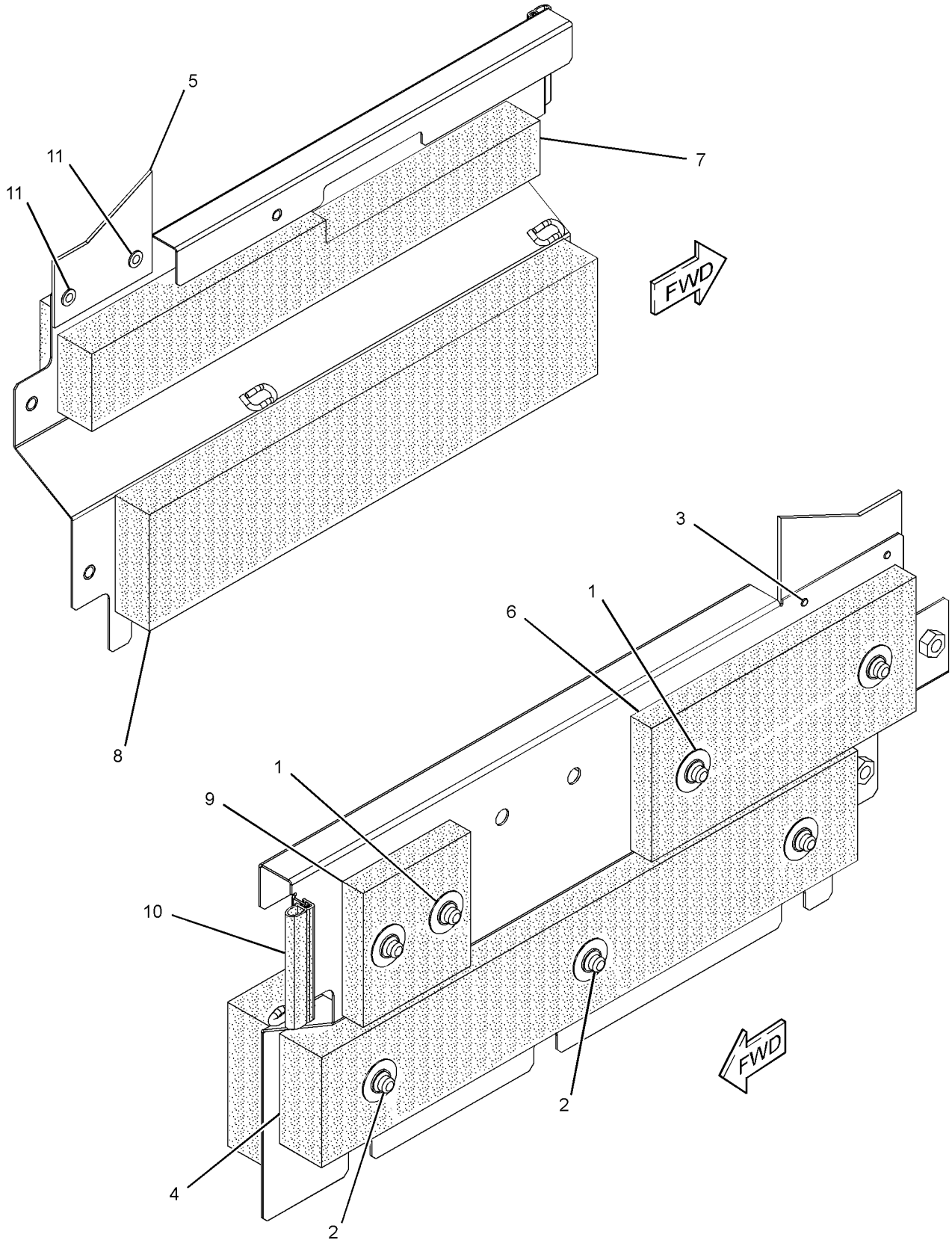

GRAPHIC #1 **<END>** g02156457

FRAME AND BODY

223-2952 STORAGE GP-VANDALISM GUARD

S/N: WAP1-UP

PART OF 220-2561, 267-4944 GUARD AR-VANDALISM

AN ATTACHMENT

SMCS-7315 **i03071742**

NOTE	REF NO	GRAPHIC REF	PART NUMBER	QTY	PART NAME 1 2 3 4 5 6 (PRODUCT LEVEL)	SEE PAGE
	1	1	**4I-2875**	1	BOLT AS	
M	2	1	**135-8575**	3	BOLT AS	
	3	1	**193-9409**	1	COVER AS	
	4	1	**193-9414**	1	COVER AS	
	5	1	**262-2619**	1	SHEET AS	
		1	**250-5114**	1	LINER	

M-METRIC PART

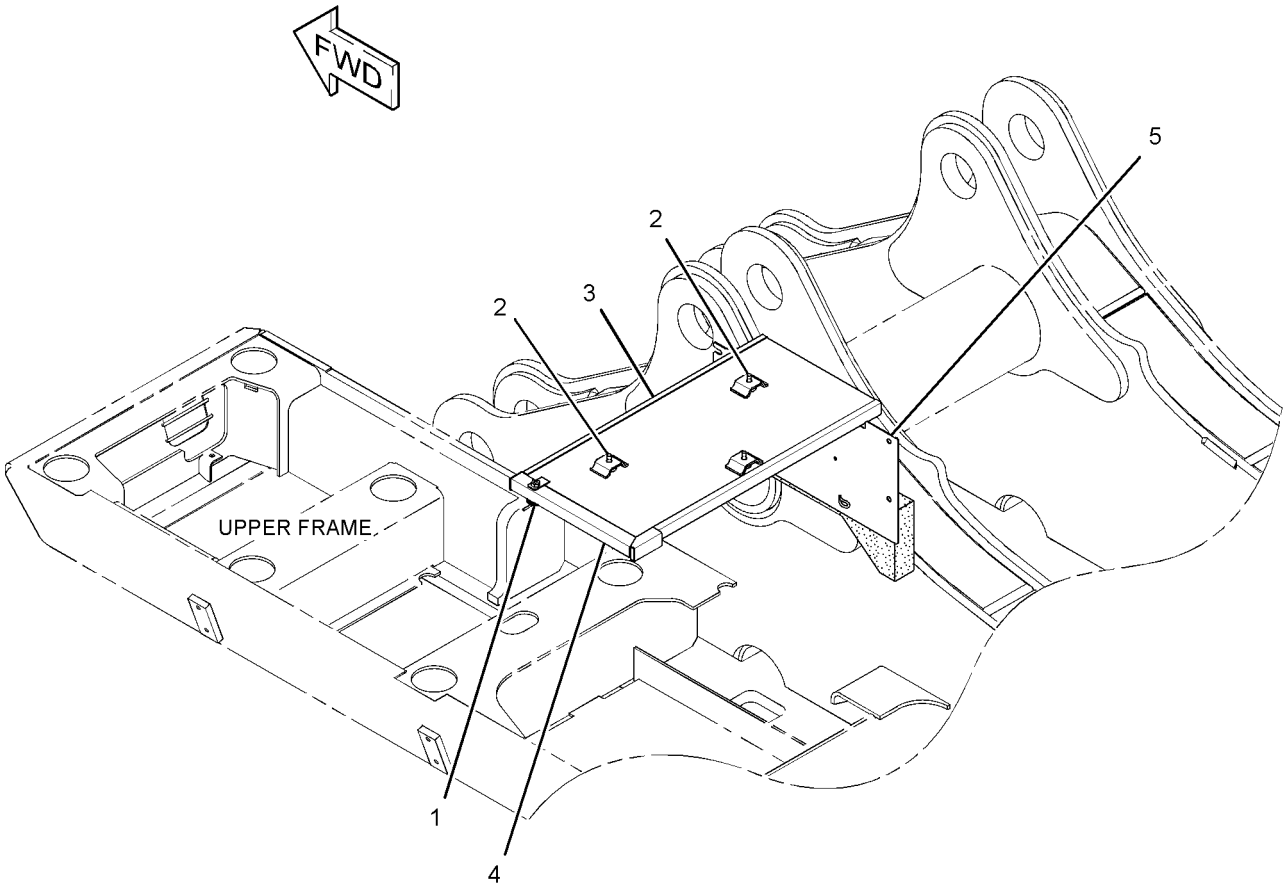

GRAPHIC #1 **<END>** g01328984

FRAME AND BODY

214-8014 SUPPORT AS-SOUND SUPPRESSION

S/N: WAP1-UP

PART OF 298-3136 SUPPORT GP-HOOD

SMCS-0635, 1801, 7076, 7251, 7263, 7267, 7272, 7276 **i02578022**

NOTE	REF NO	GRAPHIC REF	PART NUMBER	QTY	PART NAME 1 2 3 4 5 6 (PRODUCT LEVEL)	SEE PAGE
	1	1	**175-1013**	1	LINER	
	2	1	**177-5734**	1	LINER	
Z	3	1		1	SUPPORT AS	

Z-NOT SERVICED SEPARATELY

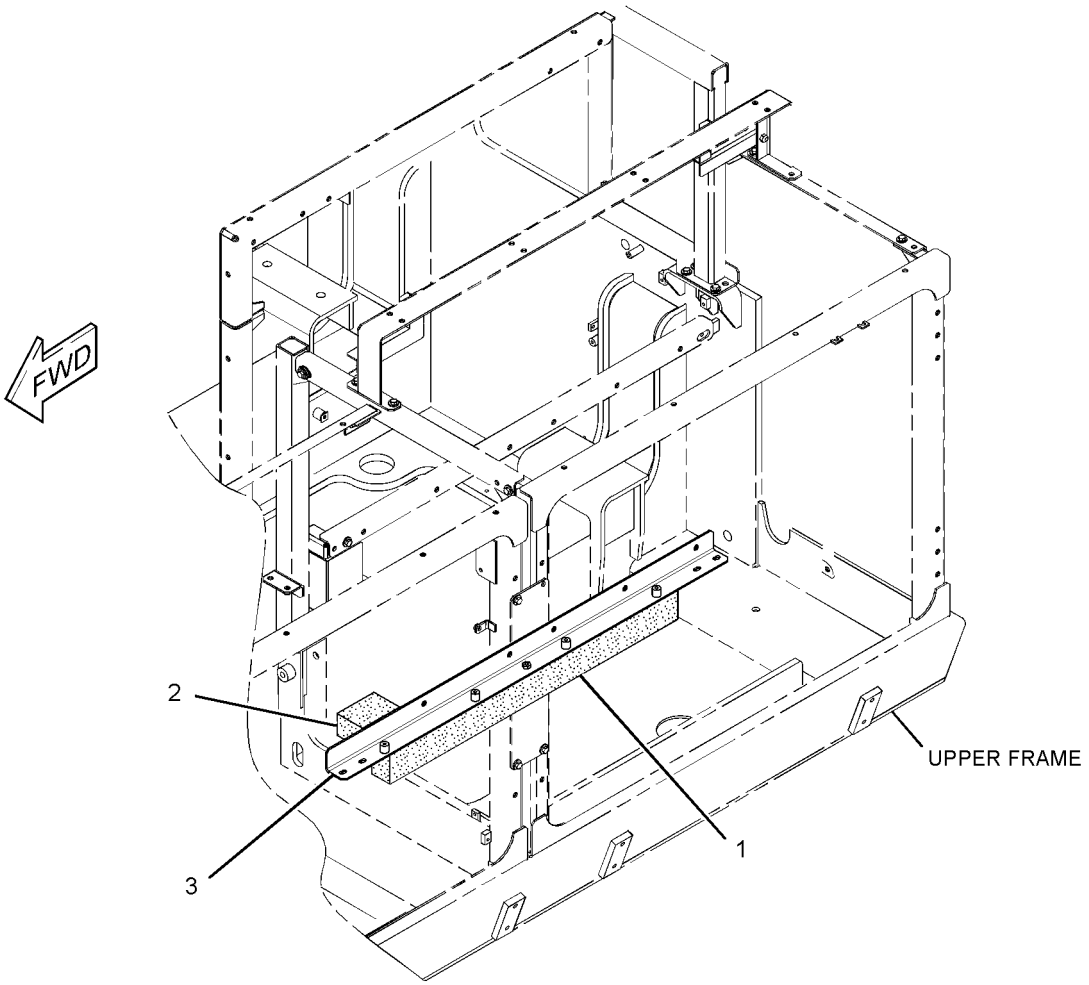

GRAPHIC #1 **<END>** g01303724

FRAME AND BODY

236-9353 SUPPORT AS-ENCLOSURE

S/N: WAP1-UP

PART OF 327-3168 SUPPORT GP-HOOD

SMCS-0635, 1801, 7076, 7251, 7263, 7267, 7272, 7276 **i02624910**

NOTE	REF NO	GRAPHIC REF	PART NUMBER	QTY	PART NAME 1 2 3 4 5 6 (PRODUCT LEVEL)	SEE PAGE
Z	1	1		1	SUPPORT AS	
	2	1	**244-7994**	1	INSULATION	
	3	1	**244-7995**	1	INSULATION	
	4	1	**096-3872**	1	GROMMET	

Z-NOT SERVICED SEPARATELY

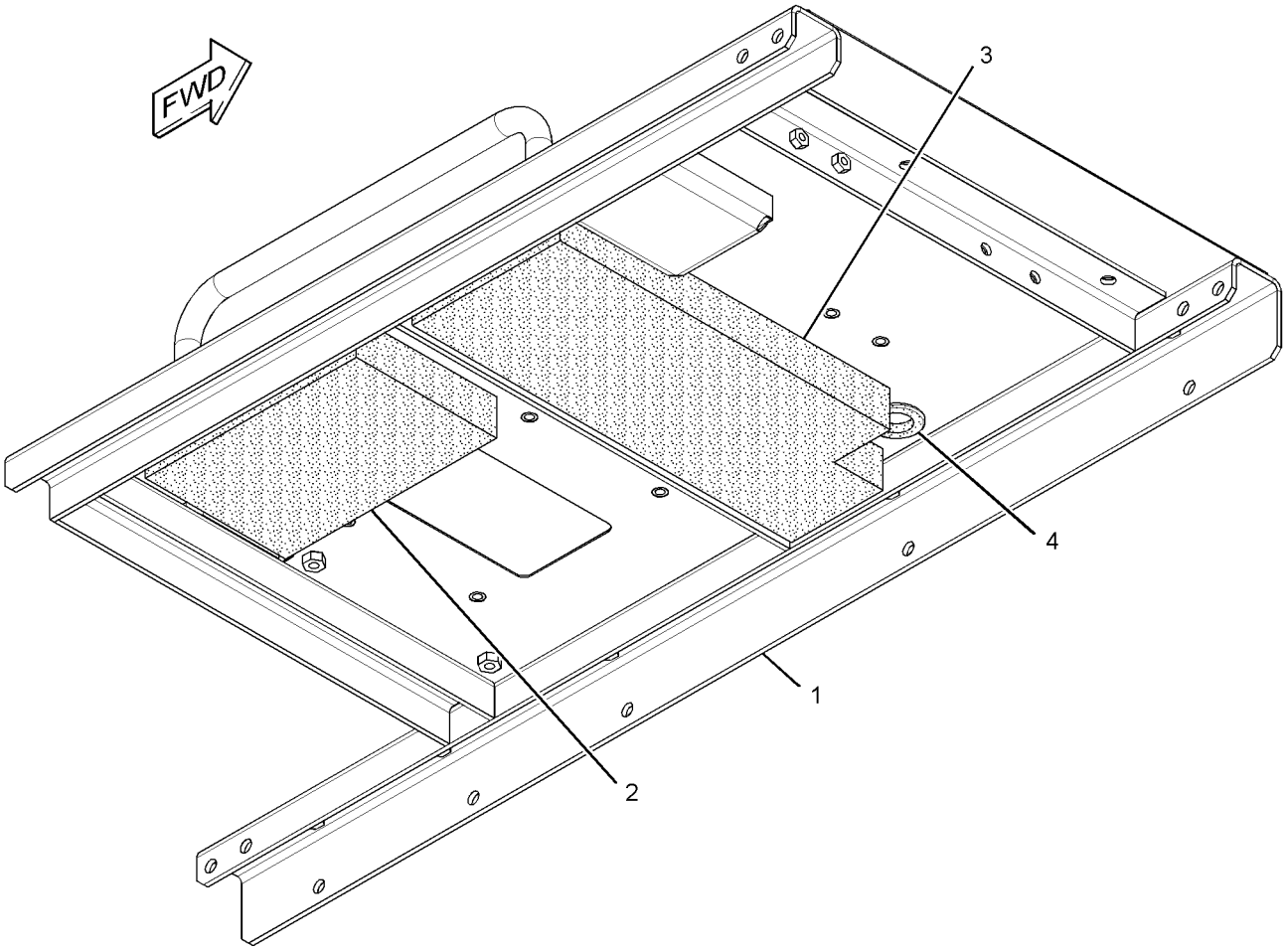

GRAPHIC #1 **<END>** g01318568

FRAME AND BODY

250-5120 SUPPORT AS-ENCLOSURE

S/N: WAP1-UP

PART OF 313-8122 HOOD & GUARD GP

SMCS-0635, 1801, 7076, 7251, 7263, 7267, 7272, 7276 **i02578019**

NOTE	REF NO	GRAPHIC REF	PART NUMBER	QTY	PART NAME 1 2 3 4 5 6 (PRODUCT LEVEL)	SEE PAGE
	1	1	**127-7960**	1	LINER	
	2	1	**250-5113**	1	LINER	
	3	1	**096-3872**	1	GROMMET	

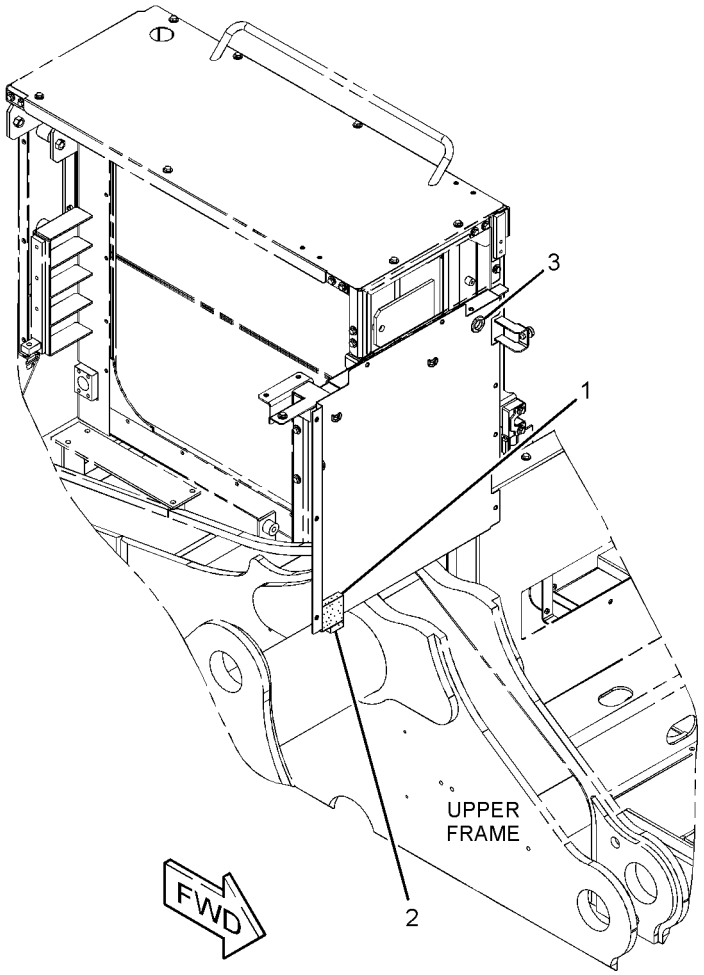

GRAPHIC #1 **<END>** g01357548

250-5121 SUPPORT AS-ENCLOSURE

S/N: WAP1-UP

PART OF 298-3136 SUPPORT GP-HOOD

SMCS-0635, 1801, 7076, 7251, 7263, 7267, 7272, 7276 **i02578024**

NOTE	REF NO	GRAPHIC REF	PART NUMBER	QTY	PART NAME 1 2 3 4 5 6 (PRODUCT LEVEL)	SEE PAGE
	1	1	**250-5112**	1	LINER	
	2	1	**250-5111**	1	LINER	

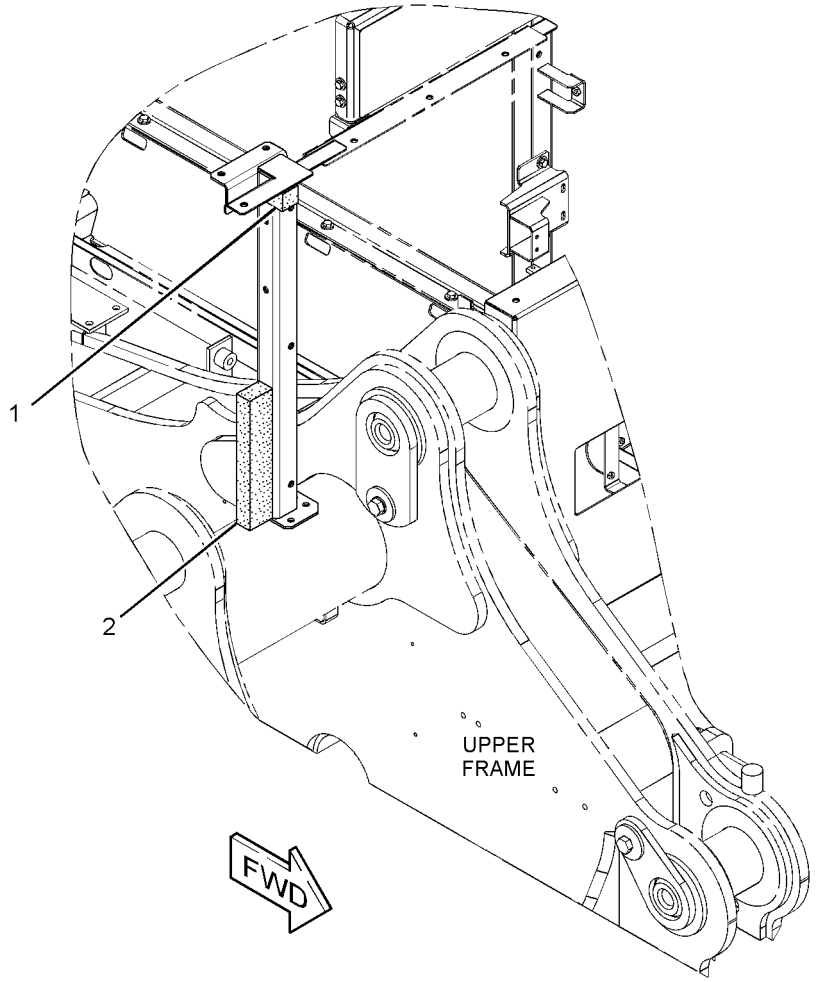

GRAPHIC #1 **<END>** g01357529

FRAME AND BODY

298-3136 SUPPORT GP-HOOD

S/N: WAP1-UP

PART OF 294-1237 CHASSIS AR

SMCS-7251 **i03903132**

NOTE	REF NO	GRAPHIC REF	PART NUMBER	QTY	PART NAME 1 2 3 4 5 6 (PRODUCT LEVEL)	SEE PAGE
M	1	1,2	**135-8573**	9	BOLT AS	
M	2	1,2	**135-8575**	56	BOLT AS	
M	3	1,2	**135-8577**	24	BOLT AS	
M	4	1,2	**135-8578**	9	BOLT AS	
	5	1	**175-0675**	1	SUPPORT AS	
	6	1	**175-0681**	2	PLATE	
	7	1	**175-0745**	1	SUPPORT AS	
	8	2	**175-0751**	1	SUPPORT AS	
	9	2	**175-0754**	1	SUPPORT AS	
	10	2	**175-0803**	1	SUPPORT AS	
	11	1	**190-6919**	3	SPACER (24X38X16.5-MM THK)	
B	12	2	**208-4148**	3	SHIM (0.2-MM THK)	
B	13	1,2	**208-4149**	6	SHIM (0.2-MM THK)	
B	14	1,2	**208-4150**	6	SHIM (1-MM THK)	
B	15	1,2	**208-4151**	6	SHIM (0.5-MM THK)	
B	16	1,2	**208-4152**	3	SHIM (0.2-MM THK)	
B	17	1,2	**208-4153**	6	SHIM (0.5-MM THK)	
B	18	1,2	**208-4154**	6	SHIM (1-MM THK)	
Y	19	1	**214-8014**	1	SUPPORT AS-ENCLOSURE	426
B	20	2	**223-3082**	2	SHIM (0.5-MM THK)	
B	21	2	**223-3083**	1	SHIM (1-MM THK)	
B	22	2	**223-3084**	2	SHIM (0.5-MM THK)	
B	23	2	**223-3085**	1	SHIM (1-MM THK)	
	24	2	**236-9382**	1	SUPPORT AS	
	25	1	**236-9383**	1	SUPPORT AS	
	26	2	**237-8829**	1	SUPPORT AS	
	27	1	**244-8162**	1	SUPPORT AS	
Y	28	1	**250-5121**	1	SUPPORT AS-ENCLOSURE	429
	29	1	**259-3722**	1	SUPPORT AS	
Y	30	1	*303-9613*	1	SUPPORT GP-HOOD	433
	31	2	**313-7873**	1	SUPPORT AS	
Y	32	1	*327-3168*	1	HOOD & GUARD GP	434
	33	1	**337-4878**	1	SUPPORT AS	
	34	2	**339-7281**	1	SUPPORT AS	
	35	1	**7Y-2854**	3	SPACER (24X38X3-MM THK)	
	36	1	**7Y-8990**	3	SPACER (24X38X1.5-MM THK)	

B-USE AS REQUIRED
M-METRIC PART
Y-SEPARATE ILLUSTRATION

REFER TO ALL ILLUSTRATIONS OF
THIS GROUP FOR AUXILIARY VIEWS

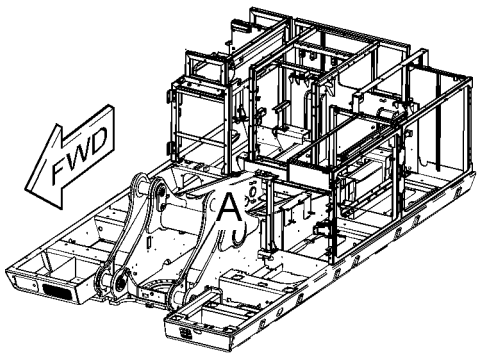

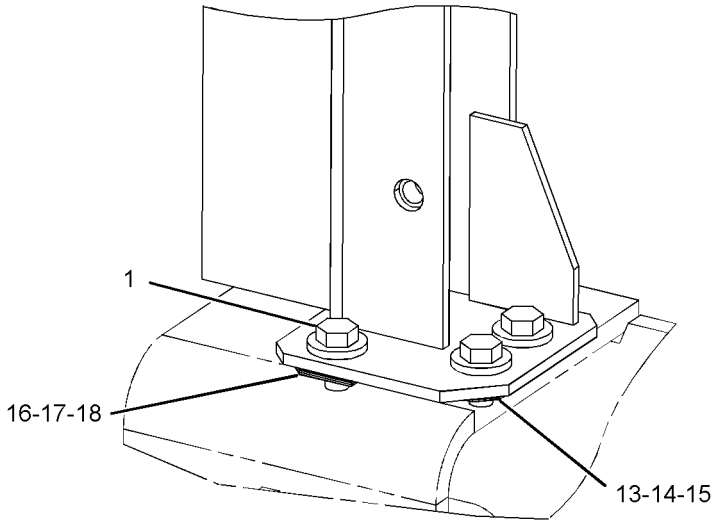

VIEW OF AREA B

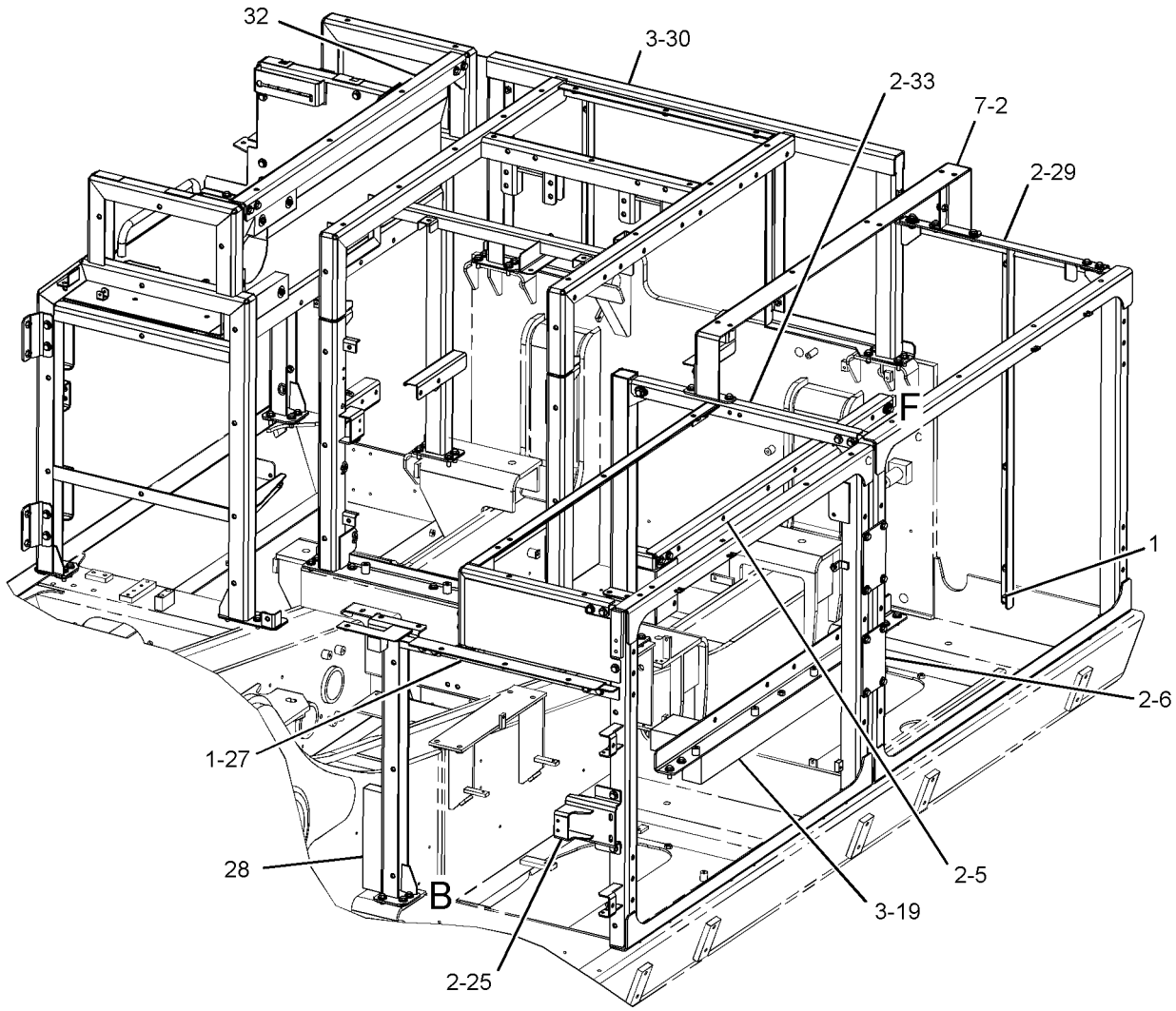

VIEW OF AREA A

GRAPHIC #1 g02165063

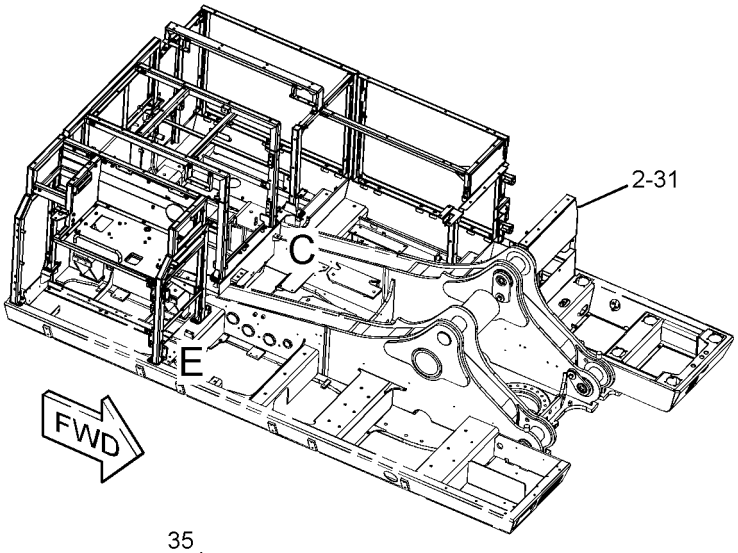

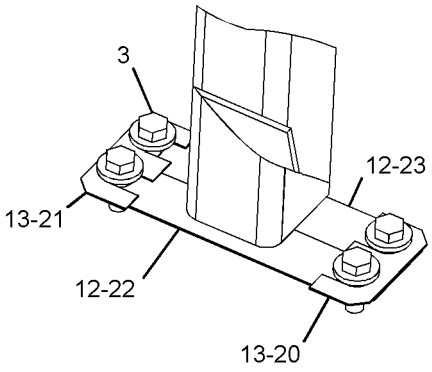

VIEW OF AREA D

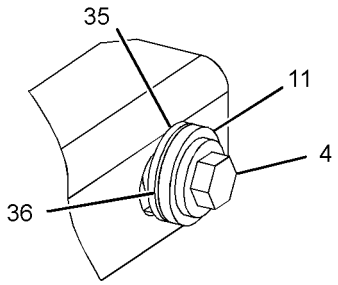

VIEW OF AREA F

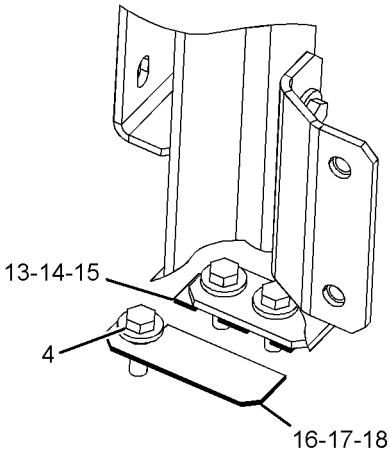

VIEW OF AREA E

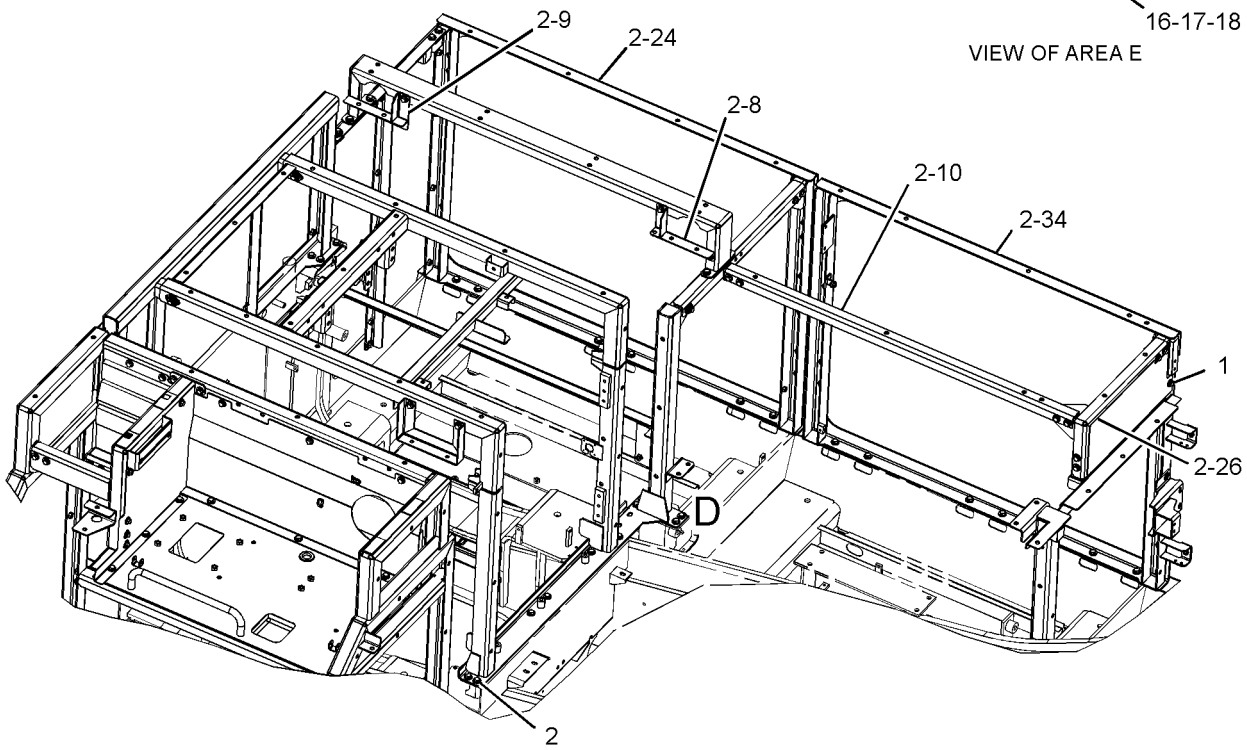

VIEW OF AREA C

GRAPHIC #2 **<END>** g02165064

FRAME AND BODY

303-9613 SUPPORT GP-HOOD

S/N: WAP1-UP

PART OF 298-3136 SUPPORT GP-HOOD

SMCS-7251 **i03874770**

NOTE	REF NO	GRAPHIC REF	PART NUMBER	QTY	PART NAME 1 2 3 4 5 6 (PRODUCT LEVEL)	SEE PAGE
M	1	1	**135-8575**	6	BOLT AS	
M	2	1	**135-8578**	2	BOLT AS	
	3	1	**175-0733**	1	SUPPORT AS	
	4	1	**175-0749**	1	SUPPORT	
	5	1	**190-6919**	2	SPACER (24X38X16.5-MM THK)	
	6	1	**7Y-2854**	2	SPACER (24X38X3-MM THK)	
	7	1	**236-9364**	1	SUPPORT AS	
	8	1	**313-7901**	1	SUPPORT AS	
	9	1	**7Y-8990**	2	SPACER (24X38X1.5-MM THK)	

M-METRIC PART

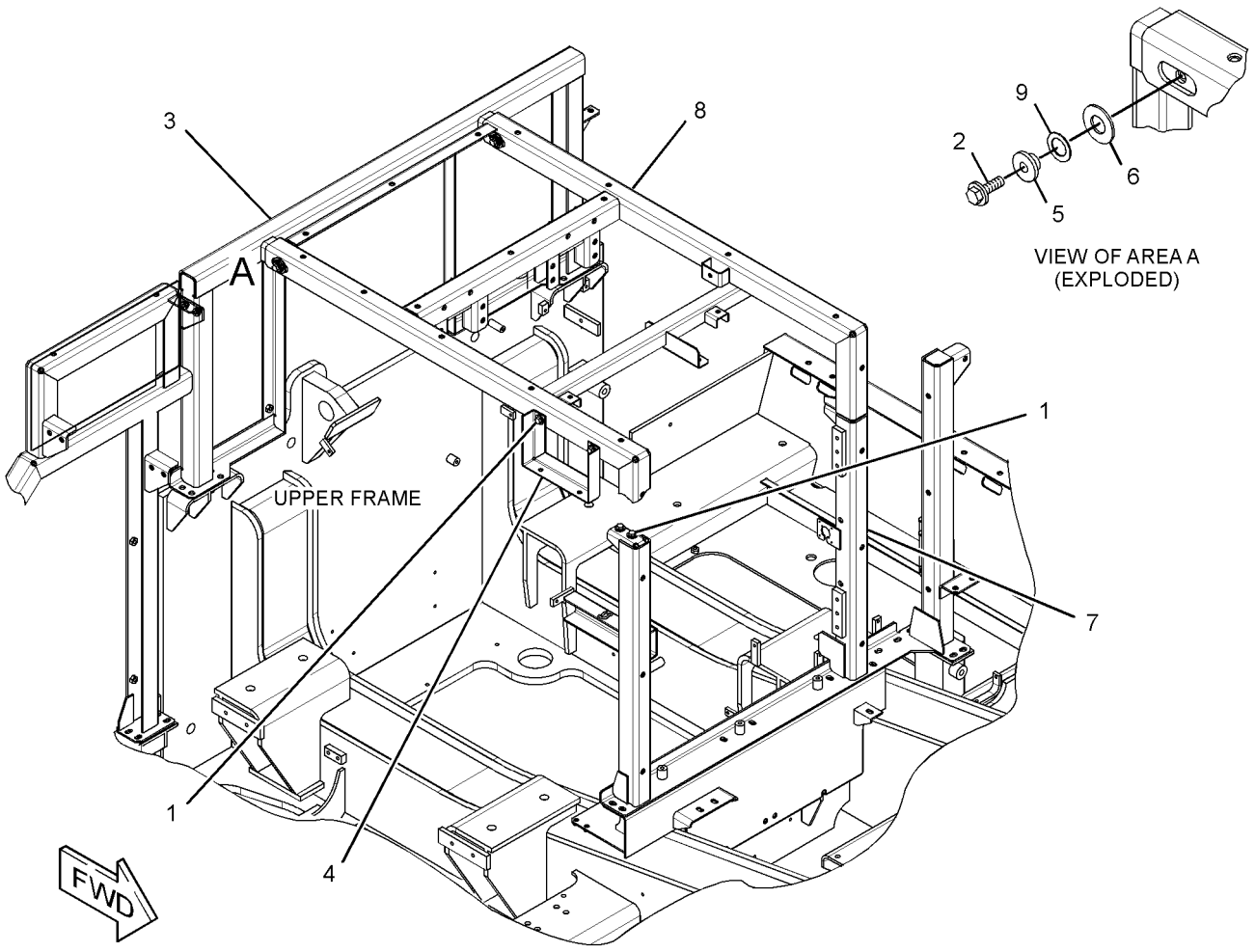

GRAPHIC #1 **<END>** g01534383

FRAME AND BODY

327-3168 SUPPORT GP-HOOD

S/N: WAP1-UP

PART OF 298-3136 SUPPORT GP-HOOD

SMCS-7251 **i04028048**

NOTE	REF NO	GRAPHIC REF	PART NUMBER	QTY	PART NAME 1 2 3 4 5 6 (PRODUCT LEVEL)	SEE PAGE
M	1	1	**135-8572**	3	BOLT AS	
M	2	1	**135-8573**	10	BOLT AS	
M	3	1	**135-8575**	27	BOLT AS	
	4	1	**175-0673**	2	SUPPORT AS	
	5	1	**175-0902**	1	SUPPORT AS	
	6	1	**190-6993**	1	SUPPORT AS	
	7	1	**190-6996**	1	SUPPORT AS	
Y	8	1	**236-9353**	1	SUPPORT AS-ENCLOSURE	427
	9	1	**244-7991**	1	SUPPORT AS	
		1	**244-7992**	1	INSULATION	
		1	**268-0745**	2	SHEET-RUBBER	
Y	10	1	**244-8011**	1	SHEET AS-SOUND SUPPRESSION	411
	11	1	**244-8072**	1	SHEET AS	
		1	**236-9259**	1	SHEET	
		1	**244-8073**	1	INSULATION	
	12	1	**333-5140**	1	SUPPORT AS	
		1	**244-8062**	1	INSULATION	
	13	1	**339-7587**	1	SUPPORT AS	

M-METRIC PART
Y-SEPARATE ILLUSTRATION

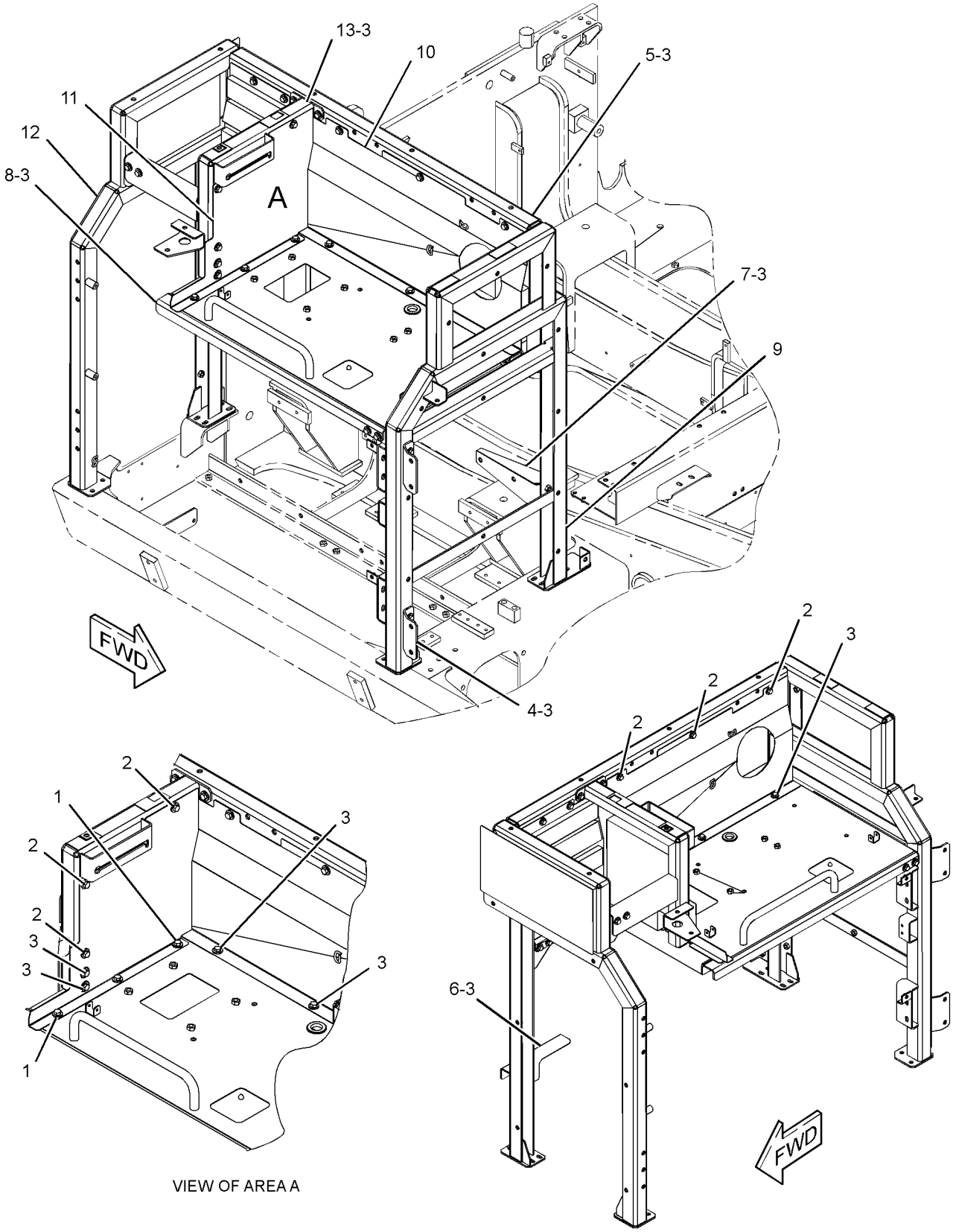

VIEW OF AREA A

GRAPHIC #1 **<END>** g02129790

FRAME AND BODY

307-7994 WALKWAY GP

S/N: WAP1-UP

PART OF 294-1237 CHASSIS AR

SMCS-7255 **i03903249**

NOTE	REF NO	GRAPHIC REF	PART NUMBER	QTY	PART NAME 1 2 3 4 5 6 (PRODUCT LEVEL)	SEE PAGE
	1	1	**170-2999**	1	HANDRAIL AS	
	2	1	**313-7886**	1	WALKWAY AS	
	3	1	**313-7888**	5	WALKWAY AS	
	4	1	**3E-9411**	26	WASHER-HARD (17.5X38X6-MM THK)	
M	5	1	**8T-4139**	2	BOLT (M12X1.75X30-MM)	
M	6	1	**8T-4190**	26	BOLT (M16X2X25-MM)	
	7	1	**8T-4223**	2	WASHER-HARD (13.5X25.5X3-MM THK)	

M-METRIC PART

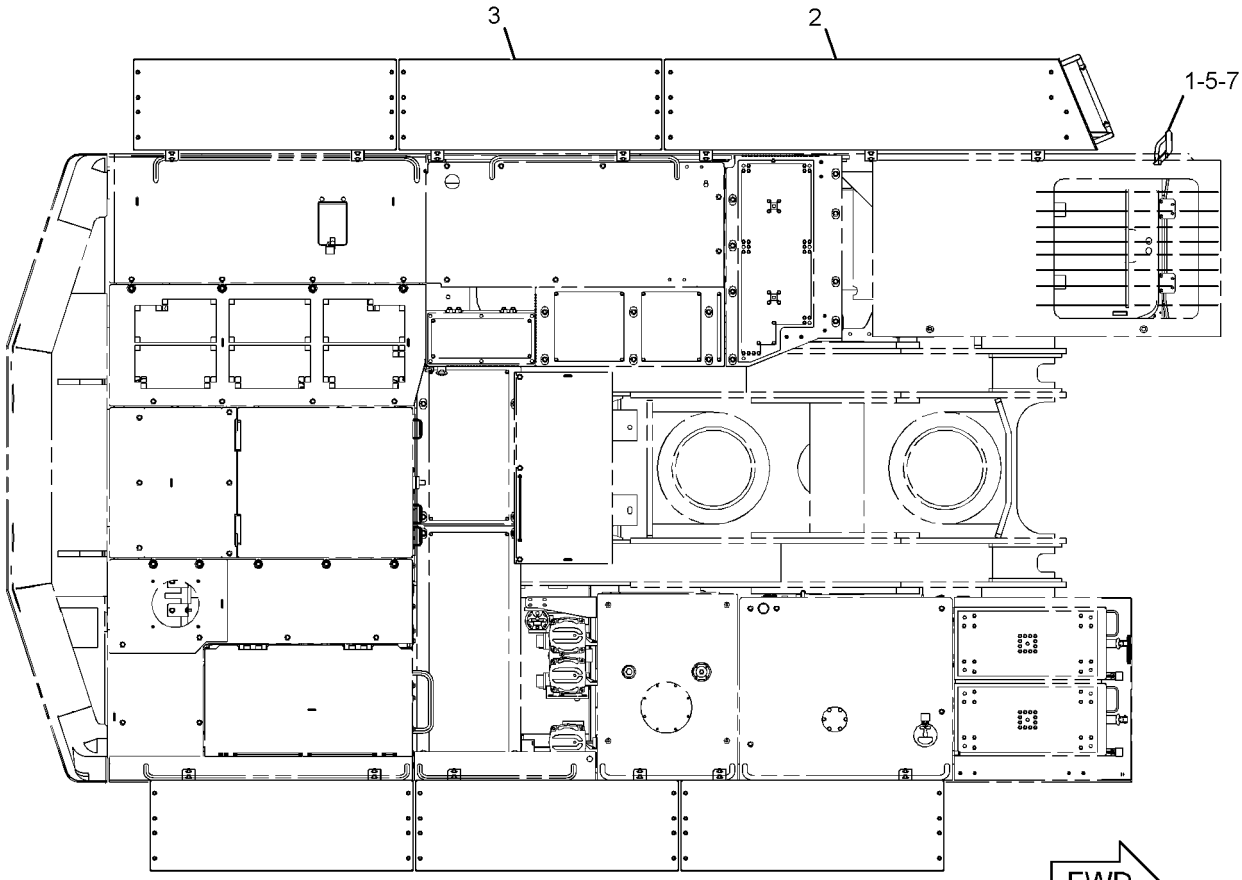

TOP VIEW

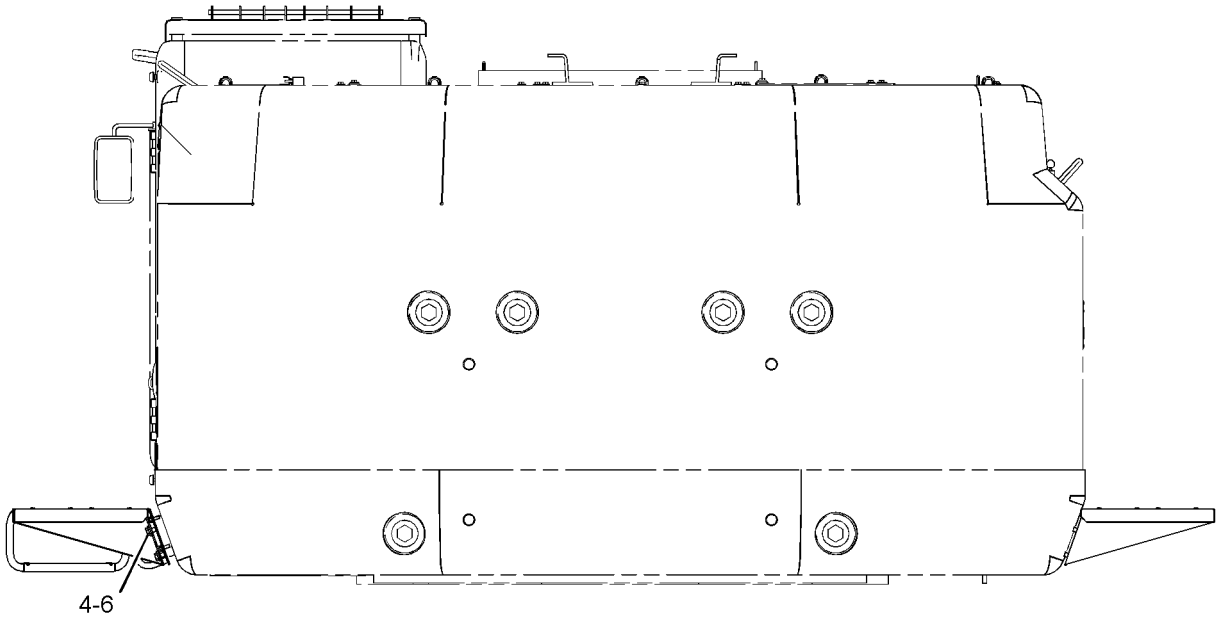

REAR VIEW

GRAPHIC #1 **<END>** g02153686

UNDERCARRIAGE

297-9154 ADJUSTMENT GP-HYDRAULIC TRACK

S/N: WAP1-UP

PART OF 248-7305 IDLER GP-FRONT

SMCS-4157 **i03090281**

NOTE	REF NO	GRAPHIC REF	PART NUMBER	QTY	PART NAME 1 2 3 4 5 6 (PRODUCT LEVEL)	SEE PAGE
M	1	1	**8T-4191**	2	BOLT (M10X1.5X16-MM)	
	2	1	**168-6745**	1	PLATE AS	
	2A	1	**4B-4158**	4	SCREW-DRIVE (4X0.25-IN)	
	2B	1	**5P-9891**	1	PLATE-WARNING (HIGH PRESSURE CYLINDER)	
	3	1	**168-6744**	1	CYLINDER	
	4	1	**297-9158**	1	PISTON	
	5	1	**248-7179**	2	SEAL-O-RING	
	6	1	**136-2445**	2	RING-BACKUP	
	7	1	**7Y-4633**	2	RING-BACKUP	
	8	1	**136-2443**	1	SEAL-LIP TYPE	
	9	1	**136-2444**	1	RING	
	10	1	**095-2927**	1	VALVE-FILL	
	11	1	**2S-5926**	1	VALVE-RELIEF	

M-METRIC PART

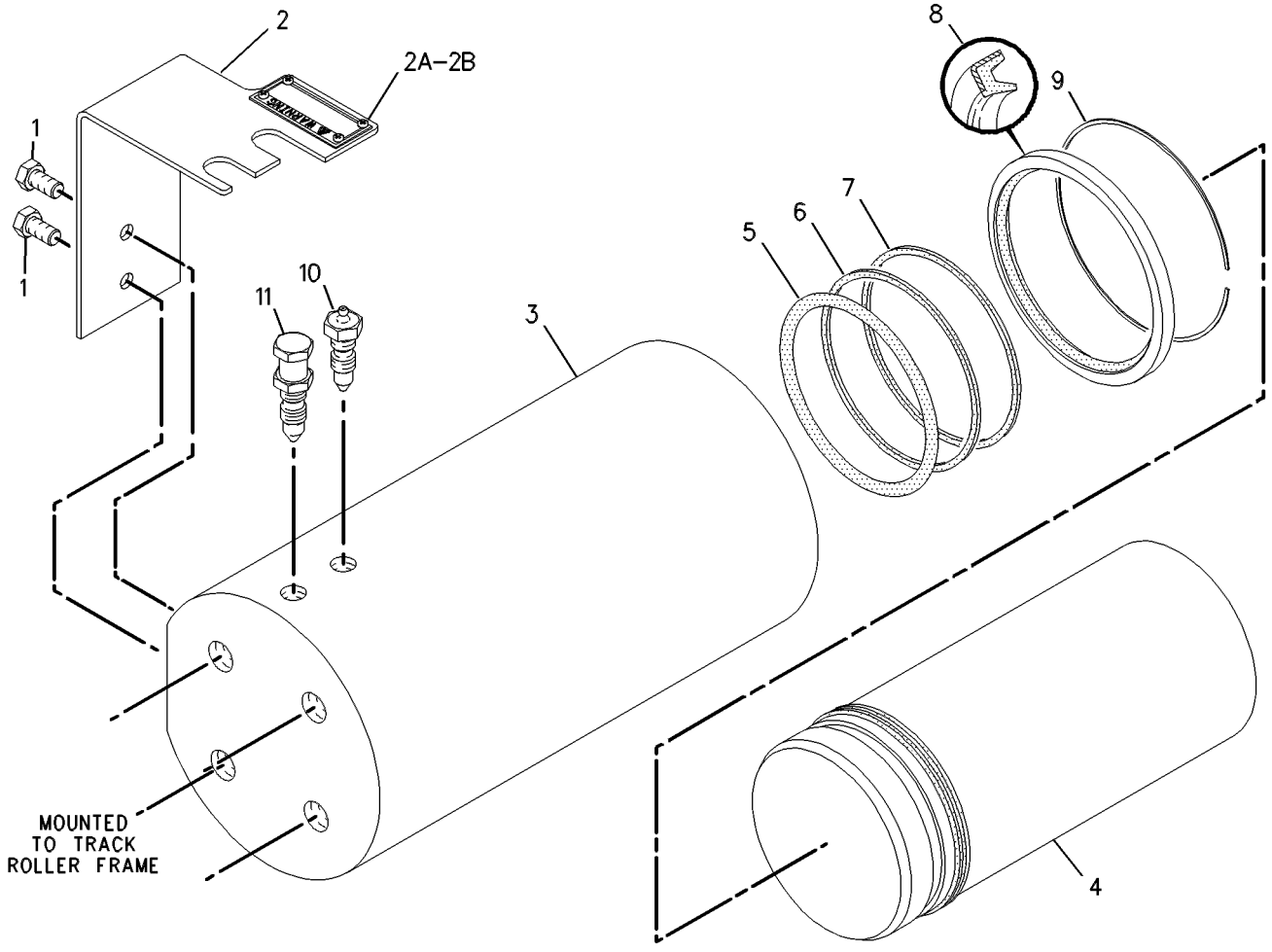

GRAPHIC #1 **<END>** g00533678

UNDERCARRIAGE

294-1302 FRAME AR-UNDERCARRIAGE

S/N: WAP1-UP

PART OF 294-1203 GENERAL AR

SMCS-4151 **i03904049**

NOTE	PART NUMBER	QTY	PART NAME 1 2 3 4 5 6 (PRODUCT LEVEL)	SEE PAGE
Y	*303-8891*	1	FRAME GP-UNDERCARRIAGE	440
Y	*296-6177*	1	GEAR & BEARING GP-SWING	367
Y	*284-7282*	1	GUARD GP-SWIVEL	372
Y	*167-9842*	1	GUARD GP-TRAVEL MOTOR	448
Y	*248-7305*	1	IDLER GP-FRONT	450
Y	*248-7287*	1	ROLLER AR-TRACK & CARRIER	454

Y-SEPARATE ILLUSTRATION

<END>

UNDERCARRIAGE

303-8891 FRAME GP-UNDERCARRIAGE

S/N: WAP1-UP

PART OF 294-1302 FRAME AR-UNDERCARRIAGE

SMCS-4150 **i03904120**

NOTE	REF NO	GRAPHIC REF	PART NUMBER	QTY	PART NAME 1 2 3 4 5 6 (PRODUCT LEVEL)	SEE PAGE
H	1	1	**104-8147**	32	PLUG	
J	2	1	**107-9711**	36	SPACER (37X70X65-MM THK)	
J	3	1	**172-2871**	4	PLATE	
	4	1	**172-3088**	4	PLATE	
J	5	1	**207-4919**	44	BOLT (M36X4X180-MM)	
	6	1	**303-8894**	1	FRAME AS-CARBODY	
	7	1	**346-7268**	4	STEP	
	8	1	**350-6481**	1	FRAME AS-TRACK ROLLER (RH)	
	8A	1	**7Y-1000**	2	BRACKET	
	8B	1	**174-8353**	1	BRACKET	
	9	1	**350-6482**	1	FRAME AS-TRACK ROLLER (LH)	
	9A	1	**7Y-1000**	2	BRACKET	
	9B	1	**174-8353**	1	BRACKET	
M	10	1	**147-2001**	8	BOLT (M36X4X100-MM)	
JM	11	1	**7X-2552**	16	BOLT (M16X2X30-MM)	
M	12	1	**7X-2563**	24	BOLT (M20X2.5X60-MM)	
M	13	1	**7Y-5245**	8	BOLT (M36X4X150-MM)	
	14	1	**7Y-8942**	2	PLATE	
	15	1	**8T-4123**	24	WASHER (22X35X3.5-MM THK)	
J	16	1	**9X-8257**	16	WASHER (17.5X30X3.5-MM THK)	
J	17	1	**9X-8259**	24	WASHER (39X66X6-MM THK)	

H-USE TO PLUG UNUSED BOLT HOLES WHEN IN TRANSPORTATION STYLE
J-TOTAL QUANTITIES REQUIRED FOR USE WITH WORKING STYLE
M-METRIC PART

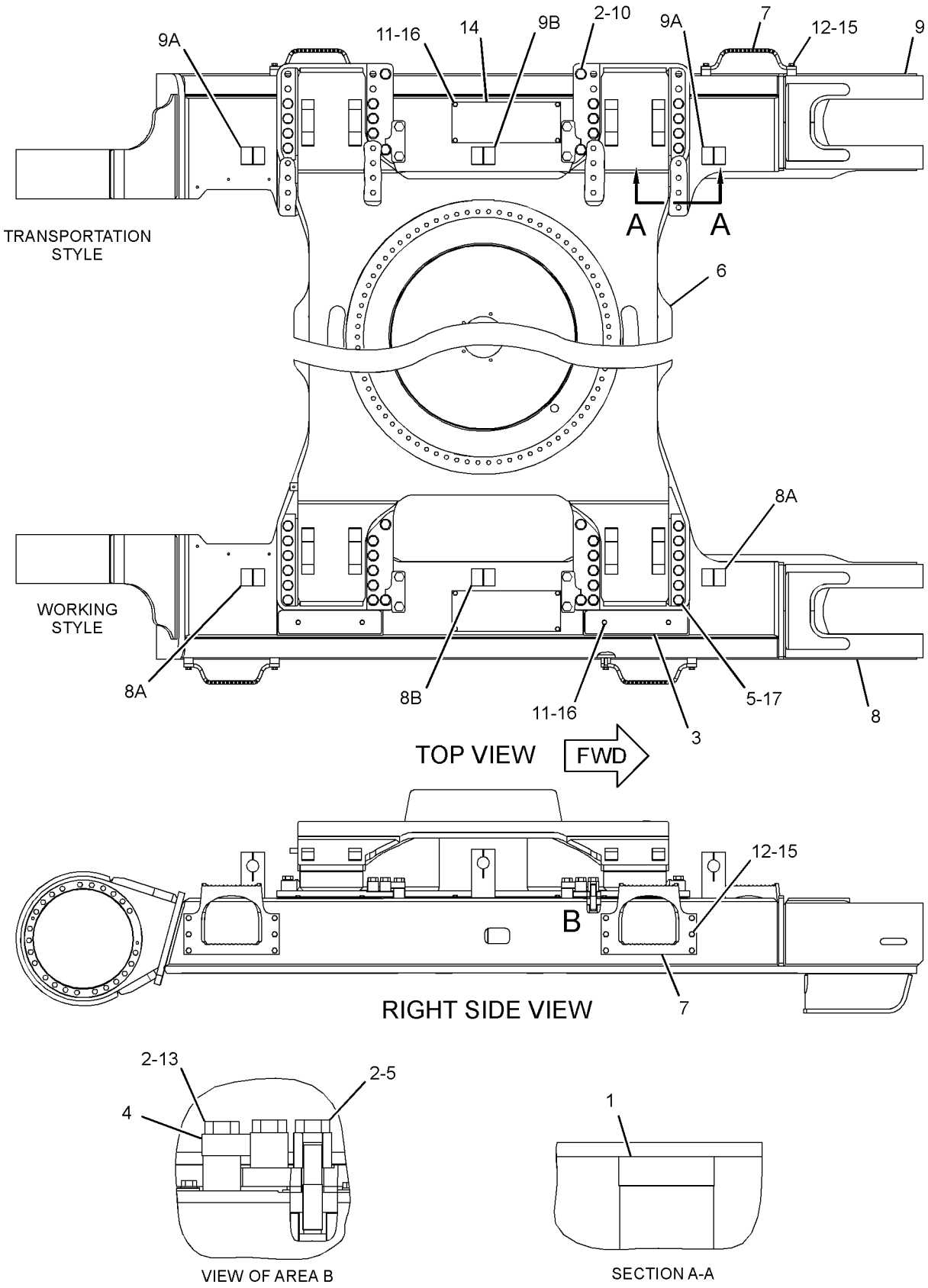

GRAPHIC #1 **<END>** g02159722

UNDERCARRIAGE

297-7516 GUARD GP-TRACK GUIDE—CENTER

S/N: WAP1-UP

FOR USE WITH 294-1313—PAGE 459, 301-2288—PAGE 459, 301-2290—PAGE 459. CANNOT BE USED WITH 297-7518—PAGE 444

AN ATTACHMENT

SMCS-4177 **i03437585**

NOTE	REF NO	GRAPHIC REF	PART NUMBER	QTY	PART NAME 1 2 3 4 5 6 (PRODUCT LEVEL)	SEE PAGE
	1	1	**148-3111**	8	SPACER (30X55X24-MM)	
	2	1	**297-7517**	2	GUARD AS-TRACK GUIDE	
M	3	1	**8C-8723**	8	BOLT (M30X3.5X80-MM)	

M-METRIC PART

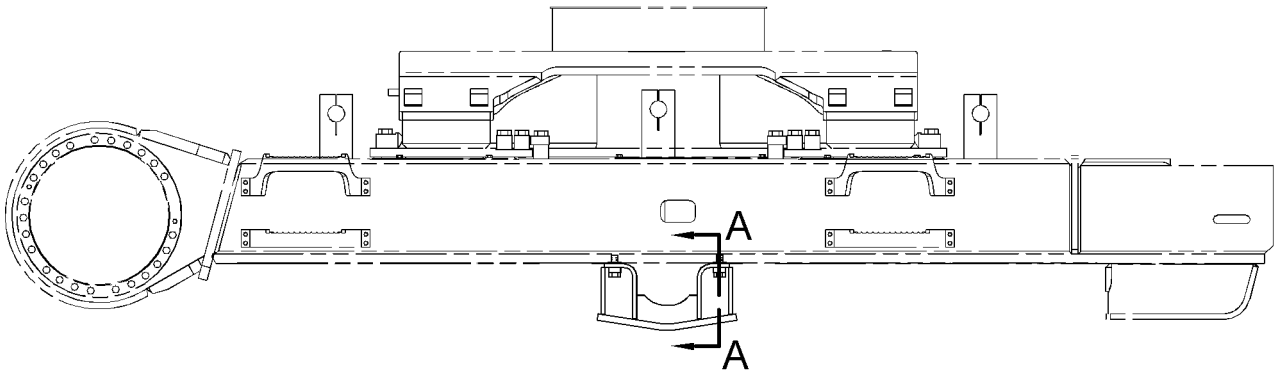

RIGHT SIDE VIEW

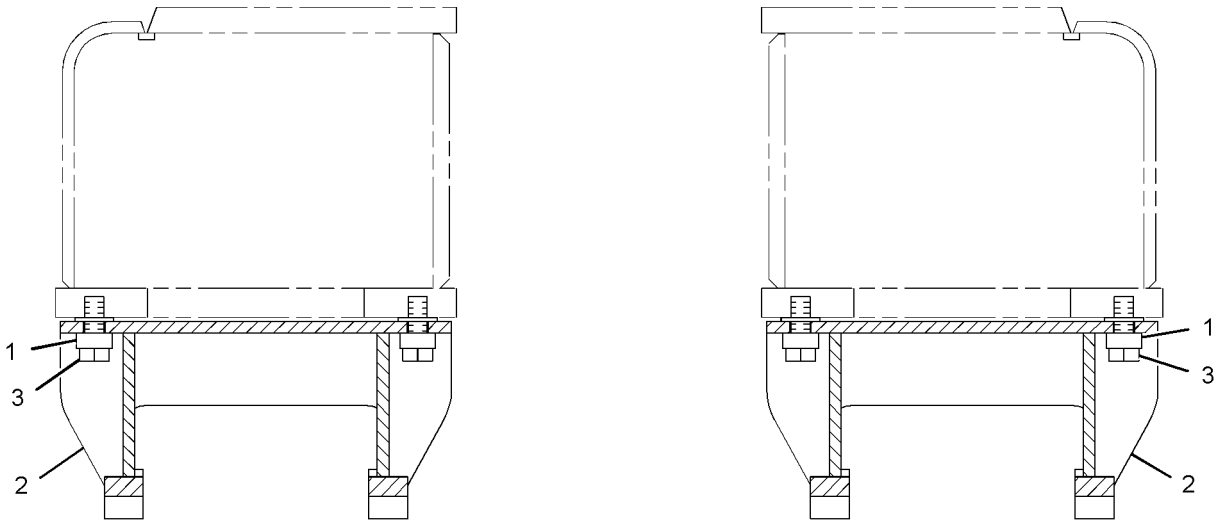

SECTION A-A

GRAPHIC #1 **<END>** g01794529

UNDERCARRIAGE

297-7518 GUARD GP-TRACK GUIDE—FRONT, CENTER, REAR

S/N: WAP1-UP

CANNOT BE USED WITH 297-7516—PAGE 442

AN ATTACHMENT

SMCS-4177 **i03438006**

NOTE	REF NO	GRAPHIC REF	PART NUMBER	QTY	PART NAME 1 2 3 4 5 6 (PRODUCT LEVEL)	SEE PAGE
	1	1	**148-3111**	24	SPACER (30X55X24-MM)	
	2	1	**297-7517**	2	GUARD AS-TRACK GUIDE	
	3	1	**297-7519**	4	GUARD AS-TRACK GUIDE	
M	4	1	**8C-8723**	24	BOLT (M30X3.5X80-MM)	

M-METRIC PART

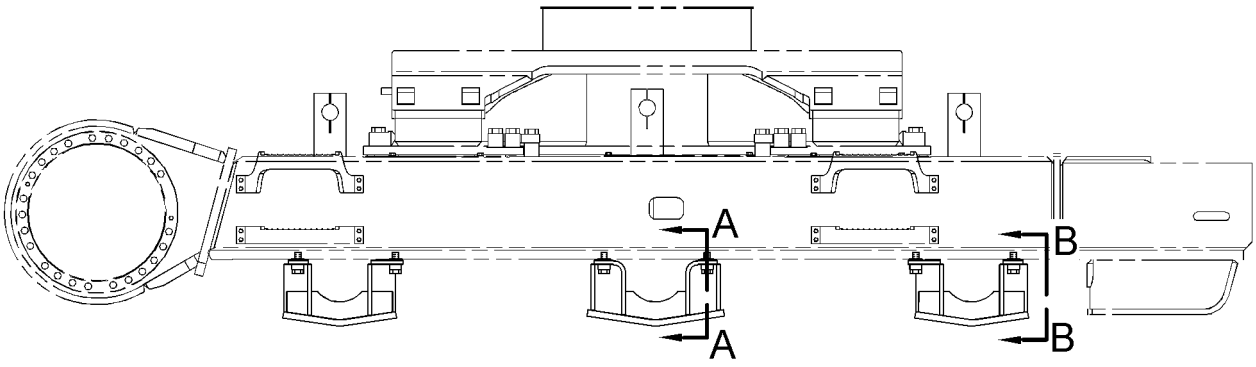

RIGHT SIDE VIEW

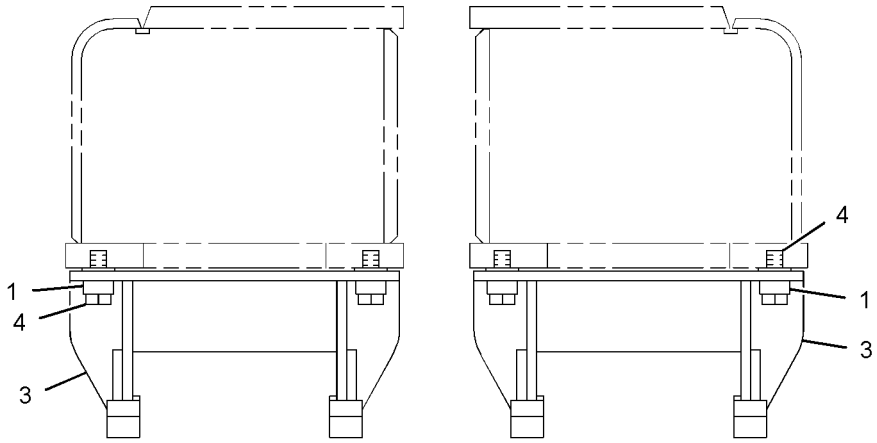

VIEW B-B

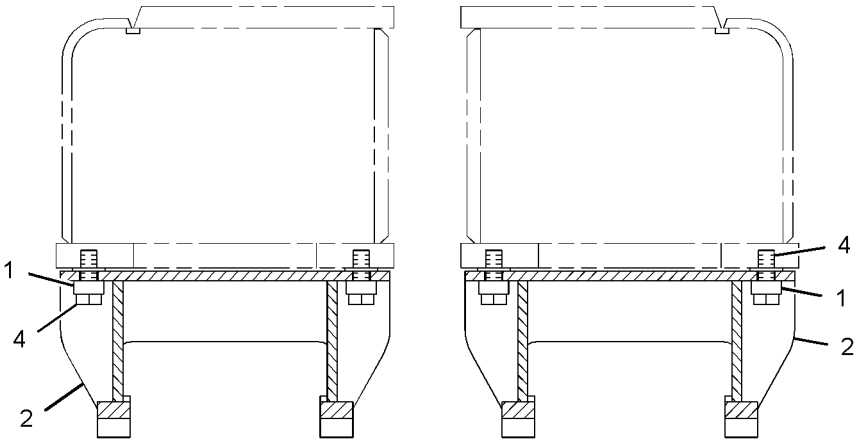

SECTION A-A

GRAPHIC #1 **<END>** g01794540

UNDERCARRIAGE

355-1939 GUARD GP-TRACK GUIDE—FULL LENGTH

S/N: WAP1-UP

CANNOT BE USED WITH 297-7516—PAGE 442, 297-7518—PAGE 444

AN ATTACHMENT

SMCS-4177 **i03909596**

NOTE	REF NO	GRAPHIC REF	PART NUMBER	QTY	PART NAME 1 2 3 4 5 6 (PRODUCT LEVEL)	SEE PAGE
	1	1	**101-2160**	16	SUPPORT AS	
	2	1	**148-3111**	32	SPACER (30X55X24-MM)	
	3	1	**176-2146**	16	PIPE	
	4	1	**297-7524**	4	GUARD AS-TRACK GUIDE (FULL LENGTH)	
	5	1	**297-7525**	4	GUARD AS-TRACK GUIDE (FULL LENGTH)	
	6	1	**355-1936**	1	FRAME AS-TRACK ROLLER (RH)	
	6A	1	**7Y-1000**	2	BRACKET	
	6B	1	**174-8353**	1	BRACKET	
	7	1	**355-1937**	1	FRAME AS-TRACK ROLLER (LH)	
	7A	1	**7Y-1000**	2	BRACKET	
	7B	1	**174-8353**	1	BRACKET	
M	8	1	**176-7524**	16	BOLT (M30X3.5X450-MM)	
M	9	1	**8C-8723**	32	BOLT (M30X3.5X80-MM)	
	10	1	**9X-8258**	32	WASHER (33X56X6-MM THK)	

QUANTITIES SHOWN ARE THOSE REQUIRED FOR BOTH LH AND RH SIDES
M-METRIC PART

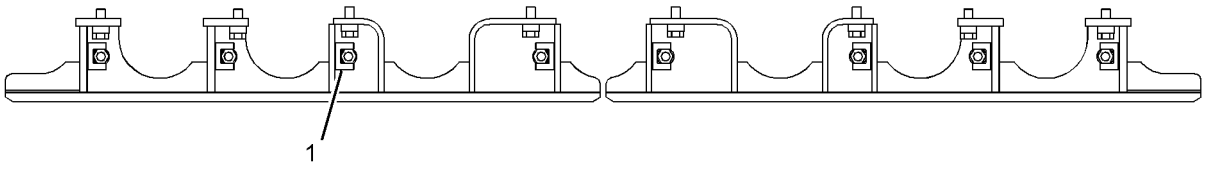

VIEW B-B

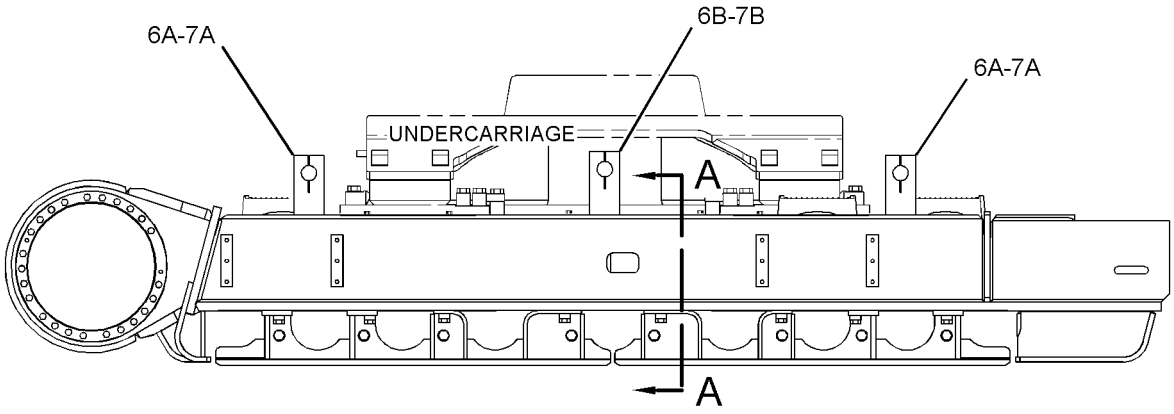

RIGHT SIDE VIEW

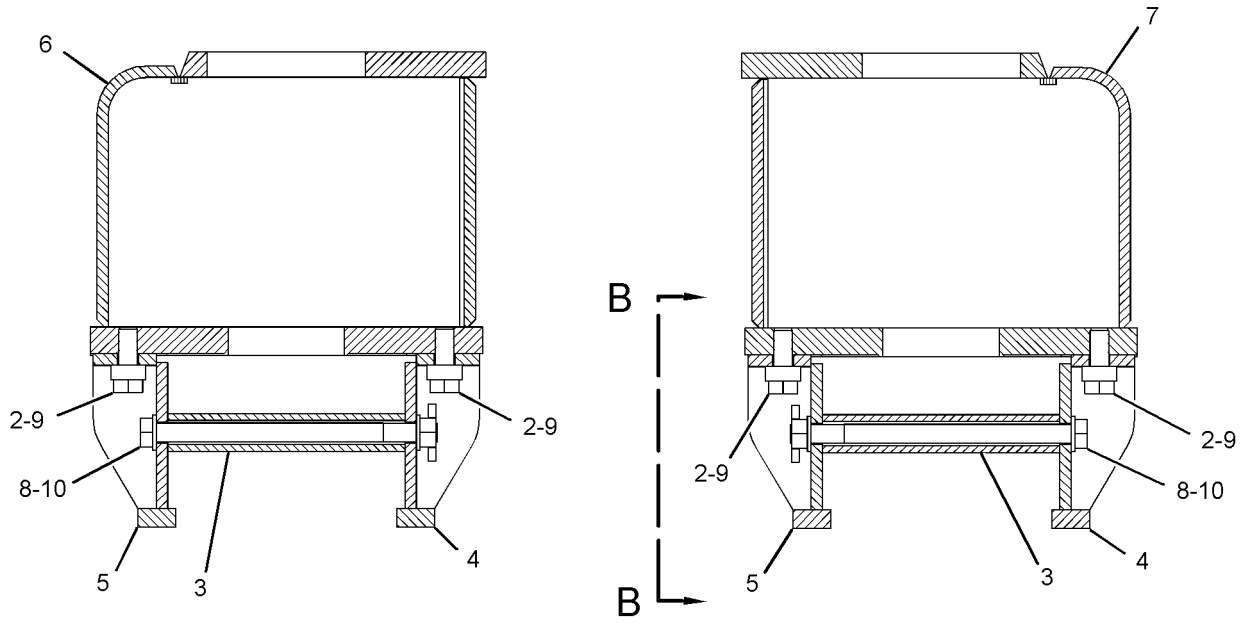

SECTION A-A

GRAPHIC #1 **<END>** g02154440

UNDERCARRIAGE

167-9842 GUARD GP-TRAVEL MOTOR

S/N: WAP1-UP

PART OF 294-1302 FRAME AR-UNDERCARRIAGE

SMCS-7163 **i03383381**

NOTE	REF NO	GRAPHIC REF	PART NUMBER	QTY	PART NAME 1 2 3 4 5 6 (PRODUCT LEVEL)	SEE PAGE
	1	1	**176-2149**	1	COVER AS (RH)	
	2	1	**176-2150**	1	COVER AS (LH)	
	3	1	**176-2157**	1	COVER AS (RH)	
	4	1	**176-2158**	1	COVER AS (LH)	
	5	1	**176-2159**	1	COVER AS (RH)	
	5A	1	**7Y-2812**	1	HANDLE	
	6	1	**176-2162**	1	COVER AS (LH)	
	6A	1	**7Y-2812**	1	HANDLE	
	7	1	**176-2163**	1	COVER AS (RH)	
	8	1	**176-2164**	1	COVER AS (LH)	
	9	1	**176-2165**	1	COVER AS (RH)	
	10	1	**176-2166**	1	COVER AS (LH)	
	11	1	**254-2999**	1	COVER AS (RH)	
	12	1	**254-3000**	1	COVER AS (LH)	
M	13	1	**100-3866**	54	BOLT-SELF-LOCKING (M16X2X40-MM)	
	14	1	**3E-9411**	54	WASHER-HARD (17.5X38X6-MM THK)	

M-METRIC PART

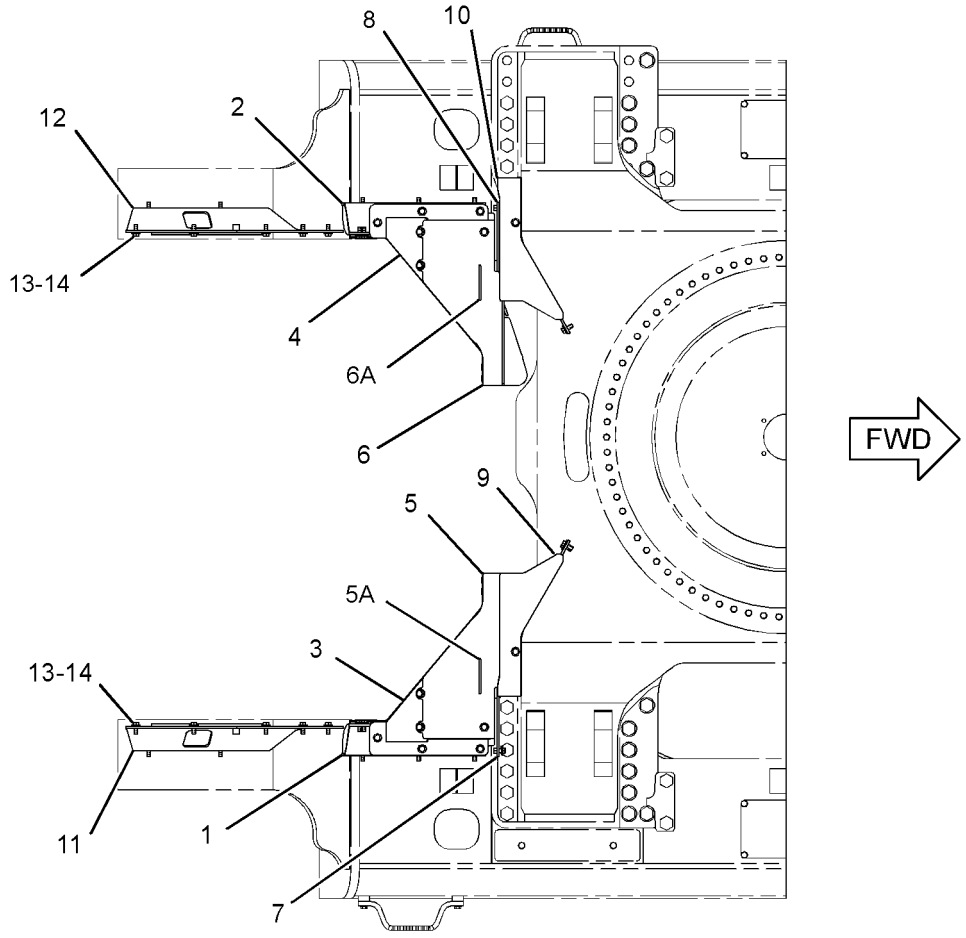

TOP VIEW

GRAPHIC #1 **<END>** g01753255

UNDERCARRIAGE

248-7257 IDLER GP-FRONT

S/N: WAP1-UP

PART OF 297-9197, 297-9198 IDLER GP-FRONT

SMCS-4159 **i03539704**

NOTE	REF NO	GRAPHIC REF	PART NUMBER	QTY	PART NAME 1 2 3 4 5 6 (PRODUCT LEVEL)	SEE PAGE
	1	1	**171-5825**	2	SEAL GP-DUO-CONE	
		1	**171-5714**	2	RING-TORIC	
	2	1	**194-1155**	2	PIN	
	3	1	**194-1156**	2	BEARING-IDLER	
	4	1	**194-1162**	2	DOWEL	
	5	1	**278-7286**	1	IDLER & BEARING AS	
	5A	1	**6Y-7599**	2	BEARING-IDLER	
	6	1	**7H-3171**	1	PLUG-PIPE	
	7	1	**102-0883**	2	PLUG-PIPE	
	8	1	**2H-3928**	2	SEAL-O-RING	
	9	1	**293-8218**	1	SHAFT-IDLER	

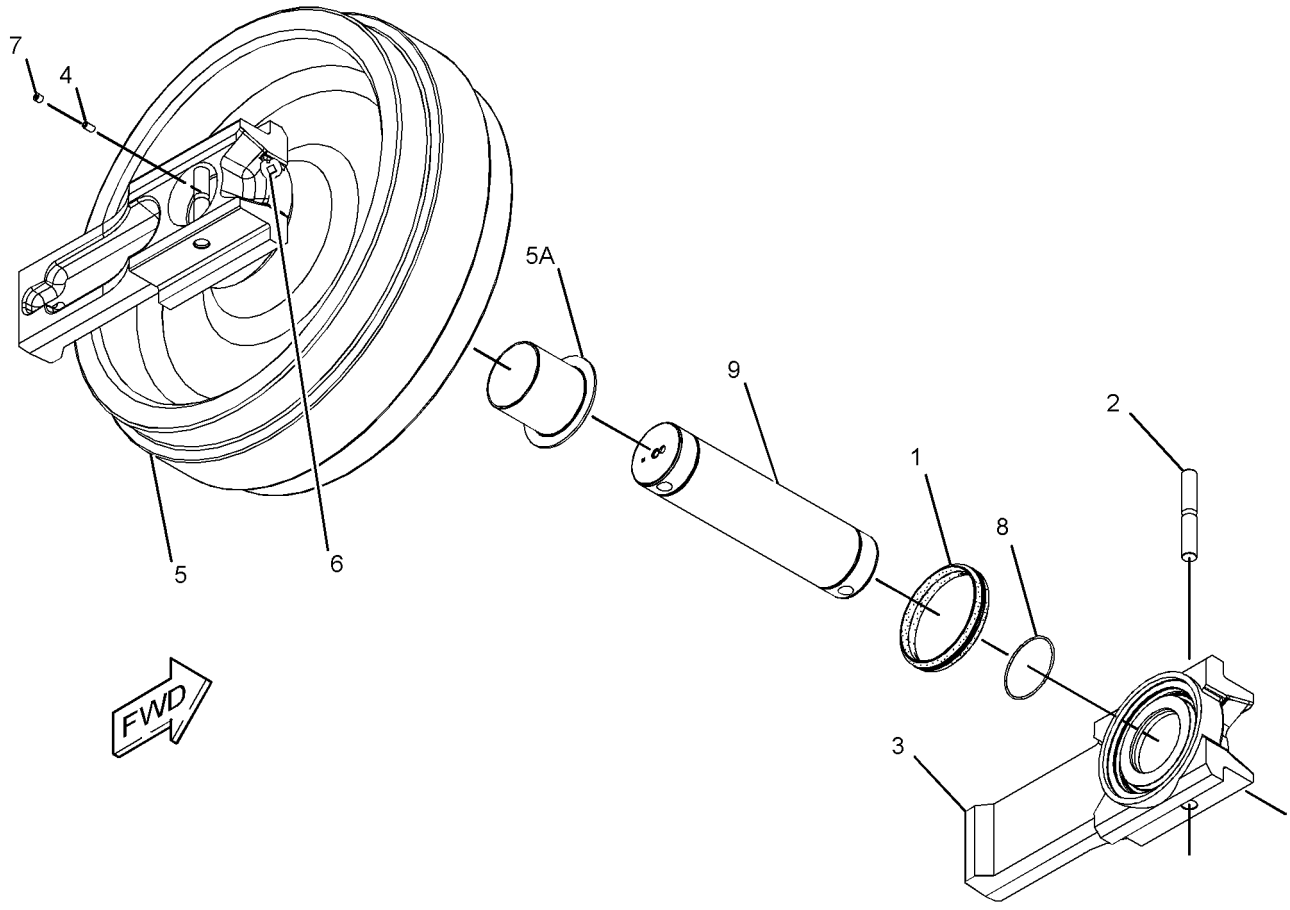

GRAPHIC #1 **<END>** g01868915

UNDERCARRIAGE

248-7305 IDLER GP-FRONT—HEAVY DUTY

S/N: WAP1-UP

PART OF 294-1302 FRAME AR-UNDERCARRIAGE

SMCS-4159 **i03350001**

NOTE	REF NO	GRAPHIC REF	PART NUMBER	QTY	PART NAME 1 2 3 4 5 6 (PRODUCT LEVEL)	SEE PAGE
	1	1	**168-6747**	2	SPACER	
Y	2	1	**297-9154**	2	ADJUSTMENT GP-HYDRAULIC TRACK	438
Y	3	1	*297-9197*	1	IDLER GP-FRONT (RH)	451
Y	4	1	*297-9198*	1	IDLER GP-FRONT (LH)	452
M	5	1	**099-8112**	4	SETSCREW-SOCKET (M20X2.5X25-MM)	
	6	1	**8T-4167**	4	WASHER-HARD (26X44X4-MM THK)	
M	7	1	**8T-5878**	4	BOLT (M24X3X80-MM)	

M-METRIC PART
Y-SEPARATE ILLUSTRATION

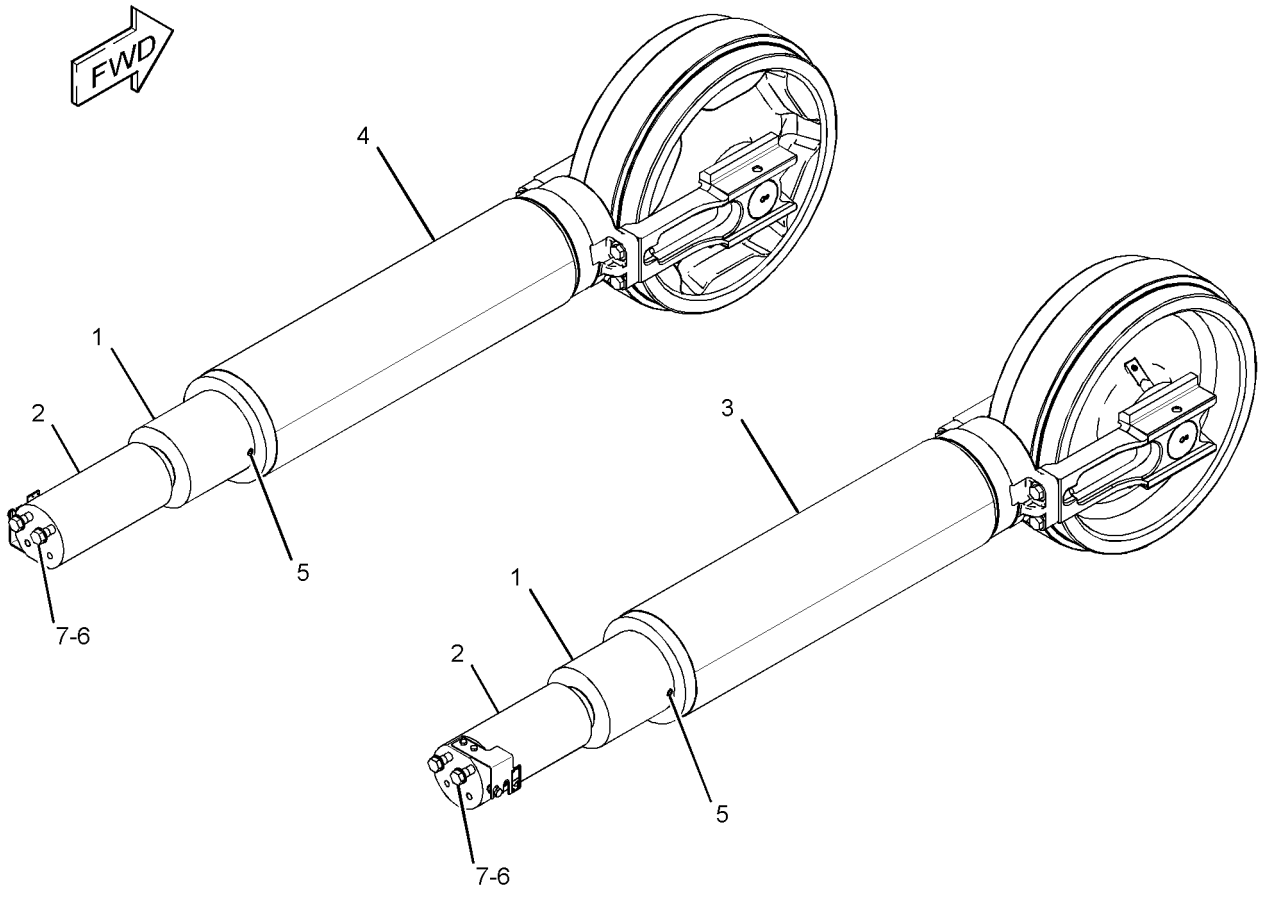

GRAPHIC #1 **<END>** g01802820

UNDERCARRIAGE

297-9197 IDLER GP-FRONT—RH

S/N: WAP1-UP

PART OF 248-7305 IDLER GP-FRONT

SMCS-4159 **i03328554**

NOTE	REF NO	GRAPHIC REF	PART NUMBER	QTY	PART NAME 1 2 3 4 5 6 (PRODUCT LEVEL)	SEE PAGE
Y	1	1	**248-7257**	1	IDLER GP-FRONT	449
Y	2	1	*248-7308*	1	SPRING GP-RECOIL	458
M	3	1	**8T-5878**	4	BOLT (M24X3X80-MM)	

M-METRIC PART
Y-SEPARATE ILLUSTRATION

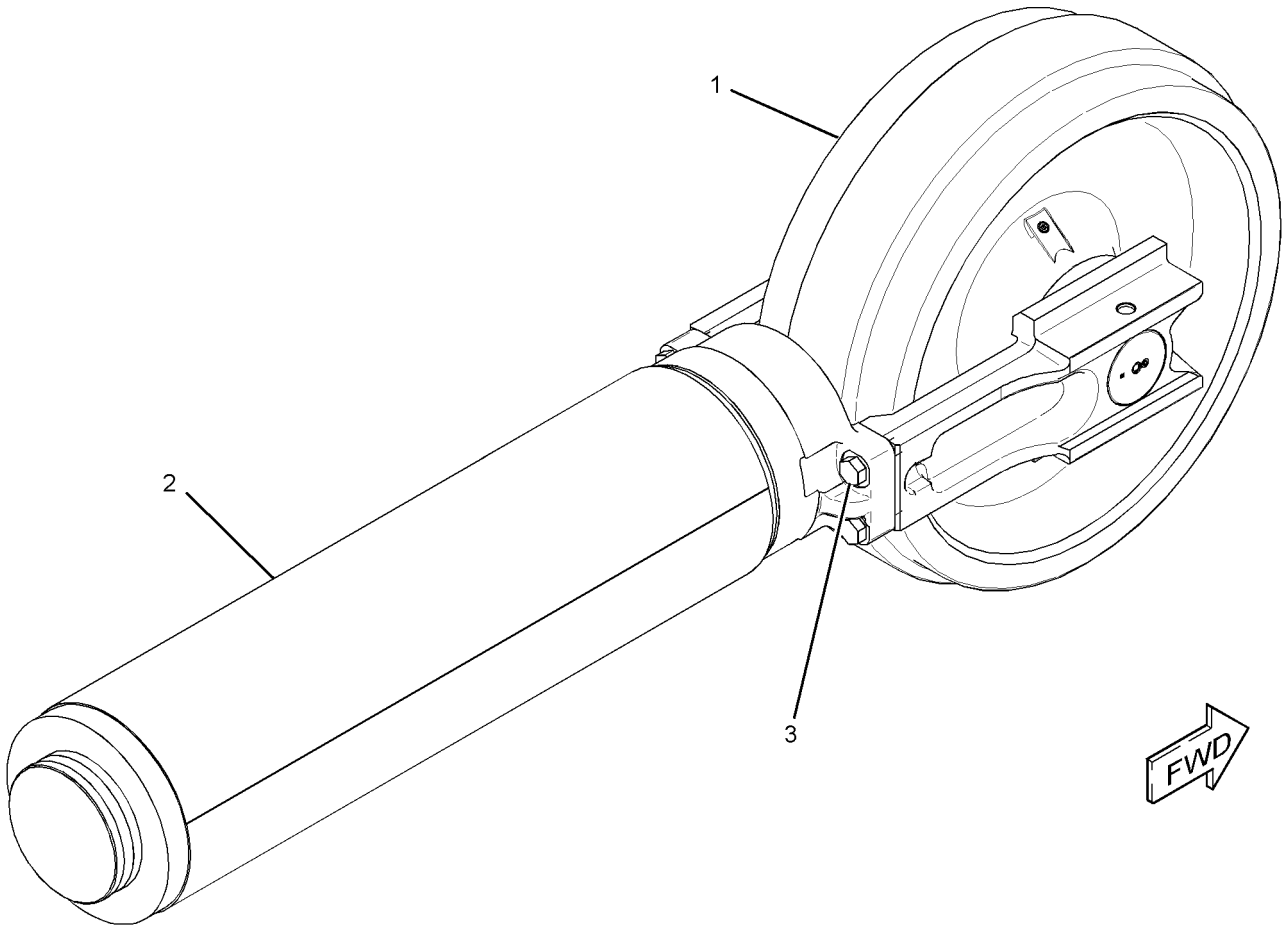

GRAPHIC #1 **<END>** g01766273

UNDERCARRIAGE

297-9198 IDLER GP-FRONT–LH

S/N: WAP1-UP

PART OF 248-7305 IDLER GP-FRONT

SMCS-4159 **i03352021**

NOTE	REF NO	GRAPHIC REF	PART NUMBER	QTY	PART NAME 1 2 3 4 5 6 (PRODUCT LEVEL)	SEE PAGE
Y	1	1	**248-7257**	1	IDLER GP-FRONT	449
Y	2	1	*248-7308*	1	SPRING GP-RECOIL	458
M	3	1	**8T-5878**	4	BOLT (M24X3X80-MM)	

M-METRIC PART
Y-SEPARATE ILLUSTRATION

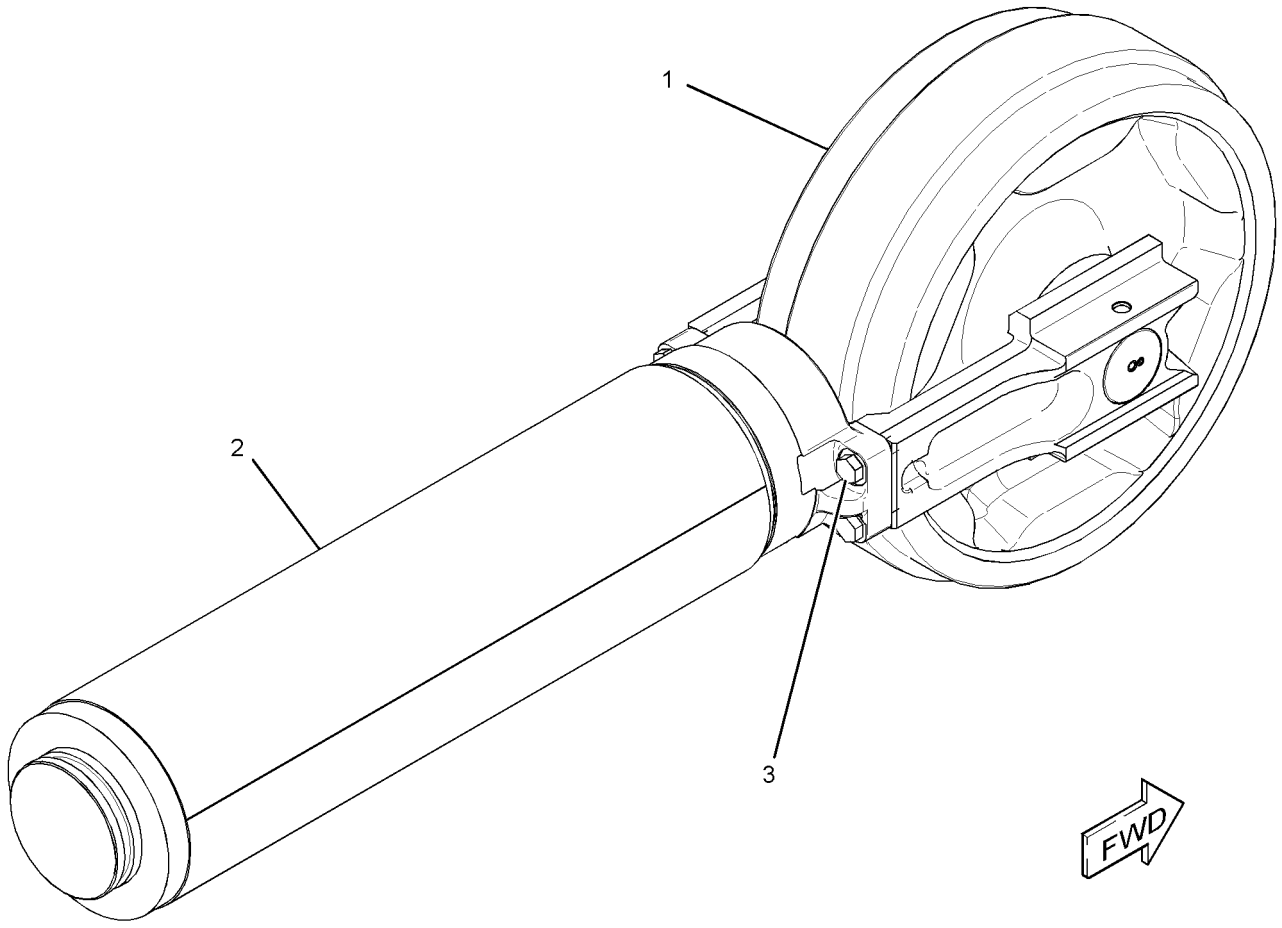

GRAPHIC #1 **<END>** g01766114

UNDERCARRIAGE

297-0129 LINK AS-TRACK

S/N: WAP1-UP

PART OF 301-2288, 301-2290, 301-2292 TRACK GP

AN ATTACHMENT

SMCS-4169, 4171 **i03812134**

NOTE	REF NO	GRAPHIC REF	PART NUMBER	QTY	PART NAME 1 2 3 4 5 6 (PRODUCT LEVEL)	SEE PAGE
	1	1	**245-3806**	1	BUSHING-MASTER	
	2	1	**245-3805**	50	BUSHING-TRACK	
	3	1	**296-4359**	51	LINK-TRACK (RH)	
	4	1	**296-4360**	51	LINK-TRACK (LH)	
	5	1	**294-3064**	1	PIN-TRACK (MASTER)	
	6	1	**294-3063**	50	PIN-TRACK	
	7	1	**244-8697**	2	SEAL AS (MASTER)	
	8	1	**248-1537**	100	SEAL AS	
	9	1	**245-3808**	2	RING-THRUST (MASTER)	
	10	1	**2P-9419**	100	RING-THRUST	

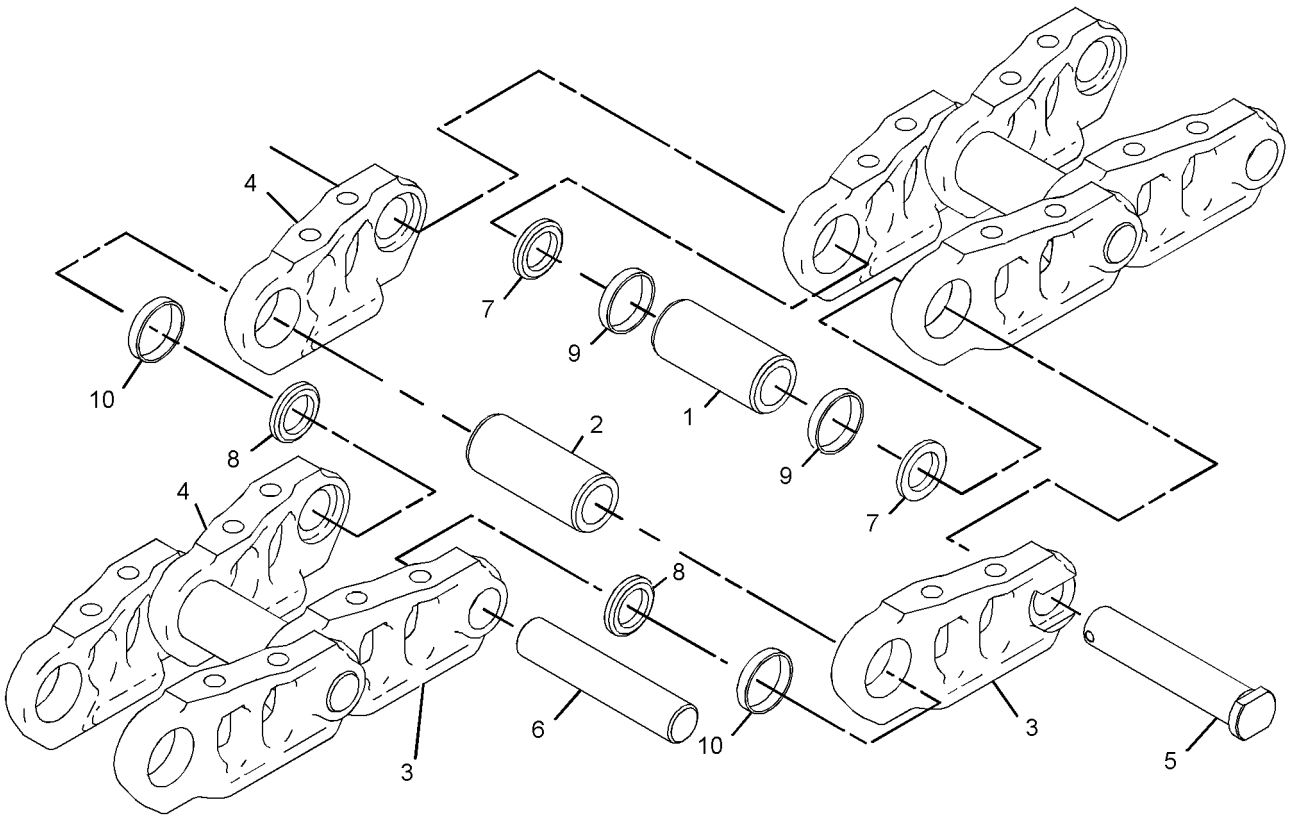

GRAPHIC #1 **<END>** g02127224

UNDERCARRIAGE

248-7287 ROLLER AR-TRACK & CARRIER

S/N: WAP1-UP

PART OF 294-1302 FRAME AR-UNDERCARRIAGE

SMCS-4154, 4180 **i03465661**

NOTE	REF NO	GRAPHIC REF	PART NUMBER	QTY	PART NAME 1 2 3 4 5 6 (PRODUCT LEVEL)	SEE PAGE
Y	1	1	**185-5065**	18	ROLLER GP-TRACK-SINGLE FLANGE	456
Y	2	1	**300-4611**	6	ROLLER GP-TRACK CARRIER	455
M	3	1	**107-3953**	72	BOLT (M30X3.5X150-MM)	
M	4	1	**7X-2584**	6	BOLT (M30X3.5X140-MM)	
	5	1	**9X-8258**	72	WASHER (33X56X6-MM THK)	

M-METRIC PART
Y-SEPARATE ILLUSTRATION

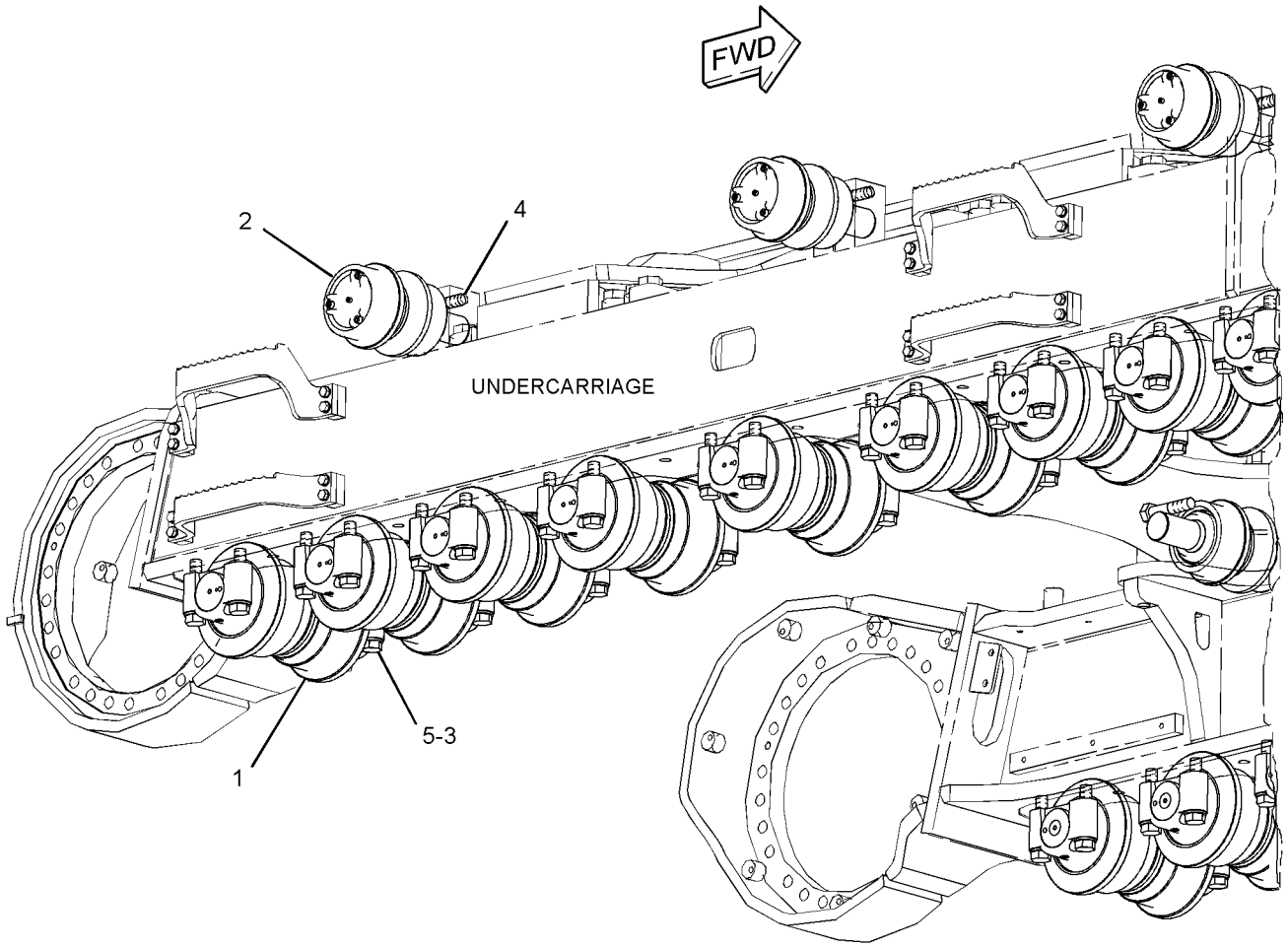

GRAPHIC #1 **<END>** g01809476

UNDERCARRIAGE

300-4611 ROLLER GP-TRACK CARRIER

S/N: WAP1-UP

PART OF 248-7287 ROLLER AR-TRACK & CARRIER

SMCS-4154 **i03905631**

NOTE	REF NO	GRAPHIC REF	PART NUMBER	QTY	PART NAME 1 2 3 4 5 6 (PRODUCT LEVEL)	SEE PAGE
	1	1	**4H-9105**	1	SEAL-O-RING	
	2	1	**6Y-8176**	1	WASHER-THRUST (78X116X4.5-MM THK)	
	3	1	**6Y-9339**	1	RETAINER	
	4	1	**300-4523**	1	ROLLER & BEARING AS	
	4A	1	**6Y-8171**	1	BEARING-CARRIER ROLLER	
	4B	1	**6Y-8172**	1	BEARING-CARRIER ROLLER	
	5	1	**300-4525**	1	SHAFT AS-TRACK	
	6	1	**320-2677**	1	COVER	
	7	1	**171-5811**	1	SEAL GP-DUO-CONE	
		1	**171-5713**	2	RING-TORIC	
	8	1	**3H-7654**	3	WASHER-HARD (13.5X22.5X3.0-MM THK)	
	9	1	**7H-3171**	1	PLUG-PIPE	
M	10	1	**8T-0273**	5	BOLT-SOCKET HEAD (M12X1.75X40-MM)	

M-METRIC PART

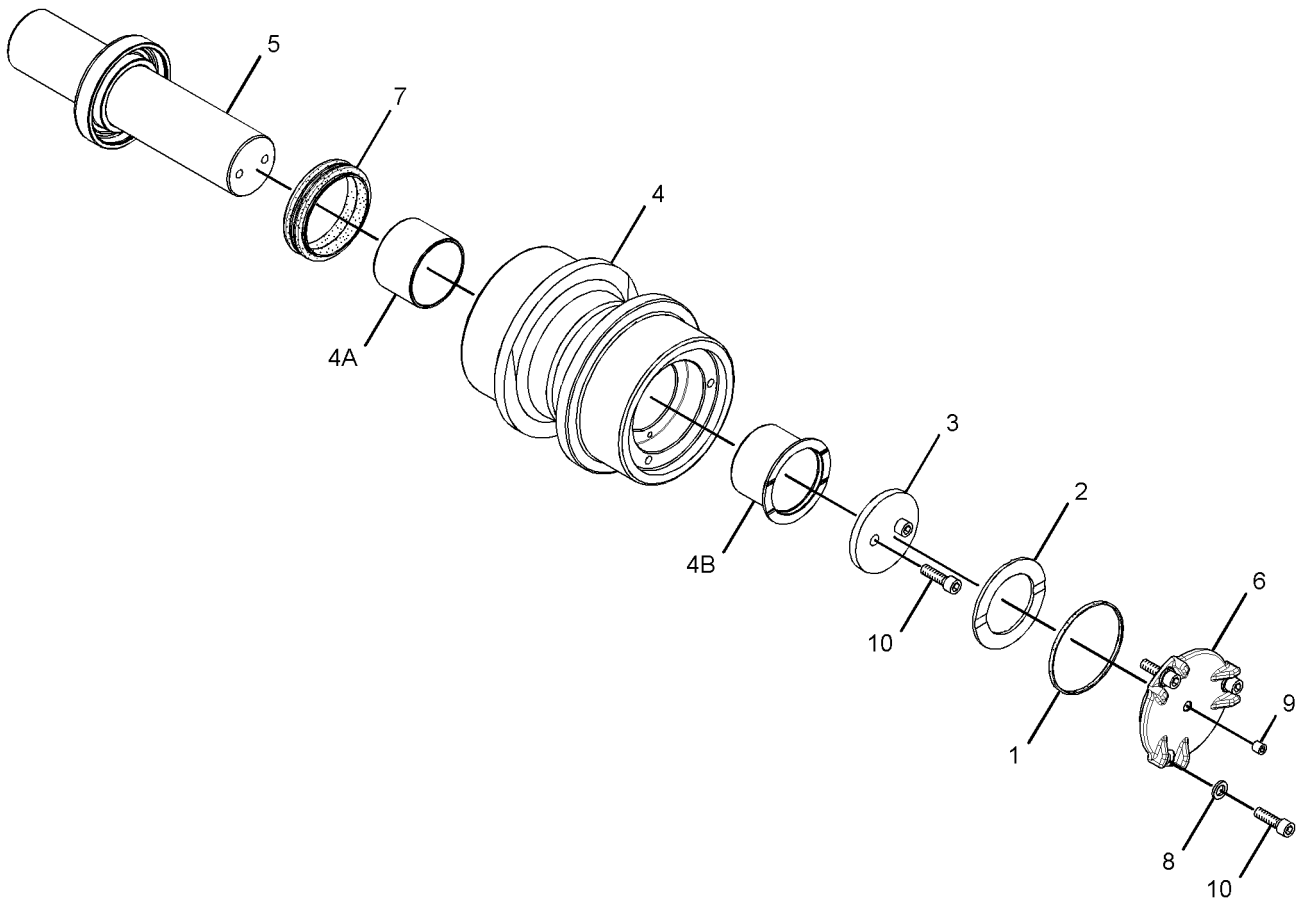

GRAPHIC #1 **<END>** g01817557

UNDERCARRIAGE

185-5065 ROLLER GP-TRACK-SINGLE FLANGE

S/N: WAP1-UP

PART OF 248-7287 ROLLER AR-TRACK & CARRIER

SMCS-4180 **i02135475**

NOTE	REF NO	GRAPHIC REF	PART NUMBER	QTY	PART NAME 1 2 3 4 5 6 (PRODUCT LEVEL)	SEE PAGE
	1	1	**185-5093**	1	ROLLER & BEARING AS	
	1A	1	**6Y-8127**	2	BEARING-TRACK ROLLER	
	2	1	**9W-2146**	1	PLUG	
	3	1	**176-5332**	2	SEAL GP-DUO-CONE	
	3A	1	**176-5334**	2	RING-TORIC	
	4	1	**178-7291**	2	COLLAR-TRACK ROLLER	
	5	1	**178-7540**	2	DOWEL	
	6	1	**178-7292**	1	SHAFT-TRACK ROLLER	
	7	1	**175-7900**	2	SEAL-O-RING	

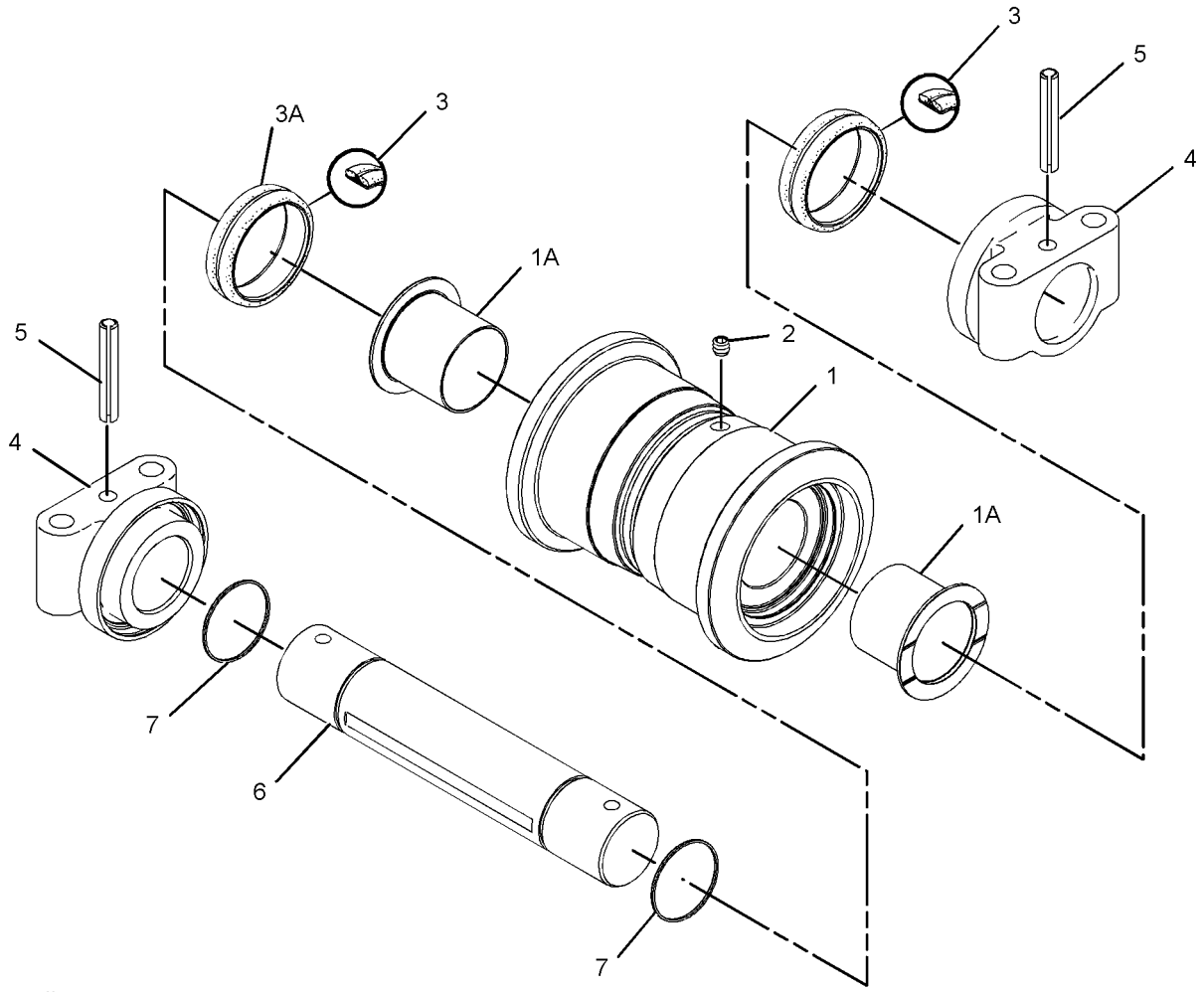

GRAPHIC #1 **<END>** g01088233

186-5479 SPACER GP-UNDERCARRIAGE

S/N: WAP1-UP
PART OF 294-1313 TRACK GP
AN ATTACHMENT

SMCS-4150 **i02235346**

NOTE	REF NO	GRAPHIC REF	PART NUMBER	QTY	PART NAME 1 2 3 4 5 6 (PRODUCT LEVEL)	SEE PAGE
	1	1	**198-5510**	2	PLATE	

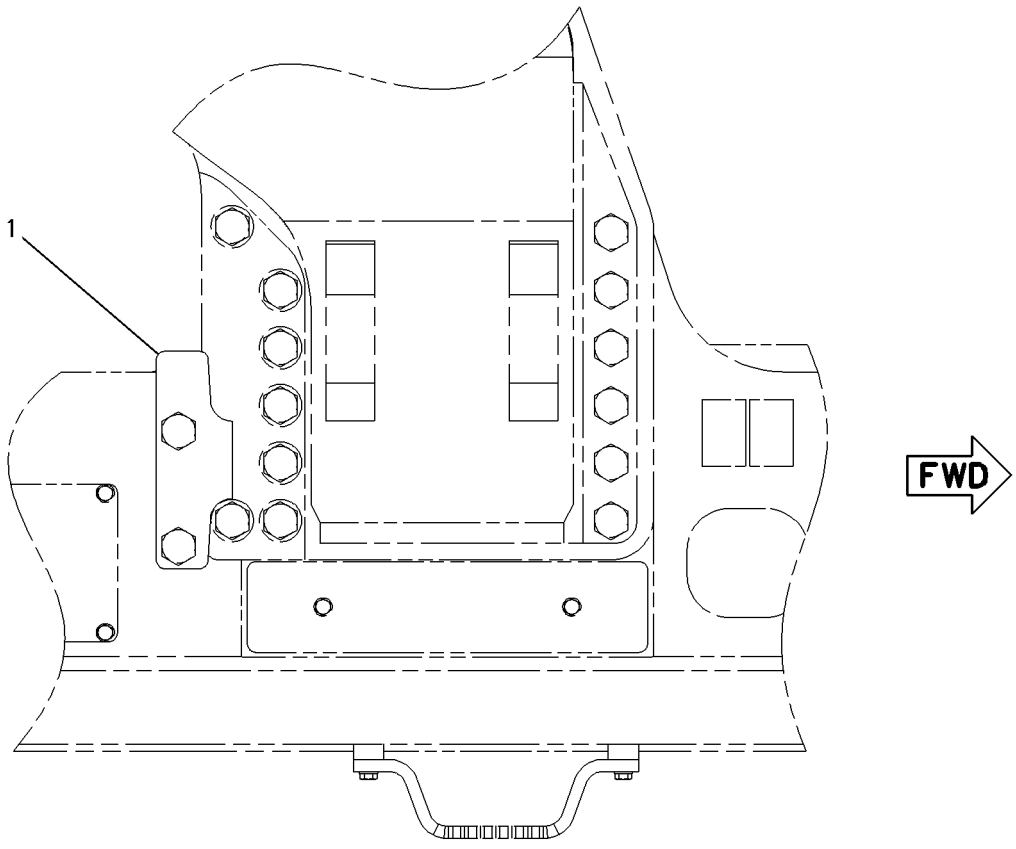

TOP VIEW

GRAPHIC #1 **<END>** g00885437

UNDERCARRIAGE

248-7308 SPRING GP-RECOIL

S/N: WAP1-UP

PART OF 297-9197, 297-9198 IDLER GP-FRONT

SMCS-4158 **i03309480**

NOTE	REF NO	GRAPHIC REF	PART NUMBER	QTY	PART NAME 1 2 3 4 5 6 (PRODUCT LEVEL)	SEE PAGE
	1	1	**168-6740**	1	WASHER	
	2	1	**168-6742**	1	PLATE	
	3	1	**248-7161**	1	ROD	
	4	1	**248-7163**	1	SPRING	
	5	1	**297-9120**	1	SUPPORT AS	
	6	1	**297-9121**	1	SUPPORT	
M	7	1	**168-6741**	1	NUT (M85X6-THD)	
M	8	1	**8T-6594**	2	BOLT-SOCKET HEAD (M16X2X35-MM)	

M-METRIC PART

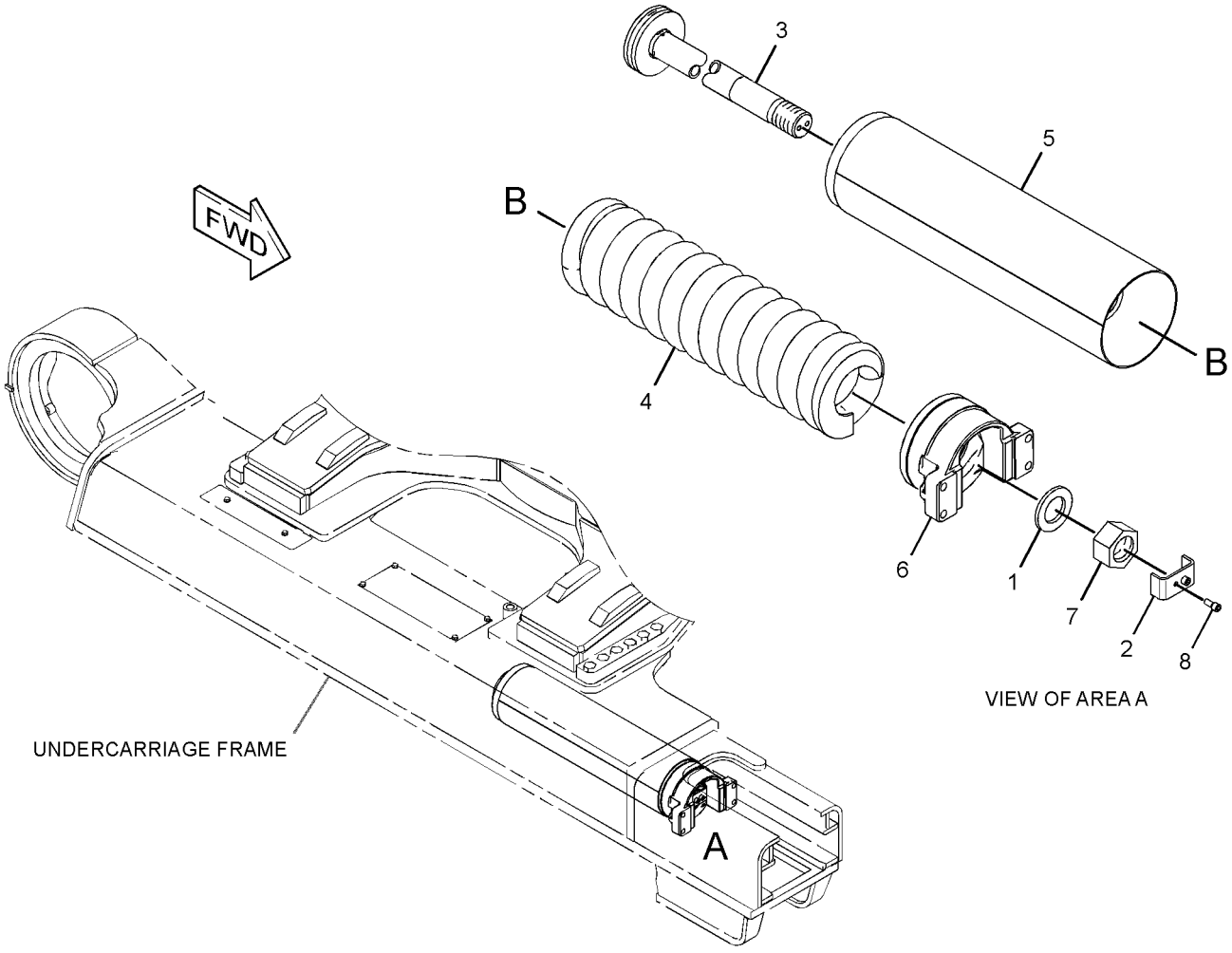

GRAPHIC #1 **<END>** g01694141

294-1313 TRACK GP—2-REQUIRED, HEAVY-DUTY

S/N: WAP1-UP
900-MM (36-IN) DOUBLE GROUSER SHOE. GREASE LUBRICATED TRACK
FOR USE WITH 297-7516—PAGE 442, 297-7518—PAGE 444
AN ATTACHMENT

SMCS-4170 **i03812131**

NOTE	PART NUMBER	QTY	PART NAME 1 2 3 4 5 6 (PRODUCT LEVEL)	SEE PAGE
Y	*186-5479*	1	SPACER GP-UNDERCARRIAGE	457
Y	*301-2292*	1	TRACK GP (2-REQUIRED)	460

Y-SEPARATE ILLUSTRATION

<END>

301-2288 TRACK GP—2-REQUIRED, HEAVY-DUTY

S/N: WAP1-UP
650-MM (26-IN) DOUBLE GROUSER SHOE. GREASE LUBRICATED TRACK,
POSITIVE PIN RETENTION 2
FOR USE WITH 297-7516—PAGE 442, 297-7518—PAGE 444
AN ATTACHMENT

SMCS-4170 **i03925750**

NOTE	PART NUMBER	QTY	PART NAME 1 2 3 4 5 6 (PRODUCT LEVEL)	SEE PAGE
Y	**297-0129**	1	LINK AS-TRACK	453
	301-2301	204	BOLT-TRACK	
	174-0222	204	NUT-TRACK	
	301-2283	51	SHOE-TRACK	

Y-SEPARATE ILLUSTRATION

<END>

301-2290 TRACK GP—2-REQUIRED, HEAVY-DUTY

S/N: WAP1-UP
750-MM (30-IN) DOUBLE GROUSER SHOE. GREASE LUBRICATED TRACK,
POSITIVE PIN RETENTION 2
FOR USE WITH 297-7516—PAGE 442, 297-7518—PAGE 444
AN ATTACHMENT

SMCS-4170 **i03925512**

NOTE	PART NUMBER	QTY	PART NAME 1 2 3 4 5 6 (PRODUCT LEVEL)	SEE PAGE
Y	**297-0129**	1	LINK AS-TRACK	453
	301-2301	204	BOLT-TRACK	
	174-0222	204	NUT-TRACK	
	301-2285	51	SHOE-TRACK	

Y-SEPARATE ILLUSTRATION

<END>

301-2292 TRACK GP—2-REQUIRED, HEAVY-DUTY

S/N: WAP1-UP
900-MM (36-IN) DOUBLE GROUSER SHOE. GREASE LUBRICATED TRACK, POSITIVE PIN RETENTION
PART OF 294-1313 TRACK GP
AN ATTACHMENT

SMCS-4170 **i04025965**

NOTE	PART NUMBER	QTY	PART NAME 1 2 3 4 5 6 (PRODUCT LEVEL)	SEE PAGE
Y	**297-0129**	1	LINK AS-TRACK	453
	301-2301	204	BOLT-TRACK	
	174-0222	204	NUT-TRACK	
	301-2279	51	SHOE-TRACK	

Y-SEPARATE ILLUSTRATION

<END>

HYDRAULIC SYSTEM

335-0538 ACCUMULATOR GP–CHARGED

S/N: WAP1-UP

PART OF 296-7107 LINES GP-RETURN & FILTER

SMCS-5077 **i03906431**

NOTE	PART NUMBER	QTY	PART NAME 1 2 3 4 5 6 (PRODUCT LEVEL)	SEE PAGE
			(NO SERVICED PARTS)	

<END>

HYDRAULIC SYSTEM

335-0546 ACCUMULATOR GP-HYDRAULIC—CHARGED

S/N: WAP1-UP

PART OF 296-7109 LINES GP-PILOT

SMCS-5077 **i03906680**

NOTE	REF NO	GRAPHIC REF	PART NUMBER	QTY	PART NAME 1 2 3 4 5 6 (PRODUCT LEVEL)	SEE PAGE
	1	1	**161-1309**	1	SUPPORT	
	2	1	**161-6879**	1	CAP	
	3	1	**161-6880**	1	CORE	
Y	4	1	**352-6923**	1	ACCUMULATOR GP-HYDRAULIC (CHARGED)	464

Y-SEPARATE ILLUSTRATION

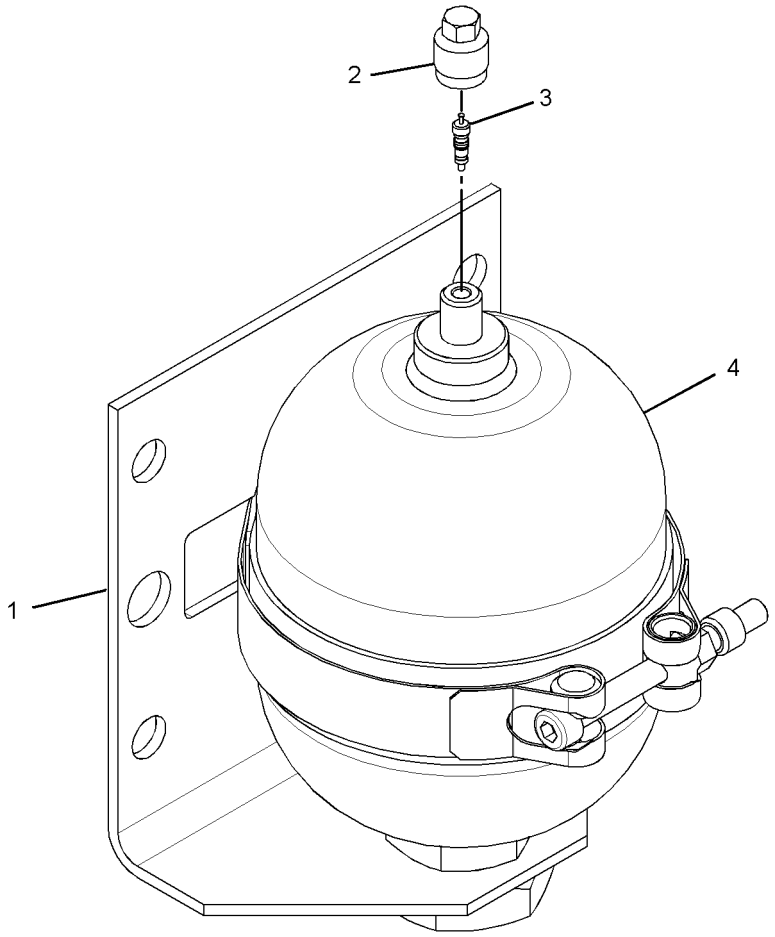

GRAPHIC #1 **<END>** g02153645

HYDRAULIC SYSTEM

335-0547 ACCUMULATOR GP-HYDRAULIC—CHARGED

S/N: WAP1-UP
PART OF 296-7113 LINES GP-PILOT
FIELD REPLACEMENT ORDER 352-6924—PAGE 465
AN ATTACHMENT

SMCS-5077 **i03907670**

NOTE	REF NO	GRAPHIC REF	PART NUMBER	QTY	PART NAME 1 2 3 4 5 6 (PRODUCT LEVEL)	SEE PAGE
					(NO SERVICED PARTS)	

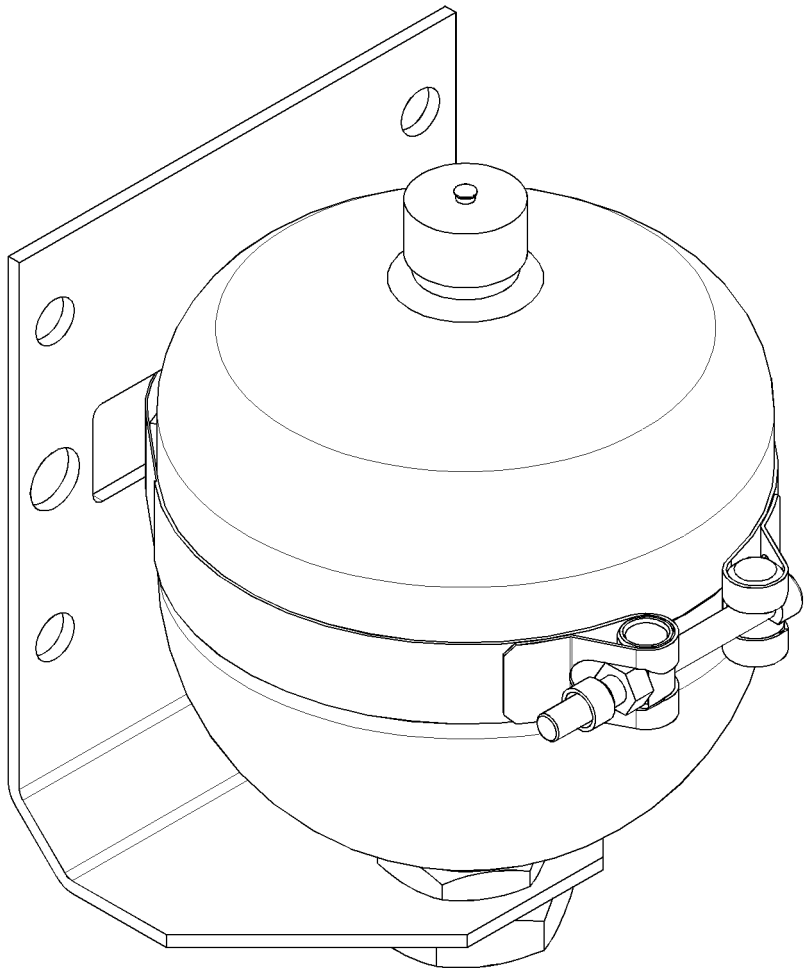

GRAPHIC #1 **<END>** g02180293

352-6923 ACCUMULATOR GP-HYDRAULIC—CHARGED

S/N: WAP1-UP

PART OF 335-0546 ACCUMULATOR GP-HYDRAULIC

SMCS-5077 **i03906688**

NOTE	REF NO	GRAPHIC REF	PART NUMBER	QTY	PART NAME 1 2 3 4 5 6 (PRODUCT LEVEL)	SEE PAGE
	1	1	**161-6879**	1	CAP	
	2	1	**161-6880**	1	CORE	
					PARTS SHOWN IN GRAPHIC(S) WITHOUT A REFERENCE NUMBER ARE NOT SERVICED SEPARATELY	

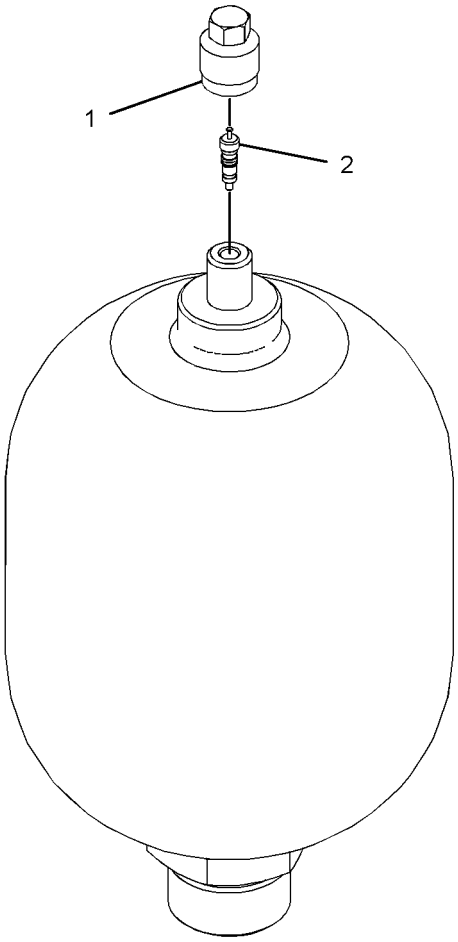

GRAPHIC #1 **<END>** g02154630

352-6924 ACCUMULATOR GP-HYDRAULIC—UNCHARGED

S/N: WAP1-UP

FIELD REPLACEMENT FOR 335-0547—PAGE 463

SMCS-5077 **i03907671**

NOTE	REF NO	GRAPHIC REF	PART NUMBER	QTY	PART NAME 1 2 3 4 5 6 (PRODUCT LEVEL)	SEE PAGE
					(NO SERVICED PARTS)	

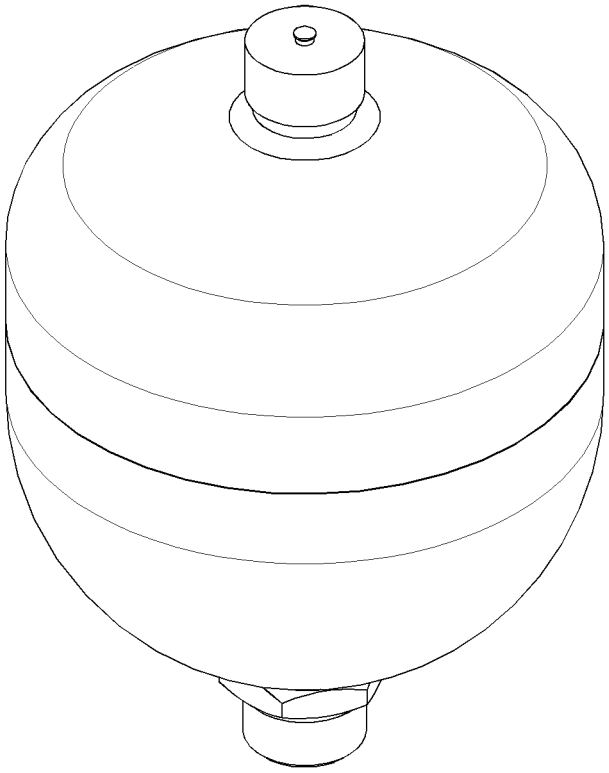

GRAPHIC #1 **<END>** g02179333

HYDRAULIC SYSTEM

209-5982 ACTUATOR GP

S/N: WAP1-UP

PART OF 170-9918 PUMP GP-PISTON

SMCS-5078 **i02404415**

NOTE	REF NO	GRAPHIC REF	PART NUMBER	QTY	PART NAME 1 2 3 4 5 6 (PRODUCT LEVEL)	SEE PAGE
	1	1	**155-9141**	1	PISTON	
	2	1	**155-9142**	1	GUIDE	
	3	1	**155-9143**	1	SPRING	
	4	1	**191-7584**	1	GUIDE	
	5	1	**155-9139**	1	PISTON	

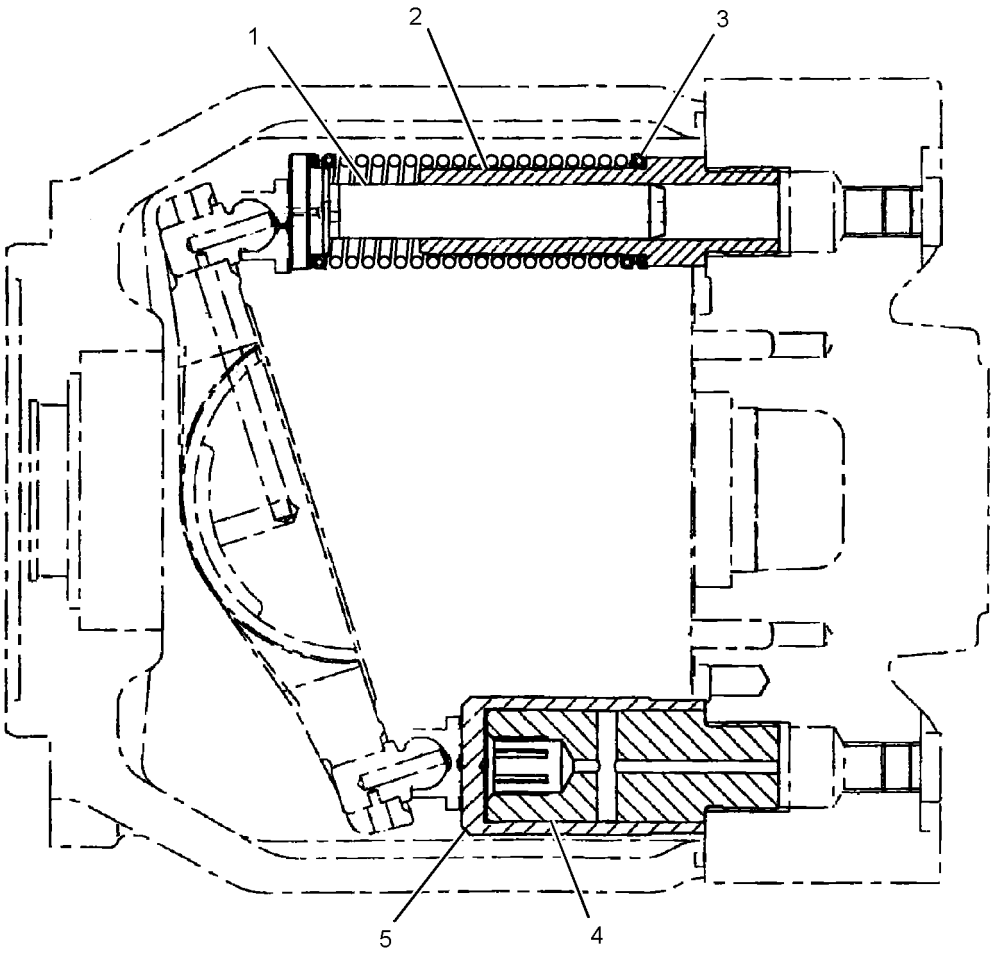

GRAPHIC #1 **<END>** g01201563

HYDRAULIC SYSTEM

158-9103 ACTUATOR GP-PUMP

S/N: WAP1-UP

PART OF 295-9678 PUMP GP-PISTON

SMCS-5078 **i03576423**

NOTE	REF NO	GRAPHIC REF	PART NUMBER	QTY	PART NAME 1 2 3 4 5 6 (PRODUCT LEVEL)	SEE PAGE
	1	1	**6E-3869**	1	SPRING	
B	2	1	**165-9396**	1	ROD (159.2-MM, OAL)	
B	3	1	**165-9397**	1	ROD (159.4-MM, OAL)	
B	4	1	**165-9398**	1	ROD (159.0-MM, OAL)	
B	5	1	**165-9399**	1	ROD (158.8-MM, OAL)	
	6	1	**165-9400**	1	SEAT	
	7	1	**165-9395**	1	PISTON	

B-USE AS REQUIRED

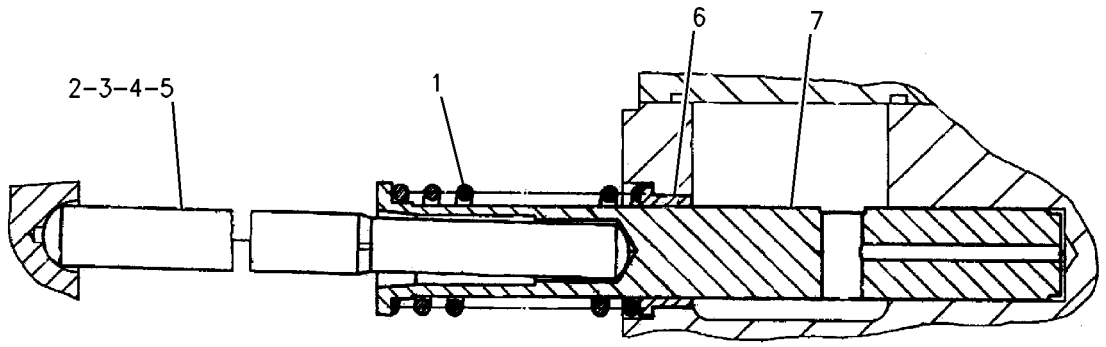

GRAPHIC #1 **<END>** g00703193

HYDRAULIC SYSTEM

158-9104 ACTUATOR GP-PUMP

S/N: WAP1-UP

PART OF 295-9678 PUMP GP-PISTON

SMCS-5078 **i03906548**

NOTE	REF NO	GRAPHIC REF	PART NUMBER	QTY	PART NAME 1 2 3 4 5 6 (PRODUCT LEVEL)	SEE PAGE
B	1	1	**165-9402**	1	ROD (152.2-MM, OAL)	
	2	1	**259-0901**	1	PISTON	
	3	1	**6E-3872**	1	SPRING	

B-USE AS REQUIRED

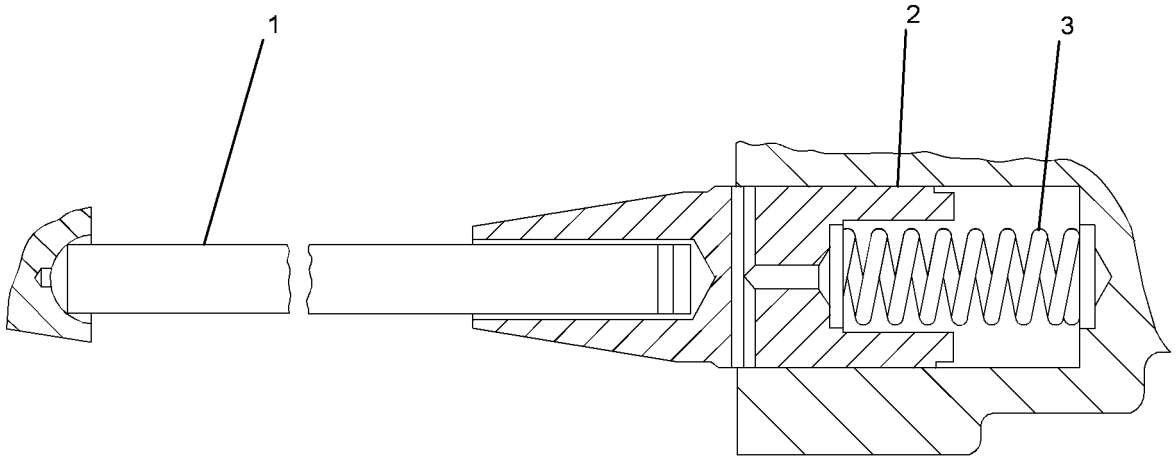

GRAPHIC #1 **<END>** g02148748

129-8053 BASE GP-OIL FILTER—HYDRAULIC

S/N: WAP1-UP

PART OF 234-4531 FILTER GP-OIL

SMCS-5068 **i03529625**

NOTE	REF NO	GRAPHIC REF	PART NUMBER	QTY	PART NAME 1 2 3 4 5 6 (PRODUCT LEVEL)	SEE PAGE
	1	1	**3J-1907**	2	SEAL-O-RING	
	2	1	**7Y-5272**	4	PIN-SPRING	
M	3	1	**137-3626**	2	BOLT-SPECIAL	
	4	1	**137-3630**	2	PLATE-SLIDE	
	5	1	**6V-7658**	4	SEAL-O-RING	
					—OR—	
	5A	1	**177-2619**	4	PACKING	
	6	1	**137-3631**	2	PACKING	
	7	1	**5L-4758**	2	SEAL-O-RING	
	8	1	**137-3628**	2	SHIM (0.1-MM THK)	
	9	1	**137-3632**	2	PLUG AS	

M-METRIC PART

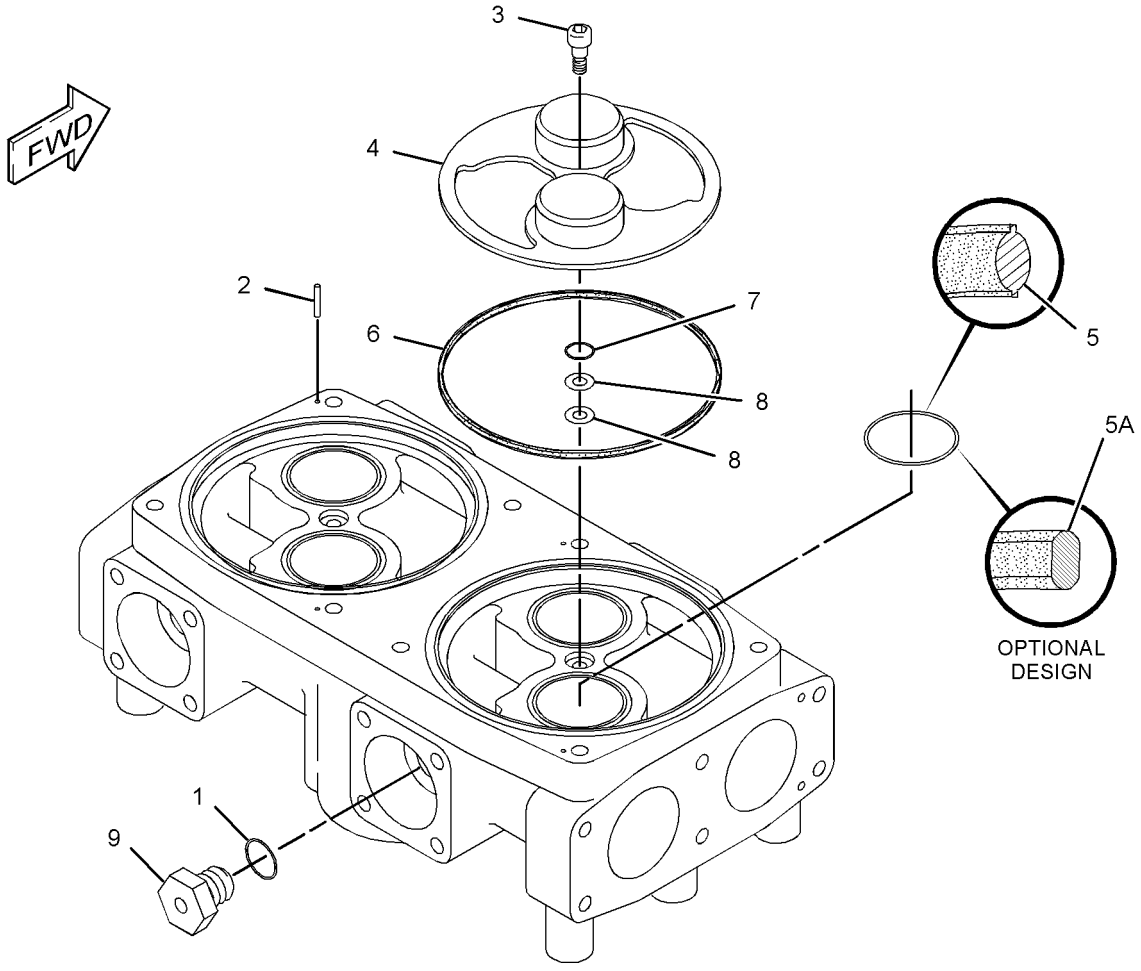

GRAPHIC #1 **<END>** g01833730

HYDRAULIC SYSTEM

173-3503 BASE GP-OIL FILTER—HYDRAULIC

S/N: WAP1-UP

PART OF 242-6878 FILTER GP-OIL

SMCS-5068 **i02553552**

NOTE	REF NO	GRAPHIC REF	PART NUMBER	QTY	PART NAME 1 2 3 4 5 6 (PRODUCT LEVEL)	SEE PAGE
C	1	1	**204-2763**	1	BLOCK	
	2	1	**5L-4758**	1	SEAL-O-RING	
C	3	1	**177-2619**	2	PACKING	
	4	1	**173-3505**	1	PLATE-SLIDE	
	5	1	**137-3631**	1	PACKING	
M	6	1	**137-3626**	1	BOLT-SPECIAL	
	7	1	**173-3506**	1	PLUG AS	
	8	1	**3J-1907**	1	SEAL-O-RING	
	9	1	**7Y-5272**	2	PIN-SPRING	
	10	1	**137-3628**	1	SHIM (0.1-MM THK)	

C-CHANGE FROM PREVIOUS TYPE
M-METRIC PART

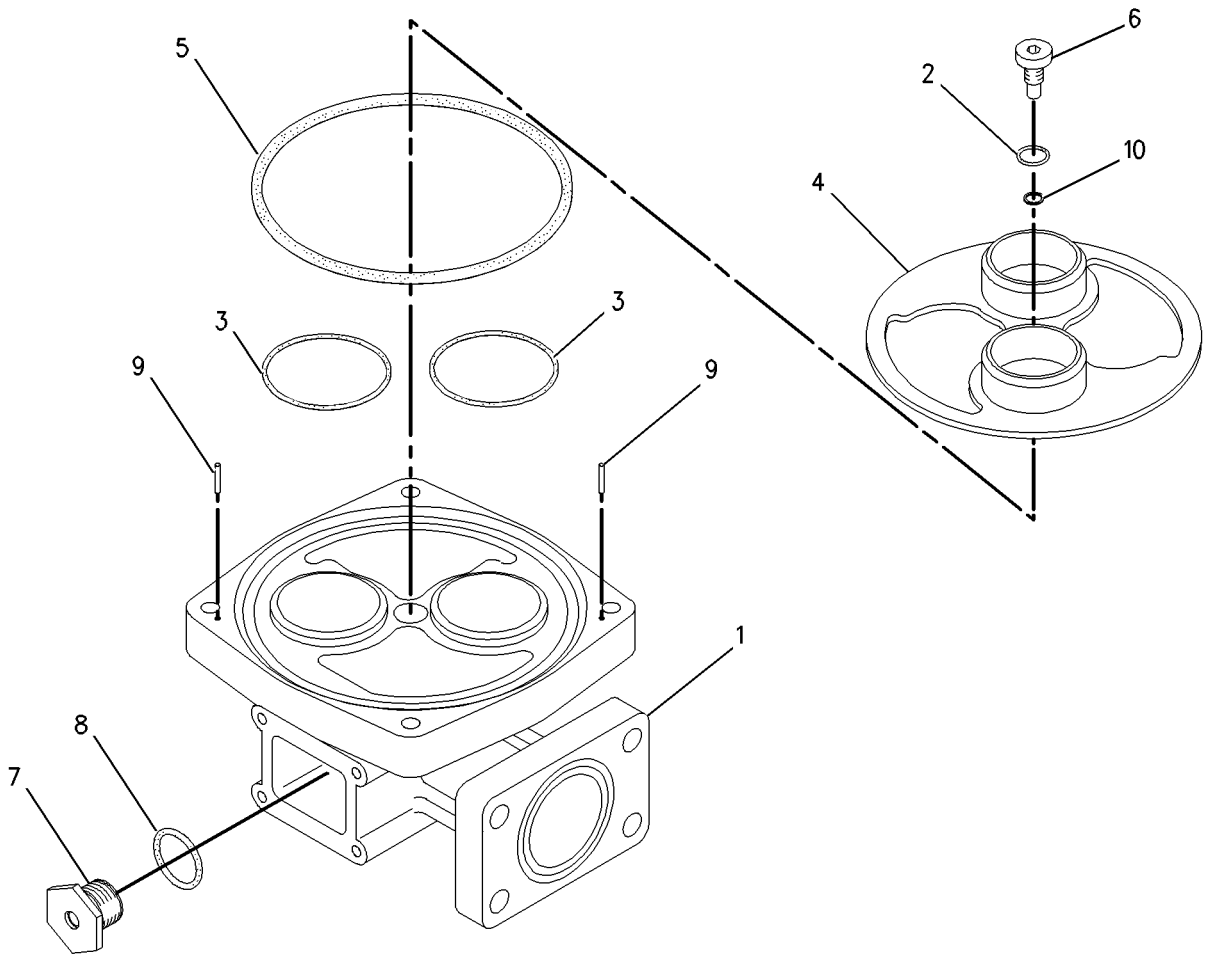

GRAPHIC #1 **<END>** g00669130

HYDRAULIC SYSTEM

263-3762 CONTROL AR-AUXILIARY—1-SWITCH, JOYSTICK

S/N: WAP1-UP
AN ATTACHMENT

SMCS-5051 **i02637367**

NOTE	PART NUMBER	QTY	PART NAME 1 2 3 4 5 6 (PRODUCT LEVEL)	SEE PAGE
Y	*221-8818*	1	CONTROL & MTG GP-JOYSTICK (1-SWITCH)	950
	4I-8472	1	FILM-INSTRUCTION (OPERATOR CONTROLS)	

Y-SEPARATE ILLUSTRATION

<END>

310-0001 CONTROL AR-AUXILIARY—PEDAL, LH

S/N: WAP1-UP
AN ATTACHMENT

SMCS-5051 **i03790245**

NOTE	PART NUMBER	QTY	PART NAME 1 2 3 4 5 6 (PRODUCT LEVEL)	SEE PAGE
Y	*221-8884*	1	CONTROL & MTG GP-PEDAL (LH)	955
Y	*303-2678*	1	FILM GP	1072
Y	*306-8555*	1	WIRING GP-ELECTRONIC CONTROL	309

Y-SEPARATE ILLUSTRATION

<END>

310-0005 CONTROL AR-AUXILIARY—SYSTEM 1, 1-WAY, 1-PUMP

S/N: WAP1-UP
FOR USE WITH 310-0001—PAGE 471
AN ATTACHMENT

SMCS-5051 **i03998606**

NOTE	PART NUMBER	QTY	PART NAME 1 2 3 4 5 6 (PRODUCT LEVEL)	SEE PAGE
Y	*290-9517*	1	CONTROL & MTG GP-MACHINE	189
Y	*362-4377*	1	COVER GP-CONTROL VALVE	352
Y	*290-9518*	1	ELECTRONICS GP-MACHINE	191
Y	*338-6172*	1	LINES GP-FRONT (SYSTEM 1, 1-WAY, 1-PUMP)	581
Y	*299-2937*	1	WIRING GP-CHASSIS (AUXILIARY, COMBINED FUNCTION)	286

Y-SEPARATE ILLUSTRATION

<END>

HYDRAULIC SYSTEM

310-0006 CONTROL AR-AUXILIARY–COMBINED, WITHOUT THIRD PEDAL

S/N: WAP1-UP

FOR USE WITH 310-0001–PAGE 471

AN ATTACHMENT

SMCS-5051 **i03998622**

NOTE	PART NUMBER	QTY	PART NAME 1 2 3 4 5 6 (PRODUCT LEVEL)	SEE PAGE
Y	*290-9517*	1	CONTROL & MTG GP-MACHINE	189
Y	*362-4377*	1	COVER GP-CONTROL VALVE	352
Y	*290-9518*	1	ELECTRONICS GP-MACHINE	191
Y	*338-6173*	1	LINES GP-FRONT (1-WAY, 2-WAY FLOW)	585
Y	*238-2184*	1	WIRING GP-AUXILIARY CONTROL (FLOW CONTROL)	274
Y	*299-2937*	1	WIRING GP-CHASSIS (AUXILIARY, COMBINED FUNCTION)	286
Y-SEPARATE ILLUSTRATION				

<END>

352-6875 CONTROL AR-AUXILIARY–JOYSTICK MODULATION SWITCH

S/N: WAP1-UP

FOR USE WITH 310-0005–PAGE 471, 310-0006–PAGE 472. CANNOT BE USED WITH 352-6876–PAGE 472

AN ATTACHMENT

SMCS-5051 **i03854629**

NOTE	PART NUMBER	QTY	PART NAME 1 2 3 4 5 6 (PRODUCT LEVEL)	SEE PAGE
Y	*221-8883*	1	CONTROL & MTG GP-JOYSTICK (WITH THUMB SWITCHES)	951
Y	*259-5295*	1	FASTENER GP-WIRING HARNESS (JOYSTICK)	193
Y	*319-9324*	1	FILM GP	1076
Y-SEPARATE ILLUSTRATION				

<END>

352-6876 CONTROL AR-AUXILIARY–JOYSTICK, 4-BUTTON

S/N: WAP1-UP

PART OF 340-4055, 340-4057 DISTRIBUTION AR

FOR USE WITH 310-0005–PAGE 471, 310-0006–PAGE 472. CANNOT BE USED WITH 352-6875–PAGE 472

AN ATTACHMENT

SMCS-5051 **i03854869**

NOTE	PART NUMBER	QTY	PART NAME 1 2 3 4 5 6 (PRODUCT LEVEL)	SEE PAGE
Y	*247-5190*	1	CONTROL & MTG GP-JOYSTICK (3-BUTTON, TRIGGER SWITCH)	952
Y	*259-5295*	1	FASTENER GP-WIRING HARNESS (JOYSTICK)	193
Y	*319-9326*	1	FILM GP (OPERATOR CONTROLS, HAMMER)	1077
Y-SEPARATE ILLUSTRATION				

<END>

HYDRAULIC SYSTEM

302-9443 CONTROL AR-COUPLER—UNIVERSAL

S/N: WAP1-UP

AN ATTACHMENT

SMCS-6129 **i04025612**

NOTE	PART NUMBER	QTY	PART NAME 1 2 3 4 5 6 (PRODUCT LEVEL)	SEE PAGE
Y	*199-0071*	1	COVER GP-CONTROL VALVE	350
Y	*268-6816*	1	FILM GP (QUICK COUPLER)	1071
Y	*302-3059*	1	LINES GP-FRONT (UNIVERSAL QUICK COUPLER)	572
Y	*299-2945*	1	WIRING GP-CHASSIS (UNIVERSAL QUICK COUPLER)	288
Y	*306-8538*	1	WIRING GP-QUICK COUPLER	325

Y-SEPARATE ILLUSTRATION

<END>

319-9265 CONTROL AR-FAN—REVERSING

S/N: WAP1-UP

CANNOT BE USED WITH 230-2826—PAGE 111

AN ATTACHMENT

SMCS-1386, 138R **i03911096**

NOTE	PART NUMBER	QTY	PART NAME 1 2 3 4 5 6 (PRODUCT LEVEL)	SEE PAGE
Y	*248-9358*	1	DOOR GP-ACCESS (REVERSING FAN)	357
Y	*257-4599*	1	FILM GP (REVERSING FAN)	1070
Y	*337-2778*	1	LINES GP-HYDRAULIC FAN (REVERSING)	588
Y	*247-8833*	1	MOTOR & MTG GP-HYDRAULIC FAN (REVERSING)	642
Y	*245-9239*	1	SCREEN GP-RADIATOR (REVERSING FAN)	112
Y	*299-3017*	1	WIRING GP-FAN (REVERSING)	312

Y-SEPARATE ILLUSTRATION

<END>

HYDRAULIC SYSTEM

305-7590 COOLER & MTG GP-HYDRAULIC OIL

S/N: WAP1-UP

PART OF 310-9678 INSTALLATION AR-ENGINE

SMCS-1356, 1374, 5058 **i03904217**

NOTE	REF NO	GRAPHIC REF	PART NUMBER	QTY	PART NAME 1 2 3 4 5 6 (PRODUCT LEVEL)	SEE PAGE
	1	1	**139-8877**	1	SPIDER AS (8-BLADE)	
	2	2	**162-6357**	2	PLATE	
	3	2	**171-8991**	1	SUPPORT AS-FAN (LH)	
	4	2	**171-8995**	1	SUPPORT AS-FAN (RH)	
	5	1	**171-9002**	1	BRACE	
	6	1	**171-9003**	1	BRACE	
	7	1	**171-9005**	1	SHROUD AS	
	8	1	**201-3785**	2	GUARD AS	
Y	9	1	**210-8157**	1	COOLER GP-HYDRAULIC OIL	477
YR	10	1	**225-4614**	1	MOTOR GP-PISTON (HYDRAULIC FAN)	648
	11	1	**281-3645**	1	ADAPTER-FAN	
Y	12	1	*315-4365*	1	DRIVE GP-FAN (MODULATING)	35
	13	2	**326-3901**	1	SUPPORT AS-FAN	
M	14	2	**136-4182**	2	BOLT (M16X2X100-MM)	
	15	1	**4M-0189**	1	SEAL-O-RING	
	16	2	**5P-1076**	6	WASHER-HARD (13.5X30X4-MM THK)	
	17	2	**7X-0515**	8	WASHER-HARD (17X35X5-MM THK)	
M	18	1	**7X-2563**	4	BOLT (M20X2.5X60-MM)	
	19	1,2	**7X-7729**	20	WASHER (11X25X3-MM THK)	
	20	1	**8T-4121**	8	WASHER-HARD (11X21X2.5-MM THK)	
	21	1,2	**8T-4123**	6	WASHER (22X35X3.5-MM THK)	
M	22	2	**8T-4132**	6	NUT (M16X2-THD)	
M	23	2	**8T-4133**	2	NUT (M10X1.5-THD)	
M	24	1	**8T-4136**	20	BOLT (M10X1.5X25-MM)	
M	25	1,2	**8T-4137**	6	BOLT (M10X1.5X20-MM)	
M	26	2	**8T-4140**	4	BOLT (M16X2X60-MM)	
M	27	2	**8T-4183**	6	BOLT (M12X1.75X40-MM)	
M	28	2	**8T-4186**	2	BOLT (M10X1.5X40-MM)	
M	29	1	**8T-4194**	2	BOLT (M12X1.75X50-MM)	
M	30	1	**8T-4195**	10	BOLT (M10X1.5X30-MM)	
M	31	1	**8T-4196**	8	BOLT (M10X1.5X35-MM)	
	32	1	**8T-4222**	20	WASHER-PLATED (11X32X2.5-MM THK)	
	33	1	**8T-4223**	2	WASHER-HARD (13.5X25.5X3-MM THK)	
M	34	1	**8T-4779**	3	BOLT (M16X2X35-MM)	
	35	2	**8T-5439**	2	WASHER-HARD (21.5X45X6-MM THK)	
M	36	2	**8T-6430**	4	BOLT (M20X2.5X50-MM)	
	37	1	**9X-8257**	3	WASHER (17.5X30X3.5-MM THK)	
D	38	2	**5P-5649**		SEAL (1.2-M)	

D-ORDER BY THE METER
M-METRIC PART
R-REMFG PART MAY BE AVAILABLE
Y-SEPARATE ILLUSTRATION

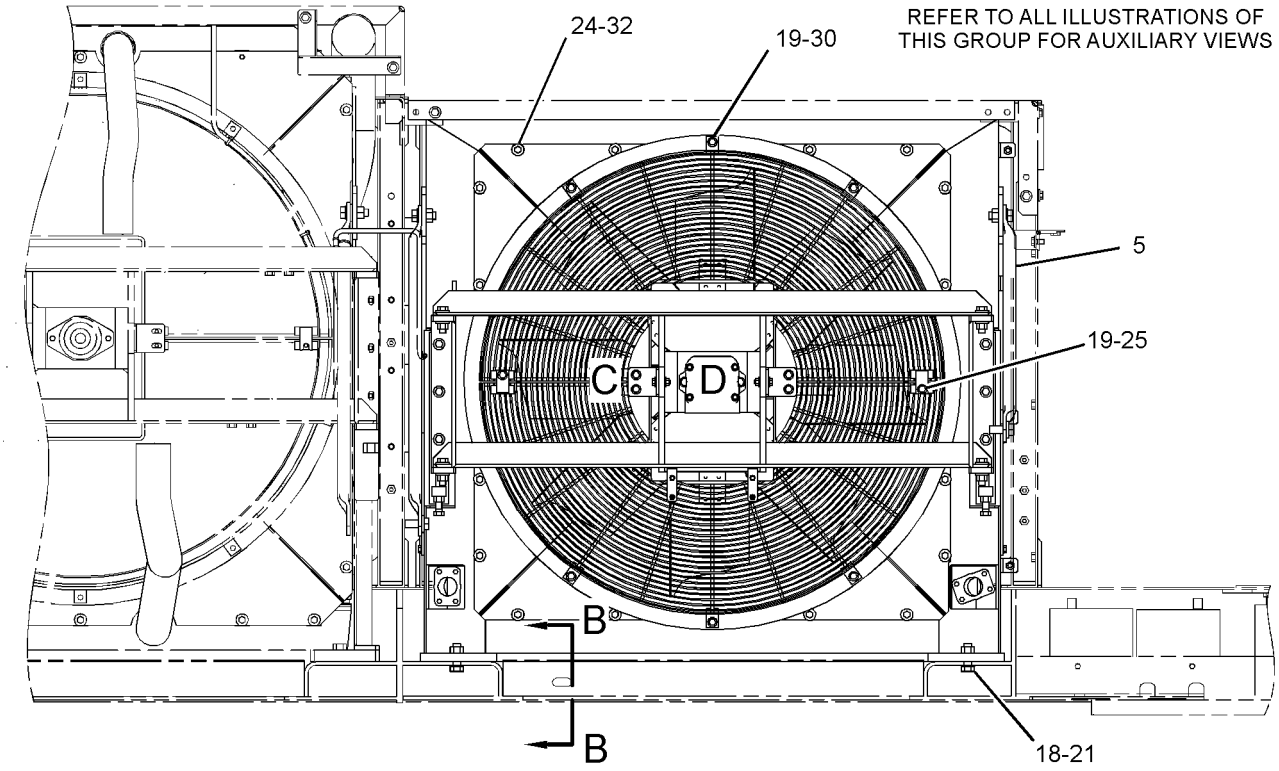

RIGHT SIDE VIEW

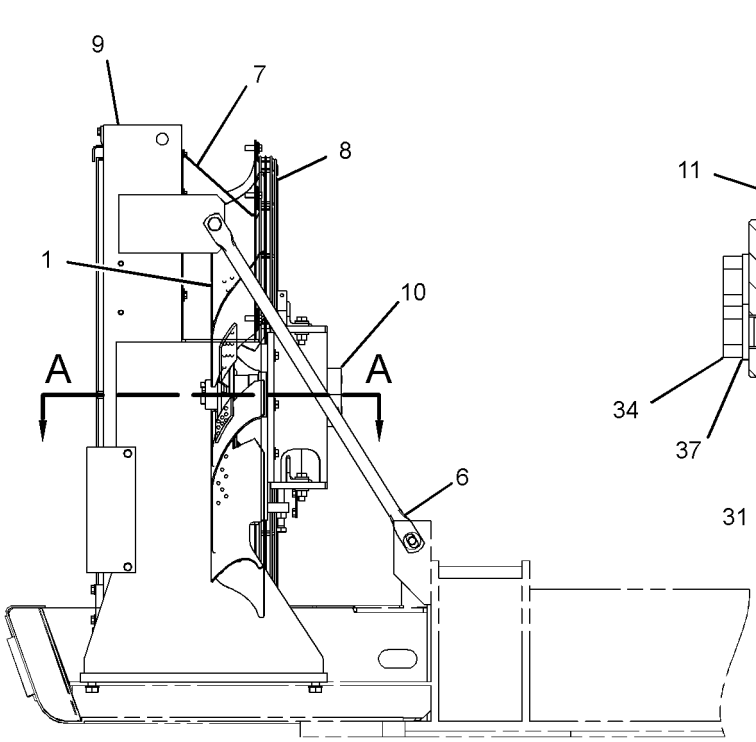

REAR VIEW

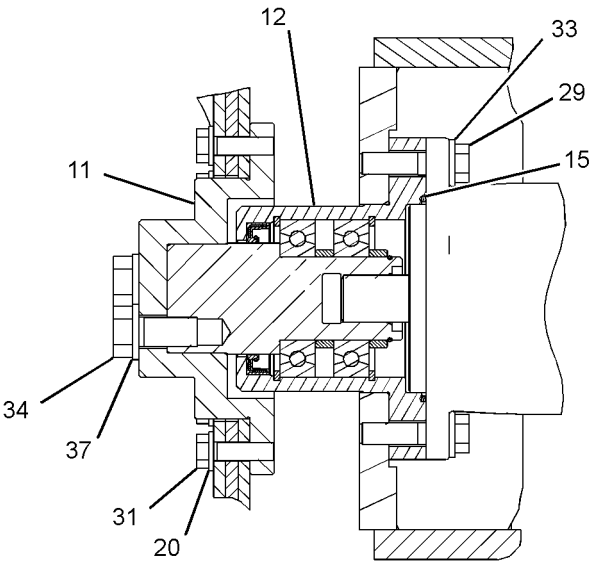

SECTION A-A

GRAPHIC #1 g02163257

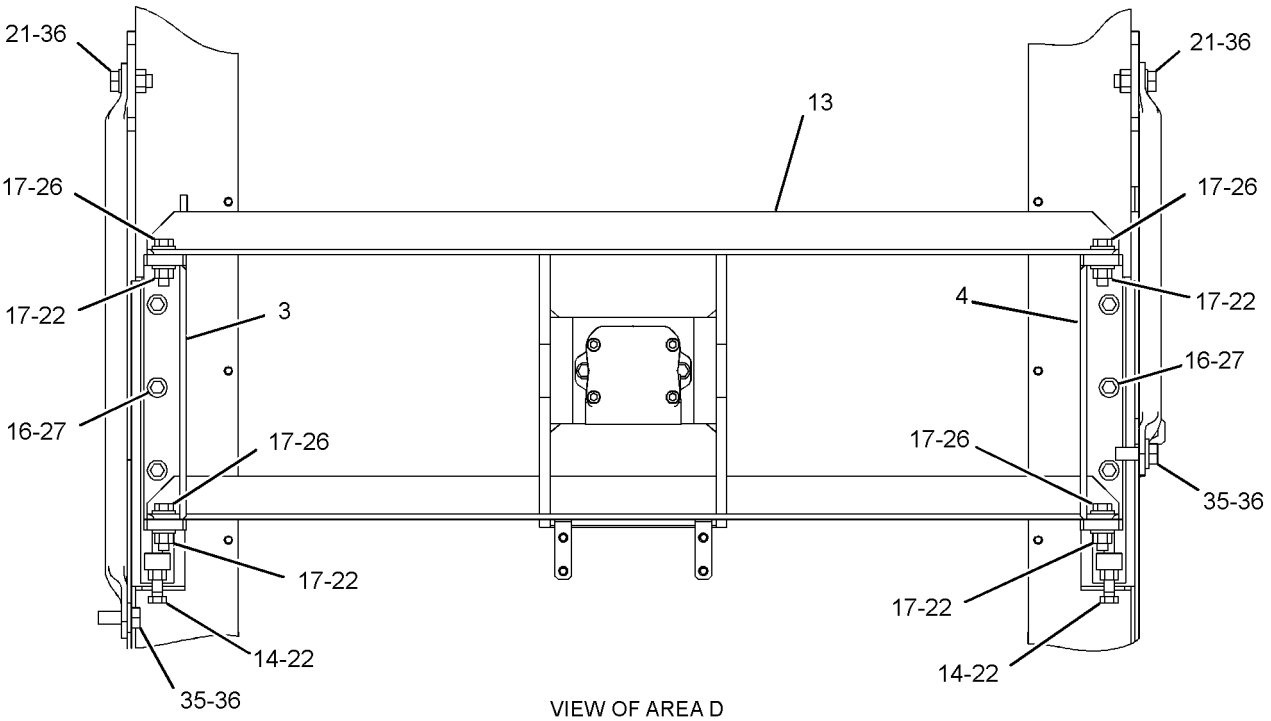

VIEW OF AREA D

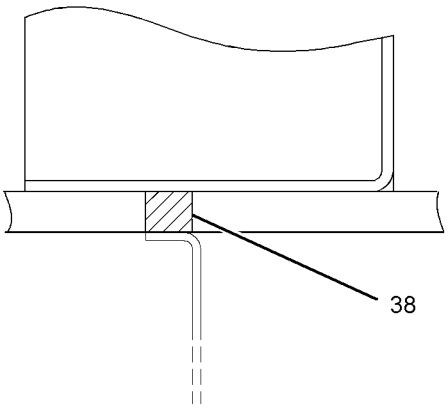

SECTION B-B

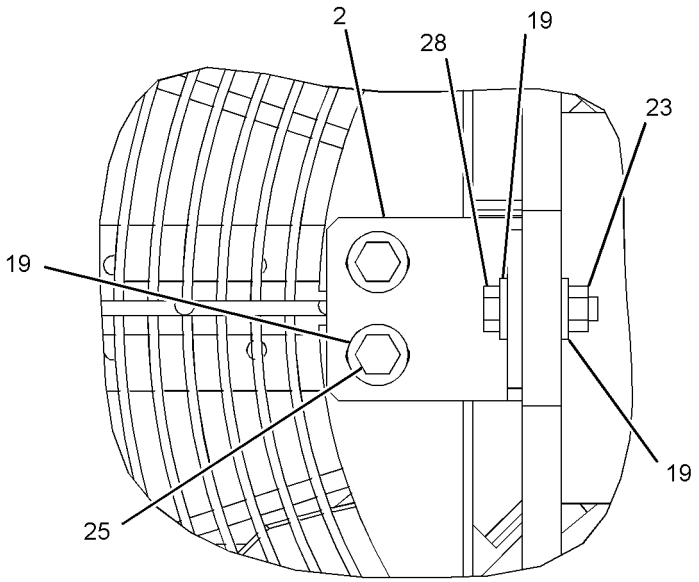

VIEW OF AREA C

GRAPHIC #2 **<END>** g02163428

HYDRAULIC SYSTEM

210-8157 COOLER GP-HYDRAULIC OIL

S/N: WAP1-UP

PART OF 305-7590 COOLER & MTG GP-HYDRAULIC OIL

SMCS-1374 **i02957730**

NOTE	REF NO	GRAPHIC REF	PART NUMBER	QTY	PART NAME 1 2 3 4 5 6 (PRODUCT LEVEL)	SEE PAGE
	1	1	**196-8137**	2	SEAL	
	2	1	**210-8081**	2	SEAL-O-RING	
	3	1	**281-3516**	1	CORE AS-OIL COOLER (HYDRAULIC)	
	4	1	**230-2925**	1	FRAME AS	
	5	1	**230-2926**	2	SUPPORT AS	
	6	1	**230-2927**	2	SEAL	
	7	1	**8T-4121**	20	WASHER-HARD (11X21X2.5-MM THK)	
M	8	1	**8T-4195**	20	BOLT (M10X1.5X30-MM)	
	9	1	**281-3517**	2	SEAL	

M-METRIC PART

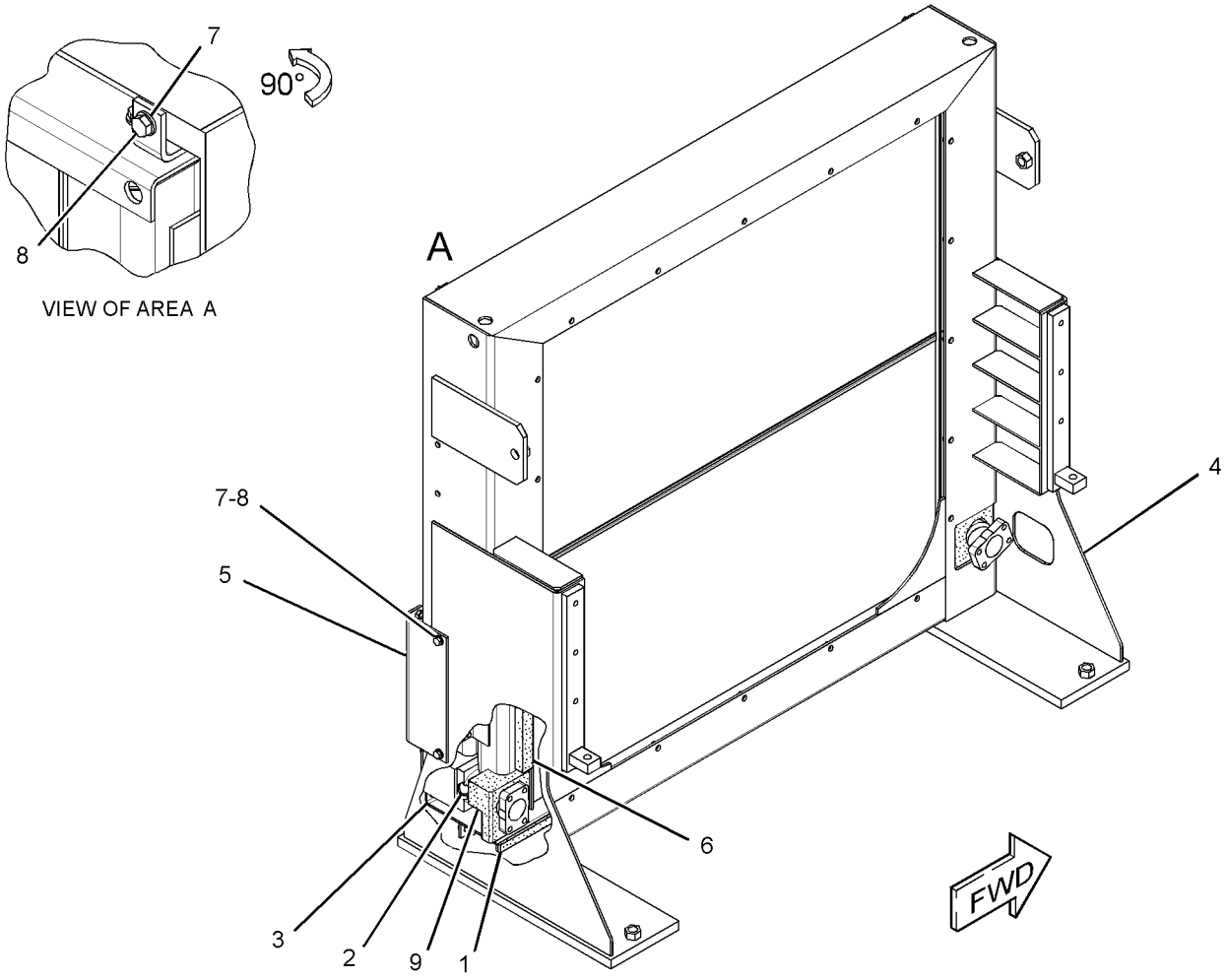

GRAPHIC #1 **<END>** g01576214

HYDRAULIC SYSTEM

310-9714 COUPLING GP-FLEXIBLE

S/N: WAP1-UP

PART OF 151-6646 COUPLING GP-PUMP

SMCS-3252 **i03005781**

NOTE	REF NO	GRAPHIC REF	PART NUMBER	QTY	PART NAME 1 2 3 4 5 6 (PRODUCT LEVEL)	SEE PAGE
	1	1	**212-8525**	1	HUB	
	2	1	**212-8526**	4	CAGE-SPRING	
	3	1	**212-8527**	2	SPACER	
	4	1	**212-8528**	2	PLATE	
	5	1	**212-8529**	1	SPACER	
	6	1	**212-8530**	1	SPACER	
	7	1	**212-8531**	1	COLLAR	
	8	1	**217-5450**	20	SPRING AS	
	9	1	**8T-8920**	20	BOLT (1/2-13X3.25-IN)	
	10	1	**8T-9389**	20	BOLT (1/2-13X2.75-IN)	

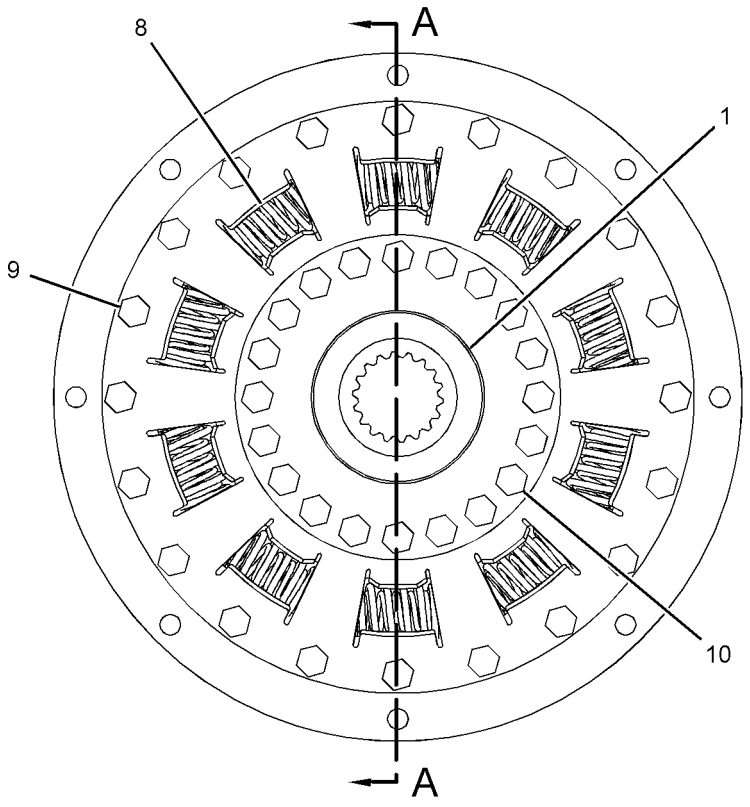

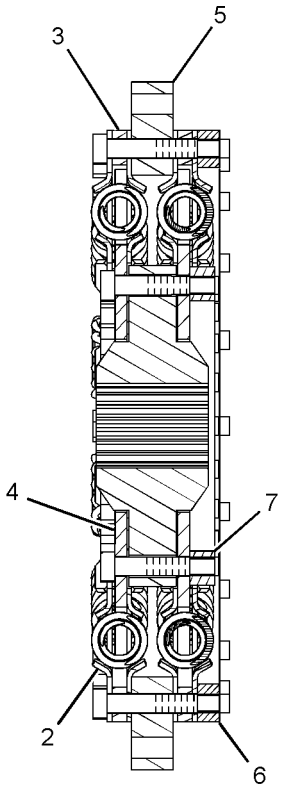

SECTION A-A

GRAPHIC #1 **<END>** g01523241

HYDRAULIC SYSTEM

151-6646 COUPLING GP-PUMP

S/N: WAP1-UP

PART OF 324-4130 PUMP & MTG GP-MAIN HYDRAULIC

SMCS-5062 **i03084992**

NOTE	REF NO	GRAPHIC REF	PART NUMBER	QTY	PART NAME 1 2 3 4 5 6 (PRODUCT LEVEL)	SEE PAGE
CY	1	1	**310-9714**	1	COUPLING GP-FLEXIBLE	478
	2	1	**8T-4835**	8	BOLT (1/2-13X2-IN)	

C-CHANGE FROM PREVIOUS TYPE
Y-SEPARATE ILLUSTRATION

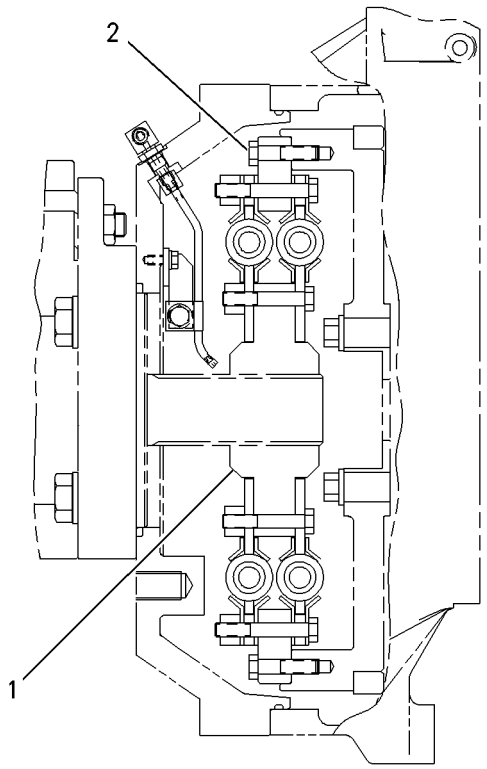

GRAPHIC #1 **<END>** g00848912

HYDRAULIC SYSTEM

191-5596 COVER GP-PUMP

S/N: WAP1-UP

PART OF 295-9678 PUMP GP-PISTON

SMCS-5070 **i03908837**

NOTE	REF NO	GRAPHIC REF	PART NUMBER	QTY	PART NAME 1 2 3 4 5 6 (PRODUCT LEVEL)	SEE PAGE
	1	1	**3K-0715**	1	SEAL-O-RING	
	2	1	**135-9991**	1	COUPLING	
	3	1	**191-5597**	1	FLANGE	
	4	1	**2H-3935**	1	SEAL-O-RING	
M	5	1	**8T-4944**	4	BOLT-SOCKET HEAD (M16X2X40-MM)	

M-METRIC PART

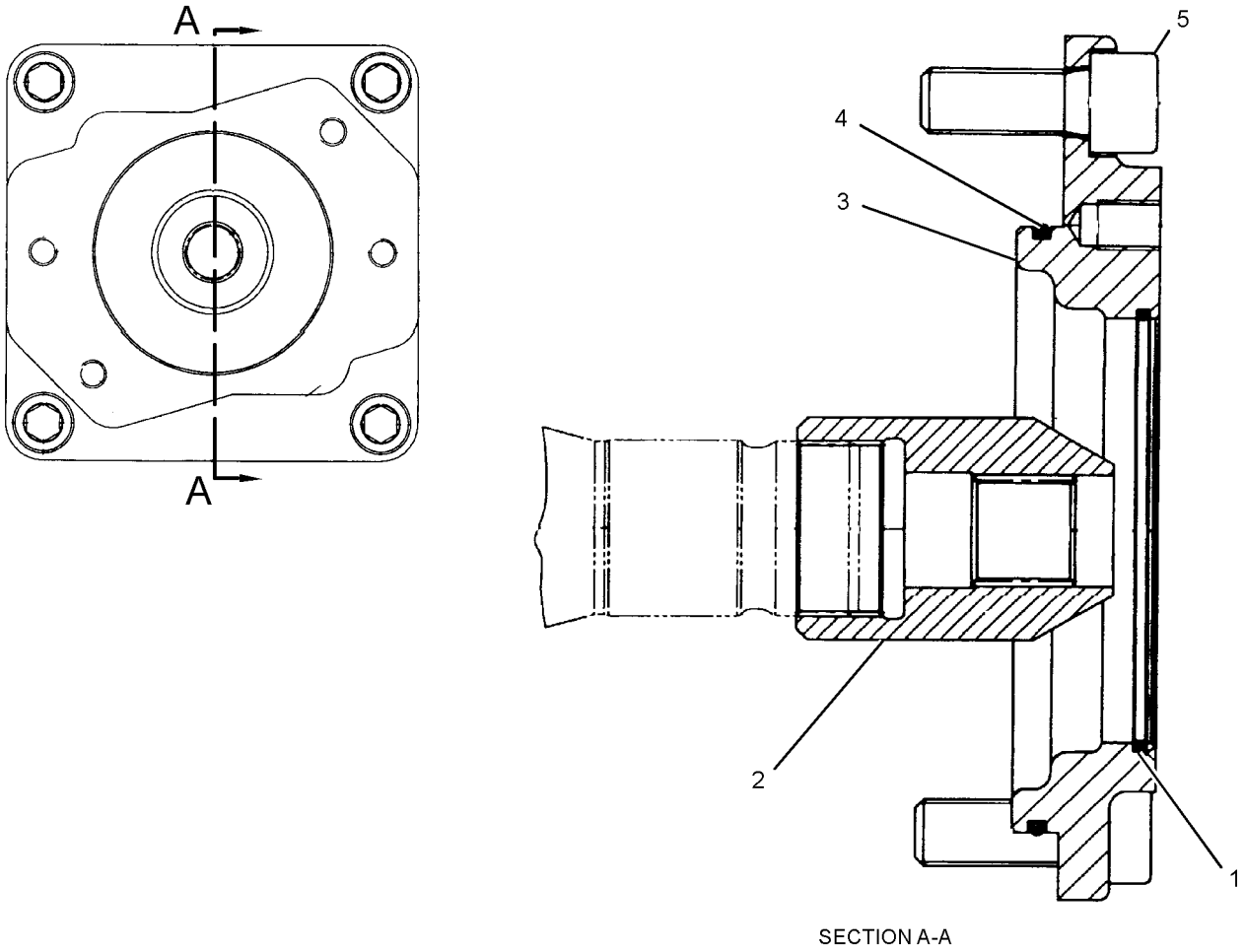

SECTION A-A

GRAPHIC #1 **<END>** g02162850

HYDRAULIC SYSTEM

353-9648 CYLINDER & LINES GP-BOOM–LH

S/N: WAP1-UP
PART OF 303-2689 BOOM AR, 303-2690, 319-9211 BOOM AR-MASS, 303-2688 BOOM AR-REACH
AN ATTACHMENT

SMCS-5456, 7562 **i03907910**

NOTE	PART NUMBER	QTY	PART NAME 1 2 3 4 5 6 (PRODUCT LEVEL)	SEE PAGE
Y	*353-9650*	1	CYLINDER & SEAL GP-HYDRAULIC	488
Y	*353-9651*	1	LINES GP-BOOM CYLINDER (LH)	554

Y-SEPARATE ILLUSTRATION

<END>

353-9649 CYLINDER & LINES GP-BOOM–RH

S/N: WAP1-UP
PART OF 303-2689 BOOM AR, 303-2690 BOOM AR-MASS, 303-2688 BOOM AR-REACH
AN ATTACHMENT

SMCS-5456, 7562 **i03907913**

NOTE	PART NUMBER	QTY	PART NAME 1 2 3 4 5 6 (PRODUCT LEVEL)	SEE PAGE
Y	*353-9650*	1	CYLINDER & SEAL GP-HYDRAULIC	488
Y	*353-9652*	1	LINES GP-BOOM CYLINDER (RH)	555

Y-SEPARATE ILLUSTRATION

<END>

356-0668 CYLINDER & LINES GP-BOOM–RH

S/N: WAP1-UP
PART OF 319-9211 BOOM AR-MASS
AN ATTACHMENT

SMCS-5456, 7562 **i03965399**

NOTE	PART NUMBER	QTY	PART NAME 1 2 3 4 5 6 (PRODUCT LEVEL)	SEE PAGE
Y	*356-0664*	1	CYLINDER & SEAL GP-BOOM	483
Y	*353-9652*	1	LINES GP-BOOM CYLINDER	555

Y-SEPARATE ILLUSTRATION

<END>

354-6068 CYLINDER & LINES GP-BUCKET

S/N: WAP1-UP
PART OF 340-3996 SPECIAL AR
AN ATTACHMENT

SMCS-5457 **i03929049**

NOTE	PART NUMBER	QTY	PART NAME 1 2 3 4 5 6 (PRODUCT LEVEL)	SEE PAGE
Y	*354-6070*	1	CYLINDER & SEAL GP-BUCKET	484
Y	*353-9647*	1	LINES GP-BUCKET CYLINDER	556

Y-SEPARATE ILLUSTRATION

<END>

HYDRAULIC SYSTEM

361-2899 CYLINDER & LINES GP-BUCKET

S/N: WAP1-UP
PART OF 303-2699, 303-2701, 319-9241 LINKAGE AR-BUCKET
AN ATTACHMENT

SMCS-5457 **i03983409**

NOTE	PART NUMBER	QTY	PART NAME 1 2 3 4 5 6 (PRODUCT LEVEL)	SEE PAGE
Y	*361-2898*	1	CYLINDER & SEAL GP-BUCKET	485
Y	*361-2897*	1	LINES GP-BUCKET CYLINDER	557

Y-SEPARATE ILLUSTRATION

<END>

361-3324 CYLINDER & LINES GP-BUCKET

S/N: WAP1-UP
PART OF 303-2698, 303-2700 LINKAGE AR-BUCKET
AN ATTACHMENT

SMCS-5457 **i03983337**

NOTE	PART NUMBER	QTY	PART NAME 1 2 3 4 5 6 (PRODUCT LEVEL)	SEE PAGE
Y	*361-3322*	1	CYLINDER & SEAL GP-BUCKET	486
Y	*361-3323*	1	LINES GP-BUCKET CYLINDER	558

Y-SEPARATE ILLUSTRATION

<END>

353-9642 CYLINDER & LINES GP-STICK

S/N: WAP1-UP
PART OF 303-2689 BOOM AR, 303-2690, 319-9211 BOOM AR-MASS, 303-2688 BOOM AR-REACH
AN ATTACHMENT

SMCS-5458 **i03907921**

NOTE	PART NUMBER	QTY	PART NAME 1 2 3 4 5 6 (PRODUCT LEVEL)	SEE PAGE
Y	*353-9643*	1	CYLINDER & SEAL GP-HYDRAULIC	487
Y	*353-9644*	1	LINES GP-STICK CYLINDER	627

Y-SEPARATE ILLUSTRATION

<END>

HYDRAULIC SYSTEM

356-0664 CYLINDER & SEAL GP-BOOM

S/N: WAP1-UP
PART OF 356-0668 CYLINDER & LINES GP-BOOM
AN ATTACHMENT

SMCS-5456 **i03958014**

NOTE	REF NO	GRAPHIC REF	PART NUMBER	QTY	PART NAME 1 2 3 4 5 6 (PRODUCT LEVEL)	SEE PAGE
	1	1	**3B-8489**	1	FITTING-GREASE	
Y	2	1	**356-0663**	1	CYLINDER GP-BOOM	491
	3	1	**113-5950**	4	SEAL-LIP TYPE	
	4	1	**8T-6757**	1	PLUG-PIPE	

Y-SEPARATE ILLUSTRATION

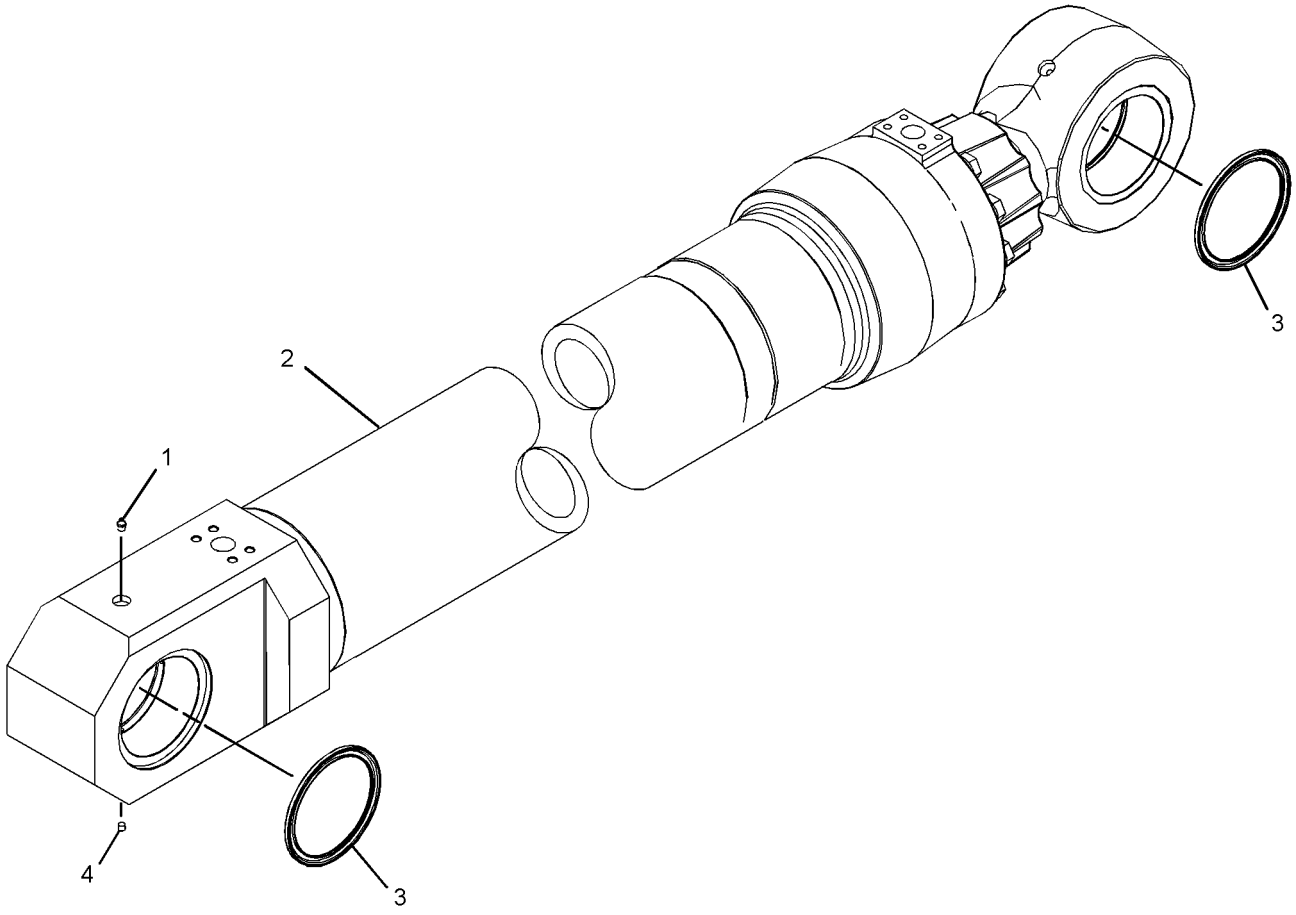

GRAPHIC #1 **<END>** g02178619

HYDRAULIC SYSTEM

354-6070 CYLINDER & SEAL GP-BUCKET

S/N: WAP1-UP
PART OF 354-6068 CYLINDER & LINES GP-BUCKET
AN ATTACHMENT

SMCS-5457 **i03929053**

NOTE	REF NO	GRAPHIC REF	PART NUMBER	QTY	PART NAME 1 2 3 4 5 6 (PRODUCT LEVEL)	SEE PAGE
	1	1	**3B-8489**	1	FITTING-GREASE	
	2	1	**9X-4599**	2	SEAL-LIP TYPE	
	3	1	**9X-4600**	2	SEAL-LIP TYPE	
Y	4	1	**354-6071**	1	CYLINDER GP-BUCKET	493

Y-SEPARATE ILLUSTRATION

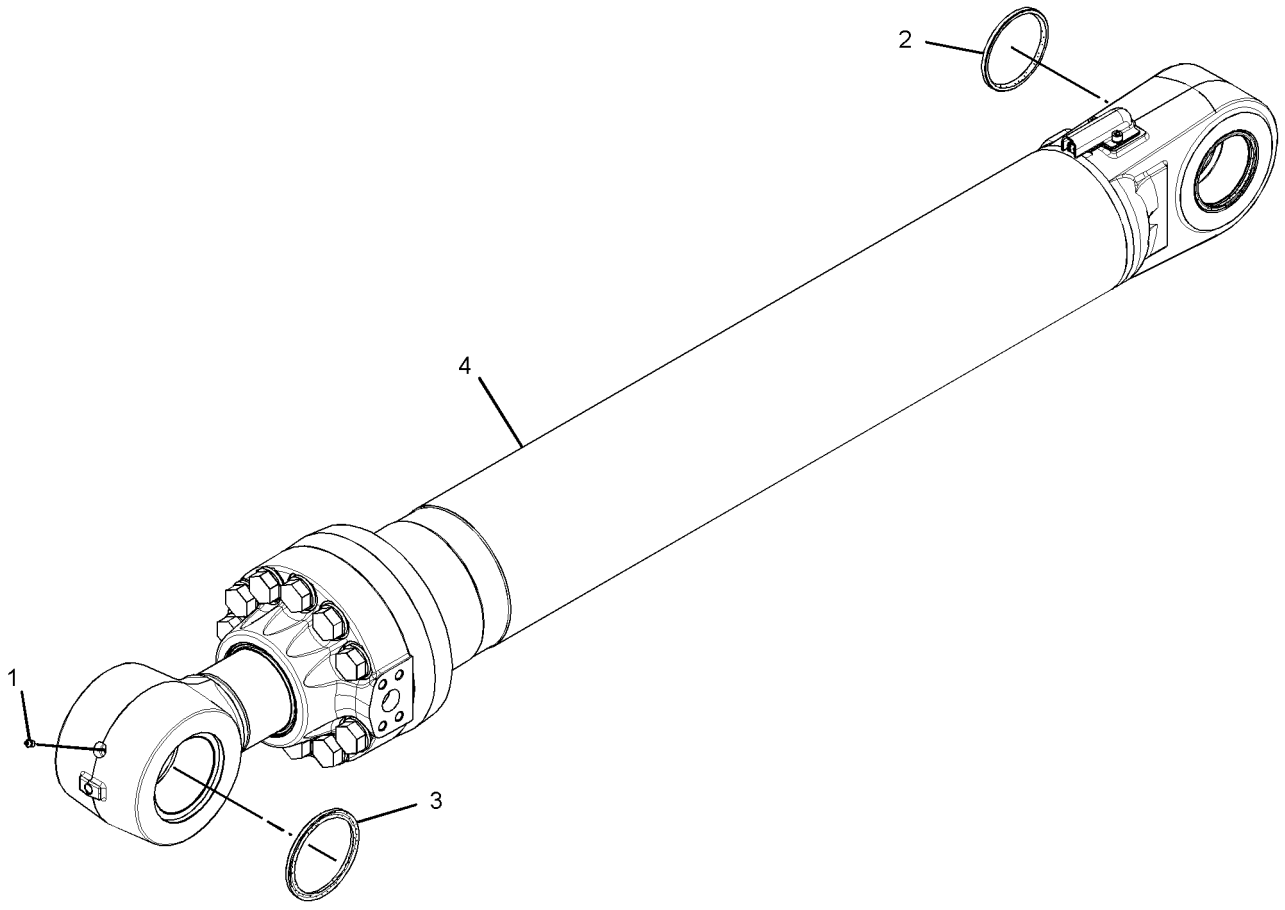

GRAPHIC #1 **<END>** g02173256

HYDRAULIC SYSTEM

361-2898 CYLINDER & SEAL GP-BUCKET

S/N: WAP1-UP
PART OF 361-2899 CYLINDER & LINES GP-BUCKET
AN ATTACHMENT

SMCS-5457 **i03983432**

NOTE	REF NO	GRAPHIC REF	PART NUMBER	QTY	PART NAME 1 2 3 4 5 6 (PRODUCT LEVEL)	SEE PAGE
	1	1	**3B-8489**	1	FITTING-GREASE	
	2	1	**9X-4600**	2	SEAL-LIP TYPE	
Y	3	1	**361-2862**	1	CYLINDER GP-BUCKET	495
	4	1	**113-5950**	2	SEAL-LIP TYPE	

Y-SEPARATE ILLUSTRATION

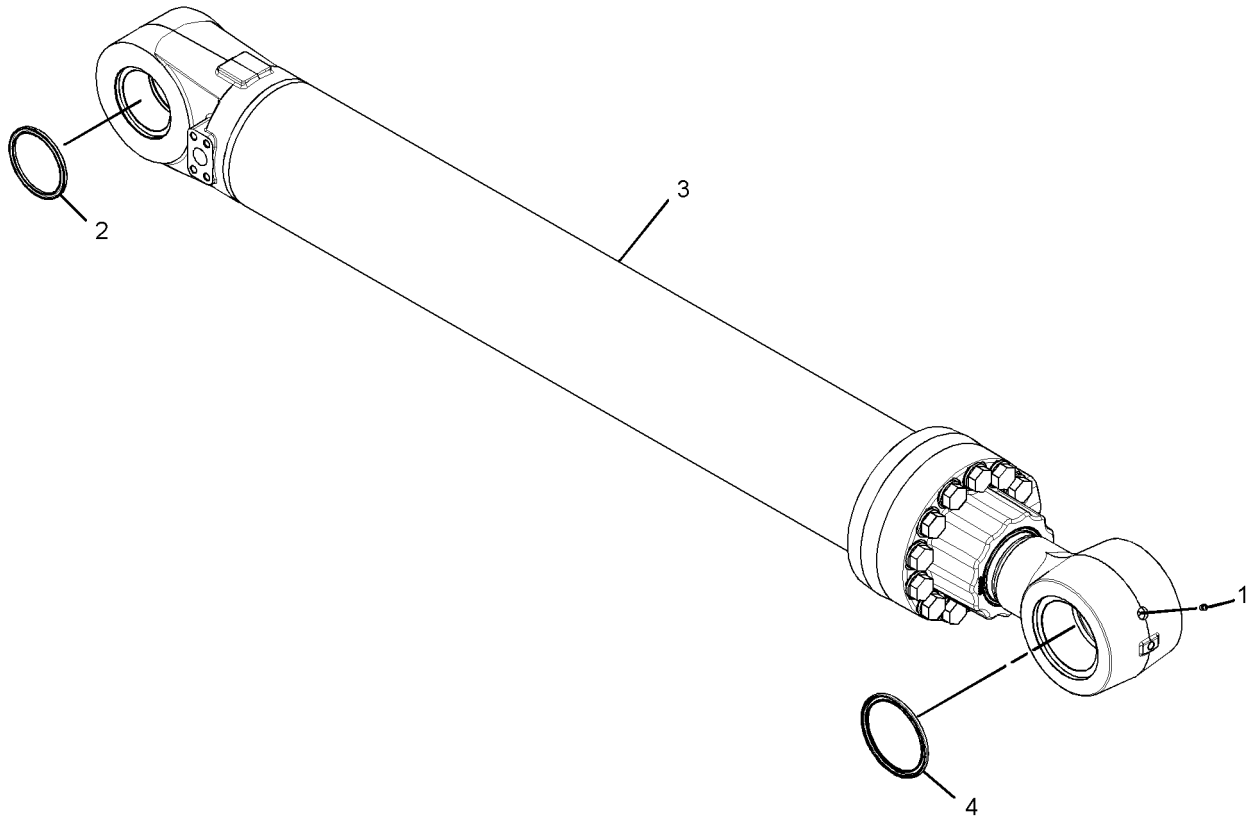

GRAPHIC #1 **<END>** g02183095

HYDRAULIC SYSTEM

361-3322 CYLINDER & SEAL GP-BUCKET

S/N: WAP1-UP

PART OF 361-3324 CYLINDER & LINES GP-BUCKET

AN ATTACHMENT

SMCS-5457 **i03983347**

NOTE	REF NO	GRAPHIC REF	PART NUMBER	QTY	PART NAME 1 2 3 4 5 6 (PRODUCT LEVEL)	SEE PAGE
	1	1	**3B-8489**	1	FITTING-GREASE	
	2	1	**9X-4600**	2	SEAL-LIP TYPE	
Y	3	1	**361-3321**	1	CYLINDER GP-BUCKET	497
	4	1	**9X-4599**	2	SEAL-LIP TYPE	

Y-SEPARATE ILLUSTRATION

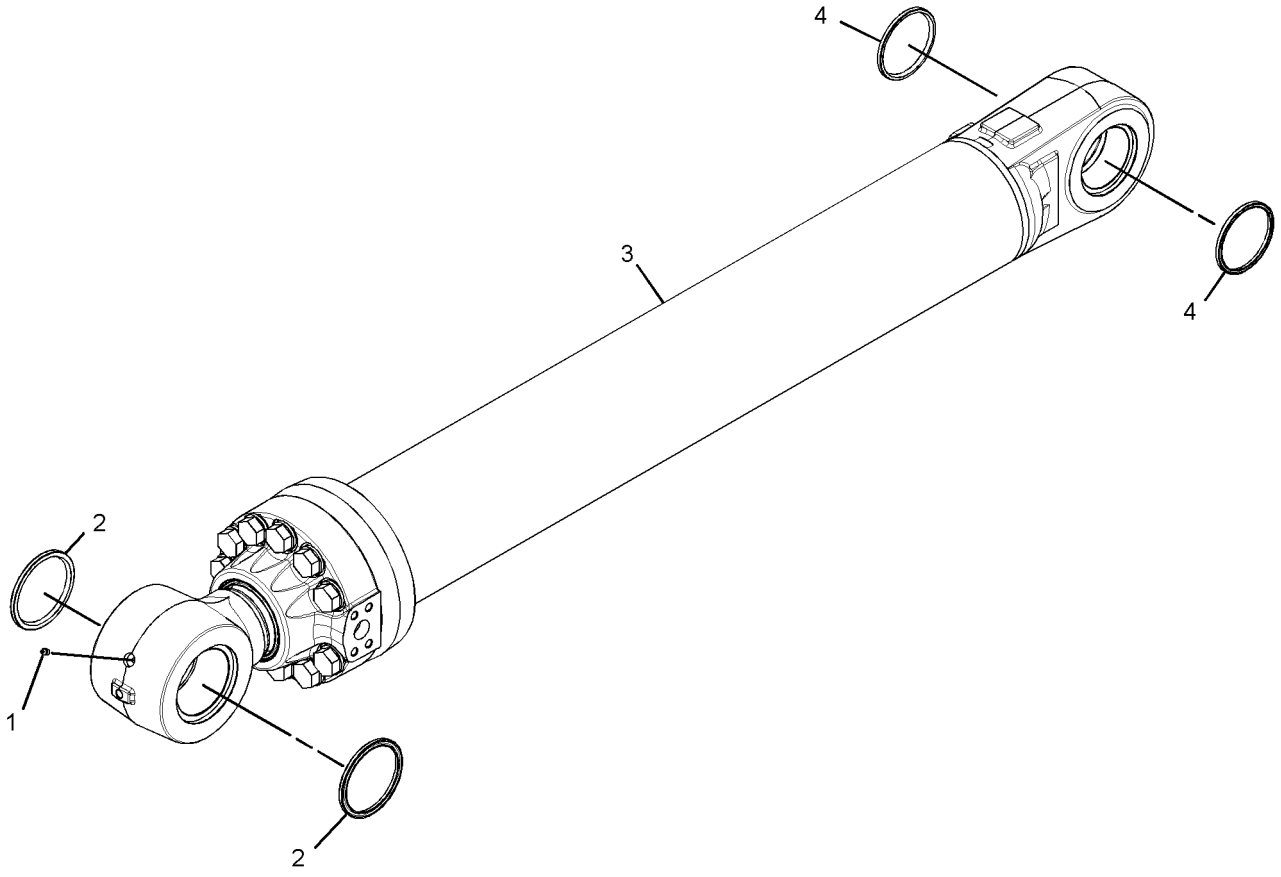

GRAPHIC #1 **<END>** g02172453

HYDRAULIC SYSTEM

353-9643 CYLINDER & SEAL GP-HYDRAULIC

S/N: WAP1-UP
PART OF 353-9642 CYLINDER & LINES GP-STICK
AN ATTACHMENT

SMCS-7562 **i03908019**

NOTE	REF NO	GRAPHIC REF	PART NUMBER	QTY	PART NAME 1 2 3 4 5 6 (PRODUCT LEVEL)	SEE PAGE
	1	1	**9X-4600**	4	SEAL-LIP TYPE	
Y	2	1	**353-9625**	1	CYLINDER GP-STICK	504

Y-SEPARATE ILLUSTRATION

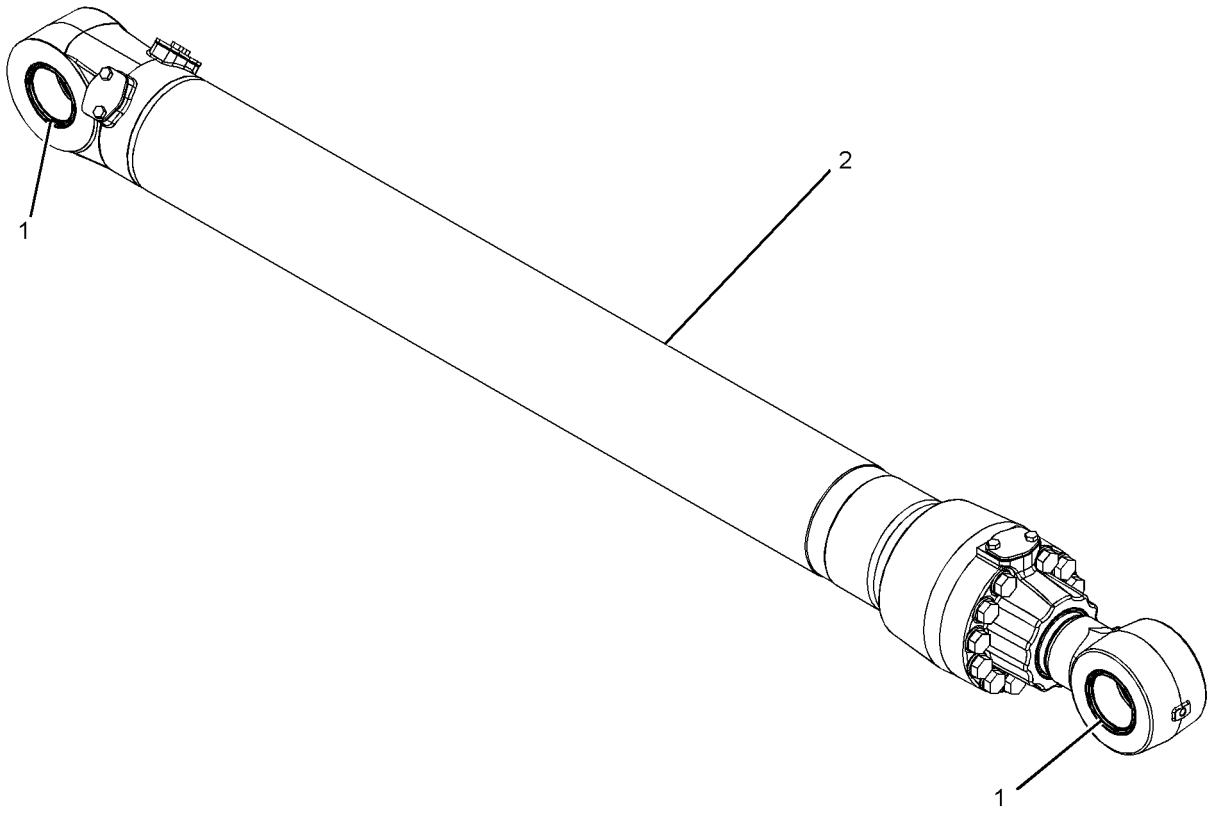

GRAPHIC #1 **<END>** g02152851

HYDRAULIC SYSTEM

353-9650 CYLINDER & SEAL GP-HYDRAULIC

S/N: WAP1-UP

PART OF 353-9648, 353-9649 CYLINDER & LINES GP-BOOM

AN ATTACHMENT

SMCS-7562 **i03908034**

NOTE	REF NO	GRAPHIC REF	PART NUMBER	QTY	PART NAME 1 2 3 4 5 6 (PRODUCT LEVEL)	SEE PAGE
	1	1	**3B-8489**	1	FITTING-GREASE	
Y	2	1	**353-9616**	1	CYLINDER GP-BOOM	489
	3	1	**113-5950**	4	SEAL-LIP TYPE	
	4	1	**8T-6757**	1	PLUG-PIPE	

Y-SEPARATE ILLUSTRATION

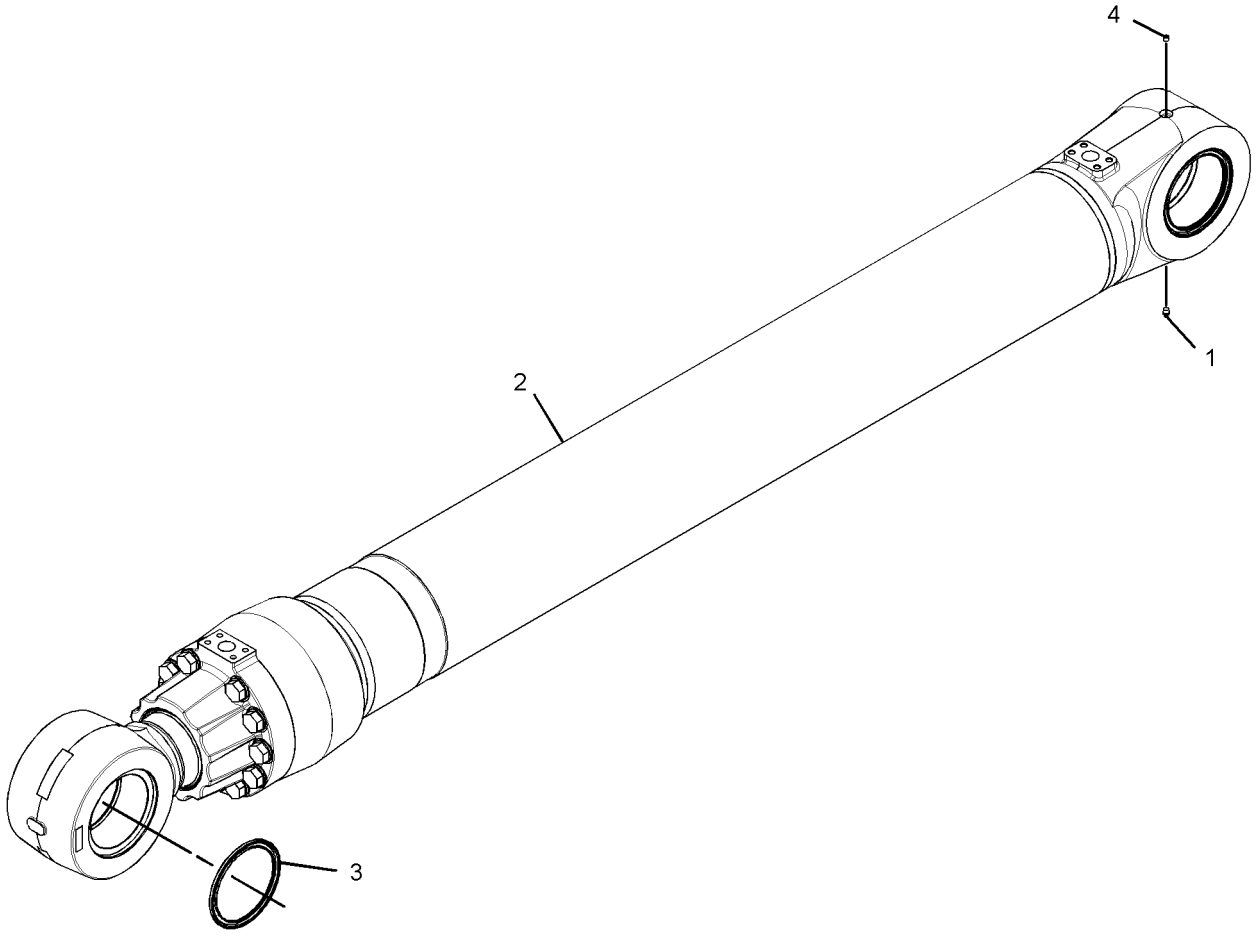

GRAPHIC #1 **<END>** g02150109

HYDRAULIC SYSTEM

353-9616 CYLINDER GP-BOOM

S/N: WAP1-UP
210-MM (8.3-IN) BORE X 1967-MM (77.4-IN) STROKE
PART OF 353-9650 CYLINDER & SEAL GP-HYDRAULIC
AN ATTACHMENT

SMCS-5456 **i04025614**

NOTE	REF NO	GRAPHIC REF	PART NUMBER	QTY	PART NAME 1 2 3 4 5 6 (PRODUCT LEVEL)	SEE PAGE
R	1	1	**155-9087**	1	ROD AS	
	1A	1	**172-2997**	1	BUSHING	
	2	1	**155-9092**	1	PISTON	
	3	1	**155-9095**	1	STOP	
J	4	1	**155-9096**	1	RING-SEAL	
	5	1	**155-9097**	1	HEAD	
	6	1	**155-9099**	1	RING-RETAINING	
J	7	1	**165-9295**	1	SEAL-LIP TYPE	
J	8	1	**170-9852**	1	SEAL-BUFFER	
J	9	1	**172-3918**	1	SEAL AS	
	10	1	**188-4192**	1	LOCKNUT-SPECIAL	
	11	1	**353-9617**	1	CYLINDER AS	
	11A	1	**244-4258**	1	BUSHING	
J	12	1	**095-1732**	1	SEAL-O-RING	
J	13	1	**155-9093**	2	RING	
J	14	1	**155-9094**	1	RING	
J	15	1	**155-9098**	1	RING-BACKUP	
	16	1	**155-9100**	1	BUSHING	
J	17	1	**155-9103**	1	RING-BACKUP	
J	18	1	**216-0010**	1	SEAL-U-CUP	
M	19	1	**7X-2489**	11	BOLT (M24X3X100-MM)	
	20	1	**8T-4167**	11	WASHER-HARD (26X44X4-MM THK)	
					AVAILABLE REPAIR KIT(S):	
J			**215-9999**	1	KIT-SEAL (HYDRAULIC CYLINDER) (BOOM)	

J-KIT MARKED J INCLUDES PART(S) MARKED J
M-METRIC PART
R-REMFG PART MAY BE AVAILABLE

353-9616 CYLINDER GP-BOOM *(contd.)* **i04025614**

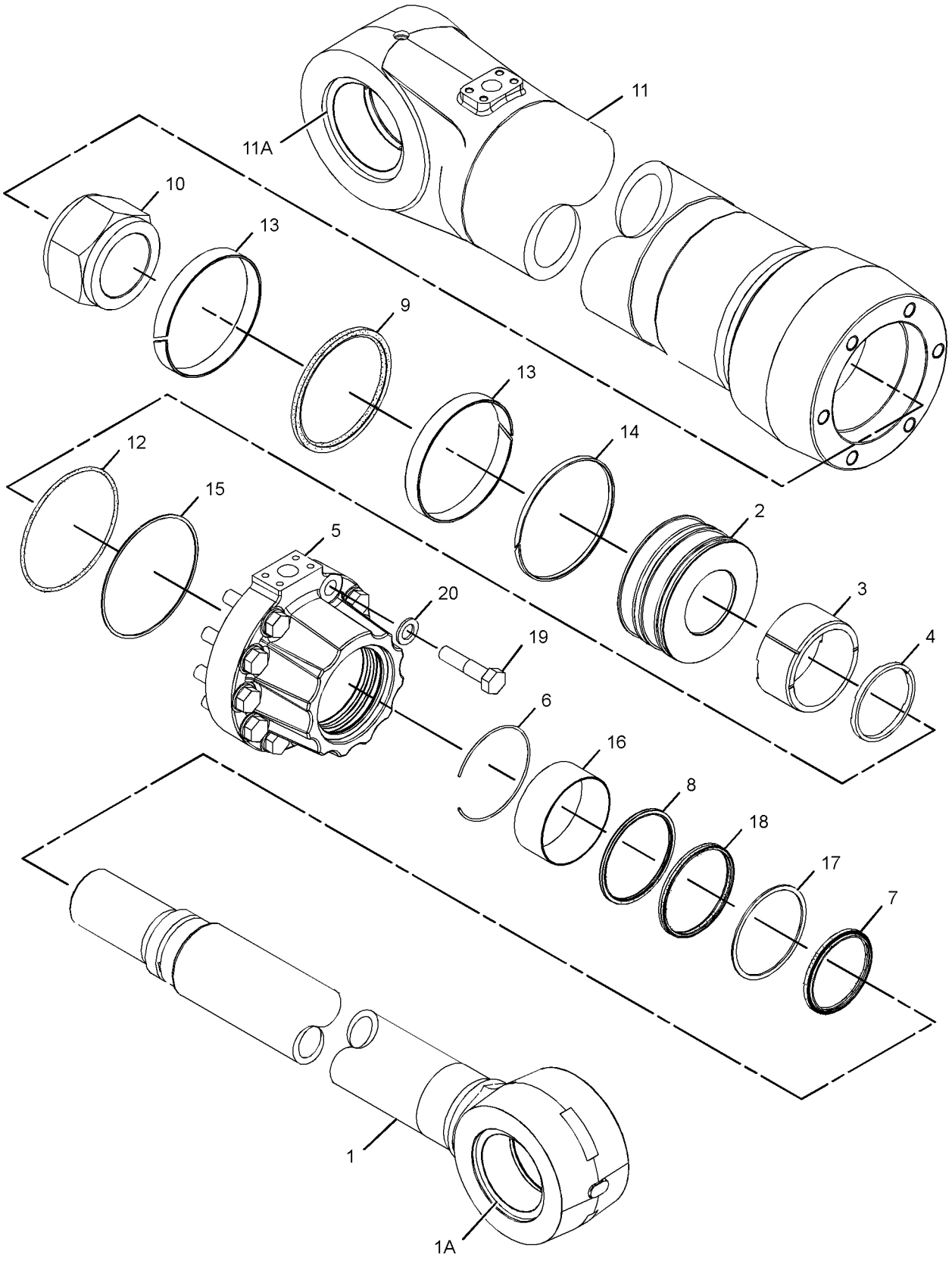

GRAPHIC #1 **<END>** g02152516

HYDRAULIC SYSTEM

356-0663 CYLINDER GP-BOOM

S/N: WAP1-UP
210-MM (8.3-IN) BORE X 1967-MM (77.4-IN) STROKE
PART OF 356-0664 CYLINDER & SEAL GP-BOOM
AN ATTACHMENT

SMCS-5456 **i04026711**

NOTE	REF NO	GRAPHIC REF	PART NUMBER	QTY	PART NAME 1 2 3 4 5 6 (PRODUCT LEVEL)	SEE PAGE
	1	1	**3E-3377**	1	WEDGE-RECEPTACLE LOCK (4-PIN)	
	2	1	**8T-8737**	1	PLUG-SEAL	
	3	1	**102-2244**	1	GROMMET	
	4	1	**155-9095**	1	STOP	
J	5	1	**155-9096**	1	RING-SEAL	
	6	1	**155-9097**	1	HEAD	
	7	1	**155-9099**	1	RING-RETAINING	
J	8	1	**165-9295**	1	SEAL-LIP TYPE	
J	9	1	**170-9852**	1	SEAL-BUFFER	
J	10	1	**172-3918**	1	SEAL AS	
	11	1	**212-0907**	1	PLATE-CONNECTOR	
	12	1	**214-1639**	1	MAGNET	
	13	1	**217-8763**	1	COVER-PROTECTION	
	14	1	**243-3177**	1	RETAINER	
	15	1	**331-9340**	1	SENSOR GP-POSITION	
		1	**9X-3401**	3	PIN-CONNECTOR (16-GA TO 18-GA)	
	16	1	**331-9341**	1	PISTON	
	17	1	**331-9344**	1	ROD AS	
	17A	1	**172-2997**	1	BUSHING	
	18	1	**356-0662**	1	CYLINDER AS	
	18A	1	**244-4258**	1	BUSHING	
M	19	1	**095-1280**	2	SETSCREW-SOCKET (M16X2X20-MM)	
J	20	1	**095-1732**	1	SEAL-O-RING	
J	21	1	**155-9093**	2	RING	
J	22	1	**155-9094**	1	RING	
J	23	1	**155-9098**	1	RING-BACKUP	
	24	1	**155-9100**	1	BUSHING	
J	25	1	**155-9103**	1	RING-BACKUP	
	26	1	**188-2199**	1	SEAL-O-RING	
	27	1	**215-1942**	1	RING-BACKUP	
J	28	1	**216-0010**	1	SEAL-U-CUP	
	29	1	**102-8804**	1	KIT-RECEPTACLE (4-PIN)	
					(KIT INCLUDES RECEPTACLE AS & WEDGE)	
	30	1	**3V-2431**	2	WASHER (10.2X16X2-MM THK)	
M	31	1	**6V-8223**	1	SETSCREW-SOCKET (M10X1.5X16-MM)	
M	32	1	**7X-2489**	11	BOLT (M24X3X100-MM)	
	33	1	**8T-4167**	11	WASHER-HARD (26X44X4-MM THK)	
M	34	1	**8T-8894**	2	BOLT-SOCKET HEAD (M10X1.5X20-MM)	
E	35	1	**9X-1386**		SLEEVE (20-CM)	
					AVAILABLE REPAIR KIT(S):	
J			**215-9999**	1	KIT-SEAL (HYDRAULIC CYLINDER) (BOOM)	

E-ORDER BY THE CENTIMETER
J-KIT MARKED J SERVICES PART(S) MARKED J
M-METRIC PART

356-0663 CYLINDER GP-BOOM *(contd.)* **i04026711**

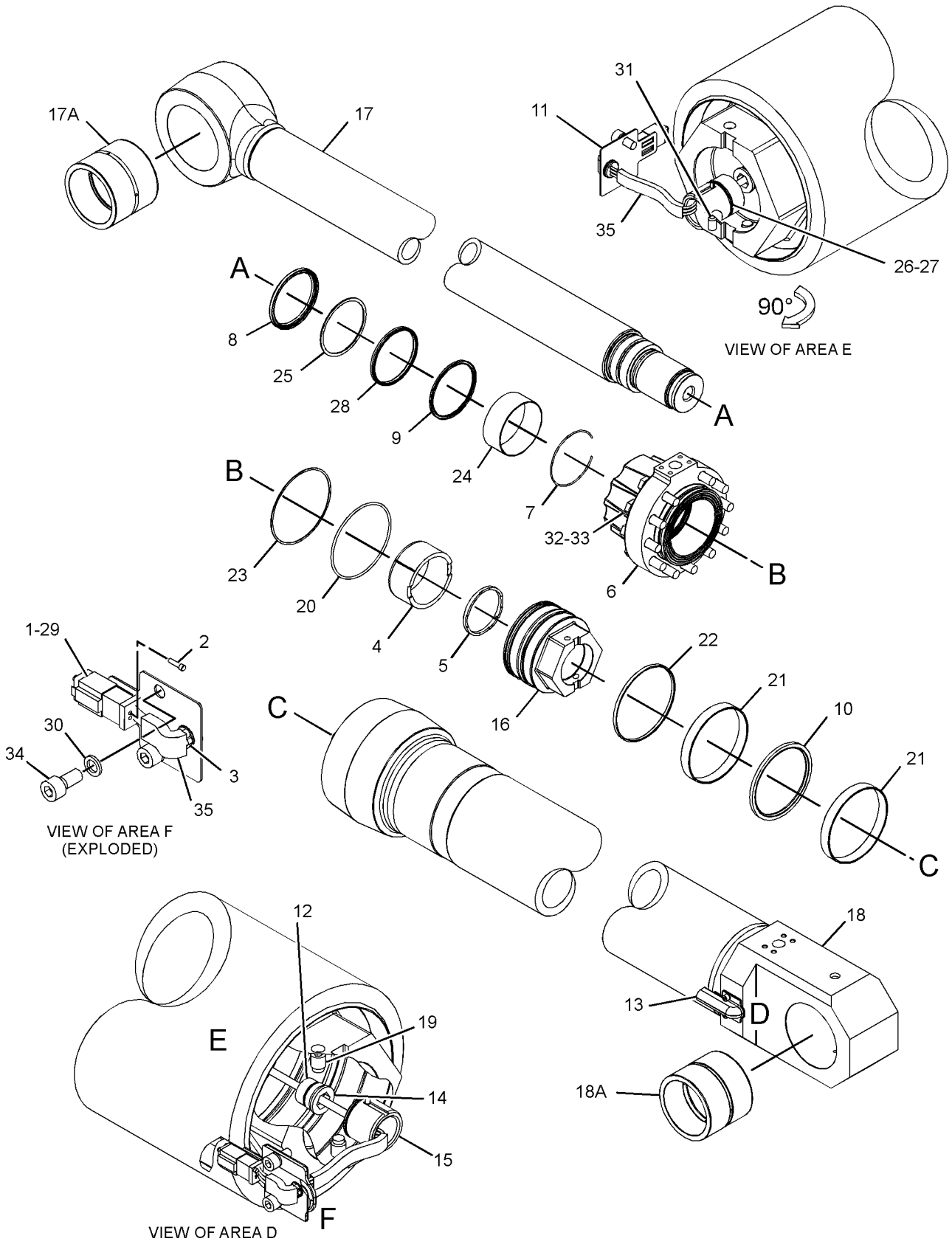

GRAPHIC #1 **<END>** g02178587

HYDRAULIC SYSTEM

354-6071 CYLINDER GP-BUCKET

S/N: WAP1-UP
200-MM (7.9-IN) BORE X 1451-MM (57.2-IN) STROKE
PART OF 354-6070 CYLINDER & SEAL GP-BUCKET
AN ATTACHMENT

SMCS-5457 **i04026009**

NOTE	REF NO	GRAPHIC REF	PART NUMBER	QTY	PART NAME 1 2 3 4 5 6 (PRODUCT LEVEL)	SEE PAGE
	1	1	**354-6072**	1	CYLINDER AS	
	1A	1	**198-5529**	1	BUSHING	
	2	1	**315-3319**	1	ROD AS	
	2A	1	**6E-0813**	1	BUSHING	
	3	1	**300-9672**	1	PISTON	
J	4	1	**147-5776**	1	RING	
J	5	1	**147-5738**	2	RING	
J	6	1	**8C-9179**	1	SEAL AS	
M	7	1	**6V-8223**	1	SETSCREW-SOCKET (M10X1.5X16-MM)	
	8	1	**209-6026**	1	HEAD	
J	9	1	**4I-6330**	1	RING-BACKUP	
J	10	1	**095-1731**	1	SEAL-O-RING	
	11	1	**128-9261**	1	BUSHING	
	12	1	**102-0786**	1	RING-RETAINING	
J	13	1	**216-0009**	1	SEAL-U-CUP	
J	14	1	**147-5771**	1	RING-BACKUP	
J	15	1	**165-9294**	1	SEAL-LIP TYPE	
M	16	1	**095-1280**	2	SETSCREW-SOCKET (M16X2X20-MM)	
	17	1	**9X-8258**	11	WASHER (33X56X6-MM THK)	
M	18	1	**9X-6618**	11	BOLT (M30X3.5X130-MM)	
	19	1	**214-1639**	1	MAGNET	
	20	1	**243-3177**	1	RETAINER	
	21	1	**300-8784**	1	SENSOR GP-POSITION	
		1	**9X-3401**	3	PIN-CONNECTOR (16-GA TO 18-GA)	
	22	1	**102-2244**	1	GROMMET	
	23	1	**212-0907**	1	PLATE-CONNECTOR	
	24	1	**102-8804**	1	KIT-RECEPTACLE (4-PIN)	
					(INCLUDES RECEPTACLE AS & WEDGE)	
	25	1	**3E-3377**	1	WEDGE-RECEPTACLE LOCK (4-PIN)	
	26	1	**217-8763**	1	COVER-PROTECTION	
	27	1	**3V-2431**	2	WASHER (10.2X16X2-MM THK)	
M	28	1	**8T-8894**	2	BOLT-SOCKET HEAD (M10X1.5X20-MM)	
	29	1	**215-1942**	1	RING-BACKUP	
	30	1	**188-2199**	1	SEAL-O-RING	
	31	1	**8T-8737**	1	PLUG-SEAL	
J	32	1	**170-9851**	1	SEAL-BUFFER	
E	33	1	**9X-1386**		SLEEVE (20-CM)	
					AVAILABLE REPAIR KIT(S):	
J			**215-9995**	1	KIT-SEAL (HYDRAULIC CYLINDER) (BUCKET)	

E-ORDER BY THE CENTIMETER
J-KIT MARLED J INCLUDES PART(S) MARKED J
M-METRIC PART

354-6071 CYLINDER GP-BUCKET *(contd.)* **i04026009**

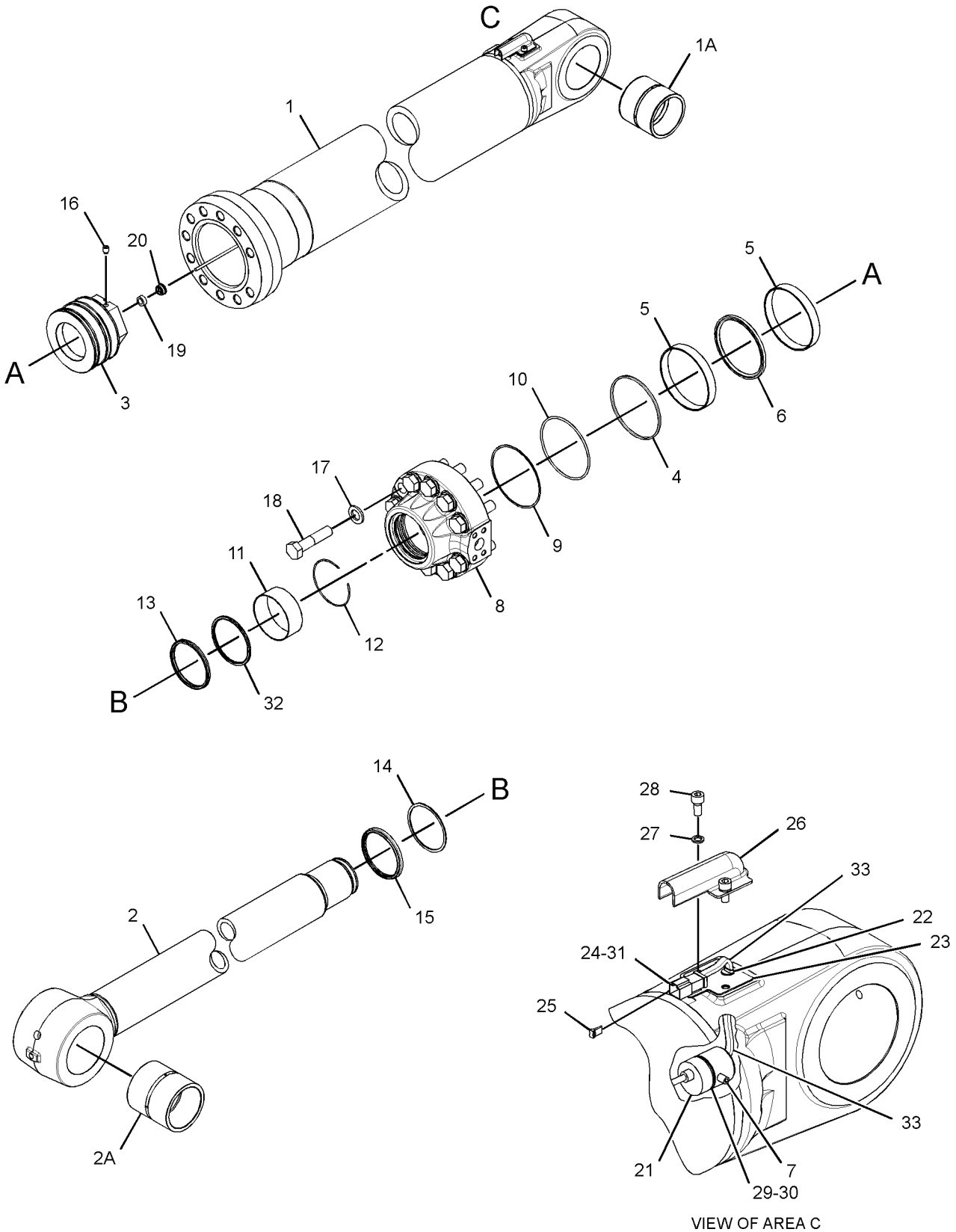

GRAPHIC #1 **<END>** g02173833

HYDRAULIC SYSTEM

361-2862 CYLINDER GP-BUCKET

S/N: WAP1-UP
220-MM (8.7-IN) BORE X 1586-MM (62.4-IN) STROKE
PART OF 361-2898 CYLINDER & SEAL GP-BUCKET
AN ATTACHMENT

SMCS-5457 **i04026010**

NOTE	REF NO	GRAPHIC REF	PART NUMBER	QTY	PART NAME 1 2 3 4 5 6 (PRODUCT LEVEL)	SEE PAGE
M	1	1	**116-3516**	1	NUT-SELF LOCKING (M120X2-THD)	
J	2	1	**165-9296**	1	SEAL-LIP TYPE	
J	3	1	**170-9853**	1	SEAL-BUFFER	
	4	1	**173-3366**	1	HEAD	
	5	1	**215-9972**	1	PISTON	
	6	1	**361-2827**	1	CYLINDER AS	
	6A	1	**172-2848**	1	BUSHING	
	7	1	**361-2830**	1	ROD AS-HYDRAULIC CYLINDER	
	7A	1	**308-8824**	1	BUSHING	
J	8	1	**095-1733**	1	SEAL-O-RING	
	9	1	**103-8364**	1	RING-RETAINING	
	10	1	**128-9262**	1	BUSHING	
J	11	1	**155-9157**	2	RING	
J	12	1	**173-3414**	1	RING	
J	13	1	**215-9864**	1	RING-BACKUP	
J	14	1	**216-0011**	1	SEAL-U-CUP	
J	15	1	**4I-6442**	1	RING-BACKUP	
J	16	1	**8C-9182**	1	SEAL AS	
M	17	1	**9X-6618**	12	BOLT (M30X3.5X130-MM)	
	18	1	**9X-8399**	12	WASHER (33X56X6-MM THK)	
					AVAILABLE REPAIR KIT(S):	
J			**216-0000**	1	KIT-SEAL (HYDRAULIC CYLINDER) (BUCKET)	
					(INCLUDES SEAL RING)	

J-KIT MARKED J INCLUDES PART(S) MARKED J
M-METRIC PART

361-2862 CYLINDER GP-BUCKET *(contd.)* **i04026010**

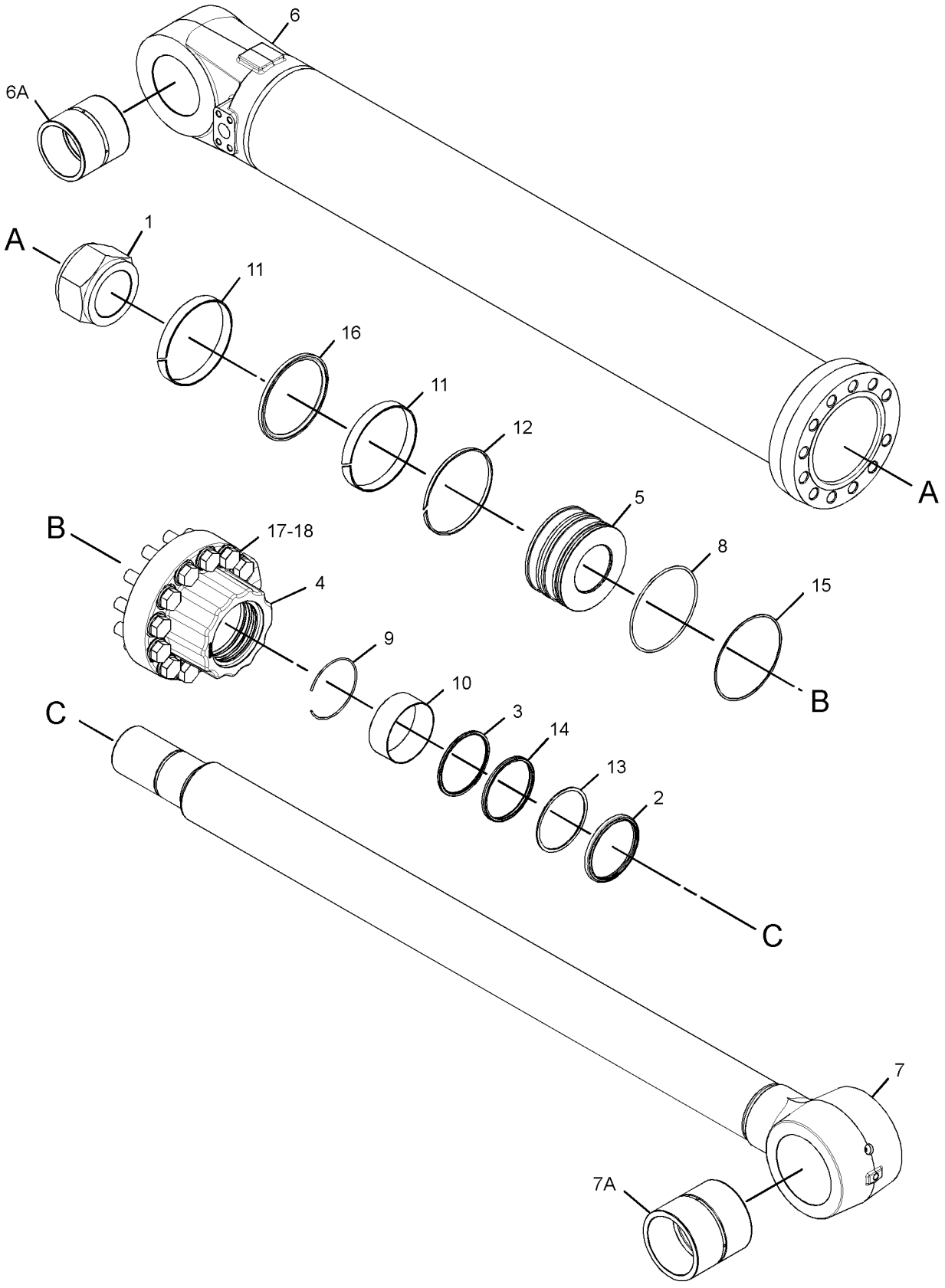

GRAPHIC #1 **<END>** g02174553

HYDRAULIC SYSTEM

361-3321 CYLINDER GP-BUCKET

S/N: WAP1-UP
200-MM (7.9-IN) BORE X 1451-MM (57.1-IN) STROKE
PART OF 361-3322 CYLINDER & SEAL GP-BUCKET
AN ATTACHMENT

SMCS-5457 **i04026011**

NOTE	REF NO	GRAPHIC REF	PART NUMBER	QTY	PART NAME 1 2 3 4 5 6 (PRODUCT LEVEL)	SEE PAGE
	1	1	**361-3318**	1	CYLINDER AS	
	2	1	**361-3320**	1	ROD AS	
		1	**6E-0813**	1	BUSHING	
	3	1	**209-6026**	1	HEAD	
	4	1	**147-5737**	1	PISTON	
J	5	1	**147-5776**	1	RING	
J	6	1	**147-5738**	2	RING	
J	7	1	**8C-9179**	1	SEAL AS	
J	8	1	**095-1731**	1	SEAL-O-RING	
J	9	1	**4I-6330**	1	RING-BACKUP	
	10	1	**128-9261**	1	BUSHING	
	11	1	**102-0786**	1	RING-RETAINING	
J	12	1	**170-9851**	1	SEAL-BUFFER	
J	13	1	**216-0009**	1	SEAL-U-CUP	
J	14	1	**147-5771**	1	RING-BACKUP	
J	15	1	**165-9294**	1	SEAL-LIP TYPE	
	16	1	**9X-8399**	11	WASHER (33X56X6-MM THK)	
M	17	1	**9X-6618**	11	BOLT (M30X3.5X130-MM)	
M	18	1	**116-3513**	1	LOCKNUT-NYLON (M105X2-THD)	
					AVAILABLE REPAIR KIT(S):	
J			**215-9995**	1	KIT-SEAL (HYDRAULIC CYLINDER) (BUCKET)	

J-(KIT MARKED J SERVICES PART(S) MARKED J)
M-METRIC PART

361-3321 CYLINDER GP-BUCKET *(contd.)* **i04026011**

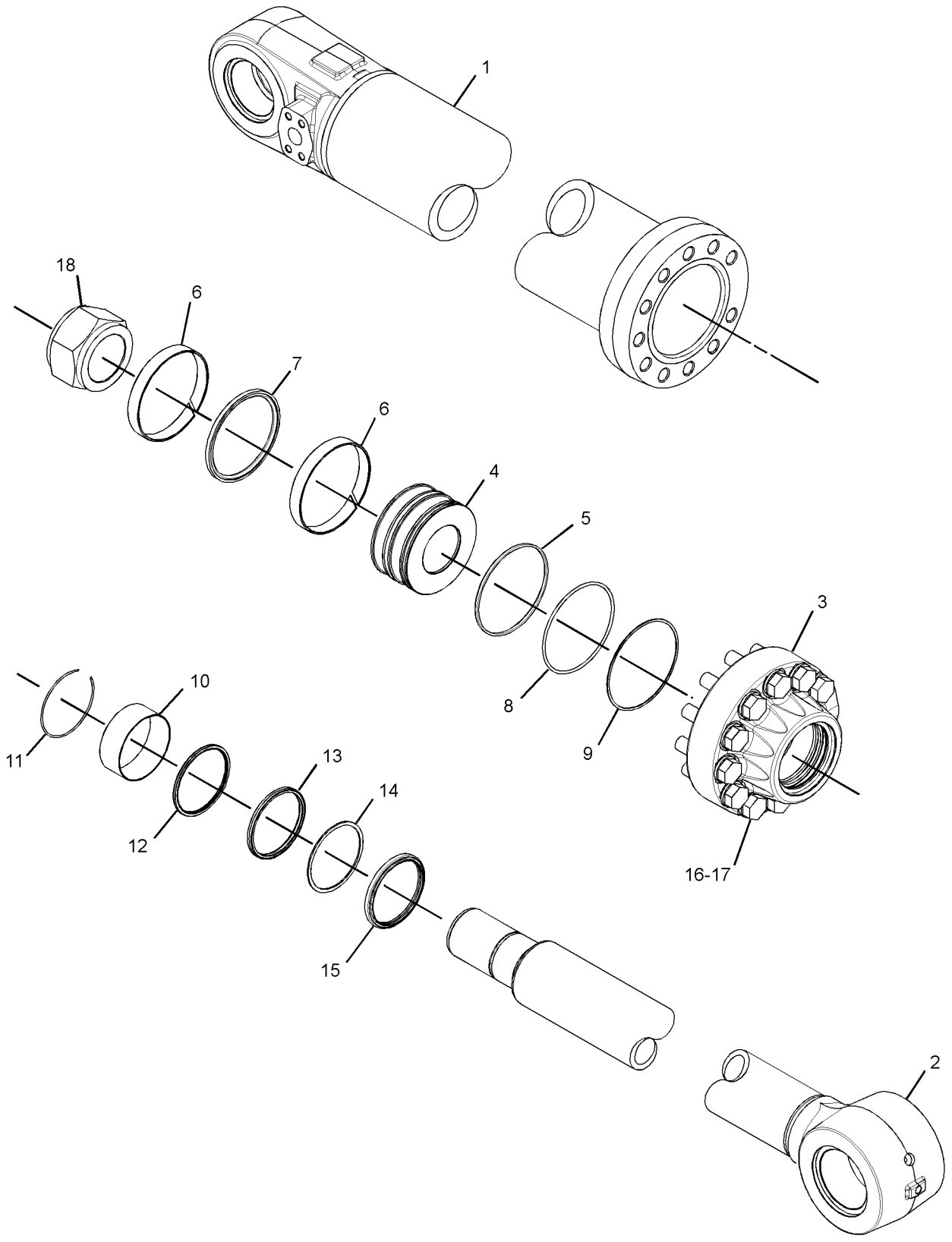

GRAPHIC #1 **<END>** g02173135

HYDRAULIC SYSTEM

155-9196 CYLINDER GP-COUNTERWEIGHT

S/N: WAP1-UP
PART OF 294-1295 COUNTERWEIGHT AR
AN ATTACHMENT

SMCS-5409 **i01701089**

NOTE	REF NO	GRAPHIC REF	PART NUMBER	QTY	PART NAME 1 2 3 4 5 6 (PRODUCT LEVEL)	SEE PAGE
Y	1	1	**155-9197**	1	CYLINDER GP-COUNTERWEIGHT	501
	2	1	**3B-8489**	2	FITTING-GREASE	
	3	1	**7X-4803**	2	SEAL-LIP TYPE	
	4	1	**096-0854**	2	SEAL-LIP TYPE	

Y-SEPARATE ILLUSTRATION

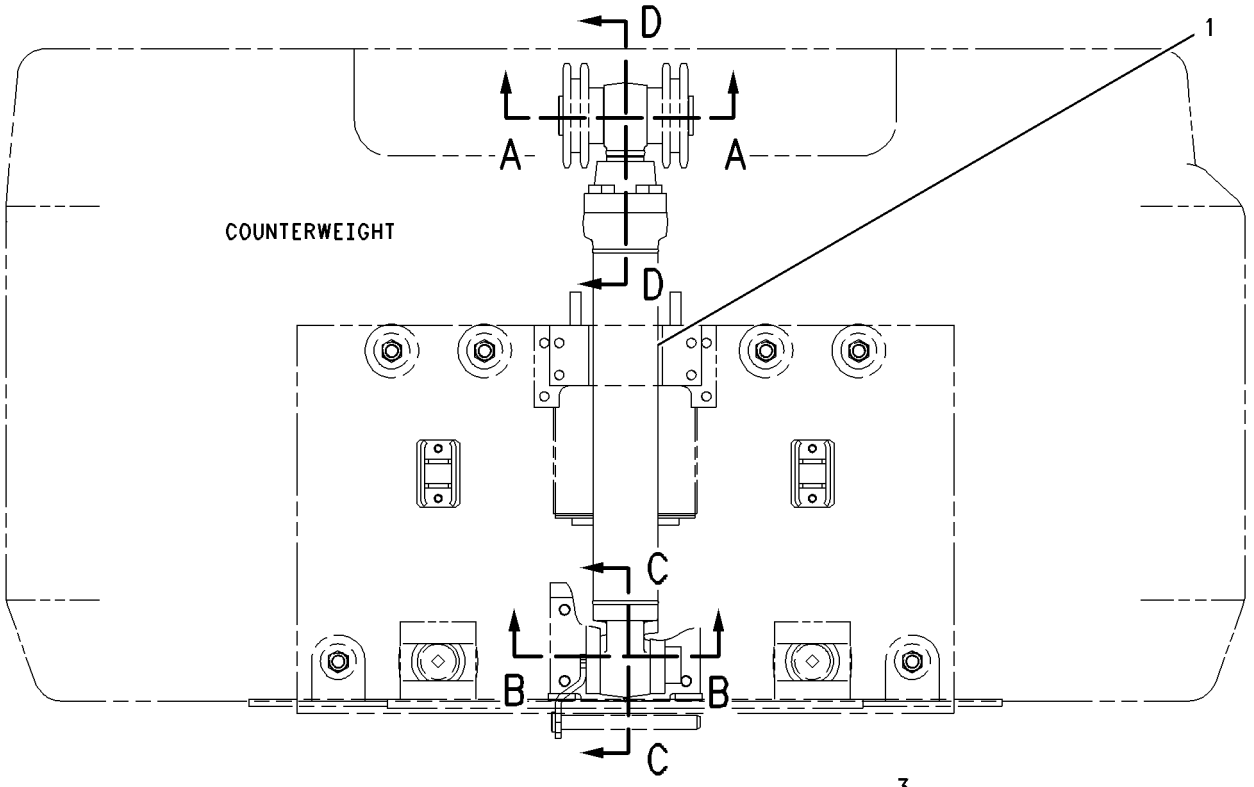

FRONT VIEW

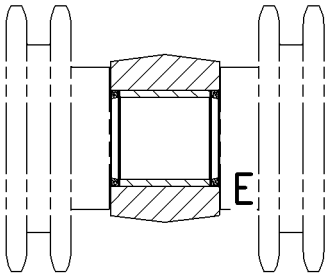

SECTION A-A

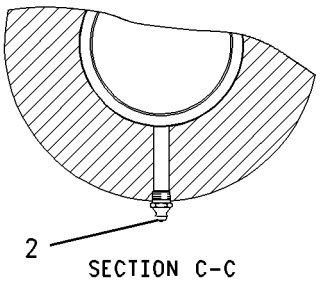

SECTION C-C

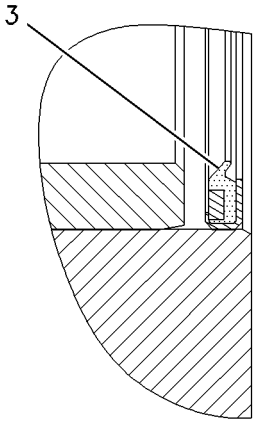

VIEW OF AREA F

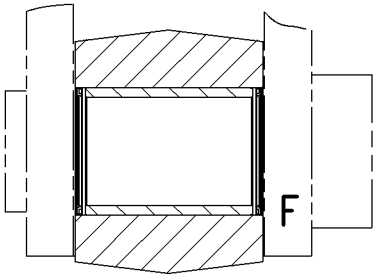

SECTION B-B

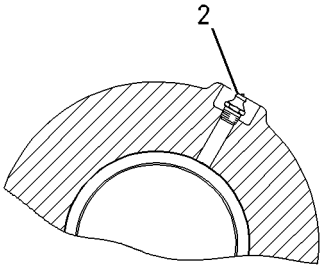

SECTION D-D

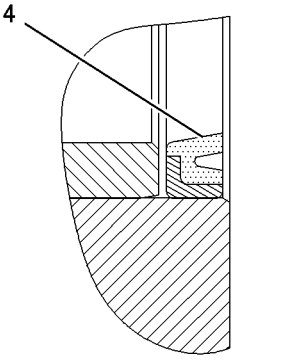

VIEW OF AREA E

GRAPHIC #1 **<END>** g00838715

HYDRAULIC SYSTEM

155-9197 CYLINDER GP-COUNTERWEIGHT

S/N: WAP1-UP
150-MM (5.9-IN) BORE X 940-MM (37-IN) STROKE
PART OF 155-9196 CYLINDER GP-COUNTERWEIGHT
AN ATTACHMENT

SMCS-5409 **i02956032**

NOTE	REF NO	GRAPHIC REF	PART NUMBER	QTY	PART NAME 1 2 3 4 5 6 (PRODUCT LEVEL)	SEE PAGE
	1	1	**188-4224**	1	CYLINDER AS	
	1A	1	**7Y-4666**	1	BEARING-SLEEVE	
M	2	1	**7Y-4695**	1	LOCKNUT (M80X2-THD)	
J	3	1	**188-4217**	2	RING	
J	4	1	**9X-3601**	1	SEAL AS	
J	5	1	**188-4218**	1	RING	
	6	1	**188-4216**	1	PISTON	
J	7	1	**095-1633**	1	SEAL-O-RING	
J	8	1	**7Y-4673**	1	RING-BACKUP	
	9	1	**7Y-4660**	1	HEAD	
M	10	1	**7Y-5215**	8	BOLT-SOCKET HEAD (M24X3X90-MM)	
	11	1	**173-3363**	1	ROD AS	
	11A	1	**7Y-5102**	1	BEARING-SLEEVE	
	12	1	**7Y-4672**	1	RING-RETAINING	
	13	1	**114-0760**	1	BEARING-SLEEVE	
J	14	1	**128-9265**	1	SEAL-BUFFER	
J	15	1	**170-9864**	1	SEAL-U-CUP	
J	16	1	**7Y-4669**	1	RING-BACKUP	
J	17	1	**165-9290**	1	SEAL-LIP TYPE	
					AVAILABLE REPAIR KIT(S):	
J			**191-5619**	1	KIT-SEAL (COUNTERWEIGHT CYLINDER)	

J-KIT MARKED J SERVICES PARTS MARKED J
M-METRIC PART

155-9197 CYLINDER GP-COUNTERWEIGHT *(contd.)* i02956032

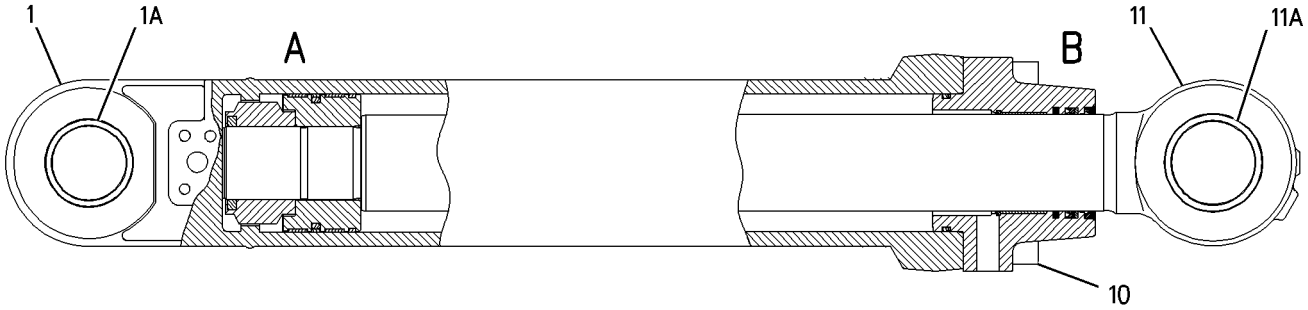

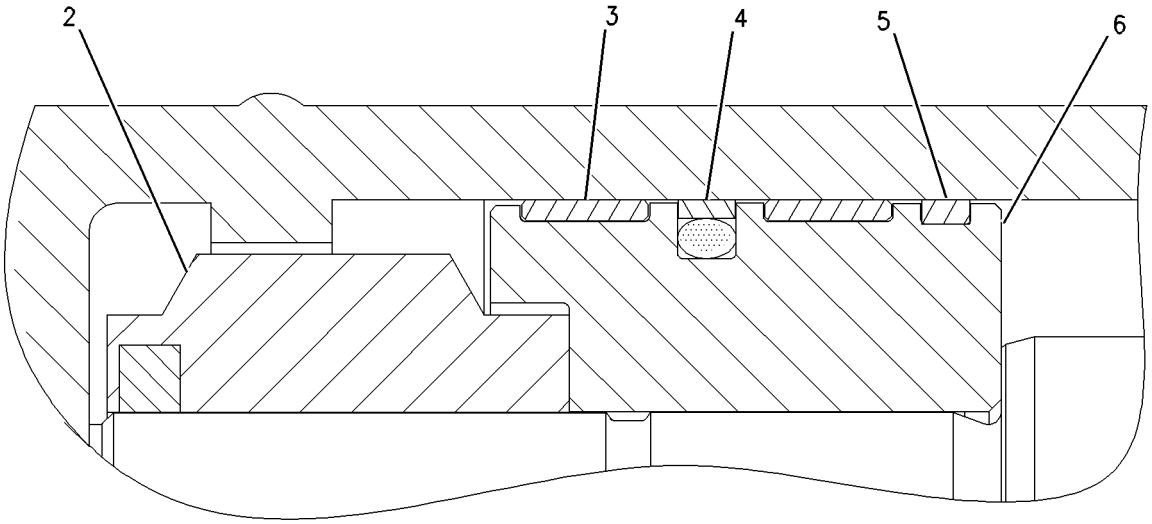

VIEW OF AREA A

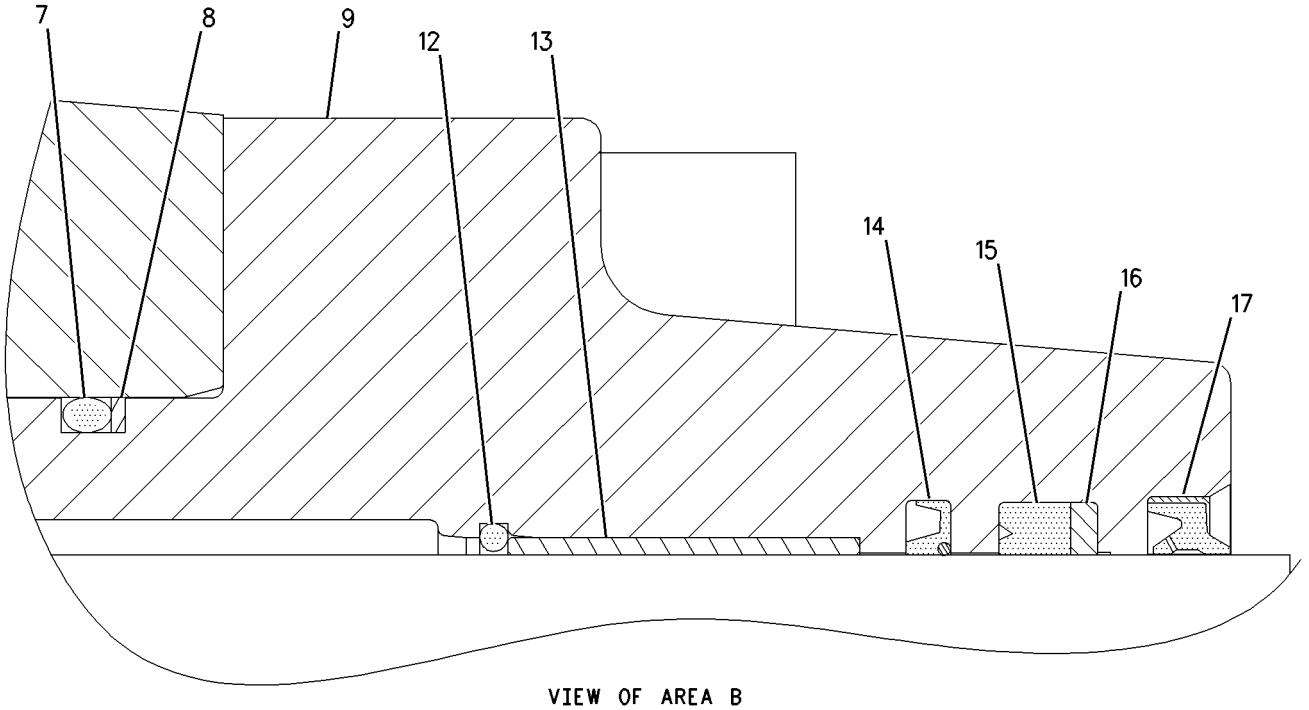

VIEW OF AREA B

GRAPHIC #1 **<END>** g00776738

169-0776 CYLINDER GP-COUPLER

S/N: WAP1-UP
90-MM (3.5-IN) BORE X 200-MM (7.9-IN) STROKE
PART OF 169-0762 LOCK GP-QUICK COUPLER
AN ATTACHMENT

SMCS-5133 **i03901487**

NOTE	REF NO	GRAPHIC REF	PART NUMBER	QTY	PART NAME 1 2 3 4 5 6 (PRODUCT LEVEL)	SEE PAGE
	1	1	**169-3923**	1	KIT-VALVE (QUICK COUPLER)	
					AVAILABLE REPAIR KIT(S):	
			219-1323	1	KIT-SEAL (COUPLER CYLINDER)	

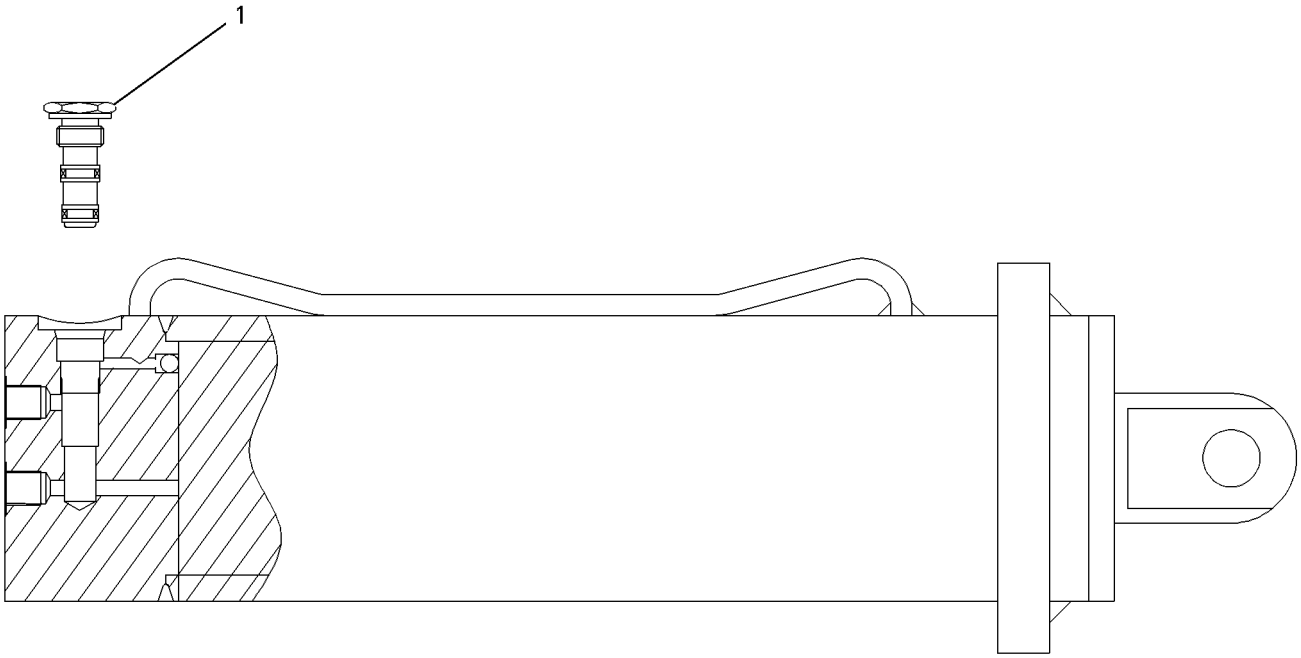

GRAPHIC #1 **<END>** g00562808

HYDRAULIC SYSTEM

353-9625 CYLINDER GP-STICK

S/N: WAP1-UP
220-MM (8.7-IN) BORE X 2262-MM (89-IN) STROKE
PART OF 353-9643 CYLINDER & SEAL GP-HYDRAULIC
AN ATTACHMENT

SMCS-5458 **i04026013**

NOTE	REF NO	GRAPHIC REF	PART NUMBER	QTY	PART NAME 1 2 3 4 5 6 (PRODUCT LEVEL)	SEE PAGE
M	1	1	**116-3516**	1	NUT-SELF LOCKING (M120X2-THD)	
	2	1	**116-3518**	1	STOP	
J	3	1	**116-3519**	1	RING-SEAL	
J	4	1	**165-9296**	1	SEAL-LIP TYPE	
J	5	1	**170-9853**	1	SEAL-BUFFER	
	6	1	**173-3366**	1	HEAD	
	7	1	**215-9972**	1	PISTON	
	8	1	**317-8434**	1	NUT	
	9	1	**317-8435**	1	ROD AS	
	9A	1	**172-2848**	1	BUSHING	
	10	1	**353-9626**	1	CYLINDER AS	
	10A	1	**172-2848**	1	BUSHING	
	11	1	**191-5704**	1	STOP	
J	12	1	**095-1733**	1	SEAL-O-RING	
	13	1	**103-8364**	1	RING-RETAINING	
	14	1	**128-9262**	1	BUSHING	
J	15	1	**155-9157**	2	RING	
M	16	1	**170-4763**	2	SETSCREW-SOCKET	
J	17	1	**173-3414**	1	RING	
J	18	1	**215-9864**	1	RING-BACKUP	
J	19	1	**216-0011**	1	SEAL-U-CUP	
J	20	1	**4I-6442**	1	RING-BACKUP	
J	21	1	**8C-9182**	1	SEAL AS	
M	22	1	**9X-6618**	12	BOLT (M30X3.5X130-MM)	
	23	1	**9X-8258**	12	WASHER (33X56X6-MM THK)	
					AVAILABLE REPAIR KIT(S):	
J			**216-0000**	1	KIT-SEAL (HYDRAULIC CYLINDER) (STICK)	

J-KIT MARKED J INCLUDES PART(S) MARKED J
M-METRIC PART

353-9625 CYLINDER GP-STICK *(contd.)* **i04026013**

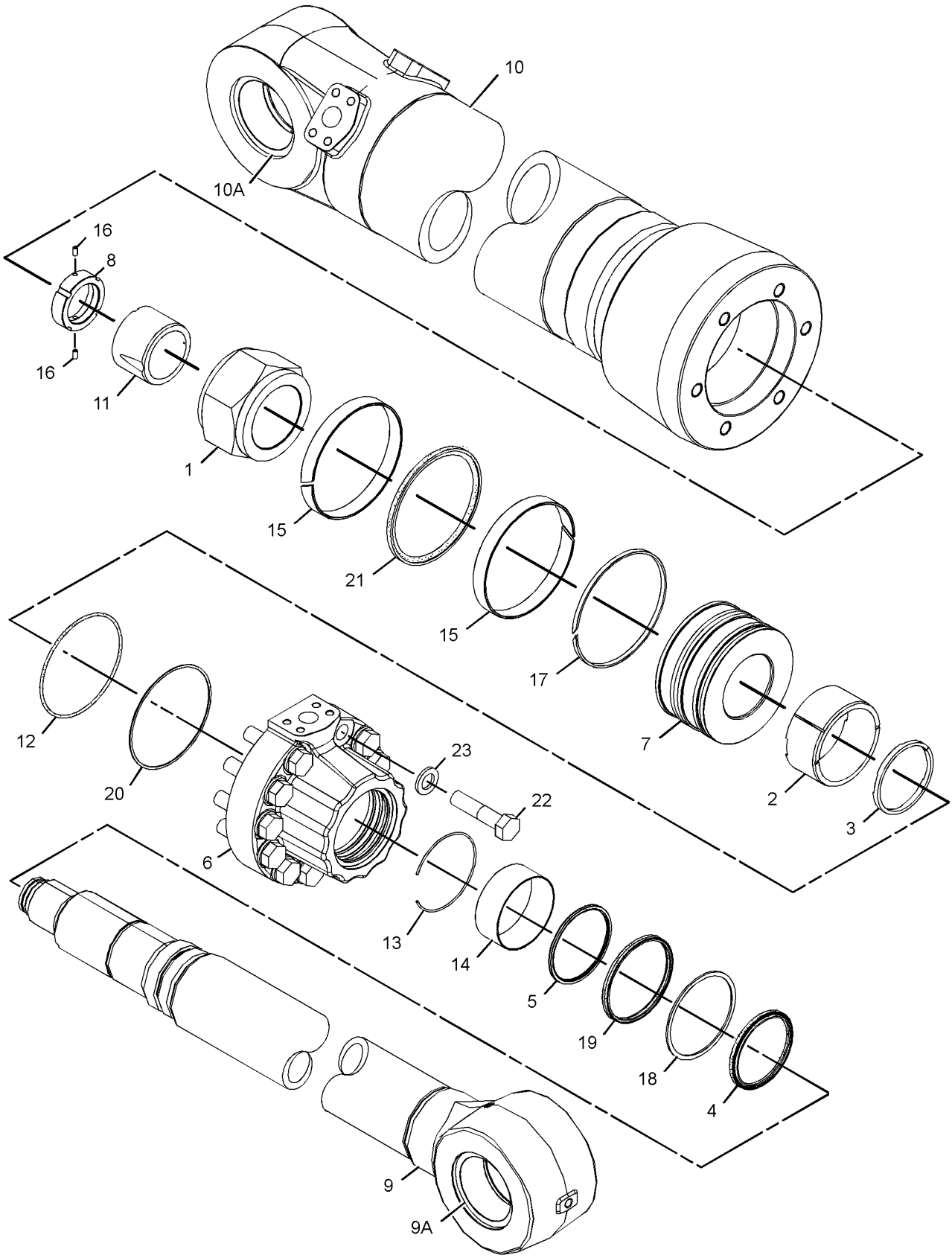

GRAPHIC #1 **<END>** g02152955

HYDRAULIC SYSTEM

6I-3638 DRIVE GP-PUMP

S/N: RHX7868-UP

PART OF 286-9798 ENGINE AR-COMPLETE

SMCS-3108 **i02936794**

NOTE	REF NO	GRAPHIC REF	PART NUMBER	QTY	PART NAME 1 2 3 4 5 6 (PRODUCT LEVEL)	SEE PAGE
	1	1	**0S-1590**	3	BOLT (3/8-16X2-IN)	
	2	1	**8T-9527**	1	SEAL-O-RING	
YC	3	1	*133-9907*	1	ADAPTER GP-PUMP DRIVE	13
	4	1	**5M-2894**	4	WASHER-HARD (10.2X18.5X2.5-MM THK)	
	5	1	**9S-8752**	1	NUT-FULL (3/8-16-THD)	

C-CHANGE FROM PREVIOUS TYPE
Y-SEPARATE ILLUSTRATION

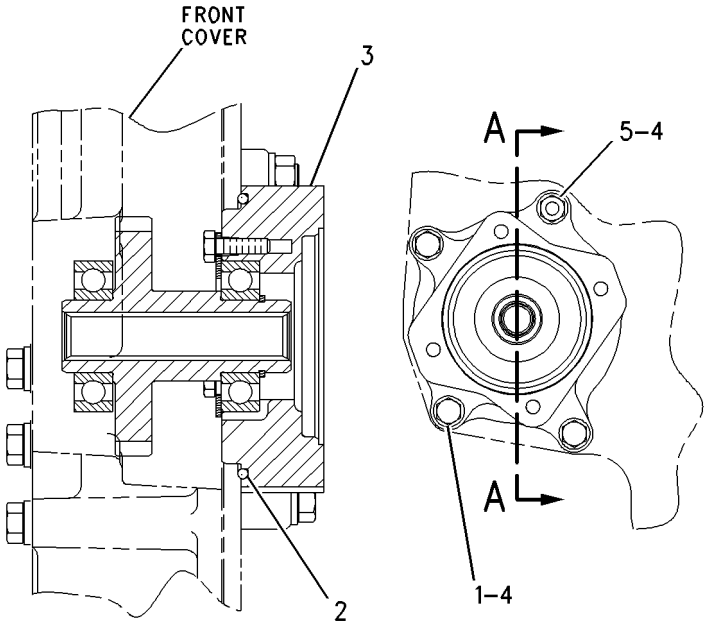

SECTION A–A

GRAPHIC #1 **<END>** g00892672

HYDRAULIC SYSTEM

148-4598 DRIVE GP-SWING—WITHOUT MOTOR, FRONT

S/N: WAP1-UP

PART OF 227-6131 DRIVE GP-SWING

SMCS-5459 **i02956207**

NOTE	REF NO	GRAPHIC REF	PART NUMBER	QTY	PART NAME 1 2 3 4 5 6 (PRODUCT LEVEL)	SEE PAGE
	1	1	**148-4602**	4	GEAR-PLANETARY (24-TEETH)	
M	2	1	**094-1528**	8	WASHER (53X84X1-MM THK)	
	3	1	**148-4608**	4	SHAFT-PLANETARY	
	4	1	**191-2525**	1	COVER-HOUSING	
	5	1	**148-4600**	1	GEAR-SUN (17-TEETH)	
M	6	1	**7I-7684**	2	SPACER (50X79.6X6-MM THK)	
	7	1	**199-4680**	1	GAUGE-OIL LEVEL (SWING DRIVE)	
	8	1	**199-4678**	1	PIPE AS	
	9	1	**096-1441**	1	RING-RETAINING	
	10	1	**093-1730**	1	RING-RETAINING	
	11	1	**148-4601**	1	GEAR-SUN (17-TEETH)	
	12	1	**191-2511**	1	CARRIER-PLANETARY	
	13	1	**114-1322**	1	RING-RETAINING	
	14	1	**148-4607**	1	CARRIER-PLANETARY	
	15	1	**148-4604**	1	GEAR-RING (67-TEETH)	
B	17	1	**1U-8846**		SEALANT-GASKET	
	18	1	**110-7149**	1	RING-RETAINING	
	19	1	**9U-8693**	1	BEARING-ROLLER	
	20	1	**6V-7238**	1	VALVE-SHUTOFF	
	21	1	**3K-0360**	1	SEAL-O-RING	
	22	1	**7I-7619**	1	BEARING-ROLLER	
	23	1	**128-9170**	2	SEAL-LIP TYPE	
	24	1	**199-4496**	1	SHAFT-PINION	
	25	1	**7I-7611**	1	CAGE	
M	26	1	**8T-4183**	10	BOLT (M12X1.75X40-MM)	
	27	1	**8T-4223**	10	WASHER-HARD (13.5X25.5X3-MM THK)	
	28	1	**5M-4454**	1	SEAL-O-RING	
	29	1	**191-2524**	1	HOUSING	
	30	1	**148-4611**	8	WASHER (71.3X112X1-MM THK)	
	31	1	**191-2514**	8	BEARING AS	
	32	1	**148-4609**	4	SHAFT-PLANETARY	
	33	1	**148-4603**	4	GEAR-PLANETARY (24-TEETH)	
	34	1	**099-5194**	8	PIN-SPRING	
M	35	1	**8T-6383**	24	BOLT (M16X2X200-MM)	
	36	1	**9X-8257**	24	WASHER (17.5X30X3.5-MM THK)	
	37	1	**191-2513**	4	BEARING AS-ROLLER	
C	38	1	**227-6221**	1	BREATHER AS (SWING DRIVE)	
		1	**4H-6112**	1	BREATHER (SWING DRIVE)	
		1	**227-6215**	1	BOSS (1/4-18-THD)	
		1	**267-6785**	1	PIPE	
	39	1	**171-9413**	1	SPACER (140.5X160X103.2-MM THK)	
	40	1	**199-4672**	1	CONNECTOR AS	
		1	**6V-9746**	1	SEAL-O-RING	

B-USE AS REQUIRED
C-CHANGE FROM PREVIOUS TYPE
M-METRIC PART

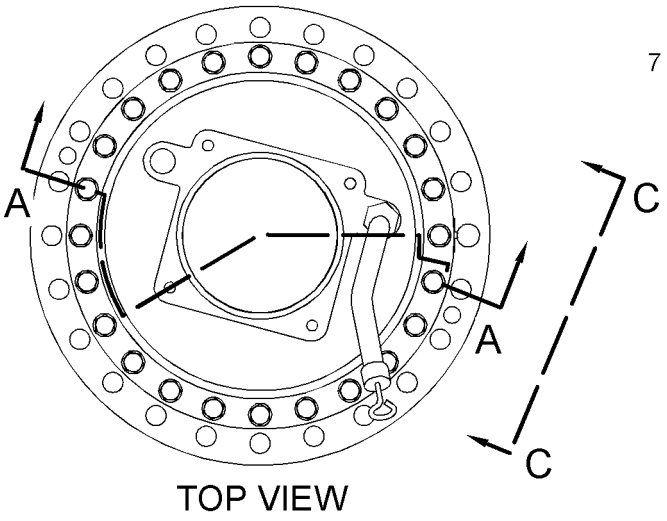

TOP VIEW

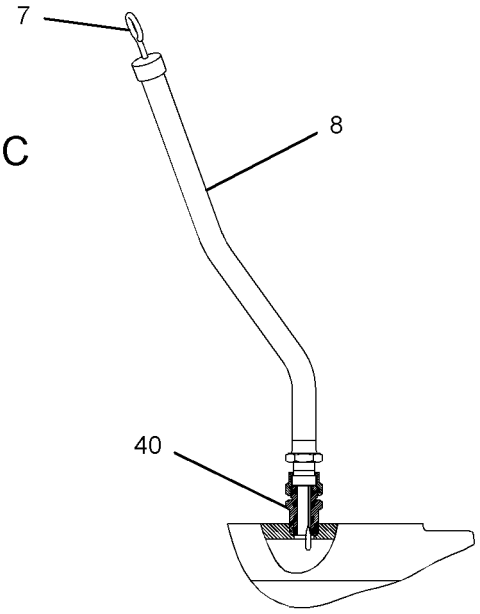

VIEW C-C

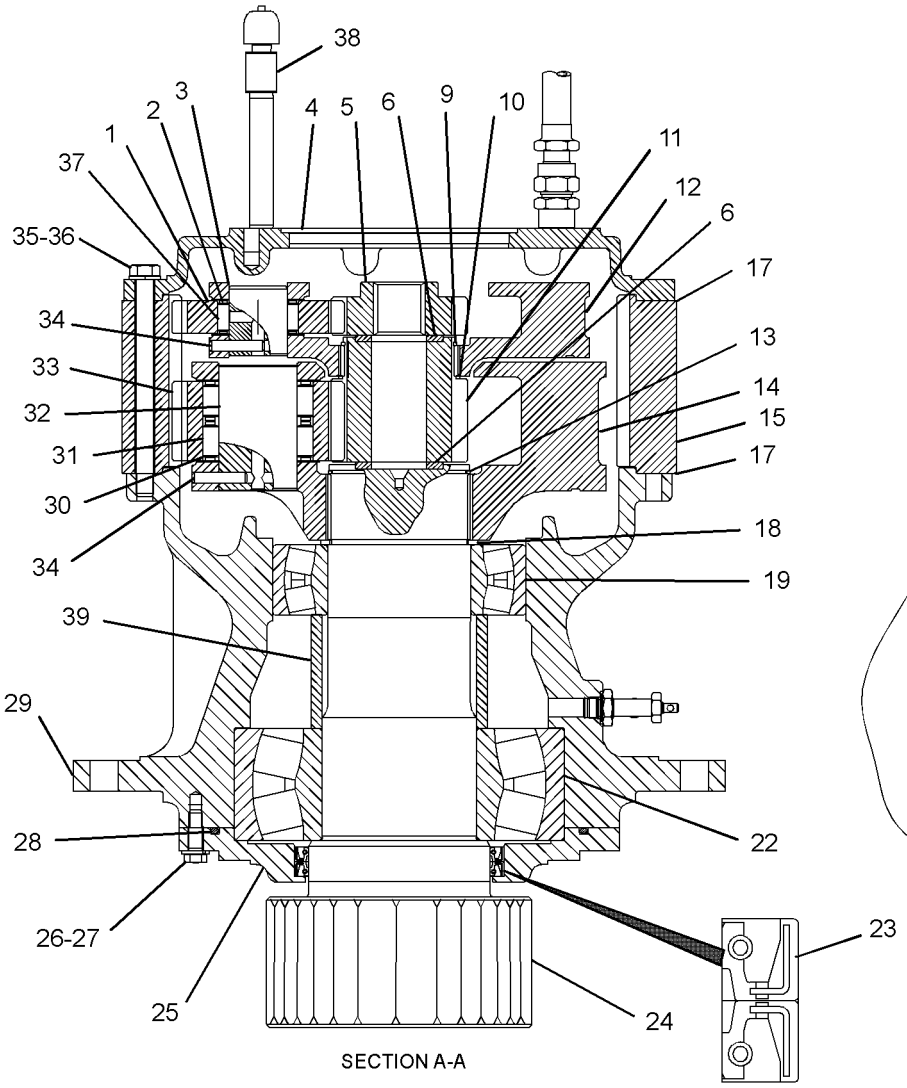

SECTION A-A

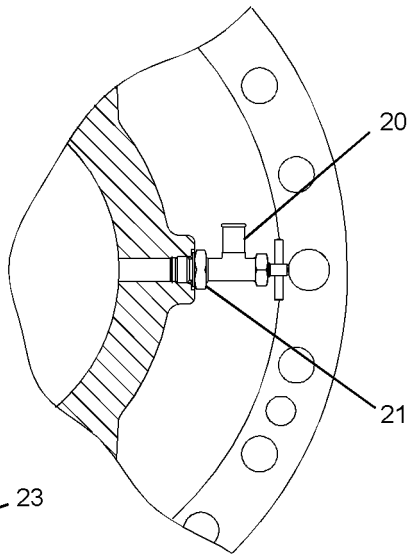

SECTION B-B

GRAPHIC #1 **<END>** g01225494

HYDRAULIC SYSTEM

148-4626 DRIVE GP-SWING—WITHOUT MOTOR, REAR

S/N: WAP1-UP

PART OF 227-6130 DRIVE GP-SWING

SMCS-5459 **i03545101**

NOTE	REF NO	GRAPHIC REF	PART NUMBER	QTY	PART NAME 1 2 3 4 5 6 (PRODUCT LEVEL)	SEE PAGE
	1	1	**148-4602**	4	GEAR-PLANETARY (24-TEETH)	
M	2	1	**094-1528**	8	WASHER (53X84X1-MM THK)	
	3	1	**148-4608**	4	SHAFT-PLANETARY	
	4	1	**191-2525**	1	COVER-HOUSING	
	5	1	**148-4600**	1	GEAR-SUN (17-TEETH)	
M	6	1	**7I-7684**	2	SPACER (50X79.6X6-MM THK)	
	7	1	**199-4672**	1	CONNECTOR AS	
		1	**6V-9746**	1	SEAL-O-RING	
	8	1	**199-4674**	1	PIPE AS	
	9	1	**096-1441**	1	RING-RETAINING	
	10	1	**093-1730**	1	RING-RETAINING	
	11	1	**148-4601**	1	GEAR-SUN (17-TEETH)	
	12	1	**191-2511**	1	CARRIER-PLANETARY	
	13	1	**114-1322**	1	RING-RETAINING	
	14	1	**148-4607**	1	CARRIER-PLANETARY	
	15	1	**148-4604**	1	GEAR-RING (67-TEETH)	
B	17	1	**1U-8846**		SEALANT-GASKET	
	18	1	**110-7149**	1	RING-RETAINING	
	19	1	**9U-8693**	1	BEARING-ROLLER	
	20	1	**7I-7619**	1	BEARING-ROLLER	
	21	1	**128-9170**	2	SEAL-LIP TYPE	
	22	1	**199-4496**	1	SHAFT-PINION	
	23	1	**7I-7611**	1	CAGE	
M	24	1	**8T-4183**	10	BOLT (M12X1.75X40-MM)	
	25	1	**8T-4223**	10	WASHER-HARD (13.5X25.5X3-MM THK)	
	26	1	**5M-4454**	1	SEAL-O-RING	
	27	1	**191-2524**	1	HOUSING	
	28	1	**6V-7238**	1	VALVE-SHUTOFF	
	29	1	**3K-0360**	1	SEAL-O-RING	
	30	1	**148-4611**	8	WASHER (71.3X112X1-MM THK)	
	31	1	**191-2514**	8	BEARING AS	
	32	1	**148-4609**	4	SHAFT-PLANETARY	
	33	1	**148-4603**	4	GEAR-PLANETARY (24-TEETH)	
	34	1	**099-5194**	8	PIN-SPRING	
M	35	1	**8T-6383**	24	BOLT (M16X2X200-MM)	
	36	1	**9X-8257**	24	WASHER (17.5X30X3.5-MM THK)	
	37	1	**191-2513**	4	BEARING AS-ROLLER	
C	38	1	**227-6221**	1	BREATHER AS (SWING DRIVE)	
		1	**4H-6112**	1	BREATHER (SWING DRIVE)	
		1	**227-6215**	1	BOSS (1/4-18-THD)	
		1	**267-6785**		PIPE	
	39	1	**171-9413**	1	SPACER (140.5X160X103.2-MM THK)	
	40	1	**199-4681**	1	GAUGE-OIL LEVEL (SWING DRIVE)	

B-USE AS REQUIRED
C-CHANGE FROM PREVIOUS TYPE
M-METRIC PART

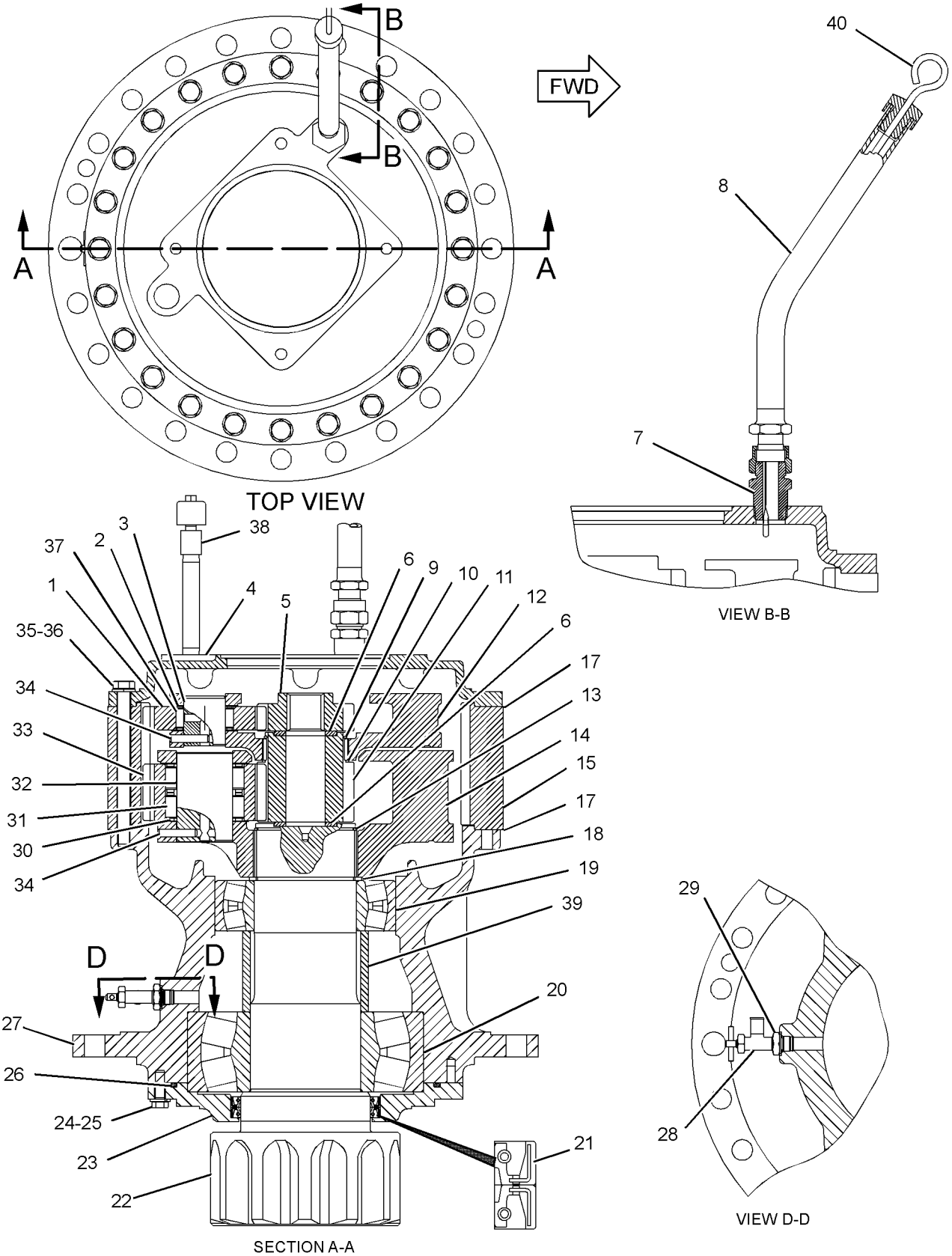

GRAPHIC #1 **<END>** g01232553

227-6130 DRIVE GP-SWING—WITH MOTOR, REAR

S/N: WAP1-UP

PART OF 227-6129 POWER TRAIN AR

SMCS-5459 **i02157302**

NOTE	REF NO	GRAPHIC REF	PART NUMBER	QTY	PART NAME 1 2 3 4 5 6 (PRODUCT LEVEL)	SEE PAGE
Y	1	1	*148-4626*	1	DRIVE GP-SWING (WITHOUT MOTOR, REAR)	509
Y	2	1	*234-4534*	1	MOTOR & MTG GP-SWING	643

Y-SEPARATE ILLUSTRATION

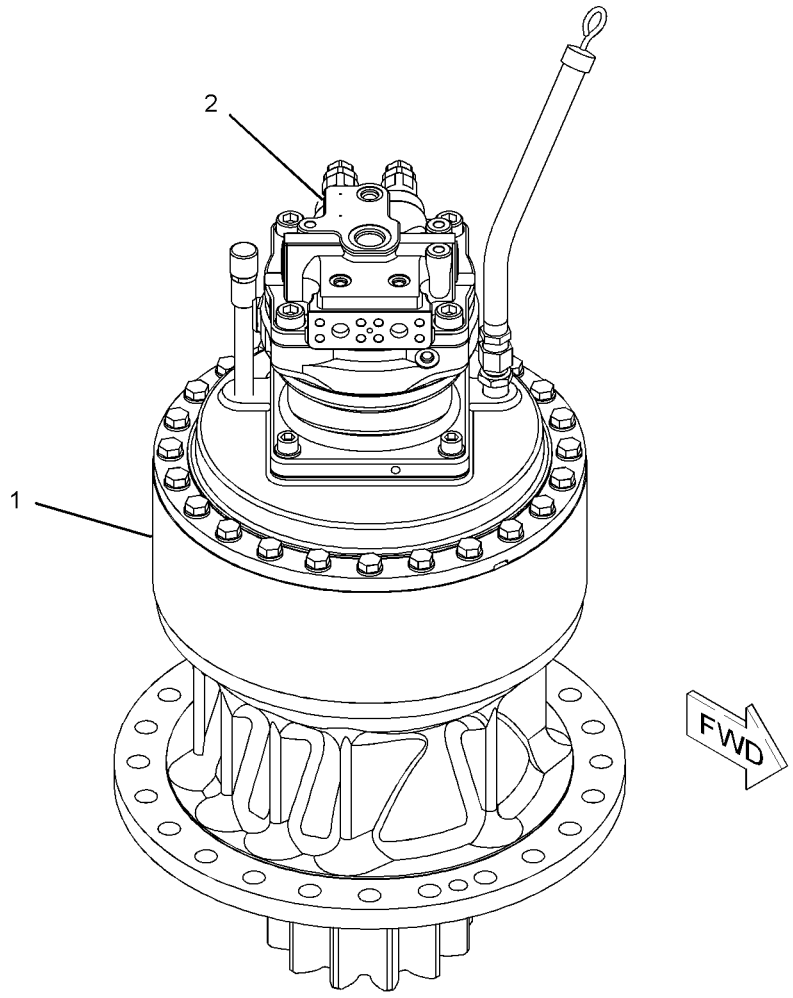

GRAPHIC #1

<END>

g01086957

HYDRAULIC SYSTEM

227-6131 DRIVE GP-SWING—WITH MOTOR, FRONT

S/N: WAP1-UP

PART OF 227-6129 POWER TRAIN AR

SMCS-5459 **i02124719**

NOTE	REF NO	GRAPHIC REF	PART NUMBER	QTY	PART NAME 1 2 3 4 5 6 (PRODUCT LEVEL)	SEE PAGE
Y	1	1	*148-4598*	1	DRIVE GP-SWING (WITHOUT MOTOR, FRONT)	507
Y	2	1	*234-4536*	1	MOTOR & MTG GP-SWING	644

Y-SEPARATE ILLUSTRATION

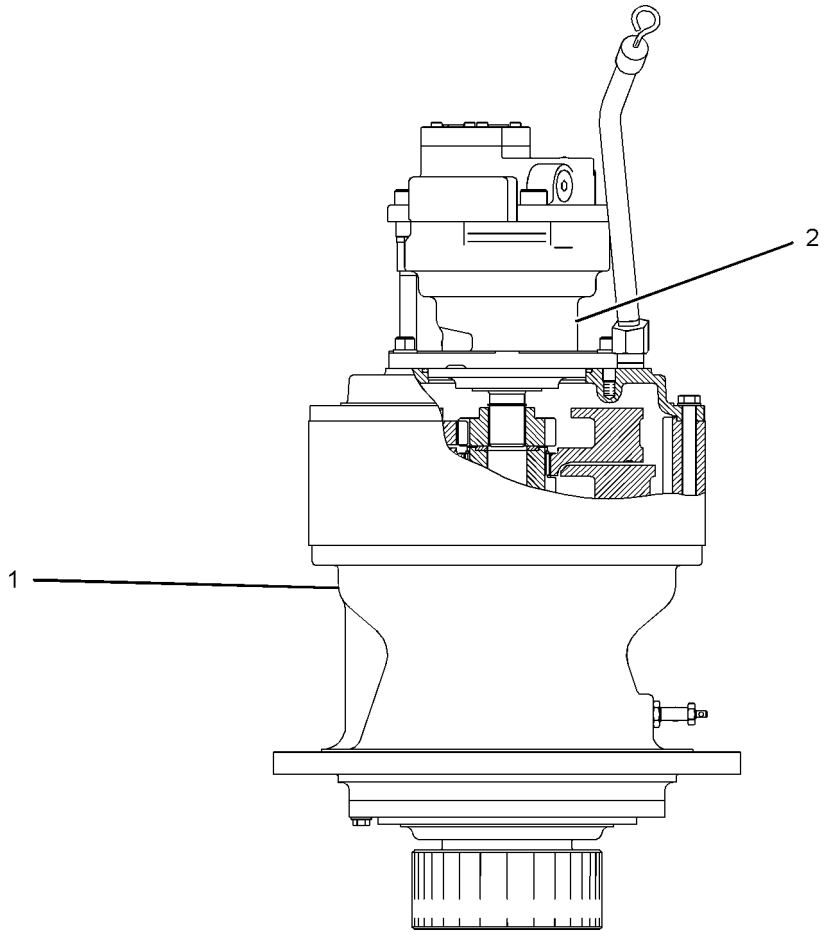

RIGHT SIDE VIEW

GRAPHIC #1 **<END>** g01086132

HYDRAULIC SYSTEM

148-4627 FASTENER GP-SWING & FINAL DR

S/N: WAP1-UP

PART OF 227-6129 POWER TRAIN AR

SMCS-4050, 5459 **i02777759**

NOTE	REF NO	GRAPHIC REF	PART NUMBER	QTY	PART NAME 1 2 3 4 5 6 (PRODUCT LEVEL)	SEE PAGE
M	1	1,2	**7X-2582**	48	BOLT (M30X3.5X110-MM)	
	2	1,2	**9X-8258**	48	WASHER (33X56X6-MM THK)	
M	3	2	**8T-5878**	46	BOLT (M24X3X80-MM)	
	4	2	**096-4755**	2	PIN	
B	5	2	**1U-8846**		SEALANT-GASKET	
E	6	1	**5P-0767**		HOSE (140-CM)	
E	6A	1	**5P-0767**		HOSE (70-CM)	
	7	1	**2B-7561**	4	CORK	
	8	2	**5D-1026**	2	CLAMP-BAND	
	10	1	**114-1374**	1	SUPPORT	
M	11	1	**8T-4137**	1	BOLT (M10X1.5X20-MM)	
	12	1,2	**8T-4121**	3	WASHER-HARD (11X21X2.5-MM THK)	
	13	2	**267-6787**	46	SPACER (24.5X44X14-MM THK)	
	14	2	**199-4677**	1	SUPPORT	
	15	2	**122-8705**	1	U-BOLT	
M	16	2	**096-4883**	2	LOCKNUT (M10X1.5-THD)	
M	17	2	**8T-4179**	2	BOLT (M12X1.75X20-MM)	
	18	2	**8T-4223**	2	WASHER-HARD (13.5X25.5X3-MM THK)	
	19	1	**9V-5382**	1	GROMMET	

B-USE AS REQUIRED
E-ORDER BY THE CENTIMETER
M-METRIC PART

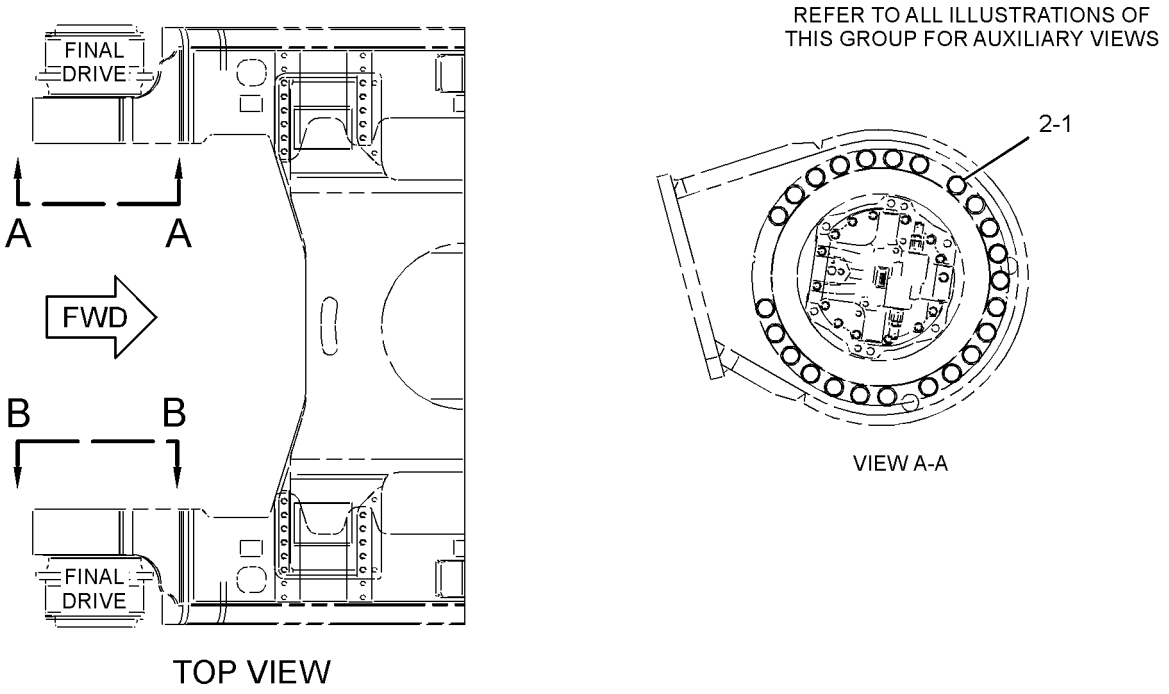

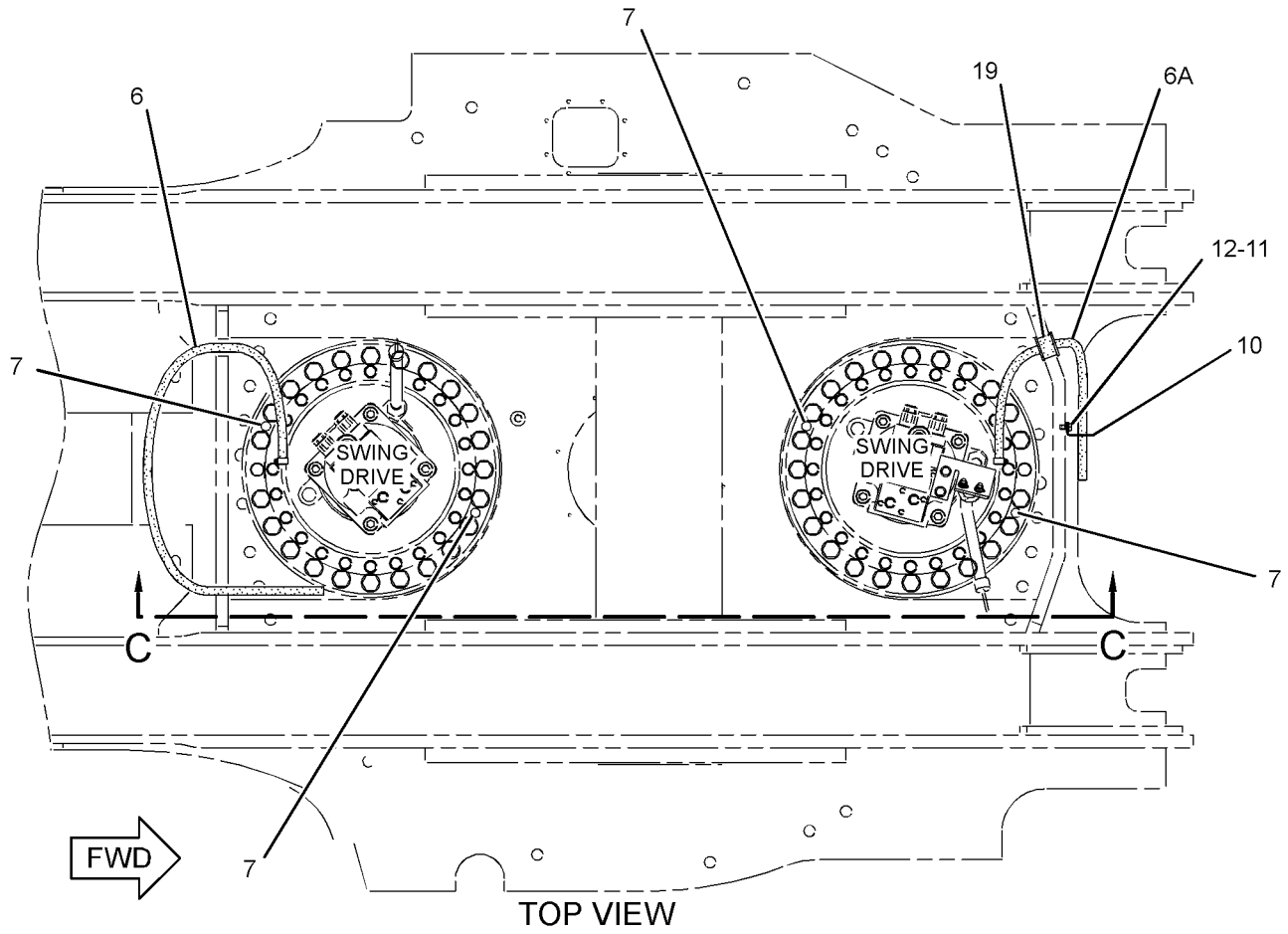

GRAPHIC #1 g01398887

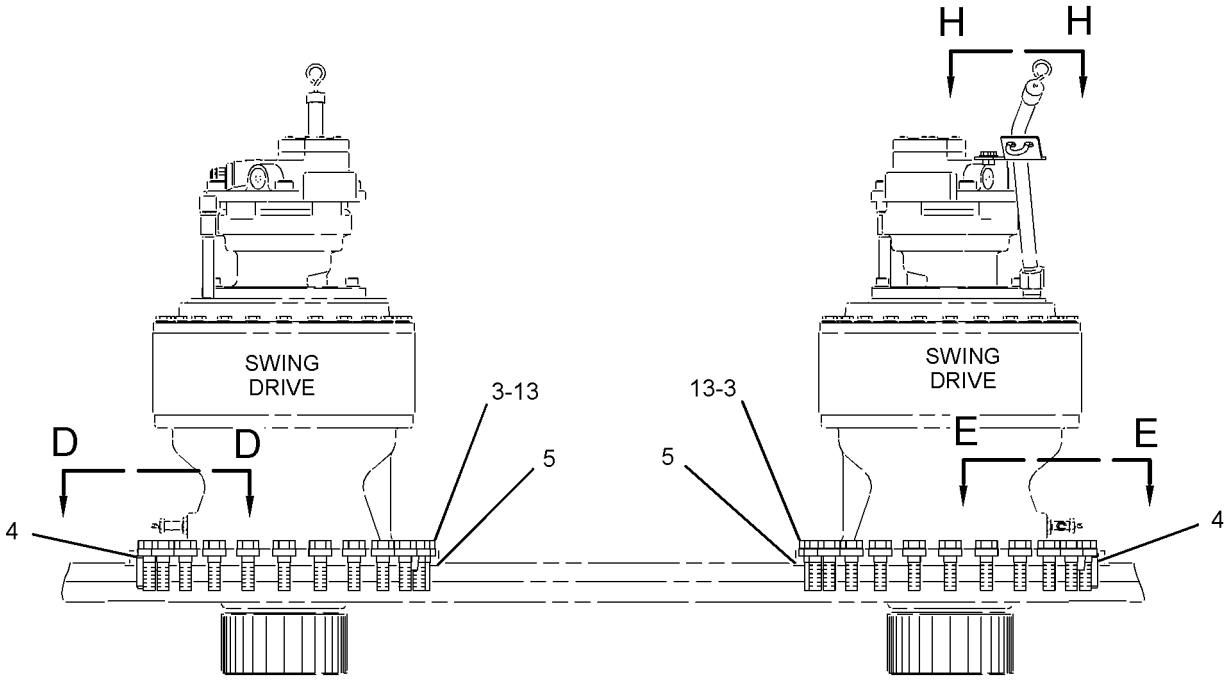

VIEW C-C

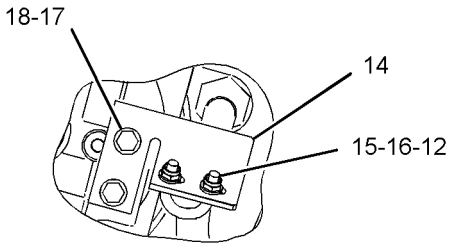

VIEW H-H

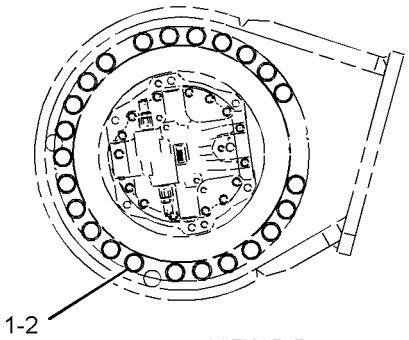

VIEW B-B

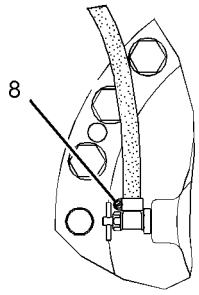

VIEW D-D

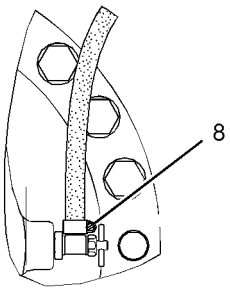

VIEW E-E

GRAPHIC #2 **<END>** g01398888

HYDRAULIC SYSTEM

296-7116 FILTER & LINES GP-HYDRAULIC–

FINE FILTRATION

S/N: WAP1-UP

PART OF 294-1296 FILTER AR-HYDRAULIC

AN ATTACHMENT

SMCS-5057, 5068 **i03907372**

NOTE	REF NO	GRAPHIC REF	PART NUMBER	QTY	PART NAME 1 2 3 4 5 6 (PRODUCT LEVEL)	SEE PAGE
	1	1	**6V-0852**	1	CAP-DUST	
	2	1	**7K-1181**	3	STRAP-CABLE	
Y	3	1	**250-0729**	1	FILTER GP-OIL (HYDRAULIC)	527
I	4	1	**307-4946**	1	HOSE AS	
I	5	1	**307-4949**	1	HOSE AS	
	6	1	**307-5110**	1	SUPPORT	
	7	1	**333-7152**	1	SUPPORT AS	
	8	1	*148-8365*	2	ELBOW AS	
					(EACH INCLUDES)	
		1	**3J-1907**	1	SEAL-O-RING	
		1	**6V-8398**	1	SEAL-O-RING	
		1	**8T-6876**	1	ELBOW	
	9	1	*148-8372*	1	ELBOW AS	
		1	**2M-9780**	1	SEAL-O-RING	
		1	**6V-8398**	1	SEAL-O-RING	
		1	**6V-8721**	1	ELBOW	
	10	1	*148-8418*	1	REDUCER AS	
		1	**6V-8398**	1	SEAL-O-RING	
		1	**6V-8942**	1	REDUCER-O-RING	
	11	1	*164-5574*	1	TEE AS	
		1	**3D-2824**	1	SEAL-O-RING	
		1	**6V-8784**	1	TEE-FACE SEAL	
		1	**6V-9746**	2	SEAL-O-RING	
	12	1	**1S-0994**	1	CLIP	
	13	1	*241-6215*	1	ELBOW AS	
		1	**6V-8076**	1	ELBOW	
		1	**3J-1907**	2	SEAL-O-RING	
	14	1	**3J-1907**	1	SEAL-O-RING	
	15	1	**6V-3965**	1	FITTING (QUICK DISCONNECT)	
	16	1	**6V-8556**	1	NUT (1-3/16-12-THD)	
M	17	1	**7X-2537**	4	BOLT (M8X1.25X35-MM)	
	18	1	**8T-4121**	4	WASHER-HARD (11X21X2.5-MM THK)	
M	19	1	**8T-4139**	8	BOLT (M12X1.75X30-MM)	
M	20	1	**8T-4195**	4	BOLT (M10X1.5X30-MM)	
	21	1	**8T-4223**	8	WASHER-HARD (13.5X25.5X3-MM THK)	
	22	1	**8T-4224**	4	WASHER-HARD (8.8X16X2-MM THK)	

I-REFER TO HYDRAULIC INFORMATION SYSTEM
M-METRIC PART
Y-SEPARATE ILLUSTRATION

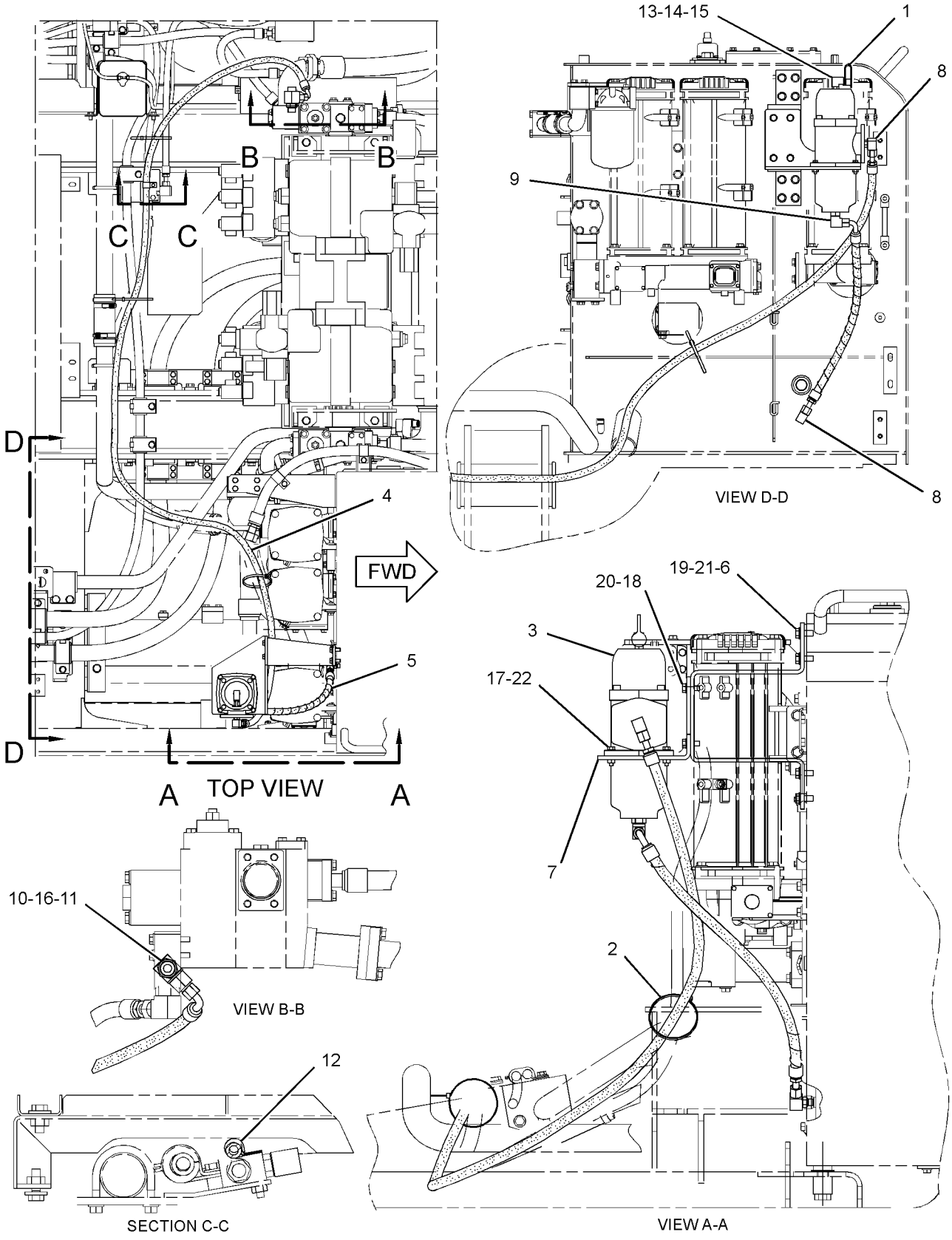

GRAPHIC #1 **<END>** g02149057

HYDRAULIC SYSTEM

294-1296 FILTER AR—FINE FILTRATION

S/N: WAP1-UP

AN ATTACHMENT

SMCS-5068 **i03907366**

NOTE	PART NUMBER	QTY	PART NAME 1 2 3 4 5 6 (PRODUCT LEVEL)	SEE PAGE
Y	*296-7116*	1	FILTER & LINES GP (FINE FILTRATION)	516

Y-SEPARATE ILLUSTRATION

<END>

6E-5534 FILTER GP-OIL—HYDRAULIC

S/N: WAP1-UP

PART OF 296-7109 LINES GP-PILOT, 227-0367 TANK & FILTER GP-HYDRAULIC

SMCS-3004, 4295, 431F, 5068, 5091, 5092 **i02636069**

NOTE	REF NO	GRAPHIC REF	PART NUMBER	QTY	PART NAME 1 2 3 4 5 6 (PRODUCT LEVEL)	SEE PAGE
	1	1	**4T-6788**	1	FILTER-OIL (ADVANCED EFFICIENCY) (HYDRAULIC)	

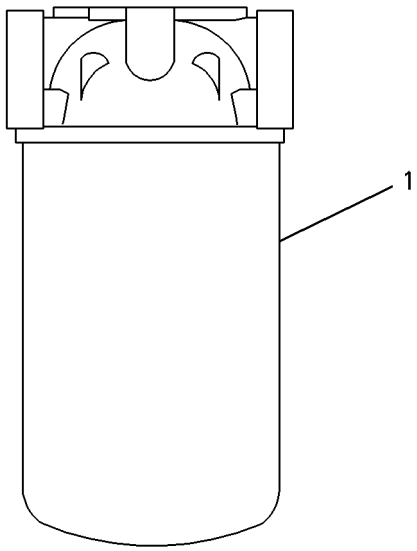

GRAPHIC #1 **<END>** g00233591

HYDRAULIC SYSTEM

185-0336 FILTER GP-OIL–HYDRAULIC

S/N: WAP1-UP

PART OF 296-7109 LINES GP-PILOT

SMCS-3004, 4295, 431F, 5068, 5091, 5092 **i02636070**

NOTE	REF NO	GRAPHIC REF	PART NUMBER	QTY	PART NAME 1 2 3 4 5 6 (PRODUCT LEVEL)	SEE PAGE
	1	1	**185-0337**	1	FILTER-OIL (ADVANCED EFFICIENCY) (HYDRAULIC)	
	2	1	**103-8236**	1	RING	

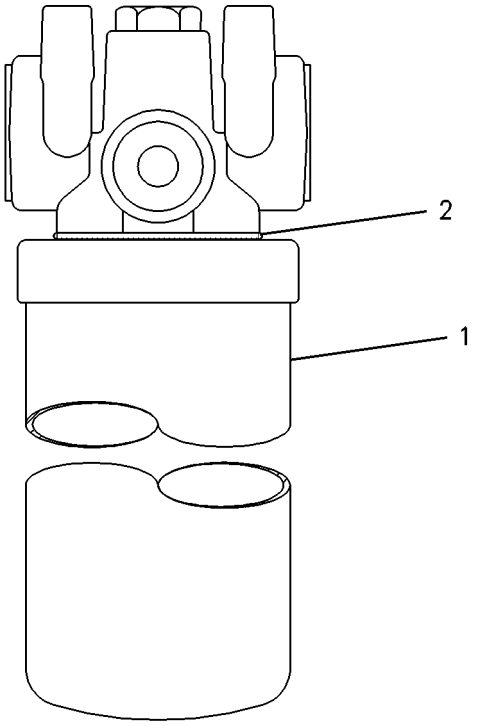

GRAPHIC #1 **<END>** g00233577

HYDRAULIC SYSTEM

188-4142 FILTER GP-OIL—HYDRAULIC RETURN

S/N: WAP1-UP

PART OF 234-4531, 242-6878 FILTER GP-OIL

SMCS-3004, 4295, 431F, 5068, 5091, 5092 **i03493360**

NOTE	REF NO	GRAPHIC REF	PART NUMBER	QTY	PART NAME 1 2 3 4 5 6 (PRODUCT LEVEL)	SEE PAGE
	1	1	**204-2762**	1	PLATE	
JM	2	1	**173-3529**	6	BOLT (M6X1X15-MM)	
J	3	1	**3T-7528**	6	SEAL-O-RING	
	4	1	**173-3513**	1	BASE	
J	5	1	**3E-4297**	2	SEAL-O-RING	
M	6	1	**137-3626**	1	BOLT-SHOULDER (M6X1X28.75-MM)	
	7	1	**188-4143**	1	FILM-INSTRUCTION (HYDRAULIC OIL RETURN FILTER)	
	8	1	**179-9806**	1	FILTER ELEMENT AS-OIL (ULTRA HIGH EFFICIENCY) (HYDRAULIC RETURN)	
J	9	1	**137-3623**	4	SEAL-O-RING	
J	10	1	**6V-7658**	2	SEAL-O-RING	
J	11	1	**177-2553**	1	SEAL	
J	12	1	**095-1681**	1	SEAL-O-RING	
	13	1	**173-3515**	1	RING-RETAINING	
	14	1	**173-3516**	1	HANDLE	
J	15	1	**4J-7533**	1	SEAL-O-RING	
J	16	1	**9S-4180**	1	PLUG	
JM	17	1	**137-3624**	8	SCREW (M3X0.5X5-MM)	
J	18	1	**137-3625**	2	PAD	
	19	1	**173-3517**	1	PLATE	
J	20	1	**137-3628**	1	SHIM (0.1-MM THK)	
					AVAILABLE REPAIR KIT(S):	
J			**201-9299**	1	KIT-SERVICE (HYDRAULIC FILTER)	

J-KIT MARKED J SERVICES PARTS MARKED J
M-METRIC PART

188-4142 **FILTER GP-OIL** *(contd.)* **i03493360**

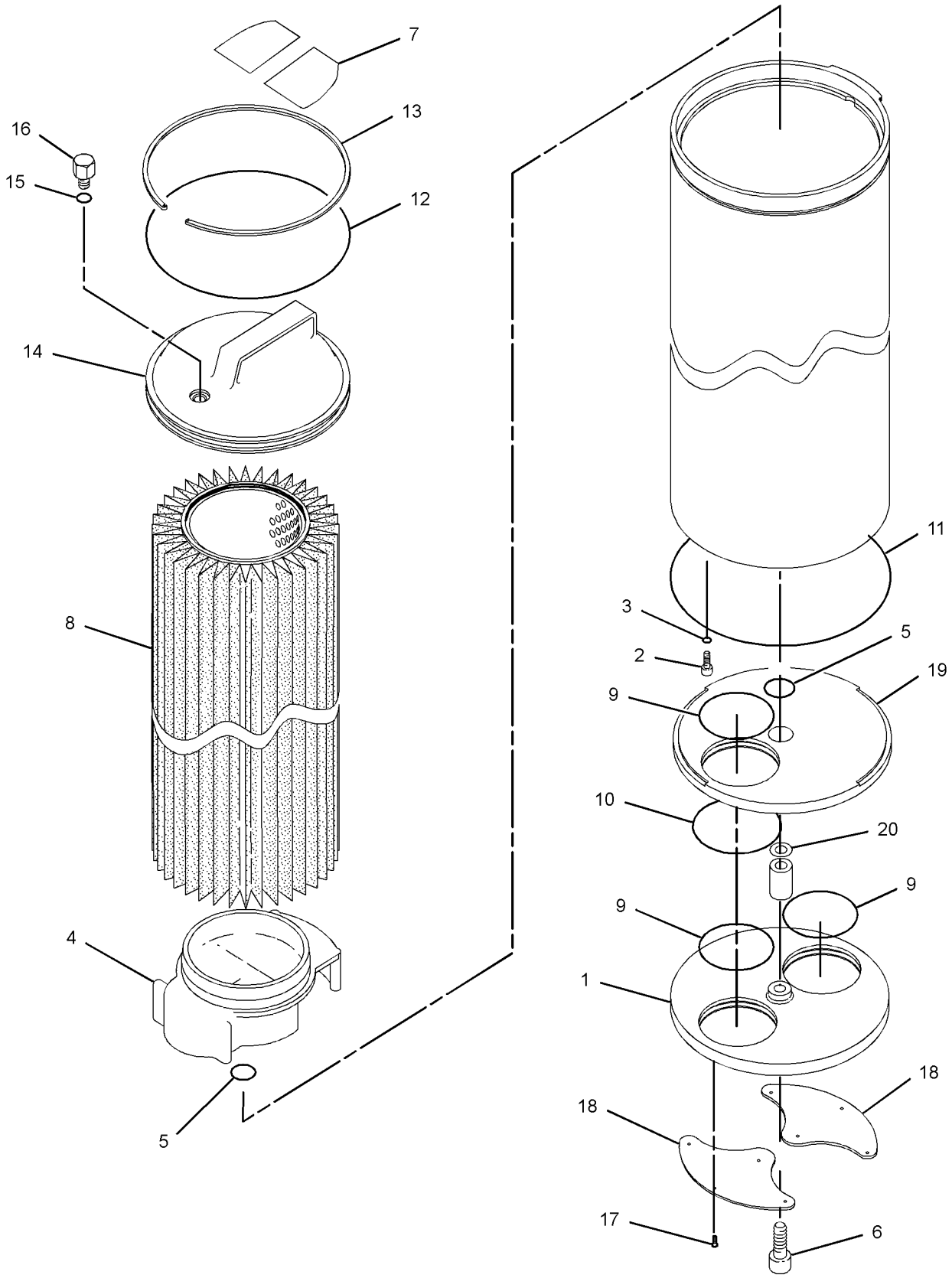

GRAPHIC #1 **<END>** g01830153

HYDRAULIC SYSTEM

234-4531 FILTER GP-OIL—HYDRAULIC

S/N: WAP1-UP

PART OF 227-0367 TANK & FILTER GP-HYDRAULIC

SMCS-3004, 4295, 431F, 5068, 5091, 5092 **i02497558**

NOTE	REF NO	GRAPHIC REF	PART NUMBER	QTY	PART NAME 1 2 3 4 5 6 (PRODUCT LEVEL)	SEE PAGE
	1	1	**129-8034**	2	VALVE AS-BYPASS	
Y	2	1	**129-8053**	1	BASE GP-OIL FILTER (HYDRAULIC)	469
	3	1	**129-8055**	2	FLANGE	
	4	1	**129-8056**	1	COVER	
	5	1	**129-7815**	1	COVER	
	6	1	**173-3507**	2	HOUSING AS	
	7	1	**173-3510**	2	COVER	
	8	1	**173-3518**	1	INDICATOR AS (HYDRAULIC RETURN FILTER)	
Y	9	1	**188-4142**	2	FILTER GP-OIL (HYDRAULIC RETURN)	521
	11	1	**242-6882**	1	COVER	
	12	1	**242-6883**	1	GASKET	
M	13	1	**095-0759**	2	SCREW-MACHINE (M6X1X3.4-MM)	
	15	1	**123-2003**	4	SEAL-O-RING	
	16	1	**159-7784**	1	SEAL-O-RING	
	17	1	**3J-7354**	1	SEAL-O-RING	
	18	1	**6J-2680**	4	SEAL-O-RING	
M	19	1	**6V-4298**	8	BOLT (M5X0.8X16-MM)	
	20	1	**6V-7609**	2	SEAL-O-RING	
	21	1	**8T-0328**	8	WASHER-HARD (5.5X10X1-MM THK)	
M	22	1	**8T-4183**	6	BOLT (M12X1.75X40-MM)	
M	23	1	**8T-4194**	16	BOLT (M12X1.75X50-MM)	
	24	1	**8T-4223**	32	WASHER-HARD (13.5X25.5X3-MM THK)	
M	25	1	**8T-4956**	10	BOLT (M12X1.75X35-MM)	
M	26	1	**8T-6693**	4	SCREW-MACHINE (M5X0.8X16-MM)	
	27	1	**9S-4182**	1	PLUG-O RING	

M-METRIC PART
Y-SEPARATE ILLUSTRATION

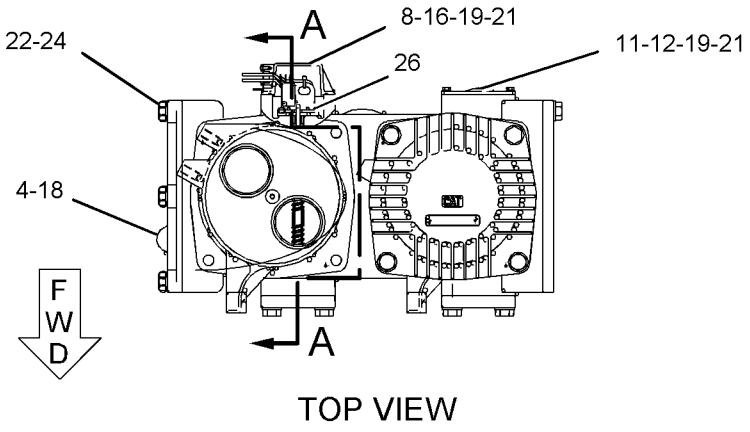

TOP VIEW

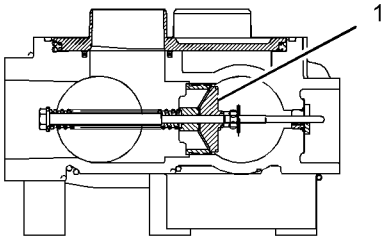

SECTION A-A

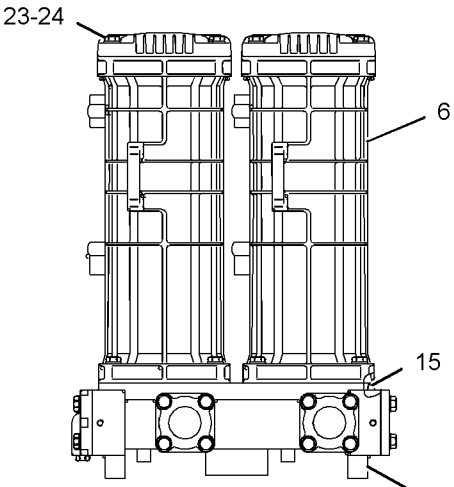

FRONT VIEW

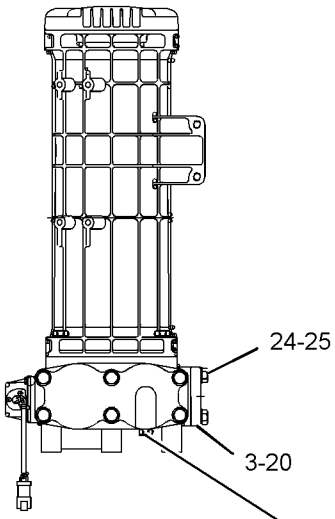

RIGHT SIDE VIEW

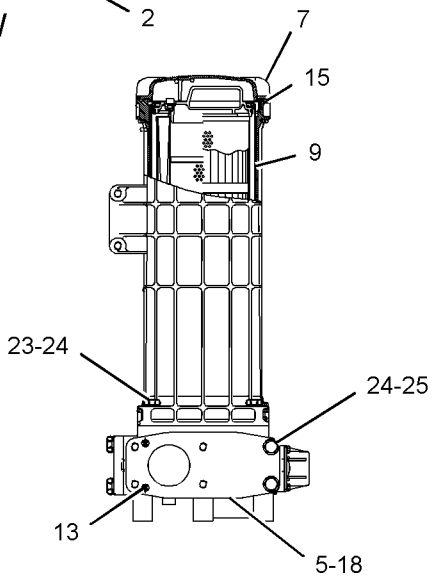

LEFT SIDE VIEW

GRAPHIC #1 **<END>** g01076063

242-6878 FILTER GP-OIL—HYDRAULIC

S/N: WAP1-UP

PART OF 227-0367 TANK & FILTER GP-HYDRAULIC

SMCS-3004, 4295, 431F, 5068, 5091, 5092 **i02110714**

NOTE	REF NO	GRAPHIC REF	PART NUMBER	QTY	PART NAME 1 2 3 4 5 6 (PRODUCT LEVEL)	SEE PAGE
	1	1	**129-8034**	1	VALVE AS-BYPASS	
Y	2	1	**173-3503**	1	BASE GP-OIL FILTER (HYDRAULIC)	470
	3	1	**173-3507**	1	HOUSING AS	
	4	1	**173-3510**	1	COVER	
Y	5	1	**188-4142**	1	FILTER GP-OIL (HYDRAULIC RETURN)	521
	6	1	**242-6882**	1	COVER	
	7	1	**242-6883**	1	GASKET	
	10	1	**123-2003**	2	SEAL-O-RING	
M	11	1	**6V-4298**	4	BOLT (M5X0.8X16-MM)	
	12	1	**8T-0328**	4	WASHER-HARD (5.5X10X1-MM THK)	
M	13	1	**8T-4194**	8	BOLT (M12X1.75X50-MM)	
	14	1	**8T-4223**	8	WASHER-HARD (13.5X25.5X3-MM THK)	

M-METRIC PART
Y-SEPARATE ILLUSTRATION

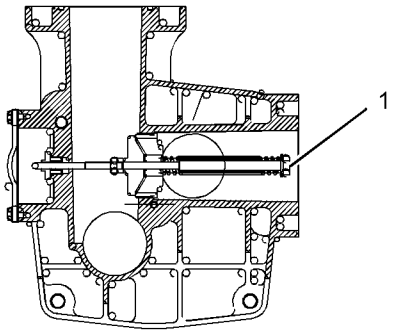

SECTION A-A

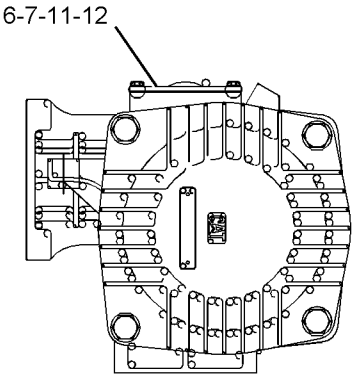

TOP VIEW

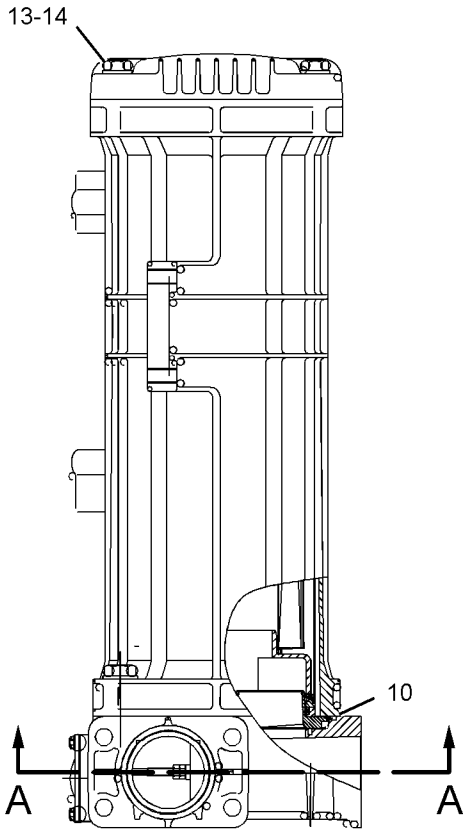

FRONT VIEW

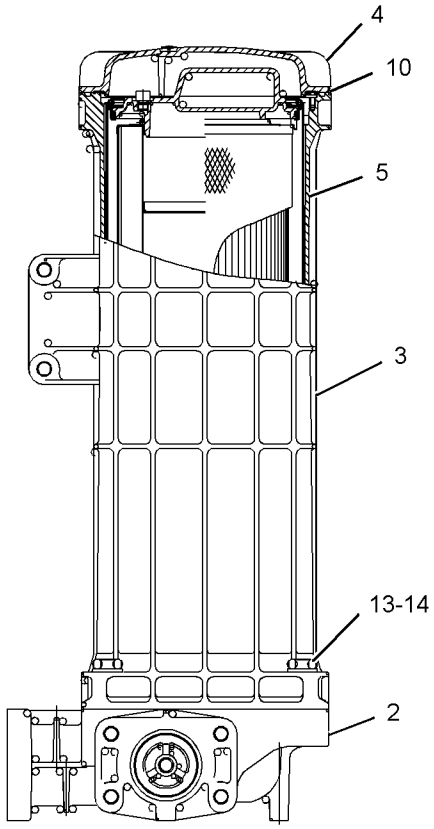

LEFT SIDE VIEW

GRAPHIC #1 **<END>** g01081939

250-0729 FILTER GP-OIL–HYDRAULIC

S/N: WAP1-UP
PART OF 296-7116 FILTER & LINES GP-HYDRAULIC
AN ATTACHMENT

SMCS-3004, 4295, 431F, 5068, 5091, 5092 **i02956347**

NOTE	REF NO	GRAPHIC REF	PART NUMBER	QTY	PART NAME 1 2 3 4 5 6 (PRODUCT LEVEL)	SEE PAGE
	1	1	**146-9290**	1	FILTER ELEMENT-OIL (ULTRA HIGH EFFICIENCY) (HYDRAULIC)	
	2	1	**250-6967**	1	COVER	
M	3	1	**105-3484**	4	BOLT-SOCKET HEAD (M10X1.5X25-MM)	
	4	1	**155-4038**	1	SEAL-O-RING	
	5	1	**155-4039**	1	SEAL-O-RING	
	6	1	**155-4041**	1	SEAL-O-RING	

M-METRIC PART

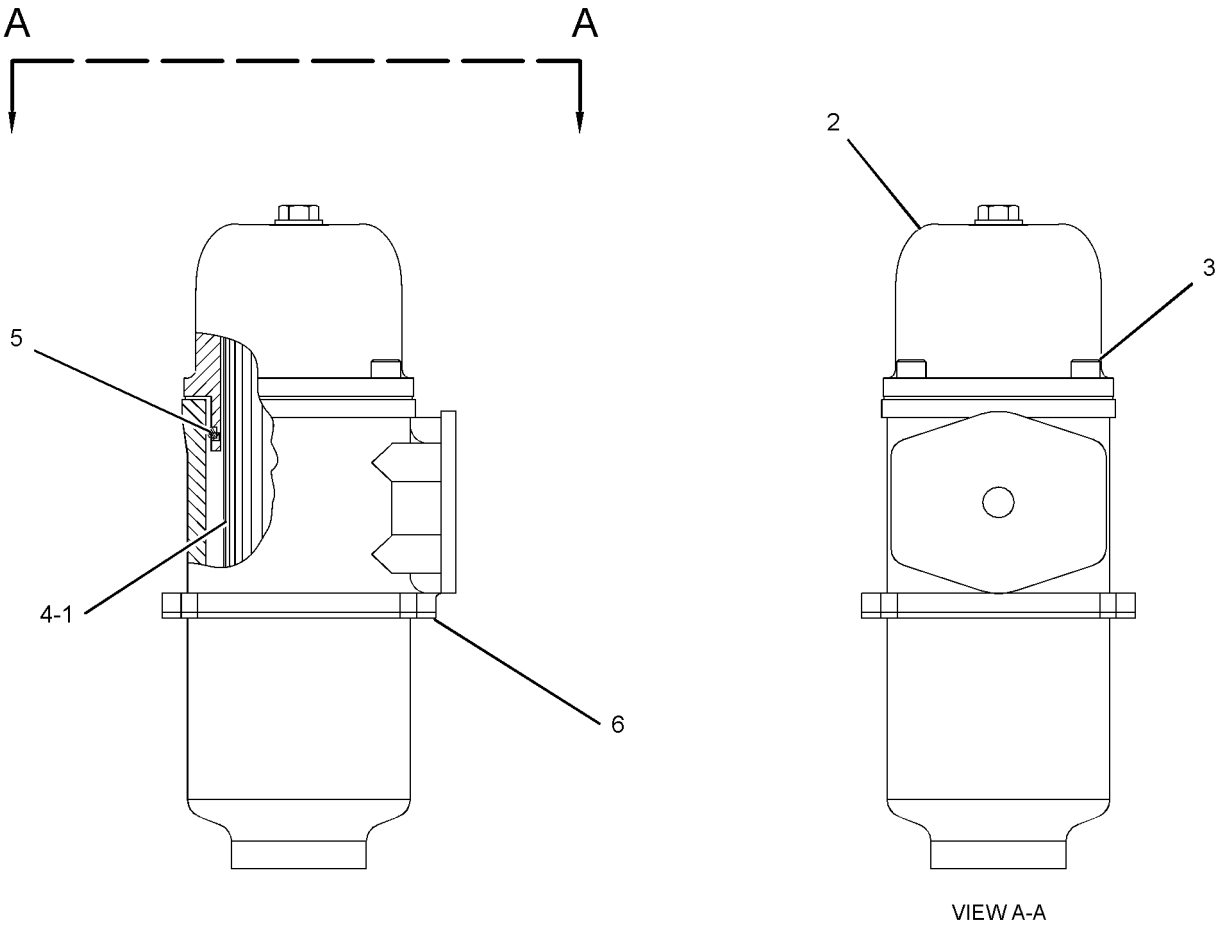

GRAPHIC #1 **<END>** g01176490

227-0620 GAUGE GP-SIGHT—HYDRAULIC OIL LEVEL

S/N: WAP1-UP

PART OF 227-0367 TANK & FILTER GP-HYDRAULIC

SMCS-7479 **i02553818**

NOTE	REF NO	GRAPHIC REF	PART NUMBER	QTY	PART NAME 1 2 3 4 5 6 (PRODUCT LEVEL)	SEE PAGE
	1	1	**236-3258**	2	BLOCK	
M	2	1	**236-3259**	2	BOLT-SPECIAL	
	3	1	**236-3257**	1	PIPE	
	4	1	**095-1519**	4	SEAL-O-RING	
	5	1	**6F-4855**	4	SEAL-O-RING	

M-METRIC PART

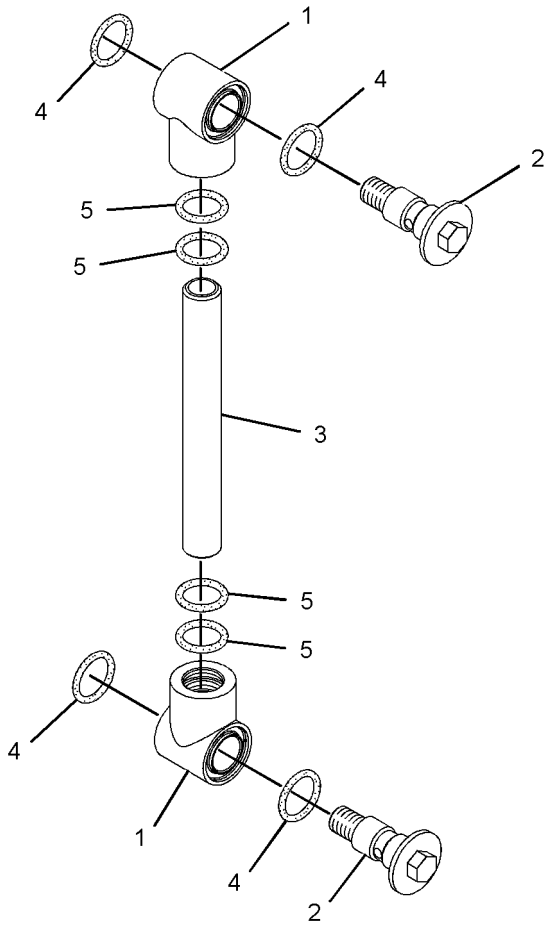

GRAPHIC #1 **<END>** g01091508

HYDRAULIC SYSTEM

191-5593 HEAD GP-PUMP

S/N: WAP1-UP

PART OF 295-9678 PUMP GP-PISTON

SMCS-3222, 5070, 5086 **i02140325**

NOTE	REF NO	GRAPHIC REF	PART NUMBER	QTY	PART NAME 1 2 3 4 5 6 (PRODUCT LEVEL)	SEE PAGE
	1	1	**087-4772**	2	PLUG-O-RING	
	2	1	**120-4394**	8	PLUG-BREAK OFF	
	3	1	**6E-3873**	1	PLUG-ORIFICE	
	4	1	**099-5845**	2	PLUG	
Z	5	1		1	BODY	
	6	1	**4H-9105**	1	SEAL-O-RING	
	7	1	**191-5595**	1	FLANGE	
M	8	1	**8T-0439**	4	BOLT-SOCKET HEAD (M16X2X30-MM)	
	9	1	**5I-4277**	1	ORIFICE	
	10	1	**5I-4341**	2	DOWEL	
	11	1	**170-9903**	1	PIN-TAPERED	
	12	1	**6E-3874**	1	BEARING	
	13	1	**165-9367**	1	VALVE	

M-METRIC PART
Z-NOT SERVICED SEPARATELY

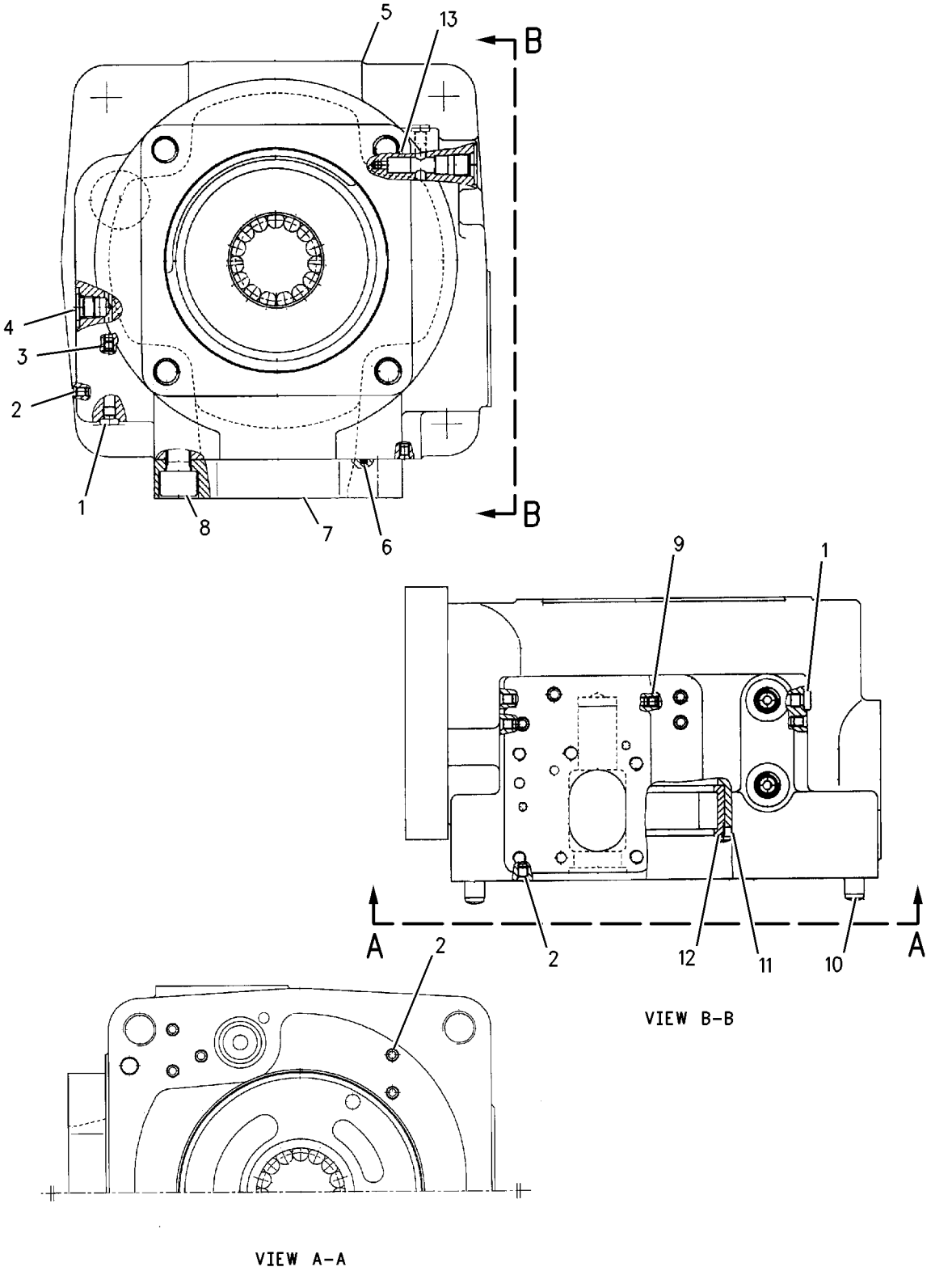

GRAPHIC #1 **<END>** g00786733

HYDRAULIC SYSTEM

297-0223 HYDRAULIC AR

S/N: WAP1-UP

PART OF 294-1203 GENERAL AR

SMCS-5050 **i03904241**

NOTE	PART NUMBER	QTY	PART NAME 1 2 3 4 5 6 (PRODUCT LEVEL)	SEE PAGE
Y	*338-6160*	1	LINES GP-FRONT	578
Y	*296-7102*	1	LINES GP-MOTOR	591
Y	*296-7109*	1	LINES GP-PILOT	595
Y	*338-6161*	1	LINES GP-PUMP	609
Y	*296-7107*	1	LINES GP-RETURN & FILTER	618
Y	*296-7105*	1	LINES GP-SWING MOTOR	630
Y	*338-6163*	1	LINES GP-SWIVEL & TRAVEL MOTOR	632
Y	*239-1784*	1	MOUNTING GP-MAIN CONTROL VALVE	659
Y	*311-9552*	1	PUMP & MTG GP-HYDRAULIC (SWING, FAN, PILOT)	662
Y	*324-4130*	1	PUMP & MTG GP-MAIN HYDRAULIC	663
Y	*227-0374*	1	TANK & MTG GP-HYDRAULIC	686
Y	**295-7745**	1	VALVE GP-MAIN CONTROL	736

Y-SEPARATE ILLUSTRATION

<END>

HYDRAULIC SYSTEM

352-6790 LINES GP-AUXILIARY HYDRAULIC–STICK, HIGH PRESSURE

S/N: WAP1-UP
HB-FAMILY
PART OF 340-4067 OPTION AR-HYDRAULIC
FOR USE WITH 5.5-M (18-FT) STICK
AN ATTACHMENT

SMCS-5057 **i03909980**

NOTE	REF NO	GRAPHIC REF	PART NUMBER	QTY	PART NAME 1 2 3 4 5 6 (PRODUCT LEVEL)	SEE PAGE
	1	1	**292-7752**	2	VALVE AS-MANUAL (AUXILIARY, SHUTOFF)	
	2	1	**302-9217**	2	TUBE AS	
	3	1	**306-1355**	8	CLAMP-HALF	
I	4	1	**350-4085**	2	HOSE AS	
M	5	1	**100-4982**	8	BOLT-SELF-LOCKING (M16X2X45-MM)	
	6	1	**1P-3705**	6	SEAL-RECTANGULAR	
	7	1	**5P-8077**	8	FLANGE-HALF	
M	8	1	**7X-2557**	4	BOLT (M16X2X140-MM)	
M	9	1	**8T-4140**	16	BOLT (M16X2X60-MM)	
M	10	1	**8T-4193**	8	BOLT (M16X2X50-MM)	
	11	1	**9X-8257**	28	WASHER (17.5X30X3.5-MM THK)	

I-REFER TO HYDRAULIC INFORMATION SYSTEM
M-METRIC PART

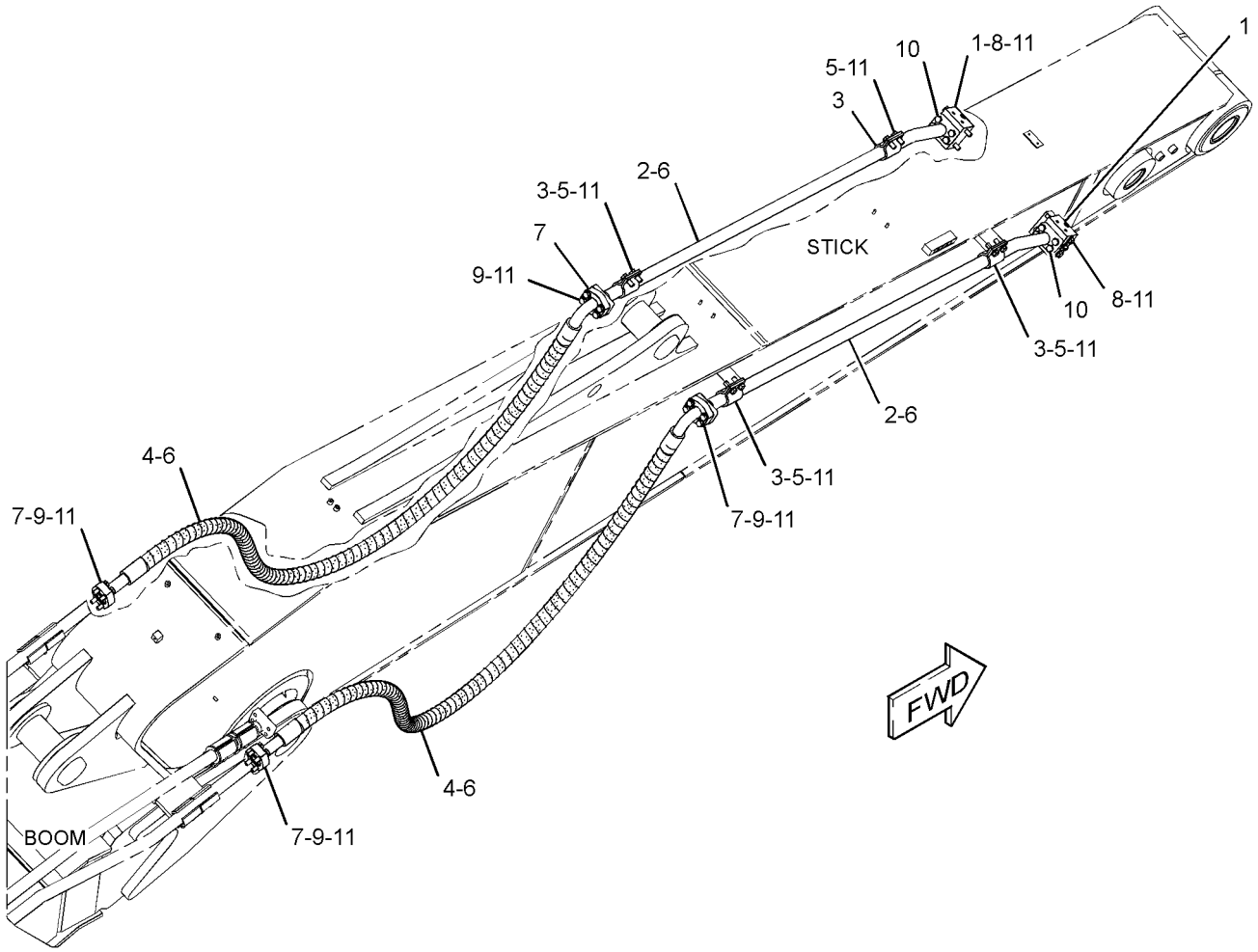

GRAPHIC #1 **<END>** g02173558

HYDRAULIC SYSTEM

352-6791 LINES GP-AUXILIARY HYDRAULIC–STICK, HIGH PRESSURE

S/N: WAP1-UP
HB-FAMILY
PART OF 340-4065, 340-4066 OPTION AR-HYDRAULIC
FOR USE WITH 4.4-M (14.4-FT) STICK
AN ATTACHMENT

SMCS-5057 **i03909977**

NOTE	REF NO	GRAPHIC REF	PART NUMBER	QTY	PART NAME 1 2 3 4 5 6 (PRODUCT LEVEL)	SEE PAGE
	1	1	**292-7752**	2	VALVE AS-MANUAL (AUXILIARY, SHUTOFF)	
	2	1	**302-9216**	2	TUBE AS	
	3	1	**306-1355**	8	CLAMP-HALF	
I	4	1	**350-4084**	2	HOSE AS	
M	5	1	**100-4982**	8	BOLT-SELF-LOCKING (M16X2X45-MM)	
	6	1	**1P-3705**	6	SEAL-RECTANGULAR	
	7	1	**5P-8077**	8	FLANGE-HALF	
M	8	1	**7X-2557**	4	BOLT (M16X2X140-MM)	
M	9	1	**8T-4140**	16	BOLT (M16X2X60-MM)	
M	10	1	**8T-4193**	8	BOLT (M16X2X50-MM)	
	11	1	**9X-8257**	28	WASHER (17.5X30X3.5-MM THK)	

I-REFER TO HYDRAULIC INFORMATION SYSTEM
M-METRIC PART

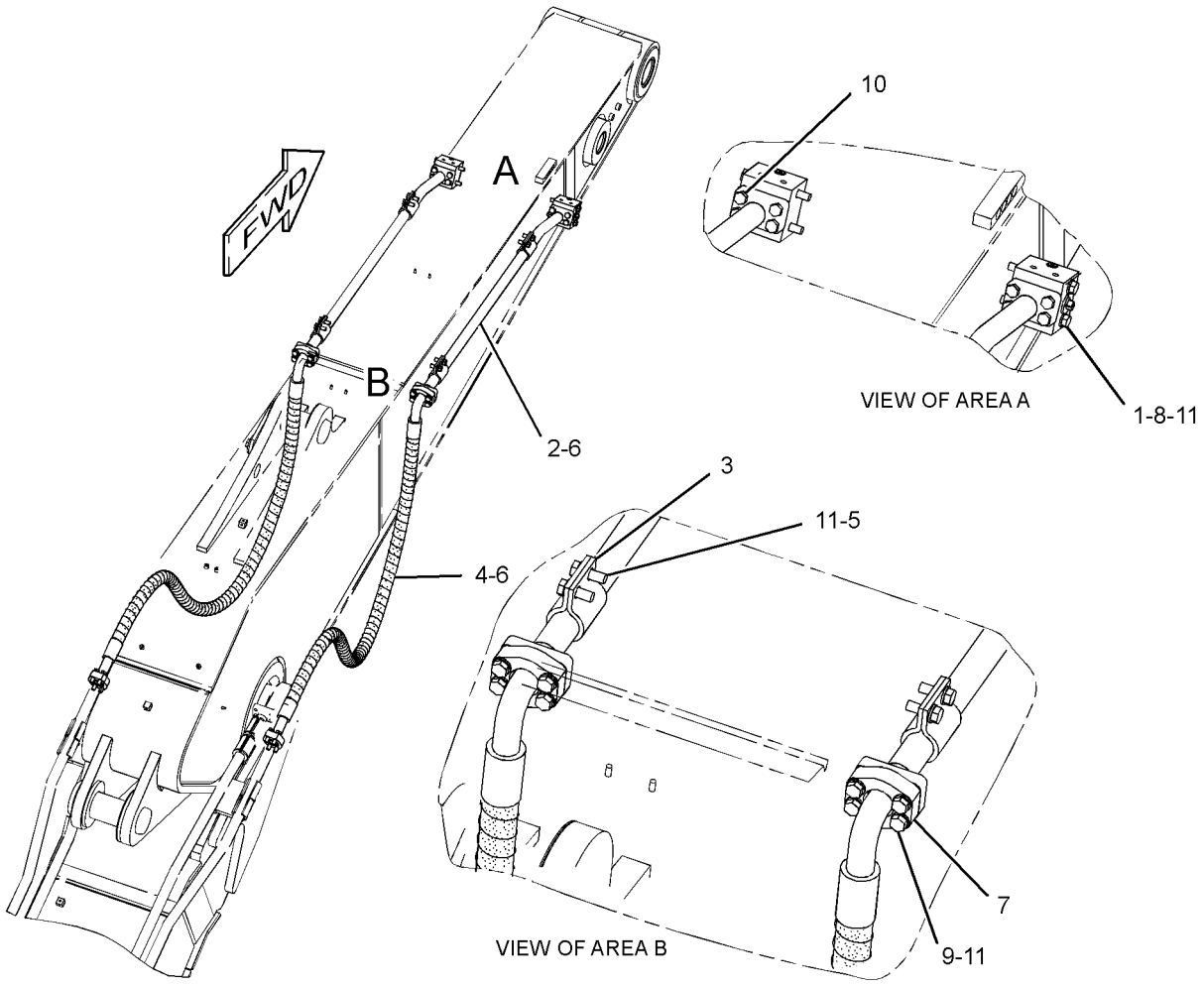

GRAPHIC #1 **<END>** g02173553

HYDRAULIC SYSTEM

352-6793 LINES GP-AUXILIARY HYDRAULIC–

STICK, HIGH PRESSURE
S/N: WAP1-UP
JB-FAMILY
PART OF 340-4063, 340-4064 OPTION AR-HYDRAULIC
FOR USE WITH 3.4-M (11.2-FT) STICK
AN ATTACHMENT

SMCS-5057 **i03909941**

NOTE	REF NO	GRAPHIC REF	PART NUMBER	QTY	PART NAME 1 2 3 4 5 6 (PRODUCT LEVEL)	SEE PAGE
	1	1	**292-7752**	2	VALVE AS-MANUAL (AUXILIARY, SHUTOFF)	
	2	1	**302-9219**	2	TUBE AS	
	3	1	**306-1355**	8	CLAMP-HALF	
I	4	1	**350-4082**	2	HOSE AS	
M	5	1	**100-4982**	8	BOLT-SELF-LOCKING (M16X2X45-MM)	
	6	1	**1P-3705**	6	SEAL-RECTANGULAR	
	7	1	**5P-8077**	8	FLANGE-HALF	
M	8	1	**7X-2557**	4	BOLT (M16X2X140-MM)	
M	9	1	**8T-4140**	16	BOLT (M16X2X60-MM)	
M	10	1	**8T-4193**	8	BOLT (M16X2X50-MM)	
	11	1	**9X-8257**	28	WASHER (17.5X30X3.5-MM THK)	

I-REFER TO HYDRAULIC INFORMATION SYSTEM
M-METRIC PART

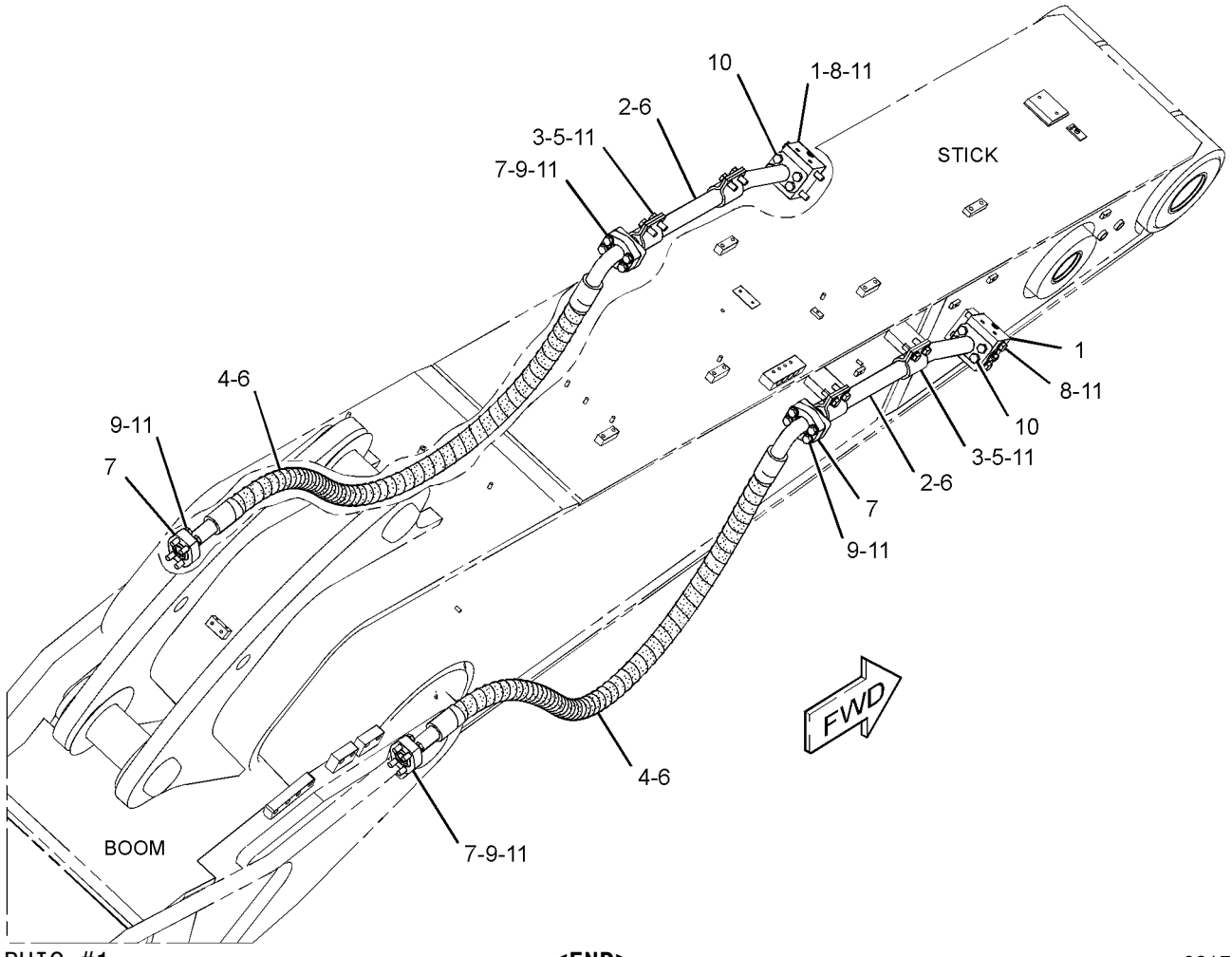

GRAPHIC #1 **<END>** g02173359

352-6794 LINES GP-AUXILIARY HYDRAULIC–STICK, HIGH PRESSURE

S/N: WAP1-UP
JB-FAMILY
PART OF 340-4062 OPTION AR-HYDRAULIC
FOR USE WITH 2.92-M (9.6-FT) STICK
AN ATTACHMENT

SMCS-5057 **i03909936**

NOTE	REF NO	GRAPHIC REF	PART NUMBER	QTY	PART NAME 1 2 3 4 5 6 (PRODUCT LEVEL)	SEE PAGE
	1	1	**292-7752**	2	VALVE AS-MANUAL (AUXILIARY, SHUTOFF)	
	2	1	**302-9218**	2	TUBE AS	
	3	1	**306-1355**	4	CLAMP-HALF	
I	4	1	**338-6209**	2	HOSE AS	
M	5	1	**100-4982**	4	BOLT-SELF-LOCKING (M16X2X45-MM)	
	6	1	**1P-3705**	6	SEAL-RECTANGULAR	
	7	1	**5P-8077**	8	FLANGE-HALF	
M	8	1	**7X-2557**	4	BOLT (M16X2X140-MM)	
M	9	1	**8T-4140**	16	BOLT (M16X2X60-MM)	
M	10	1	**8T-4193**	8	BOLT (M16X2X50-MM)	
	11	1	**9X-8257**	24	WASHER (17.5X30X3.5-MM THK)	

I-REFER TO HYDRAULIC INFORMATION SYSTEM
M-METRIC PART

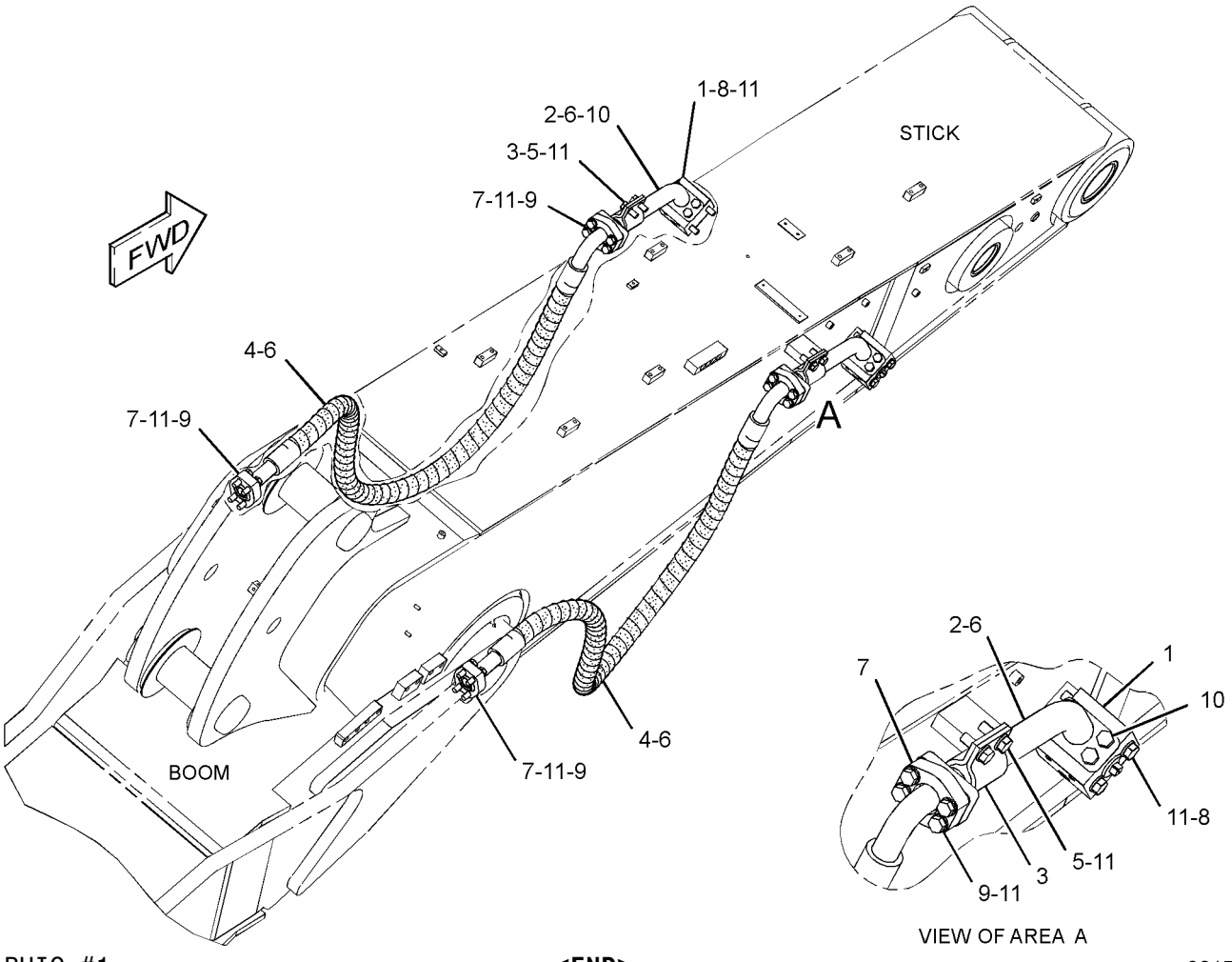

GRAPHIC #1 **<END>** g02173271

359-8631 LINES GP-AUXILIARY HYDRAULIC–BOOM

S/N: WAP1-UP
PART OF 340-4066, 340-4067 OPTION AR-HYDRAULIC
AN ATTACHMENT

SMCS-5057 **i03983325**

NOTE	REF NO	GRAPHIC REF	PART NUMBER	QTY	PART NAME 1 2 3 4 5 6 (PRODUCT LEVEL)	SEE PAGE
	1	1	**6H-3615**	2	PLUG-PROTECTION	
	2	1	**9F-2167**	2	SCREW-PURGE (3/8-24X1.164-IN)	
	3	1	**143-4160**	28	CLIP	
	4	1	**146-1463**	2	CLIP	
	5	1	**153-8587**	6	PLATE AS	
	6	1	**173-8065**	2	PLATE AS	
	7	1	**173-8067**	4	CLIP	
	8	1	**173-8069**	2	PLATE	
	9	1	**179-5212**	10	PLATE	
	10	1	**197-2356**	1	TUBE AS	
	11	1	**197-2375**	2	PLATE AS	
	12	1	**202-7153**	2	PLATE	
	13	1	**247-9080**	1	TUBE AS	
I	14	1	**333-7055**	2	HOSE AS	
	15	1	**359-8671**	2	TUBE GP-HYDRAULIC (BOOM)	
					(EACH INCLUDES)	
		1	**1P-3706**	1	SEAL-RECTANGULAR	
M		1	**8T-4193**	4	BOLT (M16X2X50-MM)	
	16	1	**359-8679**	2	TUBE GP-HYDRAULIC (BOOM)	
					(EACH INCLUDES)	
		1	**1P-3706**	1	SEAL-RECTANGULAR	
M		1	**8T-4193**	4	BOLT (M16X2X50-MM)	
	17	1	**146-1461**	4	PLATE	
	18	1	**1P-3705**	4	SEAL-RECTANGULAR	
	19	1	**1P-3706**	4	SEAL-RECTANGULAR	
	20	1	**5P-8077**	8	FLANGE-HALF	
M	21	1	**7X-2554**	14	BOLT (M16X2X70-MM)	
M	22	1	**7X-2559**	16	BOLT (M16X2X160-MM)	
M	23	1	**8T-4132**	4	NUT (M16X2-THD)	
M	24	1	**8T-4140**	24	BOLT (M16X2X60-MM)	
M	25	1	**8T-4193**	36	BOLT (M16X2X50-MM)	
M	26	1	**8T-6385**	4	BOLT (M16X2X180-MM)	
	27	1	**9X-8257**	78	WASHER (17.5X30X3.5-MM THK)	

I-REFER TO HYDRAULIC INFORMATION SYSTEM
M-METRIC PART

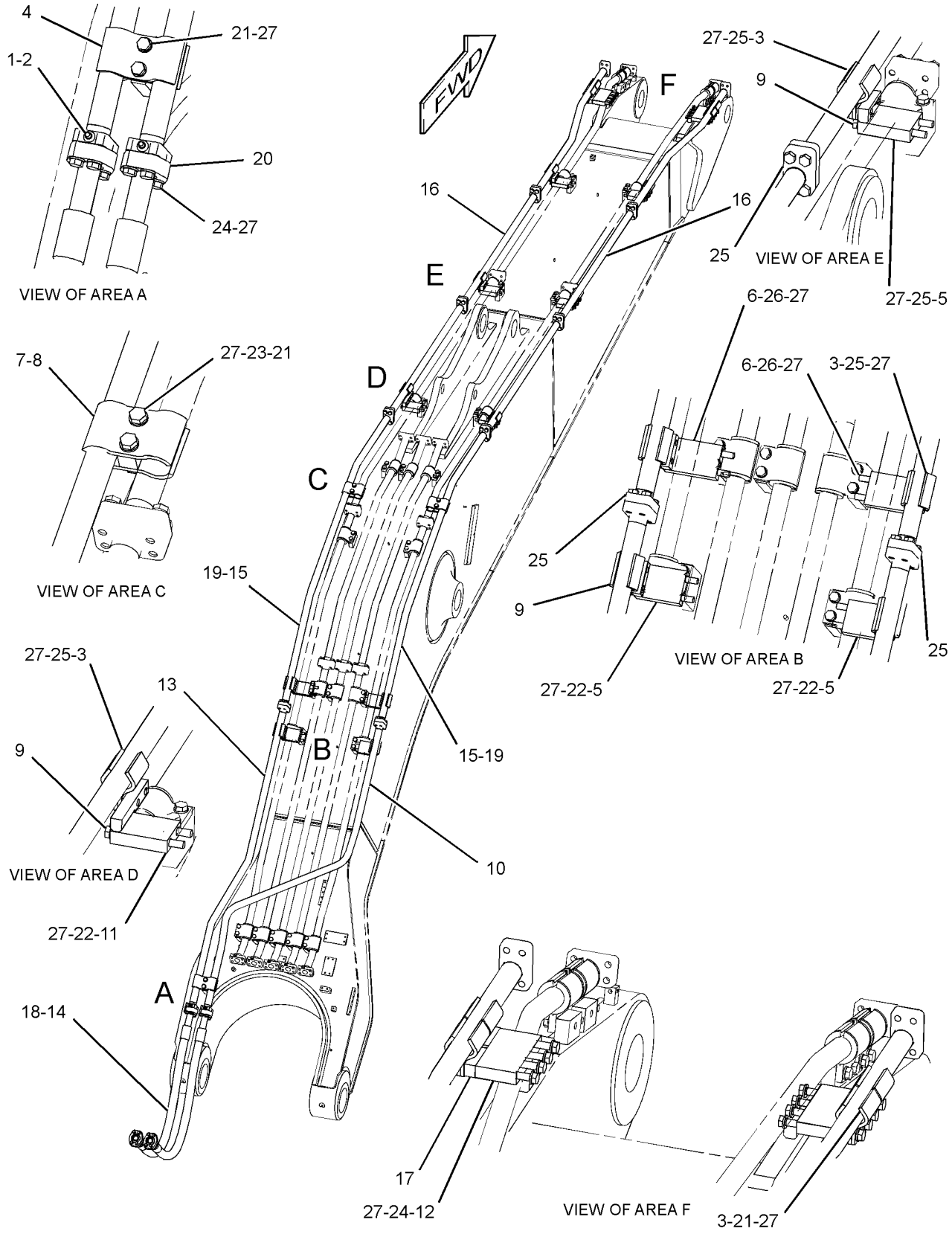

GRAPHIC #1 **<END>** g02174493

HYDRAULIC SYSTEM

359-8632 LINES GP-AUXILIARY HYDRAULIC–BOOM

S/N: WAP1-UP
PART OF 340-4064, 340-4065 OPTION AR-HYDRAULIC
AN ATTACHMENT

SMCS-5057 **i04001700**

NOTE	REF NO	GRAPHIC REF	PART NUMBER	QTY	PART NAME 1 2 3 4 5 6 (PRODUCT LEVEL)	SEE PAGE
	1	1	**6H-3615**	2	PLUG-PROTECTION	
	2	1	**9F-2167**	2	SCREW-PURGE (3/8-24X1.164-IN)	
	3	1	**143-4160**	24	CLIP	
	4	1	**146-1463**	2	CLIP	
	5	1	**153-8587**	6	PLATE AS	
	6	1	**173-8057**	1	TUBE AS	
	7	1	**173-8059**	2	TUBE AS	
	8	1	**173-8065**	2	PLATE AS	
	9	1	**173-8067**	4	CLIP	
	10	1	**173-8069**	2	PLATE	
	11	1	**179-5212**	8	PLATE	
	12	1	**202-7153**	2	PLATE	
	13	1	**245-2431**	1	TUBE AS	
I	14	1	**333-7055**	2	HOSE AS	
	15	1	**359-8683**	2	TUBE GP-HYDRAULIC	
					(EACH INCLUDES)	
		1	**1P-3706**	1	SEAL-RECTANGULAR	
M		1	**8T-4193**	4	BOLT (M16X2X50-MM)	
	16	1	**146-1461**	4	PLATE	
	17	1	**1P-3705**	4	SEAL-RECTANGULAR	
	18	1	**1P-3706**	4	SEAL-RECTANGULAR	
	19	1	**5P-8077**	8	FLANGE-HALF	
M	20	1	**7X-2554**	14	BOLT (M16X2X70-MM)	
M	21	1	**7X-2559**	12	BOLT (M16X2X160-MM)	
M	22	1	**8T-4132**	4	NUT (M16X2-THD)	
M	23	1	**8T-4140**	24	BOLT (M16X2X60-MM)	
M	24	1	**8T-4193**	32	BOLT (M16X2X50-MM)	
M	25	1	**8T-6385**	4	BOLT (M16X2X180-MM)	
	26	1	**9X-8257**	70	WASHER (17.5X30X3.5-MM THK)	

I-REFER TO HYDRAULIC INFORMATION SYSTEM
M-METRIC PART

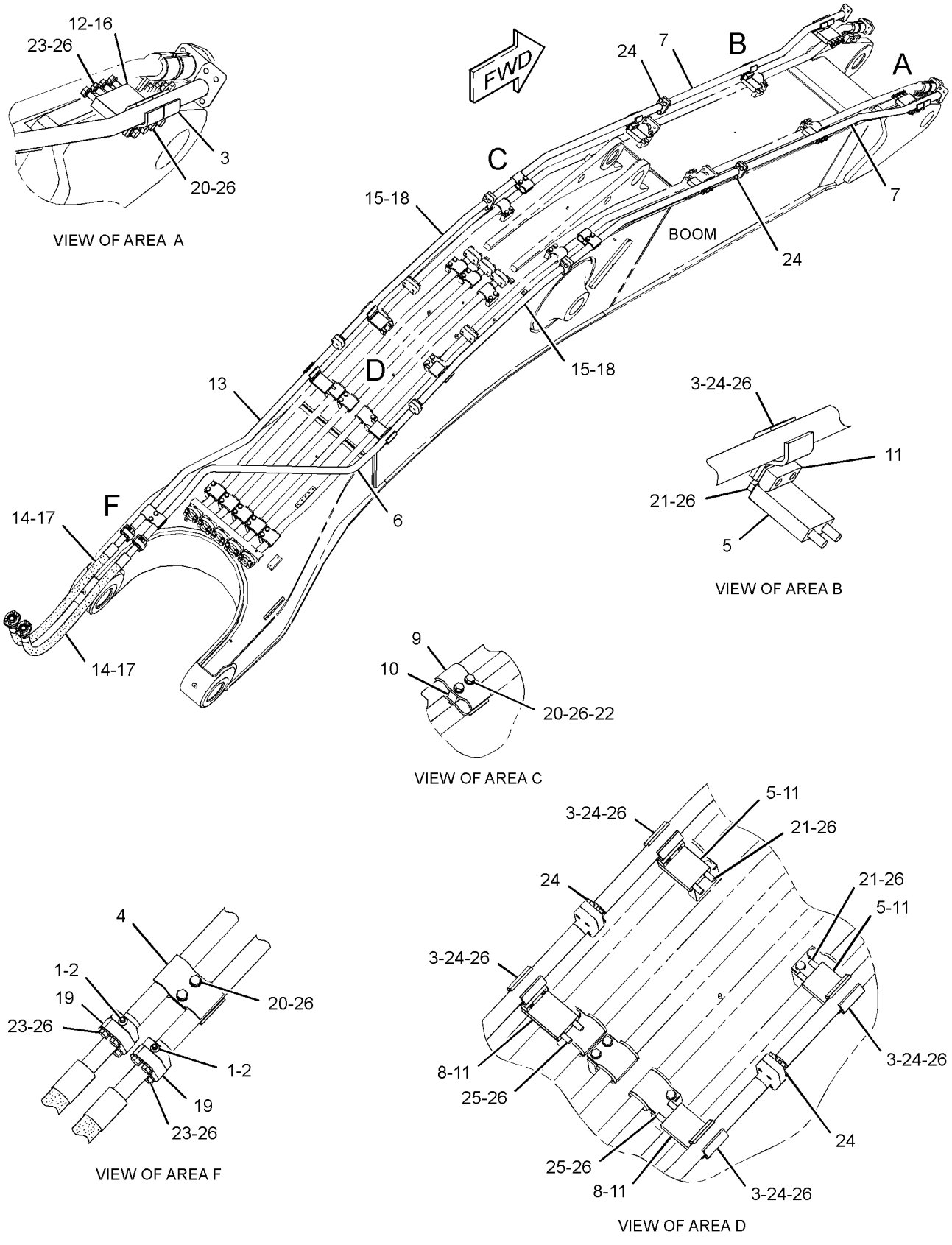

GRAPHIC #1 **<END>** g02173637

HYDRAULIC SYSTEM

359-8633 LINES GP-AUXILIARY HYDRAULIC—MASS BOOM

S/N: WAP1-UP
PART OF 340-4062, 340-4063 OPTION AR-HYDRAULIC
AN ATTACHMENT

SMCS-5057 **i03991099**

NOTE	REF NO	GRAPHIC REF	PART NUMBER	QTY	PART NAME 1 2 3 4 5 6 (PRODUCT LEVEL)	SEE PAGE
	1	2	**6H-3615**	2	PLUG-PROTECTION	
	2	2	**9F-2167**	2	SCREW-PURGE (3/8-24X1.164-IN)	
	3	1,2	**143-4160**	20	CLIP	
	4	2	**146-1463**	2	CLIP	
	5	1	**153-8587**	4	PLATE AS	
	6	2	**173-8067**	4	CLIP	
	7	2	**173-8069**	2	PLATE	
	8	1,2	**179-5212**	4	PLATE	
	9	1	**197-2329**	2	PLATE	
	10	2	**197-2338**	2	PLATE AS	
	11	2	**202-7153**	2	PLATE	
	12	1	**247-9081**	1	TUBE AS	
	13	1	**247-9308**	1	TUBE AS	
I	14	1	**333-7055**	2	HOSE AS	
	15	1	**359-8685**	2	TUBE AS	
	16	1	**359-8686**	2	TUBE AS	
	17	2	**146-1461**	4	PLATE	
	18	1	**1P-3705**	4	SEAL-RECTANGULAR	
	19	1	**1P-3706**	4	SEAL-RECTANGULAR	
	20	2	**5P-8077**	8	FLANGE-HALF	
M	21	2	**7X-2554**	14	BOLT (M16X2X70-MM)	
M	22	1,2	**7X-2559**	12	BOLT (M16X2X160-MM)	
M	23	2	**8T-4132**	4	NUT (M16X2-THD)	
M	24	2	**8T-4140**	24	BOLT (M16X2X60-MM)	
M	25	1,2	**8T-4193**	28	BOLT (M16X2X50-MM)	
	26	1,2	**9X-8257**	62	WASHER (17.5X30X3.5-MM THK)	

I-REFER TO HYDRAULIC INFORMATION SYSTEM
M-METRIC PART

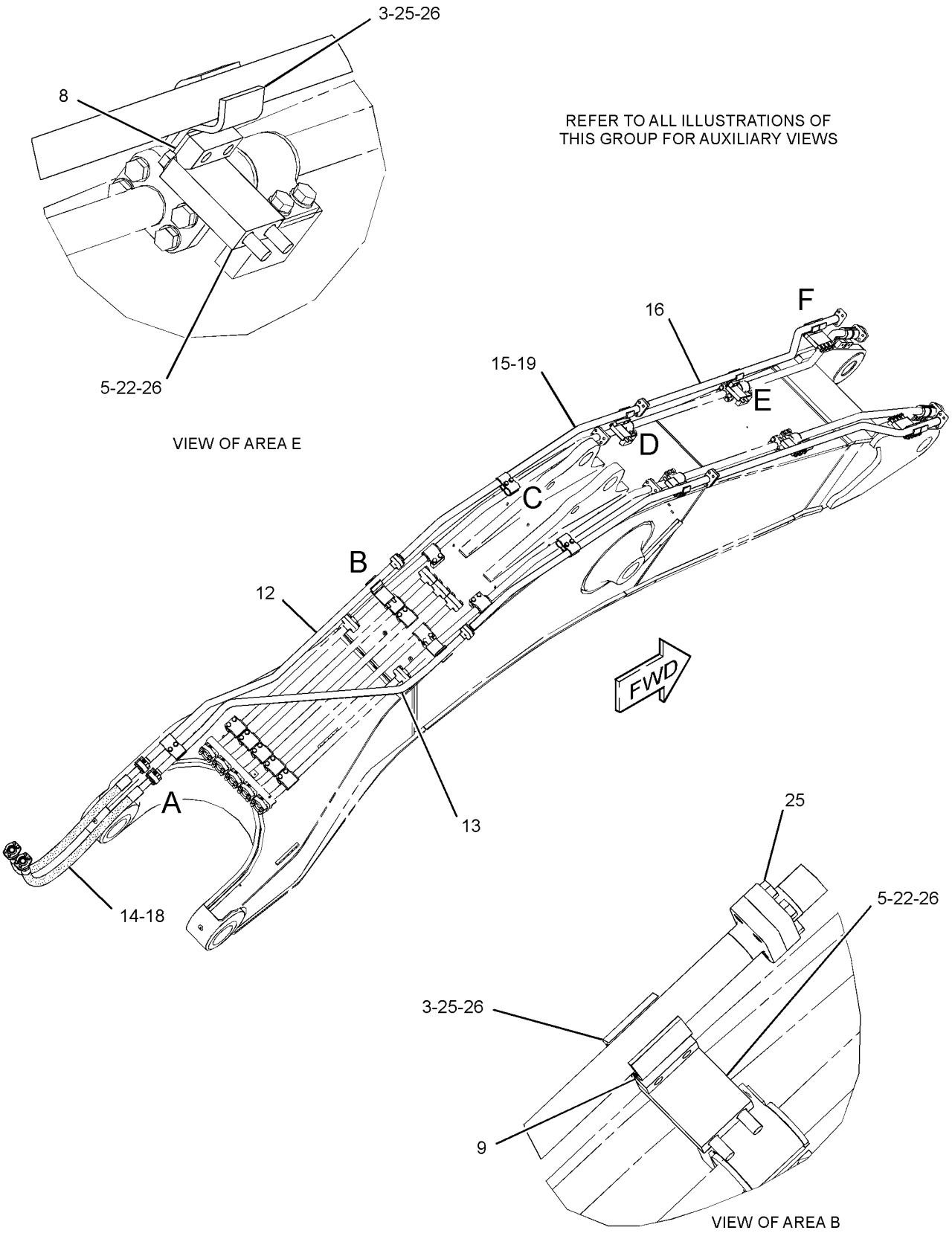

GRAPHIC #1

g02173601

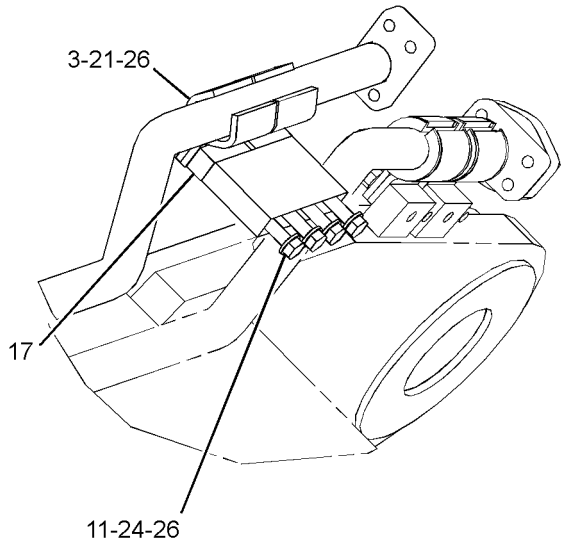

VIEW OF AREA F

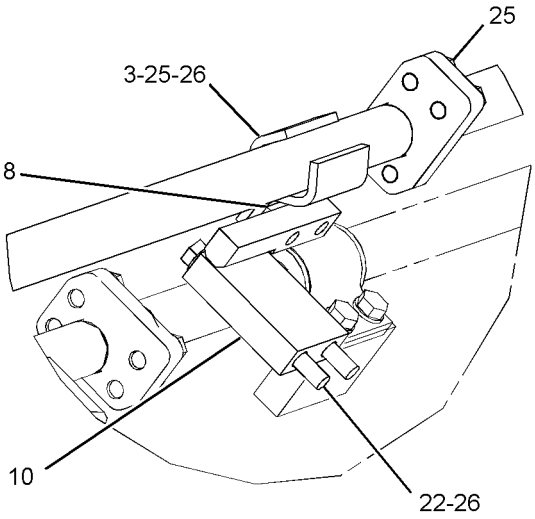

VIEW OF AREA D

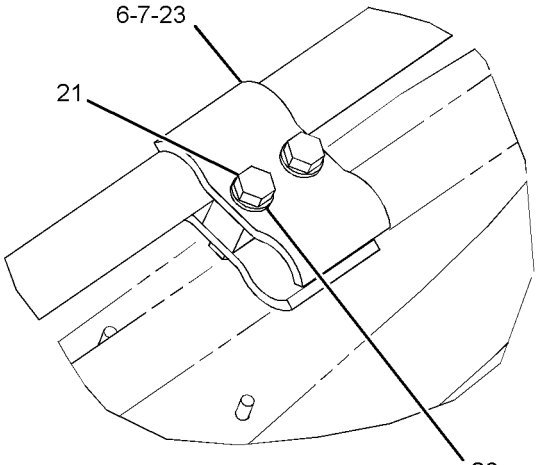

VIEW OF AREA C

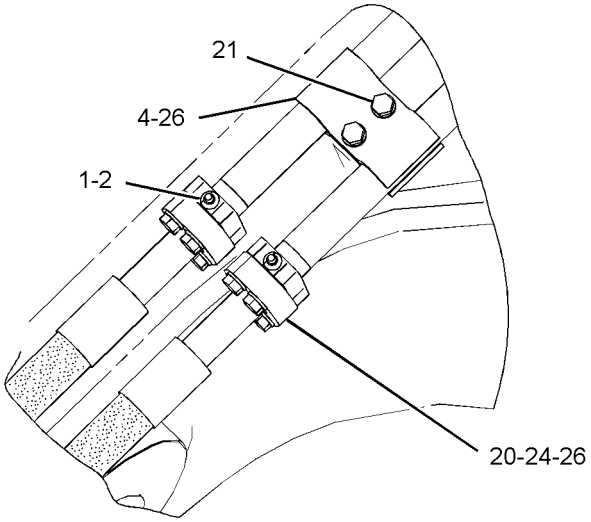

VIEW OF AREA A

GRAPHIC #2 **<END>** g02173673

HYDRAULIC SYSTEM

330-2409 LINES GP-BOOM

S/N: WAP1-UP
PART OF 303-2688 BOOM AR-REACH
AN ATTACHMENT

SMCS-5057 **i03907922**

NOTE	REF NO	GRAPHIC REF	PART NUMBER	QTY	PART NAME 1 2 3 4 5 6 (PRODUCT LEVEL)	SEE PAGE
	1	1	**6H-3615**	5	PLUG-PROTECTION	
	2	1	**9F-2167**	5	SCREW-PURGE (3/8-24X1.164-IN)	
	3	1	**138-5708**	50	CLIP-HALF	
	4	1	**138-5709**	25	GROMMET	
	5	1	**317-4855**	3	TUBE AS	
	6	1	**333-4594**	1	PLATE	
I	7	1	**333-7054**	2	HOSE AS	
I	8	1	**333-7055**	1	HOSE AS	
	9	1	**353-0792**	1	TUBE GP-HYDRAULIC	
		1	**1P-3706**	1	SEAL-RECTANGULAR	
M		1	**8T-4193**	4	BOLT (M16X2X50-MM)	
		1	**9X-8257**	4	WASHER (17.5X30X3.5-MM THK)	
	10	1	**353-0793**	1	TUBE GP-HYDRAULIC	
		1	**1P-3706**	1	SEAL-RECTANGULAR	
M		1	**8T-4193**	4	BOLT (M16X2X50-MM)	
		1	**9X-8257**	4	WASHER (17.5X30X3.5-MM THK)	
	11	1	**353-0794**	3	TUBE AS	
	12	1	**353-0795**	2	TUBE GP-HYDRAULIC	
					(EACH INCLUDES)	
		1	**1P-3706**	1	SEAL-RECTANGULAR	
M		1	**8T-4193**	4	BOLT (M16X2X50-MM)	
		1	**9X-8257**	4	WASHER (17.5X30X3.5-MM THK)	
	13	1	**353-0796**	1	TUBE AS	
	14	1	**353-0797**	1	TUBE AS	
M	15	1	**170-8555**	10	BOLT (M16X2X90-MM)	
	16	1	**1P-3705**	13	SEAL-RECTANGULAR	
	17	1	**1P-3706**	7	SEAL-RECTANGULAR	
	18	1	**5P-0049**	7	COVER	
	19	1	**5P-8077**	26	FLANGE-HALF	
M	20	1	**7X-2554**	42	BOLT (M16X2X70-MM)	
M	21	1	**8T-4132**	10	NUT (M16X2-THD)	
M	22	1	**8T-4140**	50	BOLT (M16X2X60-MM)	
M	23	1	**8T-4193**	28	BOLT (M16X2X50-MM)	
	24	1	**9X-8257**	140	WASHER (17.5X30X3.5-MM THK)	

I-REFER TO HYDRAULIC INFORMATION SYSTEM
M-METRIC PART

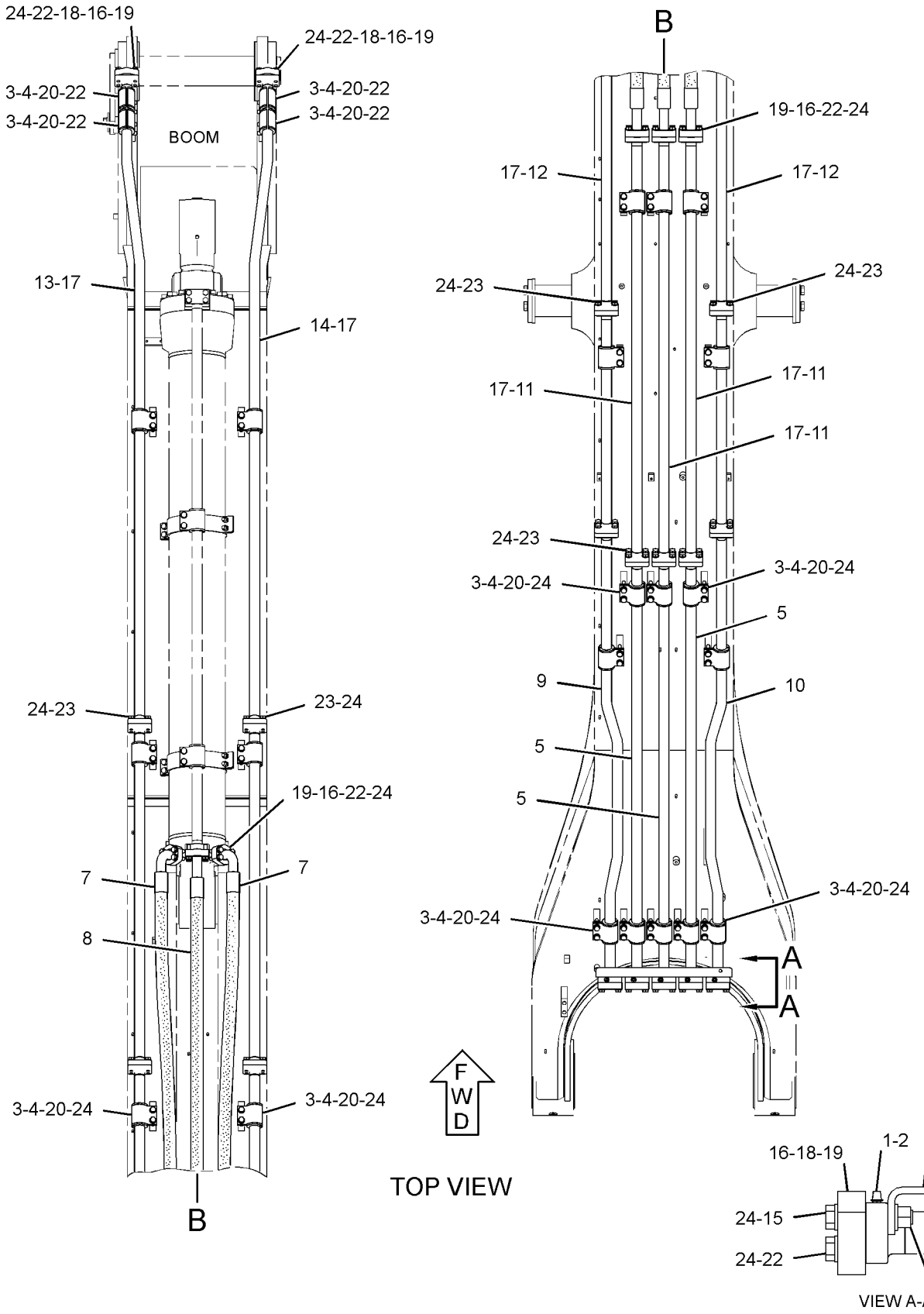

GRAPHIC #1 **<END>** g02179653

HYDRAULIC SYSTEM

338-6164 LINES GP-BOOM

S/N: WAP1-UP
PART OF 303-2689 BOOM AR, 319-9211 BOOM AR-MASS
AN ATTACHMENT

SMCS-5057 **i03907931**

NOTE	REF NO	GRAPHIC REF	PART NUMBER	QTY	PART NAME 1 2 3 4 5 6 (PRODUCT LEVEL)	SEE PAGE
	1	1	**6H-3615**	5	PLUG-PROTECTION	
	2	1	**9F-2167**	5	SCREW-PURGE (3/8-24X1.164-IN)	
	3	1	**138-5708**	46	CLIP-HALF	
	4	1	**138-5709**	23	GROMMET	
	5	1	**317-4890**	3	TUBE AS	
	6	1	**317-4891**	2	TUBE AS	
	7	1	**333-4590**	1	TUBE AS	
	8	1	**333-4591**	1	TUBE AS	
	9	1	**333-4592**	1	TUBE AS	
	10	1	**333-4593**	1	TUBE AS	
	11	1	**333-4594**	1	PLATE	
I	12	1	**333-7054**	2	HOSE AS	
I	13	1	**333-7055**	1	HOSE AS	
M	14	1	**170-8555**	10	BOLT (M16X2X90-MM)	
	15	1	**1P-3705**	13	SEAL-RECTANGULAR	
	16	1	**1P-3706**	4	SEAL-RECTANGULAR	
	17	1	**5P-0049**	7	COVER	
	18	1	**5P-8077**	26	FLANGE-HALF	
M	19	1	**7X-2554**	38	BOLT (M16X2X70-MM)	
M	20	1	**8T-4132**	10	NUT (M16X2-THD)	
M	21	1	**8T-4140**	50	BOLT (M16X2X60-MM)	
M	22	1	**8T-4193**	16	BOLT (M16X2X50-MM)	
	23	1	**9X-8257**	124	WASHER (17.5X30X3.5-MM THK)	

I-REFER TO HYDRAULIC INFORMATION SYSTEM
M-METRIC PART

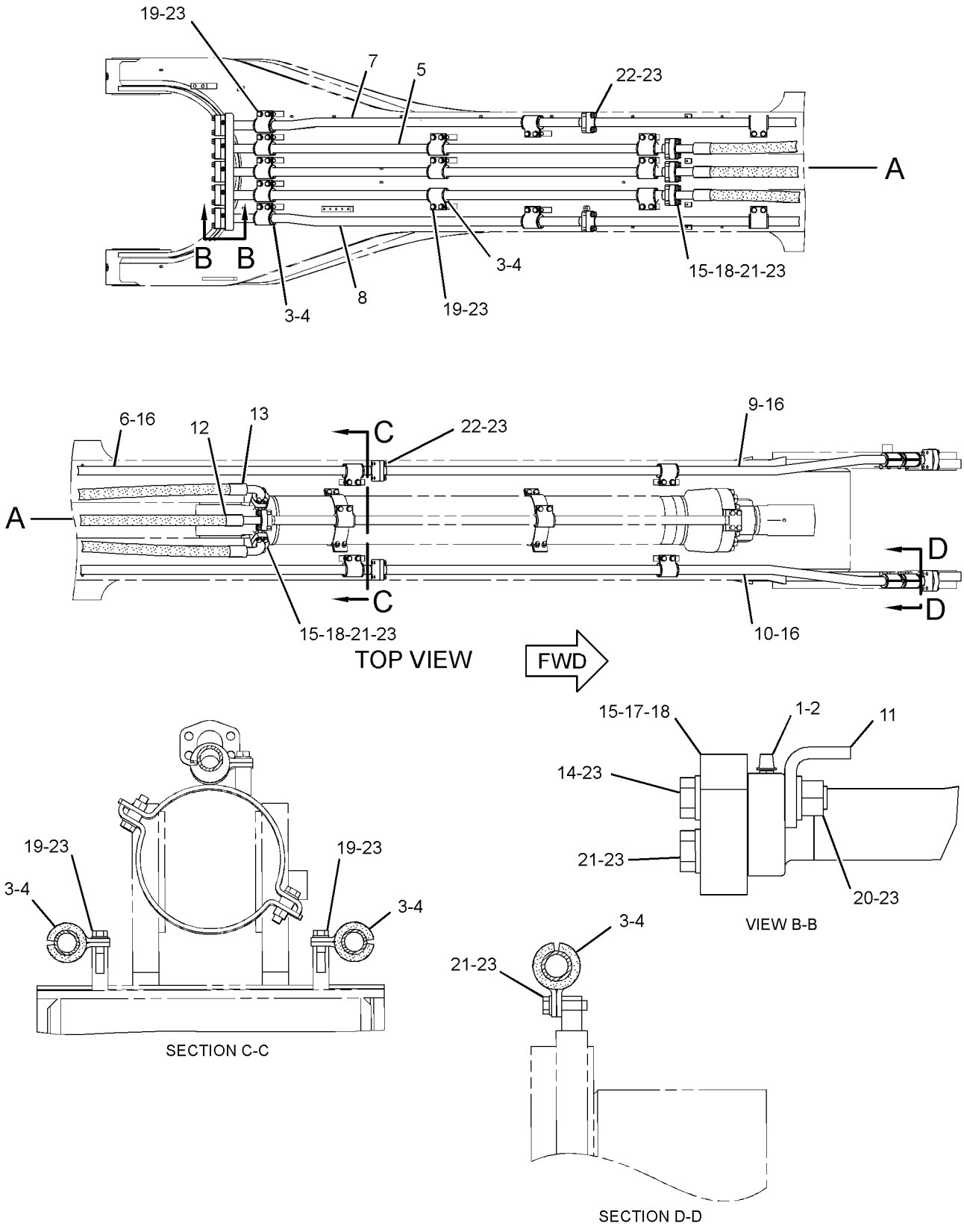

GRAPHIC #1 **<END>** g02178602

HYDRAULIC SYSTEM

338-6165 LINES GP-BOOM

S/N: WAP1-UP
PART OF 303-2690 BOOM AR-MASS
AN ATTACHMENT

SMCS-5057 **i03907992**

NOTE	REF NO	GRAPHIC REF	PART NUMBER	QTY	PART NAME 1 2 3 4 5 6 (PRODUCT LEVEL)	SEE PAGE
	1	1	**6H-3615**	5	PLUG-PROTECTION	
	2	1	**9F-2167**	5	SCREW-PURGE (3/8-24X1.164-IN)	
	3	1	**138-5708**	36	CLIP-HALF	
	4	1	**138-5709**	18	GROMMET	
	5	1	**317-4860**	3	TUBE AS	
	6	1	**333-4594**	1	PLATE	
	7	1	**333-4604**	2	TUBE AS	
	8	1	**333-4605**	1	TUBE AS	
	9	1	**333-4606**	1	TUBE AS	
I	10	1	**333-7056**	2	HOSE AS	
I	11	1	**333-7192**	1	HOSE AS	
M	12	1	**170-8555**	10	BOLT (M16X2X90-MM)	
	13	1	**1P-3705**	13	SEAL-RECTANGULAR	
	14	1	**1P-3706**	2	SEAL-RECTANGULAR	
	15	1	**5P-0049**	7	COVER	
	16	1	**5P-8077**	26	FLANGE-HALF	
M	17	1	**7X-2554**	28	BOLT (M16X2X70-MM)	
M	18	1	**8T-4132**	10	NUT (M16X2-THD)	
M	19	1	**8T-4140**	50	BOLT (M16X2X60-MM)	
M	20	1	**8T-4193**	8	BOLT (M16X2X50-MM)	
	21	1	**9X-8257**	106	WASHER (17.5X30X3.5-MM THK)	

I-REFER TO HYDRAULIC INFORMATION SYSTEM
M-METRIC PART

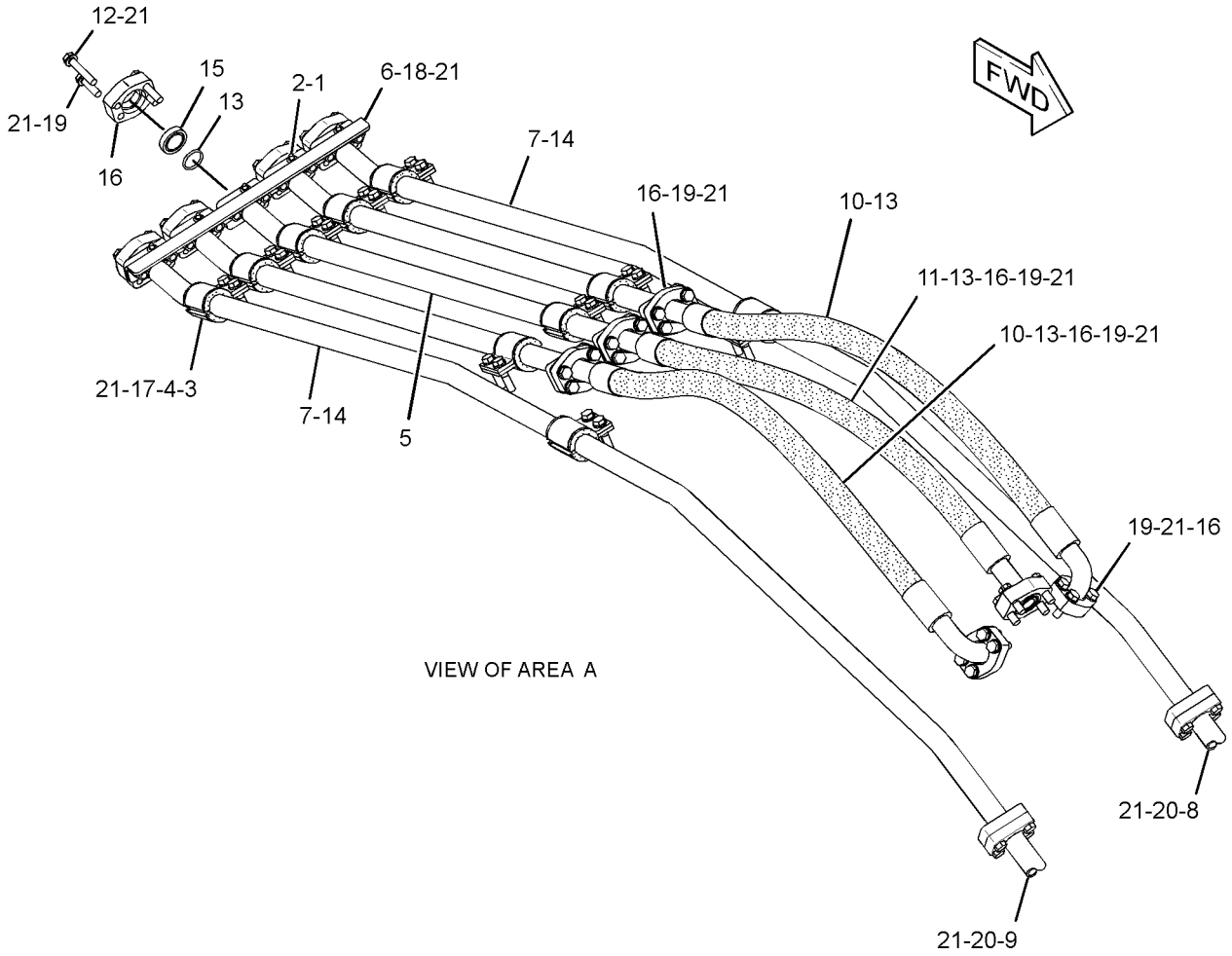

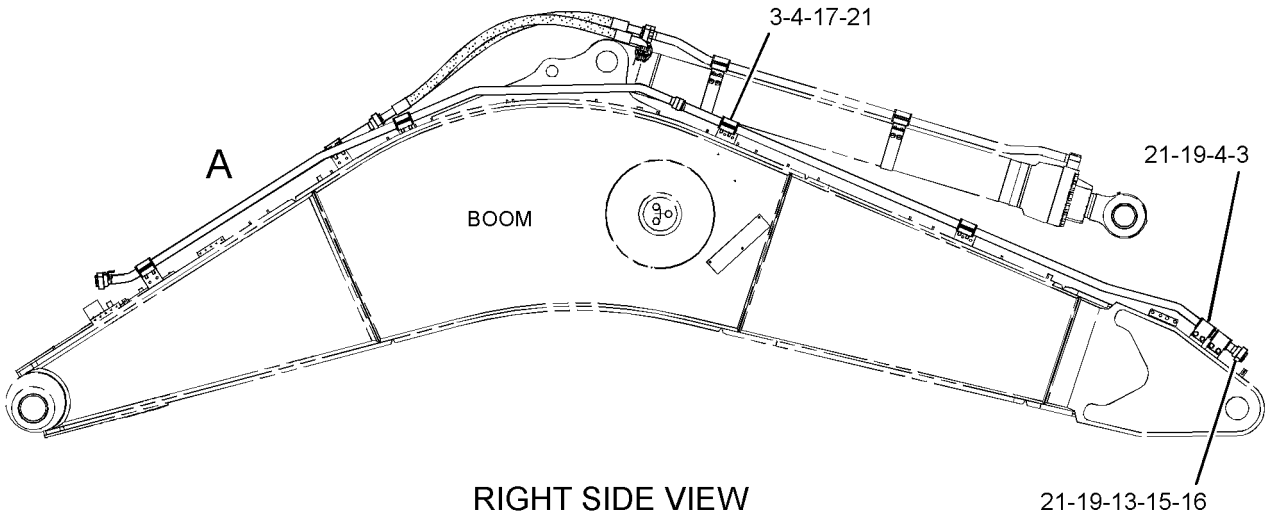

RIGHT SIDE VIEW

GRAPHIC #1 **<END>** g02180841

HYDRAULIC SYSTEM

344-4560 LINES GP-BOOM—STICK LOWERING CONTROL VALVE

S/N: WAP1-UP
PART OF 297-0428 VALVE AR-LOAD CONTROL
AN ATTACHMENT

SMCS-5057 **i03907869**

NOTE	REF NO	GRAPHIC REF	PART NUMBER	QTY	PART NAME 1 2 3 4 5 6 (PRODUCT LEVEL)	SEE PAGE
	1	1	**6K-0806**	4	STRAP-CABLE	
	2	1	**093-1293**	1	CLAMP	
	3	1	**093-1294**	2	CLAMP	
	4	1	**179-4584**	2	PLATE	
	5	1	**179-4592**	1	SUPPORT AS	
	6	1	**179-4595**	2	PLATE	
	7	1	**202-7024**	2	TUBE AS	
I	8	1	**202-7028**	2	HOSE AS	
	9	1	**344-4495**	1	TUBE AS	
	10	1	**344-4496**	1	CLIP AS	
	11	1	**344-4561**	1	HOSE AS	
	12	1	**5K-9090**	2	SEAL-O-RING	
	13	1	**6V-8398**	4	SEAL-O-RING	
M	14	1	**7X-2553**	2	BOLT (M16X2X40-MM)	
M	15	1	**7X-2556**	4	BOLT (M16X2X100-MM)	
	16	1	**7Y-3732**	3	CLIP	
	17	1	**8T-4121**	2	WASHER-HARD (11X21X2.5-MM THK)	
M	18	1	**8T-4185**	2	BOLT (M10X1.5X50-MM)	
	19	1	**8T-4223**	5	WASHER-HARD (13.5X25.5X3-MM THK)	
M	20	1	**8T-4244**	1	NUT (M12X1.75-THD)	
M	21	1	**8T-4648**	1	BOLT (M12X1.75X70-MM)	
M	22	1	**8T-4910**	4	BOLT (M12X1.75X60-MM)	
	23	1	**9X-8257**	6	WASHER (17.5X30X3.5-MM THK)	

I-REFER TO HYDRAULIC INFORMATION SYSTEM
M-METRIC PART

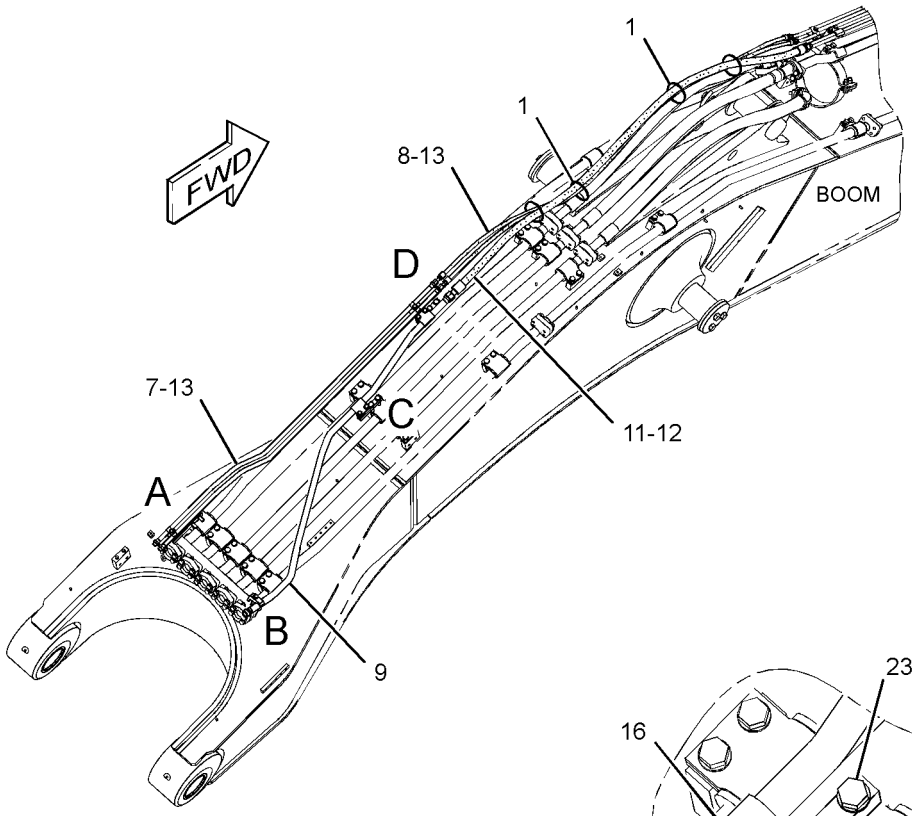

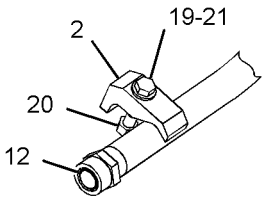

VIEW OF AREA B

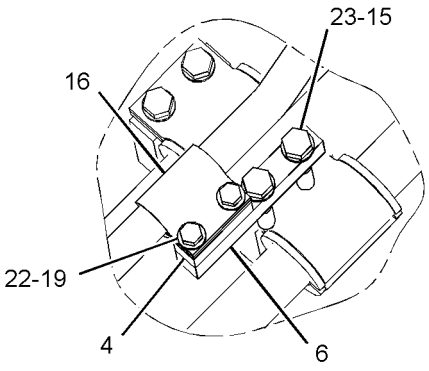

VIEW OF AREA C

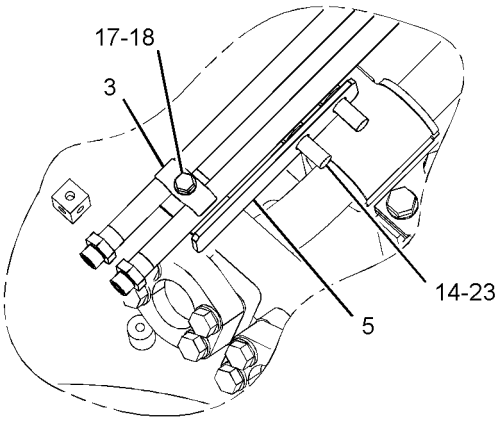

VIEW OF AREA A

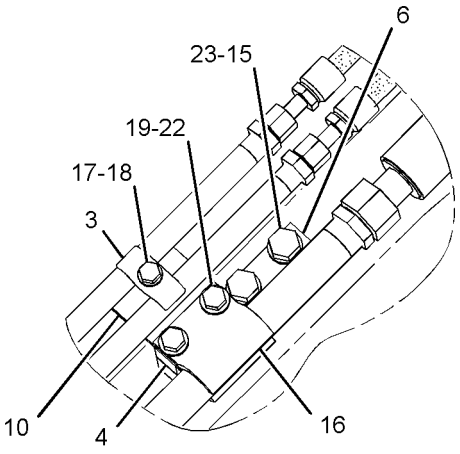

VIEW OF AREA D

GRAPHIC #1 **<END>** g02179970

296-7112 LINES GP-BOOM CYLINDER—BOOM LOWERING CONTROL

S/N: WAP1-UP

PART OF 297-0421 VALVE AR-BOOM LOWERING CONTROL AN ATTACHMENT

SMCS-5057, 5456 **i03907394**

NOTE	REF NO	GRAPHIC REF	PART NUMBER	QTY	PART NAME 1 2 3 4 5 6 (PRODUCT LEVEL)	SEE PAGE
	1	1	**7K-1181**	20	STRAP-CABLE	
I	2	1	**104-8783**	1	HOSE AS	
I	3	1	**113-6442**	1	HOSE AS	
	4	1	**221-8859**	1	SENSOR AS-PRESSURE (BOOM LOWER)	
		1	**3E-3371**	1	WEDGE-RECEPTACLE LOCK (3-PIN)	
		1	**3K-0360**	1	SEAL-O-RING	
		1	**9X-3401**	1	PIN-CONNECTOR (16-GA TO 18-GA)	
					—OR—	
		1	**126-1767**	1	PIN-CONNECTOR (14-GA)	
		1	**171-0596**	1	RECEPTACLE AS	
	5	1	**260-8285**	2	BLOCK	
I	6	1	**260-8296**	2	HOSE AS	
Y	7	1	**270-5692**	1	VALVE GP-MANUAL (BOOM LOWER)	746
Y	8	1	**274-9053**	2	VALVE GP-LOAD CONTROL (BOOM)	734
I	9	1	**302-3213**	1	HOSE AS	
	10	1	**302-3224**	1	BRACKET	
I	11	1	**302-3228**	1	HOSE AS	
I	12	1	**302-3301**	1	HOSE AS	
	13	1	*307-4849*	2	CONNECTOR AS	
					(EACH INCLUDES)	
		1	**3K-0360**	1	SEAL-O-RING	
		1	**6V-8397**	1	SEAL-O-RING	
		1	**168-9352**	1	CONNECTOR	
	14	1	**353-0685**	1	SUPPORT AS	
	15	1	**353-0799**	1	HOSE AS	
	16	1	**356-9226**	2	SUPPORT AS	
	17	1	**356-9259**	2	SUPPORT AS	
	18	1	**358-7374**	1	TUBE AS	
	19	1	**358-7375**	1	TUBE AS	
M	20	1	**108-3819**	8	BOLT-SOCKET HEAD (M12X1.75X70-MM)	
	21	1	*148-8327*	2	CONNECTOR AS	
					(EACH INCLUDES)	
		1	**3D-2824**	1	SEAL-O-RING	
		1	**6V-8637**	1	CONNECTOR	
		1	**6V-9746**	1	SEAL-O-RING	
	22	1	*148-8336*	4	CONNECTOR AS	
					(EACH INCLUDES)	
		1	**3J-1907**	1	SEAL-O-RING	
		1	**6V-8397**	1	SEAL-O-RING	
		1	**6V-8636**	1	CONNECTOR	
	23	1	*148-8347*	1	ELBOW AS	
		1	**3D-2824**	1	SEAL-O-RING	
		1	**6V-9007**	1	ELBOW	
		1	**6V-9746**	1	SEAL-O-RING	
	24	1	*148-8362*	1	ELBOW AS	
		1	**3D-2824**	1	SEAL-O-RING	
		1	**5K-9090**	1	SEAL-O-RING	
		1	**8T-6684**	1	ELBOW	
	25	1	*148-8367*	2	ELBOW AS	
					(EACH INCLUDES)	
		1	**6V-8397**	1	SEAL-O-RING	
		1	**6V-9850**	1	ELBOW	
	26	1	*148-8378*	2	ELBOW AS	
					(EACH INCLUDES)	
		1	**3J-1907**	1	SEAL-O-RING	

296-7112 **LINES GP-BOOM CYLINDER** *(contd.)* **i03907394**

NOTE	REF NO	GRAPHIC REF	PART NUMBER	QTY	PART NAME 1 2 3 4 5 6 (PRODUCT LEVEL)	SEE PAGE
		1	**6V-8397**	1	SEAL-O-RING	
		1	**6V-8724**	1	ELBOW	
	27	1	*148-8427*	1	TEE AS	
		1	**6V-8398**	3	SEAL-O-RING	
		1	**8T-6895**	1	TEE-UNION	
	28	1	*148-8433*	2	TEE AS	
					(EACH INCLUDES)	
		1	**6V-8397**	2	SEAL-O-RING	
		1	**6V-9836**	1	TEE-SWIVEL	
	29	1	*149-5452*	1	UNION AS	
		1	**6V-8397**	2	SEAL-O-RING	
		1	**6V-8994**	1	UNION	
	30	1	*164-5606*	1	CONNECTOR AS	
		1	**3D-2824**	1	SEAL-O-RING	
		1	**6V-9746**	1	SEAL-O-RING	
		1	**8T-0078**	1	CONNECTOR	
	31	1	**1P-3705**	6	SEAL-RECTANGULAR	
	32	1	**4I-9521**	2	BAND-MARKER (RED, L1)	
	33	1	**4I-9522**	2	BAND-MARKER (YELLOW, L2)	
	34	1	**6V-9168**	1	NUT (11/16-16-THD)	
	35	1	**6V-9169**	1	NUT-BULKHEAD (13/16-16-THD)	
	36	1	**8T-4121**	10	WASHER-HARD (11X21X2.5-MM THK)	
M	37	1	**8T-4139**	4	BOLT (M12X1.75X30-MM)	
M	38	1	**8T-4176**	2	BOLT (M12X1.75X90-MM)	
M	39	1	**8T-4183**	8	BOLT (M12X1.75X40-MM)	
M	40	1	**8T-4186**	8	BOLT (M10X1.5X40-MM)	
M	41	1	**8T-4195**	2	BOLT (M10X1.5X30-MM)	
	42	1	**8T-4223**	14	WASHER-HARD (13.5X25.5X3-MM THK)	
M	43	1	**8T-4648**	8	BOLT (M12X1.75X70-MM)	
M	44	1	**8T-5412**	2	BOLT (M12X1.75X140-MM)	

I-REFER TO HYDRAULIC INFORMATION SYSTEM
M-METRIC PART
Y-SEPARATE ILLUSTRATION

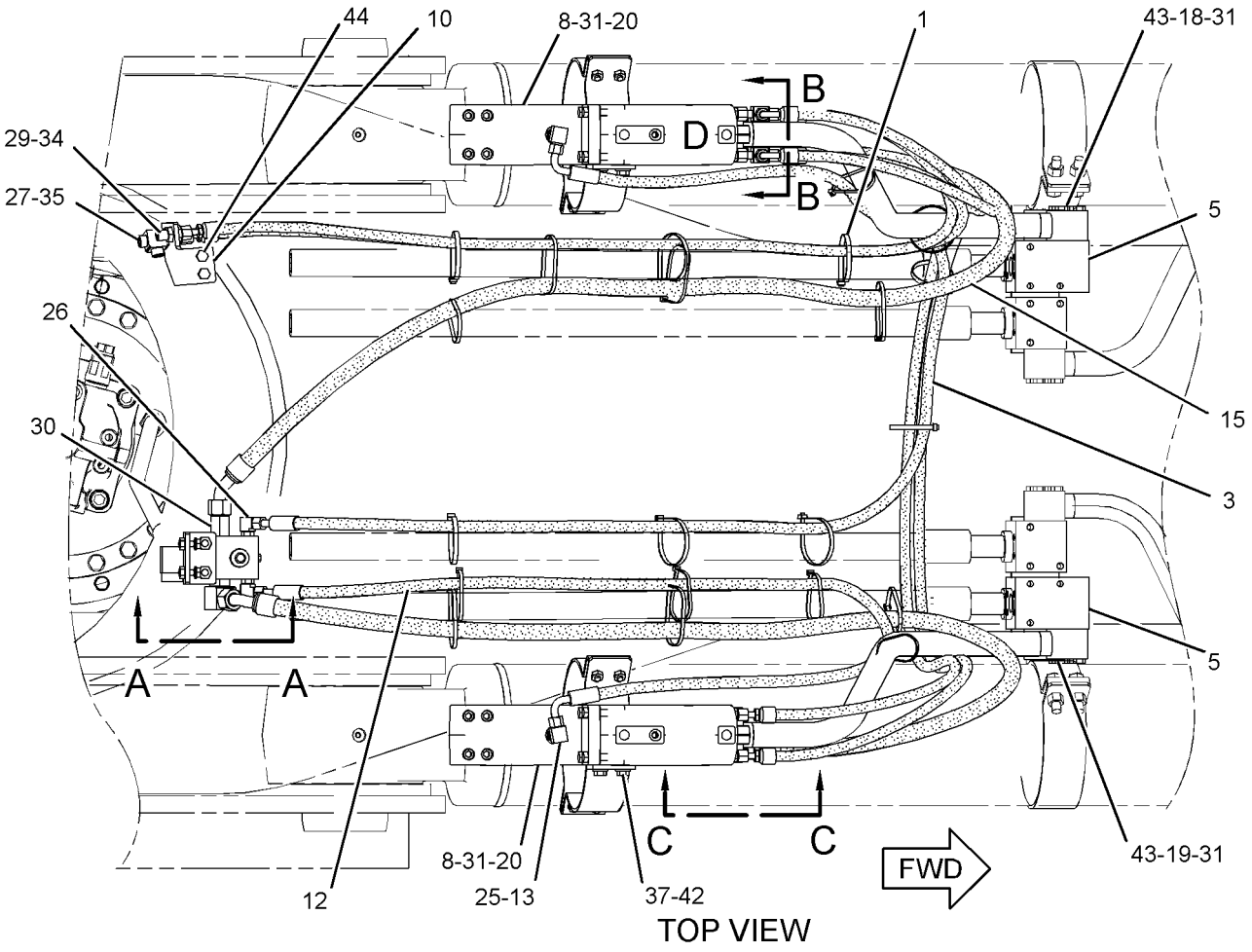

TOP VIEW

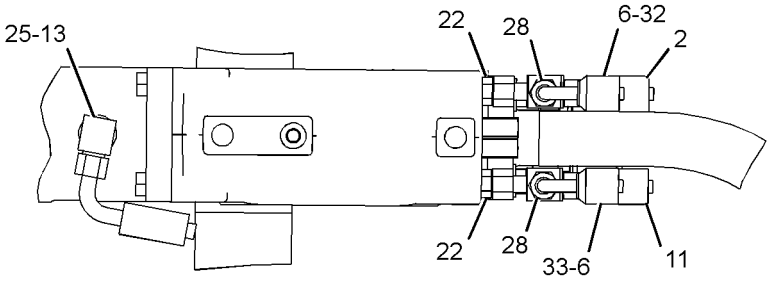

VIEW OF AREA D

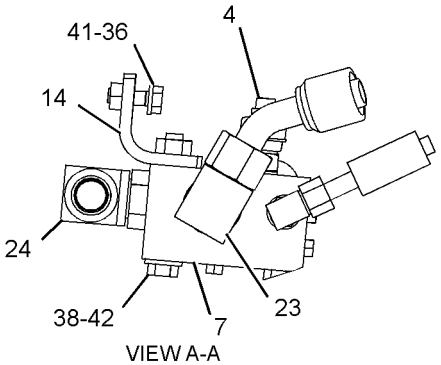

VIEW A-A

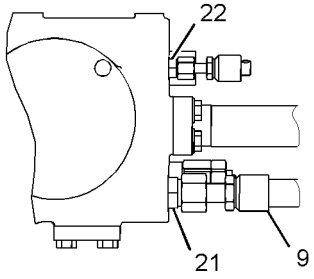

VIEW C-C

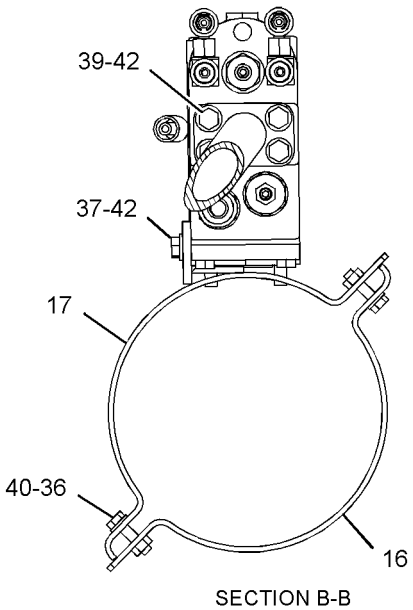

SECTION B-B

GRAPHIC #1

<END>

g02150382

HYDRAULIC SYSTEM

353-9651 LINES GP-BOOM CYLINDER–LH

S/N: WAP1-UP

PART OF 353-9648 CYLINDER & LINES GP-BOOM

AN ATTACHMENT

SMCS-5057, 5456 **i03908039**

NOTE	REF NO	GRAPHIC REF	PART NUMBER	QTY	PART NAME 1 2 3 4 5 6 (PRODUCT LEVEL)	SEE PAGE
	1	1	**173-4793**	2	BLOCK	
	2	1	**356-9143**	1	SUPPORT AS	
	3	1	**356-9226**	1	SUPPORT AS	
	4	1	**356-9235**	1	TUBE AS	
	5	1	**356-9236**	1	TUBE AS	
	6	1	**1P-3705**	4	SEAL-RECTANGULAR	
	7	1	**8T-4121**	4	WASHER-HARD (11X21X2.5-MM THK)	
M	8	1	**8T-4186**	4	BOLT (M10X1.5X40-MM)	
	9	1	**8T-4223**	14	WASHER-HARD (13.5X25.5X3-MM THK)	
M	10	1	**8T-4648**	8	BOLT (M12X1.75X70-MM)	
M	11	1	**8T-4956**	6	BOLT (M12X1.75X35-MM)	
M	12	1	**8T-6868**	8	BOLT (M12X1.75X80-MM)	

M-METRIC PART

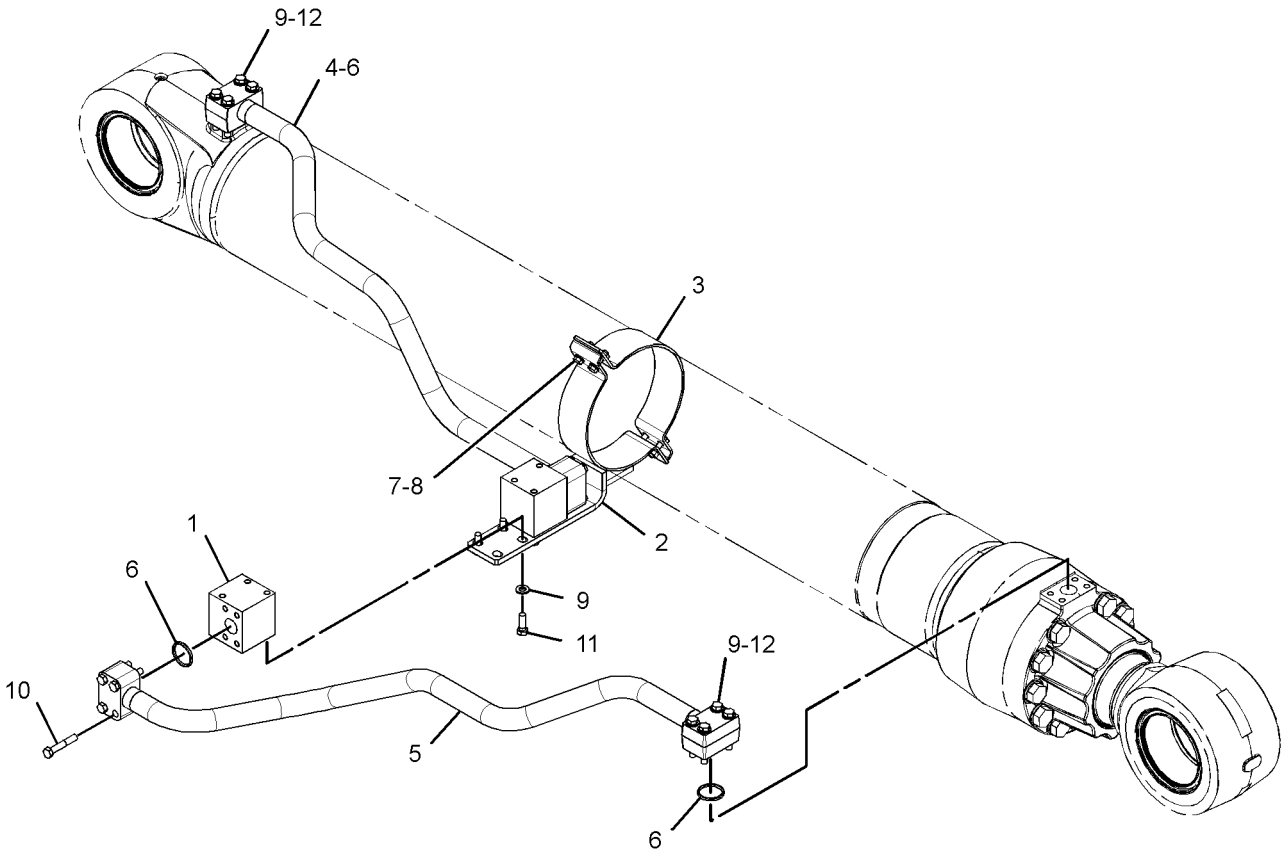

GRAPHIC #1 **<END>** g02150336

HYDRAULIC SYSTEM

353-9652 LINES GP-BOOM CYLINDER—RH

S/N: WAP1-UP

PART OF 353-9649, 356-0668 CYLINDER & LINES GP-BOOM AN ATTACHMENT

SMCS-5057, 5456 **i03908037**

NOTE	REF NO	GRAPHIC REF	PART NUMBER	QTY	PART NAME 1 2 3 4 5 6 (PRODUCT LEVEL)	SEE PAGE
	1	1	**173-4793**	2	BLOCK	
	2	1	**356-9143**	1	SUPPORT AS	
	3	1	**356-9226**	1	SUPPORT AS	
	4	1	**356-9237**	1	TUBE AS	
	5	1	**356-9238**	1	TUBE AS	
	6	1	**1P-3705**	4	SEAL-RECTANGULAR	
	7	1	**8T-4121**	4	WASHER-HARD (11X21X2.5-MM THK)	
M	8	1	**8T-4186**	4	BOLT (M10X1.5X40-MM)	
	9	1	**8T-4223**	14	WASHER-HARD (13.5X25.5X3-MM THK)	
M	10	1	**8T-4648**	8	BOLT (M12X1.75X70-MM)	
M	11	1	**8T-4956**	6	BOLT (M12X1.75X35-MM)	
M	12	1	**8T-6868**	8	BOLT (M12X1.75X80-MM)	

M-METRIC PART

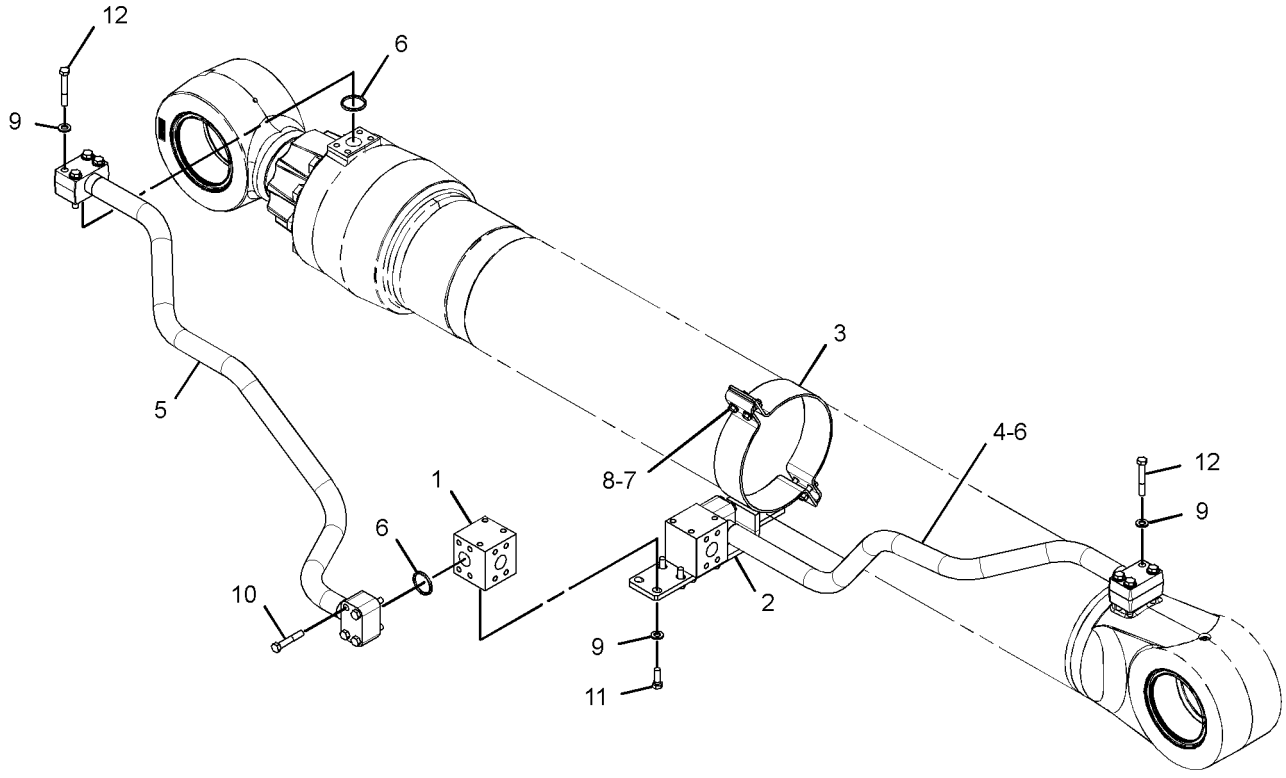

GRAPHIC #1 **<END>** g02150360

HYDRAULIC SYSTEM

353-9647 LINES GP-BUCKET CYLINDER

S/N: WAP1-UP
PART OF 354-6068 CYLINDER & LINES GP-BUCKET
AN ATTACHMENT

SMCS-5457 **i03910099**

NOTE	REF NO	GRAPHIC REF	PART NUMBER	QTY	PART NAME 1 2 3 4 5 6 (PRODUCT LEVEL)	SEE PAGE
	1	1	**138-5708**	2	CLIP-HALF	
	2	1	**138-5709**	1	GROMMET	
	3	1	**338-6110**	1	TUBE AS	
	4	1	**356-9125**	1	SUPPORT AS	
	5	1	**356-9142**	1	SUPPORT AS	
	6	1	**1P-3706**	1	SEAL-RECTANGULAR	
M	7	1	**7X-2554**	2	BOLT (M16X2X70-MM)	
M	8	1	**7X-2556**	4	BOLT (M16X2X100-MM)	
M	9	1	**8T-4140**	4	BOLT (M16X2X60-MM)	
	10	1	**9X-8257**	6	WASHER (17.5X30X3.5-MM THK)	

M-METRIC PART

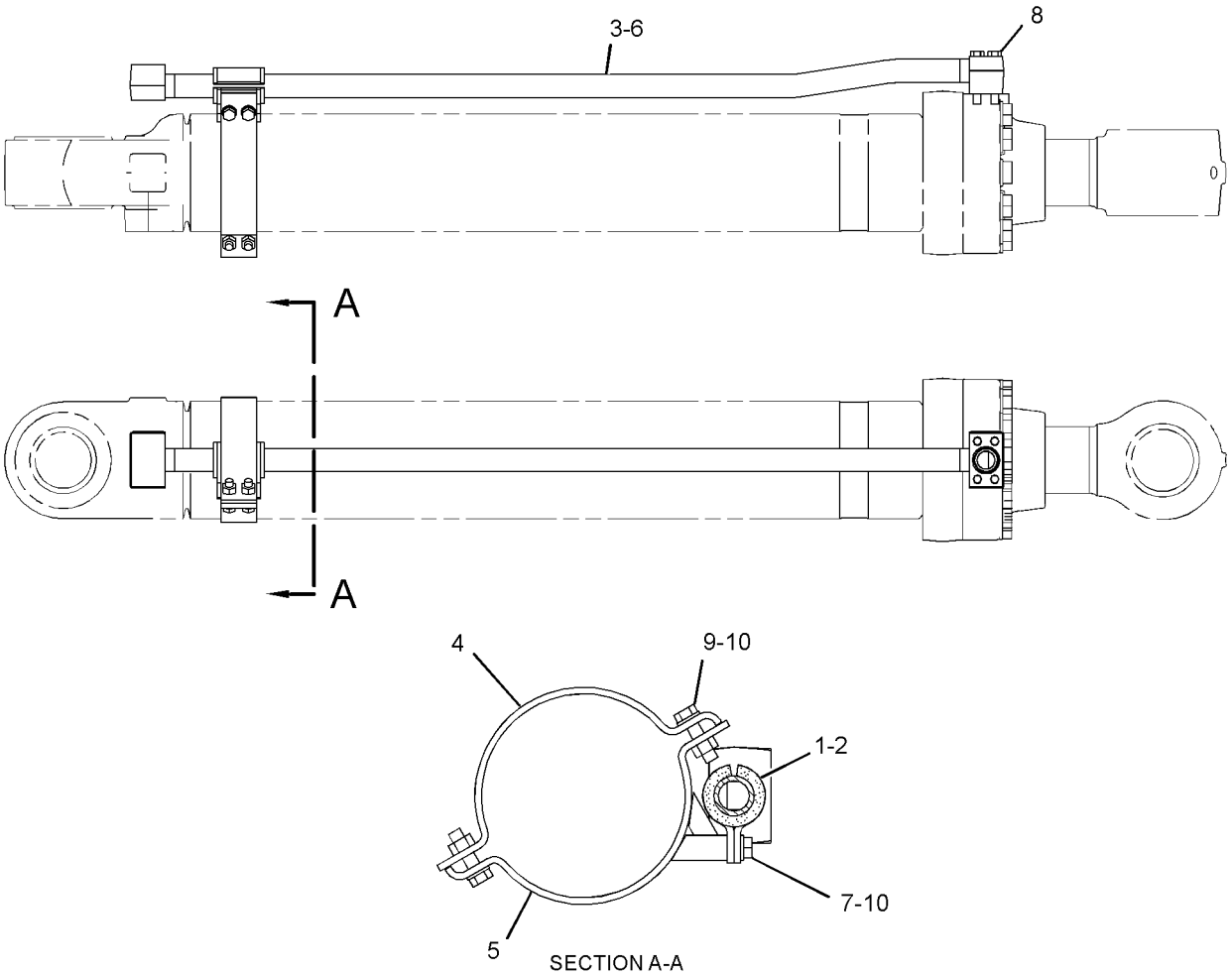

GRAPHIC #1

<END>

g02184173

HYDRAULIC SYSTEM

361-2897 LINES GP-BUCKET CYLINDER

S/N: WAP1-UP

PART OF 361-2899 CYLINDER & LINES GP-BUCKET

AN ATTACHMENT

SMCS-5457 **i03983412**

NOTE	REF NO	GRAPHIC REF	PART NUMBER	QTY	PART NAME 1 2 3 4 5 6 (PRODUCT LEVEL)	SEE PAGE
	1	1	**138-5708**	4	CLIP-HALF	
	2	1	**138-5709**	2	GROMMET	
	3	1	**338-6111**	1	TUBE AS	
	4	1	**356-9138**	2	SUPPORT AS	
	5	1	**356-9140**	2	SUPPORT AS	
	6	1	**359-8591**	1	TUBE AS	
	7	1	**1P-3706**	2	SEAL-RECTANGULAR	
M	8	1	**7X-2556**	8	BOLT (M16X2X100-MM)	
M	9	1	**8T-4140**	12	BOLT (M16X2X60-MM)	
	10	1	**9X-8257**	12	WASHER (17.5X30X3.5-MM THK)	

M-METRIC PART

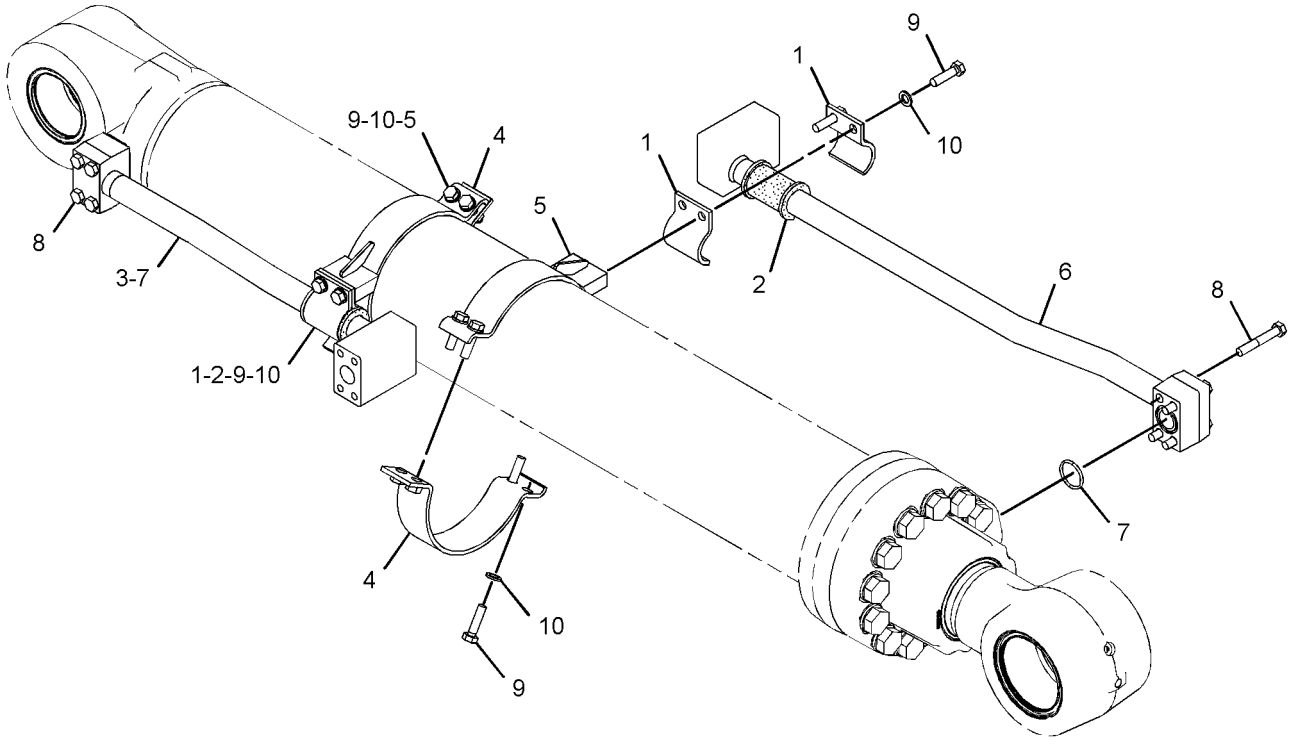

GRAPHIC #1 **<END>** g02182856

HYDRAULIC SYSTEM

361-3323 LINES GP-BUCKET CYLINDER

S/N: WAP1-UP

PART OF 361-3324 CYLINDER & LINES GP-BUCKET

AN ATTACHMENT

SMCS-5457 **i03983365**

NOTE	REF NO	GRAPHIC REF	PART NUMBER	QTY	PART NAME 1 2 3 4 5 6 (PRODUCT LEVEL)	SEE PAGE
	1	1	**138-5708**	2	CLIP-HALF	
	2	1	**138-5709**	1	GROMMET	
	3	1	**356-9125**	1	SUPPORT AS	
	4	1	**356-9142**	1	SUPPORT AS	
	5	1	**359-8590**	1	TUBE AS	
	6	1	**1P-3706**	1	SEAL-RECTANGULAR	
M	7	1	**7X-2554**	2	BOLT (M16X2X70-MM)	
M	8	1	**7X-2556**	4	BOLT (M16X2X100-MM)	
M	9	1	**8T-4140**	4	BOLT (M16X2X60-MM)	
	10	1	**9X-8257**	6	WASHER (17.5X30X3.5-MM THK)	

M-METRIC PART

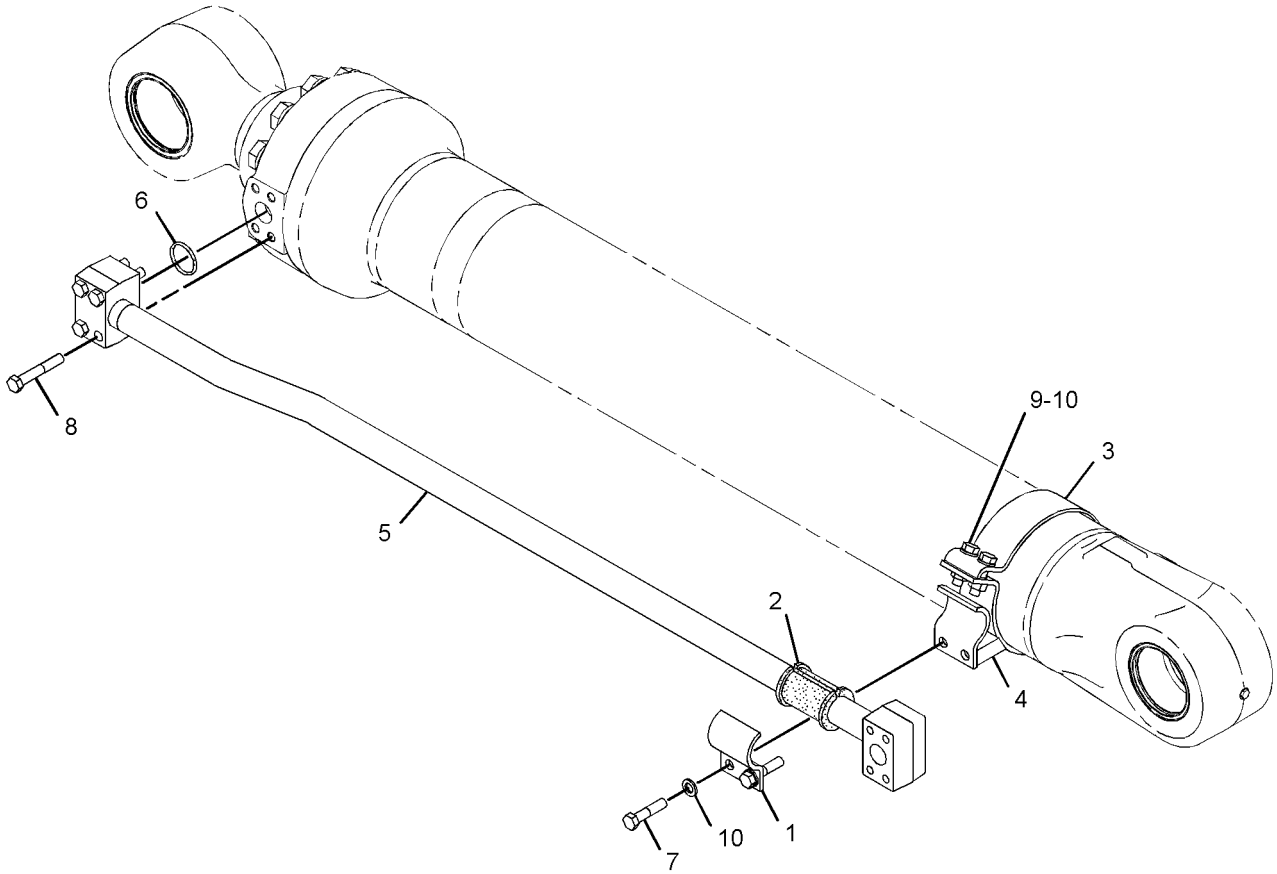

GRAPHIC #1 **<END>** g02183433

HYDRAULIC SYSTEM

342-8073 LINES GP-CONNECTING

S/N: WAP1-UP
PART OF 342-8069, 342-8070 COUPLER AR-QUICK
FOR USE WITH CW-70 QUICK COUPLER, "JC" LINKAGE
AN ATTACHMENT

SMCS-5057 **i03828591**

NOTE	REF NO	GRAPHIC REF	PART NUMBER	QTY	PART NAME 1 2 3 4 5 6 (PRODUCT LEVEL)	SEE PAGE
	1	1	**3V-0046**	1	PLATE	
	2	1	**6W-2464**	2	CLAMP	
	3	1	**7K-1181**	2	STRAP-CABLE	
	4	1	**8T-7910**	2	ADAPTER	
	5	1	**177-5025**	2	TUBE AS	
I	6	1	**344-3687**	2	HOSE AS	
	7	1	*148-8419*	1	REDUCER AS	
		1	**4J-5477**	1	SEAL-O-RING	
		1	**6V-8935**	1	REDUCER-O-RING	
	8	1	**3J-1907**	2	SEAL-O-RING	
	9	1	**6V-0405**	2	SEAL-BONDED	
	10	1	**6V-8397**	4	SEAL-O-RING	
	11	1	**6V-8554**	1	NUT (13/16-16-THD)	
	12	1	**6V-8636**	2	CONNECTOR	
	13	1	**8C-6561**	1	BOLT (5/16-18X1.375-IN)	

I-REFER TO HYDRAULIC INFORMATION SYSTEM

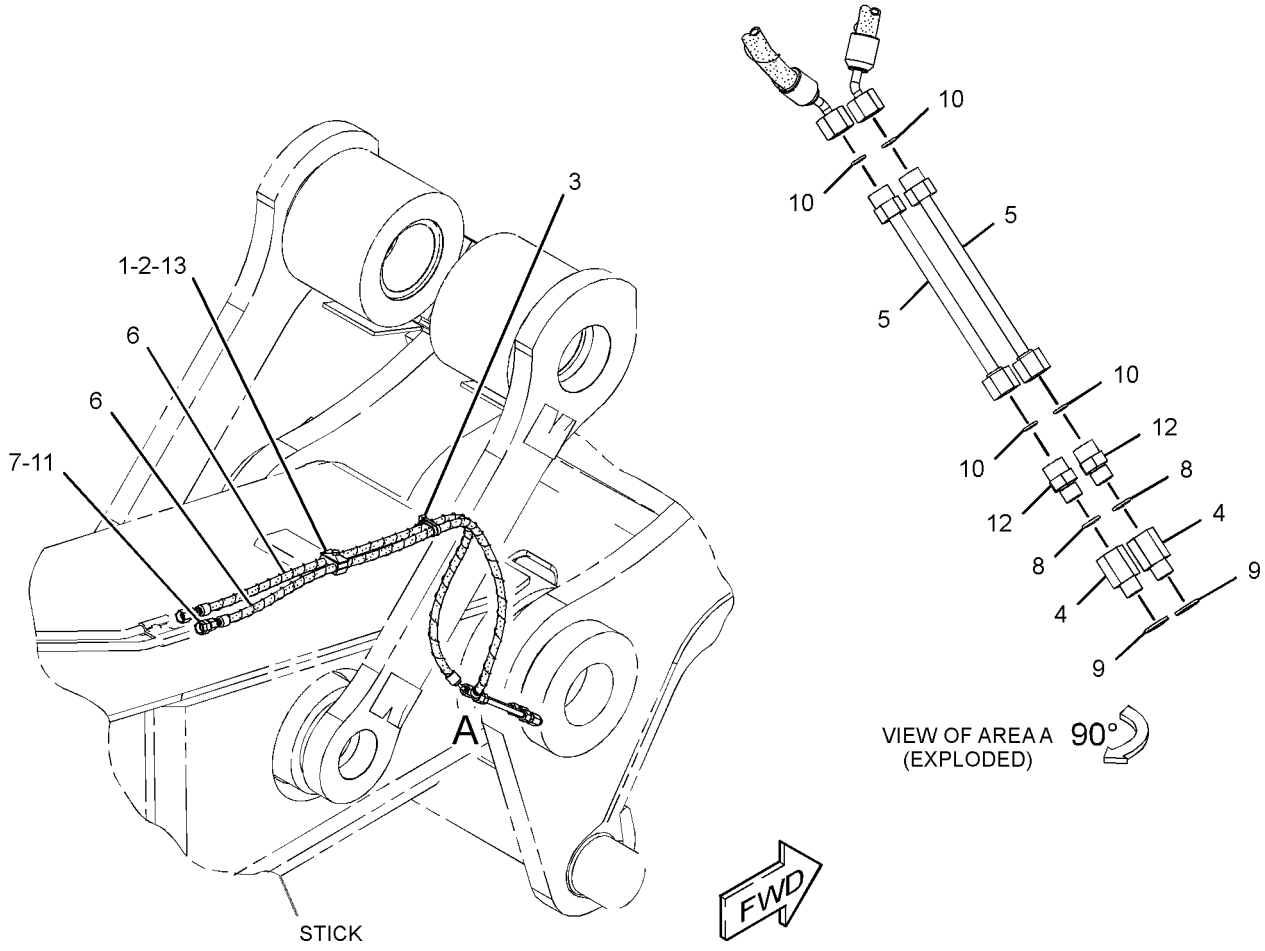

GRAPHIC #1 **<END>** g02134373

HYDRAULIC SYSTEM

277-0906 LINES GP-COUPLER—JB-FAMILY

S/N: WAP1-UP
PART OF 340-4070 OPTION AR-COUPLER
FOR USE WITH 3.4-M (11.2-FT) STICK
AN ATTACHMENT

SMCS-5057, 5133 **i03910512**

NOTE	REF NO	GRAPHIC REF	PART NUMBER	QTY	PART NAME 1 2 3 4 5 6 (PRODUCT LEVEL)	SEE PAGE
I	1	1	**207-5546**	2	HOSE AS	
	2	1	**288-7456**	1	TUBE AS	
	3	1	**288-7457**	1	TUBE AS	
	4	1	**135-3980**	2	CLIP	
	5	1	*148-8415*	1	REDUCER AS	
		1	**6V-8397**	1	SEAL-O-RING	
		1	**6V-8936**	1	REDUCER	
	6	1	*148-8419*	1	REDUCER AS	
		1	**4J-5477**	1	SEAL-O-RING	
		1	**6V-8935**	1	REDUCER-O-RING	
	7	1	**5Q-4212**	10	CLIP	
	8	1	**6V-8398**	4	SEAL-O-RING	
	9	1	**8T-4223**	12	WASHER-HARD (13.5X25.5X3-MM THK)	
M	10	1	**8T-4956**	12	BOLT (M12X1.75X35-MM)	
	11	1	**9X-6582**	1	NUT (13/16-16-THD)	

I-REFER TO HYDRAULIC INFORMATION SYSTEM
M-METRIC PART

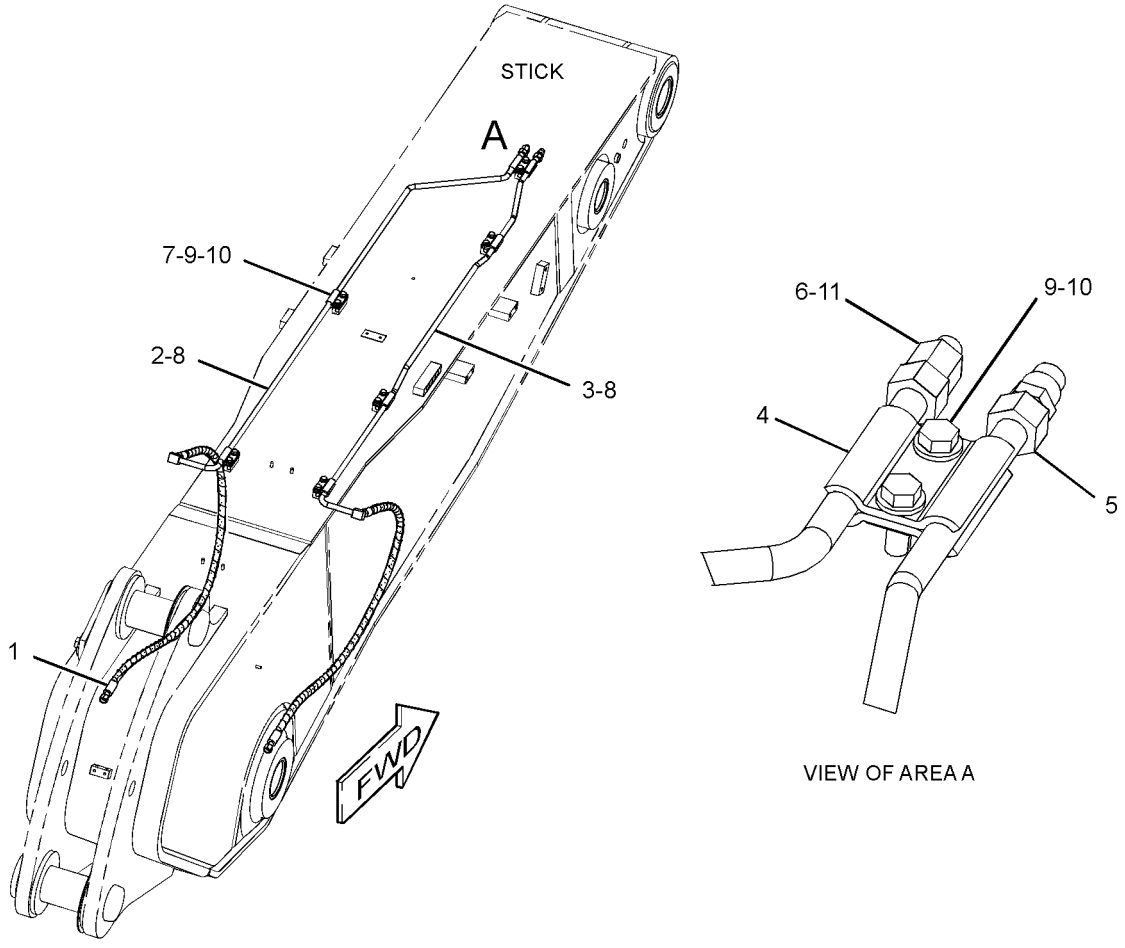

GRAPHIC #1 **<END>** g02160774

HYDRAULIC SYSTEM

334-2212 LINES GP-COUPLER–BOOM

S/N: WAP1-UP
PART OF 340-4070, 340-4071 OPTION AR-COUPLER
AN ATTACHMENT

SMCS-5057, 5133 **i03910231**

NOTE	REF NO	GRAPHIC REF	PART NUMBER	QTY	PART NAME 1 2 3 4 5 6 (PRODUCT LEVEL)	SEE PAGE
	1	1	**187-9862**	3	PLATE	
	2	1	**193-6662**	3	PLATE	
	3	1	**282-5842**	20	CLAMP-HALF	
	4	1	**282-5843**	2	SUPPORT AS	
	5	1	**282-5852**	2	TUBE AS	
	6	1	**282-5853**	1	TUBE AS	
	7	1	**282-5854**	1	TUBE AS	
	8	1	**282-5856**	1	TUBE AS	
	9	1	**282-5857**	1	TUBE AS	
	10	1	*309-5127*	2	ELBOW AS	
					(EACH INCLUDES)	
		1	**6V-8397**	1	SEAL-O-RING	
		1	**152-3411**	1	ELBOW	
	11	1	**334-2213**	1	TUBE AS	
	12	1	**334-2214**	1	TUBE AS	
	13	1	**135-3980**	6	CLIP	
	14	1	**5Q-4212**	4	CLIP	
	15	1	**6V-8398**	10	SEAL-O-RING	
M	16	1	**8T-4139**	20	BOLT (M12X1.75X30-MM)	
M	17	1	**8T-4173**	4	BOLT (M16X2X110-MM)	
M	18	1	**8T-4175**	6	BOLT (M16X2X90-MM)	
	19	1	**8T-4223**	30	WASHER-HARD (13.5X25.5X3-MM THK)	
M	20	1	**8T-4244**	20	NUT (M12X1.75-THD)	
M	21	1	**8T-4956**	4	BOLT (M12X1.75X35-MM)	
M	22	1	**8T-6868**	6	BOLT (M12X1.75X80-MM)	
	23	1	**9X-8257**	10	WASHER (17.5X30X3.5-MM THK)	

M-METRIC PART

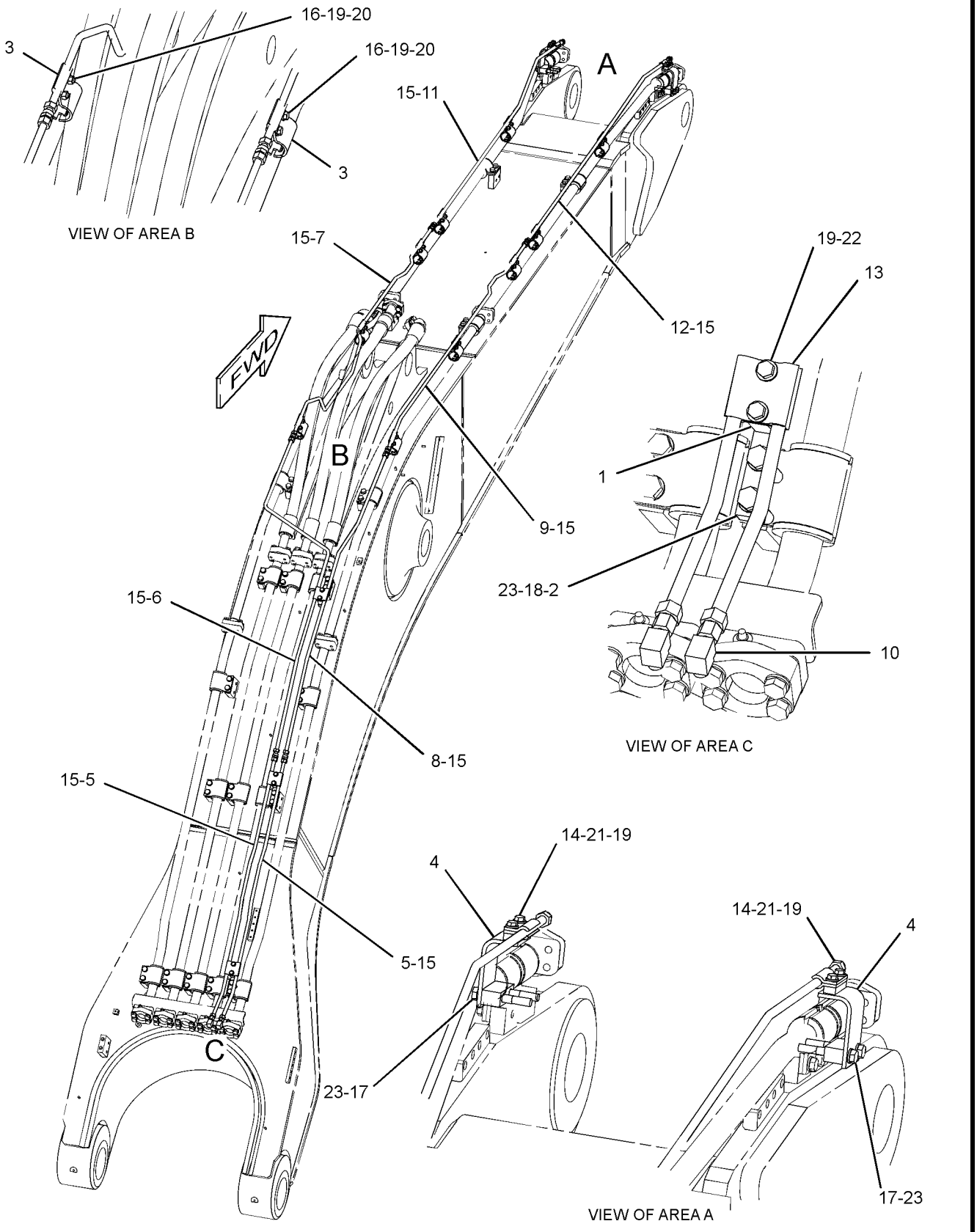

GRAPHIC #1 **<END>** g02160592

HYDRAULIC SYSTEM

335-4903 LINES GP-COUPLER–HB-FAMILY

S/N: WAP1-UP
PART OF 340-4071, 340-4072 OPTION AR-COUPLER
FOR USE WITH 4.4-M (14.4-IN) STICK
AN ATTACHMENT

SMCS-5057, 5133 **i03910238**

NOTE	REF NO	GRAPHIC REF	PART NUMBER	QTY	PART NAME 1 2 3 4 5 6 (PRODUCT LEVEL)	SEE PAGE
I	1	1	**177-8588**	2	HOSE AS	
	2	1	**335-4904**	1	TUBE AS	
	3	1	**335-4905**	1	TUBE AS	
	4	1	**135-3980**	2	CLIP	
	5	1	*148-8415*	1	REDUCER AS	
		1	**6V-8397**	1	SEAL-O-RING	
		1	**6V-8936**	1	REDUCER	
	6	1	*148-8419*	1	REDUCER AS	
		1	**4J-5477**	1	SEAL-O-RING	
		1	**6V-8935**	1	REDUCER-O-RING	
	7	1	**5Q-4212**	12	CLIP	
	8	1	**6V-8398**	4	SEAL-O-RING	
	9	1	**8T-4223**	14	WASHER-HARD (13.5X25.5X3-MM THK)	
M	10	1	**8T-4956**	14	BOLT (M12X1.75X35-MM)	
	11	1	**9X-6582**	1	NUT (13/16-16-THD)	

I-REFER TO HYDRAULIC INFORMATION SYSTEM
M-METRIC PART

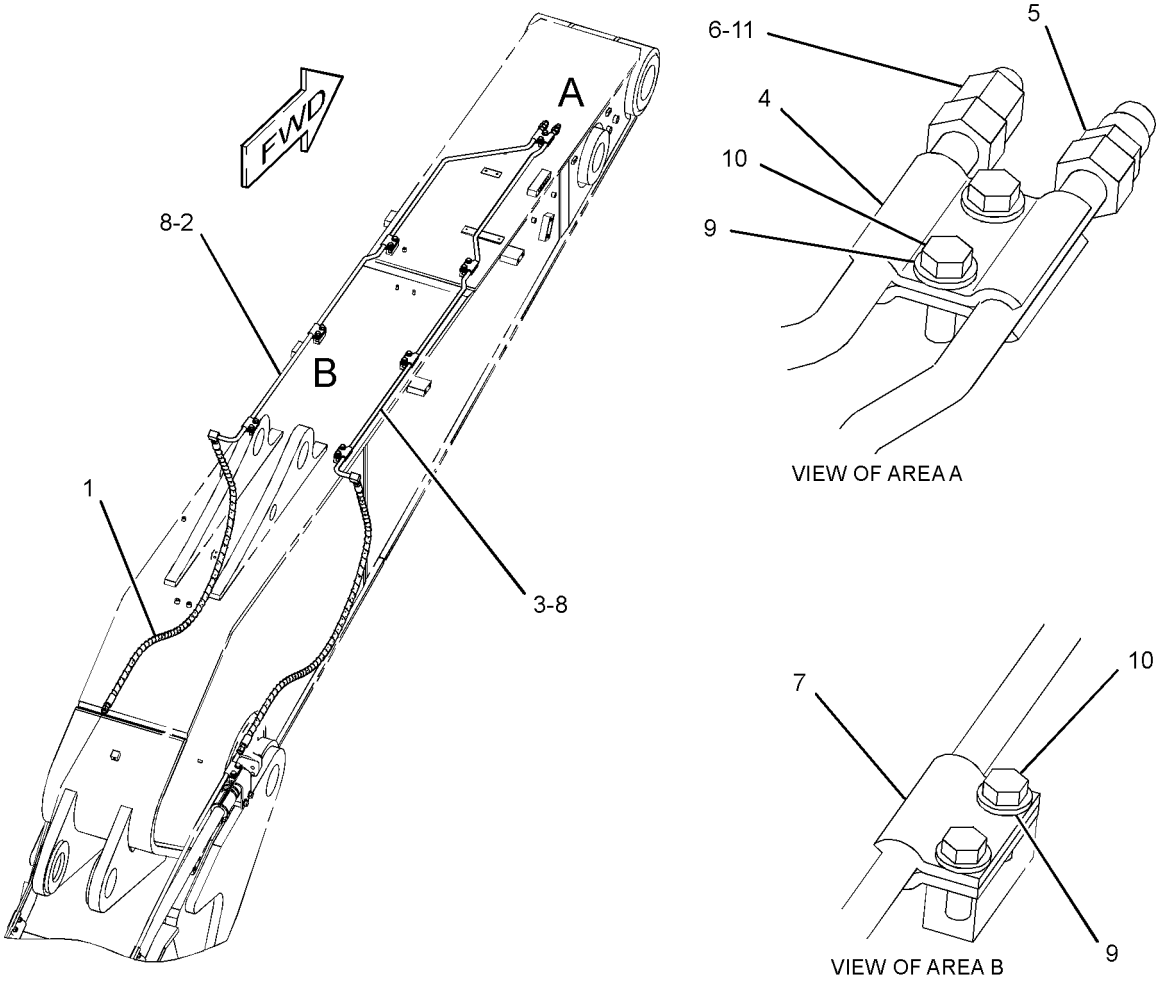

GRAPHIC #1 **<END>** g02151328

HYDRAULIC SYSTEM

335-4949 LINES GP-COUPLER—MASS BOOM

S/N: WAP1-UP
PART OF 340-4068 OPTION AR-COUPLER
AN ATTACHMENT

SMCS-5057, 5133 **i03910556**

NOTE	REF NO	GRAPHIC REF	PART NUMBER	QTY	PART NAME 1 2 3 4 5 6 (PRODUCT LEVEL)	SEE PAGE
	1	1	**187-9862**	2	PLATE	
	2	1	**193-6662**	2	PLATE	
	3	1	**282-5842**	20	CLAMP-HALF	
	4	1	**282-5843**	2	SUPPORT AS	
	5	1	**288-7597**	2	TUBE AS	
	6	1	*309-5127*	2	ELBOW AS	
					(EACH INCLUDES)	
		1	**6V-8397**	1	SEAL-O-RING	
		1	**152-3411**	1	ELBOW	
	7	1	**335-4950**	1	TUBE AS	
	8	1	**335-4951**	2	TUBE AS	
	9	1	**335-4952**	1	TUBE AS	
	10	1	**335-4953**	1	TUBE AS	
	11	1	**335-4954**	1	TUBE AS	
	12	1	**135-3980**	4	CLIP	
	13	1	**5Q-4212**	4	CLIP	
	14	1	**6V-8398**	10	SEAL-O-RING	
M	15	1	**8T-4139**	20	BOLT (M12X1.75X30-MM)	
M	16	1	**8T-4173**	4	BOLT (M16X2X110-MM)	
M	17	1	**8T-4175**	4	BOLT (M16X2X90-MM)	
	18	1	**8T-4223**	28	WASHER-HARD (13.5X25.5X3-MM THK)	
M	19	1	**8T-4244**	20	NUT (M12X1.75-THD)	
M	20	1	**8T-4956**	4	BOLT (M12X1.75X35-MM)	
M	21	1	**8T-6868**	4	BOLT (M12X1.75X80-MM)	
	22	1	**9X-8257**	8	WASHER (17.5X30X3.5-MM THK)	

M-METRIC PART

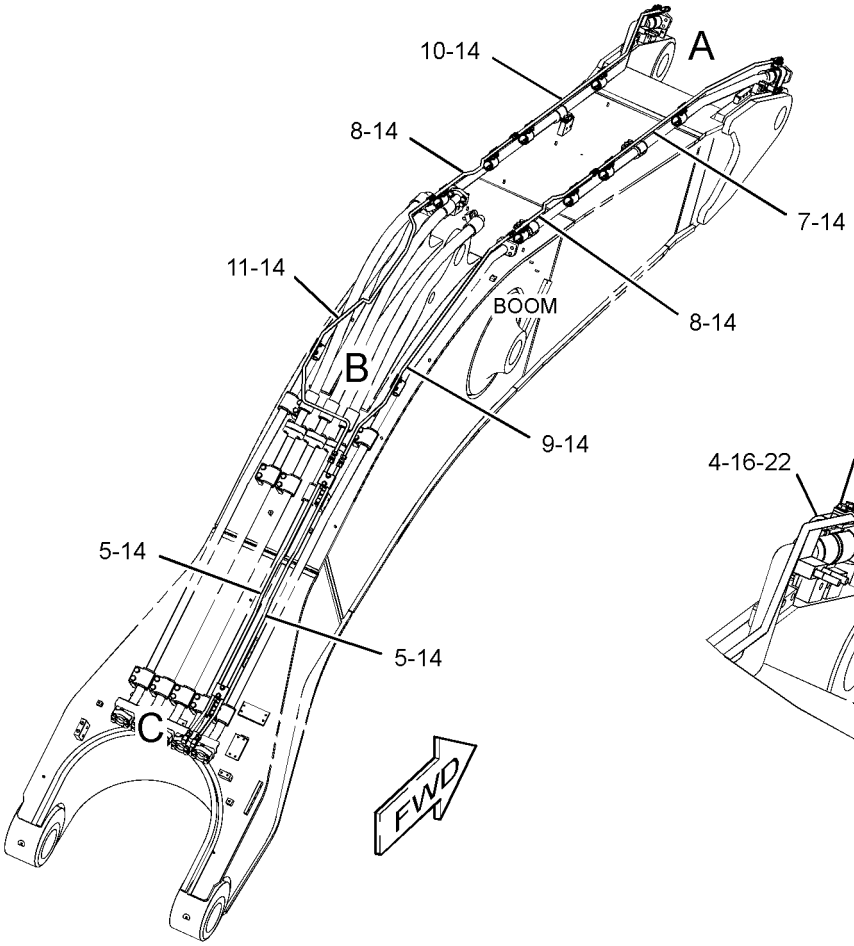

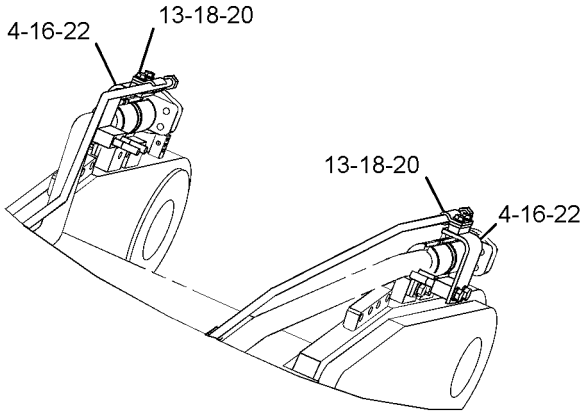

VIEW OF AREA A

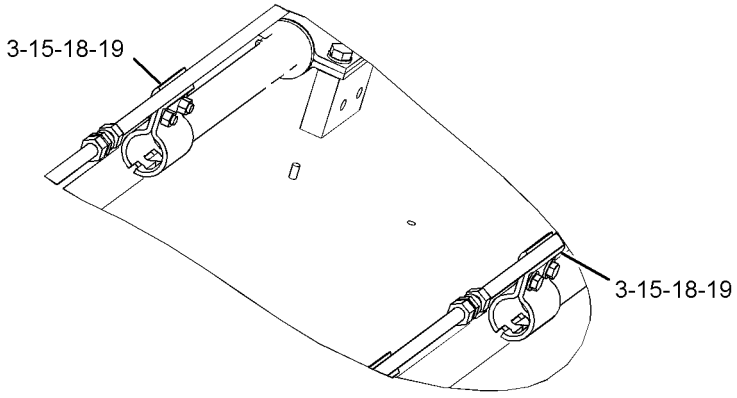

VIEW OF AREA B

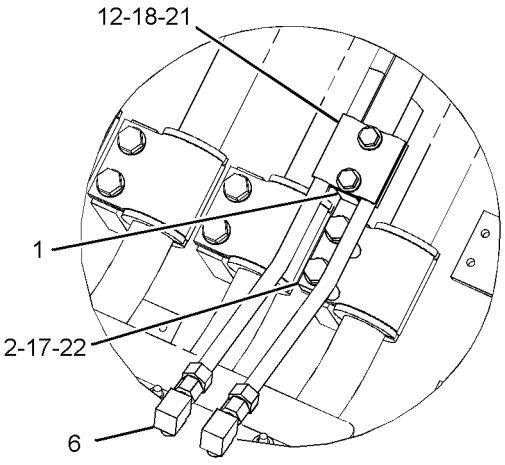

VIEW OF AREA C

GRAPHIC #1 **<END>** g02163170

HYDRAULIC SYSTEM

339-0732 LINES GP-COUPLER—JB-FAMILY

S/N: WAP1-UP
PART OF 340-4068 OPTION AR-COUPLER
FOR USE WITH 2.92-M (9.6-FT) STICK
AN ATTACHMENT

SMCS-5057, 5133 **i03910590**

NOTE	REF NO	GRAPHIC REF	PART NUMBER	QTY	PART NAME 1 2 3 4 5 6 (PRODUCT LEVEL)	SEE PAGE
I	1	1	**210-9966**	2	HOSE AS	
	2	1	**344-4207**	1	TUBE AS	
	3	1	**344-4208**	1	TUBE AS	
	4	1	**135-3980**	4	CLIP	
	5	1	*148-8415*	1	REDUCER AS	
		1	**6V-8397**	1	SEAL-O-RING	
		1	**6V-8936**	1	REDUCER	
	6	1	*148-8419*	1	REDUCER AS	
		1	**4J-5477**	1	SEAL-O-RING	
		1	**6V-8935**	1	REDUCER-O-RING	
	7	1	**5Q-4212**	8	CLIP	
	8	1	**6V-8398**	4	SEAL-O-RING	
M	9	1	**8T-4192**	4	BOLT (M12X1.75X25-MM)	
	10	1	**8T-4223**	12	WASHER-HARD (13.5X25.5X3-MM THK)	
M	11	1	**8T-4956**	8	BOLT (M12X1.75X35-MM)	
	12	1	**9X-6582**	1	NUT (13/16-16-THD)	

I-REFER TO HYDRAULIC INFORMATION SYSTEM
M-METRIC PART

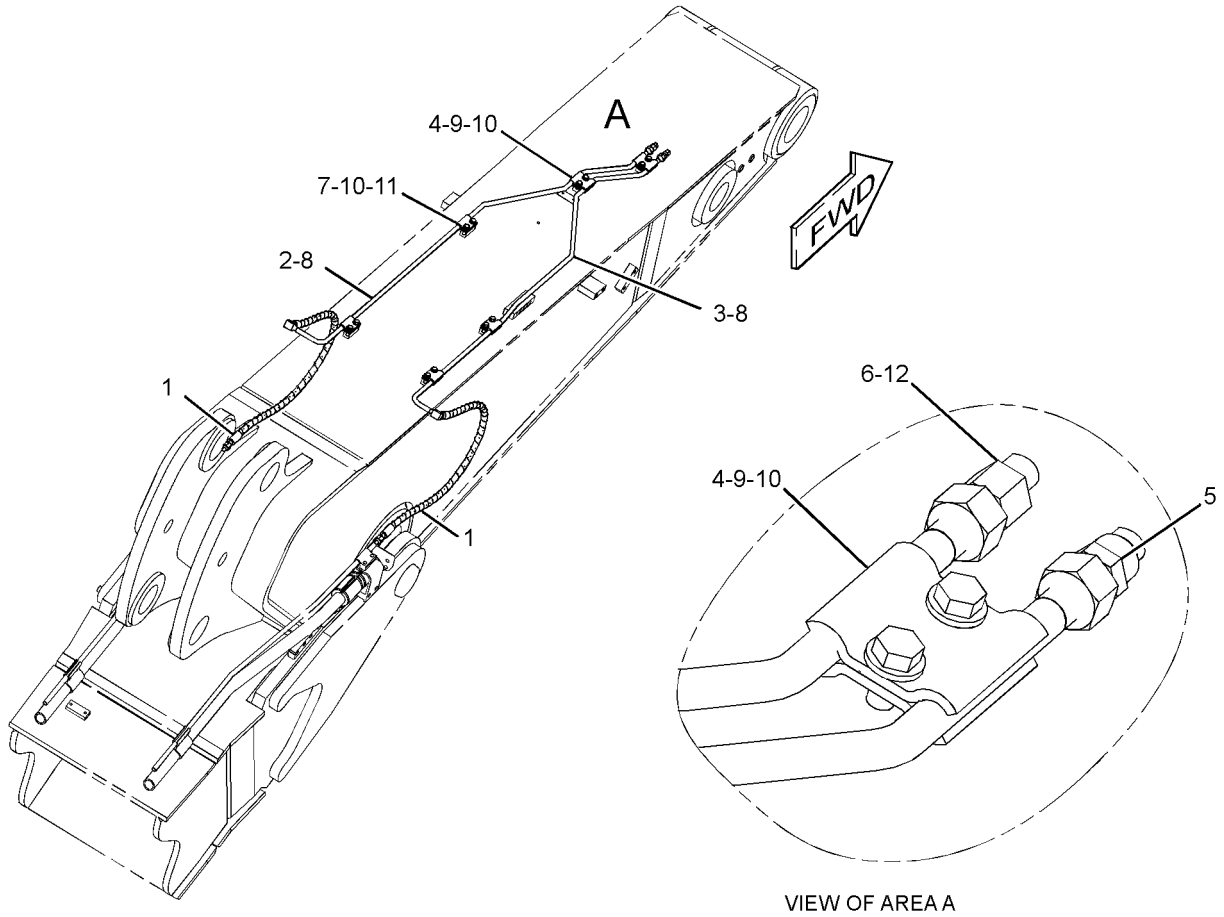

VIEW OF AREA A

GRAPHIC #1 **<END>** g02162968

344-4370 LINES GP-COUPLER–HB-FAMILY

S/N: WAP1-UP
PART OF 340-4073 OPTION AR-COUPLER
FOR USE WITH 5.5-M (18-FT) STICK
AN ATTACHMENT

SMCS-5057, 5133 **i03909985**

NOTE	REF NO	GRAPHIC REF	PART NUMBER	QTY	PART NAME 1 2 3 4 5 6 (PRODUCT LEVEL)	SEE PAGE
I	1	1	**253-6461**	2	HOSE AS	
	2	1	**344-4371**	1	TUBE AS	
	3	1	**344-4372**	1	TUBE AS	
	4	1	**135-3980**	2	CLIP	
	5	1	*148-8415*	1	REDUCER AS	
		1	**6V-8397**	1	SEAL-O-RING	
		1	**6V-8936**	1	REDUCER	
	6	1	*148-8419*	1	REDUCER AS	
		1	**4J-5477**	1	SEAL-O-RING	
		1	**6V-8935**	1	REDUCER-O-RING	
	7	1	**5Q-4212**	12	CLIP	
	8	1	**6V-8398**	4	SEAL-O-RING	
M	9	1	**8T-4192**	2	BOLT (M12X1.75X25-MM)	
	10	1	**8T-4223**	14	WASHER-HARD (13.5X25.5X3-MM THK)	
M	11	1	**8T-4956**	12	BOLT (M12X1.75X35-MM)	
	12	1	**9X-6582**	1	NUT (13/16-16-THD)	

I-REFER TO HYDRAULIC INFORMATION SYSTEM
M-METRIC PART

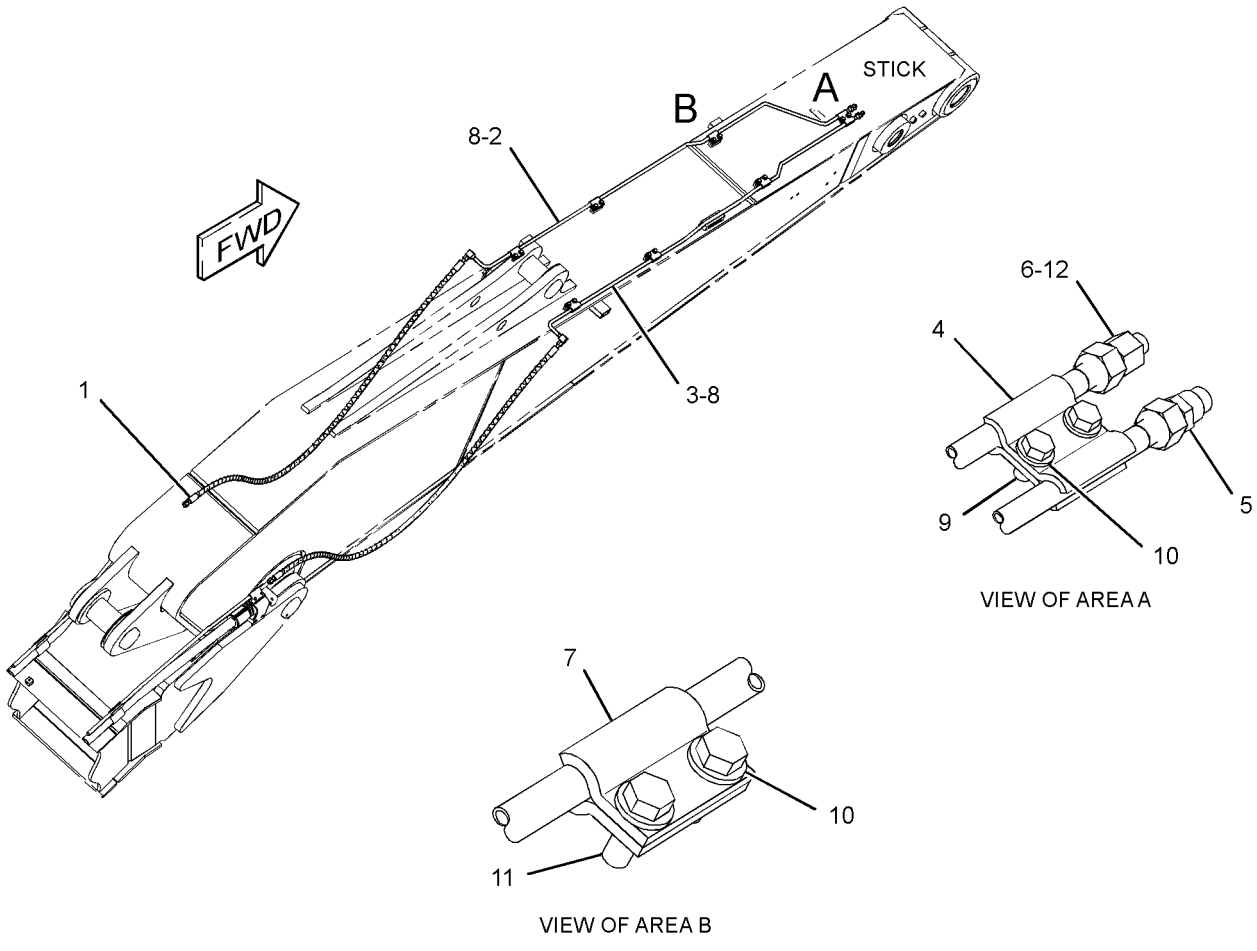

GRAPHIC #1 **<END>** g02151528

HYDRAULIC SYSTEM

355-7865 LINES GP-COUPLER–REACH BOOM

S/N: WAP1-UP

PART OF 340-4072, 340-4073 OPTION AR-COUPLER

AN ATTACHMENT

SMCS-5057, 5133 **i03909590**

NOTE	REF NO	GRAPHIC REF	PART NUMBER	QTY	PART NAME 1 2 3 4 5 6 (PRODUCT LEVEL)	SEE PAGE
	1	1	**187-9862**	3	PLATE	
	2	1	**193-6662**	3	PLATE	
	3	1	**282-5842**	24	CLAMP-HALF	
	4	1	**282-5843**	2	SUPPORT AS	
	5	1	**282-5845**	2	TUBE AS	
	6	1	**282-5846**	1	TUBE AS	
	7	1	**282-5847**	1	TUBE AS	
	8	1	**282-5848**	1	TUBE AS	
	9	1	**282-5849**	1	TUBE AS	
	10	1	**282-5850**	1	TUBE AS	
	11	1	**282-5851**	1	TUBE AS	
	12	1	*309-5127*	2	ELBOW AS	
					(EACH INCLUDES)	
		1	**6V-8397**	1	SEAL-O-RING	
		1	**152-3411**	1	ELBOW	
	13	1	**135-3980**	6	CLIP	
	14	1	**5Q-4212**	4	CLIP	
	15	1	**6V-8398**	10	SEAL-O-RING	
M	16	1	**8T-4139**	24	BOLT (M12X1.75X30-MM)	
M	17	1	**8T-4173**	4	BOLT (M16X2X110-MM)	
M	18	1	**8T-4175**	6	BOLT (M16X2X90-MM)	
	19	1	**8T-4223**	34	WASHER-HARD (13.5X25.5X3-MM THK)	
M	20	1	**8T-4244**	24	NUT (M12X1.75-THD)	
M	21	1	**8T-4956**	4	BOLT (M12X1.75X35-MM)	
M	22	1	**8T-6868**	6	BOLT (M12X1.75X80-MM)	
	23	1	**9X-8257**	10	WASHER (17.5X30X3.5-MM THK)	

M-METRIC PART

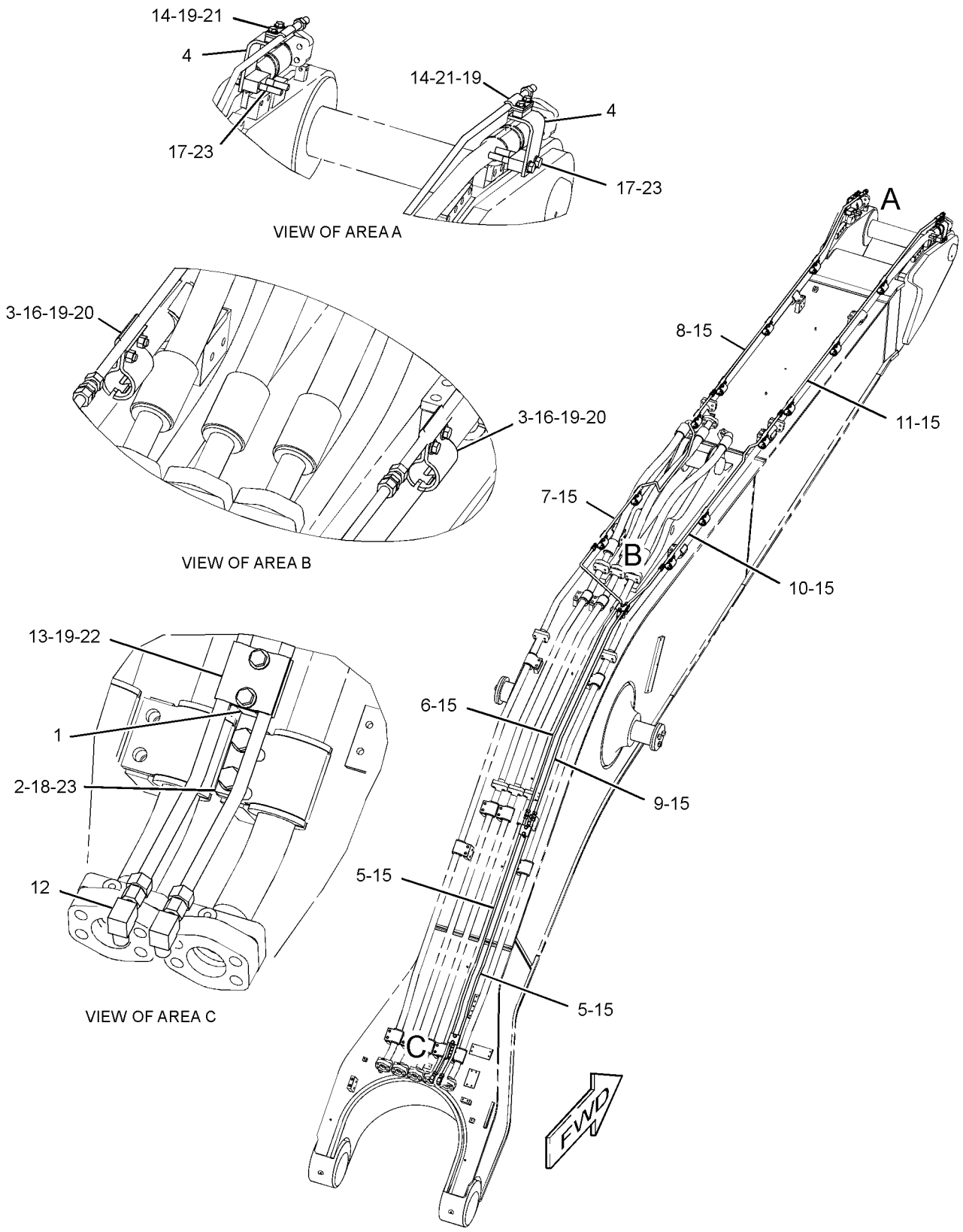

GRAPHIC #1 **<END>** g02161994

HYDRAULIC SYSTEM

302-3057 LINES GP-FRONT—SMART BOOM

S/N: WAP1-UP
PART OF 297-0421 VALVE AR-BOOM LOWERING CONTROL
AN ATTACHMENT

SMCS-5057 **i03907401**

NOTE	REF NO	GRAPHIC REF	PART NUMBER	QTY	PART NAME 1 2 3 4 5 6 (PRODUCT LEVEL)	SEE PAGE
I	1	1	**5I-8825**	1	HOSE AS	
	2	1	**7K-1181**	2	STRAP-CABLE	
	3	1	**202-9002**	1	SWITCH AS-PRESSURE (BOOM LOWERING)	
		1	**102-8802**	1	KIT-RECEPTACLE (2-PIN)	
					(INCLUDES RECEPTACLE AS & WEDGE)	
		1	**3J-1907**	1	SEAL-O-RING	
		1	**8T-8729**	2	PIN-CONNECTOR (16-GA TO 18-GA)	
	4	1	**249-3618**	1	BLOCK	
Y	5	1	**297-0370**	1	VALVE GP-CHECK	696
	6	1	**302-3318**	1	PLATE	
	7	1	**342-4176**	1	SUPPORT	
I	8	1	**348-1237**	1	HOSE AS	
	9	1	**350-7389**	1	BLOCK	
	10	1	*148-8338*	1	CONNECTOR AS	
		1	**3J-1907**	1	SEAL-O-RING	
		1	**6V-8397**	1	SEAL-O-RING	
		1	**8T-0075**	1	CONNECTOR	
	11	1	*148-8355*	1	ELBOW AS	
		1	**5K-9090**	1	SEAL-O-RING	
		1	**6V-9005**	1	ELBOW	
		1	**7M-8485**	1	SEAL-O-RING	
	12	1	*148-8415*	1	REDUCER AS	
		1	**6V-8397**	1	SEAL-O-RING	
		1	**6V-8936**	1	REDUCER	
	13	1	*164-4180*	3	PLUG AS	
					(EACH INCLUDES)	
		1	**7M-8485**	1	SEAL-O-RING	
		1	**9S-4181**	1	PLUG-O-RING	
	14	1	**1P-3703**	1	SEAL-RECTANGULAR	
	15	1	**1P-3704**	1	SEAL-RECTANGULAR	
	16	1	**241-6215**	1	ELBOW AS	
	17	1	**3J-1907**	1	SEAL-O-RING	
	18	1	**4J-0522**	1	SEAL-O-RING	
	19	1	**5P-7468**	1	CLIP (SLOT)	
	20	1	**5P-7469**	1	CLIP (TAB)	
	21	1	**6V-0400**	2	FLANGE-HALF	
M	22	1	**7X-2550**	2	BOLT (M12X1.75X110-MM)	
	23	1	**8T-2525**	1	GROMMET	
M	24	1	**8T-4139**	3	BOLT (M12X1.75X30-MM)	
M	25	1	**8T-4184**	4	BOLT (M12X1.75X45-MM)	
M	26	1	**8T-4192**	1	BOLT (M12X1.75X25-MM)	
M	27	1	**8T-4193**	2	BOLT (M16X2X50-MM)	
M	28	1	**8T-4198**	4	BOLT (M10X1.5X100-MM)	
	29	1	**8T-4223**	8	WASHER-HARD (13.5X25.5X3-MM THK)	
M	30	1	**8T-5001**	2	BOLT (M12X1.75X130-MM)	
	31	1	**9X-8257**	2	WASHER (17.5X30X3.5-MM THK)	

I-REFER TO HYDRAULIC INFORMATION SYSTEM
M-METRIC PART
Y-SEPARATE ILLUSTRATION

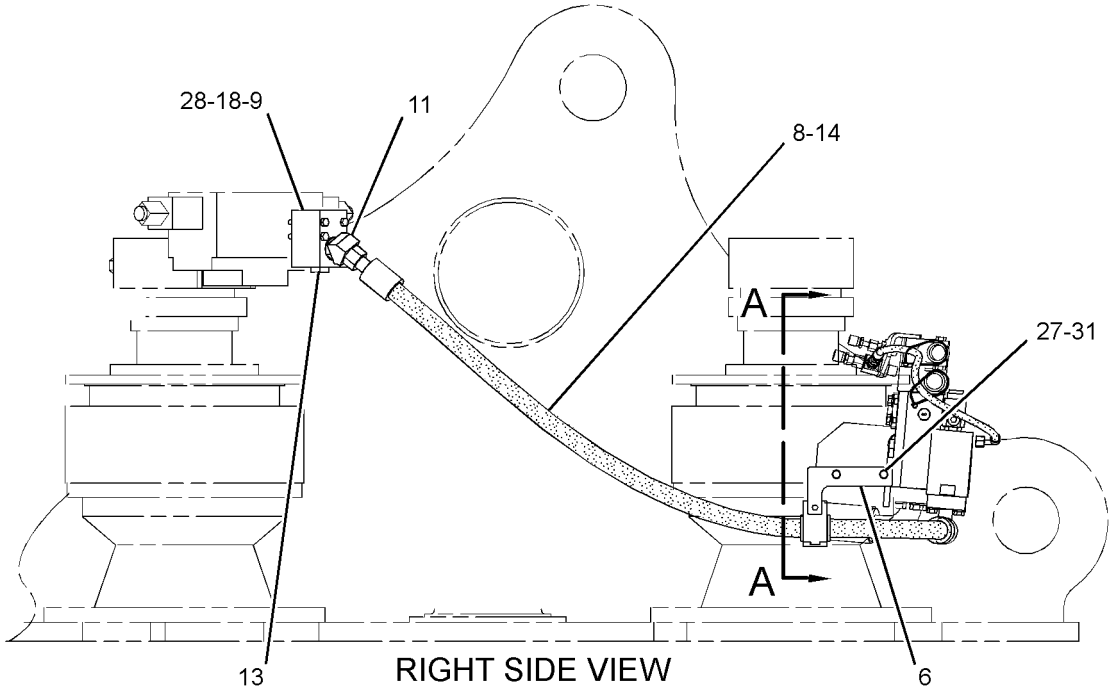

RIGHT SIDE VIEW

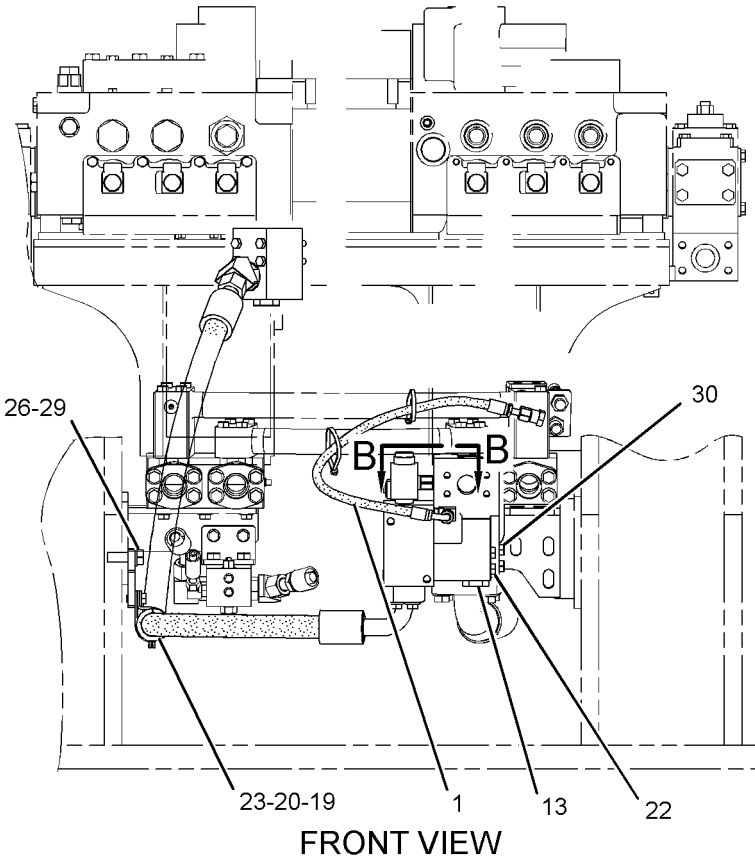

FRONT VIEW

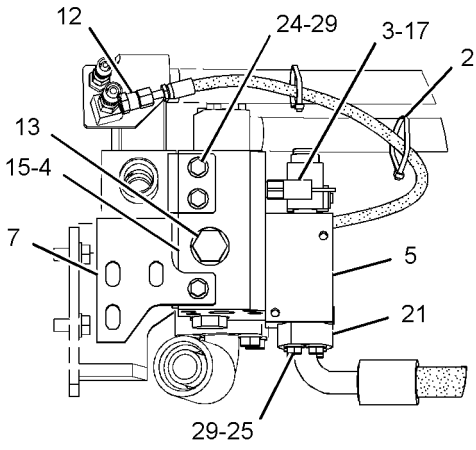

SECTION A-A

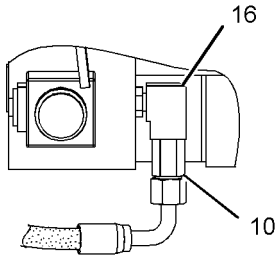

VIEW B-B

GRAPHIC #1 **<END>** g02181155

HYDRAULIC SYSTEM

302-3059 LINES GP-FRONT—UNIVERSAL QUICK COUPLER

S/N: WAP1-UP
PART OF 302-9443 CONTROL AR-COUPLER
AN ATTACHMENT

SMCS-5057 **i04007921**

NOTE	REF NO	GRAPHIC REF	PART NUMBER	QTY	PART NAME 1 2 3 4 5 6 (PRODUCT LEVEL)	SEE PAGE
Y	1	2	**4T-1860**	1	VALVE GP-SHUTTLE	767
	2	2,3	**6V-0852**	3	CAP-DUST	
	3	1,2	**7K-1181**	15	STRAP-CABLE	
I	4	2	**087-5765**	1	HOSE AS	
I	5	2	**104-8835**	1	HOSE AS	
	6	3	**123-2431**	2	BODY-VALVE	
	7	2,3	**123-4750**	3	VALVE-CHECK (QUICK COUPLER SOLENOID)	
	8	3	*148-8443*	1	TEE AS	
		3	**3J-1907**	1	SEAL-O-RING	
		3	**6V-8397**	1	SEAL-O-RING	
		3	**7X-2459**	1	TEE-O-RING	
	9	2	*164-5546*	1	TEE AS	
		2	**3E-7410**	1	TEE-O-RING	
		2	**3J-1907**	1	SEAL-O-RING	
	10	2	*164-9639*	1	CONNECTOR AS	
		2	**3J-1907**	1	SEAL-O-RING	
		2	**4J-5477**	1	SEAL-O-RING	
		2	**148-7925**	1	CONNECTOR	
	11	2	*165-6365*	2	FITTING AS	
					(EACH INCLUDES)	
		2	**3J-1907**	1	SEAL-O-RING	
		2	**7W-7381**	1	FITTING-OUTLET	
	12	2,3	**168-1968**	3	TEE AS	
					(EACH INCLUDES)	
		2,3	**3J-1907**	1	SEAL-O-RING	
		2,3	**6V-8397**	1	SEAL-O-RING	
		2,3	**126-6872**	1	TEE	
	13	2	**213-3745**	1	ELBOW	
I	14	2	**266-1136**	1	HOSE AS	
	15	1,2	**275-1442**	7	CLIP (TAB)	
	16	1,2	**275-1443**	7	CLIP (SLOT)	
I	17	2	**275-1497**	1	HOSE AS	
	18	2	**282-7198**	1	HOSE AS	
	19	1	**292-7627**	1	HOSE AS	
	20	2	**297-0616**	1	VALVE GP-SOLENOID (UNIVERSAL QUICK COUPLER)	
I	21	3	**302-2860**	2	HOSE AS	
I	22	2	**302-2891**	1	HOSE AS	
I	23	1	**325-8862**	1	HOSE AS	
Y	24	2	**329-5224**	1	VALVE GP-CONTROL (QUICK COUPLER)	724
	25	1,2	**333-4609**	7	GROMMET	
I	26	3	**337-2612**	2	HOSE AS	
	27	1	**337-2746**	1	SUPPORT AS	
I	28	1	**356-9134**	1	HOSE AS	
I	29	1	**356-9135**	2	HOSE AS	
	30	3	**356-9157**	1	SUPPORT AS	
	31	2	**356-9160**	1	SUPPORT	
	32	2	**356-9161**	1	SUPPORT AS	
	33	1	**356-9163**	1	SUPPORT AS	
	34	1	**356-9164**	1	SUPPORT AS	
	35	1	**356-9172**	1	PIPE AS	
	36	1	**356-9175**	1	SUPPORT AS	
M	37	1	**118-4977**	2	BOLT (M16X2X65-MM)	
	38	2	*148-8321*	1	CONNECTOR AS	
		2	**3J-1907**	1	SEAL-O-RING	
		2	**6V-8397**	1	SEAL-O-RING	

302-3059 **LINES GP-FRONT** *(contd.)* **i04007921**

NOTE	REF NO	GRAPHIC REF	PART NUMBER	QTY	PART NAME 1 2 3 4 5 6 (PRODUCT LEVEL)	SEE PAGE
		2	**8C-0564**	1	CONNECTOR	
	39	1,2,3	*148-8353*	11	ELBOW AS	
					(EACH INCLUDES)	
		1,2,3	**3J-1907**	1	SEAL-O-RING	
		1,2,3	**6V-8397**	1	SEAL-O-RING	
		1,2,3	**6V-9001**	1	ELBOW	
	40	2	*148-8363*	1	ELBOW AS	
		2	**3K-0360**	1	SEAL-O-RING	
		2	**6V-8397**	1	SEAL-O-RING	
		2	**6V-9876**	1	ELBOW	
	41	2	*148-8367*	1	ELBOW AS	
		2	**6V-8397**	1	SEAL-O-RING	
		2	**6V-9850**	1	ELBOW	
	42	2	*148-8371*	1	ELBOW AS	
		2	**6V-8397**	1	SEAL-O-RING	
		2	**8C-8988**	1	ELBOW	
	43	2,3	*148-8378*	5	ELBOW AS	
					(EACH INCLUDES)	
		2,3	**3J-1907**	1	SEAL-O-RING	
		2,3	**6V-8397**	1	SEAL-O-RING	
		2,3	**6V-8724**	1	ELBOW	
	44	2	*148-8435*	1	TEE AS	
		2	**3J-1907**	1	SEAL-O-RING	
		2	**6V-8397**	2	SEAL-O-RING	
		2	**6V-8781**	1	TEE-FACE SEAL	
	45	3	*150-3036*	1	ELBOW AS	
		3	**3J-1907**	1	SEAL-O-RING	
		3	**6V-8397**	1	SEAL-O-RING	
		3	**8T-1905**	1	ELBOW	
	46	2	*153-6249*	1	CONNECTOR AS	
		2	**3J-1907**	1	SEAL-O-RING	
		2	**6V-8397**	1	SEAL-O-RING	
		2	**8T-8887**	1	CONNECTOR	
	47	2,3	*164-5567*	3	COUPLER AS-QUICK DISCONNECT (MALE)	
					(EACH INCLUDES)	
		2,3	**6V-3965**	1	FITTING (QUICK DISCONNECT)	
		2,3	**214-7568**	1	SEAL-O-RING	
	48	1	**3G-8047**	1	GROMMET	
	49	1	**3G-8054**	1	CLIP (TAB)	
	50	1	**3G-8057**	1	CLIP (SLOT)	
	51	1	**4D-7388**	1	CLIP	
	52	1	**4I-9521**	6	BAND-MARKER (RED, L1)	
	53	1	**4I-9522**	6	BAND-MARKER (YELLOW, L2)	
	54	2	**4I-9526**	2	BAND-MARKER (WHITE, R2)	
	55	1	**4I-9527**	2	BAND-MARKER (GREEN, R3)	
M	56	3	**5C-7261**	2	NUT (M8X1.25-THD)	
	57	1	**5P-1076**	4	WASHER-HARD (13.5X30X4-MM THK)	
	58	1	**5P-7464**	1	CLIP (SLOT)	
	59	1	**5P-7465**	1	CLIP (TAB)	
	60	1	**6J-2680**	1	SEAL-O-RING	
	61	1	**6V-1249**	1	GROMMET	
M	62	1	**7X-2549**	4	BOLT (M12X1.75X100-MM)	
M	63	3	**8T-3647**	2	BOLT (M8X1.25X80-MM)	
	64	1,2	**8T-4121**	14	WASHER-HARD (11X21X2.5-MM THK)	
M	65	1	**8T-4136**	6	BOLT (M10X1.5X25-MM)	
M	66	1	**8T-4137**	1	BOLT (M10X1.5X20-MM)	
M	67	1,2	**8T-4139**	6	BOLT (M12X1.75X30-MM)	
M	68	3	**8T-4176**	4	BOLT (M12X1.75X90-MM)	
M	69	2	**8T-4189**	2	BOLT (M8X1.25X20-MM)	

302-3059 **LINES GP-FRONT** *(contd.)* **i04007921**

NOTE	REF NO	GRAPHIC REF	PART NUMBER	QTY	PART NAME 1 2 3 4 5 6 (PRODUCT LEVEL)	SEE PAGE
M	70	2	**8T-4195**	6	BOLT (M10X1.5X30-MM)	
M	71	1	**8T-4196**	1	BOLT (M10X1.5X35-MM)	
	72	1,2,3	**8T-4223**	12	WASHER-HARD (13.5X25.5X3-MM THK)	
	73	2,3	**8T-4224**	6	WASHER-HARD (8.8X16X2-MM THK)	
M	74	1	**8T-4956**	2	BOLT (M12X1.75X35-MM)	
	75	1	**9X-8257**	2	WASHER (17.5X30X3.5-MM THK)	
	76	2	*194-2903*	1	ELBOW AS	
		2	**3K-0360**	1	SEAL-O-RING	
		2	**8T-0119**	1	ELBOW	
	77	2	*150-4036*	1	TEE AS	
		2	**3K-0360**	1	SEAL-O-RING	
		2	**118-0911**	1	TEE-O-RING PORT	

I-REFER TO HYDRAULIC INFORMATION SYSTEM
M-METRIC PART
Y-SEPARATE ILLUSTRATION

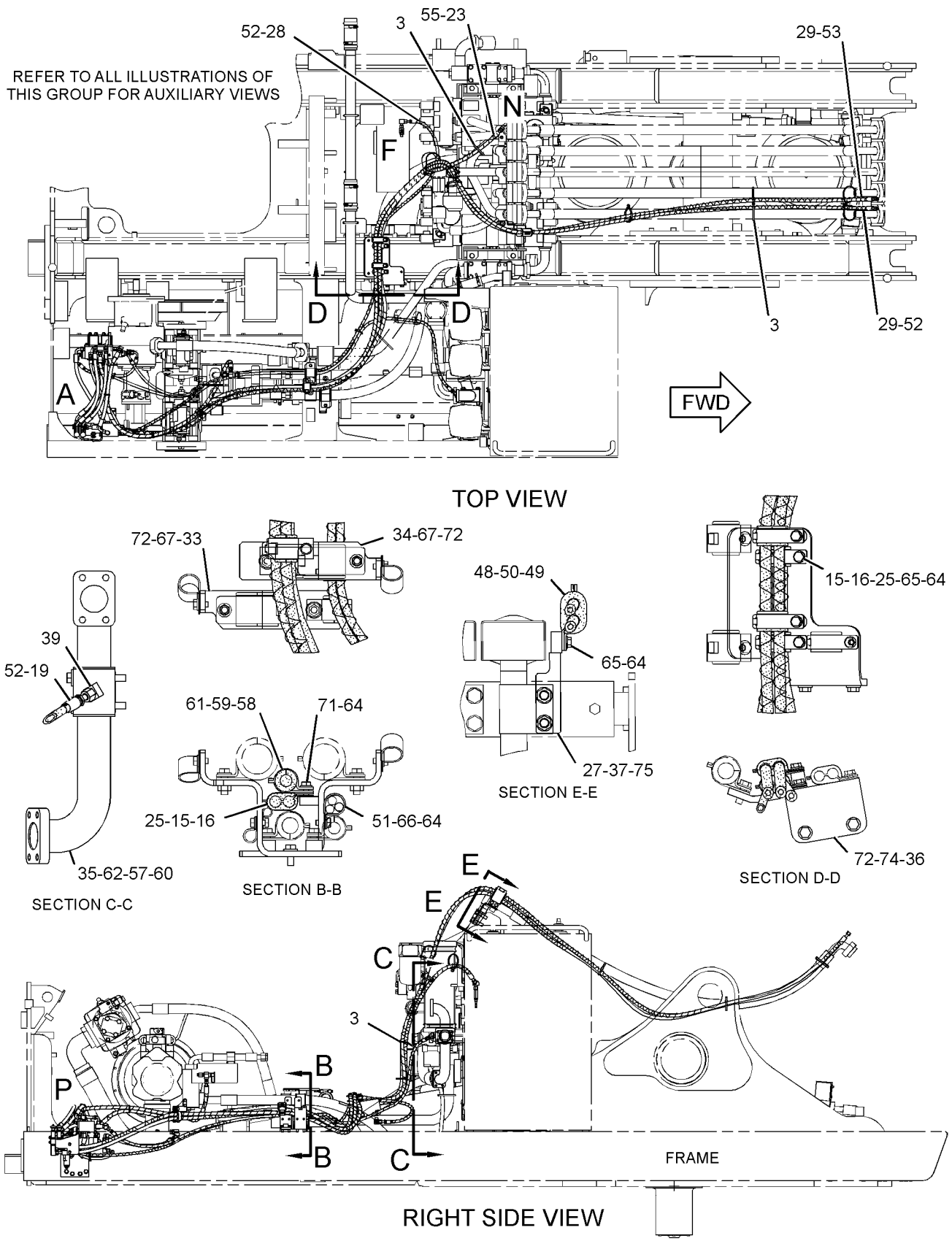

GRAPHIC #1 g02181533

REFER TO ALL ILLUSTRATIONS OF THIS GROUP FOR AUXILIARY VIEWS

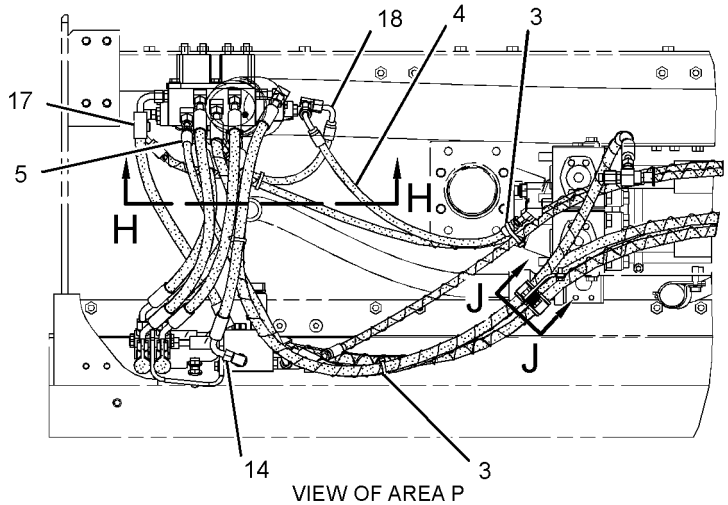

VIEW OF AREA P

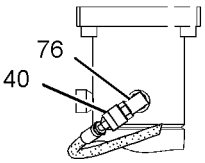

VIEW M-M

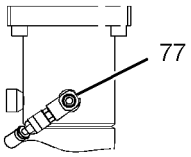

VIEW M-M (OPTIONAL DESIGN WITH BLVC)

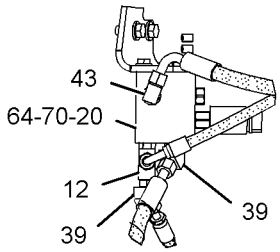

VIEW R-R

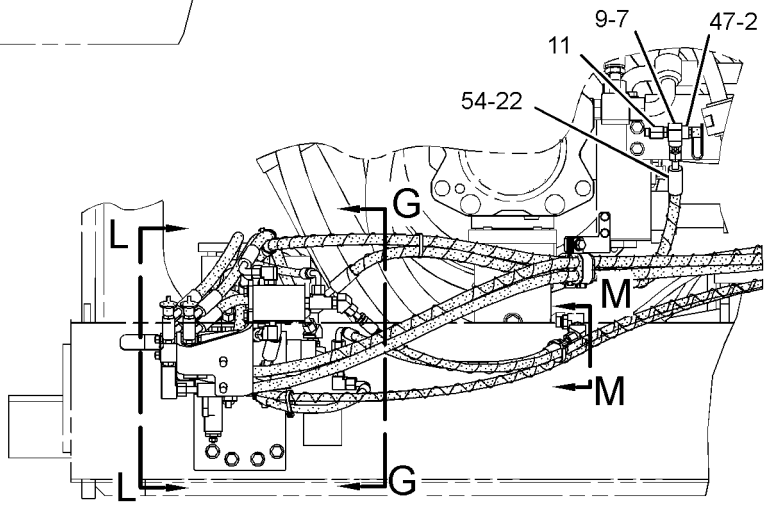

VIEW OF AREA A

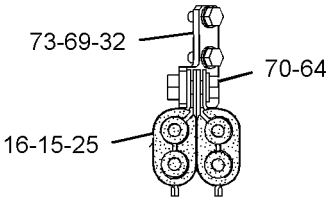

SECTION J-J

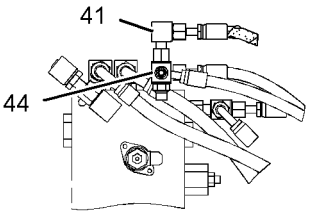

VIEW OF AREA F

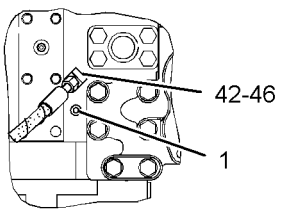

VIEW OF AREA N

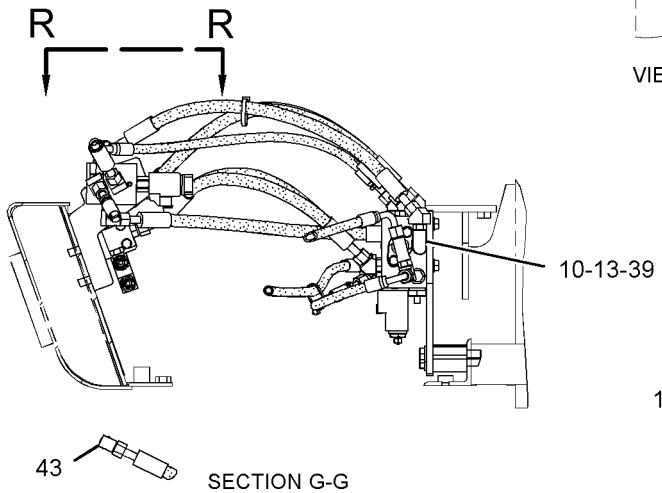

SECTION G-G

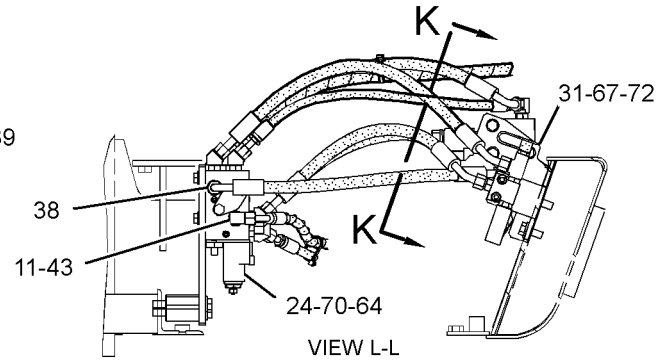

VIEW L-L

GRAPHIC #2

g02181535

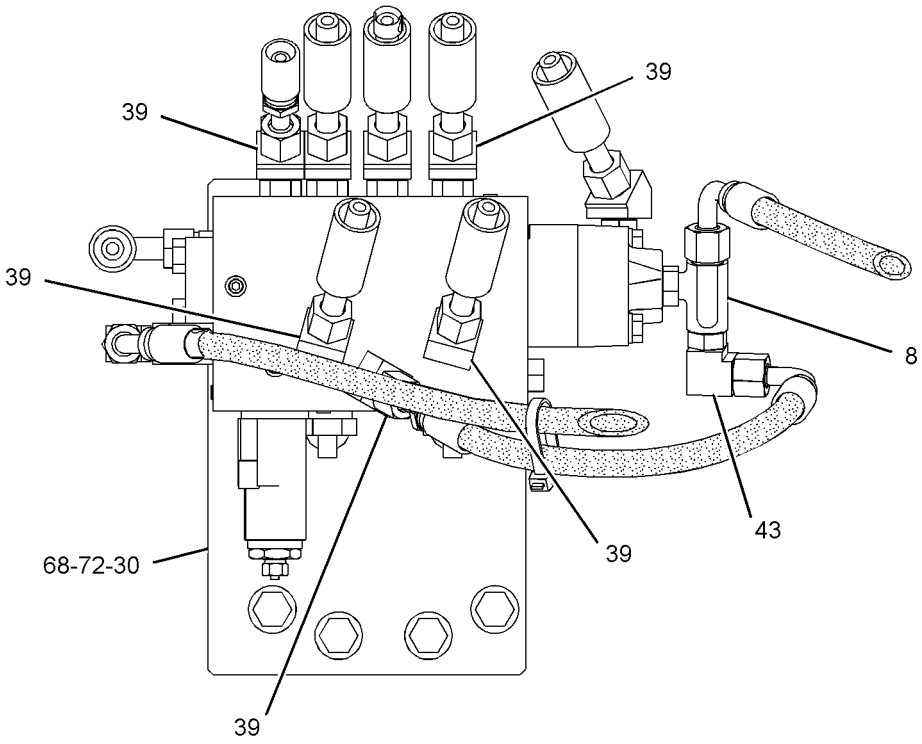

SECTION H-H

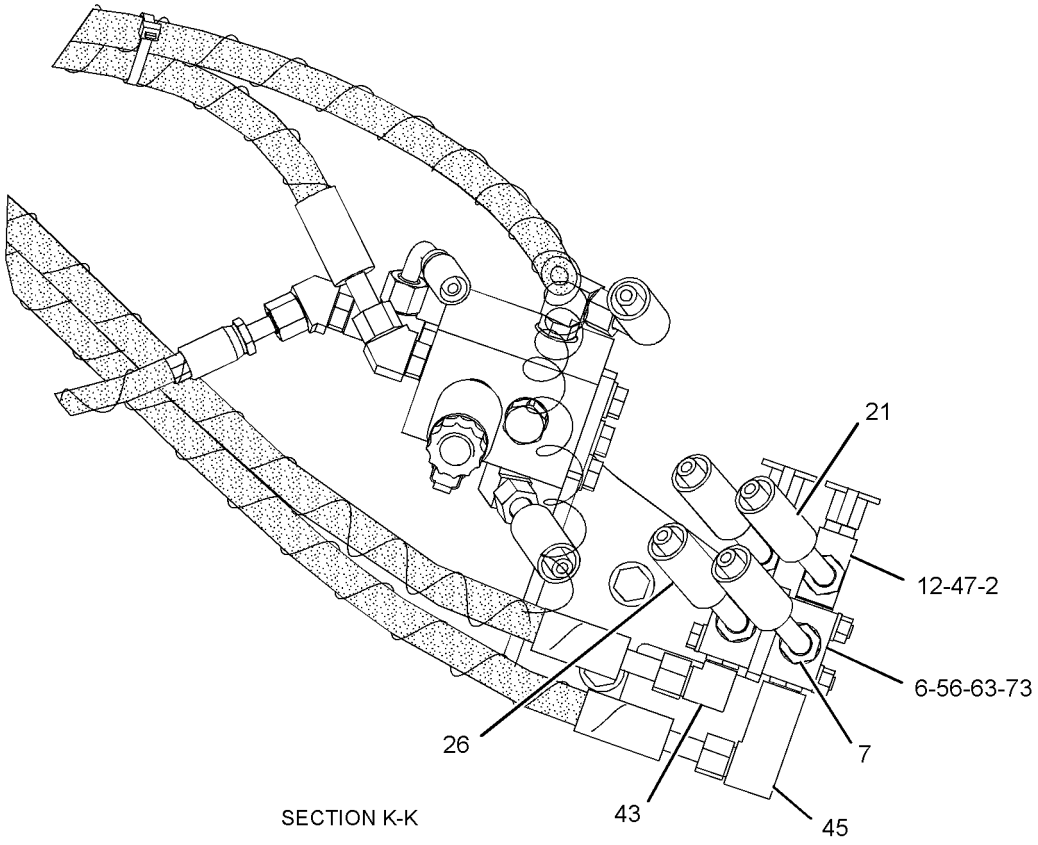

SECTION K-K

GRAPHIC #3 **<END>** g02181536

HYDRAULIC SYSTEM

338-6160 LINES GP-FRONT

S/N: WAP1-UP

PART OF 297-0223 HYDRAULIC AR

SMCS-5057 **i03906544**

NOTE	REF NO	GRAPHIC REF	PART NUMBER	QTY	PART NAME 1 2 3 4 5 6 (PRODUCT LEVEL)	SEE PAGE
	1	2	**4I-7739**	1	FLANGE	
	2	2	**4I-7822**	2	COVER	
	3	1	**6H-3615**	2	PLUG-PROTECTION	
	4	2	**7I-0011**	2	SUPPORT	
	5	1	**9F-2167**	2	SCREW-PURGE (3/8-24X1.164-IN)	
	6	2	**128-7514**	16	CLIP	
	7	1	**173-5046**	1	BLOCK	
	8	2	**173-5110**	1	SUPPORT AS	
	9	2	**221-8859**	1	SENSOR AS-PRESSURE (OVERLOAD WARNING)	
		2	**3E-3371**	1	WEDGE-RECEPTACLE LOCK (3-PIN)	
		2	**3K-0360**	1	SEAL-O-RING	
		2	**9X-3401**	1	PIN-CONNECTOR (16-GA TO 18-GA)	
					—OR—	
		2	**126-1767**	1	PIN-CONNECTOR (14-GA)	
		2	**171-0596**	1	RECEPTACLE AS	
	10	2	**302-2942**	2	FLANGE	
	11	2	**307-5140**	1	BLOCK	
	12	2	**307-5142**	1	BLOCK	
	13	2	**307-5148**	1	TUBE AS	
	14	1	**317-4762**	1	TUBE AS	
	15	1	**317-4765**	1	TUBE AS	
	16	2	**317-4766**	1	TUBE AS	
	17	2	**338-6073**	1	TUBE AS	
	18	2	**338-6074**	1	TUBE AS	
	19	2	**338-6075**	1	TUBE AS	
	20	2	**338-6076**	1	TUBE AS	
	21	2	**338-6077**	1	TUBE AS	
	22	2	**338-6078**	1	TUBE AS	
I	23	1	**338-6140**	4	HOSE AS	
I	24	1	**338-6141**	5	HOSE AS	
I	25	1	**338-6143**	1	HOSE AS	
I	26	1	**338-6191**	1	HOSE AS	
	27	1	**342-4175**	1	SUPPORT	
	28	2	**342-4180**	1	SUPPORT AS	
I	29	2	**347-1204**	1	HOSE AS	
I	30	2	**347-1205**	1	HOSE AS	
	31	2	**350-7257**	1	SUPPORT AS	
	32	2	**350-7270**	1	SUPPORT AS	
	33	1	**350-7273**	1	SUPPORT AS	
	34	2	**353-0802**	1	SUPPORT AS	
	35	2	**354-4601**	1	TUBE AS	
	36	2	**354-4602**	1	TUBE AS	
M	37	2	**107-9403**	8	BOLT-SOCKET HEAD (M16X2X35-MM)	
M	38	2	**179-5107**	4	BOLT (M16X2X220-MM)	
	39	2	**1P-3703**	4	SEAL-RECTANGULAR	
	40	1,2	**1P-3704**	10	SEAL-RECTANGULAR	
	41	1,2	**1P-3705**	20	SEAL-RECTANGULAR	
	42	2	**1P-3706**	11	SEAL-RECTANGULAR	
	43	1	**1P-5767**	16	FLANGE-HALF	
	44	2	**5P-1076**	6	WASHER-HARD (13.5X30X4-MM THK)	
	45	1,2	**5P-8077**	28	FLANGE-HALF	
	46	2	**6V-0400**	8	FLANGE-HALF	
	47	1	**6V-1572**	2	CLIP (SLOT)	
	48	1	**6V-1573**	2	CLIP (TAB)	
	49	1	**6V-1574**	2	GROMMET	
M	50	2	**7X-2550**	4	BOLT (M12X1.75X110-MM)	

HYDRAULIC SYSTEM

338-6160 **LINES GP-FRONT** *(contd.)* **i03906544**

NOTE	REF NO	GRAPHIC REF	PART NUMBER	QTY	PART NAME 1 2 3 4 5 6 (PRODUCT LEVEL)	SEE PAGE
M	51	2	**7X-2557**	4	BOLT (M16X2X140-MM)	
	52	1	**8T-4121**	2	WASHER-HARD (11X21X2.5-MM THK)	
M	53	1	**8T-4136**	2	BOLT (M10X1.5X25-MM)	
M	54	1,2	**8T-4139**	15	BOLT (M12X1.75X30-MM)	
M	55	1,2	**8T-4140**	66	BOLT (M16X2X60-MM)	
M	56	2	**8T-4173**	4	BOLT (M16X2X110-MM)	
M	57	2	**8T-4175**	8	BOLT (M16X2X90-MM)	
M	58	2	**8T-4183**	8	BOLT (M12X1.75X40-MM)	
M	59	1,2	**8T-4184**	48	BOLT (M12X1.75X45-MM)	
M	60	2	**8T-4193**	4	BOLT (M16X2X50-MM)	
	61	1,2	**8T-4223**	65	WASHER-HARD (13.5X25.5X3-MM THK)	
M	62	1,2	**8T-4244**	8	NUT (M12X1.75-THD)	
M	63	1,2	**8T-4648**	12	BOLT (M12X1.75X70-MM)	
M	64	1,2	**8T-4779**	10	BOLT (M16X2X35-MM)	
M	65	1,2	**8T-4956**	6	BOLT (M12X1.75X35-MM)	
M	66	1,2	**8T-5001**	8	BOLT (M12X1.75X130-MM)	
M	67	2	**8T-7338**	14	BOLT (M16X2X45-MM)	
	68	1,2	**9X-8257**	82	WASHER (17.5X30X3.5-MM THK)	

I-REFER TO HYDRAULIC INFORMATION SYSTEM
M-METRIC PART

REFER TO ALL ILLUSTRATIONS OF THIS GROUP FOR AUXILIARY VIEWS

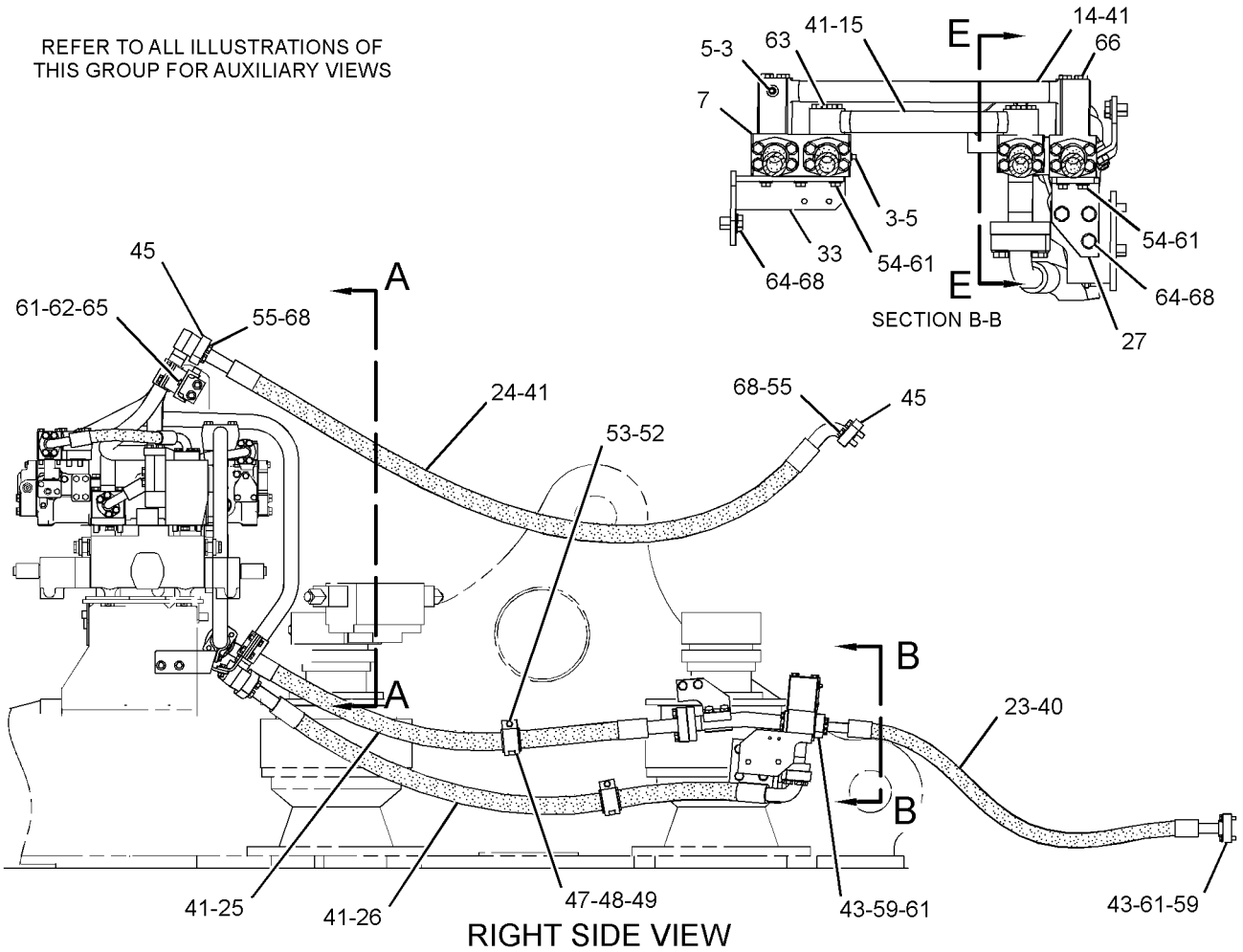

GRAPHIC #1

g02180874

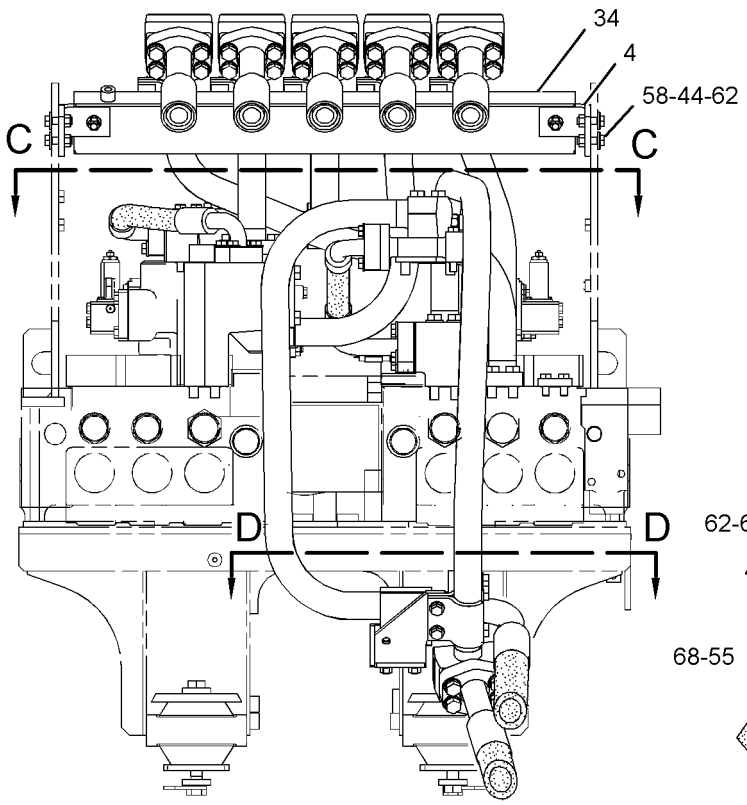

SECTION A-A

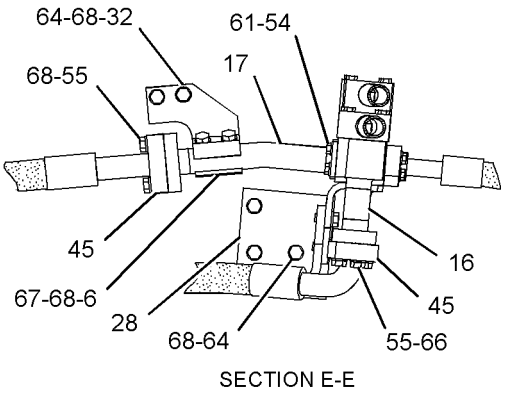

SECTION E-E

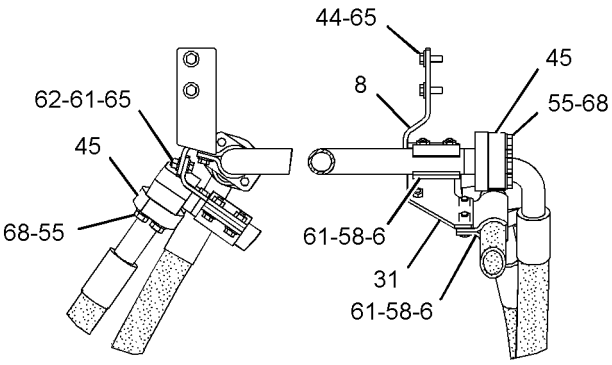

SECTION D-D

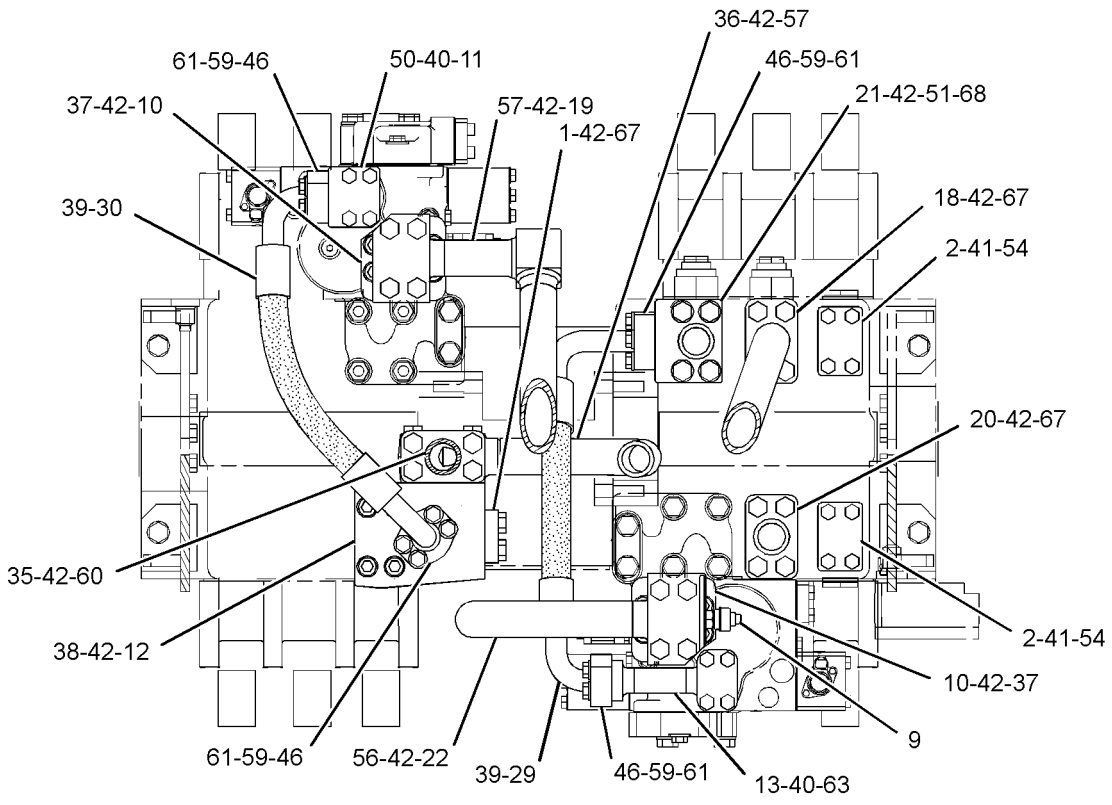

SECTION C-C

GRAPHIC #2 **<END>** g02180875

HYDRAULIC SYSTEM

338-6172 LINES GP-FRONT—SYSTEM 1, 1-WAY, 1-PUMP

S/N: WAP1-UP
PART OF 310-0005 CONTROL AR-AUXILIARY
AN ATTACHMENT

SMCS-5057 **i03910293**

NOTE	REF NO	GRAPHIC REF	PART NUMBER	QTY	PART NAME 1 2 3 4 5 6 (PRODUCT LEVEL)	SEE PAGE
	1	1,2	**7K-1181**	4	STRAP-CABLE	
	2	1	**103-1384**	1	GUARD	
	3	2	**143-4156**	2	CLIP	
Y	4	1	*165-9614*	1	VALVE GP-RELIEF	761
	5	1	**176-4508**	1	PLATE	
	6	2	**176-4512**	1	FLANGE	
	7	2	**204-8105**	1	PIPE AS	
I	8	2	**245-5413**	1	HOSE AS	
	9	2	**314-8218**	1	SUPPORT AS	
	10	2	**314-8222**	1	TUBE AS	
	11	2	**317-4768**	1	TUBE AS	
	12	2	**317-4769**	1	TUBE AS	
	13	2	**337-2619**	1	TUBE AS	
	14	2	**337-2621**	1	TUBE AS	
I	15	1	**337-2762**	1	HOSE AS	
I	16	2	**347-6145**	1	HOSE AS	
	17	2	**347-6148**	1	PIPE AS	
	18	2	**347-6154**	1	SUPPORT AS	
M	19	2	**101-7402**	4	BOLT-SOCKET HEAD (M12X1.75X30-MM)	
	20	1	*148-8408*	1	PLUG AS	
		1	**3D-2824**	1	SEAL-O-RING	
		1	**9S-4183**	1	PLUG-O-RING	
	21	2	*164-4180*	2	PLUG AS	
					(EACH INCLUDES)	
		2	**7M-8485**	1	SEAL-O-RING	
		2	**9S-4181**	1	PLUG-O-RING	
	22	1	*164-5616*	1	PLUG AS	
		1	**2S-4078**	1	SEAL-O-RING	
		1	**9S-6130**	1	PLUG	
	23	1,2	**1P-3704**	3	SEAL-RECTANGULAR	
	24	2	**1P-3705**	3	SEAL-RECTANGULAR	
	25	2	**1P-3706**	2	SEAL-RECTANGULAR	
	26	2	**1P-4578**	2	FLANGE-HALF	
	27	2	**1P-4579**	2	FLANGE-HALF	
	28	2	**1P-4582**	4	FLANGE-HALF	
	29	1	**1P-5767**	4	FLANGE-HALF	
	30	2	**4J-0522**	1	SEAL-O-RING	
	31	2	**4J-0523**	1	SEAL-O-RING	
	32	2	**4J-0524**	1	SEAL-O-RING	
	33	2	**4J-0527**	3	SEAL-O-RING	
M	34	2	**7X-2550**	4	BOLT (M12X1.75X110-MM)	
	35	2	**8T-4121**	4	WASHER-HARD (11X21X2.5-MM THK)	
M	36	1,2	**8T-4140**	6	BOLT (M16X2X60-MM)	
M	37	2	**8T-4175**	8	BOLT (M16X2X90-MM)	
M	38	2	**8T-4183**	12	BOLT (M12X1.75X40-MM)	
M	39	1	**8T-4184**	8	BOLT (M12X1.75X45-MM)	
M	40	2	**8T-4195**	4	BOLT (M10X1.5X30-MM)	
M	41	2	**8T-4196**	4	BOLT (M10X1.5X35-MM)	
	42	1,2	**8T-4223**	24	WASHER-HARD (13.5X25.5X3-MM THK)	
M	43	2	**8T-4648**	4	BOLT (M12X1.75X70-MM)	
M	44	1,2	**8T-4956**	8	BOLT (M12X1.75X35-MM)	
M	45	2	**8T-5412**	4	BOLT (M12X1.75X140-MM)	
	46	1,2	**9X-8257**	6	WASHER (17.5X30X3.5-MM THK)	

338-6172 **LINES GP-FRONT** ***(contd.)*** **i03910293**

I-REFER TO HYDRAULIC INFORMATION SYSTEM
M-METRIC PART
Y-SEPARATE ILLUSTRATION

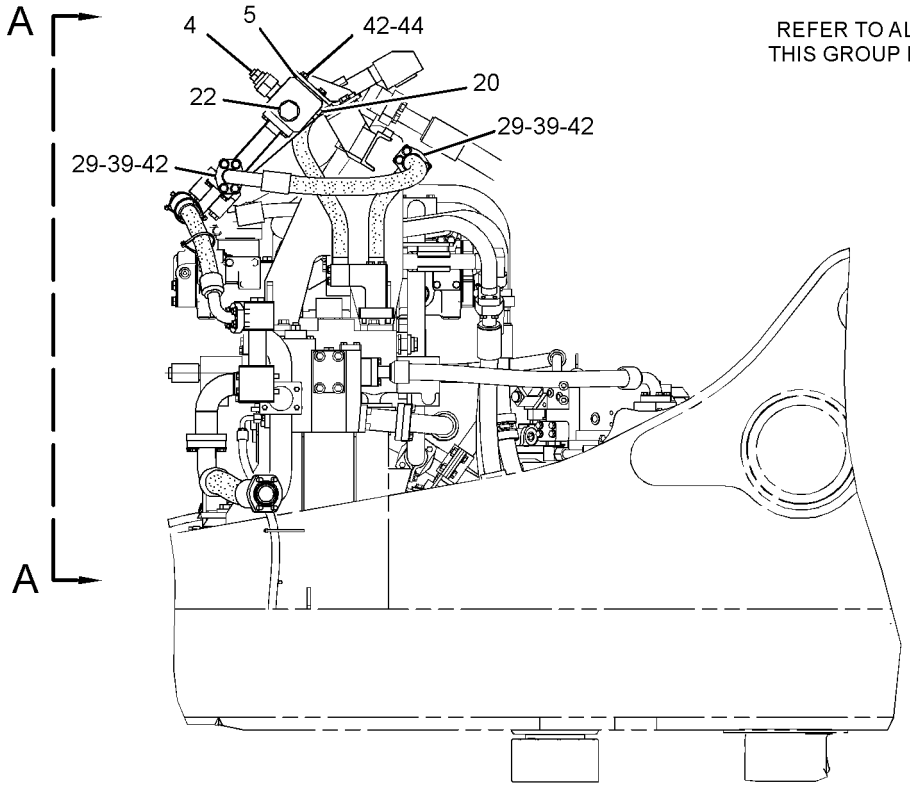

REFER TO ALL ILLUSTRATIONS OF THIS GROUP FOR AUXILIARY VIEWS

RIGHT SIDE VIEW

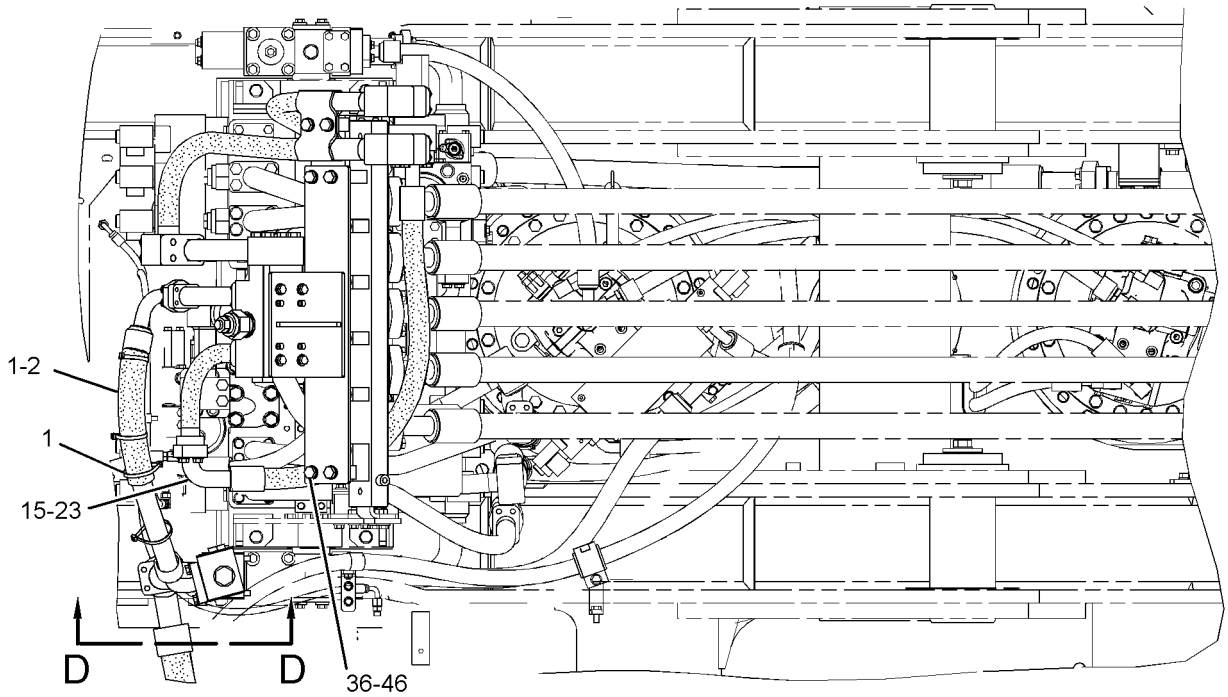

TOP VIEW

FWD

GRAPHIC #1

g02175435

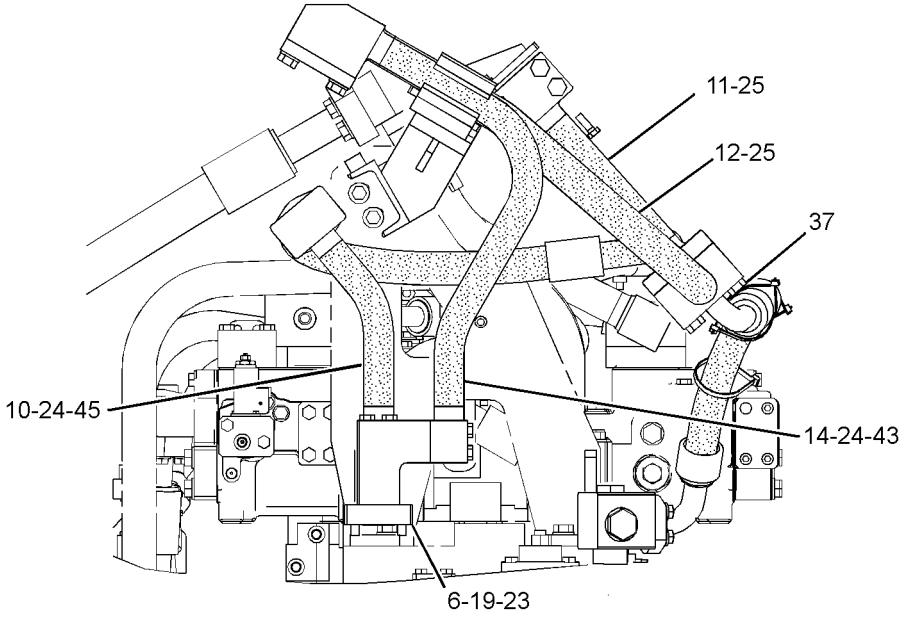

VIEW B-B

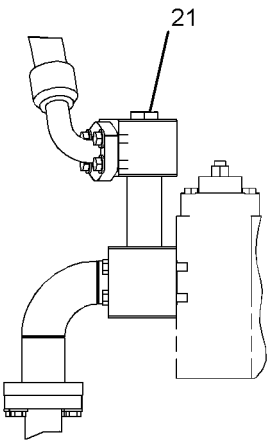

SECTION D-D

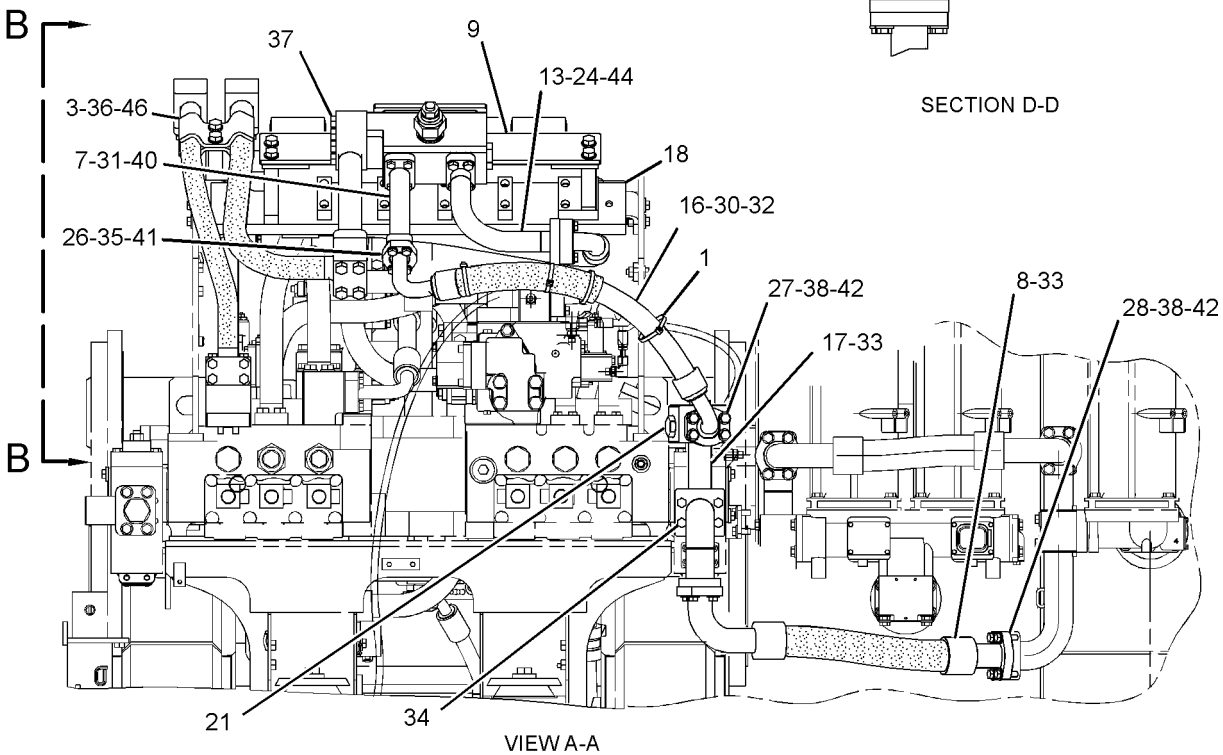

VIEW A-A

GRAPHIC #2 **<END>** g02175536

HYDRAULIC SYSTEM

338-6173 LINES GP-FRONT–1-WAY, 2-WAY FLOW

S/N: WAP1-UP
PART OF 310-0006 CONTROL AR-AUXILIARY
AN ATTACHMENT

SMCS-5057 **i03910839**

NOTE	REF NO	GRAPHIC REF	PART NUMBER	QTY	PART NAME 1 2 3 4 5 6 (PRODUCT LEVEL)	SEE PAGE
	1	1	**7K-1181**	4	STRAP-CABLE	
	2	1	**103-1384**	1	GUARD	
	3	1	**143-4156**	2	CLIP	
Y	4	1	**160-0964**	1	VALVE GP-MANUAL (LH)	744
Y	5	1	*165-9579*	1	VALVE GP-RELIEF (LINE)	760
Y	6	1	**175-1814**	1	VALVE GP-MANUAL (RH)	745
	7	1	**176-4508**	1	PLATE	
	8	1	**176-4511**	1	FLANGE	
	9	1	**176-4512**	1	FLANGE	
I	10	1	**245-5413**	1	HOSE AS	
	11	1	**314-8218**	1	SUPPORT AS	
	12	1	**314-8222**	1	TUBE AS	
	13	1	**337-2621**	1	TUBE AS	
	14	1	**337-2622**	1	TUBE AS	
I	15	1	**337-2762**	1	HOSE AS	
	16	1	**347-6148**	1	PIPE AS	
	17	1	**347-6154**	1	SUPPORT AS	
Y	18	1	**352-6914**	2	VALVE GP-RELIEF (LINE)	766
	19	1	**359-8483**	1	TUBE AS	
	20	1	**359-8516**	1	HOSE AS	
	21	1	**359-8518**	1	TUBE AS	
	22	1	**359-8519**	1	PIPE AS	
M	23	1	**101-7402**	8	BOLT-SOCKET HEAD (M12X1.75X30-MM)	
	24	1	*148-8408*	1	PLUG AS	
		1	**3D-2824**	1	SEAL-O-RING	
		1	**9S-4183**	1	PLUG-O-RING	
	25	1	*164-4180*	2	PLUG AS	
					(EACH INCLUDES)	
		1	**7M-8485**	1	SEAL-O-RING	
		1	**9S-4181**	1	PLUG-O-RING	
	26	1	*164-5616*	1	PLUG AS	
		1	**2S-4078**	1	SEAL-O-RING	
		1	**9S-6130**	1	PLUG	
	27	1	**1P-3704**	5	SEAL-RECTANGULAR	
	28	1	**1P-3705**	6	SEAL-RECTANGULAR	
	29	1	**1P-3706**	2	SEAL-RECTANGULAR	
	30	1	**1P-4578**	2	FLANGE-HALF	
	31	1	**1P-4579**	2	FLANGE-HALF	
	32	1	**1P-4582**	4	FLANGE-HALF	
	33	1	**1P-5767**	4	FLANGE-HALF	
	34	1	**4J-0522**	1	SEAL-O-RING	
	35	1	**4J-0524**	1	SEAL-O-RING	
	36	1	**4J-0527**	3	SEAL-O-RING	
M	37	1	**7X-2549**	4	BOLT (M12X1.75X100-MM)	
M	38	1	**7X-2550**	4	BOLT (M12X1.75X110-MM)	
M	39	1	**7X-2555**	4	BOLT (M16X2X80-MM)	
	40	1	**8T-4121**	6	WASHER-HARD (11X21X2.5-MM THK)	
M	41	1	**8T-4137**	2	BOLT (M10X1.5X20-MM)	
M	42	1	**8T-4140**	6	BOLT (M16X2X60-MM)	
M	43	1	**8T-4173**	4	BOLT (M16X2X110-MM)	
M	44	1	**8T-4175**	4	BOLT (M16X2X90-MM)	
M	45	1	**8T-4183**	12	BOLT (M12X1.75X40-MM)	
M	46	1	**8T-4184**	8	BOLT (M12X1.75X45-MM)	
M	47	1	**8T-4196**	4	BOLT (M10X1.5X35-MM)	
	48	1	**8T-4223**	28	WASHER-HARD (13.5X25.5X3-MM THK)	

338-6173 **LINES GP-FRONT** *(contd.)* **i03910839**

NOTE	REF NO	GRAPHIC REF	PART NUMBER	QTY	PART NAME 1 2 3 4 5 6 (PRODUCT LEVEL)	SEE PAGE
M	49	1	**8T-4648**	4	BOLT (M12X1.75X70-MM)	
M	50	1	**8T-5412**	4	BOLT (M12X1.75X140-MM)	
M	51	1	**8T-6868**	4	BOLT (M12X1.75X80-MM)	
M	52	1	**8T-7930**	8	BOLT (M12X1.75X160-MM)	
	53	1	**9X-8257**	6	WASHER (17.5X30X3.5-MM THK)	

I-REFER TO HYDRAULIC INFORMATION SYSTEM
M-METRIC PART
Y-SEPARATE ILLUSTRATION

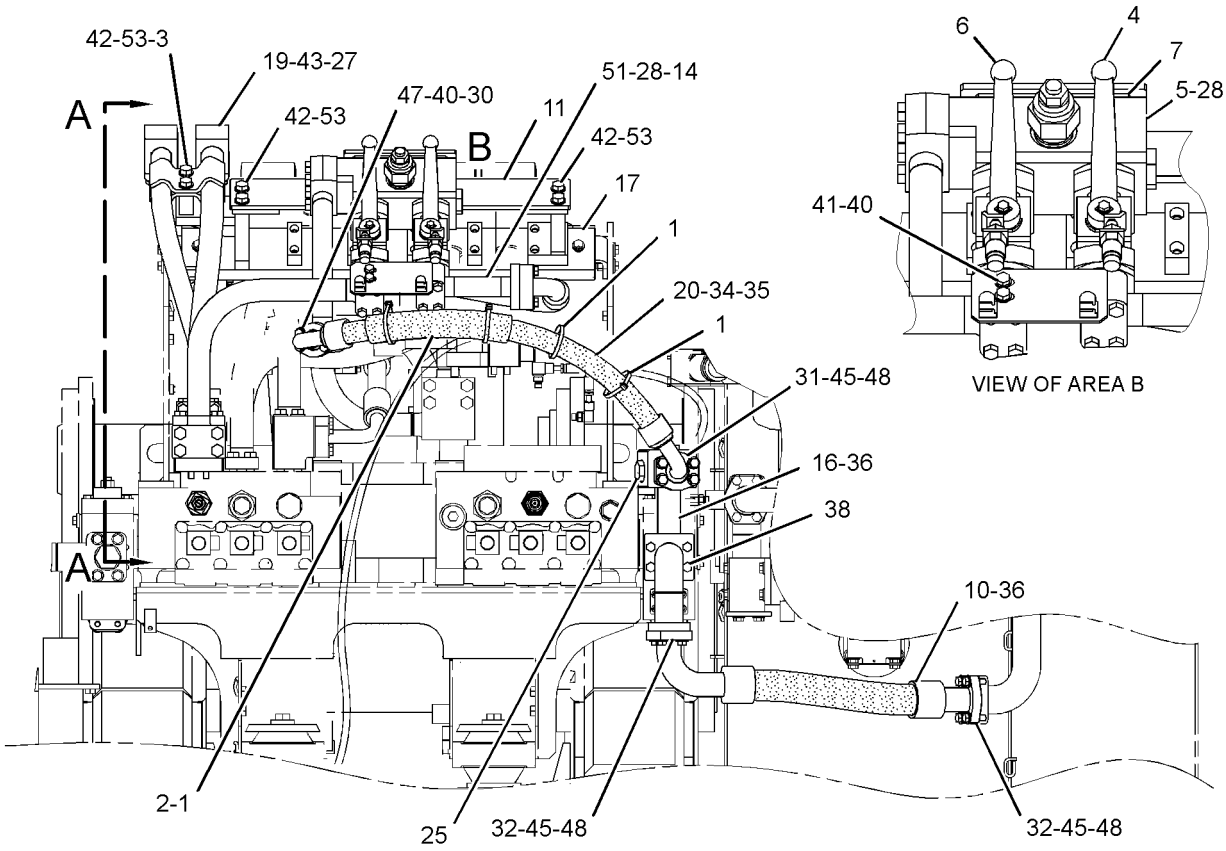

REAR VIEW

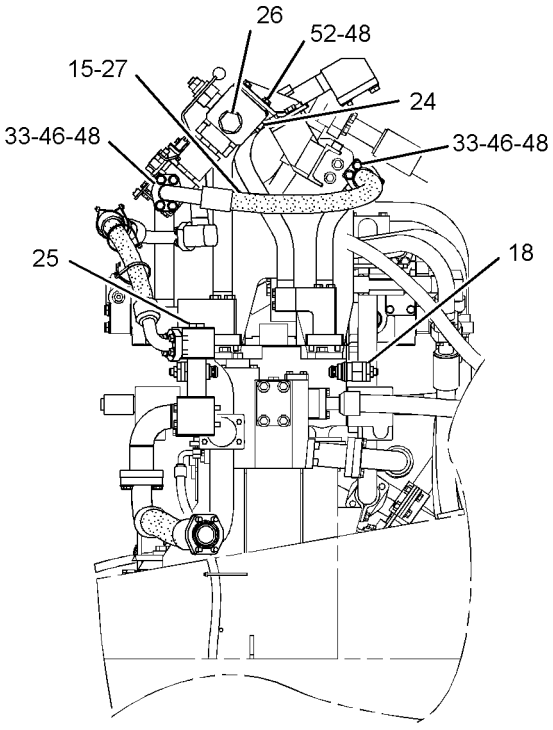

RIGHT SIDE VIEW

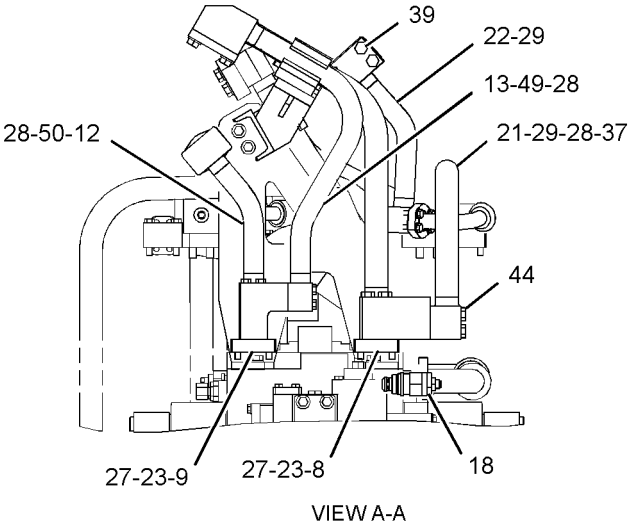

VIEW A-A

GRAPHIC #1 **<END>** g02174332

HYDRAULIC SYSTEM

337-2778 LINES GP-HYDRAULIC FAN–REVERSING

S/N: WAP1-UP
PART OF 319-9265 CONTROL AR-FAN
AN ATTACHMENT

SMCS-1386, 1387, 5057 **i03911100**

NOTE	REF NO	GRAPHIC REF	PART NUMBER	QTY	PART NAME 1 2 3 4 5 6 (PRODUCT LEVEL)	SEE PAGE
I	1	2	**4I-0806**	1	HOSE AS	
	2	1,2	**7K-1181**	7	STRAP-CABLE	
I	3	2	**7Y-4366**	1	HOSE AS	
M	4	2	**101-7399**	6	BOLT-SOCKET HEAD (M10X1.5X120-MM)	
M	5	2	**101-7400**	6	BOLT-SOCKET HEAD (M10X1.5X110-MM)	
I	6	2	**104-8838**	1	HOSE AS	
	7	1,2	*197-8940*	2	CONNECTOR AS	
					(EACH INCLUDES)	
		1,2	**2M-9780**	1	SEAL-O-RING	
		1,2	**7J-9108**	1	SEAL-O-RING	
		1,2	**8T-1576**	1	CONNECTOR	
Y	8	2	**234-4624**	1	VALVE GP-CONTROL (REVERSE FLOW FAN)	702
Y	9	2	**242-6880**	1	VALVE GP-SOLENOID (REVERSING FAN)	776
Y	10	2	**274-2553**	1	VALVE GP-CONTROL (REVERSIBLE FAN)	710
	11	2	**319-9756**	1	HOSE AS	
I	12	2	**337-2785**	1	HOSE AS	
	13	2	**337-2786**	1	SUPPORT AS	
M	14	2	**129-3181**	2	BOLT-SOCKET HEAD (M10X1.5X55-MM)	
	15	2	*148-8336*	2	CONNECTOR AS	
					(EACH INCLUDES)	
		2	**3J-1907**	1	SEAL-O-RING	
		2	**6V-8397**	1	SEAL-O-RING	
		2	**6V-8636**	1	CONNECTOR	
	16	2	*148-8345*	1	CONNECTOR AS	
		2	**2M-9780**	1	SEAL-O-RING	
		2	**6V-8398**	1	SEAL-O-RING	
		2	**6V-8638**	1	CONNECTOR	
	17	2	*148-8353*	2	ELBOW AS	
					(EACH INCLUDES)	
		2	**3J-1907**	1	SEAL-O-RING	
		2	**6V-8397**	1	SEAL-O-RING	
		2	**6V-9001**	1	ELBOW	
	18	2	*148-8371*	1	ELBOW AS	
		2	**6V-8397**	1	SEAL-O-RING	
		2	**8C-8988**	1	ELBOW	
	19	2	*148-8374*	1	ELBOW AS	
		2	**3K-0360**	1	SEAL-O-RING	
		2	**6V-8397**	1	SEAL-O-RING	
		2	**6V-8723**	1	ELBOW	
	20	2	*148-8383*	1	ELBOW AS	
		2	**3K-0360**	1	SEAL-O-RING	
		2	**6V-8397**	1	SEAL-O-RING	
		2	**8T-1683**	1	ELBOW	
	21	1	*148-8388*	2	ELBOW AS	
					(EACH INCLUDES)	
		1	**2M-9780**	1	SEAL-O-RING	
		1	**6V-8629**	1	ELBOW	
		1	**6V-9746**	1	SEAL-O-RING	
	22	2	*148-8417*	1	REDUCER AS	
		2	**6V-8397**	1	SEAL-O-RING	
		2	**6V-8941**	1	REDUCER	
	23	2	*148-8435*	2	TEE AS	
					(EACH INCLUDES)	
		2	**3J-1907**	1	SEAL-O-RING	
		2	**6V-8397**	2	SEAL-O-RING	

337-2778 **LINES GP-HYDRAULIC FAN** *(contd.)* **i03911100**

NOTE	REF NO	GRAPHIC REF	PART NUMBER	QTY	PART NAME 1 2 3 4 5 6 (PRODUCT LEVEL)	SEE PAGE
		2	**6V-8781**	1	TEE-FACE SEAL	
	24	2	*148-8449*	1	TEE AS-SWIVEL	
		2	**6V-9746**	2	SEAL-O-RING	
		2	**6V-9839**	1	TEE-SWIVEL	
	25	1,2	*150-3035*	2	ELBOW AS	
					(EACH INCLUDES)	
		1,2	**6V-9746**	1	SEAL-O-RING	
		1,2	**8T-1718**	1	ELBOW	
	26	2	**4J-5267**	4	SEAL-O-RING	
	27	1	**4K-8302**	1	CLIP	
	28	2	**6K-8178**	1	CLIP	
M	29	2	**8T-4192**	2	BOLT (M12X1.75X25-MM)	
	30	2	**8T-4223**	2	WASHER-HARD (13.5X25.5X3-MM THK)	
	31	2	**9X-6580**	1	NUT (1-3/16-12-THD)	

I-REFER TO HYDRAULIC INFORMATION SYSTEM
M-METRIC PART
Y-SEPARATE ILLUSTRATION

REFER TO ALL ILLUSTRATIONS OF THIS GROUP FOR AUXILIARY VIEWS

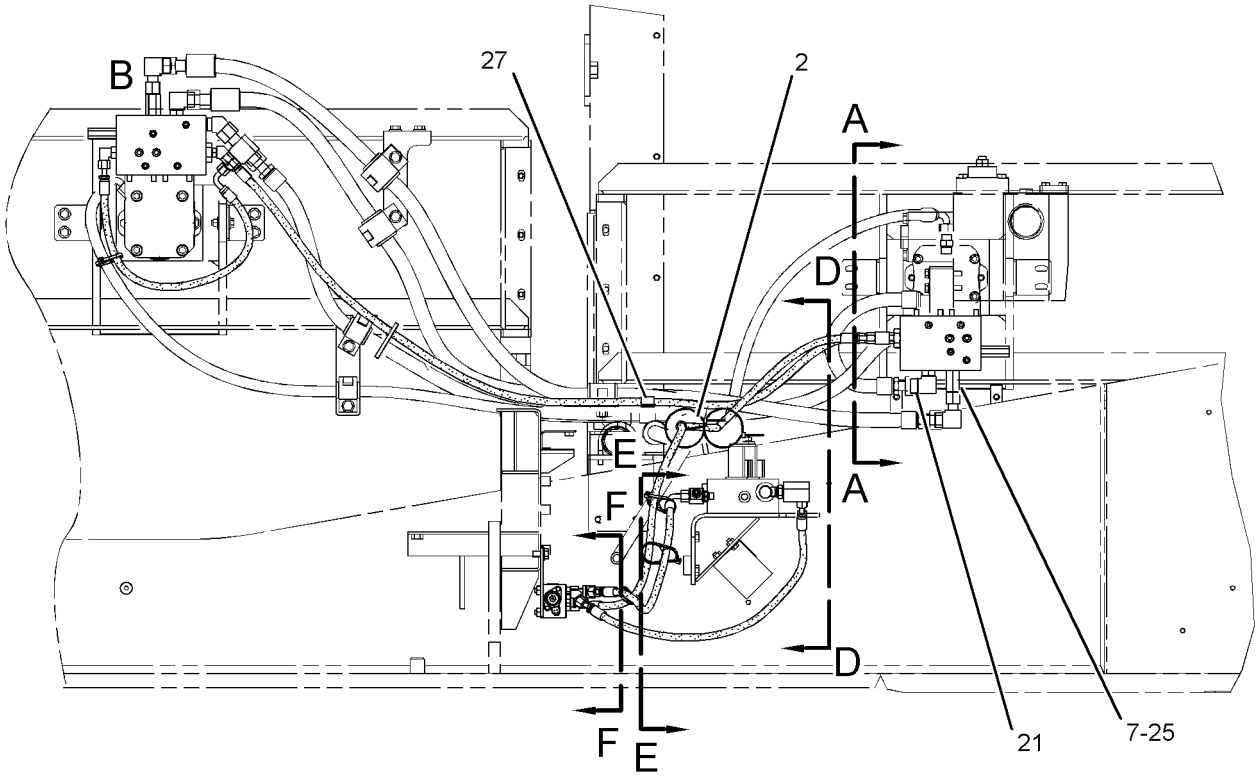

RIGHT SIDE VIEW

GRAPHIC #1 g02181614

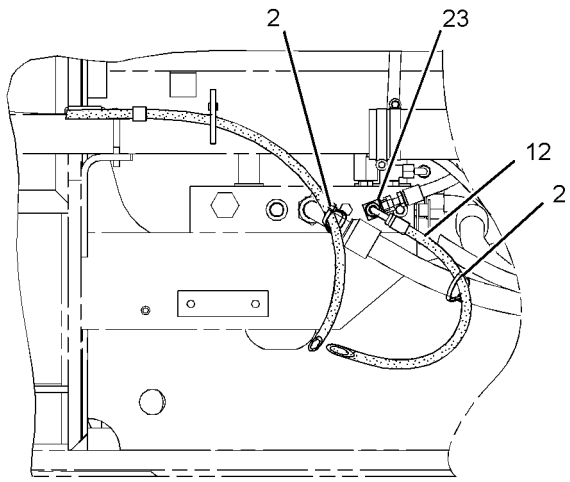

SECTION E-E

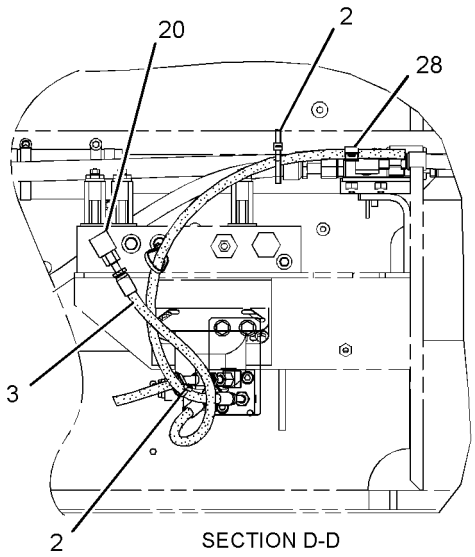

SECTION D-D

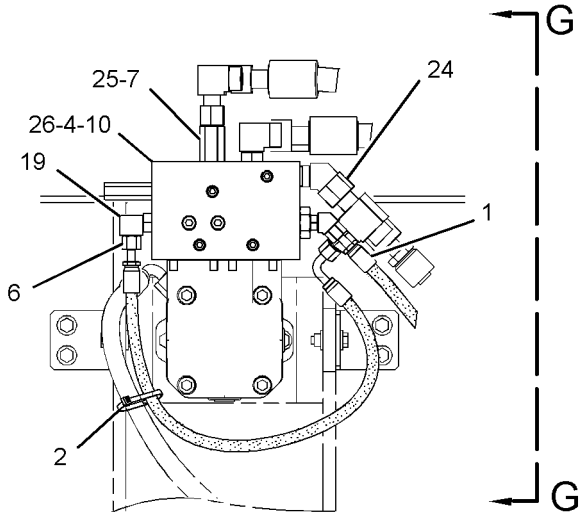

VIEW OF AREA B

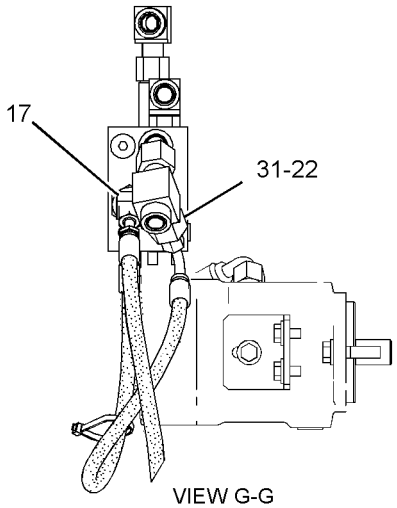

VIEW G-G

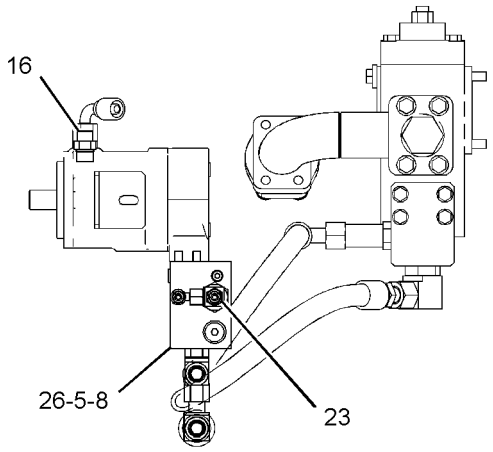

SECTION A-A

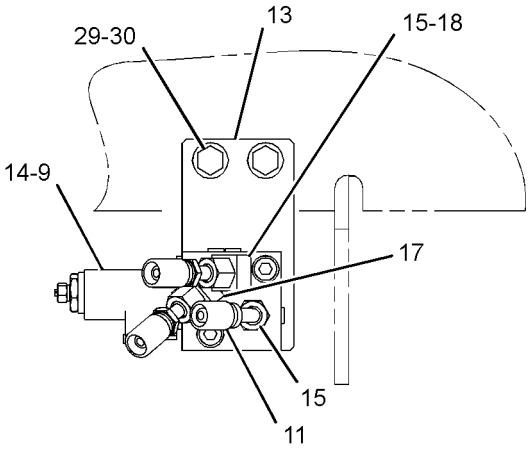

SECTION F-F

GRAPHIC #2 **<END>** g02181615

HYDRAULIC SYSTEM

296-7102 LINES GP-MOTOR

S/N: WAP1-UP

PART OF 297-0223 HYDRAULIC AR

SMCS-5057, 5058 **i03906370**

NOTE	REF NO	GRAPHIC REF	PART NUMBER	QTY	PART NAME 1 2 3 4 5 6 (PRODUCT LEVEL)	SEE PAGE
I	1	2	**5I-4390**	1	HOSE AS	
I	2	1	**7I-1090**	1	HOSE AS	
M	3	1	**101-7396**	6	BOLT-SOCKET HEAD (M10X1.5X50-MM)	
I	4	1	**102-1157**	1	HOSE AS	
I	5	1	**108-7206**	1	HOSE AS	
Y	6	1	**173-3429**	1	VALVE GP-CHECK	690
	7	2	**173-5130**	1	HOSE AS	
	8	1	**173-5135**	1	BLOCK	
	9	2	*197-8940*	1	CONNECTOR AS	
		2	**2M-9780**	1	SEAL-O-RING	
		2	**7J-9108**	1	SEAL-O-RING	
		2	**8T-1576**	1	CONNECTOR	
	10	2	**204-8353**	2	SUPPORT AS	
	11	1	**204-8355**	1	BLOCK	
I	12	1	**207-6206**	1	HOSE AS	
	13	2	**207-6290**	1	BLOCK	
	14	1	**239-1778**	1	SUPPORT AS	
I	15	2	**302-3312**	1	HOSE AS	
I	16	1	**347-1202**	1	HOSE AS	
I	17	2	**347-1203**	1	HOSE AS	
	18	2	**087-3591**	1	SPACER (15.5X30X12-MM THK)	
	19	1	*148-8315*	1	CONNECTOR AS	
		1	**2M-9780**	1	SEAL-O-RING	
		1	**6V-8642**	1	CONNECTOR	
		1	**7J-9108**	1	SEAL-O-RING	
	20	1	*148-8340*	1	CONNECTOR AS	
		1	**3K-0360**	1	SEAL-O-RING	
		1	**6V-8398**	1	SEAL-O-RING	
		1	**6V-8639**	1	CONNECTOR	
	21	2	*148-8345*	2	CONNECTOR AS	
					(EACH INCLUDES)	
		2	**2M-9780**	1	SEAL-O-RING	
		2	**6V-8398**	1	SEAL-O-RING	
		2	**6V-8638**	1	CONNECTOR	
	22	1	*148-8347*	2	ELBOW AS	
					(EACH INCLUDES)	
		1	**3D-2824**	1	SEAL-O-RING	
		1	**6V-9007**	1	ELBOW	
		1	**6V-9746**	1	SEAL-O-RING	
	23	2	*148-8360*	1	ELBOW AS	
		2	**6V-9182**	1	ELBOW	
		2	**6V-9746**	1	SEAL-O-RING	
		2	**7M-8485**	1	SEAL-O-RING	
	24	1	*148-8372*	1	ELBOW AS	
		1	**2M-9780**	1	SEAL-O-RING	
		1	**6V-8398**	1	SEAL-O-RING	
		1	**6V-8721**	1	ELBOW	
	25	2	*148-8381*	1	ELBOW AS	
		2	**3D-2824**	1	SEAL-O-RING	
		2	**6V-8398**	1	SEAL-O-RING	
		2	**8T-5429**	1	ELBOW	
	26	2	*148-8388*	1	ELBOW AS	
		2	**2M-9780**	1	SEAL-O-RING	
		2	**6V-8629**	1	ELBOW	
		2	**6V-9746**	1	SEAL-O-RING	
	27	2	*148-8392*	1	ELBOW AS	

296-7102 **LINES GP-MOTOR** *(contd.)* **i03906370**

NOTE	REF NO	GRAPHIC REF	PART NUMBER	QTY	PART NAME 1 2 3 4 5 6 (PRODUCT LEVEL)	SEE PAGE
		2	**6V-9746**	1	SEAL-O-RING	
		2	**6V-9853**	1	ELBOW	
	28	2	*150-3035*	1	ELBOW AS	
		2	**6V-9746**	1	SEAL-O-RING	
		2	**8T-1718**	1	ELBOW	
	29	2	*150-3071*	1	REDUCER AS	
		2	**6V-8945**	1	REDUCER-O-RING	
		2	**7J-9108**	1	SEAL-O-RING	
	30	2	*153-6244*	1	ELBOW AS	
		2	**2M-9780**	1	SEAL-O-RING	
		2	**6V-9746**	1	SEAL-O-RING	
		2	**8T-5389**	1	ELBOW	
	31	2	*164-5606*	1	CONNECTOR AS	
		2	**3D-2824**	1	SEAL-O-RING	
		2	**6V-9746**	1	SEAL-O-RING	
		2	**8T-0078**	1	CONNECTOR	
	32	1	*164-5608*	1	CONNECTOR AS	
		1	**3K-0360**	1	SEAL-O-RING	
		1	**6V-8398**	1	SEAL-O-RING	
		1	**8T-1687**	1	CONNECTOR	
	33	2	*185-2271*	1	CONNECTOR AS	
		2	**3D-2824**	1	SEAL-O-RING	
		2	**6V-9746**	1	SEAL-O-RING	
		2	**8T-9023**	1	CONNECTOR-O-RING	
	34	1	**1P-3703**	1	SEAL-RECTANGULAR	
	35	2	**1P-4578**	4	FLANGE-HALF	
	36	2	**4J-0522**	2	SEAL-O-RING	
	37	1	**4J-5267**	2	SEAL-O-RING	
	38	2	**4J-5573**	1	SEAL-O-RING	
	39	2	**5P-7462**	1	CLIP (SLOT)	
	40	2	**5P-7463**	1	CLIP (TAB)	
	41	2	**5P-7464**	1	CLIP (SLOT)	
	42	2	**5P-7465**	1	CLIP (TAB)	
	43	1,2	**5P-7466**	9	CLIP (SLOT)	
	44	1,2	**5P-7467**	9	CLIP (TAB)	
	45	1,2	**5P-8112**	9	GROMMET	
	46	2	**6D-4636**	2	CLIP	
	47	2	**6V-0683**	1	GROMMET	
	48	2	**8T-2920**	1	GROMMET	
	49	1,2	**8T-4121**	16	WASHER-HARD (11X21X2.5-MM THK)	
M	50	1,2	**8T-4137**	4	BOLT (M10X1.5X20-MM)	
M	51	1,2	**8T-4139**	10	BOLT (M12X1.75X30-MM)	
M	52	1	**8T-4183**	1	BOLT (M12X1.75X40-MM)	
M	53	2	**8T-4184**	1	BOLT (M12X1.75X45-MM)	
M	54	1,2	**8T-4192**	3	BOLT (M12X1.75X25-MM)	
M	55	2	**8T-4196**	8	BOLT (M10X1.5X35-MM)	
	56	1,2	**8T-4223**	16	WASHER-HARD (13.5X25.5X3-MM THK)	
M	57	1	**8T-4956**	1	BOLT (M12X1.75X35-MM)	
M	58	2	**8T-5005**	4	BOLT (M10X1.5X70-MM)	
M	59	1	**8T-6466**	6	BOLT (M10X1.5X60-MM)	
	60	1	**9D-1829**	1	CLIP	
	61	2	**9X-6579**	1	NUT-ORIFICE (7/16-12-THD)	

I-REFER TO HYDRAULIC INFORMATION SYSTEM
M-METRIC PART
Y-SEPARATE ILLUSTRATION

REFER TO ALL ILLUSTRATIONS OF
THIS GROUP FOR AUXILIARY VIEWS

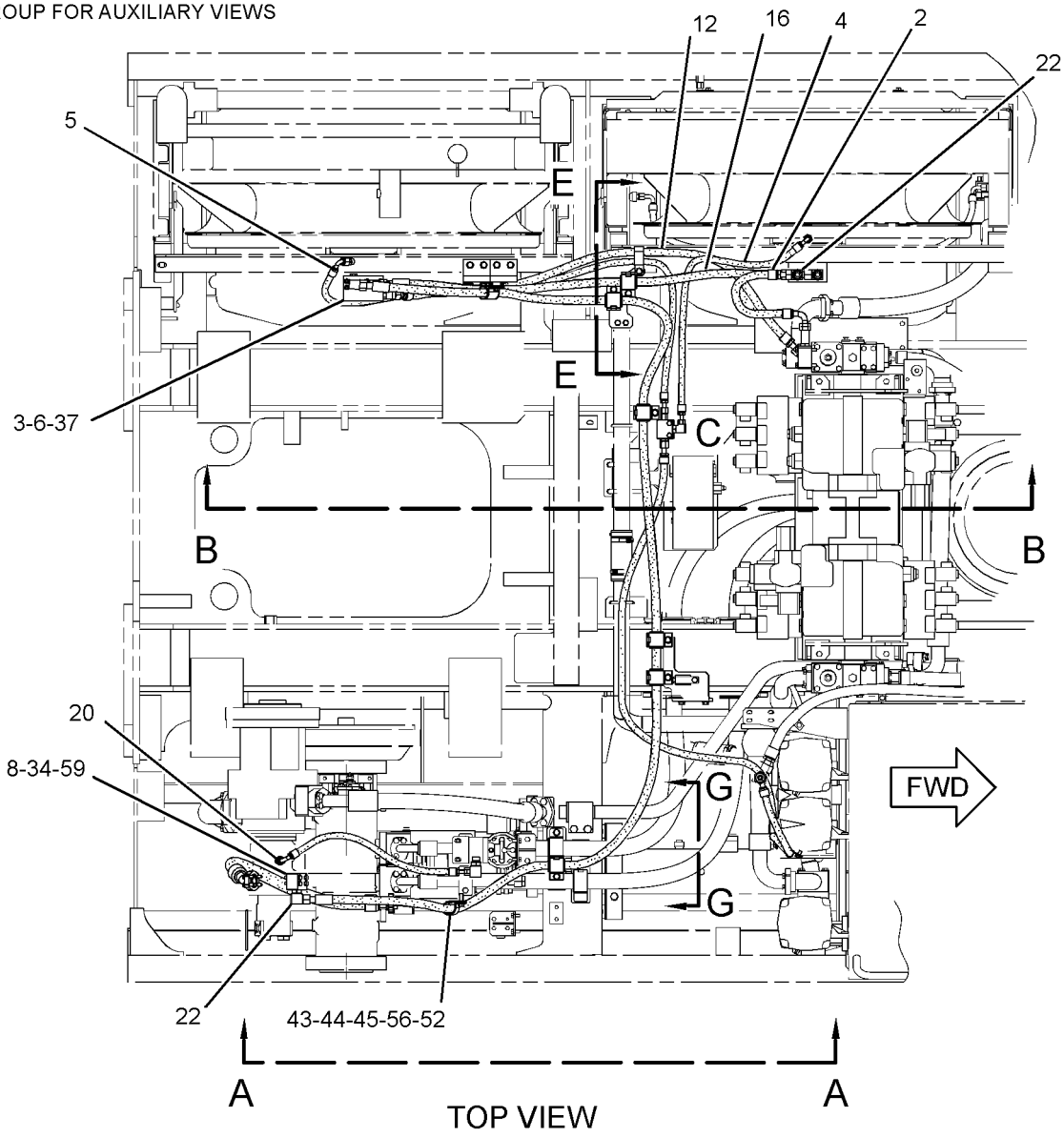

TOP VIEW

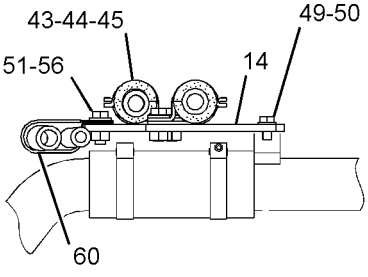

SECTION E-E

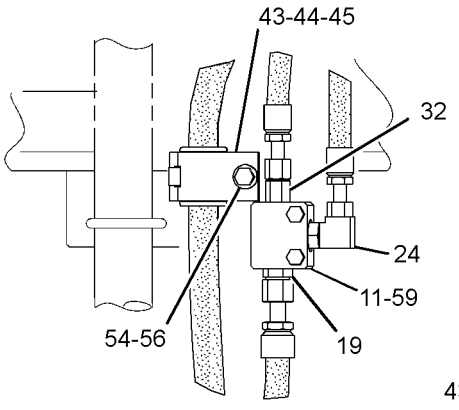

VIEW OF AREA C

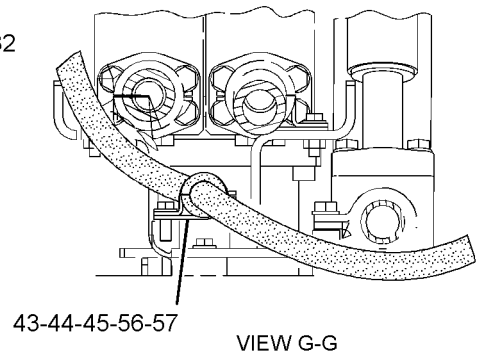

VIEW G-G

GRAPHIC #1

g02161000

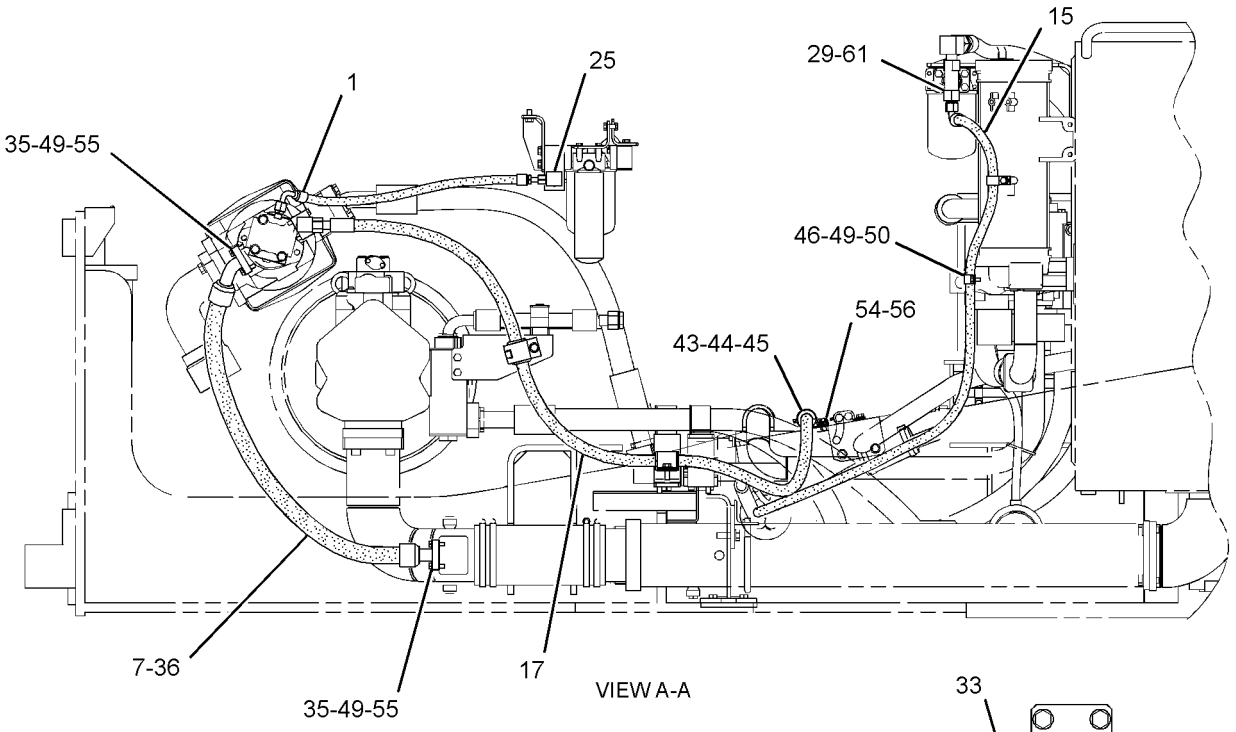

VIEW A-A

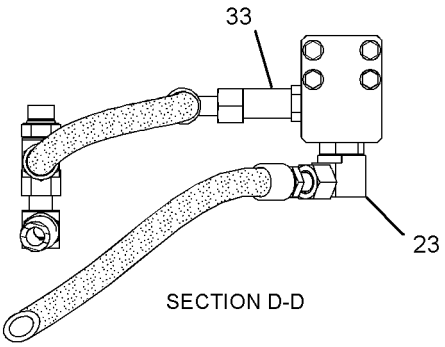

SECTION D-D

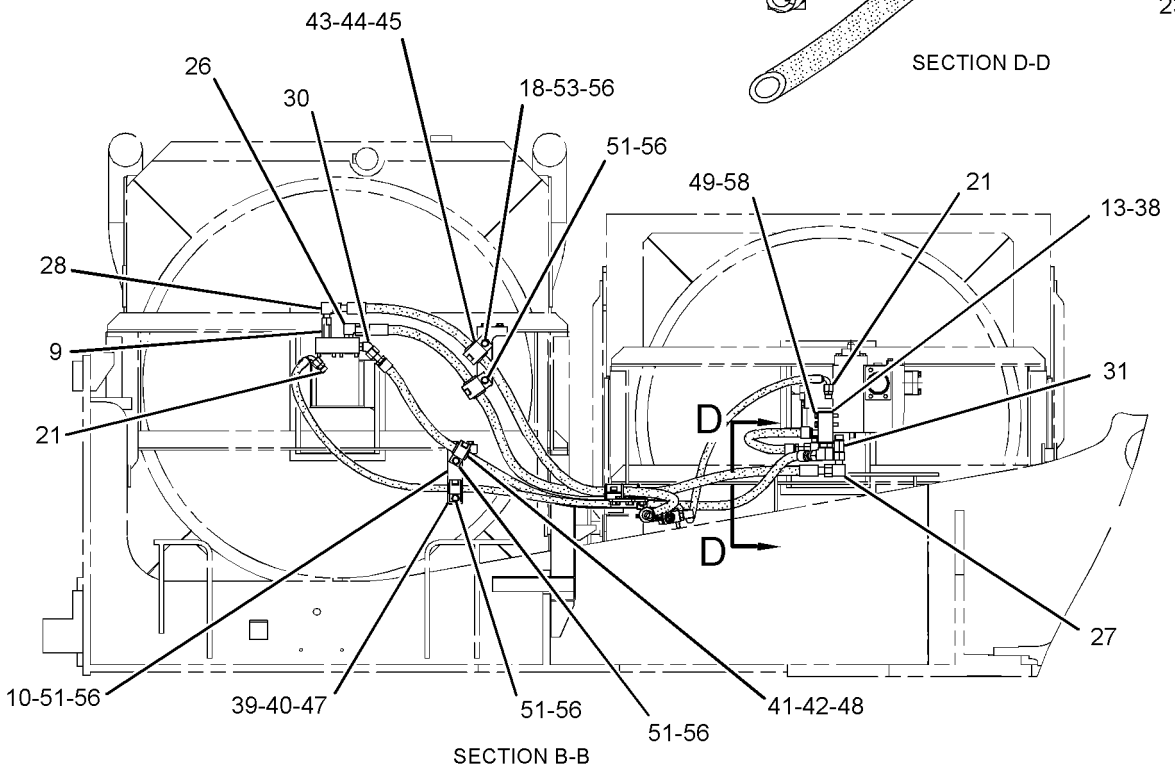

SECTION B-B

GRAPHIC #2 **<END>** g02161902

HYDRAULIC SYSTEM

296-7109 LINES GP-PILOT

S/N: WAP1-UP

PART OF 297-0223 HYDRAULIC AR

SMCS-5057, 5059 **i03906569**

NOTE	REF NO	GRAPHIC REF	PART NUMBER	QTY	PART NAME 1 2 3 4 5 6 (PRODUCT LEVEL)	SEE PAGE
I	1	4	**4I-0769**	1	HOSE AS	
I	2	3	**4I-0806**	1	HOSE AS	
I	3	1,3	**4I-0821**	2	HOSE AS	
I	4	3	**4I-3981**	1	HOSE AS	
I	5	4	**4I-5795**	1	HOSE AS	
I	6	2	**4I-7778**	1	HOSE AS	
	7	1,4	**4I-9521**	4	BAND-MARKER (RED, L1)	
	8	3,4	**4I-9522**	4	BAND-MARKER (YELLOW, L2)	
	9	3,4	**4I-9523**	6	BAND-MARKER (BLUE, L3)	
	10	1,4	**4I-9524**	4	BAND-MARKER (BROWN, L4)	
	11	3	**4I-9525**	4	BAND-MARKER (ORANGE, R1)	
	12	3	**4I-9526**	2	BAND-MARKER (WHITE, R2)	
	13	4	**4I-9527**	4	BAND-MARKER (GREEN, R3)	
	14	3,4	**4I-9528**	4	BAND-MARKER (PURPLE, R4)	
Y	15	2	**6E-5534**	1	FILTER GP-OIL (HYDRAULIC)	519
	16	2,4	**6V-0852**	8	CAP-DUST	
	17	1,3	**7K-1181**	12	STRAP-CABLE	
I	18	1	**7Y-5088**	1	HOSE AS	
	19	4	**8C-3451**	1	CAP-DUST	
I	20	4	**087-4411**	2	HOSE AS	
I	21	4	**087-4532**	1	HOSE AS	
I	22	4	**087-5306**	1	HOSE AS	
I	23	3,4	**087-5777**	2	HOSE AS	
I	24	4	**087-5780**	1	HOSE AS	
I	25	3	**111-0976**	1	HOSE AS	
	26	1	**115-8645**	2	GUARD	
	27	1	**136-0207**	4	STRAP-CABLE (BLACK)	
I	28	1	**138-5095**	1	HOSE AS	
Y	29	4	**140-0736**	1	VALVE GP-MANIFOLD & REDUCING	742
I	30	1	**141-1310**	1	HOSE AS	
	31	4	*150-4027*	1	TEE AS	
		4	**3E-2310**	1	TEE	
		4	**3J-1907**	1	SEAL-O-RING	
		4	**6V-8397**	1	SEAL-O-RING	
	32	2	*164-5546*	1	TEE AS	
		2	**3E-7410**	1	TEE-O-RING	
		2	**3J-1907**	1	SEAL-O-RING	
	33	3	*164-5628*	1	CONNECTOR AS	
		3	**3J-1907**	1	SEAL-O-RING	
		3	**6V-8397**	1	SEAL-O-RING	
		3	**107-6631**	1	CONNECTOR-FILTER	
	34	3,4	*164-5639*	2	ELBOW AS	
					(EACH INCLUDES)	
		3,4	**3K-0360**	1	SEAL-O-RING	
		3,4	**6V-8398**	1	SEAL-O-RING	
		3,4	**124-0988**	1	ELBOW-FILTER	
	35	1,2,4	*164-6874*	3	FITTING AS-ELBOW	
					(EACH INCLUDES)	
		1,2,4	**3J-1907**	1	SEAL-O-RING	
		1,2,4	**085-7356**	1	FITTING	
	36	4	**168-9688**	1	BLOCK	
	37	2	**176-4414**	1	BRACKET AS	
Y	38	2	**185-0336**	1	FILTER GP-OIL (HYDRAULIC)	520
	39	2	*188-1035*	1	TEE AS	
		2	**3D-2824**	1	SEAL-O-RING	
		2	**5K-9090**	1	SEAL-O-RING	

296-7109 **LINES GP-PILOT** *(contd.)* **i03906569**

NOTE	REF NO	GRAPHIC REF	PART NUMBER	QTY	PART NAME 1 2 3 4 5 6 (PRODUCT LEVEL)	SEE PAGE
		2	**6V-9746**	1	SEAL-O-RING	
		2	**8T-7520**	1	TEE	
I	40	4	**196-0590**	2	HOSE AS	
	41	2	*202-9762*	1	CONNECTOR AS	
		2	**6V-9746**	1	SEAL-O-RING	
		2	**7M-8485**	1	SEAL-O-RING	
		2	**152-9254**	1	CONNECTOR	
I	42	4	**204-8271**	1	HOSE AS	
	43	4	**204-8350**	1	HOSE AS	
I	44	4	**204-8480**	1	HOSE AS	
I	45	2	**204-8481**	1	HOSE AS	
	46	2	**204-8482**	1	SUPPORT AS	
	47	2	**204-8485**	1	SUPPORT AS	
	48	2	**204-8487**	1	FLANGE	
I	49	2,4	**207-6418**	2	HOSE AS	
	50	4	**221-8859**	1	SENSOR AS-PRESSURE (LOAD SENSING)	
		4	**3E-3371**	1	WEDGE-RECEPTACLE LOCK (3-PIN)	
		4	**3K-0360**	1	SEAL-O-RING	
		4	**9X-3401**	1	PIN-CONNECTOR (16-GA TO 18-GA)	
					—OR—	
		4	**126-1767**	1	PIN-CONNECTOR (14-GA TO 16-GA)	
		4	**171-0596**	1	RECEPTACLE AS	
	51	2	**221-8912**	2	FLANGE	
	52	2	**227-0666**	1	BLOCK	
I	53	1	**245-4980**	1	HOSE AS	
I	54	1	**245-4983**	1	HOSE AS	
	55	2	**260-2180**	1	SENSOR AS-PRESSURE (SWING PUMP)	
	55A	2	**260-2180**	1	SENSOR AS-PRESSURE (MAIN PUMP)	
					(EACH INCLUDES)	
		2	**095-1777**	1	RING-BACKUP	
		2	**260-2191**	1	SEAL-O-RING	
I	56	1	**260-8273**	1	HOSE AS	
	57	1	**275-1442**	2	CLIP (TAB)	
	58	1	**275-1443**	2	CLIP (SLOT)	
	59	1	**275-1444**	2	GROMMET	
I	60	3	**286-6458**	1	HOSE AS	
I	61	3	**286-6475**	1	HOSE AS	
I	62	3	**286-6815**	1	HOSE AS	
	63	1	**302-3177**	1	PLATE	
	64	1	**302-3178**	1	GROMMET	
I	65	4	**307-5004**	1	HOSE AS	
	66	1	**310-0122**	1	MANIFOLD & VALVE GP (LOAD SENSING)	
		1	**7Y-4359**	2	SCREW	
I	67	4	**317-4771**	1	HOSE AS	
I	68	1	**317-4864**	1	HOSE AS	
I	69	3	**319-9903**	1	HOSE AS	
	70	1	**333-7090**	1	SUPPORT AS	
Y	71	4	**335-0546**	1	ACCUMULATOR GP-HYDRAULIC (CHARGED)	462
I	72	1	**340-2958**	1	HOSE AS	
I	73	1	**342-4177**	1	HOSE AS	
Y	74	3	**352-6819**	1	VALVE GP-SOLENOID (HIGH PRESSURE CUTOFF)	777
	75	3	**354-4407**	1	PLATE	
	76	1,4	*148-8317*	3	CONNECTOR AS	
					(EACH INCLUDES)	
		1,4	**3D-2824**	1	SEAL-O-RING	
		1,4	**5K-9090**	1	SEAL-O-RING	
		1,4	**6V-8714**	1	CONNECTOR	
	77	4	*148-8318*	1	CONNECTOR AS	
		4	**3K-0360**	1	SEAL-O-RING	

HYDRAULIC SYSTEM

296-7109 **LINES GP-PILOT** *(contd.)* **i03906569**

NOTE	REF NO	GRAPHIC REF	PART NUMBER	QTY	PART NAME 1 2 3 4 5 6 (PRODUCT LEVEL)	SEE PAGE
		4	**6V-8397**	1	SEAL-O-RING	
		4	**6V-8634**	1	CONNECTOR	
	78	2	*148-8323*	1	CONNECTOR AS	
		2	**2S-4078**	1	SEAL-O-RING	
		2	**5K-9090**	1	SEAL-O-RING	
		2	**6V-9875**	1	CONNECTOR	
	79	1	*148-8335*	1	CONNECTOR AS	
		1	**5K-9090**	1	SEAL-O-RING	
		1	**6V-8635**	1	CONNECTOR	
		1	**7M-8485**	1	SEAL-O-RING	
	80	1,3,4	*148-8336*	9	CONNECTOR AS	
					(EACH INCLUDES)	
		1,3,4	**3J-1907**	1	SEAL-O-RING	
		1,3,4	**6V-8397**	1	SEAL-O-RING	
		1,3,4	**6V-8636**	1	CONNECTOR	
	81	4	*148-8340*	2	CONNECTOR AS	
					(EACH INCLUDES)	
		4	**3K-0360**	1	SEAL-O-RING	
		4	**6V-8398**	1	SEAL-O-RING	
		4	**6V-8639**	1	CONNECTOR	
	82	2	*148-8347*	1	ELBOW AS	
		2	**3D-2824**	1	SEAL-O-RING	
		2	**6V-9007**	1	ELBOW	
		2	**6V-9746**	1	SEAL-O-RING	
	83	1,3,4	*148-8353*	3	ELBOW AS	
					(EACH INCLUDES)	
		1,3,4	**3J-1907**	1	SEAL-O-RING	
		1,3,4	**6V-8397**	1	SEAL-O-RING	
		1,3,4	**6V-9001**	1	ELBOW	
	84	3	*148-8354*	2	ELBOW AS	
					(EACH INCLUDES)	
		3	**3K-0360**	1	SEAL-O-RING	
		3	**6V-8398**	1	SEAL-O-RING	
		3	**6V-9002**	1	ELBOW	
	85	1,2,4	*148-8355*	3	ELBOW AS	
					(EACH INCLUDES)	
		1,2,4	**5K-9090**	1	SEAL-O-RING	
		1,2,4	**6V-9005**	1	ELBOW	
		1,2,4	**7M-8485**	1	SEAL-O-RING	
	86	2	*148-8362*	1	ELBOW AS	
		2	**3D-2824**	1	SEAL-O-RING	
		2	**5K-9090**	1	SEAL-O-RING	
		2	**8T-6684**	1	ELBOW	
	87	4	*148-8364*	2	ELBOW AS	
					(EACH INCLUDES)	
		4	**3K-0360**	1	SEAL-O-RING	
		4	**6V-8398**	1	SEAL-O-RING	
		4	**6V-8625**	1	ELBOW	
	88	3	*148-8374*	1	ELBOW AS	
		3	**3K-0360**	1	SEAL-O-RING	
		3	**6V-8397**	1	SEAL-O-RING	
		3	**6V-8723**	1	ELBOW	
	89	1,2,3,4	*148-8378*	21	ELBOW AS	
					(EACH INCLUDES)	
		1,2,3,4	**3J-1907**	1	SEAL-O-RING	
		1,2,3,4	**6V-8397**	1	SEAL-O-RING	

296-7109 **LINES GP-PILOT** *(contd.)* **i03906569**

NOTE	REF NO	GRAPHIC REF	PART NUMBER	QTY	PART NAME 1 2 3 4 5 6 (PRODUCT LEVEL)	SEE PAGE
		1,2,3, 4	**6V-8724**	1	ELBOW	
	90	4	*148-8411*	1	PLUG AS	
		4	**3K-0360**	1	SEAL-O-RING	
		4	**9S-4185**	1	PLUG-O-RING	
	91	4	*148-8433*	2	TEE AS	
					(EACH INCLUDES)	
		4	**6V-8397**	2	SEAL-O-RING	
		4	**6V-9836**	1	TEE-SWIVEL	
	92	4	*148-8434*	1	TEE AS	
		4	**6V-8397**	2	SEAL-O-RING	
		4	**6V-9843**	1	TEE-SWIVEL	
	93	2,4	*148-8435*	2	TEE AS	
					(EACH INCLUDES)	
		2,4	**3J-1907**	1	SEAL-O-RING	
		2,4	**6V-8397**	2	SEAL-O-RING	
		2,4	**6V-8781**	1	TEE-FACE SEAL	
	94	2,3	*148-8439*	2	TEE AS	
					(EACH INCLUDES)	
		2,3	**3J-1907**	1	SEAL-O-RING	
		2,3	**6V-8397**	2	SEAL-O-RING	
		2,3	**6V-8774**	1	TEE	
	95	1,4	*150-3036*	2	ELBOW AS	
					(EACH INCLUDES)	
		1,4	**3J-1907**	1	SEAL-O-RING	
		1,4	**6V-8397**	1	SEAL-O-RING	
		1,4	**8T-1905**	1	ELBOW	
	96	2	*150-4049*	1	ELBOW AS	
		2	**6V-9746**	1	SEAL-O-RING	
		2	**7M-8485**	1	SEAL-O-RING	
		2	**8T-4149**	1	ELBOW	
	97	2	*155-3624*	1	PLUG AS	
		2	**3J-7354**	1	SEAL-O-RING	
		2	**9S-4182**	1	PLUG-O-RING	
	98	2,4	*164-5567*	8	COUPLER AS-QUICK DISCONNECT (MALE)	
					(EACH INCLUDES)	
		2,4	**6V-3965**	1	FITTING (QUICK DISCONNECT)	
		2,4	**214-7568**	1	SEAL-O-RING	
	99	4	*164-5572*	1	UNION AS	
		4	**6V-8398**	2	SEAL-O-RING	
		4	**6V-8731**	1	UNION	
	100	4	*164-5590*	1	VALVE AS-FLUID SAMPLING	
		4	**3J-7354**	1	SEAL-O-RING	
		4	**8C-3446**	1	VALVE-FLUID SAMPLING	
	101	4	*164-5598*	1	PLUG AS	
		4	**7M-8485**	1	SEAL-O-RING	
		4	**8J-0426**	1	PLUG	
	102	3	*164-8908*	1	CONNECTOR AS	
		3	**3K-0360**	1	SEAL-O-RING	
		3	**6V-8398**	1	SEAL-O-RING	
		3	**8T-0077**	1	CONNECTOR	
	103	2	*165-4931*	1	ELBOW AS	
		2	**3J-1907**	1	SEAL-O-RING	
		2	**6V-8077**	1	ELBOW	
	104	4	*171-6728*	1	ELBOW AS	
		4	**3K-0360**	1	SEAL-O-RING	
		4	**8T-0249**	1	ELBOW	
	105	1	**1P-4578**	4	FLANGE-HALF	
	106	1,3,4	**4D-7388**	4	CLIP	
	107	4	**4J-0520**	1	SEAL-O-RING	

296-7109 **LINES GP-PILOT** *(contd.)* **i03906569**

NOTE	REF NO	GRAPHIC REF	PART NUMBER	QTY	PART NAME 1 2 3 4 5 6 (PRODUCT LEVEL)	SEE PAGE
	108	1	**4J-0522**	2	SEAL-O-RING	
	109	2	**4J-0524**	2	SEAL-O-RING	
	110	3	**4P-7582**	3	CLIP	
	111	1	**4S-1936**	1	CLIP	
	112	4	**5P-1076**	3	WASHER-HARD (13.5X30X4-MM THK)	
	113	3	**5P-2369**	1	CLIP	
	114	3,4	**5P-7464**	4	CLIP (SLOT)	
	115	3,4	**5P-7465**	4	CLIP (TAB)	
	116	3,4	**6V-1249**	4	GROMMET	
	117	1,2,3, 4	**8T-4121**	32	WASHER-HARD (11X21X2.5-MM THK)	
M	118	1,2,3	**8T-4136**	10	BOLT (M10X1.5X25-MM)	
M	119	1,3,4	**8T-4137**	8	BOLT (M10X1.5X20-MM)	
M	120	3,4	**8T-4179**	5	BOLT (M12X1.75X20-MM)	
M	121	4	**8T-4183**	1	BOLT (M12X1.75X40-MM)	
M	122	2	**8T-4189**	4	BOLT (M8X1.25X20-MM)	
M	123	1	**8T-4191**	1	BOLT (M10X1.5X16-MM)	
M	124	1,2,3, 4	**8T-4192**	10	BOLT (M12X1.75X25-MM)	
M	125	3	**8T-4195**	1	BOLT (M10X1.5X30-MM)	
M	126	1	**8T-4196**	8	BOLT (M10X1.5X35-MM)	
M	127	2	**8T-4200**	4	BOLT (M8X1.25X16-MM)	
	128	1,2,3, 4	**8T-4223**	22	WASHER-HARD (13.5X25.5X3-MM THK)	
	129	2	**8T-4224**	12	WASHER-HARD (8.8X16X2-MM THK)	
M	130	3	**8T-4244**	1	NUT (M12X1.75-THD)	
M	131	1,3,4	**8T-4956**	4	BOLT (M12X1.75X35-MM)	
M	132	4	**8T-5005**	4	BOLT (M10X1.5X70-MM)	
M	133	2	**8T-6868**	4	BOLT (M12X1.75X80-MM)	
M	134	2	**8T-7547**	4	BOLT (M8X1.25X30-MM)	
	135	1,4	**9M-8406**	3	CLIP	

I-REFER TO HYDRAULIC INFORMATION SYSTEM
M-METRIC PART
Y-SEPARATE ILLUSTRATION

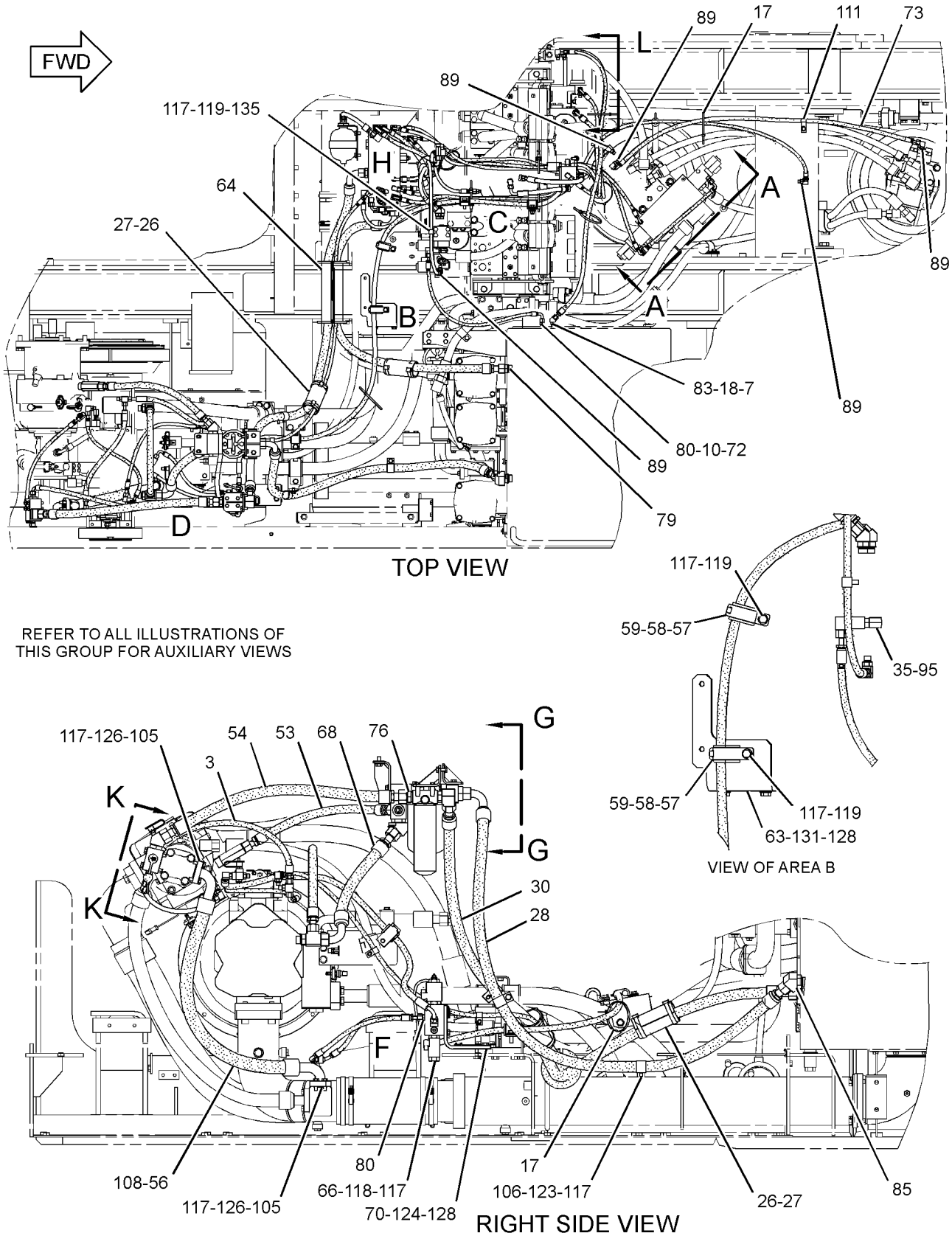

GRAPHIC #1 g02178896

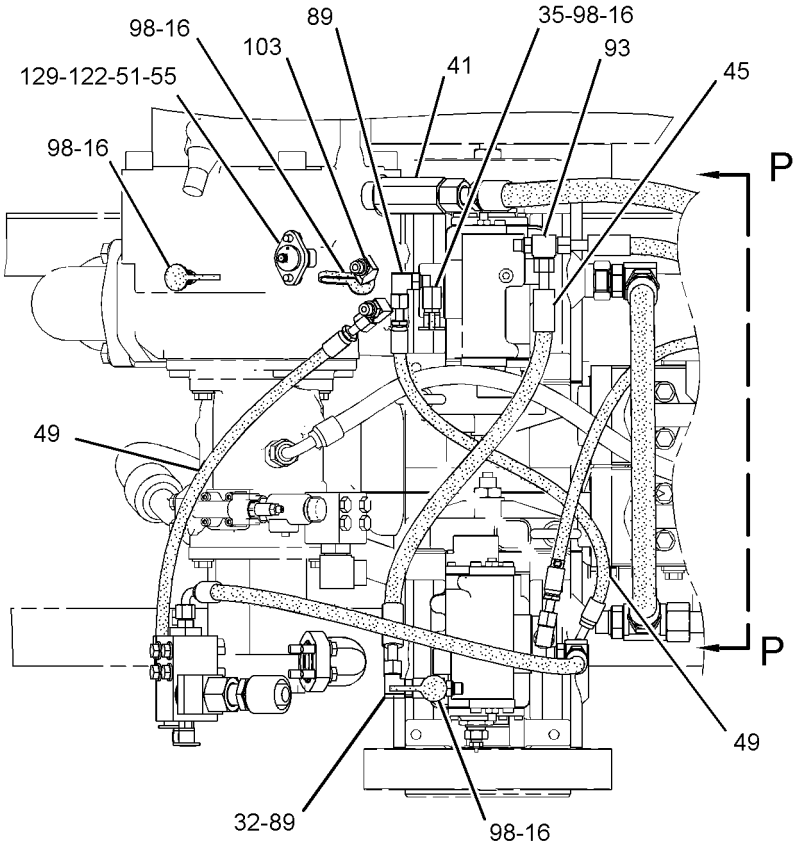

VIEW OF AREA D

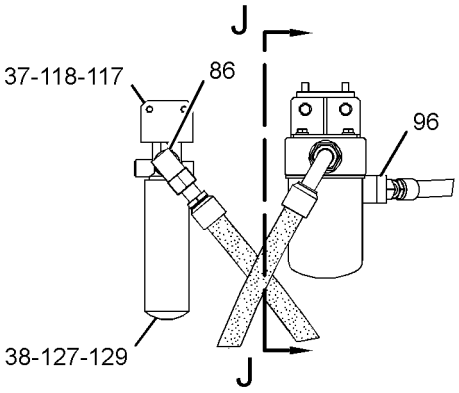

VIEW G-G

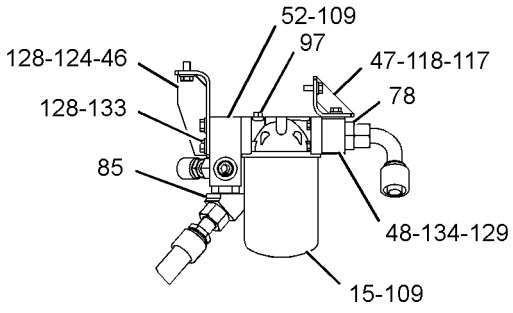

VIEW J-J

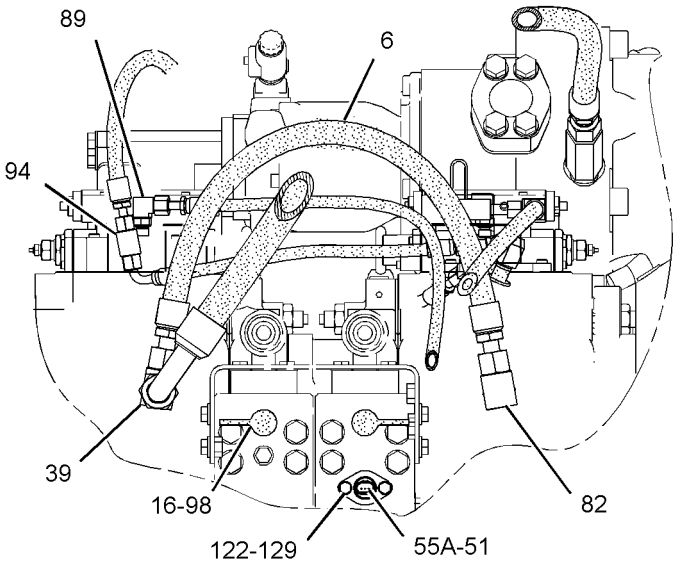

VIEW P-P

GRAPHIC #2

g02178897

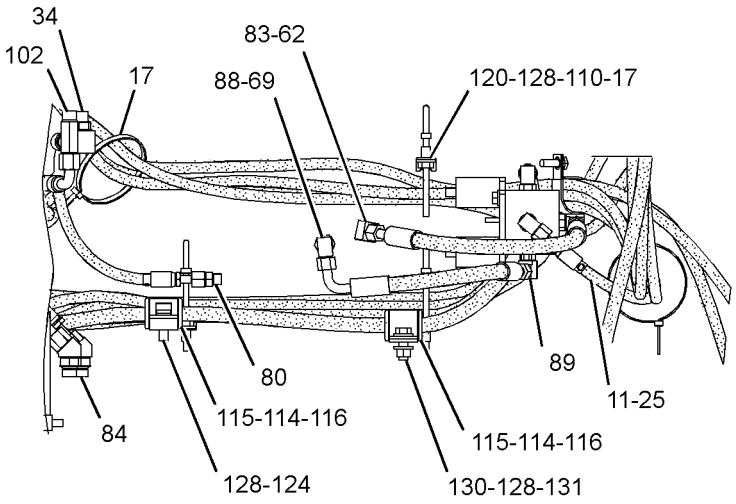

VIEW OF AREA C

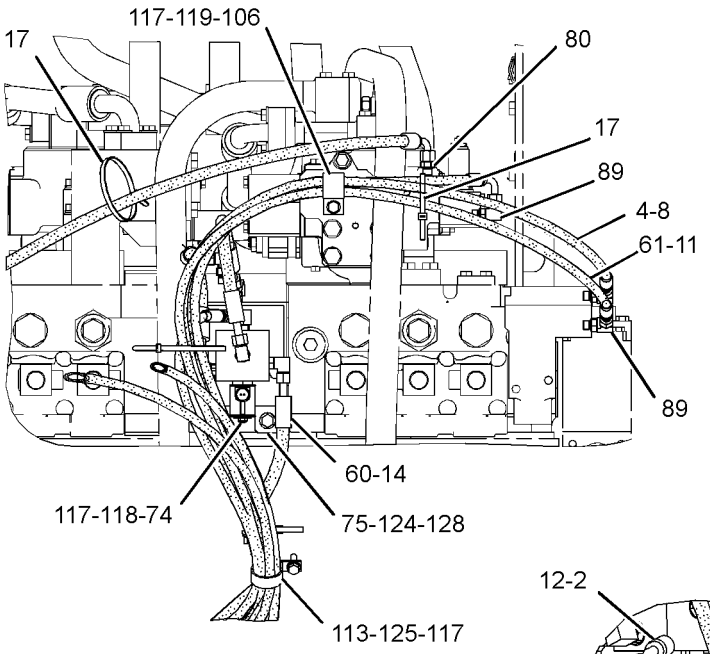

SECTION L

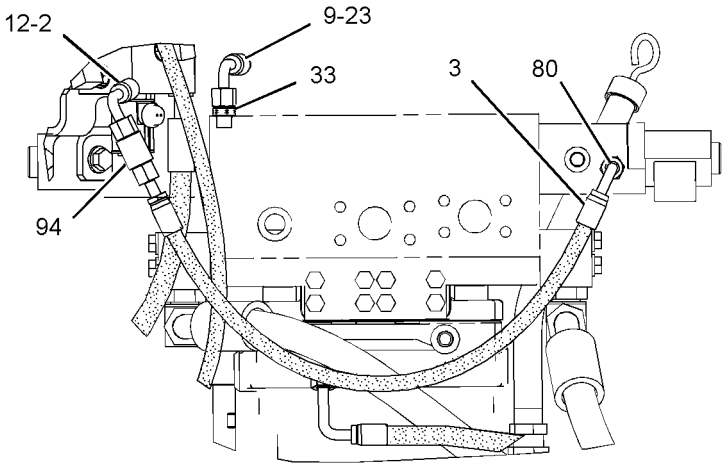

VIEW A-A

GRAPHIC #3 g02178898

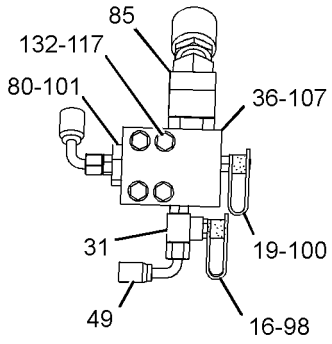

VIEW K-K

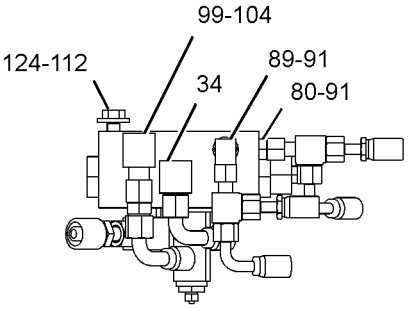

VIEW N-N

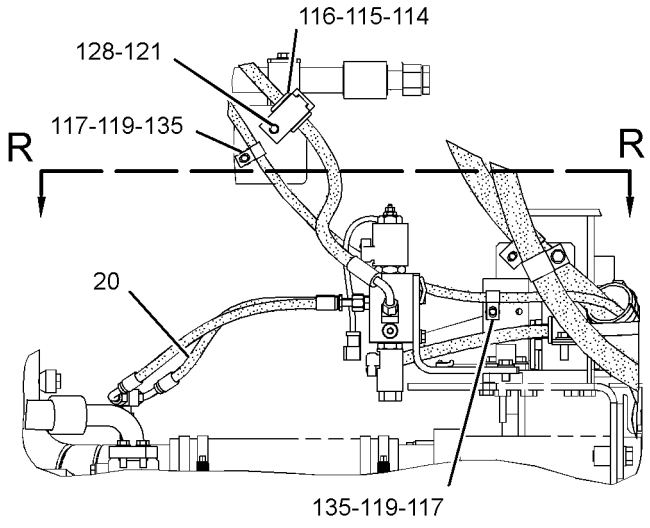

VIEW OF AREA F

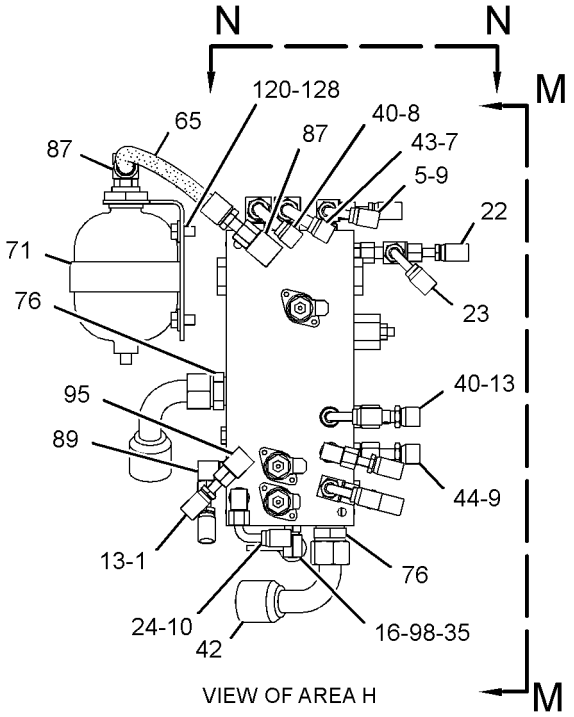

VIEW OF AREA H

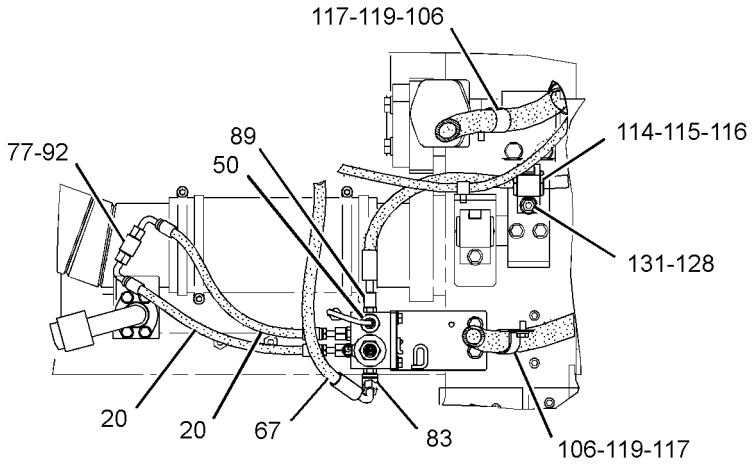

SECTION R-R

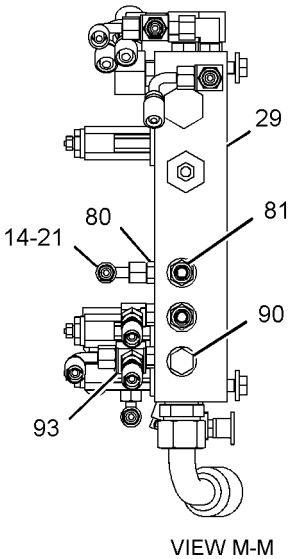

VIEW M-M

GRAPHIC #4 **<END>** g02178899

HYDRAULIC SYSTEM

296-7113 LINES GP-PILOT—BOOM LOWERING CONTROL

S/N: WAP1-UP
PART OF 297-0421 VALVE AR-BOOM LOWERING CONTROL
AN ATTACHMENT

SMCS-5057, 5059 **i03907407**

NOTE	REF NO	GRAPHIC REF	PART NUMBER	QTY	PART NAME 1 2 3 4 5 6 (PRODUCT LEVEL)	SEE PAGE
I	1	1	**4I-0812**	1	HOSE AS	
I	2	1	**4I-3994**	1	HOSE AS	
I	3	1	**4I-6239**	1	HOSE AS	
	4	1	**4I-7856**	1	SPACER (11X30X75-MM THK)	
	5	1	**7K-1181**	8	STRAP-CABLE	
	6	1	**134-6838**	1	GUARD	
Y	7	1	**171-0028**	1	VALVE GP-SOLENOID	774
	8	1	**171-0049**	1	HOUSING	
Y	9	1	**171-0113**	1	PLUG GP-CONTROL VALVE	661
I	10	1	**245-5413**	1	HOSE AS	
I	11	1	**292-7523**	1	HOSE AS	
Y	12	1	*335-0547*	1	ACCUMULATOR GP-HYDRAULIC (CHARGED)	463
I	13	1	**347-6142**	1	HOSE AS	
	14	1	**347-6148**	1	PIPE AS	
	15	1	*148-8318*	1	CONNECTOR AS	
		1	**3K-0360**	1	SEAL-O-RING	
		1	**6V-8397**	1	SEAL-O-RING	
		1	**6V-8634**	1	CONNECTOR	
	16	1	*148-8336*	1	CONNECTOR AS	
		1	**3J-1907**	1	SEAL-O-RING	
		1	**6V-8397**	1	SEAL-O-RING	
		1	**6V-8636**	1	CONNECTOR	
	17	1	*148-8357*	1	ELBOW AS	
		1	**5K-9090**	1	SEAL-O-RING	
		1	**6V-9008**	1	ELBOW	
		1	**7M-8485**	1	SEAL-O-RING	
	18	1	*148-8364*	1	ELBOW AS	
		1	**3K-0360**	1	SEAL-O-RING	
		1	**6V-8398**	1	SEAL-O-RING	
		1	**6V-8625**	1	ELBOW	
	19	1	*148-8378*	2	ELBOW AS	
					(EACH INCLUDES)	
		1	**3J-1907**	1	SEAL-O-RING	
		1	**6V-8397**	1	SEAL-O-RING	
		1	**6V-8724**	1	ELBOW	
	20	1	*148-8407*	2	PLUG AS	
					(EACH INCLUDES)	
		1	**3J-1907**	1	SEAL-O-RING	
		1	**9S-4191**	1	PLUG-O-RING	
	21	1	**148-8411**	1	PLUG AS	
		1	**3K-0360**	1	SEAL-O-RING	
		1	**9S-4185**	1	PLUG-O-RING	
	22	1	*148-8412*	1	REDUCER AS	
		1	**6V-8398**	1	SEAL-O-RING	
		1	**6V-8944**	1	REDUCER-O-RING	
	23	1	*148-8431*	1	TEE AS	
		1	**5K-9090**	2	SEAL-O-RING	
		1	**6V-8785**	1	TEE	
		1	**7M-8485**	1	SEAL-O-RING	
	24	1	*148-8433*	1	TEE AS	
		1	**6V-8397**	2	SEAL-O-RING	
		1	**6V-9836**	1	TEE-SWIVEL	
	25	1	*164-4180*	1	PLUG AS	
		1	**7M-8485**	1	SEAL-O-RING	
		1	**9S-4181**	1	PLUG-O-RING	

296-7113 **LINES GP-PILOT** *(contd.)* **i03907407**

NOTE	REF NO	GRAPHIC REF	PART NUMBER	QTY	PART NAME 1 2 3 4 5 6 (PRODUCT LEVEL)	SEE PAGE
	26	1	**1P-4579**	2	FLANGE-HALF	
	27	1	**1P-4582**	4	FLANGE-HALF	
	28	1	**2J-2668**	1	COVER	
	29	1	**4D-7388**	1	CLIP	
	30	1	**4J-0524**	1	SEAL-O-RING	
	31	1	**4J-0527**	3	SEAL-O-RING	
	32	1	**6D-4244**	2	CLIP	
M	33	1	**7I-2272**	4	BOLT (M5X0.8X12-MM)	
M	34	1	**7X-2550**	4	BOLT (M12X1.75X110-MM)	
M	35	1	**8T-3647**	4	BOLT (M8X1.25X80-MM)	
	36	1	**8T-4121**	4	WASHER-HARD (11X21X2.5-MM THK)	
M	37	1	**8T-4137**	3	BOLT (M10X1.5X20-MM)	
M	38	1	**8T-4179**	2	BOLT (M12X1.75X20-MM)	
M	39	1	**8T-4183**	12	BOLT (M12X1.75X40-MM)	
M	40	1	**8T-4198**	1	BOLT (M10X1.5X100-MM)	
	41	1	**8T-4223**	14	WASHER-HARD (13.5X25.5X3-MM THK)	
	42	1	**9M-8406**	1	CLIP	
	43	1	**9X-6579**	1	NUT-ORIFICE (7/16-12-THD)	

I-REFER TO HYDRAULIC INFORMATION SYSTEM
M-METRIC PART
Y-SEPARATE ILLUSTRATION

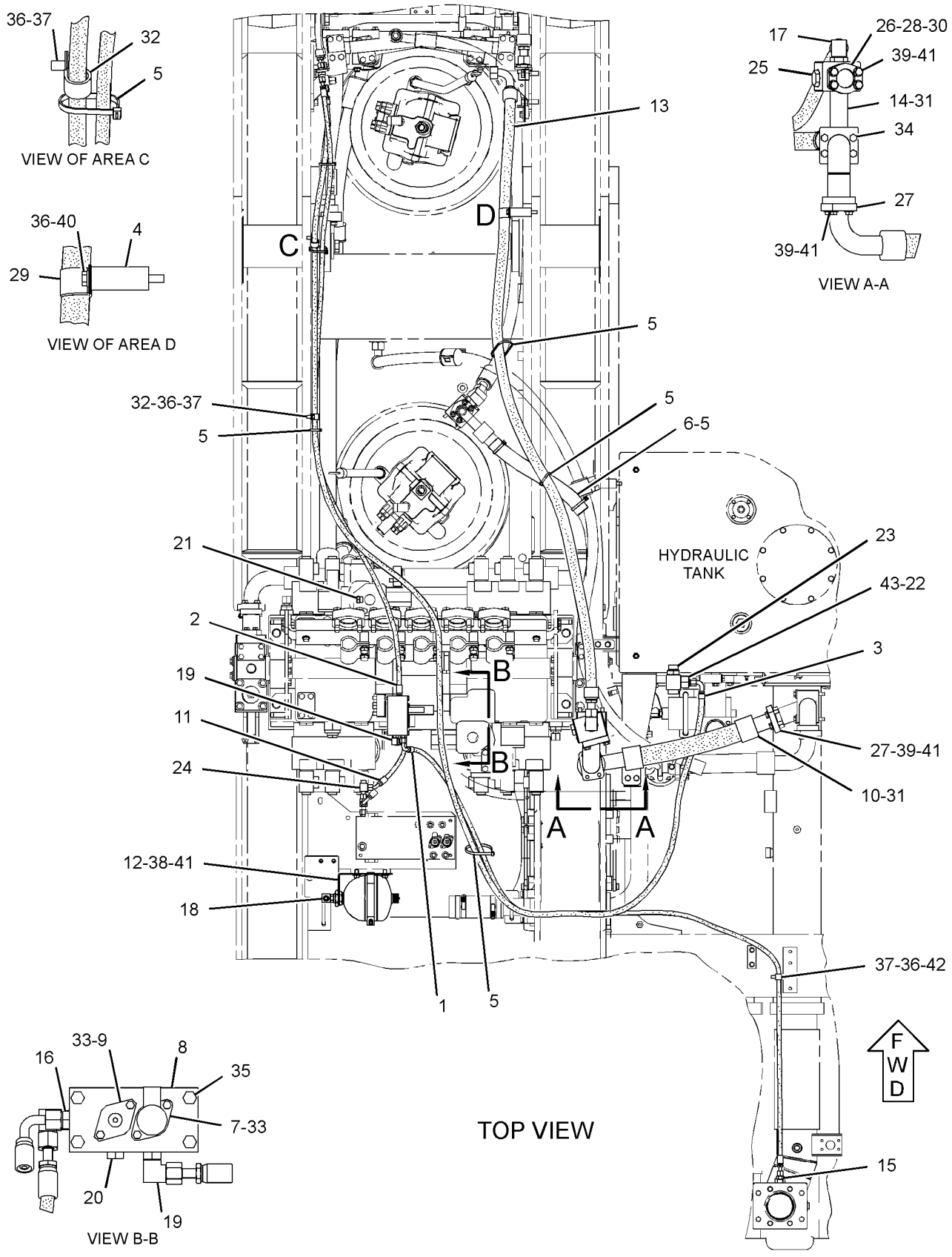

GRAPHIC #1 **<END>** g02177672

296-7114 LINES GP-PILOT—STICK LOWERING CONTROL

S/N: WAP1-UP
PART OF 297-0428 VALVE AR-LOAD CONTROL
AN ATTACHMENT

SMCS-5057, 5059 **i03907868**

NOTE	REF NO	GRAPHIC REF	PART NUMBER	QTY	PART NAME 1 2 3 4 5 6 (PRODUCT LEVEL)	SEE PAGE
	1	1	**5E-9684**	1	FITTING	
	2	1	**7K-1181**	6	STRAP-CABLE	
Y	3	1	**171-0028**	1	VALVE GP-SOLENOID (STICK LOWERING CONTROL)	774
	4	1	**340-3027**	1	HOSE AS	
	5	1	**340-3036**	1	HOSE AS	
I	6	1	**347-6139**	1	HOSE AS	
	7	1	*148-8338*	1	CONNECTOR AS	
		1	**3J-1907**	1	SEAL-O-RING	
		1	**6V-8397**	1	SEAL-O-RING	
		1	**8T-0075**	1	CONNECTOR	
	8	1	*148-8415*	1	REDUCER AS	
		1	**6V-8397**	1	SEAL-O-RING	
		1	**6V-8936**	1	REDUCER	
	9	1	*150-4037*	1	TEE AS	
		1	**6V-8398**	2	SEAL-O-RING	
		1	**6V-9844**	1	TEE-SWIVEL	
	10	1	**5K-9090**	1	SEAL-O-RING	
	11	1	**5P-7468**	1	CLIP (SLOT)	
	12	1	**5P-7469**	1	CLIP (TAB)	
M	13	1	**7I-2272**	2	BOLT (M5X0.8X12-MM)	
	14	1	**7M-8485**	1	SEAL-O-RING	
	15	1	**8T-2525**	1	GROMMET	
M	16	1	**8T-4192**	1	BOLT (M12X1.75X25-MM)	
	17	1	**8T-4223**	1	WASHER-HARD (13.5X25.5X3-MM THK)	

I-REFER TO HYDRAULIC INFORMATION SYSTEM
M-METRIC PART
Y-SEPARATE ILLUSTRATION

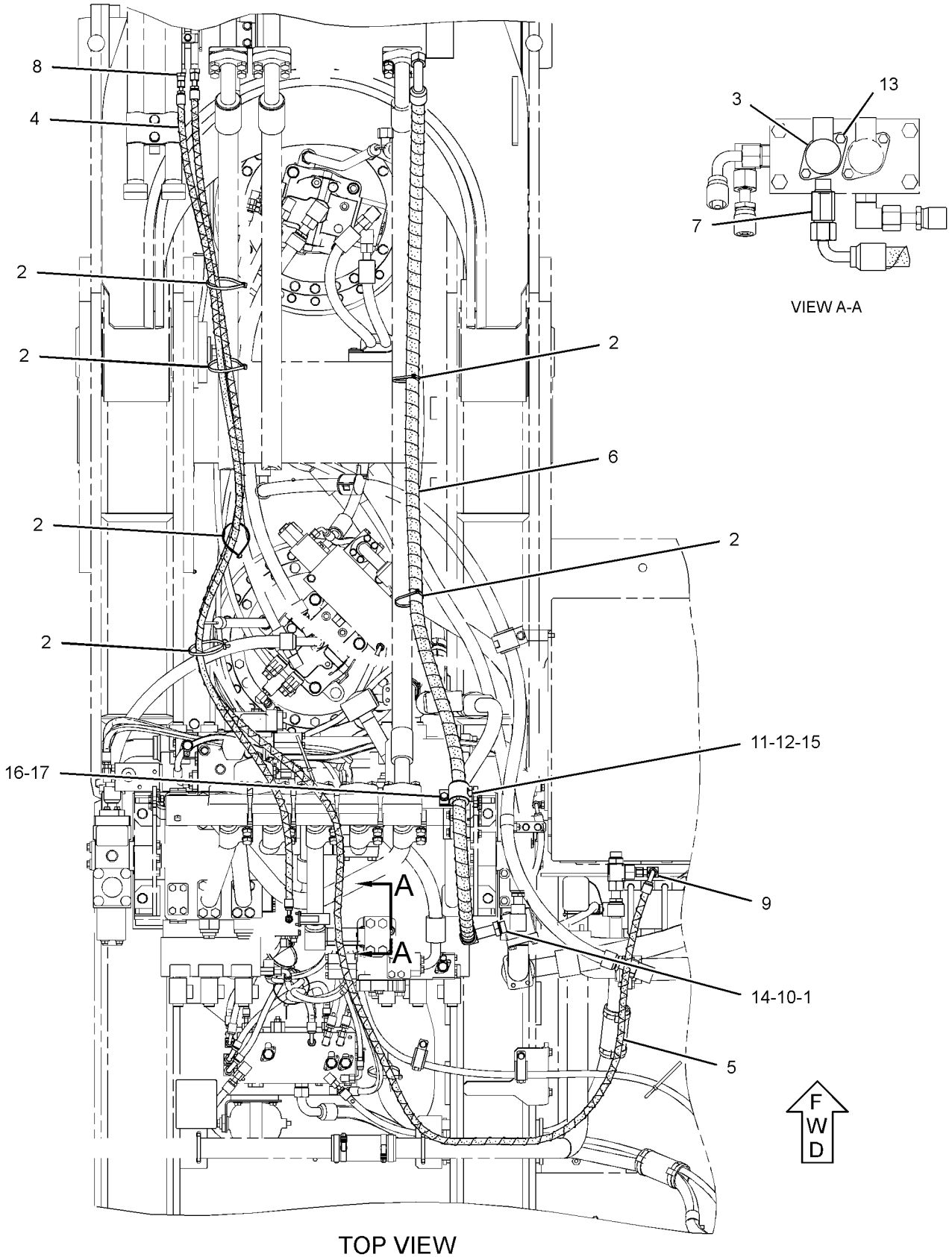

TOP VIEW

GRAPHIC #1 **<END>** g02177855

HYDRAULIC SYSTEM

338-6161 LINES GP-PUMP

S/N: WAP1-UP

PART OF 297-0223 HYDRAULIC AR

SMCS-5057 **i03906574**

NOTE	REF NO	GRAPHIC REF	PART NUMBER	QTY	PART NAME 1 2 3 4 5 6 (PRODUCT LEVEL)	SEE PAGE
	1	2	**3E-7424**	4	CLAMP-HOSE	
	2	1	**4I-5732**	1	COVER	
	3	1	**5I-8494**	1	SUPPORT AS	
I	4	2	**113-6518**	1	HOSE AS	
	5	1	**138-5708**	4	CLIP-HALF	
	6	1	**138-5709**	2	GROMMET	
	7	2	**148-4964**	1	HOSE	
	8	2	**173-4955**	1	SUPPORT AS	
	9	2	**173-4974**	1	FLANGE	
	10	1	**187-6754**	2	PLATE	
	11	1	**199-1996**	4	GROMMET	
	12	1	**207-6467**	1	PIPE AS	
	13	1	**227-0632**	4	GROMMET	
	14	2	**227-0633**	2	SUPPORT AS	
	15	1	**227-0636**	2	CLIP	
	16	1	**227-0637**	2	CLIP	
	17	1	**236-3210**	4	CLIP	
	18	1	**236-3211**	4	PLATE	
	19	2	**255-1950**	1	TUBE AS	
	20	2	**314-8099**	1	TUBE AS	
	21	1	**317-4858**	1	BLOCK	
	22	1	**319-9778**	1	SUPPORT AS	
I	23	1	**338-6144**	1	HOSE AS	
I	24	1	**338-6145**	1	HOSE AS	
I	25	1	**338-6146**	1	HOSE AS	
I	26	1	**338-6147**	1	HOSE AS	
I	27	1	**347-1206**	2	HOSE AS	
	28	1,2	**354-4460**	2	SUPPORT AS	
	29	1	**356-9228**	1	BLOCK	
M	30	2	**096-4885**	2	LOCKNUT (M16X2-THD)	
M	31	1	**099-0169**	4	BOLT (M16X2X55-MM)	
	32	2	*148-8407*	1	PLUG AS	
		2	**3J-1907**	1	SEAL-O-RING	
		2	**9S-4191**	1	PLUG-O-RING	
	33	1,2	*148-8411*	6	PLUG AS	
					(EACH INCLUDES)	
		1,2	**3K-0360**	1	SEAL-O-RING	
		1,2	**9S-4185**	1	PLUG-O-RING	
	34	2	*150-3073*	2	PLUG AS	
					(EACH INCLUDES)	
		2	**5K-9090**	1	SEAL-O-RING	
		2	**6V-9512**	1	PLUG (1-7/16-12-THD)	
	35	2	*164-5616*	2	PLUG AS	
					(EACH INCLUDES)	
		2	**2S-4078**	1	SEAL-O-RING	
		2	**9S-6130**	1	PLUG	
	36	2	**190-6064**	1	U-BOLT	
	37	1	**1P-3703**	2	SEAL-RECTANGULAR	
	38	1	**1P-3704**	3	SEAL-RECTANGULAR	
	39	1	**1P-3705**	7	SEAL-RECTANGULAR	
	40	1	**1P-5767**	2	FLANGE-HALF	
	41	1,2	**1P-7016**	4	FLANGE-HALF	
	42	2	**2H-3934**	2	SEAL-O-RING	
	43	1	**4J-0527**	1	SEAL-O-RING	
	44	1,2	**5P-8077**	14	FLANGE-HALF	
	45	1	**6F-4718**	1	SEAL-O-RING	

338-6161 **LINES GP-PUMP** *(contd.)* **i03906574**

NOTE	REF NO	GRAPHIC REF	PART NUMBER	QTY	PART NAME 1 2 3 4 5 6 (PRODUCT LEVEL)	SEE PAGE
	46	2	**6V-0400**	4	FLANGE-HALF	
	47	1	**6V-1574**	2	GROMMET	
M	48	2	**7X-2475**	8	BOLT (M16X2X130-MM)	
M	49	2	**7X-2553**	6	BOLT (M16X2X40-MM)	
M	50	2	**8T-0439**	4	BOLT-SOCKET HEAD (M16X2X30-MM)	
M	51	1,2	**8T-2393**	8	BOLT-SOCKET HEAD (M16X2X60-MM)	
	52	1	**8T-4121**	20	WASHER-HARD (11X21X2.5-MM THK)	
M	53	1,2	**8T-4139**	6	BOLT (M12X1.75X30-MM)	
M	54	1,2	**8T-4140**	28	BOLT (M16X2X60-MM)	
M	55	1	**8T-4183**	2	BOLT (M12X1.75X40-MM)	
M	56	2	**8T-4184**	8	BOLT (M12X1.75X45-MM)	
M	57	2	**8T-4192**	4	BOLT (M12X1.75X25-MM)	
M	58	2	**8T-4193**	6	BOLT (M16X2X50-MM)	
M	59	1	**8T-4194**	4	BOLT (M12X1.75X50-MM)	
M	60	1	**8T-4195**	16	BOLT (M10X1.5X30-MM)	
M	61	1	**8T-4196**	4	BOLT (M10X1.5X35-MM)	
	62	1,2	**8T-4223**	24	WASHER-HARD (13.5X25.5X3-MM THK)	
M	63	1	**8T-4956**	4	BOLT (M12X1.75X35-MM)	
M	64	1	**8T-7338**	4	BOLT (M16X2X45-MM)	
	65	1	**9M-2092**	2	SEAL-O-RING	
	66	1,2	**9X-8257**	62	WASHER (17.5X30X3.5-MM THK)	

I-REFER TO HYDRAULIC INFORMATION SYSTEM
M-METRIC PART

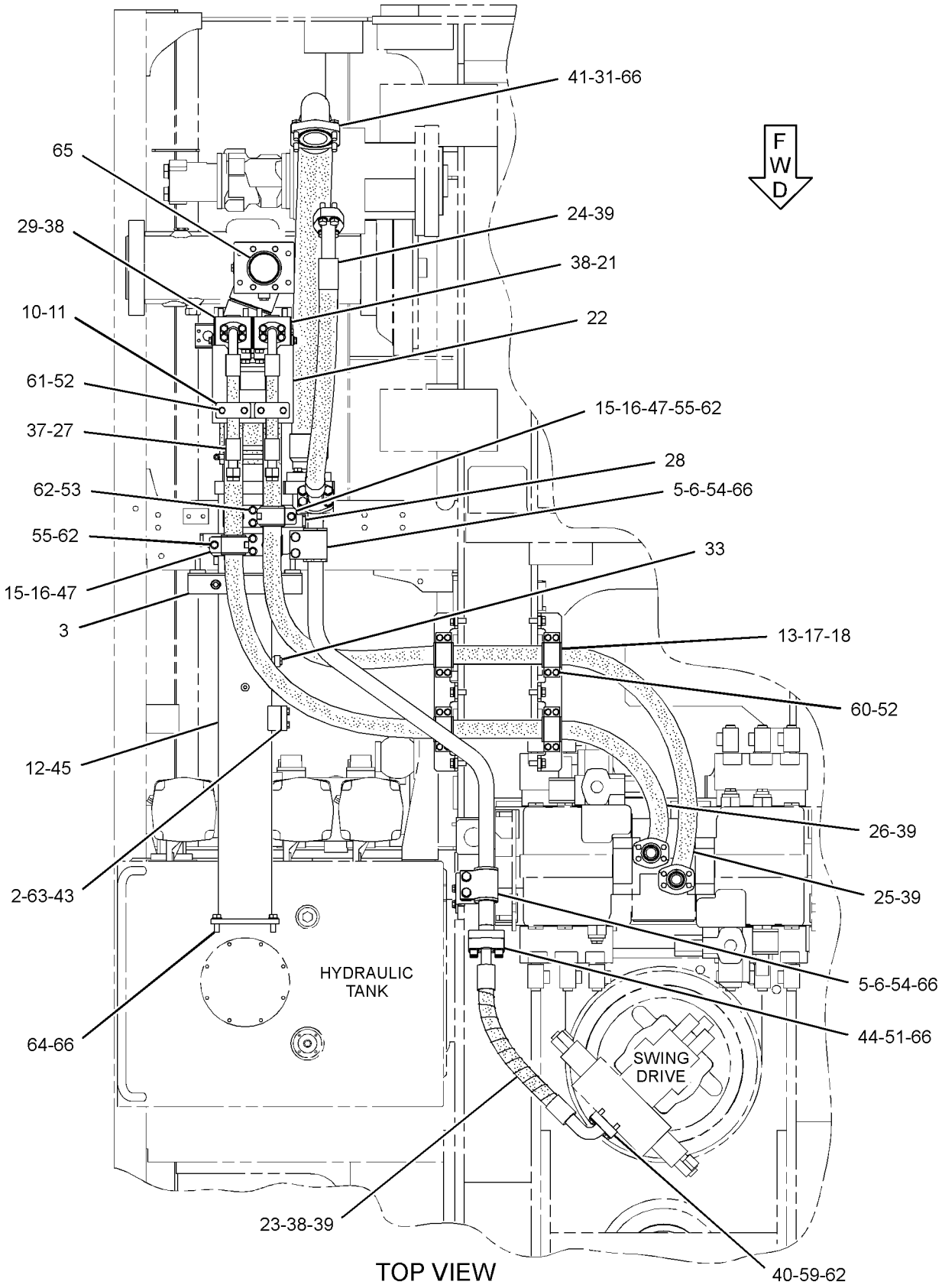

GRAPHIC #1 g02180238

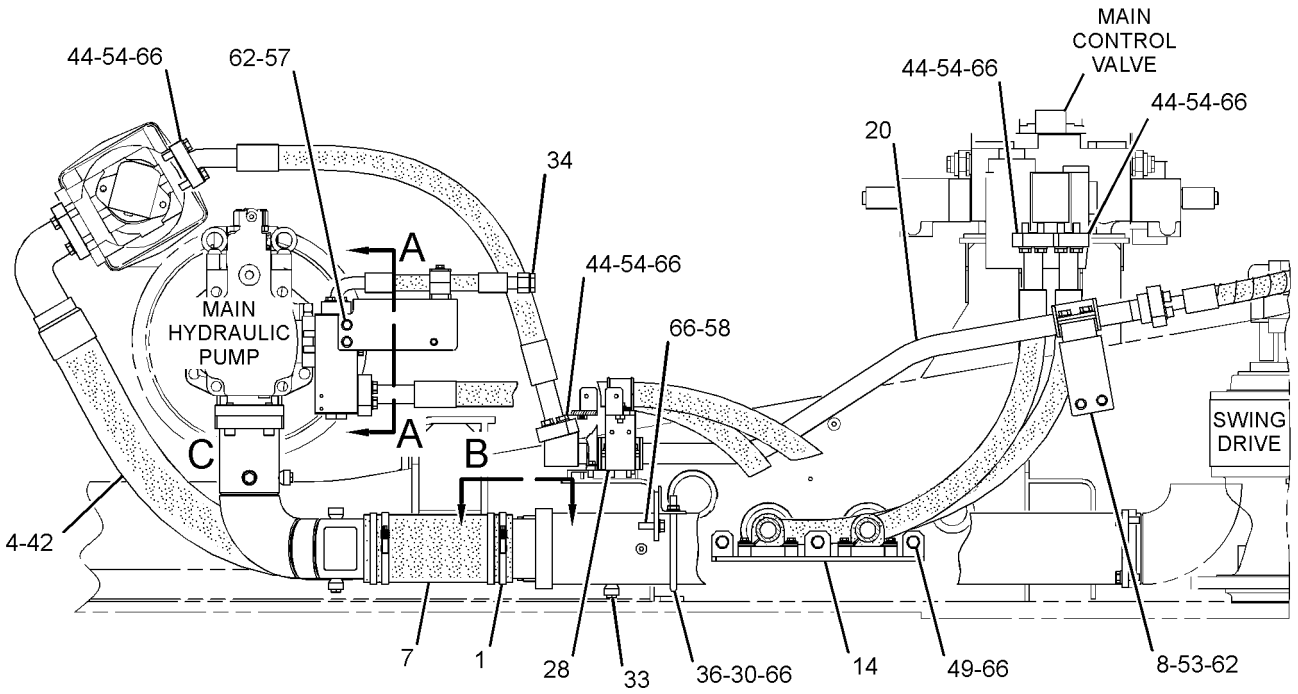

RIGHT SIDE VIEW

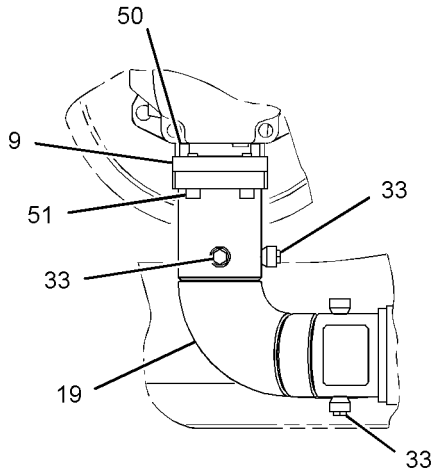

VIEW OF AREA C

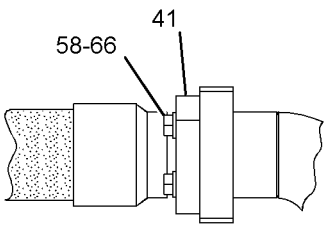

VIEW B

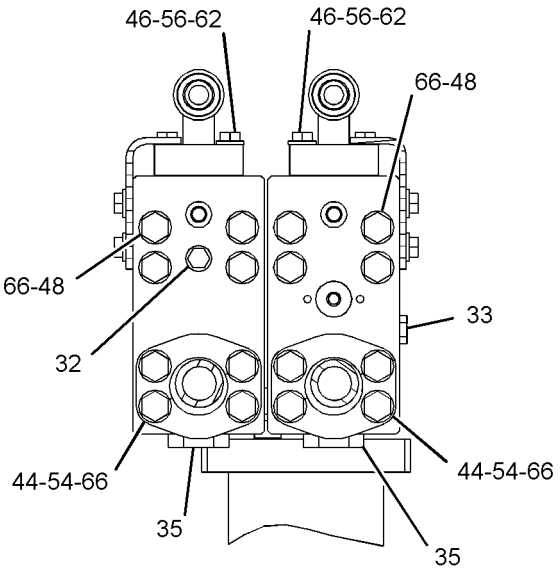

SECTION A-A

GRAPHIC #2 **<END>** g02181236

HYDRAULIC SYSTEM

296-7115 LINES GP-REAR ATTACHMENT

S/N: WAP1-UP
PART OF 294-1295 COUNTERWEIGHT AR
AN ATTACHMENT

SMCS-5409 **i04026016**

NOTE	REF NO	GRAPHIC REF	PART NUMBER	QTY	PART NAME 1 2 3 4 5 6 (PRODUCT LEVEL)	SEE PAGE
	1	1	**4I-6188**	2	VALVE AS-MANUAL	
					(EACH INCLUDES)	
		1	**134-7113**	1	HANDLE	
M		1	**134-7114**	1	BOLT-SPECIAL	
		1	**134-7115**	1	PLATE	
		1	**195-0090**	1	PLATE-DETENT	
	2	1	**4I-9522**	2	BAND-MARKER (YELLOW, L2)	
Y	3	1	**4T-1860**	1	VALVE GP-SHUTTLE	767
I	4	1	**5I-4390**	1	HOSE AS	
	5	1	**7I-0970**	2	SUPPORT	
	6	1	**7I-0972**	2	BAR	
	7	1	**7K-1181**	4	STRAP-CABLE	
	8	2	**081-6344**	1	SPACER (13.3X21.3X25-MM THK)	
	9	1	**087-4962**	1	LINK	
Y	10	2	**087-5087**	1	VALVE GP-CHECK (PILOT OPERATED)	688
I	11	1	**104-8768**	1	HOSE AS	
M	12	2	**105-3483**	3	BOLT-SOCKET HEAD (M10X1.5X70-MM)	
I	13	1	**107-1430**	1	HOSE AS	
I	14	1	**113-6738**	1	HOSE AS	
I	15	2	**113-6758**	1	HOSE AS	
	16	1	**119-2379**	1	SUPPORT AS	
Y	17	2	**123-2514**	1	VALVE GP-PILOT (COUNTERWEIGHT)	747
Y	18	1	**123-2515**	1	VALVE GP-COUNTERWEIGHT CONTROL	726
I	19	1	**129-5904**	1	HOSE AS	
I	20	2	**148-4933**	1	HOSE AS	
	21	2	**148-4934**	1	HOSE AS	
	22	2	**148-4935**	1	HOSE AS	
	23	2	**148-4939**	1	SUPPORT AS	
	24	1	**148-4944**	1	SUPPORT AS	
	25	2	**152-9372**	1	COUPLING AS	
	26	1	**168-9700**	1	HANDLE	
	27	2	**176-4714**	1	ELBOW	
	28	1	**176-4715**	1	SUPPORT AS	
	29	2	**176-4719**	1	FLANGE	
I	30	1	**236-2852**	1	HOSE AS	
	31	1	**255-1957**	1	SUPPORT AS	
I	32	1	**307-5029**	1	HOSE AS	
I	33	2	**347-1209**	1	HOSE AS	
I	34	1	**347-1210**	1	HOSE AS	
	35	1	**095-0840**	3	PIN-COTTER	
	36	1	**095-1310**	3	PIN-CLEVIS	
	37	2	*148-8336*	1	CONNECTOR AS	
		2	**3J-1907**	1	SEAL-O-RING	
		2	**6V-8397**	1	SEAL-O-RING	
		2	**6V-8636**	1	CONNECTOR	
	38	1	*148-8340*	1	CONNECTOR AS	
		1	**3K-0360**	1	SEAL-O-RING	
		1	**6V-8398**	1	SEAL-O-RING	
		1	**6V-8639**	1	CONNECTOR	
	39	1,2	*148-8345*	3	CONNECTOR AS	
					(EACH INCLUDES)	
		1,2	**2M-9780**	1	SEAL-O-RING	
		1,2	**6V-8398**	1	SEAL-O-RING	
		1,2	**6V-8638**	1	CONNECTOR	
	40	2	*148-8361*	1	ELBOW AS	

296-7115 LINES GP-REAR ATTACHMENT *(contd.)* i04026016

NOTE	REF NO	GRAPHIC REF	PART NUMBER	QTY	PART NAME 1 2 3 4 5 6 (PRODUCT LEVEL)	SEE PAGE
		2	**3J-7354**	1	SEAL-O-RING	
		2	**6V-8397**	1	SEAL-O-RING	
		2	**6V-9200**	1	ELBOW	
	41	1	*148-8364*	4	ELBOW AS	
					(EACH INCLUDES)	
		1	**3K-0360**	1	SEAL-O-RING	
		1	**6V-8398**	1	SEAL-O-RING	
		1	**6V-8625**	1	ELBOW	
	42	2	*148-8365*	1	ELBOW AS	
		2	**3J-1907**	1	SEAL-O-RING	
		2	**6V-8398**	1	SEAL-O-RING	
		2	**8T-6876**	1	ELBOW	
	43	1,2	*148-8367*	3	ELBOW AS	
					(EACH INCLUDES)	
		1,2	**6V-8397**	1	SEAL-O-RING	
		1,2	**6V-9850**	1	ELBOW	
	44	1,2	*148-8370*	2	ELBOW AS	
					(EACH INCLUDES)	
		1,2	**6V-8398**	1	SEAL-O-RING	
		1,2	**6V-9851**	1	ELBOW	
	45	1,2	*148-8372*	2	ELBOW AS	
					(EACH INCLUDES)	
		1,2	**2M-9780**	1	SEAL-O-RING	
		1,2	**6V-8398**	1	SEAL-O-RING	
		1,2	**6V-8721**	1	ELBOW	
	46	1	*148-8378*	1	ELBOW AS	
		1	**3J-1907**	1	SEAL-O-RING	
		1	**6V-8397**	1	SEAL-O-RING	
		1	**6V-8724**	1	ELBOW	
	47	2	*148-8391*	2	ELBOW AS	
					(EACH INCLUDES)	
		2	**2S-4078**	1	SEAL-O-RING	
		2	**5K-9090**	1	SEAL-O-RING	
		2	**8T-8987**	1	ELBOW	
	48	2	*148-8407*	1	PLUG AS	
		2	**3J-1907**	1	SEAL-O-RING	
		2	**9S-4191**	1	PLUG-O-RING	
	49	2	*148-8412*	1	REDUCER AS	
		2	**6V-8398**	1	SEAL-O-RING	
		2	**6V-8944**	1	REDUCER-O-RING	
	50	1,2	*148-8415*	2	REDUCER AS	
					(EACH INCLUDES)	
		1,2	**6V-8397**	1	SEAL-O-RING	
		1,2	**6V-8936**	1	REDUCER	
	51	1	*148-8436*	1	TEE AS	
		1	**3K-0360**	1	SEAL-O-RING	
		1	**6V-8398**	2	SEAL-O-RING	
		1	**6V-8775**	1	TEE-FACE SEAL	
	52	2	*148-8444*	2	TEE AS-SWIVEL	
					(EACH INCLUDES)	
		2	**6V-8398**	2	SEAL-O-RING	
		2	**6V-9837**	1	TEE-SWIVEL	
	53	1	*150-3036*	1	ELBOW AS	
		1	**3J-1907**	1	SEAL-O-RING	
		1	**6V-8397**	1	SEAL-O-RING	
		1	**8T-1905**	1	ELBOW	
	54	1	*150-4037*	1	TEE AS	
		1	**6V-8398**	2	SEAL-O-RING	
		1	**6V-9844**	1	TEE-SWIVEL	

296-7115 **LINES GP-REAR ATTACHMENT** *(contd.)* **i04026016**

NOTE	REF NO	GRAPHIC REF	PART NUMBER	QTY	PART NAME 1 2 3 4 5 6 (PRODUCT LEVEL)	SEE PAGE
	55	1	*164-5589*	1	CONNECTOR AS	
		1	**3J-1907**	1	SEAL-O-RING	
		1	**6V-8397**	1	SEAL-O-RING	
		1	**8C-0597**	1	CONNECTOR	
	56	1	*164-5605*	2	CONNECTOR AS	
					(EACH INCLUDES)	
		1	**3K-0360**	1	SEAL-O-RING	
		1	**6V-8397**	1	SEAL-O-RING	
		1	**8T-0076**	1	CONNECTOR	
	57	2	**1P-3704**	1	SEAL-RECTANGULAR	
	58	1	**1S-0994**	2	CLIP	
	59	2	**4J-0519**	1	SEAL-O-RING	
	60	1	**4K-8864**	2	CLIP	
	61	2	**5P-4325**	2	CLIP	
	62	2	**6D-4636**	1	CLIP	
M	63	1	**6V-3938**	3	BOLT (M10X1.5X20-MM)	
	64	2	**6V-8398**	1	SEAL-O-RING	
	65	2	**6V-9746**	1	SEAL-O-RING	
	66	1	**7Y-8165**	1	GROMMET	
	67	1,2	**8T-4121**	19	WASHER-HARD (11X21X2.5-MM THK)	
M	68	1	**8T-4136**	2	BOLT (M10X1.5X25-MM)	
M	69	1,2	**8T-4137**	5	BOLT (M10X1.5X20-MM)	
M	70	1	**8T-4138**	4	BOLT (M6X1X20-MM)	
M	71	2	**8T-4139**	4	BOLT (M12X1.75X30-MM)	
M	72	2	**8T-4176**	4	BOLT (M12X1.75X90-MM)	
M	73	2	**8T-4194**	1	BOLT (M12X1.75X50-MM)	
M	74	2	**8T-4195**	4	BOLT (M10X1.5X30-MM)	
M	75	1	**8T-4196**	8	BOLT (M10X1.5X35-MM)	
M	76	2	**8T-4198**	2	BOLT (M10X1.5X100-MM)	
	77	2	**8T-4223**	1	WASHER-HARD (13.5X25.5X3-MM THK)	
	78	1	**9X-6165**	4	WASHER (6.5X22X2.5-MM THK)	
	79	2	**9X-6579**	1	NUT-ORIFICE (7/16-12-THD)	
	80	1	**9X-8256**	3	WASHER (6.6X12X2-MM THK)	

I-REFER TO HYDRAULIC INFORMATION SYSTEM
M-METRIC PART
Y-SEPARATE ILLUSTRATION

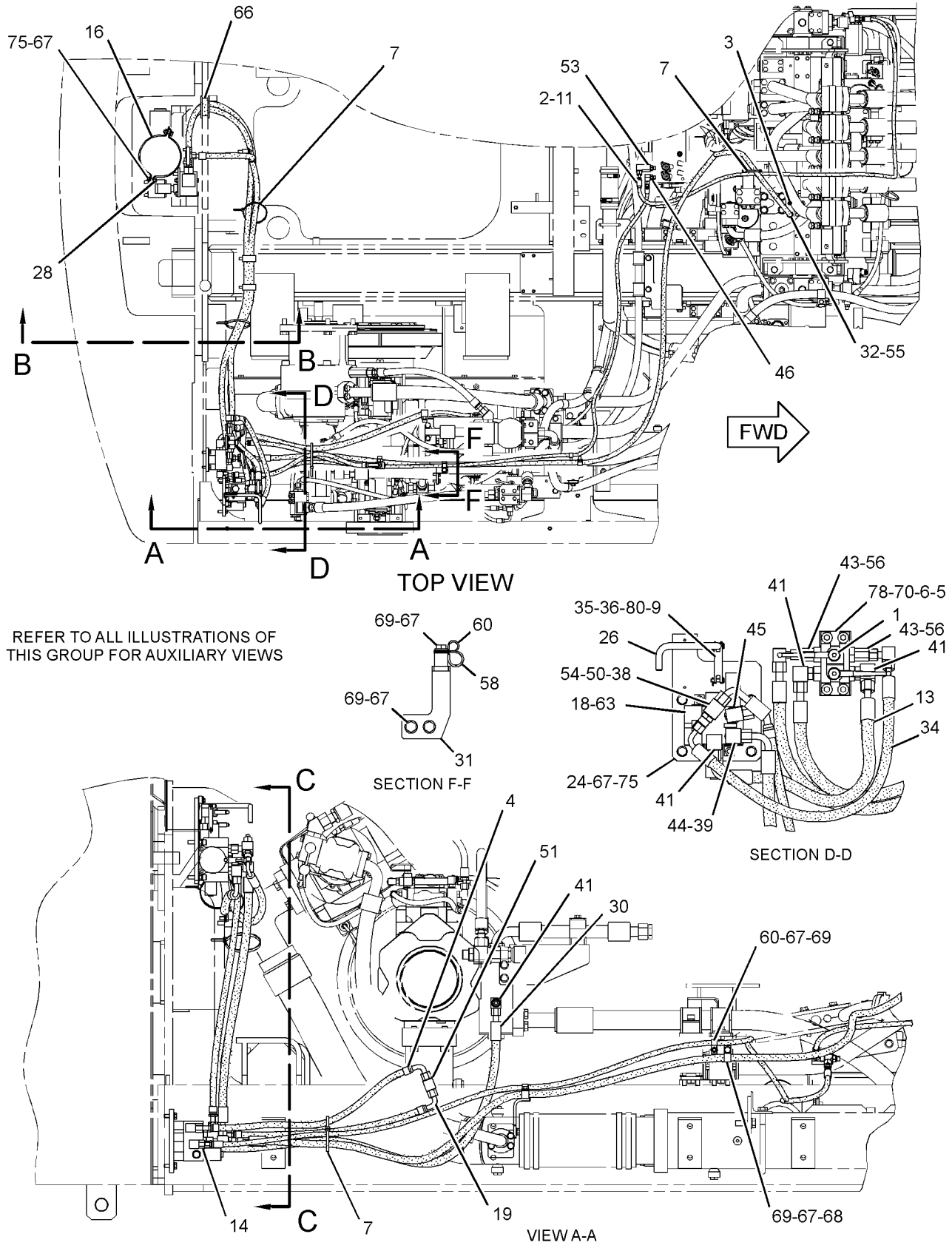

GRAPHIC #1

g02177670

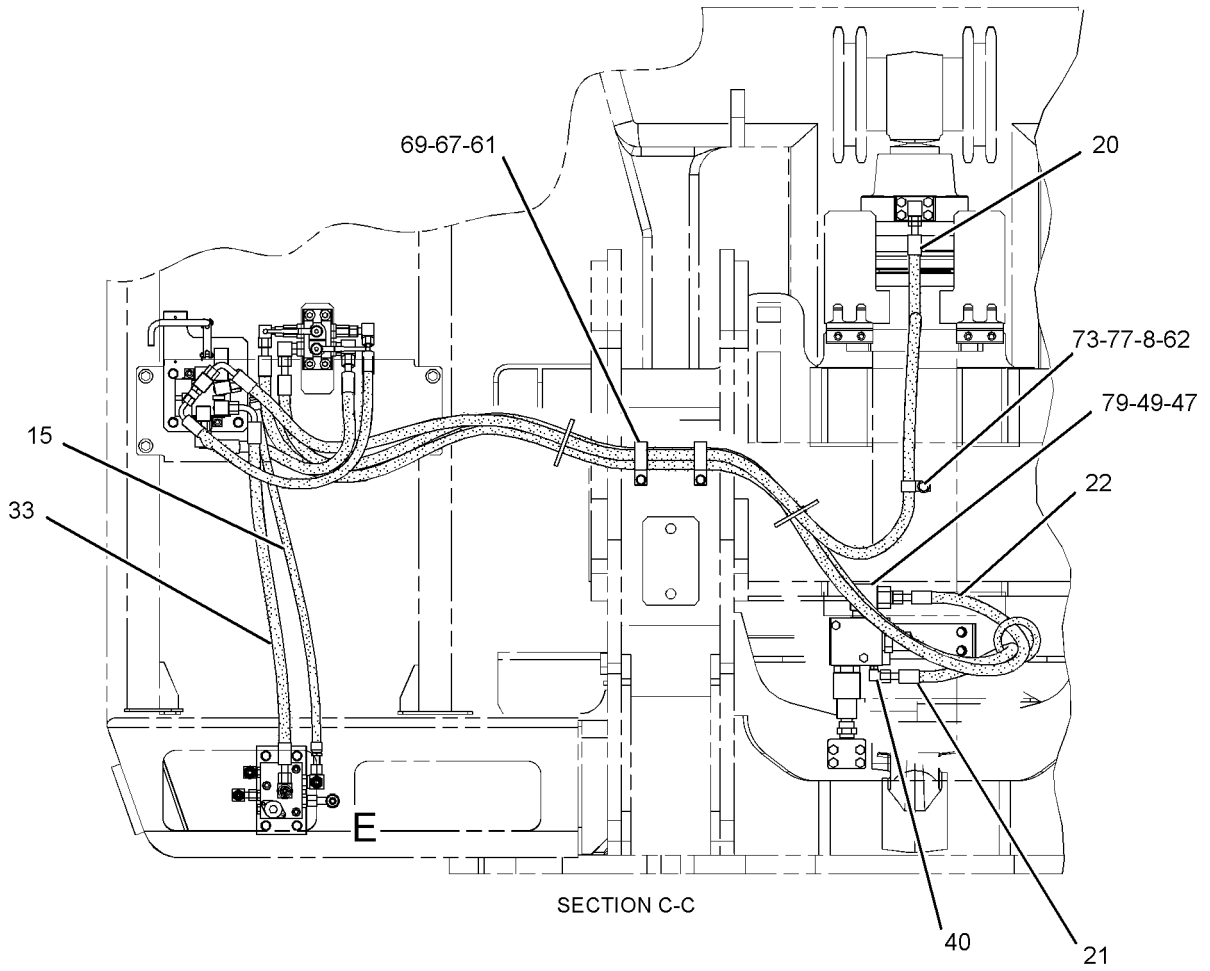

SECTION C-C

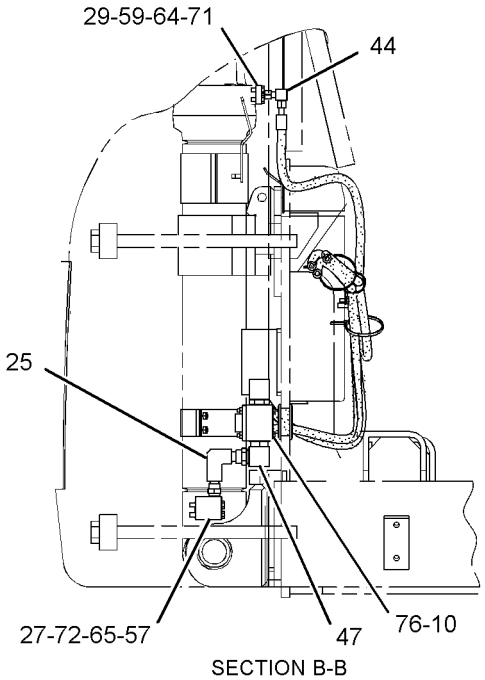

SECTION B-B

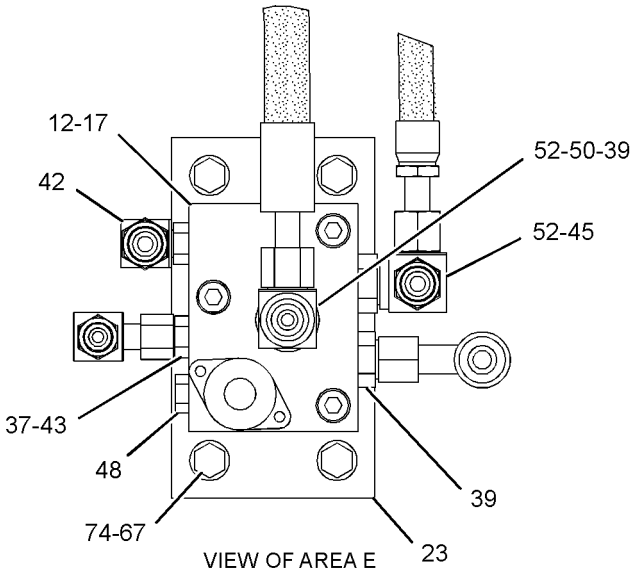

VIEW OF AREA E

GRAPHIC #2 **<END>** g02177671

HYDRAULIC SYSTEM

296-7107 LINES GP-RETURN & FILTER

S/N: WAP1-UP

PART OF 297-0223 HYDRAULIC AR

SMCS-5057 **i03906419**

NOTE	REF NO	GRAPHIC REF	PART NUMBER	QTY	PART NAME 1 2 3 4 5 6 (PRODUCT LEVEL)	SEE PAGE
	1	1	**7K-1181**	1	STRAP-CABLE	
I	2	2	**7Y-4154**	1	HOSE AS	
	3	2	**087-5729**	1	BLOCK	
M	4	2	**101-7398**	4	BOLT-SOCKET HEAD (M10X1.5X40-MM)	
	5	1	**144-0367**	8	CLAMP-HOSE	
	6	2	**148-4787**	1	BLOCK	
	7	2	**152-9521**	2	FLANGE	
	8	2	**152-9522**	2	COVER	
	9	1	**173-4929**	1	PIPE AS	
	10	2	**173-4939**	2	FLANGE	
	11	2	**173-4991**	1	HOSE AS	
I	12	1	**187-5870**	1	HOSE AS	
	13	2	**192-6815**	2	PIPE AS	
I	14	2	**194-0248**	1	HOSE AS	
Y	15	1	**201-9381**	1	VALVE GP-CHECK	692
Y	16	2	**201-9382**	1	VALVE GP-CHECK	694
I	17	1	**204-8298**	1	HOSE AS	
	18	1	**204-8334**	1	SUPPORT AS	
	19	2	**212-5452**	2	HOSE AS	
	20	2	**212-5473**	1	BLOCK	
	21	2	**212-5595**	8	SPACER (13.5X30X6-MM THK)	
	22	2	**218-1038**	1	FLANGE	
	23	1	**218-1042**	1	HOSE AS	
E		1	**145-8495**		GUARD (69-CM)	
	24	1	**227-0428**	2	HOSE	
	25	1	**227-0613**	1	TUBE AS	
	26	1	*250-1439*	1	ADAPTER AS	
		1	**3D-2824**	1	SEAL-O-RING	
		1	**117-0473**	1	ADAPTER	
I	27	2	**292-7244**	1	HOSE AS	
	28	1	**302-3176**	1	SUPPORT	
	29	1	**302-3260**	1	PIPE AS	
	30	1	**302-3263**	1	PIPE AS	
I	31	1	**302-3265**	1	HOSE AS	
	32	1	**302-3319**	1	PIPE AS	
	33	2	**333-7195**	1	SUPPORT AS	
	34	2	**333-7197**	1	SUPPORT AS	
Y	35	1	**335-0538**	1	ACCUMULATOR GP	461
I	36	1	**337-2788**	1	HOSE AS	
	37	1	**337-2791**	1	HOSE AS	
	38	2	*338-5994*	1	TEE AS	
		2	**6V-9746**	1	SEAL-O-RING	
		2	**7M-8485**	1	SEAL-O-RING	
		2	**338-5995**	1	TEE	
I	39	1	**342-4124**	1	HOSE AS	
	40	2	**356-9268**	1	SUPPORT AS	
M	41	2	**101-7402**	8	BOLT-SOCKET HEAD (M12X1.75X30-MM)	
M	42	2	**108-1781**	8	BOLT-SOCKET HEAD (M12X1.75X35-MM)	
	43	2	*148-8335*	1	CONNECTOR AS	
		2	**5K-9090**	1	SEAL-O-RING	
		2	**6V-8635**	1	CONNECTOR	
		2	**7M-8485**	1	SEAL-O-RING	
	44	1,2	*148-8340*	2	CONNECTOR AS	
					(EACH INCLUDES)	
		1,2	**3K-0360**	1	SEAL-O-RING	
		1,2	**6V-8398**	1	SEAL-O-RING	

HYDRAULIC SYSTEM

296-7107 **LINES GP-RETURN & FILTER** *(contd.)* **i03906419**

NOTE	REF NO	GRAPHIC REF	PART NUMBER	QTY	PART NAME 1 2 3 4 5 6 (PRODUCT LEVEL)	SEE PAGE
		1,2	**6V-8639**	1	CONNECTOR	
	45	1	*148-8352*	1	ELBOW AS	
		1	**5K-9090**	1	SEAL-O-RING	
		1	**6V-9854**	1	ELBOW	
	46	1	*148-8357*	1	ELBOW AS	
		1	**5K-9090**	1	SEAL-O-RING	
		1	**6V-9008**	1	ELBOW	
		1	**7M-8485**	1	SEAL-O-RING	
	47	1	*148-8359*	2	ELBOW AS	
					(EACH INCLUDES)	
		1	**3K-0360**	1	SEAL-O-RING	
		1	**6V-9746**	1	SEAL-O-RING	
		1	**6V-9877**	1	ELBOW	
	48	1,2	*148-8364*	2	ELBOW AS	
					(EACH INCLUDES)	
		1,2	**3K-0360**	1	SEAL-O-RING	
		1,2	**6V-8398**	1	SEAL-O-RING	
		1,2	**6V-8625**	1	ELBOW	
	49	2	*148-8422*	1	TEE AS	
		2	**5K-9090**	1	SEAL-O-RING	
		2	**6V-9746**	1	SEAL-O-RING	
		2	**7M-8485**	1	SEAL-O-RING	
		2	**8T-6356**	1	TEE-O-RING PORT	
	50	2	*148-8429*	1	TEE AS	
		2	**5K-9090**	2	SEAL-O-RING	
		2	**6V-9840**	1	TEE-SWIVEL	
	51	2	*150-3072*	2	PLUG AS	
					(EACH INCLUDES)	
		2	**6V-8398**	1	SEAL-O-RING	
		2	**6V-9509**	1	PLUG (13/16-16-THD)	
	52	1	*164-5616*	1	PLUG AS	
		1	**2S-4078**	1	SEAL-O-RING	
		1	**9S-6130**	1	PLUG	
	53	1	*164-6858*	1	TEE AS	
		1	**5K-9090**	2	SEAL-O-RING	
		1	**6V-8778**	1	TEE-FACE SEAL	
		1	**7M-8485**	1	SEAL-O-RING	
	54	1,2	**1P-4578**	6	FLANGE-HALF	
	55	1,2	**1P-4582**	16	FLANGE-HALF	
	56	2	**4D-7388**	1	CLIP	
	57	1,2	**4J-0522**	5	SEAL-O-RING	
	58	2	**4J-0524**	1	SEAL-O-RING	
	59	1,2	**4J-0527**	16	SEAL-O-RING	
	60	1	**5P-1076**	4	WASHER-HARD (13.5X30X4-MM THK)	
	61	2	**5P-7468**	3	CLIP (SLOT)	
	62	2	**5P-7469**	3	CLIP (TAB)	
	63	2	**6D-4246**	4	CLIP	
	64	1,2	**6J-2680**	7	SEAL-O-RING	
M	65	1	**7X-2549**	4	BOLT (M12X1.75X100-MM)	
M	66	1	**7X-2550**	4	BOLT (M12X1.75X110-MM)	
M	67	1	**7Y-5247**	2	U-BOLT	
	68	1	**7Y-5289**	2	U-BOLT	
	69	1,2	**8T-4121**	23	WASHER-HARD (11X21X2.5-MM THK)	
M	70	1	**8T-4132**	4	NUT (M16X2-THD)	
M	71	1	**8T-4133**	4	NUT (M10X1.5-THD)	
M	72	2	**8T-4136**	3	BOLT (M10X1.5X25-MM)	
M	73	2	**8T-4137**	4	BOLT (M10X1.5X20-MM)	
M	74	1,2	**8T-4139**	7	BOLT (M12X1.75X30-MM)	
M	75	1,2	**8T-4183**	32	BOLT (M12X1.75X40-MM)	

296-7107 LINES GP-RETURN & FILTER *(contd.)* i03906419

NOTE	REF NO	GRAPHIC REF	PART NUMBER	QTY	PART NAME 1 2 3 4 5 6 (PRODUCT LEVEL)	SEE PAGE
M	76	1,2	**8T-4196**	12	BOLT (M10X1.5X35-MM)	
M	77	2	**8T-4198**	4	BOLT (M10X1.5X100-MM)	
	78	1,2	**8T-4223**	47	WASHER-HARD (13.5X25.5X3-MM THK)	
M	79	1,2	**8T-4956**	12	BOLT (M12X1.75X35-MM)	
M	80	2	**8T-5092**	8	BOLT (M12X1.75X150-MM)	
M	81	2	**8T-6868**	4	BOLT (M12X1.75X80-MM)	
	82	2	**8T-7087**	3	GROMMET	
	83	1	**9X-8257**	4	WASHER (17.5X30X3.5-MM THK)	

E-ORDER BY THE CENTIMETER
I-REFER TO HYDRAULIC INFORMATION SYSTEM
M-METRIC PART
Y-SEPARATE ILLUSTRATION

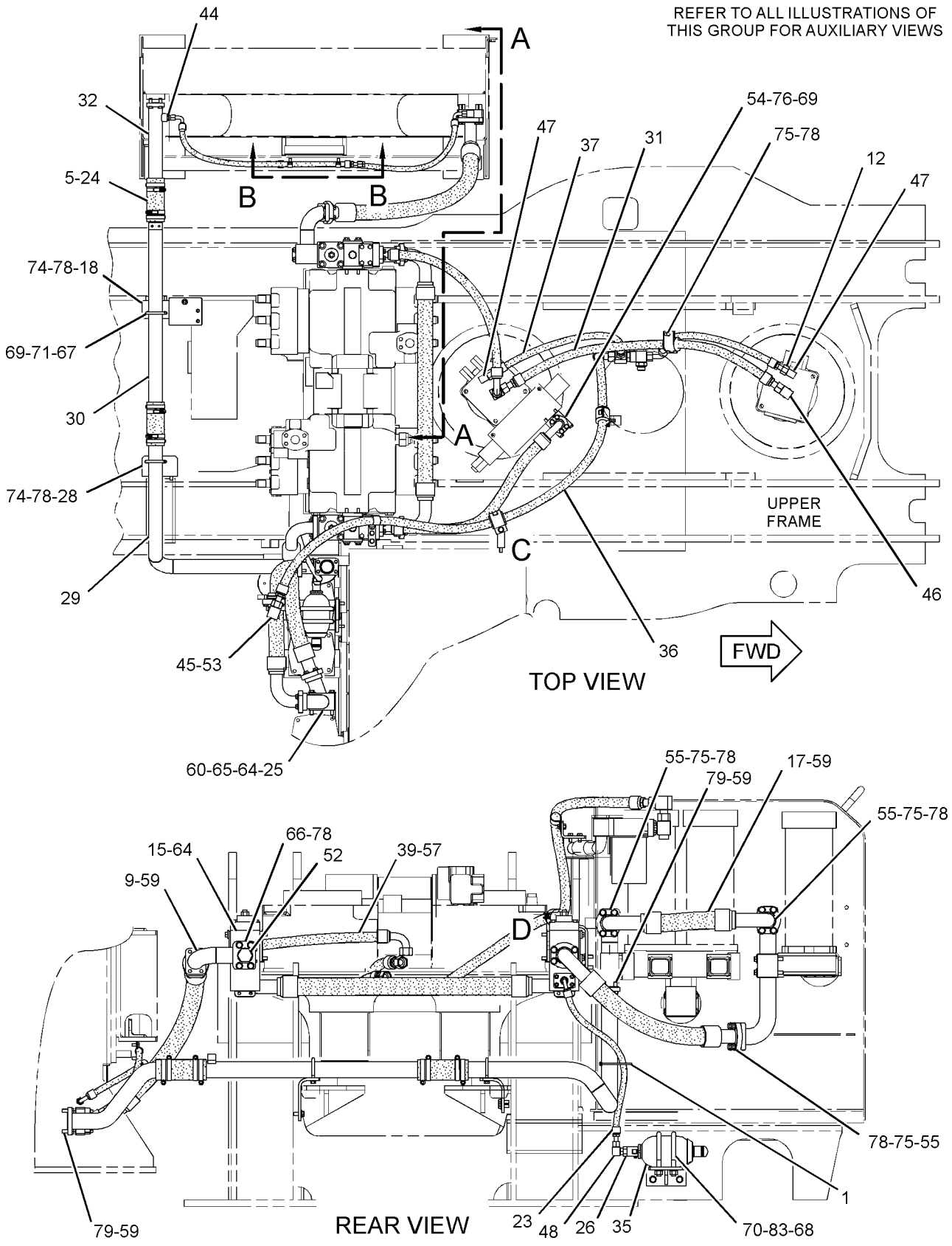

GRAPHIC #1 g02161087

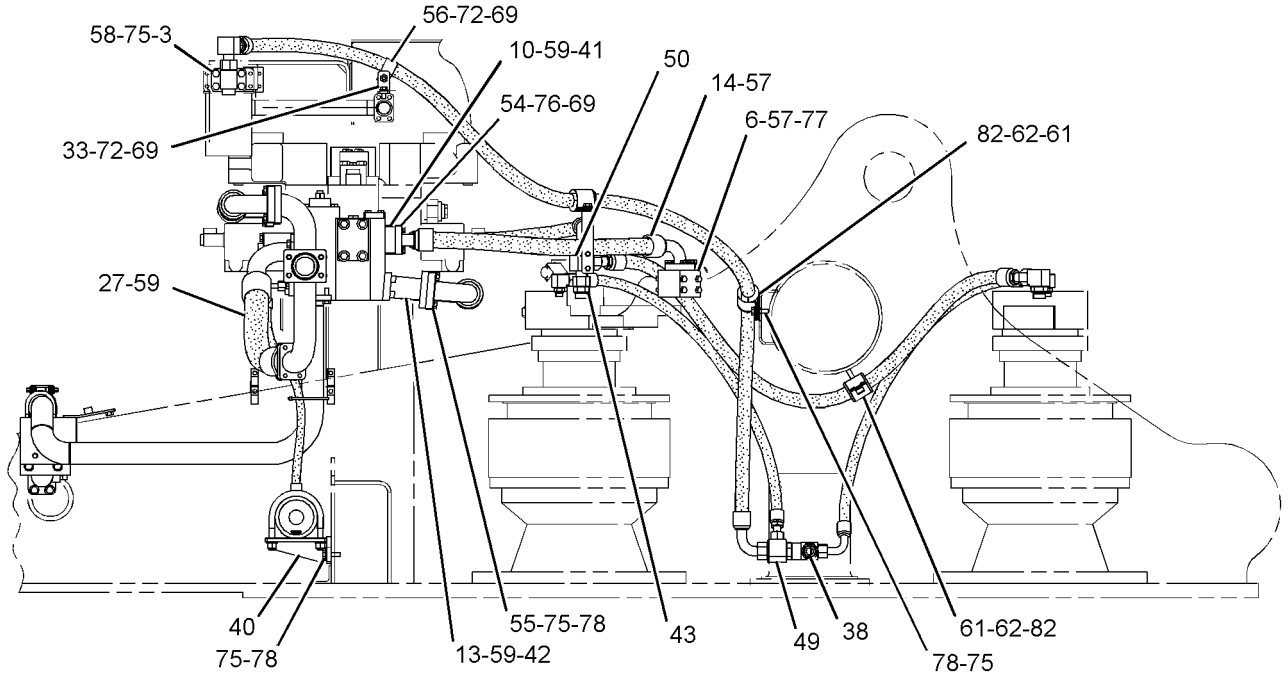

RIGHT SIDE VIEW

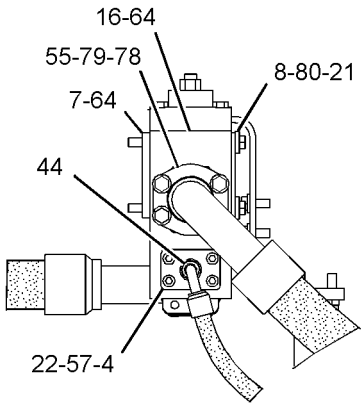

VIEW OF AREA D

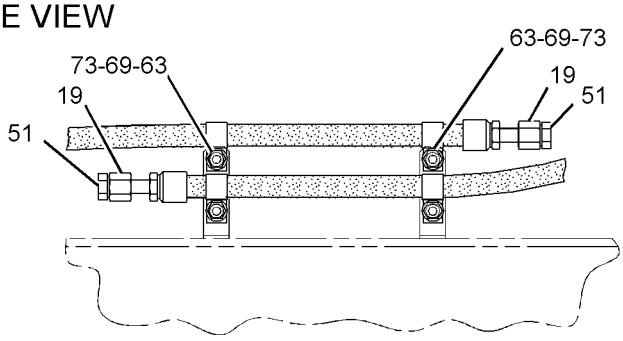

VIEW B-B

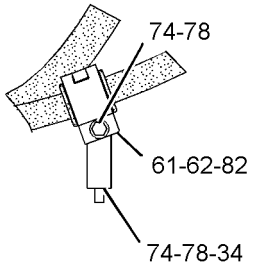

VIEW OF AREA C

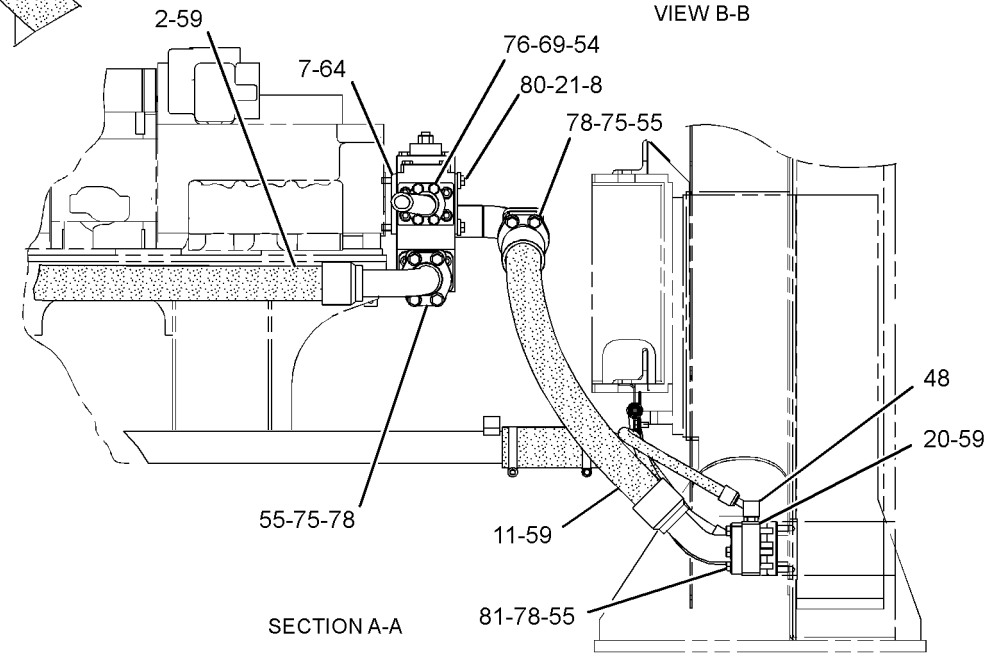

SECTION A-A

GRAPHIC #2 **<END>** g02161088

HYDRAULIC SYSTEM

338-6166 LINES GP-STICK

S/N: WAP1-UP
PART OF 303-2691, 319-9212 STICK AR-HOE
AN ATTACHMENT

SMCS-5057, 5458 **i03908772**

NOTE	REF NO	GRAPHIC REF	PART NUMBER	QTY	PART NAME 1 2 3 4 5 6 (PRODUCT LEVEL)	SEE PAGE
	1	1	**4I-0924**	1	FLANGE	
I	2	1	**338-6158**	2	HOSE AS	
	3	1	**1P-3705**	4	SEAL-RECTANGULAR	
	4	1	**1P-3706**	1	SEAL-RECTANGULAR	
	5	1	**5P-8077**	8	FLANGE-HALF	
M	6	1	**7X-2558**	4	BOLT (M16X2X150-MM)	
M	7	1	**8T-4140**	12	BOLT (M16X2X60-MM)	
	8	1	**9X-8257**	16	WASHER (17.5X30X3.5-MM THK)	

I-REFER TO HYDRAULIC INFORMATION SYSTEM
M-METRIC PART

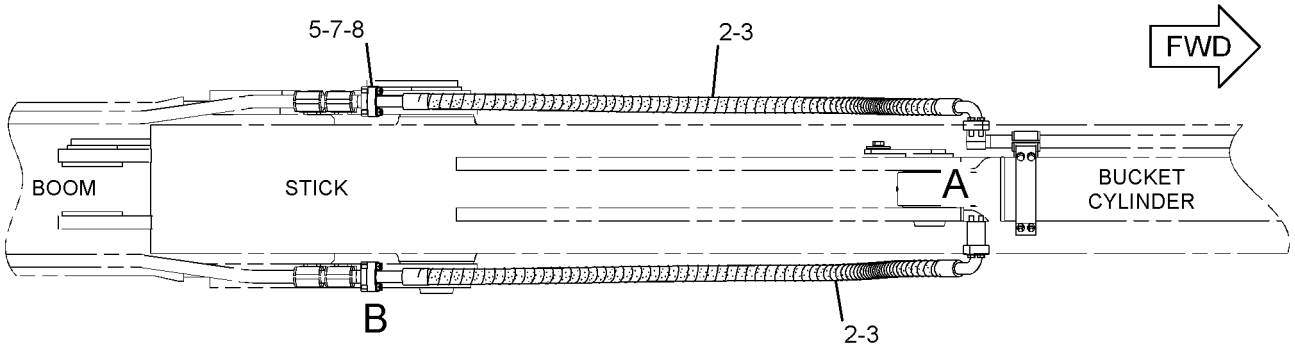

TOP VIEW

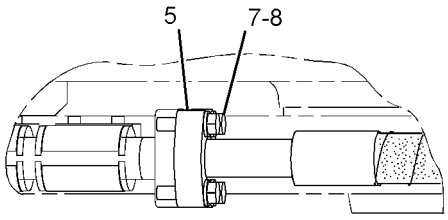

VIEW OF AREA B

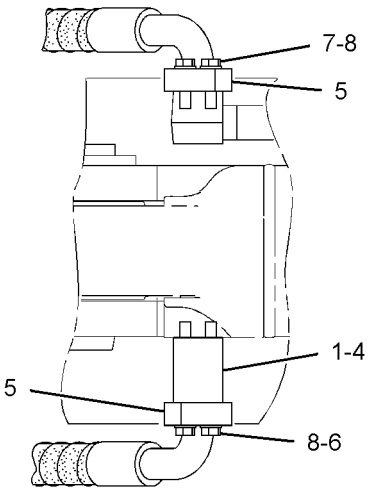

VIEW OF AREA A

GRAPHIC #1 **<END>** g02177411

HYDRAULIC SYSTEM

338-6167 LINES GP-STICK

S/N: WAP1-UP
PART OF 303-2692, 319-9213 STICK AR-HOE
AN ATTACHMENT

SMCS-5057, 5458 **i03908776**

NOTE	REF NO	GRAPHIC REF	PART NUMBER	QTY	PART NAME 1 2 3 4 5 6 (PRODUCT LEVEL)	SEE PAGE
	1	1	**4I-0924**	1	FLANGE	
I	2	1	**338-6159**	2	HOSE AS	
	3	1	**1P-3705**	4	SEAL-RECTANGULAR	
	4	1	**1P-3706**	1	SEAL-RECTANGULAR	
	5	1	**5P-8077**	8	FLANGE-HALF	
M	6	1	**7X-2558**	4	BOLT (M16X2X150-MM)	
M	7	1	**8T-4140**	12	BOLT (M16X2X60-MM)	
	8	1	**9X-8257**	16	WASHER (17.5X30X3.5-MM THK)	

I-REFER TO HYDRAULIC INFORMATION SYSTEM
M-METRIC PART

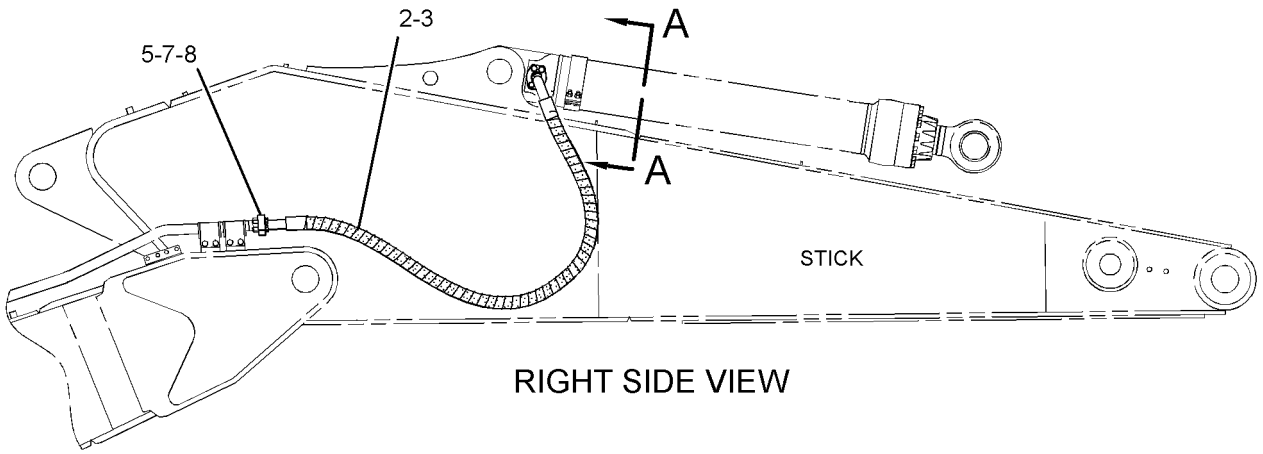

RIGHT SIDE VIEW

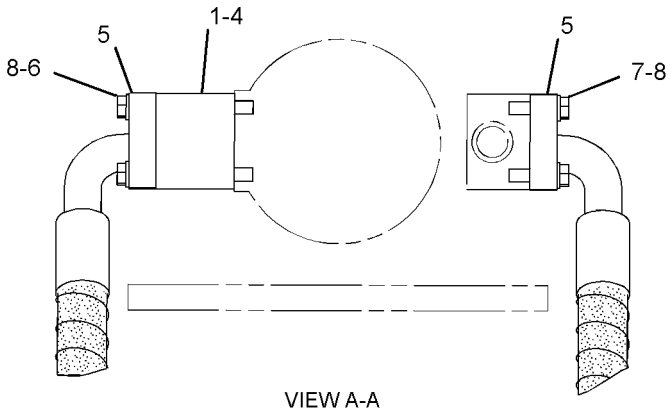

VIEW A-A

GRAPHIC #1 **<END>** g02180904

HYDRAULIC SYSTEM

338-6169 LINES GP-STICK

S/N: WAP1-UP
PART OF 303-2694, 303-2696 STICK AR-HOE
AN ATTACHMENT

SMCS-5057, 5458 **i03908782**

NOTE	REF NO	GRAPHIC REF	PART NUMBER	QTY	PART NAME 1 2 3 4 5 6 (PRODUCT LEVEL)	SEE PAGE
I	1	1	**338-6157**	2	HOSE AS	
	2	1	**1P-3705**	4	SEAL-RECTANGULAR	
	3	1	**5P-8077**	8	FLANGE-HALF	
M	4	1	**8T-4140**	16	BOLT (M16X2X60-MM)	
	5	1	**9X-8257**	16	WASHER (17.5X30X3.5-MM THK)	

I-REFER TO HYDRAULIC INFORMATION SYSTEM
M-METRIC PART

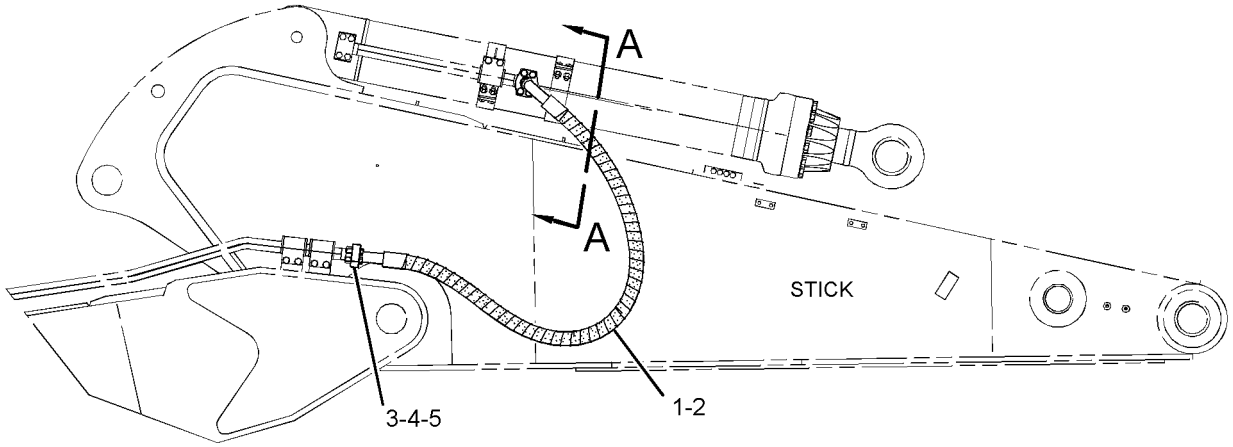

RIGHT SIDE VIEW

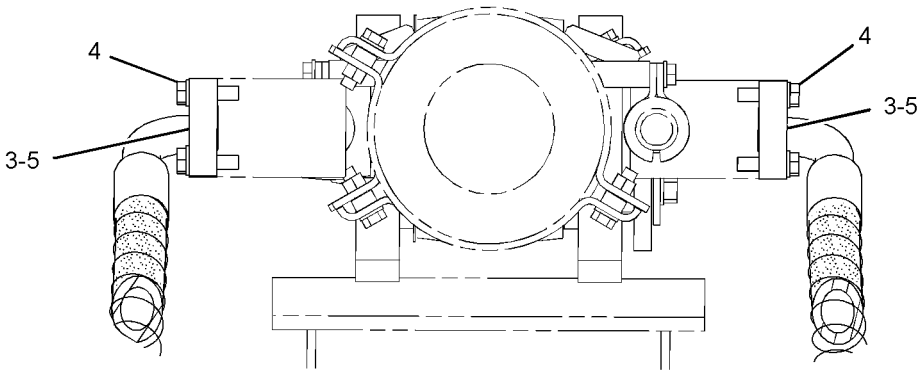

SECTION A-A

GRAPHIC #1 **<END>** g02180353

HYDRAULIC SYSTEM

338-6171 LINES GP-STICK

S/N: WAP1-UP
PART OF 303-2697, 319-9240 STICK AR-HOE
AN ATTACHMENT

SMCS-5057, 5458 **i03908836**

NOTE	REF NO	GRAPHIC REF	PART NUMBER	QTY	PART NAME 1 2 3 4 5 6 (PRODUCT LEVEL)	SEE PAGE
I	1	1	**338-6156**	2	HOSE AS	
	2	1	**1P-3705**	4	SEAL-RECTANGULAR	
	3	1	**5P-8077**	8	FLANGE-HALF	
M	4	1	**8T-4140**	16	BOLT (M16X2X60-MM)	
	5	1	**9X-8257**	16	WASHER (17.5X30X3.5-MM THK)	

I-REFER TO HYDRAULIC INFORMATION SYSTEM
M-METRIC PART

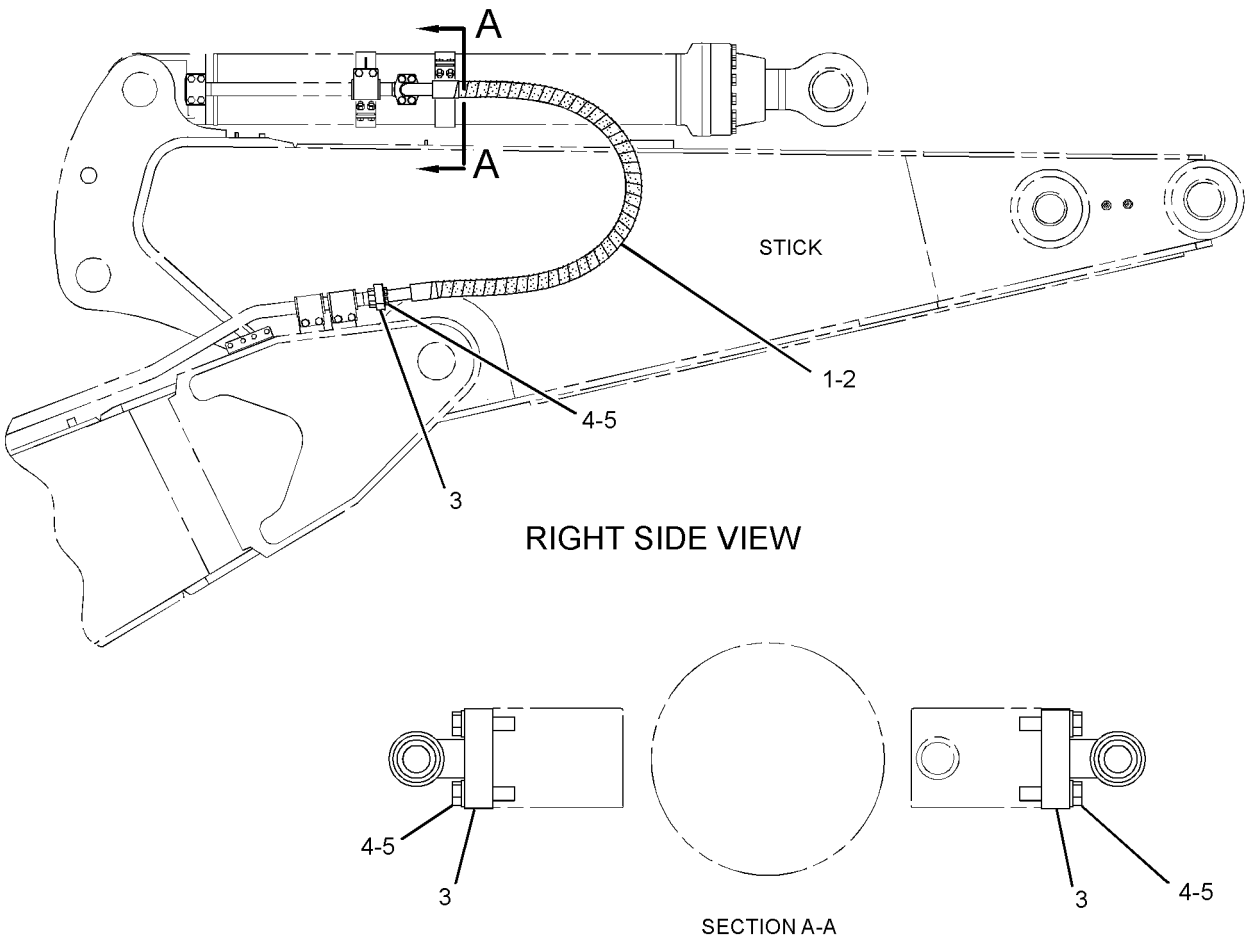

GRAPHIC #1 **<END>** g02180047

HYDRAULIC SYSTEM

353-9644 LINES GP-STICK CYLINDER

S/N: WAP1-UP
PART OF 353-9642 CYLINDER & LINES GP-STICK
AN ATTACHMENT

SMCS-5458 **i03908020**

NOTE	REF NO	GRAPHIC REF	PART NUMBER	QTY	PART NAME 1 2 3 4 5 6 (PRODUCT LEVEL)	SEE PAGE
	1	1	**138-5708**	4	CLIP-HALF	
	2	1	**138-5709**	2	GROMMET	
	3	1	**356-9138**	2	SUPPORT AS	
	4	1	**356-9141**	2	SUPPORT AS	
	5	1	**356-9245**	1	TUBE AS	
	6	1	**1P-3706**	1	SEAL-RECTANGULAR	
M	7	1	**7X-2556**	4	BOLT (M16X2X100-MM)	
M	8	1	**8T-4140**	12	BOLT (M16X2X60-MM)	
	9	1	**9X-8257**	12	WASHER (17.5X30X3.5-MM THK)	

M-METRIC PART

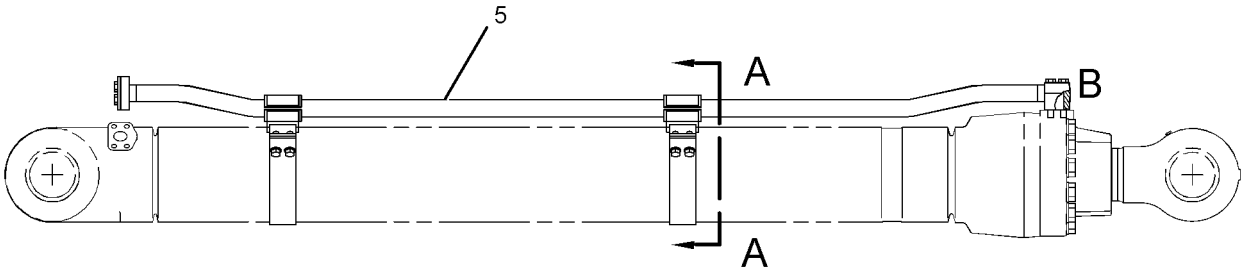

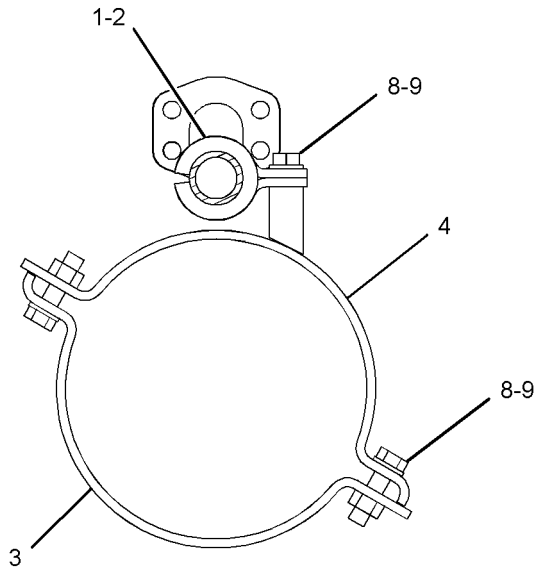

SECTION A-A

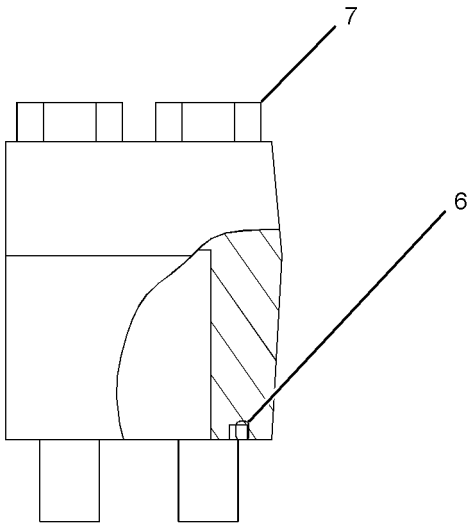

VIEW OF AREA B

GRAPHIC #1 **<END>** g02150085

HYDRAULIC SYSTEM

356-8046 LINES GP-STICK CYLINDER—LOWERING CONTROL

S/N: WAP1-UP
PART OF 297-0428 VALVE AR-LOAD CONTROL
AN ATTACHMENT

SMCS-5458 **i03907876**

NOTE	REF NO	GRAPHIC REF	PART NUMBER	QTY	PART NAME 1 2 3 4 5 6 (PRODUCT LEVEL)	SEE PAGE
	1	1	**093-1294**	2	CLAMP	
	2	1	**143-4160**	4	CLIP	
	3	1	**173-8137**	1	TUBE AS	
	4	1	**173-8139**	1	PIPE AS	
	5	1	**173-8141**	1	PIPE AS	
	6	1	**179-4587**	2	PLATE	
	7	1	**187-9862**	2	PLATE	
Y	8	1	**335-0311**	1	VALVE GP-CHECK & RELIEF	697
	9	1	**344-4341**	2	PLATE AS	
					(EACH INCLUDES)	
M		1	**8T-4133**	1	NUT (M10X1.5-THD)	
	10	1	**344-4564**	1	TUBE AS	
	11	1	**344-4566**	2	PLATE	
	12	1	*347-4429*	1	ADAPTER AS	
		1	**3D-2824**	1	SEAL-O-RING	
		1	**5K-9090**	1	SEAL-O-RING	
		1	**347-4425**	1	ADAPTER	
	13	1	**356-8104**	2	SUPPORT AS	
	14	1	**356-8107**	1	SUPPORT AS	
	15	1	**356-9138**	3	SUPPORT AS	
	16	1	*148-8318*	1	CONNECTOR AS	
		1	**3K-0360**	1	SEAL-O-RING	
		1	**6V-8397**	1	SEAL-O-RING	
		1	**6V-8634**	1	CONNECTOR	
	17	1	*148-8336*	1	CONNECTOR AS	
		1	**3J-1907**	1	SEAL-O-RING	
		1	**6V-8397**	1	SEAL-O-RING	
		1	**6V-8636**	1	CONNECTOR	
	18	1	**1P-3706**	2	SEAL-RECTANGULAR	
	19	1	**5K-9090**	1	SEAL-O-RING	
	20	1	**6V-8398**	2	SEAL-O-RING	
M	21	1	**7X-2557**	4	BOLT (M16X2X140-MM)	
	22	1	**7Y-3732**	4	CLIP	
	23	1	**8T-4121**	2	WASHER-HARD (11X21X2.5-MM THK)	
M	24	1	**8T-4140**	12	BOLT (M16X2X60-MM)	
M	25	1	**8T-4182**	2	BOLT (M10X1.5X45-MM)	
M	26	1	**8T-4193**	8	BOLT (M16X2X50-MM)	
M	27	1	**8T-4194**	4	BOLT (M12X1.75X50-MM)	
	28	1	**8T-4223**	16	WASHER-HARD (13.5X25.5X3-MM THK)	
M	29	1	**8T-4956**	8	BOLT (M12X1.75X35-MM)	
M	30	1	**8T-6868**	4	BOLT (M12X1.75X80-MM)	
	31	1	**9X-8257**	16	WASHER (17.5X30X3.5-MM THK)	

M-METRIC PART
Y-SEPARATE ILLUSTRATION

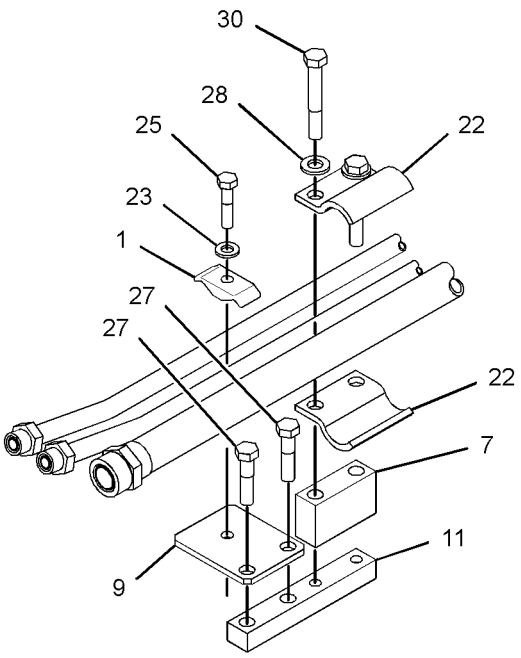

VIEW OF AREA A

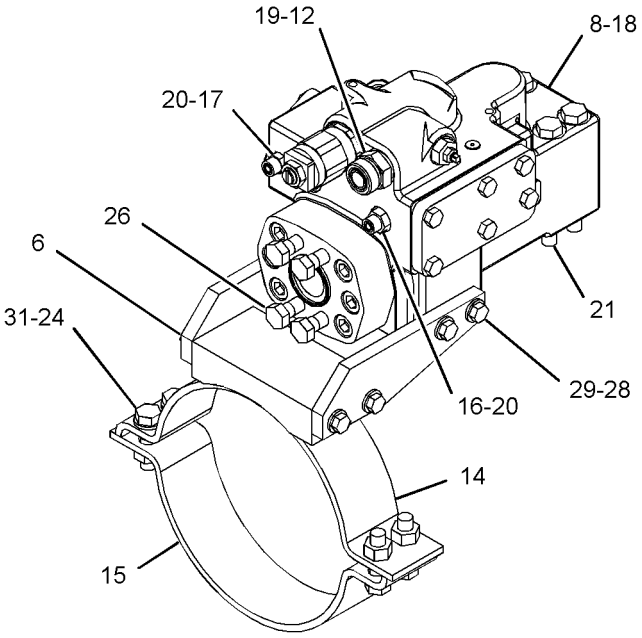

VIEW OF AREA B
(TUBES AND PIPES REMOVED FOR CLARITY)

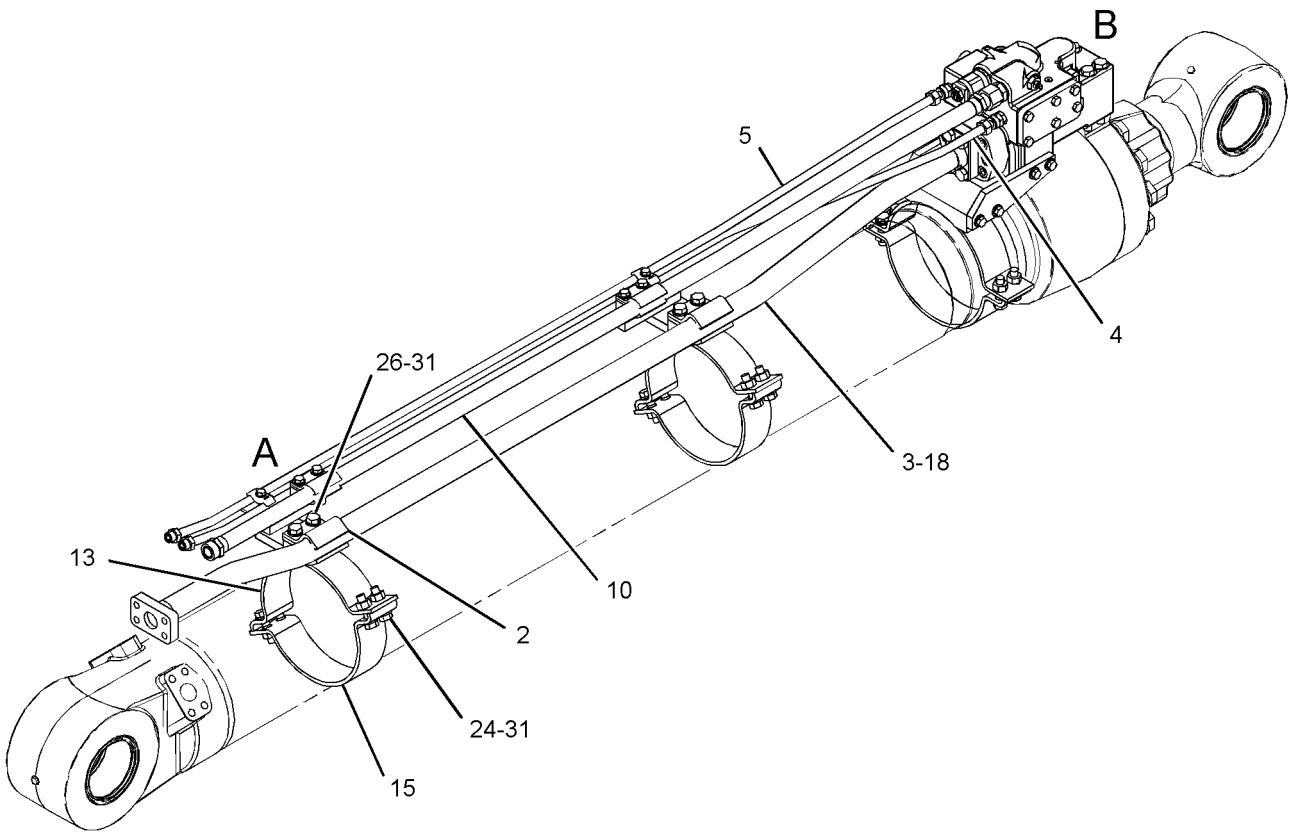

GRAPHIC #1 **<END>** g02180094

HYDRAULIC SYSTEM

296-7105 LINES GP-SWING MOTOR

S/N: WAP1-UP

PART OF 297-0223 HYDRAULIC AR

SMCS-5057 **i03906409**

NOTE	REF NO	GRAPHIC REF	PART NUMBER	QTY	PART NAME 1 2 3 4 5 6 (PRODUCT LEVEL)	SEE PAGE
	1	1	*106-8715*	1	ELBOW AS	
		1	**3D-2824**	1	SEAL-O-RING	
		1	**6V-9746**	1	SEAL-O-RING	
		1	**8C-8400**	1	ELBOW	
Y	2	1	**116-3420**	1	VALVE GP-SWING CUSHION	778
	3	1	**149-6812**	2	BLOCK	
Y	4	1	**241-8929**	1	VALVE GP-CONTROL (SWING)	705
I	5	1	**347-1207**	1	HOSE AS	
I	6	1	**347-1208**	1	HOSE AS	
	7	1	*148-8347*	3	ELBOW AS	
					(EACH INCLUDES)	
		1	**3D-2824**	1	SEAL-O-RING	
		1	**6V-9007**	1	ELBOW	
		1	**6V-9746**	1	SEAL-O-RING	
	8	1	**1P-3702**	2	SEAL-RECTANGULAR	
	9	1	**4F-8946**	2	SEAL-O-RING	
	10	1	**4J-5267**	2	SEAL-O-RING	
	11	1	**6V-1876**	1	GROMMET	
	12	1	**7G-5984**	1	CLIP (TAB)	
	13	1	**7G-5985**	1	CLIP (SLOT)	
	14	1	**8T-4121**	8	WASHER-HARD (11X21X2.5-MM THK)	
M	15	1	**8T-4178**	6	BOLT (M10X1.5X90-MM)	
M	16	1	**8T-4183**	2	BOLT (M12X1.75X40-MM)	
	17	1	**8T-4223**	2	WASHER-HARD (13.5X25.5X3-MM THK)	
M	18	1	**8T-5005**	8	BOLT (M10X1.5X70-MM)	
M	19	1	**8T-5436**	8	BOLT (M10X1.5X130-MM)	

I-REFER TO HYDRAULIC INFORMATION SYSTEM
M-METRIC PART
Y-SEPARATE ILLUSTRATION

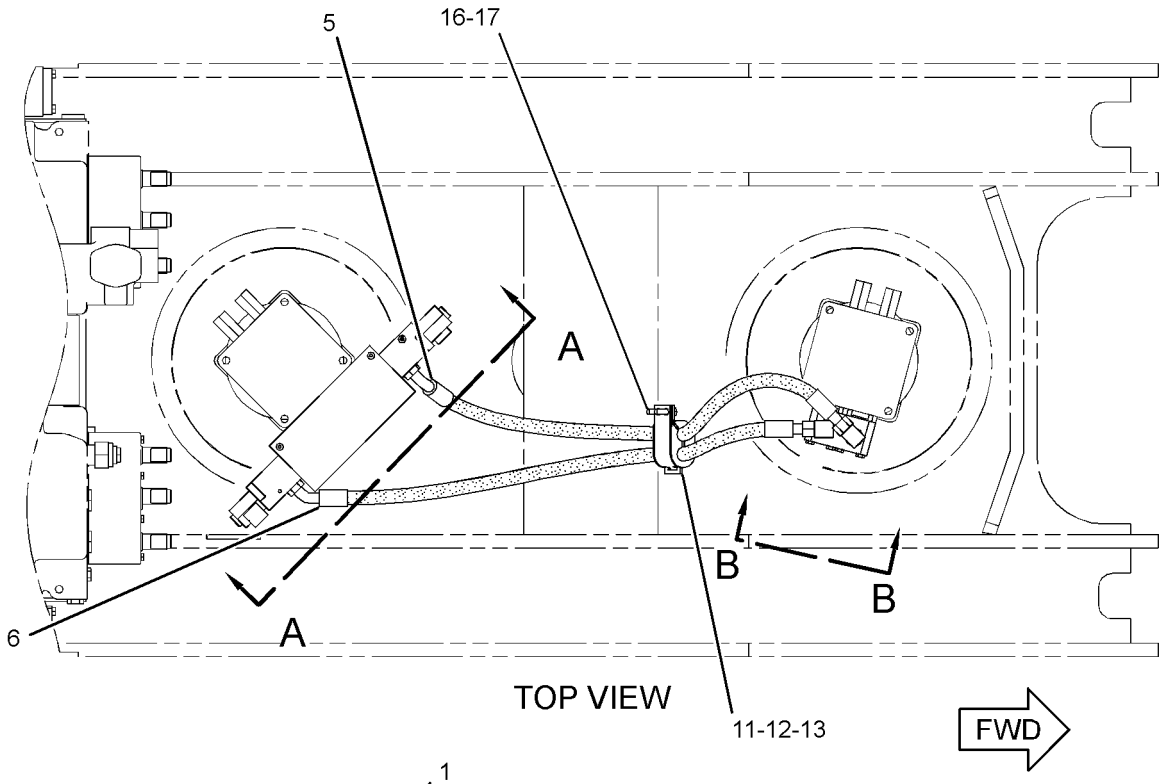

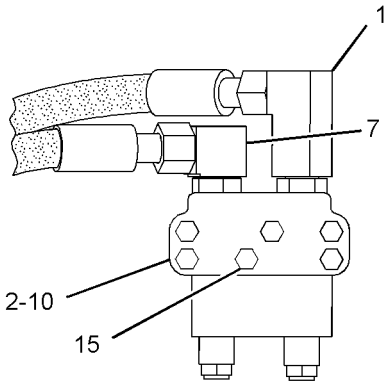

VIEW B-B

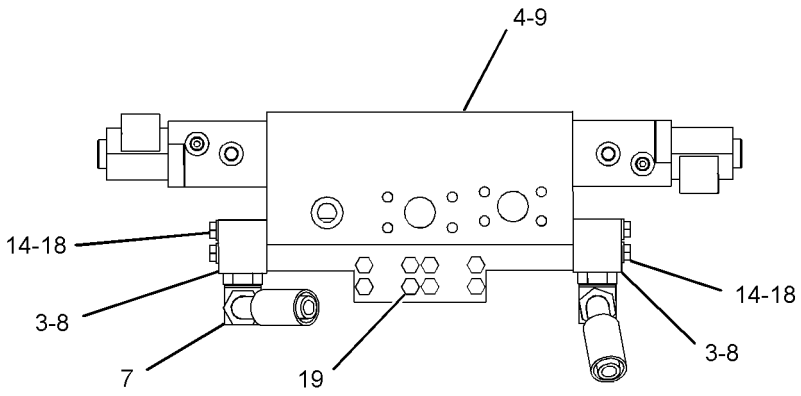

VIEW A-A

GRAPHIC #1 **<END>** g02159874

HYDRAULIC SYSTEM

338-6163 LINES GP-SWIVEL & TRAVEL MOTOR

S/N: WAP1-UP

PART OF 297-0223 HYDRAULIC AR

SMCS-5057, 5058, 5060 **i03906733**

NOTE	REF NO	GRAPHIC REF	PART NUMBER	QTY	PART NAME 1 2 3 4 5 6 (PRODUCT LEVEL)	SEE PAGE
	1	2	**5P-0597**	4	CLAMP-HOSE	
	2	2	**7K-1181**	10	STRAP-CABLE	
B	3	2	**1U-8846**		SEALANT-GASKET	
M	4	2	**110-4821**	12	BOLT-SOCKET HEAD (M16X2X55-MM)	
Y	5	2	**155-9200**	2	VALVE GP-TRAVEL COUNTERBALANCE	779
	6	2	**165-3350**	4	GUARD	
	7	2	**173-4946**	2	CLIP	
	8	2	**173-4947**	2	CLIP	
	9	2	**173-5120**	4	GROMMET	
	10	2	**173-5150**	8	CLIP	
	11	2	**204-8488**	2	GROMMET	
Y	12	1	**295-9595**	1	SWIVEL GP	681
	13	2	**295-9609**	1	SUPPORT AS	
	14	2	**295-9626**	1	PLATE	
	15	2	**302-3136**	1	SUPPORT AS	
I	16	2	**307-4881**	2	HOSE AS	
	17	2	**307-4884**	2	HOSE AS	
	18	1	**338-6108**	1	TUBE AS	
	19	1	**338-6109**	1	TUBE AS	
	20	2	**338-6117**	1	TUBE AS	
	21	2	**338-6118**	1	TUBE AS	
I	22	1	**338-6149**	1	HOSE AS	
I	23	1	**338-6150**	1	HOSE AS	
I	24	1	**338-6151**	1	HOSE AS	
I	25	1	**338-6153**	1	HOSE AS	
I	26	2	**338-6154**	2	HOSE AS	
I	27	2	**338-6155**	2	HOSE AS	
	28	2	*148-8336*	2	CONNECTOR AS	
					(EACH INCLUDES)	
		2	**3J-1907**	1	SEAL-O-RING	
		2	**6V-8397**	1	SEAL-O-RING	
		2	**6V-8636**	1	CONNECTOR	
	29	2	*148-8439*	1	TEE AS	
		2	**3J-1907**	1	SEAL-O-RING	
		2	**6V-8397**	2	SEAL-O-RING	
		2	**6V-8774**	1	TEE	
	30	2	*153-6236*	2	REDUCER AS	
					(EACH INCLUDES)	
		2	**6V-8946**	1	REDUCER	
		2	**6V-9746**	1	SEAL-O-RING	
	31	2	*153-6259*	1	TEE AS	
		2	**3D-2824**	1	SEAL-O-RING	
		2	**6V-8777**	1	TEE-FACE SEAL	
		2	**6V-9746**	2	SEAL-O-RING	
	32	2	*164-5615*	2	ELBOW AS	
					(EACH INCLUDES)	
		2	**4K-1388**	1	SEAL-O-RING	
		2	**5K-9090**	1	SEAL-O-RING	
		2	**8T-8986**	1	ELBOW	
	33	2	*172-4621*	1	ADAPTER AS	
		2	**6V-0301**	1	ADAPTER	
		2	**7M-8485**	1	SEAL-O-RING	
	34	1,2	**1P-3704**	16	SEAL-RECTANGULAR	
	35	1,2	**1P-3705**	4	SEAL-RECTANGULAR	
	36	1,2	**1P-5767**	32	FLANGE-HALF	
	37	2	**6V-1577**	2	GROMMET	

338-6163 LINES GP-SWIVEL & TRAVEL MOTOR *(contd.)* i03906733

NOTE	REF NO	GRAPHIC REF	PART NUMBER	QTY	PART NAME 1 2 3 4 5 6 (PRODUCT LEVEL)	SEE PAGE
M	38	2	**7X-2552**	5	BOLT (M16X2X30-MM)	
	39	2	**8T-0706**	2	RING-RETAINING	
	40	2	**8T-4121**	8	WASHER-HARD (11X21X2.5-MM THK)	
M	41	2	**8T-4136**	8	BOLT (M10X1.5X25-MM)	
M	42	1,2	**8T-4183**	20	BOLT (M12X1.75X40-MM)	
M	43	1	**8T-4184**	8	BOLT (M12X1.75X45-MM)	
M	44	1,2	**8T-4194**	58	BOLT (M12X1.75X50-MM)	
	45	1,2	**8T-4223**	78	WASHER-HARD (13.5X25.5X3-MM THK)	
M	46	2	**8T-4956**	8	BOLT (M12X1.75X35-MM)	
	47	2	**9X-8257**	5	WASHER (17.5X30X3.5-MM THK)	

B-USE AS REQUIRED
I-REFER TO HYDRAULIC INFORMATION SYSTEM
M-METRIC PART
Y-SEPARATE ILLUSTRATION

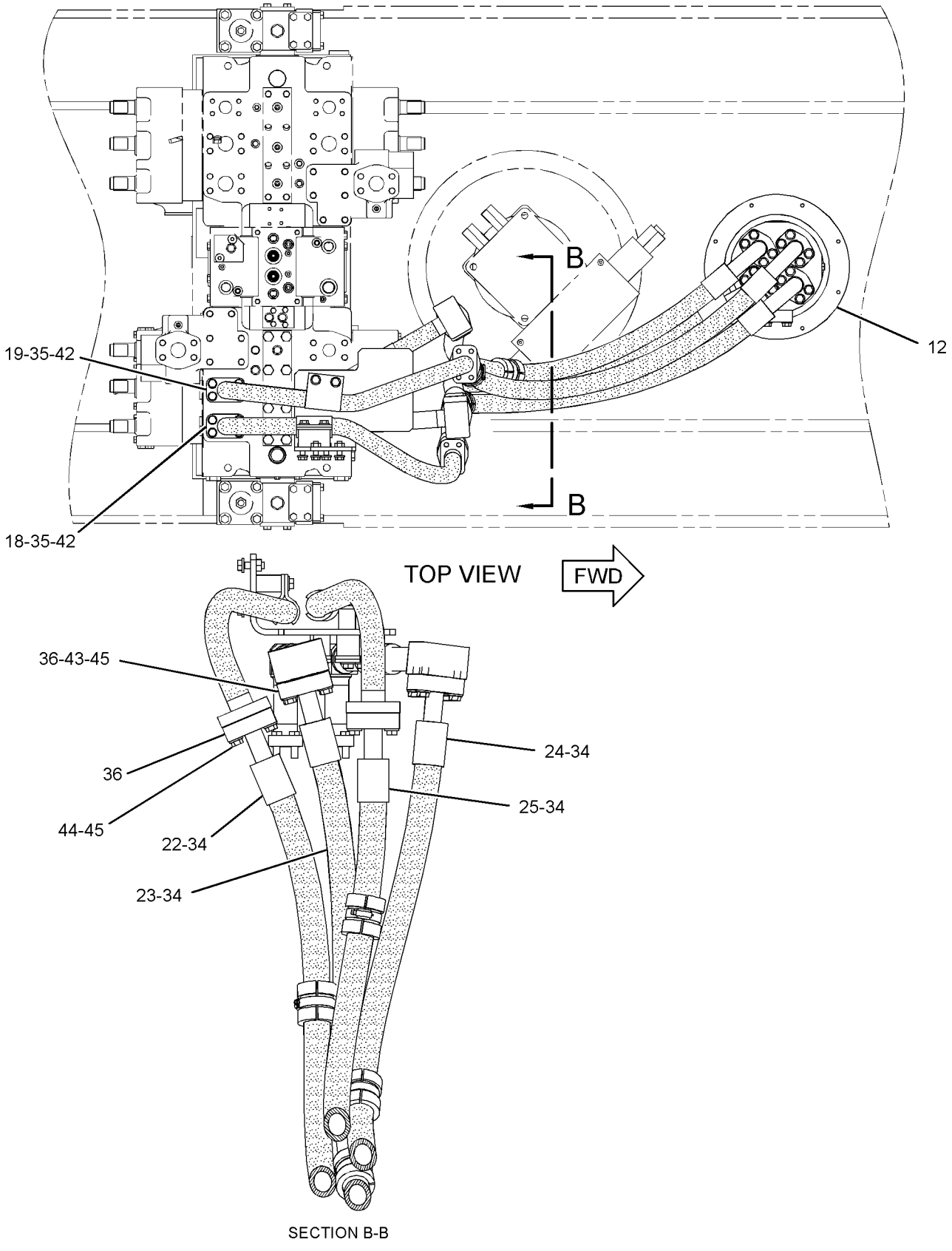

GRAPHIC #1 g02160079

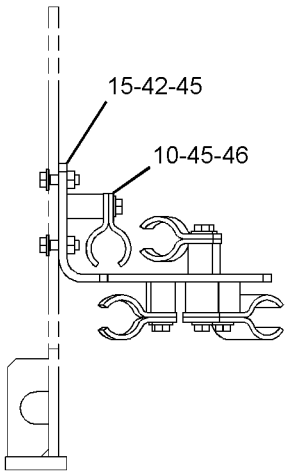

SECTION C-C

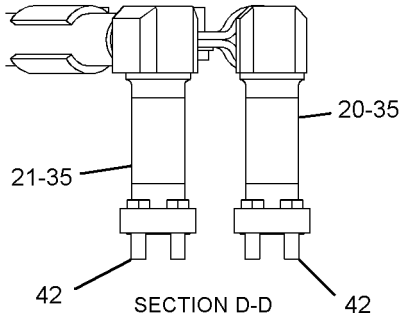

SECTION D-D

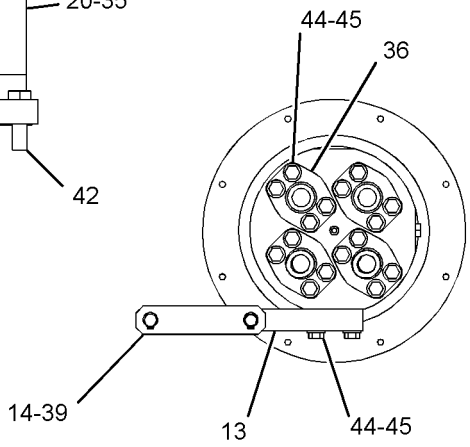

SECTION A-A

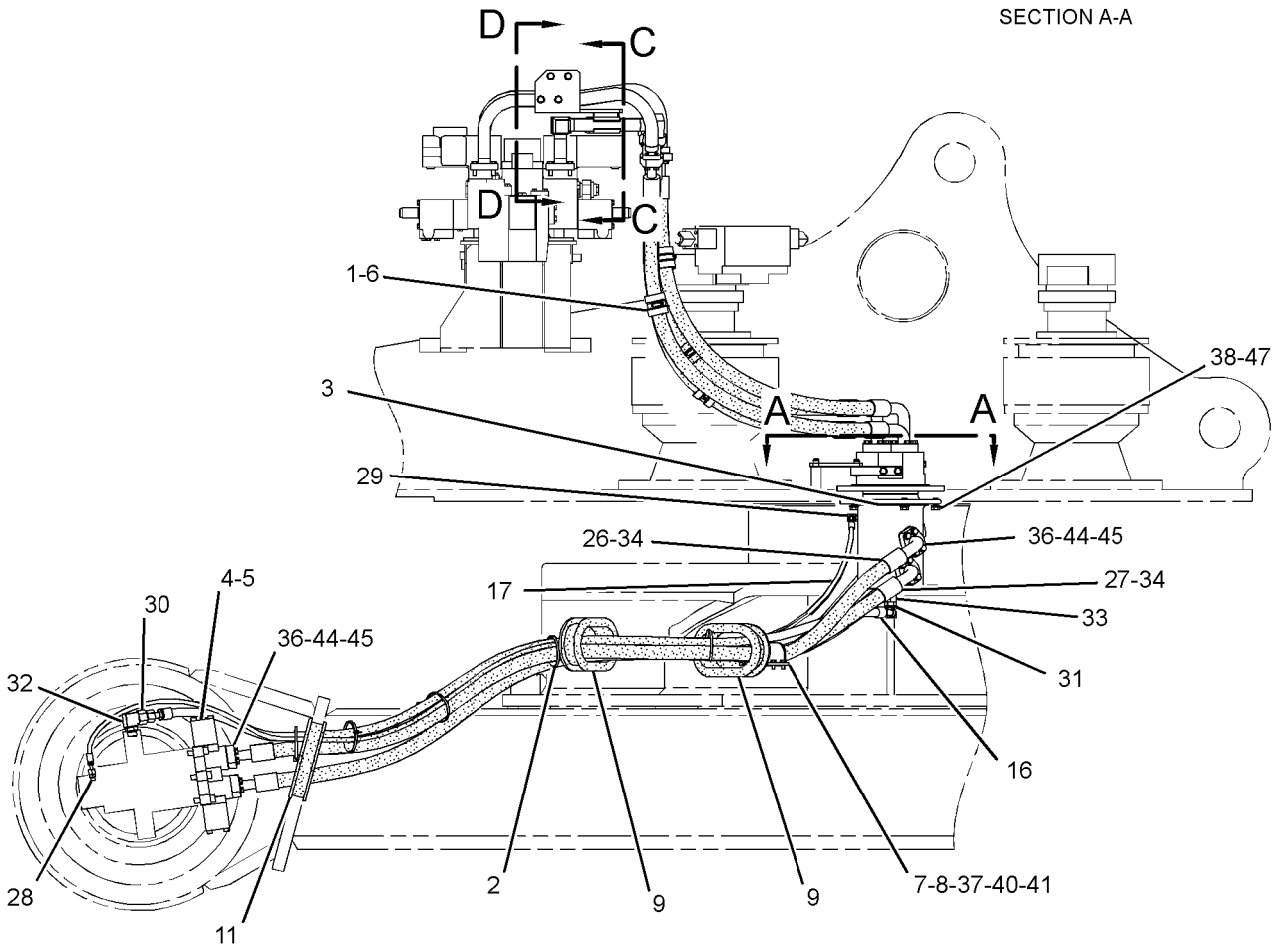

RIGHT SIDE VIEW

GRAPHIC #2 **<END>** g02160277

HYDRAULIC SYSTEM

194-0946 MANIFOLD & VALVE GP—MAIN CONTROL VALVE

S/N: WAP1-UP

PART OF 295-7747, 295-7748, 295-7769 VALVE GP-CONTROL

ALSO AN ATTACHMENT

SMCS-5264, 5479 **i04026017**

NOTE	REF NO	GRAPHIC REF	PART NUMBER	QTY	PART NAME 1 2 3 4 5 6 (PRODUCT LEVEL)	SEE PAGE
	1	1	*148-8407*	3	PLUG AS	
					(EACH INCLUDES)	
		1	**3J-1907**	1	SEAL-O-RING	
		1	**9S-4191**	1	PLUG-O-RING	
	2	1	**118-5085**	3	RETAINER	
	3	1	**118-5086**	3	SPRING	
	4	1	**118-5087**	3	SPRING	
	5	1	**155-2251**	3	PLATE	
Y	6	1	*156-2829*	1	SOLENOID GP	253
Y	6A	1	*156-2829*	1	SOLENOID GP	253
Y	6B	1	*156-2829*	1	SOLENOID GP	253
	7	1	**158-3504**	3	SPOOL-CONTROL	
	8	1	**194-0944**	1	HOUSING	
	9	1	*148-8411*	4	PLUG AS	
					(EACH INCLUDES)	
		1	**3K-0360**	1	SEAL-O-RING	
		1	**9S-4185**	1	PLUG-O-RING	
	10	1	**030-4605**	3	SEAL-O-RING	
	11	1	**177-1403**	3	SPRING	
	12	1	**177-1405**	3	SPRING	
	13	1	**1H-5728**	3	SEAL-O-RING	
	14	1	**2D-6648**	3	RING-RETAINING	
	15	1	**3C-8388**	6	PIN-ROLL	
	16	1	**4J-9535**	2	SEAL-O-RING	
M	17	1	**8T-3998**	12	BOLT (M4X0.7X12-MM)	
	18	1	*155-3624*	10	PLUG AS	
					(EACH INCLUDES)	
		1	**3J-7354**	1	SEAL-O-RING	
		1	**9S-4182**	1	PLUG-O-RING	
	19	1	**8T-6759**	3	PLUG-PIPE	

M-METRIC PART
Y-SEPARATE ILLUSTRATION

194-0946 MANIFOLD & VALVE GP *(contd.)* **i04026017**

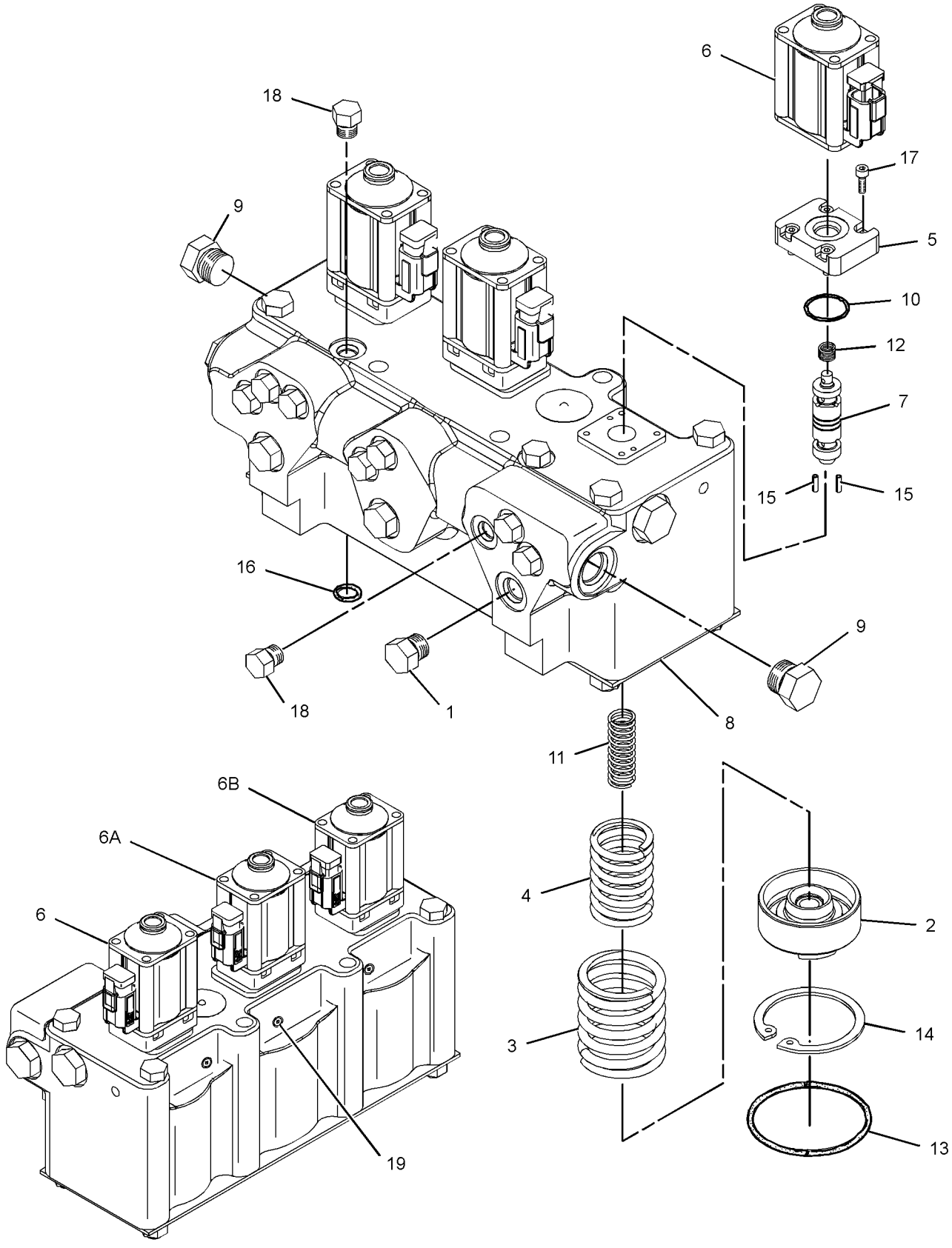

GRAPHIC #1 **<END>** g02157433

HYDRAULIC SYSTEM

194-0947 MANIFOLD & VALVE GP—MAIN CONTROL VALVE

S/N: WAP1-UP

PART OF 295-7747, 295-7748, 295-7769 VALVE GP-CONTROL

ALSO AN ATTACHMENT

SMCS-5264, 5479 **i04026018**

NOTE	REF NO	GRAPHIC REF	PART NUMBER	QTY	PART NAME 1 2 3 4 5 6 (PRODUCT LEVEL)	SEE PAGE
	1	1	*148-8395*	2	PLUG AS	
					(EACH INCLUDES)	
		1	**3K-0360**	1	SEAL-O-RING	
		1	**9S-8005**	1	PLUG-O-RING	
	2	1	**118-5085**	3	RETAINER	
	3	1	**118-5086**	3	SPRING	
	4	1	**118-5087**	3	SPRING	
	5	1	**155-2251**	3	PLATE	
Y	6	1	*156-2829*	1	SOLENOID GP	253
Y	6A	1	*156-2829*	1	SOLENOID GP	253
Y	6B	1	*156-2829*	1	SOLENOID GP	253
	7	1	**158-3504**	3	SPOOL-CONTROL	
	8	1	**194-0945**	1	HOUSING	
	9	1	*148-8407*	3	PLUG AS	
					(EACH INCLUDES)	
		1	**3J-1907**	1	SEAL-O-RING	
		1	**9S-4191**	1	PLUG-O-RING	
	10	1	**030-4605**	3	SEAL-O-RING	
	11	1	**177-1403**	3	SPRING	
	12	1	**177-1405**	3	SPRING	
	13	1	**1H-5728**	3	SEAL-O-RING	
	14	1	**2D-6648**	3	RING-RETAINING	
	15	1	**3C-8388**	6	PIN-ROLL	
	16	1	**4J-9535**	2	SEAL-O-RING	
M	17	1	**8T-3998**	12	BOLT (M4X0.7X12-MM)	
	18	1	*155-3624*	10	PLUG AS	
					(EACH INCLUDES)	
		1	**3J-7354**	1	SEAL-O-RING	
		1	**9S-4182**	1	PLUG-O-RING	
	19	1	*148-8411*	2	PLUG AS	
					(EACH INCLUDES)	
		1	**3K-0360**	1	SEAL-O-RING	
		1	**9S-4185**	1	PLUG-O-RING	
	20	1	**8T-6759**	3	PLUG-PIPE	

M-METRIC PART
Y-SEPARATE ILLUSTRATION

194-0947 MANIFOLD & VALVE GP *(contd.)* i04026018

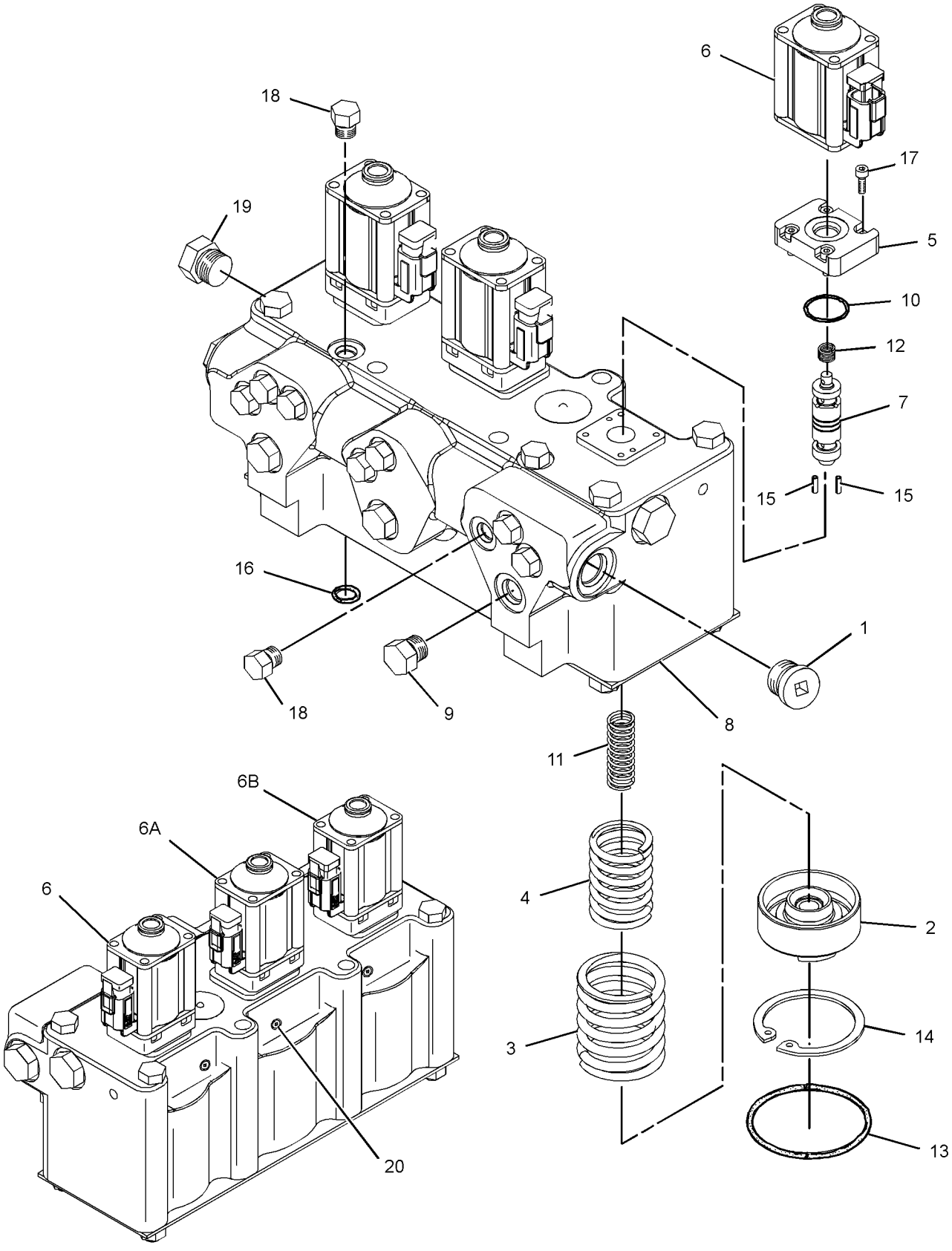

GRAPHIC #1 **<END>** g02157437

HYDRAULIC SYSTEM

224-6809 MANIFOLD & VALVE GP

S/N: WAP1-UP

PART OF 241-8929 VALVE GP-CONTROL

SMCS-5264, 5479 **i02208733**

NOTE	REF NO	GRAPHIC REF	PART NUMBER	QTY	PART NAME 1 2 3 4 5 6 (PRODUCT LEVEL)	SEE PAGE
	1	1	**141-5497**	1	SPRING	
	2	1	**141-5498**	1	SPRING	
Y	3	1	*156-2829*	1	SOLENOID GP (SWING)	253
	4	1	**158-1113**	1	RING-RETAINING	
	5	1	**158-6564**	1	RETAINER	
	6	1	**173-4012**	1	SPRING	
Z	7	1		1	SPOOL-CONTROL	
	8	1	**188-3365**	1	SPRING	
	9	1	*222-4737*	2	PLUG AS	
					(EACH INCLUDES)	
		1	**4J-7533**	1	SEAL-O-RING	
		1	**9S-4180**	1	PLUG	
Z	10	1		1	HOUSING	
	11	1	**099-8111**	1	PIN-SPRING	
	12	1	*148-8407*	1	PLUG AS	
		1	**3J-1907**	1	SEAL-O-RING	
		1	**9S-4191**	1	PLUG-O-RING	
	13	1	**6V-5597**	1	SEAL-O-RING	
	14	1	**8J-8343**	1	SEAL-O-RING	
M	15	1	**8T-4198**	2	BOLT (M10X1.5X100-MM)	

M-METRIC PART
Y-SEPARATE ILLUSTRATION
Z-NOT SERVICED SEPARATELY

224-6809 MANIFOLD & VALVE GP *(contd.)* **i02208733**

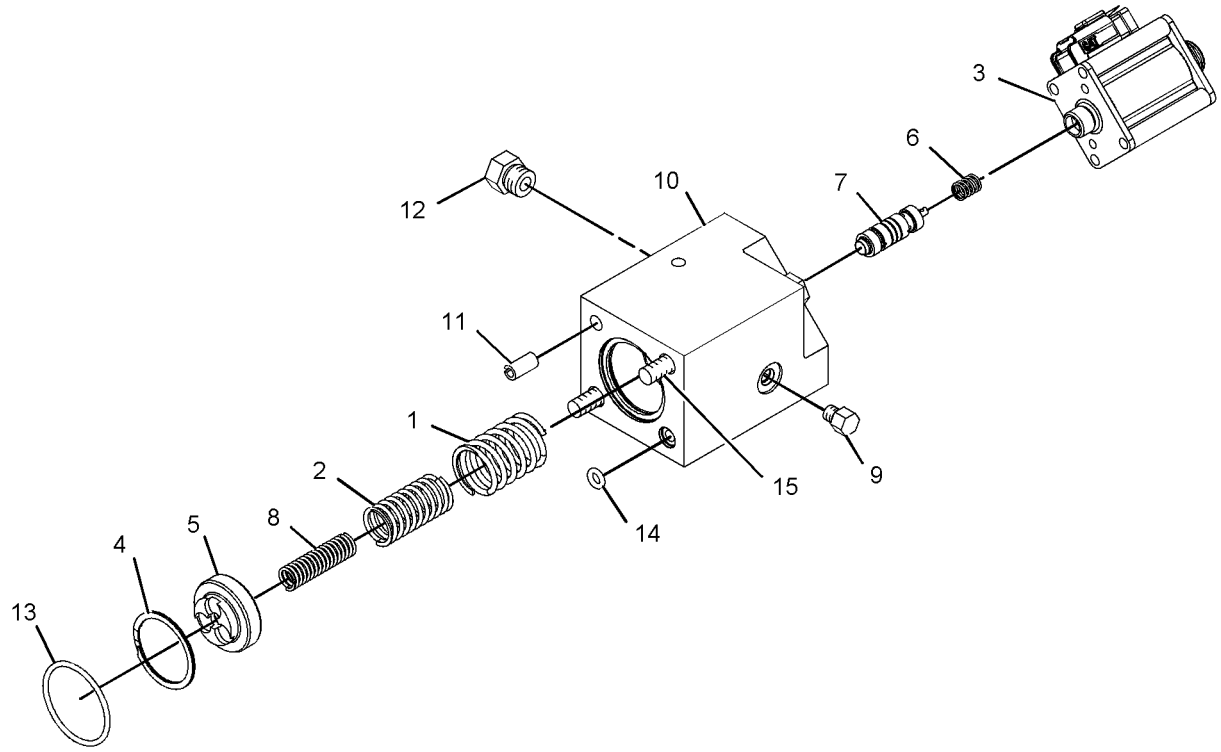

GRAPHIC #1 **<END>** g01117308

HYDRAULIC SYSTEM

247-8833 MOTOR & MTG GP-HYDRAULIC FAN—REVERSING

S/N: WAP1-UP
PART OF 319-9265 CONTROL AR-FAN
AN ATTACHMENT

SMCS-1386 **i02104601**

NOTE	REF NO	GRAPHIC REF	PART NUMBER	QTY	PART NAME 1 2 3 4 5 6 (PRODUCT LEVEL)	SEE PAGE
Y	1	1	**200-3252**	1	MOTOR GP-PISTON (HYDRAULIC FAN)	646

Y-SEPARATE ILLUSTRATION

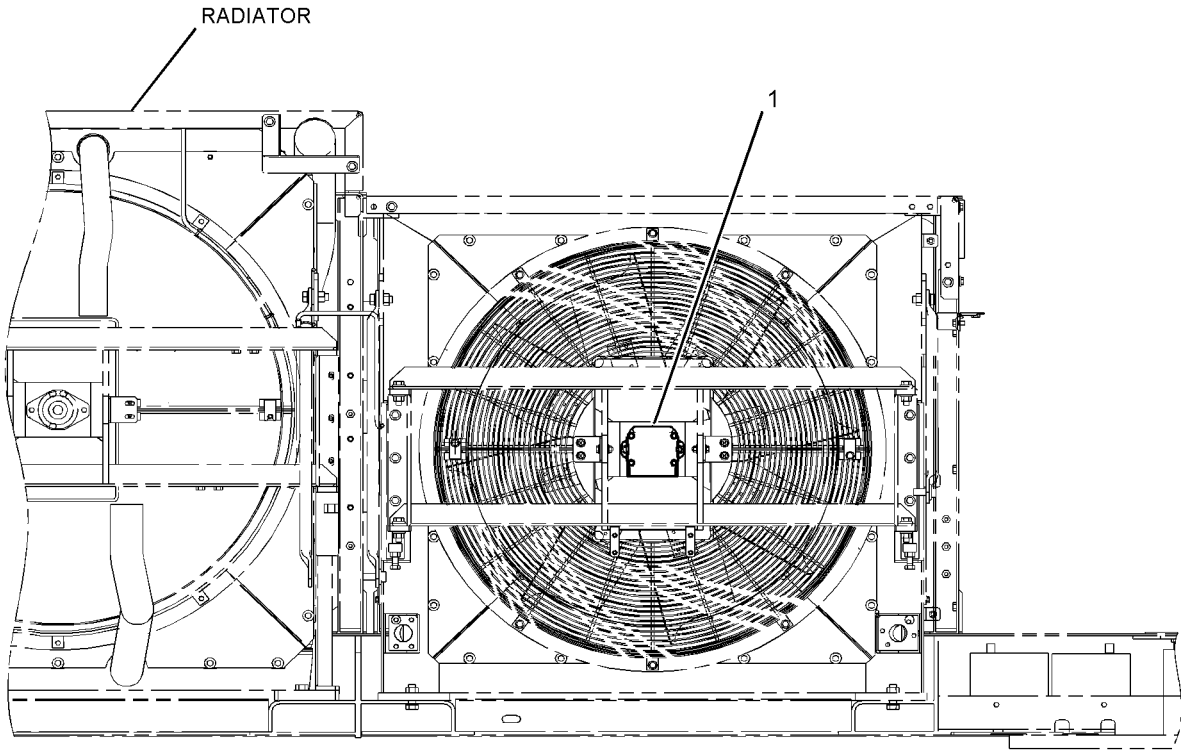

RIGHT SIDE VIEW

GRAPHIC #1 **<END>** g01074435

HYDRAULIC SYSTEM

234-4534 MOTOR & MTG GP-SWING–REAR

S/N: WAP1-UP

PART OF 227-6130 DRIVE GP-SWING

SMCS-5058 **i02960251**

NOTE	REF NO	GRAPHIC REF	PART NUMBER	QTY	PART NAME 1 2 3 4 5 6 (PRODUCT LEVEL)	SEE PAGE
CYR	1	1	**295-9446**	1	MOTOR GP-SWING (REAR)	653
	2	1	**095-1687**	1	SEAL-O-RING	
	3	1	**6V-5204**	1	RING-RETAINING	
M	4	1	**6V-8201**	4	BOLT-SOCKET HEAD (M16X2X45-MM)	
	5	1	**9X-8257**	4	WASHER (17.5X30X3.5-MM THK)	

C-CHANGE FROM PREVIOUS TYPE
M-METRIC PART
R-REMFG PART MAY BE AVAILABLE
Y-SEPARATE ILLUSTRATION

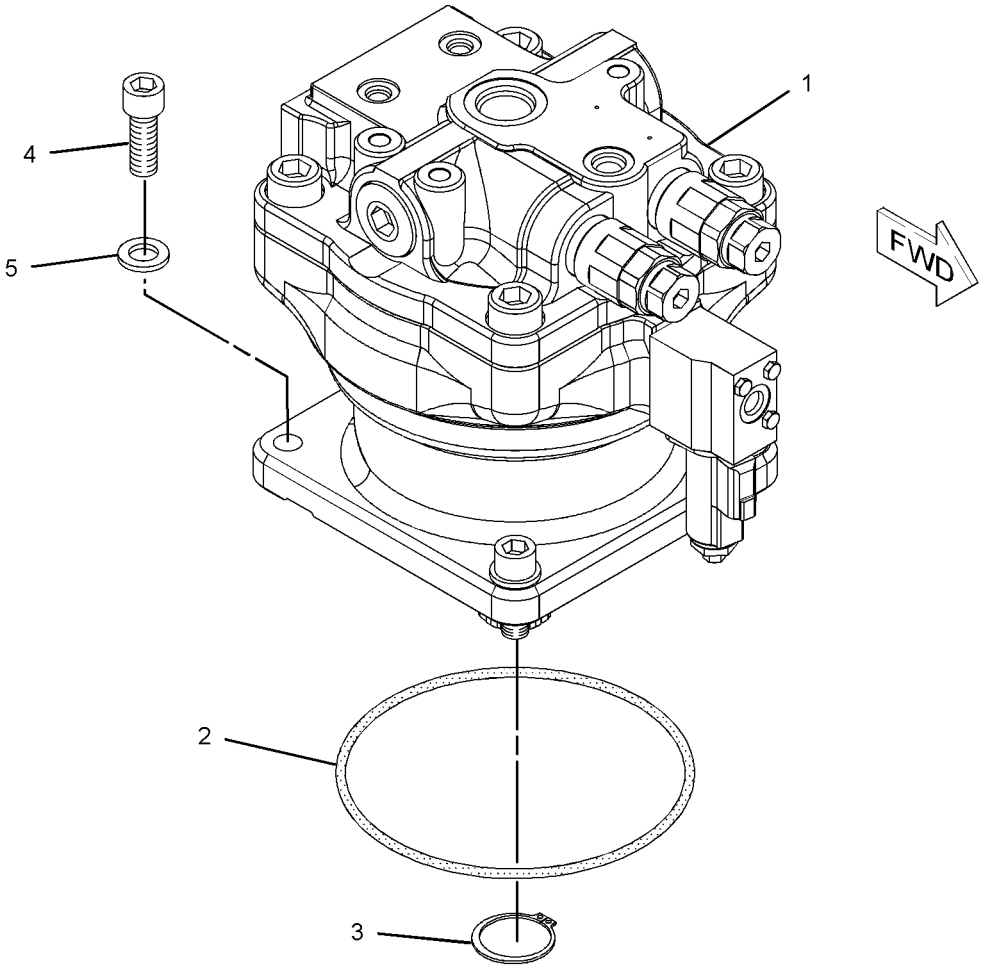

GRAPHIC #1 **<END>** g01074996

HYDRAULIC SYSTEM

234-4536 MOTOR & MTG GP-SWING–FRONT

S/N: WAP1-UP

PART OF 227-6131 DRIVE GP-SWING

SMCS-5058 **i02889021**

NOTE	REF NO	GRAPHIC REF	PART NUMBER	QTY	PART NAME 1 2 3 4 5 6 (PRODUCT LEVEL)	SEE PAGE
CYR	1	1	**295-9447**	1	MOTOR GP-SWING (FRONT)	654
	2	1	**095-1687**	1	SEAL-O-RING	
	3	1	**6V-5204**	1	RING-RETAINING	
M	4	1	**6V-8201**	4	BOLT-SOCKET HEAD (M16X2X45-MM)	
	5	1	**9X-8257**	4	WASHER (17.5X30X3.5-MM THK)	

C-CHANGE FROM PREVIOUS TYPE
M-METRIC PART
R-REMFG PART MAY BE AVAILABLE
Y-SEPARATE ILLUSTRATION

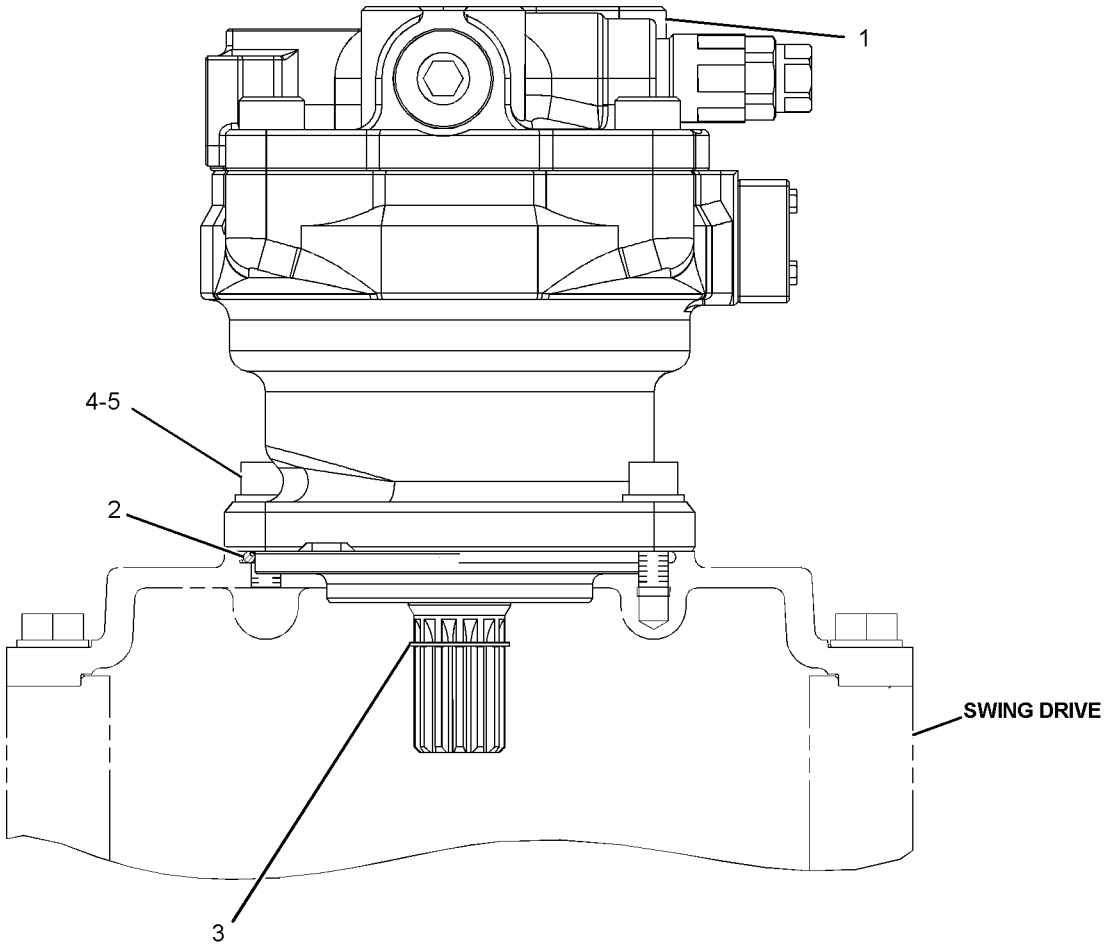

GRAPHIC #1 **<END>** g01082362

HYDRAULIC SYSTEM

155-9198 MOTOR & MTG GP-TRAVEL

S/N: WAP1-UP

PART OF 353-0590 DRIVE GP-FINAL

SMCS-4351 **i01886583**

NOTE	REF NO	GRAPHIC REF	PART NUMBER	QTY	PART NAME 1 2 3 4 5 6 (PRODUCT LEVEL)	SEE PAGE
Y	1	1	**209-5895**	1	MOTOR GP-TRAVEL	655
	2	1	**6D-0692**	1	SEAL-O-RING	
M	3	1	**7Y-5241**	6	BOLT-SOCKET HEAD (M20X2.5X60-MM)	

M-METRIC PART
Y-SEPARATE ILLUSTRATION

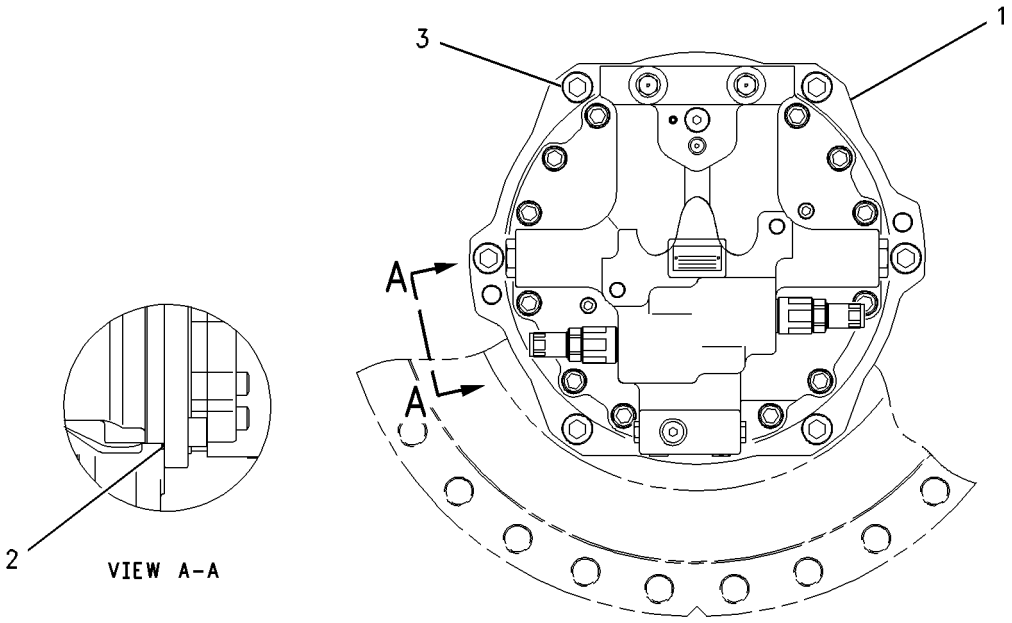

GRAPHIC #1 **<END>** g00892680

HYDRAULIC SYSTEM

200-3252 MOTOR GP-PISTON*R

S/N: WAP1-UP

PART OF 247-8833 MOTOR & MTG GP-HYDRAULIC FAN

AN ATTACHMENT

SMCS-5058 **i02237382**

NOTE	REF NO	GRAPHIC REF	PART NUMBER	QTY	PART NAME 1 2 3 4 5 6 (PRODUCT LEVEL)	SEE PAGE
	1	1	**185-0270**	1	SHAFT	
	2	1	**8C-3110**	1	RING-RETAINING	
	3	1	**185-0248**	1	SEAL-OIL	
Y	4	1	**185-0266**	1	ROTATING GP-MOTOR	675
	5	1	**127-9485**	1	SEAL-O-RING	
	6	1	**185-0268**	1	COVER	
M	7	1	**095-0673**	4	BOLT-SOCKET HEAD (M12X1.75X60-MM)	
	8	1	**188-6280**	1	DOWEL	
	9	1	**185-0267**	1	HOUSING	
	10	1	**101-2862**	2	DOWEL	
	11	1	**200-3257**	1	SWASHPLATE	
	12	1	**9S-8006**	1	PLUG-O-RING	
	13	1	**2M-9780**	1	SEAL-O-RING	
	14	1	*185-0271*	1	BEARING AS	
	14A	1	**189-4717**	1	BEARING	
	14B	1	**185-0265**	1	SHIM PACK (INCLUDES 14-SHIMS)	
	14C	1	**185-0263**	1	BEARING	
	15	1	**185-0242**	1	PLATE	

M-METRIC PART
Y-SEPARATE ILLUSTRATION

200-3252 MOTOR GP-PISTON *(contd.)* **i02237382**

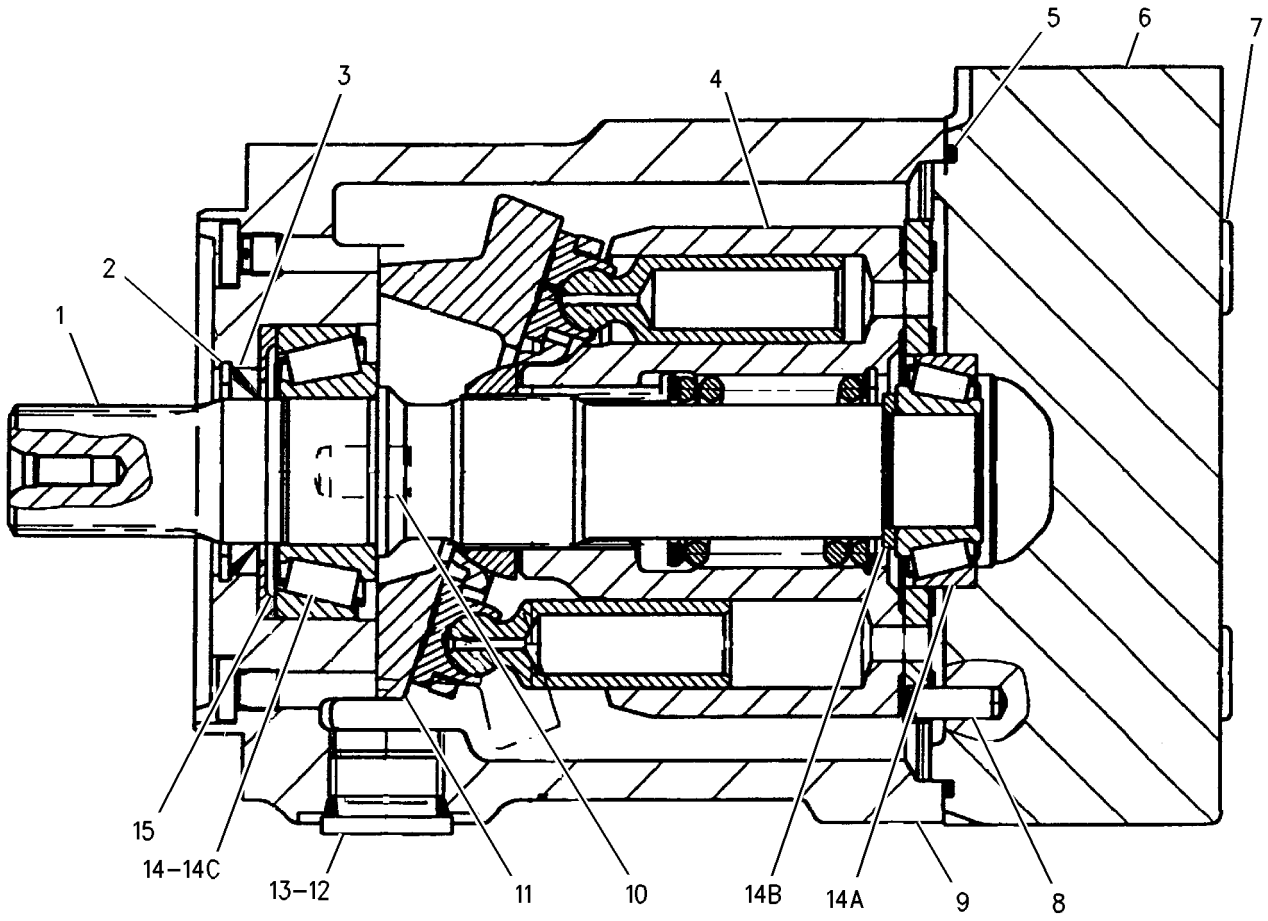

GRAPHIC #1 **<END>** g00789418

HYDRAULIC SYSTEM

225-4614 MOTOR GP-PISTON—HYDRAULIC FAN*R

S/N: WAP1-UP

PART OF 305-7590 COOLER & MTG GP-HYDRAULIC OIL

SMCS-5058 **i03012625**

NOTE	REF NO	GRAPHIC REF	PART NUMBER	QTY	PART NAME 1 2 3 4 5 6 (PRODUCT LEVEL)	SEE PAGE
	1	1	**8C-3110**	1	RING-RETAINING	
	2	1	**185-0248**	1	SEAL-OIL	
	3	1	**185-0267**	1	HOUSING	
	4	1	**200-3257**	1	SWASHPLATE	
Y	5	1	**185-0266**	1	ROTATING GP-MOTOR	675
	6	1	**127-9485**	1	SEAL-O-RING	
	7	1	**242-6845**	1	COVER	
M	8	1	**095-0673**	4	BOLT-SOCKET HEAD (M12X1.75X60-MM)	
	9	1	**189-4717**	1	BEARING	
		1	**105-3035**	1	CONE-BEARING	
		1	**203-8609**	1	CUP-BEARING	
	10	1	**204-2799**	1	DOWEL	
	11	1	**242-6903**	1	SHIM (3-MM THK)	
	12	1	**101-2862**	2	DOWEL	
	13	1	**185-0263**	1	BEARING	
	14	1	**185-0242**	1	PLATE	
	16	1	**242-6902**	1	SHAFT	
	17	1	**197-2471**	1	PLUG AS	
		1	**197-2472**	1	SEAL	
	18	1	**9S-8006**	1	PLUG-O-RING	
	19	1	**2M-9780**	1	SEAL-O-RING	
	20	1	**242-3374**	1	SLEEVE	
	21	1	**197-2474**	1	VALVE AS	

M-METRIC PART
Y-SEPARATE ILLUSTRATION

225-4614 MOTOR GP-PISTON *(contd.)* **i03012625**

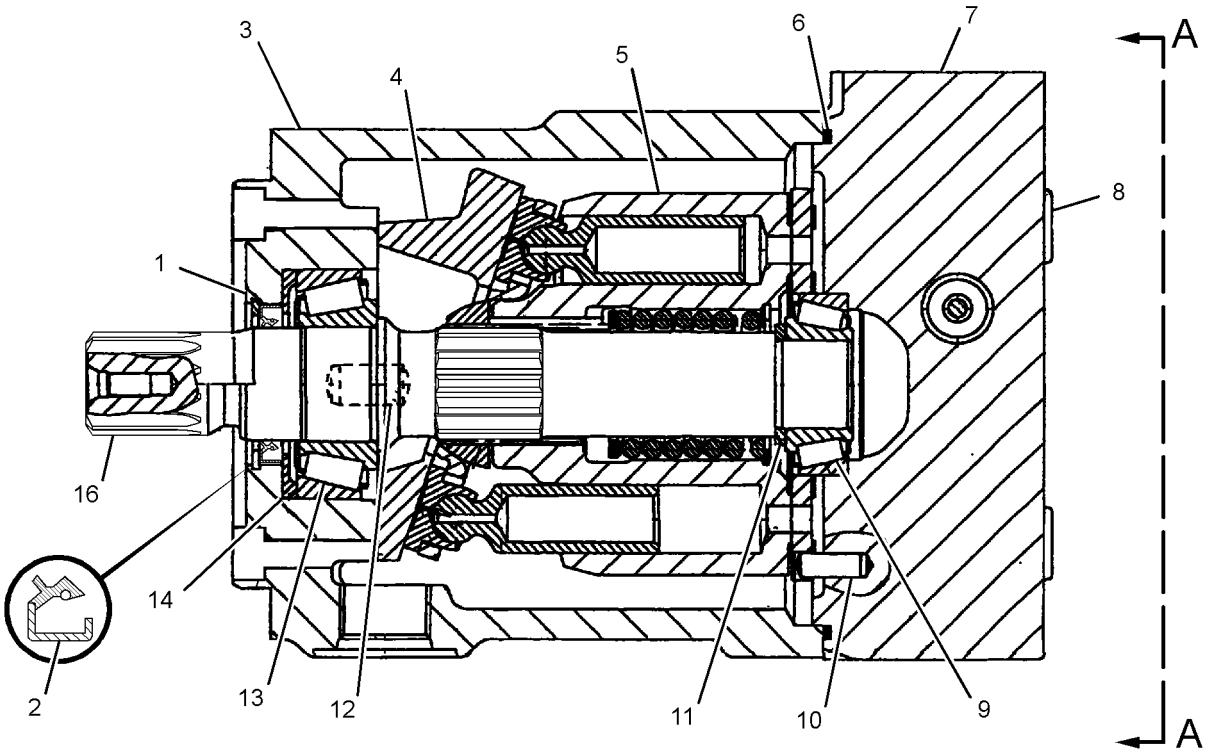

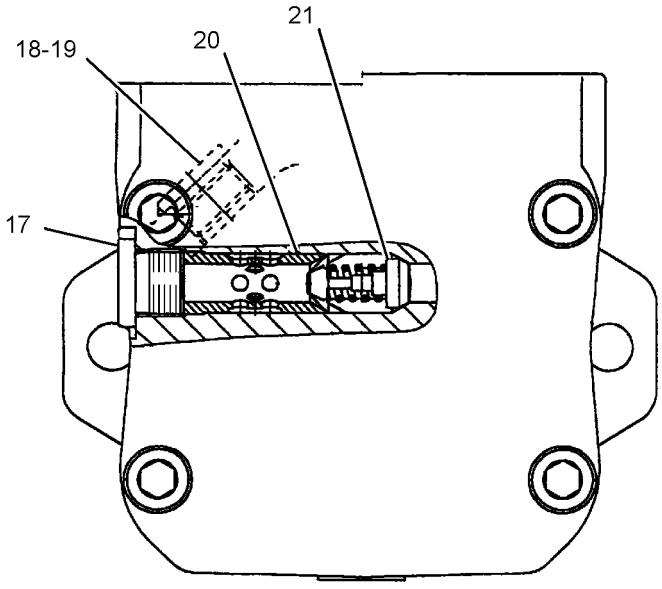

VIEW A-A

GRAPHIC #1 **<END>** g01527611

HYDRAULIC SYSTEM

247-8978 MOTOR GP-PISTON–FAN*R

S/N: WAP1-UP

PART OF 281-3647 FAN GP-SUCTION

SMCS-5058 **i02237598**

NOTE	REF NO	GRAPHIC REF	PART NUMBER	QTY	PART NAME 1 2 3 4 5 6 (PRODUCT LEVEL)	SEE PAGE
	1	1	**168-7319**	1	SEAL-SHAFT	
	2	1	**9S-8006**	1	PLUG-O-RING	
	3	1	**2M-9780**	1	SEAL-O-RING	
	4	1	**185-0278**	1	SWASHPLATE	
	5	1	**185-0276**	1	HOUSING	
Y	6	1	**259-0816**	1	ROTATING GP-PUMP	678
	7	1	**192-7470**	1	SEAL-O-RING	
	8	1	**185-0277**	1	COVER	
M	9	1	**095-0690**	4	BOLT-SOCKET HEAD (M14X2X60-MM)	
	10	1	**7Y-5267**	1	RING-RETAINING	
	11	1	**188-6280**	1	DOWEL	
	12	1	**101-2862**	2	DOWEL	
	13	1	**185-0295**	1	BEARING	
	14	1	**185-0296**	1	BEARING	
	15	1	**185-0297**	1	KIT-SHIM (INCLUDES 9-SHIMS)	
	16	1	**185-0280**	1	PLATE	
	17	1	**209-6063**	1	SHAFT	

M-METRIC PART
Y-SEPARATE ILLUSTRATION

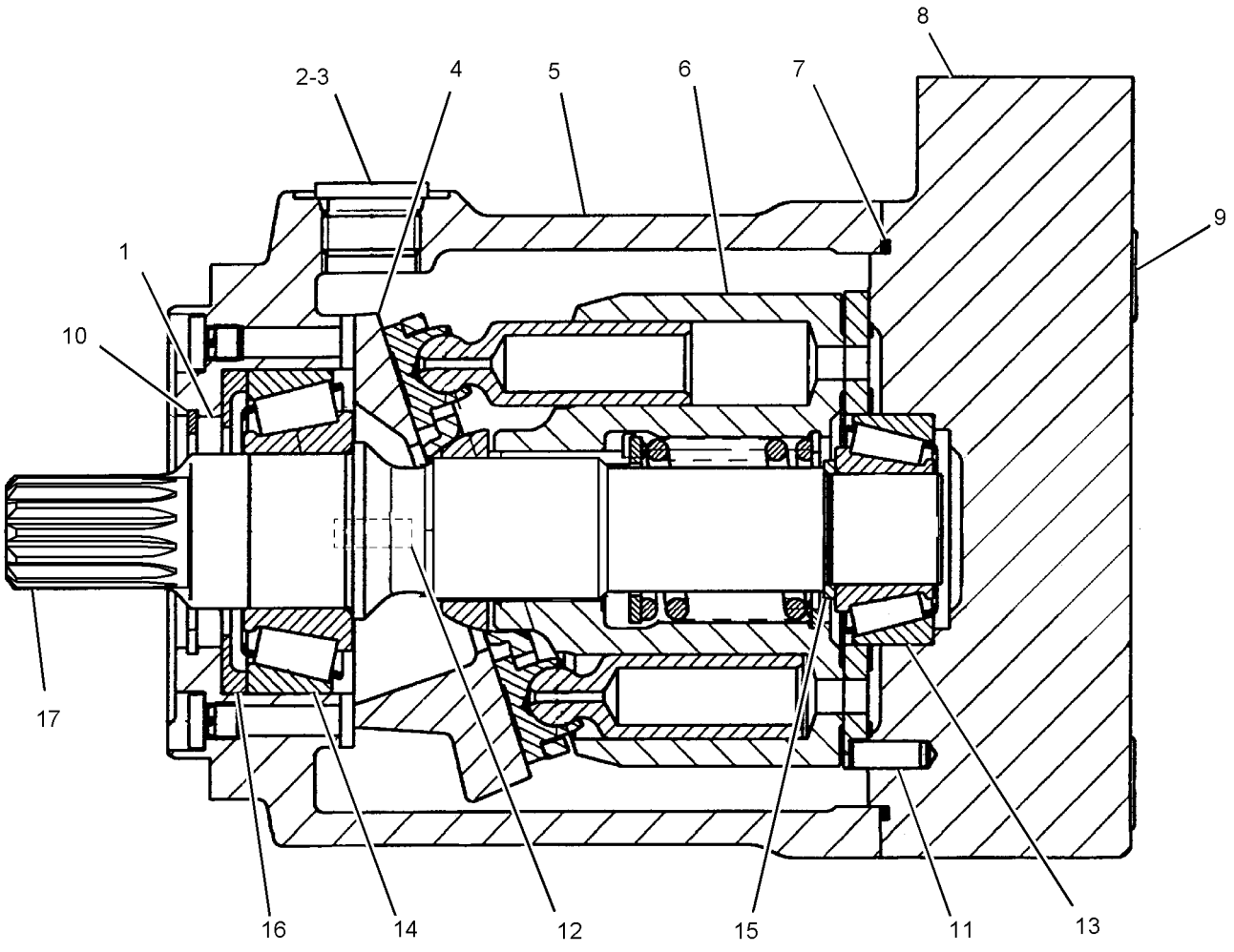

GRAPHIC #1 **<END>** g01129548

HYDRAULIC SYSTEM

295-9421 MOTOR GP-PISTON–SWING

S/N: WAP1-UP

PART OF 295-9446, 295-9447 MOTOR GP-SWING

SMCS-5058 **i02862048**

NOTE	REF NO	GRAPHIC REF	PART NUMBER	QTY	PART NAME 1 2 3 4 5 6 (PRODUCT LEVEL)	SEE PAGE
	1	1	**158-8967**	1	BUSHING	
	2	1	**158-8970**	1	SPACER (47X58X1.5-MM THK)	
	3	1	**158-8969**	12	PIN	
	4	1	**242-6922**	1	PLATE	
	5	1	**158-8973**	1	PLATE	
	6	1	**158-9009**	1	PISTON AS	
	7	1	**158-8966**	1	BARREL	
	8	1	**158-8981**	3	PLATE-FRICTION	
	9	1	**158-8982**	4	PLATE-SEPARATOR	
J	10	1	**7Y-4277**	1	SEAL-O-RING	
J	11	1	**8F-5900**	1	SEAL-O-RING	
	12	1	**185-0325**	1	PISTON-BRAKE	
J	13	1	**158-8978**	1	SEAL-O-RING	
	14	1	**158-8971**	1	SPACER (47X61X3-MM THK)	
	15	1	**177-2550**	1	HEAD GP-MOTOR	
	16	1	**110-5525**	2	PLUG	
J	17	1	**3J-1907**	2	SEAL-O-RING	
	18	1	**8T-9598**	1	RING-RETAINING	
	19	1	**4I-5850**	1	RING	
	20	1	**7Y-4269**	1	BEARING AS-ROLLER	
	21	1	**158-8965**	3	SPACER (50X61X3-MM THK)	
	22	1	**234-4543**	1	PLATE	
	23	1	**123-2139**	20	SPRING	
	24	1	**158-8968**	1	SPRING	
	25	1	**8T-4241**	2	RING-RETAINING	
	26	1	**234-4542**	1	BODY	
	27	1	**095-0946**	1	RING-RETAINING	
J	28	1	**158-8979**	1	SEAL-OIL	
	29	1	**158-8964**	1	SHAFT	
	30	1	**158-8976**	1	RETAINER	
	31	1	**295-9432**	1	BEARING AS	
J	32	1	**095-1716**	1	SEAL-O-RING	
	33	1	**170-9985**	2	VALVE	
	34	1	**170-9996**	2	PLUG	
J	35	1	**095-1600**	2	SEAL-O-RING	
	36	1	**170-9986**	2	SPRING	
M	37	1	**161-7611**	4	BOLT-SOCKET HEAD	
					AVAILABLE REPAIR KIT(S):	
J			**177-2547**		KIT-SEAL (SWING MOTOR)	

J-KIT MARKED J SERVICES PART(S) MARKED J
M-METRIC PART

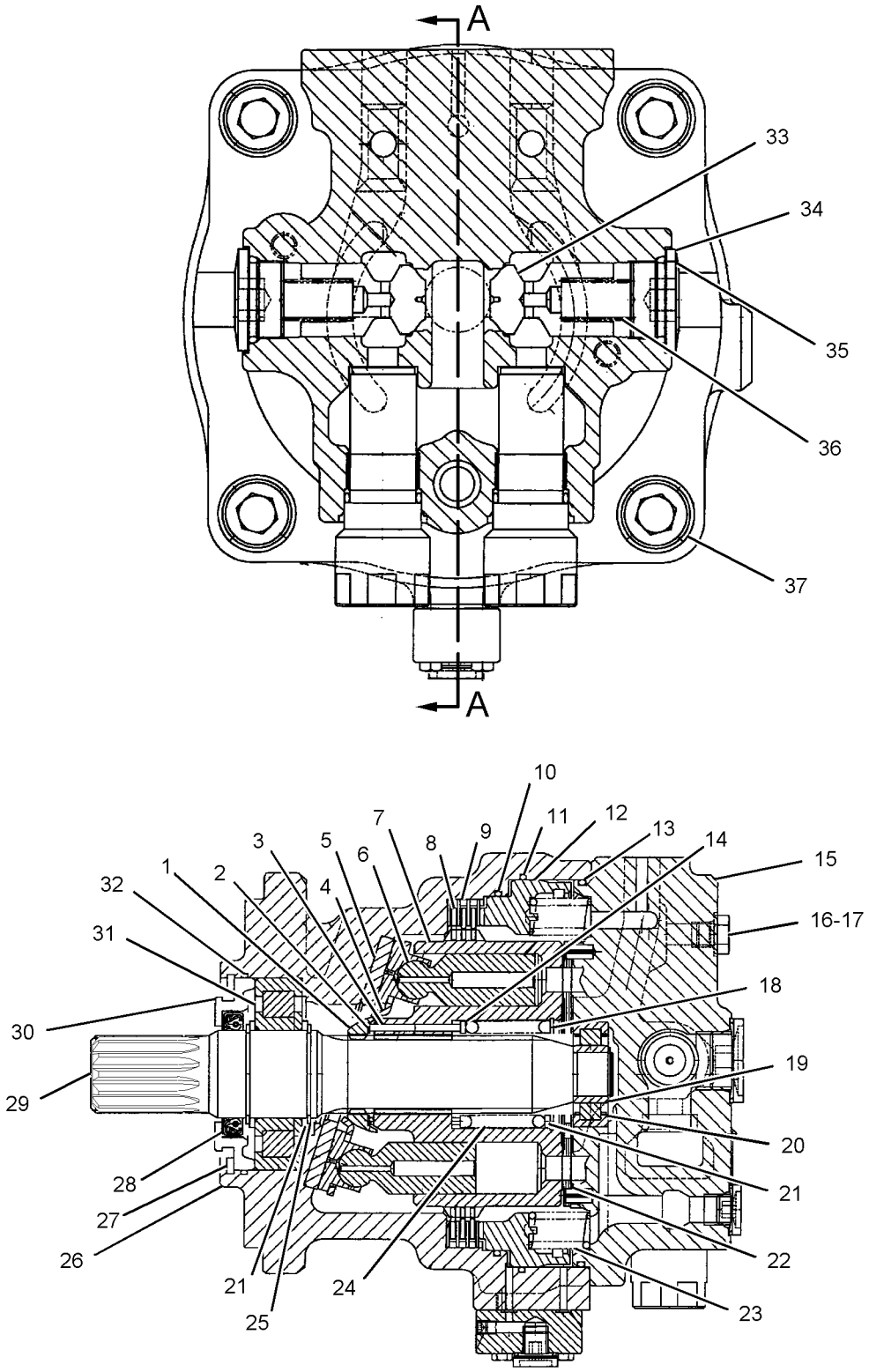

SECTION A-A

GRAPHIC #1 **<END>** g01083731

HYDRAULIC SYSTEM

295-9446 MOTOR GP-SWING–REAR*R

S/N: WAP1-UP

PART OF 234-4534 MOTOR & MTG GP-SWING

SMCS-5058 **i02889167**

NOTE	REF NO	GRAPHIC REF	PART NUMBER	QTY	PART NAME 1 2 3 4 5 6 (PRODUCT LEVEL)	SEE PAGE
	1	1	**095-1574**	2	SEAL-O-RING	
Y	2	1	**137-3713**	1	VALVE GP-SOLENOID (SWING PARKING BRAKE)	773
M	3	1	**8T-6974**	3	BOLT (M6X1X80-MM)	
	4	1	**8T-6759**	1	PLUG-PIPE	
Y	5	1	*295-9421*	1	MOTOR GP-PISTON (SWING)	651
Y	6	1	**177-2549**	2	VALVE GP-RELIEF (SWING)	762

M-METRIC PART
Y-SEPARATE ILLUSTRATION

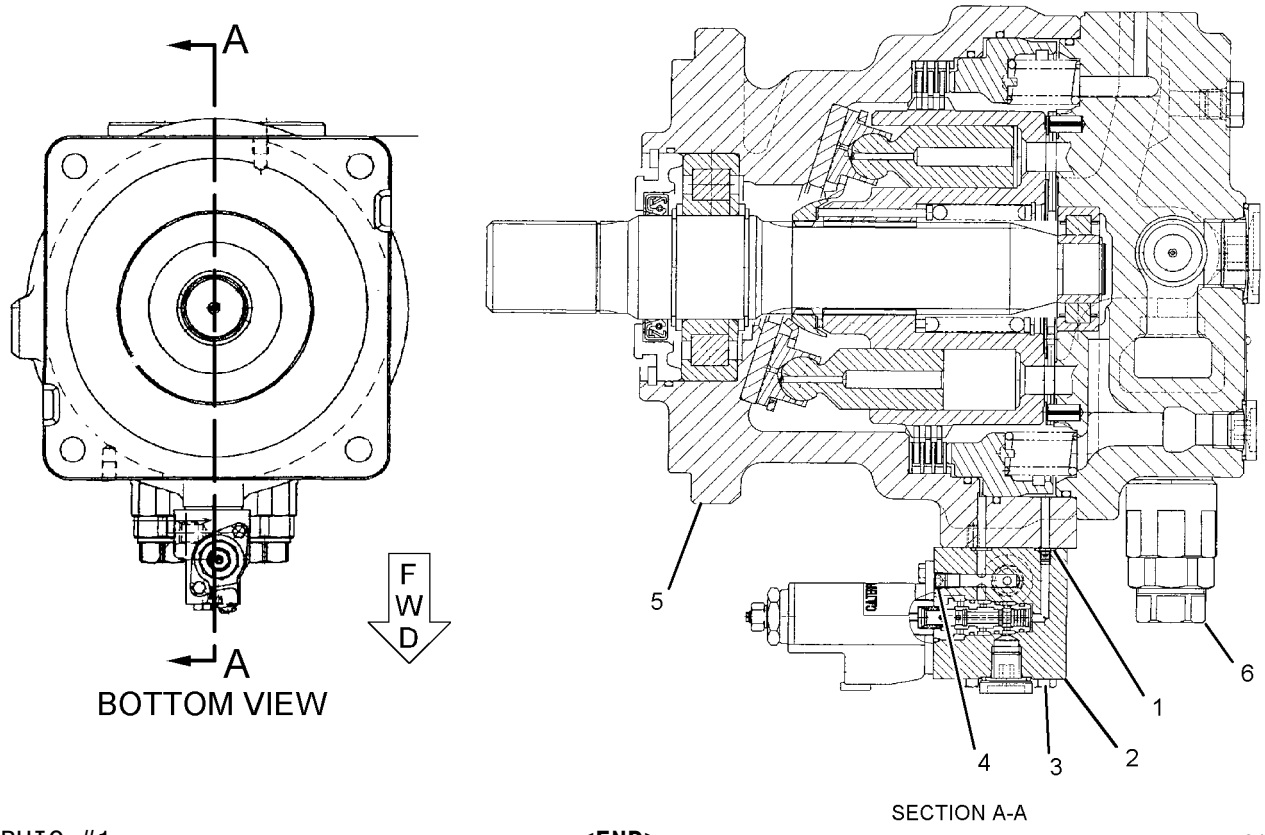

GRAPHIC #1 **<END>** g01079031

HYDRAULIC SYSTEM

295-9447 MOTOR GP-SWING–FRONT*R

S/N: WAP1-UP

PART OF 234-4536 MOTOR & MTG GP-SWING

SMCS-5058 **i02888873**

NOTE	REF NO	GRAPHIC REF	PART NUMBER	QTY	PART NAME 1 2 3 4 5 6 (PRODUCT LEVEL)	SEE PAGE
	1	1	**095-1573**	2	SEAL-O-RING	
	2	1	**137-3716**	1	BODY	
M	3	1	**7X-2533**	3	BOLT (M6X1X35-MM)	
	4	1	**8T-6759**	1	PLUG-PIPE	
Y	5	1	*295-9421*	1	MOTOR GP-PISTON (SWING)	651
Y	6	1	**177-2549**	2	VALVE GP-RELIEF (SWING)	762

M-METRIC PART
Y-SEPARATE ILLUSTRATION

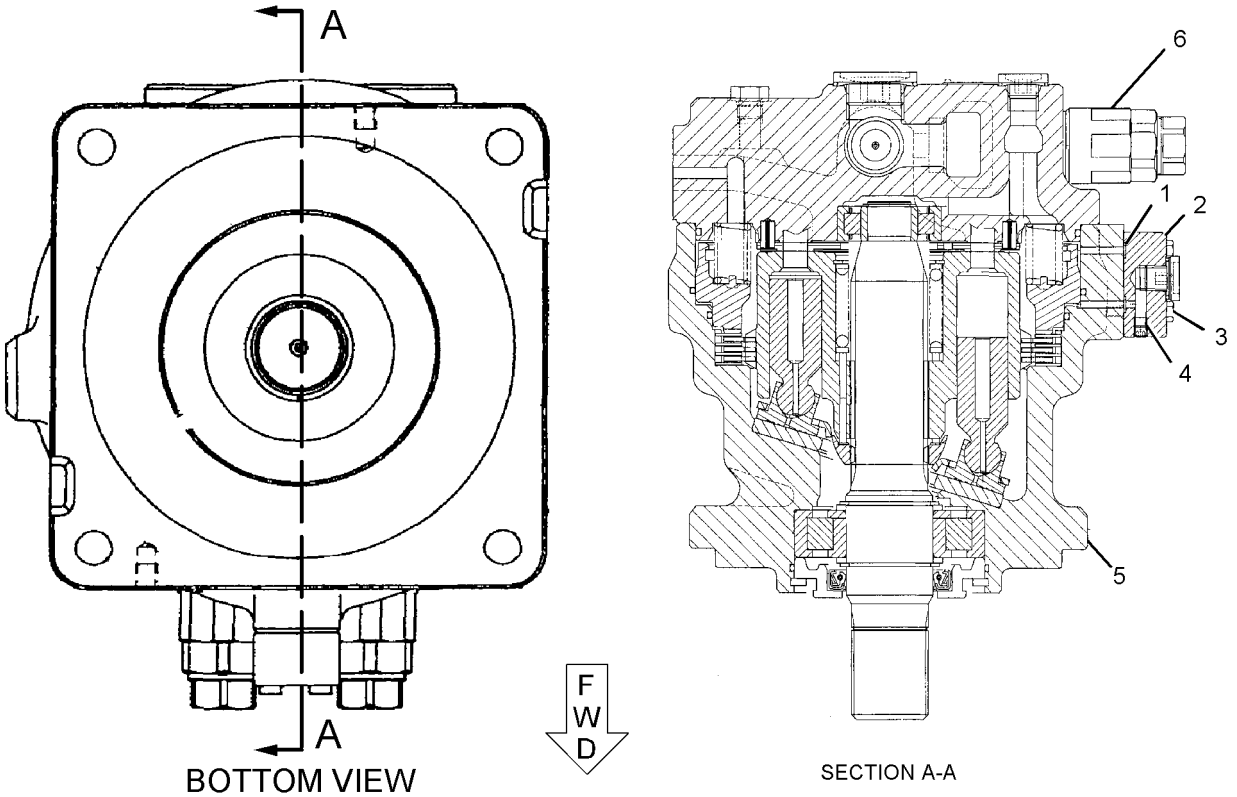

GRAPHIC #1 **<END>** g01089894

HYDRAULIC SYSTEM

209-5895 MOTOR GP-TRAVEL*R

S/N: WAP1-UP

PART OF 155-9198 MOTOR & MTG GP-TRAVEL

SMCS-4351, 5058 **i04028196**

NOTE	REF NO	GRAPHIC REF	PART NUMBER	QTY	PART NAME 1 2 3 4 5 6 (PRODUCT LEVEL)	SEE PAGE
	1	1	**191-5658**	1	PLATE	
	2	1	**191-5659**	1	PLATE	
	3	1	**295-9690**	1	PISTON AS	
	4	1	**191-5675**	1	BARREL AS	
	5	1	**191-5671**	16	SPRING	
	6	1	**191-5670**	1	PISTON-BRAKE	
J	7	1	**196-6103**	2	SEAL-O-RING	
	8	1	**095-0965**	2	PLUG	
	9	1	**4I-1022**	2	ORIFICE	
J	10	1	**3J-1907**	6	SEAL-O-RING	
	11	1	**110-5525**	6	PLUG	
	12	1	**191-5662**	1	VALVE GP-PRESSURE REDUCING (PARKING BRAKE RELEASE)	
	13	1	**191-5663**	1	COVER	
	14	1	**191-5665**	1	BEARING-NEEDLE	
	17	1	**191-5678**	1	RING-RETAINING	
	18	1	**191-5676**	1	HEAD GP-MOTOR	
		1	**5I-4168**	1	PIN	
	19	1	**1R-7037**	1	ORIFICE	
J	20	1	**095-1578**	2	SEAL-O-RING	
J	21	1	**196-6102**	1	SEAL-O-RING	
	22	1	**191-5673**	4	PLATE-FRICTION	
	23	1	**191-5672**	5	PLATE-SEPARATOR	
	24	1	**191-5657**	9	SPRING	
	25	1	**7I-8084**	12	PLUG	
	26	1	**191-5677**	1	PISTON AS	
	27	1	**8T-9044**	1	RING-RETAINING	
	28	1	**095-0930**	1	RING-RETAINING (EXTERNAL)	
	29	1	**191-5655**	1	SHAFT	
J	30	1	**191-5666**	1	SEAL-OIL	
	31	1	**191-5664**	1	BEARING-ROLLER	
	32	1	**191-5667**	2	PIVOT	
	33	1	**209-5908**	1	BODY	
	34	1	**191-5656**	1	GUIDE-BALL	
	35	1	**200-3391**	1	SWASHPLATE	
	36	1	**095-1698**	2	SEAL-O-RING	
	37	1	**5I-8770**	2	RING-BACKUP	
	38	1	**191-5654**	2	VALVE GP-RELIEF (LINE)	
	39	1	**4D-3118**	2	PLUG-PIPE	
	40	1	**9S-4188**	2	PLUG	
	41	1	**291-8148**	2	SEAL-O-RING	
M	42	1	**8T-0348**	12	BOLT-SOCKET HEAD (M16X2X50-MM)	
	43	1	**5I-8765**	1	STOP	
	44	1	**5H-1472**	1	BALL	
	45	1	**191-5669**	1	SEAT	
	46	1	**4I-7874**	1	SPRING	
	47	1	**191-5668**	1	SPOOL	
J	48	1	**095-1582**	2	SEAL-O-RING	
	49	1	**111-9998**	2	PLUG	
					AVAILABLE REPAIR KIT(S):	
J			**194-8258**	1	KIT-SEAL (TRAVEL MOTOR)	

J-KIT MARKED J SERVICES PARTS MARKED J
M-METRIC PART

209-5895 MOTOR GP-TRAVEL *(contd.)* i04028196

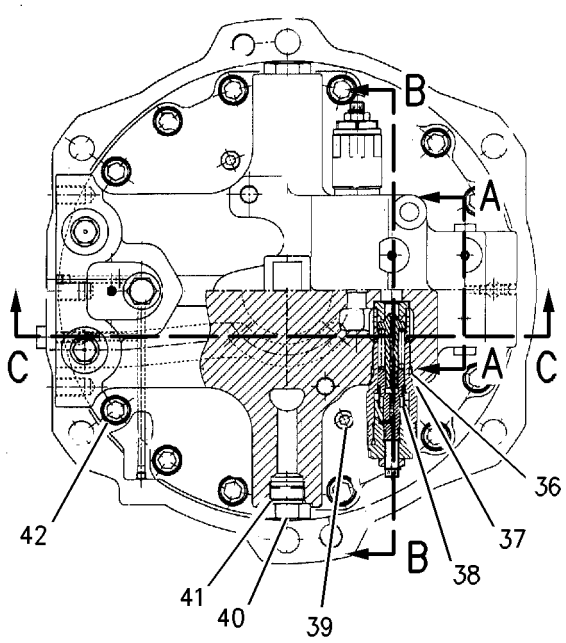

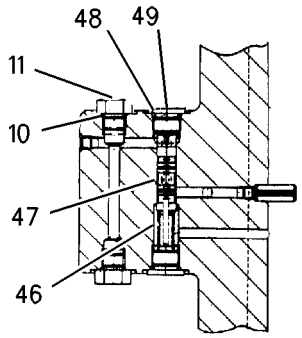

SECTION A-A

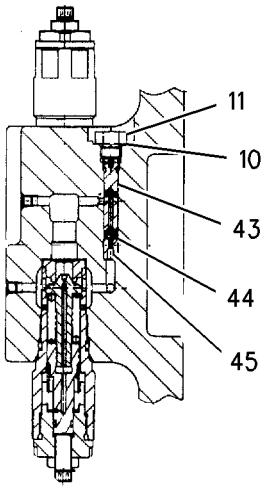

SECTION B-B

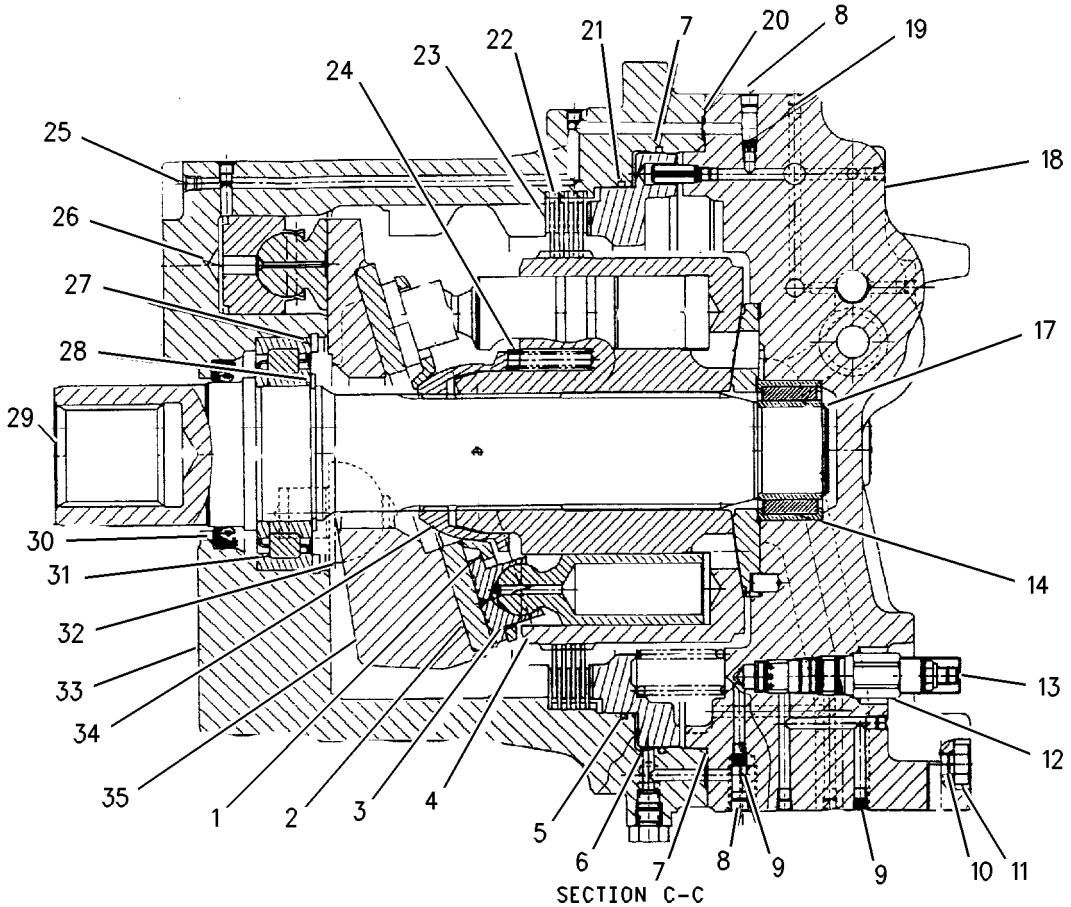

SECTION C-C

GRAPHIC #1 **<END>** g00848608

HYDRAULIC SYSTEM

197-2172 MOUNTING GP-COUNTERWEIGHT CYL

S/N: WAP1-UP
PART OF 294-1295 COUNTERWEIGHT AR
AN ATTACHMENT

SMCS-5409 **i02960267**

NOTE	REF NO	GRAPHIC REF	PART NUMBER	QTY	PART NAME 1 2 3 4 5 6 (PRODUCT LEVEL)	SEE PAGE
	1	1	**135-3924**	2	GUIDE AS	
M	2	1	**7X-2562**	4	BOLT (M20X2.5X45-MM)	
	3	1	**8T-4123**	4	WASHER (22X35X3.5-MM THK)	
M	4	1	**8T-4956**	2	BOLT (M12X1.75X35-MM)	
	5	1	**8T-4223**	2	WASHER-HARD (13.5X25.5X3-MM THK)	
	6	1	**173-8127**	1	PIN AS	
	7	1	**173-8122**	1	BRACKET AS	
M	8	1	**7X-2581**	6	BOLT (M30X3.5X100-MM)	
M	9	1	**8C-8722**	6	NUT (M30X3.5-THD)	
	10	1	**9X-8258**	6	WASHER (33X56X6-MM THK)	
M	11	1	**8T-5412**	1	BOLT (M12X1.75X140-MM)	
M	12	1	**8T-4244**	2	NUT (M12X1.75-THD)	
	13	1	**173-8130**	1	PIN	
	14	1	**173-8114**	1	BRACKET AS	
	15	1	**5R-5927**	1	WASHER (14X65X6-MM THK)	
M	16	1	**135-8575**	1	BOLT AS	
M	17	1	**8T-5878**	4	BOLT (M24X3X80-MM)	
	18	1	**8T-4167**	8	WASHER-HARD (26X44X4-MM THK)	
M	19	1	**8T-4001**	4	NUT (M24X3-THD)	
B	20	1	**121-1891**	2	SHIM (1-MM THK)	
B	21	1	**127-6680**	4	SHIM (0.5-MM THK)	
	22	1	**173-8119**	1	BAND AS	
M	23	1	**7X-2576**	4	BOLT (M24X3X70-MM)	
	24	1	**302-9275**	2	SPRING	
	25	1	**173-8113**	2	PLATE	
M	26	1	**8T-1159**	4	BOLT-SOCKET HEAD (M10X1.5X25-MM)	

B-USE AS REQUIRED
M-METRIC PART

197-2172 MOUNTING GP-COUNTERWEIGHT CYL *(contd.)* i02960267

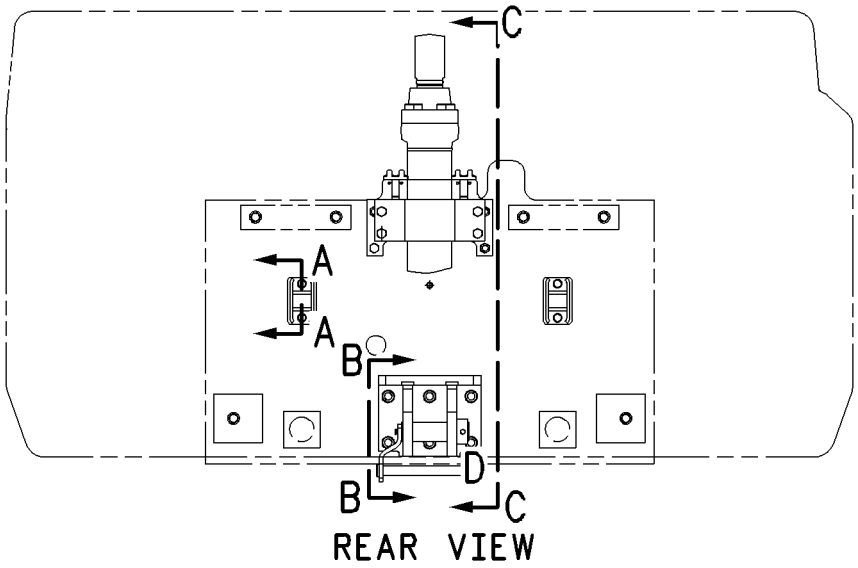

REAR VIEW

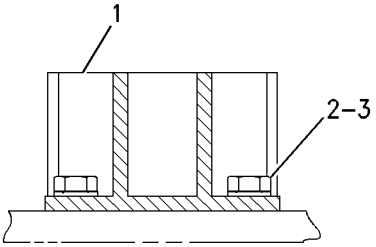

SECTION A-A

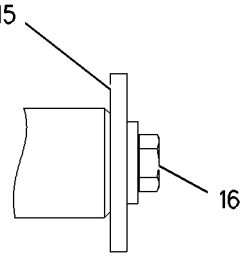

VIEW OF AREA D

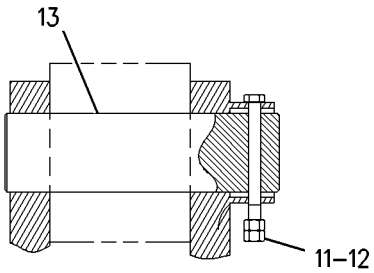

SECTION G-G

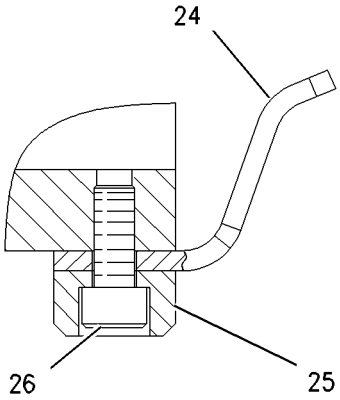

VIEW OF AREA F

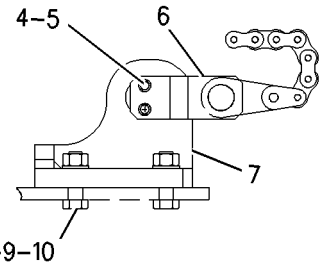

SECTION B-B

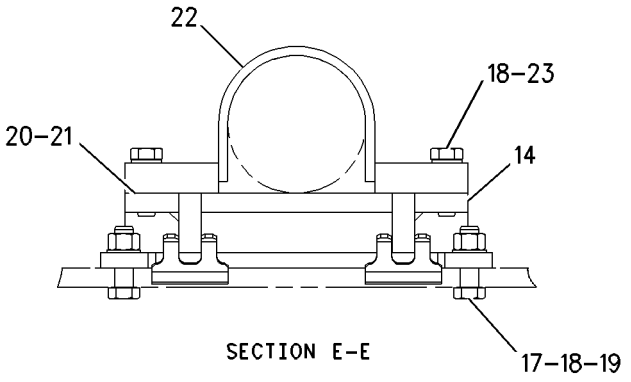

SECTION E-E

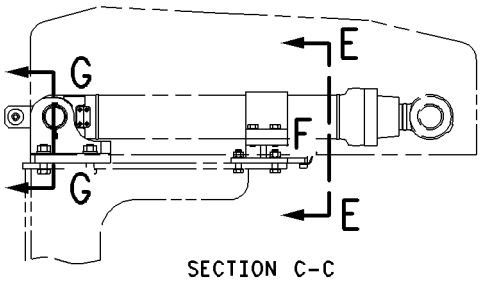

SECTION C-C

GRAPHIC #1 **<END>** g00838728

239-1784 MOUNTING GP-MAIN CONTROL VALVE

S/N: WAP1-UP

PART OF 297-0223 HYDRAULIC AR

SMCS-5051 **i03348081**

NOTE	REF NO	GRAPHIC REF	PART NUMBER	QTY	PART NAME 1 2 3 4 5 6 (PRODUCT LEVEL)	SEE PAGE
B	1	1	**7I-0070**	12	SHIM (1.6-MM THK)	
B	2	1	**7I-0071**	12	SHIM (3-MM THK)	
B	3	1	**7I-0072**	12	SHIM (5-MM THK)	
	4	1	**7I-0985**	8	RUBBER	
	5	1	**7I-7400**	4	COVER	
	6	1	**7X-2622**	8	WASHER (22X115X10-MM THK)	
	7	1	**7Y-0839**	3	SUPPORT AS	
	8	1	**333-7137**	1	SUPPORT AS	
	9	1	**176-4347**	4	SUPPORT AS	
	10	1	**207-6518**	1	SUPPORT AS	
	11	1	**260-8156**	1	SUPPORT AS	
	12	1	**245-5267**	1	SUPPORT AS	
M	13	1	**110-6968**	4	BOLT (M16X2X280-MM)	
	14	1	**6C-9149**	8	WASHER (22X50X10-MM THK)	
M	15	1	**7X-2553**	1	BOLT (M16X2X40-MM)	
M	16	1	**7X-2570**	4	BOLT (M20X2.5X220-MM)	
	17	1	**9X-8257**	5	WASHER (17.5X30X3.5-MM THK)	

B-USE AS REQUIRED
M-METRIC PART

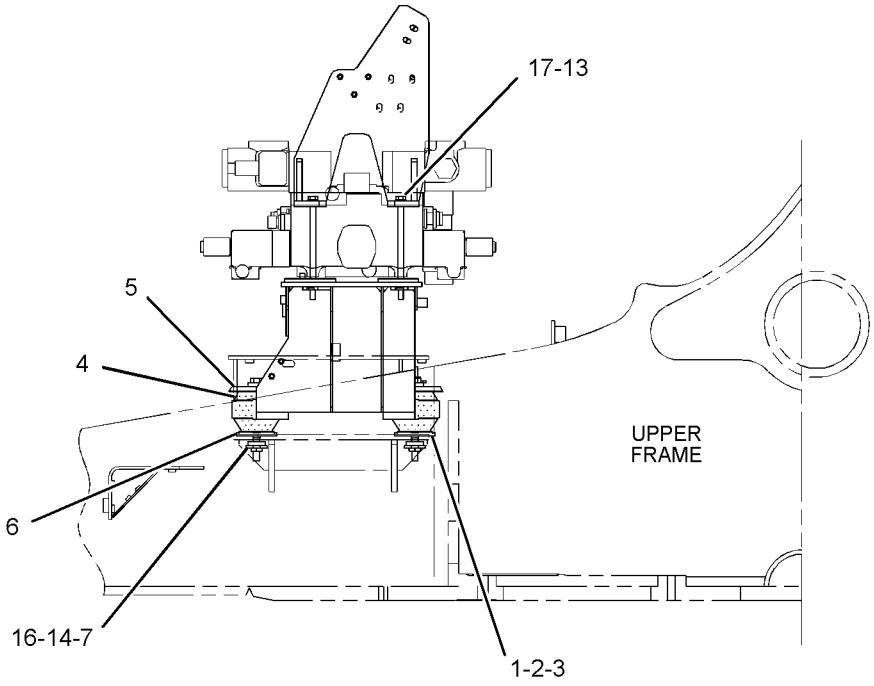

RIGHT SIDE VIEW

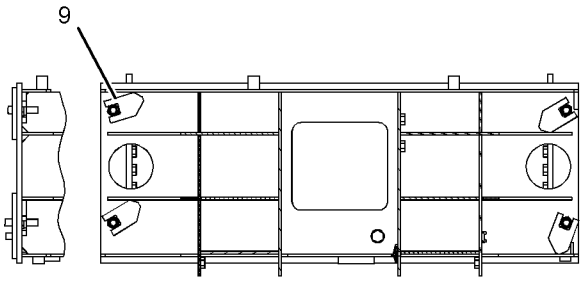

SECTION B-B

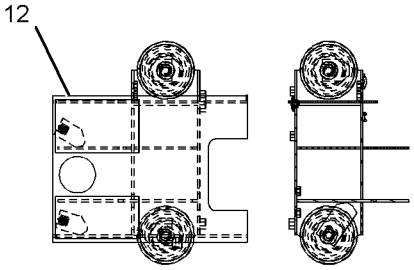

SECTION A-A

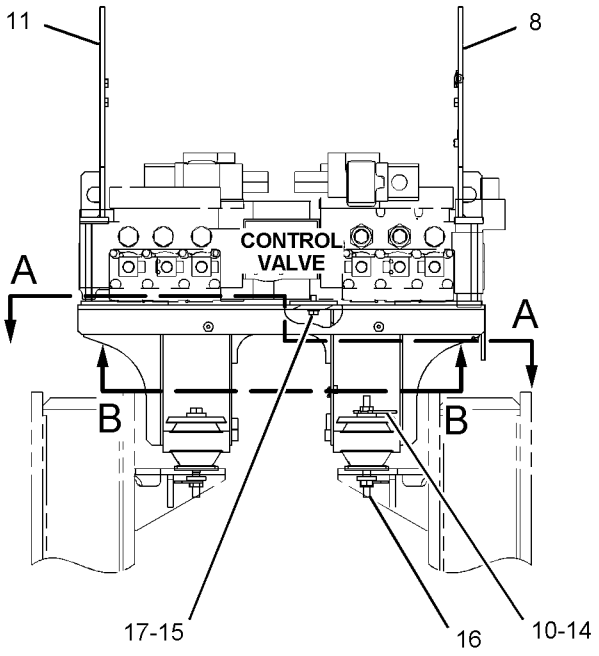

FRONT VIEW

GRAPHIC #1 **<END>** g01082604

HYDRAULIC SYSTEM

171-0113 PLUG GP-CONTROL VALVE

S/N: WAP1-UP
PART OF 296-7113 LINES GP-PILOT
AN ATTACHMENT

SMCS-5051 **i03590321**

NOTE	REF NO	GRAPHIC REF	PART NUMBER	QTY	PART NAME 1 2 3 4 5 6 (PRODUCT LEVEL)	SEE PAGE
	1	1	**4K-2039**	1	SEAL-O-RING	
	2	1	**5L-4758**	1	SEAL-O-RING	
	3	1	**4D-2297**	1	SEAL-O-RING	
	4	1	**095-1586**	1	SEAL-O-RING	

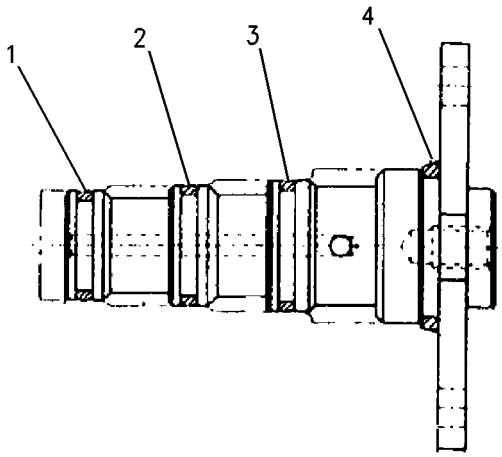

GRAPHIC #1 **<END>** g00856802

HYDRAULIC SYSTEM

311-9552 PUMP & MTG GP-HYDRAULIC

S/N: WAP1-UP

PART OF 297-0223 HYDRAULIC AR

SMCS-1387, 4324, 5055, 5070, 5073, 5084 **i03906483**

NOTE	REF NO	GRAPHIC REF	PART NUMBER	QTY	PART NAME 1 2 3 4 5 6 (PRODUCT LEVEL)	SEE PAGE
Y	1	1	**155-9222**	1	PUMP GP-GEAR (PILOT)	665
YR	2	1	**170-9918**	1	PUMP GP-PISTON (FAN MOTOR)	667
Y	3	1	**295-9678**	1	PUMP GP-PISTON	669
	4	1	**6V-7681**	1	SEAL-O-RING	
M	5		**7X-2563**	4	BOLT (M20X2.5X60-MM)	
	6		**8T-4123**	4	WASHER (22X35X3.5-MM THK)	
M	7	1	**8T-4139**	2	BOLT (M12X1.75X30-MM)	
	8	1	**8T-4223**	4	WASHER-HARD (13.5X25.5X3-MM THK)	
M	9	1	**8T-4956**	2	BOLT (M12X1.75X35-MM)	

M-METRIC PART
R-REMFG PART MAY BE AVAILABLE
Y-SEPARATE ILLUSTRATION

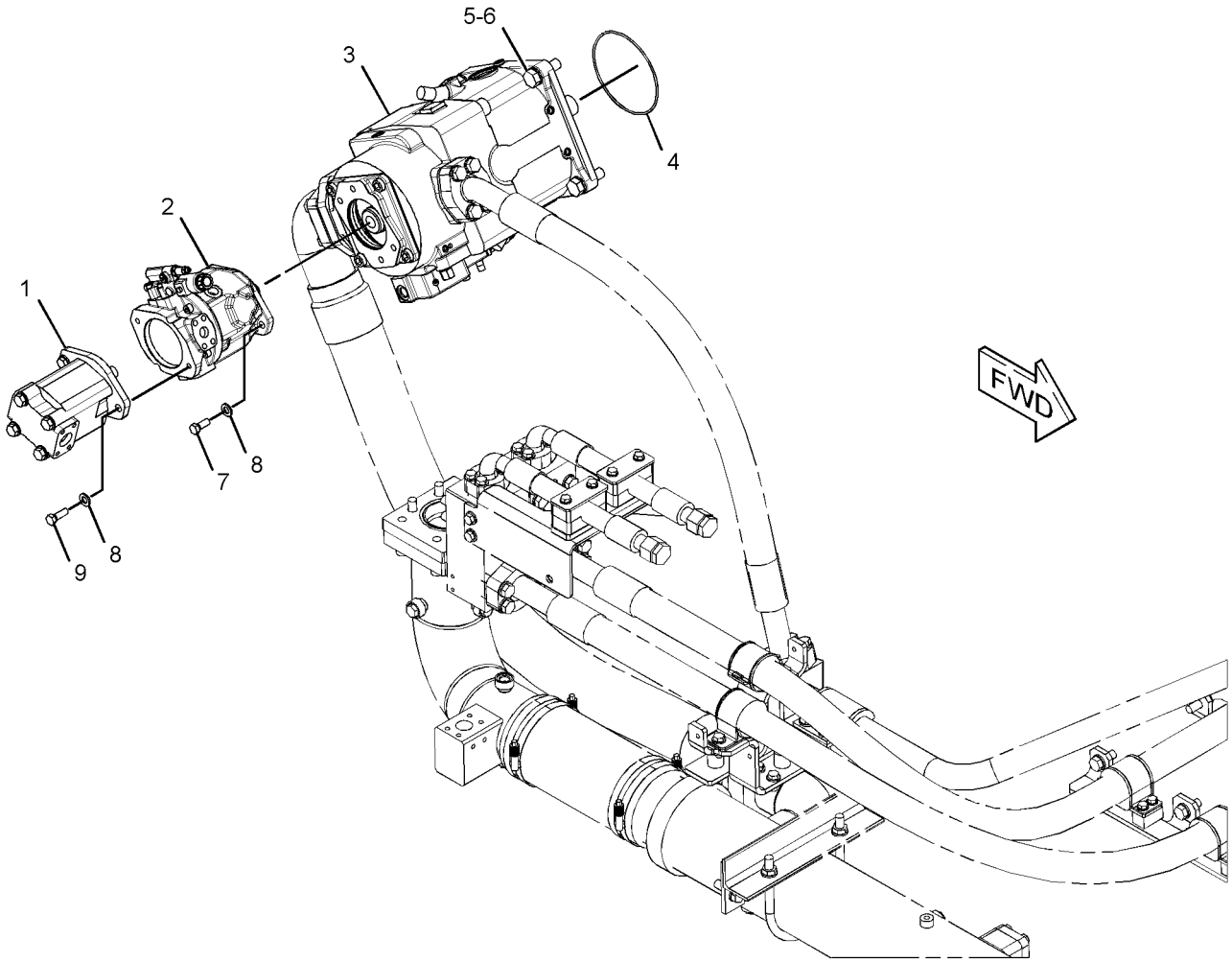

GRAPHIC #1 **<END>** g02161736

HYDRAULIC SYSTEM

324-4130 PUMP & MTG GP-MAIN HYDRAULIC

S/N: WAP1-UP

PART OF 297-0223 HYDRAULIC AR

SMCS-5070 **i03906596**

NOTE	REF NO	GRAPHIC REF	PART NUMBER	QTY	PART NAME 1 2 3 4 5 6 (PRODUCT LEVEL)	SEE PAGE
I	1	1	**2W-4332**	1	HOSE AS	
Y	2	1	**151-6646**	1	COUPLING GP-PUMP	479
	3	1	**196-8173**	1	ELBOW	
	4	1	**233-1152**	1	COVER	
	5	1	**233-1153**	1	CLAMP	
	6	1	**233-1154**	1	PLATE	
	7	1	**233-1155**	1	TUBE AS	
Y	8	1	**334-9990**	1	PUMP GP-PISTON	671
	9	1	**067-2551**	1	CLIP	
	10	1	**214-7568**	1	SEAL-O-RING	
	11	1	**3P-0658**	1	SEAL-O-RING	
	12	1	**6V-5043**	1	SEAL-O-RING	
	13	1	**7X-0314**	10	BOLT (7/16-14X3-IN)	
	14	1	**7X-0316**	2	BOLT (7/16-14X3.5-IN)	
M	15	1	**7X-2537**	2	BOLT (M8X1.25X35-MM)	
M	16	1	**7X-2577**	4	BOLT (M24X3X90-MM)	
	17	1	**8T-4121**	1	WASHER-HARD (11X21X2.5-MM THK)	
M	18	1	**8T-4136**	1	BOLT (M10X1.5X25-MM)	
	19	1	**8T-4167**	4	WASHER-HARD (26X44X4-MM THK)	
	20	1	**8T-4224**	2	WASHER-HARD (8.8X16X2-MM THK)	
	21	1	**8T-5360**	12	WASHER (12X22.5X2.5-MM THK)	

I-REFER TO HYDRAULIC INFORMATION SYSTEM
M-METRIC PART
Y-SEPARATE ILLUSTRATION

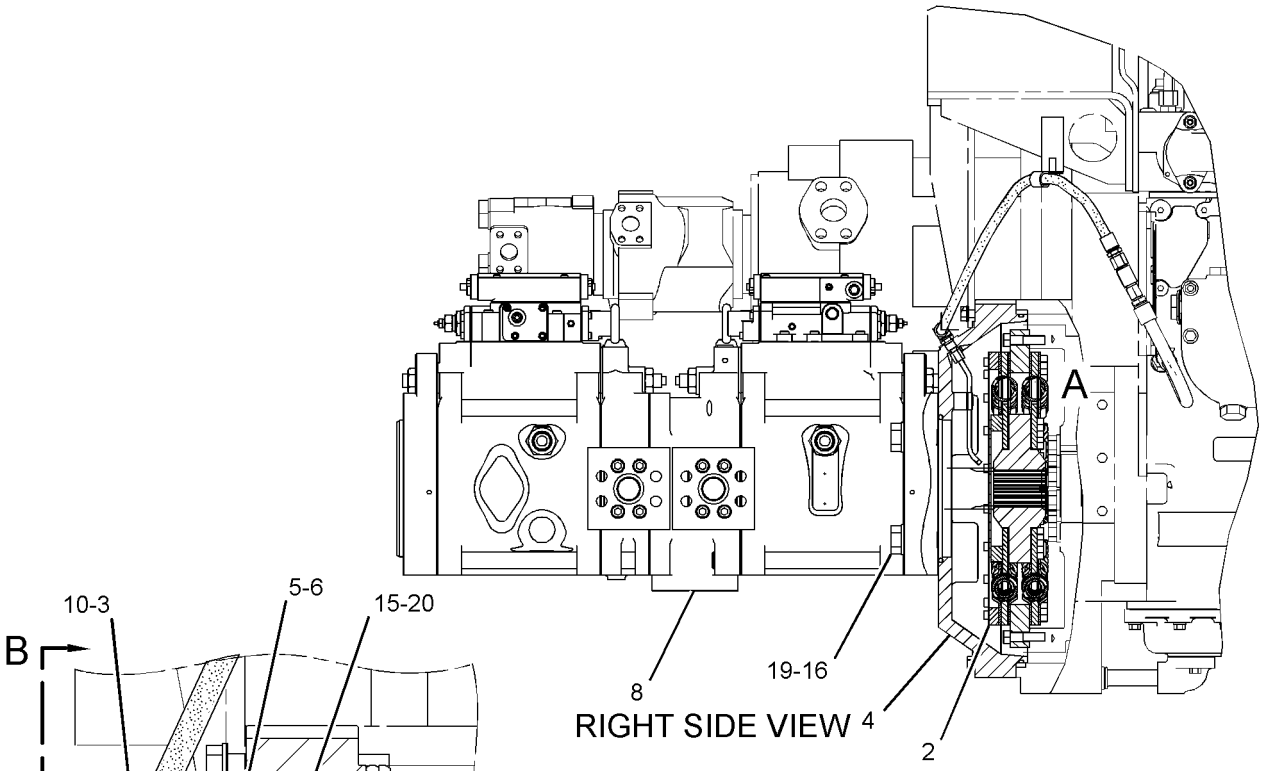

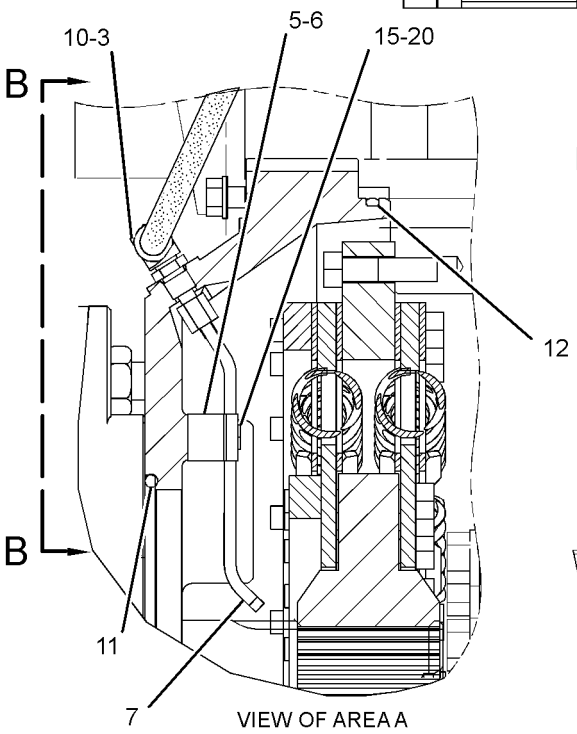

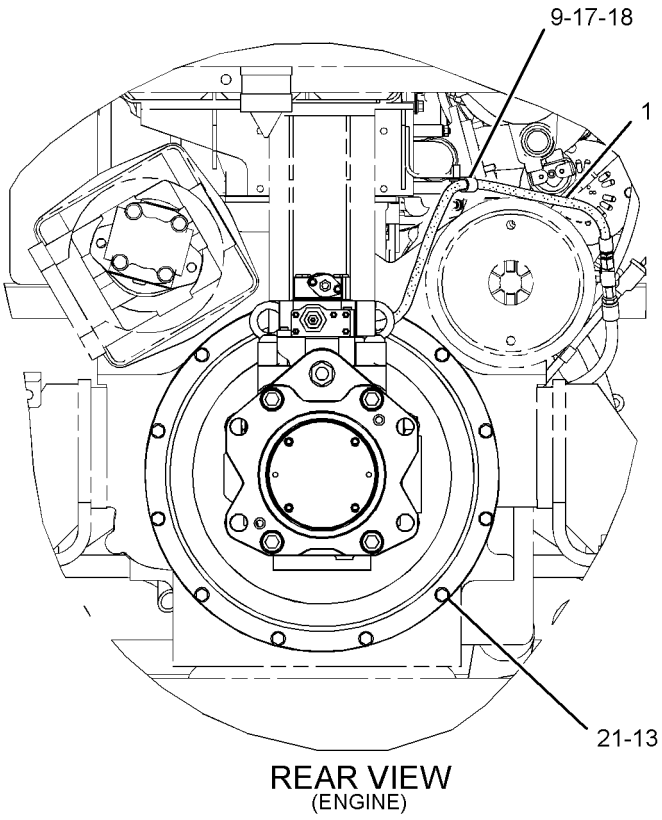

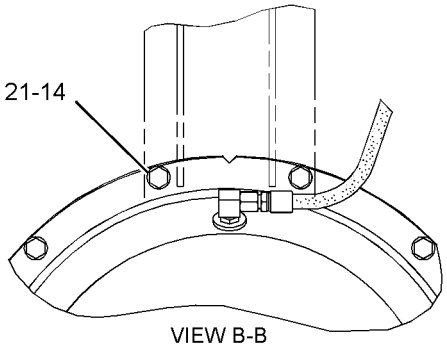

GRAPHIC #1 **<END>** g02149455

HYDRAULIC SYSTEM

155-9222 PUMP GP-GEAR–PILOT

S/N: WAP1-UP

PART OF 311-9552 PUMP & MTG GP-HYDRAULIC

SMCS-5073 **i03546604**

NOTE	PART NUMBER	QTY	PART NAME 1 2 3 4 5 6 (PRODUCT LEVEL)	SEE PAGE
Y	*155-9224*	1	PUMP GP-GEAR	666

Y-SEPARATE ILLUSTRATION

<END>

HYDRAULIC SYSTEM

155-9224 PUMP GP-GEAR

S/N: WAP1-UP

PART OF 155-9222 PUMP GP-GEAR

SMCS-5073 **i03643767**

NOTE	REF NO	GRAPHIC REF	PART NUMBER	QTY	PART NAME 1 2 3 4 5 6 (PRODUCT LEVEL)	SEE PAGE
	1	1	**158-8937**	2	PLATE	
M	2	1	**099-0724**	4	BOLT (M14X2X145-MM)	
	3	1	**096-5867**	4	WASHER-HARD (15X28X2.5-MM THK)	
	4	1	**209-5979**	1	COVER	
	5	1	**209-5981**	1	GEAR AS	
	6	1	**158-8936**	1	FLANGE	
J	7	1	**158-8940**	1	SEAL-LIP TYPE	
J	8	1	**8C-3110**	1	RING-RETAINING	
J	9	1	**158-8938**	2	SEAL-OIL	
J	10	1	**158-8939**	2	RING-BACKUP	
					AVAILABLE REPAIR KIT(S):	
J			**209-5980**	1	KIT-SEAL (GEAR PUMP)	

J-KIT MARKED J SERVICES PART(S) MARKED J
M-METRIC PART

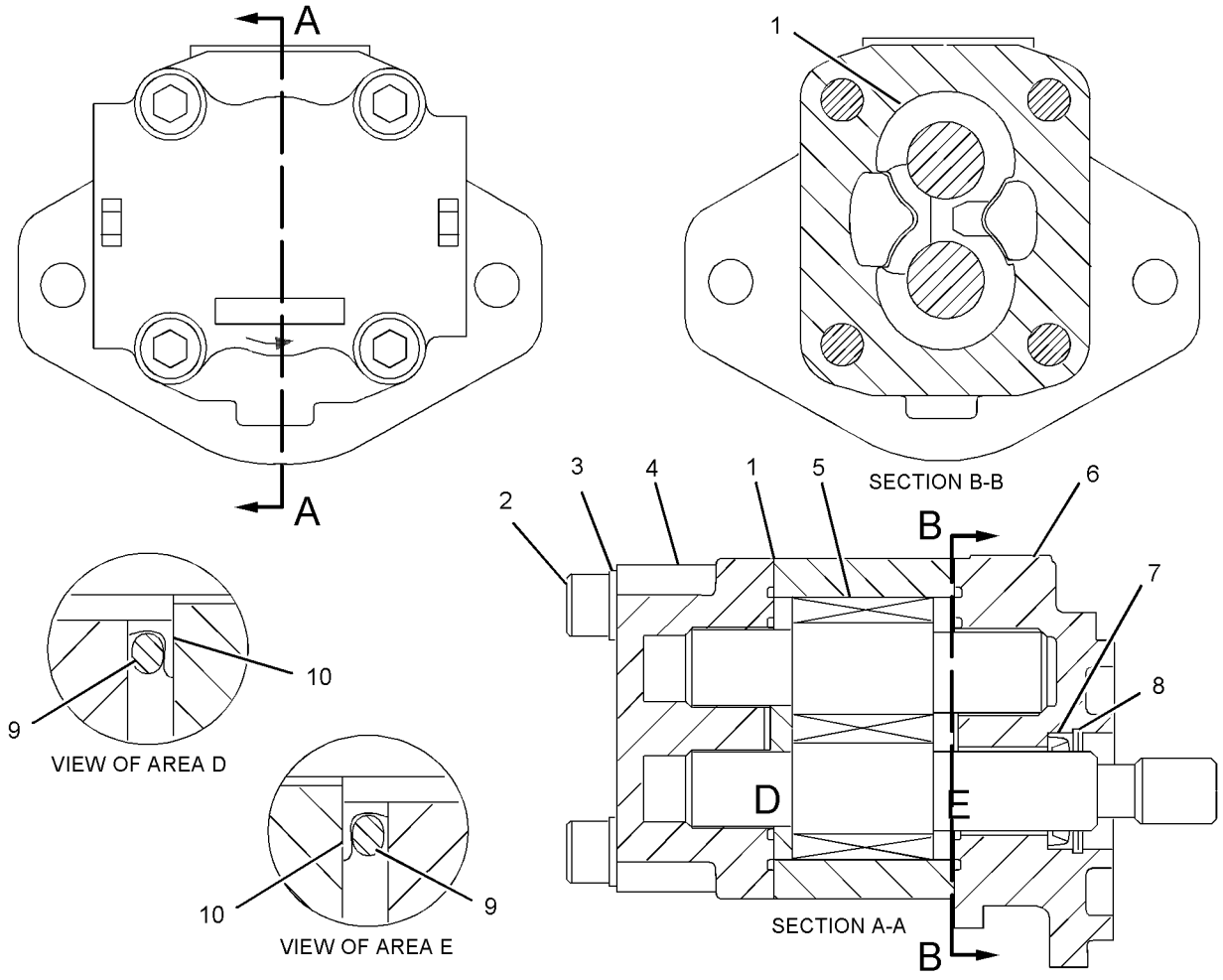

GRAPHIC #1 **<END>** g01079666

170-9918 PUMP GP-PISTON–FAN MOTOR*R

S/N: WAP1-UP

PART OF 311-9552 PUMP & MTG GP-HYDRAULIC

SMCS-5070 **i03497022**

NOTE	REF NO	GRAPHIC REF	PART NUMBER	QTY	PART NAME 1 2 3 4 5 6 (PRODUCT LEVEL)	SEE PAGE
	1	1	**185-0303**	1	SEAL-OIL	
	2	1	**213-9250**	4	SEAL-O-RING	
M	3	1	**9X-6032**	4	BOLT-SOCKET HEAD (M10X1.5X30-MM)	
	4	1	**209-5985**	1	COUPLING	
	5	1	**118-3122**	1	SEAL-O-RING	
	6	1	**213-9248**	1	SEAL-O-RING	
Y	7	1	**155-9135**	1	ROTATING GP-PUMP	676
	8	1	**9S-8005**	1	PLUG-O-RING	
	9	1	**033-6028**	1	SEAL-O-RING	
	10	1	**155-9134**	2	PLATE	
	11	1	*209-5986*	1	BEARING AS	
	11A	1	**185-0305**	1	KIT-SHIM	
	11B	1	**155-9125**	1	BEARING AS-ROLLER	
	11C	1	**191-7583**	1	BEARING AS-ROLLER	
	12	1	**185-0299**	1	HOUSING	
	13	1	**194-9473**	1	RING	
	14	1	**8T-9597**	1	RING-RETAINING	
	15	1	**209-5984**	1	SHAFT	
	16	1	**155-9131**	1	SWASHPLATE	
Y	17	1	**209-5982**	1	ACTUATOR GP	466
	18	1	**209-5983**	1	COVER	
	19	1	**8T-4223**	2	WASHER-HARD (13.5X25.5X3-MM THK)	
M	20	1	**8T-3957**	2	BOLT-SOCKET HEAD (M12X1.75X30-MM)	
	21	1	**188-6280**	1	DOWEL	
Y	22	1	**209-5937**	1	VALVE GP-PUMP CONTROL (PRESSURE COMPENSATOR)	754
M	23	1	**8T-8442**	4	BOLT-SOCKET HEAD (M6X1X30-MM)	

M-METRIC PART
Y-SEPARATE ILLUSTRATION

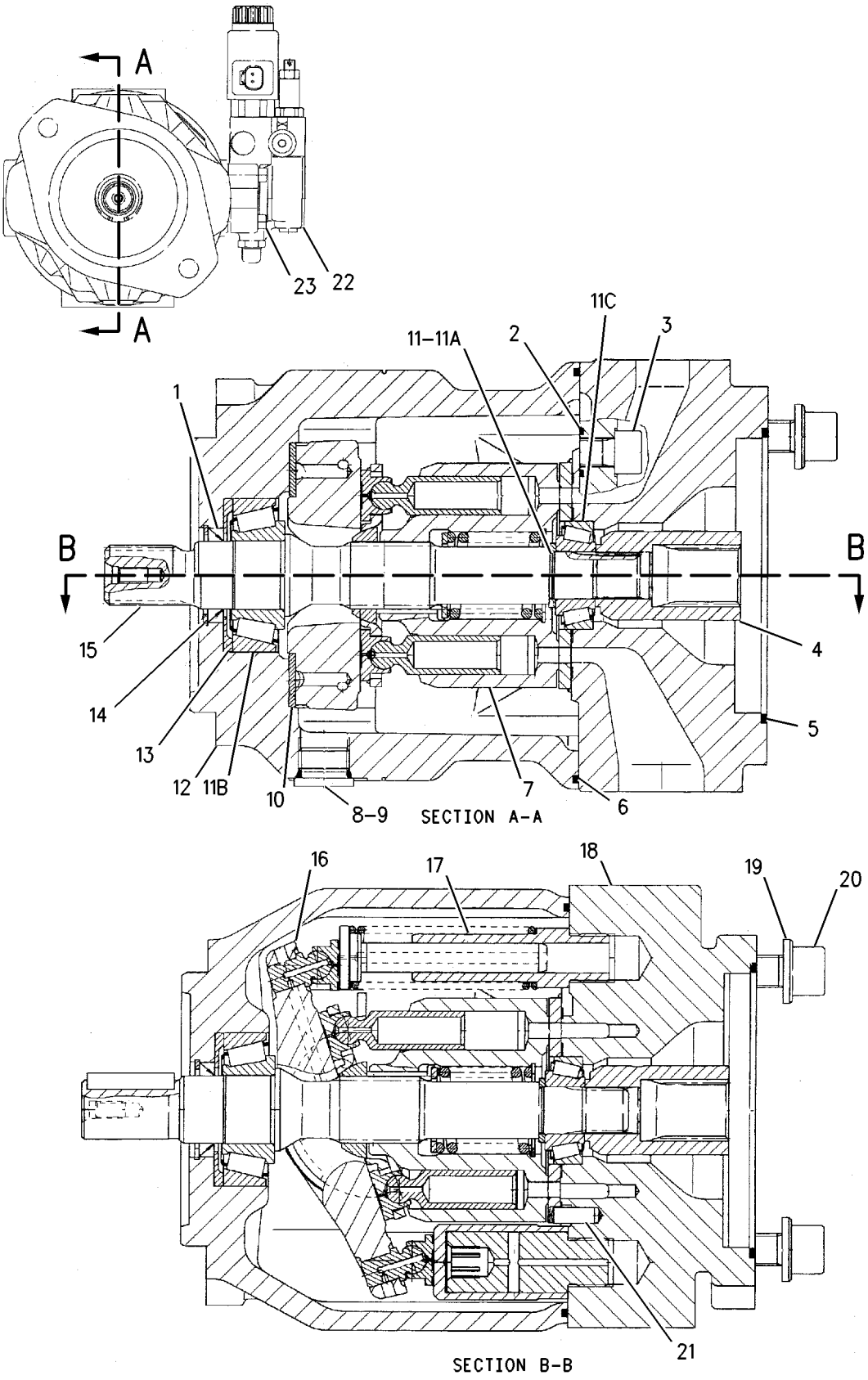

GRAPHIC #1 **<END>** g00853508

HYDRAULIC SYSTEM

295-9678 PUMP GP-PISTON

S/N: WAP1-UP

PART OF 311-9552 PUMP & MTG GP-HYDRAULIC

SMCS-5070 **i03950293**

NOTE	REF NO	GRAPHIC REF	PART NUMBER	QTY	PART NAME 1 2 3 4 5 6 (PRODUCT LEVEL)	SEE PAGE
Y	1	1	*259-0899*	1	ROTATING GP-PUMP	679
	2	1	**170-9900**	2	PIN	
	3	1	**128-8981**	2	CAP	
Y	4	1	**158-9103**	1	ACTUATOR GP-PUMP	467
	5	1	**145-3171**	2	LOCKNUT-SEAL	
	6	1	**145-3169**	2	PIN-THREADED	
	7	1	**234-9503**	1	SEAL-O-RING	
Y	8	1	**191-5593**	1	HEAD GP-PUMP	529
	9	1	**096-8058**	2	RING-RETAINING	
Y	10	1	*191-5596*	1	COVER GP-PUMP	480
	11	1	**164-6944**	1	IMPELLER	
Y	12	1	**315-4478**	1	VALVE GP-COMPENSATING	756
Y	13	1	**158-9104**	1	ACTUATOR GP-PUMP	468
	14	1	**112-4630**	2	SCREW (1-5/16-THD)	
Y	15	1	**158-9105**	1	VALVE GP-SHUTTLE	770
	16	1	**117-5716**	4	PIN	
	17	1	**9T-3928**	4	PLUG AS	
					(EACH INCLUDES)	
		1	**187-8001**	1	SEAL	
M	18	1	**177-0359**	4	BOLT-SOCKET HEAD (M22X2.5X90-MM)	

M-METRIC PART
Y-SEPARATE ILLUSTRATION

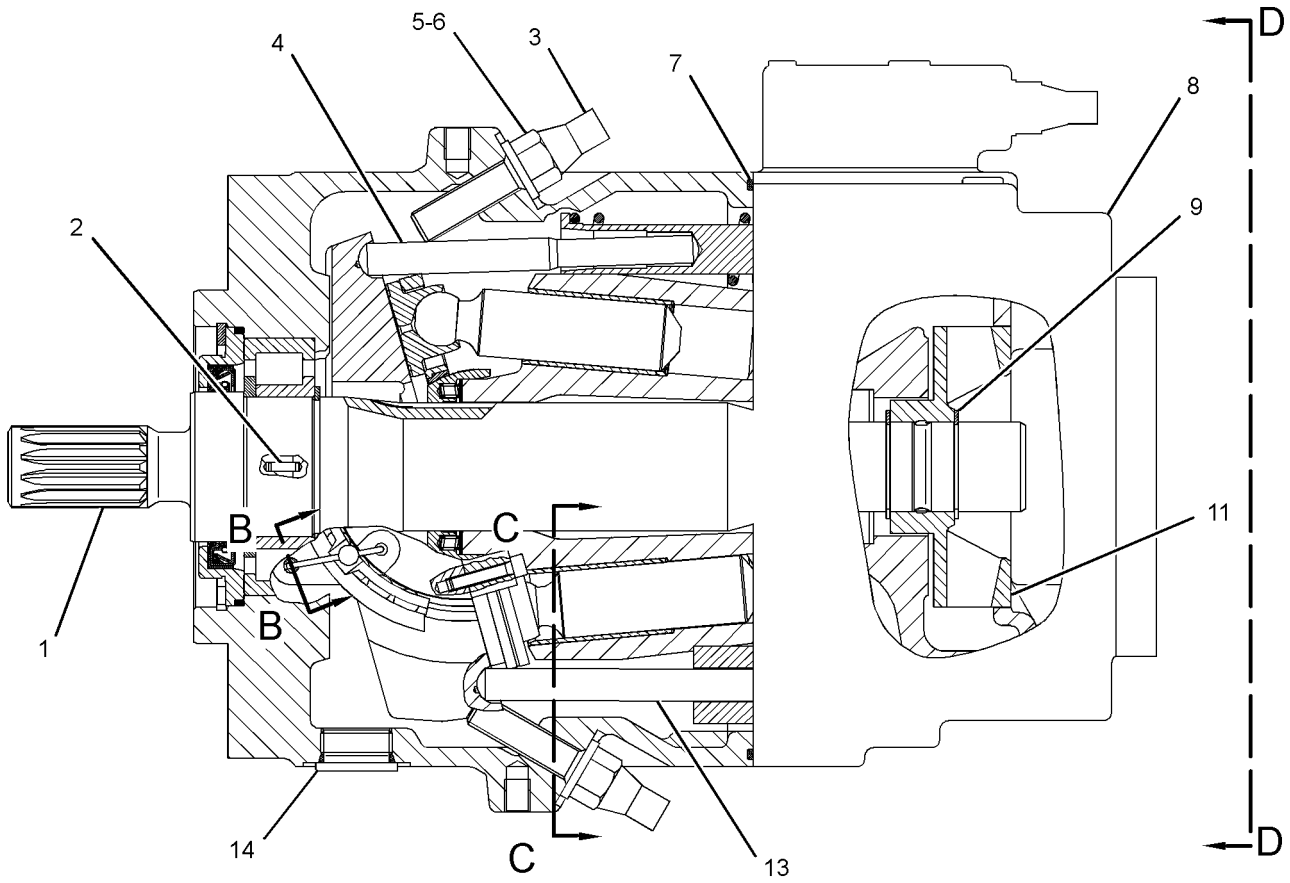

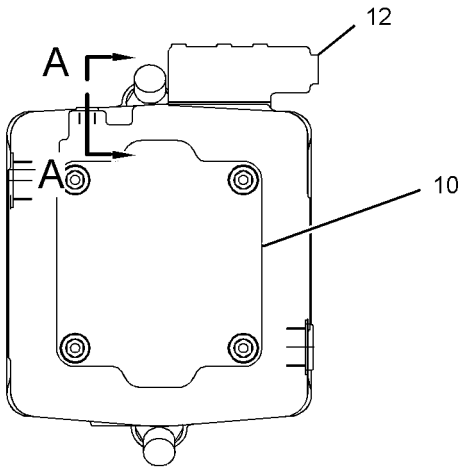

VIEW D-D

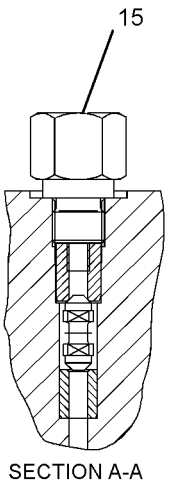

SECTION A-A

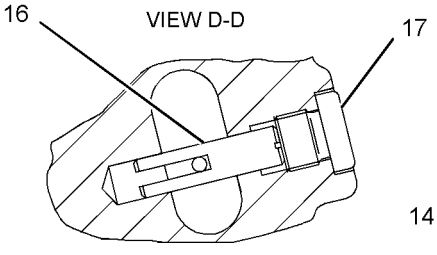

SECTION B-B

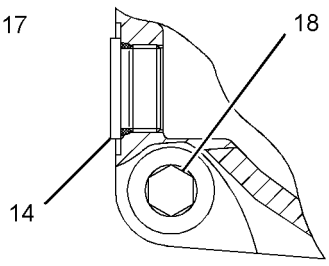

SECTION C-C

GRAPHIC #1

<END>

g02158260

HYDRAULIC SYSTEM

334-9990 PUMP GP-PISTON

S/N: WAP1-UP

PART OF 324-4130 PUMP & MTG GP-MAIN HYDRAULIC

SMCS-5070 **i03906641**

NOTE	REF NO	GRAPHIC REF	PART NUMBER	QTY	PART NAME 1 2 3 4 5 6 (PRODUCT LEVEL)	SEE PAGE
Y	1	1	**335-0011**	1	PUMP GP-PISTON	673
Y	2	1	**200-3270**	2	VALVE GP-PUMP CONTROL (PRESSURE, FLOW COMPENSATOR)	751
	3	1	**204-2856**	2	FLANGE	
	4	1	**109-1296**	2	SEAL-O-RING	
M	5	1	**6V-8200**	8	BOLT-SOCKET HEAD (M12X1.75X35-MM)	

M-METRIC PART
Y-SEPARATE ILLUSTRATION

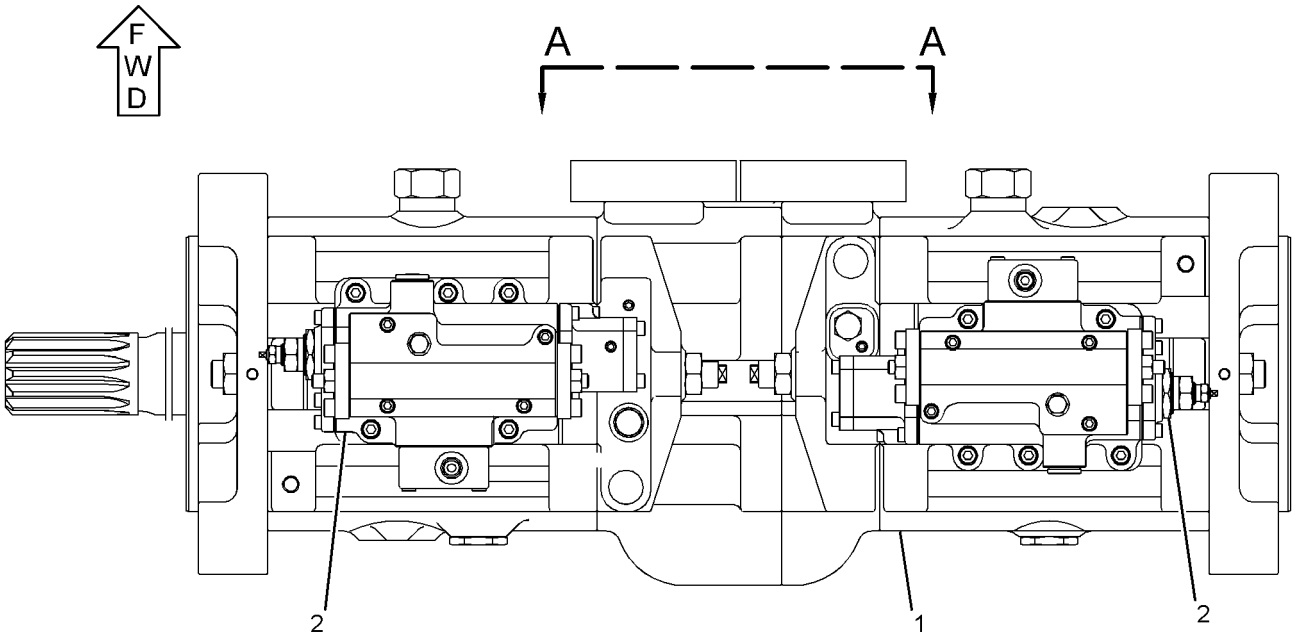

TOP VIEW

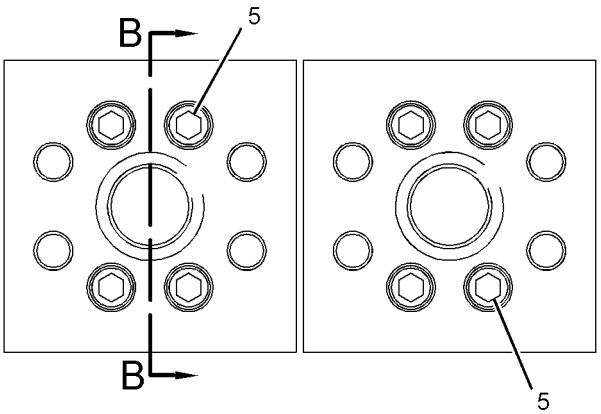

VIEW A-A

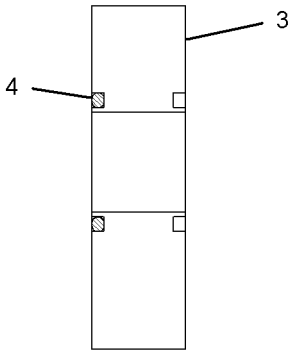

SECTION B-B

GRAPHIC #1 **<END>** g02149444

HYDRAULIC SYSTEM

335-0011 PUMP GP-PISTON

S/N: WAP1-UP

PART OF 334-9990 PUMP GP-PISTON

SMCS-5070 **i03906709**

NOTE	REF NO	GRAPHIC REF	PART NUMBER	QTY	PART NAME 1 2 3 4 5 6 (PRODUCT LEVEL)	SEE PAGE
	1	1	**200-3291**	2	STOP	
	2	1	**095-1787**	2	RING-BACKUP	
	3	1	**206-9297**	2	SEAL-O-RING	
	4	1	**200-3289**	2	PISTON	
	5	1	**200-3297**	2	PIN AS	
	6	1	**206-9285**	2	SEAL-O-RING	
	7	1	**095-1795**	2	RING-BACKUP	
	8	1	**200-3290**	2	STOP	
	9	1	**206-9290**	19	SEAL-O-RING	
M	10	1	**200-3292**	2	SETSCREW (M20X2.5X90-MM)	
	11	1	**210-0834**	1	SEAL-O-RING	
	12	1	**7Y-4274**	2	PLUG	
	13	1	**206-9292**	2	SEAL-O-RING	
M	14	1	**197-0226**	2	BOLT-SOCKET HEAD (M10X1.5X75-MM)	
	15	1	**206-9286**	1	SEAL-O-RING	
	16	1	**210-0835**	4	SEAL-O-RING	
	17	1	**295-9692**	2	PISTON AS	
	18	1	**7I-8084**	31	PLUG	
M	19	1	**160-8758**	4	BOLT-SOCKET HEAD (M10X1.5X55-MM)	
	20	1	**206-9287**	2	SEAL-O-RING	
	21	1	**200-3272**	1	SHAFT	
	22	1	**200-3285**	1	COVER	
	23	1	**7I-8177**	2	ADAPTER	
	24	1	**190-7674**	4	SEAL-O-RING	
	25	1	**200-3283**	8	WASHER	
M	26	1	**210-9434**	4	BOLT-SOCKET HEAD (M22X2.5X300-MM)	
	27	1	**200-3286**	2	HOUSING	
	28	1	**335-0009**	1	BARREL AS	
	29	1	**234-4539**	2	DOWEL	
	30	1	**200-3287**	1	COVER	
	31	1	**200-3273**	1	COUPLING	
	32	1	**200-3277**	1	PLATE	
	33	1	**200-3288**	1	COVER	
	34	1	**200-3275**	2	BEARING-NEEDLE	
	35	1	**209-5875**	8	SETSCREW	
	36	1	**200-3280**	18	SPRING	
	37	1	**200-3279**	2	GUIDE	
	38	1	**200-3278**	2	PLATE	
	39	1	**200-3281**	2	PLATE	
	40	1	**200-3296**	2	SWASHPLATE AS	
M	41	1	**210-9435**	4	BOLT-SOCKET HEAD (M22X2.5X370-MM)	
	42	1	**200-3282**	2	PLATE	
	43	1	**200-3274**	2	BEARING-ROLLER	
	44	1	**200-3276**	4	SPACER	
	45	1	**096-5516**	2	RING-RETAINING	
	46	1	**200-3298**	1	SEAL	
	47	1	**200-3271**	1	SHAFT	
	48	1	**200-3284**	1	COVER	
M	49	1	**8T-1158**	8	BOLT-SOCKET HEAD (M8X1.25X20-MM)	
	50	1	**093-1323**	2	PLUG	
	51	1	**8C-3347**	5	PIN-ROLL	
M	52	1	**096-5400**	2	SETSCREW-SOCKET (M20X2.5X50-MM)	
M	53	1	**8T-4131**	4	NUT (M20X2.5-THD)	
	54	1	**095-0965**	5	PLUG	
	55	1	**7I-8164**	4	ORIFICE	
	56	1	**335-0008**	1	BARREL AS	

M-METRIC PART

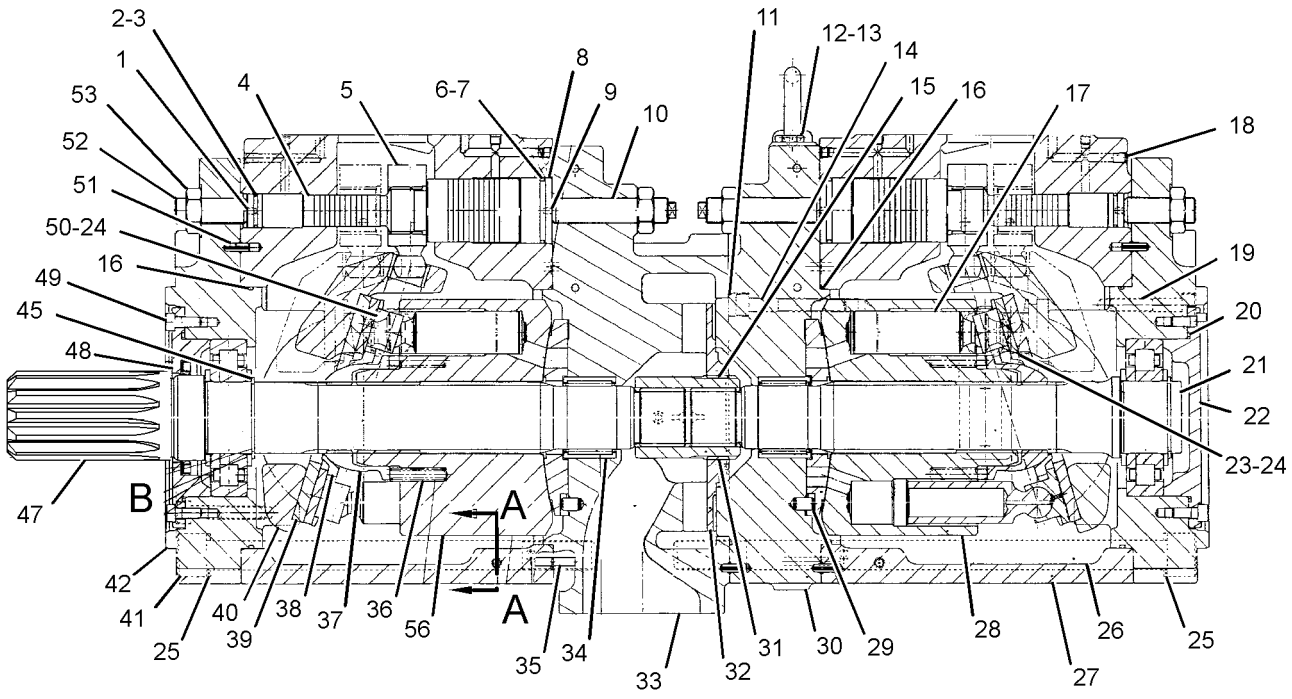

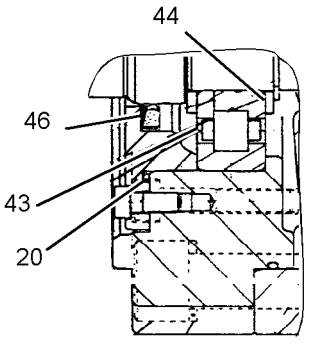

VIEW OF AREA B

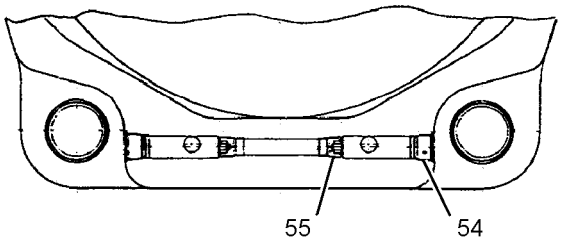

VIEW A-A

GRAPHIC #1 **<END>** g02180039

HYDRAULIC SYSTEM

185-0266 ROTATING GP-MOTOR

S/N: WAP1-UP
PART OF 200-3252, 225-4614 MOTOR GP-PISTON
ALSO AN ATTACHMENT

SMCS-5058 **i04006163**

NOTE	REF NO	GRAPHIC REF	PART NUMBER	QTY	PART NAME 1 2 3 4 5 6 (PRODUCT LEVEL)	SEE PAGE
	1	1	**168-7940**	3	PIN	
	2	1	**313-4424**	1	PLATE-CONTROL	
	3	1	**096-0015**	1	RING-RETAINING	
	4	1	**155-6654**	1	BARREL	
	5	1	**168-7941**	1	SPRING	
	6	1	**168-7942**	1	WASHER (36.5-MM ODX2.0-MM THK)	
	7	1	**185-0253**	1	GUIDE-BALL	
	8	1	**185-0250**	1	PISTON AS	
	9	1	**168-7944**	1	PLATE-RETRACTION	

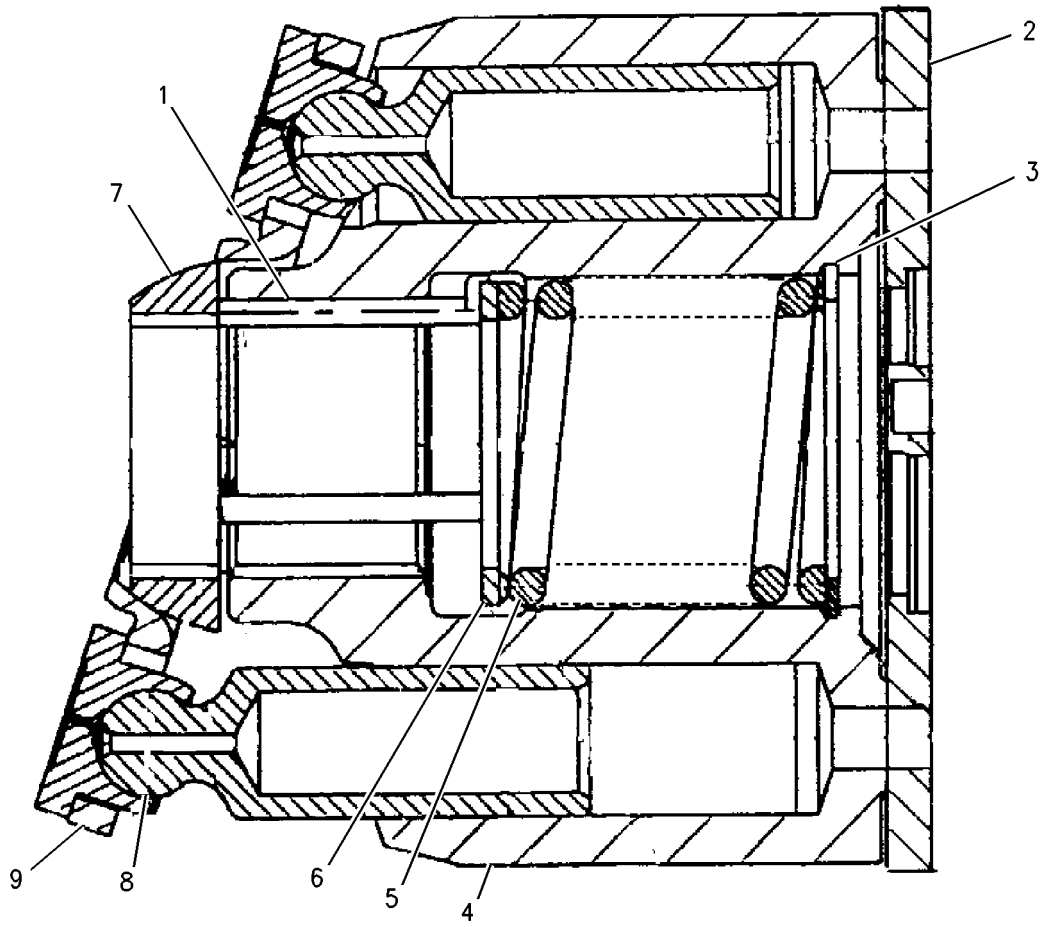

GRAPHIC #1 **<END>** g00789456

HYDRAULIC SYSTEM

155-9135 ROTATING GP-PUMP

S/N: WAP1-UP

PART OF 170-9918 PUMP GP-PISTON

SMCS-5070 **i00968552**

NOTE	REF NO	GRAPHIC REF	PART NUMBER	QTY	PART NAME 1 2 3 4 5 6 (PRODUCT LEVEL)	SEE PAGE
	1	1	**155-9137**	1	PLATE	
	2	1	**155-9149**	1	RING-RETAINING	
	3	1	**155-9136**	1	BARREL	
	4	1	**155-9117**	1	SPRING	
	5	1	**155-9119**	1	PLATE	
	6	1	**155-9118**	3	PIN	
	7	1	**155-9112**	9	PISTON AS	
	8	1	**155-9115**	1	PLATE	
	9	1	**155-9116**	1	GUIDE-BALL	

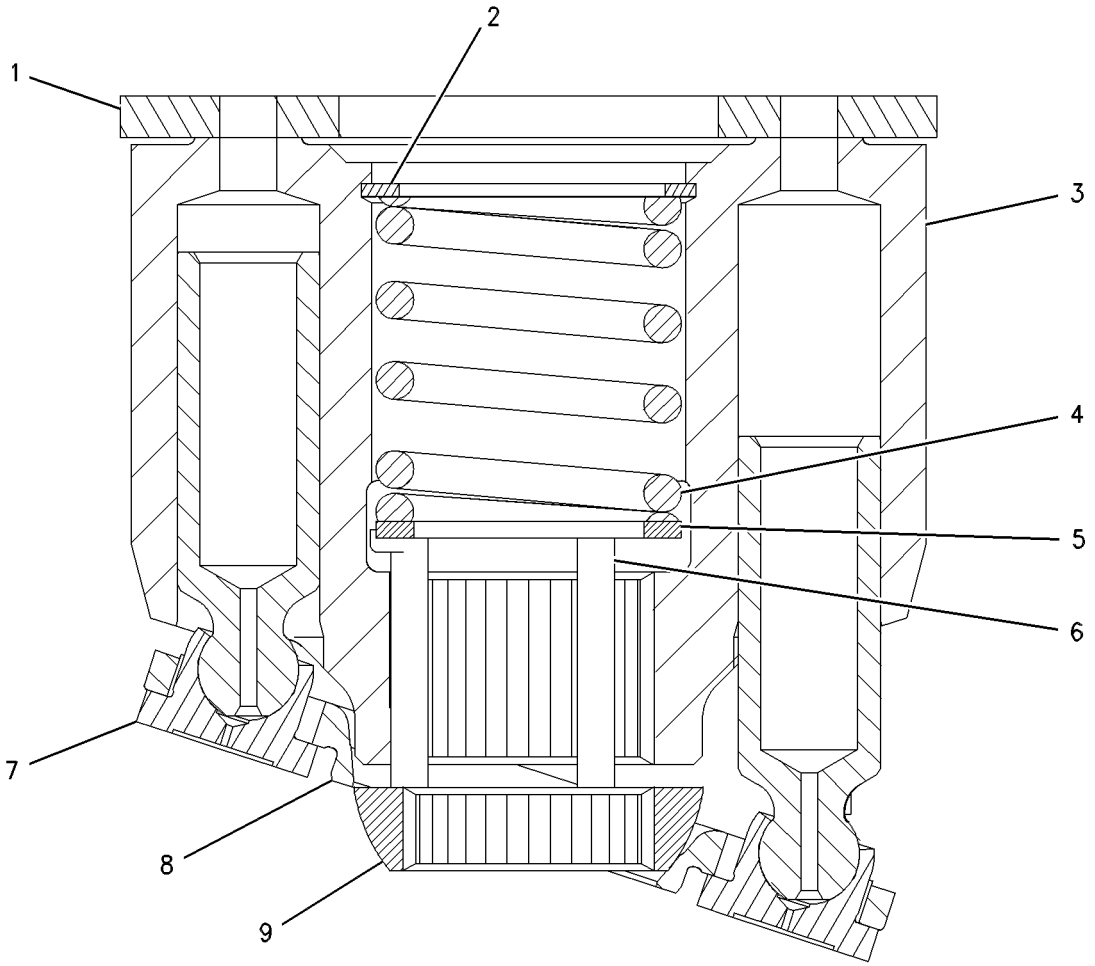

GRAPHIC #1 **<END>** g00493789

HYDRAULIC SYSTEM

165-9358 ROTATING GP-PUMP

S/N: WAP1-UP

PART OF 259-0899 ROTATING GP-PUMP

SMCS-5070 **i02466501**

NOTE	REF NO	GRAPHIC REF	PART NUMBER	QTY	PART NAME 1 2 3 4 5 6 (PRODUCT LEVEL)	SEE PAGE
	1	1	**165-9363**	20	SPRING	
	2	1	**165-9359**	1	RETAINER	
B	3	1	**165-9361**	2	SHIM (0.5-MM THK)	
B	4	1	**165-9362**	2	SHIM (0.75-MM THK)	
	5	1	**165-9360**	1	GUIDE-BALL	
	6	1	**164-8166**	1	BARREL AS	
	7	1	**259-0882**	1	PISTON AS-PUMP	

B-USE AS REQUIRED

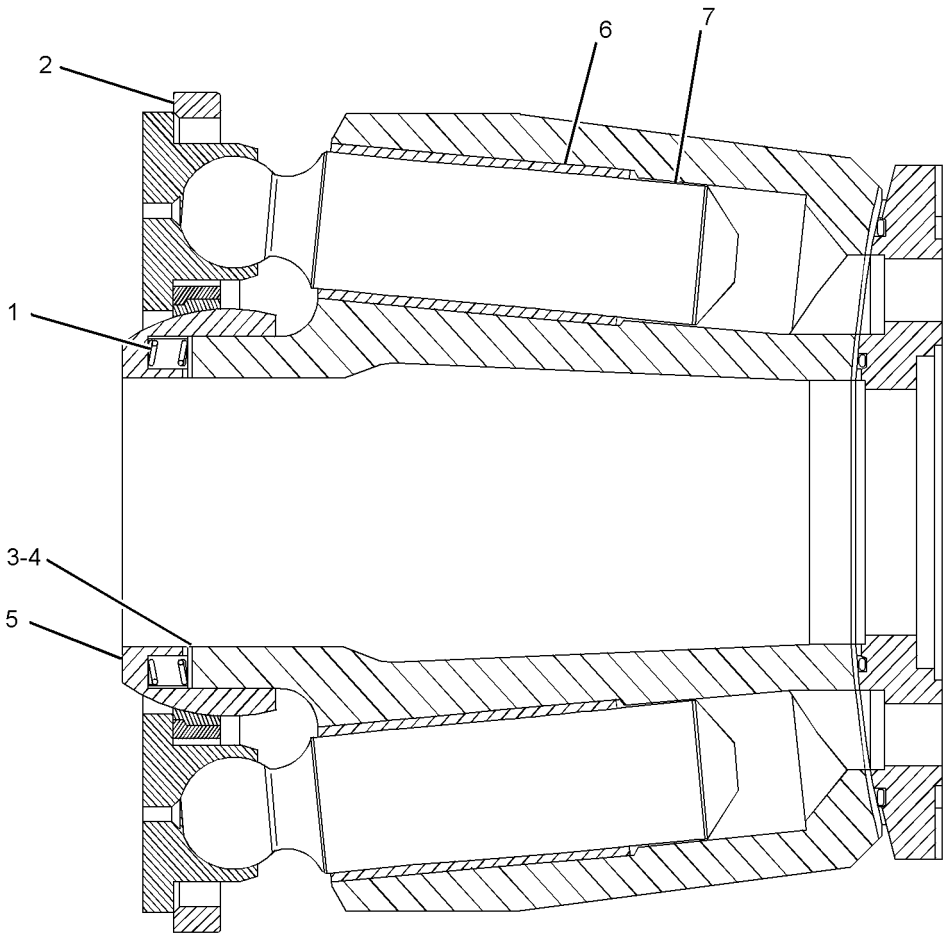

GRAPHIC #1 **<END>** g01226990

HYDRAULIC SYSTEM

259-0816 ROTATING GP-PUMP

S/N: WAP1-UP

PART OF 247-8978 MOTOR GP-PISTON

SMCS-5070 **i02364925**

NOTE	REF NO	GRAPHIC REF	PART NUMBER	QTY	PART NAME 1 2 3 4 5 6 (PRODUCT LEVEL)	SEE PAGE
	1	1	**168-3379**	3	PIN	
	2	1	**168-3382**	1	WASHER (42-MM ODX2.7-MM THK)	
	3	1	**185-0292**	1	SPRING	
	4	1	**6V-7723**	1	RING-RETAINING	
	5	1	**185-0287**	1	PLATE-VALVE	
	6	1	**185-0289**	1	BARREL	
	7	1	**259-0817**	9	PISTON AS	
	8	1	**168-3378**	1	BEARING-SPHERICAL	
	9	1	**168-3385**	1	PLATE-RETRACTION	

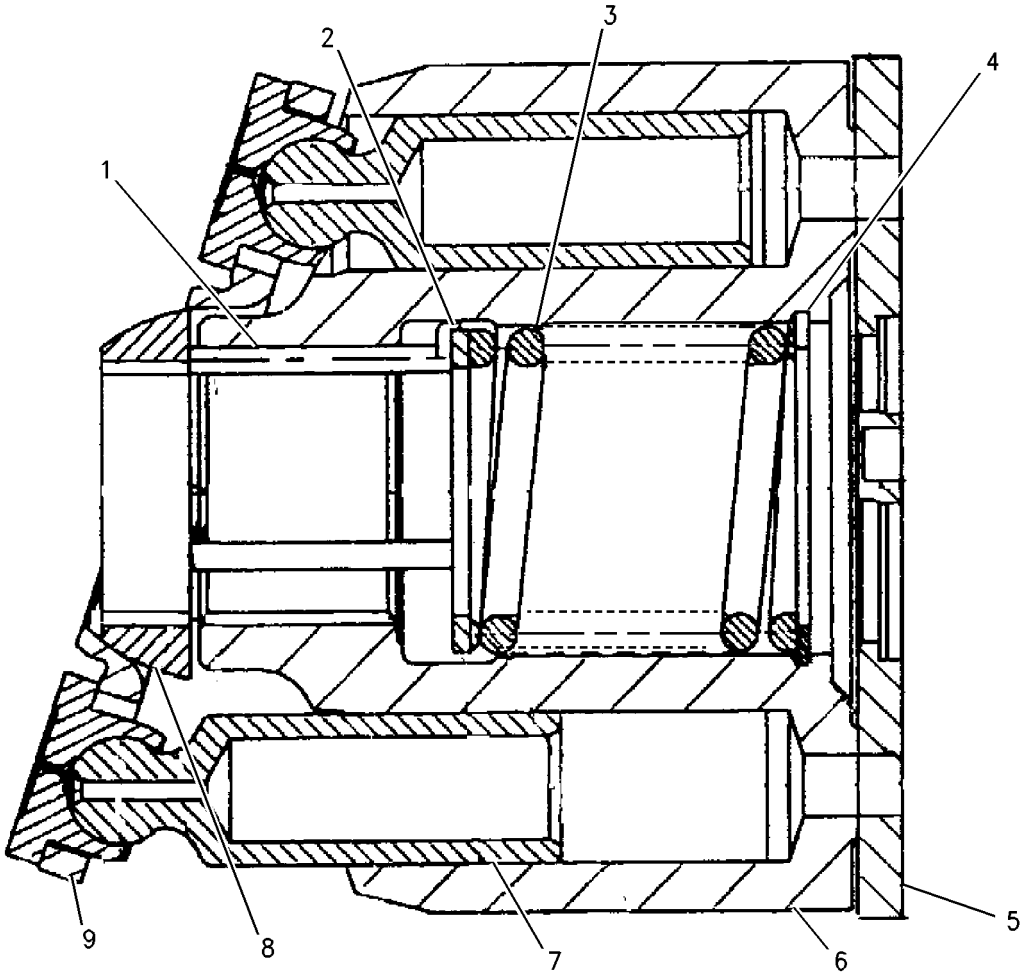

GRAPHIC #1 **<END>** g00790134

HYDRAULIC SYSTEM

259-0899 ROTATING GP-PUMP

S/N: WAP1-UP

PART OF 295-9678 PUMP GP-PISTON

SMCS-5070 **i02474439**

NOTE	REF NO	GRAPHIC REF	PART NUMBER	QTY	PART NAME 1 2 3 4 5 6 (PRODUCT LEVEL)	SEE PAGE
	1	1	**259-0884**	1	SEAL-SHAFT	
	2	1	**6I-6788**	1	RING-RETAINING	
	3	1	**6V-8260**	1	SEAL-O-RING	
	4	1	**170-9901**	1	BEARING	
	5	1	**095-0929**	1	RING-RETAINING	
Y	6	1	**165-9358**	1	ROTATING GP-PUMP	677
M	7	1	**8T-8442**	4	BOLT-SOCKET HEAD (M6X1X30-MM)	
	8	1	**165-9357**	2	RETAINER	
	9	1	**259-0895**	1	BEARING	
	10	1	**165-9354**	1	SWASHPLATE	
	11	1	**191-5592**	1	BEARING AS	
	12	1	**6E-3840**	4	ROD	
	13	1	**259-0883**	1	COVER	
	14	1	**191-5591**	1	SHAFT	

M-METRIC PART
Y-SEPARATE ILLUSTRATION

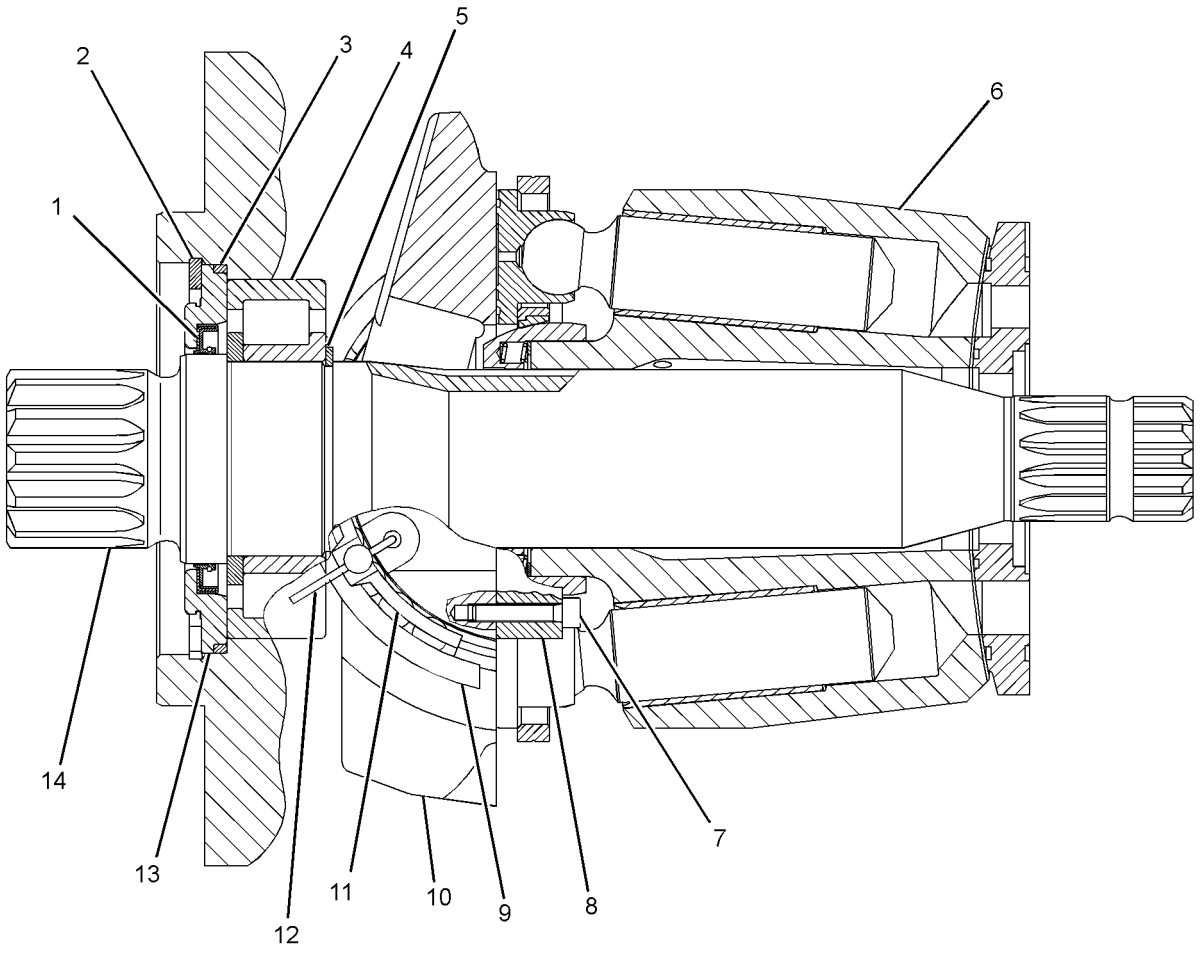

GRAPHIC #1 **<END>** g01234894

HYDRAULIC SYSTEM

155-9235 SCREEN GP-HYDRAULIC—TANK

S/N: WAP1-UP

PART OF 227-0367 TANK & FILTER GP-HYDRAULIC

SMCS-5068 **i01886586**

NOTE	REF NO	GRAPHIC REF	PART NUMBER	QTY	PART NAME 1 2 3 4 5 6 (PRODUCT LEVEL)	SEE PAGE
	1	1	**095-6641**	1	GUIDE	
	2	1	**209-6014**	1	SCREEN AS	
	3	1	**095-6639**	1	SPRING	
	4	1	**155-9236**	1	ROD	
	5	1	**5L-5032**	1	SEAL-O-RING	
M	6	1	**8T-4133**	2	NUT (M10X1.5-THD)	

M-METRIC PART

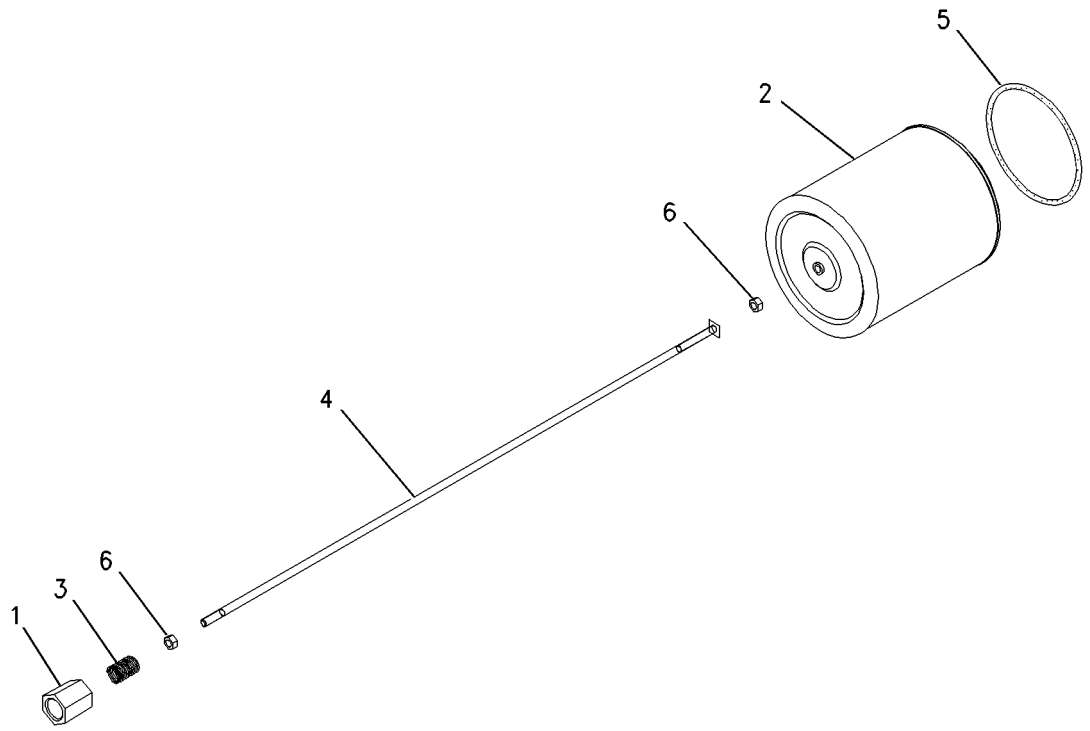

GRAPHIC #1 **<END>** g00979464

HYDRAULIC SYSTEM

295-9595 SWIVEL GP

S/N: WAP1-UP

PART OF 338-6163 LINES GP-SWIVEL & TRAVEL MOTOR

SMCS-5060 **i03656700**

NOTE	REF NO	GRAPHIC REF	PART NUMBER	QTY	PART NAME 1 2 3 4 5 6 (PRODUCT LEVEL)	SEE PAGE
	1	1	**7Y-4837**	1	COVER	
	2	1	**7Y-4843**	1	RETAINER	
	3	1	**156-0619**	5	SEAL	
	4	1	**295-9606**	1	HOUSING	
	5	1	**295-9607**	1	ROTOR	
	6	1	**095-1633**	3	SEAL-O-RING	
	7	1	**095-1728**	1	SEAL-O-RING	
M	8	1	**8T-4136**	9	BOLT (M10X1.5X25-MM)	
	9	1	**8T-6759**	1	PLUG-PIPE	
	10	1	**8T-6763**	1	PLUG-PIPE	

M-METRIC PART

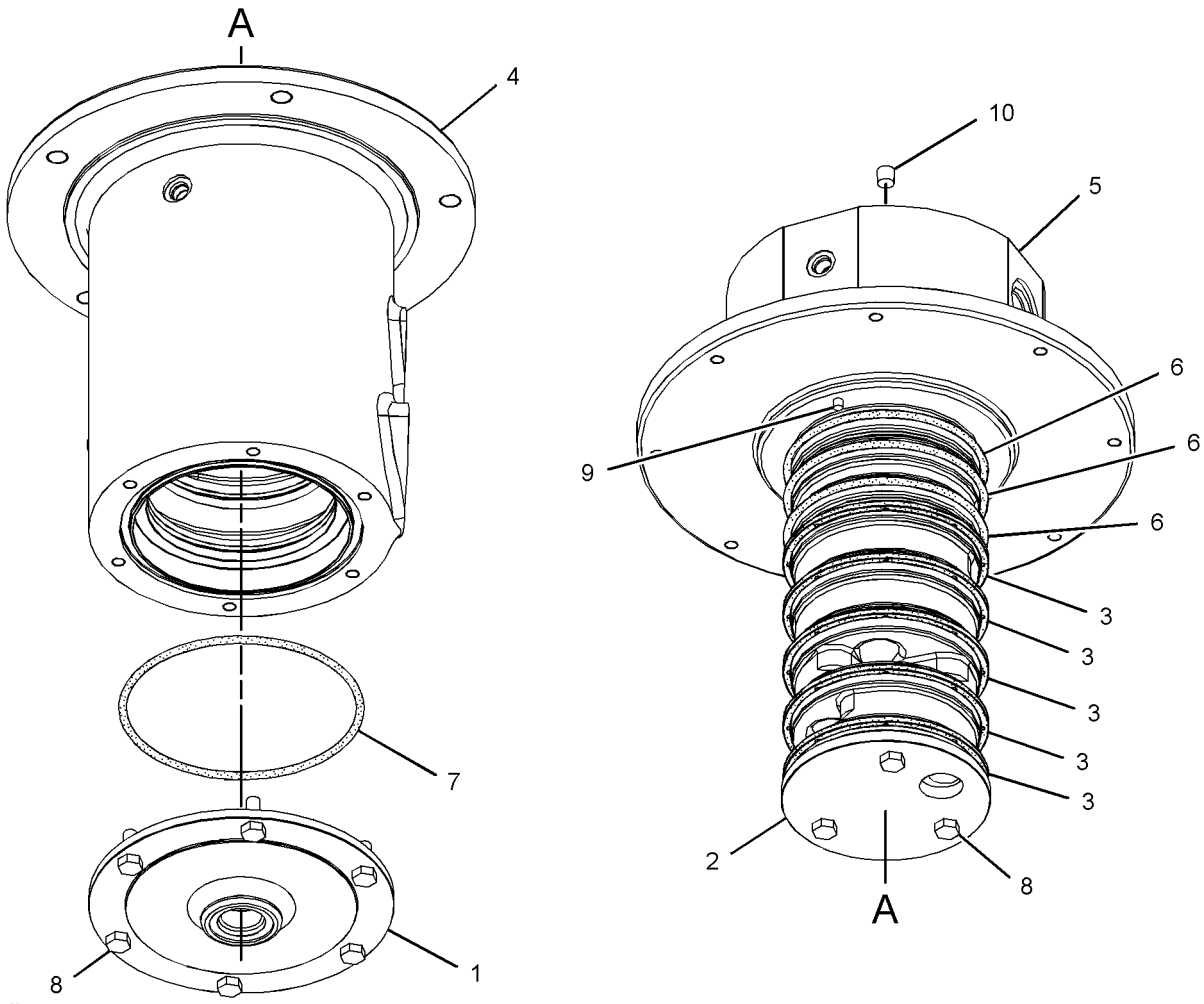

GRAPHIC #1 **<END>** g02113854

HYDRAULIC SYSTEM

227-0367 TANK & FILTER GP-HYDRAULIC

S/N: WAP1-UP
810-L (214-US GAL)
PART OF 227-0374 TANK & MTG GP-HYDRAULIC

SMCS-5056, 5068 **i03860912**

NOTE	REF NO	GRAPHIC REF	PART NUMBER	QTY	PART NAME 1 2 3 4 5 6 (PRODUCT LEVEL)	SEE PAGE
	1	1	**4I-3591**	1	FLANGE AS	
	2	1	**342-2924**	1	SENDER AS-TEMPERATURE (HYDRAULIC OIL)	
M		1	**095-7930**	2	SCREW-MACHINE (M4X0.7X6-MM)	
		1	**095-0826**	2	LOCKWASHER	
	3	1	**7Y-4796**	1	COVER AS	
	4	1	**202-3773**	1	SUPPORT AS	
C	5	2	**337-2694**	1	TUBE AS	
	6	2	**202-4048**	1	PIPE AS	
	7	2	**204-8295**	1	PIPE AS	
	8	1	**212-5467**	1	BREATHER GP (HYDRAULIC TANK)	
	9	2	**213-0677**	1	SWITCH AS-LIQUID LEVEL (LOW HYDRAULIC OIL)	
		2	**102-8802**	1	KIT-RECEPTACLE (2-PIN)	
					(INCLUDES RECEPTACLE AS & WEDGE)	
	10	2	**215-4011**	2	CLAMP	
Y	11	1	**227-0620**	1	GAUGE GP-SIGHT (HYDRAULIC OIL LEVEL)	528
	13	2	**227-0684**	1	TUBE AS	
	14	2	**229-1021**	1	HOSE	
Y	15	1	**234-4531**	1	FILTER GP-OIL (HYDRAULIC) (RETURN)	523
Y	16	1	**242-6878**	1	FILTER GP-OIL (HYDRAULIC) (RETURN)	525
	17	1	**207-6403**	1	PLUG	
	18	1	**207-6404**	1	WASHER (49.5X60.5X1.5-MM THK)	
	19	1	**095-1608**	1	SEAL-O-RING	
	20	1	**095-1735**	2	SEAL-O-RING	
	21	2	**129-7813**	1	PLATE	
	22	1	*155-3624*	1	PLUG AS	
		1	**3J-7354**	1	SEAL-O-RING	
		1	**9S-4182**	1	PLUG-O-RING	
Y	23	1	**155-9235**	1	SCREEN GP-HYDRAULIC (TANK)	680
	24	2	**1H-7339**	1	SEAL-O-RING	
C	25	1	**8T-7971**	4	WASHER-HARD (13.5X25.5X5-MM THK)	
	26	2	**3D-2824**	1	SEAL-O-RING	
	27	1	**3K-0360**	1	SEAL-O-RING	
	28	2	**4J-0522**	1	SEAL-O-RING	
	29	1	**4J-0524**	1	SEAL-O-RING	
	30	1	**4J-0527**	1	SEAL-O-RING	
	31	1	**5P-8068**	1	SEAL-O-RING	
Y	32	1	**6E-5534**	1	FILTER GP-OIL (HYDRAULIC) (CASE DRAIN)	519
	33	1	**6I-0723**	1	PLUG-OIL DRAIN (HYDRAULIC TANK)	
	34	1	**6I-0724**	1	ADAPTER-PLUG	
	35	1,2	**6J-2680**	3	SEAL-O-RING	
M	36	2	**7X-2549**	4	BOLT (M12X1.75X100-MM)	
M	37	2	**7X-2550**	8	BOLT (M12X1.75X110-MM)	
	38	1	**8T-4121**	20	WASHER-HARD (11X21X2.5-MM THK)	
M	39	1	**8T-4137**	16	BOLT (M10X1.5X20-MM)	
M	40	1	**8T-4138**	4	BOLT (M6X1X20-MM)	
M	41	2	**8T-4139**	4	BOLT (M12X1.75X30-MM)	
M	42	1,2	**8T-4183**	8	BOLT (M12X1.75X40-MM)	
M	43	2	**8T-4194**	2	BOLT (M12X1.75X50-MM)	
M	44	1	**8T-4195**	4	BOLT (M10X1.5X30-MM)	
	45	1,2	**8T-4223**	26	WASHER-HARD (13.5X25.5X3-MM THK)	
	46	2	**8T-4224**	4	WASHER-HARD (8.8X16X2-MM THK)	
M	47	1	**8T-4956**	6	BOLT (M12X1.75X35-MM)	
M	48	2	**8T-5041**	2	BOLT (M12X1.75X120-MM)	
	49	1	**8T-6761**	1	PLUG-PIPE	
M	50	2	**8T-7547**	4	BOLT (M8X1.25X30-MM)	

227-0367 TANK & FILTER GP-HYDRAULIC *(contd.)* i03860912

NOTE	REF NO	GRAPHIC REF	PART NUMBER	QTY	PART NAME 1 2 3 4 5 6 (PRODUCT LEVEL)	SEE PAGE
	51	1	**9X-8256**	4	WASHER (6.6X12X2-MM THK)	
	52	1	**7X-1443**	2	PROTECTOR	

C-CHANGE FROM PREVIOUS TYPE
M-METRIC PART
Y-SEPARATE ILLUSTRATION

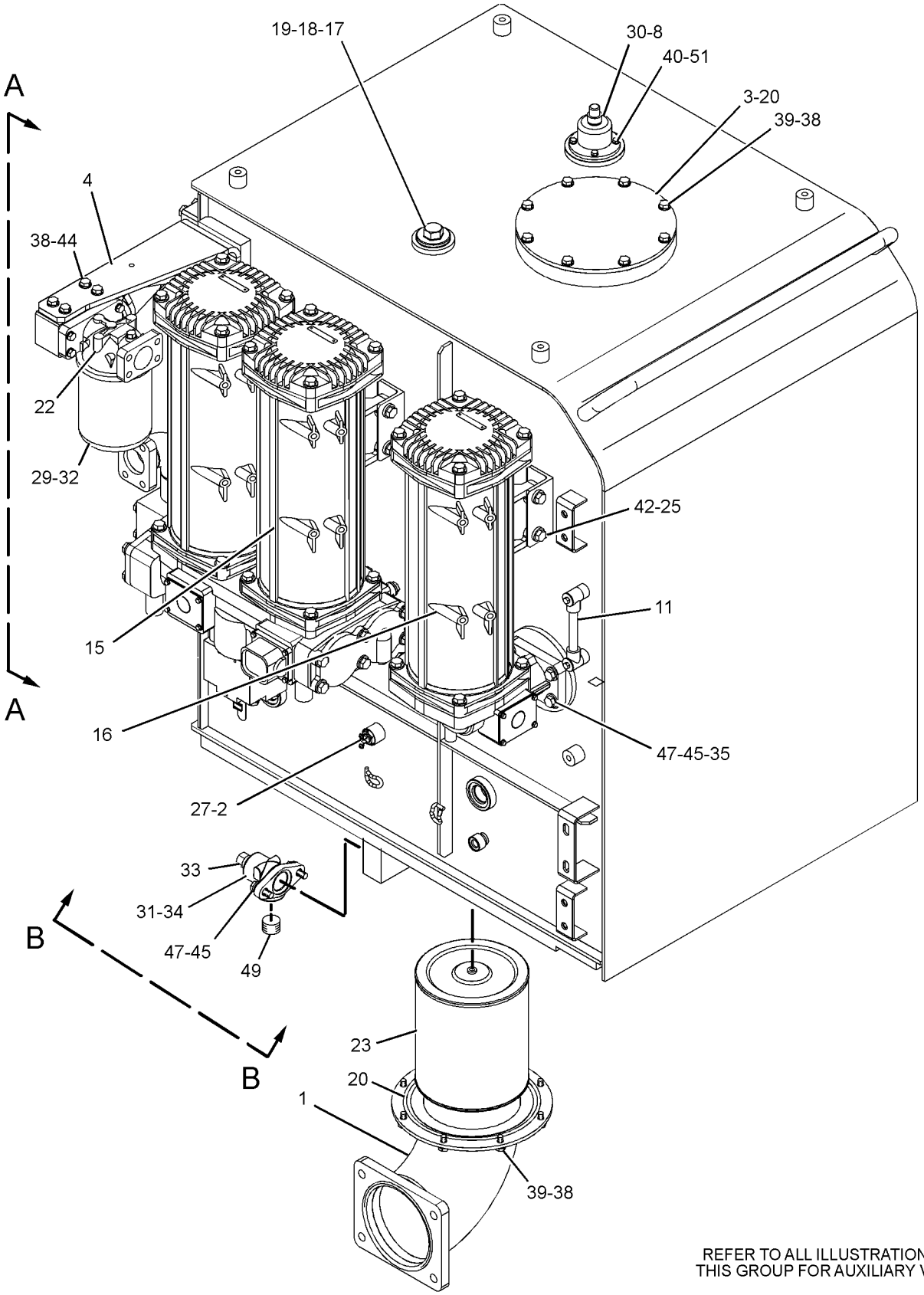

REFER TO ALL ILLUSTRATIONS OF
THIS GROUP FOR AUXILIARY VIEWS

GRAPHIC #1

g01748095

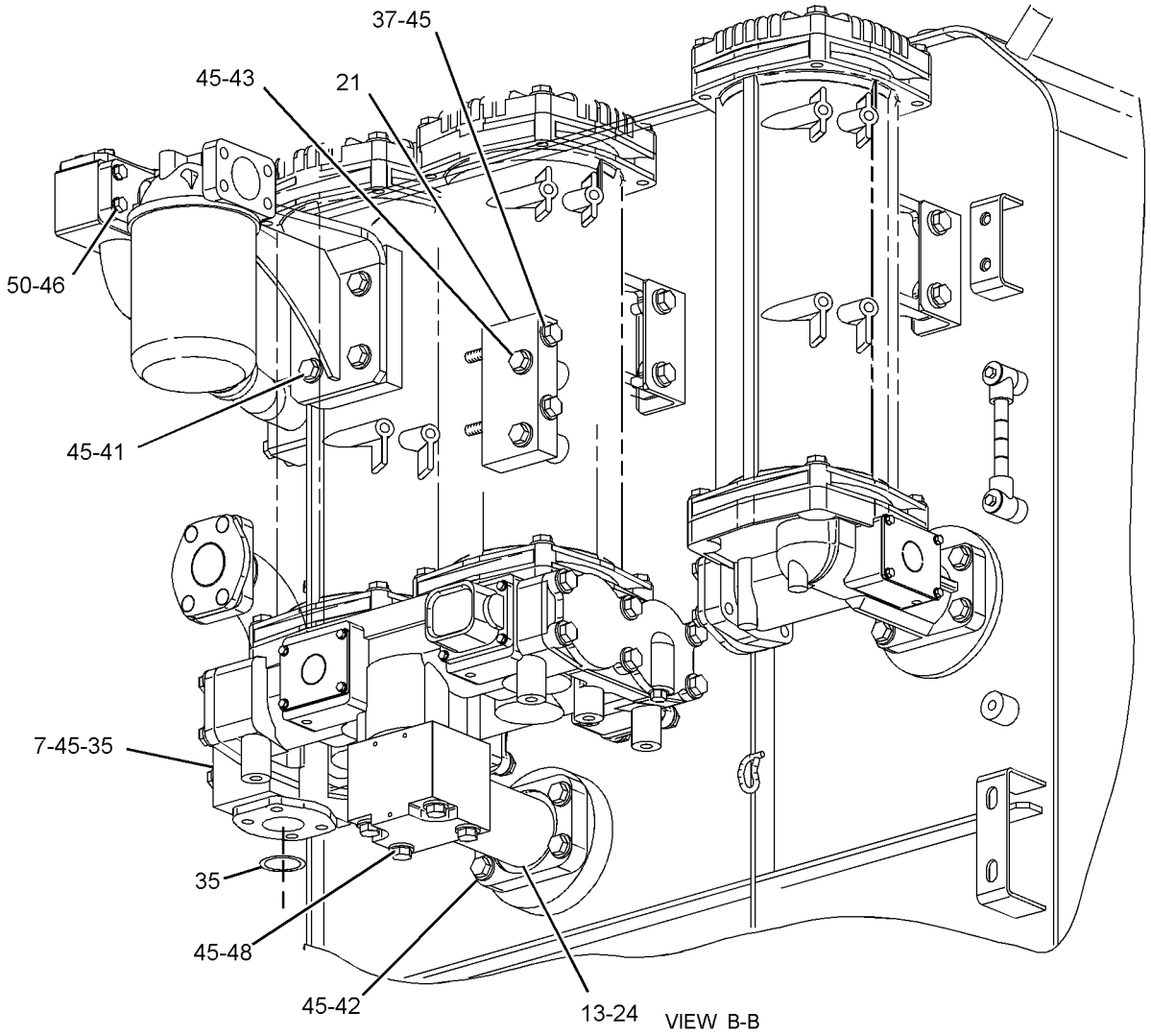

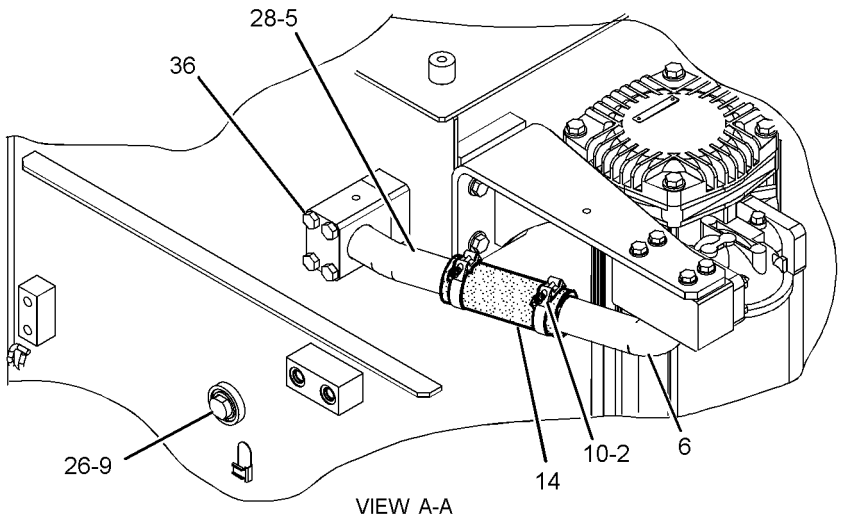

REFER TO ALL ILLUSTRATIONS OF THIS GROUP FOR AUXILIARY VIEWS

GRAPHIC #2 **<END>** g01226848

HYDRAULIC SYSTEM

227-0374 TANK & MTG GP-HYDRAULIC

S/N: WAP1-UP

PART OF 297-0223 HYDRAULIC AR

SMCS-5056 **i02124384**

NOTE	REF NO	GRAPHIC REF	PART NUMBER	QTY	PART NAME 1 2 3 4 5 6 (PRODUCT LEVEL)	SEE PAGE
	1	1	**9S-8178**	6	SPACER (0.89X1.625X1.5-IN THK)	
Y	2	1	**227-0367**	1	TANK & FILTER GP-HYDRAULIC	682
B	3	1	**087-8906**	6	SHIM (2-MM THK)	
B	4	1	**087-8907**	6	SHIM (1-MM THK)	
B	5	1	**087-8909**	6	SHIM (0.4-MM THK)	
M	6	1	**8T-4187**	6	BOLT (M20X2.5X80-MM)	

B-USE AS REQUIRED
M-METRIC PART
Y-SEPARATE ILLUSTRATION

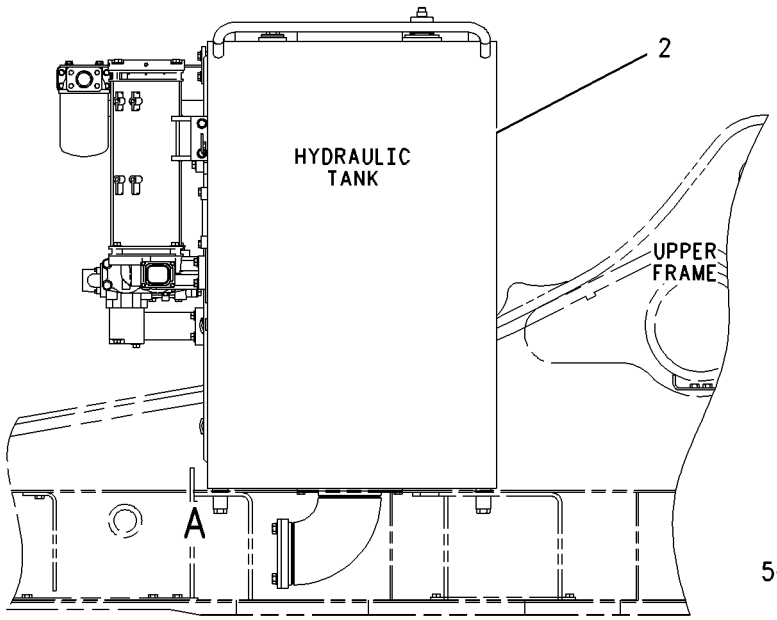

RIGHT SIDE VIEW

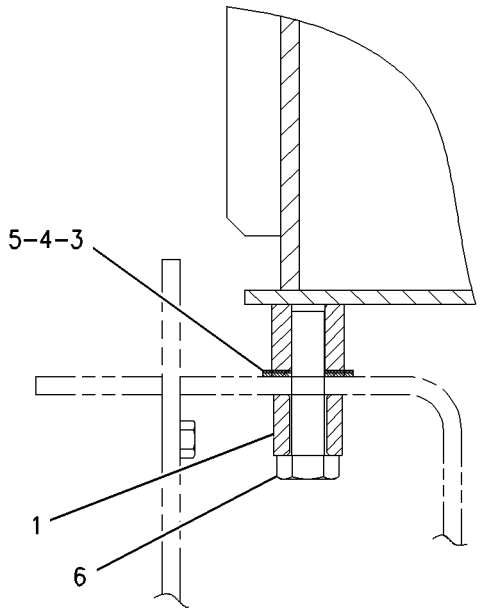

VIEW OF AREA A

GRAPHIC #1 **<END>** g00849161

HYDRAULIC SYSTEM

297-0421 VALVE AR-BOOM LOWERING CONTROL–BOOM FLOAT

S/N: WAP1-UP

AN ATTACHMENT

SMCS-5147 **i03907389**

NOTE	PART NUMBER	QTY	PART NAME 1 2 3 4 5 6 (PRODUCT LEVEL)	SEE PAGE
Y	*319-9236*	1	FILM GP (OVERLOAD WARNING DEVICE)	1075
Y	*296-7112*	1	LINES GP-BOOM CYLINDER (BOOM LOWERING CONTROL)	551
Y	*302-3057*	1	LINES GP-FRONT (SMART BOOM)	570
Y	*296-7113*	1	LINES GP-PILOT (BOOM LOWERING CONTROL)	604
Y	*295-7767*	1	VALVE GP-MAIN CONTROL (SMARTBOOM, BOOM LOAD CONTROL)	739
Y	*328-0102*	1	WIRING GP-CAB (OVERLOAD WARNING DEVICE)	280
Y	*299-3009*	1	WIRING GP-CHASSIS (BOOM FLOAT)	291
Y	*250-0103*	1	WIRING GP-CONSOLE (RH)	297

Y-SEPARATE ILLUSTRATION

<END>

297-0428 VALVE AR-LOAD CONTROL–STICK LOWERING CONTROL VALVE

S/N: WAP1-UP

FOR USE WITH 297-0421–PAGE 687, 303-2689–PAGE 780. CANNOT BE USED WITH 303-2688–PAGE 781, 303-2690–PAGE 780

AN ATTACHMENT

SMCS-5067, 5117, 5147, 5811 **i03907829**

NOTE	PART NUMBER	QTY	PART NAME 1 2 3 4 5 6 (PRODUCT LEVEL)	SEE PAGE
Y	*344-4560*	1	LINES GP-BOOM (STICK LOWERING CONTROL VALVE)	549
Y	*296-7114*	1	LINES GP-PILOT (STICK LOWERING CONTROL)	607
Y	*356-8046*	1	LINES GP-STICK CYLINDER (LOWERING CONTROL)	628

Y-SEPARATE ILLUSTRATION

<END>

HYDRAULIC SYSTEM

087-5087 VALVE GP-CHECK

S/N: WAP1-UP
PART OF 296-7115 LINES GP-REAR ATTACHMENT
AN ATTACHMENT

SMCS-5067 **i01061891**

NOTE	REF NO	GRAPHIC REF	PART NUMBER	QTY	PART NAME 1 2 3 4 5 6 (PRODUCT LEVEL)	SEE PAGE
Y	1	1	**114-0649**	1	VALVE GP-CHECK	689
	2	1	**114-0648**	1	BODY	

Y-SEPARATE ILLUSTRATION

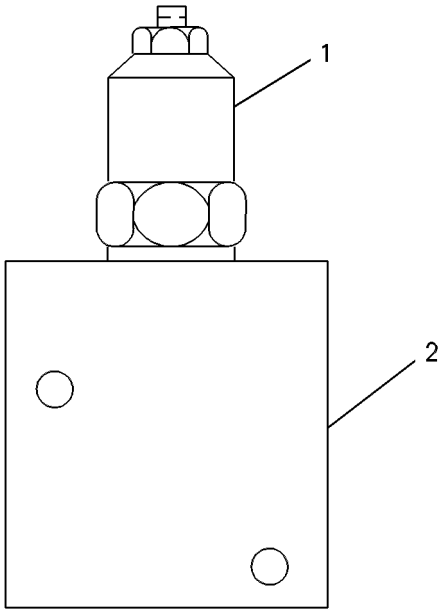

GRAPHIC #1 **<END>** g00250127

HYDRAULIC SYSTEM

114-0649 VALVE GP-CHECK

S/N: WAP1-UP
PART OF 087-5087 VALVE GP-CHECK
AN ATTACHMENT

SMCS-5067 **i00621405**

NOTE	REF NO	GRAPHIC REF	PART NUMBER	QTY	PART NAME 1 2 3 4 5 6 (PRODUCT LEVEL)	SEE PAGE
	1	1	**7M-8485**	1	SEAL-O-RING	
	2	1	**115-9865**	2	RING-BACKUP	
	3	1	**8C-3101**	1	SEAL-O-RING	
	4	1	**8C-3102**	1	SEAL-O-RING	
	5	1	**115-9864**	1	RING-BACKUP	

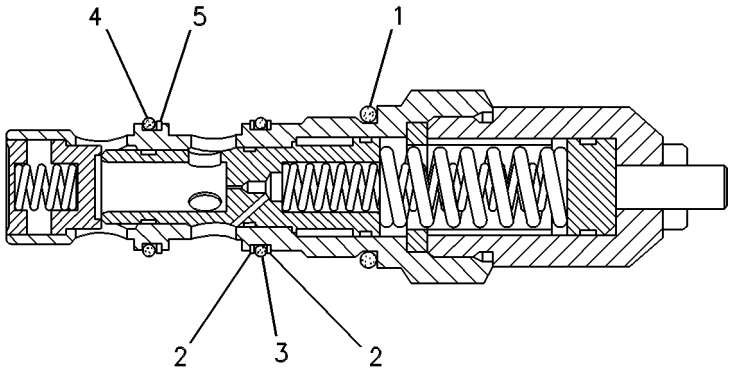

GRAPHIC #1 **<END>** g00250128

HYDRAULIC SYSTEM

173-3429 VALVE GP-CHECK

S/N: WAP1-UP

PART OF 296-7102 LINES GP-MOTOR

SMCS-5067 **i01548167**

NOTE	REF NO	GRAPHIC REF	PART NUMBER	QTY	PART NAME 1 2 3 4 5 6 (PRODUCT LEVEL)	SEE PAGE
	1	1	**173-3430**	1	BODY-VALVE	
	2	1	**119-5365**	1	VALVE	
	3	1	**119-5362**	1	SPRING	
	4	1	**2M-9780**	1	SEAL-O-RING	
	5	1	**119-5364**	1	PLUG	
	6	1	**9S-4185**	1	PLUG-O-RING	
	7	1	**3K-0360**	1	SEAL-O-RING	

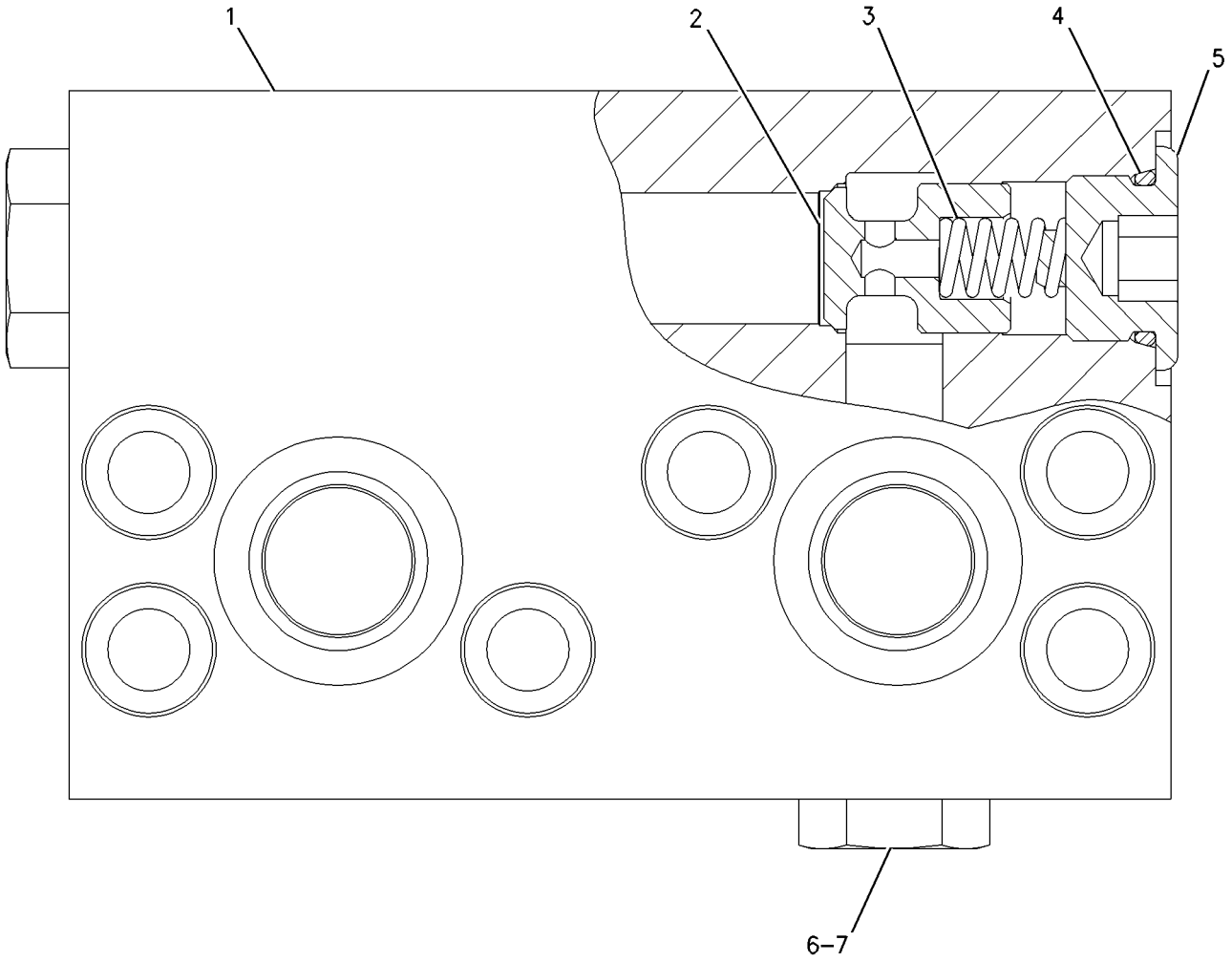

GRAPHIC #1 **<END>** g00782302

HYDRAULIC SYSTEM

200-7127 VALVE GP-CHECK

S/N: WAP1-UP

PART OF 241-8929 VALVE GP-CONTROL

SMCS-5067 **i02223444**

NOTE	REF NO	GRAPHIC REF	PART NUMBER	QTY	PART NAME 1 2 3 4 5 6 (PRODUCT LEVEL)	SEE PAGE
	1	1	**6E-5484**	1	VALVE	
	2	1	**6E-5483**	1	SEAT	
	3	1	**2K-8199**	1	SEAL-O-RING	
	4	1	**7J-7837**	1	SPRING	
	5	1	**200-7126**	2	RETAINER	

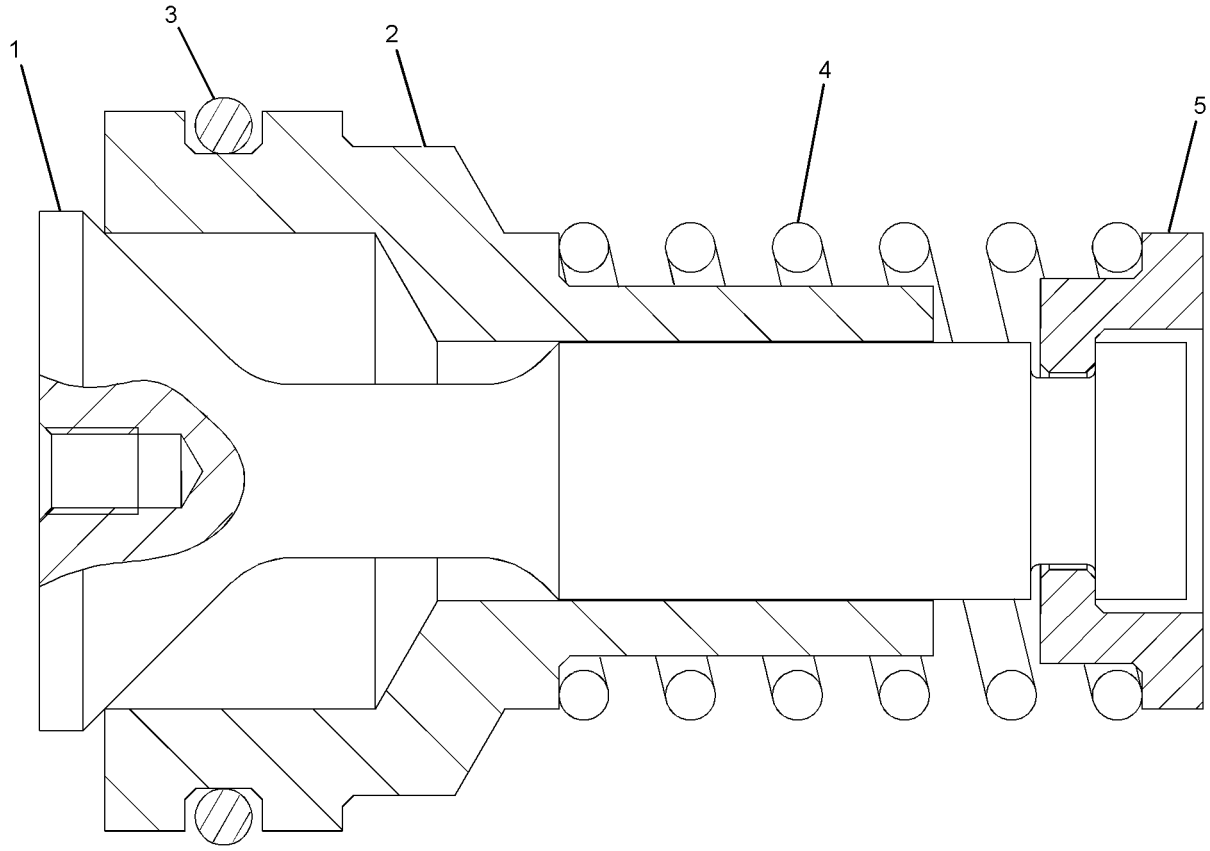

GRAPHIC #1 **<END>** g01123108

HYDRAULIC SYSTEM

201-9381 VALVE GP-CHECK

S/N: WAP1-UP

PART OF 296-7107 LINES GP-RETURN & FILTER

SMCS-5067 **i01823399**

NOTE	REF NO	GRAPHIC REF	PART NUMBER	QTY	PART NAME 1 2 3 4 5 6 (PRODUCT LEVEL)	SEE PAGE
Z	1	1		1	BODY-VALVE	
	2	1	**201-9383**	1	VALVE	
	3	1	**7I-0075**	1	SPRING	
	4	1	**201-9385**	1	STOP	
	5	1	**201-9384**	1	FLANGE	
M	6	1	**8T-4184**	4	BOLT (M12X1.75X45-MM)	
M	7	1	**185-0373**	1	SETSCREW (SOCKET)	
M	8	1	**8T-4132**	1	NUT (M16X2-THD)	
	9	1	**9S-4190**	1	PLUG-O RING	
	10	1	**158-8263**	1	COVER	
	11	1	**158-8262**	1	FLANGE	
M	12	1	**8T-4195**	4	BOLT (M10X1.5X30-MM)	
M	13	1	**8T-4956**	4	BOLT (M12X1.75X35-MM)	
	14	1	**6V-3922**	1	SEAL-O-RING	
	15	1	**6V-6707**	1	SEAL-O-RING	
	16	1	**2M-9780**	1	SEAL-O-RING	
	17	1	**4J-0524**	1	SEAL-O-RING	
	18	1	**4J-0527**	1	SEAL-O-RING	
	19	1	**185-0391**	1	WASHER (1.2-MM THK)	

M-METRIC PART
Z-NOT SERVICED SEPARATELY

201-9381 **VALVE GP-CHECK** *(contd.)* **i01823399**

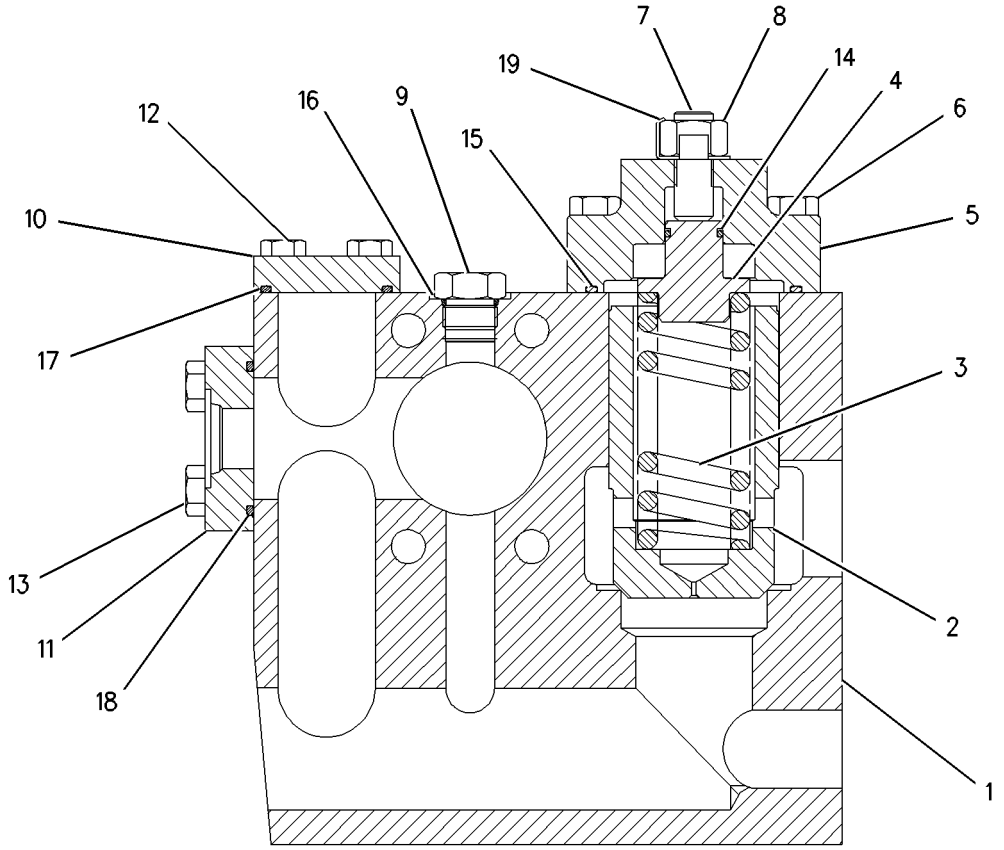

GRAPHIC #1 **<END>** g00836141

HYDRAULIC SYSTEM

201-9382 VALVE GP-CHECK

S/N: WAP1-UP

PART OF 296-7107 LINES GP-RETURN & FILTER

SMCS-5067 **i01889087**

NOTE	REF NO	GRAPHIC REF	PART NUMBER	QTY	PART NAME 1 2 3 4 5 6 (PRODUCT LEVEL)	SEE PAGE
Z	1	1		1	BODY-VALVE	
	2	1	**201-9383**	1	VALVE	
	3	1	**7I-7120**	1	SPRING	
	4	1	**4I-5734**	2	SPACER (28X45X3-MM THK)	
	5	1	**201-9386**	1	STOP	
	6	1	**201-9384**	1	FLANGE	
M	7	1	**8T-4184**	4	BOLT (M12X1.75X45-MM)	
M	8	1	**185-0373**	1	SETSCREW (SOCKET)	
M	9	1	**8T-4132**	1	NUT (M16X2-THD)	
	10	1	**9S-4190**	1	PLUG-O RING	
	11	1	**158-8263**	1	COVER	
	12	1	**158-8261**	1	COVER	
M	13	1	**8T-4195**	4	BOLT (M10X1.5X30-MM)	
M	14	1	**8T-4956**	4	BOLT (M12X1.75X35-MM)	
	15	1	**6V-3922**	1	SEAL-O-RING	
	16	1	**6V-6707**	1	SEAL-O-RING	
	17	1	**2M-9780**	1	SEAL-O-RING	
	18	1	**4J-0524**	1	SEAL-O-RING	
	19	1	**4J-0527**	1	SEAL-O-RING	
	20	1	**185-0391**	1	WASHER (1.2-MM THK)	

M-METRIC PART
Z-NOT SERVICED SEPARATELY

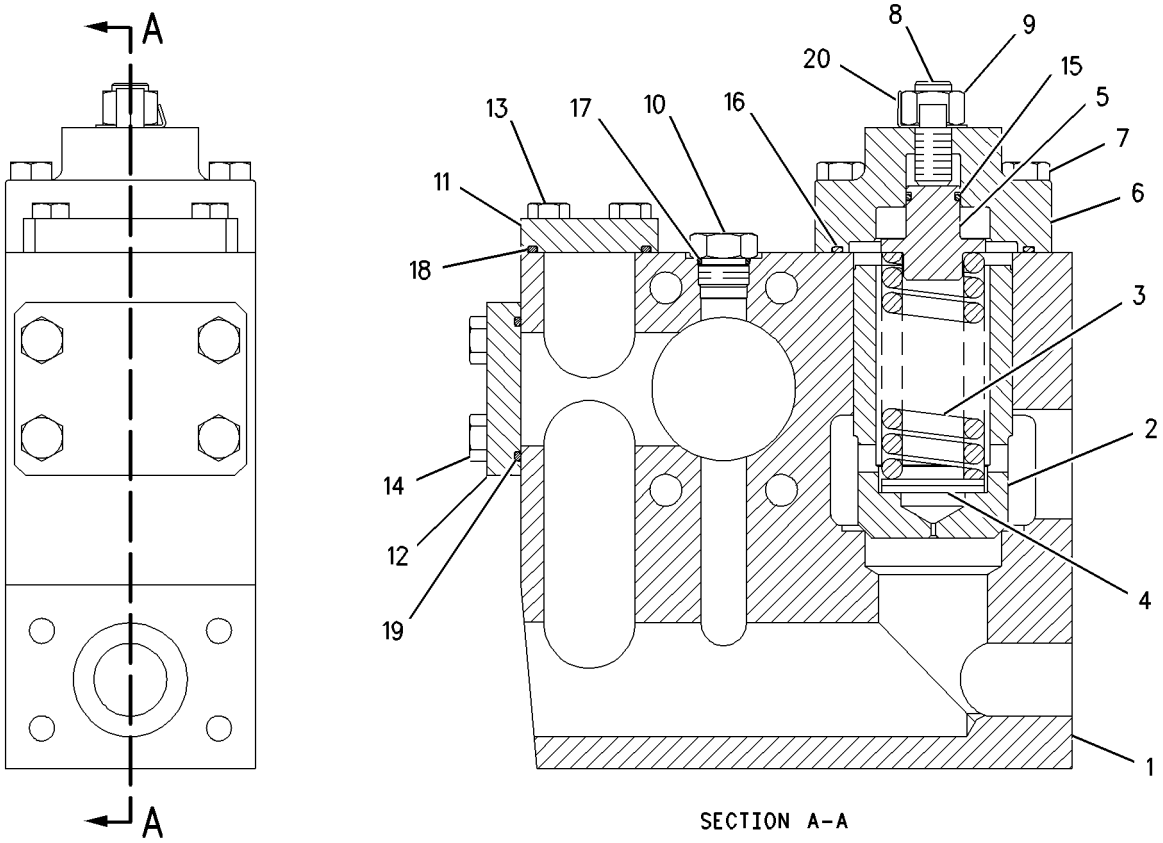

SECTION A-A

GRAPHIC #1 **<END>** g00839190

HYDRAULIC SYSTEM

297-0370 VALVE GP-CHECK

S/N: WAP1-UP
PART OF 302-3057 LINES GP-FRONT
AN ATTACHMENT

SMCS-5067 **i03915291**

NOTE	REF NO	GRAPHIC REF	PART NUMBER	QTY	PART NAME 1 2 3 4 5 6 (PRODUCT LEVEL)	SEE PAGE
	1	1	**095-1585**	1	SEAL-O-RING	
	2	1	**225-4804**	3	PLUG	
	3	1	**4J-7533**	3	SEAL-O-RING	
	4	1	**095-1602**	1	SEAL-O-RING	
	5	1	**232-4113**	1	RING	
	6	1	**095-1601**	1	SEAL-O-RING	
	7	1	**8T-3008**	1	RING-BACKUP	
	8	1	**095-1700**	1	SEAL-O-RING	
	9	1	**7M-8485**	1	SEAL-O-RING	
	10	1	**095-1657**	1	SEAL-O-RING	
	11	1	**232-4114**	2	RING	

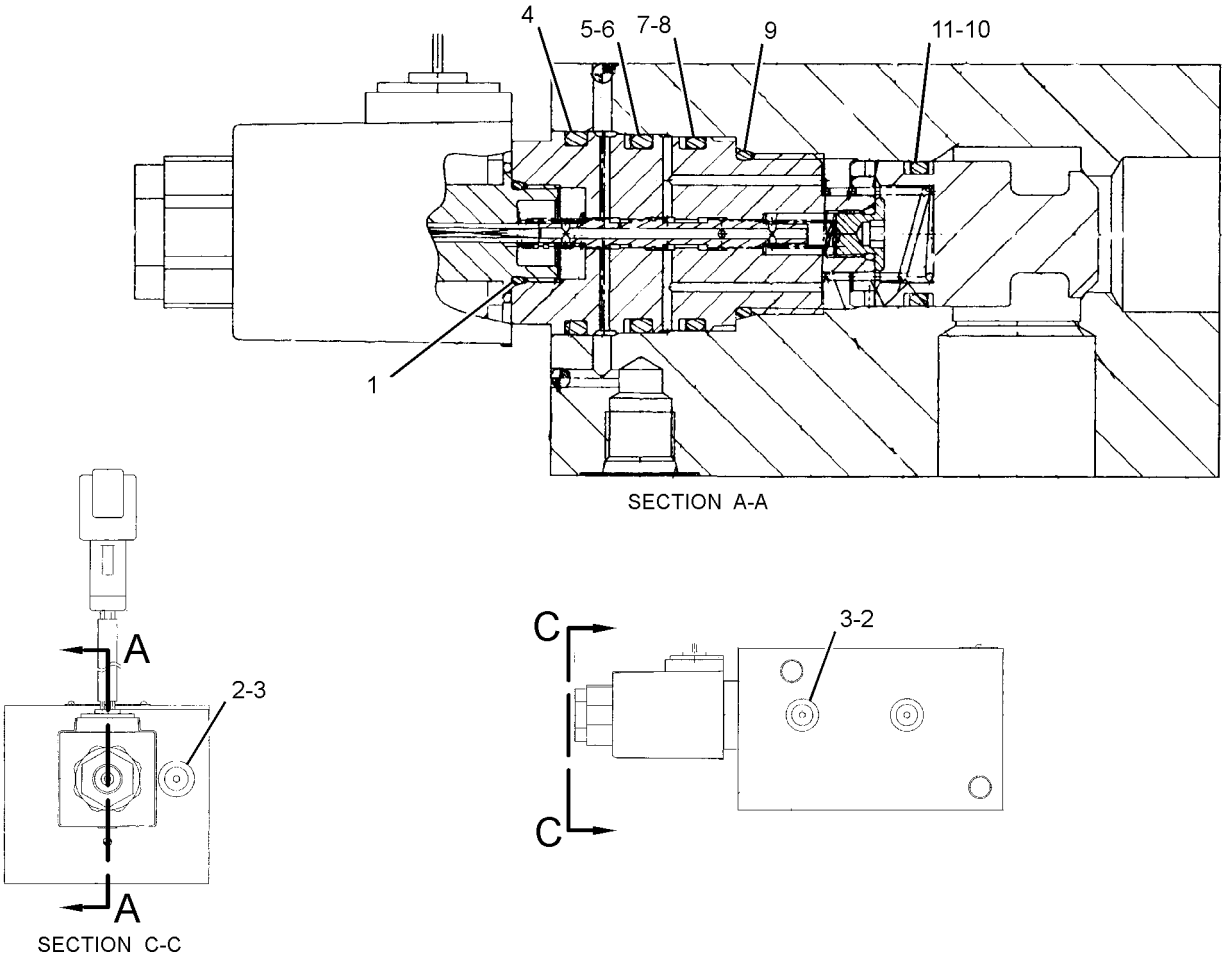

GRAPHIC #1 **<END>** g01950574

335-0311 VALVE GP-CHECK & RELIEF–
STICK LOWERING CONTROL VALVE
S/N: WAP1-UP
PART OF 356-8046 LINES GP-STICK CYLINDER
AN ATTACHMENT

SMCS-5117, 5453 **i04026041**

NOTE	REF NO	GRAPHIC REF	PART NUMBER	QTY	PART NAME 1 2 3 4 5 6 (PRODUCT LEVEL)	SEE PAGE
	1	1	**4I-8965**	1	GUIDE	
	2	1	**5I-8511**	1	SPRING	
	3	1	**8J-1751**	1	PLUG	
	4	1	**8J-1752**	1	PLUNGER	
	5	1	**122-7774**	1	SPRING	
	6	1	**153-5134**	1	SPRING	
	7	1	**153-5135**	1	GUIDE	
	8	1	**153-5139**	1	SEAT	
	9	1	**153-5264**	1	VALVE	
	10	1	**153-5265**	1	SPRING	
	11	1	**153-5278**	1	SEAT	
	12	1	**165-9469**	1	COVER	
	13	1	**165-9471**	1	COVER	
	14	1	**165-9478**	1	SEAT	
	15	1	*225-4818*	11	PLUG AS	
					(EACH INCLUDES)	
		1	**4J-7533**	1	SEAL-O-RING	
		1	**225-4804**	1	PLUG	
	16	1	**9L-7712**	1	NUT (3/8-24-THD)	
Y	17	1	**352-6869**	1	VALVE GP-RELIEF (PILOT OPERATED)	764
	18	1	**095-1599**	1	SEAL-O-RING	
	19	1	**095-1616**	2	SEAL-O-RING	
	20	1	**095-1793**	1	RING-BACKUP	
	21	1	**096-5572**	1	SEAL-O-RING	
	22	1	*148-8395*	3	PLUG AS	
					(EACH INCLUDES)	
		1	**3K-0360**	1	SEAL-O-RING	
		1	**9S-8005**	1	PLUG-O-RING	
	23	1	*162-0177*	1	PLUG AS	
		1	**3J-1907**	1	SEAL-O-RING	
		1	**9S-8004**	1	PLUG-O-RING	
	24	1	**2M-9780**	1	SEAL-O-RING	
	25	1	**4B-9783**	1	BALL	
	26	1	**4J-0528**	1	SEAL-O-RING	
	27	1	**6J-3134**	1	SEAL-O-RING	
M	28	1	**8T-0348**	6	BOLT-SOCKET HEAD (M16X2X50-MM)	
M	29	1	**8T-4139**	6	BOLT (M12X1.75X30-MM)	
M	30	1	**8T-4195**	2	BOLT (M10X1.5X30-MM)	
	31	1	**8T-6347**	2	RING-BACKUP	

M-METRIC PART
Y-SEPARATE ILLUSTRATION

335-0311 VALVE GP-CHECK & RELIEF *(contd.)* i04026041

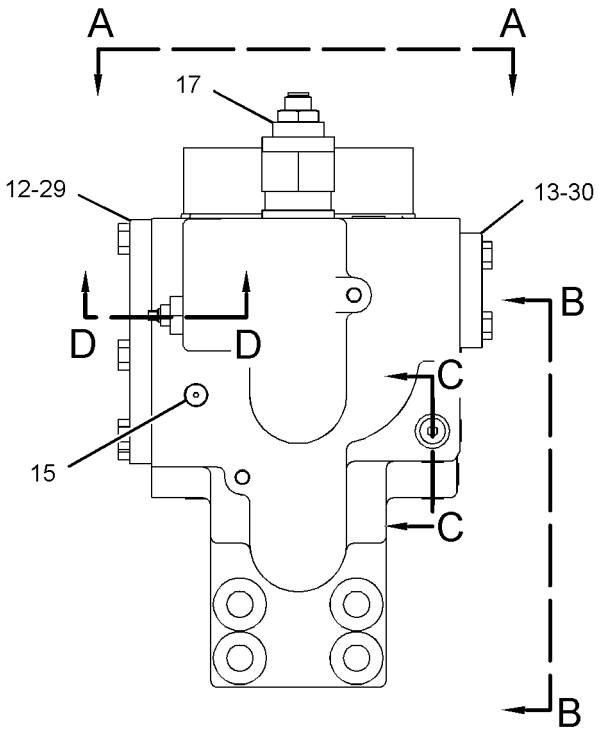

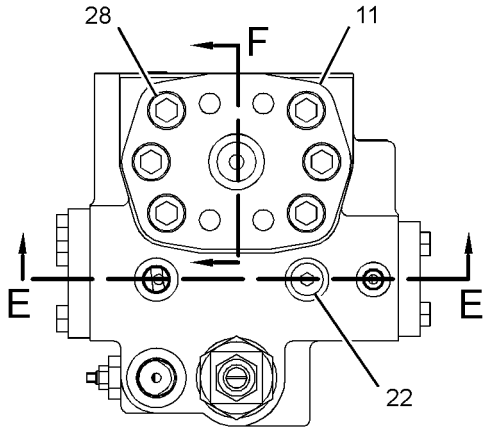

VIEW A-A

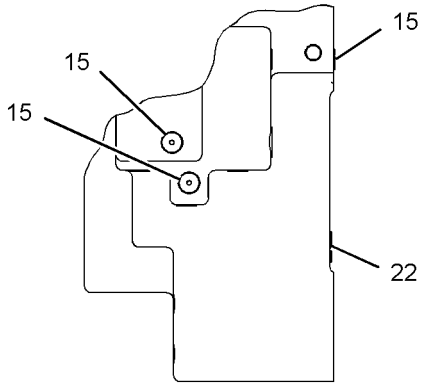

VIEW B-B

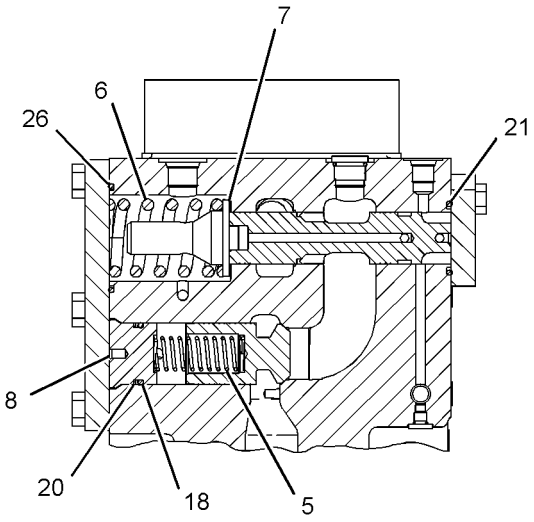

SECTION E-E

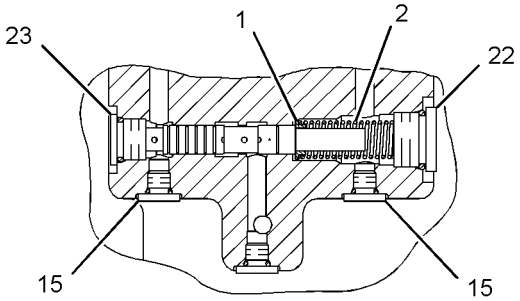

SECTION C-C

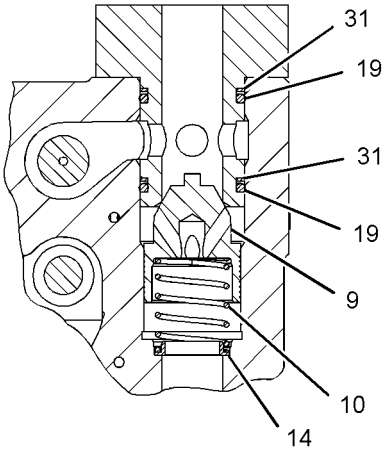

SECTION F

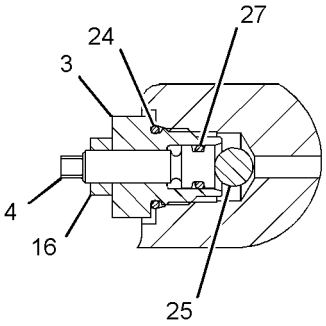

SECTION D-D

GRAPHIC #1 **<END>** g02135993

HYDRAULIC SYSTEM

144-7087 VALVE GP-CONTROL–NEUTRAL BYPASS

S/N: WAP1-UP

PART OF 295-7748, 295-7769 VALVE GP-CONTROL

ALSO AN ATTACHMENT

SMCS-5051 **i02241224**

NOTE	PART NUMBER	QTY	PART NAME 1 2 3 4 5 6 (PRODUCT LEVEL)	SEE PAGE
Y	*225-6287*	1	VALVE GP-CONTROL (NEUTRAL BYPASS)	700
			-OR-	
Y	*234-6899*	1	VALVE GP-CONTROL (NEUTRAL BYPASS)	703
			–OR–	
Y	*257-7284*	1	VALVE GP-CONTROL (NEUTRAL BYPASS)	707

Y-SEPARATE ILLUSTRATION

<END>

225-6287 VALVE GP-CONTROL—NEUTRAL BYPASS

S/N: WAP1-UP
PART OF 144-7087 VALVE GP-CONTROL
ALSO AN ATTACHMENT

SMCS-5051 **i03865108**

NOTE	REF NO	GRAPHIC REF	PART NUMBER	QTY	PART NAME 1 2 3 4 5 6 (PRODUCT LEVEL)	SEE PAGE
B	1	1	**9N-1574**	4	SHIM (0.03-IN THK)	
B	2	1	**9N-1575**	4	SHIM (0.03-IN THK)	
Y	3	1	**171-3685**	1	VALVE GP-SOLENOID (24-VOLT) (NEUTRAL BYPASS)	775
	4	1	**008-2103**	2	SEAL-O-RING	
	5	1	**095-1587**	1	SEAL-O-RING	
	6	1	**095-1786**	1	RING-BACKUP	
	7	1	**173-3993**	6	PLUG AS	
					(EACH INCLUDES)	
		1	**4J-7533**	1	SEAL-O-RING	
		1	**9S-8001**	1	PLUG-O-RING	
	8	1	**2M-9780**	1	SEAL-O-RING	
M	9	1	**7X-2549**	4	BOLT (M12X1.75X100-MM)	
M	10	1	**8T-4136**	4	BOLT (M10X1.5X25-MM)	

B-USE AS REQUIRED
M-METRIC PART
Y-SEPARATE ILLUSTRATION

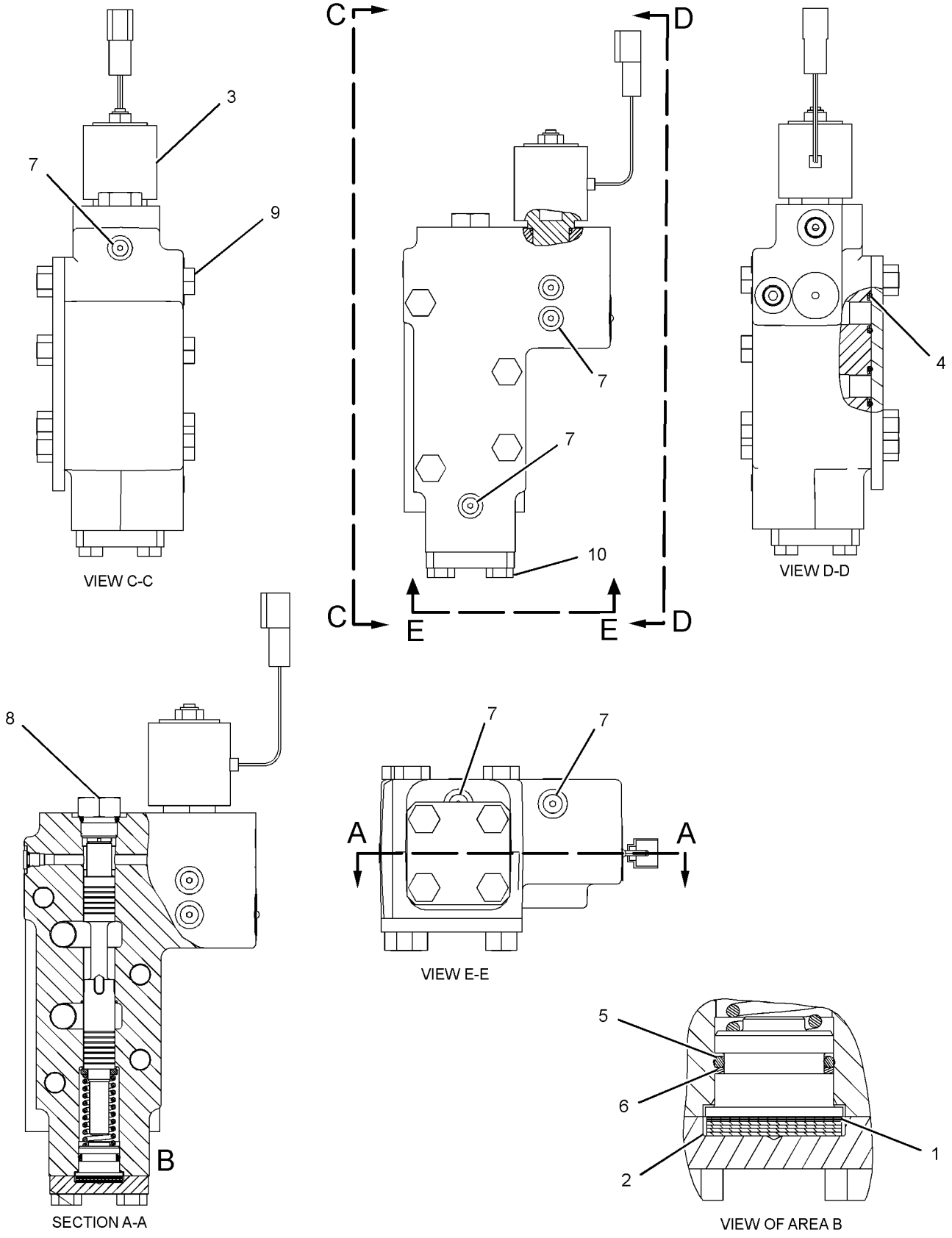

GRAPHIC #1 **<END>** g02124754

HYDRAULIC SYSTEM

234-4624 VALVE GP-CONTROL—REVERSE FLOW FAN

S/N: WAP1-UP
PART OF 337-2778 LINES GP-HYDRAULIC FAN
AN ATTACHMENT

SMCS-5051 **i02637453**

NOTE	REF NO	GRAPHIC REF	PART NUMBER	QTY	PART NAME 1 2 3 4 5 6 (PRODUCT LEVEL)	SEE PAGE
	1	1	**7Y-5010**	2	PLUG	
	2	1	**283-5990**	1	BODY AS-VALVE	
Z	3	1		1	SPOOL	
	4	1	**242-6890**	1	SPRING	
	5	1	**242-6891**	1	PLUG	
	6	1	**242-6892**	1	VALVE GP-RELIEF (LINE)	
		1	**242-6925**	1	KIT-SEAL (LINE RELIEF VALVE)	
	7	1	**107-7068**	11	PLUG-PIPE	
	8	1	**111-9959**	3	PLUG-PIPE	
	9	1	**096-1598**	1	SPRING	
	10	1	**3J-1907**	2	SEAL-O-RING	
	11	1	**3K-0360**	2	SEAL-O-RING	
	12	1	**4K-1388**	1	SEAL-O-RING	
	13	1	**7Y-5011**	1	VALVE	
	14	1	**9S-8004**	2	PLUG-O-RING	

Z-NOT SERVICED SEPARATELY

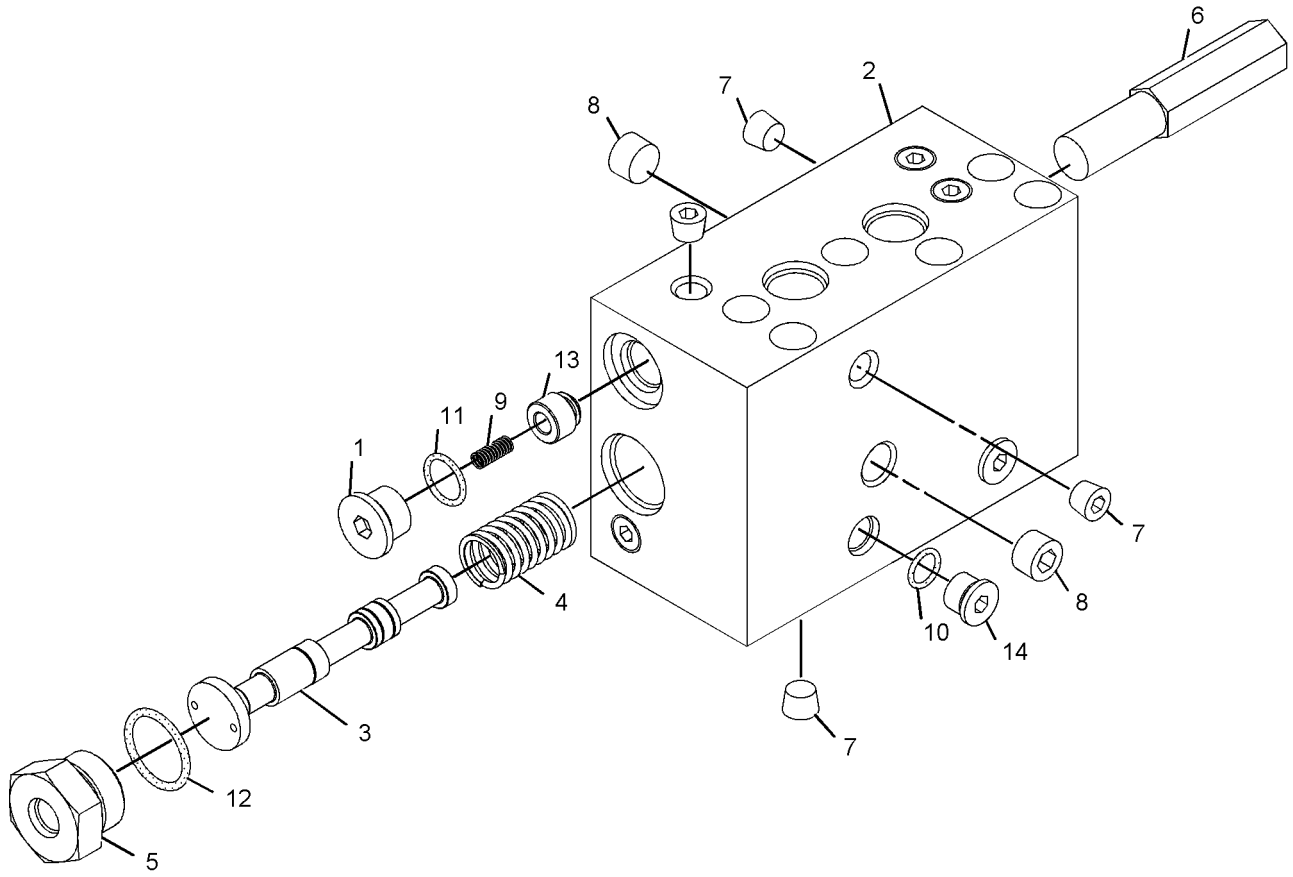

GRAPHIC #1 **<END>** g01093739

234-6899 VALVE GP-CONTROL—NEUTRAL BYPASS

S/N: WAP1-UP
PART OF 144-7087 VALVE GP-CONTROL
ALSO AN ATTACHMENT

SMCS-5051 **i02111004**

NOTE	REF NO	GRAPHIC REF	PART NUMBER	QTY	PART NAME 1 2 3 4 5 6 (PRODUCT LEVEL)	SEE PAGE
	2	1	**144-7088**	1	COVER	
	3	1	**144-7092**	2	RETAINER-SPRING	
	4	1	**144-7093**	1	HOUSING-SPRING	
Z	5	1		1	VALVE-STEM	
Z	6	1		1	BODY	
	7	1	**147-2286**	1	SLEEVE	
	8	1	**161-7204**	1	SPRING	
	10	1	**008-2103**	2	SEAL-O-RING	
Y	12	1	**171-3685**	1	VALVE GP-SOLENOID (24-VOLT) (NEUTRAL BYPASS)	775
	13	1	**173-3993**	5	PLUG AS	
					(EACH INCLUDES)	
		1	**4J-7533**	1	SEAL-O-RING	
		1	**9S-8001**	1	PLUG-O-RING	
	14	1	**1R-5318**	1	SEAL-O-RING	
	15	1	**3K-4520**	5	WASHER (0.377X0.75X0.048-IN THK)	
	16	1	**3P-0760**	8	SPACER (9.53X20.62X0.25-MM THK)	
	17	1	**4J-5309**	2	SEAL-O-RING	
	18	1	**4J-8997**	1	SEAL-O-RING	
M	19	1	**7X-2549**	4	BOLT (M12X1.75X100-MM)	
	20	1	**7X-7729**	1	WASHER (11X25X3-MM THK)	
M	21	1	**8T-4185**	2	BOLT (M10X1.5X50-MM)	
M	22	1	**8T-4198**	2	BOLT (M10X1.5X100-MM)	
M	23	1	**8T-5005**	1	BOLT (M10X1.5X70-MM)	
	24	1	**9X-2027**	1	WASHER (11X18X2-MM THK)	

M-METRIC PART
Y-SEPARATE ILLUSTRATION
Z-NOT SERVICED SEPARATELY

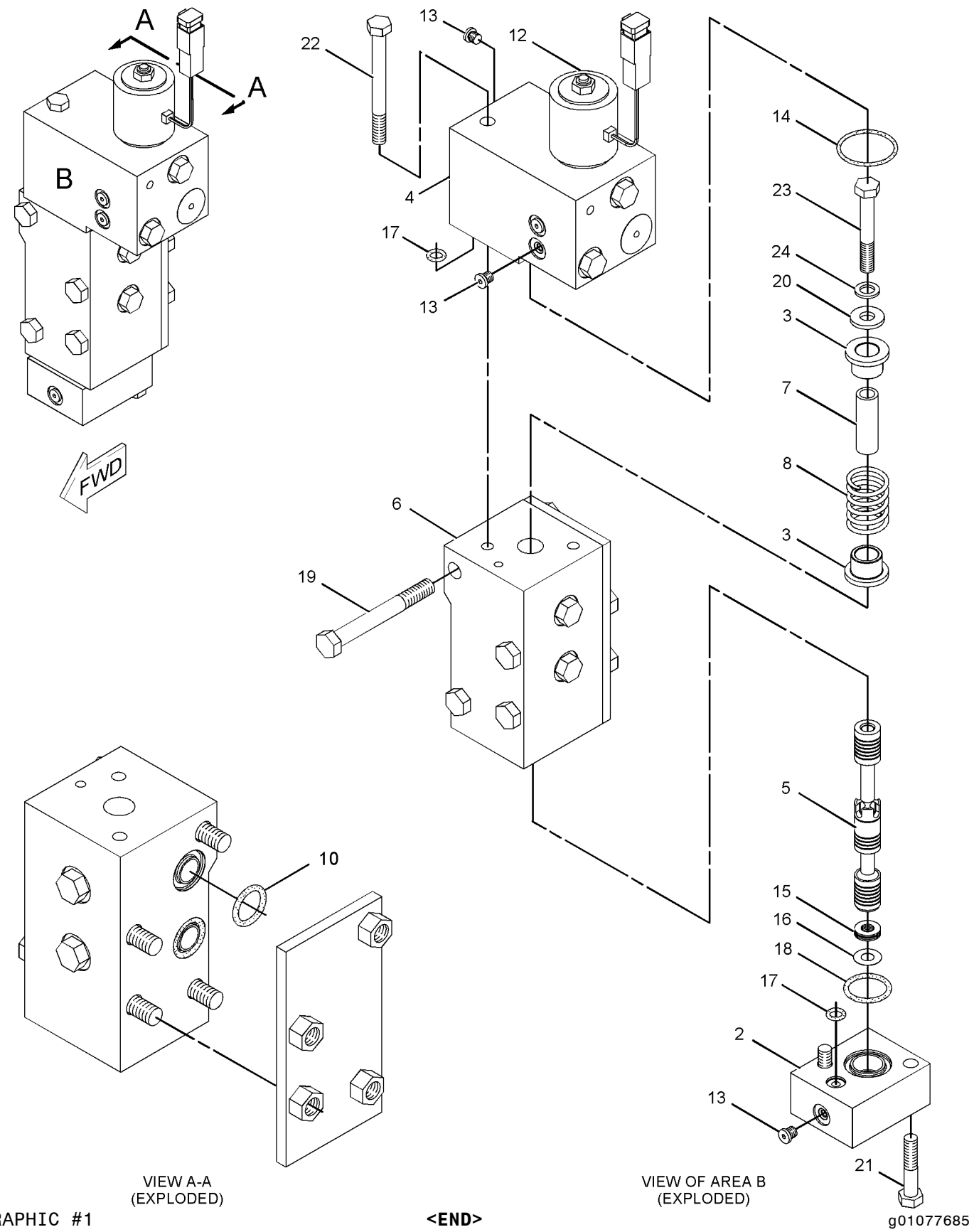

GRAPHIC #1

<END>

g01077685

HYDRAULIC SYSTEM

241-8929 VALVE GP-CONTROL—SWING

S/N: WAP1-UP

PART OF 296-7105 LINES GP-SWING MOTOR

SMCS-5051 **i02960412**

NOTE	REF NO	GRAPHIC REF	PART NUMBER	QTY	PART NAME 1 2 3 4 5 6 (PRODUCT LEVEL)	SEE PAGE
	1	1	**2S-2596**	3	SPRING	
	2	1	**9T-1614**	3	VALVE	
Y	3	1	**200-7127**	1	VALVE GP-CHECK (BACK PRESSURE)	691
	4	1	**142-0844**	3	PLUG AS	
					(EACH INCLUDES)	
	4A	1	**4T-0987**	1	BUSHING	
Z	5	1		1	BODY-VALVE	
Z	6	1		1	STEM-SWING	
Y	7	1	**224-6809**	2	MANIFOLD & VALVE GP (SWING)	640
	8	1	*148-8407*	1	PLUG AS	
		1	**3J-1907**	1	SEAL-O-RING	
		1	**9S-4191**	1	PLUG-O-RING	
	9	1	*148-8410*	1	PLUG AS	
		1	**2M-9780**	1	SEAL-O-RING	
		1	**9S-4190**	1	PLUG-O-RING	
	10	1	**173-3993**	2	PLUG AS	
					(EACH INCLUDES)	
		1	**4J-7533**	1	SEAL-O-RING	
		1	**9S-8001**	1	PLUG-O-RING	
	11	1	*183-7263*	2	PLUG AS	
					(EACH INCLUDES)	
		1	**3J-7354**	1	SEAL-O-RING	
		1	**9S-8002**	1	PLUG-O-RING	
	12	1	**4F-8946**	2	SEAL-O-RING	
	13	1	**4J-2506**	1	SEAL-O-RING	
	14	1	**7M-8485**	3	SEAL-O-RING	

Y-SEPARATE ILLUSTRATION
Z-NOT SERVICED SEPARATELY

241-8929 VALVE GP-CONTROL *(contd.)* **i02960412**

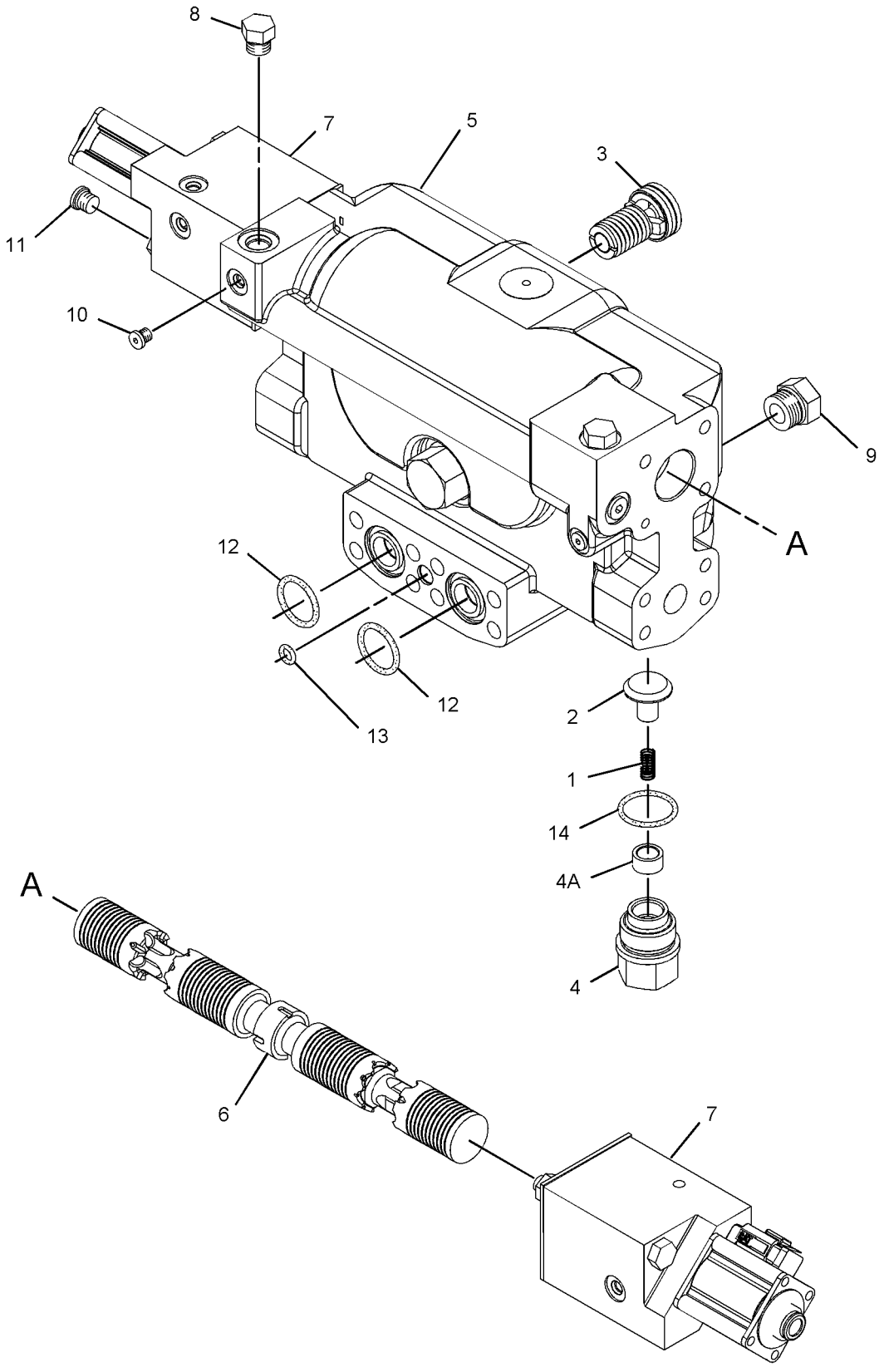

GRAPHIC #1 **<END>** g01129451

257-7284 VALVE GP-CONTROL—NEUTRAL BYPASS

S/N: WAP1-UP
PART OF 144-7087 VALVE GP-CONTROL
ALSO AN ATTACHMENT

SMCS-5051 **i02293810**

NOTE	REF NO	GRAPHIC REF	PART NUMBER	QTY	PART NAME 1 2 3 4 5 6 (PRODUCT LEVEL)	SEE PAGE
B	2	1	**9N-1574**	4	SHIM (0.03-IN THK)	
B	3	1	**9N-1575**	4	SHIM (0.03-IN THK)	
Z	4	1		1	STEM	
Z	5	1		1	SPRING	
Z	6	1		1	PLUG	
Z	7	1		1	GUIDE	
Z	8	1		1	COVER	
Z	9	1		1	RETAINER	
Z	10	1		1	BODY	
	12	1	**008-2103**	2	SEAL-O-RING	
	13	1	**095-1587**	1	SEAL-O-RING	
	14	1	**095-1786**	1	RING-BACKUP	
	15	1	**162-0177**	2	PLUG AS	
					(EACH INCLUDES)	
		1	**3J-1907**	1	SEAL-O-RING	
		1	**9S-8004**	1	PLUG-O-RING	
Y	16	1	**171-3685**	1	VALVE GP-SOLENOID (24-VOLT) (NEUTRAL BYPASS)	775
	17	1	**173-3993**	6	PLUG AS	
					(EACH INCLUDES)	
		1	**4J-7533**	1	SEAL-O-RING	
		1	**9S-8001**	1	PLUG-O-RING	
	18	1	**2M-9780**	1	SEAL-O-RING	
M	19	1	**7X-2549**	4	BOLT (M12X1.75X100-MM)	
M	20	1	**8T-4136**	4	BOLT (M10X1.5X25-MM)	

B-USE AS REQUIRED
M-METRIC PART
Y-SEPARATE ILLUSTRATION
Z-NOT SERVICED SEPARATELY

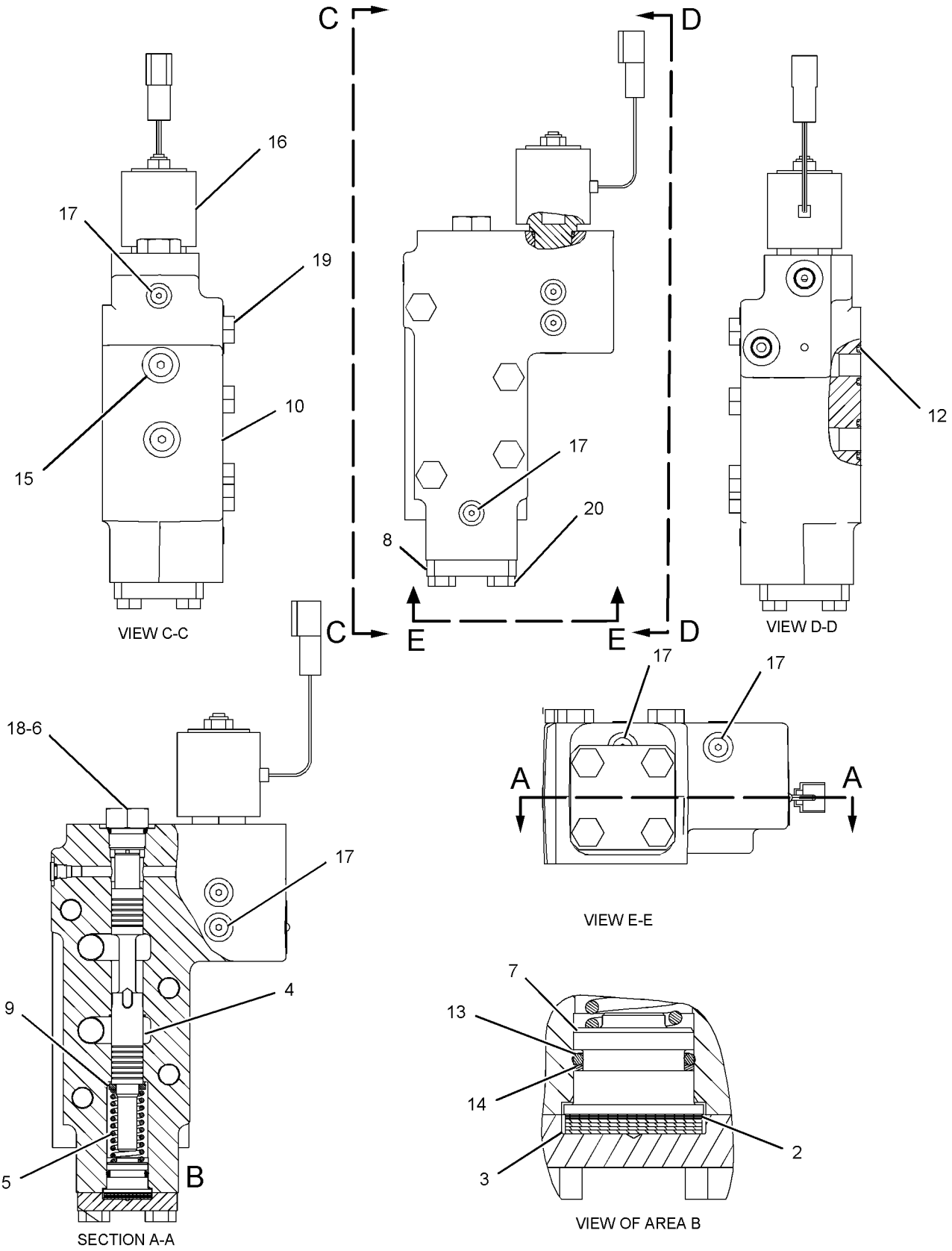

GRAPHIC #1 **<END>** g01129675

HYDRAULIC SYSTEM

270-5810 VALVE GP-CONTROL

S/N: WAP1-UP
PART OF 270-5804 VALVE GP-LOAD CONTROL
ALSO AN ATTACHMENT

SMCS-5051 **i03960163**

NOTE	REF NO	GRAPHIC REF	PART NUMBER	QTY	PART NAME 1 2 3 4 5 6 (PRODUCT LEVEL)	SEE PAGE
B	1	1	**285-1489**	1	SHIM	
B	2	1	**285-1490**	1	SHIM	
B	3	1	**285-1491**	1	SHIM	
	4	1	**4J-0523**	1	SEAL-O-RING	
M	5	1	**8T-2223**	4	BOLT-SOCKET HEAD (M10X1.5X45-MM)	
	6	1	**285-1620**	1	COVER	
	7	1	**285-1622**	1	SPRING	
	8	1	**095-1579**	1	SEAL-O-RING	
	9	1	**095-1780**	1	RING-BACKUP	
	10	1	*148-8395*	1	PLUG AS	
		1	**3K-0360**	1	SEAL-O-RING	
		1	**9S-8005**	1	PLUG-O-RING	
	11	1	**352-6865**	1	PIN	
	12	1	**8F-9538**	1	SEAL-O-RING	
					PARTS SHOWN IN GRAPHIC(S) WITHOUT A REFERENCE NUMBER ARE NOT SERVICED SEPARATELY	

B-USE AS REQUIRED
M-METRIC PART

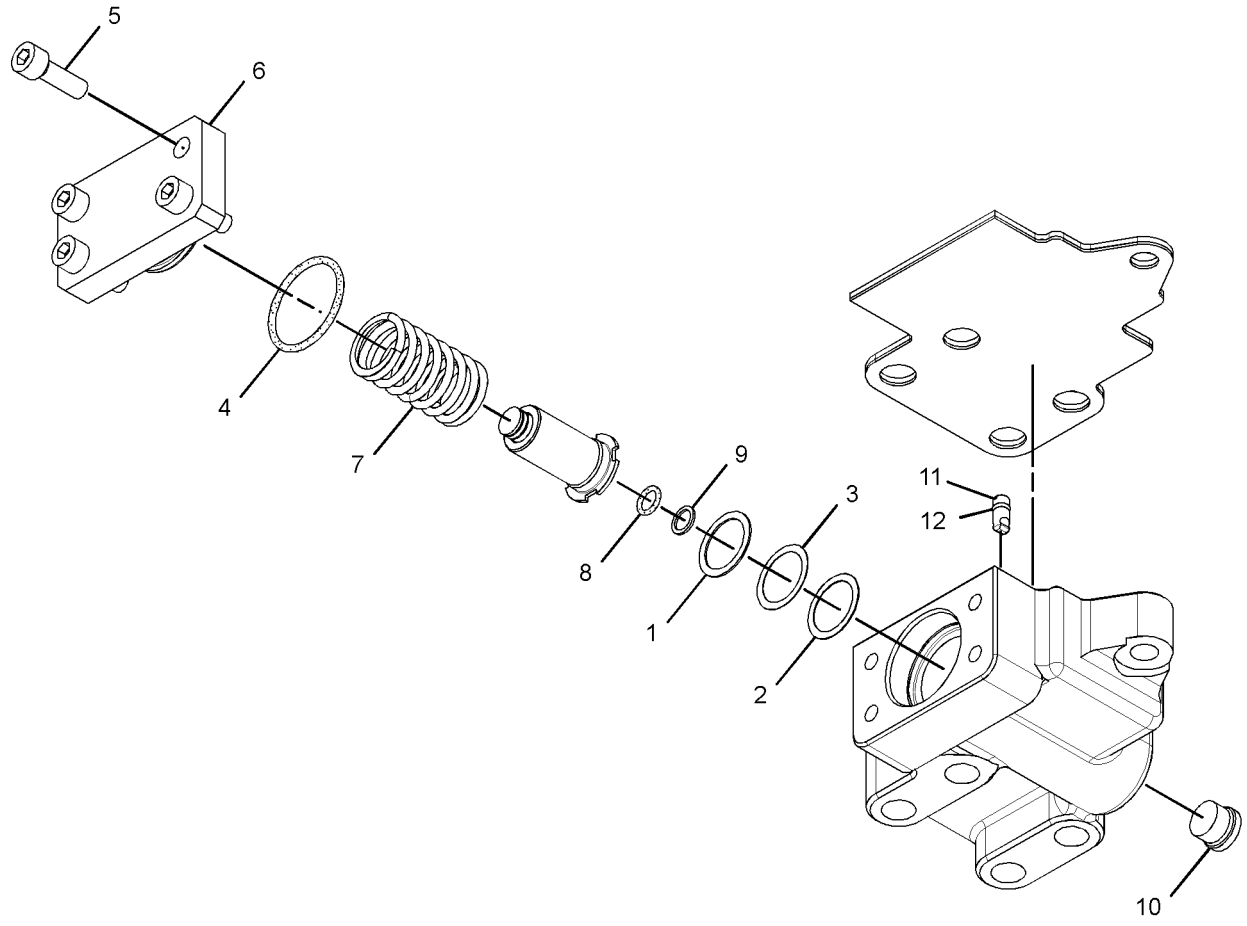

GRAPHIC #1 **<END>** g02177287

HYDRAULIC SYSTEM

274-2553 VALVE GP-CONTROL–REVERSIBLE FAN

S/N: WAP1-UP
PART OF 337-2778 LINES GP-HYDRAULIC FAN
AN ATTACHMENT

SMCS-5051 **i03614943**

NOTE	REF NO	GRAPHIC REF	PART NUMBER	QTY	PART NAME 1 2 3 4 5 6 (PRODUCT LEVEL)	SEE PAGE
	1	1	**7Y-5010**	1	PLUG	
	2	1	**242-6890**	1	SPRING	
	3	1	**242-6891**	1	PLUG	
J	4	1	**242-6892**	1	VALVE GP-RELIEF (LINE) (REVERSIBLE FAN)	
	7	1	**107-7068**	13	PLUG-PIPE	
	8	1	**111-9959**	3	PLUG-PIPE	
	9	1	**096-1598**	1	SPRING	
	10	1	**3J-1907**	2	SEAL-O-RING	
	11	1	**3K-0360**	1	SEAL-O-RING	
	12	1	**4K-1388**	1	SEAL-O-RING	
	13	1	**7Y-5011**	1	VALVE	
	14	1	**9S-8004**	2	PLUG-O-RING	
					PARTS SHOWN IN GRAPHIC(S) WITHOUT A REFERENCE NUMBER ARE NOT SERVICED SEPARATELY	
					AVAILABLE REPAIR KIT(S):	
J			**242-6925**	1	KIT-SEAL (LINE RELIEF VALVE)	
					(INCLUDES SEAL-O-RINGS, BACK-UP RING & RETAINING RING)	

J-KIT MARKED J SERVICES PART MARKED J

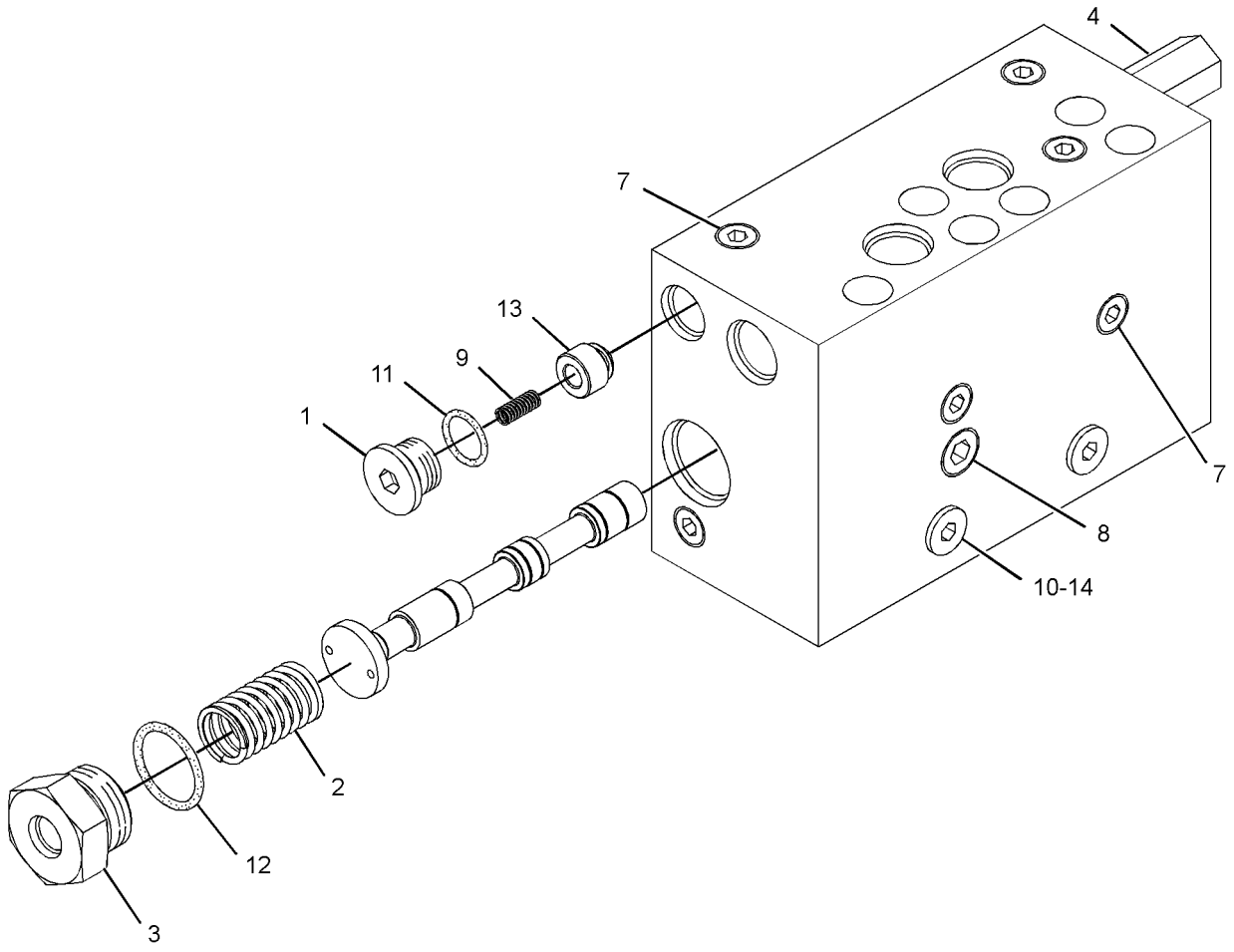

GRAPHIC #1 **<END>** g01356804

HYDRAULIC SYSTEM

295-7747 VALVE GP-CONTROL

S/N: WAP1-UP
PART OF 295-7745, 295-7767 VALVE GP-MAIN CONTROL
ALSO AN ATTACHMENT

SMCS-5051 **i03904319**

NOTE	REF NO	GRAPHIC REF	PART NUMBER	QTY	PART NAME 1 2 3 4 5 6 (PRODUCT LEVEL)	SEE PAGE
	1	1	**4J-9780**	1	PLUG-ORIFICE	
Y	2	1	**4T-1860**	1	VALVE GP-SHUTTLE	767
	3	1	**5J-5004**	3	PLUG-ORIFICE	
	4	1	**6E-3993**	5	PLUG AS	
					(EACH INCLUDES)	
		1	**2M-9780**	1	SEAL-O-RING	
		1	**2S-4078**	1	SEAL-O-RING	
		1	**6E-3991**	1	PLUG	
		1	**148-0767**	1	RING-SPLIT	
	5	2	**005-8164**	1	PLUG	
	6	2	**100-6211**	3	PISTON	
	7	1	**109-8040**	2	PLUG-ORIFICE	
Y	8	1	**111-0336**	1	VALVE GP-SHUTTLE	769
Y	9	1	**144-7113**	1	VALVE GP-RELIEF (LOAD SENSING DIFF PRESSURE)	758
	10	2	**146-0182**	1	BLOCK-MANIFOLD	
Y	11	1	**194-0946**	1	MANIFOLD & VALVE GP (MAIN CONTROL VALVE)	636
Y	12	2	**194-0947**	1	MANIFOLD & VALVE GP (MAIN CONTROL VALVE)	638
	13	1,2	*222-4737*	8	PLUG AS	
					(EACH INCLUDES)	
		1,2	**4J-7533**	1	SEAL-O-RING	
		1,2	**9S-4180**	1	PLUG	
	14	1	*225-4818*	3	PLUG AS	
					(EACH INCLUDES)	
		1	**4J-7533**	1	SEAL-O-RING	
		1	**9S-8001**	1	PLUG-O-RING	
	16	1	**247-4574**	2	SPRING	
	17	1	**247-4577**	1	SPRING	
	18	1	**247-4579**	1	SPRING	
	19	1	**247-4585**	1	COVER	
	20	1	**248-6875**	3	RING-BACKUP	
	21	1	**250-2942**	1	VALVE GP (FLOW COMPENSATOR)	
Y	23	1	**270-5804**	1	VALVE GP-LOAD CONTROL (DRIFT REDUCTION, VAR ADJ BOOM)	731
	25	1	**352-6836**	2	VALVE GP-CHECK (COMPENSATOR)	
Y	26	1	**352-6869**	1	VALVE GP-RELIEF (PILOT OPERATED)	764
	27	1	**095-1607**	3	SEAL-O-RING	
	28	1	**095-1608**	3	SEAL-O-RING	
	29	2	*148-8405*	3	PLUG AS	
					(EACH INCLUDES)	
		2	**1J-9671**	1	SEAL-O-RING	
		2	**3K-8460**	1	PLUG	
	30	1,2	*148-8407*	6	PLUG AS	
					(EACH INCLUDES)	
		1,2	**3J-1907**	1	SEAL-O-RING	
		1,2	**9S-4191**	1	PLUG-O-RING	
	31	2	*148-8408*	1	PLUG AS	
		2	**3D-2824**	1	SEAL-O-RING	
		2	**9S-4183**	1	PLUG-O-RING	
	32	2	*148-8409*	2	PLUG AS	
					(EACH INCLUDES)	
		2	**3D-2824**	1	SEAL-O-RING	
		2	**9S-8008**	1	PLUG-O-RING	
	33	1,2	*148-8410*	2	PLUG AS	
					(EACH INCLUDES)	
		1,2	**2M-9780**	1	SEAL-O-RING	

295-7747 VALVE GP-CONTROL *(contd.)* i03904319

NOTE	REF NO	GRAPHIC REF	PART NUMBER	QTY	PART NAME 1 2 3 4 5 6 (PRODUCT LEVEL)	SEE PAGE
		1,2	**9S-4190**	1	PLUG-O-RING	
	34	1,2	*155-3624*	4	PLUG AS	
					(EACH INCLUDES)	
		1,2	**3J-7354**	1	SEAL-O-RING	
		1,2	**9S-4182**	1	PLUG-O-RING	
	35	2	*183-7262*	1	PLUG AS	
		2	**2S-4078**	1	SEAL-O-RING	
		2	**9S-8010**	1	PLUG	
	36	1	*183-7263*	1	PLUG AS	
		1	**3J-7354**	1	SEAL-O-RING	
		1	**9S-8002**	1	PLUG-O-RING	
	37	2	**1H-5728**	3	SEAL-O-RING	
	38	2	**2D-6392**	3	SEAL-O-RING	
	39	2	**3D-2824**	1	SEAL-O-RING	
	40	2	**4J-9535**	2	SEAL-O-RING	
	41	1	**6V-7666**	3	RING-BACKUP	
M	42	1	**7X-2546**	8	BOLT (M10X1.5X180-MM)	
M	43	1	**7X-2555**	8	BOLT (M16X2X80-MM)	
	44	1	**8J-1699**	2	SEAL-O-RING	
M	45	1	**8T-5436**	8	BOLT (M10X1.5X130-MM)	

M-METRIC PART
Y-SEPARATE ILLUSTRATION

REFER TO ALL ILLUSTRATIONS OF THIS GROUP FOR AUXILIARY VIEWS

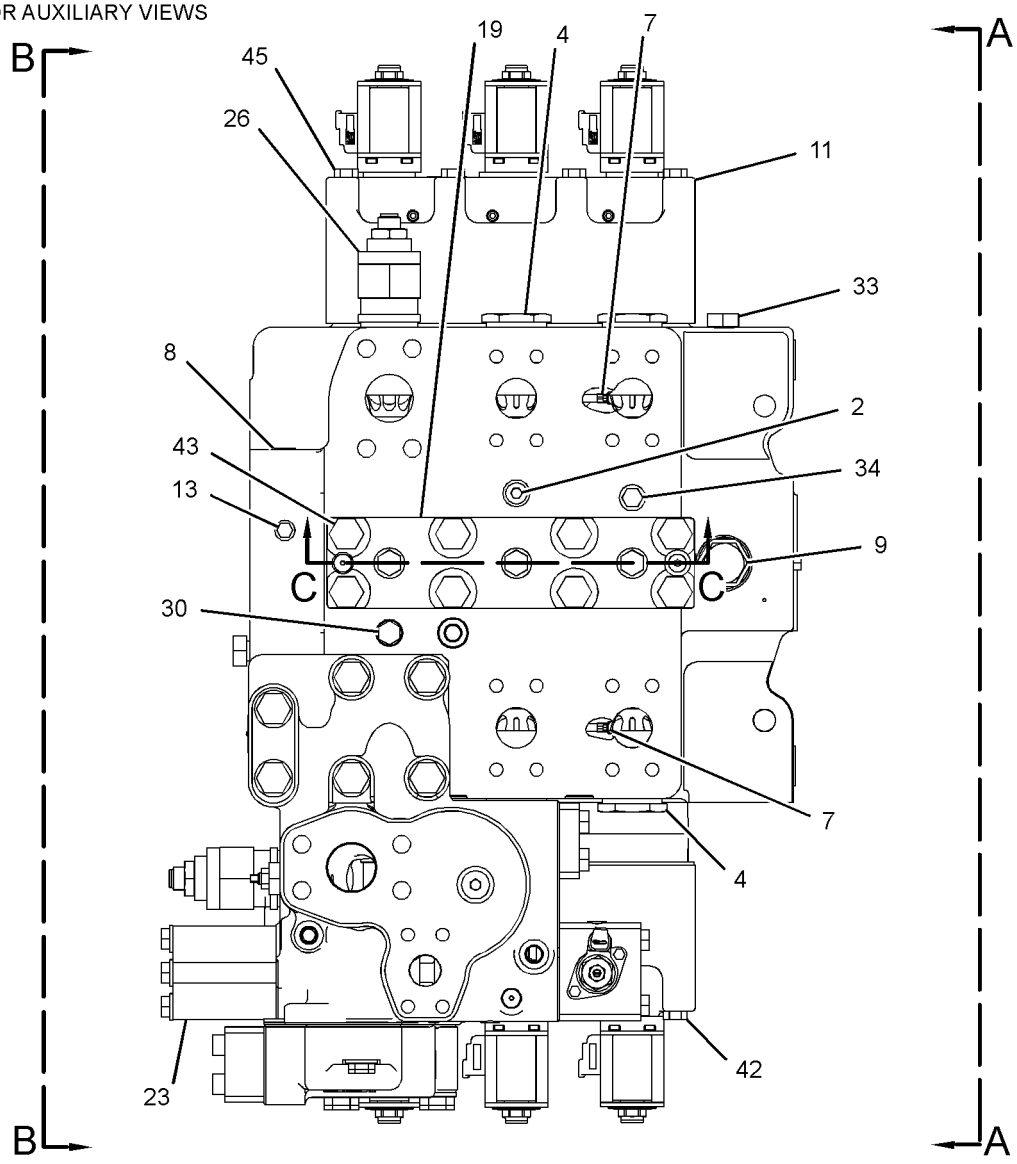

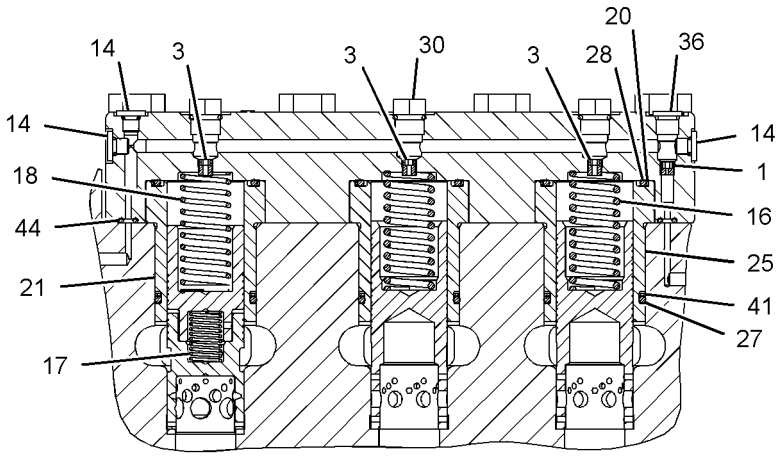

SECTION C-C

GRAPHIC #1

g02163708

295-7747 VALVE GP-CONTROL *(contd.)* i03904319

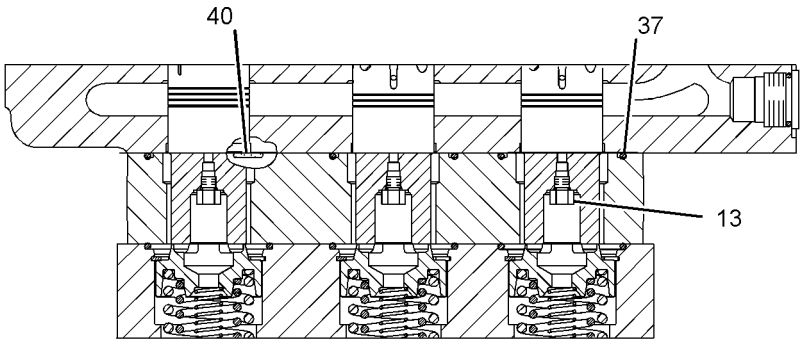

SECTION D-D

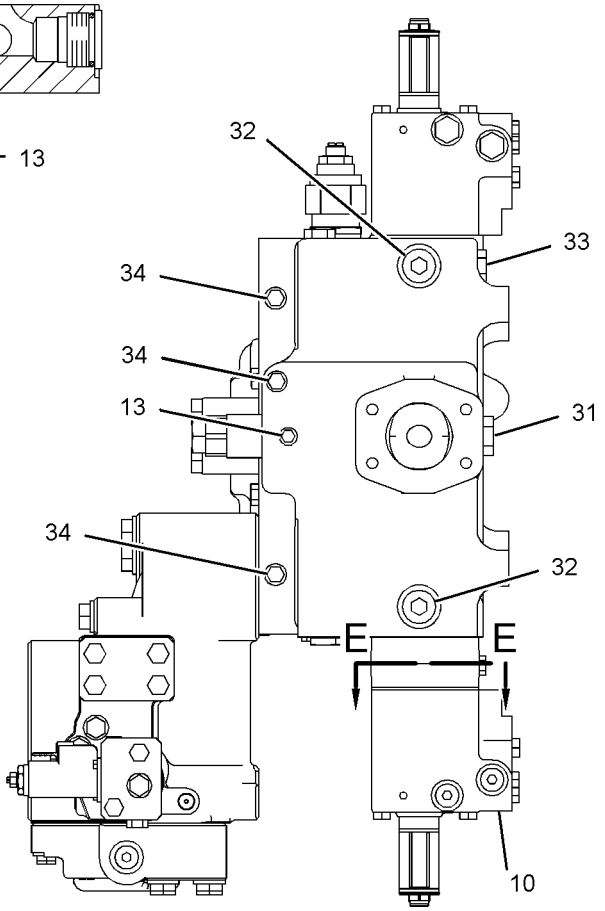

VIEW A-A

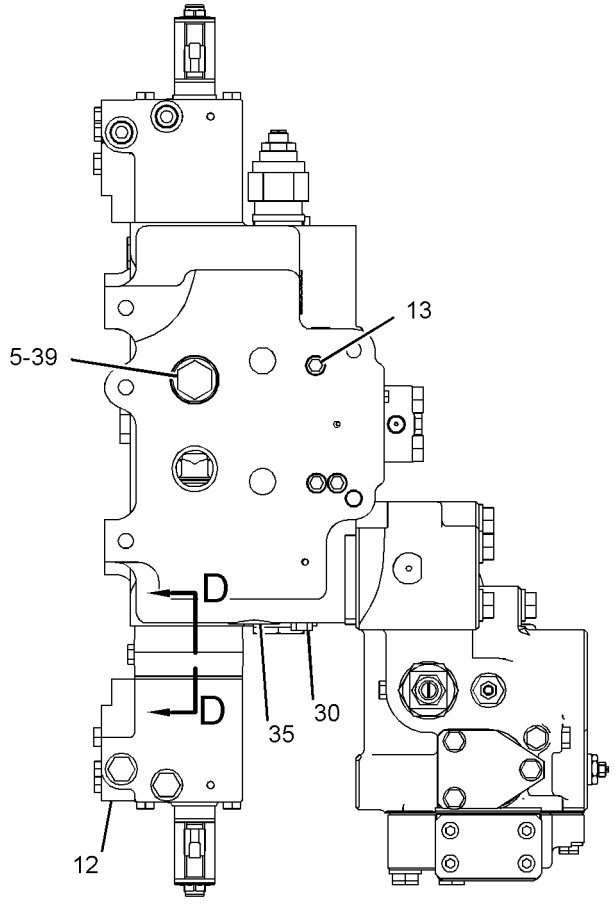

VIEW B-B

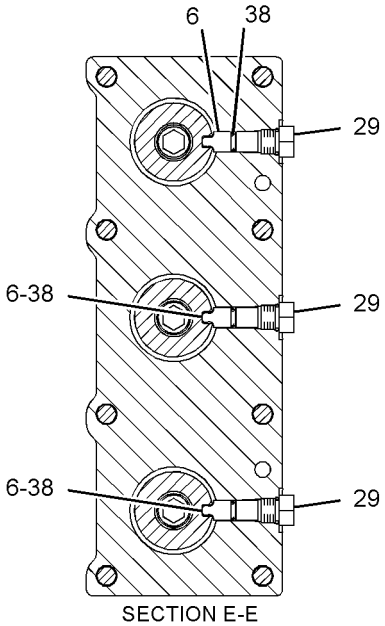

SECTION E-E

GRAPHIC #2 **<END>** g02163875

HYDRAULIC SYSTEM

295-7748 VALVE GP-CONTROL

S/N: WAP1-UP

PART OF 295-7745 VALVE GP-MAIN CONTROL

SMCS-5051 **i03906238**

NOTE	REF NO	GRAPHIC REF	PART NUMBER	QTY	PART NAME 1 2 3 4 5 6 (PRODUCT LEVEL)	SEE PAGE
	1	3	**4J-9780**	1	PLUG-ORIFICE	
Y	2	1	**4T-1860**	1	VALVE GP-SHUTTLE	767
	3	3	**4T-4207**	1	PLUG-ORIFICE	
	4	3	**5J-5004**	1	PLUG-ORIFICE	
	5	1	**6E-3993**	3	PLUG AS	
					(EACH INCLUDES)	
		1	**2M-9780**	1	SEAL-O-RING	
		1	**2S-4078**	1	SEAL-O-RING	
		1	**6E-3991**	1	PLUG	
		1	**148-0767**	1	RING-SPLIT	
Y	6	2	**6E-4429**	1	VALVE GP-SHUTTLE	768
	7	3	**9J-8126**	1	PLUG-ORIFICE	
	8	3	**005-8164**	1	PLUG	
	9	1	**100-6211**	3	PISTON	
Y	10	2	**144-7087**	1	VALVE GP-CONTROL (NEUTRAL BYPASS)	699
Y	11	2	**144-7113**	1	VALVE GP-RELIEF (LOAD SENSING DIFF PRESSURE)	758
	12	1	**145-8747**	1	SPACER	
Y	14	1	**194-0946**	1	MANIFOLD & VALVE GP (MAIN CONTROL VALVE)	636
Y	15	1	**194-0947**	1	MANIFOLD & VALVE GP (MAIN CONTROL VALVE)	638
	16	1,2,3	*222-4737*	8	PLUG AS	
					(EACH INCLUDES)	
		1,2,3	**4J-7533**	1	SEAL-O-RING	
		1,2,3	**9S-4180**	1	PLUG	
	18	3	**247-4574**	3	SPRING	
	19	3	**247-4577**	3	SPRING	
	20	1	**247-4585**	1	COVER	
	21	3	**248-6875**	3	RING-BACKUP	
	22	3	**250-2942**	2	VALVE GP (FLOW COMPENSATOR)	
Y	23	1	**270-5803**	1	VALVE GP-LOAD CONTROL	728
	24	3	**323-7776**	1	VALVE GP-CONTROL	
Y	27	1	**352-6869**	3	VALVE GP-RELIEF (PILOT OPERATED)	764
	28	3	**095-1607**	3	SEAL-O-RING	
	29	3	**095-1608**	3	SEAL-O-RING	
	30	1	*148-8405*	3	PLUG AS	
					(EACH INCLUDES)	
		1	**1J-9671**	1	SEAL-O-RING	
		1	**3K-8460**	1	PLUG	
	31	1	*148-8407*	6	PLUG AS	
					(EACH INCLUDES)	
		1	**3J-1907**	1	SEAL-O-RING	
		1	**9S-4191**	1	PLUG-O-RING	
	32	2	*148-8408*	1	PLUG AS	
		2	**3D-2824**	1	SEAL-O-RING	
		2	**9S-4183**	1	PLUG-O-RING	
	33	2	*148-8409*	2	PLUG AS	
					(EACH INCLUDES)	
		2	**3D-2824**	1	SEAL-O-RING	
		2	**9S-8008**	1	PLUG-O-RING	
	34	2	*148-8410*	2	PLUG AS	
					(EACH INCLUDES)	
		2	**2M-9780**	1	SEAL-O-RING	
		2	**9S-4190**	1	PLUG-O-RING	
	35	1,2	*155-3624*	2	PLUG AS	
					(EACH INCLUDES)	
		1,2	**3J-7354**	1	SEAL-O-RING	
		1,2	**9S-4182**	1	PLUG-O-RING	

295-7748 **VALVE GP-CONTROL** *(contd.)* **i03906238**

NOTE	REF NO	GRAPHIC REF	PART NUMBER	QTY	PART NAME 1 2 3 4 5 6 (PRODUCT LEVEL)	SEE PAGE
	36	3	*225-4818*	3	PLUG AS	
					(EACH INCLUDES)	
		3	**4J-7533**	1	SEAL-O-RING	
		3	**225-4804**	1	PLUG	
	37	1	*183-7262*	1	PLUG AS	
		1	**2S-4078**	1	SEAL-O-RING	
		1	**9S-8010**	1	PLUG	
	38	1	*183-7263*	1	PLUG AS	
		1	**3J-7354**	1	SEAL-O-RING	
		1	**9S-8002**	1	PLUG-O-RING	
	39	3	**1H-5728**	3	SEAL-O-RING	
	40	1	**2D-6392**	3	SEAL-O-RING	
	41	3	**3D-2824**	1	SEAL-O-RING	
	42	2	**4J-9535**	2	SEAL-O-RING	
	43	3	**6V-7666**	3	RING-BACKUP	
M	44	2	**7X-2546**	8	BOLT (M10X1.5X180-MM)	
M	45	1	**7X-2555**	8	BOLT (M16X2X80-MM)	
	46	3	**8J-1699**	2	SEAL-O-RING	
M	47	1	**8T-5436**	8	BOLT (M10X1.5X130-MM)	

M-METRIC PART
Y-SEPARATE ILLUSTRATION

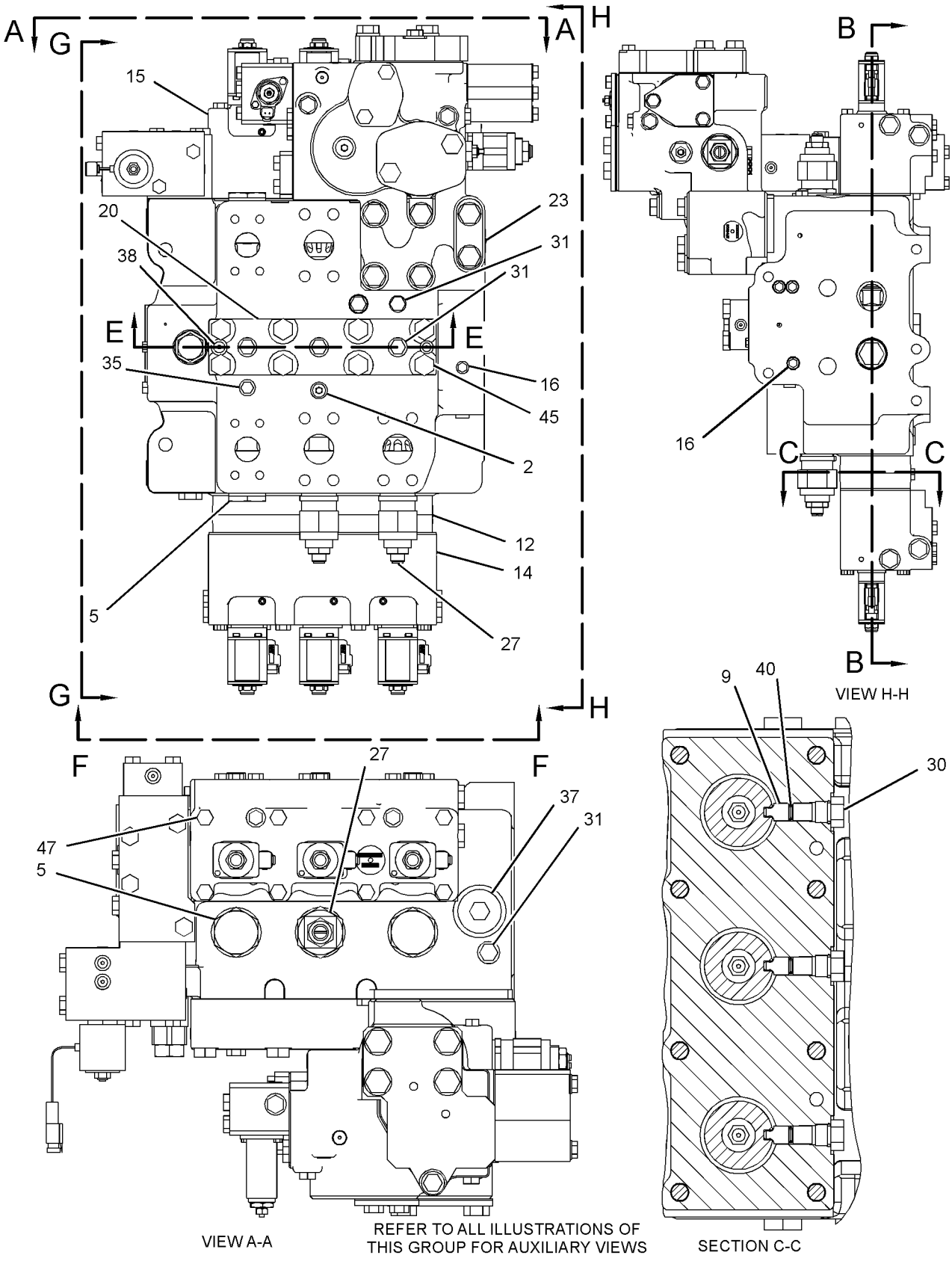

GRAPHIC #1

g02161894

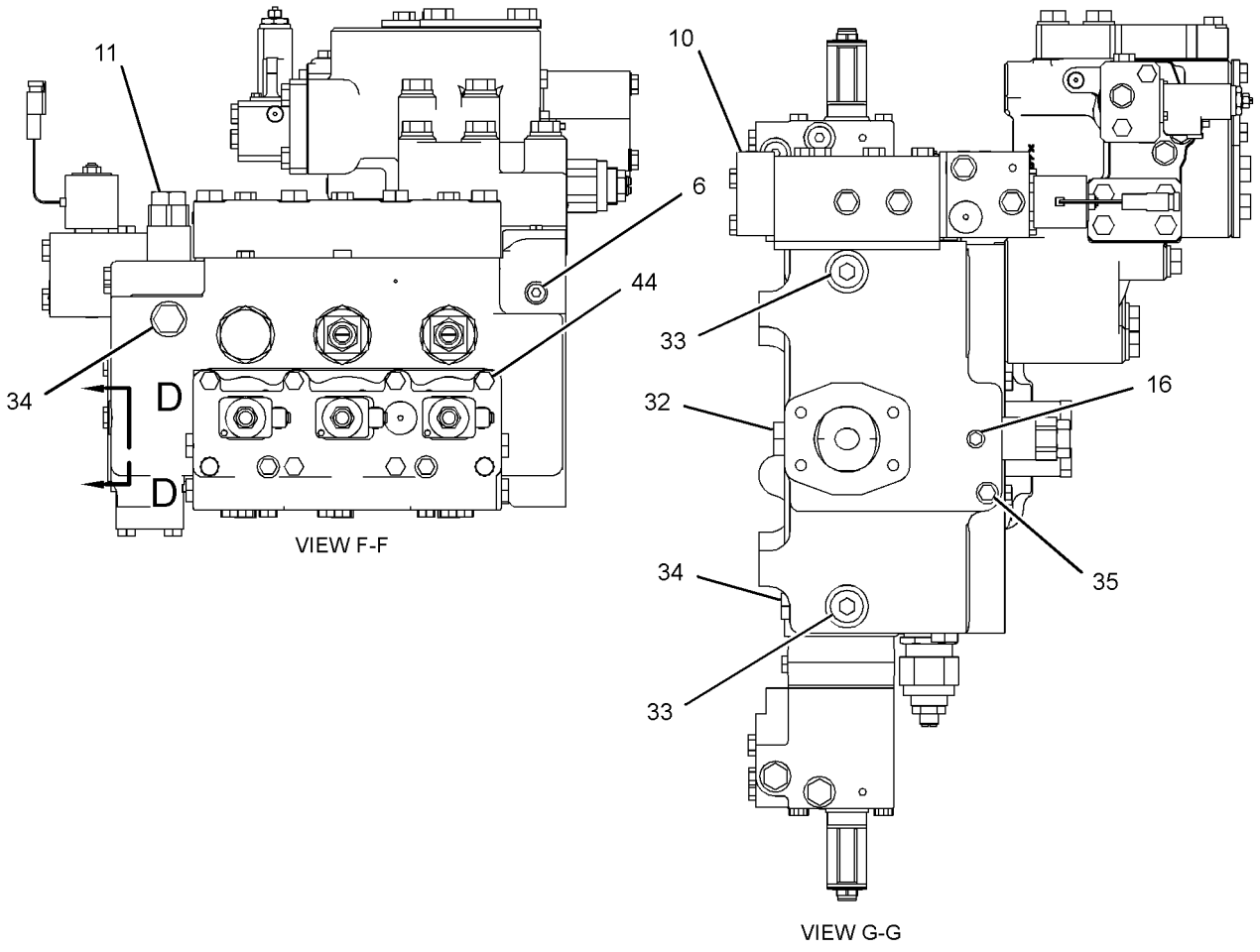

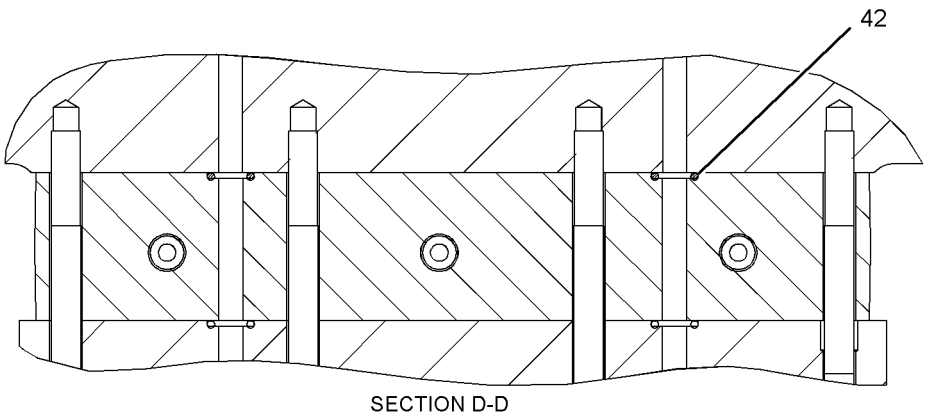

GRAPHIC #2 g02161931

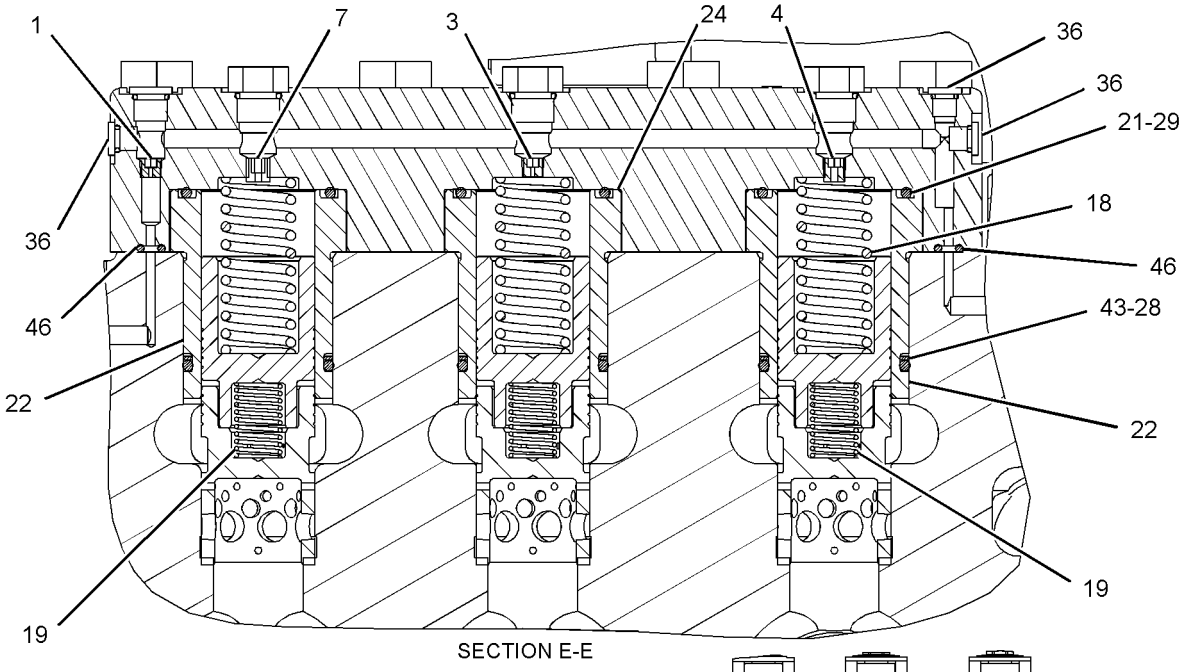

SECTION E-E

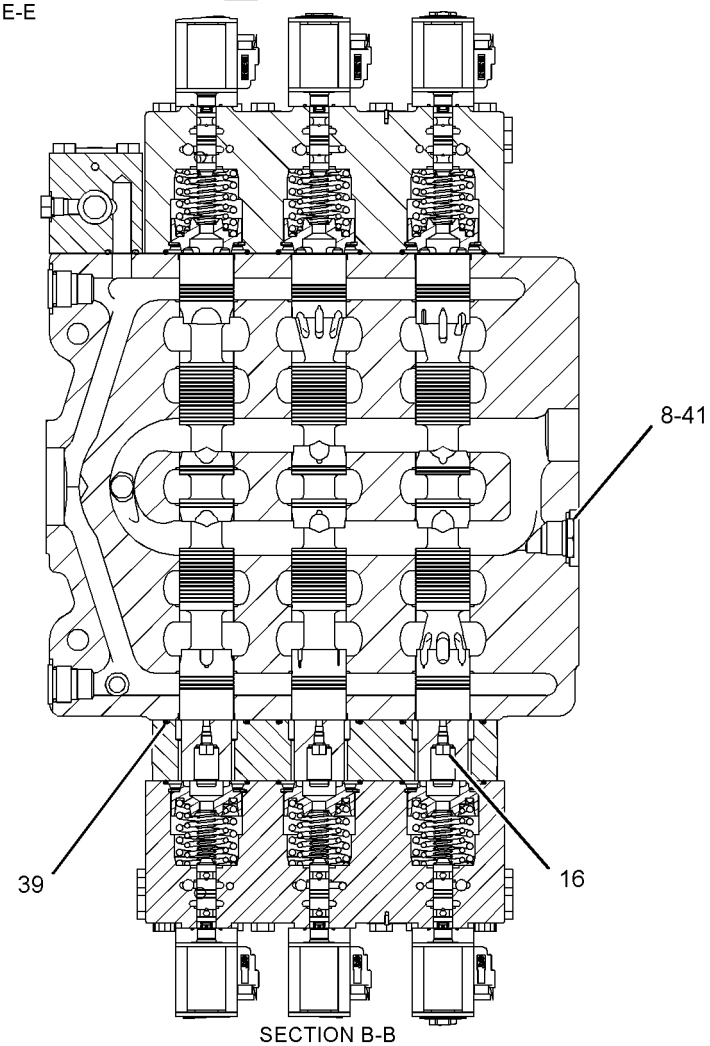

SECTION B-B

GRAPHIC #3 **<END>** g02161936

HYDRAULIC SYSTEM

295-7769 VALVE GP-CONTROL

S/N: WAP1-UP
SMARTBOOM
PART OF 295-7767 VALVE GP-MAIN CONTROL
AN ATTACHMENT

SMCS-5051 **i03959956**

NOTE	REF NO	GRAPHIC REF	PART NUMBER	QTY	PART NAME 1 2 3 4 5 6 (PRODUCT LEVEL)	SEE PAGE
	1	1	**4J-9780**	1	PLUG-ORIFICE	
Y	2	1	**4T-1860**	1	VALVE GP-SHUTTLE	767
	3	1	**4T-4207**	1	PLUG-ORIFICE	
	4	1	**5J-5004**	1	PLUG-ORIFICE	
	5	1	*6E-3993*	3	PLUG AS	
					(EACH INCLUDES)	
		1	**2M-9780**	1	SEAL-O-RING	
		1	**2S-4078**	1	SEAL-O-RING	
		1	**6E-3991**	1	PLUG	
		1	**148-0767**	1	RING-SPLIT	
Y	6	1	**6E-4429**	1	VALVE GP-SHUTTLE	768
	7	1	**9J-8126**	1	PLUG-ORIFICE	
	8	2	**005-8164**	1	PLUG	
	9	2	**100-6211**	3	PISTON	
Y	10	2	**144-7087**	1	VALVE GP-CONTROL (NEUTRAL BYPASS)	699
Y	11	1	**144-7113**	1	VALVE GP-RELIEF (LOAD SENSING DIFF PRESSURE)	758
	12	1	**145-8747**	1	SPACER	
Y	14	1	**194-0946**	1	MANIFOLD & VALVE GP (MAIN CONTROL VALVE)	636
Y	15	1	**194-0947**	1	MANIFOLD & VALVE GP (MAIN CONTROL VALVE)	638
	16	1,2	*222-4737*	8	PLUG AS	
					(EACH INCLUDES)	
		1,2	**4J-7533**	1	SEAL-O-RING	
		1,2	**9S-4180**	1	PLUG	
	18	1	**247-4574**	3	SPRING	
	19	1	**247-4577**	3	SPRING	
	20	1	**247-4585**	1	COVER	
	21	1	**248-6875**	3	RING-BACKUP	
	22	1	**250-2942**	2	VALVE GP (FLOW COMPENSATOR)	
Y	23	1	**270-5803**	1	VALVE GP-LOAD CONTROL	728
	25	1	**323-7776**	1	VALVE GP-CONTROL	
Y	27	1	**352-6869**	3	VALVE GP-RELIEF (PILOT OPERATED)	764
	28	1	**095-1607**	3	SEAL-O-RING	
	29	1	**095-1608**	3	SEAL-O-RING	
	30	2	*148-8405*	3	PLUG AS	
					(EACH INCLUDES)	
		2	**1J-9671**	1	SEAL-O-RING	
		2	**3K-8460**	1	PLUG	
	31	1	*148-8407*	6	PLUG AS	
					(EACH INCLUDES)	
		1	**3J-1907**	1	SEAL-O-RING	
		1	**9S-4191**	1	PLUG-O-RING	
	32	2	*148-8408*	1	PLUG AS	
		2	**3D-2824**	1	SEAL-O-RING	
		2	**9S-4183**	1	PLUG-O-RING	
	33	2	*148-8409*	2	PLUG AS	
					(EACH INCLUDES)	
		2	**3D-2824**	1	SEAL-O-RING	
		2	**9S-8008**	1	PLUG-O-RING	
	34	1,2	*148-8410*	2	PLUG AS	
					(EACH INCLUDES)	
		1,2	**2M-9780**	1	SEAL-O-RING	
		1,2	**9S-4190**	1	PLUG-O-RING	
	35	1,2	*155-3624*	2	PLUG AS	
					(EACH INCLUDES)	

295-7769 VALVE GP-CONTROL *(contd.)* i03959956

NOTE	REF NO	GRAPHIC REF	PART NUMBER	QTY	PART NAME 1 2 3 4 5 6 (PRODUCT LEVEL)	SEE PAGE
		1,2	**3J-7354**	1	SEAL-O-RING	
		1,2	**9S-4182**	1	PLUG-O-RING	
	36	1	*225-4818*	3	PLUG AS	
					(EACH INCLUDES)	
		1	**4J-7533**	1	SEAL-O-RING	
		1	**225-4804**	1	PLUG	
	37	1	*183-7262*	1	PLUG AS	
		1	**2S-4078**	1	SEAL-O-RING	
		1	**9S-8010**	1	PLUG	
	38	1	*183-7263*	1	PLUG AS	
		1	**3J-7354**	1	SEAL-O-RING	
		1	**9S-8002**	1	PLUG-O-RING	
	39	2	**1H-5728**	3	SEAL-O-RING	
	40	2	**2D-6392**	3	SEAL-O-RING	
	41	2	**3D-2824**	1	SEAL-O-RING	
	42	2	**4J-9535**	2	SEAL-O-RING	
	43	1	**6V-7666**	3	RING-BACKUP	
M	44	1	**7X-2546**	8	BOLT (M10X1.5X180-MM)	
M	45	1	**7X-2555**	8	BOLT (M16X2X80-MM)	
	46	1	**8J-1699**	2	SEAL-O-RING	
M	47	1	**8T-5436**	8	BOLT (M10X1.5X130-MM)	

M-METRIC PART
Y-SEPARATE ILLUSTRATION

REFER TO ALL ILLUSTRATIONS OF THIS GROUP FOR AUXILIARY VIEWS

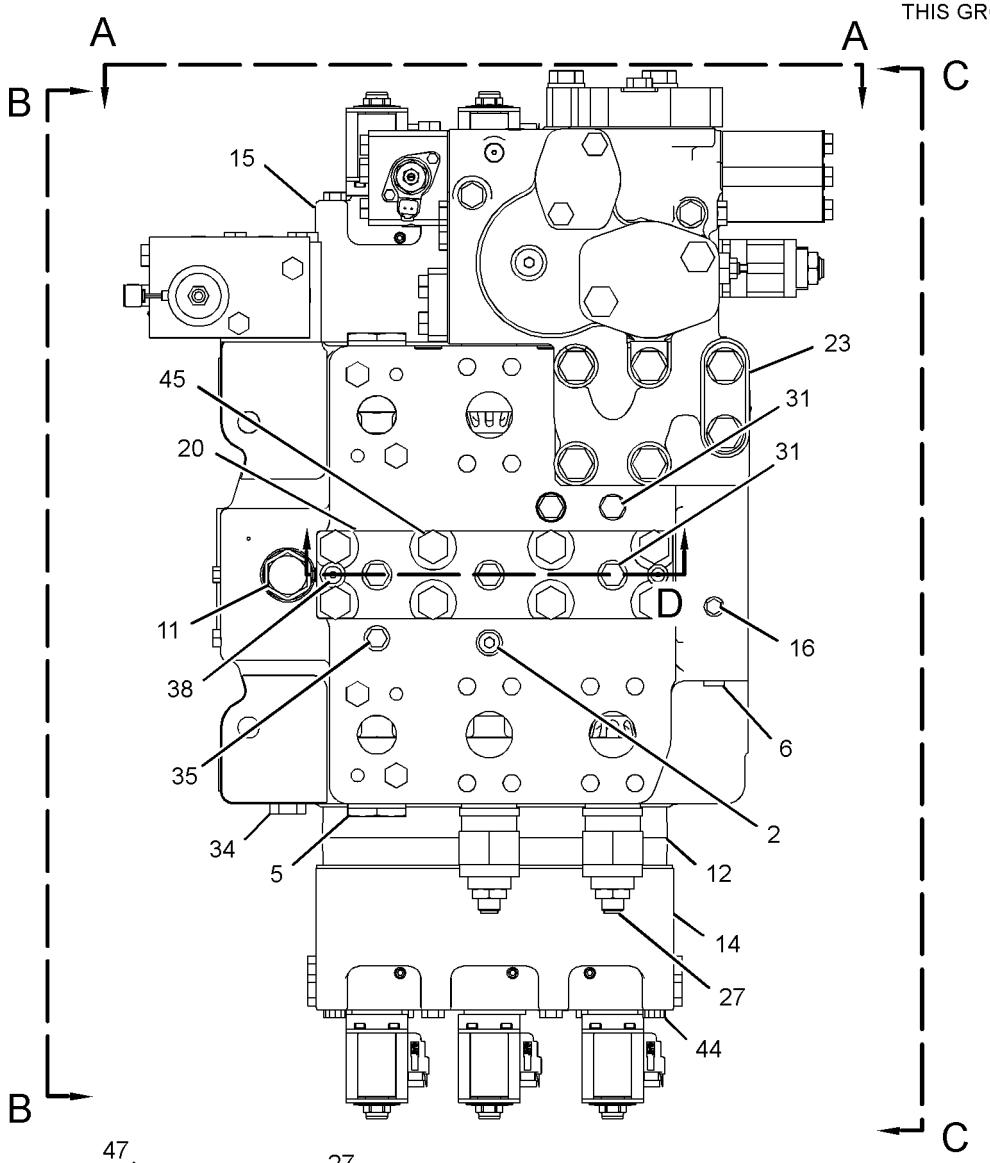

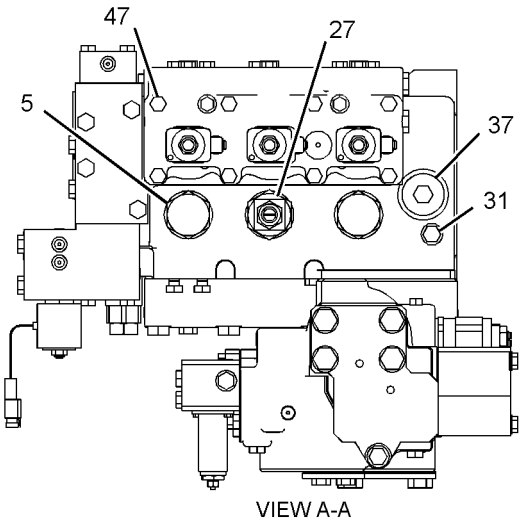

VIEW A-A

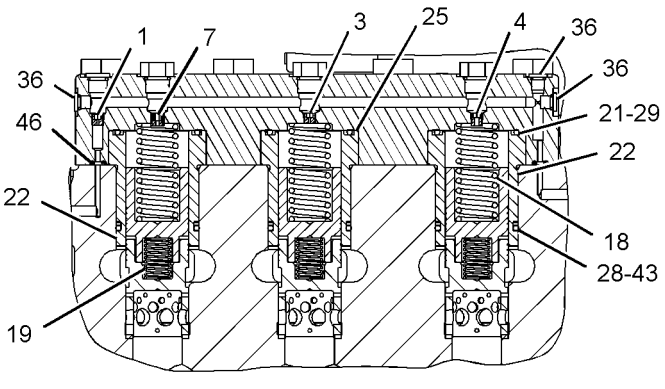

SECTION D

GRAPHIC #1

g02154672

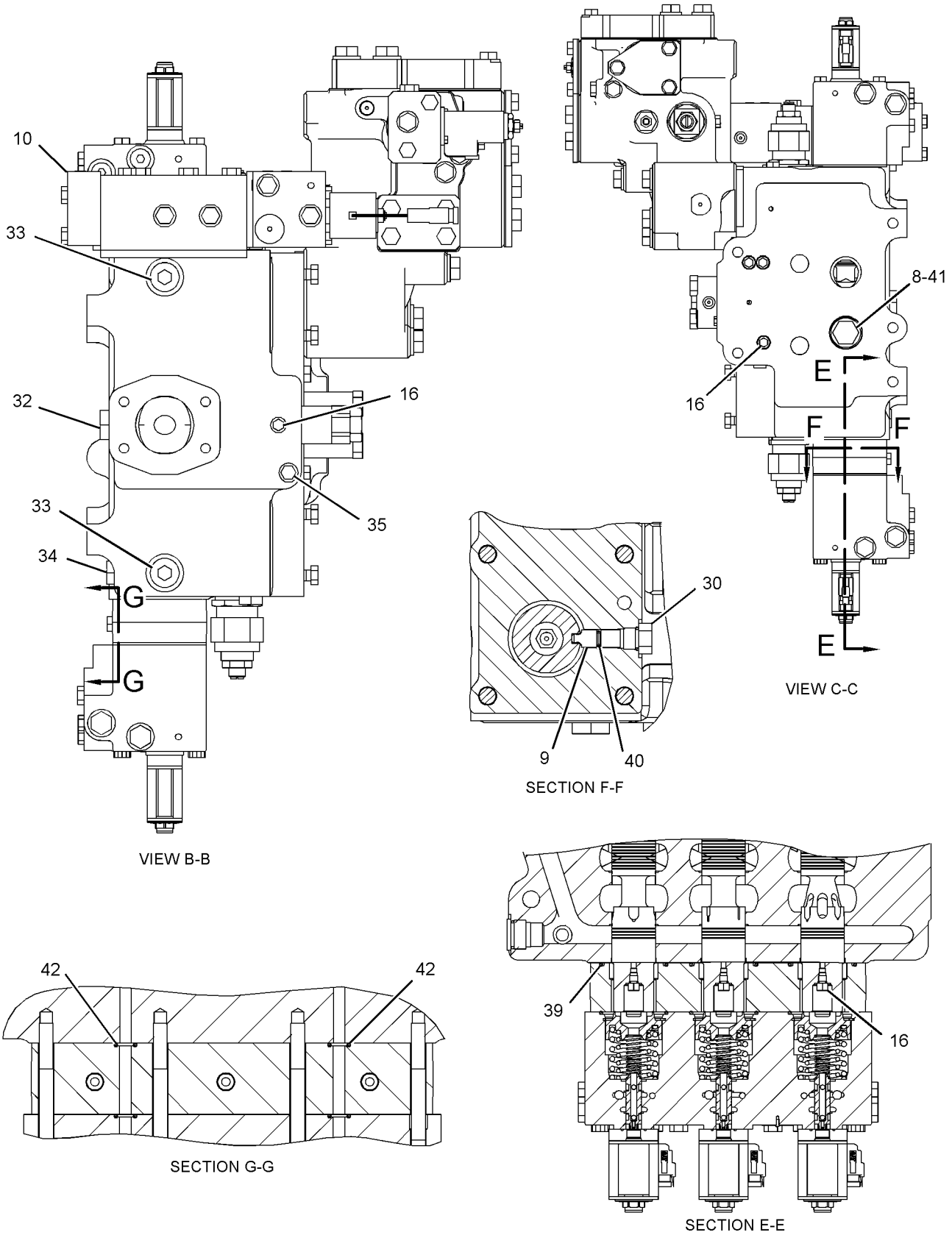

GRAPHIC #2 **<END>** g02154673

HYDRAULIC SYSTEM

329-5224 VALVE GP-CONTROL—QUICK COUPLER

S/N: WAP1-UP
PART OF 302-3059 LINES GP-FRONT
AN ATTACHMENT

SMCS-5051 **i03785312**

NOTE	REF NO	GRAPHIC REF	PART NUMBER	QTY	PART NAME 1 2 3 4 5 6 (PRODUCT LEVEL)	SEE PAGE
	1	1	**6E-5438**	1	SPRING	
	2	1	**6E-5439**	1	SPRING	
Y	3	1	**121-1491**	1	VALVE GP-SOLENOID (QUICK COUPLER, LOCK, UNLOCK)	772
	4	1	**287-2352**	1	RETAINER-SPRING	
M	5	1	**8T-6870**	2	BOLT (M8X1.25X70-MM)	
	6	1	*291-0811*	2	VALVE GP-PRESSURE REDUCING	
					(EACH INCLUDES)	
		1	**172-4432**	1	KIT-SEAL (QUICK COUPLER VALVE)	
	7	1	**8T-6759**	10	PLUG-PIPE	
	8	1	*148-8407*	4	PLUG AS	
					(EACH INCLUDES)	
		1	**3J-1907**	1	SEAL-O-RING	
		1	**9S-4191**	1	PLUG-O-RING	
	9	1	**4J-5267**	1	SEAL-O-RING	
	10	1	**6E-2313**	1	COVER	
	11	1	**6E-5431**	5	SHIM (0.5-MM THK)	
	12	1	**6E-5434**	1	HOUSING-PILOT	
M	13	1	**7I-2272**	2	BOLT (M5X0.8X12-MM)	
	14	1	**8F-0212**	1	SEAL-O-RING	
M	15	1	**8T-4195**	2	BOLT (M10X1.5X30-MM)	
	16	1	**8T-4224**	2	WASHER-HARD (8.8X16X2-MM THK)	
					PARTS SHOWN IN GRAPHIC(S) WITHOUT A REFERENCE NUMBER ARE NOT SERVICED SEPARATELY	

M-METRIC PART
Y-SEPARATE ILLUSTRATION

329-5224 VALVE GP-CONTROL *(contd.)* **i03785312**

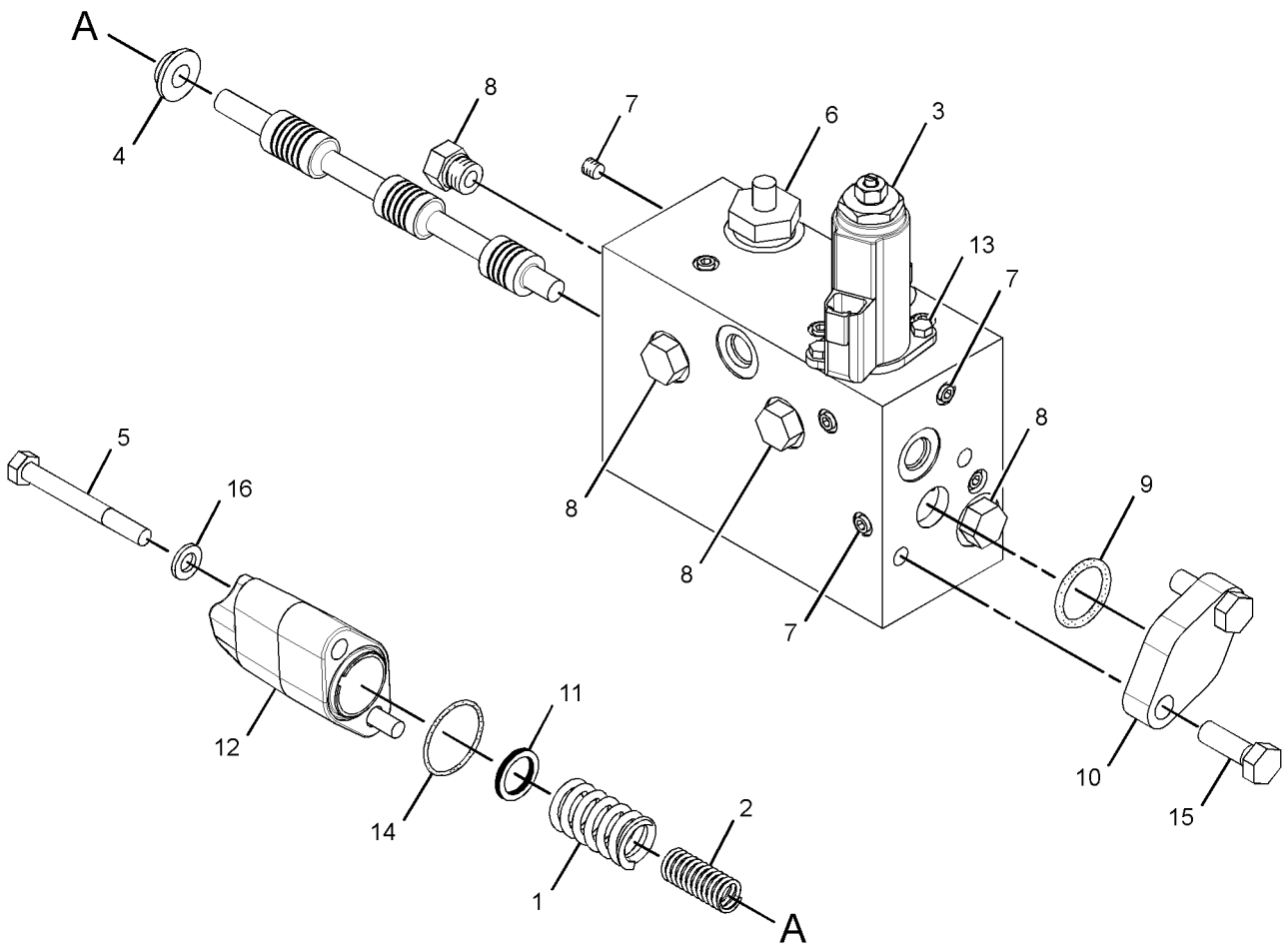

GRAPHIC #1 **<END>** g02126566

HYDRAULIC SYSTEM

123-2515 VALVE GP-COUNTERWEIGHT CONTROL

S/N: WAP1-UP
PART OF 296-7115 LINES GP-REAR ATTACHMENT
AN ATTACHMENT

SMCS-5408 **i04026043**

NOTE	REF NO	GRAPHIC REF	PART NUMBER	QTY	PART NAME 1 2 3 4 5 6 (PRODUCT LEVEL)	SEE PAGE
	1	1	**7I-0135**	2	PLUG	
	2	1	**099-3990**	1	BODY	
	3	1	**093-3093**	1	ROD	
M	4	1	**1R-6484**	2	NUT (M10X1.25-THD)	
	5	1	**093-3094**	2	ROD	
M	6	1	**095-6636**	4	NUT (M8X1.25-THD)	
	7	1	**102-7024**	1	VALVE GP-RELIEF	
		1	**093-3328**	1	SEAL-O-RING	
		1	**095-1578**	1	SEAL-O-RING (9.8-MM I.D.)	
	8	1	**7I-0134**	2	PLUG	

M-METRIC PART

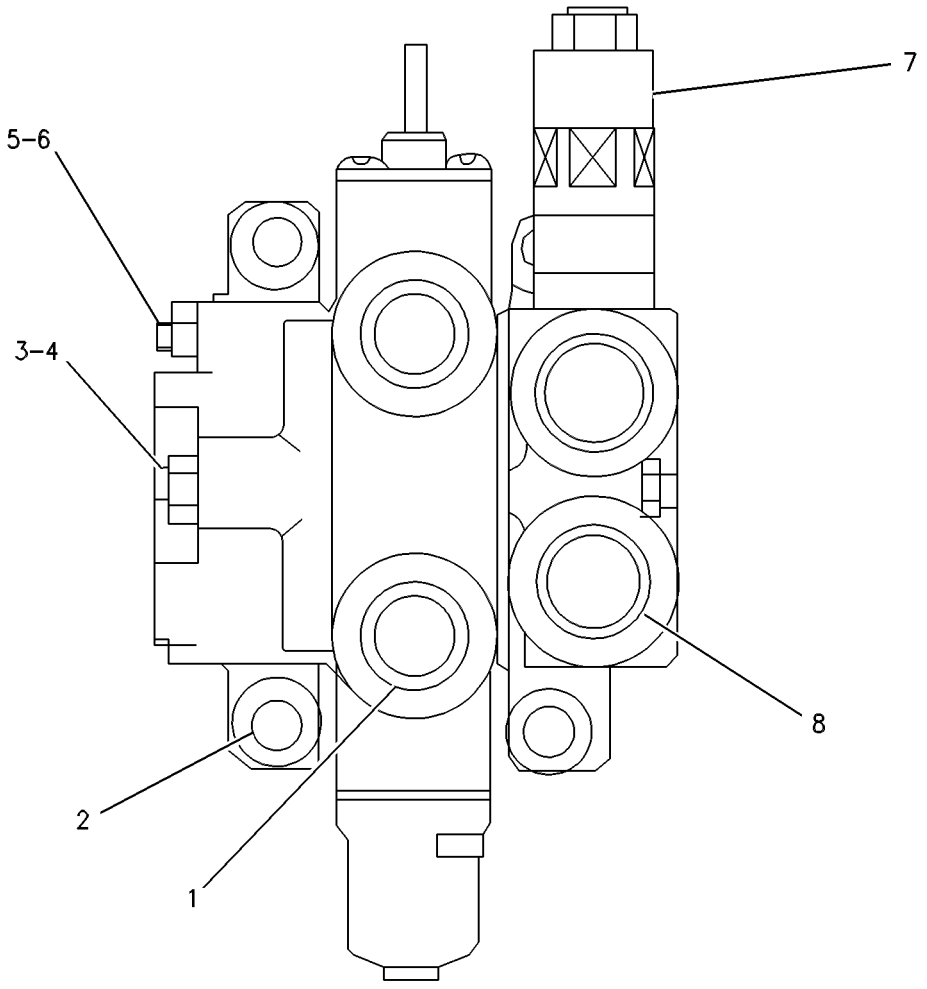

GRAPHIC #1 **<END>** g00268644

HYDRAULIC SYSTEM

322-8706 VALVE GP-FLOW CONTROL

S/N: WAP1-UP

PART OF 315-4478 VALVE GP-PUMP CONTROL

SMCS-5137 **i03906537**

NOTE	REF NO	GRAPHIC REF	PART NUMBER	QTY	PART NAME 1 2 3 4 5 6 (PRODUCT LEVEL)	SEE PAGE
	1	1	**216-1594**	1	ADAPTER	
	2	1	**3D-4245**	1	SEAL-O-RING	
	3	1	**170-9820**	1	BUSHING	
	4	1	**177-7747**	2	RING	
	5	1	**102-0811**	1	RETAINER	
	6	1	**322-8705**	1	SPRING	
	7	1	**247-8764**	1	SLEEVE	
	8	1	**315-4385**	1	PISTON	
	9	1	**170-9822**	1	SPRING	
M	10	1	**8T-9405**	4	BOLT-SOCKET HEAD (M4X0.7X16-MM)	
	11	1	**112-4717**	1	SEAL-O-RING	
	12	1	**216-1397**	1	SOLENOID AS	
		1	**217-3875**	1	SEAL-O-RING	
M	13	1	**170-9906**	1	SETSCREW (M6X1X25-MM)	
M	14	1	**9T-3853**	1	LOCKNUT (M6X1-THD)	

M-METRIC PART

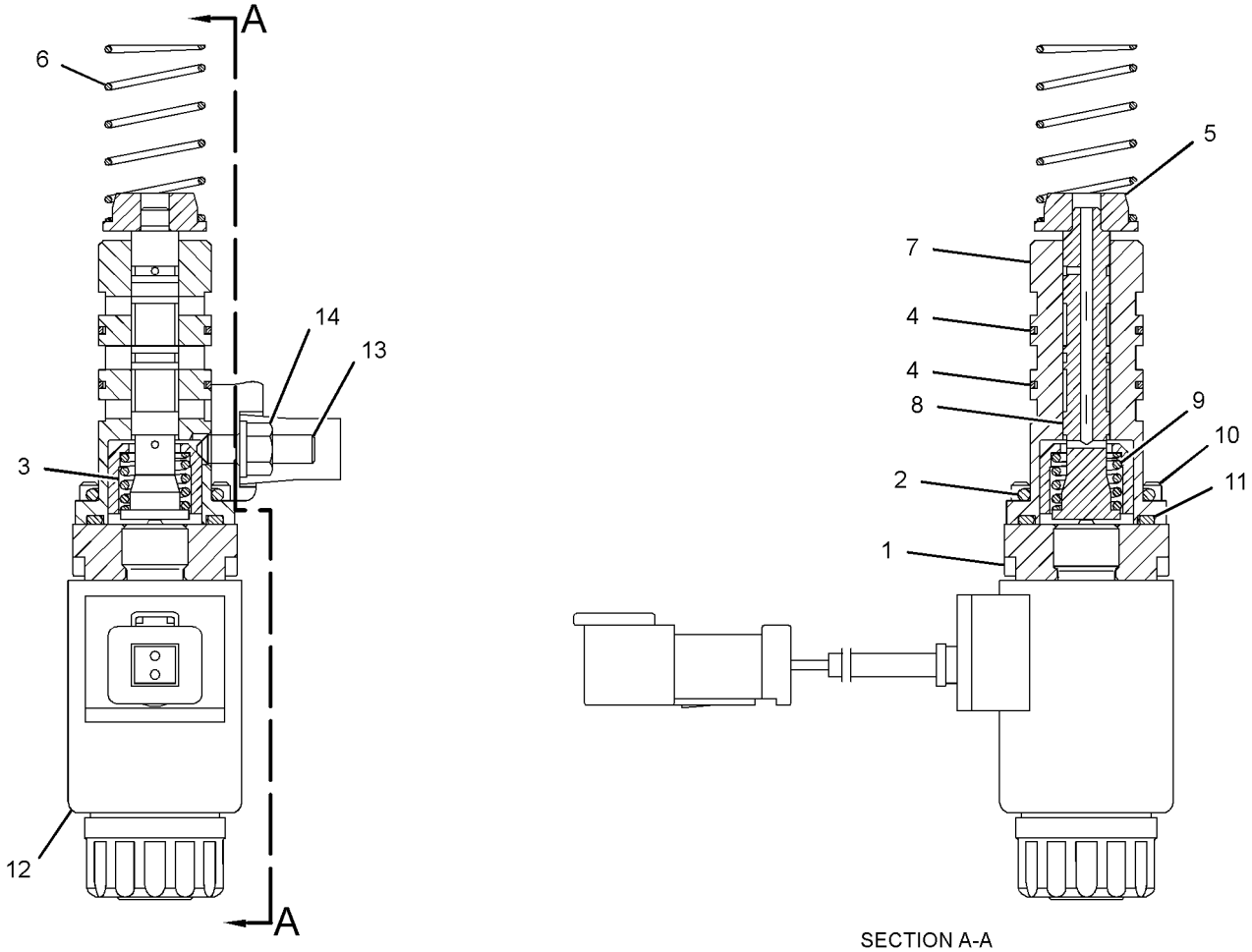

SECTION A-A

GRAPHIC #1 **<END>** g02161958

HYDRAULIC SYSTEM

270-5803 VALVE GP-LOAD CONTROL–

BOOM LOWERING, REGENERATION

S/N: WAP1-UP

PART OF 295-7748, 295-7769 VALVE GP-CONTROL

ALSO AN ATTACHMENT

SMCS-5067, 5117, 5147, 5811 **i03960142**

NOTE	REF NO	GRAPHIC REF	PART NUMBER	QTY	PART NAME 1 2 3 4 5 6 (PRODUCT LEVEL)	SEE PAGE
	1	1	**9X-8257**	10	WASHER (17.5X30X3.5-MM THK)	
	2	2	**8J-1751**	1	PLUG	
	3	2	**8J-1752**	1	PLUNGER	
	4	2	**095-1706**	1	SEAL-O-RING	
Y	5	1	**111-9916**	1	VALVE GP-SOLENOID (BOOM FLOAT)	771
Y	6	1	**352-6869**	1	VALVE GP-RELIEF (PILOT OPERATED)	764
	7	1,2	*225-4818*	5	PLUG AS	
					(EACH INCLUDES)	
		1,2	**4J-7533**	1	SEAL-O-RING	
		1,2	**225-4804**	1	PLUG	
	10	1	**270-5816**	1	BLOCK	
	11	2	**270-5817**	1	COVER	
	12	1	**270-5818**	1	PLUG	
	13	2	**270-5819**	1	COVER	
	14	2	**270-5820**	1	SPRING	
	15	1	**270-5821**	1	PLUG	
	16	2	**270-5822**	1	SPRING	
	17	2	**335-0505**	1	RETAINER	
	19	1	**285-1621**	1	COVER	
	20	1	**335-0498**	1	SPRING	
	21	1	**095-1579**	2	SEAL-O-RING	
	22	2	**095-1597**	1	SEAL-O-RING	
	23	1	**095-1780**	1	RING-BACKUP	
	24	2	**096-3044**	1	SEAL-O-RING	
	25	1,2	*148-8407*	5	PLUG AS	
					(EACH INCLUDES)	
		1,2	**3J-1907**	1	SEAL-O-RING	
		1,2	**9S-4191**	1	PLUG-O-RING	
	26	2	*155-3624*	1	PLUG AS	
		2	**3J-7354**	1	SEAL-O-RING	
		2	**9S-4182**	1	PLUG-O-RING	
	27	2	**1P-3706**	1	SEAL-RECTANGULAR	
	28	2	**2M-9780**	1	SEAL-O-RING	
	29	2	**4B-9783**	1	BALL	
	30	1	**4J-5573**	1	SEAL-O-RING	
	31	1	**4T-5076**	1	RING-BACKUP	
	32	1	**5J-2974**	1	SEAL-O-RING	
	33	2	**6J-3134**	1	SEAL-O-RING	
	34	1	**6V-3922**	2	SEAL-O-RING	
	35	2	**6V-8218**	1	SEAL-O-RING	
M	36	1	**7I-2272**	2	BOLT (M5X0.8X12-MM)	
M	37	1	**7X-2557**	4	BOLT (M16X2X140-MM)	
	38	1	**7Y-5219**	1	SEAL-O-RING	
	39	2	**8T-4121**	3	WASHER-HARD (11X21X2.5-MM THK)	
M	40	1	**8T-4140**	4	BOLT (M16X2X60-MM)	
M	41	2	**8T-4172**	2	BOLT (M10X1.5X80-MM)	
M	42	1	**8T-4194**	1	BOLT (M12X1.75X50-MM)	
M	43	2	**8T-4198**	3	BOLT (M10X1.5X100-MM)	
	44	1	**8T-4223**	1	WASHER-HARD (13.5X25.5X3-MM THK)	
M	45	2	**8T-4956**	4	BOLT (M12X1.75X35-MM)	
M	46	1	**8T-6385**	2	BOLT (M16X2X180-MM)	
	47	2	**9L-7712**	1	NUT (3/8-24-THD)	

M-METRIC PART
Y-SEPARATE ILLUSTRATION

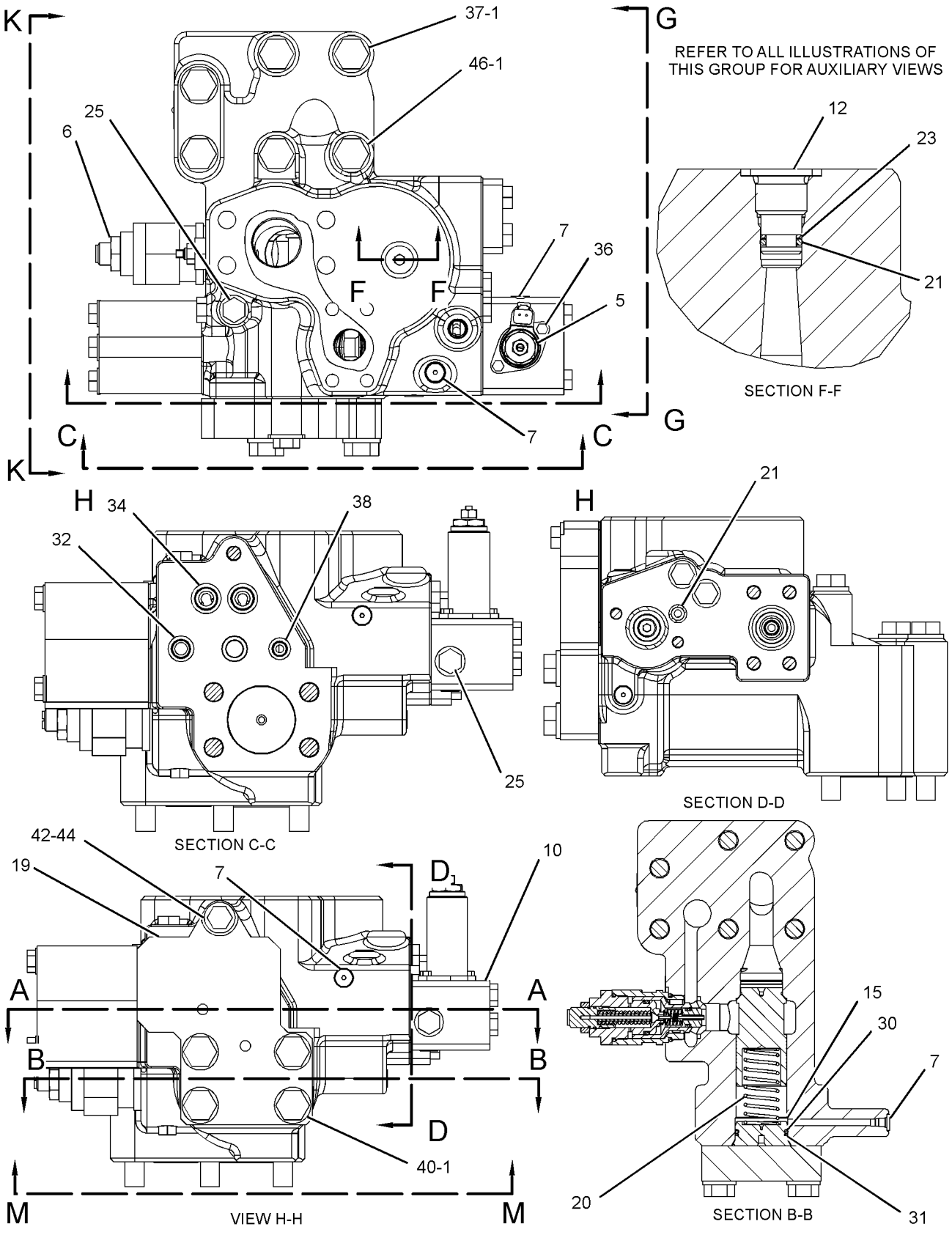

GRAPHIC #1

g02145352

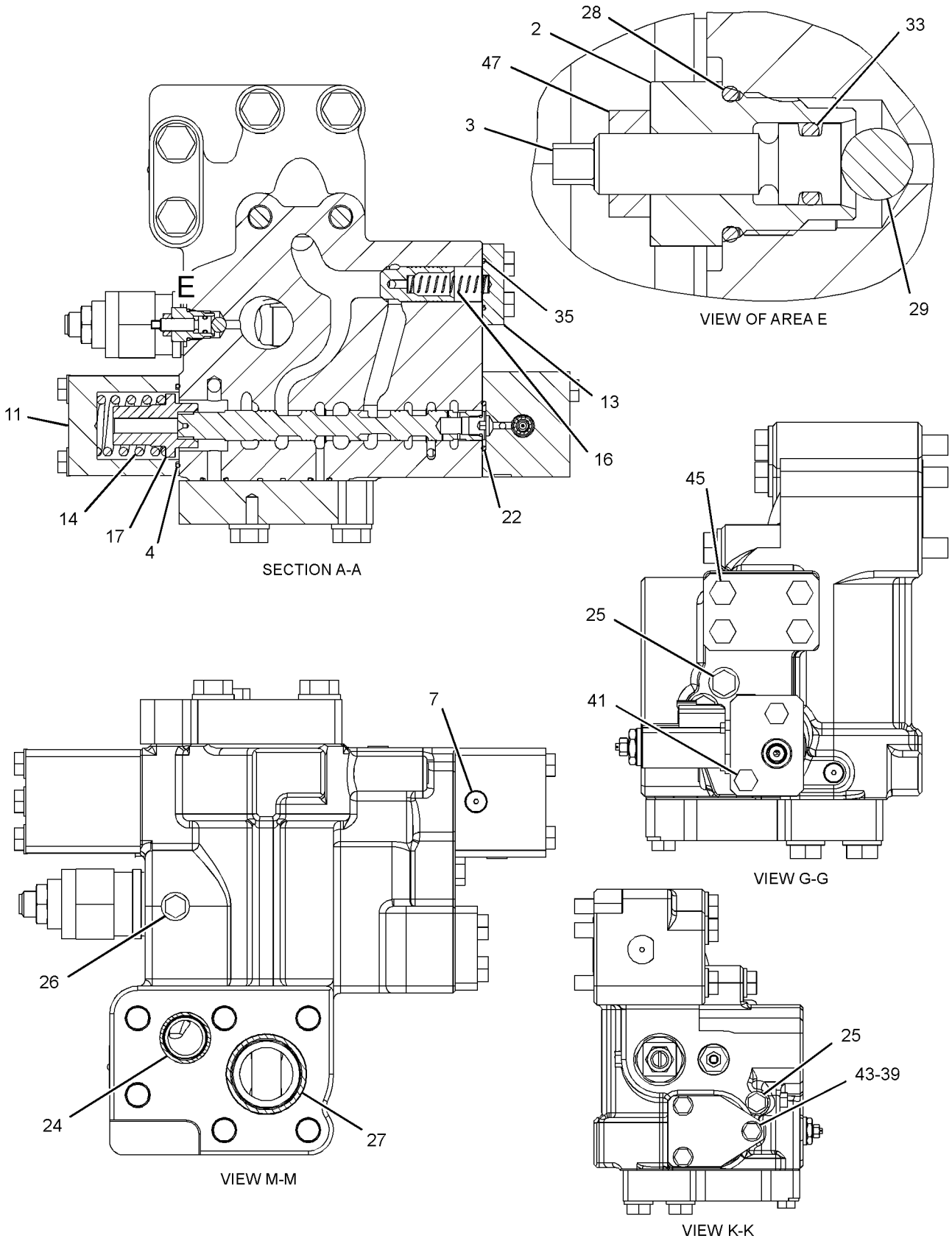

GRAPHIC #2 **<END>** g02177250

HYDRAULIC SYSTEM

270-5804 VALVE GP-LOAD CONTROL

S/N: WAP1-UP
PART OF 295-7747 VALVE GP-CONTROL
ALSO AN ATTACHMENT

SMCS-5067, 5117, 5147, 5811 **i03906196**

NOTE	REF NO	GRAPHIC REF	PART NUMBER	QTY	PART NAME 1 2 3 4 5 6 (PRODUCT LEVEL)	SEE PAGE
	1	2	**9X-8257**	10	WASHER (17.5X30X3.5-MM THK)	
	2	1	**8J-1751**	1	PLUG	
	3	1	**8J-1752**	1	PLUNGER	
	4	1	**095-1706**	1	SEAL-O-RING	
Y	5	2	**111-9916**	1	VALVE GP-SOLENOID (BOOM FLOAT)	771
Y	6	2	**352-6869**	1	VALVE GP-RELIEF (PILOT OPERATED)	764
	7	1,2	*225-4818*	5	PLUG AS	
					(EACH INCLUDES)	
		1,2	**4J-7533**	1	SEAL-O-RING	
		1,2	**225-4804**	1	PLUG	
Y	9	1	**270-5810**	1	VALVE GP-CONTROL (DRIFT REDUCTION, STICK)	709
	11	2	**270-5816**	1	BLOCK	
	12	1	**270-5817**	1	COVER	
	13	2	**270-5818**	1	PLUG	
	14	1	**270-5819**	1	COVER	
	15	1	**270-5820**	1	SPRING	
	16	2	**270-5821**	1	PLUG	
	17	1	**270-5822**	1	SPRING	
	20	2	**335-0498**	1	SPRING	
	21	2	**095-1579**	2	SEAL-O-RING	
	22	1	**095-1597**	1	SEAL-O-RING	
	23	2	**095-1780**	1	RING-BACKUP	
	24	1	**096-3044**	1	SEAL-O-RING	
	25	1,2	*148-8407*	5	PLUG AS	
					(EACH INCLUDES)	
		1,2	**3J-1907**	1	SEAL-O-RING	
		1,2	**9S-4191**	1	PLUG-O-RING	
	26	1	*155-3624*	1	PLUG AS	
		1	**3J-7354**	1	SEAL-O-RING	
		1	**9S-4182**	1	PLUG-O-RING	
	27	1	**1P-3706**	1	SEAL-RECTANGULAR	
	28	1	**2M-9780**	1	SEAL-O-RING	
	29	1	**4B-9783**	1	BALL	
	30	2	**4J-5573**	1	SEAL-O-RING	
	31	2	**4T-5076**	1	RING-BACKUP	
	32	1	**5J-2974**	2	SEAL-O-RING	
	33	1	**6J-3134**	1	SEAL-O-RING	
	34	1	**6V-3922**	2	SEAL-O-RING	
	35	1	**6V-8218**	1	SEAL-O-RING	
M	36	2	**7I-2272**	2	BOLT (M5X0.8X12-MM)	
M	37	2	**7X-2555**	4	BOLT (M16X2X80-MM)	
M	38	2	**7X-2557**	4	BOLT (M16X2X140-MM)	
	39	1	**7Y-5219**	1	SEAL-O-RING	
	40	1	**8T-4121**	3	WASHER-HARD (11X21X2.5-MM THK)	
M	41	1	**8T-4172**	2	BOLT (M10X1.5X80-MM)	
M	42	2	**8T-4194**	1	BOLT (M12X1.75X50-MM)	
M	43	1	**8T-4198**	3	BOLT (M10X1.5X100-MM)	
	44	2	**8T-4223**	1	WASHER-HARD (13.5X25.5X3-MM THK)	
M	45	1	**8T-4956**	4	BOLT (M12X1.75X35-MM)	
M	46	2	**8T-6385**	2	BOLT (M16X2X180-MM)	
	47	1	**9L-7712**	1	NUT (3/8-24-THD)	
	48	1	**335-0505**	1	RETAINER	

M-METRIC PART
Y-SEPARATE ILLUSTRATION

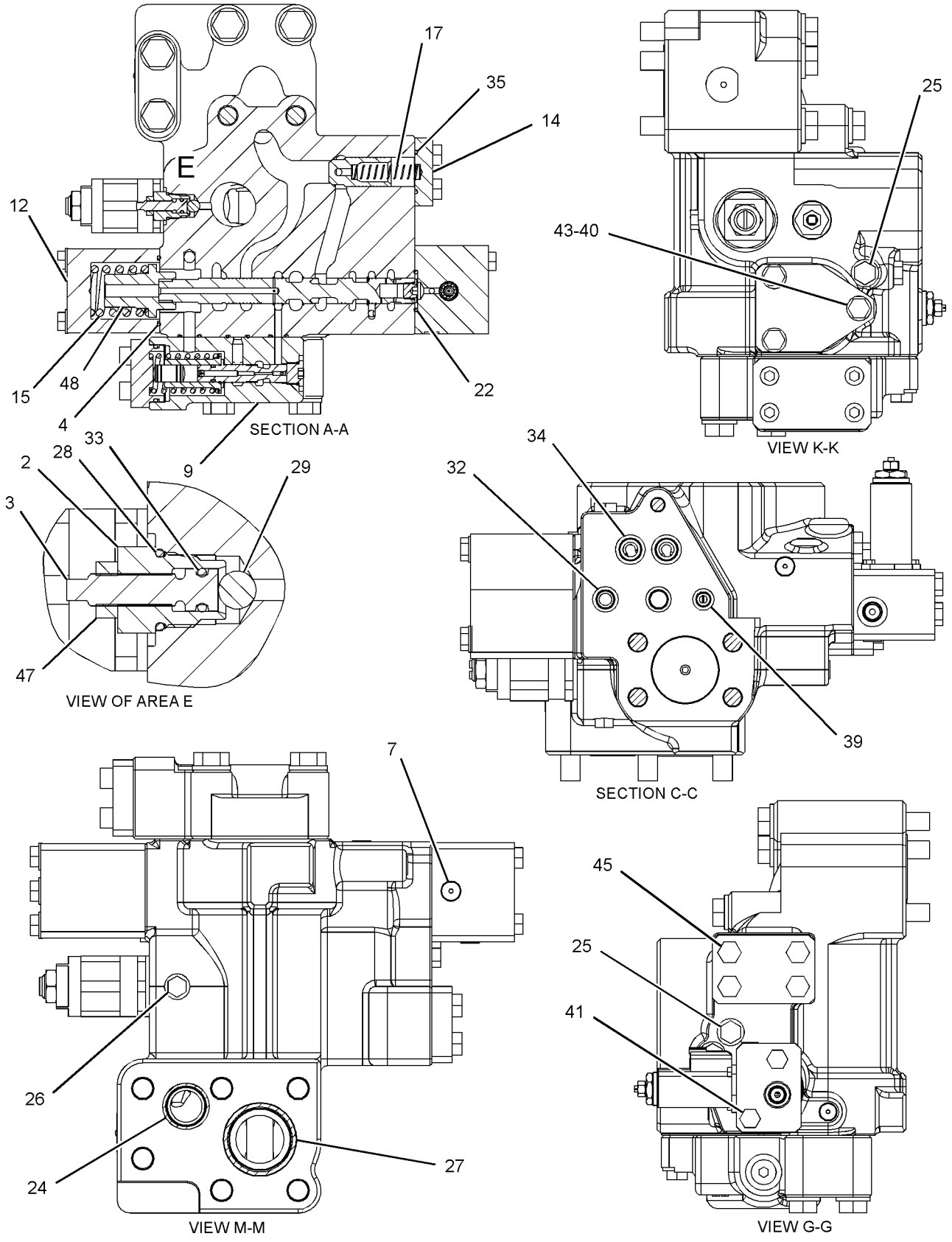

GRAPHIC #1 g02148093

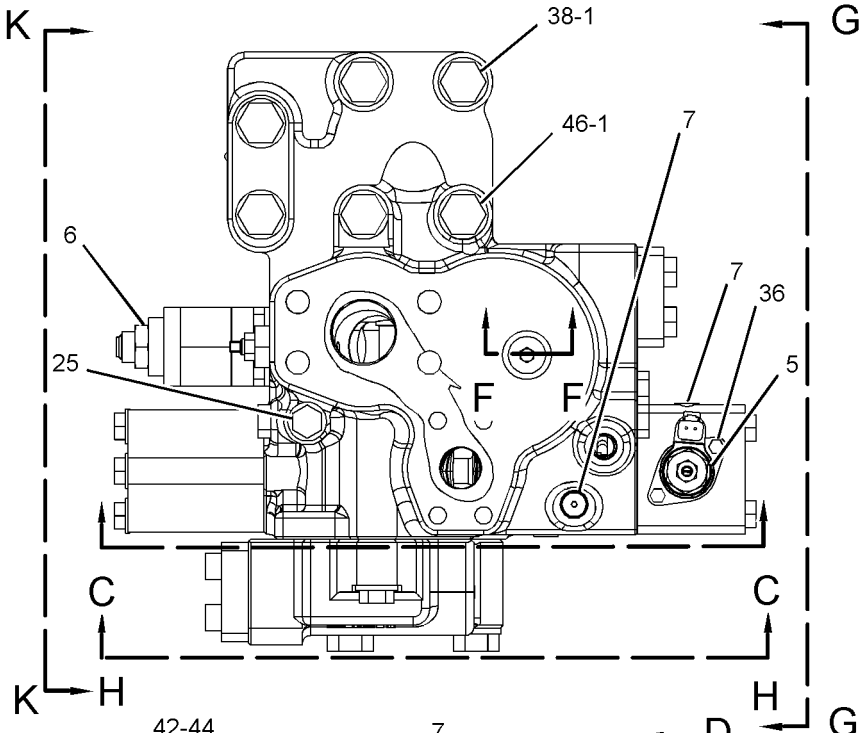

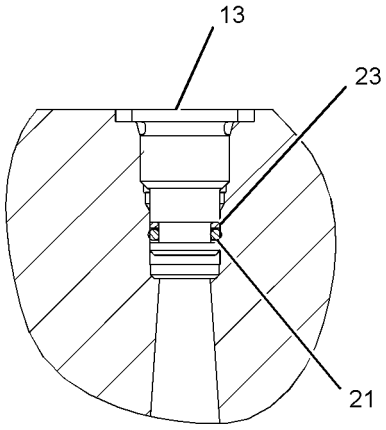

REFER TO ALL ILLUSTRATIONS OF THIS GROUP FOR AUXILIARY VIEWS

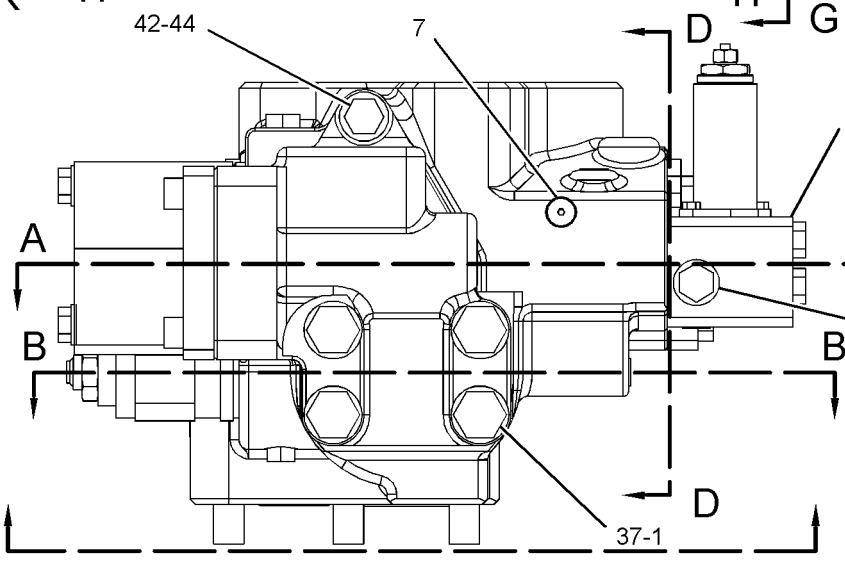

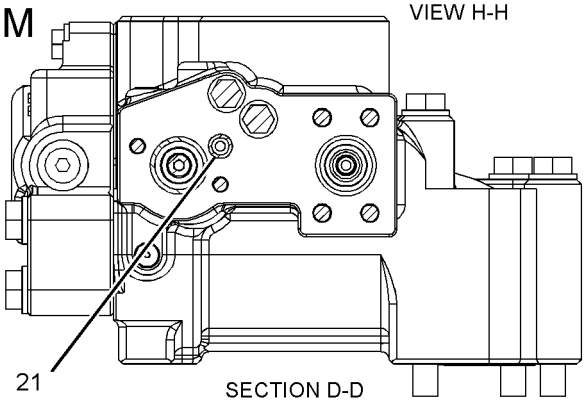

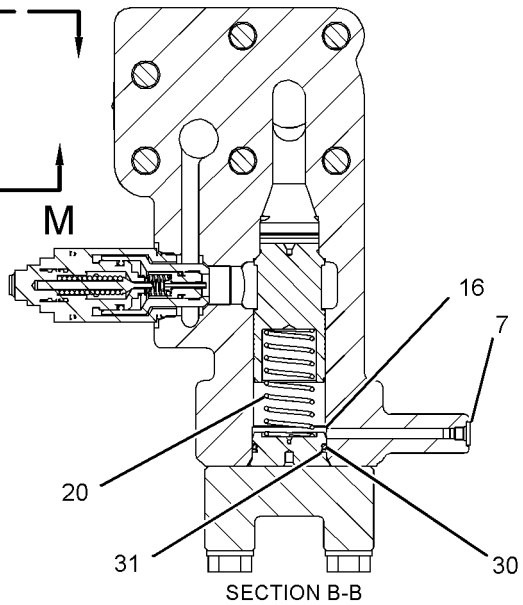

GRAPHIC #2 **<END>** g02148073

HYDRAULIC SYSTEM

274-9053 VALVE GP-LOAD CONTROL–BOOM

S/N: WAP1-UP
PART OF 296-7112 LINES GP-BOOM CYLINDER
AN ATTACHMENT

SMCS-5067, 5117, 5147, 5811 **i03907629**

NOTE	REF NO	GRAPHIC REF	PART NUMBER	QTY	PART NAME 1 2 3 4 5 6 (PRODUCT LEVEL)	SEE PAGE
	1	1	**2S-2596**	1	SPRING	
	2	1	**8J-6815**	1	PLUG-ORIFICE	
B	3	1	**9N-1574**	3	SHIM (0.03-IN THK)	
B	4	1	**9N-1575**	2	SHIM (0.03-IN THK)	
	5	1	**153-8623**	1	RING-BACKUP	
	6	1	**190-8601**	1	PLUNGER	
	7	1	**190-8602**	1	VALVE GP-CHECK (PILOT OPERATED)	
	8	1	**203-3022**	1	VALVE	
	9	1	**225-4796**	1	PISTON	
	10	1	*225-4818*	5	PLUG AS	
					(EACH INCLUDES)	
		1	**4J-7533**	1	SEAL-O-RING	
		1	**225-4804**	1	PLUG	
	11	1	*225-4820*	1	PLUG AS	
		1	**3J-7354**	1	SEAL-O-RING	
		1	**225-4821**	1	PLUG	
Y	12	1	**239-8983**	1	VALVE GP-RELIEF	763
	14	1	**264-0726**	1	GUIDE AS	
	14A	1	**1U-0322**	1	BUSHING	
	15	1	**264-6346**	1	GUIDE AS	
	16	1	**274-1252**	1	GUIDE	
	17	1	**274-9051**	1	POPPET	
	19	1	**292-7882**	1	SEAT	
	20	1	**292-8517**	1	COVER	
	21	1	**314-8312**	1	RETAINER	
	22	1	**335-3038**	1	SPRING	
	23	1	**095-0933**	1	RING-RETAINING	
	24	1	**095-1599**	1	SEAL-O-RING	
	25	1	**095-1793**	1	RING-BACKUP	
	26	1	**158-8267**	1	COVER	
	27	1	**1P-3705**	1	SEAL-RECTANGULAR	
	28	1	**3D-2824**	1	SEAL-O-RING	
	29	1	**3J-1907**	1	SEAL-O-RING	
	31	1	**4D-2886**	2	CLIP	
	32	1	**4I-6397**	1	RING-BACKUP	
	33	1	**4J-0522**	1	SEAL-O-RING	
	34	1	**4T-5071**	1	RING-BACKUP	
	35	1	**6V-3922**	1	SEAL-O-RING	
	36	1	**8C-3085**	1	SEAL-O-RING	
M	37	1	**8T-0293**	1	BOLT (M12X1.75X20-MM)	
M	38	1	**8T-4139**	4	BOLT (M12X1.75X30-MM)	
M	39	1	**8T-4184**	3	BOLT (M12X1.75X45-MM)	
M	40	1	**8T-4194**	1	BOLT (M12X1.75X50-MM)	
	41	1	**8T-4223**	5	WASHER-HARD (13.5X25.5X3-MM THK)	

B-USE AS REQUIRED
M-METRIC PART
Y-SEPARATE ILLUSTRATION

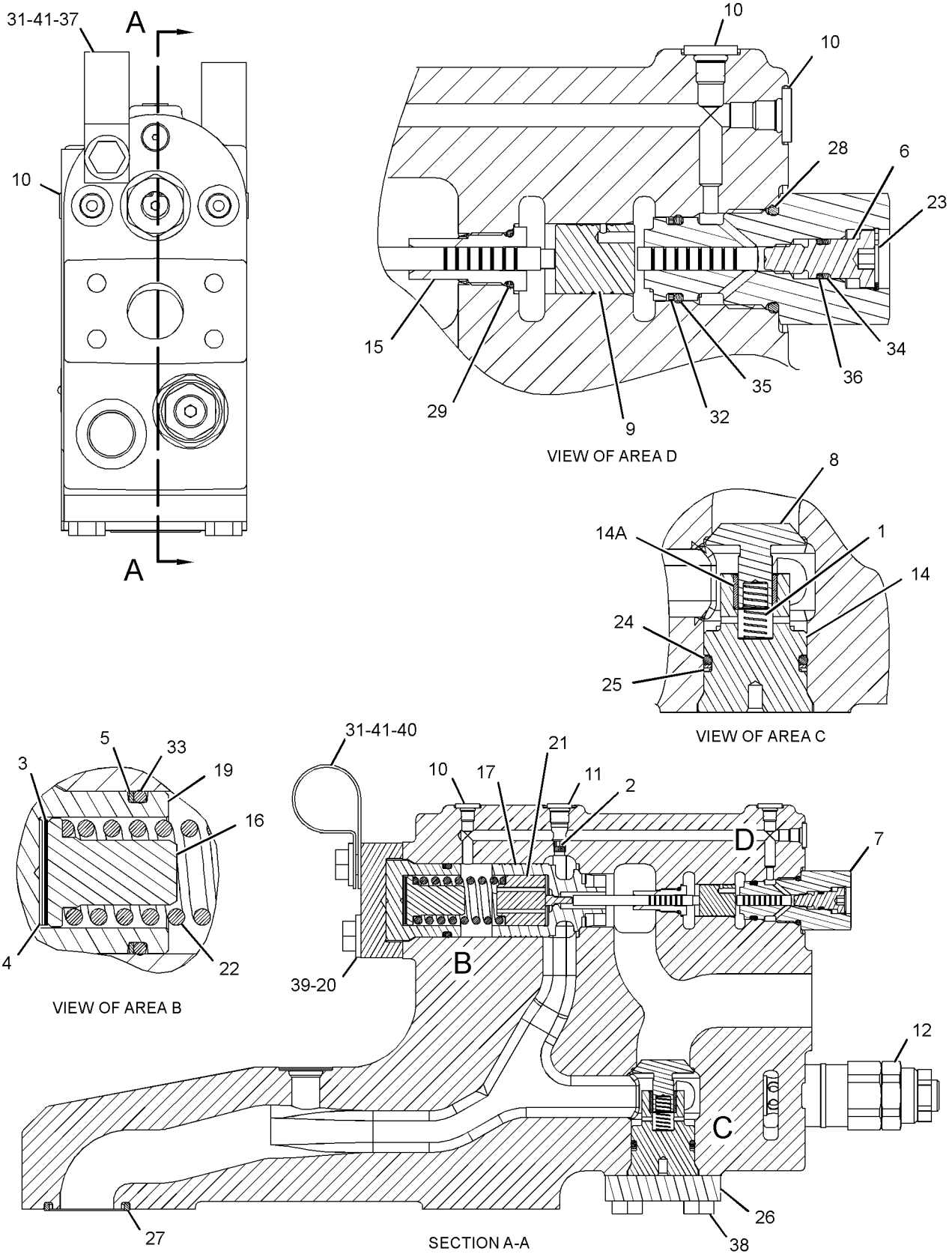

GRAPHIC #1 **<END>** g02152177

HYDRAULIC SYSTEM

295-7745 VALVE GP-MAIN CONTROL

S/N: WAP1-UP

PART OF 297-0223 HYDRAULIC AR

SMCS-5051 **i03904313**

NOTE	REF NO	GRAPHIC REF	PART NUMBER	QTY	PART NAME 1 2 3 4 5 6 (PRODUCT LEVEL)	SEE PAGE
Y	1	1	**295-7747**	1	VALVE GP-CONTROL	711
	2	1	*3J-3679*	1	PLUG AS	
		1	**1J-9671**	1	SEAL-O-RING	
		1	**9S-8003**	1	PLUG	
	4	1	**4J-9780**	1	PLUG-ORIFICE	
Y	5	2	**4T-1860**	1	VALVE GP-SHUTTLE	767
Y	6	2	**117-5270**	2	VALVE GP-RELIEF	757
	7	1	**119-2265**	1	FILTER (EDGE)	
	8	1	**165-5623**	1	MANIFOLD-INLET	
Y	9	2	**171-3685**	1	VALVE GP-SOLENOID (24-VOLT)	775
Y	10	1	**193-1665**	1	VALVE GP-PRESSURE REDUCING	748
	11	1,2	*222-4737*	16	PLUG AS	
					(EACH INCLUDES)	
		1,2	**4J-7533**	1	SEAL-O-RING	
		1,2	**9S-4180**	1	PLUG	
Y	13	1	**295-7748**	1	VALVE GP-CONTROL	715
	14	2	**310-0036**	1	COVER	
	15	2	*148-8407*	3	PLUG AS	
					(EACH INCLUDES)	
		2	**3J-1907**	1	SEAL-O-RING	
		2	**9S-4191**	1	PLUG-O-RING	
	16	1	*148-8411*	1	PLUG AS	
		1	**3K-0360**	1	SEAL-O-RING	
		1	**9S-4185**	1	PLUG-O-RING	
	17	1,2	*155-3624*	4	PLUG AS	
					(EACH INCLUDES)	
		1,2	**3J-7354**	1	SEAL-O-RING	
		1,2	**9S-4182**	1	PLUG-O-RING	
	18	2	**1P-3705**	1	SEAL-RECTANGULAR	
	19	1	**1P-3707**	4	SEAL-RECTANGULAR	
	20	1	**3J-1907**	1	SEAL-O-RING	
	21	1	**4J-0522**	4	SEAL-O-RING	
	22	1	**6V-5555**	5	SEAL-O-RING	
M	23	1,2	**8T-0348**	8	BOLT-SOCKET HEAD (M16X2X50-MM)	
M	24	2	**8T-4183**	4	BOLT (M12X1.75X40-MM)	
M	25	2	**8T-4193**	2	BOLT (M16X2X50-MM)	
	26	2	**8T-4223**	4	WASHER-HARD (13.5X25.5X3-MM THK)	
	27	1,2	**9X-8257**	10	WASHER (17.5X30X3.5-MM THK)	

M-METRIC PART
Y-SEPARATE ILLUSTRATION

295-7745 VALVE GP-MAIN CONTROL *(contd.)* i03904313

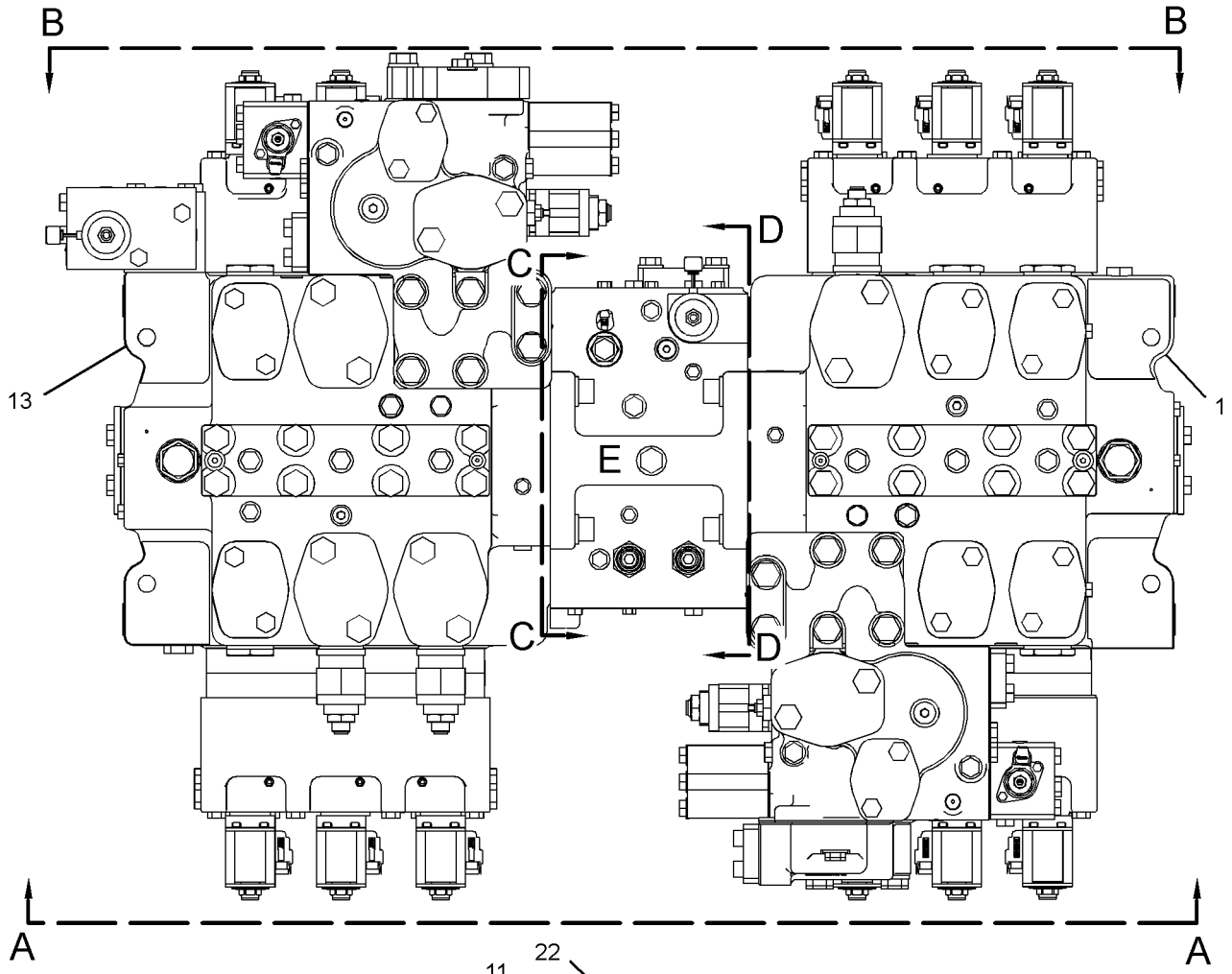

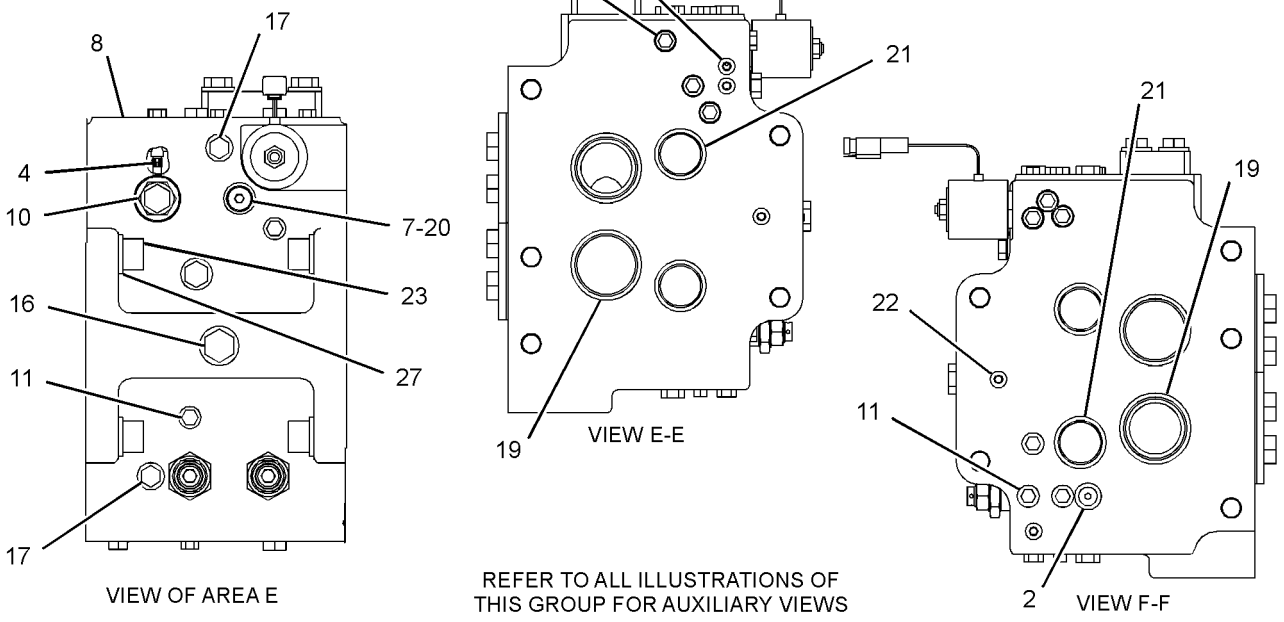

REFER TO ALL ILLUSTRATIONS OF THIS GROUP FOR AUXILIARY VIEWS

GRAPHIC #1 g02164340

295-7745 VALVE GP-MAIN CONTROL *(contd.)* i03904313

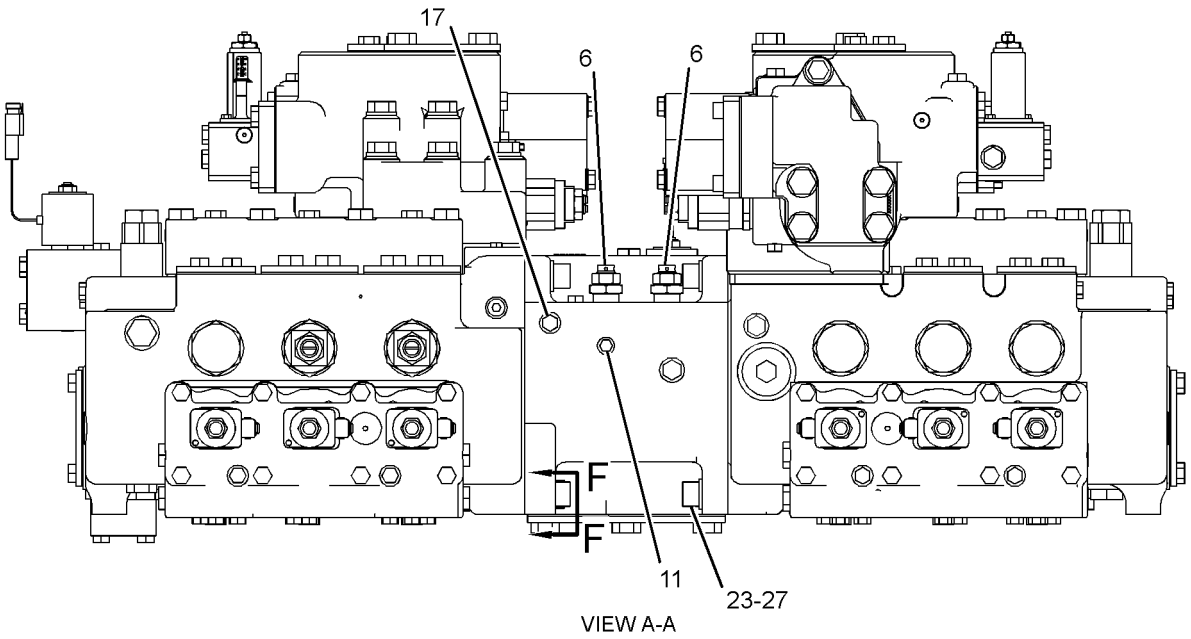

VIEW A-A

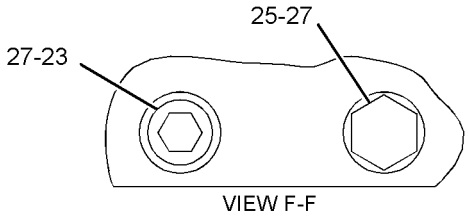

VIEW F-F

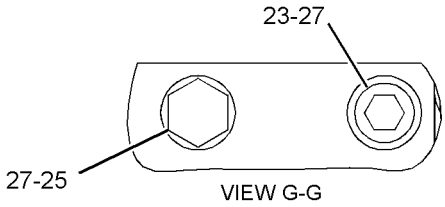

VIEW G-G

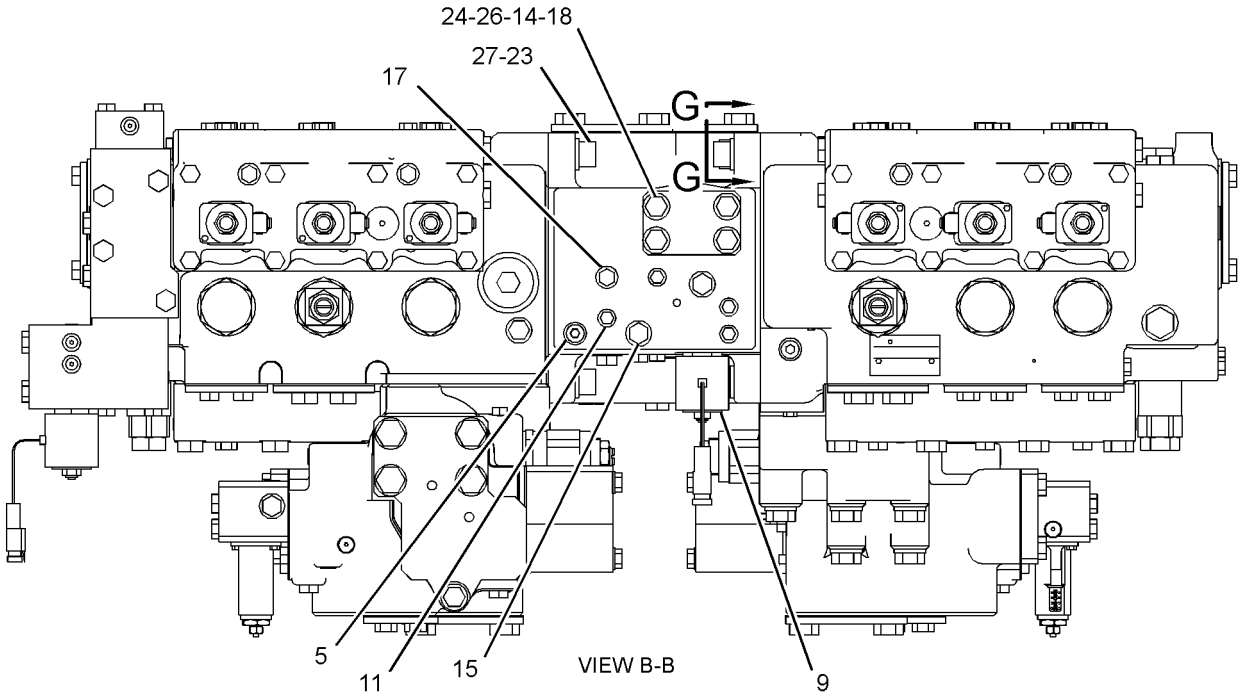

VIEW B-B

GRAPHIC #2 **<END>** g02164514

HYDRAULIC SYSTEM

295-7767 VALVE GP-MAIN CONTROL

S/N: WAP1-UP

PART OF 297-0421 VALVE AR-BOOM LOWERING CONTROL AN ATTACHMENT

SMCS-5051 **i03907426**

NOTE	REF NO	GRAPHIC REF	PART NUMBER	QTY	PART NAME 1 2 3 4 5 6 (PRODUCT LEVEL)	SEE PAGE
Y	1	1	**295-7747**	1	VALVE GP-CONTROL	711
	2	1	*3J-3679*	1	PLUG AS	
		1	**1J-9671**	1	SEAL-O-RING	
		1	**9S-8003**	1	PLUG	
	4	2	**4J-9780**	1	PLUG-ORIFICE	
Y	5	2	**4T-1860**	1	VALVE GP-SHUTTLE	767
Y	6	2	**117-5270**	2	VALVE GP-RELIEF (HIGH SIGNAL PRESSURE)	757
	7	1	**119-2265**	1	FILTER (EDGE)	
	8	1	**165-5623**	1	MANIFOLD-INLET	
Y	9	2	**171-3685**	1	VALVE GP-SOLENOID (24-VOLT) (HYDRAULIC PUMP CONTROL)	775
Y	10	1	**193-1665**	1	VALVE GP-PRESSURE REDUCING (SIGNAL DUPLICATION)	748
	11	1,2	*222-4737*	16	PLUG AS	
					(EACH INCLUDES)	
		1,2	**4J-7533**	1	SEAL-O-RING	
		1,2	**9S-4180**	1	PLUG	
Y	13	1	**295-7769**	1	VALVE GP-CONTROL	720
	14	2	**310-0036**	1	COVER	
	15	1,2	*148-8407*	3	PLUG AS	
					(EACH INCLUDES)	
		1,2	**3J-1907**	1	SEAL-O-RING	
		1,2	**9S-4191**	1	PLUG-O-RING	
	16	1	*148-8411*	1	PLUG AS	
		1	**3K-0360**	1	SEAL-O-RING	
		1	**9S-4185**	1	PLUG-O-RING	
	17	1,2	*155-3624*	4	PLUG AS	
					(EACH INCLUDES)	
		1,2	**3J-7354**	1	SEAL-O-RING	
		1,2	**9S-4182**	1	PLUG-O-RING	
	18	2	**1P-3705**	1	SEAL-RECTANGULAR	
	19	1	**1P-3707**	4	SEAL-RECTANGULAR	
	20	1	**3J-1907**	1	SEAL-O-RING	
	21	1	**4J-0522**	4	SEAL-O-RING	
	22	1	**6V-5555**	5	SEAL-O-RING	
M	23	1,2	**8T-0348**	8	BOLT-SOCKET HEAD (M16X2X50-MM)	
M	24	2	**8T-4183**	4	BOLT (M12X1.75X40-MM)	
M	25	2	**8T-4193**	2	BOLT (M16X2X50-MM)	
	26	2	**8T-4223**	4	WASHER-HARD (13.5X25.5X3-MM THK)	
	27	1,2	**9X-8257**	10	WASHER (17.5X30X3.5-MM THK)	

M-METRIC PART
Y-SEPARATE ILLUSTRATION

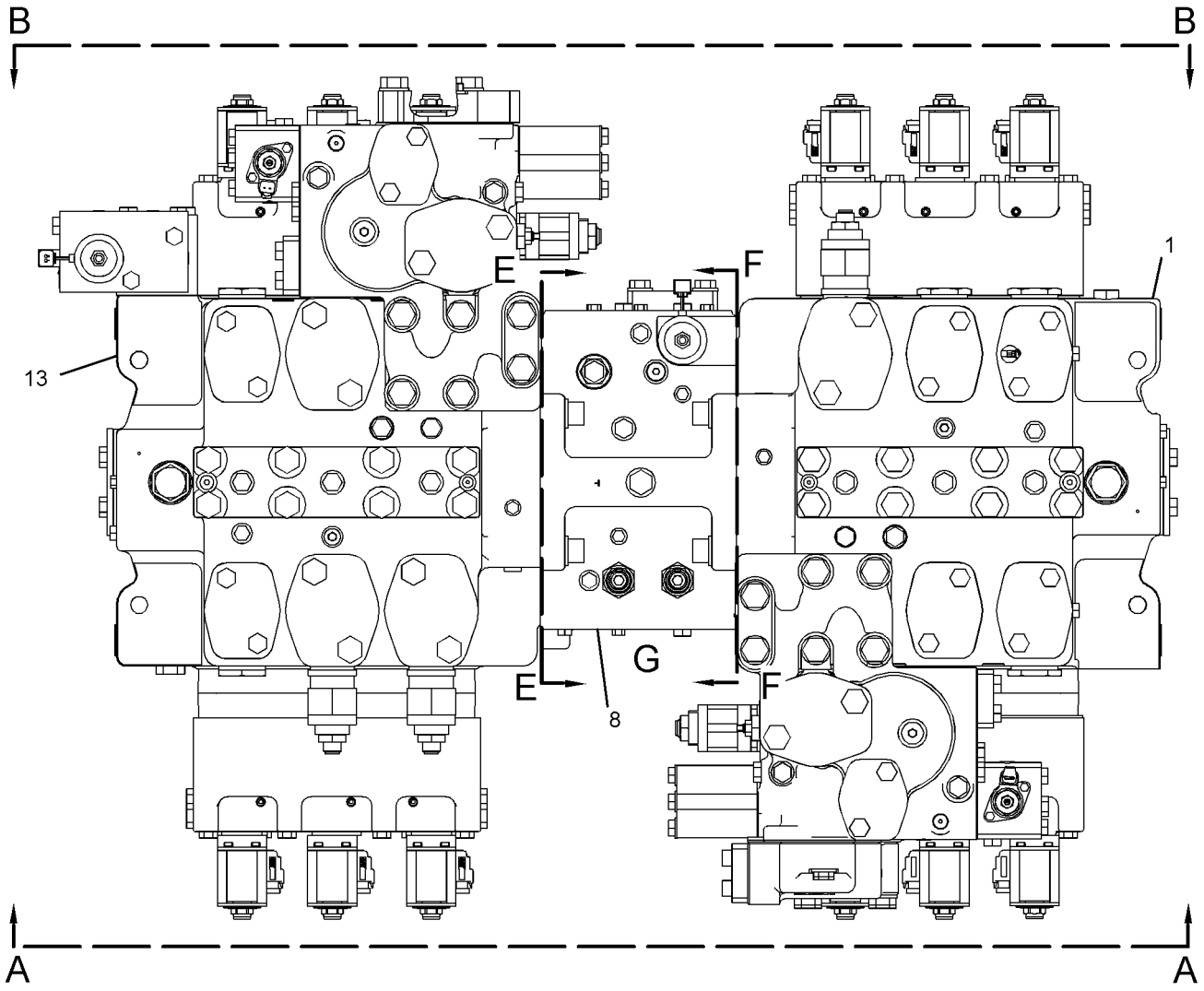

REFER TO ALL ILLUSTRATIONS OF THIS GROUP FOR AUXILIARY VIEWS

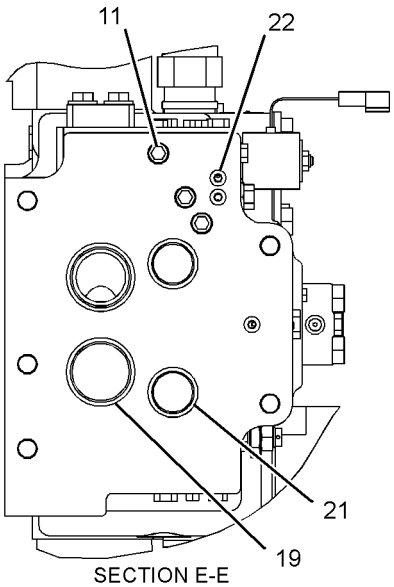

SECTION E-E

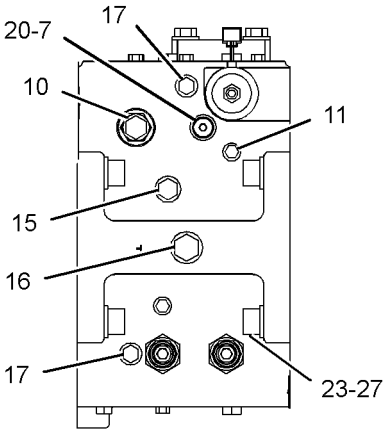

VIEW OF AREA G

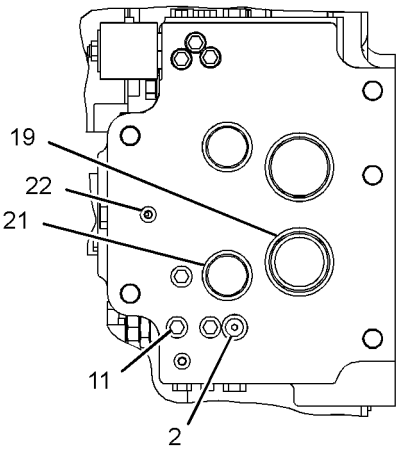

SECTION F-F

GRAPHIC #1

g02181748

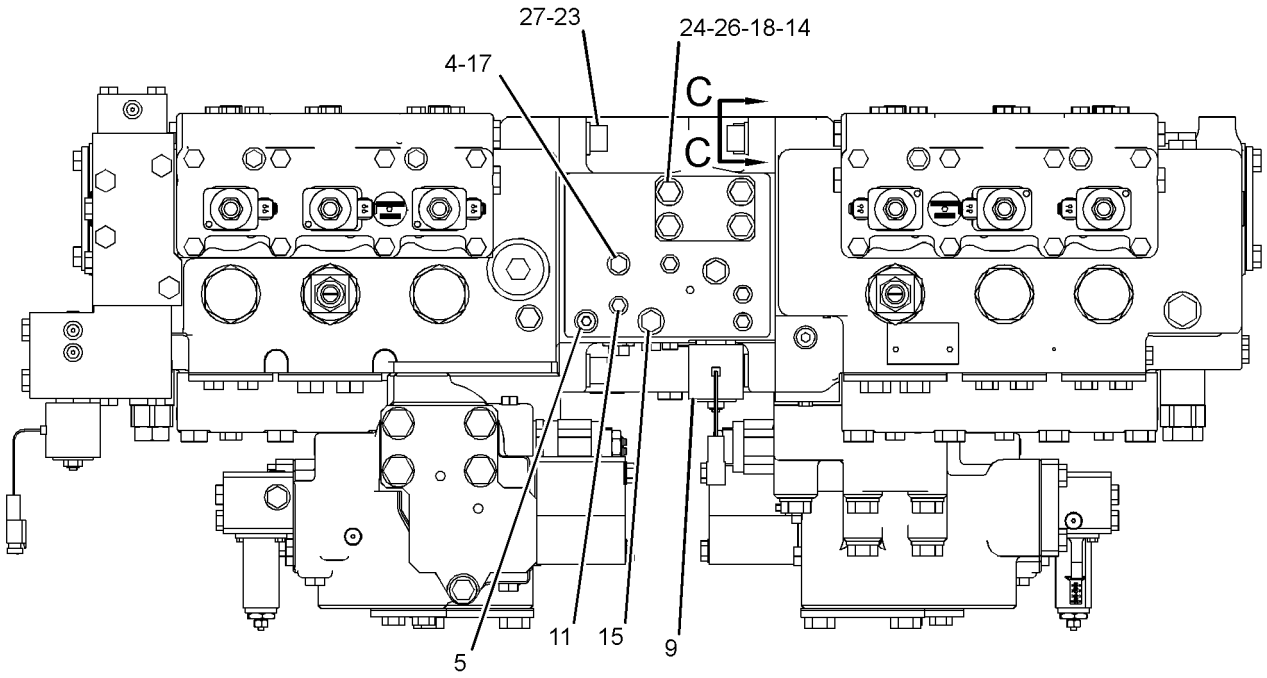

VIEW B-B

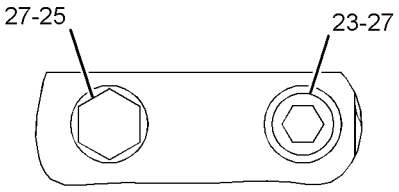

VIEW C-C

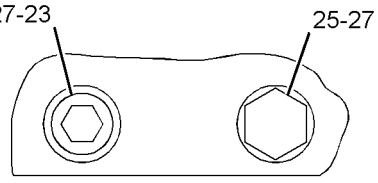

VIEW D-D

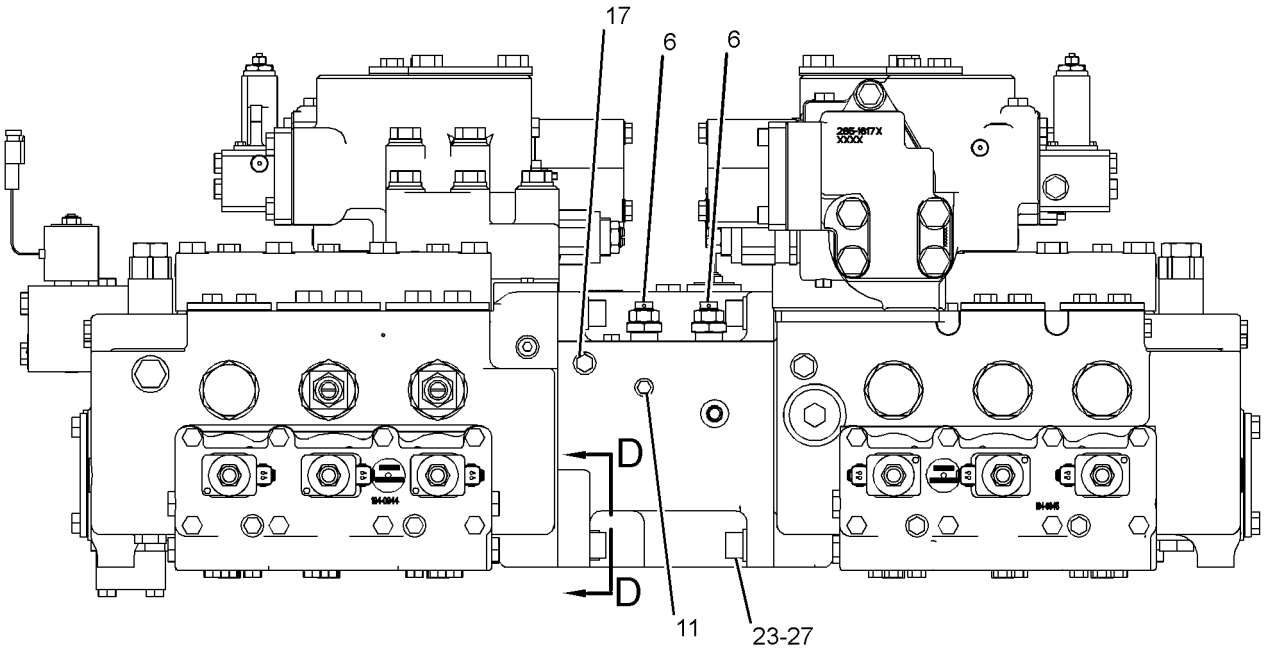

VIEW A-A

GRAPHIC #2 **<END>** g02181749

HYDRAULIC SYSTEM

140-0736 VALVE GP-MANIFOLD & REDUCING

S/N: WAP1-UP

PART OF 296-7109 LINES GP-PILOT

SMCS-3206 **i03909360**

NOTE	REF NO	GRAPHIC REF	PART NUMBER	QTY	PART NAME 1 2 3 4 5 6 (PRODUCT LEVEL)	SEE PAGE
Z	1	1		1	VALVE GP-CONTROL	
	2	1	**119-5364**	1	PLUG	
	3	1	**2M-9780**	1	SEAL-O-RING	
	4	1	**119-5362**	1	SPRING	
	5	1	**119-5365**	1	VALVE	
	6	1	**107-7068**	2	PLUG-PIPE	
	7	1	**7Y-5009**	1	CAP	
M	8	1	**8T-4133**	1	NUT (M10X1.5-THD)	
M	9	1	**4I-8915**	1	SETSCREW-SOCKET (M10X1.5X25-MM)	
	10	1	**4I-5657**	1	PLUG	
	11	1	**095-1582**	1	SEAL-O-RING	
	12	1	**153-5187**	1	SPRING	
	13	1	**095-1592**	1	SEAL-O-RING	
	14	1	**8T-6759**	11	PLUG-PIPE	
Y	15	1	**111-9916**	1	VALVE GP-SOLENOID (POWER SHIFT PRESSURE)	771
Y	16	1	**121-1491**	1	VALVE GP-SOLENOID (TRAVEL SPEED)	772
Y	16A	1	**121-1491**	1	VALVE GP-SOLENOID (HYDRAULIC LOCK)	772
M	17	1	**7I-2272**	6	BOLT (M5X0.8X12-MM)	
	18	1	**095-0968**	1	PLUG	
	19	1	**140-0741**	2	PLUG	
	20	1	**7M-8485**	2	SEAL-O-RING	
	21	1	**140-0742**	1	SPRING	
	27	1	**9S-4191**	3	PLUG-O-RING	
	28	1	**3J-1907**	3	SEAL-O-RING	

M-METRIC PART
Y-SEPARATE ILLUSTRATION
Z-NOT SERVICED SEPARATELY

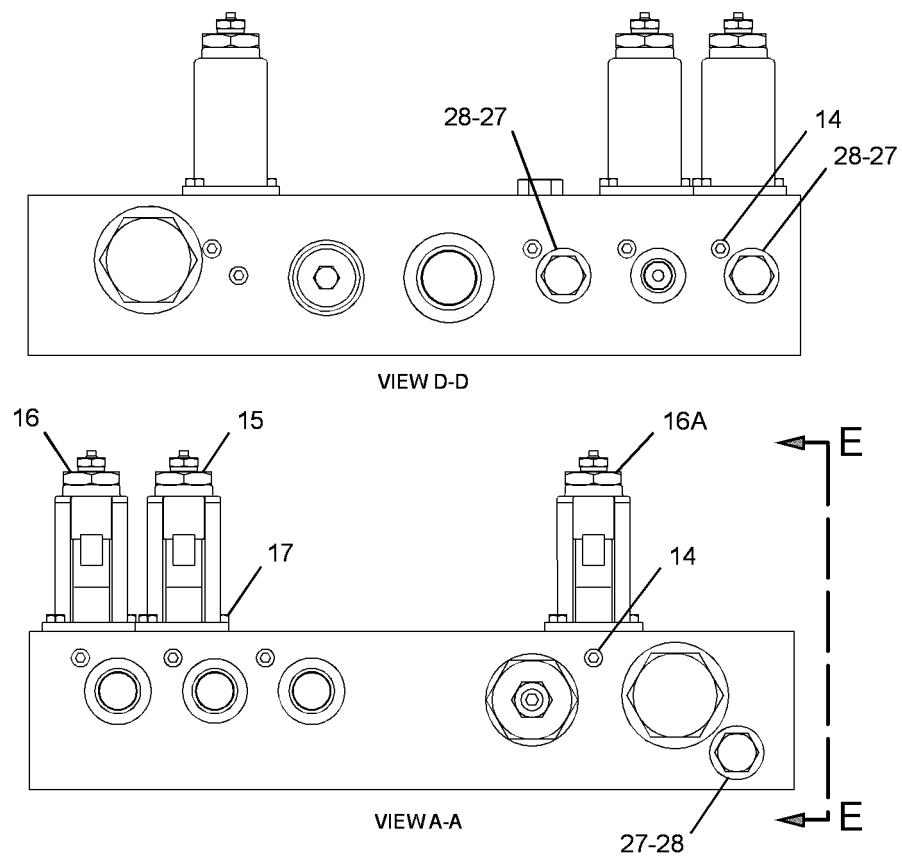

GRAPHIC #1 **<END>** g02147934

HYDRAULIC SYSTEM

160-0964 VALVE GP-MANUAL–LH

S/N: WAP1-UP
PART OF 338-6173 LINES GP-FRONT
AN ATTACHMENT

SMCS-1329, 5001, 5130 **i03071786**

NOTE	REF NO	GRAPHIC REF	PART NUMBER	QTY	PART NAME 1 2 3 4 5 6 (PRODUCT LEVEL)	SEE PAGE
	1	1	**160-9185**	1	HANDLE	
	2	1	**160-9187**	1	PLATE	
M	3	1	**7X-2536**	1	BOLT (M8X1.25X14-MM)	
	4	1	**160-9999**	2	PLATE	
	5	1	**142-1356**	1	PIN	
	6	1	**175-3796**	1	PLATE	
	7	1	**175-3797**	1	PLATE	
M	8	1	**099-2374**	2	BOLT-SOCKET HEAD (M5X0.8X12-MM)	
	9	1	**171-7085**	1	SWITCH AS-LIMIT (FLOW INDICATOR)	
		1	**186-3735**	4	PIN-CONNECTOR (16-GA TO 18-GA)	
E		1	**9X-1386**		SLEEVE (9-CM)	
		1	**102-8804**	1	KIT-RECEPTACLE (4-PIN)	
					(INCLUDES RECEPTACLE AS & WEDGE)	
					AVAILABLE REPAIR KIT(S):	
			160-9186	1	KIT-SEAL (MANUAL VALVE)	

E-ORDER BY THE CENTIMETER
M-METRIC PART

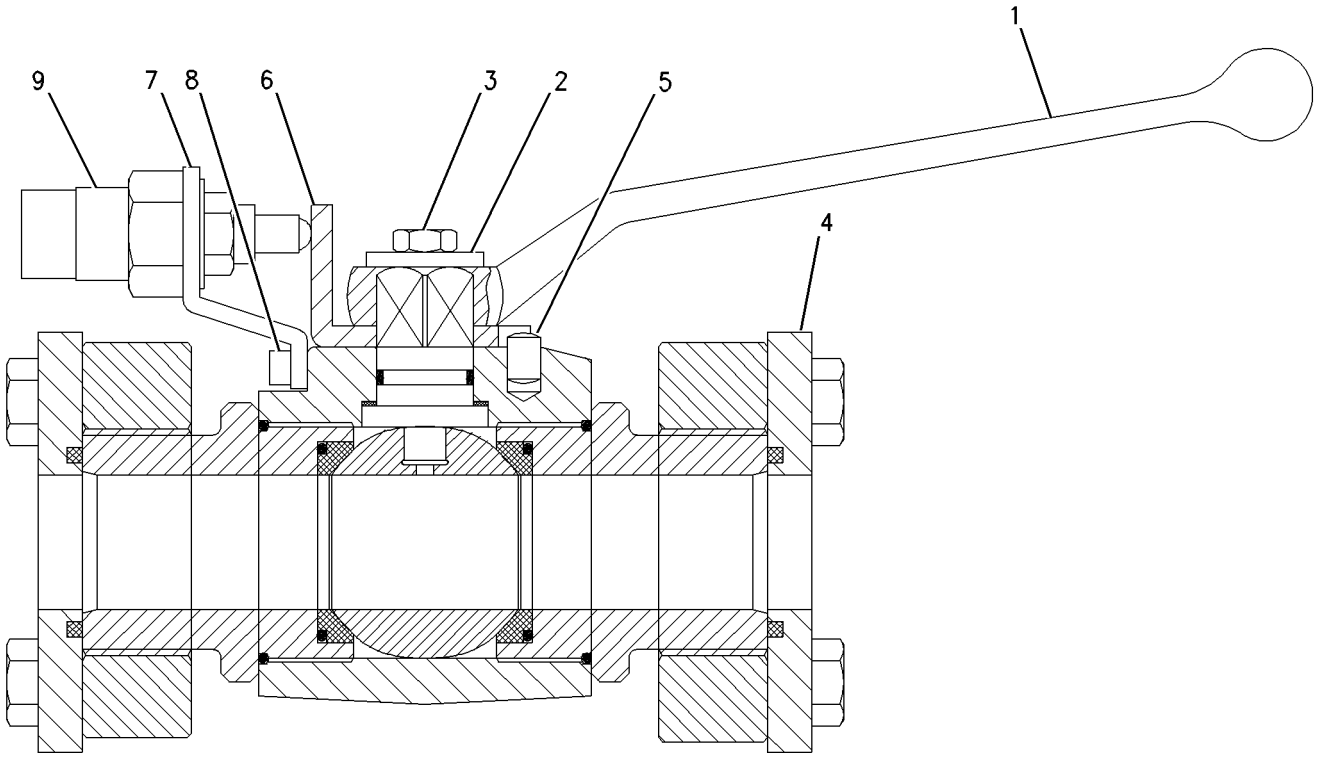

GRAPHIC #1 **<END>** g00812137

HYDRAULIC SYSTEM

175-1814 VALVE GP-MANUAL–RH

S/N: WAP1-UP
PART OF 338-6173 LINES GP-FRONT
AN ATTACHMENT

SMCS-1329, 5001, 5130 **i03905793**

NOTE	REF NO	GRAPHIC REF	PART NUMBER	QTY	PART NAME 1 2 3 4 5 6 (PRODUCT LEVEL)	SEE PAGE
	1	1	**160-9185**	1	HANDLE	
	2	1	**160-9187**	1	PLATE	
M	3	1	**7X-2536**	1	BOLT (M8X1.25X14-MM)	
	4	1	**160-9999**	2	PLATE	
	5	1	**142-1356**	1	PIN	
	6	1	**175-3800**	1	PLATE	
	7	1	**175-3797**	1	PLATE	
M	8	1	**099-2374**	2	BOLT-SOCKET HEAD (M5X0.8X12-MM)	
	9	1	**171-7085**	1	SWITCH AS-LIMIT (FLOW INDICATOR)	
		1	**186-3735**	4	PIN-CONNECTOR (16-GA TO 18-GA)	
E		1	**9X-1386**		SLEEVE (9-CM)	
		1	**102-8804**	1	KIT-RECEPTACLE (4-PIN)	
					(INCLUDES RECEPTACLE AS & WEDGE)	
					AVAILABLE REPAIR KIT(S):	
			160-9186	1	KIT-SEAL (MANUAL VALVE)	

E-ORDER BY THE CENTIMETER
M-METRIC PART

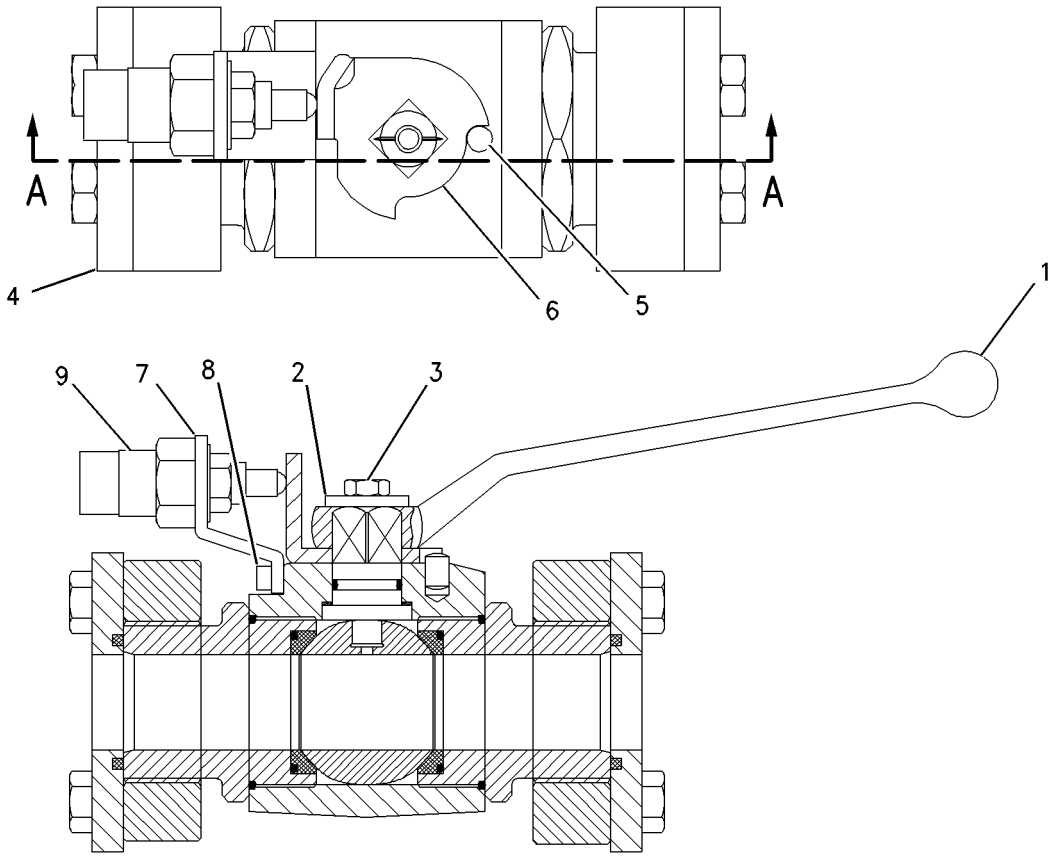

SECTION A-A

GRAPHIC #1 **<END>** g00710867

HYDRAULIC SYSTEM

270-5692 VALVE GP-MANUAL–BOOM LOWER

S/N: WAP1-UP

PART OF 296-7112 LINES GP-BOOM CYLINDER

AN ATTACHMENT

SMCS-1329, 5001, 5130 **i02466135**

NOTE	REF NO	GRAPHIC REF	PART NUMBER	QTY	PART NAME 1 2 3 4 5 6 (PRODUCT LEVEL)	SEE PAGE
	1	1	**165-9513**	1	SEAT	
	2	1	**165-9514**	1	PLUG	
	3	1	*222-4737*	3	PLUG AS	
					(EACH INCLUDES)	
		1	**4J-7533**	1	SEAL-O-RING	
		1	**9S-4180**	1	PLUG	
	4	1	**270-5693**	1	BLOCK	
	5	1	**2D-6642**	1	BALL	
	6	1	**3H-0442**	1	SEAL-O-RING	
	7	1	**3J-1907**	1	SEAL-O-RING	
M	8	1	**7Y-5226**	1	NUT (M5X0.8-THD)	

M-METRIC PART

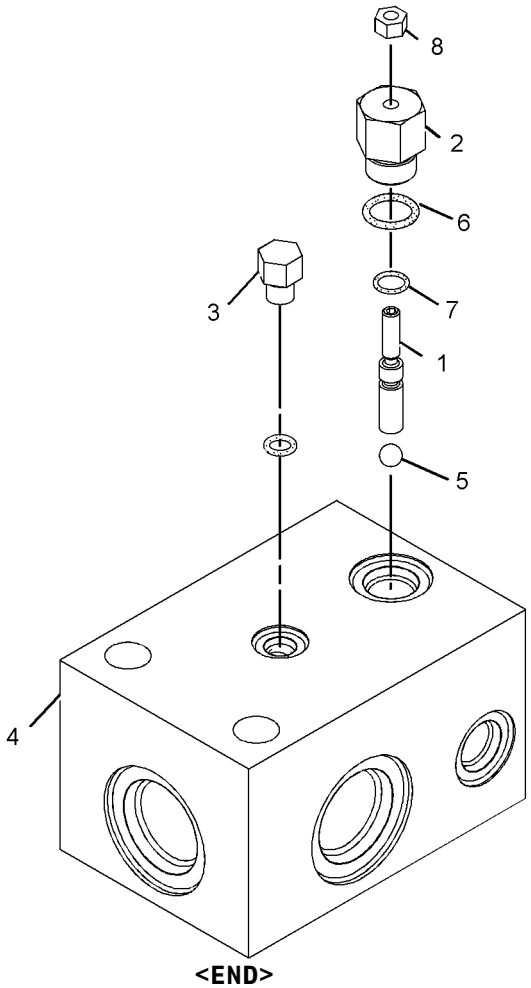

GRAPHIC #1 **<END>** g01193347

123-2514 VALVE GP-PILOT–COUNTERWEIGHT

S/N: WAP1-UP
PART OF 296-7115 LINES GP-REAR ATTACHMENT
AN ATTACHMENT

SMCS-5059 **i01138427**

NOTE	REF NO	GRAPHIC REF	PART NUMBER	QTY	PART NAME 1 2 3 4 5 6 (PRODUCT LEVEL)	SEE PAGE
M	1	1	**099-0822**	2	BOLT-SOCKET HEAD (M5X0.8X10-MM)	
	2	1	**7I-9001**	1	STOP	
	3	1	**096-4509**	1	SPRING	
	4	1	**7I-2789**	1	WASHER (4.3X9X0.8-MM THK)	
	5	1	**095-1519**	1	SEAL-O-RING	
	6	1	**8T-6759**	1	PLUG-PIPE	
	7	1	**126-9992**	1	SOLENOID AS	
	8	1	**131-5894**	1	SPRING	
	9	1	**096-4514**	2	PLUG	
	10	1	**095-1582**	2	SEAL-O-RING	

M-METRIC PART

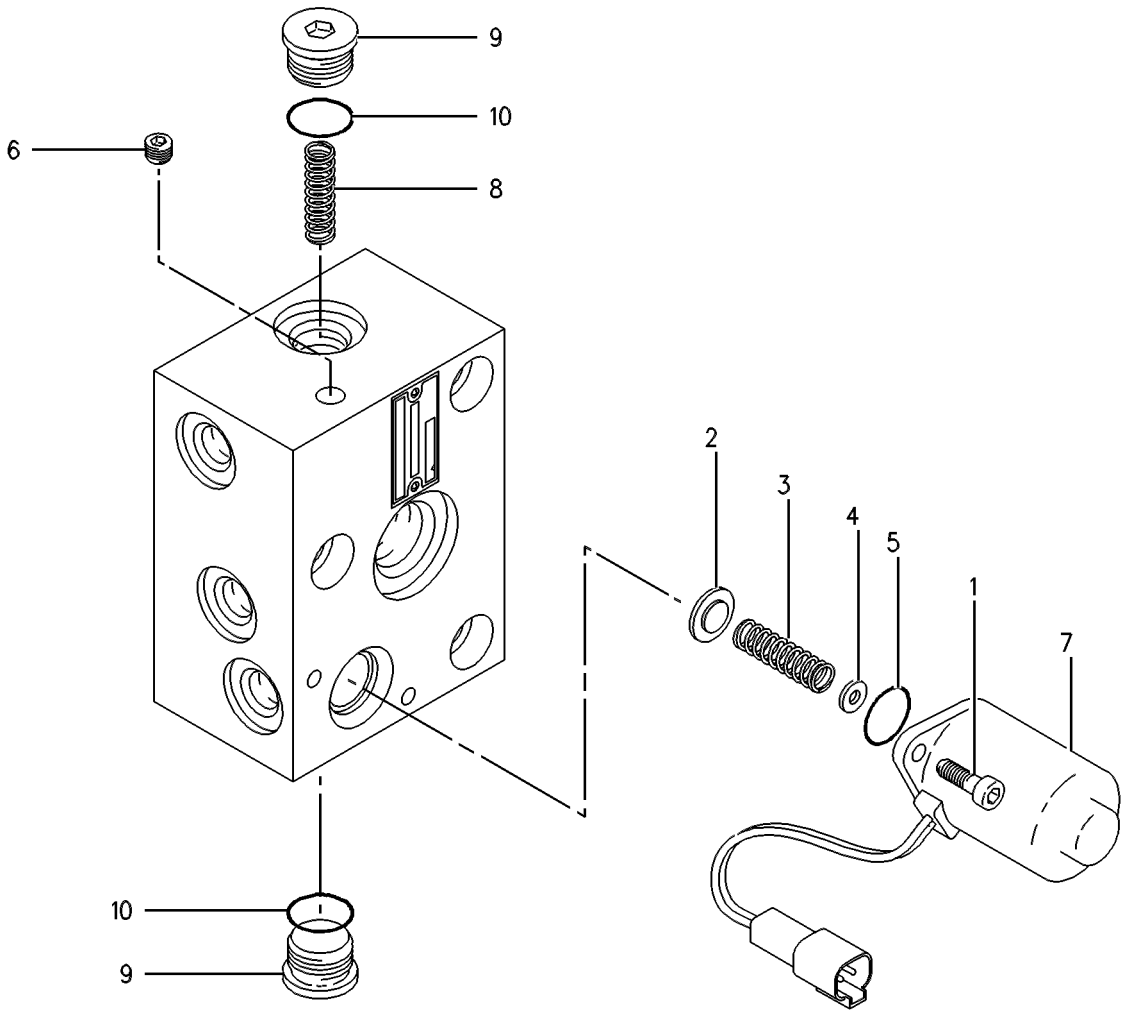

GRAPHIC #1 **<END>** g00268646

HYDRAULIC SYSTEM

193-1665 VALVE GP-PRESSURE REDUCING

S/N: WAP1-UP
PART OF 295-7745, 295-7767 VALVE GP-MAIN CONTROL
ALSO AN ATTACHMENT

SMCS-5117 **i02778327**

NOTE	REF NO	GRAPHIC REF	PART NUMBER	QTY	PART NAME 1 2 3 4 5 6 (PRODUCT LEVEL)	SEE PAGE
	1	1	**193-1664**	1	VALVE GP-CONTROL	
	2	1	**3J-1907**	2	SEAL-O-RING	
	3	1	**4J-5268**	1	SEAL-O-RING	
	4	1	**4J-5351**	1	SEAL-O-RING	
	5	1	**301-5243**	1	RING-BACKUP	
	6	1	**5J-2974**	1	SEAL-O-RING	
	7	1	**5P-6719**	1	PLUG	
	8	1	**301-5241**	1	RING-BACKUP	
	9	1	**301-5242**	1	RING-BACKUP	

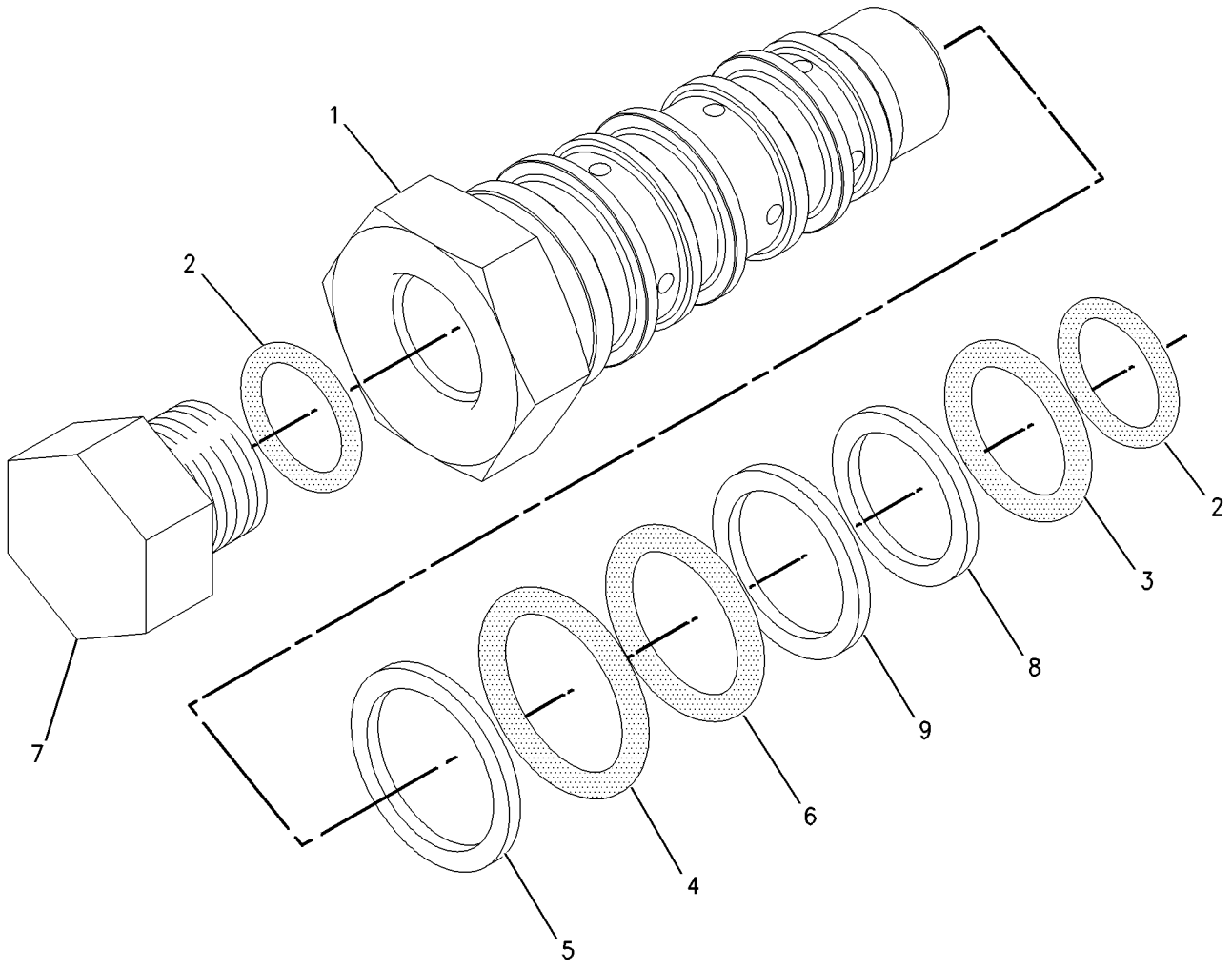

GRAPHIC #1 **<END>** g00763618

111-9997 VALVE GP-PUMP CONTROL–PRESSURE COMPENSATOR

S/N: WAP1-UP

PART OF 200-3270 VALVE GP-PUMP CONTROL

SMCS-5455 **i00623656**

NOTE	REF NO	GRAPHIC REF	PART NUMBER	QTY	PART NAME 1 2 3 4 5 6 (PRODUCT LEVEL)	SEE PAGE
M	1	1	**096-2966**	2	SETSCREW-SOCKET	
M	2	1	**8T-4133**	2	NUT (M10X1.5-THD)	
	3	1	**7I-7476**	2	COVER	
	4	1	**7I-7462**	1	CASE-PISTON	
	5	1	**095-1787**	2	RING-BACKUP	
	6	1	**095-1590**	2	SEAL-O-RING	
	7	1	**095-1785**	2	RING-BACKUP	
	8	1	**095-1586**	2	SEAL-O-RING	
	9	1	**7I-7463**	1	SPRING	
	10	1	**112-0001**	1	BODY	
	11	1	**094-6452**	1	SEAT-SPRING	
	12	1	**095-1574**	5	SEAL-O-RING	
	13	1	**096-3021**	1	SEAL-O-RING	
	14	1	**107-6550**	1	SPOOL AS	
	15	1	**7I-7469**	1	CASE-PISTON	
	16	1	**7I-7475**	2	PISTON	
M	17	1	**8C-6965**	4	BOLT-SOCKET HEAD (M6X1X45-MM)	
M	18	1	**8T-1158**	4	BOLT-SOCKET HEAD (M8X1.25X20-MM)	
	19	1	**111-9999**	1	PLUG	

M-METRIC PART

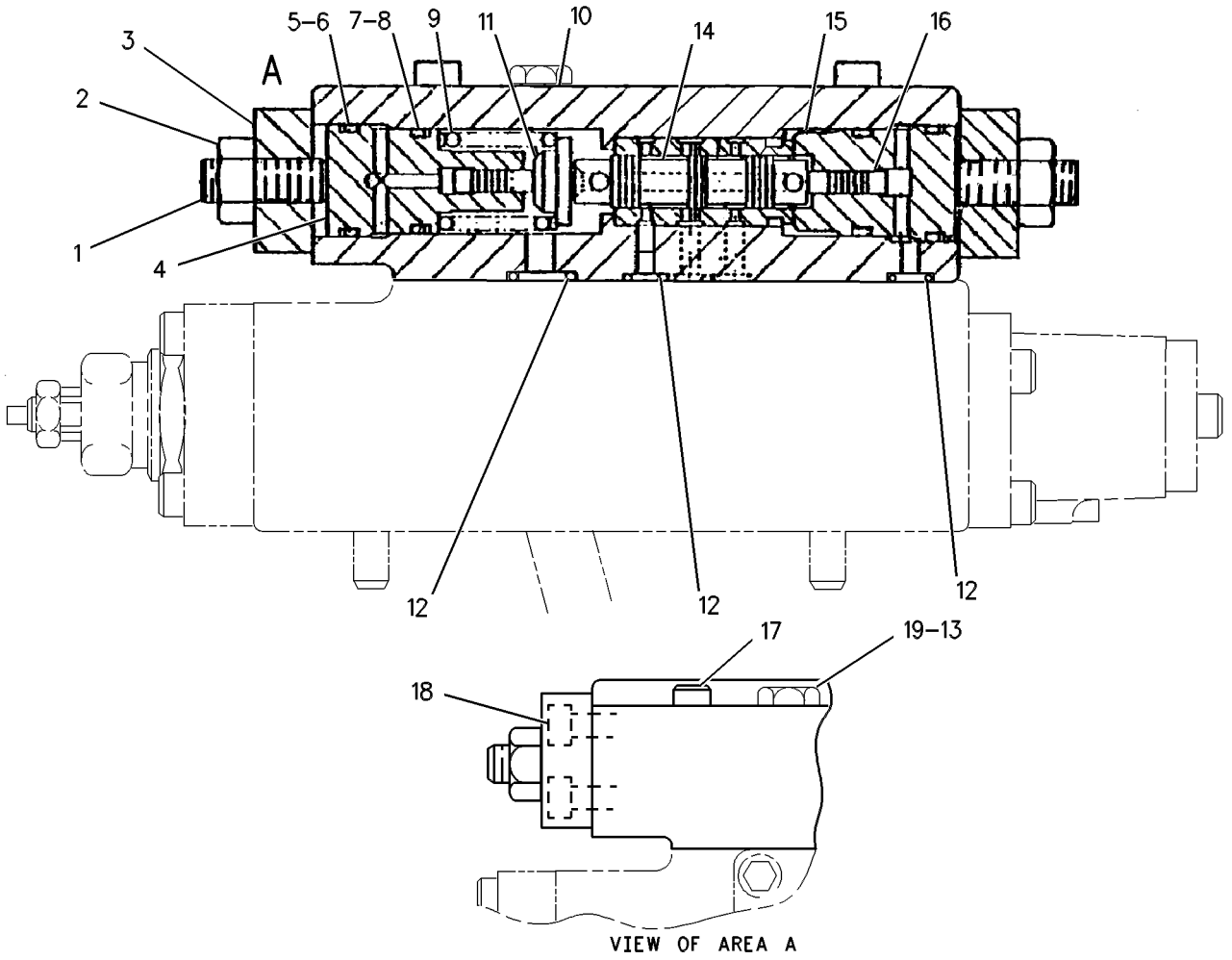

GRAPHIC #1 **<END>** g00284200

200-3270 VALVE GP-PUMP CONTROL–
PRESSURE, FLOW COMPENSATOR
S/N: WAP1-UP
PART OF 334-9990 PUMP GP-PISTON

SMCS-5455 **i02570233**

NOTE	REF NO	GRAPHIC REF	PART NUMBER	QTY	PART NAME 1 2 3 4 5 6 (PRODUCT LEVEL)	SEE PAGE
Y	1	1	**111-9997**	1	VALVE GP-PUMP CONTROL (PRESSURE COMPENSATOR)	749
Y	2	1	**204-2730**	1	VALVE GP-PUMP CONTROL (FLOW COMPENSATOR)	752

Y-SEPARATE ILLUSTRATION

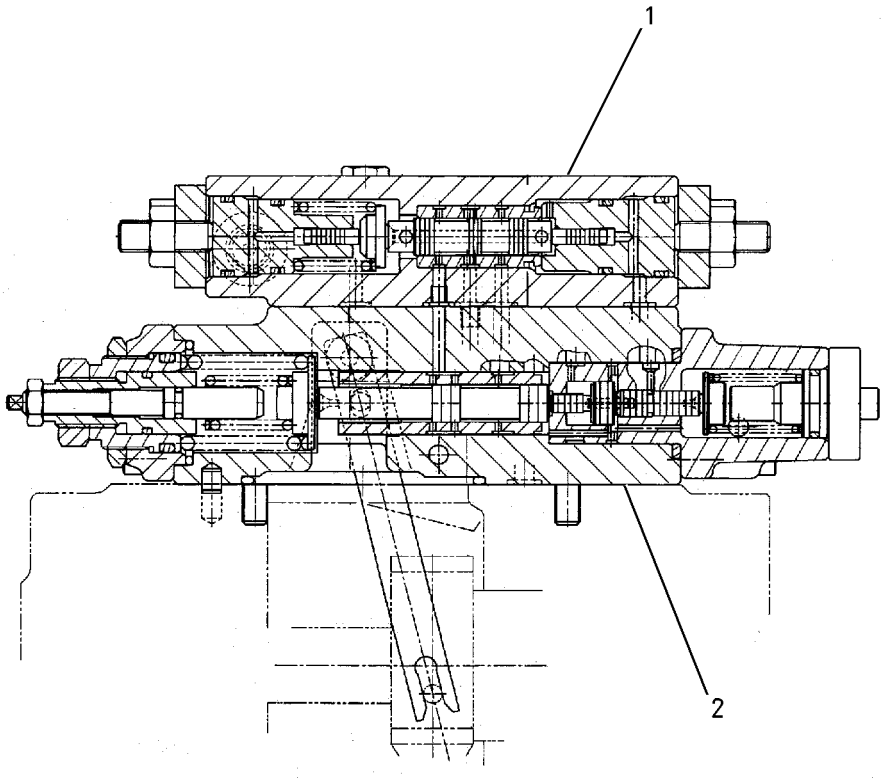

GRAPHIC #1 **<END>** g00850727

HYDRAULIC SYSTEM

204-2730 VALVE GP-PUMP CONTROL—FLOW COMPENSATOR

S/N: WAP1-UP

PART OF 200-3270 VALVE GP-PUMP CONTROL

SMCS-5455 **i02570281**

NOTE	REF NO	GRAPHIC REF	PART NUMBER	QTY	PART NAME 1 2 3 4 5 6 (PRODUCT LEVEL)	SEE PAGE
	1	1	**5I-8794**	1	SEAT-SPRING	
	2	1	**200-3299**	1	SPRING	
	3	1	**105-7331**	1	COVER	
	4	1	**206-9289**	1	SEAL-O-RING	
	5	1	**206-9294**	2	SEAL-O-RING	
	6	1	**7I-7458**	1	SCREW	
	7	1	**7I-7457**	1	SCREW	
	8	1	**7I-7453**	1	SCREW	
M	9	1	**5C-7261**	1	NUT (M8X1.25-THD)	
M	10	1	**8T-4132**	1	NUT (M16X2-THD)	
	11	1	**5I-8800**	1	LOCKNUT (M30X1.5-THD)	
	12	1	**206-9301**	1	SEAL-O-RING	
	13	1	**206-9299**	1	SEAL-O-RING	
	14	1	**112-0003**	1	BODY AS	
	15	1	**206-9298**	1	SEAL-O-RING	
	16	1	**7I-7470**	1	SPRING	
	17	1	**7I-7473**	1	COVER	
M	18	1	**8T-0269**	10	BOLT-SOCKET HEAD (M6X1X20-MM)	
	19	1	**204-2855**	1	STOP	
	20	1	**206-9295**	1	SEAL-O-RING	
	21	1	**105-7329**	1	CASE	
	22	1	**5I-8804**	1	SEAT-SPRING	
	23	1	**105-7328**	1	PISTON-COMPENSATOR	
	24	1	**8C-5899**	1	PIN-SPRING	
	25	1	**200-3302**	1	PISTON	
	26	1	**200-3301**	1	SLEEVE	
	27	1	**206-9300**	1	SEAL-O-RING	
	28	1	**200-3300**	1	SPRING	
M	29	1	**1R-5396**	5	BOLT (M6X1X35-MM)	
	30	1	**7I-7446**	1	BLOCK	
	31	1	**206-9292**	2	SEAL-O-RING	
	32	1	**7I-7447**	2	SEAT	
	33	1	**5H-1472**	2	BALL	
	34	1	**7I-7448**	1	STOP	
	35	1	**204-2733**	1	LEVER AS	
	36	1	**112-0000**	1	PLUG	
	37	1	**5I-8814**	1	RING-RETAINING	
	38	1	**111-9998**	1	PLUG	
	39	1	**206-9293**	1	SEAL-O-RING	
M	40	1	**8T-1158**	3	BOLT-SOCKET HEAD (M8X1.25X20-MM)	
	41	1	**7I-8084**	10	PLUG	
M	42	1	**3E-8025**	2	BOLT-SOCKET HEAD (M8X1.25X50-MM)	
	43	1	**206-9290**	5	SEAL-O-RING	
	44	1	**7I-7449**	1	STOP	
	45	1	**189-9763**	1	SEAL-O-RING	

M-METRIC PART

204-2730 VALVE GP-PUMP CONTROL *(contd.)* i02570281

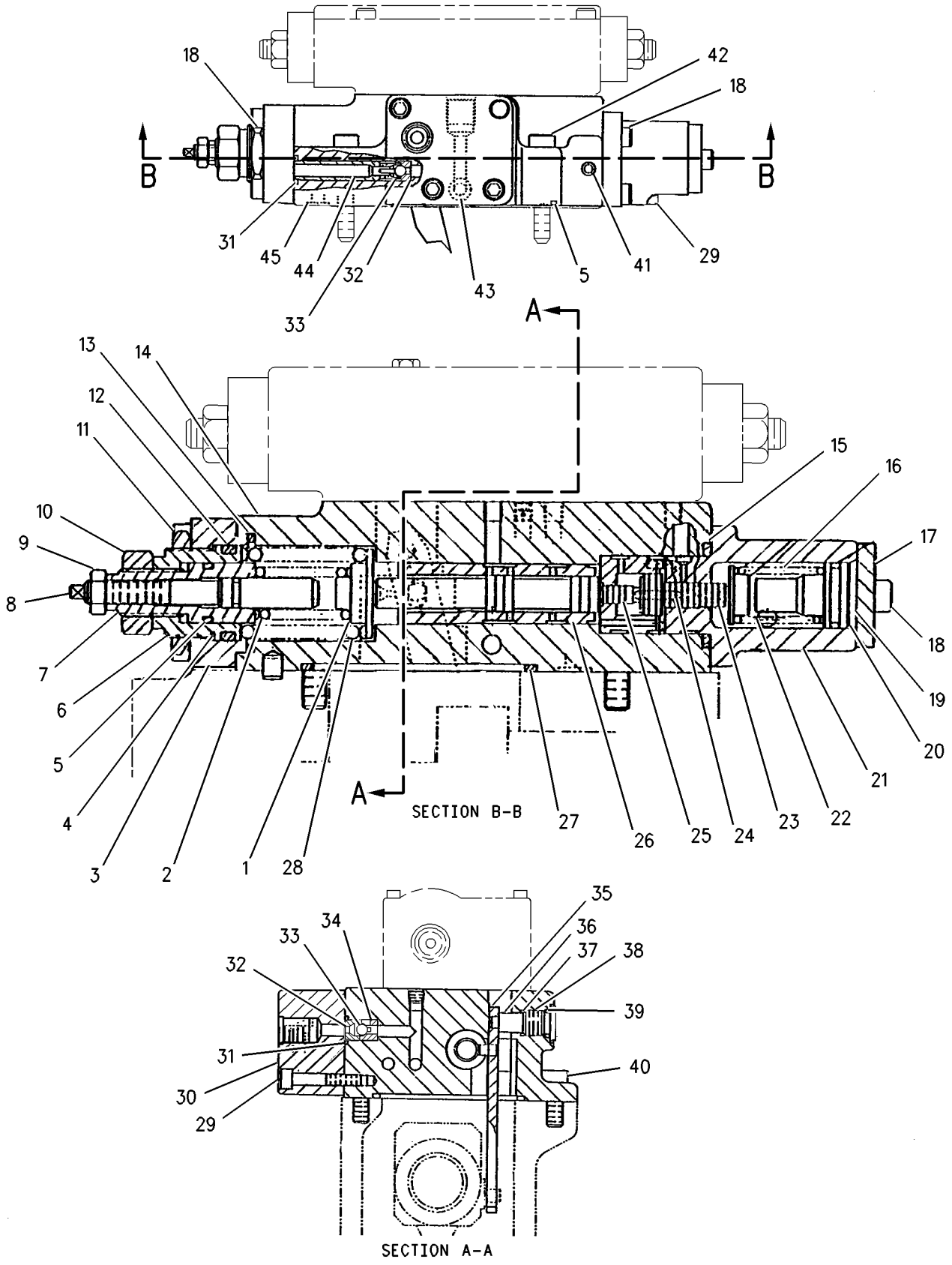

GRAPHIC #1 **<END>** g00853461

HYDRAULIC SYSTEM

209-5937 VALVE GP-PUMP CONTROL–PRESSURE COMPENSATOR

S/N: WAP1-UP

PART OF 170-9918 PUMP GP-PISTON

SMCS-5455 **i03879840**

NOTE	REF NO	GRAPHIC REF	PART NUMBER	QTY	PART NAME 1 2 3 4 5 6 (PRODUCT LEVEL)	SEE PAGE
	1	1	**209-5943**	1	CAP	
	2	1	**134-7489**	1	PLUG	
	3	1	**6E-6528**	1	SEAL	
	4	1	**033-6043**	1	SEAL-O-RING	
	5	1	**213-9244**	1	SEAL-O-RING	
	6	1	**200-5363**	1	RING-THRUST	
	7	1	**209-5941**	1	PLUG	
M	8	1	**5C-7261**	1	NUT (M8X1.25-THD)	
	9	1	**209-5939**	1	VALVE GP-SOLENOID (FAN PUMP)	
	10	1	**213-9242**	1	SEAL-O-RING	
	11	1	**213-9247**	1	SEAL-O-RING	
	12	1	**209-6004**	1	RING	
	13	1	**213-9243**	1	SEAL-O-RING	
	14	1	**209-5940**	1	ORIFICE	
	15	1	**213-9246**	1	SEAL-O-RING	
	16	1	**9X-7680**	3	SEAL-O-RING	
	17	1	**209-5942**	1	PLUG	
M	18	1	**5C-2890**	1	NUT (M6X1-THD)	
	19	1	**9S-8002**	2	PLUG-O-RING	
	20	1	**033-5853**	2	SEAL-O-RING	
	21	1	**209-6005**	1	RING	

M-METRIC PART

209-5937 VALVE GP-PUMP CONTROL *(contd.)* i03879840

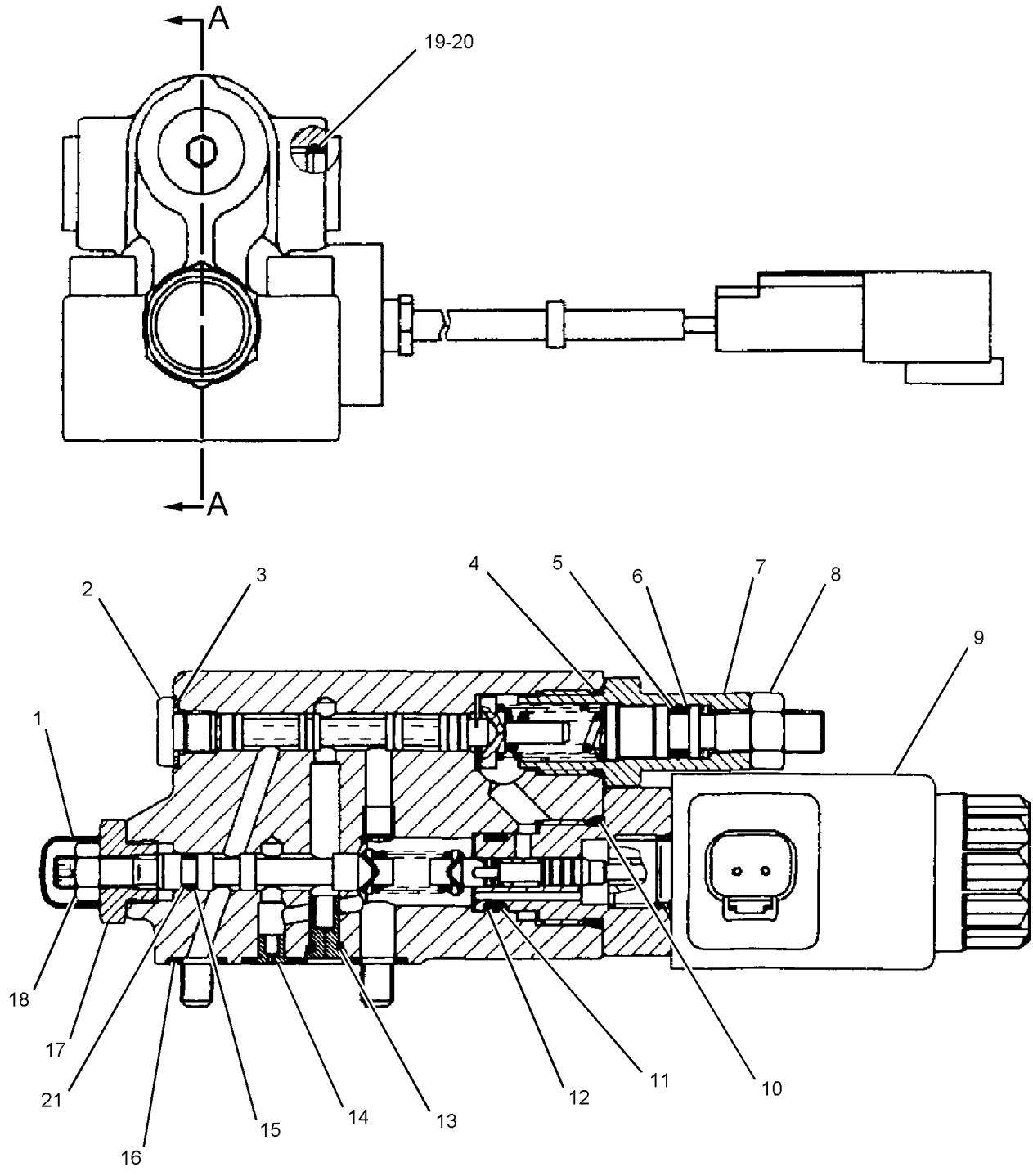

SECTION A-A

GRAPHIC #1 **<END>** g01124453

HYDRAULIC SYSTEM

315-4478 VALVE GP-COMPENSATING

S/N: WAP1-UP

PART OF 295-9678 PUMP GP-PISTON

SMCS-5455 **i03906534**

NOTE	REF NO	GRAPHIC REF	PART NUMBER	QTY	PART NAME 1 2 3 4 5 6 (PRODUCT LEVEL)	SEE PAGE
	1	1	**120-4394**	8	PLUG-BREAK OFF	
	2	1	**112-4629**	1	SCREW	
M	3	1	**095-0645**	5	BOLT-SOCKET HEAD (M6X1X55-MM)	
	4	1	**315-4388**	1	BODY	
	5	1	**259-0891**	3	SEAL-RING	
	6	1	**6E-5412**	1	SEAL-O-RING	
	7	1	**146-3493**	2	PIN	
	8	1	**170-9817**	1	ROD	
Y	9	1	**322-8706**	1	VALVE GP-FLOW CONTROL	727

M-METRIC PART
Y-SEPARATE ILLUSTRATION

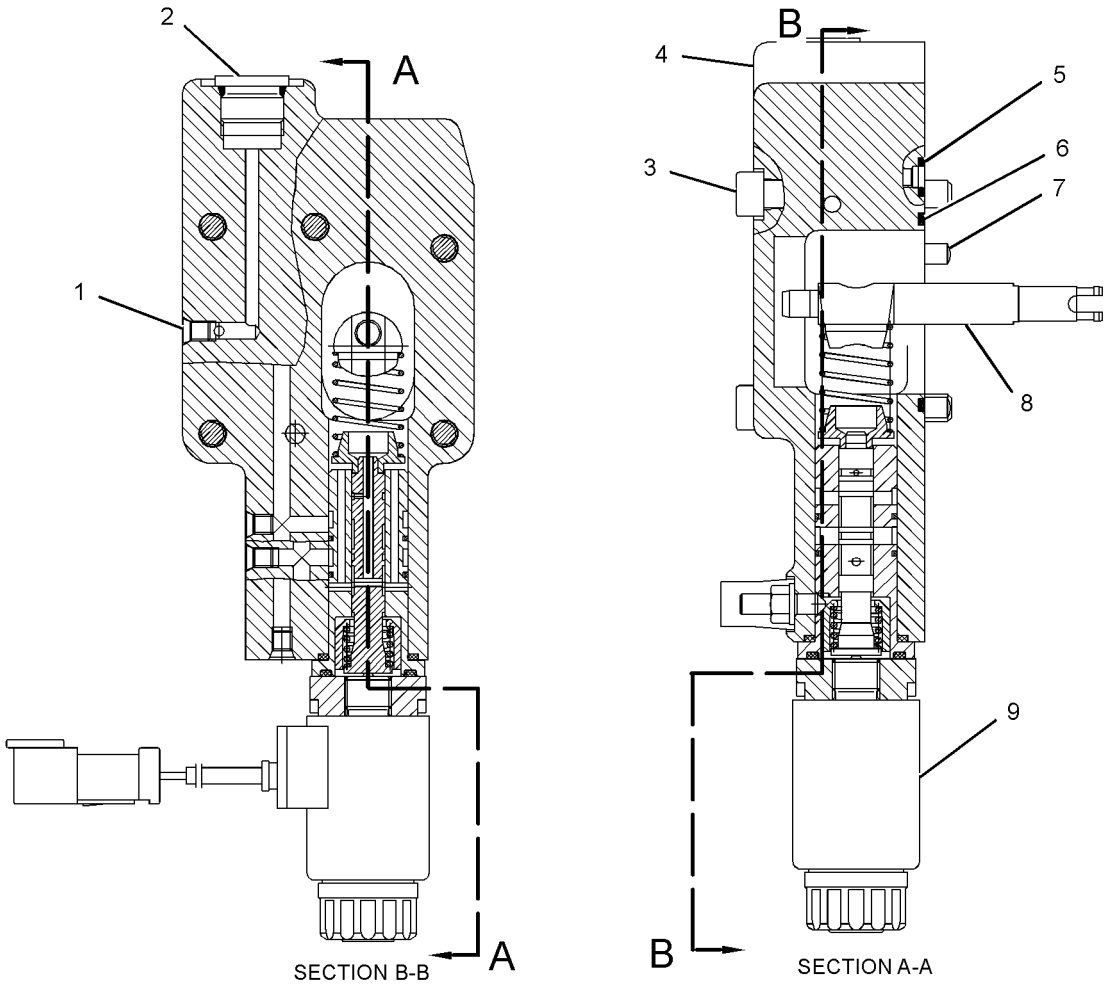

GRAPHIC #1 **<END>** g02158839

117-5270 VALVE GP-RELIEF

S/N: WAP1-UP
PART OF 295-7745, 295-7767 VALVE GP-MAIN CONTROL
ALSO AN ATTACHMENT

SMCS-5069, 5117 **i04026051**

NOTE	REF NO	GRAPHIC REF	PART NUMBER	QTY	PART NAME 1 2 3 4 5 6 (PRODUCT LEVEL)	SEE PAGE
	1	1	**9T-7202**	1	RETAINER AS	
	2	1	**9X-6395**	1	NUT (3/4-16-THD)	
	3	1	**3K-0360**	2	SEAL-O-RING	
	4	1	**9T-1670**	1	SPRING	
	5	1	**111-5754**	1	VALVE	
	6	1	**5P-3108**	1	SEAL-O-RING	
	7	1	**117-5272**	1	BODY AS	
	7A	1	**3J-7354**	1	SEAL-O-RING	
	7B	1	**115-5637**	1	SCREEN AS	
	7C	1	**117-5274**	1	SEAT	
	8	1	**8J-4376**	1	SPACER (0.12-IN THK)	

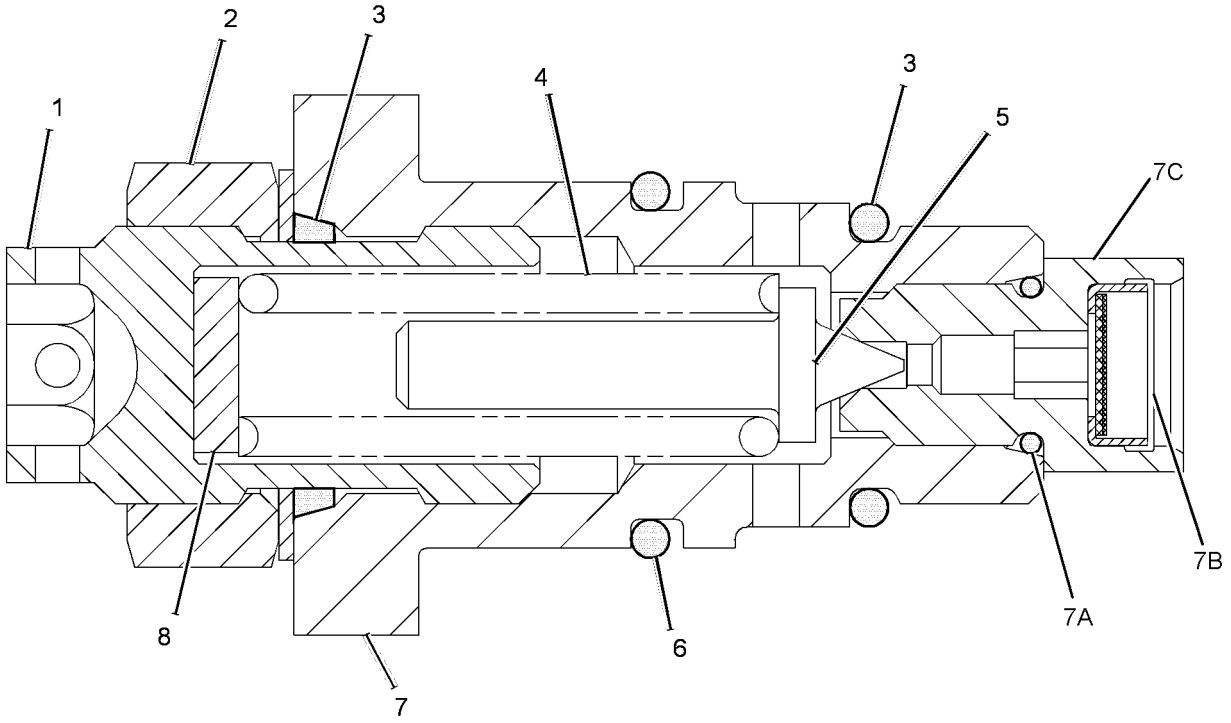

GRAPHIC #1 **<END>** g02209176

HYDRAULIC SYSTEM

144-7113 VALVE GP-RELIEF

S/N: WAP1-UP

PART OF 295-7747, 295-7748, 295-7769 VALVE GP-CONTROL

ALSO AN ATTACHMENT

SMCS-5069, 5117 **i01823550**

NOTE	REF NO	GRAPHIC REF	PART NUMBER	QTY	PART NAME 1 2 3 4 5 6 (PRODUCT LEVEL)	SEE PAGE
B	1	1	**152-5550**	1	SPACER (0.16-MM THK)	
	2	1	**168-5102**	1	PLUG	
	3	1	**168-5103**	1	VALVE	
Z	4	1		1	BODY	
	5	1	**168-5191**	1	SPRING	
	6	1	**170-2414**	1	RING-BACKUP	
	7	1	**170-2415**	1	RING-BACKUP	
B	8	1	**179-5857**	1	SPACER (11.12X23X0.1-MM THK)	
	9	1	**3D-2824**	1	SEAL-O-RING	
	10	1	**4J-0519**	1	SEAL-O-RING	
	11	1	**4J-0521**	1	SEAL-O-RING	
	12	1	**4K-1388**	1	SEAL-O-RING	
B	13	1	**8S-6214**	2	SPACER (11.12X23X0.4-MM THK)	

B-USE AS REQUIRED
Z-NOT SERVICED SEPARATELY

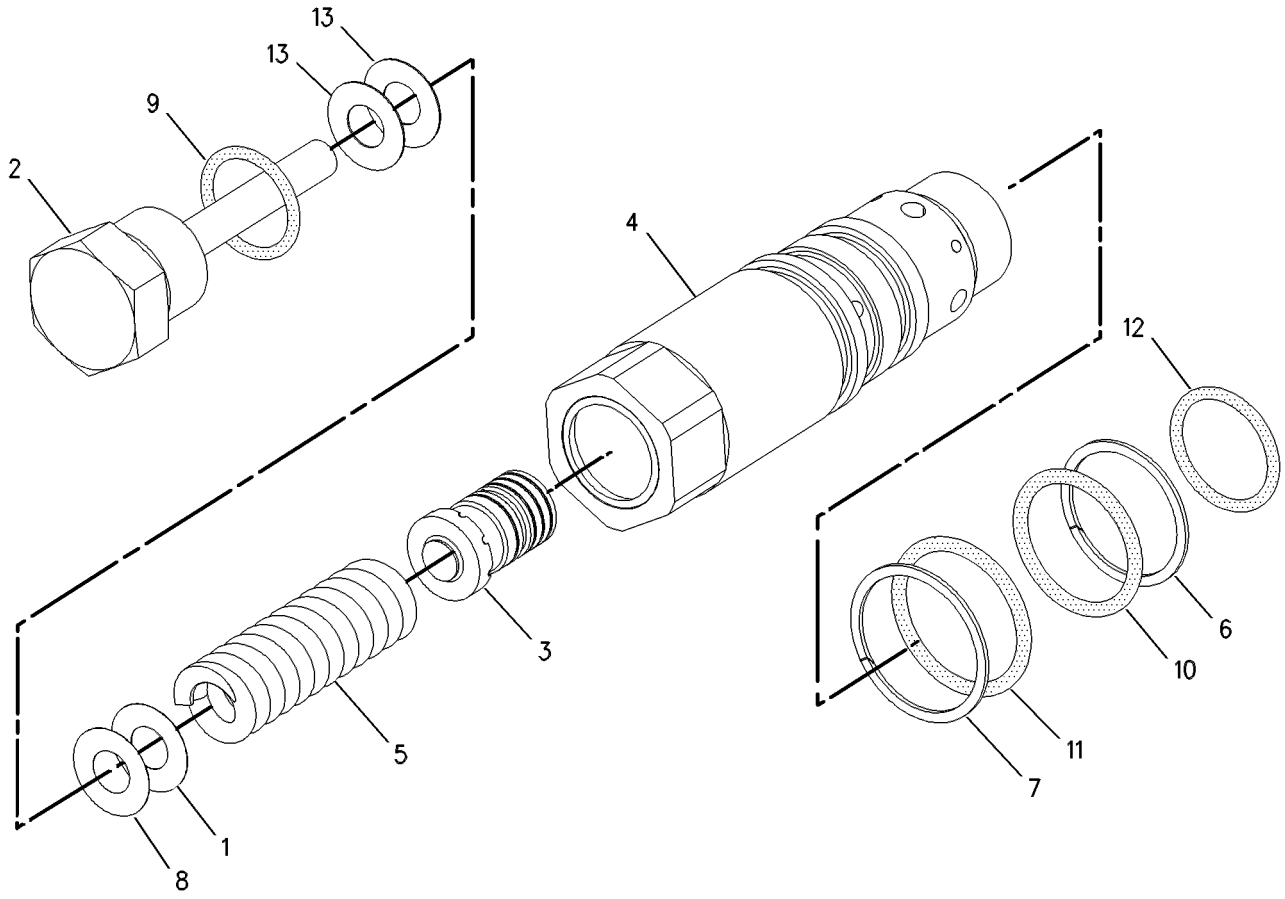

GRAPHIC #1 **<END>** g00634048

HYDRAULIC SYSTEM

155-4847 VALVE GP-RELIEF

S/N: WAP1-UP
PART OF 165-9579, 165-9614 VALVE GP-RELIEF
AN ATTACHMENT

SMCS-5069, 5117 **i03591002**

NOTE	REF NO	GRAPHIC REF	PART NUMBER	QTY	PART NAME 1 2 3 4 5 6 (PRODUCT LEVEL)	SEE PAGE
	1	1	**9T-9992**	2	RING-BACKUP	
	2	1	**8T-9522**	1	SEAL-O-RING	
	3	1	**2S-4078**	2	SEAL-O-RING	
	4	1	**3P-1155**	1	SEAL-O-RING	
	5	1	**117-0775**	2	RING-BACKUP	
	6	1	**2P-2975**	1	SEAL-O-RING	
					PARTS SHOWN IN GRAPHIC(S) WITHOUT A REFERENCE NUMBER ARE NOT SERVICED SEPARATELY	

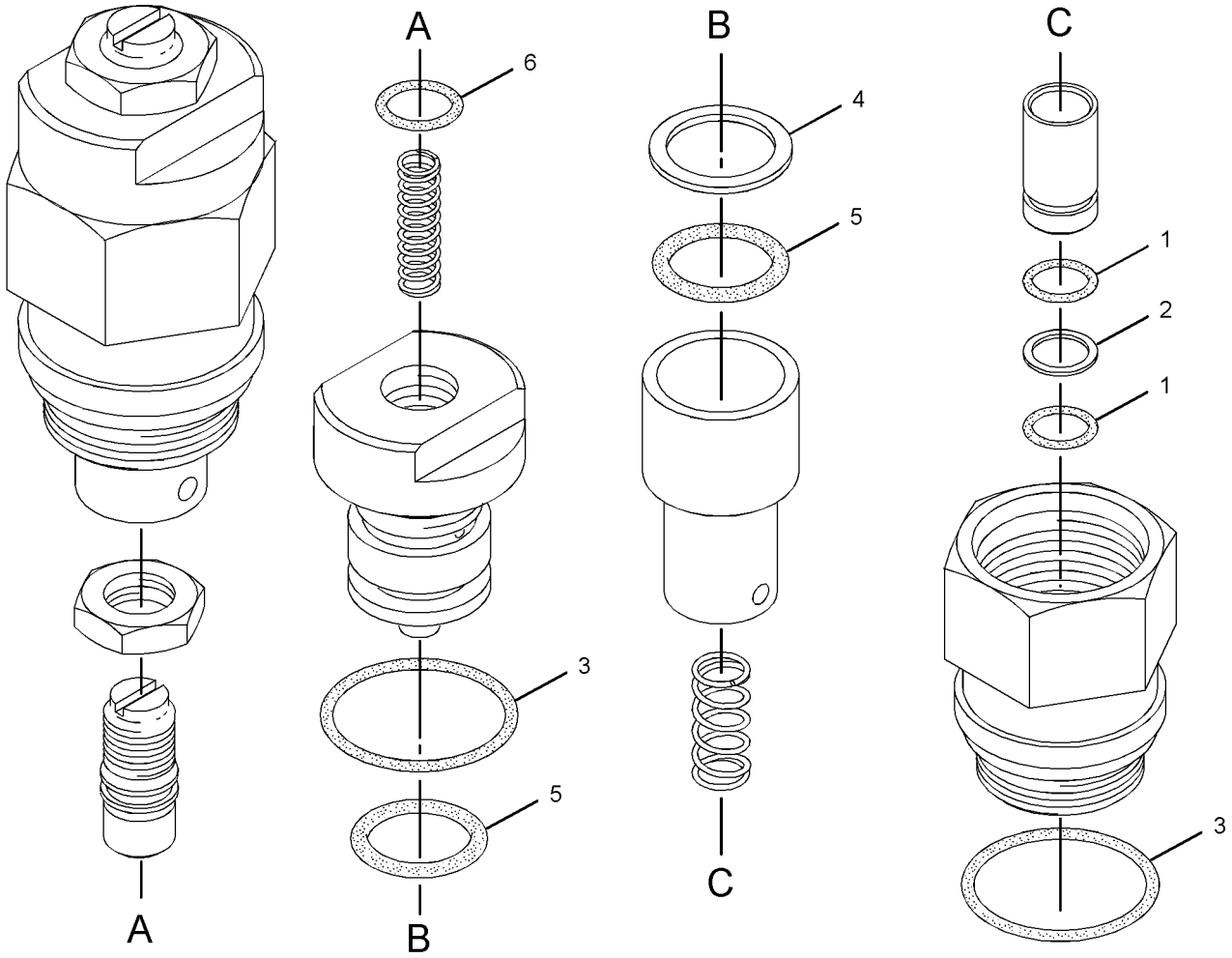

GRAPHIC #1 **<END>** g01916983

HYDRAULIC SYSTEM

165-9579 VALVE GP-RELIEF

S/N: WAP1-UP
PART OF 338-6173 LINES GP-FRONT
AN ATTACHMENT

SMCS-5069, 5117 **i01563523**

NOTE	REF NO	GRAPHIC REF	PART NUMBER	QTY	PART NAME 1 2 3 4 5 6 (PRODUCT LEVEL)	SEE PAGE
	1	1	**149-6558**	1	BLOCK	
Y	2	1	**155-4847**	1	VALVE GP-RELIEF	759

Y-SEPARATE ILLUSTRATION

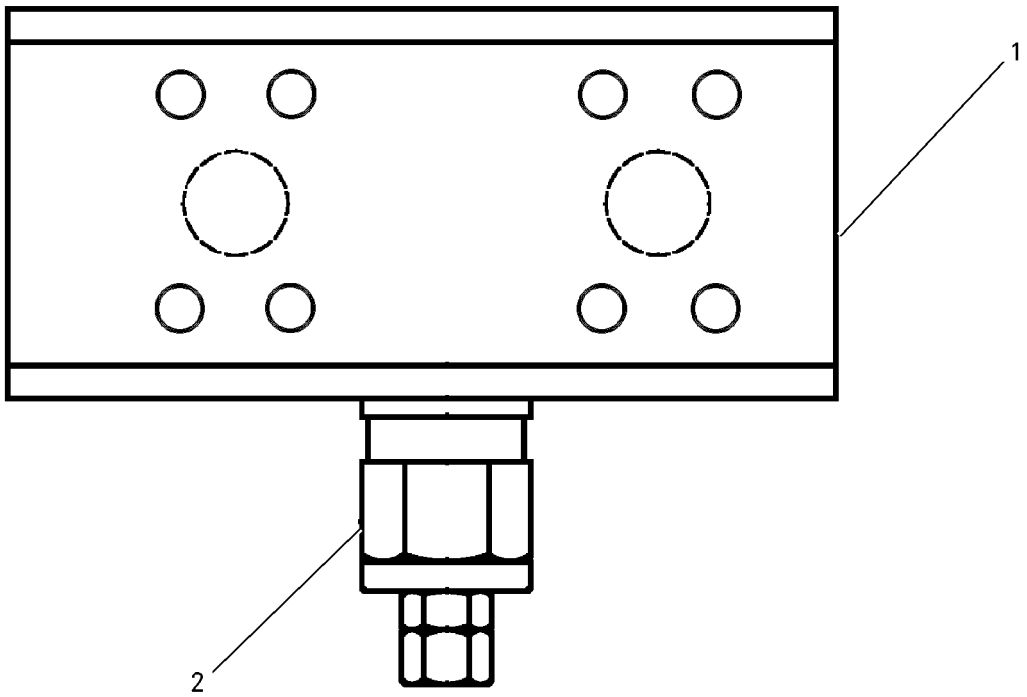

GRAPHIC #1 **<END>** g00812239

HYDRAULIC SYSTEM

165-9614 VALVE GP-RELIEF

S/N: WAP1-UP
PART OF 338-6172 LINES GP-FRONT
AN ATTACHMENT

SMCS-5069, 5117 **i01200044**

NOTE	REF NO	GRAPHIC REF	PART NUMBER	QTY	PART NAME 1 2 3 4 5 6 (PRODUCT LEVEL)	SEE PAGE
	1	1	**152-9191**	1	BLOCK	
Y	2	1	**155-4847**	1	VALVE GP-RELIEF	759

Y-SEPARATE ILLUSTRATION

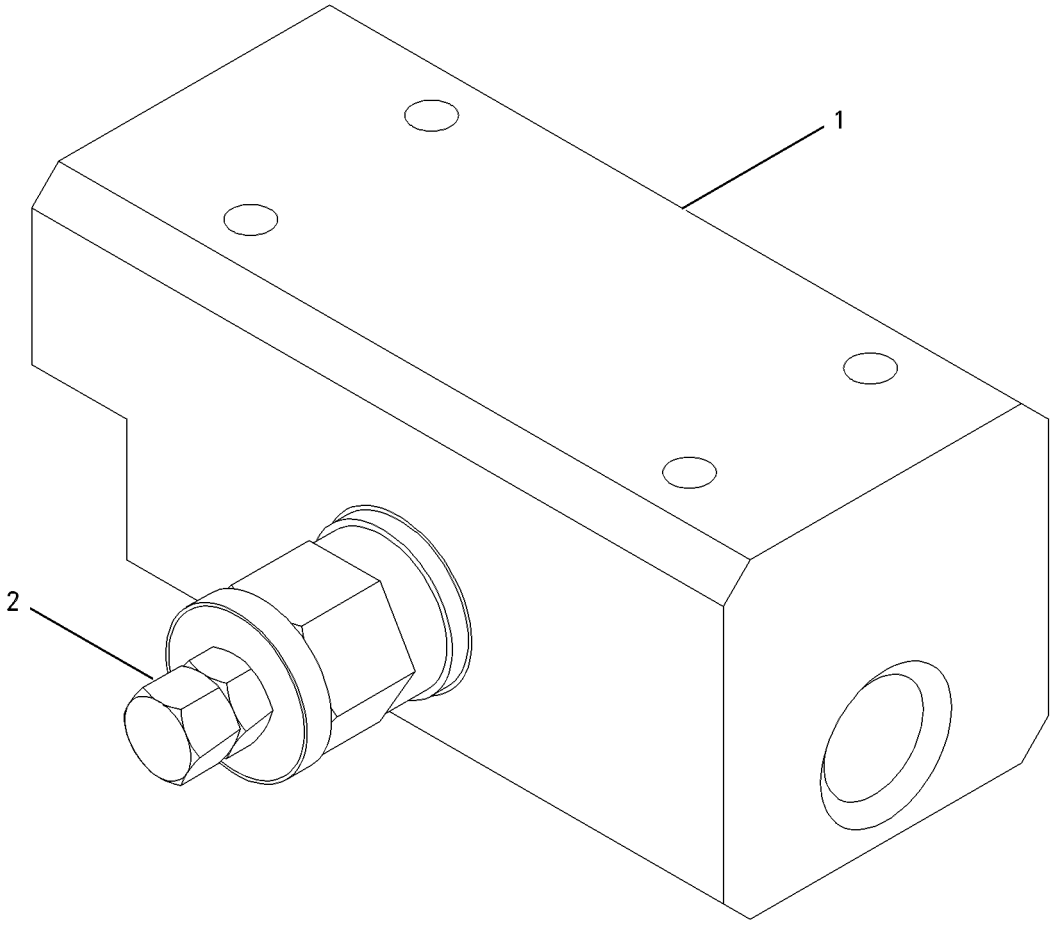

GRAPHIC #1 **<END>** g00642690

HYDRAULIC SYSTEM

177-2549 VALVE GP-RELIEF

S/N: WAP1-UP

PART OF 295-9446, 295-9447 MOTOR GP-SWING

SMCS-5069, 5117 **i02330663**

NOTE	REF NO	GRAPHIC REF	PART NUMBER	QTY	PART NAME 1 2 3 4 5 6 (PRODUCT LEVEL)	SEE PAGE
	1	1	**168-0765**	1	RING-BACKUP	
	2	1	**7J-9933**	1	SEAL-O-RING	
	3	1	**7I-0966**	1	RING-BACKUP	
	4	1	**6V-5556**	1	SEAL-O-RING	
	5	1	**095-1698**	1	SEAL-O-RING	

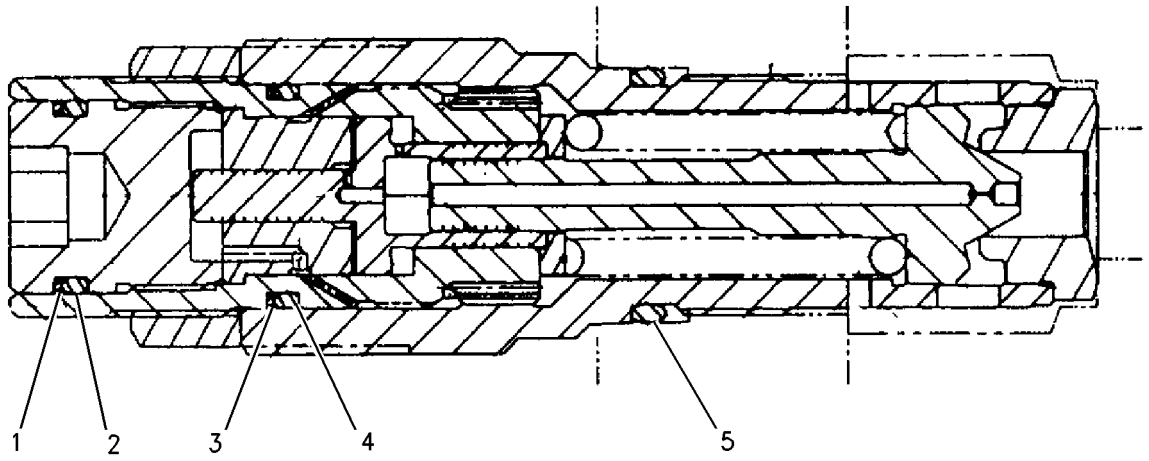

GRAPHIC #1 **<END>** g00766908

239-8983 VALVE GP-RELIEF

S/N: WAP1-UP
PART OF 274-9053 VALVE GP-LOAD CONTROL
AN ATTACHMENT

SMCS-5069, 5117 **i02435120**

NOTE	REF NO	GRAPHIC REF	PART NUMBER	QTY	PART NAME 1 2 3 4 5 6 (PRODUCT LEVEL)	SEE PAGE
	1	1	**030-0167**	1	RING-BACKUP	
	2	1	**183-8068**	2	RING-BACKUP	
	3	1	**2P-2975**	1	SEAL-O-RING	
	4	1	**2T-2695**	1	SEAL	
	5	1	**6V-8397**	1	SEAL-O-RING	
	6	1	**7M-8485**	2	SEAL-O-RING	

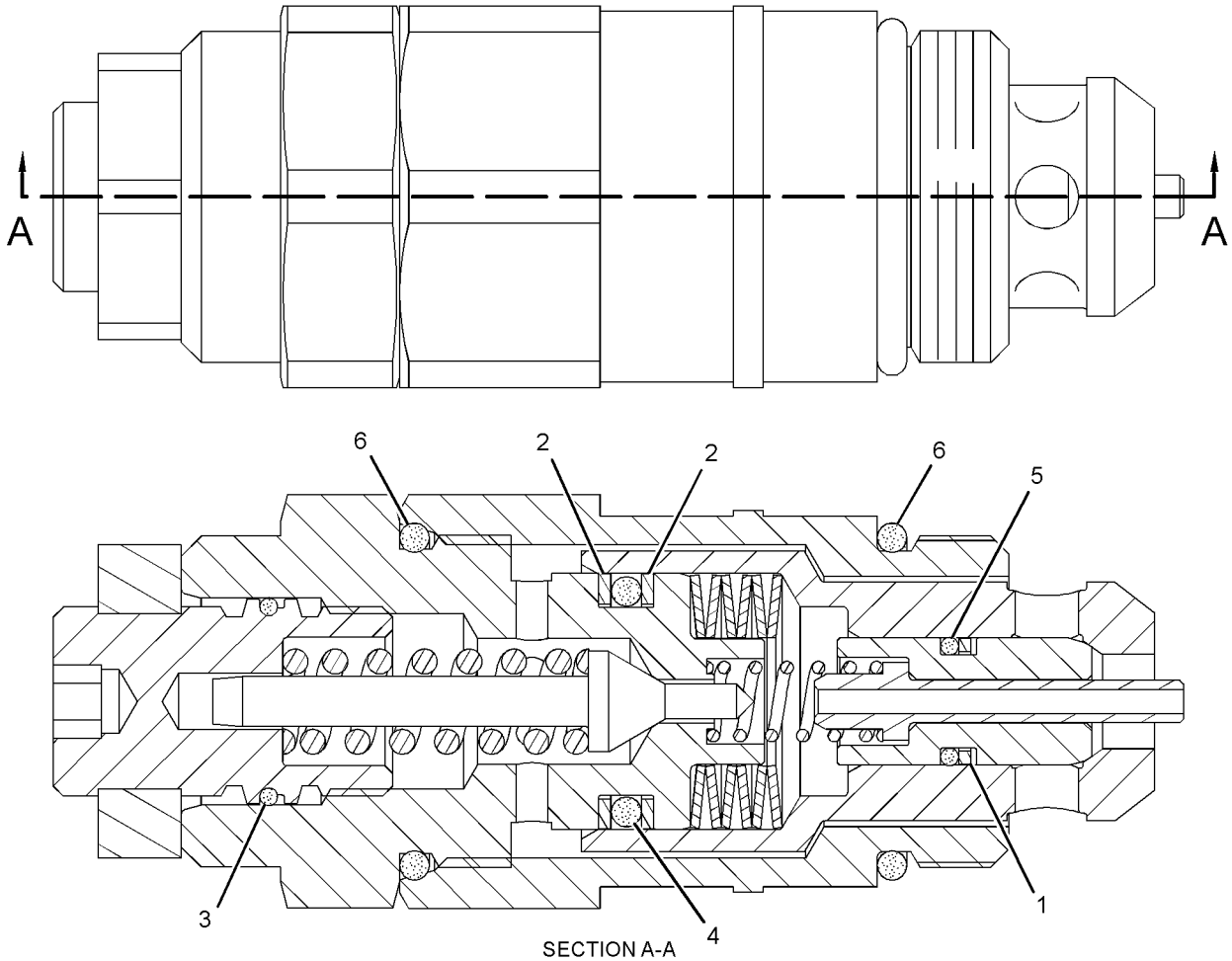

SECTION A-A

GRAPHIC #1 **<END>** g01217845

HYDRAULIC SYSTEM

352-6869 VALVE GP-RELIEF

S/N: WAP1-UP

PART OF 335-0311 VALVE GP-CHECK & RELIEF, 295-7747, 295-7748, 295-7769 VALVE GP-CONTROL, 270-5803, 270-5804 VALVE GP-LOAD CONTROL

ALSO AN ATTACHMENT

SMCS-5069, 5117 **i03875605**

NOTE	REF NO	GRAPHIC REF	PART NUMBER	QTY	PART NAME 1 2 3 4 5 6 (PRODUCT LEVEL)	SEE PAGE
	1	1	**9T-9992**	1	RING-BACKUP	
	2	1	**117-0775**	1	RING-BACKUP	
	3	1	**2P-2975**	1	SEAL-O-RING	
	4	1	**2S-4078**	2	SEAL-O-RING	
	5	1	**3P-1155**	1	SEAL-O-RING	
	6	1	**8T-9522**	1	SEAL-O-RING	

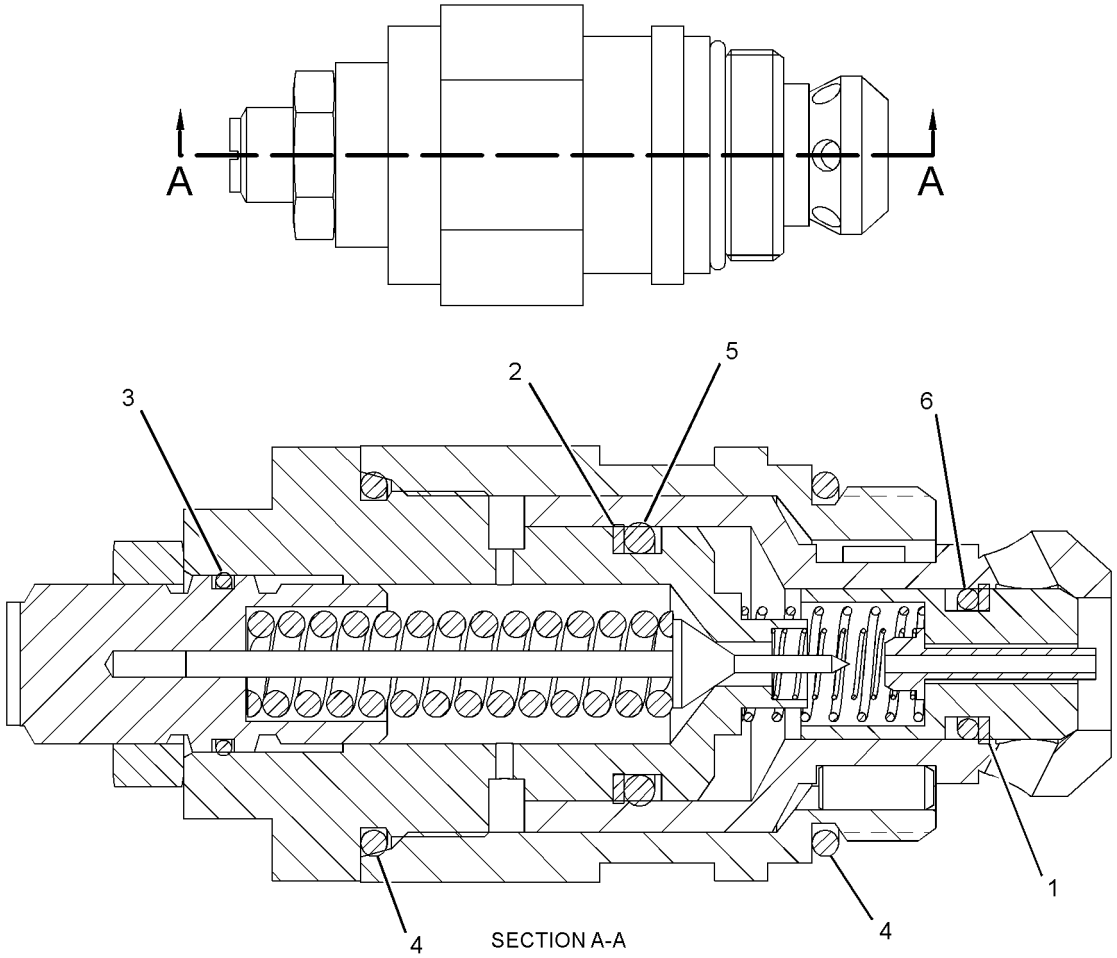

SECTION A-A

GRAPHIC #1 **<END>** g02126172

HYDRAULIC SYSTEM

352-6870 VALVE GP-RELIEF

S/N: WAP1-UP

FIELD INSTALLATION

SMCS-5069, 5117 **i03998570**

NOTE	REF NO	GRAPHIC REF	PART NUMBER	QTY	PART NAME 1 2 3 4 5 6 (PRODUCT LEVEL)	SEE PAGE
	1	1	**9T-9992**	1	RING-BACKUP	
	2	1	**117-0775**	1	RING-BACKUP	
	3	1	**2P-2975**	1	SEAL-O-RING	
	4	1	**2S-4078**	2	SEAL-O-RING	
	5	1	**3P-1155**	1	SEAL-O-RING	
	6	1	**8T-9522**	1	SEAL-O-RING	

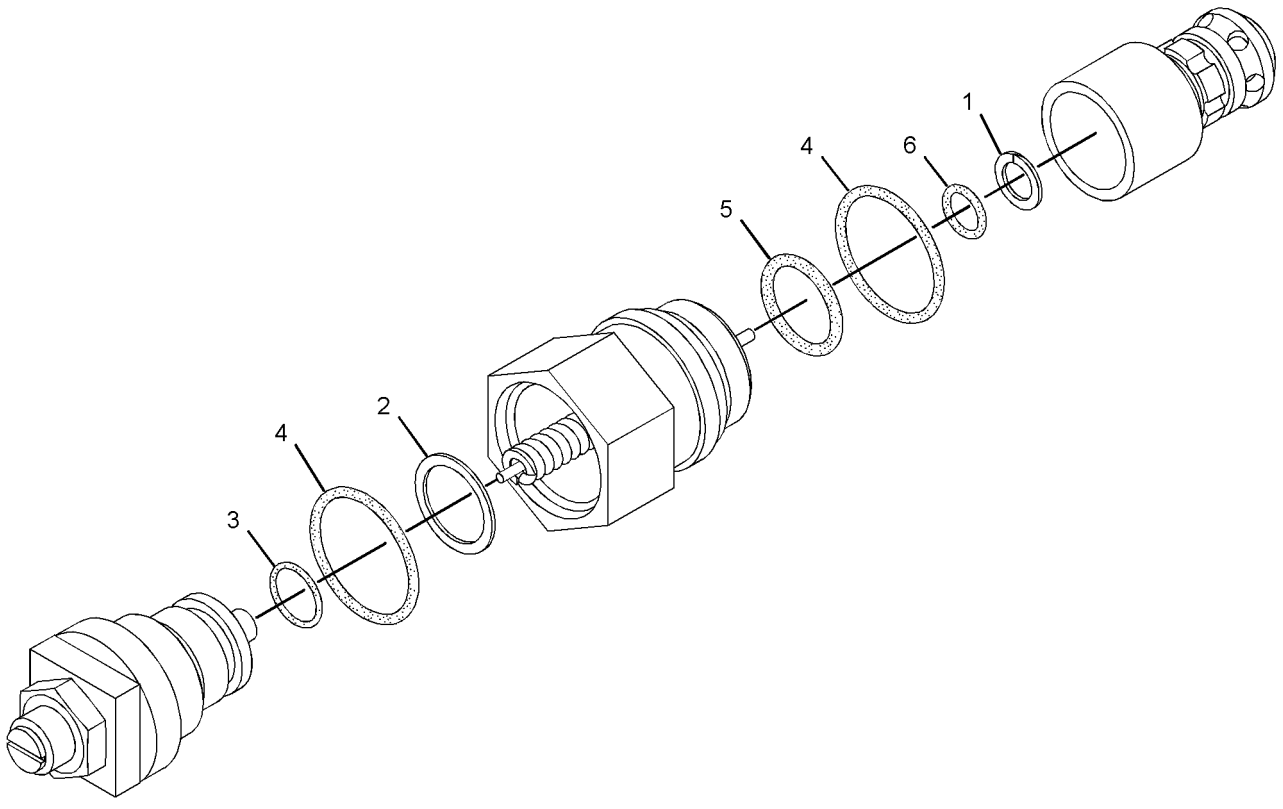

GRAPHIC #1 **<END>** g02176833

HYDRAULIC SYSTEM

352-6914 VALVE GP-RELIEF

S/N: WAP1-UP
PART OF 338-6173 LINES GP-FRONT
AN ATTACHMENT

SMCS-5069, 5117 **i03993130**

NOTE	REF NO	GRAPHIC REF	PART NUMBER	QTY	PART NAME 1 2 3 4 5 6 (PRODUCT LEVEL)	SEE PAGE
	1	1	**9T-9992**	1	RING-BACKUP	
	2	1	**117-0775**	1	RING-BACKUP	
	3	1	**2P-2975**	1	SEAL-O-RING	
	4	1	**2S-4078**	2	SEAL-O-RING	
	5	1	**3P-1155**	1	SEAL-O-RING	
	6	1	**8T-9522**	1	SEAL-O-RING	
					PARTS SHOWN IN GRAPHIC(S) WITHOUT A REFERENCE NUMBER ARE NOT SERVICED SEPARATELY	

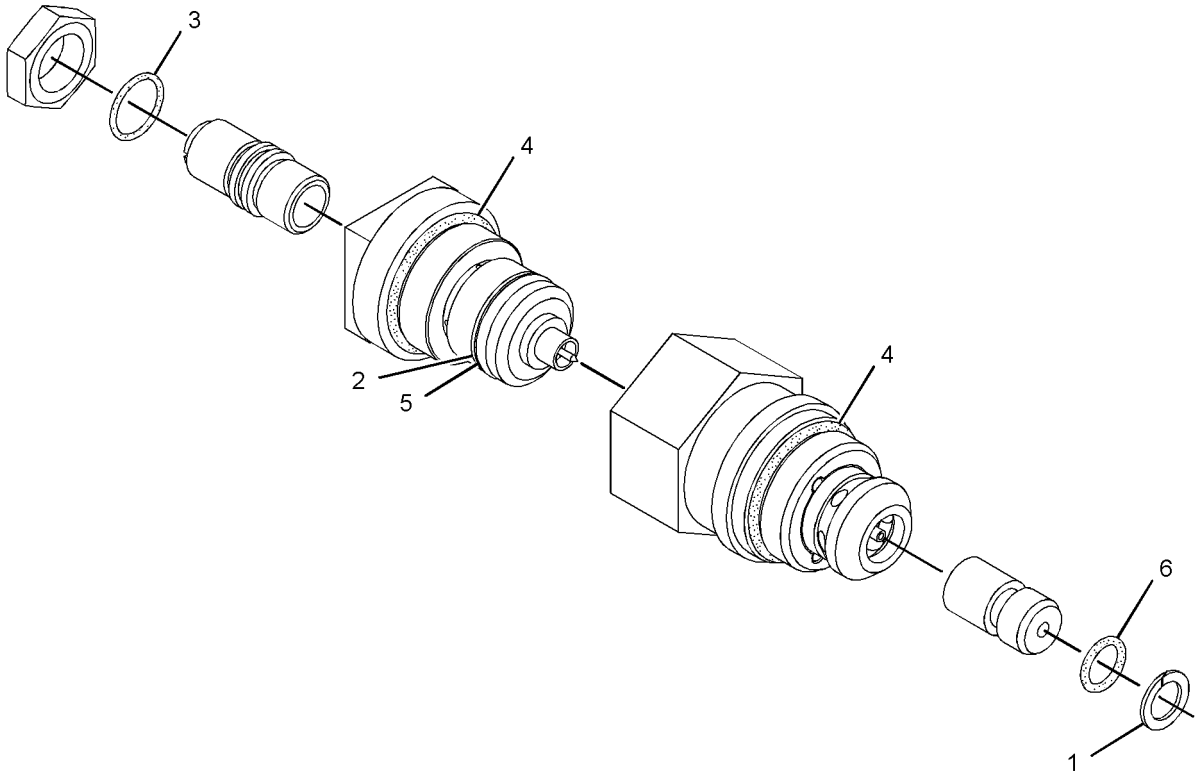

GRAPHIC #1 **<END>** g02173612

HYDRAULIC SYSTEM

4T-1860 VALVE GP-SHUTTLE

S/N: WAP1-UP

PART OF 302-3059 LINES GP-FRONT, 296-7115 LINES GP-REAR ATTACHMENT, 295-7747, 295-7748, 295-7769 VALVE GP-CONTROL, 295-7745, 295-7767 VALVE GP-MAIN CONTROL

ALSO AN ATTACHMENT

SMCS-5079 **i03242612**

NOTE	REF NO	GRAPHIC REF	PART NUMBER	QTY	PART NAME 1 2 3 4 5 6 (PRODUCT LEVEL)	SEE PAGE
	1	1	**4T-0925**	1	SEAT	
	2	1	**1M-6718**	1	BALL	
Z	3	1		1	VALVE	
	4	1	**6V-5324**	1	SEAL-O-RING	
	5	1	**147-6603**	1	SEAL-O-RING	
	6	1	**3J-1907**	1	SEAL-O-RING	
	7	1	**147-6604**	2	RING-BACKUP	
	8	1	**147-6605**	2	RING-BACKUP	

Z-NOT SERVICED SEPARATELY

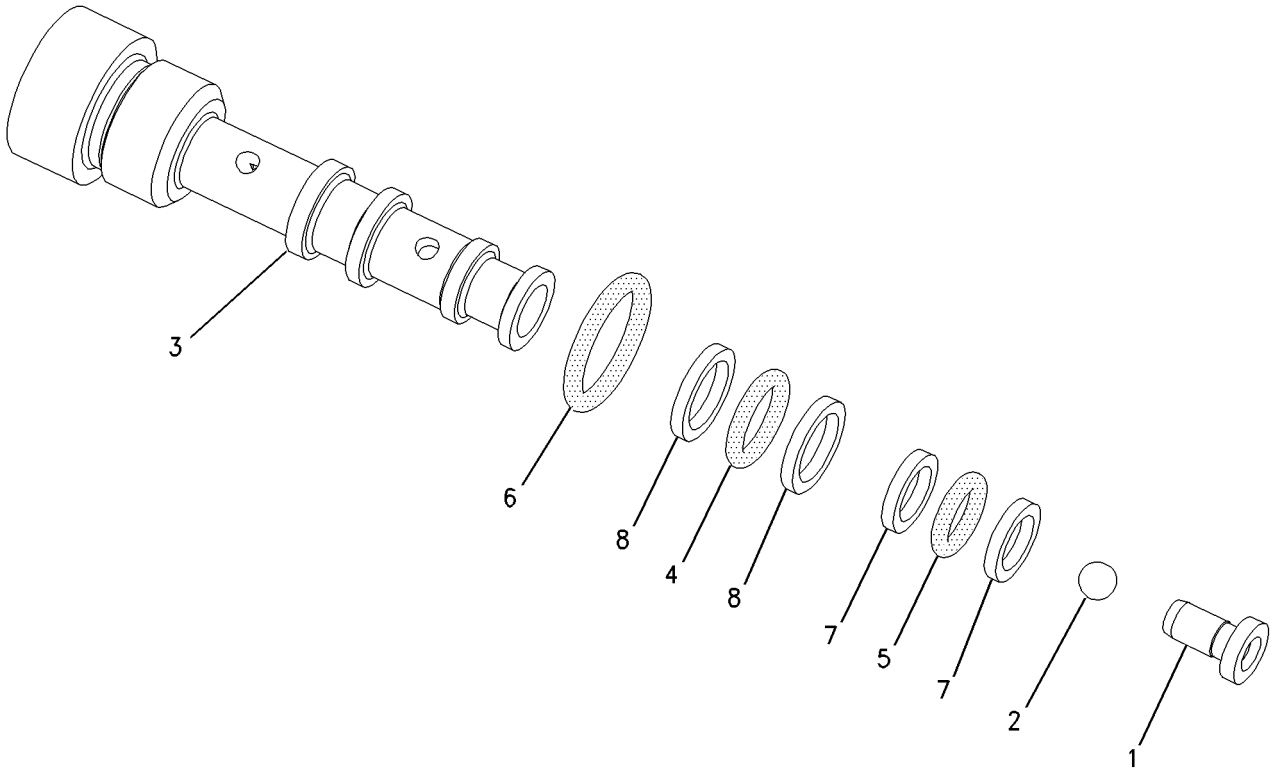

GRAPHIC #1 **<END>** g00775006

HYDRAULIC SYSTEM

6E-4429 VALVE GP-SHUTTLE

S/N: WAP1-UP
PART OF 295-7748, 295-7769 VALVE GP-CONTROL
ALSO AN ATTACHMENT

SMCS-5079 **i02353698**

NOTE	REF NO	GRAPHIC REF	PART NUMBER	QTY	PART NAME 1 2 3 4 5 6 (PRODUCT LEVEL)	SEE PAGE
	1	1	**4T-0925**	1	SEAT	
	2	1	**1M-6718**	1	BALL	
	3	1	**6E-4428**	1	VALVE	
	4	1	**3J-1907**	1	SEAL-O-RING	
	5	1	**147-6605**	2	RING-BACKUP	
	6	1	**6V-5324**	1	SEAL-O-RING	
	7	1	**147-6603**	1	SEAL-O-RING	
	8	1	**147-6604**	2	RING-BACKUP	

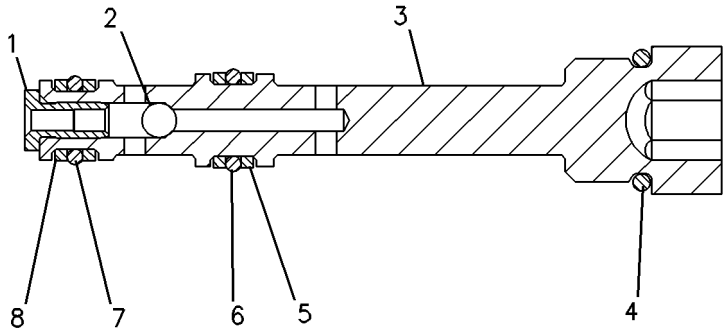

GRAPHIC #1 **<END>** g00083868

HYDRAULIC SYSTEM

111-0336 VALVE GP-SHUTTLE

S/N: WAP1-UP
PART OF 295-7747 VALVE GP-CONTROL
ALSO AN ATTACHMENT

SMCS-5079 **i02450276**

NOTE	REF NO	GRAPHIC REF	PART NUMBER	QTY	PART NAME 1 2 3 4 5 6 (PRODUCT LEVEL)	SEE PAGE
	1	1	**4T-0925**	1	SEAT	
	2	1	**1M-6718**	1	BALL	
	3	1	**111-0337**	1	VALVE	
	4	1	**3J-1907**	1	SEAL-O-RING	
	5	1	**147-6605**	2	RING-BACKUP	
	6	1	**6V-5324**	1	SEAL-O-RING	
	7	1	**147-6603**	1	SEAL-O-RING	
	8	1	**147-6604**	2	RING-BACKUP	

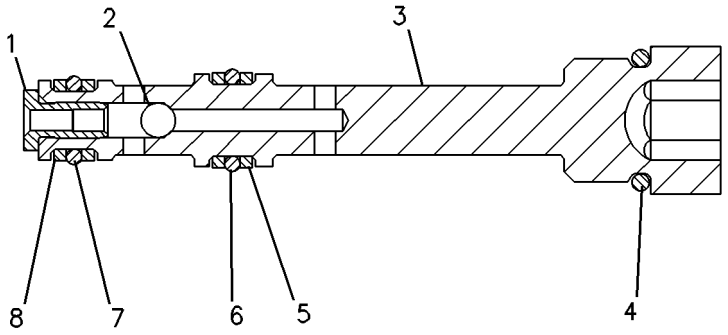

GRAPHIC #1 **<END>** g00083868

HYDRAULIC SYSTEM

158-9105 VALVE GP-SHUTTLE

S/N: WAP1-UP

PART OF 295-9678 PUMP GP-PISTON

SMCS-5079 **i03880367**

NOTE	REF NO	GRAPHIC REF	PART NUMBER	QTY	PART NAME 1 2 3 4 5 6 (PRODUCT LEVEL)	SEE PAGE
	1	1	**3J-1907**	1	SEAL-O-RING	
	2	1	**102-0814**	1	BUSHING	
	3	1	**138-6780**	1	VALVE-SHUTTLE	
	4	1	**138-6781**	1	ADAPTER	
	5	1	**165-9367**	1	VALVE	

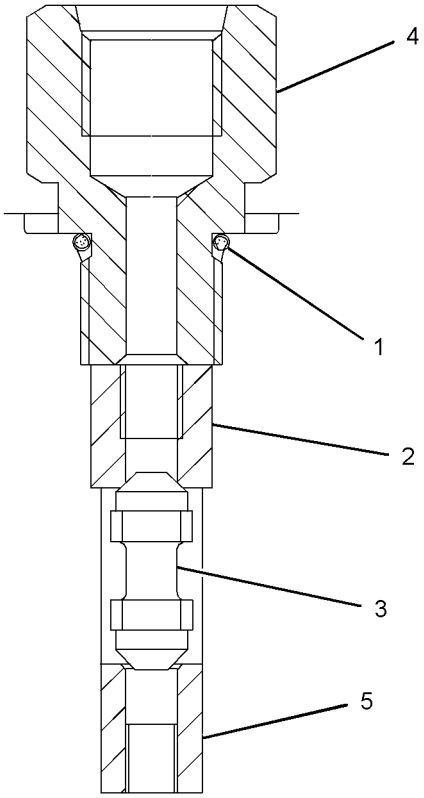

GRAPHIC #1 **<END>** g02127050

111-9916 VALVE GP-SOLENOID

S/N: WAP1-UP

PART OF 270-5803, 270-5804 VALVE GP-LOAD CONTROL, 140-0736 VALVE GP-MANIFOLD & REDUCING

ALSO AN ATTACHMENT

SMCS-5479 **i02668929**

NOTE	REF NO	GRAPHIC REF	PART NUMBER	QTY	PART NAME 1 2 3 4 5 6 (PRODUCT LEVEL)	SEE PAGE
	1	1	**095-1750**	1	SEAL-O-RING	
	2	1	**6V-8398**	1	SEAL-O-RING	
	3	1	**095-1751**	1	SEAL-O-RING	
	4	1	**095-1586**	1	SEAL-O-RING	
M	5	1	**114-0623**	1	NUT AS (M6X1-THD)	

M-METRIC PART

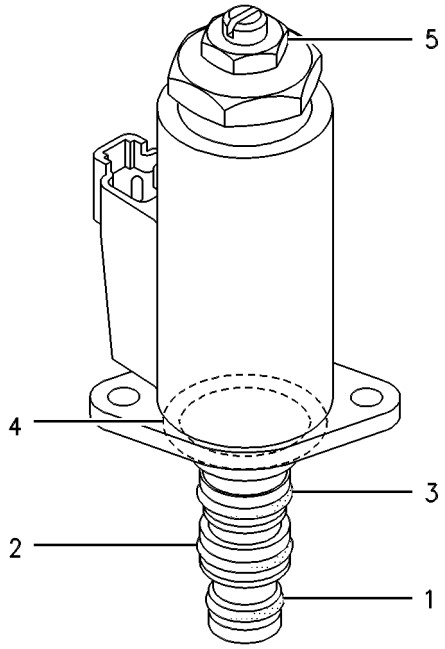

GRAPHIC #1 **<END>** g00258219

HYDRAULIC SYSTEM

121-1491 VALVE GP-SOLENOID

S/N: WAP1-UP

PART OF 329-5224 VALVE GP-CONTROL, 140-0736 VALVE GP-MANIFOLD & REDUCING, 137-3713, 242-6880 VALVE GP-SOLENOID

ALSO AN ATTACHMENT

SMCS-5479 **i02195437**

NOTE	REF NO	GRAPHIC REF	PART NUMBER	QTY	PART NAME 1 2 3 4 5 6 (PRODUCT LEVEL)	SEE PAGE
	1	1	**095-1750**	1	SEAL-O-RING	
	2	1	**6V-8398**	1	SEAL-O-RING	
	3	1	**095-1751**	1	SEAL-O-RING	
	4	1	**095-1586**	1	SEAL-O-RING	
M	5	1	**114-0623**	1	NUT AS (M6X1-THD)	

M-METRIC PART

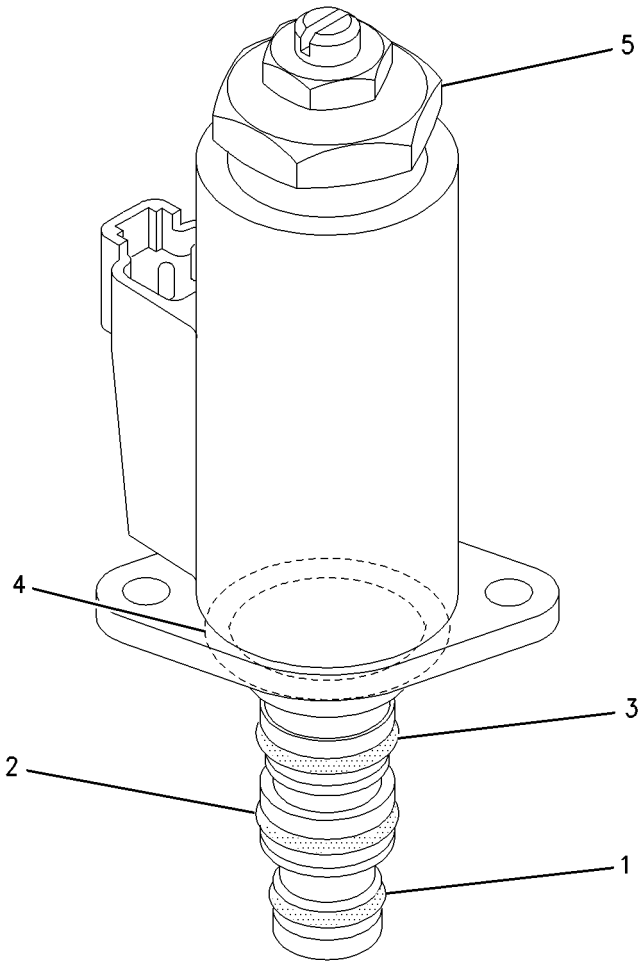

GRAPHIC #1 **<END>** g00928680

HYDRAULIC SYSTEM

137-3713 VALVE GP-SOLENOID

S/N: WAP1-UP

PART OF 295-9446 MOTOR GP-SWING

SMCS-5479 **i01036888**

NOTE	REF NO	GRAPHIC REF	PART NUMBER	QTY	PART NAME 1 2 3 4 5 6 (PRODUCT LEVEL)	SEE PAGE
Y	1	1	**121-1491**	1	VALVE GP-SOLENOID	772
M	2	1	**8T-0288**	2	BOLT (M5X0.8X12-MM)	
	3	1	**137-3639**	1	ORIFICE	
	4	1	**8T-6759**	1	PLUG-PIPE	

M-METRIC PART
Y-SEPARATE ILLUSTRATION

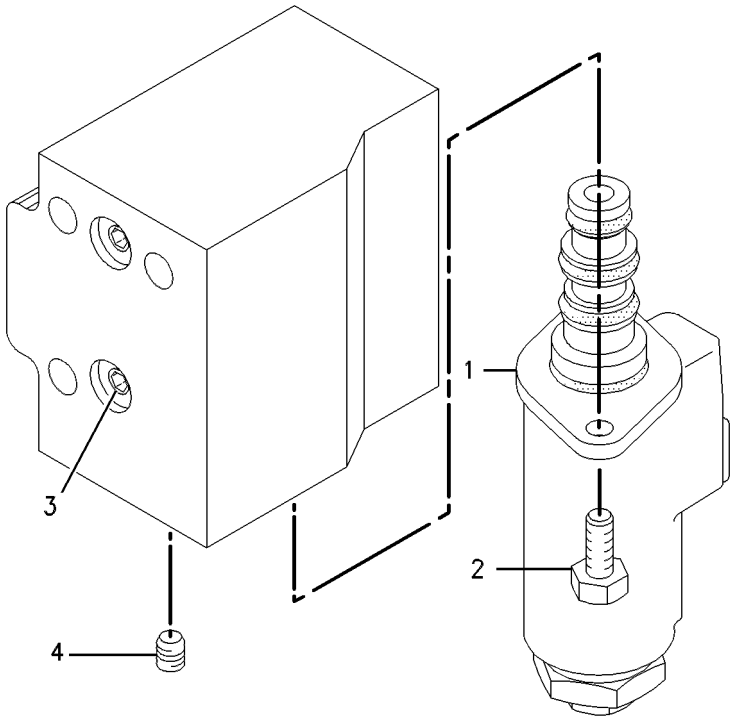

GRAPHIC #1 **<END>** g00295176

HYDRAULIC SYSTEM

171-0028 VALVE GP-SOLENOID

S/N: WAP1-UP
PART OF 296-7113, 296-7114 LINES GP-PILOT
AN ATTACHMENT

SMCS-5479 **i02672467**

NOTE	REF NO	GRAPHIC REF	PART NUMBER	QTY	PART NAME 1 2 3 4 5 6 (PRODUCT LEVEL)	SEE PAGE
	1	1	**6V-8398**	1	SEAL-O-RING	
	2	1	**095-1751**	1	SEAL-O-RING	
	3	1	**7J-9108**	1	SEAL-O-RING	
	4	1	**095-1586**	1	SEAL-O-RING	
M	5	1	**114-0623**	1	NUT AS (M6X1-THD)	

M-METRIC PART

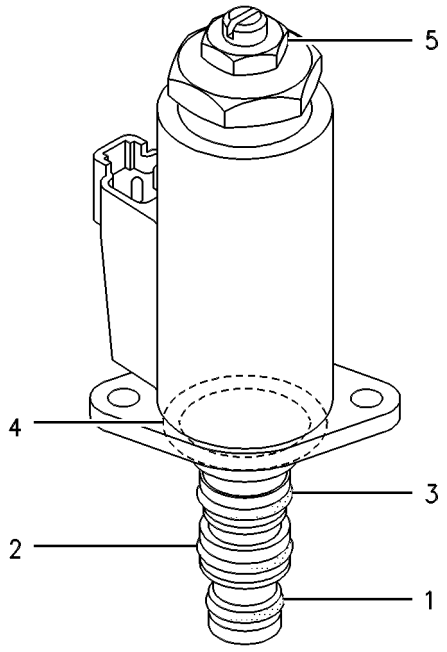

GRAPHIC #1 **<END>** g00258219

HYDRAULIC SYSTEM

171-3685 VALVE GP-SOLENOID

S/N: WAP1-UP

PART OF 225-6287, 234-6899, 257-7284 VALVE GP-CONTROL, 295-7745, 295-7767 VALVE GP-MAIN CONTROL, 352-6819 VALVE GP-SOLENOID

ALSO AN ATTACHMENT

SMCS-5479 **i03656896**

NOTE	REF NO	GRAPHIC REF	PART NUMBER	QTY	PART NAME 1 2 3 4 5 6 (PRODUCT LEVEL)	SEE PAGE
J	1	1	**171-3684**	1	VALVE AS	
		1	**8C-9987**	1	WASHER (8.3X28X2.5-MM THK)	
		1	**111-0343**	1	LOCKNUT (5/16-18-THD)	
	2	1	**218-9894**	1	COIL AS (24-VOLT)	
		1	**3E-3365**	1	WEDGE-RECEPTACLE LOCK (2-PIN)	
		1	**1S-9593**	2	STRAP-CABLE	
		1	**102-8802**	1	KIT-RECEPTACLE (2-PIN)	
					(INCLUDES RECEPTACLE AS & WEDGE)	
		1	**8T-8729**	2	PIN-CONNECTOR (16-GA TO 18-GA)	
	3	1	**111-0343**	1	LOCKNUT (5/16-18-THD)	
	4	1	**8C-9987**	1	WASHER (8.3X28X2.5-MM THK)	
					AVAILABLE REPAIR KIT(S):	
J			**160-3771**	1	KIT-SEAL (SOLENOID VALVE)	
					(INCLUDES BACKUP RINGS & O-RING SEALS)	

J-KIT MARKED J SERVICES PART(S) MARKED J

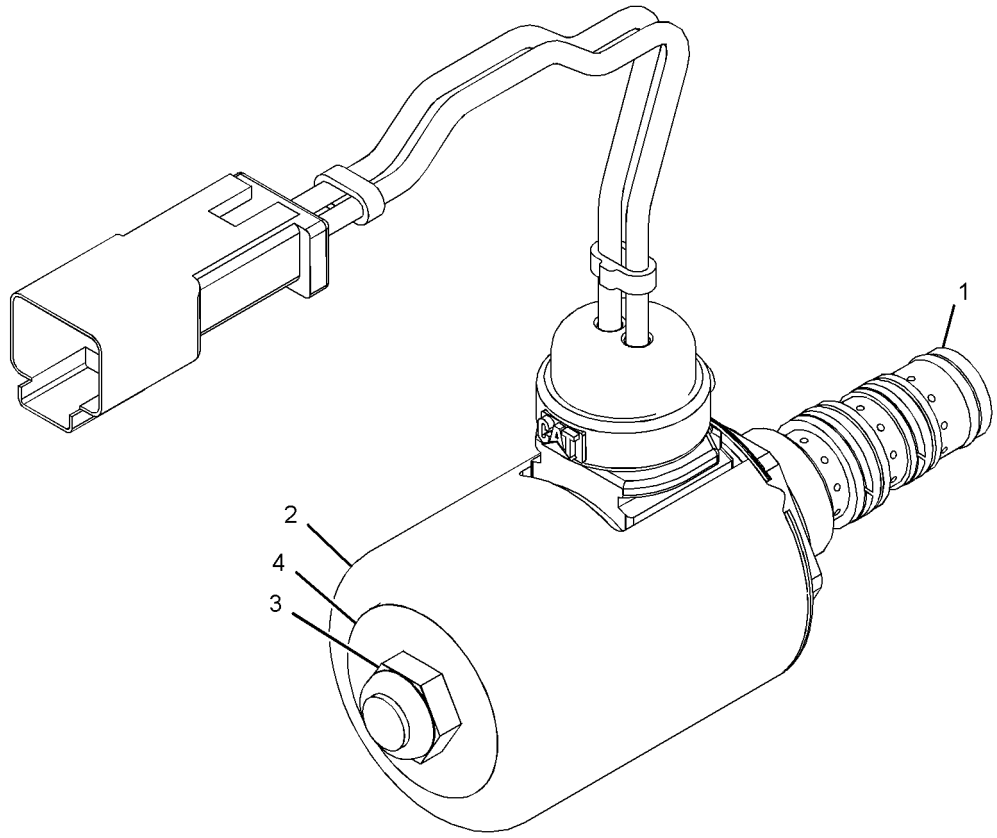

GRAPHIC #1 **<END>** g02071354

HYDRAULIC SYSTEM

242-6880 VALVE GP-SOLENOID

S/N: WAP1-UP
PART OF 337-2778 LINES GP-HYDRAULIC FAN
AN ATTACHMENT

SMCS-5479 **i02117544**

NOTE	REF NO	GRAPHIC REF	PART NUMBER	QTY	PART NAME 1 2 3 4 5 6 (PRODUCT LEVEL)	SEE PAGE
Y	1	1	**121-1491**	1	VALVE GP-SOLENOID	772
	2	1	**242-6893**	1	BLOCK	
	3	1	**4J-7533**	3	SEAL-O-RING	
M	4	1	**7I-2272**	2	BOLT (M5X0.8X12-MM)	
	5	1	**9S-8001**	3	PLUG-O-RING	

M-METRIC PART
Y-SEPARATE ILLUSTRATION

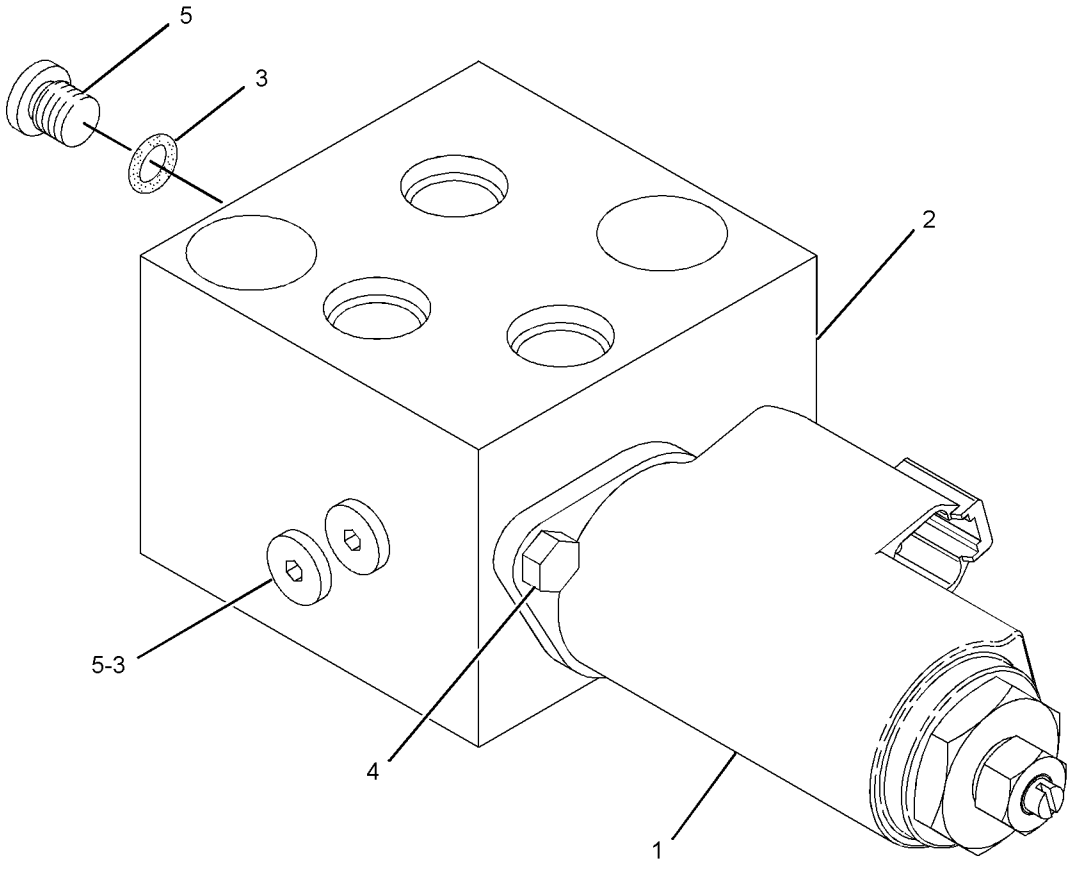

GRAPHIC #1 **<END>** g01084421

HYDRAULIC SYSTEM

352-6819 VALVE GP-SOLENOID

S/N: WAP1-UP

PART OF 296-7109 LINES GP-PILOT

SMCS-5479 **i03901636**

NOTE	REF NO	GRAPHIC REF	PART NUMBER	QTY	PART NAME 1 2 3 4 5 6 (PRODUCT LEVEL)	SEE PAGE
Y	1	1	**171-3685**	1	VALVE GP-SOLENOID (24-VOLT)	775
	2	1	**352-6820**	1	BLOCK-HYDRAULIC	

Y-SEPARATE ILLUSTRATION

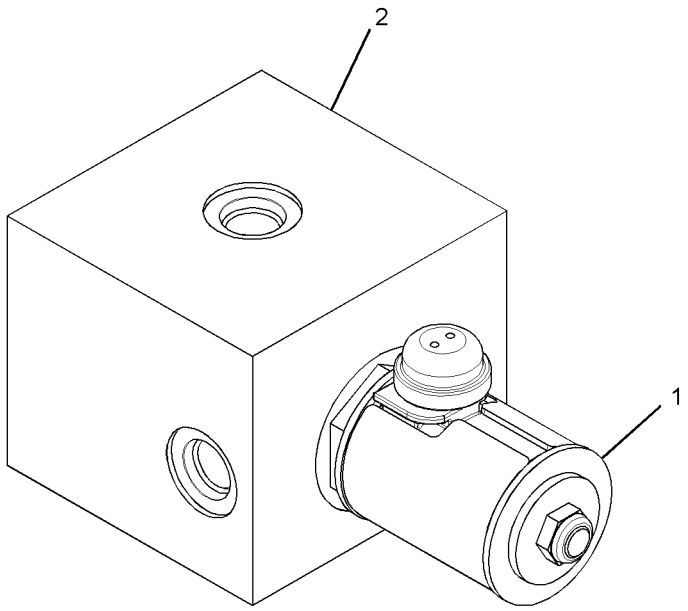

GRAPHIC #1 **<END>** g02129634

116-3420 VALVE GP-SWING CUSHION–
ANTI-REACTION, FINE SWING
S/N: WAP1-UP
PART OF 296-7105 LINES GP-SWING MOTOR

SMCS-5480 **i01272314**

NOTE	REF NO	GRAPHIC REF	PART NUMBER	QTY	PART NAME 1 2 3 4 5 6 (PRODUCT LEVEL)	SEE PAGE
	1	1	**095-1576**	1	SEAL-O-RING	
	2	1	**8T-6759**	4	PLUG-PIPE	
	3	1	**095-1698**	2	SEAL-O-RING	
	4	1	**114-0550**	2	VALVE GP-RELIEF	
	5	1	**094-1902**	2	RING	
	6	1	**095-1586**	2	SEAL-O-RING	
	7	1	**095-1785**	2	RING-BACKUP	

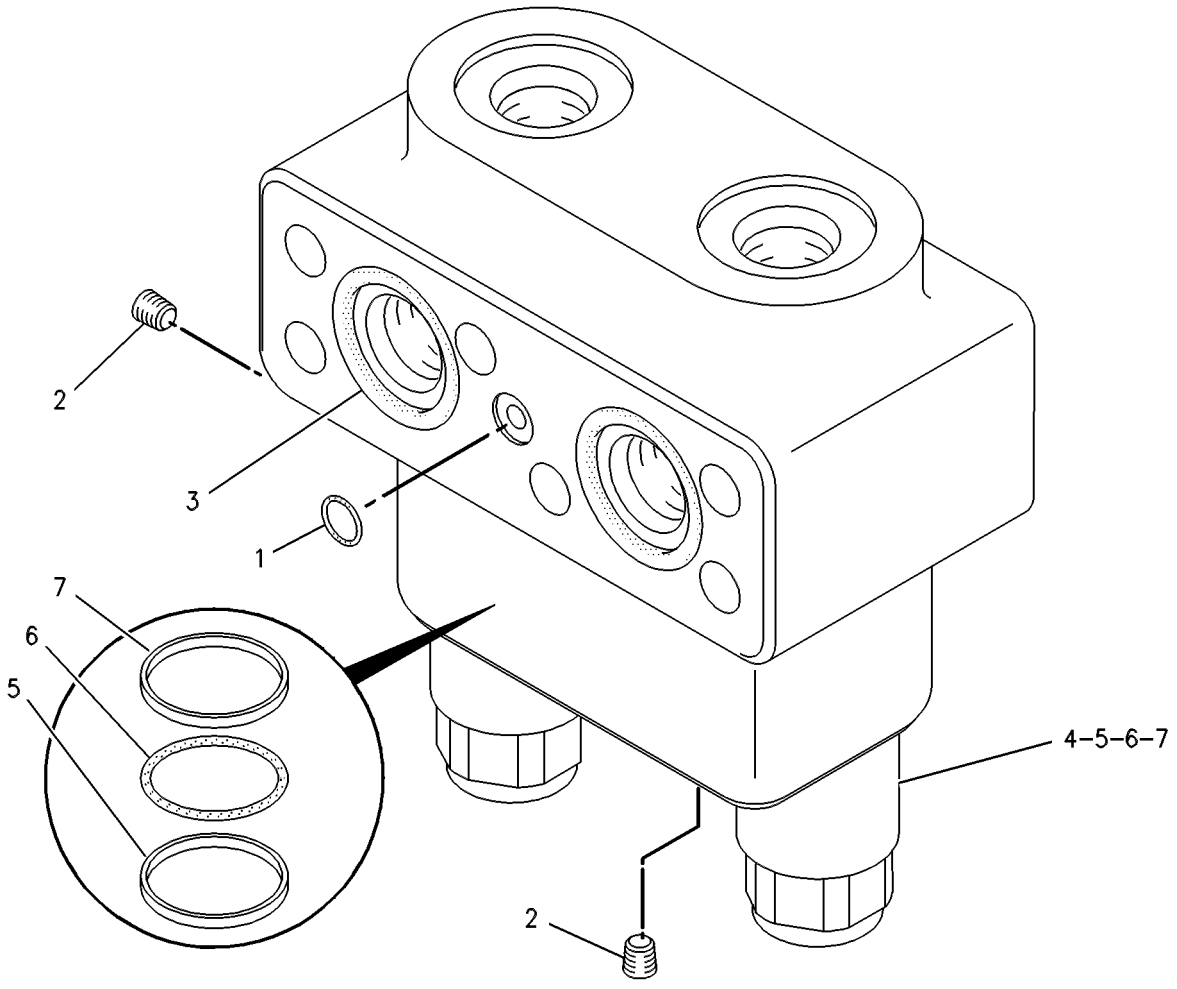

GRAPHIC #1 **<END>** g00267839

HYDRAULIC SYSTEM

155-9200 VALVE GP-TRAVEL COUNTERBALANCE

S/N: WAP1-UP

PART OF 338-6163 LINES GP-SWIVEL & TRAVEL MOTOR

SMCS-5811 **i01528511**

NOTE	REF NO	GRAPHIC REF	PART NUMBER	QTY	PART NAME 1 2 3 4 5 6 (PRODUCT LEVEL)	SEE PAGE
	1	1	**095-1579**	1	SEAL-O-RING	
	2	1	**095-1703**	2	SEAL-O-RING	
	3	1	**095-1704**	2	SEAL-O-RING	
	4	1	**194-8402**	1	VALVE GP-CONTROL	
	5	1	**099-7951**	2	WASHER-HARD	
M	6	1	**8T-6429**	6	BOLT-SOCKET HEAD (M16X2X55-MM)	
	7	1	**7I-0965**	2	SPRING	
	8	1	**7I-0964**	2	COVER	
M	9	1	**095-0680**	8	BOLT-SOCKET HEAD (M12X1.75X105-MM)	

M-METRIC PART

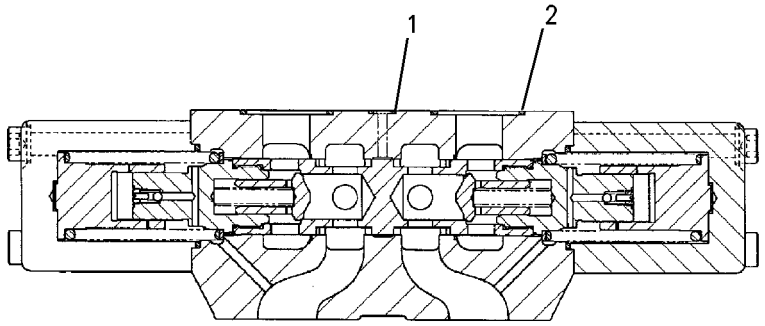

SECTION B-B

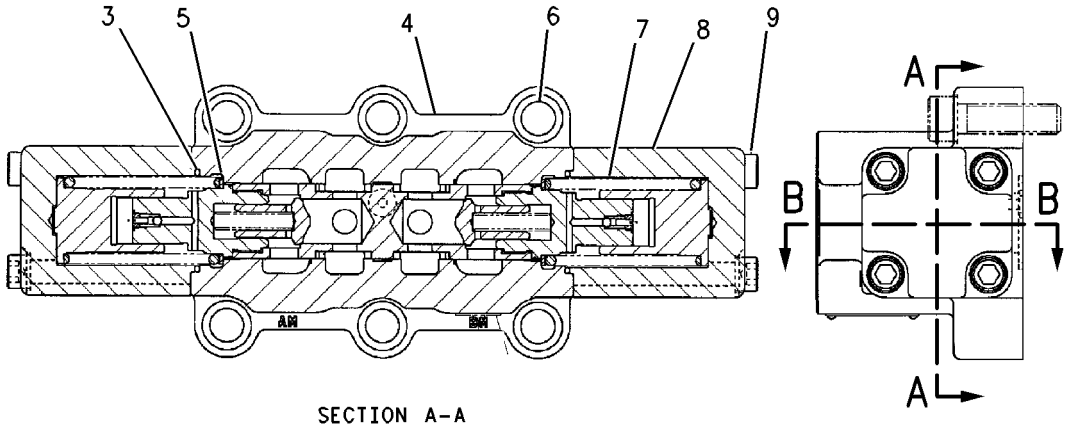

SECTION A-A

GRAPHIC #1 **<END>** g00799753

IMPLEMENTS

303-2689 BOOM AR

S/N: WAP1-UP
8.4-M (27.6-FT)
FOR USE WITH 303-2691—PAGE 823, 303-2692—PAGE 823, 303-2694—PAGE 823
AN ATTACHMENT

SMCS-6000 **i03907853**

NOTE	PART NUMBER	QTY	PART NAME 1 2 3 4 5 6 (PRODUCT LEVEL)	SEE PAGE
Y	*308-8693*	1	BOOM GP	784
Y	*353-9648*	1	CYLINDER & LINES GP-BOOM (LH)	481
Y	*353-9649*	1	CYLINDER & LINES GP-BOOM (RH)	481
Y	*353-9642*	1	CYLINDER & LINES GP-STICK	482
Y	*238-1610*	1	LIGHTING GP-FLOOD (GENERAL PURPOSE BOOM)	202
Y	*338-6164*	1	LINES GP-BOOM	545
Y	*172-2958*	1	LINES GP-GREASE (BOOM)	796
Y-SEPARATE ILLUSTRATION				

<END>

303-2690 BOOM AR-MASS

S/N: WAP1-UP
7.25-M (23.8-FT)
FOR USE WITH 303-2696—PAGE 824, 303-2697—PAGE 824
AN ATTACHMENT

SMCS-6501, 7000 **i03907856**

NOTE	PART NUMBER	QTY	PART NAME 1 2 3 4 5 6 (PRODUCT LEVEL)	SEE PAGE
Y	*308-8696*	1	BOOM GP	786
Y	*353-9648*	1	CYLINDER & LINES GP-BOOM (LH)	481
Y	*353-9649*	1	CYLINDER & LINES GP-BOOM (RH)	481
Y	*353-9642*	1	CYLINDER & LINES GP-STICK	482
Y	*238-1612*	1	LIGHTING GP-FLOOD (MASS BOOM)	203
Y	*338-6165*	1	LINES GP-BOOM (MASS BOOM)	547
Y	*172-2959*	1	LINES GP-GREASE (MASS BOOM)	798
Y-SEPARATE ILLUSTRATION				

<END>

319-9211 BOOM AR-MASS—ACCUGRADE

S/N: WAP1-UP
8.4-M (27.6-FT)
FOR USE WITH 319-9212—PAGE 824, 319-9213—PAGE 825
AN ATTACHMENT

SMCS-6501, 7000 **i03921774**

NOTE	PART NUMBER	QTY	PART NAME 1 2 3 4 5 6 (PRODUCT LEVEL)	SEE PAGE
Y	*339-4173*	1	BOOM GP	788
Y	*353-9648*	1	CYLINDER & LINES GP-BOOM (LH)	481
Y	*356-0668*	1	CYLINDER & LINES GP-BOOM (RH)	481
Y	*353-9642*	1	CYLINDER & LINES GP-STICK	482
Y	*327-7546*	1	GUARD GP-FRONT	793
Y	*238-1610*	1	LIGHTING GP-FLOOD	202
Y	*338-6164*	1	LINES GP-BOOM	545
Y	*172-2958*	1	LINES GP-GREASE (BOOM)	796
Y	*297-4518*	1	SENSOR & MTG GP-POSITION	233
Y-SEPARATE ILLUSTRATION				

<END>

IMPLEMENTS

303-2688 BOOM AR-REACH

S/N: WAP1-UP
10-M (32.8-FT)
FOR USE WITH 303-2691—PAGE 823, 303-2692—PAGE 823
AN ATTACHMENT

SMCS-7000 **i03907850**

NOTE	PART NUMBER	QTY	PART NAME 1 2 3 4 5 6 (PRODUCT LEVEL)	SEE PAGE
Y	*308-8685*	1	BOOM GP	782
Y	*353-9648*	1	CYLINDER & LINES GP-BOOM (LH)	481
Y	*353-9649*	1	CYLINDER & LINES GP-BOOM (RH)	481
Y	*353-9642*	1	CYLINDER & LINES GP-STICK	482
Y	*238-2173*	1	LIGHTING GP-FLOOD (REACH BOOM)	204
Y	*330-2409*	1	LINES GP-BOOM (REACH)	543
Y	*172-2957*	1	LINES GP-GREASE (REACH BOOM)	794

Y-SEPARATE ILLUSTRATION

<END>

IMPLEMENTS

308-8685 BOOM GP

S/N: WAP1-UP
10-M (32.8-FT)
PART OF 303-2688 BOOM AR-REACH
AN ATTACHMENT

SMCS-6301, 6302, 6460, 6501, 6516, 6521, 6535, 6536 **i03907891**

NOTE	REF NO	GRAPHIC REF	PART NUMBER	QTY	PART NAME 1 2 3 4 5 6 (PRODUCT LEVEL)	SEE PAGE
	1	1	**7Y-9267**	1	SPACER (133X190X14-MM THK)	
B	2	1	**093-0076**	2	SHIM (1-MM THK)	
B	3	1	**093-0077**	2	SHIM (1-MM THK)	
B	4	1	**093-0108**	1	SHIM (2-MM THK)	
B	5	1	**093-0109**	1	SHIM (2-MM THK)	
	6	1	**123-5574**	2	SPACER (153X210X14-MM THK)	
B	7	1	**151-0653**	1	SHIM (0.5-MM THK)	
B	8	1	**158-3852**	1	SHIM (0.5-MM THK)	
	9	1	**172-3024**	1	PIN AS	
	10	1	**172-3051**	2	PLATE	
	11	1	**172-3052**	1	PIN	
	12	1	**201-2771**	2	WASHER (26X90X8-MM THK)	
	13	1	**308-8686**	1	BOOM & BEARING AS	
	13A	1	**244-4150**	2	BUSHING	
	14	1	**330-2624**	1	PIN AS	
	15	1	**093-0377**	1	SPACER (143X210X14-MM THK)	
	16	1	**113-5950**	4	SEAL-LIP TYPE	
M	17	1	**7X-2573**	1	BOLT (M24X3X40-MM)	
M	18	1	**7X-2574**	1	BOLT (M24X3X45-MM)	
	19	1	**8T-4167**	8	WASHER-HARD (26X44X4-MM THK)	
M	20	1	**8T-5379**	6	BOLT (M24X3X50-MM)	

B-USE AS REQUIRED
M-METRIC PART

308-8685 **BOOM GP** *(contd.)* **i03907891**

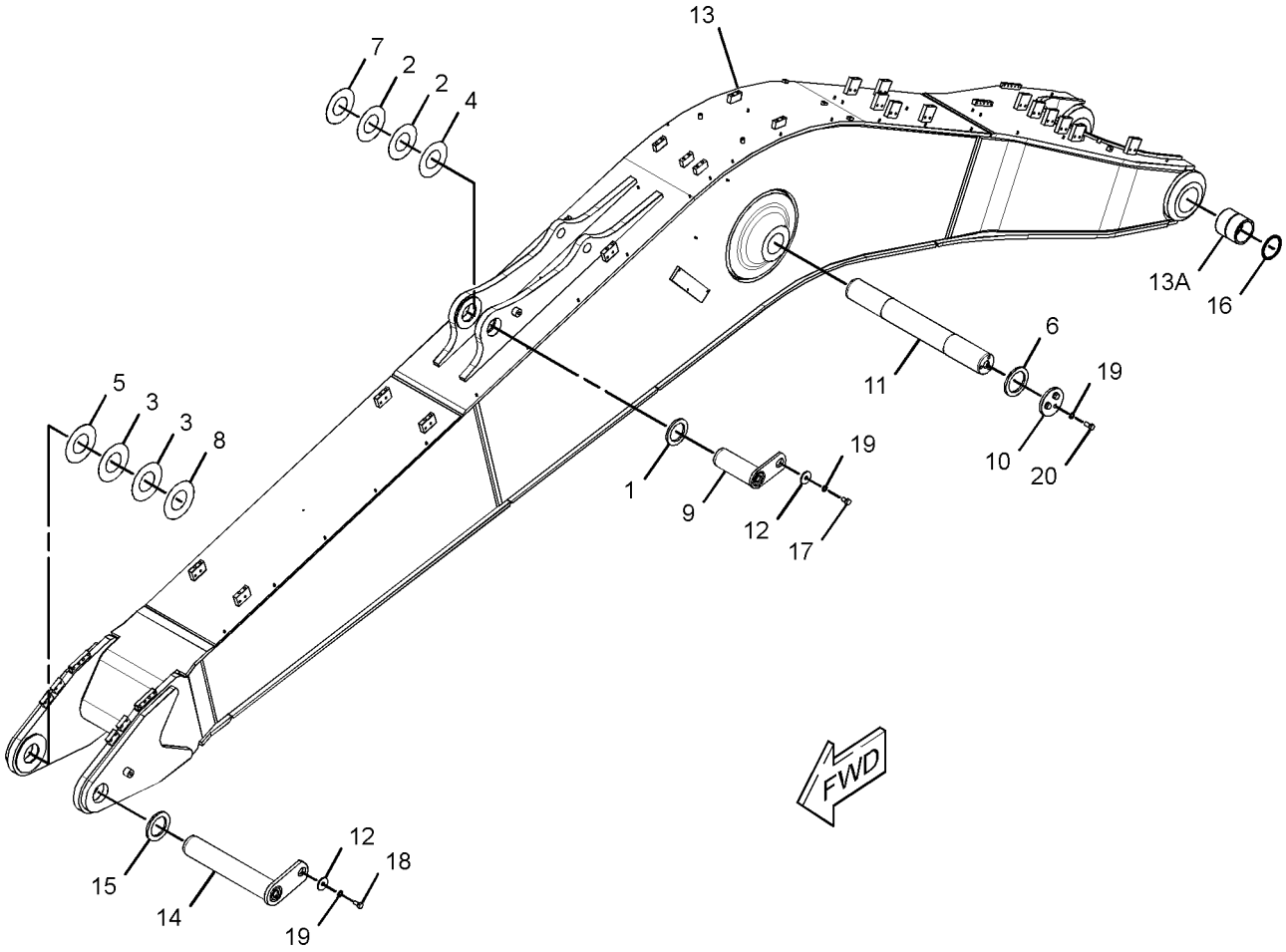

GRAPHIC #1 **<END>** g02181739

IMPLEMENTS

308-8693 BOOM GP

S/N: WAP1-UP
8.4-M (27.6-FT)
PART OF 303-2689 BOOM AR
AN ATTACHMENT

SMCS-6301, 6302, 6460, 6501, 6516, 6521, 6535, 6536 **i03907930**

NOTE	REF NO	GRAPHIC REF	PART NUMBER	QTY	PART NAME 1 2 3 4 5 6 (PRODUCT LEVEL)	SEE PAGE
	1	1	**7Y-9267**	1	SPACER (133X190X14-MM THK)	
B	2	1	**093-0076**	2	SHIM (1-MM THK)	
B	3	1	**093-0077**	2	SHIM (1-MM THK)	
B	4	1	**093-0108**	1	SHIM (2-MM THK)	
B	5	1	**093-0109**	1	SHIM (2-MM THK)	
	6	1	**123-5574**	2	SPACER (153X210X14-MM THK)	
B	7	1	**151-0653**	1	SHIM (0.5-MM THK)	
B	8	1	**158-3852**	1	SHIM (0.5-MM THK)	
	9	1	**172-3024**	1	PIN AS	
	10	1	**172-3051**	2	PLATE	
	11	1	**172-3052**	1	PIN	
	12	1	**201-2771**	2	WASHER (26X90X8-MM THK)	
	13	1	**308-8694**	1	BOOM & BEARING AS	
	13A	1	**244-4150**	2	BUSHING	
	14	1	**330-2624**	1	PIN AS	
	15	1	**093-0377**	1	SPACER (143X210X14-MM THK)	
	16	1	**113-5950**	4	SEAL-LIP TYPE	
M	17	1	**7X-2573**	1	BOLT (M24X3X40-MM)	
M	18	1	**7X-2574**	1	BOLT (M24X3X45-MM)	
	19	1	**8T-4167**	8	WASHER-HARD (26X44X4-MM THK)	
M	20	1	**8T-5379**	6	BOLT (M24X3X50-MM)	

B-USE AS REQUIRED
M-METRIC PART

308-8693 **BOOM GP** ***(contd.)*** **i03907930**

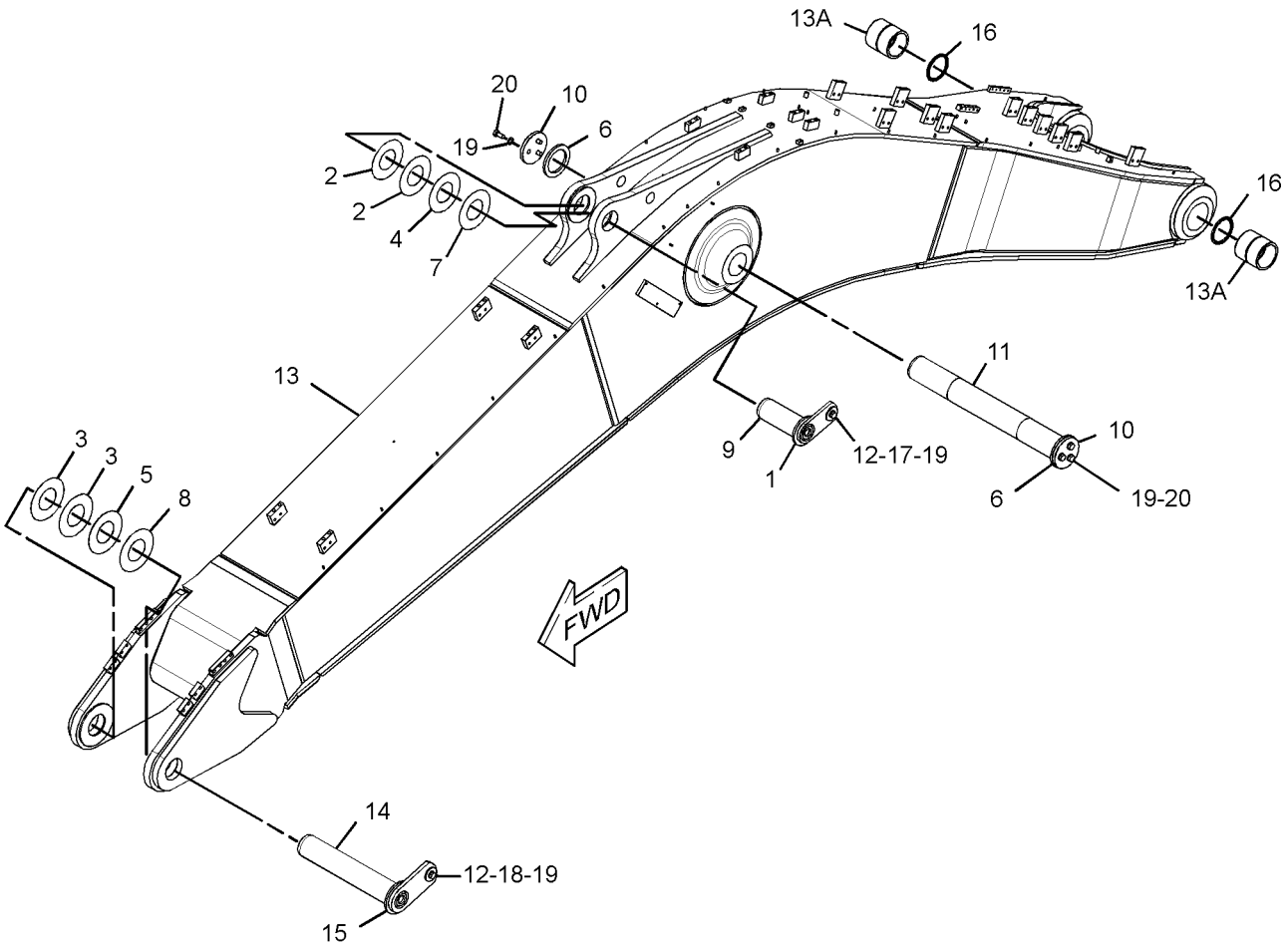

GRAPHIC #1 **<END>** g02174594

IMPLEMENTS

308-8696 BOOM GP—AUXILIARY

S/N: WAP1-UP
7.25-M (23.8-FT)
PART OF 303-2690 BOOM AR-MASS
AN ATTACHMENT

SMCS-6301, 6302, 6460, 6501, 6516, 6521, 6535, 6536 **i03907981**

NOTE	REF NO	GRAPHIC REF	PART NUMBER	QTY	PART NAME 1 2 3 4 5 6 (PRODUCT LEVEL)	SEE PAGE
	1	1	**7Y-9267**	1	SPACER (133X190X14-MM THK)	
B	2	1	**093-0076**	2	SHIM (1-MM THK)	
B	3	1	**093-0077**	2	SHIM (1-MM THK)	
B	4	1	**093-0108**	1	SHIM (2-MM THK)	
B	5	1	**093-0109**	1	SHIM (2-MM THK)	
	6	1	**123-5574**	2	SPACER (153X210X14-MM THK)	
B	7	1	**151-0653**	1	SHIM (0.5-MM THK)	
B	8	1	**158-3852**	1	SHIM (0.5-MM THK)	
	9	1	**172-3024**	1	PIN AS	
	10	1	**172-3051**	2	PLATE	
	11	1	**172-3052**	1	PIN	
	12	1	**201-2771**	2	WASHER (26X90X8-MM THK)	
	13	1	**234-3966**	1	PIN AS	
	14	1	**308-8697**	1	BOOM & BEARING AS	
	14A	1	**244-4150**	2	BUSHING	
	15	1	**093-0377**	1	SPACER (143X210X14-MM THK)	
	16	1	**113-5950**	4	SEAL-LIP TYPE	
M	17	1	**7X-2573**	1	BOLT (M24X3X40-MM)	
M	18	1	**7X-2574**	1	BOLT (M24X3X45-MM)	
	19	1	**8T-4167**	8	WASHER-HARD (26X44X4-MM THK)	
M	20	1	**8T-5379**	6	BOLT (M24X3X50-MM)	

B-USE AS REQUIRED
M-METRIC PART

308-8696 **BOOM GP** *(contd.)* **i03907981**

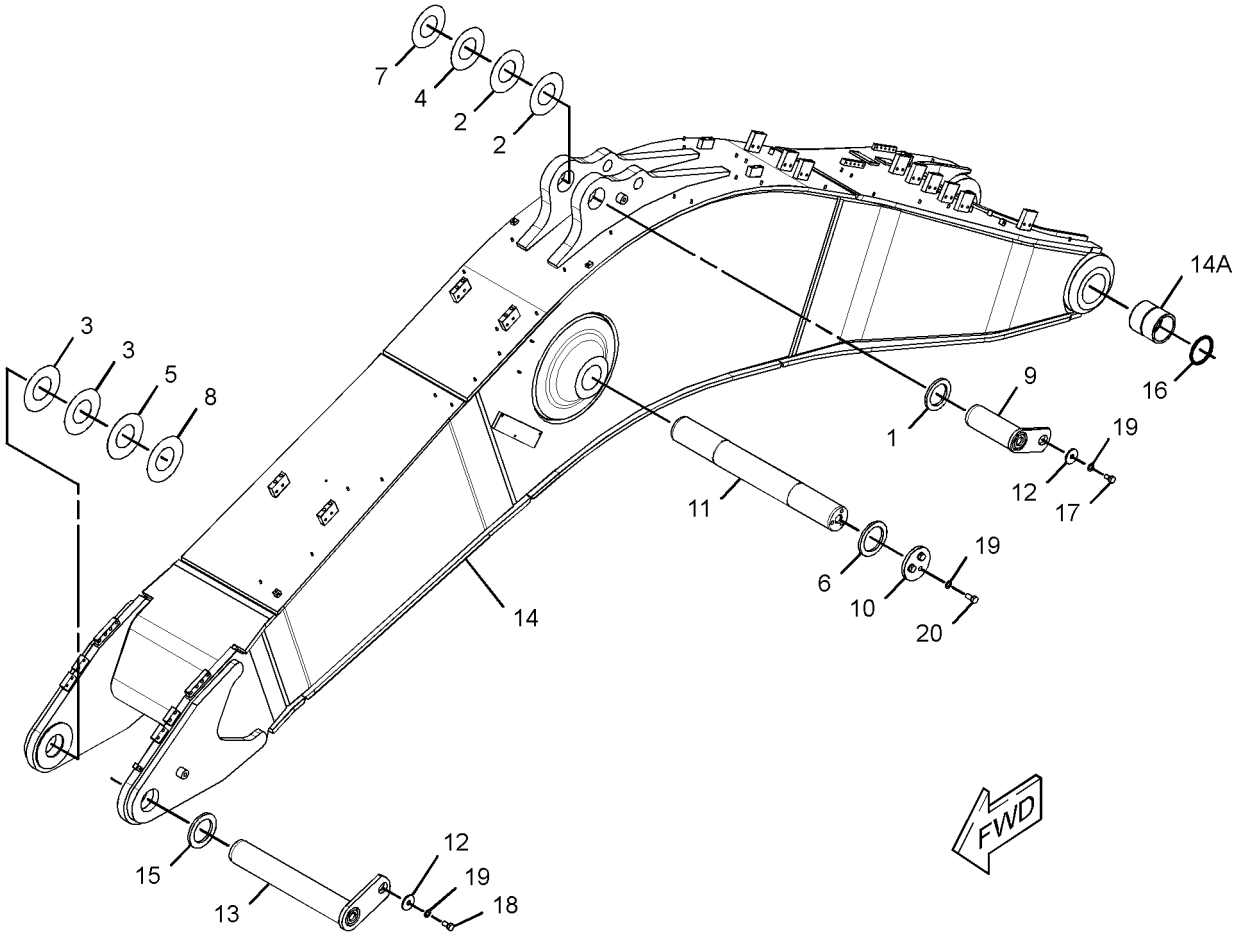

GRAPHIC #1 **<END>** g02179393

IMPLEMENTS

339-4173 BOOM GP–ACCUGRADE

S/N: WAP1-UP
8.4-M (27.6-FT)
PART OF 319-9211 BOOM AR-MASS
AN ATTACHMENT

SMCS-6301, 6302, 6460, 6501, 6516, 6521, 6535, 6536 **i03922169**

NOTE	REF NO	GRAPHIC REF	PART NUMBER	QTY	PART NAME 1 2 3 4 5 6 (PRODUCT LEVEL)	SEE PAGE
	1	1	**7Y-9267**	1	SPACER (133X190X14-MM THK)	
B	2	1	**093-0076**	2	SHIM (1-MM THK)	
B	3	2	**093-0077**	2	SHIM (1-MM THK)	
B	4	1	**093-0108**	1	SHIM (2-MM THK)	
B	5	2	**093-0109**	1	SHIM (2-MM THK)	
	6	1	**113-5950**	4	SEAL-LIP TYPE	
	7	1,2	**123-5574**	2	SPACER (153X210X14-MM THK)	
B	8	1	**151-0653**	1	SHIM (0.5-MM THK)	
B	9	2	**158-3852**	1	SHIM (0.5-MM THK)	
	10	1	**172-3024**	1	PIN AS	
	11	1,2	**172-3051**	2	PLATE	
	12	1	**172-3052**	1	PIN	
	13	1	**201-2771**	1	WASHER (26X90X8-MM THK)	
	14	1	**308-8953**	1	PLATE	
	15	2	**341-5236**	1	PIN AS	
	16	1	**343-9348**	1	BOOM & BEARING AS	
	16A	1	**244-4150**	2	BUSHING	
	17	2	**350-6445**	1	PLATE	
	18	2	**093-0377**	1	SPACER (143X210X14-MM THK)	
M	19	2	**096-4885**	2	LOCKNUT (M16X2-THD)	
M	20	1	**5A-3604**	4	BOLT-SOCKET HEAD (M8X1.25X25-MM)	
M	21	1	**7X-2573**	1	BOLT (M24X3X40-MM)	
M	22	1	**7X-2575**	1	BOLT (M24X3X60-MM)	
M	23	2	**8T-4140**	2	BOLT (M16X2X60-MM)	
	24	1,2	**8T-4167**	8	WASHER-HARD (26X44X4-MM THK)	
M	25	1,2	**8T-5379**	6	BOLT (M24X3X50-MM)	
	26	2	**9X-8257**	2	WASHER (17.5X30X3.5-MM THK)	

B-USE AS REQUIRED
M-METRIC PART

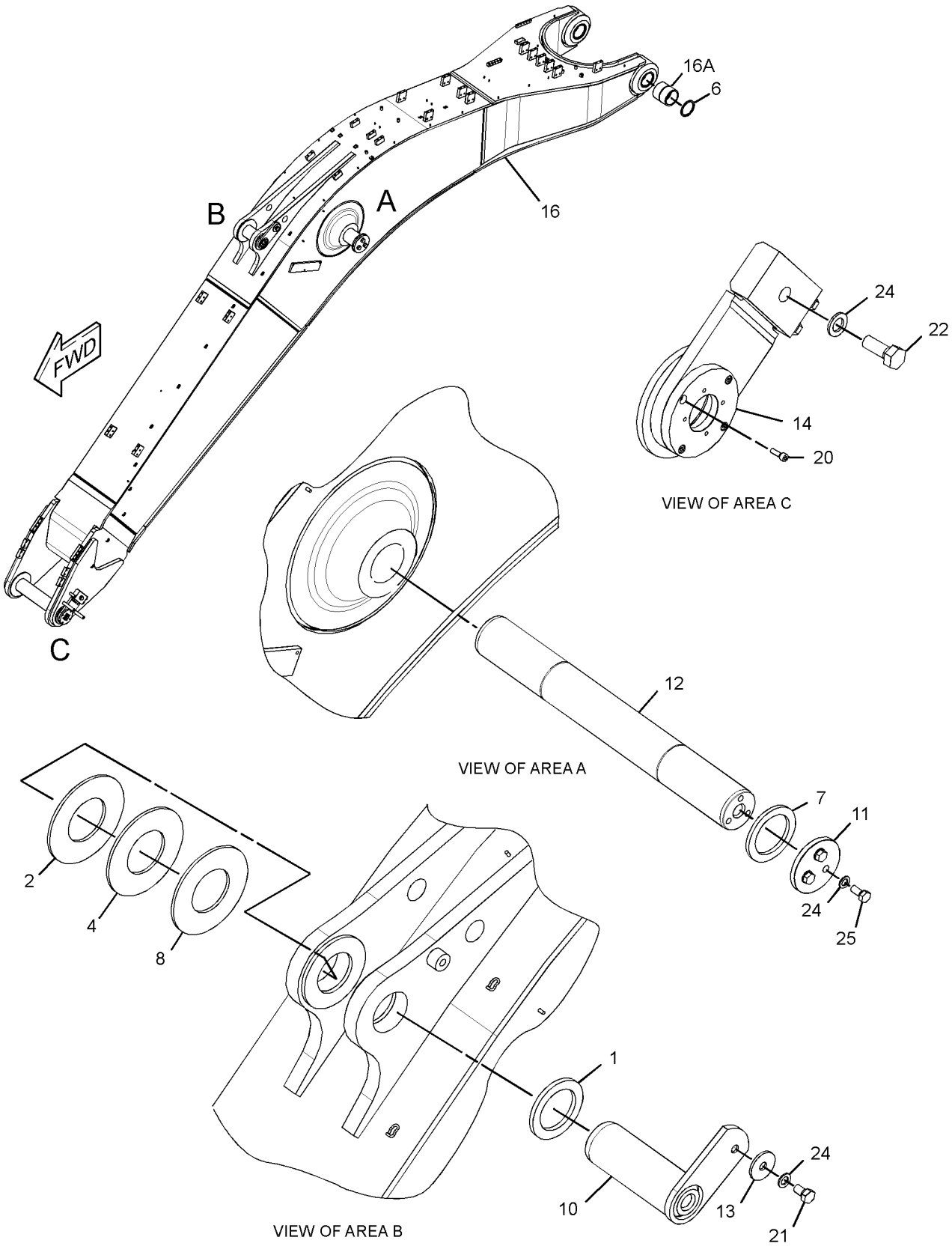

GRAPHIC #1 g02157237

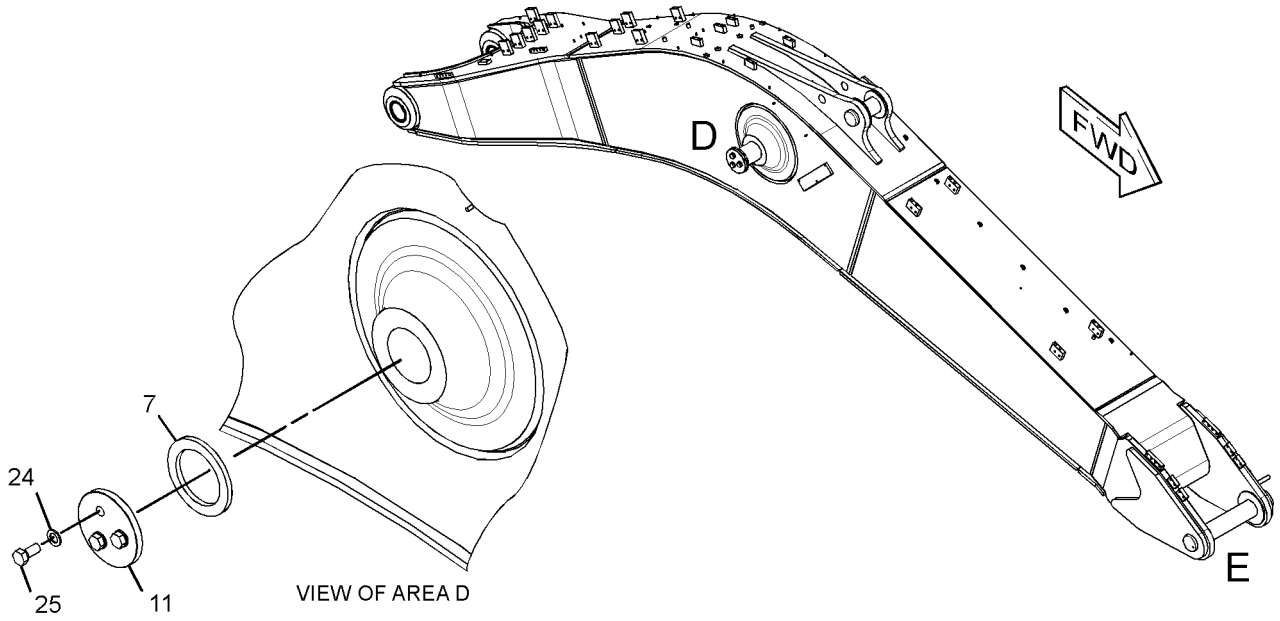

VIEW OF AREA D

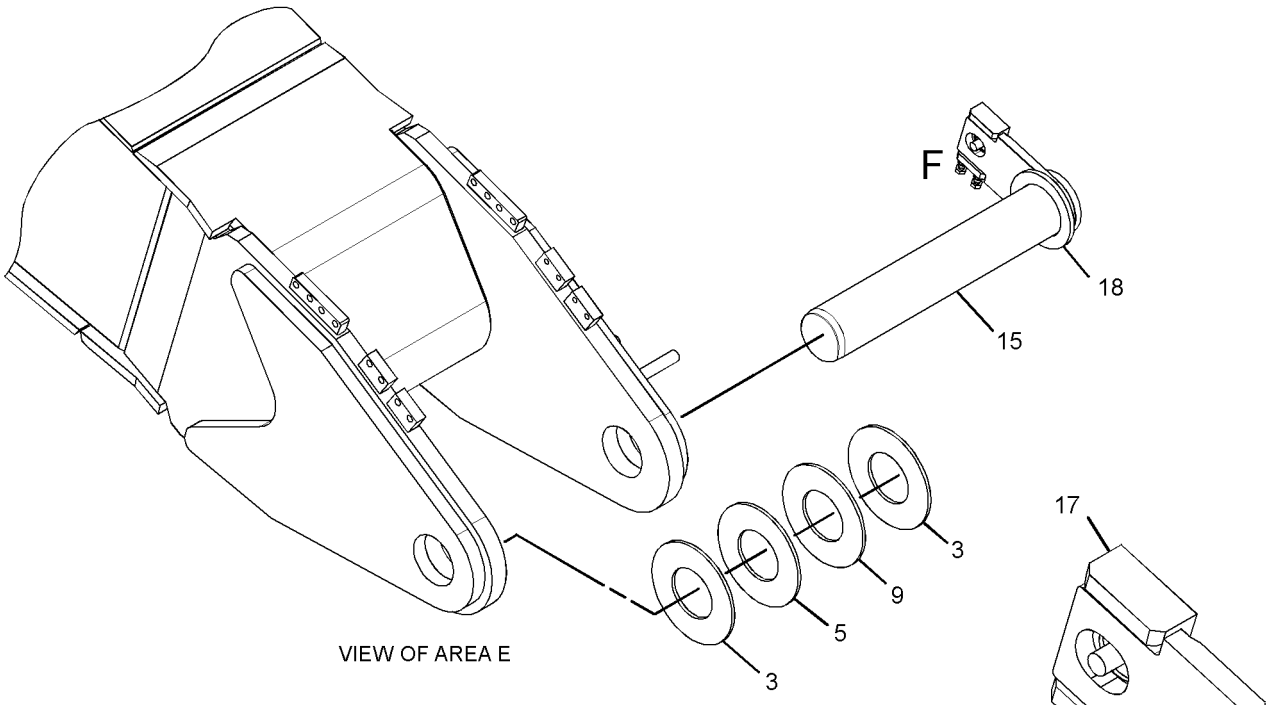

VIEW OF AREA E

VIEW OF AREA F

GRAPHIC #2 **<END>** g02157639

342-1910 GUARD GP-CYLINDER

S/N: WAP1-UP
PART OF 340-3996 SPECIAL AR
AN ATTACHMENT

SMCS-7164 **i03917629**

NOTE	REF NO	GRAPHIC REF	PART NUMBER	QTY	PART NAME 1 2 3 4 5 6 (PRODUCT LEVEL)	SEE PAGE
	1	1	**138-5708**	2	CLIP-HALF	
	2	1	**138-5709**	1	GROMMET	
	3	1	**342-1911**	1	GUARD AS-CYLINDER	
	4	1	**342-1913**	1	SUPPORT AS	
	5	1	**342-1915**	1	SUPPORT	
	6	1	**349-4101**	1	SUPPORT AS	
	7	1	**356-9142**	1	SUPPORT AS	
M	8	1	**7X-2553**	4	BOLT (M16X2X40-MM)	
M	9	1	**7X-2554**	2	BOLT (M16X2X70-MM)	
M	10	1	**8T-4001**	2	NUT (M24X3-THD)	
M	11	1	**8T-4140**	4	BOLT (M16X2X60-MM)	
	12	1	**8T-4167**	2	WASHER-HARD (26X44X4-MM THK)	
	13	1	**9X-8257**	10	WASHER (17.5X30X3.5-MM THK)	

M-METRIC PART

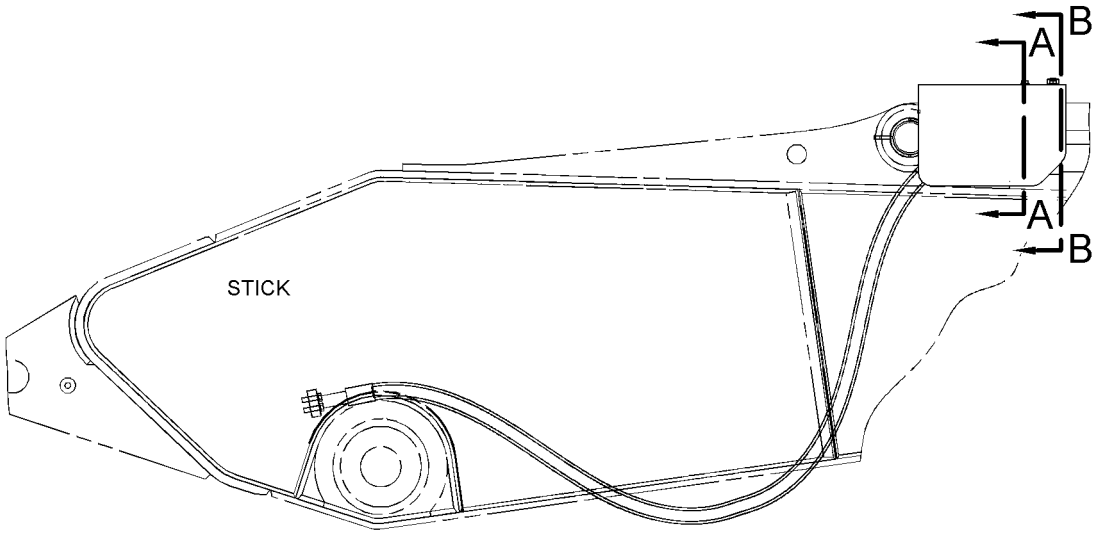

RIGHT SIDE VIEW

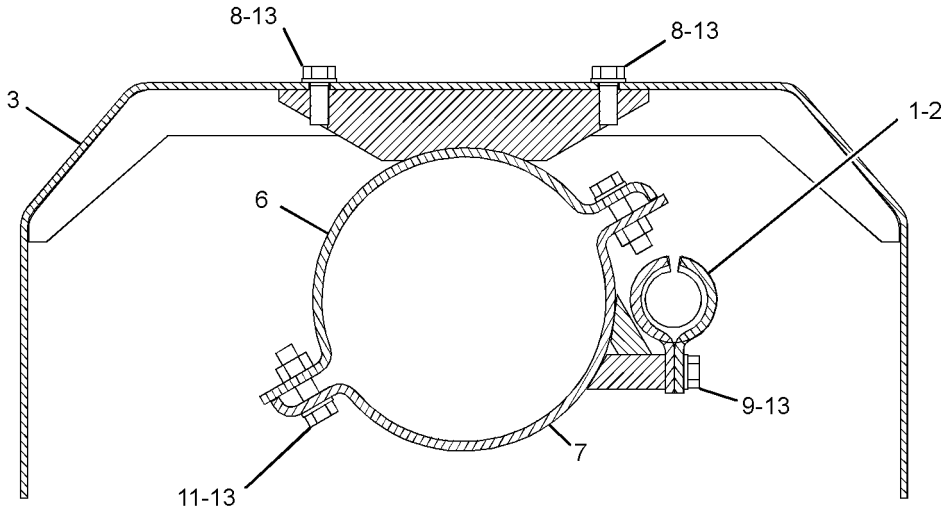

SECTION A-A

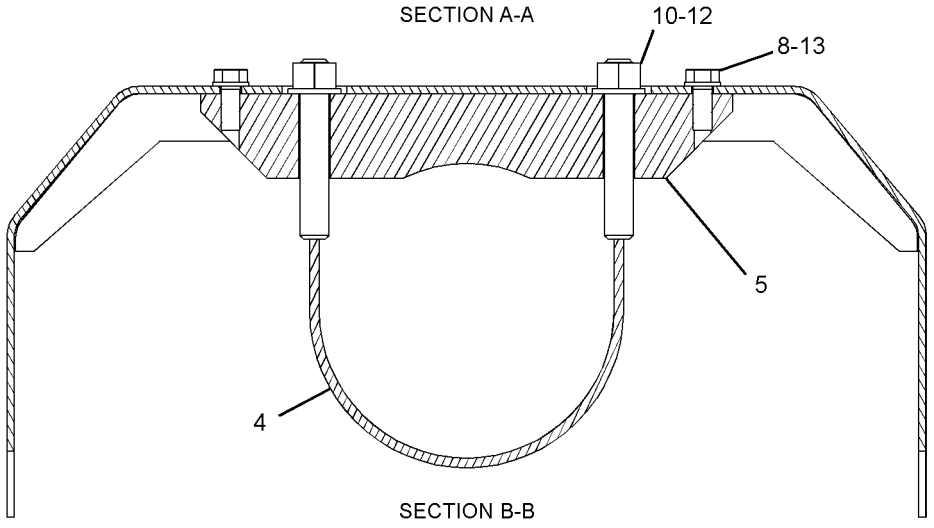

SECTION B-B

GRAPHIC #1 **<END>** g02164077

IMPLEMENTS

327-7546 GUARD GP-SENSOR

S/N: WAP1-UP
PART OF 319-9211 BOOM AR-MASS
AN ATTACHMENT

SMCS-5736, 7150 **i04028013**

NOTE	REF NO	GRAPHIC REF	PART NUMBER	QTY	PART NAME 1 2 3 4 5 6 (PRODUCT LEVEL)	SEE PAGE
	1	1	**327-7547**	1	GUARD AS	
	2	1	**5P-1076**	2	WASHER-HARD (13.5X30X4-MM THK)	
M	3	1	**8T-4179**	2	BOLT (M12X1.75X20-MM)	

M-METRIC PART

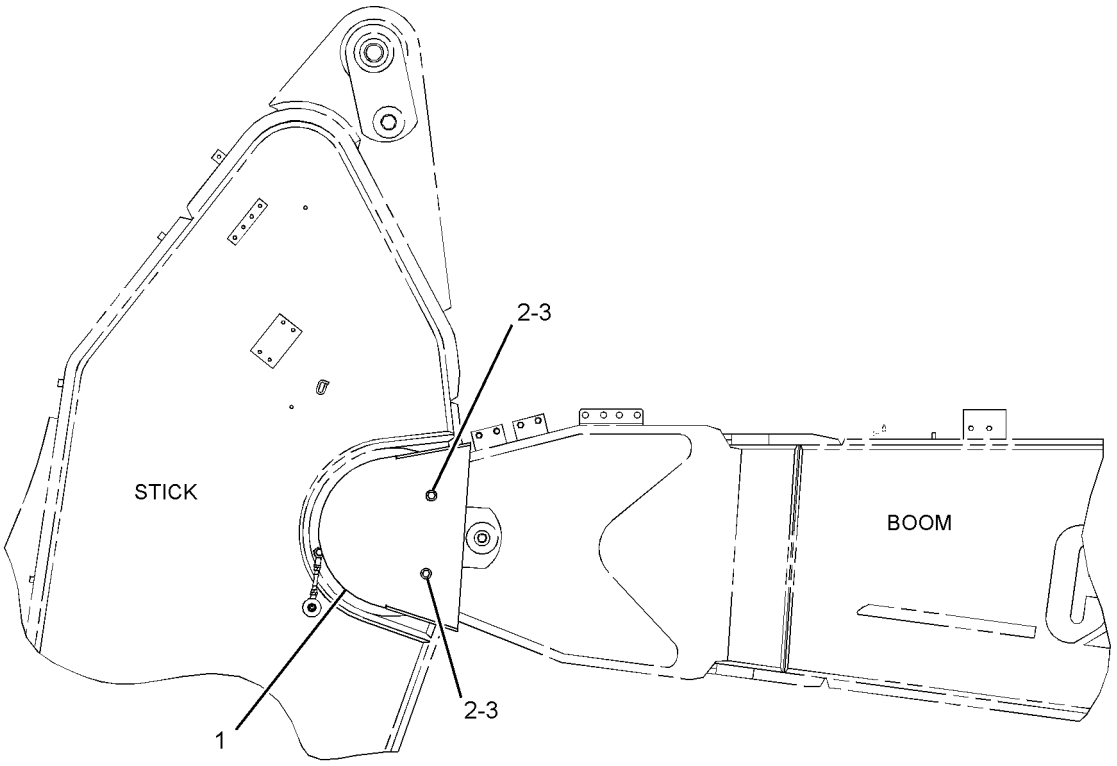

LEFT SIDE VIEW

GRAPHIC #1 **<END>** g02172616

IMPLEMENTS

172-2957 LINES GP-GREASE–BOOM

S/N: WAP1-UP
PART OF 303-2688 BOOM AR-REACH
FOR USE WITH 10-M (32.8-FT) BOOM
AN ATTACHMENT

SMCS-7510 **i02100265**

NOTE	REF NO	GRAPHIC REF	PART NUMBER	QTY	PART NAME 1 2 3 4 5 6 (PRODUCT LEVEL)	SEE PAGE
	1	1	**212-2873**	1	TUBE AS	
	2	1	**6K-6967**	2	ADAPTER-PIPE	
	3	1	**176-2143**	3	TUBE AS	
	4	1	**151-0749**	1	HOSE AS	
	5	1	**184-5788**	1	HOSE AS	
	6	1	**5K-9243**	2	ELBOW-FLARED	
	7	1	**3B-8489**	9	FITTING-GREASE	
	8	1	**108-6709**	6	CONNECTOR	
	9	1	**4M-5317**	1	BUSHING-REDUCING	
	10	1	**8M-2772**	3	CLIP	
	11	1	**5P-9085**	6	CLIP	
	12	1	**141-3678**	3	PLATE	
M	13	1	**8T-4133**	12	NUT (M10X1.5-THD)	
	14	1	**8T-4121**	15	WASHER-HARD (11X21X2.5-MM THK)	
M	15	1	**8T-4191**	3	BOLT (M10X1.5X16-MM)	
	16	1	**184-5789**	1	HOSE AS	
	17	1	**6L-3616**	10	CONNECTOR	
	19	1	**8T-6764**	1	PLUG-PIPE (1/8-27-THD)	
	20	1	**208-2044**	1	TUBE AS	
	21	1	**212-2874**	1	TUBE AS	

M-METRIC PART

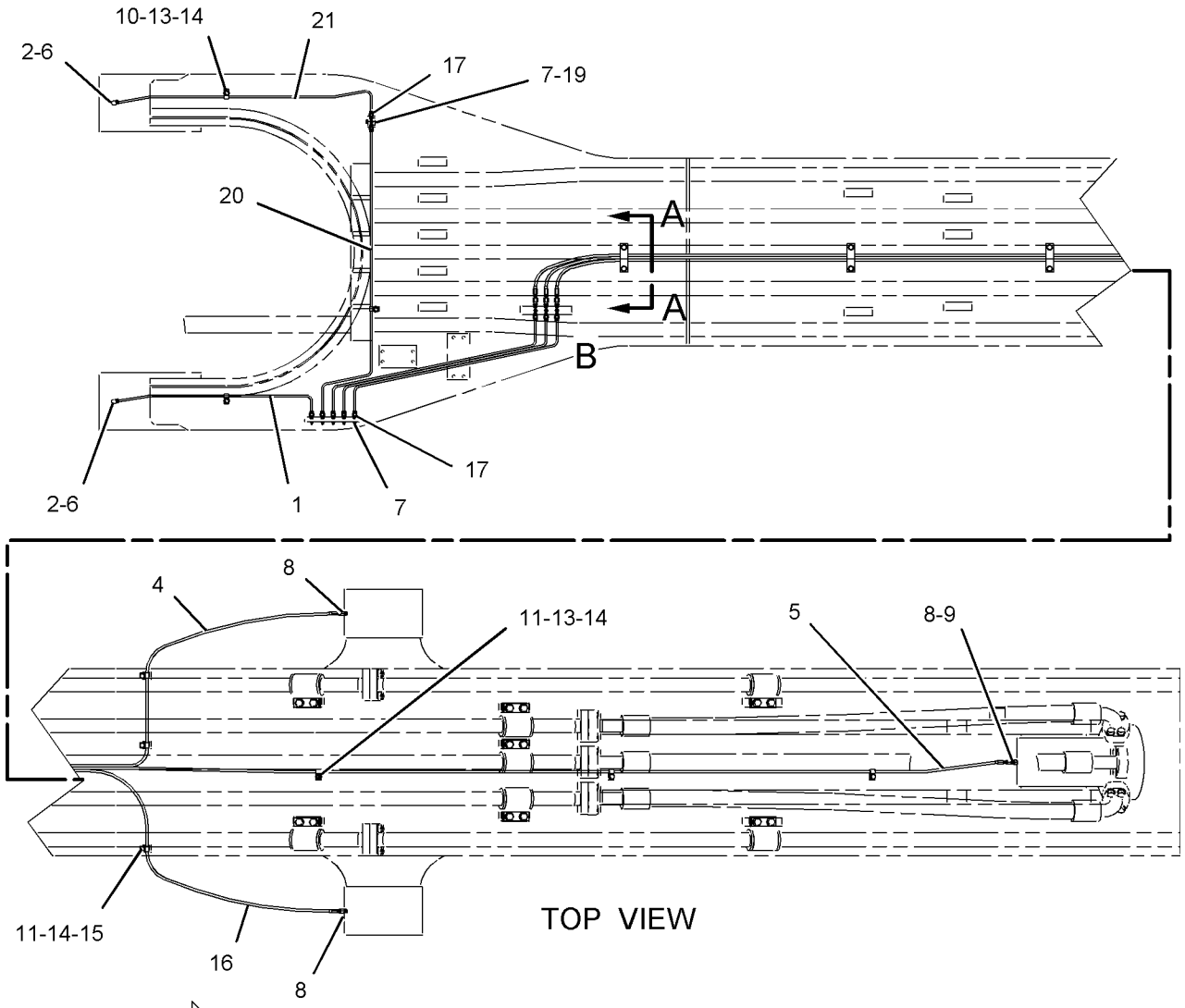

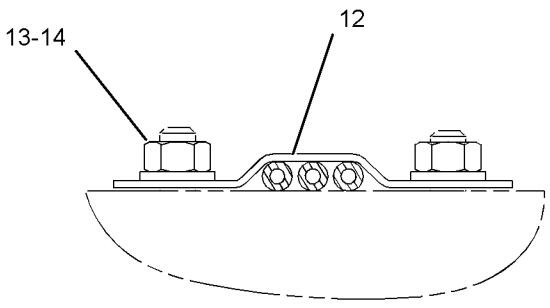

SECTION A-A

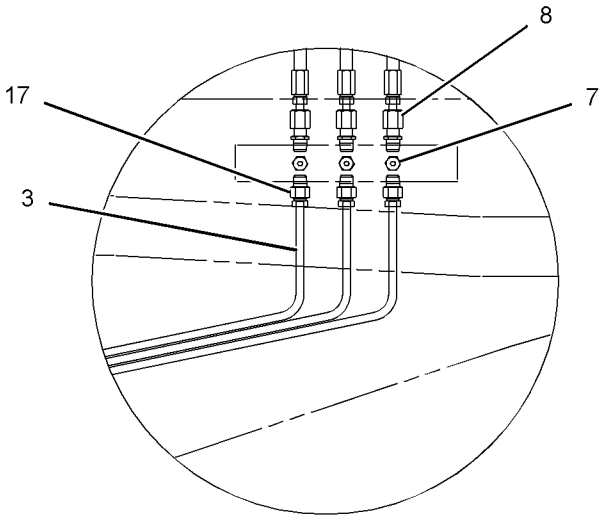

VIEW OF AREA B

GRAPHIC #1 **<END>** g01071006

IMPLEMENTS

172-2958 LINES GP-GREASE–BOOM

S/N: WAP1-UP
PART OF 303-2689 BOOM AR, 319-9211 BOOM AR-MASS
FOR USE WITH 8.4-M (27.6-FT) BOOM
AN ATTACHMENT

SMCS-7510 **i01888528**

NOTE	REF NO	GRAPHIC REF	PART NUMBER	QTY	PART NAME 1 2 3 4 5 6 (PRODUCT LEVEL)	SEE PAGE
	1	1	**212-2873**	1	TUBE AS	
	2	1	**6K-6967**	2	ADAPTER-PIPE	
	3	1	**176-2143**	3	TUBE AS	
	4	1	**137-3055**	1	HOSE AS	
	5	1	**147-3942**	1	HOSE AS	
	6	1	**5K-9243**	2	ELBOW-FLARED	
	7	1	**3B-8489**	9	FITTING-GREASE	
	8	1	**108-6709**	6	CONNECTOR	
	9	1	**4M-5317**	1	BUSHING-REDUCING	
	10	1	**8M-2772**	3	CLIP	
	11	1	**5P-9085**	5	CLIP	
	12	1	**141-3678**	3	PLATE	
M	13	1	**8T-4133**	10	NUT (M10X1.5-THD)	
	14	1	**8T-4121**	14	WASHER-HARD (11X21X2.5-MM THK)	
M	15	1	**8T-4191**	4	BOLT (M10X1.5X16-MM)	
	16	1	**151-0525**	1	HOSE AS	
	17	1	**6L-3616**	10	CONNECTOR	
	19	1	**8T-6764**	1	PLUG-PIPE (1/8-27-THD)	
	20	1	**208-2044**	1	TUBE AS	
	21	1	**212-2874**	1	TUBE AS	

M-METRIC PART

172-2958 **LINES GP-GREASE** *(contd.)* **i01888528**

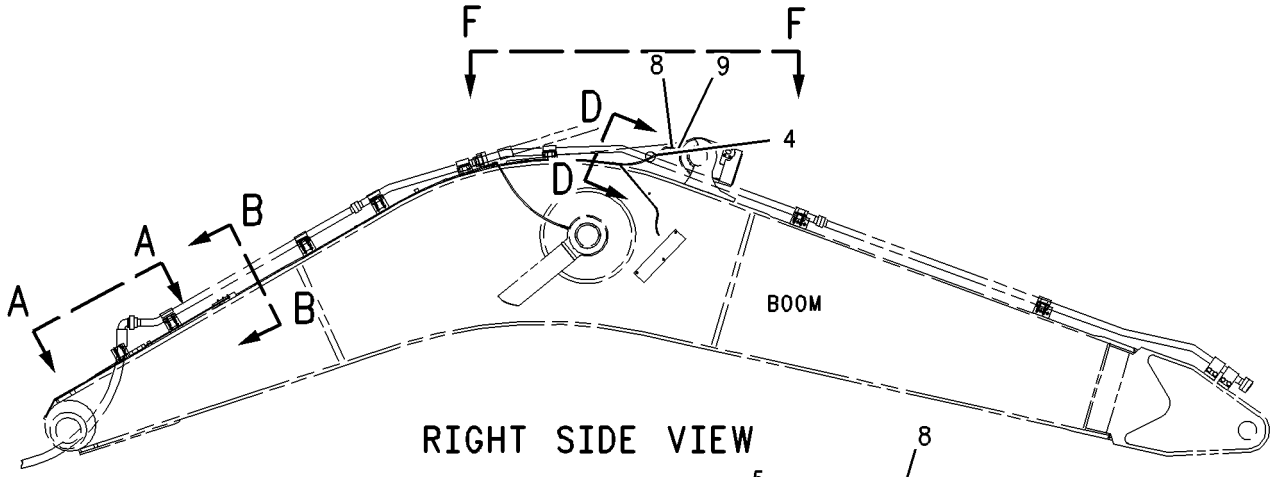

RIGHT SIDE VIEW

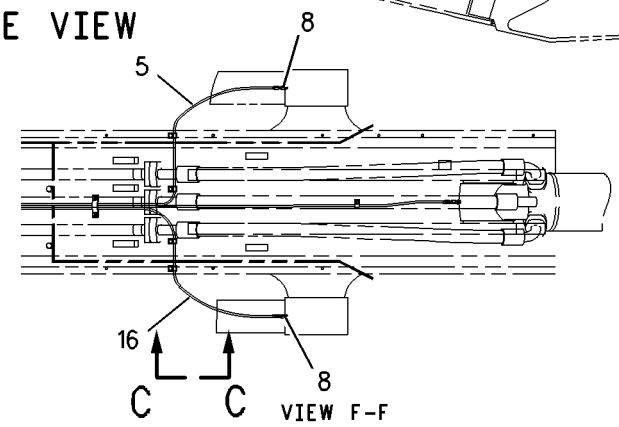

VIEW F-F

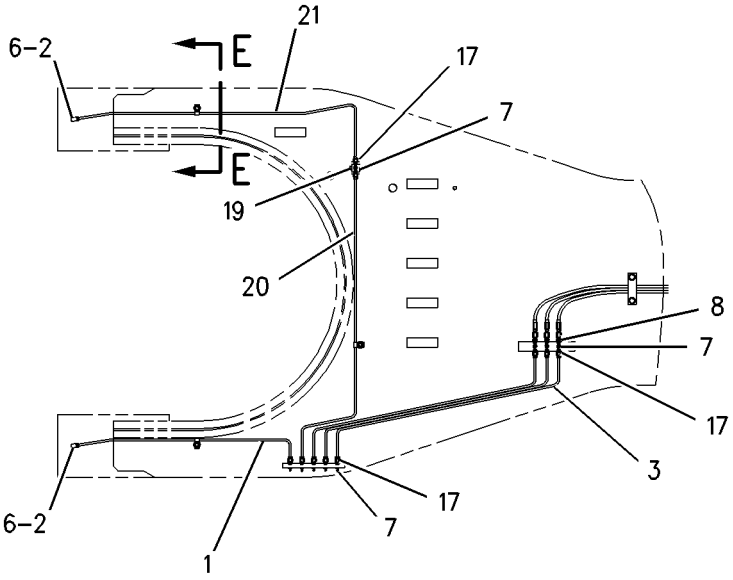

VIEW A-A

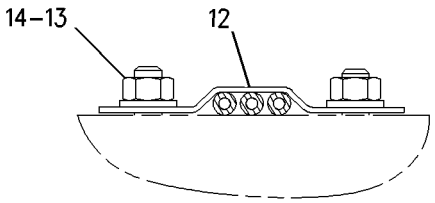

SECTION B-B

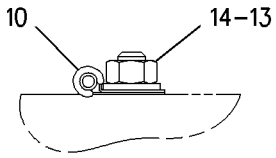

SECTION E-E

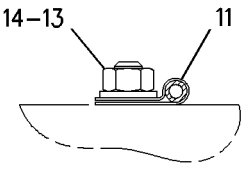

SECTION D-D

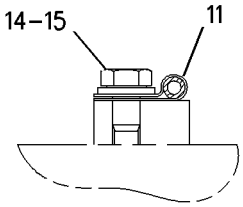

VIEW C-C

GRAPHIC #1 **<END>** g00979693

IMPLEMENTS

172-2959 LINES GP-GREASE—MASS BOOM

S/N: WAP1-UP
PART OF 303-2690 BOOM AR-MASS
FOR USE WITH 7.3-M (24-FT) BOOM
AN ATTACHMENT

SMCS-7510 **i01888534**

NOTE	REF NO	GRAPHIC REF	PART NUMBER	QTY	PART NAME 1 2 3 4 5 6 (PRODUCT LEVEL)	SEE PAGE
	1	1	**212-2873**	1	TUBE AS	
	2	1	**6K-6967**	2	ADAPTER-PIPE	
	3	1	**176-2143**	3	TUBE AS	
	4	1	**176-2306**	1	HOSE AS	
	5	1	**158-4007**	1	HOSE AS	
	6	1	**5K-9243**	2	ELBOW-FLARED	
	7	1	**3B-8489**	9	FITTING-GREASE	
	8	1	**108-6709**	4	CONNECTOR	
	9	1	**4M-5317**	1	BUSHING-REDUCING	
	10	1	**8M-2772**	3	CLIP	
	11	1	**5P-9085**	9	CLIP	
	12	1	**141-3678**	2	PLATE	
M	13	1	**8T-4133**	14	NUT (M10X1.5-THD)	
	14	1	**8T-4121**	16	WASHER-HARD (11X21X2.5-MM THK)	
M	15	1	**8T-4191**	2	BOLT (M10X1.5X16-MM)	
	16	1	**137-3055**	1	HOSE AS	
	17	1	**6L-3616**	10	CONNECTOR	
	19	1	**8T-6764**	1	PLUG-PIPE (1/8-27-THD)	
	20	1	**108-6717**	2	ELBOW	
	21	1	**208-2044**	1	TUBE AS	
	22	1	**212-2874**	1	TUBE AS	

M-METRIC PART

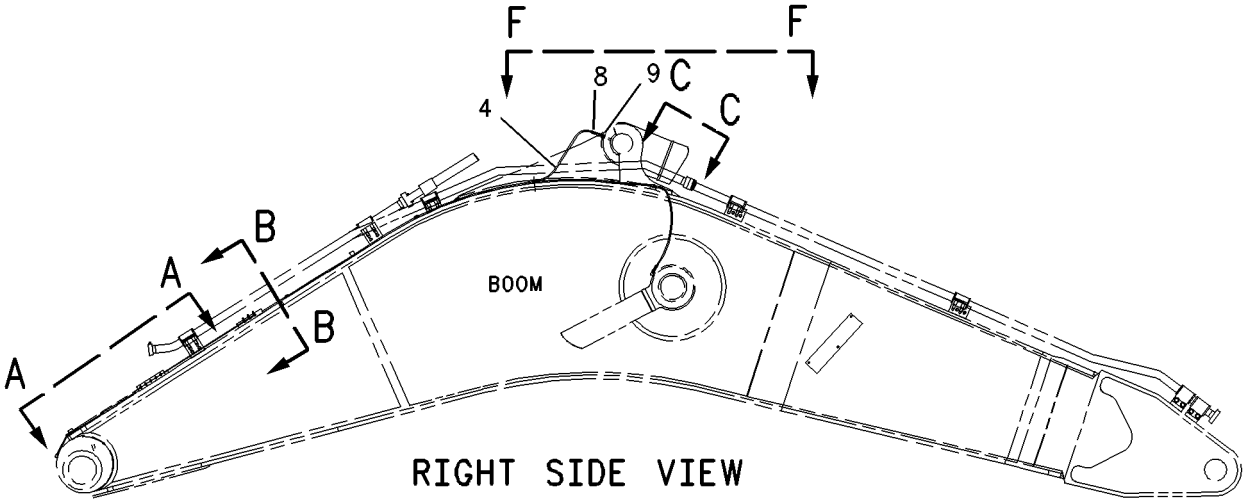

RIGHT SIDE VIEW

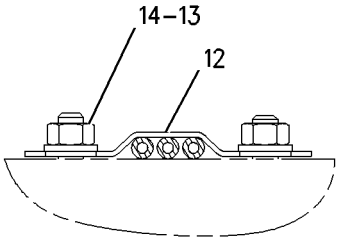

SECTION B-B

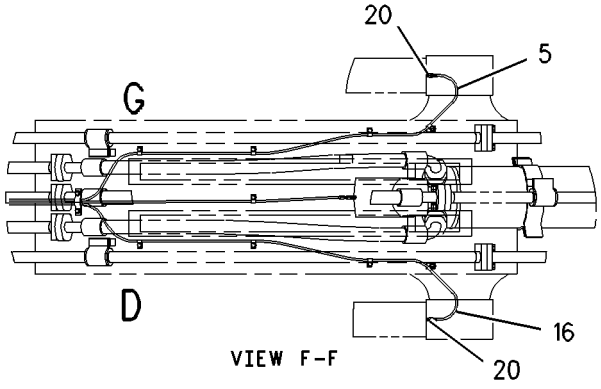

VIEW F-F

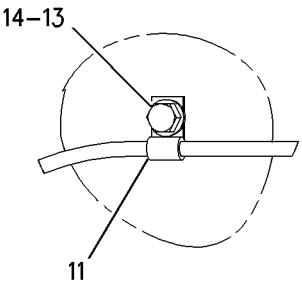

VIEW OF AREA G

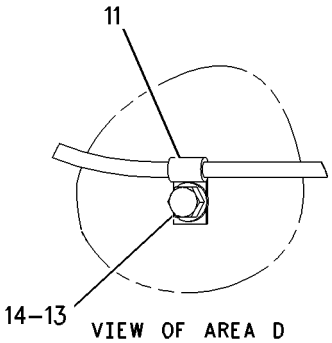

VIEW OF AREA D

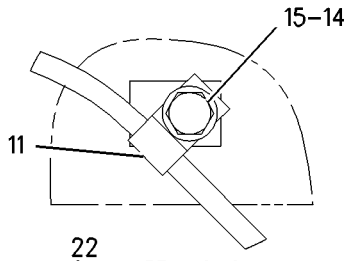

VIEW C-C

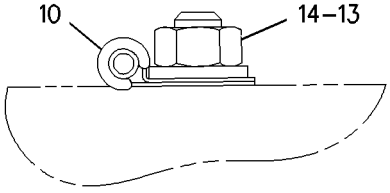

SECTION E-E

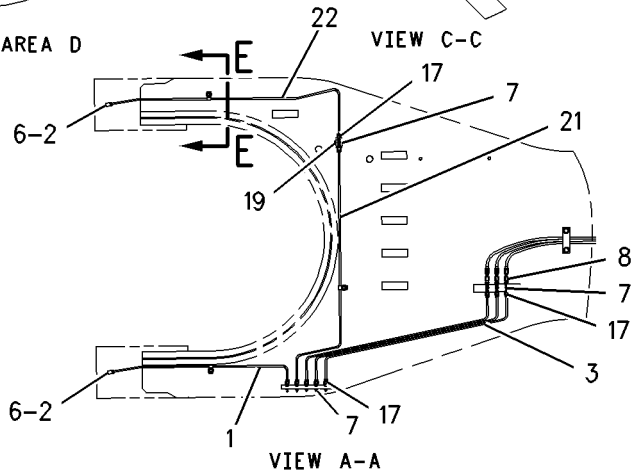

VIEW A-A

GRAPHIC #1 **<END>** g00979697

IMPLEMENTS

176-2220 LINES GP-GREASE–STICK

S/N: WAP1-UP
PART OF 303-2696 STICK AR-HOE
FOR USE WITH 3.4-M (11.2-FT) STICK
AN ATTACHMENT

SMCS-7510 **i03923969**

NOTE	REF NO	GRAPHIC REF	PART NUMBER	QTY	PART NAME 1 2 3 4 5 6 (PRODUCT LEVEL)	SEE PAGE
	1	1	**7I-6729**	1	TUBE AS	
	2	1	**7I-6730**	1	TUBE AS	
	3	1	**7I-6731**	1	TUBE AS	
	4	1	**7I-6732**	1	TUBE AS	
	5	1	**176-2301**	1	TUBE AS	
	6	1	**176-2302**	1	TUBE AS	
	7	1	**176-2303**	1	TUBE AS	
	8	1	**176-2304**	1	TUBE AS	
	9	1	**130-4317**	1	HOSE AS	
	10	1	**123-5592**	1	HOSE AS	
	11	1	**3B-8489**	4	FITTING-GREASE	
	12	1	**6L-3616**	6	CONNECTOR	
	13	1	**8M-2772**	2	CLIP	
	14	1	**8T-4121**	6	WASHER-HARD (11X21X2.5-MM THK)	
M	15	1	**8T-4133**	6	NUT (M10X1.5-THD)	
	16	1	**5K-9242**	4	UNION-FLARED	
	17	1	**5K-9243**	2	ELBOW-FLARED	
	18	1	**108-6709**	1	CONNECTOR	
	19	1	**4M-5317**	2	BUSHING-REDUCING	
	20	1	**141-3672**	1	ELBOW AS	
		1	**2D-1683**	1	FITTING	
		1	**141-3636**	1	ELBOW	
	21	1	**108-6717**	2	ELBOW	
	22	1	**087-5838**	2	PLATE	
	23	1	**8T-6757**	4	PLUG-PIPE	

M-METRIC PART

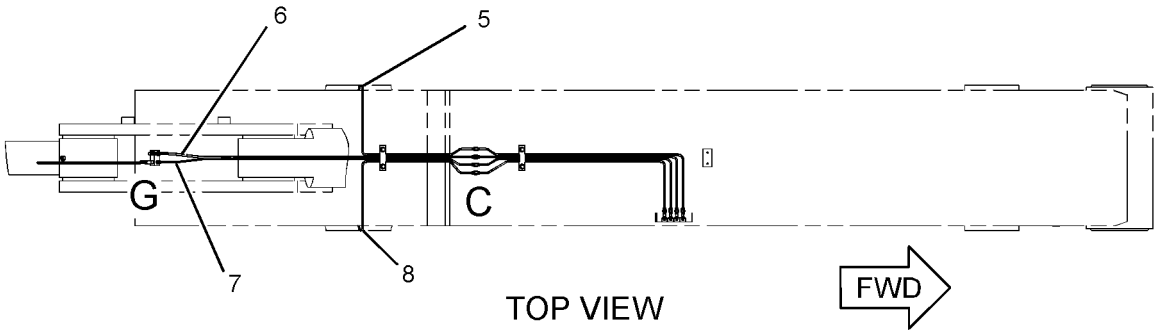

TOP VIEW

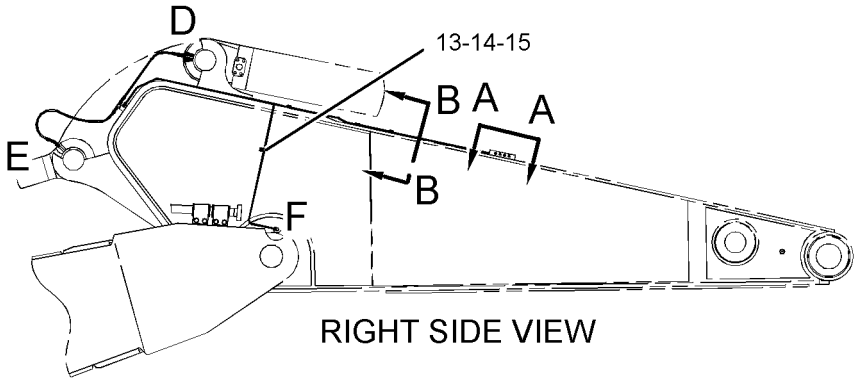

RIGHT SIDE VIEW

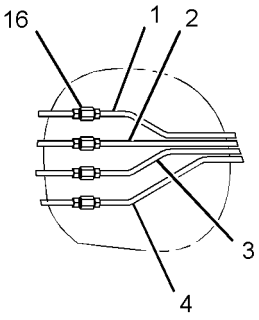

VIEW OF AREA C

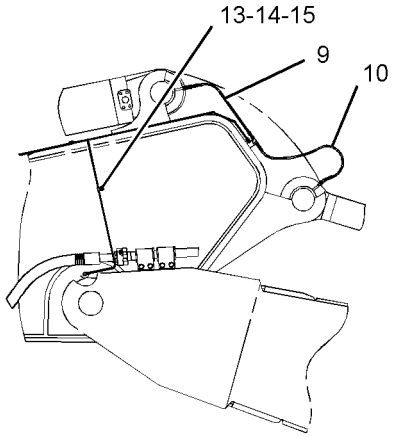

LEFT SIDE VIEW

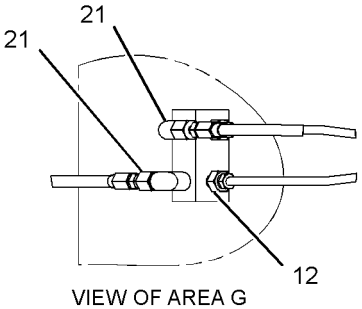

VIEW OF AREA G

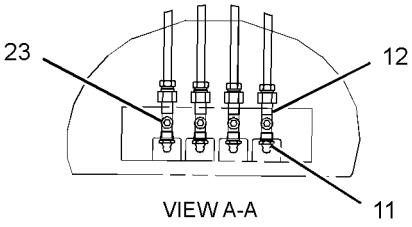

VIEW A-A

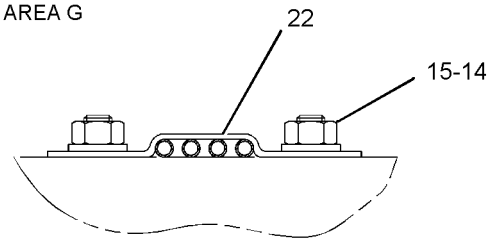

SECTION B-B

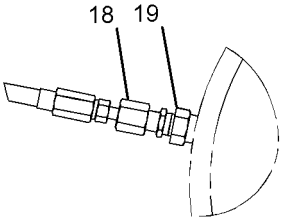

VIEW OF AREA D

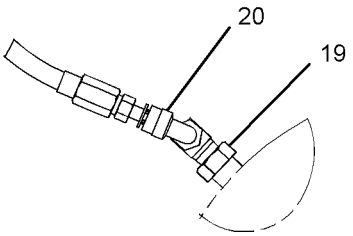

VIEW OF AREA E

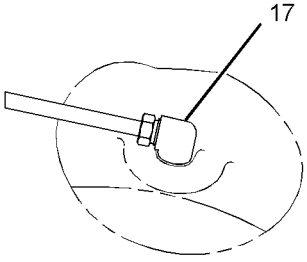

VIEW OF AREA F

GRAPHIC #1 **<END>** g02165011

IMPLEMENTS

176-2221 LINES GP-GREASE—STICK

S/N: WAP1-UP
PART OF 303-2697, 319-9240 STICK AR-HOE
FOR USE WITH 2.9-M (9.6-FT) STICK
AN ATTACHMENT

SMCS-7510 **i03506124**

NOTE	REF NO	GRAPHIC REF	PART NUMBER	QTY	PART NAME 1 2 3 4 5 6 (PRODUCT LEVEL)	SEE PAGE
	1	1	**201-2985**	1	TUBE AS	
	2	1	**201-2986**	1	TUBE AS	
	3	1	**201-2981**	1	TUBE AS	
	4	1	**201-2980**	1	TUBE AS	
	5	1	**201-2979**	1	TUBE AS	
	6	1	**201-2978**	1	TUBE AS	
	7	1	**151-0465**	1	HOSE AS	
	8	1	**118-6119**	1	HOSE AS	
	9	1	**108-6717**	1	ELBOW	
	10	1	**108-6709**	2	CONNECTOR	
	11	1,2	**6L-3616**	6	CONNECTOR	
	12	2	**5K-9243**	2	ELBOW-FLARED	
	13	1	**4M-5317**	2	BUSHING-REDUCING	
	14	1	**141-3672**	1	ELBOW AS	
		1	**2D-1683**	1	FITTING	
		1	**141-3636**	1	ELBOW	
	15	1,2	**8M-2772**	4	CLIP	
	16	1,2	**8T-4121**	8	WASHER-HARD (11X21X2.5-MM THK)	
M	17	1,2	**8T-4133**	6	NUT (M10X1.5-THD)	
	18	2	**087-5838**	2	PLATE	
M	19	2	**8T-4191**	2	BOLT (M10X1.5X16-MM)	
	20	2	**3B-8489**	4	FITTING-GREASE	
	21	2	**5K-9242**	2	UNION-FLARED	
J	22	2	**8T-6757**	4	PLUG-PIPE	

J-(USE WITH OPTIONAL DESIGN) (SEE GRAPHIC FOR OPTIONAL DESIGN)
M-METRIC PART

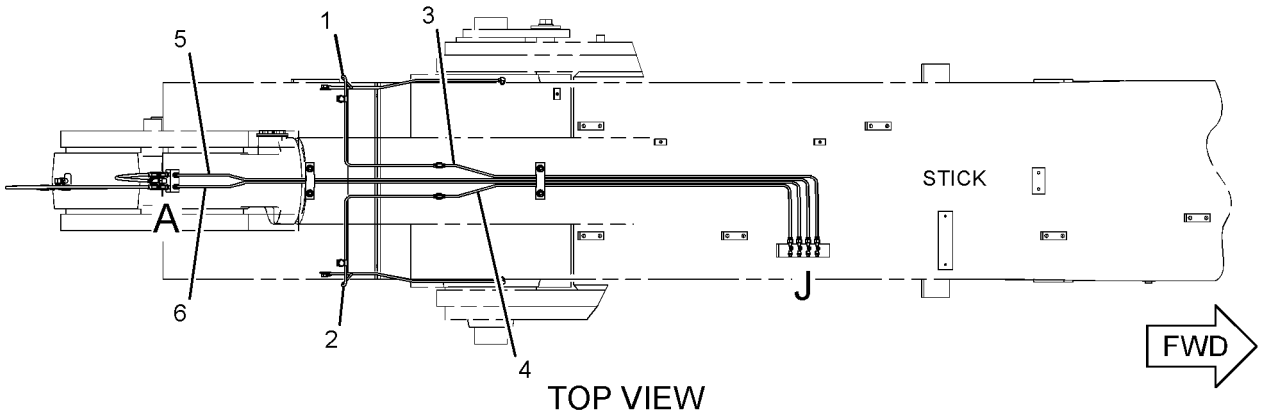

TOP VIEW

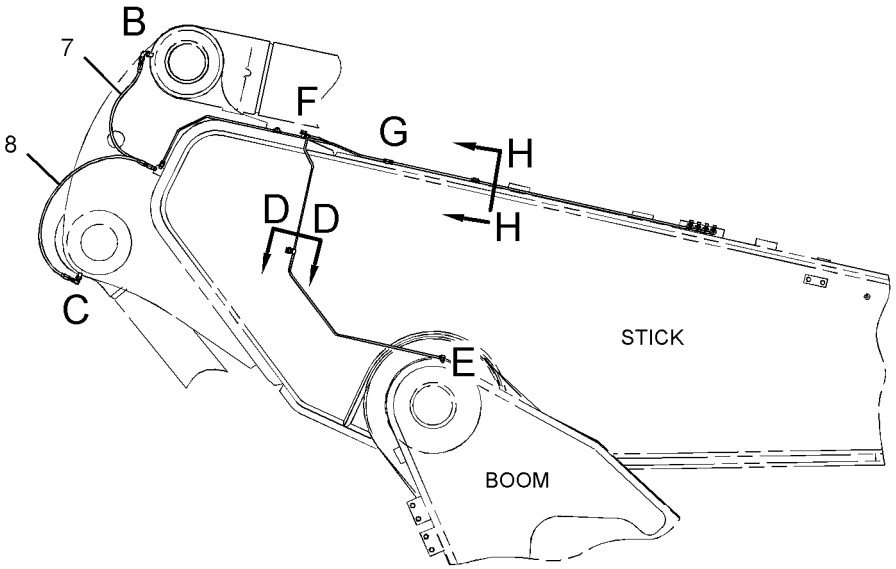

RIGHT SIDE VIEW

REFER TO ALL ILLUSTRATIONS OF THIS GROUP FOR AUXILIARY VIEWS

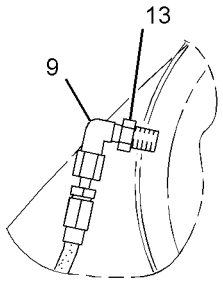

VIEW OF AREA B

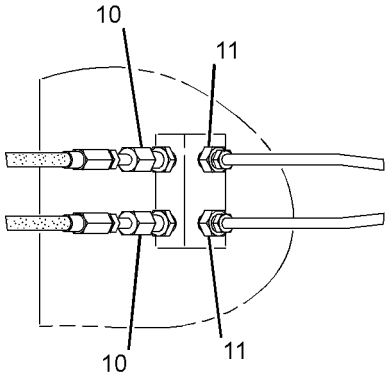

VIEW OF AREA A

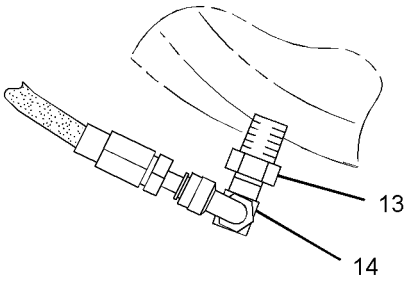

VIEW OF AREA C

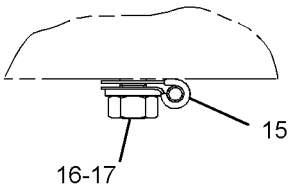

SECTION D-D

GRAPHIC #1 g01847813

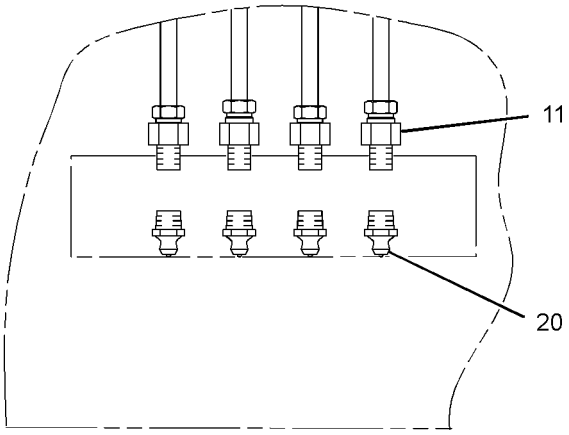

VIEW OF AREA J

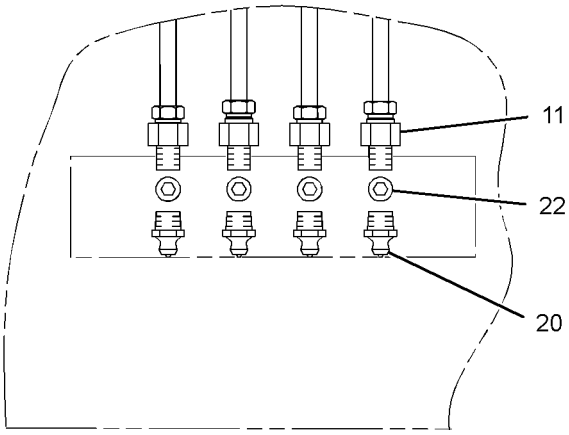

VIEW OF AREA J
(OPTIONAL DESIGN)

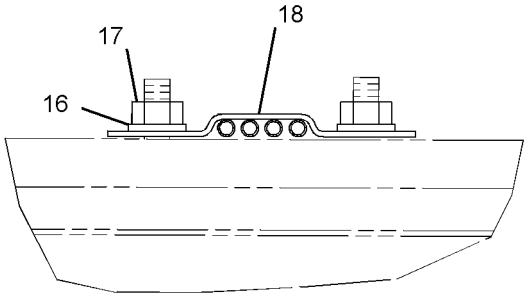

SECTION H-H

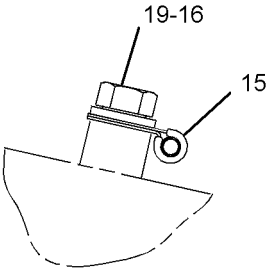

VIEW OF AREA F

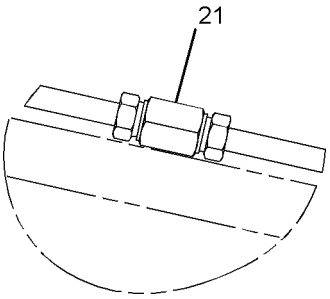

VIEW OF AREA G

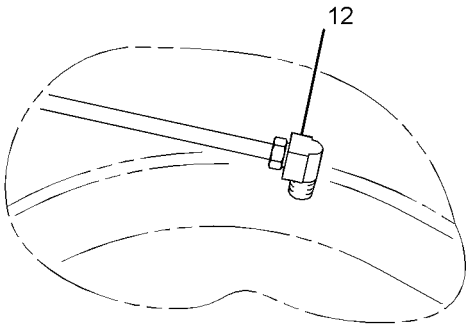

VIEW OF AREA E

GRAPHIC #2 **<END>** g01848000

IMPLEMENTS

203-7450 LINES GP-GREASE–STICK

S/N: WAP1-UP
PART OF 303-2694 STICK AR-HOE
FOR USE WITH 3.4-M (11.2-FT) STICK
AN ATTACHMENT

SMCS-7510 **i01696369**

NOTE	REF NO	GRAPHIC REF	PART NUMBER	QTY	PART NAME 1 2 3 4 5 6 (PRODUCT LEVEL)	SEE PAGE
	1	1	**7I-6729**	1	TUBE AS	
	2	1	**7I-6730**	1	TUBE AS	
	3	1	**7I-6731**	1	TUBE AS	
	4	1	**7I-6732**	1	TUBE AS	
	5	1	**208-1888**	1	TUBE AS	
	6	1	**176-2302**	1	TUBE AS	
	7	1	**176-2303**	1	TUBE AS	
	8	1	**208-1889**	1	TUBE AS	
	9	1	**130-4317**	1	HOSE AS	
	10	1	**123-5592**	1	HOSE AS	
	11	1	**3B-8489**	4	FITTING-GREASE	
	12	1	**6L-3616**	6	CONNECTOR	
	13	1	**8M-2772**	2	CLIP	
	14	1	**8T-4121**	6	WASHER-HARD (11X21X2.5-MM THK)	
M	15	1	**8T-4133**	6	NUT (M10X1.5-THD)	
	16	1	**5K-9242**	4	UNION-FLARED	
	17	1	**5K-9243**	2	ELBOW-FLARED	
	18	1	**108-6709**	1	CONNECTOR	
	19	1	**4M-5317**	2	BUSHING-REDUCING	
	20	1	**141-3672**	1	ELBOW AS	
	21	1	**108-6717**	2	ELBOW	
	22	1	**087-5838**	2	PLATE	

M-METRIC PART

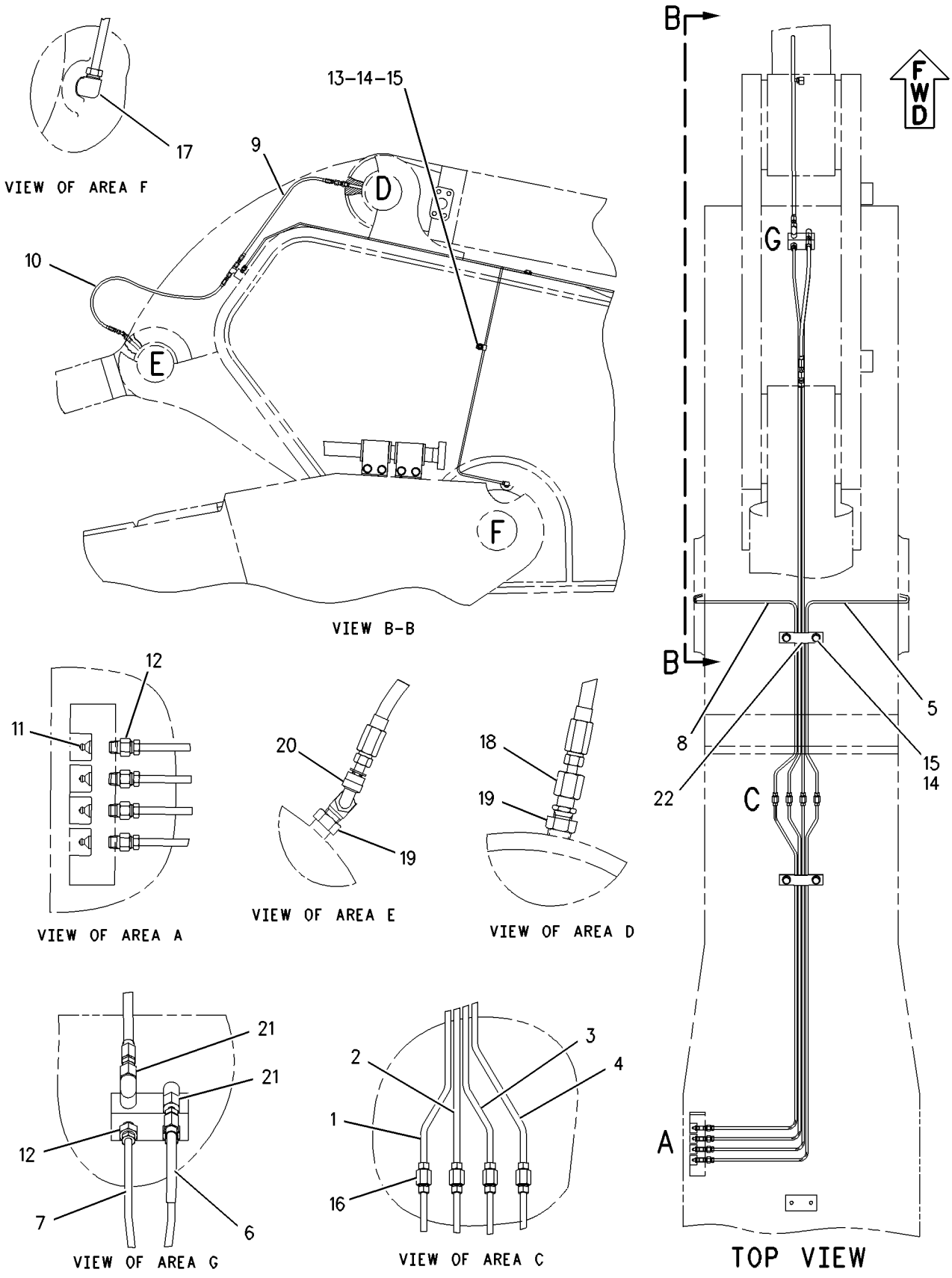

GRAPHIC #1 **<END>** g00875260

303-9147 LINES GP-GREASE–STICK

S/N: WAP1-UP
PART OF 303-2691, 319-9212 STICK AR-HOE
FOR USE WITH 5.5-M (18-FT) STICK
AN ATTACHMENT

SMCS-7510 **i03908773**

NOTE	REF NO	GRAPHIC REF	PART NUMBER	QTY	PART NAME 1 2 3 4 5 6 (PRODUCT LEVEL)	SEE PAGE
	1	1	**4M-5317**	2	BUSHING-REDUCING	
	2	1	**5K-9242**	9	UNION-FLARED	
	3	1	**5K-9243**	2	ELBOW-FLARED	
	4	1	**087-5838**	2	PLATE	
	5	1	**108-6709**	2	CONNECTOR	
	6	1	**108-6717**	1	ELBOW	
	7	1	**141-3672**	1	ELBOW AS	
		1	**2D-1683**	1	FITTING	
		1	**141-3636**	1	ELBOW	
	8	1	**151-0465**	1	HOSE AS	
	9	1	**198-5663**	1	TUBE AS	
	10	1	**198-5664**	2	TUBE AS	
	11	1	**202-2918**	1	HOSE AS	
	12	1	**348-0539**	1	TUBE AS	
	13	1	**348-0540**	1	TUBE AS	
	14	1	**348-0541**	1	TUBE AS	
	15	1	**348-0542**	1	TUBE AS	
	16	1	**348-0543**	1	TUBE AS	
	17	1	**348-0544**	1	TUBE AS	
	18	1	**348-0545**	1	TUBE AS	
	19	1	**348-0546**	1	TUBE AS	
	20	1	**348-0547**	1	TUBE AS	
	21	1	**348-0548**	1	TUBE AS	
	22	1	**3B-8489**	4	FITTING-GREASE	
	23	1	**5K-2298**	1	CLIP	
	24	1	**6L-3616**	6	CONNECTOR	
	25	1	**8M-2772**	8	CLIP	
	26	1	**8T-4121**	12	WASHER-HARD (11X21X2.5-MM THK)	
M	27	1	**8T-4133**	8	NUT (M10X1.5-THD)	
M	28	1	**8T-4191**	4	BOLT (M10X1.5X16-MM)	
	29	1	**8T-6757**	6	PLUG-PIPE	

M-METRIC PART

303-9147 **LINES GP-GREASE** *(contd.)* **i03908773**

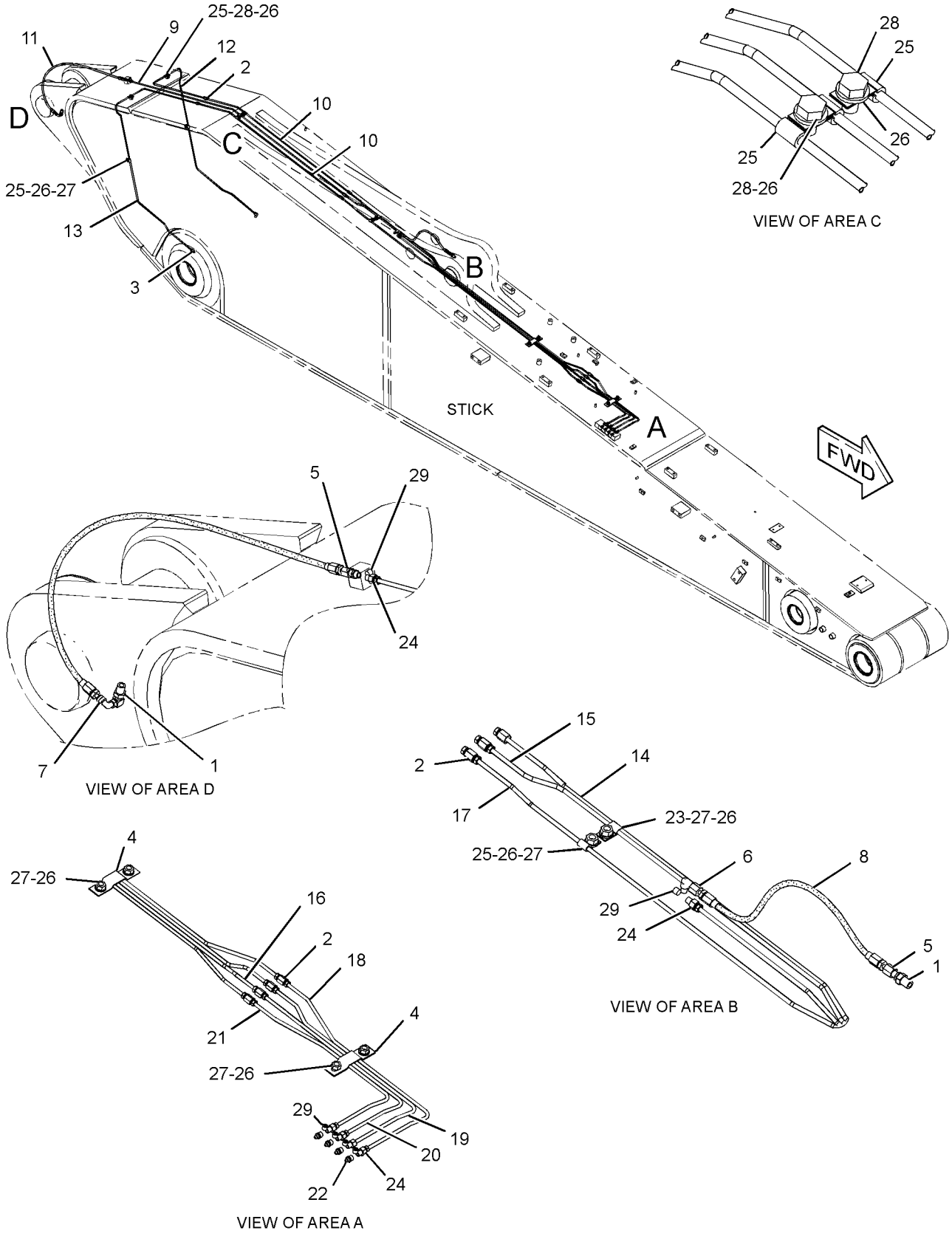

GRAPHIC #1 **<END>** g02182519

303-9149 LINES GP-GREASE–STICK

S/N: WAP1-UP
PART OF 303-2692, 319-9213 STICK AR-HOE
FOR USE WITH 4.4-M (14.4-FT) STICK
AN ATTACHMENT

SMCS-7510 **i03908777**

NOTE	REF NO	GRAPHIC REF	PART NUMBER	QTY	PART NAME 1 2 3 4 5 6 (PRODUCT LEVEL)	SEE PAGE
	1	1	**4M-5317**	2	BUSHING-REDUCING	
	2	1	**5K-9242**	3	UNION-FLARED	
	3	1	**5K-9243**	2	ELBOW-FLARED	
	4	1	**087-5838**	1	PLATE	
	5	1	**108-6709**	2	CONNECTOR	
	6	1	**108-6717**	1	ELBOW	
	7	1	**130-4317**	1	HOSE AS	
	8	1	**141-3672**	1	ELBOW AS	
		1	**2D-1683**	1	FITTING	
		1	**141-3636**	1	ELBOW	
	9	1	**149-6661**	1	HOSE AS	
	10	1	**198-5639**	1	TUBE AS	
	11	1	**198-5642**	1	TUBE AS	
	12	1	**339-3919**	1	TUBE AS	
	13	1	**343-9285**	1	TUBE AS	
	14	1	**343-9286**	1	TUBE AS	
	15	1	**343-9287**	1	TUBE AS	
	16	1	**343-9288**	1	TUBE AS	
	17	1	**3B-8489**	4	FITTING-GREASE	
	18	1	**6L-3616**	6	CONNECTOR	
	19	1	**8M-2772**	7	CLIP	
	20	1	**8T-4121**	8	WASHER-HARD (11X21X2.5-MM THK)	
M	21	1	**8T-4133**	4	NUT (M10X1.5-THD)	
M	22	1	**8T-4191**	4	BOLT (M10X1.5X16-MM)	
	23	1	**8T-6757**	6	PLUG-PIPE	

M-METRIC PART

303-9149 **LINES GP-GREASE** *(contd.)* **i03908777**

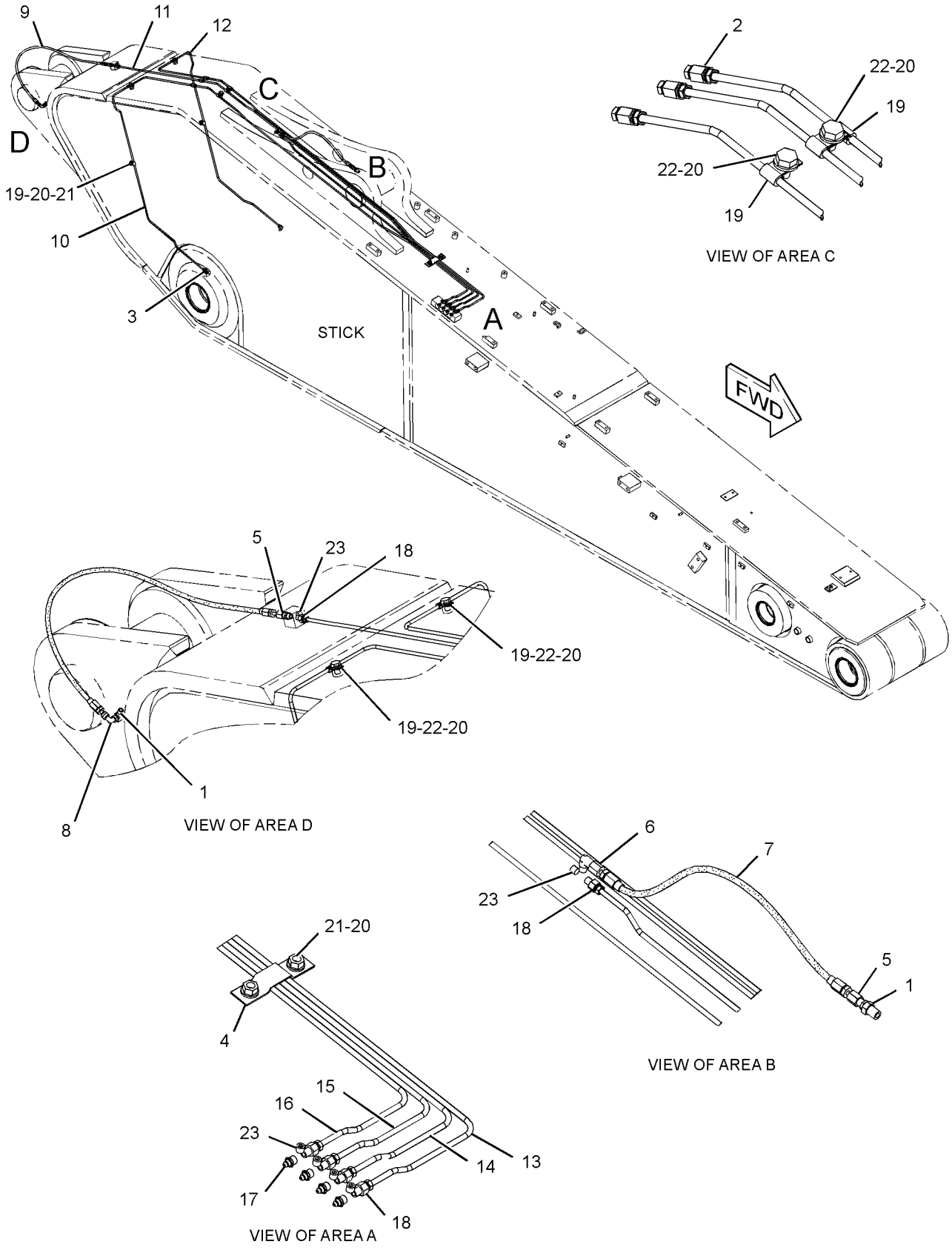

GRAPHIC #1 **<END>** g02182854

IMPLEMENTS

303-2698 LINKAGE AR-BUCKET—HB2-FAMILY, WITHOUT LIFT EYE

S/N: WAP1-UP

FOR USE WITH 303-2691—PAGE 823, 303-2692—PAGE 823

AN ATTACHMENT

SMCS-6513 **i03983334**

NOTE	PART NUMBER	QTY	PART NAME 1 2 3 4 5 6 (PRODUCT LEVEL)	SEE PAGE
Y	*361-3324*	1	CYLINDER & LINES GP-BUCKET	482
Y	*308-8734*	1	LINKAGE GP-BUCKET	817

Y-SEPARATE ILLUSTRATION

<END>

303-2699 LINKAGE AR-BUCKET—JC-FAMILY, WITHOUT LIFTING EYE

S/N: WAP1-UP

FOR USE WITH 303-2694—PAGE 823, 303-2696—PAGE 824, 303-2697—PAGE 824

AN ATTACHMENT

SMCS-6513 **i03983335**

NOTE	PART NUMBER	QTY	PART NAME 1 2 3 4 5 6 (PRODUCT LEVEL)	SEE PAGE
Y	*361-2899*	1	CYLINDER & LINES GP-BUCKET	482
Y	*308-8741*	1	LINKAGE AR-BUCKET (JC-FAMILY)	812

Y-SEPARATE ILLUSTRATION

<END>

303-2700 LINKAGE AR-BUCKET—HB2-FAMILY, WITH LIFTING EYE

S/N: WAP1-UP

FOR USE WITH 303-2691—PAGE 823, 303-2692—PAGE 823

AN ATTACHMENT

SMCS-6513 **i03983336**

NOTE	PART NUMBER	QTY	PART NAME 1 2 3 4 5 6 (PRODUCT LEVEL)	SEE PAGE
Y	*361-3324*	1	CYLINDER & LINES GP-BUCKET	482
Y	*308-8738*	1	LINKAGE GP-BUCKET	819

Y-SEPARATE ILLUSTRATION

<END>

303-2701 LINKAGE AR-BUCKET—JC-FAMILY, WITH LIFTING EYE

S/N: WAP1-UP

FOR USE WITH 303-2694—PAGE 823, 303-2696—PAGE 824, 303-2697—PAGE 824

AN ATTACHMENT

SMCS-6513 **i03998383**

NOTE	PART NUMBER	QTY	PART NAME 1 2 3 4 5 6 (PRODUCT LEVEL)	SEE PAGE
Y	*361-2899*	1	CYLINDER & LINES GP-BUCKET	482
Y	*308-8745*	1	LINKAGE AR-BUCKET	814

Y-SEPARATE ILLUSTRATION

<END>

IMPLEMENTS

308-8741 LINKAGE AR-BUCKET—JC-FAMILY

S/N: WAP1-UP
PART OF 303-2699 LINKAGE AR-BUCKET
AN ATTACHMENT

SMCS-6513 **i04004069**

NOTE	REF NO	GRAPHIC REF	PART NUMBER	QTY	PART NAME 1 2 3 4 5 6 (PRODUCT LEVEL)	SEE PAGE
	1	1	**5B-0651**	1	FITTING-STRAIGHT	
	2	1	**9X-4600**	2	SEAL-LIP TYPE	
	3	1	**113-5950**	4	SEAL-LIP TYPE	
	4	1	**195-5580**	1	PIN AS	
	5	1	**305-1768**	2	SEAL-O-RING	
	6	1	**324-1144**	1	LINK AS	
	7	1	**324-1147**	1	LINK AS	
	8	1	**324-1148**	1	PIN AS	
	9	1	**324-1155**	1	PIN AS	
	10	1	**324-1162**	1	LINK & BEARING AS	
	10A	1	**6I-5168**	2	BUSHING	
	10B	1	**324-1163**	2	BUSHING	
	11	1	**330-2645**	1	PLATE	
	12	1	**330-2646**	2	PLATE	
	13	1	**330-2718**	1	PIN AS	
	14	1	**341-5272**	1	PLATE	
	15	1	**101-2154**	2	SEAL-O-RING	
	16	1	**3B-8489**	4	FITTING-GREASE	
	17	1	**7X-0513**	3	WASHER-HARD (17X30X5-MM THK)	
	18	1	**8T-4123**	9	WASHER (22X35X3.5-MM THK)	
M	19	1	**8T-4140**	3	BOLT (M16X2X60-MM)	
M	20	1	**8T-4141**	9	BOLT (M20X2.5X70-MM)	
	21	1	**8T-6757**	4	PLUG-PIPE	

M-METRIC PART

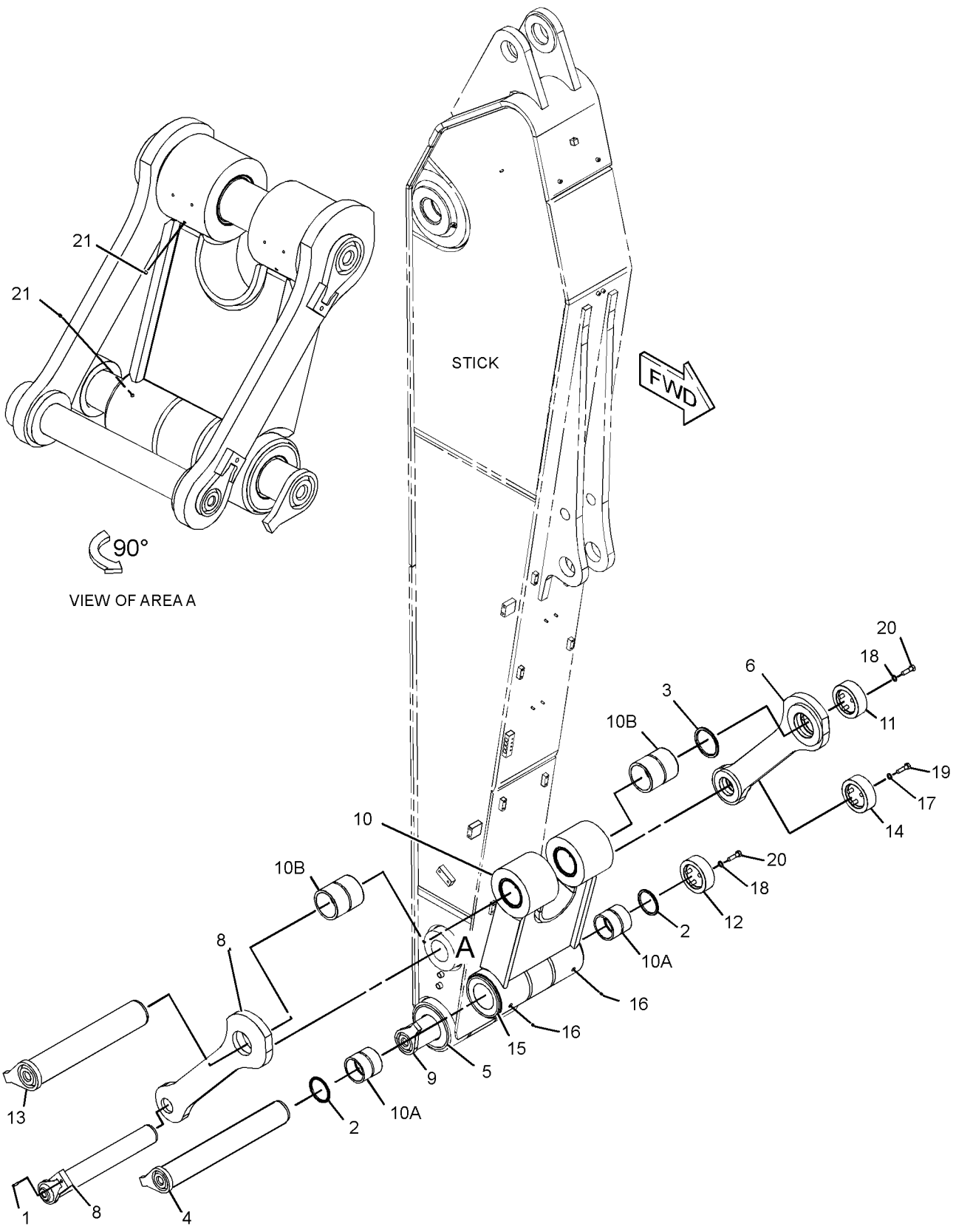

GRAPHIC #1 **<END>** g02179234

IMPLEMENTS

308-8745 LINKAGE AR-BUCKET—JC-FAMILY

S/N: WAP1-UP
PART OF 303-2701 LINKAGE AR-BUCKET
AN ATTACHMENT

SMCS-6513 **i03908007**

NOTE	REF NO	GRAPHIC REF	PART NUMBER	QTY	PART NAME 1 2 3 4 5 6 (PRODUCT LEVEL)	SEE PAGE
	1	1	**5B-0651**	1	FITTING-STRAIGHT	
	2	1	**9X-4600**	2	SEAL-LIP TYPE	
	3	1	**113-5950**	4	SEAL-LIP TYPE	
	4	1	**195-5580**	1	PIN AS	
	5	1	**305-1768**	2	SEAL-O-RING	
	6	1	**308-8746**	1	LINK & BEARING AS	
	6A	1	**6I-5168**	2	BUSHING	
	6B	1	**324-1163**	2	BUSHING	
	7	1	**324-1144**	1	LINK AS	
	8	1	**324-1147**	1	LINK AS	
	9	1	**324-1148**	1	PIN AS	
	10	1	**324-1155**	1	PIN AS	
	11	1	**330-2645**	1	PLATE	
	12	1	**330-2646**	2	PLATE	
	13	1	**330-2718**	1	PIN AS	
	14	1	**341-5272**	1	PLATE	
	15	1	**101-2154**	2	SEAL-O-RING	
	16	1	**3B-8489**	4	FITTING-GREASE	
	17	1	**7X-0513**	3	WASHER-HARD (17X30X5-MM THK)	
	18	1	**8T-4123**	9	WASHER (22X35X3.5-MM THK)	
M	19	1	**8T-4140**	3	BOLT (M16X2X60-MM)	
M	20	1	**8T-4141**	9	BOLT (M20X2.5X70-MM)	
	21	1	**8T-6757**	4	PLUG-PIPE	

M-METRIC PART

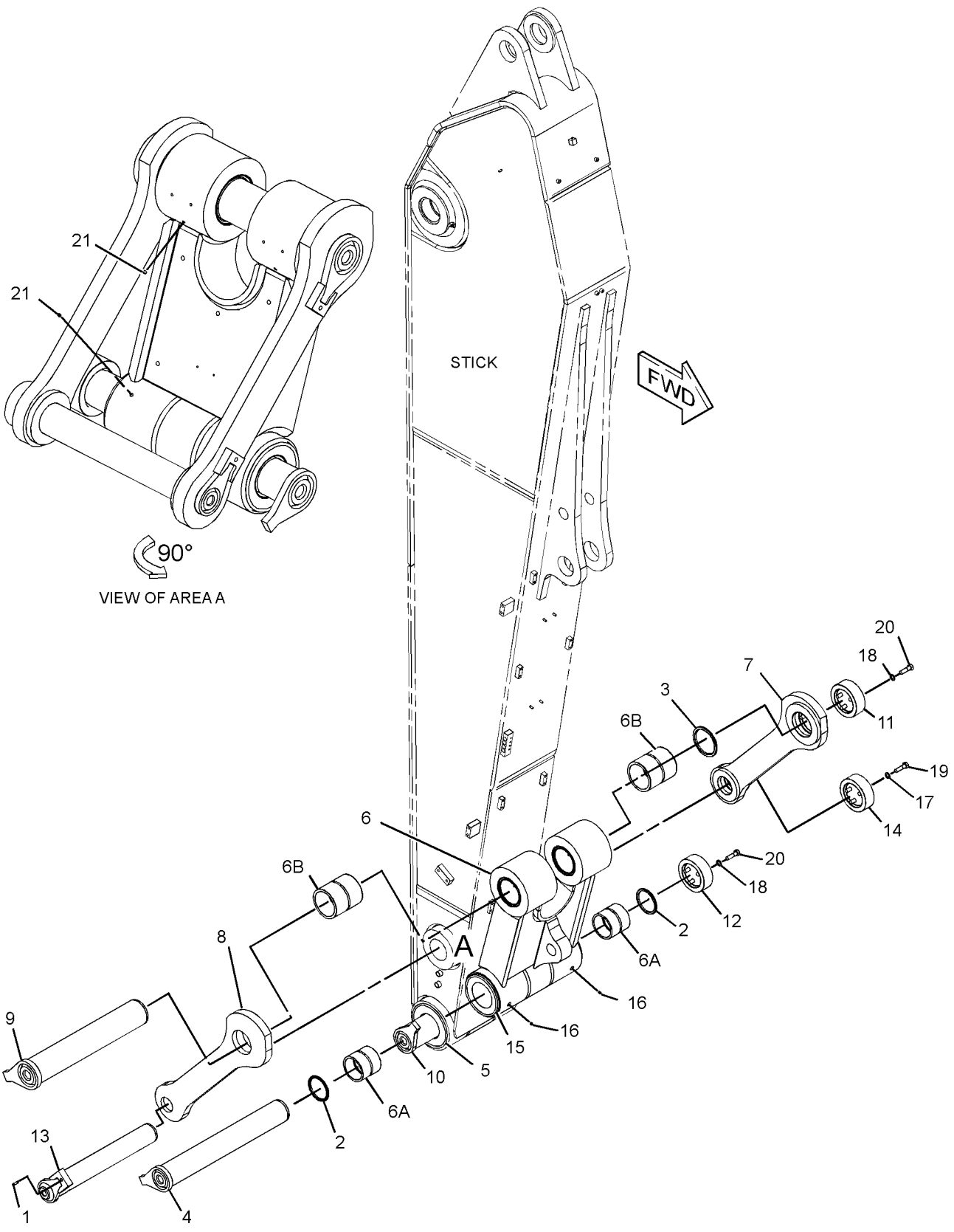

GRAPHIC #1 **<END>** g02176546

IMPLEMENTS

319-9241 LINKAGE AR-BUCKET—JC-FAMILY

S/N: WAP1-UP
PART OF 319-9239 SPECIAL AR
AN ATTACHMENT

SMCS-6513 **i03998649**

NOTE	PART NUMBER	QTY	PART NAME 1 2 3 4 5 6 (PRODUCT LEVEL)	SEE PAGE
Y	*361-2899*	1	CYLINDER & LINES GP-BUCKET	482
Y	*348-0508*	1	LINKAGE GP-BUCKET	821

Y-SEPARATE ILLUSTRATION

<END>

308-8734 LINKAGE GP-BUCKET—HB2-FAMILY

S/N: WAP1-UP
PART OF 303-2698 LINKAGE AR-BUCKET
AN ATTACHMENT

SMCS-6513 **i03910077**

NOTE	REF NO	GRAPHIC REF	PART NUMBER	QTY	PART NAME 1 2 3 4 5 6 (PRODUCT LEVEL)	SEE PAGE
	1	1	**3B-8489**	4	FITTING-GREASE	
	2	1	**5B-0651**	1	FITTING-STRAIGHT	
	3	1	**9X-4599**	2	SEAL-LIP TYPE	
	4	1	**9X-4600**	4	SEAL-LIP TYPE	
	5	1	**195-5476**	1	PIN AS	
	6	1	**195-5481**	1	PIN AS	
	7	1	**195-5484**	1	PIN AS	
	8	1	**198-5647**	2	SEAL-O-RING	
	9	1	**308-8735**	1	LINK & BEARING AS	
	9A	1	**7Y-9915**	2	BUSHING	
	9B	1	**198-5529**	2	BUSHING	
	10	1	**330-2646**	3	PLATE	
	11	1	**332-5024**	1	LINK AS	
	12	1	**332-5027**	1	LINK AS	
	13	1	**332-5029**	1	PIN AS	
	14	1	**341-5272**	1	PLATE	
	15	1	**101-2154**	2	SEAL-O-RING	
	16	1	**7X-0513**	3	WASHER-HARD (17X30X5-MM THK)	
	17	1	**8T-4123**	9	WASHER (22X35X3.5-MM THK)	
M	18	1	**8T-4140**	3	BOLT (M16X2X60-MM)	
M	19	1	**8T-4141**	9	BOLT (M20X2.5X70-MM)	

M-METRIC PART

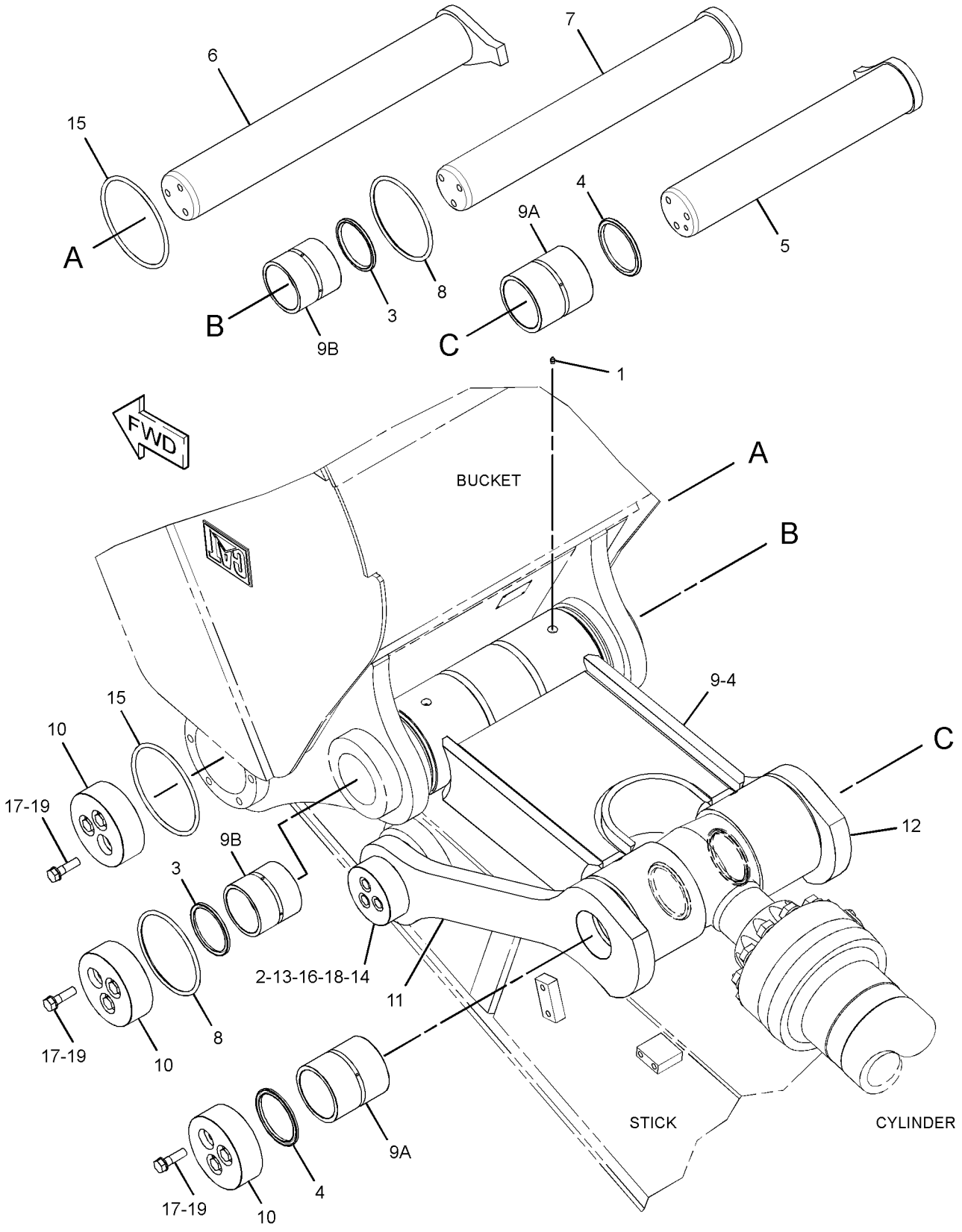

GRAPHIC #1 **<END>** g02182174

308-8738 LINKAGE GP-BUCKET—HB2-FAMILY

S/N: WAP1-UP
PART OF 303-2700 LINKAGE AR-BUCKET
AN ATTACHMENT

SMCS-6513 **i03910201**

NOTE	REF NO	GRAPHIC REF	PART NUMBER	QTY	PART NAME 1 2 3 4 5 6 (PRODUCT LEVEL)	SEE PAGE
	1	1	**3B-8489**	4	FITTING-GREASE	
	2	1	**5B-0651**	1	FITTING-STRAIGHT	
	3	1	**9X-4599**	2	SEAL-LIP TYPE	
	4	1	**9X-4600**	4	SEAL-LIP TYPE	
	5	1	**195-5476**	1	PIN AS	
	6	1	**195-5481**	1	PIN AS	
	7	1	**195-5484**	1	PIN AS	
	8	1	**198-5647**	2	SEAL-O-RING	
	9	1	**308-8739**	1	LINK & BEARING AS	
	9A	1	**7Y-9915**	2	BUSHING	
	9B	1	**198-5529**	2	BUSHING	
	10	1	**330-2646**	3	PLATE	
	11	1	**332-5024**	1	LINK AS	
	12	1	**332-5027**	1	LINK AS	
	13	1	**332-5029**	1	PIN AS	
	14	1	**341-5272**	1	PLATE	
	15	1	**101-2154**	2	SEAL-O-RING	
	16	1	**7X-0513**	3	WASHER-HARD (17X30X5-MM THK)	
	17	1	**8T-4123**	9	WASHER (22X35X3.5-MM THK)	
M	18	1	**8T-4140**	3	BOLT (M16X2X60-MM)	
M	19	1	**8T-4141**	9	BOLT (M20X2.5X70-MM)	

M-METRIC PART

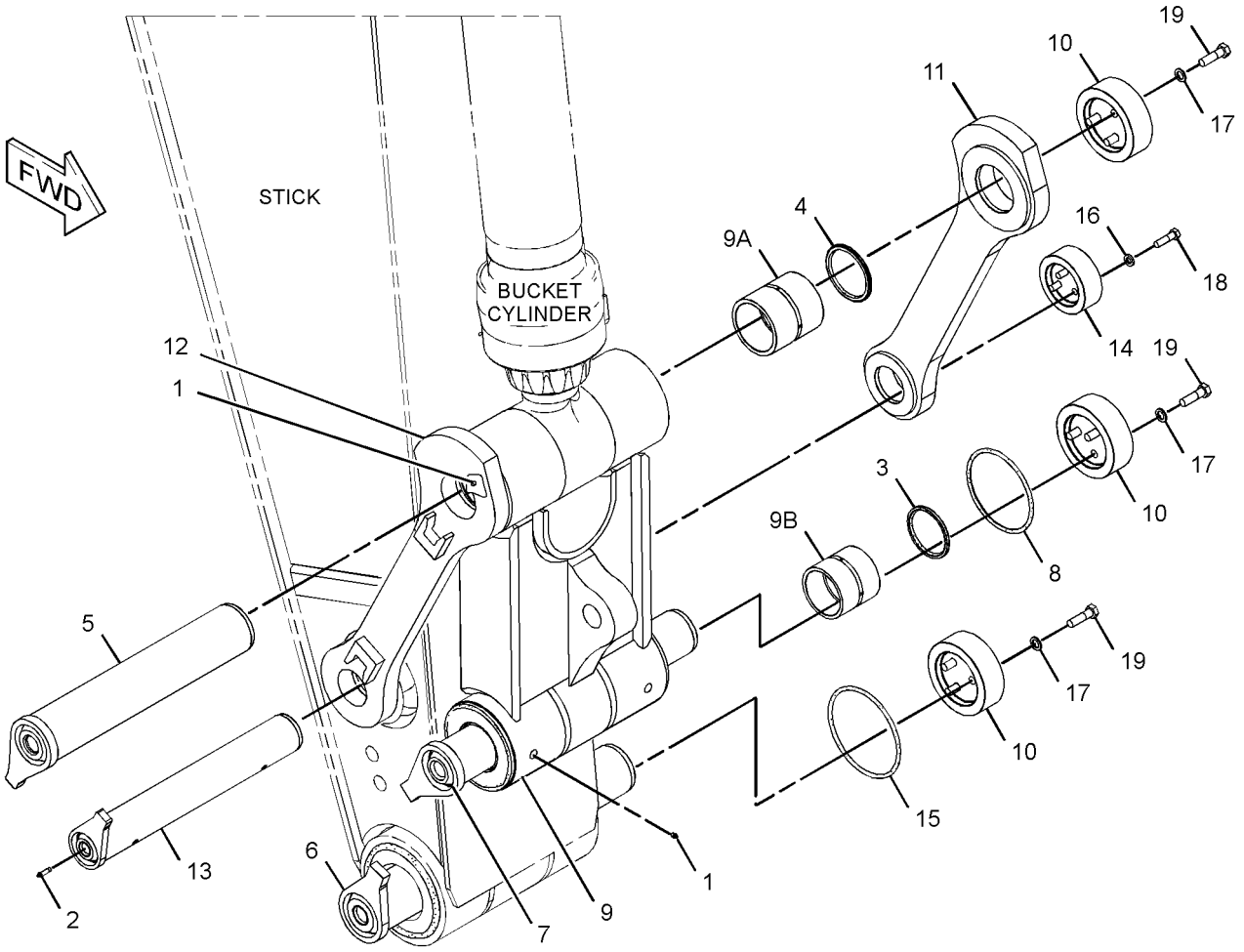

GRAPHIC #1 **<END>** g02191988

348-0508 LINKAGE GP-BUCKET—JC-FAMILY

S/N: WAP1-UP
PART OF 319-9241 LINKAGE AR-BUCKET
AN ATTACHMENT

SMCS-6513 **i03920342**

NOTE	REF NO	GRAPHIC REF	PART NUMBER	QTY	PART NAME 1 2 3 4 5 6 (PRODUCT LEVEL)	SEE PAGE
	1	1	**5B-0651**	1	FITTING-STRAIGHT	
	2	1	**9X-4600**	2	SEAL-LIP TYPE	
	3	1	**113-5950**	4	SEAL-LIP TYPE	
	4	1	**195-5580**	1	PIN AS	
	5	1	**305-1768**	2	SEAL-O-RING	
	6	1	**308-8746**	1	LINK & BEARING AS	
	6A	1	**6I-5168**	2	BUSHING	
	6B	1	**324-1163**	2	BUSHING	
	7	1	**324-1144**	1	LINK AS	
	8	1	**324-1147**	1	LINK AS	
	9	1	**324-1148**	1	PIN AS	
	10	1	**330-2645**	1	PLATE	
	11	1	**330-2646**	2	PLATE	
	12	1	**330-2718**	1	PIN AS	
	13	1	**341-5272**	1	PLATE	
	14	1	**348-0503**	1	PIN AS	
	15	1	**101-2154**	2	SEAL-O-RING	
	16	1	**3B-8489**	4	FITTING-GREASE	
	17	1	**7X-0513**	3	WASHER-HARD (17X30X5-MM THK)	
	18	1	**8T-4123**	9	WASHER (22X35X3.5-MM THK)	
M	19	1	**8T-4140**	3	BOLT (M16X2X60-MM)	
M	20	1	**8T-4141**	9	BOLT (M20X2.5X70-MM)	
	21	1	**8T-6757**	4	PLUG-PIPE	

M-METRIC PART

348-0508 **LINKAGE GP-BUCKET** *(contd.)* **i03920342**

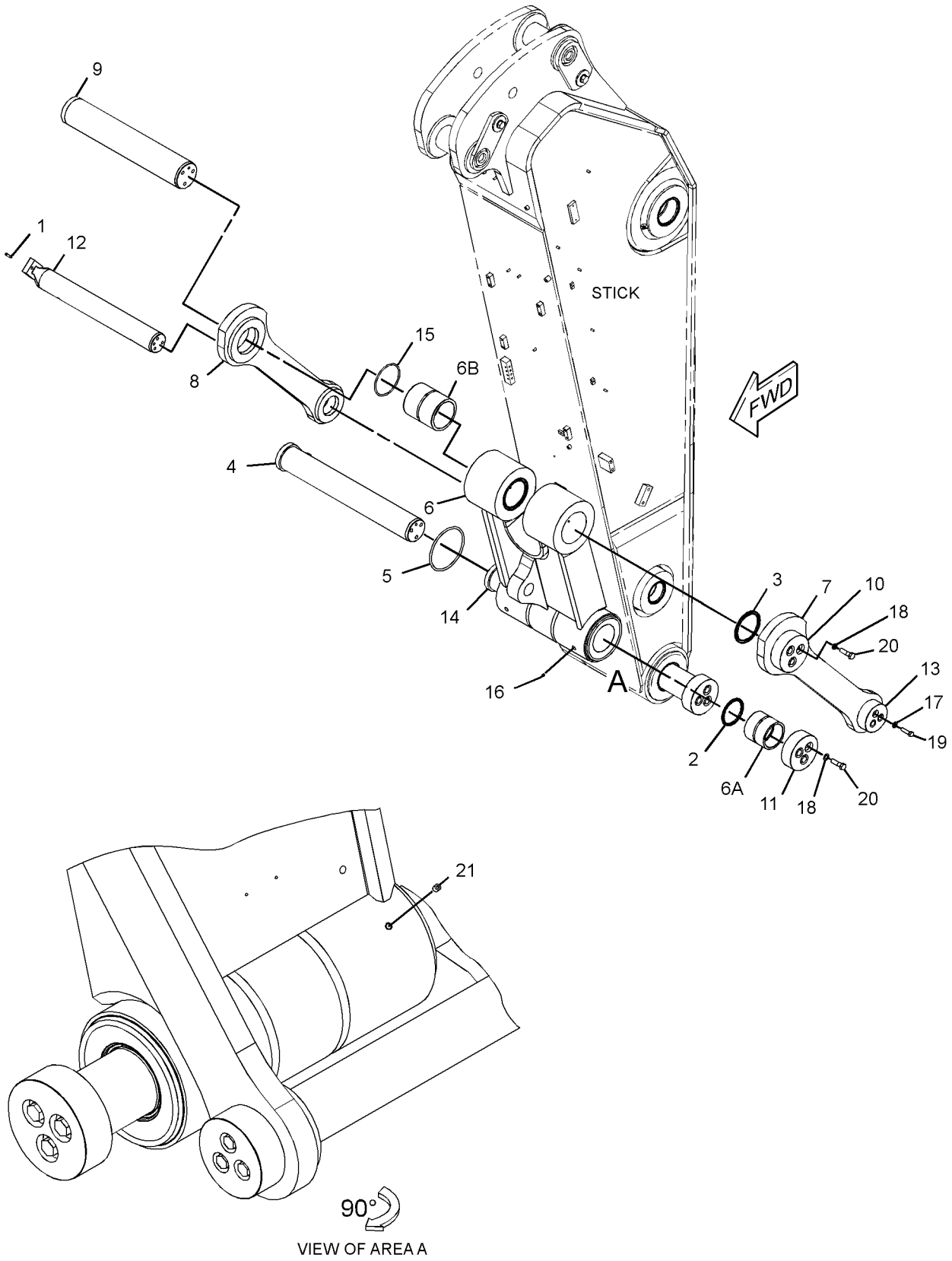

GRAPHIC #1 **<END>** g02163472

IMPLEMENTS

303-2691 STICK AR-HOE—REACH

S/N: WAP1-UP
5.5-M (18-FT). HB2-FAMILY
FOR USE WITH 303-2688—PAGE 781, 303-2698—PAGE 811, 303-2689—PAGE 780, 303-2700—PAGE 811
AN ATTACHMENT

SMCS-6502 **i03907866**

NOTE	PART NUMBER	QTY	PART NAME 1 2 3 4 5 6 (PRODUCT LEVEL)	SEE PAGE
Y	*303-9147*	1	LINES GP-GREASE	807
Y	*338-6166*	1	LINES GP-STICK	623
Y	*308-8701*	1	STICK GP-HOE (REACH)	826
Y-SEPARATE ILLUSTRATION				

<END>

303-2692 STICK AR-HOE—REACH

S/N: WAP1-UP
4.4-M (14.4-FT). HB2-FAMILY
FOR USE WITH 303-2688—PAGE 781, 303-2698—PAGE 811, 303-2689—PAGE 780, 303-2700—PAGE 811
AN ATTACHMENT

SMCS-6502 **i03907867**

NOTE	PART NUMBER	QTY	PART NAME 1 2 3 4 5 6 (PRODUCT LEVEL)	SEE PAGE
Y	*303-9149*	1	LINES GP-GREASE	809
Y	*338-6167*	1	LINES GP-STICK	624
Y	*308-8705*	1	STICK GP-HOE (REACH)	828
Y-SEPARATE ILLUSTRATION				

<END>

303-2694 STICK AR-HOE

S/N: WAP1-UP
3.4-M (11.2-FT). JC-FAMILY
FOR USE WITH 303-2689—PAGE 780, 303-2699—PAGE 811, 303-2701—PAGE 811
AN ATTACHMENT

SMCS-6502 **i03907926**

NOTE	PART NUMBER	QTY	PART NAME 1 2 3 4 5 6 (PRODUCT LEVEL)	SEE PAGE
Y	*203-7450*	1	LINES GP-GREASE (STICK)	805
Y	*338-6169*	1	LINES GP-STICK	625
Y	*308-8714*	1	STICK GP-HOE (REACH)	830
Y-SEPARATE ILLUSTRATION				

<END>

IMPLEMENTS

303-2696 STICK AR-HOE—MASS

S/N: WAP1-UP
3.4-M (11.2-FT) . JC-FAMILY
FOR USE WITH 303-2690—PAGE 780, 303-2701—PAGE 811, 303-2699—PAGE 811
AN ATTACHMENT

SMCS-6502 **i03907951**

NOTE	PART NUMBER	QTY	PART NAME 1 2 3 4 5 6 (PRODUCT LEVEL)	SEE PAGE
Y	*176-2220*	1	LINES GP-GREASE (STICK)	800
Y	*338-6169*	1	LINES GP-STICK	625
Y	*308-8725*	1	STICK GP-HOE (REACH)	831
Y-SEPARATE ILLUSTRATION				

<END>

303-2697 STICK AR-HOE—MASS

S/N: WAP1-UP
2.92-M (9.6-FT). JC-FAMILY
FOR USE WITH 303-2690—PAGE 780, 303-2699—PAGE 811, 303-2701—PAGE 811
AN ATTACHMENT

SMCS-6502 **i03907961**

NOTE	PART NUMBER	QTY	PART NAME 1 2 3 4 5 6 (PRODUCT LEVEL)	SEE PAGE
Y	*176-2221*	1	LINES GP-GREASE (STICK)	802
Y	*338-6171*	1	LINES GP-STICK	626
Y	*308-8730*	1	STICK GP-HOE (MASS) (REACH)	833
Y-SEPARATE ILLUSTRATION				

<END>

319-9212 STICK AR-HOE—REACH, ACCUGRADE READY

S/N: WAP1-UP
5.5-M (18-FT)
FOR USE WITH 319-9211—PAGE 780
AN ATTACHMENT

SMCS-6502 **i03911043**

NOTE	PART NUMBER	QTY	PART NAME 1 2 3 4 5 6 (PRODUCT LEVEL)	SEE PAGE
Y	*303-9147*	1	LINES GP-GREASE (STICK)	807
Y	*338-6166*	1	LINES GP-STICK	623
Y	*339-4174*	1	STICK GP-HOE (REACH, ACCUGRADE READY)	836
Y-SEPARATE ILLUSTRATION				

<END>

319-9213 STICK AR-HOE—REACH, ACCUGRADE READY

S/N: WAP1-UP
4.4-M (14.4-FT)
AN ATTACHMENT

SMCS-6502 **i03911054**

NOTE	PART NUMBER	QTY	PART NAME 1 2 3 4 5 6 (PRODUCT LEVEL)	SEE PAGE
Y	*303-9149*	1	LINES GP-GREASE (STICK)	809
Y	*338-6167*	1	LINES GP-STICK	624
Y	*339-4175*	1	STICK GP-HOE (REACH, ACCUGRADE READY)	838
Y-SEPARATE ILLUSTRATION				

<END>

319-9240 STICK AR-HOE—MASS

S/N: WAP1-UP
2.9-M (9.6-FT). JC-FAMILY, EXTREME SERVICE
PART OF 319-9239 SPECIAL AR
AN ATTACHMENT

SMCS-6502 **i03921111**

NOTE	PART NUMBER	QTY	PART NAME 1 2 3 4 5 6 (PRODUCT LEVEL)	SEE PAGE
Y	*176-2221*	1	LINES GP-GREASE	802
Y	*338-6171*	1	LINES GP-STICK	626
Y	*332-4961*	1	STICK GP-HOE	834
Y-SEPARATE ILLUSTRATION				

<END>

IMPLEMENTS

308-8701 STICK GP-HOE—REACH

S/N: WAP1-UP
5.5-M (18-FT). HB2-FAMILY
PART OF 303-2691 STICK AR-HOE
AN ATTACHMENT

SMCS-6502 **i03908775**

NOTE	REF NO	GRAPHIC REF	PART NUMBER	QTY	PART NAME 1 2 3 4 5 6 (PRODUCT LEVEL)	SEE PAGE
	1	1	**7Y-9267**	1	SPACER (133X190X14-MM THK)	
	2	1	**9X-4598**	2	SEAL-LIP TYPE	
	3	1	**9X-4600**	2	SEAL-LIP TYPE	
	4	1	**9X-4601**	2	SEAL-LIP TYPE	
B	5	1	**093-0074**	2	SHIM (1-MM THK)	
B	6	1	**093-0076**	2	SHIM (1-MM THK)	
B	7	1	**093-0106**	1	SHIM (2-MM THK)	
B	8	1	**093-0108**	1	SHIM (2-MM THK)	
B	9	1	**147-3957**	1	SHIM (0.5-MM THK)	
B	10	1	**151-0653**	1	SHIM (0.5-MM THK)	
	11	1	**201-2771**	2	WASHER (26X90X8-MM THK)	
	12	1	**234-3970**	1	PIN AS	
	13	1	**308-8702**	1	STICK & BEARING AS	
	13A	1	**4I-4542**	2	BUSHING	
	13B	1	**234-3748**	2	BUSHING	
	13C	1	**234-3749**	2	BUSHING	
	14	1	**330-2829**	1	PIN AS	
	15	1	**093-0373**	1	SPACER (123X180X14-MM THK)	
	16	1	**3B-8489**	2	FITTING-GREASE	
M	17	1	**7X-2573**	1	BOLT (M24X3X40-MM)	
M	18	1	**7X-2574**	1	BOLT (M24X3X45-MM)	
	19	1	**8T-4167**	2	WASHER-HARD (26X44X4-MM THK)	

B-USE AS REQUIRED
M-METRIC PART

308-8701 **STICK GP-HOE** *(contd.)* **i03908775**

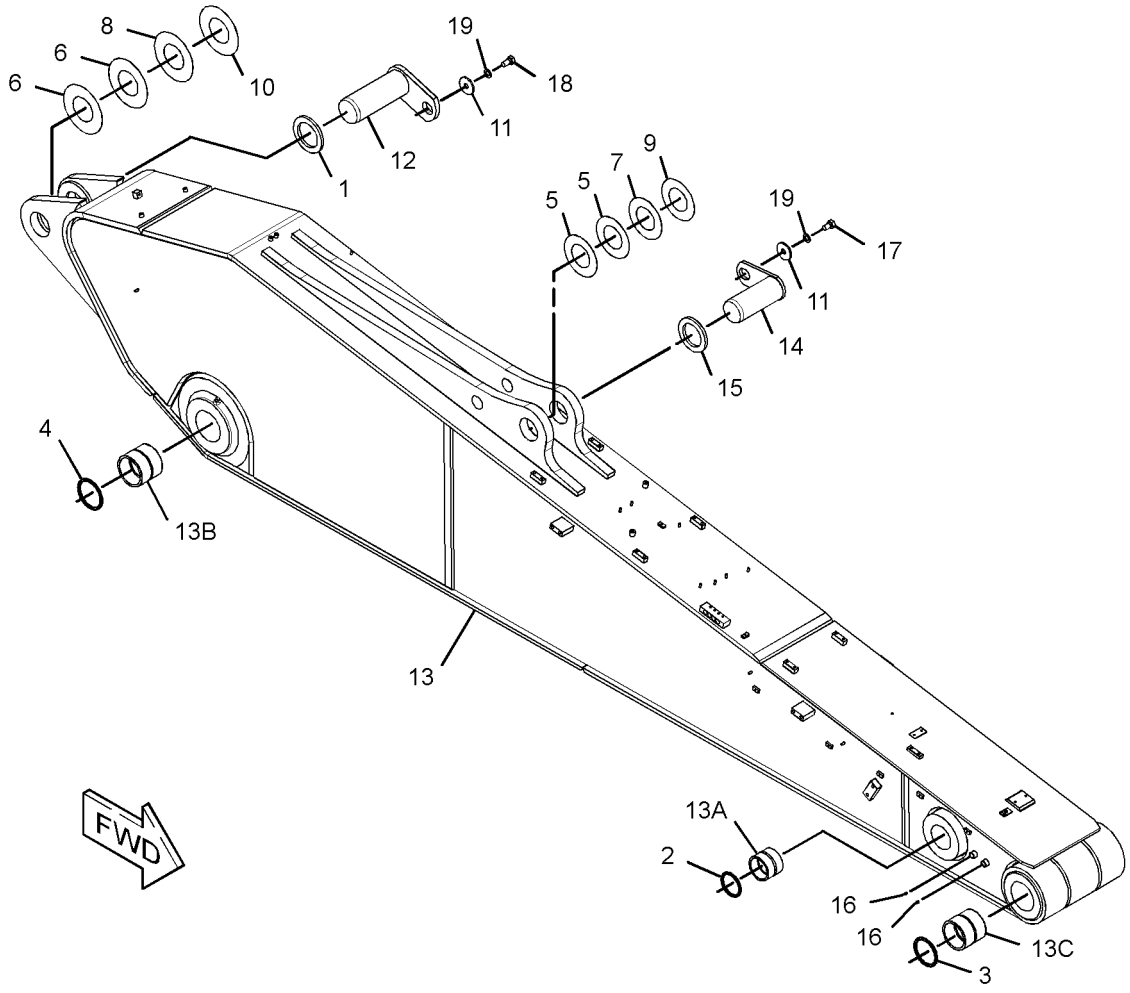

GRAPHIC #1 **<END>** g02177410

IMPLEMENTS

308-8705 STICK GP-HOE

S/N: WAP1-UP
4.4-M (14.4-FT). HB2-FAMILY
PART OF 303-2692 STICK AR-HOE
AN ATTACHMENT

SMCS-6502 **i03908780**

NOTE	REF NO	GRAPHIC REF	PART NUMBER	QTY	PART NAME 1 2 3 4 5 6 (PRODUCT LEVEL)	SEE PAGE
	1	1	**7Y-9267**	1	SPACER (133X190X14-MM THK)	
	2	1	**9X-4598**	2	SEAL-LIP TYPE	
	3	1	**9X-4600**	2	SEAL-LIP TYPE	
	4	1	**9X-4601**	2	SEAL-LIP TYPE	
B	5	1	**093-0074**	2	SHIM (1-MM THK)	
B	6	1	**093-0076**	2	SHIM (1-MM THK)	
B	7	1	**093-0108**	1	SHIM (2-MM THK)	
B	8	1	**151-0653**	1	SHIM (0.5-MM THK)	
	9	1	**201-2771**	2	WASHER (26X90X8-MM THK)	
	10	1	**234-3970**	1	PIN AS	
	11	1	**308-8706**	1	STICK & BEARING AS	
	11A	1	**4I-4542**	2	BUSHING	
	11B	1	**234-3748**	2	BUSHING	
	11C	1	**234-3749**	2	BUSHING	
	12	1	**330-2829**	1	PIN AS	
B	13	1	**093-0106**	1	SHIM (2-MM THK)	
	14	1	**093-0373**	1	SPACER (123X180X14-MM THK)	
B	15	1	**147-3957**	1	SHIM (0.5-MM THK)	
	16	1	**3B-8489**	2	FITTING-GREASE	
M	17	1	**7X-2573**	1	BOLT (M24X3X40-MM)	
M	18	1	**7X-2574**	1	BOLT (M24X3X45-MM)	
	19	1	**8T-4167**	2	WASHER-HARD (26X44X4-MM THK)	

B-USE AS REQUIRED
M-METRIC PART

308-8705 **STICK GP-HOE** *(contd.)* **i03908780**

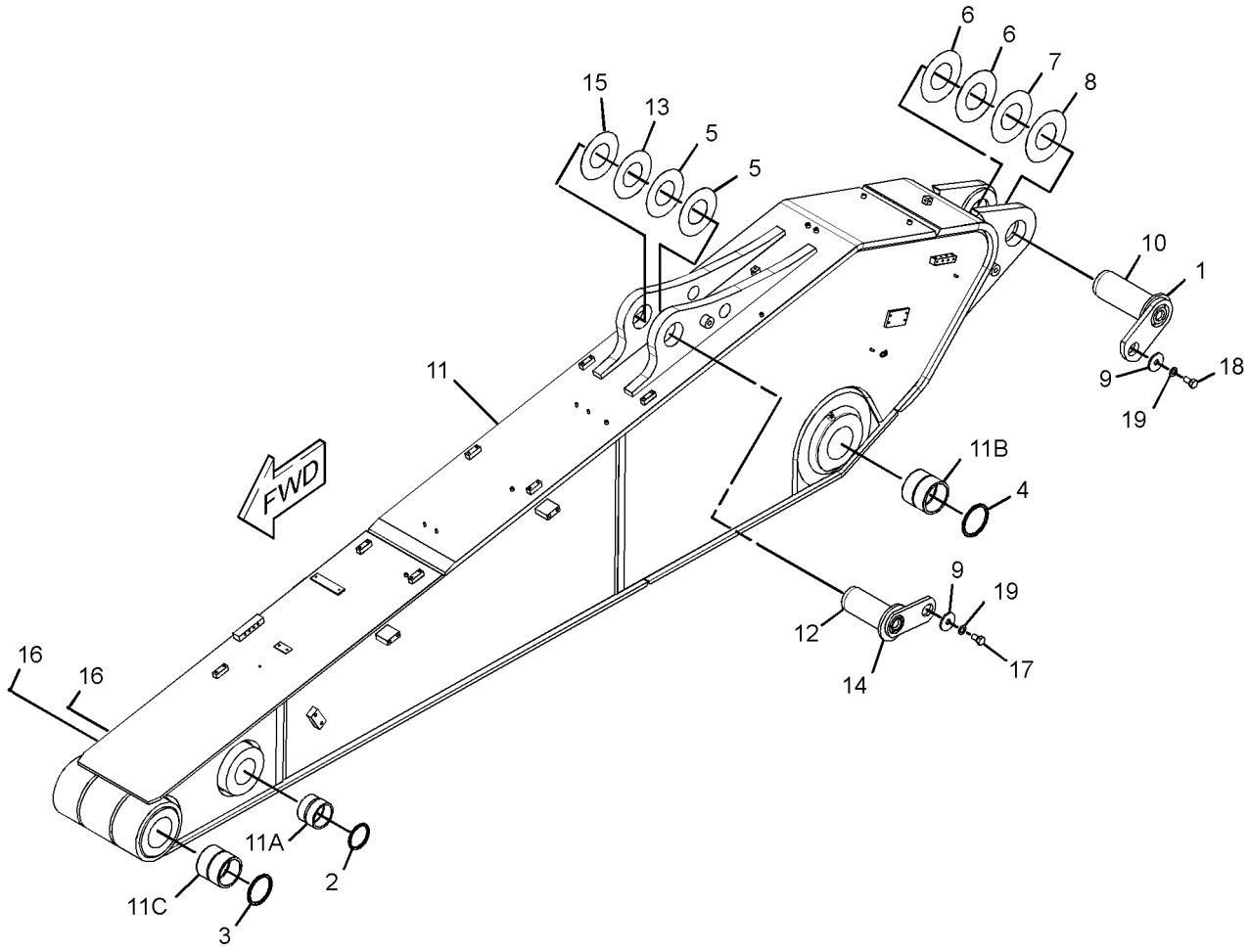

GRAPHIC #1 **<END>** g02179795

IMPLEMENTS

308-8714 STICK GP-HOE

S/N: WAP1-UP
3.4-M (11.2-FT). JC-FAMILY
PART OF 303-2694 STICK AR-HOE
AN ATTACHMENT

SMCS-6502 **i03908784**

NOTE	REF NO	GRAPHIC REF	PART NUMBER	QTY	PART NAME 1 2 3 4 5 6 (PRODUCT LEVEL)	SEE PAGE
	1	1	**7Y-9267**	2	SPACER (133X190X14-MM THK)	
	2	1	**9X-4598**	2	SEAL-LIP TYPE	
	3	1	**9X-4601**	4	SEAL-LIP TYPE	
B	4	1	**093-0076**	4	SHIM (1-MM THK)	
B	5	1	**093-0108**	2	SHIM (2-MM THK)	
B	6	1	**151-0653**	2	SHIM (0.5-MM THK)	
	7	1	**172-3024**	1	PIN AS	
	8	1	**201-2771**	2	WASHER (26X90X8-MM THK)	
	9	1	**234-3970**	1	PIN AS	
	10	1	**308-8715**	1	STICK & BEARING AS	
	10A	1	**4I-4542**	2	BUSHING	
	10B	1	**234-3748**	4	BUSHING	
	11	1	**3B-8489**	2	FITTING-GREASE	
M	12	1	**7X-2573**	1	BOLT (M24X3X40-MM)	
M	13	1	**7X-2574**	1	BOLT (M24X3X45-MM)	
	14	1	**8T-4167**	2	WASHER-HARD (26X44X4-MM THK)	

B-USE AS REQUIRED
M-METRIC PART

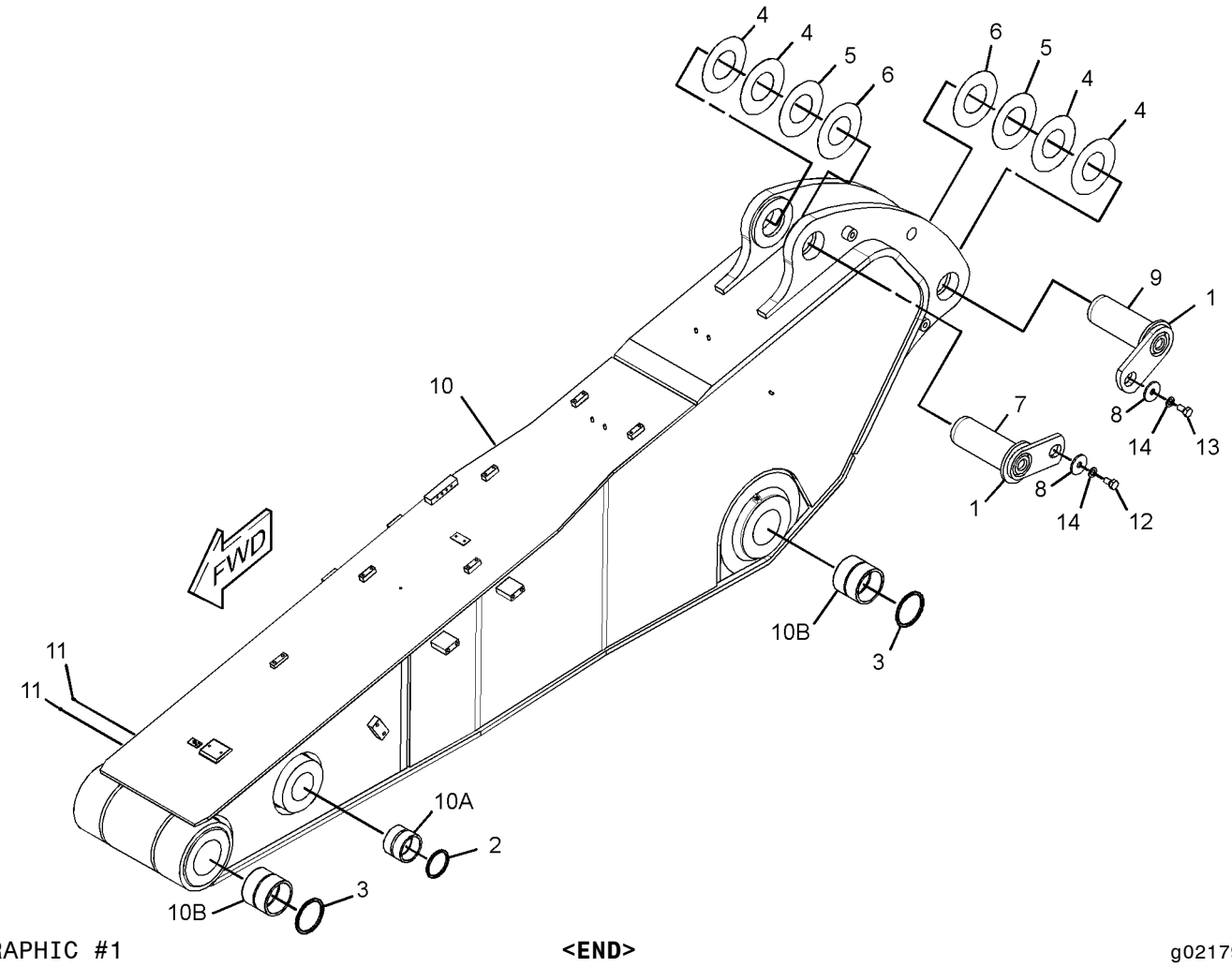

GRAPHIC #1 **<END>** g02179416

308-8725 STICK GP-HOE—MASS

S/N: WAP1-UP
3.4-M (11.2-FT). JC-FAMILY
PART OF 303-2696 STICK AR-HOE
AN ATTACHMENT

SMCS-6502 **i03908831**

NOTE	REF NO	GRAPHIC REF	PART NUMBER	QTY	PART NAME 1 2 3 4 5 6 (PRODUCT LEVEL)	SEE PAGE
	1	1	**7Y-9267**	2	SPACER (133X190X14-MM THK)	
	2	1	**9X-4598**	2	SEAL-LIP TYPE	
	3	1	**9X-4601**	4	SEAL-LIP TYPE	
B	4	1	**093-0076**	4	SHIM (1-MM THK)	
B	5	1	**093-0108**	2	SHIM (2-MM THK)	
B	6	1	**151-0653**	2	SHIM (0.5-MM THK)	
	7	1	**172-3024**	1	PIN AS	
	8	1	**201-2771**	2	WASHER (26X90X8-MM THK)	
	9	1	**234-3970**	1	PIN AS	
	10	1	**308-8726**	1	STICK & BEARING AS	
	10A	1	**4I-4542**	2	BUSHING	
	10B	1	**234-3748**	4	BUSHING	
	11	1	**3B-8489**	2	FITTING-GREASE	
M	12	1	**7X-2573**	1	BOLT (M24X3X40-MM)	
M	13	1	**7X-2574**	1	BOLT (M24X3X45-MM)	
	14	1	**8T-4167**	2	WASHER-HARD (26X44X4-MM THK)	

B-USE AS REQUIRED
M-METRIC PART

308-8725 **STICK GP-HOE** *(contd.)* **i03908831**

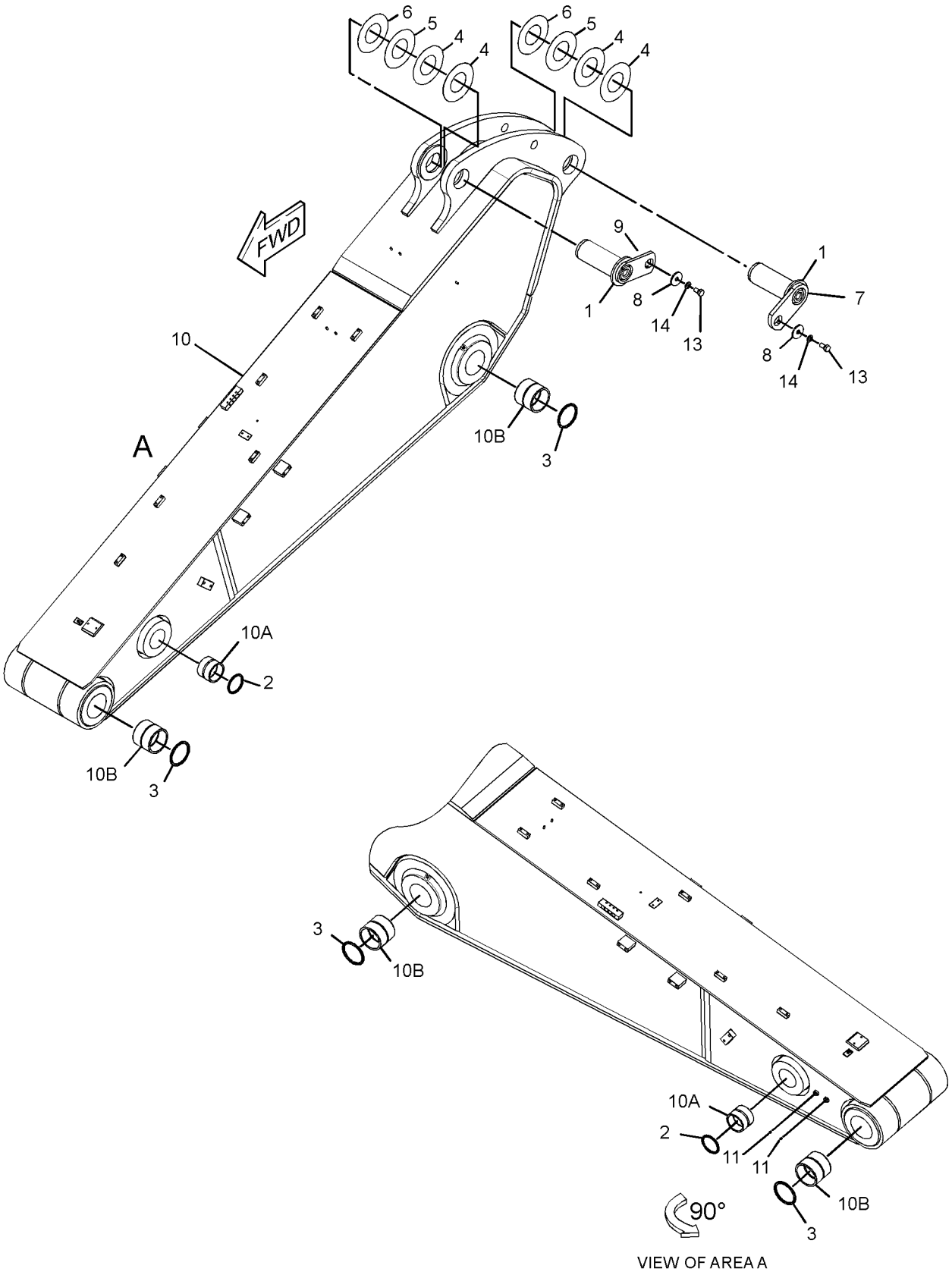

VIEW OF AREA A

GRAPHIC #1 **<END>** g02174961

308-8730 STICK GP-HOE—MASS

S/N: WAP1-UP
2.92-M (9.6-FT). JC-FAMILY
PART OF 303-2697 STICK AR-HOE
AN ATTACHMENT

SMCS-6502 **i03908838**

NOTE	REF NO	GRAPHIC REF	PART NUMBER	QTY	PART NAME 1 2 3 4 5 6 (PRODUCT LEVEL)	SEE PAGE
	1	1	**7Y-9267**	2	SPACER (133X190X14-MM THK)	
	2	1	**9X-4598**	2	SEAL-LIP TYPE	
	3	1	**9X-4601**	4	SEAL-LIP TYPE	
B	4	1	**093-0076**	4	SHIM (1-MM THK)	
B	5	1	**093-0108**	2	SHIM (2-MM THK)	
B	6	1	**151-0653**	2	SHIM (0.5-MM THK)	
	7	1	**172-3024**	1	PIN AS	
	8	1	**201-2771**	2	WASHER (26X90X8-MM THK)	
	9	1	**234-3970**	1	PIN AS	
	10	1	**308-8731**	1	STICK & BEARING AS	
	10A	1	**4I-4542**	2	BUSHING	
	10B	1	**234-3748**	4	BUSHING	
	11	1	**3B-8489**	2	FITTING-GREASE	
M	12	1	**7X-2573**	1	BOLT (M24X3X40-MM)	
M	13	1	**7X-2574**	1	BOLT (M24X3X45-MM)	
	14	1	**8T-4167**	2	WASHER-HARD (26X44X4-MM THK)	

B-USE AS REQUIRED
M-METRIC PART

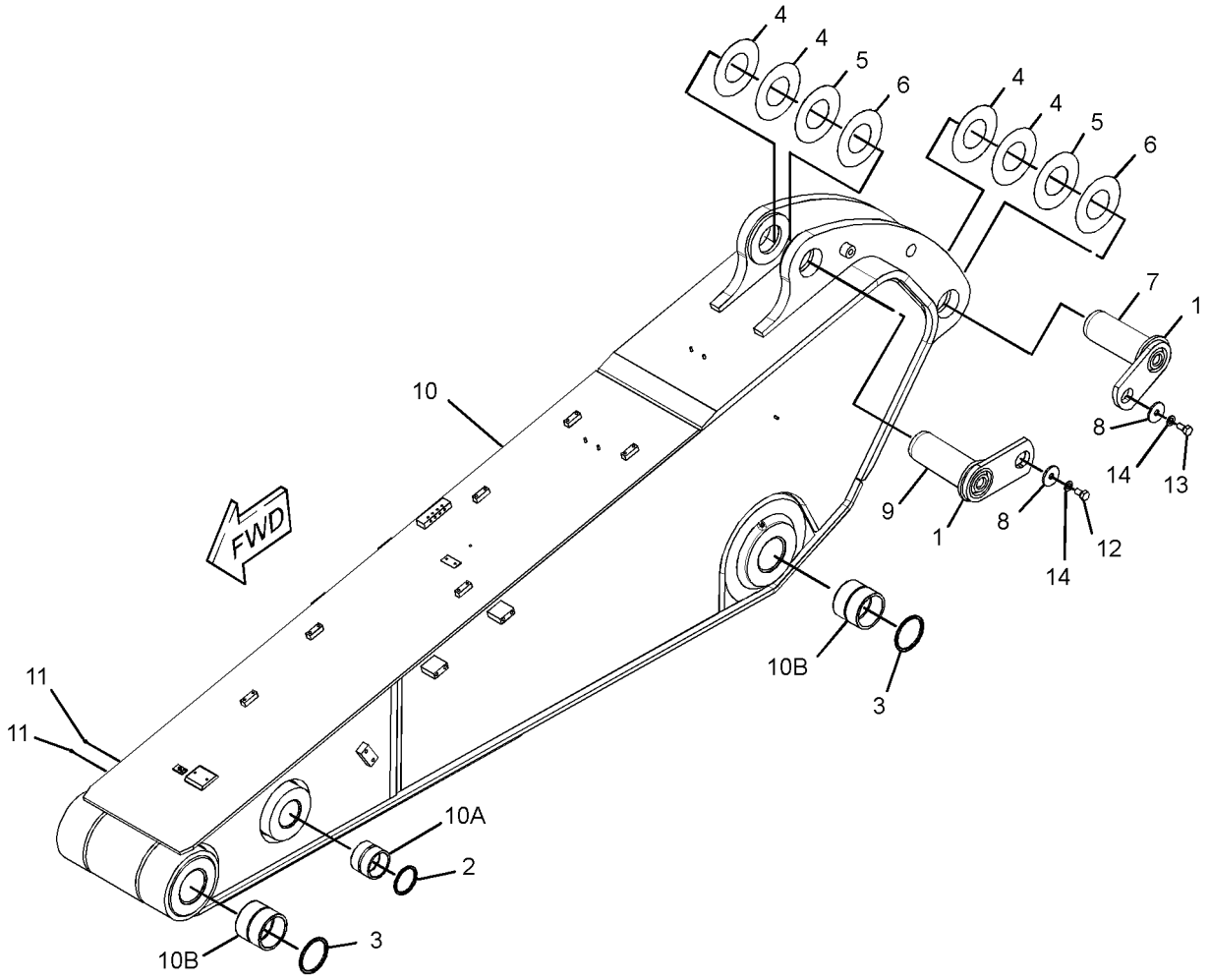

GRAPHIC #1 **<END>** g02178132

IMPLEMENTS

332-4961 STICK GP-HOE—MASS

S/N: WAP1-UP
2.9-M (9.6-FT) . JC-FAMILY, EXTREME SERVICE
PART OF 319-9240 STICK AR-HOE
AN ATTACHMENT

SMCS-6502 **i03921129**

NOTE	REF NO	GRAPHIC REF	PART NUMBER	QTY	PART NAME 1 2 3 4 5 6 (PRODUCT LEVEL)	SEE PAGE
	1	1	**7Y-9267**	2	SPACER (133X190X14-MM THK)	
	2	1	**9X-4598**	2	SEAL-LIP TYPE	
	3	1	**9X-4601**	4	SEAL-LIP TYPE	
B	4	1	**093-0076**	4	SHIM (1-MM THK)	
B	5	1	**093-0108**	2	SHIM (2-MM THK)	
B	6	1	**151-0653**	2	SHIM (0.5-MM THK)	
	7	1	**172-3024**	1	PIN AS	
	8	1	**201-2771**	2	WASHER (26X90X8-MM THK)	
	9	1	**234-3970**	1	PIN AS	
	10	1	**332-4962**	1	STICK & BEARING AS	
	10A	1	**4I-4542**	2	BUSHING	
	10B	1	**234-3748**	2	BUSHING	
	10C	1	**336-2650**	2	FLANGE	
	11	1	**3B-8489**	2	FITTING-GREASE	
M	12	1	**7X-2573**	1	BOLT (M24X3X40-MM)	
M	13	1	**7X-2574**	1	BOLT (M24X3X45-MM)	
	14	1	**8T-4167**	2	WASHER-HARD (26X44X4-MM THK)	

B-USE AS REQUIRED
M-METRIC PART

332-4961 **STICK GP-HOE** *(contd.)* **i03921129**

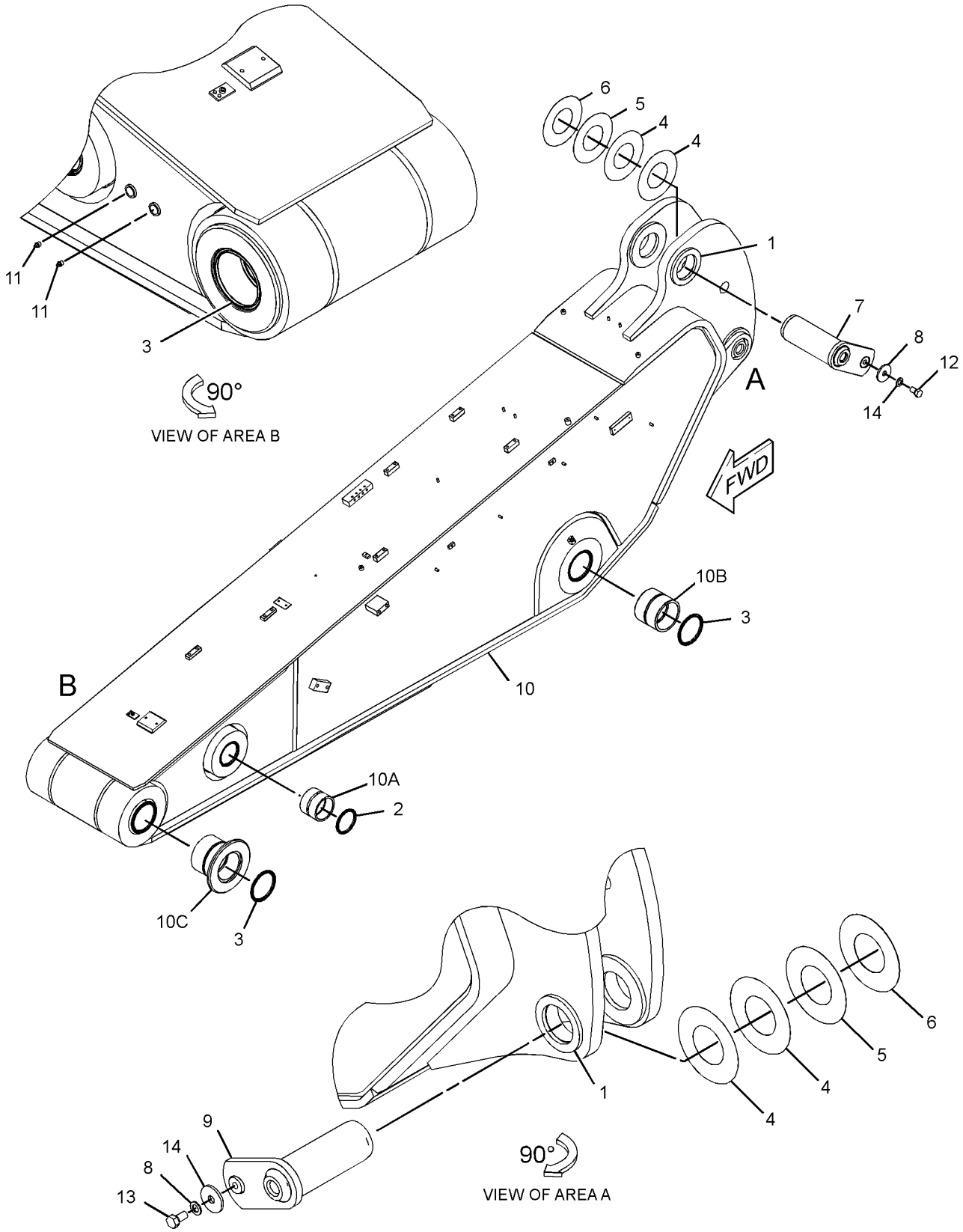

GRAPHIC #1 **<END>** g02158073

IMPLEMENTS

339-4174 STICK GP-HOE—REACH, ACCUGRADE READY

S/N: WAP1-UP
5.5-M (18-FT)
PART OF 319-9212 STICK AR-HOE
AN ATTACHMENT

SMCS-6502 **i03911045**

NOTE	REF NO	GRAPHIC REF	PART NUMBER	QTY	PART NAME 1 2 3 4 5 6 (PRODUCT LEVEL)	SEE PAGE
	1	1	**7Y-9267**	1	SPACER (133X190X14-MM THK)	
	2	1	**9X-4598**	2	SEAL-LIP TYPE	
	3	1	**9X-4600**	2	SEAL-LIP TYPE	
	4	1	**9X-4601**	2	SEAL-LIP TYPE	
B	5	1	**093-0074**	2	SHIM (1-MM THK)	
B	6	1	**093-0076**	2	SHIM (1-MM THK)	
B	7	1	**093-0106**	1	SHIM (2-MM THK)	
B	8	1	**093-0108**	1	SHIM (2-MM THK)	
B	9	1	**147-3957**	1	SHIM (0.5-MM THK)	
B	10	1	**151-0653**	1	SHIM (0.5-MM THK)	
	11	1	**201-2771**	2	WASHER (26X90X8-MM THK)	
	12	1	**234-3970**	1	PIN AS	
	13	1	**297-7380**	1	STICK & BEARING AS	
	13A	1	**4I-4542**	2	BUSHING	
	13B	1	**234-3748**	2	BUSHING	
	13C	1	**234-3749**	2	BUSHING	
	14	1	**330-2829**	1	PIN AS	
	15	1	**093-0373**	1	SPACER (123X180X14-MM THK)	
	16	1	**3B-8489**	2	FITTING-GREASE	
M	17	1	**7X-2573**	1	BOLT (M24X3X40-MM)	
M	18	1	**7X-2574**	1	BOLT (M24X3X45-MM)	
	19	1	**8T-4167**	2	WASHER-HARD (26X44X4-MM THK)	

B-USE AS REQUIRED
M-METRIC PART

339-4174 **STICK GP-HOE** *(contd.)* **i03911045**

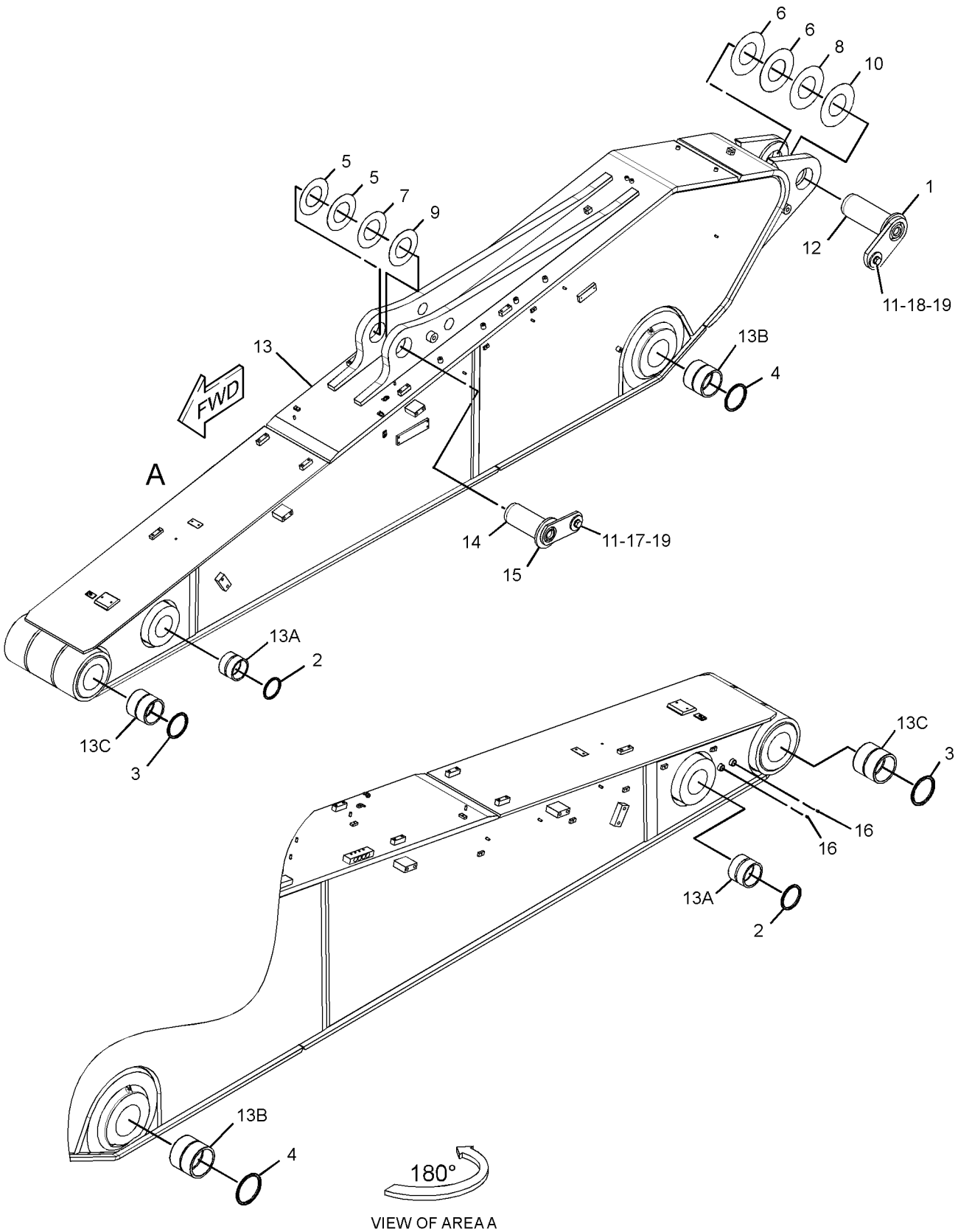

VIEW OF AREA A

GRAPHIC #1 **<END>** g02175656

IMPLEMENTS

339-4175 STICK GP-HOE—REACH, ACCUGRADE READY

S/N: WAP1-UP
4.4-M (14.4-FT)
PART OF 319-9213 STICK AR-HOE
AN ATTACHMENT

SMCS-6502 **i03911060**

NOTE	REF NO	GRAPHIC REF	PART NUMBER	QTY	PART NAME 1 2 3 4 5 6 (PRODUCT LEVEL)	SEE PAGE
	1	1	**7Y-9267**	1	SPACER (133X190X14-MM THK)	
	2	1	**9X-4598**	2	SEAL-LIP TYPE	
	3	1	**9X-4600**	2	SEAL-LIP TYPE	
	4	1	**9X-4601**	2	SEAL-LIP TYPE	
B	5	1	**093-0074**	2	SHIM (1-MM THK)	
B	6	1	**093-0076**	2	SHIM (1-MM THK)	
B	7	1	**093-0106**	1	SHIM (2-MM THK)	
B	8	1	**093-0108**	1	SHIM (2-MM THK)	
B	9	1	**147-3957**	1	SHIM (0.5-MM THK)	
B	10	1	**151-0653**	1	SHIM (0.5-MM THK)	
	11	1	**201-2771**	2	WASHER (26X90X8-MM THK)	
	12	1	**234-3970**	1	PIN AS	
	13	1	**297-7383**	1	STICK & BEARING AS	
	13A	1	**4I-4542**	2	BUSHING	
	13B	1	**234-3748**	2	BUSHING	
	13C	1	**234-3749**	2	BUSHING	
	14	1	**330-2829**	1	PIN AS	
	15	1	**093-0373**	1	SPACER (123X180X14-MM THK)	
	16	1	**3B-8489**	2	FITTING-GREASE	
M	17	1	**7X-2573**	1	BOLT (M24X3X40-MM)	
M	18	1	**7X-2574**	1	BOLT (M24X3X45-MM)	
	19	1	**8T-4167**	2	WASHER-HARD (26X44X4-MM THK)	

B-USE AS REQUIRED
M-METRIC PART

339-4175 **STICK GP-HOE** *(contd.)* **i03911060**

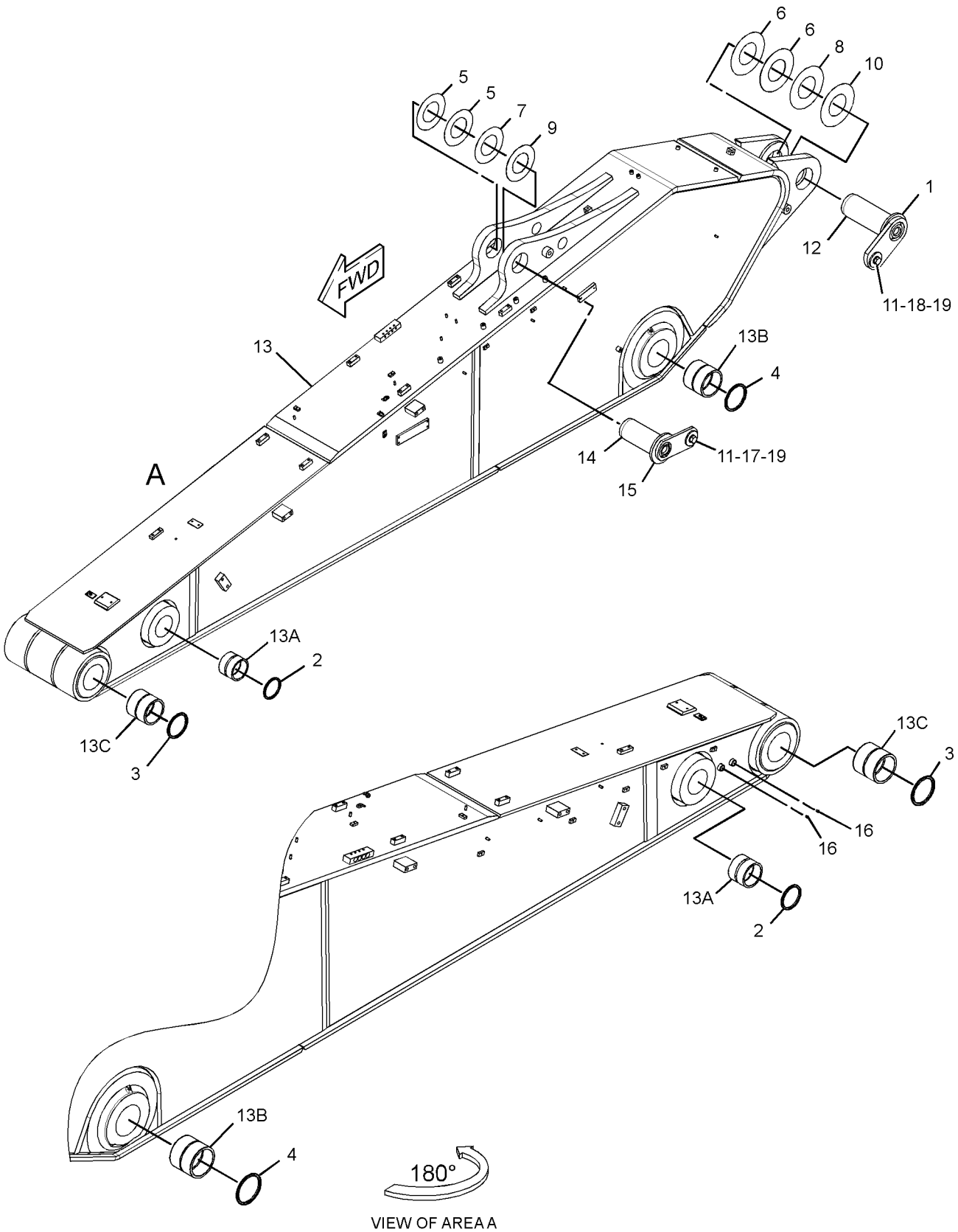

VIEW OF AREA A

GRAPHIC #1 **<END>** g02175213

WORK TOOLS

7Y-3477 ADJUSTER GP-BUCKET—UB/WB/HB/JB-FAMILY

S/N: WAP1-UP

PART OF 331-1221, 331-1222, 331-1224, 331-1225, 331-1226, 331-1230, 331-1231, 331-1232, 331-1233, 341-8649, 341-8650, 341-8651, 341-8652, 361-0756 BUCKET & ADJUSTER GP

AN ATTACHMENT

SMCS-6513, 6700 **i01826549**

NOTE	REF NO	GRAPHIC REF	PART NUMBER	QTY	PART NAME 1 2 3 4 5 6 (PRODUCT LEVEL)	SEE PAGE
B	1	1	**7Y-7830**	6	SHIM (1-MM THK)	
B	2	1	**7Y-7829**	4	SHIM (0.5-MM THK)	
	3	1	**7Y-7828**	1	PIN	
	4	1	**158-3960**	1	PLATE	
M	5	1	**7X-2563**	6	BOLT (M20X2.5X60-MM)	
	6	1	**8T-4123**	6	WASHER (22X35X3.5-MM THK)	
	7	1	**153-1731**	1	FLANGE	

B-USE AS REQUIRED
M-METRIC PART

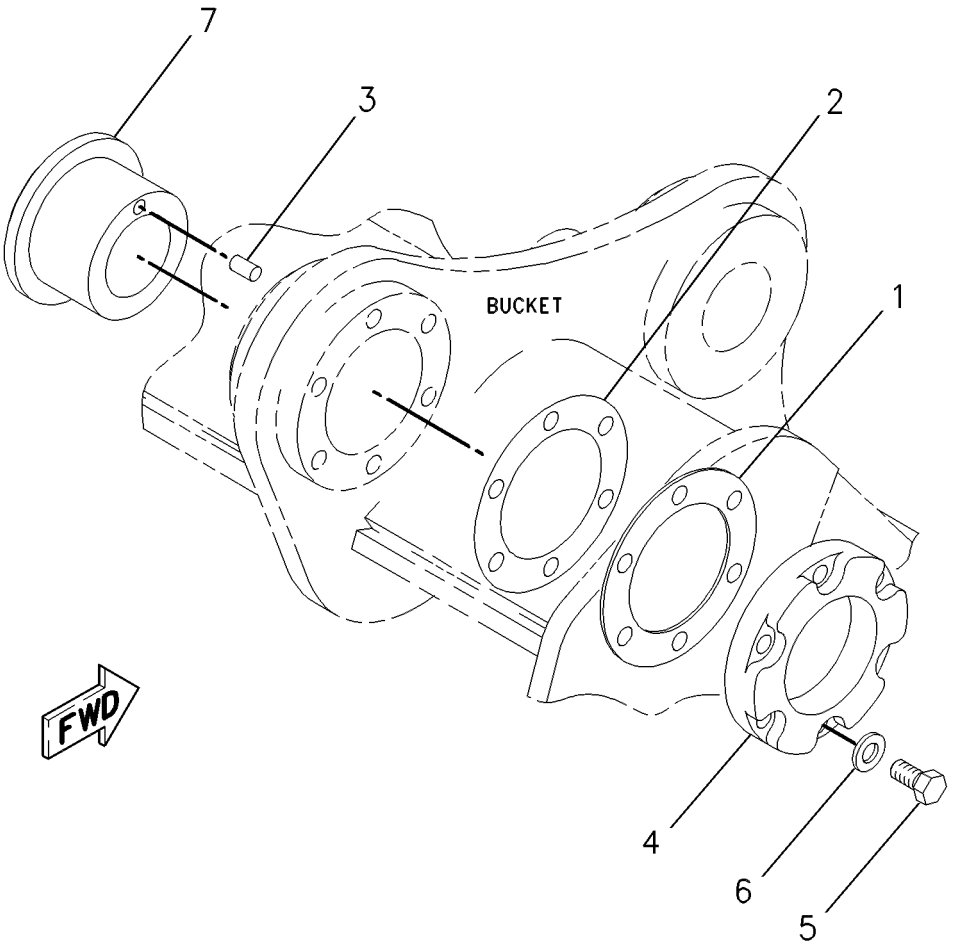

GRAPHIC #1 **<END>** g00540240

WORK TOOLS

305-1767 ADJUSTER GP-BUCKET—JC-FAMILY

S/N: WAP1-UP

PART OF 331-1234, 331-1235, 331-1236, 331-1240, 331-1241, 331-1242, 331-1245, 331-1246, 331-1247, 331-1248, 331-1251, 331-1252, 331-1253, 338-8622 BUCKET & ADJUSTER GP

AN ATTACHMENT

SMCS-6513, 6700 **i04026160**

NOTE	REF NO	GRAPHIC REF	PART NUMBER	QTY	PART NAME 1 2 3 4 5 6 (PRODUCT LEVEL)	SEE PAGE
	1	1	**305-1765**	1	FLANGE	
	2	1	**305-1766**	1	PLATE	
B	3	1	**305-1769**	4	SHIM	
B	4	1	**305-1770**	6	SHIM	
M	5	1	**7X-2563**	6	BOLT (M20X2.5X60-MM)	
	6	1	**7Y-7828**	1	PIN	
	7	1	**8T-4123**	6	WASHER (22X35X3.5-MM THK)	

B-USE AS REQUIRED
M-METRIC PART

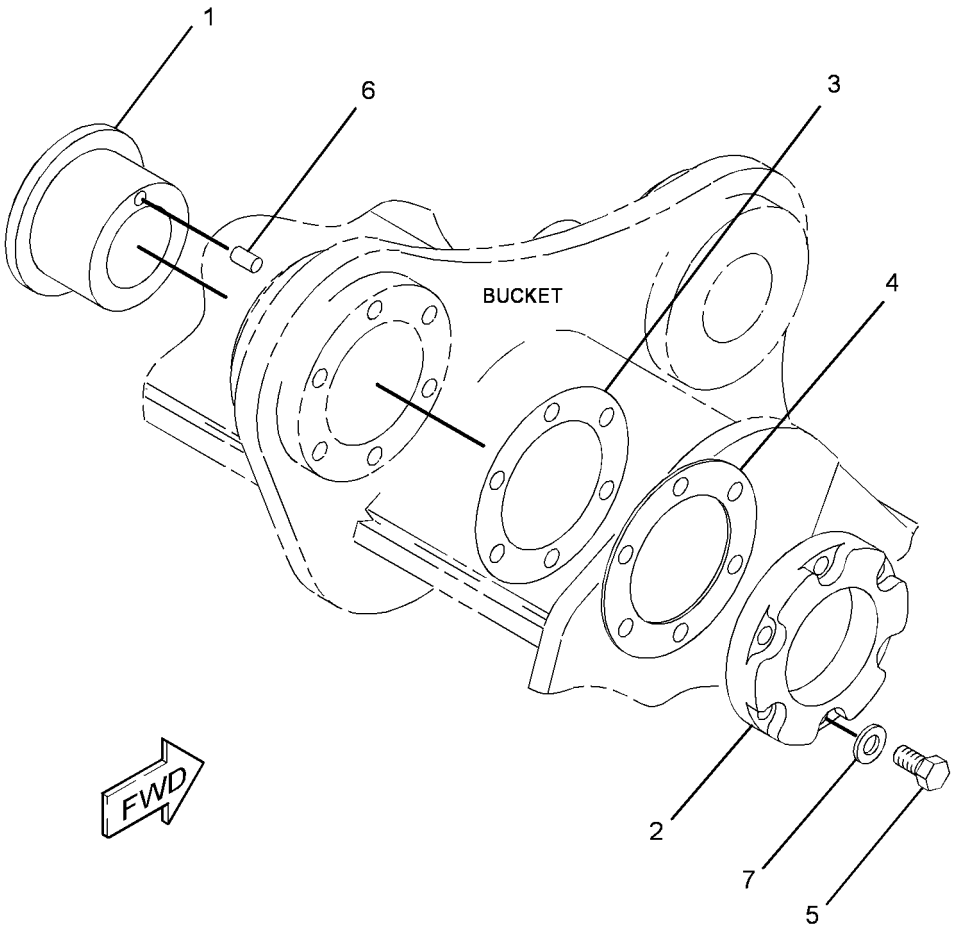

GRAPHIC #1 **<END>** g02209655

WORK TOOLS

331-1221 BUCKET & ADJUSTER GP–
GENERAL PURPOSE, HB2-FAMILY
S/N: WAP1-UP
1350-MM (54-IN) WIDE X 3-CU M (4-CU YD) CAPACITY. K-150 ADAPTERS, QTY OF 4
AN ATTACHMENT

SMCS-6503, 6513 **i03967391**

NOTE	PART NUMBER	QTY	PART NAME 1 2 3 4 5 6 (PRODUCT LEVEL)	SEE PAGE
Y	*7Y-3477*	1	ADJUSTER GP-BUCKET (UB/WB/HB/JB-FAMILY)	840
Y	*349-9624*	1	BUCKET AS-GENERAL PURPOSE	862
	2C-9259	2	PLATE-IDENTIFICATION (CAT)	
			(ON LH & RH SIDES OF BUCKET)	
Y-SEPARATE ILLUSTRATION				

<END>

331-1222 BUCKET & ADJUSTER GP–
GENERAL PURPOSE, HB2-FAMILY
S/N: WAP1-UP
1650-MM (66-IN) WIDE X 3.9-CU M (5.1-CU YD) CAPACITY.
K-150 ADAPTERS, QTY OF 4
AN ATTACHMENT

SMCS-6503, 6513 **i03967531**

NOTE	PART NUMBER	QTY	PART NAME 1 2 3 4 5 6 (PRODUCT LEVEL)	SEE PAGE
Y	*7Y-3477*	1	ADJUSTER GP-BUCKET (UB/WB/HB/JB-FAMILY)	840
Y	*349-9604*	1	BUCKET AS-GENERAL PURPOSE	861
	2C-9259	2	PLATE-IDENTIFICATION (CAT)	
			(ON LH & RH SIDES OF BUCKET)	
Y-SEPARATE ILLUSTRATION				

<END>

331-1224 BUCKET & ADJUSTER GP–
GENERAL PURPOSE, HB2-FAMILY
S/N: WAP1-UP
1900-MM (75-IN) WIDE X 4.6-CU M (6-CU YD) CAPACITY. K-150 ADAPTERS, QTY OF 5
AN ATTACHMENT

SMCS-6503, 6513 **i03913438**

NOTE	PART NUMBER	QTY	PART NAME 1 2 3 4 5 6 (PRODUCT LEVEL)	SEE PAGE
Y	*7Y-3477*	1	ADJUSTER GP-BUCKET (UB/WB/HB/JB-FAMILY)	840
Y	*349-8280*	1	BUCKET AS-GENERAL PURPOSE (JC-FAMILY)	859
	2C-9259	2	PLATE-IDENTIFICATION (CAT)	
			(ON LH & RH SIDES OF BUCKET)	
Y-SEPARATE ILLUSTRATION				

<END>

WORK TOOLS

331-1225 BUCKET & ADJUSTER GP–
GENERAL PURPOSE, HB2-FAMILY
S/N: WAP1-UP
2000-MM (79-IN) WIDE X 5.3-CU M (7-CU YD) CAPACITY. K-150 ADAPTERS, QTY OF 5
AN ATTACHMENT

SMCS-6503, 6513 **i04019627**

NOTE	PART NUMBER	QTY	PART NAME 1 2 3 4 5 6 (PRODUCT LEVEL)	SEE PAGE
Y	*7Y-3477*	1	ADJUSTER GP-BUCKET (UB/WB/HB/JB-FAMILY)	840
Y	*362-0454*	1	BUCKET AS-GENERAL PURPOSE	868
	2C-9259	2	PLATE-IDENTIFICATION (CAT)	
			(ON RH & LH SIDES OF BUCKET)	

Y-SEPARATE ILLUSTRATION

<END>

331-1226 BUCKET & ADJUSTER GP–
GENERAL PURPOSE, HB2-FAMILY
S/N: WAP1-UP
2200-MM (87-IN) WIDE X 6-CU M (8-CU YD) CAPACITY. K-150 ADAPTERS, QTY OF 6
AN ATTACHMENT

SMCS-6503, 6513 **i04020113**

NOTE	PART NUMBER	QTY	PART NAME 1 2 3 4 5 6 (PRODUCT LEVEL)	SEE PAGE
Y	*7Y-3477*	1	ADJUSTER GP-BUCKET (UB/WB/HB/JB-FAMILY)	840
Y	*363-9195*	1	BUCKET AS-GENERAL PURPOSE	869
	2C-9259	2	PLATE-IDENTIFICATION (CAT)	
			(ON RH & LH SIDES OF BUCKET)	

Y-SEPARATE ILLUSTRATION

<END>

331-1230 BUCKET & ADJUSTER GP–
SEVERE SERVICE ROCK, HB2-FAMILY
S/N: WAP1-UP
1100-MM (43-IN) WIDE X 2.3-CU M (3-CU YD) CAPACITY. K-150 ADAPTERS, QTY OF 3
AN ATTACHMENT

SMCS-6503, 6513 **i04004412**

NOTE	PART NUMBER	QTY	PART NAME 1 2 3 4 5 6 (PRODUCT LEVEL)	SEE PAGE
Y	*7Y-3477*	1	ADJUSTER GP-BUCKET (UB/WB/HB/JB-FAMILY)	840
Y	*361-4848*	1	BUCKET AS-SEVERE SERVICE ROCK	879
	2C-9259	2	PLATE-IDENTIFICATION (CAT)	
			(ON LH & RH SIDES OF BUCKET)	

Y-SEPARATE ILLUSTRATION

<END>

WORK TOOLS

331-1231 BUCKET & ADJUSTER GP–
SEVERE SERVICE ROCK, HB2-FAMILY
S/N: WAP1-UP
1350-MM (54-IN) WIDE X 3-CU M (4-CU YD) CAPACITY. K-150 ADAPTERS, QTY OF 4
AN ATTACHMENT

SMCS-6503, 6513 **i04004419**

NOTE	PART NUMBER	QTY	PART NAME 1 2 3 4 5 6 (PRODUCT LEVEL)	SEE PAGE
Y	**7Y-3477**	1	ADJUSTER GP-BUCKET (UB/WB/HB/JB-FAMILY)	840
Y	*361-4849*	1	BUCKET AS-SEVERE SERVICE ROCK	880
	2C-9259	2	PLATE-IDENTIFICATION (CAT)	
			(ON LH & RH SIDES OF BUCKET)	

Y-SEPARATE ILLUSTRATION

<END>

331-1232 BUCKET & ADJUSTER GP–
SEVERE SERVICE ROCK, HB2-FAMILY
S/N: WAP1-UP
1650-MM (66-IN) WIDE X 3.9-CU M (5.1-CU YD) CAPACITY.
K-150 ADAPTERS, QTY OF 4
AN ATTACHMENT

SMCS-6503, 6513 **i04004447**

NOTE	PART NUMBER	QTY	PART NAME 1 2 3 4 5 6 (PRODUCT LEVEL)	SEE PAGE
Y	*7Y-3477*	1	ADJUSTER GP-BUCKET (UB/WB/HB/JB-FAMILY)	840
Y	*361-4850*	1	BUCKET AS-SEVERE SERVICE ROCK (HB2-FAMILY)	881
	2C-9259	2	PLATE-IDENTIFICATION (CAT)	
			(ON LH & RH SIDES OF BUCKET)	

Y-SEPARATE ILLUSTRATION

<END>

331-1233 BUCKET & ADJUSTER GP–
SEVERE SERVICE ROCK, HB2-FAMILY
S/N: WAP1-UP
1900-MM (75-IN) WIDE X 4.6-CU M (6-CU YD) CAPACITY. K-150 ADAPTERS, QTY OF 5
AN ATTACHMENT

SMCS-6503, 6513 **i04004454**

NOTE	PART NUMBER	QTY	PART NAME 1 2 3 4 5 6 (PRODUCT LEVEL)	SEE PAGE
Y	*7Y-3477*	1	ADJUSTER GP-BUCKET (UB/WB/HB/JB-FAMILY)	840
Y	*361-4851*	1	BUCKET AS-SEVERE SERVICE ROCK	882
	2C-9259	2	PLATE-IDENTIFICATION (CAT)	
			(ON LH & RH SIDES OF BUCKET)	

Y-SEPARATE ILLUSTRATION

<END>

WORK TOOLS

331-1234 BUCKET & ADJUSTER GP–
GENERAL PURPOSE, JC-FAMILY
S/N: WAP1-UP
2300-MM (91-IN) WIDE X 5.7-CU M (7.4-CU YD) CAPACITY.
K170 ADAPTERS, QTY OF 6
AN ATTACHMENT

SMCS-6503, 6513 **i03996080**

NOTE	PART NUMBER	QTY	PART NAME 1 2 3 4 5 6 (PRODUCT LEVEL)	SEE PAGE
Y	*305-1767*	1	ADJUSTER GP-BUCKET (JC-FAMILY)	841
Y	*348-4476*	1	BUCKET AS-GENERAL PURPOSE	858
	2C-9259	2	PLATE-IDENTIFICATION (CAT)	
			(ON LH & RH SIDES OF BUCKET)	

Y-SEPARATE ILLUSTRATION

<END>

331-1235 BUCKET & ADJUSTER GP–
GENERAL PURPOSE, JC-FAMILY
S/N: WAP1-UP
2420-MM (95-IN) WIDE X 6-CU M (7.9-CU YD) CAPACITY. K-170 ADAPTERS, QTY OF 6
AN ATTACHMENT

SMCS-6503, 6513 **i03996504**

NOTE	PART NUMBER	QTY	PART NAME 1 2 3 4 5 6 (PRODUCT LEVEL)	SEE PAGE
Y	*305-1767*	1	ADJUSTER GP-BUCKET (JC-FAMILY)	841
Y	*348-4475*	1	BUCKET AS-GENERAL PURPOSE	857
	2C-9259	2	PLATE-IDENTIFICATION (CAT)	
			(ON LH & RH SIDES OF BUCKET)	

Y-SEPARATE ILLUSTRATION

<END>

331-1236 BUCKET & ADJUSTER GP–
GENERAL PURPOSE, JC-FAMILY
S/N: WAP1-UP
2575-MM (101-IN) WIDE X 6.5-CU M (8.5-CU YD) CAPACITY.
K-170 ADAPTERS, QTY OF 6
AN ATTACHMENT

SMCS-6503, 6513 **i04012949**

NOTE	PART NUMBER	QTY	PART NAME 1 2 3 4 5 6 (PRODUCT LEVEL)	SEE PAGE
Y	*305-1767*	1	ADJUSTER GP-BUCKET (JC-FAMILY)	841
Y	*360-6140*	1	BUCKET AS-GENERAL PURPOSE	866
	2C-9259	2	PLATE-IDENTIFICATION (CAT)	
			(ON LH & RH SIDES OF BUCKET)	

Y-SEPARATE ILLUSTRATION

<END>

WORK TOOLS

331-1240 BUCKET & ADJUSTER GP—HEAVY-DUTY, JC-FAMILY

S/N: WAP1-UP
1750-MM (69-IN) WIDE X 4.1-CU M (5.3-CU YD) CAPACITY.
K-170 ADAPTERS, QTY OF 4
AN ATTACHMENT

SMCS-6503, 6513 **i03996020**

NOTE	PART NUMBER	QTY	PART NAME 1 2 3 4 5 6 (PRODUCT LEVEL)	SEE PAGE
Y	*305-1767*	1	ADJUSTER GP-BUCKET (JC-FAMILY)	841
Y	*360-6127*	1	BUCKET AS-HEAVY DUTY	870
	2C-9259	2	PLATE-IDENTIFICATION (CAT)	
			(ON LH & RH SIDES OF BUCKET)	

Y-SEPARATE ILLUSTRATION

<END>

331-1241 BUCKET & ADJUSTER GP—HEAVY-DUTY, JC-FAMILY

S/N: WAP1-UP
2090-MM (82-IN) WIDE X 5.1-CU M (6.6-CU YD) CAPACITY.
K-170 ADAPTERS, QTY OF 5
AN ATTACHMENT

SMCS-6503, 6513 **i03996471**

NOTE	PART NUMBER	QTY	PART NAME 1 2 3 4 5 6 (PRODUCT LEVEL)	SEE PAGE
Y	*305-1767*	1	ADJUSTER GP-BUCKET (JC-FAMILY)	841
Y	*360-6128*	1	BUCKET AS-HEAVY DUTY	871
	2C-9259	2	PLATE-IDENTIFICATION (CAT)	
			(ON LH & RH SIDES OF BUCKET)	

Y-SEPARATE ILLUSTRATION

<END>

331-1242 BUCKET & ADJUSTER GP—HEAVY-DUTY, JC-FAMILY

S/N: WAP1-UP
2300-MM (91-IN) WIDE X 5.7-CU M (7.4-CU YD) CAPACITY.
K-170 ADAPTERS, QTY OF 6
AN ATTACHMENT

SMCS-6503, 6513 **i03996615**

NOTE	PART NUMBER	QTY	PART NAME 1 2 3 4 5 6 (PRODUCT LEVEL)	SEE PAGE
Y	*305-1767*	1	ADJUSTER GP-BUCKET (JC-FAMILY)	841
Y	*360-6129*	1	BUCKET AS-HEAVY DUTY	872
	2C-9259	2	PLATE-IDENTIFICATION (CAT)	
			(ON LH & RH SIDES OF BUCKET)	

Y-SEPARATE ILLUSTRATION

<END>

WORK TOOLS

331-1245 BUCKET & ADJUSTER GP–
SEVERE SERVICE ROCK, JC-FAMILY
S/N: WAP1-UP
1950-MM (77-IN) WIDE X 4.6-CU M (6-CU YD) CAPACITY. J-800 ADAPTERS, QTY OF 4
AN ATTACHMENT

SMCS-6503, 6513 **i04004469**

NOTE	PART NUMBER	QTY	PART NAME 1 2 3 4 5 6 (PRODUCT LEVEL)	SEE PAGE
Y	*305-1767*	1	ADJUSTER GP-BUCKET (JC-FAMILY)	841
Y	*360-6045*	1	BUCKET AS-SEVERE SERVICE ROCK	873
	2C-9259	2	PLATE-IDENTIFICATION (CAT)	
			(ON LH & RH SIDES OF BUCKET)	

Y-SEPARATE ILLUSTRATION

<END>

331-1246 BUCKET & ADJUSTER GP–
SEVERE SERVICE ROCK, JC-FAMILY
S/N: WAP1-UP
2200-MM (88-IN) WIDE X 5.4-CU M (7.1-CU YD) CAPACITY.
J-800 ADAPTERS, QTY OF 4
AN ATTACHMENT

SMCS-6503, 6513 **i04004490**

NOTE	PART NUMBER	QTY	PART NAME 1 2 3 4 5 6 (PRODUCT LEVEL)	SEE PAGE
Y	*305-1767*	1	ADJUSTER GP-BUCKET (JC-FAMILY)	841
Y	*360-6046*	1	BUCKET AS-SEVERE SERVICE ROCK	874
	2C-9259	2	PLATE-IDENTIFICATION (CAT)	
			(ON LH & RH SIDES OF BUCKET)	

Y-SEPARATE ILLUSTRATION

<END>

331-1247 BUCKET & ADJUSTER GP–
SEVERE SERVICE ROCK, JC-FAMILY
S/N: WAP1-UP
2300-MM (93-IN) WIDE X 5.7-CU M (7.5-CU YD) CAPACITY.
J-800 ADAPTERS, QTY OF 4
AN ATTACHMENT

SMCS-6503, 6513 **i04004500**

NOTE	PART NUMBER	QTY	PART NAME 1 2 3 4 5 6 (PRODUCT LEVEL)	SEE PAGE
Y	*305-1767*	1	ADJUSTER GP-BUCKET (JC-FAMILY)	841
Y	*360-6047*	1	BUCKET AS-SEVERE SERVICE ROCK	875
	2C-9259	2	PLATE-IDENTIFICATION (CAT)	
			(ON LH & RH SIDES OF BUCKET)	

Y-SEPARATE ILLUSTRATION

<END>

WORK TOOLS

331-1248 BUCKET & ADJUSTER GP–
SEVERE SERVICE ROCK, JC-FAMILY
S/N: WAP1-UP
2400-MM (96-IN) WIDE X 6-CU M (7.9-CU YD) CAPACITY. J-800 ADAPTERS, QTY OF 5
AN ATTACHMENT

SMCS-6503, 6513 **i04004510**

NOTE	PART NUMBER	QTY	PART NAME 1 2 3 4 5 6 (PRODUCT LEVEL)	SEE PAGE
Y	*305-1767*	1	ADJUSTER GP-BUCKET (JC-FAMILY)	841
Y	*360-6048*	1	BUCKET AS-SEVERE SERVICE ROCK	876
	2C-9259	2	PLATE-IDENTIFICATION (CAT)	
			(ON LH & RH SIDES OF BUCKET)	

Y-SEPARATE ILLUSTRATION

<END>

WORK TOOLS

331-1251 BUCKET & ADJUSTER GP–

EXTREME SERVICE ROCK, JC-FAMILY

S/N: WAP1-UP

2050-MM (82-IN) WIDE X 5-CU M (6.5-CU YD) CAPACITY. J-800 ADAPTERS, QTY OF 4 AN ATTACHMENT

SMCS-6503, 6513 **i03996624**

NOTE	REF NO	GRAPHIC REF	PART NUMBER	QTY	PART NAME 1 2 3 4 5 6 (PRODUCT LEVEL)	SEE PAGE
	1	1	**109-9080**	1	EDGE-SEGMENT (CENTER)	
	2	1	**109-9081**	1	EDGE-SEGMENT (LH)	
Y	3	1	*305-1767*	1	ADJUSTER GP-BUCKET (JC-FAMILY)	841
Y	4	1	*357-2688*	1	PROTECTOR GP	895
Y	5	1	*360-6050*	1	BUCKET AS-EXTREME SERVICE ROCK	855
	6	1	**109-9082**	1	EDGE-SEGMENT (RH)	
	7	1	**2C-9259**	2	PLATE-IDENTIFICATION (CAT)	
	8	1	**3K-9770**	9	NUT-FULL (1-1/4-7-THD)	
	9	1	**5P-8361**	9	BOLT-PLOW (1-1/4-7X4.92-IN)	

Y-SEPARATE ILLUSTRATION

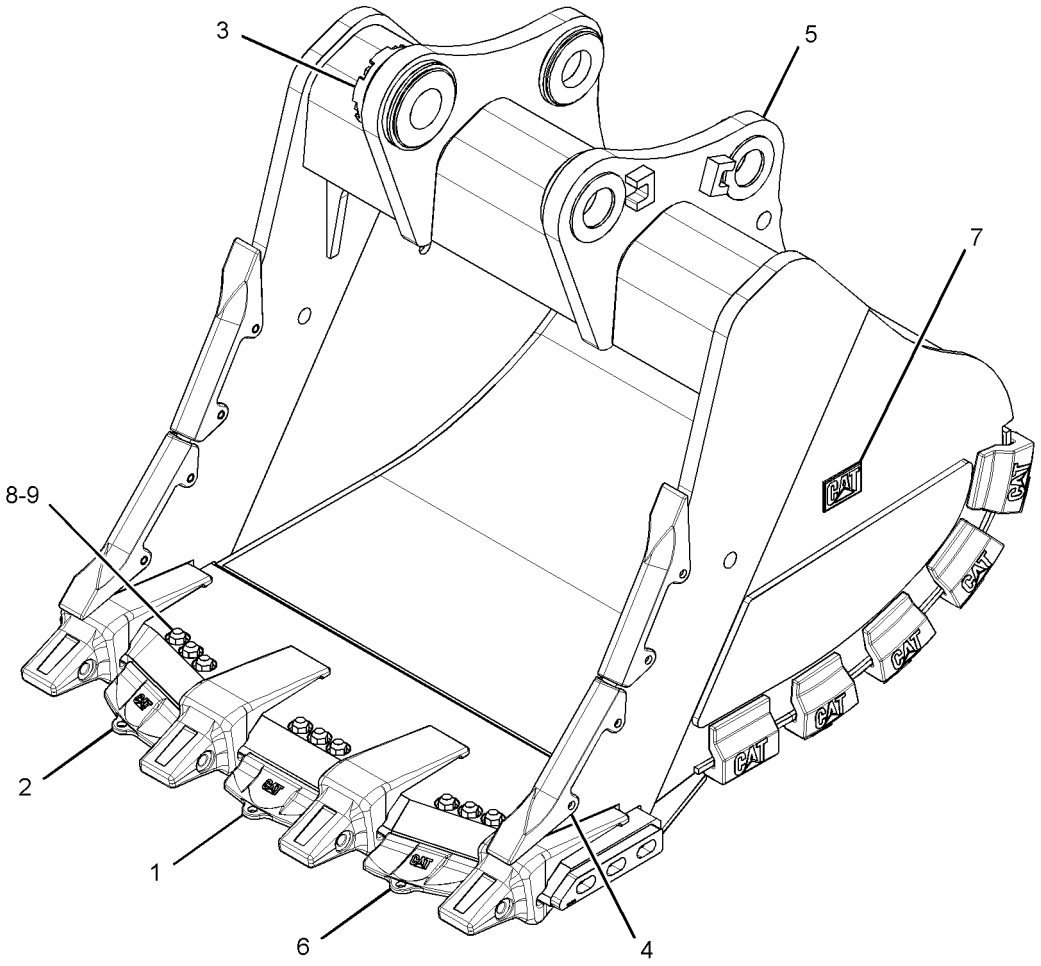

GRAPHIC #1 **<END>** g02175879

WORK TOOLS

331-1252 BUCKET & ADJUSTER GP–
EXTREME SERVICE ROCK, JC-FAMILY
S/N: WAP1-UP
2240-MM (88-IN) WIDE X 5.4-CU M (7.1-CU YD) CAPACITY.
J-800 ADAPTERS, QTY OF 4
AN ATTACHMENT

SMCS-6503, 6513 **i03996642**

NOTE	REF NO	GRAPHIC REF	PART NUMBER	QTY	PART NAME 1 2 3 4 5 6 (PRODUCT LEVEL)	SEE PAGE
	1	1	**257-1782**	1	EDGE-SEGMENT (CENTER)	
	2	1	**257-1783**	1	EDGE-SEGMENT (RH)	
	3	1	**257-1784**	1	EDGE-SEGMENT (LH)	
Y	4	1	*305-1767*	1	ADJUSTER GP-BUCKET (JC-FAMILY)	841
Y	5	1	*357-2688*	1	PROTECTOR GP	895
Y	6	1	*360-6051*	1	BUCKET AS-SEVERE SERVICE ROCK (JC-FAMILY)	877
	7	1	**2C-9259**	2	PLATE-IDENTIFICATION (CAT)	
	8	1	**3K-9770**	12	NUT-FULL (1-1/4-7-THD)	
	9	1	**5P-8361**	12	BOLT-PLOW (1-1/4-7X4.92-IN)	

Y-SEPARATE ILLUSTRATION

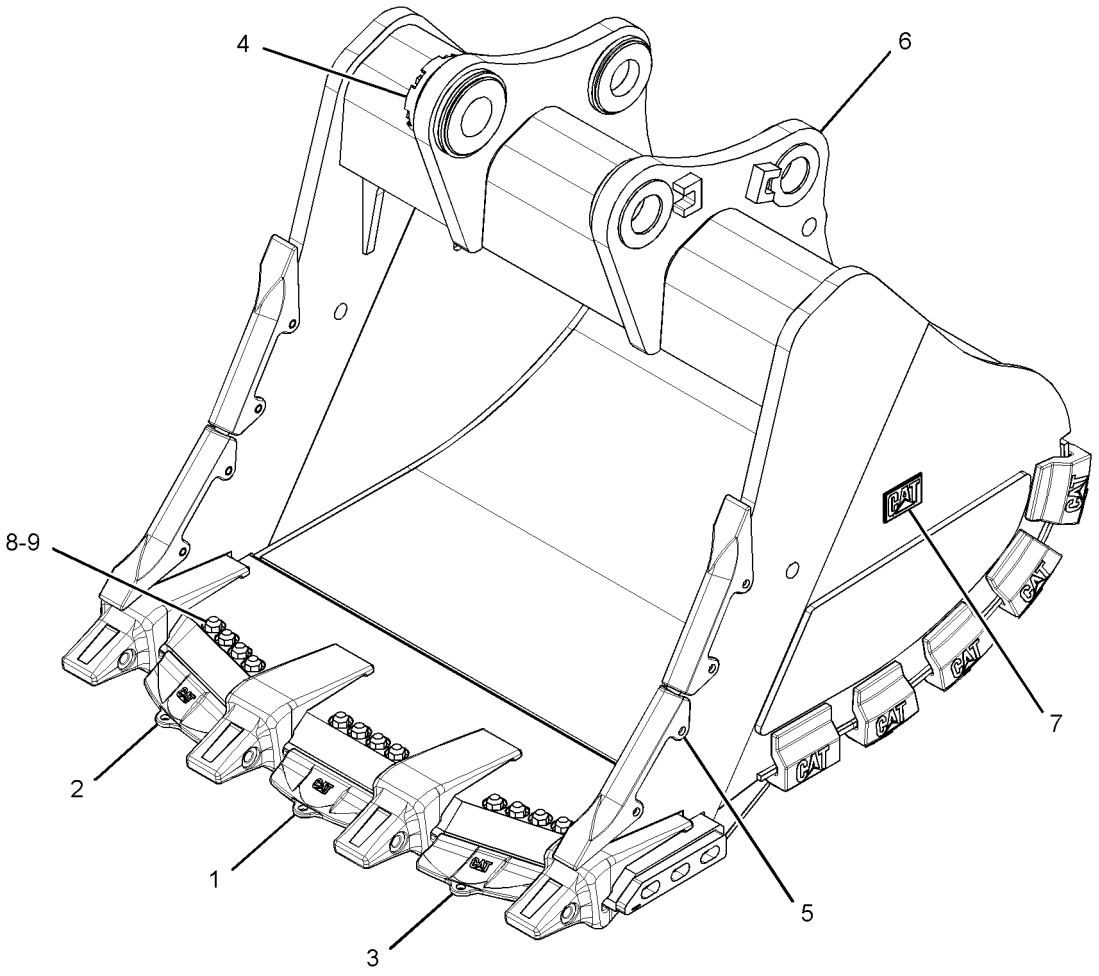

GRAPHIC #1 **<END>** g02175881

WORK TOOLS

331-1253 BUCKET & ADJUSTER GP–

SEVERE SERVICE ROCK, JC-FAMILY

S/N: WAP1-UP

2300-MM (93-IN) WIDE X 5.7-CU M (7.5-CU YD) CAPACITY.

J-800 ADAPTERS, QTY OF 4

AN ATTACHMENT

SMCS-6503, 6513 **i03996658**

NOTE	REF NO	GRAPHIC REF	PART NUMBER	QTY	PART NAME 1 2 3 4 5 6 (PRODUCT LEVEL)	SEE PAGE
	1	1	**257-1782**	1	EDGE-SEGMENT (CENTER)	
	2	1	**257-1783**	1	EDGE-SEGMENT (RH)	
	3	1	**257-1784**	1	EDGE-SEGMENT (LH)	
Y	4	1	*305-1767*	1	ADJUSTER GP-BUCKET (JC-FAMILY)	841
Y	5	1	*357-2688*	1	PROTECTOR GP	895
Y	6	1	*360-6052*	1	BUCKET AS-SEVERE SERVICE ROCK (JC-FAMILY)	878
	7	1	**2C-9259**	2	PLATE-IDENTIFICATION (CAT)	
	8	1	**3K-9770**	12	NUT-FULL (1-1/4-7-THD)	
	9	1	**5P-8361**	12	BOLT-PLOW (1-1/4-7X4.92-IN)	

Y-SEPARATE ILLUSTRATION

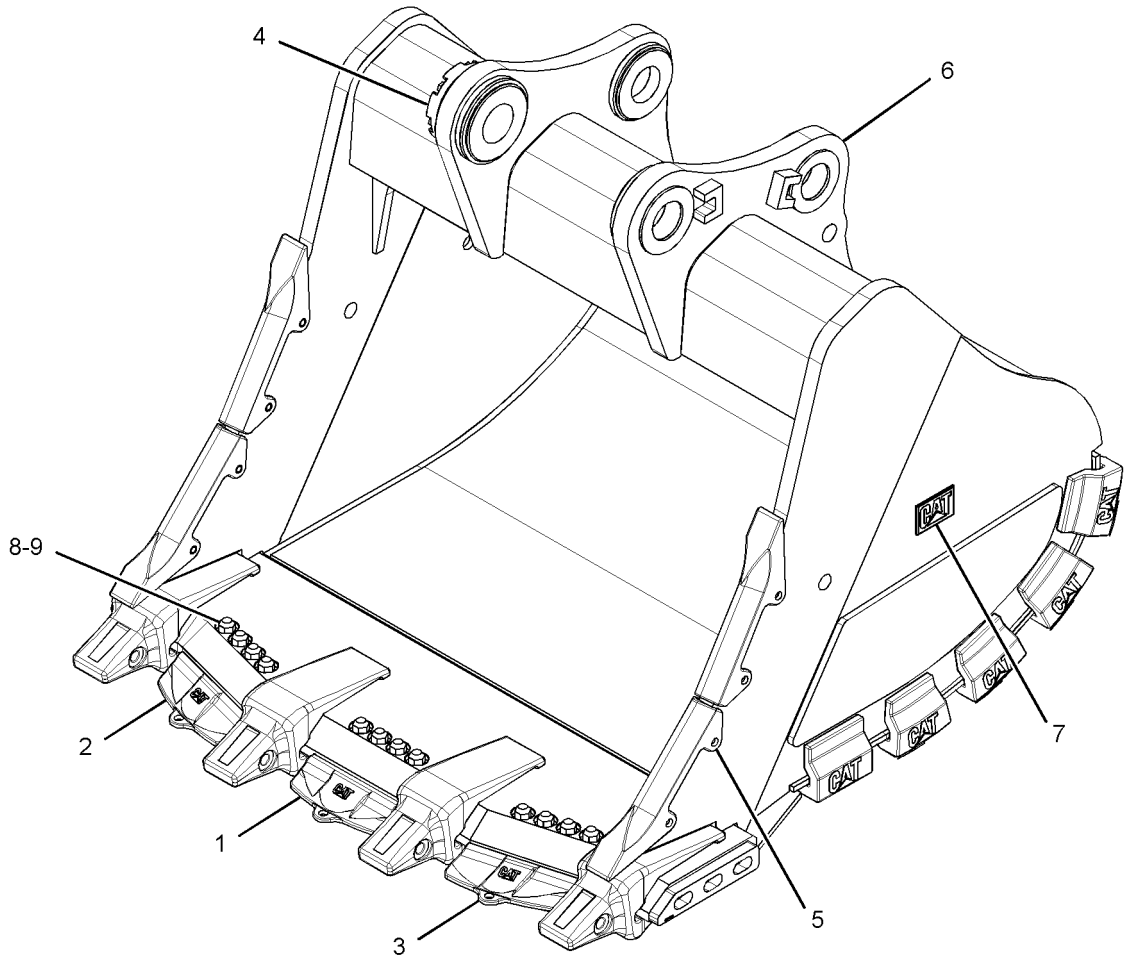

GRAPHIC #1 **<END>** g02175877

WORK TOOLS

338-8622 BUCKET & ADJUSTER GP–
SEVERE SERVICE ROCK, JC-FAMILY
S/N: WAP1-UP
2350-MM (93-IN) WIDE X 5.7-CU M (7.5-CU YD) CAPACITY.
J-800 ADAPTERS, QTY OF 4
AN ATTACHMENT

SMCS-6503, 6513 **i04020102**

NOTE	REF NO	GRAPHIC REF	PART NUMBER	QTY	PART NAME 1 2 3 4 5 6 (PRODUCT LEVEL)	SEE PAGE
Y	1	1	*357-2688*	2	PROTECTOR GP	895
	2	1	**257-1782**	1	EDGE-SEGMENT (CENTER)	
	3	1	**257-1784**	1	EDGE-SEGMENT (LH)	
	4	1	**257-1783**	1	EDGE-SEGMENT (RH)	
Y	5	1	*305-1767*	1	ADJUSTER GP-BUCKET (JC-FAMILY)	841
	6	1	**3K-9770**	12	NUT-FULL (1-1/4-7-THD)	
Y	7	1	*362-7824*	1	BUCKET AS-EXTREME SERVICE ROCK	856
	8	1	**5P-8361**	12	BOLT-PLOW (1-1/4-7X4.92-IN)	
	9	1	**2C-9259**	2	PLATE-IDENTIFICATION (CAT)	

Y-SEPARATE ILLUSTRATION

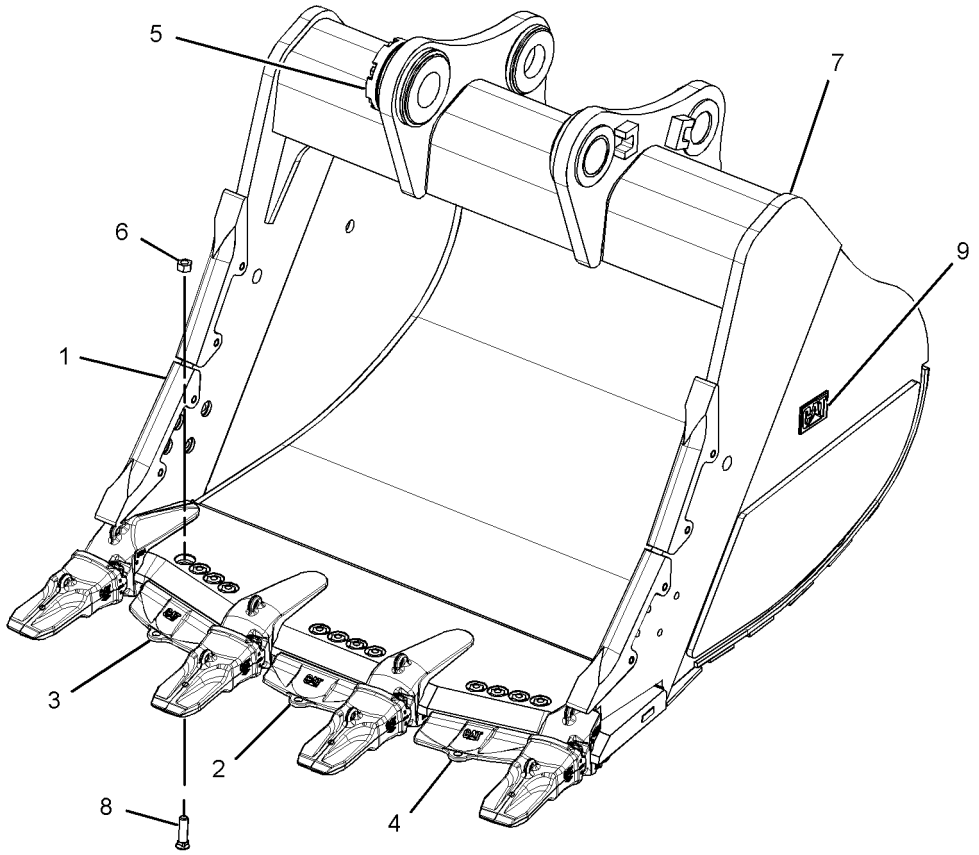

GRAPHIC #1 **<END>** g02194702

WORK TOOLS

341-8649 BUCKET & ADJUSTER GP–
GENERAL PURPOSE, HB2-FAMILY
S/N: WAP1-UP
1100-MM (43-IN) WIDE X 2.2-CU M (2.8-CU YD) CAPACITY.
K-150 ADAPTERS, QTY OF 3
AN ATTACHMENT

SMCS-6503, 6513 **i03997072**

NOTE	PART NUMBER	QTY	PART NAME 1 2 3 4 5 6 (PRODUCT LEVEL)	SEE PAGE
Y	*7Y-3477*	1	ADJUSTER GP-BUCKET (UB/WB/HB/JB-FAMILY)	840
Y	*350-0491*	1	BUCKET AS-GENERAL PURPOSE	863
	2C-9259	2	PLATE-IDENTIFICATION (CAT)	

Y-SEPARATE ILLUSTRATION

<END>

341-8650 BUCKET & ADJUSTER GP–
GENERAL PURPOSE, HB2-FAMILY
S/N: WAP1-UP
1350-MM (54-IN) WIDE X 2.9-CU M (3.8-CU YD) CAPACITY.
K-150 ADAPTERS, QTY OF 5
AN ATTACHMENT

SMCS-6503, 6513 **i03997115**

NOTE	PART NUMBER	QTY	PART NAME 1 2 3 4 5 6 (PRODUCT LEVEL)	SEE PAGE
Y	*7Y-3477*	1	ADJUSTER GP-BUCKET (UB/WB/HB/JB-FAMILY)	840
Y	*350-0627*	1	BUCKET AS-GENERAL PURPOSE	865
	2C-9259	2	PLATE-IDENTIFICATION (CAT)	
			(ON LH & RH SIDES OF BUCKET)	

Y-SEPARATE ILLUSTRATION

<END>

341-8651 BUCKET & ADJUSTER GP–
GENERAL PURPOSE, HB2 FAMILY
S/N: WAP1-UP
1650-MM (66-IN) WIDE X 3.7-CU M (4.9-CU YD) CAPACITY.
K-150 ADAPTERS, QTY OF 4
AN ATTACHMENT

SMCS-6503, 6513 **i03997026**

NOTE	PART NUMBER	QTY	PART NAME 1 2 3 4 5 6 (PRODUCT LEVEL)	SEE PAGE
Y	*7Y-3477*	1	ADJUSTER GP-BUCKET (UB/WB/HB/JB-FAMILY)	840
Y	*350-0626*	1	BUCKET AS-GENERAL PURPOSE	864
	2C-9259	2	PLATE-IDENTIFICATION (CAT)	
			(ON LH & RH SIDES OF BUCKET)	

Y-SEPARATE ILLUSTRATION

<END>

WORK TOOLS

341-8652 BUCKET & ADJUSTER GP–
GENERAL PURPOSE, HB2-FAMILY
S/N: WAP1-UP
2000-MM (79-IN) WIDE X 4.6-CU M (6-CU YD) CAPACITY. K-150 ADAPTERS, QTY OF 4
AN ATTACHMENT

SMCS-6503, 6513 **i03997100**

NOTE	PART NUMBER	QTY	PART NAME 1 2 3 4 5 6 (PRODUCT LEVEL)	SEE PAGE
Y	*7Y-3477*	1	ADJUSTER GP-BUCKET (UB/WB/HB/JB-FAMILY)	840
Y	*349-9603*	1	BUCKET AS-GENERAL PURPOSE	860
	2C-9259	2	PLATE-IDENTIFICATION (CAT)	

Y-SEPARATE ILLUSTRATION

<END>

361-0756 BUCKET & ADJUSTER GP–
GENERAL PURPOSE, HB2-FAMILY
S/N: WAP1-UP
1900-MM (75-IN) WIDE X 4.3-CU M (5.7-CU YD) CAPACITY.
K-150 ADAPTERS, QTY OF 4
AN ATTACHMENT

SMCS-6503, 6513 **i03997553**

NOTE	PART NUMBER	QTY	PART NAME 1 2 3 4 5 6 (PRODUCT LEVEL)	SEE PAGE
Y	*7Y-3477*	1	ADJUSTER GP-BUCKET (UB/WB/HB/JB-FAMILY)	840
Y	*361-0757*	1	BUCKET AS-GENERAL PURPOSE (HB2-FAMILY)	867
	2C-9259	2	PLATE-IDENTIFICATION (CAT)	
			(ON LH & RH SIDES OF BUCKET)	

Y-SEPARATE ILLUSTRATION

<END>

WORK TOOLS

360-6050 BUCKET AS-EXTREME SERVICE ROCK–JC-FAMILY

S/N: WAP1-UP
2050-MM (82-IN) WIDE X 5-CU M (6.5-CU YD) CAPACITY. J-800 ADAPTERS, QTY OF 4
PART OF 331-1251 BUCKET & ADJUSTER GP
AN ATTACHMENT

SMCS-6102, 6529 **i03996637**

NOTE	REF NO	GRAPHIC REF	PART NUMBER	QTY	PART NAME 1 2 3 4 5 6 (PRODUCT LEVEL)	SEE PAGE
	1	1	**360-6056**	1	EDGE AS	
	1A	1	**357-6516**	4	ADAPTER	
	1B	1	**286-2126**	2	BLOCK-WEAR	
	2	1	**360-6073**	1	PLATE AS-BOX	
	3	1	**360-6067**	4	PLATE-WEAR	
	4	1	**360-6070**	5	PLATE-WEAR	
	5	1	**360-6066**	1	PLATE-WEAR	
	6	1	**360-6065**	2	PLATE-WEAR	
	7	1	**157-1019**	2	SHROUD (HEEL, STRAIGHT)	
	8	1	**157-1027**	8	SHROUD (HEEL, CURVED)	
	9	1	**360-6080**	1	PLATE-WEAR	

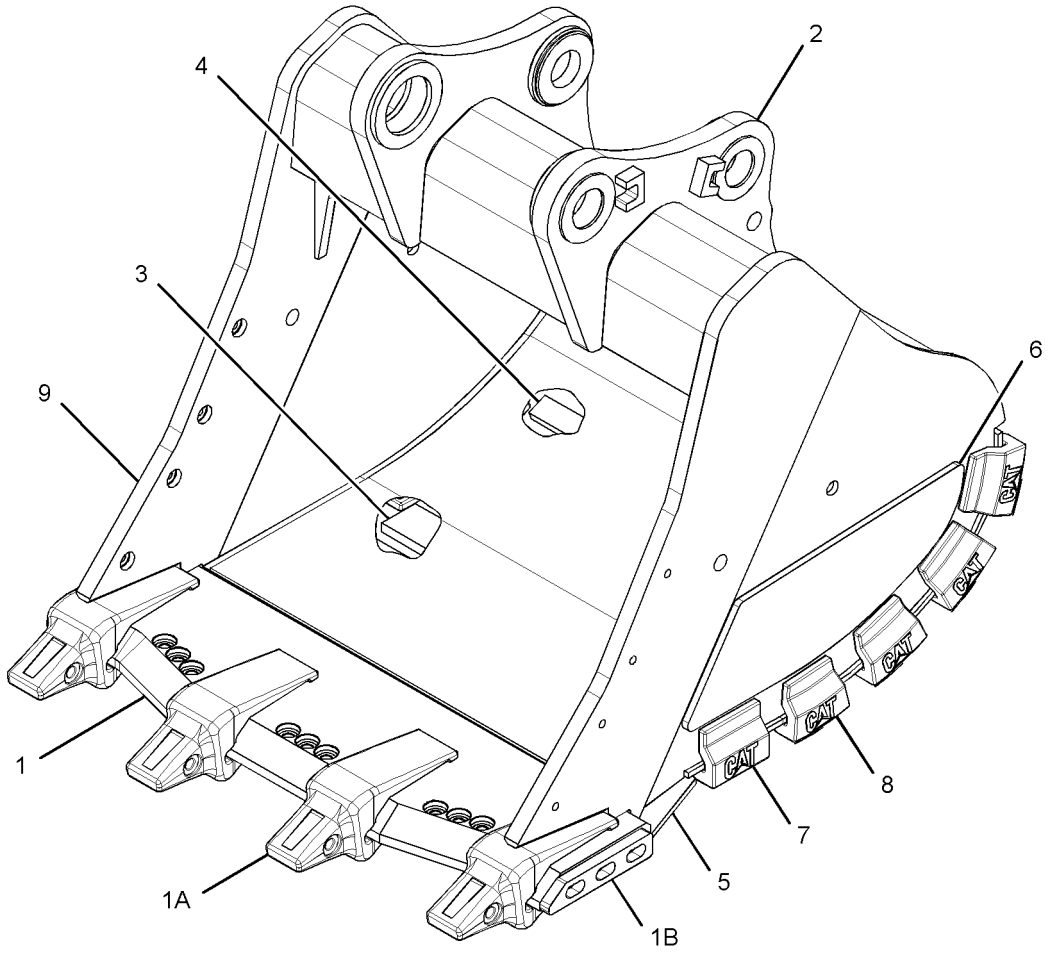

GRAPHIC #1 **<END>** g02183394

WORK TOOLS

362-7824 BUCKET AS-EXTREME SERVICE ROCK–JC-FAMILY

S/N: WAP1-UP
2350-MM (93-IN) WIDE X 5.7-CU M (7.5-CU YD) CAPACITY.
J-800 ADAPTERS, QTY OF 4
PART OF 338-8622 BUCKET & ADJUSTER GP
AN ATTACHMENT

SMCS-6102, 6529 **i04020108**

NOTE	REF NO	GRAPHIC REF	PART NUMBER	QTY	PART NAME 1 2 3 4 5 6 (PRODUCT LEVEL)	SEE PAGE
	1	1	**360-6058**	1	EDGE AS	
	1A	1	**357-6516**	4	ADAPTER (J-800)	
	1B	1	**286-2126**	2	BLOCK-WEAR	
	2	1	**157-1019**	2	SHROUD (HEEL, STRAIGHT)	
	3	1	**157-1027**	8	SHROUD (HEEL, CURVED)	
	4	1	**360-6011**	1	PLATE-WEAR	
	5	1	**360-6065**	2	PLATE-WEAR	
	6	1	**360-6069**	4	PLATE-WEAR	
	7	1	**360-6072**	5	PLATE-WEAR	
	8	1	**360-6082**	1	PLATE-WEAR	
	9	1	**362-7825**	1	PLATE AS-HINGE	

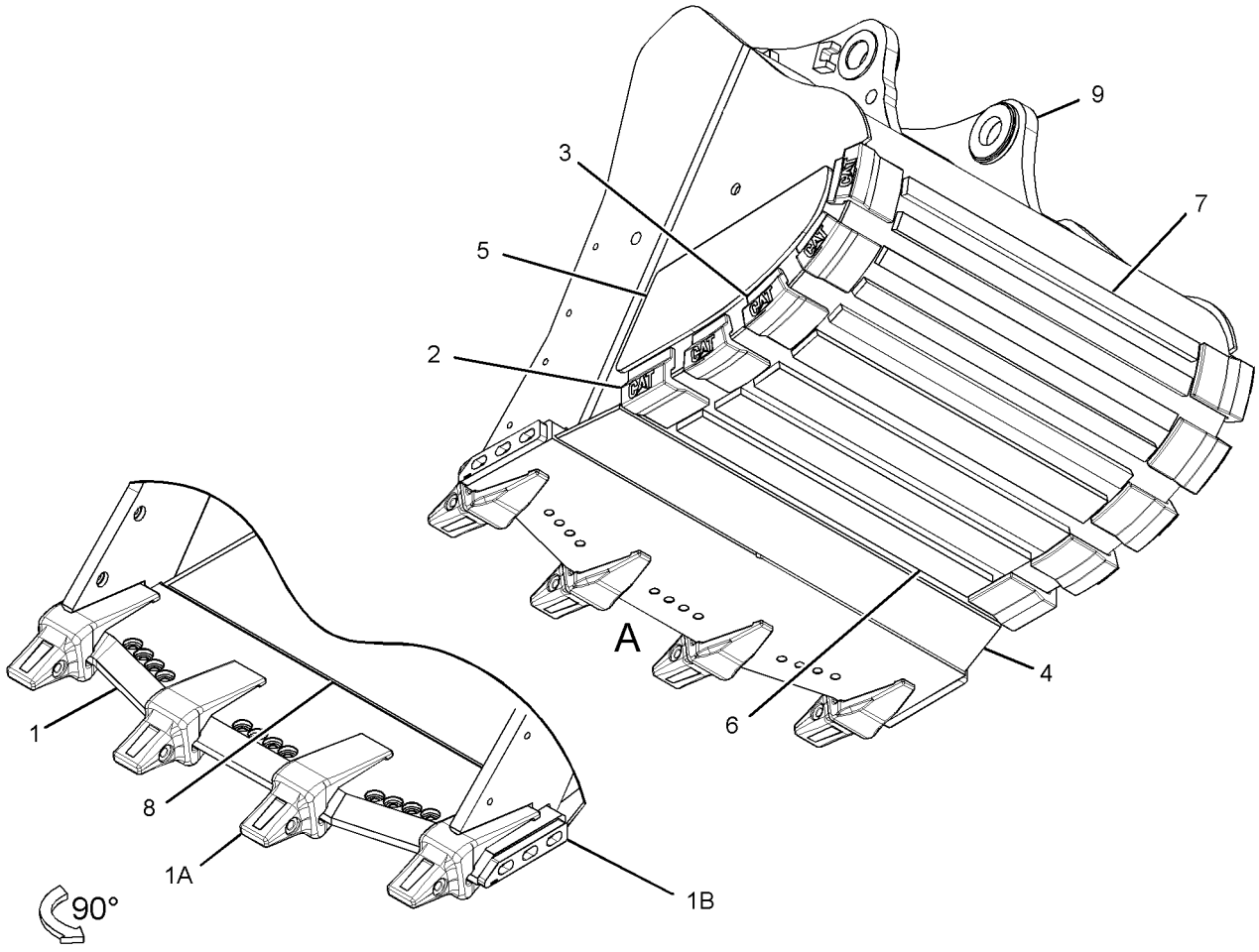

VIEW OF AREA A

GRAPHIC #1 **<END>** g02195255

WORK TOOLS

348-4475 BUCKET AS-GENERAL PURPOSE–JC-FAMILY

S/N: WAP1-UP
2420-MM (95-IN) WIDE X 6-CU M (7.9-CU YD) CAPACITY. K-170 ADAPTERS, QTY OF 6
PART OF 331-1235 BUCKET & ADJUSTER GP
AN ATTACHMENT

SMCS-6101 **i03996065**

NOTE	REF NO	GRAPHIC REF	PART NUMBER	QTY	PART NAME 1 2 3 4 5 6 (PRODUCT LEVEL)	SEE PAGE
	1	1	**360-6098**	1	PLATE AS-BOX	
	2	1	**348-4489**	2	PLATE-WEAR	
	3	1	**348-4517**	3	PLATE-WEAR	
	4	1	**348-4516**	4	PLATE-WEAR	
	5	1	**360-6138**	1	PLATE-WEAR	
	6	1	**348-6569**	1	EDGE AS	
	6A	1	**232-2172**	1	ADAPTER-TIP (K-170, 2-STRAP, LH)	
	6B	1	**232-2170**	4	ADAPTER-TIP (K-170, 2-STRAP, CENTER)	
	6C	1	**232-2171**	1	ADAPTER-TIP (K-170, 2-STRAP, RH)	
	6D	1	**8P-9770**	1	PLATE	

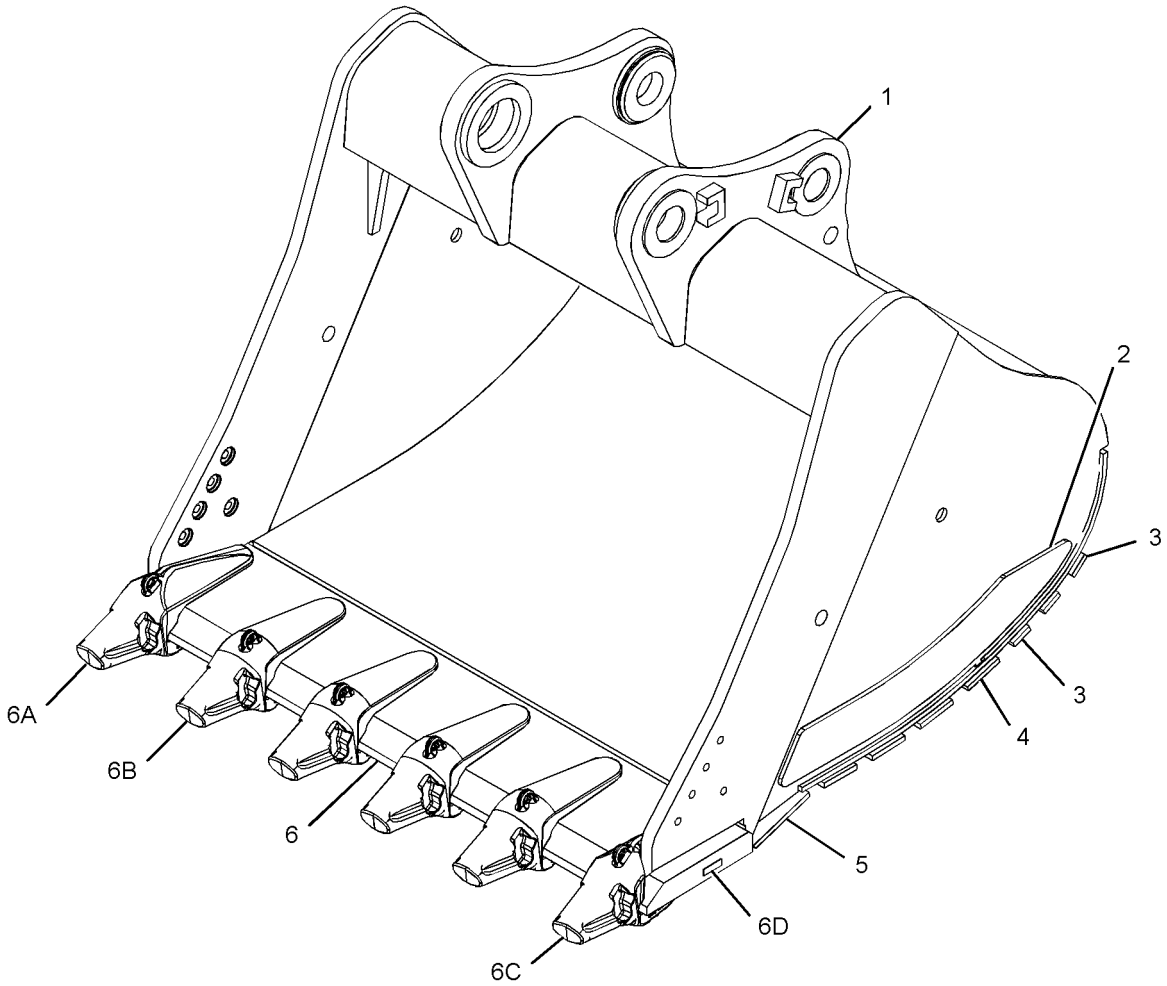

GRAPHIC #1 **<END>** g02177050

WORK TOOLS

348-4476 BUCKET AS-GENERAL PURPOSE—JC-FAMILY

S/N: WAP1-UP
2300-MM (91-IN) WIDE X 5.7-CU M (7.4-CU YD) CAPACITY.
K170 ADAPTERS, QTY OF 6
PART OF 331-1234 BUCKET & ADJUSTER GP
AN ATTACHMENT

SMCS-6101 **i03996063**

NOTE	REF NO	GRAPHIC REF	PART NUMBER	QTY	PART NAME 1 2 3 4 5 6 (PRODUCT LEVEL)	SEE PAGE
	1	1	**348-4520**	1	PLATE AS-BOX	
	2	1	**348-4519**	3	PLATE-WEAR	
	3	1	**348-4518**	4	PLATE-WEAR	
	4	1	**348-4489**	2	PLATE-WEAR	
	5	1	**360-6137**	1	PLATE-WEAR	
	6	1	**348-4526**	1	EDGE AS	
	6A	1	**232-2172**	1	ADAPTER-TIP (K-170, 2-STRAP, LH)	
	6B	1	**232-2170**	4	ADAPTER-TIP (K-170, 2-STRAP, CENTER)	
	6C	1	**232-2171**	1	ADAPTER-TIP (K-170, 2-STRAP, RH)	
	6D	1	**8P-9770**	1	PLATE	

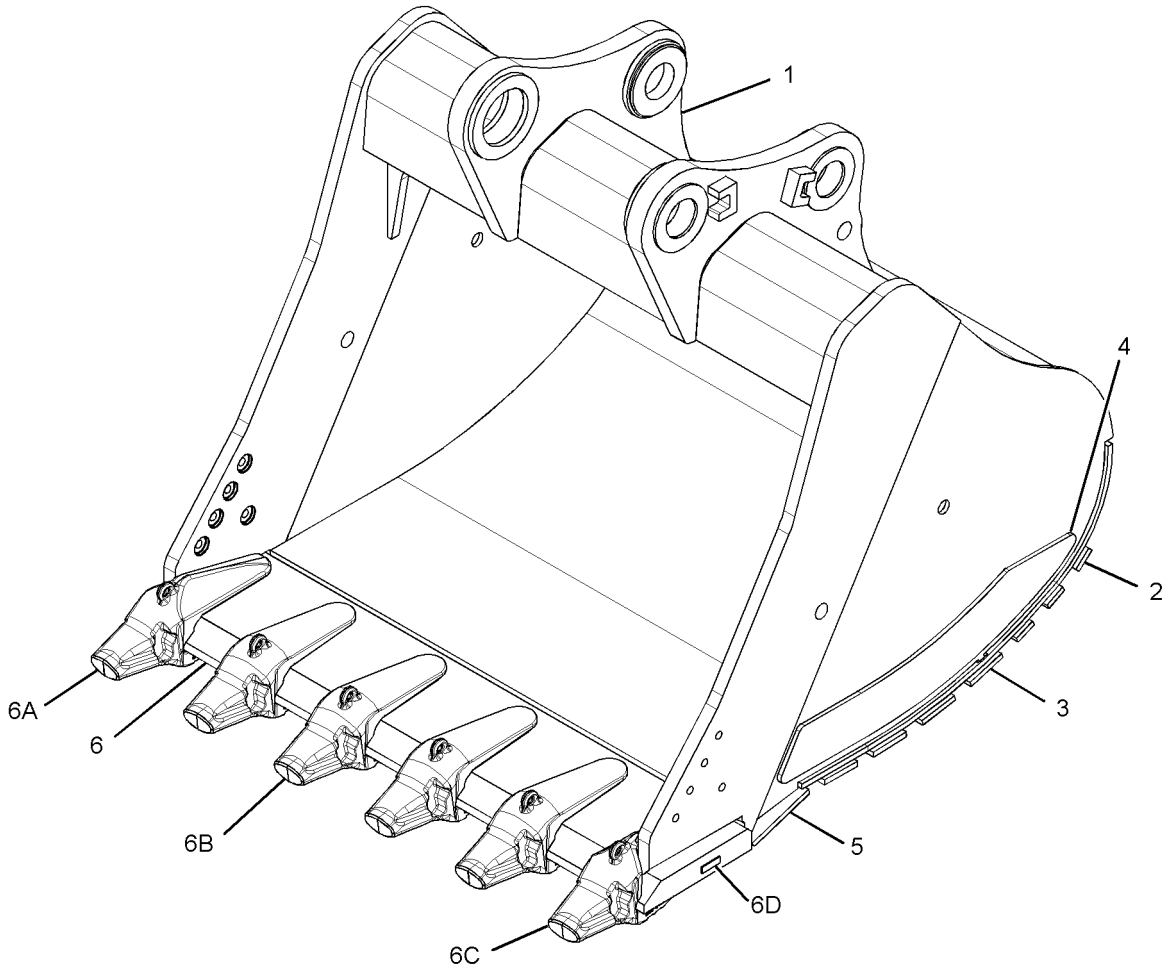

GRAPHIC #1 **<END>** g02177872

349-8280 BUCKET AS-GENERAL PURPOSE–HB2-FAMILY

S/N: WAP1-UP
1900-MM (75-IN) WIDE X 4.6-CU M (6-CU YD) CAPACITY. K-150 ADAPTERS, QTY OF 5
PART OF 331-1224 BUCKET & ADJUSTER GP
AN ATTACHMENT

SMCS-6101 **i03967489**

NOTE	REF NO	GRAPHIC REF	PART NUMBER	QTY	PART NAME 1 2 3 4 5 6 (PRODUCT LEVEL)	SEE PAGE
	1	1	**357-1003**	1	EDGE AS	
	1A	1	**8P-9770**	1	PLATE	
	1B	1	**195-9154**	3	ADAPTER-TIP (K-150, 2-STRAP, CENTER)	
	1C	1	**195-9155**	1	ADAPTER-TIP (K-150, 2-STRAP, RH)	
	1D	1	**195-9156**	1	ADAPTER-TIP (K-150, 2-STRAP, LH)	
	2	1	**331-3015**	2	PLATE-WEAR	
	3	1	**357-1011**	1	PLATE-WEAR	
	4	1	**360-2765**	4	PLATE-WEAR	
	5	1	**360-2766**	2	PLATE-WEAR	
	6	1	**360-2767**	1	PLATE AS-BOX	

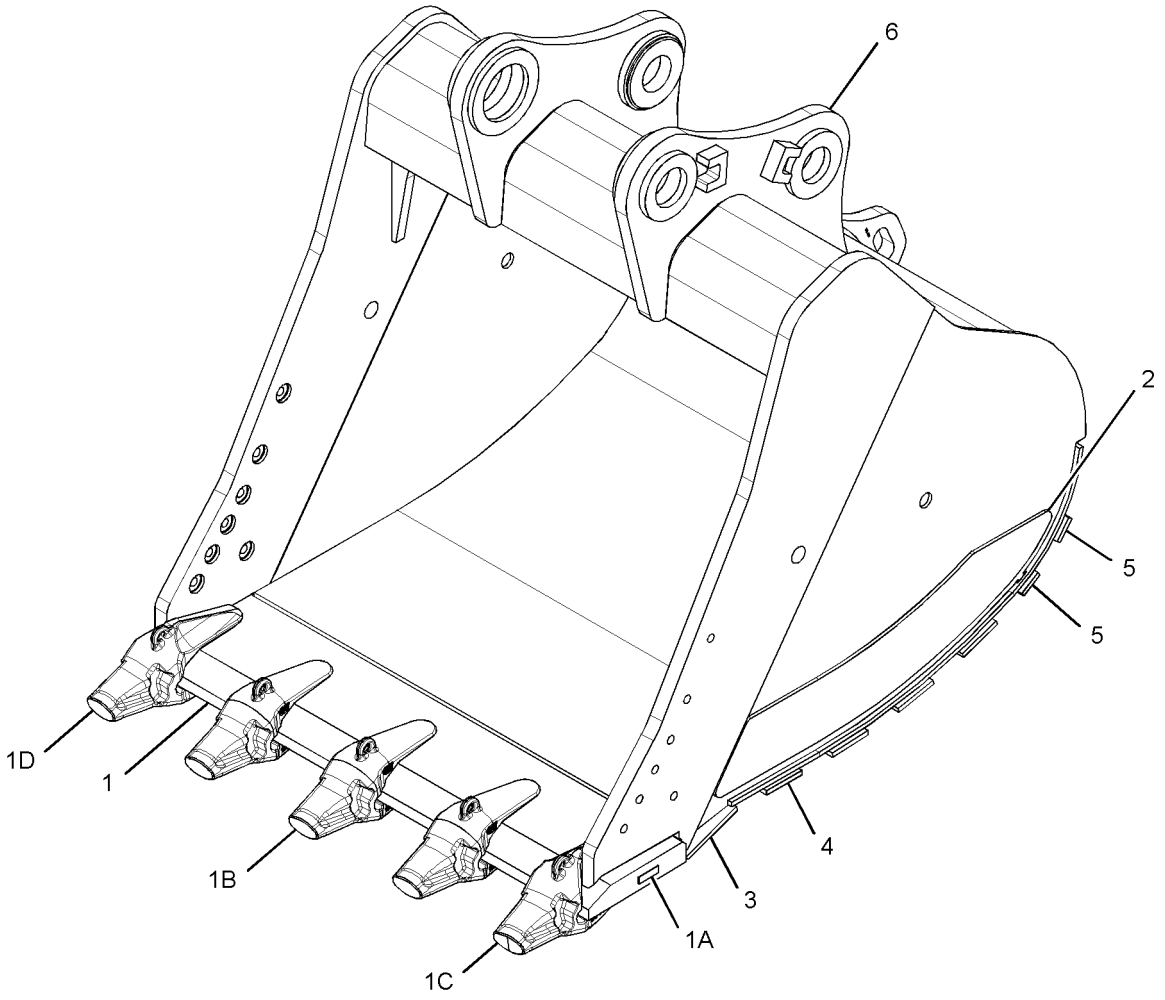

GRAPHIC #1 **<END>** g02178369

WORK TOOLS

349-9603 BUCKET AS-GENERAL PURPOSE–HB2-FAMILY

S/N: WAP1-UP

2000-MM (79-IN) WIDE X 4.6-CU M (6-CU YD) CAPACITY. K-150 ADAPTERS, QTY OF 4

PART OF 341-8652 BUCKET & ADJUSTER GP

AN ATTACHMENT

SMCS-6101 **i03997101**

NOTE	REF NO	GRAPHIC REF	PART NUMBER	QTY	PART NAME 1 2 3 4 5 6 (PRODUCT LEVEL)	SEE PAGE
	1	1	**358-3907**	1	EDGE AS	
	1A	1	**195-9154**	2	ADAPTER-TIP (K-150, 2-STRAP, CENTER)	
	1B	1	**195-9155**	1	ADAPTER-TIP (K-150, 2-STRAP, RH)	
	1C	1	**195-9156**	1	ADAPTER-TIP (K-150, 2-STRAP, LH)	
	1D	1	**8P-9770**	1	PLATE	
	2	1	**361-2276**	1	PLATE AS-BOX	
	3	1	**361-0765**	4	PLATE-WEAR	
	4	1	**361-0766**	2	PLATE-WEAR	
	5	1	**358-1377**	1	PLATE-WEAR	
	6	1	**350-0493**	2	PLATE-WEAR	

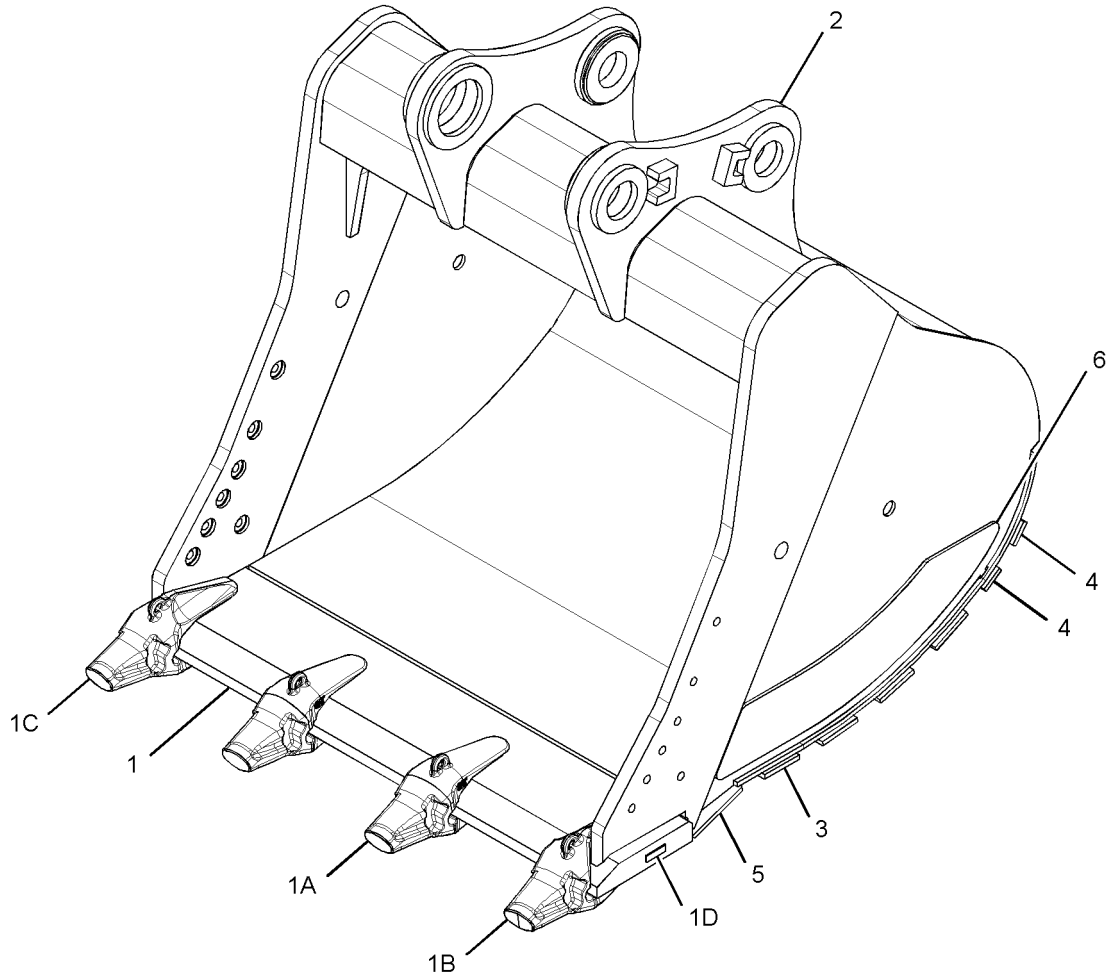

GRAPHIC #1 **<END>** g02191971

WORK TOOLS

349-9604 BUCKET AS-GENERAL PURPOSE—HB2-FAMILY

S/N: WAP1-UP
1650-MM (66-IN) WIDE X 3.9-CU M (5.1-CU YD) CAPACITY.
K-150 ADAPTERS, QTY OF 4
PART OF 331-1222 BUCKET & ADJUSTER GP
AN ATTACHMENT

SMCS-6101 **i03967538**

NOTE	REF NO	GRAPHIC REF	PART NUMBER	QTY	PART NAME 1 2 3 4 5 6 (PRODUCT LEVEL)	SEE PAGE
	1	1	**357-1457**	1	EDGE AS	
	1A	1	**8P-9770**	1	PLATE	
	1B	1	**195-9154**	2	ADAPTER-TIP (K-150, 2-STRAP, CENTER)	
	1C	1	**195-9155**	1	ADAPTER-TIP (K-150, 2-STRAP, RH)	
	1D	1	**195-9156**	1	ADAPTER-TIP (K-150, 2-STRAP, LH)	
	2	1	**331-3015**	2	PLATE-WEAR	
	3	1	**349-9607**	4	PLATE-WEAR	
	4	1	**349-9608**	2	PLATE-WEAR	
	5	1	**357-3286**	1	PLATE-WEAR	

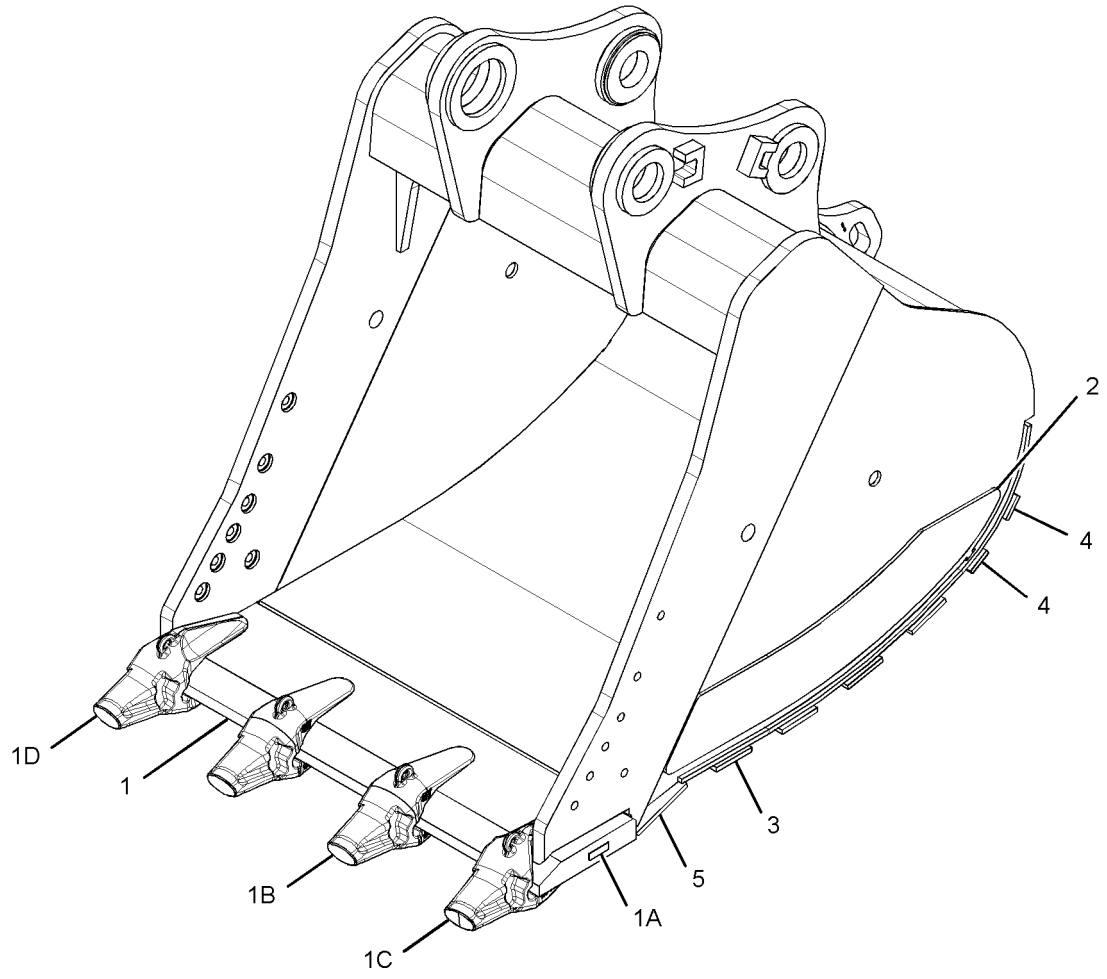

GRAPHIC #1 **<END>** g02179973

WORK TOOLS

349-9624 BUCKET AS-GENERAL PURPOSE–HB2-FAMILY

S/N: WAP1-UP
1350-MM (54-IN) WIDE X 3-CU M (4-CU YD) CAPACITY. K-150 ADAPTERS, QTY OF 4
PART OF 331-1221 BUCKET & ADJUSTER GP
AN ATTACHMENT

SMCS-6101 **i03967410**

NOTE	REF NO	GRAPHIC REF	PART NUMBER	QTY	PART NAME 1 2 3 4 5 6 (PRODUCT LEVEL)	SEE PAGE
	1	1	**360-7805**	1	EDGE AS	
	1A	1	**8P-9770**	1	PLATE	
	1B	1	**195-9154**	2	ADAPTER-TIP (K-150, 2-STRAP, CENTER)	
	1C	1	**195-9155**	1	ADAPTER-TIP (K-150, 2-STRAP, RH)	
	1D	1	**195-9156**	1	ADAPTER-TIP (K-150, 2-STRAP, LH)	
	2	1	**331-3015**	2	PLATE-WEAR	
	3	1	**349-9627**	4	PLATE-WEAR	
	4	1	**349-9628**	2	PLATE-WEAR	
	5	1	**349-9629**	1	PLATE AS-BOX	
	6	1	**360-7807**	1	PLATE-WEAR	

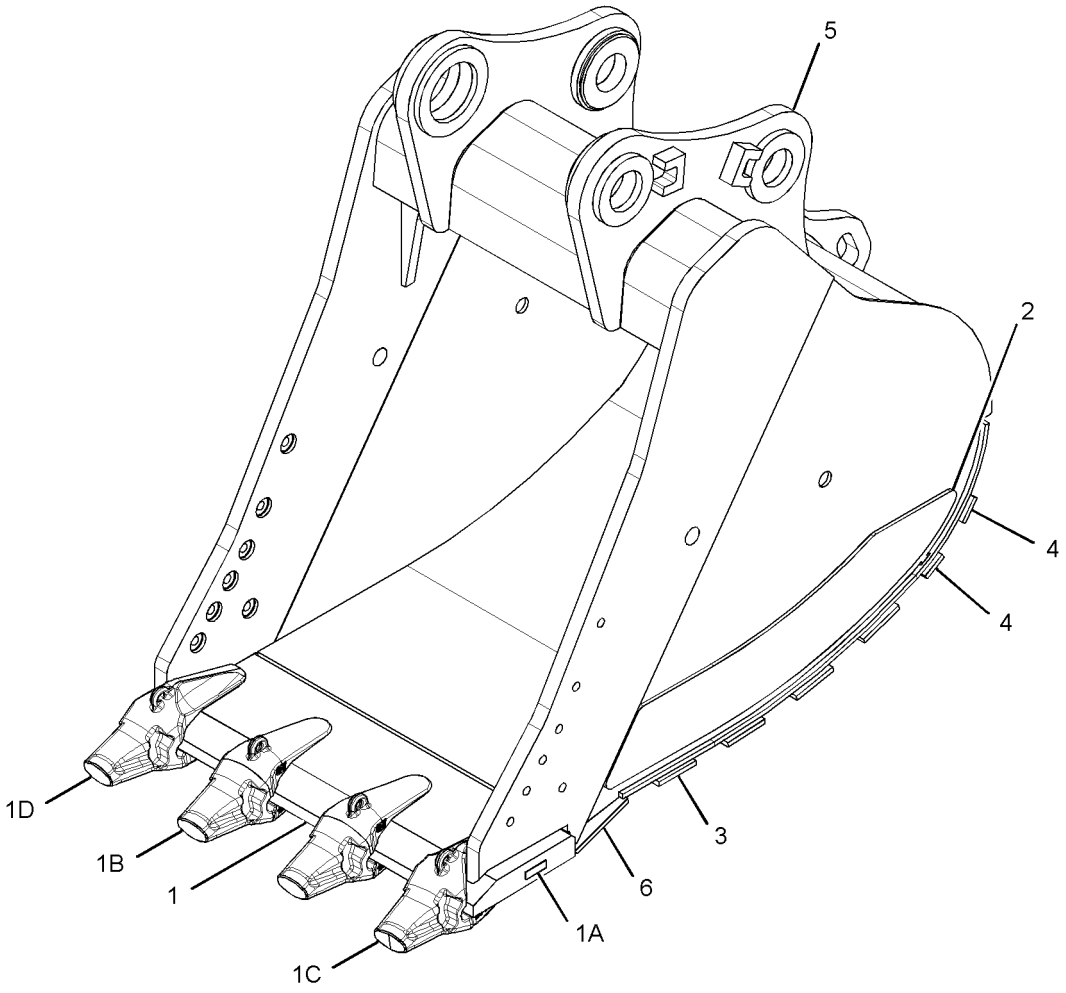

GRAPHIC #1 **<END>** g02178388

WORK TOOLS

350-0491 BUCKET AS-GENERAL PURPOSE—HB2-FAMILY

S/N: WAP1-UP
1100-MM (43-IN) WIDE X 2.2-CU M (2.8-CU YD) CAPACITY.
K-150 ADAPTERS, QTY OF 3
PART OF 341-8649 BUCKET & ADJUSTER GP
AN ATTACHMENT

SMCS-6101 **i03997094**

NOTE	REF NO	GRAPHIC REF	PART NUMBER	QTY	PART NAME 1 2 3 4 5 6 (PRODUCT LEVEL)	SEE PAGE
	1	1	**357-1453**	1	EDGE AS	
	1A	1	**195-9154**	1	ADAPTER-TIP (K-150, 2-STRAP, CENTER)	
	1B	1	**195-9155**	1	ADAPTER-TIP (K-150, 2-STRAP, RH)	
	1C	1	**195-9156**	1	ADAPTER-TIP (K-150, 2-STRAP, LH)	
	1D	1	**8P-9770**	1	PLATE	
	2	1	**361-2273**	1	PLATE AS-BOX	
	3	1	**350-0494**	4	PLATE-WEAR	
	4	1	**357-4790**	1	PLATE-WEAR	
	5	1	**350-0495**	2	PLATE-WEAR	
	6	1	**350-0493**	2	PLATE-WEAR	

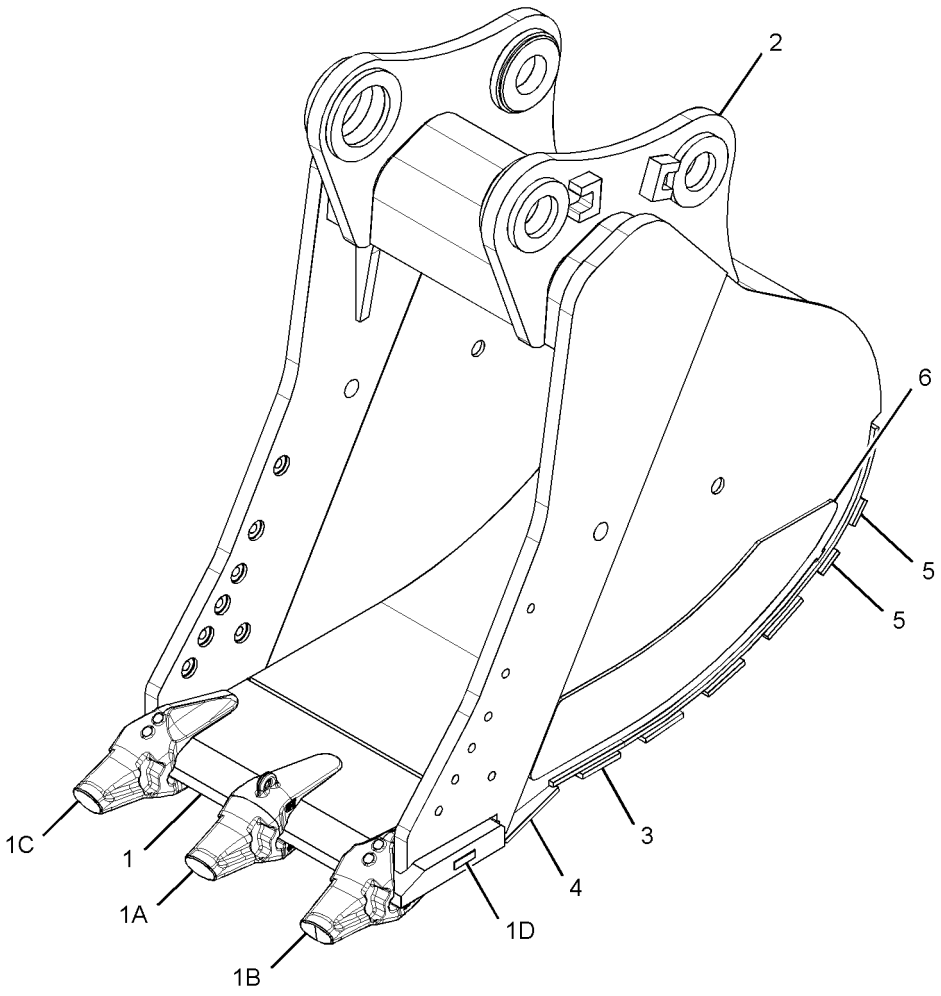

GRAPHIC #1 **<END>** g02175846

WORK TOOLS

350-0626 BUCKET AS-GENERAL PURPOSE–HB2-FAMILY

S/N: WAP1-UP
1650-MM (66-IN) WIDE X 3.7-CU M (4.9-CU YD) CAPACITY.
K-150 ADAPTERS, QTY OF 4
PART OF 341-8651 BUCKET & ADJUSTER GP
AN ATTACHMENT

SMCS-6101 **i03997061**

NOTE	REF NO	GRAPHIC REF	PART NUMBER	QTY	PART NAME 1 2 3 4 5 6 (PRODUCT LEVEL)	SEE PAGE
	1	1	**357-1457**	1	EDGE AS	
	1A	1	**195-9154**	2	ADAPTER-TIP (K-150, 2-STRAP, CENTER)	
	1B	1	**195-9155**	1	ADAPTER-TIP (K-150, 2-STRAP, RH)	
	1C	1	**195-9156**	1	ADAPTER-TIP (K-150, 2-STRAP, LH)	
	1D	1	**8P-9770**	1	PLATE	
	2	1	**361-2275**	1	PLATE AS-BOX	
	3	1	**349-9607**	4	PLATE-WEAR	
	4	1	**357-3286**	1	PLATE-WEAR	
	5	1	**349-9608**	2	PLATE-WEAR	
	6	1	**350-0493**	2	PLATE-WEAR	

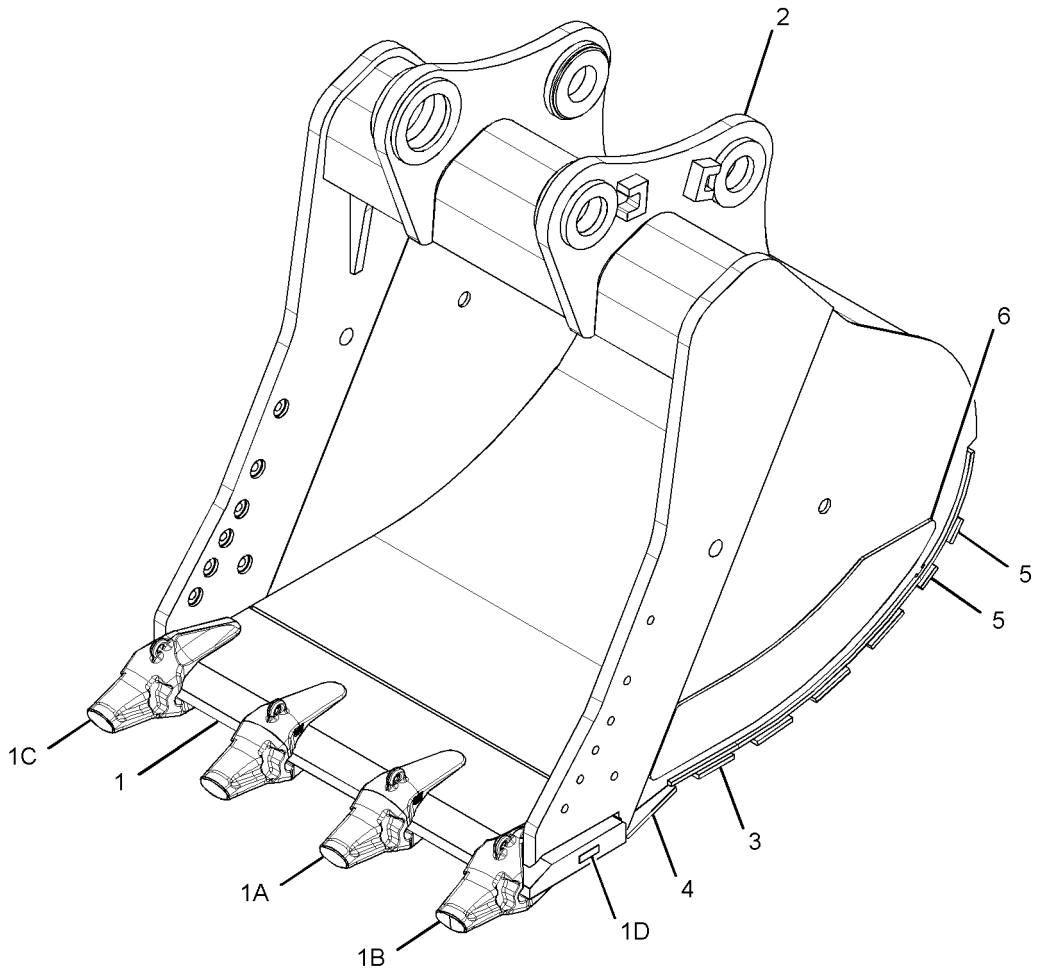

GRAPHIC #1 **<END>** g02191493

WORK TOOLS

350-0627 BUCKET AS-GENERAL PURPOSE—HB2-FAMILY

S/N: WAP1-UP
1350-MM (54-IN) WIDE X 2.9-CU M (3.8-CU YD) CAPACITY.
K-150 ADAPTERS, QTY OF 3
PART OF 341-8650 BUCKET & ADJUSTER GP
AN ATTACHMENT

SMCS-6101 **i03997121**

NOTE	REF NO	GRAPHIC REF	PART NUMBER	QTY	PART NAME 1 2 3 4 5 6 (PRODUCT LEVEL)	SEE PAGE
	1	1	**361-0761**	1	EDGE AS	
	1A	1	**195-9154**	1	ADAPTER-TIP (K-150, 2-STRAP, CENTER)	
	1B	1	**195-9155**	1	ADAPTER-TIP (K-150, 2-STRAP, RH)	
	1C	1	**195-9156**	1	ADAPTER-TIP (K-150, 2-STRAP, LH)	
	1D	1	**8P-9770**	1	PLATE	
	2	1	**361-2274**	1	PLATE AS-BOX	
	3	1	**349-9627**	4	PLATE-WEAR	
	4	1	**360-7807**	1	PLATE-WEAR	
	5	1	**349-9628**	2	PLATE-WEAR	
	6	1	**350-0493**	2	PLATE-WEAR	

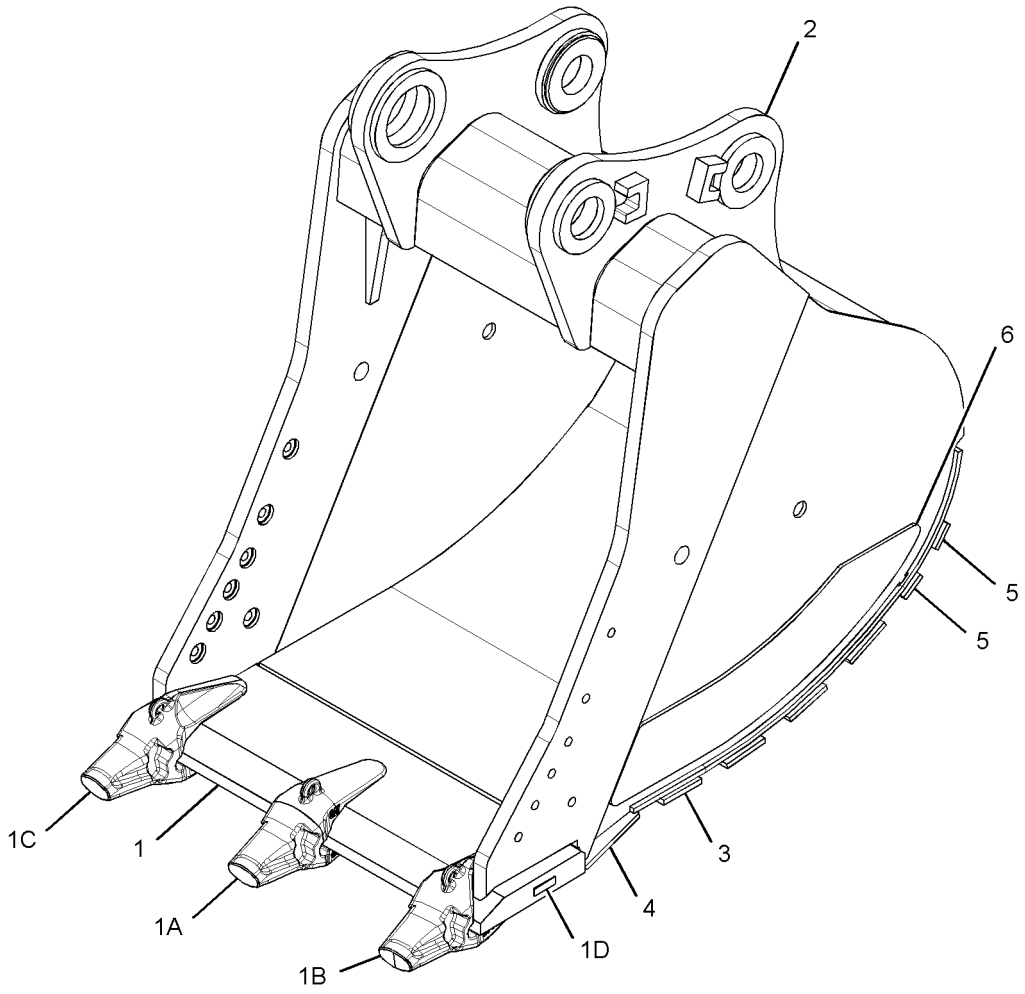

GRAPHIC #1 **<END>** g02175845

WORK TOOLS

360-6140 BUCKET AS-GENERAL PURPOSE–JC-FAMILY

S/N: WAP1-UP
2575-MM (101-IN) WIDE X 6.5-CU M (8.5-CU YD) CAPACITY.
K-170 ADAPTERS, QTY OF 6
PART OF 331-1236 BUCKET & ADJUSTER GP
AN ATTACHMENT

SMCS-6101 **i04012973**

NOTE	REF NO	GRAPHIC REF	PART NUMBER	QTY	PART NAME 1 2 3 4 5 6 (PRODUCT LEVEL)	SEE PAGE
	1	1	**360-6142**	1	EDGE AS	
	1A	1	**8P-9770**	1	PLATE	
	1B	1	**232-2170**	4	ADAPTER-TIP (K-170, 2-STRAP, CENTER)	
	1C	1	**232-2171**	1	ADAPTER-TIP (K-170, 2-STRAP, RH)	
	1D	1	**232-2172**	1	ADAPTER-TIP (K-170, 2-STRAP, LH)	
	2	1	**348-4489**	2	PLATE-WEAR	
	3	1	**360-6144**	1	PLATE-WEAR	
	4	1	**360-6145**	4	PLATE-WEAR	
	5	1	**360-6146**	3	PLATE-WEAR	
	6	1	**360-6147**	1	PLATE AS-HINGE	

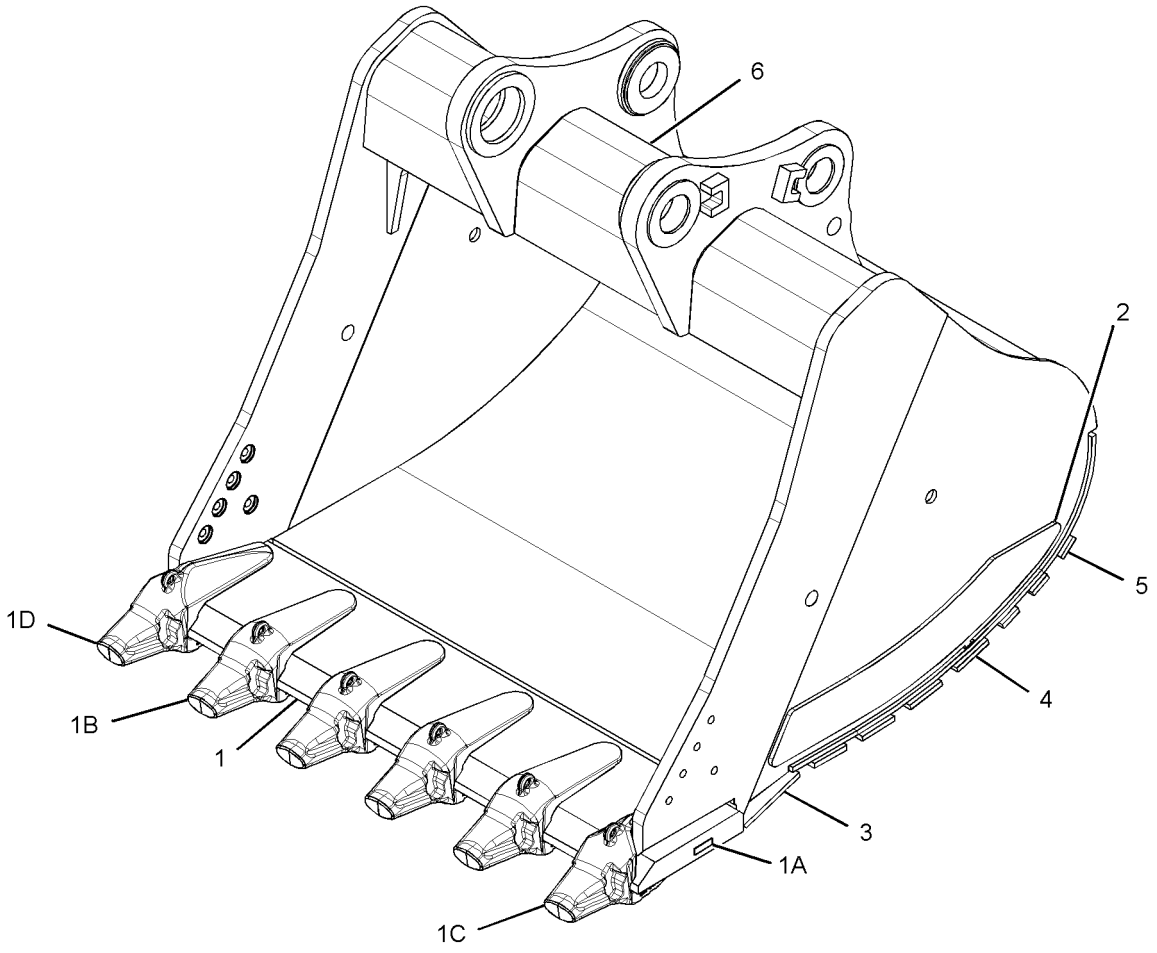

GRAPHIC #1 **<END>** g02188216

WORK TOOLS

361-0757 BUCKET AS-GENERAL PURPOSE—HB2-FAMILY

S/N: WAP1-UP
1900-MM (75-IN) WIDE X 4.3-CU M (5.7-CU YD) CAPACITY.
K-150 ADAPTERS, QTY OF 4
PART OF 361-0756 BUCKET & ADJUSTER GP
AN ATTACHMENT

SMCS-6101 **i03998273**

NOTE	REF NO	GRAPHIC REF	PART NUMBER	QTY	PART NAME 1 2 3 4 5 6 (PRODUCT LEVEL)	SEE PAGE
	1	1	**357-1002**	1	EDGE AS	
	1A	1	**8P-9770**	1	PLATE	
	1B	1	**195-9154**	2	ADAPTER-TIP (K-150, 2-STRAP, CENTER)	
	1C	1	**195-9155**	1	ADAPTER-TIP (K-150, 2-STRAP, RH)	
	1D	1	**195-9156**	1	ADAPTER-TIP (K-150, 2-STRAP, LH)	
	2	1	**350-0493**	2	PLATE-WEAR	
	3	1	**357-1011**	1	PLATE-WEAR	
	4	1	**360-2765**	4	PLATE-WEAR	
	5	1	**360-2766**	2	PLATE-WEAR	
	6	1	**361-0767**	1	PLATE AS-HINGE	

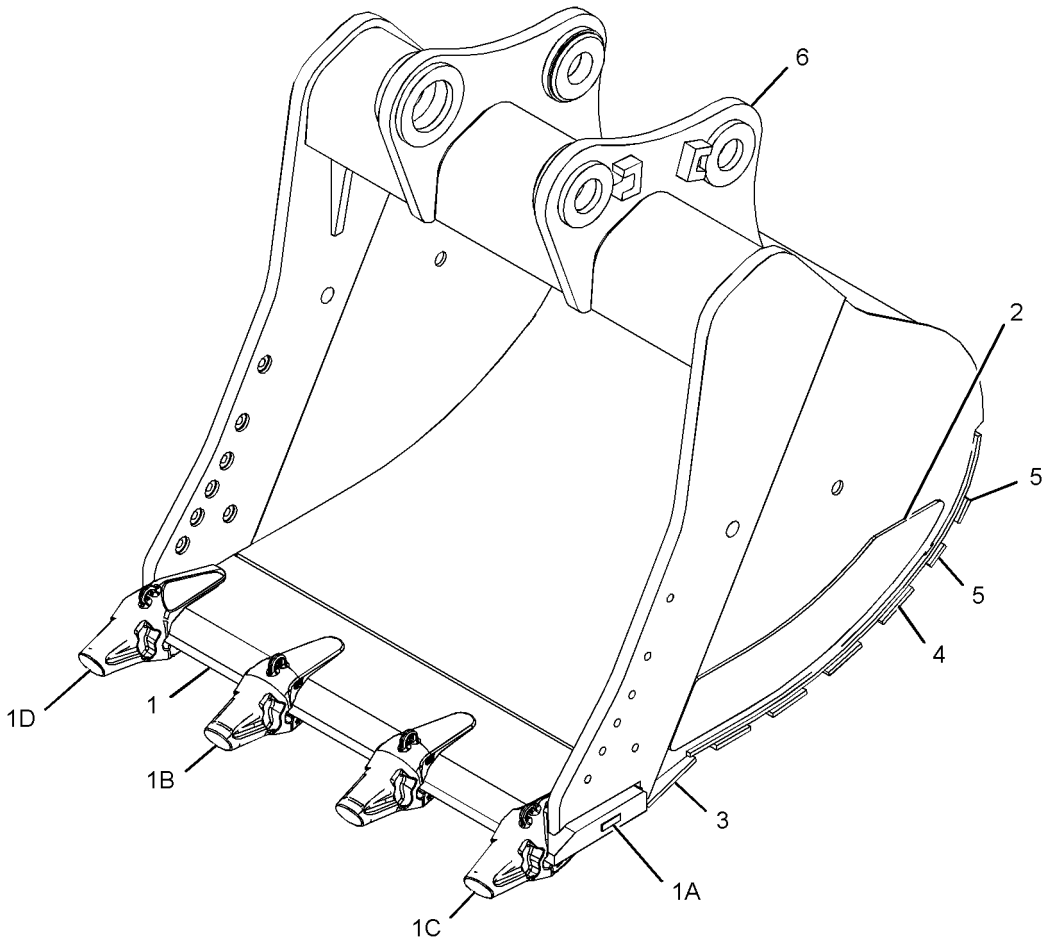

GRAPHIC #1 **<END>** g02177068

WORK TOOLS

362-0454 BUCKET AS-GENERAL PURPOSE–HB2-FAMILY

S/N: WAP1-UP

2000-MM (79-IN) WIDE X 5.3-CU M (7-CU YD) CAPACITY. K-150 ADAPTERS, QTY OF 5

PART OF 331-1225 BUCKET & ADJUSTER GP

AN ATTACHMENT

SMCS-6101 **i04019631**

NOTE	REF NO	GRAPHIC REF	PART NUMBER	QTY	PART NAME 1 2 3 4 5 6 (PRODUCT LEVEL)	SEE PAGE
	1	1	**358-7878**	1	EDGE AS	
	1A	1	**195-9154**	3	ADAPTER-TIP (K-150, 2-STRAP, CENTER)	
	1B	1	**195-9156**	1	ADAPTER-TIP (K-150, 2-STRAP, LH)	
	1C	1	**195-9155**	1	ADAPTER-TIP (K-150, 2-STRAP, RH)	
	1D	1	**8P-9770**	1	PLATE	
	2	1	**358-1377**	1	PLATE-WEAR	
	3	1	**361-0765**	4	PLATE-WEAR	
	4	1	**361-0766**	3	PLATE-WEAR	
	5	1	**362-0461**	2	PLATE-WEAR	
	6	1	**362-0462**	1	PLATE AS-HINGE	

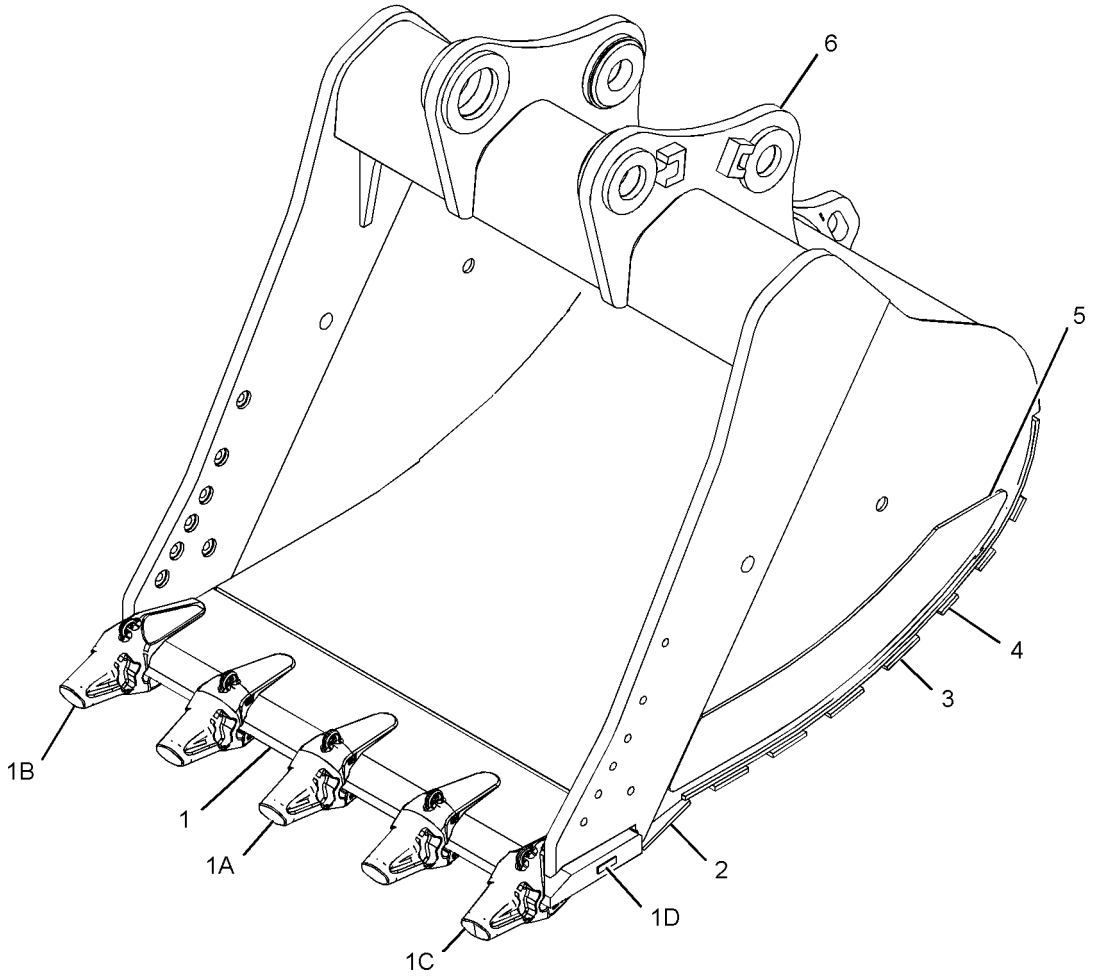

GRAPHIC #1 **<END>** g02194133

363-9195 BUCKET AS-GENERAL PURPOSE—HB2-FAMILY

S/N: WAP1-UP
2200-MM (87-IN) WIDE X 6-CU M (8-CU YD) CAPACITY. K-150 ADAPTERS, QTY OF 6
PART OF 331-1226 BUCKET & ADJUSTER GP
AN ATTACHMENT

SMCS-6101 **i04020117**

NOTE	REF NO	GRAPHIC REF	PART NUMBER	QTY	PART NAME 1 2 3 4 5 6 (PRODUCT LEVEL)	SEE PAGE
	1	1	**363-9197**	1	EDGE AS	
	1A	1	**195-9154**	4	ADAPTER-TIP (K-150, 2-STRAP, CENTER)	
	1B	1	**195-9156**	1	ADAPTER-TIP (K-150, 2-STRAP, LH)	
	1C	1	**195-9155**	1	ADAPTER-TIP (K-150, 2-STRAP, RH)	
	1D	1	**8P-9770**	1	PLATE	
	2	1	**363-9204**	2	PLATE-WEAR	
	3	1	**363-9205**	1	PLATE-WEAR	
	4	1	**363-9206**	4	PLATE-WEAR	
	5	1	**363-9207**	3	PLATE-WEAR	
	6	1	**363-9208**	1	PLATE AS-HINGE	

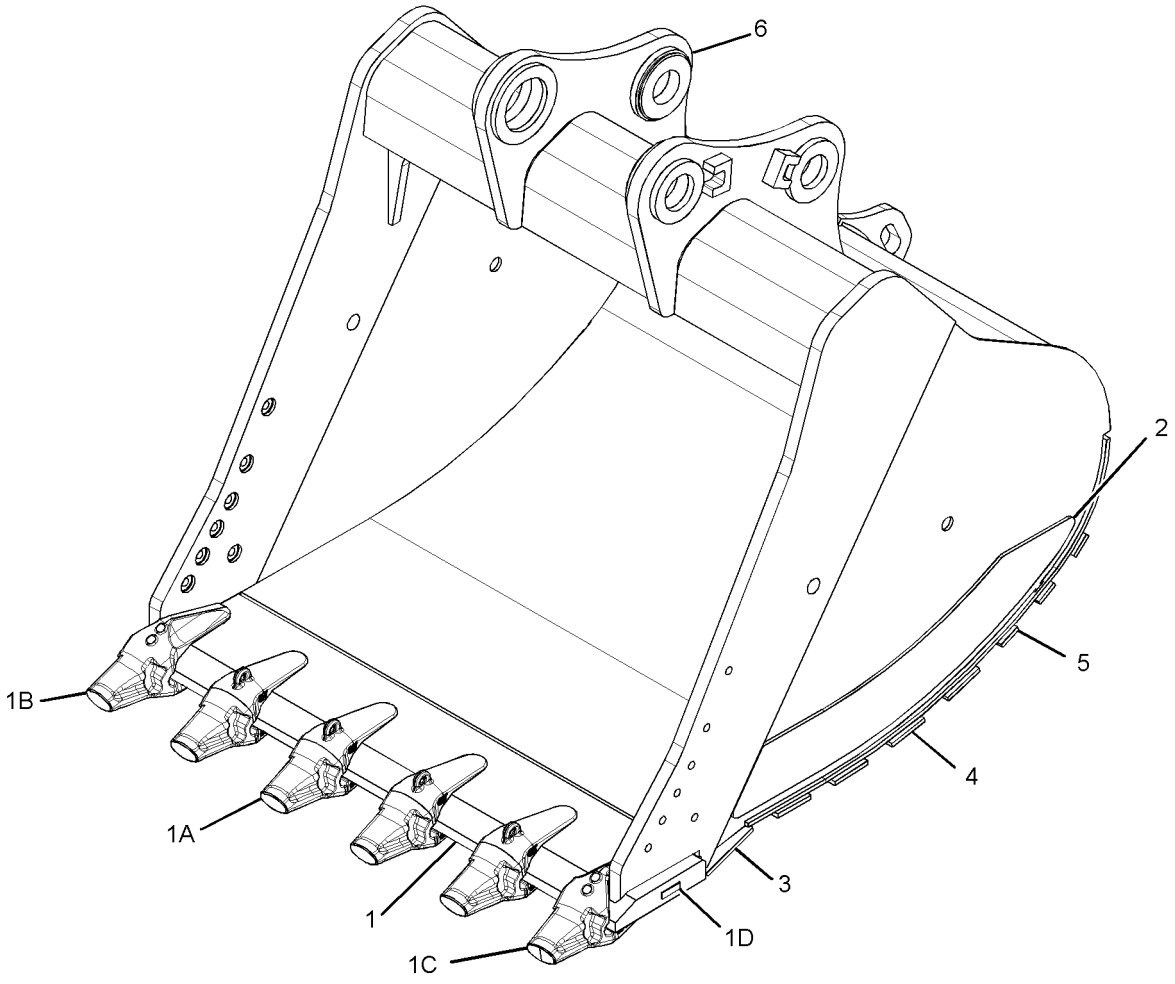

GRAPHIC #1 **<END>** g02194873

WORK TOOLS

360-6127 BUCKET AS-HEAVY DUTY—JC-FAMILY

S/N: WAP1-UP
1750-MM (69-IN) WIDE X 4.1-CU M (5.3-CU YD) CAPACITY.
K170 ADAPTERS, QTY OF 4
PART OF 331-1240 BUCKET & ADJUSTER GP
AN ATTACHMENT

SMCS-6531 **i03996014**

NOTE	REF NO	GRAPHIC REF	PART NUMBER	QTY	PART NAME 1 2 3 4 5 6 (PRODUCT LEVEL)	SEE PAGE
	1	1	**360-6099**	1	PLATE AS-BOX	
	2	1	**360-6134**	4	PLATE-WEAR	
	3	1	**360-6126**	2	PLATE-WEAR	
	4	1	**360-6131**	4	PLATE-WEAR	
	5	1	**360-6130**	1	PLATE-WEAR	
	6	1	**360-6120**	1	EDGE AS	
	6A	1	**232-2172**	1	ADAPTER-TIP (K-170, 2-STRAP, LH)	
	6B	1	**232-2170**	2	ADAPTER-TIP (K-170, 2-STRAP, CENTER)	
	6C	1	**232-2171**	1	ADAPTER-TIP (K-170, 2-STRAP, RH)	
	6D	1	**8P-9770**	1	PLATE	

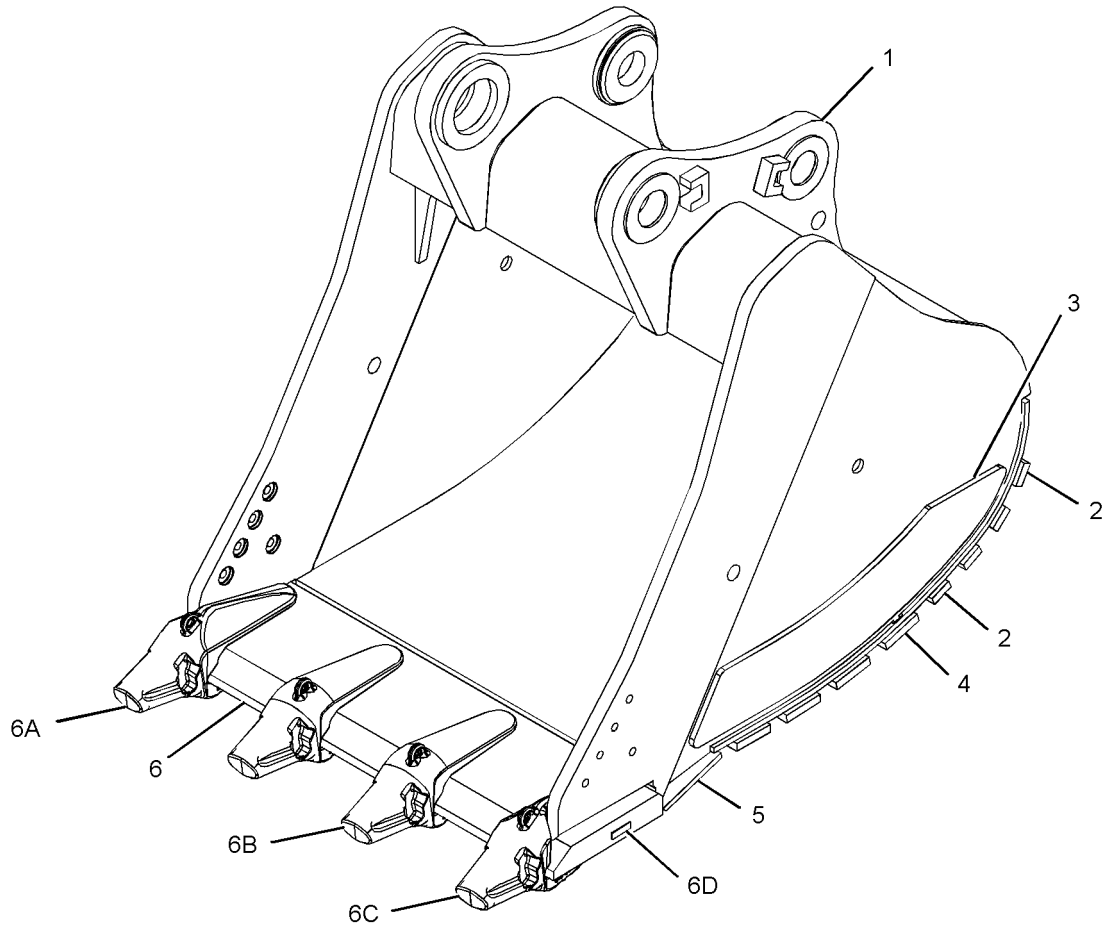

GRAPHIC #1 **<END>** g02177036

WORK TOOLS

360-6128 BUCKET AS-HEAVY DUTY—JC-FAMILY

S/N: WAP1-UP
2090-MM (82-IN) WIDE X 5.1-CU M (6.6-CU YD) CAPACITY.
K-170 ADAPTERS, QTY OF 5
PART OF 331-1241 BUCKET & ADJUSTER GP
AN ATTACHMENT

SMCS-6531 **i03996484**

NOTE	REF NO	GRAPHIC REF	PART NUMBER	QTY	PART NAME 1 2 3 4 5 6 (PRODUCT LEVEL)	SEE PAGE
	1	1	**360-6122**	1	EDGE AS	
	1A	1	**232-2172**	1	ADAPTER-TIP (K-170, 2-STRAP, LH)	
	1B	1	**232-2170**	3	ADAPTER-TIP (K-170, 2-STRAP, CENTER)	
	1C	1	**232-2171**	1	ADAPTER-TIP (K-170, 2-STRAP, RH)	
	1D	1	**8P-9770**	1	PLATE	
	2	1	**360-6139**	1	PLATE-WEAR	
	3	1	**360-6132**	4	PLATE-WEAR	
	4	1	**360-6126**	2	PLATE-WEAR	
	5	1	**360-6135**	4	PLATE-WEAR	
	6	1	**360-6100**	1	PLATE AS-HINGE	

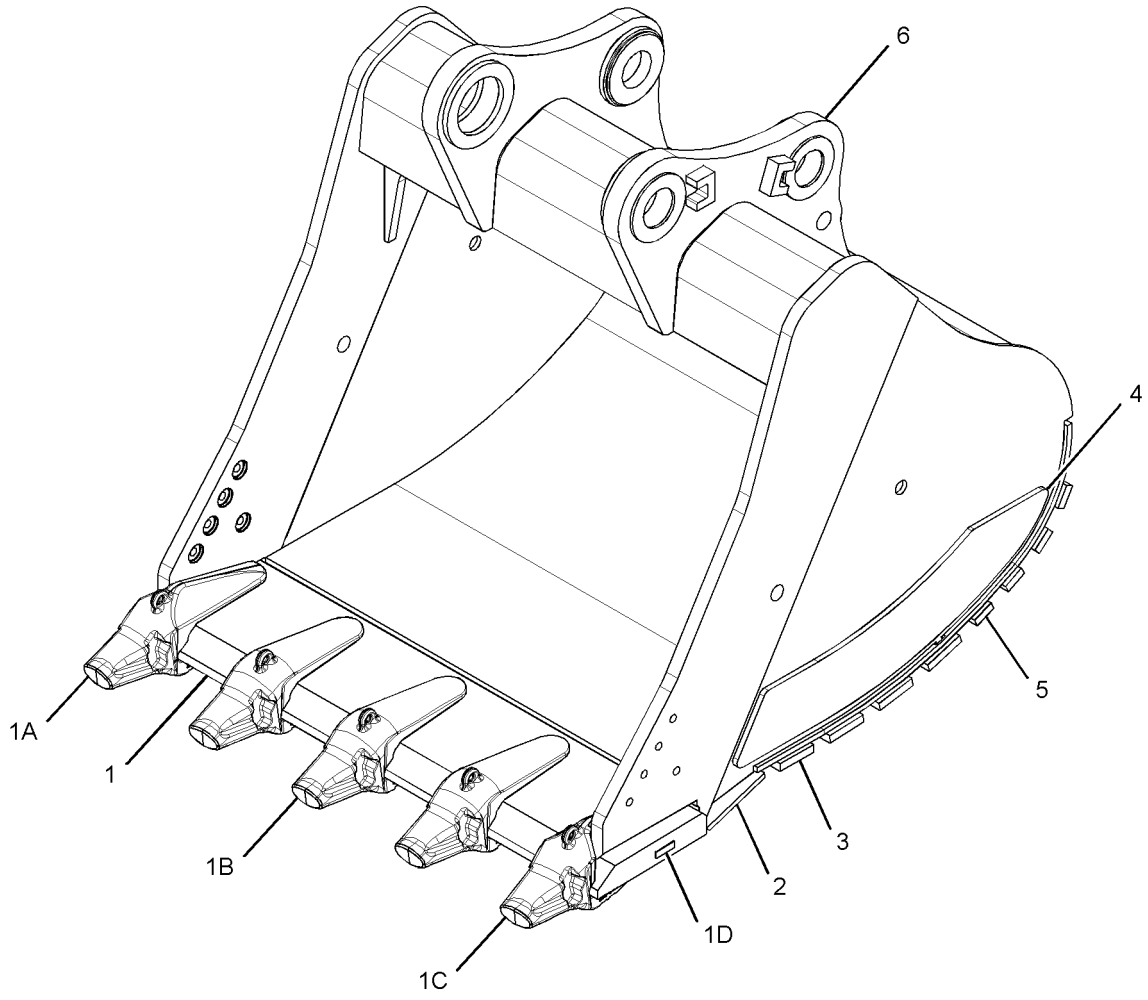

GRAPHIC #1 **<END>** g02177293

WORK TOOLS

360-6129 BUCKET AS-HEAVY DUTY—JC-FAMILY

S/N: WAP1-UP
2300-MM (91-IN) WIDE X 5.7-CU M (7.4-CU YD) CAPACITY.
K-170 ADAPTERS, QTY OF 6
PART OF 331-1242 BUCKET & ADJUSTER GP
AN ATTACHMENT

SMCS-6531 **i03996622**

NOTE	REF NO	GRAPHIC REF	PART NUMBER	QTY	PART NAME 1 2 3 4 5 6 (PRODUCT LEVEL)	SEE PAGE
	1	1	**348-4526**	1	EDGE AS	
	1A	1	**232-2172**	1	ADAPTER-TIP (K-170, 2-STRAP, LH)	
	1B	1	**232-2170**	4	ADAPTER-TIP (K-170, 2-STRAP, CENTER)	
	1C	1	**232-2171**	1	ADAPTER-TIP (K-170, 2-STRAP, RH)	
	1D	1	**8P-9770**	1	PLATE	
	2	1	**360-6137**	1	PLATE-WEAR	
	3	1	**360-6133**	4	PLATE-WEAR	
	4	1	**360-6126**	2	PLATE-WEAR	
	5	1	**360-6136**	4	PLATE-WEAR	
	6	1	**348-4520**	1	PLATE AS-BOX	

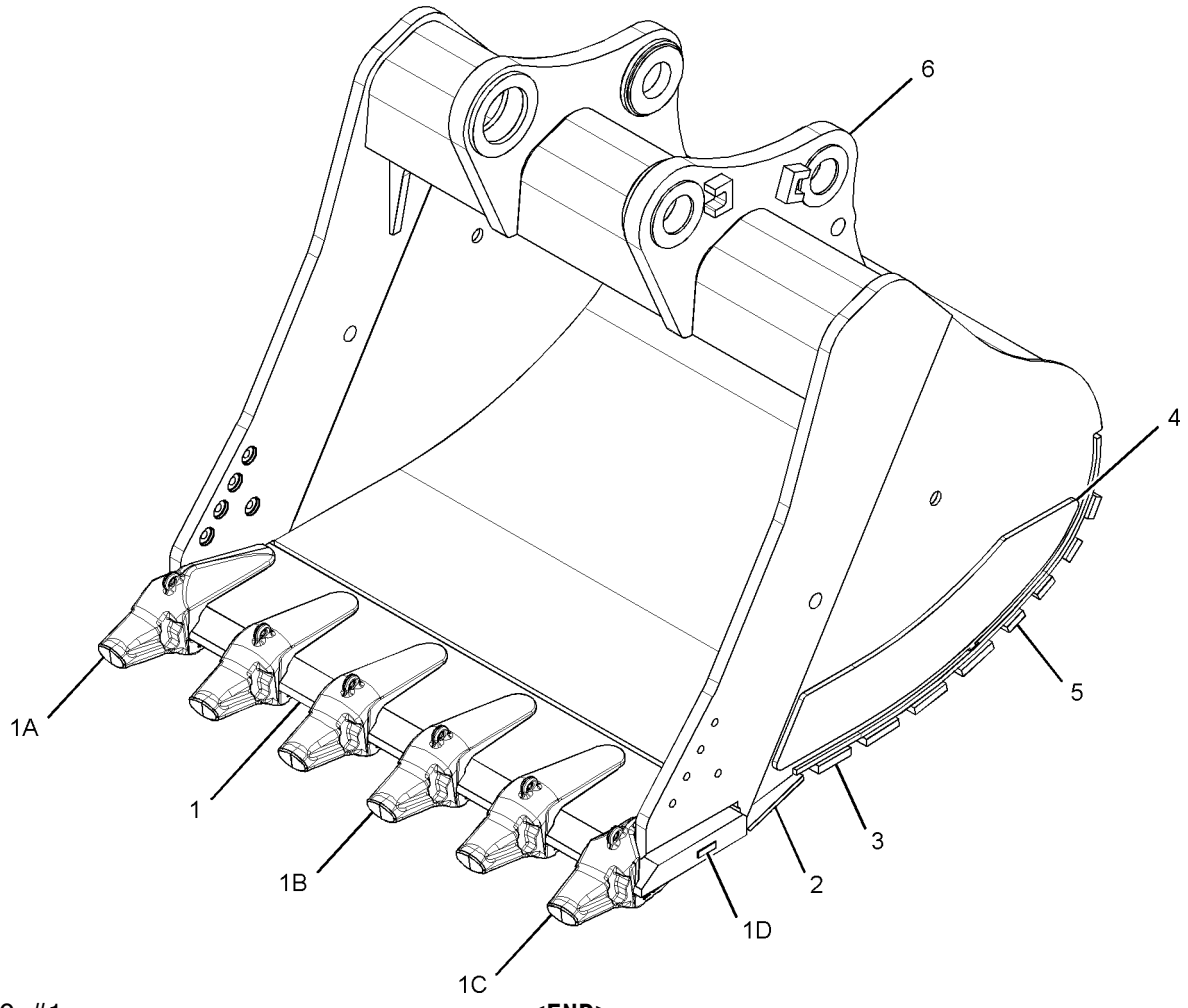

GRAPHIC #1 **<END>** g02177292

360-6045 BUCKET AS-SEVERE SERVICE ROCK–JC-FAMILY

S/N: WAP1-UP
1950-MM (77-IN) WIDE X 4.6-CU M (6-CU YD) CAPACITY. J-800 ADAPTERS, QTY OF 4
PART OF 331-1245 BUCKET & ADJUSTER GP
AN ATTACHMENT

SMCS-6001 **i04004475**

NOTE	REF NO	GRAPHIC REF	PART NUMBER	QTY	PART NAME 1 2 3 4 5 6 (PRODUCT LEVEL)	SEE PAGE
	1	1	**360-6021**	1	PLATE AS-BOX	
	2	1	**360-6008**	2	PLATE-WEAR	
	3	1	**360-6017**	5	PLATE-WEAR	
	4	1	**360-6013**	4	PLATE-WEAR	
	5	1	**360-6009**	1	PLATE-WEAR	
	6	1	**360-5995**	1	EDGE AS	
	6A	1	**357-6516**	4	ADAPTER (J-800)	
	6B	1	**8P-9770**	1	PLATE	

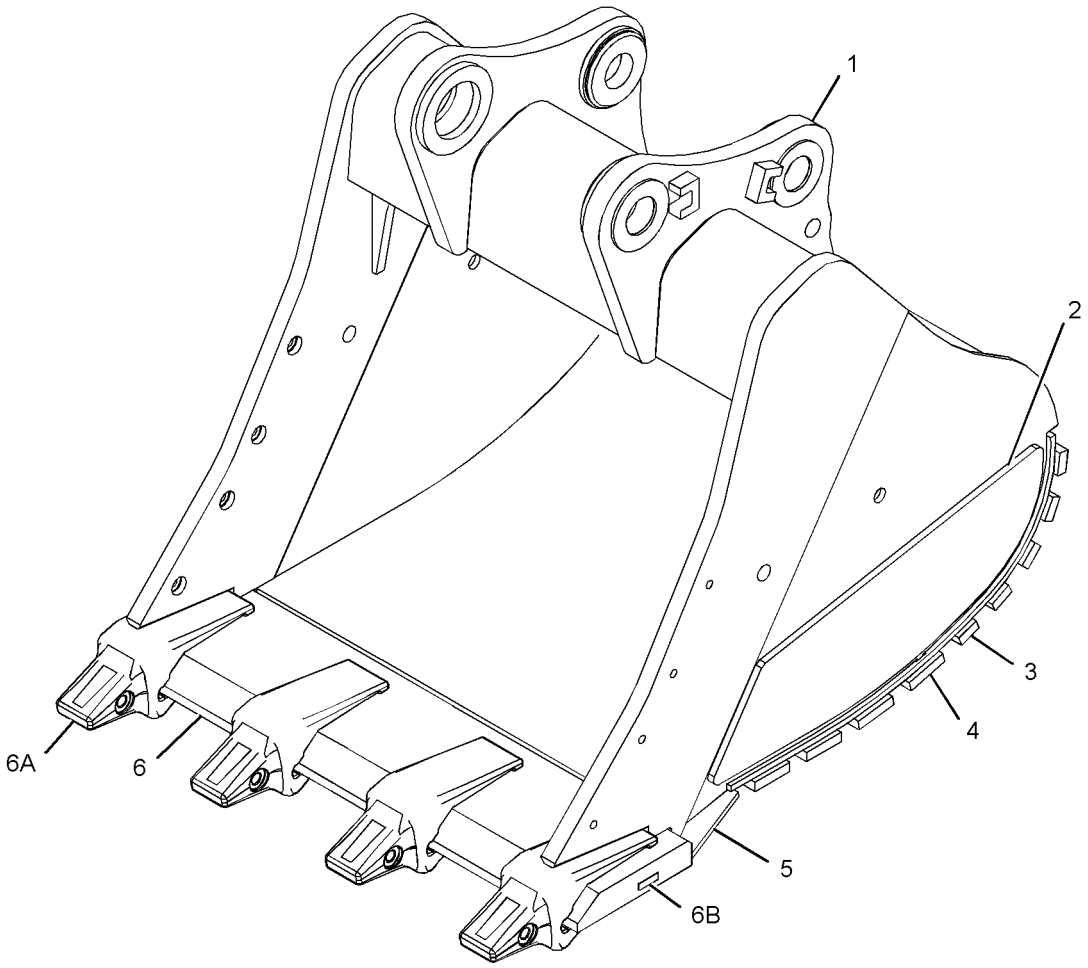

GRAPHIC #1 **<END>** g02185344

WORK TOOLS

360-6046 BUCKET AS-SEVERE SERVICE ROCK–JC-FAMILY

S/N: WAP1-UP
2200-MM (88-IN) WIDE X 5.4-CU M (7.1-CU YD) CAPACITY.
J-800 ADAPTERS, QTY OF 4
PART OF 331-1246 BUCKET & ADJUSTER GP
AN ATTACHMENT

SMCS-6001 **i04004496**

NOTE	REF NO	GRAPHIC REF	PART NUMBER	QTY	PART NAME 1 2 3 4 5 6 (PRODUCT LEVEL)	SEE PAGE
	1	1	**360-6022**	1	PLATE AS-HINGE	
	2	1	**360-6008**	2	PLATE-WEAR	
	3	1	**360-6018**	5	PLATE-WEAR	
	4	1	**360-6014**	4	PLATE-WEAR	
	5	1	**360-6010**	1	PLATE-WEAR	
	6	1	**360-5996**	1	EDGE AS	
	6A	1	**357-6516**	4	ADAPTER (J-800)	
	6B	1	**8P-9770**	1	PLATE	

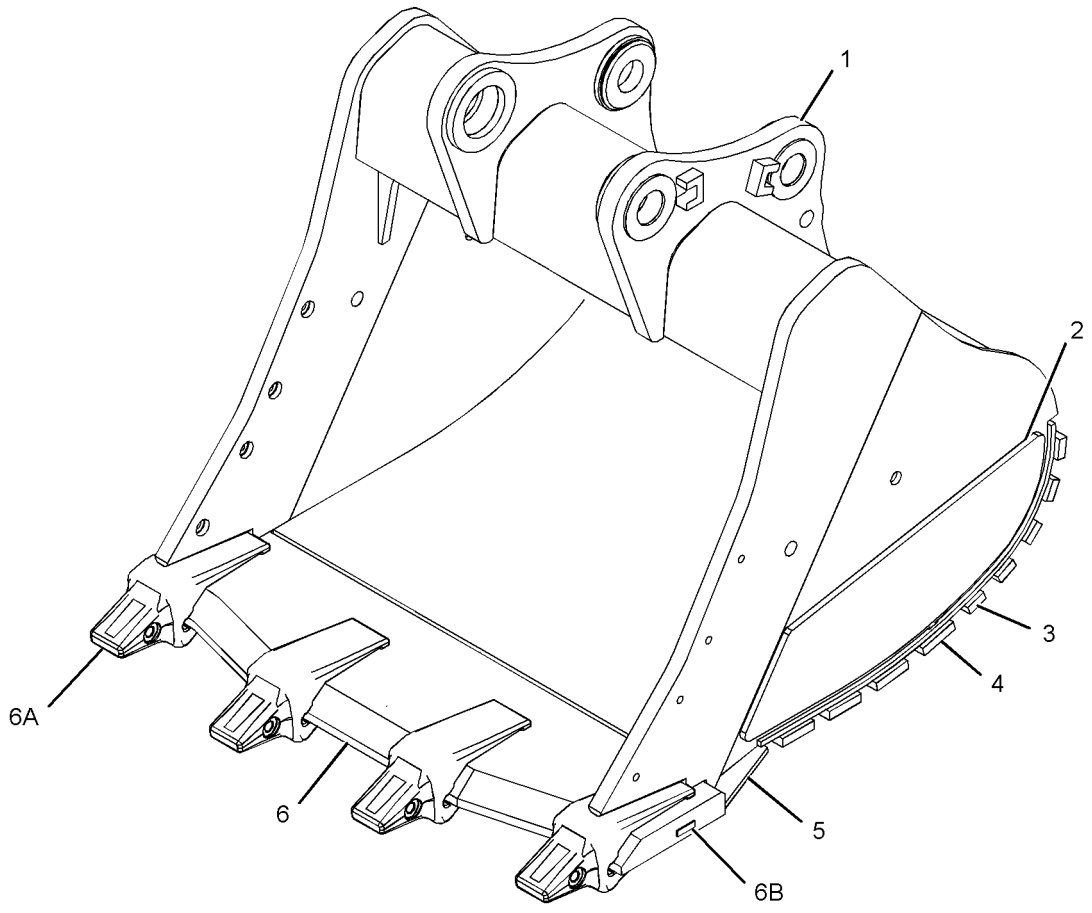

GRAPHIC #1 **<END>** g02185313

WORK TOOLS

360-6047 BUCKET AS-SEVERE SERVICE ROCK–JC-FAMILY

S/N: WAP1-UP
2300-MM (93-IN) WIDE X 5.7-CU M (7.5-CU YD) CAPACITY.
J-800 ADAPTERS, QTY OF 4
PART OF 331-1247 BUCKET & ADJUSTER GP
AN ATTACHMENT

SMCS-6001 **i04004505**

NOTE	REF NO	GRAPHIC REF	PART NUMBER	QTY	PART NAME 1 2 3 4 5 6 (PRODUCT LEVEL)	SEE PAGE
	1	1	**360-6023**	1	PLATE AS-HINGE	
	2	1	**360-6008**	2	PLATE-WEAR	
	3	1	**360-6019**	5	PLATE-WEAR	
	4	1	**360-6015**	4	PLATE-WEAR	
	5	1	**360-6011**	1	PLATE-WEAR	
	6	1	**360-5997**	1	EDGE AS	
	6A	1	**357-6516**	4	ADAPTER	
	6B	1	**8P-9770**	1	PLATE	

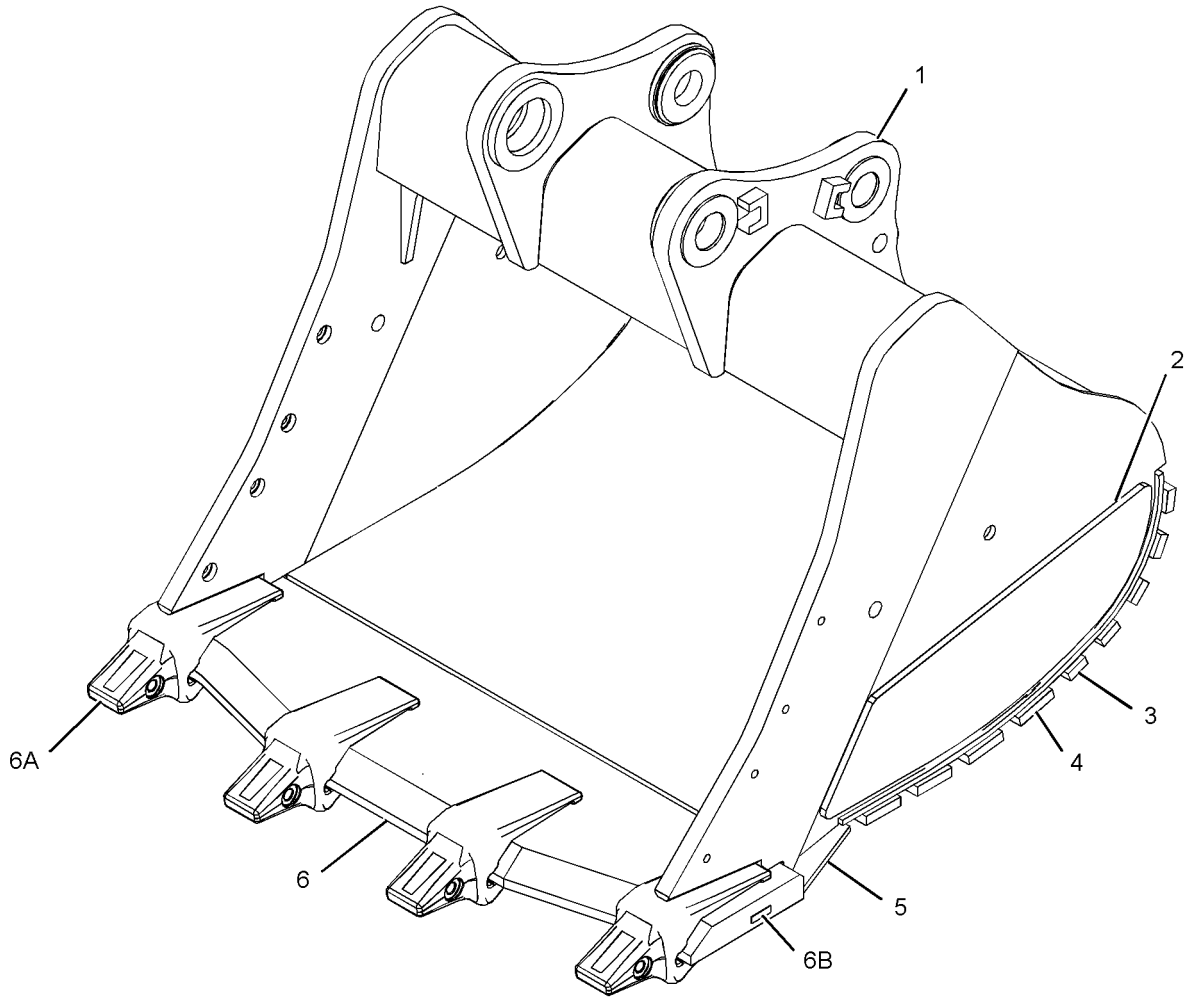

GRAPHIC #1 **<END>** g02185333

WORK TOOLS

360-6048 BUCKET AS-SEVERE SERVICE ROCK–JC-FAMILY

S/N: WAP1-UP

2400-MM (96-IN) WIDE X 6-CU M (7.9-CU YD) CAPACITY. J-800 ADAPTERS, QTY OF 5

PART OF 331-1248 BUCKET & ADJUSTER GP

AN ATTACHMENT

SMCS-6001 **i04004512**

NOTE	REF NO	GRAPHIC REF	PART NUMBER	QTY	PART NAME 1 2 3 4 5 6 (PRODUCT LEVEL)	SEE PAGE
	1	1	**360-5998**	1	EDGE AS	
	1A	1	**357-6516**	5	ADAPTER	
	1B	1	**8P-9770**	1	PLATE	
	2	1	**360-6012**	1	PLATE-WEAR	
	3	1	**360-6016**	4	PLATE-WEAR	
	4	1	**360-6020**	5	PLATE-WEAR	
	5	1	**360-6008**	2	PLATE-WEAR	
	6	1	**360-6024**	1	PLATE AS-BOX	

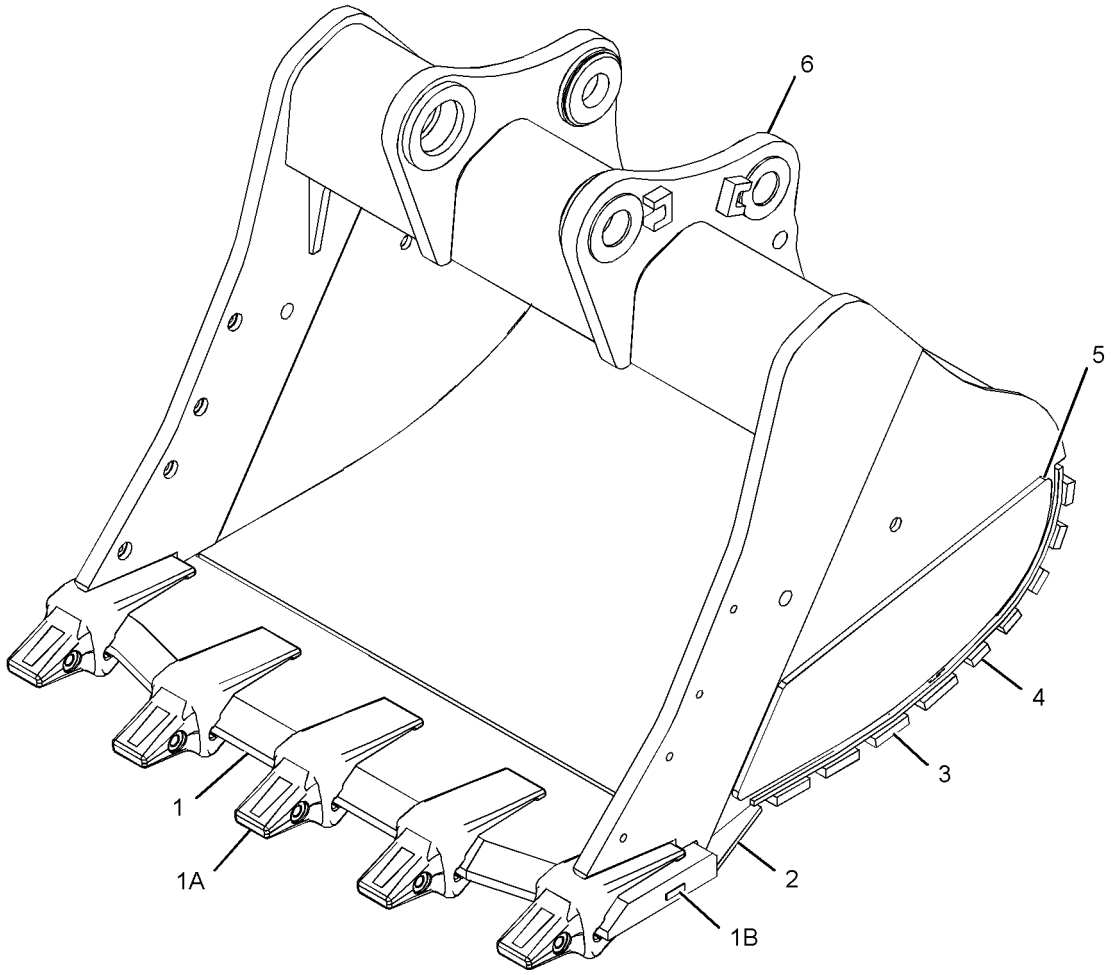

GRAPHIC #1 **<END>** g02184393

WORK TOOLS

360-6051 BUCKET AS-SEVERE SERVICE ROCK–JC-FAMILY

S/N: WAP1-UP
2240-MM (88-IN) WIDE X 5.4-CU M (7.1-CU YD) CAPACITY.
J-800 ADAPTERS, QTY OF 4
PART OF 331-1252 BUCKET & ADJUSTER GP
AN ATTACHMENT

SMCS-6001 **i03996646**

NOTE	REF NO	GRAPHIC REF	PART NUMBER	QTY	PART NAME 1 2 3 4 5 6 (PRODUCT LEVEL)	SEE PAGE
	1	1	**360-6057**	1	EDGE AS	
	1A	1	**357-6516**	4	ADAPTER	
	1B	1	**286-2126**	2	BLOCK-WEAR	
	2	1	**360-6010**	1	PLATE-WEAR	
	3	1	**157-1019**	2	SHROUD	
	4	1	**157-1027**	8	SHROUD	
	5	1	**360-6065**	2	PLATE-WEAR	
	6	1	**360-6022**	1	PLATE AS-HINGE	
	7	1	**360-6081**	1	PLATE-WEAR	
	8	1	**360-6068**	4	PLATE-WEAR	
	9	1	**360-6071**	5	PLATE-WEAR	

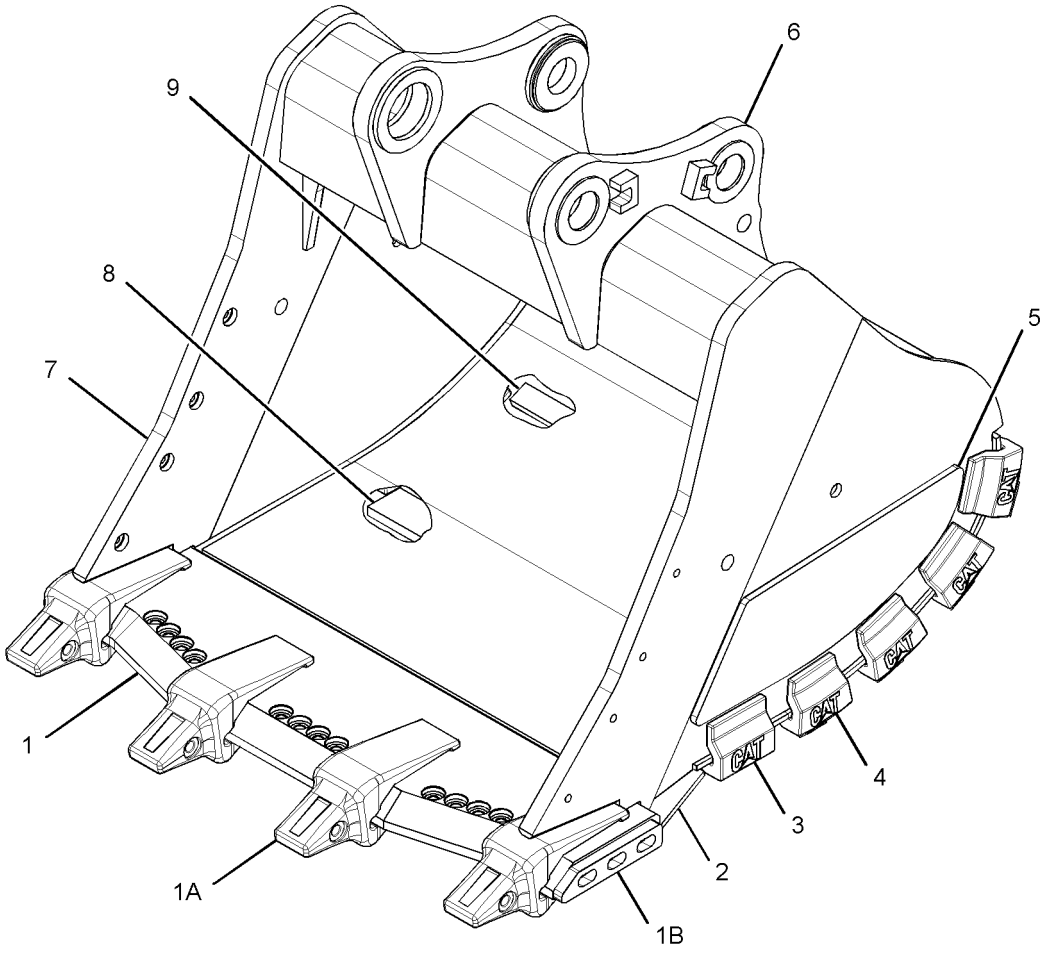

GRAPHIC #1 **<END>** g02177294

WORK TOOLS

360-6052 BUCKET AS-SEVERE SERVICE ROCK—JC-FAMILY

S/N: WAP1-UP
2300-MM (93-IN) WIDE X 5.7-CU M (7.5-CU YD) CAPACITY.
J-800 ADAPTERS, QTY OF 4
PART OF 331-1253 BUCKET & ADJUSTER GP
AN ATTACHMENT

SMCS-6001 **i03996661**

NOTE	REF NO	GRAPHIC REF	PART NUMBER	QTY	PART NAME 1 2 3 4 5 6 (PRODUCT LEVEL)	SEE PAGE
	1	1	**360-6058**	1	EDGE AS	
	1A	1	**357-6516**	4	ADAPTER	
	1B	1	**286-2126**	2	BLOCK-WEAR	
	2	1	**360-6011**	1	PLATE-WEAR	
	3	1	**157-1019**	2	SHROUD	
	4	1	**157-1027**	8	SHROUD	
	5	1	**360-6065**	2	PLATE-WEAR	
	6	1	**360-6023**	1	PLATE AS-HINGE	
	7	1	**360-6082**	1	PLATE-WEAR	
	8	1	**360-6069**	4	PLATE-WEAR	
	9	1	**360-6072**	5	PLATE-WEAR	

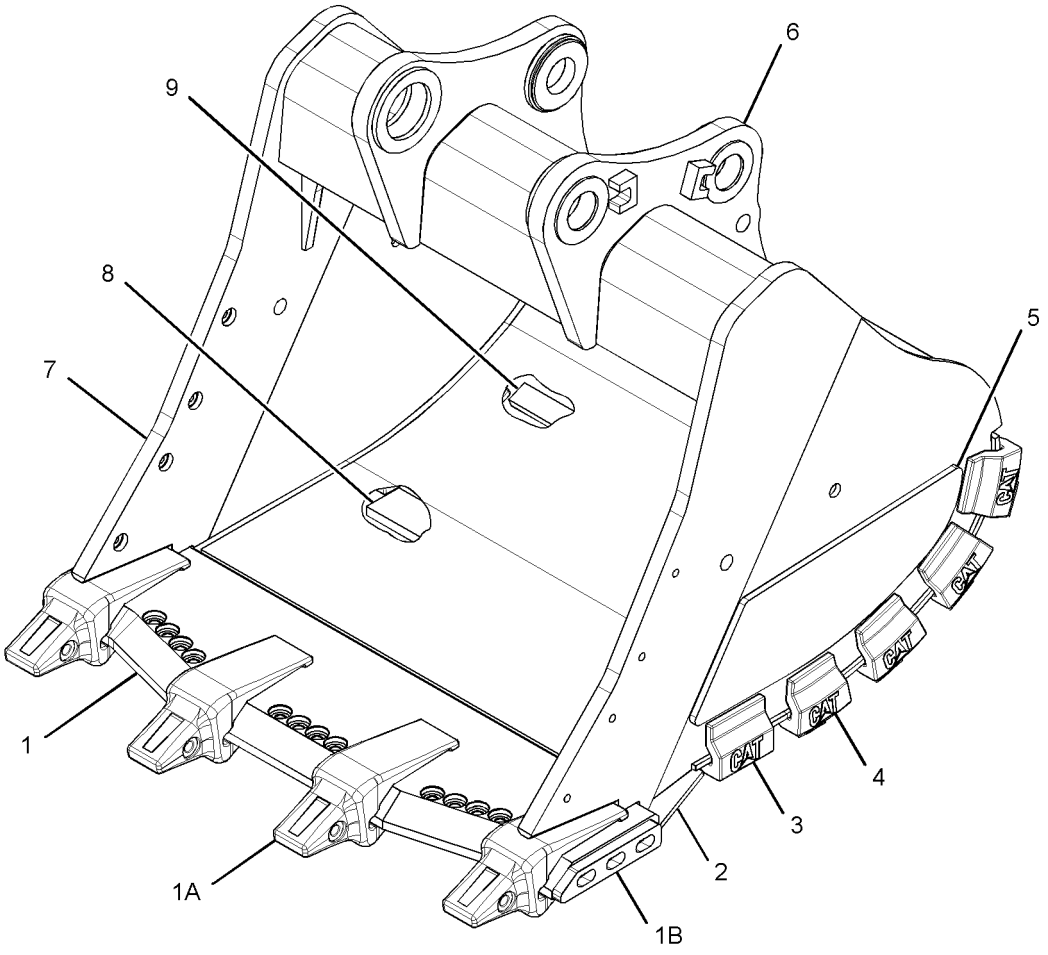

GRAPHIC #1 **<END>** g02177294

WORK TOOLS

361-4848 BUCKET AS-SEVERE SERVICE ROCK–HB2-FAMILY

S/N: WAP1-UP
1100-MM (43-IN) WIDE X 2.3-CU M (3-CU YD) CAPACITY. K-150 ADAPTERS, QTY OF 3
PART OF 331-1230 BUCKET & ADJUSTER GP
AN ATTACHMENT

SMCS-6001 **i04004416**

NOTE	REF NO	GRAPHIC REF	PART NUMBER	QTY	PART NAME 1 2 3 4 5 6 (PRODUCT LEVEL)	SEE PAGE
	1	1	**357-1453**	1	EDGE AS	
	1A	1	**195-9156**	1	ADAPTER-TIP (K-150, 2-STRAP, LH)	
	1B	1	**195-9154**	1	ADAPTER-TIP (K-150, 2-STRAP, CENTER)	
	1C	1	**195-9155**	1	ADAPTER-TIP (K-150, 2-STRAP, RH)	
	1D	1	**8P-9770**	1	PLATE	
	2	1	**357-4790**	1	PLATE-WEAR	
	3	1	**361-4857**	4	PLATE-WEAR	
	4	1	**361-4861**	4	PLATE-WEAR	
	5	1	**361-4856**	2	PLATE-WEAR	
	6	1	**361-4865**	1	PLATE AS-BOX	

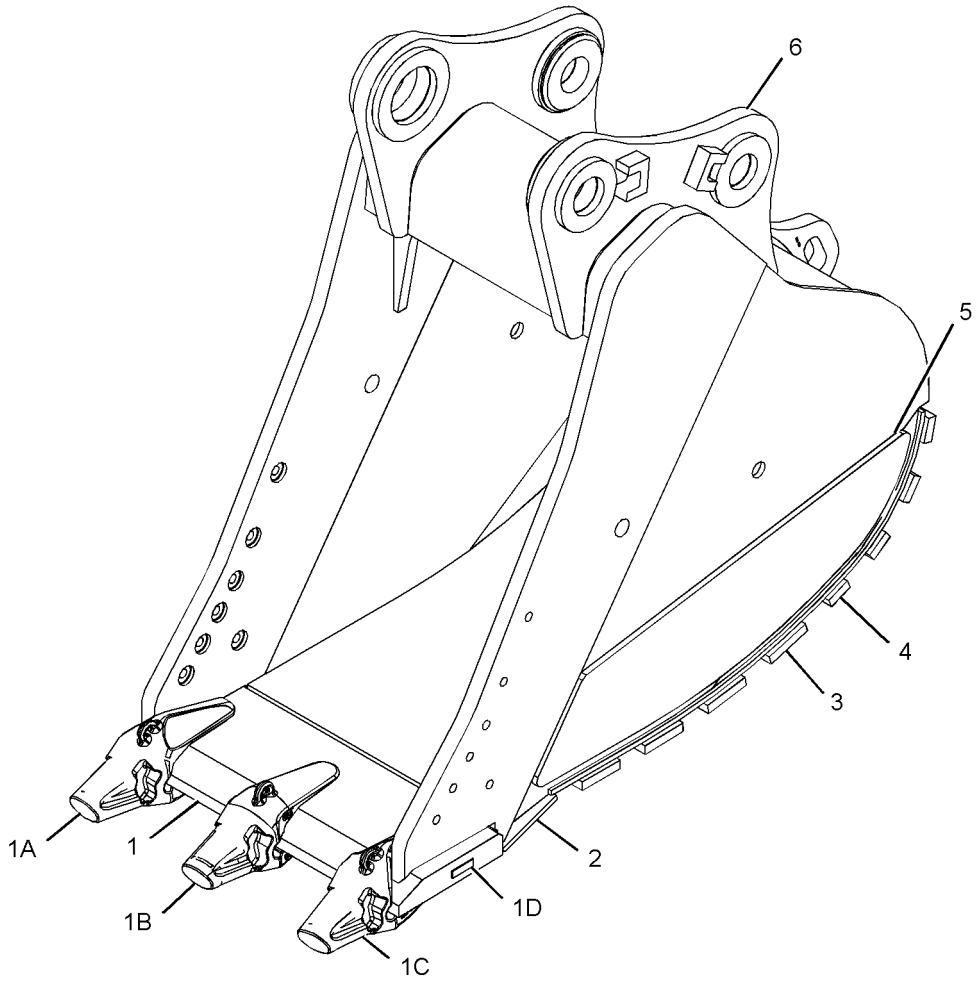

GRAPHIC #1 **<END>** g02185138

WORK TOOLS

361-4849 BUCKET AS-SEVERE SERVICE ROCK–HB2-FAMILY

S/N: WAP1-UP

1350-MM (54-IN) WIDE X 3-CU M (4-CU YD) CAPACITY. K-150 ADAPTERS, QTY OF 4

PART OF 331-1231 BUCKET & ADJUSTER GP

AN ATTACHMENT

SMCS-6001 **i04004429**

NOTE	REF NO	GRAPHIC REF	PART NUMBER	QTY	PART NAME 1 2 3 4 5 6 (PRODUCT LEVEL)	SEE PAGE
	1	1	**360-7805**	1	EDGE AS	
	1A	1	**195-9156**	1	ADAPTER-TIP (K-150, 2-STRAP, LH)	
	1B	1	**195-9154**	2	ADAPTER-TIP (K-150, 2-STRAP, CENTER)	
	1C	1	**195-9155**	1	ADAPTER-TIP (K-150, 2-STRAP, RH)	
	1D	1	**8P-9770**	1	PLATE	
	2	1	**360-7807**	1	PLATE-WEAR	
	3	1	**361-4858**	4	PLATE-WEAR	
	4	1	**361-4862**	4	PLATE-WEAR	
	5	1	**361-4856**	2	PLATE-WEAR	
	6	1	**349-9629**	1	PLATE AS-BOX	

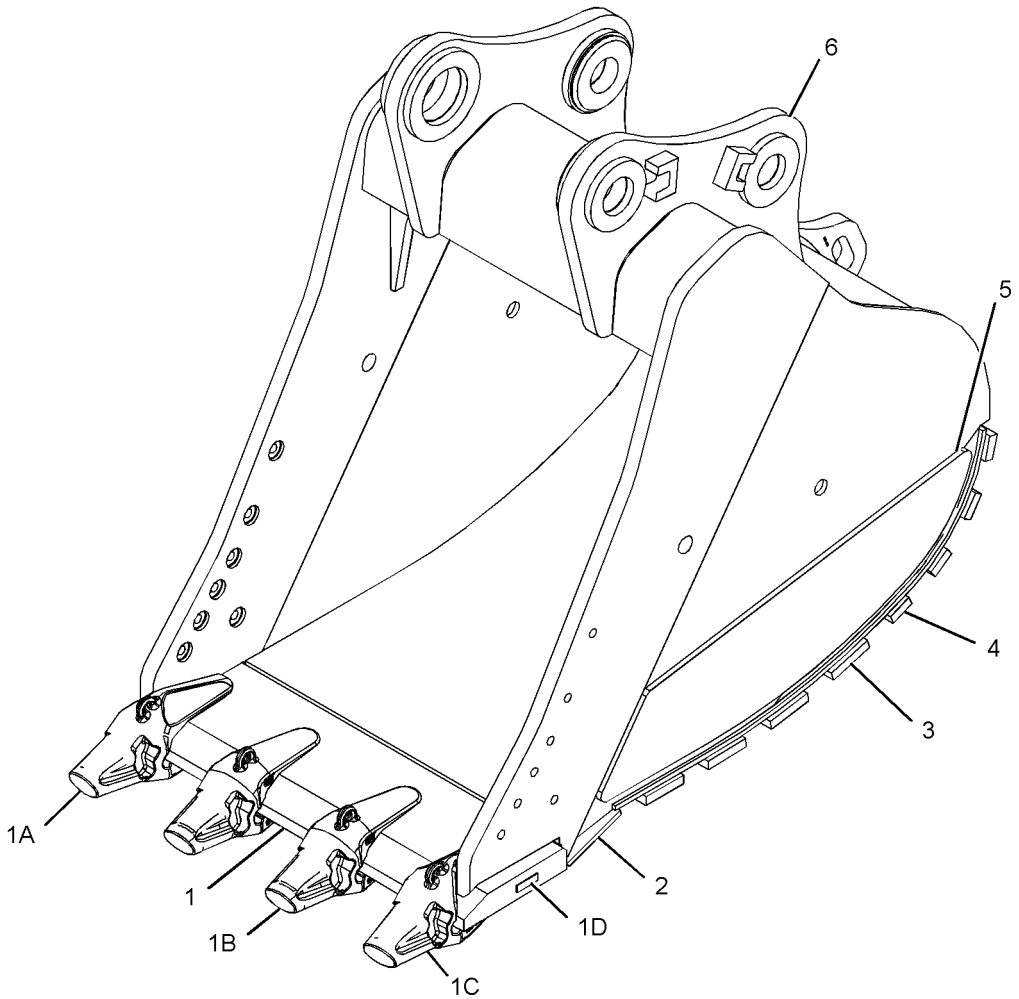

GRAPHIC #1 **<END>** g02184454

WORK TOOLS

361-4850 BUCKET AS-SEVERE SERVICE ROCK–HB2-FAMILY

S/N: WAP1-UP
1650-MM (66-IN) WIDE X 3.9-CU M (5.1-CU YD) CAPACITY.
K-150 ADAPTERS, QTY OF 4
PART OF 331-1232 BUCKET & ADJUSTER GP
AN ATTACHMENT

SMCS-6001 **i04004450**

NOTE	REF NO	GRAPHIC REF	PART NUMBER	QTY	PART NAME 1 2 3 4 5 6 (PRODUCT LEVEL)	SEE PAGE
	1	1	**357-1457**	1	EDGE AS	
	1A	1	**195-9156**	1	ADAPTER-TIP (K-150, 2-STRAP, LH)	
	1B	1	**195-9154**	2	ADAPTER-TIP (K-150, 2-STRAP, CENTER)	
	1C	1	**195-9155**	1	ADAPTER-TIP (K-150, 2-STRAP, RH)	
	1D	1	**8P-9770**	1	PLATE	
	2	1	**357-3286**	1	PLATE-WEAR	
	3	1	**361-4859**	4	PLATE-WEAR	
	4	1	**361-4863**	4	PLATE-WEAR	
	5	1	**361-4856**	2	PLATE-WEAR	
	6	1	**349-9609**	1	PLATE AS-BOX	

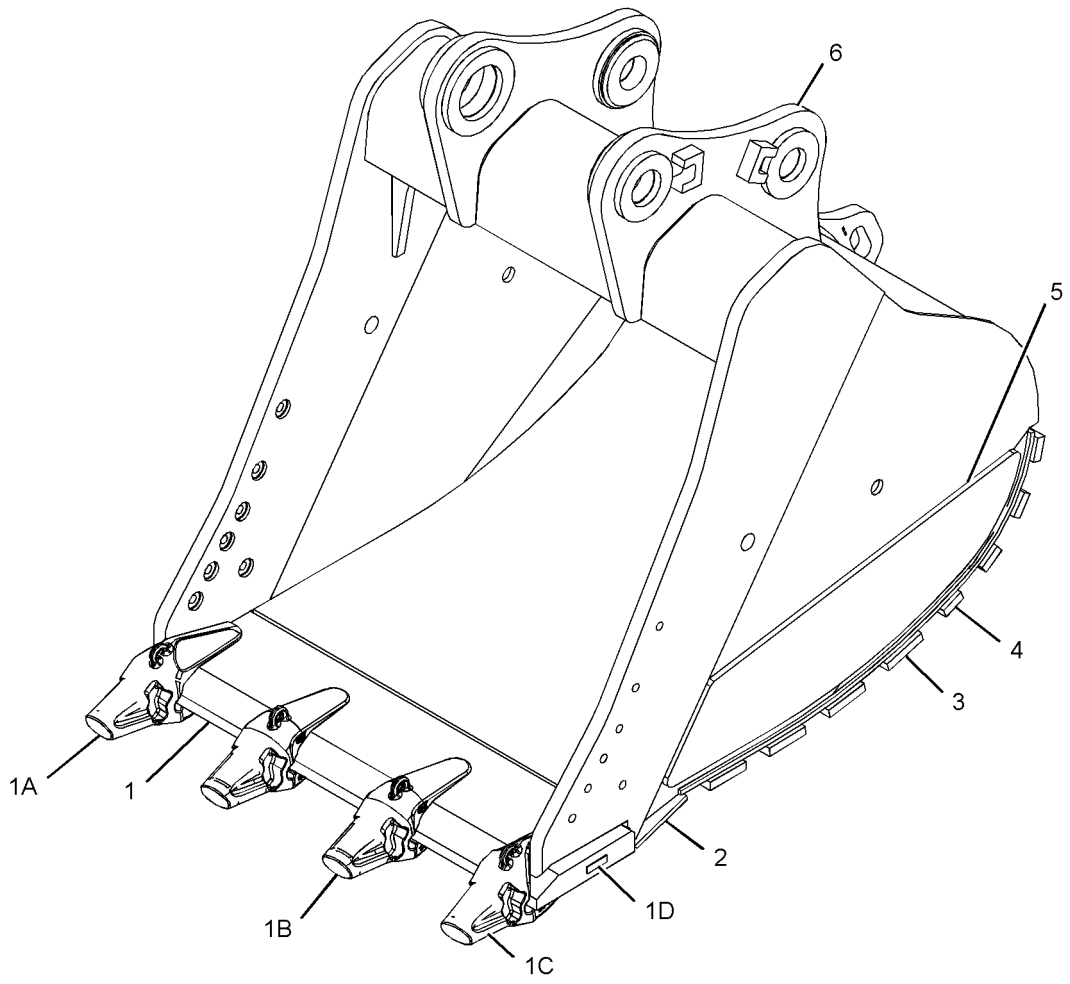

GRAPHIC #1 **<END>** g02185176

WORK TOOLS

361-4851 BUCKET AS-SEVERE SERVICE ROCK–HB2-FAMILY

S/N: WAP1-UP
1900-MM (75-IN) WIDE X 4.6-CU M (6-CU YD) CAPACITY. K-150 ADAPTERS, QTY OF 5
PART OF 331-1233 BUCKET & ADJUSTER GP
AN ATTACHMENT

SMCS-6001 **i04004457**

NOTE	REF NO	GRAPHIC REF	PART NUMBER	QTY	PART NAME 1 2 3 4 5 6 (PRODUCT LEVEL)	SEE PAGE
	1	1	**357-1003**	1	EDGE AS	
	1A	1	**195-9156**	1	ADAPTER-TIP (K-150, 2-STRAP, LH)	
	1B	1	**195-9154**	3	ADAPTER-TIP (K-150, 2-STRAP, CENTER)	
	1C	1	**195-9155**	1	ADAPTER-TIP (K-150, 2-STRAP, RH)	
	1D	1	**8P-9770**	1	PLATE	
	2	1	**357-1011**	1	PLATE-WEAR	
	3	1	**361-4860**	4	PLATE-WEAR	
	4	1	**361-4864**	4	PLATE-WEAR	
	5	1	**361-4856**	2	PLATE-WEAR	
	6	1	**360-2767**	1	PLATE AS-BOX	

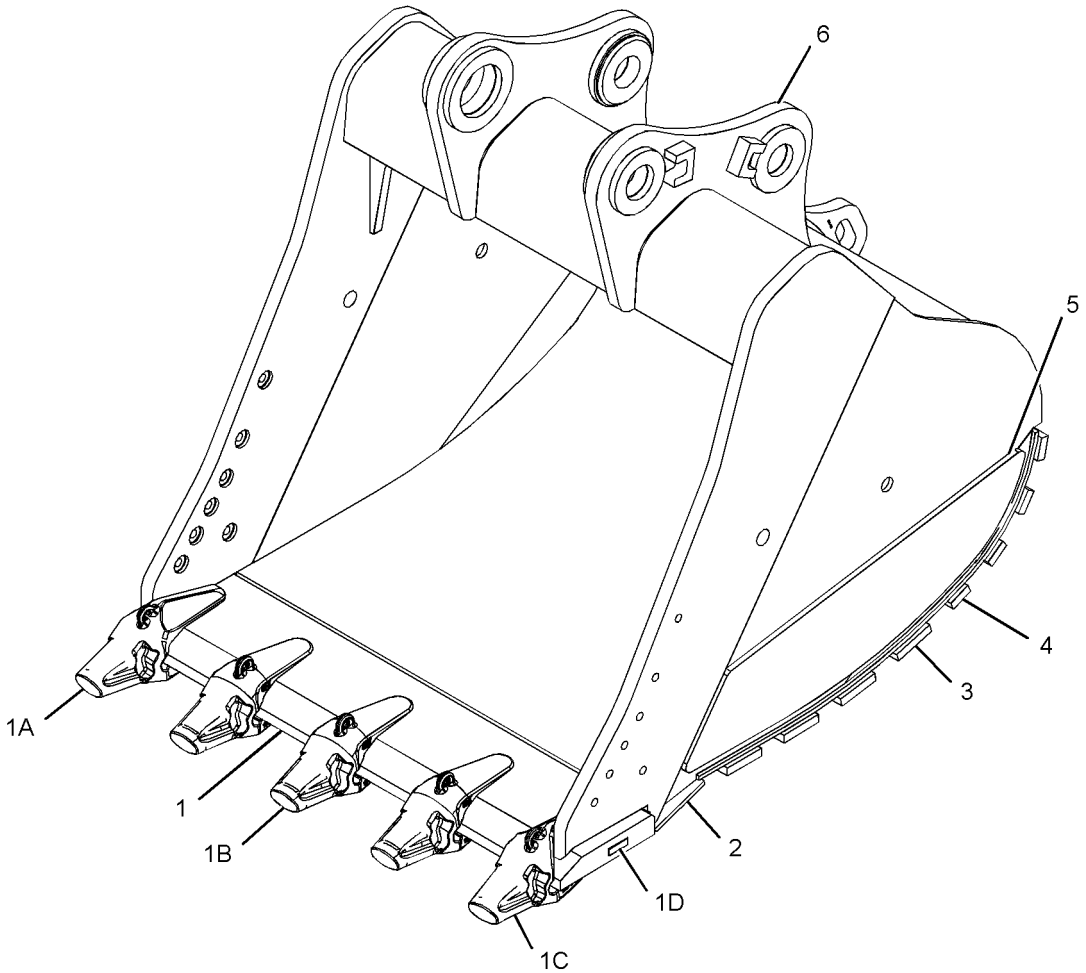

GRAPHIC #1 **<END>** g02185053

WORK TOOLS

331-1260 BUCKET GP-SEVERE SERVICE ROCK–JC-FAMILY

S/N: WAP1-UP
2350-MM (93-IN) WIDE X 5.7-CU M (7.6-CU YD) CAPACITY.
J-800 ADAPTERS, QTY OF 5
AN ATTACHMENT

SMCS-6102, 6529 **i04019752**

NOTE	REF NO	GRAPHIC REF	PART NUMBER	QTY	PART NAME 1 2 3 4 5 6 (PRODUCT LEVEL)	SEE PAGE
	1	1	*342-4567*	1	BUCKET AS-SEVERE SERVICE ROCK	
	2	1	**341-9050**	1	EDGE AS	
	2A	1	**232-2170**	3	ADAPTER-TIP (K-170, 2-STRAP, CENTER)	
	2B	1	**264-2175**	1	ADAPTER-TIP (K-170, RH)	
	2C	1	**264-2176**	1	ADAPTER-TIP (K-170, LH)	
	2D	1	**8P-9770**	1	PLATE	
	3	1	**341-9055**	1	PLATE AS-HINGE	
	4	1	**341-9052**	1	PLATE-WEAR	
	5	1	**331-3030**	2	PLATE-WEAR	
	6	1	**341-9053**	4	PLATE-WEAR	
	7	1	**341-9054**	4	PLATE-WEAR	
	8	1	**2C-9259**	2	PLATE-IDENTIFICATION (CAT)	

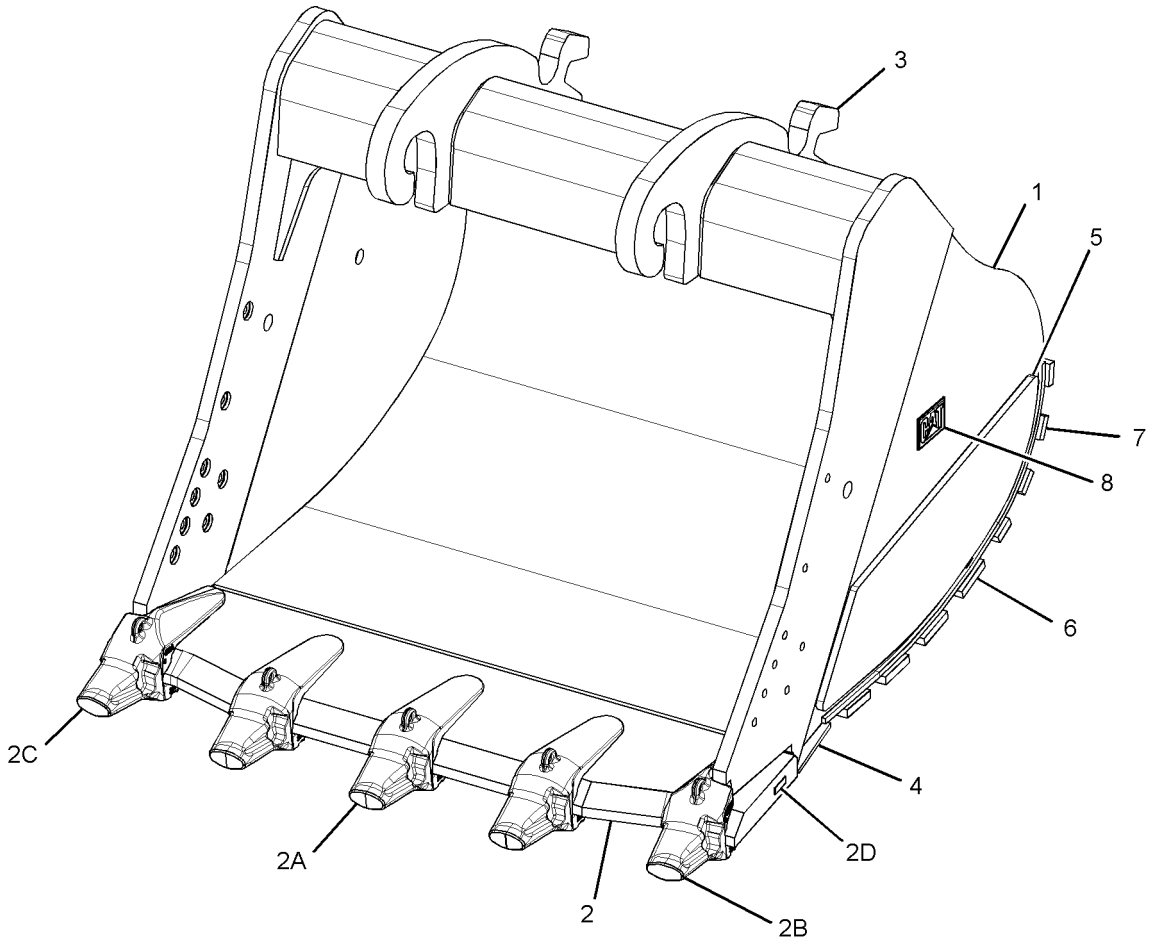

GRAPHIC #1 **<END>** g02156531

WORK TOOLS

341-8648 BUCKET GP-SEVERE SERVICE ROCK—JC-FAMILY

S/N: WAP1-UP
2200-MM (88-IN) WIDE X 5.4-CU M (7.1-CU YD) CAPACITY.
J-800 ADAPTERS, QTY OF 4
AN ATTACHMENT

SMCS-6102, 6529 **i03996702**

NOTE	REF NO	GRAPHIC REF	PART NUMBER	QTY	PART NAME 1 2 3 4 5 6 (PRODUCT LEVEL)	SEE PAGE
	1	1	**2C-9259**	2	PLATE-IDENTIFICATION (CAT)	
	2	1	*360-6083*	1	BUCKET AS-EXTREME SERVICE ROCK (JC-FAMILY)	
	3	1	**360-5996**	1	EDGE AS	
	3A	1	**357-6516**	4	ADAPTER	
	3B	1	**8P-9770**	1	PLATE	
	4	1	**360-6085**	1	PLATE AS-HINGE	
	5	1	**360-6014**	4	PLATE-WEAR	
	6	1	**360-6018**	5	PLATE-WEAR	
	7	1	**360-6010**	1	PLATE-WEAR	

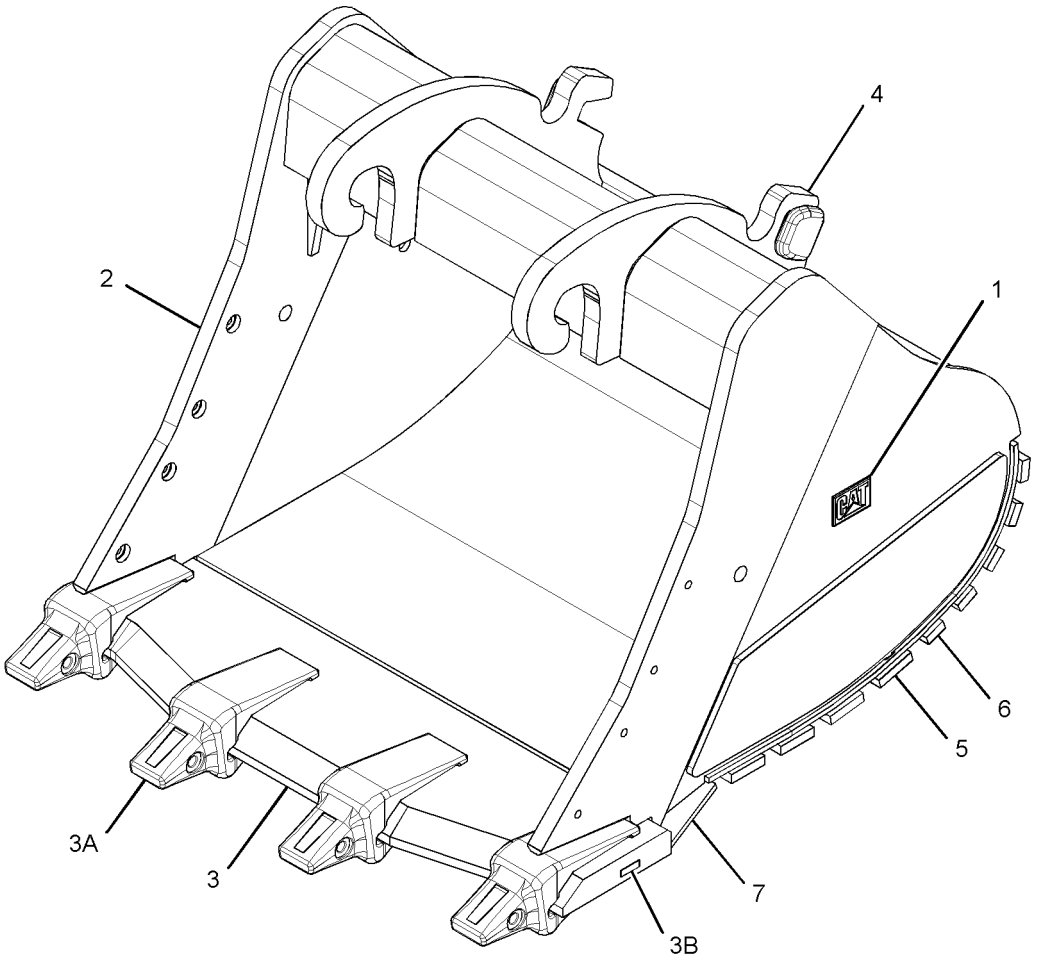

GRAPHIC #1 **<END>** g02175882

WORK TOOLS

219-6703 COUPLER AR-QUICK–HYDRAULIC

S/N: WAP1-UP

FOR USE WITH "HB" LINKAGE, TOOLS EQUIPPED WITH CA-70 QUICK COUPLER HOOKS AN ATTACHMENT

SMCS-1408, 5057, 6129 **i04026380**

NOTE	REF NO	GRAPHIC REF	PART NUMBER	QTY	PART NAME 1 2 3 4 5 6 (PRODUCT LEVEL)	SEE PAGE
Y	1	1	*169-0762*	1	LOCK GP-QUICK COUPLER (HYDRAULIC)	891
	2	1	**159-8036**	2	FILM-WARNING (READ OMM)	
Y	3	1	*173-9958*	1	HOOK GP-LIFTING	890
M	4	1	**136-0155**	2	SETSCREW (M4X0.7X8-MM)	

M-METRIC PART
Y-SEPARATE ILLUSTRATION

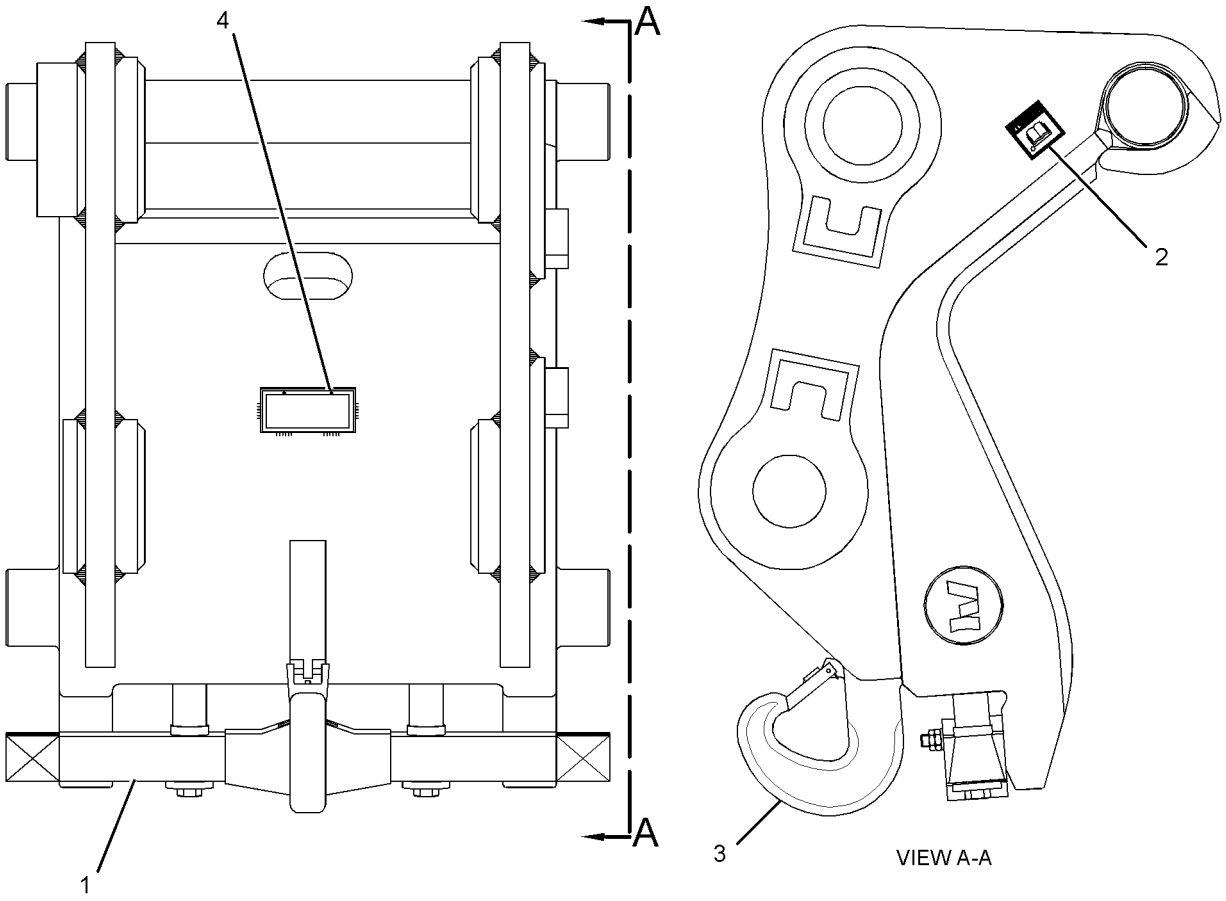

GRAPHIC #1 **<END>** g02210813

WORK TOOLS

231-7734 COUPLER AR-QUICK–HYDRAULIC

S/N: WAP1-UP

FOR USE WITH "HB" LINKAGE, TOOLS EQUIPPED WITH CA-70 QUICK COUPLER HOOKS AN ATTACHMENT

SMCS-1408, 5057, 6129 **i03907239**

NOTE	REF NO	GRAPHIC REF	PART NUMBER	QTY	PART NAME 1 2 3 4 5 6 (PRODUCT LEVEL)	SEE PAGE
	1	1	**150-8896**	2	FILM-NOTICE (LIFT EYE LOCATION)	
Y	2	1	*169-0762*	1	LOCK GP-QUICK COUPLER (HYDRAULIC)	891
Y	3	1	*235-5634*	1	YOKE GP-LIFTING	916
M	4	1	**136-0155**	2	SETSCREW (M4X0.7X8-MM)	
	5	1	**159-8036**	2	FILM-WARNING (READ OMM)	
Z	6	1		1	HOUSING AS-COUPLER	

M-METRIC PART
Y-SEPARATE ILLUSTRATION
Z-NOT SERVICED SEPARATELY

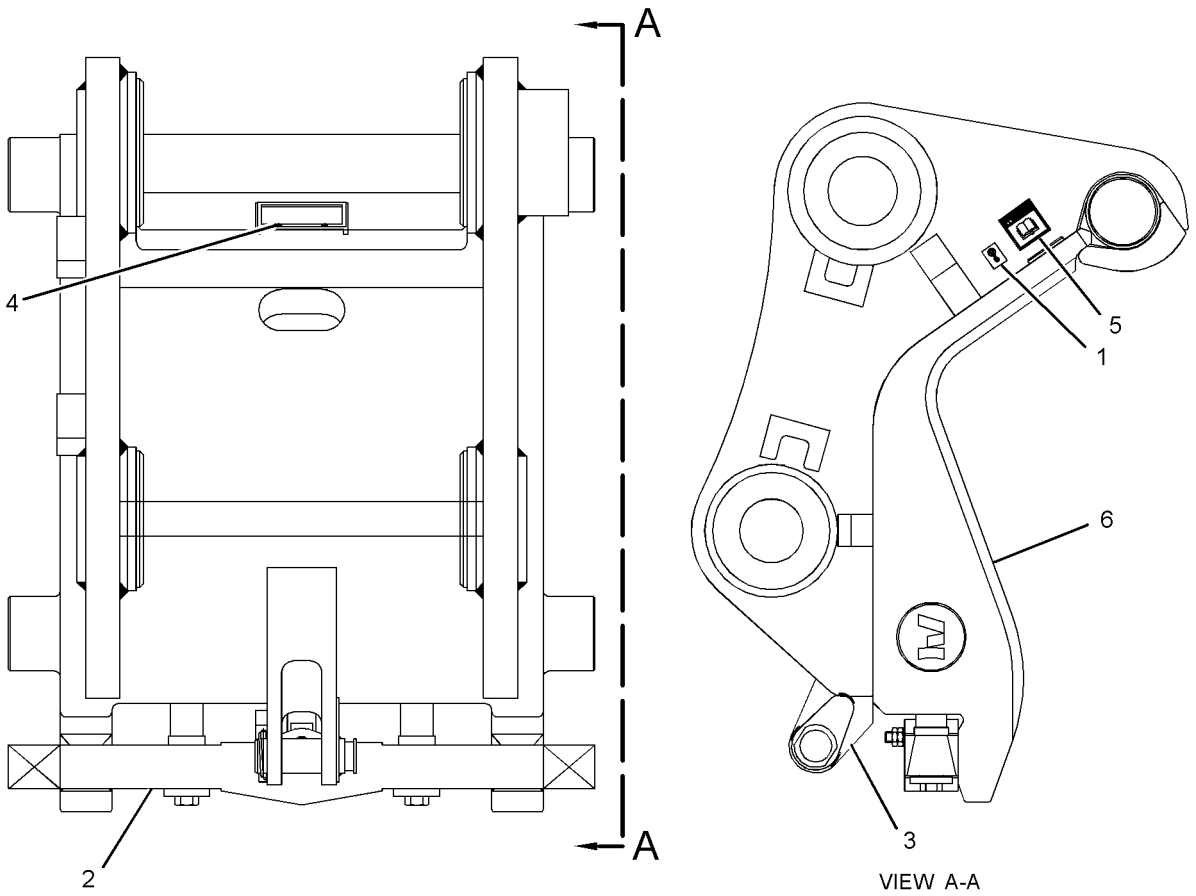

GRAPHIC #1 **<END>** g01339692

WORK TOOLS

342-8069 COUPLER AR-QUICK

S/N: WAP1-UP

FOR USE WITH TOOLS EQUIPPED WITH CA-7O QUICK COUPLER HOOKS, "JC" LINKAGE AN ATTACHMENT

SMCS-1408, 5057, 6129 **i03910052**

NOTE	PART NUMBER	QTY	PART NAME 1 2 3 4 5 6 (PRODUCT LEVEL)	SEE PAGE
Y	*342-8071*	1	COUPLER AR-QUICK	888
Y	*342-8073*	1	LINES GP-CONNECTING	559

Y-SEPARATE ILLUSTRATION

<END>

342-8070 COUPLER AR-QUICK

S/N: WAP1-UP

FOR USE WITH TOOLS EQUIPPED WITH CA-7O QUICK COUPLER HOOKS, JC LINKAGE AN ATTACHMENT

SMCS-1408, 5057, 6129 **i03910021**

NOTE	PART NUMBER	QTY	PART NAME 1 2 3 4 5 6 (PRODUCT LEVEL)	SEE PAGE
Y	*342-8072*	1	COUPLER AR-QUICK	889
Y	*342-8073*	1	LINES GP-CONNECTING	559

Y-SEPARATE ILLUSTRATION

<END>

WORK TOOLS

342-8071 COUPLER AR-QUICK

S/N: WAP1-UP

PART OF 342-8069 COUPLER AR-QUICK

FOR USE WITH TOOLS EQUIPPED WITH CA-70 QUICK COUPLER, JC LINKAGE AN ATTACHMENT

SMCS-1408, 5057, 6129 **i03951992**

NOTE	REF NO	GRAPHIC REF	PART NUMBER	QTY	PART NAME 1 2 3 4 5 6 (PRODUCT LEVEL)	SEE PAGE
	1	1	**247-6876**	2	FILM-WARNING (DO NOT OPERATE, READ OMM)	
Y	2	1	*169-0762*	1	LOCK GP-QUICK COUPLER (HYDRAULIC)	891
Y	3	1	**173-9958**	1	HOOK GP-LIFTING	890
	4	1	**168-8672**	1	PLATE-INFORMATION	
M	5	1	**136-0155**	2	SETSCREW (M4X0.7X8-MM)	

M-METRIC PART
Y-SEPARATE ILLUSTRATION

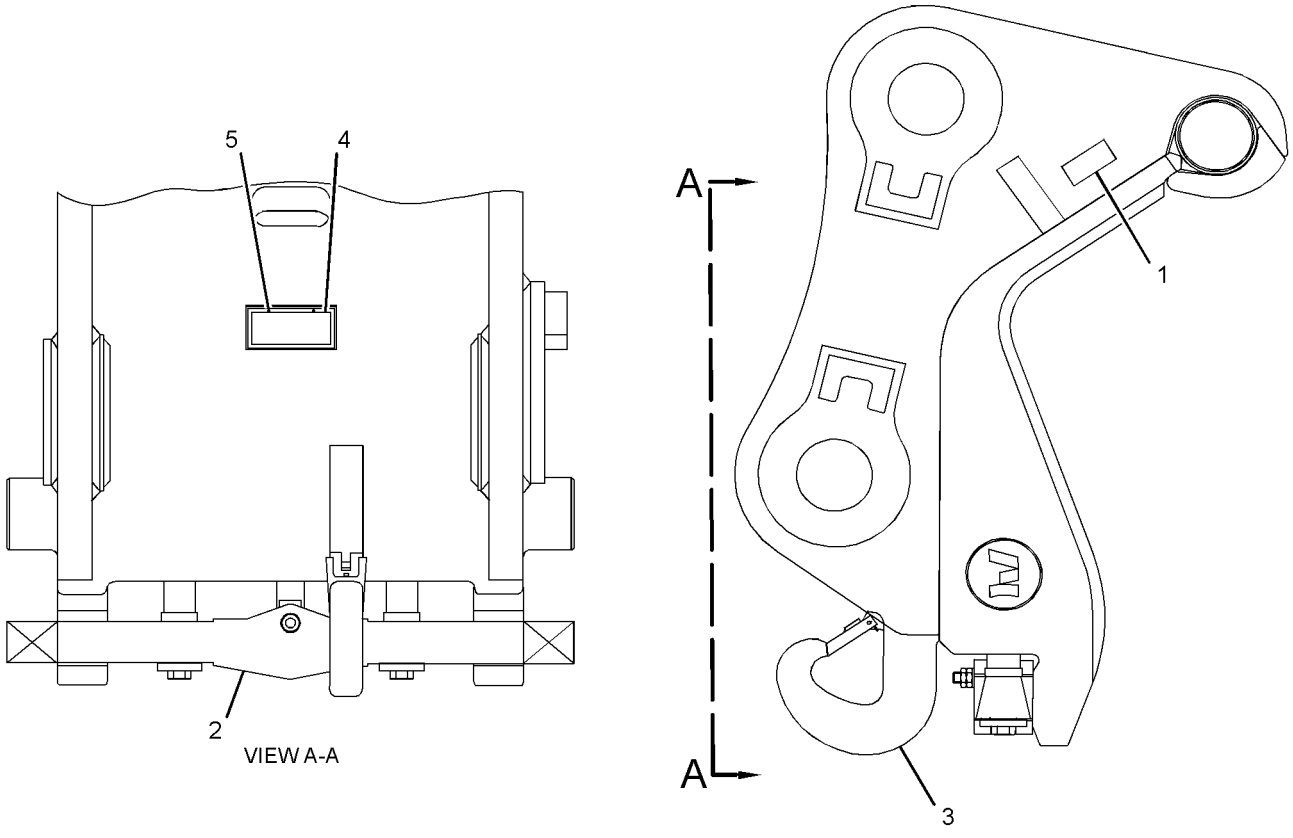

GRAPHIC #1 **<END>** g02173828

WORK TOOLS

342-8072 COUPLER AR-QUICK

S/N: WAP1-UP
PART OF 342-8070 COUPLER AR-QUICK
FOR USE WITH TOOLS EQUIPPED WITH CA-70 QUICK COUPLER, JC LINKAGE AN ATTACHMENT

SMCS-1408, 5057, 6129 **i03954693**

NOTE	REF NO	GRAPHIC REF	PART NUMBER	QTY	PART NAME 1 2 3 4 5 6 (PRODUCT LEVEL)	SEE PAGE
Y	1	1	*169-0762*	1	LOCK GP-QUICK COUPLER (HYDRAULIC)	891
Y	2	1	**235-5634**	1	YOKE GP-LIFTING	916
M	3	1	**136-0155**	2	SETSCREW (M4X0.7X8-MM)	
	4	1	**247-6876**	2	FILM-WARNING (DO NOT OPERATE, READ OMM)	

M-METRIC PART
Y-SEPARATE ILLUSTRATION

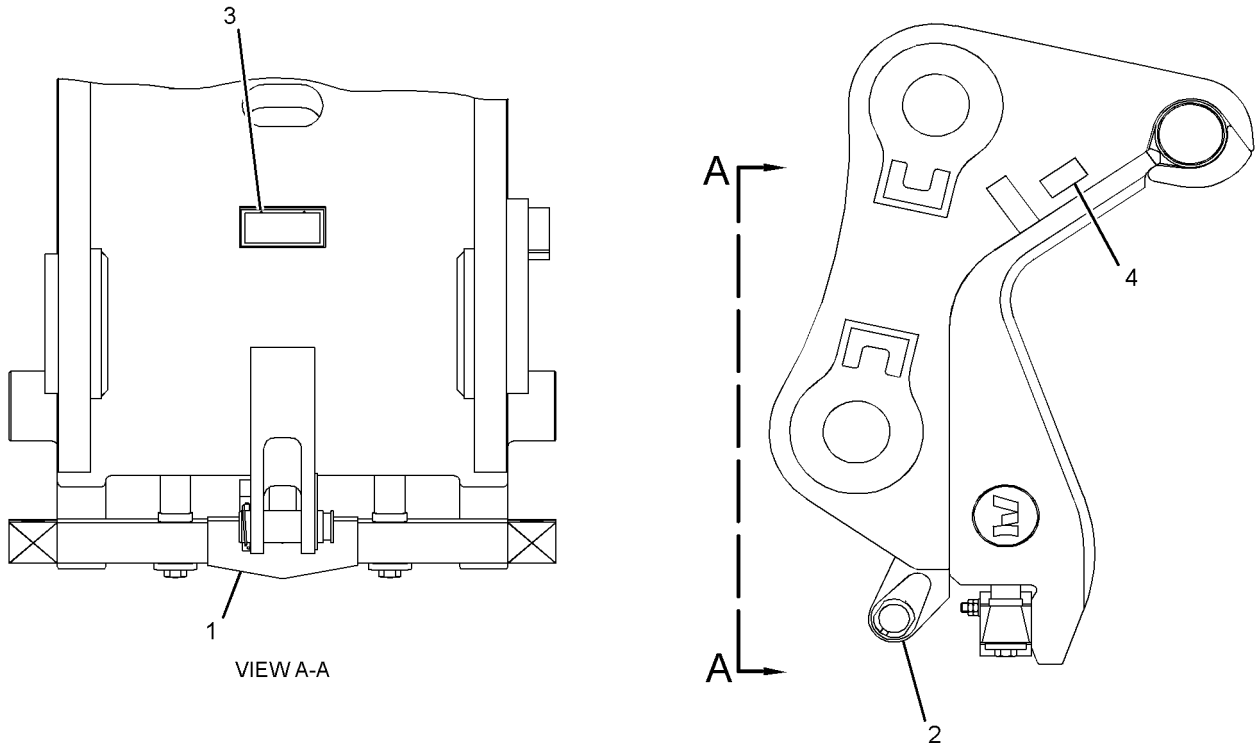

GRAPHIC #1 **<END>** g02173832

WORK TOOLS

173-9958 HOOK GP-LIFTING

S/N: WAP1-UP
20-TON (18140-KG)
PART OF 219-6703, 342-8071 COUPLER AR-QUICK
AN ATTACHMENT

SMCS-6459 **i02834902**

NOTE	REF NO	GRAPHIC REF	PART NUMBER	QTY	PART NAME 1 2 3 4 5 6 (PRODUCT LEVEL)	SEE PAGE
	1	1	**173-9971**	1	KIT-LATCH (QUICK COUPLER)	
					(INCLUDES PIN, SPRING & LATCH)	

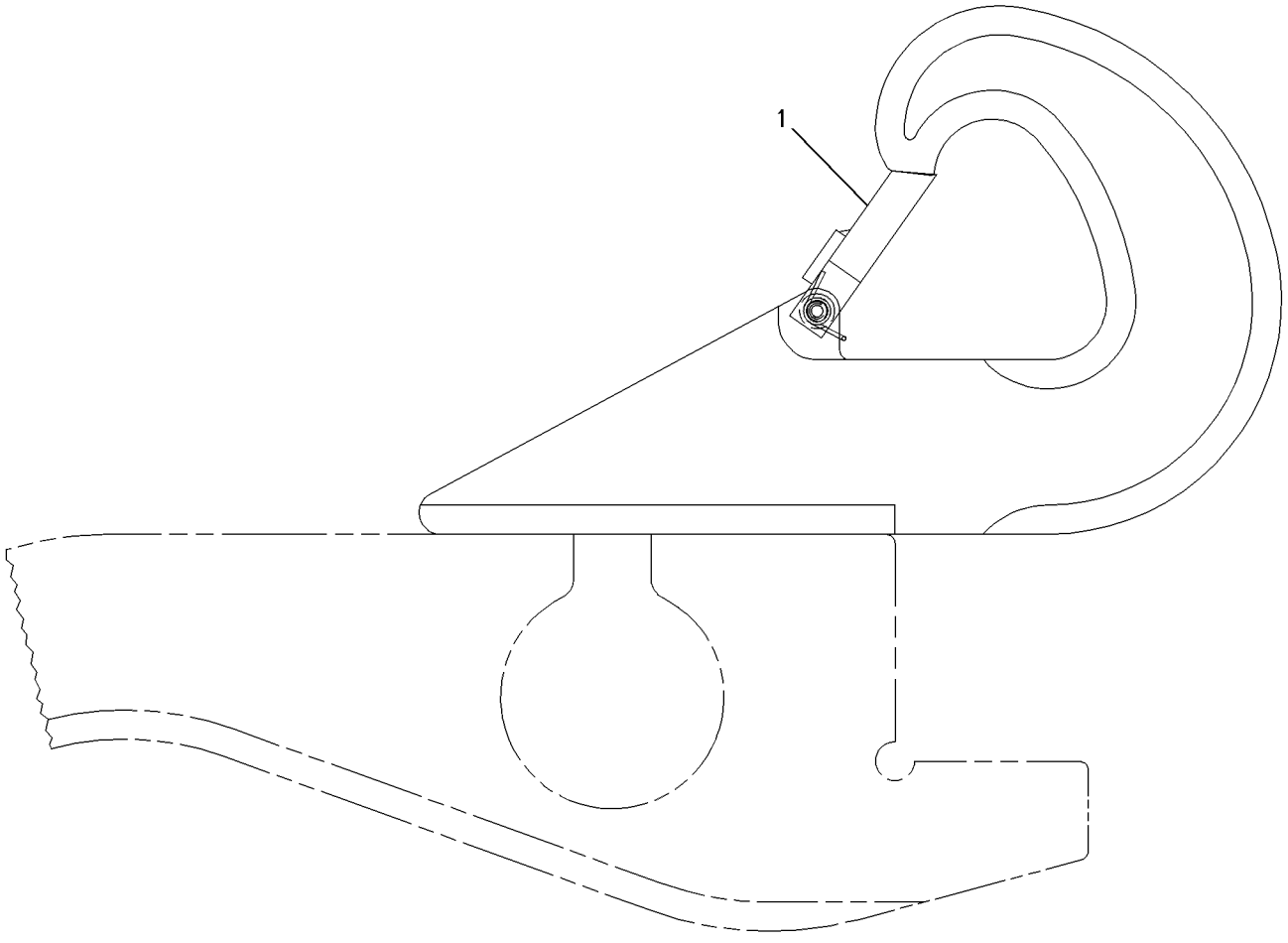

GRAPHIC #1 **<END>** g00576284

WORK TOOLS

169-0762 LOCK GP-QUICK COUPLER—HYDRAULIC

S/N: WAP1-UP

PART OF 219-6703, 231-7734, 342-8071, 342-8072 COUPLER AR-QUICK

AN ATTACHMENT

SMCS-6129 **i03928959**

NOTE	REF NO	GRAPHIC REF	PART NUMBER	QTY	PART NAME 1 2 3 4 5 6 (PRODUCT LEVEL)	SEE PAGE
	1	1	**169-0766**	1	WEDGE	
	2	1	**169-0768**	2	SHAFT	
	3	1	**169-0774**	2	RING	
	4	1	**169-0775**	2	RING	
M	5	1	**152-0191**	4	BOLT (M24X3X120-MM)	
M	6	1	**8T-4140**	4	BOLT (M16X2X60-MM)	
	7	1	**9X-8257**	4	WASHER (17.5X30X3.5-MM THK)	
Y	8	1	**169-0776**	1	CYLINDER GP-COUPLER	503
	9	1	**169-0777**	2	SPRING	
	10	1	**169-0778**	2	SPRING	
M	11	1	**8C-8478**	1	BOLT (M20X2.5X140-MM)	
M	12	1	**098-6004**	2	LOCKNUT (M20X2.5-THD)	
	13	1	**8T-4123**	2	WASHER (22X35X3.5-MM THK)	

M-METRIC PART
Y-SEPARATE ILLUSTRATION

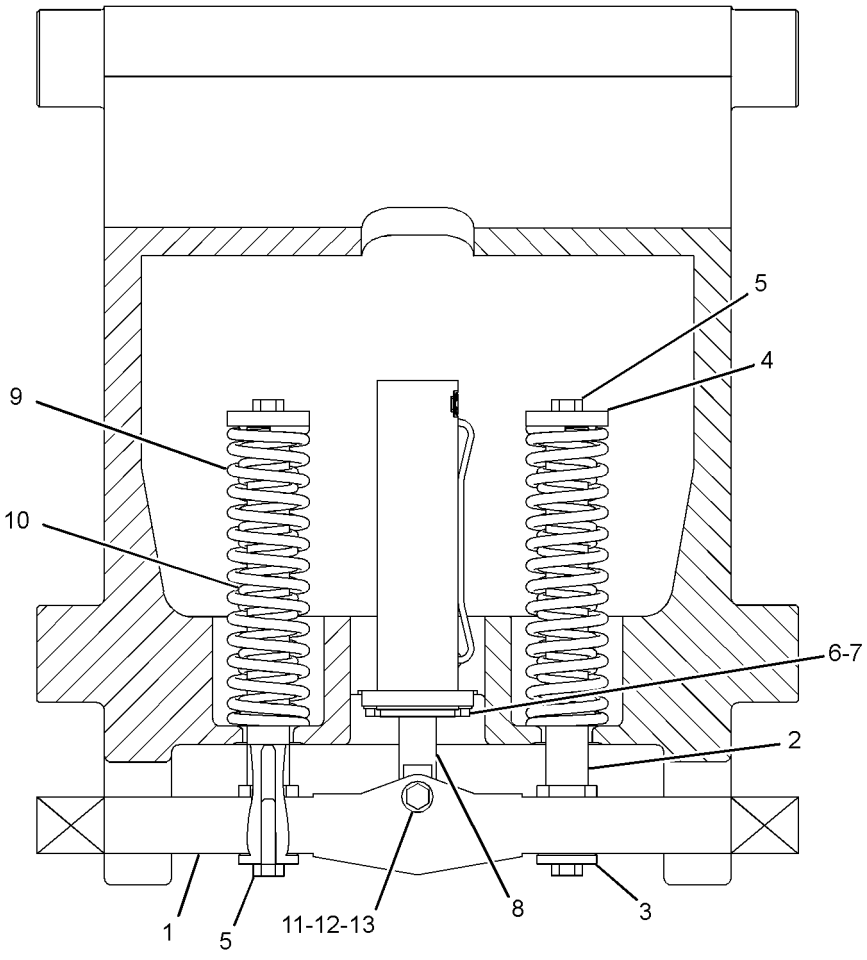

GRAPHIC #1 **<END>** g02173960

WORK TOOLS

357-2686 PROTECTOR GP-BUCKET

S/N: WAP1-UP

FOR USE WITH BUCKETS WITH 50-MM THICK SIDEBARS

AN ATTACHMENT

SMCS-6817 **i03909377**

NOTE	REF NO	GRAPHIC REF	PART NUMBER	QTY	PART NAME 1 2 3 4 5 6 (PRODUCT LEVEL)	SEE PAGE
	1	1	**326-3405**	1	SIDECUTTER-RH	
	2	1	**326-3406**	1	SIDECUTTER-LH	
	3	1	**2J-3507**	10	NUT-FULL (1-8-THD)	
	4	1	**3K-5234**	10	WASHER-HARD (28X49X6-MM THK)	
	5	1	**7X-0410**	10	BOLT (1-8X4-IN)	

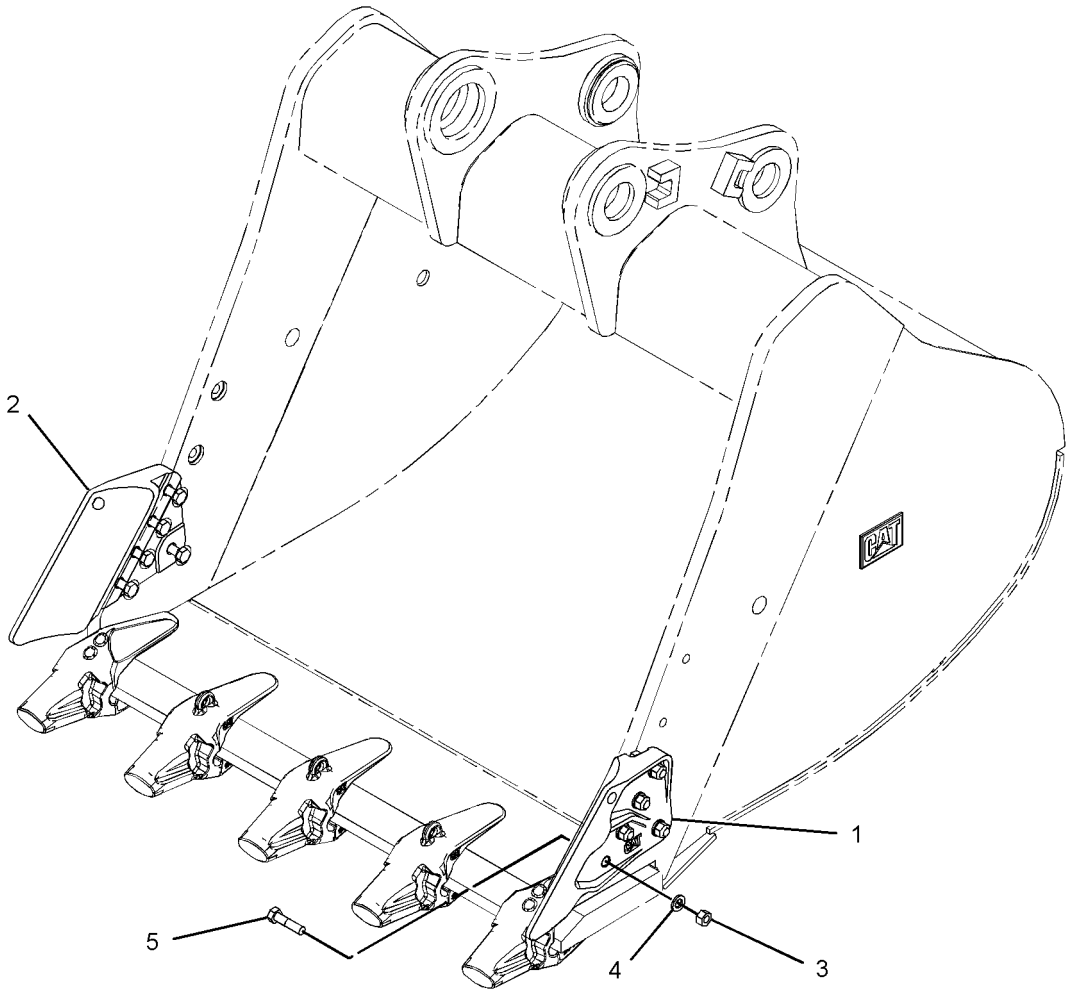

GRAPHIC #1 **<END>** g02149974

WORK TOOLS

112-2491 PROTECTOR GP-SIDE BAR—BUCKET

S/N: WAP1-UP
FOR USE WITH BUCKETS WITH 50-MM THICK SIDEBARS
AN ATTACHMENT

SMCS-6817 **i03918694**

NOTE	REF NO	GRAPHIC REF	PART NUMBER	QTY	PART NAME 1 2 3 4 5 6 (PRODUCT LEVEL)	SEE PAGE
	1	1	**112-2492**	2	PROTECTOR-SIDE BAR	
	2	1	**132-0999**	4	RETAINER AS	
	3	1	**132-1008**	4	PIN	
B	4	1	**286-2140**	4	KIT-SHIM	
					(EACH KIT INCLUDES 4 SHIMS)	

B-USE AS REQUIRED

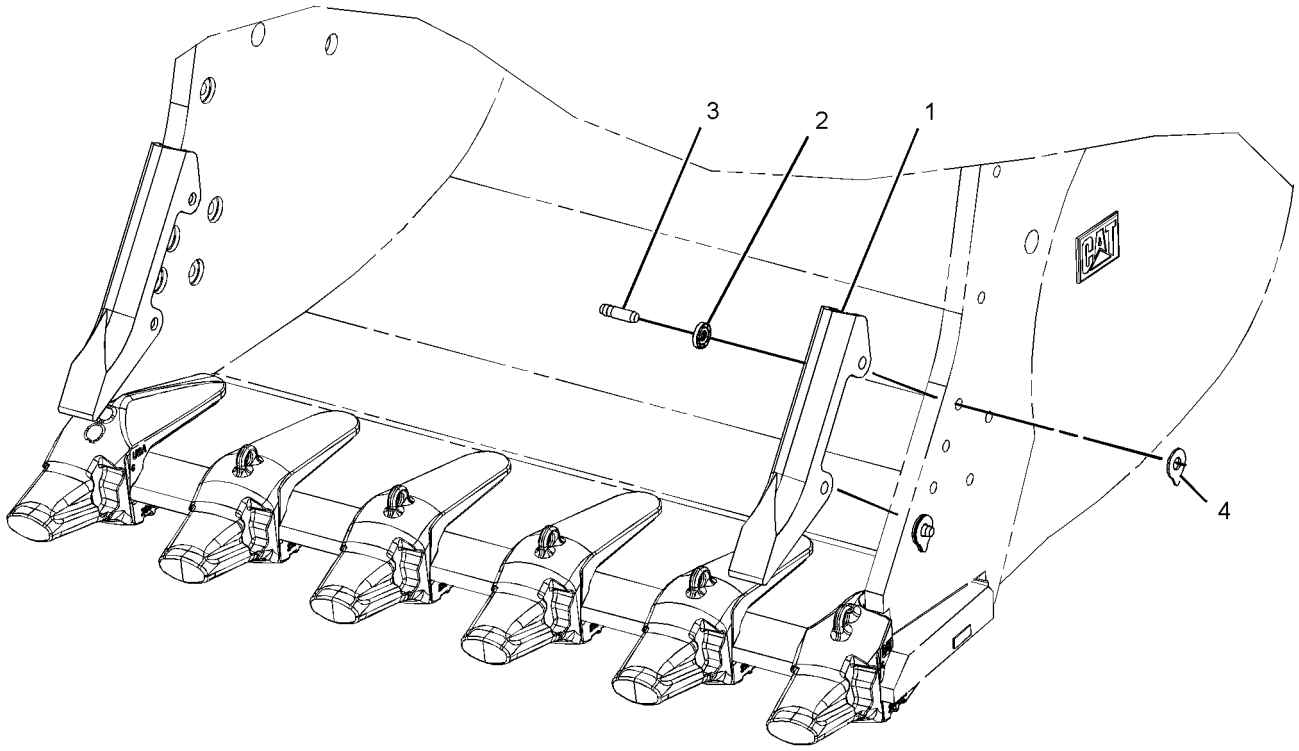

GRAPHIC #1 **<END>** g02162899

WORK TOOLS

329-5956 PROTECTOR GP-SIDE BAR—BUCKET

S/N: WAP1-UP

FOR USE WITH BUCKETS WITH 50-MM THICK SIDEBARS

AN ATTACHMENT

SMCS-6817 **i04026434**

NOTE	REF NO	GRAPHIC REF	PART NUMBER	QTY	PART NAME 1 2 3 4 5 6 (PRODUCT LEVEL)	SEE PAGE
	1	1	**132-0999**	8	RETAINER AS	
	2	1	**132-1008**	8	PIN	
B	3	1	**286-2140**	8	KIT-SHIM	
					(EACH KIT INCLUDES 4 SHIMS)	
	4	1	**329-5955**	4	PROTECTOR-SIDE BAR	

B-USE AS REQUIRED

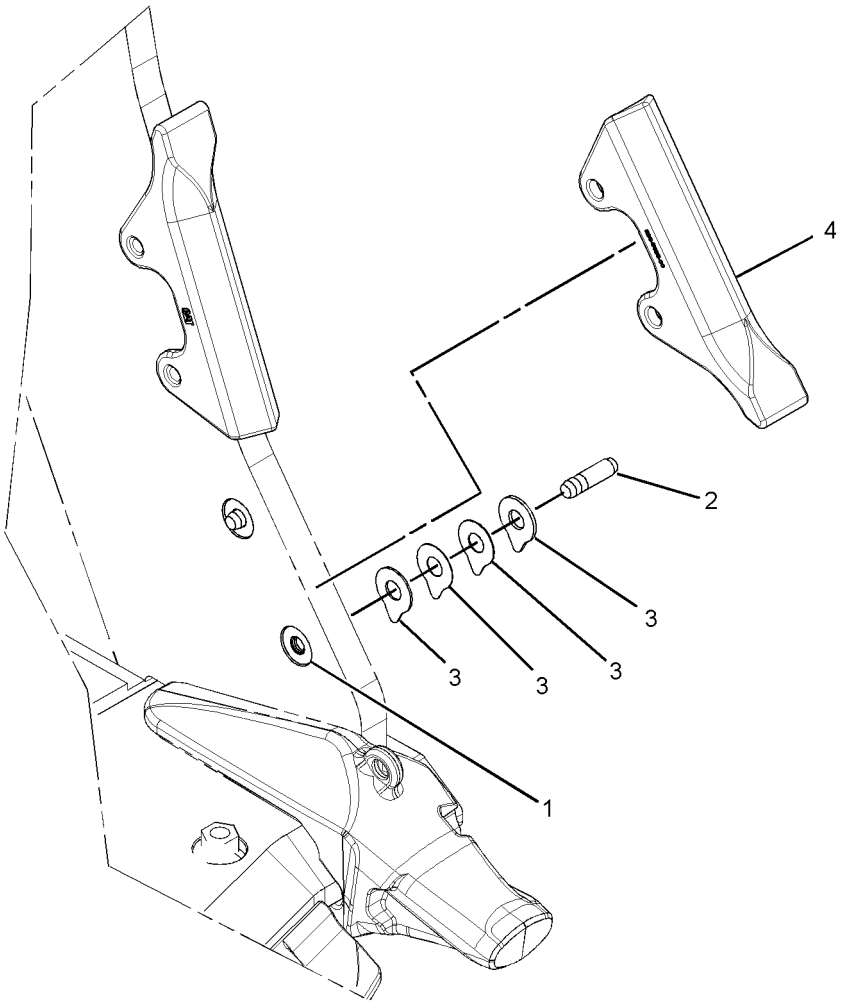

GRAPHIC #1 **<END>** g02210993

357-2688 PROTECTOR GP-SIDE BAR—BUCKET

S/N: WAP1-UP
PART OF 331-1251, 331-1252, 331-1253, 338-8622 BUCKET & ADJUSTER GP
FOR USE WITH BUCKETS WITH 60-MM THICK SIDEBARS
AN ATTACHMENT

SMCS-6817 **i04026435**

NOTE	REF NO	GRAPHIC REF	PART NUMBER	QTY	PART NAME 1 2 3 4 5 6 (PRODUCT LEVEL)	SEE PAGE
	1	1	**132-0999**	8	RETAINER AS (G.E.T.)	
B	2	1	**286-2140**	8	KIT-SHIM	
					(INCLUDES 4 SHIMS)	
	3	1	**329-5957**	4	PROTECTOR (SIDE BAR)	
	4	1	**357-2689**	8	PIN (G.E.T.)	

B-USE AS REQUIRED

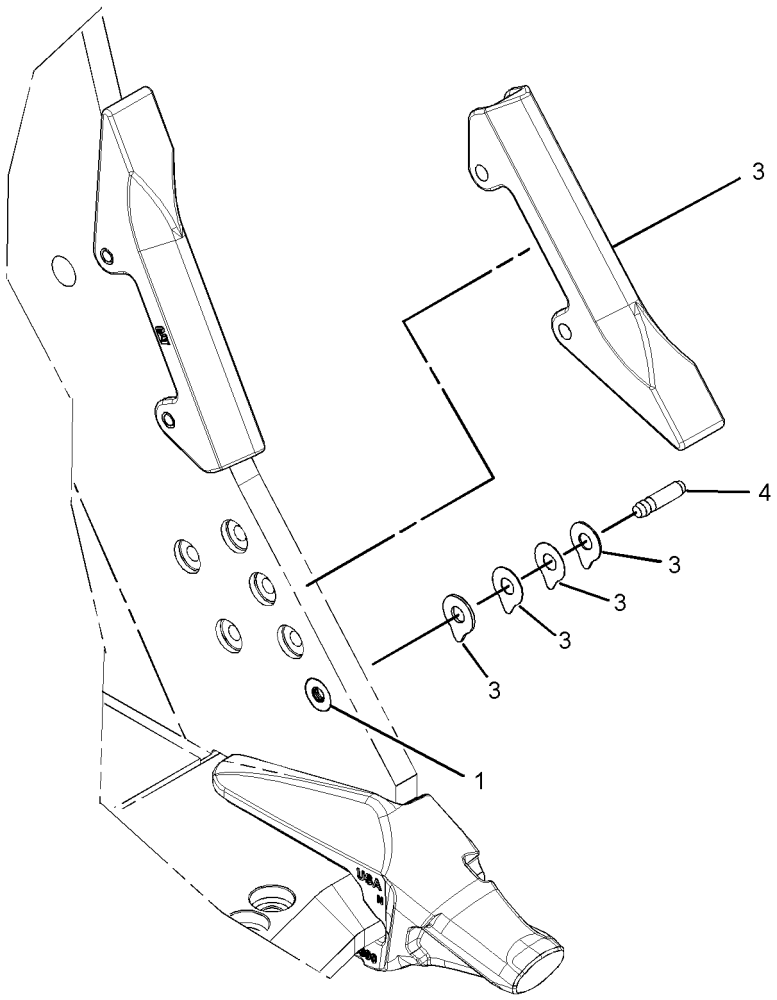

GRAPHIC #1 **<END>** g02210913

WORK TOOLS

277-5814 SIDECUTTER GP

S/N: WAP1-UP

AN ATTACHMENT

SMCS-6813 **i03592484**

NOTE	REF NO	GRAPHIC REF	PART NUMBER	QTY	PART NAME 1 2 3 4 5 6 (PRODUCT LEVEL)	SEE PAGE
	1	1	**256-8690**	1	SIDECUTTER (RH)	
	2	1	**256-8691**	1	SIDECUTTER (LH)	
	3	1	**1D-4637**	10	BOLT (1-8X3.25-IN)	
	4	1	**2J-3507**	10	NUT-FULL (1-8-THD)	
	5	1	**3K-5234**	10	WASHER-HARD (28X49X6-MM THK)	

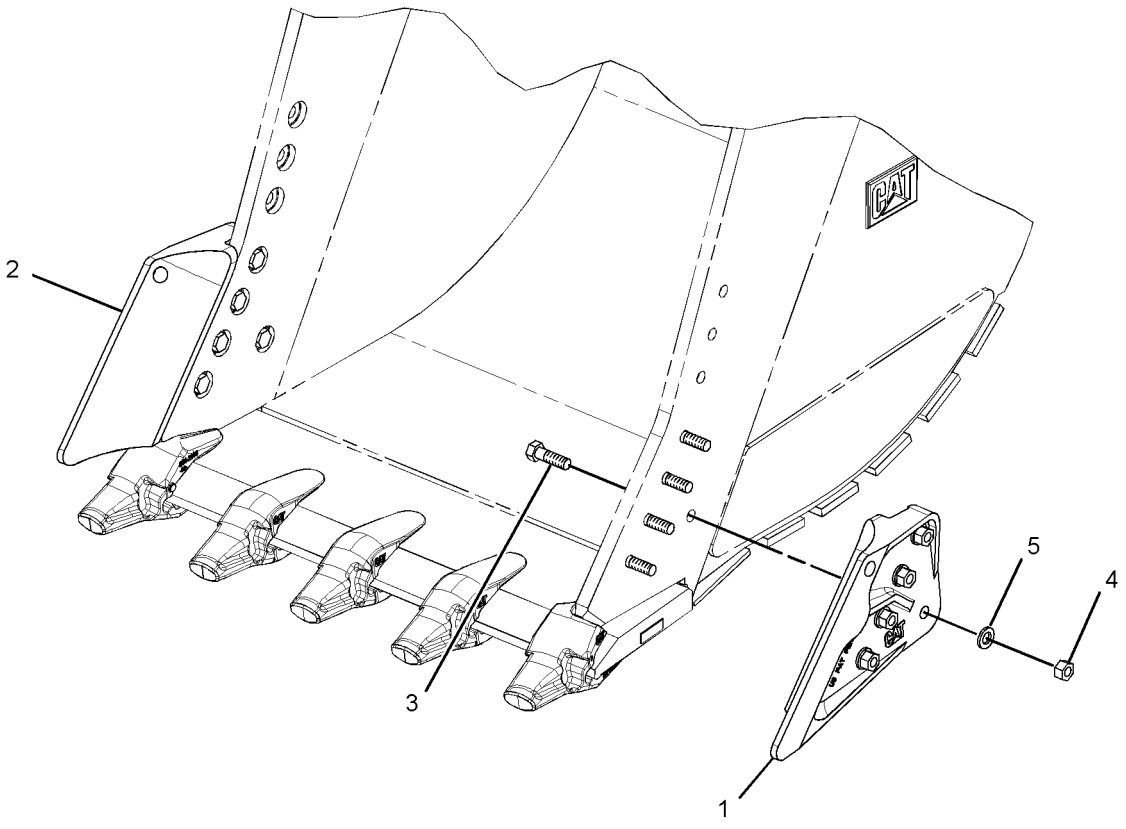

GRAPHIC #1 **<END>** g01427753

WORK TOOLS

283-3325 SIDECUTTER GP

S/N: WAP1-UP

AN ATTACHMENT

SMCS-6813 **i03537214**

NOTE	REF NO	GRAPHIC REF	PART NUMBER	QTY	PART NAME 1 2 3 4 5 6 (PRODUCT LEVEL)	SEE PAGE
	1	1	**238-3169**	1	SIDECUTTER (RH)	
	2	1	**238-3170**	1	SIDECUTTER (LH)	
	3	1	**2J-3507**	12	NUT-FULL (1-8-THD)	
	4	1	**3K-5234**	12	WASHER-HARD (28X49X6-MM THK)	
	5	1	**9X-8896**	12	BOLT (1-8X4-IN)	

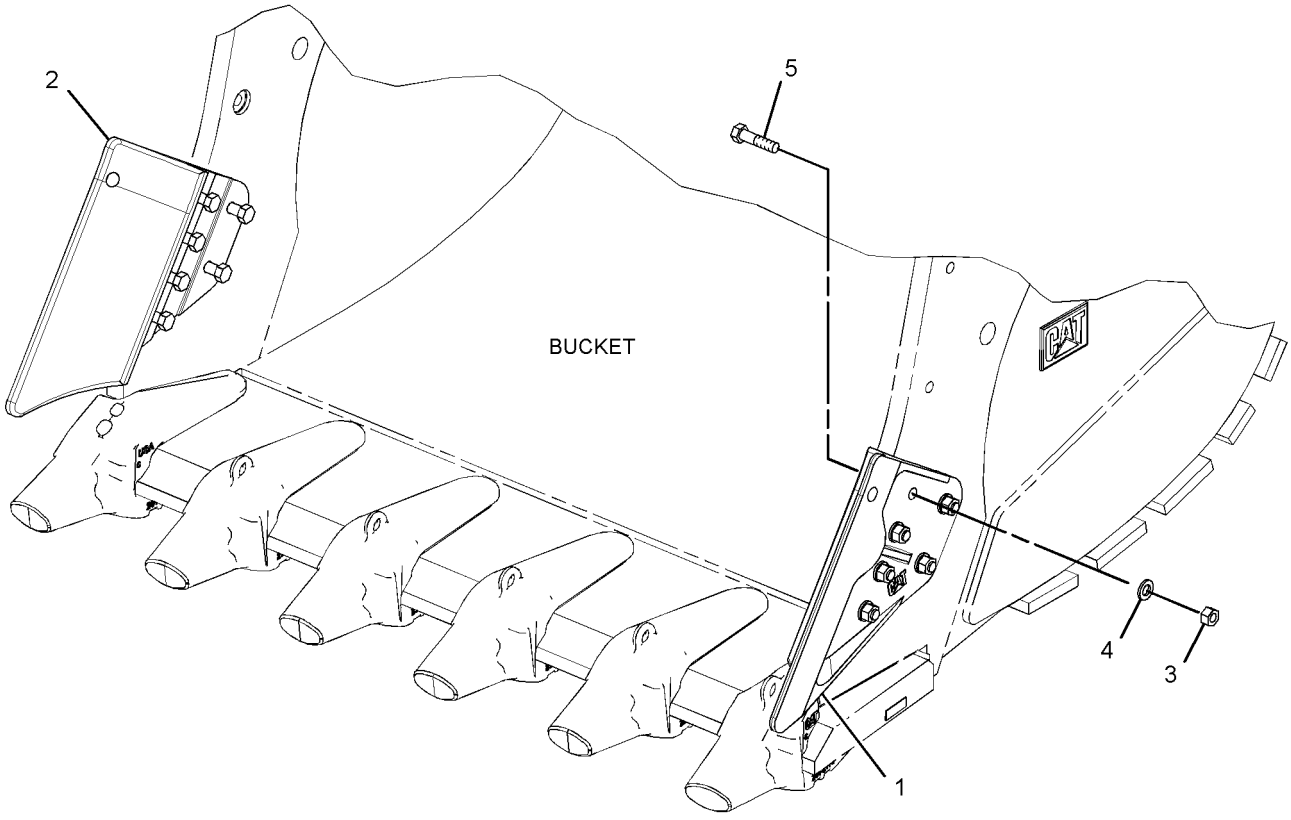

GRAPHIC #1 **<END>** g01866714

WORK TOOLS

318-8254 TIP AS-ABRASION–J-800, HEAVY-DUTY

S/N: WAP1-UP

AN ATTACHMENT

SMCS-6805 **i03997648**

NOTE	REF NO	GRAPHIC REF	PART NUMBER	QTY	PART NAME 1 2 3 4 5 6 (PRODUCT LEVEL)	SEE PAGE
	1	1	**340-0585**	2	KIT-RETAINER	
					(INCLUDES RETAINER LOCK & SLEEVE)	

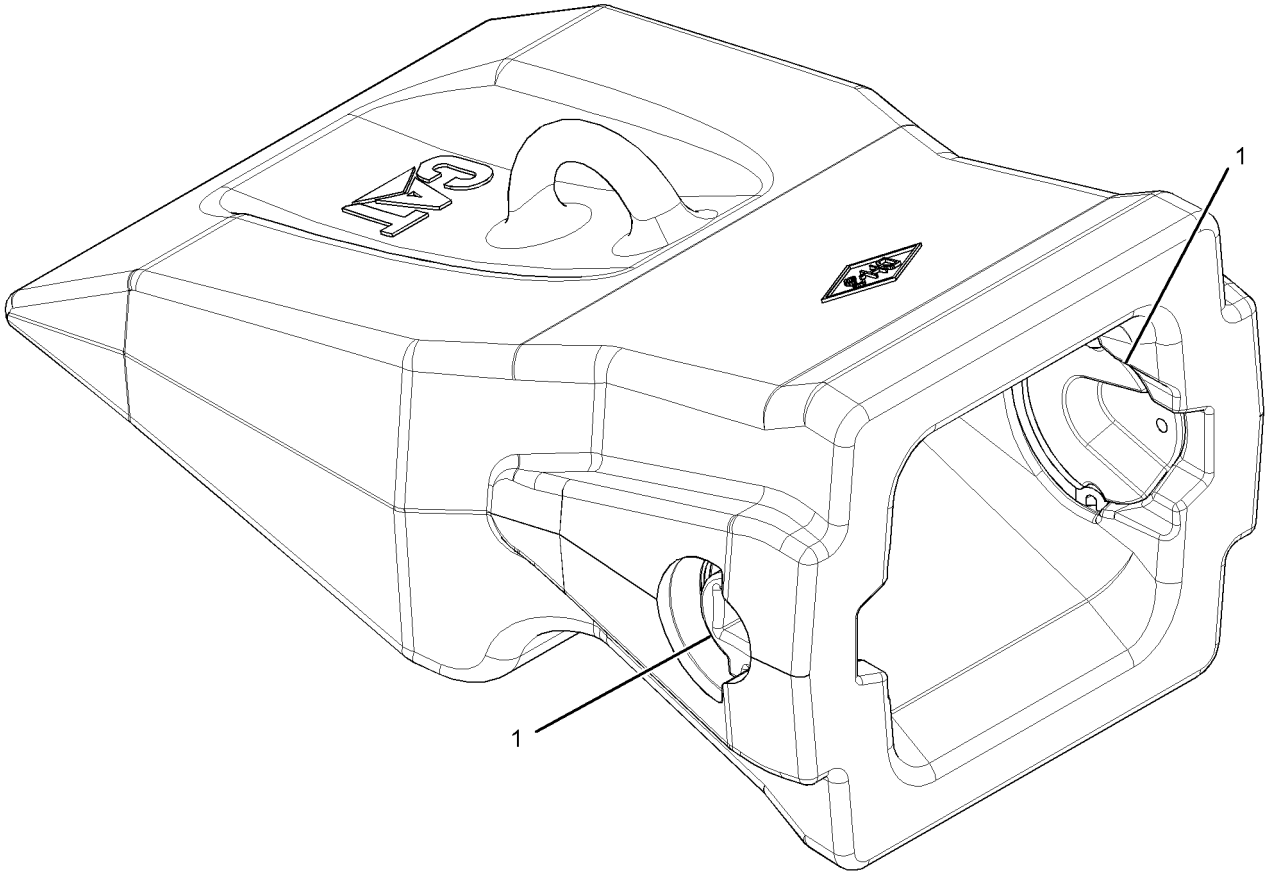

GRAPHIC #1 **<END>** g02176916

WORK TOOLS

311-8605 TIP AS-HEAVY PENETRATION–J-800

S/N: WAP1-UP

AN ATTACHMENT

SMCS-6805 **i03997635**

NOTE	REF NO	GRAPHIC REF	PART NUMBER	QTY	PART NAME 1 2 3 4 5 6 (PRODUCT LEVEL)	SEE PAGE
	1	1	**340-0585**	2	KIT-RETAINER	
					(INCLUDES RETAINER LOCK & SLEEVE)	

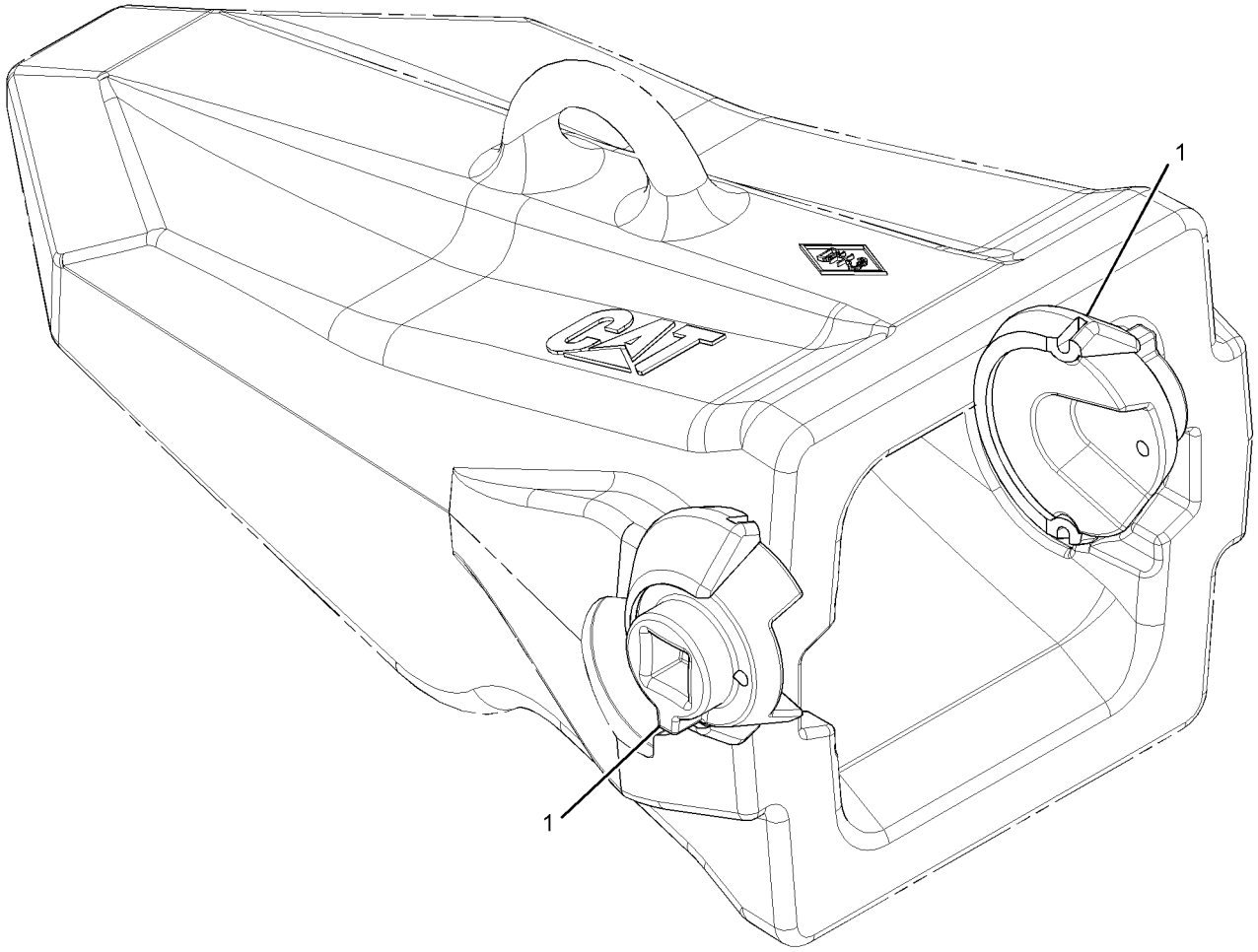

GRAPHIC #1 **<END>** g02175895

WORK TOOLS

323-9544 TIP AS-HEAVY PENETRATION—J-800, HEAVY-DUTY

S/N: WAP1-UP

AN ATTACHMENT

SMCS-6805 **i03997656**

NOTE	REF NO	GRAPHIC REF	PART NUMBER	QTY	PART NAME 1 2 3 4 5 6 (PRODUCT LEVEL)	SEE PAGE
	1	1	**340-0585**	2	KIT-RETAINER	
					(EACH KIT INCLUDES RETAINER & SLEEVE)	

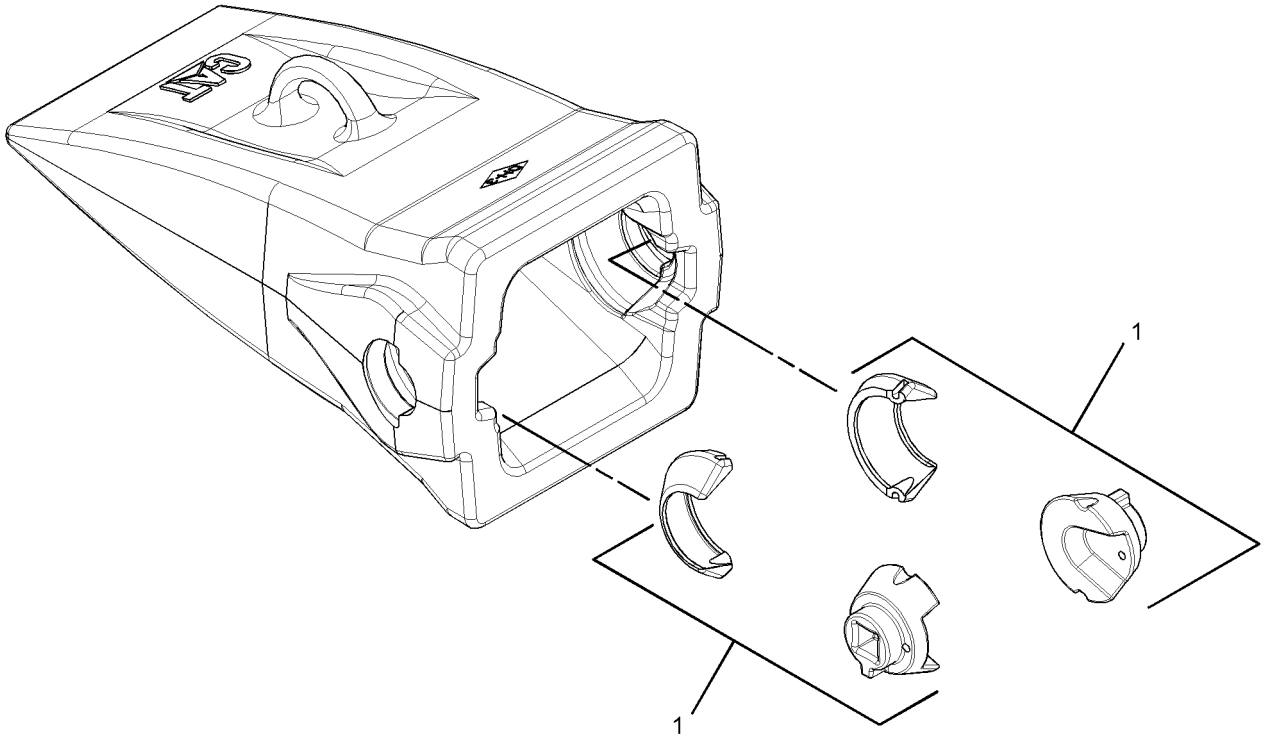

GRAPHIC #1 **<END>** g02136197

WORK TOOLS

310-2783 TIP AS-PENETRATION PLUS–J-800

S/N: WAP1-UP

AN ATTACHMENT

SMCS-6805 **i03997624**

NOTE	REF NO	GRAPHIC REF	PART NUMBER	QTY	PART NAME 1 2 3 4 5 6 (PRODUCT LEVEL)	SEE PAGE
	1	1	**340-0585**	2	KIT-RETAINER	
					(INCLUDES RETAINER LOCK & SLEEVE)	

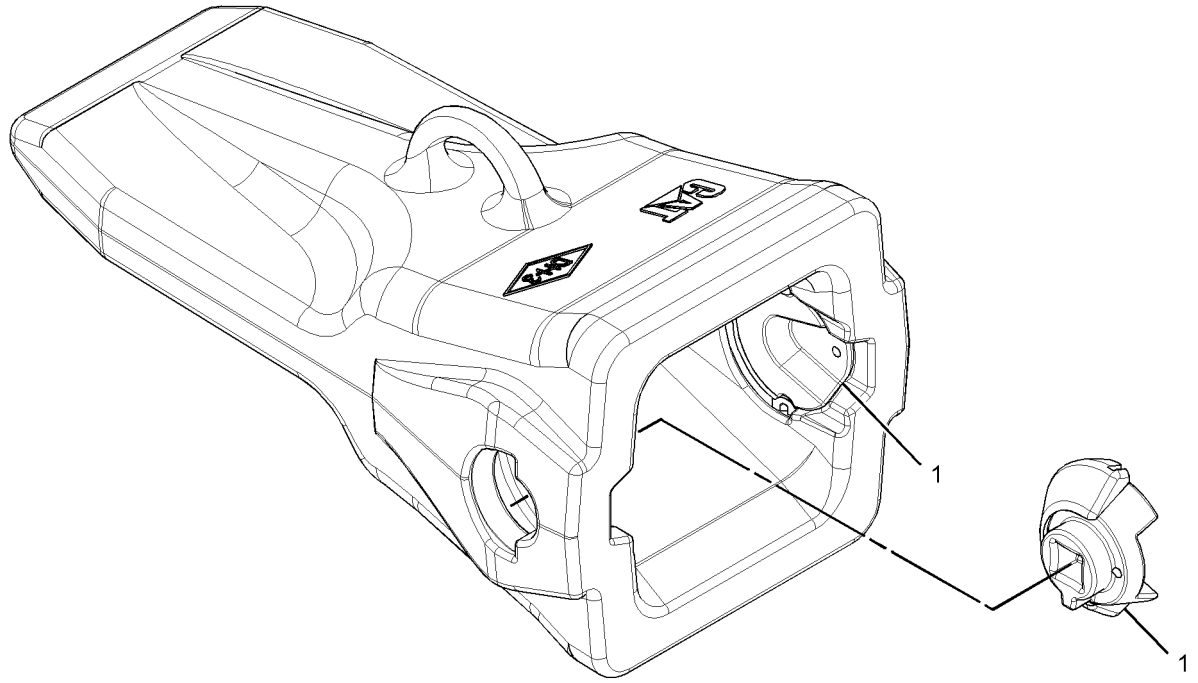

GRAPHIC #1 **<END>** g02177247

WORK TOOLS

229-7161 TIP GP-BUCKET—K-150, HEAVY-DUTY

S/N: WAP1-UP

AN ATTACHMENT

SMCS-6805 **i03591367**

NOTE	REF NO	GRAPHIC REF	PART NUMBER	QTY	PART NAME 1 2 3 4 5 6 (PRODUCT LEVEL)	SEE PAGE
	1	1	**233-7150**	1	RETAINER-G.E.T. (K-150)	
	2	1	**229-7151**	1	TIP-BUCKET (K-150, HEAVY-DUTY)	

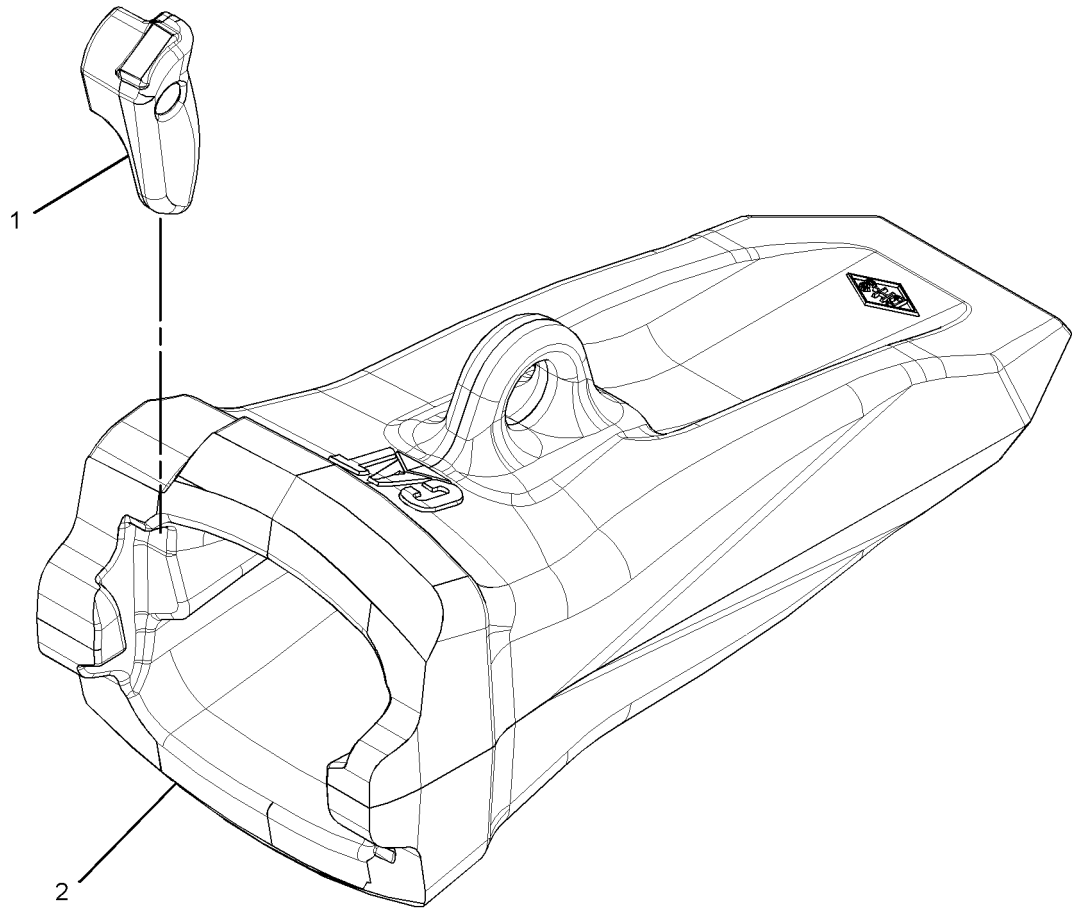

GRAPHIC #1 **<END>** g01377135

WORK TOOLS

229-7165 TIP GP-DOUBLE SPIKE–K-150

S/N: WAP1-UP

AN ATTACHMENT

SMCS-6805 **i03656936**

NOTE	REF NO	GRAPHIC REF	PART NUMBER	QTY	PART NAME 1 2 3 4 5 6 (PRODUCT LEVEL)	SEE PAGE
	1	1	**229-7158**	1	TIP GP-DOUBLE SPIKE	
	2	1	**233-7150**	1	RETAINER-G.E.T. (K-150)	

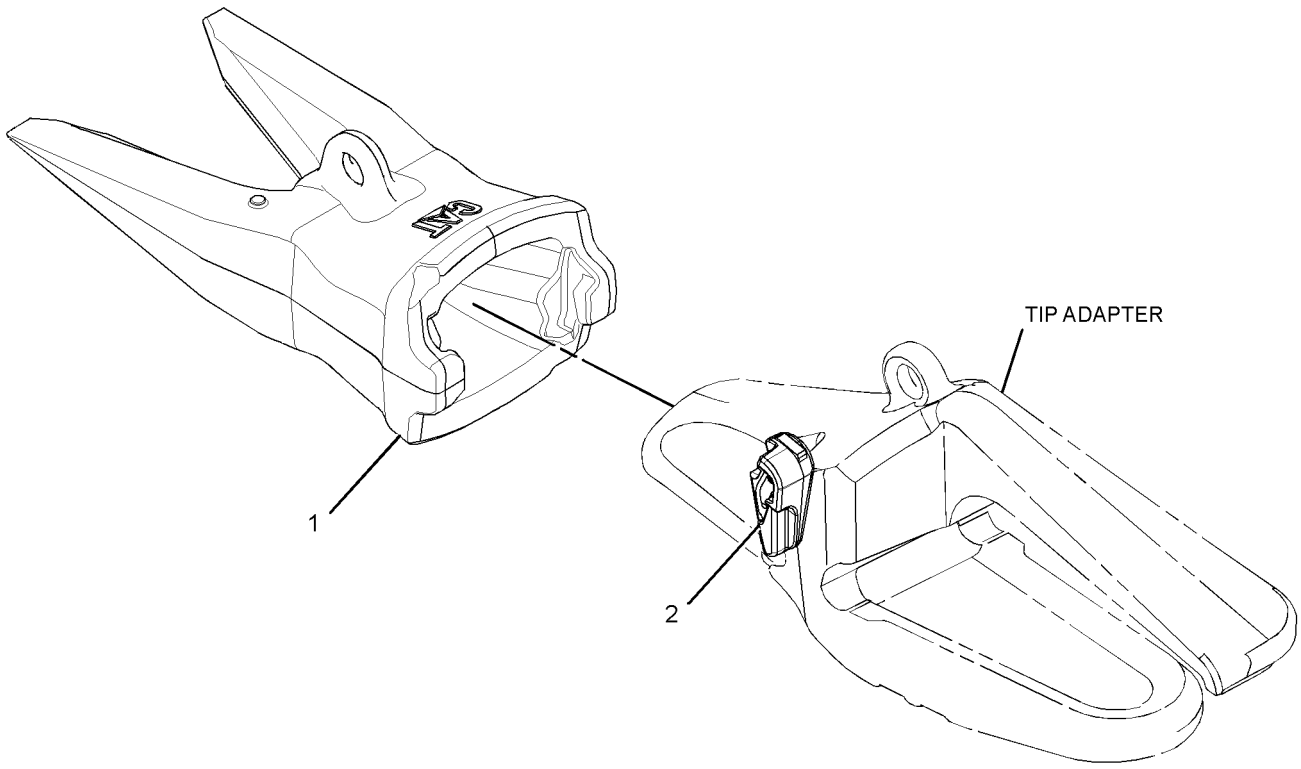

GRAPHIC #1 **<END>** g01347502

WORK TOOLS

232-0075 TIP GP-DOUBLE SPIKE–K-170

S/N: WAP1-UP

AN ATTACHMENT

SMCS-6805 **i03928310**

NOTE	REF NO	GRAPHIC REF	PART NUMBER	QTY	PART NAME 1 2 3 4 5 6 (PRODUCT LEVEL)	SEE PAGE
	1	1	**232-0170**	1	RETAINER-G.E.T. (K-170)	
	2	1	**232-0178**	1	TIP-DOUBLE SPIKE (K-170)	

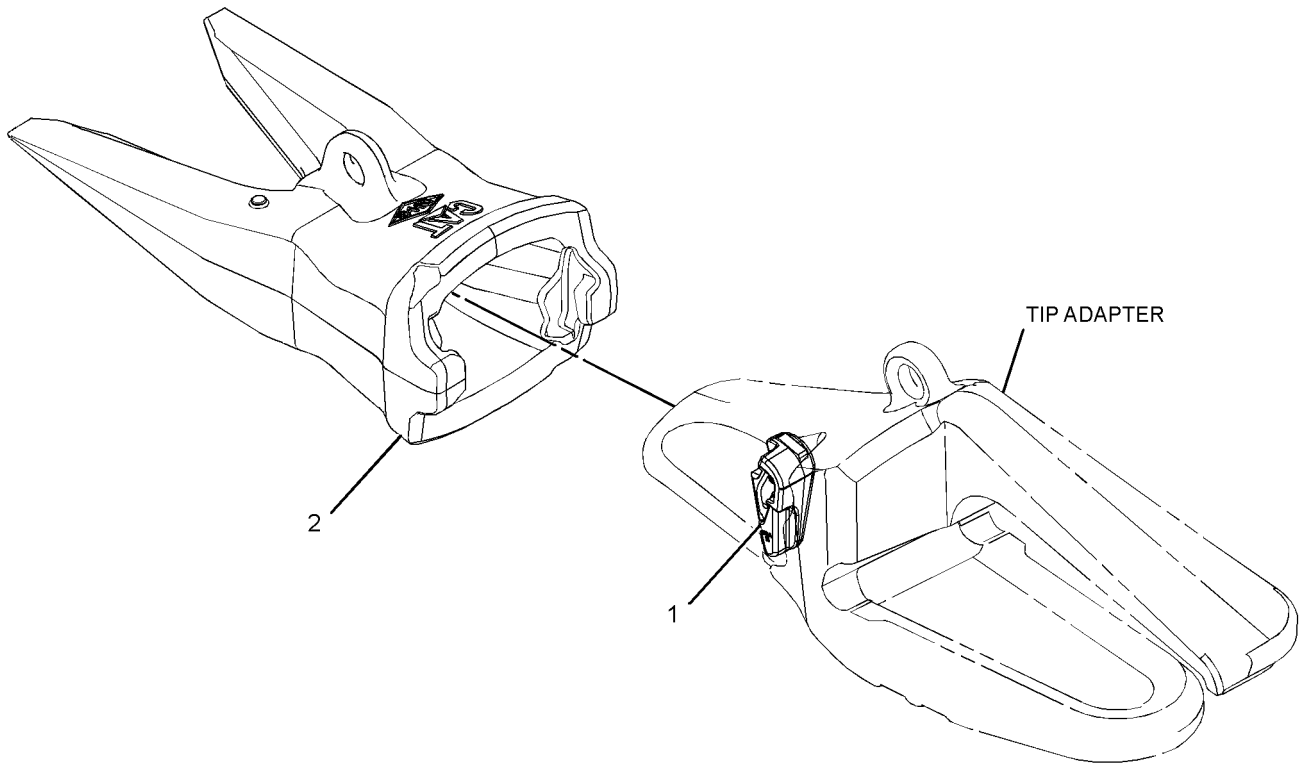

GRAPHIC #1 **<END>** g01195510

WORK TOOLS

232-0071 TIP GP-EXTRA-DUTY–K-170

S/N: WAP1-UP

AN ATTACHMENT

SMCS-6805 **i03888069**

NOTE	REF NO	GRAPHIC REF	PART NUMBER	QTY	PART NAME 1 2 3 4 5 6 (PRODUCT LEVEL)	SEE PAGE
	1	1	**232-0170**	1	RETAINER-G.E.T. (K-170)	
	2	1	**264-2171**	1	TIP-EXTRA-DUTY (K-170)	

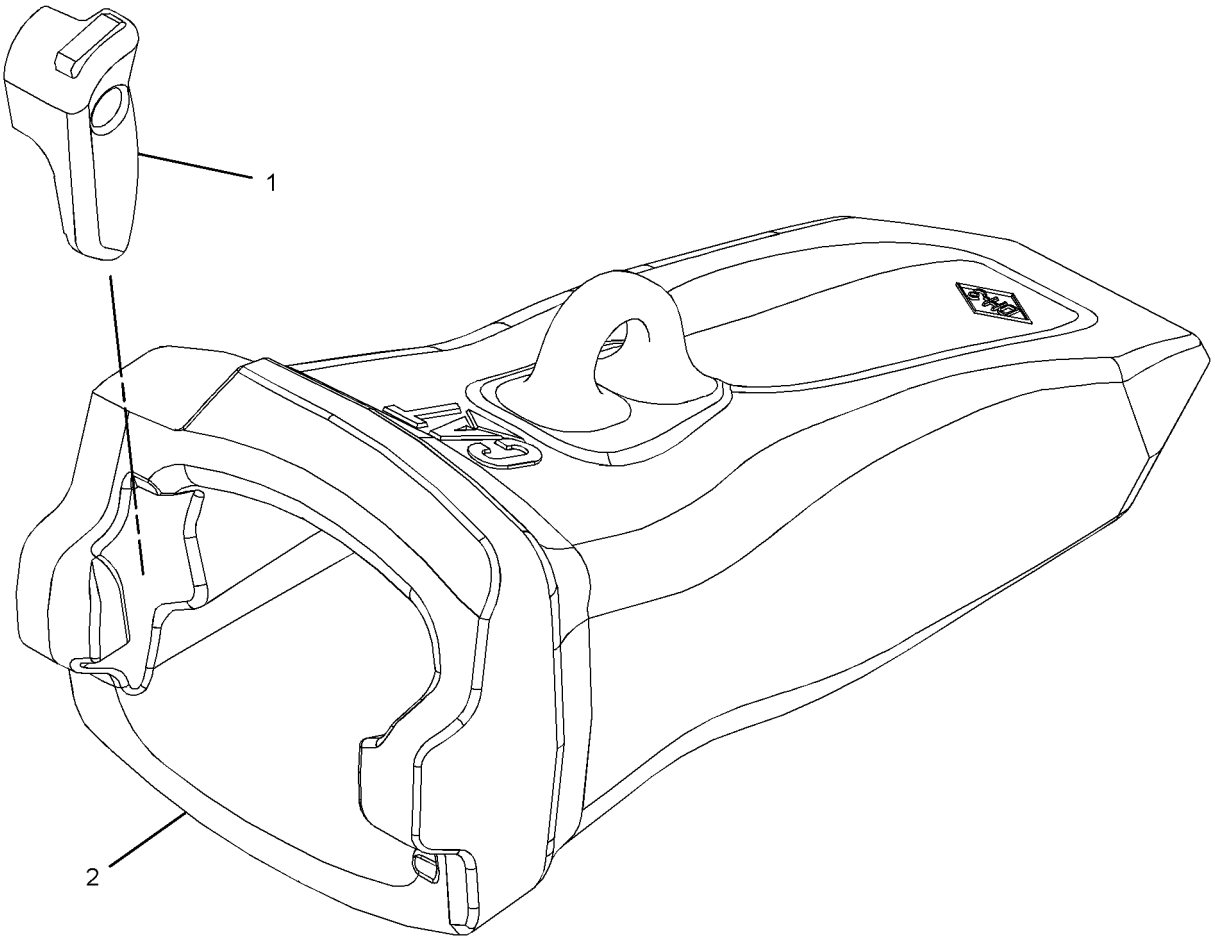

GRAPHIC #1 **<END>** g01254943

WORK TOOLS

229-7166 TIP GP-GENERAL PURPOSE–K-150

S/N: WAP1-UP

AN ATTACHMENT

SMCS-6805 **i03184225**

NOTE	REF NO	GRAPHIC REF	PART NUMBER	QTY	PART NAME 1 2 3 4 5 6 (PRODUCT LEVEL)	SEE PAGE
	1	1	**233-7150**	1	RETAINER-G.E.T. (K-150)	
	2	1	**229-7159**	1	TIP GP-GENERAL PURPOSE (K-150)	

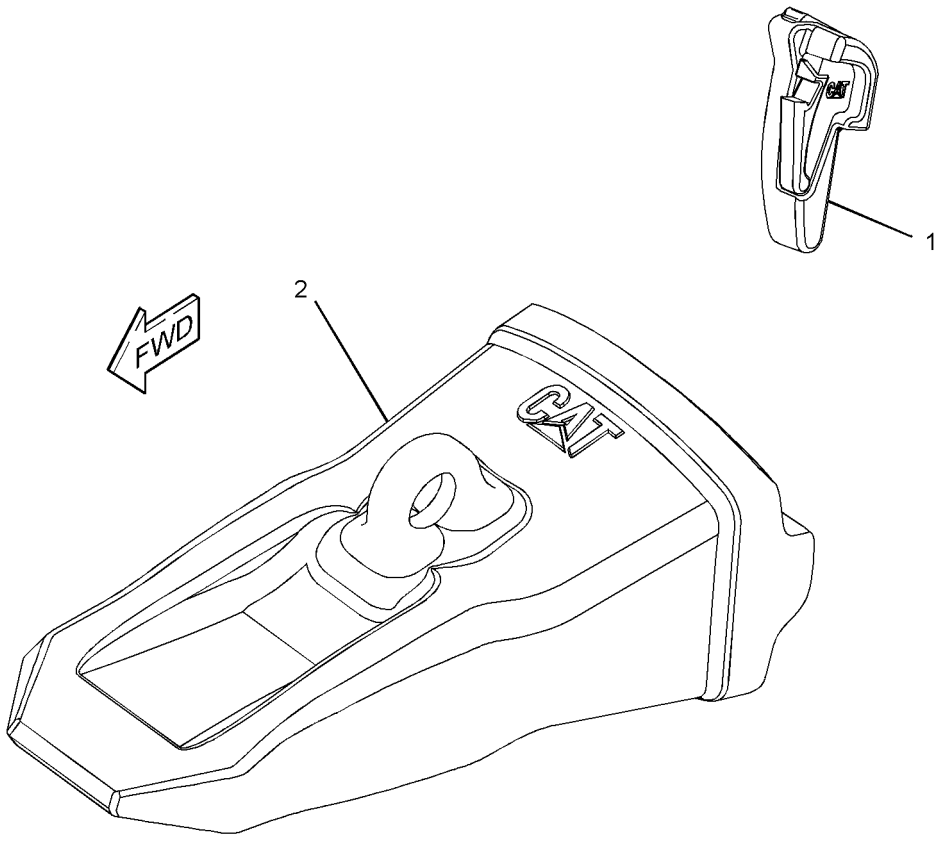

GRAPHIC #1 **<END>** g01218666

WORK TOOLS

232-0076 TIP GP-GENERAL PURPOSE–K-170

S/N: WAP1-UP

AN ATTACHMENT

SMCS-6805 **i03591566**

NOTE	REF NO	GRAPHIC REF	PART NUMBER	QTY	PART NAME 1 2 3 4 5 6 (PRODUCT LEVEL)	SEE PAGE
	1	1	**232-0170**	1	RETAINER-G.E.T. (K-170)	
	2	1	**232-0179**	1	TIP-GENERAL PURPOSE (K-170)	

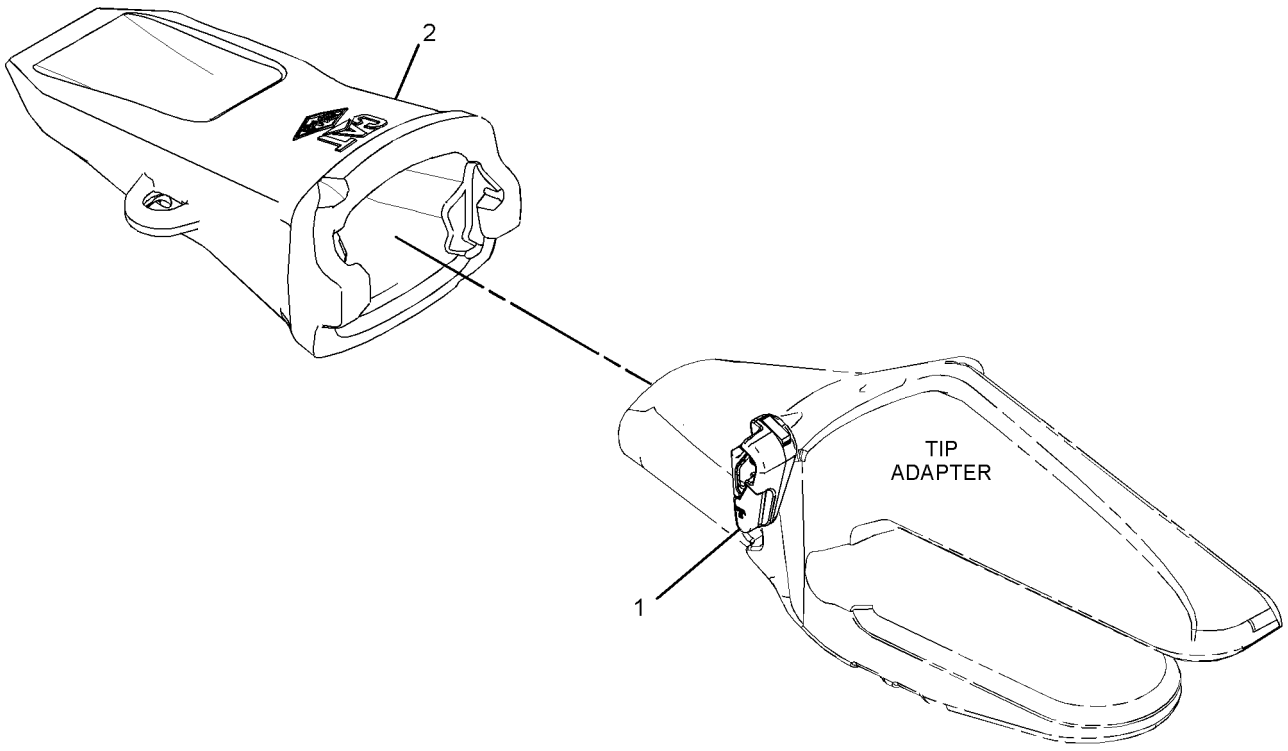

GRAPHIC #1 **<END>** g01310616

WORK TOOLS

229-7162 TIP GP-PENETRATION–K-150

S/N: WAP1-UP

AN ATTACHMENT

SMCS-6805 **i03184270**

NOTE	REF NO	GRAPHIC REF	PART NUMBER	QTY	PART NAME 1 2 3 4 5 6 (PRODUCT LEVEL)	SEE PAGE
	1	1	**229-7152**	1	TIP-PENETRATION (K-150)	
	2	1	**233-7150**	1	RETAINER-G.E.T. (K-150)	

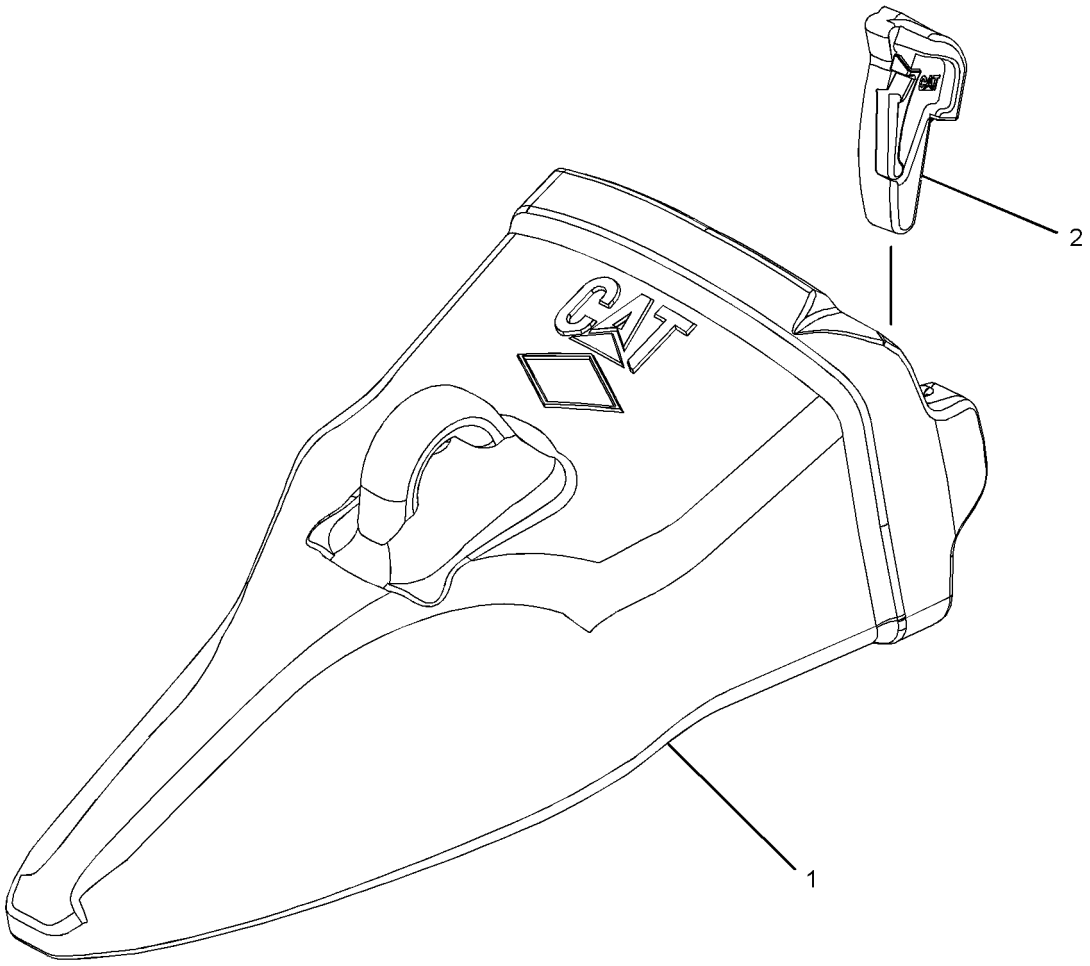

GRAPHIC #1 **<END>** g01626159

WORK TOOLS

232-0072 TIP GP-PENETRATION–K-170

S/N: WAP1-UP

AN ATTACHMENT

SMCS-6805 **i02955265**

NOTE	REF NO	GRAPHIC REF	PART NUMBER	QTY	PART NAME 1 2 3 4 5 6 (PRODUCT LEVEL)	SEE PAGE
	1	1	**232-0170**	1	RETAINER-G.E.T. (K-170)	
	2	1	**232-0172**	1	TIP-PENETRATION (K-170)	

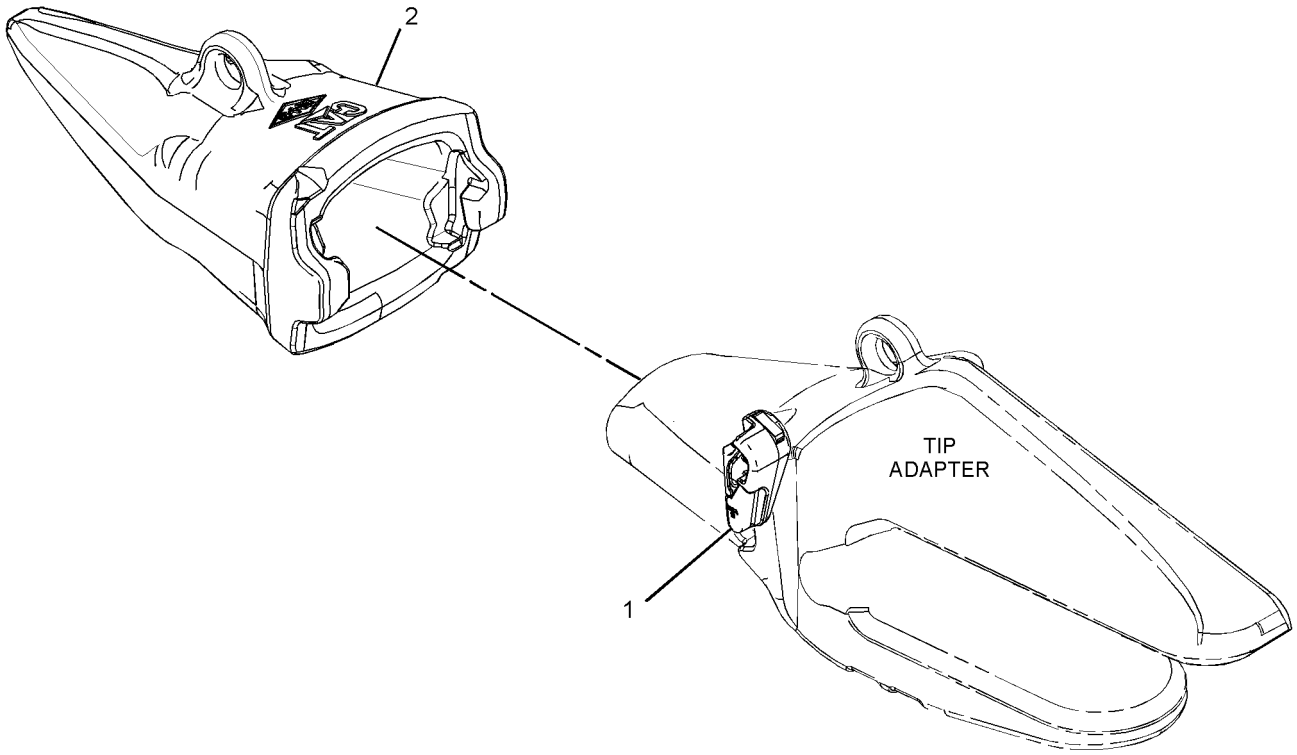

GRAPHIC #1 **<END>** g01289240

WORK TOOLS

229-7163 TIP GP-PENETRATION PLUS–K-150

S/N: WAP1-UP

AN ATTACHMENT

SMCS-6805 **i02514081**

NOTE	REF NO	GRAPHIC REF	PART NUMBER	QTY	PART NAME 1 2 3 4 5 6 (PRODUCT LEVEL)	SEE PAGE
	1	1	**233-7150**	1	RETAINER-G.E.T. (K-150)	
	2	1	**229-7153**	1	TIP-PENETRATION PLUS (K-150)	

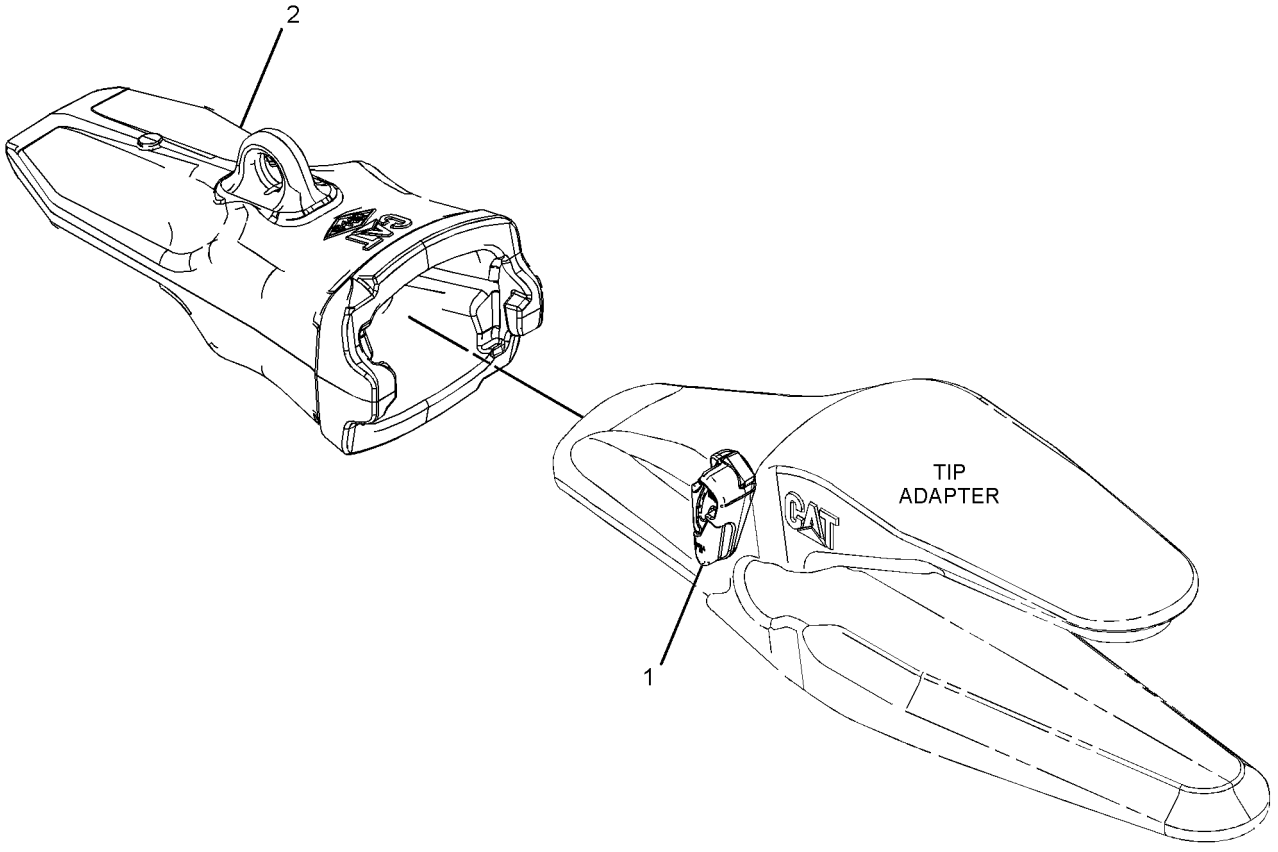

GRAPHIC #1 **<END>** g01258043

WORK TOOLS

232-0073 TIP GP-PENETRATION PLUS–K-170

S/N: WAP1-UP

AN ATTACHMENT

SMCS-6805 **i02955266**

NOTE	REF NO	GRAPHIC REF	PART NUMBER	QTY	PART NAME 1 2 3 4 5 6 (PRODUCT LEVEL)	SEE PAGE
	1	1	**232-0170**	1	RETAINER-G.E.T. (K-170)	
	2	1	**232-0173**	1	TIP-PENETRATION PLUS (K-170)	

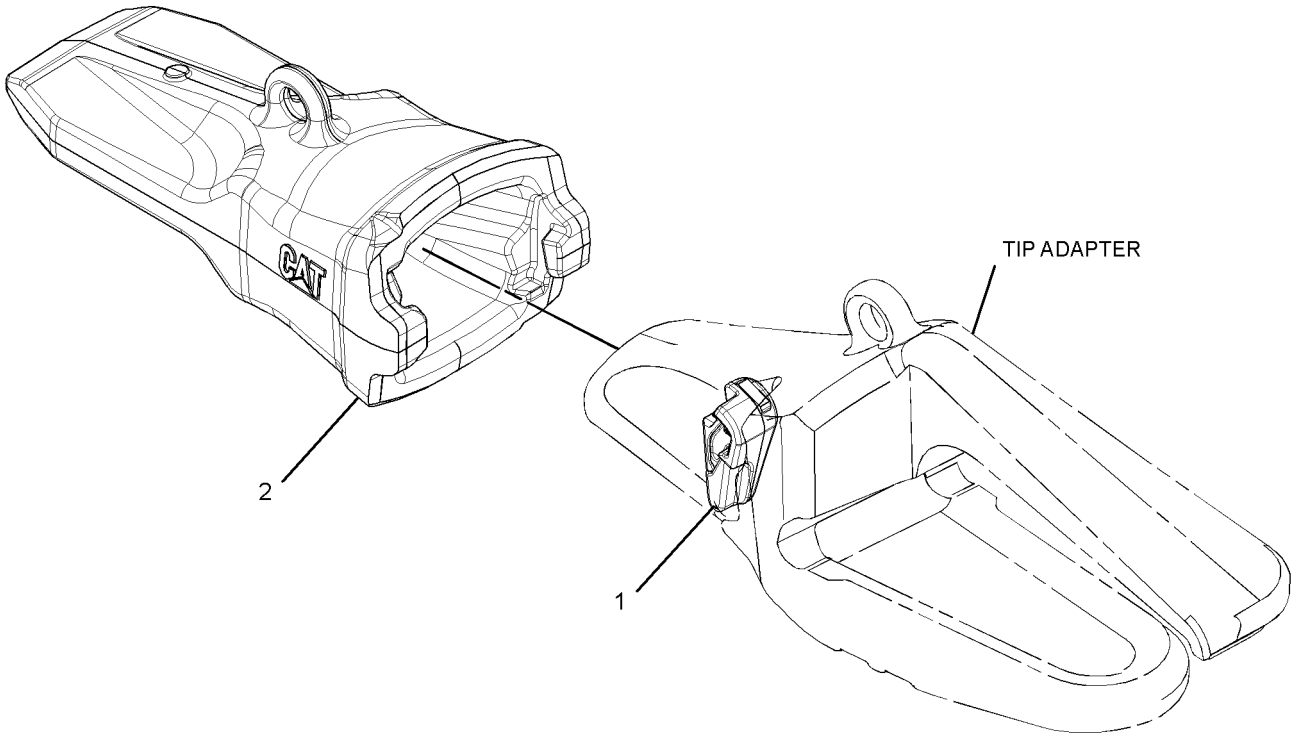

GRAPHIC #1 **<END>** g01442754

WORK TOOLS

229-7164 TIP GP-SPIKE–K-150

S/N: WAP1-UP

AN ATTACHMENT

SMCS-6805 **i03656933**

NOTE	REF NO	GRAPHIC REF	PART NUMBER	QTY	PART NAME 1 2 3 4 5 6 (PRODUCT LEVEL)	SEE PAGE
	1	1	**229-7157**	1	TIP-SPIKE	
	2	1	**233-7150**	1	RETAINER-G.E.T. (K-150)	

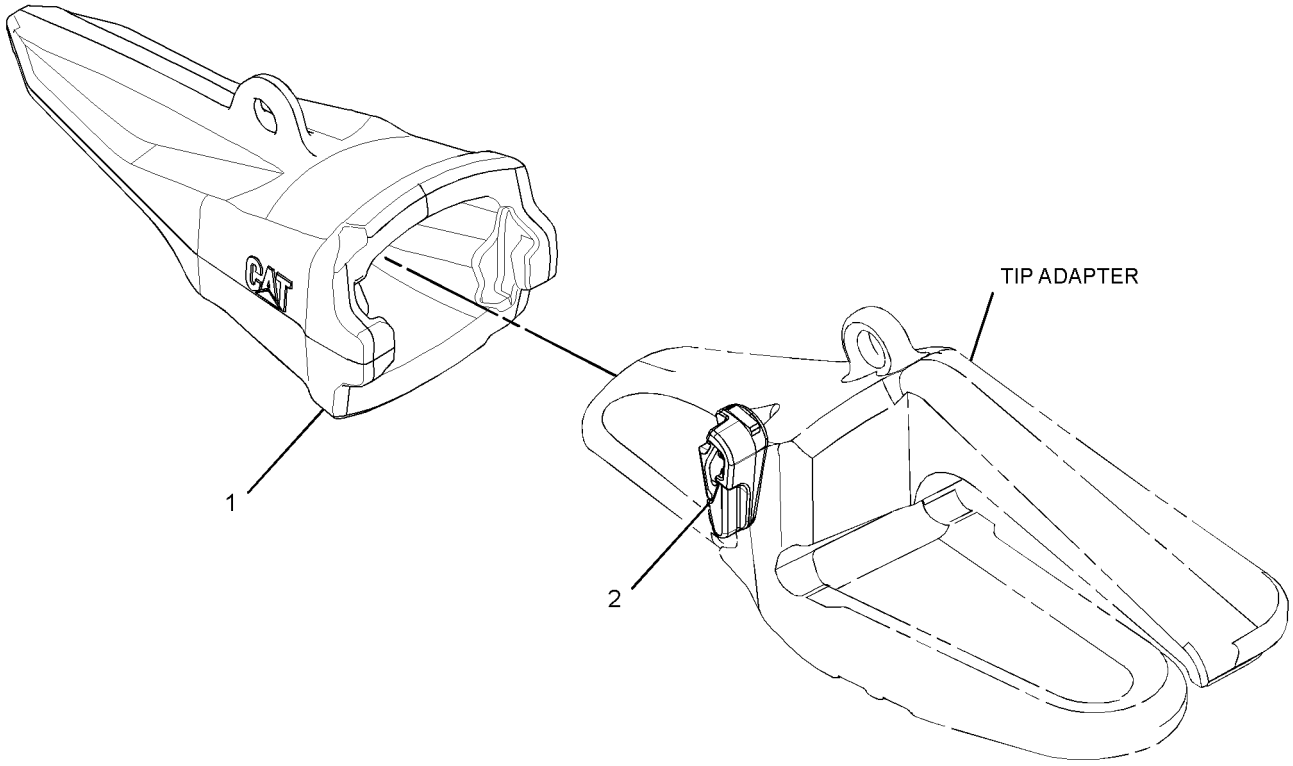

GRAPHIC #1 **<END>** g01347501

WORK TOOLS

232-0074 TIP GP-SPIKE–K-170

S/N: WAP1-UP

AN ATTACHMENT

SMCS-6805 **i03902250**

NOTE	REF NO	GRAPHIC REF	PART NUMBER	QTY	PART NAME 1 2 3 4 5 6 (PRODUCT LEVEL)	SEE PAGE
	1	1	**232-0170**	1	RETAINER-G.E.T. (K-170)	
	2	1	**232-0177**	1	TIP-SPIKE (K-170, WITH LIFTING EYE)	

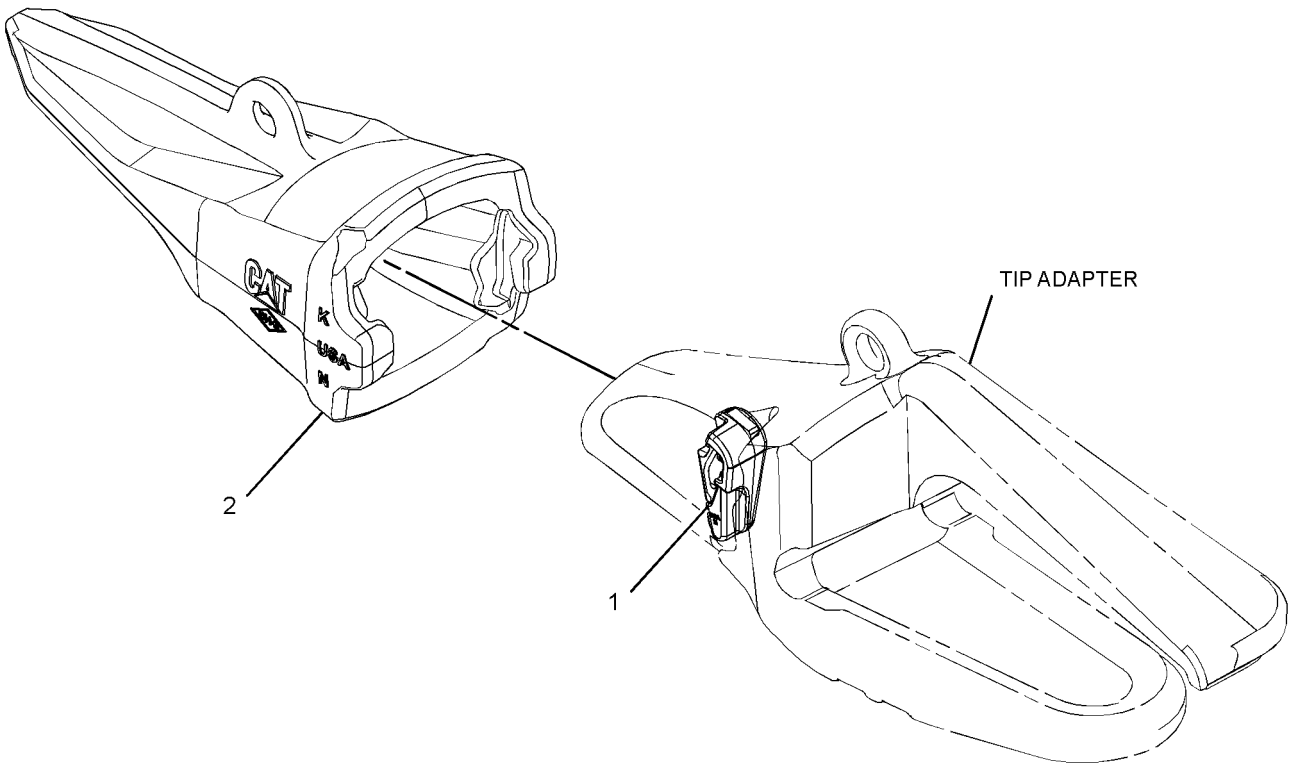

GRAPHIC #1 **<END>** g01195454

WORK TOOLS

229-7160 TIP GP-WIDE–K-150

S/N: WAP1-UP

AN ATTACHMENT

SMCS-6805 **i03656932**

NOTE	REF NO	GRAPHIC REF	PART NUMBER	QTY	PART NAME 1 2 3 4 5 6 (PRODUCT LEVEL)	SEE PAGE
	1	1	**195-5151**	1	TIP-WIDE (K-150, INCLUDES LIFTING EYE)	
	2	1	**233-7150**	1	RETAINER-G.E.T. (K-150)	

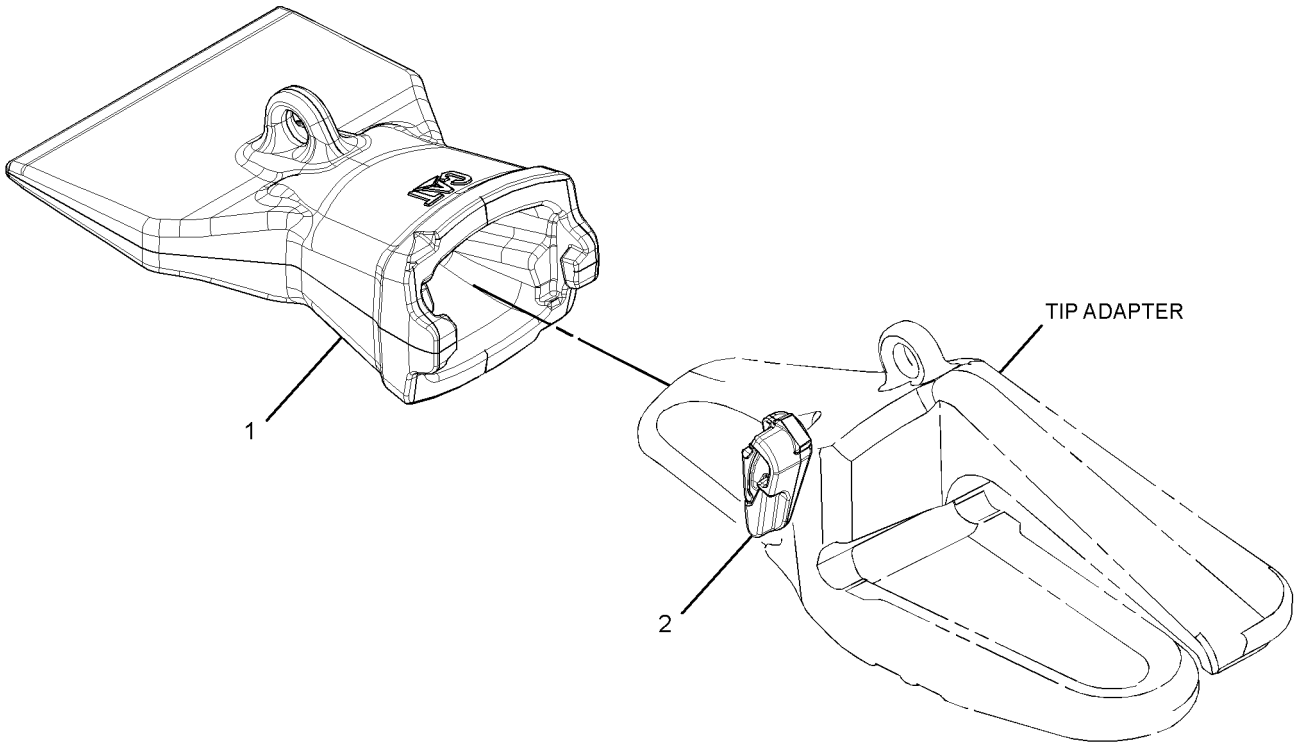

GRAPHIC #1 **<END>** g01343293

WORK TOOLS

232-0070 TIP GP-WIDE–K-170

S/N: WAP1-UP

AN ATTACHMENT

SMCS-6805 **i03887850**

NOTE	REF NO	GRAPHIC REF	PART NUMBER	QTY	PART NAME 1 2 3 4 5 6 (PRODUCT LEVEL)	SEE PAGE
	1	1	**232-0170**	1	RETAINER-G.E.T. (K-170)	
	2	1	**223-8170**	1	TIP-WIDE (K-170)	

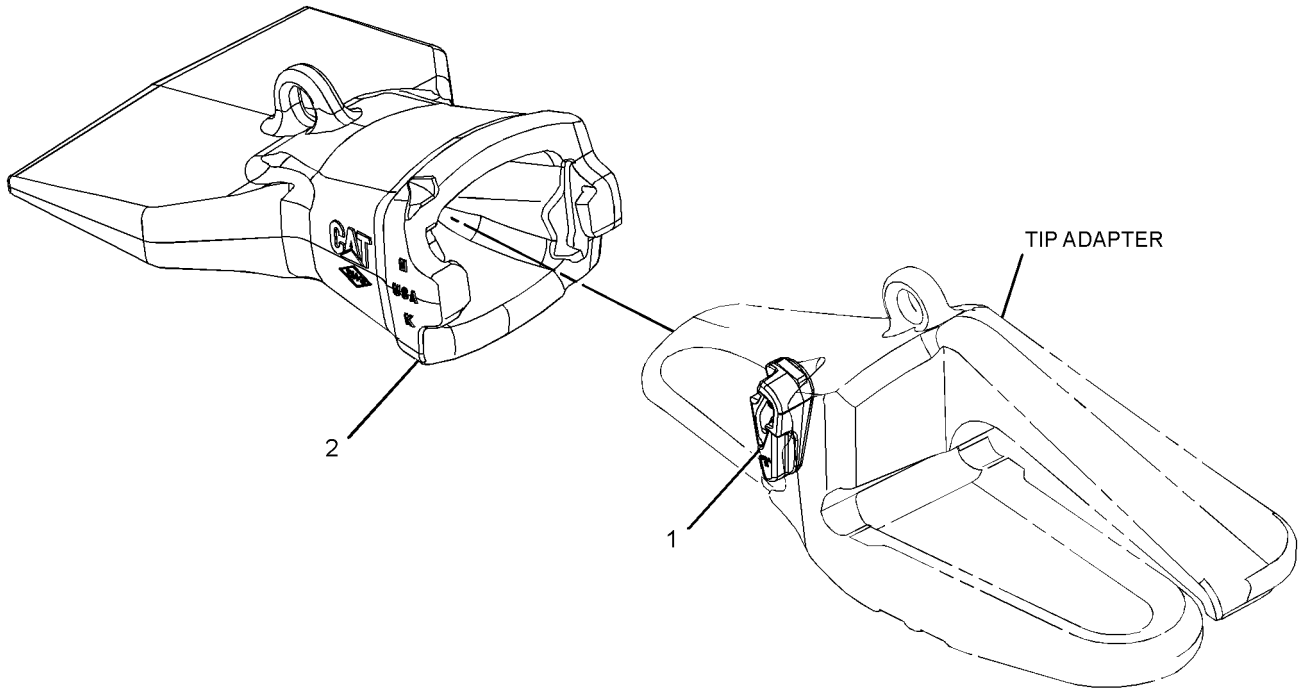

GRAPHIC #1 **<END>** g01195066

WORK TOOLS

235-5634 YOKE GP-LIFTING

S/N: WAP1-UP
PART OF 231-7734, 342-8072 COUPLER AR-QUICK
AN ATTACHMENT

SMCS-6129 **i03829731**

NOTE	REF NO	GRAPHIC REF	PART NUMBER	QTY	PART NAME 1 2 3 4 5 6 (PRODUCT LEVEL)	SEE PAGE
	1	1	**235-5636**	1	PIN AS	
	2	1	**235-5637**	1	LOCKPIN	

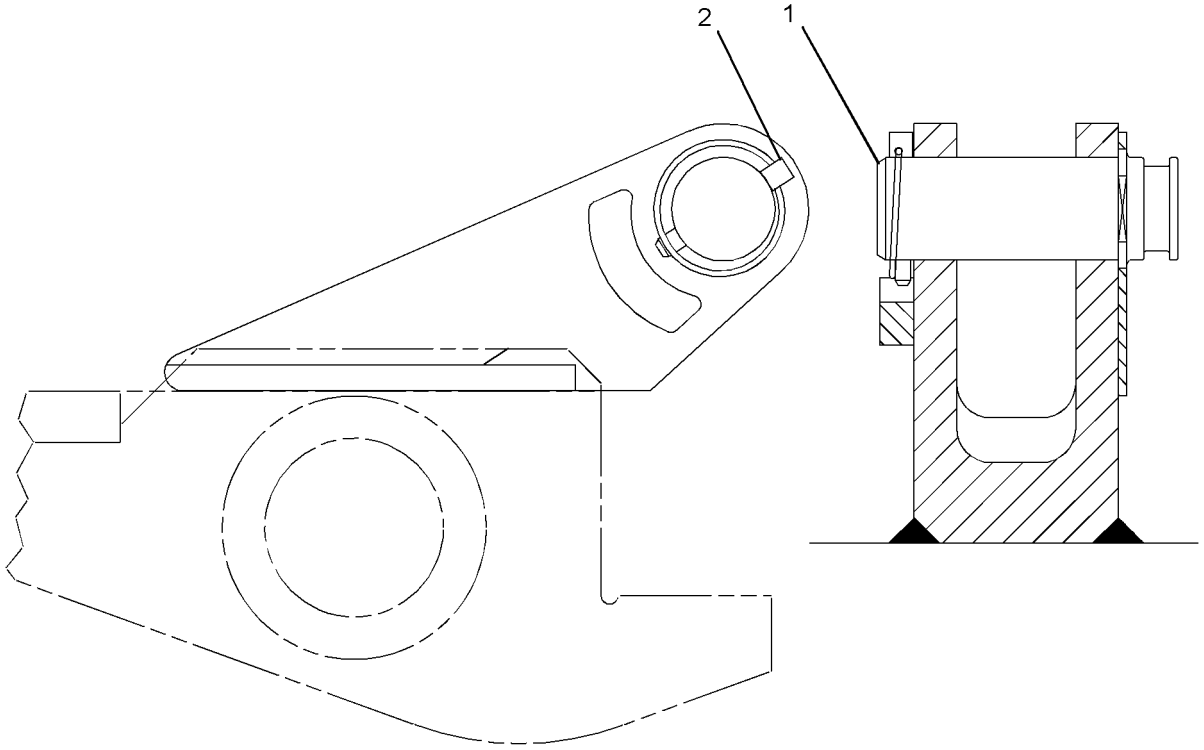

GRAPHIC #1 **<END>** g01173558

OPERATOR STATION

229-9080 AIR CONDITIONER & MOUNTING GP

S/N: WAP1-UP
PART OF 229-9079 AIR CONDITIONER AR
AN ATTACHMENT

SMCS-7320 **i03484963**

NOTE	REF NO	GRAPHIC REF	PART NUMBER	QTY	PART NAME 1 2 3 4 5 6 (PRODUCT LEVEL)	SEE PAGE
	1	1	**293-1136**	1	PANEL AS-CONTROL	
	2	1	**235-8873**	1	HARNESS AS-HEATER & AIR COND (CONTROL PANEL SWITCHES)	
	3	1	**235-8874**	1	SENSOR-TEMPERATURE (AMBIENT AIR)	
	4	1	**235-8875**	1	BRACKET	
	5	1	**235-9006**	1	HARNESS AS-HEATER & AIR COND	
M	7	1	**099-2374**	2	BOLT-SOCKET HEAD (M5X0.8X12-MM)	
	8	1	**111-4836**	3	CLIP	
CY	9	1	**316-8917**	1	AIR CONDITIONER GP	924
	10	1	**3S-2093**	2	STRAP-CABLE	
M	11	1	**5C-9553**	1	BOLT (M6X1X16-MM)	
	12	1	**7X-7729**	7	WASHER (11X25X3-MM THK)	
	13	1	**8T-0328**	2	WASHER-HARD (5.5X10X1-MM THK)	
	14	1	**8T-4121**	3	WASHER-HARD (11X21X2.5-MM THK)	
M	15	1	**8T-4136**	7	BOLT (M10X1.5X25-MM)	
M	16	1	**8T-4137**	3	BOLT (M10X1.5X20-MM)	
	17	1	**9X-8256**	1	WASHER (6.6X12X2-MM THK)	

C-CHANGE FROM PREVIOUS TYPE
M-METRIC PART
Y-SEPARATE ILLUSTRATION

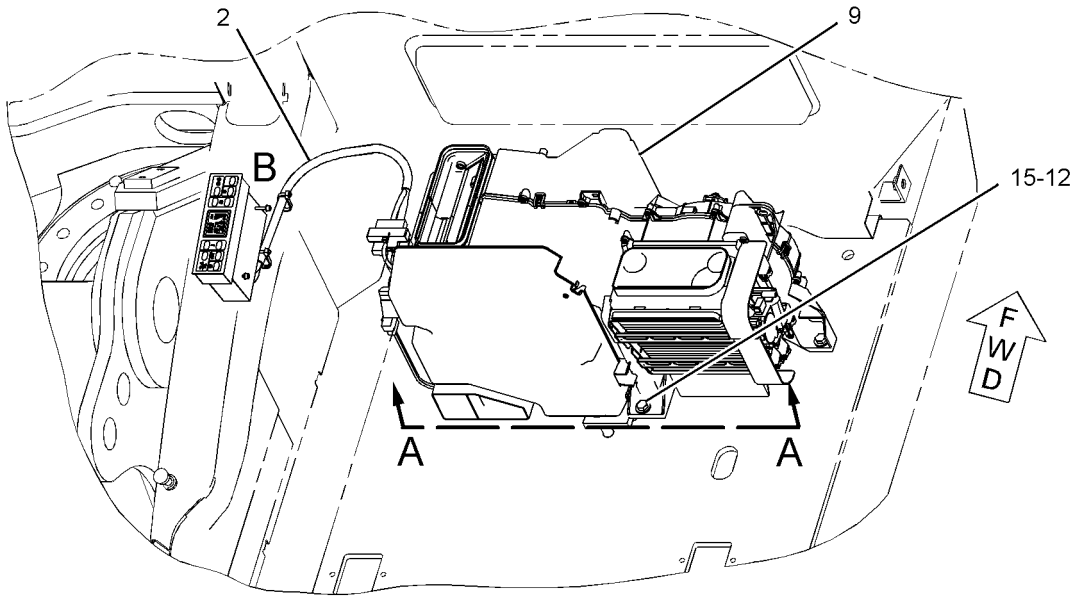

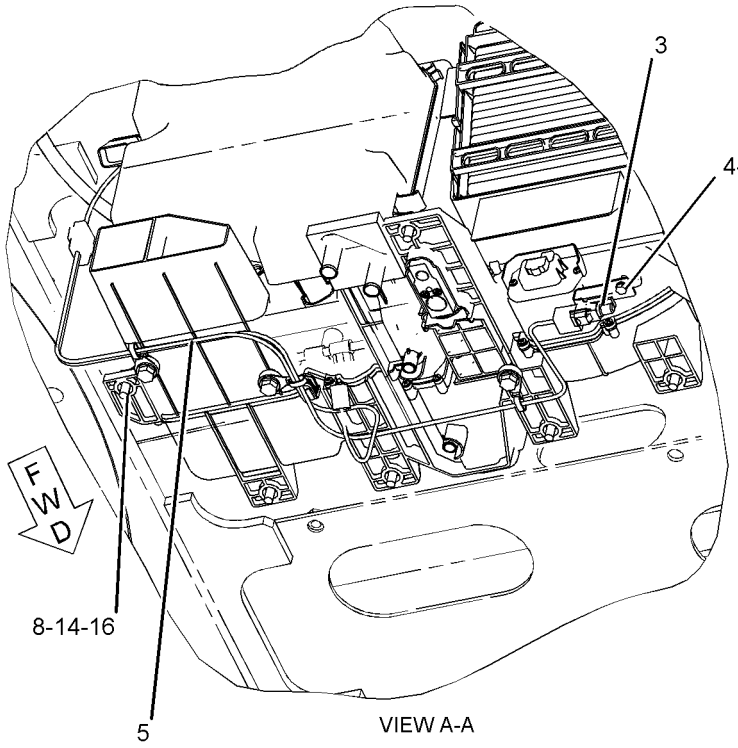

VIEW A-A

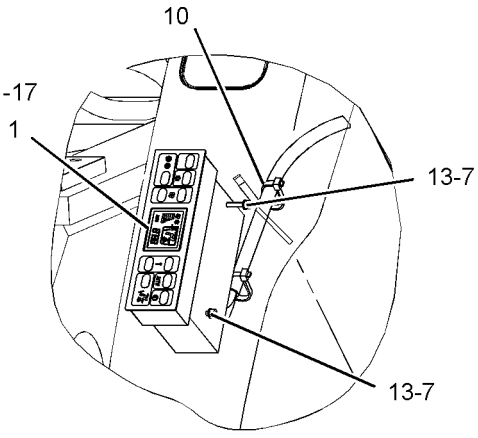

VIEW OF AREA B

GRAPHIC #1 **<END>** g01401004

OPERATOR STATION

235-9004 AIR CONDITIONER & MOUNTING GP

S/N: WAP1-UP
PART OF 235-9003 AIR CONDITIONER AR
AN ATTACHMENT

SMCS-7320 **i03430661**

NOTE	REF NO	GRAPHIC REF	PART NUMBER	QTY	PART NAME 1 2 3 4 5 6 (PRODUCT LEVEL)	SEE PAGE
	1	1	**293-1136**	1	PANEL AS-CONTROL	
	2	1	**235-8873**	1	HARNESS AS-HEATER & AIR COND (CONTROL PANEL SWITCHES)	
	3	1	**235-8874**	1	SENSOR-TEMPERATURE (AMBIENT AIR)	
	4	1	**235-8875**	1	BRACKET	
	5	1	**235-9005**	1	HARNESS AS-HEATER & AIR COND (AIR CONDITIONER, LOW SIDE)	
CY	6	1	**316-8916**	1	AIR CONDITIONER GP	922
	7	1	**9X-8256**	1	WASHER (6.6X12X2-MM THK)	
M	8	1	**099-2374**	2	BOLT-SOCKET HEAD (M5X0.8X12-MM)	
	9	1	**111-4836**	3	CLIP	
	10	1	**3S-2093**	2	STRAP-CABLE	
M	11	1	**5C-9553**	1	BOLT (M6X1X16-MM)	
	12	1	**7X-7729**	7	WASHER (11X25X3-MM THK)	
	13	1	**8T-0328**	2	WASHER-HARD (5.5X10X1-MM THK)	
	14	1	**8T-4121**	3	WASHER-HARD (11X21X2.5-MM THK)	
M	15	1	**8T-4136**	7	BOLT (M10X1.5X25-MM)	
M	16	1	**8T-4137**	3	BOLT (M10X1.5X20-MM)	

C-CHANGE FROM PREVIOUS TYPE
M-METRIC PART
Y-SEPARATE ILLUSTRATION

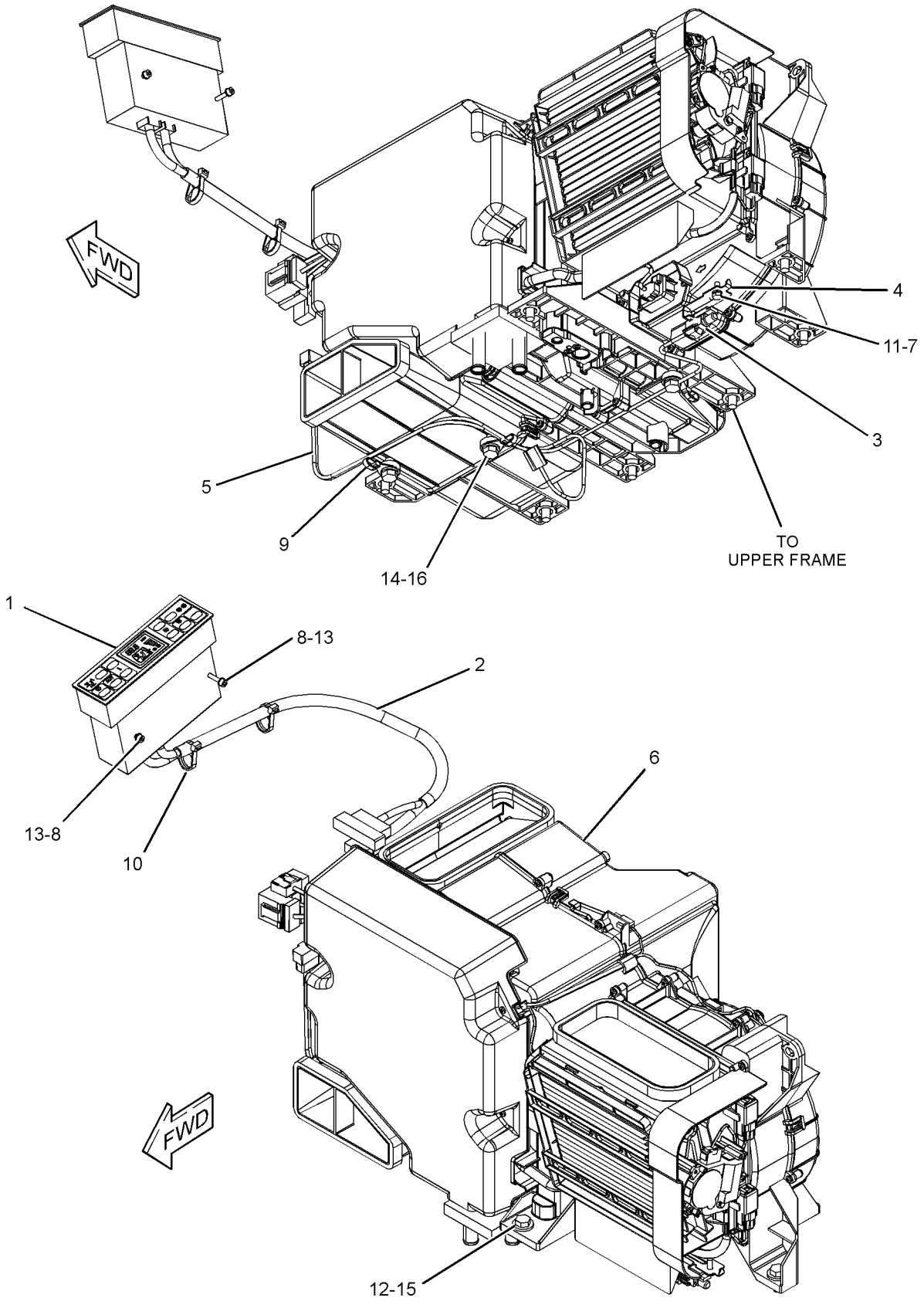

GRAPHIC #1 **<END>** g01397723

OPERATOR STATION

229-9079 AIR CONDITIONER AR

S/N: WAP1-UP
PART OF 340-4002, 340-4003, 340-4004 OPTION AR-CAB
AN ATTACHMENT

SMCS-7320 **i02116728**

NOTE	PART NUMBER	QTY	PART NAME 1 2 3 4 5 6 (PRODUCT LEVEL)	SEE PAGE
Y	*229-9080*	1	AIR CONDITIONER & MOUNTING GP	917
Y	*229-9082*	1	DUCT GP-CAB AIR	981

Y-SEPARATE ILLUSTRATION

<END>

235-9003 AIR CONDITIONER AR

S/N: WAP1-UP
AN ATTACHMENT

SMCS-7320 **i02103267**

NOTE	PART NUMBER	QTY	PART NAME 1 2 3 4 5 6 (PRODUCT LEVEL)	SEE PAGE
Y	*235-9004*	1	AIR CONDITIONER & MOUNTING GP	919
Y	*229-9082*	1	DUCT GP-CAB AIR	981

Y-SEPARATE ILLUSTRATION

<END>

OPERATOR STATION

316-8916 AIR CONDITIONER GP

S/N: WAP1-UP
PART OF 235-9004 AIR CONDITIONER & MOUNTING GP
AN ATTACHMENT

SMCS-7320 **i03430741**

NOTE	REF NO	GRAPHIC REF	PART NUMBER	QTY	PART NAME 1 2 3 4 5 6 (PRODUCT LEVEL)	SEE PAGE
	1	1	**185-8300**	35	SCREW-TAPPING	
	2	1	**185-8302**	3	SCREW AS-TAPPING	
	3	1	**245-7817**	2	MOTOR AS	
	4	1	**245-7818**	3	CLIP	
	5	1	**245-7819**	2	CLIP	
	6	1	**245-7820**	1	COVER-FRONT	
	7	1	**245-7825**	1	INSULATOR	
	8	1	**245-7826**	1	INSULATOR	
	9	1	**245-7827**	1	INSULATOR	
	10	1	**245-7828**	1	INSULATOR	
	11	1	**245-7829**	1	PACKING	
	12	1	**245-7830**	1	CLIP	
	13	1	**245-7831**	1	SENSOR AS-TEMPERATURE (COOLANT)	
	14	1	**245-7832**	1	CONTROL AS	
	15	1	**245-7833**	1	CORE AS-HEATER	
	16	1	**245-7834**	1	DAMPER AS	
	17	1	**245-7835**	1	SENSOR AS-TEMPERATURE (AMBIENT AIR TEMP)	
Y	18	1	**245-7836**	1	COIL GP-EVAPORATOR	937
	19	1	**245-7838**	1	PACKING	
	20	1	**245-7839**	1	MOTOR AS (WITH FAN)	
Y	21	1	**245-7846**	1	CONTROL GP-HEAT & AIR COND (AIR INLET)	963
	22	1	**245-7847**	1	HARNESS AS-HEATER & AIR COND	
	23	1	**245-7856**	3	SCREW AS-TAPPING	
	24	1	**293-1137**	1	FILTER GP-AIR (AIR CONDITIONER)	
		1	**245-7823**	1	FILTER ELEMENT-CAB AIR	
		1	**245-7824**	1	PACKING	
	25	1	**316-8846**	1	PLATE	
	26	1	**316-8847**	2	ROD	
	27	1	**316-8849**	1	ROD	
	28	1	**316-8918**	1	PLATE	
	29	1	**316-8920**	1	ROD	
	30	1	**316-8921**	1	ROD	

Y-SEPARATE ILLUSTRATION

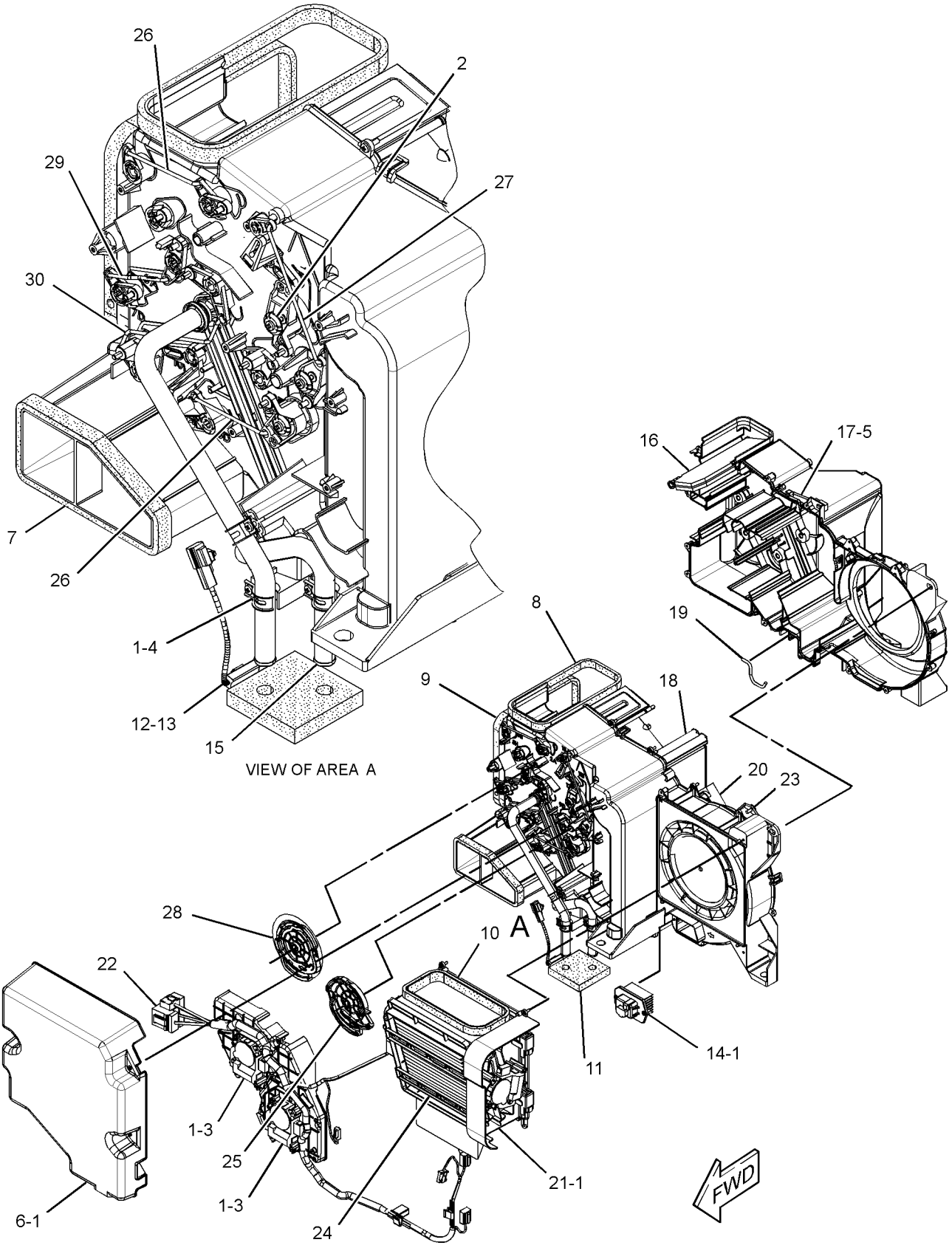

GRAPHIC #1 **<END>** g01788009

OPERATOR STATION

316-8917 AIR CONDITIONER GP

S/N: WAP1-UP
PART OF 229-9080 AIR CONDITIONER & MOUNTING GP
AN ATTACHMENT

SMCS-7320 **i03891949**

NOTE	REF NO	GRAPHIC REF	PART NUMBER	QTY	PART NAME 1 2 3 4 5 6 (PRODUCT LEVEL)	SEE PAGE
	1	1	**185-8300**	35	SCREW-TAPPING	
	2	1	**185-8302**	3	SCREW AS-TAPPING	
Y	3	1	**245-7812**	1	HOUSING GP-AIR CONDITIONER (INLET AIR)	995
	4	1	**245-7817**	2	MOTOR AS	
	5	1	**245-7818**	3	CLIP	
	6	1	**245-7819**	2	CLIP	
	7	1	**245-7820**	1	COVER-FRONT	
	8	1	**245-7821**	1	HARNESS AS-HEATER & AIR COND	
	9	1	**245-7825**	1	INSULATOR	
	10	1	**245-7826**	1	INSULATOR	
	11	1	**245-7827**	1	INSULATOR	
	12	1	**245-7828**	1	INSULATOR	
	13	1	**245-7829**	1	PACKING	
	14	1	**245-7830**	1	CLIP	
	15	1	**245-7831**	1	SENSOR AS-TEMPERATURE (COOLANT)	
	16	1	**245-7832**	1	CONTROL AS (BLOWER FAN)	
	17	1	**245-7833**	1	CORE AS-HEATER	
	18	1	**245-7834**	1	DAMPER AS	
	19	1	**245-7835**	1	SENSOR AS-TEMPERATURE (AMBIENT AIR)	
Y	20	1	**245-7836**	1	COIL GP-EVAPORATOR	937
	21	1	**245-7838**	1	PACKING	
	22	1	**245-7839**	1	MOTOR AS (WITH FAN)	
	23	1	**245-7856**	3	SCREW AS-TAPPING	
	24	1	**293-1137**	1	FILTER GP-AIR (AIR CONDITIONER)	
		1	**245-7823**	1	FILTER ELEMENT-CAB AIR	
		1	**245-7824**	1	PACKING	
	25	1	**316-8846**	1	PLATE	
	26	1	**316-8847**	2	ROD	
	27	1	**316-8849**	1	ROD	
	28	1	**316-8918**	1	PLATE	
	29	1	**316-8920**	1	ROD	
	30	1	**316-8921**	1	ROD	

Y-SEPARATE ILLUSTRATION

316-8917 AIR CONDITIONER GP *(contd.)* i03891949

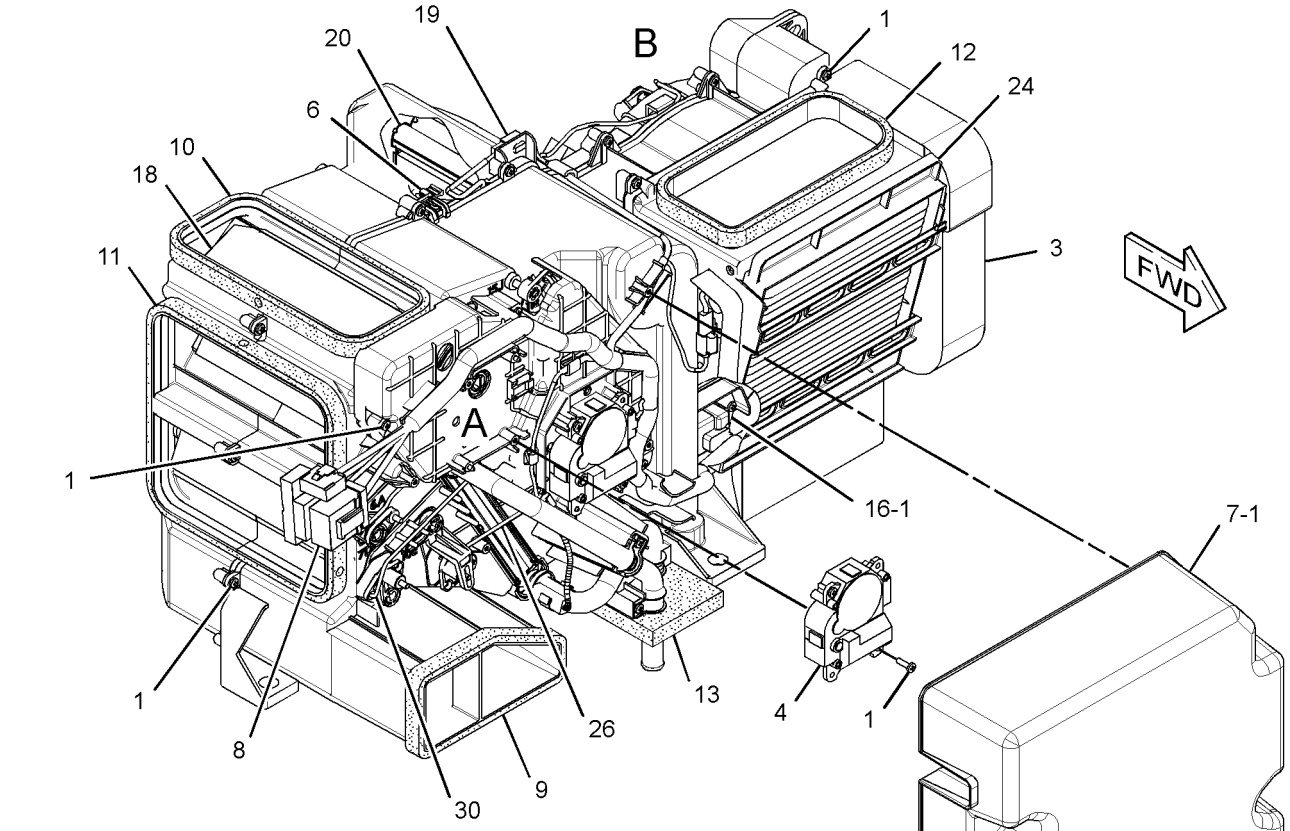

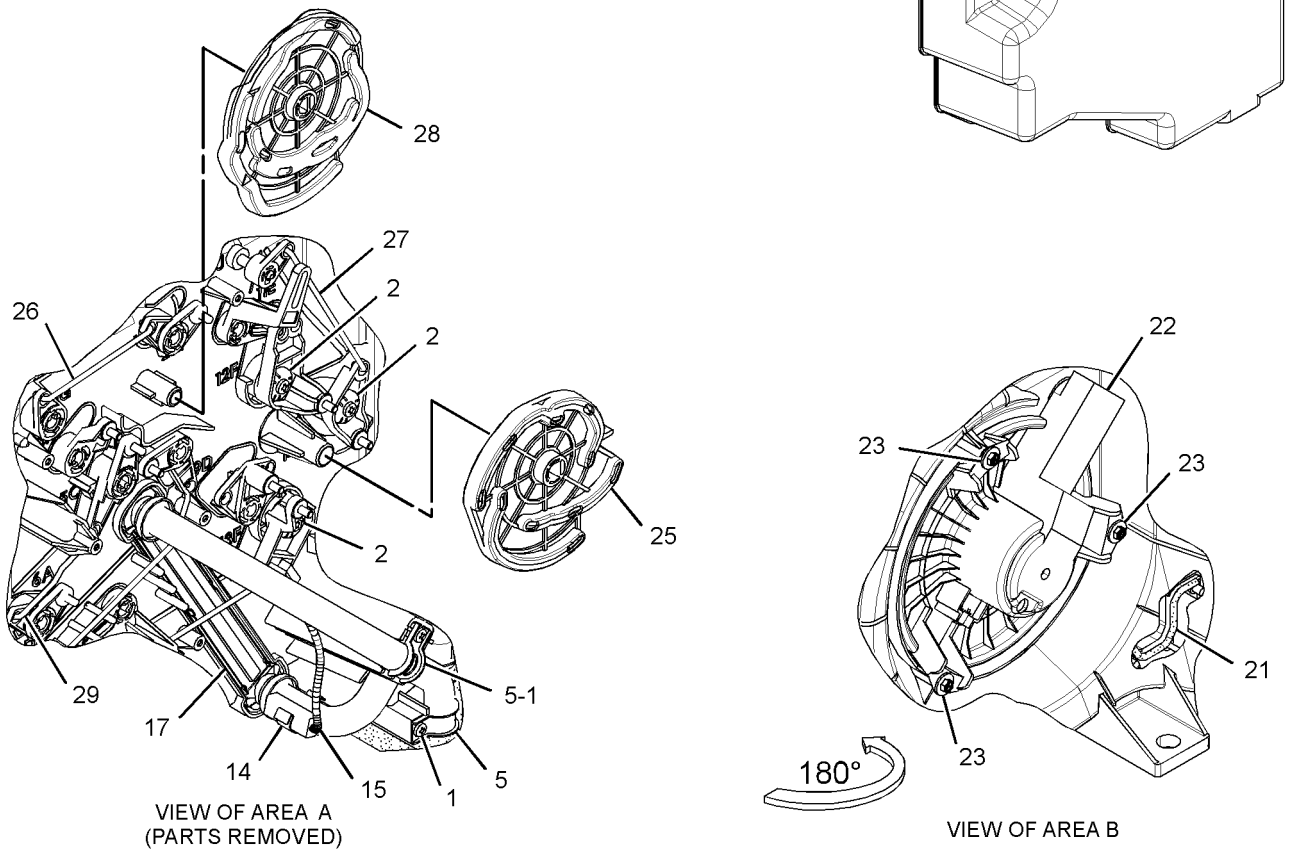

VIEW OF AREA A
(PARTS REMOVED)

VIEW OF AREA B

GRAPHIC #1 **<END>** g01825495

OPERATOR STATION

259-7346 ARMREST GP–RH

S/N: WAP1-UP

PART OF 259-7348 CONSOLE GP-OPERATOR

SMCS-7307 **i02427006**

NOTE	REF NO	GRAPHIC REF	PART NUMBER	QTY	PART NAME 1 2 3 4 5 6 (PRODUCT LEVEL)	SEE PAGE
M	1	1	**171-7325**	3	SCREW-TAPPING (M5X0.8-THD)	
M	2	1	**185-8286**	2	SCREW-MACHINE (M4X0.7X8-MM)	
	3	1	**235-8951**	1	SUPPORT AS	
	4	1	**235-8996**	1	COVER	
	5	1	**235-8997**	1	KNOB	
	6	1	**279-3161**	1	CUSHION	

M-METRIC PART

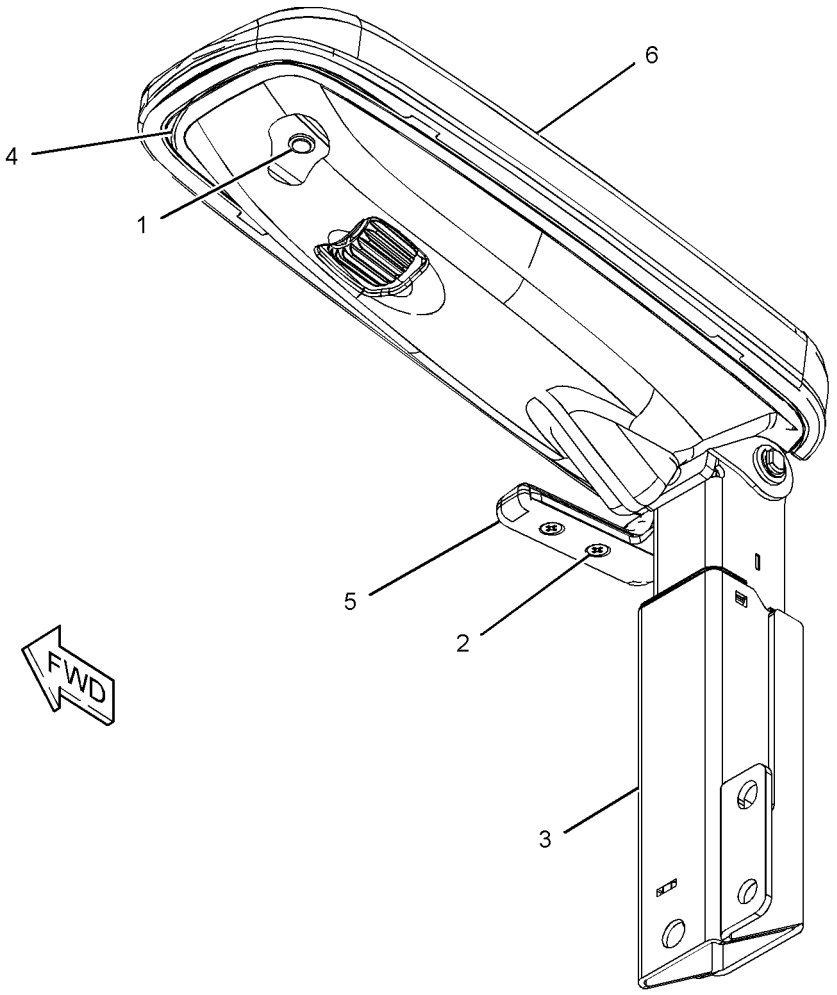

GRAPHIC #1 **<END>** g01217218

OPERATOR STATION

259-7347 ARMREST GP–LH

S/N: WAP1-UP

PART OF 259-7349 CONSOLE GP-OPERATOR

SMCS-7307 **i02427035**

NOTE	REF NO	GRAPHIC REF	PART NUMBER	QTY	PART NAME 1 2 3 4 5 6 (PRODUCT LEVEL)	SEE PAGE
M	1	1	**171-7325**	3	SCREW-TAPPING (M5X0.8-THD)	
M	2	1	**185-8286**	2	SCREW-MACHINE (M4X0.7X8-MM)	
	3	1	**235-8952**	1	SUPPORT AS	
	4	1	**235-8996**	1	COVER	
	5	1	**235-8998**	1	KNOB	
	6	1	**279-3161**	1	CUSHION	

M-METRIC PART

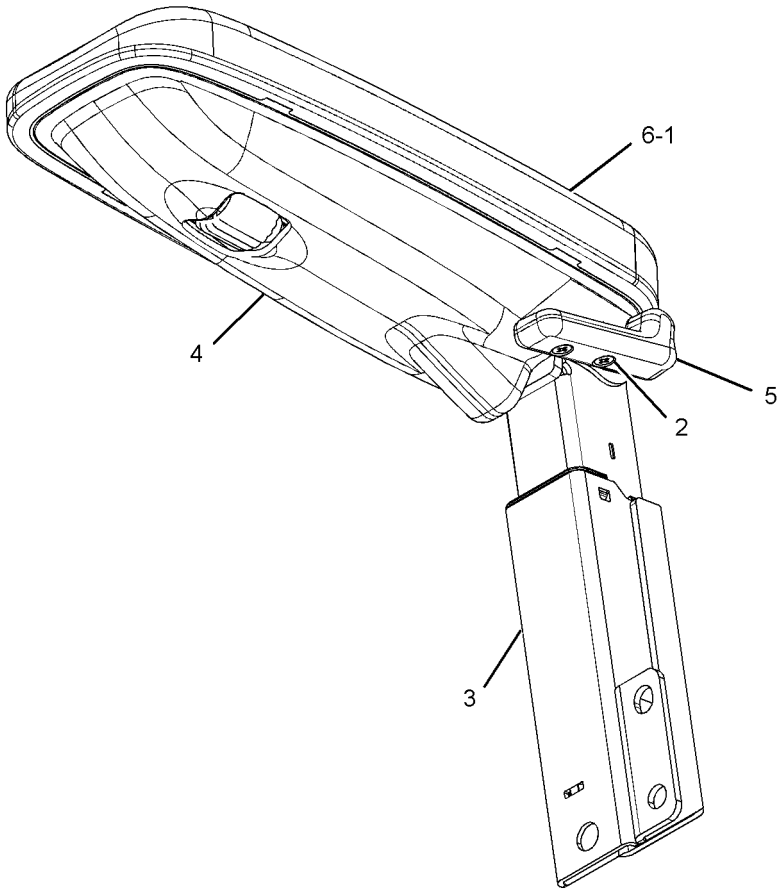

GRAPHIC #1 **<END>** g01210886

OPERATOR STATION

282-6526 BRACKET GP-MOUNTING—WIPER SWITCH

S/N: WAP1-UP
PART OF 282-6532 WINDOW GP-CAB
AN ATTACHMENT

SMCS-0635 **i02585874**

NOTE	REF NO	GRAPHIC REF	PART NUMBER	QTY	PART NAME 1 2 3 4 5 6 (PRODUCT LEVEL)	SEE PAGE
	1	1	**282-6527**	1	COVER	
	2	1	**280-3075**	1	LEVER	
	3	1	**282-6528**	1	SPRING	
	4	1	**283-4161**	1	PIN	

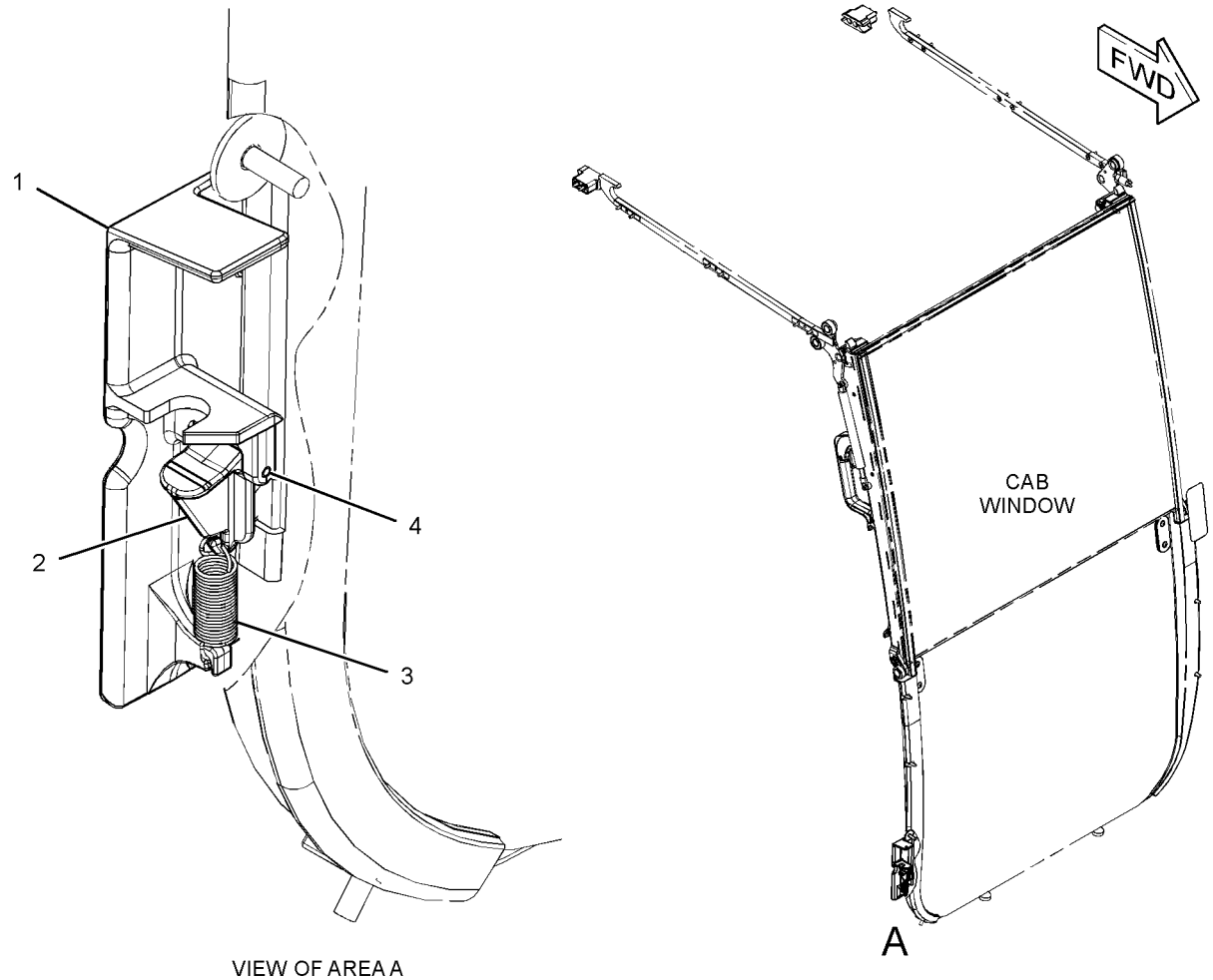

VIEW OF AREA A

GRAPHIC #1 **<END>** g01306882

OPERATOR STATION

308-7020 CAB AR

S/N: WAP1-UP

AN ATTACHMENT

SMCS-7301, 7325 **i04026464**

NOTE	REF NO	GRAPHIC REF	PART NUMBER	QTY	PART NAME 1 2 3 4 5 6 (PRODUCT LEVEL)	SEE PAGE
Y	1	1	**184-7621**	1	SCREEN GP-SUN	1031
Y	2	1	**189-2768**	1	DOOR & MTG GP-CAB	974
Y	3	1	*221-8813*	1	MONITOR & MTG GP-OPERATOR	1008
Y	4	1	*237-3567*	1	CAB GP (EXTERIOR)	933
Y	5	1	*249-2663*	1	TRIM GP-CAB (INTERIOR, REAR)	1044
Y	6	1	*357-6190*	1	WINDOW GP-CAB (REAR, SIDE, TOP WINDOWS)	1059
Y	7	1	*308-7024*	1	COVER GP-CAB (INTERIOR, FRONT)	970
	8	1	*237-3550*	1	CAB AS	
		1	**256-8609**	1	HINGE	

Y-SEPARATE ILLUSTRATION

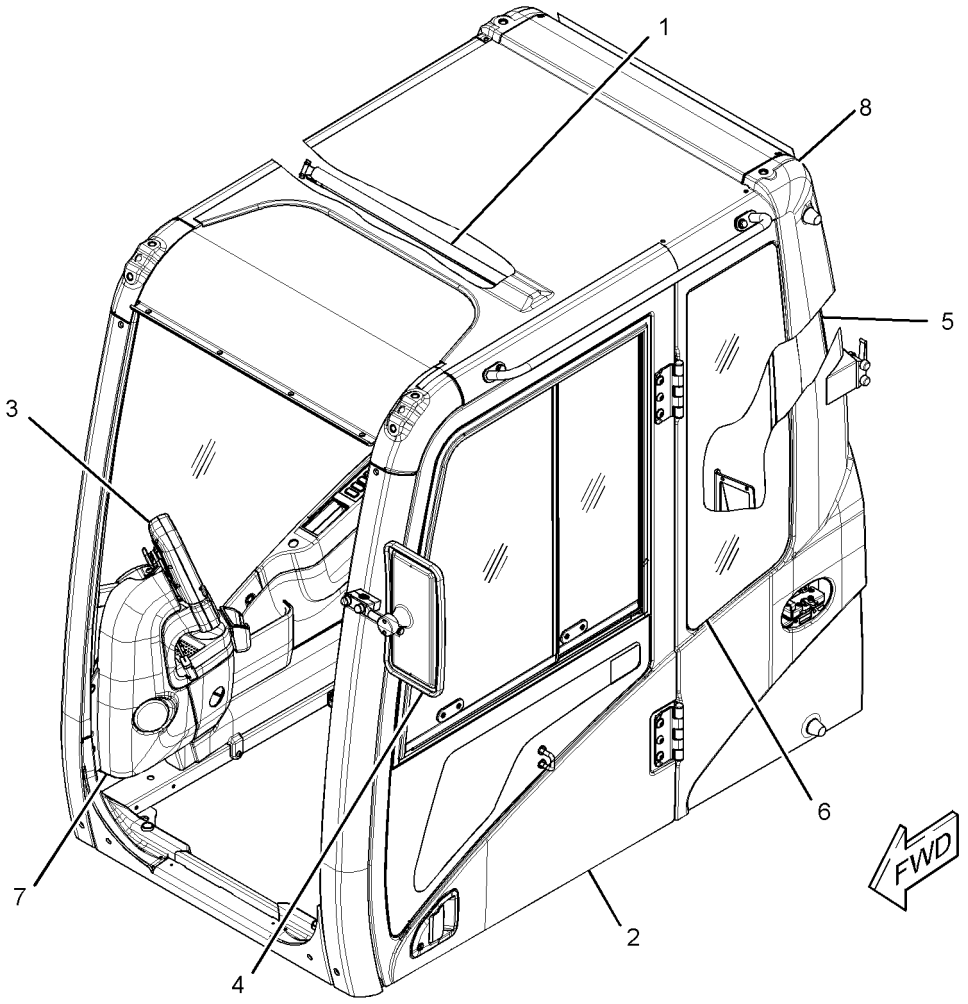

GRAPHIC #1 **<END>** g02211093

OPERATOR STATION

308-7021 CAB AR

S/N: WAP1-UP

AN ATTACHMENT

SMCS-7301, 7325 **i03902333**

NOTE	REF NO	GRAPHIC REF	PART NUMBER	QTY	PART NAME 1 2 3 4 5 6 (PRODUCT LEVEL)	SEE PAGE
Y	1	1	**184-7621**	1	SCREEN GP-SUN	1031
Y	2	1	**189-2793**	1	DOOR GP-CAB	975
Y	3	1	*221-8813*	1	MONITOR & MTG GP-OPERATOR	1008
Y	4	1	*237-3567*	1	CAB GP (EXTERIOR)	933
	5	1	**237-3568**	1	CAB AS	
		1	**256-8609**	1	HINGE	
Y	6	1	*249-2663*	1	TRIM GP-CAB (INTERIOR, REAR)	1044
Y	7	1	*308-7024*	1	COVER GP-CAB (INTERIOR, FRONT)	970
Y	8	1	*357-6189*	1	WINDOW GP-CAB (REAR, SIDE, TOP WINDOWS)	1058

Y-SEPARATE ILLUSTRATION

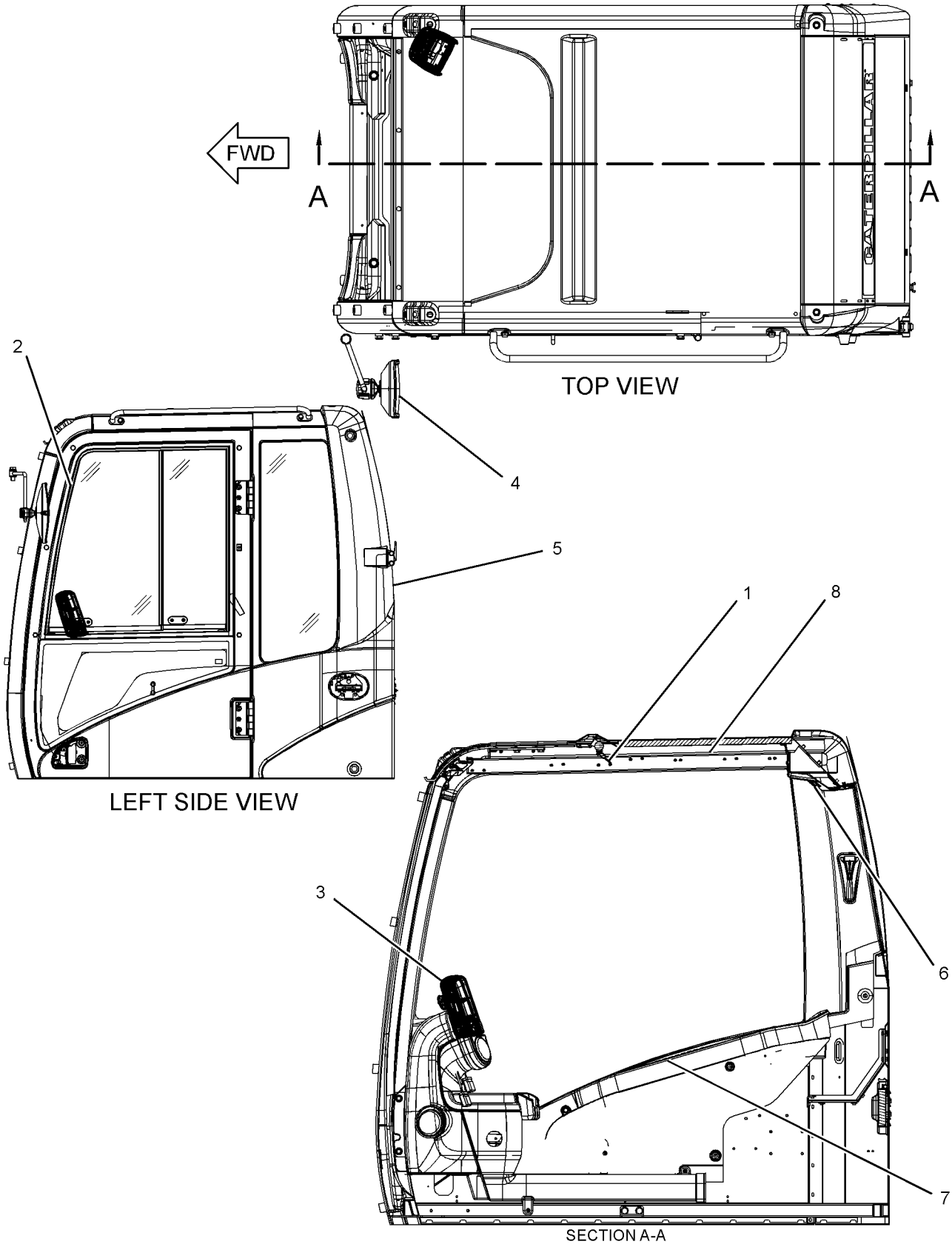

GRAPHIC #1 **<END>** g02134033

OPERATOR STATION

308-7022 CAB AR

S/N: WAP1-UP
PART OF 340-4055, 340-4057 DISTRIBUTION AR
AN ATTACHMENT

SMCS-7301, 7325 **i03823671**

NOTE	PART NUMBER	QTY	PART NAME 1 2 3 4 5 6 (PRODUCT LEVEL)	SEE PAGE
Y	*237-3567*	1	CAB GP (EXTERIOR)	933
Y	*308-7024*	1	COVER GP-CAB (INTERIOR, FRONT)	970
Y	**189-2793**	1	DOOR GP-CAB	975
Y	*221-8813*	1	MONITOR & MTG GP-OPERATOR	1008
Y	**184-7621**	1	SCREEN GP-SUN	1031
Y	*249-2663*	1	TRIM GP-CAB (INTERIOR, REAR)	1044
Y	*357-6187*	1	WINDOW GP-CAB (SIDES, TOP, BACK)	1057
	237-3568	1	CAB AS	
	256-8609	1	HINGE	

Y-SEPARATE ILLUSTRATION

<END>

OPERATOR STATION

237-3567 CAB GP–EXTERIOR

S/N: WAP1-UP
PART OF 308-7020, 308-7021, 308-7022 CAB AR
AN ATTACHMENT

SMCS-7301, 7325 **i03907065**

NOTE	REF NO	GRAPHIC REF	PART NUMBER	QTY	PART NAME 1 2 3 4 5 6 (PRODUCT LEVEL)	SEE PAGE
	1	2	**3Y-2806**	1	SPRING	
	2	1	**5J-5003**	9	PLUG-HOLE	
	3	2	**6V-7636**	2	PIN AS-SPRING	
M	4	1	**129-5167**	3	SCREW (M6X1X8-MM)	
	5	1	**161-3697**	1	GUARD	
Y	6	2	*164-0528*	1	LEVER GP-CAB DOOR	1001
	7	2	**171-7426**	1	CABLE AS	
	8	2	*176-1939*	1	LEVER AS	
M		2	**9X-2044**	1	SCREW-TRUSS HEAD (M6X1X16-MM)	
		2	**176-1937**	1	BRACKET AS	
		2	**176-1938**	1	LEVER	
	9	2	**176-6417**	1	CABLE	
	10	1	**176-6418**	1	STOP	
	11	2	**176-6420**	1	SUPPORT	
	12	1	**341-0554**	2	WASHER (17X30X2-MM THK)	
	13	2	**205-6295**	1	LATCH AS	
	14	1	**215-2913**	2	GROMMET	
	15	1	**220-4079**	3	WASHER (6.25X14X1.2-MM THK)	
C	16	1	**220-4081**	2	CAP	
	17	1	**235-8912**	1	HANDLE AS	
	18	2	**247-6801**	1	COVER AS	
	19	1	**252-1230**	1	HANDLE AS (UPPER)	
	20	2	**252-1234**	1	PLATE	
	21	1	**262-7954**	2	BUMPER	
	22	2	**262-7956**	1	ROD	
	23	2	**262-7957**	1	BRACKET AS	
M		2	**8T-4137**	3	BOLT (M10X1.5X20-MM)	
M	24	2	**284-4426**	1	BOLT-WING (M8X1.25X15-MM)	
CY	25	1	**327-6550**	1	MIRROR GP-REAR VIEW	1007
C	26	1	**331-9934**	1	SUPPORT AS	
	27	1	**1R-5998**	2	LOCKWASHER	
M	28	1	**099-0823**	1	SCREW-MACHINE (M6X1X6-MM)	
	29	1	**156-6599**	1	STRIKER	
	30	2	**180-9417**	2	NUT	
	31	2	**180-9418**	4	CAP	
M	32	1	**188-9644**	4	SCREW-FLAT HEAD (M8X1.25X25-MM)	
M	33	1	**8C-7581**	3	SCREW-MACHINE (M4X0.7X8-MM)	
	34	2	**4I-1278**	1	FILTER ELEMENT-CAB AIR	
M	35	2	**5C-2874**	2	NUT (M5X0.8-THD)	
M	36	1	**5C-2890**	1	NUT (M6X1-THD)	
M	37	1	**5C-7261**	2	NUT (M8X1.25-THD)	
	38	1	**5P-1075**	2	WASHER-HARD (10.2X22.5X3-MM THK)	
	39	1	**6C-4000**	2	SHIM (1-MM THK)	
M	40	2	**6C-9058**	2	SCREW (M6X1X12-MM)	
	41	2	**6C-9087**	3	WASHER	
M	42	2	**6V-4298**	2	BOLT (M5X0.8X16-MM)	
M	43	2	**6V-7357**	4	BOLT (M6X1X25-MM)	
	44	1	**8C-0572**	2	WASHER (8.8X25.5X2-MM THK)	
C	45	1,2	**8T-4121**	5	WASHER-HARD (11X21X2.5-MM THK)	
CM	46	2	**8T-4133**	3	NUT (M10X1.5-THD)	
M	47	1	**8T-4136**	4	BOLT (M10X1.5X25-MM)	
CM	48	1	**8T-4193**	1	BOLT (M16X2X50-MM)	
M	49	2	**8T-4200**	2	BOLT (M8X1.25X16-MM)	
M	50	2	**9X-2044**	5	SCREW-TRUSS HEAD (M6X1X16-MM)	
M	52	2	**9X-2480**	2	BOLT (M6X1X45-MM)	

OPERATOR STATION

237-3567 **CAB GP** ***(contd.)*** **i03907065**

NOTE	REF NO	GRAPHIC REF	PART NUMBER	QTY	PART NAME 1 2 3 4 5 6 (PRODUCT LEVEL)	SEE PAGE
	53	2	**9X-8256**	8	WASHER (6.6X12X2-MM THK)	
C	54	1	**9X-8257**	1	WASHER (17.5X30X3.5-MM THK)	
E	55	2	**260-2649**		FOAM (144-CM)	
E	56	2	**133-3234**		SEAL (74-CM)	
E	57	1	**263-0788**		SEAL-BULK (112-CM)	

C-CHANGE FROM PREVIOUS TYPE
E-ORDER BY THE CENTIMETER
M-METRIC PART
Y-SEPARATE ILLUSTRATION

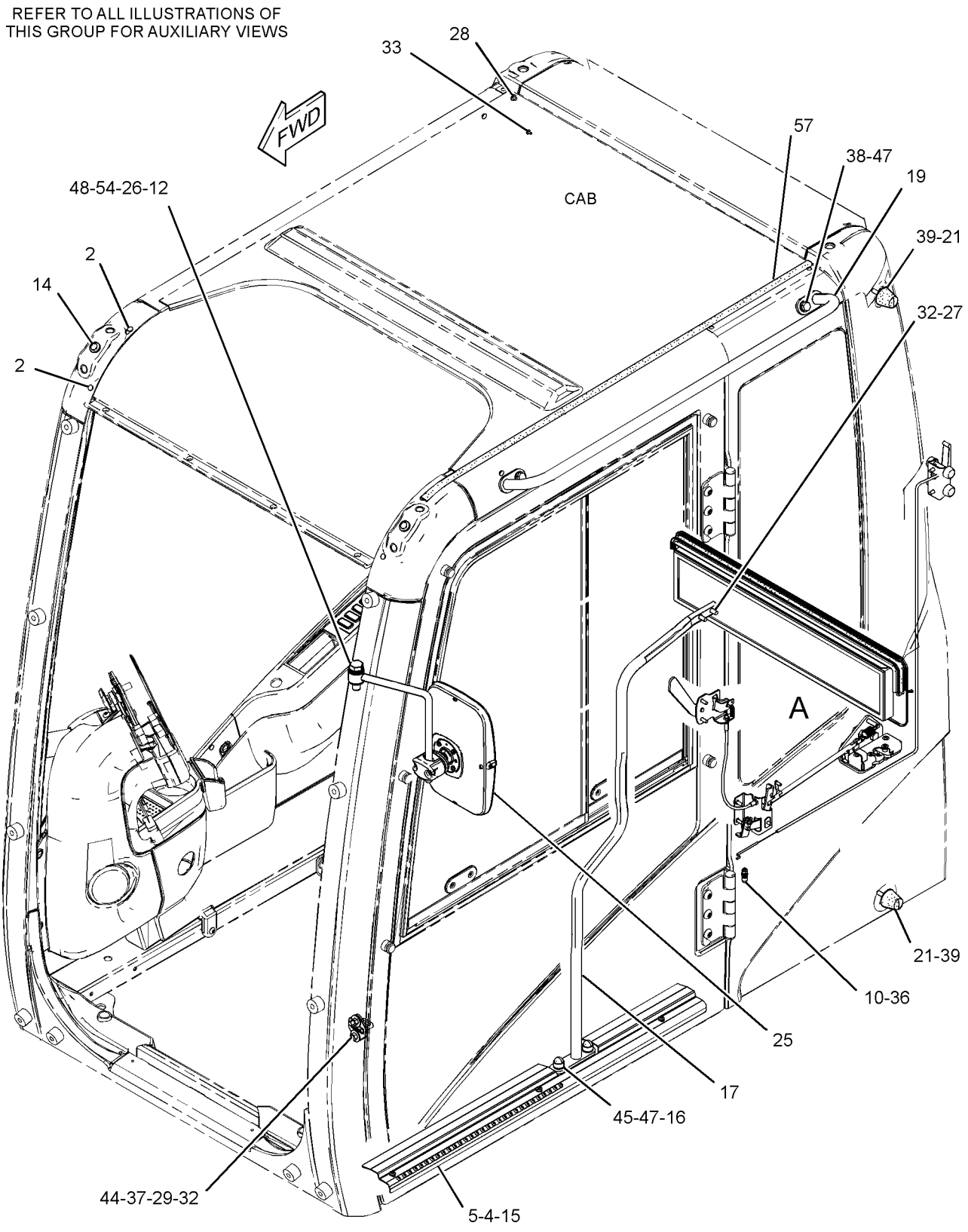

GRAPHIC #1 g02148753

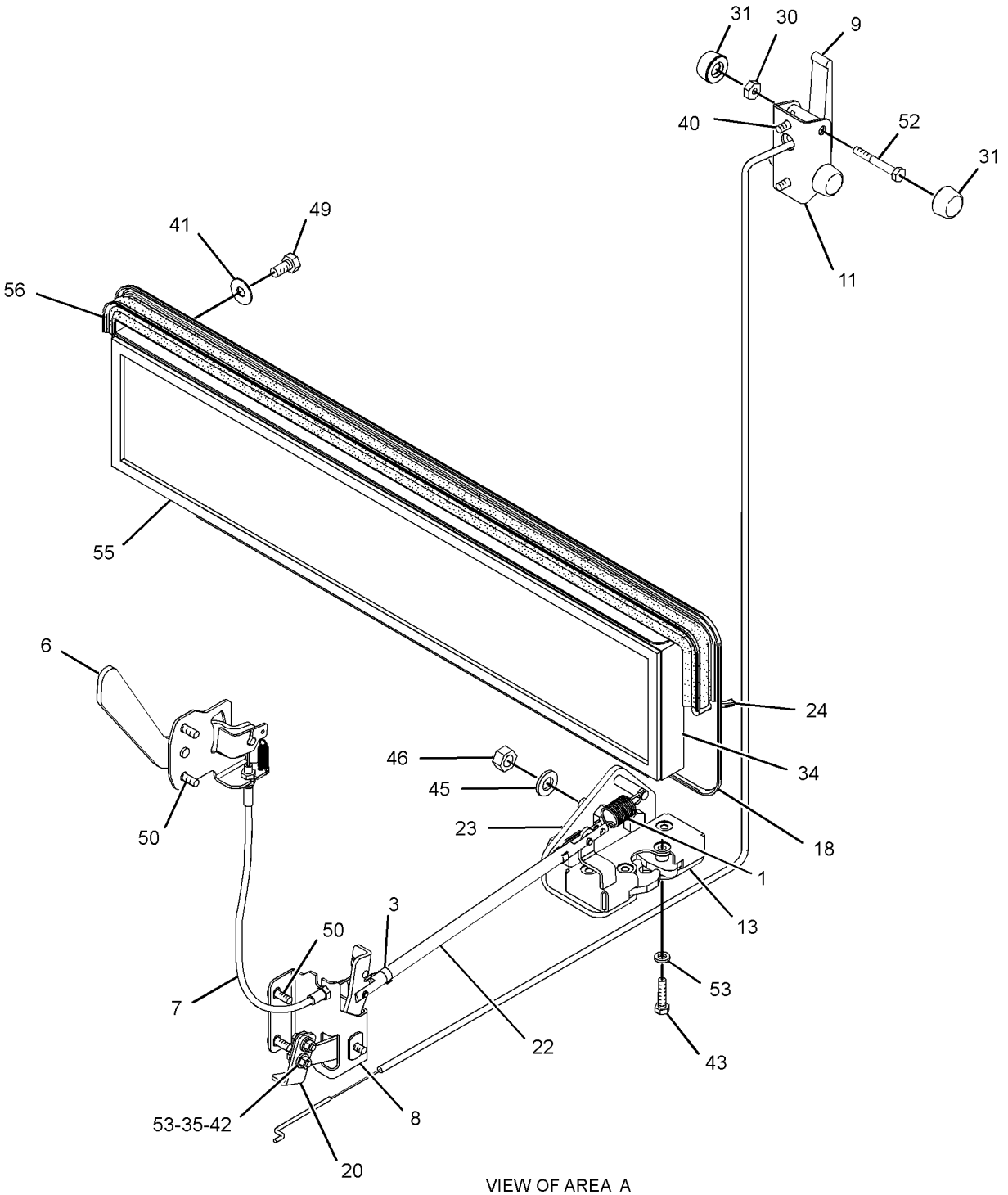

VIEW OF AREA A

GRAPHIC #2 **<END>** g01716395

OPERATOR STATION

245-7836 COIL GP-EVAPORATOR

S/N: WAP1-UP
PART OF 316-8916, 316-8917 AIR CONDITIONER GP
AN ATTACHMENT

SMCS-7343 **i02218172**

NOTE	REF NO	GRAPHIC REF	PART NUMBER	QTY	PART NAME 1 2 3 4 5 6 (PRODUCT LEVEL)	SEE PAGE
	1	1	**245-7837**	1	VALVE AS-EXPANSION	
	2	1	**245-7905**	1	INSULATOR	
M	3	1	**8T-0266**	2	BOLT-SOCKET HEAD (M5X0.8X40-MM)	
	4	1	**121-7136**	1	SEAL-O-RING	
	5	1	**121-7138**	1	SEAL-O-RING	

M-METRIC PART

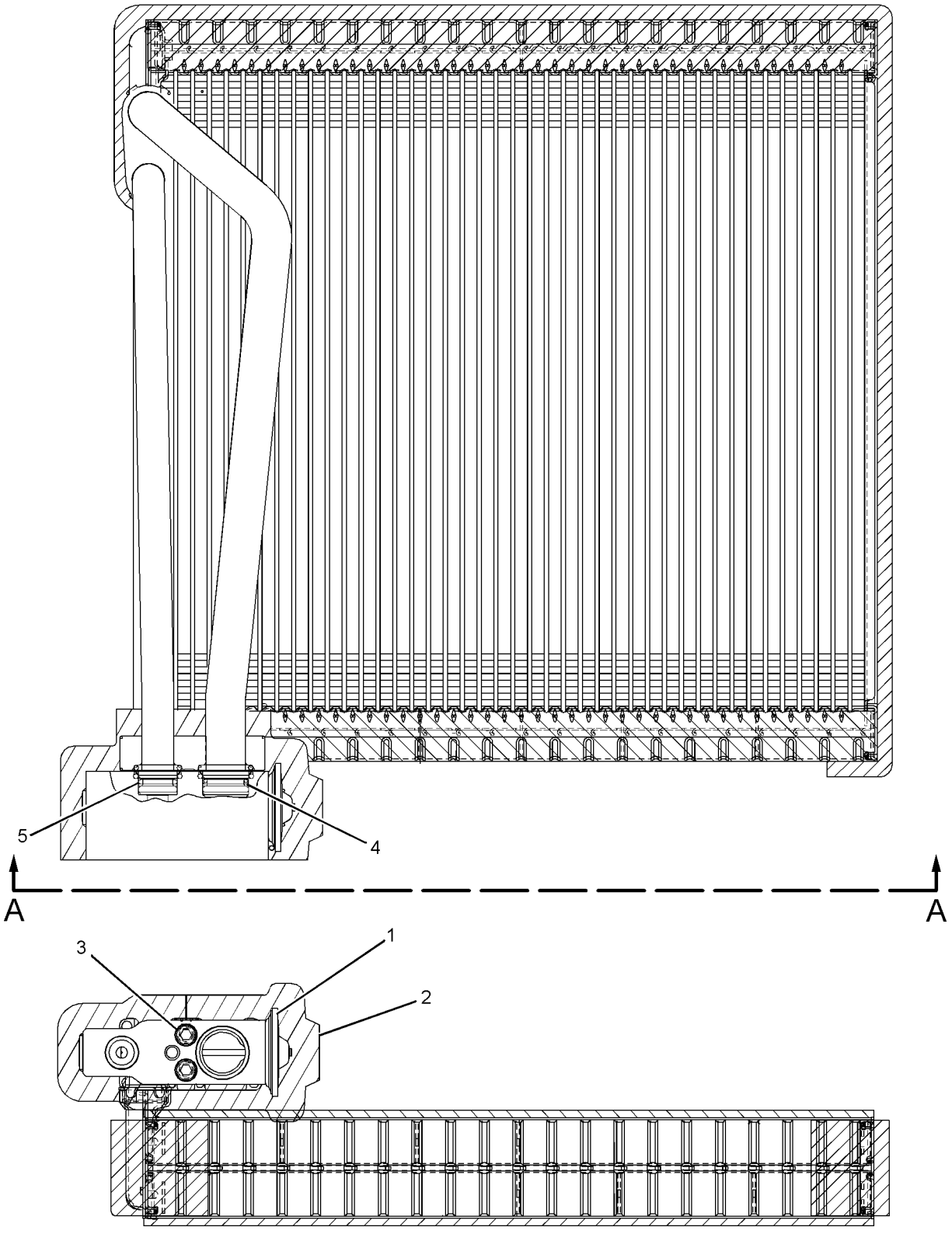

VIEW A-A

GRAPHIC #1 **<END>** g01134658

OPERATOR STATION

353-2151 COIL GP-EVAPORATOR

S/N: WAP1-UP

FIELD INSTALLATION

SMCS-7343 **i03909619**

NOTE	REF NO	GRAPHIC REF	PART NUMBER	QTY	PART NAME 1 2 3 4 5 6 (PRODUCT LEVEL)	SEE PAGE
	1	1	**245-7837**	1	VALVE AS-EXPANSION	
	2	1	**245-7905**	1	INSULATOR	
	3	1	**281-0791**	2	BOLT-SOCKET HEAD (M5X0.8X40-MM)	
	4	1	**121-7136**	1	SEAL-O-RING	
	5	1	**121-7138**	1	SEAL-O-RING	

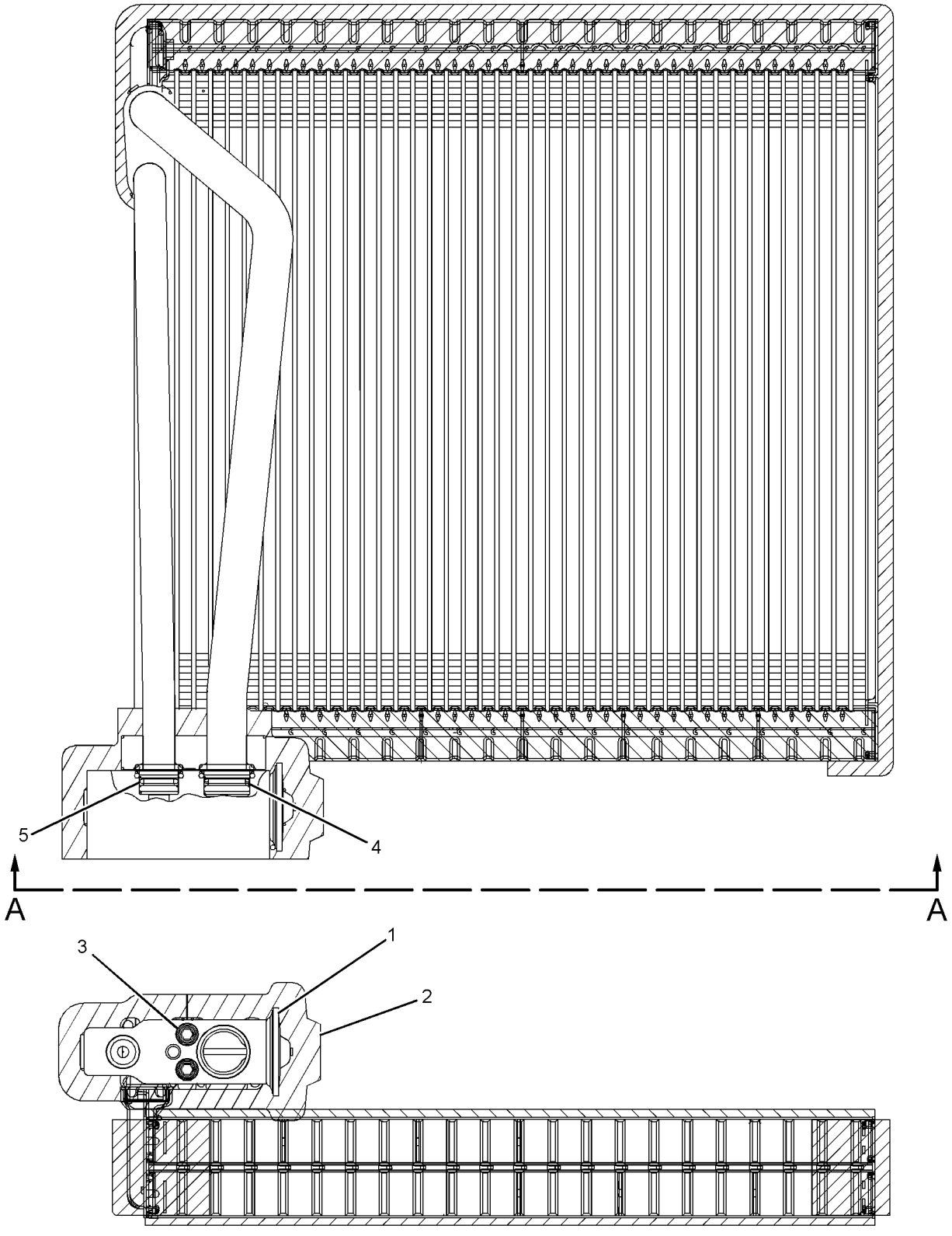

VIEW A-A

GRAPHIC #1 **<END>** g02150001

OPERATOR STATION

275-6470 COMPRESSOR & MTG GP-REFRIG

S/N: RHX7868-UP

PART OF 286-9798 ENGINE AR-COMPLETE

SMCS-1802 **i03129583**

NOTE	REF NO	GRAPHIC REF	PART NUMBER	QTY	PART NAME 1 2 3 4 5 6 (PRODUCT LEVEL)	SEE PAGE
M	1	1	**258-9892**	2	BOLT (M8X1.25X80-MM)	
C	2	1	**305-0325**	1	COMPRESSOR & MTG GP-REFRIG	
	3	1	**8T-4224**	4	WASHER-HARD (8.8X16X2-MM THK)	
M	4	1	**8T-3647**	2	BOLT (M8X1.25X80-MM)	
	5	1	**130-5300**	1	CLIP	

C-CHANGE FROM PREVIOUS TYPE
M-METRIC PART

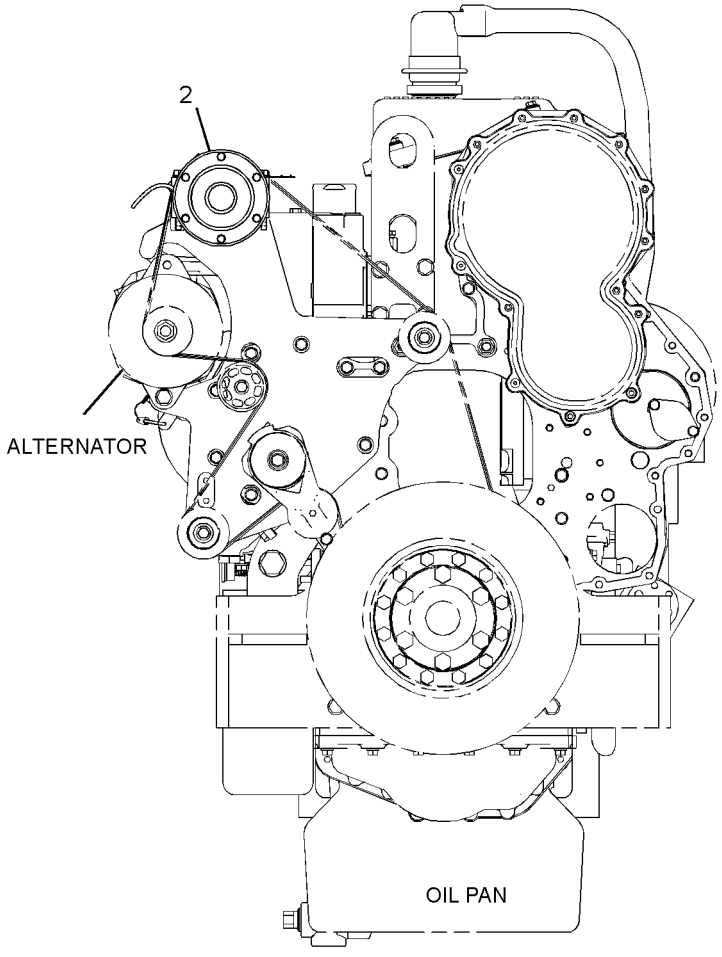

FRONT VIEW OF ENGINE

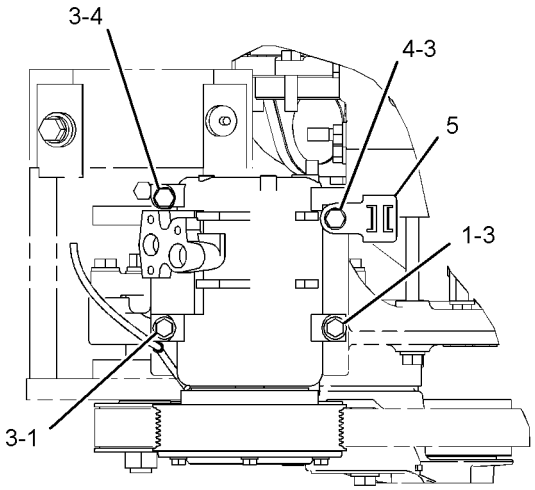

TOP VIEW OF ENGINE

GRAPHIC #1 **<END>** g01620753

OPERATOR STATION

229-9014 CONDENSER & MTG GP-REFRIGERANT

S/N: WAP1-UP

PART OF 310-9678 INSTALLATION AR-ENGINE

SMCS-1805 **i03567787**

NOTE	REF NO	GRAPHIC REF	PART NUMBER	QTY	PART NAME 1 2 3 4 5 6 (PRODUCT LEVEL)	SEE PAGE
	1	1	**235-8881**	1	SUPPORT AS (CONDENSER)	
Y	2	1	**245-7749**	1	CONDENSER GP-REFRIGERANT	943
M	3	1	**7X-2533**	4	BOLT (M6X1X35-MM)	
	4	1	**8T-4121**	4	WASHER-HARD (11X21X2.5-MM THK)	
M	5	1	**8T-4136**	4	BOLT (M10X1.5X25-MM)	
	6	1	**9X-6165**	4	WASHER (6.5X22X2.5-MM THK)	

M-METRIC PART
Y-SEPARATE ILLUSTRATION

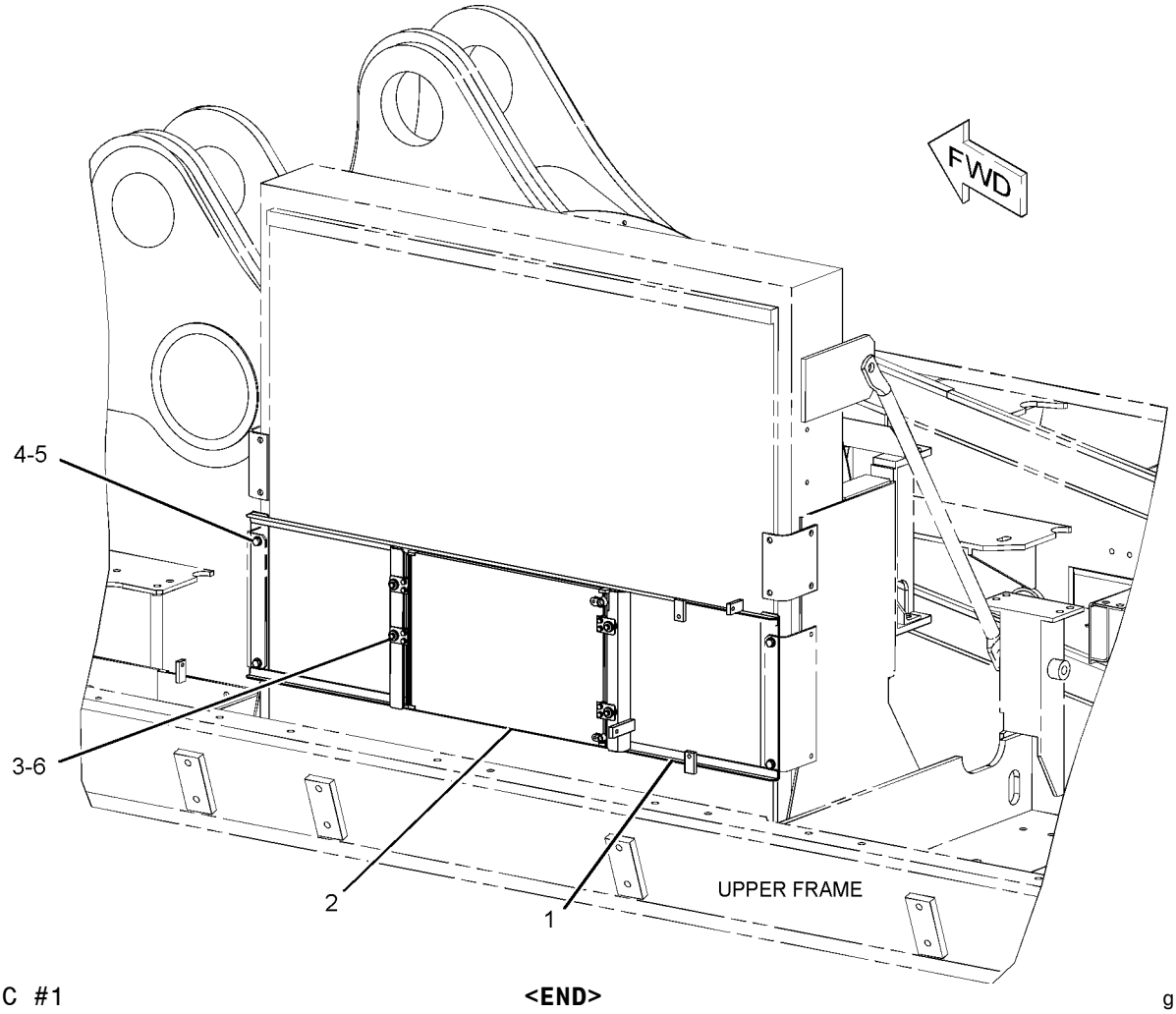

GRAPHIC #1 **<END>** g01086365

OPERATOR STATION

245-7749 CONDENSER GP-REFRIGERANT

S/N: WAP1-UP

PART OF 229-9014 CONDENSER & MTG GP-REFRIGERANT

SMCS-1805 **i02136246**

NOTE	REF NO	GRAPHIC REF	PART NUMBER	QTY	PART NAME 1 2 3 4 5 6 (PRODUCT LEVEL)	SEE PAGE
	1	1	**235-8880**	1	CONDENSER AS	
	2	1	**245-7750**	4	BUSHING-RUBBER	
	3	1	**245-7751**	4	BRACKET	
	4	1	**095-0827**	8	LOCKWASHER	
M	5	1	**8T-4171**	8	BOLT (M6X1X12-MM)	
	6	1	**9X-8256**	8	WASHER (6.6X12X2-MM THK)	

M-METRIC PART

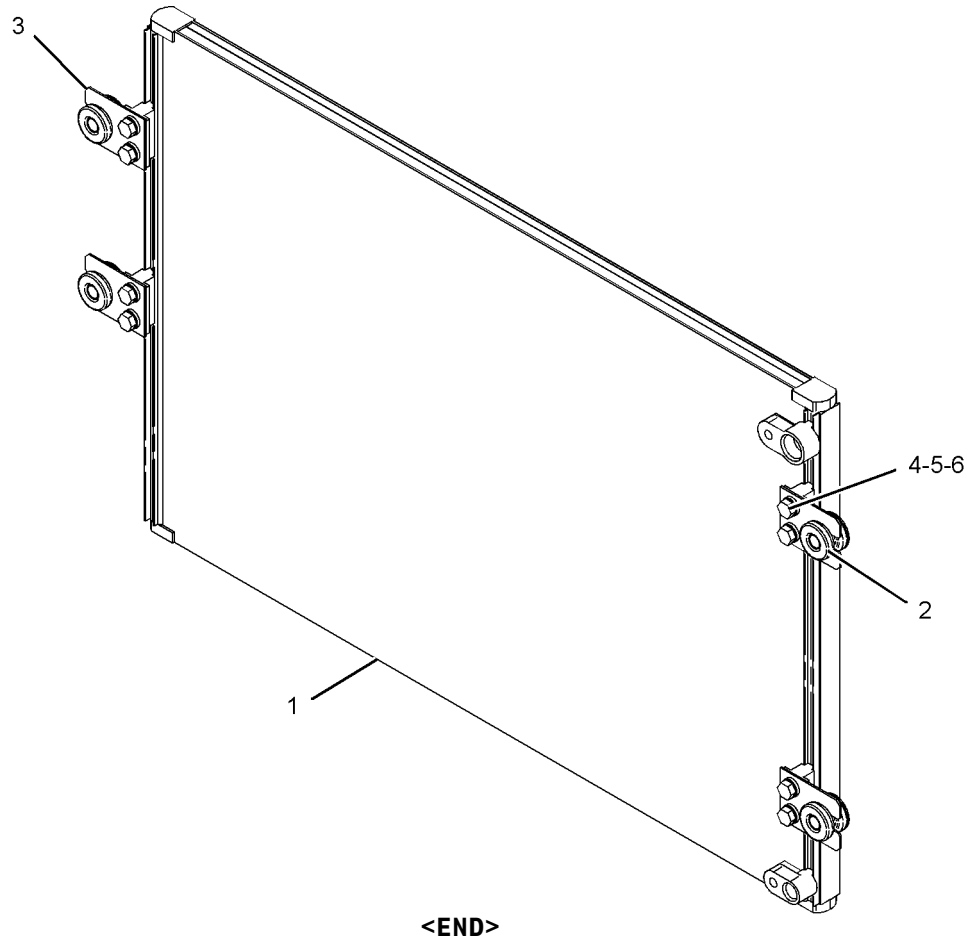

GRAPHIC #1 **<END>** g01086695

OPERATOR STATION

235-8898 CONSOLE GP-OPERATOR

S/N: WAP1-UP

PART OF 342-3451 OPERATOR AR

SMCS-5258 **i03547387**

NOTE	REF NO	GRAPHIC REF	PART NUMBER	QTY	PART NAME 1 2 3 4 5 6 (PRODUCT LEVEL)	SEE PAGE
CY	1	1	*259-7349*	1	CONSOLE GP-OPERATOR (LH)	948
CY	2	1	*259-7348*	1	CONSOLE GP-OPERATOR (RH)	946
	3	1	**235-8986**	2	SUPPORT AS	
	4	1	**235-8988**	1	GROMMET	
	5	1	**235-8989**	1	GROMMET	
	6	1	**235-8990**	1	GROMMET	
	7	1	**235-8991**	1	GROMMET	
	8	1	**235-8994**	2	STRIP	
	9	1	**8T-4121**	4	WASHER-HARD (11X21X2.5-MM THK)	
M	10	1	**8T-4137**	4	BOLT (M10X1.5X20-MM)	
M	11	1	**9X-2042**	4	SCREW-TRUSS HEAD (M6X1X12-MM)	
M	12	1	**9X-2043**	8	SCREW-TRUSS HEAD (M6X1X14-MM)	
					—OR—	
M		1	**9X-2046**	8	SCREW-TRUSS HEAD (M6X1X35-MM)	
M	13	1	**9X-2043**	8	SCREW-TRUSS HEAD (M6X1X14-MM)	
					—OR—	
M		1	**9X-2045**	8	SCREW-TRUSS HEAD (M6X1X20-MM)	

C-CHANGE FROM PREVIOUS TYPE
M-METRIC PART
Y-SEPARATE ILLUSTRATION

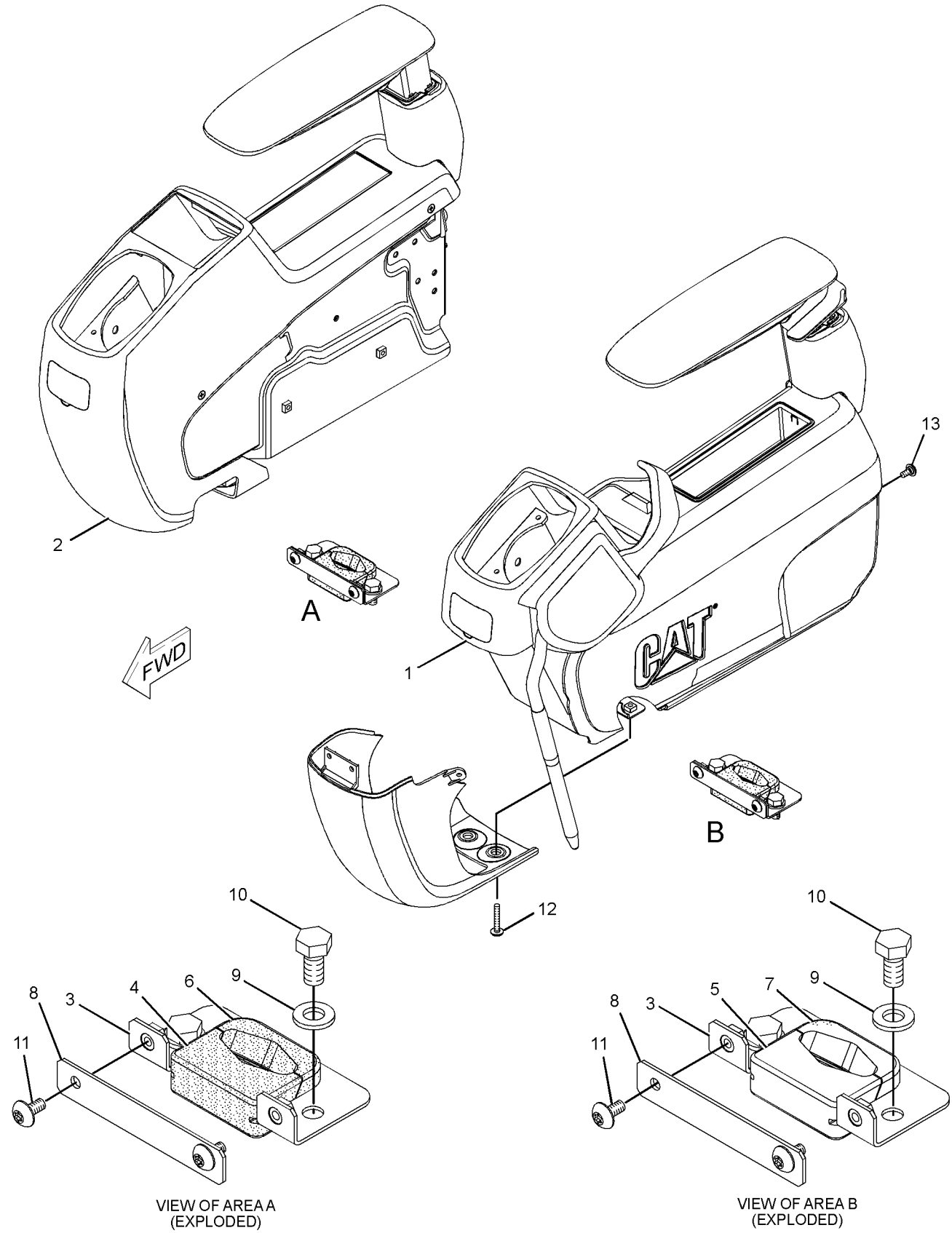

GRAPHIC #1 **<END>** g01875393

OPERATOR STATION

259-7348 CONSOLE GP-OPERATOR—RH

S/N: WAP1-UP

PART OF 235-8898 CONSOLE GP-OPERATOR

SMCS-5258 **i02426987**

NOTE	REF NO	GRAPHIC REF	PART NUMBER	QTY	PART NAME 1 2 3 4 5 6 (PRODUCT LEVEL)	SEE PAGE
M	1	1	**128-2135**	4	SCREW-TRUSS HEAD (M6X1X13-MM)	
	2	1	**185-8284**	1	COVER	
	3	1	**234-6579**	2	NUT-SPEED	
	4	1	**234-6580**	2	CAP	
	5	1	**234-6602**	1	COVER	
	6	1	**234-6604**	1	COVER	
	7	1	**234-6608**	1	COVER	
	8	1	**234-6609**	1	COVER	
	9	1	**234-6610**	1	COVER	
	10	1	**235-8914**	4	NUT-SPEED	
	11	1	**235-8966**	2	BASE-MOUNTING	
	12	1	**245-7790**	2	SCREW-TAPPING	
	13	1	**245-7926**	1	SUPPORT AS	
	14	1	**245-7948**	4	SCREW-TAPPING	
Y	15	1	**259-7346**	1	ARMREST GP (RH)	926
M	16	1	**9X-2041**	3	SCREW-TRUSS HEAD (M10X1.5X20-MM)	

M-METRIC PART
Y-SEPARATE ILLUSTRATION

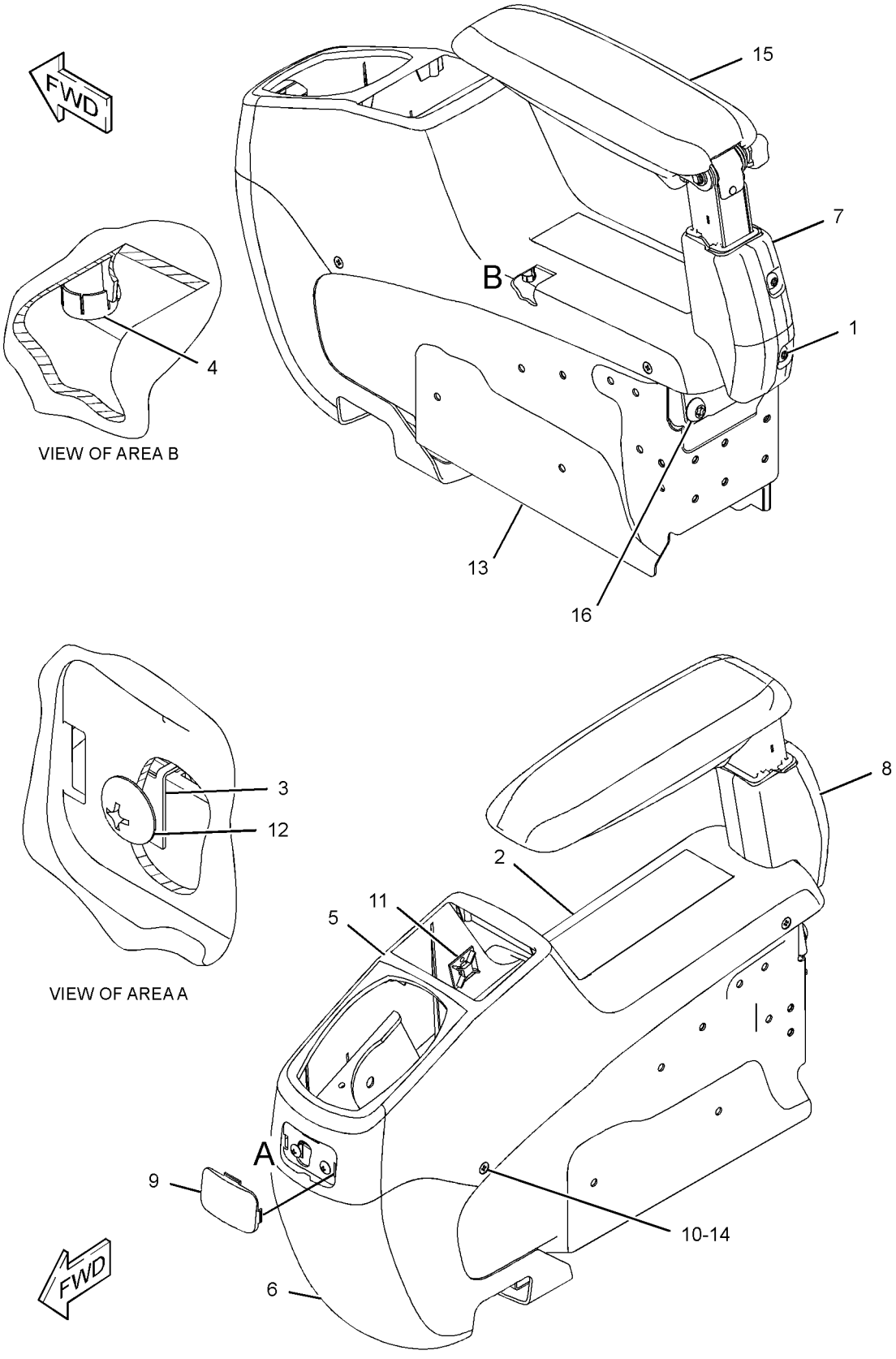

GRAPHIC #1 **<END>** g01217107

OPERATOR STATION

259-7349 CONSOLE GP-OPERATOR–LH

S/N: WAP1-UP

PART OF 235-8898 CONSOLE GP-OPERATOR

SMCS-5258 **i02426998**

NOTE	REF NO	GRAPHIC REF	PART NUMBER	QTY	PART NAME 1 2 3 4 5 6 (PRODUCT LEVEL)	SEE PAGE
M	1	1	**128-2135**	5	SCREW-TRUSS HEAD (M6X1X13-MM)	
M	2	1	**171-7325**	3	SCREW-TAPPING (M5X0.8-THD)	
	3	1	**234-6579**	6	NUT-SPEED	
	4	1	**234-6580**	4	CAP	
	5	1	**234-6603**	1	COVER	
	6	1	**234-6605**	1	COVER	
	7	1	**234-6608**	1	COVER	
	8	1	**234-6609**	1	COVER	
	9	1	**234-6610**	1	COVER	
	10	1	**234-6611**	1	CASE	
	11	1	**234-6612**	1	COVER	
Y	12	1	**234-6613**	1	SWITCH GP-POSITION (HYDRAULIC LOCKOUT)	263
	13	1	**234-6614**	1	COVER	
	14	1	**235-8914**	4	NUT-SPEED	
	15	1	**235-8965**	1	GUARD	
	16	1	**245-7790**	3	SCREW-TAPPING	
	17	1	**245-7925**	1	SUPPORT AS	
	18	1	**245-7948**	7	SCREW-TAPPING	
	19	1	**259-7202**	1	ASHTRAY	
Y	20	1	**259-7347**	1	ARMREST GP (LH)	927
M	21	1	**9X-2041**	3	SCREW-TRUSS HEAD (M10X1.5X20-MM)	
M	22	1	**9X-2042**	2	SCREW-TRUSS HEAD (M6X1X12-MM)	

M-METRIC PART
Y-SEPARATE ILLUSTRATION

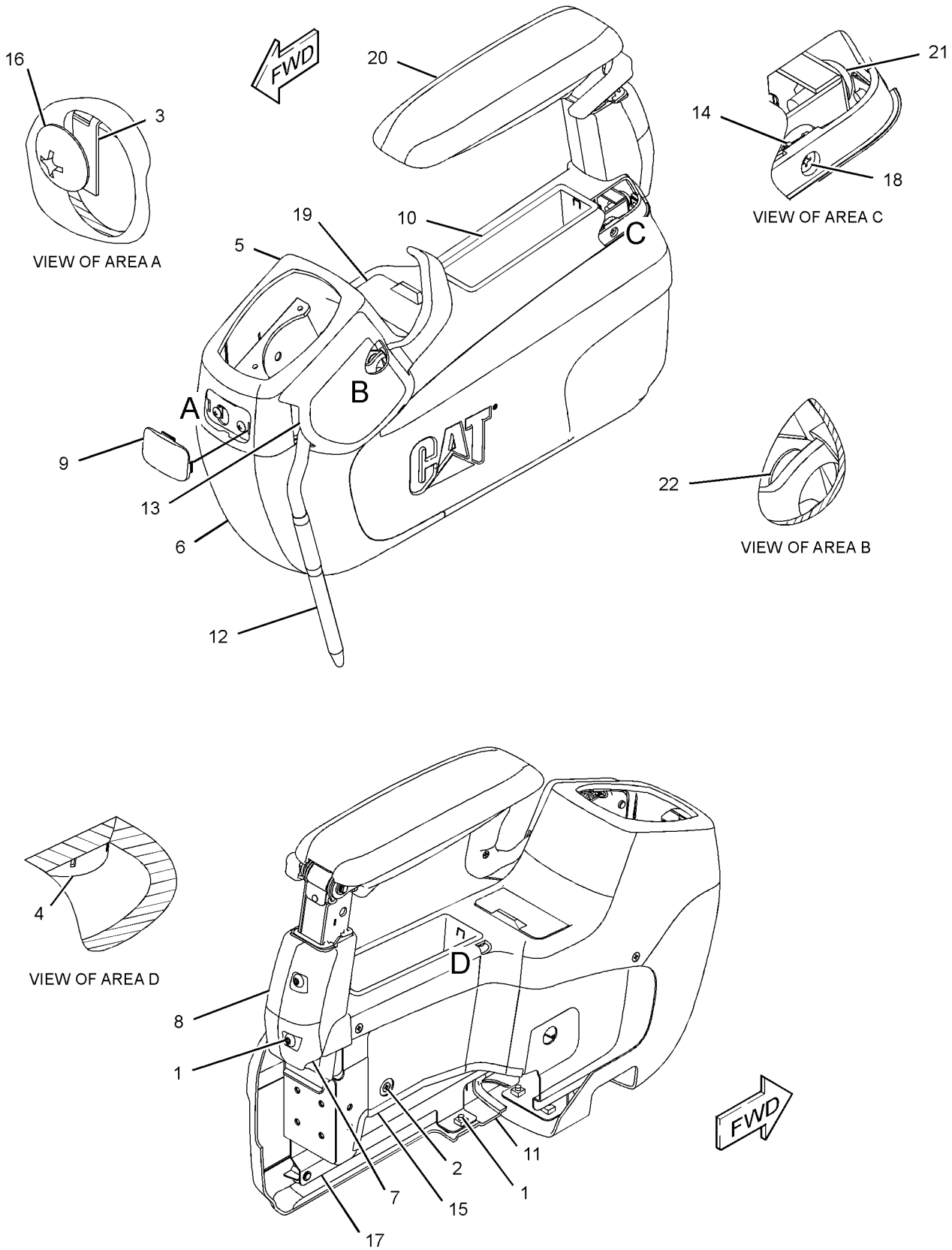

GRAPHIC #1 **<END>** g01217096

OPERATOR STATION

221-8818 CONTROL & MTG GP-JOYSTICK—1-SWITCH

S/N: WAP1-UP
PART OF 263-3762 CONTROL AR-AUXILIARY
AN ATTACHMENT

SMCS-5063, 5705 **i02489380**

NOTE	REF NO	GRAPHIC REF	PART NUMBER	QTY	PART NAME 1 2 3 4 5 6 (PRODUCT LEVEL)	SEE PAGE
M	1	1	**7Y-8463**	2	NUT (M14X2-THD)	
	2	1	**270-5620**	2	CONTROL GP-JOYSTICK (POSITION SENSOR)	
					(EACH INCLUDES)	
		1	**243-4508**	1	RECEPTACLE AS-CONNECTOR (6-PIN)	
		1	**9X-3401**	6	PIN-CONNECTOR (16-GA TO 18-GA)	
					—OR—	
		1	**126-1767**	6	PIN-CONNECTOR (14-GA)	
Y	3	1	*235-8969*	1	CONTROL GP-HANDLE (JOYSTICK, LH)	956
Y	4	1	*235-8970*	1	CONTROL GP-HANDLE (JOYSTICK, RH)	957
M	5	1	**8T-4138**	6	BOLT (M6X1X20-MM)	
	6	1	**9X-8256**	6	WASHER (6.6X12X2-MM THK)	

M-METRIC PART
Y-SEPARATE ILLUSTRATION

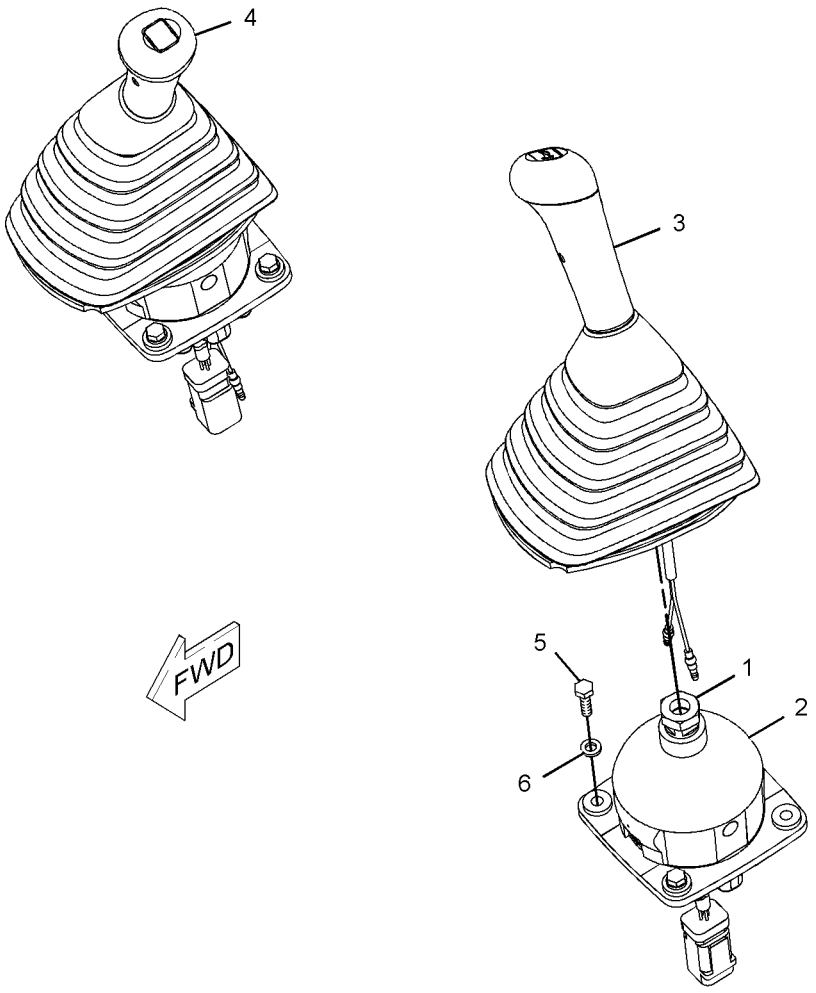

GRAPHIC #1 **<END>** g01079363

221-8883 CONTROL & MTG GP-JOYSTICK–
WITH THUMB SWITCHES
S/N: WAP1-UP
PART OF 352-6875 CONTROL AR-AUXILIARY
AN ATTACHMENT

SMCS-5063, 5705 **i02682340**

NOTE	REF NO	GRAPHIC REF	PART NUMBER	QTY	PART NAME 1 2 3 4 5 6 (PRODUCT LEVEL)	SEE PAGE
C	1	1	**270-5620**	2	CONTROL GP-JOYSTICK (POSITION SENSOR)	
					(EACH INCLUDES)	
		1	**243-4508**	1	RECEPTACLE AS-CONNECTOR (6-PIN)	
		1	**144-1636**	6	PIN-CONNECTOR (14-GA TO 18-GA)	
Y	2	1	*260-2109*	1	CONTROL GP-HANDLE (JOYSTICK, RH)	958
Y	3	1	*260-2110*	1	CONTROL GP-HANDLE (JOYSTICK, LH)	959
M	4	1	**8T-4138**	6	BOLT (M6X1X20-MM)	
	5	1	**9X-8256**	6	WASHER (6.6X12X2-MM THK)	

C-CHANGE FROM PREVIOUS TYPE
M-METRIC PART
Y-SEPARATE ILLUSTRATION

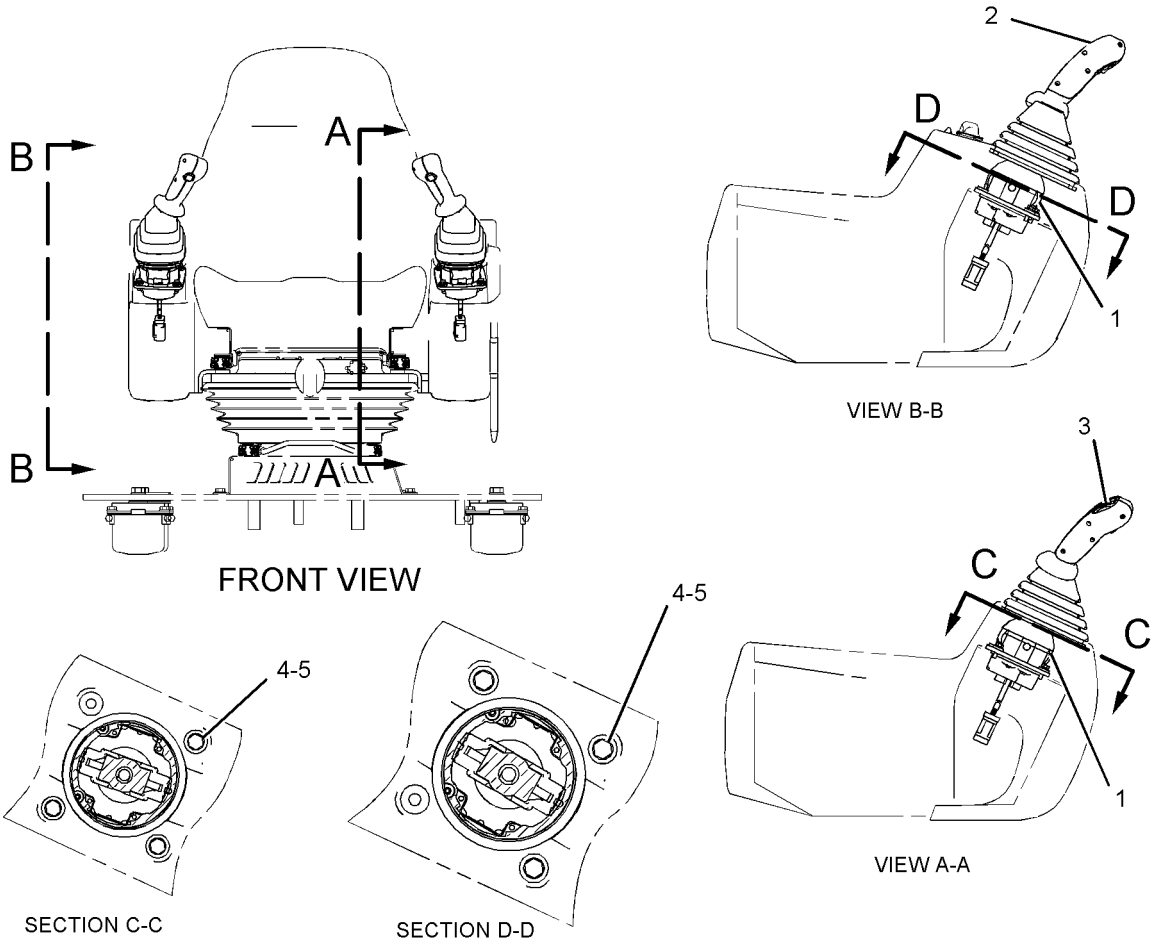

GRAPHIC #1 **<END>** g01079743

OPERATOR STATION

247-5190 CONTROL & MTG GP-JOYSTICK–

3-BUTTON, TRIGGER SWITCH
S/N: WAP1-UP
PART OF 352-6876 CONTROL AR-AUXILIARY
AN ATTACHMENT
TYPE 1

SMCS-5063, 5705 **i02581735**

NOTE	REF NO	GRAPHIC REF	PART NUMBER	QTY	PART NAME 1 2 3 4 5 6 (PRODUCT LEVEL)	SEE PAGE
C	1	1	**270-5620**	2	CONTROL GP-JOYSTICK (POSITION SENSOR)	
					(EACH INCLUDES)	
		1	**243-4508**	1	RECEPTACLE AS-CONNECTOR (6-PIN)	
		1	**9X-3401**	6	PIN-CONNECTOR (16-GA TO 18-GA)	
					–OR–	
		1	**126-1767**	6	PIN-CONNECTOR (14-GA)	
Y	2	1	**260-2127**	1	CONTROL GP-HANDLE (JOYSTICK, RH)	960
Y	3	1	**260-2128**	1	CONTROL GP-HANDLE (JOYSTICK, LH)	961
M	4	1	**8T-4138**	6	BOLT (M6X1X20-MM)	
	5	1	**9X-8256**	6	WASHER (6.6X12X2-MM THK)	

C-CHANGE FROM PREVIOUS TYPE
M-METRIC PART
Y-SEPARATE ILLUSTRATION

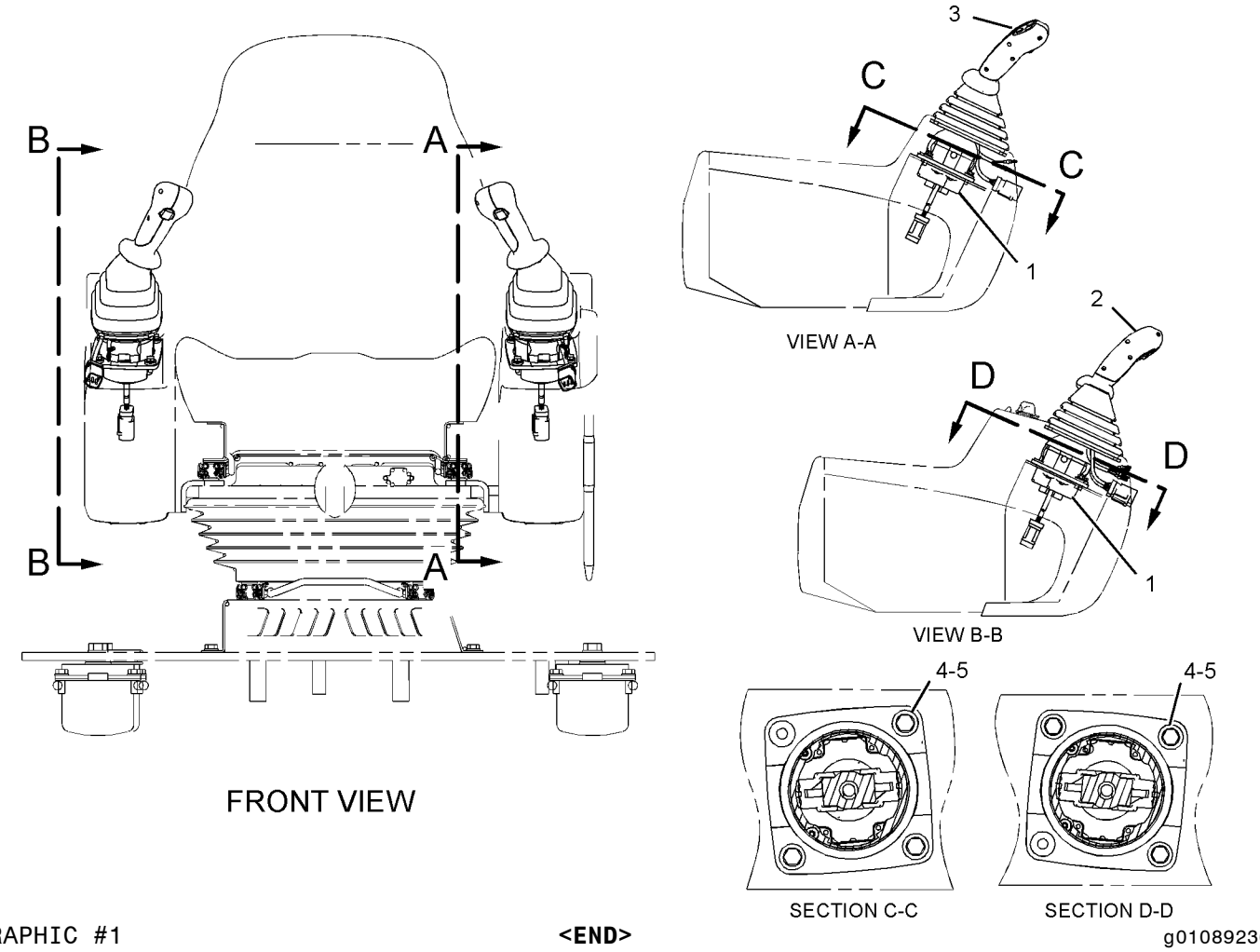

GRAPHIC #1 **<END>** g01089236

OPERATOR STATION

247-5190 CONTROL & MTG GP-JOYSTICK–
3-BUTTON, TRIGGER SWITCH
S/N: WAP1-UP
PART OF 352-6876 CONTROL AR-AUXILIARY
AN ATTACHMENT
TYPE 2

SMCS-5063, 5705 **i02581728**

NOTE	REF NO	GRAPHIC REF	PART NUMBER	QTY	PART NAME 1 2 3 4 5 6 (PRODUCT LEVEL)	SEE PAGE
	1	1	**227-7569**	2	SENSOR GP-POSITION (JOYSTICK)	
					(EACH INCLUDES)	
		1	**243-4508**	1	RECEPTACLE AS-CONNECTOR (6-PIN)	
		1	**9X-3401**	6	PIN-CONNECTOR (16-GA TO 18-GA)	
					–OR–	
		1	**126-1767**	6	PIN-CONNECTOR (14-GA)	
Y	2	1	**260-2127**	1	CONTROL GP-HANDLE (JOYSTICK, RH)	960
Y	3	1	**260-2128**	1	CONTROL GP-HANDLE (JOYSTICK, LH)	961
M	4	1	**8T-4138**	6	BOLT (M6X1X20-MM)	
	5	1	**9X-8256**	6	WASHER (6.6X12X2-MM THK)	

M-METRIC PART
Y-SEPARATE ILLUSTRATION

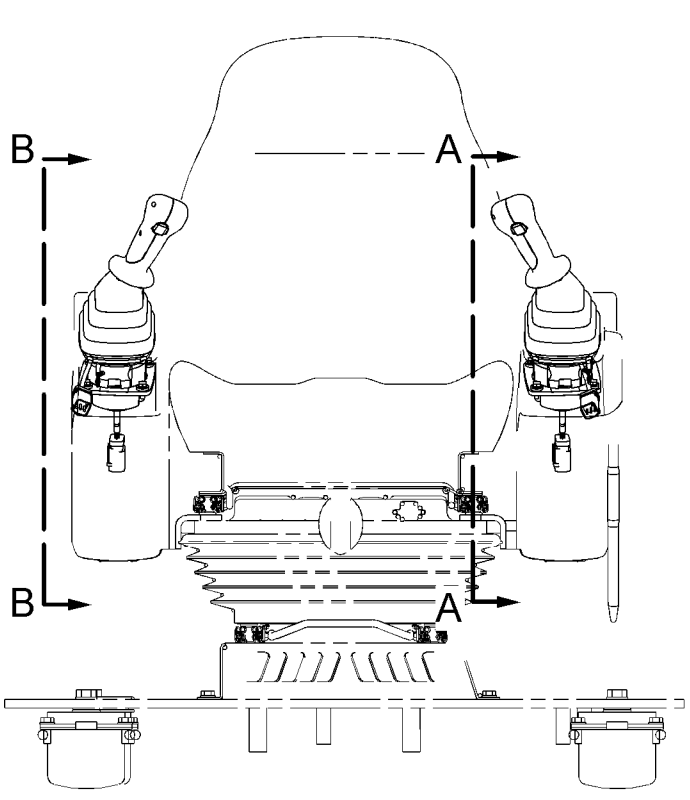

FRONT VIEW

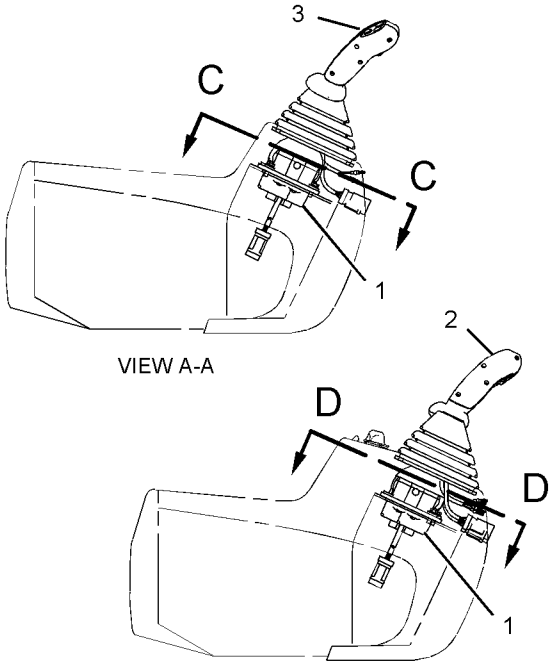

VIEW A-A

VIEW B-B

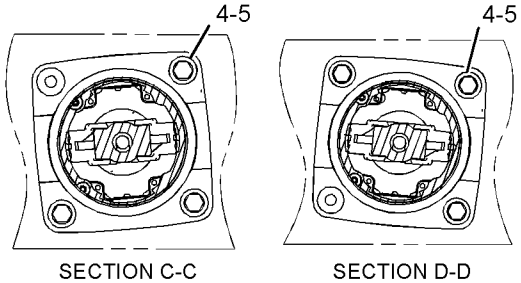

SECTION C-C SECTION D-D

GRAPHIC #1 **<END>** g01089236

OPERATOR STATION

221-8819 CONTROL & MTG GP-PEDAL–TRAVEL

S/N: WAP1-UP

PART OF 342-3451 OPERATOR AR

SMCS-5462 **i02495130**

NOTE	REF NO	GRAPHIC REF	PART NUMBER	QTY	PART NAME 1 2 3 4 5 6 (PRODUCT LEVEL)	SEE PAGE
Y	1	1	**247-5275**	1	CONTROL GP-PEDAL (TRAVEL)	965
	2	1	**8T-4121**	4	WASHER-HARD (11X21X2.5-MM THK)	
M	3	1	**8T-4136**	4	BOLT (M10X1.5X25-MM)	

M-METRIC PART
Y-SEPARATE ILLUSTRATION

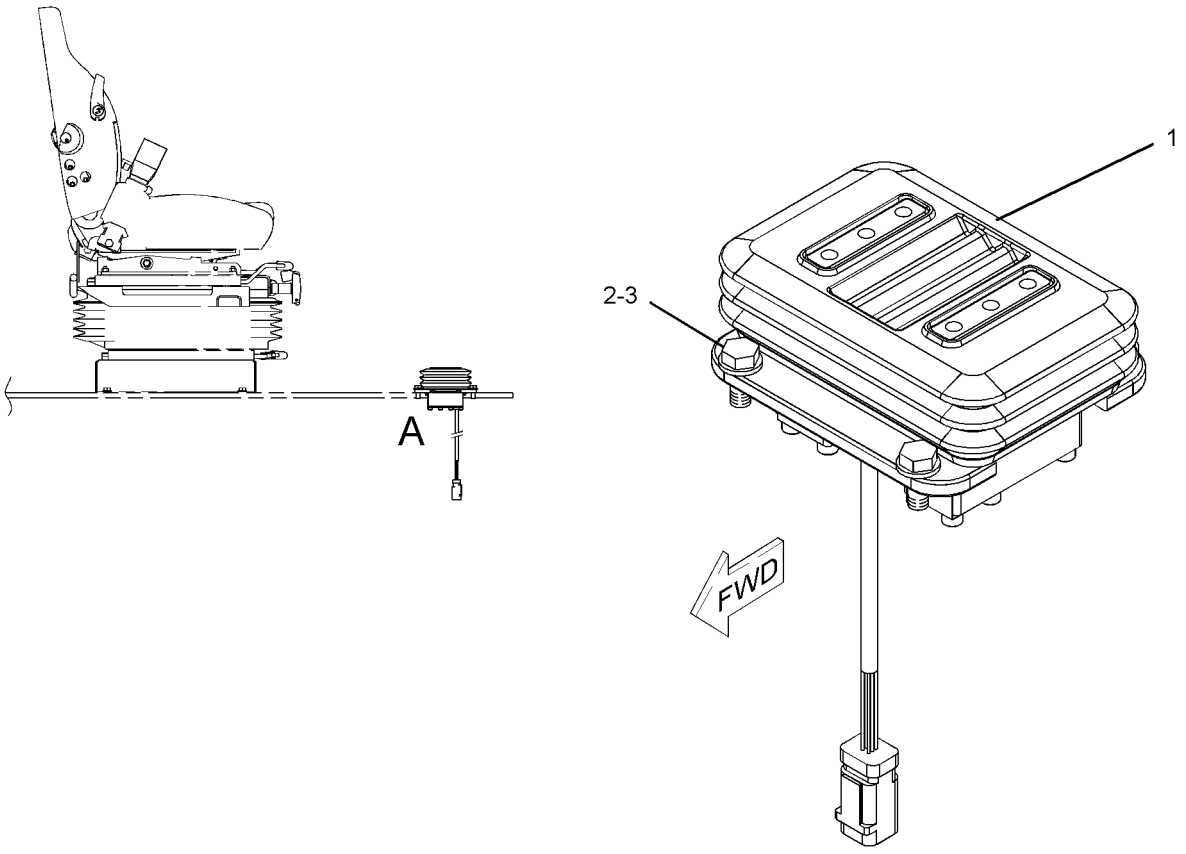

EXPLODED VIEW OF AREA A

GRAPHIC #1 **<END>** g01247514

OPERATOR STATION

221-8884 CONTROL & MTG GP-PEDAL–LH

S/N: WAP1-UP
PART OF 310-0001 CONTROL AR-AUXILIARY
AN ATTACHMENT

SMCS-5462 **i03923185**

NOTE	REF NO	GRAPHIC REF	PART NUMBER	QTY	PART NAME 1 2 3 4 5 6 (PRODUCT LEVEL)	SEE PAGE
	1	1	**233-5260**	1	LANYARD	
	2	1	**121-1865**	1	PEDAL-RUBBER (LH)	
	3	1	**128-2173**	1	PIN	
	4	1	**153-8723**	1	PEDAL AS	
CY	5	1	**309-5808**	1	CONTROL GP-PEDAL (ELECTRIC)	966
	6	1	**227-7625**	1	SUPPORT AS	
M	7	1	**095-0735**	2	SCREW-MACHINE (M5X0.8X8-MM)	
M	8	1	**7X-2536**	2	BOLT (M8X1.25X14-MM)	
	9	1	**8T-0114**	1	PIN-SPRING	
	10	1	**8T-4121**	3	WASHER-HARD (11X21X2.5-MM THK)	
M	11	1	**8T-4136**	2	BOLT (M10X1.5X25-MM)	
M	12	1	**8T-4191**	1	BOLT (M10X1.5X16-MM)	
	13	1	**8T-4224**	2	WASHER-HARD (8.8X16X2-MM THK)	

C-CHANGE FROM PREVIOUS TYPE
M-METRIC PART
Y-SEPARATE ILLUSTRATION

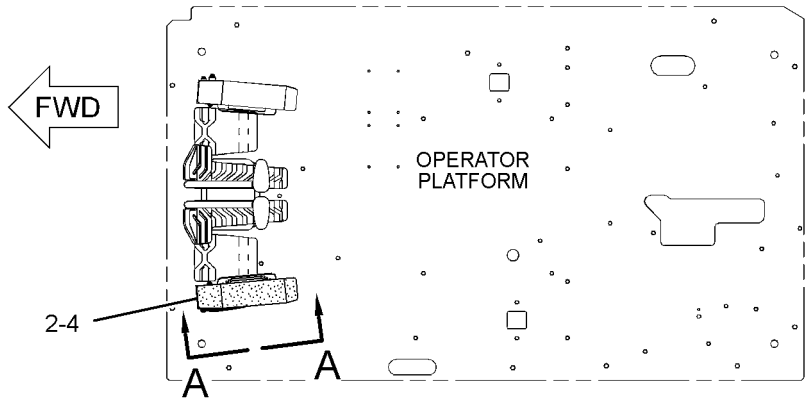

TOP VIEW

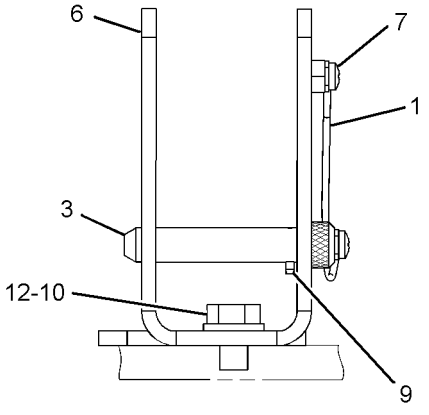

VIEW B-B

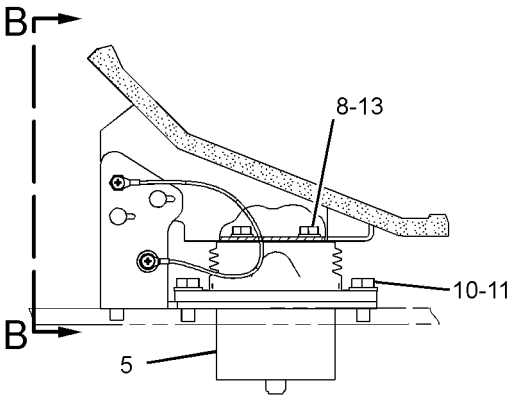

VIEW A-A

GRAPHIC #1 **<END>** g02155930

OPERATOR STATION

235-8969 CONTROL GP-HANDLE–JOYSTICK, LH

S/N: WAP1-UP
PART OF 221-8818 CONTROL & MTG GP-JOYSTICK
AN ATTACHMENT

SMCS-5705 **i03896225**

NOTE	REF NO	GRAPHIC REF	PART NUMBER	QTY	PART NAME 1 2 3 4 5 6 (PRODUCT LEVEL)	SEE PAGE
	1	1	**124-4010**	1	LEVER	
	2	1	**353-2149**	1	BOOT	
	3	1	**245-7842**	1	KNOB AS	
M		1	**6I-5298**	1	SCREW-TAPPING	
		1	**124-4009**	1	SHAFT	
		1	**222-0225**	1	SWITCH AS-PUSH BUTTON (HORN)	
M	4	1	**096-2617**	2	SCREW-MACHINE (M5X0.8X6-MM)	

M-METRIC PART

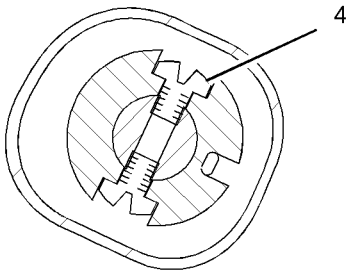

SECTION B-B

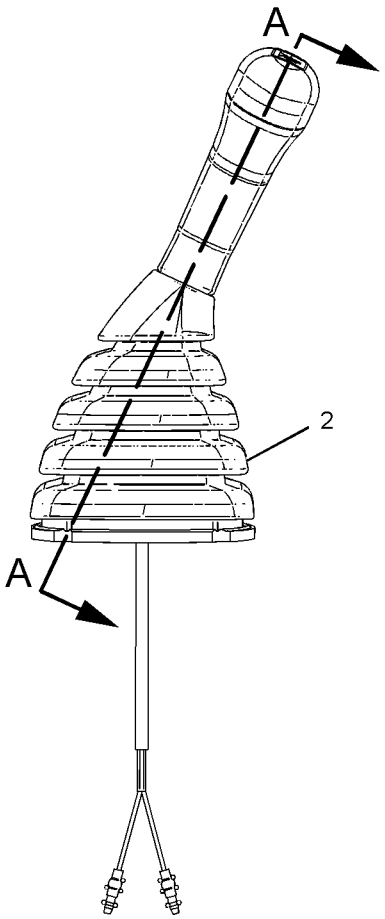

LEFT SIDE VIEW

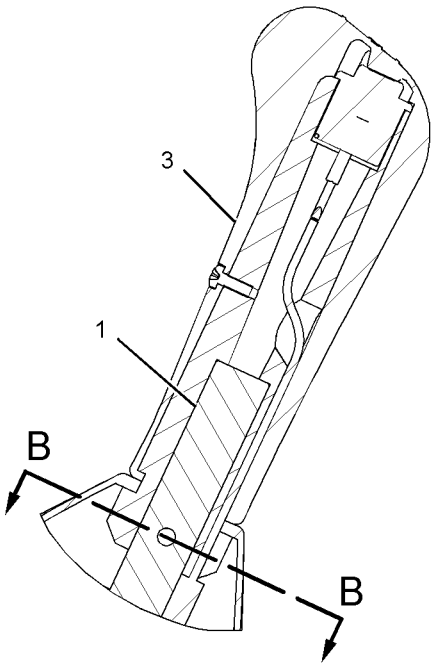

SECTION A-A

GRAPHIC #1 **<END>** g01082395

OPERATOR STATION

235-8970 CONTROL GP-HANDLE–JOYSTICK, RH

S/N: WAP1-UP
PART OF 221-8818 CONTROL & MTG GP-JOYSTICK
AN ATTACHMENT

SMCS-5705 **i03896229**

NOTE	REF NO	GRAPHIC REF	PART NUMBER	QTY	PART NAME 1 2 3 4 5 6 (PRODUCT LEVEL)	SEE PAGE
	1	1	**124-4010**	1	LEVER	
	2	1	**353-2150**	1	BOOT	
	3	1	**245-7844**	1	KNOB AS	
M		1	**6I-5298**	1	SCREW-TAPPING	
		1	**124-4009**	1	SHAFT	
		1	**222-0225**	1	SWITCH AS-PUSH BUTTON (MANUAL LOW IDLE)	
M	4	1	**096-2617**	2	SCREW-MACHINE (M5X0.8X6-MM)	

M-METRIC PART

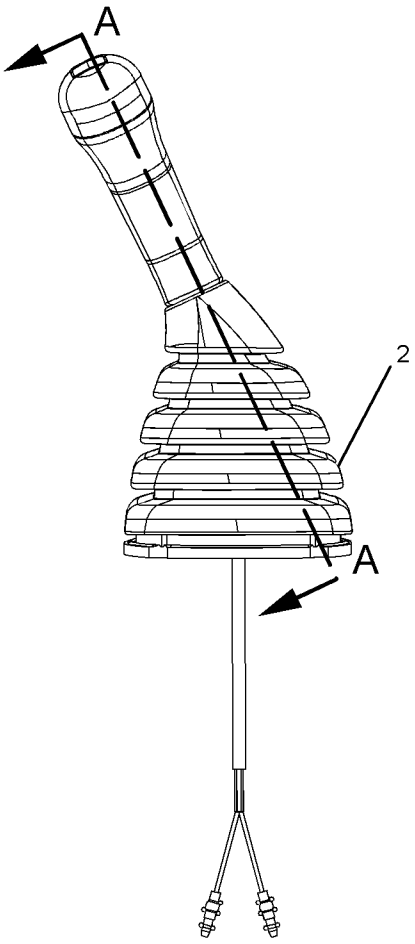

RIGHT SIDE VIEW

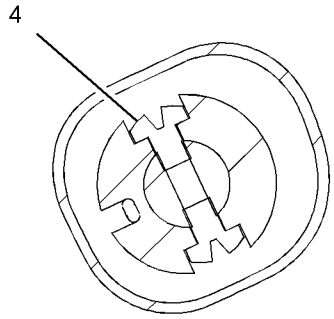

SECTION B-B

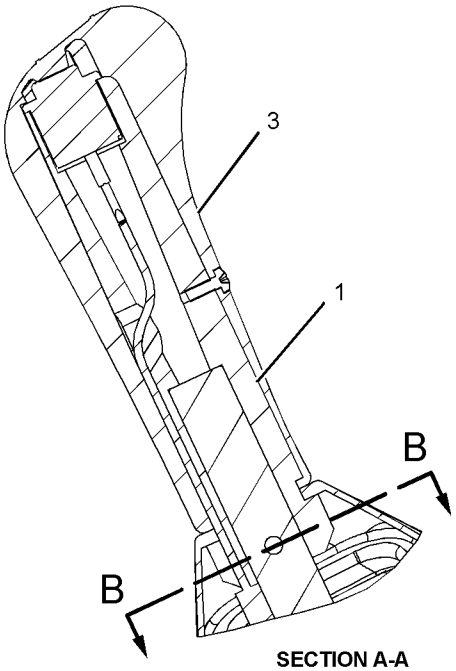

SECTION A-A

GRAPHIC #1 **<END>** g01082427

OPERATOR STATION

260-2109 CONTROL GP-HANDLE—JOYSTICK, RH

S/N: WAP1-UP

PART OF 221-8883 CONTROL & MTG GP-JOYSTICK

AN ATTACHMENT

SMCS-5705 **i02981496**

NOTE	REF NO	GRAPHIC REF	PART NUMBER	QTY	PART NAME 1 2 3 4 5 6 (PRODUCT LEVEL)	SEE PAGE
M	1	1	**7Y-8463**	1	NUT (M14X2-THD)	
	2	1	**117-8683**	1	PIN-SPRING	
	3	1	**260-2111**	1	LEVER	
	4	1	**297-4589**	1	CONTROL GP-HANDLE (RH)	
		1	**247-2693**	1	RECEPTACLE AS-CONNECTOR (6-PIN)	
		1	**9X-3401**	6	PIN-CONNECTOR (16-GA TO 18-GA)	
					—OR—	
		1	**126-1767**	6	PIN-CONNECTOR (14-GA)	
	5	1	**305-0332**	1	BOOT	

M-METRIC PART

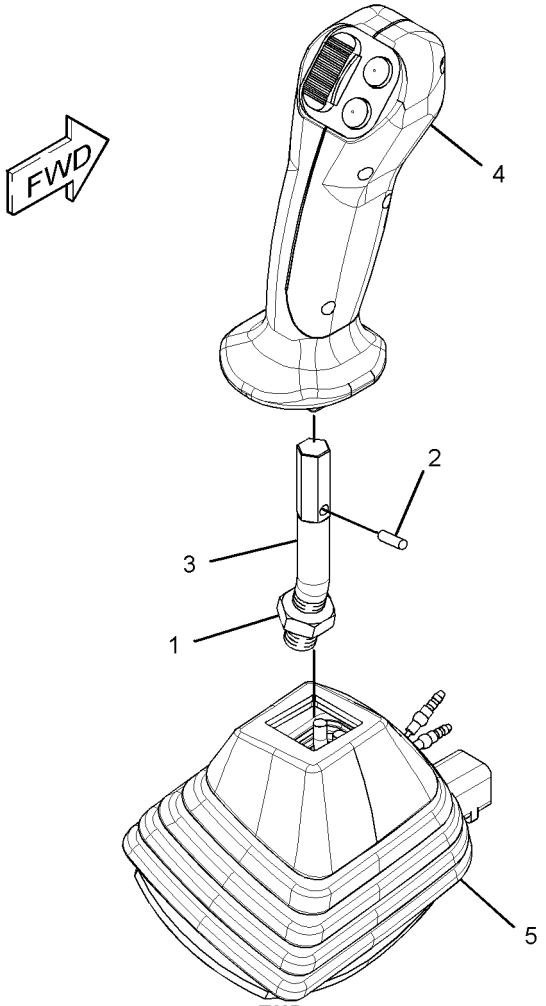

GRAPHIC #1

<END>

g01436256

OPERATOR STATION

260-2110 CONTROL GP-HANDLE–JOYSTICK, LH

S/N: WAP1-UP
PART OF 221-8883 CONTROL & MTG GP-JOYSTICK
AN ATTACHMENT

SMCS-5705 **i02978363**

NOTE	REF NO	GRAPHIC REF	PART NUMBER	QTY	PART NAME 1 2 3 4 5 6 (PRODUCT LEVEL)	SEE PAGE
M	1	1	**7Y-8463**	1	NUT (M14X2-THD)	
	2	1	**117-8683**	1	PIN-SPRING	
	3	1	**260-2111**	1	LEVER	
CY	4	1	**297-4590**	1	CONTROL GP-HANDLE (LH)	962
	5	1	**305-0331**	1	BOOT	

C-CHANGE FROM PREVIOUS TYPE
M-METRIC PART
Y-SEPARATE ILLUSTRATION

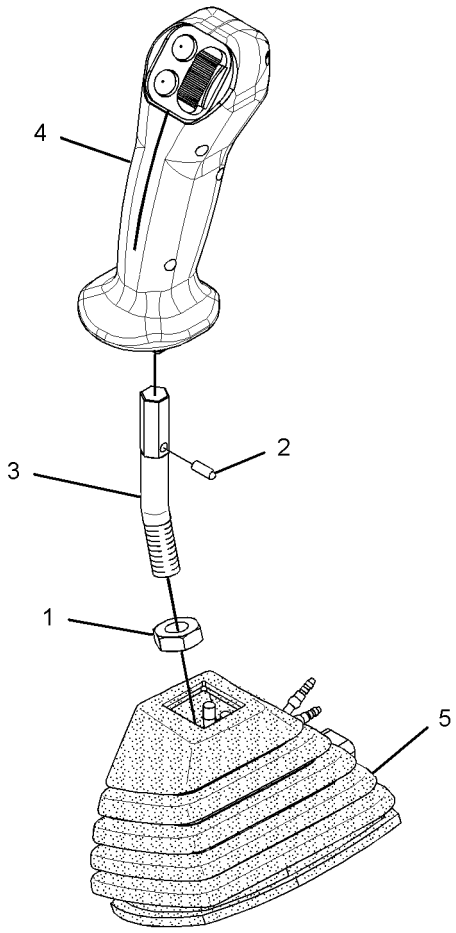

GRAPHIC #1 **<END>** g01428094

OPERATOR STATION

260-2127 CONTROL GP-HANDLE—JOYSTICK, RH

S/N: WAP1-UP
PART OF 247-5190 CONTROL & MTG GP-JOYSTICK
AN ATTACHMENT

SMCS-5705 **i02981501**

NOTE	REF NO	GRAPHIC REF	PART NUMBER	QTY	PART NAME 1 2 3 4 5 6 (PRODUCT LEVEL)	SEE PAGE
M	1	1	**7Y-8463**	1	NUT (M14X2-THD)	
	2	1	**117-8683**	1	PIN-SPRING	
	3	1	**260-2111**	1	LEVER	
	4	1	**297-4595**	1	CONTROL GP-HANDLE (RH)	
		1	**8T-8737**	2	PLUG-SEAL	
		1	**9X-3401**	4	PIN-CONNECTOR (16-GA TO 18-GA)	
					—OR—	
		1	**126-1767**	4	PIN-CONNECTOR (14-GA)	
		1	**247-2693**	1	RECEPTACLE AS-CONNECTOR (6-PIN)	
	5	1	**305-0332**	1	BOOT	

M-METRIC PART

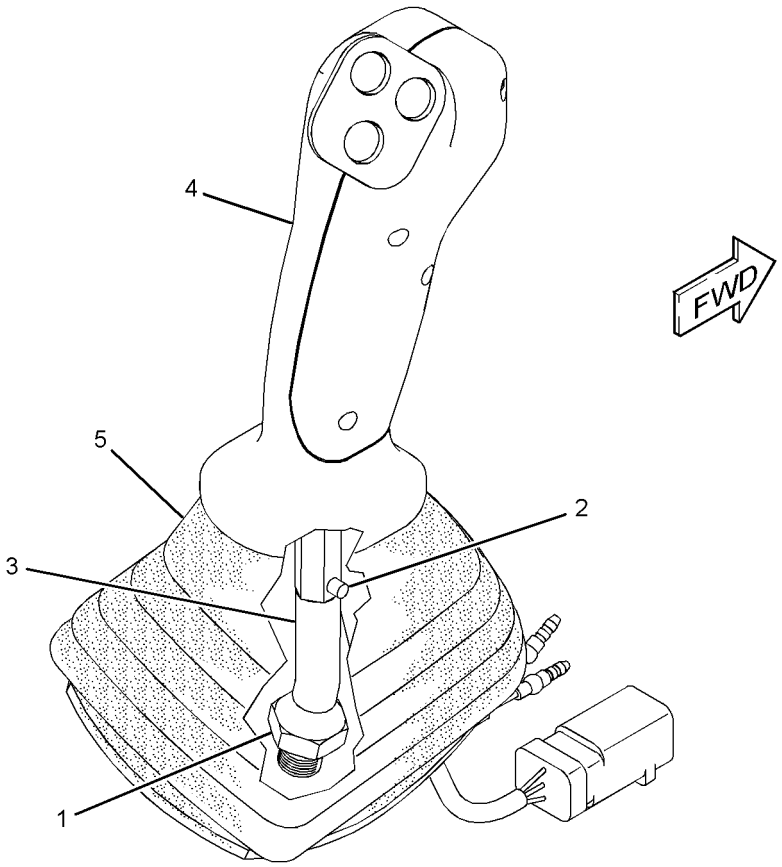

GRAPHIC #1 **<END>** g01430928

OPERATOR STATION

260-2128 CONTROL GP-HANDLE—JOYSTICK, LH

S/N: WAP1-UP
PART OF 247-5190 CONTROL & MTG GP-JOYSTICK
AN ATTACHMENT

SMCS-5705 **i02981493**

NOTE	REF NO	GRAPHIC REF	PART NUMBER	QTY	PART NAME 1 2 3 4 5 6 (PRODUCT LEVEL)	SEE PAGE
M	1	1	**7Y-8463**	1	NUT (M14X2-THD)	
	2	1	**117-8683**	1	PIN-SPRING	
	3	1	**305-0331**	1	BOOT	
	4	1	**297-4595**	1	CONTROL GP-HANDLE (LH)	
		1	**8T-8737**	2	PLUG-SEAL	
		1	**9X-3401**	4	PIN-CONNECTOR (16-GA TO 18-GA)	
					—OR—	
		1	**126-1767**	4	PIN-CONNECTOR (14-GA)	
		1	**247-2693**	1	RECEPTACLE AS-CONNECTOR (6-PIN)	
	5	1	**260-2111**	1	LEVER	

M-METRIC PART

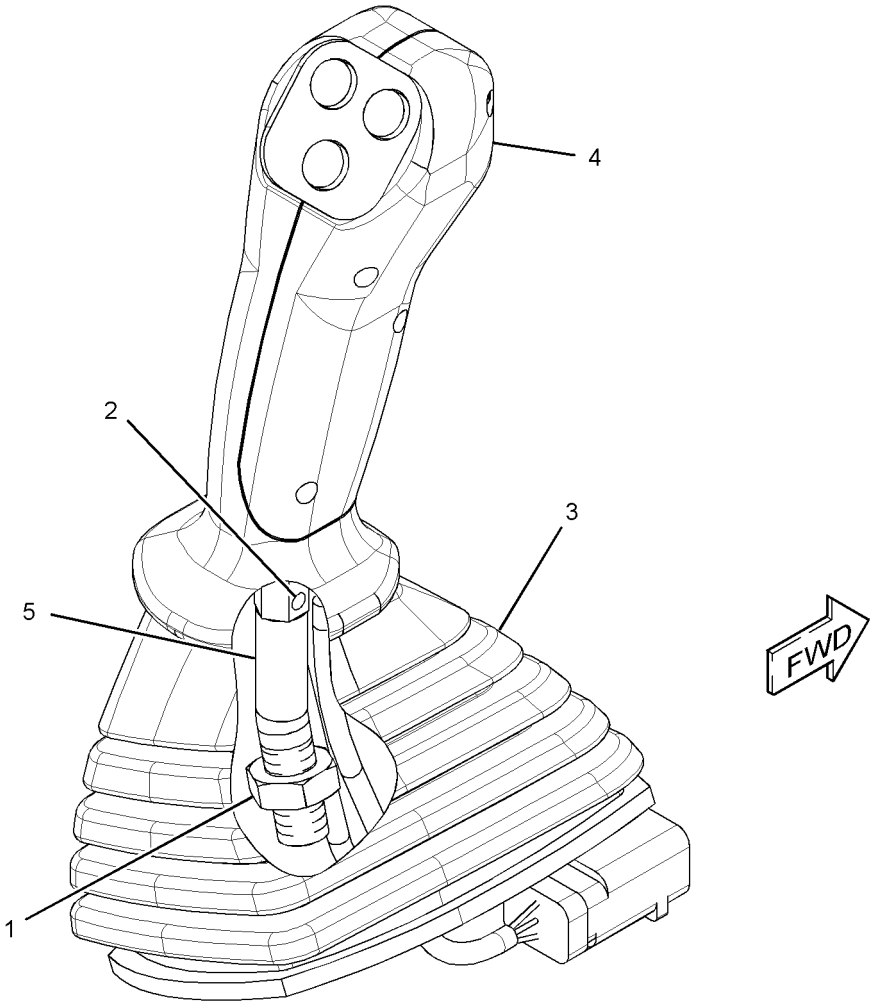

GRAPHIC #1 **<END>** g01436267

OPERATOR STATION

297-4590 CONTROL GP-HANDLE—LH

S/N: WAP1-UP
PART OF 260-2110 CONTROL GP-HANDLE
AN ATTACHMENT

SMCS-5705 **i02977011**

NOTE	REF NO	GRAPHIC REF	PART NUMBER	QTY	PART NAME 1 2 3 4 5 6 (PRODUCT LEVEL)	SEE PAGE
	1	1	**9X-3401**	6	PIN-CONNECTOR (16-GA TO 18-GA)	
					—OR—	
		1	**126-1767**	6	PIN-CONNECTOR (14-GA)	
	2	1	**247-2693**	1	RECEPTACLE AS-CONNECTOR (6-PIN)	

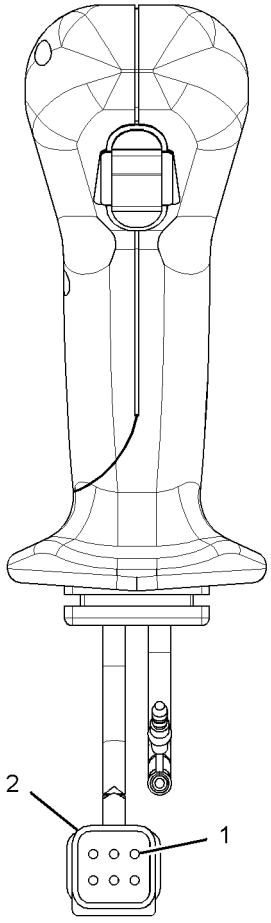

REAR VIEW

GRAPHIC #1 **<END>** g01508125

OPERATOR STATION

245-7846 CONTROL GP-HEAT & AIR COND–AIR INLET

S/N: WAP1-UP
PART OF 316-8916 AIR CONDITIONER GP
AN ATTACHMENT

SMCS-7309 **i02821861**

NOTE	REF NO	GRAPHIC REF	PART NUMBER	QTY	PART NAME 1 2 3 4 5 6 (PRODUCT LEVEL)	SEE PAGE
	1	1	**185-8300**	4	SCREW-TAPPING	
	2	1	**196-1666**	1	RELAY (COMPRESSOR CLUTCH)	
	2A	1	**196-1666**	1	RELAY (BLOWER)	
	3	1	**245-7813**	1	MOTOR AS	
	4	1	**245-7814**	1	BRACKET	
	5	1	**245-7815**	1	SENSOR AS-TEMPERATURE (AIR)	
	6	1	**245-7816**	1	DAMPER AS	

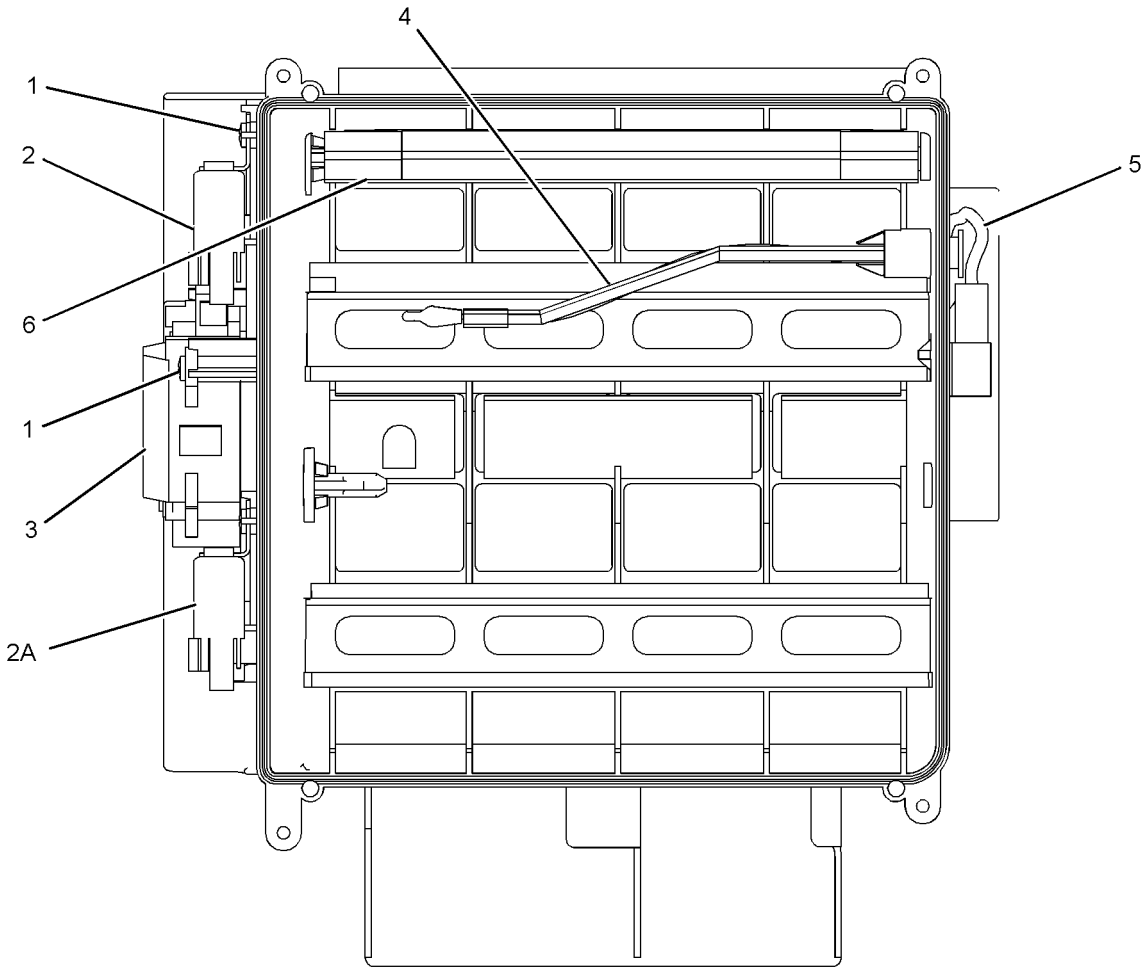

GRAPHIC #1 **<END>** g01245591

OPERATOR STATION

225-5783 CONTROL GP-HYDRAULIC PEDAL

S/N: WAP1-UP
PART OF 225-5782 PEDAL AR-THIRD
AN ATTACHMENT

SMCS-5059, 5063 **i04026064**

NOTE	REF NO	GRAPHIC REF	PART NUMBER	QTY	PART NAME 1 2 3 4 5 6 (PRODUCT LEVEL)	SEE PAGE
	1	1	**233-5260**	1	LANYARD	
	2	1	**357-3877**	1	PIN	
	3	1	**135-2274**	1	PEDAL-RUBBER	
	4	1	**156-6512**	1	PEDAL AS	
	5	1	**235-8992**	1	SUPPORT AS	
CY	6	1	**309-5808**	1	CONTROL GP-PEDAL (ELECTRIC)	966
	7	1	**8T-4224**	2	WASHER-HARD (8.8X16X2-MM THK)	
M	8	1	**095-0735**	2	SCREW-MACHINE (M5X0.8X8-MM)	
M	9	1	**7X-2536**	2	BOLT (M8X1.25X14-MM)	
	10	1	**8T-0114**	1	PIN-SPRING	
	11	1	**8T-4121**	3	WASHER-HARD (11X21X2.5-MM THK)	
M	12	1	**8T-4136**	2	BOLT (M10X1.5X25-MM)	
M	13	1	**8T-4191**	1	BOLT (M10X1.5X16-MM)	

C-CHANGE FROM PREVIOUS TYPE
M-METRIC PART
Y-SEPARATE ILLUSTRATION

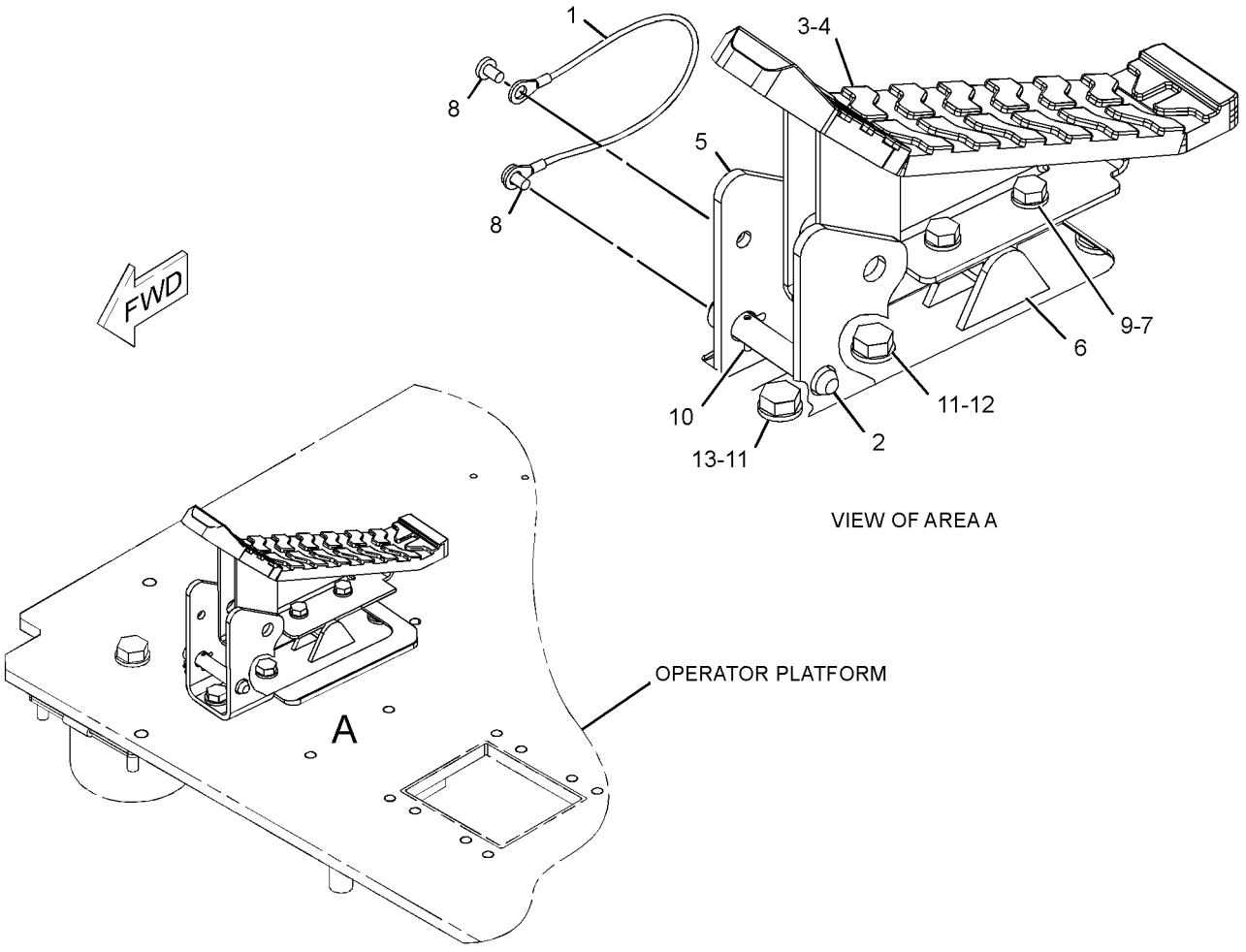

GRAPHIC #1 **<END>** g02170393

OPERATOR STATION

247-5275 CONTROL GP-PEDAL–TRAVEL

S/N: WAP1-UP

PART OF 221-8819 CONTROL & MTG GP-PEDAL

SMCS-1435, 5702 **i02628749**

NOTE	REF NO	GRAPHIC REF	PART NUMBER	QTY	PART NAME 1 2 3 4 5 6 (PRODUCT LEVEL)	SEE PAGE
	1	1	**126-1767**	6	PIN-CONNECTOR (14-GA)	
	2	1	**227-7571**	1	BOOT	
	3	1	**247-2693**	1	RECEPTACLE AS-CONNECTOR (6-PIN)	

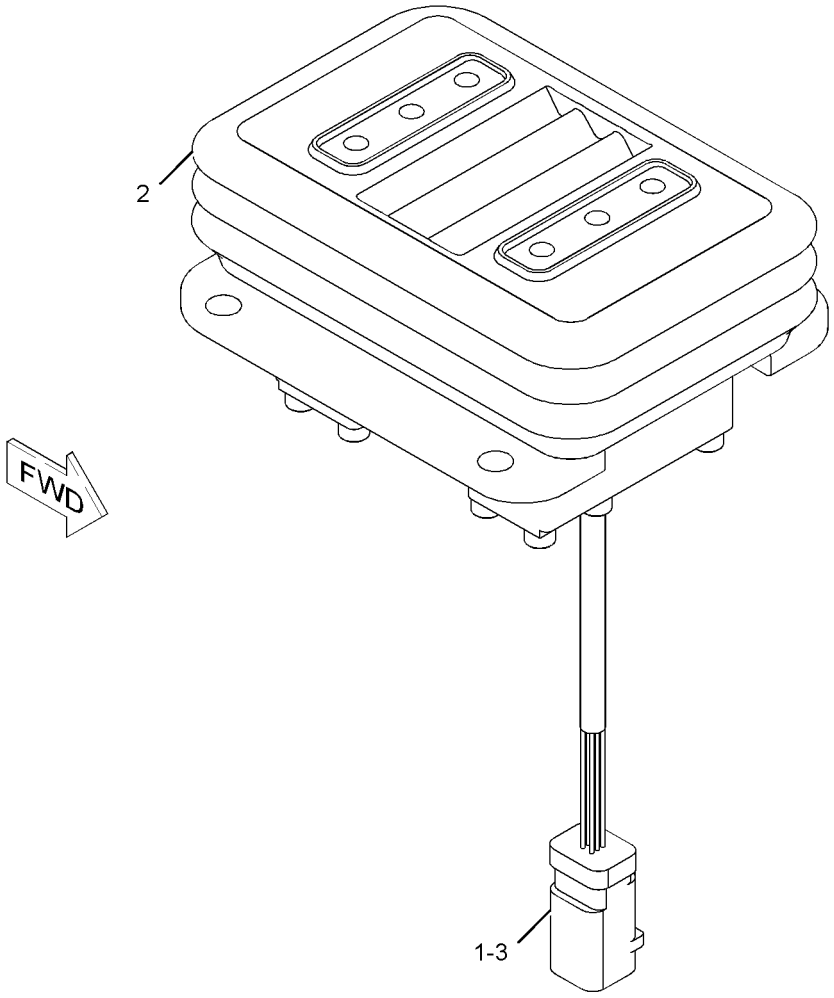

GRAPHIC #1 **<END>** g01123856

OPERATOR STATION

309-5808 CONTROL GP-PEDAL—ELECTRIC

S/N: WAP1-UP

PART OF 221-8884 CONTROL & MTG GP-PEDAL, 225-5783 CONTROL GP-HYDRAULIC PEDAL AN ATTACHMENT

SMCS-1435, 5702 **i02981742**

NOTE	REF NO	GRAPHIC REF	PART NUMBER	QTY	PART NAME 1 2 3 4 5 6 (PRODUCT LEVEL)	SEE PAGE
	1	1	**8T-8737**	1	PLUG-SEAL	
	2	1	**9X-3401**	5	PIN-CONNECTOR (16-GA TO 18-GA)	
					—OR—	
		1	**126-1767**	5	PIN-CONNECTOR (14-GA)	
	3	1	**247-2693**	1	RECEPTACLE AS-CONNECTOR (6-PIN)	
	4	1	**247-5112**	1	BOOT	

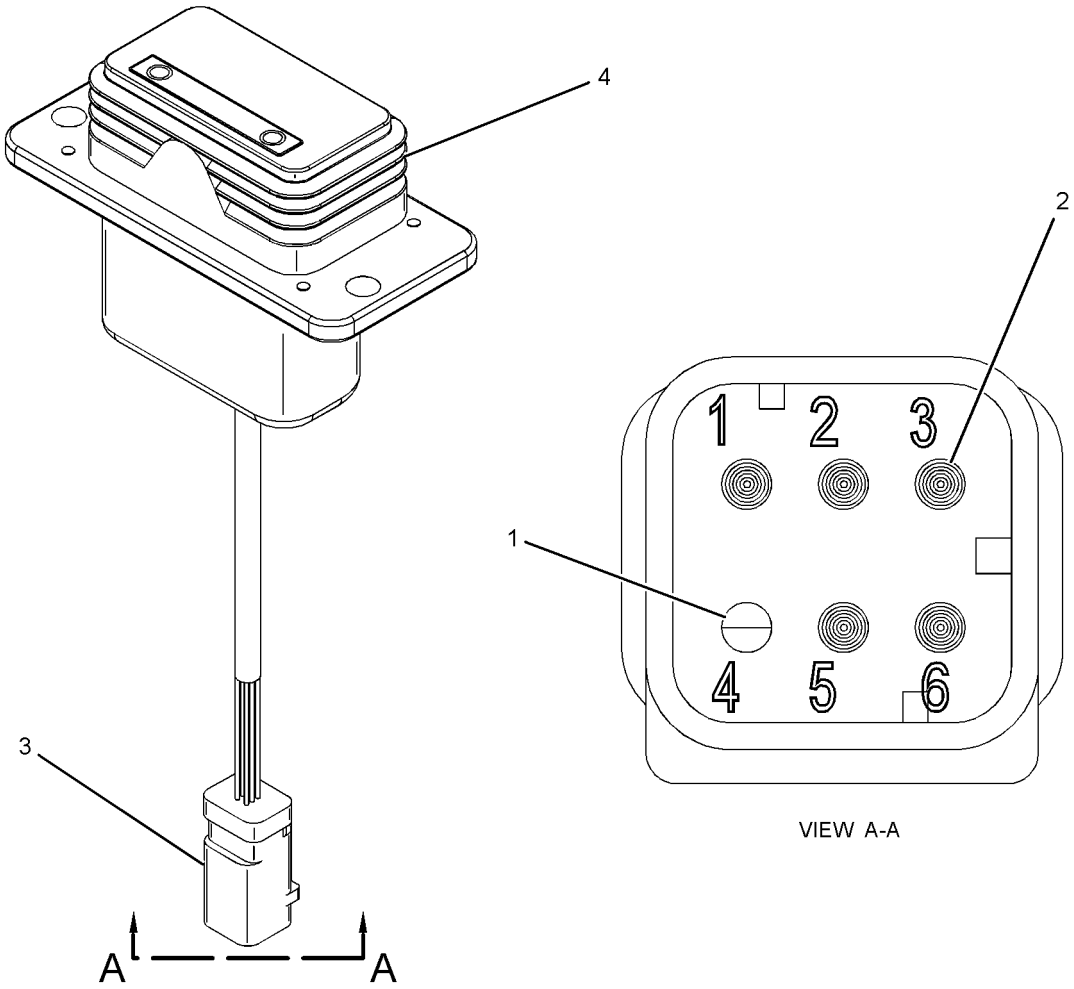

GRAPHIC #1 **<END>** g01219365

OPERATOR STATION

235-8899 CONTROL GP-TRAVEL—LEVERS, PEDALS

S/N: WAP1-UP

PART OF 342-3451 OPERATOR AR

SMCS-546S, 5910 **i02497561**

NOTE	REF NO	GRAPHIC REF	PART NUMBER	QTY	PART NAME 1 2 3 4 5 6 (PRODUCT LEVEL)	SEE PAGE
	1	1	**117-6356**	2	STEP AS	
	2	1	**122-9608**	1	PEDAL-RUBBER	
	3	1	**122-9609**	1	PEDAL-RUBBER	
	4	1	**235-8975**	1	PEDAL AS	
	5	1	**235-8976**	1	PEDAL AS	
M	6	1	**095-0728**	2	SCREW-MACHINE (M4X0.7X12-MM)	
	7	1	**096-6166**	2	WASHER-HARD (4.5X9X1-MM THK)	
	8	1	**8T-4121**	12	WASHER-HARD (11X21X2.5-MM THK)	
M	9	1	**8T-4136**	4	BOLT (M10X1.5X25-MM)	
M	10	1	**8T-4191**	8	BOLT (M10X1.5X16-MM)	
	11	1	**122-9610**	2	STEP	
	12	1	**142-5546**	2	KNOB	
	13	1	**170-9498**	1	LEVER AS (RH)	
	14	1	**170-9499**	1	LEVER AS (LH)	

M-METRIC PART

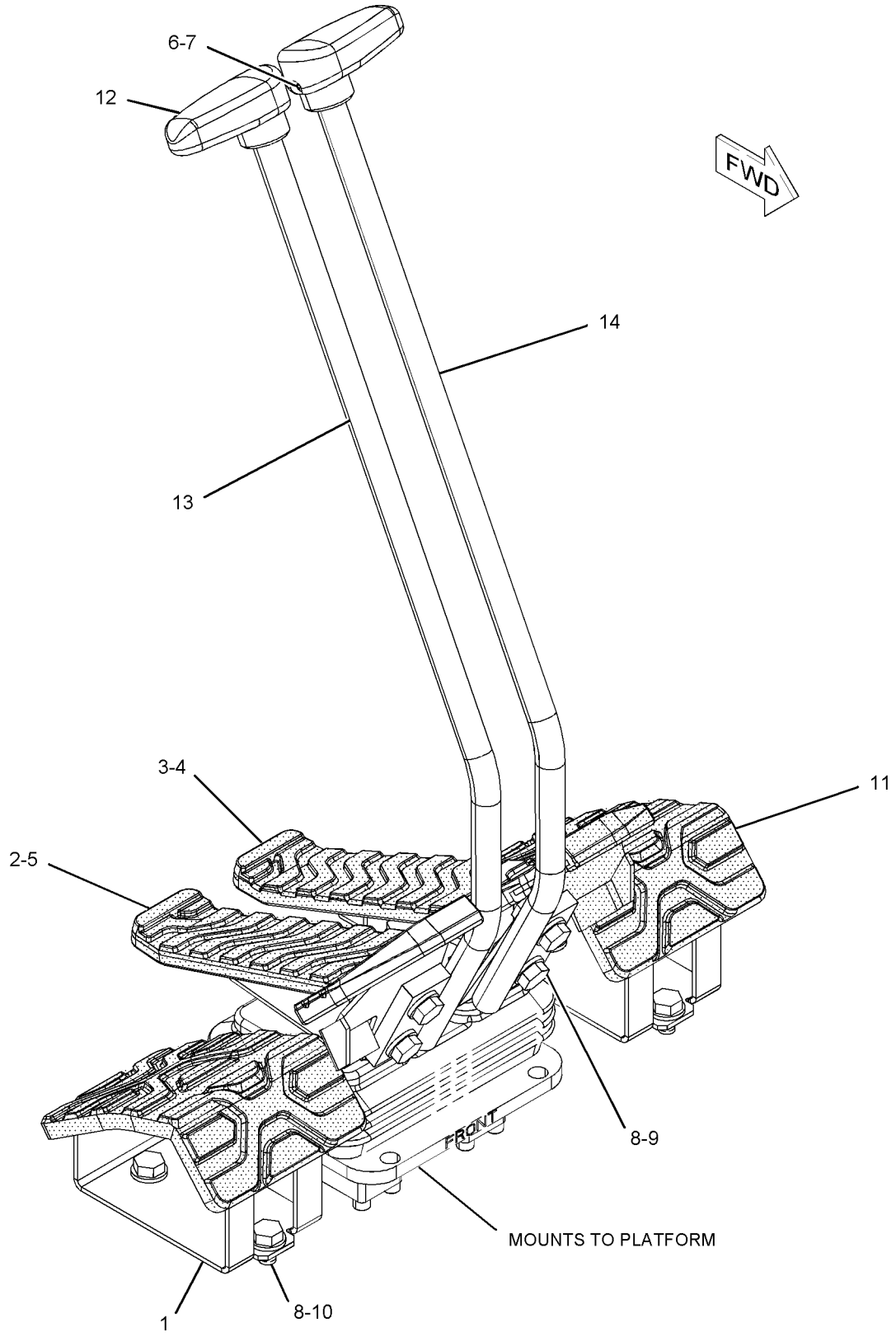

GRAPHIC #1 **<END>** g01072272

OPERATOR STATION

234-6501 COVER GP-CAB–REAR

S/N: WAP1-UP

PART OF 225-5765 MOUNTING GP-CAB

SMCS-7301, 7308 **i03711500**

NOTE	REF NO	GRAPHIC REF	PART NUMBER	QTY	PART NAME 1 2 3 4 5 6 (PRODUCT LEVEL)	SEE PAGE
	1	1	**234-6499**	1	COVER AS	
	2	1	**234-6502**	1	COVER-ACCESS (FUSE-REAR PANEL)	
	3	1	**234-6593**	2	FASTENER	
					(USE WITH COVER WITH A 9-MM DIAMETER UPPER MOUNTING HOLE)	
					–OR–	
			245-7929	2	CLIP	
					(USE WITH COVER WITH A 7.6-MM DIAMETER UPPER MOUNTING HOLE)	

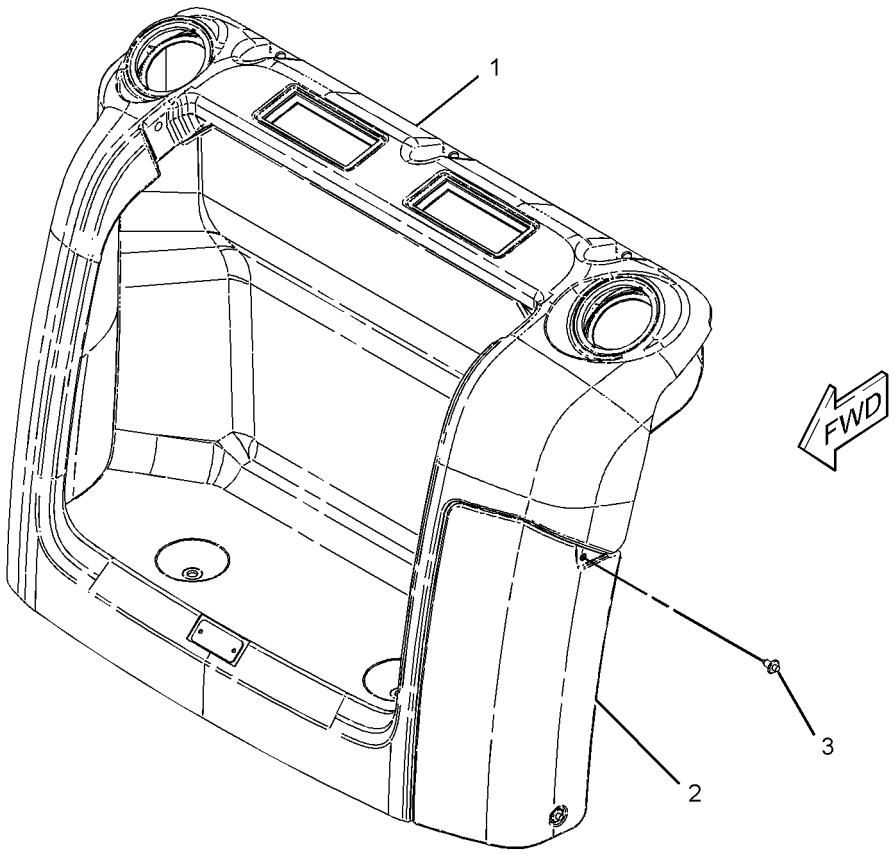

GRAPHIC #1 **<END>** g01998793

OPERATOR STATION

308-7024 COVER GP-CAB—INTERIOR, FRONT

S/N: WAP1-UP
PART OF 308-7020, 308-7021, 308-7022 CAB AR
AN ATTACHMENT

SMCS-7301, 7308 **i02896253**

NOTE	REF NO	GRAPHIC REF	PART NUMBER	QTY	PART NAME 1 2 3 4 5 6 (PRODUCT LEVEL)	SEE PAGE
	1	1	**2S-1647**	1	GROMMET	
	2	1	**139-6039**	1	NUT (U-TYPE RETAINER)	
	3	1	**234-6470**	1	COVER-MONITOR	
	4	1	**234-6471**	1	COVER-DUCT	
	5	1	**234-6473**	1	COVER-FRONT (UPPER, RH)	
	6	1	**234-6474**	1	COVER (UPPER, RH)	
	7	1	**234-6490**	1	CUP	
	8	1	**234-6497**	1	COVER	
	9	1	**234-6498**	5	RIVET	
	10	1	**234-6579**	2	NUT-SPEED	
	11	1	**253-6915**	1	INSERT	
	12	1	**282-0045**	1	DUCT	
	13	1	**282-7758**	1	COVER AS	
		1	**259-7353**	4	CLIP	
	14	1	**290-0332**	1	CASE	
	15	1	**290-0373**	1	CASE	
	16	1	*302-0455*	1	COVER GP-CONSOLE	
		1	**234-6469**	1	COVER	
		1	**234-6521**	1	COVER	
	17	1	**305-0333**	1	BRACKET	
	18	1	**306-3970**	1	COVER	
M	19	1	**128-2135**	7	SCREW-TRUSS HEAD (M6X1X13-MM)	
M	20	1	**151-6282**	1	BOLT-SOCKET HEAD (M6X1X40-MM)	
	21	1	**164-0655**	1	PANEL-SWITCH (OPERATOR CONSOLE)	
	22	1	**164-8474**	2	LOUVER AS-VENT	
M	23	1	**171-7325**	2	SCREW-TAPPING (M5X0.8-THD)	
	24	1	**234-6480**	1	BRACKET AS	
	25	1	**234-6483**	1	BRACKET AS	
	26	1	**234-6485**	1	BRACKET AS	
	27	1	**235-8923**	2	CAP	
M	28	1	**3E-8020**	2	SCREW-TRUSS HEAD (M6X1X25-MM)	
	29	1	**8Y-6352**	1	LOUVER AS	
M	30	1	**9X-2042**	13	SCREW-TRUSS HEAD (M6X1X12-MM)	
M	31	1	**9X-2045**	1	SCREW-TRUSS HEAD (M6X1X20-MM)	

M-METRIC PART

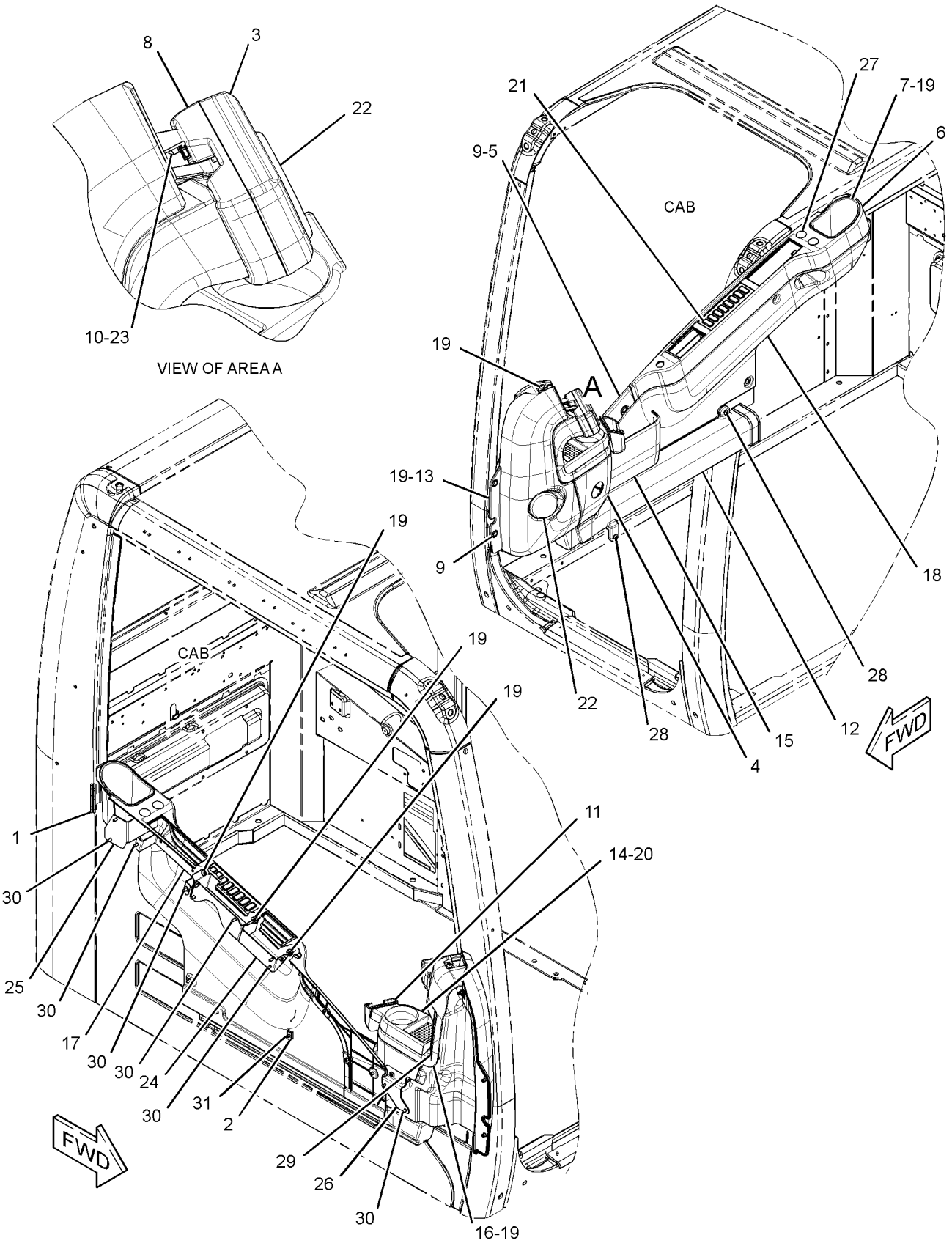

GRAPHIC #1 **<END>** g01526830

OPERATOR STATION

356-0658 COVER GP-CAB–EXTERIOR, LH

S/N: WAP1-UP

PART OF 342-3451 OPERATOR AR

SMCS-7301, 7308 **i03872144**

NOTE	REF NO	GRAPHIC REF	PART NUMBER	QTY	PART NAME 1 2 3 4 5 6 (PRODUCT LEVEL)	SEE PAGE
	1	1	**156-6643**	2	COVER	
	2	1	**315-5313**	1	COVER	
	3	1	**4I-4392**	3	CLIP	

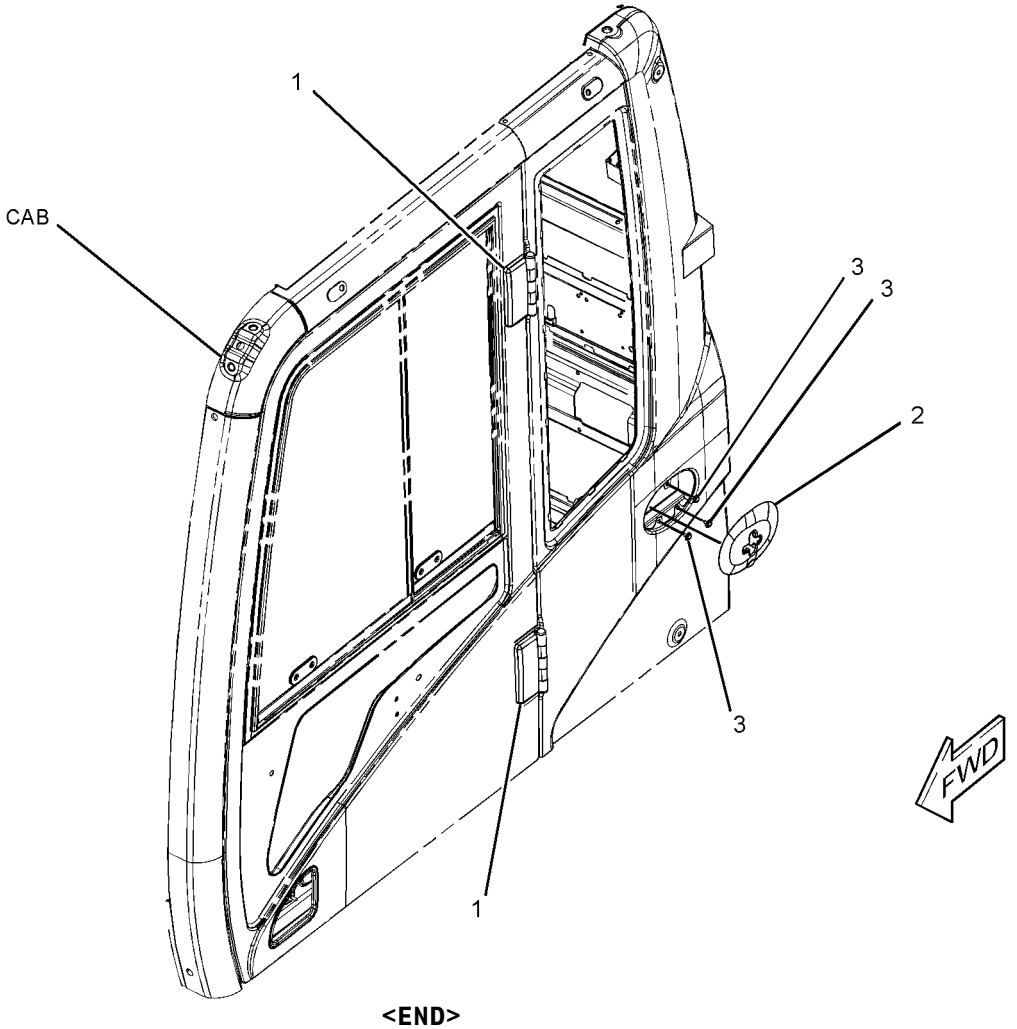

GRAPHIC #1 **<END>** g02134857

OPERATOR STATION

234-6500 COVER GP-STORAGE–CAB, REAR

S/N: WAP1-UP

PART OF 340-4002, 340-4003, 340-4004 OPTION AR-CAB

AN ATTACHMENT

SMCS-7268 **i02108928**

NOTE	REF NO	GRAPHIC REF	PART NUMBER	QTY	PART NAME 1 2 3 4 5 6 (PRODUCT LEVEL)	SEE PAGE
					(NO SERVICED PARTS)	

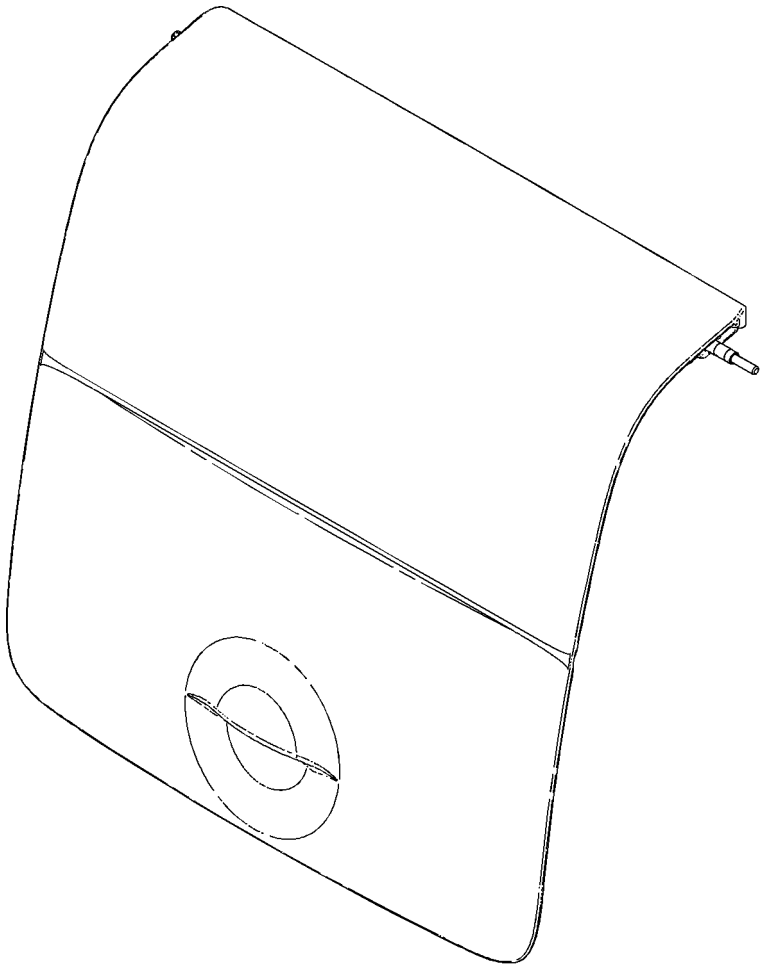

GRAPHIC #1 **<END>** g01092876

OPERATOR STATION

189-2768 DOOR & MTG GP-CAB

S/N: WAP1-UP
PART OF 308-7020 CAB AR
AN ATTACHMENT

SMCS-7308 **i01898152**

NOTE	REF NO	GRAPHIC REF	PART NUMBER	QTY	PART NAME 1 2 3 4 5 6 (PRODUCT LEVEL)	SEE PAGE
Y	1	1	*139-7100*	1	DOOR GP-CAB	976
M	2	1	**9X-2041**	6	SCREW-TRUSS HEAD (M10X1.5X20-MM)	
	3	1	**151-6777**	2	HINGE	

M-METRIC PART
Y-SEPARATE ILLUSTRATION

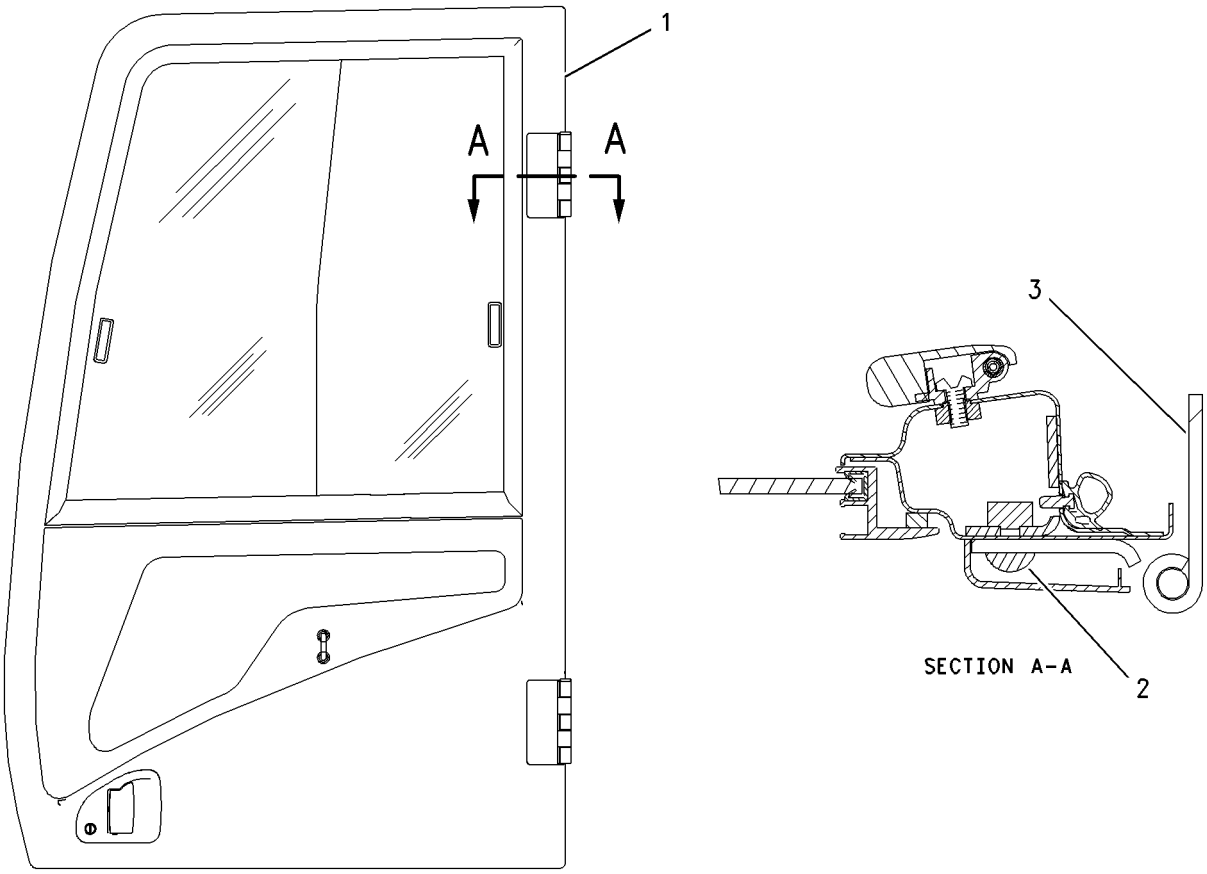

RIGHT SIDE VIEW

GRAPHIC #1 **<END>** g00987645

OPERATOR STATION

189-2793 DOOR GP-CAB

S/N: WAP1-UP
PART OF 308-7021, 308-7022 CAB AR
AN ATTACHMENT

SMCS-7308 **i02518082**

NOTE	REF NO	GRAPHIC REF	PART NUMBER	QTY	PART NAME 1 2 3 4 5 6 (PRODUCT LEVEL)	SEE PAGE
Y	1	1	**176-1964**	1	DOOR GP-CAB	979
	2	1	**189-2796**	1	DOOR AS	
	2A	1	**151-6777**	2	HINGE	
M	2B	1	**9X-2041**	6	SCREW-TRUSS HEAD (M10X1.5X20-MM)	

M-METRIC PART
Y-SEPARATE ILLUSTRATION

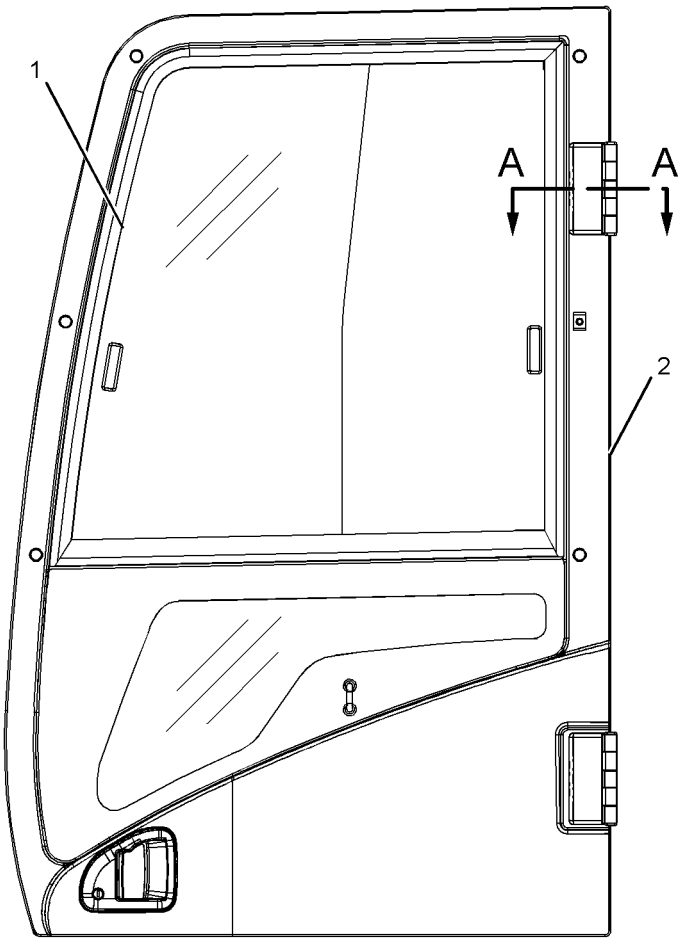

LEFT SIDE VIEW

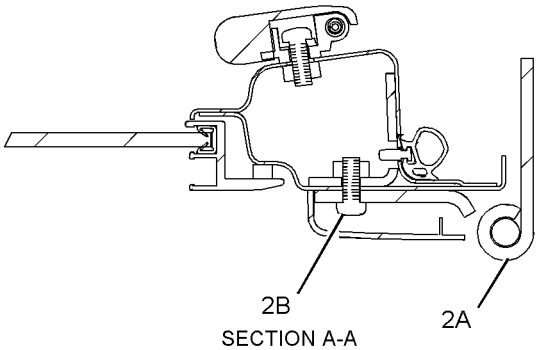

SECTION A-A

GRAPHIC #1 **<END>** g01121662

OPERATOR STATION

139-7100 DOOR GP-CAB

S/N: WAP1-UP
PART OF 189-2768 DOOR & MTG GP-CAB
AN ATTACHMENT

SMCS-7308 **i03478305**

NOTE	REF NO	GRAPHIC REF	PART NUMBER	QTY	PART NAME 1 2 3 4 5 6 (PRODUCT LEVEL)	SEE PAGE
	1	1	**327-6579**	1	HANDLE-PULL	
CY	3	1	**286-8861**	1	WINDOW GP-DOOR (GLASS)	1060
	4	2	**156-6471**	1	GLASS	
	5	2	**156-6598**	1	HOOK	
	6	1	**156-6600**	1	LOCK AS	
		1	**164-0514**	1	CLIP	
		1	**164-0519**	1	CLIP	
	7	1	**156-6645**	1	HANDLE AS	
		1	**201-4391**	1	CLIP	
J	8	2	**161-3639**	1	HANDLE AS	
	9	2	**161-3650**	1	COVER AS	
	10	1	**161-3663**	1	SEAL AS	
		1	**151-9497**	45	CLIP	
	11	2	**161-3665**	1	SEAL	
	12	1	**161-3699**	1	COVER	
	13	2	**164-0515**	1	JOINT	
	14	2	**167-7039**	1	GROMMET	
M	15	1	**119-8338**	4	SCREW (M6X1X20-MM)	
M	16	1	**5C-7423**	3	SCREW (M6X1X16-MM)	
	17	2	**8T-4224**	6	WASHER-HARD (8.8X16X2-MM THK)	
M	18	1,2	**9X-2042**	10	SCREW-TRUSS HEAD (M6X1X12-MM)	
	19	1	**189-2690**	1	HANDLE	
	20	2	**220-4080**	2	SCREW	
	21	2	**4I-4286**	1	KNOB	
M	22	2	**5C-7261**	2	NUT (M8X1.25-THD)	
	23	1	**315-8672**	1	BUMPER	

C-CHANGE FROM PREVIOUS TYPE
J-REQUIRES CORPORATE KEY
M-METRIC PART
Y-SEPARATE ILLUSTRATION

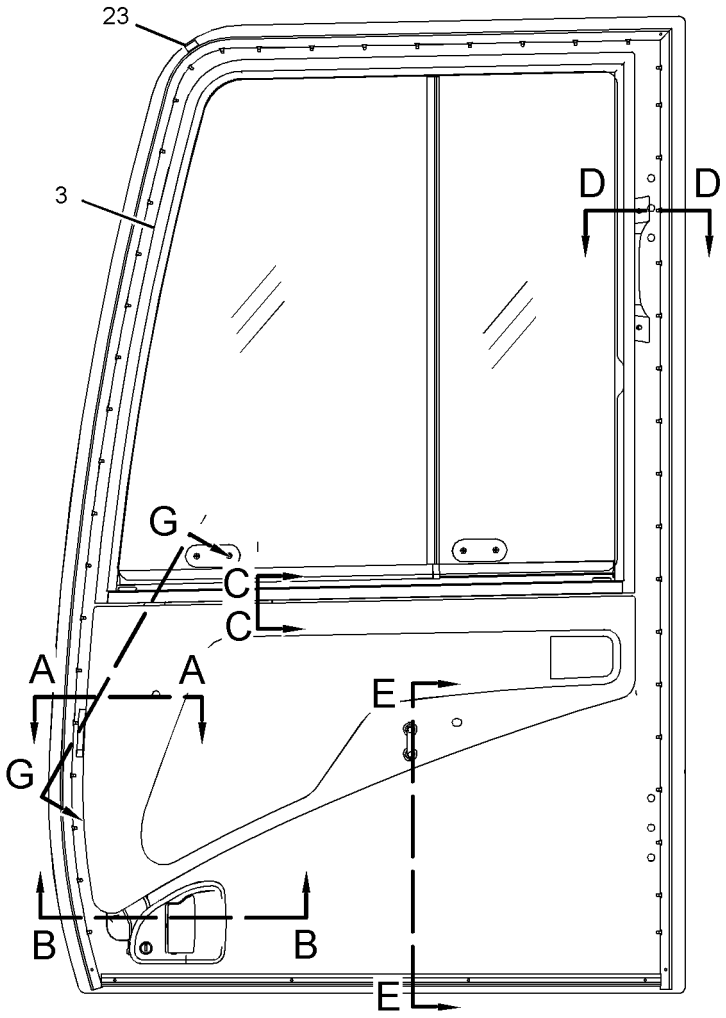

LEFT SIDE VIEW

REFER TO ALL ILLUSTRATIONS OF THIS GROUP FOR AUXILIARY VIEWS

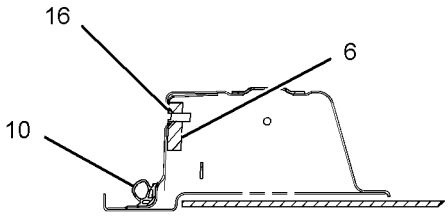

SECTION A-A

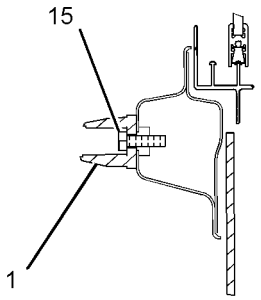

SECTION C-C

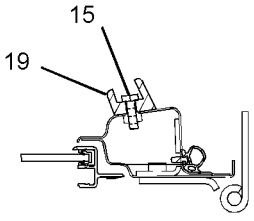

SECTION D-D

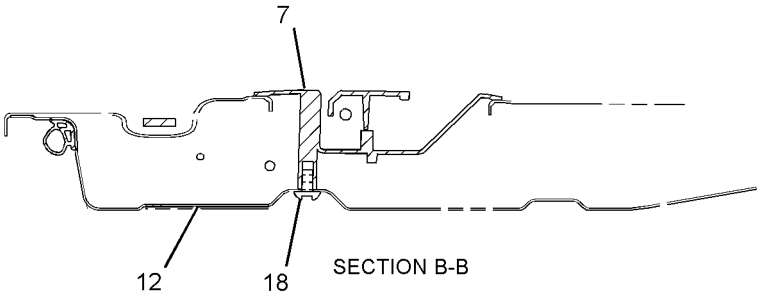

SECTION B-B

GRAPHIC #1 g01742733

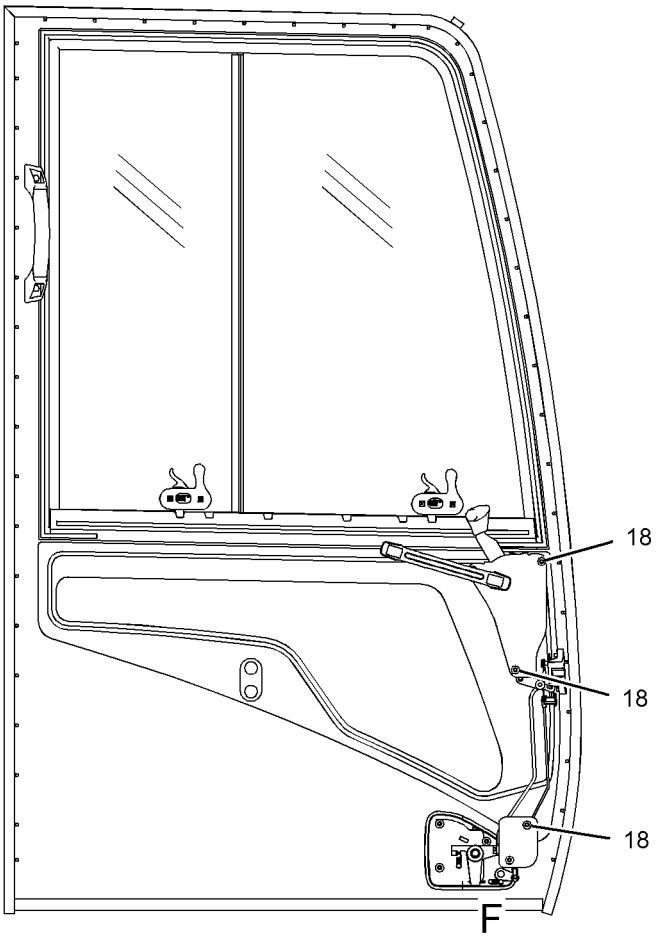

RIGHT SIDE VIEW

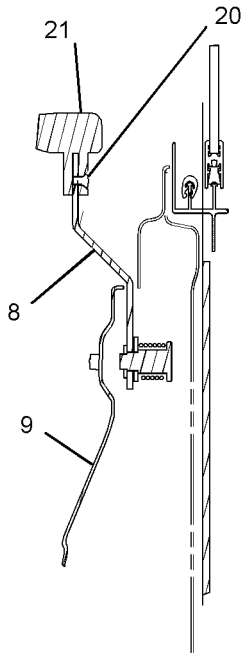

SECTION G-G

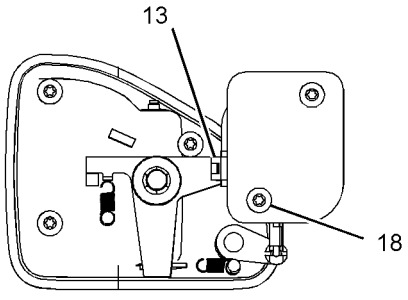

VIEW OF AREA F

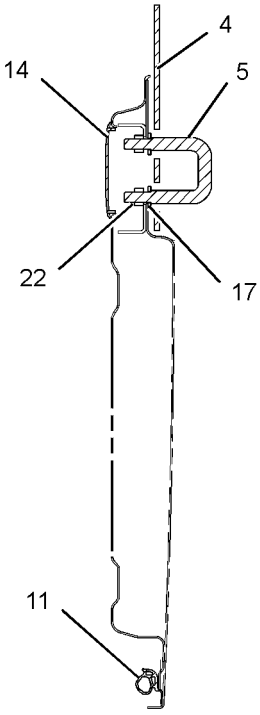

SECTION E-E

GRAPHIC #2 **<END>** g01431161

OPERATOR STATION

176-1964 DOOR GP-CAB

S/N: WAP1-UP
PART OF 189-2793 DOOR & MTG GP-CAB
AN ATTACHMENT

SMCS-7308 **i03434842**

NOTE	REF NO	GRAPHIC REF	PART NUMBER	QTY	PART NAME 1 2 3 4 5 6 (PRODUCT LEVEL)	SEE PAGE
C	1	1	**327-6579**	1	HANDLE-PULL	
Y	3	1	**286-8861**	1	WINDOW GP-DOOR (GLASS)	1060
	4	1	**156-6598**	1	HOOK	
J	5	1	**156-6600**	1	LOCK AS	
		1	**164-0514**	1	CLIP	
		1	**164-0519**	1	CLIP	
	6	1	**156-6645**	1	HANDLE AS	
		1	**201-4391**	1	CLIP	
	7	1	**161-3639**	1	HANDLE AS	
	8	1	**161-3650**	1	COVER AS	
	9	1	**161-3663**	1	SEAL AS	
		1	**151-9497**	45	CLIP	
	10	1	**161-3665**	1	SEAL	
	11	1	**161-3699**	1	COVER	
	12	1	**164-0515**	1	JOINT	
	13	1	**156-6471**	1	GLASS	
	14	1	**167-7039**	1	GROMMET	
M	15	1	**119-8338**	4	SCREW (M6X1X20-MM)	
	16	1	**189-2690**	1	HANDLE	
	17	1	**220-4080**	2	SCREW	
	18	1	**4I-4286**	1	KNOB	
M	19	1	**5C-7261**	2	NUT (M8X1.25-THD)	
M	20	1	**5C-7423**	3	SCREW (M6X1X16-MM)	
	21	1	**9M-1974**	6	WASHER-HARD (8.8X16X2-MM THK)	
M	22	1	**9X-2044**	10	SCREW-TRUSS HEAD (M6X1X16-MM)	
	23	1	**315-8672**	1	BUMPER	

C-CHANGE FROM PREVIOUS TYPE
J-REQUIRES CORPORATE KEY
M-METRIC PART
Y-SEPARATE ILLUSTRATION

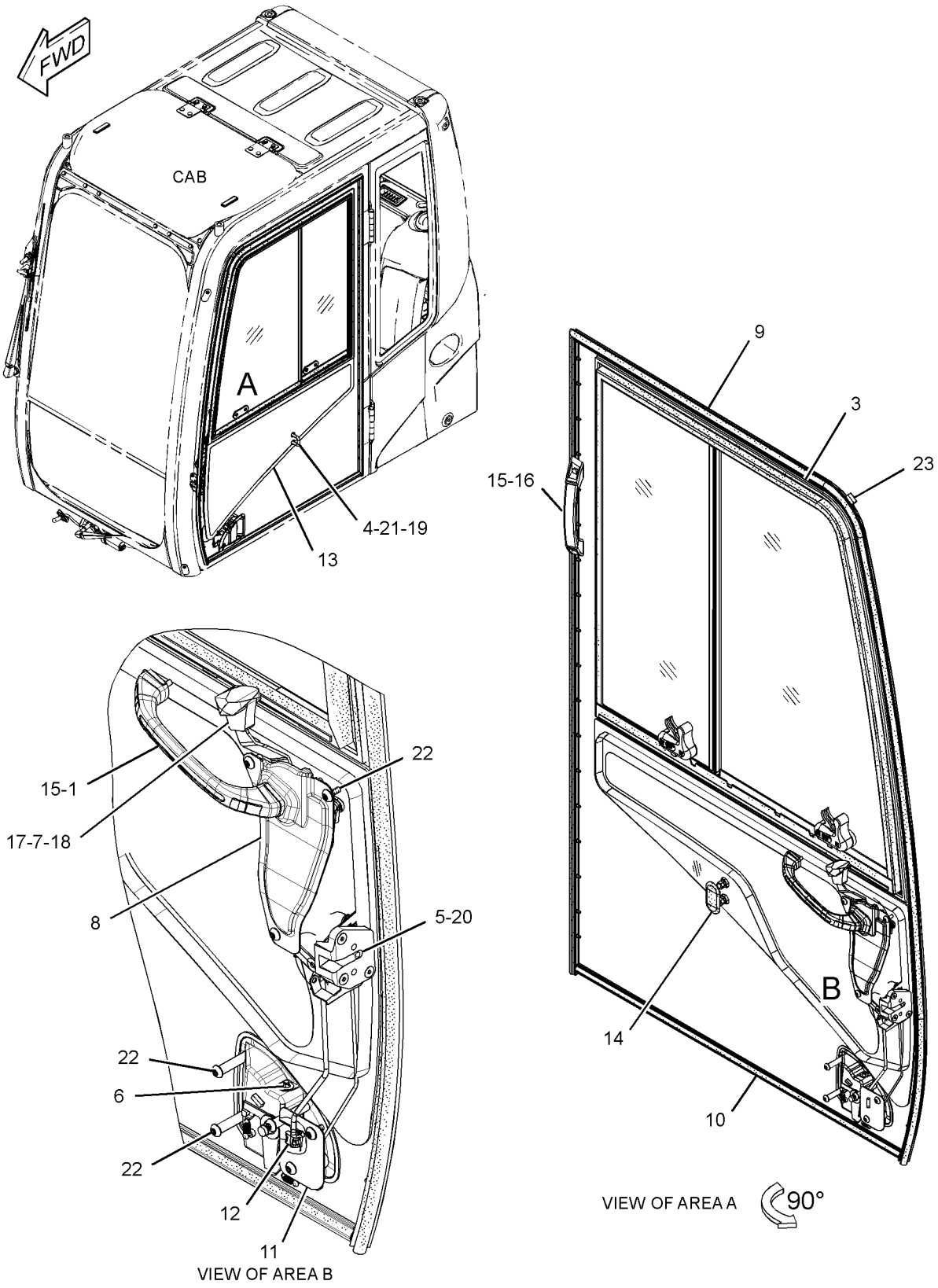

GRAPHIC #1 **<END>** g01742735

OPERATOR STATION

229-9082 DUCT GP-CAB AIR

S/N: WAP1-UP
PART OF 229-9079, 235-9003 AIR CONDITIONER AR
AN ATTACHMENT

SMCS-734D **i02623568**

NOTE	REF NO	GRAPHIC REF	PART NUMBER	QTY	PART NAME 1 2 3 4 5 6 (PRODUCT LEVEL)	SEE PAGE
	1	1	**235-8876**	1	DUCT AS (FRESH AIR, UPPER)	
		1	**245-7872**	1	INSULATOR	
	2	1	**235-8877**	1	DUCT AS (VENT, REAR)	
		1	**245-7792**	1	INSULATOR	
	3	1	**235-8878**	1	DUCT AS (VENT, FRONT)	
		1	**245-7793**	1	INSULATOR	
	4	1	**235-8879**	1	DUCT AS (FLOOR)	
		1	**245-7873**	1	INSULATOR	
	5	1	**240-5074**	1	DUCT AS (FRESH AIR, LOWER)	
		1	**245-7791**	1	INSULATOR	
	6	1	**176-1996**	3	CLIP	
M	7	1	**9X-2044**	4	SCREW-TRUSS HEAD (M6X1X16-MM)	

M-METRIC PART

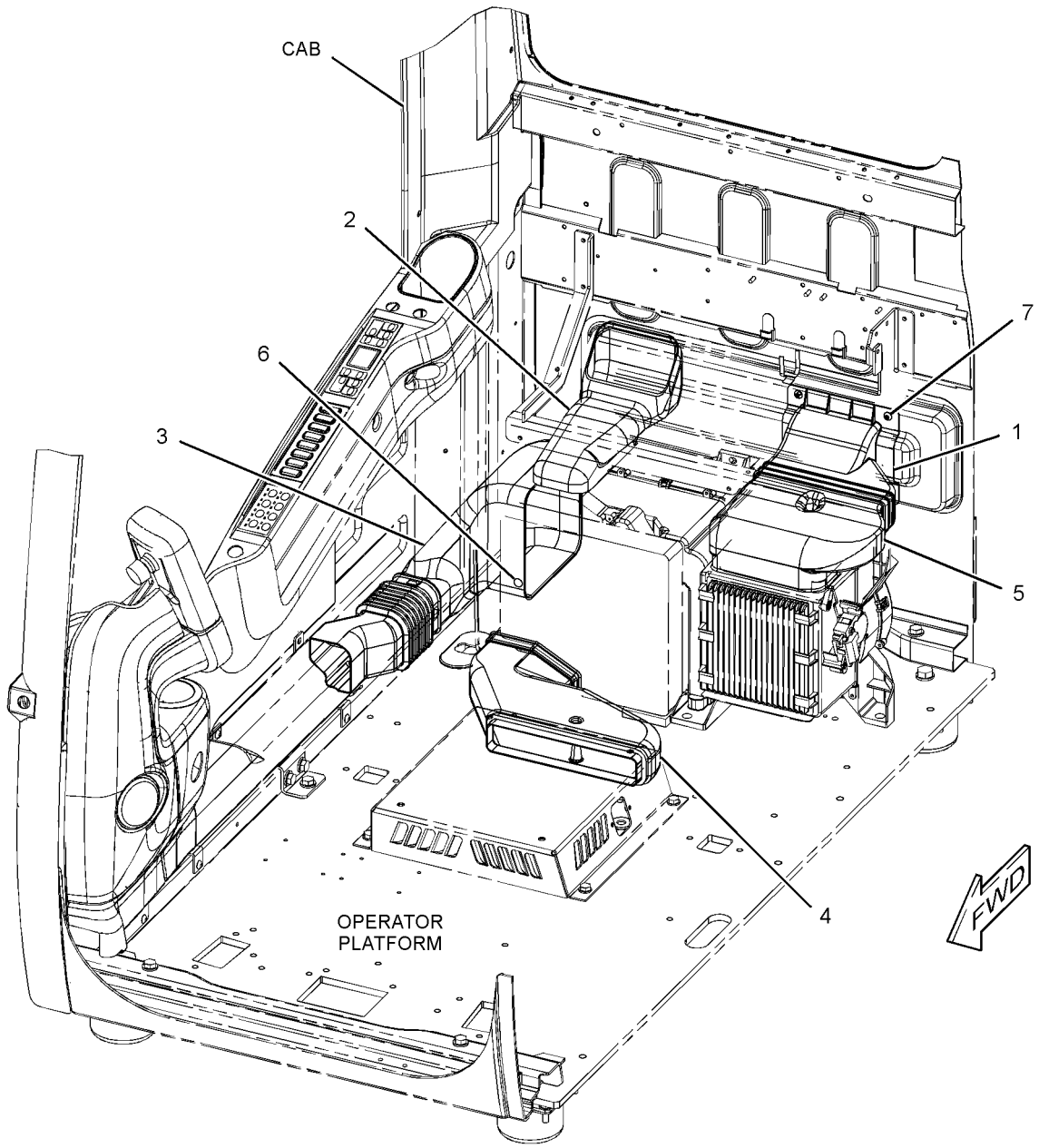

GRAPHIC #1 **<END>** g01204249

OPERATOR STATION

273-5358 FLOOR MAT GP—ACCUGRADE READY

S/N: WAP1-UP
PART OF 319-9186 CAMERA AR, 340-3996 SPECIAL AR
AN ATTACHMENT

SMCS-7265, 726M **i03861249**

NOTE	REF NO	GRAPHIC REF	PART NUMBER	QTY	PART NAME 1 2 3 4 5 6 (PRODUCT LEVEL)	SEE PAGE
	1	1	**273-5333**	1	FLOOR MAT	
	2	1	**273-5359**	1	PLATE-RUBBER	
	3	1	**273-5360**	1	PLATE-RUBBER	

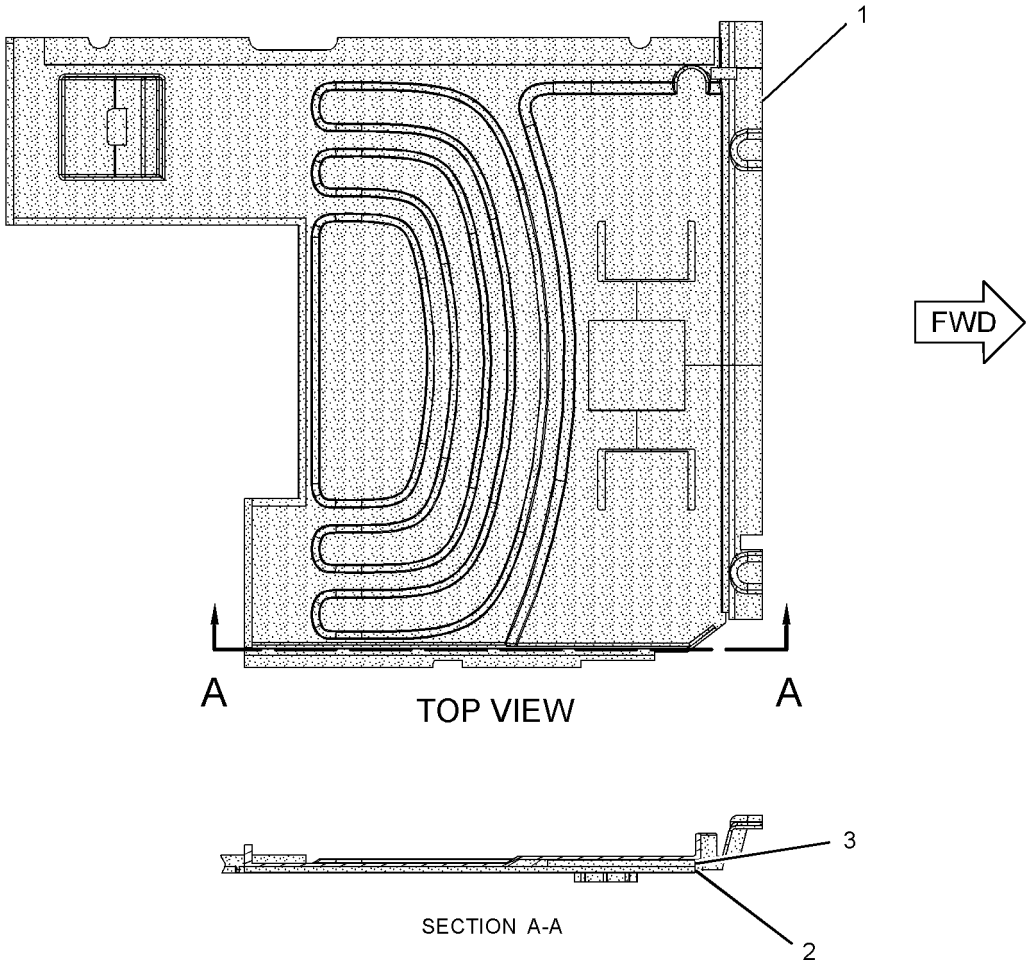

GRAPHIC #1 **<END>** g01235480

OPERATOR STATION

249-7109 GUARD AR-OVERHEAD

S/N: WAP1-UP

CANNOT BE USED WITH 249-7107—PAGE 1022, 330-3027—PAGE 1023, 259-8009—PAGE 985, 250-0712—PAGE 984, 330-3028—PAGE 984, 259-8003—PAGE 992

AN ATTACHMENT

SMCS-7159 **i02669553**

NOTE	PART NUMBER	QTY	PART NAME 1 2 3 4 5 6 (PRODUCT LEVEL)	SEE PAGE
Y	*194-3259*	1	GUARD GP-OVERHEAD	986
Y	*249-7108*	1	HANDRAIL GP (CAB)	373
Y	*252-1242*	1	LIGHTING GP-FLOOD (CAB GUARD)	207
	249-7887	2	SPACER (20.5X38X41-MM THK)	

Y-SEPARATE ILLUSTRATION

<END>

250-0712 GUARD AR-OVERHEAD—WINDOW

S/N: WAP1-UP

CANNOT BE USED WITH 249-7107—PAGE 1022, 330-3027—PAGE 1023, 259-8009—PAGE 985, 249-7109—PAGE 984, 330-3028—PAGE 984, 259-8003—PAGE 992

AN ATTACHMENT

SMCS-7159 **i02109521**

NOTE	PART NUMBER	QTY	PART NAME 1 2 3 4 5 6 (PRODUCT LEVEL)	SEE PAGE
Y	*194-3259*	1	GUARD GP-OVERHEAD	986
Y	*253-9224*	1	GUARD GP-WINDOW	990
Y	*252-1242*	1	LIGHTING GP-FLOOD (CAB GUARD)	207

Y-SEPARATE ILLUSTRATION

<END>

330-3028 GUARD AR-OVERHEAD

S/N: WAP1-UP

CANNOT BE USED WITH 330-3027—PAGE 1023, 249-7107—PAGE 1022, 259-8009—PAGE 985, 259-8003 GUARD GP-WINDOW

AN ATTACHMENT

SMCS-7159 **i03789989**

NOTE	PART NUMBER	QTY	PART NAME 1 2 3 4 5 6 (PRODUCT LEVEL)	SEE PAGE
Y	*194-3259*	1	GUARD GP-OVERHEAD	986
Y	*253-9224*	1	GUARD GP-WINDOW	990
Y	*299-2939*	1	LIGHTING GP-FLOOD	209

Y-SEPARATE ILLUSTRATION

<END>

OPERATOR STATION

220-2561 GUARD AR-VANDALISM—CAB

S/N: WAP1-UP

AN ATTACHMENT

SMCS-7315 **i04026469**

NOTE	PART NUMBER	QTY	PART NAME 1 2 3 4 5 6 (PRODUCT LEVEL)	SEE PAGE
Y	*207-0159*	1	GUARD GP-VANDALISM (CAB)	987
Y	*223-2952*	1	STORAGE GP-VANDALISM GUARD	425

Y-SEPARATE ILLUSTRATION

<END>

267-4944 GUARD AR-VANDALISM—CAB

S/N: WAP1-UP

CANNOT BE USED WITH 250-0712—PAGE 984, 259-8009—PAGE 985

AN ATTACHMENT

SMCS-7315 **i04026470**

NOTE	PART NUMBER	QTY	PART NAME 1 2 3 4 5 6 (PRODUCT LEVEL)	SEE PAGE
Y	*266-5812*	1	GUARD GP-VANDALISM (CAB)	989
Y	*223-2952*	1	STORAGE GP-VANDALISM GUARD	425

Y-SEPARATE ILLUSTRATION

<END>

259-8009 GUARD GP-FRONT WINDOW

S/N: WAP1-UP

CANNOT BE USED WITH 249-7109—PAGE 984, 250-0712—PAGE 984, 249-7107—PAGE 1022

AN ATTACHMENT

SMCS-7182, 7315 **i02220559**

NOTE	PART NUMBER	QTY	PART NAME 1 2 3 4 5 6 (PRODUCT LEVEL)	SEE PAGE
Y	*259-8003*	1	GUARD GP-WINDOW	992
Y	*259-8120*	1	LIGHTING GP-FLOOD (CAB)	208

Y-SEPARATE ILLUSTRATION

<END>

OPERATOR STATION

194-3259 GUARD GP-OVERHEAD

S/N: WAP1-UP

PART OF 249-7109, 250-0712, 330-3028 GUARD AR-OVERHEAD AN ATTACHMENT

SMCS-7159 **i02957719**

NOTE	REF NO	GRAPHIC REF	PART NUMBER	QTY	PART NAME 1 2 3 4 5 6 (PRODUCT LEVEL)	SEE PAGE
	1	1	**6C-8787**	4	TUBE	
	2	1	**193-2153**	1	GUARD AS	
	3	1	**227-1086**	1	FILM-WARNING (TOP GUARD, READ OMM)	
					—OR—	
	4	1	**266-0545**	1	FILM-WARNING (TOP GUARD, READ OMM)	
	5	1	**219-0305**	1	FILM-WARNING (NO WELD, NO DRILL, READ OMM)	
M	6	1	**7X-2475**	2	BOLT (M16X2X130-MM)	
M	7	1	**7X-2552**	2	BOLT (M16X2X30-MM)	
M	8	1	**7Y-5227**	2	BOLT (M16X2X190-MM)	
	9	1	**9X-8257**	2	WASHER (17.5X30X3.5-MM THK)	
J	10	1	**090-8865**	3	SPACER (17X40X3-MM THK)	

J-REQUIRED WHEN USED WITH CONTROL AR 303-2723
M-METRIC PART

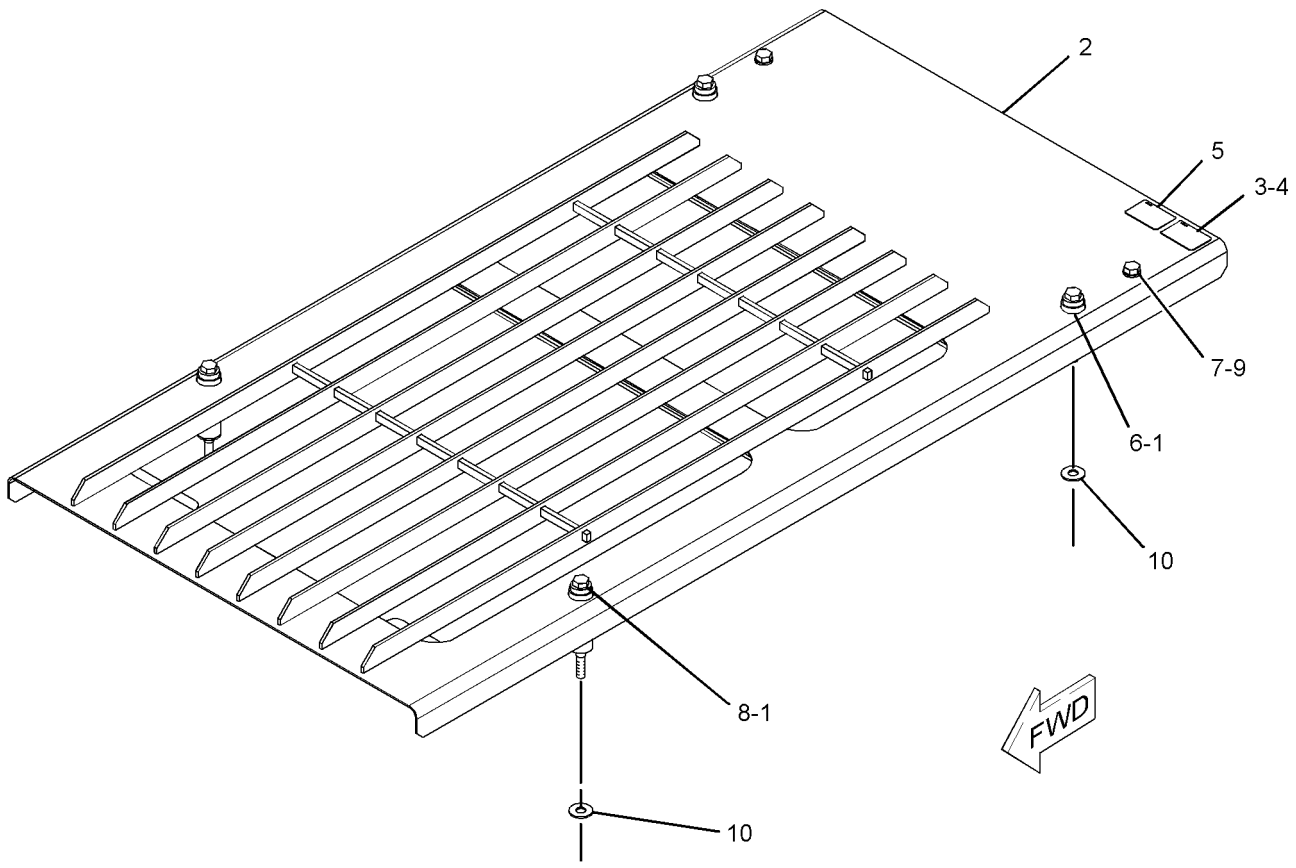

GRAPHIC #1 **<END>** g01526143

OPERATOR STATION

207-0159 GUARD GP-VANDALISM—CAB

S/N: WAP1-UP
PART OF 220-2561 GUARD AR-VANDALISM
AN ATTACHMENT

SMCS-7315 **i02499566**

NOTE	REF NO	GRAPHIC REF	PART NUMBER	QTY	PART NAME 1 2 3 4 5 6 (PRODUCT LEVEL)	SEE PAGE
	1	1	**7Y-8621**	6	PIN	
	2	1	**7Y-8622**	1	PIN	
	3	1	**207-0161**	1	GUARD AS	
		1	**240-5025**	2	HINGE	
	4	1	**207-0164**	1	GUARD AS	
		1	**240-5025**	2	HINGE	
	5	1	**207-0167**	1	GUARD AS	
		1	**240-5025**	2	HINGE	
	6	1	**207-0170**	1	GUARD AS	
		1	**240-5025**	2	HINGE	
	7	1	**207-0173**	1	GUARD AS	
		1	**240-5025**	2	HINGE	
M	8	1	**8T-4200**	2	BOLT (M8X1.25X16-MM)	
	9	1	**8T-4224**	2	WASHER-HARD (8.8X16X2-MM THK)	
	10	1	**260-4651**	2	PIN	

M-METRIC PART

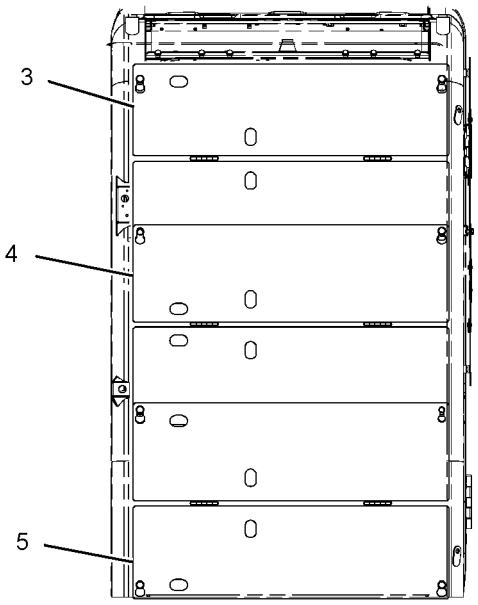

FRONT VIEW

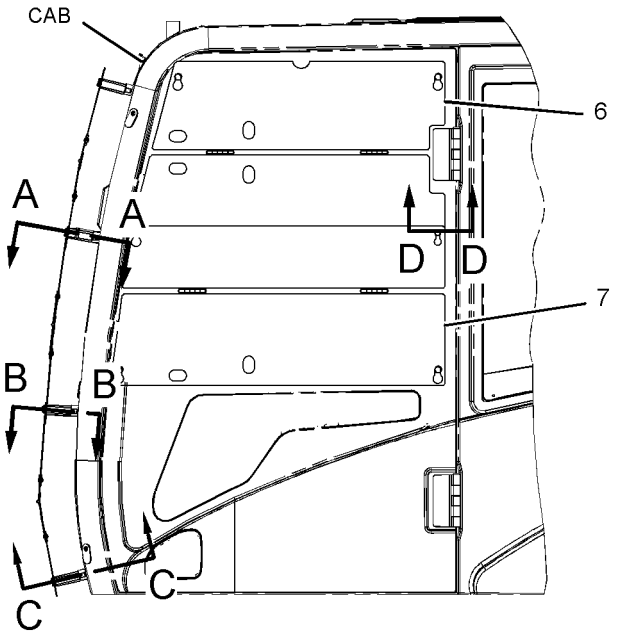

LEFT SIDE VIEW

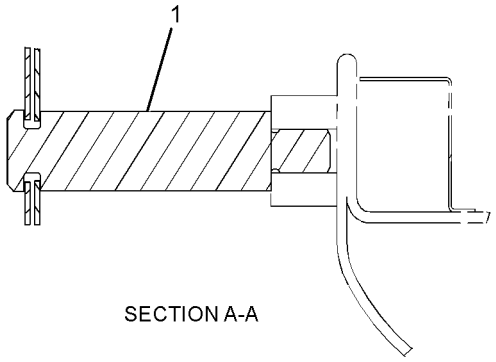

SECTION A-A

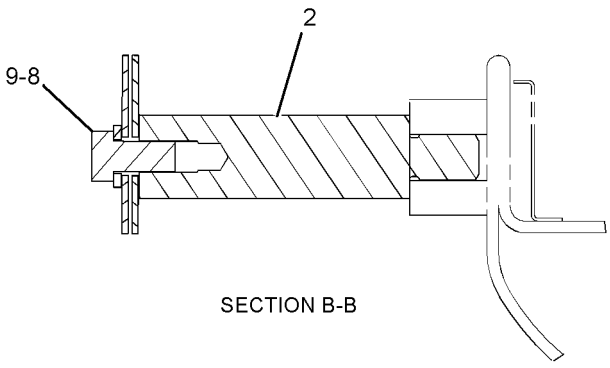

SECTION B-B

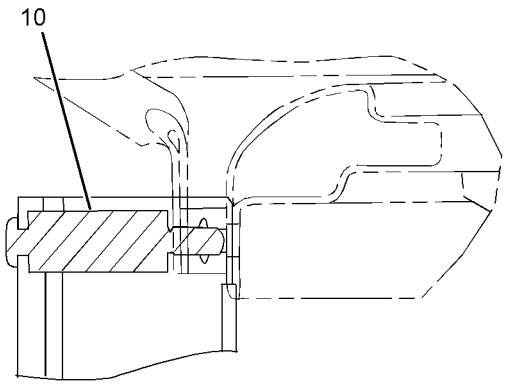

SECTION C-C

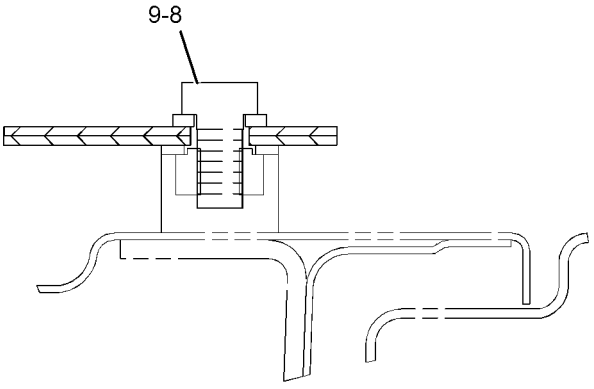

SECTION D-D

GRAPHIC #1 **<END>** g01243574

OPERATOR STATION

266-5812 GUARD GP-VANDALISM–CAB

S/N: WAP1-UP
PART OF 267-4944 GUARD AR-VANDALISM
AN ATTACHMENT

SMCS-7315 **i02575448**

NOTE	REF NO	GRAPHIC REF	PART NUMBER	QTY	PART NAME 1 2 3 4 5 6 (PRODUCT LEVEL)	SEE PAGE
	1	1	**7Y-8621**	6	PIN	
	2	1	**7Y-8622**	1	PIN	
	3	1	**207-0164**	1	GUARD AS	
		1	**240-5025**	2	HINGE	
	4	1	**207-0167**	1	GUARD AS	
		1	**240-5025**	2	HINGE	
	5	1	**207-0170**	1	GUARD AS	
		1	**240-5025**	2	HINGE	
	6	1	**207-0173**	1	GUARD AS	
		1	**240-5025**	2	HINGE	
	7	1	**260-4651**	1	PIN	
	8	1	**266-6474**	1	GUARD AS	
		1	**240-5025**	2	HINGE	
M	9	1	**8T-4200**	2	BOLT (M8X1.25X16-MM)	
	10	1	**8T-4224**	2	WASHER-HARD (8.8X16X2-MM THK)	

M-METRIC PART

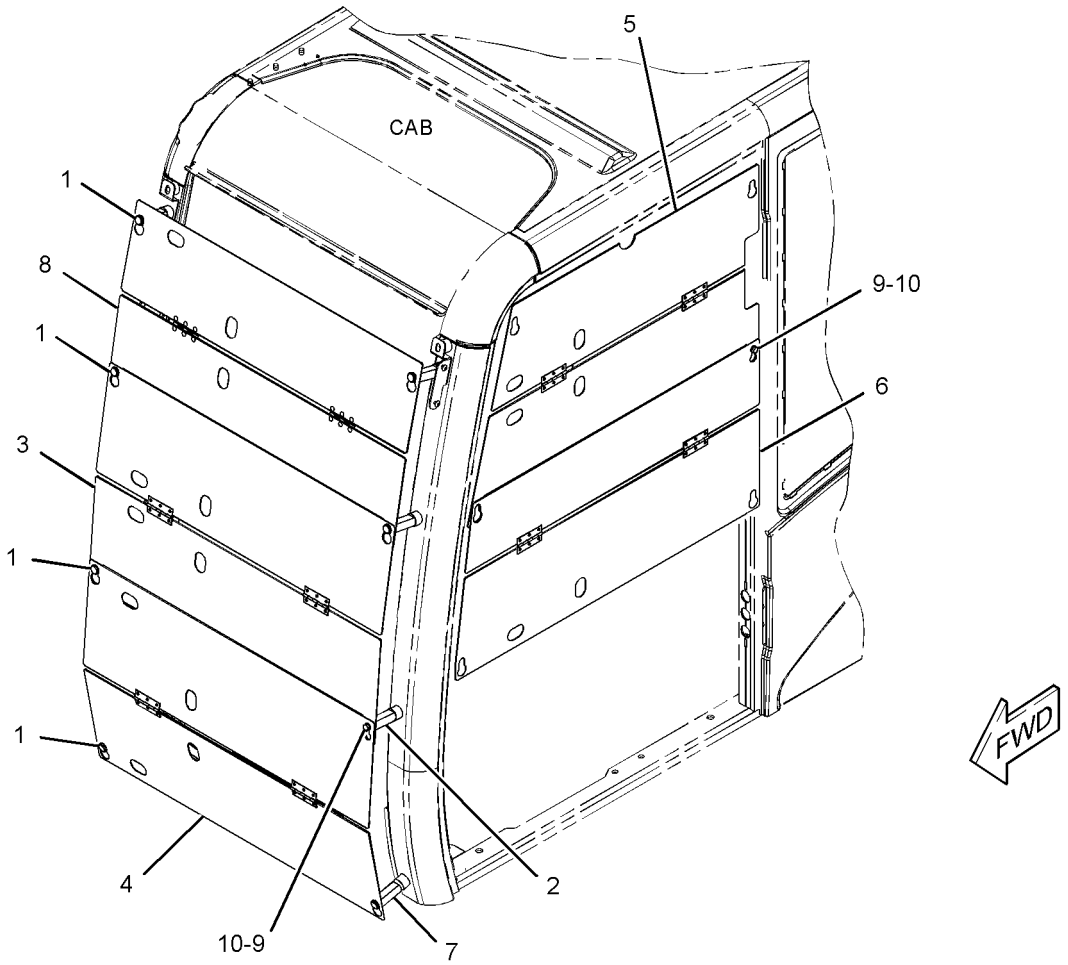

GRAPHIC #1 **<END>** g01303662

OPERATOR STATION

253-9224 GUARD GP-WINDOW

S/N: WAP1-UP

PART OF 250-0712, 330-3028 GUARD AR-OVERHEAD

AN ATTACHMENT

SMCS-7182, 7315 **i03532744**

NOTE	REF NO	GRAPHIC REF	PART NUMBER	QTY	PART NAME 1 2 3 4 5 6 (PRODUCT LEVEL)	SEE PAGE
	1	1	**4E-1384**	2	BUMPER-CONICAL	
	2	1	**6C-8379**	2	LATCH AS	
	3	1	**6C-8382**	2	SPRING-LATCH	
	4	1	**115-1624**	2	SPRING AS-GAS	
	5	1	**141-6518**	2	SPACER (13.5X30X10-MM THK)	
C	6	1	**331-9373**	1	GUARD AS-WINDOW	
	7	1	**191-2752**	1	BRACKET AS	
	8	1	**191-2753**	1	BRACKET AS	
	9	1	**191-6243**	6	SPACER (13.5X30X20-MM THK) (OUTSIDE NACD)	
M		1	**8T-4910**	6	BOLT (M12X1.75X60-MM) (OUTSIDE NACD)	
					—OR—	
M		1	**8T-4183**	6	BOLT (M12X1.75X40-MM) (NACD)	
	10	1	**194-0715**	2	SPACER (18X38X29-MM THK)	
	11	1	**199-3680**	1	HANDLE AS	
	12	1	**201-4534**	2	PIN	
	13	1	**201-4535**	2	PIN	
	14	1	**241-4052**	1	SUPPORT AS	
	15	1	**241-4053**	1	SUPPORT AS	
M	16	1	**096-4882**	2	LOCKNUT (M8X1.25-THD)	
	17	1	**219-0305**	1	FILM-WARNING (NO WELD, NO DRILL, READ OMM)	
	18	1	**266-0546**	1	FILM-WARNING (FRONT GUARD, READ OMM)	
M	19	1	**5C-7261**	8	NUT (M8X1.25-THD)	
M	21	1	**7Y-0623**	2	LOCKNUT (M16X2-THD)	
M	22	1	**8T-4139**	2	BOLT (M12X1.75X30-MM)	
	23	1	**8T-4223**	6	WASHER-HARD (13.5X25.5X3-MM THK)	
	24	1	**8T-4224**	6	WASHER-HARD (8.8X16X2-MM THK)	
	27	1	**9X-8257**	2	WASHER (17.5X30X3.5-MM THK)	

C-CHANGE FROM PREVIOUS TYPE
M-METRIC PART

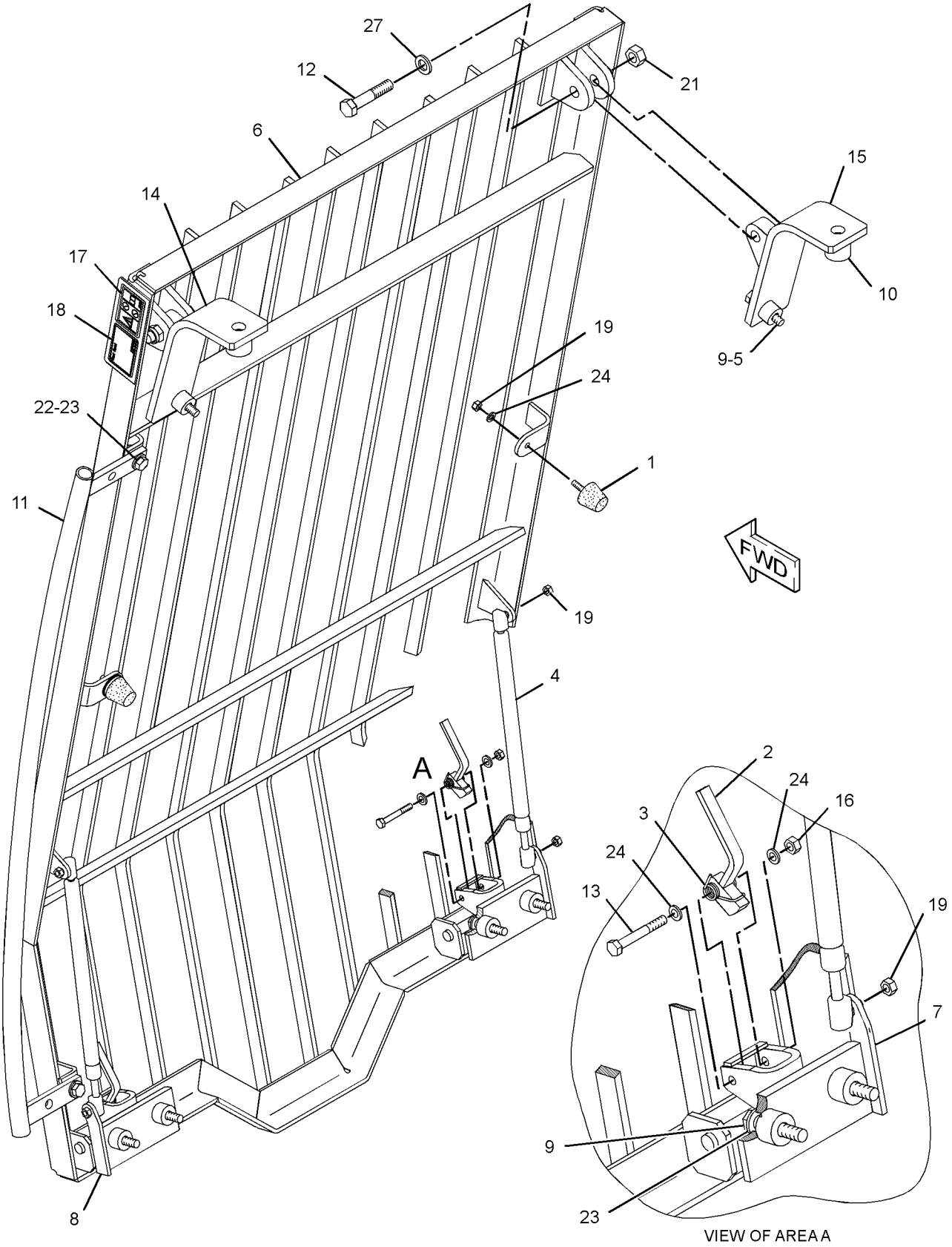

GRAPHIC #1 **<END>** g01678433

OPERATOR STATION

259-8003 GUARD GP-WINDOW

S/N: WAP1-UP
PART OF 259-8009 GUARD GP-FRONT WINDOW
AN ATTACHMENT

SMCS-7182, 7315 **i03120340**

NOTE	REF NO	GRAPHIC REF	PART NUMBER	QTY	PART NAME 1 2 3 4 5 6 (PRODUCT LEVEL)	SEE PAGE
	1	1	**4E-1384**	2	BUMPER-CONICAL	
	2	1	**6C-8379**	2	LATCH AS	
	3	1	**6C-8382**	2	SPRING-LATCH	
	4	1	**115-1624**	2	SPRING AS-GAS	
	5	1	**141-6518**	2	SPACER (13.5X30X10-MM THK)	
	6	1	**191-2752**	1	BRACKET AS	
	7	1	**191-2753**	1	BRACKET AS	
B	8	1	**191-6243**	6	SPACER (13.5X30X20-MM THK) (OUTSIDE NACD)	
	9	1	**194-0715**	2	SPACER (18X38X29-MM THK)	
	10	1	**199-3680**	1	HANDLE AS	
	11	1	**201-4534**	2	PIN	
	12	1	**201-4535**	2	PIN	
	13	1	**241-4052**	1	SUPPORT AS	
	14	1	**241-4053**	1	SUPPORT AS	
	15	1	**332-1454**	1	GUARD AS-WINDOW	
M	16	1	**096-4882**	2	LOCKNUT (M8X1.25-THD)	
M	17	1	**5C-7261**	6	NUT (M8X1.25-THD)	
B	18	1	**6C-4000**	8	SHIM (1-MM THK)	
M	19	1	**7Y-0623**	2	LOCKNUT (M16X2-THD)	
M	20	1	**8T-4139**	2	BOLT (M12X1.75X30-MM)	
	21	1	**8T-4223**	6	WASHER-HARD (13.5X25.5X3-MM THK)	
	22	1	**8T-4224**	6	WASHER-HARD (8.8X16X2-MM THK)	
BC	23	1	**8T-4897**	2	WASHER (10.2X35X6-MM THK)	
BM	24	1	**8T-4910**	6	BOLT (M12X1.75X60-MM) (OUTSIDE NACD)	
					—OR—	
BCM		1	**8T-4183**	6	BOLT (M12X1.75X40-MM) (NACD)	
	25	1	**9X-8257**	4	WASHER (17.5X30X3.5-MM THK)	
M	26	1	**118-4977**	2	BOLT (M16X2X65-MM)	

B-USE AS REQUIRED
C-CHANGE FROM PREVIOUS TYPE
M-METRIC PART

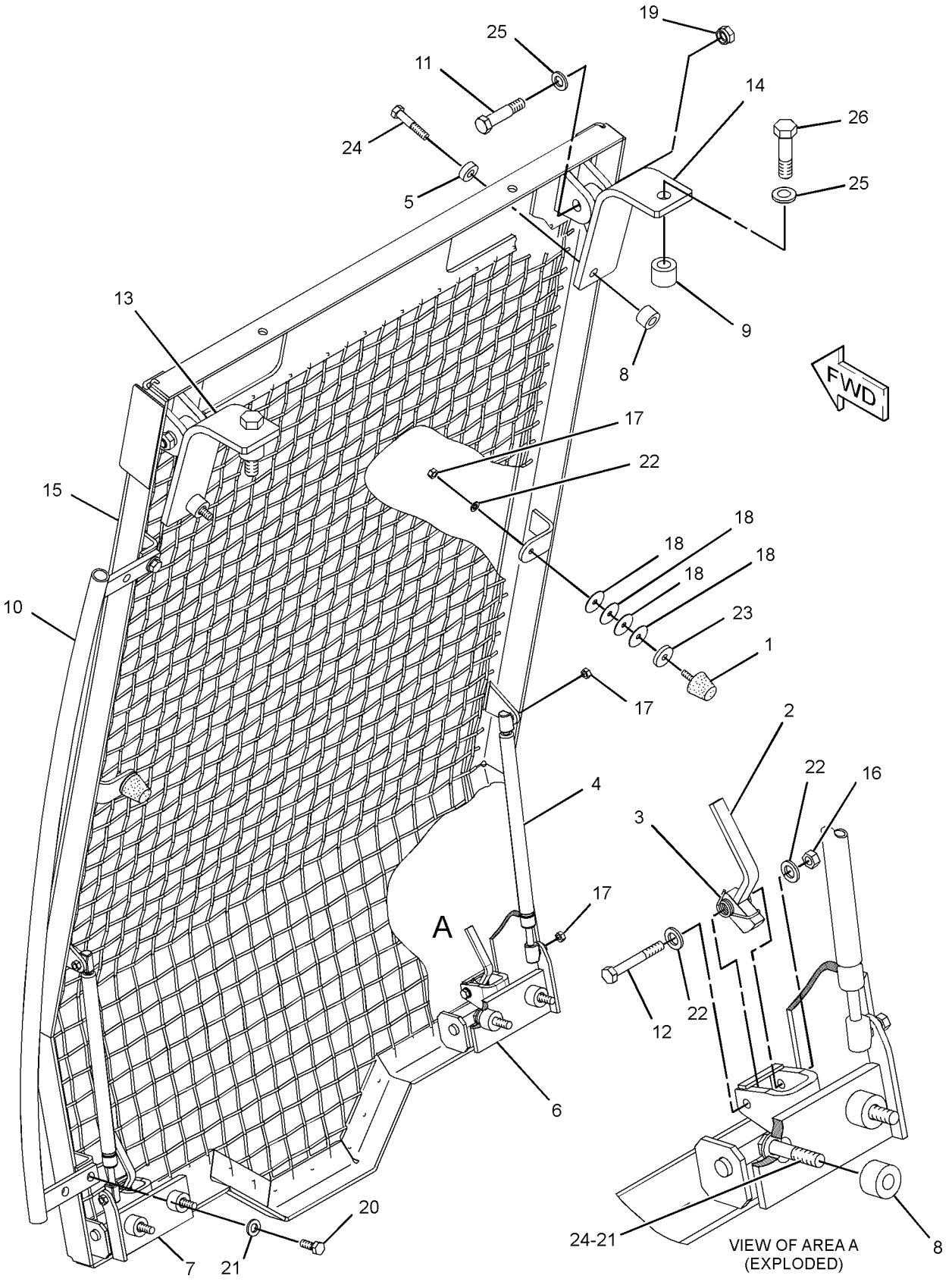

GRAPHIC #1 **<END>** g01378553

OPERATOR STATION

267-7860 HORN GP-ELECTRIC

S/N: WAP1-UP

PART OF 294-1237 CHASSIS AR

SMCS-7402 **i02393827**

NOTE	REF NO	GRAPHIC REF	PART NUMBER	QTY	PART NAME 1 2 3 4 5 6 (PRODUCT LEVEL)	SEE PAGE
	1	1	**3S-2093**	3	STRAP-CABLE	
	2	1	**213-0710**	2	HORN AS (24-VOLT, LOW TONE)	
					(EACH INCLUDES)	
		1	**8H-0878**	2	LOCKWASHER	
M		1	**8C-7581**	2	SCREW-MACHINE (M4X0.7X8-MM)	
		1	**8C-9660**	2	WASHER (4.6X7.9X0.8-MM THK)	
	3	1	**213-0711**	1	HORN AS (24-VOLT, HIGH TONE)	
		1	**8H-0878**	2	LOCKWASHER	
M		1	**8C-7581**	2	SCREW-MACHINE (M4X0.7X8-MM)	
		1	**8C-9660**	2	WASHER (4.6X7.9X0.8-MM THK)	
	4	1	**224-2940**	1	BRACKET AS	
	5	1	**267-7861**	1	HARNESS AS-WIRING (HORN)	
		1	**243-4505**	1	RECEPTACLE AS-CONNECTOR (2-PIN)	
	6	1	**8T-4121**	3	WASHER-HARD (11X21X2.5-MM THK)	
M	7	1	**8T-4136**	3	BOLT (M10X1.5X25-MM)	
M	8	1	**8T-4189**	6	BOLT (M8X1.25X20-MM)	
	9	1	**8T-4224**	6	WASHER-HARD (8.8X16X2-MM THK)	

M-METRIC PART

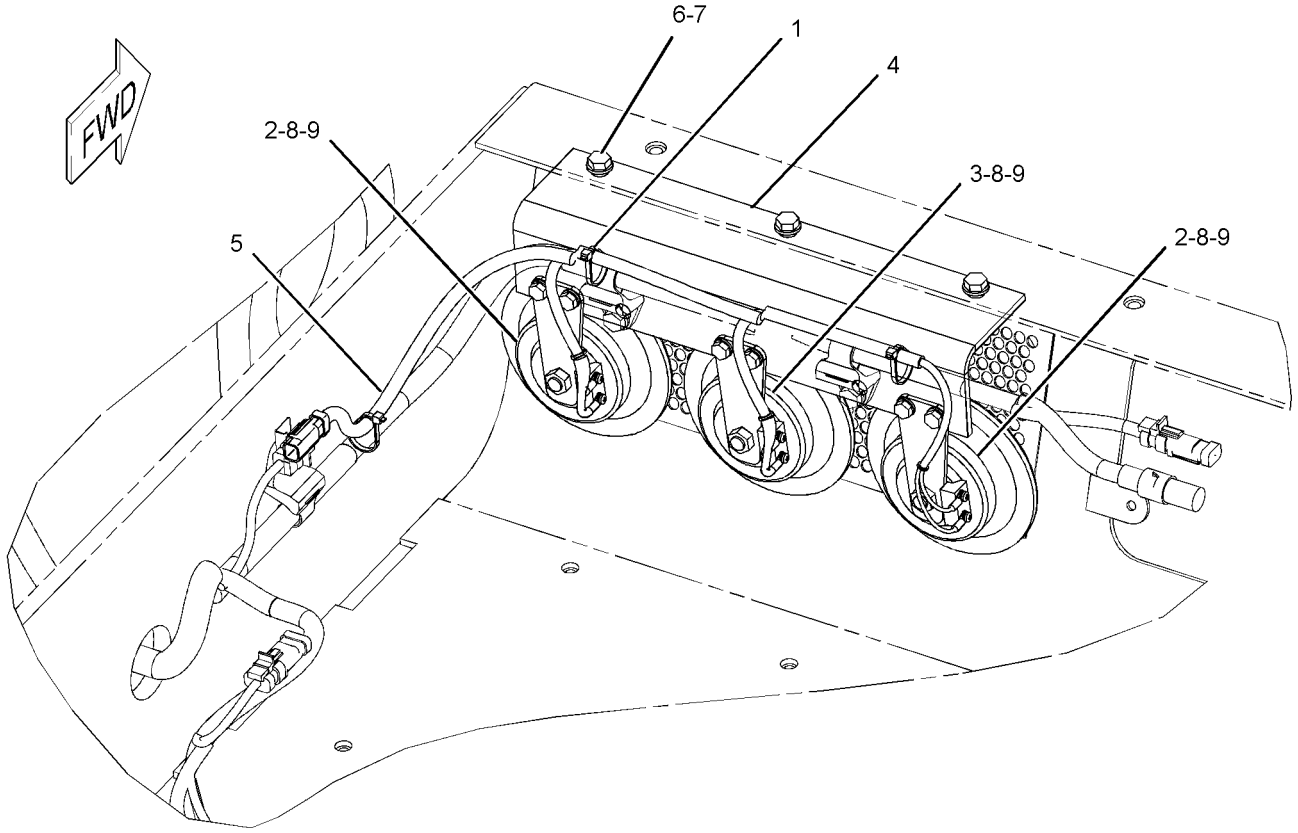

GRAPHIC #1 **<END>** g01201478

OPERATOR STATION

245-7812 HOUSING GP-AIR CONDITIONER—INLET AIR

S/N: WAP1-UP
PART OF 316-8917 AIR CONDITIONER GP
AN ATTACHMENT

SMCS-7320 **i02503827**

NOTE	REF NO	GRAPHIC REF	PART NUMBER	QTY	PART NAME 1 2 3 4 5 6 (PRODUCT LEVEL)	SEE PAGE
	1	1	**185-8300**	6	SCREW-TAPPING	
	2	1	**196-1666**	1	RELAY (COMPRESSOR CLUTCH)	
	2A	1	**196-1666**	1	RELAY (BLOWER)	
	2B	1	**196-1666**	1	RELAY (CONDENSER)	
	2C	1	**196-1666**	1	RELAY (CONDENSER, HIGH)	
	3	1	**245-7813**	1	MOTOR AS	
	4	1	**245-7814**	1	BRACKET	
	5	1	**245-7815**	1	SENSOR AS-TEMPERATURE (AIR)	
	6	1	**245-7816**	1	DAMPER AS	

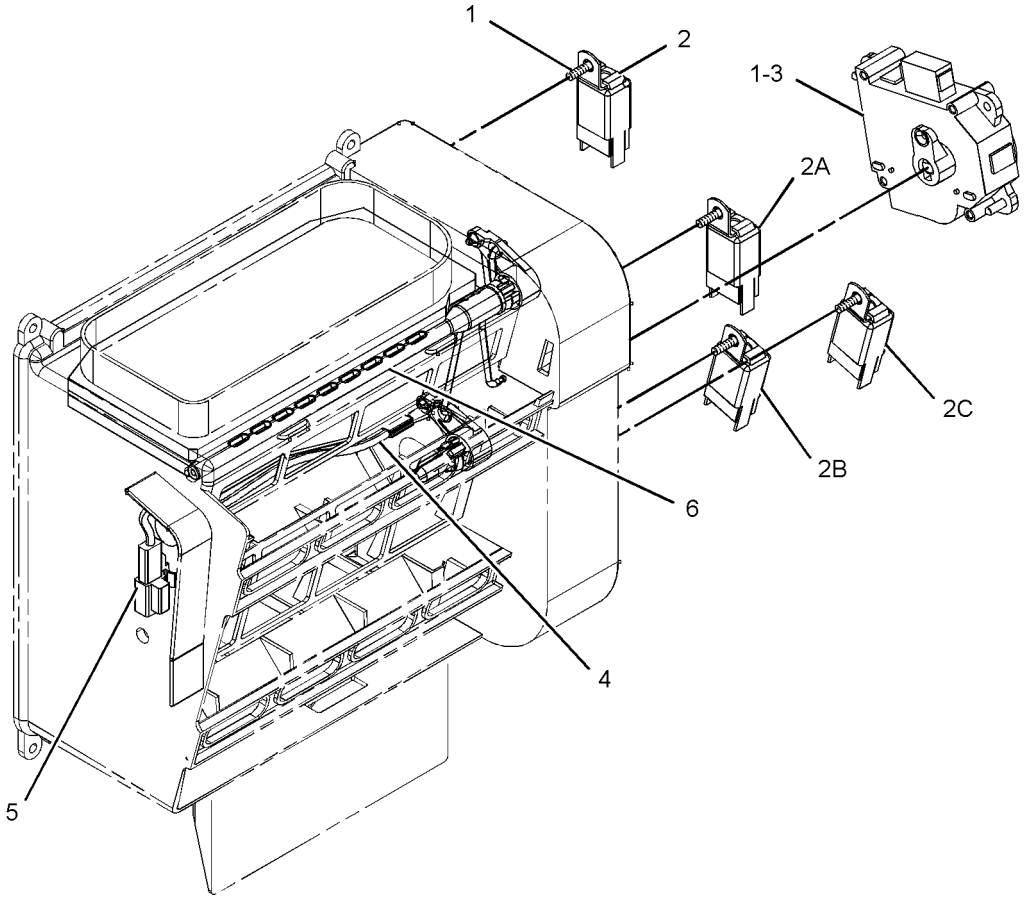

GRAPHIC #1 **<END>** g01253121

OPERATOR STATION

319-9188 INSTALLATION AR-RADIO–2-WAY

S/N: WAP1-UP

AN ATTACHMENT

SMCS-1408, 7338 **i03910943**

NOTE	PART NUMBER	QTY	PART NAME 1 2 3 4 5 6 (PRODUCT LEVEL)	SEE PAGE
Y	*309-5765*	1	MOUNTING GP-ANTENNA (COMMUNICATION RADIO)	1013
Y	*342-2933*	1	WIRING GP-CHASSIS (COMMUNICATION RADIO)	293
Y	*299-2636*	1	WIRING GP-CONVERTER (COMMUNICATION RADIO)	304

Y-SEPARATE ILLUSTRATION

<END>

OPERATOR STATION

231-1768 INSTALLATION GP-RADIO

S/N: WAP1-UP

CANNOT BE USED WITH 251-0538—PAGE 1029

AN ATTACHMENT

SMCS-7338 **i02538512**

NOTE	REF NO	GRAPHIC REF	PART NUMBER	QTY	PART NAME 1 2 3 4 5 6 (PRODUCT LEVEL)	SEE PAGE
	1	1	**3S-2093**	9	STRAP-CABLE	
	2	1	**7K-1181**	8	STRAP-CABLE	
	3	1	**283-2783**	1	CONVERTER-POWER (24-VOLT TO 12-VOLT)	
	4	1	**234-1124**	1	HARNESS AS-RADIO	
		1	**3S-2093**	15	STRAP-CABLE	
		1	**230-5010**	1	PLUG AS-CONNECTOR (6-PIN)	
		1	**231-2295**	2	PLUG AS-CONNECTOR (8-PIN)	
		1	**243-4505**	1	RECEPTACLE AS-CONNECTOR (2-PIN)	
		1	**243-4509**	1	RECEPTACLE AS-CONNECTOR (8-PIN)	
	5	1	**238-1463**	1	RECEPTACLE AS (8-PIN)	
	6	1	**238-2216**	1	SWITCH AS-ROCKER (RADIO MUTE)	
		1	**167-3543**	5	TERMINAL (MALE)	
		1	**167-3542**	1	CONNECTOR-RECEPTACLE	
M	7	1	**8T-4171**	4	BOLT (M6X1X12-MM)	
	8	1	**9X-8256**	4	WASHER (6.6X12X2-MM THK)	

M-METRIC PART

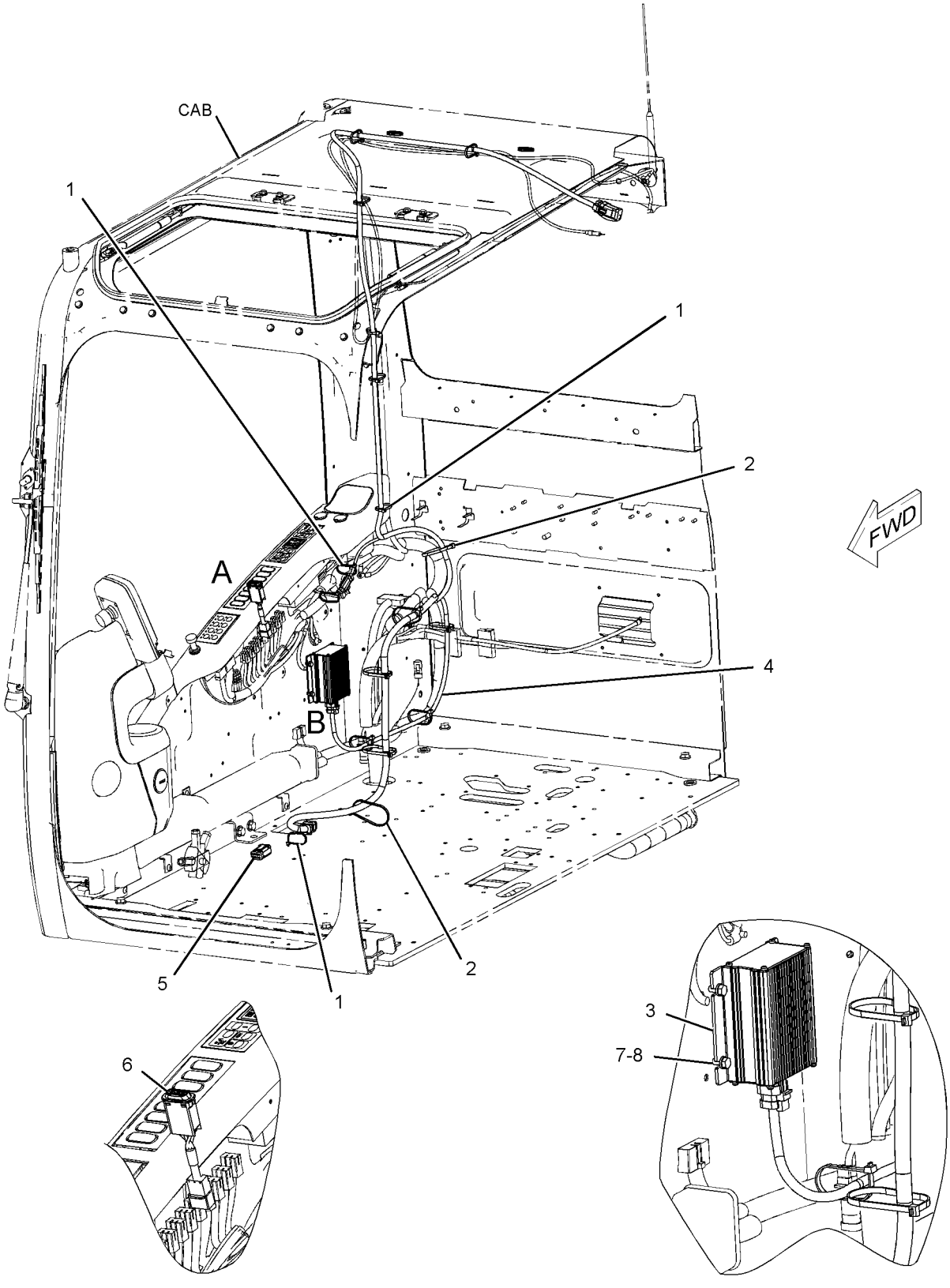

VIEW OF AREA A

VIEW OF AREA B

GRAPHIC #1 **<END>** g01199689

OPERATOR STATION

327-6645 KIT-SEAT SUSPENSION—MECHANICAL

S/N: WAP1-UP
PART OF 327-6520 SUSPENSION GP-SEAT
AN ATTACHMENT

SMCS-7312 **i03579304**

NOTE	REF NO	GRAPHIC REF	PART NUMBER	QTY	PART NAME 1 2 3 4 5 6 (PRODUCT LEVEL)	SEE PAGE
	1	1	**327-6646**	1	KIT-CYLINDER (DAMPENER)	
J	2	1	**327-6647**	1	KIT-COVER (SUSPENSION SEAT)	
					(INCLUDES COVER & CLIP KIT)	
	3	1	**333-4180**	6	SCREW-BUTTON HEAD (M8X1.25X20-MM)	
	4	1	**333-4181**	1	KIT-HANDLE (SEAT HEIGHT)	
M	5	1	**7Y-7394**	4	SCREW-BUTTON HEAD (M8X1.25X25-MM)	
					PARTS SHOWN IN GRAPHIC(S) WITHOUT A REFERENCE NUMBER ARE NOT SERVICED SEPARATELY	
					AVAILABLE REPAIR KIT(S):	
J			**245-7895**	1	KIT-CLIP (SUSPENSION SEAT)	
					(INCLUDES 28 CLIPS)	

J-KIT MARKED J SERVICES PART(S) MARKED J
M-METRIC PART

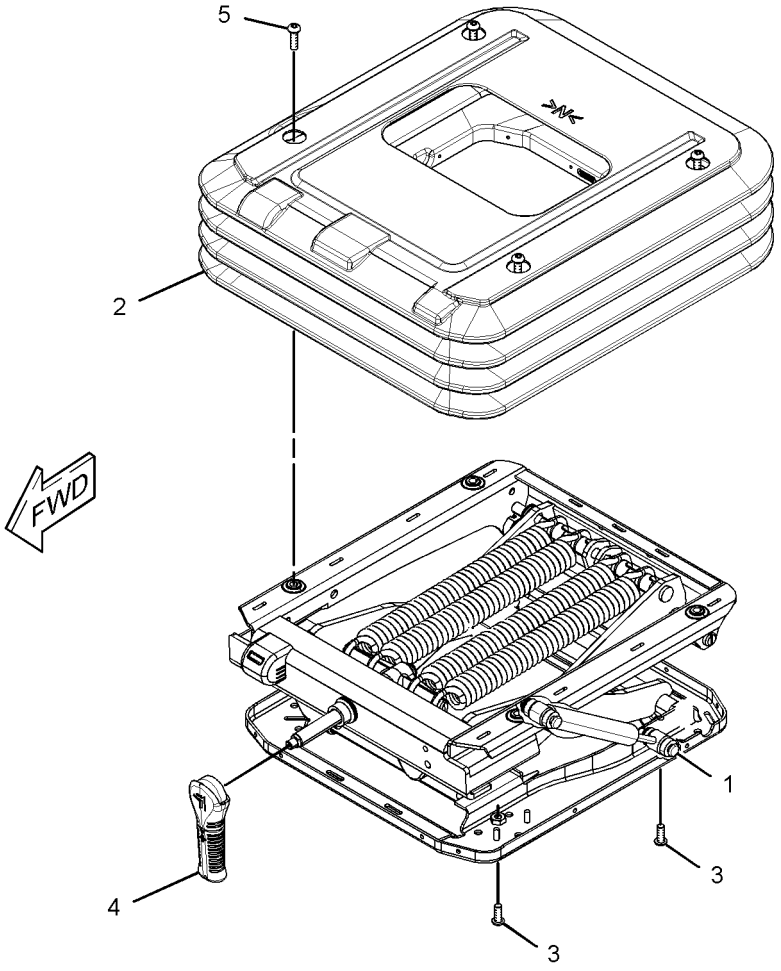

GRAPHIC #1 **<END>** g01689513

OPERATOR STATION

333-4157 KIT-SEAT SUSPENSION–AIR

S/N: WAP1-UP
PART OF 327-6521 SUSPENSION GP-SEAT
AN ATTACHMENT

SMCS-7312 **i03861192**

NOTE	REF NO	GRAPHIC REF	PART NUMBER	QTY	PART NAME 1 2 3 4 5 6 (PRODUCT LEVEL)	SEE PAGE
	1	1	**327-6646**	1	KIT-CYLINDER (DAMPENER)	
J	2	1	**333-4158**	1	KIT-COVER (AIR SEAT)	
					(INCLUDES COVER & CLIP KIT)	
	3	1	**333-4159**	1	KIT-VALVE (AIR SEAT)	
		1	**333-4178**	1	NUT	
	4	1	**333-4180**	6	SCREW-BUTTON HEAD (M8X1.25X20-MM)	
M	5	1	**7Y-7394**	4	SCREW-BUTTON HEAD (M8X1.25X25-MM)	
					PARTS SHOWN IN GRAPHIC(S) WITHOUT A REFERENCE NUMBER ARE NOT SERVICED SEPARATELY	
					AVAILABLE REPAIR KIT(S):	
J			**245-7895**	1	KIT-CLIP (INCLUDES 28-CLIPS)	
					(INCLUDES 28 CLIPS)	

J-MARKED J SERVICES PART(S) MARKED J
M-METRIC PART

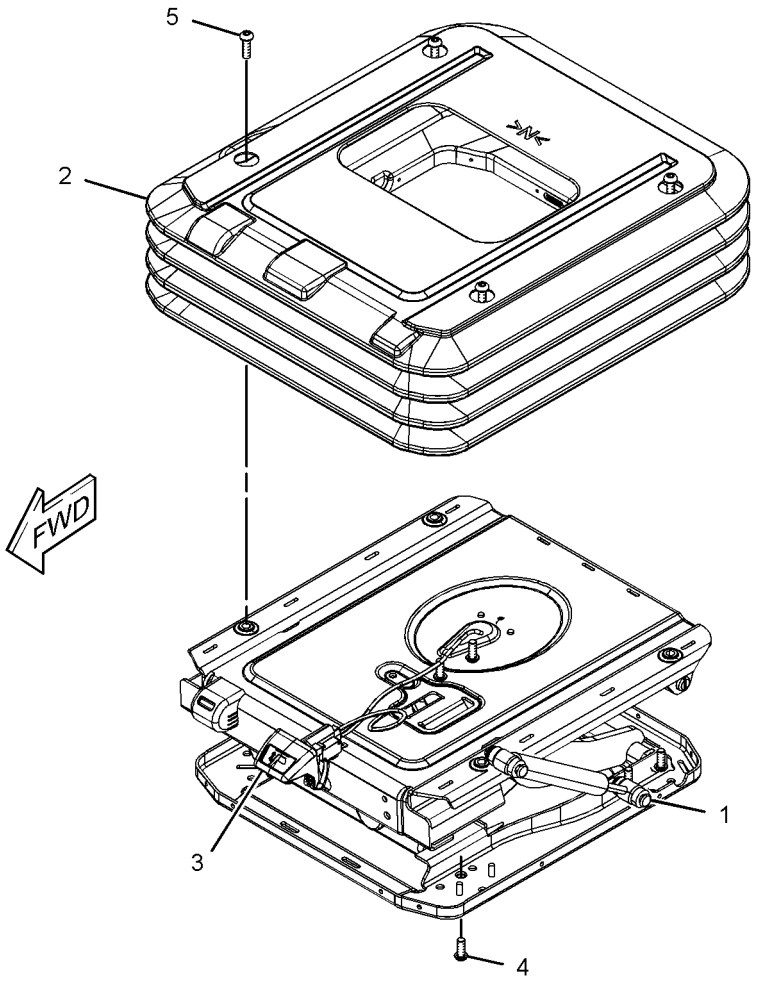

GRAPHIC #1 **<END>** g01689529

OPERATOR STATION

164-0528 LEVER GP-CAB DOOR

S/N: WAP1-UP
PART OF 237-3567 CAB GP
AN ATTACHMENT

SMCS-7308 **i02430902**

NOTE	REF NO	GRAPHIC REF	PART NUMBER	QTY	PART NAME 1 2 3 4 5 6 (PRODUCT LEVEL)	SEE PAGE
	1	1	**156-6642**	1	LEVER AS	
	2	1	**164-0664**	1	BRACKET	
	3	1	**176-1941**	1	PIN	
	4	1	**185-8280**	1	WASHER-WAVE (10.5X15X0.3-MM THK)	
	5	1	**185-8281**	1	SPRING	

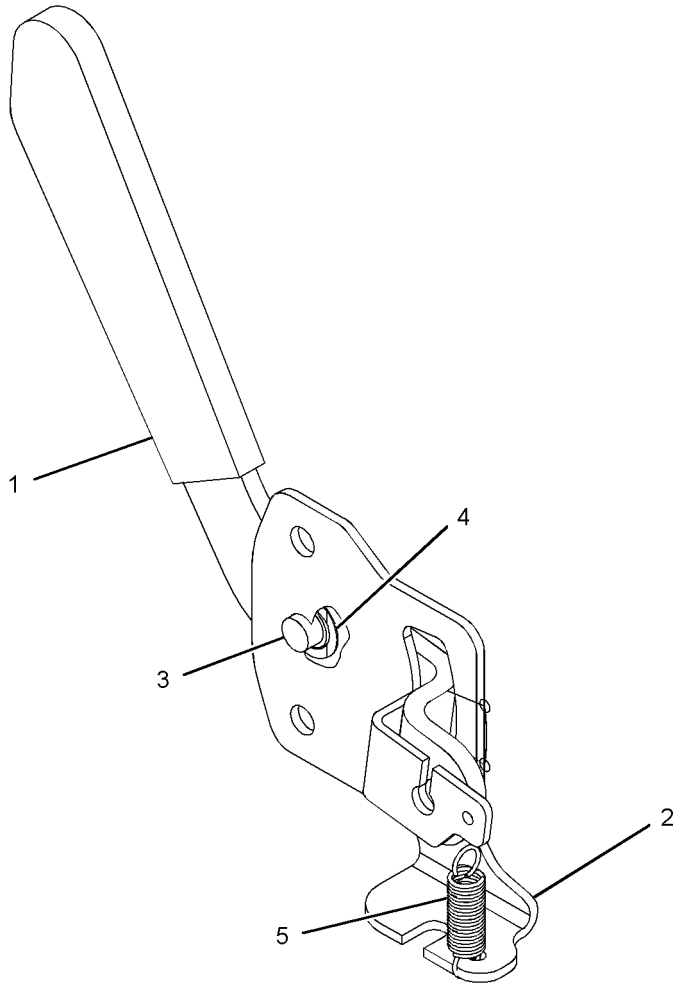

GRAPHIC #1 **<END>** g01217036

OPERATOR STATION

225-5759 LINES GP-AIR CONDITIONER

S/N: WAP1-UP

PART OF 294-1237 CHASSIS AR

SMCS-1808 **i03902293**

NOTE	REF NO	GRAPHIC REF	PART NUMBER	QTY	PART NAME 1 2 3 4 5 6 (PRODUCT LEVEL)	SEE PAGE
	1	1	**6P-8855**	2	TUBE	
	2	1	**122-9657**	2	CLAMP	
	3	2	**176-1902**	1	DRYER-REFRIGERANT (RECEIVER)	
	4	1	**235-8891**	1	PLATE	
	5	1,2	**5D-1026**	8	CLAMP-BAND	
	6	1	**235-9015**	2	HOSE	
	7	2	**245-7776**	1	BRACKET AS	
	8	1	**093-2064**	1	GROMMET	
	9	1,2	**104-3173**	5	CLIP	
	10	2	**121-7098**	1	BRACKET AS	
M		2	**8T-4138**	2	BOLT (M6X1X20-MM)	
		2	**9X-8256**	2	WASHER (6.6X12X2-MM THK)	
	11	1	**161-3718**	2	HOSE-DRAIN	
	12	1	**1S-0994**	1	CLIP	
	13	2	**235-8848**	1	HOSE AS	
		2	**245-7850**	1	PLUG	
		2	**121-7137**	2	SEAL-O-RING	
	14	2	**235-8849**	1	HOSE AS	
		2	**121-7138**	2	SEAL-O-RING	
	15	1	**235-8850**	1	HOSE AS	
		1	**130-0270**	1	SWITCH AS-PRESSURE (REFRIGERANT)	
		1	**185-8293**	1	SEAL-O-RING	
		1	**121-7138**	2	SEAL-O-RING	
	16	1	**235-8851**	1	HOSE AS	
		1	**245-7851**	1	PLUG	
		1	**121-7136**	2	SEAL-O-RING	
	17	2	**3D-2824**	2	SEAL-O-RING	
	18	2	**3K-0360**	3	SEAL-O-RING	
	19	2	**3S-2093**	1	STRAP-CABLE	
	20	2	**4S-4455**	1	CLIP	
	21	2	**5K-5338**	4	CLIP	
	22	1	**5P-2369**	3	CLIP	
	23	1,2	**6D-1641**	6	CLIP	
	24	2	**6D-4244**	2	CLIP	
	25	2	**6V-1722**	2	ADAPTER-O-RING	
	26	1	**6V-3265**	1	CLIP	
	27	2	**6V-7238**	2	VALVE-SHUTOFF (ENGINE COOLANT)	
M	28	1,2	**6V-7357**	3	BOLT (M6X1X25-MM)	
	29	1	**7K-1181**	3	STRAP-CABLE	
	30	1,2	**8T-4121**	20	WASHER-HARD (11X21X2.5-MM THK)	
M	31	2	**8T-4136**	4	BOLT (M10X1.5X25-MM)	
M	32	1,2	**8T-4137**	12	BOLT (M10X1.5X20-MM)	
M	33	2	**8T-4189**	2	BOLT (M8X1.25X20-MM)	
M	34	2	**8T-4191**	4	BOLT (M10X1.5X16-MM)	
	35	2	**8T-4224**	2	WASHER-HARD (8.8X16X2-MM THK)	
M	36	2	**8T-4971**	4	BOLT (M6X1X30-MM)	
	37	1,2	**9X-8256**	7	WASHER (6.6X12X2-MM THK)	
	38	2	**194-7631**	1	ELBOW	
E	39	2	**225-5714**		GUARD (25-CM)	
E	40	2	**5P-0767**		HOSE (475-CM)	
E	40A	2	**5P-0767**		HOSE (500-CM)	
	41	1,2	**305-0441**	2	BAND-MARKER (HS)	
	42	1,2	**305-0442**	2	BAND-MARKER (HR)	

E-ORDER BY THE CENTIMETER
M-METRIC PART

REFER TO ALL ILLUSTRATIONS OF THIS GROUP FOR AUXILIARY VIEWS.

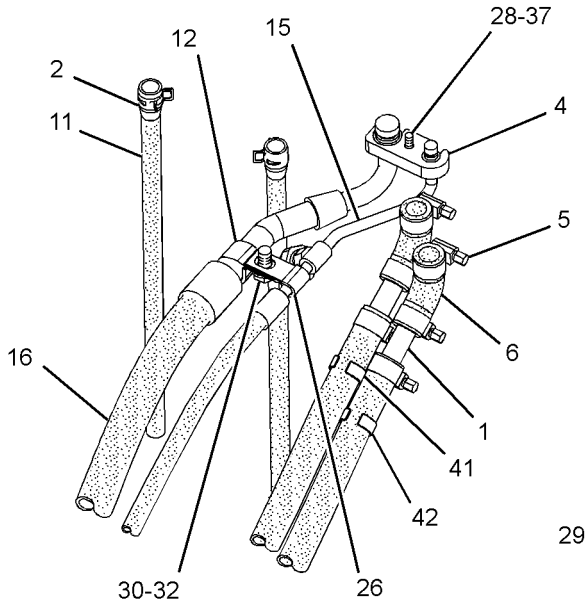

VIEW OF AREA E

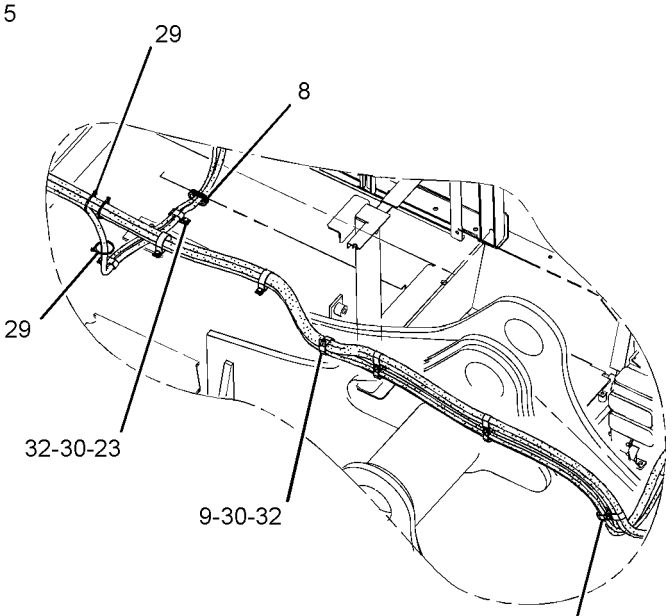

VIEW OF AREA D

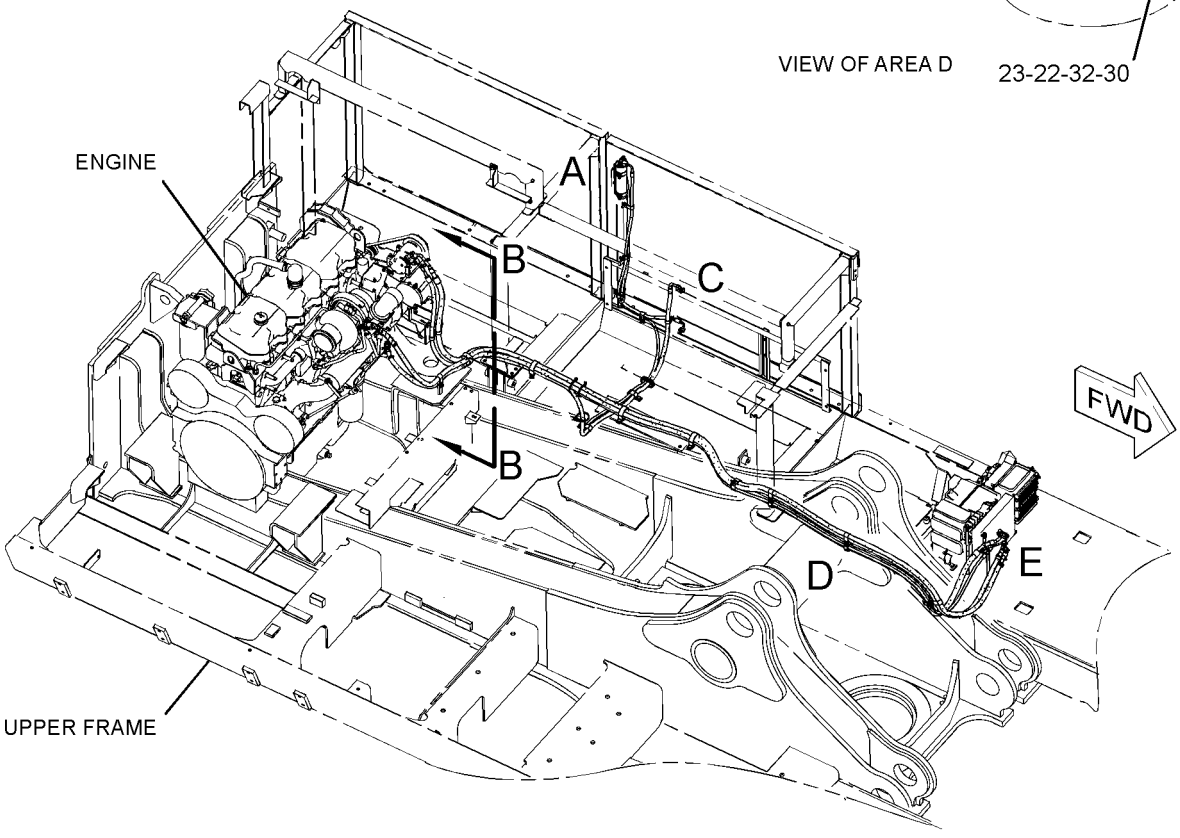

GRAPHIC #1 g01824934

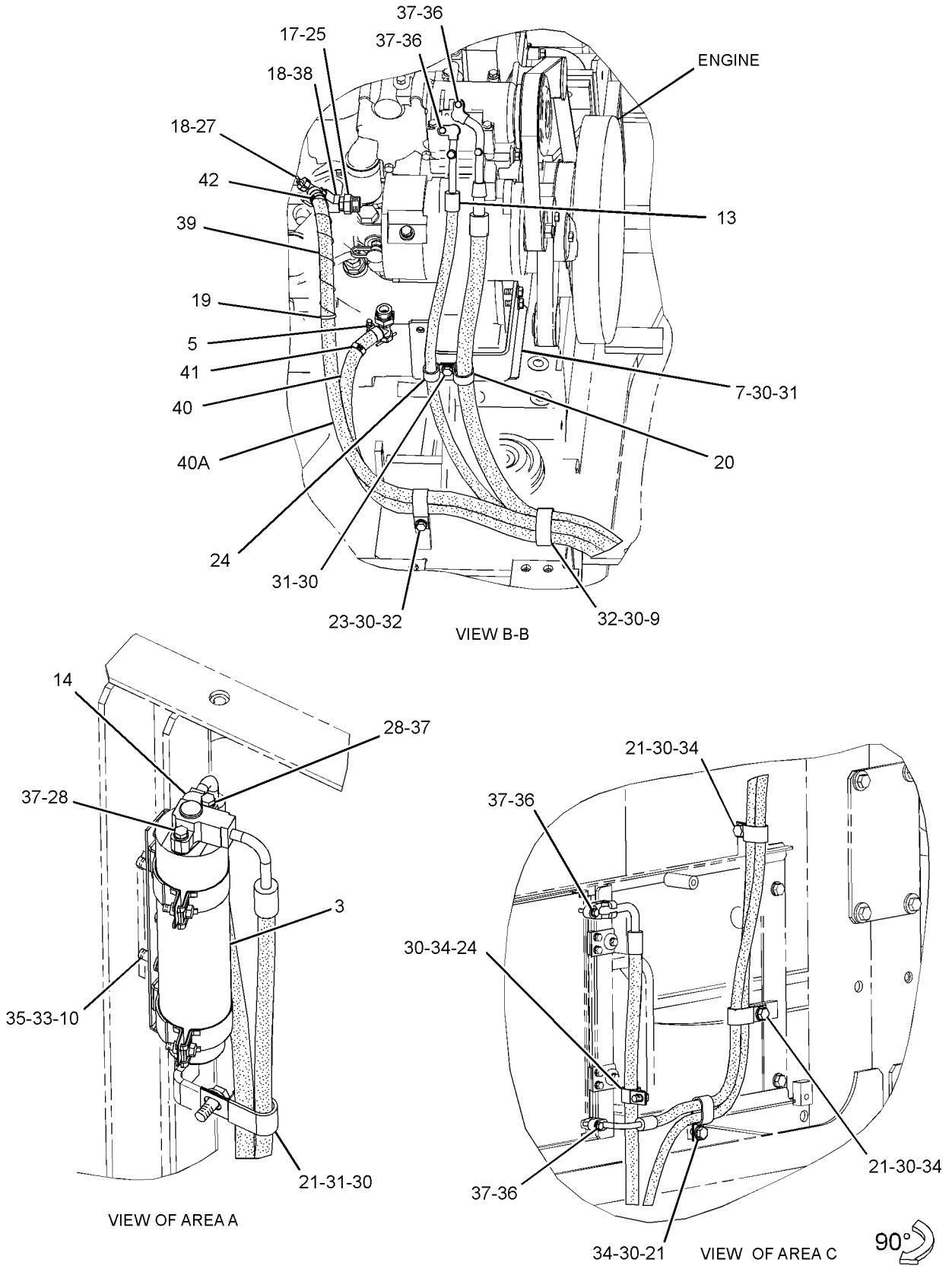

GRAPHIC #2 **<END>** g02161924

OPERATOR STATION

7Y-0059 LITERATURE GP

S/N: WAP1-UP

PART OF 294-1237 CHASSIS AR

SMCS-7300 **i01853716**

NOTE	PART NUMBER	QTY	PART NAME 1 2 3 4 5 6 (PRODUCT LEVEL)	SEE PAGE
	099-3645	1	CABLE-LANYARD	
	5P-8500	2	KEY (LITERATURE GP)	
	5P-7958	2	SLEEVE-CABLE SPLICE	

<END>

OPERATOR STATION

223-3074 MIRROR GP-REAR VIEW

S/N: WAP1-UP

PART OF 294-1237 CHASSIS AR

SMCS-7319 **i03649770**

NOTE	REF NO	GRAPHIC REF	PART NUMBER	QTY	PART NAME 1 2 3 4 5 6 (PRODUCT LEVEL)	SEE PAGE
	1	1	**5P-6879**	1	MIRROR (RH)	
M	2	1	**135-8575**	3	BOLT AS	
	3	1	**262-2292**	1	CLIP	
	4	1	**262-2293**	1	CLIP	
	5	1	**262-2356**	1	PLATE	
	6	1	**262-2357**	1	SUPPORT AS	
	7	1	**5P-1076**	6	WASHER-HARD (13.5X30X4-MM THK)	
	8	1	**5P-8112**	1	GROMMET	
	9	1	**8T-4121**	2	WASHER-HARD (11X21X2.5-MM THK)	
M	10	1	**8T-4183**	4	BOLT (M12X1.75X40-MM)	
M	11	1	**8T-4195**	2	BOLT (M10X1.5X30-MM)	
M	12	1	**8T-4244**	2	NUT (M12X1.75-THD)	

M-METRIC PART

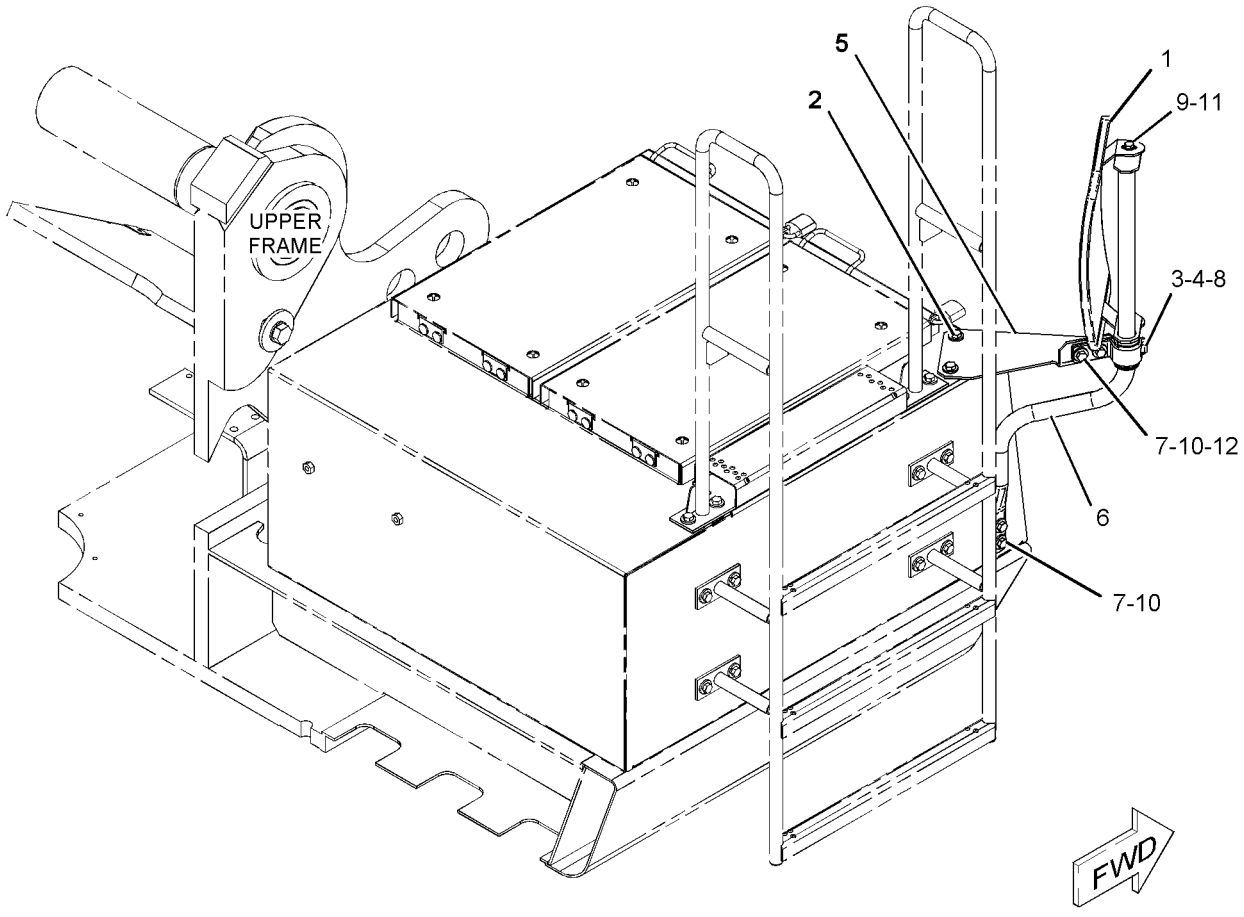

GRAPHIC #1 **<END>** g01149973

OPERATOR STATION

327-6550 MIRROR GP-REAR VIEW

S/N: WAP1-UP
PART OF 237-3567 CAB GP
AN ATTACHMENT

SMCS-7319 **i03114210**

NOTE	REF NO	GRAPHIC REF	PART NUMBER	QTY	PART NAME 1 2 3 4 5 6 (PRODUCT LEVEL)	SEE PAGE
M	1	1	**8T-0269**	2	BOLT-SOCKET HEAD (M6X1X20-MM)	
	2	1	**9X-8256**	2	WASHER (6.6X12X2-MM THK)	

M-METRIC PART

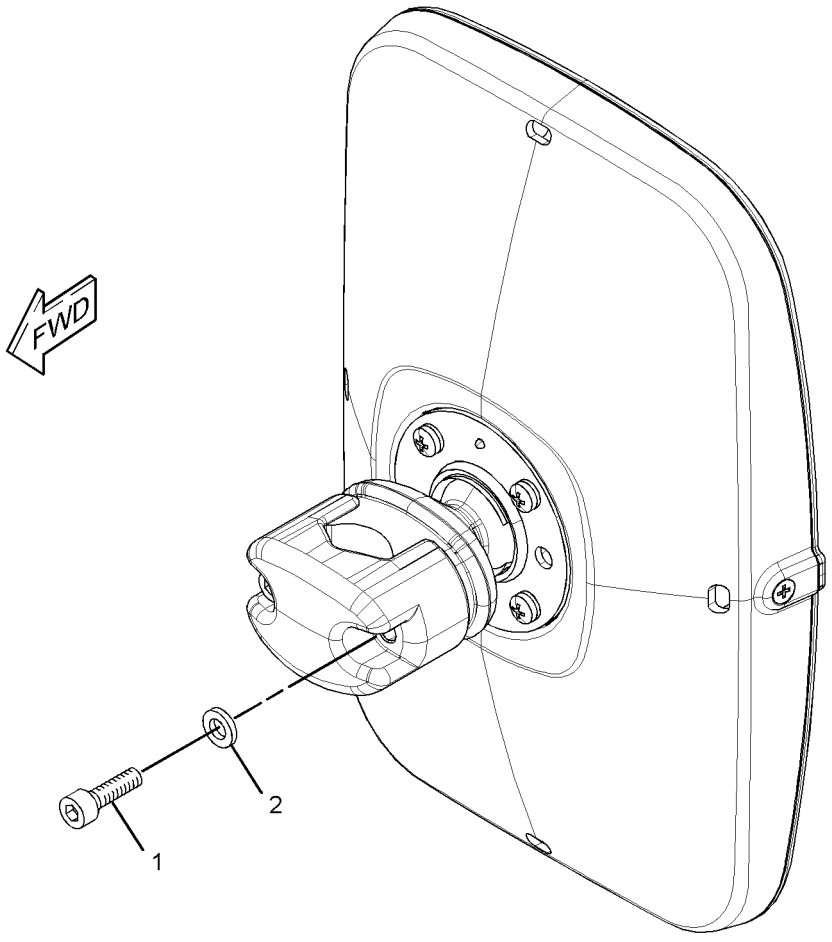

GRAPHIC #1 **<END>** g01615528

OPERATOR STATION

221-8813 MONITOR & MTG GP-OPERATOR

S/N: WAP1-UP
PART OF 308-7020, 308-7021, 308-7022 CAB AR
AN ATTACHMENT

SMCS-7490 **i03623393**

NOTE	REF NO	GRAPHIC REF	PART NUMBER	QTY	PART NAME 1 2 3 4 5 6 (PRODUCT LEVEL)	SEE PAGE
CY	1	1	**327-7482**	1	MONITOR GP-OPERATOR	1009
M	2	1	**9X-2046**	3	SCREW-TRUSS HEAD (M6X1X35-MM)	

C-CHANGE FROM PREVIOUS TYPE
M-METRIC PART
Y-SEPARATE ILLUSTRATION

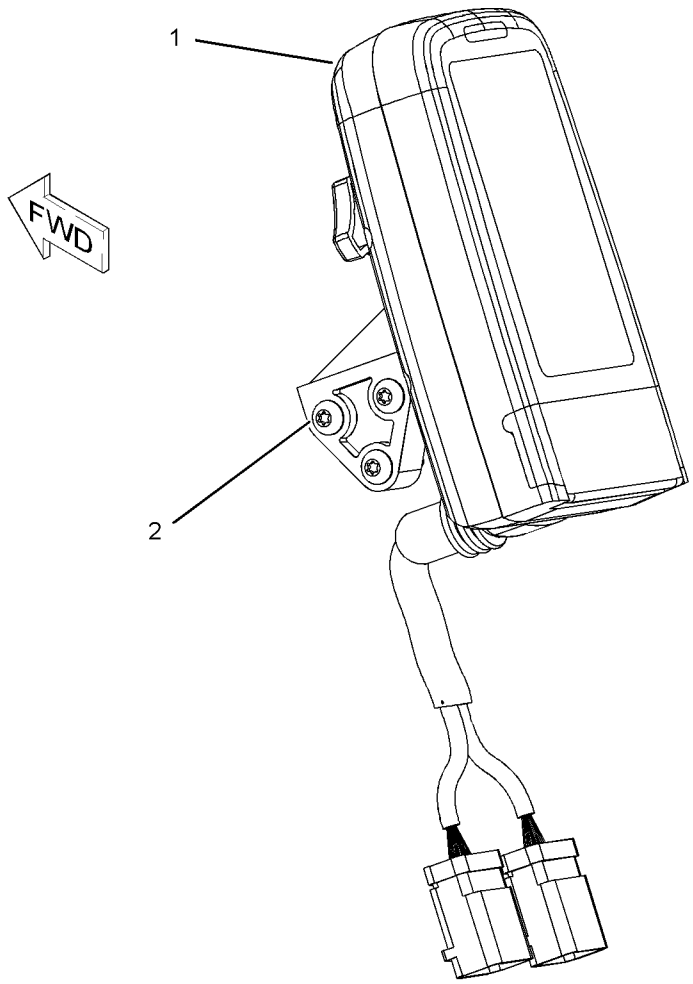

GRAPHIC #1 **<END>** g01072616

OPERATOR STATION

327-7482 MONITOR GP-OPERATOR

S/N: WAP1-UP

PART OF 221-8813 MONITOR & MTG GP-OPERATOR, 349-5408 MONITOR GP-OPERATOR

ALSO AN ATTACHMENT

SMCS-7490 **i03790294**

NOTE	REF NO	GRAPHIC REF	PART NUMBER	QTY	PART NAME 1 2 3 4 5 6 (PRODUCT LEVEL)	SEE PAGE
	1	1	**247-2694**	1	RECEPTACLE AS-CONNECTOR (12-PIN)	
	2	1	**247-2695**	1	RECEPTACLE AS-CONNECTOR (12-PIN)	
	3	1	**144-1636**	17	PIN-CONNECTOR (14-GA TO 18-GA)	
	4	1	**8T-8737**	7	PLUG-SEAL	
	5	1	**327-7594**	1	COVER AS-MONITOR	

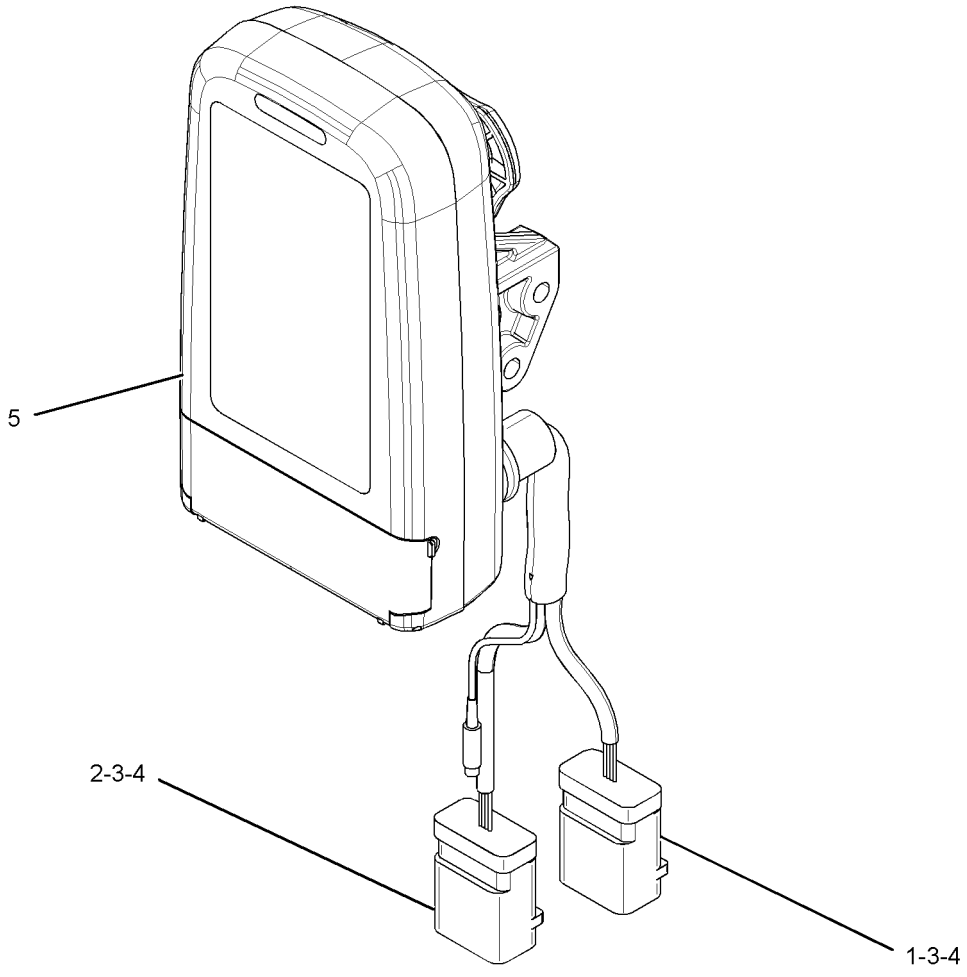

GRAPHIC #1 **<END>** g02046156

OPERATOR STATION

349-5408 MONITOR GP-OPERATOR

S/N: WAP1-UP

PART OF 221-8861 ELECTRONICS GP-MONITOR

SMCS-7490 **i03901162**

NOTE	REF NO	GRAPHIC REF	PART NUMBER	QTY	PART NAME 1 2 3 4 5 6 (PRODUCT LEVEL)	SEE PAGE
Y	1	1	**327-7482**	1	MONITOR GP-OPERATOR	1009
	2	1	**349-5410**	1	SOFTWARE GP-MONITOR	

Y-SEPARATE ILLUSTRATION

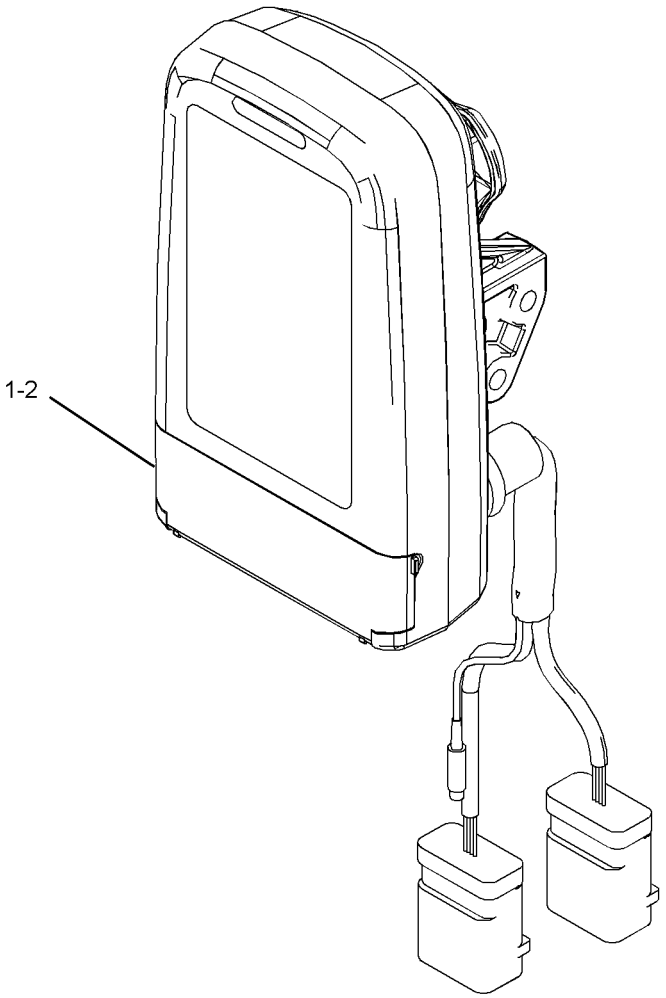

GRAPHIC #1 **<END>** g01993756

OPERATOR STATION

270-5603 MOUNTING GP-ANTENNA–ACCUGRADE READY

S/N: WAP1-UP
PART OF 340-3996 SPECIAL AR
AN ATTACHMENT

SMCS-7338, 7606 **i02897599**

NOTE	REF NO	GRAPHIC REF	PART NUMBER	QTY	PART NAME 1 2 3 4 5 6 (PRODUCT LEVEL)	SEE PAGE
	1	1	**309-5849**	1	BRACKET AS	
M	2	1	**7X-2552**	2	BOLT (M16X2X30-MM)	
	3	1	**9X-8257**	2	WASHER (17.5X30X3.5-MM THK)	

M-METRIC PART

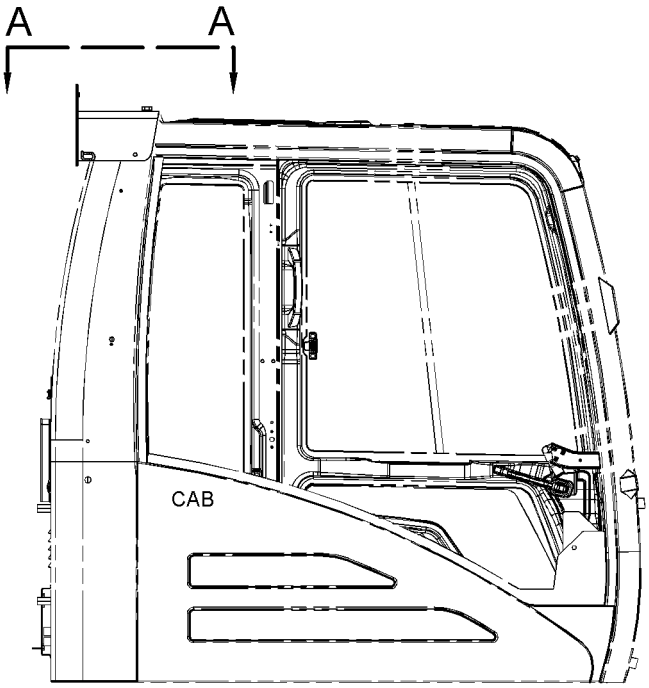

RIGHT SIDE VIEW
(WITHOUT CAB GUARD)

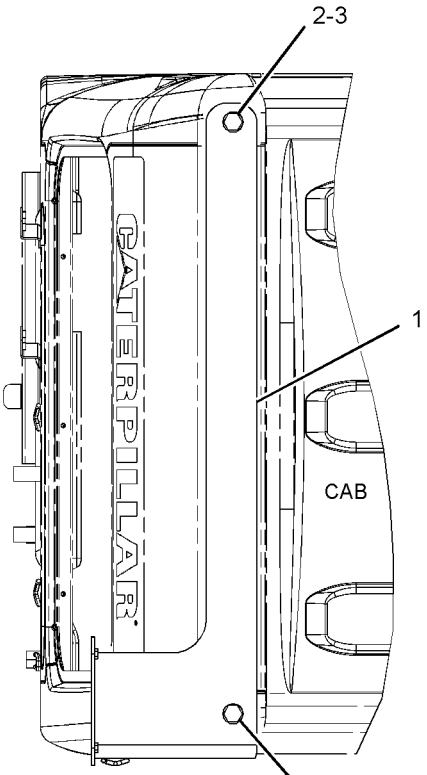

VIEW A-A

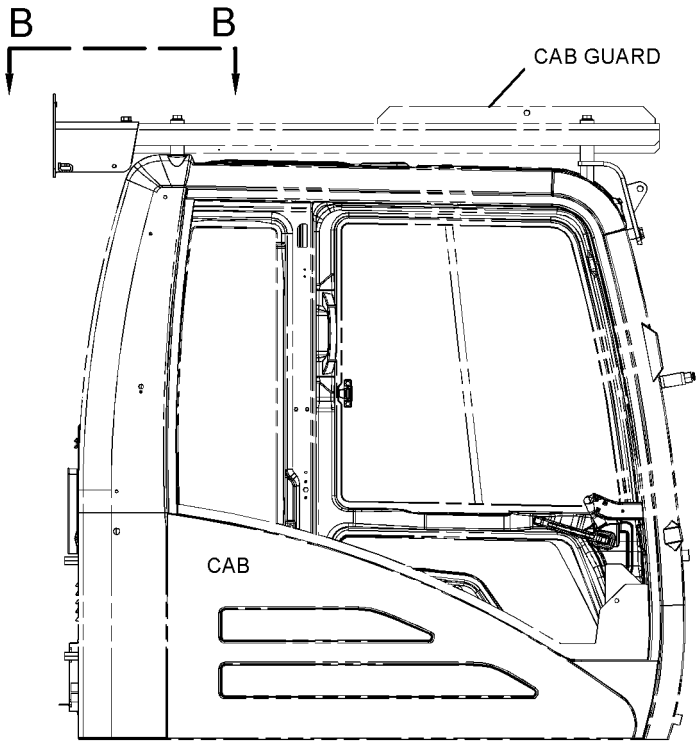

RIGHT SIDE VIEW
(WITH CAB GUARD)

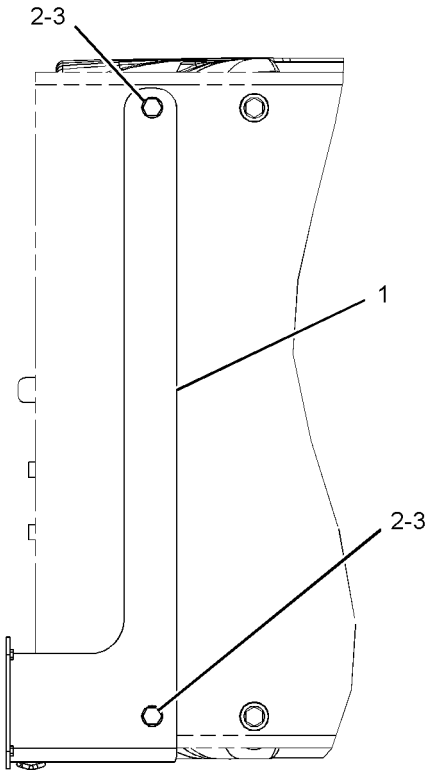

VIEW B-B

GRAPHIC #1 **<END>** g01237239

OPERATOR STATION

309-5765 MOUNTING GP-ANTENNA–COMMUNICATION RADIO

S/N: WAP1-UP
PART OF 319-9188 INSTALLATION AR-RADIO
AN ATTACHMENT

SMCS-7338, 7606 **i02960816**

NOTE	REF NO	GRAPHIC REF	PART NUMBER	QTY	PART NAME 1 2 3 4 5 6 (PRODUCT LEVEL)	SEE PAGE
	1	1	**9U-2331**	2	ANTENNA AS (COMMUNICATION RADIO)	
	2	1	**9U-4431**	2	MOUNT-ANTENNA	
	3	1	**309-5796**	1	PLATE	

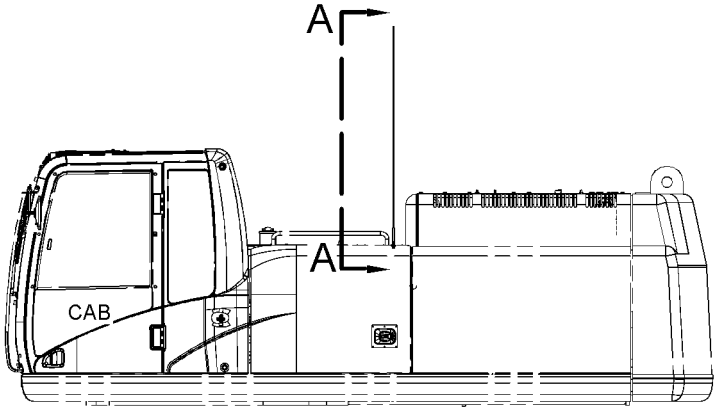

LEFT SIDE VIEW

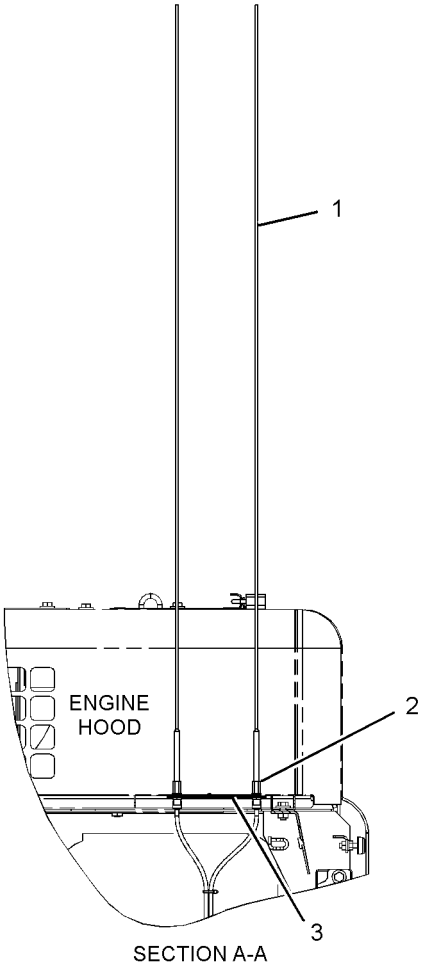

SECTION A-A

GRAPHIC #1 **<END>** g01456327

OPERATOR STATION

309-5852 MOUNTING GP-ANTENNA—PRODUCT LINK

S/N: WAP1-UP

PART OF 303-2647 INSTALLATION AR-COMMUNICATION

AN ATTACHMENT

SMCS-7338, 7606 **i03839491**

NOTE	REF NO	GRAPHIC REF	PART NUMBER	QTY	PART NAME 1 2 3 4 5 6 (PRODUCT LEVEL)	SEE PAGE
M	1	1	**143-9397**	3	SCREW-PAN HEAD (M4X0.7X12-MM)	
	2	1	**309-5751**	1	BRACKET	
	3	1	**310-2393**	1	ANTENNA AS (450-CM)	
		1	**301-0589**	1	ANTENNA (FLEXIBLE)	
					-OR-	
		1	*263-8948*	1	ANTENNA AS (600-CM)	
		1	**223-4296**		ANTENNA (FLEXIBLE)	
	4	1	**095-0910**	4	CLIP	
	5	1	**161-6987**	3	WASHER-HARD (5.2X16X1.5-MM THK)	
M	6	1	**8T-4190**	1	BOLT (M16X2X25-MM)	
M	7	1	**8T-4138**	1	BOLT (M6X1X20-MM)	
	8	1	**9X-2026**	1	WASHER (6.5X17X1-MM THK)	
	9	1	**9X-6165**	1	WASHER (6.5X22X2.5-MM THK)	
	10	1	**9X-8257**	1	WASHER (17.5X30X3.5-MM THK)	

M-METRIC PART

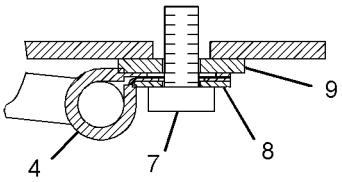

SECTION B-B

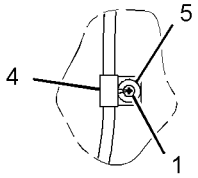

VIEW OF AREA C

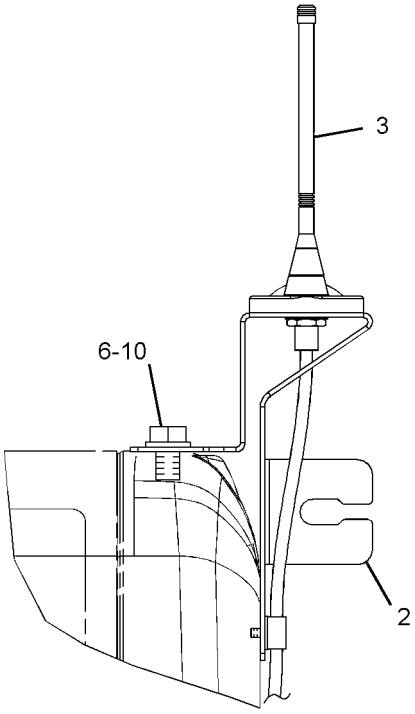

VIEW A-A

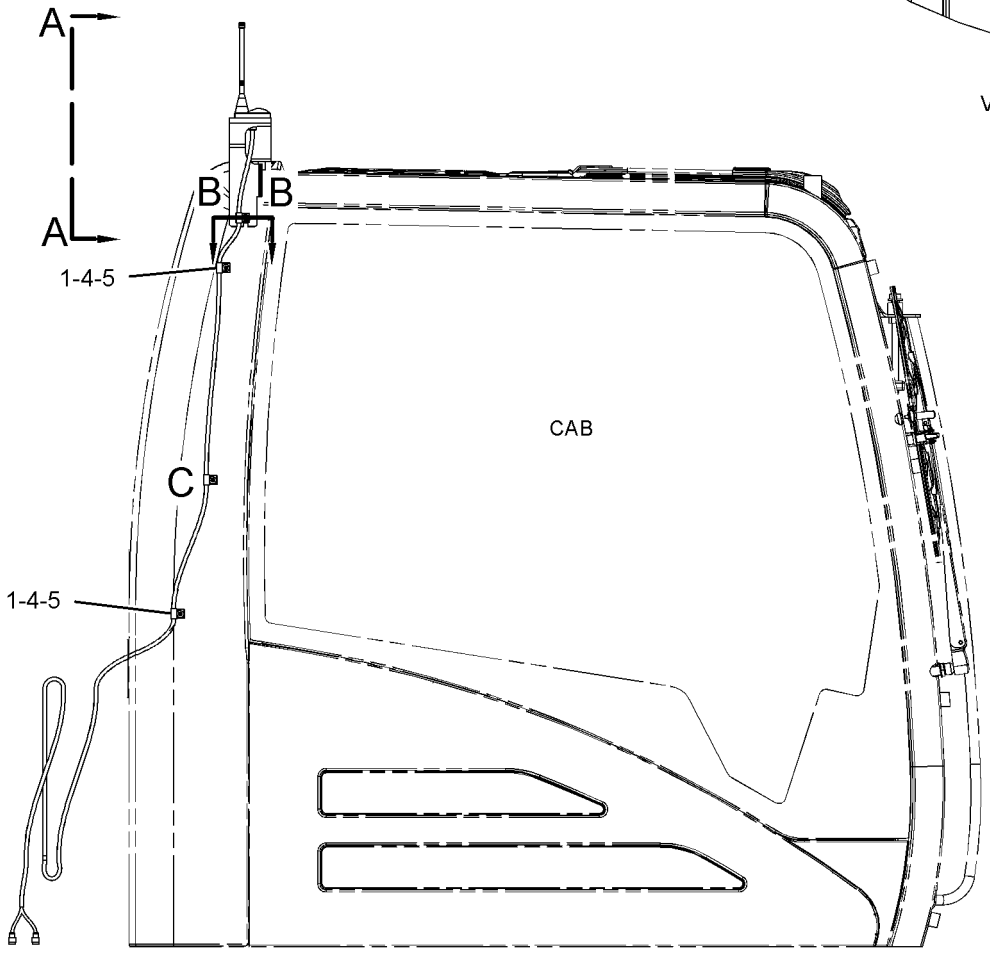

RIGHT SIDE VIEW

GRAPHIC #1 **<END>** g01515333

OPERATOR STATION

225-5765 MOUNTING GP-CAB–REAR

S/N: WAP1-UP

PART OF 342-3451 OPERATOR AR

i04027145

NOTE	REF NO	GRAPHIC REF	PART NUMBER	QTY	PART NAME 1 2 3 4 5 6 (PRODUCT LEVEL)	SEE PAGE
	1	1	**164-8474**	2	LOUVER AS-VENT	
	2	1	**234-6472**	1	COVER	
Y	3	1	**234-6501**	1	COVER GP-CAB (REAR)	969
M	4	1	**128-2135**	7	SCREW-TRUSS HEAD (M6X1X13-MM)	
M	5	1	**8T-4179**	3	BOLT (M12X1.75X20-MM)	
	6	1	**8T-4223**	11	WASHER-HARD (13.5X25.5X3-MM THK)	
M	7	1	**8T-4910**	6	BOLT (M12X1.75X60-MM)	
M	8	1	**8T-6868**	2	BOLT (M12X1.75X80-MM)	
	9	1	**8Y-6967**	2	LOUVER AS-VENT	
A	10	1	**256-8609**	1	HINGE	

A-NOT PART OF THIS GROUP
M-METRIC PART
Y-SEPARATE ILLUSTRATION

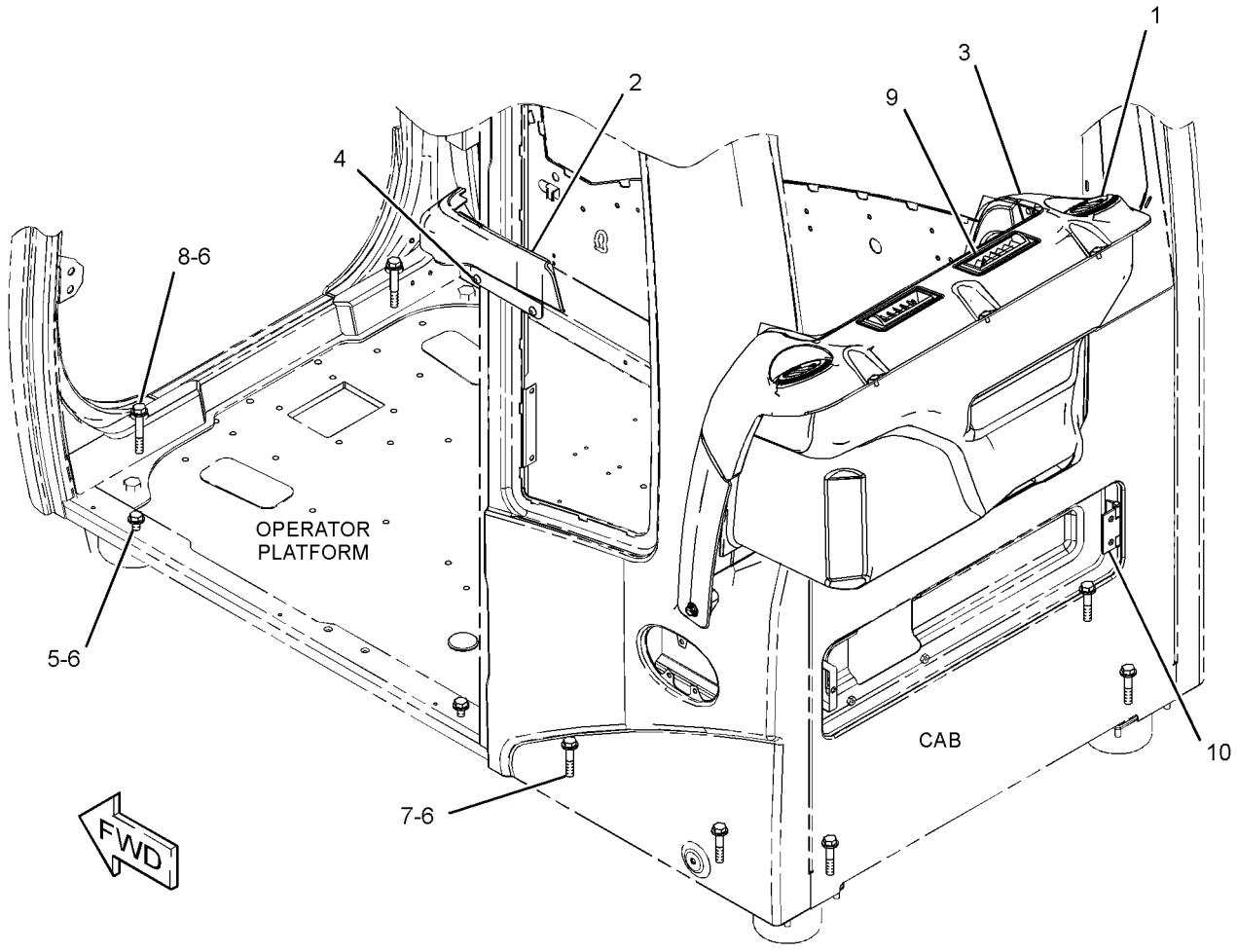

GRAPHIC #1 **<END>** g02212273

OPERATOR STATION

309-5805 MOUNTING GP-DISPLAY—WORK AREA VISUAL SYSTEM

S/N: WAP1-UP
PART OF 319-9186 CAMERA AR
AN ATTACHMENT

SMCS-7347, 7490 **i03656903**

NOTE	REF NO	GRAPHIC REF	PART NUMBER	QTY	PART NAME 1 2 3 4 5 6 (PRODUCT LEVEL)	SEE PAGE
B	1	1	**6I-5976**	1	SHIM (1-MM THK)	
	2	1	**309-5806**	1	BRACKET AS	
	3	1	**8T-4121**	5	WASHER-HARD (11X21X2.5-MM THK)	
M	4	1	**8T-4137**	2	BOLT (M10X1.5X20-MM)	
M	5	1	**8T-4176**	1	BOLT (M12X1.75X90-MM)	
	6	1	**8T-4223**	3	WASHER-HARD (13.5X25.5X3-MM THK)	

B-USE AS REQUIRED
M-METRIC PART

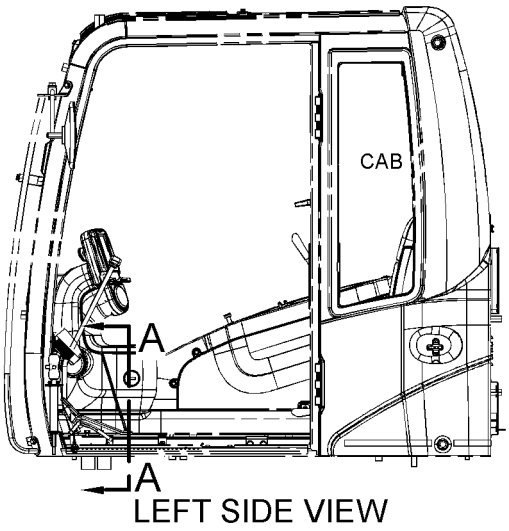

LEFT SIDE VIEW

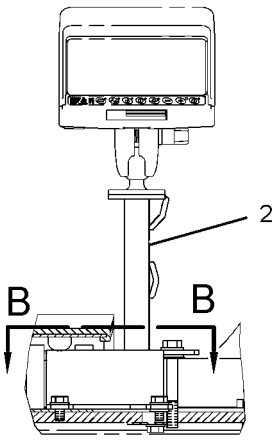

VIEW A-A

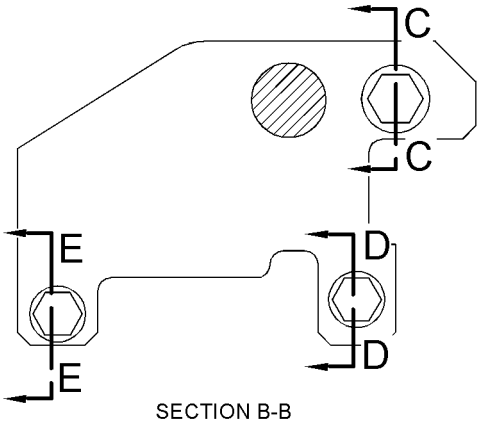

SECTION B-B

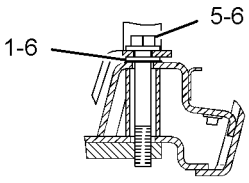

SECTION C-C
(Akashi)

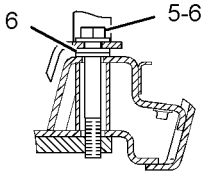

SECTION C-C
(WITH THIRD PEDAL)

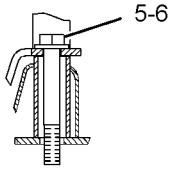

SECTION C-C
(WITH THIRD PEDAL - OPTIONAL DESIGN)

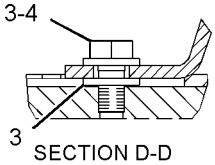

SECTION D-D

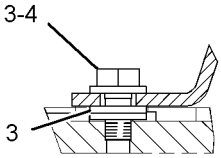

SECTION D-D
(OPTIONAL DESIGN)

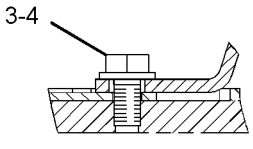

SECTION E-E

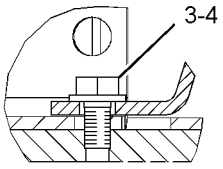

SECTION D-D
(WITH THIRD PEDAL)

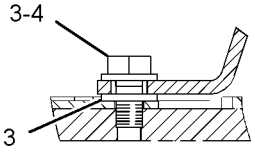

SECTION E-E
(WITH THIRD PEDAL)

GRAPHIC #1 **<END>** g02046833

OPERATOR STATION

245-7811 MOUNTING GP-PLATFORM

S/N: WAP1-UP

PART OF 294-1237 CHASSIS AR

SMCS-7253 **i02708582**

NOTE	REF NO	GRAPHIC REF	PART NUMBER	QTY	PART NAME 1 2 3 4 5 6 (PRODUCT LEVEL)	SEE PAGE
	1	1	**235-8862**	4	MOUNT AS	
M	2	1	**7X-2553**	4	BOLT (M16X2X40-MM)	
	3	1	**8T-4121**	16	WASHER-HARD (11X21X2.5-MM THK)	
M	4	1	**8T-4195**	16	BOLT (M10X1.5X30-MM)	
	5	1	**9X-8257**	4	WASHER (17.5X30X3.5-MM THK)	
	6	1	**257-1110**	1	FLOOR MAT	

M-METRIC PART

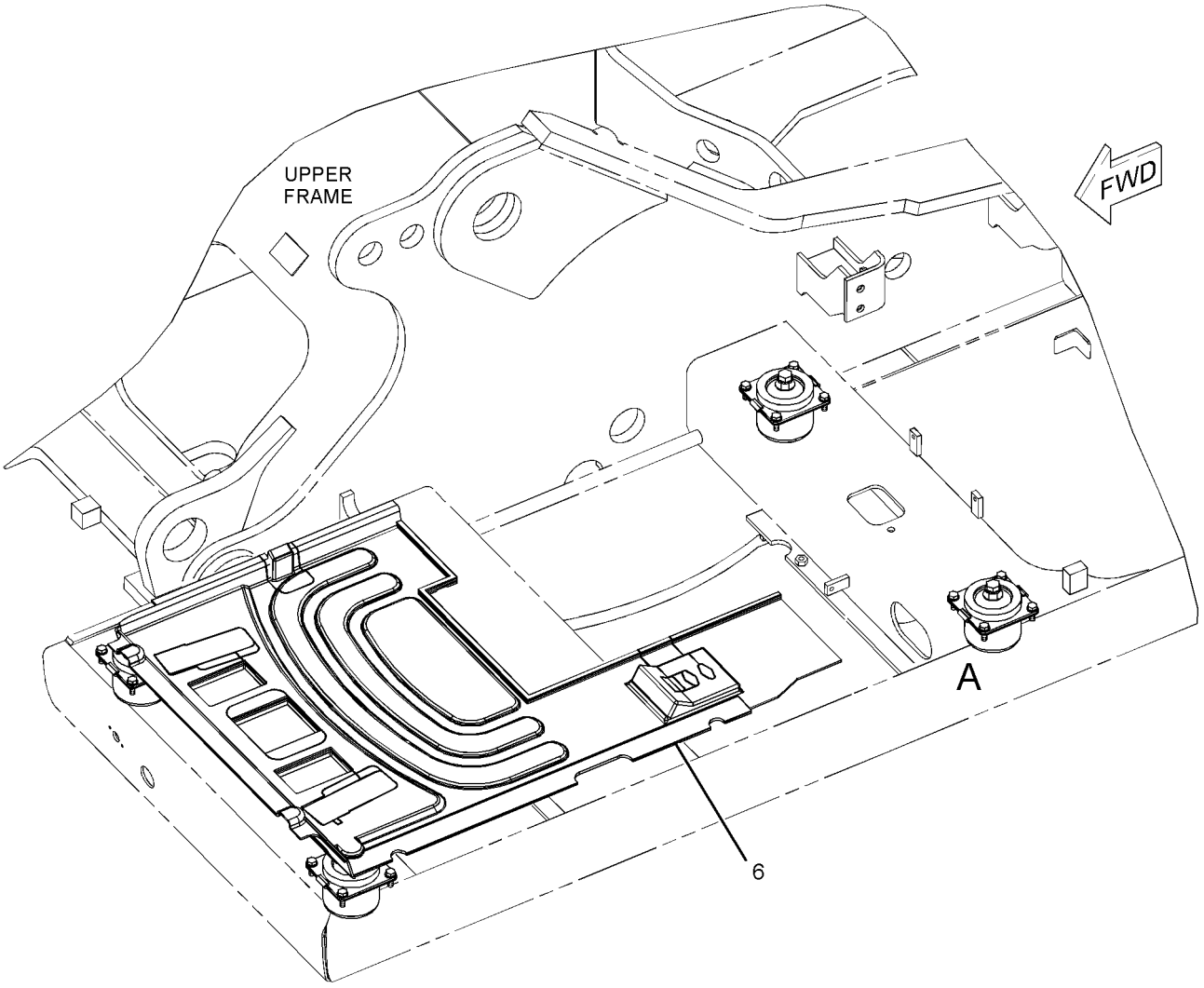

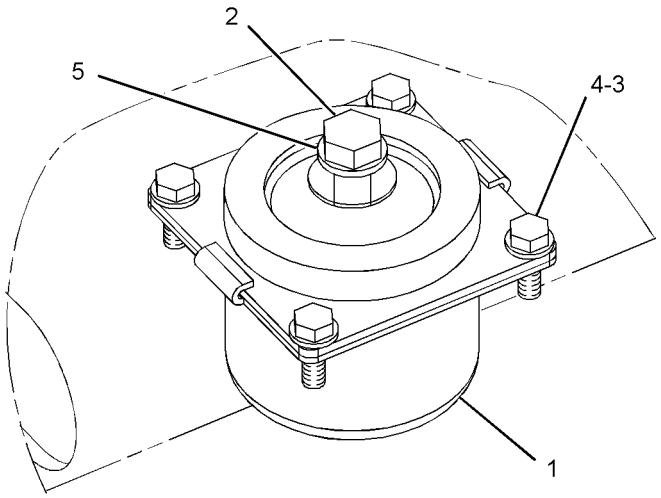

VIEW OF AREA A

GRAPHIC #1 **<END>** g01362744

OPERATOR STATION

342-3451 OPERATOR AR

S/N: WAP1-UP

PART OF 294-1237 CHASSIS AR

SMCS-7301 **i03872133**

NOTE	PART NUMBER	QTY	PART NAME 1 2 3 4 5 6 (PRODUCT LEVEL)	SEE PAGE
Y	*235-8898*	1	CONSOLE GP-OPERATOR	944
Y	*221-8819*	1	CONTROL & MTG GP-PEDAL (TRAVEL)	954
Y	*235-8899*	1	CONTROL GP-TRAVEL (LEVERS, PEDALS)	967
Y	*356-0658*	1	COVER GP-CAB (EXTERIOR, LH)	972
Y	*225-5765*	1	MOUNTING GP-CAB (REAR)	1016
Y	*225-5757*	1	PLATFORM GP-OPERATOR	1028
Y	*327-6542*	1	SUPPORT GP-SEAT	1041
Y	*299-2628*	1	WIRING GP-CAB	275
Y	*342-2887*	1	WIRING GP-CONSOLE	300
Y	*299-2629*	1	WIRING GP-PLATFORM	323

Y-SEPARATE ILLUSTRATION

<END>

OPERATOR STATION

249-7107 PARTS AR-CAB

S/N: WAP1-UP

AN ATTACHMENT

SMCS-7301 **i03179203**

NOTE	REF NO	GRAPHIC REF	PART NUMBER	QTY	PART NAME 1 2 3 4 5 6 (PRODUCT LEVEL)	SEE PAGE
Y	1	1	*249-7108*	1	HANDRAIL GP (CAB)	373
Y	2	1	*252-1241*	1	LIGHTING GP-FLOOD (CAB)	206

Y-SEPARATE ILLUSTRATION

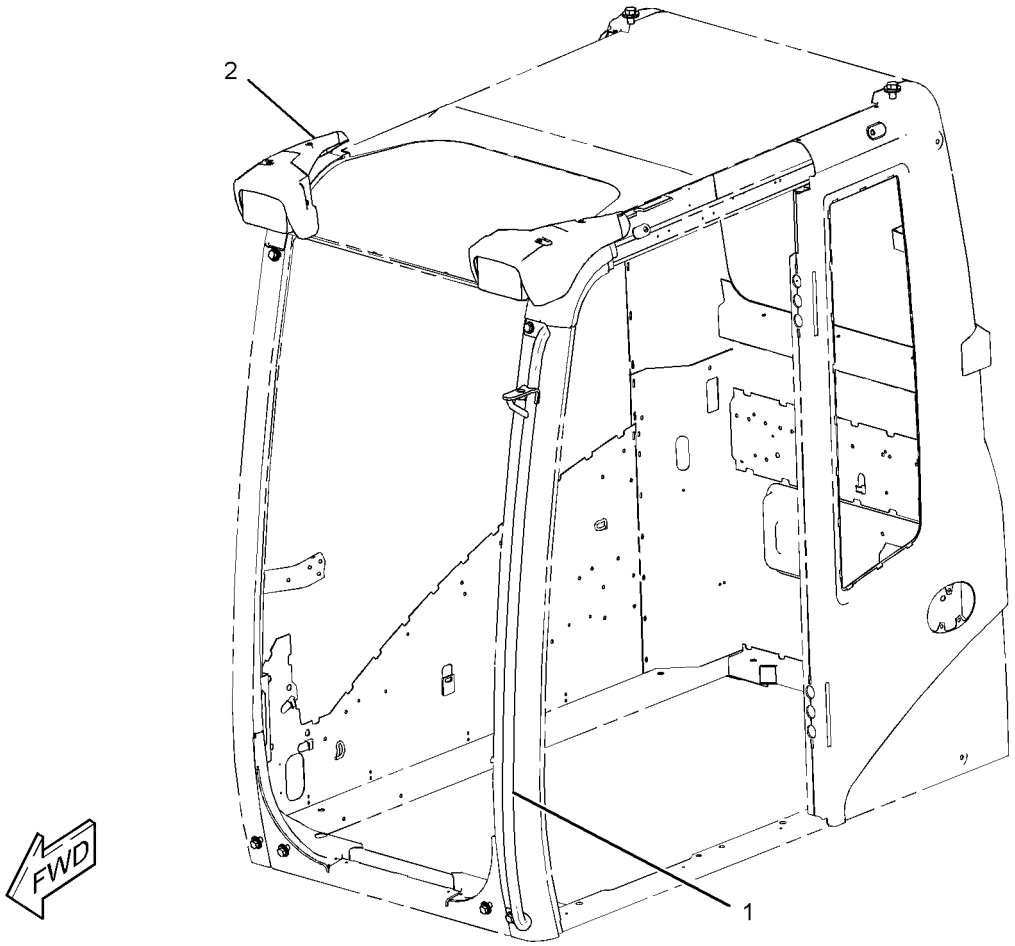

GRAPHIC #1 **<END>** g01625978

OPERATOR STATION

330-3027 PARTS AR-CAB

S/N: WAP1-UP

CANNOT BE USED WITH 259-8009—PAGE 985, 249-7109—PAGE 984, 259-8003—PAGE 992, 250-0712—PAGE 984, 249-7107—PAGE 1022, 330-3028—PAGE 984

AN ATTACHMENT

SMCS-7301 **i03601597**

NOTE	REF NO	GRAPHIC REF	PART NUMBER	QTY	PART NAME 1 2 3 4 5 6 (PRODUCT LEVEL)	SEE PAGE
Y	1	1	*249-7108*	1	HANDRAIL GP (CAB)	373
Y	2	1	*299-2940*	1	LIGHTING GP-FLOOD (HID, CAB FRONT)	210

Y-SEPARATE ILLUSTRATION

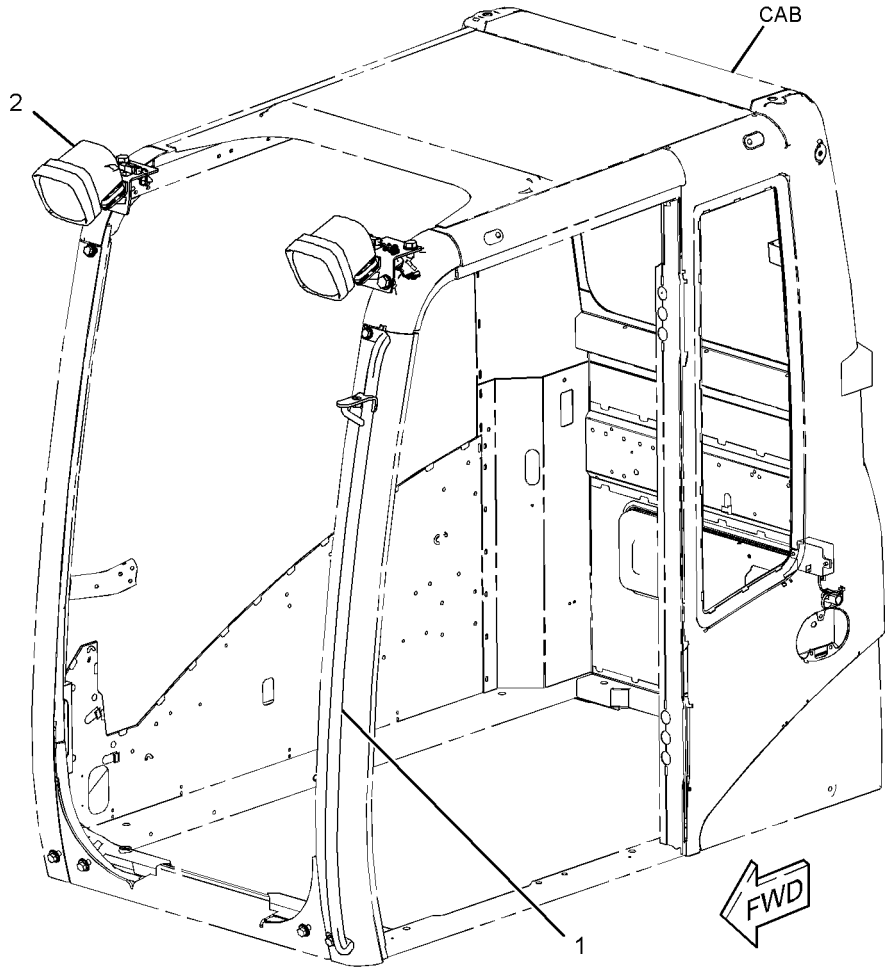

GRAPHIC #1 **<END>** g01931974

OPERATOR STATION

225-5782 PEDAL AR-THIRD

S/N: WAP1-UP

AN ATTACHMENT

SMCS-5059, 5462 **i02112936**

NOTE	PART NUMBER	QTY	PART NAME 1 2 3 4 5 6 (PRODUCT LEVEL)	SEE PAGE
Y	*225-5783*	1	CONTROL GP-HYDRAULIC PEDAL (STRAIGHT TRAVEL)	964
	127-5250	1	FILM-INSTRUCTION (TRAVEL CONTROLS)	

Y-SEPARATE ILLUSTRATION

<END>

OPERATOR STATION

304-0052 PLATFORM GP

S/N: WAP1-UP

PART OF 294-1237 CHASSIS AR

SMCS-7253 **i04026483**

NOTE	REF NO	GRAPHIC REF	PART NUMBER	QTY	PART NAME 1 2 3 4 5 6 (PRODUCT LEVEL)	SEE PAGE
	1	2	**4I-2187**	1	SUPPORT AS	
	2	1,2	**246-2641**	1	PADLOCK GP	
		1,2	**5P-8500**	1	KEY	
	3	2	**7Y-2853**	2	SPACER (13X38X5-MM THK)	
	4	2	**9M-3835**	1	LATCH-RUBBER	
M	5	1	**135-8573**	14	BOLT AS	
M	6	1,2	**135-8575**	25	BOLT AS	
M	7	1,2	**135-8577**	14	BOLT AS	
	8	1	**175-0689**	1	SUPPORT AS	
	9	1	**175-0691**	1	SUPPORT AS	
	10	1	**175-0964**	1	SUPPORT AS	
	11	1	**175-0966**	1	SUPPORT AS	
	12	1	**175-0968**	1	SUPPORT AS	
	13	1	**175-0970**	1	SUPPORT AS	
	14	1	**362-4350**	1	SHEET AS	
	15	1	**362-4352**	1	ROD	
	16	1	**236-9389**	1	COVER AS	
	17	1	**236-9391**	1	COVER AS	
	18	1	**236-9397**	1	COVER AS	
	18A	1	**7Y-2814**	2	HINGE	
	19	1	**236-9399**	1	SUPPORT AS	
	20	1	**236-9401**	1	COVER AS	
	21	1	**237-8846**	1	SUPPORT AS	
	22	1	**304-0054**	1	SUPPORT AS	
	23	2	**313-7935**	1	SUPPORT AS	
	24	2	**095-0843**	1	PIN-COTTER	
	25	2	**096-3780**	1	PIN-CLEVIS	
	26	1	**171-3396**	2	GROMMET	
	27	2	**2M-5795**	1	PIN-CLEVIS	
	28	2	**3B-4607**	1	PIN-COTTER	
	29	2	**7Y-2854**	2	SPACER (24X38X3-MM THK)	
	30	2	**8T-4224**	1	WASHER-HARD (8.8X16X2-MM THK)	

M-METRIC PART

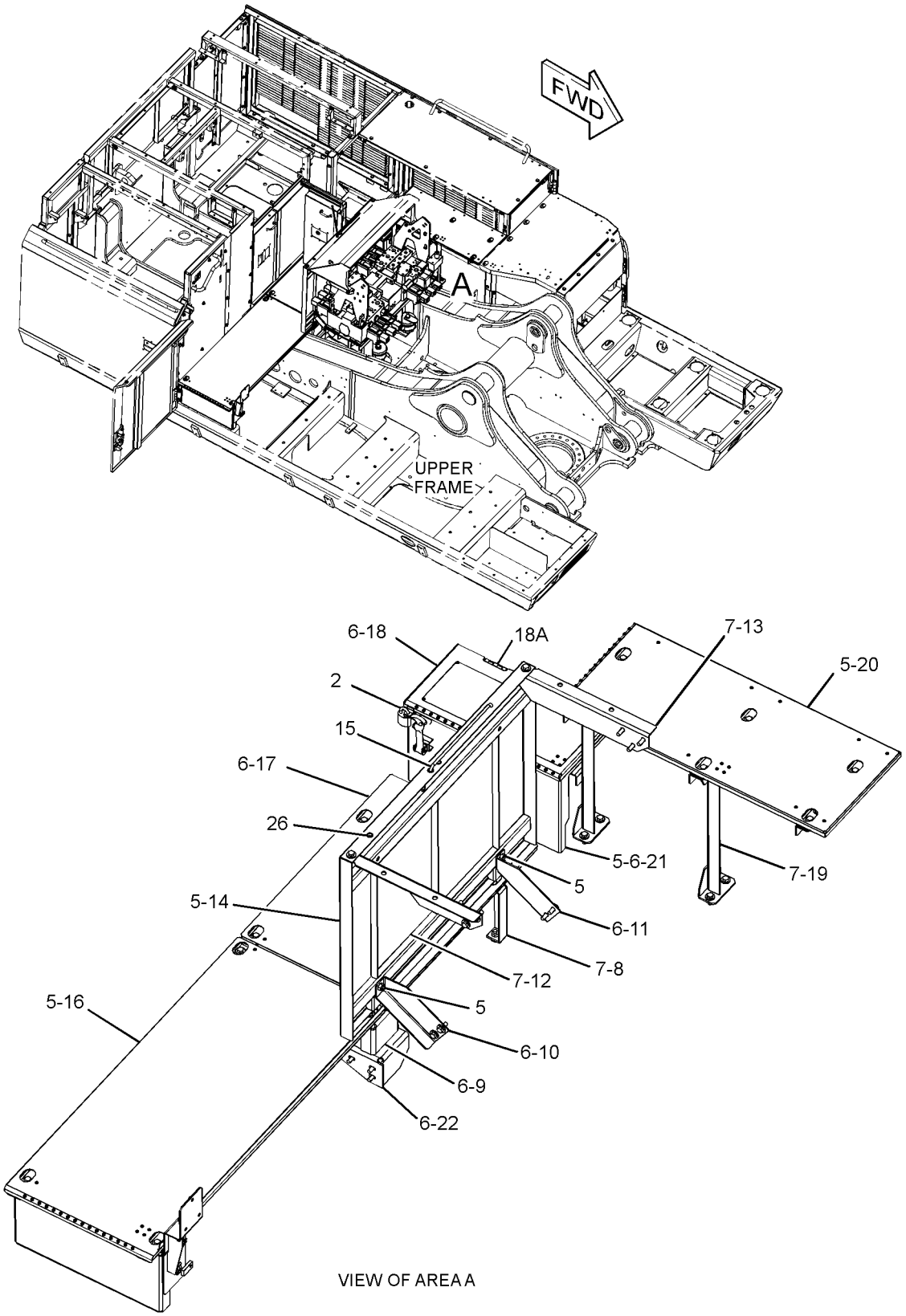

GRAPHIC #1 g02162639

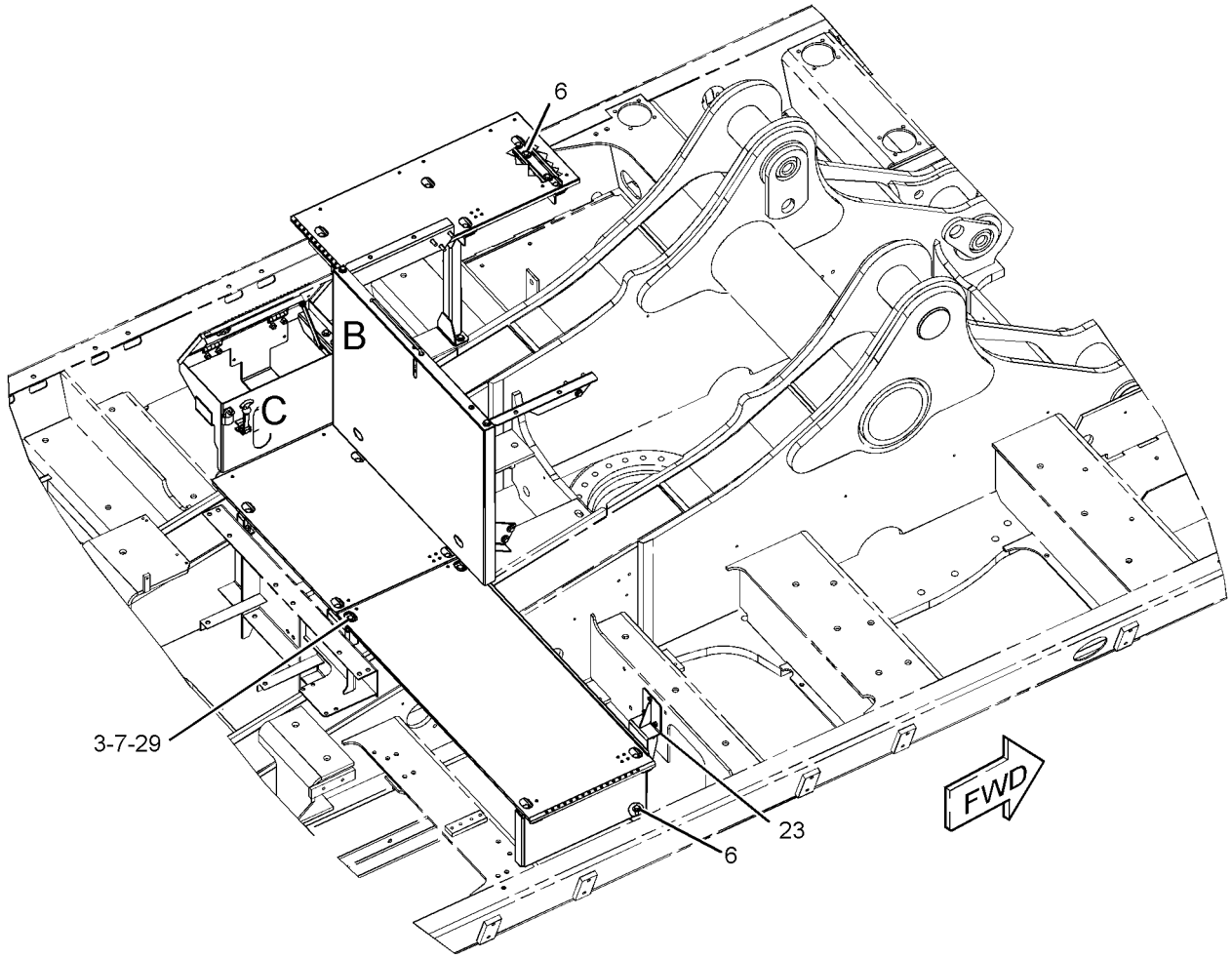

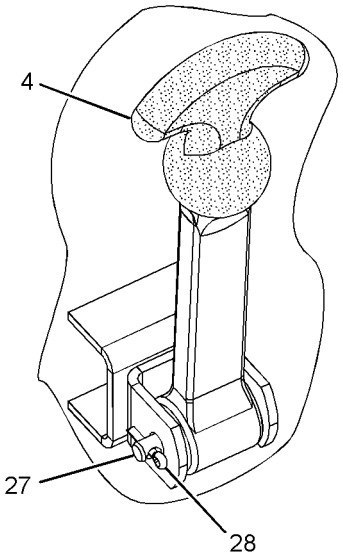

VIEW OF AREA C

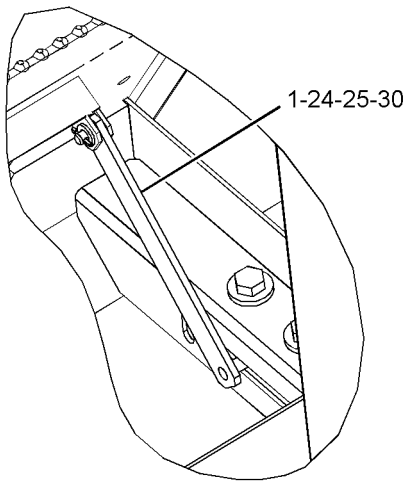

VIEW OF AREA B

GRAPHIC #2 **<END>** g02162957

OPERATOR STATION

225-5757 PLATFORM GP-OPERATOR

S/N: WAP1-UP

PART OF 342-3451 OPERATOR AR

SMCS-7253 **i03897558**

NOTE	REF NO	GRAPHIC REF	PART NUMBER	QTY	PART NAME 1 2 3 4 5 6 (PRODUCT LEVEL)	SEE PAGE
C	1	1	**135-8966**	1	GROMMET	
	2	1	**147-4960**	2	GROMMET	
	3	1	**162-0349**	2	COVER	
	4	1	**296-4908**	2	CAP	
	5	1	**245-7941**	3	BOSS	
C	6	1	**274-5048**	5	BOSS	
	7	1	**296-4907**	1	CAP	
	8	1	**353-1986**	1	INSULATION	

C-CHANGE FROM PREVIOUS TYPE

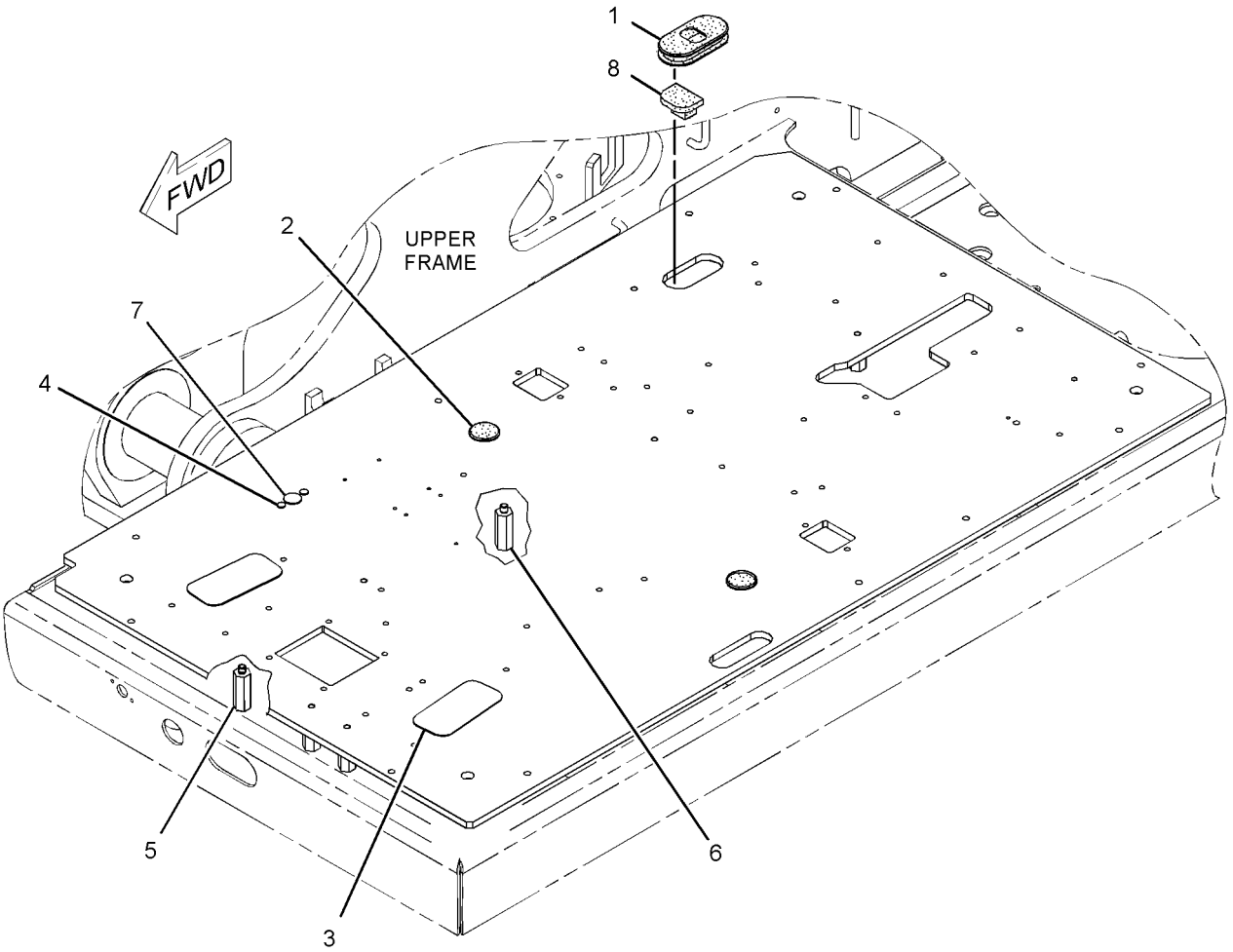

GRAPHIC #1 **<END>** g02126526

OPERATOR STATION

251-0538 RADIO GP–AM/FM

S/N: WAP1-UP

AN ATTACHMENT

SMCS-7338, 733C **i03024523**

NOTE	REF NO	GRAPHIC REF	PART NUMBER	QTY	PART NAME 1 2 3 4 5 6 (PRODUCT LEVEL)	SEE PAGE
	1	1	**3S-2093**	2	STRAP-CABLE	
	2	1	**7K-1181**	2	STRAP-CABLE	
	3	1	**106-2704**	2	SCREW AS (M5X0.8X10-MM)	
	4	1	**238-2260**	1	CABLE	
	5	1	**306-8802**	1	RADIO-AM/FM	
	6	1	**259-4914**	1	BRACKET AS	
	7	1	**119-5026**	2	SCREW-PAN HEAD (10-16X0.63-IN)	

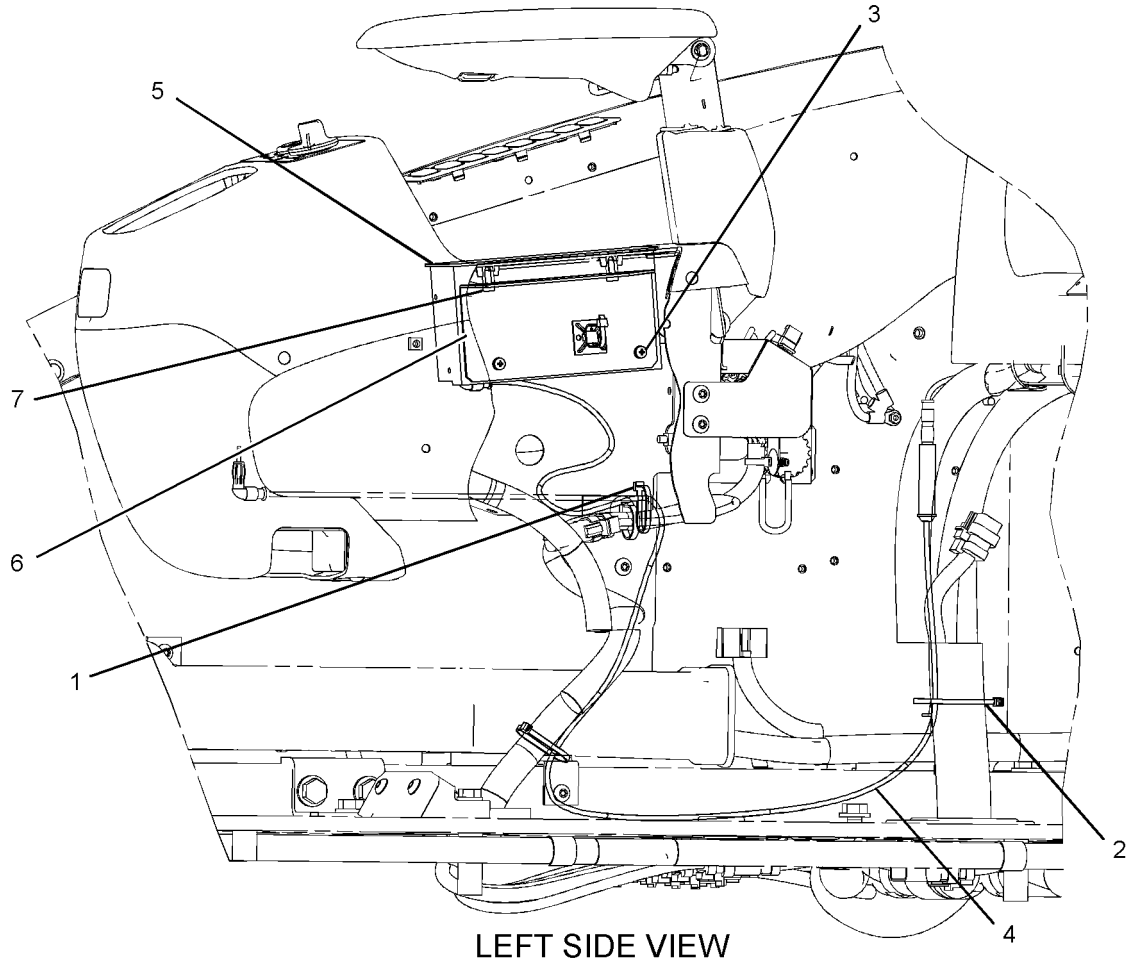

LEFT SIDE VIEW

GRAPHIC #1 **<END>** g01225602

OPERATOR STATION

336-3545 RADIO GP-COMMUNICATION—PRODUCT LINK 121SR

S/N: WAP1-UP
PART OF 309-5845 CONTROL & MTG GP-COMMUNICATION
AN ATTACHMENT

SMCS-733T **i03690902**

NOTE	PART NUMBER	QTY	PART NAME 1 2 3 4 5 6 (PRODUCT LEVEL)	SEE PAGE
	336-3566	1	SOFTWARE GP-COMMUNICATION (PRODUCT LINK 121SR)	

<END>

OPERATOR STATION

184-7621 SCREEN GP-SUN

S/N: WAP1-UP
PART OF 308-7020, 308-7021, 308-7022 CAB AR
AN ATTACHMENT

SMCS-7165 **i02981808**

NOTE	REF NO	GRAPHIC REF	PART NUMBER	QTY	PART NAME 1 2 3 4 5 6 (PRODUCT LEVEL)	SEE PAGE
	1	1	**229-4818**	1	SHADE AS-SUN	
	2	1	**6C-9119**	4	SCREW (M5X0.8X12-MM)	
					-OR-	
		1	**6V-2687**	4	SCREW-PAN HEAD (10-24X1-IN)	
	3	1	**229-3756**	1	SUPPORT	
	4	1	**229-3757**	1	SUPPORT	

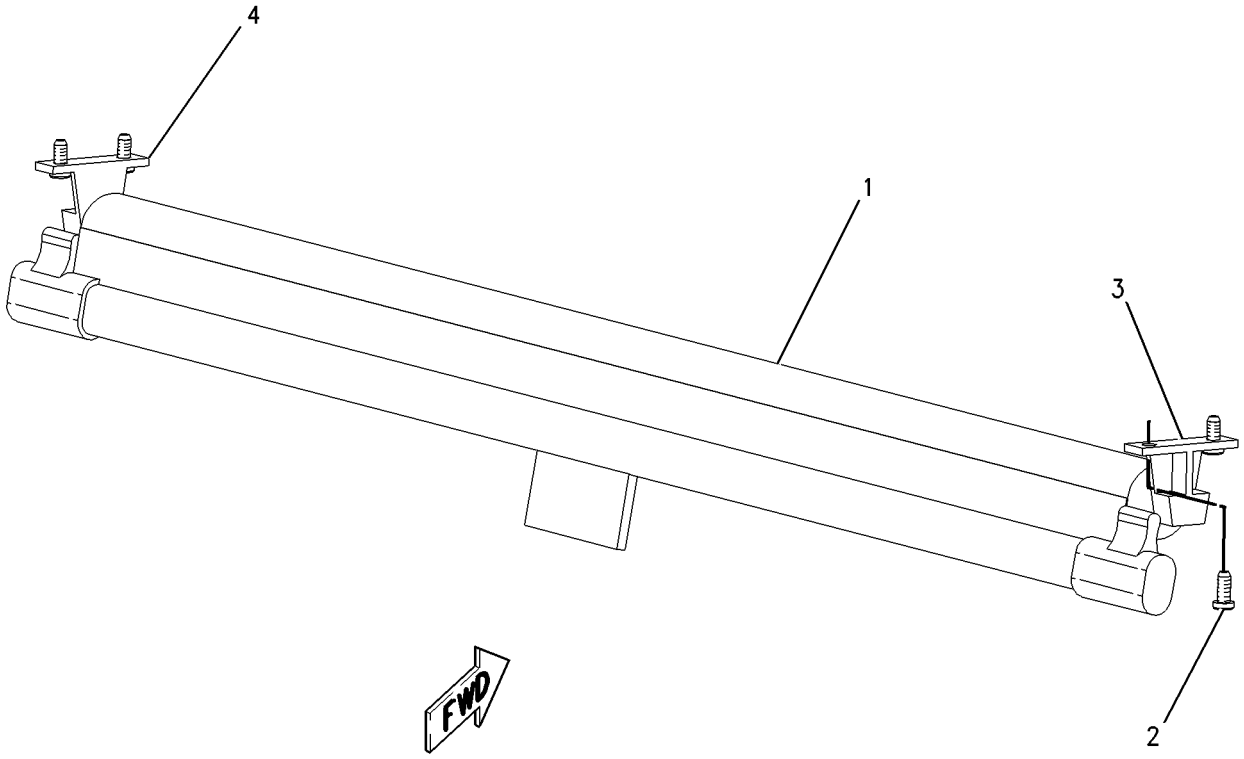

GRAPHIC #1 **<END>** g00943485

OPERATOR STATION

327-6501 SEAT & MOUNTING GP—HIGH BACK, TILT

S/N: WAP1-UP
PART OF 340-4004 OPTION AR-CAB
AN ATTACHMENT

SMCS-7312 **i03636621**

NOTE	REF NO	GRAPHIC REF	PART NUMBER	QTY	PART NAME 1 2 3 4 5 6 (PRODUCT LEVEL)	SEE PAGE
Y	1	1	*327-6507*	1	SEAT GP-SUSPENSION (HIGH BACK, TILT)	1038
M	2	1	**6V-8202**	4	BOLT-SOCKET HEAD (M8X1.25X16-MM)	

M-METRIC PART
Y-SEPARATE ILLUSTRATION

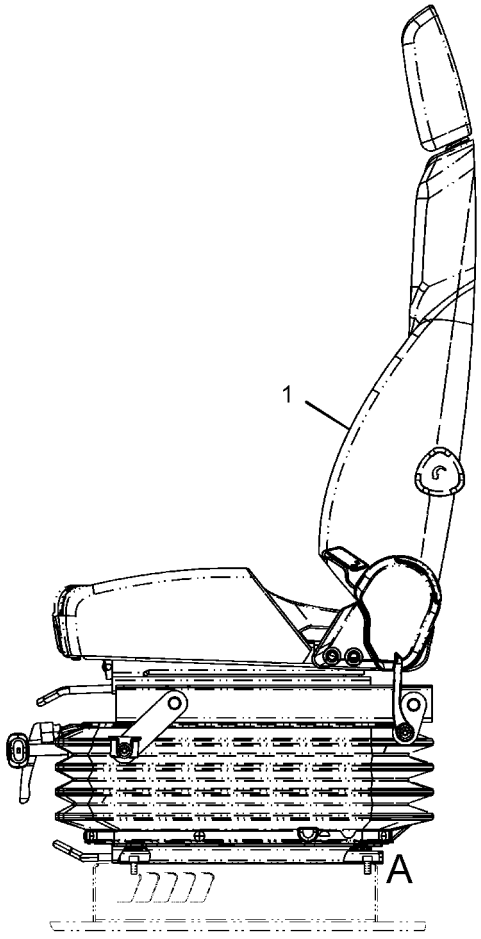

LEFT SIDE VIEW

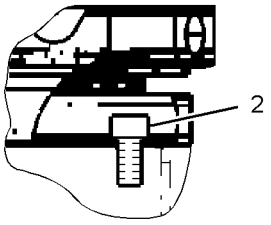

VIEW OF AREA A

GRAPHIC #1 **<END>** g01804737

OPERATOR STATION

327-6502 SEAT & MOUNTING GP–HIGH BACK, TILT

S/N: WAP1-UP

AN ATTACHMENT

SMCS-7312 **i03892025**

NOTE	REF NO	GRAPHIC REF	PART NUMBER	QTY	PART NAME 1 2 3 4 5 6 (PRODUCT LEVEL)	SEE PAGE
M	1	1	**6V-8202**	2	BOLT-SOCKET HEAD (M8X1.25X16-MM)	
Y	2	1	*327-6508*	1	SEAT GP-SUSPENSION (HIGH BACK, TILT)	1039
M	3	1	**5A-3604**	2	BOLT-SOCKET HEAD (M8X1.25X25-MM)	

M-METRIC PART
Y-SEPARATE ILLUSTRATION

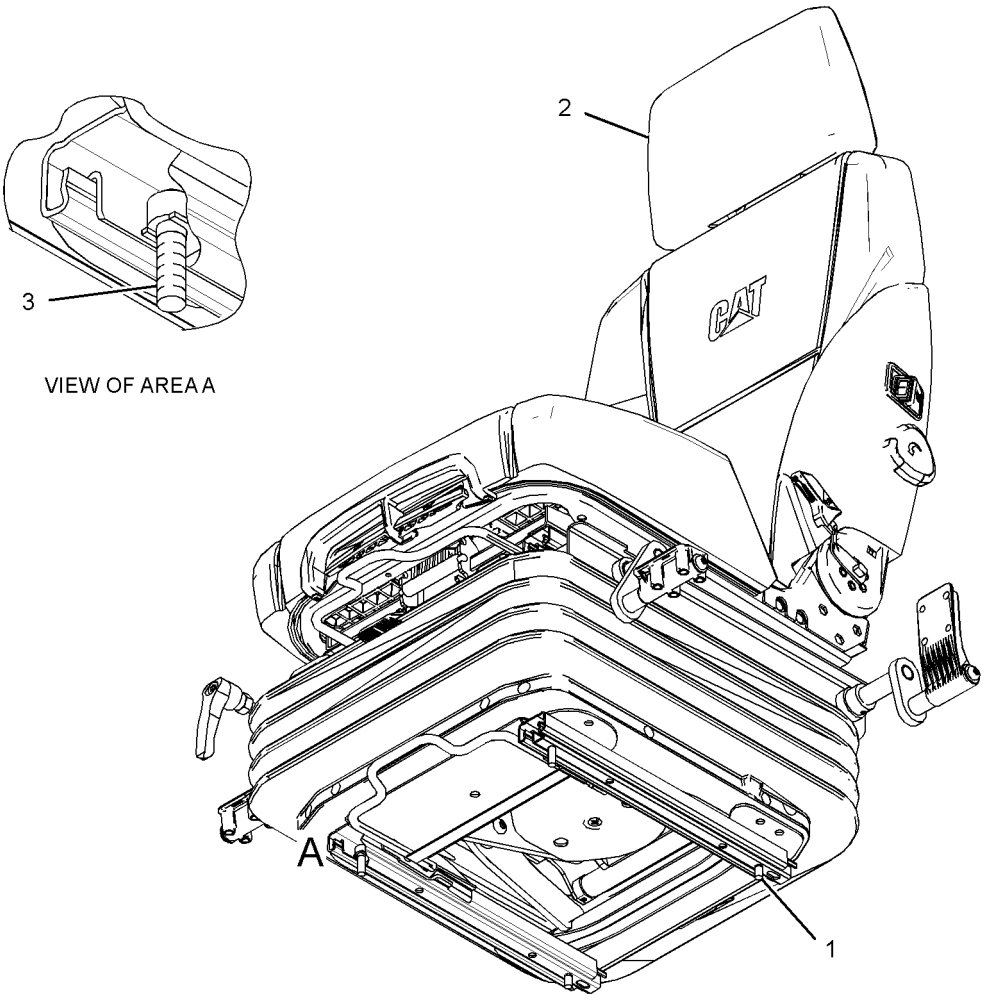

GRAPHIC #1 **<END>** g01804556

OPERATOR STATION

327-6503 SEAT & MOUNTING GP—HIGH BACK, WITH HEATER

S/N: WAP1-UP
PART OF 340-4002, 340-4003 OPTION AR-CAB
AN ATTACHMENT

SMCS-7312 **i03572349**

NOTE	REF NO	GRAPHIC REF	PART NUMBER	QTY	PART NAME 1 2 3 4 5 6 (PRODUCT LEVEL)	SEE PAGE
	1	1	**238-2211**	1	SWITCH AS-ROCKER (HEATED SEAT)	
		1	**167-3542**	1	CONNECTOR-RECEPTACLE	
		1	**167-3543**	4	TERMINAL (MALE)	
Y	2	1	*327-6509*	1	SEAT GP-SUSPENSION (HIGH BACK, WITH HEATER)	1040
M	3	1	**6V-8202**	4	BOLT-SOCKET HEAD (M8X1.25X16-MM)	

M-METRIC PART
Y-SEPARATE ILLUSTRATION

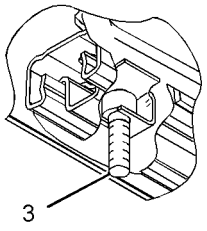

VIEW OF AREA A

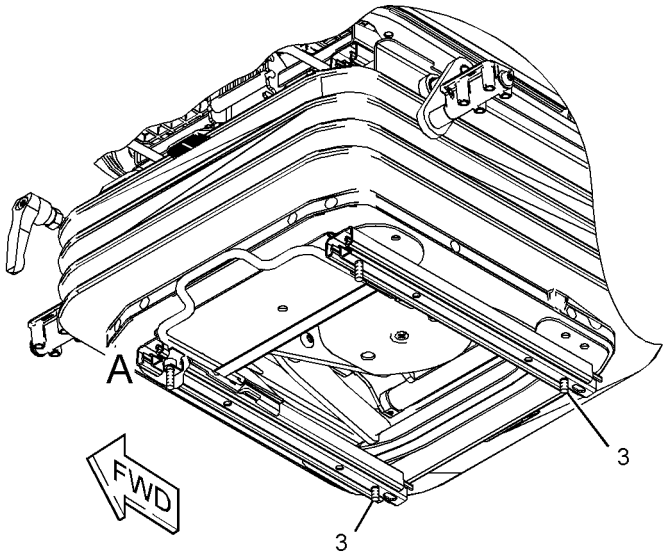

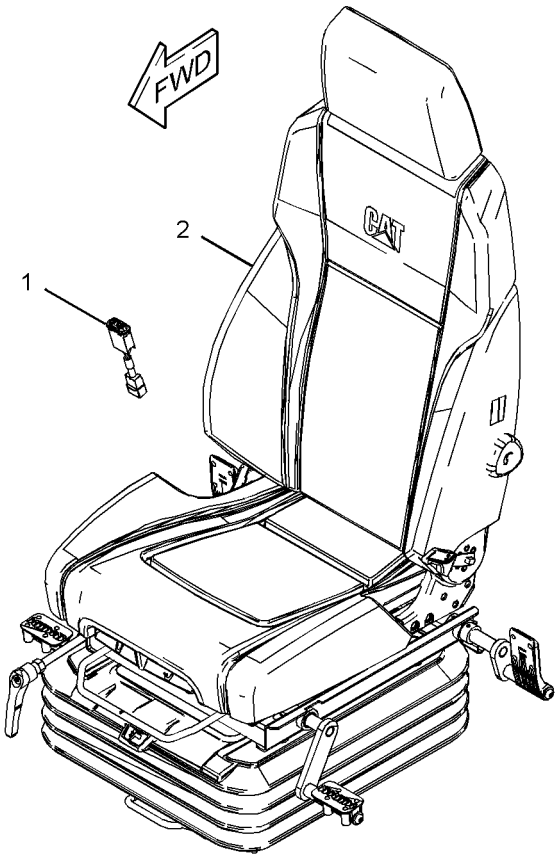

GRAPHIC #1 **<END>** g01901913

OPERATOR STATION

305-0466 SEAT BELT GP—RETRACTABLE, 76-MM

S/N: WAP1-UP

PART OF 340-4002, 340-4003, 340-4004 OPTION AR-CAB

AN ATTACHMENT

SMCS-7327 **i03533980**

NOTE	REF NO	GRAPHIC REF	PART NUMBER	QTY	PART NAME 1 2 3 4 5 6 (PRODUCT LEVEL)	SEE PAGE
	1	1	**327-6540**	1	SEAT BELT GP (RETRACTABLE, 76-MM)	

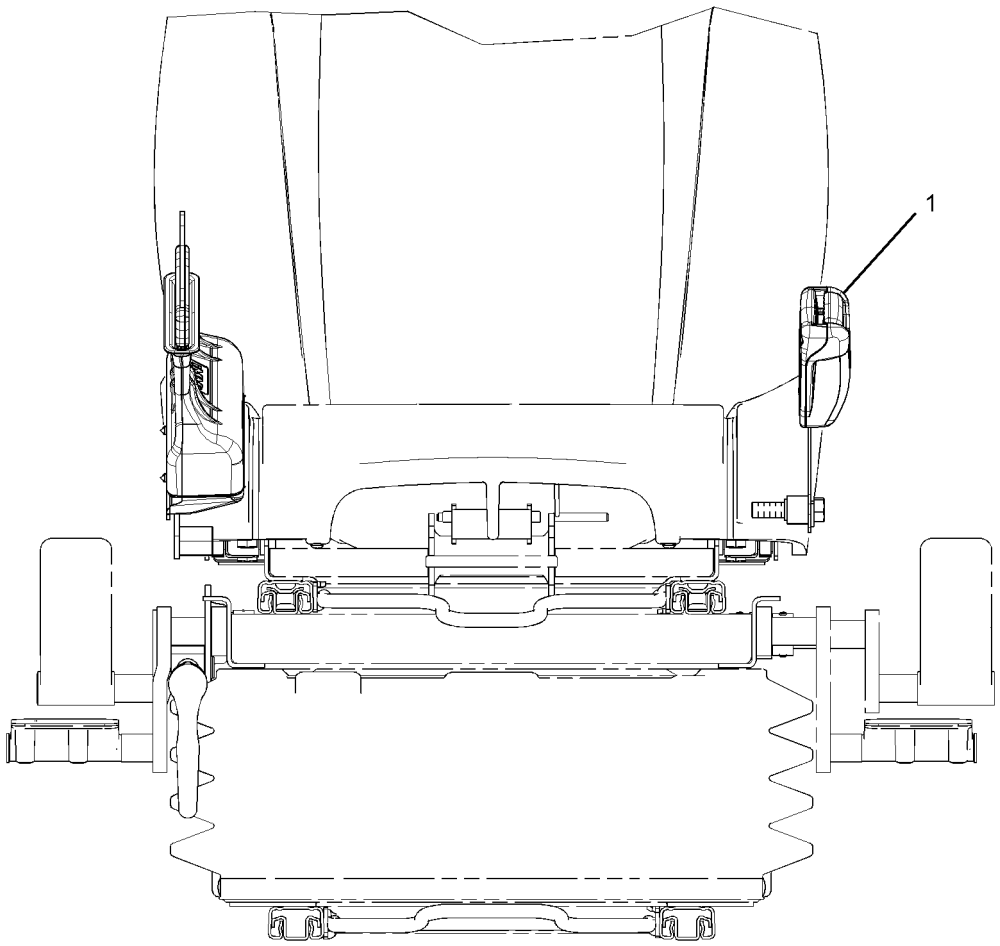

FRONT VIEW

GRAPHIC #1 **<END>** g01576875

OPERATOR STATION

327-6512 SEAT GP—HIGH BACK, TILT

S/N: WAP1-UP

PART OF 327-6507, 327-6508 SEAT GP-SUSPENSION

AN ATTACHMENT

SMCS-7312 **i03986069**

NOTE	REF NO	GRAPHIC REF	PART NUMBER	QTY	PART NAME 1 2 3 4 5 6 (PRODUCT LEVEL)	SEE PAGE
	1	1	**178-5659**	1	HANDLE (LUMBAR SUPPORT ADJUSTER)	
	2	1	**316-8987**	2	BRACKET	
	3	1	**327-6515**	1	HEADREST AS-SEAT	
	4	1	**327-6640**	1	KIT-HANDLE (RECLINER)	
	5	1	**327-6642**	1	KIT-SEAT TILT (ADJUSTER)	
	6	1	**327-6643**	1	KIT-ADJUSTER (CUSHION POSITIONING)	
	7	1	**333-4160**	1	KIT-SEAT (HIGH BACK, MANUAL)	
	8	1	**333-4179**	2	BOLT-SPECIAL	
M	9	1	**9X-2616**	4	SCREW-SOCKET (M8X1.25X16-MM)	

M-METRIC PART

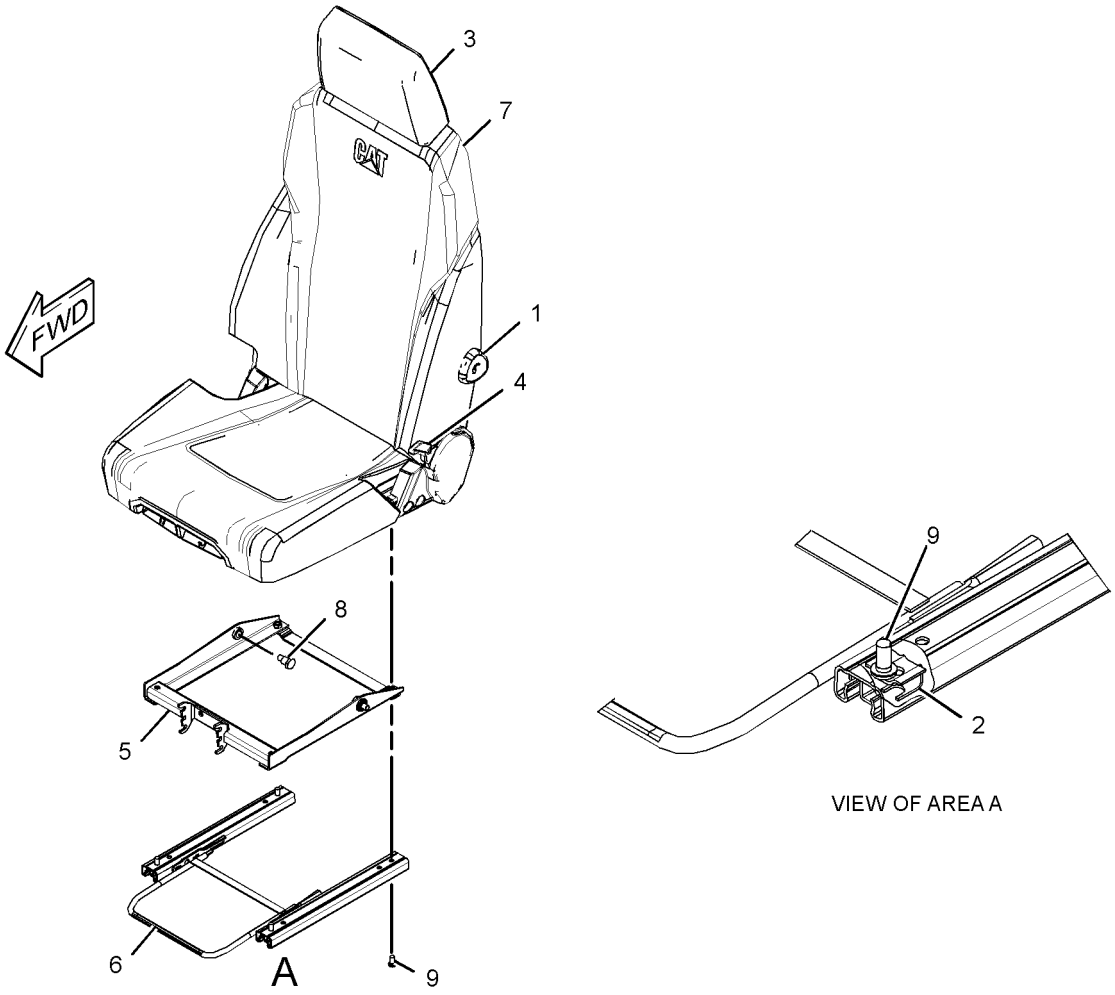

VIEW OF AREA A

GRAPHIC #1 **<END>** g02173701

OPERATOR STATION

327-6513 SEAT GP–HIGH BACK, WITH HEATER

S/N: WAP1-UP
PART OF 327-6509 SEAT GP-SUSPENSION
AN ATTACHMENT

SMCS-7312 **i03982430**

NOTE	REF NO	GRAPHIC REF	PART NUMBER	QTY	PART NAME 1 2 3 4 5 6 (PRODUCT LEVEL)	SEE PAGE
	1	1	**178-5659**	1	HANDLE (LUMBAR SUPPORT ADJUSTER)	
	2	1	**316-8987**	2	BRACKET	
	3	1	**327-6515**	1	HEADREST AS-SEAT	
	4	1	**327-6640**	1	KIT-HANDLE (RECLINER)	
	5	1	**327-6642**	1	KIT-SEAT TILT	
	6	1	**327-6643**	1	KIT-ADJUSTER (CUSHION POSITIONING)	
	7	1	**327-6649**	1	KIT-SEAT (HIGH BACK, WITH HEATER)	
	8	1	**333-4179**	2	BOLT-SPECIAL	
M	9	1	**9X-2616**	4	SCREW-SOCKET (M8X1.25X16-MM)	

M-METRIC PART

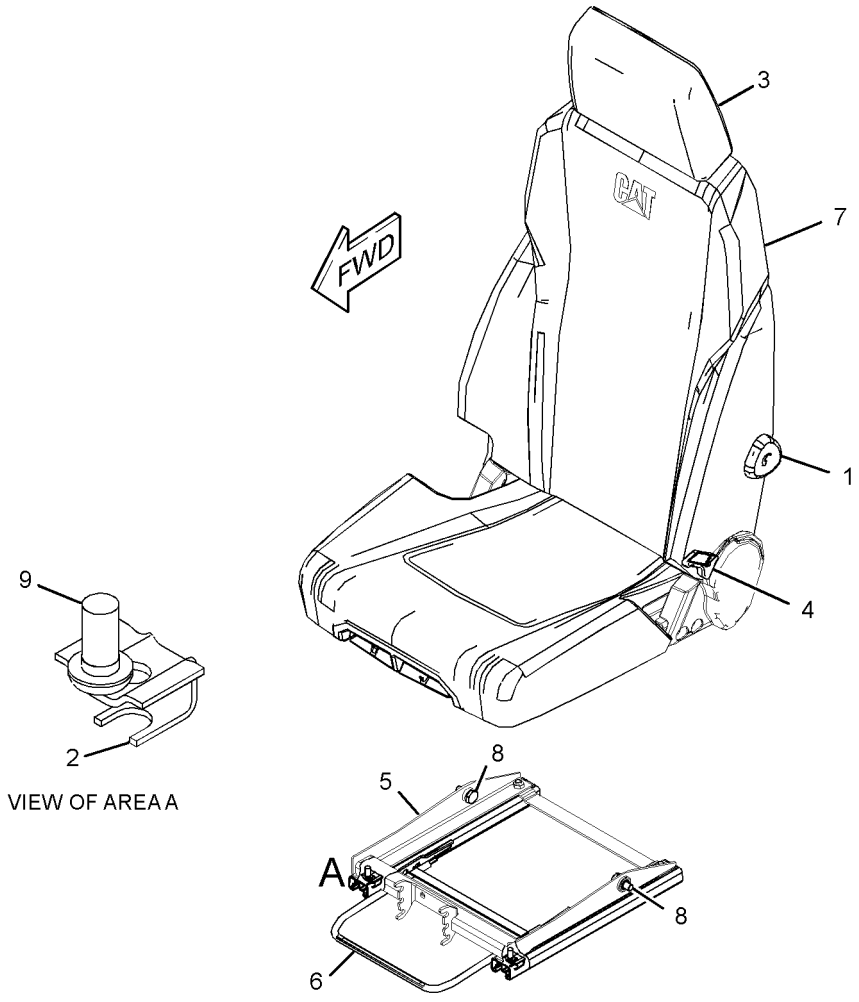

GRAPHIC #1

<END>

g02173863

OPERATOR STATION

327-6507 SEAT GP-SUSPENSION—HIGH BACK, TILT

S/N: WAP1-UP

PART OF 327-6501 SEAT & MOUNTING GP

AN ATTACHMENT

SMCS-7324, 7336 **i03572478**

NOTE	REF NO	GRAPHIC REF	PART NUMBER	QTY	PART NAME 1 2 3 4 5 6 (PRODUCT LEVEL)	SEE PAGE
	1	1	**316-8987**	2	BRACKET	
Y	2	1	**327-6512**	1	SEAT GP (HIGH BACK, TILT)	1036
Y	3	1	**327-6520**	1	SUSPENSION GP-SEAT (MECHANICAL)	1042
M	4	1	**5A-3604**	4	BOLT-SOCKET HEAD (M8X1.25X25-MM)	

M-METRIC PART
Y-SEPARATE ILLUSTRATION

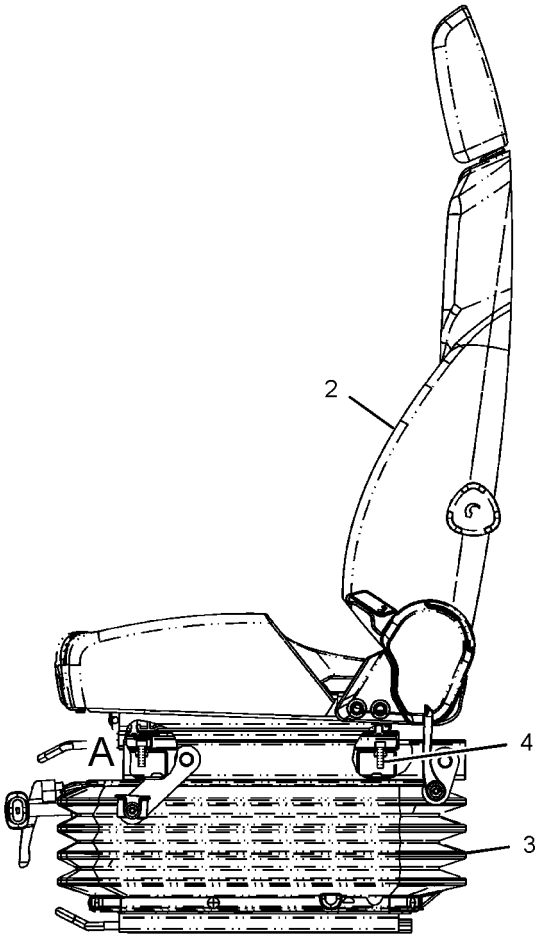

LEFT SIDE VIEW

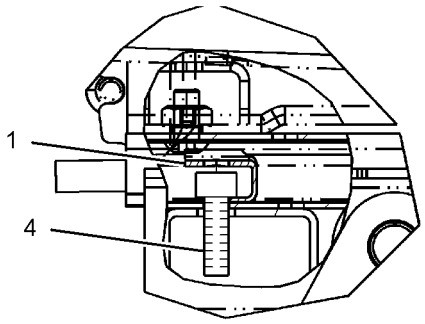

VIEW OF AREA A

GRAPHIC #1 **<END>** g01794435

OPERATOR STATION

327-6508 SEAT GP-SUSPENSION—HIGH BACK, TILT

S/N: WAP1-UP
PART OF 327-6502 SEAT & MOUNTING GP
AN ATTACHMENT

SMCS-7324, 7336 **i03581191**

NOTE	REF NO	GRAPHIC REF	PART NUMBER	QTY	PART NAME 1 2 3 4 5 6 (PRODUCT LEVEL)	SEE PAGE
	1	1	**316-8987**	2	BRACKET	
Y	2	1	**327-6512**	1	SEAT GP (HIGH BACK, TILT)	1036
Y	3	1	**327-6521**	1	SUSPENSION GP-SEAT (AIR)	1043
M	4	1	**5A-3604**	4	BOLT-SOCKET HEAD (M8X1.25X25-MM)	

M-METRIC PART
Y-SEPARATE ILLUSTRATION

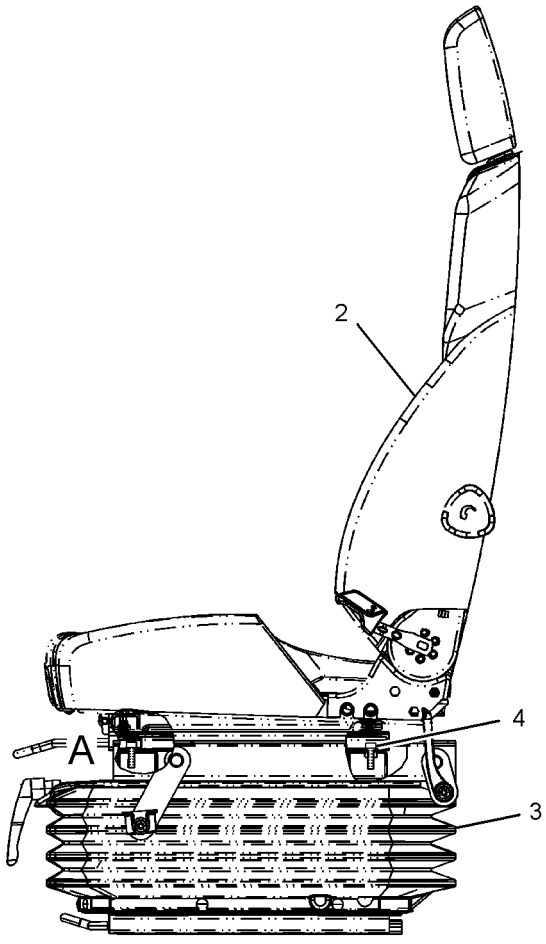

LEFT SIDE VIEW

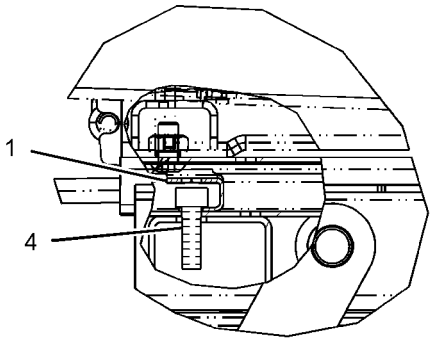

VIEW OF AREA A

GRAPHIC #1 **<END>** g01577953

OPERATOR STATION

327-6509 SEAT GP-SUSPENSION—HIGH BACK, WITH HEATER

S/N: WAP1-UP

PART OF 327-6503 SEAT & MOUNTING GP

AN ATTACHMENT

SMCS-7324, 7336 **i03608343**

NOTE	REF NO	GRAPHIC REF	PART NUMBER	QTY	PART NAME 1 2 3 4 5 6 (PRODUCT LEVEL)	SEE PAGE
	1	1	**7I-2673**	1	STRAP-CABLE	
	2	1	**316-8987**	2	BRACKET	
Y	3	1	**327-6513**	1	SEAT GP (HIGH BACK, WITH HEATER)	1037
Y	4	1	**327-6521**	1	SUSPENSION GP-SEAT (AIR)	1043
M	5	1	**5A-3604**	4	BOLT-SOCKET HEAD (M8X1.25X25-MM)	

M-METRIC PART
Y-SEPARATE ILLUSTRATION

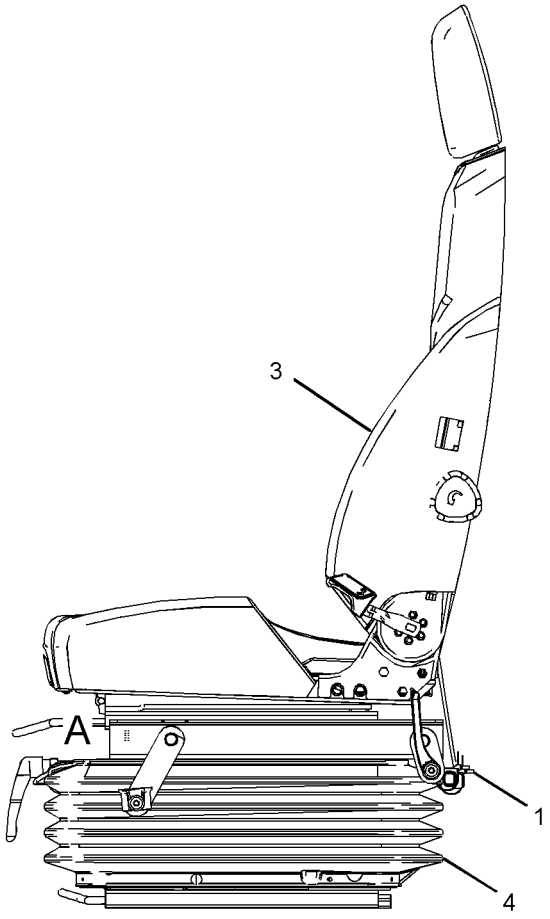

LEFT SIDE VIEW

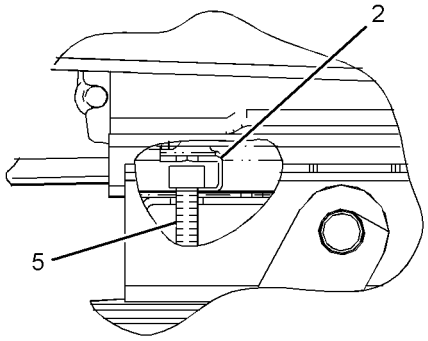

VIEW OF AREA A

GRAPHIC #1 **<END>** g01810781

OPERATOR STATION

327-6542 SUPPORT GP-SEAT

S/N: WAP1-UP

PART OF 342-3451 OPERATOR AR

SMCS-7321 **i03619360**

NOTE	REF NO	GRAPHIC REF	PART NUMBER	QTY	PART NAME 1 2 3 4 5 6 (PRODUCT LEVEL)	SEE PAGE
	1	1	**327-6538**	1	SUPPORT AS-SEAT	
	2	1	**327-6543**	1	COVER	
	3	1	**096-6166**	2	WASHER-HARD (4.5X9X1-MM THK)	
M	4	1	**8T-0337**	2	SCREW-MACHINE (M4X0.7X12-MM)	
	5	1	**8T-4121**	4	WASHER-HARD (11X21X2.5-MM THK)	
M	6	1	**8T-4191**	4	BOLT (M10X1.5X16-MM)	

M-METRIC PART

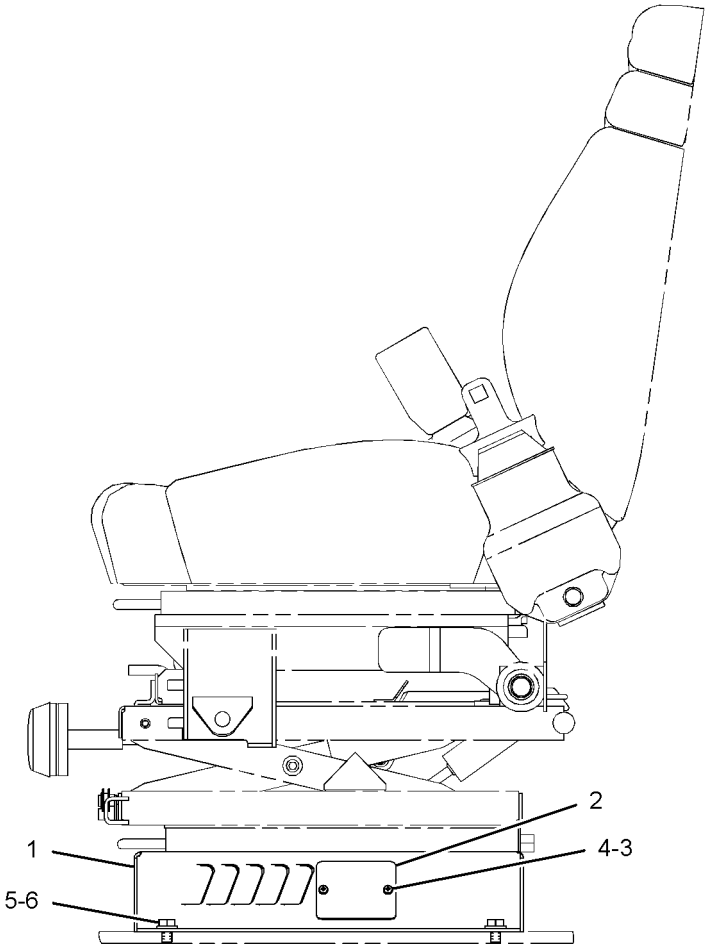

LEFT SIDE VIEW

GRAPHIC #1 **<END>** g01944713

OPERATOR STATION

327-6520 SUSPENSION GP-SEAT—MECHANICAL

S/N: WAP1-UP
PART OF 327-6507 SEAT GP-SUSPENSION
AN ATTACHMENT

SMCS-7324 **i03982957**

NOTE	REF NO	GRAPHIC REF	PART NUMBER	QTY	PART NAME 1 2 3 4 5 6 (PRODUCT LEVEL)	SEE PAGE
	1	1	**327-6644**	1	KIT-BRACKET (CONSOLE RAISE, LOWER)	
Y	2	1	**327-6645**	1	KIT-SEAT SUSPENSION (MECHANICAL)	999
	3	1	**327-6648**	1	KIT-ADJUSTER (SEAT POSITION)	
M	4	1	**198-3899**	4	SCREW-BUTTON HEAD (M8X1.25X20-MM)	
	5	1	**245-7895**	1	KIT-CLIP (INCLUDES 28-CLIPS)	
	6	1	**327-6646**	1	KIT-CYLINDER (DAMPENER)	
	7	1	**327-6647**	1	KIT-COVER (SUSPENSION SEAT)	
	8	1	**333-4180**	6	SCREW-BUTTON HEAD (M8X1.25X20-MM)	
	9	1	**333-4181**	1	KIT-HANDLE	

M-METRIC PART
Y-SEPARATE ILLUSTRATION

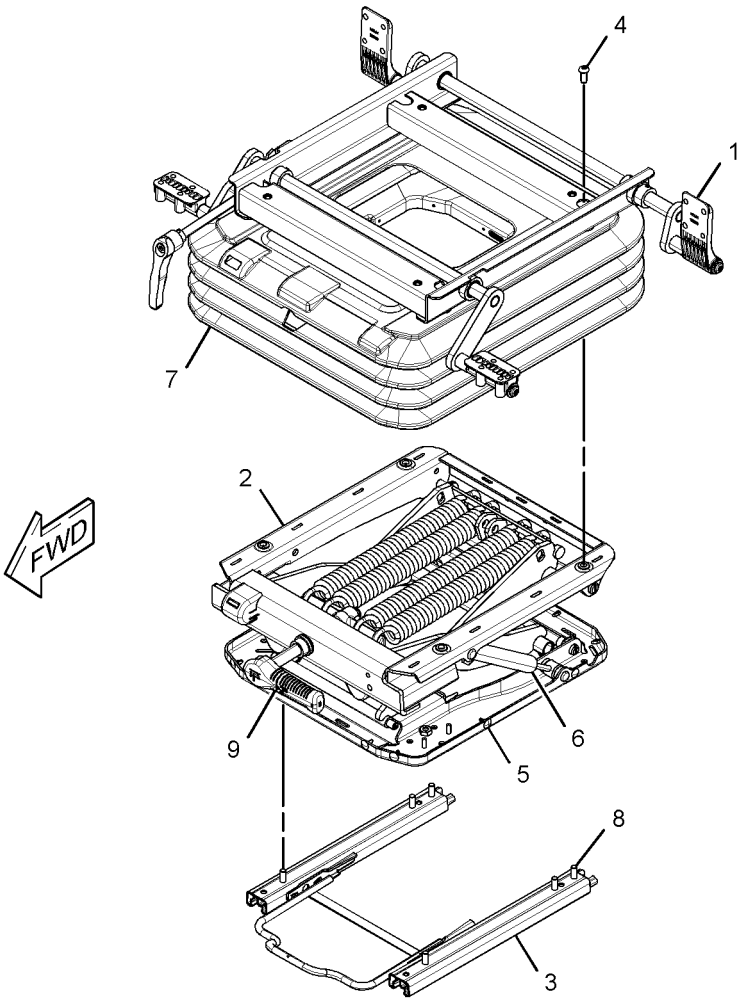

GRAPHIC #1

<END>

g02173849

OPERATOR STATION

327-6521 SUSPENSION GP-SEAT–AIR

S/N: WAP1-UP

PART OF 327-6508, 327-6509 SEAT GP-SUSPENSION

AN ATTACHMENT

SMCS-7324 **i03982551**

NOTE	REF NO	GRAPHIC REF	PART NUMBER	QTY	PART NAME 1 2 3 4 5 6 (PRODUCT LEVEL)	SEE PAGE
	1	1	**7I-2673**	1	STRAP-CABLE	
M	2	1	**198-3899**	4	SCREW-BUTTON HEAD (M8X1.25X20-MM)	
	3	1	**245-7895**	1	KIT-CLIP (INCLUDES 28-CLIPS)	
	4	1	**327-6644**	1	KIT-BRACKET (CONSOLE RAISE, LOWER)	
	5	1	**327-6646**	1	KIT-CYLINDER (DAMPENER)	
	6	1	**327-6648**	1	KIT-ADJUSTER (SEAT POSITION)	
Y	7	1	**333-4157**	1	KIT-SEAT SUSPENSION (AIR)	1000
	8	1	**333-4158**	1	KIT-COVER (AIR SEAT)	
	9	1	**333-4159**	1	KIT-VALVE (AIR SEAT)	
	10	1	**333-4178**	1	NUT	
	11	1	**333-4180**	6	SCREW-BUTTON HEAD (M8X1.25X20-MM)	

M-METRIC PART
Y-SEPARATE ILLUSTRATION

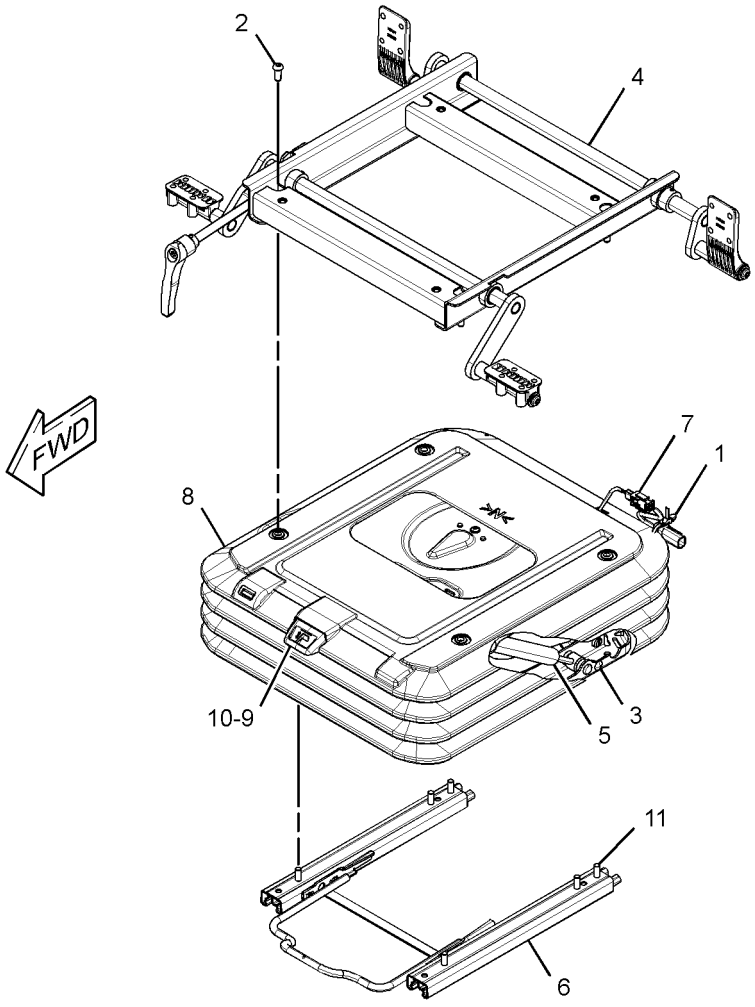

GRAPHIC #1

<END>

g02173885

OPERATOR STATION

249-2663 TRIM GP-CAB—INTERIOR, REAR

S/N: WAP1-UP
PART OF 308-7020, 308-7021, 308-7022 CAB AR
AN ATTACHMENT

SMCS-7301, 7329 **i03923411**

NOTE	REF NO	GRAPHIC REF	PART NUMBER	QTY	PART NAME 1 2 3 4 5 6 (PRODUCT LEVEL)	SEE PAGE
M	1	2	**5I-3054**	8	NUT (M4X0.7-THD)	
	2	2	**262-3663**	2	COVER-SPEAKER	
M	3	2	**096-3772**	12	SCREW-MACHINE (M4X0.7X16-MM)	
	4	2	**096-6166**	8	WASHER-HARD (4.5X9X1-MM THK)	
M	5	1	**108-1780**	4	BOLT-SOCKET HEAD (M6X1X45-MM)	
M	6	2	**111-4627**	6	SCREW-MACHINE (M6X1X30-MM)	
	7	2	**114-6658**	6	WASHER (6.5X17X1-MM THK)	
M	8	1,2	**128-2135**	12	SCREW-TRUSS HEAD (M6X1X13-MM)	
	9	2	**139-6039**	7	NUT (U-TYPE RETAINER)	
	10	1	**167-7042**	2	SEAL	
M	11	1,2	**180-1718**	11	NUT (M6X1-THD)	
	12	2	**191-2764**	1	CASE	
	13	2	**191-2768**	1	COVER	
	14	1	**224-2669**	2	PLUG-PLASTIC	
	15	1	**229-8059**	1	STRIKER (RH)	
	16	1	**229-8060**	1	STRIKER (LH)	
	17	2	**234-6477**	1	BRACKET AS	
	18	1	**235-9001**	1	SUPPORT	
	19	2	**247-6812**	1	PLATE	
	20	2	**361-3875**	1	COVER	
	21	2	**361-3872**	1	COVER AS (LOWER, LH)	
	22	1	**361-3874**	1	COVER	
	23	2	**361-3873**	1	COVER-RADIO	
	24	1	**252-1243**	1	LINER	
M	25	2	**5C-9553**	8	BOLT (M6X1X16-MM)	
	26	1	**6C-8972**	1	HOOK	
	27	1	**6C-9131**	2	SCREW-TAPPING	
	28	2	**9X-8256**	8	WASHER (6.6X12X2-MM THK)	
M	29	1	**8T-0269**	2	BOLT-SOCKET HEAD (M6X1X20-MM)	
	30	1	**8T-4121**	6	WASHER-HARD (11X21X2.5-MM THK)	
M	31	1	**8T-4136**	6	BOLT (M10X1.5X25-MM)	
M	32	1	**8T-4192**	2	BOLT (M12X1.75X25-MM)	
	33	1	**8T-4223**	2	WASHER-HARD (13.5X25.5X3-MM THK)	
	34	2	**9U-8263**	1	COVER	
M	35	2	**9X-2044**	4	SCREW-TRUSS HEAD (M6X1X16-MM)	

M-METRIC PART

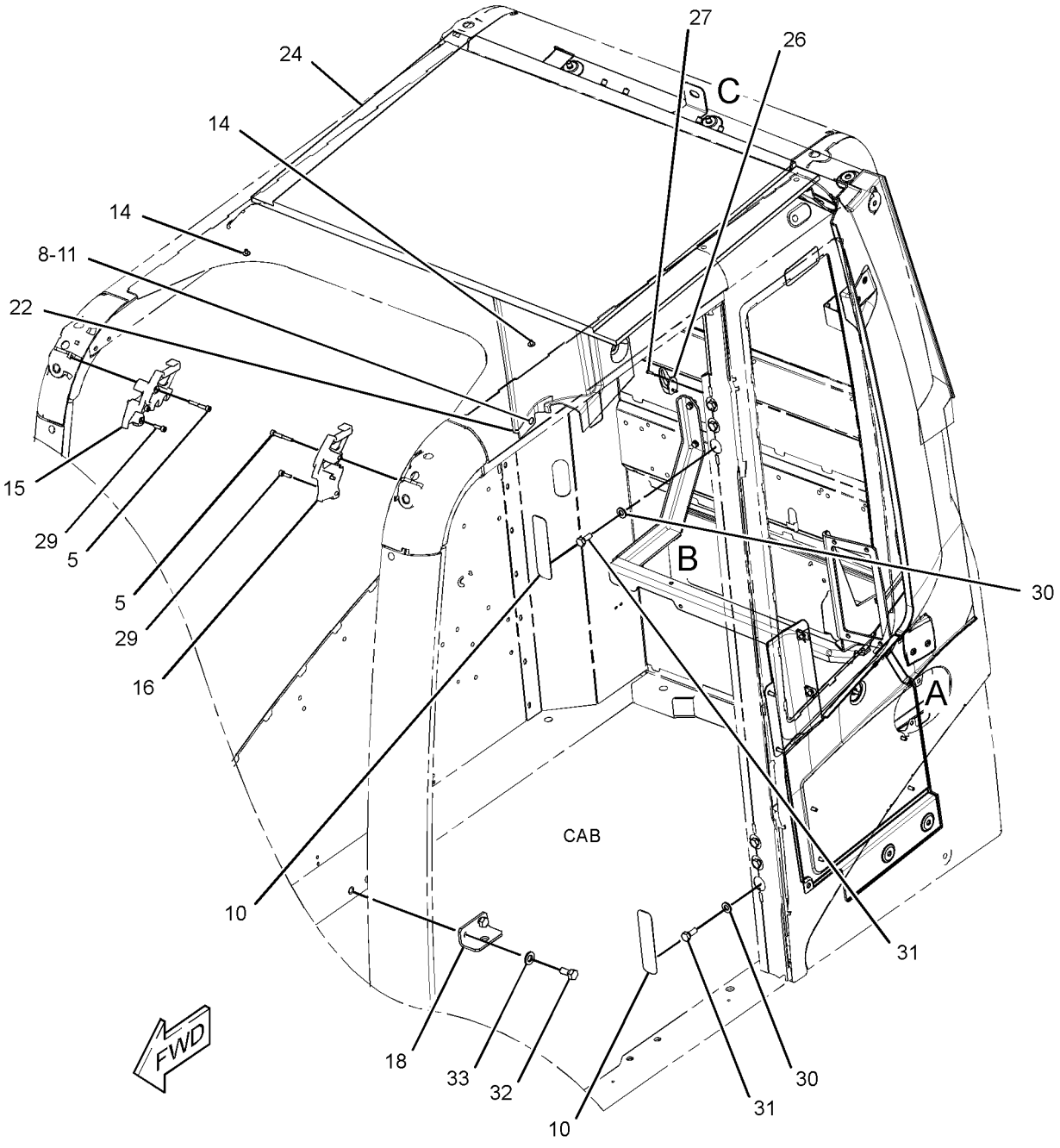

GRAPHIC #1 g02172981

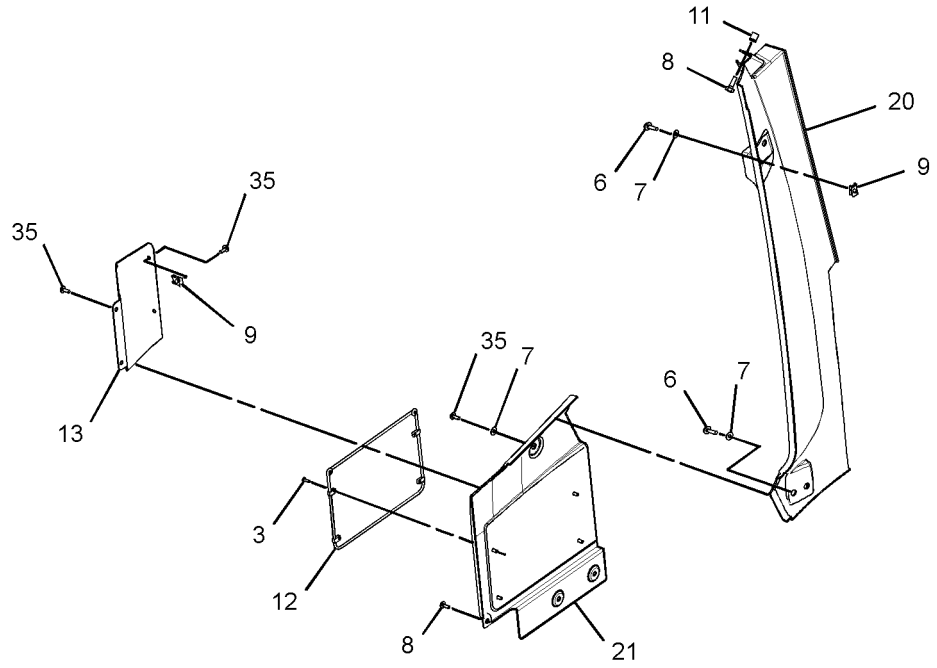

VIEW OF AREA A
(EXPLODED)

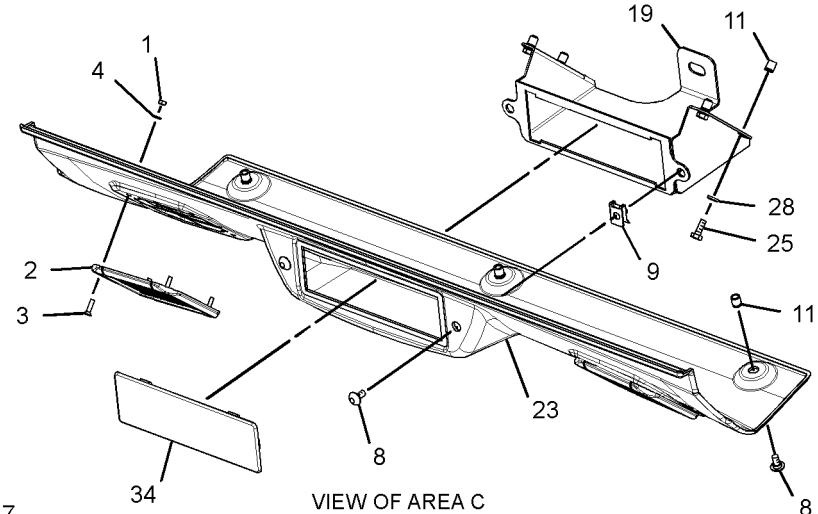

VIEW OF AREA C
(EXPLODED)

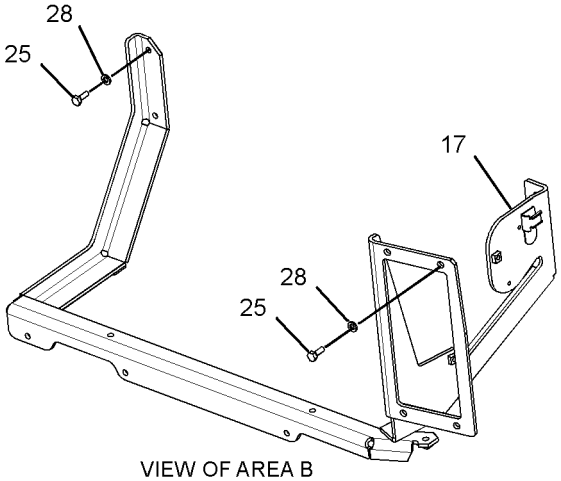

VIEW OF AREA B
(EXPLODED)

GRAPHIC #2 **<END>** g02172983

OPERATOR STATION

225-5753 WASHER GP-WINDOW

S/N: WAP1-UP

PART OF 294-1237 CHASSIS AR

SMCS-7306 **i02954420**

NOTE	REF NO	GRAPHIC REF	PART NUMBER	QTY	PART NAME 1 2 3 4 5 6 (PRODUCT LEVEL)	SEE PAGE
	1	1	**7Y-3474**	1	VALVE AS-CHECK (WINDOW WASHER)	
	2	1	**176-1931**	1	TANK AS-WINDOW WASHER	
		1	**5C-8138**	1	GROMMET	
		1	**7T-8890**	1	PUMP AS-WASHER	
		1	**178-5431**	1	CAP AS (WINDOW WASHER)	
		1	**3W-6399**	1	PACKING	
	3	1	**176-1995**	1	SUPPORT	
	4	1	**6V-3265**	4	CLIP	
	5	1	**8T-4121**	4	WASHER-HARD (11X21X2.5-MM THK)	
M	6	1	**8T-4137**	4	BOLT (M10X1.5X20-MM)	
M	7	1	**8T-4138**	2	BOLT (M6X1X20-MM)	
	8	1	**9X-8256**	2	WASHER (6.6X12X2-MM THK)	
E	9	1	**144-0195**		HOSE (430-CM)	
E	9A	1	**144-0195**		HOSE (30-CM)	

E-ORDER BY THE CENTIMETER
M-METRIC PART

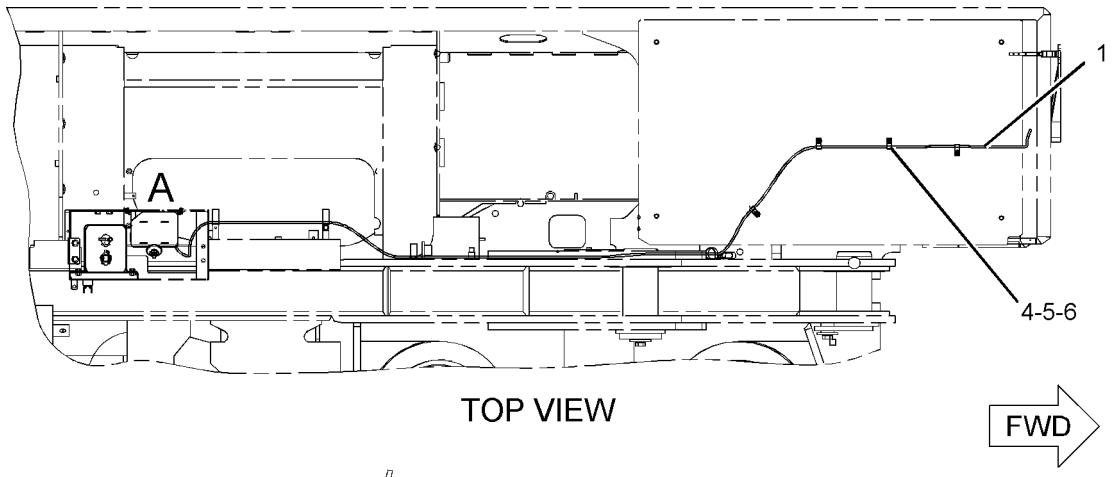

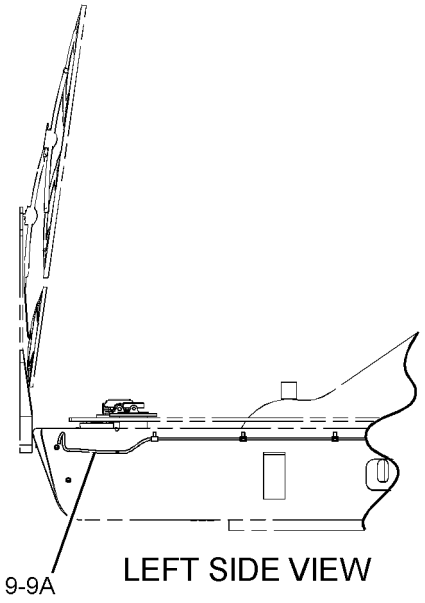

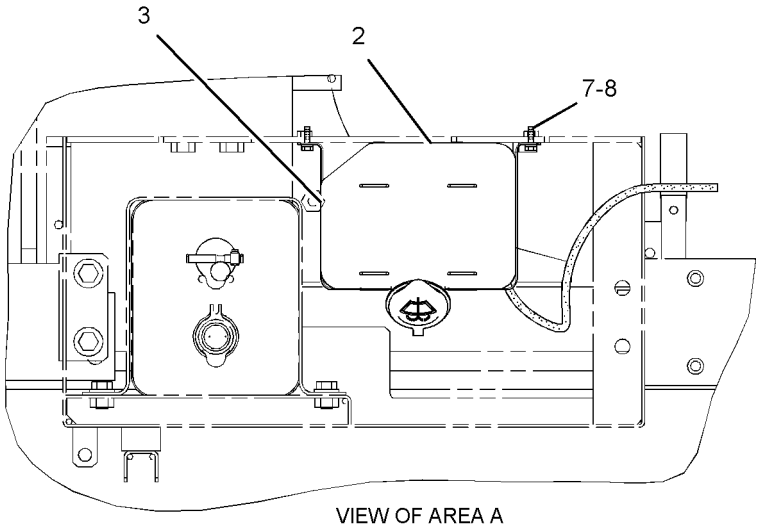

GRAPHIC #1 **<END>** g01083807

OPERATOR STATION

249-7114 WINDOW GP-CAB—FRONT WINDOW, 1-PIECE

S/N: WAP1-UP
PART OF 249-2759 WIPER & WINDOW AR-CAB
AN ATTACHMENT

SMCS-7310 **i02399145**

NOTE	REF NO	GRAPHIC REF	PART NUMBER	QTY	PART NAME 1 2 3 4 5 6 (PRODUCT LEVEL)	SEE PAGE
	1	1	**167-4064**	1	GLASS	
	2	1	**167-4183**	6	BRACKET	
	3	1	**191-2757**	3	BRACKET	
	4	1	**191-2758**	3	BRACKET	
	5	1	**198-1754**	6	HOOK	
	6	1	**220-4080**	12	SCREW	
	7	1	**262-7961**	1	PLATE	
	8	1	**262-7962**	1	PLATE	
	9	1	**264-0214**	1	SEAL	
	10	1	**096-6166**	1	WASHER-HARD (4.5X9X1-MM THK)	
	11	1	**204-6101**	6	WASHER-HARD (5.3X10X1-MM THK)	
M	12	1	**6V-9673**	6	SCREW-MACHINE (M5X0.8X12-MM)	
M	13	1	**8T-0337**	1	SCREW-MACHINE (M4X0.7X12-MM)	
M	14	1	**9X-2044**	12	SCREW-TRUSS HEAD (M6X1X16-MM)	
E	15	1	**223-0118**		SEAL (370-CM)	
E	16	1	**133-3234**		SEAL (362-CM)	

E-ORDER BY THE CENTIMETER
M-METRIC PART

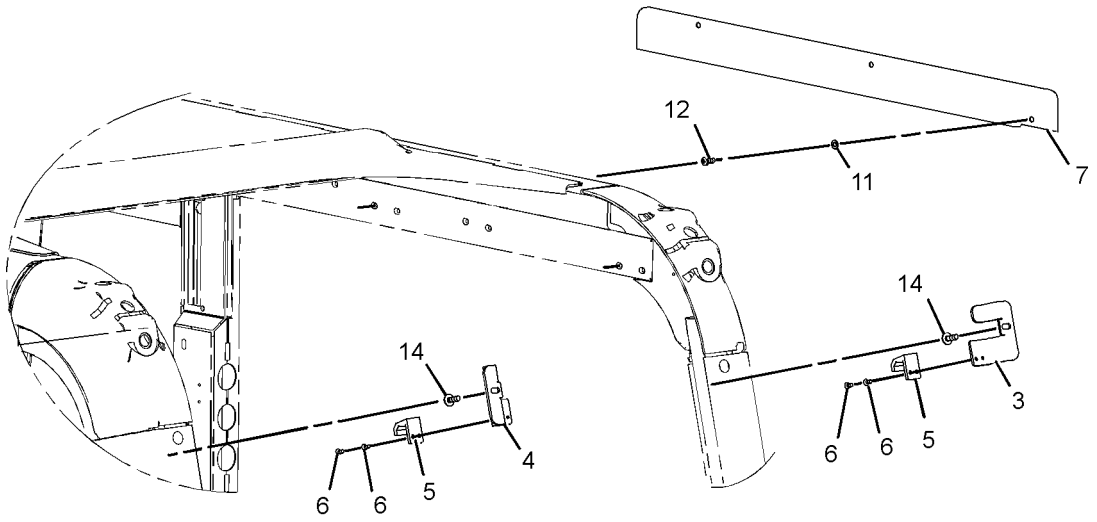

VIEW OF AREA A

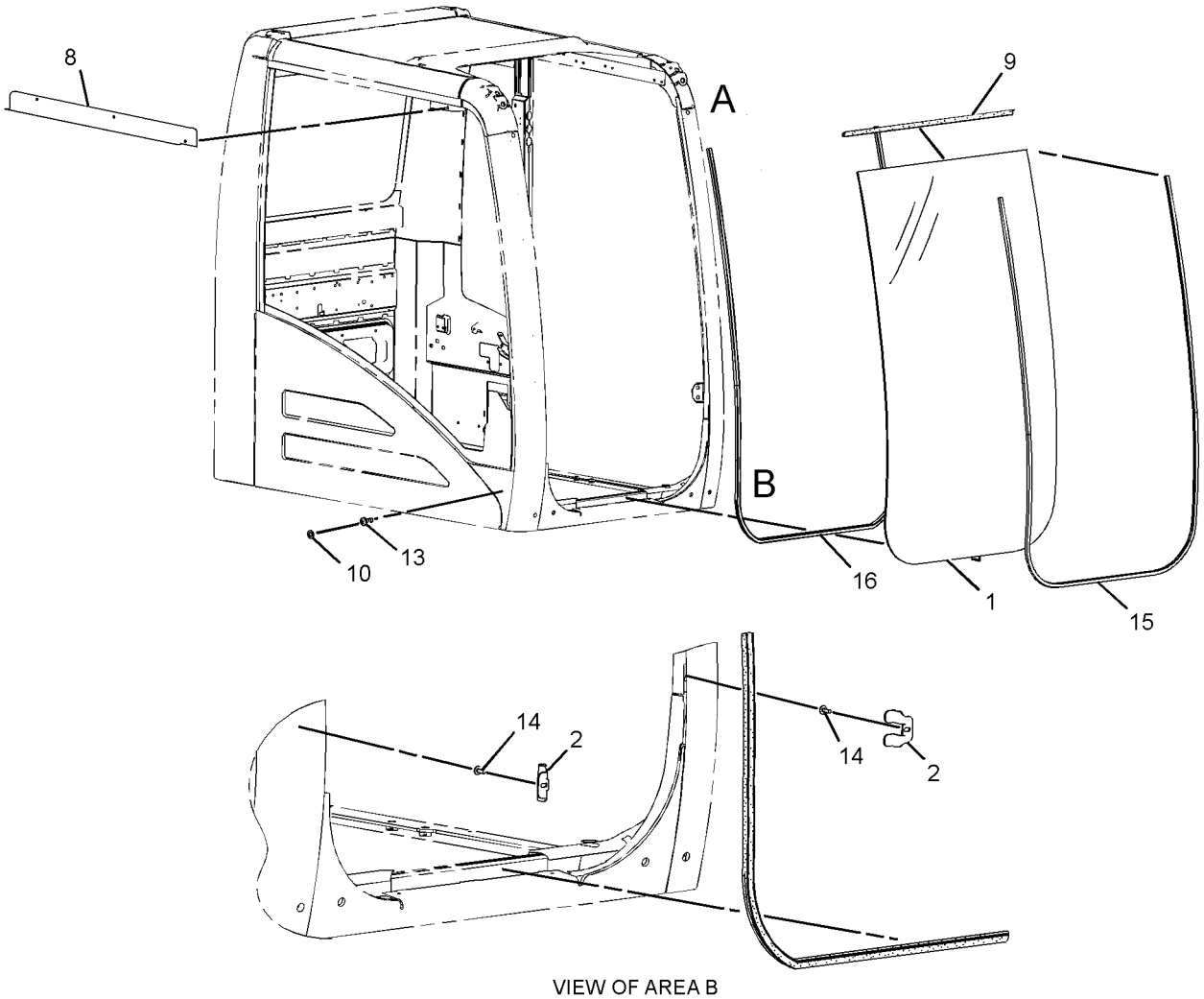

VIEW OF AREA B

GRAPHIC #1 **<END>** g01207277

OPERATOR STATION

282-6532 WINDOW GP-CAB—FRONT WINDOW, 70/30-SPLIT

S/N: WAP1-UP
PART OF 249-7113 WIPER & WINDOW AR-CAB
AN ATTACHMENT

SMCS-7310 **i02796152**

NOTE	REF NO	GRAPHIC REF	PART NUMBER	QTY	PART NAME 1 2 3 4 5 6 (PRODUCT LEVEL)	SEE PAGE
	1	1	**189-2054**	2	SWITCH AS (WIPER CUT-OUT)	
					(EACH INCLUDES)	
		1	**6T-3631**	2	NUT-HEX (15/32-32-THD)	
		1	**6V-8373**	2	SCREW-MACHINE (6-32X0.187-IN)	
	2	1	**192-7512**	1	SEAL-O-RING	
	3	1	**232-1473**	2	WASHER (6X18X1-MM THK)	
Y	4	1	**282-6526**	1	BRACKET GP-MOUNTING (WIPER SWITCH)	928
Y	5	1	*282-6534*	1	WINDOW GP-CAB (FRONT WINDOW, 70/30-SPLIT)	1053
M	6	1	**138-8454**	2	SCREW-TRUSS HEAD (M4X0.7X10-MM)	

M-METRIC PART
Y-SEPARATE ILLUSTRATION

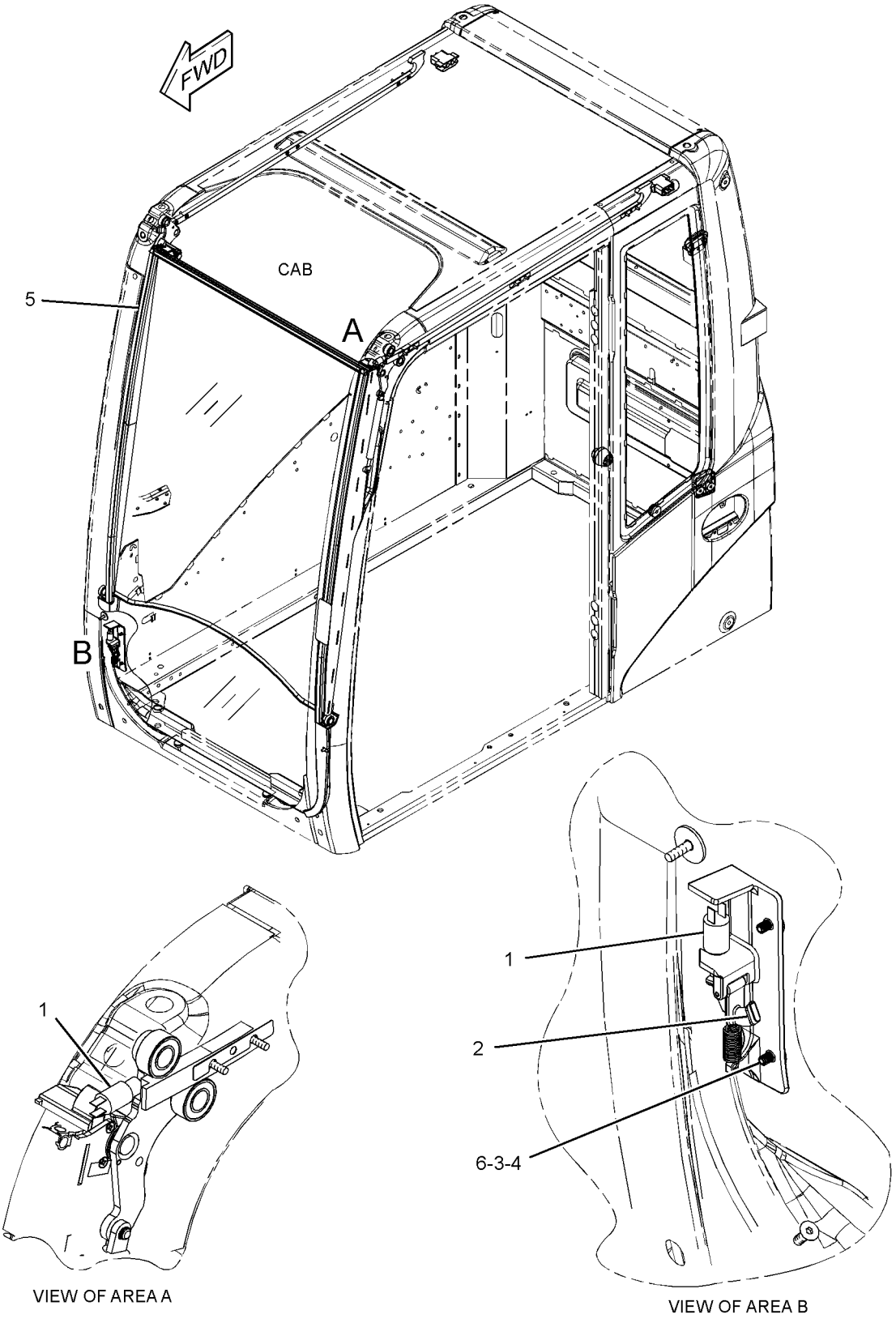

GRAPHIC #1 **<END>** g01305149

OPERATOR STATION

282-6534 WINDOW GP-CAB—FRONT WINDOW, 70/30-SPLIT

S/N: WAP1-UP
PART OF 282-6532 WINDOW GP-CAB
AN ATTACHMENT

SMCS-7310 **i02796154**

NOTE	REF NO	GRAPHIC REF	PART NUMBER	QTY	PART NAME 1 2 3 4 5 6 (PRODUCT LEVEL)	SEE PAGE
	1	1	**139-7127**	1	HOLDER	
	2	1	**167-4084**	2	STRIKER	
M	3	1	**230-6045**	5	BOLT-SOCKET HEAD (M6X50-MM)	
	4	1	**247-6847**	1	RAIL	
	5	1	**247-6848**	1	RAIL	
	6	1	**247-6849**	1	STOP	
	7	1	**247-6850**	1	RING	
B	8	1	**247-6859**	2	SPACER	
B	9	1	**252-1248**	2	SPACER	
B	10	1	**252-1249**	2	SPACER	
Y	11	1	**282-6535**	1	WINDOW GP-CAB (FRONT WINDOW, 70/30-SPLIT)	1055
	12	1	**293-8698**	2	BUMPER	
	13	1	**101-2867**	2	WASHER-HARD (7.2X25X2-MM THK)	
	14	1	**217-6421**	1	PLATE	
	15	1	**4I-4270**	1	HOLDER-GLASS	
M	16	1	**5C-7423**	2	SCREW (M6X1X16-MM)	
M	17	1	**8T-1573**	12	SCREW-FLAT HEAD (M5X0.8X25-MM)	
M	18	1	**8T-7964**	2	NUT (M6X1-THD)	
M	19	1	**9X-2045**	2	SCREW-TRUSS HEAD (M6X1X20-MM)	
E	20	1	**172-1681**		SEAL (68-CM)	
E	21	1	**133-3234**		SEAL (111-CM EACH)	

B-USE AS REQUIRED
E-ORDER BY THE CENTIMETER
M-METRIC PART
Y-SEPARATE ILLUSTRATION

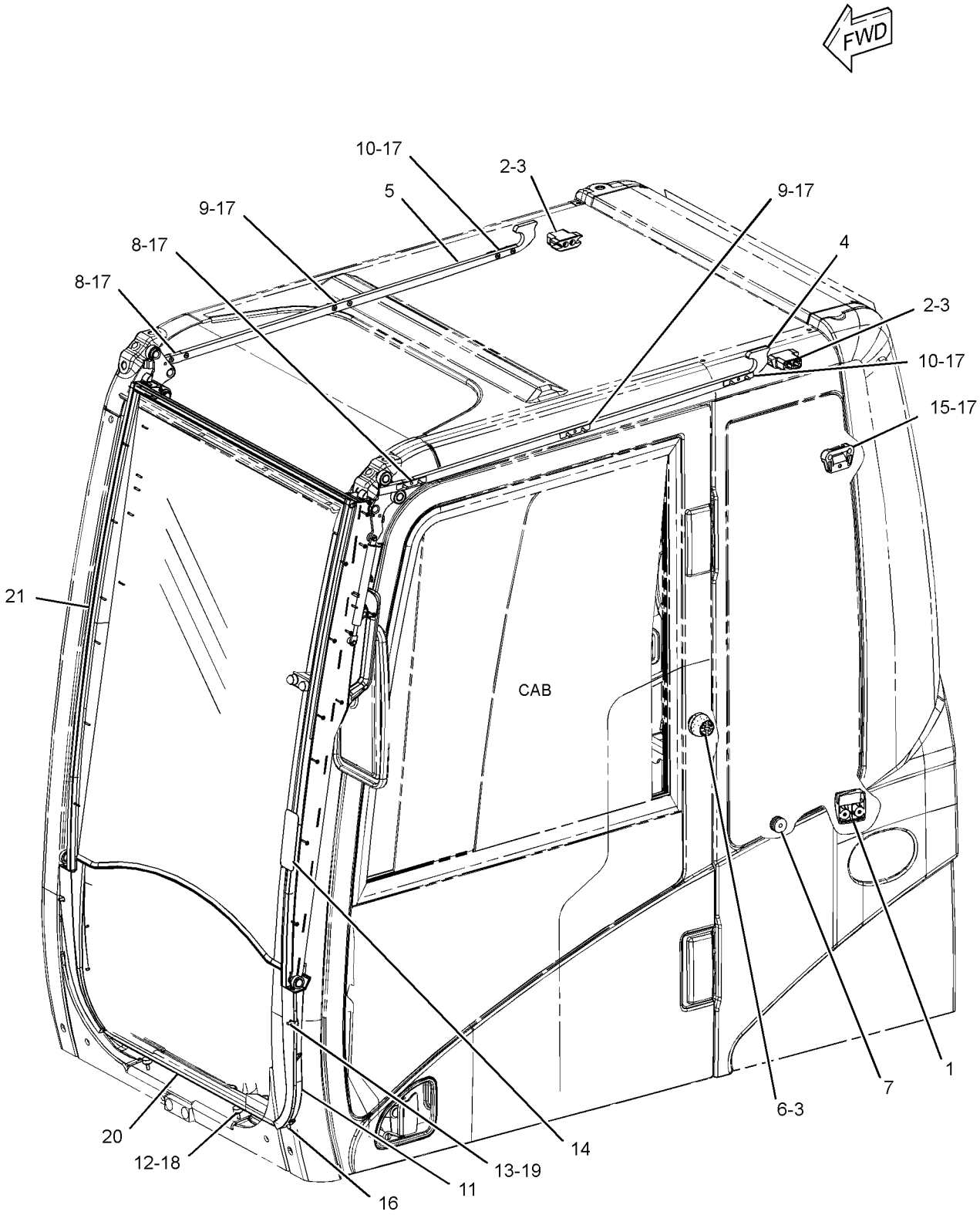

GRAPHIC #1 **<END>** g01306689

OPERATOR STATION

282-6535 WINDOW GP-CAB—FRONT WINDOW, 70/30-SPLIT

S/N: WAP1-UP
PART OF 282-6534 WINDOW GP-CAB
AN ATTACHMENT

SMCS-7310 **i02612492**

NOTE	REF NO	GRAPHIC REF	PART NUMBER	QTY	PART NAME 1 2 3 4 5 6 (PRODUCT LEVEL)	SEE PAGE
	1	1	**167-4062**	4	RING-RETAINING	
M	2	1	**167-4063**	30	SCREW (M4X0.7X20-MM)	
	3	1	**175-1198**	4	PAD	
	4	1	**175-1199**	2	ROLLER	
	5	1	**180-1714**	2	CLIP	
	6	1	**228-0987**	2	BEARING	
M	7	1	**260-7522**	4	SCREW-MACHINE (M4X1.75X20-MM)	
	8	1	**246-9987**	1	GLASS	
	9	1	**247-6820**	1	FRAME AS-WINDOW	
	10	1	**280-3079**	1	RAIL AS	
	11	1	**247-6836**	1	RAIL	
	12	1	**247-6837**	1	LEVER AS	
	13	1	**247-6839**	2	SEAL	
	14	1	**247-6840**	1	SPACER (LOWER, LH)	
	15	1	**247-6841**	1	SPACER (UPPER, LH)	
	16	1	**247-6842**	1	SPACER (LOWER, RH)	
	17	1	**247-6844**	1	LEVER AS	
	18	1	**282-6536**	1	GLASS	
M	19	1	**096-3772**	2	SCREW-MACHINE (M4X0.7X16-MM)	
	20	1	**167-4076**	2	LATCH	
	21	1	**167-4130**	1	SUPPORT AS (RH)	
	22	1	**167-4131**	1	SUPPORT AS (LH)	
	23	1	**167-4179**	2	SPRING AS-GAS	
	24	1	**167-4180**	4	BEARING	
	25	1	**167-4181**	2	SPRING	
	26	1	**247-6831**	1	COVER	
	27	1	**247-6832**	1	COVER	
	28	1	**247-6833**	1	HANDLE AS (RH)	
	29	1	**247-6834**	1	HANDLE AS (LH)	
	30	1	**247-6838**	1	SEAL	
	31	1	**247-6843**	1	SPACER (UPPER, RH)	
	32	1	**6C-9037**	2	CATCH	
E	33	1	**257-1111**		SEAL (81-CM)	
E	34	1	**252-1244**		SEAL (83-CM)	
E	35	1	**247-6845**		SEAL (81-CM)	
	36	1	**282-6537**	1	SEAL	

E-ORDER BY THE CENTIMETER
M-METRIC PART

282-6535 WINDOW GP-CAB *(contd.)* i02612492

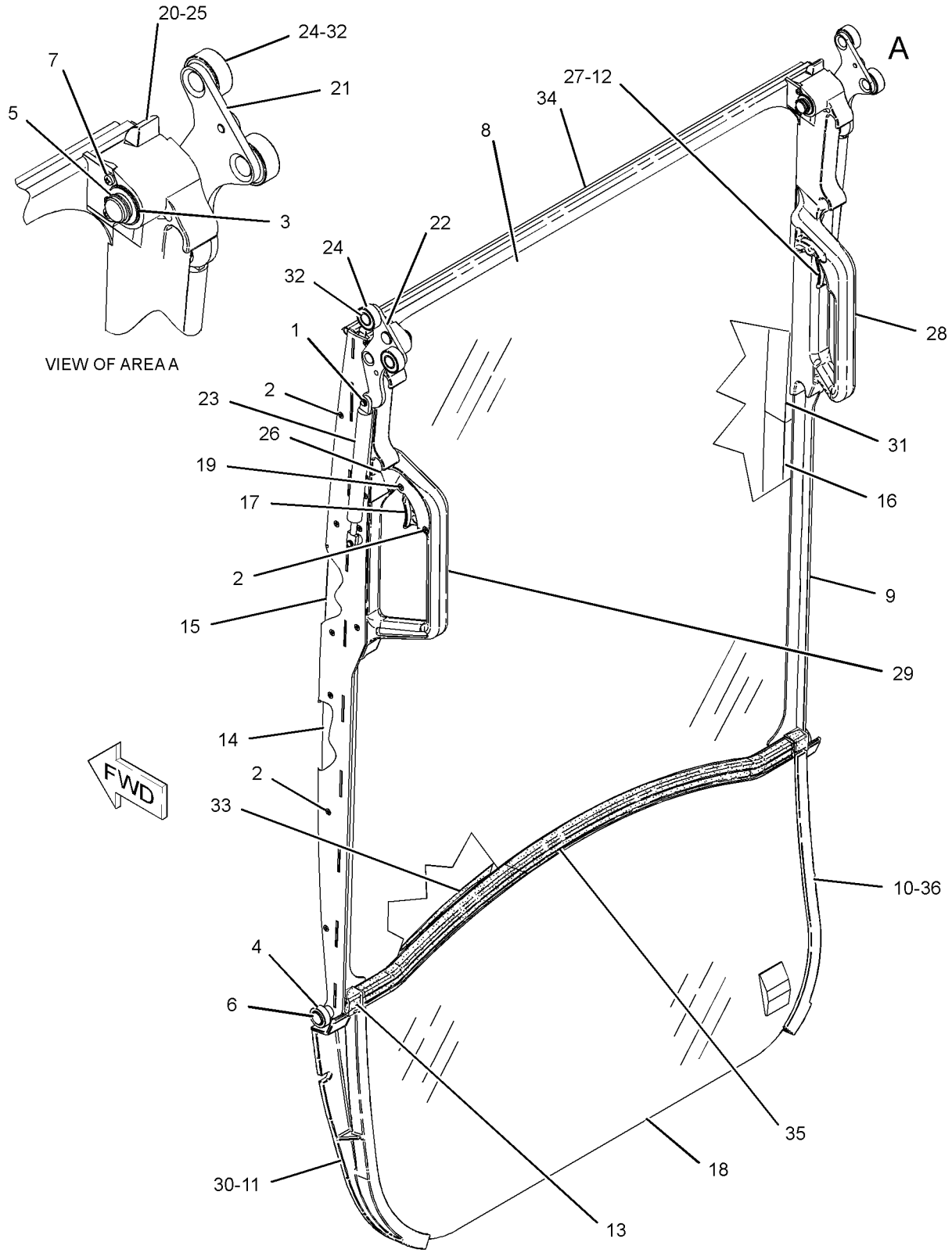

GRAPHIC #1 **<END>** g01307528

OPERATOR STATION

357-6187 WINDOW GP-CAB—REAR, SIDE, TOP WINDOWS

S/N: WAP1-UP
PART OF 308-7022 CAB AR
AN ATTACHMENT

SMCS-7310 **i03823673**

NOTE	REF NO	GRAPHIC REF	PART NUMBER	QTY	PART NAME 1 2 3 4 5 6 (PRODUCT LEVEL)	SEE PAGE
	1	1	**145-3697**	1	STRIP	
	2	1	**151-6790**	1	GLASS (LH)	
	3	1	**167-4142**	1	GLASS (REAR)	
	4	1	**234-9966**	1	GLASS (TOP)	
	5	1	**235-8911**	1	GLASS (RH)	
	6	1	**247-6854**	6	PLUG	
	7	1	**103-8089**	2	RIVET-POP	
	8	1	**133-5514**	1	HAMMER	
	9	1	**6C-9236**	2	RETAINER	
	10	1	**6C-9237**	2	RIVET	

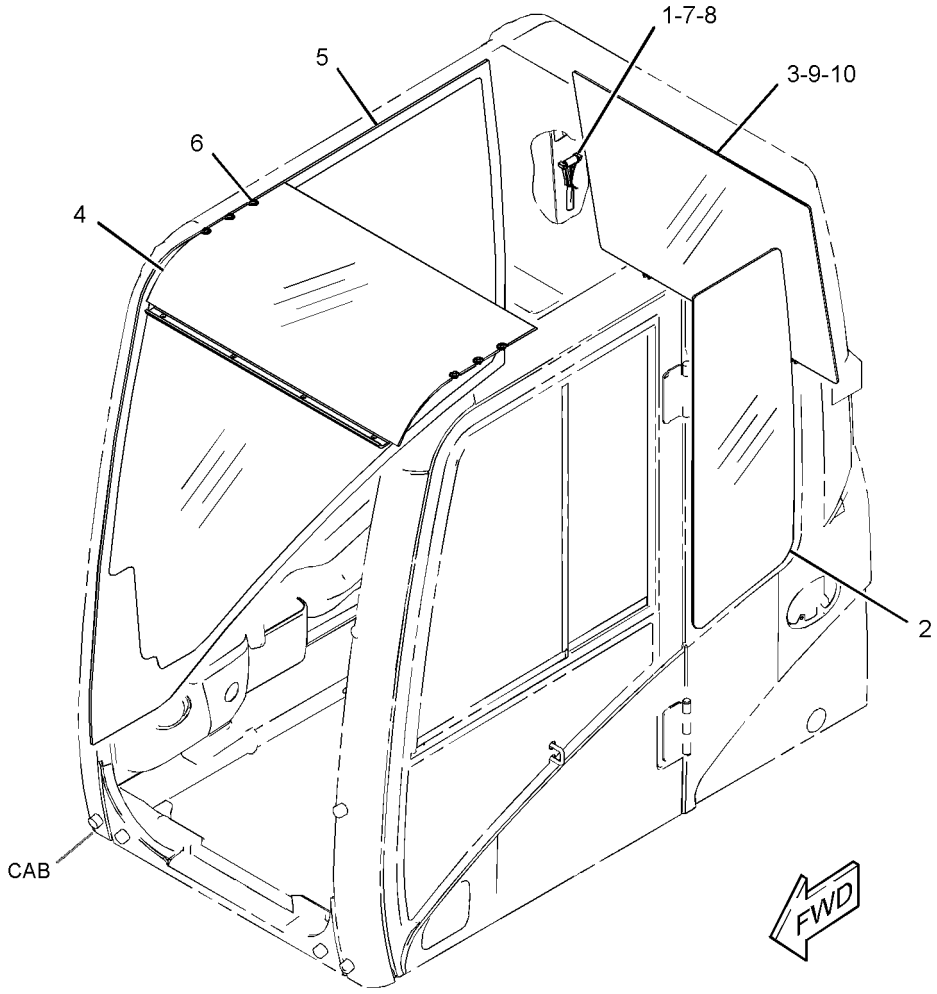

GRAPHIC #1 **<END>** g02131873

OPERATOR STATION

357-6189 WINDOW GP-CAB—REAR, SIDE, TOP WINDOWS

S/N: WAP1-UP
PART OF 308-7021 CAB AR
AN ATTACHMENT

SMCS-7310 **i03832707**

NOTE	REF NO	GRAPHIC REF	PART NUMBER	QTY	PART NAME 1 2 3 4 5 6 (PRODUCT LEVEL)	SEE PAGE
	1	1	**145-3697**	1	STRIP	
	2	1	**151-6790**	1	GLASS (LH)	
	3	1	**167-4142**	1	GLASS (REAR)	
	4	1	**234-9966**	1	GLASS (TOP)	
	5	1	**235-8911**	1	GLASS (RH)	
	6	1	**252-1235**	1	GUARD AS	
	7	1	**103-8089**	2	RIVET-POP	
	8	1	**133-5514**	1	HAMMER	
	9	1	**6C-9236**	2	RETAINER	
	10	1	**6C-9237**	2	RIVET	
	11	1	**7X-7729**	6	WASHER (11X25X3-MM THK)	
M	12	1	**8T-4137**	6	BOLT (M10X1.5X20-MM)	

M-METRIC PART

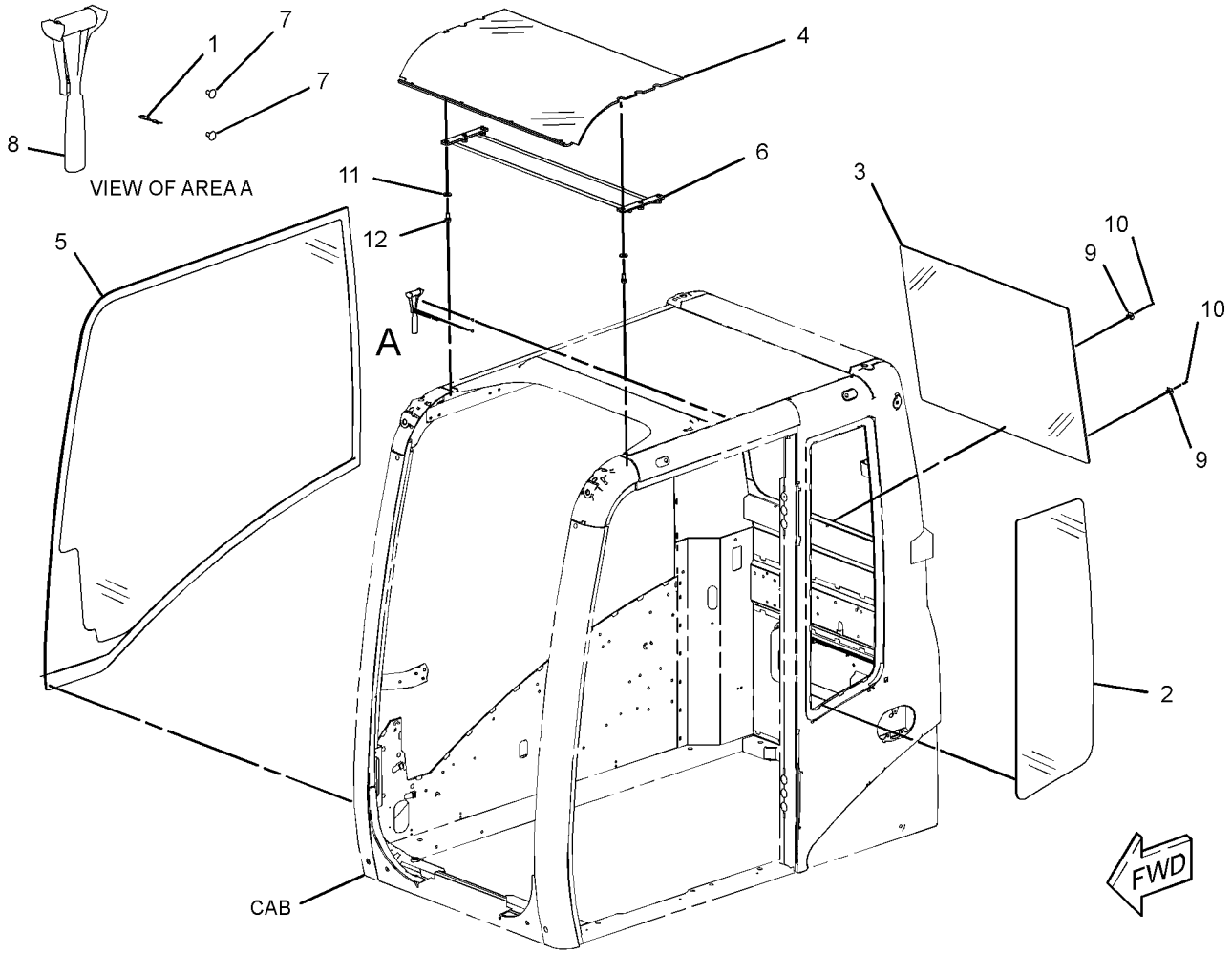

GRAPHIC #1 **<END>** g02126225

OPERATOR STATION

357-6190 WINDOW GP-CAB—REAR, SIDE, TOP WINDOWS

S/N: WAP1-UP
PART OF 308-7020 CAB AR
AN ATTACHMENT

SMCS-7310 **i03832850**

NOTE	REF NO	GRAPHIC REF	PART NUMBER	QTY	PART NAME 1 2 3 4 5 6 (PRODUCT LEVEL)	SEE PAGE
	1	1	**145-3697**	1	STRIP	
	2	1	**151-6790**	1	GLASS (LH)	
	3	1	**167-4067**	1	GLASS (TOP)	
	4	1	**167-4142**	1	GLASS (REAR)	
	5	1	**235-8911**	1	GLASS (RH)	
	6	1	**103-8089**	2	RIVET-POP	
	7	1	**133-5514**	1	HAMMER	
	8	1	**6C-9236**	2	RETAINER	
	9	1	**6C-9237**	2	RIVET	

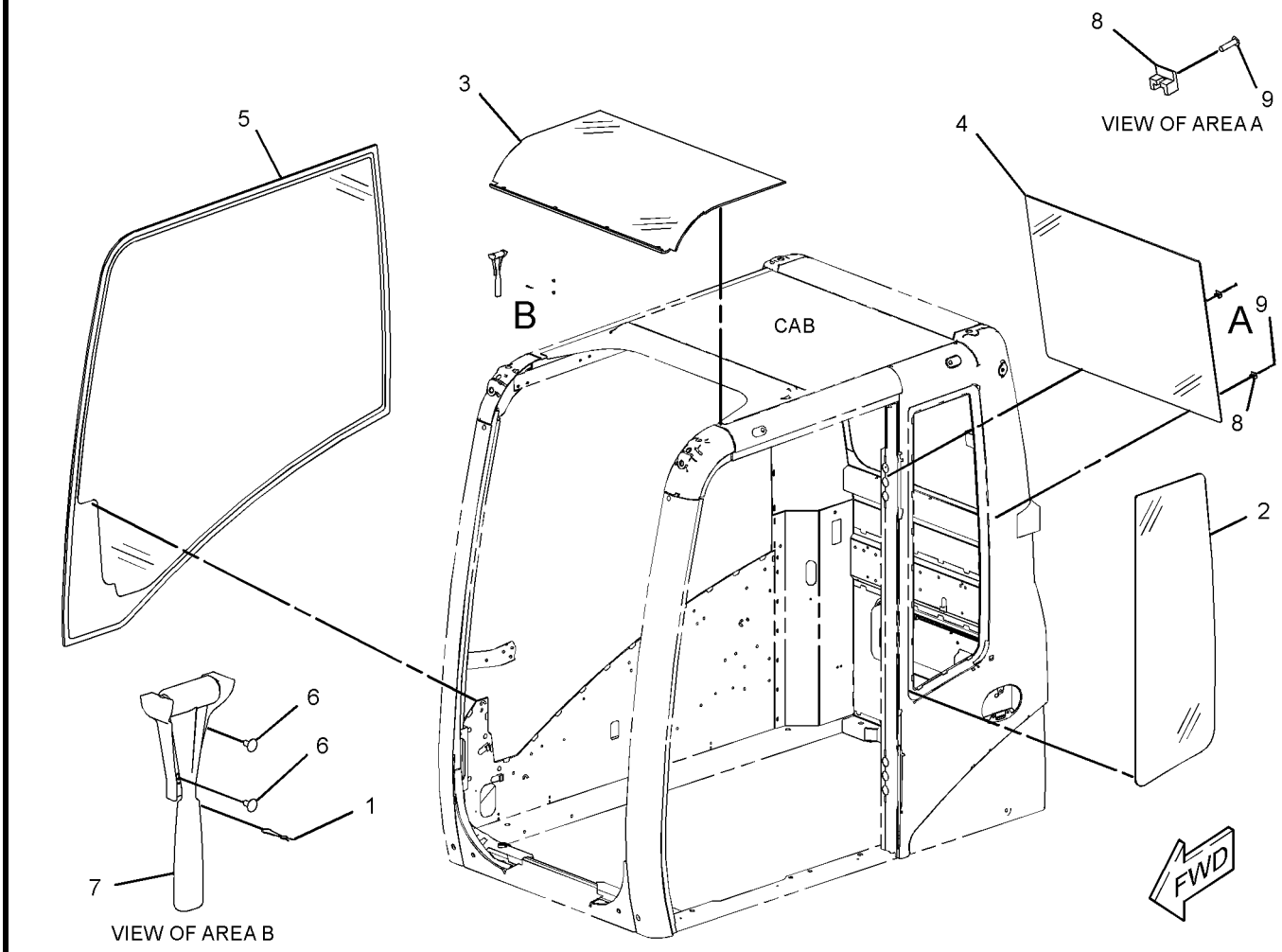

GRAPHIC #1 **<END>** g02131385

OPERATOR STATION

286-8861 WINDOW GP-DOOR

S/N: WAP1-UP

PART OF 139-7100, 176-1964 DOOR GP-CAB

AN ATTACHMENT

SMCS-7308, 7310 **i03637275**

NOTE	REF NO	GRAPHIC REF	PART NUMBER	QTY	PART NAME 1 2 3 4 5 6 (PRODUCT LEVEL)	SEE PAGE
	1	1	**286-8862**	1	FRAME	
	2	1	**286-8863**	1	SEAL	
	3	1	**286-8864**	1	SEAL	
	4	1	**286-8866**	1	KIT-GLASS (WINDOW)	
					(INCLUDES GLASS, 2 RAILS, 2 STOPPERS, 3 SEALS & 2 SCREWS)	
	5	1	**286-8867**	1	KIT-GLASS (WINDOW)	
					(INCLUDES GLASS, 2 RAILS, 2 SEALS, STOPPER & 2 SCREWS)	
	6	1	**286-8868**	1	STOP	
	7	1	**286-8869**	1	STOP	
	8	1	**286-8870**	1	LATCH	
	9	1	**286-8871**	1	LATCH	

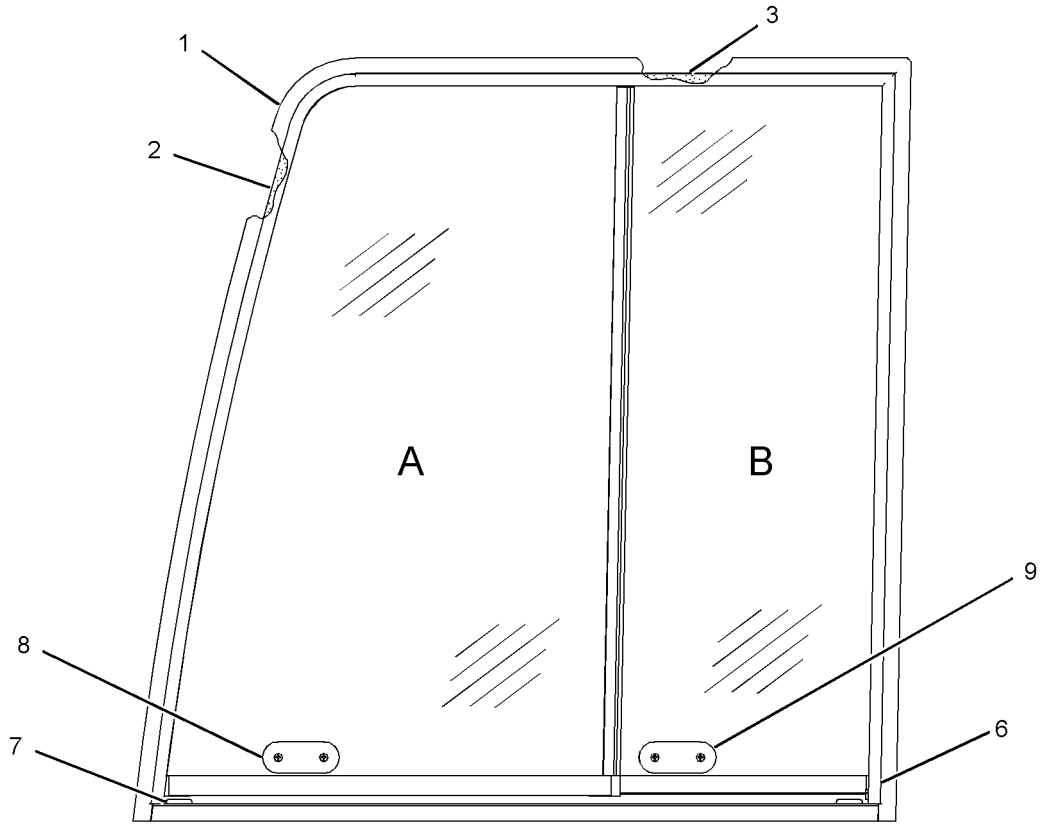

LEFT SIDE VIEW

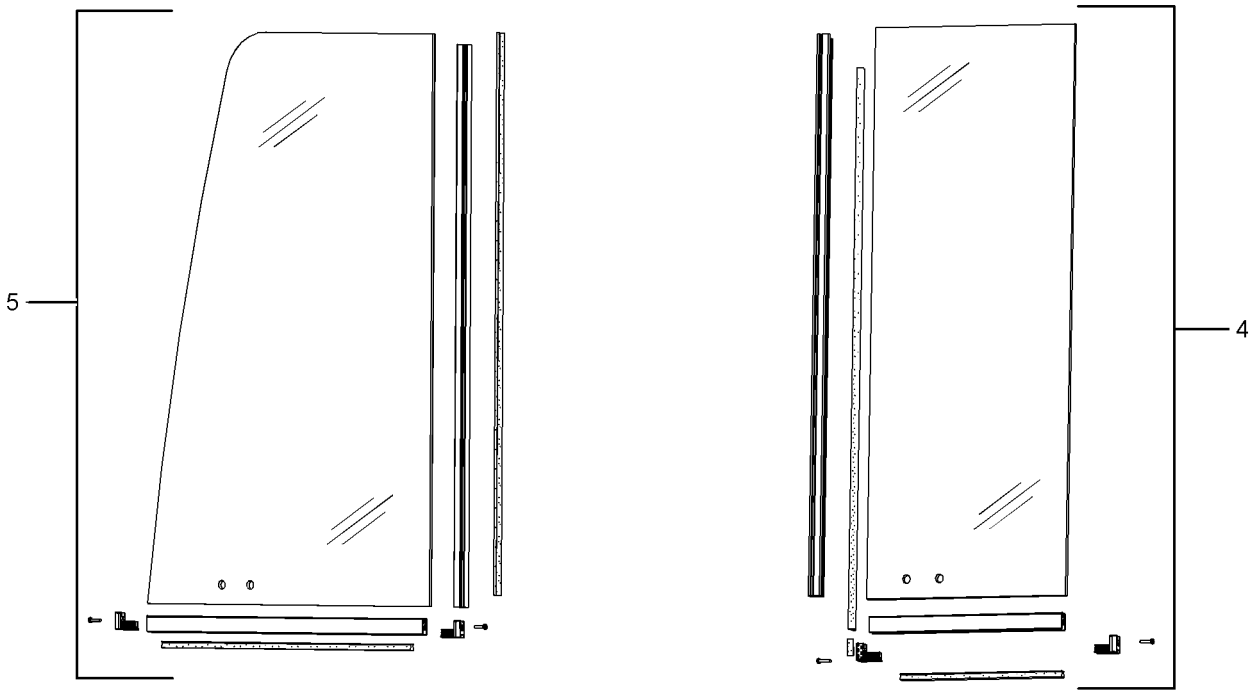

VIEW OF AREA A

VIEW OF AREA B

GRAPHIC #1 **<END>** g01306270

OPERATOR STATION

249-2759 WIPER & WINDOW AR-CAB—FRONT WINDOW, 1-PIECE

S/N: WAP1-UP
PART OF 340-4003 OPTION AR-CAB
CANNOT BE USED WITH 249-7113—PAGE 1063
AN ATTACHMENT

SMCS-7305, 7340 **i02821903**

NOTE	PART NUMBER	QTY	PART NAME 1 2 3 4 5 6 (PRODUCT LEVEL)	SEE PAGE
Y	*249-7114*	1	WINDOW GP-CAB (FRONT WINDOW, 1-PIECE)	1049
Y	*239-3433*	1	WIPER GP-WINDOW (FRONT WINDOW, 1-PIECE)	1064

Y-SEPARATE ILLUSTRATION

<END>

OPERATOR STATION

249-7113 WIPER & WINDOW AR-CAB–
FRONT WINDOW, 70/30-SPLIT
S/N: WAP1-UP
PART OF 340-4002, 340-4004 OPTION AR-CAB
CANNOT BE USED WITH 249-2759–PAGE 1062
AN ATTACHMENT

SMCS-7305, 7340 **i03636758**

NOTE	REF NO	GRAPHIC REF	PART NUMBER	QTY	PART NAME 1 2 3 4 5 6 (PRODUCT LEVEL)	SEE PAGE
Y	1	1	*247-8427*	1	WIPER GP-WINDOW (FRONT WINDOW, 70/30-SPLIT)	1066
Y	2	1	**282-6532**	1	WINDOW GP-CAB (FRONT WINDOW, 70/30-SPLIT)	1051

Y-SEPARATE ILLUSTRATION

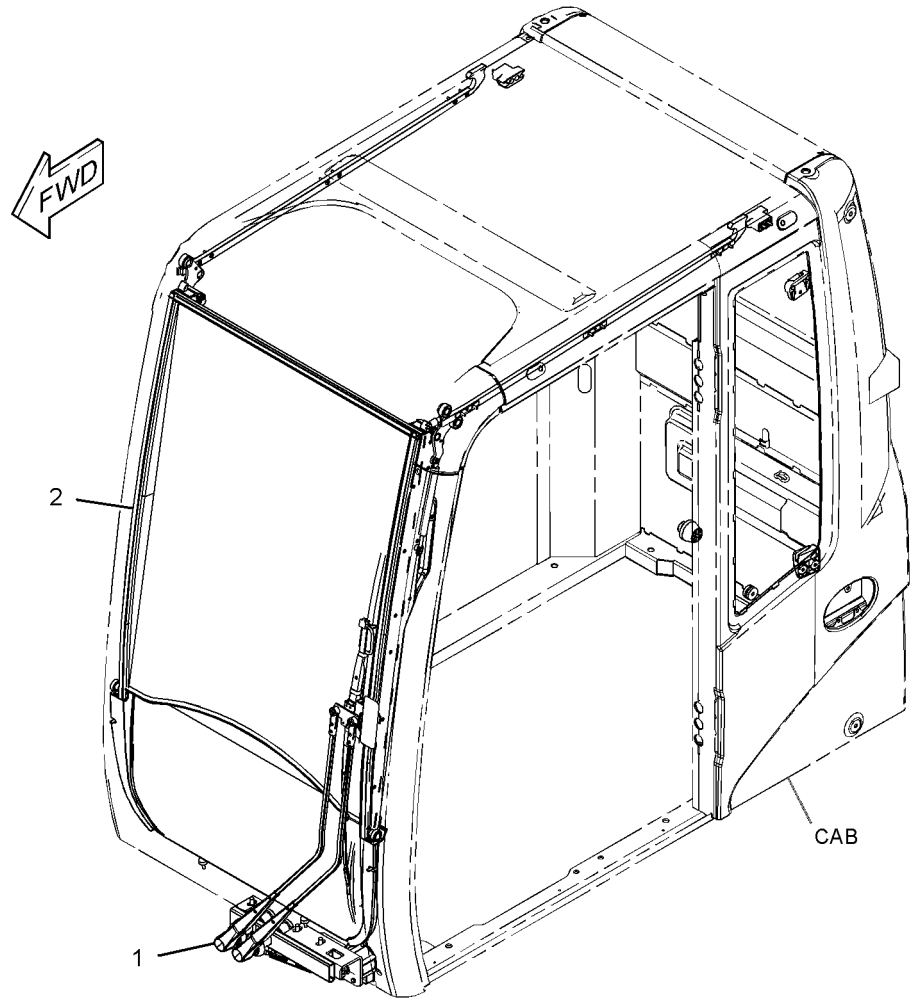

GRAPHIC #1 **<END>** g01953210

OPERATOR STATION

239-3433 WIPER GP-WINDOW—FRONT WINDOW, 1-PIECE

S/N: WAP1-UP

PART OF 249-2759 WIPER & WINDOW AR-CAB

AN ATTACHMENT

SMCS-7305 **i02992821**

NOTE	REF NO	GRAPHIC REF	PART NUMBER	QTY	PART NAME 1 2 3 4 5 6 (PRODUCT LEVEL)	SEE PAGE
	1	1	**7Y-3474**	1	VALVE AS-CHECK (WINDOW WASHER)	
	2	1	**8T-5400**	1	CONNECTOR AS	
	3	1	**239-3434**	1	SUPPORT AS	
	4	1	**248-7988**	1	LINKAGE AS	
		1	**218-2657**	2	COVER	
	5	1	**326-4465**	1	MOTOR AS-WINDOW WIPER	
	6	1	**308-1249**	1	ARM AS-WIPER	
	7	1	**195-3218**	1	BLADE AS-WIPER (TWIN BLADE)	
		1	**6V-6864**	1	BLADE AS-WIPER (600-MM) (LOWER)	
		1	**6V-7419**	1	BLADE AS-WIPER (700-MM) (UPPER)	
		1	**218-2656**	1	FITTING	
	8	1	**5P-8524**	2	GROMMET	
	9	1	**8T-4121**	3	WASHER-HARD (11X21X2.5-MM THK)	
M	10	1	**8T-4137**	3	BOLT (M10X1.5X20-MM)	
E	11	1	**144-0195**		HOSE (40-CM)	
E	11A	1	**144-0195**		HOSE (3-CM)	

E-ORDER BY THE CENTIMETER
M-METRIC PART

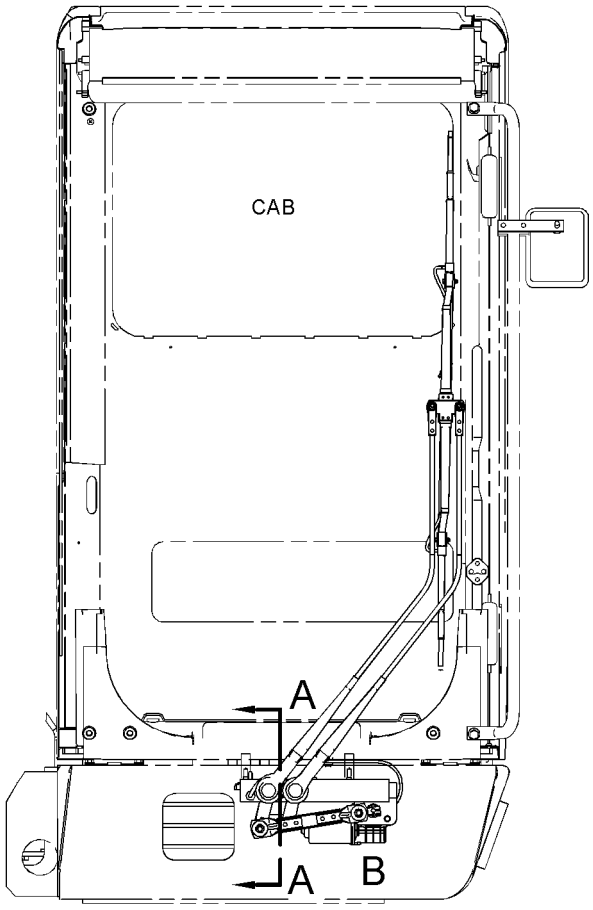

FRONT VIEW

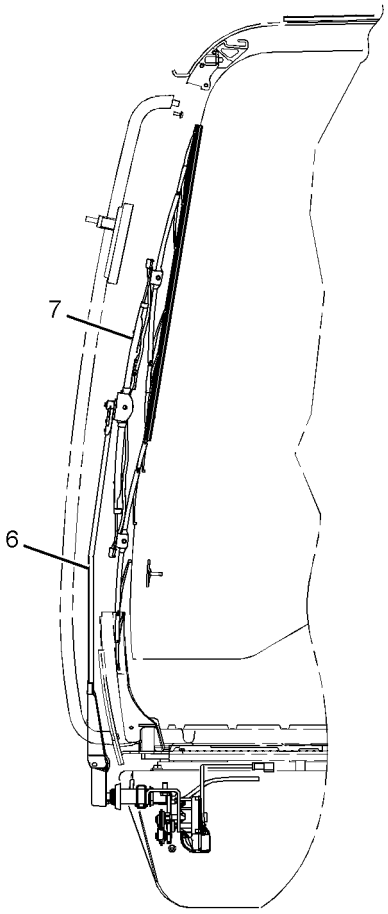

LEFT SIDE VIEW

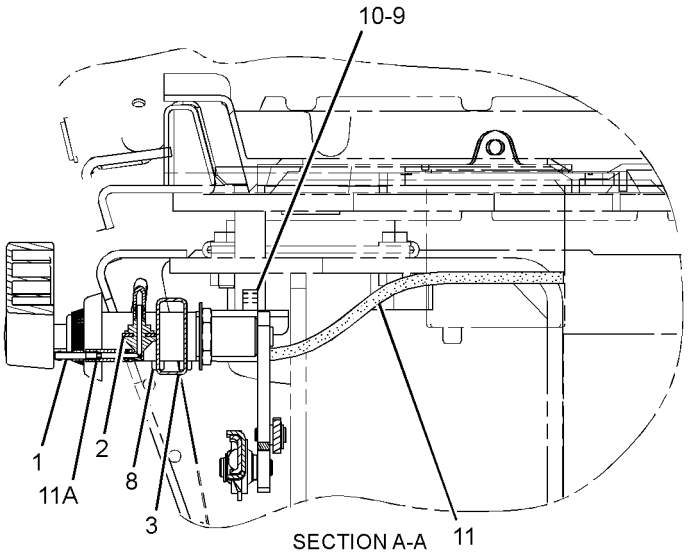

SECTION A-A

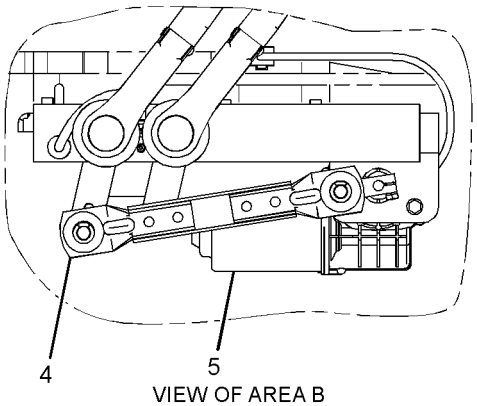

VIEW OF AREA B

GRAPHIC #1 **<END>** g01523149

OPERATOR STATION

247-8427 WIPER GP-WINDOW—FRONT WINDOW, 70/30-SPLIT

S/N: WAP1-UP

PART OF 249-7113 WIPER & WINDOW AR-CAB

AN ATTACHMENT

SMCS-7305 **i02998134**

NOTE	REF NO	GRAPHIC REF	PART NUMBER	QTY	PART NAME 1 2 3 4 5 6 (PRODUCT LEVEL)	SEE PAGE
	1	1	**8T-5400**	1	CONNECTOR AS	
	2	1	**239-3434**	1	SUPPORT AS	
	3	1	**308-1249**	1	ARM AS-WIPER	
Y	4	1	**287-7534**	1	WIPER GP-WINDOW (FRONT WINDOW, 70/30-SPLIT)	1068
	5	1	**248-7988**	1	LINKAGE AS	
		1	**218-2657**	2	COVER	
	6	1	**326-4465**	1	MOTOR AS-WINDOW WIPER	
	7	1	**5P-8524**	2	GROMMET	
	8	1	**8T-4121**	3	WASHER-HARD (11X21X2.5-MM THK)	
M	9	1	**8T-4137**	3	BOLT (M10X1.5X20-MM)	
E	10	1	**144-0195**		HOSE (40-CM)	
E	10A	1	**144-0195**		HOSE (3-CM)	
	11	1	**7Y-3474**	1	VALVE AS-CHECK (WINDOW WASHER)	

E-ORDER BY THE CENTIMETER
M-METRIC PART
Y-SEPARATE ILLUSTRATION

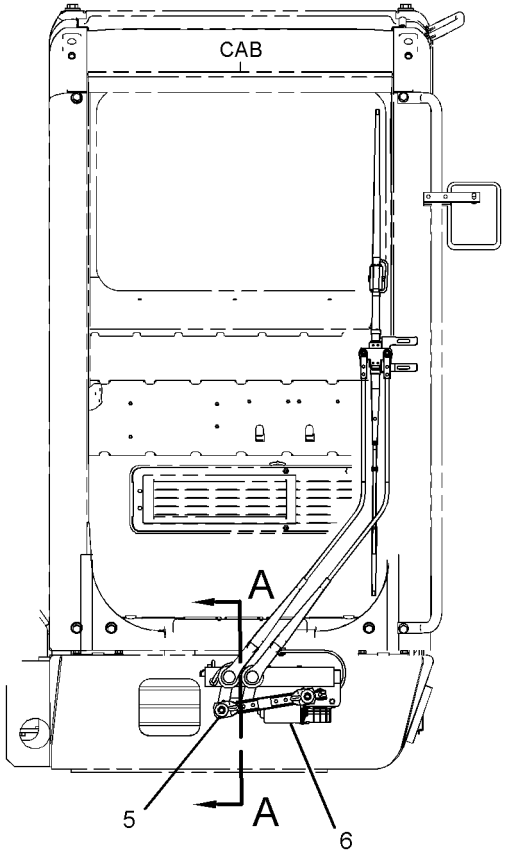

FRONT VIEW

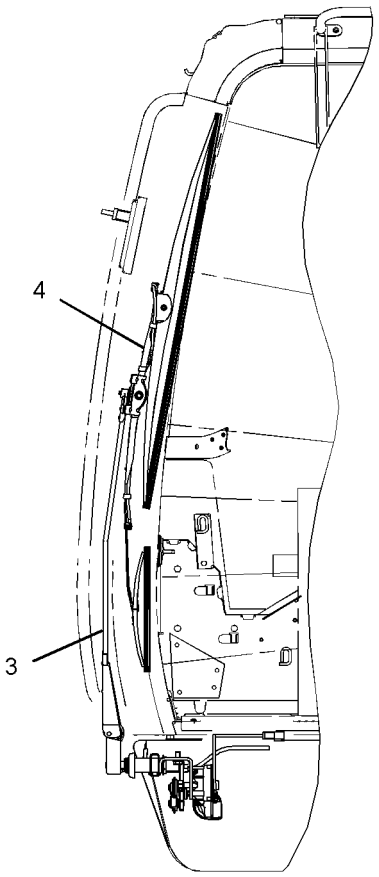

LEFT SIDE VIEW

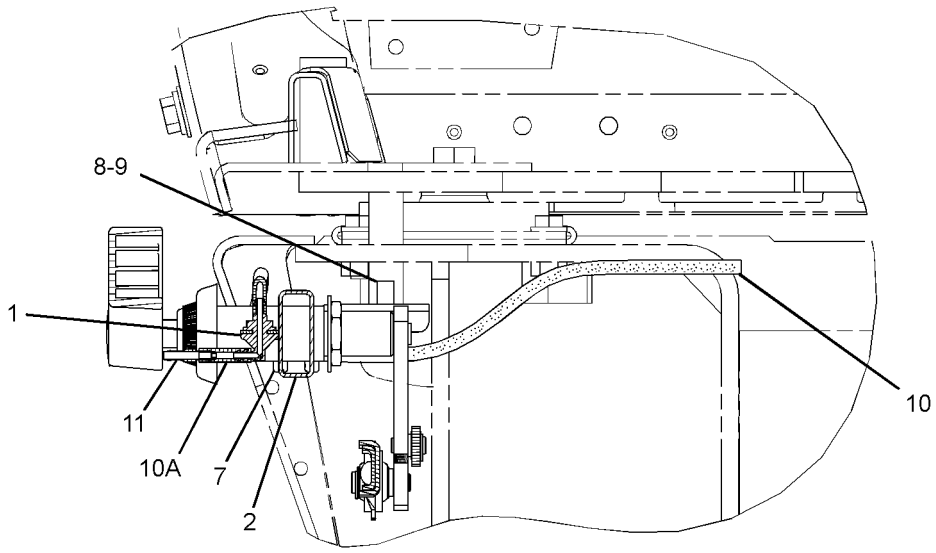

SECTION A-A

GRAPHIC #1 **<END>** g01524886

OPERATOR STATION

287-7534 WIPER GP-WINDOW—FRONT WINDOW, 70/30-SPLIT

S/N: WAP1-UP

PART OF 247-8427 WIPER GP-WINDOW

AN ATTACHMENT

SMCS-7305 **i03915789**

NOTE	REF NO	GRAPHIC REF	PART NUMBER	QTY	PART NAME 1 2 3 4 5 6 (PRODUCT LEVEL)	SEE PAGE
	1	1	**353-2017**	1	FITTING	
	2	1	**233-0806**	1	KIT-SUPPORT (WINDOW WIPER)	
					(INCLUDES BOLT, 2 BUMPERS, NUT, SPACER & SUPPORT)	
	3	1	**235-5763**	1	NOZZLE	
	4	1	**248-7990**	1	BLADE AS-WIPER (900-MM) (UPPER)	
	5	1	**292-6567**	1	BLADE AS-WIPER (280-MM) (LOWER)	
	6	1	**302-1835**	2	SPRING	
	7	1	**307-4485**	1	NOZZLE	

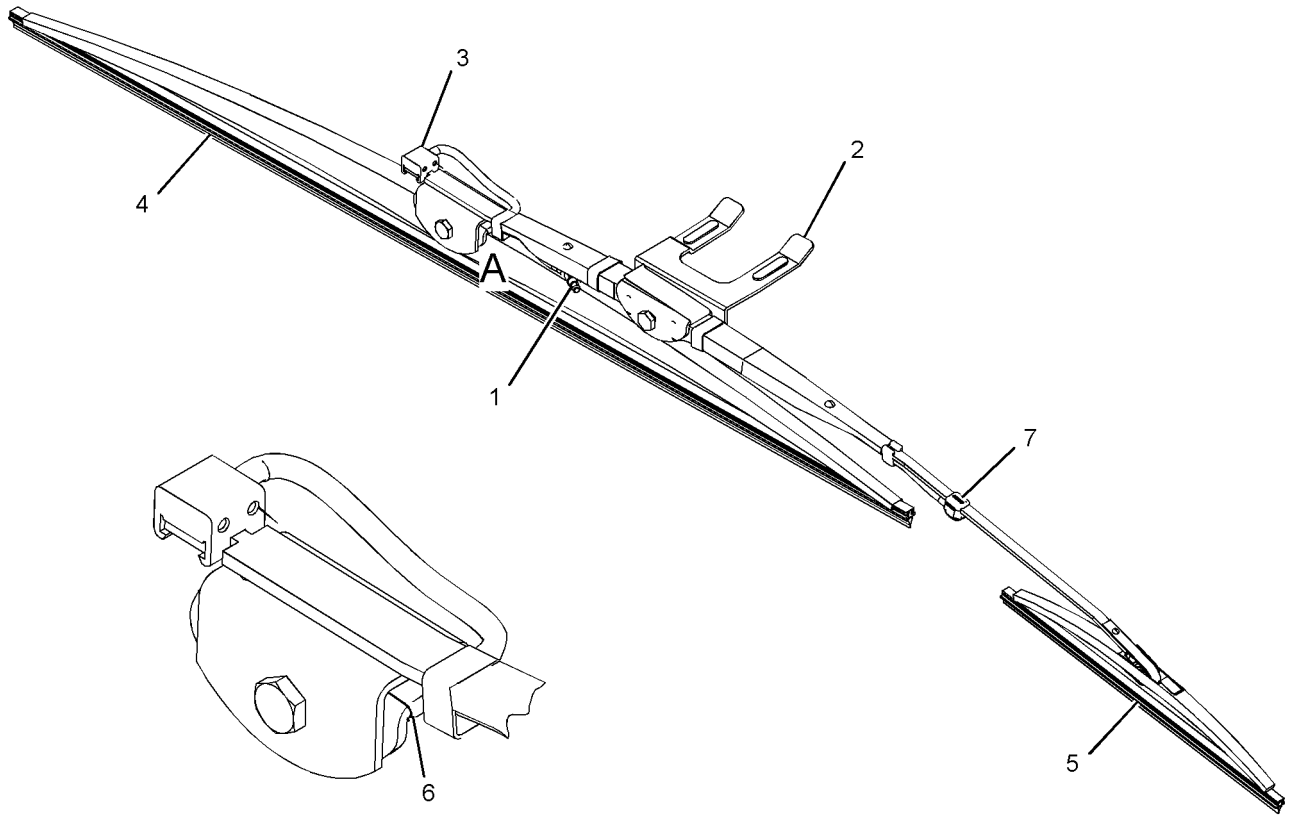

VIEW OF AREA A

GRAPHIC #1 **<END>** g01407988

SERVICE EQUIPMENT AND SUPPLIES

245-5554 FILM GP—COUNTERWEIGHT REMOVAL

S/N: WAP1-UP
PART OF 294-1295 COUNTERWEIGHT AR
AN ATTACHMENT

SMCS-7405, 7557 **i03940138**

NOTE	REF NO	GRAPHIC REF	PART NUMBER	QTY	PART NAME 1 2 3 4 5 6 (PRODUCT LEVEL)	SEE PAGE
	1	1	**250-6094**	1	FILM-WARNING (CRUSH HAZARD, READ OMM, INTL)	
					—OR—	
		1	**251-1105**	1	FILM-WARNING (CRUSH HAZARD, READ OMM, U.S.)	
	2	1	**318-8835**	1	FILM-INFORMATION (NO SERVICE-READ OMM)	

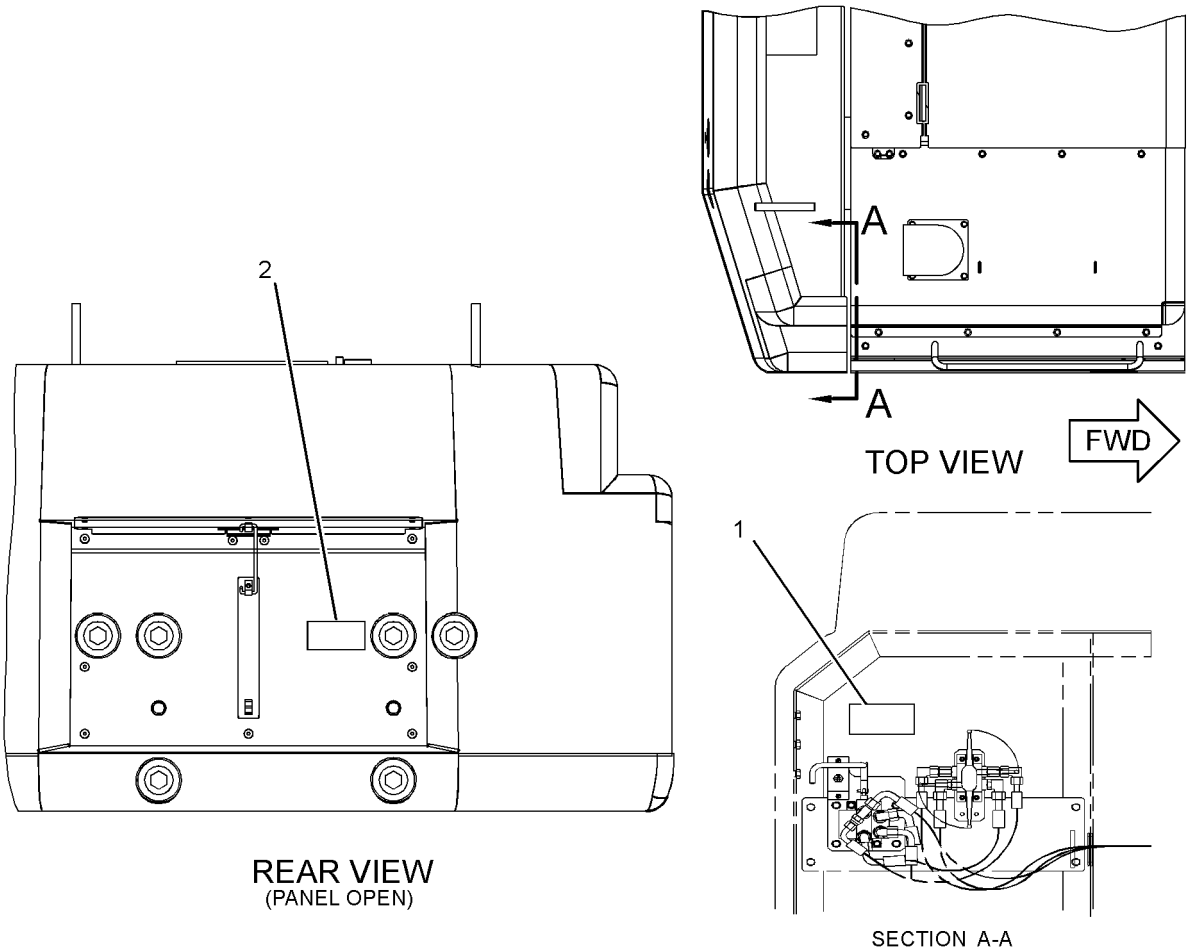

GRAPHIC #1 **<END>** g01516118

SERVICE EQUIPMENT AND SUPPLIES

257-4599 FILM GP—REVERSING FAN

S/N: WAP1-UP
PART OF 319-9265 CONTROL AR-FAN
AN ATTACHMENT

SMCS-7405, 7557 **i02954421**

NOTE	REF NO	GRAPHIC REF	PART NUMBER	QTY	PART NAME 1 2 3 4 5 6 (PRODUCT LEVEL)	SEE PAGE
	1	1	**225-4130**	1	FILM-WARNING (FLYING DEBRIS, STAY BACK, U.S.)	
					—OR—	
			225-4131	1	FILM-WARNING (FLYING DEBRIS, STAY BACK, INTL)	

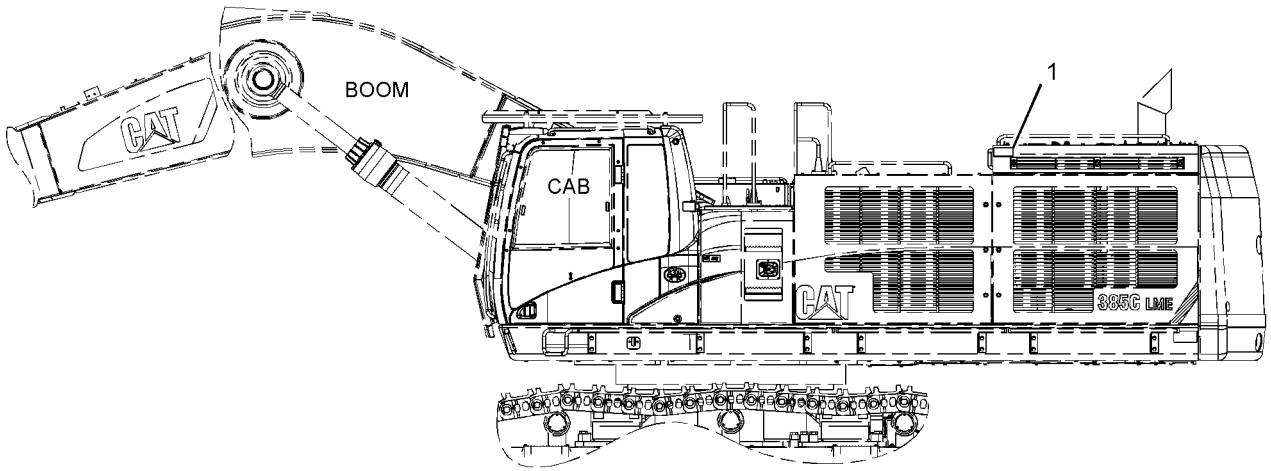

LEFT SIDE VIEW

GRAPHIC #1 **<END>** g01307690

SERVICE EQUIPMENT AND SUPPLIES

268-6816 FILM GP–QUICK COUPLER

S/N: WAP1-UP
PART OF 302-9443 CONTROL AR-COUPLER
AN ATTACHMENT

SMCS-7405, 7557 **i02390035**

NOTE	REF NO	GRAPHIC REF	PART NUMBER	QTY	PART NAME 1 2 3 4 5 6 (PRODUCT LEVEL)	SEE PAGE
	1	1	**268-6817**	1	FILM-IDENTIFICATION (QUICK COUPLER)	

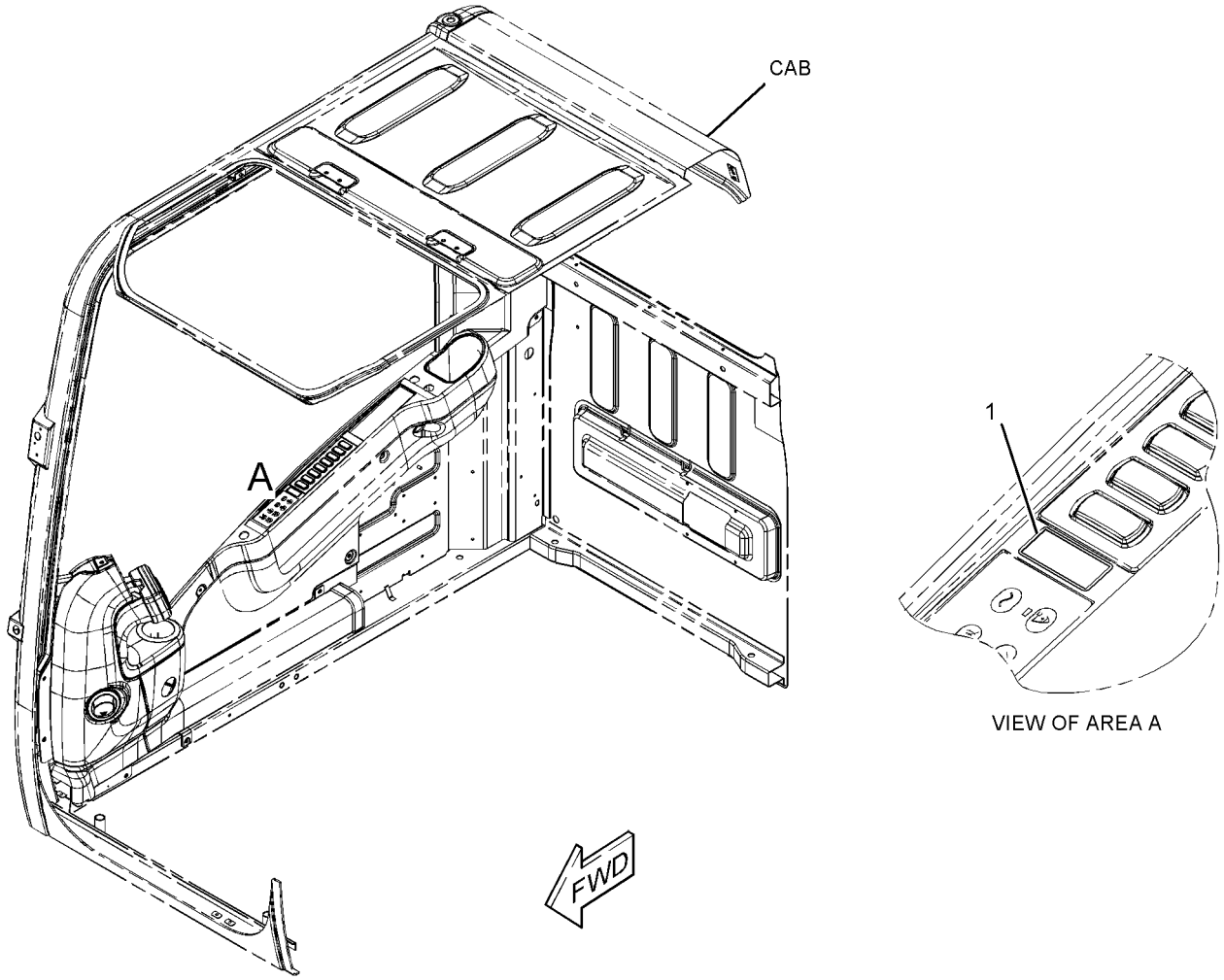

VIEW OF AREA A

GRAPHIC #1 **<END>** g01199575

SERVICE EQUIPMENT AND SUPPLIES

303-2678 FILM GP—OPERATOR CONTROLS, HAMMER

S/N: WAP1-UP

PART OF 310-0001 CONTROL AR-AUXILIARY

AN ATTACHMENT

SMCS-7405, 7557 **i03790449**

NOTE	REF NO	GRAPHIC REF	PART NUMBER	QTY	PART NAME 1 2 3 4 5 6 (PRODUCT LEVEL)	SEE PAGE
	1	1	**319-9304**	1	FILM (CONTROLS)	
	2	1	**250-8054**	1	FILM-NOTICE (HAMMER, READ OMM)	

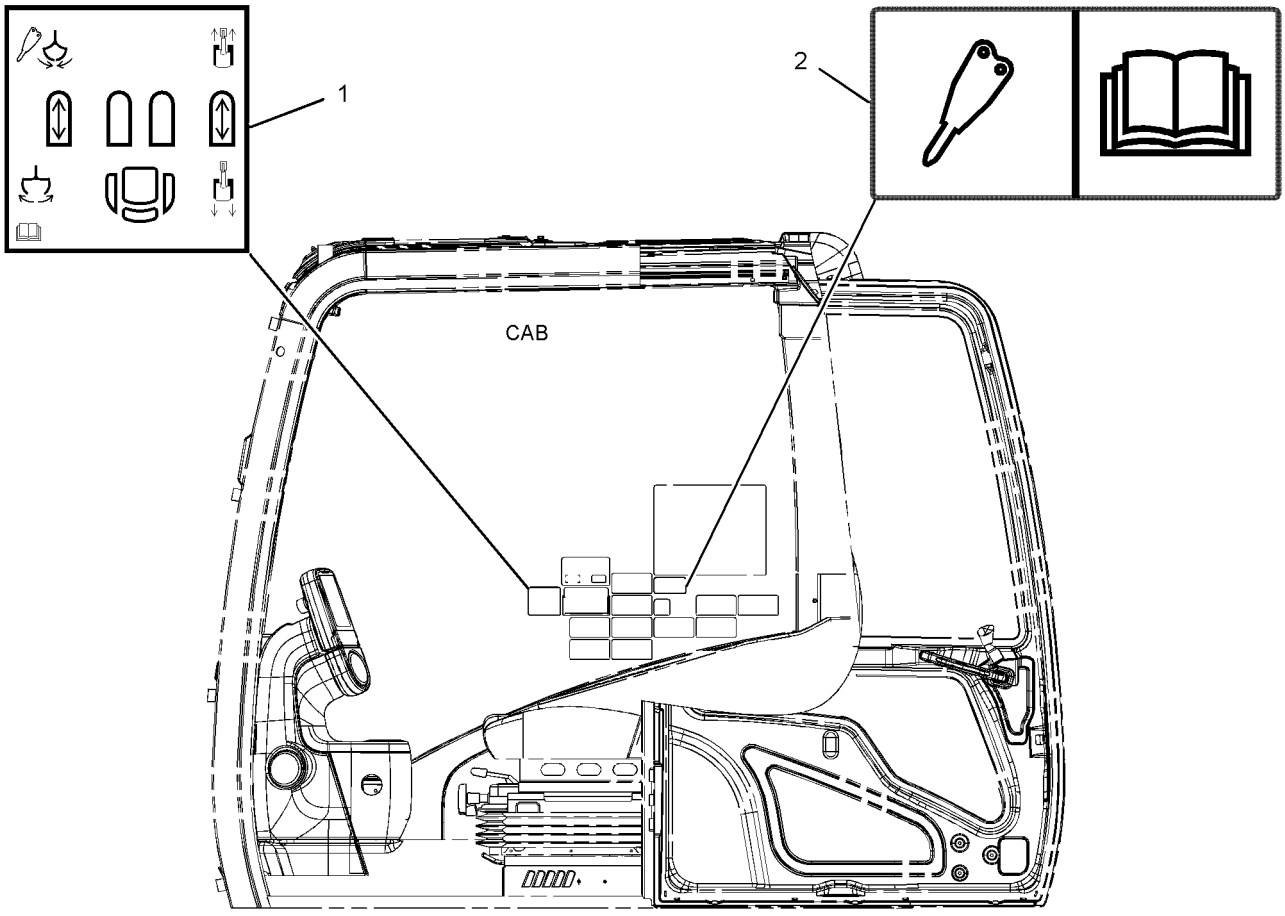

LEFT SIDE VIEW

GRAPHIC #1 **<END>** g02127094

SERVICE EQUIPMENT AND SUPPLIES

303-2787 FILM GP–WORK AREA VISUAL SYSTEM, REAR

S/N: WAP1-UP
PART OF 340-4025 CAMERA AR
AN ATTACHMENT

SMCS-7405, 7557 **i03023311**

NOTE	REF NO	GRAPHIC REF	PART NUMBER	QTY	PART NAME 1 2 3 4 5 6 (PRODUCT LEVEL)	SEE PAGE
	1	1	**319-9152**	1	FILM-INSTRUCTION (BATTERY LIFE, CAMERA)	

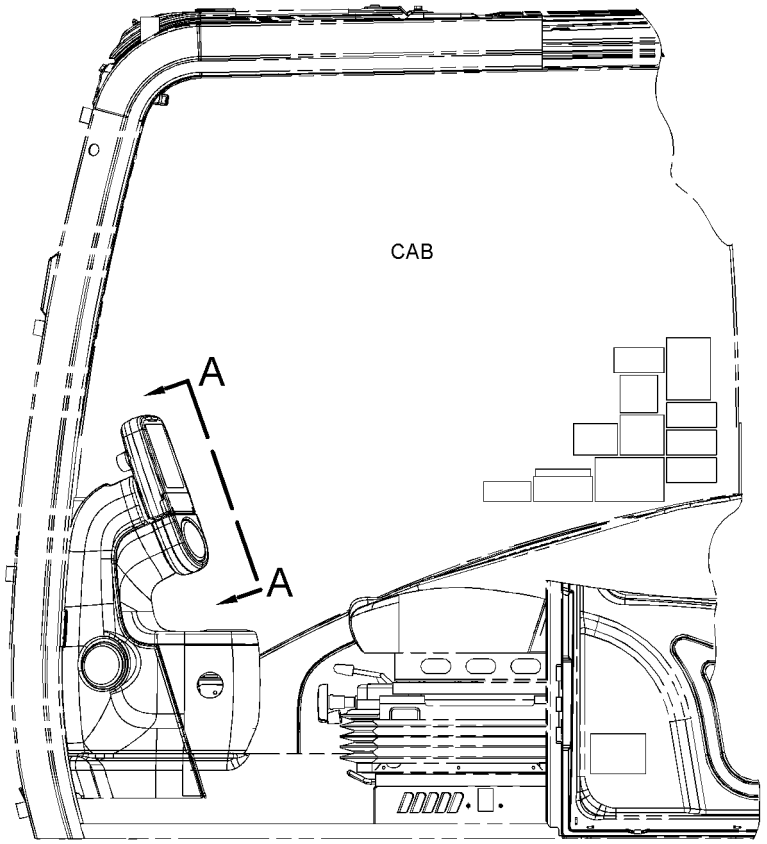

LEFT SIDE VIEW

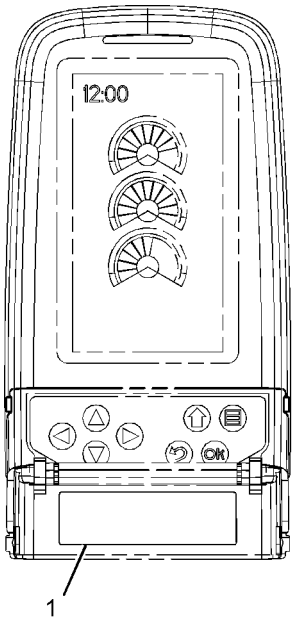

VIEW A-A

GRAPHIC #1 **<END>** g01520371

SERVICE EQUIPMENT AND SUPPLIES

319-9228 FILM GP

S/N: WAP1-UP
CHINA
AN ATTACHMENT

SMCS-7405, 7557 **i03911094**

NOTE	REF NO	GRAPHIC REF	PART NUMBER	QTY	PART NAME 1 2 3 4 5 6 (PRODUCT LEVEL)	SEE PAGE
	1	1	**158-7864**	1	FILM-IDENTIFICATION (HYDRAULIC OIL)	

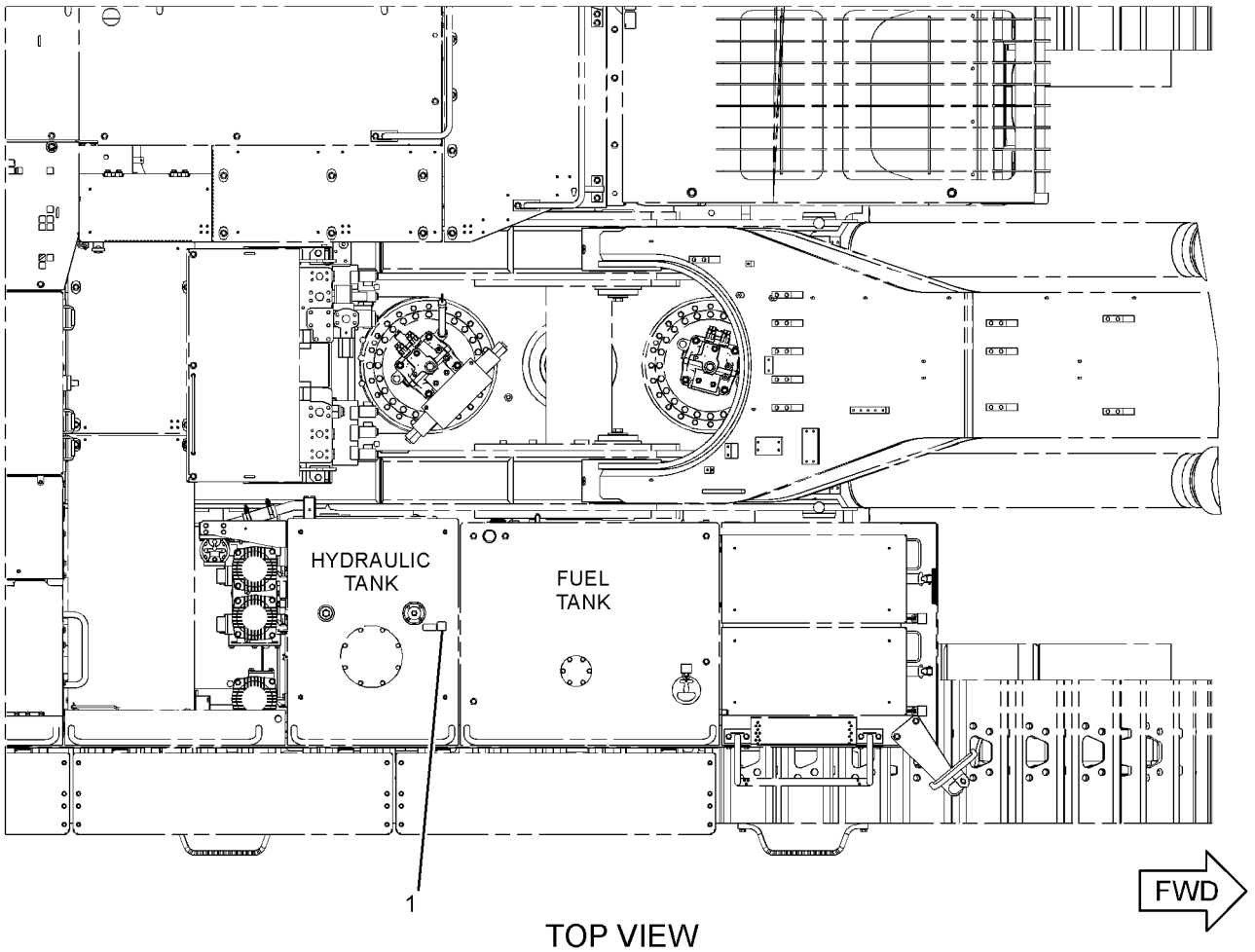

TOP VIEW

GRAPHIC #1 **<END>** g02175844

SERVICE EQUIPMENT AND SUPPLIES

319-9236 FILM GP—OVERLOAD WARNING DEVICE

S/N: WAP1-UP
PART OF 297-0421 VALVE AR-BOOM LOWERING CONTROL
AN ATTACHMENT

SMCS-7405, 7557 **i03958174**

NOTE	REF NO	GRAPHIC REF	PART NUMBER	QTY	PART NAME 1 2 3 4 5 6 (PRODUCT LEVEL)	SEE PAGE
	1	1	**260-6944**	1	FILM-WARNING (BOOM FLOAT)	
	2	1	**236-0562**	1	FILM-IDENTIFICATION (SMARTBOOM)	
	3	1	**322-4582**	1	FILM-WARNING (TIPPING HAZARD, READ OMM)	

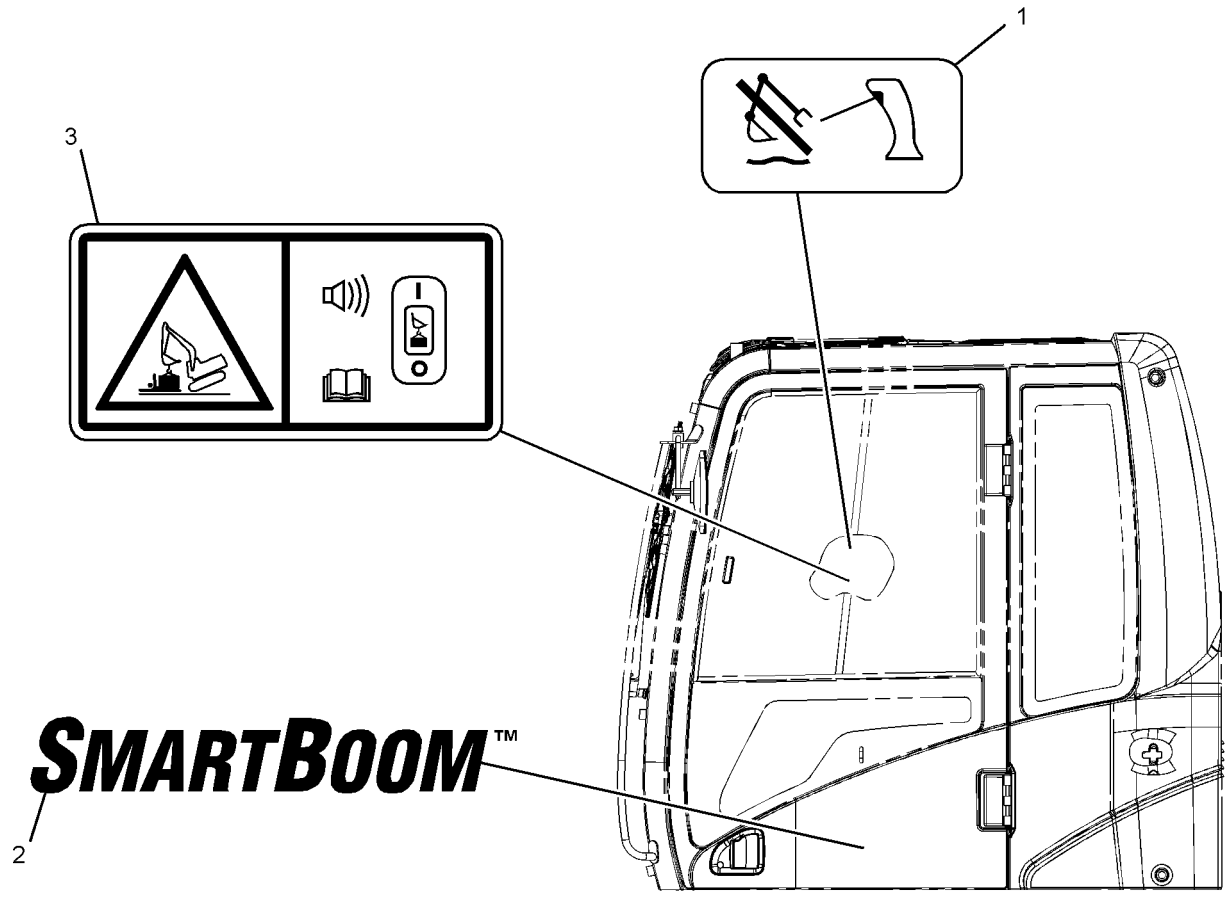

LEFT SIDE VIEW
(CAB)

GRAPHIC #1 **<END>** g02127074

SERVICE EQUIPMENT AND SUPPLIES

319-9324 FILM GP—OPERATOR CONTROLS, HAMMER

S/N: WAP1-UP

PART OF 352-6875 CONTROL AR-AUXILIARY

AN ATTACHMENT

SMCS-7405, 7557 **i03822229**

NOTE	REF NO	GRAPHIC REF	PART NUMBER	QTY	PART NAME 1 2 3 4 5 6 (PRODUCT LEVEL)	SEE PAGE
	1	1	**250-8054**	1	FILM-NOTICE (HAMMER, READ OMM)	
	2	1	**319-9325**	1	FILM-INSTRUCTION (OPERATOR CONTROL PEDALS)	

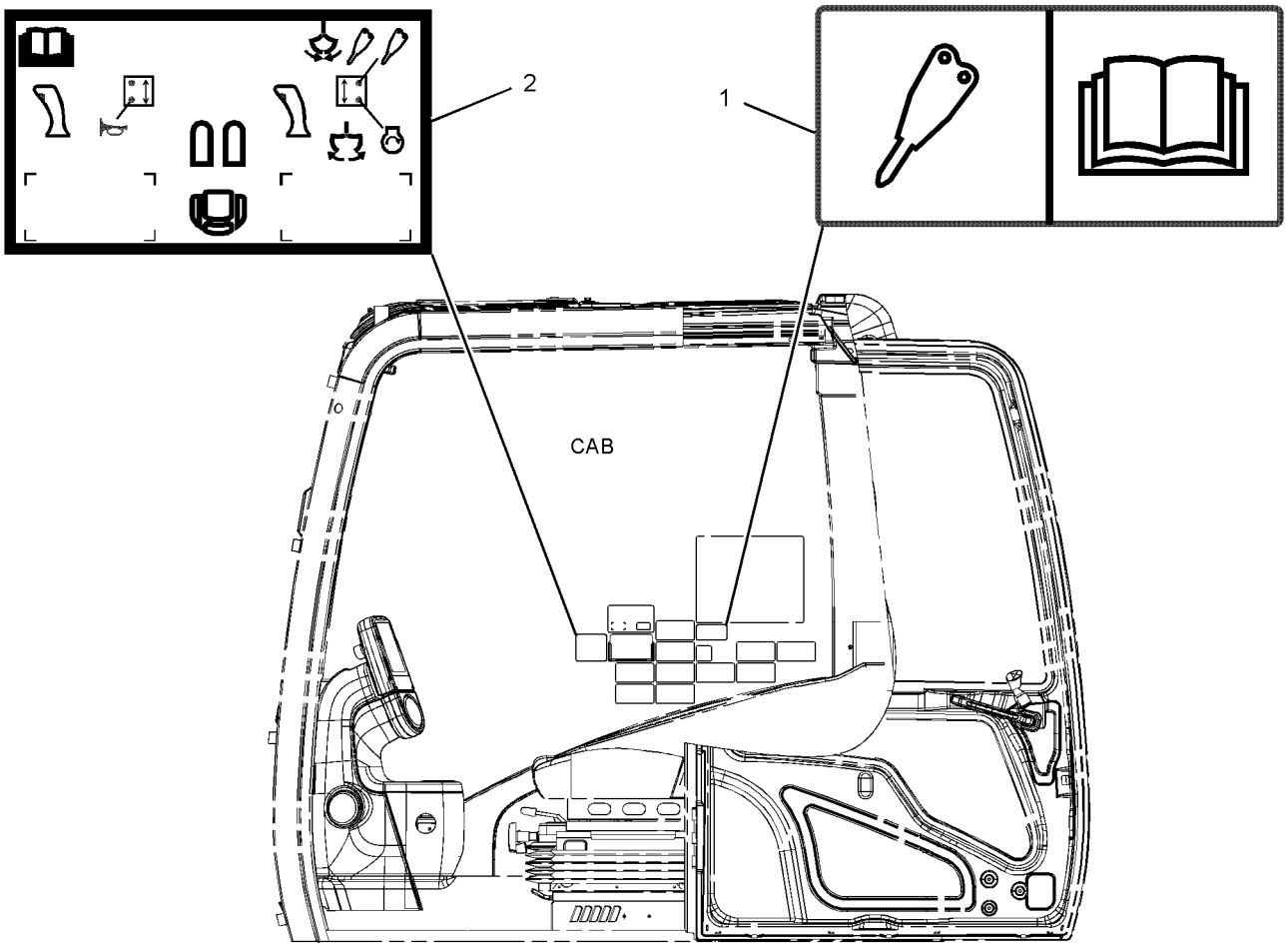

LEFT SIDE VIEW

GRAPHIC #1

<END>

g02129043

SERVICE EQUIPMENT AND SUPPLIES

319-9326 FILM GP–OPERATOR CONTROLS, HAMMER

S/N: WAP1-UP

PART OF 352-6876 CONTROL AR-AUXILIARY

AN ATTACHMENT

SMCS-7405, 7557 **i04026533**

NOTE	REF NO	GRAPHIC REF	PART NUMBER	QTY	PART NAME 1 2 3 4 5 6 (PRODUCT LEVEL)	SEE PAGE
	1	1	**250-8054**	1	FILM-NOTICE (HAMMER, READ OMM)	
	2	1	**319-9327**	1	FILM-INFORMATION (OPERATOR CONTROLS, READ OMM)	

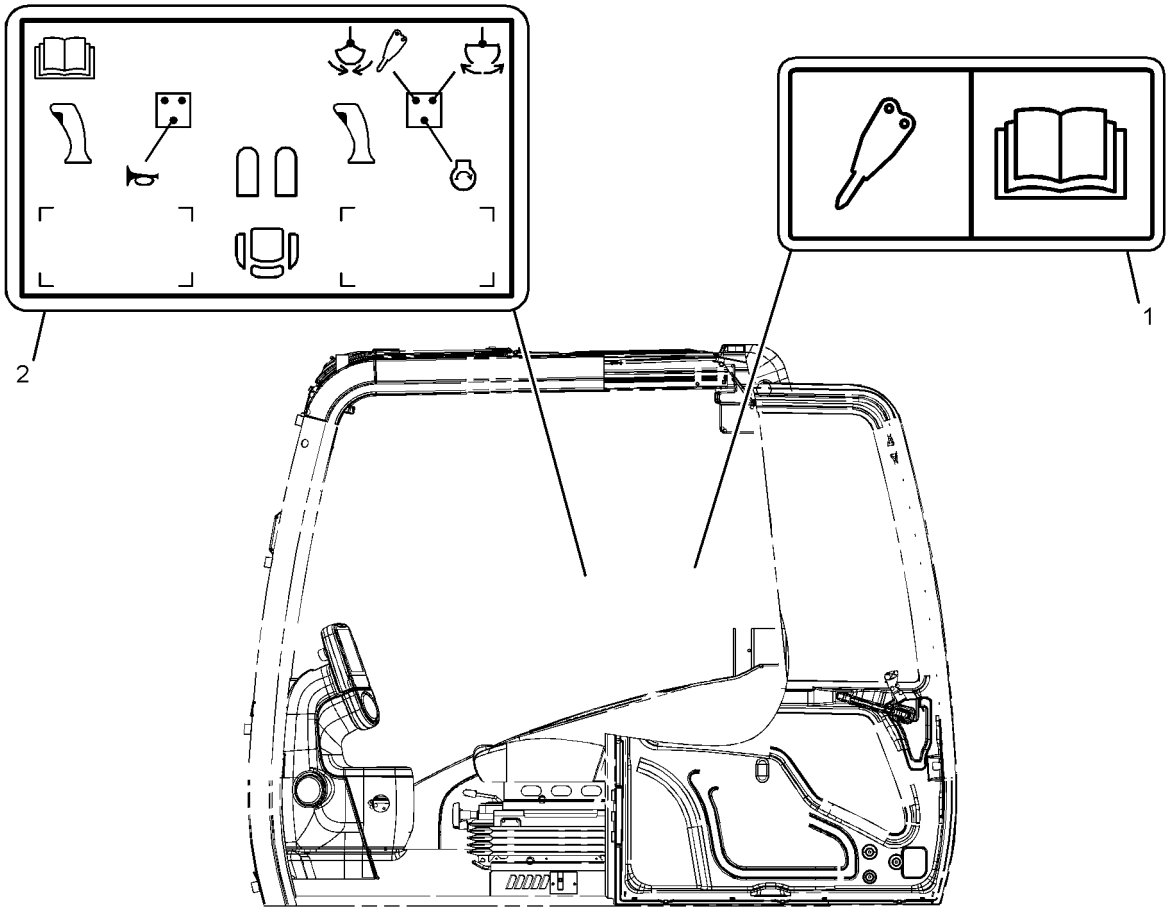

LEFT SIDE VIEW
(CAB)

GRAPHIC #1 **<END>** g02127041

SERVICE EQUIPMENT AND SUPPLIES

346-4595 FILM GP–LIFTING, READ OMM

S/N: WAP1-UP

PART OF 360-6361 SENSOR GP-MACHINE LEVEL

AN ATTACHMENT

SMCS-7405, 7557 **i03894833**

NOTE	REF NO	GRAPHIC REF	PART NUMBER	QTY	PART NAME 1 2 3 4 5 6 (PRODUCT LEVEL)	SEE PAGE
	1	1	**343-1150**	1	PLATE-INFORMATION (LOAD CAPACITY, READ OMM)	
	2	1	**343-1151**	1	PLATE-INFORMATION (LOAD CAPACITY, READ OMM)	
	3	1	**343-1152**	1	PLATE-INFORMATION (LOAD CAPACITY, READ OMM)	
	4	1	**343-1153**	1	FILM-INFORMATION (READ OMM)	
	5	1	**343-1154**	1	FILM-INFORMATION (READ OMM)	
	6	1	**343-1155**	1	FILM-WARNING (TIPPING HAZARD, READ OMM)	
	7	1	**343-1156**	1	FILM-WARNING (LIFTING, READ OMM)	
	8	1	**343-1157**	1	FILM-WARNING (CRUSH HAZARD, READ OMM)	

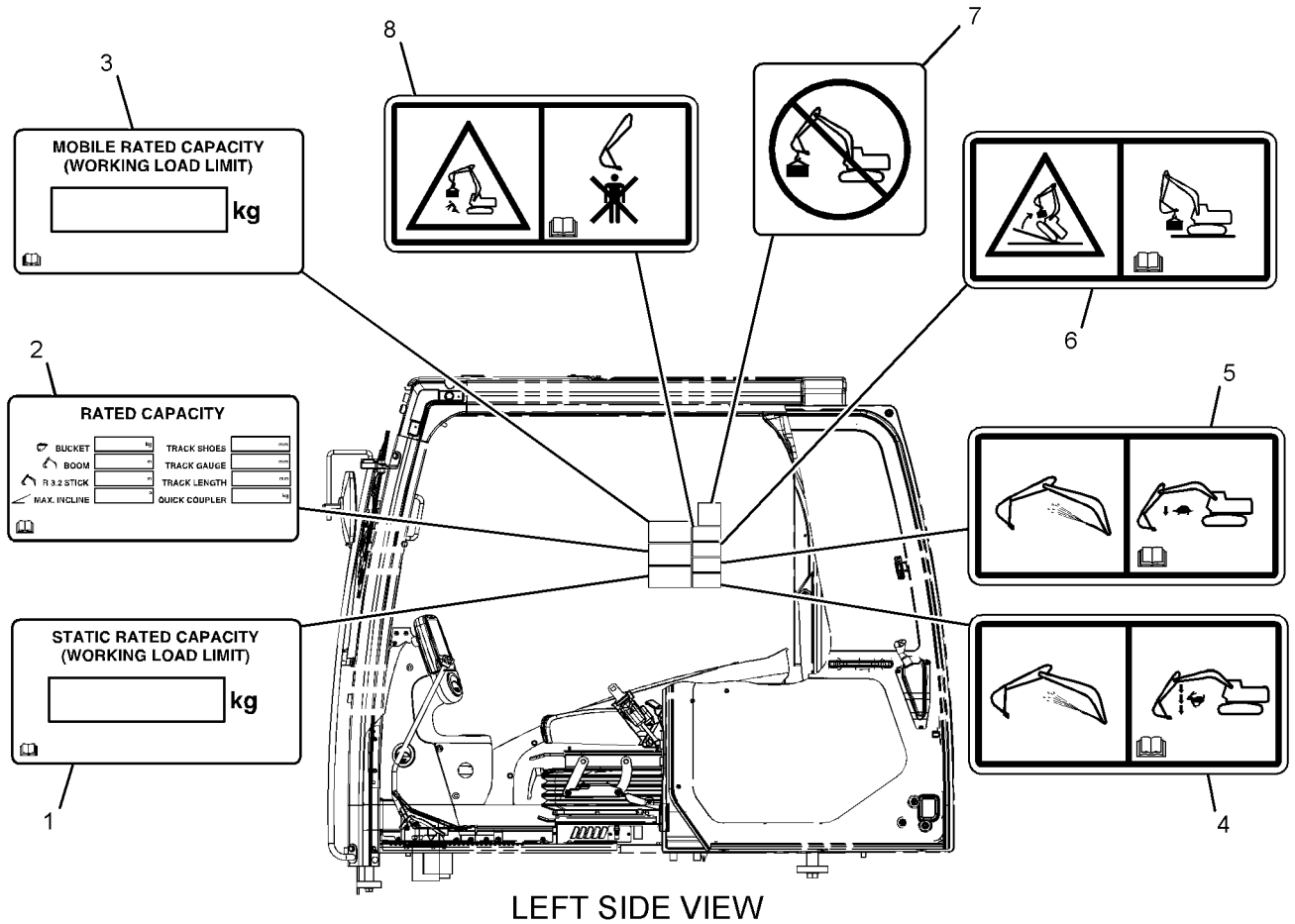

LEFT SIDE VIEW

GRAPHIC #1 **<END>** g02138772

SERVICE EQUIPMENT AND SUPPLIES

202-2928 PLATE & FILM GP—BIODEGRADABLE HYDRAULIC OIL

S/N: WAP1-UP

AN ATTACHMENT

SMCS-7405, 7557 **i02364580**

NOTE	REF NO	GRAPHIC REF	PART NUMBER	QTY	PART NAME 1 2 3 4 5 6 (PRODUCT LEVEL)	SEE PAGE
	1	1	**169-3530**	1	FILM-IDENTIFICATION (BIODEGRADABLE HYDRAULIC OIL)	

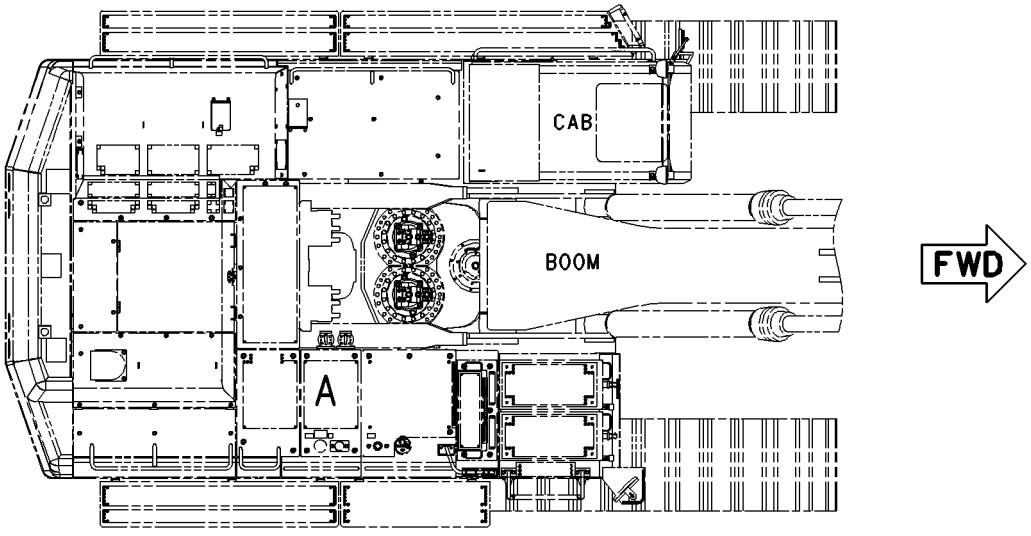

TOP VIEW

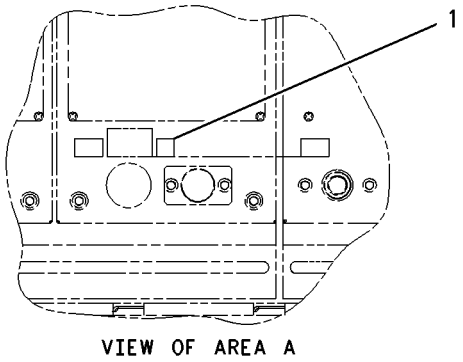

VIEW OF AREA A

GRAPHIC #1 **<END>** g00914390

SERVICE EQUIPMENT AND SUPPLIES

294-1245 PLATE & FILM GP

S/N: WAP1-UP

PART OF 294-1237 CHASSIS AR

SMCS-7405, 7557 **i03903116**

NOTE	REF NO	GRAPHIC REF	PART NUMBER	QTY	PART NAME 1 2 3 4 5 6 (PRODUCT LEVEL)	SEE PAGE
	1	1	**137-6606**	1	FILM-IDENTIFICATION (FUEL)	
	2	1	**245-5591**	1	FILM-WARNING (HIGH PRESSURE, READ OMM)	
	3	1	**242-6092**	1	FILM-WARNING (ACCUMULATOR PRESSURE)	
	4	1	**134-7258**	1	FILM-INFORMATION (EXTENDED LIFE COOLANT)	
	5	1	**143-9536**	1	FILM-IDENTIFICATION (MIN-MAX)	
	6	2	**229-0887**	1	FILM-INFORMATION (AIR CLEANER)	
	7	1	**225-4257**	2	FILM-WARNING (HOT FLUID UNDER PRESS, INTL)	
	8	1	**124-2456**	2	FILM-INSTRUCTION (NO STEP)	
	9	1,2	**7X-7644**	4	FILM-INFORMATION (TIE-DOWN)	
	10	1	**242-1510**	1	FILM-INSTRUCTION (HYDRAULIC OIL CHECK)	
	11	1	**319-9329**	1	FILM-WARNING (HOT SURFACE)	
	12	2	**228-7316**	1	FILM-WARNING (HOT SURFACE, HANDS CLEAR, INTL)	
	13	2	**239-6986**	1	PLATE-IDENTIFICATION (MACHINE)	
	14	2	**290-1727**	1	FILM-IDENTIFICATION (CAT BOOM, RH)	
	15	2	**1P-2807**	3	FILM-INFORMATION (LIFT EYE LOCATION)	
	16	2	**319-9282**	2	FILM-IDENTIFICATION (390D L)	
					—OR—	
J	16A	2	**319-9284**	2	FILM-IDENTIFICATION (390D LME)	
	17	2	**102-6046**	2	FILM-IDENTIFICATION (CAT)	
	18	2	**253-0861**	2	FILM-INFORMATION (CAT POWER, ACERT TECHNOLOGY)	
	19	2	**294-1307**		FILM-STRIPE (47-CM EACH)	
	20	2	**228-2781**	2	FILM-WARNING (MACHINE SWING, CRUSHING, INTL)	
	21	2	**357-4727**	2	FILM-WARNING (CRUSH HAZARD, STAY BACK, INTL)	
	22	1	**190-5386**	2	FILM-STRIPE (ROUND RED REFLECTIVE)	
	23	1	**245-5495**	1	FILM-IDENTIFICATION (CAT, REAR)	
	24	2	**112-0545**	2	FILM-INSTRUCTION (TRACK GAUGE)	
	25	2	**290-1728**	1	FILM-IDENTIFICATION (CAT, BOOM, LH)	
	26	2	**214-7915**	1	FILM-INSTRUCTION (ENGINE SHUTOFF)	
	27	2	**303-2686**	1	FILM-IDENTIFICATION (FUSE PANEL)	
	28	1	**225-0312**	1	FILM-WARNING (JUMP START, READ OMM, INTL)	
	29	1	**146-6747**	1	FILM-INFORMATION (24-VOLT)	
	30	1	**223-9818**	1	FILM-INSTRUCTION (WINDOW CLEANING, READ OMM)	
	31	3	**255-3171**	1	PLATE-INSTRUCTION (CONTROL PATTERN, READ OMM)	
	32	3	**4I-2885**	1	CASE	
	33	3	**255-3173**	1	FILM-WARNING (CRUSH HAZARD, READ OMM, INTL)	
	34	3	**224-0554**	1	FILM-WARNING (UNIVERSAL, READ OMM, INTL)	
	35	3	**266-5431**	1	FILM-WARNING (CRUSH HAZARD, READ OMM, INTL)	
	36	3	**228-9254**	1	FILM-WARNING (ELEC HAZARD, READ OMM, INTL)	
	37	3	**221-8045**	1	FILM-WARNING (SEAT BELT, INTERNATIONAL)	
	38	3	**303-2668**	1	PLATE-INSTRUCTION (AIR CONDITIONER, READ OMM)	
	39	3	**269-0120**	1	FILM-WARNING (CRUSH HAZARD, READ OMM, INTL)	
	40	1	**100-5612**	1	FILM-INSTRUCTION (ALTERNATE EXIT, REMOVE WINDOW)	
	41	3	**245-5456**	1	FILM-INSTRUCTION (BACKUP CONTROL, RH TRACK, SPD)	
	42	3	**245-5458**	1	FILM-INSTRUCTION (BACKUP CONTROL, BOOM, LH TRACK)	
	43	3	**242-1588**	1	FILM-WARNING (FRONT WINDOW, READ OMM, INTL)	
	44	1	**334-4603**	1	FILM-INFORMATION (HYDO ADVANCED 10)	

J-USED WHEN MASS BOOM IS EQUIPPED

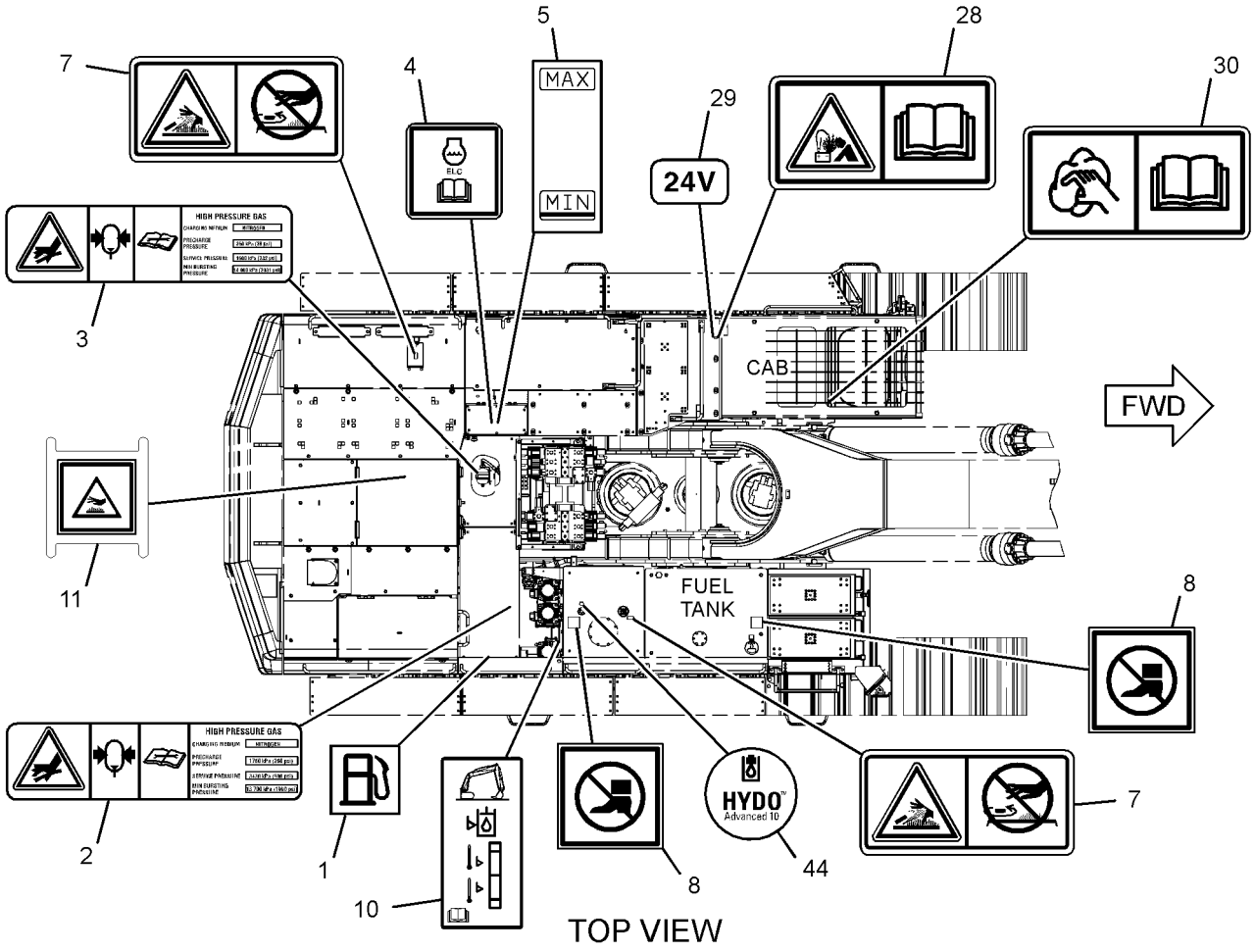

TOP VIEW

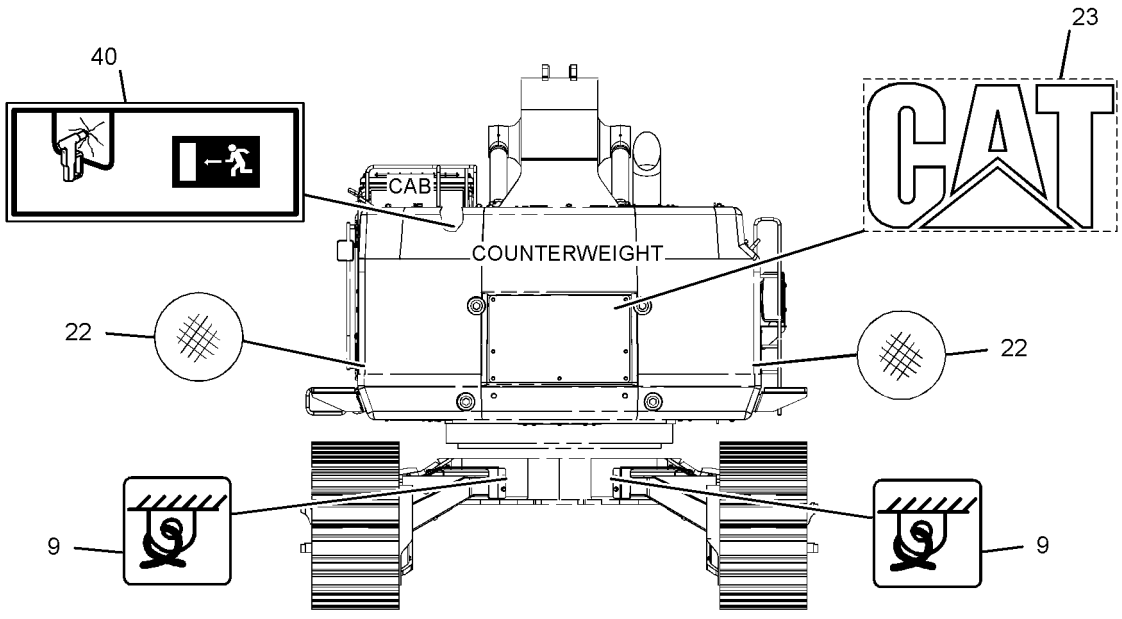

REAR VIEW

GRAPHIC #1 g02160852

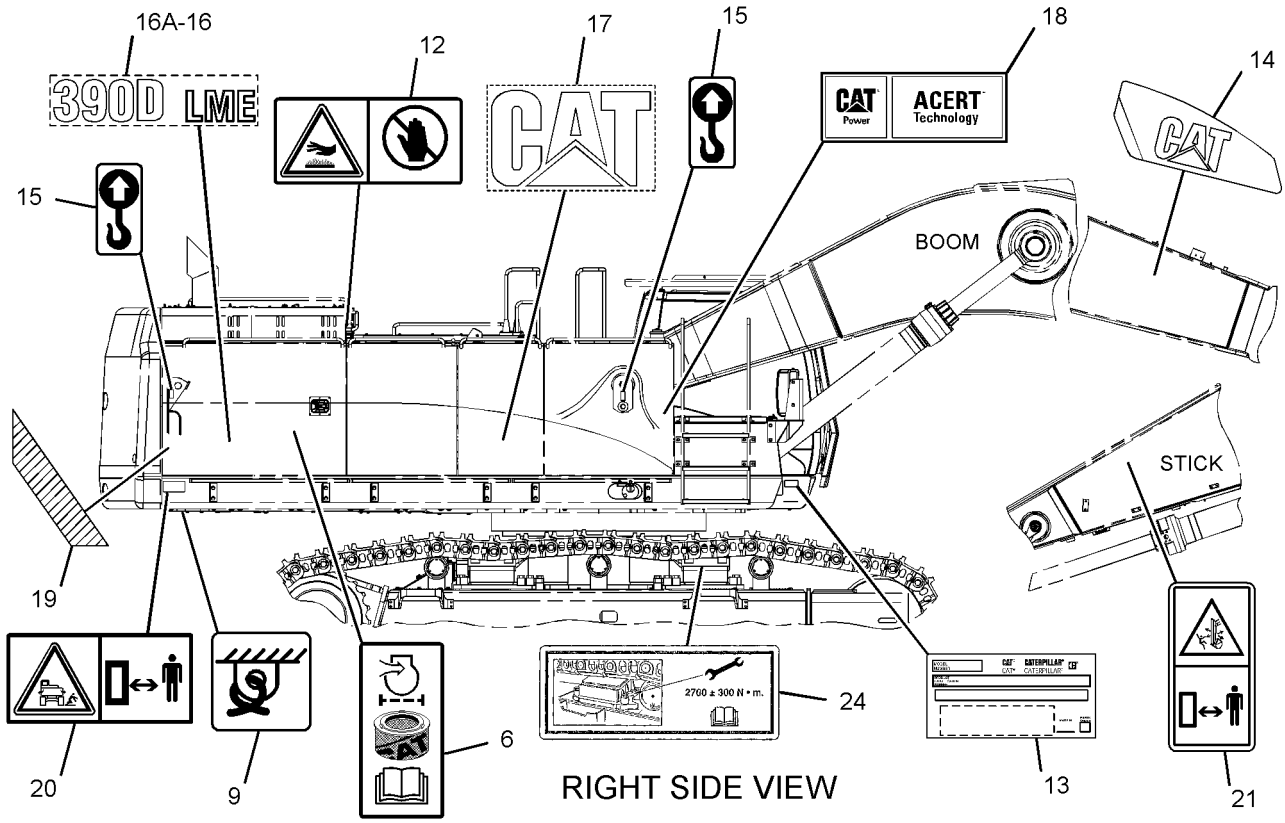

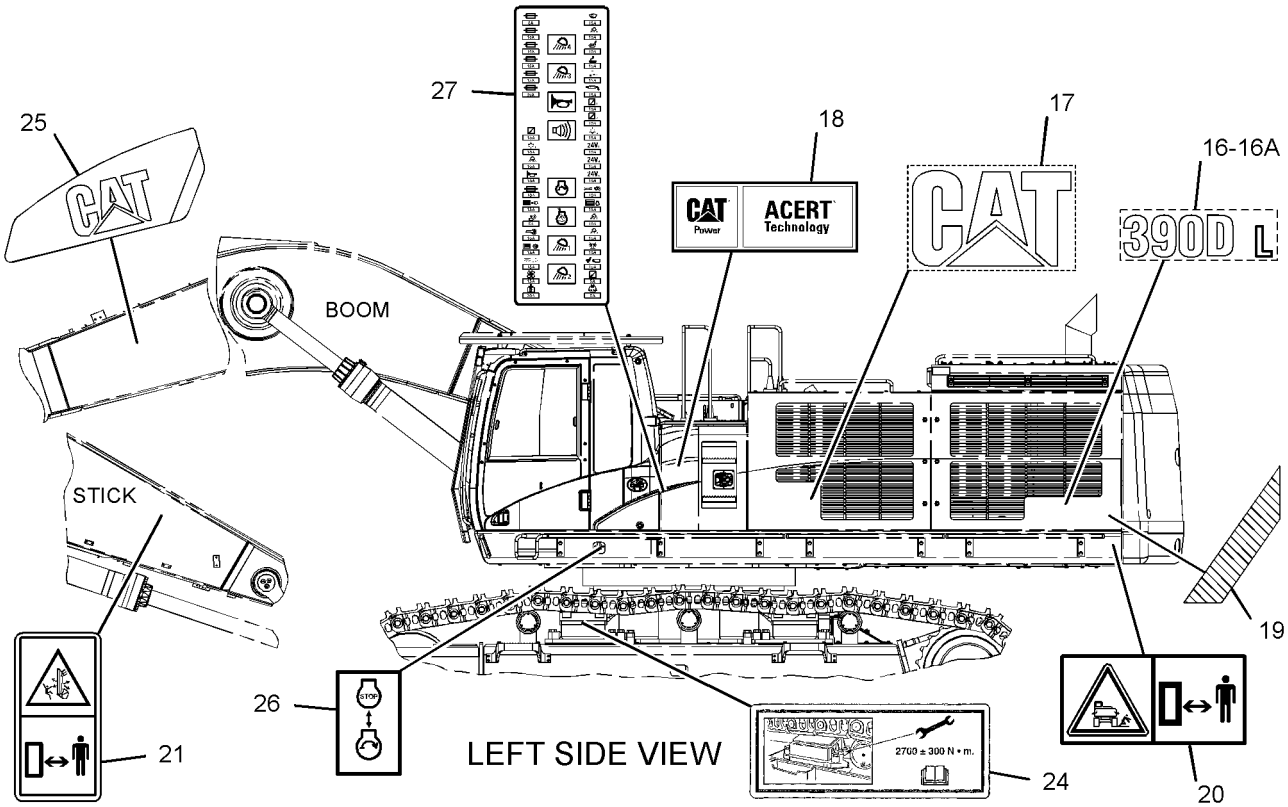

GRAPHIC #2 g02160855

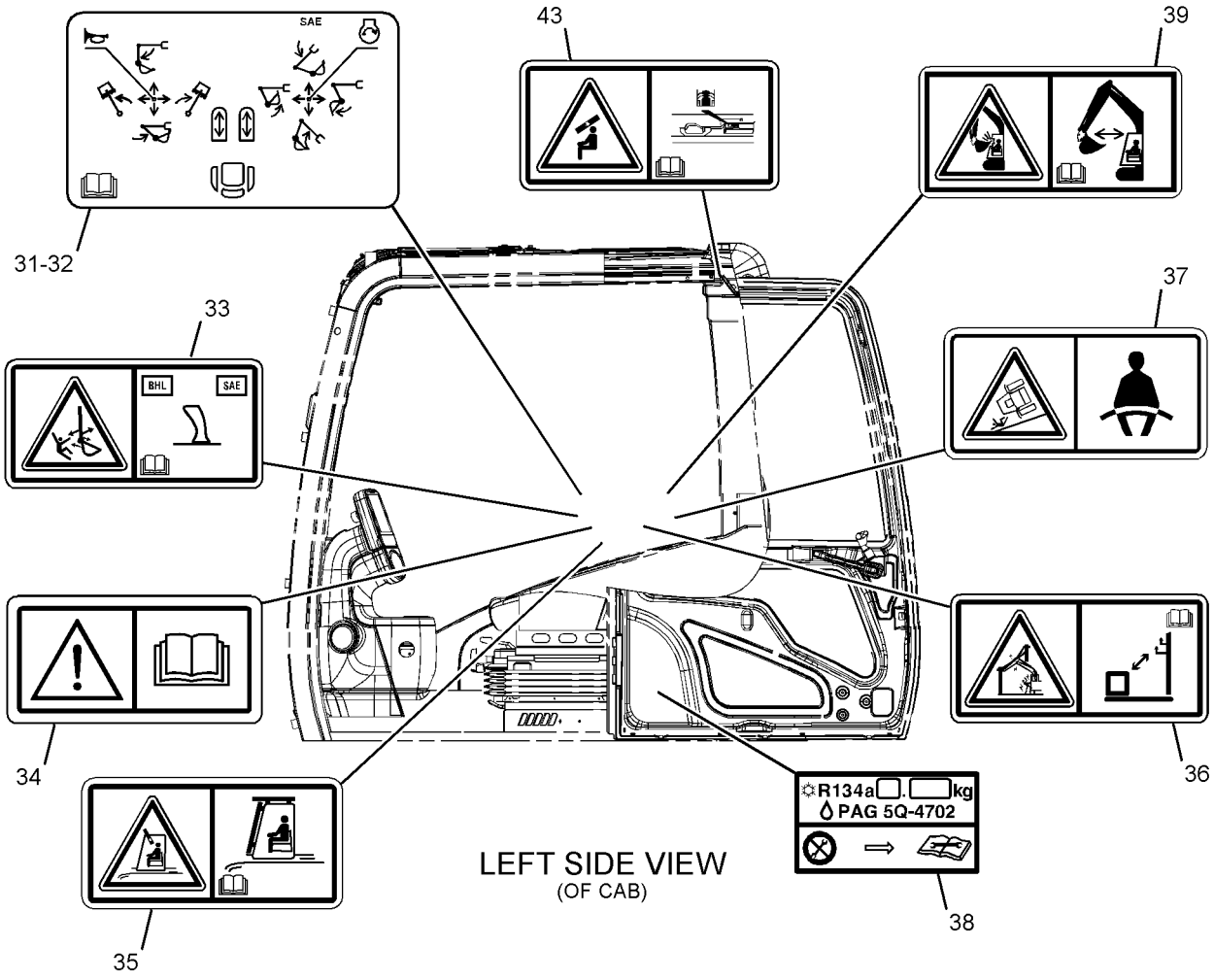

LEFT SIDE VIEW
(OF CAB)

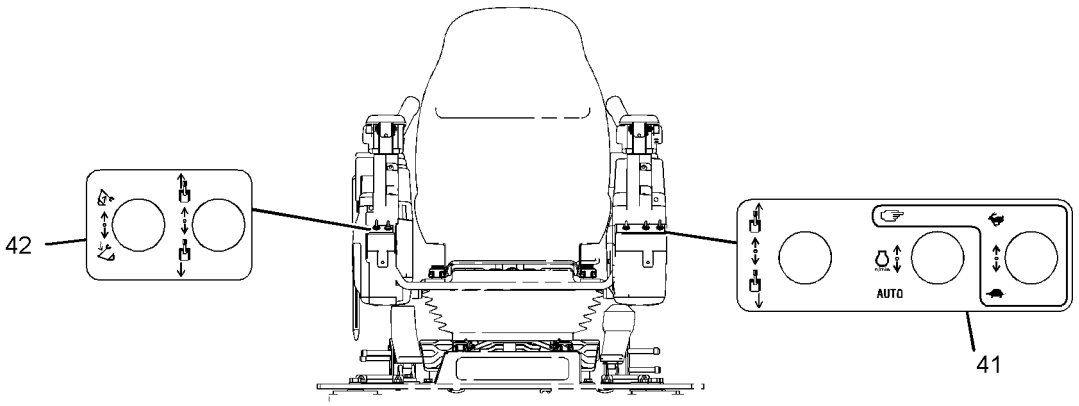

REAR VIEW
(OF SEAT)

GRAPHIC #3 **<END>** g02161634

MEMORANDA

PART NUMBER INDEX

Part	Page
0	
0L-1143	76
0L-1351	84
0L-1352	98
	100
0L-1571	139
0L-2070	48
	54
	87
0S-0509	310
0S-1571	41
	57
	96
	310
0S-1576	310
0S-1585	34
0S-1587	57
0S-1588	48
	57
	59
	77
	79
	81
	84
	118
0S-1590	76
	81
	84
	506
0S-1591	71
	84
	96
	139
	235
	399
0S-1594	16
	36
	44
	51
	77
	88
	98
	100
	139
0S-1595	52
0S-1608	80
0S-1619	44
	80
	139
0S-1621	44
0T-0055	48
	399
0T-0065	98
	100
0T-0768	44
0V-0375	160
0V-0523	39
1	
1A-1460	44
1A-2029	44
	80
	83
	399
1A-4273	310
1A-5964	399
1B-3057	96
1B-3581	254
1B-3623	34
1B-3867	13
1B-7182	103
1B-8705	41
1D-4637	896
1D-5117	178
1F-0750	77
1F-7958	17
	37
	160
1H-1023	257
1H-2629	257
1H-3244	158
	224
1H-3338	262
1H-5728	636
	638
	712
	716
	721
1H-7339	682
1H-8128	128
	152
1H-8647	13
1J-9671	98
	105
	128
	711
	715
	720
	736
	739
1K-8850	348
	359
	361
	391
1L-5081	96
1M-0644	91
1M-3381	131
	139
1M-6119	163
	173
	272
1M-6120	163
	173
	272
1M-6718	767
	768
	769
1M-9968	258
1M-9971	257
1P-2807	1080
1P-3702	630
1P-3703	570
	578
	592
	609
1P-3704	570
	578
	581
	585
	609
	615
	632
1P-3705	532
	533
	534
	535
	536
	538
	540
	543
	545
	547
	552
	554
	555
	578
	581
	585
	609
	623
	624
	625
	626
	632
	734
	736
	739
1P-3706	536
	538
	540
	543
	545
	547
	556
	557
	558
	578
	581
	585
	623
	624
	627
	628
	728
	731
1P-3707	736
	739
1P-4278	105
1P-4578	581
	585
	592
	598
	619
1P-4579	581
	585
	605
1P-4582	581
	585
	605
	619
1P-5767	578
	581
	585
	609
	632
1P-7016	609
1P-7346	41
1P-7625	139
1P-7919	89
1R-0755	136
1R-1808	80
1R-5318	703
1R-5396	752
1R-5998	933
1R-6484	726
1R-7037	655
1S-0812	265
	266
1S-0994	516
	615
	1002
1S-4295	126
1S-5485	114
1S-7251	162
	173
	260
	272
1S-7252	163
	173
	260
	272
1S-7446	257
1S-9540	26
1S-9593	775
1T-0720	222
1T-0765	147
1U-0322	734
1U-8846	329
	367
	507
	509
	513
	632
1V-6341	246
1W-3136	47
1W-4738	44
1W-4746	44
1W-6448	235
2	
2A-4429	30
2B-2404	254
2B-2695	18
	187
2B-7558	335
2B-7561	513
2C-9259	842
	843
	844
	845
	846
	847
	848
	849
	850

► **PRIMARY REFERENCE**

PART NUMBER INDEX

Part	Page
	851
	852
	853
	854
	883
	884
2D-0388	148
2D-1683	800
	802
	807
	809
2D-6392	257
	712
	716
	721
2D-6642	746
2D-6648	636
	638
2F-6678	258
2G-8767	161
	173
2H-3429	257
2H-3755	235
2H-3922	261
2H-3928	449
2H-3934	609
2H-3935	480
2J-2668	605
2J-3118	41
2J-3507	892
	896
	897
2J-8163	257
2K-4821	158
2K-4973	84
2K-8199	691
2L-1701	139
2L-6679	257
2L-8049	162
2L-8050	163
2L-8057	162
2L-8064	301
2L-8065	165
	225
2L-8066	225
	275
2L-8067	163
	225
	275
2L-8069	164
	323
2L-8074	298
	301
2L-8075	162
	165
	225
	230
	275
	323
2L-8076	225
2L-8077	278
	282
	291
	295
	304
2L-8079	288
	317
	322
2M-0849	72
2M-5795	339
	340
	378
	1025
2M-9780	98
	132
	516
	588
	591
	592
	613
	614
	646
	648
	650
	690
	692
	694
	697
	700
	705
	707
	711
	715
	720
	728
	731
	742
2N-2766	122
	126
2N-8109	75
2P-1292	132
2P-2772	44
2P-2975	759
	763
	764
	765
	766
2P-4304	73
2P-7214	139
2P-7636	132
2P-9419	453
2R-6806	139
	142
2S-1647	148
	318
	417
	970
2S-2053	81
2S-2596	705
	734
2S-2760	91
2S-4078	148
	152
	581
	585
	597
	609
	614
	619
	711
	712
	715
	716
	720
	721
	759
	764
	765
	766
2S-5926	438
2S-7905	91
2T-2695	763
2W-0493	44
2W-0494	44
2W-0496	44
2W-2021	88
2W-4332	663
3	
3B-0551	89
	152
3B-0623	28
3B-0645	28
3B-1915	84
	310
3B-4501	195
	196
	198
3B-4607	339
	340
	1025
3B-4618	378
	381
	384
	388
3B-6768	254
3B-8485	341
3B-8489	364
	366
	367
	483
	484
	485
	486
	488
	499
	794
	796
	798
	800
	802
	805
	807
	809
	812
	814
	817
	819
	821
	826
	828
	830
	831
	833
	834
	836
	838
3C-8388	636
	638
3D-2824	92
	98
	516
	551
	552
	581
	585
	591
	592
	595
	596
	597
	618
	628
	630
	632
	682
	711
	712
	715
	716
	720
	721
	734
	758
	1002
3D-4245	727
3D-5102	254
3D-9143	339
	340
3D-9428	343
	344
3E-2306	152
3E-2310	595
3E-2338	329
3E-3365	775
3E-3371	241
	551
	578
	596
3E-3377	491
	493
3E-3389	194
3E-4297	521
3E-4353	139
3E-5169	161
3E-6772	32
3E-7389	266
3E-7410	572
	595
3E-7424	609
3E-7445	83
3E-7771	258
3E-8020	970
3E-8025	752
3E-8044	50
3E-8048	166
	225
	241

► **PRIMARY REFERENCE**

PART NUMBER INDEX

Part	Page
3E-8320	224
3E-9411	436
	448
3F-6156	77
3F-9556	158
3G-8047	573
3G-8054	573
3G-8057	573
3H-0442	746
3H-7654	38
	455
3J-1907	98
	138
	152
	238
	469
	470
	516
	551
	559
	570
	572
	573
	588
	595
	597
	598
	604
	607
	609
	613
	614
	615
	628
	632
	636
	638
	640
	651
	655
	697
	702
	705
	707
	710
	711
	715
	720
	724
	728
	731
	734
	736
	739
	742
	746
	748
	767
	768
	769
	770
3J-3679	98
	736
	739
3J-7354	92
	93
	98
	245
	523
	598
	614
	636
	638
	682
	705
	712
	715
	716
	721
	728
	731
	734
	736
	739
	757
3K-0360	98
	132
	507
	509
	551
	573
	574
	578
	588
	591
	592
	595
	596
	597
	598
	604
	609
	613
	614
	615
	618
	619
	628
	636
	638
	682
	690
	697
	702
	709
	710
	736
	739
	757
	1002
3K-0715	480
3K-0835	265
	266
3K-4520	703
3K-5234	892
	896
	897
3K-8460	711
	715
	720
3K-9770	849
	850
	851
	852
3L-3380	257
3L-8187	307
	325
3M-6018	275
3N-3763	258
3P-0658	663
3P-0760	703
3P-1155	235
	759
	764
	765
	766
3P-1323	24
3R-5818	114
3R-8797	257
3R-8801	258
3R-9965	317
3S-2093	131
	139
	161
	162
	163
	164
	165
	173
	179
	184
	193
	209
	210
	211
	214
	216
	224
	225
	230
	232
	254
	263
	274
	275
	278
	283
	286
	288
	291
	293
	295
	297
	298
	301
	304
	307
	310
	312
	313
	315
	317
	322
	323
	325
3S-6049	163
	173
3S-6050	163
	173
	272
3S-9643	98
	100
3T-3418	257
3T-3422	257
3T-3423	257
	258
3T-3424	257
	258
3T-4688	163
3T-4709	257
3T-4710	257
3T-6469	84
3T-6471	84
3T-7528	521
3T-9494	257
	258
3T-9524	258
3T-9525	257
3V-0046	559
3V-2431	491
	493
3W-6399	1047
3Y-2806	933
4	
4B-2049	258
4B-3665	35
4B-4043	44
4B-4158	438
4B-4276	224
4B-4278	339
4B-9782	68
4B-9783	697
	728
	731
4D-2297	661
4D-2886	734
4D-3118	655
4D-3704	39
4D-7388	132
	573
	598
	605
	619
4E-1384	990
	992
4E-2289	161
4F-0411	98
	100
4F-6024	44
4F-7957	13

► **PRIMARY REFERENCE**

PART NUMBER INDEX

Part	Page	Part	Page	Part	Page	Part	Page
	14		317		585	4K-1388	98
4F-8946	630	4I-7924	356		599		632
	705		358		605		702
4H-6112	507		380		619		710
	509		381		682		758
4H-9105	455		384		692	4K-2039	661
	529		388		694	4K-8302	589
4I-0117	378		393	4J-0527	128	4K-8380	77
4I-0118	378		394		581	4K-8501	359
4I-0378	152		396		585		361
4I-0379	132		397		605	4K-8864	615
4I-0769	595		398		609	4L-2729	258
4I-0806	588		400		619	4L-7124	224
	595		402		682	4L-9337	123
4I-0812	604		404		692	4M-0189	44
4I-0821	595		407		694		94
4I-0924	623		410	4J-0528	697		474
	624		411	4J-2506	705	4M-1827	257
4I-1022	655		412	4J-5267	589	4M-1828	257
4I-1205	378		413		592	4M-1831	257
	380		414		630	4M-1853	257
4I-1278	933		416		724	4M-1854	257
4I-2187	339		417	4J-5268	748	4M-1896	258
	340		418	4J-5309	703	4M-5317	794
	1025		419	4J-5351	748		796
4I-2509	361		420	4J-5477	559		798
4I-2599	380		423		560		800
4I-2875	425	4I-7948	358		563		802
4I-2885	1080	4I-7949	358		566		805
4I-3038	263	4I-8019	380		567		807
4I-3591	682	4I-8472	471		572		809
4I-3981	595	4I-8915	742	4J-5573	592	4M-8547	37
4I-3994	604	4I-8965	697		728	4N-0683	26
4I-4270	1053	4I-9521	552		731	4N-0684	23
4I-4286	976		573	4J-7533	521		44
	979		595		640	4N-0699	16
4I-4392	972	4I-9522	552		696	4N-1156	98
4I-4542	826		573		697		100
	828		595		700	4N-1230	44
	830		613		703	4N-1650	26
	831	4I-9523	595		705	4N-2481	9
	833	4I-9524	595		707		▶76
	834	4I-9525	595		711	4N-2514	39
	836	4I-9526	573		715	4N-5339	91
	838		595		716	4N-8150	74
4I-5049	161	4I-9527	573		720	4N-8410	84
4I-5426	166		595		721	4N-9170	367
4I-5657	742	4I-9528	595		728	4P-0519	57
4I-5732	609	4J-0519	615		731	4P-4460	87
4I-5734	694		758		734	4P-6846	9
4I-5795	595	4J-0520	598		736		▶36
4I-5850	651	4J-0521	758		739	4P-7373	84
4I-6188	613	4J-0522	570		746	4P-7428	166
4I-6239	604		581		776		174
4I-6330	493		585	4J-8997	703		283
	497		592	4J-9535	636		318
4I-6397	734		599		638	4P-7429	291
4I-6442	495		619		712		310
	504		682		716		312
4I-7739	578		734		721	4P-7581	166
4I-7778	595		736	4J-9780	711		274
4I-7822	578		739		715		293
4I-7856	604	4J-0523	581		720		310
4I-7874	655		709		736		318
4I-7889	132	4J-0524	581		739	4P-7582	139

▶ **PRIMARY REFERENCE**

PART NUMBER INDEX

Part	Page
	310
	315
	318
	599
4P-8134	310
4P-9823	9
	▶44
4S-1936	599
4S-1962	313
4S-4455	1002
4T-0925	767
	768
	769
4T-0987	705
4T-1860	572
	613
	711
	715
	720
	736
	739
	▶767
4T-4207	715
	720
4T-5071	734
4T-5076	728
	731
4T-6788	519
4W-5698	23
4W-5699	23
4W-5700	23
4W-5701	23
4W-9160	123
4W-9890	16

5

Part	Page
5A-3604	788
	1033
	1038
	1039
	1040
5B-0651	812
	814
	817
	819
	821
5C-2874	933
5C-2889	195
	196
	198
5C-2890	262
	754
	933
5C-7261	166
	272
	573
	752
	754
	933
	976
	979
	990
	992
5C-7423	976
	979
	1053
5C-7883	166
5C-8138	1047
5C-9553	123
	179
	202
	203
	204
	211
	214
	216
	303
	304
	306
	917
	919
	1044
5D-1026	513
	1002
5E-8771	41
5E-9684	607
5F-4899	54
	91
5F-9144	138
5H-1472	655
	752
5H-1504	32
5H-6734	128
	152
5I-3054	1044
5I-3190	139
5I-3876	132
5I-4168	655
5I-4277	529
5I-4341	529
5I-4390	591
	613
5I-8494	609
5I-8511	697
5I-8748	123
5I-8765	655
5I-8770	655
5I-8794	752
5I-8800	752
5I-8804	752
5I-8814	752
5I-8825	570
5J-2974	728
	731
	748
5J-5003	933
5J-5004	711
	715
	720
5J-5314	257
5J-5793	46
5K-0430	254
5K-2298	807
5K-5338	1002
5K-9090	549
	551
	570
	595
	596
	597
	604
	607
	609
	614
	618
	619
	628
	632
5K-9242	800
	802
	805
	807
	809
5K-9243	367
	794
	796
	798
	800
	802
	805
	807
	809
5L-3708	187
5L-4758	469
	470
	661
5L-5032	680
5M-2894	16
	36
	44
	48
	51
	54
	57
	59
	71
	76
	77
	79
	80
	81
	87
	91
	96
	98
	100
	118
	139
	147
	222
	235
	310
	399
	506
5M-3034	257
5M-3062	166
5M-4454	507
	509
5P-0049	543
	545
	547
5P-0537	14
5P-0597	632
5P-0747	260
5P-0767	513
	1002
5P-0840	26
	32
5P-1075	89
	166
	933
5P-1076	94
	105
	115
	123
	254
	336
	361
	378
	381
	474
	573
	578
	599
	619
	793
	1006
5P-1420	105
5P-1442	121
	133
5P-2094	86
5P-2321	325
5P-2369	599
	1002
5P-2618	128
5P-2766	301
5P-2957	275
5P-3108	757
5P-4115	123
	381
5P-4116	123
	157
	166
5P-4142	41
5P-4255	48
5P-4325	615
5P-4924	152
5P-4961	105
	121
5P-4981	329
5P-5602	275
5P-5623	194
5P-5649	474
5P-5677	194
5P-5846	84
5P-5998	263
5P-6298	257
5P-6312	254
5P-6313	254
5P-6314	254
5P-6719	748
5P-6879	1006
5P-6882	105
5P-6944	136
5P-7462	592
5P-7463	592
5P-7464	573
	592

▶ **PRIMARY REFERENCE**

PART NUMBER INDEX

Part	Page	Part	Page	Part	Page	Part	Page
	599		850		1002	6I-3968	71
5P-7465	573		851	6D-4246	619	6I-4025	32
	592		852	6D-4247	132	6I-4421	26
	599	5P-8500	151	6D-4636	132	6I-4575	13
5P-7466	592		268		592	6I-4582	41
5P-7467	592		336		615	6I-5168	812
5P-7468	570		338	6D-5257	317		814
	607		378	6E-0813	493		821
	619		1005		497	6I-5298	956
5P-7469	570		1025	6E-2313	724		957
	607	5P-8524	1064	6E-3840	679	6I-5976	380
	619		1066	6E-3869	467		1017
5P-7958	1005	5P-9085	794	6E-3872	468	6I-5977	380
5P-8068	84		796	6E-3873	529	6I-6373	329
	682		798	6E-3874	529	6I-6375	329
5P-8077	532	5P-9205	148	6E-3991	711	6I-6563	367
	533	5P-9891	438		715	6I-6788	679
	534	5Q-4212	560		720	6J-2680	523
	535		561	6E-3993	711		573
	536		563		715		619
	538		564		720		682
	540		566	6E-4428	768	6J-3134	697
	543		567	6E-4429	715		728
	545		568		720		731
	547	5R-5927	657		▶768	6K-0806	549
	578	5S-7349	158	6E-5412	756	6K-6967	794
	609	5S-7383	87	6E-5431	724		796
	623	5V-3854	348	6E-5434	724		798
	624		359	6E-5438	724	6K-8178	589
	625		361	6E-5439	724	6K-8420	89
	626		391	6E-5483	691	6L-3314	114
5P-8112	592			6E-5484	691	6L-3316	114
	1006			6E-5534	▶519	6L-3616	794
5P-8244	44				595		796
5P-8245	17				682		798
	37	6B-6683	246	6E-6528	754		800
	44	6C-4000	933	6F-0253	265		802
	46		992		266		805
	52	6C-8379	990	6F-4718	609		807
	160		992	6F-4855	528		809
5P-8247	44	6C-8382	990	6F-5282	72	6N-1127	136
	139		992	6F-7045	261	6N-1931	91
	158	6C-8787	986	6G-2256	161	6N-2343	91
	183	6C-8972	1044		173	6N-3279	257
	246	6C-9037	1055	6G-2263	161	6N-3826	257
	310	6C-9058	275		173	6N-6460	114
5P-8309	380		933	6H-0406	147	6N-7654	34
	381	6C-9081	275	6H-3615	536	6P-1306	254
	384	6C-9087	933		538	6P-2216	356
	388	6C-9119	1031		540		358
	394	6C-9121	275		543		380
	396	6C-9122	275		545		381
	397	6C-9131	1044		547		384
	398	6C-9149	659		578		388
	400	6C-9236	1057	6I-0213	145		393
	402		1058	6I-0723	682		394
	407		1059	6I-0724	682		396
	414	6C-9237	1057	6I-0928	30		397
	417		1058	6I-1055	26		398
	418		1059	6I-1418	187		400
	419	6D-0692	645	6I-3623	41		402
	420	6D-1641	132	6I-3624	41		404
5P-8347	199		1002	6I-3625	41		407
	200	6D-4244	132	6I-3638	9		410
5P-8361	849		605		▶506		411

6

▶ PRIMARY REFERENCE

PART NUMBER INDEX

Part	Page
	412
	413
	414
	416
	417
	418
	419
	420
	423
6P-4975	92
	93
6P-8855	1002
6S-6652	339
6T-0363	257
6T-0371	257
6T-0372	257
6T-3631	269
	270
	307
	325
	1051
6T-3632	269
	270
	307
	325
6T-3633	269
	270
	307
	325
6T-6506	275
6T-9442	265
6V-0128	14
6V-0301	632
6V-0400	570
	578
	610
6V-0405	559
6V-0683	592
6V-0852	136
	139
	516
	572
	595
6V-1197	15
6V-1249	573
	599
6V-1322	257
6V-1572	578
6V-1573	578
6V-1574	578
	610
6V-1577	632
6V-1722	1002
6V-1820	139
6V-1876	630
6V-1903	100
6V-2687	1031
6V-2722	173
	177
	178
	272
6V-3251	65
6V-3265	1002
	1047
6V-3582	119
6V-3677	41
6V-3683	222
6V-3822	136
6V-3830	57
	89
6V-3831	75
6V-3922	692
	694
	728
	731
	734
6V-3938	615
6V-3965	136
	139
	516
	573
	598
6V-4248	139
6V-4298	275
	523
	525
	933
6V-4589	150
	264
6V-5043	663
6V-5048	103
6V-5049	237
6V-5063	93
6V-5065	64
6V-5100	21
6V-5134	84
6V-5204	643
	644
6V-5210	195
	196
	198
6V-5266	87
6V-5324	767
	768
	769
6V-5555	736
	739
6V-5556	762
6V-5590	35
6V-5597	640
6V-5645	225
6V-5819	283
6V-5839	136
6V-6609	17
	63
	65
	100
	142
	251
6V-6707	692
	694
6V-6777	380
6V-6864	1064
6V-6923	154
6V-7238	507
	509
	1002
6V-7357	123
	933
	1002
6V-7419	1064
6V-7420	132
6V-7609	523
6V-7636	933
6V-7658	469
	521
6V-7666	712
	716
	721
6V-7681	662
6V-7723	678
6V-8076	516
6V-8077	598
6V-8185	224
6V-8187	224
6V-8188	258
6V-8189	158
6V-8200	671
6V-8201	643
	644
6V-8202	1032
	1033
	1034
6V-8218	728
	731
6V-8223	491
	493
6V-8260	679
6V-8362	268
6V-8373	1051
6V-8374	307
	325
6V-8397	551
	552
	559
	560
	561
	563
	564
	566
	567
	568
	570
	572
	573
	588
	595
	597
	598
	604
	607
	613
	614
	615
	618
	619
	628
	771
	772
	774
6V-8554	559
6V-8556	516
6V-8625	597
	604
	614
	619
6V-8629	588
	591
6V-8633	96
6V-8634	87
	597
	604
	628
6V-8635	597
	618
6V-8636	551
	559
	588
	597
	604
	613
	628
	632
6V-8637	551
6V-8638	588
	591
	613
6V-8639	96
	591
	597
	613
	619
6V-8642	591
6V-8714	596
6V-8721	516
	591
	614
6V-8723	588
	597
6V-8724	552
	573
	598
	604
	614
6V-8731	598

► **PRIMARY REFERENCE**

PART NUMBER INDEX

Part	Page
6V-8774	598
	632
6V-8775	614
6V-8777	632
6V-8778	619
6V-8781	573
	589
	598
6V-8784	516
6V-8785	604
6V-8801	183
6V-8935	559
	560
	563
	566
	567
6V-8936	560
	563
	566
	567
	570
	607
	614
6V-8941	588
6V-8942	516
6V-8944	604
	614
6V-8945	592
6V-8946	632
6V-8994	552
6V-9001	573
	588
	597
6V-9002	597
6V-9005	570
	597
6V-9007	551
	591
	597
	630
6V-9008	604
	619
6V-9168	552
6V-9169	552
6V-9182	591
6V-9189	199
	200
6V-9200	614
6V-9491	230
6V-9509	132
	619
6V-9512	609
6V-9632	204
6V-9671	241
6V-9673	276
	307
	1049
6V-9746	507
	509
	516
	551
	552
	588
	589
	591
	592
	596
	597
	598
	615
	618
	619
	630
	632
6V-9836	552
	598
	604
6V-9837	132
	614
6V-9839	589
6V-9840	619
6V-9843	598
6V-9844	607
	614
6V-9850	551
	573
	614
6V-9851	614
6V-9853	592
6V-9854	619
6V-9875	597
6V-9876	573
6V-9877	619
6W-2464	559
6Y-1352	96
6Y-7599	449
6Y-8127	456
6Y-8171	455
6Y-8172	455
6Y-8176	455
6Y-9339	455
7C-1445	18
7C-6514	21
7D-9984	139
7E-4509	84
7E-4661	57
7E-5142	84
7E-6508	14
7E-6513	14
7E-8996	9
	▶46
7F-0560	177
	178
7F-3488	257
7F-3491	257
7F-3525	257
7F-9090	136
7G-1060	323
7G-5984	630
7G-5985	630
7H-3171	449
	455
7I-0011	578
7I-0070	659
7I-0071	659
7I-0072	659
7I-0075	692
7I-0134	726
7I-0135	726
7I-0964	779
7I-0965	779
7I-0966	762
7I-0970	613
7I-0972	613
7I-0985	659
7I-1090	591
7I-1418	380
7I-2272	605
	607
	724
	728
	731
	742
	776
7I-2673	105
	224
	283
	298
	312
	1040
	1043
7I-2789	747
7I-6729	800
	805
7I-6730	800
	805
7I-6731	800
	805
7I-6732	800
	805
7I-7120	694
7I-7400	659
7I-7446	752
7I-7447	752
7I-7448	752
7I-7449	752
7I-7453	752
7I-7457	752
7I-7458	752
7I-7462	749
7I-7463	749
7I-7469	749
7I-7470	752
7I-7473	752
7I-7475	749
7I-7476	749
7I-7611	507
	509
7I-7619	507
	509
7I-7684	507
	509
7I-8084	655
	673
	752
7I-8164	673
7I-8177	673
7I-9001	747
7J-7837	691
7J-9108	588
	591
	592
	774
7J-9933	762
7K-1181	105
	121
	148
	161
	173
	207
	274
	276
	278
	280
	282
	283
	286
	288
	291
	293
	295
	298
	301
	304
	307
	312
	313
	315
	317
	322
	323
	325
	516
	551
	559
	570
	572
	581
	585
	588
	595
	604
	607
	613
	618
	632
	997
	1002
	1029
7L-2894	257
7M-0324	257
7M-0325	257
7M-0326	257
7M-0327	257
7M-8485	329
	570
	581
	585
	591
	596
	597
	598
	604
	607
	618
	619

7

▶ PRIMARY REFERENCE

PART NUMBER INDEX

Part	Page	Part	Page	Part	Page	Part	Page
	632	7X-2538	189	7X-2562	657		▶1005
	689	7X-2539	132	7X-2563	105	7Y-0623	990
	696	7X-2546	712		440		992
	705		716		474	7Y-0640	329
	742		721		662	7Y-0795	329
	763	7X-2548	254		840	7Y-0807	329
7M-8651	257		291		841	7Y-0808	329
7M-9918	127		318	7X-2567	55	7Y-0839	659
7N-0140	254	7X-2549	378	7X-2570	659	7Y-1000	440
7N-0452	36		573	7X-2573	359		446
7N-0719	224		585		361	7Y-1090	329
	▶261		619		782	7Y-1095	367
7N-2059	254		682		784	7Y-1109	367
7N-2155	91		700		786	7Y-1110	367
7N-2156	91		703		788	7Y-1241	105
7N-5274	163		707		826	7Y-1275	119
	173	7X-2550	570		828	7Y-1492	329
	272		578		830	7Y-1493	329
7N-7221	275		581		831	7Y-1647	367
7N-7559	87		585		833	7Y-1648	367
7N-7878	96		605		834	7Y-1976	105
7N-8374	44		619		836		107
7N-9801	271		682		838		110
7S-5005	23	7X-2552	440	7X-2574	359	7Y-2812	339
7T-2035	161		633		361		448
7T-6799	268		986		782	7Y-2814	1025
7T-8890	1047		1011		784	7Y-2853	370
7T-9123	258	7X-2553	94		786		378
7V-6571	139		549		826		384
7W-0629	114		610		828		388
7W-6528	91		659		830		1025
7W-7141	91		791		831	7Y-2854	370
7W-7381	572		1019		833		378
7X-0289	123	7X-2554	536		834		384
7X-0314	663		538		836		388
7X-0316	663		540		838		430
7X-0410	892		543	7X-2575	788		433
7X-0513	812		545	7X-2576	657		1025
	814		547	7X-2577	663	7Y-3281	340
	817		556	7X-2578	341	7Y-3474	1047
	819		558	7X-2581	657		1064
	821		791	7X-2582	513		1066
7X-0515	94	7X-2555	585	7X-2584	454	7Y-3477	▶840
	474		712	7X-2619	225		842
7X-0562	258		716		291		843
7X-0579	132		721		381		844
7X-0595	94		731	7X-2621	166		853
7X-0613	187	7X-2556	549		309		854
7X-1443	683		556		323	7Y-3693	275
7X-2459	572		557	7X-2622	659	7Y-3732	549
7X-2475	610		558	7X-2634	114		628
	986		627	7X-3373	257	7Y-3951	225
7X-2489	489	7X-2557	532	7X-4803	499		230
	491		533	7X-7644	1080		291
7X-2533	161		534	7X-7700	152	7Y-3952	225
	381		535	7X-7729	94		230
	654		579		119		291
	942		628		121	7Y-3962	165
7X-2536	189		728		381		209
	744		731		474		210
	745	7X-2558	623		703		230
	955		624		917		275
	964	7X-2559	536		919		282
7X-2537	516		538		1058		288
	663		540	7Y-0059	1		304

▶ **PRIMARY REFERENCE**

PART NUMBER INDEX

Part	Page	Part	Page	Part	Page	Part	Page
	317		958		933	8N-0869	162
	322		959		994	8N-1544	162
	325		960	8C-8400	630	8N-1545	163
7Y-3963	165		961	8C-8422	46	8N-1725	162
	209	7Y-8621	987	8C-8451	186		173
	210		989		233	8P-8540	202
	225	7Y-8622	987	8C-8478	891		203
	230		989	8C-8722	657		204
	298	7Y-8876	348	8C-8723	442		211
	301		391		444		214
7Y-3993	225	7Y-8942	440		446		216
7Y-4154	618	7Y-8990	430	8C-8988	573	8P-9770	857
7Y-4269	651		433		588		858
7Y-4274	673	7Y-9267	782	8C-9179	493		859
7Y-4277	651		784		497		860
7Y-4359	596		786	8C-9182	495		861
7Y-4366	588		788		504		862
7Y-4633	438		826	8C-9660	257		863
7Y-4660	501		828		994		864
7Y-4666	501		830	8C-9987	775		865
7Y-4669	501		831	8D-0482	161		866
7Y-4672	501		833	8F-0212	724		867
7Y-4673	501		834	8F-1434	258		868
7Y-4695	501		836	8F-5900	651		869
7Y-4796	682		838	8F-7219	138		870
7Y-4837	681	7Y-9915	817	8F-9538	709		871
7Y-4843	681		819	8H-0878	994		872
7Y-5009	742			8H-5303	261		873
7Y-5010	702			8H-5306	261		874
	710	**8**		8J-0426	598		875
7Y-5011	702			8J-1699	712		876
	710	8B-3410	89		716		879
7Y-5088	595	8C-0564	573		721		880
7Y-5102	501	8C-0572	933	8J-1751	697		881
7Y-5215	329	8C-0597	615		728		882
	501	8C-3085	734		731		883
7Y-5219	728	8C-3089	116	8J-1752	697		884
	731		257		728	8S-2634	272
7Y-5226	746	8C-3101	689		731	8S-6214	758
7Y-5227	986	8C-3102	689	8J-4351	222	8S-9191	145
7Y-5231	329	8C-3110	646	8J-4376	757	8T-0075	570
7Y-5241	645		648	8J-6815	734		607
7Y-5245	440		666	8J-8343	640	8T-0076	615
7Y-5247	619	8C-3347	673	8K-0968	128	8T-0077	598
7Y-5267	650	8C-3445	74	8L-2777	67	8T-0078	552
7Y-5272	469	8C-3446	74	8L-8413	38		592
	470		598		162	8T-0114	955
7Y-5289	619	8C-3451	595		163		964
7Y-5416	202	8C-5063	301		173	8T-0119	132
	203	8C-5230	80		272		136
	204	8C-5608	186		278		574
7Y-5458	267	8C-5899	752		315	8T-0249	598
7Y-5464	267	8C-5917	163		317	8T-0266	937
7Y-5499	224		173	8M-0505	139	8T-0269	752
7Y-7394	999	8C-6354	163	8M-2772	794		1007
	1000		225		796		1044
7Y-7828	840		275		798	8T-0273	329
	841	8C-6358	177		800		455
7Y-7829	840		178		802	8T-0275	139
7Y-7830	840	8C-6362	55		805	8T-0288	773
7Y-8165	615	8C-6561	559		807	8T-0293	734
7Y-8273	202	8C-6712	74		809	8T-0328	152
	203	8C-6871	96	8M-8489	91		225
	204	8C-6965	749	8M-9315	47		258
7Y-8463	950	8C-7581	225	8N-0788	96		276

► **PRIMARY REFERENCE**

PART NUMBER INDEX

Part	Page
	307
	327
	523
	525
	917
	919
8T-0337	276
	1041
	1049
8T-0348	655
	697
	736
	739
8T-0439	529
	610
8T-0706	633
8T-1158	673
	749
	752
8T-1159	657
8T-1160	233
8T-1482	55
8T-1573	1053
8T-1576	588
	591
8T-1683	588
8T-1687	592
8T-1718	589
	592
8T-1887	123
8T-1888	123
8T-1889	139
8T-1890	139
8T-1905	573
	598
	614
8T-2223	709
8T-2393	610
8T-2501	123
8T-2502	89
8T-2525	570
	607
8T-2920	592
8T-3008	696
8T-3518	177
	178
8T-3519	177
	178
8T-3647	573
	605
	941
8T-3957	667
8T-3998	636
	638
8T-4001	657
	791
8T-4121	54
	66
	94
	105
	107
	119
	123
	128
	130
	131
	132
	148
	152
	166
	174
	184
	199
	200
	202
	203
	204
	207
	208
	209
	211
	214
	216
	219
	225
	233
	237
	254
	272
	283
	288
	291
	293
	295
	307
	309
	313
	315
	318
	323
	327
	339
	340
	348
	359
	361
	367
	378
	381
	384
	388
	391
	474
	477
	513
	516
	549
	552
	554
	555
	573
	579
	581
	585
	592
	599
	605
	610
	615
	619
	628
	630
	633
	663
	682
	728
	731
	794
	796
	798
	800
	802
	805
	807
	809
	917
	919
	933
	942
	944
	954
	955
	964
	967
	994
	1002
	1006
	1017
	1019
	1041
	1044
	1047
	1064
	1066
8T-4122	55
	206
	210
8T-4123	105
	440
	474
	657
	662
	812
	814
	817
	819
	821
	840
	841
	891
8T-4127	327
8T-4131	341
	673
8T-4132	94
	372
	474
	536
	538
	540
	543
	545
	547
	619
	692
	694
	752
8T-4133	94
	119
	148
	202
	203
	204
	207
	208
	209
	211
	214
	216
	233
	313
	339
	340
	348
	359
	361
	378
	381
	391
	474
	619
	628
	680
	742
	749
	794
	796
	798
	800
	802
	805
	807
	809
	933
8T-4136	105
	107
	119
	121
	123
	128
	130
	131
	152
	166
	174
	207
	272
	291
	318
	367
	474
	573
	579
	599
	615
	619
	633
	663
	681
	700
	707

► **PRIMARY REFERENCE**

PART NUMBER INDEX

Part	Page
	917
	919
	933
	942
	954
	955
	964
	967
	994
	1002
	1044
8T-4137	94
	121
	131
	132
	148
	166
	174
	184
	202
	203
	204
	208
	209
	211
	214
	216
	219
	237
	283
	288
	291
	295
	307
	315
	318
	323
	327
	381
	474
	513
	573
	585
	592
	599
	605
	615
	619
	682
	917
	919
	933
	944
	1002
	1017
	1047
	1058
	1064
	1066
8T-4138	123
	184
	381
	615
	682
	950
	951
	952
	953
	1002
	1014
	1047
8T-4139	107
	115
	221
	223
	336
	341
	374
	436
	516
	552
	561
	564
	568
	570
	573
	579
	592
	610
	615
	619
	662
	682
	697
	734
	990
	992
8T-4140	94
	474
	532
	533
	534
	535
	536
	538
	540
	543
	545
	547
	556
	557
	558
	579
	581
	585
	610
	623
	624
	625
	626
	627
	628
	728
	788
	791
	812
	814
	817
	819
	821
	891
8T-4141	105
	812
	814
	817
	819
	821
8T-4149	598
8T-4157	380
8T-4158	380
8T-4167	55
	341
	359
	361
	450
	489
	491
	657
	663
	782
	784
	786
	788
	791
	826
	828
	830
	831
	833
	834
	836
	838
8T-4171	226
	327
	943
	997
8T-4172	66
	728
	731
8T-4173	561
	564
	568
	579
	585
8T-4175	561
	564
	568
	579
	581
	585
8T-4176	552
	573
	615
	1017
8T-4178	630
8T-4179	105
	202
	203
	204
	211
	214
	216
	254
	373
	377
	513
	599
	605
	793
	1016
8T-4182	166
	628
8T-4183	94
	361
	474
	507
	509
	523
	552
	579
	581
	585
	592
	599
	605
	610
	619
	630
	633
	682
	736
	739
	990
	992
	1006
8T-4184	570
	579
	581
	585
	592
	610
	633
	692
	694
	734
8T-4185	131
	166
	174
	549
	703
8T-4186	54
	94
	148
	199
	200
	474
	552
	554
	555
8T-4187	151
	686
8T-4189	123
	157
	166
	573
	599
	994
	1002
8T-4190	206
	210

► **PRIMARY REFERENCE**

PART NUMBER INDEX

Part	Page
	436
	1014
8T-4191	132
	166
	202
	203
	204
	211
	214
	216
	226
	254
	272
	288
	291
	293
	313
	318
	323
	327
	438
	599
	794
	796
	798
	802
	807
	809
	955
	964
	967
	1002
	1041
8T-4192	107
	111
	336
	359
	361
	373
	566
	567
	570
	589
	592
	599
	607
	610
	1044
8T-4193	532
	533
	534
	535
	536
	538
	540
	543
	545
	547
	570
	579
	610
	628
	736
	739
	933
8T-4194	94
	474
	523
	525
	610
	615
	628
	633
	682
	728
	731
	734
8T-4195	94
	117
	119
	132
	166
	174
	233
	254
	272
	313
	327
	474
	477
	516
	552
	574
	581
	599
	610
	615
	682
	692
	694
	697
	724
	1006
	1019
8T-4196	94
	131
	209
	474
	574
	581
	585
	592
	599
	610
	615
	620
8T-4198	570
	605
	615
	620
	640
	703
	728
	731
8T-4199	166
	367
8T-4200	599
	933
	987
	989
8T-4205	146
	158
	224
	257
8T-4222	105
	117
	474
8T-4223	89
	94
	105
	107
	109
	111
	113
	117
	123
	128
	195
	196
	198
	202
	203
	204
	211
	214
	216
	223
	254
	291
	310
	318
	341
	359
	361
	373
	374
	436
	474
	507
	509
	513
	516
	523
	525
	549
	552
	554
	555
	560
	561
	563
	564
	566
	567
	568
	570
	574
	579
	581
	585
	589
	592
	599
	605
	607
	610
	615
	620
	628
	630
	633
	657
	662
	667
	682
	728
	731
	734
	736
	739
	990
	992
	1016
	1017
	1044
8T-4224	146
	158
	166
	189
	233
	254
	272
	340
	378
	381
	384
	388
	516
	574
	599
	663
	682
	724
	941
	955
	964
	976
	987
	989
	990
	992
	994
	1002
	1025
8T-4241	651
8T-4244	117
	123
	195
	196
	198
	254
	381
	549
	561
	564
	568
	579
	599
	657
	1006

► **PRIMARY REFERENCE**

PART NUMBER INDEX

Part	Page	Part	Page	Part	Page	Part	Page
8T-4648	128		207	8T-6703	98		271
	381		226		100		278
	549		288	8T-6757	28		280
	552	8T-4971	146		367		282
	554		1002		483		288
	555	8T-4984	119		488		291
	579	8T-4985	105		800		295
	581	8T-4986	117		802		298
	586	8T-4988	119		807		301
8T-4779	94	8T-4989	119		809		317
	474	8T-5001	570		812		323
	579		579		814		570
8T-4835	89	8T-5005	132		821		775
	479		318	8T-6759	636	8T-8730	162
8T-4896	57		592		638		163
	123		599		653		164
	166		630		654		165
	183		703		681		225
8T-4897	992	8T-5041	682		724		266
8T-4908	123	8T-5092	620		742		274
	254	8T-5360	663		747		275
	272	8T-5379	782		773		278
	378		784		778		280
8T-4910	381		786	8T-6761	682		286
	549		788	8T-6763	681		288
	990	8T-5389	592	8T-6764	794		291
	992	8T-5400	1064		796		298
	1016		1066		798		301
8T-4944	480	8T-5412	552	8T-6765	118		317
8T-4956	105		581	8T-6868	554		323
	107		586		555	8T-8731	295
	109		657		561	8T-8732	295
	113	8T-5413	339		564	8T-8737	14
	123		359		568		161
	254		361		586		162
	336	8T-5429	591		599		163
	341	8T-5436	630		620		164
	373		712		628		165
	523		716		1016		194
	554		721	8T-6869	132		225
	555	8T-5439	105	8T-6870	724		230
	560		474	8T-6876	516		232
	561	8T-5878	450		614		267
	563		451	8T-6895	552		274
	564		452	8T-6974	653		275
	566		513	8T-7087	620		278
	567		657	8T-7338	94		282
	568	8T-6347	697		579		286
	574	8T-6356	619		610		291
	579	8T-6383	507	8T-7520	596		295
	581		509	8T-7547	146		297
	592	8T-6385	536		599		298
	599		538		682		301
	610		728	8T-7910	559		304
	620		731	8T-7930	586		310
	628	8T-6411	226	8T-7964	1053		313
	633	8T-6412	208	8T-7971	682		315
	657	8T-6429	779	8T-8442	667		317
	662	8T-6430	105		679		323
	682		474	8T-8729	161		491
	692	8T-6466	592		162		493
	694	8T-6594	458		163		960
	728	8T-6684	551		164		961
	731		597		165		966
8T-4970	206	8T-6693	523		225		1009

► **PRIMARY REFERENCE**

PART NUMBER INDEX

Part	Page
8T-8748	265
	266
8T-8827	163
8T-8887	573
8T-8894	491
	493
8T-8915	130
8T-8920	89
	478
8T-8986	632
8T-8987	614
8T-9023	592
8T-9044	655
8T-9389	478
8T-9393	55
8T-9405	727
8T-9522	759
	764
	765
	766
8T-9527	506
8T-9597	667
8T-9598	651
8T-9655	132
	187
8T-9757	163
	173
8X-1386	123
8Y-6352	970
8Y-6967	1016
8Y-9603	260
9	
9B-7233	268
9D-0630	128
9D-1058	380
9D-1829	592
9F-2167	536
	538
	540
	543
	545
	547
	578
9F-5599	257
9F-5644	261
9G-0003	163
	173
9G-0004	163
	173
9G-4101	257
	258
9G-4336	163
9G-4343	163
9G-7641	230
	▶268
9G-8140	81
9G-8451	224
9G-8909	163
	173
	272
9H-1024	207
9H-1031	24
9H-3757	257
9H-8260	160
9J-8126	715
	720
9K-7290	46
9L-5854	25
9L-6770	158
9L-7657	73
9L-7712	697
	728
	731
9L-8925	14
9M-0853	74
9M-1974	18
	187
	235
	979
9M-2092	610
9M-2307	394
	396
	397
	398
	400
	402
	404
	414
	418
	420
	423
9M-2904	77
	81
9M-3835	339
	340
	378
	1025
9M-5732	394
	396
	397
	398
	400
	402
	404
	414
	418
	420
	423
9M-6522	152
9M-7609	257
9M-7783	183
9M-7958	148
9M-8406	132
	599
	605
9N-0869	187
9N-1574	700
	707
	734
9N-1575	700
	707
	734
9N-2038	127
9R-7941	224
9R-7980	224
9S-2544	257
9S-4180	521
	640
	711
	715
	720
	736
	739
	746
9S-4181	570
	581
	585
	604
9S-4182	92
	523
	598
	636
	638
	682
	712
	715
	721
	728
	731
	736
	739
9S-4183	98
	581
	585
	711
	715
	720
9S-4185	98
	598
	604
	609
	636
	638
	690
	736
	739
9S-4188	98
	655
9S-4190	98
	692
	694
	705
	712
	715
	720
9S-4191	98
	604
	609
	614
	636
	638
	640
	705
	711
	715
	720
	724
	728
	731
	736
	739
	742
9S-6130	152
	581
	585
	609
	619
9S-8001	700
	703
	705
	707
	711
	776
9S-8002	17
	47
	63
	93
	98
	100
	103
	116
	222
	705
	712
	716
	721
	754
9S-8003	47
	98
	100
	736
	739
9S-8004	32
	47
	65
	74
	100
	138
	697
	702
	707
	710
9S-8005	17
	46
	47
	63
	65
	98
	100
	136
	142
	638
	667
	697
	709
9S-8006	26
	65
	100
	132
	646
	648
	650
9S-8008	100
	711
	715
	720
9S-8009	100

▶ **PRIMARY REFERENCE**

PART NUMBER INDEX

Part	Page
9S-8010	64
	712
	716
	721
9S-8178	151
	686
9S-8752	41
	48
	83
	147
	399
	506
9S-9272	89
9S-9334	74
9T-1614	705
9T-1670	757
9T-3853	727
9T-3928	669
9T-7202	757
9T-9992	759
	764
	765
	766
9U-2331	1013
9U-4431	1013
9U-8263	1044
9U-8693	507
	509
9V-3659	348
	359
	361
	391
9V-5382	513
9W-0335	276
9W-0625	265
9W-0742	161
	▶177
	272
9W-0844	161
	162
	163
	164
	165
	194
	209
	210
	211
	214
	216
	225
	278
	288
	298
	301
	304
	317
	323
	325
9W-0852	161
	162
	163
	164
	165
	211
	214
	216
	224
	225
	278
	286
	288
	295
	298
	301
	304
	317
	323
	325
9W-1951	163
	225
	275
9W-2146	456
9W-7388	55
9X-0196	163
	225
9X-0262	235
9X-1386	248
	491
	493
	744
	745
9X-1813	157
	241
	242
	262
	264
9X-2026	1014
9X-2027	703
9X-2038	13
9X-2041	946
	948
	974
	975
9X-2042	276
	298
	301
	325
	944
	948
	970
	976
9X-2043	944
9X-2044	298
	933
	979
	981
	1044
	1049
9X-2045	944
	970
	1053
9X-2046	944
	1008
9X-2065	233
9X-2205	152
9X-2480	188
	189
	933
9X-2616	1036
	1037
9X-3401	152
	162
	164
	165
	225
	241
	242
	248
	264
	267
	274
	275
	278
	286
	291
	295
	298
	301
	312
	313
	315
	317
	323
	491
	493
	551
	578
	596
	950
	952
	953
	958
	960
	961
	962
	966
9X-3402	162
	163
	164
	165
	225
	230
	275
	278
	286
	291
	295
	298
	301
	310
	312
	313
	315
	317
	322
	323
9X-3463	195
	196
	197
	198
9X-3495	295
9X-3601	501
9X-4184	266
9X-4385	317
9X-4598	826
9X-4599	484
	486
	817
	819
9X-4600	484
	485
	486
	487
	812
	814
	817
	819
	821
	826
	828
	836
	838
9X-4601	826
	828
	830
	831
	833
	834
	836
	838
9X-4813	165
9X-4998	163
9X-6032	667
9X-6165	186
	615
	942
	1014
9X-6395	757
9X-6458	41
	83
	84
	88
	139
	399
9X-6579	592
	605
	615
9X-6580	589
9X-6582	560
	563
	566
	567
9X-6618	493
	495
	497
	504
9X-6654	117
9X-7317	145
9X-7371	44
9X-7430	28
9X-7680	754
9X-7737	155
	264

▶ **PRIMARY REFERENCE**

PART NUMBER INDEX

Part	Page	Part	Page	Part	Page	Part	Page
9X-8081	325		570	012-0380	262		831
9X-8256	123		574	030-0167	763		833
	166		579	030-1706	162		834
	179		581	030-4605	636		836
	184		586		638		838
	188		610	030-7942	139	093-0077	782
	189		620	030-7947	139		784
	202		623	030-7955	84		786
	203		624	030-8188	136		788
	204		625		139	093-0106	826
	206		626	030-8194	84		828
	207		627	031-3185	41		836
	208		628	031-4155	19		838
	211		633	031-4564	89	093-0108	782
	214		643	033-5853	754		784
	216		644	033-6028	667		786
	226		659	033-6033	154		788
	233		728	033-6043	754		826
	276		731	036-9821	257		828
	288		736	036-9823	257		830
	291		739	045-4065	258		831
	298		788	061-7540	79		833
	303		791	061-8639	69		834
	304		891	061-9413	152		836
	306		934	061-9455	18		838
	327		986	067-2551	663	093-0109	782
	381		990	081-6344	613		784
	615		992	085-7356	595		786
	683		1011	086-0507	341		788
	917		1014	087-3591	591	093-0349	341
	919		1019	087-3765	359	093-0373	826
	934	9X-8258	329		361		828
	943		446	087-4411	595		836
	950		454	087-4532	595		838
	951		493	087-4683	263	093-0377	782
	952		504	087-4772	529		784
	953		513	087-4962	613		786
	997		657	087-5087	613		788
	1002	9X-8259	440		▶688	093-0407	151
	1007	9X-8267	139	087-5306	595	093-0408	151
	1044	9X-8399	495	087-5729	618	093-1293	549
	1047		497	087-5765	572	093-1294	549
9X-8257	94	9X-8600	152	087-5777	595		628
	372	9X-8872	40	087-5780	595	093-1323	673
	440	9X-8896	897	087-5838	800	093-1730	507
	474	9X-9896	186		802		509
	507	9Y-1792	91		805	093-2064	318
	509	9Y-5373	84		807		339
	532	9Y-8389	146		809		1002
	533			087-8906	686	093-3093	726
	534			087-8907	686	093-3094	726
	535	**0**		087-8909	686	093-3328	726
	536			090-8865	986	094-1528	507
	538	002-9372	283	091-9035	184		509
	540	003-7764	132	093-0074	826	094-1902	778
	543	005-4273	86		828	094-6452	749
	545	005-4362	136		836	095-0645	756
	547		139		838	095-0673	646
	549	005-8164	711	093-0076	782		648
	556		715		784	095-0680	779
	557		720		786	095-0690	650
	558	006-5707	148		788	095-0728	967
	561	008-2103	700		826	095-0735	225
	564		703		828		955
	568		707		830		964

▶ **PRIMARY REFERENCE**

PART NUMBER INDEX

Part	Page
095-0736	152
095-0742	206
095-0759	523
095-0826	682
095-0827	943
095-0840	613
095-0843	339
	340
	378
	381
	1025
095-0891	329
095-0910	1014
095-0929	679
095-0930	655
095-0933	734
095-0946	651
095-0965	655
	673
095-0968	742
095-1280	491
	493
095-1310	613
095-1314	340
095-1319	378
095-1320	378
095-1386	132
095-1390	86
095-1392	313
095-1519	528
	747
095-1573	654
095-1574	653
	749
095-1576	778
095-1578	655
	726
095-1579	709
	728
	731
	779
095-1582	655
	742
	747
095-1585	696
095-1586	661
	749
	771
	772
	774
	778
095-1587	700
	707
095-1590	749
095-1592	742
095-1597	728
	731
095-1599	697
	734
095-1600	651
095-1601	696
095-1602	696
095-1607	711
	715
	720
095-1608	682
	711
	715
	720
095-1616	697
095-1633	501
	681
095-1657	696
095-1681	521
095-1687	643
	644
095-1698	655
	762
	778
095-1700	696
095-1703	779
095-1704	779
095-1706	728
	731
095-1716	651
095-1728	681
095-1731	493
	497
095-1732	489
	491
095-1733	495
	504
095-1735	682
095-1750	771
	772
095-1751	771
	772
	774
095-1777	596
095-1780	709
	728
	731
095-1785	749
	778
095-1786	700
	707
095-1787	673
	749
095-1793	697
	734
095-1795	673
095-2927	438
095-6636	726
095-6639	680
095-6641	680
095-7424	35
095-7930	682
095-9785	313
096-0015	675
096-0061	237
096-0679	161
096-0854	499
096-1441	507
	509
096-1598	702
	710
096-2320	380
096-2617	956
	957
096-2966	749
096-3021	749
096-3044	728
	731
096-3216	329
096-3772	1044
	1055
096-3780	339
	1025
096-3872	407
	427
	428
096-4035	107
	110
096-4509	747
096-4514	747
096-4755	513
096-4833	225
096-4879	341
096-4882	381
	384
	388
	990
	992
096-4883	513
096-4885	609
	788
096-5400	673
096-5516	673
096-5572	697
096-5863	161
096-5867	666
096-5962	166
	225
	276
096-6166	225
	230
	276
	967
	1041
	1044
	1049
096-8058	669
098-6004	891
099-0001	107
	110
099-0169	609
099-0492	381
099-0724	666
099-0822	747
099-0823	933
099-2374	744
	745
	917
	919
099-3645	1005
099-3990	726
099-4674	415
099-5194	329
	507
	509
099-5845	529
099-7951	779
099-8111	640
099-8112	450
1	
100-3237	123
100-3866	448
100-4265	9
	►147
100-4982	372
	532
	533
	534
	535
100-5072	145
100-5612	1080
100-5805	165
100-6211	711
	715
	720
100-7399	26
101-2154	812
	814
	817
	819
	821
101-2160	446
101-2862	646
	648
	650
101-2867	1053
101-3120	310
101-3125	118
101-7396	591
101-7398	618
101-7399	588
101-7400	588
101-7402	581
	585
	618
101-8468	41
101-9848	356
	358
	380
	394
	400
	404
	418
	423
102-0786	493
	497
102-0811	727
102-0814	770
102-0883	449
102-1157	591
102-2244	491
	493
102-5861	41
102-6046	1080
102-7024	726
102-7964	275
	301
	323
102-7965	275
	280
	301
	323
	325

► **PRIMARY REFERENCE**

PART NUMBER INDEX

Part	Page	Part	Page	Part	Page	Part	Page
102-8801	14	105-3035	648	109-5839	57		▶771
102-8802	57	105-3483	613	109-5840	57	111-9959	702
	152	105-3484	128	109-8040	711		710
	156		527	109-9080	849	111-9997	▶749
	157	105-3487	381	109-9081	849		751
	163	105-6836	380	109-9082	849	111-9998	655
	164	105-6838	380	109-9985	51		752
	224	105-6855	354	110-4821	632	111-9999	749
	230		355	110-5525	651	112-0000	752
	248		357		655	112-0001	749
	262		381	110-6968	659	112-0003	752
	271	105-7328	752	110-7149	507	112-0545	1080
	288	105-7329	752		509	112-2418	9
	297	105-7331	752	110-7183	364		▶52
	310	105-9983	224	111-0336	711	112-2491	▶893
	327	105-9986	224		▶769	112-2492	893
	570	106-0193	224	111-0337	769	112-4629	756
	682	106-0210	267	111-0343	775	112-4630	669
	775	106-1792	122	111-0976	595	112-4717	727
102-8803	163	106-2704	1029	111-2088	9	112-9217	41
	224	106-3544	87		▶51	113-5304	80
	241	106-3969	114	111-4627	1044	113-5950	483
	242	106-3973	114	111-4799	263		485
	263	106-5673	32	111-4815	275		488
	269	106-8715	630	111-4836	161		782
	275	107-0583	41		173		784
	278	107-1430	613		184		786
	280	107-3953	454		202		788
	286	107-5769	147		203		812
	291	107-6550	749		204		814
	317	107-6631	595		211		821
102-8804	162	107-6736	9		214	113-6442	551
	238		▶16		216	113-6518	609
	304	107-7068	702		283	113-6738	613
	491		710		288	113-6758	613
	493		742		291	113-8490	224
	744	107-9403	578		307	113-8491	224
	745	107-9711	440		313		317
102-8805	270	108-1780	1044		317	114-0421	307
	282	108-1781	618		327	114-0550	778
102-8806	162	108-3612	122		917	114-0623	771
	194	108-3819	551		919		772
	232	108-5914	47	111-4837	161		774
102-9089	15	108-6709	794		173	114-0648	688
103-0126	40		796		202	114-0649	688
103-1384	581		798		203		▶689
	585		800		204	114-0760	501
103-2529	165		802		211	114-1322	507
103-4672	147		805		214		509
103-8089	1057		807		216	114-1374	513
	1058		809		272	114-1541	329
	1059	108-6717	798		295	114-2687	84
103-8134	14		800		313		87
103-8236	520		802		317	114-6658	1044
103-8364	495		805		323	115-1624	990
	504		807	111-4838	161		992
104-3173	1002		809		313	115-2670	359
104-6202	310	108-7206	591		323		361
104-6871	317	108-7930	103	111-4839	161	115-5637	757
104-8147	440	109-0076	84		323	115-7087	127
104-8586	52	109-0077	98	111-4874	225	115-8645	595
104-8768	613		100	111-5754	757	115-9864	689
104-8783	551	109-1296	671	111-9916	728	115-9865	689
104-8835	572	109-1657	11		731	116-0118	161
104-8838	588		▶38		742		202

▶ **PRIMARY REFERENCE**

PART NUMBER INDEX

Part	Page
	203
	204
	211
	214
	216
	237
	288
	291
	307
	309
	313
	315
	317
	323
	327
116-0126	163
	165
116-0128	143
	163
	165
116-0255	163
	165
116-3420	630
	▶778
116-3513	497
116-3516	495
	504
116-3518	504
116-3519	504
117-0473	618
117-0775	759
	764
	765
	766
117-5270	736
	739
	▶757
117-5272	757
117-5274	757
117-5716	669
117-6356	967
117-8683	958
	959
	960
	961
117-8801	17
	41
118-0911	574
118-3122	667
118-4977	572
	992
118-5068	83
118-5085	636
	638
118-5086	636
	638
118-5087	636
	638
118-6119	802
119-0036	15
119-2265	736
	739
119-2379	613
119-3662	162
	163
	164
	165
	211
	214
	216
	225
	241
	275
	286
	317
	322
	323
119-5026	230
	1029
119-5362	690
	742
119-5364	690
	742
119-5365	690
	742
119-8338	976
	979
120-4394	529
	756
120-4779	275
120-5114	148
120-5737	206
120-5738	206
120-9027	199
	200
	263
120-9847	9
	▶18
121-0987	303
121-1022	225
	291
121-1038	143
	165
121-1039	143
	165
121-1168	230
	275
	323
121-1173	230
	275
	323
	325
121-1491	724
	742
	▶772
	773
	776
121-1865	955
121-1891	657
121-7098	1002
121-7136	937
	939
	1002
121-7137	1002
121-7138	937
	939
	1002
122-0447	28
122-1472	14
122-3772	102
122-4021	148
122-4120	388
122-7375	28
122-7774	697
122-8612	28
122-8705	513
122-9608	967
122-9609	967
122-9610	967
122-9657	1002
123-0791	66
123-2003	523
	525
123-2139	651
123-2431	572
123-2514	613
	▶747
123-2515	613
	▶726
123-3202	14
123-4750	572
123-5362	359
	361
123-5364	359
	361
123-5574	359
	361
	782
	784
	786
	788
123-5592	800
	805
124-0988	595
124-1854	32
124-1855	32
124-2456	1080
124-3548	224
124-4009	956
	957
124-4010	956
	957
124-5815	174
	▶178
124-9108	161
125-0434	98
	100
125-1302	224
	▶262
125-4838	275
125-4841	275
	301
	323
125-5032	118
125-6535	258
125-6536	258
125-6537	258
125-7874	163
	164
	165
	275
	278
	286
	288
	291
	295
	298
	301
	315
	317
	322
125-7875	162
	163
	164
	165
	211
	214
	216
	225
	265
	266
	274
	275
	278
	288
	295
	301
	304
	310
	317
	323
	325
126-0081	9
	▶116
126-1756	41
126-1757	62
126-1767	242
	248
	267
	286
	551
	578
	596
	950
	952
	953
	958
	960
	961
	962
	965
	966
126-1768	162
	163
	230
	310
126-1774	295
126-4935	98
	100
126-6367	361
126-6872	572
126-7631	9
	▶183
126-8449	183
126-9992	747
127-0929	116
127-5250	1024
127-5485	163
127-5486	162
127-6680	657

▶ **PRIMARY REFERENCE**

PART NUMBER INDEX

Part	Page	Part	Page	Part	Page	Part	Page
127-7678	343	132-9770	235		434		627
	344	133-3234	934		657		791
127-7960	428		1049		1006	138-5709	543
127-9485	646		1053		1025		545
	648	133-3359	122	135-8576	370		547
128-2135	240	133-5514	1057	135-8577	370		556
	946		1058		374		557
	948		1059		378		558
	970	133-7023	66		380		609
	1016	133-7442	165		384		627
	1044	133-9906	13		388		791
128-2173	955	133-9907	▶13		430	138-6780	770
128-2661	41		506		1025	138-6781	770
128-7514	578	134-3196	130	135-8578	384	138-8454	1051
128-7875	298	134-6838	604		388	139-1398	148
128-8981	669	134-6852	136		430	139-3550	98
128-9170	507	134-7113	613		433		100
	509	134-7114	613	135-8965	283	139-6039	970
128-9261	493	134-7115	613	135-8966	1028		1044
	497	134-7258	1080	135-9991	480	139-6873	136
128-9262	495	134-7489	754	136-0155	885		▶155
	504	135-2274	964		886	139-7100	974
128-9265	501	135-3924	657		888		▶976
129-3181	588	135-3980	560		889	139-7127	1053
129-5167	933		561	136-0207	595	139-8873	55
129-5427	62		563	136-1107	103	139-8877	474
129-5428	62		564	136-2443	438	139-8878	94
129-5429	130		566	136-2444	438	140-0736	595
129-5904	613		567	136-2445	438		▶742
129-7813	682		568	136-4055	224	140-0741	742
129-7815	523	135-8572	151	136-4182	94	140-0742	742
129-8034	523		152		474	141-1060	130
	525		376	137-3055	796	141-1310	595
129-8053	▶469		380		798	141-2759	224
	523		388	137-3623	521	141-3636	800
129-8055	523		434	137-3624	521		802
129-8056	523	135-8573	112	137-3625	521		807
130-0270	1002		148	137-3626	469		809
130-4317	800		338		470	141-3672	800
	805		343		521		802
	809		344	137-3628	469		805
130-4698	41		348		470		807
130-4701	41		350		521		809
130-5300	941		374	137-3630	469	141-3678	794
131-3983	233		376	137-3631	469		796
131-4770	114		378		470		798
131-5894	747		380	137-3632	469	141-5497	640
132-0999	893		384	137-3639	773	141-5498	640
	894		388	137-3713	653	141-6518	990
	895		391		▶773		992
132-1008	893		430	137-3716	654	142-0844	705
	894		434	137-3749	35	142-1356	744
132-1806	161		1025	137-6606	1080		745
132-1829	▶156	135-8574	384	137-6645	249	142-2329	26
	275		388	138-5095	595	142-5546	967
132-1854	307	135-8575	351	138-5471	396	142-5867	70
132-5789	166		352		414	142-8545	207
	276		370	138-5506	408	143-4156	581
	283		378	138-5708	543		585
	288		380		545	143-4160	536
	295		384		547		538
	310		388		556		540
	313		425		557		628
	315		430		558	143-9393	98
132-7168	114		433		609		100

▶ **PRIMARY REFERENCE**

PART NUMBER INDEX

Part	Page
143-9397	1014
143-9536	1080
144-0195	1047
	1064
	1066
144-0367	105
	618
144-1636	57
	951
	1009
144-7087	▶699
	715
	720
144-7088	703
144-7092	703
144-7093	703
144-7113	711
	715
	720
	▶758
145-2970	335
145-3014	332
	▶335
145-3084	224
145-3169	669
145-3171	669
145-3697	1057
	1058
	1059
145-3849	98
	100
145-5181	89
145-8495	618
145-8503	91
145-8747	715
	720
146-0182	711
146-1335	341
146-1336	341
146-1346	341
146-1461	536
	538
	540
146-1463	536
	538
	540
146-3493	756
146-3728	253
146-4936	356
	376
	393
146-4952	380
146-6747	272
	1080
146-9290	527
147-0323	98
	100
147-2001	440
147-2286	703
147-3942	796
147-3957	826
	828
	836
	838
147-4960	1028
147-5737	497
147-5738	493
	497
147-5771	493
	497
147-5776	493
	497
147-6603	767
	768
	769
147-6604	767
	768
	769
147-6605	767
	768
	769
147-6982	55
147-6983	55
147-7142	117
148-0767	711
	715
	720
148-2350	253
148-3111	442
	444
	446
148-4575	329
148-4579	329
148-4580	329
148-4582	329
148-4585	329
148-4598	▶507
	512
148-4600	507
	509
148-4601	507
	509
148-4602	507
	509
148-4603	507
	509
148-4604	507
	509
148-4607	507
	509
148-4608	507
	509
148-4609	507
	509
148-4611	507
	509
148-4616	329
148-4617	329
148-4626	▶509
	511
148-4627	334
	▶513
148-4685	366
148-4787	618
148-4933	613
148-4934	613
148-4935	613
148-4939	613
148-4944	613
148-4964	609
148-4977	374
148-7925	572
148-8315	591
148-8317	596
148-8318	596
	604
	628
148-8321	572
148-8323	597
148-8327	551
148-8335	597
	618
148-8336	551
	588
	597
	604
	613
	628
	632
148-8338	570
	607
148-8340	591
	597
	613
	618
148-8345	588
	591
	613
148-8347	551
	591
	597
	630
148-8352	619
148-8353	573
	588
	597
148-8354	597
148-8355	570
	597
148-8357	604
	619
148-8359	619
148-8360	591
148-8361	613
148-8362	551
	597
148-8363	573
148-8364	597
	604
	614
	619
148-8365	516
	614
148-8367	551
	573
	614
148-8370	614
148-8371	573
	588
148-8372	516
	591
	614
148-8374	588
	597
148-8378	551
	573
	597
	604
	614
148-8381	591
148-8383	588
148-8388	588
	591
148-8391	614
148-8392	591
148-8395	98
	638
	697
	709
148-8405	711
	715
	720
148-8407	98
	604
	609
	614
	636
	638
	640
	705
	711
	715
	720
	724
	728
	731
	736
	739
148-8408	98
	581
	585
	711
	715
	720
148-8409	711
	715
	720
148-8410	98
	705
	711
	715
	720
148-8411	98
	598
	604
	609
	636
	638
	736
	739
148-8412	604
	614
148-8415	560
	563
	566
	567
	570
	607
	614
148-8417	588

▶ **PRIMARY REFERENCE**

PART NUMBER INDEX

Part	Page
148-8418	516
148-8419	559
	560
	563
	566
	567
148-8422	619
148-8427	552
148-8429	619
148-8431	604
148-8433	552
	598
	604
148-8434	598
148-8435	573
	588
	598
148-8436	614
148-8439	598
	632
148-8443	572
148-8444	132
	614
148-8449	589
149-5050	224
	288
	291
	327
149-5051	225
	288
	291
149-5069	225
	288
	291
149-5070	225
	288
	291
149-5071	225
149-5268	37
149-5452	552
149-6558	760
149-6661	809
149-6812	630
149-7378	20
	21
149-7738	132
149-9110	41
150-2557	20
150-3035	589
	592
150-3036	573
	598
	614
150-3071	592
150-3072	132
	619
150-3073	609
150-3135	▶20
	22
150-3136	21
150-4027	595
150-4036	574
150-4037	607
	614
150-4049	598
150-6256	276
150-7033	1
	▶201
150-8896	886
151-0465	802
	807
151-0474	359
	361
151-0525	796
151-0653	782
	784
	786
	788
	826
	828
	830
	831
	833
	834
	836
	838
151-0749	794
151-1975	105
151-2898	66
151-2900	66
151-5925	61
151-5966	41
151-6282	970
151-6641	121
151-6646	▶479
	663
151-6662	12
	▶86
151-6777	974
	975
151-6790	1057
	1058
	1059
151-9360	224
151-9497	976
	979
152-0191	891
152-3411	561
	564
	568
152-5550	758
152-9191	761
152-9254	596
152-9372	613
152-9521	618
152-9522	618
152-9560	148
153-1256	103
153-1731	840
153-2447	161
	291
153-2451	161
153-2475	161
153-2521	▶195
	201
	202
	203
	204
153-2523	▶196
	201
153-2540	230
153-2541	230
153-2602	275
153-2620	286
	323
153-2630	286
153-2631	275
153-5134	697
153-5135	697
153-5139	697
153-5187	742
153-5264	697
153-5265	697
153-5278	697
153-5710	161
	173
153-6236	632
153-6244	592
153-6249	573
153-6259	632
153-7024	30
153-8587	536
	538
	540
153-8623	734
153-8723	955
154-4133	253
154-9023	92
	93
155-0696	187
155-0698	187
155-0809	25
155-2251	636
	638
155-2255	295
	310
155-2260	162
	164
	165
	225
	278
	280
	286
	291
	298
	313
	317
155-2265	310
155-2270	162
	164
	165
	209
	210
	211
	214
	216
	225
	230
	238
	276
	280
	286
	288
	291
	307
	310
	312
	327
155-2271	162
	274
	304
	315
	317
	323
155-2274	282
	323
155-2793	25
155-3624	92
	598
	636
	638
	682
	712
	715
	720
	728
	731
	736
	739
155-4038	527
155-4039	527
155-4041	527
155-4847	▶759
	760
	761
155-6654	675
155-9087	489
155-9092	489
155-9093	489
	491
155-9094	489
	491
155-9095	489
	491
155-9096	489
	491
155-9097	489
	491
155-9098	489
	491
155-9099	489
	491
155-9100	489
	491
155-9103	489
	491
155-9112	676
155-9115	676
155-9116	676
155-9117	676
155-9118	676
155-9119	676
155-9125	667
155-9131	667
155-9134	667
155-9135	667
	▶676
155-9136	676
155-9137	676
155-9139	466

▶ **PRIMARY REFERENCE**

PART NUMBER INDEX

Part	Page	Part	Page	Part	Page	Part	Page
155-9141	466	158-8262	692		745	164-3417	152
155-9142	466	158-8263	692	161-1309	462	164-4180	570
155-9143	466		694	161-3115	161		581
155-9149	676	158-8267	734	161-3116	161		585
155-9157	495	158-8936	666	161-3117	161		604
	504	158-8937	666	161-3128	224	164-5546	572
155-9196	345	158-8938	666	161-3639	976		595
	▶499	158-8939	666		979	164-5567	136
155-9197	499	158-8940	666	161-3650	976		139
	▶501	158-8964	651		979		573
155-9198	333	158-8965	651	161-3663	976		598
	▶645	158-8966	651		979	164-5572	598
155-9200	632	158-8967	651	161-3665	976	164-5574	516
	▶779	158-8968	651		979	164-5589	615
155-9222	662	158-8969	651	161-3697	933	164-5590	598
	▶665	158-8970	651	161-3699	976	164-5598	598
155-9224	665	158-8971	651		979	164-5605	615
	▶666	158-8973	651	161-3718	1002	164-5606	552
155-9235	▶680	158-8976	651	161-6879	462		592
	682	158-8978	651		464	164-5608	592
155-9236	680	158-8979	651	161-6880	462	164-5615	632
155-9524	48	158-8981	651		464	164-5616	581
156-0619	681	158-8982	651	161-6958	127		585
156-2525	132	158-9009	651	161-6963	127		609
156-2829	▶253	158-9103	▶467	161-6987	1014		619
	636		669	161-7204	703	164-5619	132
	638	158-9104	▶468	161-7419	187	164-5628	595
	640		669	161-7611	651	164-5639	595
156-6471	976	158-9105	669	162-0177	697	164-6858	619
	979		▶770		707	164-6874	595
156-6512	964	159-1533	41	162-0349	1028	164-6944	669
156-6598	976	159-6159	9	162-2266	75	164-8166	677
	979		▶19	162-6208	114	164-8474	970
156-6599	933	159-7784	523	162-6356	94		1016
156-6600	976	159-8036	885	162-6357	94	164-8908	598
	979		886		474	164-9639	572
156-6642	1001	159-8049	162	163-2478	30	165-2827	60
156-6643	972		163	163-6082	329	165-3010	376
156-6645	976		173	163-6083	329		381
	979		272	163-6637	164		393
157-0670	92	159-8050	163	163-6659	276	165-3350	632
	93		173	163-6699	276	165-3930	46
157-1019	855		272	163-6704	224	165-3932	46
	856	159-8524	41	163-6711	298	165-3936	46
	877	159-9322	162		301	165-4931	598
	878		295	163-6759	286	165-4962	▶143
157-1027	855	160-0964	585	163-6790	276		148
	856		▶744	163-6795	208	165-5623	736
	877	160-3771	775		298		739
	878	160-5945	105		301	165-5970	161
157-4822	161	160-6894	9	163-6803	276		▶269
	173		▶84		280	165-6170	83
158-1113	640	160-7271	19		325	165-6365	572
158-3416	41	160-7452	▶21	163-9361	77	165-9290	501
158-3504	636		22	164-0514	976	165-9294	493
	638	160-7690	295		979		497
158-3852	782	160-8184	44	164-0515	976	165-9295	489
	784	160-8758	673		979		491
	786	160-9185	744	164-0519	976	165-9296	495
	788		745		979		504
158-3960	840	160-9186	744	164-0528	933	165-9354	679
158-4007	798		745		▶1001	165-9357	679
158-6564	640	160-9187	744	164-0646	240	165-9358	▶677
158-7864	1074		745	164-0655	970		679
158-8261	694	160-9999	744	164-0664	1001	165-9359	677

▶ **PRIMARY REFERENCE**

PART NUMBER INDEX

Part	Page
165-9360	677
165-9361	677
165-9362	677
165-9363	677
165-9367	529
	770
165-9395	467
165-9396	467
165-9397	467
165-9398	467
165-9399	467
165-9400	467
165-9402	468
165-9469	697
165-9471	697
165-9478	697
165-9513	746
165-9514	746
165-9579	585
	▶760
165-9614	581
	▶761
166-2904	28
166-6358	66
166-6693	222
166-9144	48
167-3441	▶197
	206
	207
	208
167-3487	276
	280
	325
167-3542	280
	325
	997
	1034
167-3543	280
	997
	1034
167-3587	▶198
	202
	203
	204
167-3593	161
	224
	275
167-4062	1055
167-4063	1055
167-4064	1049
167-4067	1059
167-4076	1055
167-4084	1053
167-4130	1055
167-4131	1055
167-4142	1057
	1058
	1059
167-4179	1055
167-4180	1055
167-4181	1055
167-4183	1049
167-7039	976
	979
167-7042	1044
167-8081	24
167-8130	34
167-8987	317
167-9842	439
	▶448
168-0300	142
168-0765	762
168-1968	572
168-3378	678
168-3379	678
168-3382	678
168-3385	678
168-5102	758
168-5103	758
168-5191	758
168-6740	458
168-6741	458
168-6742	458
168-6744	438
168-6745	438
168-6747	450
168-7319	650
168-7940	675
168-7941	675
168-7942	675
168-7944	675
168-8672	888
168-8974	139
168-9352	551
168-9688	595
168-9700	613
169-0417	233
	▶241
169-0418	241
169-0762	885
	886
	888
	889
	▶891
169-0766	891
169-0768	891
169-0774	891
169-0775	891
169-0776	▶503
	891
169-0777	891
169-0778	891
169-3530	1079
169-3923	503
170-2414	758
170-2415	758
170-2512	161
	▶270
170-2942	370
170-2943	370
170-2946	370
170-2947	370
170-2948	370
170-2949	370
170-2977	343
	344
170-2999	436
170-3026	132
170-3562	9
	▶88
170-4763	504
170-6888	224
170-6890	225
170-6891	225
	291
	317
170-6977	161
170-6993	195
	196
170-8555	543
	545
	547
170-9295	208
170-9324	230
170-9328	161
170-9417	195
	196
	198
170-9418	195
	196
	198
170-9479	164
170-9480	164
170-9498	967
170-9499	967
170-9817	756
170-9820	727
170-9822	727
170-9851	493
	497
170-9852	489
	491
170-9853	495
	504
170-9864	501
170-9900	669
170-9901	679
170-9903	529
170-9906	727
170-9918	662
	▶667
170-9985	651
170-9986	651
170-9996	651
171-0028	604
	607
	▶774
171-0049	604
171-0113	604
	▶661
171-0596	551
	578
	596
171-2210	224
171-2212	224
171-2584	189
171-3370	105
171-3396	1025
171-3684	775
171-3685	700
	703
	707
	736
	739
	▶775
	777
171-5349	248
171-5713	455
171-5714	449
171-5811	455
171-5825	449
171-6728	598
171-7085	744
	745
171-7325	926
	927
	948
	970
171-7426	933
171-8706	329
171-8707	329
171-8963	9
	▶246
171-8991	94
	474
171-8995	94
	474
171-9002	474
171-9003	105
	474
171-9004	105
171-9005	474
171-9016	105
171-9017	119
171-9018	119
171-9049	123
171-9057	55
171-9075	131
171-9079	131
171-9413	507
	509
172-1482	241
172-1483	241
172-1681	1053
172-2848	495
	504
172-2871	440
172-2957	781
	▶794
172-2958	780
	▶796
172-2959	780
	▶798
172-2997	489
	491
172-3024	782
	784
	786
	788
	830
	831
	833
	834
172-3051	782
	784
	786
	788
172-3052	782
	784
	786

▶ **PRIMARY REFERENCE**

PART NUMBER INDEX

Part	Page
	788
172-3088	440
172-3918	489
	491
172-4432	724
172-4621	632
172-8827	84
173-3363	501
173-3366	495
	504
173-3414	495
	504
173-3429	591
	▶690
173-3430	690
173-3503	▶470
	525
173-3505	470
173-3506	470
173-3507	523
	525
173-3510	523
	525
173-3513	521
173-3515	521
173-3516	521
173-3517	521
173-3518	523
173-3529	521
173-3993	700
	703
	705
	707
173-4012	640
173-4793	554
	555
173-4929	618
173-4939	618
173-4946	632
173-4947	632
173-4955	609
173-4974	609
173-4991	618
173-5046	578
173-5110	578
173-5120	632
173-5130	591
173-5135	591
173-5150	632
173-8057	538
173-8059	538
173-8065	536
	538
173-8067	536
	538
	540
173-8069	536
	538
	540
173-8094	341
173-8095	341
173-8096	341
173-8097	341
173-8099	341
173-8102	341
173-8103	341
173-8104	341
173-8106	341
173-8113	657
173-8114	657
173-8119	657
173-8122	657
173-8127	657
173-8130	657
173-8137	628
173-8139	628
173-8141	628
173-9958	885
	888
	▶890
173-9971	890
174-0222	459
	460
174-0503	286
	317
174-3016	164
	276
	278
	286
	317
174-7791	195
	196
174-8353	440
	446
174-8354	359
	361
175-0673	434
175-0675	430
175-0681	430
175-0689	1025
175-0691	1025
175-0733	433
175-0745	430
175-0749	433
175-0751	430
175-0754	430
175-0786	380
	▶406
175-0788	406
175-0789	406
175-0790	406
175-0803	430
175-0808	409
175-0843	409
175-0874	408
175-0902	434
175-0961	408
	409
175-0962	408
175-0964	1025
175-0966	1025
175-0968	1025
175-0970	1025
175-0995	381
175-1001	413
175-1005	388
	412
175-1013	426
175-1024	381
175-1198	1055
175-1199	1055
175-1366	19
175-1367	19
175-1814	585
	▶745
175-3721	44
175-3796	744
175-3797	744
	745
175-3800	745
175-7900	456
176-0433	148
176-0436	148
176-1363	▶73
	74
176-1902	1002
176-1913	298
176-1931	1047
176-1937	933
176-1938	933
176-1939	933
176-1941	1001
176-1964	975
	▶979
176-1995	1047
176-1996	981
176-2143	794
	796
	798
176-2146	446
176-2149	448
176-2150	448
176-2157	448
176-2158	448
176-2159	448
176-2162	448
176-2163	448
176-2164	448
176-2165	448
176-2166	448
176-2220	▶800
	824
176-2221	▶802
	824
	825
176-2301	800
176-2302	800
	805
176-2303	800
	805
176-2304	800
176-2306	798
176-2543	260
176-4347	659
176-4414	595
176-4508	581
	585
176-4511	585
176-4512	581
	585
176-4714	613
176-4715	613
176-4719	613
176-5332	456
176-5334	456
176-6417	933
176-6418	933
176-6420	933
176-7524	446
176-9299	164
	275
	278
	286
	317
177-0359	669
177-1403	636
	638
177-1405	636
	638
177-2547	651
177-2549	653
	654
	▶762
177-2550	651
177-2553	521
177-2619	469
	470
177-5025	559
177-5575	378
177-5582	354
177-5583	354
177-5587	354
	355
177-5598	384
	388
177-5632	340
177-5637	348
	391
177-5654	347
	353
	387
177-5655	347
	353
	387
177-5664	393
177-5674	378
177-5701	380
177-5716	417
177-5734	426
177-5854	388
177-5857	388
177-5892	388
177-5894	388
	▶407
177-5895	407
177-5896	407
177-5898	407
177-7747	727
177-8588	563
177-9953	▶158
	160
178-2334	238
178-2335	238
178-2345	237
	▶238
178-5431	1047
178-5659	1036
	1037
178-7291	456
178-7292	456

▶ PRIMARY REFERENCE

PART NUMBER INDEX

Part	Page	Part	Page	Part	Page	Part	Page
178-7540	456	185-0268	646		269	190-5386	1080
179-4584	549	185-0270	646		270	190-6064	609
179-4587	628	185-0271	646		744	190-6919	384
179-4592	549	185-0276	650		745		388
179-4595	549	185-0277	650	186-3736	194		430
179-5107	578	185-0278	650		238		433
179-5212	536	185-0280	650	186-3792	240	190-6993	434
	538	185-0287	678	186-5479	▶457	190-6996	434
	540	185-0289	678		459	190-7001	380
179-5857	758	185-0292	678	187-1679	152	190-7006	418
179-9806	521	185-0295	650	187-5420	50	190-7014	378
180-1714	1055	185-0296	650	187-5870	618	190-7017	378
180-1718	206	185-0297	650	187-6754	609	190-7018	378
	1044	185-0299	667	187-8001	669	190-7674	673
180-3861	195	185-0303	667	187-8194	44	190-8601	734
	196	185-0305	667	187-8202	44	190-8602	734
	198	185-0325	651	187-8229	44	190-8970	132
180-9339	14	185-0336	▶520	187-8230	44	191-1782	132
180-9417	933		595	187-8979	41	191-1783	132
180-9418	933	185-0337	520	187-8980	41	191-2508	329
183-1000	225	185-0373	692	187-8981	23	191-2511	507
183-2823	146		694	187-9862	561		509
183-2824	136	185-0391	692		564	191-2513	507
	▶146		694		568		509
183-3407	32	185-2271	592		628	191-2514	507
	47	185-2638	158	188-0210	57		509
	65	185-2639	158	188-1035	595	191-2524	507
	74	185-2643	158	188-2103	329		509
	100	185-2644	158	188-2199	491	191-2525	507
183-7262	712	185-2645	158		493		509
	716	185-2647	158	188-3365	640	191-2752	990
	721	185-2648	158	188-4142	▶521		992
183-7263	98	185-2650	158		523	191-2753	990
	705	185-2651	158		525		992
	712	185-2653	158	188-4143	521	191-2757	1049
	716	185-2654	158	188-4192	489	191-2758	1049
	721	185-2655	158	188-4216	501	191-2764	1044
183-8068	763	185-2658	158	188-4217	501	191-2768	1044
184-5719	359	185-5065	454	188-4218	501	191-5591	679
	361		▶456	188-4224	501	191-5592	679
184-5720	359	185-5093	456	188-5095	128	191-5593	▶529
	361	185-8280	1001	188-6280	646		669
184-5788	794	185-8281	1001		650	191-5595	529
184-5789	794	185-8284	946		667	191-5596	▶480
184-7621	929	185-8286	263	188-9644	933		669
	930		926	189-2054	1051	191-5597	480
	932		927	189-2690	976	191-5619	501
	▶1031	185-8293	1002		979	191-5654	655
184-8258	356	185-8300	922	189-2768	929	191-5655	655
184-8347	132		924		▶974	191-5656	655
184-9085	350		963	189-2793	930	191-5657	655
185-0242	646		995		932	191-5658	655
	648	185-8302	922		▶975	191-5659	655
185-0248	646		924	189-2796	975	191-5662	655
	648	185-9208	230	189-4717	646	191-5663	655
185-0250	675	186-2001	30		648	191-5664	655
185-0253	675	186-3735	148	189-4918	23	191-5665	655
185-0263	646		156	189-5746	246	191-5666	655
	648		157		▶248	191-5667	655
185-0265	646		194	189-9763	752	191-5668	655
185-0266	646		224	190-0009	11	191-5669	655
	648		238		▶53	191-5670	655
	▶675		262	190-2470	83	191-5671	655
185-0267	646		263	190-2472	9	191-5672	655
	648		265		▶83	191-5673	655

▶ **PRIMARY REFERENCE**

PART NUMBER INDEX

Part	Page
191-5675	655
191-5676	655
191-5677	655
191-5678	655
191-5704	504
191-6243	990
	992
191-7583	667
191-7584	466
191-7805	139
191-8303	249
191-9253	241
192-4151	69
192-6815	618
192-7470	650
192-7512	1051
193-1598	128
193-1664	748
193-1665	736
	739
	▶748
193-2153	986
193-3476	161
193-6662	561
	564
	568
193-7404	139
	▶142
193-9409	425
193-9414	425
193-9421	370
193-9623	388
194-0248	618
194-0715	990
	992
194-0944	636
194-0945	638
194-0946	▶636
	711
	715
	720
194-0947	▶638
	711
	715
	720
194-1155	449
194-1156	449
194-1162	449
194-2903	574
194-3259	984
	▶986
194-7097	9
	▶39
194-7631	1002
194-8258	655
194-8402	779
194-9473	667
195-0090	613
195-0313	39
195-0319	103
195-0980	109
195-3218	1064
195-5151	914
195-5476	817
	819
195-5481	817
	819
195-5484	817
	819
195-5580	812
	814
	821
195-9154	859
	860
	861
	862
	863
	864
	865
	867
	868
	869
	879
	880
	881
	882
195-9155	859
	860
	861
	862
	863
	864
	865
	867
	868
	869
	879
	880
	881
	882
195-9156	859
	860
	861
	862
	863
	864
	865
	867
	868
	869
	879
	880
	881
	882
196-0590	596
196-1666	963
	995
196-5069	69
196-5070	69
196-6102	655
196-6103	655
196-8085	107
196-8088	107
196-8089	107
196-8090	107
196-8102	105
196-8104	105
196-8137	477
196-8173	663
197-0226	673
197-2172	345
	▶657
197-2173	▶341
	345
197-2329	540
197-2338	540
197-2356	536
197-2375	536
197-2471	648
197-2472	648
197-2474	648
197-4385	327
197-4971	41
197-7415	9
	▶222
197-8006	98
	100
197-8940	588
	591
198-1508	9
	▶91
198-1659	207
	208
198-1754	1049
198-3899	1042
	1043
198-5510	457
198-5529	493
	817
	819
198-5639	809
198-5642	809
198-5647	817
	819
198-5663	807
198-5664	807
198-6223	207
198-7070	161
	173
199-0071	▶350
	473
199-1996	609
199-3680	990
	992
199-4492	▶364
	365
199-4496	507
	509
199-4500	367
199-4501	335
	367
199-4502	367
199-4533	329
199-4545	329
199-4546	329
199-4554	367
199-4555	367
199-4609	329
199-4611	329
199-4650	329
199-4663	329
199-4665	329
199-4666	329
199-4669	329
199-4670	329
199-4671	329
199-4672	507
	509
199-4674	509
199-4677	513
199-4678	507
199-4680	507
199-4681	509
199-4688	329
199-4689	329
199-4690	329
199-7891	158
199-8436	158
	9
	▶222
	98
	100
200-0655	▶74
	79
200-2279	66
200-3252	642
	▶646
200-3257	646
	648
200-3270	671
	▶751
200-3271	673
200-3272	673
200-3273	673
200-3274	673
200-3275	673
200-3276	673
200-3277	673
200-3278	673
200-3279	673
200-3280	673
200-3281	673
200-3282	673
200-3283	673
200-3284	673
200-3285	673
200-3286	673
200-3287	673
200-3288	673
200-3289	673
200-3290	673
200-3291	673
200-3292	673
200-3296	673
200-3297	673
200-3298	673
200-3299	752
200-3300	752
200-3301	752
200-3302	752
200-3391	655
200-4246	79
200-5363	754
200-7126	691
200-7127	▶691
	705
201-1704	335
201-2771	359
	361
	782

2

▶ PRIMARY REFERENCE

PART NUMBER INDEX

Part	Page
	784
	786
	788
	826
	828
	830
	831
	833
	834
	836
	838
201-2978	802
201-2979	802
201-2980	802
201-2981	802
201-2985	802
201-2986	802
201-3785	474
201-3825	▶89
201-3826	89
201-4391	976
	979
201-4534	990
	992
201-4535	990
	992
201-9299	521
201-9381	618
	▶692
201-9382	618
	▶694
201-9383	692
	694
201-9384	692
	694
201-9385	692
201-9386	694
202-2918	807
202-2928	▶1079
202-3572	91
202-3773	682
202-4048	682
202-7024	549
202-7028	549
202-7153	536
	538
	540
202-9002	570
202-9762	596
203-3022	734
203-3831	103
203-5105	132
203-5161	356
203-5162	356
203-5209	346
203-7450	▶805
	823
203-8609	648
204-0920	105
204-1611	105
	161
	288
	291
	313
	315
	317
204-1673	173
	272
204-1771	161
204-1807	139
204-2730	751
	▶752
204-2733	752
204-2762	521
204-2763	470
204-2799	648
204-2855	752
204-2856	671
204-6101	1049
204-8105	581
204-8271	596
204-8295	682
204-8298	618
204-8334	618
204-8350	596
204-8353	591
204-8355	591
204-8480	596
204-8481	596
204-8482	596
204-8485	596
204-8487	596
204-8488	632
204-9316	▶40
	41
205-6295	933
205-6716	123
205-6833	130
206-9285	673
206-9286	673
206-9287	673
206-9289	752
206-9290	673
	752
206-9292	673
	752
206-9293	752
206-9294	752
206-9295	752
206-9297	673
206-9298	752
206-9299	752
206-9300	752
206-9301	752
207-0159	985
	▶987
207-0161	987
207-0164	987
	989
207-0167	987
	989
207-0170	987
	989
207-0173	987
	989
207-0449	11
	▶41
207-4919	440
207-5546	560
207-6206	591
207-6290	591
207-6403	682
207-6404	682
207-6418	596
207-6467	609
207-6518	659
207-7899	98
208-1888	805
208-1889	805
208-2044	794
	796
	798
208-4148	430
208-4149	388
	430
208-4150	388
	430
208-4151	388
	430
208-4152	388
	430
208-4153	388
	430
208-4154	388
	430
209-1317	272
209-3569	19
209-5875	673
209-5895	645
	▶655
209-5908	655
209-5937	667
	▶754
209-5939	754
209-5940	754
209-5941	754
209-5942	754
209-5943	754
209-5979	666
209-5980	666
209-5981	666
209-5982	▶466
	667
209-5983	667
209-5984	667
209-5985	667
209-5986	667
209-6004	754
209-6005	754
209-6014	680
209-6026	493
	497
209-6063	650
210-0834	673
210-0835	673
210-7989	104
	▶107
210-7992	107
210-7993	107
210-7994	107
	110
210-7995	107
	110
210-8025	▶104
	105
210-8026	104
	▶109
210-8027	109
	▶110
210-8030	107
	110
210-8078	107
	110
210-8081	477
210-8155	12
	▶117
210-8157	474
	▶477
210-8165	117
210-9246	77
210-9434	673
210-9435	673
210-9966	566
211-3122	30
211-6807	310
212-0907	491
	493
212-2086	34
212-2113	9
	▶34
212-2873	794
	796
	798
212-2874	794
	796
	798
212-5452	618
212-5467	682
212-5473	618
212-5595	618
212-8525	478
212-8526	478
212-8527	478
212-8528	478
212-8529	478
212-8530	478
212-8531	478
212-9580	132
	▶138
213-0677	57
	682
213-0710	994
213-0711	994
213-0772	224
	327
213-3217	61
213-3745	572
213-9100	157
213-9242	754
213-9243	754
213-9244	754
213-9246	754
213-9247	754
213-9248	667
213-9250	667
214-1639	491
	493
214-2484	235
	▶249
214-7566	17

▶ **PRIMARY REFERENCE**

PART NUMBER INDEX

Part	Page	Part	Page	Part	Page	Part	Page
	47	217-8763	491	221-8859	551		▶648
	63		493		578	225-4796	734
	74	217-8946	116		596	225-4804	696
	93	217-9060	92	221-8861	2		697
	100		93		▶192		716
	116	218-1038	618	221-8874	189		721
	222	218-1042	618	221-8883	472		728
	235	218-2656	1064		▶951		731
	243	218-2657	1064	221-8884	471		734
	245		1066		▶955	225-4818	697
214-7567	47	218-7647	388	221-8912	596		711
	100	218-7649	388	221-9784	378		716
214-7568	32	218-7650	388	222-0225	956		721
	47	218-7758	380		957		728
	65		▶408	222-4737	640		731
	74	218-7761	380		711		734
	84		▶409		715	225-4820	734
	100	218-9894	775		720	225-4821	734
	136	219-0305	986		736	225-5714	1002
	139		990		739	225-5753	1
	142	219-1323	503		746		▶1047
	235	219-4458	61	222-8210	89	225-5757	1021
	244	219-6703	▶885	222-8255	8		▶1028
	253	220-1441	11		▶123	225-5759	1
	573		▶61	222-8321	12		▶1002
	598	220-2421	128		▶121	225-5765	▶1016
	663	220-2422	▶128	222-8323	12		1021
214-7915	1080	220-2561	▶985		▶131	225-5782	▶1024
214-8014	▶426	220-3490	9	222-8334	12	225-5783	▶964
	430		▶87		▶115		1024
214-8031	409	220-3493	9	223-0118	1049	225-6287	699
214-8310	380		▶96	223-0533	62		▶700
214-8889	275	220-3496	96	223-2952	▶425	225-8569	87
215-1942	491	220-4079	933		985	226-5561	28
	493	220-4080	976	223-3074	1	227-0367	▶682
215-2913	933		979		▶1006		686
215-4011	682		1049	223-3082	430	227-0374	531
215-9864	495	220-4081	933	223-3083	430		▶686
	504	220-6060	9	223-3084	430	227-0428	618
215-9972	495		▶126	223-3085	430	227-0613	618
	504	220-6372	9	223-4296	1014	227-0620	▶528
215-9995	493		▶122	223-4746	98		682
	497	220-6420	275		100	227-0632	609
215-9999	489	220-8678	138	223-7962	98	227-0633	609
	491	221-1426	122		100	227-0636	609
216-0000	495	221-1428	9	223-8170	915	227-0637	609
	504		▶37	223-9159	61	227-0666	596
216-0009	493	221-2683	148	223-9257	98	227-0684	682
	497	221-2685	148		100	227-1086	986
216-0010	489	221-2687	336	223-9732	11	227-1204	26
	491	221-2688	336		▶23	227-3503	9
216-0011	495	221-2689	336	223-9818	1080		▶54
	504	221-2690	336	224-0554	1080	227-6077	366
216-1397	727	221-3705	9	224-2669	1044	227-6098	▶365
216-1594	727		▶66	224-2940	994		367
216-5582	28	221-7693	128	224-3245	61	227-6099	365
217-0751	28	221-8045	1080	224-3246	61		▶366
217-0752	28	221-8813	929	224-5122	32	227-6129	2
217-2543	206		930	224-6809	▶640		▶334
217-2544	206		932		705	227-6130	334
217-3875	727		▶1008	225-0312	1080		▶511
217-5449	123	221-8818	471	225-4130	1070	227-6131	334
217-5450	478		▶950	225-4131	1070		▶512
217-5703	128	221-8819	▶954	225-4257	1080	227-6177	329
217-6421	1053		1021	225-4614	474	227-6178	329

▶ **PRIMARY REFERENCE**

PART NUMBER INDEX

Part	Page
227-6179	329
227-6180	329
227-6215	507
	509
227-6221	507
	509
227-7569	953
227-7571	965
227-7625	955
227-9495	9
	▶71
228-0987	1055
228-2775	132
228-2781	1080
228-4224	9
	▶98
	▶100
228-4947	249
	250
228-7090	96
228-7316	1080
228-8218	▶144
228-8255	148
228-9254	1080
229-0887	1080
229-1021	682
229-1857	148
229-1860	148
229-1861	148
229-2282	98
	100
229-3756	1031
229-3757	1031
229-4818	1031
229-5509	9
	▶187
229-5519	9
	▶17
229-6259	61
229-6709	9
	▶63
229-7151	902
229-7152	908
229-7153	910
229-7157	912
229-7158	903
229-7159	906
229-7160	▶914
229-7161	▶902
229-7162	▶908
229-7163	▶910
229-7164	▶912
229-7165	▶903
229-7166	▶906
229-8059	1044
229-8060	1044
229-8062	373
229-9014	12
	▶942
229-9079	2
	3
	▶921
229-9080	▶917
	921
229-9082	921
	▶981
229-9974	199
	200
230-1340	184
230-1341	184
230-1434	254
230-2569	61
230-2800	105
230-2802	94
230-2806	117
230-2808	117
230-2810	117
230-2811	117
230-2812	111
230-2813	111
230-2825	12
	▶105
230-2826	▶111
230-2831	111
	112
230-2895	117
230-2925	477
230-2926	477
230-2927	477
230-3728	145
230-3775	87
	145
230-4009	162
	164
	165
	225
	276
	298
	301
	313
	317
	323
230-4011	164
	165
	225
	264
	266
	276
	298
	301
	304
230-4013	161
	164
	165
	310
	317
	322
	327
230-5008	278
	291
	325
230-5010	164
	194
	230
	278
	291
	298
	301
	304
	323
	997
230-6045	1053
231-1767	▶303
231-1768	▶997
231-1771	▶157
231-2214	▶79
	80
231-2215	9
	▶80
231-2295	164
	165
	301
	323
	997
231-7734	▶886
232-0070	▶915
232-0071	▶905
232-0072	▶909
232-0073	▶911
232-0074	▶913
232-0075	▶904
232-0076	▶907
232-0170	904
	905
	907
	909
	911
	913
	915
232-0172	909
232-0173	911
232-0177	913
232-0178	904
232-0179	907
232-1473	1051
232-1693	187
232-2170	857
	858
	866
	870
	871
	872
	883
232-2171	857
	858
	866
	870
	871
	872
232-2172	857
	858
	866
	870
	871
	872
232-3235	61
232-3236	61
232-4113	696
232-4114	696
233-0806	1068
233-0891	187
233-1143	119
233-1152	663
233-1153	663
233-1154	663
233-1155	663
233-1184	123
233-1186	12
	▶113
233-1188	123
233-1190	123
233-1250	254
233-5260	955
	964
233-7150	902
	903
	906
	908
	910
	912
	914
234-1097	275
234-1112	298
234-1124	997
234-1155	298
234-1156	230
234-1158	230
234-1190	161
234-1194	224
234-1196	224
234-1198	224
234-1199	224
234-2916	▶75
	81
234-3748	826
	828
	830
	831
	833
	834
	836
	838
234-3749	826
	828
	836
	838
234-3966	786
234-3970	826
	828
	830
	831
	833
	836
	838
234-4531	▶523
	682
234-4534	511
	▶643
234-4536	512
	▶644
234-4539	673
234-4542	651
234-4543	651
234-4624	588
	▶702
234-5012	235
	▶251
234-5013	136

▶ **PRIMARY REFERENCE**

PART NUMBER INDEX

Part	Page
	235
	▶252
234-6469	970
234-6470	970
234-6471	970
234-6472	1016
234-6473	970
234-6474	970
234-6477	1044
234-6480	970
234-6483	970
234-6485	970
234-6490	970
234-6497	970
234-6498	970
234-6499	969
234-6500	2
	3
	▶973
234-6501	▶969
	1016
234-6502	969
234-6521	970
234-6579	946
	948
	970
234-6580	946
	948
234-6593	969
234-6602	946
234-6603	948
234-6604	946
234-6605	948
234-6608	946
	948
234-6609	946
	948
234-6610	946
	948
234-6611	948
234-6612	948
234-6613	▶263
	948
234-6614	948
234-6615	263
234-6899	699
	▶703
234-7935	11
	▶15
234-8937	44
234-9503	669
234-9966	1057
	1058
235-1402	11
	▶145
235-1587	91
235-2470	140
235-2471	9
	▶160
235-5634	886
	889
	▶916
235-5636	916
235-5637	916
235-5763	1068
235-5942	10
	▶92
	▶93
235-6387	139
	▶150
235-8200	9
	▶232
235-8848	1002
235-8849	1002
235-8850	1002
235-8851	1002
235-8862	1019
235-8873	917
	919
235-8874	917
	919
235-8875	917
	919
235-8876	981
235-8877	981
235-8878	981
235-8879	981
235-8880	943
235-8881	942
235-8891	1002
235-8898	▶944
	1021
235-8899	▶967
	1021
235-8911	1057
	1058
	1059
235-8912	933
235-8914	946
	948
235-8923	970
235-8951	926
235-8952	927
235-8965	948
235-8966	946
235-8969	950
	▶956
235-8970	950
	▶957
235-8975	967
235-8976	967
235-8986	944
235-8988	944
235-8989	944
235-8990	944
235-8991	944
235-8992	964
235-8994	944
235-8996	926
	927
235-8997	926
235-8998	927
235-9001	1044
235-9003	▶921
235-9004	▶919
	921
235-9005	919
235-9006	917
235-9015	1002
236-0562	1075
236-2852	613
236-3210	609
236-3211	609
236-3257	528
236-3258	528
236-3259	528
236-4545	254
236-5605	30
236-9255	384
	▶410
236-9256	388
	410
236-9259	388
	434
236-9266	384
	▶394
236-9267	394
	400
236-9271	402
	420
236-9272	402
	420
236-9277	404
	423
236-9278	404
	423
236-9283	380
236-9287	418
236-9288	381
236-9294	419
236-9295	419
236-9345	▶356
	380
236-9349	380
236-9353	▶427
	434
236-9364	433
236-9382	430
236-9383	430
236-9389	1025
236-9391	1025
236-9397	1025
236-9399	1025
236-9401	1025
236-9404	388
236-9605	374
236-9610	370
236-9611	370
236-9612	370
236-9624	338
236-9863	81
237-0227	166
	245
	310
237-2706	140
237-3550	929
237-3567	929
	930
	932
	▶933
237-3568	930
	932
237-4332	399
237-8518	388
	▶396
237-8519	396
	414
237-8522	388
	▶397
237-8523	397
	398
237-8829	430
237-8843	380
237-8845	380
237-8846	1025
237-9311	136
237-9323	136
238-1463	997
238-1499	272
238-1548	▶307
	345
238-1549	307
238-1594	▶265
	327
238-1595	265
238-1596	▶266
	327
238-1597	266
238-1610	▶202
	780
238-1611	202
238-1612	▶203
	780
238-1613	203
238-1636	144
	▶327
238-1637	327
238-1641	298
238-2173	▶204
	781
238-2174	204
238-2184	▶274
	472
238-2211	1034
238-2214	280
238-2216	997
238-2260	1029
238-2323	274
238-2337	274
238-2363	276
	301
	323
238-2366	230
	276
	323
238-2392	224
238-2393	161
238-2420	161
238-2474	162
238-2526	224
238-2707	61
238-3169	897
238-3170	897
238-5078	19
238-5080	17
	46
	47
	63
	87
	96

▶ PRIMARY REFERENCE

PART NUMBER INDEX

Part	Page
	100
	136
	139
	252
238-5081	26
	84
	100
	136
238-5082	57
	96
	100
238-5084	74
238-5436	54
238-6801	59
238-6802	9
	▶59
238-8643	54
239-1134	254
	▶271
239-1778	591
239-1784	531
	▶659
239-3433	1062
	▶1064
239-3434	1064
	1066
239-6304	98
	100
239-6460	119
239-6472	1
	▶237
239-6638	121
239-6639	119
239-6640	119
239-6641	119
239-6673	254
239-6986	1080
239-7352	297
	298
	301
	323
239-7356	164
	165
	225
	276
239-7853	119
239-8983	734
	▶763
240-5025	987
	989
240-5074	981
241-0164	9
	▶48
241-0478	48
	▶50
241-1920	374
241-3283	96
241-4052	990
	992
241-4053	990
	992
241-5933	9
	▶11
241-6215	516
	570
241-6217	235
241-6326	9
	▶81
241-8929	630
	▶705
242-1510	1080
242-1588	1080
242-3360	127
242-3374	648
242-3375	87
242-6092	1080
242-6845	648
242-6878	▶525
	682
242-6880	588
	▶776
242-6882	523
	525
242-6883	523
	525
242-6890	702
	710
242-6891	702
	710
242-6892	702
	710
242-6893	776
242-6902	648
242-6903	648
242-6922	651
242-6925	702
	710
242-9537	20
	21
243-1159	20
	21
243-1276	66
243-3177	491
	493
243-4505	148
	164
	166
	225
	265
	276
	278
	298
	301
	304
	312
	327
	994
	997
243-4506	161
	164
	202
	203
	204
	211
	214
	216
	274
	307
243-4507	278
	280
	288
	325
243-4508	164
	165
	267
	278
	286
	291
	295
	323
	950
	951
	952
	953
243-4509	164
	166
	301
	323
	997
243-4510	162
	164
	166
	225
	278
	298
	301
	313
	315
	317
	318
	323
243-5010	164
243-5362	278
	315
	318
243-6718	23
244-4150	782
	784
	786
	788
244-4258	489
	491
244-6835	98
	100
244-7972	384
244-7973	384
244-7976	384
244-7977	384
244-7991	434
244-7992	434
244-7994	427
244-7995	427
244-7997	384
244-8000	384
244-8002	380
244-8005	▶60
	380
244-8006	60
244-8009	422
244-8011	▶411
	434
244-8012	411
	416
244-8025	411
	416
244-8026	411
244-8027	354
244-8028	354
244-8029	354
244-8031	354
244-8032	354
244-8033	354
244-8034	354
244-8035	354
244-8036	380
244-8049	380
244-8062	434
244-8066	398
244-8067	398
244-8068	397
	398
244-8069	397
	398
244-8070	397
	398
244-8071	414
244-8072	434
244-8073	434
244-8075	420
244-8076	420
244-8077	402
	404
	420
	423
244-8078	402
	420
244-8079	423
244-8080	423
244-8081	404
	423
244-8082	394
	400
244-8083	394
244-8084	394
244-8085	394
	400
244-8086	394
	400
244-8087	394
	400
244-8088	384
244-8089	384
244-8090	384
244-8091	380
244-8093	384
	▶412
244-8094	412
244-8095	384
	▶413
244-8096	413
244-8097	410
244-8104	384
	▶414
244-8108	384
	▶398
244-8155	347
	353
	387
244-8158	348
	391

▶ **PRIMARY REFERENCE**

PART NUMBER INDEX

Part	Page
244-8159	348
	391
244-8160	348
	391
244-8162	430
244-8166	394
	400
244-8167	380
244-8168	380
244-8170	398
244-8171	398
244-8176	354
244-8177	354
244-8697	453
245-2431	538
245-3805	453
245-3806	453
245-3808	453
245-4980	596
245-4983	596
245-5267	659
245-5413	581
	585
	604
245-5456	1080
245-5458	1080
245-5495	1080
245-5554	345
	▶1069
245-5555	144
	▶148
245-5591	1080
245-7560	140
245-7749	942
	▶943
245-7750	943
245-7751	943
245-7776	1002
245-7790	946
	948
245-7791	981
245-7792	981
245-7793	981
245-7811	1
	▶1019
245-7812	924
	▶995
245-7813	963
	995
245-7814	963
	995
245-7815	963
	995
245-7816	963
	995
245-7817	922
	924
245-7818	922
	924
245-7819	922
	924
245-7820	922
	924
245-7821	924
245-7823	922
	924
245-7824	922
	924
245-7825	922
	924
245-7826	922
	924
245-7827	922
	924
245-7828	922
	924
245-7829	922
	924
245-7830	922
	924
245-7831	922
	924
245-7832	922
	924
245-7833	922
	924
245-7834	922
	924
245-7835	922
	924
245-7836	922
	924
	▶937
245-7837	937
	939
245-7838	922
	924
245-7839	922
	924
245-7842	956
245-7844	957
245-7846	922
	▶963
245-7847	922
245-7850	1002
245-7851	1002
245-7856	922
	924
245-7872	981
245-7873	981
245-7895	999
	1000
	1042
	1043
245-7905	937
	939
245-7925	948
245-7926	946
245-7929	969
245-7941	1028
245-7948	946
	948
245-9206	105
245-9239	▶112
	473
245-9309	105
246-1235	77
246-2641	151
	336
	338
	378
	1025
246-3129	103
246-3130	103
246-4785	9
	▶139
246-5628	9
	▶22
246-5659	61
246-5984	9
	▶399
246-9353	232
246-9906	9
	▶77
246-9987	1055
247-2693	297
	298
	301
	323
	958
	960
	961
	962
	965
	966
247-2694	1009
247-2695	1009
247-4574	711
	715
	720
247-4577	711
	715
	720
247-4579	711
247-4585	711
	715
	720
247-5112	966
247-5190	472
	▶952
	▶953
247-5275	954
	▶965
247-6801	933
247-6812	1044
247-6820	1055
247-6831	1055
247-6832	1055
247-6833	1055
247-6834	1055
247-6836	1055
247-6837	1055
247-6838	1055
247-6839	1055
247-6840	1055
247-6841	1055
247-6842	1055
247-6843	1055
247-6844	1055
247-6845	1055
247-6847	1053
247-6848	1053
247-6849	1053
247-6850	1053
247-6854	1057
247-6859	1053
247-6876	888
	889
247-8427	1063
	▶1066
247-8764	727
247-8833	473
	▶642
247-8978	94
	▶650
247-9080	536
247-9081	540
247-9308	540
247-9908	30
248-1537	453
248-5358	278
248-5513	98
	100
248-6875	711
	715
	720
248-7161	458
248-7163	458
248-7179	438
248-7257	▶449
	451
	452
248-7287	439
	▶454
248-7305	439
	▶450
248-7308	451
	452
	▶458
248-7988	1064
	1066
248-7990	1068
248-9358	▶357
	473
249-0096	235
	▶243
249-2663	929
	930
	932
	▶1044
249-2759	3
	▶1062
249-3618	570
249-7107	▶1022
249-7108	▶373
	984
	1022
	1023
249-7109	▶984
249-7113	2
	3
	▶1063
249-7114	▶1049
	1062
249-7887	984
250-0091	297
250-0103	▶297
	687
250-0466	26
250-0712	▶984

▶ **PRIMARY REFERENCE**

PART NUMBER INDEX

Part	Page
250-0729	516
	▶527
250-1439	618
250-2942	711
	715
	720
250-5093	370
250-5111	429
250-5112	429
250-5113	428
250-5114	380
	425
250-5115	415
250-5116	415
250-5118	380
	▶415
250-5119	380
250-5120	380
	▶428
250-5121	▶429
	430
250-5132	380
250-5404	388
250-5405	388
250-5406	388
	▶400
250-5407	388
	▶402
250-5408	388
	▶404
250-5410	388
	▶416
250-6094	1069
250-6967	527
250-8054	1072
	1076
	1077
251-0524	162
251-0538	▶1029
251-0542	2
	3
	▶230
251-0602	301
251-0605	298
251-0606	301
251-1105	1069
251-4162	182
251-4169	283
252-1230	933
252-1234	933
252-1235	1058
252-1241	▶206
	1022
252-1242	▶207
	984
252-1243	1044
252-1244	1055
252-1248	1053
252-1249	1053
253-0616	145
253-0861	1080
253-1752	23
253-2111	224
253-2695	278
	315
	318
253-6461	567
253-6915	970
253-9224	984
	▶990
254-2869	359
	361
254-2870	359
	361
254-2999	448
254-3000	448
255-1950	609
255-1957	613
255-2882	2
	▶8
255-2901	115
255-2918	123
255-3171	1080
255-3173	1080
255-9074	206
255-9075	206
256-1730	380
256-1732	380
256-6453	251
	252
256-8609	929
	930
	932
	1016
256-8690	896
256-8691	896
257-1110	1019
257-1111	1055
257-1782	850
	851
	852
257-1783	850
	851
	852
257-1784	850
	851
	852
257-2943	240
257-4599	473
	▶1070
257-7284	699
	▶707
258-4524	127
258-8721	67
258-9892	941
259-0816	650
	▶678
259-0817	678
259-0882	677
259-0883	679
259-0884	679
259-0891	756
259-0895	679
259-0899	669
	▶679
259-0901	468
259-3505	340
259-3525	343
	344
259-3680	343
	344
259-3722	430
259-3726	388
259-3727	384
259-3943	343
	344
259-4884	325
259-4914	1029
259-5022	275
259-5081	275
259-5082	275
259-5295	▶193
	472
259-6227	343
	344
259-7202	948
259-7220	325
259-7346	▶926
	946
259-7347	▶927
	948
259-7348	944
	▶946
259-7349	944
	▶948
259-7353	970
259-8003	985
	▶992
259-8009	▶985
259-8120	▶208
	985
260-2109	951
	▶958
260-2110	951
	▶959
260-2111	958
	959
	960
	961
260-2127	952
	953
	▶960
260-2128	952
	953
	▶961
260-2180	596
260-2191	596
260-2649	934
260-4651	987
	989
260-6944	1075
260-7522	1055
260-8156	659
260-8273	596
260-8285	551
260-8296	551
261-0191	11
	▶26
261-3223	283
261-3429	28
261-3430	28
261-4176	77
261-4178	77
262-1421	186
	▶191
262-2292	1006
262-2293	1006
262-2356	1006
262-2357	1006
262-2619	425
262-2879	187
262-3663	1044
262-7954	933
262-7956	933
262-7957	933
262-7961	1049
262-7962	1049
262-8088	313
	317
263-0788	934
263-1129	9
	▶118
263-3762	▶471
263-4920	28
263-5055	▶30
	32
263-8948	1014
264-0214	1049
264-0726	734
264-2171	905
264-2175	883
264-2176	883
264-4501	83
264-5732	310
264-6346	734
264-7029	164
	165
	225
	264
	266
	276
	298
	301
	304
	310
	318
	322
264-7030	161
	164
	165
	166
	310
264-7031	278
	291
	325
264-7032	164
	194
	278
	291
	298
	301
	304
264-7033	164
	165
	301
264-7034	162
	164
	165
	225
	276

▶ **PRIMARY REFERENCE**

PART NUMBER INDEX

Part	Page	Part	Page	Part	Page	Part	Page
	298		▶57	280-3079	1055	284-0057	376
	301	272-0390	14	280-3979	28	284-0062	376
	313	272-5000	165	280-8039	9	284-4426	933
	317		225		▶102	284-7282	▶372
264-9971	132		323	281-0791	939		439
266-0545	986	272-7123	▶257	281-1640	▶28	284-7283	372
266-0546	990		260		30	284-7284	372
266-1136	572	272-7152	257	281-2725	150	285-0823	17
266-2337	▶242	273-5333	983		▶154	285-1489	709
266-5431	1080	273-5358	7	281-3516	477	285-1490	709
266-5812	985		181	281-3517	477	285-1491	709
	▶989		▶983	281-3564	112	285-1620	709
266-6474	989	273-5359	983	281-3565	112	285-1621	728
267-4631	▶24	273-5360	983	281-3566	112	285-1622	709
	25	274-1252	734	281-3567	112	285-7945	▶376
267-4944	▶985	274-1953	11	281-3614	94	286-2126	855
267-6785	507		▶32	281-3645	474		856
	509	274-2553	588	281-3646	94		877
267-6787	513		▶710	281-3647	12		878
267-7671	325	274-4491	67		▶94	286-2140	893
267-7672	325	274-5048	1028	281-8261	32		894
267-7860	1	274-6717	244	282-0045	970		895
	▶994	274-6718	243	282-3645	9	286-6458	596
267-7861	994	274-6719	245		▶65	286-6475	596
267-7976	230	274-8359	61	282-5842	561	286-6815	596
268-0745	434	274-9051	734		564	286-8861	976
268-1616	98	274-9053	551		568		979
	100		▶734	282-5843	561		▶1060
268-2960	127	275-1253	136		564	286-8862	1060
268-3700	10		▶264		568	286-8863	1060
268-6816	473	275-1442	131	282-5845	568	286-8864	1060
	▶1071		572	282-5846	568	286-8866	1060
268-6817	1071		596	282-5847	568	286-8867	1060
269-0120	1080	275-1443	131	282-5848	568	286-8868	1060
270-5603	7		572	282-5849	568	286-8869	1060
	▶1011		596	282-5850	568	286-8870	1060
270-5620	950	275-1444	596	282-5851	568	286-8871	1060
	951	275-1497	572	282-5852	561	286-9798	8
	952	275-6470	9	282-5853	561		▶9
270-5692	551		▶941	282-5854	561	287-0203	12
	▶746	275-6596	9	282-5856	561		▶55
270-5693	746		▶82	282-5857	561	287-0204	55
270-5803	715	275-6842	317	282-6526	▶928	287-2352	724
	720	276-5317	67		1051	287-7534	1066
	▶728	276-8548	235	282-6527	928		▶1068
270-5804	711		▶244	282-6528	928	287-8404	278
	▶731	276-9067	136	282-6532	▶1051	288-4881	28
270-5810	▶709		235		1063	288-4882	28
	731		▶245	282-6534	1051	288-4883	28
270-5816	728	276-9217	376		▶1053	288-4884	28
	731	276-9221	376	282-6535	1053	288-7324	310
270-5817	728	277-0906	4		▶1055	288-7456	560
	731		▶560	282-6536	1055	288-7457	560
270-5818	728	277-3082	199	282-6537	1055	288-7597	564
	731		200	282-7198	572	289-2492	123
270-5819	728	277-5814	▶896	282-7758	970	289-5150	310
	731	278-1365	69	283-2783	303	289-6304	66
270-5820	728	278-5662	11		304	289-8215	14
	731		▶14		997	290-0332	970
270-5821	728	278-7286	449	283-3074	301	290-0373	970
	731	279-3161	926	283-3325	▶897	290-1727	1080
270-5822	728		927	283-4046	380	290-1728	1080
	731	279-9829	250		384	290-8160	199
271-4068	57	280-2562	254	283-4161	928		200
271-5761	9	280-3075	928	283-5990	702	290-8996	199

▶ PRIMARY REFERENCE

PART NUMBER INDEX

Part	Page
	200
290-9020	72
290-9021	9
	▶72
290-9395	1
	▶188
290-9398	2
	▶191
290-9479	188
290-9517	▶189
	471
	472
290-9518	▶191
	471
	472
290-9519	191
290-9520	191
290-9528	191
290-9529	191
291-0811	724
291-8148	655
292-6567	1068
292-7244	618
292-7523	604
292-7627	572
292-7752	532
	533
	534
	535
292-7882	734
292-8517	734
292-9782	84
292-9783	84
293-1136	917
	919
293-1137	922
	924
293-8218	449
293-8698	1053
294-1203	▶2
294-1237	▶1
	2
294-1245	1
	▶1080
294-1295	▶345
294-1296	▶518
294-1302	2
	▶439
294-1307	1080
294-1313	▶459
294-3063	453
294-3064	453
295-7745	531
	▶736
295-7747	▶711
	736
	739
295-7748	▶715
	736
295-7767	687
	▶739
295-7769	▶720
	739
295-9421	▶651
	653
	654
295-9432	651
295-9446	643
	▶653
295-9447	644
	▶654
295-9595	632
	▶681
295-9606	681
295-9607	681
295-9609	632
295-9626	632
295-9678	662
	▶669
295-9690	655
295-9692	673
296-4359	453
296-4360	453
296-4907	1028
296-4908	1028
296-6177	▶367
	439
296-6211	367
296-6212	367
296-6213	367
296-7102	531
	▶591
296-7105	531
	▶630
296-7107	531
	▶618
296-7109	531
	▶595
296-7112	▶551
	687
296-7113	▶604
	687
296-7114	▶607
	687
296-7115	345
	▶613
296-7116	▶516
	518
296-7635	126
	▶127
297-0129	▶453
	459
	460
297-0223	2
	▶531
297-0370	570
	▶696
297-0421	▶687
297-0428	▶687
297-0616	572
297-1813	19
297-4518	▶233
	780
297-4530	233
297-4589	958
297-4590	959
	▶962
297-4595	960
	961
297-7380	836
297-7383	838
297-7516	▶442
297-7517	442
	444
297-7518	▶444
297-7519	444
297-7524	446
297-7525	446
297-9120	458
297-9121	458
297-9154	▶438
	450
297-9158	438
297-9197	450
	▶451
297-9198	450
	▶452
298-3136	1
	▶430
299-2627	162
	▶224
299-2628	▶275
	1021
299-2629	▶323
	1021
299-2635	1
	▶161
299-2636	▶304
	996
299-2754	▶298
	300
299-2937	▶286
	471
	472
299-2939	▶209
	984
299-2940	▶210
	1023
299-2943	181
	▶322
299-2945	▶288
	473
299-2948	▶211
299-2999	7
	▶278
299-3002	7
	▶313
299-3005	7
	▶315
299-3009	▶291
	687
299-3012	194
	▶295
299-3014	▶214
299-3015	▶216
299-3016	181
	▶282
299-3017	▶312
	473
299-3050	295
299-3064	162
299-3065	162
	3
300-4523	455
300-4525	455
300-4611	454
	▶455
300-8784	493
300-9672	493
300-9806	235
	▶250
301-0091	162
	163
301-0589	1014
301-2279	460
301-2283	459
301-2285	459
301-2288	▶459
301-2290	▶459
301-2292	459
	▶460
301-2301	459
	460
301-5241	748
301-5242	748
301-5243	748
301-7292	275
302-0455	970
302-1410	127
302-1835	1068
302-2860	572
302-2891	572
302-2942	578
302-3057	▶570
	687
302-3059	473
	▶572
302-3136	632
302-3176	618
302-3177	596
302-3178	596
302-3213	551
302-3224	551
302-3228	551
302-3260	618
302-3263	618
302-3265	618
302-3301	551
302-3312	591
302-3318	570
302-3319	618
302-9216	533
302-9217	532
302-9218	535
302-9219	534
302-9275	657
302-9443	▶473
303-2004	260
303-2647	▶194
303-2668	1080
303-2678	471
	▶1072
303-2686	1080
303-2688	▶781
303-2689	▶780
303-2690	▶780

▶ **PRIMARY REFERENCE**

PART NUMBER INDEX

Part	Page
303-2691	▶823
303-2692	▶823
303-2694	▶823
303-2696	▶824
303-2697	▶824
303-2698	▶811
303-2699	▶811
303-2700	▶811
303-2701	▶811
303-2787	181
	▶1073
303-8698	103
303-8891	439
	▶440
303-8894	440
303-9147	▶807
	823
	824
303-9149	▶809
	823
	825
303-9613	430
	▶433
303-9672	380
303-9673	381
303-9674	381
303-9676	381
303-9677	▶354
	384
303-9678	354
303-9679	▶355
	388
303-9933	152
303-9937	152
304-0052	1
	▶1025
304-0054	1025
305-0325	941
305-0331	959
	961
305-0332	958
	960
305-0333	970
305-0441	1002
305-0442	1002
305-0466	2
	3
	▶1035
305-1765	841
305-1766	841
305-1767	▶841
	845
	846
	847
	848
	849
	850
	851
	852
305-1768	812
	814
	821
305-1769	841
305-1770	841
305-7590	12
	▶474
305-9196	26
	▶64
306-1355	532
	533
	534
	535
306-3970	970
306-3998	257
306-8326	286
306-8328	211
	214
	216
306-8332	211
	214
	216
306-8534	298
306-8538	▶325
	473
306-8555	▶309
	471
306-8571	210
306-8572	209
306-8588	282
306-8640	293
306-8641	304
306-8802	1029
307-0047	184
307-2671	17
	47
	63
	93
	100
	116
	222
307-2673	17
	46
	47
	63
	100
	136
307-4485	1068
307-4849	551
307-4881	632
307-4884	632
307-4946	516
307-4949	516
307-5004	596
307-5029	613
307-5110	516
307-5140	578
307-5142	578
307-5148	578
307-7655	381
	384
	388
307-7757	181
	▶219
307-7830	378
307-7881	381
307-7884	388
	422
307-7888	384
307-7890	▶347
	384
307-7895	378
307-7905	▶353
	377
307-7994	1
	▶436
307-8001	7
	▶377
307-8008	374
307-8017	378
	▶393
307-8141	132
307-8142	132
307-8145	1
	▶132
307-8322	68
307-9615	139
308-1249	1064
	1066
308-7020	▶929
308-7021	▶930
308-7022	1
	2
	▶932
308-7024	929
	930
	932
	▶970
308-8685	781
	▶782
308-8686	782
308-8693	780
	▶784
308-8694	784
308-8696	780
	▶786
308-8697	786
308-8701	823
	▶826
308-8702	826
308-8705	823
	▶828
308-8706	828
308-8714	823
	▶830
308-8715	830
308-8725	824
	▶831
308-8726	831
308-8730	824
	▶833
308-8731	833
308-8734	811
	▶817
308-8735	817
308-8738	811
	▶819
308-8739	819
308-8741	811
	▶812
308-8745	811
	▶814
308-8746	814
	821
308-8763	1
	▶359
308-8764	359
308-8766	345
	▶361
308-8767	361
308-8824	495
308-8953	788
309-5127	561
	564
	568
309-5131	26
	100
309-5694	233
309-5695	233
309-5733	233
309-5734	233
309-5751	1014
309-5765	996
	▶1013
309-5796	1013
309-5805	181
	▶1017
309-5806	1017
309-5808	955
	964
	▶966
309-5845	▶184
	194
309-5846	▶186
	194
309-5849	1011
309-5852	194
	▶1014
310-0001	▶471
310-0005	▶471
310-0006	▶472
310-0036	736
	739
310-0122	596
310-2393	1014
310-2783	▶901
310-9504	123
310-9508	89
310-9590	113
	▶114
310-9602	114
310-9678	2
	▶12
310-9714	▶478
	479
310-9760	123
311-8605	▶899
311-9552	531
	▶662
312-2645	148
313-4424	675
313-7833	▶179
	219
313-7848	1
	▶378
313-7873	430
313-7886	436
313-7888	436
313-7890	▶358
	381
313-7891	358

▶ PRIMARY REFERENCE

PART NUMBER INDEX

Part	Page	Part	Page	Part	Page	Part	Page
313-7893	358		924	320-2677	455		1066
313-7896	▶348	316-8987	1036	320-2796	▶67	326-4512	14
	378		1037		68	327-3087	220
313-7897	348		1038	320-2797	67	327-3168	430
313-7900	1		1039	320-5392	179		▶434
	▶374		1040	320-5396	219	327-3172	1
313-7901	433	317-4762	578	320-5621	181		▶384
313-7906	378	317-4765	578		▶220	327-3173	345
313-7915	378	317-4766	578	321-8642	47		▶388
313-7935	1025	317-4768	581		100	327-3175	384
313-8053	1	317-4769	581	321-8649	74	327-3176	388
	▶370	317-4771	596	321-8671	136	327-6501	3
313-8055	370	317-4855	543		139		▶1032
313-8088	151	317-4858	609	322-1126	25	327-6502	▶1033
	▶152	317-4860	547	322-4582	1075	327-6503	2
313-8092	370	317-4864	596	322-8705	727		3
313-8122	1	317-4890	545	322-8706	▶727		▶1034
	▶380	317-4891	545		756	327-6507	1032
313-8123	381	317-8434	504	323-7776	715		▶1038
313-8267	1	317-8435	504		720	327-6508	1033
	▶151	317-8766	23	323-8451	▶25		▶1039
313-8284	376	318-2082	258		26	327-6509	1034
	▶387	318-3150	61	323-9544	▶900		▶1040
313-8286	376	318-8254	▶898	324-1144	812	327-6512	▶1036
313-9550	122	318-8835	1069		814		1038
313-9614	139	319-1434	209		821		1039
	142	319-4420	230	324-1147	812	327-6513	▶1037
314-8099	609		▶267		814		1040
314-8218	581	319-6215	96		821	327-6515	1036
	585	319-6217	96	324-1148	812		1037
314-8222	581	319-6234	74		814	327-6520	1038
	585	319-7384	199		821		▶1042
314-8312	734		200	324-1155	812	327-6521	1039
315-3319	493	319-7401	23		814		1040
315-4365	▶35		▶70	324-1162	812		▶1043
	94	319-9152	1073	324-1163	812	327-6538	1041
	474	319-9186	▶181		814	327-6540	1035
315-4366	35	319-9188	▶996		821	327-6542	1021
315-4367	35	319-9211	▶780	324-4083	123		▶1041
315-4368	35	319-9212	▶824	324-4085	123	327-6543	1041
315-4385	727	319-9213	▶825	324-4087	▶254	327-6550	933
315-4388	756	319-9228	▶1074		256		▶1007
315-4478	669	319-9235	3	324-4088	254	327-6579	976
	▶756		▶256	324-4091	254		979
315-5313	972	319-9236	687	324-4098	123	327-6640	1036
315-6645	103		▶1075	324-4100	123		1037
315-8672	976	319-9239	▶6	324-4130	531	327-6642	1036
	979	319-9240	6		▶663		1037
315-9859	100		▶825	324-4132	1	327-6643	1036
316-6864	147	319-9241	6		▶130		1037
316-8846	922		▶816	324-4133	130	327-6644	1042
	924	319-9265	▶473	324-4152	119		1043
316-8847	922	319-9282	1080	324-4181	114	327-6645	▶999
	924	319-9284	1080	324-4196	254		1042
316-8849	922	319-9304	1072	324-4197	12	327-6646	999
	924	319-9324	472		▶119		1000
316-8916	919		▶1076	324-5770	306		1042
	▶922	319-9325	1076	324-5771	306		1043
316-8917	917	319-9326	472	325-8862	572	327-6647	999
	▶924		▶1077	326-1643	138		1042
316-8918	922	319-9327	1077	326-3405	892	327-6648	1042
	924	319-9329	1080	326-3406	892		1043
316-8920	922	319-9756	588	326-3900	94	327-6649	1037
	924	319-9778	609	326-3901	474	327-7248	131
316-8921	922	319-9903	596	326-4465	1064	327-7250	123

▶ **PRIMARY REFERENCE**

PART NUMBER INDEX

Part	Page
327-7482	1008
	▶1009
	1010
327-7546	780
	▶793
327-7547	793
327-7594	1009
328-0021	230
328-0028	280
328-0102	▶280
	687
328-0106	3
	▶272
328-0107	181
	▶221
328-0110	▶173
	256
328-0163	312
328-0213	224
328-0219	162
328-0307	224
328-0308	224
328-0310	162
328-0312	162
328-0324	162
328-0325	162
328-0326	162
328-0327	163
328-0330	163
328-0333	163
	173
328-0335	173
328-0336	173
328-0338	173
	272
328-0339	173
	272
328-0404	291
328-0651	276
328-4236	53
	▶68
328-4238	68
	▶69
329-4511	61
329-5224	572
	▶724
329-5955	894
329-5956	▶894
329-5957	895
329-9776	98
	100
330-2409	▶543
	781
330-2624	782
	784
330-2645	812
	814
	821
330-2646	812
	814
	817
	819
	821
330-2718	812
	814
	821
330-2775	359
	361
330-2829	826
	828
	836
	838
330-3027	▶1023
330-3028	▶984
330-9732	136
330-9764	74
331-1221	▶842
331-1222	▶842
331-1224	▶842
331-1225	▶843
331-1226	▶843
331-1230	▶843
331-1231	▶844
331-1232	▶844
331-1233	▶844
331-1234	▶845
331-1235	▶845
331-1236	▶845
331-1240	▶846
331-1241	▶846
331-1242	▶846
331-1245	▶847
331-1246	▶847
331-1247	▶847
331-1248	▶848
331-1251	▶849
331-1252	▶850
331-1253	▶851
331-1260	▶883
331-3015	859
	861
	862
331-3030	883
331-6081	9
	▶260
331-7263	373
331-9340	491
331-9341	491
331-9344	491
331-9373	990
331-9934	933
332-1454	992
332-4961	825
	▶834
332-4962	834
332-5024	817
	819
332-5027	817
	819
332-5029	817
	819
332-7298	15
332-9402	▶199
	209
	211
	214
	216
333-2897	▶329
	333
333-2898	329
333-4157	▶1000
	1043
333-4158	1000
	1043
333-4159	1000
	1043
333-4160	1036
333-4178	1000
	1043
333-4179	1036
	1037
333-4180	999
	1000
	1042
	1043
333-4181	999
	1042
333-4590	545
333-4591	545
333-4592	545
333-4593	545
333-4594	543
	545
	547
333-4604	547
333-4605	547
333-4606	547
333-4609	572
333-5022	1
	▶343
333-5026	343
	▶346
333-5027	346
333-5130	▶344
	345
333-5131	344
333-5140	434
333-5220	377
	▶391
333-5221	391
333-5261	1
	▶336
333-5262	336
	▶340
333-5263	340
333-5319	256
	▶338
333-5320	338
	▶417
333-7054	543
	545
333-7055	536
	538
	540
	543
	545
333-7056	547
333-7090	596
333-7137	659
333-7152	516
333-7192	547
333-7195	618
333-7197	618
334-2212	4
	▶561
334-2213	561
334-2214	561
334-4603	1080
334-6832	62
334-9990	663
	▶671
335-0008	673
335-0009	673
335-0011	671
	▶673
335-0311	628
	▶697
335-0498	728
	731
335-0505	728
	731
335-0538	▶461
	618
335-0546	▶462
	596
335-0547	▶463
	604
335-2081	▶194
335-3038	734
335-3976	136
335-4198	96
335-4225	140
335-4903	4
	▶563
335-4904	563
335-4905	563
335-4949	4
	▶564
335-4950	564
335-4951	564
335-4952	564
335-4953	564
335-4954	564
336-1653	381
	▶418
336-1655	381
336-1657	381
	▶419
336-1665	338
	▶339
336-1666	339
336-1667	339
336-1668	388
336-1669	381
336-2213	102
	▶103
336-2650	834
336-3545	184
	▶1030
336-3566	1030
336-5959	221
336-6335	317
336-6350	313
336-6684	179
	▶182
337-2612	572
337-2619	581
337-2621	581
337-2622	585

▶ **PRIMARY REFERENCE**

PART NUMBER INDEX

Part	Page	Part	Page	Part	Page	Part	Page
337-2694	682		▶581	341-8650	▶853	343-9287	809
337-2746	572	338-6173	472	341-8651	▶853	343-9288	809
337-2762	581		▶585	341-8652	▶854	343-9348	788
	585	338-6191	578	341-9050	883	343-9866	14
337-2778	473	338-6209	535	341-9052	883	344-3687	559
	▶588	338-6833	276	341-9053	883	344-4207	566
337-2785	588	338-8622	▶852	341-9054	883	344-4208	566
337-2786	588	339-0732	4	341-9055	883	344-4341	628
337-2788	618		▶566	342-1910	7	344-4370	5
337-2791	618	339-3919	809		▶791		▶567
337-4878	430	339-4173	780	342-1911	791	344-4371	567
338-5994	618		▶788	342-1913	791	344-4372	567
338-5995	618	339-4174	824	342-1915	791	344-4495	549
338-6073	578		▶836	342-2822	317	344-4496	549
338-6074	578	339-4175	825	342-2823	315	344-4560	▶549
338-6075	578		▶838	342-2886	323		687
338-6076	578	339-4983	147	342-2887	▶300	344-4561	549
338-6077	578	339-7151	132		1021	344-4564	628
338-6078	578	339-7152	132	342-2888	300	344-4566	628
338-6108	632	339-7153	132		▶301	346-4595	239
338-6109	632	339-7154	132	342-2889	301		▶1078
338-6110	556	339-7155	132	342-2890	224	346-7268	440
338-6111	557	339-7281	430	342-2924	682	347-1202	591
338-6117	632	339-7476	357	342-2925	278	347-1203	591
338-6118	632	339-7477	357	342-2926	278	347-1204	578
338-6140	578	339-7587	434	342-2931	325	347-1205	578
338-6141	578	340-0585	898	342-2932	325	347-1206	609
338-6143	578		899	342-2933	▶293	347-1207	630
338-6144	609		900		996	347-1208	630
338-6145	609		901	342-2934	322	347-1209	613
338-6146	609	340-2958	596	342-2935	322	347-1210	613
338-6147	609	340-3027	607	342-2936	304	347-4425	628
338-6149	632	340-3036	607	342-2937	304	347-4429	628
338-6150	632	340-3996	▶7	342-2939	280	347-6139	607
338-6151	632	340-4002	1	342-2940	280	347-6142	604
338-6153	632		▶2	342-2947	7	347-6145	581
338-6154	632	340-4003	▶3		▶317	347-6148	581
338-6155	632	340-4004	2	342-3153	163		585
338-6156	626		▶3	342-3451	1		604
338-6157	625	340-4025	▶181		▶1021	347-6154	581
338-6158	623	340-4055	▶1	342-4124	618		585
338-6159	624	340-4057	▶2	342-4175	578	347-9361	139
338-6160	531	340-4062	▶5	342-4176	570	347-9427	▶200
	▶578	340-4063	▶5	342-4177	596		210
338-6161	531	340-4064	▶5	342-4180	578		211
	▶609	340-4065	▶6	342-4567	883		214
338-6163	531	340-4066	▶6	342-8069	▶887		216
	▶632	340-4067	▶6	342-8070	▶887	348-0503	821
338-6164	▶545	340-4068	▶4	342-8071	887	348-0508	816
	780	340-4070	▶4		▶888		▶821
338-6165	▶547	340-4071	▶4	342-8072	887	348-0539	807
	780	340-4072	▶4		▶889	348-0540	807
338-6166	▶623	340-4073	▶5	342-8073	▶559	348-0541	807
	823	340-4074	▶3		887	348-0542	807
	824	341-0554	933	343-1150	1078	348-0543	807
338-6167	▶624	341-0826	139	343-1151	1078	348-0544	807
	823	341-3684	152	343-1152	1078	348-0545	807
	825	341-5236	788	343-1153	1078	348-0546	807
338-6169	▶625	341-5272	812	343-1154	1078	348-0547	807
	823		814	343-1155	1078	348-0548	807
	824		817	343-1156	1078	348-1237	570
338-6171	▶626		819	343-1157	1078	348-4475	845
	824		821	343-5527	138		▶857
	825	341-8648	▶884	343-9285	809	348-4476	845
338-6172	471	341-8649	▶853	343-9286	809		▶858

▶ **PRIMARY REFERENCE**

PART NUMBER INDEX

Part	Page	Part	Page	Part	Page	Part	Page
348-4489	857	350-7273	578	353-0796	543	355-1939	▶446
	858	350-7389	570	353-0797	543	355-5105	191
	866	350-8107	181	353-0799	551	355-7865	4
348-4516	857		▶283	353-0802	578		5
348-4517	857	350-8108	163	353-1986	1028		▶568
348-4518	858	350-8109	164	353-2017	1068	355-9764	191
348-4519	858	350-8110	165	353-2149	956	356-0658	▶972
348-4520	858	350-8118	291	353-2150	957		1021
	872	350-8119	165	353-2151	▶939	356-0662	491
348-4526	858	350-8124	291	353-5102	136	356-0663	483
	872	350-8154	317		139		▶491
348-6569	857	350-8247	2	353-5103	139	356-0664	481
348-7743	53		3	353-5108	139		▶483
349-0173	354		▶306	353-5111	139	356-0668	▶481
	355	350-8248	275	353-5125	65		780
349-4101	791	350-8358	209	353-5126	17	356-1797	10
349-5084	276	350-8359	210		63		▶310
349-5085	276	350-8360	210		65	356-1879	9
349-5408	192	350-8410	211		142		▶136
	▶1010	350-8411	214	353-6501	378	356-5212	38
349-5410	192	350-8412	216	353-9616	488	356-8046	▶628
	1010	350-8457	165		▶489		687
349-5418	7	350-8496	288	353-9617	489	356-8104	628
	▶223	351-0059	46	353-9625	487	356-8107	628
349-5419	223		▶47		▶504	356-9038	384
349-8280	842	352-6496	96	353-9626	504		▶420
	▶859	352-6790	6	353-9642	▶482	356-9042	384
349-9603	854		▶532		780		▶422
	▶860	352-6791	6		781	356-9043	422
349-9604	842		▶533	353-9643	482	356-9044	384
	▶861	352-6793	5		▶487		▶423
349-9607	861		▶534	353-9644	482	356-9125	556
	864	352-6794	5		▶627		558
349-9608	861		▶535	353-9647	481	356-9134	572
	864	352-6819	596		▶556	356-9135	572
349-9609	881		▶777	353-9648	▶481	356-9138	557
349-9624	842	352-6820	777		780		627
	▶862	352-6836	711		781		628
349-9627	862	352-6865	709	353-9649	▶481	356-9140	557
	865	352-6869	697		780	356-9141	627
349-9628	862		711		781	356-9142	556
	865		715	353-9650	481		558
349-9629	862		720		▶488		791
	880		728	353-9651	481	356-9143	554
350-0491	853		731		▶554		555
	▶863		▶764	353-9652	481	356-9157	572
350-0493	860	352-6870	▶765		▶555	356-9160	572
	863	352-6875	▶472	353-9982	48	356-9161	572
	864	352-6876	1		▶62	356-9163	572
	865		2	354-0041	9	356-9164	572
	867		▶472		▶235	356-9172	572
350-0494	863	352-6914	585	354-0049	310	356-9175	572
350-0495	863		▶766	354-4407	596	356-9226	551
350-0626	853	352-6923	462	354-4460	609		554
	▶864		▶464	354-4601	578		555
350-0627	853	352-6924	▶465	354-4602	578	356-9228	609
	▶865	353-0589	▶332	354-6068	7	356-9235	554
350-4082	534		334		▶481	356-9236	554
350-4084	533	353-0590	332	354-6070	481	356-9237	555
350-4085	532		▶333		▶484	356-9238	555
350-6445	788	353-0685	551	354-6071	484	356-9245	627
350-6481	440	353-0792	543		▶493	356-9259	551
350-6482	440	353-0793	543	354-6072	493	356-9268	618
350-7257	578	353-0794	543	355-1936	446	357-1002	867
350-7270	578	353-0795	543	355-1937	446	357-1003	859

▶ **PRIMARY REFERENCE**

PART NUMBER INDEX

Part	Page	Part	Page	Part	Page	Part	Page
	882	360-2766	859	360-6071	877	361-2862	485
357-1011	859		867	360-6072	856		▶495
	867	360-2767	859		878	361-2897	482
	882		882	360-6073	855		▶557
357-1453	863	360-5995	873	360-6080	855	361-2898	482
	879	360-5996	874	360-6081	877		▶485
357-1457	861		884	360-6082	856	361-2899	▶482
	864	360-5997	875		878		811
	881	360-5998	876	360-6083	884		816
357-2686	▶892	360-6008	873	360-6085	884	361-3318	497
357-2688	849		874	360-6098	857	361-3320	497
	850		875	360-6099	870	361-3321	486
	851		876	360-6100	871		▶497
	852	360-6009	873	360-6120	870	361-3322	482
	▶895	360-6010	874	360-6122	871		▶486
357-2689	895		877	360-6126	870	361-3323	482
357-3286	861		884		871		▶558
	864	360-6011	856		872	361-3324	▶482
	881		875	360-6127	846		811
357-3877	964		878		▶870	361-3872	1044
357-4727	1080	360-6012	876	360-6128	846	361-3873	1044
357-4790	863	360-6013	873		▶871	361-3874	1044
	879	360-6014	874	360-6129	846	361-3875	1044
357-6187	932		884		▶872	361-4848	843
	▶1057	360-6015	875	360-6130	870		▶879
357-6189	930	360-6016	876	360-6131	870	361-4849	844
	▶1058	360-6017	873	360-6132	871		▶880
357-6190	929	360-6018	874	360-6133	872	361-4850	844
	▶1059		884	360-6134	870		▶881
357-6516	855	360-6019	875	360-6135	871	361-4851	844
	856	360-6020	876	360-6136	872		▶882
	873	360-6021	873	360-6137	858	361-4856	879
	874	360-6022	874		872		880
	875		877	360-6138	857		881
	876	360-6023	875	360-6139	871		882
	877		878	360-6140	845	361-4857	879
	878	360-6024	876		▶866	361-4858	880
	884	360-6045	847	360-6142	866	361-4859	881
358-1377	860		▶873	360-6144	866	361-4860	882
	868	360-6046	847	360-6145	866	361-4861	879
358-3907	860		▶874	360-6146	866	361-4862	880
358-4889	271	360-6047	847	360-6147	866	361-4863	881
358-7374	551		▶875	360-6361	▶239	361-4864	882
358-7375	551	360-6048	848	360-7805	862	361-4865	879
358-7878	868		▶876		880	362-0454	843
359-8483	585	360-6050	849	360-7807	862		▶868
359-8516	585		▶855		865	362-0461	868
359-8518	585	360-6051	850		880	362-0462	868
359-8519	585		▶877	360-9895	239	362-4350	1025
359-8590	558	360-6052	851		▶240	362-4352	1025
359-8591	557		▶878	361-0756	▶854	362-4374	1
359-8631	6	360-6056	855	361-0757	854		▶351
	▶536	360-6057	877		▶867	362-4375	351
359-8632	5	360-6058	856	361-0761	865	362-4377	▶352
	6		878	361-0765	860		471
	▶538	360-6065	855		868		472
359-8633	5		856	361-0766	860	362-4378	352
	▶540		877		868	362-7824	852
359-8671	536		878	361-0767	867		▶856
359-8679	536	360-6066	855	361-2273	863	362-7825	856
359-8683	538	360-6067	855	361-2274	865	363-9195	843
359-8685	540	360-6068	877	361-2275	864		▶869
359-8686	540	360-6069	856	361-2276	860	363-9197	869
360-2765	859		878	361-2827	495	363-9204	869
	867	360-6070	855	361-2830	495	363-9205	869

▶ **PRIMARY REFERENCE**

PART NUMBER INDEX

Part	Page	Part	Page	Part	Page	Part	Page
363-9206	869						
363-9207	869						
363-9208	869						



© 2010 CATERPILLAR
ALL RIGHTS
RESERVED

CAT, CATERPILLAR, THEIR RESPECTIVE LOGOS, “CATERPILLAR YELLOW” AND THE POWER EDGE TRADE DRESS, AS WELL AS CORPORATE AND PRODUCT IDENTITY USED HEREIN, ARE TRADEMARKS OF CATERPILLAR AND MAY NOT BE USED WITHOUT PERMISSION.

PRINTED IN
U.S.A.