Parts Book

RUTHZIL TRATOR COMERCIAL DE PEÇAS LTDA 11 97083-6812 ROLANDO CITRANGULO

Model JCB 3C 14' AND JCB 3C PLUS
JCB/IESA ENGINED BACKHOE
LOADER BRAZIL
M1395001 ON

MOTOR P4001T 8C89

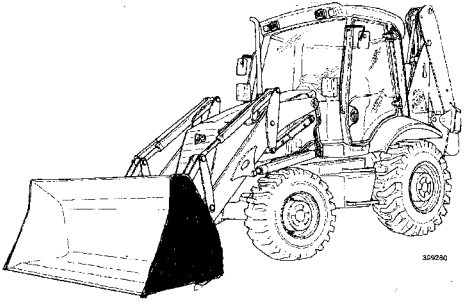

JCB

A Product of Hard Work

M152

JCB/IESA ENGINED BACKHOE LOADER BRAZIL

M1001572 to M1397499
Model JCB 3C 14' AND JCB 3C PLUS

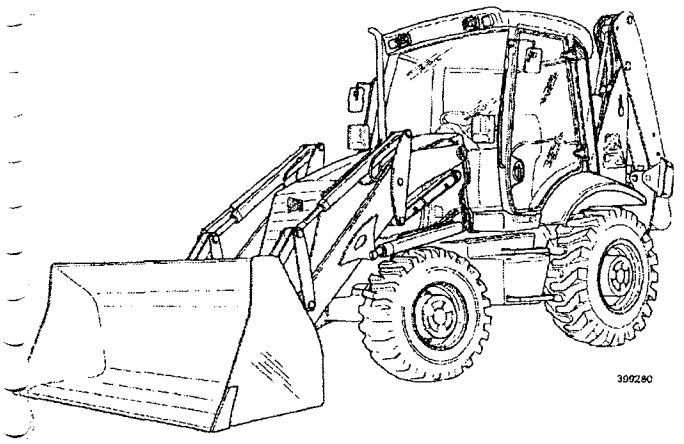

ATTACHMENTS	A
BODYWORK, CAB, LOADER END	B
ELECTRICS-MACHINE, CAB & ENGINE	C
CONTROLS-MACHINE, ENGINE & STEERING	D
HYDRAULICS INCLUDING STEERING	E
AXLES, WHEELS & TRANSMISSION	F
BRAKES	G
IESA P4001/P4001T ENGINES, FROM S/N 1395000	L
JCB444 ENGINE INSTALLATION, COMPONENTS	V

KEY TO STANDARD ABBREVIATIONS

9812/0080U
ISSUE 1

P.S.I	Pounds Per Square Inch
A/R	As Required
N.S.P	None Serviced Part
N/A	Not Applicable / Not Available
HBCV	Hose Burst Check Valve
KP	Kingpost
SS	Sideshift
CM	Centremount
M.P.H	Miles Per Hour
K.P.H	Kilometres Per Hour
STD	Standard
O/D	Outside Diameter
I/D	Inside Diameter
M.S.S	Multiple Supersession
T.I	Technical Information
M/S	Manual Shift Transmission
P/S	Powershift Transmission
M TBA	Machine Serial Number Not Yet Known
SUPERSEDED	Part Fully Interchangeable
TO M	To Machine Number
M ON	From Machine Number
4WD	4 Wheel Drive
LTR	Litre
L1=	Length (vertical)
L2=	Length (horizontal)
L=	Length
MM	Millimeter
T=	Thickness
W/	With
WO/	Without
KG	Kilogram
LH	Left Hand
RH	Right Hand
PTO	Power Take Off
S/M	Sitemaster
H/M	Hammermaster
PR	Pair
4WS	4 Wheel Steer
2WS	2 Wheel Steer
C/W	Complete With

9809/0058	Desk Top Reader 240 Volt
9809/0059	Desk Top Reader 110 Volt
9809/0060	Bulb For 9809/0058 & 9809/0059
9809/0048	Bulb For 375 Reader
9809/0044	Case 2 Reader Portable
9809/0054	Bulb For Case 2 Reader Fhx
9809/0045	Case 4 Reader Large Screen
9809/0055	Bulb For Case 4 Reader Epz
9809/0007	Bulb For Bell & Howell Sr 1020
9809/0047	Bulb For Mt4 Reader
9809/0053	Hand Held Elite Reader
9809/0056	Bulb For Microscot Reader

Lens

9809/0017	Lens 29mm For Sr 1020

Binder & Panels

9809/0006	Binder For Fiche (service)
9809/0052	Binder For Fiche (prof. Prod. Support)
9809/0015	Binder Fiche Panels

PAGE	ILLN	ITEM	PART NUMBER	CHANGE NUMBER	DESCRIPTION

PART NUMBER	PAGE NUMBER	ITEM
--		

A

- A1 SHOVELS
- A2 BUCKETS
- A3 ATTACHMENTS

ENGLISH

A1-1-1 SHOVEL, G.P 1.0M3, 2253MM (7'4") WIDE
A1-1-2 SHOVEL, G.P 1.0M3, 2253MM (7'4") WIDE, HEAVY DUTY
A1-1-3 SHOVEL, G.P 1.0M3, 2253MM (7'4") WIDE, HEAVY DUTY ,HIGH PIVOT 4WD
A1-1-10 SHOVEL, G.P 1.1M3, 2350MM (7'8")H/DUTY, BRAZIL HIGH PIVOT
A1-4-2 SHOVEL, G.P 1.1M3, 2350MM (7'8.5") WIDE, QUICKHITCH
A1-7-1 SHOVEL, CLAM, 6 IN 1, 7'4" WIDE 1.0M3
A1-8-2 SHOVEL, CLAM, 6 IN 1, 2350MM (7'8.5") WIDE, QUICKHITCH

A1-1-1 SHOVEL, G.P 1.0M3, 2253MM (7'4") WIDE

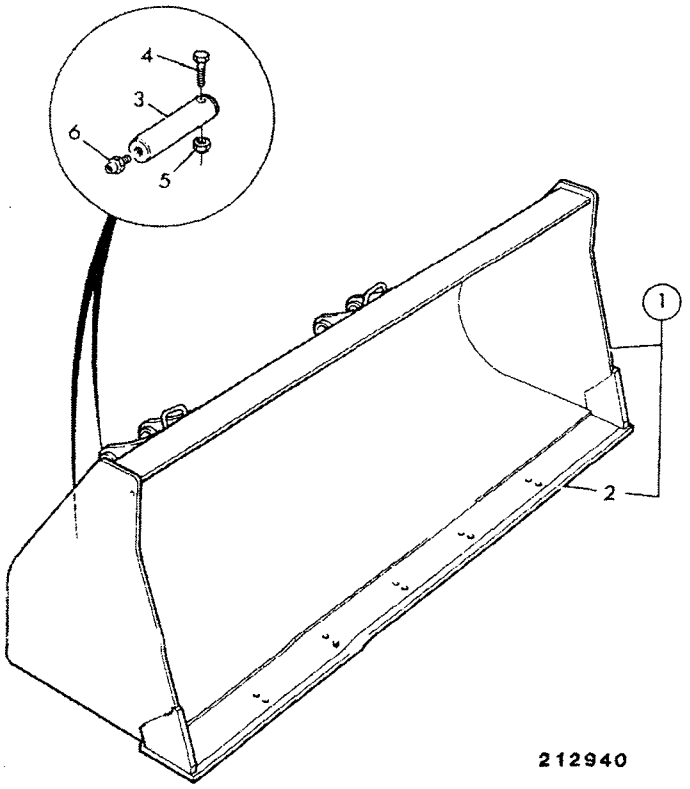

212940

	FROM	TO	FROM	TO
3C PLUS				
3C 14				

ITEM	PART NO	CHANGE NO	DESCRIPTION	REMARKS	USAGE CODE	QTY
1	335/05773		Shovel, GP 1.0m3 7'4", 214e Brazil			1
2	123/04023		:Toeplate			1
3	811/80001		Pin, pivot			4
4	1305/3222Z		Bolt, 3/8"UNF x 3"			4
5	1340/0203Z		Nut			4
6	1450/0002		Nipple, grease, straight, 1/4			4

A2-1-2 BUCKET, GENERAL PURPOSE, BOLT ON TEETH

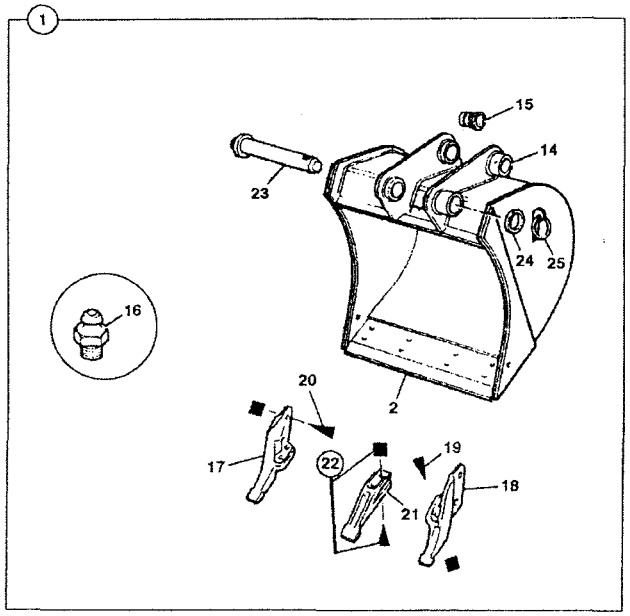

078281

ITEM	PART NO	CHANGE NO	DESCRIPTION	REMARKS	USAGE CODE	QTY
	1340/0701Z		:Nut		A to H	4
20	1305/0714Z		:Bolt		B to H	2
	1340/0701Z		:Nut		B to H	2
21	531/03205		:Tooth		B to H	A/R
22	826/00303		:Ploughbolt, 3/4unf x 70mm		B to H	A/R
	1340/0701Z		:Nut		B to H	A/R
23	911/12400		Pin, pivot		C to H	2
	911/16600		Pin, pivot, 305mm	12" bucket only	B	2
24	823/00470		Washer		B to H	2
25	826/00512		Pin, lynch		B to H	2

A2-1-3 BUCKET, GENERAL PURPOSE, BOLT ON TEETH

	FROM	TO	FROM	TO
3C PLUS				
3C 14				

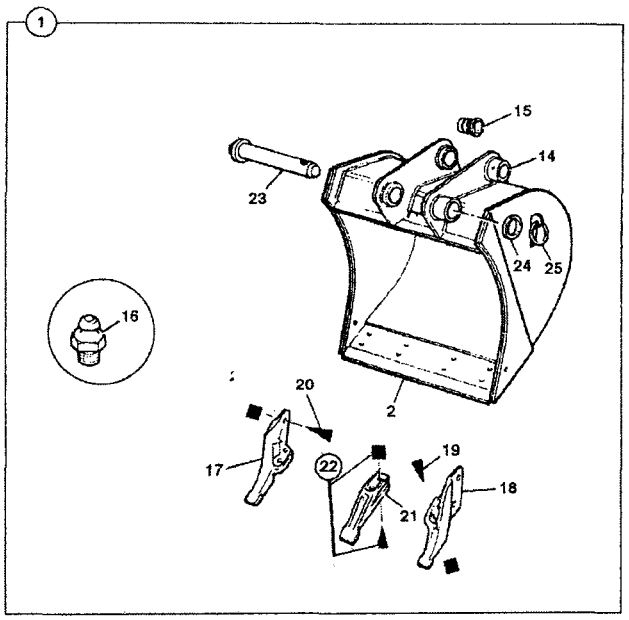

078281

ITEM	PART NO	CHANGE NO	DESCRIPTION	REMARKS	USAGE CODE	QTY
1	980/89993		Bucket, 600mm		G	1
	980/89994		Bucket, 800mm		H	1
2	331/49470		:Toeplate, 600mm bucket		G	1
	331/49472		:Toeplate, 800mm bucket		H	1
14	NSP		None serviced part			1
15	G65/0		:Bush, pivot		G & H	4
16	1450/0001		:Nipple, grease, straight, 1/8 BSP		G & H	4
17	531/03208		:Sidecutter, double flange, right hand		G & H	1
18	531/03209		:Sidecutter, double flange, left hand		G & H	1
19	826/00303		:Ploughbolt, 3/4unf x 70mm		G & H	4
	1340/0701Z		:Nut		G & H	4
20	1305/0714Z		:Bolt		G & H	2
	1340/0701Z		:Nut		G & H	2
21	531/03205		:Tooth		G & H	A/R
22	826/00303		:Ploughbolt, 3/4unf x 70mm		G & H	A/R
	1340/0701Z		:Nut		G & H	A/R
23	911/12400		Pin, pivot		G & H	2
24	823/00470		Washer		G & H	2
25	826/00512		Pin, lynch		G & H	2

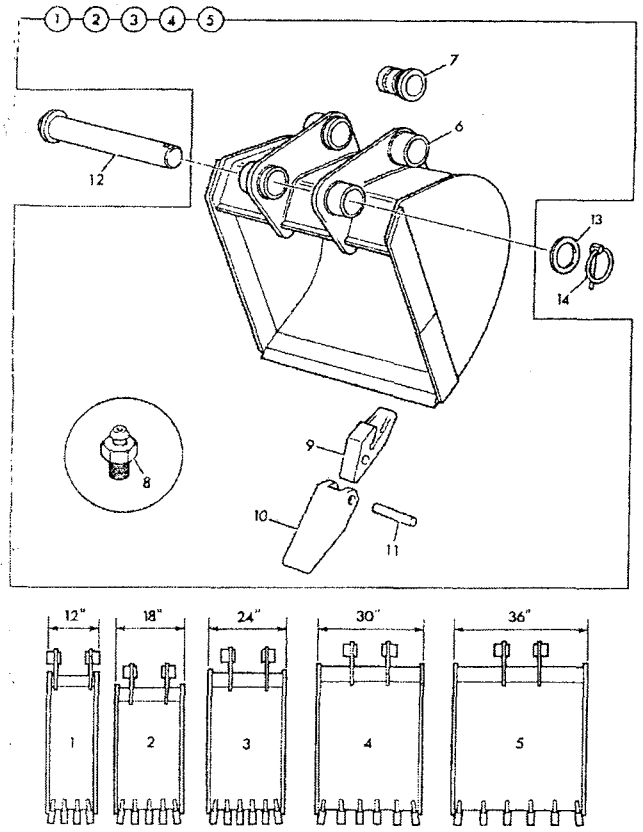

190570

	FROM	TO	FROM	TO
3C PLUS				
3C 14				

ITEM	PART NO	CHANGE NO	DESCRIPTION	REMARKS	USAGE CODE	Q
1	980/88295		Bucket, 305mm wide		A	
1A	980/84403		:Toeplate, 12"			
2	980/88296		Bucket, 457mm wide		B	
	980/88400		Bucket, HIGH CAPACITY 18", heavy duty			
2A	980/84407		:Toeplate, 18"			
3	980/88297		Bucket, 610mm wide		C	
	980/88299		Bucket, 610mm wide, HD high capacity			
3A	980/84411		:Toeplate, 24"			
4	980/88298		Bucket, 762mm wide		D	
	980/88300		Bucket, 762mm wide, HD high capacity			
4A	980/84415		:Toeplate, 30"			
5	980/88302		Bucket, 914mm wide		E	
	980/88301		Bucket, 914mm wide, HD high capacity			
5A	980/84419		:Toeplate, 36"			
6	1096/2004		:Boss, pivot		ABCDE	
7	G65/0		:Bush, pivot		ABCDE	
8	1450/0001		:Nipple, grease, straight, 1/8 BSP		ABCDE	
9	980/68209		:Adapter, tooth		ABCDE	A
10	980/33601		:Tooth, tip-forged		ABCDE	A

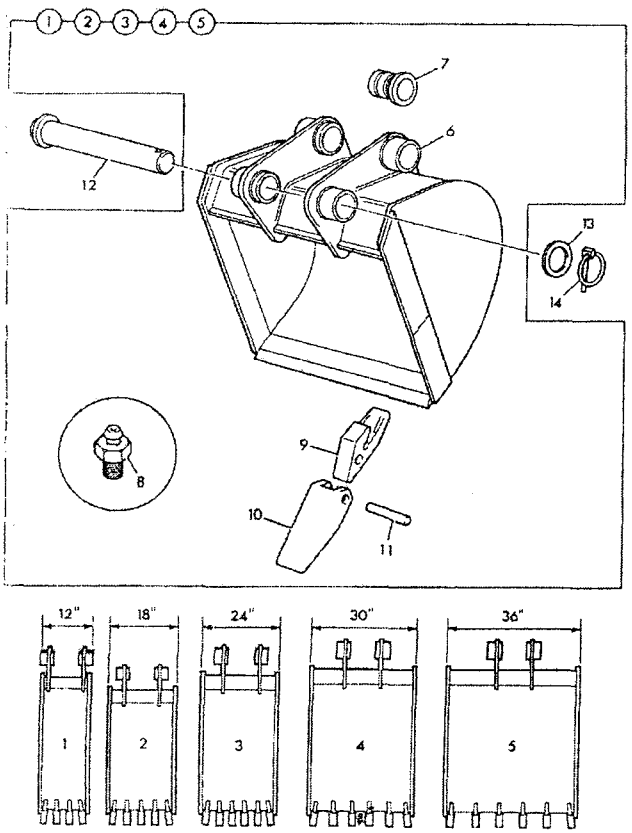

190570

ITEM	PART NO	CHANGE NO	DESCRIPTION	REMARKS	USAGE CODE	Q
11	980/33603		:Pin, flex		ABCDE	A
12	911/12400		Pin, pivot		ABCDE	
13	823/00470		Washer		ABCDE	
14	826/00512		Pin, lynch		ABCDE	

A2-2-1 TOOTH, RIPPER

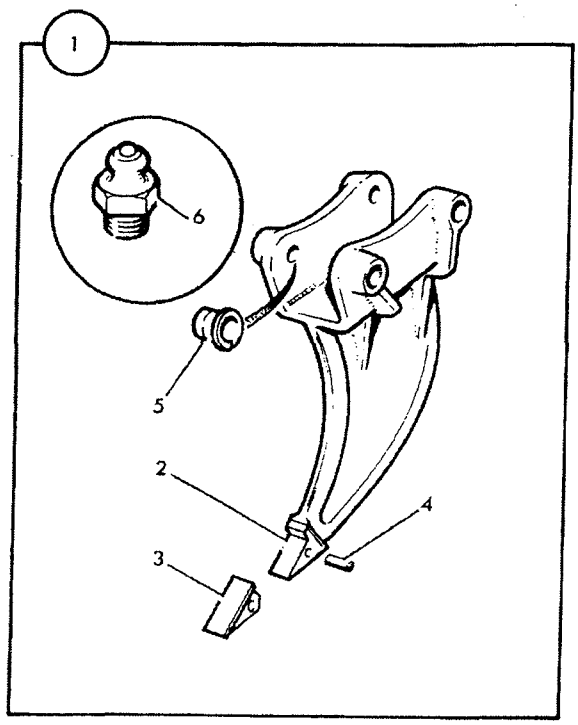

120000

	FROM	TO	FROM	TO
3C PLUS				
3C 14				

ITEM	PART NO	CHANGE NO	DESCRIPTION	REMARKS	USAGE CODE	QTY
1	529/03000		Tooth, Ripper Fabrication			1
2	529/03102		:Holder, tooth,ripper casting			1
3	529/03001		:Tooth, tip			1
4	529/03002		:Pin, flex			1
5	G65/0		:Bush, pivot			4
6	1450/0001		:Nipple, grease, straight, 1/8 BSP			1

A2-3-1 BLADE, DITCH CLEANING

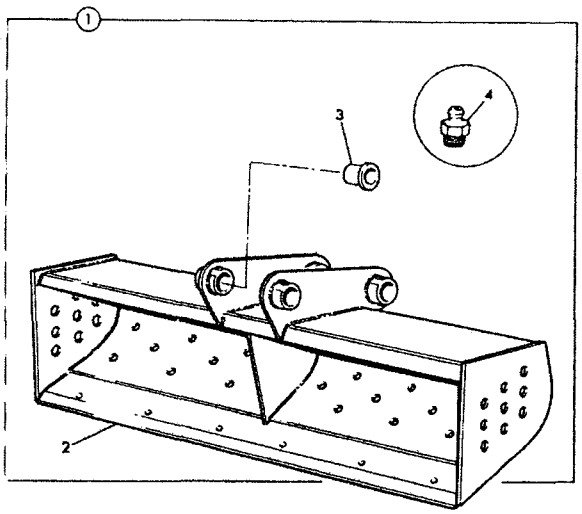

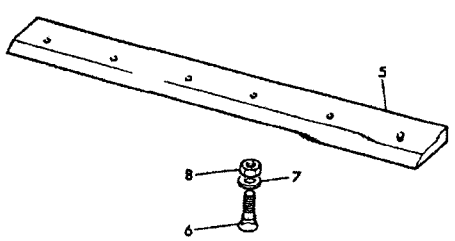

138350

	FROM	TO	FROM	TO
3C PLUS				
3C 14				

ITEM	PART NO	CHANGE NO	DESCRIPTION	REMARKS	USAGE CODE	QTY
1	993/35700		Blade, grading, 1525mm wide		A	1
	993/35800		Blade, grading, 1830mm wide		B	1
2	534/02505		:Toeplate, 5'0" (1525mm)		A	1
	533/04704		:Toeplate, 6'0" (1830mm)		B	1
3	G65/0		:Bush, pivot			4
4	1450/0002		:Nipple, grease, straight, 1/4			4
5	NSP		None serviced part			1
6	NSP		None serviced part			1
7	NSP		None serviced part			1
8	NSP		None serviced part			1

◄ = ⊂⊃
■ = ⊕

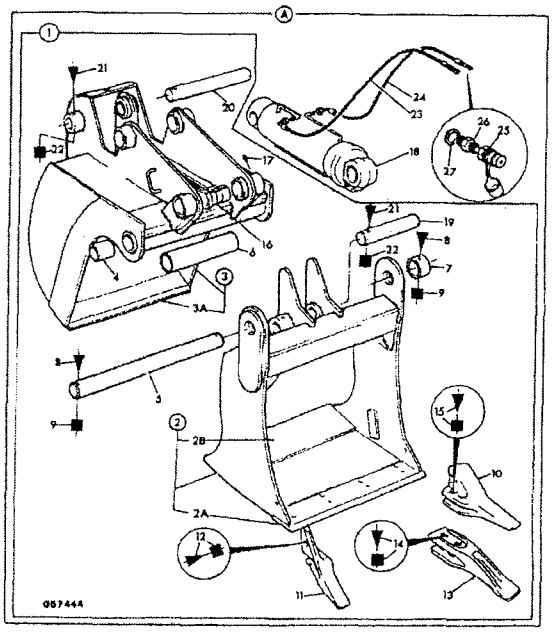

	FROM	TO	FROM	TO
3C PLUS				
3C 14				

ITEM	PART NO	CHANGE NO	DESCRIPTION	REMARKS	USAGE CODE	QTY
0A	531/20100		Bucket, jaw, 460mm (18") wide		A	1
	531/19800		Bucket, jaw, 600mm (23") wide		B	1
1	531/20200		:Bucket, jaw, 460mm (18") wide		A	1
	531/19900		:Bucket, jaw, 600mm (23")		B	1
2	529/69000		::Jaw, 460mm (18") wide		A	1
	529/69200		::Jaw, 600mm (23") wide		B	1
2A	529/69001		:::Toeplate, front, 460mm (18") wide	Welded to jaw	A	1
	529/69201		:::Toeplate, front, 600mm (23") wide	Welded to jaw	B	1
2B	529/24603		:::Toeplate, rear, 460mm (18") wide	Welded to jaw	A	1
	529/24506		:::Toeplate, rear, 600mm (23") wide	Welded to jaw	B	1
3	531/20300		::Blade, dozer, 460mm (18") wide		A	1
	531/20000		::Blade, dozer, 600mm (23") wide		B	1
3A	529/25108		:::Toeplate, 460mm (18") wide	Welded to blade	A	1
	529/25204		:::Toeplate, 600mm (23") wide	Welded to blade	B	1
4	1208/0017		::Bush		AB	2

◄ = ⊂⊃
■ = ⊕

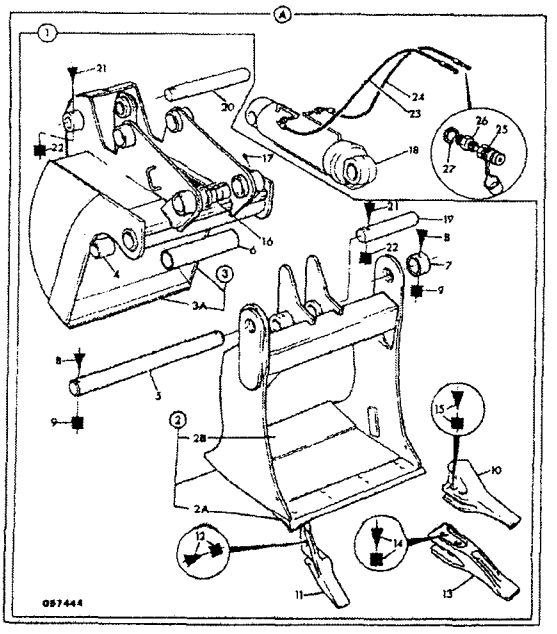

ITEM	PART NO	CHANGE NO	DESCRIPTION	REMARKS	USAGE CODE	QTY
5	811/20007		::Pin, pivot, 460mm (18") wide jaw		A	1
	811/20008		::Pin, pivot, 600mm (23") wide jaw		B	1
6	830/00207		::Spacer, 460mm (18") wide jaw		A	1
	830/00208		::Spacer, 305mm wide jaw		B	1
7	1089/0005		::Collar		AB	1
8	1305/3224		::Bolt		AB	2
9	1340/0203Z		::Nut		AB	2
10	531/03206		:Sidecutter, single flange		AB	1
	531/03208		:Sidecutter, double flange, right hand		AB	1
11	531/03207		:Sidecutter, single flange		AB	1
	531/03209		:Sidecutter, double flange, left hand		AB	1
12	1305/0714		:Bolt		AB	2
	1340/0701		:Nut		AB	2
13	531/03205		:Tooth		AB	2
14	826/00303		:Ploughbolt, 3/4unf x 70mm		AB	4
	1340/0701		:Nut		AB	4
15	826/00303		:Ploughbolt, 3/4unf x 70mm		AB	4
	1340/0701		:Nut		AB	4
16	G65/0		:Bush, pivot		AB	4
17	1450/0001		:Nipple, grease, straight, 1/8 BSP		AB	6
18	.		:'See Remark'	See Index E4	AB	1

◄ = ⊂⊃
■ = ◎

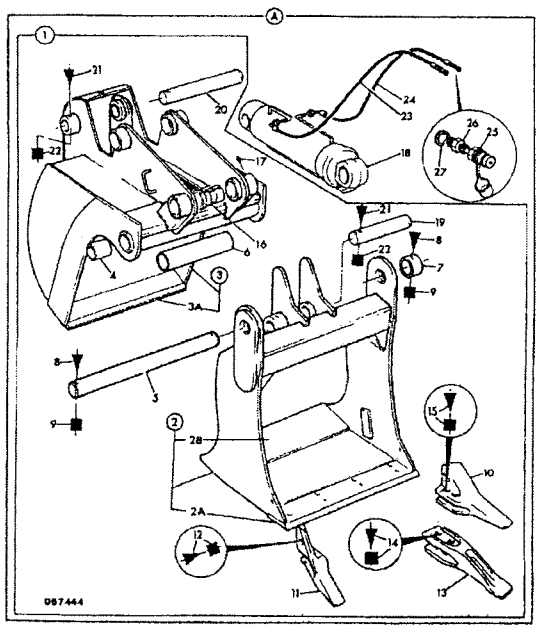

ITEM	PART NO	CHANGE NO	DESCRIPTION	REMARKS	USAGE CODE	QTY
19	1019/2018		Pin, Pivot		AB	1
20	811/80013		Pin, pivot		AB	1
21	1305/3226		Bolt, L=1.3/4"		AB	2
22	1340/0203Z		Nut		AB	2
23	613/22000		Hose		AB	1
24	613/22000		Hose		AB	1
25	45/903400		Coupling	See Note 1		2
26	1604/0004		Adapter, male/male			2
27	1406/0018		Seal, bonded, 1/2" BSP			2

Note 1: A new design coupling 45/904800 & 45/904700 may be used to replace this part

A

- A1 SHOVELS
- A2 BUCKETS
- ● A3 ATTACHMENTS

ENGLISH

A3-1-5 FORK LIFT, 6 IN 1 CLAM SHOVEL, MOUNTED 1.0M3
A3-3-1 ROCKBREAKER, HM265Q, 980/90241
A3-3-11 ROCKBREAKER, HM265Q, COMPONENTS
A3-3-21 ROCKBREAKER, HM385Q, 980/90239
A3-3-31 ROCKBREAKER, HM385Q, COMPONENTS
A3-6-10 QUICKHITCH, LOADER, MANUAL
A3-7-1 TOOTH & TOEPLATE, OPTIONS, SHOVELS
A3-8-1 FORK FRAMES & FORKS, INDUSTRIAL
A3-24-5 QUICKHITCH, EXCAVATOR

A3-1-5 FORK LIFT, 6 IN 1 CLAM SHOVEL, MOUNTED 1.0M3

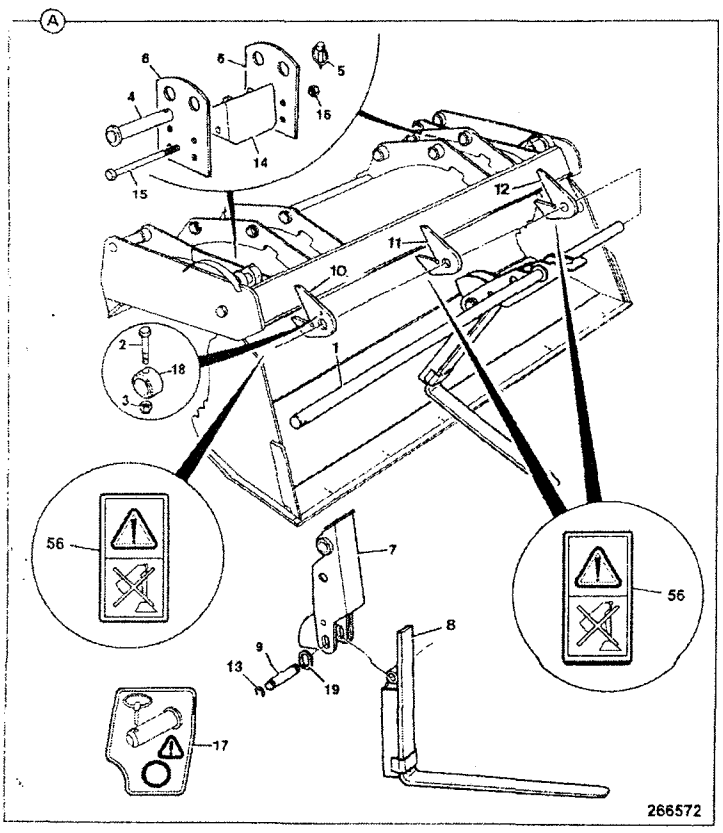

	FROM	TO	FROM	TO
3C PLUS				
3C 14				

ITEM	PART NO	CHANGE NO	DESCRIPTION	REMARKS	USAGE CODE	QTY
1	123/06667		Pin, pivot			1
2	1315/3416Z		Bolt, hex. head, M10 x 70			2
3	1370/0303Z		Nut, lock, M10			1
4	123/00932		Pin, pivot			2
5	826/00600		Pin, linch			2
6	123/07329		Bracket			4
7	125/00224		Carrier, link arm, 1.0m3			2
8	123/04827		Fork			2
9	811/70109		Pin, pivot			2
10	123/04293		Bracket, fork rail support			1
11	123/04294		Bracket, fork rail support			1
12	123/04293		Bracket, fork rail support			1
13	821/00309		Clip, 'E'			4
14	123/06296		Block, rubber pad			2
15	1315/3424Z		Bolt, M10 x 140			2
16	1370/0303Z		Nut, lock, M10			2
17	817/04503		Decal			2
18	123/06668		Collar			2
19	823/00569	Superseded	Spacer			4
	332/C7128		Washer, 39x60x3.2mm			4
56	817/70144		Label, no pull			3

A3-3-1 ROCKBREAKER, HM265Q, 980/90241

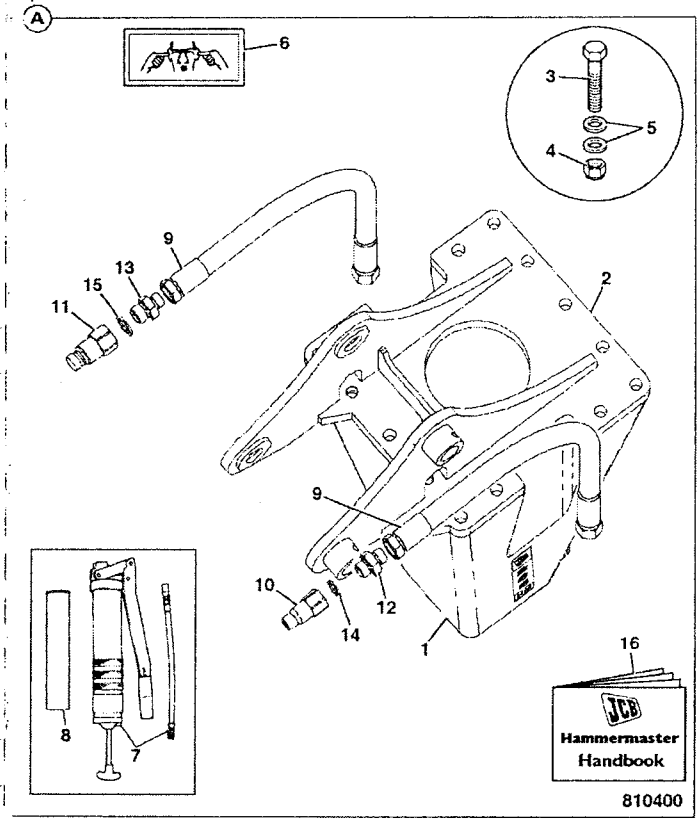

	FROM	TO	FROM	TO
3C PLUS				
3C 14				

ITEM	PART NO	CHANGE NO	DESCRIPTION	REMARKS	USAGE CODE	QTY
0A	980/90241		Rockbreaker, HM265Q assembly			1
1	980/90192		:Rockbreaker, SB410 ABI	For components see A3-3-11		1
2	335/10703		:Bracket, hanger HM265, JCB2CX			1
3	1315/3717D		:Bolt, M16x75			14
4	1370/0603Z		:Nut, M16			14
5	823/10400		:Washer, Nord-lock, M16			28
6	817/00592		:Label			1
7	992/11300		:Tool, grease gun			1
8	4003/1119		:Cartridge, grease, hammer P64			1
9	613/07900		:Hose			2
10	45/910500		:Coupling, 1/2" BSP male, quick release			1
11	45/910300		:Coupling, 3/4" BSP male, quick release			1
12	1606/0009		:Adapter, reducing			1
13	1604/0004		:Adapter, male/male			1
14	1406/0018		:Seal, bonded, 1/2" BSP			1
15	1406/0021		:Seal, bonded 3/4" BSP			1
16	9814/0525		:Book, rockbreaker instruct, HM165, 265, 385, 495			1

A3-3-11 ROCKBREAKER, HM265Q, COMPONENTS

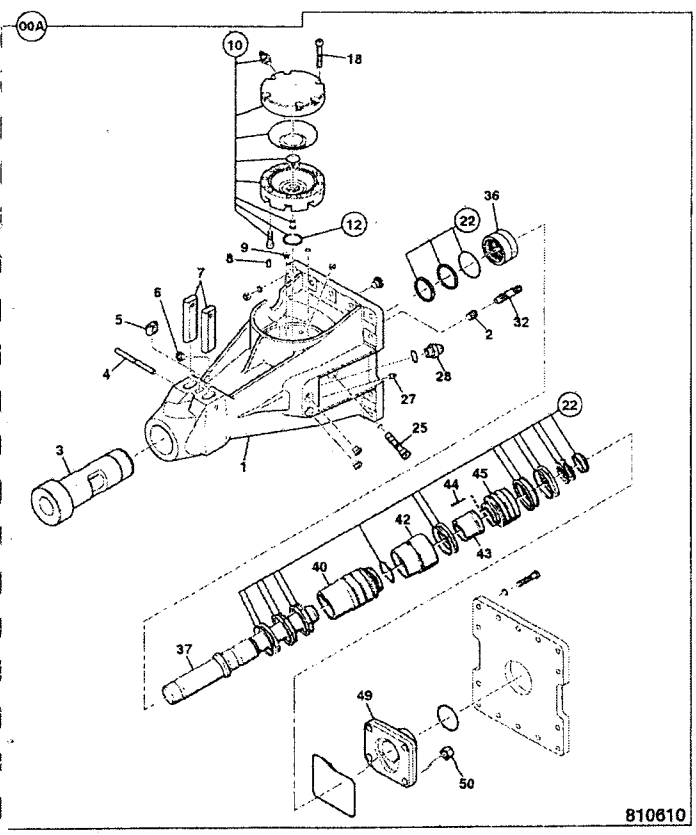

	FROM	TO	FROM	TO
3C PLUS				
3C 14				

ITEM	PART NO	CHANGE NO	DESCRIPTION	REMARKS	USAGE CODE	QTY
0A	.		'See Remark'	See A3-3-1		1
1	980/90192		:Rockbreaker, SB410 ABI			1
2	331/56106		::Insert, thread			4
3	331/56109		::Bush, BUSH			1
	331/56110		::Bush, 1mm oversize			1
4	331/56113		::Pin, lock			1
5	331/56085		::Lock, buffer			1
6	331/56118		::Plug			3
7	331/56120		::Retainer, tool			2
8	331/56121		::Pin, parallel			1
9	331/56122		::Plug			2
10	331/56123		::Accumulator, assembly			1
10A	331/62382		Valve, charge			1
12	331/56136		::Kit-repair, accumulator			1
18	331/56124		::Screw			4
22	331/56139		::Kit-repair, breaker			1
24	331/56013		::Plug, hex socket			1
25	331/56125		::Restrictor			1
27	816/13445		::Nipple, grease			1
28	1604/0004		::Adapter, male/male			2
32	331/56127		::Stud			4
36	331/56128		::Guide, piston			1

A3-3-11 ROCKBREAKER, HM265Q, COMPONENTS

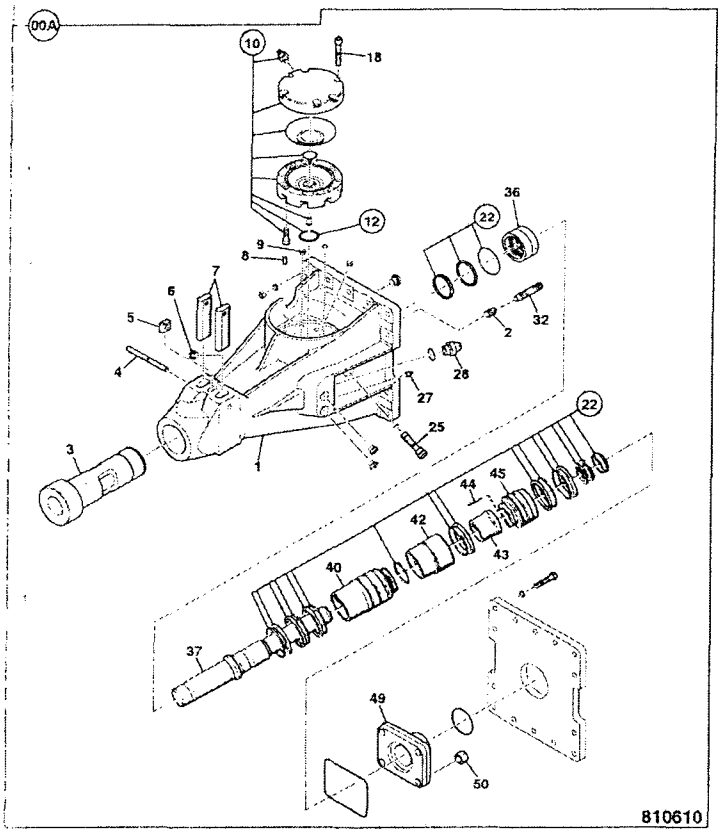

ITEM	PART NO	CHANGE NO	DESCRIPTION	REMARKS	USAGE CODE	QTY
37	331/56129		::Piston			1
40	331/56130		::Liner			1
42	331/56131		::Housing, valve			1
43	331/56132		::Valve, main			1
44	331/55931		::Plunger			6
45	331/56133		::Housing, seal			1
49	331/56134		::Bracket, end piece			1
50	331/56135		::Nut			4
51	817/20107		Decal, HM265			2

A3-3-21 ROCKBREAKER, HM385Q, 980/90239

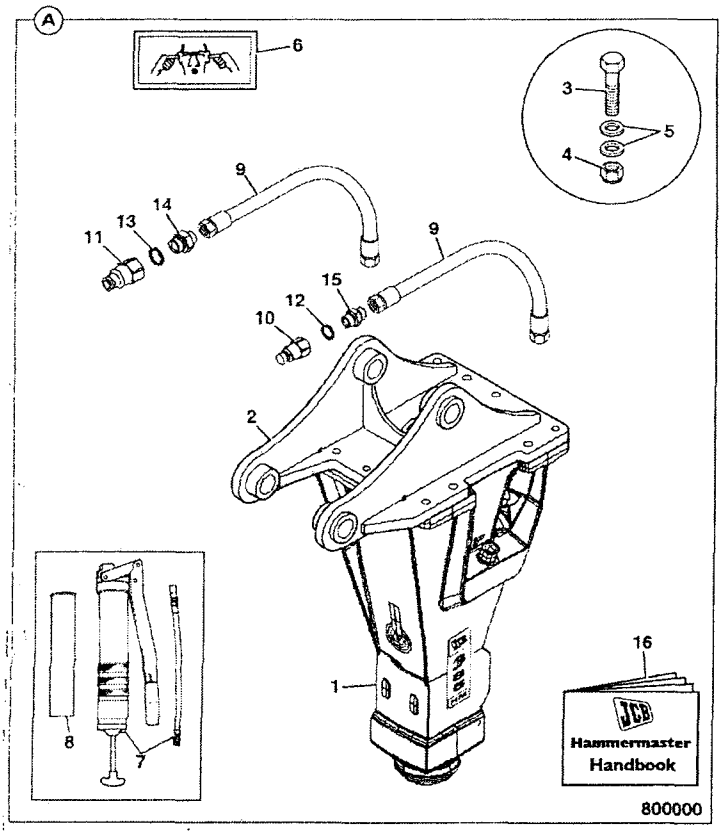

	FROM	TO	FROM	TO
3C PLUS				
3C 14				

ITEM	PART NO	CHANGE NO	DESCRIPTION	REMARKS	USAGE CODE	QTY
0A	980/90239		Rockbreaker, HM385Q assembly, 3CX 4CX			1
1	980/90191		:Rockbreaker, HM385Q ABI	For components see A3-3-31		1
2	335/09865	Superseded	:Bracket, hanger HM385, 3CX, 4CX			1
	335/11592		Bracket, HANGER BRACKET, 3CX - HM365Q			1
3	1315/3718D		:Bolt			14
4	1370/0603Z		:Nut, M16			14
5	823/10400		:Washer, Nord-lock, M16			28
6	817/00592		:Label			1
7	992/11300		:Tool, grease gun			1
8	4003/1119		:Cartridge, grease, hammer P64			1
9	615/80103		:Hose			2
10	45/910300		:Coupling, 3/4" BSP male, quick release			1
11	45/910200		:Coupling, 1"BSP male, quick release			1
12	1406/0021		:Seal, bonded 3/4" BSP			1
13	1406/0026		:Washer, seal			1
14	1606/0012		:Adapter			1
15	1604/0006		:Adapter, 3/4" BSP M/M			1

A3-3-21 ROCKBREAKER, HM385Q, 980/90239

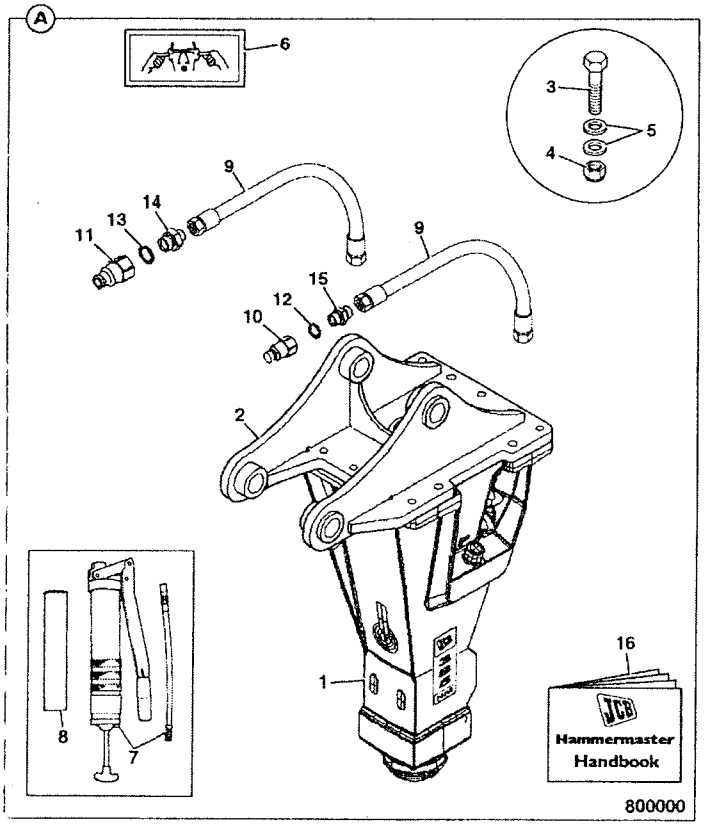

ITEM	PART NO	CHANGE NO	DESCRIPTION	REMARKS	USAGE CODE	QTY
16	9814/0525		:Book, rockbreaker instruct, HM165, 265, 385, 495			1
17	817/20423		Label, pump flow/rpm			1
18	335/12566		:Lever, bent			1

A3-3-31 ROCKBREAKER, HM385Q, COMPONENTS

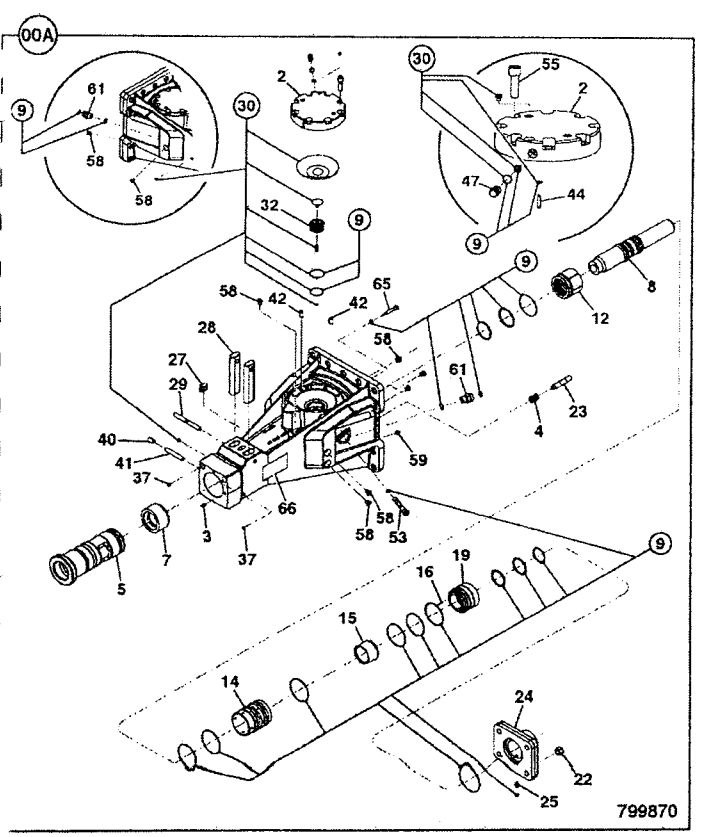

	FROM	TO	FROM	TO
3C PLUS				
3C 14				

ITEM	PART NO	CHANGE NO	DESCRIPTION	REMARKS	USAGE CODE	QTY
0A	.		'See Remark'	See A3-3-21		1
1	980/90191		:Rockbreaker, HM385Q ABI			1
2	331/55898		::Housing, Accumulator			1
3	331/56022		::Plug			1
4	331/55983		::Insert, thread			4
5	331/55979		::Bush			1
7	331/55903		::Stop, ring			1
8	331/55907		::Piston			1
9	331/55895		::Kit-repair, Breaker			1
12	331/55909		::Guide, piston			1
14	331/55911		::Liner			1
15	331/55913		::Valve, main			1
16	331/55931		::Plunger			8
19	331/55932		::Housing, seal			1
22	331/55933		::Nut			4
23	331/55936		::Stud			4
24	331/55938		::Bracket, end piece			1
25	331/55940		::Valve, check complete			1
27	331/55945		::Buffer, lock			1
28	331/55947		::Retainer, Tool			1
29	331/55949		::Pin, lock			1
30	331/55930		::Kit-repair, accumulator			1

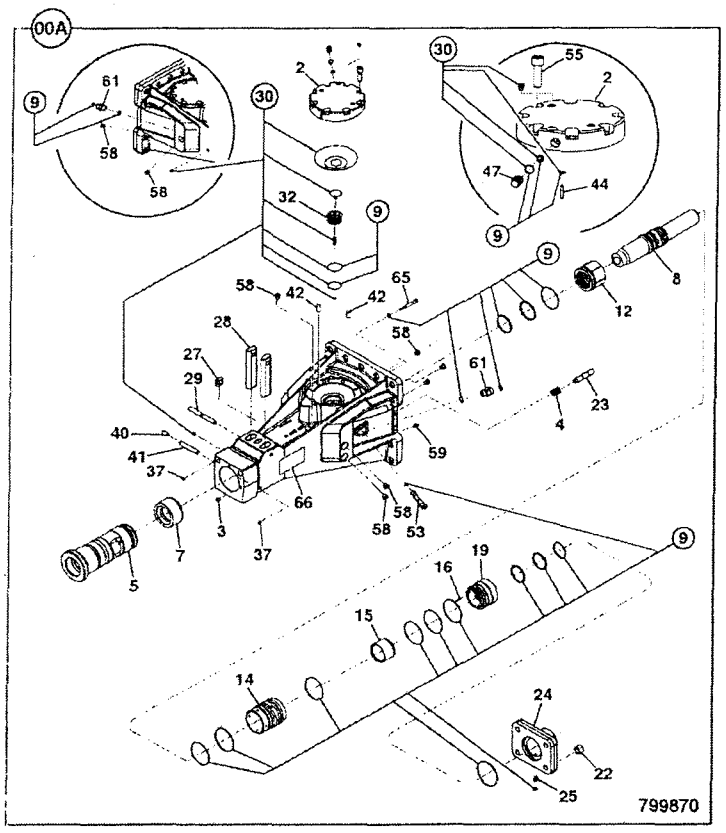

ITEM	PART NO	CHANGE NO	DESCRIPTION	REMARKS	USAGE CODE	QTY
32	331/55956		::Seat, diaphragm support			1
37	331/55996		::Plug			2
40	826/11502		::Pin, spring			1
41	331/55958		::Pin, parallel			1
42	331/56010		::Pin, parallel			2
44	331/56011		::Pin, parallel			1
47	331/55951		::Valve, charge			1
53	331/55990		::Restrictor			1
55	331/55966		::Capscrew			8
58	331/56013		::Plug, hex socket			8
59	816/13445		::Nipple, grease			1
61	1604/0006		:Adapter, 3/4" BSP M/M			2
65	331/56018		::Pin, lock			1
66	817/20106		:Decal, HM385			2
67	817/20423		Label, pump flow/rpm			1

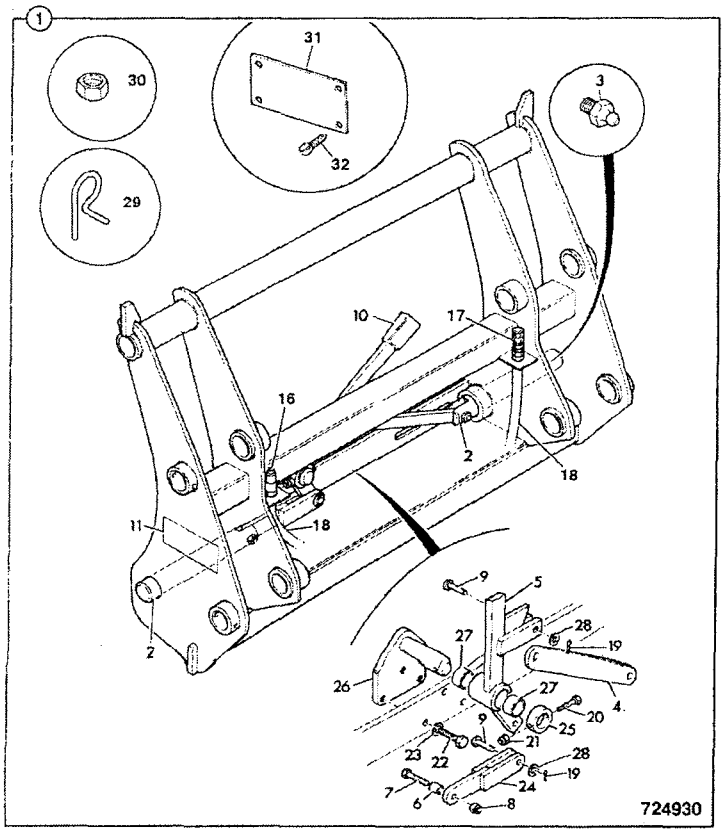

	FROM	TO	FROM	TO
3C PLUS				
3C 14				

ITEM	PART NO	CHANGE NO	DESCRIPTION	REMARKS	USAGE CODE	QTY
0A	980/89601		Attachment, Quickhitch			1
1	335/06316		:Quickhitch, loader			1
2	980/11401		:Pin, pivot			2
3	1450/0001A		:Nipple, grease			2
4	980/84223		:Link, LONG			1
5	980/86033		:Handle			1
6	980/82200		:Spacer, 22mm long			2
7	1315/3419Z		:Bolt, M10x90mm			2
8	1370/0303Z		:Nut, lock, M10			2
9	980/84225		:Pin			3
10	123/01256		:Handle, grip			1
11	N.S.P		:None serviced part			1
13	45/920067		:Coupling, 3/8"BSP male, quick release			1
14	45/920066		:Coupling, 3/8"BSP female, quick release			1
15	612/07600		:Hose, high pressure, 3/8", L=610			2
16	2103/0709		:Pin, split			2
17	1315/3213Z		:Bolt, M6x55			1
18	1370/0103Z		:Nut, Self lock, M6			1
19	1315/0507Z		:Bolt			3
20	1425/0009Z		:Washer, Spring M12			3

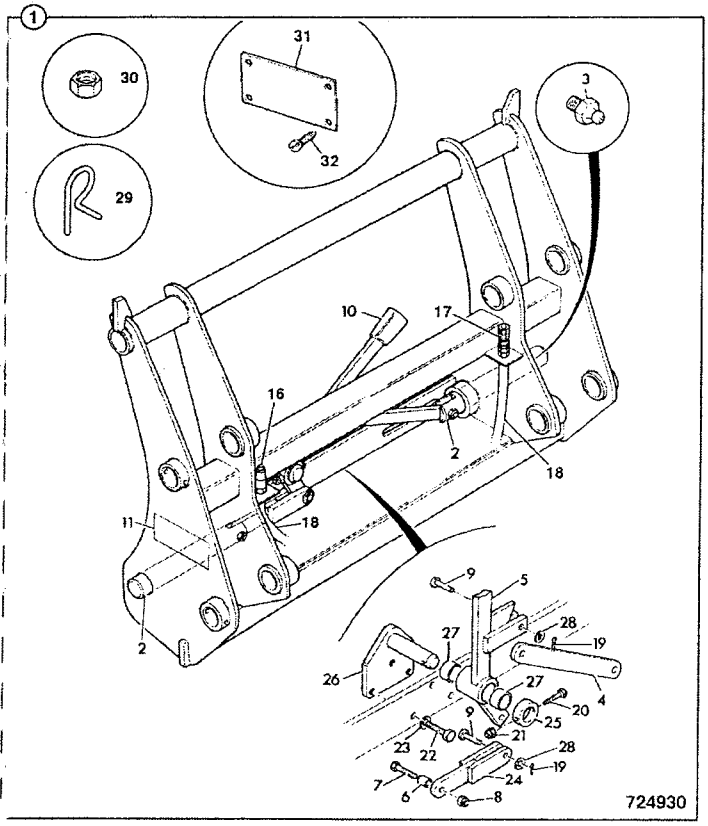

ITEM	PART NO	CHANGE NO	DESCRIPTION	REMARKS	USAGE CODE	QTY
21	980/86035		Link, short			1
22	980/84224		Boss			1
23	980/86034		Bracket			1
24	980/11402		Bush			1
25	1420/0008Z		Washer, Plain M10			2
26	826/00479		Clip, 'R'			1
27	1356/0203Z		Nut, backing			2
28	817/19231		Label, 1.1M3 Max.			1
29	826/10511		Fastener			8

	FROM	TO	FROM	TO
3C PLUS				
3C 14				

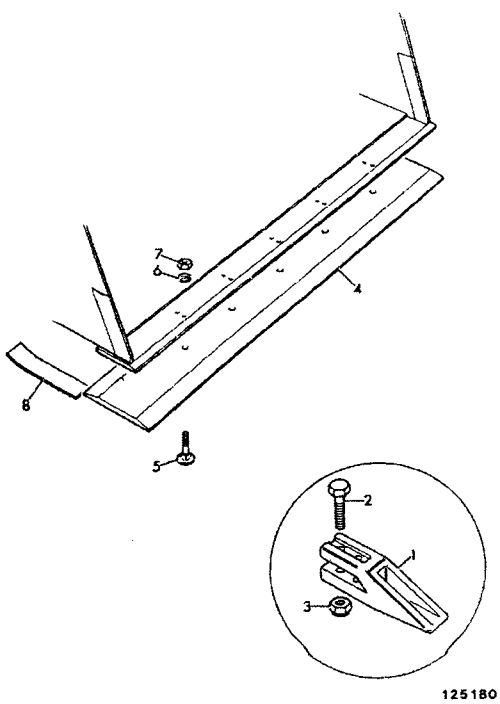

ITEM	PART NO	CHANGE NO	DESCRIPTION	REMARKS	USAGE CODE	QTY
1	531/03205		Tooth			A/R
2	826/00303		Ploughbolt, 3/4unf x 70mm	2 per tooth		A/R
3	1340/0701Z		Nut			A/R
4	993/99391		Toeplate, 8 hole, bolt on type, 295mm x 2235mm long	double cutting edge		1
5	826/00217		Ploughbolt, 3/4UNF x 2 1/4			A/R
6	1416/0011		Washer			A/R
7	1340/0701Z		Nut			A/R

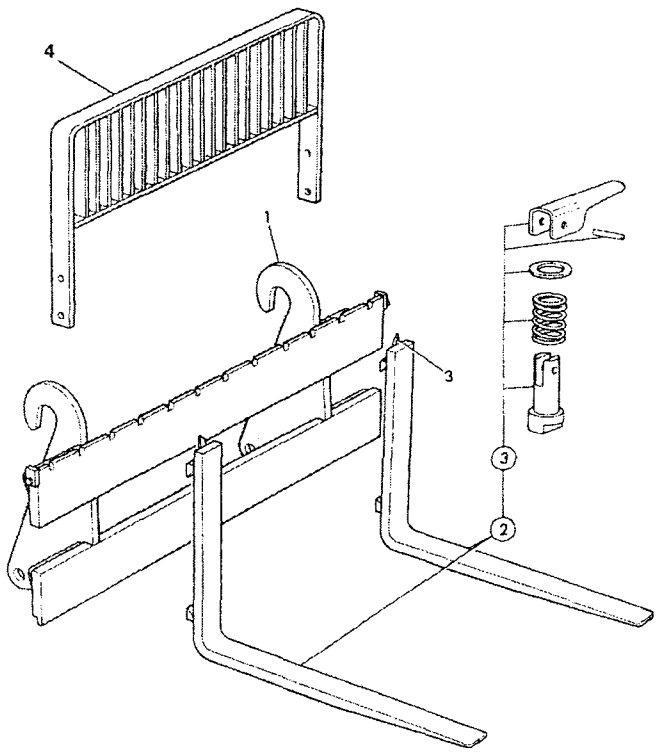

251310

	FROM	TO	FROM	TO
3C PLUS				
3C 14				

ITEM	PART NO	CHANGE NO	DESCRIPTION	REMARKS	USAGE CODE	QTY
1	980/07200		*Frame, fork*			1
2	123/01374		Fork, 2T S.W.L.			1PR
3	993/51100		Kit-fork retention, Class 2 fork			1
4	980/14200		Guard, load			1

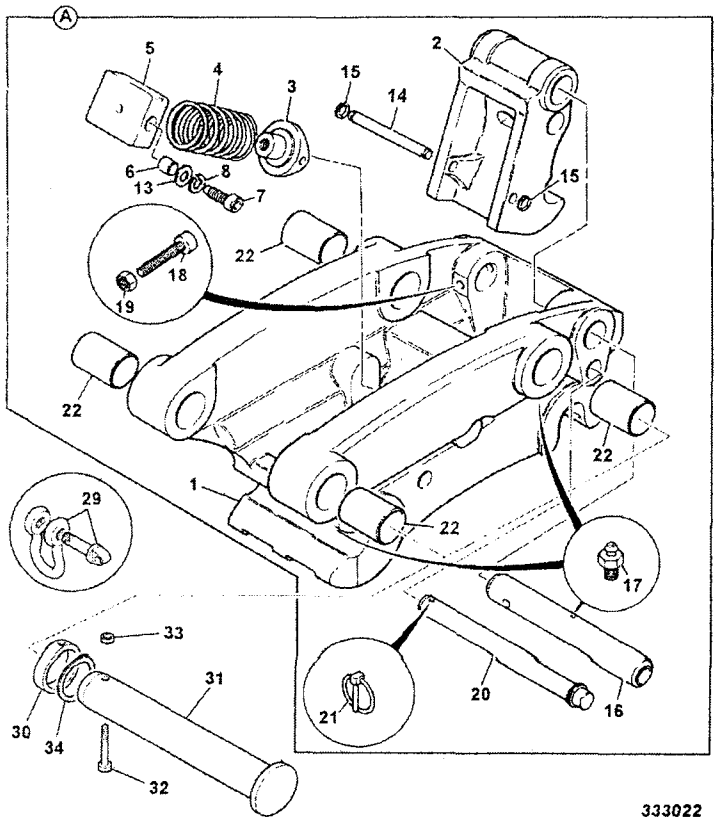

333022

	FROM	TO	FROM	TO
3C PLUS				
3C 14				

ITEM	PART NO	CHANGE NO	DESCRIPTION	REMARKS	USAGE CODE	QTY
0A	126/03077		Kit-quickhitch, mechanical			1
1	128/10412		:Body, c/w bearings, quickhitch			1
2	123/07757		:Latch			1
3	123/07772		:Pivot, quickhitch			1
4	814/10143		:Spring, off-pins quichhitch			2
5	128/10413		:Block, pivot c/w bearings			1
6	831/00137		:Bush			2
7	123/07761		:Bolt, trunnion			2
8	1425/0014Z		:Washer			2
13			'See Remark'	no longer fitted		2
14	123/07762		:Pin, pivot			1
15	826/00614		:Circlip			2
16	811/50578		:Pin, pivot			1
17	1450/0001		:Nipple, grease, straight, 1/8 BSP			5
18	1391/3419Z		:Capscrew			1
19	1370/0303Z		:Nut, lock, M10			1
20	123/07763		:Pin, lock			1
21	826/00600		:Pin, linch			1
22	809/00192		:Bearing			4
27	123/09001		:Plate, SWL 1ton			1
28	826/00562		:Screw, hammer drive			2

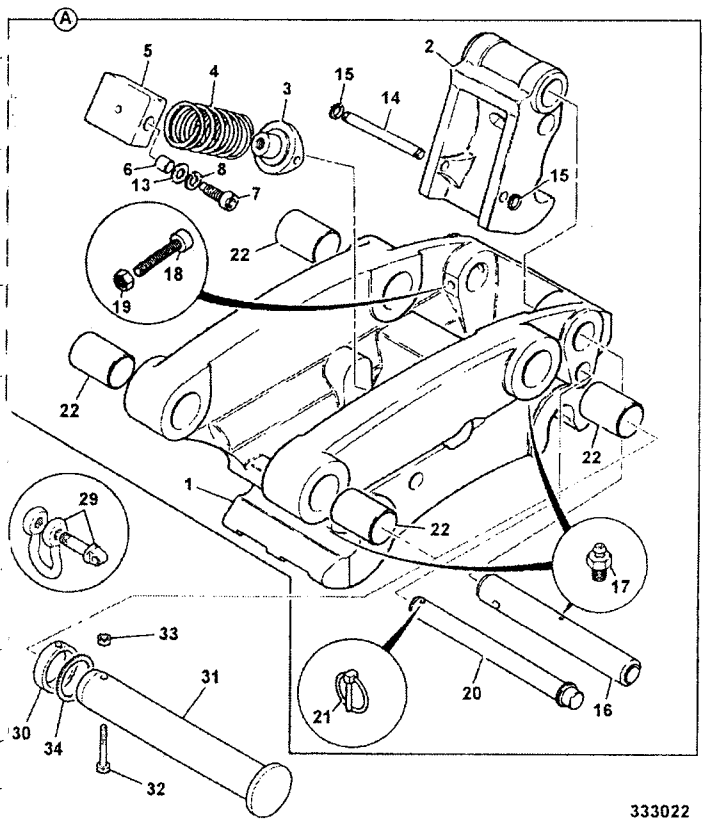

333022

ITEM	PART NO	CHANGE NO	DESCRIPTION	REMARKS	USAGE CODE	QTY
29	918/66900		Link, bow, 1 TON SWL			1
30	123/06668		Collar			2
31	911/12400		Pin, pivot			2
32	1315/3416Z		Bolt, hex. head, M10 x 70			2
33	1370/0303Z		Nut, lock, M10			2
34	823/00470		Washer			2

B

- ● B1 BODYWORK/FRAME
- B2 CAB
- B3 LOADER, FRONT END
- B4 BACKHOE
- B5 REFURBISHMENTS

ENGLISH

B1-1-51 CHASSIS CENTREMOUNT, 2WS
B1-2-10 TANK, HYDRAULIC
B1-2-11 GUARD, SUCTION HOSE
B1-3-10 TANK, DIESEL FUEL, 130 LITRES
B1-4-20 STABILISER, CENTREMOUNT
B1-4-30 GUARD, STABILISER RAM, CENTREMOUNT
B1-5-1 BONNET ASSEMBLY, 2WS
B1-5-3 BONNET ASSEMBLY, 2WS
B1-6-11 GRILLE, FRONT, 2WS
B1-6-21 GRILLE, FRONT, 2WS
B1-7-1 STEP, CAB ACCESS, HYDRAULIC TANK SIDE
B1-8-20 MUDGUARDS, REAR, YELLOW
B1-10-12 PADS, STREET, STABILISER, CENTREMOUNT
B1-10-14 PADS, FLIP, STABILISER, CENTREMOUNT
B1-12-11 COVER PLATES, LOADER TOWER
B1-13-1 VALVE MOUNTINGS, EXCAVATOR
B1-13-11 VALVE MOUNTINGS, LOADER
B1-14-11 TOOLBOX

B1-1-51 CHASSIS CENTREMOUNT, 2WS

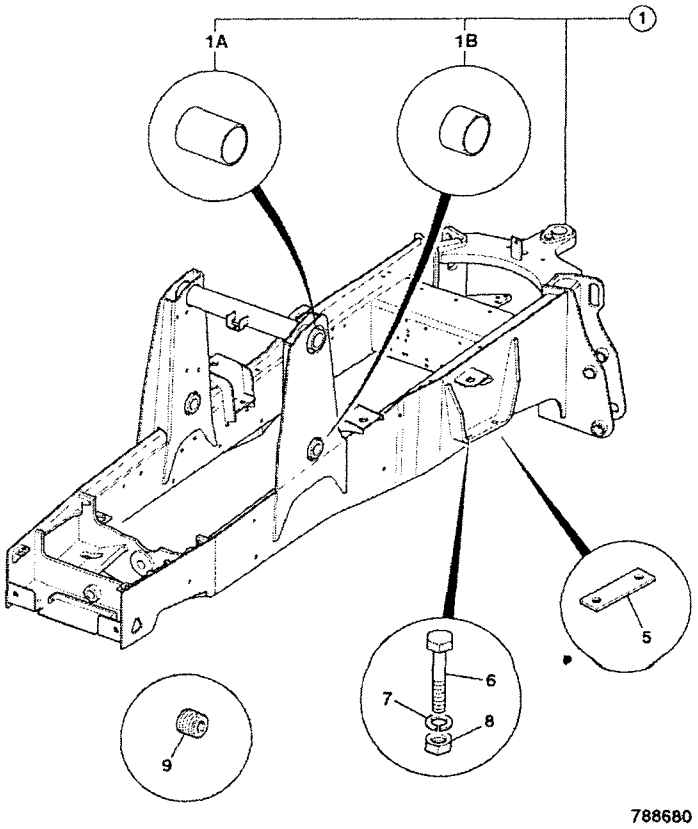

788680

	FROM	TO	FROM	TO
3C PLUS				
3C 14				

ITEM	PART NO	CHANGE NO	DESCRIPTION	REMARKS	USAGE CODE	QTY
1	128/15678	Superseded	Chassis, 2WS centremount			1
	128/C0138		Chassis, 2WS centremount	Dieselmax		1
	128/17704		Chassis, 2WS cintremount	International engine		1
1A	809/00102		:Bearing, liner			2
1B	809/00093		:Bearing, liner			2
5	123/06350		Spacer, rear axle, 25mm	use with 16" Armstrong front wheels	A	2
	331/17737		Spacer, rear axle, 20mm	use with 826/01712 for 17.5" front wheels	B	1
6	826/11353		Bolt, 1"unf X 8" long			4
	826/01712		Bolt, 1"unf X 9" long	use with 16" Armstrong front wheels	A	4
	826/11352		Bolt, 1"unf X 9 1/2" long		B	1
7	826/01714		Nut			4
8	823/00578		Washer			4
9	835/10026		Plug, plastic			17

B1-2-10 TANK, HYDRAULIC

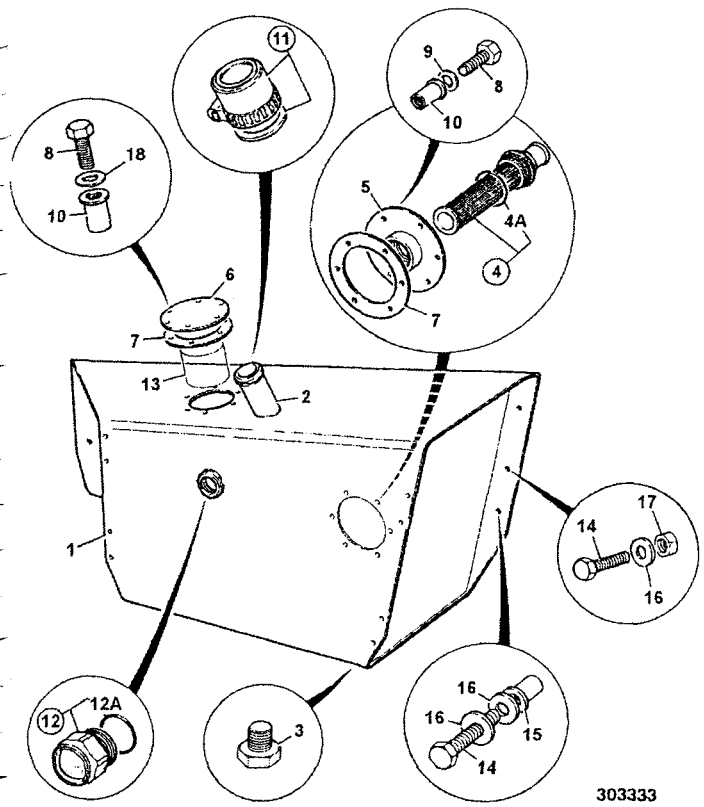

303333

	FROM	TO	FROM	TO
3C PLUS				
3C 14				

ITEM	PART NO	CHANGE NO	DESCRIPTION	REMARKS	USAGE CODE	QTY
1	128/13783		Tank, hydraulic 214e			1
2	NSP		:None serviced part	Replace tank		1
3	32/925390		:Plug, drain			1
3A	2401/0510		:O Ring			1
4	32/920300		:Element, suction			1
4A	32/920301		:O Ring			1
5	125/00430		:Cover			1
6	123/06717		:Cover, plate			1
7	813/00466	To M TBA	:Gasket		A	2
	813/10186		:Gasket, hyd filter cover		B	2
8	1315/0307Z		:Screw, M8 X 25			12
9	1420/0007Z		:Washer, plain, M8			6
10	826/10381		:Rivet, nut M8 closed			12
11	32/925421		:Cap, filler/breather			1
11A	123/04056		:Seal, cap			1
12	123/08053		:Gauge, sight			1
12A	25/700013		:O Ring			1
13	.		:'See Remark'	Filter see frame E3-7-1		1
14	1315/0512Z		Bolt, M12 x 50mm			6
15	826/01717		Nut, rivet, M12			4
16	823/00589		Washer			8
17	1370/0403Z		Nut, M12			2

B1-2-10 TANK, HYDRAULIC

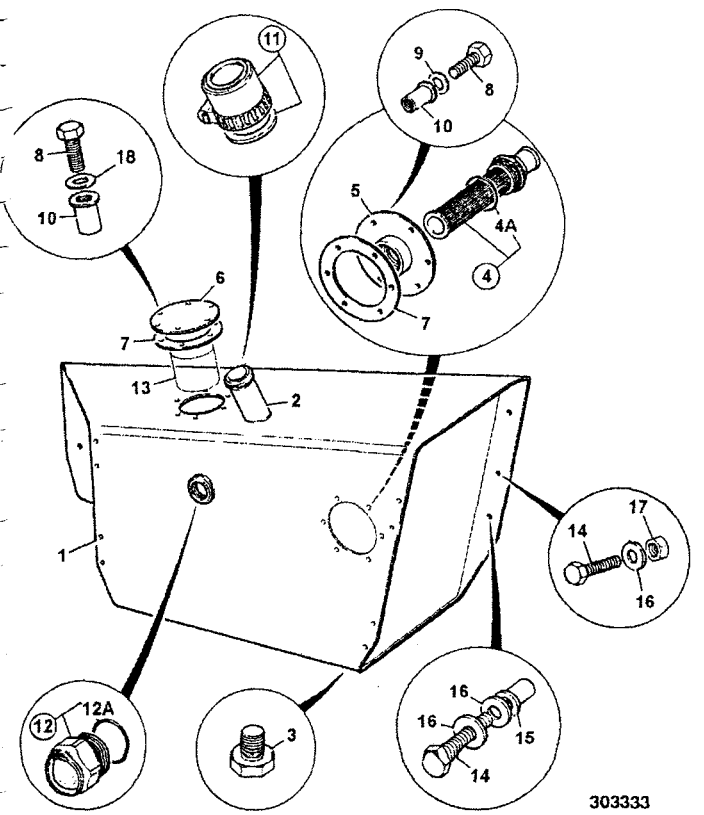

303333

ITEM	PART NO	CHANGE NO	DESCRIPTION	REMARKS	USAGE CODE	QTY
18	1420/0007Z	To M TBA	:Washer, plain, M8		A	6
	823/10874		:Washer, sealing.M8		B	6

B1-2-11 GUARD, SUCTION HOSE

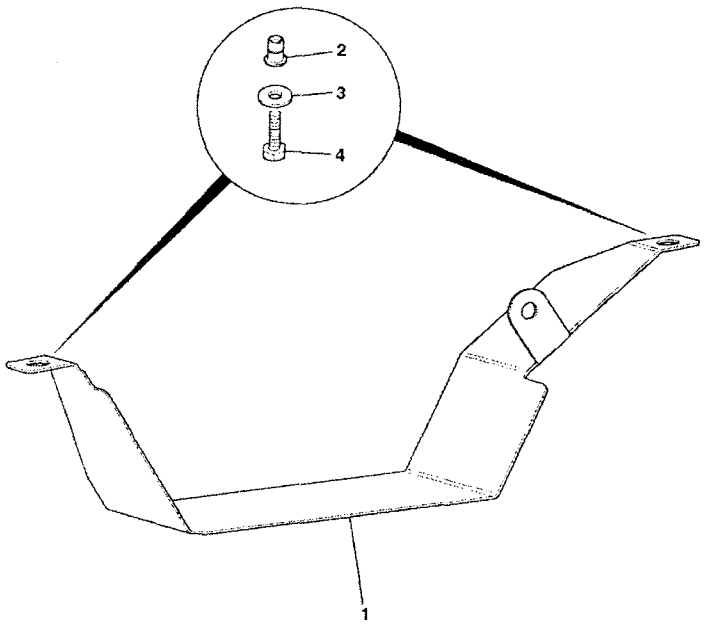

781200

	FROM	TO	FROM	TO
3C PLUS				
3C 14				

ITEM	PART NO	CHANGE NO	DESCRIPTION	REMARKS	USAGE CODE	QTY
1	339/01056		Guard, suction hose			1
2	826/01717		Nut, rivet, M12			2
3	823/00589		Washer			2
4	1315/3510Z		Bolt			2

B1-3-10 TANK, DIESEL FUEL, 130 LITRES

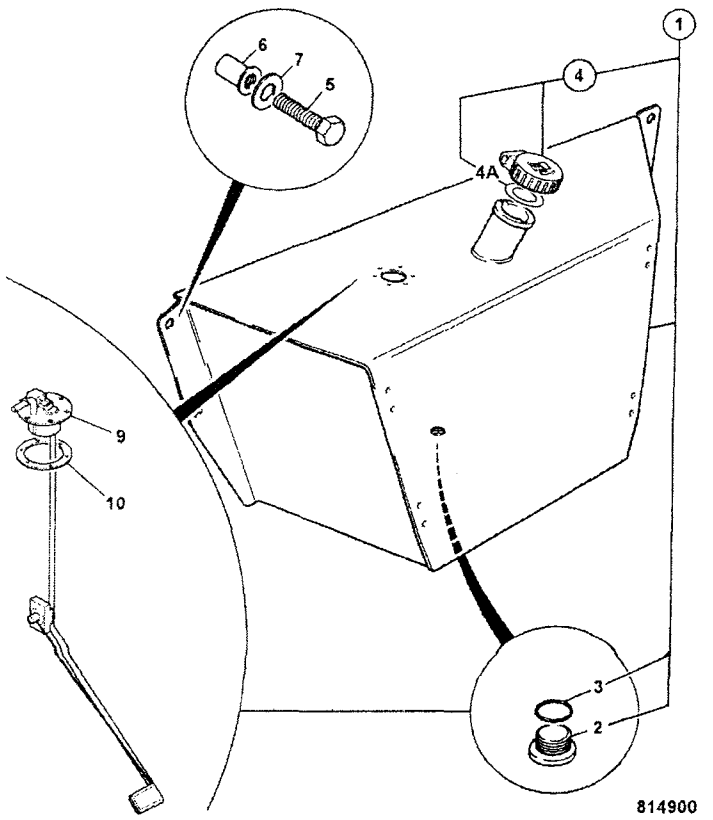

814900

	FROM	TO	FROM	TO
3C PLUS				
3C 14				

ITEM	PART NO	CHANGE NO	DESCRIPTION	REMARKS	USAGE CODE	QTY
1	128/15230		Tank, diesel, 130 litres			1
2	32/925390		:Plug, drain			1
3	2401/0510		::O Ring			1
4	331/45908	To M TBA	:Cap, filler, diesel, lockable	For key use 701/45501		1
	123/05892		:Cap, filler, lockable, supplied without key	use key 701/45501		1
4A	904/20333	To M TBA	::Seal, fuel cap			1
	123/06343		::Seal			1
5	1315/0512Z		Bolt, M12 x 50mm			4
6	826/01717		Nut, rivet, M12			4
7	823/00589		Washer			4
8	826/00520		:Screw			6
9	716/27600		:Gauge, fuel sender unit			1
10	813/10331		:Gasket, sensor, fuel level			1

B1-4-20 STABILISER, CENTREMOUNT

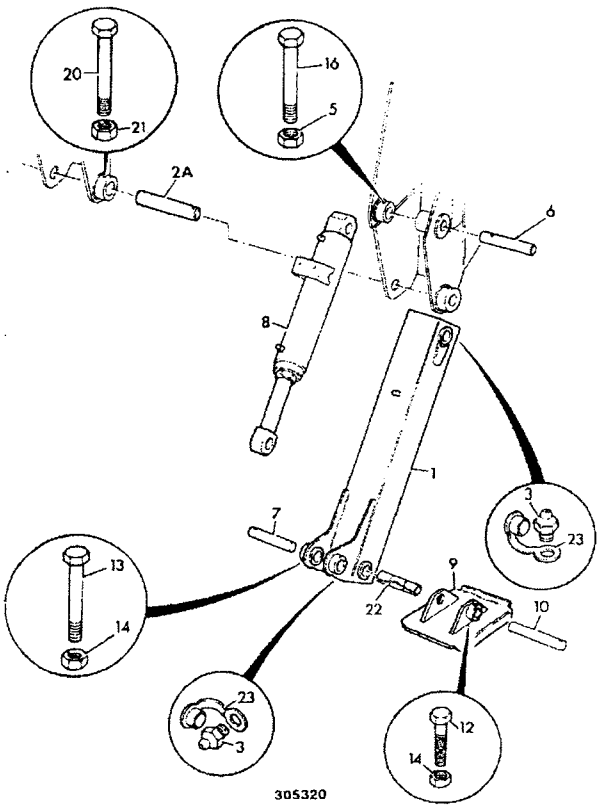

	FROM	TO	FROM	TO
3C PLUS				
3C 14				

ITEM	PART NO	CHANGE NO	DESCRIPTION	REMARKS	USAGE CODE	QTY
1	335/04734		Leg, stabiliser, centremount, Brazil			2
2A	811/50536		Pin, pivot			2
	811/50536A		Pin, pivot, plus 0.005"			2
	811/50536B		Pin, pivot, plus 0.010"			2
3	1450/1002		Nipple, grease, 1/4" BSP 90deg.			2
5	1370/0403Z		Nut, M12			4
6	811/50565		Pin, pivot			2
7	811/90339		Pin, black version of, 1019/2019			2
8	557/60073		Ram, stabiliser c. mount, 90 X 50			2
9	339/01051		Foot, dirt, Brazil			2
10	811/50038		Pin, 44.5dia x 279.5			2
12	1315/3419Z		Bolt, M10x90mm			2
13	1305/3226Z		Bolt			2
14	1340/0203Z		Nut			4
	1370/0303Z		Nut, lock, M10	for item 12		2
16	1315/3519Z		Bolt, M12x90mm			2
20	1315/3520Z		Bolt, M12 x 100mm			2
21	1370/0403Z		Nut, M12			2
22	.		'See Remark'	not fitted		1
23	835/00017		Cap, grease nipple			8

B1-4-30 GUARD, STABILISER RAM, CENTREMOUNT

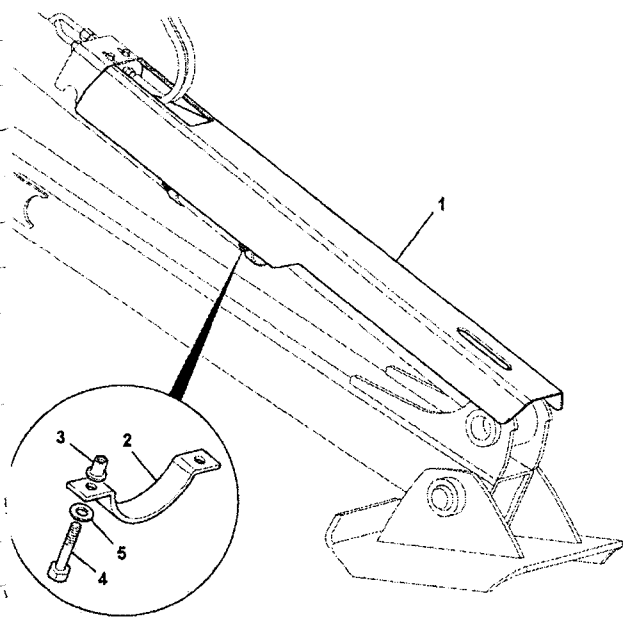

	FROM	TO	FROM	TO
3C PLUS				
3C 14				

ITEM	PART NO	CHANGE NO	DESCRIPTION	REMARKS	USAGE CODE	QTY
1	335/11063		Guard, stabiliser ram			2
2	331/59515		Clamp, stabiliser guard			4
3	826/01681		Nut, rivet			8
4	1315/3510Z		Bolt			8
5	1420/0009Z		Washer, Plain M12			8

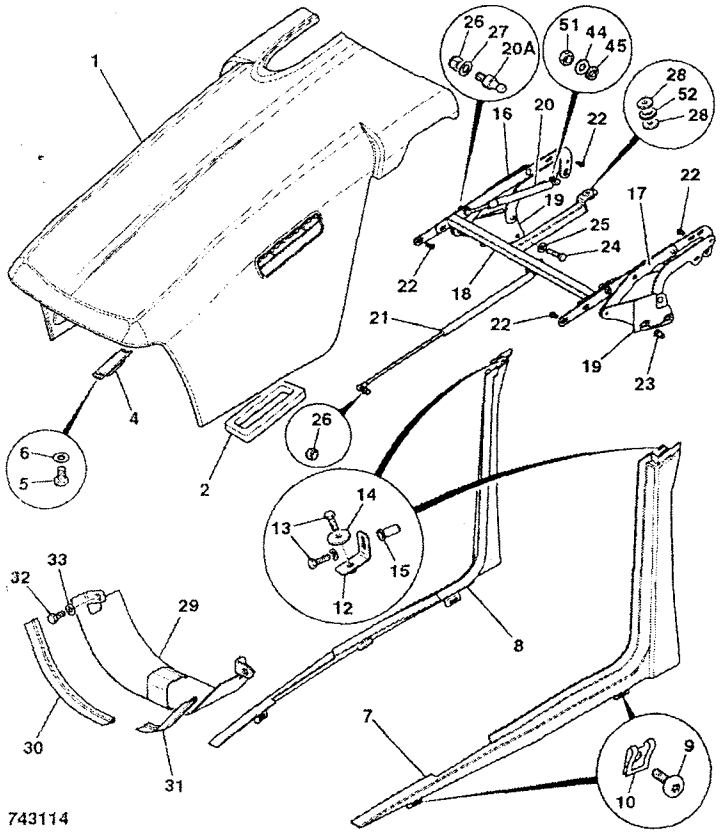

	FROM	TO	FROM	TO
3C PLUS		M1002999		
3C 14		M1002999		

ITEM	PART NO	CHANGE NO	DESCRIPTION	REMARKS	USAGE CODE	QTY
1	346/90019	Superseded	Bonnet			1
	128/C6611		Bonnet			1
1A	128/15667		:Vent, assembly, air induction			1
1B	1430/1206Z		:Screw, No 8 x 1 1/4"	holds item 1A to item 1		2
2	926/51401		Gasket, air intake			1
4	331/26981		Catch, bonnet			1
5	1315/0301Z		Screw, hex head, M8 X 12			2
6	1420/0007Z		Washer, plain, M8			2
7	346/00064		Rail, bonnet LH, 2WS, NLA see TI 2/503			1
8	346/00065		Rail, bonnet RH, 2WS, NLA see TI 2/503			1
9	826/01768		Screw, M6x25mm			6
10	826/01465		Retainer, "U" nut			6
12	331/47298		Bracket, upper rail			2
13	1315/0205Z		Bolt			4
14	823/00030		Washer, 25mm o/dia. 7mm i/dia			2
15	826/01810		Nut, rivet, M6 open end, for 5.5 to 8mm plate			2
16	128/14553	To M TBA	Hinge, bonnet RH			1
	128/C1888		Hinge, bonnet, RH			1

B1-5-1 BONNET ASSEMBLY, 2WS

9812/0080U
ISSUE 1

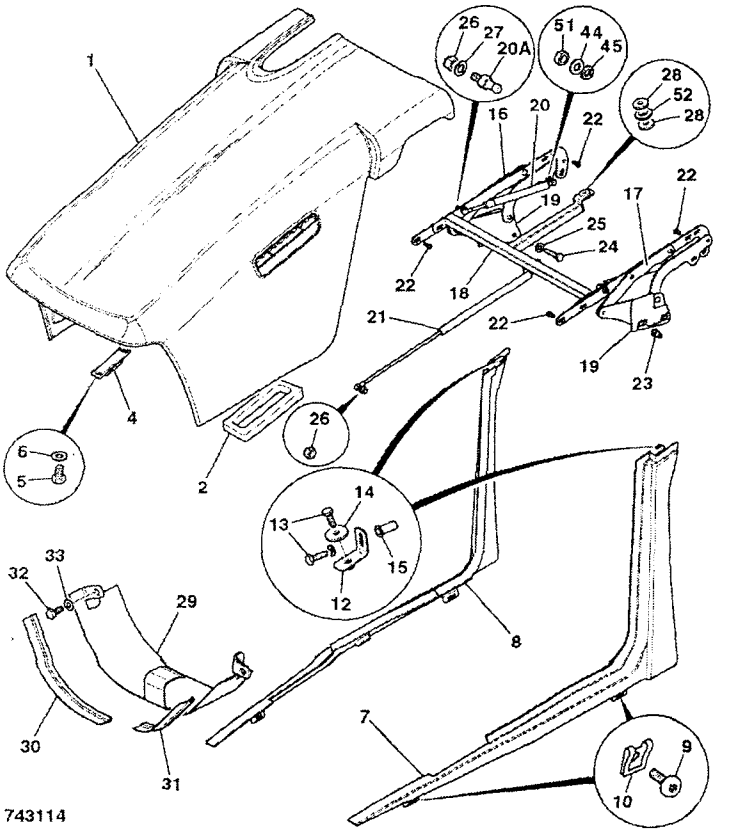

ITEM	PART NO	CHANGE NO	DESCRIPTION	REMARKS	USAGE CODE	QTY
17	128/14552	To M TBA	Hinge, bonnet LH			1
	128/C1889		Hinge, bonnet, LH			1
18	335/07952		Hinge, torsion beam			1
20	331/60675	Superseded	Strut, gas 244-390			2
	331/66727		Strut, gas 235-390			2
20A	331/60391		Ball, fitting 10 X M8			1
21	331/47026	Superseded	Strut, gas 335-585			1
	331/66785		Strut, gas 585x327			1
22	826/11284		Screw, M8x16, button head			8
23	826/01249		Nut, rivet M10 open end, for 6 to 8.5mm plate			4
24	1315/0409Z		Screw, hex. head			4
25	1420/0008Z		Washer, Plain M10			4
26	1371/0203Z		Nut			3
27	1420/0007Z		Washer, plain, M8			4
28	823/10639		Washer, 9x26x5			2
29	.		'See Remark'	only used on 4WS		1
44	1418/0011Z		Washer, lock			2
45	1370/0202Z		Nut, M8			4
51	1370/0201Z		Nut, M8			2
52	2410/0304		Grommet			1

B1-8-20 MUDGUARDS, REAR, YELLOW

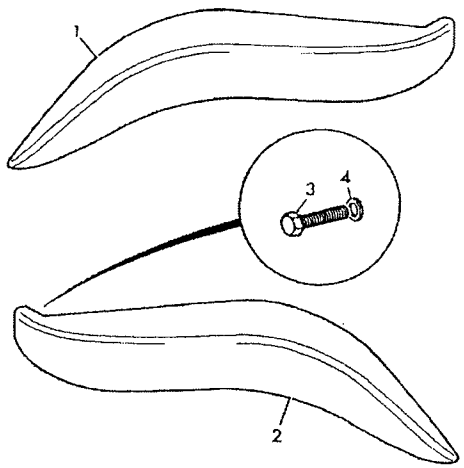

228801

	FROM	TO	FROM	TO
3C PLUS				
3C 14				

ITEM	PART NO	CHANGE NO	DESCRIPTION	REMARKS	USAGE CODE	QTY
1	331/14351		Fender, left hand, yellow, 214e			1
2	331/14352		Fender, right hand, yellow, 214e			1
3	1315/0205Z		Bolt			10
4	1425/0006Z		Washer, Spring			10
5	1412/0001Z		Washer			10
6	826/01101		Nut, rivet,M6 open ended, for 3 to 5.5mm plt			10

B1-10-12 PADS, STREET, STABILISER, CENTREMOUNT

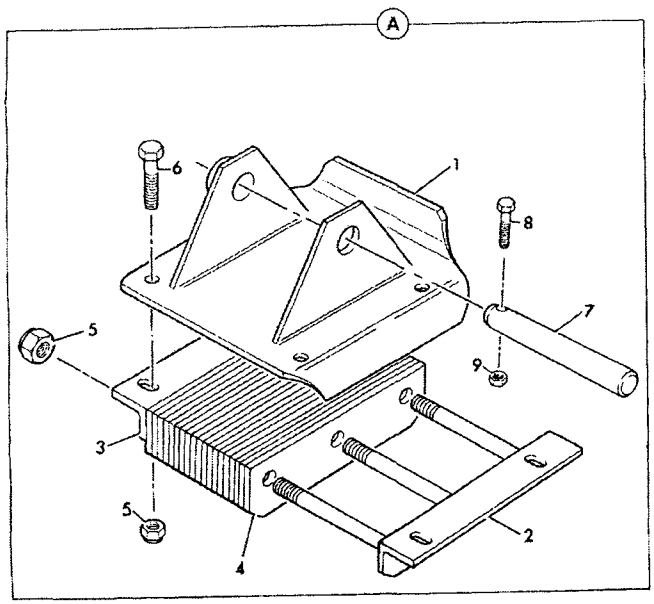

242410

	FROM	TO	FROM	TO
3C PLUS				
3C 14				

ITEM	PART NO	CHANGE NO	DESCRIPTION	REMARKS	USAGE CODE	QTY
0A	126/01644		Foot, assembly, street pad			2
1	125/98100		:Foot, centremount			1
2	125/60200		:Clamp, street foot			1
3	123/04872		:Clamp, street foot			1
4	123/04871		:Strip, rubber			19
5	1370/0703Z		:Nut, M20			7
6	1315/0810Z		:Bolt, M20 x 40 lg			4
7	811/50557		Pin, pivot			2
8	1305/3224Z		Bolt			2
9	1340/0203Z		Nut			2

	FROM	TO	FROM	TO
3C PLUS				
3C 14				

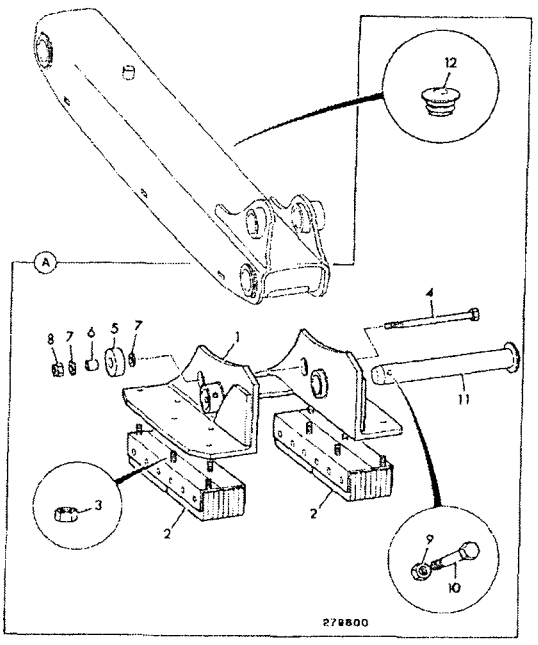

ITEM	PART NO	CHANGE NO	DESCRIPTION	REMARKS	USAGE CODE	QTY
0A	NSP		None serviced part			1
1	126/02420		:Foot, right hand flip, centremount			1
	126/02421		:Foot, left hand flip, centremount			1
2	123/06761		::Pad, street			2
3	1340/1801		::Nut			10
4	1315/3731Z		:Bolt			2
5	123/06762		:Roller			2
6	123/06763		:Sleeve			2
7	1420/0011Z		:Washer, M16 plain			2
8	1370/0603Z		:Nut, M16			2
9	1370/0403Z		:Nut, M12			2
10	1315/3518Z		:Bolt, M12 x 80mm			2
11	911/31800		:Pin, pivot			2
12	835/00174		:Plug, plastic,black			2

	FROM	TO	FROM	TO
3C PLUS				
3C 14				

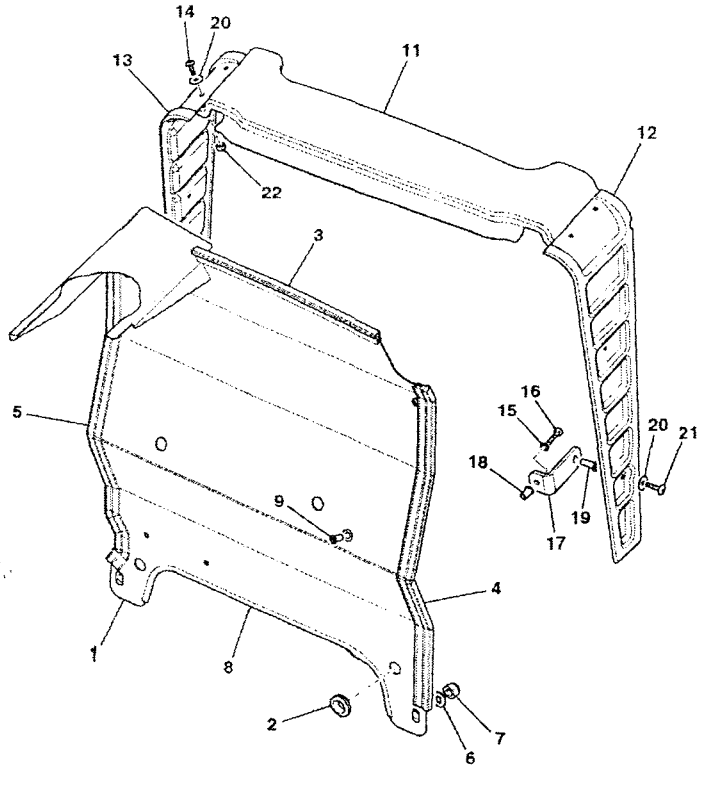

ITEM	PART NO	CHANGE NO	DESCRIPTION	REMARKS	USAGE CODE	QTY
1	335/09482		Plate, tower			1
2	2410/0012		Grommet			2
3	926/01100		Strip, sealing	approx 357mm long		1
4	926/01100		Strip, sealing	approx 620mm long		1
5	926/01100		Strip, sealing	approx 631mm long		1
6	1420/0009Z		Washer, Plain M12			4
7	1370/0403Z		Nut, M12			4
8	926/51601		Strip, edging 595mm long			1
10	2410/1012		Grommet			1
11	346/00251		Moulding, tower cover			1
12	346/00275		Moulding, L/H tower moulding			1
13	346/00276		Moulding, R/H tower panel			1
14	826/10887		Screw, button head, torx			4
15	1420/0007Z		Washer, plain, M8			4
16	1315/0305Z		Screw, M8 x 20mm long			4
17	331/53645		Bracket, mounting			4
18	826/01106		Nut, rivet,M8			4
19	826/01767		Nut, rivet M6 closed end, for 12mm plate			4
20	823/00516		Washer, nylon, M6			8

B1-12-11 COVER PLATES, LOADER TOWER

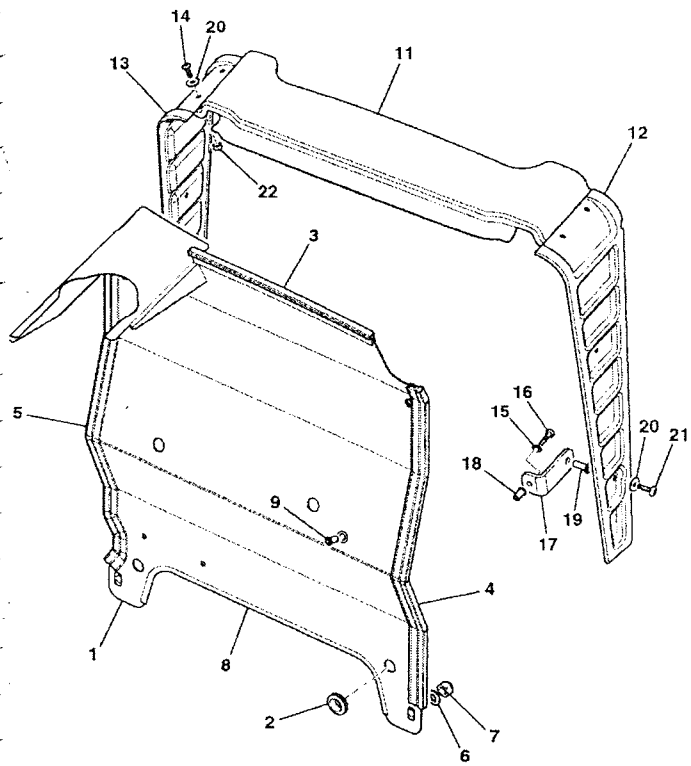

788760

ITEM	PART NO	CHANGE NO	DESCRIPTION	REMARKS	USAGE CODE	QTY
21	826/01768		Screw, M6x25mm			4
22	826/01728		Nut, nyloc			4

B1-13-1 VALVE MOUNTINGS, EXCAVATOR

	FROM	TO	FROM	TO
3C PLUS				
3C 14				

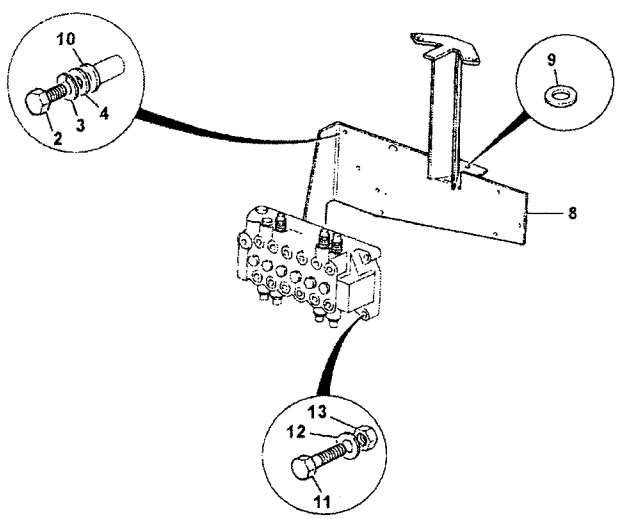

870290

ITEM	PART NO	CHANGE NO	DESCRIPTION	REMARKS	USAGE CODE	QTY
2	1315/0410Z		Bolt, M10 x 40			4
3	1425/0008Z		Washer, Spring M10			4
4	1411/0004Z		Washer			4
8	331/19085		Mounting, excavator valve			1
9	1412/0005Z		Washer, plain			1
10	826/01249		Nut, rivet M10 open end, for 6 to 8.5mm plate			3
11	1315/3414Z		Bolt			3
12	1420/0008Z		Washer, Plain M10			3
13	1370/0303Z		Nut, lock, M10			3

B1-13-11 VALVE MOUNTINGS, LOADER

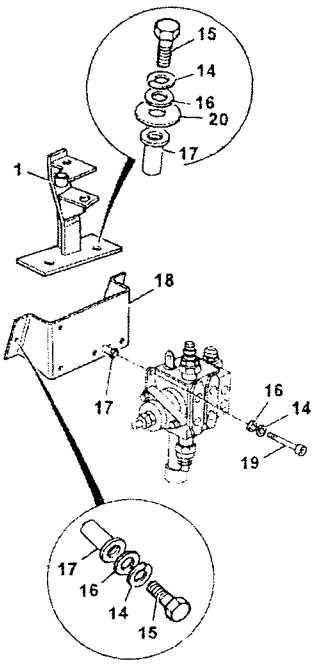

871520

	FROM	TO	FROM	TO
3C PLUS				
3C 14				

ITEM	PART NO	CHANGE NO	DESCRIPTION	REMARKS	USAGE CODE	QTY
1	125/00551		Bracket, loader lever			1
14	1425/0008Z		Washer, Spring M10			8
15	1315/0410Z		Bolt, M10 x 40			5
16	1420/0008Z		Washer, Plain M10			8
17	826/01249		Nut, rivet M10 open end, for 6 to 8.5mm plate			8
18	123/07289		Plate, loader valve mount			1
19	1391/3411Z		Capscrew			3
20	1412/0004Z		Washer			2

B1-14-11 TOOLBOX

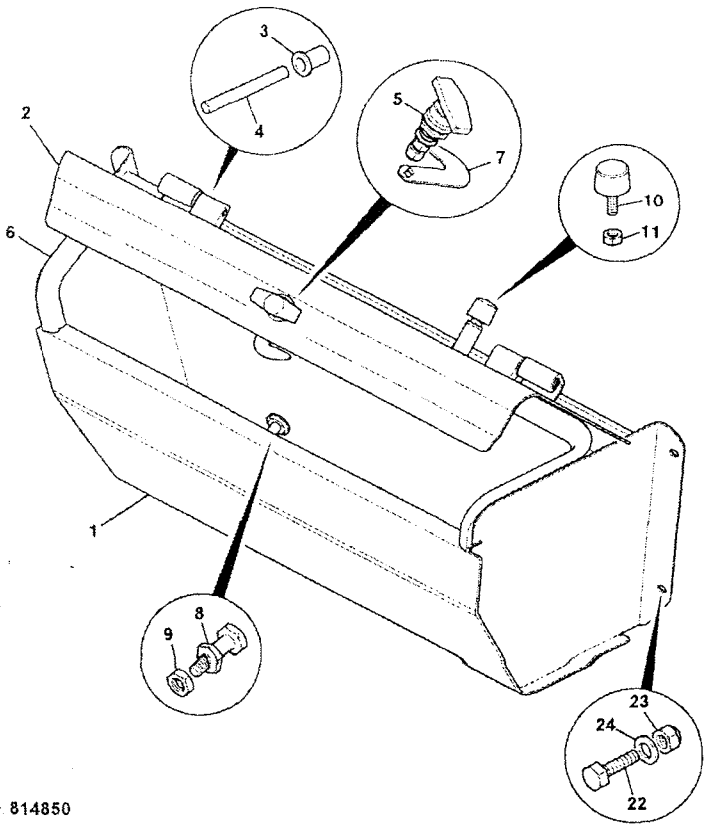

814850

	FROM	TO	FROM	TO
3C PLUS				
3C 14				

ITEM	PART NO	CHANGE NO	DESCRIPTION	REMARKS	USAGE CODE	QTY
0A	128/15526		Box, tool, assembly			1
1	.		:'See Remark'	NSP		1
2	335/10051		:Cover, toolbox lid			1
3	122/67479		:Bush, hinge			2
4	123/08089		:Pin, hinge			2
5	123/08087		:Handle, locking			1
6	904/20357		:Seal, toolbox			1
7	331/13500		:Plate, latch			1
8	331/36035		:Spindle, latch			1
9	1370/0303Z		:Nut, lock, M10			1
10	123/07243		:Buffer			1
11	1370/0202Z		:Nut, M8			1
22	1315/0405Z		Screw, M10 x 20mm long			4
23	1370/0303Z		Nut, lock, M10			4
24	1420/0008Z		Washer, Plain M10			4

B

- B1 BODYWORK/FRAME
- ● B2 CAB
- B3 LOADER, FRONT END
- B4 BACKHOE
- B5 REFURBISHMENTS

ENGLISH

B2-1-10 CAB SHELL, UNGLAZED
B2-1-30 CANOPY
B2-2-11 CAB GLAZING
B2-3-21 DOOR
B2-4-11 WINDOW, SIDE, OPENING
B2-5-11 WINDOW, REAR OPENING
B2-6-5 SOUNDPROOFING, AND FLOOR MAT, CAB BASE
B2-6-10 SOUNDPROOFING, CAB ROOF
B2-7-51 SEAT, STATIC
B2-7-61 SEAT, SUSPENSION
B2-8-1 WASH/WIPE, CANOPY
B2-8-2 WASH/WIPE, FRONT & REAR SCREEN
B2-10-11 CAB MOUNTINGS
B2-11-3 MIRROR, EXTERNAL & INTERIOR
B2-13-1 CAB REAR VALANCE, CENTREMOUNT
B2-15-21 COVER, LOADER CONTROLS
B2-18-1 DIRECT GLAZING, REPLACEMENT MATERIAL
B2-23-21 CAB ROOF, ECONOMY, ROW & USA
B2-29-1 STORAGE NET
B2-30-1 COVER, BRAKE PEDALS

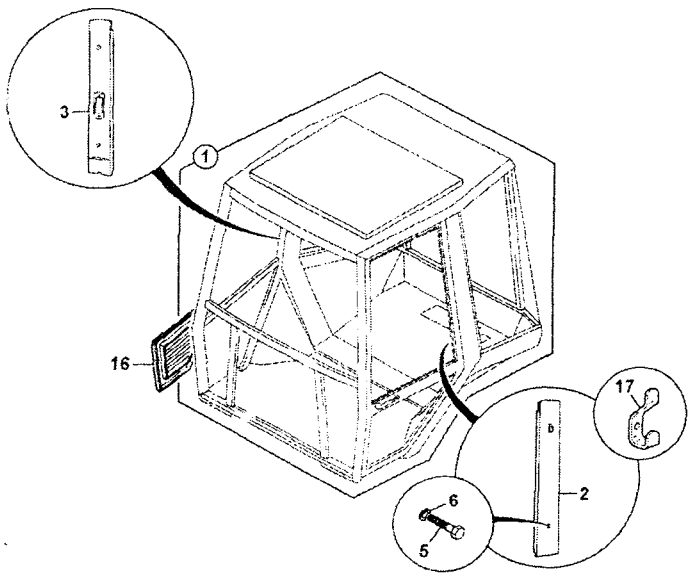

	FROM	TO	FROM	TO
3C PLUS				
3C 14				

ITEM	PART NO	CHANGE NO	DESCRIPTION	REMARKS	USAGE CODE	QTY
1	126/02572		Cab, shell as supplied			1
2	331/27481		Cover, left hand B post			1
3	331/27482		Cover, right hand B post			1
4	*NSP*		*None serviced part*	*Part of items 1 & 2*		
5	826/01561		Screw, button head, M6x45			4
6	823/00554		Washer, plain			4
	823/00516		Washer, nylon, M6			4
16	123/07467		Cover, heater			1
	123/07649		Cover, heaterless cab			1
17	142/01083		Hook, coat			1
18	826/01768		Screw, M6x25mm	Air intake filter		3
	826/01413		Screw, M6 x 16mm long, pan head	Air intake filter		1
19	123/04791		Washer, nylon			4
20	826/01101		Nut, rivet,M6 open ended, for 3 to 5.5mm plt			4
21	926/14500		Seal, w/screen assy, felt	2000mm long. Fit to item 16.		a/r

305782

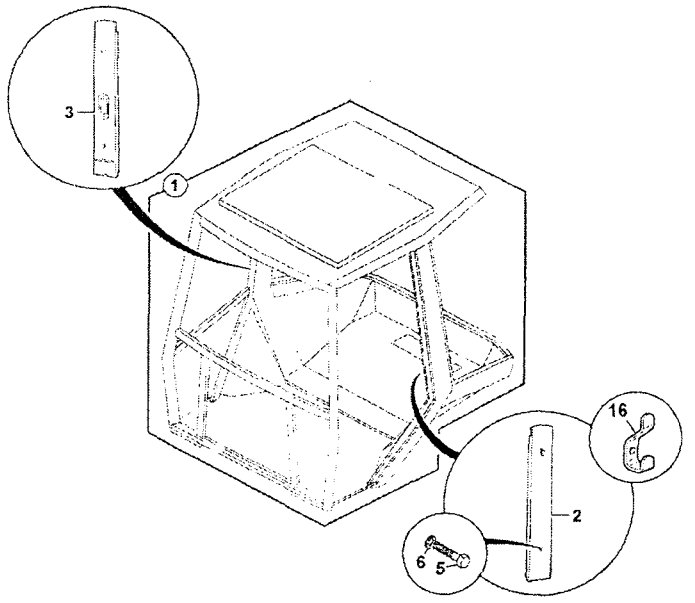

	FROM	TO	FROM	TO
3C PLUS				
3C 14				

ITEM	PART NO	CHANGE NO	DESCRIPTION	REMARKS	USAGE CODE	QTY
1	126/02571		Canopy, frame			1
2	331/27481		Cover, left hand B post			1
3	331/27482		Cover, right hand B post			1
5	826/01561		Screw, button head, M6x45			4
	826/01101		Nut, rivet,M6 open ended, for 3 to 5.5mm plt			4
6	823/00554		Washer, plain			4
	823/00516		Washer, nylon, M6			4
16	142/01083		Hook, coat			1

305792

B2-2-11 CAB GLAZING

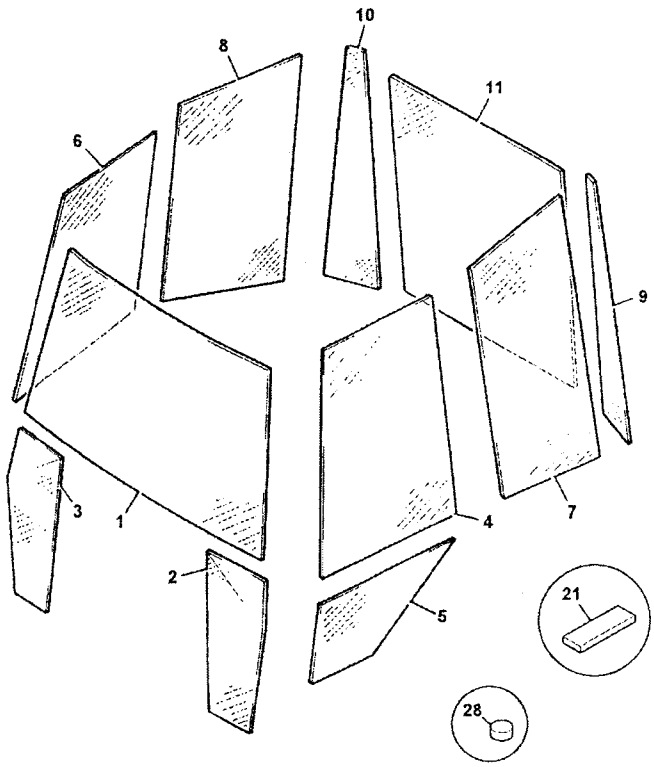

308421

	FROM	TO	FROM	TO
3C PLUS				
3C 14				

ITEM	PART NO	CHANGE NO	DESCRIPTION	REMARKS	USAGE CODE	QTY
1	827/80382		Windscreen, laminated			1
2	827/80371		Glass, left hand 1/4 light			1
3	827/80370		Glass, right hand 1/4 light			1
4	827/80372		Glass, upper door			1
5	827/80369		Glass, lower door			1
6	827/80373		Glass, right hand front			1
7	827/80374		Glass, left hand window			1
8	827/80375		Glass, right hand window			1
9	827/80376		Glass, left hand sixlight			1
10	827/80377		Glass, right hand sixlight			1
11	827/80378		Glass, rear window			1
21	926/15500		Spacer, block	6X15X4 approx 34/ cab		A/R
28	926/22100		Spacer, block	front screen		2

B2-3-21 DOOR

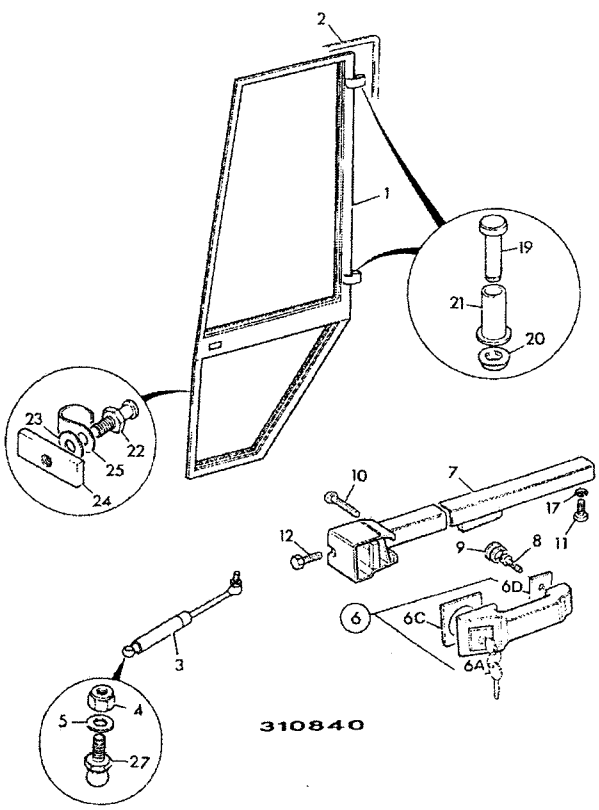

310840

	FROM	TO	FROM	TO
3C PLUS				
3C 14				

ITEM	PART NO	CHANGE NO	DESCRIPTION	REMARKS	USAGE CODE	QTY
1	125/00478		Frame, door			1
2	331/15237		Seal			A/R
3	331/14573	Superseded	Strut, door stay			1
	331/66778		Strut, gas 201-329			1
4	1370/0203Z		Nut, self lock, M8			2
5	1417/0007Z		Washer			2
6	123/06547		Handle, c/w barrel lock only			1
6A	701/45501		:Key, Door/Ignition, Ref 14657			2
6C	123/00529		:Grommet			1
6D	123/00530		:Grommet			1
7	123/02450		Lock, door, left hand			1
8	826/00792		Screw			2
9	2410/1008		Grommet			2
10	826/01077		Screw			3
11	1315/0203Z		Screw, M6x16			1
12	826/01077		Screw			2
17	1425/0006Z		Washer, Spring			1
19	142/00956		Pin, hinge			2
20	142/00957		Cap, hinge pin			2
21	120/92808		Bush, Hinge			2
22	120/77505		Bolt, closing			1

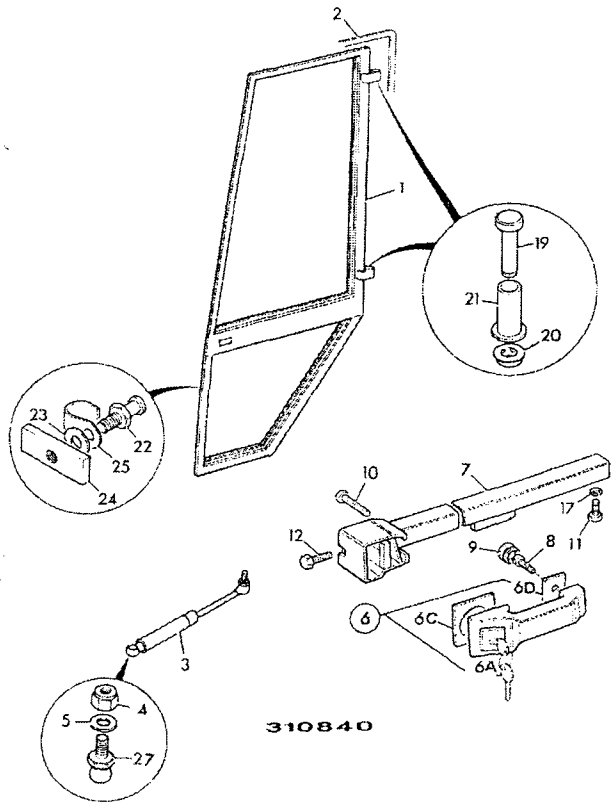

ITEM	PART NO	CHANGE NO	DESCRIPTION	REMARKS	USAGE CODE	QTY
23	1420/0009Z		Washer, Plain M12			2
24	*826/00622		Nut			1
25	140/00618		Guard			1
26	1370/0103Z		Nut, Self lock, M6			2
27	123/06335		Joint, ball			2

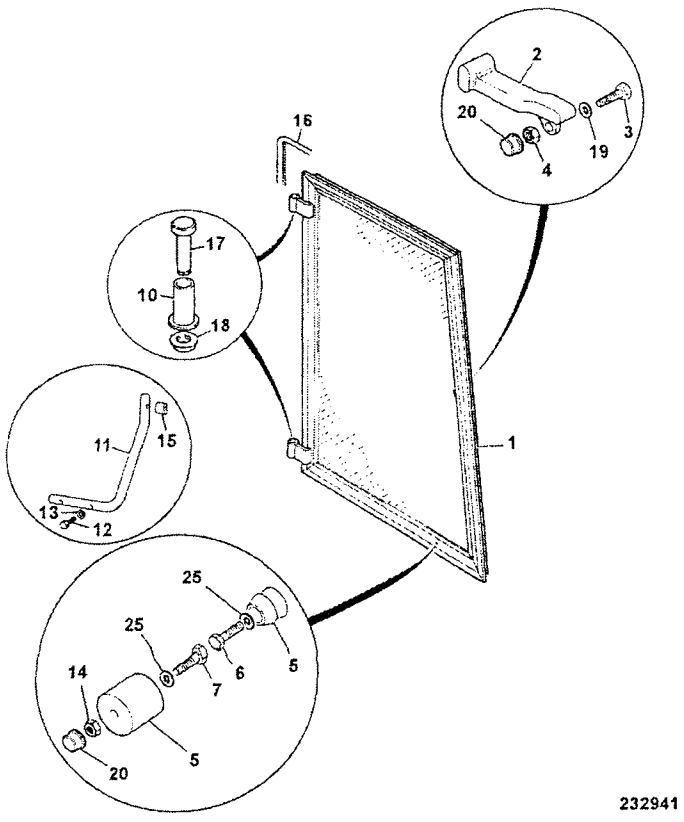

	FROM	TO	FROM	TO
3C PLUS				
3C 14				

ITEM	PART NO	CHANGE NO	DESCRIPTION	REMARKS	USAGE CODE	QTY
1	927/20025		Frame, window			1
2	116/00822		Handle			1
3	1315/3212Z		Bolt			1
4	1370/0103Z		Nut, Self lock, M6			1
5	826/00670		Catch, door			1
6	1315/0207Z		Screw, M6 x 25mm long			1
7	1315/0211Z		Bolt			1
8	1425/0006Z		Washer, Spring			1
9	1370/0101Z		Nut			1
10	120/92808		Bush, Hinge			2
11	331/15286		Bracket, window stop			1
12	1315/3312Z		Bolt			2
13	1417/0012Z		Washer, lock			2
14	1370/0103Z		Nut, Self lock, M6			1
15	331/15288		Spacer			1
16	331/15238		Seal			1
17	142/00956		Pin, hinge			2
18	142/00957		Cap, hinge pin			2
19	823/00426		Washer			1
20	835/00074		Cap			2
21	1315/0211Z		Bolt			1
22	122/23509		Cap			2

B2-4-11 WINDOW, SIDE, OPENING

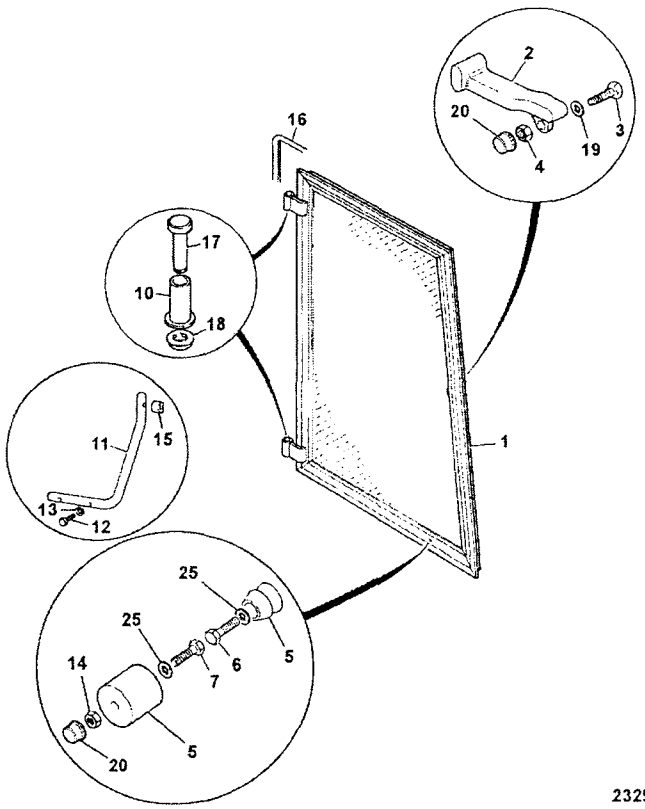

232941

ITEM	PART NO	CHANGE NO	DESCRIPTION	REMARKS	USAGE CODE	QTY
23	826/01103		Nut, rivet,M8 open ended			2
24	826/01099		Nut, rivet,M6 open ended			1
25	823/00544		Washer, special			2

B2-5-11 WINDOW, REAR OPENING

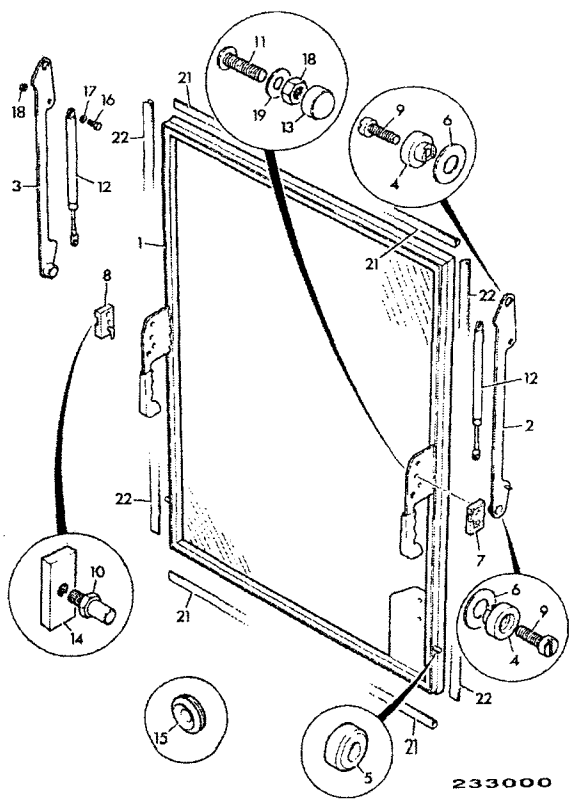

233000

	FROM	TO	FROM	TO
3C PLUS				
3C 14				

ITEM	PART NO	CHANGE NO	DESCRIPTION	REMARKS	USAGE CODE	QTY
1	927/20026		Frame, rear window			1
2	331/15293		Bracket, left hand, rear window			1
3	331/15294		Bracket, right hand, rear window			1
4	290/00806		Clamp			4
5	290/00809		Roller			2
6	823/00538		Washer			4
7	290/00812		Lock, left side,			1
7A	331/28808		Cover			1
8	290/00813		Lock, right side			1
8A	331/28808		Cover			1
9	826/01515		Screw, M8 slot head			2
10	290/00807		Latch, bolt			2
11	.		'See Remark'	Csk head Socket screw M8 X 40		4
12	142/00953		Strut			2
13	122/23509		Cap			4
14	826/00622		Nut			2
15	.		'See Remark'	Grommet		2
16	1315/0307Z		Screw, M8 X 25			4
17	1417/0012Z		Washer, lock			4
18	1370/0201Z		Nut, M8			4

B2-5-11 WINDOW, REAR OPENING

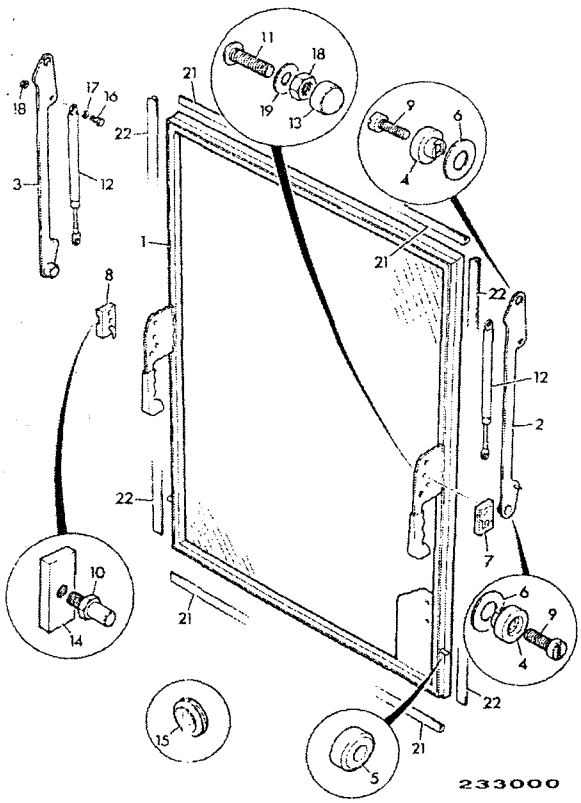

ITEM	PART NO	CHANGE NO	DESCRIPTION	REMARKS	USAGE CODE	QT
19	1420/0007Z		Washer, plain, M8			
21	331/15239		Seal	Seal top and bottom		2
22	331/15240		Seal	Seal, left and right		2
23	1420/0008Z		Washer, Plain M10	item 10		2
24	1411/0004Z		Washer	item 10		
25	1370/0301Z		Nut	item 10		2
31	140/00619		Plug, rubber, stop	See Note 1		2
32	1315/0203Z		Screw, M6x16			2
33	1418/0010Z		Washer, lock			2
34	1370/0101Z		Nut			2
35	835/00074		Cap			2
38	331/15234		Plug			2

Note 1: items 31 to 38 make rear window stop

B2-6-5 SOUNDPROOFING, AND FLOOR MAT, CAB BASE

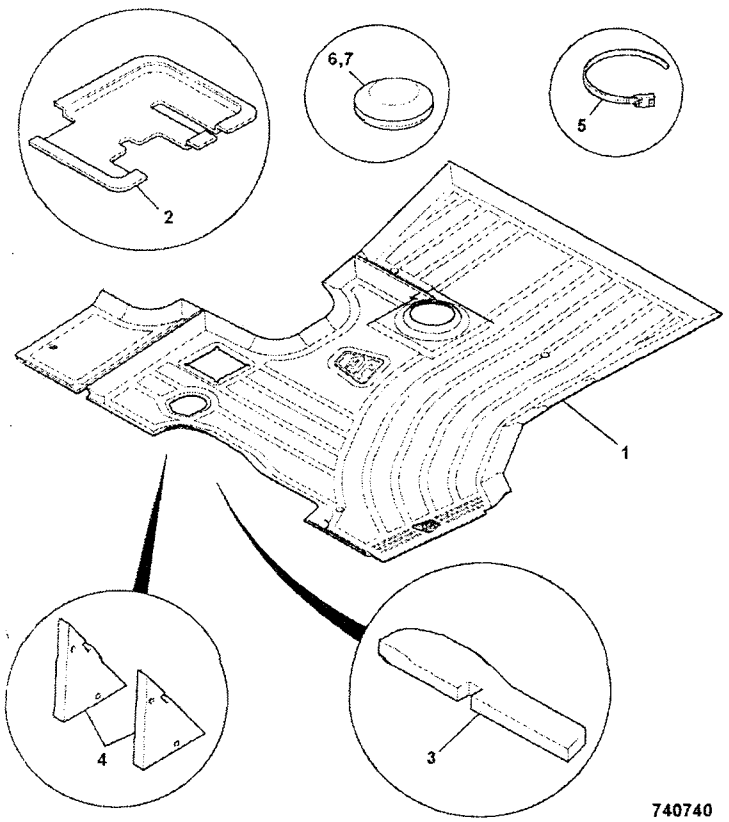

	FROM	TO	FROM	TO
3C PLUS				
3C 14				

ITEM	PART NO	CHANGE NO	DESCRIPTION	REMARKS	USAGE CODE	QTY
1	123/07620		Floormat	214e only		1
2	123/07940		Panel, seal support			1
2A	123/07672		Mat, soundproofing, loader valve			1
3	331/60578		Seal, front bulkhead			1
4	123/07720		Mat, brake cylinder			2
5	826/01144		Tie, cable, 200mm long			4
6	2410/1109		Grommet	drain holes -floor		4
7	2410/1104		Grommet, blind, 11.1mm	front bulkhead		2

B2-6-10 SOUNDPROOFING, CAB ROOF

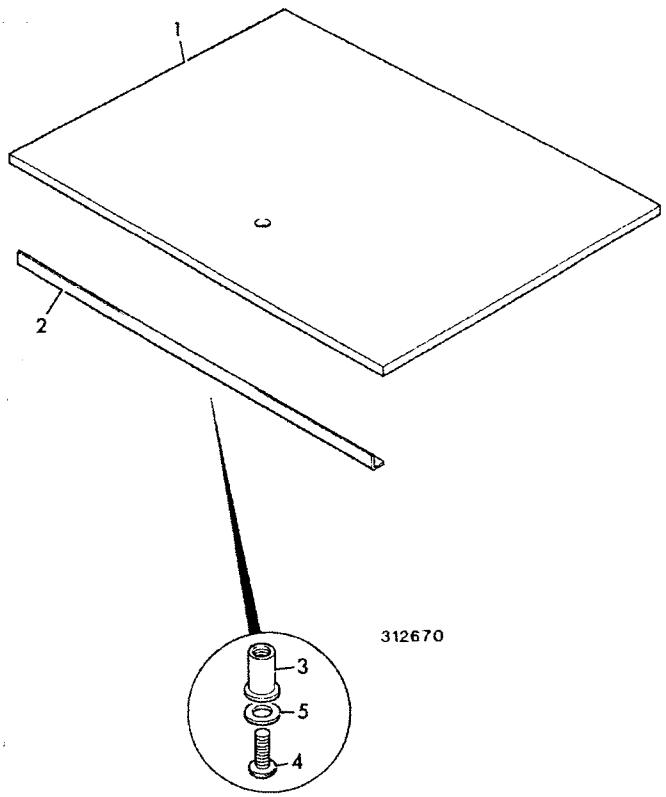

	FROM	TO	FROM	TO
3C PLUS				
3C 14				

ITEM	PART NO	CHANGE NO	DESCRIPTION	REMARKS	USAGE CODE	QTY
1	331/27483		Liner, roof			1
2	123/07694		Bracket, support			1
3	826/01101		Nut, rivet,M6 open ended, for 3 to 5.5mm plt			3
4	826/01768		Screw, M6x25mm			3
5	823/00554		Washer, plain			3

B2-7-51 SEAT, STATIC

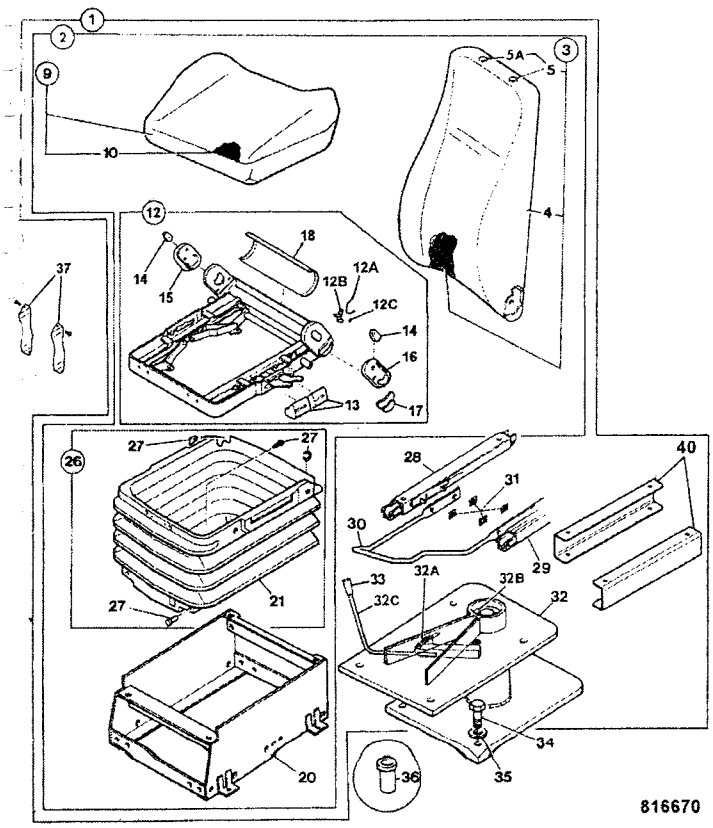

	FROM	TO	FROM	TO
3C PLUS				
3C 14				

ITEM	PART NO	CHANGE NO	DESCRIPTION	REMARKS	USAGE CODE	QTY
1	128/16497		Seat, assembly static, vinyl			1
2	40/910460		:Seat, vinyl			1
3	40/910431		::Cushion, vinyl			1
4	40/910397		:::Cover, Seat, vinyl			1
5	40/903120		:::Plug, headrest			2
5A	40/906903		:::Clip, headrest			2
9	40/910399		::Cushion, seat assembly, vinyl			1
10	40/910402		:::Cover, seat cushion, vinyl			1
12	40/910430		::Frame, assembly			1
12A	40/910447		:::Spring, Squab handle			1
12B	40/910446		:::Handle, Squab			1
12C	40/910448		:::Circlip, height adjuster			1
13	40/910404		:::Handle, grip, front	Front		2
	40/910405		:::Handle, grip, rear			1
14	40/903108		:::Cap, side plate			2
15	40/903109		::Cover, slave, right hand sideplate			1
16	40/903110		:::Cover, upper, left hand sideplate			1
17	40/910406		:::Handle, Grip, squab recline			1

B2-7-51 SEAT, STATIC

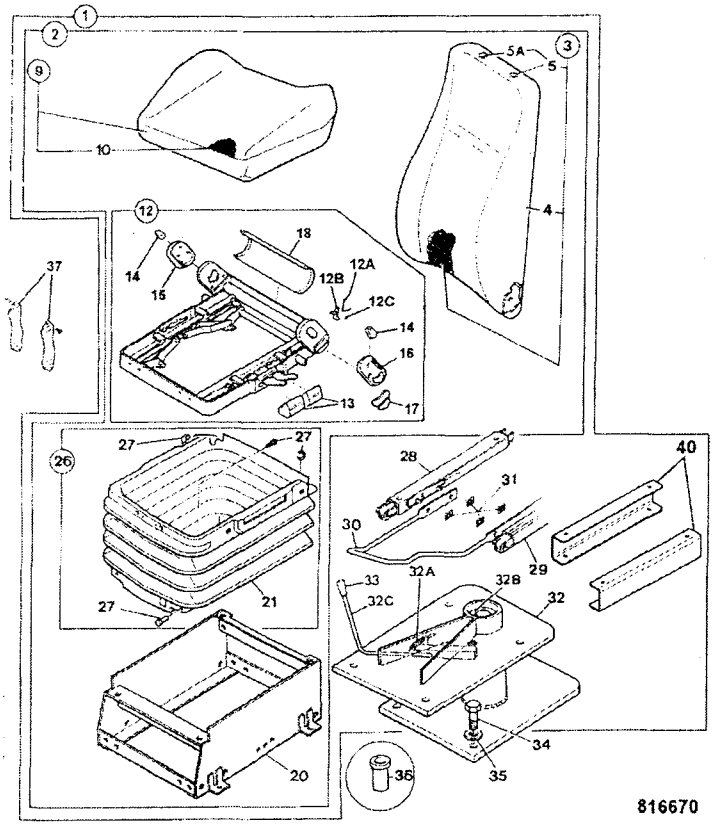

ITEM	PART NO	CHANGE NO	DESCRIPTION	REMARKS	USAGE CODE	QTY
18	40/903112		:::Plate, cushion frame back			1
20	40/902901		::Base			1
26	40/905204		::Kit-bellows			1
27	40/903116		:::Kit, bellow fixings			1
28	40/910138		:Slide, left hand			1
29	40/910139		::Slide, right hand			1
30	40/905205		:Handle, slide rail			1
31	40/903125		:Clip, slide rail			4
32	40/911069		:Pedestal, assembly			1
32A	814/10156		::Spring			1
32B	40/910413		::Kit-nut & bolt, pedestal swivel			1
32C	40/910414		::Handle, assembly			1
33	40/910415		::Handle, grip			1
34	1315/3409Z		Bolt, M10 x 35			4
35	1420/0008Z		Washer, Plain M10			4
36	826/01105		Nut, rivet,M10 open ended			4
37	40/904700		Kit-seat belt, 50" long			1
38	40/905206		Kit-arm rest			1
39	40/903700		Kit, head rest			1
40	40/911068		Spacer, U profile			2

B2-7-61 SEAT, SUSPENSION

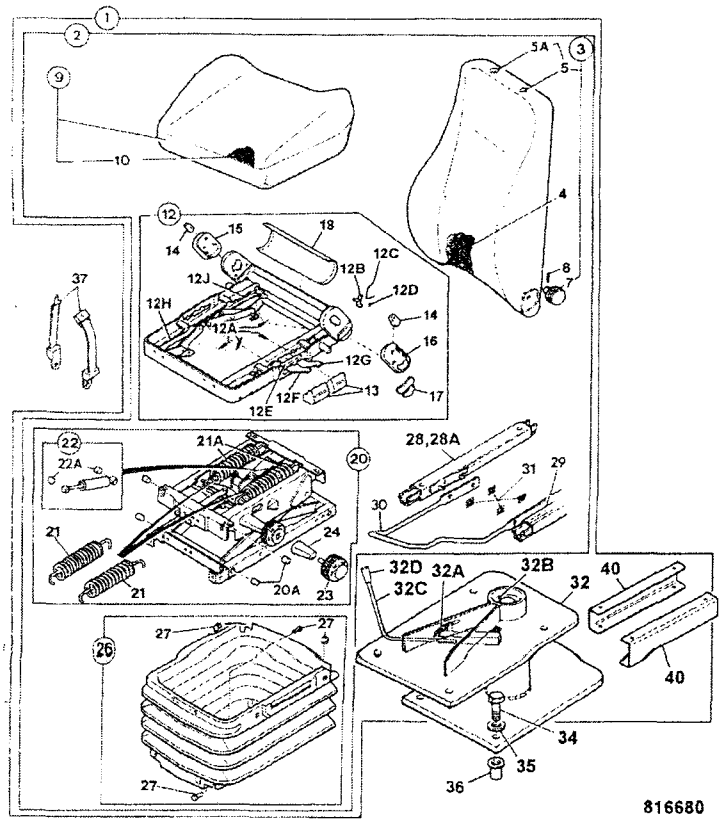

	FROM	TO	FROM	TO
3C PLUS				
3C 14				

ITEM	PART NO	CHANGE NO	DESCRIPTION	REMARKS	USAGE CODE	QTY
1	128/16499		Seat, assembly suspension, cloth			1
	128/16498		Seat, assembly suspension, vinyl			1
2	40/910469		:Seat, high back,fabric			1
	40/910470		:Seat, high back,vinyl			1
3	40/910396		::Kit, rear squab assembly, cloth			1
	40/910395		::Kit, seat squab assembly, vinyl			1
4	40/910517		:::Cover, squab assy, fabric high back			1
	40/910521		:::Cover, squab assy, Vinyl high back			1
5	40/903120		Plug, headrest			2
5A	40/906903		Clip, headrest			2
7	40/903119		:::Knob, adjuster			1
8	40/903121		::Pin, tension			1
9	40/910514		::Cushion, seat assy, fabric high back			1
	40/910518		::Cushion, seat assy, Vinyl high back			1
10	40/910515		:::Cover, seat base, fabric high back			1
	40/910519		:::Cover, seat base, Vinyl high back			1

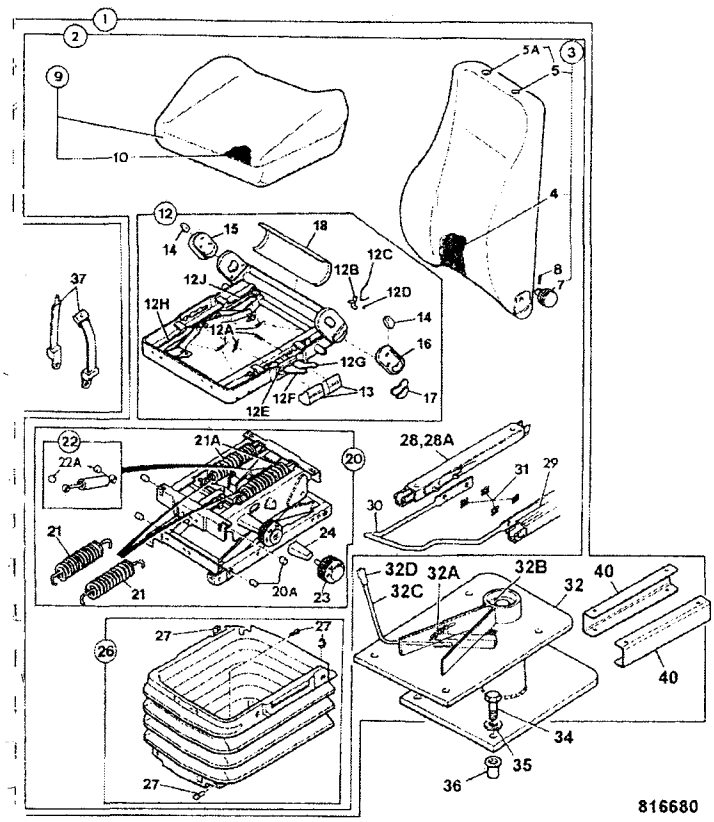

ITEM	PART NO	CHANGE NO	DESCRIPTION	REMARKS	USAGE CODE	QTY
12	40/910506		::Frame, seat base			1
12A	40/910445		:::Kit-spring, 2 lever height rise			1
12B	40/910446		::Handle, Squab			1
12C	40/910447		::Spring, Squab handle			1
12D	40/910448		::Circlip, height adjuster			1
12E	40/910141		::Clip, black, cushion frame			1
12F	40/910142		::Handle, height adjustment, front			1
12G	40/910143		::Handle, height adjustment, rear			1
12H	40/910144		::Adjuster, height			1
12J	40/910145		::Adjuster, height, rear			1
13	40/910404		:::Handle, grip, front			1
	40/910405		:::Handle, grip, rear			1
14	40/903108		:::Cap, side plate			2
15	40/903109		::Cover, slave, right hand sideplate			1
16	40/903110		:::Cover, upper, left hand sideplate			1
17	40/910406		:::Handle, Grip, squab recline			1
18	40/903112		:::Plate, cushion frame back			1
20	40/910526		::Kit, Suspension unit assy			1
21	40/910140		:::Spring			2
21A	40/903102		:::Spring, tension			2
22	40/906902		:::Damper			1

B2-7-61 SEAT, SUSPENSION

9812/0080U
ISSUE 1

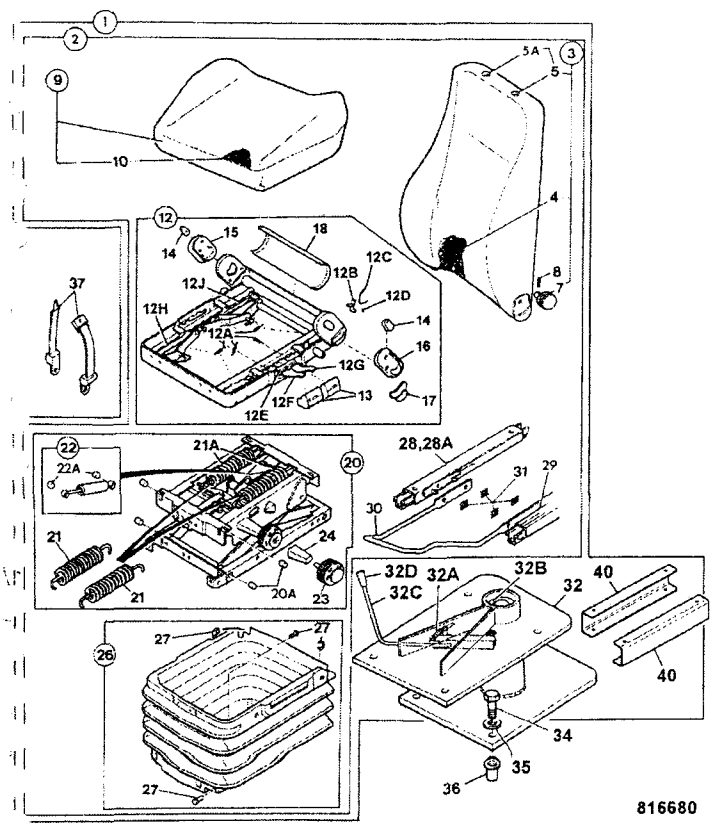

ITEM	PART NO	CHANGE NO	DESCRIPTION	REMARKS	USAGE CODE	QTY
22A	40/906905		:::Bush, shock absorber			2
22B	40/911070		:Bolt	not supplied with item 22		2
22C	40/905208		:Nut	not supplied with item 22		2
23	40/910525		:::Knob, Damper adjuster			1
24	40/903105		:::Bracket, support			1
26	40/905204		::Kit-bellows			1
27	40/903116		:::Kit, bellow fixings			1
28	40/910139		:Slide, right hand			1
28A	40/905207		:Bolt	Slide to seat		4
	1315/0305Z		:Screw, M8 x 20mm long	Slide to pedestal		4
	1391/3305Z		:Capscrew			4
	40/910138		::Slide, left hand			1
29	40/910238		::Adjuster, seat angle	Part of item 28		1
30	40/910411		:Handle, slide			1
31	40/903125		:Clip, slide rail			4
32	40/911069		:Pedestal, assembly			1
32A	814/10156		::Spring			1
32B	NSP		::None serviced part			1
32C	40/910300		::Handle, assembly			1
32D	40/910415		::Handle, grip			1
34	1315/3409Z		Bolt, M10 x 35			4
35	1420/0008Z		Washer, Plain M10			4
36	826/01105		Nut, rivet,M10 open ended			4
37	40/904700		Kit-seat belt, 50" long	Included with seat assy		1

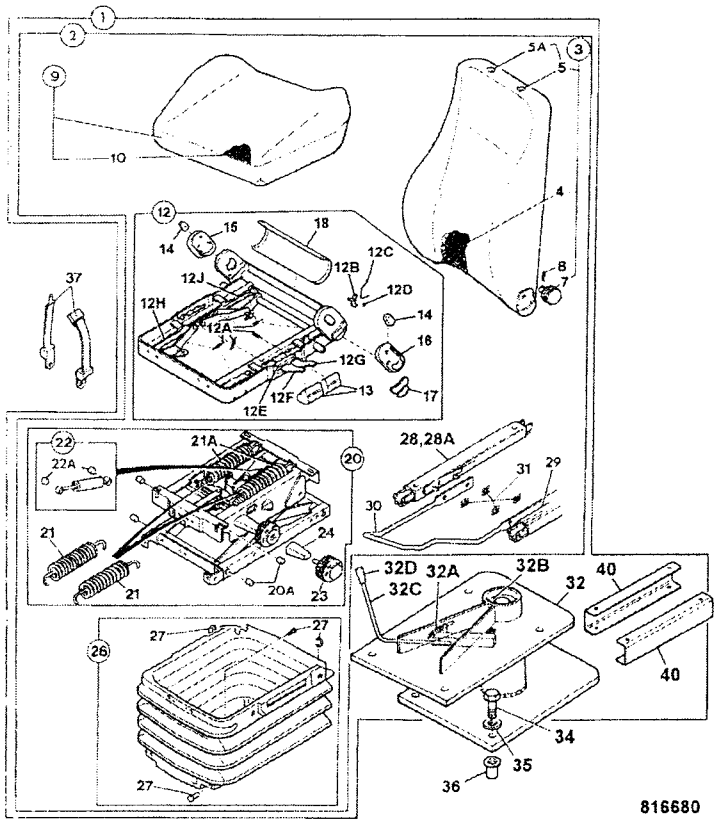

ITEM	PART NO	CHANGE NO	DESCRIPTION	REMARKS	USAGE CODE	QT
39	40/903700		Kit, head rest	Not included with seat assy		
40	40/911068		Spacer, U profile			4

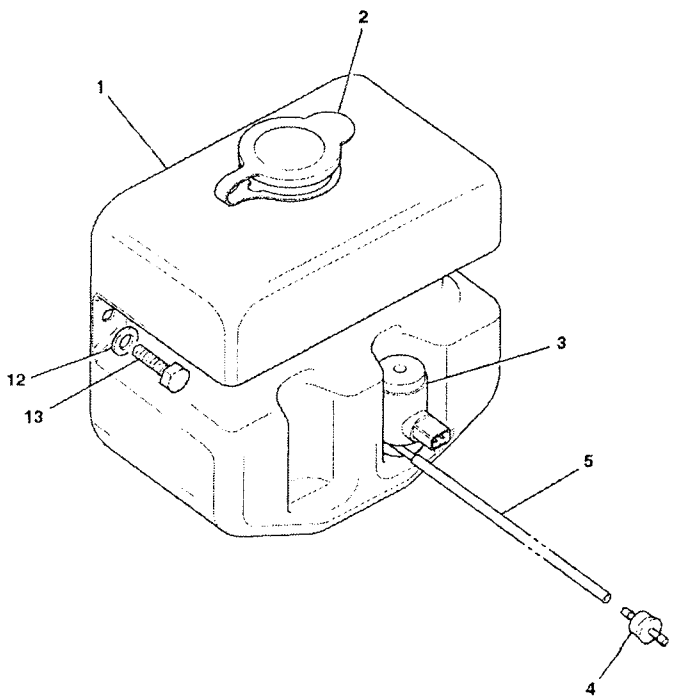

	FROM	TO	FROM	TO
3C PLUS				
3C 14				

ITEM	PART NO	CHANGE NO	DESCRIPTION	REMARKS	USAGE CODE	QTY
1	331/46930		Bottle, front screen wash	Canopy build single pump		1
2	717/06031		Cap, washer bottle			1
3	714/20600		Pump, twin motor, 12 volt			1
4	534/09703		Valve, non-return			1
5	647/02000		Tube			A/F
12	.		'See Remark'	no longer fitted		2
13	.		'See Remark'	no longer fitted		2
22	826/01144		Tie, cable, 200mm long			1
31	715/06200		Plug, dummy, 2 way sealed			1
32	835/10086		Plug, blanking, black,9mm			1

B2-8-2 WASH/WIPE, FRONT & REAR SCREEN

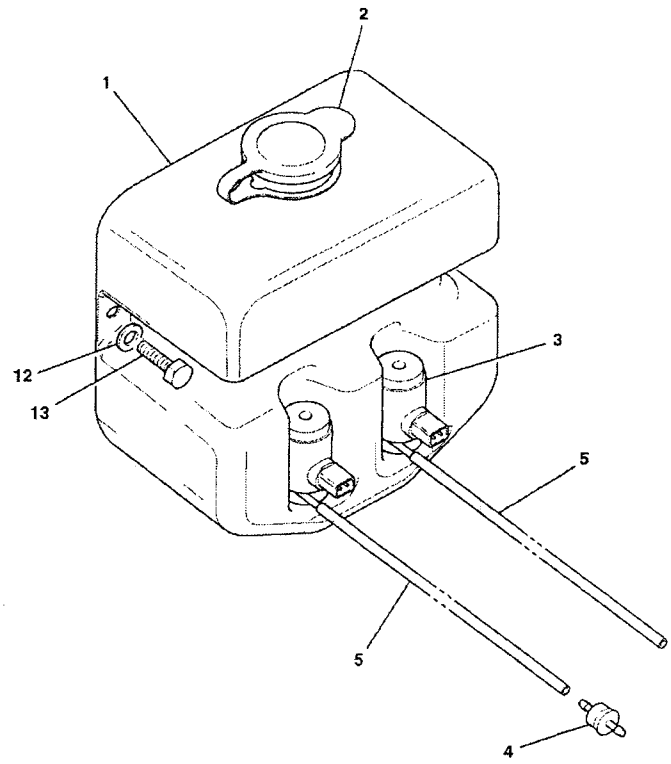

774820

	FROM	TO	FROM	TO
3C PLUS				
3C 14				

ITEM	PART NO	CHANGE NO	DESCRIPTION	REMARKS	USAGE CODE	QTY
1	331/46268		Bottle, screenwash			1
2	717/06031		Cap, washer bottle			1
3	714/20600		Pump, twin motor, 12 volt			2
4	534/09703		Valve, non-return			2
5	647/02027		Tube, 620mm long	620mm long		2
	647/02000		Tube	6200mm roll		A/R
12	.		'See Remark'	no longer fitted		2
13	.		'See Remark'	no longer fitted		2
22	826/01144		Tie, cable, 200mm long			1
23	647/02000		Tube			A/R
24	331/20304		Tube, split, conduit			1
31	255/27003		Jet, Screen washer			1

B2-10-11 CAB MOUNTINGS

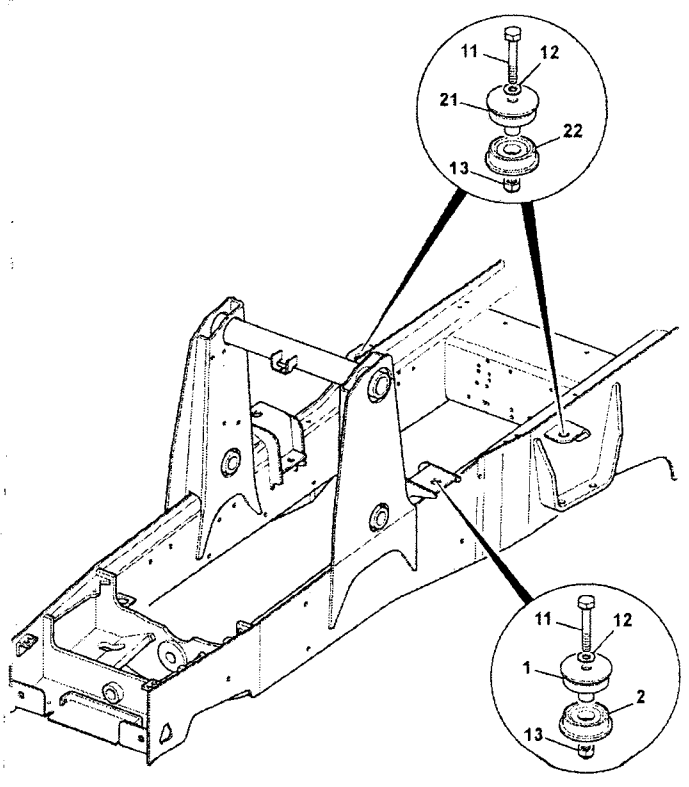

814810

	FROM	TO	FROM	TO
3C PLUS				
3C 14				

ITEM	PART NO	CHANGE NO	DESCRIPTION	REMARKS	USAGE CODE	QTY
1	331/34392		Mounting, cab upper, blue			2
2	331/18442		Mounting, cab, lower			2
11	1315/3721Z		Bolt, M16 x 110			4
12	1420/0011Z		Washer, M16 plain			4
13	1370/0603Z		Nut, M16			4
21	331/34393		Mounting, cab upper, green			2
22	331/25996		Mounting, cab lower, red			2

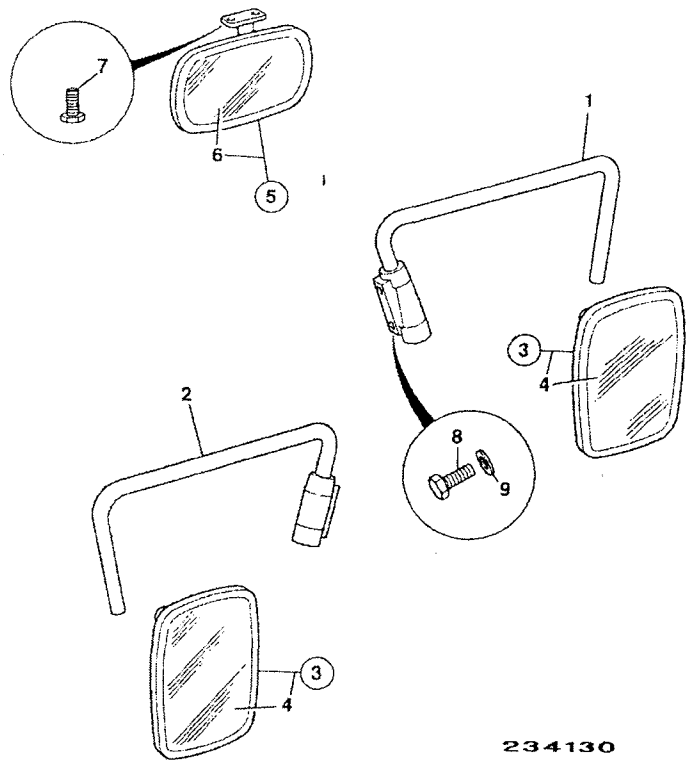

	FROM	TO	FROM	TO
3C PLUS				
3C 14				

ITEM	PART NO	CHANGE NO	DESCRIPTION	REMARKS	USAGE CODE	QTY
1	123/04968		Arm, right hand mirror			1
2	123/04969		Arm, left hand mirror			1
3	123/04970		Mirror, exterior head assy			2
4	477/01068		:Mirror			1
5	123/04971		Mirror, interior assembly			1
6	123/04975		:Glass, interior mirror			1
7	826/01524		Screw, selftap			2
8	826/01559		Screw, M6 x 16mm long, button head socket			4
9	823/00554		Washer, plain			4
9A	823/00597		Washer, spring			4
10	835/00171		Plug, blanking, 7mm	Use Inplace of mirror bracket.		8

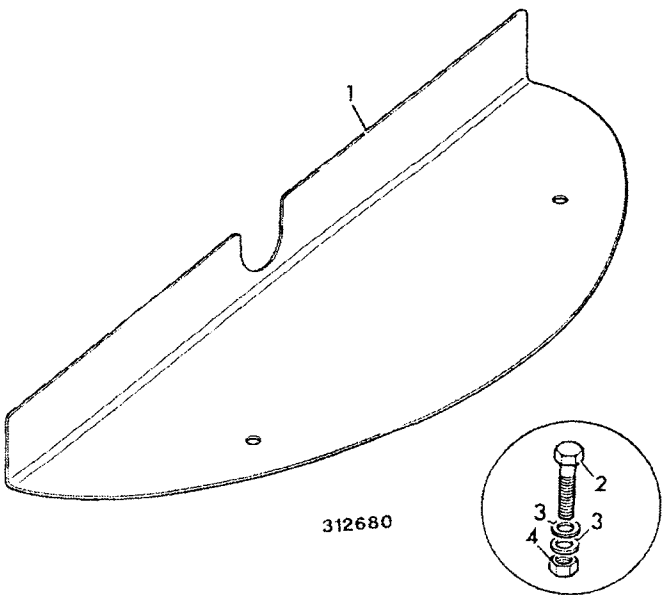

	FROM	TO	FROM	TO
3C PLUS				
3C 14				

ITEM	PART NO	CHANGE NO	DESCRIPTION	REMARKS	USAGE CODE	QTY
1	123/07703		Cover, rear valance			1
2	1315/3313Z		Bolt, M8 X 55			2
3	1420/0007Z		Washer, plain, M8			4
4	1370/0203Z		Nut, self lock, M8			2

B2-15-21 COVER, LOADER CONTROLS

	FROM	TO	FROM	TO
3C PLUS				
3C 14				

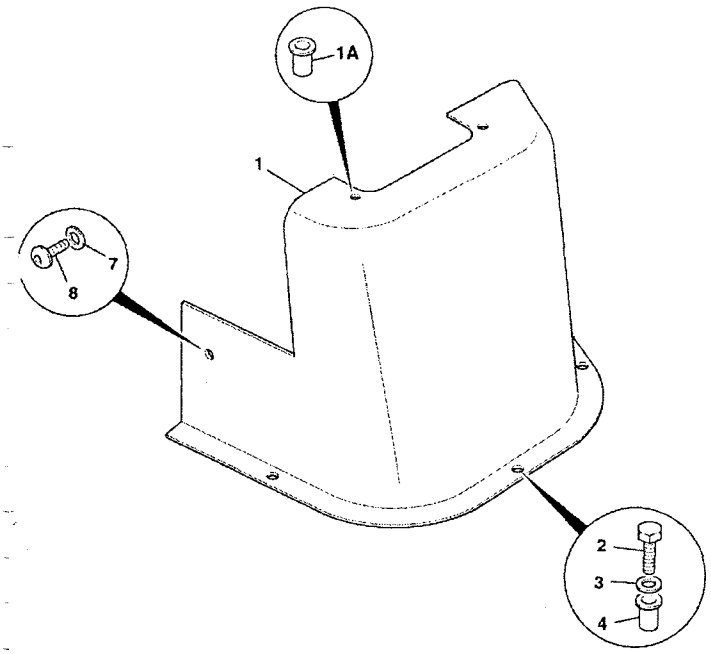

788230

ITEM	PART NO	CHANGE NO	DESCRIPTION	REMARKS	USAGE CODE	QTY
1	331/27757		Console, end cap			1
1A	826/01232		:Nut, M6 jack			2
2	1315/0207Z		Screw, M6 x 25mm long			3
3	823/00384		Washer			3
4	826/01101		Nut, rivet,M6 open ended, for 3 to 5.5mm plt			3
7	823/00516		Washer, nylon, M6			1
8	826/01768		Screw, M6x25mm			1

B2-18-1 DIRECT GLAZING, REPLACEMENT MATERIAL

	FROM	TO	FROM	TO
3C PLUS				
3C 14				

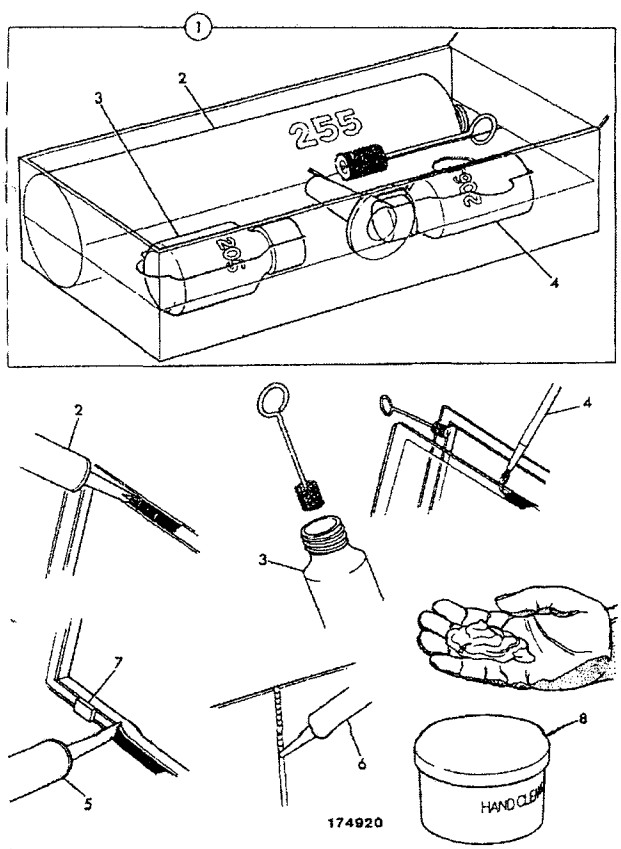

174920

ITEM	PART NO	CHANGE NO	DESCRIPTION	REMARKS	USAGE CODE	QTY
1	993/55700		Adhesive, kit-JCB ultrafast, glazing			1
2	4103/2109		:Adhesive, JCB ultrafast, 310ml cartridge	See foot note 1		A/R
3	4104/1206		:Cleaner, active wiper 205, 30ml			A/R
	4104/1203		:Cleaner, primer SIKA 205, 250ml			A/R
4	4201/4906		:Paint, black primer 206J, 30ml	Black ceramic ink band around glass border.		A/R
	4201/4911		:Paint, black primer 206J, 200gm			A/R
5	4102/2309		Sealant, black acrylic 221, 310ml cartridge			A/R
6	4102/0933		Sealant, DP2205 clear, silicone			A/R
7	926/15500		Spacer, block			34
	926/22100		Spacer, block			2
8	4104/1310		Cleaner, hand, polyurethane, 454gm/1lb			A/R

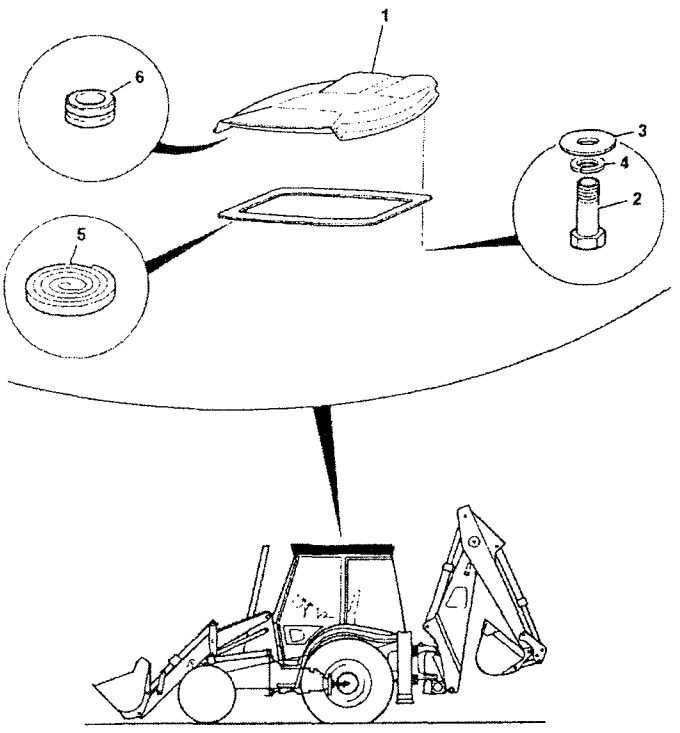

398060

	FROM	TO	FROM	TO
3C PLUS				
3C 14				

ITEM	PART NO	CHANGE NO	DESCRIPTION	REMARKS	USAGE CODE	QTY
1	123/07439		Roof, cab,USA, yellow	Yellow		1
2	1315/0312Z		Bolt			4
3	1412/0002Z		Washer			4
4	1425/0007Z		Washer, spring			4
5	926/13200		Strip, foam seal	5000mm		1
6	2410/1302		Grommet	aerial & rear washer		2
	828/10333		Plug, blanking	rear beacon		1
15	817/18078		Decal, JCB Logo, black			1

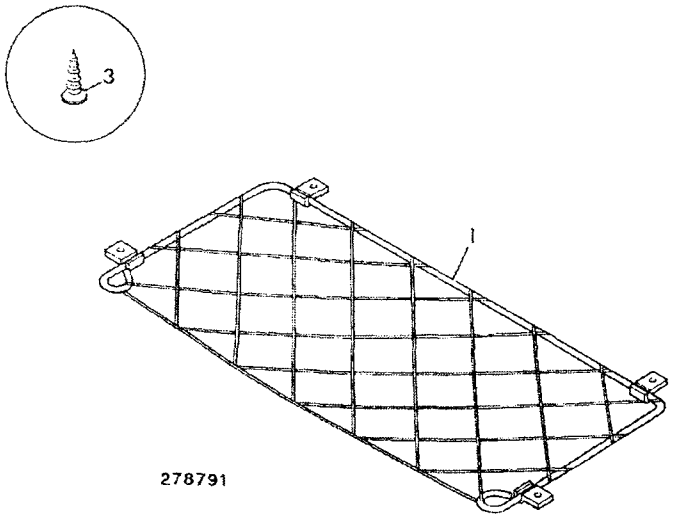

278791

	FROM	TO	FROM	TO
3C PLUS				
3C 14				

ITEM	PART NO	CHANGE NO	DESCRIPTION	REMARKS	USAGE CODE	QTY
1	267/33501		Net, stowage			1
2	826/01533		Screw			4

	FROM	TO	FROM	TO
3C PLUS				
3C 14				

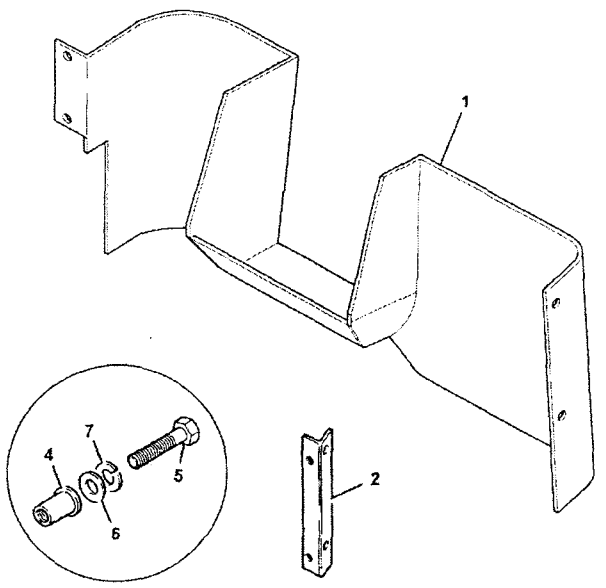

261762

ITEM	PART NO	CHANGE NO	DESCRIPTION	REMARKS	USAGE CODE	QTY
1	335/12048		Cover, brake pedals			1
2	123/08076		Bracket, pedal cover			1
4	826/01099		Nut, rivet,M6 open ended			6
5	1315/0205Z		Bolt			6
6	1420/0006Z		Washer, M6			6
7	1425/0006Z		Washer, Spring			6
8	926/01100		Strip, sealing			A/R

B

B1 BODYWORK/FRAME
B2 CAB
● B3 LOADER, FRONT END
B4 BACKHOE
B5 REFURBISHMENTS

ENGLISH

B3-1-21 ARMS, LOADER
B3-3-21 ARMS, LOADER, SHOVEL LINKAGE
B3-4-2 SAFETY STRUT, LOADER ARMS
B3-5-1 ARMS, LOADER, ANTI-SPILL, LINKAGE

B3-1-21 ARMS, LOADER

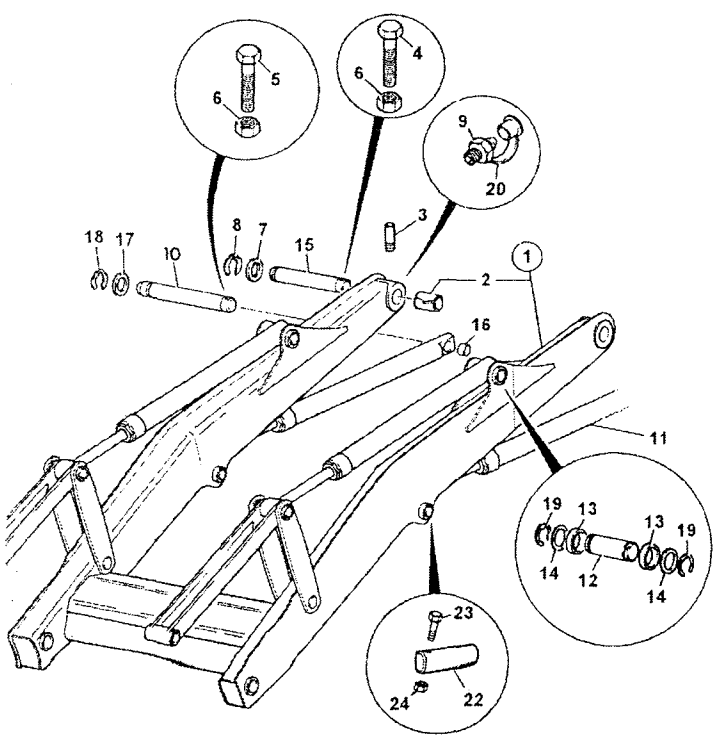

788240

	FROM	TO	FROM	TO
3C PLUS				
3C 14				

ITEM	PART NO	CHANGE NO	DESCRIPTION	REMARKS	USAGE CODE	QTY
1	128/15453		Arm, loader			1
2	808/00296		:Bush			2
3	653/00162		Pipe, grease			2
4	1315/3524Z		Bolt, M12 x 140 Lg.	loader arm to chassis		2
5	1315/3512Z		Bolt, M12 x 50mm	lift ram to chassis		2
6	1370/0401Z		Nut			4
7	819/00099		Spacer, 5mm			A/R
	819/00147		Spacer, 3mm			A/R
	823/00471		Washer, 1.45mm max			A/R
8	821/00517		Circlip, 60mm pin			2
9	1450/1007		Nipple, grease, 45 deg. angle			2
10	811/90593		Pin, pivot, 50.8 diax251			2
11	.		'See Remark'	lift ram see index E4		1
12	811/90471		Pin, pivot, black			2
13	809/10030		Bush			4
14	819/00049		Shim, 1.4mm			A/R
	819/00148		Spacer, 3mm			A/R
	823/10347		Shim, 0.5/0.6mm. o/dia 65mm			A/R
15	811/90473		Pin, pivot, black	left hand side		1

B3-1-21 ARMS, LOADER

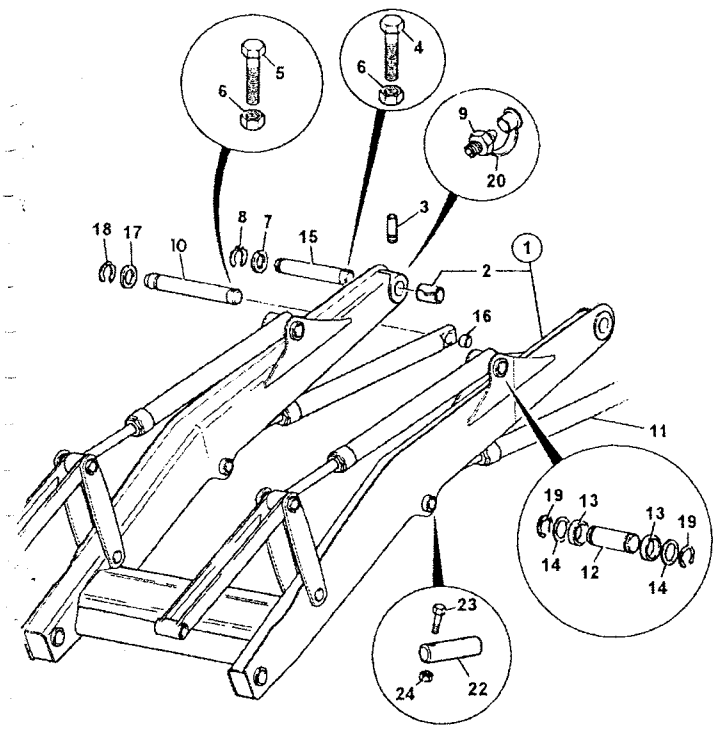

788240

ITEM	PART NO	CHANGE NO	DESCRIPTION	REMARKS	USAGE CODE	QTY
	811/90474		Pin, pivot, black	right hand side (twin circlip groove)		1
16	819/00097		Spacer			2
17	823/00220		Washer, 1.40mm thick			A/R
	819/00097		Spacer			A/R
18	826/00874		Circlip			2
19	823/00334		Clip			4
20	835/00017		Cap, grease nipple			6
21	2410/1308		Grommet, blind	use with item 10		2
22	811/90676		Pin, pivot, 44.35x169	was 811/90484		2
23	1315/3418Z		Bolt, M10x80			2
24	1370/0303Z		Nut, lock, M10			2

B3-3-21 ARMS, LOADER, SHOVEL LINKAGE

	FROM	TO	FROM	TO
3C PLUS				
3C 14				

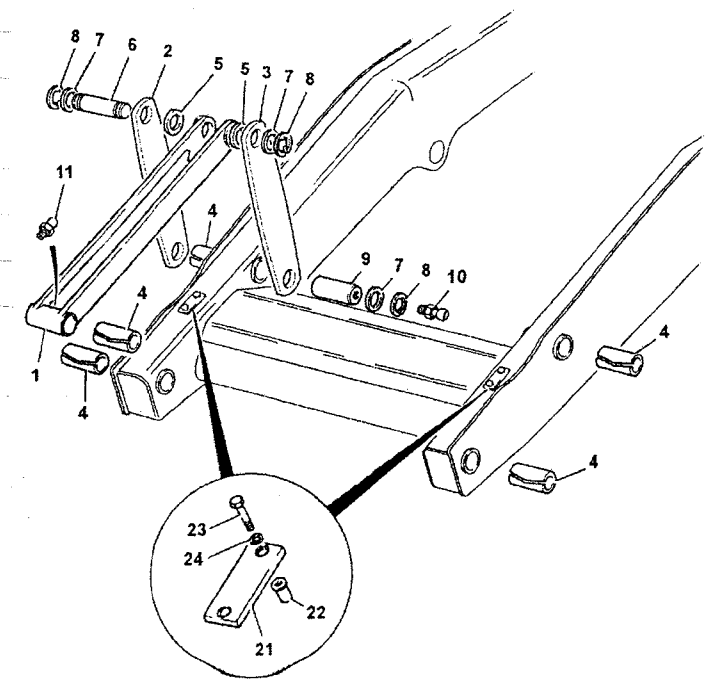

400731

ITEM	PART NO	CHANGE NO	DESCRIPTION	REMARKS	USAGE CODE	QTY
1	125/00363		Link, crowd, 595mm long			2
2	331/43845		Lever, crowd, anti spill, with tapped hole			1
3	331/43841		Lever, shovel pivot, plain			3
4	1208/0023		Bush			6
5	809/10030		Bush			4
6	811/90471		Pin, pivot, black			2
7	819/00049		Shim, 1.4mm			8
	823/10347		Shim, 0.5/0.6mm, o/dia 65mm			8
8	823/00334		Clip			8
9	811/90472		Pin, pivot, black			2
10	1450/0001		Nipple, grease, straight, 1/8 BSP			2
11	1450/0002		Nipple, grease, straight, 1/4			2
21	123/03326		Plate, shovel stop, 12mm			2
22	826/01249		Nut, rivet M10 open end, for 6 to 8.5mm plate			4
23	1315/0409Z		Screw, hex. head			4
24	1425/0008Z		Washer, Spring M10			4

	FROM	TO	FROM	TO
3C PLUS				
3C 14				

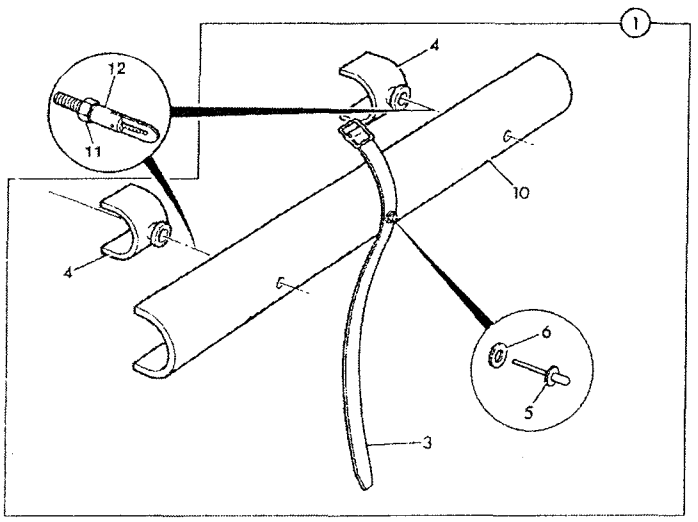

ITEM	PART NO	CHANGE NO	DESCRIPTION	REMARKS	USAGE CODE	QTY
1	128/14206		Strut, safety,assembly, loader arms,Tier 2			1
3	123/04744		:Strap			1
4	123/02971		:Stop			2
5	826/01345		:Rivet, pop			1
6	1414/0011Z		:Washer, 2 BA			1
7	123/04734		Fastener, antiluce			2
10	331/39126		:Strut, safety, 690mm			1
11	1370/0301Z		Nut			2
12	123/07718		Mounting, strut			2

143496

	FROM	TO	FROM	TO
3C PLUS				
3C 14				

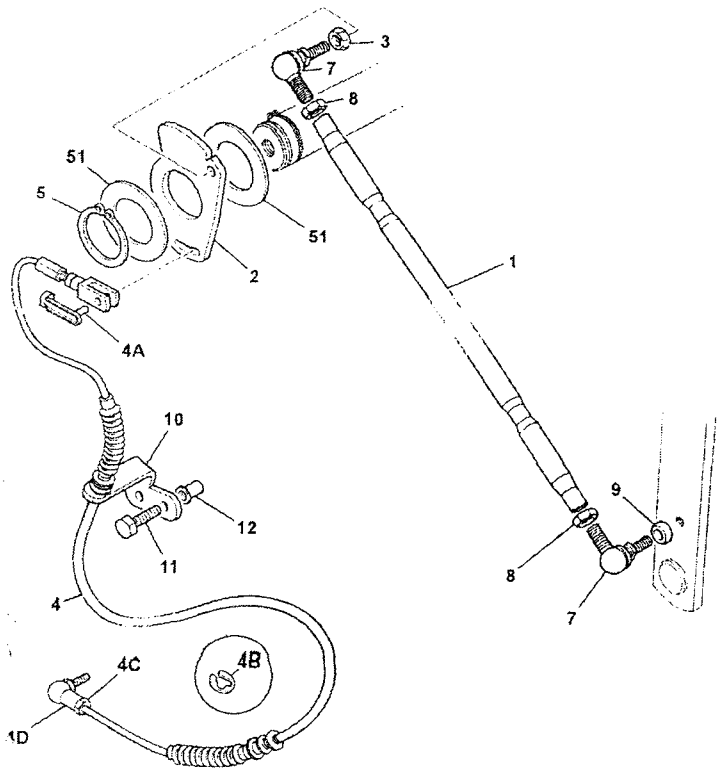

ITEM	PART NO	CHANGE NO	DESCRIPTION	REMARKS	USAGE CODE	QTY
1	123/07739		Link, anti-spill			1
2	331/50773		Cam, plate			1
3	1370/0401Z		Nut			1
4	910/60241		Cable, anti-spill			1
4A	331/56804		:Clip, M8 spring pin			1
4B	331/56802		:Clip, "E"			1
4C	1370/0203Z		:Nut, self lock, M8			1
4D	913/02902		:Joint, ball			1
5	821/00517		Circlip, 60mm pin			1
7	913/00049		Joint, ball, M16			2
8	1370/0602Z		Nut, lock			2
9	123/07745		Spacer			1
10	331/51174		Bracket, anti-spill			1
11	1315/0409Z		Screw, hex. head			2
12	826/01617		Nut, rivet M10 open end, for 8.5 to 11mm plt			2
51	823/00471		Washer, 1.45mm max			A/R
	819/00099		Spacer, 5mm			A/R
	819/00147		Spacer, 3mm			A/R

789770

B

- B1 BODYWORK/FRAME
- B2 CAB
- B3 LOADER, FRONT END
- ● B4 BACKHOE
- B5 REFURBISHMENTS

ENGLISH

34-2-1	SLEW/SWING, COMPONENTS
34-3-2	KINGPOST CENTREMOUNT, 14' 0" BACKHOE
84-4-40	BOOM, 14'
4-5-1	DIPPER (STICK), MONO
B4-6-1	DIPPER (STICK), 214 EXTRADIG
4-8-1	TIPPING LINK, STANDARD
B4-10-1	BOOM LOCK, IN CAB CONTROLS, 14'0 CENTREMOUNT
B4-11-1	KINGPOST, BULKHEAD
4-12-2	KINGPOST HOSE CLAMPS

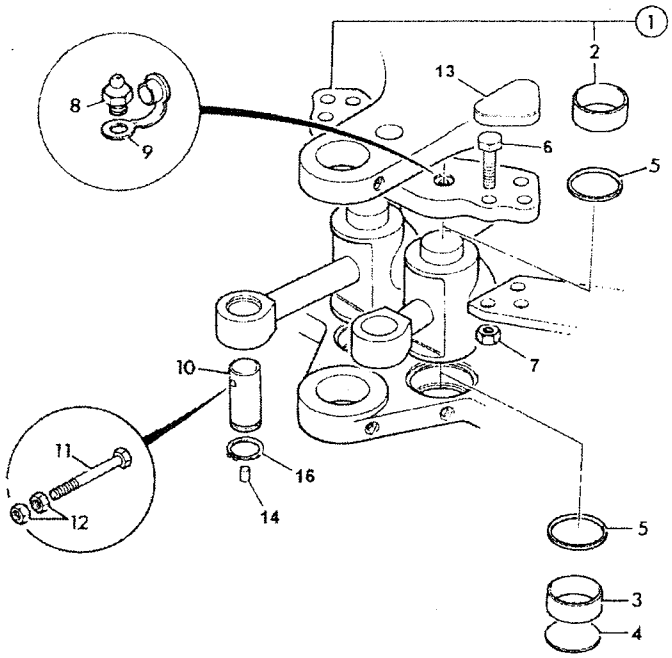

247522

	FROM	TO	FROM	TO
3C PLUS				
3C 14				

ITEM	PART NO	CHANGE NO	DESCRIPTION	REMARKS	USAGE CODE	QTY
1	126/01082		Bracket, trunnion			1
2	808/00388		:Bearing, liner			2
3	808/00388		Bearing, liner			2
4	123/05228		Disc, blanking			1
5	123/04237		Seal			4
6	1316/3818Z		Bolt, M20 x 80 (10.9)			6
7	1371/0701Z		Nut, hex M20, high strength			6
8	1450/0001		Nipple, grease, straight, 1/8 BSP			2
9	835/00017		Cap, grease nipple			2
10	811/90198		Pin, pivot, 172mm long, with groove			2
11	1315/3526Z		Bolt			2
12	1370/0402Z		Nut, M12			4
13	123/07540		Cap, bolt cover			2
14	835/00188		Plug	Use with item 10.		2
15	823/00604		Washer, hardened,zinc plated, M20			12
16	2203/0067		Circlip			2

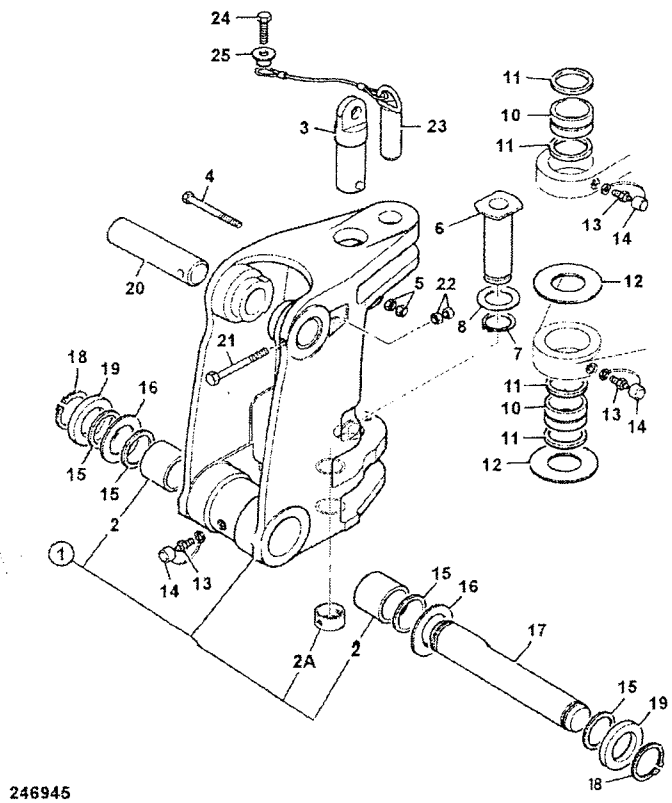

246945

	FROM	TO	FROM	TO
3C PLUS				
3C 14				

ITEM	PART NO	CHANGE NO	DESCRIPTION	REMARKS	USAGE CODE	QTY
1	128/15200		Kingpost, assembly, centrmount 14ft 0ins			1
2	808/00385		:Bearing, liner, 70mm OD x 60mm ID.			2
2A	831/10229		:Bearing, liner			4
3	913/10079		Pin, kingpost top, centremount			1
4	1315/3524Z		Bolt, M12 x 140 Lg.			1
5	1370/0402Z		Nut, M12			2
6	911/40106		Pin, bottom c/m kingpost			1
7	821/10354		Circlip			1
8	823/10638		Shim, 82od x 71id x 0.5thk			A/R
	823/10704		Shim, 82od x 71id X 1.5thk			A/R
10	831/10211		Bearing, liner, 70x84x57, slew pivot			2
11	813/00456		Seal, pivot pin grease			4
12	823/10270		Washer, thrust, 71x150x6.05			2
	998/00007		Washer, 4mm thrust			A/R
	998/00006		Washer, 7mm thust			A/R
13	1450/0001		Nipple, grease, straight, 1/8 BSP			3
14	835/00017		Cap, grease nipple			3
15	813/00427		Seal, grease	Kingpost		2

B4-3-2 KINGPOST CENTREMOUNT, 14' 0" BACKHOE

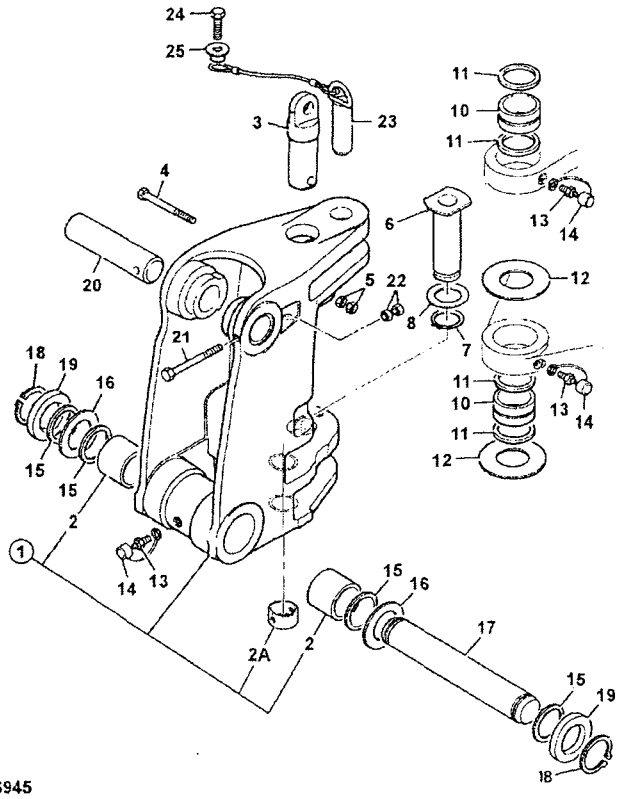

246945

ITEM	PART NO	CHANGE NO	DESCRIPTION	REMARKS	USAGE CODE	QTY
16	819/00143		Shim, 1.4mm			2
17	811/70098		Pin, pivot			1
	811/70098A		Pin, pivot, 60X440mm, 0.1mm O/S			1
	811/70098B		Pin, pivot, 60X440mm, 0.25mm O/S			1
18	821/00297		Circlip			2
19	819/00099		Spacer, 5mm			A/R
	819/00144		Spacer, 6mm			A/R
	819/00145		Spacer, 8mm			A/R
20	811/50483		Pin, pivot	Boom ram pivot		1
	811/50483A		Pin, pivot, 50X250mm, 0.1mm O/S			1
	811/50483B		Pin, pivot, 50X250mm, 0.25mm O/S			1
21	1315/3523Z		Bolt, M12x130			1
22	1370/0402Z		Nut, M12			2
23	125/81200		Pin, slewlock			1
24	1315/3518Z		Bolt, M12 x 80mm			1
25	123/05243		Spacer			1
26	1370/0403Z		Nut, M12			1

B4-4-40 BOOM, 14'

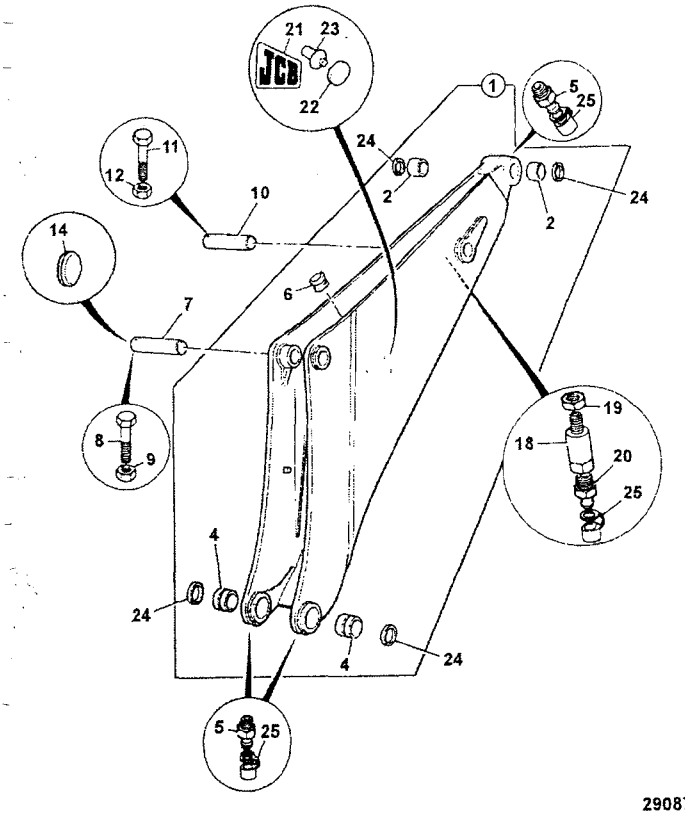

290871

FROM TO FROM TO

3C PLUS
3C 14

ITEM	PART NO	CHANGE NO	DESCRIPTION	REMARKS	USAGE CODE	QTY
1	126/02332		Boom, 2390mm long			1
2	809/00131		:Bearing, liner, 60.06IDx70.07ODx62lg			2
4	809/00131		:Bearing, liner, 60.06IDx70.07ODx62lg			2
5	1450/0001		Nipple, grease, straight, 1/8 BSP			3
6	830/00314		Ferrule, rubber			6
7	811/50569		Pin, pivot			1
	811/50569A		Pin, pivot, 60X322mm, 0.1mm O/S			1
	811/50569B		Pin, pivot, 60X322mm, 0.25mm O/S			1
8	1315/3520Z		Bolt, M12 x 100mm			1
9	1370/0403Z		Nut, M12			1
10	811/50520		Pin, pivot			1
	811/50520A		Pin, pivot, 50X275mm, 0.1mm O/S			1
	811/50520B		Pin, pivot, 50X275mm, 0.25mm O/S			1
11	1315/3520Z		Bolt, M12 x 100mm			1
12	1370/0403Z		Nut, M12			1
14	2410/1308		Grommet, blind	fit ti item 7		1
18	816/20049		Adapter			1
19	826/00871		Nut			1

B4-4-40 BOOM, 14'

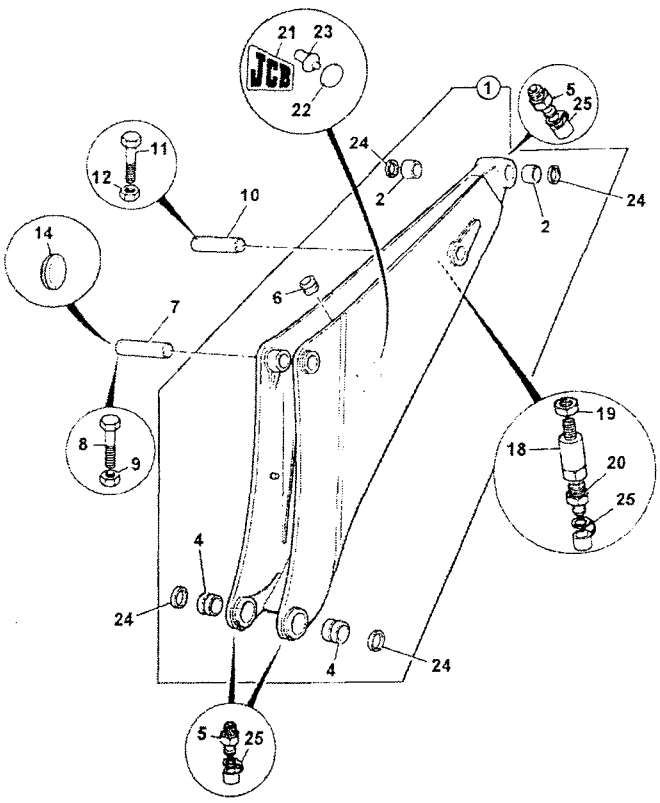

290871

ITEM	PART NO	CHANGE NO	DESCRIPTION	REMARKS	USAGE CODE	QTY
20	1450/0001		Nipple, grease, straight, 1/8 BSP			1
21	817/17454		Decal, JCB insignia, 350mm high			2
22	835/00049		Plug, blanking			8
23	826/00867		Rivet, logo			8
24	813/00427		Seal, grease			4
25	835/00017		Cap, grease nipple			4

B4-5-1 DIPPER (STICK), MONO

	FROM	TO	FROM	TO
3C PLUS				
3C 14				

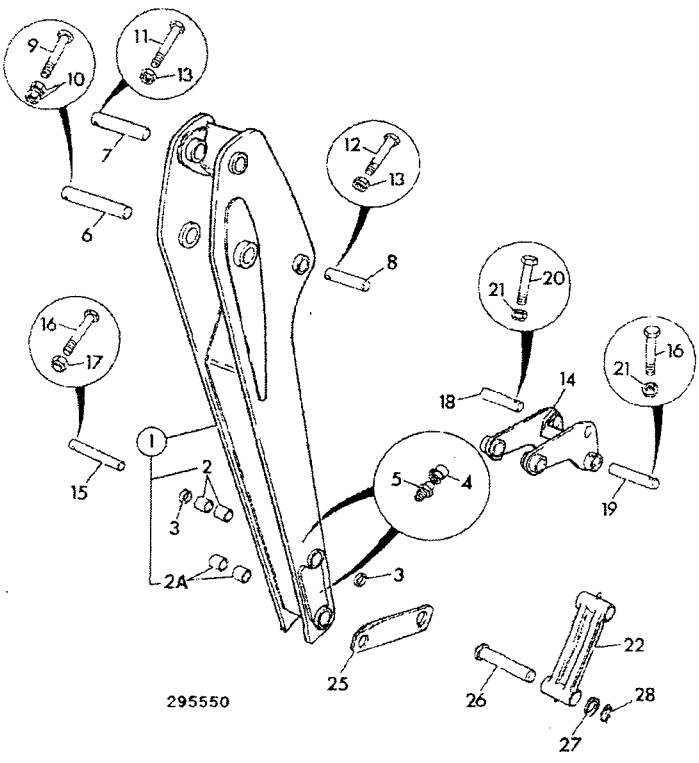

295550

ITEM	PART NO	CHANGE NO	DESCRIPTION	REMARKS	USAGE CODE	QTY
1	126/02331		Dipper, lightlift, 2339mm long	Light duty		1
	829/08117		:Boss, pivot	Bucket/lever pivot		2
2	809/00125		:Bearing, liner, 45mm pivot bore			2
2A	809/00176		Bearing, liner, 44.5IDx55.5ODx50long			2
3	813/00425		Seal, pivot pin grease			2
4	835/00017		Cap, grease nipple			2
5	1450/0001		Nipple, grease, straight, 1/8 BSP			2
6	811/50372		Pin, pivot	Boom, dipper pivot		1
	811/50372A		Pin, pivot, 60x350mm, 0.1mm O/S			1
	811/50372B		Pin, pivot, 60x350mm, 0.25mm O/S			1
7	811/50381		Pin, pivot	dipper ram eye end pivot, std duty dipper		1
	811/50381A		Pin, pivot, 50x340mm, 0.1mm O/S			1
	811/50381B		Pin, pivot, 50X340mm, 0.25mm O/S			1
8	811/50375		Pin, pivot	Bucket ram dump end		1
9	826/01642		Capscrew			1

B4-5-1 DIPPER (STICK), MONO

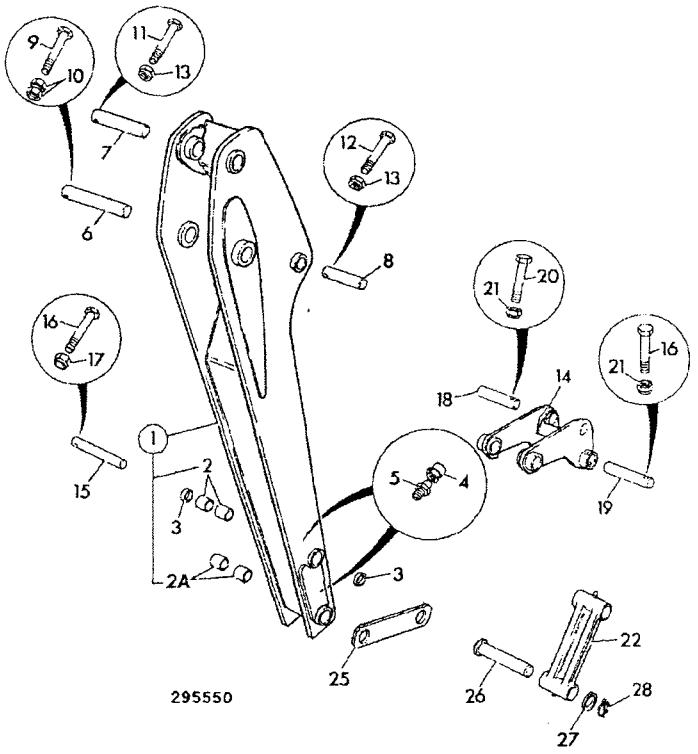

ITEM	PART NO	CHANGE NO	DESCRIPTION	REMARKS	USAGE CODE	QTY
10	1370/0403Z		Nut, M12			1
11	1315/3521Z		Bolt, M12x110			1
12	1315/3418Z		Bolt, M10x80			1
13	1370/0303Z		Nut, lock, M10	Bucket ram		1
	1370/0403Z		Nut, M12	Dipper ram		1
14	335/05602		Lever, tipping, 14'0", 4 holes per side			1
15	811/20061		Pin, pivot			1
16	1315/3418Z		Bolt, M10x80			3
17	1370/0303Z		Nut, lock, M10			2
18	811/90409		Pin, Pivot 45 x 206			1
19	811/50369		Pin, pivot			1
20	1315/3419Z		Bolt, M10x90mm			1
21	1370/0303Z		Nut, lock, M10			2
22	.		'See Remark'	Tipping link, see B4 index.		1
25	106/50001		Strap	Optional		1
26	911/12400		Pin, pivot			2
27	823/00470		Washer			2
28	826/00512		Pin, lynch			2
29	819/00100		Shim, 120x60.5x1.4thick			A/R

B4-6-1 DIPPER (STICK), 214 EXTRADIG

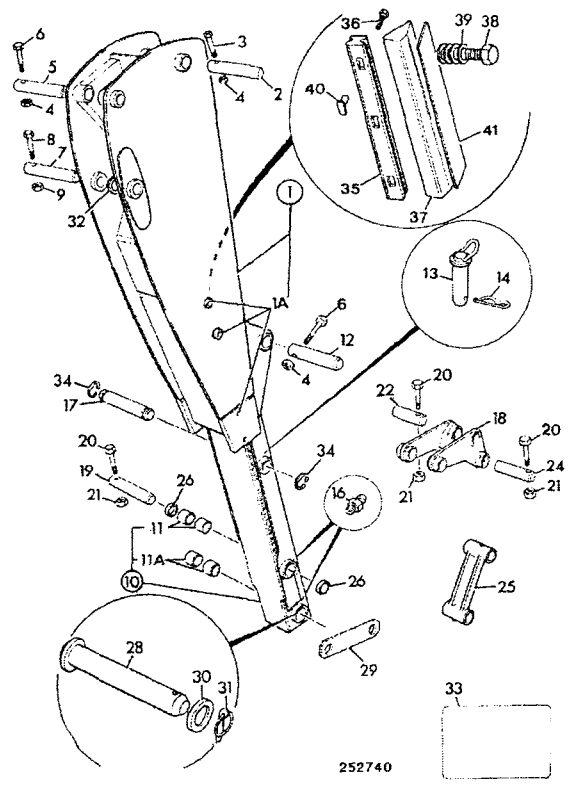

	FROM	TO	FROM	TO
3C PLUS				
3C 14				

ITEM	PART NO	CHANGE NO	DESCRIPTION	REMARKS	USAGE CODE	QTY
1	331/19807		Carrier, 14' extradig			1
1A	826/10345		Boss, wear pad adjuster. M20 thread			8
2	811/90583		Pin, pivot			1
3	1315/3317Z		Bolt, M8x75			2
4	1370/0203Z		Nut, self lock, M8	use with items 2		1
	1370/0303Z		Nut, lock, M10	use with item 12		1
	1370/0403Z		Nut, M12	For use with item 5		1
5	811/90183		Pin, pivot			1
	811/90183A		Pin, pivot			1
	811/90183B		Pin, pivot			1
6	1315/3418Z		Bolt, M10x80	For use with item 12		1
	1315/3520Z		Bolt, M12 x 100mm	For use with item 5		1
7	811/50372		Pin, pivot			1
	811/50372A		Pin, pivot, 60x350mm, 0.1mm O/S			1
	811/50372B		Pin, pivot, 60x350mm, 0.25mm O/S			1
7A	823/10536		Shim, 2mm			1
8	826/01642		Capscrew			1
9	1370/0403Z		Nut, M12			1
10	128/10774		Dipper, inner			1
10A	829/01201		Boss, locking			1

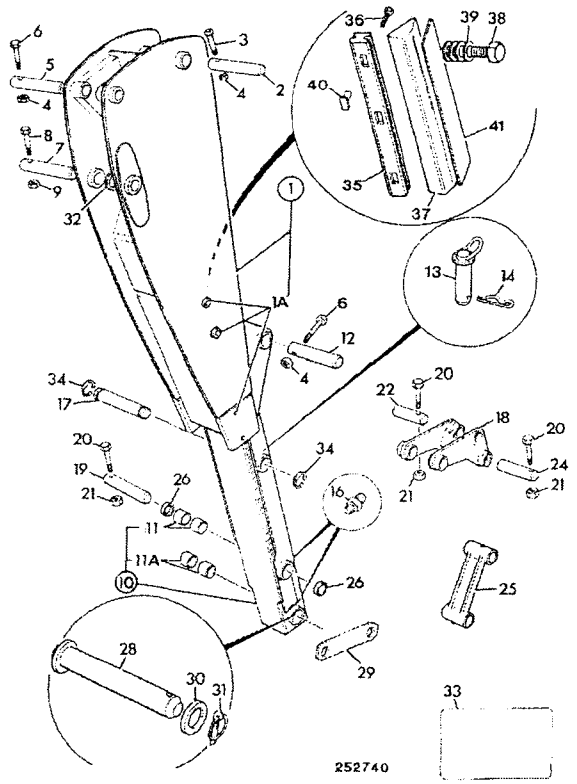

ITEM	PART NO	CHANGE NO	DESCRIPTION	REMARKS	USAGE CODE	QTY
11	809/00125		Bearing, liner, 45mm pivot bore	Lever pivot		2
11A	809/00176		Bearing, liner, 44.5IDx55.5ODx50long			2
12	811/50367		Pin, pivot			1
13	911/40092		Pin, locking			1
14	122/34401		Clip			1
16	1450/0002		Nipple, grease, straight, 1/4			2
17	811/90585		Pin, pivot			1
18	335/05602		Lever, tipping, 14'0", 4 holes per side			1
19	811/20061		Pin, pivot			1
20	1315/3418Z		Bolt, M10x80	items 19 & 24		2
	1315/3419Z		Bolt, M10x90mm	item 22		1
21	1370/0303Z		Nut, lock, M10			4
22	811/90409		Pin, Pivot 45 x 206			1
23	1305/3226Z		Bolt			1
24	811/50369		Pin, pivot			1
25	.		'See Remark'	Tipping link, B4 index		1
26	813/00425		Seal, pivot pin grease			2
27	1416/0008Z		Washer, spring			8
28	911/12400		Pin, pivot			2
29	106/50001		Strap			1
30	823/00470		Washer			2
31	826/00512		Pin, lynch			2
32	819/00100		Shim, 120x60.5x1.4thick			A/R

B4-6-1 DIPPER (STICK), 214 EXTRADIG

9812/0080U
ISSUE 1

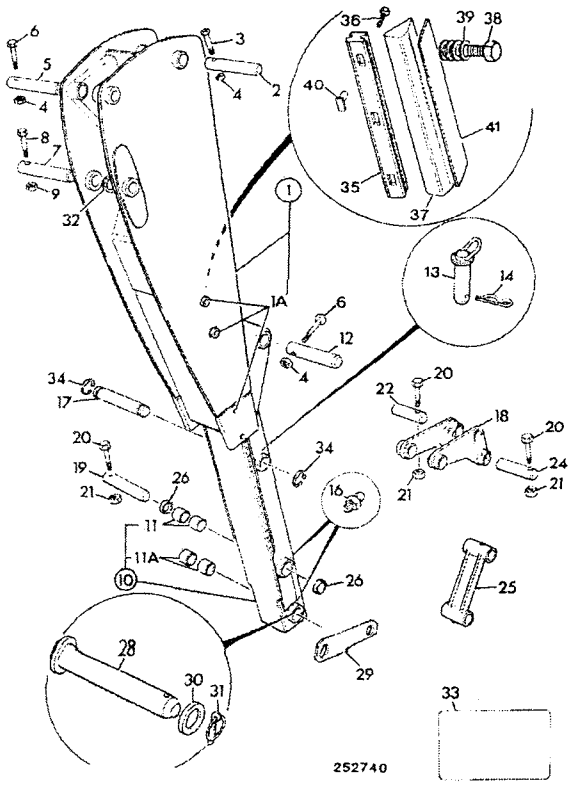

ITEM	PART NO	CHANGE NO	DESCRIPTION	REMARKS	USAGE CODE	QTY
33	817/00502		Label, greasing			1
34	823/00334		Clip			1
35	123/06189		Pad, top wear			4
36	1318/3410Z		Bolt			8
37	331/27389		Pad, wear strip, bottom, red			4
38	1315/0811Z		Bolt, M20 X 45 long			8
39	1370/0702Z		Nut, thin M20			8
40	NSP		None serviced part	Now part of item 35		8
41	331/30894		Plate, spreader			4
42	123/06256		Spacer, steel	Fitted between item 36 & 35		8
	1420/0008Z		Washer, Plain M10	replaces 123/06256		16

B4-8-1 TIPPING LINK, STANDARD

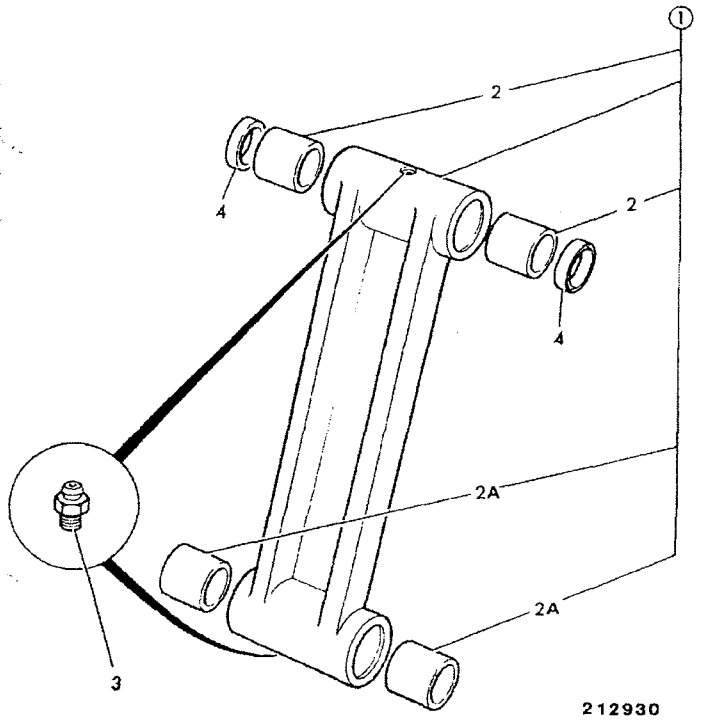

	FROM	TO	FROM	TO
3C PLUS				
3C 14				

ITEM	PART NO	CHANGE NO	DESCRIPTION	REMARKS	USAGE CODE	QTY
1	126/00247		Link, tipping			1
2	809/00125		:Bearing, liner, 45mm pivot bore			2
2A	809/00176		Bearing, liner, 44.5IDx55. 5ODx50long			2
3	1450/0002		Nipple, grease, straight, 1/4			2
4	813/00425		Seal, pivot pin grease			2

B4-10-1 BOOM LOCK, IN CAB CONTROLS, 14'0 CENTREMOUNT

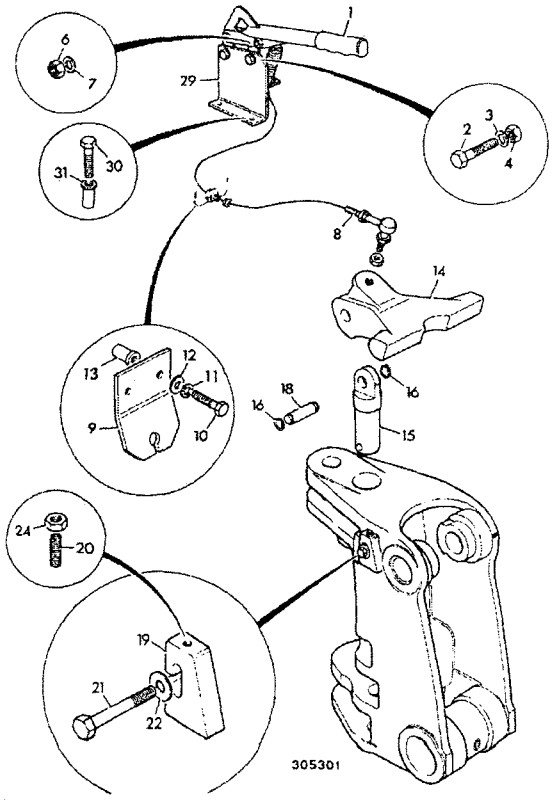

	FROM	TO	FROM	TO
3C PLUS				
3C 14				

ITEM	PART NO	CHANGE NO	DESCRIPTION	REMARKS	USAGE CODE	QTY
1	123/05234		Lever, boomlock, red grip			1
2	1315/0307Z		Screw, M8 X 25			2
3	1411/0003Z		Washer, medium			2
4	1370/0203Z		Nut, self lock, M8			2
6	913/05903		Pin, clevis			1
7	913/00005		Clip, clevis			1
8	910/48400		Cable, assembly, boomlock centremount			1
8A	123/07652		:Joint, ball end			1
9	331/30856		Bracket, reaction			1
10	1315/0307Z		Screw, M8 X 25			2
11	1425/0007Z		Washer, spring			2
12	1420/0007Z		Washer, plain, M8			2
13	826/01103		Nut, rivet,M8 open ended			2
14	123/05862	Superseded	Casting, boom lock, 14'0 (Yellow)			1
	332/C1897		Casting, boom lock			1
15	913/10079		Pin, kingpost top, centremount			1
16	2203/0035		Circlip			2
18	811/70099		Pin, boomlock			1
19	123/05236		Plate, boom stop			1
20	1390/0412Z		Screw, grub, M10x50 long			1

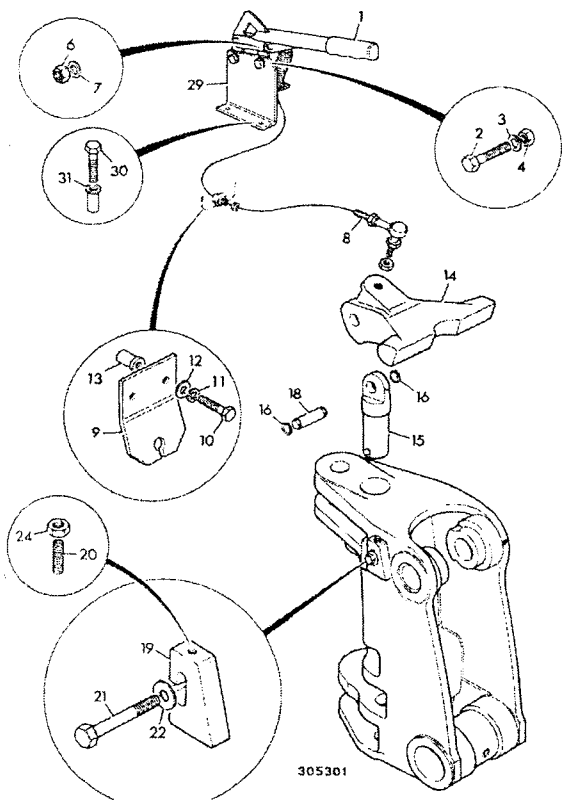

ITEM	PART NO	CHANGE NO	DESCRIPTION	REMARKS	USAGE CODE	QTY
21	1315/3814Z		Bolt, M20 x 60mm			1
22	823/00491		Washer, spacer			1
24	1370/0302Z		Nut, lock			1
26	1450/0001		Nipple, grease, straight, 1/8 BSP	Use with item 15, 18		1
27	835/00017		Cap, grease nipple			1
28	835/00166		Plug			1
29	331/14484		Bracket, boomlock, cable reaction			1
30	.		'See Remark'			2
31	.		'See Remark'			2

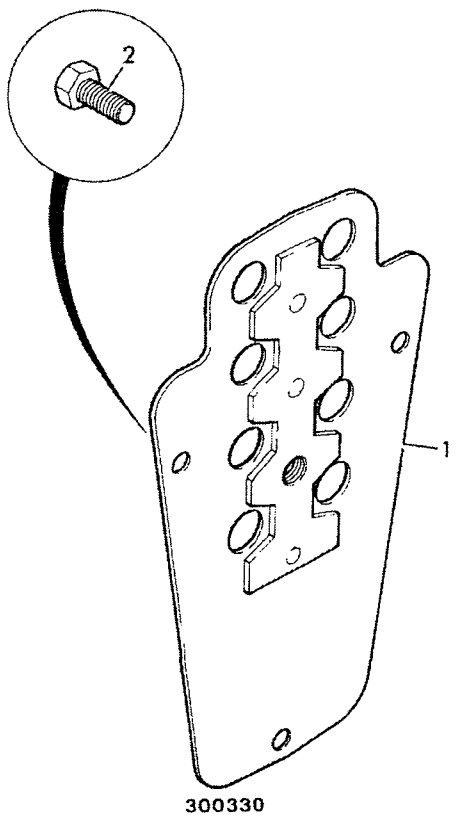

	FROM	TO	FROM	TO
3C PLUS				
3C 14				

ITEM	PART NO	CHANGE NO	DESCRIPTION	REMARKS	USAGE CODE	QTY
1	331/33337	Superseded	Plate, bulkhead,kingpost, centremount			1
	331/64233		Plate, bulkhead, kingpost, centremount			1
2	1315/0408Z		Bolt, M10x30	Was 3 off		2

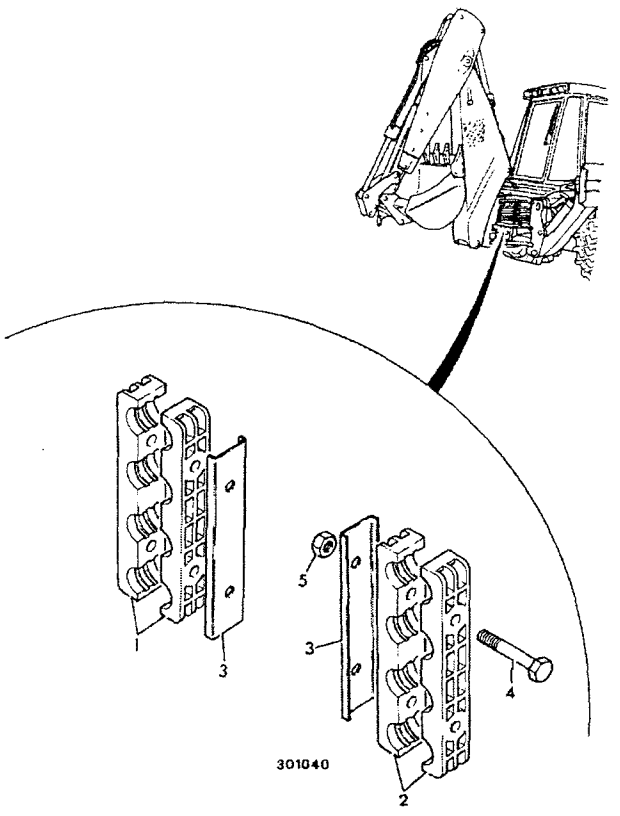

	FROM	TO	FROM	TO
3C PLUS				
3C 14				

ITEM	PART NO	CHANGE NO	DESCRIPTION	REMARKS	USAGE CODE	QTY
1	123/07468		Clamp, 5/8" top, centremount			2
2	123/07489		Clamp, 5/8" middle			2
3	123/07469		Plate, clamp			4
4	1315/3414Z		Bolt			4
5	1370/0303Z		Nut, lock, M10			4

B

B1 BODYWORK/FRAME
B2 CAB
B3 LOADER, FRONT END
B4 BACKHOE
● B5 REFURBISHMENTS

ENGLISH

B5-2-10 DECALS, WARNING, BRAZIL - PORTUGUESE
B5-2-11 DECALS, WARNING, BRAZIL - PORTUGUESE
B5-2-20 DECALS, WARNING, BRAZIL - SPANISH
B5-2-21 DECALS, WARNING, BRAZIL - SPANISH
B5-2-50 DECALS, MACHINE, 3C
B5-3-2 TOOL KIT

B5-2-10 DECALS, WARNING, BRAZIL - PORTUGUESE

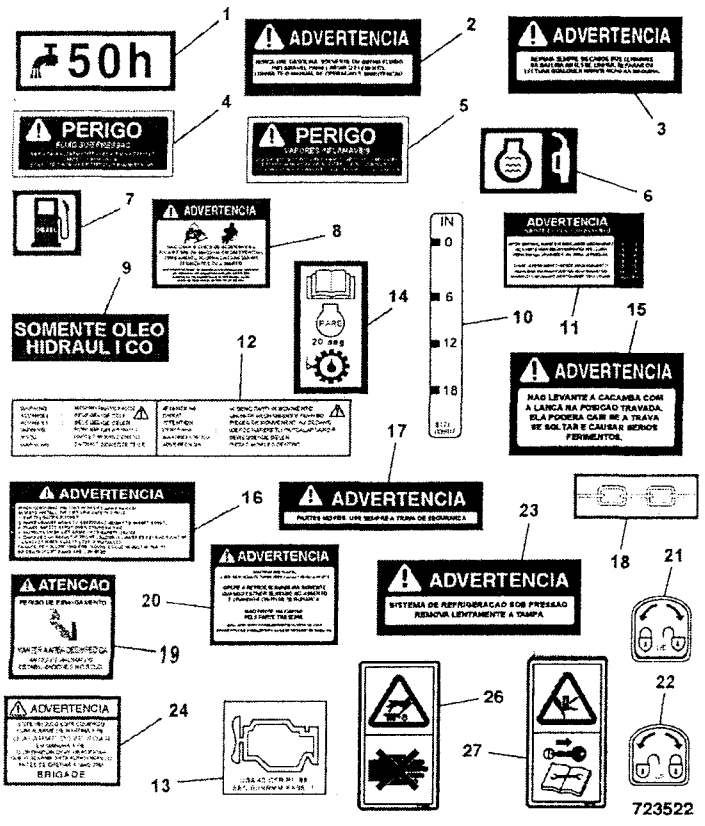

	FROM	TO	FROM	TO
3C PLUS				
3C 14				

ITEM	PART NO	CHANGE NO	DESCRIPTION	REMARKS	USAGE CODE	QTY
1	817/00380		Label, DRAIN EVERY 50 HOURS			2
2	817/18866		Label, air filter cleaning, portuguese			1
3	817/18867		Label, disconnect battery, portuguese			1
4	817/18734		Label, pressurised fluid, portuguese			2
5	817/18735		Label, flammable vapours, portuguese			1
6	817/00824		Label, filler coolant			1
7	817/02305		Label, Diesel			1
8	817/18863		Label, seatbelt, portuguese			1
9	817/18732		Label, hydraulic oil, portuguese			1
10	817/03807		Decal, 6in1 clam shovel			1
11	817/18862		Label, seat weight adjstmnt, portuguese			1
12	817/04776		Label, warning, moving parts inside			2
13	817/18733		Label, engine emission, portuguese			1
14	817/18728		Label, transmission oil, portuguese			1

B5-2-10 DECALS, WARNING, BRAZIL - PORTUGUESE

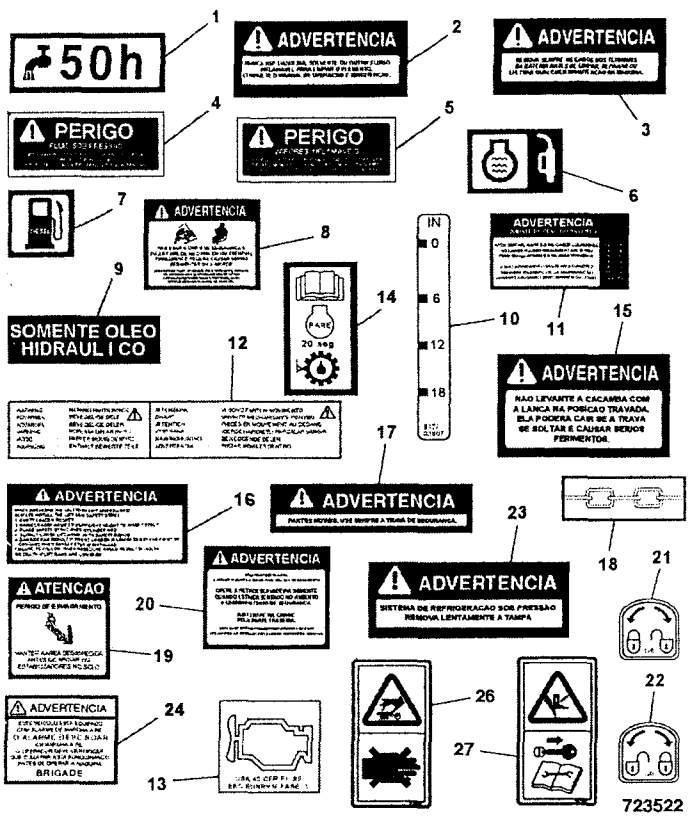

ITEM	PART NO	CHANGE NO	DESCRIPTION	REMARKS	USAGE CODE	QTY
15	817/18859		Label, lift restriction, portuguese			1
16	817/18865		Label, safety procedure, portuguese			2
17	817/18864		Label, crushing hazard, portuguese			2
18	817/01087		Decal, tie down (chain)			6
19	817/18860		Label, crushing hazard, stabliser,portuguese			2
20	817/18861		Label, crushing hazard, slew, portuguese			2
	817/04570		Decal, 4x4x4			1
21	817/18730		Label, LH sidepanel lock, portuguese			1
22	817/18731		Label, RH sidepanel lock, portuguese			1
23	817/18858		Label, pressurised coolant, portuguese			1
24	817/18473		Label, Reverse alarm, (Portuguese)Brazil			1
25	817/18825		Label, product liability, read operator h.book			1
26	817/70005		Decal, warning,hot fluid, under pressure			1
27	817/70102		Decal, warning,Moving parts, remove key			2

B5-2-11 DECALS, WARNING, BRAZIL - PORTUGUESE

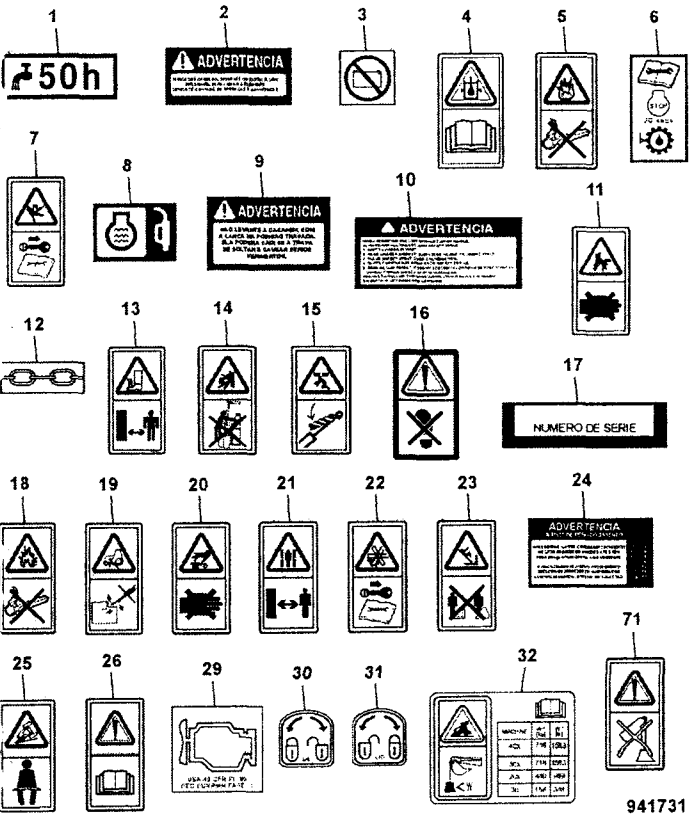

	FROM	TO	FROM	TO
3C PLUS				
3C 14				

ITEM	PART NO	CHANGE NO	DESCRIPTION	REMARKS	USAGE CODE	QTY
1	817/00380		Label, DRAIN EVERY 50 HOURS			1
2	817/18866		Label, air filter cleaning, portuguese			1
3	817/01452		Label, battery, isolator			1
4	817/70041		Decal, Pressure Hazard, Read Handbook			2
5	817/70025		Label, fire hazard			1
6	817/19906		Decal, transmission oil, 49mm X 24mm			1
7	817/70102		Decal, warning,Moving parts, remove key			2
8	817/00824		Label, filler coolant			1
9	817/18859		Label, lift restriction, portuguese			1
10	817/18865		Label, safety procedure, portuguese			2
11	817/70003		Label, warning, hazard to hands			2
12	817/01087		Decal, tie down (chain)			6
13	817/70043		Decal, warning,crush hazard, keep a safe distance			2
14	817/70018		Decal, warning,operate from, operators seat only			2
15	817/70104		Decal, warning,safety strut			2

B5-2-11 DECALS, WARNING, BRAZIL - PORTUGUESE

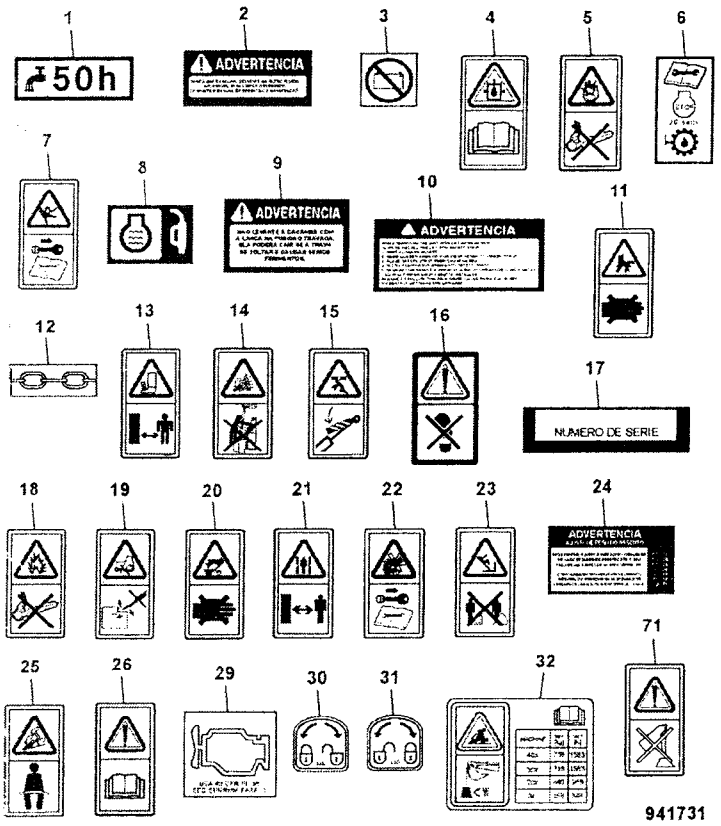

ITEM	PART NO	CHANGE NO	DESCRIPTION	REMARKS	USAGE CODE	QTY
16	817/70024		Label, warning, do not use as step			2
17	817/18729		Label, serial number hilite			1
18	817/70042		Decal, explosion hazard, remove ignitn.source			2
19	817/70012		Decal, Warning,start engine, from operators seat			1
20	817/70005		Decal, warning,hot fluid, under pressure			1
21	817/70027		Decal, warning,crush danger, keep clear			2
22	332/A0008		Decal, Warning-fan blades, remove key from ign.			1
23	817/70011		Decal, warning,do not stand, on/under bucket/ fork			2
24	817/18862		Label, seat weight adjstmnt, portuguese			1
25	817/70029		Decal, warning,overturn, risk-wear seatbelt			1
26	817/70014		Decal, warning,read manual, before operating m/c			1
29	817/18733		Label, engine emission, portuguese			1
30	817/18730		Label, LH sidepanel lock, portuguese			1
31	817/18731		Label, RH sidepanel lock, portuguese			1
32	332/E2601		Decal, safe load, ISO			1

B5-2-20 DECALS, WARNING, BRAZIL - SPANISH

FROM TO FROM TO

3C PLUS
3C 14

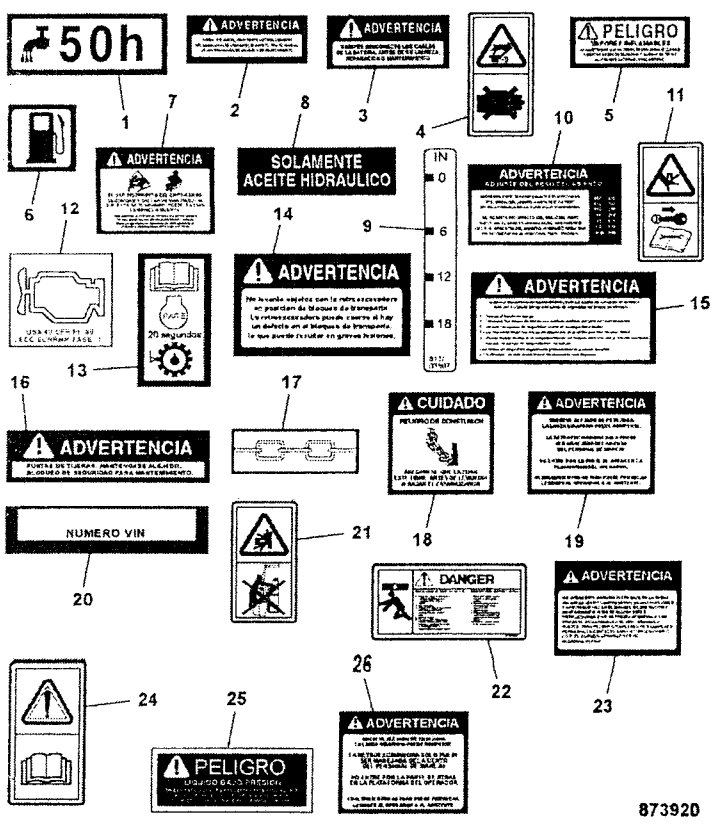

ITEM	PART NO	CHANGE NO	DESCRIPTION	REMARKS	USAGE CODE	QTY
1	817/00380		Label, DRAIN EVERY 50 HOURS			2
2	817/19039		Label, airfilter cleaning, Spanish			1
3	817/19040		Label, battery disconnect, Spanish			1
4	817/70005		Decal, warning,hot fluid, under pressure			1
5	817/19042		Label, flammable vapours, Spanish			1
6	817/02305		Label, Diesel			1
7	817/19043		Label, seat belt, Spanish			1
8	817/19044		Label, hydraulic oil, Spanish			1
9	817/03807		Decal, 6in1 clam shovel			1
10	817/19047		Label, seat height adjust, Spanish			1
11	817/70102		Decal, warning,Moving parts, remove key			2
12	817/18733		Label, engine emission, portuguese			1
13	817/19049		Label, transmission oil, Spanish			1
14	817/19036		Label, lift restrict, Spanish			1
15	817/19037		Label, safety procedure, Spanish			2

B5-2-20 DECALS, WARNING, BRAZIL - SPANISH

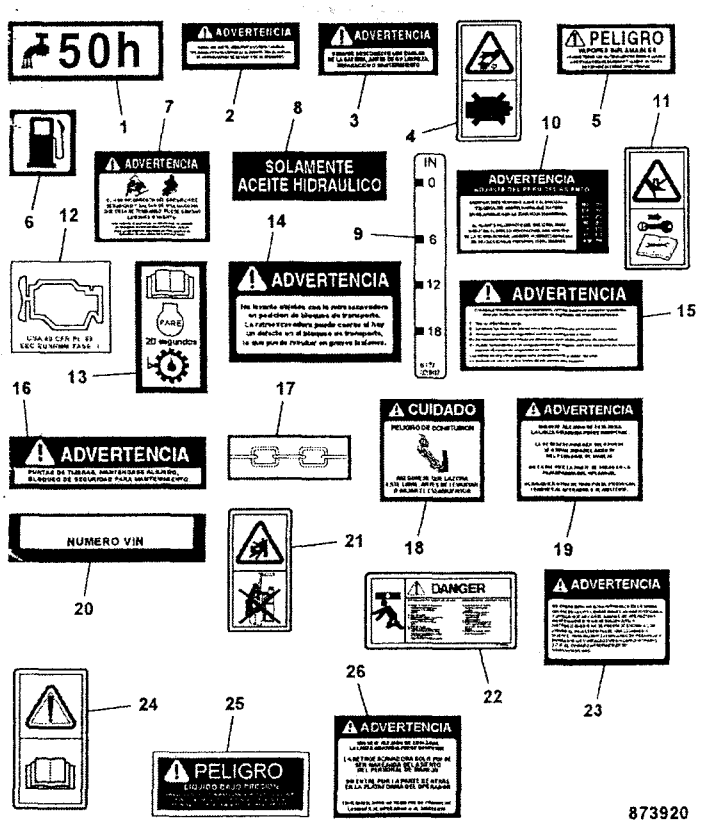

ITEM	PART NO	CHANGE NO	DESCRIPTION	REMARKS	USAGE CODE	QTY
16	817/19038		Label, crushing hazard, Spanish			2
17	817/01087		Decal, tie down (chain)			6
18	817/19045		Label, crushing hazard, Spanish			2
19	817/19046		Label, crushing hazard, Spanish			2
20	339/40782		Label, VIN No surroud			1
21	817/70018		Decal, warning,operate from, operators seat only			1
22	817/70054		Decal, Strut Guide	no longer fitted		1
23	817/01648		Label, WARNING Spanish, Read operating book			1
24	817/18825		Label, product liability, read operator h book			1
25	817/19041		Label, pressurised fluid, Spanish			1
26	817/19035		Label, crushing hazard, Spanish	no longer fitted		1

B5-2-21 DECALS, WARNING, BRAZIL - SPANISH

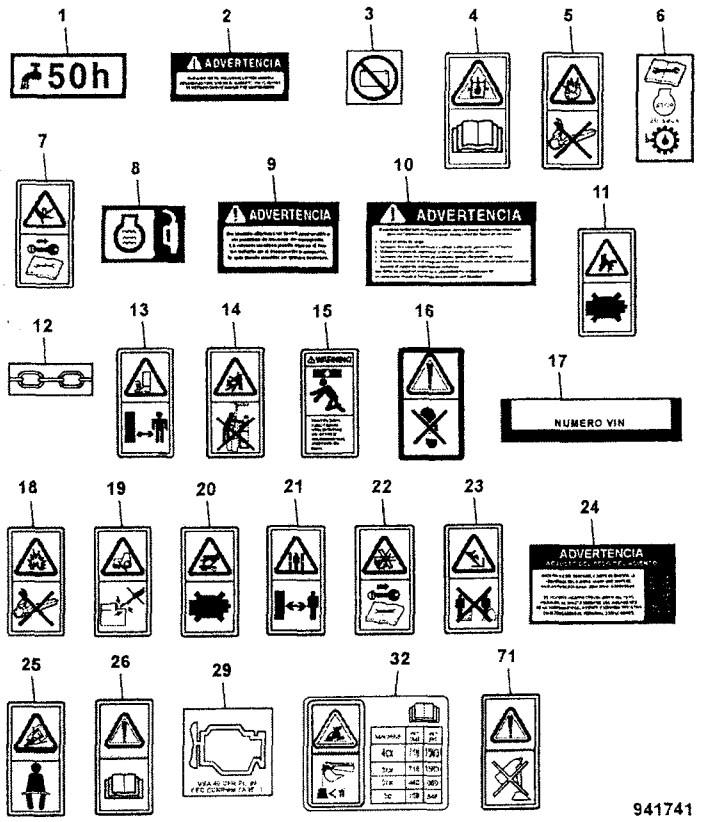

	FROM	TO	FROM	TO
3C PLUS				
3C 14				

ITEM	PART NO	CHANGE NO	DESCRIPTION	REMARKS	USAGE CODE	QTY
1	817/00380		Label, DRAIN EVERY 50 HOURS			1
2	817/19039		Label, airfilter cleaning, Spanish			1
3	817/01452		Label, battery, isolator			1
4	817/70041		Decal, Pressure Hazard, Read Handbook			2
5	817/70025		Label, fire hazard			1
6	817/19906		Decal, transmission oil, 49mm X 24mm			1
7	817/70102		Decal, warning,Moving parts, remove key			2
8	817/00824		Label, filler coolant			1
9	817/19036		Label, lift restrict, Spanish			1
10	817/19037		Label, safety procedure, Spanish			2
11	817/70003		Label, warning, hazard to hands			2
12	817/01087		Decal, tie down (chain)			6
13	817/70043		Decal, warning,crush hazard, keep a safe distance			2
14	817/70018		Decal, warning,operate from, operators seat only			2
15	332/S9999		Decal, boom support			2

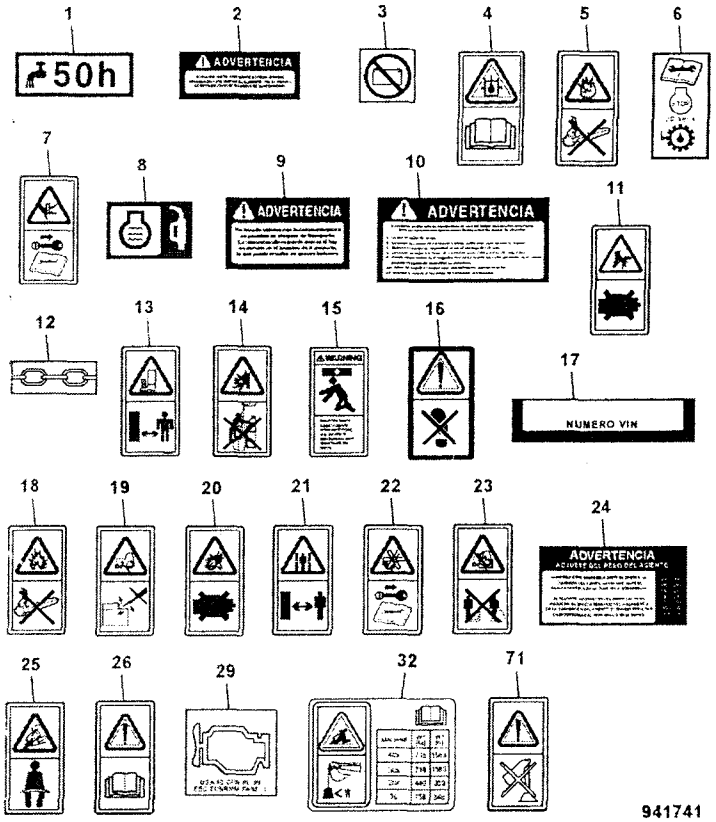

ITEM	PART NO	CHANGE NO	DESCRIPTION	REMARKS	USAGE CODE	QTY
16	817/70024		Label, warning, do not use as step			2
17	339/40782		Label, VIN No surroud			1
18	817/70042		Decal, explosion hazard, remove ignitn.source			2
19	817/70012		Decal, Warning,start engine, from operators seat			1
20	817/70005		Decal, warning,hot fluid, under pressure			1
21	817/70027		Decal, warning,crush danger, keep clear			2
22	332/A0008		Decal, Warning-fan blades, remove key from ign.			1
23	817/70011		Decal, warning,do not stand, on/under bucket/ fork			2
24	817/19047		Label, seat height adjust, Spanish			1
25	817/70029		Decal, warning,overturn, risk-wear seatbelt			1
26	817/70014		Decal, warning,read manual, before operating m/c			1
29	817/18733		Label, engine emission, portuguese			1
32	332/E2601		Decal, safe load, ISO			1

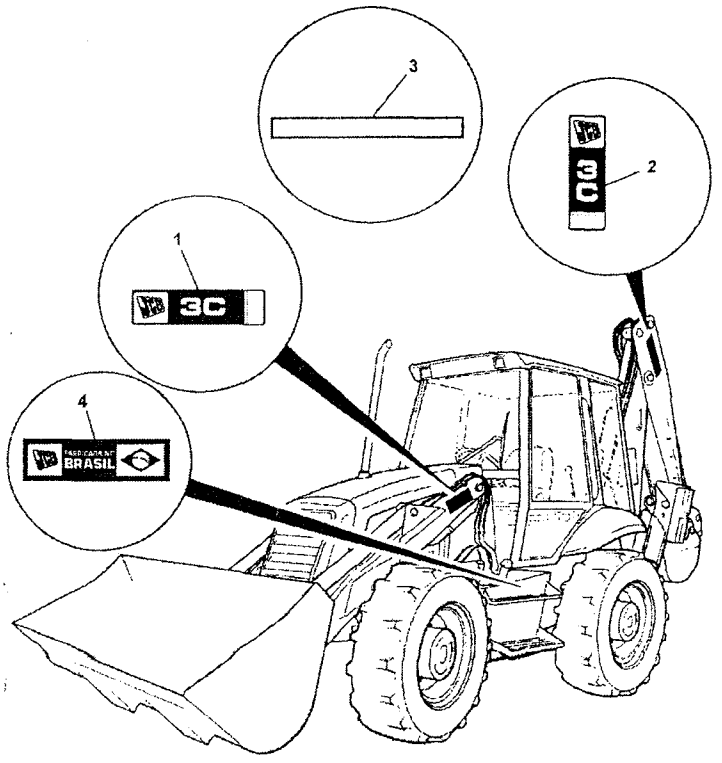

	FROM	TO	FROM	TO
3C PLUS				
3C 14				

ITEM	PART NO	CHANGE NO	DESCRIPTION	REMARKS	USAGE CODE	QTY
1	817/20015		Decal, 3C 14ft, loader arm			2
	817/20575		Decal, 3C PLUS, loader arm			2
2	817/20016		Decal, 3C 14ft, dipper			2
	817/20600		Decal, 3C PLUS, dipper			2
3	817/05232		Decal, cab rear trim			1
4	817/20125		Decal, Fabricado no Brasil, (made in Brazil)			1

	FROM	TO	FROM	TO
3C PLUS				
3C 14				

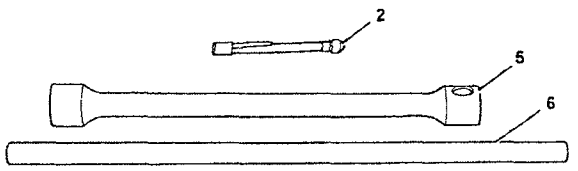

ITEM	PART NO	CHANGE NO	DESCRIPTION	REMARKS	USAGE CODE	QTY
2	339/03600		Gauge, tyre pressure, Brazil			1
5	339/99928		Wheelbrace, bar, Brazil			1
6	339/10102		Lever, wheel nut wrench, Brazil			1

734270

C

- C1 ELECTRICS, MAIN MACHINE
- C2 ELECTRICS, ENGINE
- C3 ELECTRICS, CAB

ENGLISH

C1-1-31 HARNESS CAB/CANOPY, MACHINE
C1-2-11 BATTERY 12V, CARRIER, JCB DIESELMAX ENGINE
C1-2-15 BATTERY 12V, CARRIER, JCB DIESELMAX AND IESA ENGINE
C1-2-20 ISOLATOR SWITCH, BATTERY
C1-2-21 ISOLATOR SWITCH, BATTERY, JCB DIESELMAX ENGINE
C1-2-22 ISOLATOR SWITCH, BATTERY, JCB DIESELMAX ENGINE
C1-2-31 ISOLATOR SWITCH, BATTERY, INTERNATIONAL ENGINE
C1-3-20 LIGHT, REAR, ROOF MOUNTED
C1-4-5 LIGHT, HEAD, 12.VOLT, RIGHT HAND DIP, WHITE
C1-5-1 LIGHT, WORKING, CAB FRONT
C1-5-2 LIGHT, WORKING, CAB REAR
C1-9-11 ALARM, REVERSE, INSTALLATION, OPTIONAL
C1-12-10 HORN, SINGLE TONE, FRONT AND REAR
C1-14-1 MOUNTINGS & SUPPORTS, HARNESS
C1-22-1 LIGHT, INDICATOR
C1-28-1 EARTH LEADS

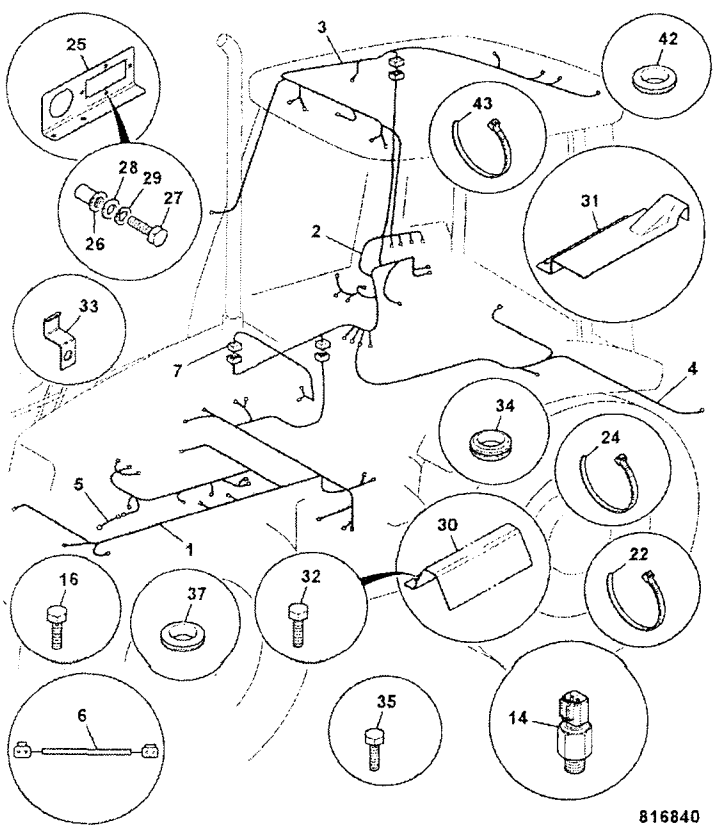

816840

	FROM	TO	FROM	TO
3C PLUS				
3C 14				

ITEM	PART NO	CHANGE NO	DESCRIPTION	REMARKS	USAGE CODE	QTY
1	721/12352		Harness, chassis	Dieselmax		1
	721/12488		Harness, chassis, International engine	International engine		1
2	721/11954	To M TBA	Harness, cab panel			1
	721/12250	To M TBA	Harness, console 3C			1
	332/D4209		Harness, console			1
3	721/10346		Harness, cab/canopy roof			1
4	721/11998		Harness, rearlamps			1
5	721/10383		Harness, extension, headlights			1
6	721/12073		Harness, numberplate light			1
7	721/12036		Harness, aircon link			1
14	701/80319	Superseded	Switch, oil pressure,M12, green body.Deutsch			1
	701/80459		Switch, oil pressure, colour, id-red o/d white i/d			1
16	826/01520		Screw, M5 X 20			4
22	826/01144		Tie, cable, 200mm long			A/R
24	826/01347		Tie, cable c/w mounting, 4.6mm x 190mm			A/R
25	331/51990		Mounting, harness			1
26	826/01099		Nut, rivet,M6 open ended			4
27	1315/0203Z		Screw, M6x16			4

C1-1-31 HARNESS CAB/CANOPY, MACHINE

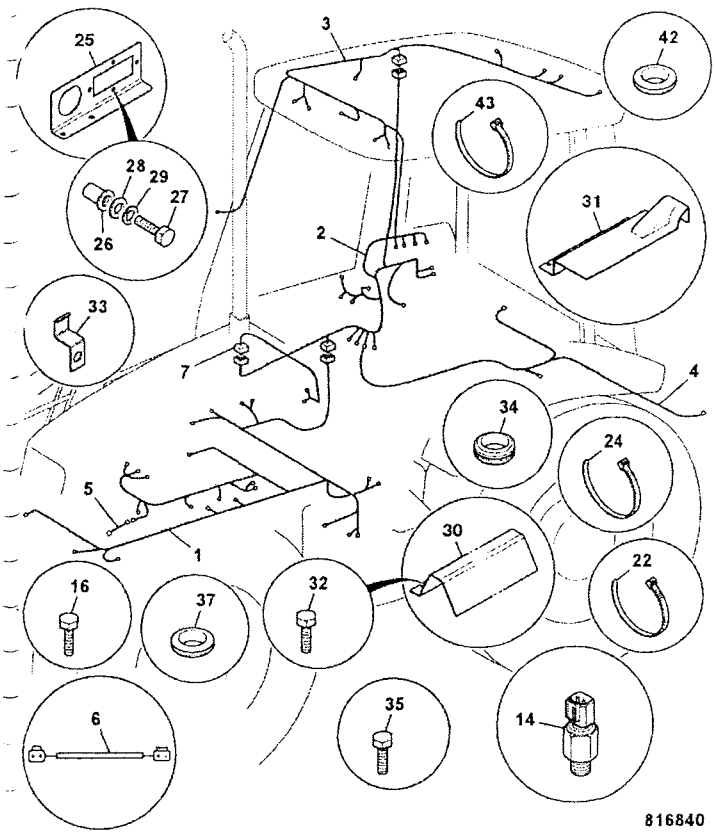

ITEM	PART NO	CHANGE NO	DESCRIPTION	REMARKS	USAGE CODE	QTY
28	1420/0006Z		Washer, M6			4
29	1425/0006Z		Washer, Spring			4
30	123/07747		Cover, harness, floor			1
31	123/07755		Cover, harness, bulkhead			1
32	826/00321		Screw			2
33	123/05247		Clip, cable			2
34	2410/0205		Grommet, hole dia 12.7mm, panel thknss 5-6mm			2
35	1315/0407Z		Bolt, M10x25			2
37	828/00273		Grommet			2
42	2410/0115		Grommet	cab roof		1
43	826/01162		Tie, cable	cab roof		2
51	721/11412		Harness, link	main harness to loader valve		1

C1-2-11 BATTERY 12V, CARRIER, JCB DIESELMAX ENGINE

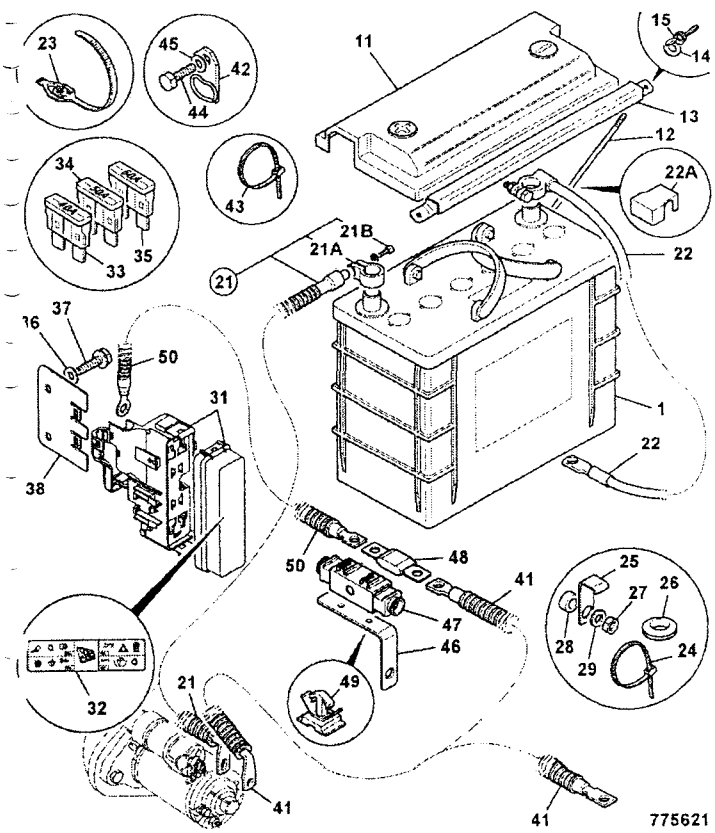

	FROM	TO	FROM	TO
3C PLUS		M1002999		
3C 14		M1002999		

ITEM	PART NO	CHANGE NO	DESCRIPTION	REMARKS	USAGE CODE	QTY
1	708/10038		Battery, type 31 950cc, Savannah	Wet battery		1
11	708/10056	Superseded	Cover, battery			1
	332/C3032		Cover, battery			1
12	826/11285		Bolt, battery, M6x268mm, J bolt			2
13	260/28401		Clamp, battery			1
14	1420/0006Z		Washer, M6			2
15	826/01115		Nut, wing			2
21	718/20216		Lead, battery,positive, 1600mm x 70sq.mm			1
	332/C2218		Lead, battery, positive, 1600mm x 95sq.mm			1
21A	998/11023		Terminal, positive battery lug			1
21B	998/10912		Bolt, battery lug, M6			1
22	718/20312		Lead, battery,negative, 1800mm x 70sq.mm			1
	332/C2416		Lead, battery, negative, 1800mm x 95sq.mm			1
23	.		'See Remark'	not used in this assembly		5
24	826/01144		Tie, cable, 200mm long			3
25	.		'See Remark'	not used in this assembly		1

C1-2-11 BATTERY 12V, CARRIER, JCB DIESELMAX ENGINE

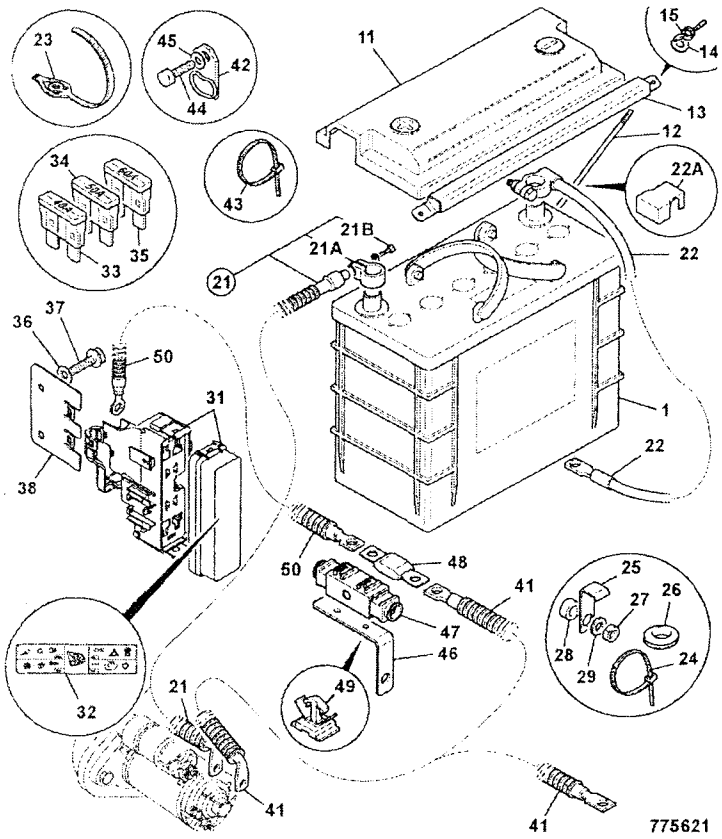

ITEM	PART NO	CHANGE NO	DESCRIPTION	REMARKS	USAGE CODE	QTY
26	.		'See Remark'	not used in this assembly		
27	.		'See Remark'	not used in this assembly		
28	.		'See Remark'	not used in this assembly		
29	.		'See Remark'	not used in this assembly		
31	716/30077		Box, fuselink			1
32	817/17068		Label, fuselink box			1
33	716/15900		Fuse, maxi fuse 40Amp			1
34	716/30081		Fuse, maxi fuse 50Amp			2
35	716/16400		Fuse, maxi fuse 60Amp			1
36	1420/0007Z		Washer, plain, M8			2
37	1317/3305Z		Bolt, flange head, M8 x 20 lg			2
38	331/42169		Bracket, fuse link box			1
41	718/20218		Lead, charge			1
42	264/36400		Clip			1
43	826/01144		Tie, cable, 200mm long			1
44	1315/0301Z		Screw, hex head, M8 X 12			1
45	1420/0007Z		Washer, plain, M8			1
46	331/42647		Bracket, fuse mounting			1
47	716/30224		Housing, fuse holder			1
48	716/30225		Fuse, 150Amp MEGAVAL			1
49	826/11189		Clip, fir-tree			2
50	718/20217		Lead, fuse link			1

C1-2-15 BATTERY 12V, CARRIER, JCB DIESELMAX AND IESA ENGINE

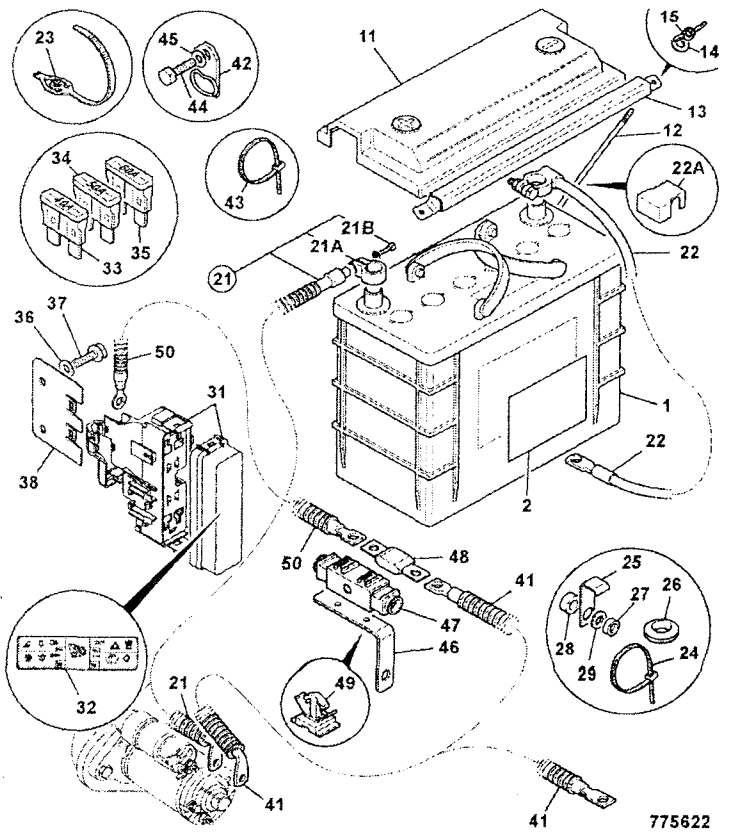

	FROM	TO	FROM	TO
3C PLUS	M1395000			
3C 14	M1395000			

ITEM	PART NO	CHANGE NO	DESCRIPTION	REMARKS	USAGE CODE	QTY
1	339/01044		Battery, 100amp/hr, 750cca			1
2	339/01043		Decal, battery, Brazil			1
11	332/C3032		Cover, battery			1
12	*826/11285		Bolt, battery, M6x268mm, J bolt			2
13	260/28401		Clamp, battery			1
14	1420/0006Z		Washer, M6			2
15	826/01115		Nut, wing			2
21	718/20216		Lead, battery,positive, 1600mm x 70sq.mm			1
21A	998/11023		:Terminal, positive battery lug			1
21B	998/10912		:Bolt, battery lug, M6			1
22	718/56078		Lead, battery, negative	IESA		1
	718/20312		Lead, battery,negative, 1800mm x 70sq.mm	Dieselmax		1
23	.		'See Remark'	not used in this assembly		5
24	826/01144		Tie, cable, 200mm long			3
25	.		'See Remark'	not used in this assembly		1
26	.		'See Remark'	not used in this assembly		1

C1-2-15 BATTERY 12V, CARRIER, JCB DIESELMAX AND IESA ENGINE

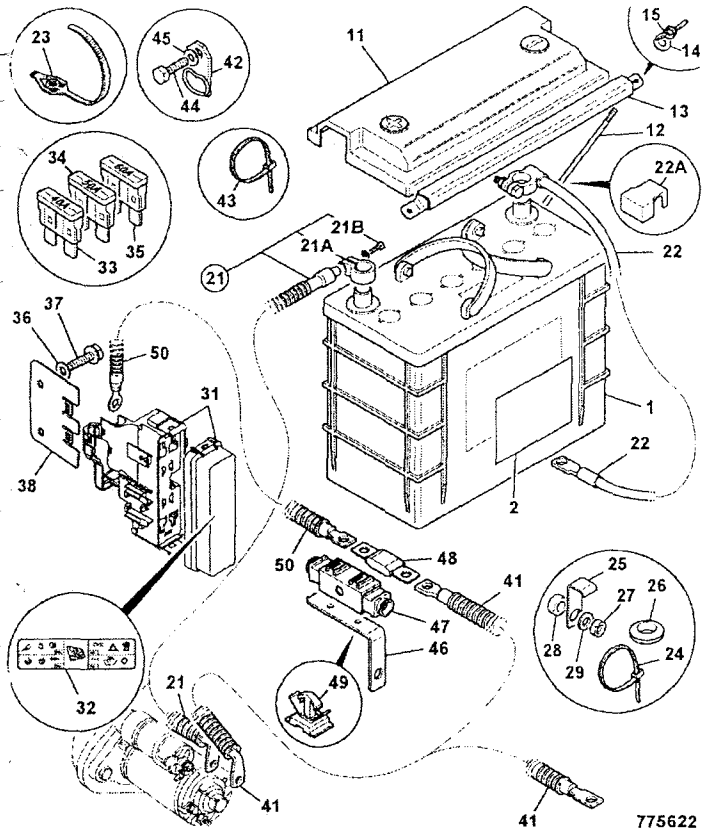

ITEM	PART NO	CHANGE NO	DESCRIPTION	REMARKS	USAGE CODE	QTY
27	.		'See Remark'	not used in this assembly		1
28	.		'See Remark'	not used in this assembly		1
29	.		'See Remark'	not used in this assembly		1
31	716/30077		Box, fuselink			1
32	817/17068		Label, fuselink box			1
33	716/15900		Fuse, maxi fuse 40Amp			1
34	716/30081		Fuse, maxi fuse 50Amp			2
35	716/16400		Fuse, maxi fuse 60Amp			1
36	1420/0007Z		Washer, plain, M8			2
37	1317/3305Z		Bolt, flange head, M8 x 20 lg			2
38	331/42169		Bracket, fuse link box			1
41	718/20218		Lead, charge			1
42	264/36400		Clip			1
43	826/01144		Tie, cable, 200mm long			1
44	1315/0301Z		Screw, hex head, M8 X 12			1
45	1420/0007Z		Washer, plain, M8			1
46	331/42647		Bracket, fuse mounting			1
47	716/30224		Housing, fuse holder			1
48	716/30225		Fuse, 150Amp MEGAVAL			1
49	826/11189		Clip, fir-tree			2
50	718/20217		Lead, fuse link			1

C1-2-20 ISOLATOR SWITCH, BATTERY

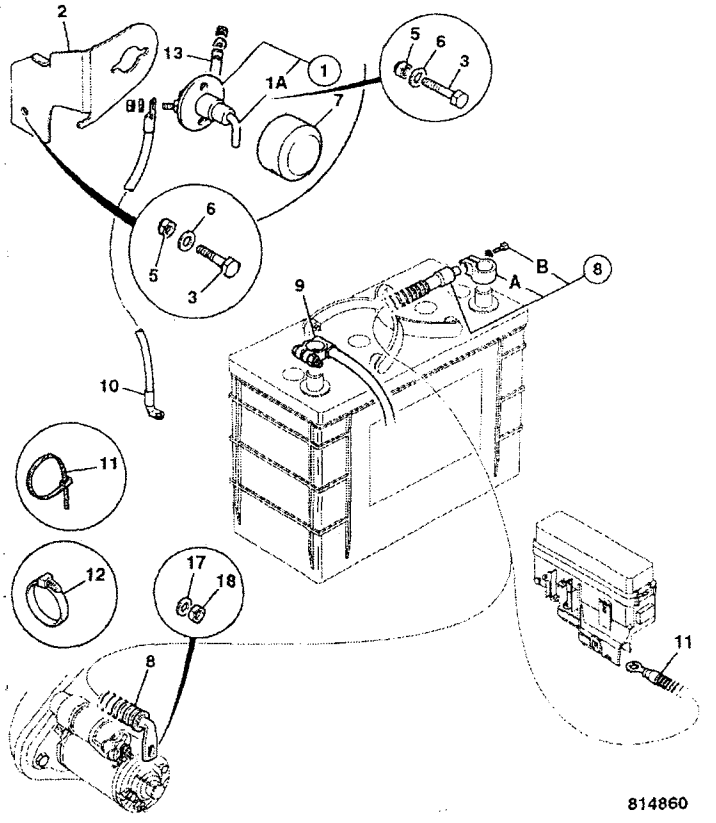

	FROM	TO	FROM	TO
3C PLUS		M TBA		
3C 14		M TBA		

ITEM	PART NO	CHANGE NO	DESCRIPTION	REMARKS	USAGE CODE	QTY
1	701/80552		Switch, isolator			1
1A	701/80553		:Key, isolator switch			1
2	331/51953		Bracket, mounting, battery isolator			1
3	1315/0308Z		Screw, M8x30			1
4	1391/3307Z		Capscrew			2
5	1370/0203Z		Nut, self lock, M8			3
6	1420/0007Z		Washer, plain, M8			2
7	265/00893		Cover, battery isolator			1
8	718/20216		Lead, battery,positive, 1600mm x 70sq.mm			1
8A	998/11023		:Terminal, positive battery lug			1
8B	998/10912		:Bolt, battery lug, M6			1
9	718/20263		Lead, battery negative, 800mm			1
10	718/20264		Lead, battery negative, 2270mm			1
11	826/01347		Tie, cable c/w mounting, 4.6mm x 190mm			6
12	826/01144		Tie, cable, 200mm long			3
17	1370/0201Z		Nut, M8			1
18	1420/0007Z		Washer, plain, M8			1

C1-2-21 ISOLATOR SWITCH, BATTERY, JCB DIESELMAX ENGINE

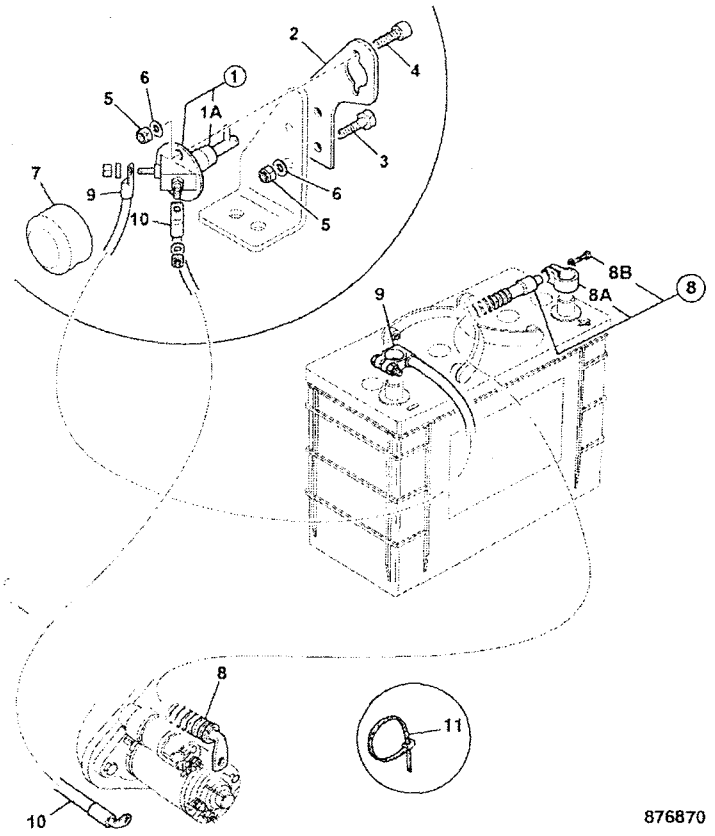

876870

	FROM	TO	FROM	TO
3C PLUS	M TBA	M1002999		
3C 14	M TBA	M1002999		

ITEM	PART NO	CHANGE NO	DESCRIPTION	REMARKS	USAGE CODE	QTY
1	701/80552		Switch, isolator			1
1A	701/80576		Key, battery isolator, with chain	not supplied with 701/80552		1
2	331/61328		Bracket, mounting, battery isolator			1
3	1315/0308Z		Screw, M8x30			2
4	1391/3307Z		Capscrew			2
5	1370/0203Z		Nut, self lock, M8			4
6	1420/0007Z		Washer, plain, M8			2
7	265/00893		Cover, battery isolator			1
8	718/20216		Lead, battery,positive, 1600mm x 70sq.mm			1
8A	998/11023		:Terminal, positive battery lug			1
8B	998/10912		:Bolt, battery lug, M6			1
9	706/68400		Lead, battery,negative, 400mm x 70sq.mm			1
10	718/20322		Lead, battery,negative, 1800mm x 70sq.mm			1
11	826/01347		Tie, cable c/w mounting, 4.6mm x 190mm			2

C1-2-22 ISOLATOR SWITCH, BATTERY, JCB DIESELMAX ENGINE

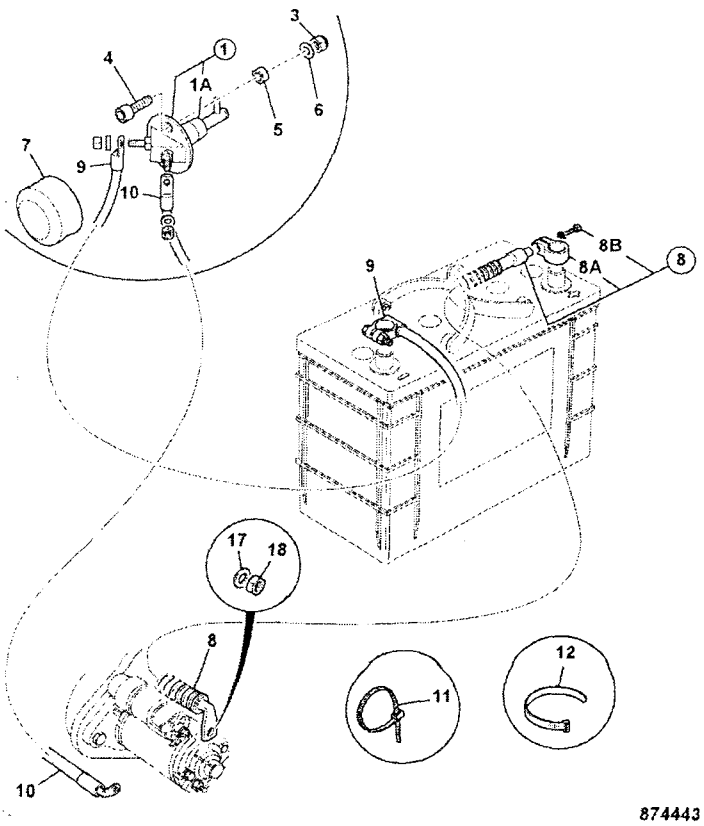

874443

	FROM	TO	FROM	TO
3C PLUS	M1395000			
3C 14	M1395000			

ITEM	PART NO	CHANGE NO	DESCRIPTION	REMARKS	USAGE CODE	QTY
1	701/80552		Switch, isolator			1
1A	701/80553		:Key, isolator switch			1
3	1370/0203Z		Nut, self lock, M8			2
4	1391/3307Z		Capscrew			2
5	1370/0201Z		Nut, M8			2
6	1411/0002Z		Washer			2
7	265/00893		Cover, battery isolator			1
8	718/20216		Lead, battery,positive, 1600mm x 70sq.mm			1
8A	998/11023		:Terminal, positive battery lug			1
8B	998/10912		:Bolt, battery lug, M6			1
9	706/68400		Lead, battery,negative, 400mm x 70sq.mm			1
10	718/20322		Lead, battery,negative, 1800mm x 70sq.mm	Dieselmax		1
11	826/01347		Tie, cable c/w mounting, 4.6mm x 190mm			3
12	826/01144		Tie, cable, 200mm long			3
17	1370/0201Z		Nut, M8			1
18	1420/0007Z		Washer, plain, M8			1

C1-2-31 ISOLATOR SWITCH, BATTERY, INTERNATIONAL ENGINE

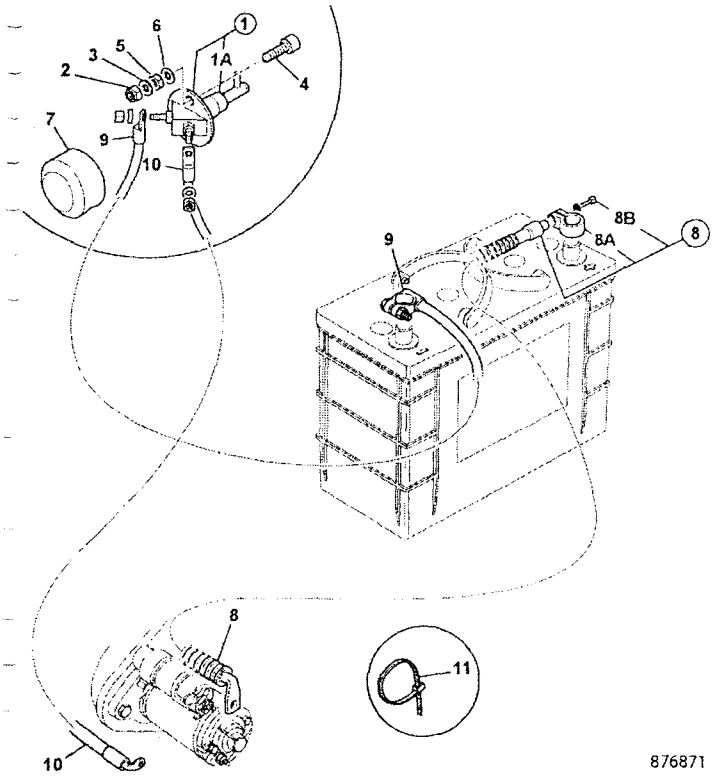

	FROM	TO	FROM	TO
3C PLUS	M1395000			
3C 14	M1395000			

ITEM	PART NO	CHANGE NO	DESCRIPTION	REMARKS	USAGE CODE	QTY
1	701/80552		Switch, isolator			1
1A	701/80553		:Key, isolator switch			1
2	1411/0002Z		Washer			2
3	1411/0002Z		Washer			2
4	1391/3307Z		Capscrew			2
5	1370/0203Z		Nut, self lock, M8			2
6	1420/0007Z		Washer, plain, M8			2
7	265/00893		Cover, battery isolator			1
8	718/56127		Lead, battery, cab, positive			1
8A	998/10911		:Terminal, battery lug			1
8B	998/10912		:Bolt, battery lug, M6			1
9	706/68400		Lead, battery,negative, 400mm x 70sq.mm			1
10	718/02500		Lead, isolator			1
11	826/01347		Tie, cable c/w mounting, 4. 6mm x 190mm			3

C1-3-20 LIGHT, REAR, ROOF MOUNTED

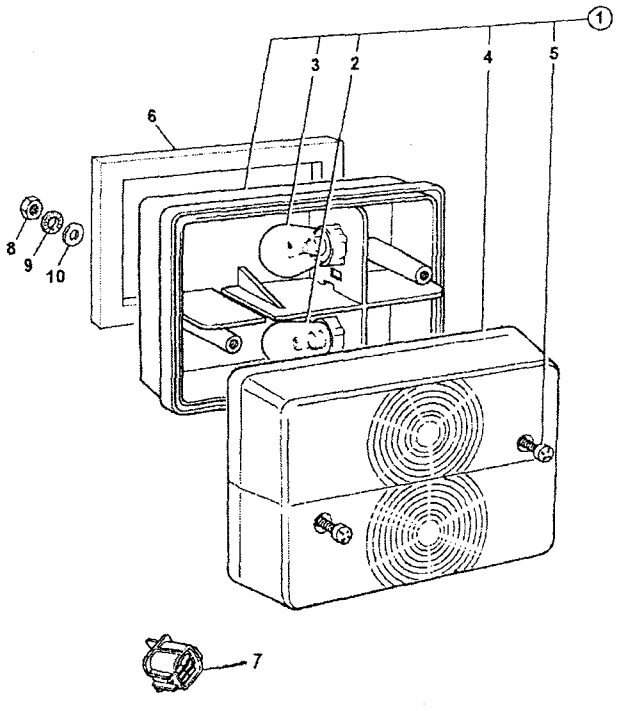

	FROM	TO	FROM	TO
3C PLUS				
3C 14				

ITEM	PART NO	CHANGE NO	DESCRIPTION	REMARKS	USAGE CODE	QTY
1	700/38900		Light, rear			2
2	720/10038		:Bulb, 12v 21/5w			1
3	720/10005		:Bulb, 12v 21w			1
4	700/38901		:Lens, rear			1
5	NSP		:None serviced part			1
6	813/00463		Gasket, rear light			2
7	715/06100		Plug			1
8	1370/0001Z		Nut, M5-8			4
9	1417/0007Z		Washer			4
10	1414/0011Z		Washer, 2 BA			4

C1-4-5 LIGHT, HEAD, 12.VOLT, RIGHT HAND DIP, WHITE

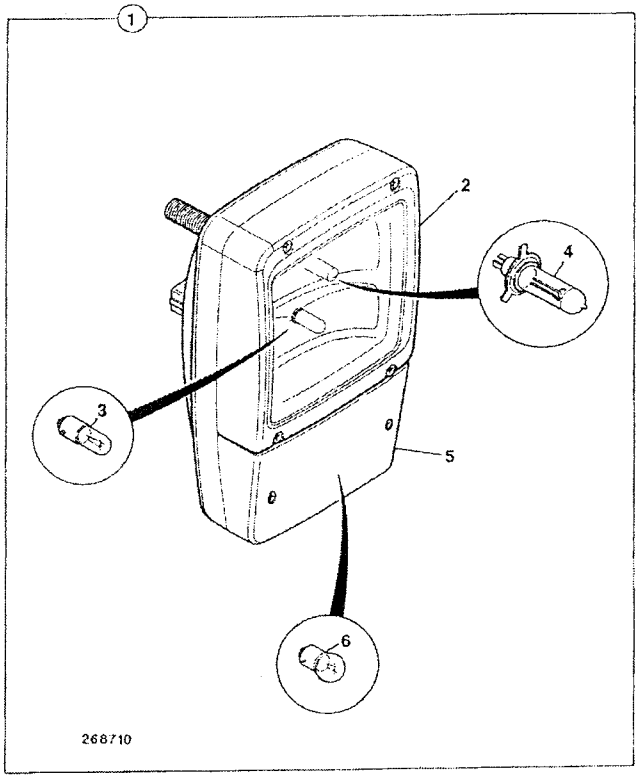

	FROM	TO	FROM	TO
3C PLUS				
3C 14				

ITEM	PART NO	CHANGE NO	DESCRIPTION	REMARKS	USAGE CODE	QTY
1	700/50055		Light, head assembly, right hand dip			2
2	700/38501		:Lens, assembly, headlight			1
3	720/10043		:Bulb, side light, 12v 4w			1
4	720/10061		:Bulb, 12V-55W H3	Main		1
	720/10068		:Bulb, 12v 55w H7	Dip		1
5	700/38401		:Lens, indicator			1
6	720/10002		:Bulb, 12v 21W			1
7	835/00075		Cap			2
8	828/00273		Grommet			2

C1-5-1 LIGHT, WORKING, CAB FRONT

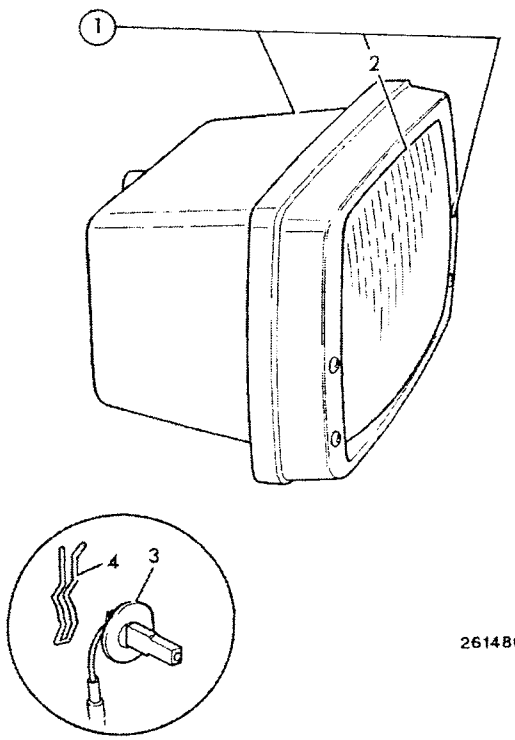

	FROM	TO	FROM	TO
3C PLUS				
3C 14				

ITEM	PART NO	CHANGE NO	DESCRIPTION	REMARKS	USAGE CODE	QTY
1	700/42300		Light, front working			2
2	NSP		:None serviced part			1
3	720/10061		:Bulb, 12V-55W H3			2
4	700/10103		:Spring			2
5	826/10538		Nut, 'U', No 8			4
6	1430/0207		Screw			4

C1-5-2 LIGHT, WORKING, CAB REAR

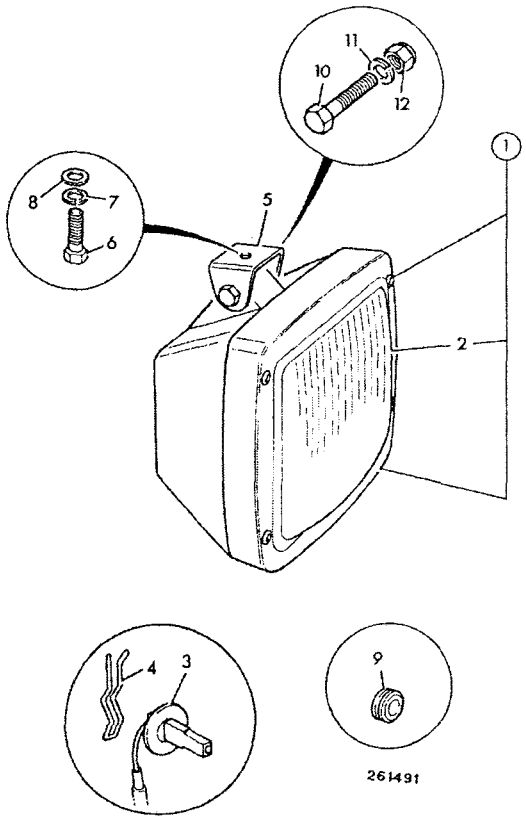

	FROM	TO	FROM	TO
3C PLUS				
3C 14				

ITEM	PART NO	CHANGE NO	DESCRIPTION	REMARKS	USAGE CODE	QTY
1	700/38800		Light, working			A/R
2	NSP		:None serviced part			1
3	720/10061		:Bulb, 12V-55W H3			1
4	700/10103		:Spring			1
5	123/06305		Bracket			A/R
6	1315/0305Z		Screw, M8 x 20mm long			A/R
7	1425/0007Z		Washer, spring			A/R
8	1420/0007Z		Washer, plain, M8			A/R
9	828/00406		Grommet, (2 holes)	4-lamp installation		2
	123/07770		Grommet, (1 hole)	2-lamp installation		2
10	1315/3313Z		Bolt, M8 X 55			A/R
11	1413/0003Z		Washer			A/R
12	1370/0203Z		Nut, self lock, M8			A/R
13	122/23509		Cap	4-lamp installation (If fitted)		2

C1-9-11 ALARM, REVERSE, INSTALLATION, OPTIONAL

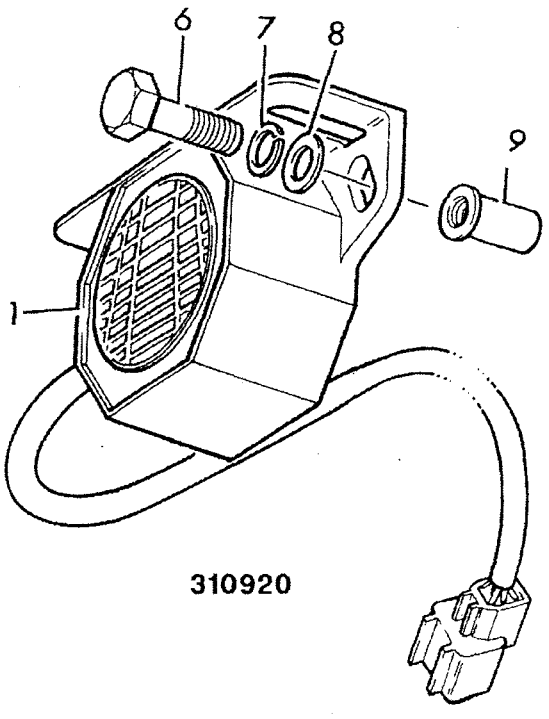

	FROM	TO	FROM	TO
3C PLUS				
3C 14				

ITEM	PART NO	CHANGE NO	DESCRIPTION	REMARKS	USAGE CODE	QTY
1	717/07700		Alarm, reverse			1
6	826/01591		Screw			2
7	823/00555		Washer, spring			2
8	823/00554		Washer, plain			2
9	826/01101		Nut, rivet,M6 open ended, for 3 to 5.5mm plt			2
11	826/01144		Tie, cable, 200mm long			2
12	817/18473		*Label, Reverse alarm,* (Portuguese)Brazil			1

	FROM	TO	FROM	TO
3C PLUS				
3C 14				

ITEM	PART NO	CHANGE NO	DESCRIPTION	REMARKS	USAGE CODE	QTY
1	704/37300		Horn, disc 12V			1
2	1315/0407Z		Bolt, M10x25			1
3	1420/0008Z		Washer, Plain M10			2
7	1370/0303Z		Nut, lock, M10			1

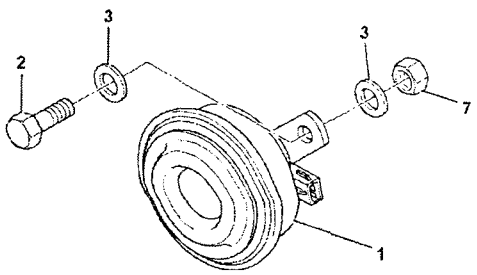

442440

C1-14-1 MOUNTINGS & SUPPORTS, HARNESS

	FROM	TO	FROM	TO
3C PLUS				
3C 14				

ITEM	PART NO	CHANGE NO	DESCRIPTION	REMARKS	USAGE CODE	QTY
1	7210/0067		Clip, Deutsch DT Mtg Clip			1
2	1315/0307Z		Screw, M8 X 25			1
3	1420/0007Z		Washer, plain, M8			2
4	826/01627		Nut, rivet M8 open end, for 8 to 10.5mm plt.			1
5	123/03965		Clip	80mm tall		2
	123/00195		Clip, harness support	45mm tall		2
6	123/02569		Clip, 'S'	13 dia hole		3
7	123/05247		Clip, cable	10 dia hole 23mm tall		3
	821/10321		Clip, harness	10.5 dia hole 35mm tall		2
8	2410/0205		Grommet, hole dia 12.7mm, panel thknss 5-6mm			8
9	826/01144		Tie, cable, 200mm long			23
	826/01347		Tie, cable c/w mounting, 4.6mm x 190mm			3
10	122/40304		Pad, cable tie mounting, self adhesive			1

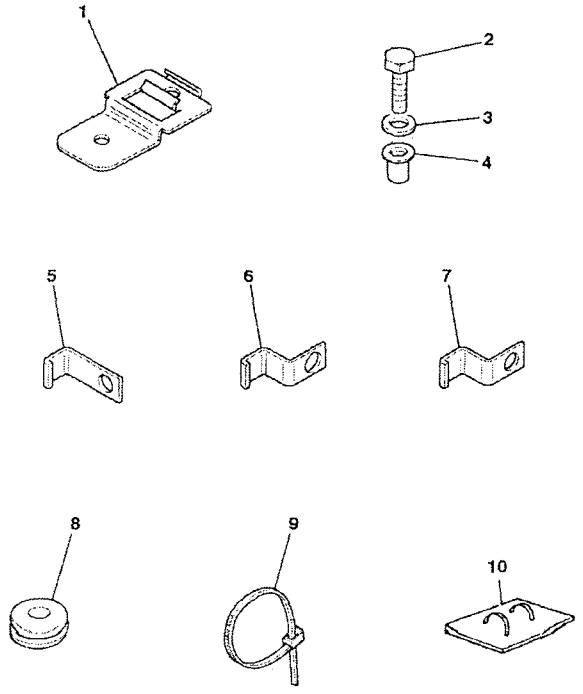

445410

C1-22-1 LIGHT, INDICATOR

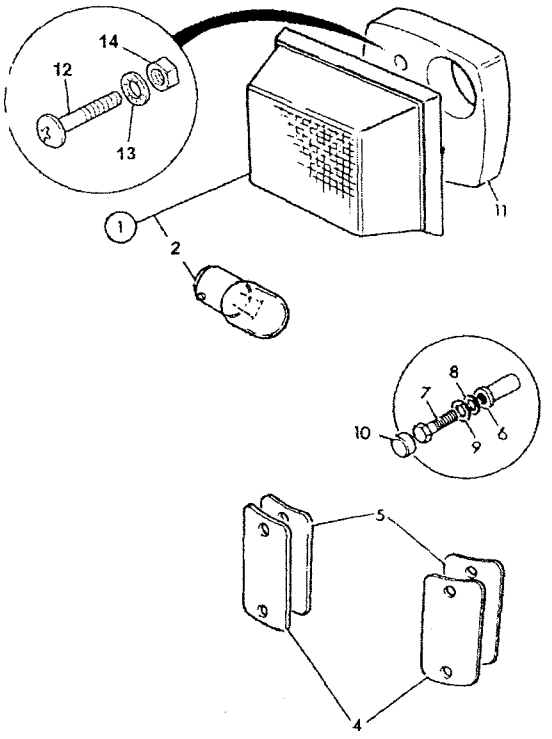

264851

	FROM	TO	FROM	TO
3C PLUS				
3C 14				

ITEM	PART NO	CHANGE NO	DESCRIPTION	REMARKS	USAGE CODE	QTY
1	700/39600		Light, indicator, 12v			2
2	720/10005		Bulb, 12v 21w			1
4	331/27358		Plate, blanking, Headlamp			2
5	813/10228		Gasket, headlamp mount	If fitted		2
6	826/01103		Nut, rivet,M8 open ended			4
7	1315/0305Z		Screw, M8 x 20mm long			4
8	1420/0007Z		Washer, plain, M8			4
9	.		'See Remark'	Not fitted		
10	122/23509		Cap	If fitted		4
11	123/06669		Gasket, left hand indicator			1
	123/06670		Gasket, right hand idicator			1
12	826/00680		Screw			4
13	1414/0007Z		Washer			4
14	826/00461		Nut, M4			4

C1-28-1 EARTH LEADS

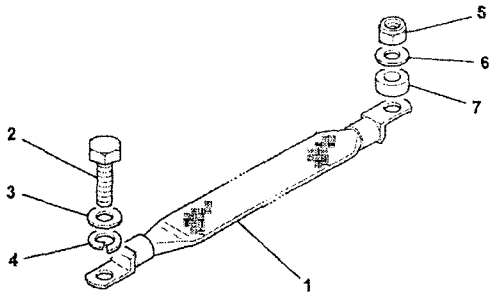

739580

	FROM	TO	FROM	TO
3C PLUS				
3C 14				

ITEM	PART NO	CHANGE NO	DESCRIPTION	REMARKS	USAGE CODE	QTY
1	718/20188		Strap, earth 400mm	Transmission casing		1
5	1370/0301Z		Nut			1
6	1420/0008Z		Washer, Plain M10			1
7	123/06256		Spacer, steel			1

C

- C1 ELECTRICS, MAIN MACHINE
- ● C2 ELECTRICS, ENGINE
- C3 ELECTRICS, CAB

C2-0-1 Also see the main index for machine applicability

ENGLISH

C2-1-1	SWITCHES & SENDERS
C2-2-1	ENGINE ELECTRICS, ACCESSORIES
C2-3-1	STARTER MOTOR, 12.VOLT
C2-3-2	MOTOR, STARTER, P4001/P4001T BUILDS, NAT ASP & TURBO 8C30/8C31
C2-4-1	ALTERNATOR, 12VOLT - 95AMP
C2-4-2	ALTERNATOR, P4001/P4001T, NAT ASP & TURBO 8C30/8C31
C2-4-3	ALTERNATOR MOUNTINGS, P4001/P4001T BUILDS, NAT ASP & TURBO 8C30/8C31
C2-5-1	GRID HEATER RELAY, INSTALLATION, NATURALLY ASPIRATED
C2-5-2	GRID HEATER RELAY, INSTALLATION, TURBO
C2-6-1	ENGINE IMMOBILISER, 12.VOLT
C2-7-1	ENGINE BLOCK HEATER, 120V

C2-1-1 SWITCHES & SENDERS

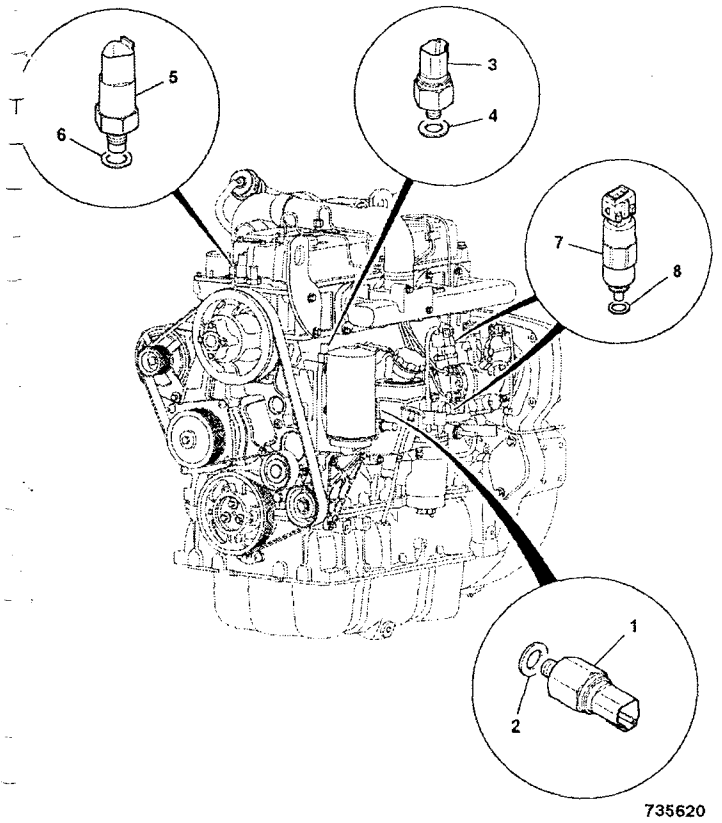

735620

	FROM	TO	FROM	TO
3C PLUS				
3C 14				

ITEM	PART NO	CHANGE NO	DESCRIPTION	REMARKS	USAGE CODE	QTY
1	320/04038		Switch, engine oil pressure			1
2	320/04057		Seal, bonded			1
3	320/04544	To U0100005	Switch, cold start advance			1
	320/04554		Switch, cold start advance			1
4	320/04521		Seal, bonded			1
5	320/04545		Switch, temperature sender			1
6	320/04521		Seal, bonded			1
7	716/30255		Solenoid, fuel pump - ESOS, cold start advance			2
8	17/105202		Seal, Ring			1

C2-2-1 ENGINE ELECTRICS, ACCESSORIES

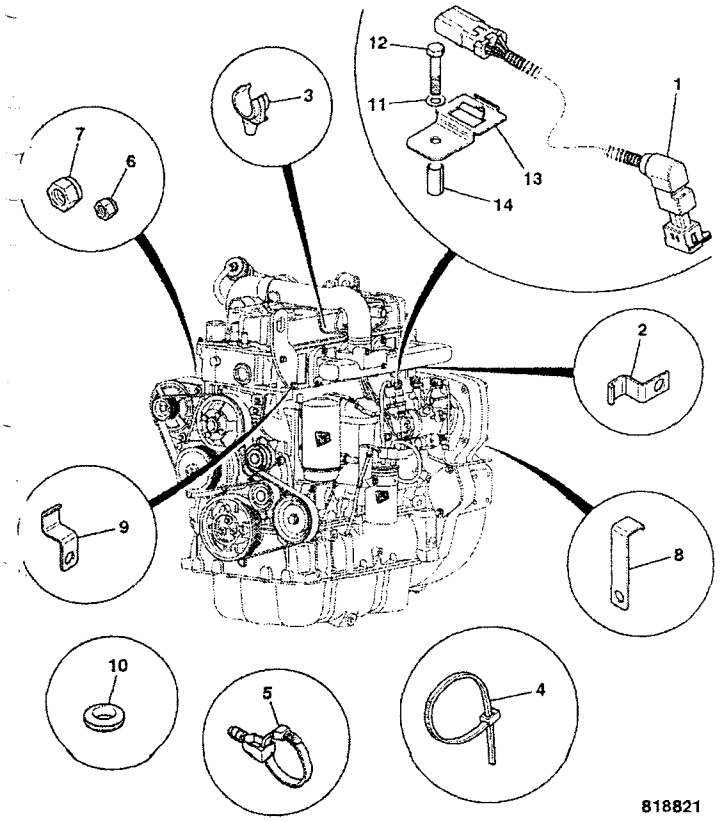

818821

	FROM	TO	FROM	TO
3C PLUS				
3C 14				

ITEM	PART NO	CHANGE NO	DESCRIPTION	REMARKS	USAGE CODE	QTY
1	721/11639		Harness, ESOS link			1
2	821/10321		Clip, harness			2
3	821/00379		Clip			3
4	826/01144		Tie, cable, 200mm long			15
5	826/01347		Tie, cable c/w mounting, 4.6mm x 190mm			3
6	826/11430		Nut, nyloc M5			2
7	826/10826		Nut, nyloc M8			1
8	123/00195		Clip, harness support			2
9	123/05247		Clip, cable			2
10	2410/0205		Grommet, hole dia 12.7mm, panel thknss 5-6mm			6
11	1420/0007Z		Washer, plain, M8			1
12	1315/0310Z		Bolt, M8x40			1
13	7210/0067		Clip, Deutsch DT Mtg Clip			1
14	123/06253		Spacer			1

C2-3-1 STARTER MOTOR, 12.VOLT

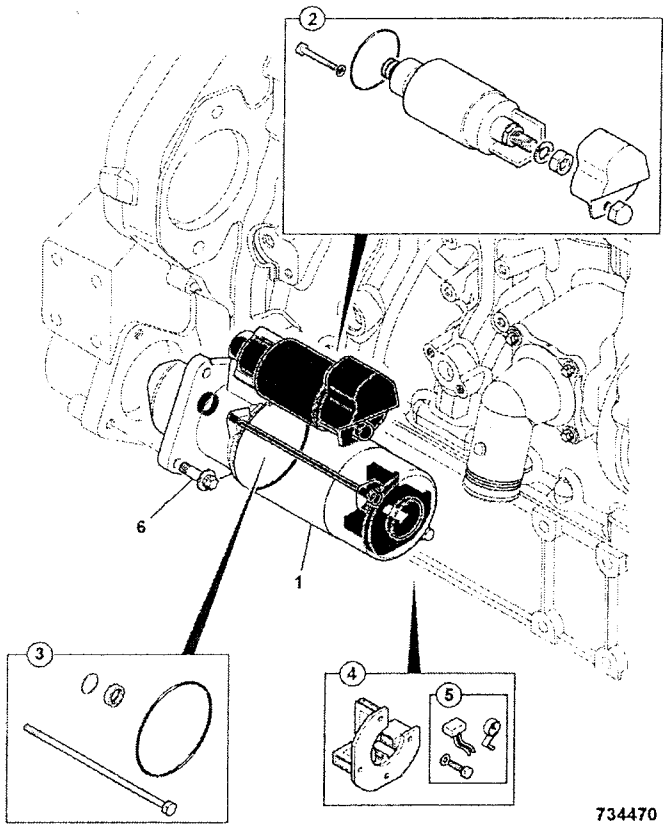

734470

	FROM	TO	FROM	TO
3C PLUS				
3C 14				

ITEM	PART NO	CHANGE NO	DESCRIPTION	REMARKS	USAGE CODE	QTY
1	320/09022		Motor, starter 12v			1
2	714/40302		:Switch, starter solenoid, 12 Volt			1
3	714/40303		:Kit-sundry parts			1
4	714/40305		:Brush, holder assembly, 12volt			1
5	714/40306		:Kit-brush, 12 Volt			1
6	1319/0408Z		Screw, star drive, M10 x 30			3

C2-3-2 MOTOR, STARTER, P4001/P4001T BUILDS, NAT ASP & TURBO 8C30/8C31

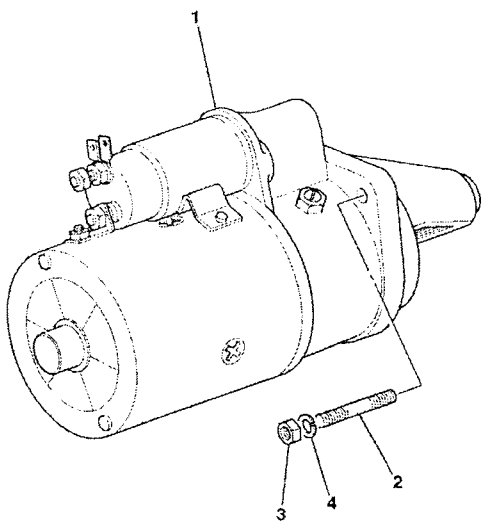

705650

	FROM	TO	FROM	TO
3C PLUS				
3C 14				

ITEM	PART NO	CHANGE NO	DESCRIPTION	REMARKS	USAGE CODE	QTY
1	714/40274		Motor, starter			1
2	822/00142		Stud			3
3	1340/0201		Nut			3
4	1416/0006		Washer			3

C2-4-1 ALTERNATOR, 12VOLT - 95AMP

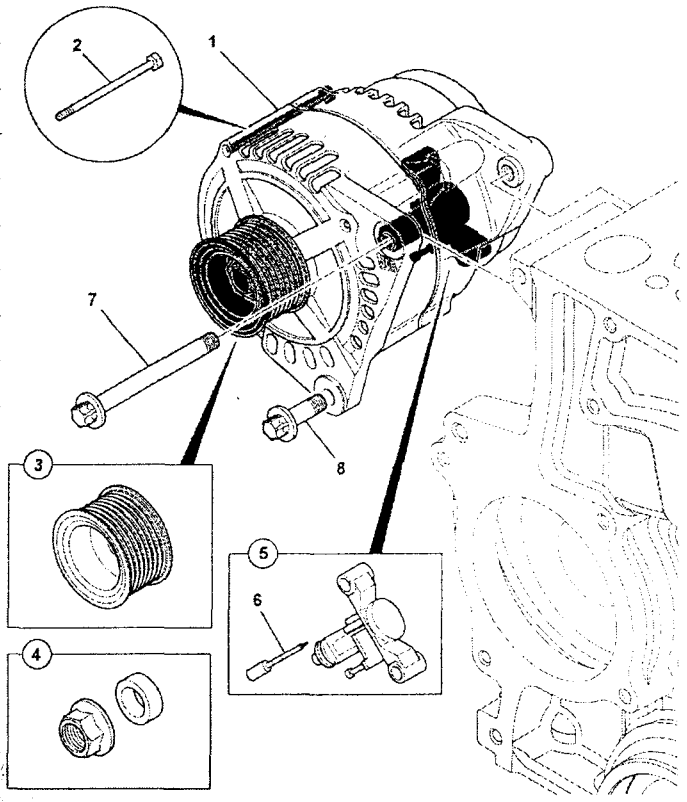

734460

	FROM	TO	FROM	TO
3C PLUS				
3C 14				

ITEM	PART NO	CHANGE NO	DESCRIPTION	REMARKS	USAGE CODE	QTY
1	320/08560		Alternator, 12V-95AMP			1
2	714/40310		:Kit-through bolt			1
3	714/40312		:Pulley, alternator			1
4	714/40311		:Kit-nut & spacer			1
5	714/40313		:Regulator, & brush box, assembly			1
6	714/40314		:Kit-brush			1
7	1319/3422Z		Bolt, star drive, M10 x 120			1
8	1319/0408Z		Screw, star drive, M10 x 30			1

C2-4-2 ALTERNATOR, P4001/P4001T, NAT ASP & TURBO 8C30/8C31

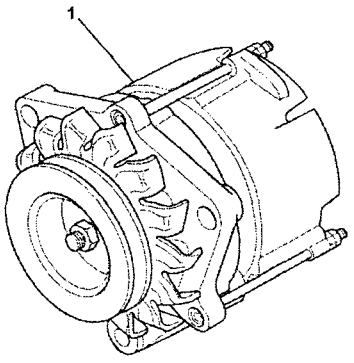

723192

	FROM	TO	FROM	TO
3C PLUS				
3C 14				

ITEM	PART NO	CHANGE NO	DESCRIPTION	REMARKS	USAGE CODE	QTY
1	714/40275		Alternator			1

	FROM	TO	FROM	TO
3C PLUS				
3C 14				

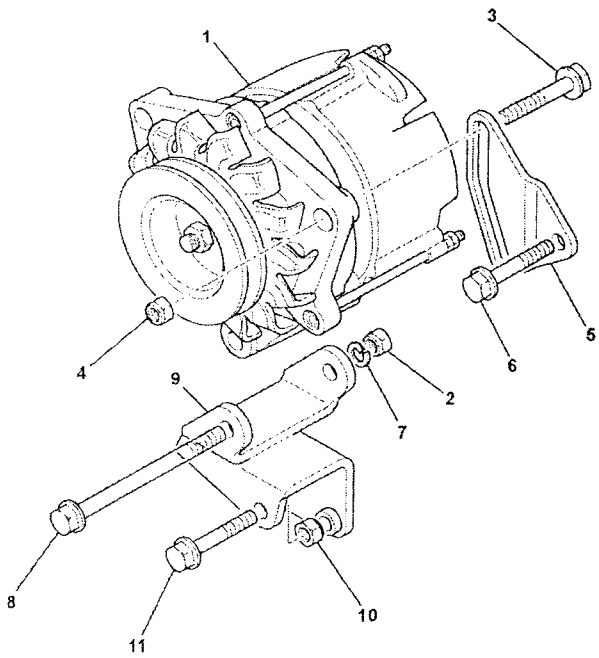

702572

ITEM	PART NO	CHANGE NO	DESCRIPTION	REMARKS	USAGE CODE	QTY
			'See Remark'	For details see frame C2-4-2		1
2	02/103544		Nut			1
3	02/103597		Bolt			1
4	02/103748		Nut, nut			1
5	02/103599		Arm, adjuster			1
6	02/103541		Bolt			1
7	1416/0006		Washer			1
8	02/103663		Bolt			1
9	02/103601		Bracket			1
10	02/103672		Nut, M12			1
11	02/103749		Bolt, bolt			1

C2-5-1 GRID HEATER RELAY, INSTALLATION, NATURALLY ASPIRATED

	FROM	TO	FROM	TO
3C 14				

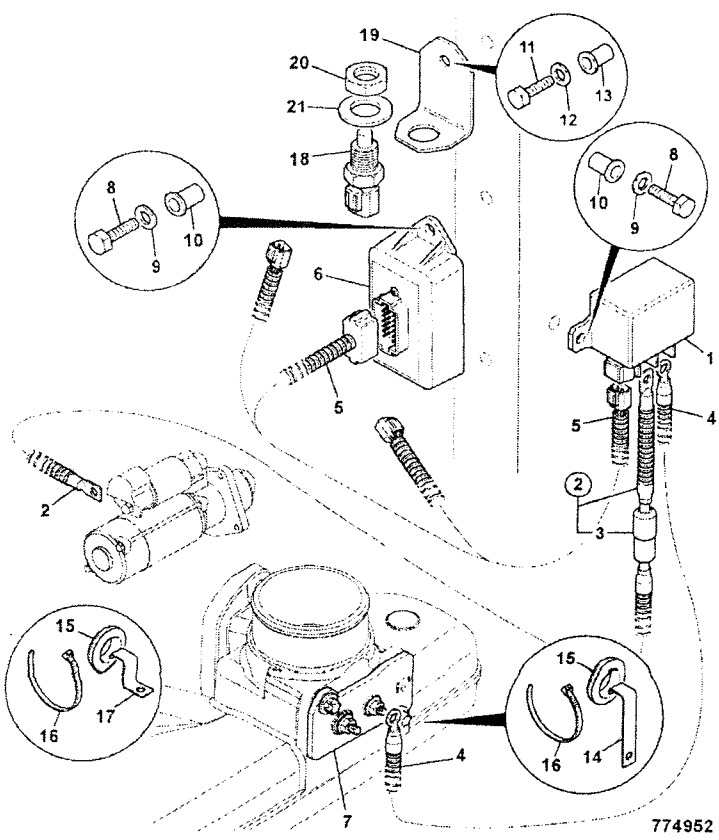

774952

ITEM	PART NO	CHANGE NO	DESCRIPTION	REMARKS	USAGE CODE	QTY
1	716/30252		Relay, grid heater			1
2	718/20232		Lead, grid heater +ve, feed			1
3	716/30225		Fuse, 150Amp MEGAVAL			1
4	718/20233		Lead, grid heater +ve, NA			1
5	721/11846		Harness, ECU to heater relay			1
6	728/26800		Unit, ECU, cold start			1
7	320/05527		Heater, air intake -12v			1
8	1315/0203Z		Screw, M6x16			2
9	1420/0006Z		Washer, M6			2
10	826/01316		Nut, M6 rivet			2
11	1315/0307Z		Screw, M8 X 25			2
12	1420/0007Z		Washer, plain, M8			2
13	826/01106		Nut, rivet,M8			2
14	123/03965		Clip			1
15	2410/0205		Grommet, hole dia 12.7mm, panel thknss 5-6mm			5
16	826/01144		Tie, cable, 200mm long			7
17	123/05247		Clip, cable			4
18	716/30126		Sender, water temperature			1
19	331/48375		Bracket, sensor mounting			1
20	1356/0204Z		Nut			1
21	1420/0013Z		Washer, plain bright			1

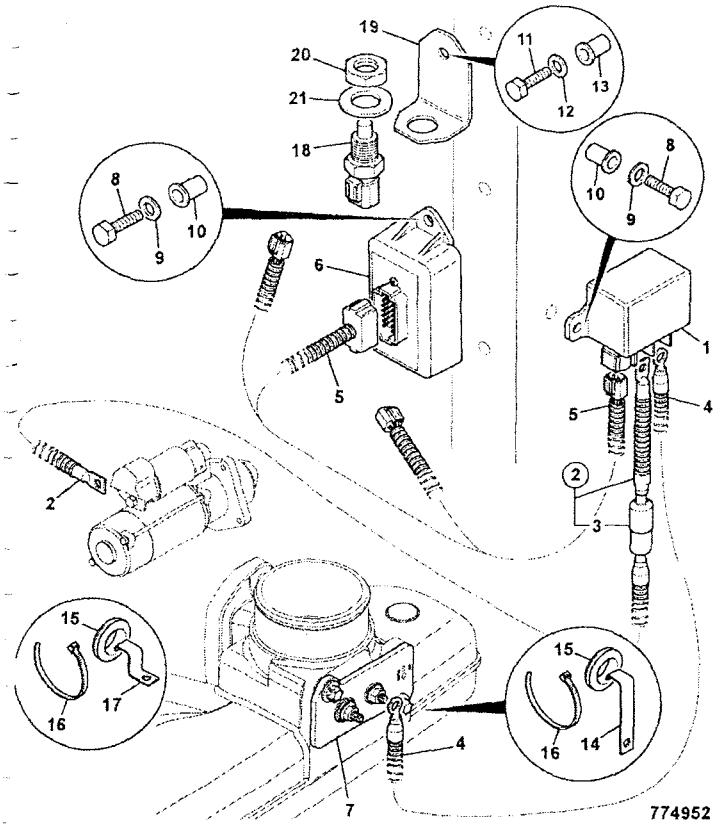

	FROM	TO	FROM	TO
3C PLUS				

ITEM	PART NO	CHANGE NO	DESCRIPTION	REMARKS	USAGE CODE	QTY
1	716/30252		Relay, grid heater			1
2	718/20232		Lead, grid heater +ve, feed			1
3	716/30225		Fuse, 150Amp MEGAVAL			1
4	718/20234		Lead, grid heater +ve, TURBO			1
5	721/11846		Harness, ECU to heater relay			1
6	728/26800		Unit, ECU, cold start			1
7	320/05527		Heater, air intake -12v			1
8	1315/0203Z		Screw, M6x16			2
9	1420/0006Z		Washer, M6			2
10	826/01316		Nut, M6 rivet			2
11	1315/0307Z		Screw, M8 X 25			2
12	1420/0007Z		Washer, plain, M8			2
13	826/01106		Nut, rivet,M8			2
14	123/03965		Clip			1
15	2410/0205		Grommet, hole dia 12. 7mm, panel thknss 5-6mm			5
16	826/01144		Tie, cable, 200mm long			7
17	123/05247		Clip, cable			4
18	716/30126		Sender, water temperature			1
19	331/48375		Bracket, sensor mounting			1
20	1356/0204Z		Nut			1

C2-5-2 GRID HEATER RELAY, INSTALLATION, TURBO
9812/0080U
ISSUE 1

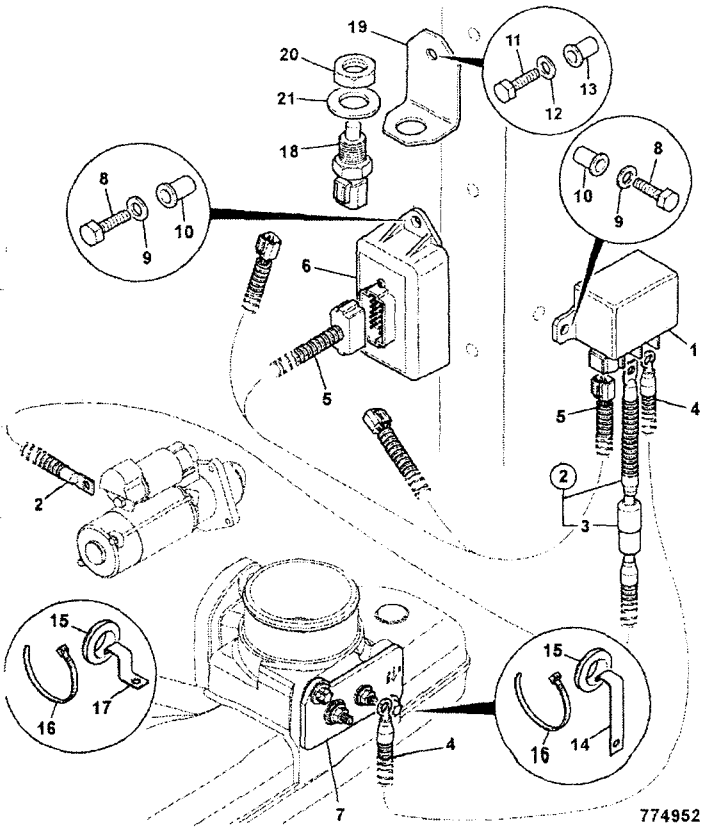

ITEM	PART NO	CHANGE NO	DESCRIPTION	REMARKS	USAGE CODE	QTY
21	1420/0013Z		Washer, plain bright			1

C2-6-1 ENGINE IMMOBILISER, 12.VOLT

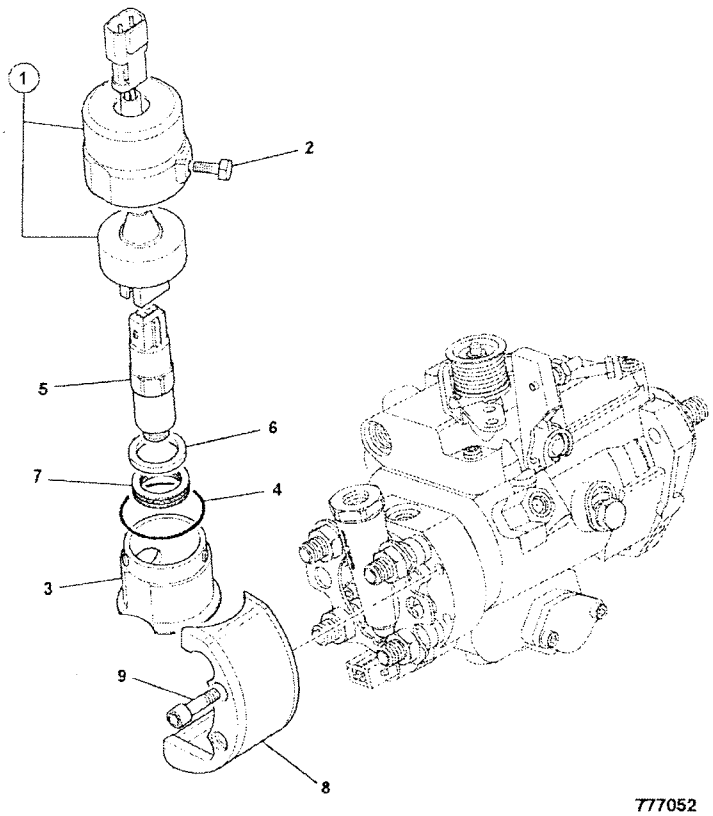

777052

	FROM	TO	FROM	TO
3C PLUS				
3C 14				

ITEM	PART NO	CHANGE NO	DESCRIPTION	REMARKS	USAGE CODE	QT
1	320/06597		Kit-cover, immobiliser			
2	826/11068		Bolt, M6x27 shear			1
3	320/06598		Base, engine immobiliser			
4	320/06595		Seal, o'ring, immobiliser cover			1
5	716/30255		Solenoid, fuel pump - ESOS, cold start advance			
6	320/06594		Spacer, immobiliser			
7	320/06593		Spring, immobiliser			1
8	320/06635		Guard, immobiliser			
9	826/11318		Bolt, M6 shear, shear @ 11Nm			2

C2-7-1 ENGINE BLOCK HEATER, 120V

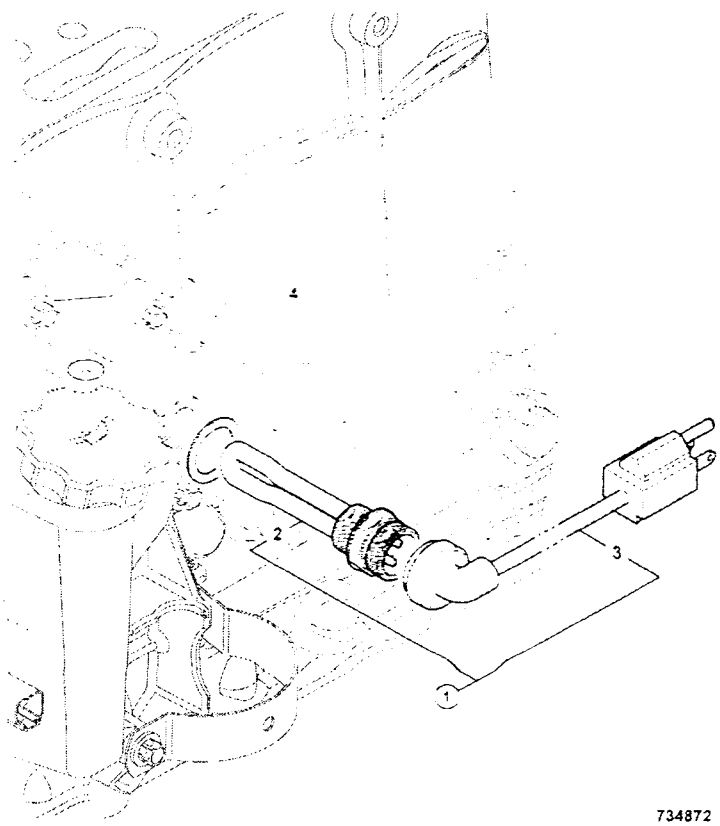

734872

	FROM	TO	FROM	TO
3C PLUS				
3C 14				

ITEM	PART NO	CHANGE NO	DESCRIPTION	REMARKS	USAGE CODE	QTY
1	320/20082		Kit-heater, engine Block, 120V			1
2	320/04550		Heater, cylinder block, 1000w - 120v mains			1
3	716/11876		Harness, 120V block heater, mains power lead			1
4	320/04553		Washer, copper sealing			1

C

C1 ELECTRICS, MAIN MACHINE
C2 ELECTRICS, ENGINE
● C3 ELECTRICS, CAB

ENGLISH

C3-1-31 GAUGES AND SWITCHES, SIDE CONSOLE, CANOPY
C3-1-41 GAUGES AND SWITCHES, SIDE CONSOLE, CAB
C3-2-4 COVER, COLUMN SWITCH
C3-4-30 SWITCH, COLUMN, SHUTTLE TRANSMISSION
C3-5-30 HEATER ASSEMBLY
C3-5-31 HEATER ASSEMBLY
C3-5-40 AIR CONDITIONING, ASSEMBLY ABI
C3-6-30 SWITCHES, FRONT CONSOLE
C3-7-60 FUSE BOX & RELAYS, SHUTTLE TRANSMISSION
C3-8-11 MOTOR, WIPER
C3-17-1 FAN, FACE LEVEL
C3-18-1 INTERIOR MOULDINGS, CANOPY BUILDS
C3-18-11 INTERIOR MOULDINGS, CAB BUILDS
C3-19-11 AIR CONDITIONING, INSTALLATION
C3-31-21 IMMOBILISER, INSTALLATION, CAB, KEY OPERATED

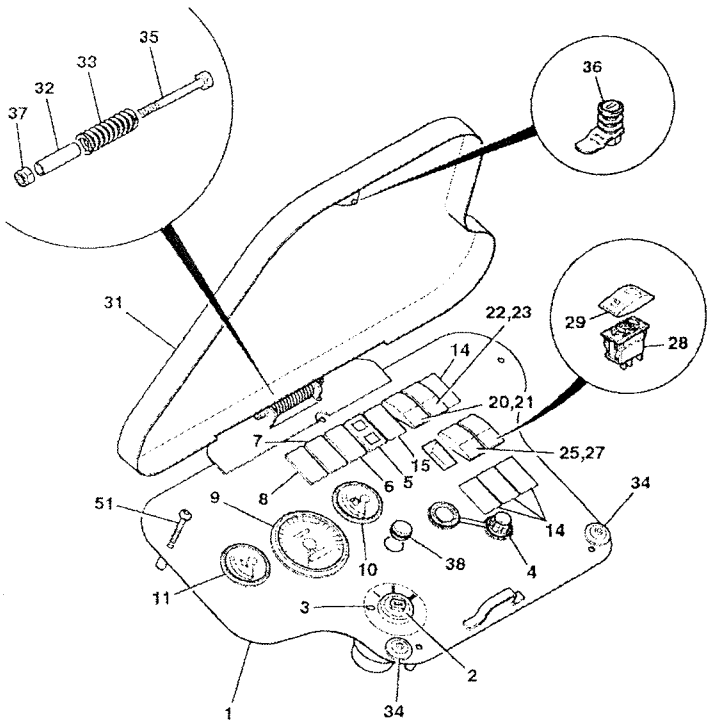

814971

FROM TO FROM TO

3C PLUS
3C 14

ITEM	PART NO	CHANGE NO	DESCRIPTION	REMARKS	USAGE CODE	QTY
1	335/10181	To M TBA	Panel, instrument			1
	128/D9577		Panel, indtrument			1
2	701/80184		Switch, ignition			1
2A	701/45501		:Key, Door/Ignition, Ref 14657			1
3	817/05167	To M TBA	Decal, ignition switch			1
	332/D9043		Decal, ignition switch			1
3A	332/D9035		Washer, ignition blank	use with 332/ D9043		1
4	715/08100		Socket, accessory			1
5	700/50176		Light, panel,LED			1
6	700/50050		Light, panel LED, eng/ trans pressure			1
7	700/50051		Light, panel LED, eng/ trans temp			1
8	700/50052		Light, panel LED, batt charge/park brk			1
9	704/50227		Gauge, tacho and hourmeter			1
9A	720/10057		:Bulb, 12V 5W, Capless			1
9B	700/50020		:Cap	cover for bulb		1
9C	700/50085		:Holder, bulb			1
10	704/50098		Gauge, fuel level			1
10A	720/10057		:Bulb, 12V 5W, Capless			1

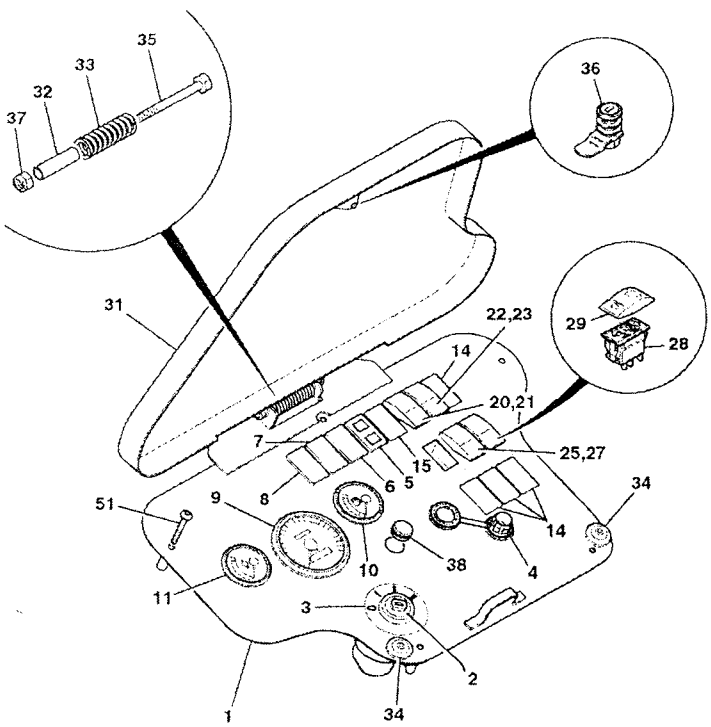

814971

ITEM	PART NO	CHANGE NO	DESCRIPTION	REMARKS	USAGE CODE	QTY
10B	700/50020		:Cap	cover for bulb		1
10C	700/50085		:Holder, bulb			1
11	704/50099		Gauge, water temp			1
11A	720/10057		:Bulb, 12V 5W, Capless			1
11B	700/50020		:Cap	cover for bulb		1
11C	700/50085		:Holder, bulb			1
14	701/80265		Blank			4
15	700/50191		Light, panel LED			1
20	701/60004		Switch, 12V			1
21	701/58826		Actuator, front worklights, switch decal			1
22	701/60003		Switch, 12V			1
23	701/58854		Decal, Wiper windscreen, switch			1
25	701/60000		Switch, 12V			1
27	701/58825		Actuator, beacon, convoy warning			1
28	701/60002		Switch, 12V			1
29	701/58827		Cover, rear working lights, switch decal			1
31	335/03582		Cover, vandal			1
32	123/07797		Spacer			1
33	123/07861		Spring			1
34	828/00261		Buffer, (stop),rubber			2
35	1315/3319Z		Bolt, M8 x 90mm long			1
36	123/04686		Catch, vandal cover			1
37	1370/0203Z		Nut, self lock, M8			1
38	2410/1108		Grommet			1

C3-1-31 GAUGES AND SWITCHES, SIDE CONSOLE, CANOPY

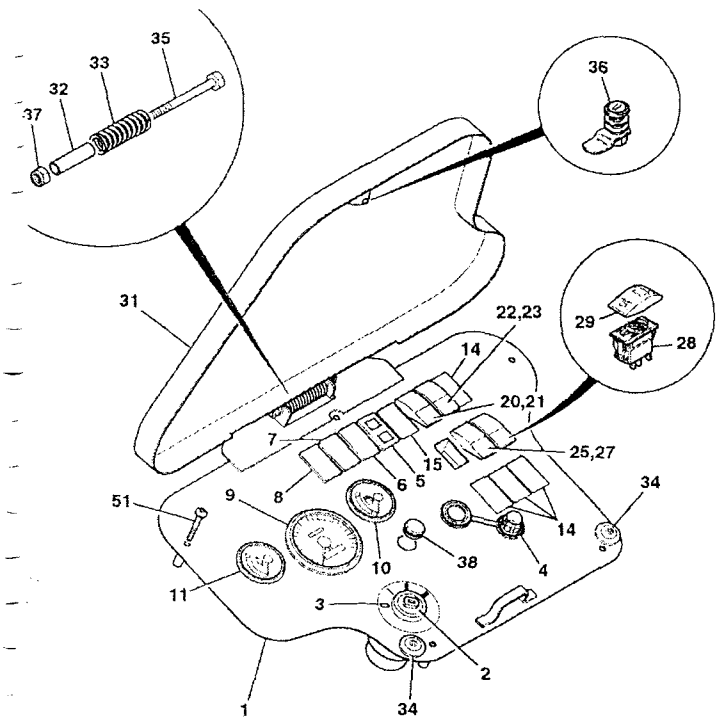

814971

ITEM	PART NO	CHANGE NO	DESCRIPTION	REMARKS	USAGE CODE	QTY
43	701/60000		Switch, 12V	4WD switch		1
44	701/58822		Cover, 4wd switch decal	4WD switch		1
51	826/01804		Bolt			5
61	926/29000		:Buffer, cable cover	fitted to B post		1

C3-1-41 GAUGES AND SWITCHES, SIDE CONSOLE, CAB

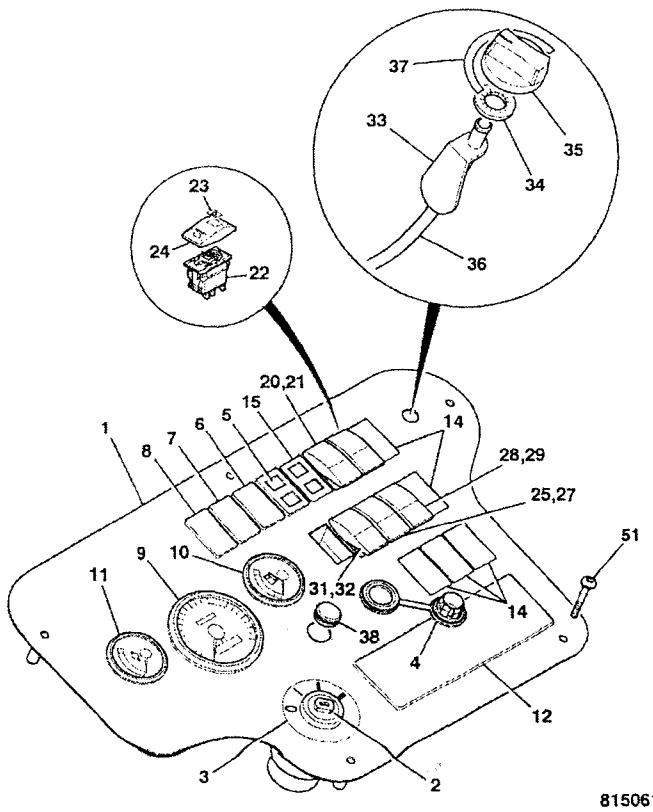

815061

	FROM	TO	FROM	TO
3C PLUS				
3C 14				

ITEM	PART NO	CHANGE NO	DESCRIPTION	REMARKS	USAGE CODE	QTY
1	335/09801	To M TBA	Panel, switch			1
	128/D9596		Panel, switch			1
2	701/80184		Switch, ignition			1
2A	701/45501		:Key, Door/Ignition, Ref 14657			1
3	817/05167	To M TBA	Decal, ignition switch			1
	332/D9043		Decal, ignition switch			1
3A	332/D9035		Washer, ignition blank	use with 332/ D9043		1
4	715/08100		Socket, accessory			1
5	700/50176		Light, panel,LED			1
6	700/50050		Light, panel LED, eng/ trans pressure			1
7	700/50051		Light, panel LED, eng/ trans temp			1
8	700/50052		Light, panel LED, batt charge/park brk			1
9	704/50227		Gauge, tacho and hourmeter			1
9A	720/10057		:Bulb, 12V 5W, Capless			1
9B	700/50020		:Cap	cover for bulb		1
9C	700/50085		:Holder, bulb			1
10	704/50098		Gauge, fuel level			1
10A	720/10057		:Bulb, 12V 5W, Capless			1

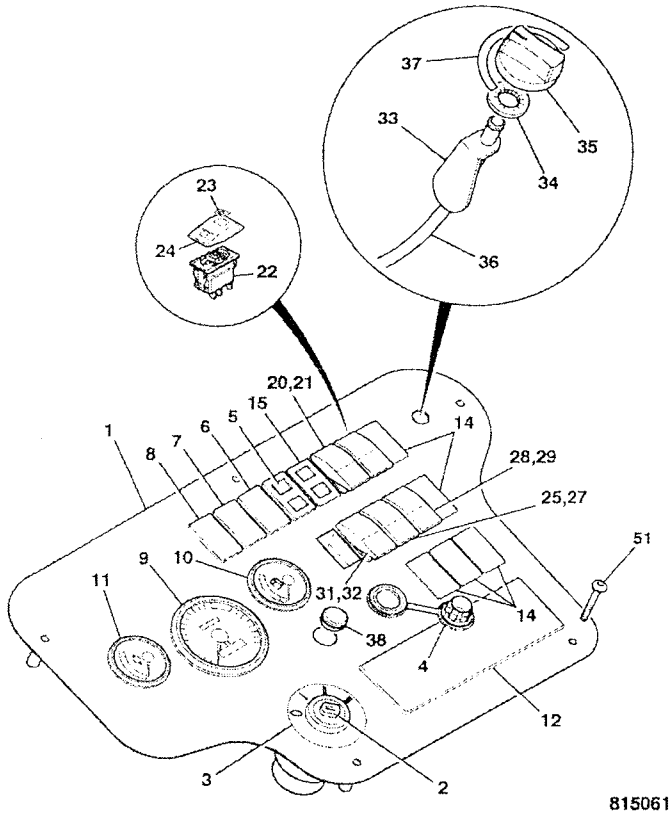

815061

ITEM	PART NO	CHANGE NO	DESCRIPTION	REMARKS	USAGE CODE	QTY
10B	700/50020		:Cap	cover for bulb		1
10C	700/50085		:Holder, bulb			1
11	704/50099		Gauge, water temp			1
11A	720/10057		:Bulb, 12V 5W, Capless			1
11B	700/50020		:Cap	cover for bulb		1
11C	700/50085		:Holder, bulb			1
12	717/08600		Cover, Radio Blanking			1
14	701/80265		Blank			4
15	700/50191	M TBA on	Light, panel LED			1
20	701/60004		Switch, 12V			1
21	701/58826		Actuator, front worklights, switch decal			1
22	701/60003		Switch, 12V			1
23	701/58854		Decal, Wiper windscreen, switch			1
24	701/58828		Actuator, wash,wipe, switch decal			1
25	701/60000		Switch, 12V			1
27	701/58825		Actuator, beacon, convoy warning			1
28	701/60002		Switch, 12V			1
29	701/58827		Cover, rear working lights, switch decal			1
31	701/60016		Switch, 3 position, 12V			1
32	701/58837		Decal, Reversing Fan, switch decal			1
33	142/00643		Actuator, cable operated			1
34	826/00711		Washer, M4'starloc'			2
35	162/00832		Knob, control			1

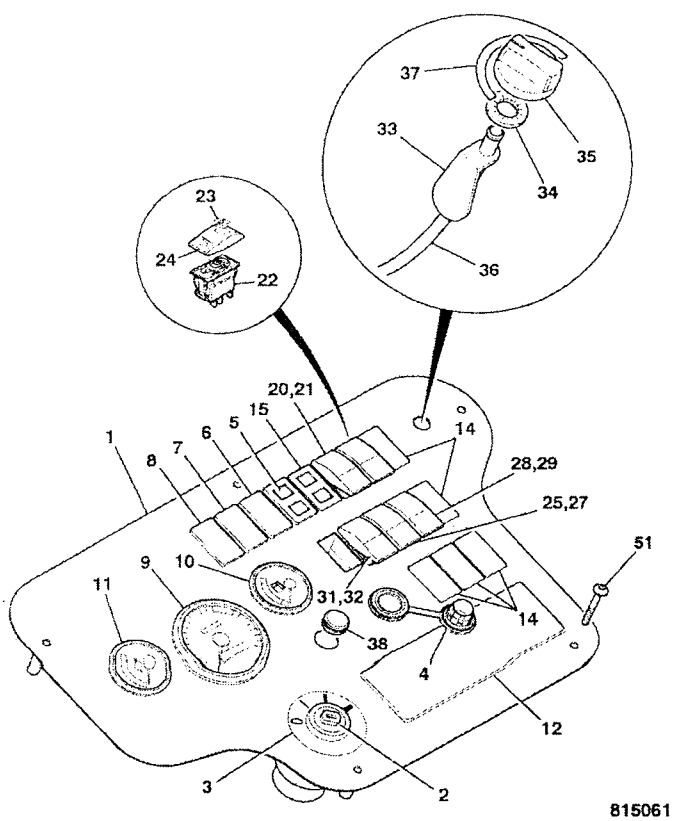

815061

ITEM	PART NO	CHANGE NO	DESCRIPTION	REMARKS	USAGE CODE	QTY
36	910/46900		Cable, control			1
37	817/04021		Decal, heater			1
38	2410/1108		Grommet			1
41	701/60000		Switch, 12V	aircon		1
42	701/58831		Actuator, aircon switch, soft touch	aircon		1
43	701/60000		Switch, 12V	4WD switch		1
44	701/58822		Cover, 4wd switch decal	4WD switch		1
51	826/01804		Bolt			5

C3-2-4 COVER, COLUMN SWITCH

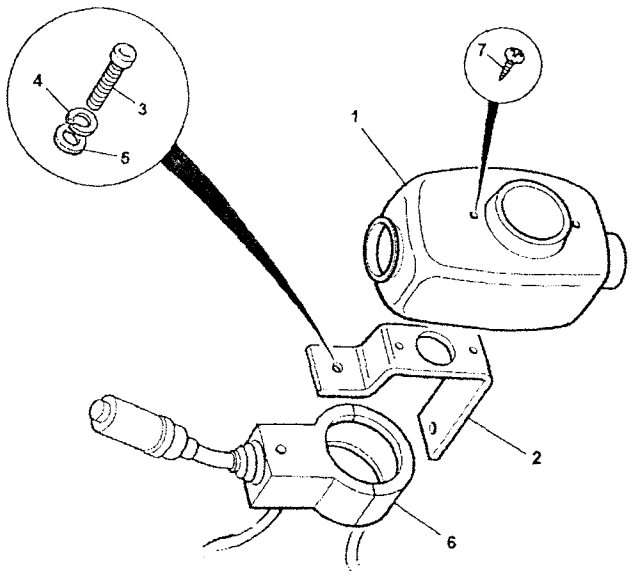

315471

	FROM	TO	FROM	TO
3C PLUS				
3C 14				

ITEM	PART NO	CHANGE NO	DESCRIPTION	REMARKS	USAGE CODE	QTY
1	331/27486		Cover, column switch			1
2	123/05014		Bracket, switch cover mount			1
3	826/01522		Screw	Switch mounting to switch		2
	826/01533		Screw	Cover to switch mounting		2
	826/01130		Screw, M4			1
4	1425/0005Z		Washer, spring, M5			1
5	1420/0005Z		Washer, M5			1
	1414/0011Z		Washer, 2 BA			1
	1417/0007Z		Washer			1
6	.		'See Remark'	See C3-4-20		1
7	826/01533		Screw			2

C3-4-30 SWITCH, COLUMN, SHUTTLE TRANSMISSION

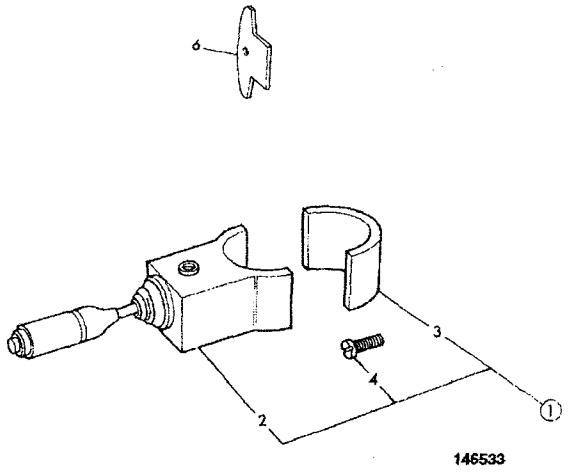

146533

	FROM	TO	FROM	TO
3C PLUS				
3C 14				

ITEM	PART NO	CHANGE NO	DESCRIPTION	REMARKS	USAGE CODE	QTY
1	701/80295		Switch, column, manual trans			1
2	NSP		:None serviced part			1
4	1391/3103		:Screw, cap			2
6	123/04058		Plate, retainer			1

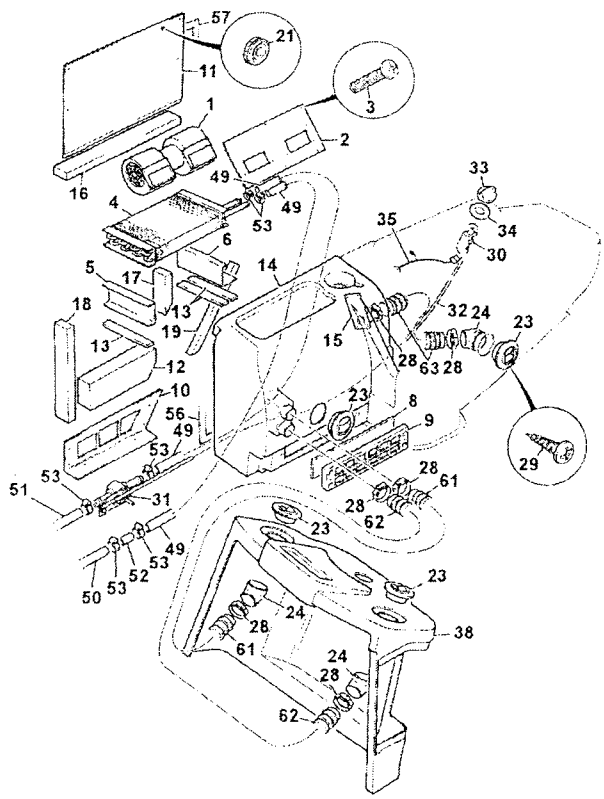

230894

	FROM	TO	FROM	TO
3C PLUS		M1002999		
3C 14		M1002999		

ITEM	PART NO	CHANGE NO	DESCRIPTION	REMARKS	USAGE CODE	QTY
0A	128/12670		Heater, assembly & cover, as supplied			1
1	142/00603		Motor, blower			1
2	142/00605		Plate, blower mounting			1
3	1360/0604Z		Screw	Use with items 69 & 70		6
4	142/00601		Heater, assembly			1
5	142/00629		Channel			1
6	142/00630		Channel			1
8	141/00843		Filter, recirculation			1
9	142/18400		Cover, filter			1
10	142/00607		Plate, intake			1
11	142/00606		Plate, blanking			1
12	142/00628		Filter			1
13	190/51912		Strip, foam			3
14	331/30981		Console, heater unit			1
15	123/07780		Adapter, air vent outlet			1
16	142/00617		Strip, foam			1
17	142/00618		Strip, foam			1
18	142/00619		Strip, foam			1
19	142/00620		Strip, foam			1
21	828/00374		Grommet			1
23	141/00494		Vent			3

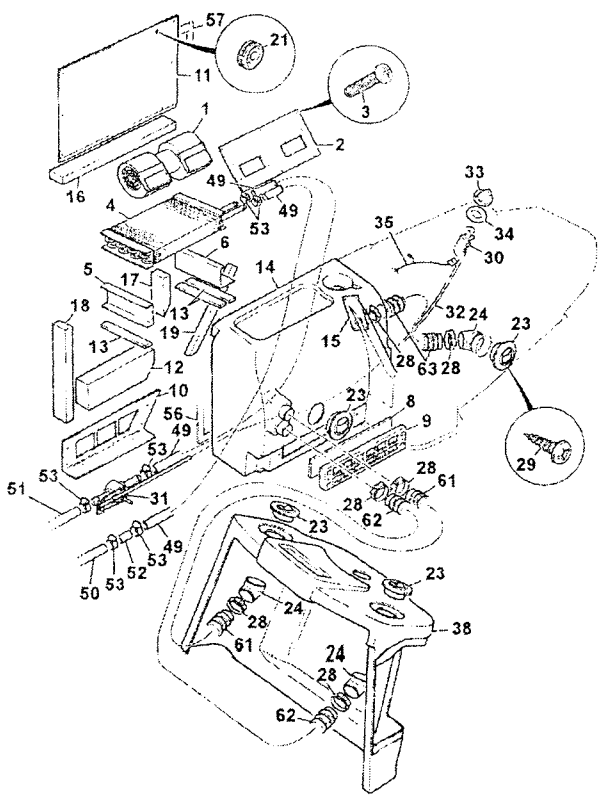

230894

ITEM	PART NO	CHANGE NO	DESCRIPTION	REMARKS	USAGE CODE	QTY
24	141/00495		Vent, elbow			3
28	2201/0009		Clip, jubilee			6
29	1430/1001		Screw, ST			12
30	142/00643		Actuator, cable operated			1
31	142/00644		Valve, water			1
32	910/46900		Cable, control			1
33	162/00832		Knob, control			1
34	817/04021		Decal, heater			1
35	721/00707		Harness, heater			1
38	.		'See Remark'	See index interior mouldings C3		1
42	816/17109		Adapter, 3/4NPTF x 16			1
	816/13380		Adapter, 1/2NPTF x 16	Tier 2 engine		1
49	648/01917		Hose			2
50	.		'See Remark'	Bottom hose see index V		1
51	834/11031		Hose, heater			1
52	123/04950		Adapter, bulkhead			1
53	2201/0005		Clip, jubilee			8
56	926/02300		Strip, foam, roll	For item 14		A/R
57	926/01100		Strip, sealing	For item 11		A/R
61	649/05400		Hose	Cut to length		1
62	649/05400		Hose	Cut to length		1
63	649/05400		Hose	Cut to length		1
69	1414/0007Z		Washer	Use with item 3		12
70	1358/0603Z		Nut	Use with item 3		6
71	1315/0108Z		Bolt	Filter cover		2

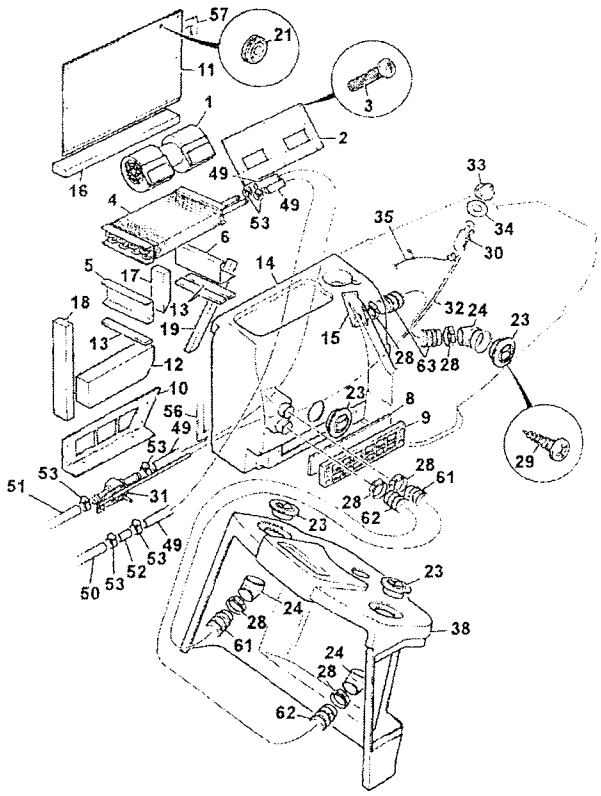

230894

ITEM	PART NO	CHANGE NO	DESCRIPTION	REMARKS	USAGE CODE	QTY
24	141/00495		Vent, elbow			3
28	2201/0009		Clip, jubilee			6
29	1430/1001		Screw, ST			12
30	142/00643		Actuator, cable operated			1
31	142/00644		Valve, water			1
32	910/46900		Cable, control			1
33	162/00832		Knob, control			1
34	817/04021		Decal, heater			1
35	721/00707		Harness, heater			1
38	.		'See Remark'	See index interior mouldings C3		1
42	816/17109		Adapter, 3/4NPTF x 16			1
	816/13380		Adapter, 1/2NPTF x 16	Tier 2 engine		1
49	648/01917		Hose			2
50	332/C9130		Hose, heater 16x1800			1
51	834/11405		Hose, heater			1
52	123/04950		Adapter, bulkhead			1
53	2201/0005		Clip, jubilee			8
56	926/02300		Strip, foam, roll	For item 14		A/R
57	926/01100		Strip, sealing	For item 11		A/R
61	649/05400		Hose	Cut to length		1
62	649/05400		Hose	Cut to length		1
63	649/05400		Hose	Cut to length		1
69	1414/0007Z		Washer	Use with item 3		12
70	1358/0603Z		Nut	Use with item 3		6
71	1315/0108Z		Bolt	Filter cover		2
72	1414/0011Z		Washer, 2 BA			21

C3-5-31 HEATER ASSEMBLY
9812/0080U
ISSUE 1

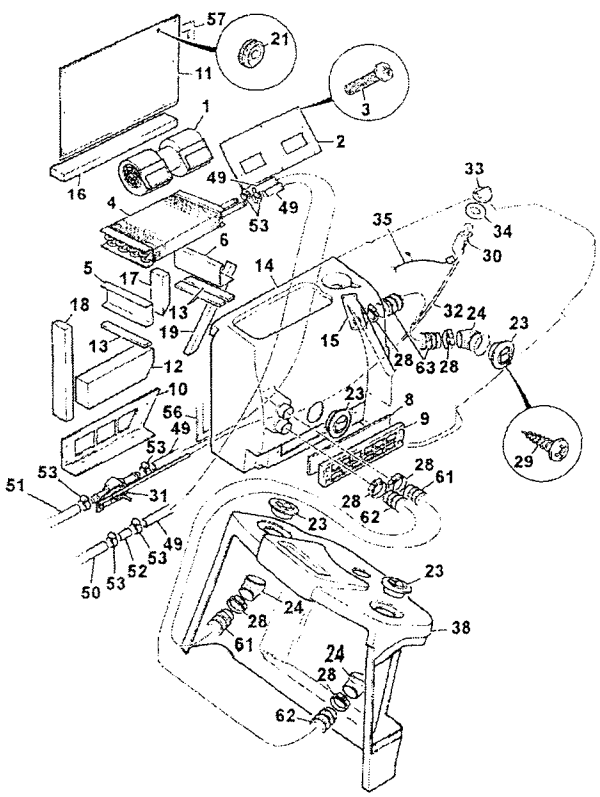

230894

ITEM	PART NO	CHANGE NO	DESCRIPTION	REMARKS	USAGE CODE	QTY
73	1315/0105Z		Bolt, M5 x 20mm long			19

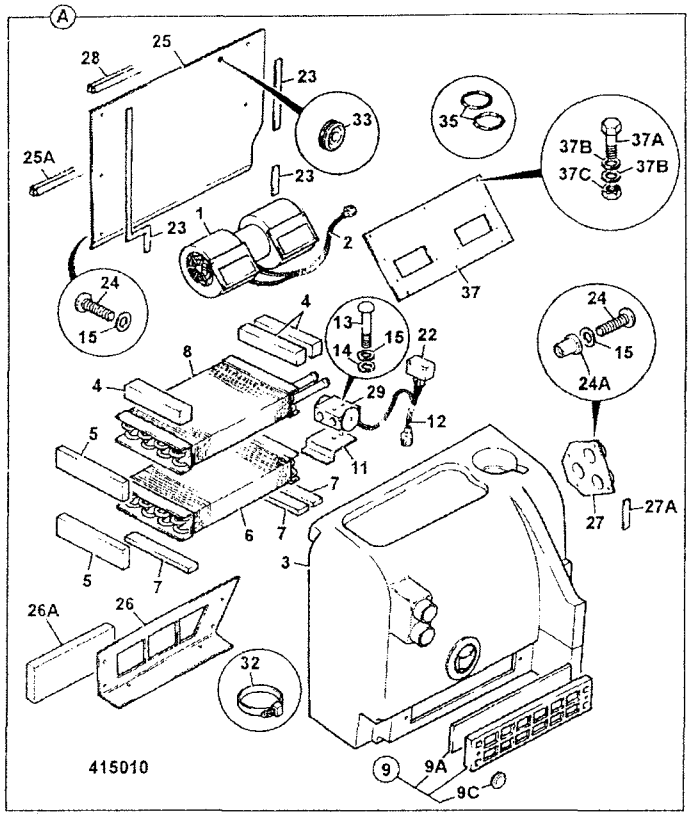

	FROM	TO	FROM	TO
3C PLUS				
3C 14				

ITEM	PART NO	CHANGE NO	DESCRIPTION	REMARKS	USAGE CODE	QTY
0A	NSP		None serviced part			1
1	142/00603		:Motor, blower			1
2	721/11041		:Harness, heater	See Harnesses index C1		1
3	.		'See Remark'	See Consoles index C3		1
4	190/51912		:Strip, foam			3
5	.		'See Remark'	Seal		3
6	142/00904		:Coil, evaporator			1
7	190/51912		:Strip, foam			3
8	142/00601		:Heater, assembly			1
9	142/18400		:Cover, filter			1
9A	141/00843		:Filter, recirculation			1
9C	2410/1104		Grommet, blind, 11.1mm	Use with item 9A		2
11	142/00952		:Bracket, expansion valve			1
12	NSP		:None serviced part	Harness, use item 22		1
13	1315/0108Z		Bolt			1
14	1425/0005Z		Washer, spring, M5			1
15	1420/0005Z		Washer, M5			26
22	142/00902		:Thermostat			1
23	926/02300		:Strip, foam, roll			A/R
24	1315/0105Z		:Bolt, M5 x 20mm long			26

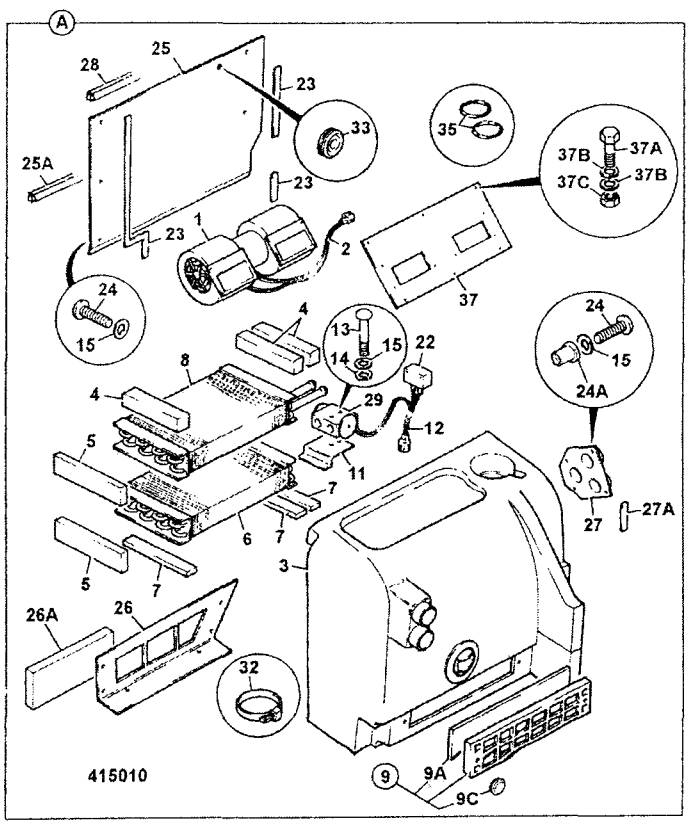

ITEM	PART NO	CHANGE NO	DESCRIPTION	REMARKS	USAGE CODE	QTY
24A	826/00842		Nut, M5 jacknut			17
25	142/00606		:Plate, blanking			1
25A	926/15601		Strip, foam			1
26	142/00607		:Plate, intake			1
26A	142/00628		Filter			1
27	142/18300		:Adapter, air outlet			1
27A	4102/0900		Sealant	Use with item 27		A/R
28	926/01100		:Strip, sealing			A/R
29	142/00903		Valve, expansion			1
33	828/00374		Grommet	Use with item 25		1
35	476/14903		O Ring			2
37	142/00605		Plate, blower mounting			1
37A	1360/0604Z		Screw	Use with item 37		4
37B	1414/0007Z		Washer	Use with item 37		8
37C	1358/0603Z		Nut	Use with item 37		4

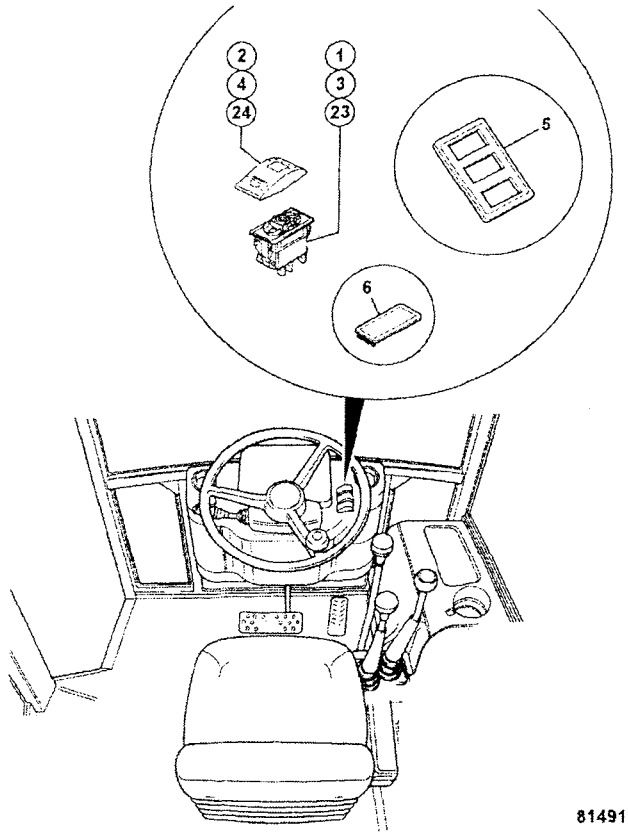

814910

	FROM	TO	FROM	TO
3C PLUS				
3C 14				

ITEM	PART NO	CHANGE NO	DESCRIPTION	REMARKS	USAGE CODE	QTY
1	701/60005		Switch, hazard, 12V			1
2	701/58839		Cover, switch,hazard			1
3	701/60006		Switch, 12V			1
4	701/58834		Cover, indicators, switch decal			1
5	715/07700		Frame, switch retaining			1
6	701/80265		Blank			1
23	701/80539		Switch, panel			1
24	701/58936		Cover, main/dip beam			1

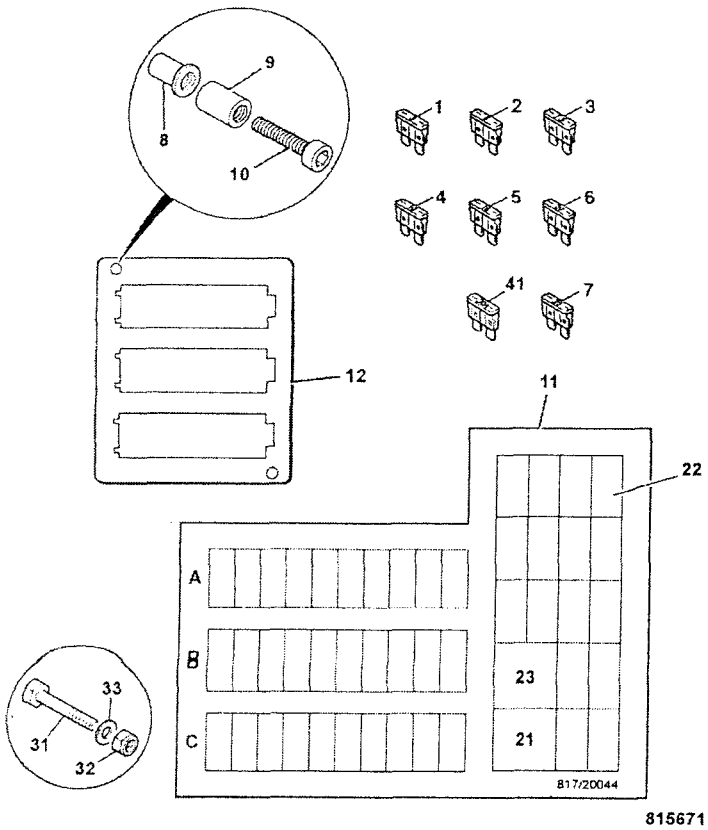

815671

	FROM	TO	FROM	TO
3C PLUS				
3C 14				

ITEM	PART NO	CHANGE NO	DESCRIPTION	REMARKS	USAGE CODE	QTY
1	716/05701		Fuse, 3 amp			3
2	716/05703		Fuse, 5 Amp			4
3	716/05704		Fuse, 7.5 Amp			3
4	716/05705		Fuse, 10 amp			5
5	716/05706		Fuse, 15 Amp			5
6	716/05707		Fuse, 20 amp			2
7	716/05708		Fuse, 25 amp			2
8	826/01099		Nut, rivet,M6 open ended			2
9	141/00899		Spacer, threaded			2
10	1315/3216Z		Bolt, M6x70			2
11	817/20044		Label, fuses and relays			1
12	123/07634		Bracket, fuse mounting			1
21	704/10000		Alarm, buzzer			1
22	716/30285		Relay, 12v micro, high capacity			14
23	716/25800		Relay, hazard, 12v 6x21w			1
31	1315/0103Z		Screw	relay base		2
32	1370/0001Z		Nut, M5-8	relay base		2
33	1418/0007Z		Washer	relay base		2
41	716/05709		Fuse, 30 amp			1

C3-8-11 MOTOR, WIPER

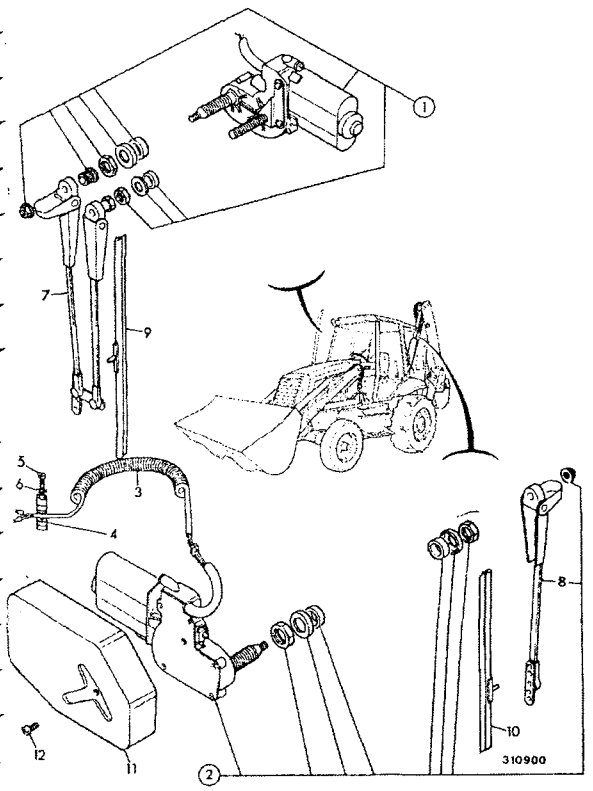

	FROM	TO	FROM	TO
3C PLUS				
3C 14				

ITEM	PART NO	CHANGE NO	DESCRIPTION	REMARKS	USAGE CODE	QTY
1	714/28200		Wiper, motor (front)			1
2	714/28500	To M TBA	Motor, wiper, 90 DEG.		A	1
	332/R8131		Motor, wiper, 90deg		B	1
3	719/80900		Harness, rear wiper			1
4	821/00531		Clip, 'P'			5
5	826/00687		Screw			5
6	1414/0011Z		Washer, 2 BA			2
7	714/04700		Arm, wiper	Front wiper		1
8	714/05000		Arm	rear		1
9	714/14900		Blade, wiper	front		1
10	714/07700		Blade, wiper, 600mm long	rear		1
11	714/09500		Cover		A	1
	346/00317		Cover, wiper motor		B	1
12	826/00687		Screw			1

C3-17-1 FAN, FACE LEVEL

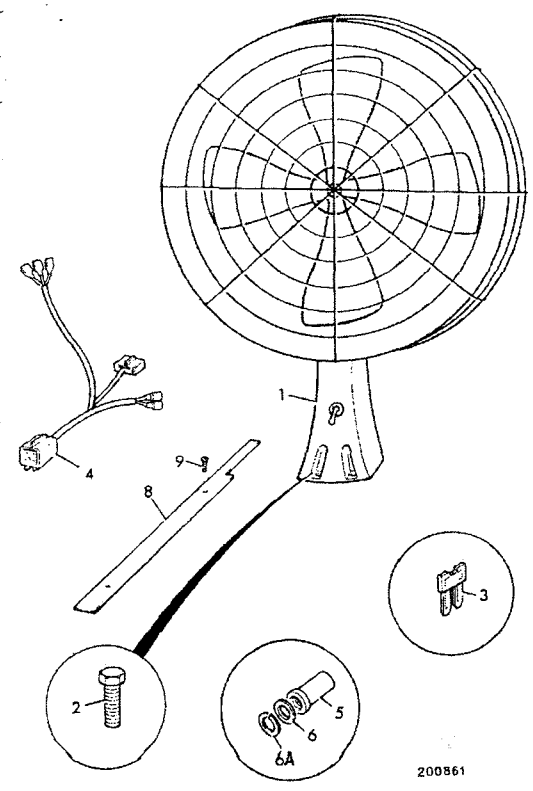

	FROM	TO	FROM	TO
3C PLUS				
3C 14				

ITEM	PART NO	CHANGE NO	DESCRIPTION	REMARKS	USAGE CODE	QTY
1	717/20040		Fan, face level, I2V			1
2	1315/0207Z		Screw, M6 x 25mm long			4
3	716/05706		Fuse, 15 Amp			1
4	.		'See Remark'	not required		1
5	826/01101		Nut, rivet,M6 open ended, for 3 to 5.5mm plt			4
6	1420/0006Z		Washer, M6			4
6A	1425/0006Z		Washer, Spring			4
7	.		'See Remark'	not fitted		2
8	123/08011		Cover, fan harness			1
9	826/01520		Screw, M5 X 20			2

	FROM	TO	FROM	TO
3C PLUS				
3C 14				

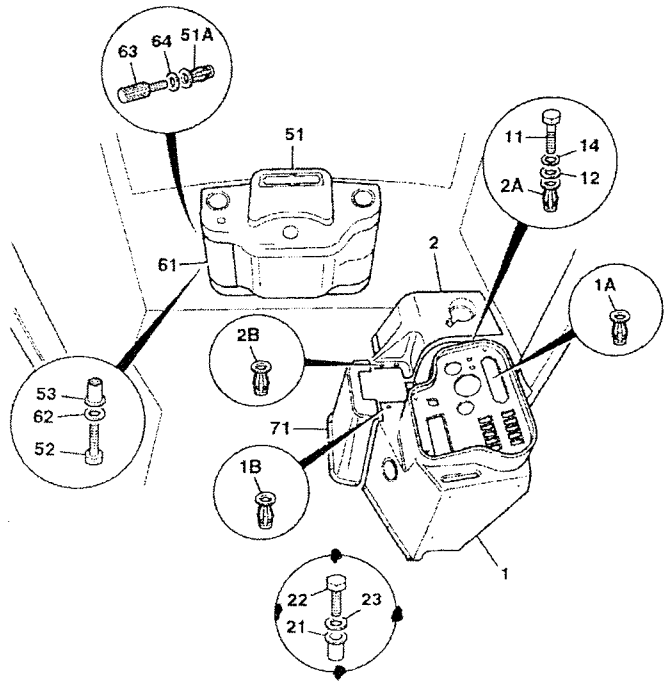

816650

ITEM	PART NO	CHANGE NO	DESCRIPTION	REMARKS	USAGE CODE	QTY
1	128/12075	To M TBA	Console, switch housing			1
	128/D9799		Console, switch housing			1
1A	826/00842		:Nut, M5 jacknut			5
1B	826/01232		:Nut, M6 jack			2
2	331/27478		Cover, side,canopy, loader/landscaper			1
2A	826/00842		Nut, M5 jacknut			3
2B	826/01232		Nut, M6 jack			2
11	1315/0108Z		Bolt			3
12	1420/0005Z		Washer, M5			3
14	1425/0005Z		Washer, spring, M5			3
21	826/01101		Nut, rivet,M6 open ended, for 3 to 5.5mm plt			6
22	1315/0207Z		Screw, M6 x 25mm long			6
23	1420/0006Z		Washer, M6			6
51	128/12074	To M TBA	Cover, front console, canopy			1
	128/D9677		Cover, front console, canopy			1
51A	826/00842		:Nut, M5 jacknut			2
52	1315/0205Z		Bolt			4
53	826/01099		Nut, rivet,M6 open ended			4
61	331/27718		Cover, fuse, front console			1
62	1420/0006Z		Washer, M6			4

C3-18-1 INTERIOR MOULDINGS, CANOPY BUILDS
9812/0080U
ISSUE 1

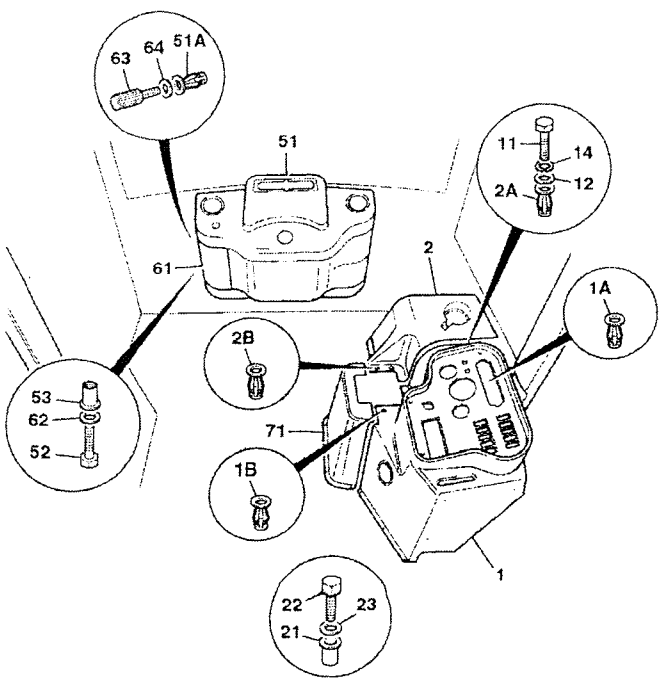

816650

ITEM	PART NO	CHANGE NO	DESCRIPTION	REMARKS	USAGE CODE	QTY
63	826/01301		Screw, thumb 20mm long			2
64	826/00711		Washer, M4'starloc'			2
71	.		'See Remark'	loader valve cover see index B2		1

	FROM	TO	FROM	TO
3C PLUS				
3C 14				

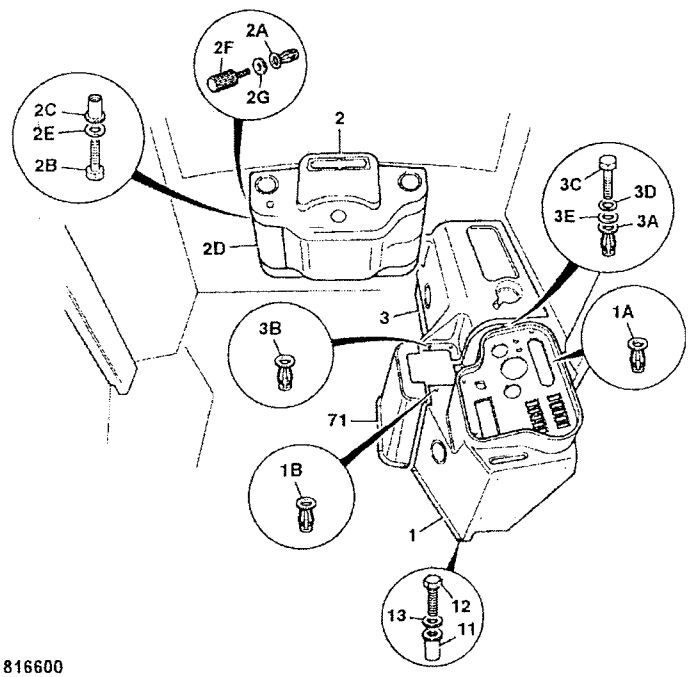

816600

ITEM	PART NO	CHANGE NO	DESCRIPTION	REMARKS	USAGE CODE	QTY
1	128/12073	To M TBA	Console, switch housing, heater build			1
	128/D9826		Console, switch housing, heater build			1
1A	826/00842		:Nut, M5 jacknut			5
1B	826/01232		:Nut, M6 jack			2
2	128/12072	To M TBA	Cover, front console, cab			1
	128/D9667		Cover, front console, cab			1
2A	826/00842		:Nut, M5 jacknut			2
2B	1315/0205Z		Bolt			4
2C	826/01099		Nut, rivet,M6 open ended			41
2D	331/27718		Cover, fuse, front console			1
2E	1420/0006Z		Washer, M6			4
2F	826/01301		Screw, thumb 20mm long			2
2G	826/00711		Washer, M4'starloc'			2
3	331/30981		Console, heater unit	heater builds		1
	346/00106		Console, aircon unit	air conditioning builds		1
3A	826/00842		Nut, M5 jacknut			6
3B	826/01232		Nut, M6 jack			2
3C	1315/0108Z		Bolt			6
3D	1420/0005Z		Washer, M5			6
3E	1425/0005Z		Washer, spring, M5			6

C3-18-11 INTERIOR MOULDINGS, CAB BUILDS

9812/0080U
ISSUE 1

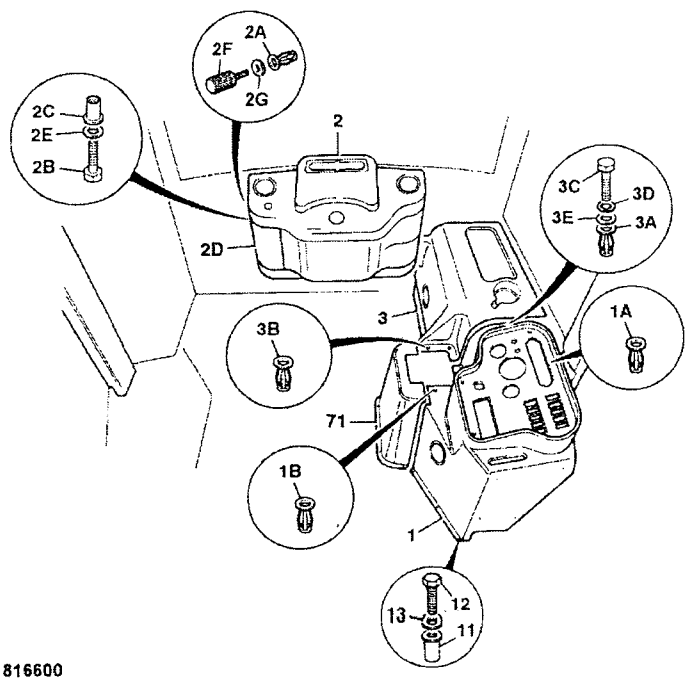

816600

ITEM	PART NO	CHANGE NO	DESCRIPTION	REMARKS	USAGE CODE	QTY
11	826/01101		Nut, rivet,M6 open ended, for 3 to 5.5mm plt			6
12	1315/0207Z		Screw, M6 x 25mm long			6
13	1420/0006Z		Washer, M6			6
71	.		'See Remark'	loader valve cover see index B2		1

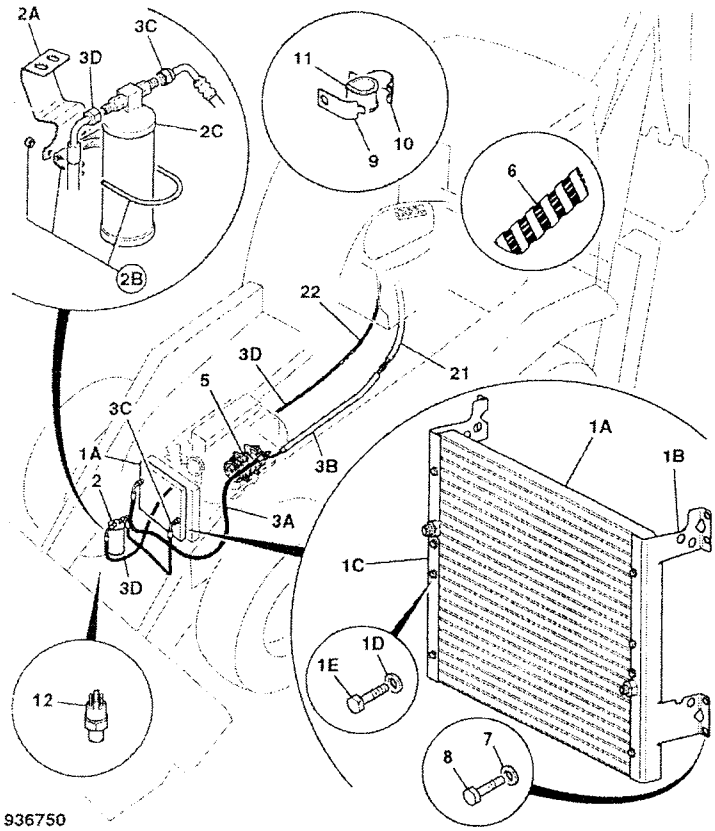

	FROM	TO	FROM	TO
3C PLUS				
3C 14				

ITEM	PART NO	CHANGE NO	DESCRIPTION	REMARKS	USAGE CODE	QT
1A	30/925766		Condenser			
1B	331/48472		Bracket, L.H.			1
1C	331/48470		Bracket, R.H.			
1D	1420/0006Z		Washer, M6			6
1E	1315/3210Z		Bolt			6
2A	331/46229		Bracket, mounting, receiver/drier			1
2B	821/00264		Clamp, exhaust D=79			
2C	30/925633		Drier, receiver			1
3A	649/51953		Hose, cond to comp 1525mm			1
3B	649/51954		Hose, comp 1200mm			1
3C	649/51626		Hose, aircon, evap-rec/ drier			1
3D	649/51955		Hose, rec.drier 2000mm			
5	320/08562		Compressor, air conditioning, 12v	see section V for installation		1
6	647/12902		Tube, spiral guard, 1000mm long			2
7	1420/0007Z		Washer, plain, M8			10
8	1315/0307Z		Screw, M8 X 25			6
9	821/00214		Clamp, Base			
10	821/00213		Clamp, Top			1
11	821/00215		Insert, Clamp			1

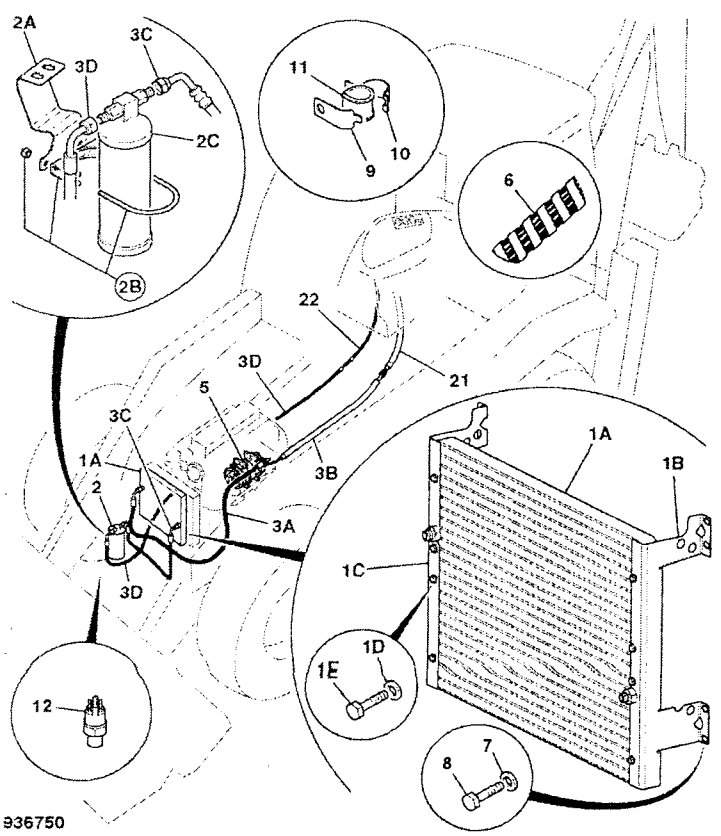

ITEM	PART NO	CHANGE NO	DESCRIPTION	REMARKS	USAGE CODE	QT
12	701/58726		Switch, Binary			
21	649/51389		Hose			1
22	649/51390		Hose			1

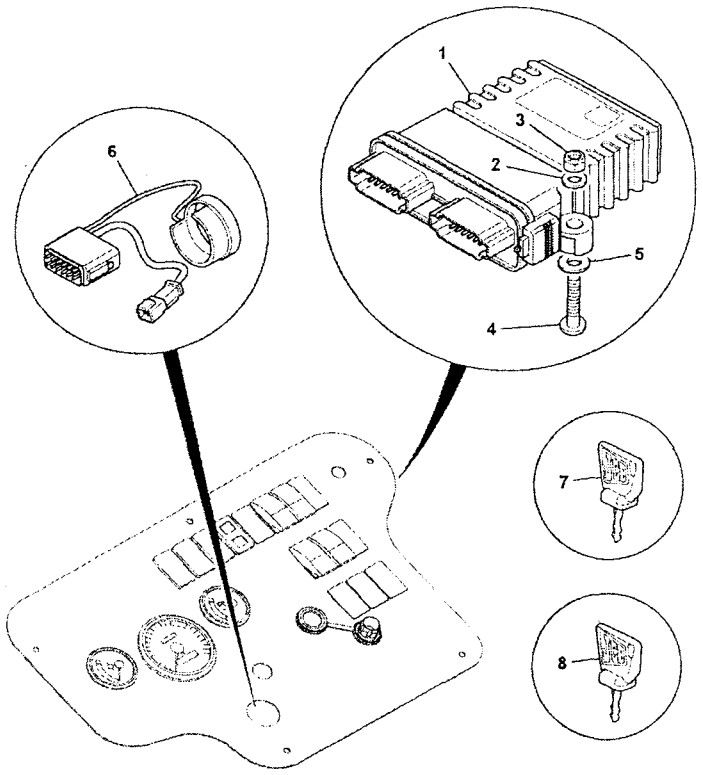

942040

	FROM	TO	FROM	TO
3C PLUS				
3C 14				

ITEM	PART NO	CHANGE NO	DESCRIPTION	REMARKS	USAGE CODE	QTY
1	332/C5822		Sensor, Immobiliser ECU			1
2	1420/0006D		Washer, M6 plain			2
3	1370/0103D		Nut, M6 lock			2
4	826/11692		Screw, Torx M6x35			2
5	1413/0001		Washer			2
6	332/C6666		Aerial, Immobiliser Antenna			1
7	332/C7608		Key, Transponder, Black			2
8	332/C7763		Key, Transponder, Red, Master			1

D

- ● D1 CONTROLS, MACHINE
- D2 CONTROLS, THROTTLE
- D3 COLUMN, STEERING

ENGLISH

D1-1-31 CONTROLS, LOADER, LOADER LIFT, SHOVEL
D1-1-51 CONTROLS, LOADER, AUXILIARY, OPTIONAL
D1-2-1 SEAL, EXCAVATOR CONTROLS
D1-2-10 CONTROLS, EXCAVATOR, & STABILISER
D1-3-20 CONTROLS, AUXILIARY VALVE, BACKHOE, OPTIONAL
D1-4-11 CONTROL, SHOVEL RESET
D1-6-1 CONTROLS, LEVER, IN CAB BOOM LOCK
D1-7-2 CONTROL KNOB, LOADER VALVE, SINGLE SWITCH
D1-20-1 CONTROLS, BRAKE PEDAL
D1-21-10 CONTROL, PARKING BRAKE
D1-24-10 CONTROL, GEAR CHANGE

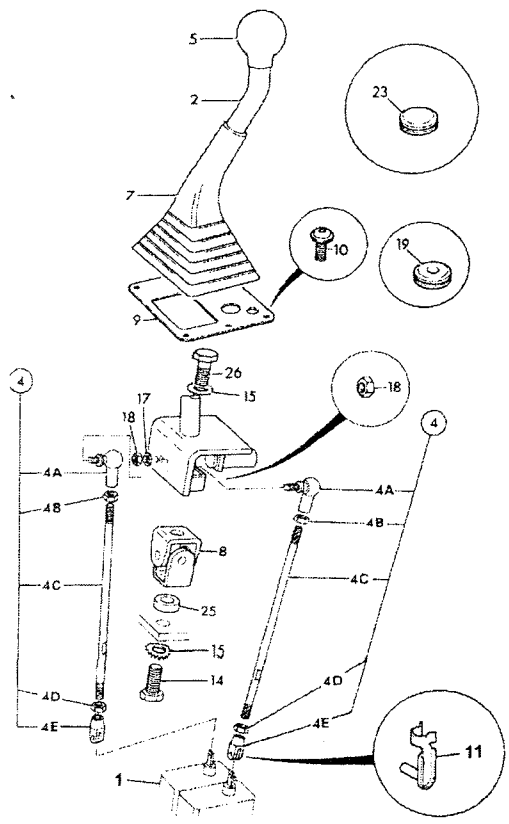

308442

	FROM	TO	FROM	TO
3C PLUS				
3C 14				

ITEM	PART NO	CHANGE NO	DESCRIPTION	REMARKS	USAGE CODE	QTY
1	.		'See Remark'	Valve, see index E3		1
2	125/00446		Lever, loader control			1
4	913/10060		Rod, control assembly, 266mm long			
	331/11267		Rod, control assembly, 270mm long			
4A	123/08002		:Joint, ball, M8 right hand			
4B	1370/0202Z		:Nut, M8			1
4C	.		:'See Remark'	Control rod, NSP		1
4D	826/01108		:Nut, M8 LH thin			
4E	913/02903		Clevis, fork (6mm hole)			1
5	.		'See Remark'	Control knob see index D1		1
7	263/05406		Gaiter, control, single lever			1
8	116/00416		Joint, universal			1
9	141/01473		Plate, gaiter retaining			1
10	826/01768		Screw, M6x25mm			5
10A	826/01232		Nut, M6 jack			5
11	913/00031		Pin, spring,6mm clevis			2
14	1305/0404Z		Bolt			1
15	1417/0014Z		Washer, star			2
17	1420/0007Z		Washer, plain, M8			1
18	1370/0203Z		Nut, self lock, M8			2

D1-1-31 CONTROLS, LOADER, LOADER LIFT, SHOVEL

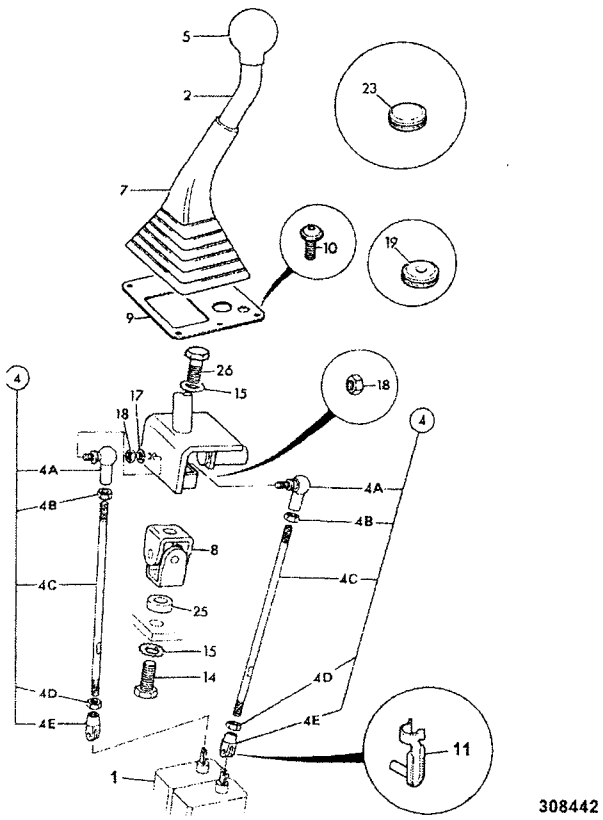

308442

ITEM	PART NO	CHANGE NO	DESCRIPTION	REMARKS	USAGE CODE	QTY
19	828/00325		Grommet, blind			1
23	2410/1312		Grommet			1
25	266/31702		Spacer			1
26	1305/0410Z		Bolt, 1/2" x 1.1/2" long			1
27	123/07672		Mat, soundproofing, loader valve			1

D1-1-51 CONTROLS, LOADER, AUXILIARY, OPTIONAL

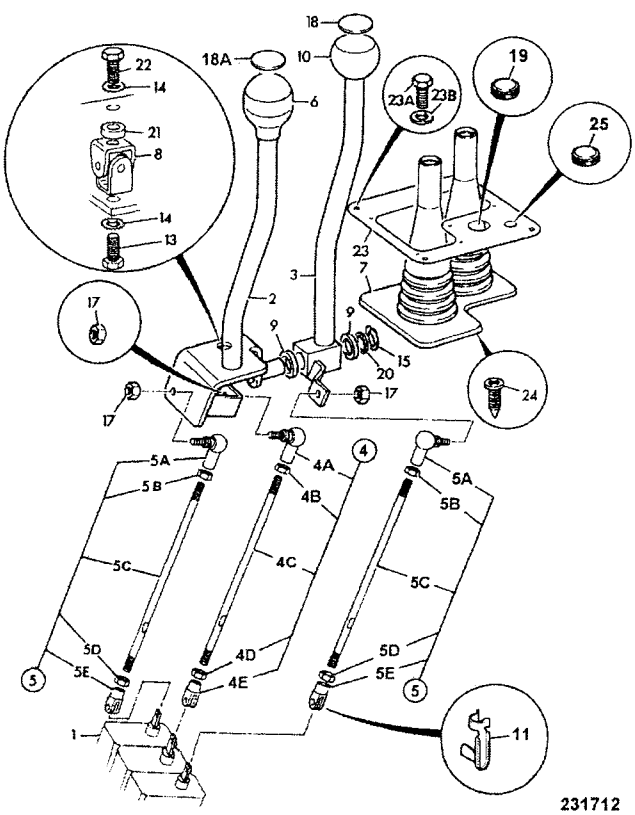

231712

	FROM	TO	FROM	TO
3C PLUS				
3C 14				

ITEM	PART NO	CHANGE NO	DESCRIPTION	REMARKS	USAGE CODE	QTY
1	.		'See Remark'	For Valve See E3		1
2	125/00446		Lever, loader control			1
3	331/33463		Lever, Auxiliary Control			1
4	913/10060		Rod, control assembly, 266mm long			1
4A	123/08002		:Joint, ball, M8 right hand			1
4B	1370/0202Z		:Nut, M8			1
4C	NSP		:None serviced part			1
4D	826/01108		:Nut, M8 LH thin			1
4E	913/02903		:Clevis, fork (6mm hole)			1
5	331/11267		Rod, control assembly, 270mm long			2
5A	123/08002		:Joint, ball, M8 right hand			1
5B	1370/0202Z		:Nut, M8			1
5C	NSP		:None serviced part			1
5D	826/01108		:Nut, M8 LH thin			1
5E	913/02903		:Clevis, fork (6mm hole)			1
6	.		'See Remark'	See D1-7-1		1
7	123/07602		Gaiter, control			1
8	116/00416		Joint, universal			1
9	831/00063		Bush			2
10	331/26977		Base, Knob			1
10A	331/30772		Knob, Top, Silver			1

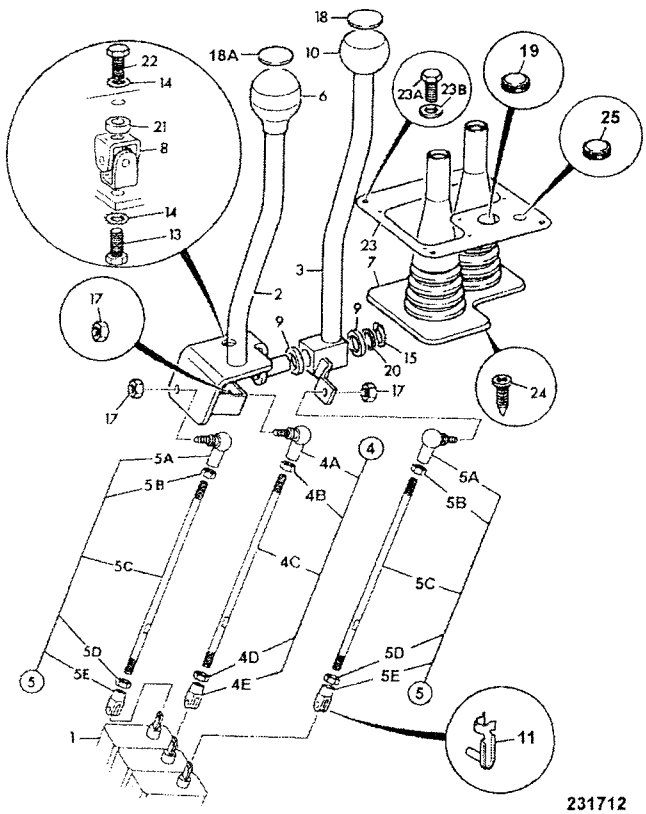

231712

ITEM	PART NO	CHANGE NO	DESCRIPTION	REMARKS	USAGE CODE	QT
10B	122/67459		Ring, tolerance			
10C	142/00610		Plug			1
11	913/00031		Pin, spring,6mm clevis			
13	1305/0404Z		Bolt			
14	1417/0014Z		Washer, star			2
15	2203/0022		Circlip			
17	1370/0203Z		Nut, self lock, M8			2
18	817/17772		Label, loader aux. clamshovel			1
18A	817/17771		Decal, loader lever, with float, reset	For Item 6		1
19	2410/1312		Grommet			1
20	1420/0011Z		Washer, M16 plain			
21	266/31702		Spacer			1
22	1305/0410Z		Bolt, 1/2" x 1.1/2" long			1
23	142/00540		Plate, gaiter retaining			
23A	826/01768		Screw, M6x25mm			5
24	142/00680		Fastener, fir tree			7
25	828/00325		Grommet, blind			1
26	826/01232		Nut, M6 jack			5

	FROM	TO	FROM	TO
3C PLUS				
3C 14				

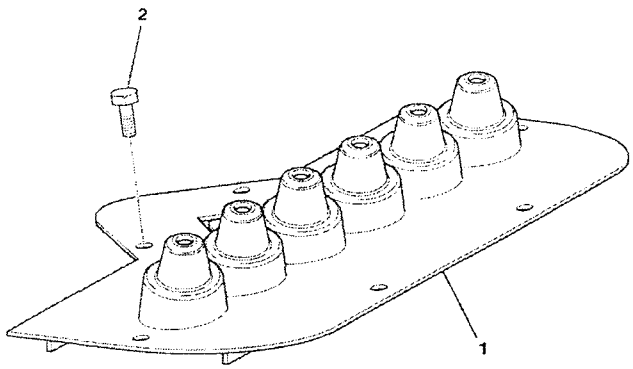

816790

ITEM	PART NO	CHANGE NO	DESCRIPTION	REMARKS	USAGE CODE	QTY
1	123/04371		Seal, excavator controls			1
2	826/00687		Screw			6

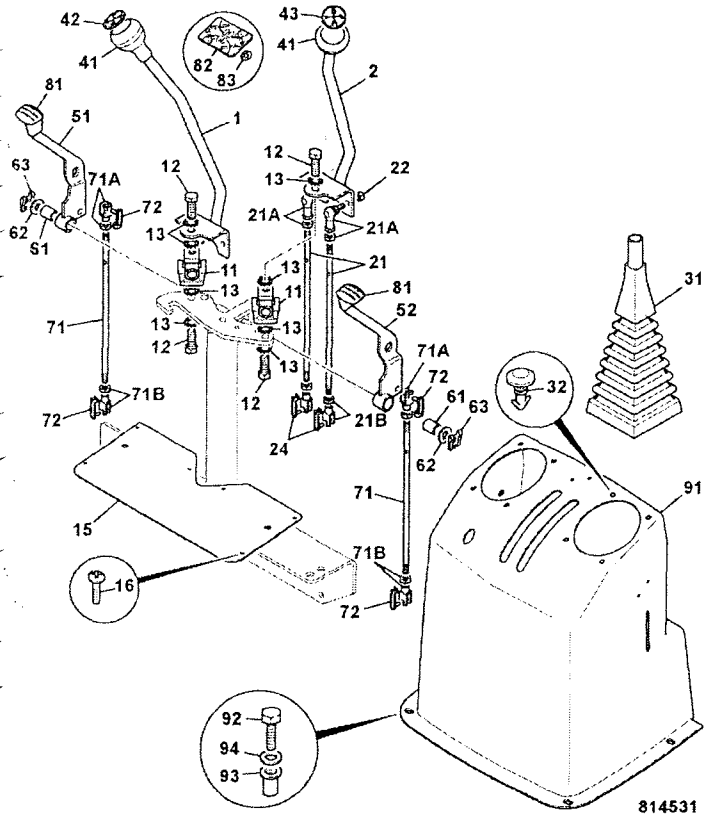

	FROM	TO	FROM	TO
3C PLUS				
3C 14				

ITEM	PART NO	CHANGE NO	DESCRIPTION	REMARKS	USAGE CODE	QTY
1	125/92000		Lever, excavator control, left hand + pattern			1
2	125/92100		Lever, excavator control, right hand + pattern			1
11	116/00416		Joint, universal			2
12	1305/0404Z		Bolt			4
13	1417/0014Z		Washer, star			8
15	128/10925		Plate, access, excavator, 214e as supplied			1
16	1430/1303		Screw			4
21	331/11275		Rod, control assembly, 343mm long			4
21A	123/08002		:Joint, ball, M8 right hand			1
	1370/0202D		:Nut, thin			1
21B	913/02601		:Clevis, fork (8mm hole)			1
	826/01108		:Nut, M8 LH thin			1
22	1370/0203Z		Nut, self lock, M8			4
24	123/07389		Pin, spring,8mm clevis			4
31	123/04714		Gaiter, excavator control			2
32	826/00959		Fastener, drive, yellow			8
41	128/12635		Knob, assembly			2
42	817/17773		Decal, LEFT HAND CONTROL, JCB & SAE			1

D1-2-10 CONTROLS, EXCAVATOR, & STABILISER

9812/0080U
ISSUE 1

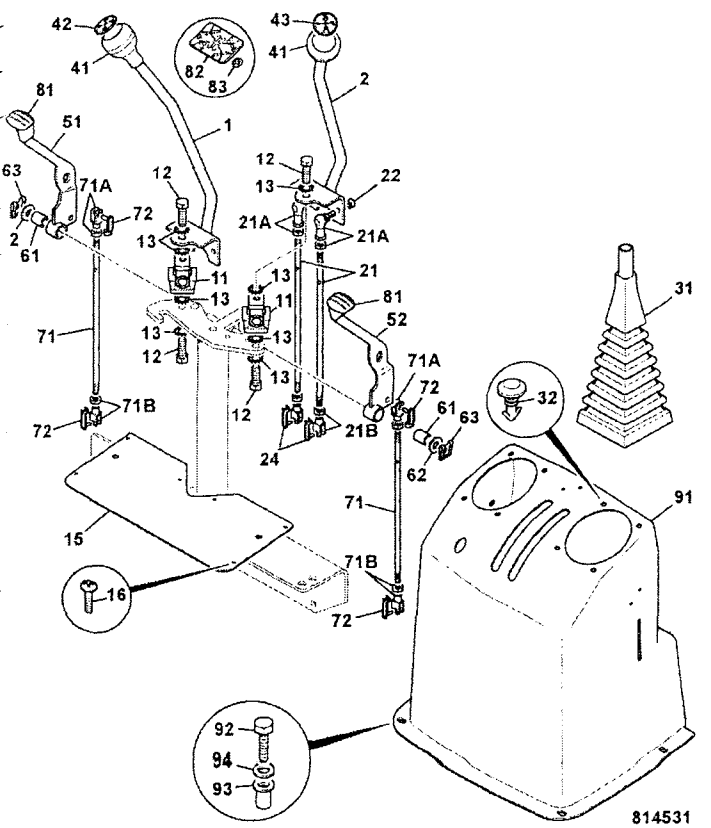

ITEM	PART NO	CHANGE NO	DESCRIPTION	REMARKS	USAGE CODE	QTY
43	817/17774		Decal, RIGHT HAND CONTROL, JCB & SAE			1
51	331/46281		Lever, stabiliser, left hand			1
52	331/46282		Lever, stabiliser, right hand			1
61	831/00098		Bearing			2
62	1420/0008Z		Washer, Plain M10			2
63	913/00026		Clip, retaining			2
71	123/07395		Rod, stabiliser control			2
71A	913/01801		:Clevis, M8			1
	1370/0202D		:Nut, thin			1
71B	913/02601		:Clevis, fork (8mm hole)			1
	826/01108		:Nut, M8 LH thin			1
72	123/07389		Pin, spring,8mm clevis			4
81	331/30884		Knob, throttle/, stabiliser control			2
82	817/17770		Decal, stabiliser control			1
83	826/00711		Washer, M4'starloc'			2
91	331/27759		Cover, excavator			1
92	1315/0207Z		Screw, M6 x 25mm long			4
93	826/01101		Nut, rivet,M6 open ended, for 3 to 5.5mm plt			2
94	823/00384		Washer			4

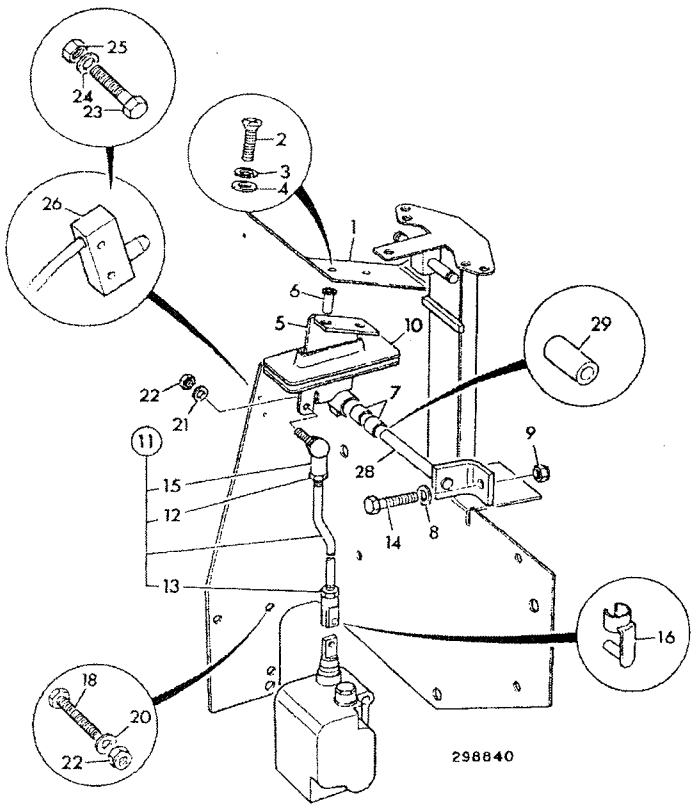

	FROM	TO	FROM	TO
3C PLUS				
3C 14				

ITEM	PART NO	CHANGE NO	DESCRIPTION	REMARKS	USAGE CODE	QTY
1	123/06353		Plate, aux pedal			1
2	826/01591		Screw			2
3	1425/0006Z		Washer, Spring			2
4	823/00573		Washer			2
5	128/14679		Pivot, aux. pedal			1
6	826/01101		:Nut, rivet,M6 open ended, for 3 to 5.5mm plt			2
7	831/00096		:Bearing			2
8	1420/0008Z		Washer, Plain M10			1
9	1370/0303Z		Nut, lock, M10			3
10	123/04384		Seal, aux pedal			1
11	913/10303		Rod, control assembly			1
12	1370/0202Z		:Nut, M8			1
13	913/01108		:Nut, left hand thread			1
14	913/02601		:Clevis, fork (8mm hole)			1
15	123/08002		:Joint, ball, M8 right hand			1
16	123/07389		Pin, spring,8mm clevis			1
18	1315/3410Z		Bolt, M10 x 40			2
20	1420/0008Z		Washer, Plain M10			2
21	1418/0011Z		Washer, lock			3
22	1370/0303Z		Nut, lock, M10			3
23	.		'See Remark'	not fitted		2
24	.		'See Remark'	not fitted		2

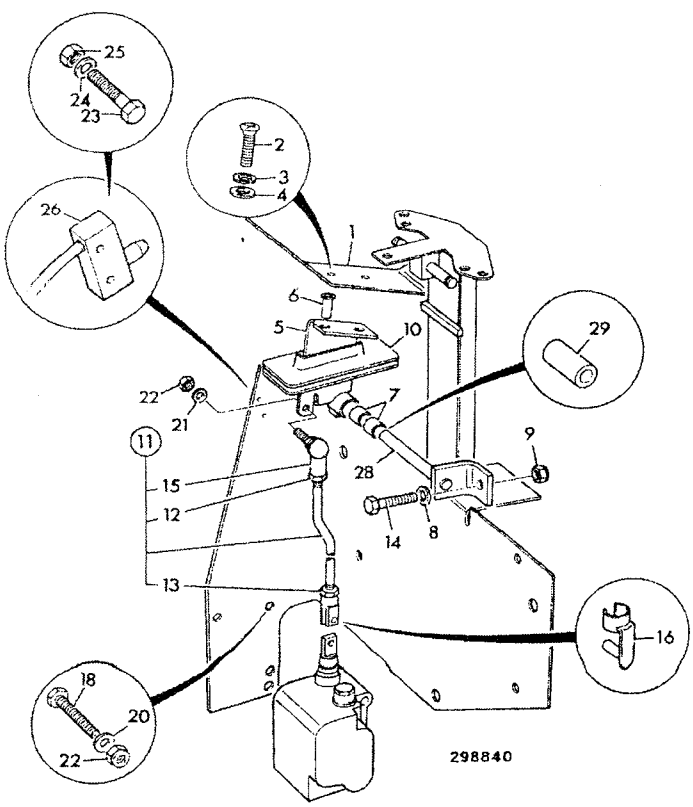

ITEM	PART NO	CHANGE NO	DESCRIPTION	REMARKS	USAGE CODE	QTY
25	.		'See Remark'	not fitted		2
26	.		'See Remark'	not fitted		1
28	123/07391		Bracket, pivot			1
29	123/07392		Spacer			1

D1-4-11 CONTROL, SHOVEL RESET

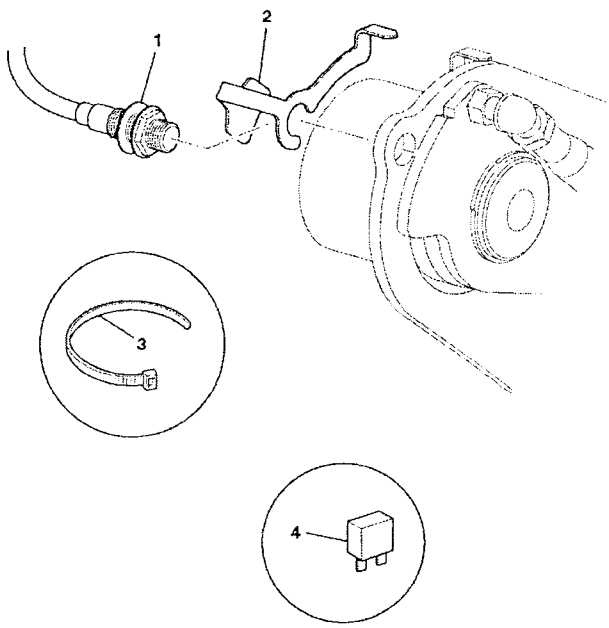

788270

	FROM	TO	FROM	TO
3C PLUS				
3C 14				

ITEM	PART NO	CHANGE NO	DESCRIPTION	REMARKS	USAGE CODE	QTY
1	701/80537		Sensor, shovel reset			1
2	331/52128		Bracket, level indicator			1
3	826/01144		Tie, cable, 200mm long	attach harness to loader pipes		5
4	716/30149		Relay, 12v micro	fit to fusebox		1
5	721/11412		Harness, link	if fitted- main harness to loader valve		1

D1-6-1 CONTROLS, LEVER, IN CAB BOOM LOCK

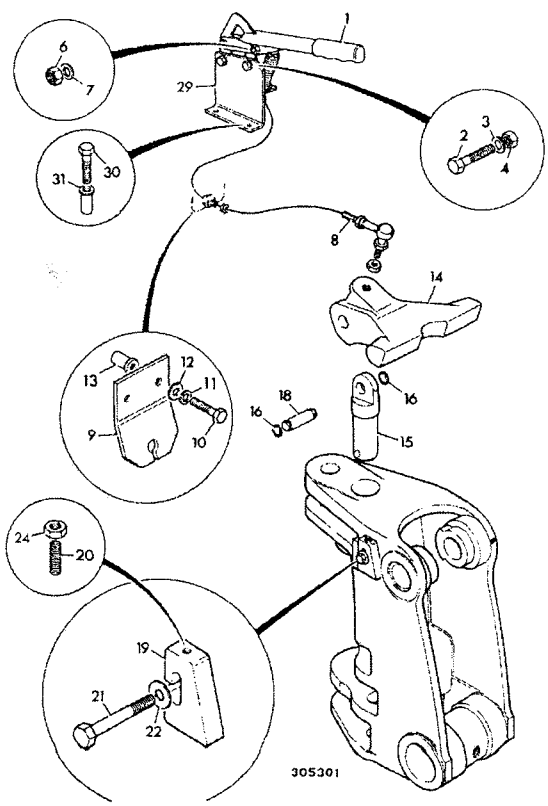

	FROM	TO	FROM	TO
3C PLUS				
3C 14				

ITEM	PART NO	CHANGE NO	DESCRIPTION	REMARKS	USAGE CODE	QTY
1	123/05234		Lever, boomlock, red grip			1
2	1315/0307Z		Screw, M8 X 25			2
3	1411/0003Z		Washer, medium			2
4	1370/0203Z		Nut, self lock, M8			2
6	913/05903		Pin, clevis			1
7	913/00005		Clip, clevis			1
8	910/48400		Cable, assembly, boomlock centremount			1
8A	123/07652		Joint, ball end			1
9	331/30856		Bracket, reaction			1
10	1315/0307Z		Screw, M8 X 25			2
11	1425/0007Z		Washer, spring			2
12	1420/0007Z		Washer, plain, M8			2
13	826/01103		Nut, rivet,M8 open ended			2
14	123/05862	Superseded	Casting, boom lock, 14'0 (Yellow)			1
	332/C1897		Casting, boom lock			1
15	913/10079		Pin, kingpost top, centremount			1
16	2203/0035		Circlip			2
18	811/70099		Pin, boomlock			1
19	123/05236		Plate, boom stop			1
20	1390/0412Z		Screw, grub, M10x50 long			1

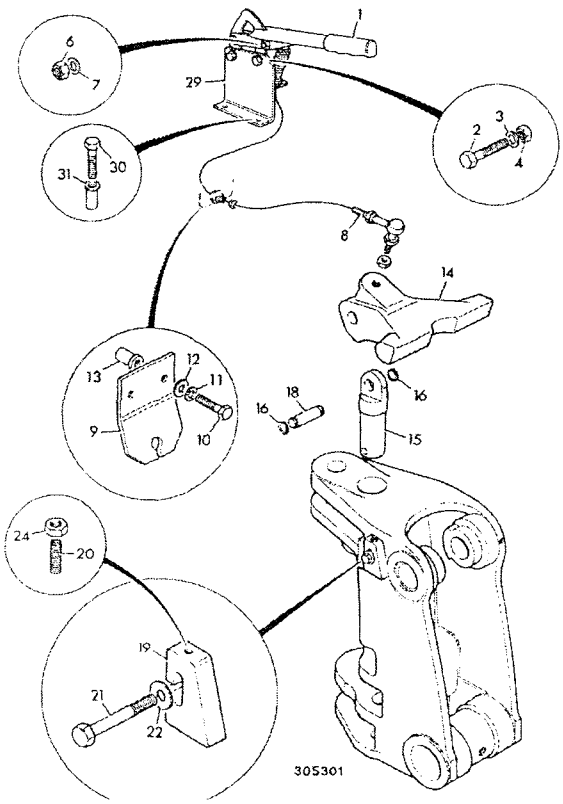

ITEM	PART NO	CHANGE NO	DESCRIPTION	REMARKS	USAGE CODE	QTY
21	1315/3814Z		Bolt, M20 x 60mm			
22	823/00491		Washer, spacer			
24	1370/0302Z		Nut, lock			
26	1450/0001		Nipple, grease, straight, 1/8 BSP	Use with item 15, 18		
27	835/00017		Cap, grease nipple			
28	835/00166		Plug			
29	331/14484		Bracket, boomlock, cable reaction			
30	.		'See Remark'			
31	.		'See Remark'			

	FROM	TO	FROM	TO
3C PLUS				
3C 14				

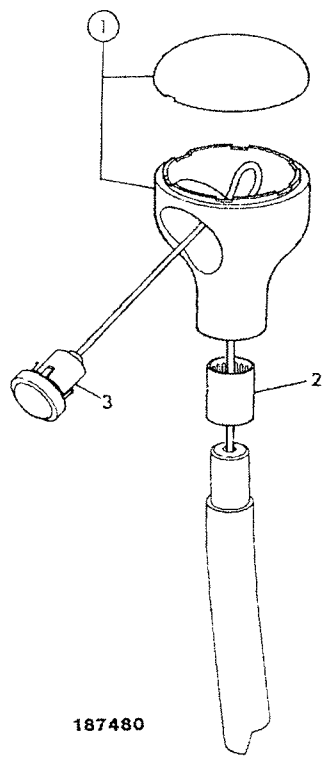

ITEM	PART NO	CHANGE NO	DESCRIPTION	REMARKS	USAGE CODE	QTY
1	128/13807		Knob, assembly 1-switch, as supplied			
2	122/67459		:Ring, tolerance			
3	701/42600		:Switch, push button black, with microswitch			
4	817/17771		Decal, loader lever, with float, reset	insert into top of knob		

D1-20-1 CONTROLS, BRAKE PEDAL

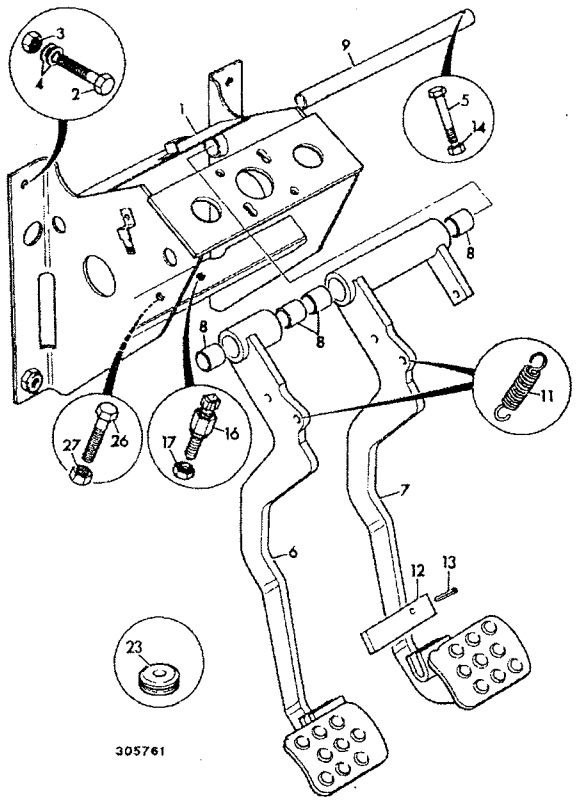

	FROM	TO	FROM	TO
3C PLUS				
3C 14				

ITEM	PART NO	CHANGE NO	DESCRIPTION	REMARKS	USAGE CODE	QTY
1	331/16346		Bracket, carrier brake pedal, 214e & 214Se			1
2	1315/0407Z		Bolt, M10x25			4
3	1370/0303Z		Nut, lock, M10			4
4	1420/0008Z		Washer, Plain M10			4
5	1315/3212Z		Bolt			1
6	128/16819		Pedal, left hand brake			1
7	128/16820		Pedal, right hand brake			1
8	831/00065		:Bush	Part of item 6 & 7		4
9	123/04301		Pin, pivot, brake pedal			1
10	1420/0012Z		Washer	between items 6 & 7		2
11	814/10122		Spring, tension			2
12	331/31649		Plate, pedal lock			1
13	2102/0615		Pin, tension			1
14	1370/0103Z		Nut, Self lock, M6			1
16	701/80266		Switch, footbrake, white top			1
17	1340/0402Z		Nut			1
23	2410/1113		Grommet			1
26	1315/0410Z		Bolt, M10 x 40			1
27	1370/0302Z		Nut, lock			1

D1-21-10 CONTROL, PARKING BRAKE

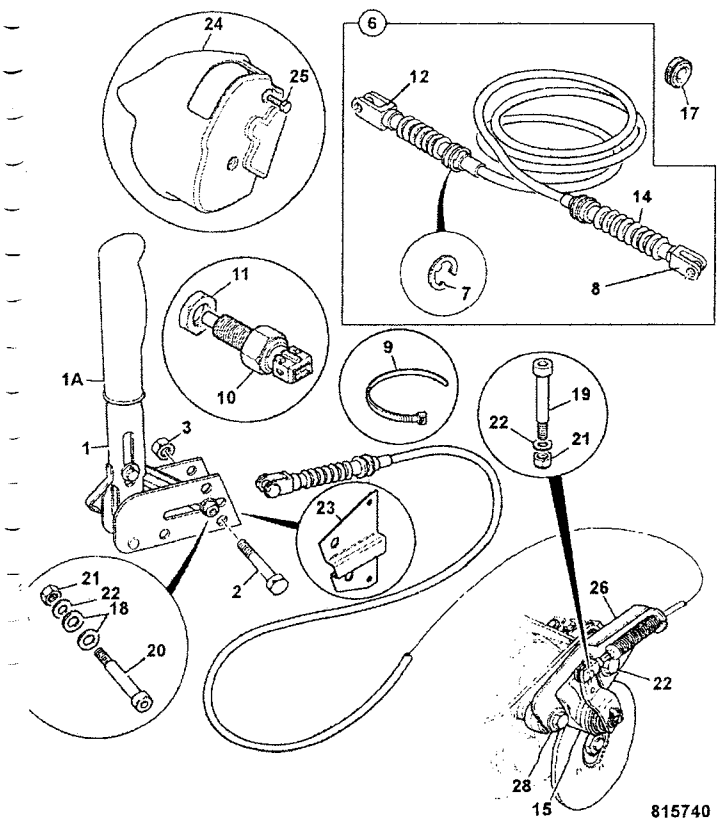

	FROM	TO	FROM	TO
3C PLUS				
3C 14				

ITEM	PART NO	CHANGE NO	DESCRIPTION	REMARKS	USAGE CODE	QTY
1	15/914100		Lever, parking brake			1
1A	331/16848		Grip, hand, red			1
2	1315/3312Z		Bolt			2
3	1370/0203Z		Nut, self lock, M8			2
5	1420/0007Z		Washer, plain, M8			2
6	910/60253		Cable, parkbrake			1
7	826/00627		:Clip, 'E'			2
8	NSP		:None serviced part			1
9	121/77603		Tie, cable, L=300mm x W=7.6mm			1
10	701/72500		Switch, red top			1
11	1340/0402Z		Nut			2
12	NSP		:None serviced part			1
14	NSP		:None serviced part			2
15	.		:'See Remark'	Parking brake, See page G1-3-1		1
17	123/04561		Grommet, cable/harness			1
18	1420/0007Z		Washer, plain, M8			2
19	826/01597		Screw, shoulder, 8 x 20 x M6			1
20	826/01596		Capscrew, 40mm long			1
21	1370/0103Z		Nut, Self lock, M6			2
22	1420/0006Z		Washer, M6			2

D1-21-10 CONTROL, PARKING BRAKE

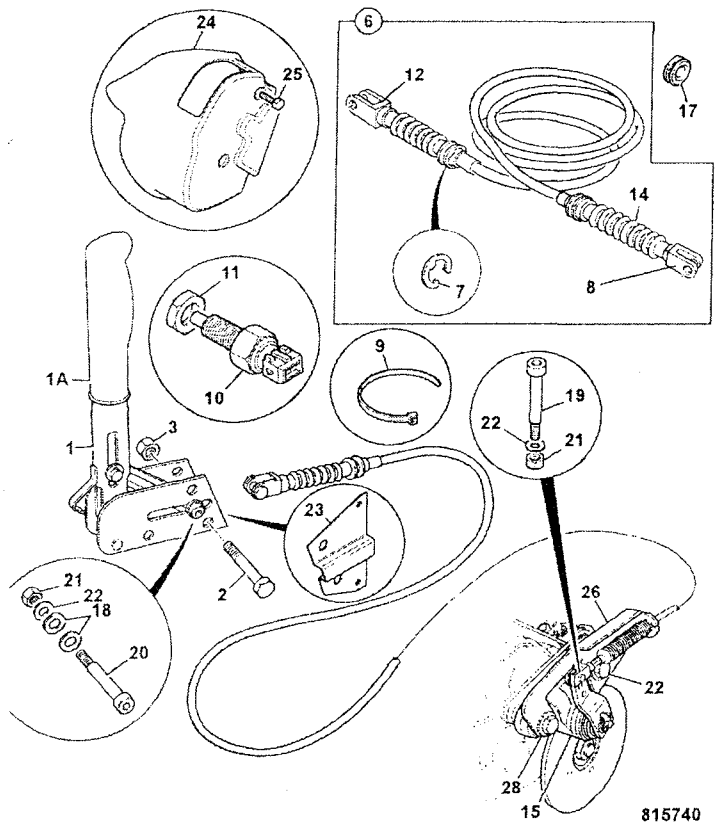

ITEM	PART NO	CHANGE NO	DESCRIPTION	REMARKS	USAGE CODE	QTY
23	123/07792		Bracket, brake lever cover			1
24	123/07793		Cover, brake lever			1
25	826/01521		Screw, M6 X 20			1
26	331/58423		Bracket, reaction, parkbrake			1
27	826/10526		Bolt			2
28	823/00603		Washer, hardened, M16			2

D1-24-10 CONTROL, GEAR CHANGE

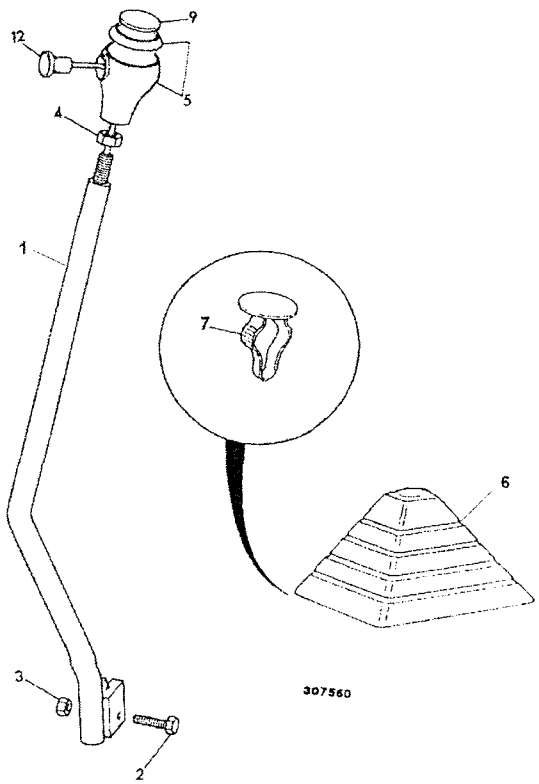

	FROM	TO	FROM	TO
3C PLUS				
3C 14				

ITEM	PART NO	CHANGE NO	DESCRIPTION	REMARKS	USAGE CODE	QTY
1	123/07588		Lever, gear			1
2	1315/3411Z		Bolt, M10 x 45mm			1
3	1370/0303Z		Nut, lock, M10			1
4	1340/0602Z		Nut			1
5	128/12634		Knob, assembly			1
5B	331/30772		:Knob, Top, Silver			1
6	122/67450		Gaiter			1
7	826/00959		Fastener, drive, yellow			4
9	817/17698		Decal, gearlever knob, 4 speed			1
12	701/49800		Switch, micro			1

D

D1 CONTROLS, MACHINE
● D2 CONTROLS, THROTTLE
D3 COLUMN, STEERING

ENGLISH

D2-1-1 THROTTLE CONTROL, P4001/P400T
D2-2-1 THROTTLE CONTROL, JCB444

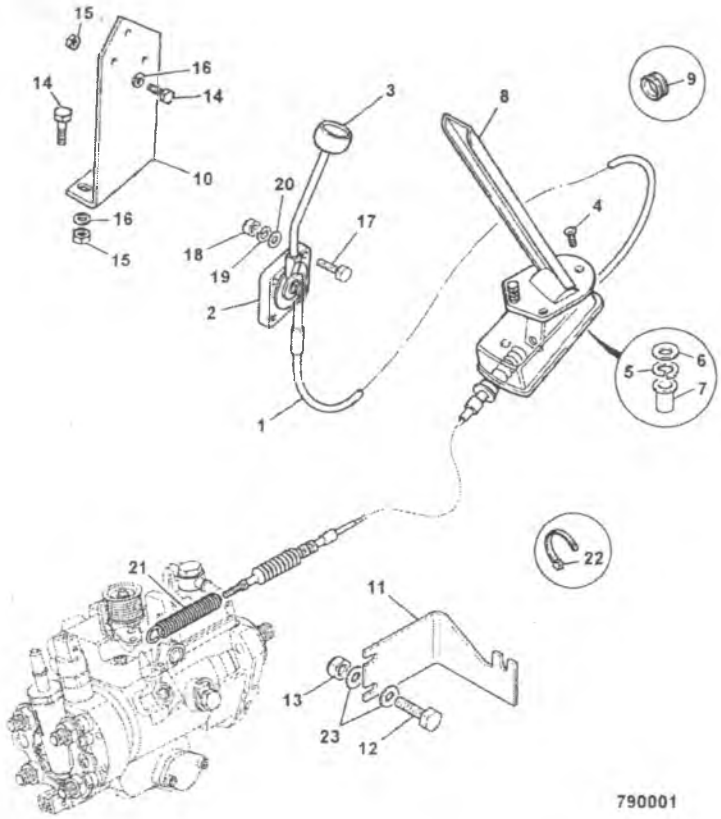

	FROM	TO	FROM	TO
3C PLUS				
3C 14				

ITEM	PART NO	CHANGE NO	DESCRIPTION	REMARKS	USAGE CODE	QTY
1	910/60176		Cable, throttle control, assembly			1
2	910/52501		Lever, assembly, throttle control			1
3	910/52502		Knob, red, throttle lever			1
4	826/01196		Screw, taptite			1
5	1425/0005Z		Washer, spring, M5			1
6	1420/0005Z		Washer, M5			3
7	1370/0001Z		Nut, M5-8			1
8	123/07303		Pedal, assembly, throttle control			1
9	2410/0213		Grommet			1
10	142/00773		Bracket, mounting, hand throttle			1
11	331/67913		Bracket, throttle, international engine			1
12	1315/0205D		Setscrew, M6 x 20mm long			2
13	1370/0103D		Nut, M6 lock			2
14	1315/0205Z		Bolt			6
15	1370/0103Z		Nut, Self lock, M6			4
16	1420/0006Z		Washer, M6			4
17	826/01218		Screw, raised c/sk. head			2
18	1370/0001Z		Nut, M5-8			2

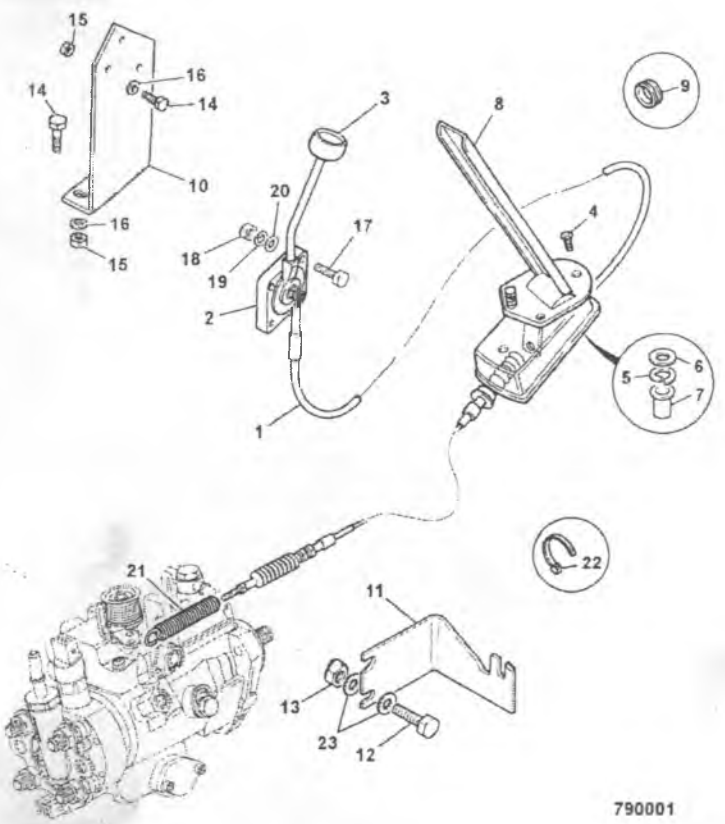

ITEM	PART NO	CHANGE NO	DESCRIPTION	REMARKS	USAGE CODE	QTY
19	1425/0006Z		Washer, Spring			3
20	1420/0006D		Washer, M6 plain			3
21	814/10179		Spring, overload			1
22	826/01144		Tie, cable, 200mm long			3
23	1420/0006D		Washer, M6 plain			4

D2-2-1 THROTTLE CONTROL, JCB444

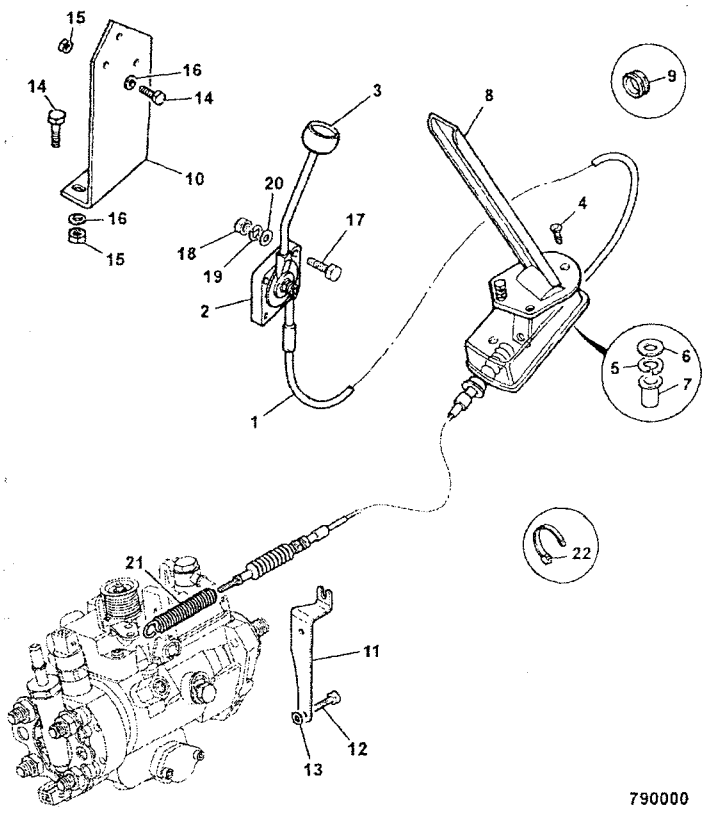

790000

	FROM	TO	FROM	TO
3C PLUS				
3C 14				

ITEM	PART NO	CHANGE NO	DESCRIPTION	REMARKS	USAGE CODE	QTY
1	910/60176		Cable, throttle control, assembly			1
2	910/52501		Lever, assembly, throttle control			1
3	910/52502		Knob, red, throttle lever			1
4	826/01196		Screw, taptite			3
5	1425/0006Z		Washer, Spring			3
6	1420/0006D		Washer, M6 plain			3
7	826/01101		Nut, rivet,M6 open ended, for 3 to 5.5mm plt			3
8	123/07303		Pedal, assembly, throttle control			1
9	2410/0013		Grommet			1
10	142/00773		Bracket, mounting, hand throttle			1
11	331/45385		Bracket, throttle reaction			1
12	1315/0307Z		Screw, M8 X 25			2
13	1420/0007Z		Washer, plain, M8			2
14	1315/0205Z		Bolt			6
15	1370/0103Z		Nut, Self lock, M6			6
16	1420/0006Z		Washer, M6			6
17	826/01218		Screw, raised c/sk. head			3
18	1370/0001Z		Nut, M5-8			3
19	1425/0006Z		Washer, Spring			3

D2-2-1 THROTTLE CONTROL, JCB444
9812/0080U
ISSUE 1

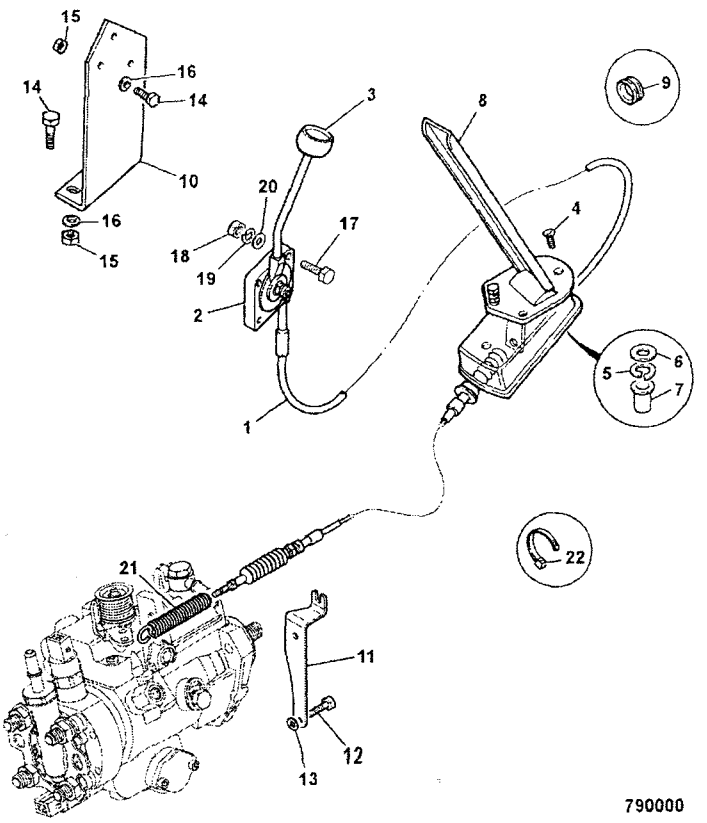

790000

ITEM	PART NO	CHANGE NO	DESCRIPTION	REMARKS	USAGE CODE	QTY
20	1420/0006D		Washer, M6 plain			3
21	814/10179		Spring, overload			1
22	826/01144		Tie, cable, 200mm long			3

D

D1 CONTROLS, MACHINE
D2 CONTROLS, THROTTLE
● D3 COLUMN, STEERING

ENGLISH

D3-1-11 STEERING COLUMN

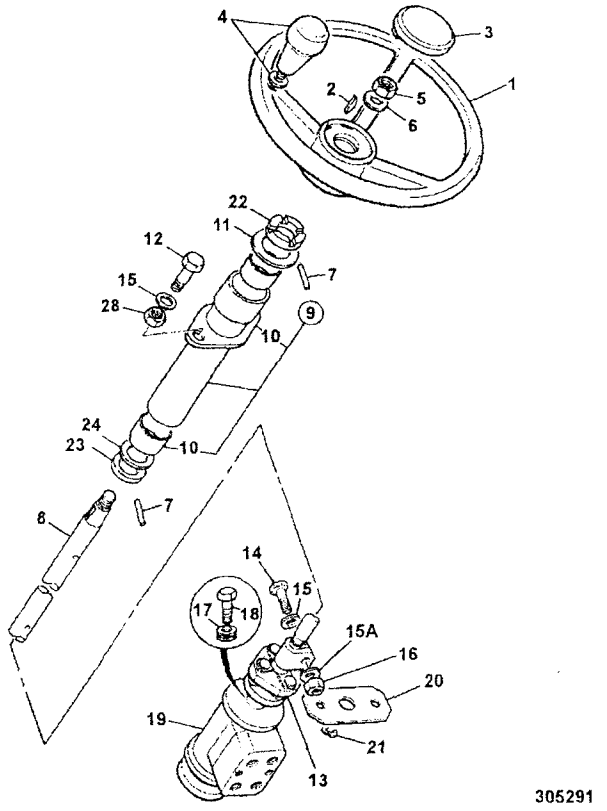

305291

	FROM	TO	FROM	TO
3C PLUS				
3C 14				

ITEM	PART NO	CHANGE NO	DESCRIPTION	REMARKS	USAGE CODE	QTY
1	331/27410		Wheel, steering			1
2	G18/2		Key			1
3	331/27487		Cap, steering wheel			1
4	331/27411		Knob, spinner	Optional		1
4A	331/27488		Plug, blanking			1
5	1340/0602Z		Nut			1
6	1411/0007Z		Washer			1
7	2102/0417		Pin, tension			1
8	123/07285		Shaft, fixed steer column			1
9	126/00314		Column, steering outer			1
10	NSP		.None serviced part			2
11	1411/0009Z		Washer			1
12	1315/0408Z		Bolt, M10x30			2
13	331/36009		Coupling			1
14	1315/0310Z		Bolt, M8x40			2
15	1420/0008Z		Washer, Plain M10			2
15A	1420/0008Z		Washer, Plain M10			2
16	1370/0203Z		Nut, self lock, M8			2
17	255/35203		Insert, mounting			4
18	1315/3409Z		Bolt, M10 x 35			4
18A	1412/0004Z		Washer			2
19	.		'See Remark'	See frame E3-10-10		1

D3-1-11 STEERING COLUMN

9812/0080U
ISSUE 1

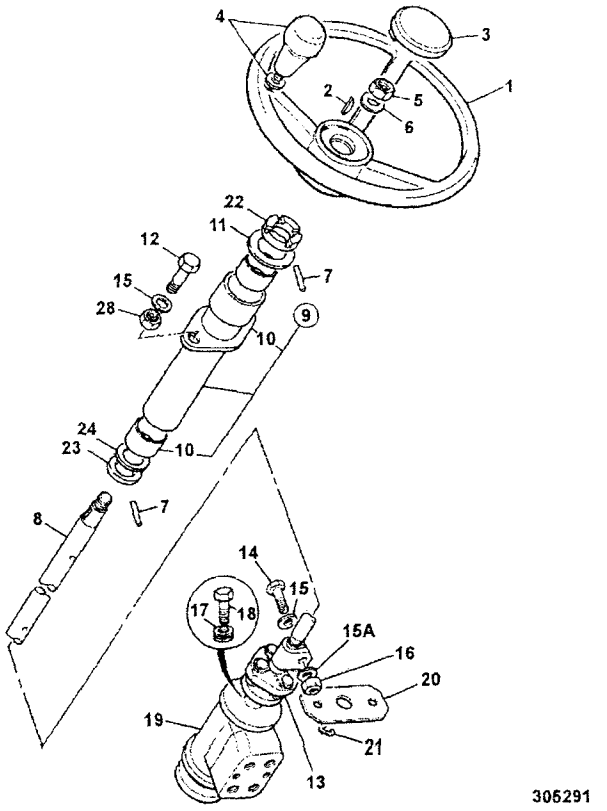

305291

ITEM	PART NO	CHANGE NO	DESCRIPTION	REMARKS	USAGE CODE	QTY
20	123/04752		Plate, retainer			1
21	821/00190		Clip, 'E'			1
22	831/00074		Bearing, thrust			1
23	1420/0012Z		Washer			1
24	823/00302		Washer, 2mm			1

E

- E1 HOSE & PIPEWORK
- E2 PUMP/MOTOR & PUMP DRIVE
- E3 VALVES & HYDRAULIC FILTERS
- E4 RAMS

ENGLISH

E1-1-11 HOSE AND PIPEWORK, LOADER VALVE TO, EXCAVATOR VALVE TO TANK
E1-1-15 HOSE AND PIPEWORK, LOFLO, HIGH PRESSURE CARRYOVER
E1-1-31 HOSE AND PIPEWORK, PUMP TO LOADER VALVE
E1-2-42 CIRCUIT, LOADER ARM
E1-3-40 CIRCUIT, AUXILIARY, LOADER, (3/8" BSP PIPWORK)
E1-4-12 CIRCUIT, COOLER, TRANSMISSION, 2 WHEEL STEER
E1-4-23 CIRCUIT, COOLER, HYDRAULIC OIL, 2 WHEEL STEER
E1-4-32 CIRCUIT, COOLER, HYDRAULIC OIL, 2 WHEEL STEER
E1-4-51 CIRCUIT, COOLERS, HYDRAULIC & TRANS, 2WS MANUAL TRANSMISSION
E1-4-95 CIRCUIT, COOLERS, HYDRAULIC & TRANS
E1-5-50 CIRCUIT, STEERING, 2WS 2WD
E1-5-60 CIRCUIT, STEERING, 2WS 4WD
E1-6-20 CIRCUIT, SLEW/SWING, CENTREMOUNT
E1-7-30 CIRCUIT, STABILISER, CENTREMOUNT
E1-8-10 CIRCUIT, BOOM RAM
E1-9-1 CIRCUIT, DIPPER RAM
E1-10-4 CIRCUIT, BUCKET RAM, MONO DIPPER
E1-10-13 CIRCUIT, BUCKET RAM, EXTRADIG DIPPER
E1-11-41 CIRCUIT, AUXILIARY, EXTENTION RAM, EXTRADIG DIPPER
E1-18-1 COOLER, COMBINATION, RADIATOR/HYDRAULIC, & TRANSMISSION, 2WS JCB DIESELMAX ENGINE
E1-18-11 COOLER, COMBINATION, RADIATOR/HYDRAULIC, & TRANSMISSION, 2WS INTERNATIONAL ENGINE
E1-18-51 COOLER, COMBINATION, RADIATOR/HYDRAULIC, & TRANSMISSION, NON CHARGED AIR COOLER
E1-21-2 CIRCUIT, ATTACHMENT, HAMMER
E1-27-20 BOOM RAM PIPEWORK

	FROM	TO	FROM	TO
3C PLUS				
3C 14				

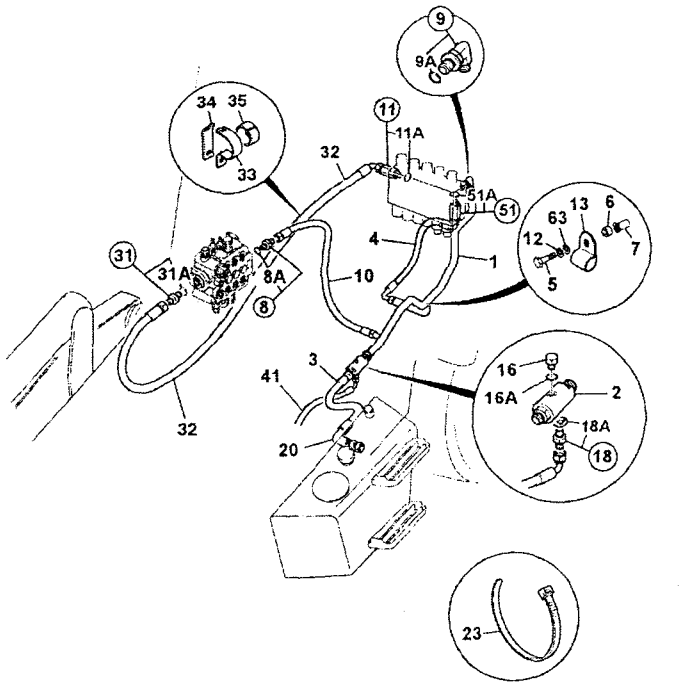

872850

ITEM	PART NO	CHANGE NO	DESCRIPTION	REMARKS	USAGE CODE	QTY
1	335/04512		Pipe, return,centremount			1
2	928/60149		Valve, dual check manifold, 2bar-2bar			1
3	637/31200		Hose, 1BSPx650, low pressure			1
4	629/80064		Hose, 3/4BSP x 480mm			1
5	1315/0412Z		Bolt, M10 x 1.5 x 50			2
6	829/31263		Spacer, 10.2x20x16long			2
7	826/01249		Nut, rivet M10 open end, for 6 to 8.5mm plate			2
8	1620/2056		Adapter			1
8A	2401/0508		:O Ring			1
9	1620/2060		Adapter, M/M			1
9A	2401/0510		:O Ring			1
10	614/80055		Hose			1
11	1620/2059		Adapter, 3/4"			1
11A	2401/0508		:O Ring			1
12	1420/0008Z		Washer, Plain M10			2
13	821/10423		Clamp, pipe			2
16	1745/0001		Plug, 7/16"UNF, o ring boss			1
16A	2401/0503		:O Ring			1
18	816/90007		Adapter, M/M			1
18A	2401/0506		:O Ring			1

E1-1-11 HOSE AND PIPEWORK, LOADER VALVE TO, EXCAVATOR VALVE TO TANK

9812/0080U
ISSUE 1

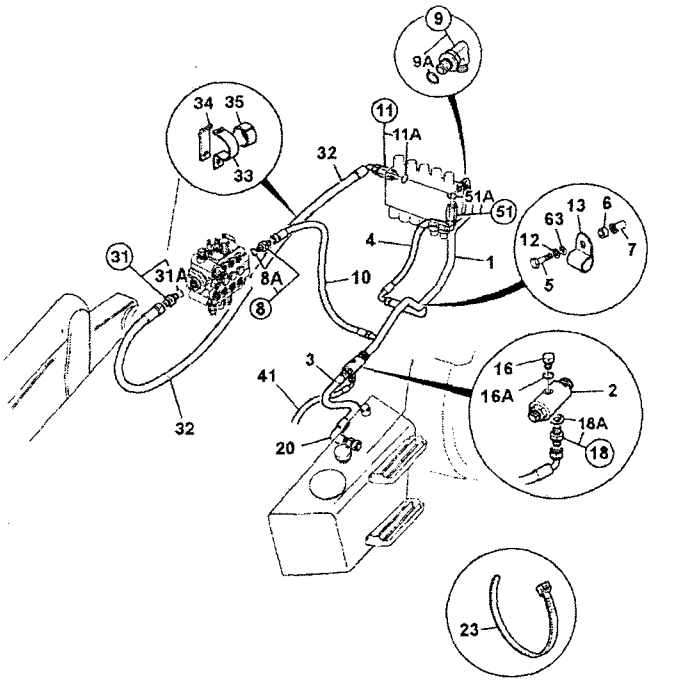

872850

ITEM	PART NO	CHANGE NO	DESCRIPTION	REMARKS	USAGE CODE	QTY
20	.		'See Remark'	not fitted		1
23	826/01453		Tie, cable, double head			2
31	1620/2059		Adapter, 3/4"			1
31A	2401/0508		.O Ring			1
32	615/48200		Hose			1
33	821/00183		Clamp, top			1
34	821/00184		Clamp, base			1
35	821/00185		Insert, clamp			1
41	649/51774		Hose, 5/8x3575mm long			1
51	1620/2059		Adapter, 3/4"			1
51A	2401/0508		:O Ring			1
60	816/90452		Adapter, elbow M/F 1"BSP			1
61	816/90467		Cap, blanking 1/2"BSP, female			1
62	816/90163		Adapter, Elbow M/F			1
63	1425/0008Z		Washer, Spring M10			2

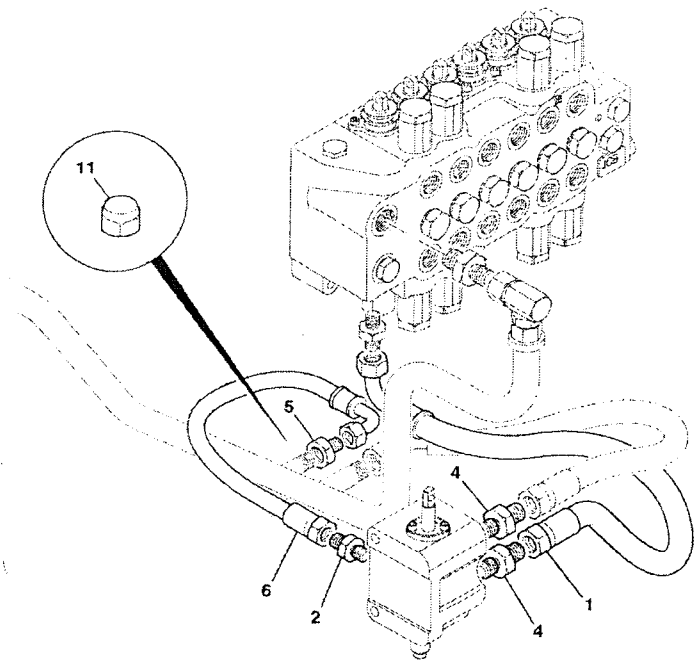

874050

	FROM	TO	FROM	TO
3C PLUS				
3C 14				

ITEM	PART NO	CHANGE NO	DESCRIPTION	REMARKS	USAGE CODE	QTY
1	629/80038		Hose, 3/4"BSP 780mm			1
2	1620/2056		Adapter			1
2A	2401/0507		:O Ring			1
4	1620/2058		Adapter, M/M			2
4A	2401/0507		:O Ring			1
5	816/90180		Adapter, M/F			1
6	614/20200		Hose			1

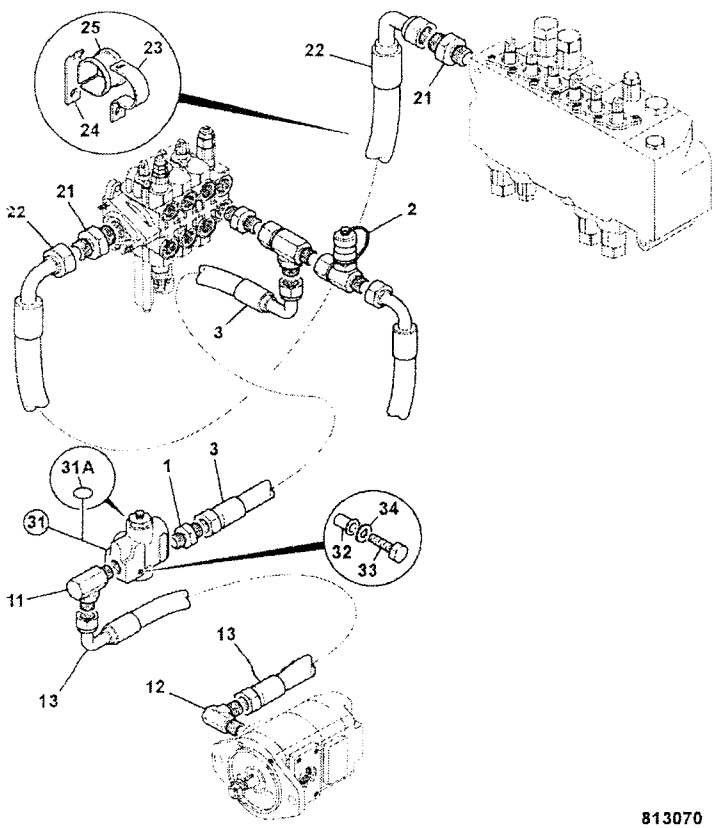

813070

	FROM	TO	FROM	TO
3C PLUS				
3C 14				

ITEM	PART NO	CHANGE NO	DESCRIPTION	REMARKS	USAGE CODE	QTY
1	1620/2056		Adapter			1
2	816/90427		Adapter, test point 5/8 BSP			1
3	614/80055		Hose			1
11	816/90460		Adapter, elbow M/M			1
12	816/90638		Adapter, elbow, with test point			1
13	614/80055		Hose			1
21	1620/2059		Adapter, 3/4"			2
22	615/48200		Hose			1
23	821/00183		Clamp, top			1
24	821/00184		Clamp, base			1
25	821/00185		Insert, clamp			1
31	35/901800		Valve, priority			1
31A	35/901701		:Kit-seal, priority valve			1
32	826/01106		Nut, rivet,M8			1
33	1315/3318Z		Bolt, M8x80mm Long			1
34	1420/0007Z		Washer, plain, M8			1

E1-2-42 CIRCUIT, LOADER ARM

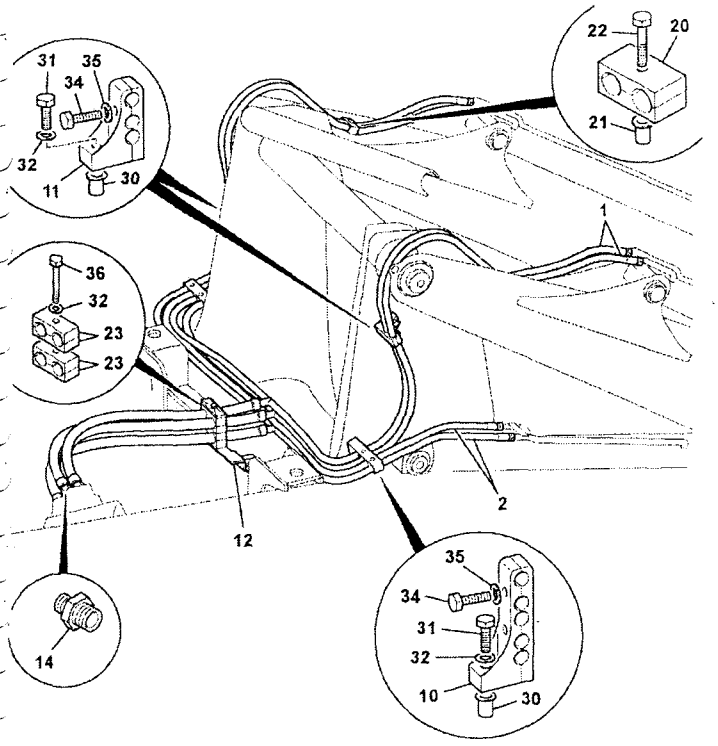

788211

	FROM	TO	FROM	TO
3C PLUS				
3C 14				

ITEM	PART NO	CHANGE NO	DESCRIPTION	REMARKS	USAGE CODE	QTY
1	629/80238		Hose, tee assembly			2
2	629/80237		Hose, tee assembly			2
10	821/10231		Clamp, assembly			2
11	821/10405		Clamp, hose			2
12	128/16844		Bracket, hose			1
12A	826/01249		Nut, rivet M10 open end, for 6 to 8.5mm plate			1
14	1620/2054		Adapter			4
20	821/10328		Clamp, twin pipe 18 dia			2
21	826/01106		Nut, rivet,M8			2
22	1315/3311Z		Bolt, M8 X 45			2
23	821/10431		Clamp, pair			2
30	826/01249		Nut, rivet M10 open end, for 6 to 8.5mm plate			4
31	1315/3412Z		Bolt			4
32	1420/0008Z		Washer, Plain M10			7
33	1315/0408Z		Bolt, M10x30			2
34	1315/0308Z		Screw, M8x30			6
35	1420/0007Z		Washer, plain, M8			8
36	1315/3420Z		Bolt, M10 X 100			1

E1-3-40 CIRCUIT, AUXILIARY, LOADER, (3/8" BSP PIPWORK)

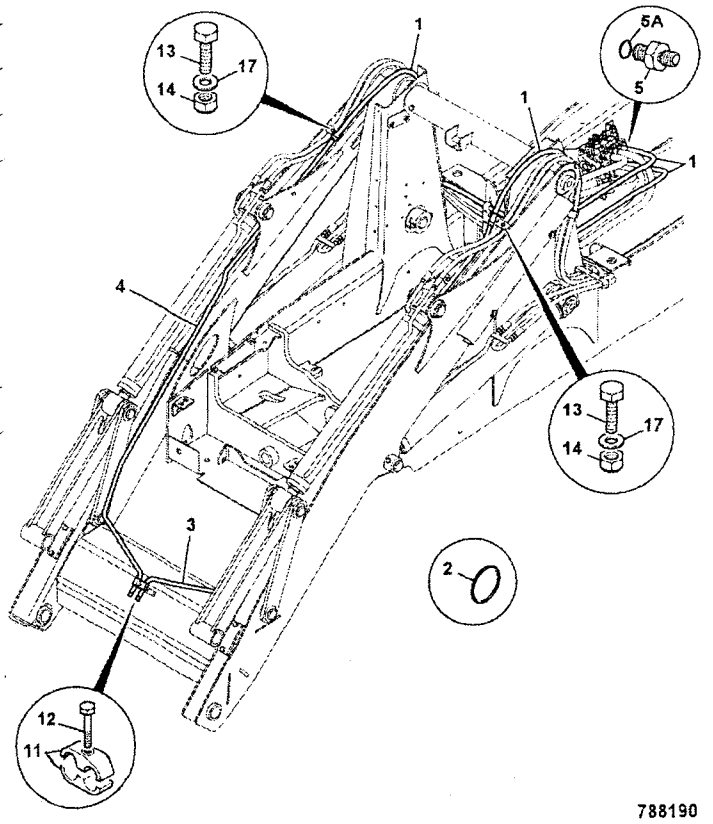

788190

	FROM	TO	FROM	TO
3C PLUS				
3C 14				

ITEM	PART NO	CHANGE NO	DESCRIPTION	REMARKS	USAGE CODE	QTY
1	629/80052		Hose			2
2	828/00135		O Ring			6
3	335/07401		Pipe, LH auxiliary, loader arms			1
4	335/07402		Pipe, RH auxiliary, loader arms			1
5	1620/2053		Adapter			2
5A	2401/0506		O Ring			1
11	821/10389		Clamp, pipe, 6x30x75			1
	829/31263		Spacer, 10.2x20x16long			1
12	1315/0408Z		Bolt, M10x30			1
13	1315/0308Z		Screw, M8x30			2
14	1370/0203Z		Nut, self lock, M8			2
17	1420/0007Z		Washer, plain, M8			2

E1-4-12 CIRCUIT, COOLER, TRANSMISSION, 2 WHEEL STEER

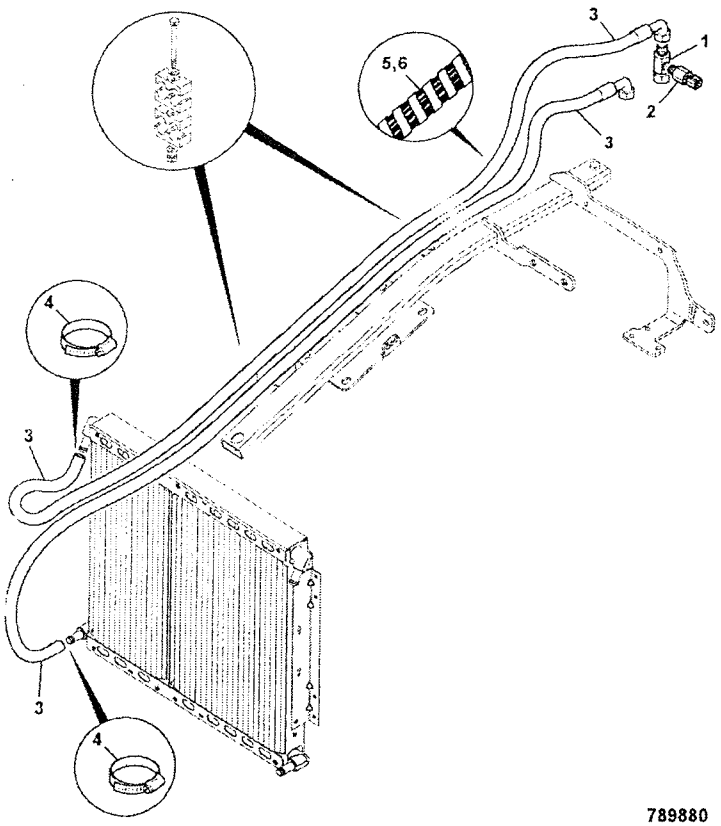

789880

	FROM	TO	FROM	TO
3C PLUS		M1002999		
3C 14		M1002999		

ITEM	PART NO	CHANGE NO	DESCRIPTION	REMARKS	USAGE CODE	QTY
0	.		'See Remark'	see index radiator fittings for centre beam		1
	.		'See Remark'	see frame E1-4-31 for clamps		
	.		'See Remark'	see frame E1-18-1 for cooler details		
1	816/90865		Adapter, M/F 9/16"tapping			1
2	701/80363		Switch, oil temp 9/16"UNF, Deutsch connector			1
3	649/51774		Hose, 5/8x3575mm long			2
4	2201/0005		Clip, jubilee			2
5	647/12905		Tube, spiral guard, 800mm long			1
6	.		'See Remark'	see item 5		1

E1-4-23 CIRCUIT, COOLER, HYDRAULIC OIL, 2 WHEEL STEER

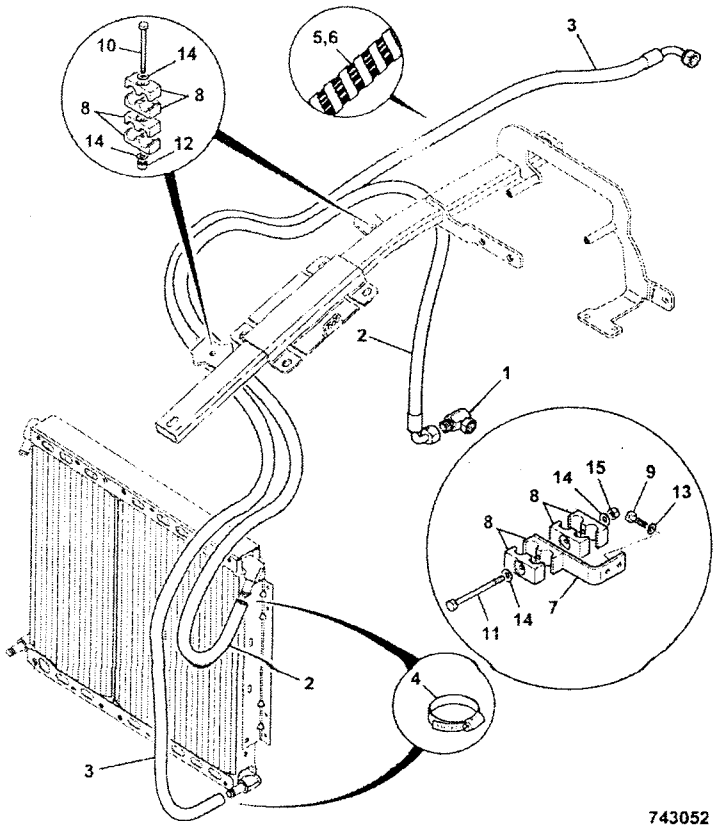

743052

	FROM	TO	FROM	TO
3C PLUS	M TBA	M1002999		
3C 14	M TBA	M1002999		

ITEM	PART NO	CHANGE NO	DESCRIPTION	REMARKS	USAGE CODE	QTY
0	.		'See Remark'	see index radiator fittings for centre beam		1
1	816/91017		Adapter, tee M/F/M, G5/8AxG1xG3/8A			1
2	649/51774		Hose, 5/8x3575mm long			1
3	649/51774		Hose, 5/8x3575mm long			1
4	2201/0005		Clip, jubilee			2
5	647/12905		Tube, spiral guard, 800mm long	fits onto item 2		1
6	647/12905		Tube, spiral guard, 800mm long	fits onto item 3		1
7	331/45861		Bracket, hose guide			1
8	821/10431		Clamp, pair			8
9	1315/3309Z		Bolt, M8 x 35mm			2
10	1315/3419Z		Bolt, M10x90mm			2
11	1315/3420Z		Bolt, M10 X 100			2
12	1370/0303Z		Nut, lock, M10			2
13	1420/0007Z		Washer, plain, M8			2
14	1420/0008Z		Washer, Plain M10			7
15	1370/0303Z		Nut, lock, M10	was 826/01249		1

E1-4-32 CIRCUIT, COOLER, HYDRAULIC OIL, 2 WHEEL STEER

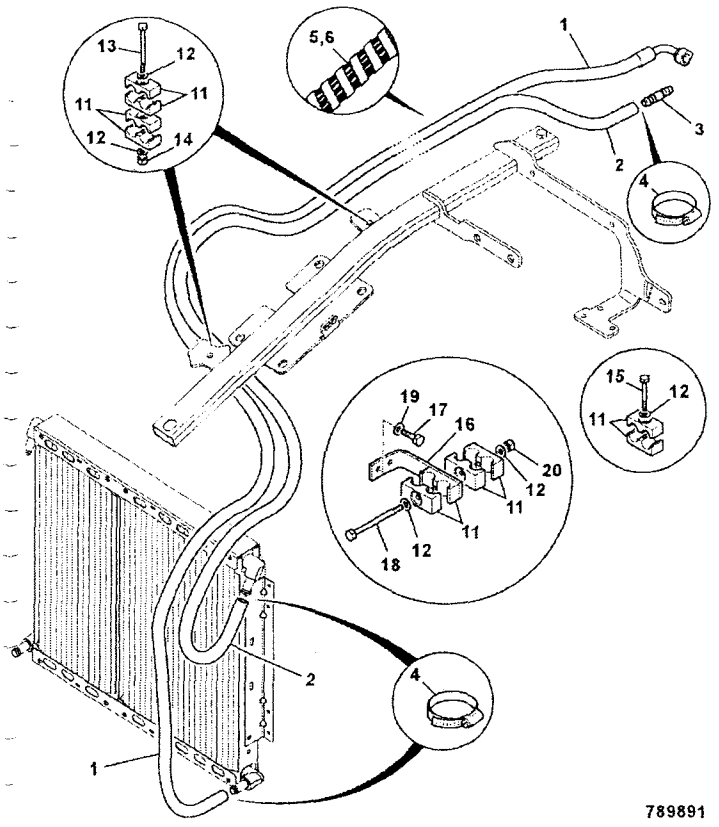

	FROM	TO	FROM	TO
3C PLUS		M1002999		
3C 14		M1002999		

ITEM	PART NO	CHANGE NO	DESCRIPTION	REMARKS	USAGE CODE	QTY
0	.		'See Remark'	see index radiator fittings for centre beam		1
	.		'See Remark'	see frame E1-18-1 for cooler details		1
1	649/51774		Hose, 5/8x3575mm long			1
2	649/51775		Hose, 5/8"BSP 2843mm long			1
3	650/10166		Adapter, hose connecter, 16mm OD			1
4	2201/0005		Clip, jubilee			4
5	647/12906		Tube, spiral guard, 900mm long			1
6	647/12905		Tube, spiral guard, 800mm long			1
11	821/10431		Clamp, pair			8
12	1420/0008Z		Washer, Plain M10			8
13	1315/3419Z		Bolt, M10x90mm			2
14	1370/0303Z		Nut, lock, M10			2
15	1315/3413Z		Bolt, M10 x 55			2
16	331/45861		Bracket, hose guide			1
17	1315/3309Z		Bolt, M8 x 35mm			2
18	1315/3420Z		Bolt, M10 X 100			1
19	1420/0007Z		Washer, plain, M8			2
20	1370/0303Z		Nut, lock, M10	was 826/01249		1

E1-4-51 CIRCUIT, COOLERS, HYDRAULIC & TRANS, 2WS MANUAL TRANSMISSION

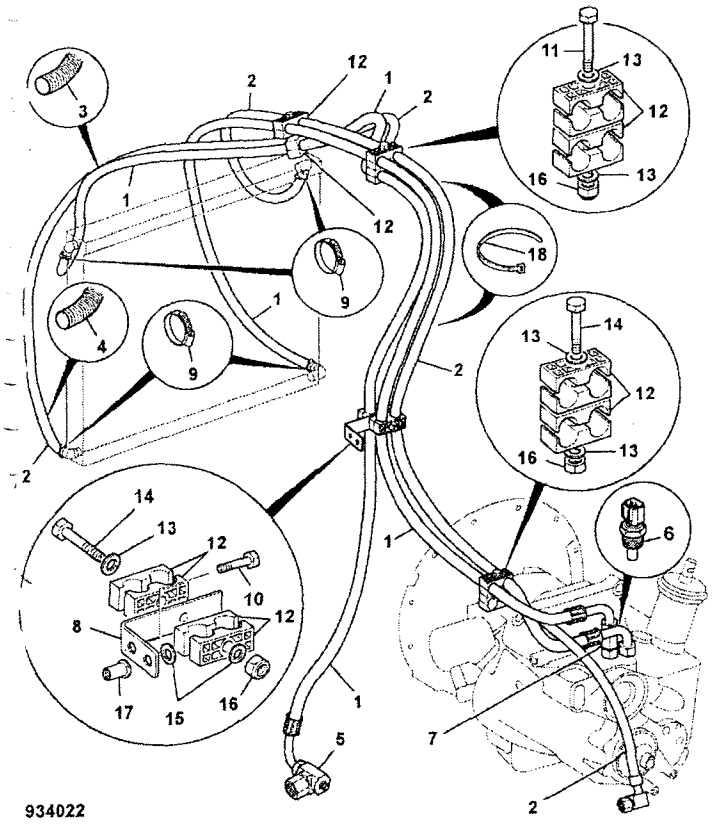

	FROM	TO	FROM	TO
3C PLUS	M1395000			
3C 14	M1395000			

ITEM	PART NO	CHANGE NO	DESCRIPTION	REMARKS	USAGE CODE	QTY
1	649/51774		Hose, 5/8x3575mm long			2
2	332/D1594		Hose, 5/8x3900mm			2
3	647/12905		Tube, spiral guard, 800mm long			2
4	332/D6249		Guard, spiral hose guard, 1150mm long			2
5	816/91017		Adapter, tee M/F/M, G5/8AxG1xG3/8A			1
6	701/80363		Switch, oil temp 9/16"UNF, Deutsch connector			1
7	816/90865		Adapter, M/F 9/16"tapping			1
8	331/45861		Bracket, hose guide			1
9	2201/0005		Clip, jubilee			4
10	1315/3309Z		Bolt, M8 x 35mm			2
11	1315/3419Z		Bolt, M10x90mm			2
12	821/10431		Clamp, pair			8
13	1420/0008Z		Washer, Plain M10			7
14	1315/3420Z		Bolt, M10 X 100			2
15	1420/0007Z		Washer, plain, M8			2
16	1370/0303Z		Nut, lock, M10			3
17	826/01106		Nut, rivet,M8			2
18	270/00106		Tie, Cable 385mm long			2

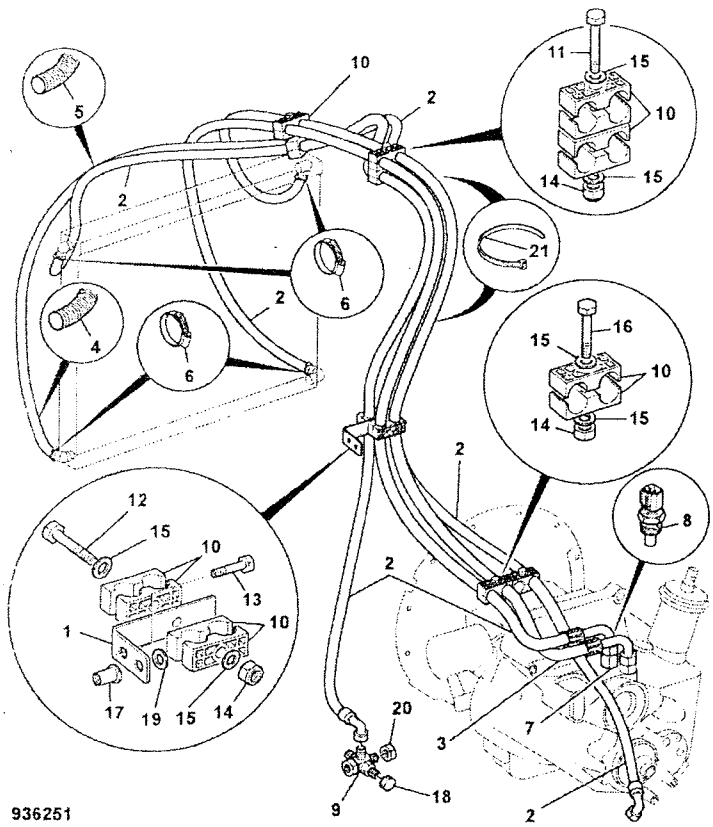

	FROM	TO	FROM	TO
3C PLUS	M1395000			
3C 14	M1395000			

ITEM	PART NO	CHANGE NO	DESCRIPTION	REMARKS	USAGE CODE	QTY
1	331/45861		Bracket, hose guide			
2	649/51774		Hose, 5/8x3575mm long			3
3	332/D1594		Hose, 5/8x3900mm			
4	332/D6249		Guard, spiral hose guard, 1150mm long			2
5	647/12905		Tube, spiral guard, 800mm long			2
6	2201/0005		Clip, jubilee			4
7	816/90865		Adapter, M/F 9/16"tapping			1
8	701/80363		Switch, oil temp 9/16"UNF, Deutsch connector			1
9	332/D3321		Adapter, 5 way			1
10	821/10431		Clamp, pair			8
11	1315/3419Z		Bolt, M10x90mm			2
12	1315/3420Z		Bolt, M10 X 100			1
13	1315/3309Z		Bolt, M8 x 35mm			2
14	1370/0303Z		Nut, lock, M10			3
15	1420/0008Z		Washer, Plain M10			8
16	1315/3413Z		Bolt, M10 x 55			2
17	826/01106		Nut, rivet,M8			2
18	816/90045		Cap, blanking 1/4"BSP, steel			1
19	1420/0007Z		Washer, plain, M8			2

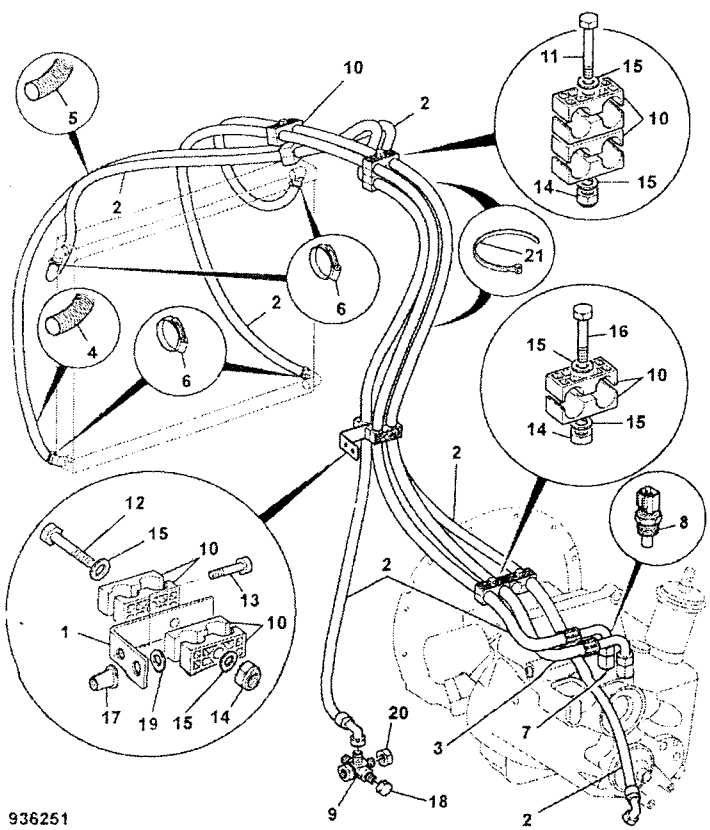

ITEM	PART NO	CHANGE NO	DESCRIPTION	REMARKS	USAGE CODE	QTY
20	816/90274		Cap, blanking 3/4"BSP, female			1
21	270/00106		Tie, Cable 385mm long			2

E1-5-50 CIRCUIT, STEERING, 2WS 2WD

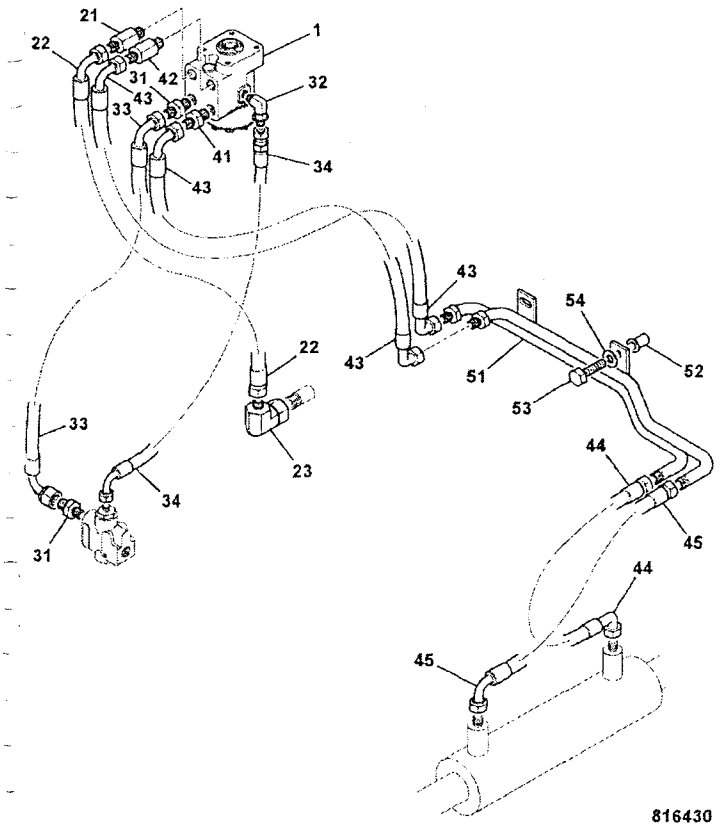

	FROM	TO	FROM	TO
3C PLUS				
3C 14				

ITEM	PART NO	CHANGE NO	DESCRIPTION	REMARKS	USAGE CODE	QTY
1	35/412300		Valve, steer 250 load sens, without anti-shock			1
21	816/90488		Adapter, extended M/M	port T		1
22	612/28800		Hose, 3/8 BSP x 1010mm			1
23	816/90718		Adapter, elbow, M/F			1
31	1620/2053		Adapter			2
32	816/90459		Adapter, elbow M/M			1
33	612/45800		Hose			1
34	649/51720		Hose, 1200 long			1
41	1620/2053		Adapter			1
42	816/90488		Adapter, extended M/M			1
43	612/47000		Hose			2
44	612/80113		Hose, 3/8BSP X 410mm long			1
45	612/80114		Hose, 3/8 BSP X 645mm long			1
51	335/09190		Pipe, steering 2WD/2WS	Dieselmax		1
	128/E3321		Pipe, steering, 2WD/2WS	IESA		1
52	826/01249		Nut, rivet M10 open end, for 6 to 8.5mm plate			2
53	1315/0410Z		Bolt, M10 x 40			2
54	1420/0008Z		Washer, Plain M10			2

E1-5-60 CIRCUIT, STEERING, 2WS 4WD

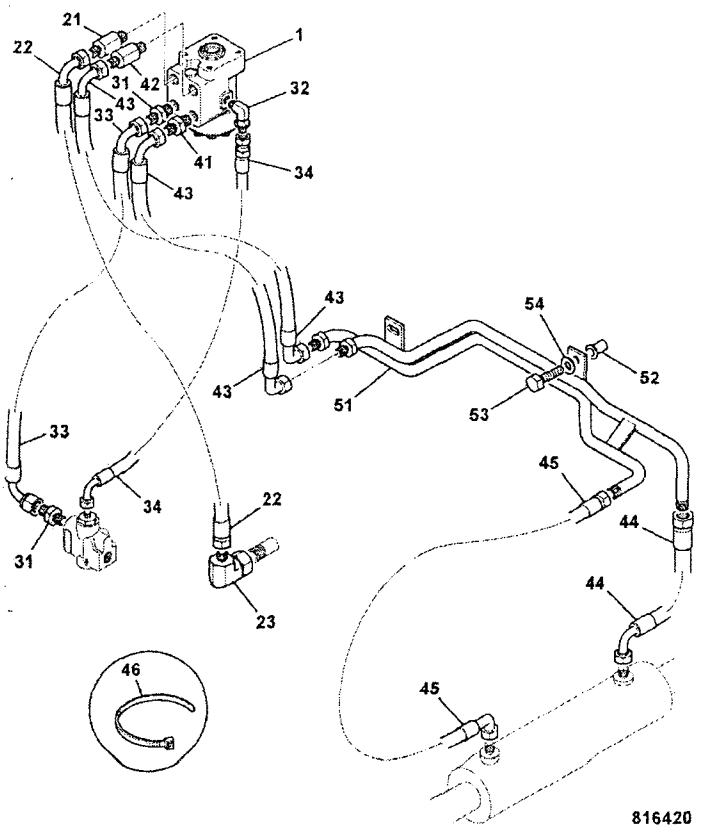

	FROM	TO	FROM	TO
3C PLUS				
3C 14				

ITEM	PART NO	CHANGE NO	DESCRIPTION	REMARKS	USAGE CODE	QTY
1	35/412300		Valve, steer 250 load sens, without anti-shock			1
21	816/90488		Adapter, extended M/M	port T		1
22	612/28800		Hose, 3/8 BSP x 1010mm			1
23	816/90718		Adapter, elbow, M/F			1
31	1620/2053		Adapter			2
32	816/90459		Adapter, elbow M/M			1
33	*612/45800		Hose			1
34	649/51720		Hose, 1200 long			1
41	1620/2053		Adapter			1
42	816/90488		Adapter, extended M/M			1
43	612/47000		Hose			2
44	612/26500		Hose, sleeved, 3/8BSPx270			1
45	612/80114		Hose, 3/8 BSP X 645mm long			1
46	826/01144		Tie, cable, 200mm long			2
51	335/09189		Pipe, Steering 2WS/4WD	Dieselmax		1
	128/E3317		Pipe, steering, 2WS/4WD	IESA		1
52	826/01249		Nut, rivet M10 open end, for 6 to 8.5mm plate			2
53	1315/0410Z		Bolt, M10 x 40			2
54	1420/0008Z		Washer, Plain M10			2

	FROM	TO	FROM	TO
3C PLUS				
3C 14				

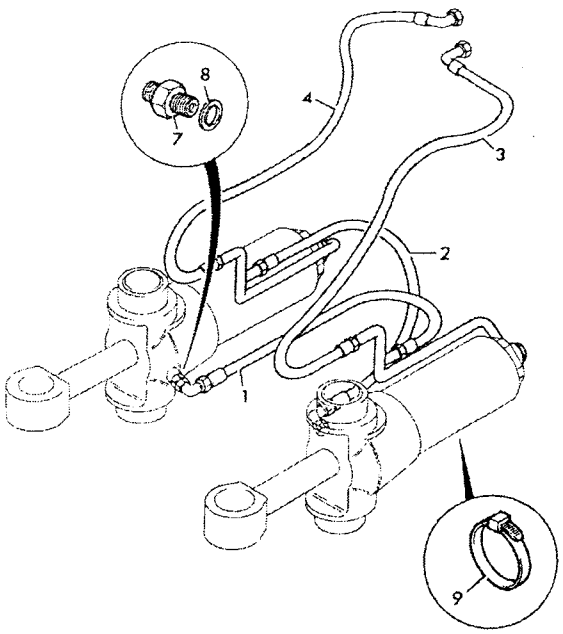

702810

ITEM	PART NO	CHANGE NO	DESCRIPTION	REMARKS	USAGE CODE	QTY
1	629/80122		Hose, 1/4BSP x 650Lg			1
2	629/80122		Hose, 1/4BSP x 650Lg			1
3	629/80126		Hose, 3/8BSP x 700Lg			1
4	629/80126		Hose, 3/8BSP x 700Lg			1
7	1620/0002		Adapter			2
	816/90676		Adapter, 90deg elbow, 9/16 SAE x G1/4			2
8	2401/0505		:O Ring			1
9	826/01144		Tie, cable, 200mm long			1

	FROM	TO	FROM	TO
3C PLUS				
3C 14				

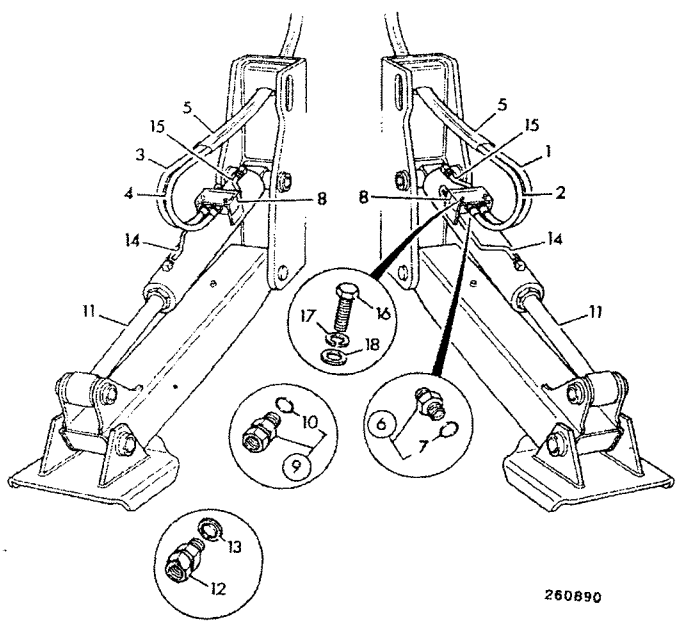

260890

ITEM	PART NO	CHANGE NO	DESCRIPTION	REMARKS	USAGE CODE	QTY
1	611/24600		Hose, 1/4"BSP x 1430mm			1
2	611/24600		Hose, 1/4"BSP x 1430mm			1
3	611/24600		Hose, 1/4"BSP x 1430mm			1
4	611/24600		Hose, 1/4"BSP x 1430mm			1
5	647/02703		Tube, black pvc, 2400mm	1350mm long per side.		2
6	1620/2051		Adapter, 1/4"BSP x 9/16"SAE			4
7	2401/0505		:O Ring			1
8	25/994800		Valve, ram lockout			2
8A	998/10409		:Kit-seal			1
9	816/90009		Adapter, M/F	item 8 to item 15		2
10	2401/0505		:O Ring			1
11	.		'See Remark'	Stabiliser ram see section E4		2
12	816/90776		Adapter, extended M/F	item 8 to item 14		2
13	2401/0505		:O Ring			1
14	653/40114		Pipe, stabiliser ram, L/H rod side	90 X 50 ram		1
	332/P0621		Pipe, stabiliser ram, L/H rod side	90 X 60 ram		1
	653/40113		Pipe, stabiliser ram, R/H rod side	90 X 50 ram		1
	332/P0622		Pipe, stabiliser ram, R/H rod side	90 X 60 ram		1

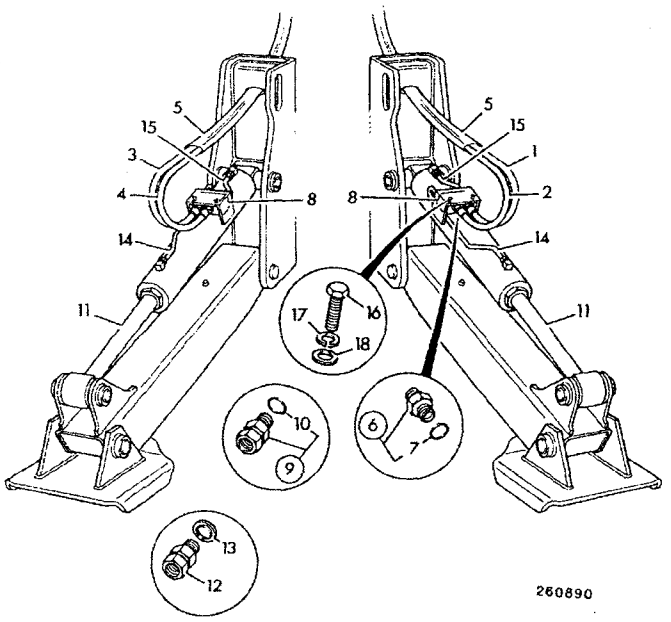

260890

ITEM	PART NO	CHANGE NO	DESCRIPTION	REMARKS	USAGE CODE	QTY
15	653/40112		Pipe, stabiliser ram, head side			2
16	1315/0308Z		Screw, M8x30			4
17	.		'See Remark'	not fitted		4
18	1[illegible]/00074		Washer, plain, M8			4

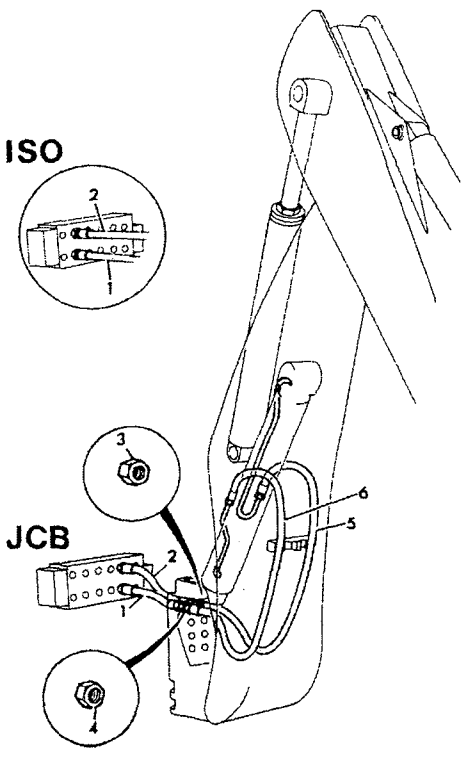

261831

	FROM	TO	FROM	TO
3C PLUS				
3C 14				

ITEM	PART NO	CHANGE NO	DESCRIPTION	REMARKS	USAGE CODE	QTY
1	613/36009		Hose, 1/2"BSP 850mm			1
2	614/05000		Hose, 5/8BSPx820			1
3	1356/0204Z		Nut			1
3A	1418/0018Z		Washer, lock, internal teeth			1
4	1356/0205Z		Nut			1
4A	1418/0018Z		Washer, lock, internal teeth			1
5	629/27000		Hose, 5/8BSP X 980mm			1
6	629/20600		Hose, 1/2BSP X 940mm			1

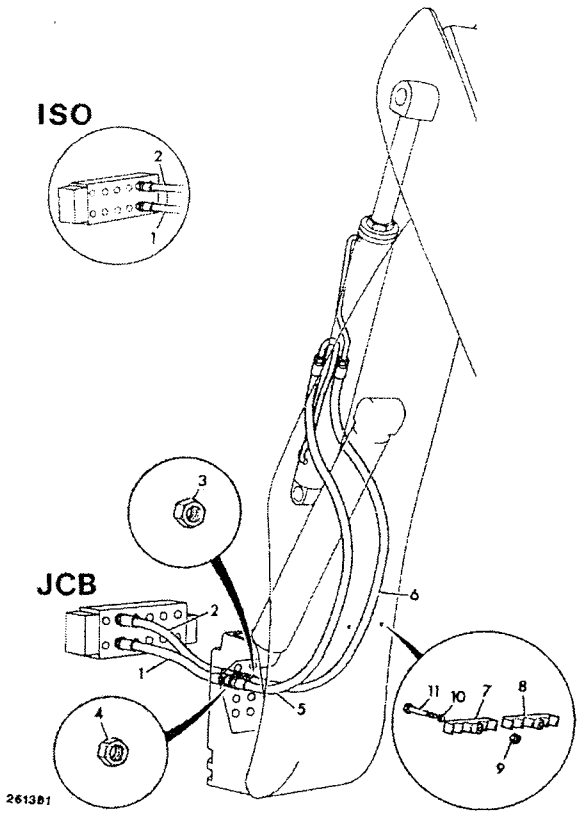

	FROM	TO	FROM	TO
3C PLUS				
3C 14				

ITEM	PART NO	CHANGE NO	DESCRIPTION	REMARKS	USAGE CODE	QTY
1	614/05000		Hose, 5/8BSPx820			1
2	613/36012		Hose, 1/2BSPx930			1
3	1356/0204Z		Nut			1
3A	1418/0018Z		Washer, lock, internal teeth			1
4	1356/0205Z		Nut			1
4A	1418/0018Z		Washer, lock, internal teeth			1
5	629/26900		Hose, 5/8 BSP X 2520mm	5/8" BSP		1
6	629/27300		Hose	1/2" BSP		1
7	123/05836		Clamp			1
8	123/05836		Clamp			1
9	1370/0303Z		Nut, lock, M10			2
10	1420/0008Z		Washer, Plain M10			8
11	1315/0414Z		Bolt			2

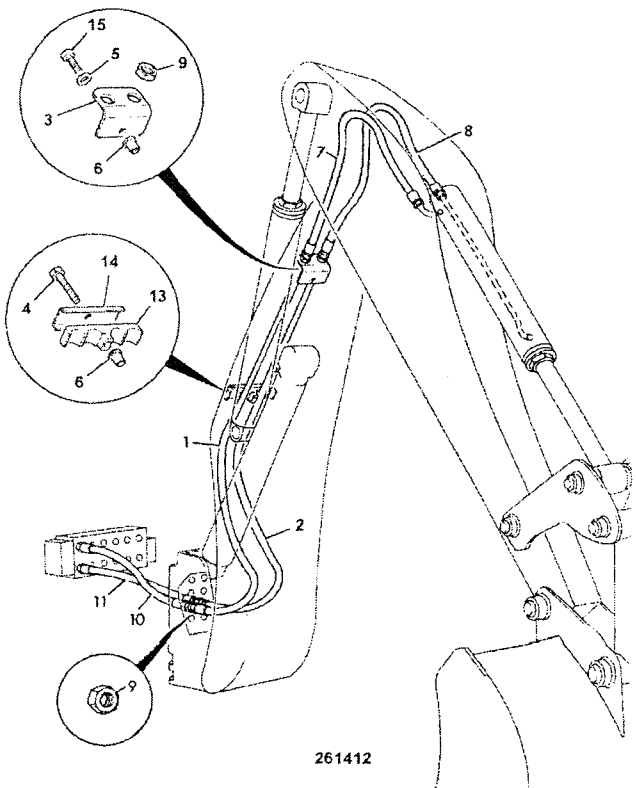

	FROM	TO	FROM	TO
3C PLUS				
3C 14				

ITEM	PART NO	CHANGE NO	DESCRIPTION	REMARKS	USAGE CODE	QTY
1	629/80005		Hose			1
1A	830/00314		Ferrule, rubber			2
2	629/80005		Hose			1
3	331/14732		Plate, adapter hose support, 2 hose			1
4	1315/0414Z		Bolt			1
5	1420/0008Z		Washer, Plain M10			1
6	826/01249		Nut, rivet M10 open end, for 6 to 8.5mm plate			2
7	613/07100		Hose	680mm long		1
8	613/07100		Hose	680mm long		1
9	1356/0204Z		Nut			2
9A	1418/0018Z		Washer, lock, internal teeth			2
10	613/36012		Hose, 1/2BSPx930			1
11	613/36013		Hose			1
12	123/06256		Spacer, steel			2
13	123/05836		Clamp			1
14	331/14805		Plate, clamp backing			1
15	1315/3414Z		Bolt			1

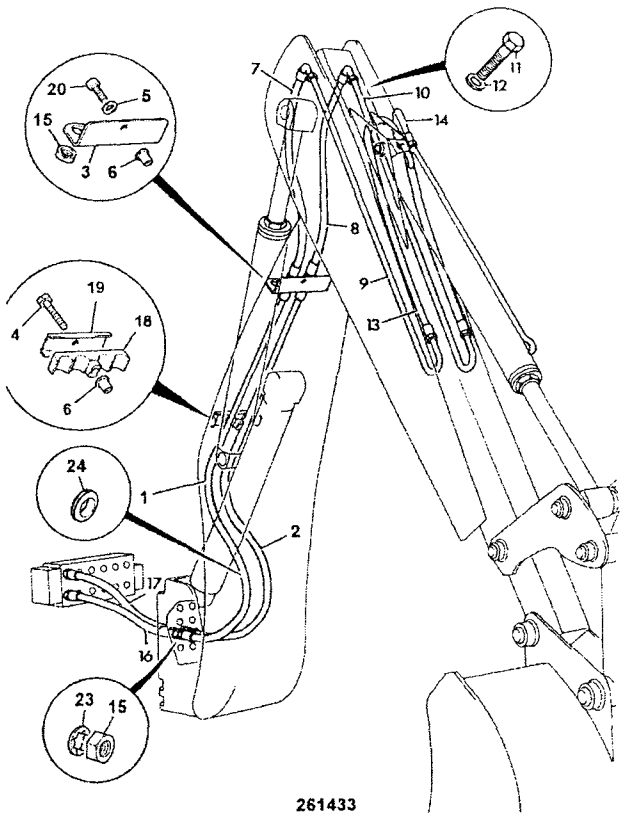

261433

	FROM	TO	FROM	TO
3C PLUS				
3C 14				

ITEM	PART NO	CHANGE NO	DESCRIPTION	REMARKS	USAGE CODE	QTY
1	629/80005		Hose			1
2	629/80005		Hose			1
3	331/14734		Plate, adapter hose support, 4 hose			1
4	1315/3414Z		Bolt			1
5	823/00377		Washer, plain M10			1
6	826/01249		Nut, rivet M10 open end, for 6 to 8.5mm plate			2
7	613/23100		Hose			1
8	613/23100		Hose			1
9	123/03285	Superseded	Pipe			1
	128/17337		Pipe, assembly R.H.			1
10	123/03286	Superseded	Pipe, left hand			1
	128/17338		Pipe, assembly L.H.			1
11	1315/0408Z		Bolt, M10x30			4
12	1420/0008Z		Washer, Plain M10			4
13	613/05400		Hose			1
14	613/05400		Hose			1
15	1356/0204Z		Nut			4
16	477/00338		Hose, 1/2"BSP x 765mm			1
17	613/36012		Hose, 1/2BSPx930			1
18	123/05836		Clamp			1
19	331/14805		Plate, clamp backing			1

E1-10-13 CIRCUIT, BUCKET RAM, EXTRADIG DIPPER

9812/0080U
ISSUE 1

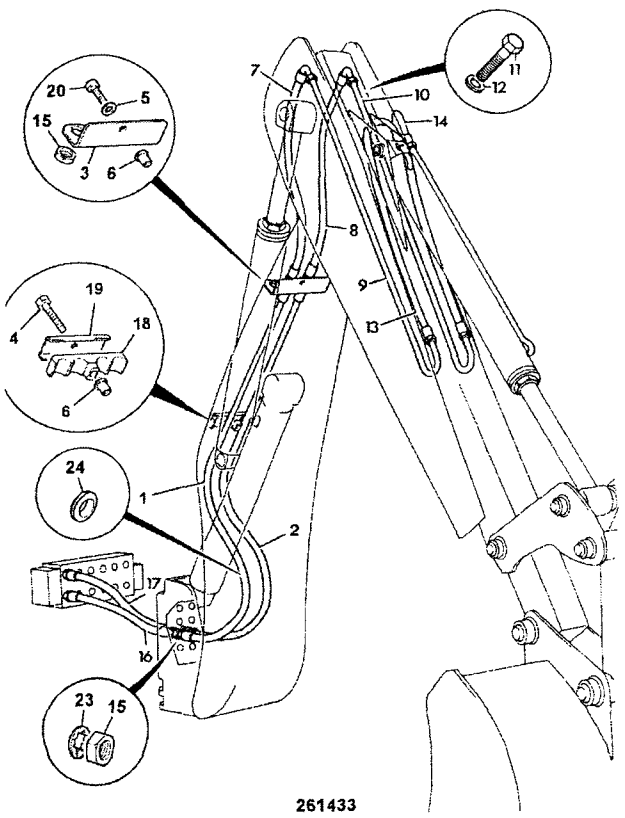

261433

ITEM	PART NO	CHANGE NO	DESCRIPTION	REMARKS	USAGE CODE	QTY
20	1391/3410Z		Capscrew			1
23	1418/0018Z		Washer, lock, internal teeth			2
24	830/00314		Ferrule, rubber			2

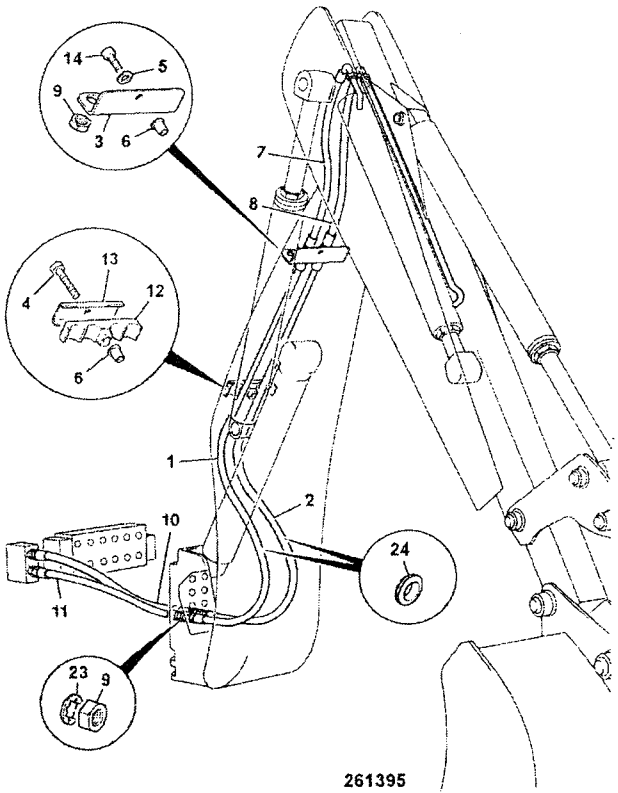

	FROM	TO	FROM	TO
3C PLUS				
3C 14				

ITEM	PART NO	CHANGE NO	DESCRIPTION	REMARKS	USAGE CODE	QTY
1	629/80005		Hose			1
2	629/80005		Hose			1
3	331/14734		Plate, adapter hose support, 4 hose			1
4	1315/3414Z		Bolt			1
5	823/00377		Washer, plain M10			1
6	826/01249		Nut, rivet M10 open end, for 6 to 8.5mm plate			2
7	613/23100		Hose			1
8	613/23100		Hose			1
9	1356/0204Z		Nut			2
10	613/36009		Hose, 1/2"BSP 850mm	Top port		1
11	613/09203		Hose, 1/2"BSP 1040mm	Bottom port		1
12	123/05836		Clamp			1
13	331/14805		Plate, clamp backing			1
14	1391/3410Z		Capscrew			1
23	1418/0018Z		Washer, lock, internal teeth			2
24	830/00314		Ferrule, rubber			2

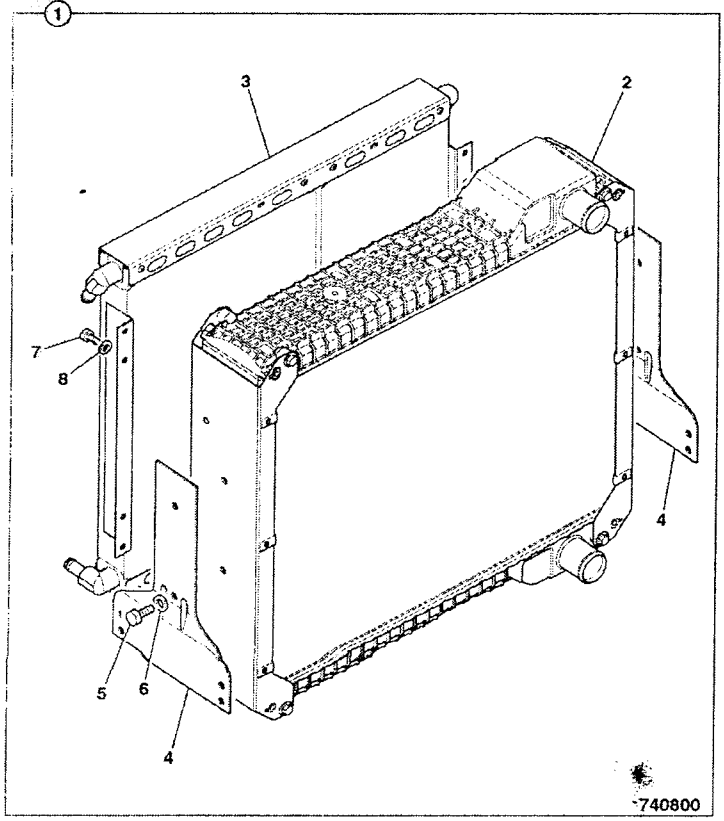

	FROM	TO	FROM	TO
3C PLUS		M1002999		
3C 14		M1002999		

ITEM	PART NO	CHANGE NO	DESCRIPTION	REMARKS	USAGE CODE	QTY
1	128/14326		Cooler, assembly 5row, 2ws non CAC			1
2	30/915200		:Radiator, assembly, 5row-9fpi, Blue spot			1
3	30/925615		:Cooler, oil, double, 14plates + 21 plates			1
4	30/926257		:Bracket, radiator mounting			2
5	30/926035		:Bolt			4
6	30/926036		:Washer			4
7	1315/0301Z		Screw, hex head, M8 X 12			8
8	826/00846		Nut, 'u'			8

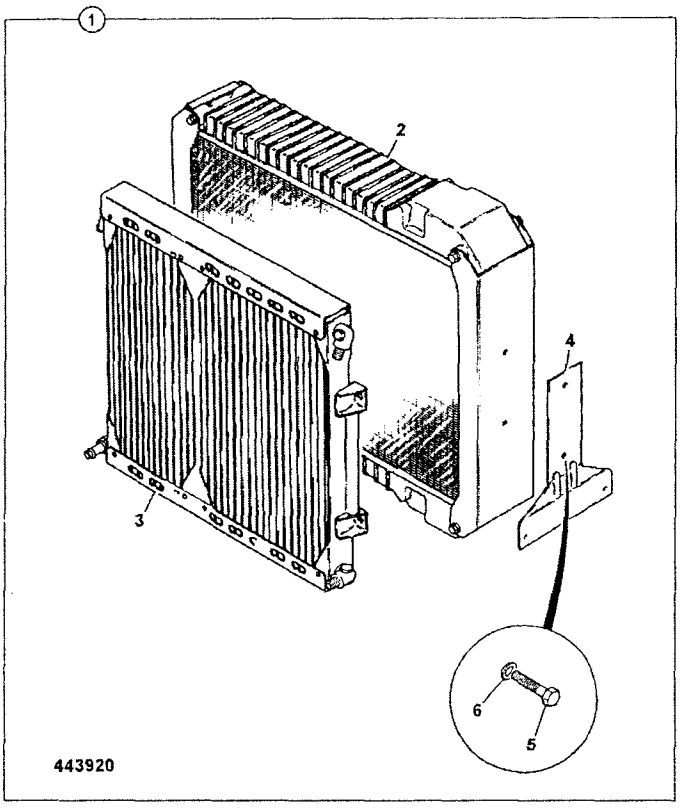

	FROM	TO	FROM	TO
3C PLUS				
3C 14				

ITEM	PART NO	CHANGE NO	DESCRIPTION	REMARKS	USAGE CODE	QTY
1	128/13930		Cooler, assembly, radiator/oil cooler			1
2	339/01031		:Radiator, assembly			1
3	339/01032		:Cooler, oil			1
4	.		:'See Remark'	part of radiator		2
5	30/926035		:Bolt			4
6	30/926036		:Washer			4
7	826/01687		Screw, set			4
8	1370/0303Z		Nut, lock, M10			4
9	1420/0008Z		Washer, Plain M10			8

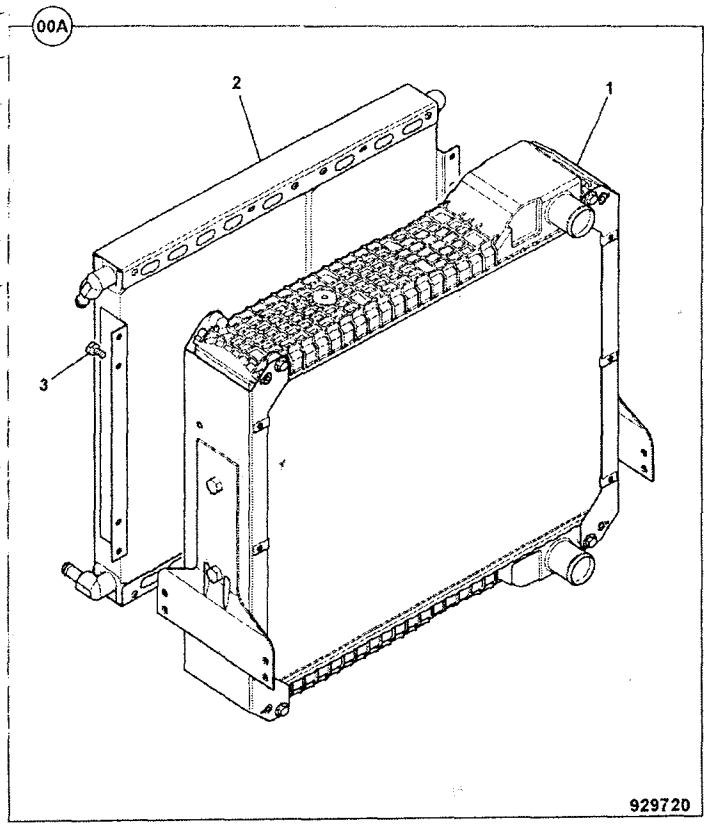

	FROM	TO	FROM	TO
3C PLUS	M1395000			
3C 14	M1395000			

ITEM	PART NO	CHANGE NO	DESCRIPTION	REMARKS	USAGE CODE	QTY
0A	128/14326		Cooler, assembly 5row, 2ws non CAC			1
1	30/926671		Radiator, 5row-9fpi			1
2	30/925615		:Cooler, oil, double, 14plates + 21 plates			1
3	02/291015		:Screw			8

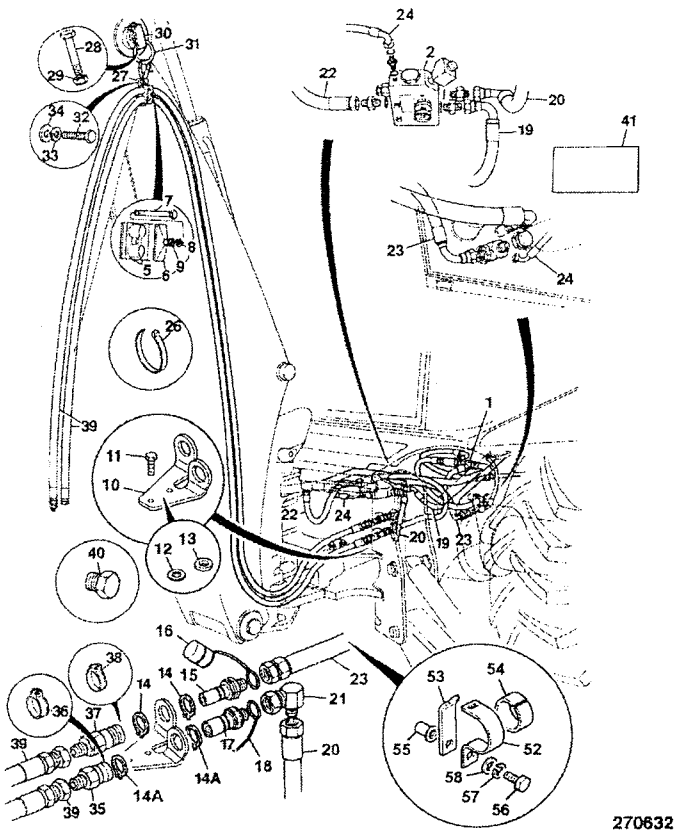

	FROM	TO	FROM	TO
3C PLUS				
3C 14				

ITEM	PART NO	CHANGE NO	DESCRIPTION	REMARKS	USAGE CODE	QTY
2	25/221197		Valve, solenoid p. flow, centre mount hammer	Flow regulator valve, see frame E3-37-1		1
3	25/222498		Valve, relief, 3800/2.5	fit to excavator valve		1
4			'See Remark'	Electrics, see frame C3-22-1.		1
5	821/00442		Clamp, body			2
6	821/00443		Plate, cover			1
7	1315/3314Z		Bolt			1
8	1425/0007Z		Washer, spring			1
9	1420/0007Z		Washer, plain, M8			1
10	331/45522		Bracket, q/r coupling			1
11	1315/0409Z		Screw, hex. head			2
12	1420/0008Z		Washer, Plain M10			3
13	823/10710		Spacer, nylon			1
14	2203/0043		Circlip		A	2
14A	2203/0049		Circlip		B	2
15	45/913400		Coupling, male		A	1
16	45/910301		Cap, dirt QRC, 3/4" male		A	1
17	45/913500		Coupling, male		B	1
18	45/912501		Cap, dirt QRC, 3/4" BSP male		B	1
19	629/80041		Hose, 3/4"BSP 650mm			1
20	209/72200		Hose, 3/4"BSP 500mm			1

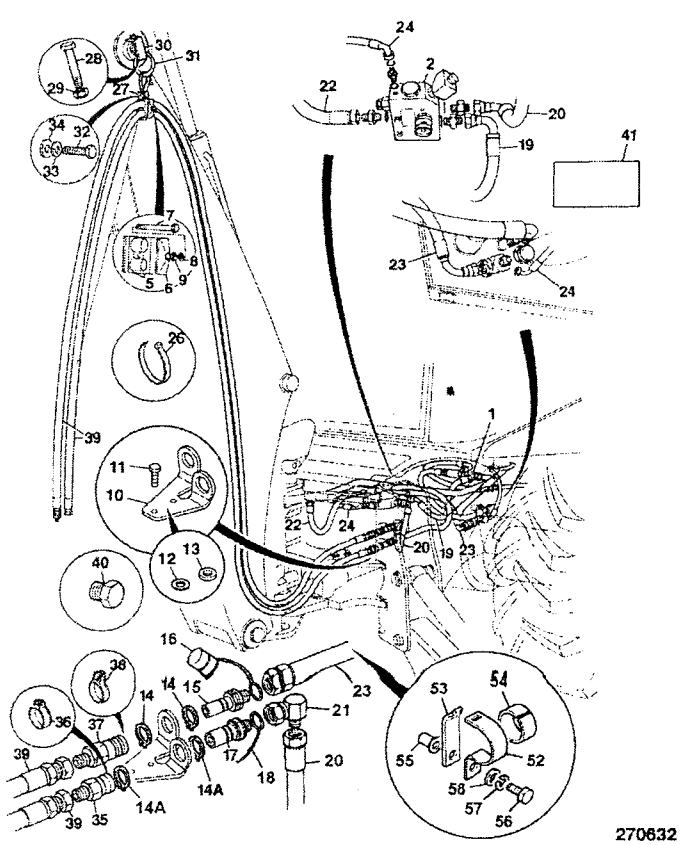

ITEM	PART NO	CHANGE NO	DESCRIPTION	REMARKS	USAGE CODE	QTY
21	816/90163		Adapter, Elbow M/F			1
22	615/48700		Hose, 3/4BSP 850mm long			1
23	635/80120		Hose, 3/4BSP 2600mm long			1
24	611/20100		Hose, 1/4BSPx1270			1
25	816/50032		Adapter, Tee			1
26	826/01144		Tie, cable, 200mm long			2
27	123/05186		Ring, support	214		1
	123/06294		Ring, support	215		1
28	1315/3524Z		Bolt, M12 x 140 Lg.			1
30	123/05187		Mounting, hook clamp			1
31	123/05188		Hook, 4" spring			1
32	1315/0407Z		Bolt, M10x25			1
33	1425/0008Z		Washer, Spring M10			1
34	1420/0008Z		Washer, Plain M10			1
35	45/914100		Coupling, female			1
36	45/908401		Cap, dirt, QRC 3/4"female			1
37	45/914200		Coupling, female			1
38	45/911301		Cap, dirt QRC, 3/4" BSP female			1
39	615/05000		Hose			2
40	816/80011		Plug			2
41	817/00592		Label			2
41A	817/70021		Decal, noise warning			1
52	821/00183		Clamp, top			2
53	821/00184		Clamp, base			2
54	821/00185		Insert, clamp			2

E1-21-2 CIRCUIT, ATTACHMENT, HAMMER

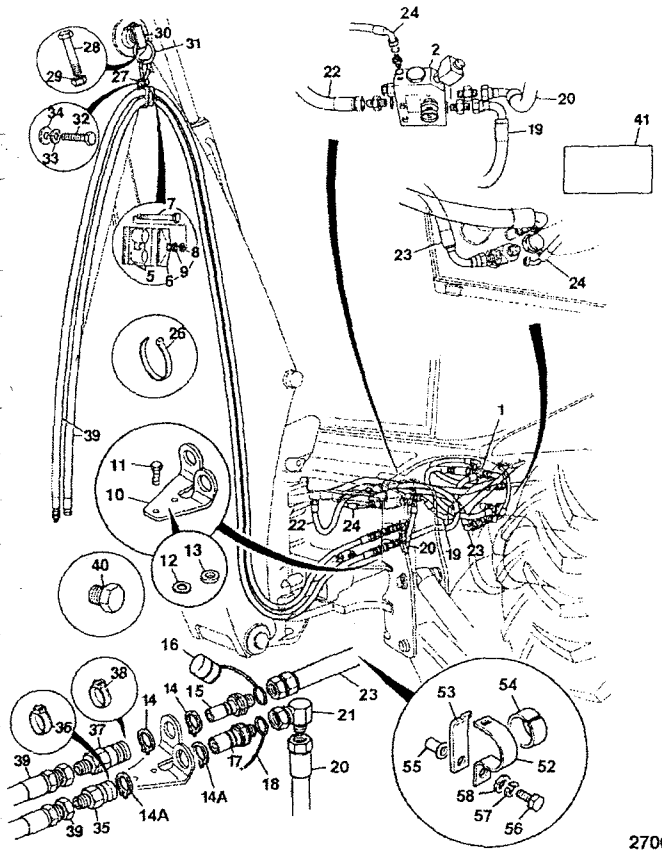

270632

ITEM	PART NO	CHANGE NO	DESCRIPTION	REMARKS	USAGE CODE	C.
55	826/01249		Nut, rivet M10 open end, for 6 to 8.5mm plate			
56	1315/0410Z		Bolt, M10 x 40			
57	1425/0008Z		Washer, Spring M10			
58	1420/0008Z		Washer, Plain M10			

9812/008

E1-27-20 BOOM RAM PIPEWORK

9812/008
ISSUE

	FROM	TO	FROM	TO
3C PLUS				
3C 14				

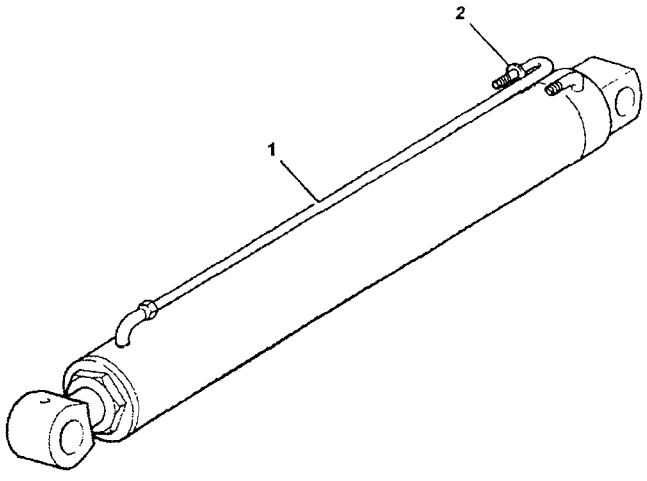

ITEM	PART NO	CHANGE NO	DESCRIPTION	REMARKS	USAGE CODE	Q
1	658/40188		Pipe, boom ram,rodside			
2	2410/0212		Grommet			

278401

E

E1 HOSE & PIPEWORK

● E2 PUMP/MOTOR & PUMP DRIVE

E3 VALVES & HYDRAULIC FILTERS

E4 RAMS

ENGLISH

E2-1-2 PUMP 36/26 CCR, MAIN HYDRAULIC
E2-1-11 PUMP 29/23 CCR, MAIN HYDRAULIC
E2-2-1 PUMP, TRANSMISSION, SYNCROSHUTTLE

E2-1-2 PUMP 36/26 CCR, MAIN HYDRAULIC

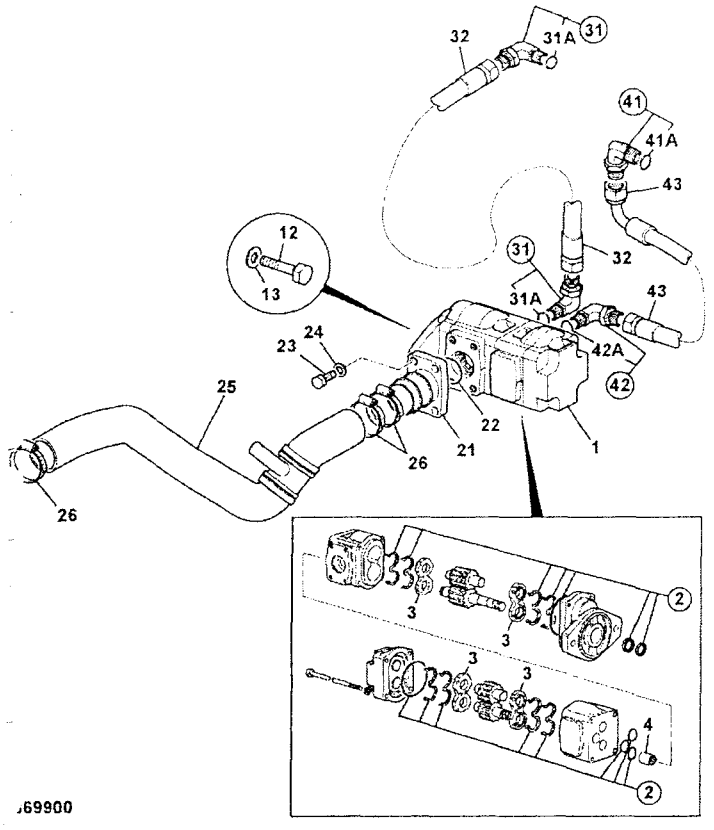

369900

		FROM	TO	FROM	TO
3C PLUS					

ITEM	PART NO	CHANGE NO	DESCRIPTION	REMARKS	USAGE CODE	QTY
1	20/925579		Pump, main hydraulic, 36/26 cc/r			1
2	20/950906		:Kit-seal, main hydraulic pump			1
3	20/902703		:Kit, pressure plates. (2 off)			2
4	20/903301		:Coupling, splined			1
12	1315/0509Z		Screw, M12 x 35mm			2
13	1420/0009Z		Washer, Plain M12			2
21	903/20774		Adapter, suction port			1
22	2401/0218		*O Ring*			1
23	1305/1908Z		Bolt			4
24	823/00309		Washer, hardened			4
25	834/10756	To M TBA	Hose, suction, hydraulic oil			1
	834/11565	M TBA on	Hose, suction, manual transmission			1
26	2201/0013		Clip, jubilee			3
31	816/90476		Adapter, elbow M/M			2
31A	2401/0508		:O Ring			1
32	614/04700		Hose, 5/8 X 485L			1
41	816/90460		Adapter, elbow M/M			1
41A	2401/0507		:O Ring			1
42	816/90638		Adapter, elbow, with test point			1

(264)

E2-1-2 PUMP 36/26 CCR, MAIN HYDRAULIC

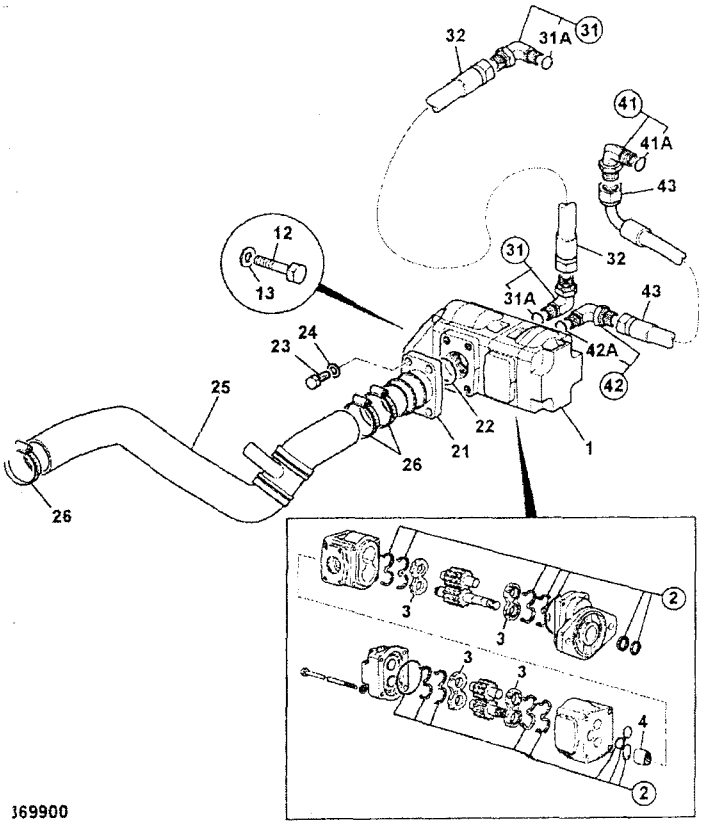

369900

ITEM	PART NO	CHANGE NO	DESCRIPTION	REMARKS	USAGE CODE	QTY
42A	2401/0507		:O Ring			1
43	614/24200		*Hose, 5/8"BSP 640mm long*			1

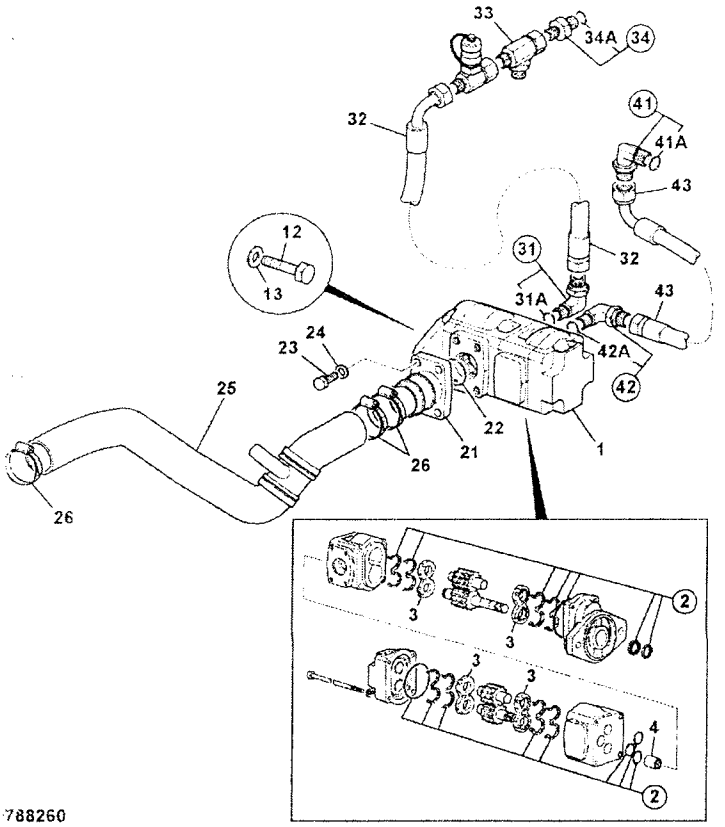

788260

FROM TO FROM TO

3C 14

ITEM	PART NO	CHANGE NO	DESCRIPTION	REMARKS	USAGE CODE	QTY
1	20/925586		Pump, main hydraulic, 29/23 cc rev			1
2	20/950906		:Kit-seal, main hydraulic pump			1
3	20/902703		:Kit, pressure plates, (2 off)			2
4	20/903301		:Coupling, splined			1
12	1315/0509Z		Screw, M12 x 35mm			2
13	1420/0009Z		Washer, Plain M12			2
21	903/20774		Adapter, suction port			1
22	2401/0218		O Ring			1
23	1305/1908Z		Bolt			4
24	823/00309		Washer, hardened			4
25	834/10756	To M TBA	Hose, suction, hydraulic oil			1
	834/11565	M TBA on	Hose, suction, manual transmission			1
26	2201/0013		Clip, jubilee			2
31	816/90476		Adapter, elbow M/M			1
31A	2401/0508		:O Ring			1
32	614/80055		Hose			1
33	816/90011		Adapter, tee , F/M/M			1
34	1620/2056		Adapter			1
34A	2401/0507		:O Ring			1
41	816/90460		Adapter, elbow M/M			1

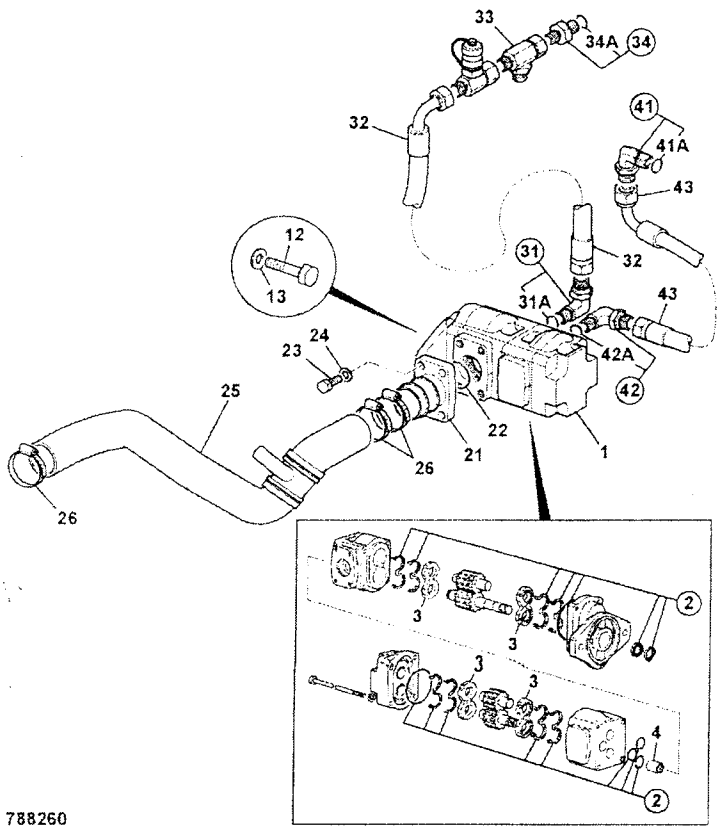

788260

ITEM	PART NO	CHANGE NO	DESCRIPTION	REMARKS	USAGE CODE	QTY
41A	2401/0507		:O Ring			1
42	816/90638		Adapter, elbow, with test point			1
42A	2401/0507		:O Ring			1
43	614/80055		Hose			1

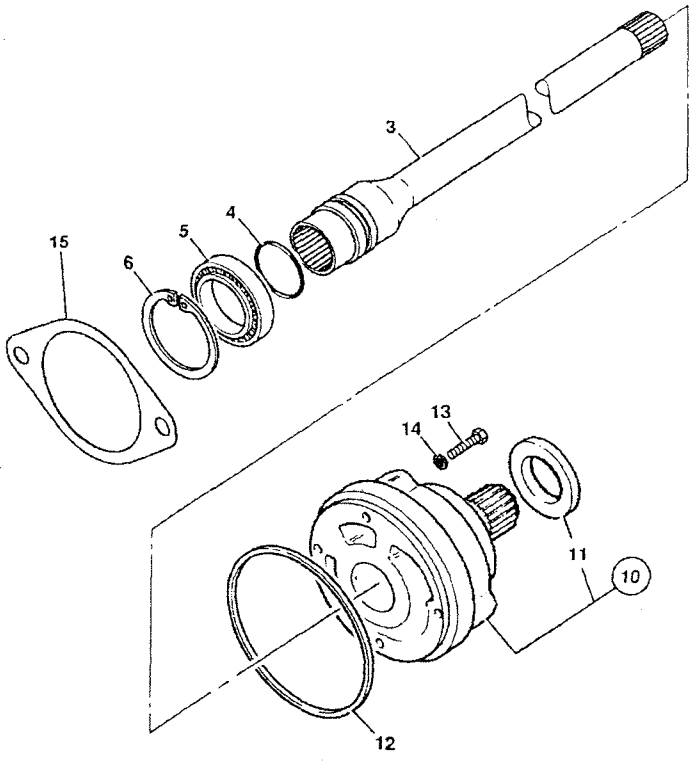

376211

	FROM	TO	FROM	TO
3C PLUS				
3C 14				

ITEM	PART NO	CHANGE NO	DESCRIPTION	REMARKS	USAGE CODE	QTY
3	459/50431		Shaft, pump drive, SS700 gearbox			1
4	904/20210		Ring, seal			1
5	916/10012		Bearing, ball			1
6	2203/1068		Circlip, internal			1
10	20/925552		Pump, assembly, transmission			1
11	904/20226		Seal, transmission pump			1
12	813/50041		Seal, rear			1
13	1315/3311Z		Bolt, M8 X 45			4
14	823/00291		Washer, copper			4
15	4102/3402		Sealant, gasket,Loctite 5910, 50ml. container	Was 813/10184 gasket		A/R

E

- E1 HOSE & PIPEWORK
- E2 PUMP/MOTOR & PUMP DRIVE
- ● E3 VALVES & HYDRAULIC FILTERS
- E4 RAMS

ENGLISH

E3-2-1 VALVE-LOADER, 2 SPOOL, WITH FLOAT
E3-2-10 VALVE-LOADER, 3 SPOOL, WITH FLOAT & RESET
E3-2-11 VALVE, LOADER, 3 SPOOL, WITH FLOAT
E3-2-20 VALVE, SECTION, SHOVEL, 2 SPOOL, LOADER VALVE
E3-2-25 VALVE, SECTION, LIFT, 2 & 3 SPOOL, MECHANICAL DETENT, LOADER VALVE
E3-2-30 VALVE, LOADER, MAIN RELIEF
E3-2-35 VALVE, LOADER, AUXILIARY RELIEF, 2 & 3 SPOOL
E3-2-40 VALVE, SECTION, SHOVEL, 3 SPOOL, ELECTRICAL DETENT, LOADER VALVE
E3-2-50 VALVE, SECTION, AUXILIARY, 3 SPOOL, LOADER VALVE
E3-2-60 VALVE-LOADER 3 SPOOL, 3RD PORT BLANKING
E3-3-11 VALVE, AUXILIARY, BACKHOE, GEAR PUMP, AUXILIARY & EXTRADIG DIPPER BREAKER
E3-3-22 VALVE, AUXILIARY, COMPONENTS, EXCAVATOR, GEAR PUMP
E3-5-10 VALVE ADAPTERS, EXCAVATOR, 14'0"
E3-6-21 VALVE-EXCAVATOR, WITH SPOOL GAITERS, CENTREMOUNT,CONTROLLED LEAK
E3-6-22 VALVE-EXCAVATOR, WITHOUT SPOOL GAITER, CENTREMOUNT,CONTROLLED LEAK
E3-6-25 VALVE, EXCAVATOR, CENTREMOUNT, RELIEF, CONTROLLED LEAK
E3-7-1 FILTER, HYDRAULIC
E3-8-3 LUBRICANTS & FILTERS
E3-10-10 VALVE, STEERING, 2WS-USA BUILDS, 250 LOAD SENSING
E3-37-1 VALVE, FLOW REGULATOR, HAMMER CIRCUIT

E3-2-1 VALVE-LOADER, 2 SPOOL, WITH FLOAT

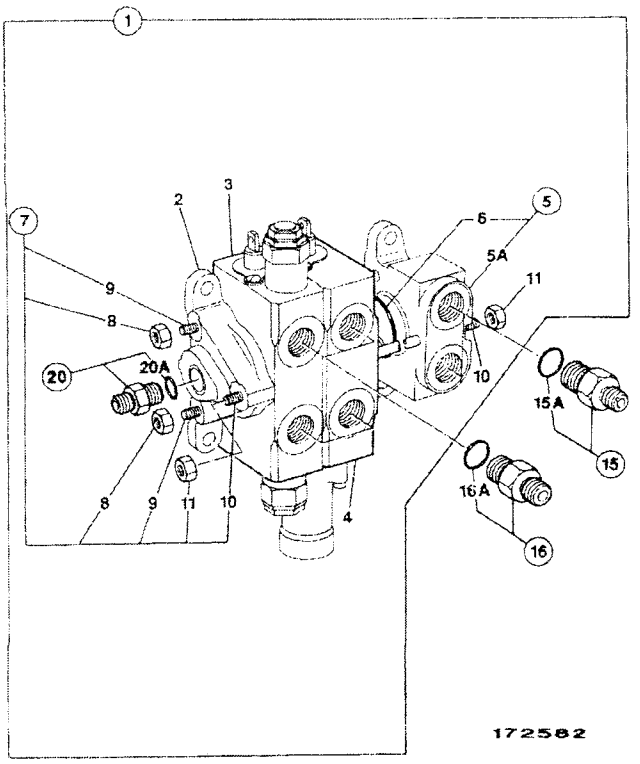

	FROM	TO	FROM	TO
3C PLUS				
3C 14				

ITEM	PART NO	CHANGE NO	DESCRIPTION	REMARKS	USAGE CODE	QTY
1	25/619300	Superseded	Valve, 2 spool loader			1
	25/223696		Valve, loader, 2 spool, with float			1
2	25/987006		:Cover, HPCO			1
3	25/222717		:Valve, section			1
4	25/222714		:Valve, section			1
5	25/987007		:Cover, inlet			1
5A	NSP		::None serviced part			1
6	25/606812		::O Ring, interface, valve sections			1
7	25/607605		::Kit-tie rod			1
8	25/606817		::Nut			4
9	25/607606		::Rod, tie			2
10	25/607607		::Rod, tie			1
11	25/606815		::Nut			2
15	1620/0009		Adapter	Feed line		1
	1620/0007		Adapter	Return line		1
15A	2401/0506		:O Ring			1
16	1620/0005		Adapter, 3/4"UNF o-ring boss, 1/2"BSP male			4
16A	2401/0506		:O Ring			1
20	1620/0010		Adapter, includes 'o'ring			1
20A	2401/0506		:O Ring			1

	FROM	TO	FROM	TC
3C PLUS				
3C 14				

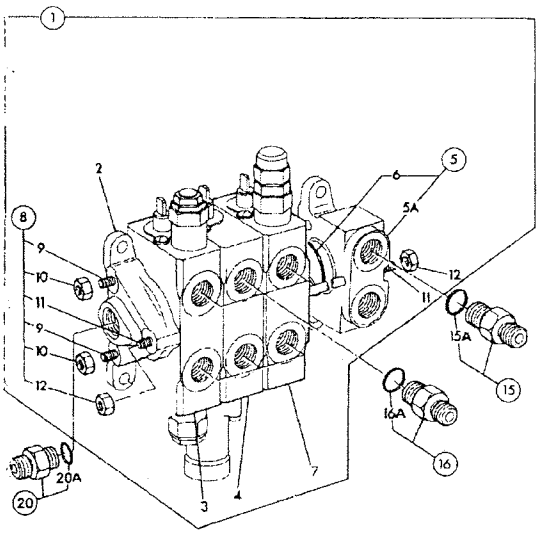

172593

ITEM	PART NO	CHANGE NO	DESCRIPTION	REMARKS	USAGE CODE	QTY
1	25/221438	Superseded	Valve, 3spool loader, float & reset			1
	25/223695		Valve, loader, 3 spool, float and reset			1
2	25/987006		:Cover, HPCO			1
3	25/222713		:Valve, section			1
4	25/222714		:Valve, section			1
5	25/987007		:Cover, inlet			1
5A	NSP		::None serviced part			1
6	25/606812		::O Ring, interface, valve sections			1
7	25/222715		:Valve, section			1
8	25/607702		:Kit-tie rod			1
9	25/607606		:Rod, tie			2
10	25/606817		:.Nut			4
11	25/607704		:.Rod, tie			1
12	25/606815		:.Nut			2
15	1620/0009		Adapter	Feed line		1
	1620/0007		Adapter	Return line		1
15A	2401/0506		:O Ring			1
16	1620/0005		Adapter, 3/4"UNF o-ring boss, 1/2"BSP male			6
16A	2401/0506		:O Ring			1
20	1620/0010		Adapter, includes 'o'ring			1

ITEM	PART NO	CHANGE NO	DESCRIPTION	REMARKS	USAGE CODE	QTY
20A	2401/0506		:O Ring			1

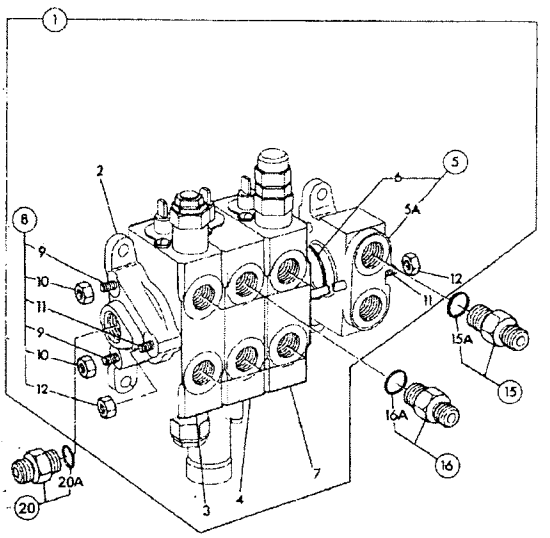

172593

E3-2-11 VALVE, LOADER, 3 SPOOL, WITH FLOAT

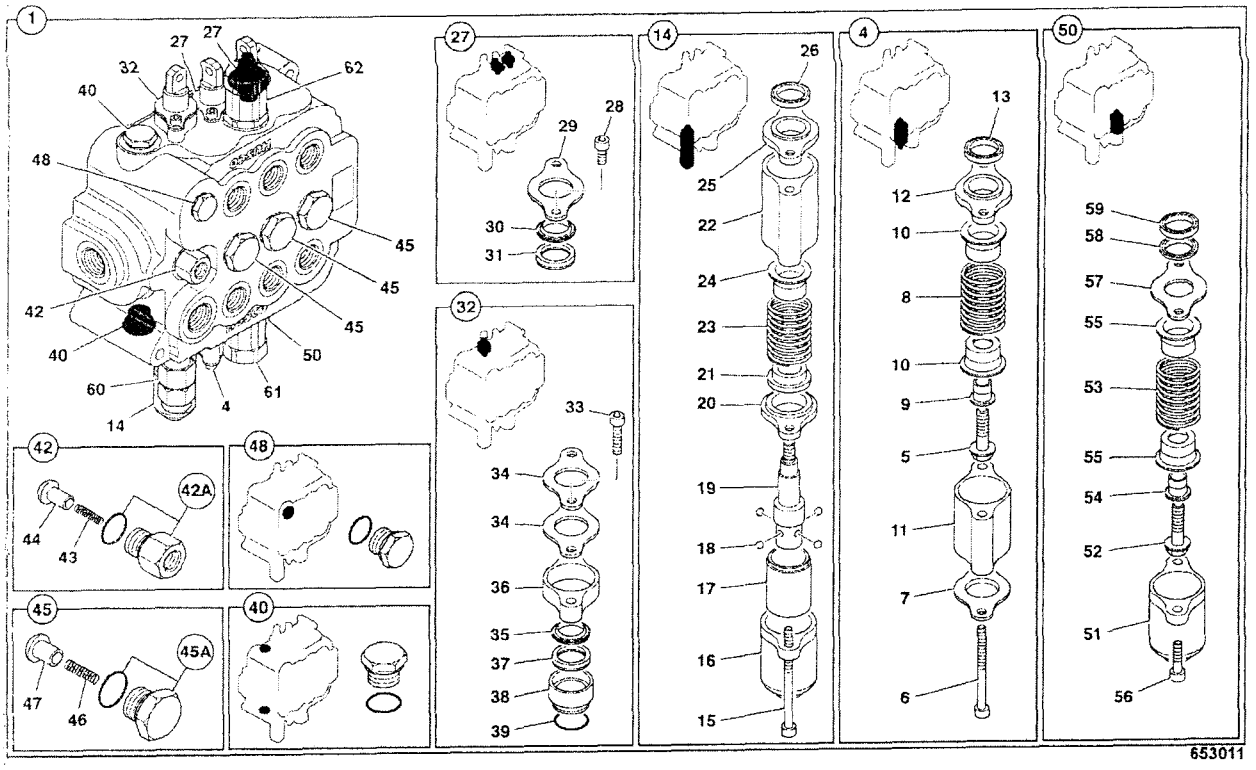

E3-2-11 VALVE, LOADER, 3 SPOOL, WITH FLOAT

FROM TO FROM TO

3C PLUS

ITEM	PART NO	CHANGE NO	DESCRIPTION	REMARKS	USAGE CODE	QTY
1	25/222643		Valve, 3 spool loader, float and reset			1
4	25/222411		:Kit-spool cap			1
5	25/608204		::Screw, spring retainer			1
6	25/608607		::Capscrew			2
7	25/974606		::Plate, seal			1
8	25/222670		::Spring			1
9	25/974605		::Spacer			1
10	25/608201		::Retainer, spring			2
11	25/222671		::Spacer			1
12	25/975702		::Plate, seal			1
13	25/221208		::Seal			1
14	25/222412		:Kit-spool end			1
15	25/974622		::Capscrew			2
16	25/222199		::Cap, spool			1
17	25/222672		::Sleeve			1
18	25/974621		::Ball, 5mm dia			4
19	25/222673		::Cap, Spool end			1
20	25/222674		::Plate, seal			1
21	25/974615		::Retainer, spring			1
22	25/222675		::Spacer			1
23	25/974619		::Spring			1
24	25/608201		::Retainer, spring			1

ITEM	PART NO	CHANGE NO	DESCRIPTION	REMARKS	USAGE CODE	QTY
25	25/975702		::Plate, seal			1
26	25/221208		::Seal			1
27	25/222660		:Kit, std spool gland			2
28	25/606101		::Screw			2
29	25/222198		::Plate, seal			1
30	25/222661		::Wiper, seal			1
31	25/221208		::Seal			1
32	25/222669		:Kit, float spool gland			1
33	25/606839		::Screw			2
34	25/222198		::Plate, seal			2
35	25/222661		::Wiper, seal			1
36	25/974609		::Spacer			1
37	25/221208		::Seal			1
38	25/974608		::Housing, seal			1
39	25/974607		::O Ring			1
40	25/606822		:Plug, assembly			2
42	25/222414		:Kit-plug			1
42A	25/612835		::Plug, assembly			1
43	25/606117		::Spring			1
44	25/974645		::Seat, check valve			1
45	25/221746		:Kit-plug			3
45A	25/606111		::Cap			3
46	25/606113		::Spring			3
47	25/606114		::Seat			3
48	25/606823		Plug, assembly			1
50	25/222668		:Kit, Spool cap assembly			1
51	25/222199		::Cap, spool			1

E3-2-11 VALVE, LOADER, 3 SPOOL, WITH FLOAT
9812/0080U
ISSUE 1

ITEM	PART NO	CHANGE NO	DESCRIPTION	REMARKS	USAGE CODE	QTY
52	25/608204		::Screw, spring retainer			1
53	25/222670		::Spring			1
54	25/608206		::Spacer			1
55	25/608201		::Retainer, spring			2
56	25/606110		::Screw, cap			2
57	25/222198		::Plate, seal			1
58	25/222661		::Wiper, seal			1
59	25/221208		::Seal			1
60	25/618901		Valve, relief			1
60A	25/618902		Kit-repair, relief valve			1
61	25/222415		Valve, relief			1
61A	25/222305		Seal, ARV service kit			1
62	25/222416		Valve, relief, 4500/2.5			1
62A	25/222305		Seal, ARV service kit			1

E3-2-20 VALVE, SECTION, SHOVEL, 2 SPOOL, LOADER VALVE

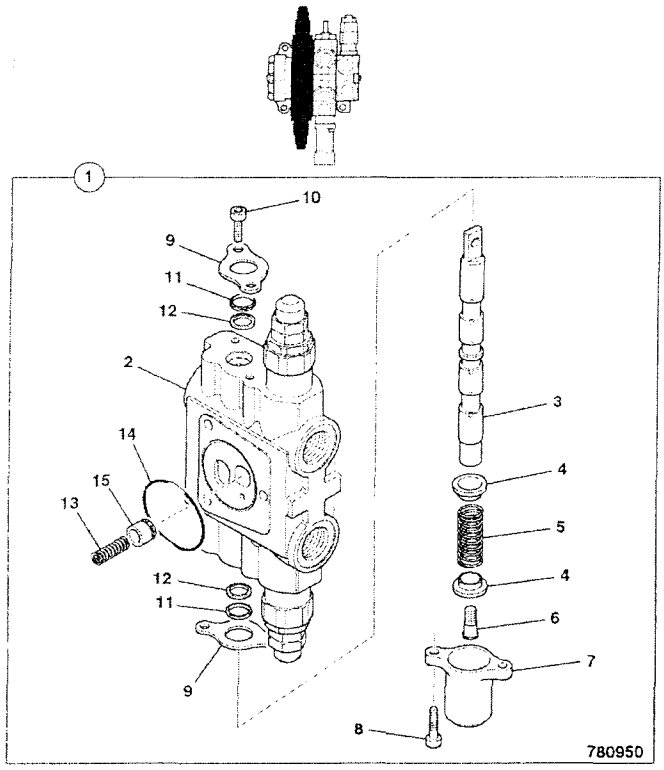

	FROM	TO	FROM	TO
3C PLUS				
3C 14				

ITEM	PART NO	CHANGE NO	DESCRIPTION	REMARKS	USAGE CODE	QTY
1	25/222717		Valve, section			1
2	NSP		:None serviced part	Spool and body are matched pairs.		1
3	NSP		:None serviced part			1
4	25/606834		:Seat, spring			2
5	25/606833		:Spring			1
6	25/606828		:Spool, end			1
7	25/606846		:Cap, spool			1
8	25/606827		:Screw			2
9	25/222718		:Plate, end plate			2
10	25/606101		:Screw			2
11	25/221933		:Seal			2
12	25/221934		:Seal			2
13	25/606844		:Spring			1
14	25/606812		:O Ring, interface, valve sections			1
15	25/606843		:Poppet			1

E3-2-25 VALVE, SECTION, LIFT, 2 & 3 SPOOL, MECHANICAL DETENT, LOADER VALVE

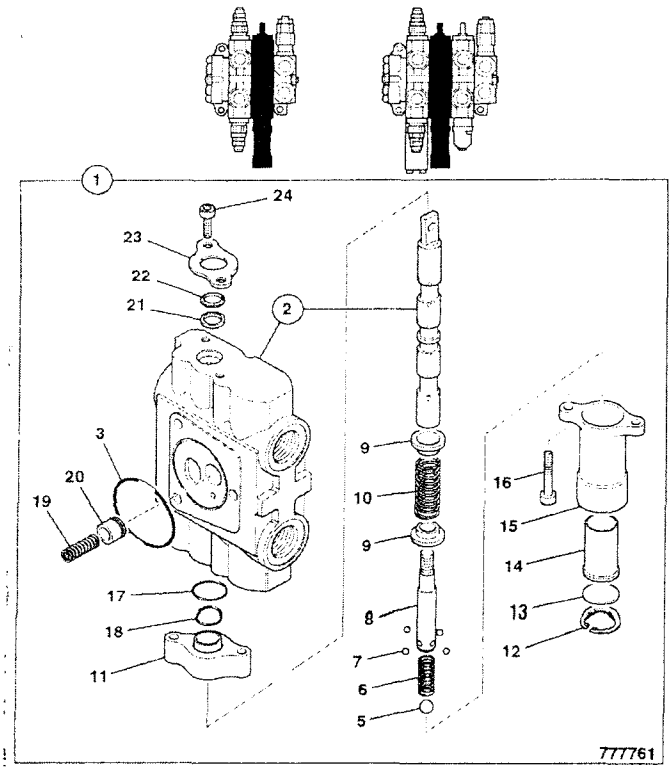

	FROM	TO	FROM	TO
3C PLUS				
3C 14				

ITEM	PART NO	CHANGE NO	DESCRIPTION	REMARKS	USAGE CODE	QTY
1	25/222714		Valve, section			1
2	NSP		:None serviced part	Spool and body		1
3	25/606812		::O Ring, interface, valve sections			1
4	25/607608		:Kit-end mechanism			1
5	25/607609		::Ball			1
6	25/607610		::Spring			1
7	25/607611		::Ball			4
8	25/607612		::End, spool			1
9	25/606834		::Seat, spring			2
10	25/606833		::Spring			1
11	25/220374		::Spacer			1
12	25/606829		::Retainer			1
13	25/607614		::Spacer			1
14	25/607615		::Sleeve			1
15	25/606825		::Cap, detent			1
16	25/607616		::Capscrew			2
17	25/606837		::O Ring			1
18	25/606836		::O Ring			1
19	25/606844		:Spring			1
20	25/606843		:Poppet			1
21	25/221934		:Seal			1
22	25/221933		:Seal			1

E3-2-25 VALVE, SECTION, LIFT, 2 & 3 SPOOL, MECHANICAL DETENT, LOADER VALVE

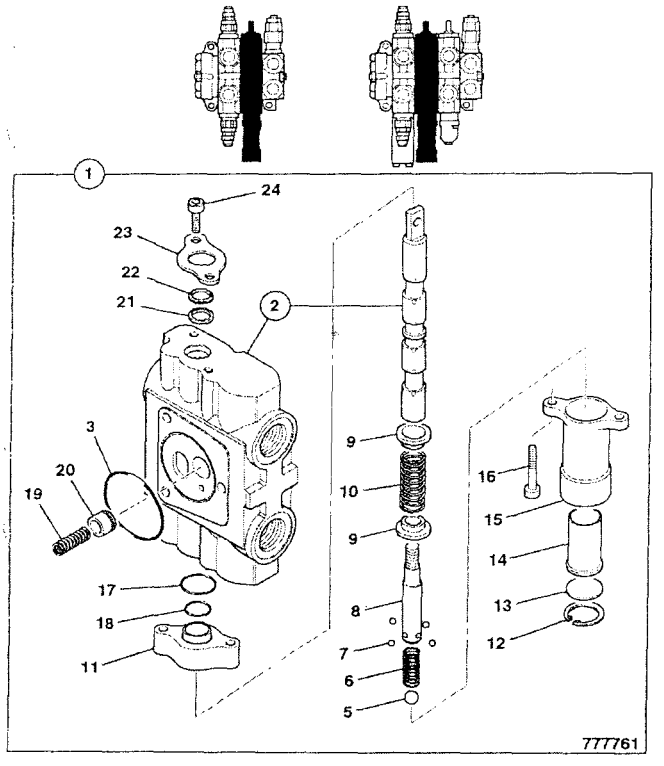

ITEM	PART NO	CHANGE NO	DESCRIPTION	REMARKS	USAGE CODE	QTY
23	25/222718		Plate, end plate			1
24	25/606101		Screw			2

E3-2-30 VALVE, LOADER, MAIN RELIEF

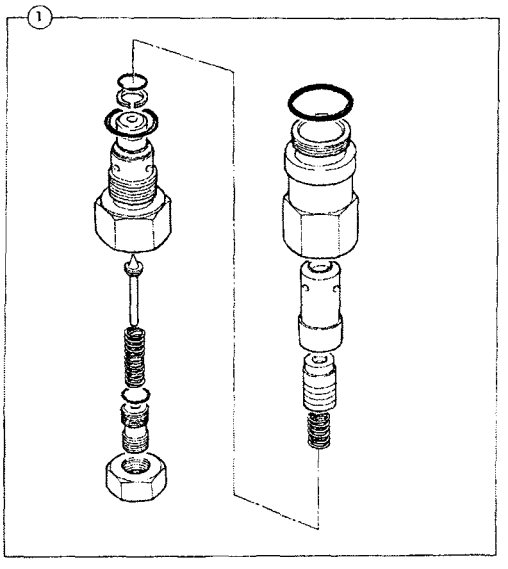

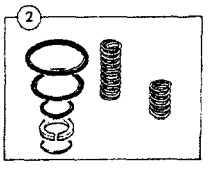

261640

	FROM	TO	FROM	TO
3C PLUS				
3C 14				

ITEM	PART NO	CHANGE NO	DESCRIPTION	REMARKS	USAGE CODE	QTY
1	25/222659		Valve, assembly, main relief			1
2	25/618902		Kit-repair, relief valve			1

E3-2-35 VALVE, LOADER, AUXILIARY RELIEF, 2 & 3 SPOOL

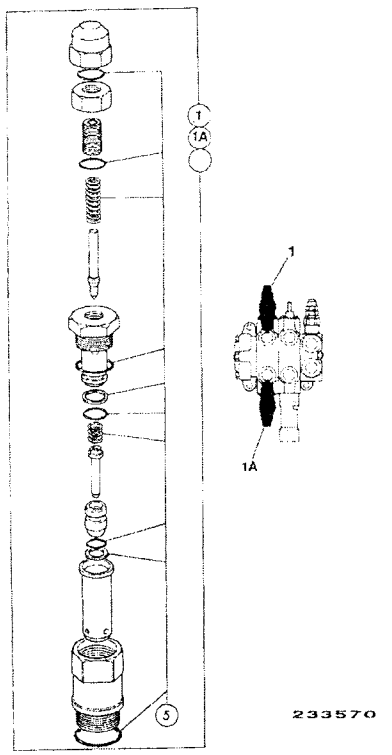

	FROM	TO	FROM	TO
3C PLUS				
3C 14				

ITEM	PART NO	CHANGE NO	DESCRIPTION	REMARKS	USAGE CODE	QTY
1	* 25/223705		Valve, auxiliary relief	Top port		1
1A	* 25/223701		Valve, auxiliary relief	Bottom port		1
5	25/974632		:Kit-repair			1

E3-2-40 VALVE, SECTION, SHOVEL, 3 SPOOL, ELECTRICAL DETENT, LOADER VALVE

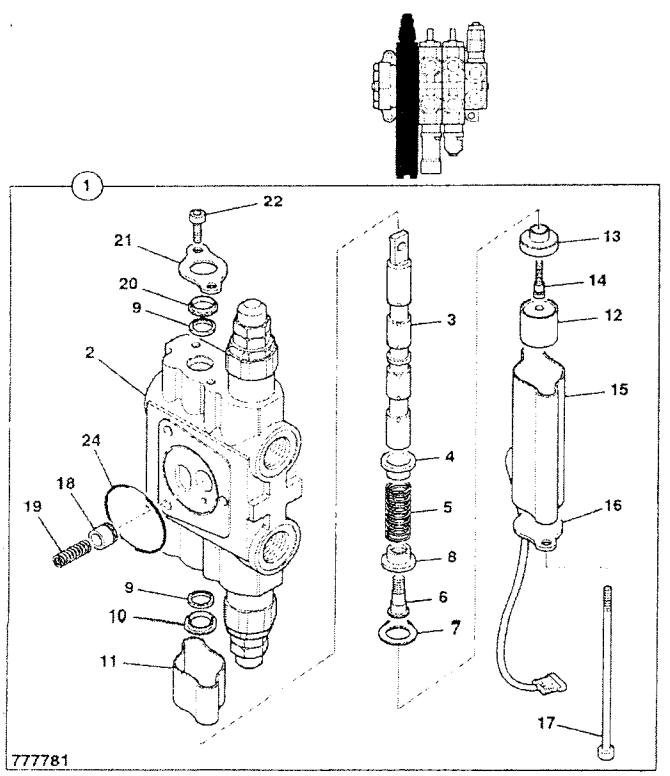

	FROM	TO	FROM	TO
3C PLUS				
3C 14				

ITEM	PART NO	CHANGE NO	DESCRIPTION	REMARKS	USAGE CODE	QTY
1	25/222713		Valve, section			1
2	NSP		:None serviced part	Body		1
3	NSP		:None serviced part	Spool		1
4	25/606834		:Seat, spring			1
5	25/606833		:Spring			1
6	25/621809		:Screw			1
7	25/621807		:Retainer			1
8	25/621808		:Retainer, spring			1
9	25/221934		:Seal			2
10	25/612211		:Retainer			1
11	25/612206		:Cap, spool			1
12	25/621803		:Sleeve, magnetic			1
13	25/621805		:Housing, claper			1
14	25/621806		:Screw, clamper housing			1
15	25/621804		:Cap, spool			1
16	25/612209		:Plate, end cap			1
17	25/621802		:Capscrew			2
18	25/606843		:Poppet			1
19	25/606844		:Spring			1
20	25/221933		:Seal			1
21	25/222718		:Plate, end plate			1
22	25/606101		:Screw			2

E3-2-40 VALVE, SECTION, SHOVEL, 3 SPOOL, ELECTRICAL DETENT, LOADER VALVE

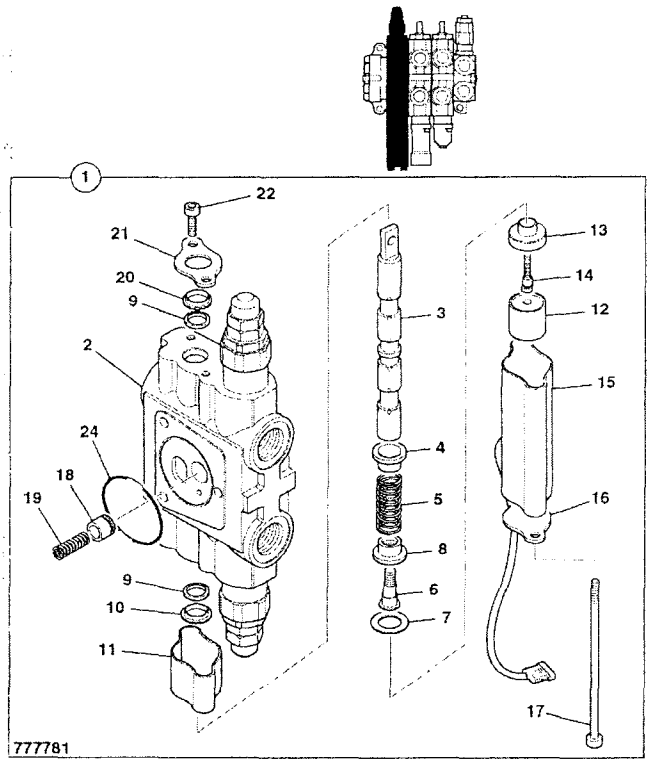

ITEM	PART NO	CHANGE NO	DESCRIPTION	REMARKS	USAGE CODE	QTY
24	25/606812		O Ring, interface, valve sections			1

E3-2-50 VALVE, SECTION, AUXILIARY, 3 SPOOL, LOADER VALVE

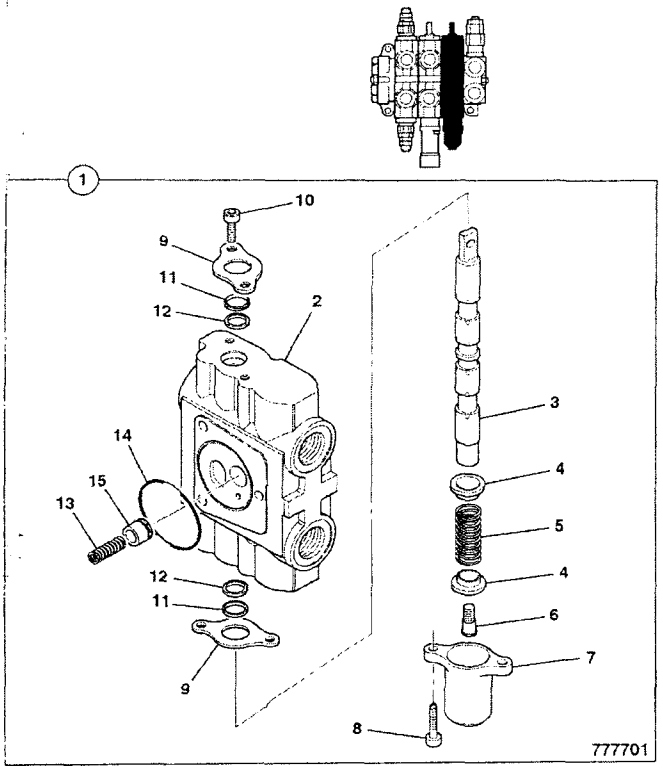

	FROM	TO	FROM	TO
3C PLUS				
3C 14				

ITEM	PART NO	CHANGE NO	DESCRIPTION	REMARKS	USAGE CODE	QTY
1	25/222715		Valve, section			1
2	NSP		:None serviced part			1
3	NSP		:None serviced part			1
4	25/606834		:Seat, spring			2
5	25/606833		:Spring			1
6	25/606828		:Spool, end			1
7	25/606846		:Cap, spool			1
8	25/606827		:Screw			2
9	25/222718		:Plate, end plate			2
10	25/606101		:Screw			2
11	25/221933		:Seal			2
12	25/221934		:Seal			2
13	25/606844		:Spring			1
14	25/606812		:O Ring, interface, valve sections			1
15	25/606843		:Poppet			1

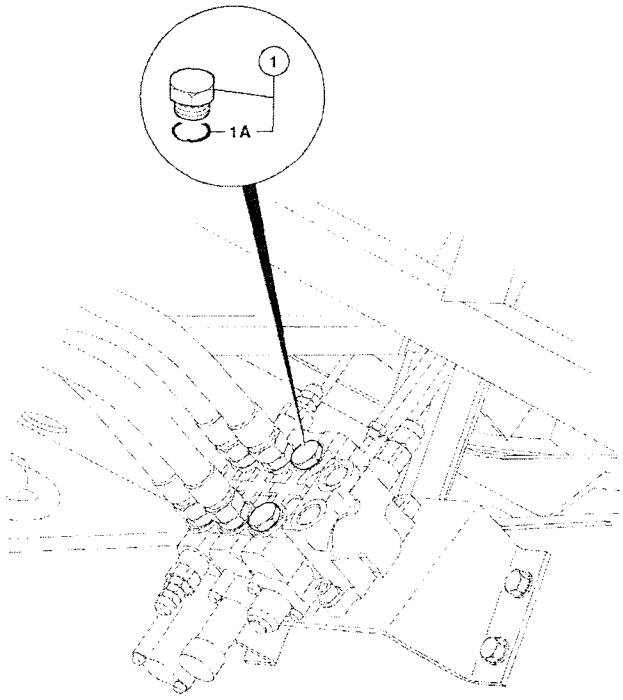

788200

	FROM	TO	FROM	TO
3C PLUS				
3C 14				

ITEM	PART NO	CHANGE NO	DESCRIPTION	REMARKS	USAGE CODE	QTY
1	1745/0003		Plug, blanking			2
1A	2401/0506		:O Ring			1

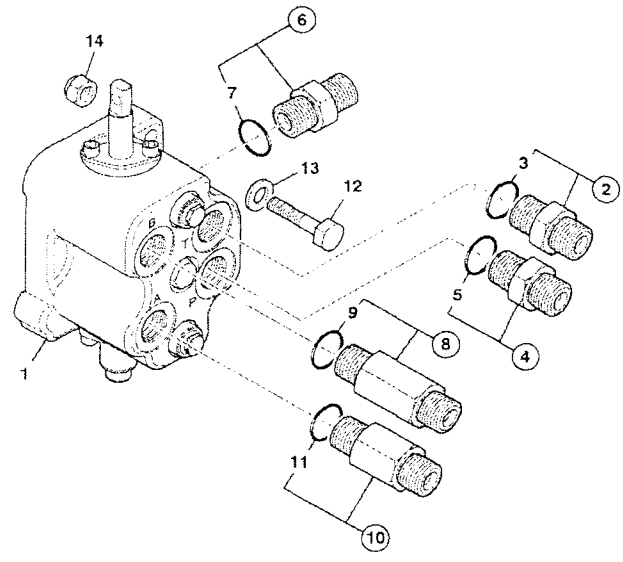

722911

	FROM	TO	FROM	TO
3C PLUS				
3C 14				

ITEM	PART NO	CHANGE NO	DESCRIPTION	REMARKS	USAGE CODE	QTY
1	25/221919		Valve, 1 spool,auxiliary, black			1
2	1620/2058		Adapter, M/M	T port		1
3	2401/0507		:O Ring			1
4	1620/2058		Adapter, M/M	P port		1
5	2401/0507		:O Ring			1
6	1620/2056		Adapter	HPCO		1
7	2401/0507		:O Ring			1
8	816/90231		Adapter, extended M/M, 7/8"SAE x 1/2"BSP			1
9	2401/0507		:O Ring			1
10	1620/2055		Adapter, 39.5mm lg. M/M	bottom port A		1
11	2401/0507		:O Ring			1
12	1315/3412Z		Bolt			2
13	1420/0008Z		Washer, Plain M10			2
14	1370/0303Z		Nut, lock, M10			2

E3-3-22 VALVE, AUXILIARY, COMPONENTS, EXCAVATOR, GEAR PUMP

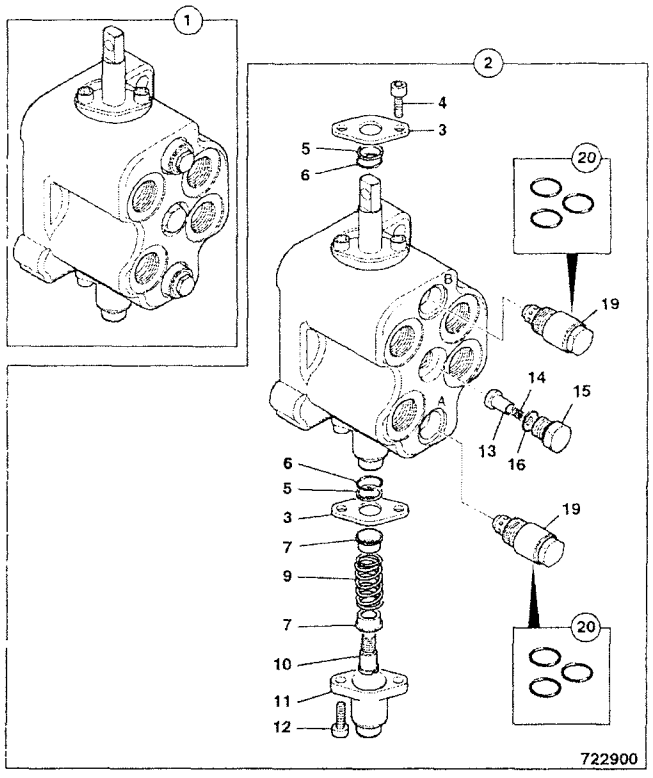

	FROM	TO	FROM	TO
3C PLUS				
3C 14				

ITEM	PART NO	CHANGE NO	DESCRIPTION	REMARKS	USAGE CODE	QTY
1	25/221919		Valve, 1 spool,auxiliary, black	Valve adaptors see E3-3-11		1
2	N.S.P.		.None serviced part	Valve section		1
3	25/607612		::End, spool			2
4	25/606101		::Screw			2
5	25/606835		::Seal, wiper			2
6	25/606836		:O Ring			2
7	25/605124		::Seat			2
9	25/606833		::Spring			1
10	25/606828		..Spool, end			1
11	25/606846		::Cap, spool			1
12	25/606827		::Screw			2
13	25/220924		::Poppet, check valve			1
14	25/220925		:Spring			1
15	25/220926		::Plug			1
16	25/607219		:::O Ring			1
19	25/222372		::Valve, relief, 138 bar		port B	1
	25/222371		::Valve, relief 207 bar		port A	1
20	25/222370		:::Kit-seal, relief valve			1

E3-5-10 VALVE ADAPTERS, EXCAVATOR, 14'0"

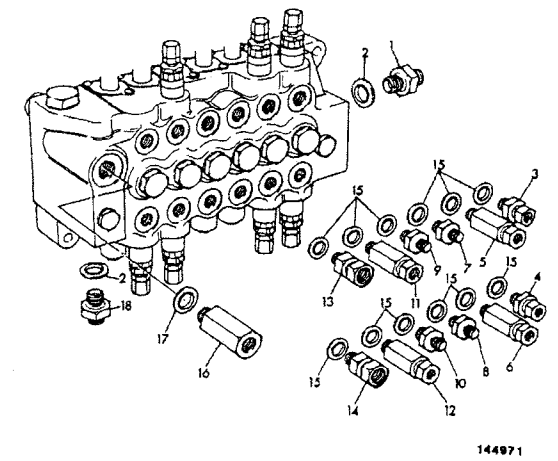

	FROM	TO	FROM	TO
3C PLUS				
3C 14				

ITEM	PART NO	CHANGE NO	DESCRIPTION	REMARKS	USAGE CODE	QTY
1	1620/2059		Adapter, 3/4"			1
2	2401/0508		:O Ring			1
3	816/90236		Adapter			1
4	816/90237		Restrictor, adapter 3. 0mm M/M			1
5	1620/2056		Adapter	JCB controls		1
6	816/90352		Restrictor, adaptr,one way 5.5mm	JCB controls		1
7	816/90234		Adapter, M/M			1
8	816/90365		Adapter, male/male			1
9	816/90234		Adapter, M/M			1
10	816/90365		Adapter, male/male			1
11	816/90283		Adapter, extended M/M	JCB controls		1
12	1620/2056		Adapter	JCB controls		1
13	816/90231		Adapter, extended M/M, 7/ 8"SAE x 1/2"BSP			1
14	1620/2055		Adapter, 39.5mm lg. M/M			1
15	2401/0507		O Ring	male end to valve items 3 to 14		1
	2401/0508		O Ring	male end to valve item 18		1
16	1620/2061		Adapter, M/M			1
17	2401/0510		O Ring	male end to valve item 16		1

ITEM	PART NO	CHANGE NO	DESCRIPTION	REMARKS	USAGE CODE	QTY
18	1620/2059		Adapter, 3/4"			1

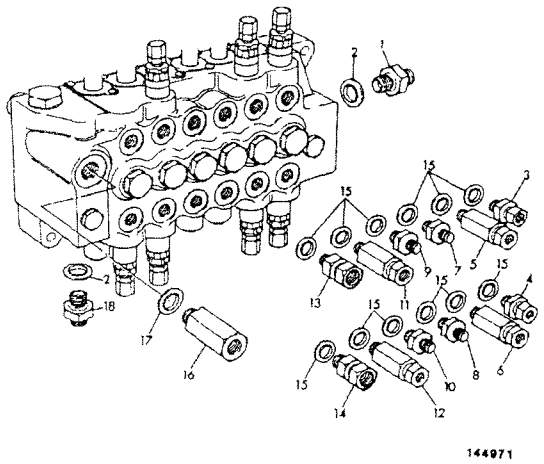

	FROM	TO	FROM	TO
3C PLUS				
3C 14				

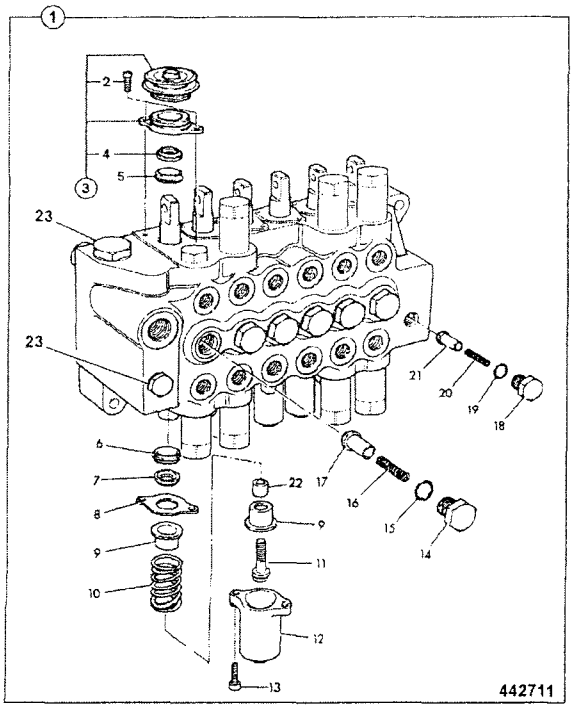

ITEM	PART NO	CHANGE NO	DESCRIPTION	REMARKS	USAGE CODE	QTY
1	25/221622		Valve, 6 spool excavator, centremount 14'			1
2	25/975705		:Screw			12
3	25/221745		:Kit-spool boot			6
4	25/975704		:Wiper			6
5	25/221208		:Seal			6
6	25/221208		:Seal			6
7	25/975704		:Wiper			6
8	25/606102		:Retainer, wiper			6
9	25/608201		:Retainer, spring			12
10	25/608202		:Spring	Boom, dipper, slew & bucket		4
	25/608203		:Spring	Stabiliser		2
11	25/608204		:Screw, spring retainer			6
12	25/608205		:Cover	With drain hole		6
13	25/606110		:Screw, cap			12
14	25/606111		:Cap			6
15	25/606112A		:O Ring			6
16	25/606113		:Spring			6
17	25/606114		:Seat			6
18	25/606115		:Cap			1
19	25/606116		:O Ring			1
20	25/606117		:Spring			1

E3-6-21 VALVE-EXCAVATOR, WITH SPOOL GAITERS, CENTREMOUNT,CONTROLLED LEAK

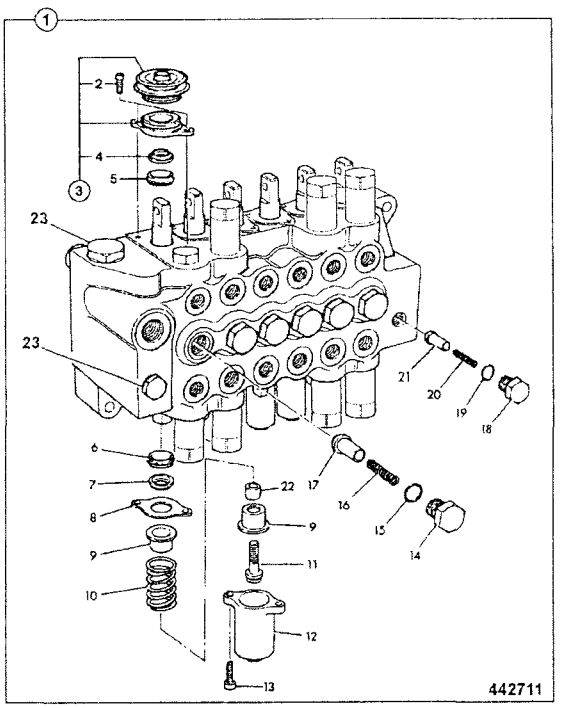

ITEM	PART NO	CHANGE NO	DESCRIPTION	REMARKS	USAGE CODE	QTY
21	25/974645		:Seat, check valve			1
22	25/608206		:Spacer			6
23	25/606822		:Plug, assembly			2

E3-6-22 VALVE-EXCAVATOR, WITHOUT SPOOL GAITER, CENTREMOUNT,CONTROLLED LEAK

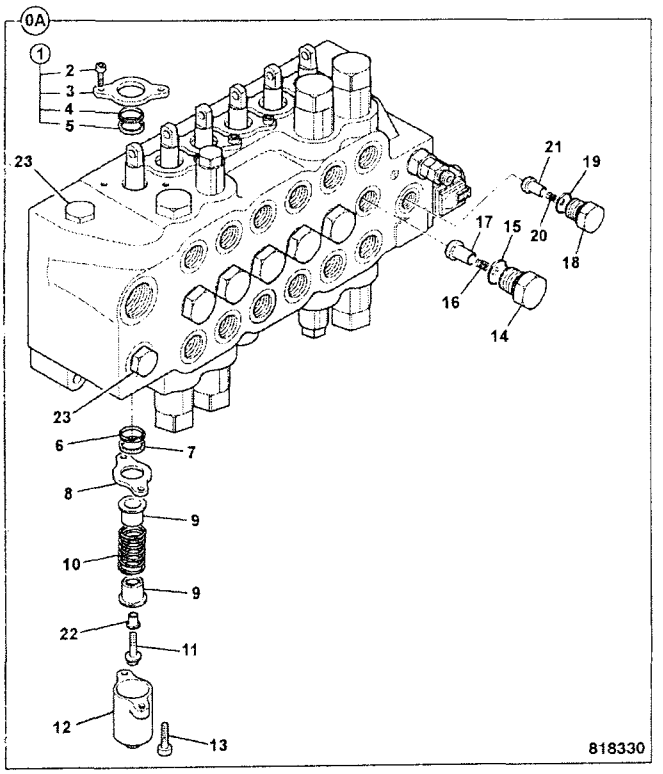

	FROM	TO	FROM	TO
3C PLUS				
3C 14				

ITEM	PART NO	CHANGE NO	DESCRIPTION	REMARKS	USAGE CODE	QTY
0A	25/221622		Valve, 6 spool excavator, centremount 14'			1
1	25/222660		:Kit, std spool gland			6
2	25/606101		::Screw			2
3	25/222198		::Plate, seal			1
4	25/222661		::Wiper, seal			1
5	25/221208		::Seal			1
6	25/221208		:Seal			6
7	25/222661		:Wiper, seal			6
8	25/606102		:Retainer, wiper			6
9	25/608201		:Retainer, spring			12
10	25/608202		:Spring	Boom, dipper, slew & bucket		4
	25/608203		:Spring	Stabiliser		2
11	25/608204		:Screw, spring retainer			6
12	25/608205		:Cover	With drain hole		6
13	25/606110		:Screw, cap			12
14	25/606111		:Cap			6
15	25/606112A		:O Ring			6
16	25/606113		:Spring			6
17	25/606114		:Seat			6
18	25/606115		:Cap			1
19	25/606116		:O Ring			1

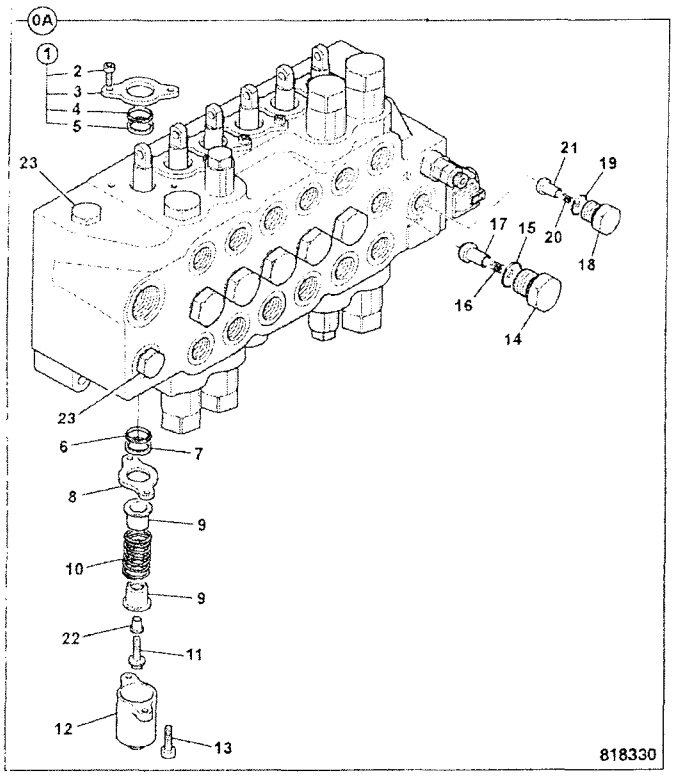

ITEM	PART NO	CHANGE NO	DESCRIPTION	REMARKS	USAGE CODE	QTY
20	25/606117		:Spring			1
21	25/974645		:Seat, check valve			1
22	25/608206		:Spacer			6
23	25/606822		:Plug, assembly			2

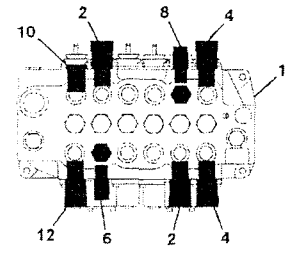

ISO CONTROLS

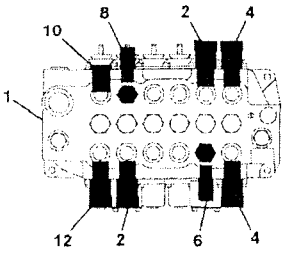

JCB CONTROLS

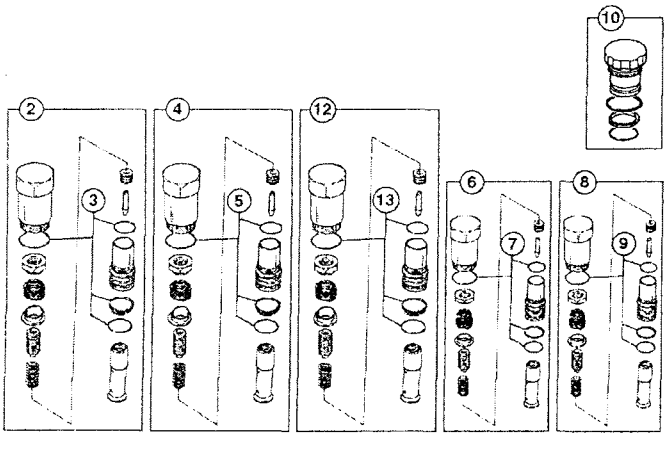

737870

	FROM	TO	FROM	TO
3C PLUS				
3C 14				

ITEM	PART NO	CHANGE NO	DESCRIPTION	REMARKS	USAGE CODE	QTY
1	25/221622		Valve, 6 spool excavator, centremount 14'			1
2	25/222499		:Valve, relief, 3600/2.5			2
4	25/222498		:Valve, relief, 3800/2.5			2
5	25/222305		::Seal, ARV service kit			1
6	25/223082		:Valve, relief, 5000/2.5			1
7	25/222190		::Kit, -RV seal and spring			1
8	25/222191		:Valve, relief 3600psi			1
9	25/222192		::Kit, -RV seal and spring			1
10	25/609901		:Plug			1
12	25/222499		:Valve, relief, 3600/2.5			1
13	25/222305		::Seal, ARV service kit			1

E3-7-1 FILTER, HYDRAULIC

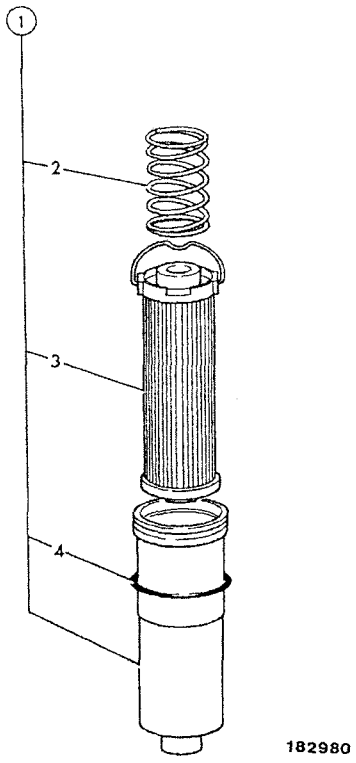

	FROM	TO	FROM	TO
3C PLUS				
3C 14				

ITEM	PART NO	CHANGE NO	DESCRIPTION	REMARKS	USAGE CODE	QTY
1	*32/926051		Filter, hydraulic 5 micro			1
2	814/00358		Spring			1
3	32/925346		Element, hydraulic filter, 12 micron,229mm long	Normal service		1
	*32/926001		Element, hydraulic filter, 5 micron 254 long	System clean, max 50 hours only		1
4	2403/0224		O Ring			1

E3-8-3 LUBRICANTS & FILTERS

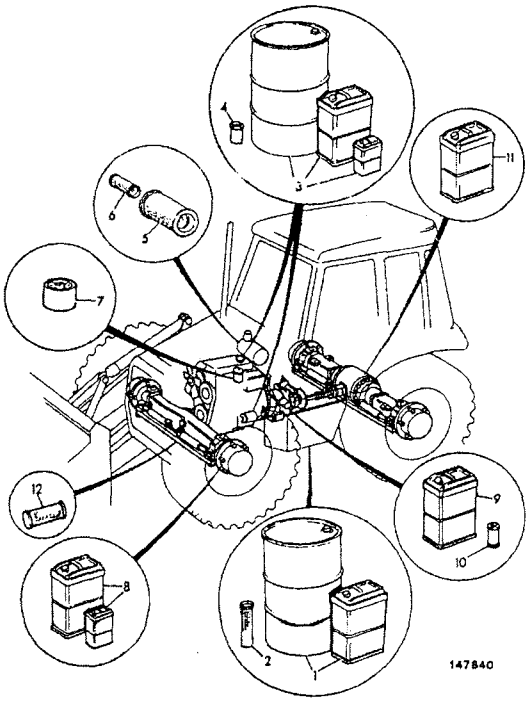

	FROM	TO	FROM	TO
3C PLUS				
3C 14				

ITEM	PART NO	CHANGE NO	DESCRIPTION	REMARKS	USAGE CODE	QTY
1	4002/1023		Fluid, hydraulic JCB HP32, 25 litre	See Note 1 25 litres. Machine capacity 130 litre		A/R
	4002/1024		Fluid, hydraulic JCB HP32, 200 litre			a/r
	4002/0801		Fluid, hydraulic 46, 5 litre	Optional Hot climate		a/r
	4002/0802		Fluid, hydraulic 46, 25 litre	Optional Hot climate		a/r
	4002/0803		Fluid, hydraulic 46, 200 litre			a/r
	4002/1223		Fluid, hydraulic, 25 litres, Biodegradable			a/r
	4002/1224		Fluid, hydraulic 205 litres, Biodegradable			a/r
2	*32/926001		Element, hydraulic filter, 5 micron 254 long			1
	32/925341		Element, hydraulic filter, 5 micron, 254mm long	System clean, max 50 hours only		1
3	4001/1701		Oil, JCB 10W/30, 5 litres			A/R
	4001/1501		Oil, 15W/40, 5 litres			A/R
	4001/1901		Oil, JCB 20/W50, 5 Litre			A/R
3A	4001/1702		Oil, JCB 10W/30, 25 litres			A/R
	4001/1502		Oil, 15W/40, 25 litres			A/R
	4001/1902		Oil, JCB 20/W50, 25 Litre			A/R

Note 1: For all items on this page, Refer to the Service Workshop Manual before use.

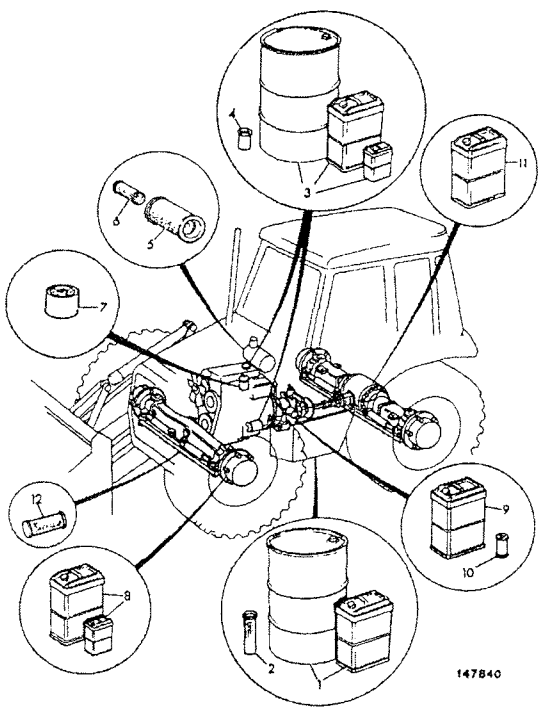

ITEM	PART NO	CHANGE NO	DESCRIPTION	REMARKS	USAGE CODE	QTY
3B	4001/1703		Oil, JCB 10W/30, 200 litres			A/R
	4001/1502		Oil, 15W/40, 25 litres			A/R
	4001/1902		Oil, JCB 20/W50, 25 Litre			A/R
4	320/04133		Filter, engine oil			1
5	32/925682		Element, air filter, main	Engine		1
6	32/925683		Element, air filter, safety	Engine		1
7	320/07057		Filter, fuel	Engine		1
8	4000/0301		Oil, HD90 gear, 5 litre			A/R
	4000/0302		Oil, HD90 gear, 25 litre			A/R
	4000/0303		Oil, HD 90 gear, 200 Litres			A/R
	4000/0702		Oil, JCB Special gear, 5 litres	Front axle with LSD		A/R
	4000/0701		Oil, Special Gear Oil, Plus. 25 litre	Front axles with LSD		A/R
	4000/0703		Oil, Special Gear Oil, Plus. 200 litre	Front axle with LSD		A/R
9	4000/2501		Fluid, transmission 10W, 5 litre			A/R
	4000/2502		Fluid, transmission 10W, 25 litre			A/R
	4000/2503		Fluid, transmission 10W, 200 litre			1
10	581/18076		Element, transmission filter, 120.7mm long	Manual, Powershift & Autoshift Transmission		1
11	4000/0701		Oil, Special Gear Oil, Plus. 25 litre			A/R
	4000/0703		Oil, Special Gear Oil, Plus. 200 litre			A/R

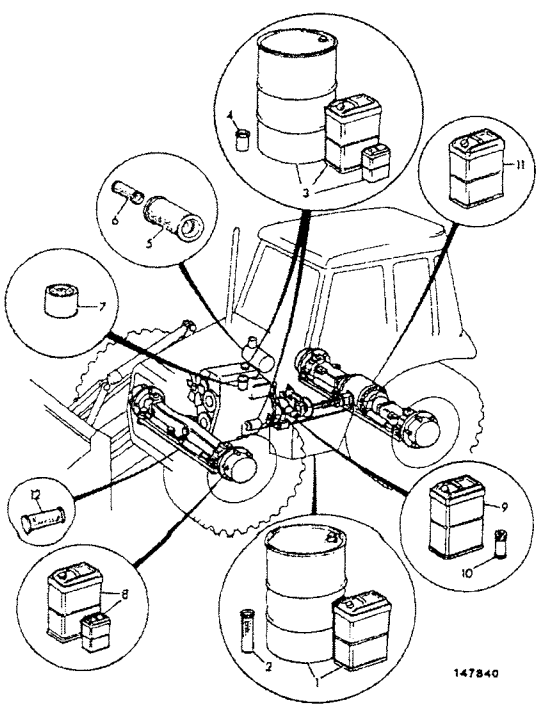

ITEM	PART NO	CHANGE NO	DESCRIPTION	REMARKS	USAGE CODE	QTY
12	4003/2007		Grease, cartridge, HP 400 gm			A/R
	4003/2006		Grease, HP 12.5kg	12.5 kg		A/R
	4003/2010		Grease, JCB high pressure, 50kg			A/R
	4003/2017		Grease, HP, 400g x 24			A/R
13	4004/0501		Sealant, Waxoyl, aerosol			A/R
	4004/0502		Sealant, Waxoyl, 5 ltr can			A/R
14	4006/0101		Fluid, anti-freeze, 1 Ltr			A/R
	4006/0102		Fluid, anti-freeze, 5 litre			A/R
	4006/0103		Fluid, anti-freeze, 25 Ltr			A/R
	4006/0104		Fluid, anti-freeze, 200 Ltr			A/R
15	4002/0503		Brake, fluid, 5 ltr			1

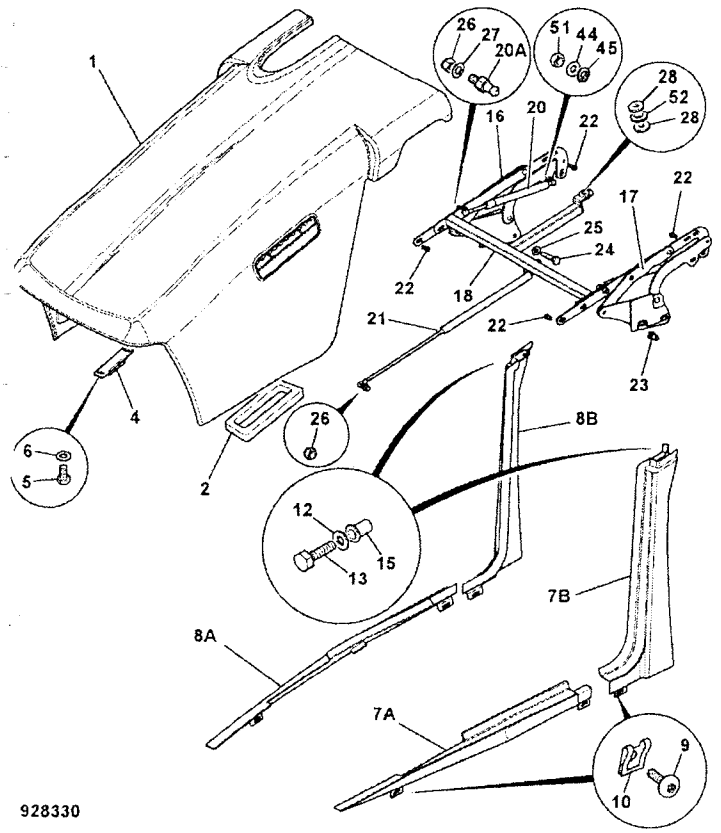

	FROM	TO	FROM	TO
3C PLUS	M1395000			
3C 14	M1395000			

ITEM	PART NO	CHANGE NO	DESCRIPTION	REMARKS	USAGE CODE	QTY
1	128/C6611		Bonnet			1
1A	128/15667		:Vent, assembly, air induction			1
1B	1430/1206Z		:Screw, No 8 x 1 1/4"	to hold 1A to 1		2
2	926/51401	Superseded	Gasket, air intake			1
	332/D5552		Seal, air filter			1
4	332/C0442		Catch, bonnet striker			1
5	1315/0301Z		Screw, hex head, M8 X 12			2
6	1420/0007Z		Washer, plain, M8			2
7A	346/00565		Rail, bonnet lower LH, yellow			1
7B	128/17722		Rail, bonnet upper LH, Loxam red			1
8A	346/00566		Rail, bonnet lower RH, yellow			1
8B	346/00564		Rail, bonnet upper RH, yellow			1
9	826/11692		Screw, Torx M6x35			4
10	826/01465		Retainer, "U" nut			4
12	1420/0006Z		Washer, M6			2
13	1315/0207Z		Screw, M6 x 25mm long			2
15	826/01810		Nut, rivet, M6 open end, for 5.5 to 8mm plate			2
16	128/14553	To M TBA	Hinge, bonnet RH			1

B1-5-3 BONNET ASSEMBLY, 2WS

9812/0080U
ISSUE 1

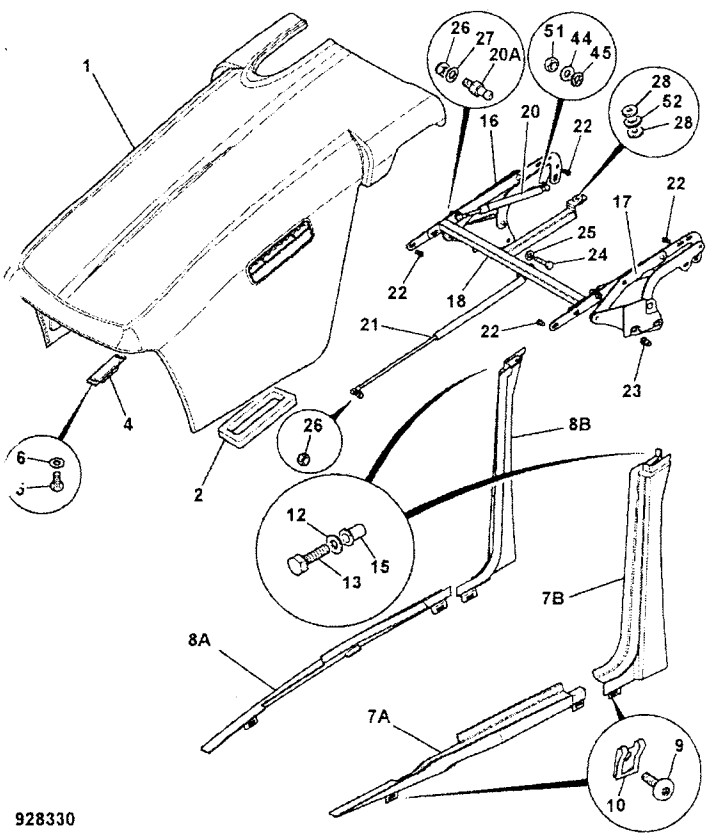

ITEM	PART NO	CHANGE NO	DESCRIPTION	REMARKS	USAGE CODE	QTY
	128/C1888		Hinge, bonnet, RH			1
17	128/14552	To M TBA	Hinge, bonnet LH			1
	128/C1889		Hinge, bonnet, LH			1
18	335/07952		Hinge, torsion beam			1
20	331/66727		Strut, gas 235-390			2
20A	331/60391		Ball, fitting 10 X M8			1
21	331/66785		Strut, gas 585x327			1
22	826/11284		Screw, M8x16, button head			8
23	826/01249		Nut, rivet M10 open end, for 6 to 8.5mm plate			4
24	1315/0409Z		Screw, hex. head			4
25	1420/0008Z		Washer, Plain M10			4
26	1371/0203Z		Nut			3
27	1420/0007Z		Washer, plain, M8			4
28	823/10639		Washer, 9x26x5			2
44	1418/0011Z		Washer, lock			2
45	1370/0202Z		Nut, M8			4
51	1370/0201Z		Nut, M8			2
52	2410/0304		Grommet			1

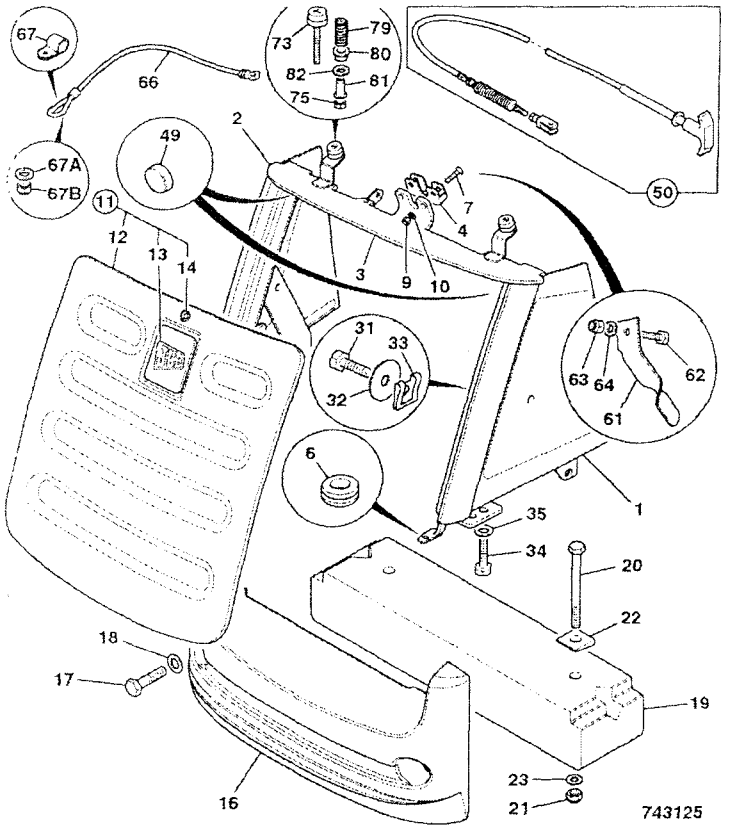

	FROM	TO	FROM	TO
3C PLUS		M1002999		
3C 14		M1002999		

ITEM	PART NO	CHANGE NO	DESCRIPTION	REMARKS	USAGE CODE	QTY
1	335/08369		Grille, side LH, 2WS			1
2	335/08370		Grille, side,RH, 2WS			1
3	335/09817		Grille, housing, 2WS			1
4	331/27126		Lock, bonnet			1
6	2410/0304		Grommet			2
7	826/01814		Screw, M8x35 countersunk			2
9	1370/0203Z		Nut, self lock, M8			2
10	1420/0007Z		Washer, plain, M8			2
11	N.S.P.		None serviced part			1
12	335/08180		Grille, front, black			1
13	817/19661		Decal, JCB logo, 100x100			1
14	162/03434		Lock, barrel assembly			1
16	331/46249		Bumper, front 46kg	Standard		1
	331/46250		Bumper, front 100kg			1
17	1315/3816Z		Bolt, M20 x 70			2
18	1420/0012Z		Washer			2
19	.		'See Remark'	items 19 to 23 not fitted		1
31	1315/0205Z		Bolt			2
32	1411/0001Z		Washer			2
33	826/11392		Nut, M6 clip on			2
34	1315/0408Z		Bolt, M10x30			4

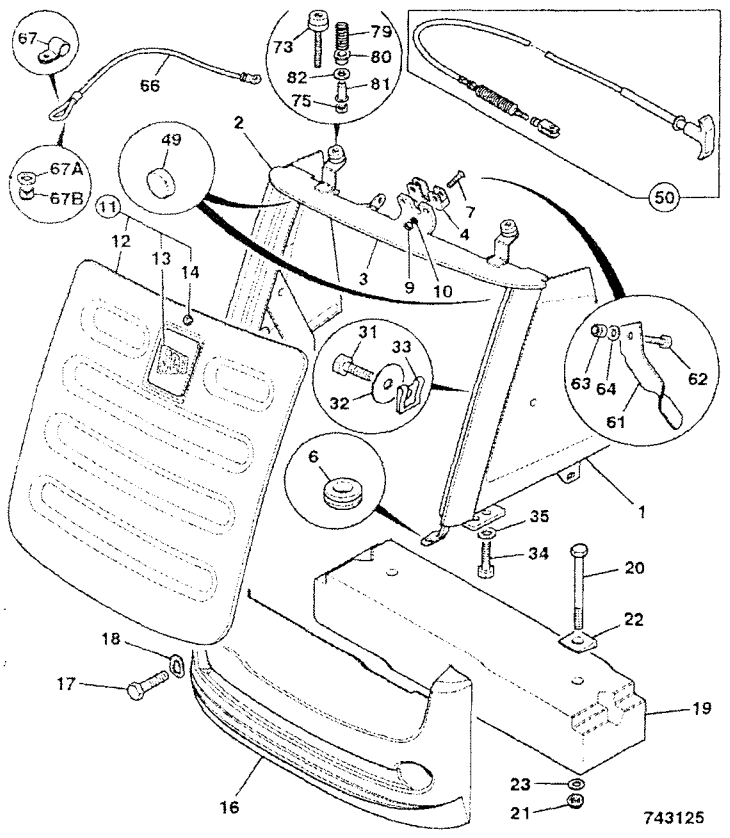

ITEM	PART NO	CHANGE NO	DESCRIPTION	REMARKS	USAGE CODE	QTY
35	1420/0008Z		Washer, Plain M10			4
49	926/22100		Spacer, block			2
50	910/60199		Cable, bonnet release	Cab builds only		1
61	331/48761		Lever, bonnet release	Canopy builds only		1
62	1315/0205Z		Bolt	Canopy builds only#		1
63	1370/0103Z		Nut, Self lock, M6	Canopy builds only		1
64	1420/0006Z		Washer, M6	Canopy builds only		1
66	331/47156		Wire, bonnet pull down, 1800mm long			1
67	821/10227		Clip, P			1
67A	1412/0002Z		Washer			1
67B	1370/0203Z		Nut, self lock, M8			1
73	835/10129		Buffer, M8x65			2
75	1370/0203Z		Nut, self lock, M8			2
79	814/10201	Superseded	Spring, compression			2
	814/10213		Spring, compression			2
80	829/31270		Bush			2
81	826/01627		Nut, rivet M8 open end, for 8 to 10.5mm plt.			2
82	1411/0004Z		Washer			2

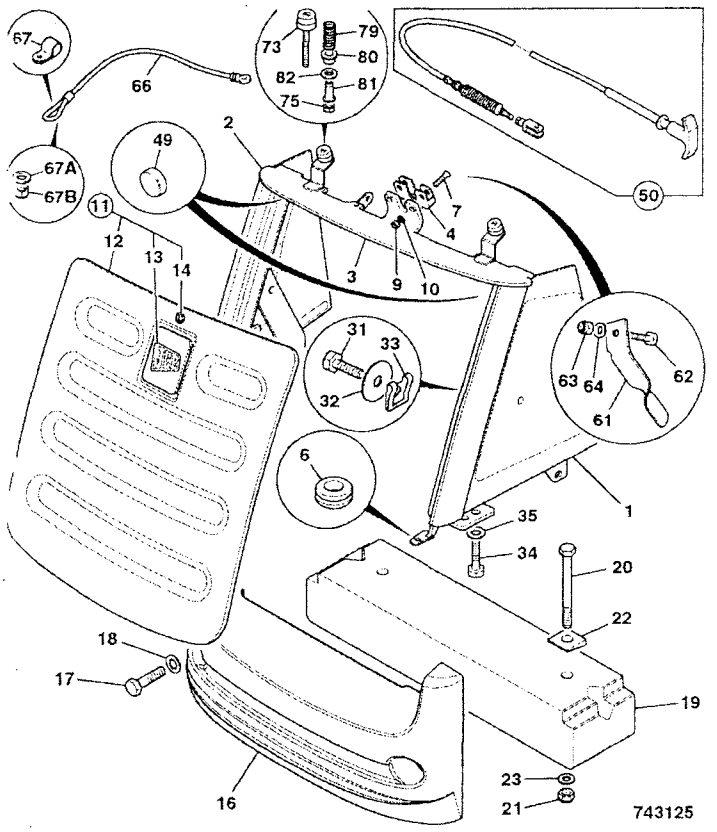

	FROM	TO	FROM	TO
3C PLUS	M1395000			
3C 14	M1395000			

ITEM	PART NO	CHANGE NO	DESCRIPTION	REMARKS	USAGE CODE	QTY
1	128/C6734		Grille, LH side 2WS			1
2	128/C6733		Grille, RH side 2WS			1
3	128/C0428		Grille, housing			1
4	331/27126		Lock, bonnet			1
6	2410/0304		Grommet			2
7	826/01814		Screw, M8x35 countersunk			2
9	1370/0203Z		Nut, self lock, M8			2
10	1420/0007Z		Washer, plain, M8			2
11	128/14741		Grille, assembly front			1
12	335/08180		:Grille, front, black			1
13	817/19661		:Decal, JCB logo, 100x100			1
14	*162/03434		:Lock, barrel assembly			1
16	331/46249		Bumper, front 46kg	Standard	A	1
	331/46250		Bumper, front 100kg		A	1
	331/46251		Bumper, front 180kg		B	1
17	1315/3816Z		Bolt, M20 x 70		A	2
	1315/3820Z		Bolt		B	2
18	1420/0012Z		Washer			2
19	331/34478		Counterweight, 75 Kg	If fitted	B	1
	331/34480		Counterweight, 156 Kg	If fitted	B	1
20	1315/3824Z		Bolt, M20 x 140lg	To fit item 19		2
21	1370/0703Z		Nut, M20	To fit item 19		2

B1-6-21 GRILLE, FRONT, 2WS

9812/0080U
ISSUE 1

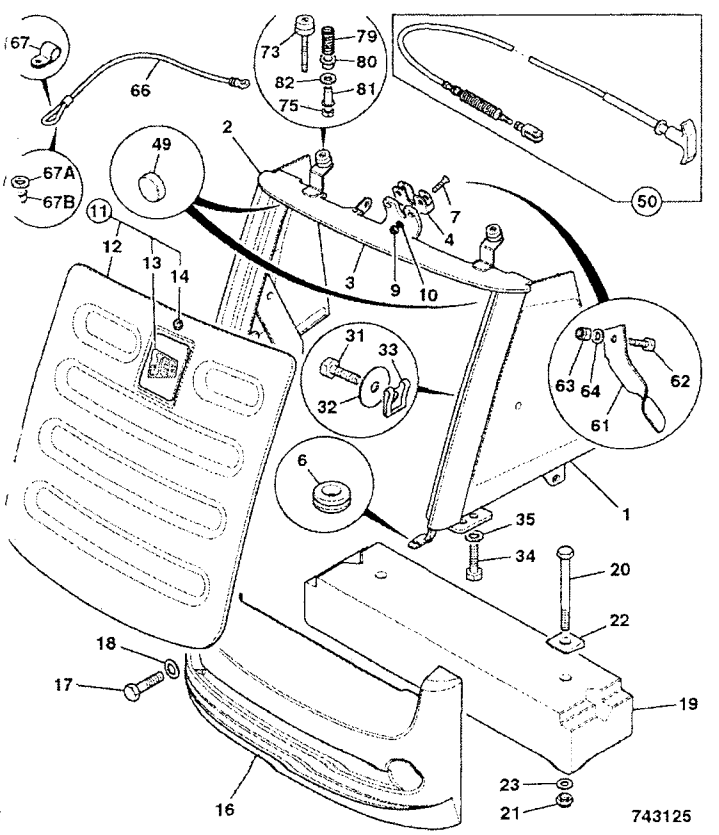

ITEM	PART NO	CHANGE NO	DESCRIPTION	REMARKS	USAGE CODE	QTY
22	823/10429		Washer, taper M20	To fit item 19		2
23	1420/0012Z		Washer	To fit item 19		2
31	1315/0205Z		Bolt			2
32	*1412/0001Z		Washer			2
33	826/11392		Nut, M6 clip on	supplied with items 1 & 2		2
34	1315/0408Z		Bolt, M10x30			4
35	1420/0008Z		Washer, Plain M10			4
49	926/22100		Spacer, block			2
50	332/C7664		Cable, bonnet release	Cab builds only		1
50A	826/01144		Tie, cable, 200mm long	for item 50		1
61	331/48761		Lever, bonnet release	Canopy builds only		1
62	1315/0205Z		Bolt	Canopy builds only#		1
63	1370/0103Z		Nut, Self lock, M6	Canopy builds only		1
64	1420/0006Z		Washer, M6	Canopy builds only		1
66	331/47156		Wire, bonnet pull down, 1800mm long			1
67	821/10227		Clip, P			1
67A	1412/0002Z		Washer			1
67B	1370/0203Z		Nut, self lock, M8			1
73	835/10129		Buffer, M8x65			2
75	*1370/0203Z		Nut, self lock, M8			2
79	814/10201	Superseded	Spring, compression			2
	814/10213		Spring, compression			2
80	829/31270		Bush			2
81	826/01627		Nut, rivet M8 open end, for 8 to 10.5mm plt.			2

B1-6-21 GRILLE, FRONT, 2WS

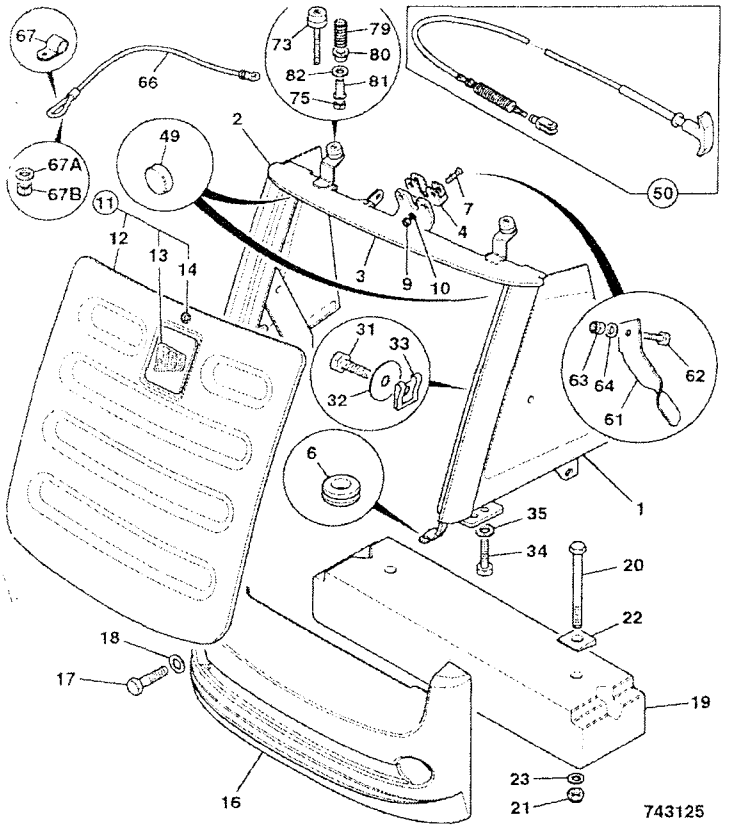

ITEM	PART NO	CHANGE NO	DESCRIPTION	REMARKS	USAGE CODE	QTY
82	1411/0004Z		Washer			1

B1-7-1 STEP, CAB ACCESS, HYDRAULIC TANK SIDE

	FROM	TO	FROM	TO
3C PLUS				
3C 14				

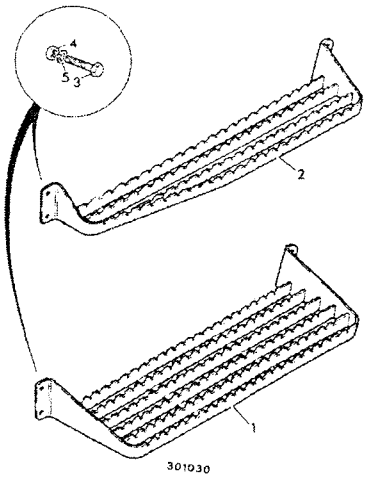

ITEM	PART NO	CHANGE NO	DESCRIPTION	REMARKS	USAGE CODE	QTY
1	331/27895		Step, lower, 214e			1
2	331/27897		Step, upper, 214e			1
3	1315/0405Z		Screw, M10 x 20mm long			8
4	1370/0303Z		Nut, lock, M10			8
5	1420/0008Z		Washer, Plain M10			8

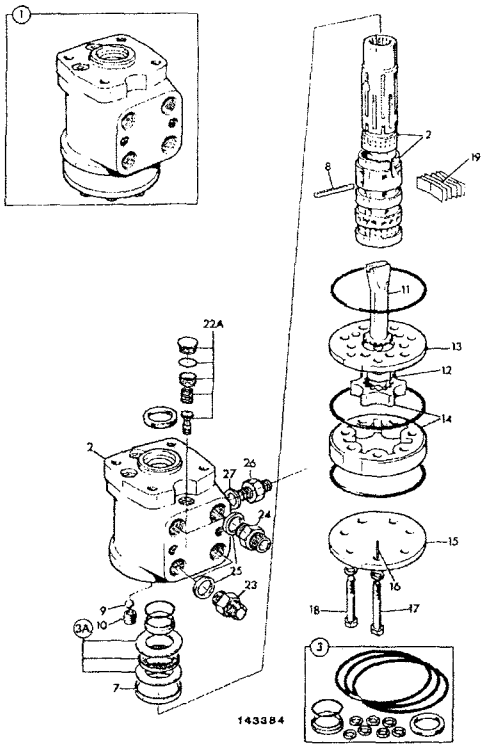

	FROM	TO	FROM	TO
3C PLUS				
3C 14				

ITEM	PART NO	CHANGE NO	DESCRIPTION	REMARKS	USAGE CODE	QTY
1	35/412300		Valve, steer 250 load sens, without anti-shock			1
2	N.S.P.		:None serviced part			1
3	35/404202		:Kit-repair			1
3A	35/404902		:Bearing, complete			1
7	35/400502		:Ring			1
8	35/400507		:Pin, cross			1
9	35/400508		:Ball			1
10	35/400510		:Bush			1
11	35/412301		:Drive			1
12	.		:'See Remark'	Not fitted or required		1
13	35/409301		:Plate, distributor			1
14	35/412302		:Kit-gear			1
15	35/400511		:Plate, end			1
16	NSP		:None serviced part	Part of item 17		1
17	35/412303		:Bolt			1
18	35/412304		:Bolt			6
19	35/407009		:Spring, kit			1
22A	35/409303		:Valve, relief assembly			1
23	1620/0004		Adapter, 3/4"UNF SAE "O" ring, 3/8"BSP male			2
24	816/17072		Adapter			2

E3-10-10 VALVE, STEERING, 2WS-USA BUILDS, 250 LOAD SENSING

9812/0080U
ISSUE 1

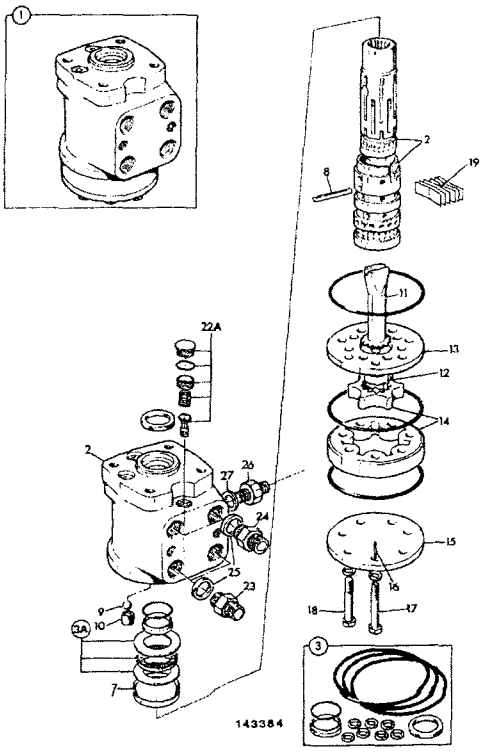

ITEM	PART NO	CHANGE NO	DESCRIPTION	REMARKS	USAGE CODE	QTY
25	2401/0506		O Ring	Component part of item 23, 24		1
26	1620/0001		Adapter			1
27	2401/0503		:O Ring	Component part of item 26		1

	FROM	TO	FROM	TO
3C PLUS				
3C 14				

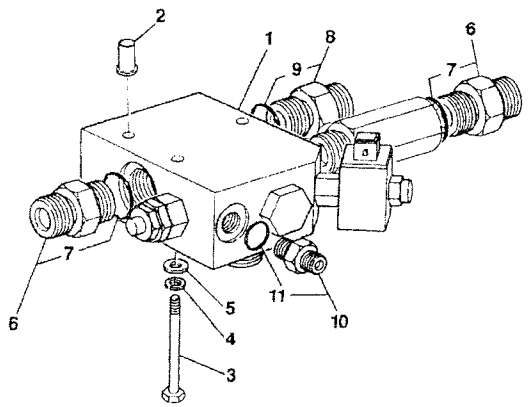

ITEM	PART NO	CHANGE NO	DESCRIPTION	REMARKS	USAGE CODE	QTY
1	25/221197		Valve, solenoid p. flow, centre mount hammer			1
1A	717/20137		:Coil, 12v	coil only		1
1B	25/221755		:Cartridge	cartridge only		1
2	626/01106		Nut, rivet,M8			3
3	1315/3318Z		Bolt, M8x80mm Long			3
4	1425/0007Z		Washer, spring			3
5	1420/0007Z		Washer, plain, M8			3
6	1620/2059		Adapter, 3/4"	Port CF & P		2
7	2401/0508		:O Ring			1
8	1620/2059		Adapter, 3/4"	Port EF		1
9	2401/0508		:O Ring			1
10	1620/2051		Adapter, 1/4"BSP x 9/16"SAE	Port T		1
11	2401/0503		:O Ring			1
12	816/00196		:Cap, blanking 3/4"BSP, steel			1

268740

E

E1 HOSE & PIPEWORK
E2 PUMP/MOTOR & PUMP DRIVE
E3 VALVES & HYDRAULIC FILTERS
● E4 RAMS

ENGLISH

E4-1-41 RAM, LIFT, 50MM ROD X 80MM CYL
E4-2-21 RAM, SHOVEL, 50MM ROD X 80MM CYL
E4-3-1 RAM, STEERING, 2WD
E4-3-2 RAM, STEERING, 4WD
E4-4-2 RAM, CLAMSHOVEL, 6 IN 1
E4-5-1 RAM, BOOM, 110MM CYL X 60MM ROD
E4-6-1 RAM, DIPPER, 100MM CYL X 60MM ROD
E4-7-2 RAM, BUCKET, MONO DIPPER
E4-7-32 RAM, BUCKET, EXTRADIG DIPPER
E4-8-11 RAM, EXTENSION, EXTRADIG DIPPER
E4-8-12 RAM, EXTENSION, EXTRADIG DIPPER
E4-10-11 RAM, STABILISER, CENTREMOUNT, 90 X 50
E4-10-21 RAM, STABILISER, CENTREMOUNT, 90 X 60, 3C
E4-11-11 RAM, SLEW/SWING
E4-14-1 RAM, JAW BUCKET

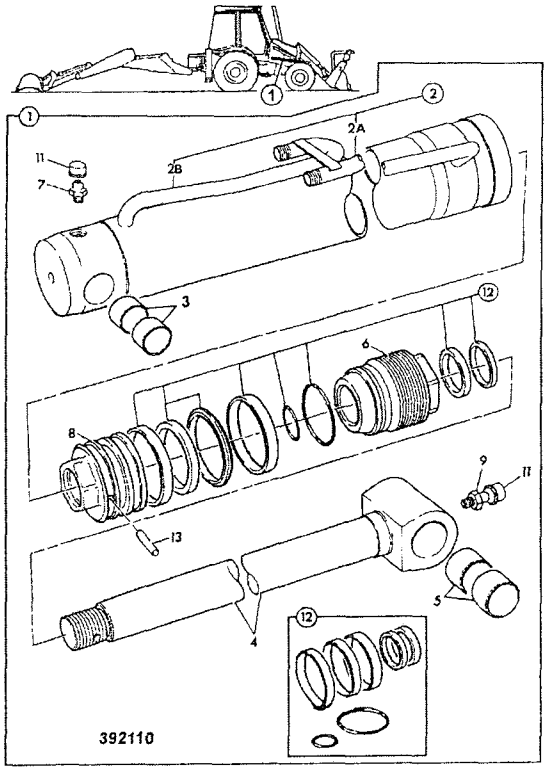

	FROM	TO	FROM	TO
3C PLUS				
3C 14				

ITEM	PART NO	CHANGE NO	DESCRIPTION	REMARKS	USAGE CODE	QTY
1	576/60163		Ram, loader lift			1
2	576/70161		:Cylinder, loader lift			1
2A	NSP		::None serviced part			1
2B	NSP		::None serviced part			1
3	831/10181		:Bearing, 50.94-55.9			1
4	590/40581		:Rod, piston, 50X957, lift ram			1
5	1208/0015		:Bush			1
6	594/14279		:Kit-end cap			1
7	1450/0001		:Nipple, grease, straight, 1/8 BSP			1
8	595/27100		:Head, piston			1
9	1450/0001		:Nipple, grease, straight, 1/8 BSP			1
11	835/00017		:Cap, grease nipple			2
12	991/00102		:Kit, seal, 50mm rod x 80mm cyl			1
13	826/01182		:Dowel			1

E4-2-21 RAM, SHOVEL, 50MM ROD X 80MM CYL

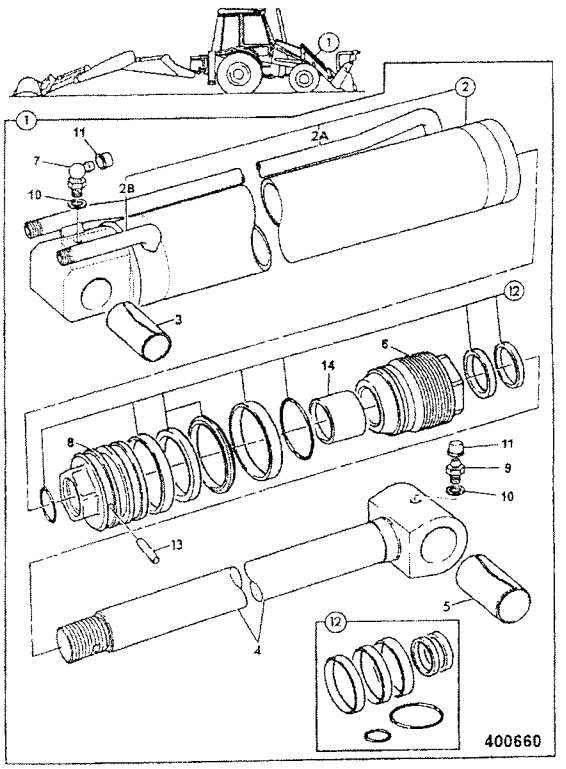

	FROM	TO	FROM	TO
3C PLUS				
3C 14				

ITEM	PART NO	CHANGE NO	DESCRIPTION	REMARKS	USAGE CODE	QTY
1	556/60236		Ram, assembly, shovel	Standard build		2
2	556/70087		:Cylinder, shovel			1
2A	NSP		::None serviced part			1
2B	NSP		::None serviced part			1
3	1208/0018		:Bush			1
4	590/40260		:Rod, piston, Shovel ram 213			1
	590/40307		:Rod, piston, 40x909, Shovel ram + reset			1
5	1208/0015		:Bush			1
6	594/00120		:Cap, end, 70X40			1
7	1450/1001		:Nipple, grease, 90deg. angle			1
8	595/10027		:Head, piston			1
9	1450/0001		:Nipple, grease, straight, 1/8 BSP			1
10	1403/0001		:Washer, aluminium			1
11	835/00017		:Cap, grease nipple			2
12	991/00100		:Kit-seal, 70x40			1
13	826/01182		:Dowel			1
14	2411/9004		:Bearing			1

E4-3-1 RAM, STEERING, 2WD

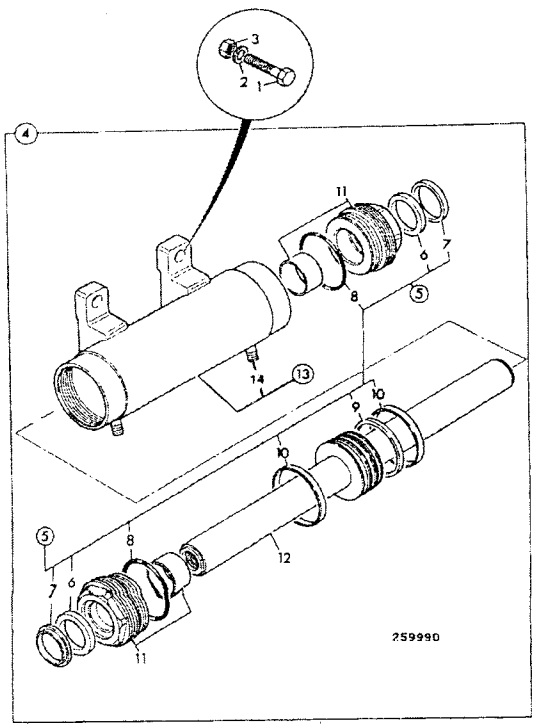

	FROM	TO	FROM	TO
3C PLUS				
3C 14				

ITEM	PART NO	CHANGE NO	DESCRIPTION	REMARKS	USAGE CODE	QTY
1	1315/3721Z		Bolt, M16 x 110			4
2	1420/0011Z		Washer, M16 plain			4
3	1370/0603Z		Nut, M16			4
4	573/10031		Ram, assembly, steer, power trackrod			1
5	991/00156		:Kit-seal, power track rod ram, 75mm cyl x 45mm rod			1
6	2411/0605		::Seal, gland, 45mm rod			2
7	2411/8705		::Seal, wiper, 45mm rod			2
8	2302/0307		::O Ring			2
9	2411/1132		::Seal, piston head, 75mm cyl			1
10	2411/7975		::Ring, wear, 75mm cyl			2
11	594/14074		:Kit-end cap, 75mm cyl x 45mm rod			2
12	590/40210		:Rod, piston			1
13	573/20000		:Cylinder, power track rod, 75mm			1

E4-3-2 RAM, STEERING, 4WD

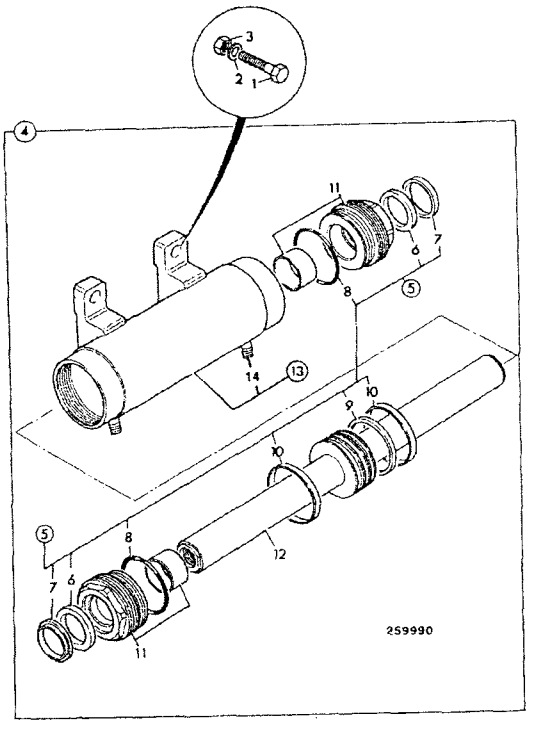

	FROM	TO	FROM	TO
3C PLUS				
3C 14				

ITEM	PART NO	CHANGE NO	DESCRIPTION	REMARKS	USAGE CODE	QTY
1	1315/3818Z		Bolt, M20 x 80mm			2
	1316/3821Z		Bolt, Hex. hd, M20x110			2
2	1420/0012Z		Washer	for 1315/3818Z		2
	1422/0012D		Washer	for 1316/3812Z		2
3	.		'See Remark'	Not fitted or required.		
4	573/10032	Superseded	Ram, steer			1
	573/10061		Ram, steer, Black Export Version			1
5	991/00156		:Kit-seal, power track rod ram, 75mm cyl x 45mm rod			1
6	2411/0605		::Seal, gland, 45mm rod			2
7	2411/8705		::Seal, wiper, 45mm rod			2
8	2302/0307		:O Ring			2
9	2411/1132		:Seal, piston head, 75mm cyl			1
10	2411/7975		:Ring, wear, 75mm cyl			2
11	594/14074		:Kit-end cap, 75mm cyl x 45mm rod			2
12	590/40208		:Rod, piston			1
13	573/20001		:Cylinder, power track rod, 75mm			1

E4-4-2 RAM, CLAMSHOVEL, 6 IN 1

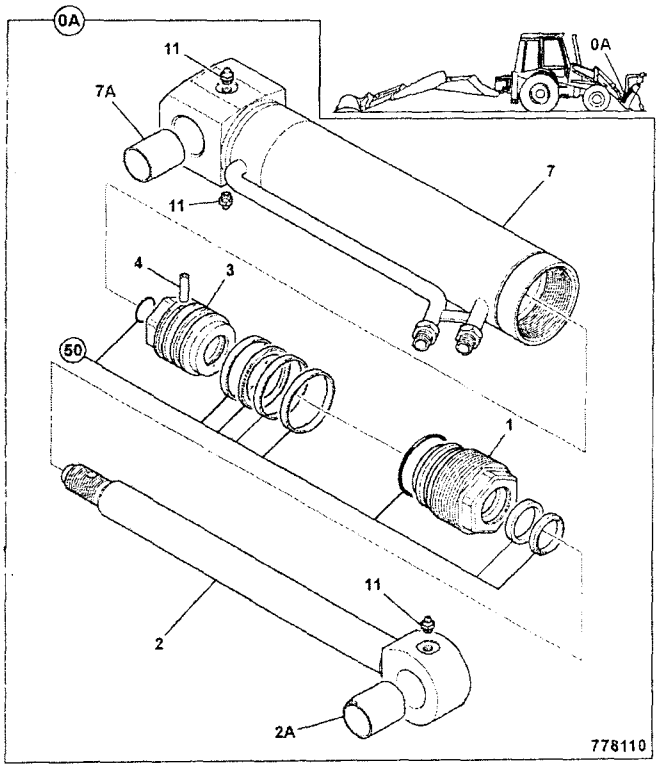

	FROM	TO	FROM	TO
3C PLUS				
3C 14				

ITEM	PART NO	CHANGE NO	DESCRIPTION	REMARKS	USAGE CODE	QTY
0A	556/60331	Superseded	Ram, clamshovel		A	1
	556/60401		Ram, clamshovel		B	1
1	594/14300		:Cap, end cap assembly, 70 X 40		A	1
	332/D4842		:Cap, endcap assembly, 70 X 40		B	1
2	590/40111		:Rod, piston, 6in1 shovel			1
2A	1207/0011		::Bush			1
3	595/27600		:Head, piston			1
4	826/01182		:Dowel			1
7	556/70345		:Cylinder, clamshovel			1
7A	1207/0019		::Bush			1
11	1450/0001		:Nipple, grease, straight, 1/8 BSP			3
50	991/10151		:Kit, seal kit 70X40		A	1
	332/D4850		:Kit, seal kit 70X40		B	1

E4-5-1 RAM, BOOM, 110MM CYL X 60MM ROD

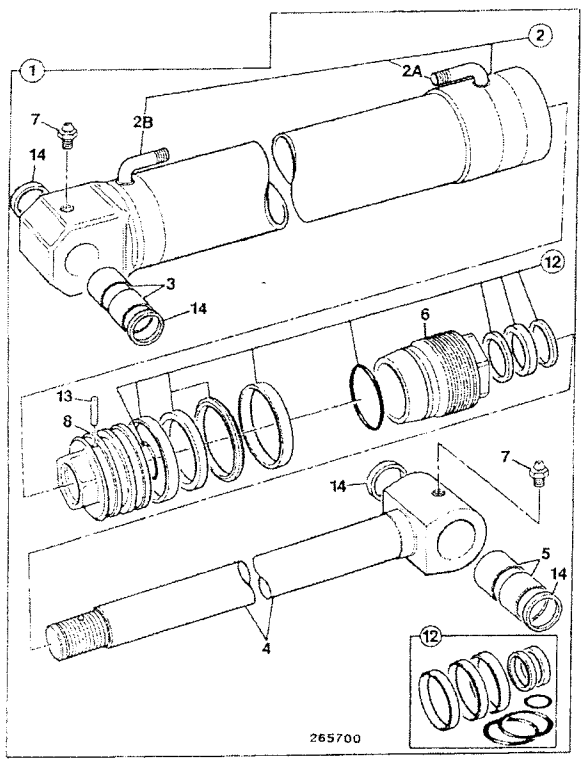

	FROM	TO	FROM	TO
3C PLUS				
3C 14				

ITEM	PART NO	CHANGE NO	DESCRIPTION	REMARKS	USAGE CODE	QTY
1	561/60200		Ram, assembly, boom			1
2	561/70199		:Cylinder, boom, 110X1221			1
2A	NSP		::None serviced part			1
2B	NSP		::None serviced part			1
3	809/00126		:Bearing, liner, 50mm pivot bore			2
4	590/40154		:Rod, piston			1
5	809/00126		:Bearing, liner, 50mm pivot bore			2
6	594/14266		:Kit-end cap, 110 x 60			1
7	1450/0001		:Nipple, grease, straight, 1/8 BSP			1
8	595/10043		:Head, piston			1
9	1450/0001		:Nipple, grease, straight, 1/8 BSP			1
12	991/00110		:Kit-seal, 60mm rod x 110mm cyl			1
13	826/01180		:Dowel			1
14	813/00426		:Seal, pivot pin grease, 60 x 50 x 5			4

E4-6-1 RAM, DIPPER, 100MM CYL X 60MM ROD

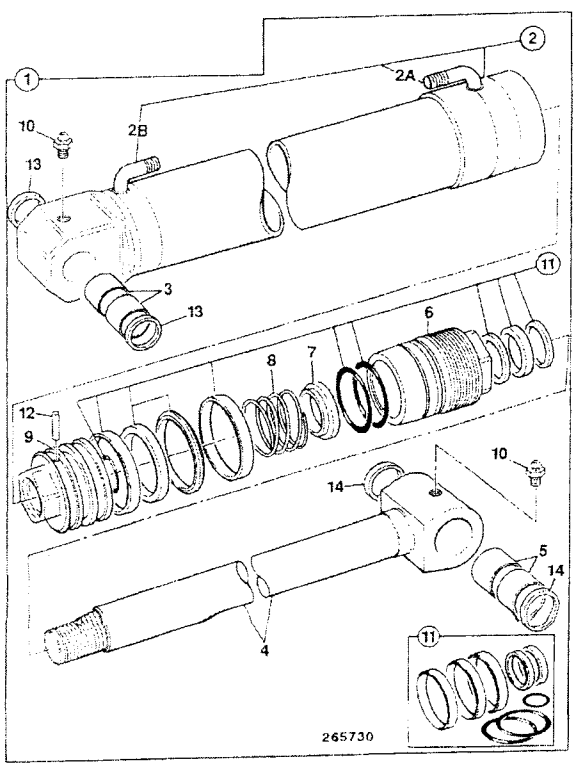

	FROM	TO	FROM	TO
3C PLUS				
3C 14				

ITEM	PART NO	CHANGE NO	DESCRIPTION	REMARKS	USAGE CODE	QTY
1	559/60172	Superseded	Ram, dipper, 100x60, 1898OC 1152.5CC			1
	559/60230		Ram, Dipper, 100x60, 1898OC 1152.5CC			1
2	559/70171	Superseded	:Cylinder, dipper ram			1
	559/70229		:Cylinder, dipper ram			1
2A	NSP		::None serviced part			1
2B	NSP		::None serviced part			1
3	809/00179		:Bearing, 60x70x90L			1
4	590/40583		:Rod, piston			1
5	809/00127		:Bearing, liner, 50mm pivot bore			2
6	594/14025		:Kit-end cap, assembly, 60mm x 100mm			1
7	559/00105		:Restrictor			1
8	559/00104		:Spring			1
9	595/10057		:Head, piston			1
10	1450/0001		:Nipple, grease, straight, 1/8 BSP			2
11	991/00145		:Kit-seal, ram, 60mm rod x 100mm cyl	For component parts see fram E4-13-18		1
12	826/01179		:Dowel			1
13	813/00427		:Seal, grease			2

E4-6-1 RAM, DIPPER, 100MM CYL X 60MM ROD

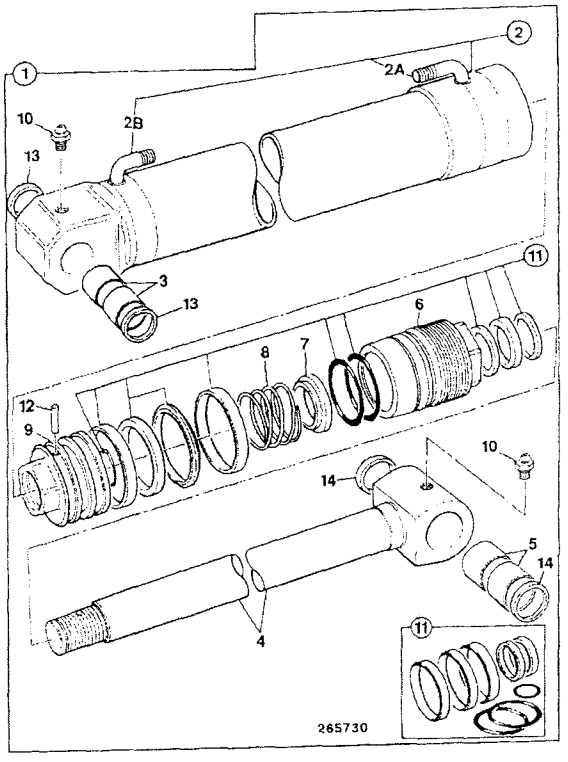

ITEM	PART NO	CHANGE NO	DESCRIPTION	REMARKS	USAGE CODE	QTY
14	813/00426		:Seal, pivot pin grease, 60 x 50 x 5			2

E4-7-2 RAM, BUCKET, MONO DIPPER

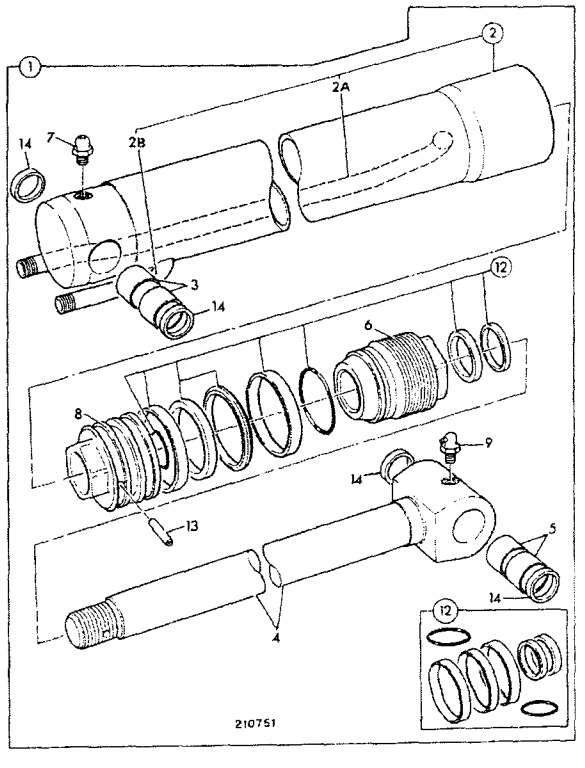

	FROM	TO	FROM	TO
3C PLUS				
3C 14				

ITEM	PART NO	CHANGE NO	DESCRIPTION	REMARKS	USAGE CODE	QTY
1	557/60156		Ram, assembly bucket, 90 X 60			1
2	557/70137		:Cylinder, bucket ram, 90mm			1
2A	NSP		::None serviced part			1
2B	NSP		::None serviced part			1
3	809/00125		:Bearing, liner, 45mm pivot bore			2
4	590/40317		:Rod, piston 60mm			1
5	809/00128		:Bearing, liner, 45mm pivot bore			2
6	594/14287		:Cap, end, 60mm rod, x 90mm cylinder			1
7	1450/0001		:Nipple, grease, straight, 1/8 BSP			1
8	595/10061		:Head, piston			1
9	1450/1001		:Nipple, grease, 90deg. angle			1
12	991/00147		:Kit-seal, 90mm cyl x 60mm rod, metric rams			1
13	826/01179		:Dowel			1
14	813/00425		:Seal, pivot pin grease			4

E4-6-1 RAM, DIPPER, 100MM CYL X 60MM ROD

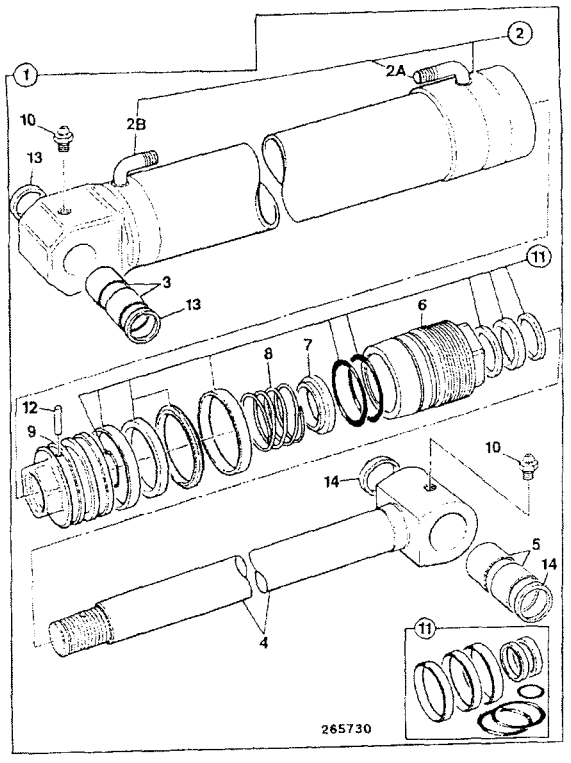

ITEM	PART NO	CHANGE NO	DESCRIPTION	REMARKS	USAGE CODE	QTY
14	813/00426		:Seal, pivot pin grease, 60 x 50 x 5			2

E4-7-2 RAM, BUCKET, MONO DIPPER

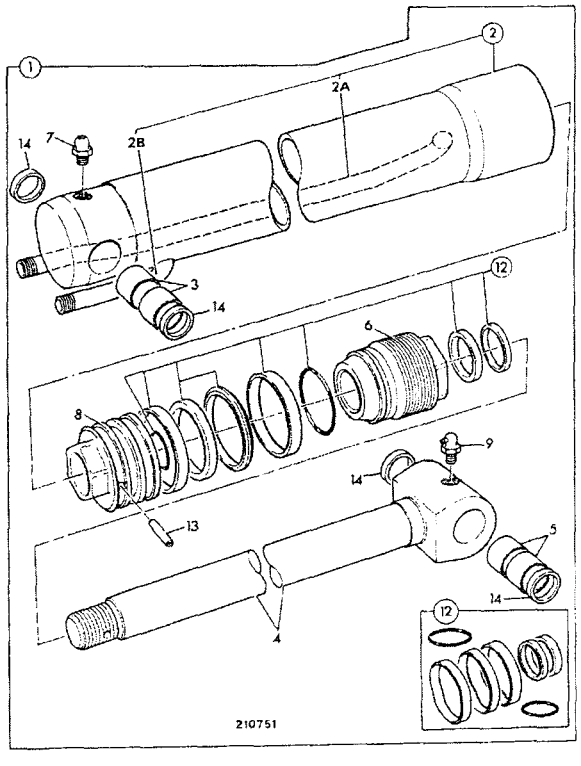

	FROM	TO	FROM	TO
3C PLUS				
3C 14				

ITEM	PART NO	CHANGE NO	DESCRIPTION	REMARKS	USAGE CODE	QTY
1	557/60156		Ram, assembly bucket, 90 X 60			1
2	557/70137		:Cylinder, bucket ram, 90mm			1
2A	NSP		::None serviced part			1
2B	NSP		::None serviced part			1
3	809/00125		:Bearing, liner, 45mm pivot bore			2
4	590/40317		:Rod, piston 60mm			1
5	809/00128		:Bearing, liner, 45mm pivot bore			2
6	594/14287		:Cap, end, 60mm rod, x 90mm cylinder			1
7	1450/0001		:Nipple, grease, straight, 1/8 BSP			1
8	595/10061		:Head, piston			1
9	1450/1001		:Nipple, grease, 90deg. angle			1
12	991/00147		:Kit-seal, 90mm cyl x 60mm rod, metric rams			1
13	826/01179		:Dowel			1
14	813/00425		:Seal, pivot pin grease			4

E4-7-32 RAM, BUCKET, EXTRADIG DIPPER

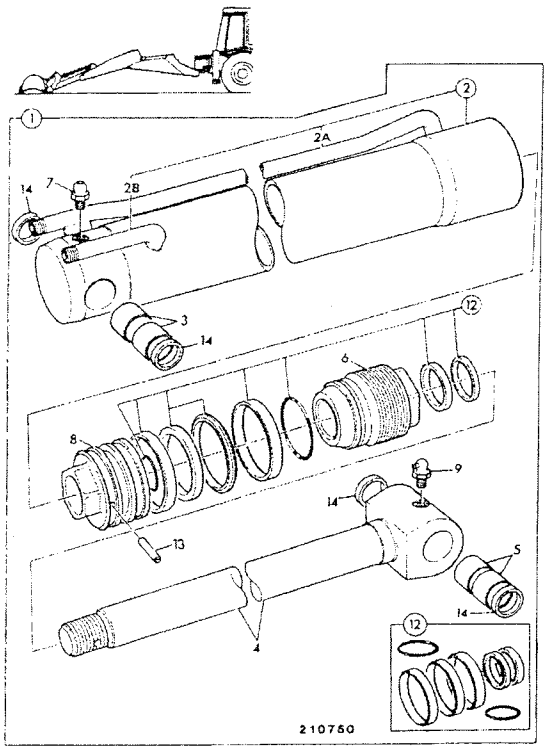

	FROM	TO	FROM	TO
3C PLUS				
3C 14				

ITEM	PART NO	CHANGE NO	DESCRIPTION	REMARKS	USAGE CODE	QTY
1	557/60154		Ram, assembly bucket, 90 X 60			1
2	557/70136		:Cylinder, bucket ram, 90mm			1
2A	NSP		::None serviced part			1
2B	NSP		::None serviced part			1
3	809/00125		:Bearing, liner, 45mm pivot bore			2
4	590/40317		:Rod, piston 60mm			1
5	809/00128		:Bearing, liner, 45mm pivot bore			2
6	594/14287		:Cap, end, 60mm rod, x 90mm cylinder			1
7	1450/0001		:Nipple, grease, straight, 1/8 BSP			1
8	595/10061		:Head, piston			1
9	1450/1001		:Nipple, grease, 90deg. angle			1
12	991/00147		:Kit-seal, 90mm cyl x 60mm rod, metric rams			1
13	826/01179		:Dowel			1
14	813/00425		:Seal, pivot pin grease			4

E4-8-11 RAM, EXTENSION, EXTRADIG DIPPER

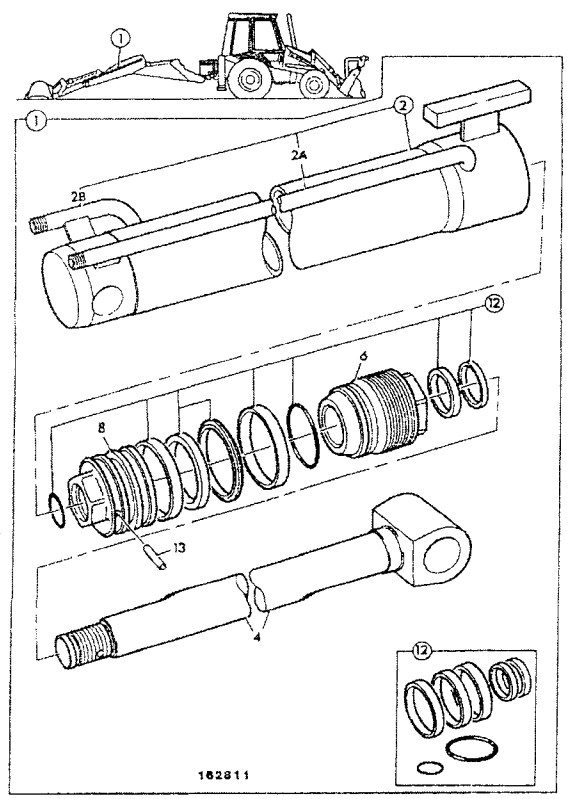

	FROM	TO	FROM	TO
3C PLUS				
3C 14				

ITEM	PART NO	CHANGE NO	DESCRIPTION	REMARKS	USAGE CODE	QTY
1	556/60259	Superseded	Ram, extension, extradig dipper			1
	556/60387		Ram, extension, extradig dipper	see page E4-8-12 for breakdown		1
2	556/70258		Cylinder, extension ram, 1244 hole ctr to end			1
2A	NSP		::None serviced part			1
2B	NSP		::None serviced part			1
4	590/40118		:Rod, piston, 45mm pivot hole			1
6	594/14130		:Cap, end assembly			1
8	595/10027		:Head, piston			1
12	991/00100		:Kit-seal, 70x40			1
13	826/01182		:Dowel			1

E4-8-12 RAM, EXTENSION, EXTRADIG DIPPER

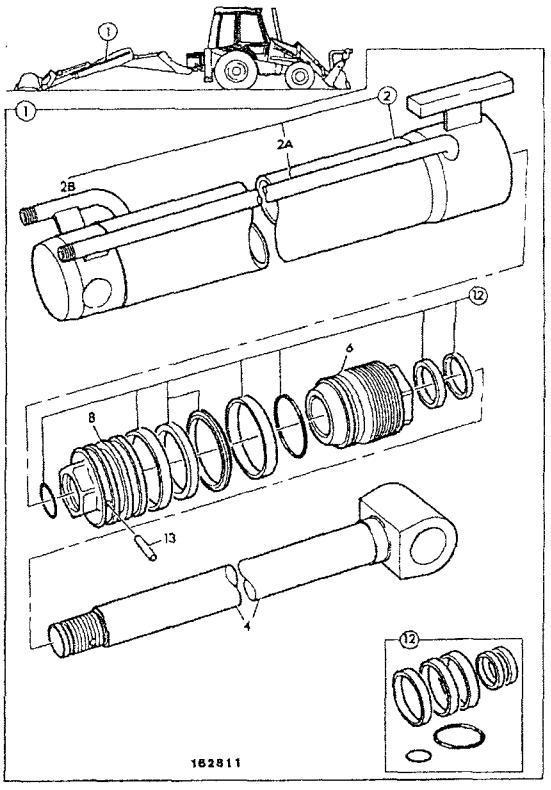

	FROM	TO	FROM	TO
3C PLUS				
3C 14				

ITEM	PART NO	CHANGE NO	DESCRIPTION	REMARKS	USAGE CODE	QTY
1	556/60387		Ram, extension, extradig dipper			1
2	556/70382		:Cylinder, extensian ram, 1129 hole ctr to end			1
2A	NSP		:None serviced part			1
2B	NSP		:None serviced part			1
4	590/40118		:Rod, piston, 45mm pivot hole			1
6	594/14300		:Cap, end cap assembly, 70 X 40			1
8	595/27600		:Head, piston			1
12	991/00100		:Kit-seal, 70x40			1
13	826/01182		:Dowel			1

E4-10-11 RAM, STABILISER, CENTREMOUNT, 90 X 50

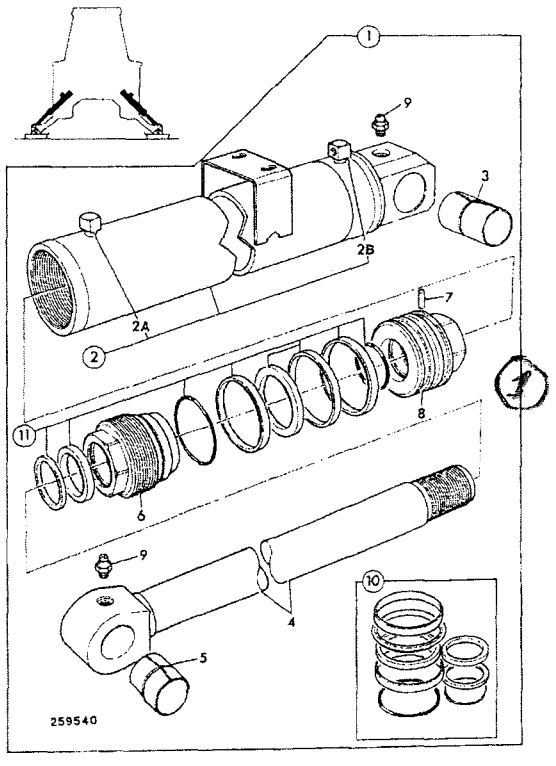

	FROM	TO	FROM	TO
3C PLUS		M TBA		
3C 14		M TBA		

ITEM	PART NO	CHANGE NO	DESCRIPTION	REMARKS	USAGE CODE	QTY
1	557/60073		Ram, stabiliser c. mount, 90 X 50			2
	128/10902		Ram, stabiliser, sunbelt green	Sunbelt green		2
2	557/70072		:Cylinder, stabiliser, centremount			1
2A	NSP		::None serviced part			1
2B	NSP		::None serviced part			1
3	809/10076	1	:Bush, 50 x 56 x 98 long			1
4	590/40259		:Rod, stabililser, 50mm x 782			1
5	1208/0015		:Bush			1
6	594/14020		:Kit-end cap, 50mm rod x 90mm cyl			1
7	826/01179		:Dowel			1
8	595/10037		:Head, piston			1
9	1450/0001		:Nipple, grease, straight, 1/8 BSP			2
10	991/00103		:Kit-seal, 50mm rod x 90mm cyl	Seal kit components see E4-13-13		1

E4-10-21 RAM, STABILISER, CENTREMOUNT, 90 X 60, 3C

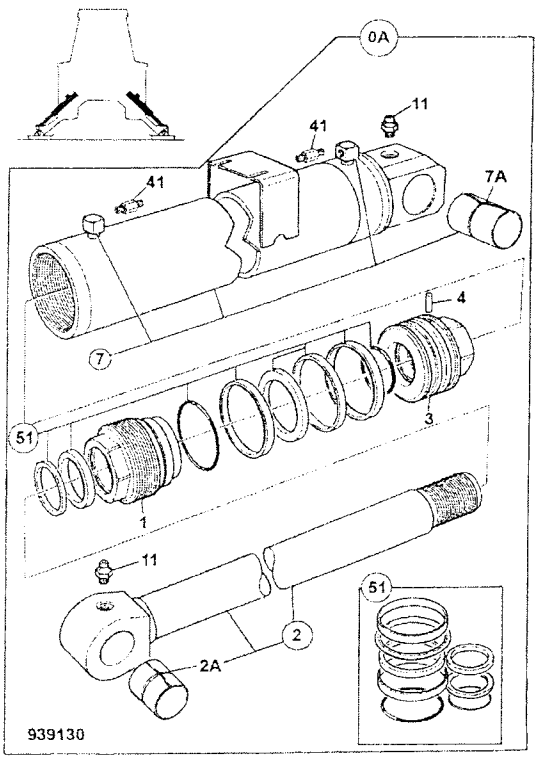

	FROM	TO	FROM	TO
3C PLUS	M TBA			
3C 14	M TBA			

ITEM	PART NO	CHANGE NO	DESCRIPTION	REMARKS	USAGE CODE	QTY
0A	557/60198		Ram, stabiliser, c/mount, 90 x 60			2
1	594/14287		:Cap, end, 60mm rod, x 90mm cylinder			1
2	590/40746		:Rod, 60x782			1
2A	1208/0015		::Bush			1
3	595/10061		:Head, piston			1
4	826/01179		:Dowel			1
7	557/70197		:Cylinder, stabiliser, c/ mount			1
11	1450/0001		:Nipple, grease, straight, 1/8 BSP			2
41	816/90009		:Adapter, M/F			2
51	991/00147		:Kit-seal, 90mm cyl x 60mm rod, metric rams			1

E4-11-11 RAM, SLEW/SWING

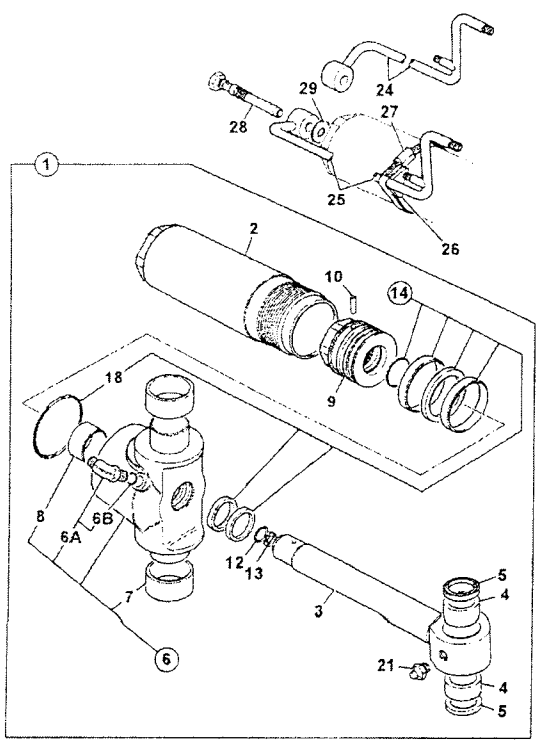

	FROM	TO	FROM	TO
3C PLUS				
3C 14				

ITEM	PART NO	CHANGE NO	DESCRIPTION	REMARKS	USAGE CODE	QTY
1	557/60127		Ram, slew	item 6A screws into item 6		1
	128/14671		Ram, slew, sunbelt green	Sunbelt green		1
2	559/70018		:Cylinder, assembly			1
3	590/40253		:Rod, piston, 50mm. slew ram			1
4	809/00177		::Bearing, 55x65x56			1
5	813/00460		::Seal, pivot pin, 55x65			2
6	594/14274		:Kit, end cap	item 6A screws into item 6		1
6A	816/90676		::Adapter, 90deg elbow, 9/ 16 SAE x G1/4			1
6B	2401/0505		:::O Ring			1
7	809/00137		::Bearing			2
8	NSP		::None serviced part			1
9	595/10037		:Head, piston			1
10	826/01180		:Dowel			1
12	821/00462		:Clip, 31.1mm			1
13	551/90107		:Plate, orifice, 27.4 x 15 x 5.8mm			1
14	991/00163		:Kit-seal, 50mm rod x 90mm cyl			1
18	2302/0336		::O Ring, 115 x 5			1
21	1450/0001		:Nipple, grease, straight, 1/8 BSP			1

E4-11-11 RAM, SLEW/SWING

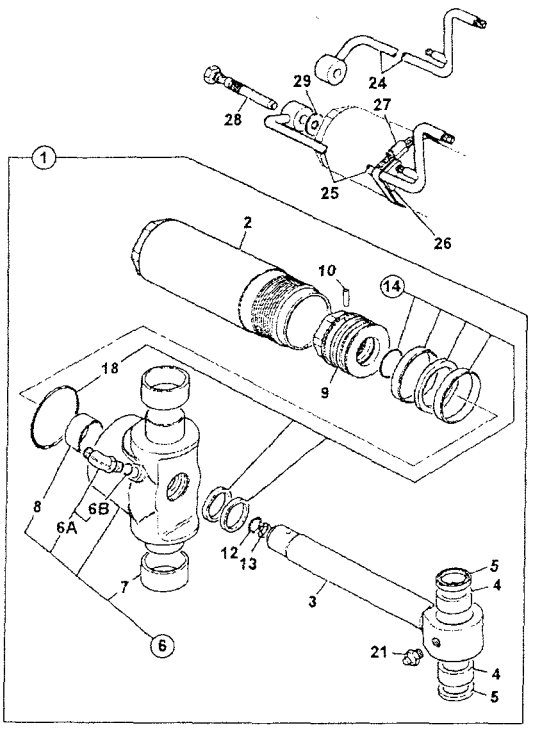

736000

ITEM	PART NO	CHANGE NO	DESCRIPTION	REMARKS	USAGE CODE	QTY
24	335/00771		Pipe, left hand slew, centremount			1
25	335/00772		Pipe, right hand slew, centremount			1
26	821/10425		Clamp, pipe support			2
27	2201/0017		Clip, worm drive			2
28	559/90066		Restrictor, banjo bolt			2
29	1406/0015		Washer, seal			4

E4-14-1 RAM, JAW BUCKET

	FROM	TO	FROM	TO
3C PLUS				
3C 14				

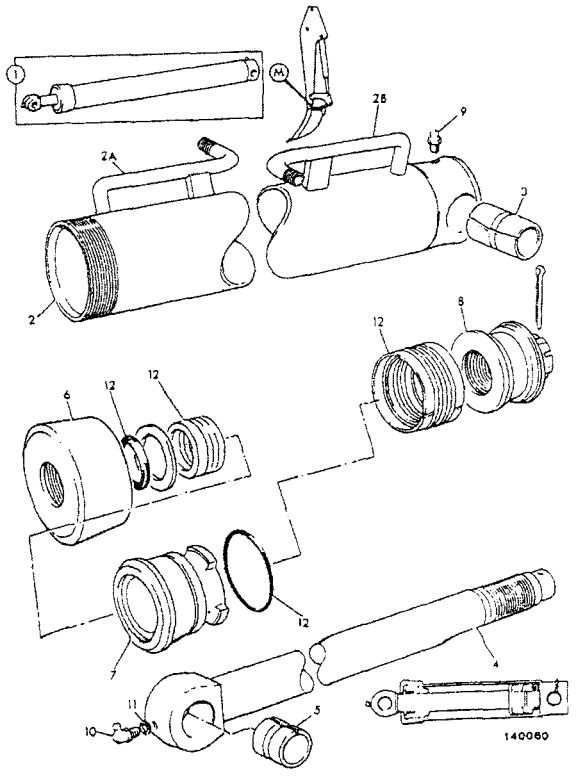

ITEM	PART NO	CHANGE NO	DESCRIPTION	REMARKS	USAGE CODE	QTY
1	560/34300		Ram, Bucket jaw		M	1
2	560/34400		:Cylinder			1
2A	658/00567		::Pipe			1
2B	658/00567		::Pipe			1
3	1208/0022		:Bush			1
4	560/29000		:Rod, piston			1
5	1208/0015		:Bush			1
6	560/19903		:Cap, end			1
7	560/19902		:Gland, bearing			1
8	560/19901		:Nut, piston head			1
9	1450/0001		:Nipple, grease, straight, 1/8 BSP			1
10	1450/1002		:Nipple, grease, 1/4" BSP 90deg.			1
11	1403/0001		:Washer, aluminium			1
12	991/00003		:Kit-seal, ram, 2.0" rod x 4.00" cyl			1

F

- F1 AXLES, FRONT
- F2 AXLES, REAR
- F3 WHEELS, TYRES & PROPSHAFTS
- F5 TRANSMISSIONS SYNCHROSHUTTLE

ENGLISH

F1-3-1 AXLE PIVOT PIN, & GREASING 2WS, 2WD/4WD
F1-6-1 AXLE ASSEMBLY, 2WS 4WD STEER AXLE, 15.785:1 RATIO 448/57470
F1-6-10 KNUCKLE, 2WS 4WD STEER AXLE, 15.785:1 RATIO 448/57470
F1-6-20 HUB & COMPONENTS, 2WS 4WD STEER AXLE, 15.785:1 RATIO 448/57470
F1-6-30 DIFFERENTIAL, 2WS 4WD STEER AXLE, 15.785:1 RATIO 448/57470
F1-10-1 AXLE ASSEMBLY, 2WS 2WD STEER AXLE
F1-30-10 POWER TRACKROD, 2WS 4WD FRONT

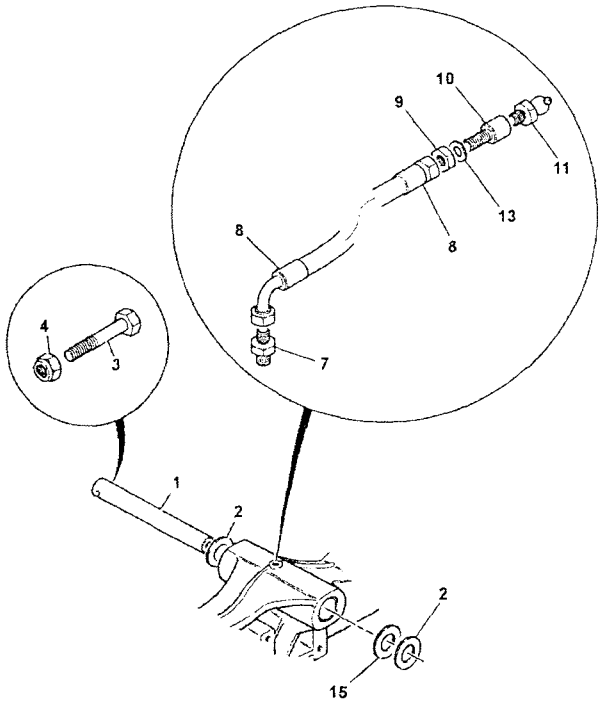

252793

	FROM	TO	FROM	TO
3C PLUS				
3C 14				

ITEM	PART NO	CHANGE NO	DESCRIPTION	REMARKS	USAGE CODE	QTY
1	811/10091		Pin, axle pivot			1
2	819/00132		Spacer, 50mmx115mmx3.5mm			1
	819/00133		Spacer, 50mmx115mmx4.0mm			1
	819/00134		Spacer, 50mmx115mmx4.5mm			1
	819/00135		Spacer, 50mmx115mmx5.0mm			1
	819/00136		Spacer, 50mmx115mmx5.5mm			1
	819/00137		Spacer, 50mmx115mmx6.0mm			1
3	1315/3520Z		Bolt, M12 x 100mm			1
4	1370/0403Z		Nut, M12			1
7	1609/0001		Adapter			1
8	649/52077		Hose, 1/8BSPx490mm long			1
9	826/00871		Nut			1
10	816/20049		Adapter	To suit 10.5mm hole in chassis		1
11	1450/1007		Nipple, grease, 45 deg. angle			1
12	835/00017		Cap, grease nipple			1
13	1420/0008Z		Washer, Plain M10			1

F1-3-1 AXLE PIVOT PIN, & GREASING 2WS, 2WD/4WD

9812/0080U
ISSUE 1

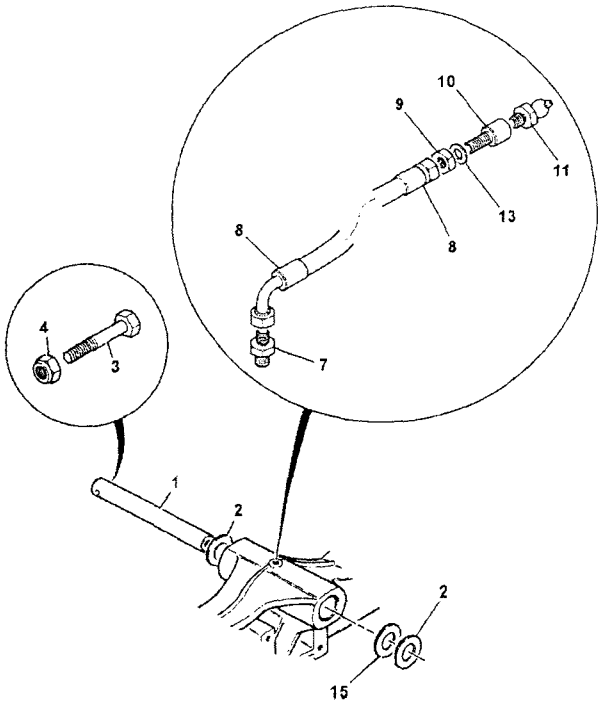

252793

ITEM	PART NO	CHANGE NO	DESCRIPTION	REMARKS	USAGE CODE	QTY
15	123/06223		Adhesive, washer			2

F1-6-1 AXLE ASSEMBLY, 2WS 4WD STEER AXLE, 15.785:1 RATIO 448/57470

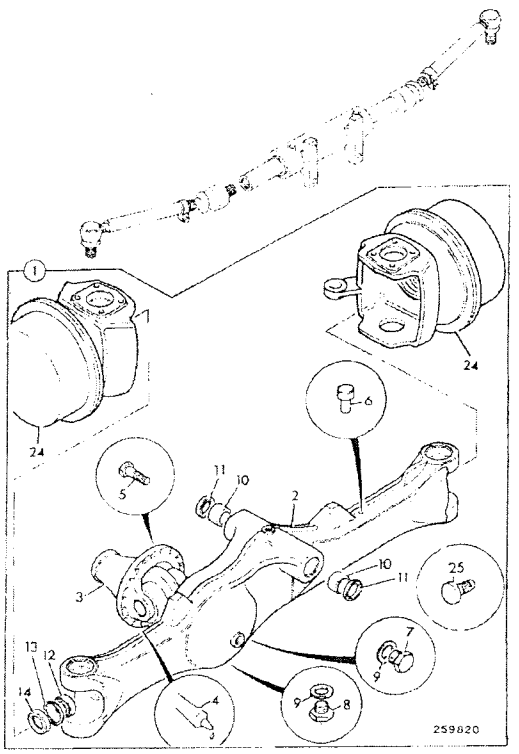

	FROM	TO	FROM	TO
3C PLUS				
3C 14				

ITEM	PART NO	CHANGE NO	DESCRIPTION	REMARKS	USAGE CODE	QTY
1	448/57470		Axle, assembly pivot mount, 15.785:1 4wd	Yellow gloss		1
2	458/20744		:Casing, axle, SD55			1
3	.		:'See Remark'	Diff assembly see frame F1-6-30		1
4	4102/1204		:Sealant, multi-gasket			A/R
5	826/01434		:Bolt, verbus ripp, M10 x 35mm			12
6	448/56282		:Breather, spring type, M10 x 1.5 thread			1
7	816/80037		:Plug, filler			1
8	816/80012		:Plug, magnetic, 3/4"BSP			1
9	1406/0021		:Seal, bonded 3/4" BSP			2
10	829/00548		:Bush			2
11	813/00426		:Seal, pivot pin grease, 60 x 50 x 5			2
12	907/08400		:Bearing			2
13	2203/1082		:Circlip			2
14	904/50040		:Seal			2
24	.		:'See Remark'	Wheel hubs see frame F1-6-10, F1-6-20		2
25	123/06718		Stop, lock, 45mm long	Use with 20" rims.		2

F1-6-10 KNUCKLE, 2WS 4WD STEER AXLE, 15.785:1 RATIO 448/57470

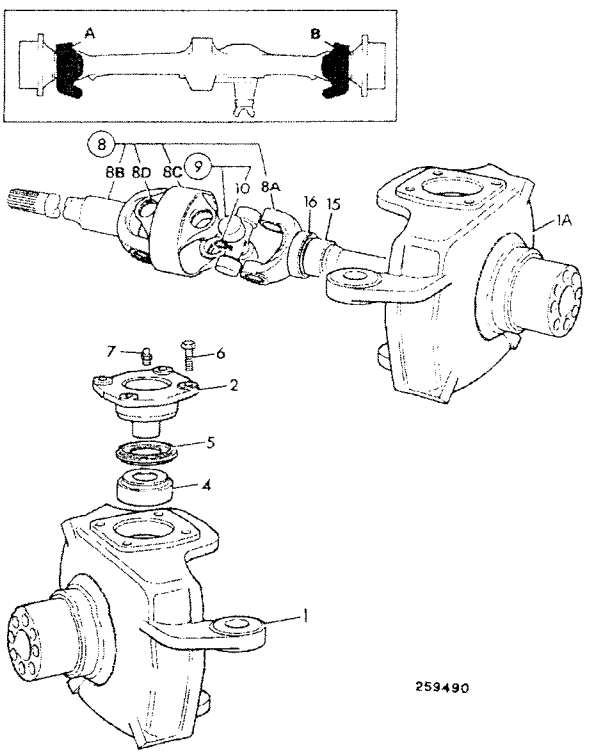

	FROM	TO	FROM	TO
3C PLUS				
3C 14				

ITEM	PART NO	CHANGE NO	DESCRIPTION	REMARKS	USAGE CODE	QTY
1	458/20404		Joint, knuckle swivel, 3CX, LOCKSTOP		A	1
1A	458/20405		Joint, knuckle swivel, 3CX, LOCKSTOP		B	1
2	448/42402		Trunnion			4
4	907/08300		Bearing, taper roller			4
5	904/06700		Seal			4
6	1321/0509		Screw			16
7	816/60056		Nipple, grease	Self Tapping type		4
8	914/86200		Shaft, drive assembly, 1275mm long		A	1
	914/86300		Shaft, drive assembly, 825mm long		B	1
8A	914/86201		:Shaft, hub side		AB	1
8B	914/86204		:Shaft, axle side, 960.5mm long		A	1
	914/86301		:Shaft, axle side, 511.5mm long		B	1
8C	914/86203		:Spacer, central		AB	1
8D	914/83303		:Circlip		AB	1
9	914/86202		:Kit-spider		AB	2
15	917/50200		Bearing			2
16	904/50047		Seal			2

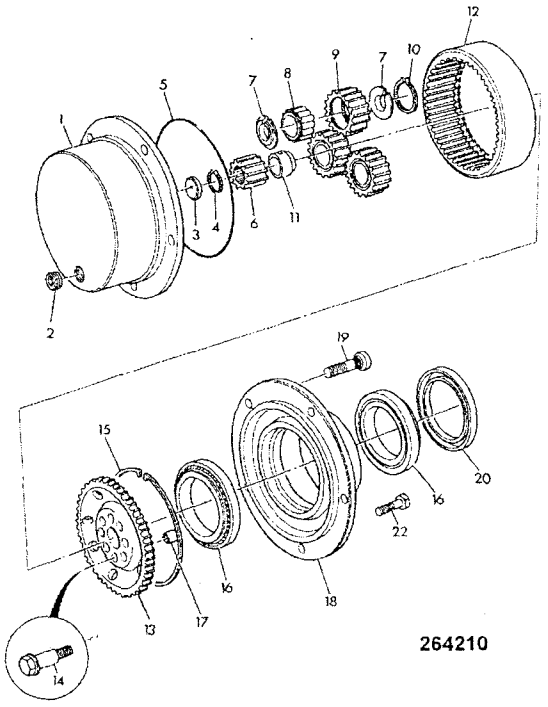

	FROM	TO	FROM	TO
3C PLUS				
3C 14				

ITEM	PART NO	CHANGE NO	DESCRIPTION	REMARKS	USAGE CODE	QTY
1	450/12401	Superseded	Carrier, planetary hub			2
	450/10216		Carrier, planetary hub, 5 stud yellow			2
2	826/00425		Plug, tapered, 3/4"-14PTF			2
3	450/10208		Pad, thrust			2
4	821/00216		Circlip, external			2
5	828/00196		O Ring			2
6	450/12403		Gear, sun			2
7	821/00209		Circlip			12
8	907/50200		Bearing, roller, double row			6
9	450/10206		Gear, planet			6
10	2203/0054		Circlip			6
11	921/50000		Spacer, 32mm long			2
12	450/10205		Gear, annulus ring			2
13	450/12702		Carrier, annulus			1
14	826/01060		Bolt, M14 x 70mm long			16
15	821/00210		Circlip, internal, square section			2
16	907/52200		Bearing			4
17	450/12703		Dowel, hollow			16
18	450/10221		Hub, without studs, 5 stud			2
19	826/00923		Stud, wheel			10

F1-6-20 HUB & COMPONENTS, 2WS 4WD STEER AXLE, 15.785:1 RATIO 448/57470

9812/0080U
ISSUE 1

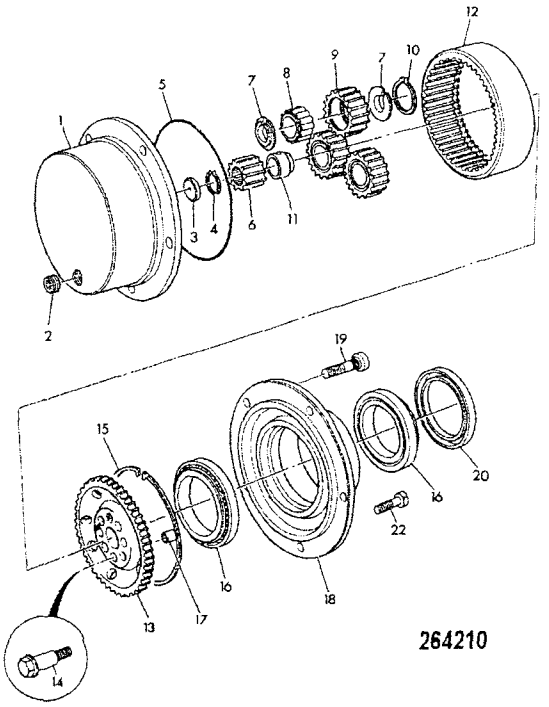

ITEM	PART NO	CHANGE NO	DESCRIPTION	REMARKS	USAGE CODE	QTY
20	904/50033		Seal, oil, 127 x 160 x 15.5-17			2
22	1321/0407Z		Bolt, coated			4

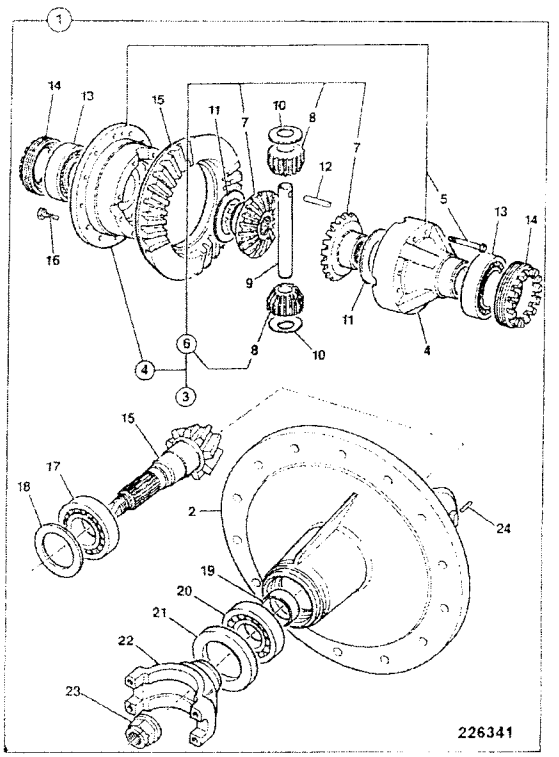

	FROM	TO	FROM	TO
3C PLUS				
3C 14				

ITEM	PART NO	CHANGE NO	DESCRIPTION	REMARKS	USAGE CODE	QTY
1	458/10600	To A5747/7	Differential, assembly, 2.923:1 ratio	to axle 448/57470/7	A	1
	458/M1873	A5747/8 on	Dnvehead, assembly	from axle 448/57470/8	B	1
2	448/15701		:Casting, drive head, yellow			1
3	448/36300		:Differential, assembly			1
4	448/23500		::Differential, case			1
5	826/01585		:::Bolt			8
6	448/36400		::Kit-gear, differential			1
7	NSP		:::None serviced part			2
8	NSP		:::None serviced part			2
9	448/05408		::Pin, trunnion			1
10	808/00210		::Washer, thrust, pinion			2
11	808/00209		::Washer, thrust, side gear			2
12	2102/0816		::Pin, tension			1
13	907/09200		:Bearing			2
14	448/05405		:Nut, adjusting			2
15	458/70189		:Kit-gear, crownwheel & pinion, 38/13T		A	1pr
	458/M1350		:Gear, crownwheel & pinion, 13/38 teeth		B	1
16	826/01084		:Bolt, Verbus ripp, M10 x 25mm long			12

F1-6-30 DIFFERENTIAL, 2WS 4WD STEER AXLE, 15.785:1 RATIO 448/57470

9812/0080U
ISSUE 1

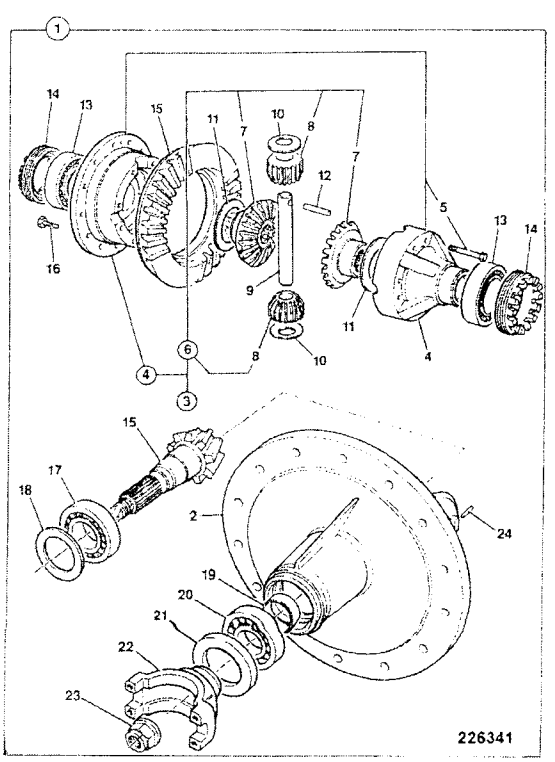

ITEM	PART NO	CHANGE NO	DESCRIPTION	REMARKS	USAGE CODE	QTY
17	907/09000		:Bearing			1
18	921/01900		:Kit-shim			A/R
19	921/53300		:Spacer			1
20	907/09100		:Bearing			1
21	904/50023		:Seal			1
22	450/27200		:Yoke		A	1
	458/20813		:Yoke, Coupling		B	1
23	826/01483		:Nut, stake and washer, M24		A	1
	826/01744		:Nut, stake, M30		B	1
24	826/00818		:Pin, tension			2

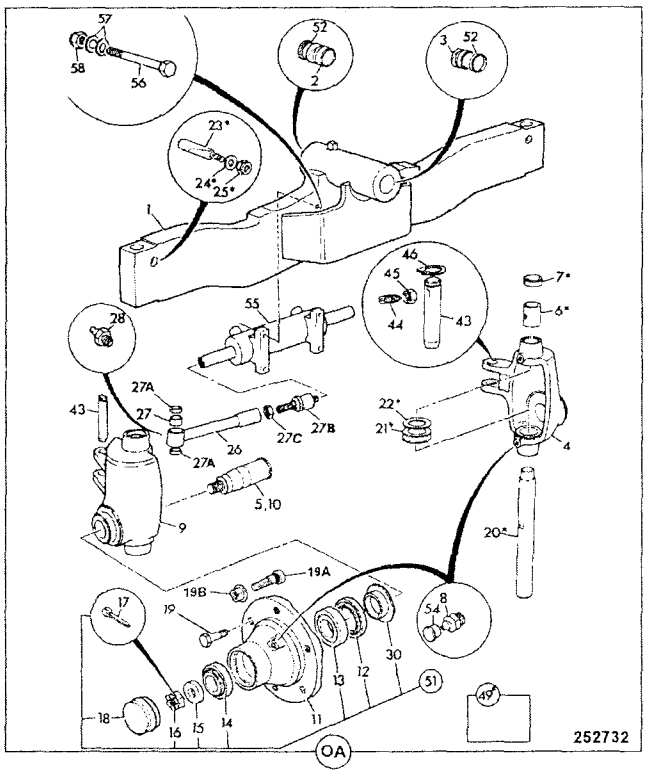

	FROM	TO	FROM	TO
3C PLUS				
3C 14				

ITEM	PART NO	CHANGE NO	DESCRIPTION	REMARKS	USAGE CODE	QTY
1	125/89700		:Beam, 2wd axle			1
2	829/00548		:Bush			1
3	829/00548		:Bush			1
4	123/05460		:Carrier, left hand			1
5	120/30003		:Axle, stub			1
6	808/00176		::Bush			4
7	904/07100		::Seal			4
8	816/60056		:Nipple, grease			6
9	123/05461		:Carrier, right hand			1
10	120/30003		:Axle, stub			1
11	458/20501		:Hub, wheel			2
12	904/06200		::Seal, oil			2
13	907/04100		::Bearing			2
14	907/05700		::Bearing			2
15	458/20541		::Washer, thrust, slab axle			2
16	1340/0905Z		::Nut			1
17	2103/1112		::Pin, split			1
18	120/30009		::Cap, grease			1
19A	826/00923		:Stud, wheel			12
19B	826/01008		:Nut, wheel			12
20	120/30001		::Pin, king			2
21	907/05800		::Bearing, thrust			2

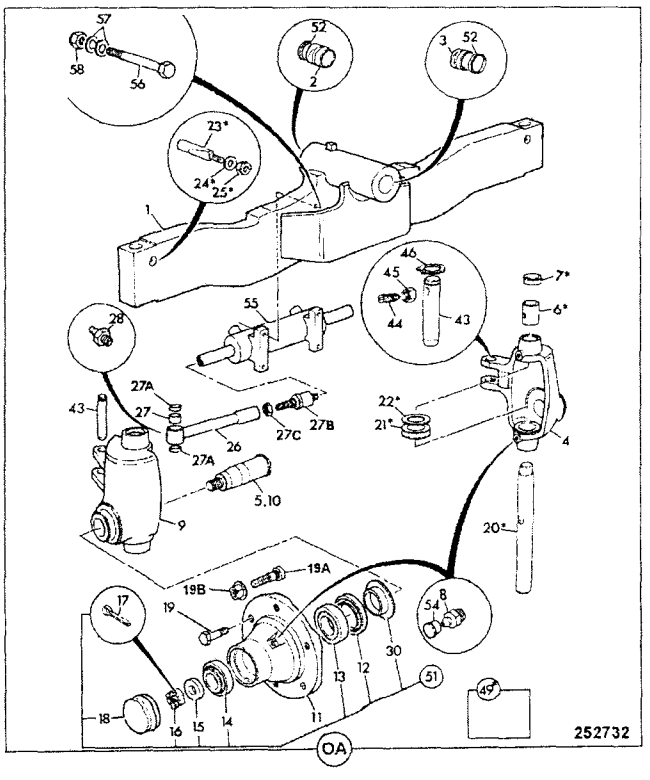

ITEM	PART NO	CHANGE NO	DESCRIPTION	REMARKS	USAGE CODE	QTY
22	921/00807		::Shim, 0.5			A/R
	921/00801		::Shim, 0.6			A/R
	921/00802		::Shim, 0.7			A/R
	921/00803		::Shim, 0.8			A/R
	921/00804		::Shim, 0.9			A/R
	921/00805		::Shim, 1.0			A/R
23	120/30002		:Pin, cotter			2
24	1420/0008Z		::Washer, Plain M10			2
25	1370/0303Z		::Nut, lock, M10			2
26	331/14862		:Link, steer arm			2
27	808/00253		:Bush, 33mm long, 30mm OD X 25mm ID			2
27A	904/09300		:Seal, oil			4
27B	331/14861		:Joint, ball, track rod			2
27C	458/80026		:Nut, lock nut			2
28	1450/0001		:Nipple, grease, straight, 1/8 BSP			2
30	904/06201		::Sleeve			2
43	811/70012		:Pin, pivot	Track rod		2
44	1390/0408		:Screw			4
45	1370/0301Z		:Nut			4
46	2203/0035		:Circlip			4
49	990/99600		:Kit-king pin	Includes items 6,7, 20 to 25		2
51	993/03300		:Kit-bearing, wheel			2
52	813/00426		:Seal, pivot pin grease, 60 x 50 x 5			2
54	835/00017		:Cap, grease nipple			2

F1-10-1 AXLE ASSEMBLY, 2WS 2WD STEER AXLE

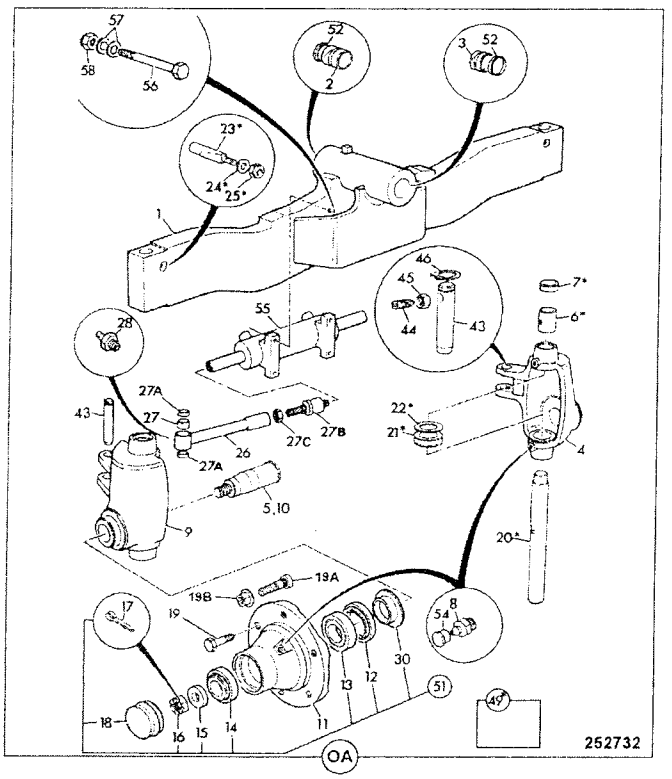

ITEM	PART NO	CHANGE NO	DESCRIPTION	REMARKS	USAGE CODE	QTY
55	.		:See Remark'	Steer ram see frame E4		1
56	1316/3721Z		:Bolt, M16 x 110			4
57	1420/0011Z		:Washer, M16 plain			4
58	1370/0603Z		:Nut, M16			4

F1-30-10 POWER TRACKROD, 2WS 4WD FRONT

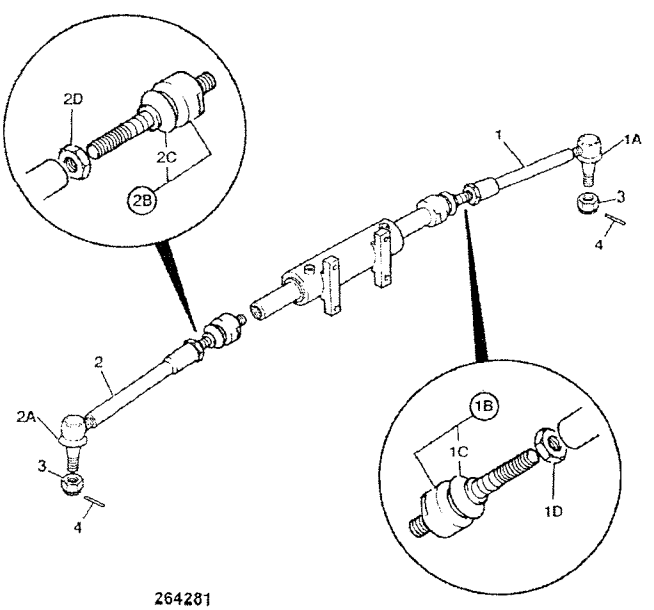

	FROM	TO	FROM	TO
3C PLUS				
3C 14				

ITEM	PART NO	CHANGE NO	DESCRIPTION	REMARKS	USAGE CODE	QTY
1	126/02253		Link, trackrod, M24/M22			1
1A	123/07855		:Gaiter	Trackrod end		1
1B	331/14861		:Joint, ball, track rod	Ram end		1
1C	123/07689		::Gaiter			1
1D	458/80026		:Nut, lock nut			1
2	126/02253		Link, trackrod, M24/M22			1
2A	123/07855		:Gaiter	Trackrod end		1
2B	331/14861		:Joint, ball, track rod	Ram end		1
2C	123/07689		::Gaiter			1
2D	458/80026		:Nut, lock nut			1
3	826/01372		Nut, castle, M20 X 1.5			2
4	2103/1112		Pin, split			2

F

F1 AXLES, FRONT
● F2 AXLES, REAR
F3 WHEELS, TYRES & PROPSHAFTS
F5 TRANSMISSIONS SYNCHROSHUTTLE

ENGLISH

F2-1-15 450/44790, PD70 PAD MOUNT AXLE, 15.78:1 REVERSE MAXTRAC, HAYES
F2-1-16 450/44800, PD70 PAD MOUNT AXLE, 15.78:1 REVERSE LSD, HAYES
F2-2-1 458/10978, YELLOW, AXLE ARM & HUB ASSY
F2-3-29 458/11212, DRIVEHEAD ASSEMBLY
F2-3-30 458/11213, DRIVEHEAD ASSEMBLY
F2-4-1 450/10900, DIFFERENTIAL ASSY
F2-4-2 450/26310, DIFFERENTIAL ASSY
F2-7-1 AXLE BREATHER, REMOTE

F2-1-15 450/44790, PD70 PAD MOUNT AXLE, 15.78:1 REVERSE MAXTRAC, HAYES

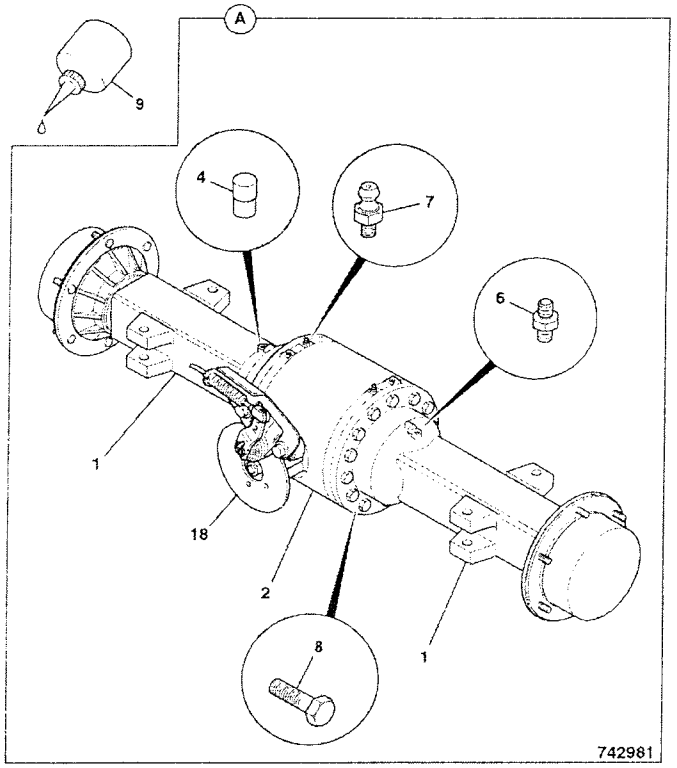

	FROM	TO	FROM	TO
3C PLUS				
3C 14				

ITEM	PART NO	CHANGE NO	DESCRIPTION	REMARKS	USAGE CODE	QTY
0A	450/44790		Axle, assy, PD70 pad mount, 15.78:1			1
1	458/10978		:Arm, axle arm and hub, assembly			2
2	458/11212		:Drivehead, assembly, 2.923:1	see index F2 for breakdown		1
4	450/13302		:Plug, breather			1
6	458/20611		:Adapter			1
7	816/60040		:Nipple, bleed			2
8	1321/3716		:Bolt, M16x70L			28
9	4102/1212		:Gasket, Multigasket			A/R
18	.		'See Remark'	See index section G1 & F2		1

F2-1-16 450/44800, PD70 PAD MOUNT AXLE, 15.78:1 REVERSE LSD, HAYES

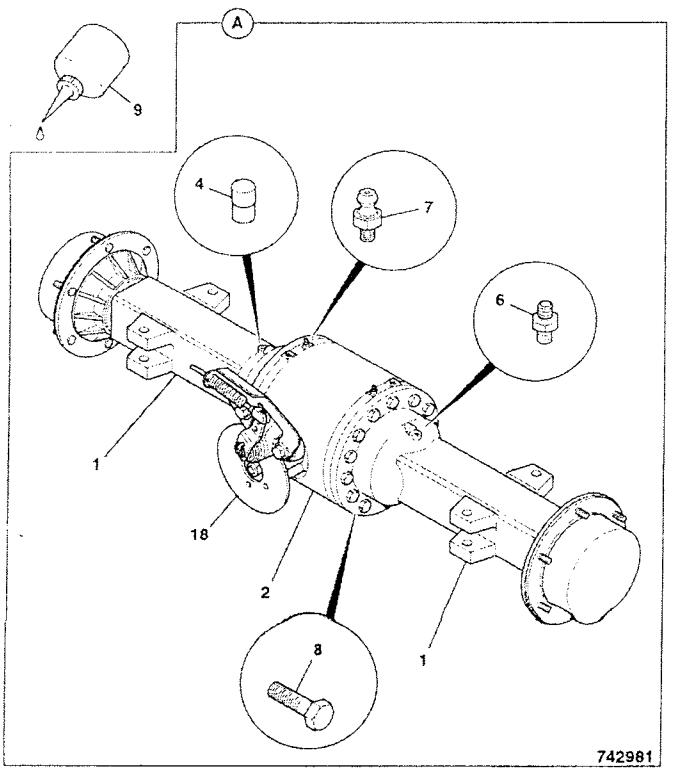

	FROM	TO	FROM	TO
3C PLUS				
3C 14				

ITEM	PART NO	CHANGE NO	DESCRIPTION	REMARKS	USAGE CODE	QTY
0A	450/44800		Axle, assy, PD70 pad mount, 15.78:1			1
1	458/10978		:Arm, axle arm and hub, assembly			2
2	458/11213		:Drivehead, assembly, pad mount, 2.923:1	see index F2 for breakdown		1
4	450/13302		:Plug, breather			1
6	458/20611		:Adapter			1
7	816/60040		:Nipple, bleed			2
8	1321/3716		:Bolt, M16x70L			28
9	4102/1212		:Gasket, Multigasket			A/R
18	.		'See Remark'	See index section G1 & F2		1

F2-2-1 458/10978, YELLOW, AXLE ARM & HUB ASSY

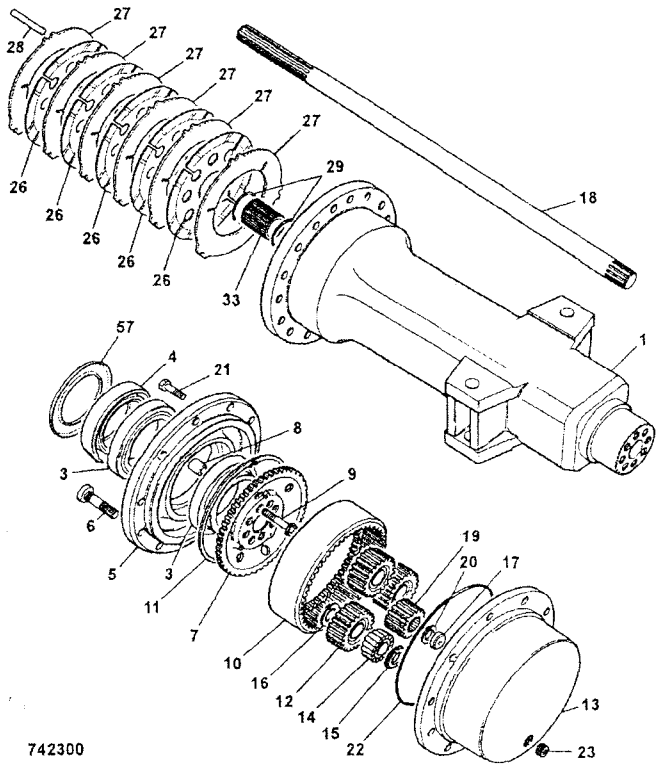

	FROM	TO	FROM	TO
3C PLUS				
3C 14				

ITEM	PART NO	CHANGE NO	DESCRIPTION	REMARKS	USAGE CODE	QTY
0A	458/10978		Arm, axle arm and hub, assembly			2
1	458/20618		:Casing, axle arm, pad thickness 139mm			1
3	907/20043		:Bearing, taper roller			2
4	904/50033		:Seal, oil, 127 x 160 x 15.5-17			1
5	458/20446		:Carrier, wheel bearing, 5 stud			1
6	826/00923		:Stud, wheel			5
7	450/12702		:Carrier, annulus			1
8	450/12703		:Dowel, hollow			8
9	826/01060		:Bolt, M14 x 70mm long			8
10	450/10205		:Gear, annulus ring			1
11	821/00210		:Circlip, internal, square section			1
12	450/10206		:Gear, planet			3
13	450/10216		:Carrier, planetary hub, 5 stud yellow			1
14	907/50200		:Bearing, roller, double row			3
15	821/00209		:Circlip			6
16	2203/0054		:Circlip			3
17	450/10208		:Pad, thrust			1

F2-2-1 458/10978, YELLOW, AXLE ARM & HUB ASSY
9812/0080U
ISSUE 1

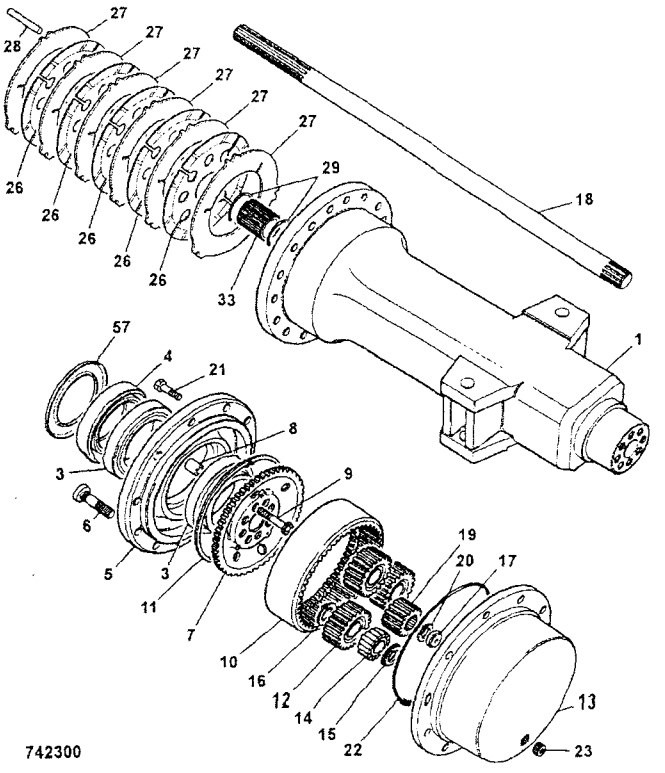

ITEM	PART NO	CHANGE NO	DESCRIPTION	REMARKS	USAGE CODE	QTY
18	914/60102		:Shaft, rigid driveshaft, Without shot peening			1
19	450/12403		:Gear, sun			1
20	821/00494		:Circlip, External			1
21	1321/0407Z		:Bolt, coated			2
22	828/00196		:O Ring			1
23	826/00425		:Plug, tapered, 3/4"-14PTF			1
26	458/20353		:Plate, brake friction			5
27	458/20285		:Plate, brake counter			6
28	450/10213		:Pin, reaction			3
29	2203/0071		:Circlip, external			2
33	450/10215		:Carrier, brake plate			1
57	458/20403		:Cover, plate, hub seal			1

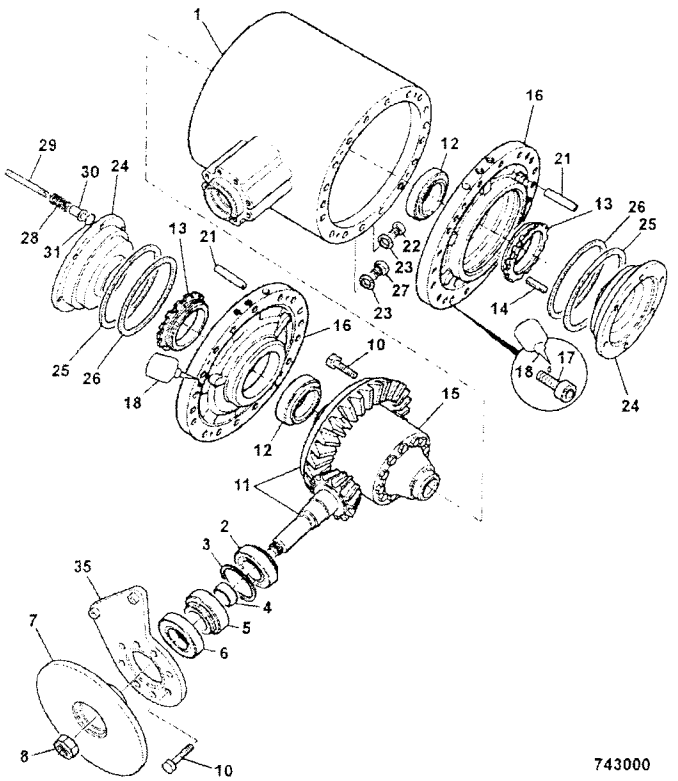

	FROM	TO	FROM	TO
3C PLUS				
3C 14				

ITEM	PART NO	CHANGE NO	DESCRIPTION	REMARKS	USAGE CODE	QTY
0A	458/11212		Drivehead, assembly, 2.923:1			1
1	458/20418		:Casing, drivehead, rigid axle			1
2	907/09000		:Bearing			1
3	921/01900		:Kit-shim			1
4	921/53400		:Kit-Spacer			1
5	907/08300		:Bearing, taper roller			1
6	904/50023		:Seal			1
7	458/20693		:Disc, park brake			1
8	826/01744		:Nut, stake, M30			1
10	826/01080		:Bolt			20
11	458/70249		:Gear, crownwheel/pinion RH, spiral, 13T/38T, M30			1
12	907/50100		:Bearing, taper roller			2
13	450/10403		:Nut, side differential			2
14	826/00818		:Pin, tension			2
15	450/10900		:Differential, assembly	see index F2 for breakdown		1
16	458/20365		:Housing, Brake Piston, Controlled Back-Off			2
17	1392/3407		:Capscrew			8
18	4102/1212		Gasket, Multigasket			A/R
21	826/00919		:Dowel			4

F2-3-29 458/11212, DRIVEHEAD ASSEMBLY

9812/0080U
ISSUE 1

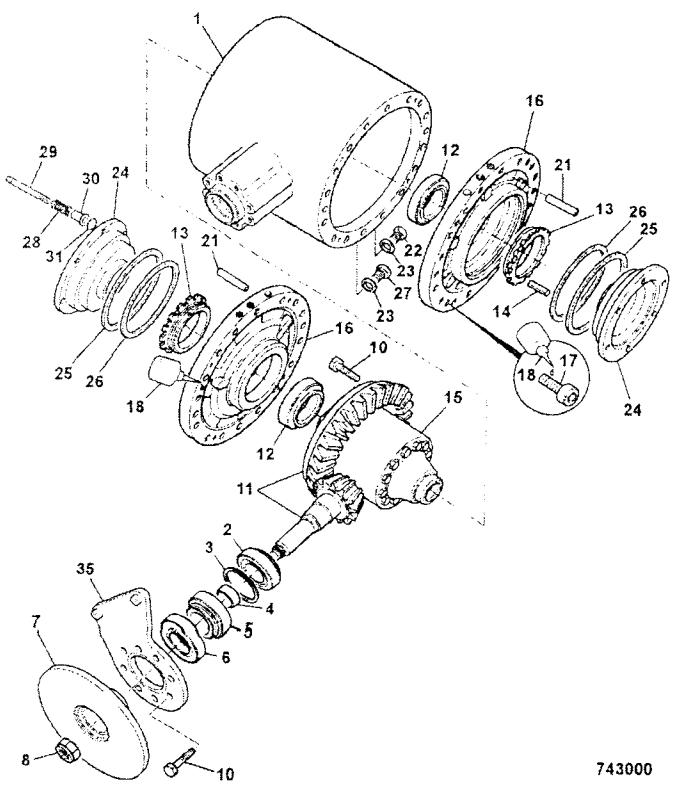

ITEM	PART NO	CHANGE NO	DESCRIPTION	REMARKS	USAGE CODE	QTY
22	816/80012		:Plug, magnetic, 3/4"BSP			1
23	1406/0021		:Seal, bonded 3/4" BSP			2
24	458/20371		:Piston, Brake			2
25	813/50012		:Seal, brake piston			2
26	813/50026		:Seal, brake piston			2
27	816/80037		:Plug, filler			1
28	814/00365		:Spring, compression			6
29	450/18204		:Pin, brake back-off			6
30	448/16905		:Bush, tension, flanged - external			6
31	2203/1020		:Circlip			6
35	458/20511		:Bracket, caliper mount, axle			1

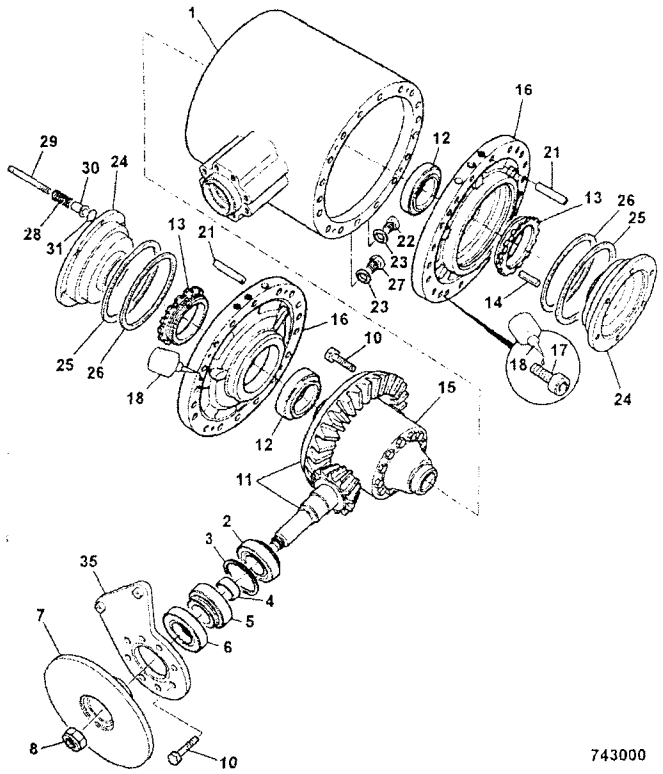

	FROM	TO	FROM	TO
3C PLUS				
3C 14				

ITEM	PART NO	CHANGE NO	DESCRIPTION	REMARKS	USAGE CODE	QTY
0A	458/11213		Drivehead, assembly, pad mount, 2.923:1			1
1	458/20418		:Casing, drivehead, rigid axle			1
2	907/09000		:Bearing			1
3	921/01900		:Kit-shim			1
4	921/53400		:Kit-Spacer			1
5	907/08300		:Bearing, taper roller			1
6	904/50023		:Seal			1
7	458/20693		:Disc, park brake			1
8	826/01744		:Nut, stake, M30			1
10	826/01080		:Bolt			20
11	458/70249		:Gear, crownwheel/pinion RH, spiral, 13T/38T, M30			1
12	907/50100		:Bearing, taper roller			2
13	450/10403		:Nut, side differential			2
14	826/00818		:Pin, tension			2
15	450/26310		:Differential, LSD assembly, 3 working faces			1
16	458/20365		:Housing, Brake Piston, Controlled Back-Off			2
17	1392/3407		:Capscrew			8
18	4102/1212		Gasket, Multigasket			A/R

F2-3-30 458/11213, DRIVEHEAD ASSEMBLY

9812/0080U
ISSUE 1

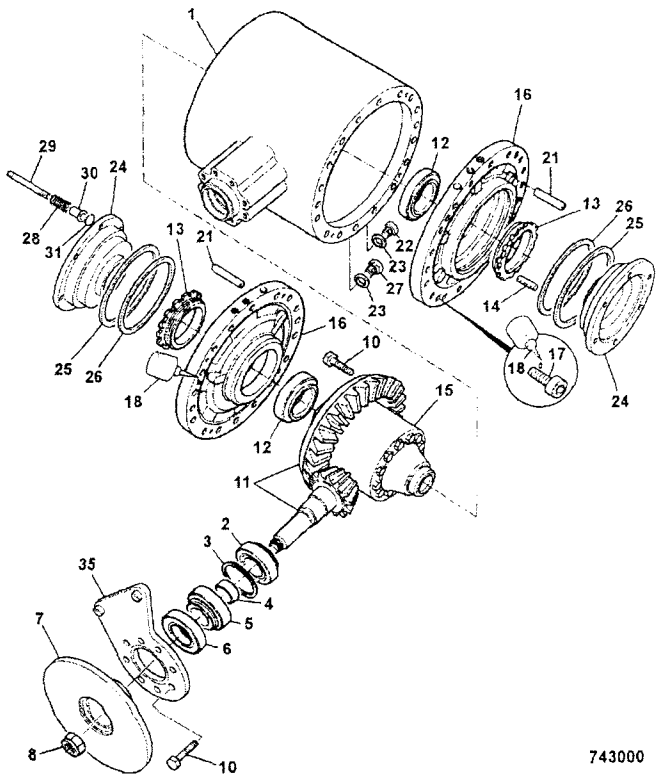

ITEM	PART NO	CHANGE NO	DESCRIPTION	REMARKS	USAGE CODE	QTY
21	826/00919		:Dowel			4
22	816/80012		:Plug, magnetic, 3/4"BSP			1
23	1406/0021		:Seal, bonded 3/4" BSP			2
24	458/20371		:Piston, Brake			2
25	813/50012		:Seal, brake piston			2
26	813/50026		:Seal, brake piston			2
27	816/80037		:Plug, filler			1
28	814/00365		:Spring, compression			6
29	450/18204		:Pin, brake back-off			6
30	448/16905		:Bush, tension, flanged - external			6
31	2203/1020		:Circlip			6
35	458/20511		:Bracket, caliper mount, axle			1

F2-4-1 450/10900, DIFFERENTIAL ASSY

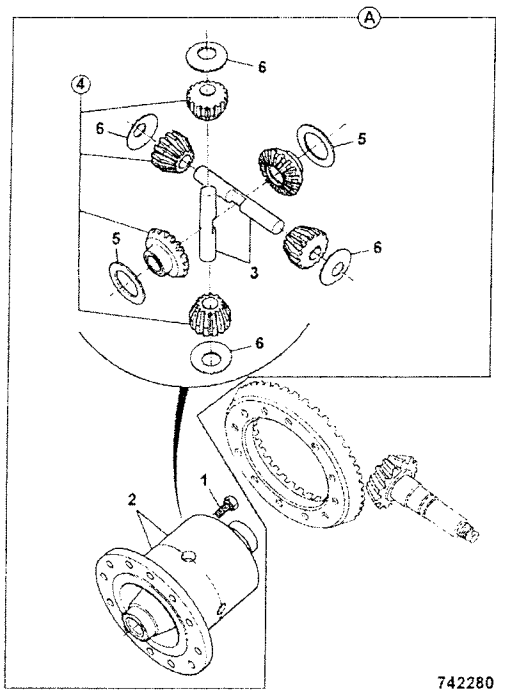

	FROM	TO	FROM	TO
3C PLUS				
3C 14				

ITEM	PART NO	CHANGE NO	DESCRIPTION	REMARKS	USAGE CODE	QTY
0A	450/10900		Differential, assembly			1
1	1315/3418		:Bolt			8
2	450/10800		:Casing, assembly, differential			1
3	450/10903		:Pin, trunnion			2
4	450/16900		:Kit-gear, differential			1
5	808/00209		:Washer, thrust, side gear			2
6	808/00210		:Washer, thrust, pinion			4

F2-4-2 450/26310, DIFFERENTIAL ASSY

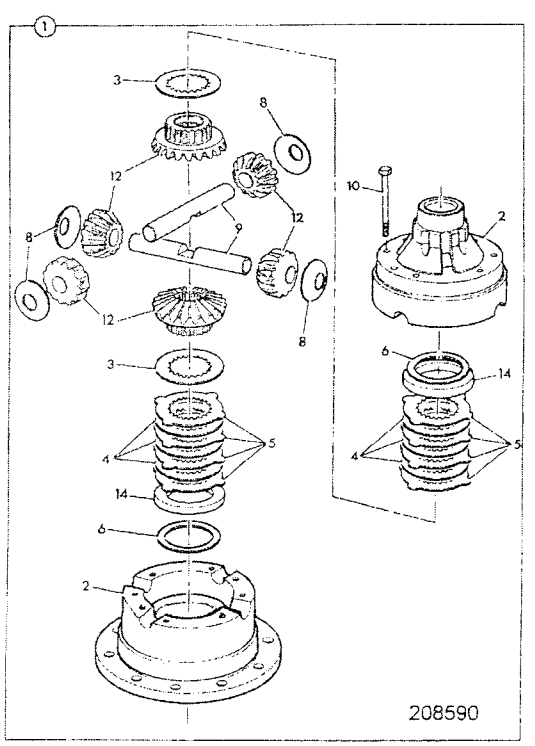

	FROM	TO	FROM	TO
3C PLUS				
3C 14				

ITEM	PART NO	CHANGE NO	DESCRIPTION	REMARKS	USAGE CODE	QTY
1	450/26310		Differential, LSD assembly, 3 working faces			1
2	450/20500		:Casing, assembly, differential			1
3	450/20401		:Plate, pressure			2
4	450/20402		:Plate, friction			2
5	450/20403		:Plate, counter			4
6	921/52100		:Kit, shim			2
8	808/00210		:Washer, thrust, pinion			4
9	450/10903		:Pin, trunnion			2
10	1315/3418Z		:Bolt, M10x80			8
12	450/20600		:Gear, set, differential			1
14	450/26201		:Spacer			6

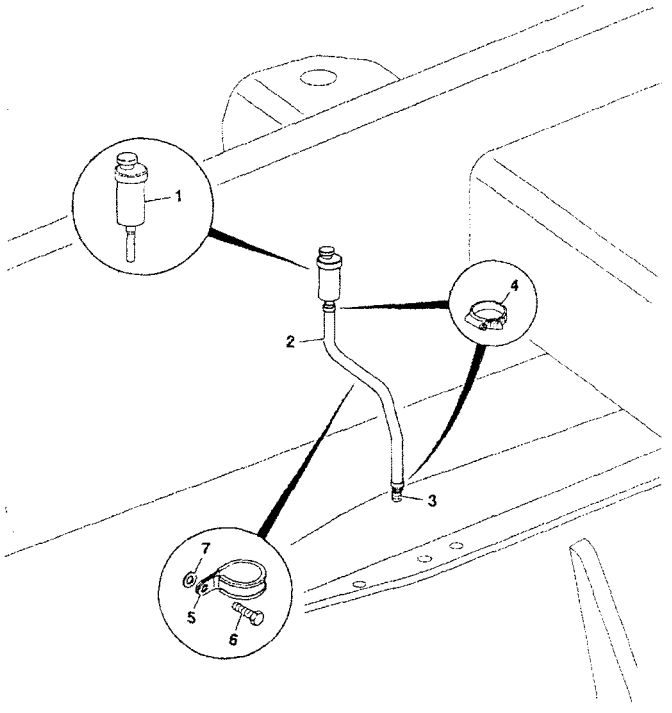

736092

	FROM	TO	FROM	TO
3C PLUS				
3C 14				

ITEM	PART NO	CHANGE NO	DESCRIPTION	REMARKS	USAGE CODE	QTY
1	32/925678		Breather	Rear axle		1
2	648/03528		Hose	was 648/21309		1
3	458/20611		Adapter			1
4	821/00520		Clip	not used with 648/03528		2
5	826/01347		Tie, cable c/w mounting, 4.6mm x 190mm	pushes onto stud welded to chassis		1
6	.		'See Remark'	no longer fitted		1
7	.		'See Remark'	no longer fitted		1

F

- F1 AXLES, FRONT
- F2 AXLES, REAR
- ● F3 WHEELS, TYRES & PROPSHAFTS
- F5 TRANSMISSIONS SYNCHROSHUTTLE

ENGLISH

F3-1-1 PROPSHAFT, TRANS. / FRONT AXLE, SYNCHOSHUTTLE TRANSMISSIONS
F3-2-1 PROPSHAFT, TRANS. / REAR AXLE, SYNCROSHUTTLE
F3-3-11 WHEEL & TYRE, FRONT 2WS 2WD, 11LX16
F3-3-51 WHEEL & TYRE, FRONT 2WS 2WD, LOCAL SOURCED
F3-4-1 WHEEL & TYRE, FRONT 2WS 4WD, 14X17.5
F3-4-51 WHEEL & TYRE, FRONT 2WS 4WD, LOCAL SOURCED
F3-5-2 WHEEL & TYRE, REAR 2WS 19.5LX24
F3-5-21 WHEEL & TYRE, REAR 2WS 17.7X24, 2WS 2WD
F3-5-51 WHEEL & TYRE, REAR 2WS, LOCAL SOURCED

F3-1-1 PROPSHAFT, TRANS. / FRONT AXLE, SYNCHOSHUTTLE TRANSMISSIONS

	FROM	TO	FROM	TO
3C PLUS				
3C 14				

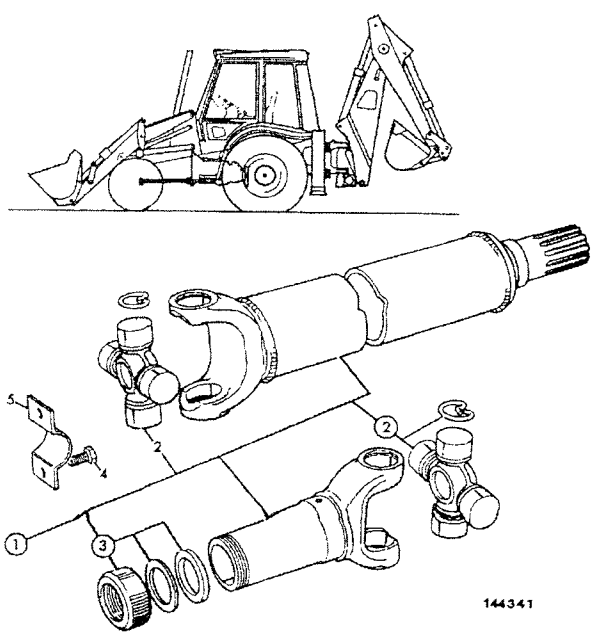

144341

ITEM	PART NO	CHANGE NO	DESCRIPTION	REMARKS	USAGE CODE	QTY
1	914/60181		Propshaft, front			1
- 2	914/56401		:Kit-spider, 106.4 X 34.9 Dia			2
3	914/35403		:Kit-end cap			1
4	826/00892		Screw, special 3/8UNF X 3/4			8
5	116/00525		Strap			4

F3-2-1 PROPSHAFT, TRANS. / REAR AXLE, SYNCROSHUTTLE

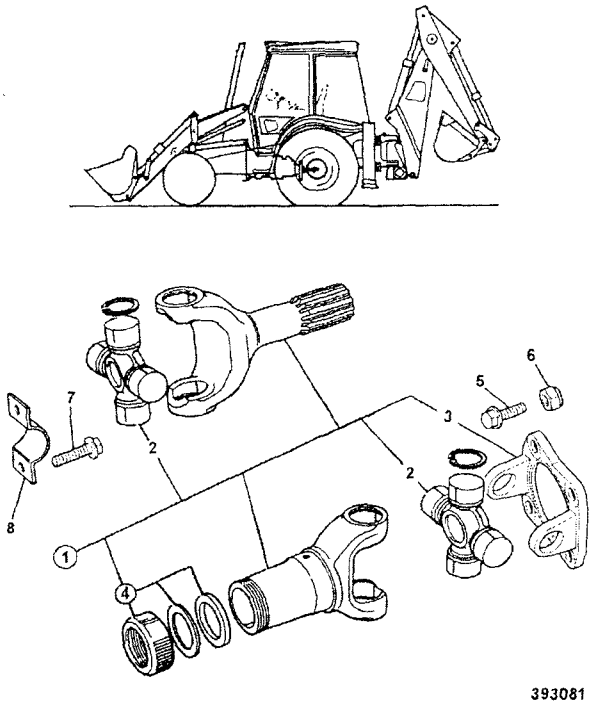

	FROM	TO	FROM	TO
3C PLUS				
3C 14				

ITEM	PART NO	CHANGE NO	DESCRIPTION	REMARKS	USAGE CODE	QTY
1	914/60265		Propshaft, rear	JCB 444 engine		1
	914/60167		*Propshaft, rear, see TI 2/422*	*International engine*		1
2	914/56401		:Kit-spider, 106.4 X 34.9 Dia			2
3	NSP		*None serviced part*			1
4	914/39702		:Cap, dust			1
5	1305/0410Z		Bolt, 1/2" x 1.1/2" long			4
6	1340/0403Z		Nut			4
7	826/00892		Screw, special 3/8UNF X 3/4			4
8	116/00525		Strap			2

F3-3-11 WHEEL & TYRE, FRONT 2WS 2WD, 11LX16

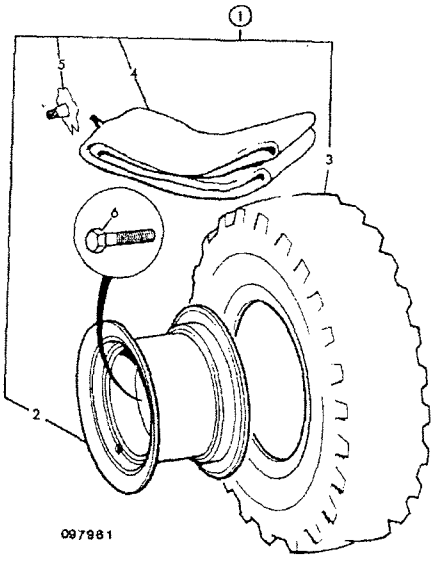

	FROM	TO	FROM	TO
3C PLUS				
3C 14				

ITEM	PART NO	CHANGE NO	DESCRIPTION	REMARKS	USAGE CODE	QTY
1	126/02919		Wheel, & tyre assembly, 11x16 12pr Armstrong			2
2	41/931200		:Wheel, rim, 8x16 (6 stud)			1
3	42/916200		:Tyre, 11Lx16x12pr, Armstrong			1
4	.		'See Remark'	Tubeless		1
5	151/05201		:Valve			1
6	826/01008		Nut, wheel			12

	FROM	TO	FROM	TO
3C PLUS				
3C 14				

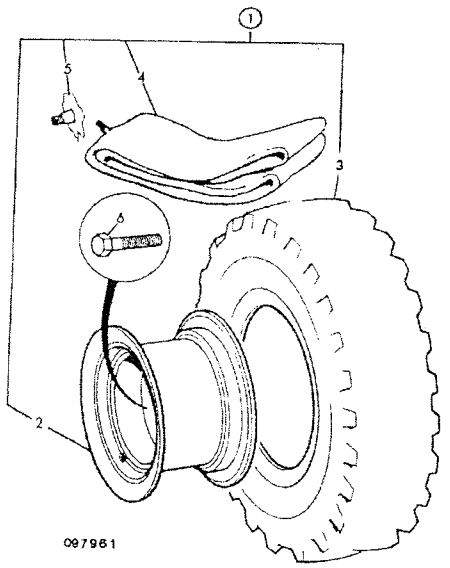

ITEM	PART NO	CHANGE NO	DESCRIPTION	REMARKS	USAGE CODE	QTY
1	339/41250		Wheel, and tyre, 10.5/80X18, 10 ply Goodyear			2
2	339/41313		:Wheel, rim, W9x18			1
3	339/41401		:Tyre, 10.5/80 X 18 10PR, Goodyear			1
4	339/41451		:Tube, 10.5/80-18 TR 15			1
5	.		'See Remark'	not fitted, tubed		1
6	826/01008		Nut, wheel			12

	FROM	TO	FROM	TO
3C PLUS				
3C 14				

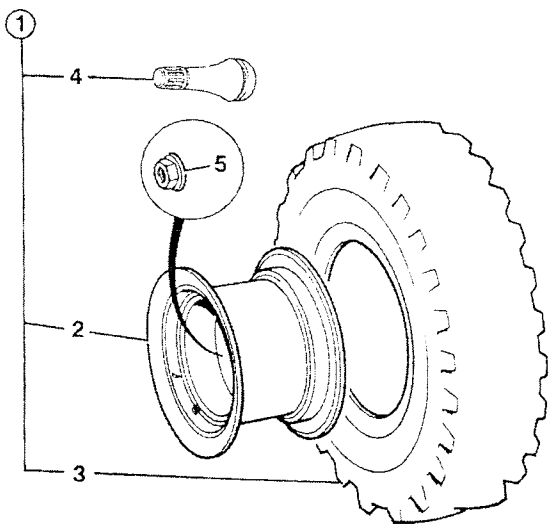

ITEM	PART NO	CHANGE NO	DESCRIPTION	REMARKS	USAGE CODE	QTY
1	126/01306		Wheel, & tyre assembly, Armstrong 14x17.5x10		A	2
	126/01688		Wheel, & tyre assy Goodyear, 14x17.5x10 ply IND		B	2
2	41/925200		:Wheel, 10.5x17.5			1
3	42/914300		:Tyre, 14x17.5x10pr, Armstrong		A	1
	42/406100		:Tyre, Goodyear, tubeless		B	1
4	123/05041		:Valve, tyre, flexible (Tubeless)			1
5	106/40001		Nut			10

245482

F3-2-1 PROPSHAFT, TRANS. / REAR AXLE, SYNCROSHUTTLE

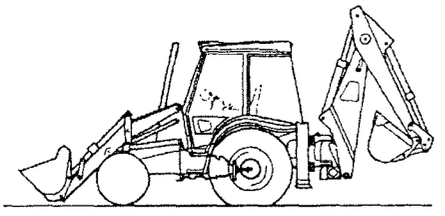

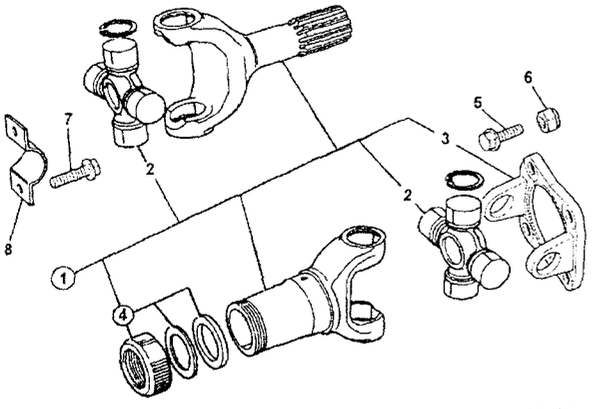

393081

	FROM	TO	FROM	TO
3C PLUS				
3C 14				

ITEM	PART NO	CHANGE NO	DESCRIPTION	REMARKS	USAGE CODE	QTY
1	914/60265		Propshaft, rear	JCB 444 engine		1
	914/60187		Propshaft, rear, see TI 2/422	International engine		1
2	914/56401		.Kit-spider, 106.4 X 34.9 Dia			2
3	NSP		.None serviced part			1
4	914/39702		.Cap, dust			1
5	1305/0410Z		.Bolt, 1/2" x 1.1/2" long			4
6	1340/0403Z		.Nut			4
7	826/00892		.Screw, special 3/8UNF X 3/4			4
8	116/00525		.Strap			2

F3-3-11 WHEEL & TYRE, FRONT 2WS 2WD, 11LX16

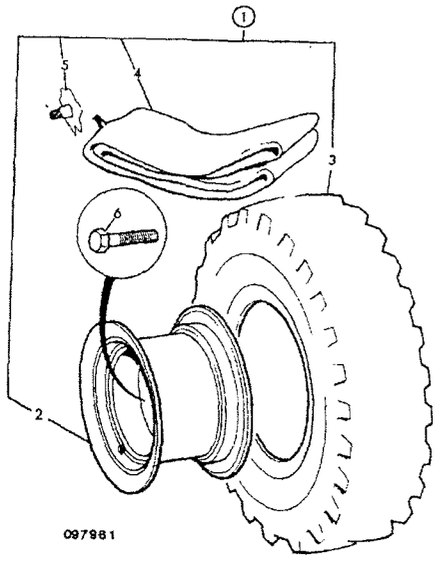

097961

	FROM	TO	FROM	TO
3C PLUS				
3C 14				

ITEM	PART NO	CHANGE NO	DESCRIPTION	REMARKS	USAGE CODE	QTY
1	126/02919		Wheel, & tyre assembly, 11x16 12pr Armstrong			2
2	41/931200		.Wheel, rim, 8x16 (6 stud)			1
3	42/916200		.Tyre, 11Lx16x12pr, Armstrong			1
4	.		'See Remark'	Tudeless		1
5	151/05201		.Valve			1
6	826/01008		Nut, wheel			12

F3-3-51 WHEEL & TYRE, FRONT 2WS 2WD, LOCAL SOURCED

	FROM	TO	FROM	TO
3C PLUS				
3C 14				

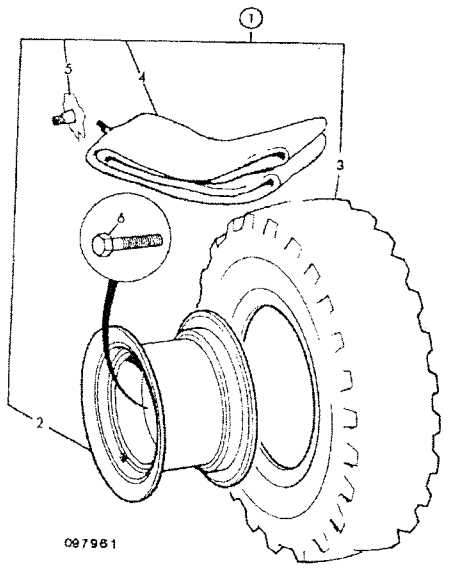

ITEM	PART NO	CHANGE NO	DESCRIPTION	REMARKS	USAGE CODE	QTY
1	339/41250		Wheel, and tyre, 10.5/80X18, 10 ply Goodyear			2
2	339/41313		:Wheel, rim, W9x18			1
3	339/41401		:Tyre, 10.5/80 X 18 10PR, Goodyear			1
4	339/41451		:Tube, 10.5/80-18 TR 15			1
5	.		'See Remark'	not fitted, tubed		1
6	826/01008		Nut, wheel			12

F3-4-1 WHEEL & TYRE, FRONT 2WS 4WD, 14X17.5

	FROM	TO	FROM	TO
3C PLUS				
3C 14				

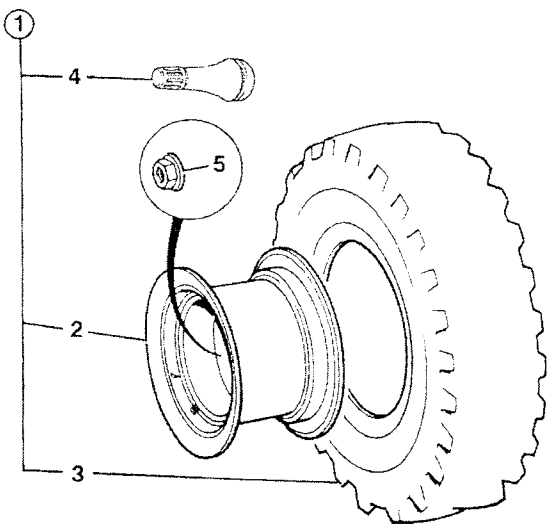

ITEM	PART NO	CHANGE NO	DESCRIPTION	REMARKS	USAGE CODE	QTY
1	126/01306		Wheel, & tyre assembly, Armstrong 14x17.5x10		A	2
	126/01688		Wheel, & tyre assy Goodyear, 14x17.5x10 ply IND		B	2
2	41/925200		:Wheel, 10.5x17.5			1
3	42/914300		:Tyre, 14x17.5x10pr, Armstrong		A	1
	42/406100		:Tyre, Goodyear, tubeless		B	1
4	123/05041		:Valve, tyre, flexible (Tubeless)			1
5	106/40001		Nut			10

245482

F3-4-51 WHEEL & TYRE, FRONT 2WS 4WD, LOCAL SOURCED

	FROM	TO	FROM	TO
3C PLUS				
3C 14				

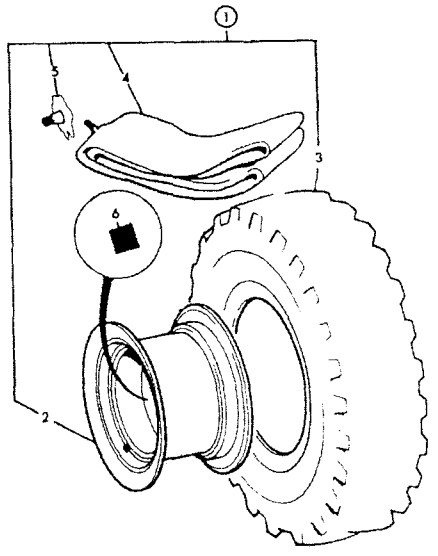

097960

ITEM	PART NO	CHANGE NO	DESCRIPTION	REMARKS	USAGE CODE	QTY
1	339/41042		Wheel, and tyre assembly, 14x17.5x10 Titan		A	2
	339/41024		Wheel, and tyre assembly, 14x17.5x10 Goodyear		B	2
	339/41235		Wheel, and tyre assembly, 12.5/80x18x10 G/year		C	1
2	339/41274		:Wheel, rim 10.5x17.5L		A B	1
	339/41275		:Wheel, rim W9x18		C	1
3	42/914300		:Tyre, 14x17.5x10pr, Armstrong		A	1
	42/406100		:Tyre, Goodyear, tubeless		B	1
	339/41403		:Tyre, 12.5/80-18 10 PR, Goodyear		C	1
4	.		'See Remark'	not fitted tubeless		1
5	339/41521		:Valve		A B C	1

F3-5-2 WHEEL & TYRE, REAR 2WS 19.5LX24

	FROM	TO	FROM	TO
3C PLUS				
3C 14				

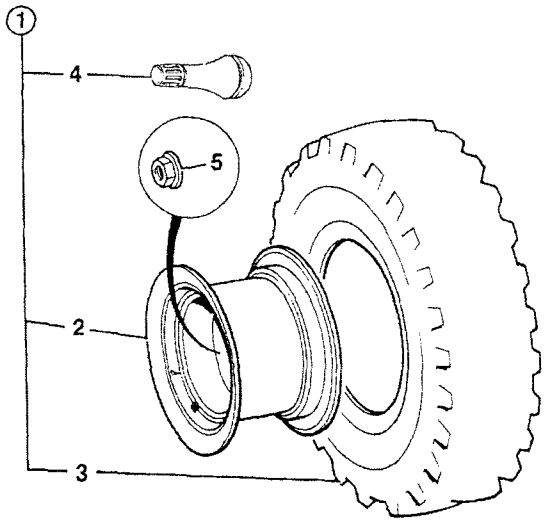

245482

ITEM	PART NO	CHANGE NO	DESCRIPTION	REMARKS	USAGE CODE	QTY
1	126/00146		Wheel, & tyre. Armstrong, 19.5Lx24x10pr		A	2
	126/00147		Wheel, & tyre. Armstrong, 19.5Lx24x12pr		B	2
	126/02367		Wheel, & tyre assembly IND, 19.5Lx24x12 Goodyear		C	2
2	41/910000		:Rim, wheel, 19,5Lx24			1
3	42/914800		:Tyre, 19.5Lx24x10pr, Armstrong		A	1
	42/914900		:Tyre, 19.5Lx24x12pr, Armstrong		B	1
	42/413400		:Tyre, 19.5lX24x12, Goodyear industrial		C	1
4	151/05201		:Valve			1
5	106/40001		:Nut			10

	FROM	TO	FROM	TO
3C PLUS				
3C 14				

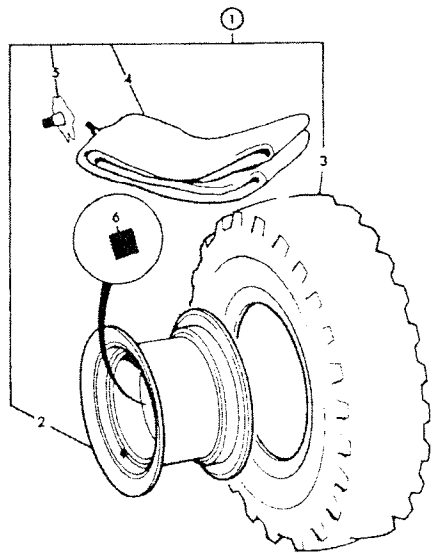

097960

ITEM	PART NO	CHANGE NO	DESCRIPTION	REMARKS	USAGE CODE	QTY
1	126/02769		Wheel, & tyre assembly, 17.5x24x10pr			2
2	41/931400		:Wheel, rim, 15x24, 101mm offset, 5 stud			1
3	42/921300		:Tyre, 17.5Lx24x10 pr, TITAN			1
4			:'See Remark'	not fitted		1
5	151/05201		:Valve			1
6	106/40001		Nut			10

	FROM	TO	FROM	TO
3C PLUS				
3C 14				

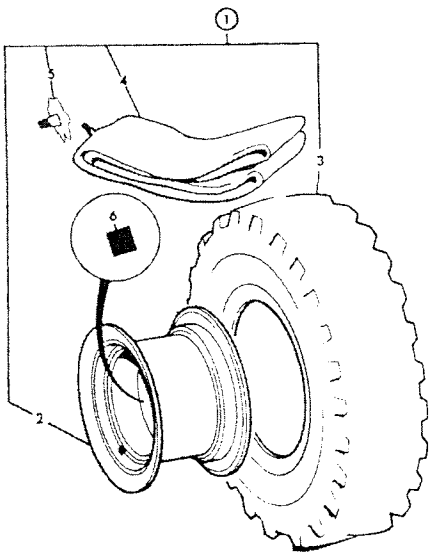

097960

ITEM	PART NO	CHANGE NO	DESCRIPTION	REMARKS	USAGE CODE	QTY
1	339/41203		::Wheel, and tyre assembly, 19.5x24x12 G/ year		A	1
	339/41236		Wheel, and tyre assembly, 17.5x25x12 G/year		B	2
	339/41206		Wheel, and tyre assembly, 3 piece rim		D	1
	339/41263		Wheel, and tyre assembly, 17.5x25x12 Pirelli		C	2
2	339/41271		:Wheel, rim DW16x24		A	1
	339/41267		:Wheel, rim 13.00DCx25		B C	1
	339/41190		:Wheel, rim 14.00X25/1.5, 3 piece		D	1
3	42/413400		:Tyre, 19.5IX24x12, Goodyear industrial		A	1
	42/400600		:Tyre, 17.5-25X12 ply, Goodyear SGL		B D	1
	339/41410		:Tyre, 17.5x25x12 PR, Pirelli		C	1
4			'See Remark'	not fitted tubeless		1
5	151/05201		:Valve		A B C D	1

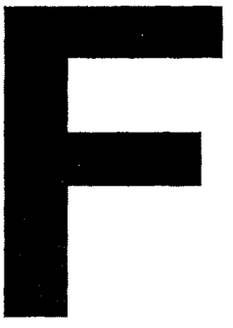

F1 AXLES, FRONT
F2 AXLES, REAR
F3 WHEELS, TYRES & PROPSHAFTS
● F5 TRANSMISSIONS SYNCHROSHUTTLE

ENGLISH

F5-0-1 MOUNTING BRACKET, SYNCROSHUTTLE, INTERNATIONAL ENGINE
F5-0-3 MOUNTING BRACKET, SYNCROSHUTTLE, JCB DIESELMAX ENGINE
F5-0-5 MOUNTING, TRANSMISSION, TO JCB DIESELMAX ENGINE
F5-0-11 MOUNTING, TRANSMISSION, TO INTERNATIONAL ENGINE
F5-0-30 DIPSTICK & FILLER, SYNCROSHUTTLE, JCB DIESELMAX ENGINE
F5-0-35 DIPSTICK & FILLER, SYNCROSHUTTLE, INTERNATIONAL ENGINE
F5-0-40 TORQUE CONVERTER, 84 & 92 HP ENGINES, W300 3.01 RATIO
F5-1-11 441/00190 - 2WD-2WS, EXTERNAL COMPONENTS, INTERNATIONAL ENGINE
F5-1-21 441/00190 - 2WD-2WS, INTERNAL COMPONENTS, INTERNATIONAL ENGINE
F5-1-31 441/00190 - 2WD-2WS, REVERSER UNIT, 459/10097, INTERNATIONAL ENGINE
F5-1-51 441/00190 - 2WD-2WS, GEAR CHANGE, INTERNATIONAL ENGINE
F5-2-11 441/00750 - 2WD-2WS, EXTERNAL COMPONENTS, JCB DIESELMAX ENGINE
F5-2-21 441/00750 - 2WD-2WS, INTERNAL COMPONENTS, JCB DIESELMAX ENGINE
F5-2-31 441/00750 - 2WD-2WS, REVERSER UNIT, 459/10097, JCB DIESELMAX ENGINE
F5-2-51 441/00750 - 2WD-2WS, GEAR CHANGE, JCB DIESELMAX ENGINE
F5-3-1 441/00500 - 4WD, TRANSMISSION ASSY, SYNCROSHUTTLE, INTERNATIONAL ENGINE
F5-3-11 441/00500 - 4WD, EXTERNAL COMPONENTS, INTERNATIONAL ENGINE
F5-3-21 441/00500 - 4WD, INTERNAL COMPONENTS, JCB DIESELMAX ENGINE
F5-3-31 441/00500 - 4WD, REVERSER UNIT, 459/10097, JCB DIESELMAX ENGINE
F5-3-41 441/00500 - 4WD, 4WD CLUTCH ASSEMBLY, 459/10119, JCB DIESELMAX ENGINE
F5-3-51 441/00500 - 4WD, GEAR CHANGE, JCB DIESELMAX ENGINE
F5-4-1 441/00760 - 4WD, TRANSMISSION ASSY, SYNCROSHUTTLE, JCB DIESELMAX ENGINE
F5-4-11 441/00760 - 4WD, EXTERNAL COMPONENTS, JCB DIESELMAX ENGINE
F5-4-21 441/00760 - 4WD, INTERNAL COMPONENTS, JCB DIESELMAX ENGINE
F5-4-31 441/00760 - 4WD, REVERSER UNIT, 459/10097, JCB DIESELMAX ENGINE
F5-4-41 441/00760 - 4WD, 4WD CLUTCH ASSEMBLY, 459/10119, JCB DIESELMAX ENGINE
F5-4-51 441/00760 - 4WD, GEAR CHANGE, JCB DIESELMAX ENGINE
F5-70-1 PUMP & DRIVESHAFT, SYNCROSHUTTLE, GEARPUMP MACHINES

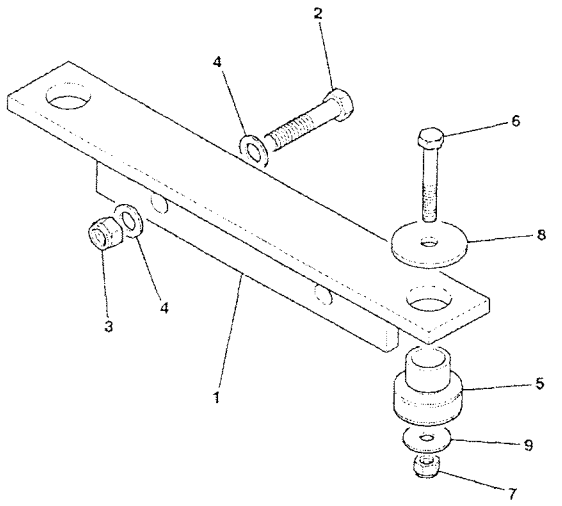

	FROM	TO	FROM	TO
3C PLUS				
3C 14				

ITEM	PART NO	CHANGE NO	DESCRIPTION	REMARKS	USAGE CODE	QTY
1	335/13944		Bracket, gearbox mounting			1
2	1315/3717Z		Bolt, M16 x 75mm			2
3	1370/0603Z		Nut, M16			2
4	1420/0011Z		Washer, M16 plain			2
5	123/03138		Mounting, rubber			2
6	1315/3518Z		Bolt, M12 x 80mm			2
7	1370/0403Z		Nut, M12			2
8	123/02453		Washer, rebound			2
9	823/00531		Washer			2

903050

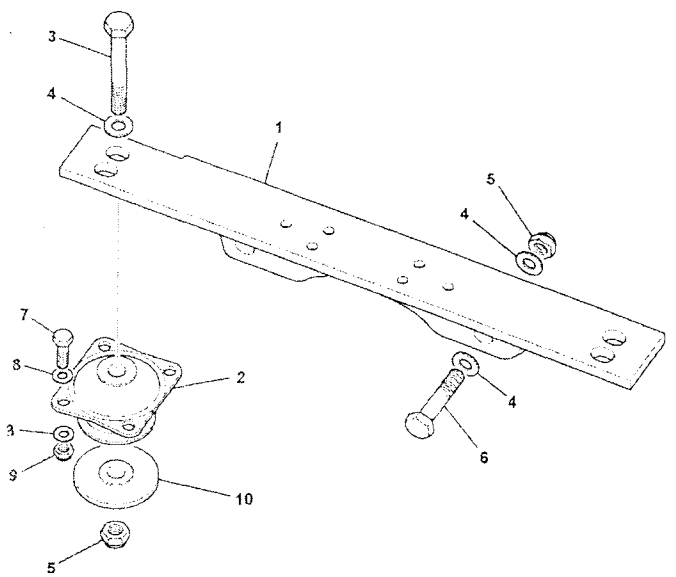

	FROM	TO	FROM	TO
3C PLUS				
3C 14				

ITEM	PART NO	CHANGE NO	DESCRIPTION	REMARKS	USAGE CODE	QTY
1	335/11254		Bracket, gearbox mounting			1
2	331/40347		Mounting, resilient			2
3	1315/3722Z		Bolt, M16 x 120			2
4	1420/0011Z		Washer, M16 plain			6
5	1370/0603Z		Nut, M16			4
6	1315/3717Z		Bolt, M16 x 75mm			2
7	1315/3409Z		Bolt, M10 x 35			8
8	1420/0008Z		Washer, Plain M10			16
9	1370/0303Z		Nut, lock, M10			8
10	829/31272		Washer, rebound. 16x75x8			2

788610

F5-0-5 MOUNTING, TRANSMISSION, TO JCB DIESELMAX ENGINE

	FROM	TO	FROM	TO
3C PLUS				
3C 14				

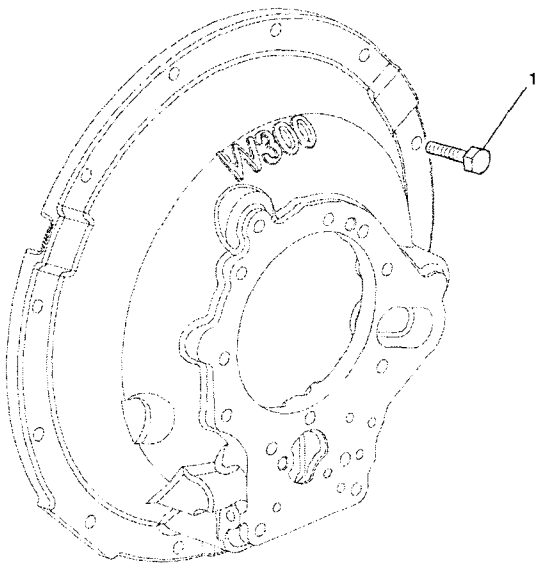

774840

ITEM	PART NO	CHANGE NO	DESCRIPTION	REMARKS	USAGE CODE	QTY
1	1315/0409Z		Screw, hex. head			12

F5-0-11 MOUNTING, TRANSMISSION, TO INTERNATIONAL ENGINE

	FROM	TO	FROM	TO
3C PLUS				
3C 14				

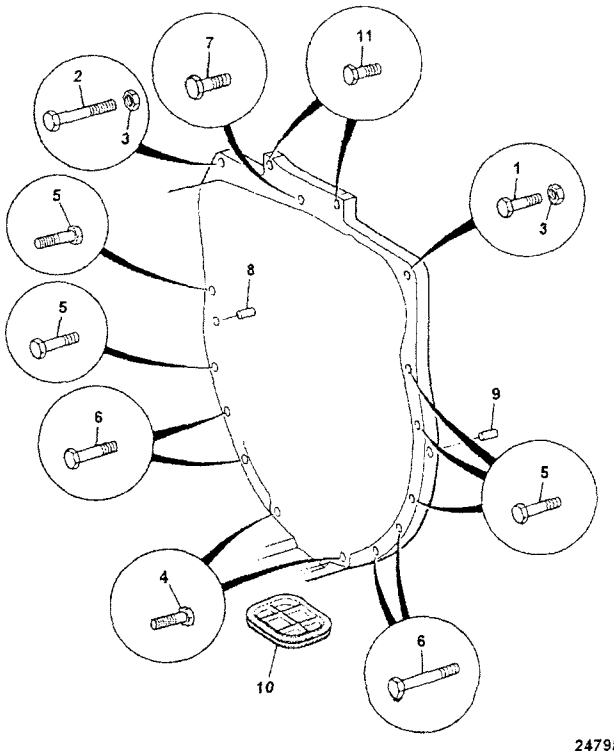

247982

ITEM	PART NO	CHANGE NO	DESCRIPTION	REMARKS	USAGE CODE	QTY
	1318/3512Z		Bolt, M12X50mm long, TUF-LOK			1
2	1315/3520Z		Bolt, M12 x 100mm			1
3	1370/0403Z		Nut, M12			2
4	1315/0511Z		Bolt, M12 x 45mm			2
5	1315/3514Z		Bolt, M12 x 60mm			5
6	1315/3516Z		Bolt, M12 x 70mm			4
7	1315/0509Z		Screw, M12 x 35mm			1
9	02/101270		Bolt			2
10	445/13703		Cover, flywheel housing, 110mm x 79mm x 17mm			1
11	1305/1808Z		Bolt			2

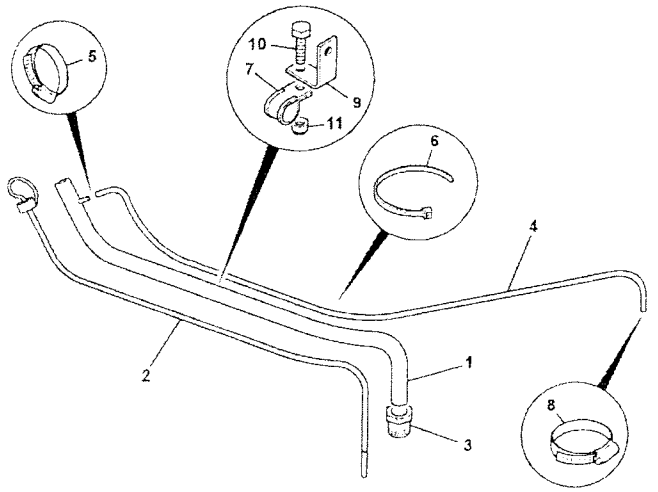

	FROM	TO	FROM	TO
3C PLUS				
3C 14				

ITEM	PART NO	CHANGE NO	DESCRIPTION	REMARKS	USAGE CODE	QTY
1	830/12343	Superseded	Tube, oil filler			1
	332/D6553		Tube, oil filler			1
2	331/46204		Dipstick			1
3	155/10600		Nut, sealastic			1
3A	904/20334		:Kit-seal & ferrule			1
4	647/02108		Tube			1
5	821/00433		Clip			1
6	826/01453		Tie, cable, double head			4
7	821/10297		Clip, P-clip,25mm Dia			1
8	821/10319		Clip, 9.5mm dia pinch type			1
9	331/46081		Bracket			1
10	1315/0305Z		Screw, M8 x 20mm long			1
11	826/01099		Nut, rivet,M6 open ended			1

743210

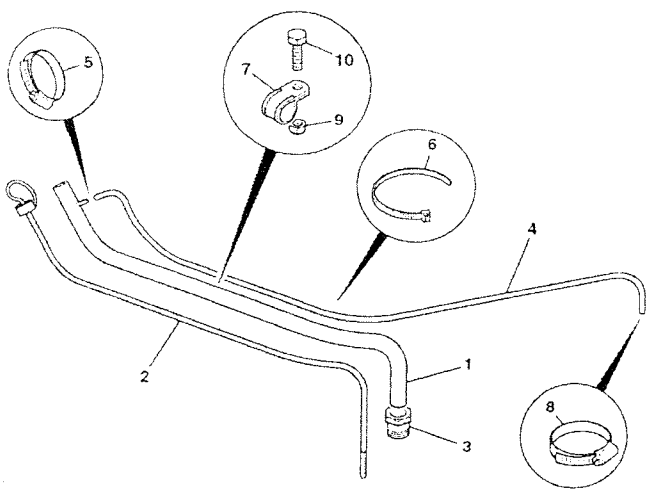

	FROM	TO	FROM	TO
3C PLUS				
3C 14				

ITEM	PART NO	CHANGE NO	DESCRIPTION	REMARKS	USAGE CODE	QTY
1	123/05942		Tube, filler			1
2	123/06299		Dipstick			1
3	155/10600		Nut, sealastic			1
3A	904/20334		:Kit-seal & ferrule			1
4	647/02108		Tube			1
5	821/00433		Clip			1
6	826/01453		Tie, cable, double head			4
7	821/10297		Clip, P-clip,25mm Dia			1
8	821/10319		Clip, 9.5mm dia pinch type			1
9	1370/0203Z		Nut, self lock, M8			1
10	1315/0305Z		Screw, M8 x 20mm long			1

743211

F5-0-40 TORQUE CONVERTER, 84 & 92 HP ENGINES, W300 3.01 RATIO

9812/. ISSUE

	FROM	TO	FROM	TO
3C PLUS				
3C 14				

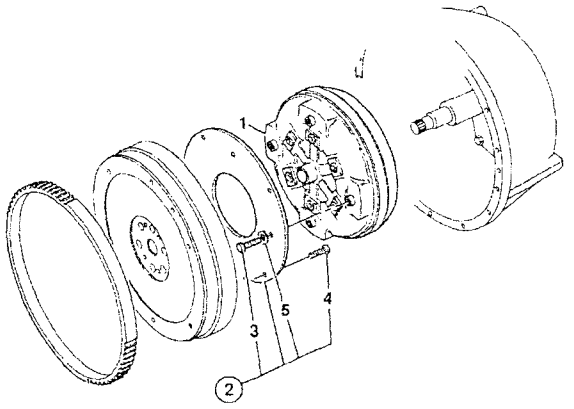

ITEM	PART NO	CHANGE NO	DESCRIPTION	REMARKS	USAGE CODE	QTY
1	04/600786		Converter, W300 3.01 ratio			1
2	04/600864		Kit-drive plate, torque converter			1
3	04/500303		:Bolt			4
4	826/11605		:Bolt, M8 x 30			6
5	823/10297		:Washer, hardened			4

376141

F5-1-11 441/00190 - 2WD-2WS, EXTERNAL COMPONENTS, INTERNATIONAL ENGINE

9812/0080U ISSUE 1

	FROM	TO	FROM	TO
3C PLUS				
3C 14				

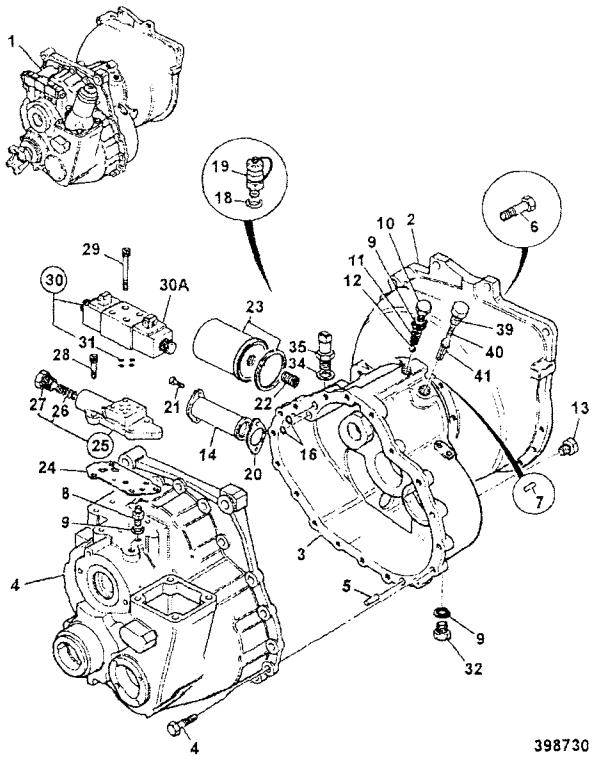

ITEM	PART NO	CHANGE NO	DESCRIPTION	REMARKS	USAGE CODE	QTY
1	441/00190		Gearbox, assembly, SS700, 2WD, 35kph			1
2	459/70442		:Casing, flywheel housing			1
3	445/76502		:Casing, front			1
4	459/30312	Superseded	:Casing, rear, SS700 2WD			1
	459/M1383		:Casing, rear SS700 2WD			1
5	826/01417		:Bolt			18
6	445/14001		:Dowel			2
7	.		'See Remark'	Gearbox components see index F5		1
8	1606/0017		:Adapter, 5/8" x 1/2" M/M			2
9	1406/0018		:Seal, bonded, 1/2" BSP			3
10	816/80041		:Plug, 1/2"BSP, 25.65mm A/F			1
11	814/00222		:Spring			1
12	916/00008		:Bearing, 14dia ball			2
13	816/80051		:Plug, 1/8" tapered			5
14	32/902200		:Strainer, suction			1
15	445/13703		:Cover, flywheel housing, 110mm x 79mm x 17mm			1
16	828/10222		:O Ring			2
18	1406/0011		:Seal, bonded			2

398730

441/00190 - 2WD-2WS, EXTERNAL COMPONENTS, INTERNATIONAL ENGINE

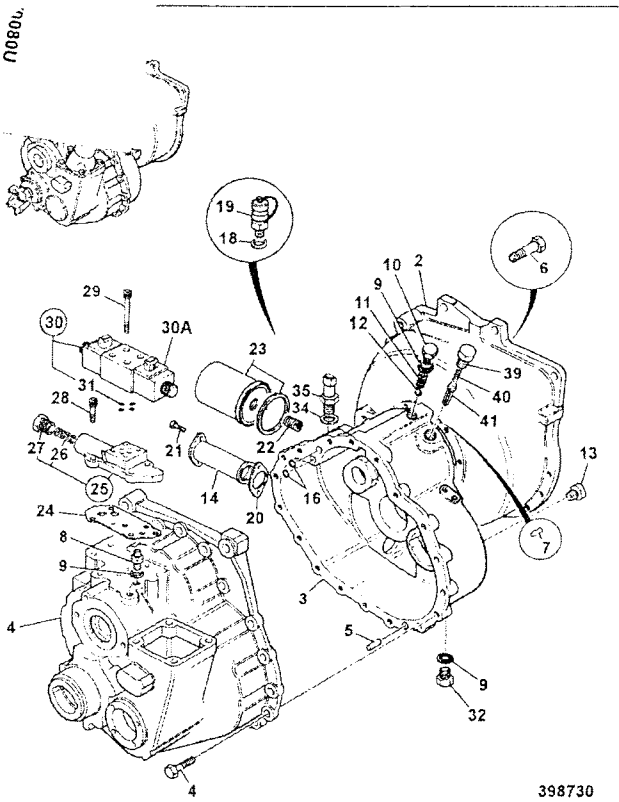

ITEM	PART NO	CHANGE NO	DESCRIPTION	REMARKS	USAGE CODE	QTY
19	45/905000		:Adapter, pressure test, 1/4BSP male			1
20	813/50027		:Gasket			1
21	1321/0303Z		:Screw, M8 x 16			2
22	816/15184		:Adapter, 1/2"BSPx1"UNF			1
23	581/18063		:Element, transmission filter, 94mm long			1
24	813/10175		:Gasket, valve block			1
25	459/10144		:Valve, Adapter block assy, SS700 low ratio			1
26	814/00412		::Spring			1
27	816/80063		::Plug			1
28	1392/3207		:Capscrew			4
29	1391/3108Z		:Capscrew			4
30	25/220998		Valve, solenoid assembly			1
30A	25/221054		:Coil, 12V			2
31	35/100801		::Kit-seal, solenoid valve			1
32	816/50031		:Adapter, Tee			1
34	816/80041		:Plug, 1/2"BSP, 25.65mm A/F			1
35	701/41600		:Switch, oil pressure, M12 red body, AMP			1
38	1315/0409Z		Screw, hex. head			12
39	816/80061		Plug			1
40	814/10153		Spring, compression, T/C press.maint			1
41	459/70168		Spool, Adapter Solenoid			1

F5-1-21 441/00190 - 2WD-2WS, INTERNAL COMPONENTS, INTERNATIONAL ENGINE

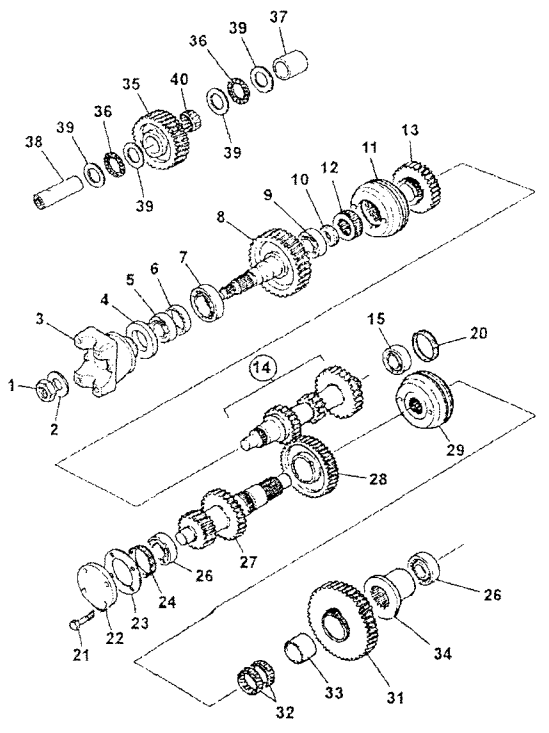

	FROM	TO	FROM	TO
3C PLUS				
3C 14				

ITEM	PART NO	CHANGE NO	DESCRIPTION	REMARKS	USAGE CODE	QTY
1	826/01551		Nut, Stake M30, (46mm Head)			1
2	460/32202		Washer			1
3	459/70317		Yoke, coupling - 1480, 35 t			1
4	904/20172		Seal, TRIPLE LIP, 53.6 x 80.35 x 12			1
5	907/51600		Bearing, taper roller			1
6	921/53400		Kit-Spacer			1
7	907/53800		Bearing			1
8	459/50208		Gear, transfer 38T, SS750 low ratio			1
9	907/20005		Bearing, taper roller			1
10	445/64302		Spacer, mainshaft seal			1
11	445/03300		Synchroniser, assembly			1
12	445/03010		Sleeve, hub shaft	3rd & 4th speed		1
13	459/50206		Gear, 3rd speed, SS750 low ratio			1
14	459/50205		Gear, mainshaft, SS750			1
15	907/52800		Bearing, 35 x 65 x 18			1
20	459/70276		Nut, mainshaft setting			1
21	826/01416		Screw, micro-encapsulated			4
22	331/23731		Cover, Layshaft			1
23	813/10176		Gasket			1

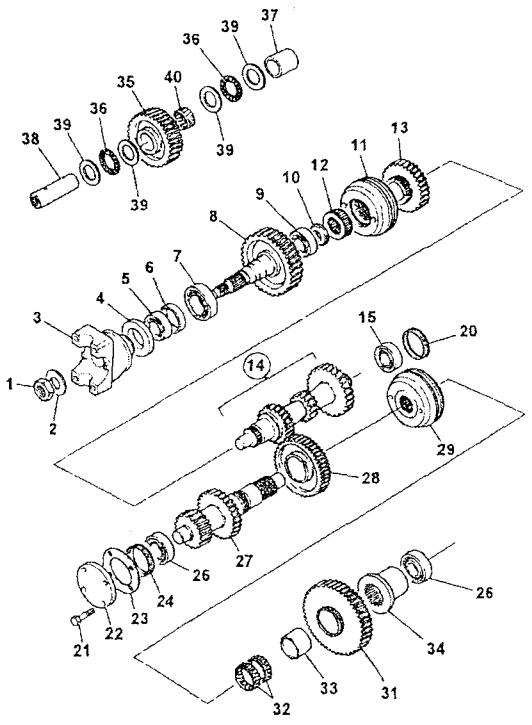

400030

ITEM	PART NO	CHANGE NO	DESCRIPTION	REMARKS	USAGE CODE	QTY
24	459/70274		Nut, layshaft setting			1
26	907/09600		Bearing, 35 x 73 x 24			2
27	459/50188		Layshaft, low ratio			1
28	459/50511		Gear, 2nd, 40t SS700	2nd 40 Teeth		1
29	459/50520		Synchroniser, assembly			1
31	459/50509		Gear, 1st, 44t SS700	1st		1
32	917/02300		Bearing			2
33	917/00008		Bearing, inner race			1
34	445/03013		Spacer			1
35	459/50440		Gear, idler, 35T	35 Teeth		1
37	459/70206		Spacer, idler gear			1
38	459/70087		Shaft, idler			1
39	823/00451		Washer, thrust			4
40	917/02400		Bearing, needle roller			1

	FROM	TO	FROM	TO
3C PLUS				
3C 14				

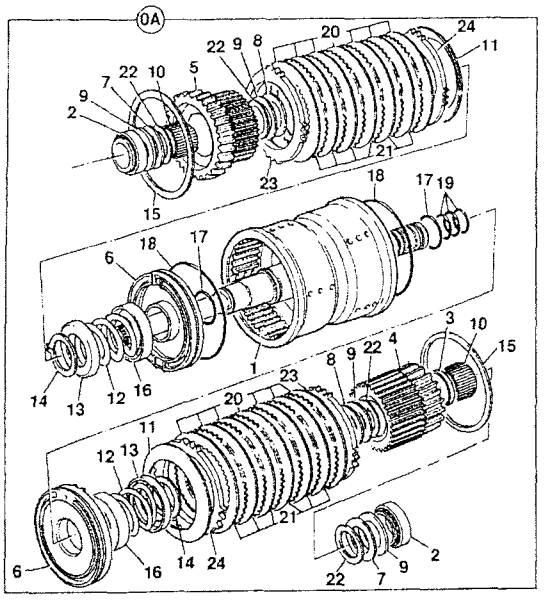

376130

ITEM	PART NO	CHANGE NO	DESCRIPTION	REMARKS	USAGE CODE	QTY
0A	459/10097		Clutch, assembly, input, reverser			1
1	459/50503		:Housing, input clutch, SS700			1
2	907/20012		:Bearing, taper roller			2
3	823/10355		:Spacer			1
4	459/50428		:Gear, 31T & plate carrier			1
5	459/50429		:Gear, 22T & plate carrier			1
6	459/10096		:Piston			2
7	823/10264		:Washer, thrust			2
8	823/10265		:Washer, thrust			2
9	917/10006		:Bearing, needle thrust			4
10	917/50600		:Bearing, needle roller			2
11	814/10115		:Disc, spring, spline			2
12	814/00345		:Spring			2
13	823/10266		:Washer, spring retainer			2
14	821/00296		:Circlip, external			2
15	826/10467		:Circlip, internal			2
16	331/16558		:Plate, oil baffle			2
17	828/10180		:O Ring			2
18	828/10181		:O Ring, 130mm I/D			2
19	904/50024		:Seal, ring			4
20	331/16520		:Plate, friction, clutch			10

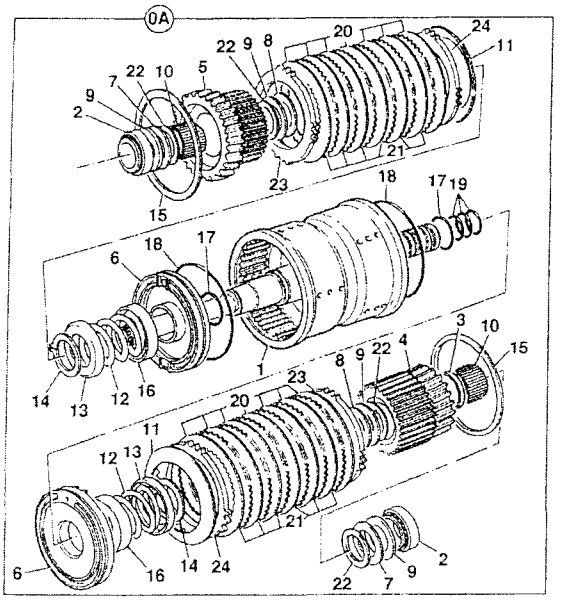

376130

ITEM	PART NO	CHANGE NO	DESCRIPTION	REMARKS	USAGE CODE	QTY
21	331/16516		:Plate, counter, clutch			10
22	823/10316		:Washer, thrust, bevelled			4
23	331/16517		:Plate, pressure, clutch, 6.0 mm			2
24	331/16519		:Plate, shim, clutch, 1.2mm			a/r

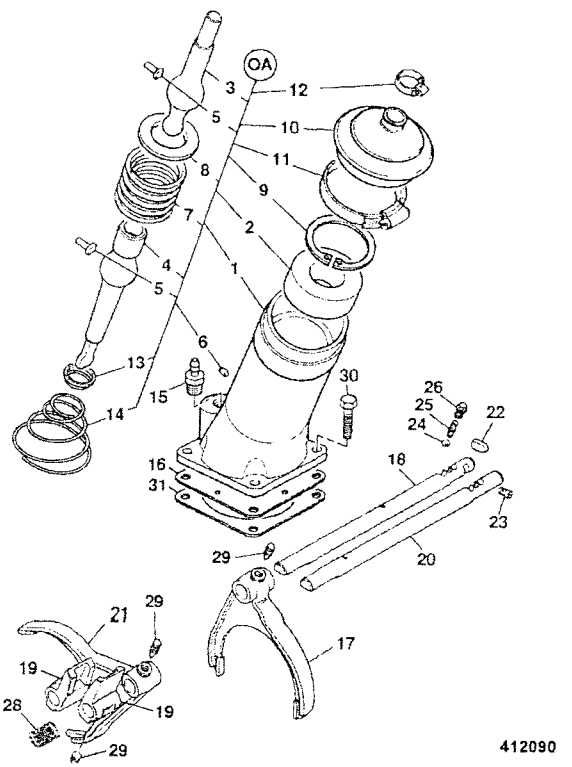

412090

	FROM	TO	FROM	TO
3C PLUS				
3C 14				

ITEM	PART NO	CHANGE NO	DESCRIPTION	REMARKS	USAGE CODE	QTY
0A	459/10143		Lever, assembly, gear turret			1
1	459/30295		:Housing, turret, gear lever			1
2	445/10802		:Seat			1
3	445/05501		:Lever, gear			1
4	459/70271		:Lever, bottom gearshift			1
5	445/03023		:Pin			2
6	835/10036		:Plug			1
7	814/00233		:Spring			1
8	445/10803		:Washer, ball			1
9	2203/1080		:Circlip			1
10	331/25566		:Gaiter, gear lever			1
11	821/10163		:Clip, worm drive			1
12	445/05302		:Clip			1
13	445/03020		:Retainer, spring			1
14	814/00221		:Spring			1
15	816/13382		:Adapter, hose			1
16	460/17603		:Baffle			1
17	459/30297		Fork, selector 1st			1
18	459/70181		Shaft, selector			1
19	459/70199		Block, selector			2
20	459/70181		Shaft, selector			1
21	459/30299		Fork, selector 3rd			1

F5-1-51 441/00190 - 2WD-2WS, GEAR CHANGE, INTERNATIONAL ENGINE

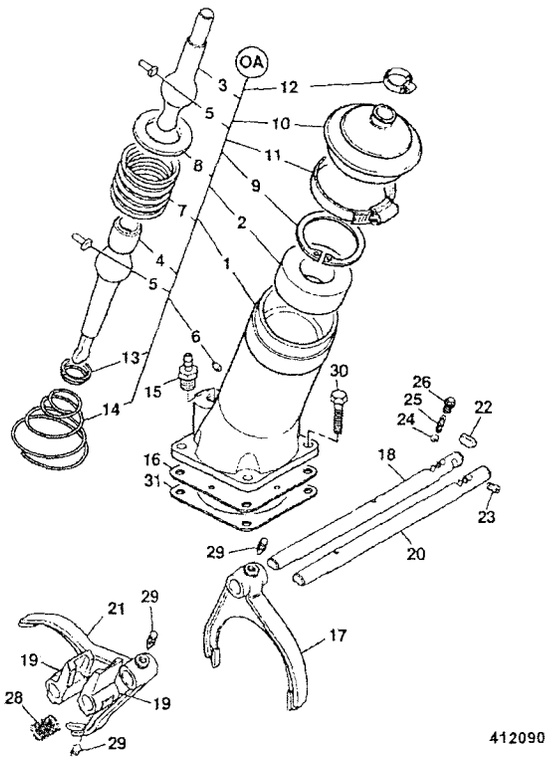

ITEM	PART NO	CHANGE NO	DESCRIPTION	REMARKS	USAGE CODE	QTY
22	445/03031		Roller, baulk			1
23	816/80027		Plug			1
24	916/00006		Ball, 11mm dia			2
25	814/00354		Spring			2
26	816/80057		Plug, detent			2
27	445/05302		Clip			2
28	814/00406		Spring			1
29	445/26110		Screw			4
30	826/01416		Screw, micro-encapsulated			4
31	813/50042		Gasket			1

F5-2-11 441/00750 - 2WD-2WS, EXTERNAL COMPONENTS, JCB DIESELMAX ENGINE

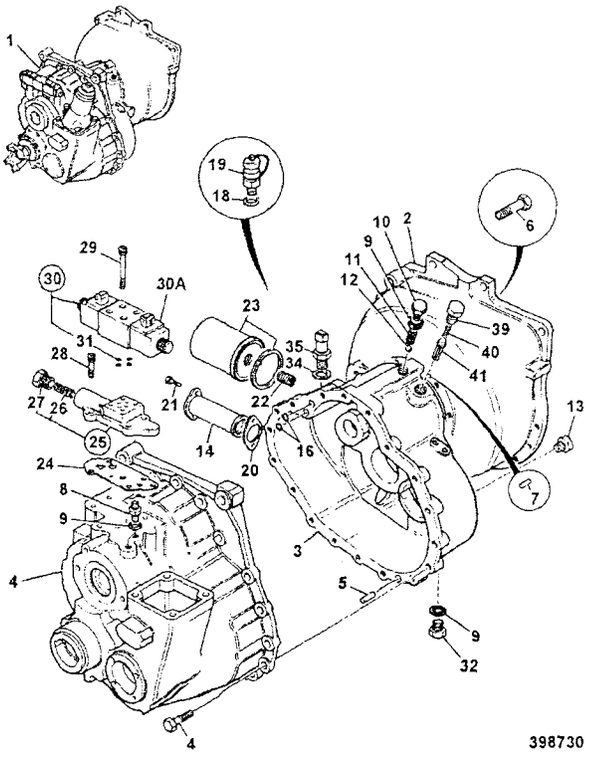

	FROM	TO	FROM	TO
3C PLUS				
3C 14				

ITEM	PART NO	CHANGE NO	DESCRIPTION	REMARKS	USAGE CODE	QTY
1	441/00750		Gearbox, assembly 2WD			1
2	459/30397		Housing, flywheel			1
3	459/30285		Casing, front, SS700			1
4	459/30312	Superseded	Casing, rear, SS700 2WD			1
	459/M1383		Casing, rear SS700 2WD			1
5	826/01417		Bolt			18
6	445/14001		Dowel			2
7	.		'See Remark'	Gearbox components see index F5		1
8	1606/0017		Adapter, 5/8" x 1/2" M/M			2
9	1406/0018		Seal, bonded. 1/2" BSP			3
10	816/80041		Plug, 1/2"BSP, 25.65mm A/F			1
11	814/00222		Spring			1
12	916/00008		Bearing, 14dia ball			2
13	816/80051		Plug, 1/8" tapered			5
14	32/902200		Strainer, suction			1
15	.		'See Remark'	no longer fitted		1
16	828/10222		O Ring			2
18	1406/0011		Seal, bonded			2
19	45/905000		Adapter, pressure test, 1/4BSP male			1
20	813/50027		Gasket			1

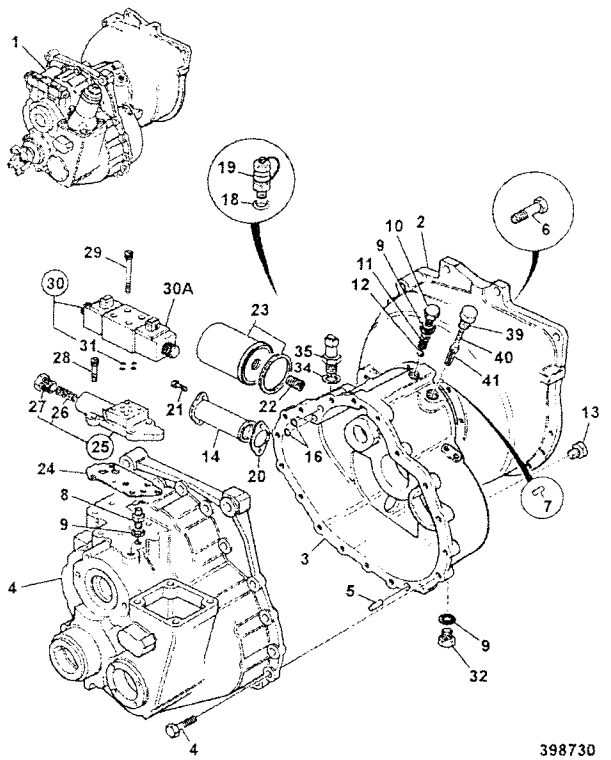

398730

ITEM	PART NO	CHANGE NO	DESCRIPTION	REMARKS	USAGE CODE	QTY
21	1321/0303Z		:Screw, M8 x 16			2
22	816/15184		.Adapter, 1/2"BSPx1"UNF			1
23	581/18076		.Element, transmission filter, 120.7mm long			1
24	813/10175		.Gasket, valve block			1
25	459/10144		.Valve, Adapter block assy, SS700 low ratio			1
26	814/00412		::Spring			1
27	816/80063		::Plug			1
28	1392/3207		:Capscrew			4
29	1391/3108Z		:Capscrew			4
30	25/220998		Valve, solenoid assembly			1
30A	25/221054		:Coil, 12V			2
31	35/100801		::Kit-seal, solenoid valve			1
32	816/50031		.Adapter, Tee			1
35	701/80319	Superseded	Switch, oil pressure,M12, green body,Deutsch	not supplied with transmission		1
	701/80626		Switch, oil pressure, M12	not supplied with transmission		1
35A	1406/0011		Seal, bonded			1
36	816/80061		.Plug			1
38	1315/0409Z		Screw, hex. head			12
39	816/80061		Plug			1
40	814/10153		Spring, compression, T/C press.maint			1
41	459/70168		Spool, Adapter Solenoid			1

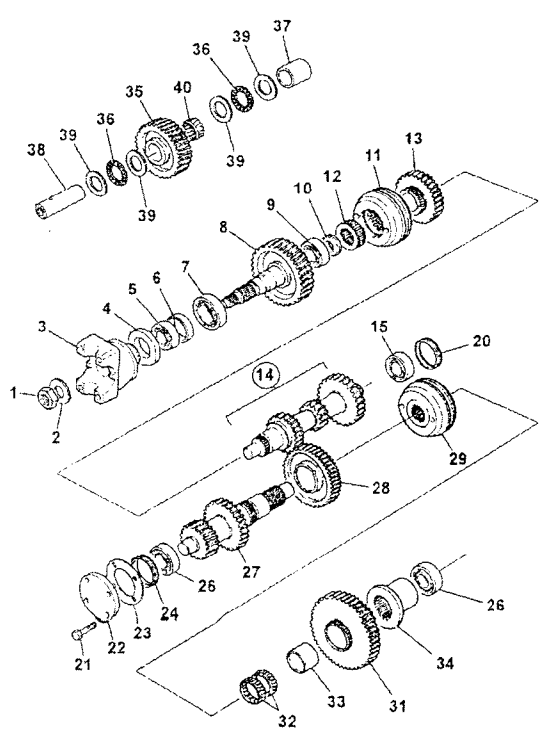

400030

	FROM	TO	FROM	TO
3C PLUS				
3C 14				

ITEM	PART NO	CHANGE NO	DESCRIPTION	REMARKS	USAGE CODE	QTY
1	826/01551		Nut, Stake M30, (46mm Head)			1
2	460/32202		Washer			1
3	459/70317		Yoke, coupling - 1480, 35 t			1
4	904/20172		Seal, TRIPLE LIP, 53.6 x 80.35 x 12			1
5	907/51600		Bearing, taper roller			1
6	921/53400		Kit-Spacer			1
7	907/20045		Bearing, taper roller			1
8	459/50208		Gear, transfer 38T, SS750 low ratio			1
9	907/20005		Bearing, taper roller			1
10	445/64302		Spacer, mainshaft seal			1
11	445/03300		Synchroniser, assembly			1
12	445/03010		Sleeve, hub shaft	3rd & 4th speed		1
13	459/50206		Gear, 3rd speed, SS750 low ratio			1
14	459/50205		Gear, mainshaft, SS750			1
15	907/52800		Bearing, 35 x 65 x 18			1
20	459/70275	To G/00740/1	Nut, mainshaft setting			1
	459/70378	G/00740/2 on	Kit, graded spacers			1
21	826/01416	To G/00740/1	Screw, micro-encapsulated			4
22	331/23731	To G/00740/1	Cover, Layshaft			1

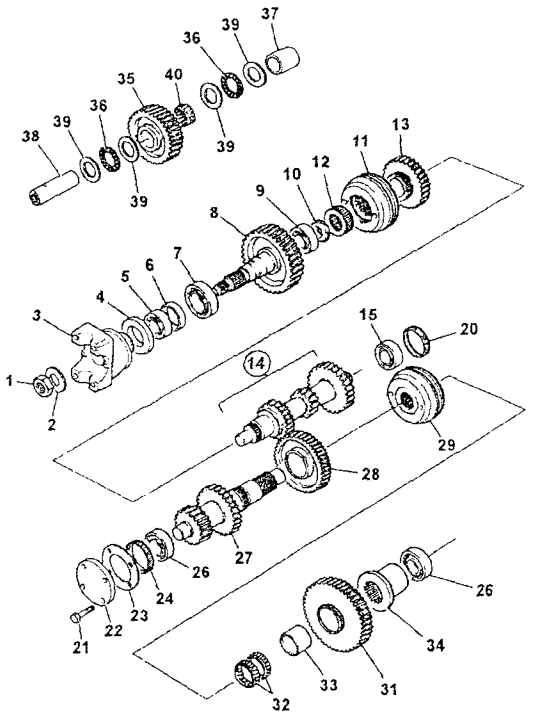

400030

ITEM	PART NO	CHANGE NO	DESCRIPTION	REMARKS	USAGE CODE	QTY
23	813/10176	To G/00740/1	Gasket			1
24	459/70274	To G/00740/1	Nut, layshaft setting			1
	459/70379	G/00740/1 on	Kit, graded spacers			1
26	907/20049		Bearing, taper roller			2
27	459/50188		Layshaft, low ratio			1
28	459/50511		Gear, 2nd, 40t SS700	2nd 40 Teeth		1
29	459/50520		Synchroniser, assembly			1
31	459/50509		Gear, 1st, 44t SS700	1st		1
32	917/02300		Bearing			2
33	917/00008		Bearing, inner race			1
34	445/03013		Spacer			1
35	459/50440		Gear, idler, 35T	35 Teeth		1
37	459/70206		Spacer, idler gear			1
38	459/70087		Shaft, idler			1
39	823/00451		Washer, thrust			4
40	917/02400		Bearing, needle roller			1

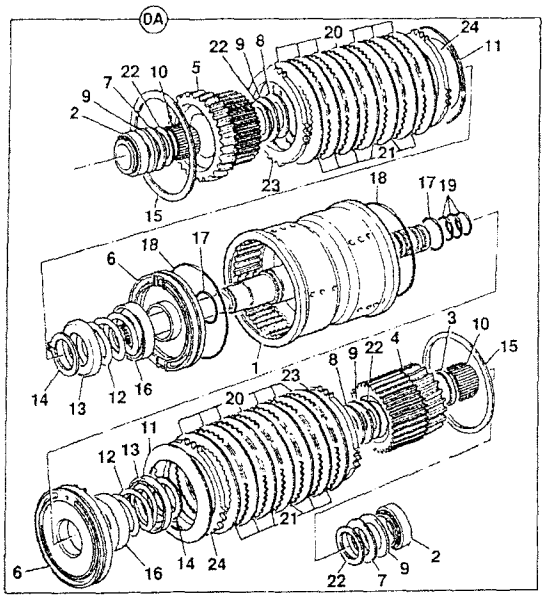

376130

	FROM	TO	FROM	TO
3C PLUS				
3C 14				

ITEM	PART NO	CHANGE NO	DESCRIPTION	REMARKS	USAGE CODE	QTY
0A	459/10097		Clutch, assembly, input, reverser			1
1	459/50503		Housing, input clutch, SS700			1
2	907/20012		Bearing, taper roller			2
3	823/10355		Spacer			1
4	459/50428		Gear, 31T & plate carrier			1
5	459/50429		Gear, 22T & plate carrier			1
6	459/10096		Piston			2
7	823/10264		Washer, thrust			2
8	823/10265		Washer, thrust			2
9	917/10006		Bearing, needle thrust			4
10	917/50600		Bearing, needle roller			2
11	814/10115		Disc, spring, spline			2
12	814/00345		Spring			2
13	823/10266		Washer, spring retainer			2
14	821/00296		Circlip, external			2
15	826/10467		Circlip, internal			2
16	331/16558		Plate, oil baffle			2
17	826/10180		O Ring			2
18	828/10181		O Ring, 130mm I/D			2
19	904/50024		Seal, ring			4
20	331/16520		Plate, friction, clutch			10

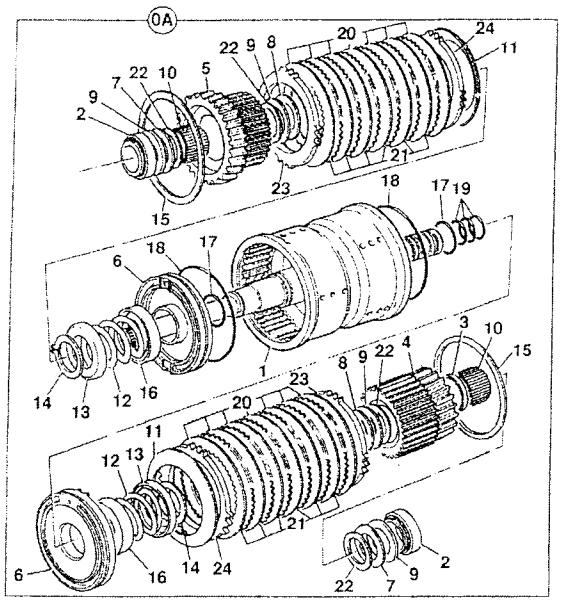

376130

ITEM	PART NO	CHANGE NO	DESCRIPTION	REMARKS	USAGE CODE	QTY
21	331/16516		:Plate, counter, clutch			10
22	823/10316		:Washer, thrust, bevelled			4
23	331/16517		:Plate, pressure, clutch, 6.0 mm			2
24	331/16519		:Plate, shim, clutch, 1.2mm			a/r

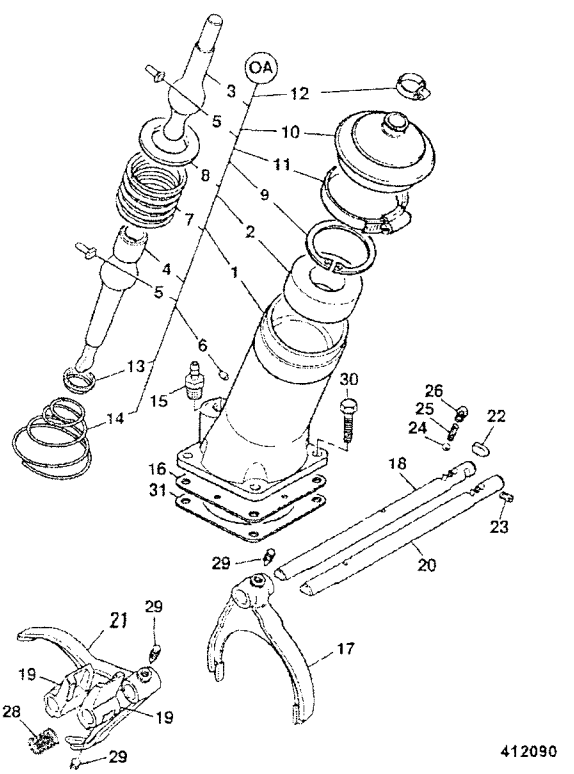

412090

	FROM	TO	FROM	TO
3C PLUS				
3C 14				

ITEM	PART NO	CHANGE NO	DESCRIPTION	REMARKS	USAGE CODE	QTY
0A	459/10143		Lever, assembly, gear turret			1
1	459/30295		:Housing, turret, gear lever			1
2	445/10802		:Seat			1
3	445/05501		:Lever, gear			1
4	459/70271		:Lever, bottom gearshift			1
5	445/03023		:Pin			2
6	835/10036		:Plug			1
7	814/00233		:Spring			1
8	445/10803		:Washer, ball			1
9	2203/1080		:Circlip			1
10	331/25566		:Gaiter, gear lever			1
11	821/10163		:Clip, worm drive			1
12	445/05302		:Clip			1
13	445/03020		:Retainer, spring			1
14	814/00221		:Spring			1
15	816/13382		:Adapter, hose			1
16	460/17603		:Baffle			1
17	459/30297		Fork, selector 1st			1
18	459/70181		Shaft, selector			1
19	459/70199		Block, selector			2
20	459/70181		Shaft, selector			1
21	459/30299		Fork, selector 3rd			1

F5-2-51 441/00750 - 2WD-2WS, GEAR CHANGE, JCB DIESELMAX ENGINE

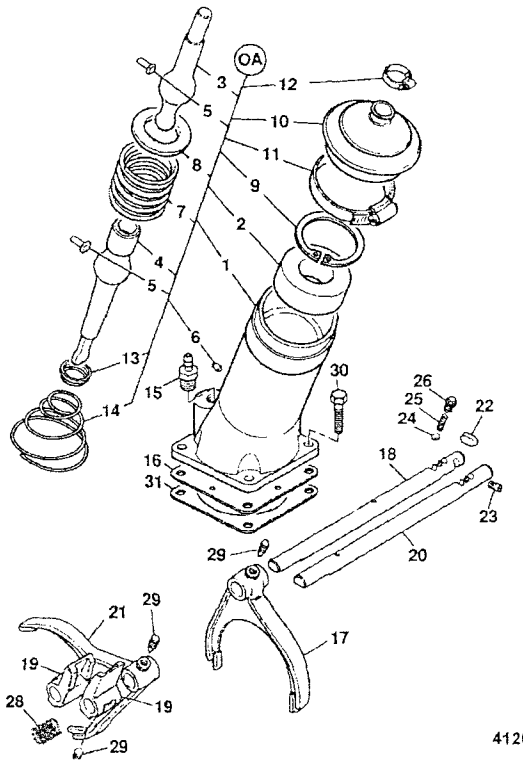

412090

ITEM	PART NO	CHANGE NO	DESCRIPTION	REMARKS	USAGE CODE	QTY
22	445/03031		Roller, baulk			1
23	816/80027		Plug			1
24	916/00006		Ball, 11mm dia			2
25	814/00354		Spring			2
26	816/80057		Plug, detent			2
27	445/05302		Clip			2
28	814/00406		Spring			1
29	445/26110		Screw			4
30	826/01416		Screw, micro-encapsulated			4
31	813/50042		Gasket			1

F5-3-1 441/00500 - 4WD, TRANSMISSION ASSY, SYNCROSHUTTLE, INTERNATIONAL ENGINE

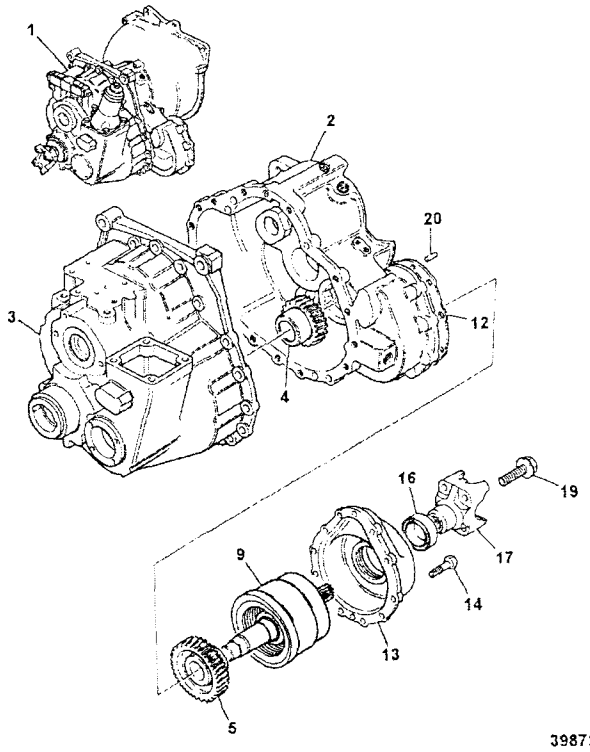

398720

	FROM	TO	FROM	TO
3C PLUS				
3C 14				

ITEM	PART NO	CHANGE NO	DESCRIPTION	REMARKS	USAGE CODE	QTY
1	441/00500		Gearbox, assembly, SS700, 4WD, 1:1.446			1
2	459/30382		Casing, front			1
3	459/30272		Casing, rear, SS700 4WD			1
4	459/50577		Gear, input 22 teeth			1
5	459/50702		Gear, output 34 teeth			1
9	459/10119		Clutch, assembly 4WD	For components see frame F5-3-40		1
12	813/50048		Gasket			1
13	459/30284		Cover, 4WD			1
14	826/01417		Bolt			10
16	904/20172		Seal, TRIPLE LIP, 53.6 x 80.35 x 12			1
17	459/70133		Yoke, coupling, 1480, 32 teeth			1
19	826/01553		Bolt, Setscrew			1
20	445/14001		Dowel			2

	FROM	TO	FROM	TO
3C PLUS				
3C 14				

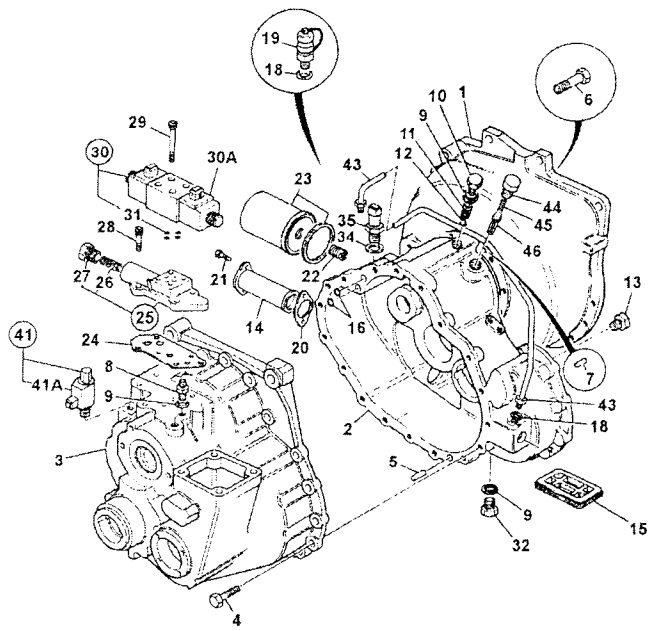

398710

ITEM	PART NO	CHANGE NO	DESCRIPTION	REMARKS	USAGE CODE	QTY
1	459/70442		:Casing, flywheel housing			1
2	459/30271		:Casing, front, SS700			1
3	459/30272		:Casing, rear, SS700 4WD			1
4	826/01417		:Bolt			18
5	445/14001		:Dowel			2
6	1315/0409Z		:Screw, hex. head			12
7	445/14001		:Dowel			2
8	1606/0017		:Adapter, 5/8" x 1/2" M/M			2
9	1406/0018		:Seal, bonded, 1/2" BSP			4
10	816/80041		:Plug, 1/2"BSP, 25.65mm A/F			3
11	814/00222		:Spring			1
12	916/00008		:Bearing, 14dia ball			2
13	816/80051		:Plug, 1/8" tapered			8
14	32/902200		:Strainer, suction			1
15	445/13703		:Cover, flywheel housing, 110mm x 79mm x 17mm			1
16	828/10222		:O Ring			2
18	1406/0011		:Seal, bonded			2
19	45/905000		Adapter, pressure test, 1/4BSP male			1
20	813/50027		Gasket			1
21	1321/0303Z		:Screw, M8 x 16			2

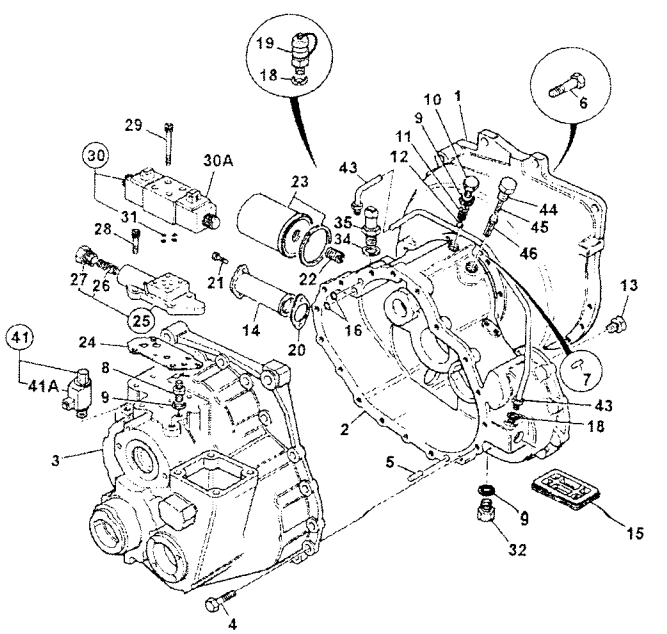

398710

ITEM	PART NO	CHANGE NO	DESCRIPTION	REMARKS	USAGE CODE	QTY
22	816/15184		:Adapter, 1/2"BSPx1"UNF			1
23	581/18063		:Element, transmission filter, 94mm long			1
24	813/10175		:Gasket, valve block			1
25	459/10144		:Valve, Adapter block assy, SS700 low ratio			1
26	814/00412		::Spring			1
27	816/80063		::Plug			1
28	1392/3207		:Capscrew			4
29	1391/3108Z		:Capscrew			4
30	25/220998		Valve, solenoid assembly			1
30A	25/221054		:Coil, 12V			1
31	35/100801		::Kit-seal, solenoid valve			1
32	816/80041		:Plug, 1/2"BSP, 25.65mm A/F			1
35	701/80319		:Switch, oil pressure,M12, green body,Deutsch			1
35A	1406/0011		Seal, bonded			1
40	813/50041		:Seal, rear			1
41	25/220992		Valve, solenoid assembly			1
41A	25/221056		:Coil, cartridge valve			1
43	830/11842		Pipe, assembly 4WD	740mm long		1
44	816/80061		Plug			1
45	814/10153		Spring, compression, T/C press.maint			1
46	459/70168		Spool, Adapter Solenoid			1

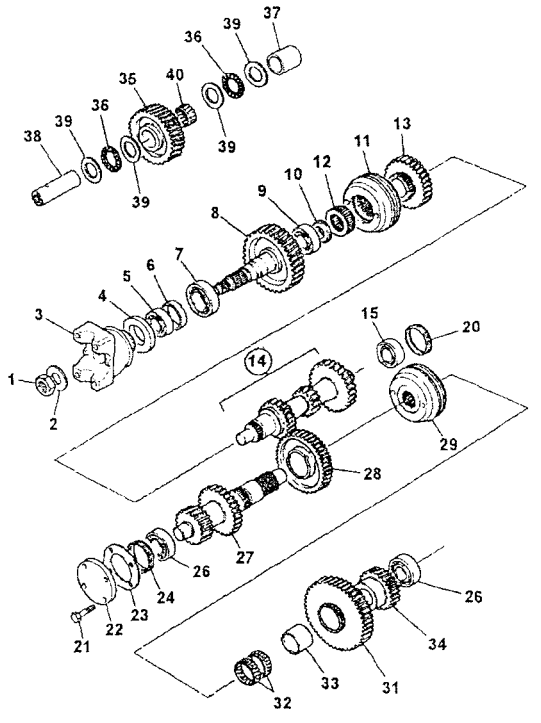

398700

	FROM	TO	FROM	TO
3C PLUS				
3C 14				

ITEM	PART NO	CHANGE NO	DESCRIPTION	REMARKS	USAGE CODE	QTY
1	826/01551		Nut, Stake M30, (46mm Head)			1
2	460/32202		Washer			1
3	459/70317		Yoke, coupling - 1480, 35 t			1
4	904/20172		Seal, TRIPLE LIP, 53.6 x 80.35 x 12			1
5	907/51600		Bearing, taper roller			1
6	921/53400		Kit-Spacer			1
7	907/53800		Bearing			1
8	459/50208		Gear, transfer 38T, SS750 low ratio			1
9	907/20005		Bearing, taper roller			1
10	445/64302		Spacer, mainshaft seal			1
11	445/03300		Synchroniser, assembly			1
12	445/03010		Sleeve, hub shaft	3rd & 4th speed		1
13	459/50206		Gear, 3rd speed, SS750 low ratio			1
14	459/50205		Gear, mainshaft, SS750			1
15	907/52800		Bearing, 35 x 65 x 18			1
20	459/70275		Nut, mainshaft setting			1
21	826/01416		Screw, micro-encapsulated			4
22	331/23731		Cover, Layshaft			1
23	813/10176		Gasket			1

F5-3-21 441/00500 - 4WD, INTERNAL COMPONENTS, JCB DIESELMAX ENGINE
9812/0080U
ISSUE 1

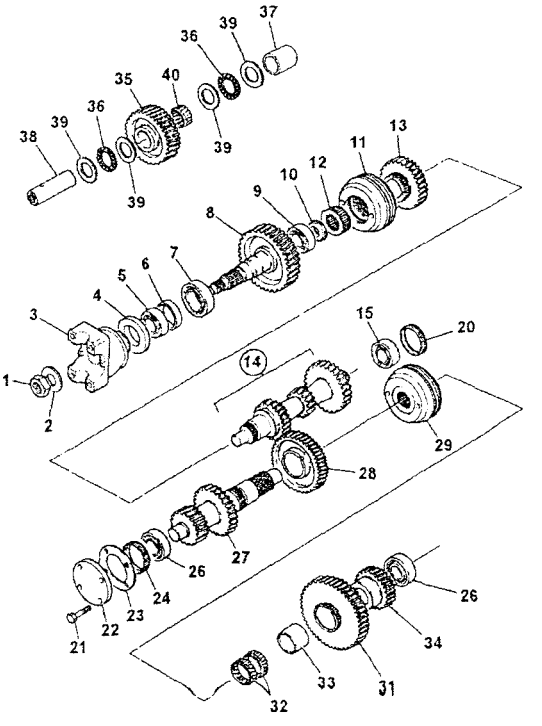

398700

ITEM	PART NO	CHANGE NO	DESCRIPTION	REMARKS	USAGE CODE	QTY
24	459/70274		Nut, layshaft setting			1
26	907/09600		Bearing, 35 x 73 x 24			2
27	459/50188		Layshaft, low ratio			1
28	459/50511		Gear, 2nd, 40t SS700	2nd 40 Teeth		1
29	459/50520		Synchroniser, assembly			1
31	459/50509		Gear, 1st, 44t SS700	1st		1
32	917/02300		Bearing			2
33	917/00008		Bearing, inner race			1
34	.		'See Remark'	See frame F5-14-1		1
35	459/50440		Gear, idler, 35T	35 Teeth		1
37	459/70206		Spacer, idler gear			1
38	459/70087		Shaft, idler			1
39	823/00451		Washer, thrust			4
40	917/02400		Bearing, needle roller			1

FROM TO FROM TO

3C PLUS

3C 14

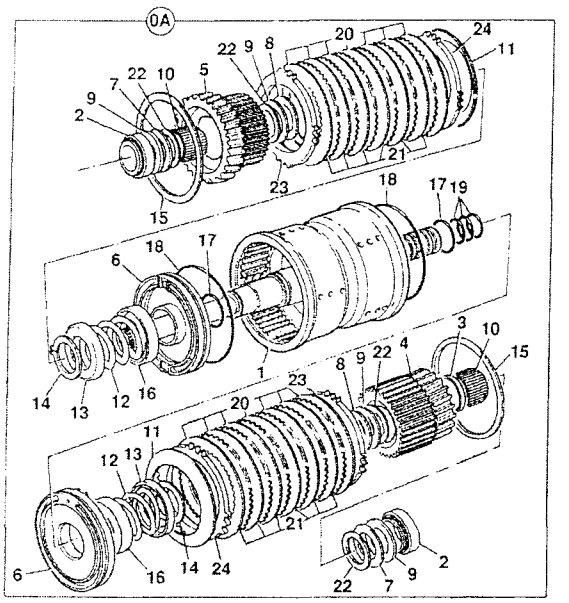

376130

ITEM	PART NO	CHANGE NO	DESCRIPTION	REMARKS	USAGE CODE	QTY
0A	459/10097		Clutch, assembly, input, reverser			1
1	459/50503		:Housing, input clutch, SS700			1
2	907/20012		:Bearing, taper roller			2
3	823/10355		:Spacer			1
4	459/50428		:Gear, 31T & plate carrier			1
5	459/50429		:Gear, 22T & plate carrier			1
6	459/10096		:Piston			2
7	823/10264		:Washer, thrust			2
8	823/10265		:Washer, thrust			2
9	917/10006		:Bearing, needle thrust			4
10	917/50600		:Bearing, needle roller			2
11	814/10115		:Disc, spring, spline			2
12	814/00345		:Spring			2
13	823/10266		:Washer, spring retainer			2
14	821/00296		:Circlip, external			2
15	826/10467		:Circlip, internal			2
16	331/16558		:Plate, oil baffle			2
17	828/10180		:O Ring			2
18	828/10181		:O Ring, 130mm I/D			2
19	904/50024		:Seal, ring			4
20	331/16520		:Plate, friction, clutch			10

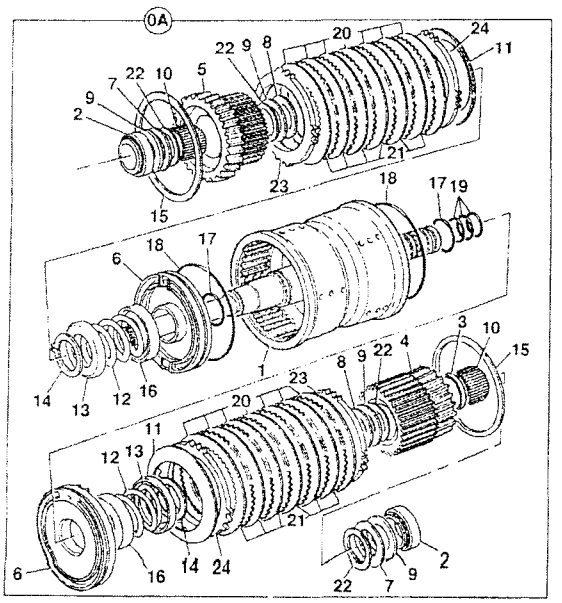

376130

ITEM	PART NO	CHANGE NO	DESCRIPTION	REMARKS	USAGE CODE	QTY
21	331/16516		:Plate, counter, clutch			10
22	823/10316		:Washer, thrust, bevelled			4
23	331/16517		:Plate, pressure, clutch, 6.0 mm			2
24	331/16519		:Plate, shim, clutch, 1.2mm			a/r

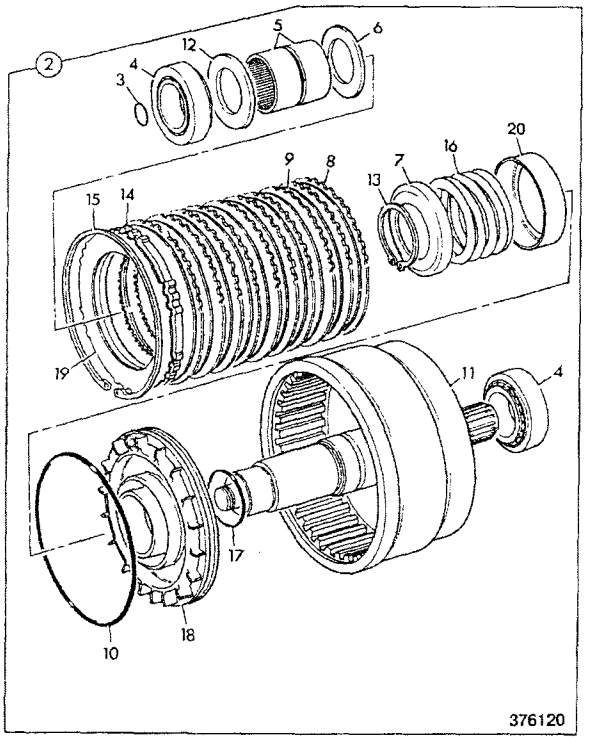

	FROM	TO	FROM	TO
3C PLUS				
3C 14				

ITEM	PART NO	CHANGE NO	DESCRIPTION	REMARKS	USAGE CODE	QTY
2	459/10119		Clutch, assembly 4WD			1
3	904/14300		:Seal, ring, 'TURQUOISE'			1
4	907/52800		:Bearing, 35 x 65 x 18			2
5	917/02700		:Bearing			2
6	445/19808		:Washer, thrust, 3.5mm thick, phosphated			1
7	445/12304		:Retainer, spring			1
8	445/12307		:Plate, counter			10
9	445/03205		:Plate, friction			10
10	828/00414		:O Ring. 123.5mm I/D			1
11	459/50483		:Housing, 4wd clutch			1
12	823/10364		:Washer, thrust			1
13	821/00523		:Circlip			1
14	449/10601		:Plate, pressure, 4mm			1
15	2203/1115		:Circlip			1
16	814/00297		:Spring			1
17	828/00224		:O Ring, 39.7mm I/D X 3. 53mm			1
18	445/12316		:Piston, reverser, c/w oil baffle			1
19	445/12314		:Shim, plate, toothed			A/R

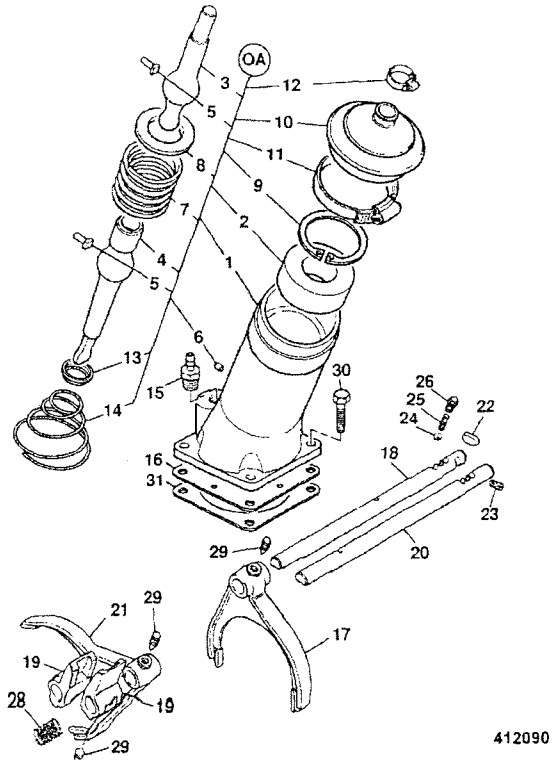

	FROM	TO	FROM	TO
3C PLUS				
3C 14				

ITEM	PART NO	CHANGE NO	DESCRIPTION	REMARKS	USAGE CODE	QTY
0A	459/10143		Lever, assembly, gear turret			1
1	459/30295		:Housing, turret, gear lever			1
2	445/10802		:Seat			1
3	445/05501		:Lever, gear			1
4	459/70271		:Lever, bottom gearshift			1
5	445/03023		:Pin			2
6	835/10036		:Plug			1
7	814/00233		:Spring			1
8	445/10803		:Washer, ball			1
9	2203/1080		:Circlip			1
10	331/25566		:Gaiter, gear lever			1
11	821/10163		:Clip, worm drive			1
12	445/05302		:Clip			1
13	445/03020		:Retainer, spring			1
14	814/00221		:Spring			1
15	816/13382		:Adapter, hose			1
16	460/17603		:Baffle			1
17	459/30297		Fork, selector 1st			1
18	459/70181		Shaft, selector			1
19	459/70199		Block, selector			2
20	459/70181		Shaft, selector			1
21	459/30299		Fork, selector 3rd			1

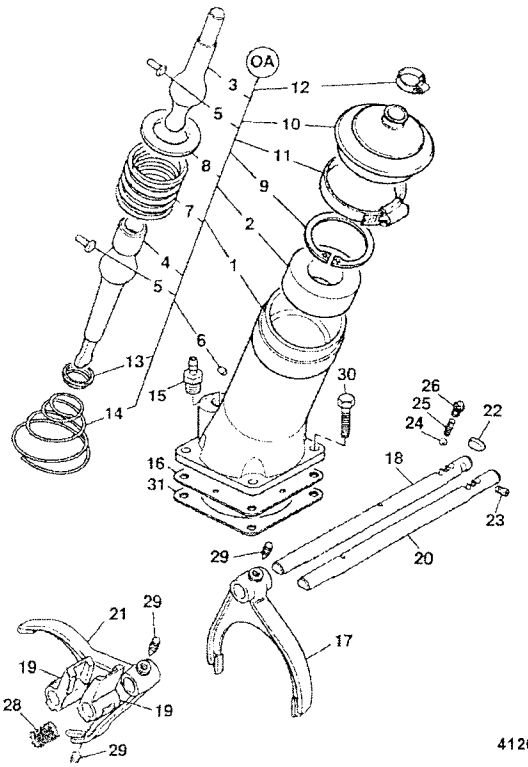

412090

ITEM	PART NO	CHANGE NO	DESCRIPTION	REMARKS	USAGE CODE	QTY
22	445/03031		Roller, baulk			1
23	816/80027		Plug			1
24	916/00006		Ball, 11mm dia			2
25	814/00354		Spring			2
26	816/80057		Plug, detent			2
27	445/05302		Clip			2
28	814/00406		Spring			1
29	445/26110		Screw			4
30	826/01416		Screw, micro-encapsulated			4
31	813/50042		Gasket			1

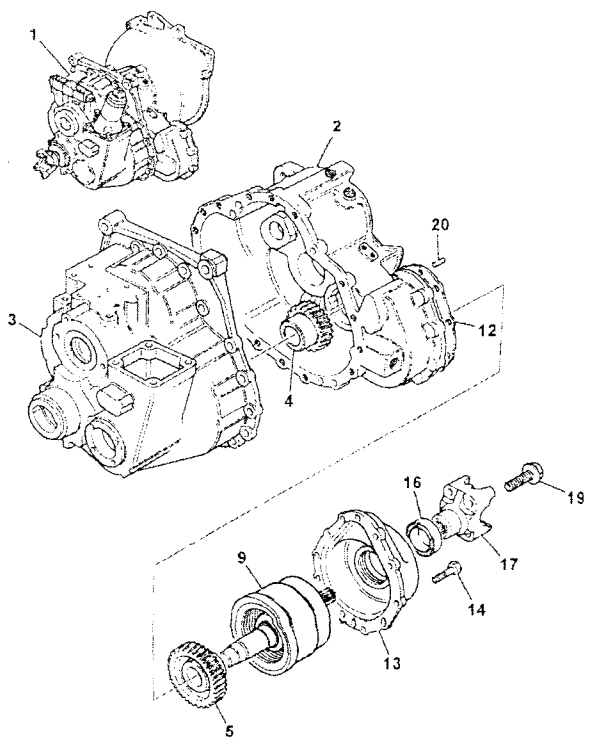

398720

	FROM	TO	FROM	TO
3C PLUS				
3C 14				

ITEM	PART NO	CHANGE NO	DESCRIPTION	REMARKS	USAGE CODE	QTY
1	441/00760		Gearbox, assembly, 4WD, 22/34 drop gears			1
2	459/30362	To G/00760/1	:Casing, front			1
	459/30463	G/00760/2 on	:Casing, front			1
3	459/30272	To G/00760/1	:Casing, rear, SS700 4WD			1
	459/30435	G/00760/2 on	:Casing, rear			1
4	459/50577		:Gear, input 22 teeth			1
5	459/50702		:Gear, output 34 teeth			1
9	459/10119		:Clutch, assembly 4WD	For components see frame F5-3-40		1
12	813/50048		:Gasket			1
13	459/30451		:Cover, 4WD clutch			1
14	826/01417		:Bolt			10
16	904/20172		:Seal, TRIPLE LIP, 53.6 x 80.35 x 12			1
17	459/70133		:Yoke, coupling, 1480, 32 teeth			1
19	826/01553		.Bolt, Setscrew			1
20	445/14001		:Dowel			2

	FROM	TO	FROM	TO
3C PLUS				
3C 14				

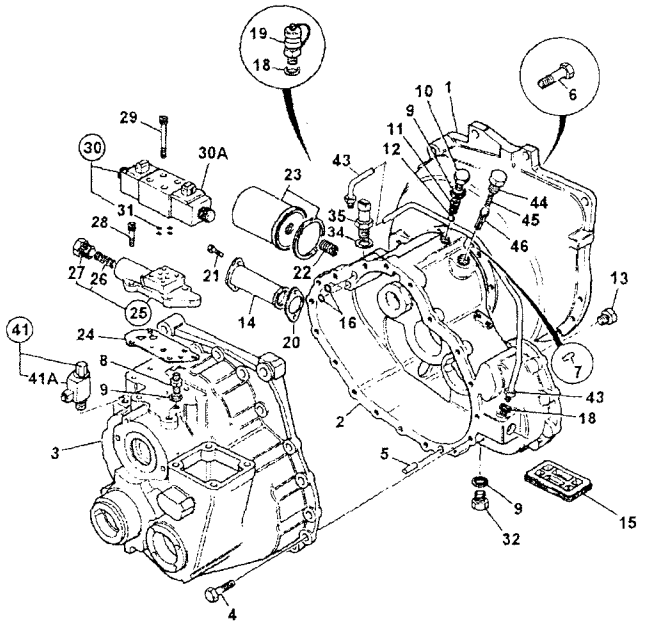

ITEM	PART NO	CHANGE NO	DESCRIPTION	REMARKS	USAGE CODE	QTY
1	459/30397	To G/00680/1	:Housing, flywheel			1
	459/30464	G/00680/2 on	:Housing, flywheel			1
2	459/30382	To G/00680/1	:Casing, front			1
	459/30463	G/00680/2 on	:Casing, front			1
3	459/30272	To G/00680/1	:Casing, rear, SS700 4WD			1
	459/30435	G/00680/2 on	:Casing, rear			1
4	826/01417		:Bolt			18
5	445/14001		:Dowel			2
6	1315/0409Z		:Screw, hex. head			12
7	445/14001		:Dowel			2
8	1606/0017		:Adapter, 5/8" x 1/2" M/M			2
9	1406/0018		:Seal, bonded, 1/2" BSP			4
10	816/60041		:Plug, 1/2"BSP, 25.65mm A/F			3
11	814/00222		:Spring			1
12	916/00008		:Bearing, 14dia ball			2
13	816/80051		:Plug, 1/8" tapered			8
14	32/902200		:Strainer, suction			1
15	.		:'See Remark'	no longer fitted		1
16	828/10222		:O Ring			2
18	1406/0011		:Seal, bonded			2
19	45/905000		:Adapter, pressure test, 1/4BSP male			1

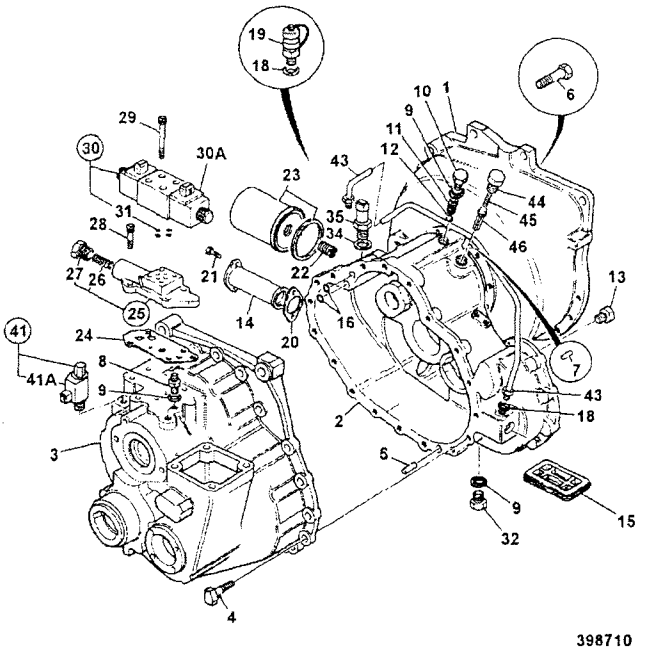

ITEM	PART NO	CHANGE NO	DESCRIPTION	REMARKS	USAGE CODE	QTY
20	813/50027		:Gasket			1
21	1321/0303Z		:Screw, M8 x 16			2
22	816/15184		:Adapter, 1/2"BSPx1"UNF			1
23	581/18076		:Element, transmission filter, 120.7mm long			1
24	813/10175		:Gasket, valve block			1
25	459/10144		:Valve, Adapter block assy, SS700 low ratio			1
26	814/00412		::Spring			1
27	816/80063		:Plug			1
28	1392/3207		:Capscrew			4
29	1391/3108Z		:Capscrew			4
30	25/220998		:Valve, solenoid assembly			1
30A	25/221054		:Coil, 12V			1
31	35/100801		::Kit-seal, solenoid valve			1
32	816/80041		:Plug, 1/2"BSP, 25.65mm A/F			1
35	701/80319	Superseded	:Switch, oil pressure,M12, green body,Deutsch			1
	701/80359		Switch, 1/4" BSP Pressure	not supplied with transmission		1
	701/80626		Switch, oil pressure, M12			1
35A	1406/0011		Seal, bonded			1
40	813/50041		:Seal, rear			1
41	25/220992	To G/00680/1	Valve, solenoid assembly			1
	25/220804	G/00680/2 on	Valve, solenoid assembly			1
41A	25/221056	To G/00680/1	:Coil, cartridge valve			1
43	830/11842		Pipe, assembly 4WD	740mm long		1

ITEM	PART NO	CHANGE NO	DESCRIPTION	REMARKS	USAGE CODE	QTY
44	816/80061		Plug			1
45	814/10153		Spring, compression, T/C press.maint			1
46	459/70168		Spool, Adapter Solenoid			1

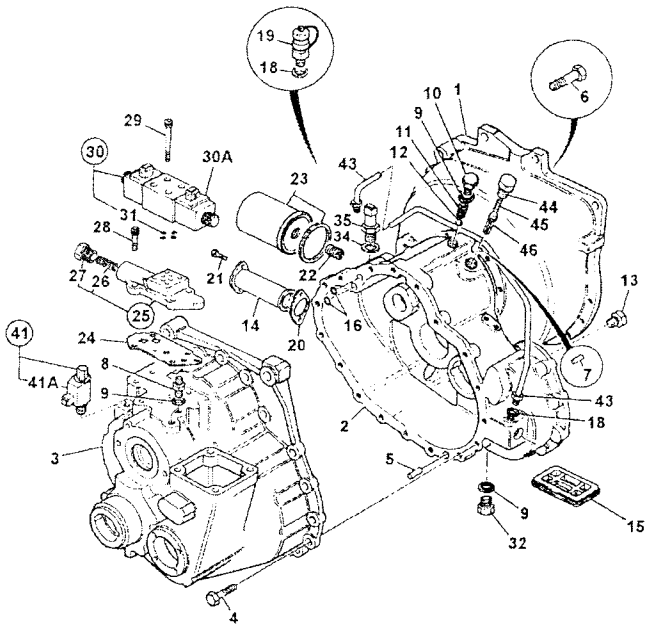

398710

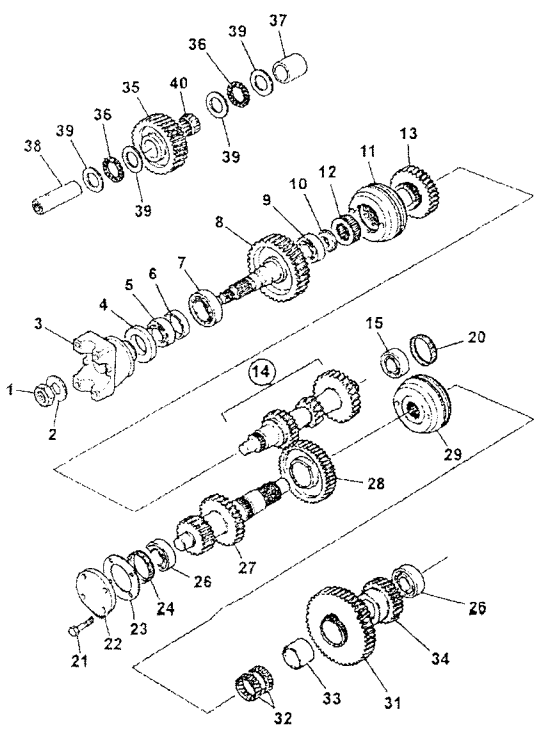

398700

	FROM	TO	FROM	TO
3C PLUS				
3C 14				

ITEM	PART NO	CHANGE NO	DESCRIPTION	REMARKS	USAGE CODE	QTY
1	826/01551		Nut, Stake M30, (46mm Head)			1
2	460/32202		Washer			1
3	459/70317		Yoke, coupling - 1480, 35 t			1
4	904/20172		Seal, TRIPLE LIP, 53.6 x 80.35 x 12			1
5	907/51600		Bearing, taper roller			1
6	921/53400		Kit-Spacer			1
7	907/20045		Bearing, taper roller			1
8	459/50208		Gear, transfer 38T, SS750 low ratio			1
9	907/20005		Bearing, taper roller			1
10	445/64302		Spacer, mainshaft seal			1
11	445/03300		Synchroniser, assembly			1
12	445/03010		Sleeve, hub shaft	3rd & 4th speed		1
13	459/50206		Gear, 3rd speed, SS750 low ratio			1
14	459/50205		Gear, mainshaft, SS750			1
15	907/52800		Bearing, 35 x 65 x 18			1
20	459/70275		Nut, mainshaft setting			1
21	826/01416		Screw, micro-encapsulated			4
22	331/23731	To G/00680/1	Cover, Layshaft			1
23	813/10176	To G/00680/1	Gasket			1

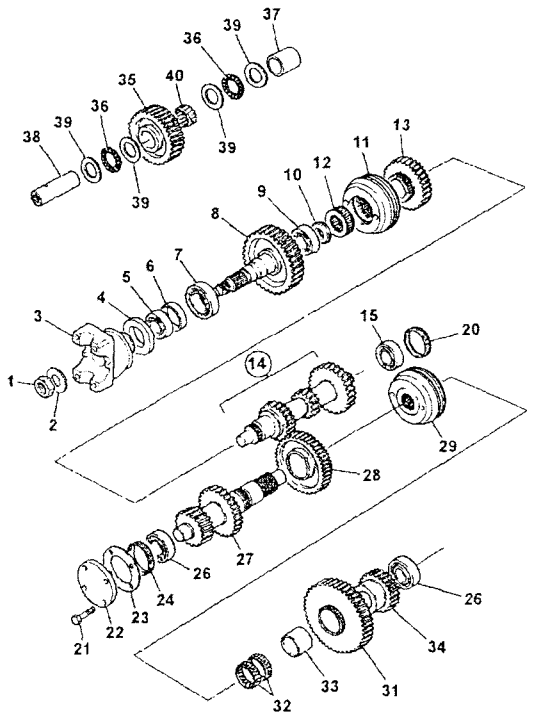

398700

ITEM	PART NO	CHANGE NO	DESCRIPTION	REMARKS	USAGE CODE	QTY
24	459/70274		Nut, layshaft setting			1
26	907/20049		Bearing, taper roller			2
27	459/50188		Layshaft, low ratio			1
28	459/50511		Gear, 2nd, 40t SS700	2nd 40 Teeth		1
29	459/50520		Synchroniser, assembly			1
31	459/50509		Gear, 1st, 44t SS700	1st		1
32	917/02300		Bearing			2
33	917/00008		Bearing, inner race			1
34	.		'See Remark'	See frame F5-1-1		1
35	459/50440		Gear, idler, 35T			1
36	917/51400		Bearing			2
37	459/70206		Spacer, idler gear			1
38	459/70087		Shaft, idler			1
39	823/00451		Washer, thrust			4
40	917/02400		Bearing, needle roller			1

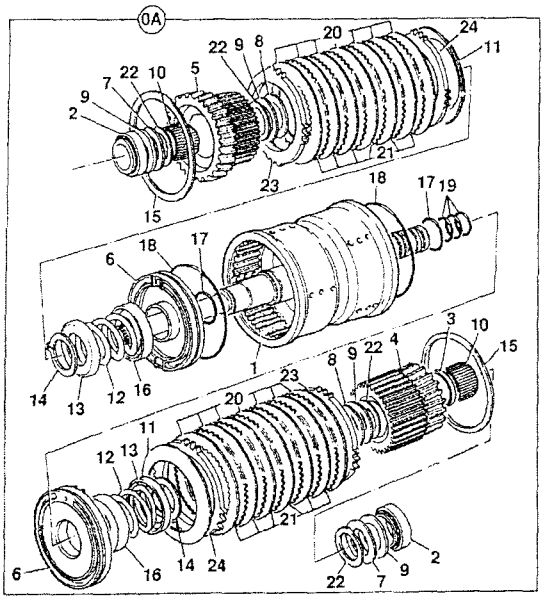

376130

	FROM	TO	FROM	TO
3C PLUS				
3C 14				

ITEM	PART NO	CHANGE NO	DESCRIPTION	REMARKS	USAGE CODE	QTY
0A	459/10097		Clutch, assembly, input, reverser			1
1	459/50503		.Housing, input clutch, SS700			1
2	907/20012		.Bearing, taper roller			2
3	823/10355		.Spacer			1
4	459/50428		.Gear, 31T & plate carrier			1
5	459/50429		.Gear, 22T & plate carrier			1
6	459/10096		.Piston			2
7	823/10264		.Washer, thrust			2
8	823/10265		.Washer, thrust			2
9	917/10006		.Bearing, needle thrust			4
10	917/50600		.Bearing, needle roller			2
11	814/10115		.Disc, spring, spline			2
12	814/00345		.Spring			2
13	823/10266		.Washer, spring retainer			2
14	821/00296		.Circlip, external			2
15	826/10467		.Circlip, internal			2
16	331/16558		.Plate, oil baffle			2
17	828/10180		.O Ring			2
18	828/10181		.O Ring, 130mm I/D			2
19	904/50024		.Seal, ring			4
20	331/16520		.Plate, friction, clutch			10

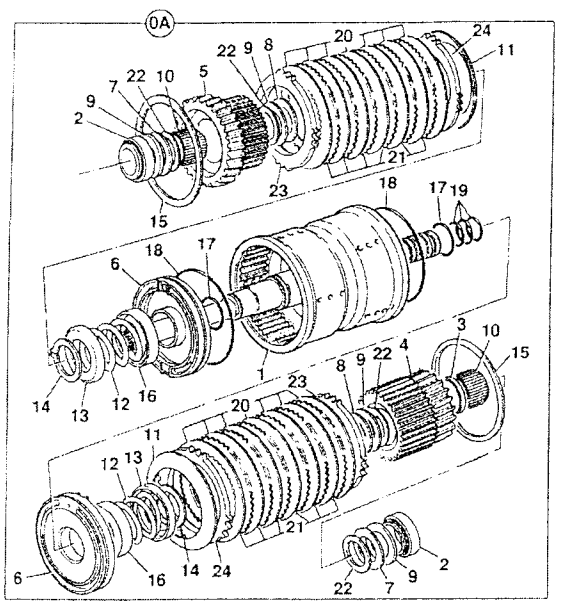

ITEM	PART NO	CHANGE NO	DESCRIPTION	REMARKS	USAGE CODE	QTY
21	331/16516		:Plate, counter, clutch			10
22	823/10316		:Washer, thrust, bevelled			4
23	331/16517		:Plate, pressure, clutch, 6.0 mm			2
24	331/16519		:Plate, shim, clutch, 1.2mm			a/r

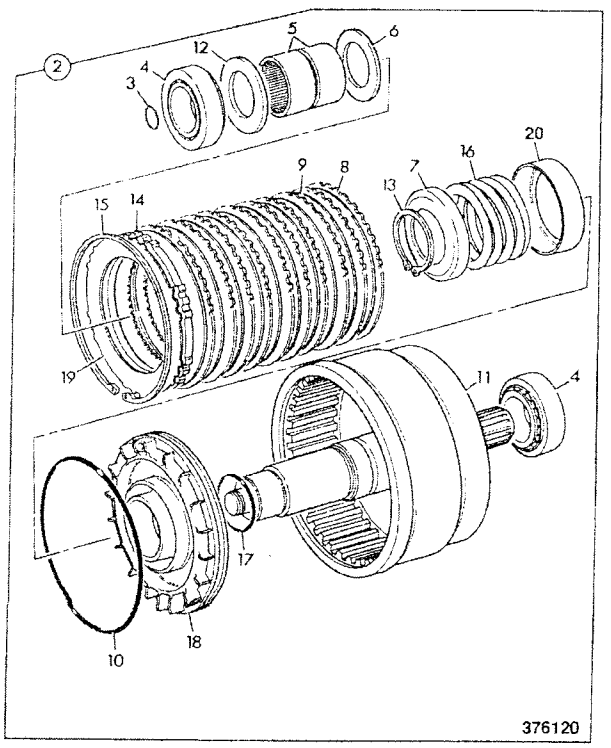

	FROM	TO	FROM	TO
3C PLUS				
3C 14				

ITEM	PART NO	CHANGE NO	DESCRIPTION	REMARKS	USAGE CODE	QTY
2	459/10119		Clutch, assembly 4WD			1
3	904/14300		:Seal, ring, 'TURQUOISE'			1
4	907/52800		:Bearing, 35 x 65 x 18			2
5	917/02700		:Bearing			2
6	445/19808		:Washer, thrust, 3.5mm thick, phosphated			1
7	445/12304		:Retainer, spring			1
8	445/12307		:Plate, counter			10
9	445/03205		:Plate, friction			10
10	828/00414		:O Ring, 123.5mm I/D			1
11	459/50483		:Housing, 4wd clutch			1
12	823/10364		:Washer, thrust			1
13	821/00523		:Circlip			1
14	449/10601		:Plate, pressure, 4mm			1
15	2203/1115		:Circlip			1
16	814/00297		:Spring			1
17	828/00224		:O Ring, 39.7mm I/D X 3.53mm			1
18	445/12316		:Piston, reverser, c/w oil baffle			1
19	445/12314		:Shim, plate, toothed			A/R

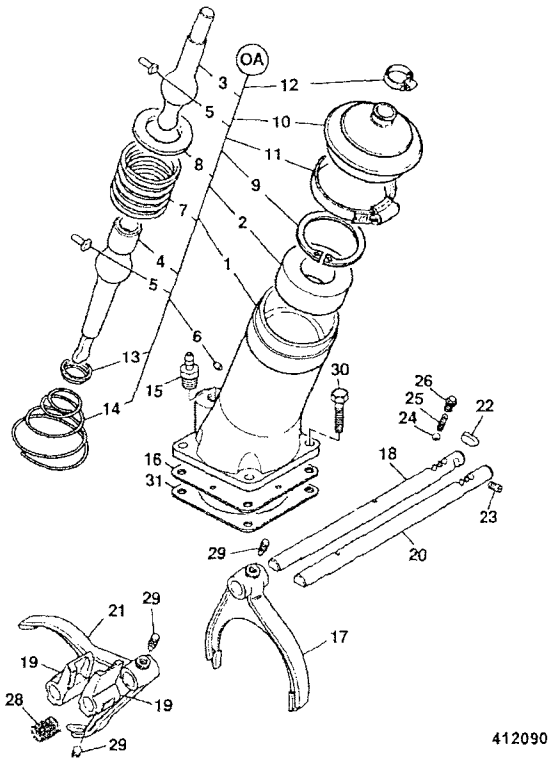

412090

	FROM	TO	FROM	TO
3C PLUS				
3C 14				

ITEM	PART NO	CHANGE NO	DESCRIPTION	REMARKS	USAGE CODE	QTY
0A	459/10143		Lever, assembly, gear turret			1
1	459/30295		:Housing, turret, gear lever			1
2	445/10802		:Seat			1
3	445/05501		:Lever, gear			1
4	459/70271		:Lever, bottom gearshift			1
5	445/03023		:Pin			2
6	835/10036		:Plug			1
7	814/00233		:Spring			1
8	445/10803		:Washer, ball			1
9	2203/1080		:Circlip			1
10	331/25566		:Gaiter, gear lever			1
11	821/10163		:Clip, worm drive			1
12	445/05302		:Clip			1
13	445/03020		:Retainer, spring			1
14	814/00221		:Spring			1
15	816/13382		:Adapter, hose			1
16	460/17603		:Baffle			1
17	459/30297		Fork, selector 1st			1
18	459/70181		Shaft, selector			1
19	459/70199		Block, selector			2
20	459/70181		Shaft, selector			1
21	459/30299		Fork, selector 3rd			1

F5-4-51 441/00760 - 4WD, GEAR CHANGE, JCB DIESELMAX ENGINE
9812/0080U
ISSUE 1

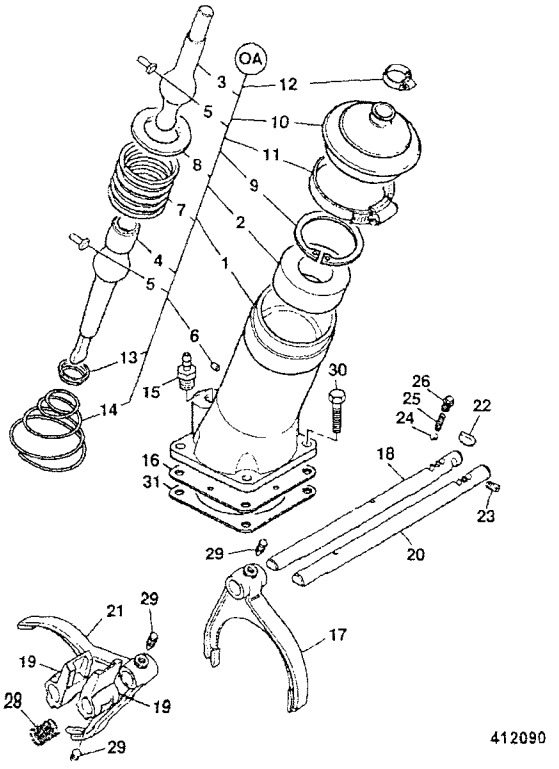

412090

ITEM	PART NO	CHANGE NO	DESCRIPTION	REMARKS	USAGE CODE	QTY
22	445/03031		Roller, baulk			1
23	816/80027		Plug			1
24	916/00006		Ball, 11mm dia			2
25	814/00354		Spring			2
26	816/80057		Plug, detent			2
27	445/05302		Clip			2
28	814/00406		Spring			1
29	445/26110		Screw			4
30	826/01416		Screw, micro-encapsulated			4
31	813/50042		Gasket			1

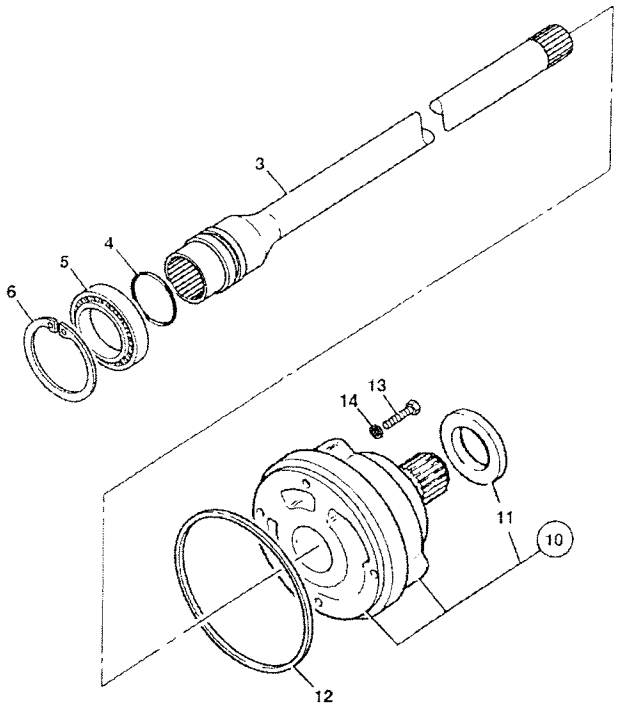

376210

	FROM	TO	FROM	TO
3C PLUS				
3C 14				

ITEM	PART NO	CHANGE NO	DESCRIPTION	REMARKS	USAGE CODE	QTY
3	459/50431		Shaft, pump drive, SS700 gearbox			1
4	904/20210		Ring, seal			1
5	916/10012		Bearing, ball			1
6	2203/1068		Circlip, internal			1
10	20/925552		Pump, assembly, transmission			1
11	904/20226		Seal, transmission pump			1
12	813/50041		Seal, rear			1
13	1315/3311Z		Bolt, M8 X 45			4
14	823/00291		Washer, copper			4

● G1 BRAKES

G

ENGLISH

G1-1-11 BRAKE, SYSTEM, STANDARD
G1-1-12 BRAKE, SYSTEM, STANDARD
G1-1-21 BRAKE, SYSTEM, REMOTE SERVO
G1-3-1 BRAKE, PARKING, SYNCROSHUTTLE

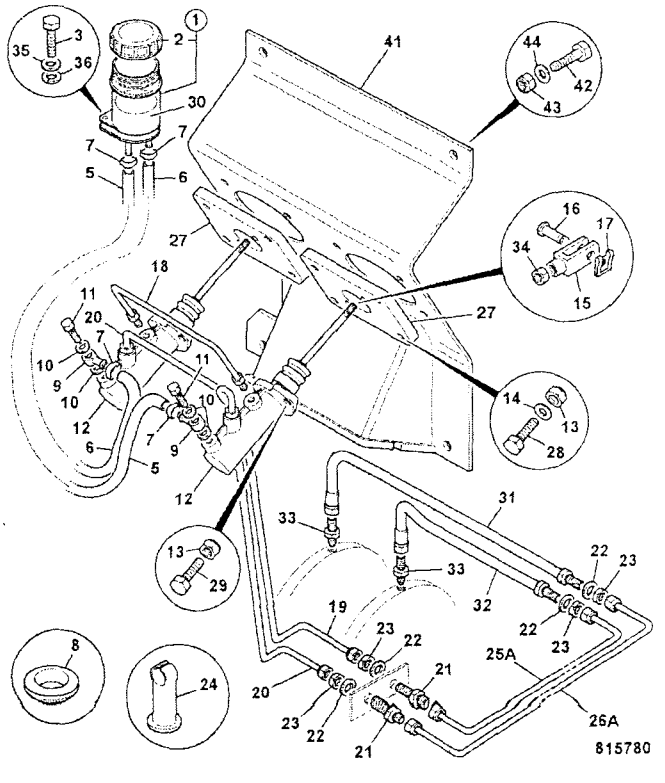

	FROM	TO	FROM	TO
3C PLUS		M TBA		
3C 14		M TBA		

ITEM	PART NO	CHANGE NO	DESCRIPTION	REMARKS	USAGE CODE	QTY
1	126/00200		Reservoir	Brake		1
1A	162/03143		.Cover, reservoir cap			1
1B	123/02142		::Seal, splash guard			1
2	123/06356		Cover, brake reservoir			1
3	1315/0210Z		*Bolt, M6 x 40mm long*			2
5	*332/C1094		Hose, 6x12x580	580mm long right hand side master cylinder		1
6	*332/C1094		Hose, 6x12x580	580mm long left hand master cylinder		1
7	*821/10420		Clip, ear clip, 11.1-13.1			4
8	828/00367		Grommet			2
9	816/70009		Connector, banjo			2
10	823/00372		Washer			4
11	816/75016		Bolt, banjo			2
12	15/920111	To M TBA	Cylinder, brake master			2
	15/920402	M TBA on	Cylinder, brake master, "Carlisle"	For installation see G1-1-12		2
12A	15/920152		Kit-repair, major			1
13	1370/0203Z		Nut, self lock, M8			12
14	1420/0007Z		Washer, plain, M8			8
15	913/00036		Clevis			2
16	913/C0014		Pin, clevis			2

G1-1-11 BRAKE, SYSTEM, STANDARD

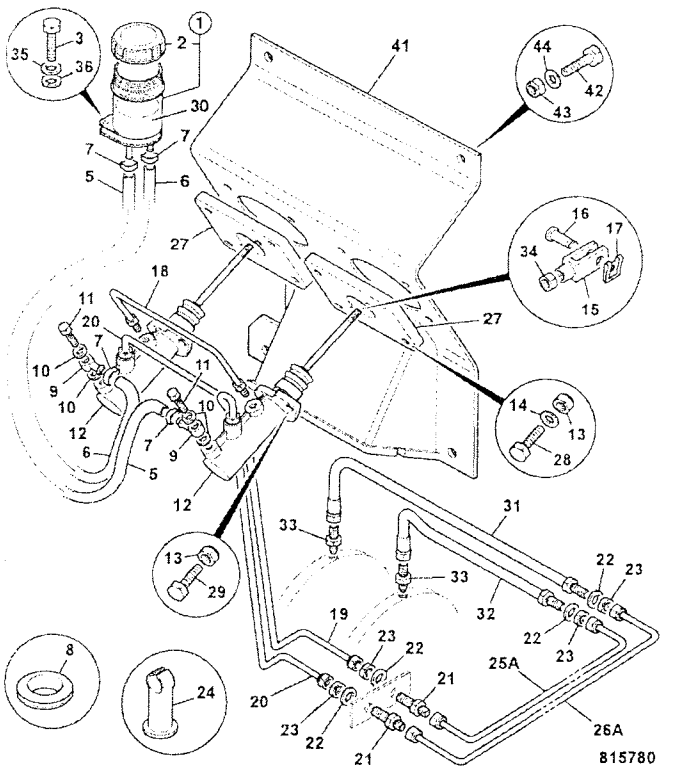

ITEM	PART NO	CHANGE NO	DESCRIPTION	REMARKS	USAGE CODE	QTY
17	913/00005		Clip, clevis			2
18	123/02516		Pipe, servo link			1
19	123/07854		Pipe, left hand side			1
20	123/07853		Pipe, right hand side, brake			1
21	816/15125		Adapter, bulkhead			2
22	1417/0014Z		Washer, star			6
23	15/106700		Nut			6
24	821/00069		Clip, pipe			2
25A	123/07436		Pipe, left hand middle			1
26A	123/07437		Pipe, right hand middle			1
27	123/02719		Plate, master cyl adapter			1
28	1315/0305Z		Screw, M8 x 20mm long			8
29	1315/0308Z		Screw, M8x30			4
30	4002/0503		Brake, fluid, 5 ltr			A/R
31	649/51320		Hose, brake, 760mm			1
32	649/51240		Hose, brake, 580mm			1
33	816/15138		Adapter, M12 x M12			2
35	1420/0006Z		Washer, M6			2
36	1425/0006Z		Washer, Spring			2
41	125/00404		Bracket, master cylinder, mounting			1
42	1315/0407Z		Bolt, M10x25			4
43	1420/0008Z		Washer, Plain M10			4
44	1370/0303Z		Nut, lock, M10			4

G1-1-12 BRAKE, SYSTEM, STANDARD

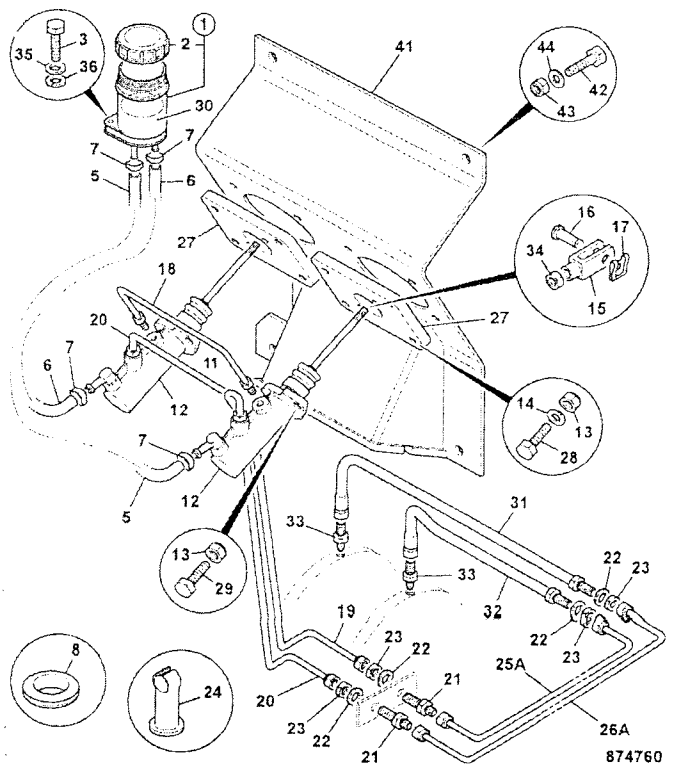

	FROM	TO	FROM	TO
3C PLUS	M TBA			
3C 14	M TBA			

ITEM	PART NO	CHANGE NO	DESCRIPTION	REMARKS	USAGE CODE	QTY
1	126/00200		Reservoir	Brake		1
1A	162/03143		::Cover, reservoir cap			1
1B	123/02142		::Seal, splash guard			1
2	123/06356		Cover, brake reservoir			1
3	1315/0210Z		Bolt, M6 x 40mm long			2
5	*332/C1094		Hose, 6x12x580	580mm long right hand side master cylinder		1
6	*332/C1094		Hose, 6x12x580	580mm long left hand master cylinder		1
7	821/10420		Clip, ear clip, 11.1-13.1			4
8	828/00367		Grommet			2
12	15/920402		Cylinder, brake master, "Carlisle"			2
13	1370/0203Z		Nut, self lock, M8			12
14	1420/0007Z		Washer, plain, M8			8
15	913/00036		Clevis			2
16	913/00014		Pin, clevis			2
17	913/00005		Clip, clevis			2
18	123/02516		Pipe, servo link			1
19	123/07854		Pipe, left hand side			1
20	123/07853		Pipe, right hand side, brake			1

G1-1-12 BRAKE, SYSTEM, STANDARD

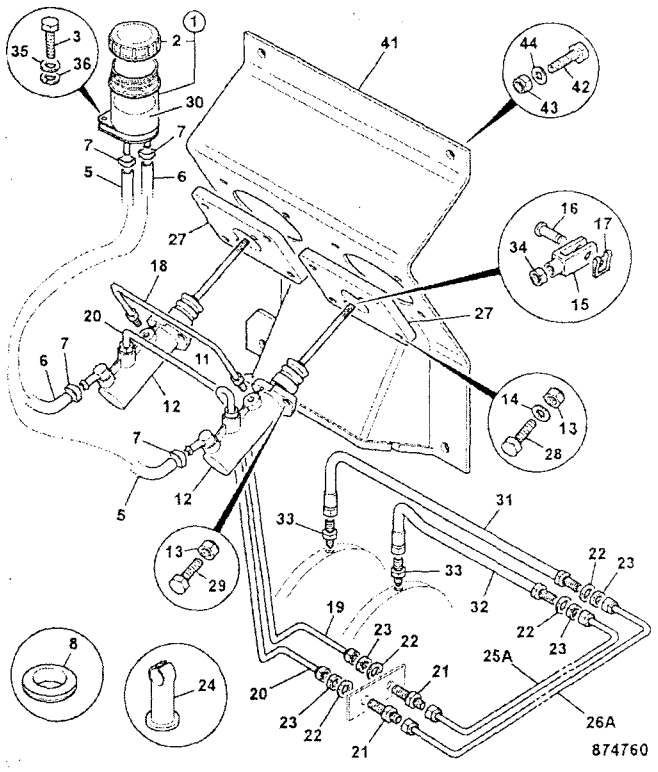

ITEM	PART NO	CHANGE NO	DESCRIPTION	REMARKS	USAGE CODE	QTY
21	816/15125		Adapter, bulkhead			2
22	1417/0014Z		Washer, star			6
23	15/106700		Nut			6
24	821/00069		Clip, pipe			2
25A	123/07436		Pipe, left hand middle			1
26A	123/07437		Pipe, right hand middle			1
27	123/02719		Plate, master cyl adapter			1
28	1315/0305Z		Screw, M8 x 20mm long			8
29	1315/0308Z		Screw, M8x30			4
30	4002/0503		Brake, fluid, 5 ltr			A/R
31	649/51320		Hose, brake, 760mm			1
32	649/51240		Hose, brake, 580mm			1
33	816/15138		Adapter, M12 x M12			2
35	1420/0006Z		Washer, M6			2
36	1425/0006Z		Washer, Spring			2
41	125/00404		Bracket, master cylinder, mounting			1
42	1315/0407Z		Bolt, M10x25			4
43	1420/0008Z		Washer, Plain M10			4
44	1370/0303Z		Nut, lock, M10			4

G1-1-21 BRAKE, SYSTEM, REMOTE SERVO

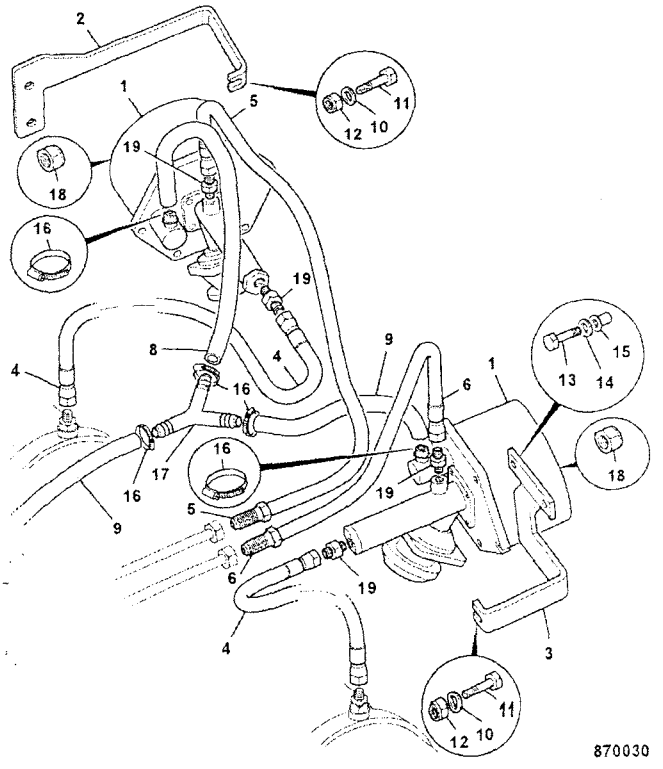

	FROM	TO	FROM	TO
3C PLUS				
3C 14				

ITEM	PART NO	CHANGE NO	DESCRIPTION	REMARKS	USAGE CODE	QTY
1	15/920255		Brake, Remote Servo			2
2	331/59835		Mounting, servo			1
3	331/59833		Mounting, servo			1
4	649/51240		Hose, brake, 580mm			2
5	649/51232		Hose			1
6	649/21000		Hose, brake, 350mm			1
7	648/31003		Hose, brake vacuum, 9.5mm bore x 400mm			1
8	648/31002		Hose, Vacuum			1
9	648/31005		Hose, vacuum 1350mm long			1
10	1420/0005Z		Washer, M5			2
11	1315/0107Z		Bolt			2
12	1370/0003Z		Nut			2
13	1315/0207Z		Screw, M6 x 25mm long			2
14	1420/0006Z		Washer, M6			2
15	826/01101		Nut, rivet,M6 open ended, for 3 to 5.5mm plt			2
16	2201/0004		Clip, jubilee			5
17	816/60231		Connector, 3 way			1
18	1370/0203Z		Nut, self lock, M8			2
19	816/15138		Adapter, M12 x M12			4

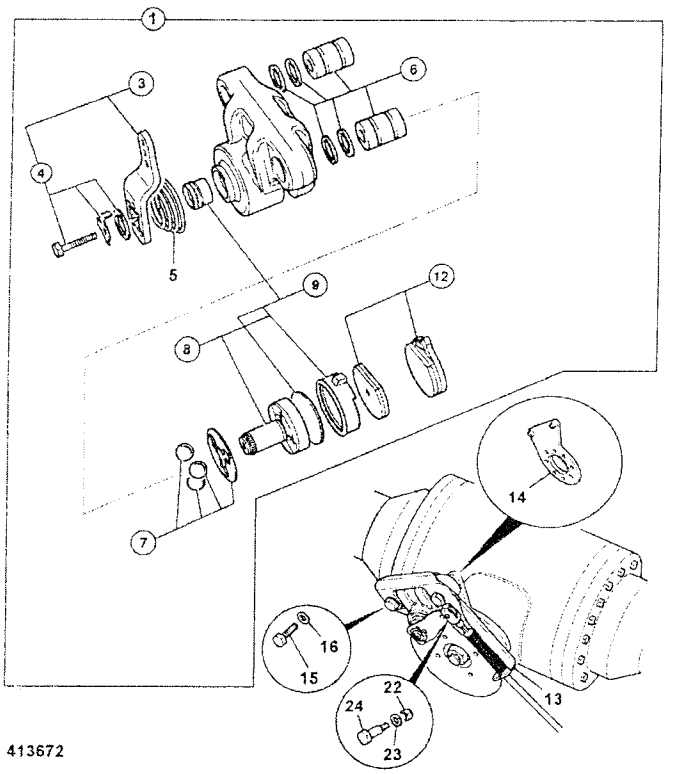

413672

	FROM	TO	FROM	TO
3C PLUS				
3C 14				

ITEM	PART NO	CHANGE NO	DESCRIPTION	REMARKS	USAGE CODE	QTY
1	15/920269		Brake, caliper, parkbrake, Hayes, booted			1
3	15/920290		:Kit-lever			1
4	15/920289		::Kit-bolt, torx head			1
5	15/920291		:Kit-spring			1
6	15/920293		:Kit-bush			1
7	478/00844		:Kit-bearing			1
8	15/920294		:Kit-rotor, assembly			1
9	15/920292		::Kit-seal			1
12	15/920103		:Kit-pad, brake Pad			1
13	331/24632		Bracket, reaction			1
14	458/20511		Bracket, caliper mount, axle			1
15	826/10526		Bolt			2
16	823/00603		Washer, hardened, M16			2
22	1370/0103Z		Nut, Self lock, M6			1
23	1420/0006Z		Washer, M6			1
24	826/01597	To M0906213	Screw, shoulder, 8 x 20 x M6			1
	826/11378		Screw, shoulder, 8 x 12 x M6			1

L

● L1 ENGINE BLOCK & SUB-ASSEMBLIES
L2 CYLINDER HEAD & SUB-ASSEMBLIES
L3 INDUCTION & EXHAUST SYSTEM
L4 COOLING SYSTEM
L5 LUBRICATION SYSTEM
L6 FUEL SYSTEM
L7 AUXILIARY EQUIPMENT
L8 GASKET SETS

	ENGLISH
L1-1-1	ENGINE, COMPLETE, NATURALLY ASPIRATED, P4001, 8C88
L1-1-2	ENGINE, COMPLETE, TURBOCHARGED, P4001T, 8C89
L1-3-1	BLOCK ASSEMBLY, NATURALLY ASPIRATED, P4001 8C88
L1-3-2	BLOCK ASSEMBLY, TURBOCHARGED, P4001T 8C89
L1-4-1	CRANKSHAFT, BEARINGS, PISTONS & CON-RODS, P4001 NAT-ASP 8C88
L1-4-2	CRANKSHAFT, BEARINGS, PISTONS & CON-RODS, P4001T TURBO 8C89
L1-5-1	FANS, PULLEYS, & FAN BELT, P4001/P4001T NAT ASP & TURBO 8C88/8C89
L1-6-1	TIMING CASE, CAMSHAFT & GEARS, P4001 NAT ASP 8C88
L1-6-2	TIMING CASE, CAMSHAFT & GEARS, TURBOCHARGED 8C89
L1-7-1	FLYWHEEL, & STARTER RING GEAR, P4001/ P4001T, 8C88 & 8C89
L1-8-1	ENGINE MOUNTINGS, P4001/P400T 8C88 & 8C89

L1-1-1 ENGINE, COMPLETE, NATURALLY ASPIRATED, P4001, 8C88

	FROM	TO	FROM	TO
3C PLUS				
3C 14				

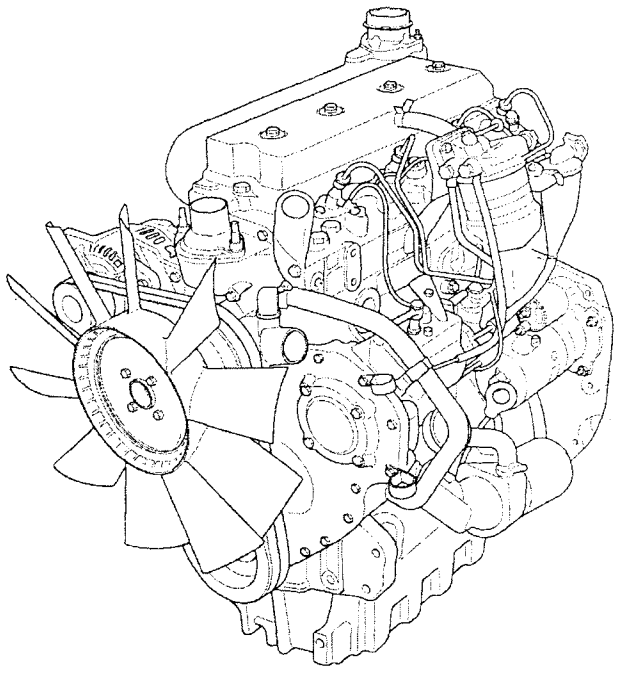

706000

ITEM	PART NO	CHANGE NO	DESCRIPTION	REMARKS	USAGE CODE	QTY
1	339/01024		Engine, naturally aspirated, INTERNATIONAL, 75bhp			1

L1-1-2 ENGINE, COMPLETE, TURBOCHARGED, P4001T, 8C89

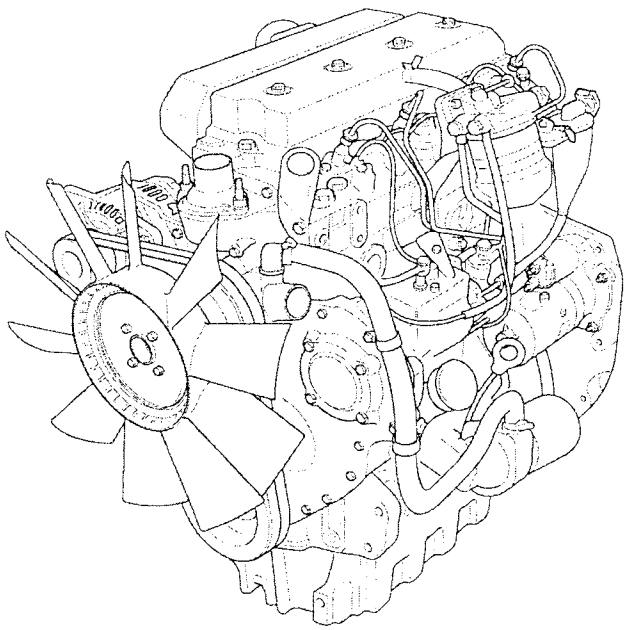

706010

	FROM	TO	FROM	TO
3C PLUS				
3C 14				

ITEM	PART NO	CHANGE NO	DESCRIPTION	REMARKS	USAGE CODE	QTY
	339/01023		Engine, turbocharged, INTERNATIONAL, 92bhp			1

L1-3-1 BLOCK ASSEMBLY, NATURALLY ASPIRATED, P4001 8C88

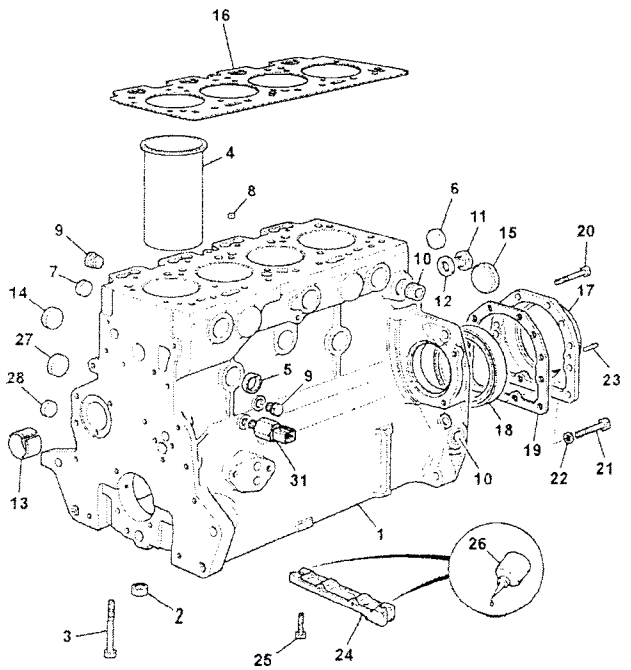

948800

	FROM	TO	FROM	TO
3C PLUS				
3C 14				

ITEM	PART NO	CHANGE NO	DESCRIPTION	REMARKS	USAGE CODE	QTY
	02/103690		Block, engine 8C30/8C88			1
2	02/100101		:Thimble			10
3	02/100102		:Bolt			10
4	02/103401		:Liner			4
5	02/103402		:Plug			5
6	02/103402		:Plug			2
7	02/103404		:Plug			4
8	02/103408		:Plug			1
9	02/103405		:Plug			2
10	02/103410		:Plug			3
11	02/100111		Plug			1
12	02/103406		Washer			1
13	02/103409		:Bush			1
14	02/103403		:Plug			4
15	02/103407		Plug			1
16	02/103707		Gasket, cylinder head			1
17	02/103491		Housing, rear seal			1
18	02/103492		Seal			1
19	02/103720		Gasket, gasket			1
20	02/103450		Bolt			12
21	1381/3106		Capscrew			2
22	02/100307		Washer			2

L1-3-1 BLOCK ASSEMBLY, NATURALLY ASPIRATED, P4001 8C88

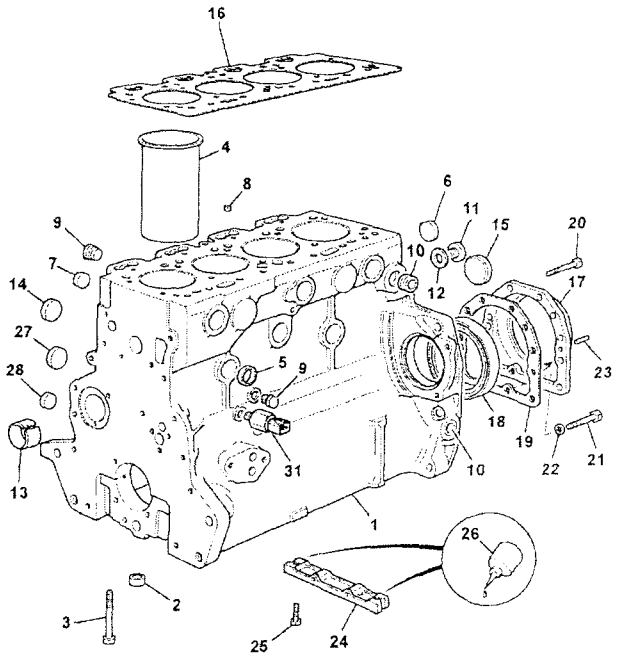

948800

ITEM	PART NO	CHANGE NO	DESCRIPTION	REMARKS	USAGE CODE	QTY
23	02/103721		Pin, guide			2
24	02/102167		Bridge, piece			1
25	826/00759		Bolt			2
26	02/103411		Gasket			2
27	02/103602		Plug			1
28	02/100116		Plug			1
31	701/80327		Switch, oil pressure, 1/8" NPTF Deutsch			1

L1-3-2 BLOCK ASSEMBLY, TURBOCHARGED, P4001T 8C89

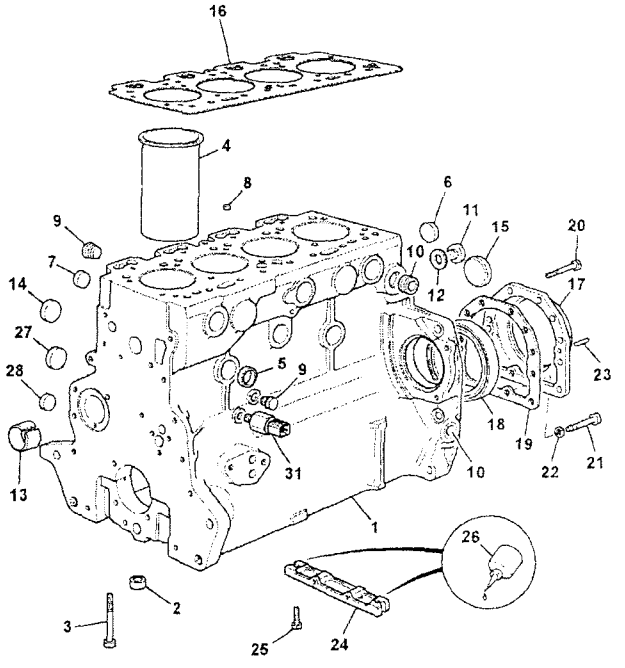

948800

	FROM	TO	FROM	TO
3C PLUS				
3C 14				

ITEM	PART NO	CHANGE NO	DESCRIPTION	REMARKS	USAGE CODE	QTY
1	02/103691		Block, engine 8C31/8C89			1
2	02/100101		Thimble			10
3	02/100102		Bolt			10
4	02/103401		Liner			4
5	02/103402		Plug			5
6	02/103402		Plug			2
7	02/103404		Plug			4
8	02/103408		Plug			1
9	02/103405		Plug			2
10	02/103410		Plug			3
11	02/100111		Plug			1
12	02/103406		Washer			1
13	02/103409		Bush			1
14	02/103403		Plug			4
15	02/103407		Plug			1
16	02/102174		Gasket, cylinder head			1
17	02/103491		Housing, rear seal			1
18	02/103492		Seal			1
19	02/103720		Gasket, gasket			1
20	02/103450		Bolt			12
21	1381/3106		Capscrew			2
22	02/100307		Washer			2

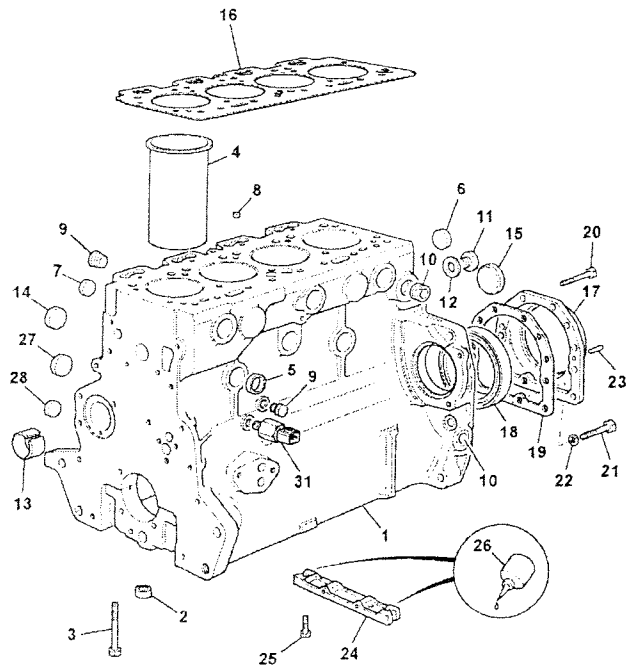

948800

ITEM	PART NO	CHANGE NO	DESCRIPTION	REMARKS	USAGE CODE	QTY
23	02/103721		Pin, guide			2
24	02/102167		Bridge, piece			1
25	826/00759		Bolt			2
26	02/103411		Gasket			2
27	02/103602		Plug			1
28	02/100116		Plug			1
31	701/80327		Switch, oil pressure, 1/8" NPTF Deutsch			1

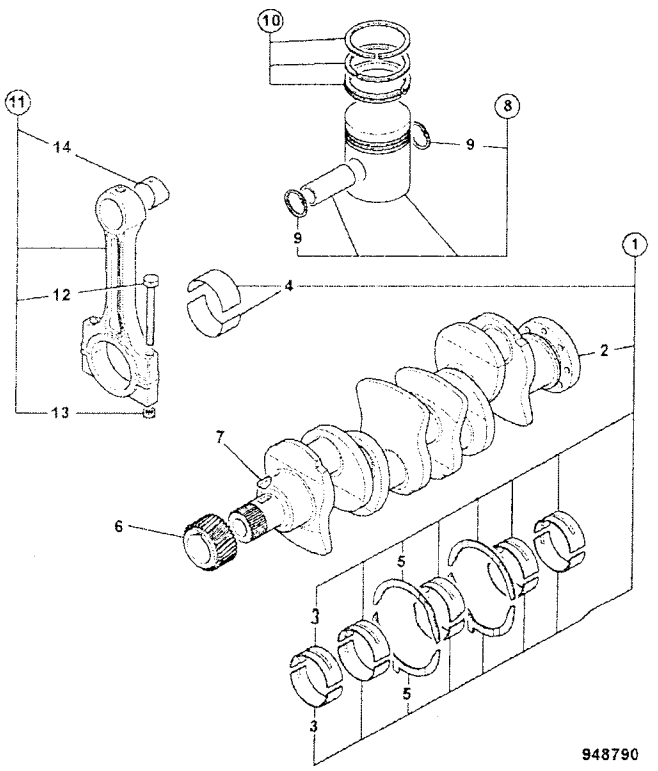

948790

	FROM	TO	FROM	TO
3C PLUS				
3C 14				

ITEM	PART NO	CHANGE NO	DESCRIPTION	REMARKS	USAGE CODE	QTY
1	02/103442		Kit-crankshaft			1
2	02/103437		:Crankshaft			1
3	02/103438		:Kit-bearing, main, standard			1
	02/103699		:Kit-bearing, bearing			1
	02/103440		:Kit-bearing, main, + .020"			1
	02/103441		:Kit-bearing, main, + .030"			1
4	02/103665		:Kit-bearing, big-end, standard			1
	02/103666		:Kit-bearing, big-end, + .010"			1
	02/103667		:Kit-bearing, big-end, + .020"			1
	02/103668		:Kit-bearing, big-end, + .030"			1
5	02/103659		:Kit-thrust washer, standard			1
	02/103660		:Kit-thrust washer, + .0075"			1
6	02/190001		Gear, crankshaft			1
7	02/100038		Key			1
8	02/103415		Piston, assembly	Cylinders 1,2 & 3		3
	02/103701		Piston, assembly	Cylinder 4		1
9	02/103448		:Circlip			8
10	02/103702		:Kit, piston ring			4

L1-4-1 CRANKSHAFT, BEARINGS, PISTONS & CON-RODS, P4001 NAT-ASP 8C88

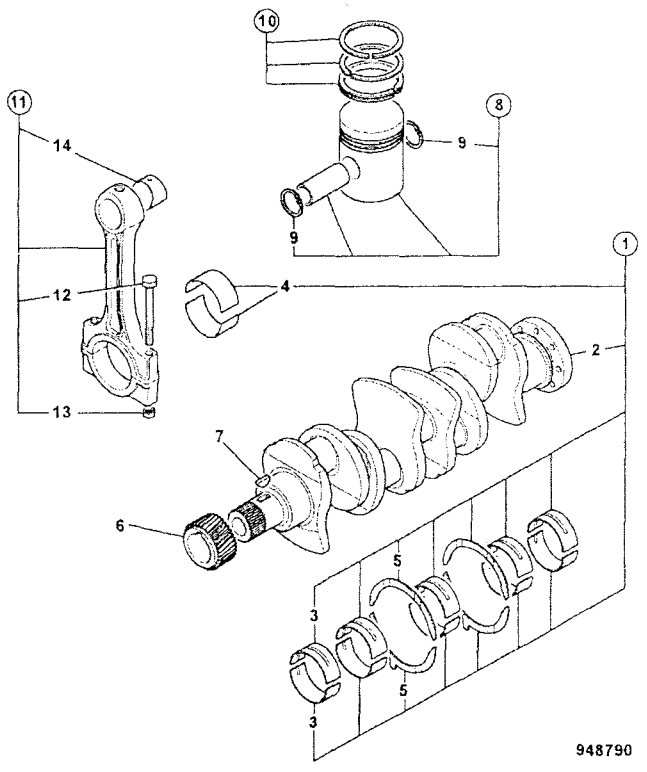

ITEM	PART NO	CHANGE NO	DESCRIPTION	REMARKS	USAGE CODE	QTY
11	02/103417		Rod, connecting			4
12	02/100127		.Bolt			8
13	02/103446		.Nut			8
14	02/103449		.Bush			4

L1-4-2 CRANKSHAFT, BEARINGS, PISTONS & CON-RODS, P4001T TURBO 8C89

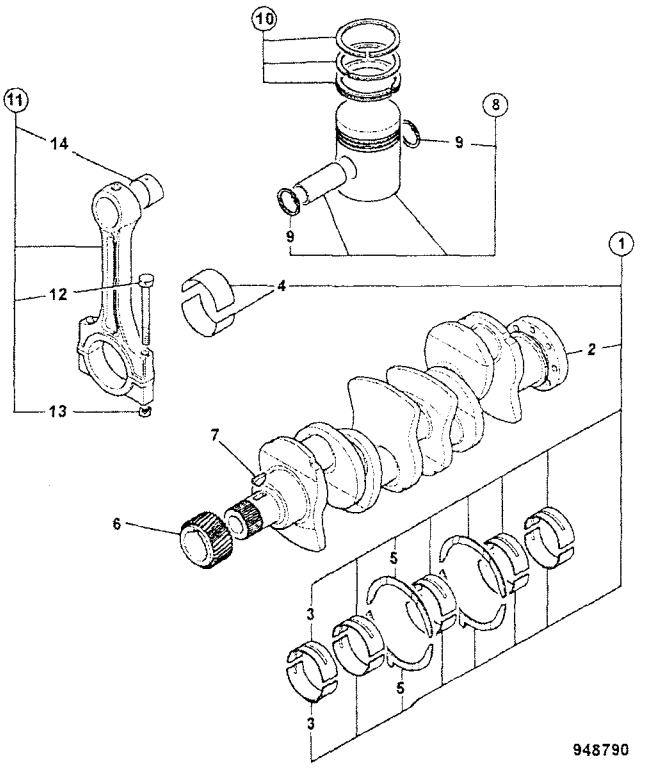

	FROM	TO	FROM	TO
3C PLUS				
3C 14				

ITEM	PART NO	CHANGE NO	DESCRIPTION	REMARKS	USAGE CODE	QTY
1	02/103442		Kit-crankshaft			1
2	02/103437		.Crankshaft			1
3	02/103438		.Kit-bearing, main, standard			1
	02/103699		.Kit-bearing, bearing			1
	02/103440		.Kit-bearing, main, + .020"			1
	02/103441		.Kit-bearing, main, + .030"			1
4	02/103661		.Kit-bearing, big-end, standard			1
	02/103662		.Kit-bearing, big-end, + .010"			1
	02/103663		.Kit-bearing, big-end, + .020"			1
	02/103664		.Kit-bearing, big-end, + .030"			1
5	02/103659		.Kit-thrust washer, standard			1
	02/103660		.Kit-thrust washer, + .0075"			1
6	02/190001		Gear, crankshaft			1
7	02/100038		Key			1
8	02/103423		Piston, assembly	Cylinders 1,2 & 3		4
9	02/100129		.Circlip			8
10	02/103702		.Kit, piston ring			1
11	02/103424		Rod, connecting			4

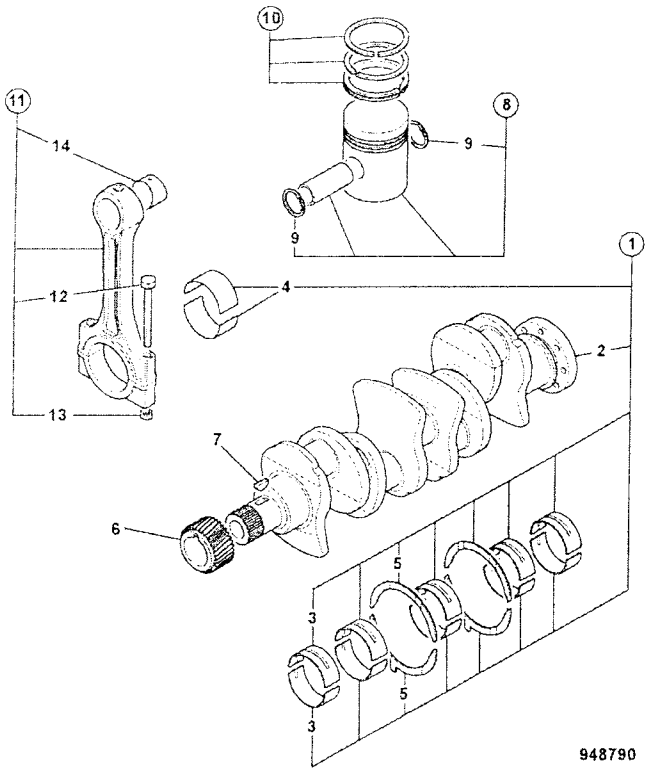

ITEM	PART NO	CHANGE NO	DESCRIPTION	REMARKS	USAGE CODE	QTY
12	02/100127		:Bolt			8
13	02/103446		:Nut			8
14	02/103447		:Bush			4

	FROM	TO	FROM	TO
3C PLUS				
3C 14				

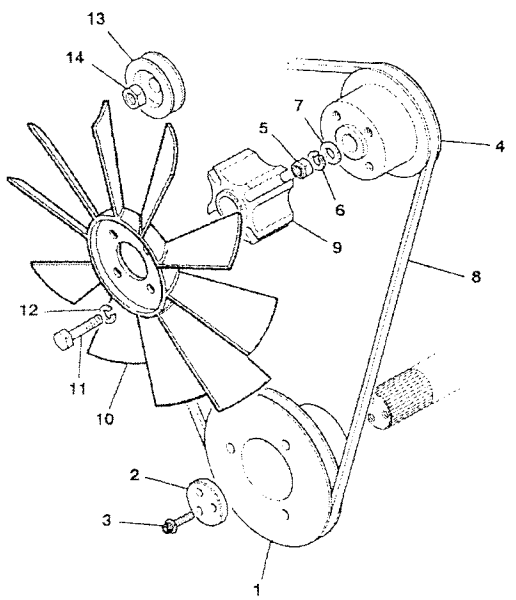

ITEM	PART NO	CHANGE NO	DESCRIPTION	REMARKS	USAGE CODE	QTY
1	02/103652		Pulley			1
2	02/101812		Block, Thrust			1
3	02/103508		Bolt			3
4	02/103615		Pulley			1
5	1340/0601		Nut			1
6	823/00270		Washer, spring			1
7	1410/0007		Washer			1
8	02/103600		Belt			1
9	339/01030		Spacer, fan			1
10	339/01027		Fan, 18" cooling			1
11	1315/3317Z		Bolt, M8x75			4
12	1420/0007Z		Washer, plain, M8			4
13	02/103671		Pulley, water pump			1
14	02/103672		Nut, M12			1

702231

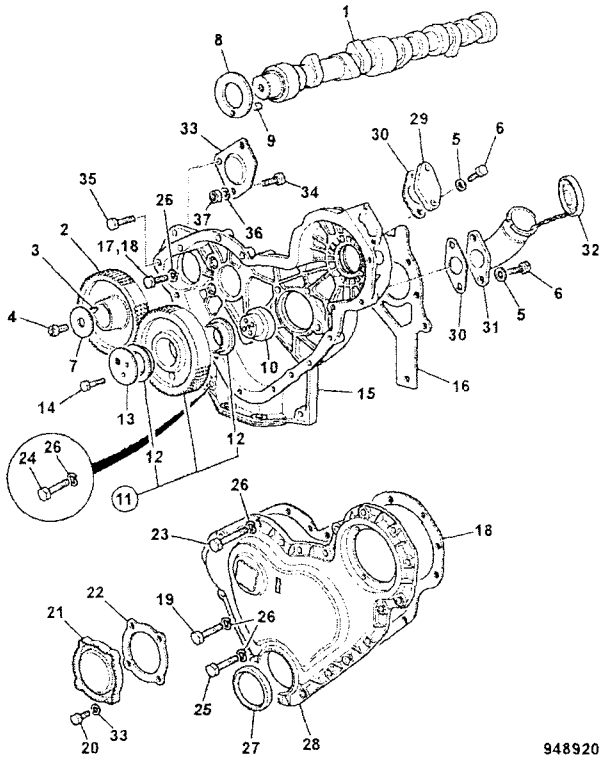

	FROM	TO	FROM	TO
3C PLUS				
3C 14				

ITEM	PART NO	CHANGE NO	DESCRIPTION	REMARKS	USAGE CODE	QTY
1	02/103722		Camshaft, camshaft			1
2	02/190017		Gear, camshaft			1
3	02/100038		Key			1
4	02/103493		Bolt			1
5	1416/0005		Washer			2
6	1305/0104		Bolt			2
7	02/103494		Washer			2
8	02/192046		Washer, thrust			1
9	02/103724		Pin, guide			1
10	02/103725		Hub, hub			1
11	02/190033		Gear, idler assembly			1
12	02/192016		Bush			2
13	02/103497		Plate			1
14	02/103498		Bolt			3
15	02/103694		Housing, timing case			1
16	02/103509		Gasket			1
17	1305/3106		Bolt			7
18	02/103510		Gasket			1
19	1305/3106		Bolt			14
20	02/103430		Bolt			4
21	02/103696		Cover, hole cover			1
22	02/100868		Gasket			1

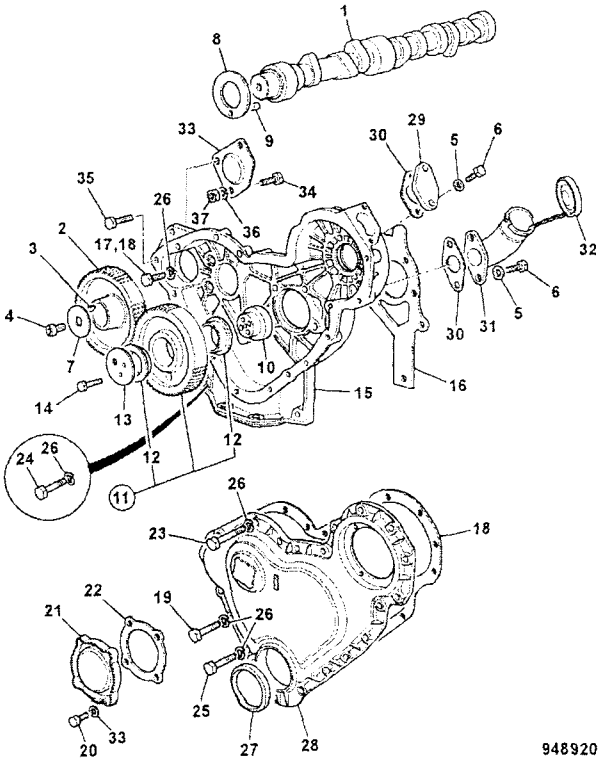

ITEM	PART NO	CHANGE NO	DESCRIPTION	REMARKS	USAGE CODE	QTY
23	02/103697		Bolt, bolt			1
24	1305/0105		Bolt			2
25	1305/3118		Bolt			3
26	1416/0005		Washer			30
27	02/103429		Seal			1
28	02/103765		Cover, cover			1
29	02/103434		Plate, cover			1
30	02/103511		Gasket			2
31	02/103432		Filter			1
32	02/103698		Cap, cover			1
33	02/100142		Plate, blanking			1
34	826/00030		Bolt			1
35	1305/3222		Bolt			2
36	1416/0006		Washer			3
37	1340/0201		Nut			3

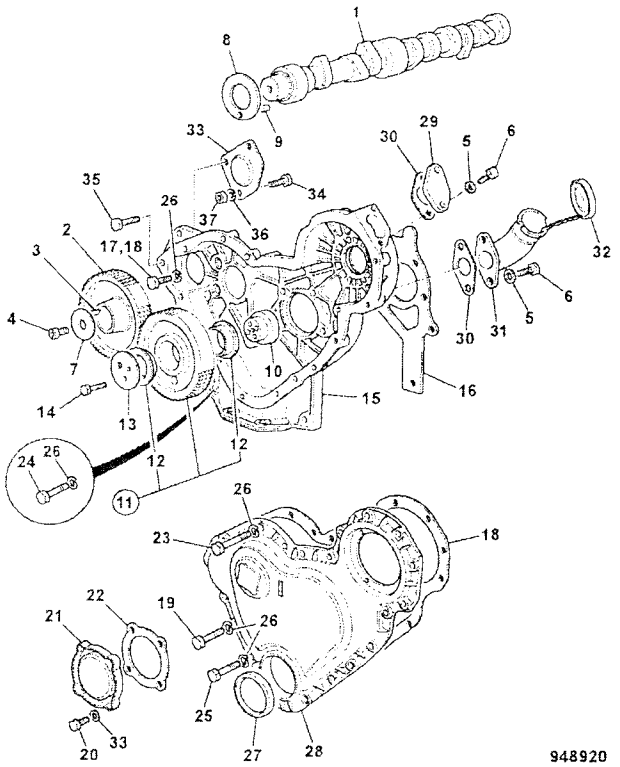

	FROM	TO	FROM	TO
3C PLUS				
3C 14				

ITEM	PART NO	CHANGE NO	DESCRIPTION	REMARKS	USAGE CODE	QTY
1	02/103723		Camshaft, camshaft			1
2	02/190017		Gear, camshaft			1
3	02/100038		Key			1
4	02/103493		Bolt			1
5	1416/0005		Washer			2
6	1305/0104		Bolt			2
7	02/103494		Washer			2
8	02/192046		Washer, thrust			1
9	02/103724		Pin, guide			1
10	02/103725		Hub, hub			1
11	02/190033		Gear, idler assembly			1
12	02/192016		Bush			2
13	02/103497		Plate			1
14	02/103498		Bolt			3
15	02/103695		Housing, timing case			1
16	02/103509		Gasket			1
17	1305/3106		Bolt			7
18	02/103510		Gasket			1
19	1305/3106		Bolt			14
20	02/103430		Bolt			4
21	02/103696		Cover, hole cover			1
22	02/100868		Gasket			1

L1-6-2 TIMING CASE, CAMSHAFT & GEARS, TURBOCHARGED 8C89

9812/0080U
ISSUE 0

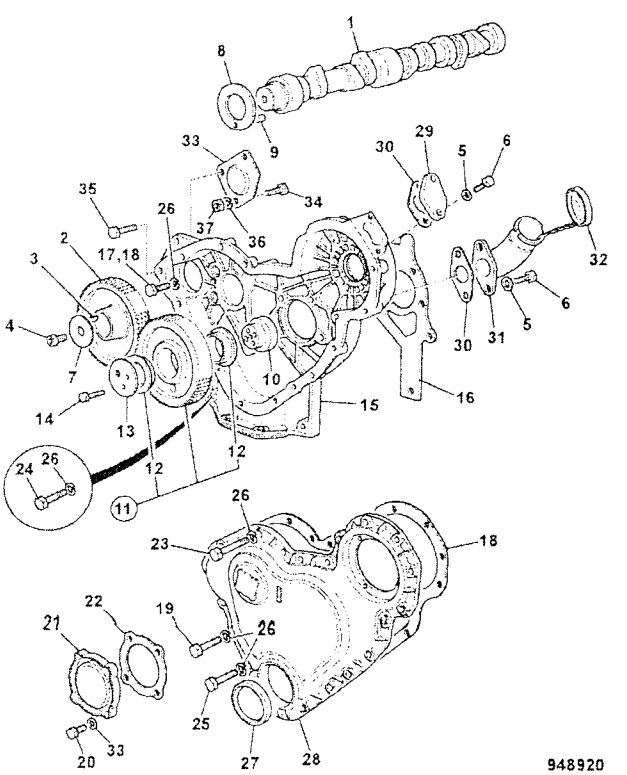

ITEM	PART NO	CHANGE NO	DESCRIPTION	REMARKS	USAGE CODE	QTY
23	02/103697		Bolt, bolt			1
24	1305/0105		Bolt			2
25	1305/3118		Bolt			3
26	1416/0005		Washer			28
27	02/103429		Seal			1
28	02/103765		Cover, cover			1
29	02/103434		Plate, cover			1
30	02/103511		Gasket			2
31	02/103432		Filler			1
32	02/103698		Cap, cover			1
33	02/100142		Plate, blanking			1
34	826/00030		Bolt			1
35	1305/3222		Bolt			2
36	1416/0006		Washer			3
37	1340/0201		Nut			3

L1-7-1 FLYWHEEL, & STARTER RING GEAR, P4001/P4001T, 8C88 & 8C89

	FROM	TO	FROM	TO
3C PLUS				
3C 14				

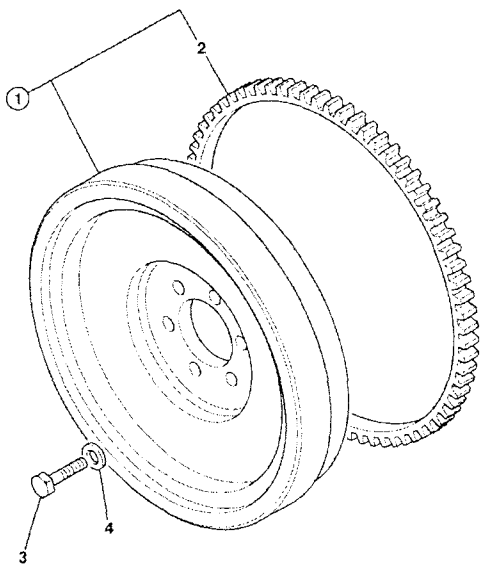

705630

ITEM	PART NO	CHANGE NO	DESCRIPTION	REMARKS	USAGE CODE	QTY
1	02/103607		Flywheel, assembly			1
2	02/100078		Gear, starter ring			1
3	02/103609		Bolt			6
4	02/100614		Washer			6

L1-8-1 ENGINE MOUNTINGS, P4001/P400T 8C88 & 8C89

	FROM	TO	FROM	TO
3C PLUS				
3C 14				

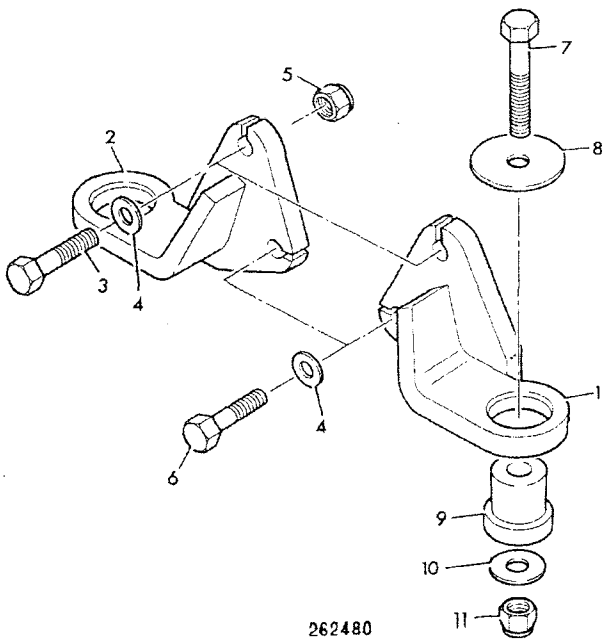

262480

ITEM	PART NO	CHANGE NO	DESCRIPTION	REMARKS	USAGE CODE	QTY
1	125/00201		Bracket, engine mounting, left hand			1
2	125/00202		Bracket, engine mounting, *right hand*			1
3	1315/3717Z		Bolt, M16 x 75mm			2
4	1370/0603Z		Nut, M16			2
5	1420/0011Z		Washer, M16 plain			4
6	1315/0710Z		Bolt, M16 x 40mm			2
7	1315/3519Z		Bolt, M12x90mm			2
8	123/02453		Washer, rebound			2
9	123/03138		Mounting, rubber			2
10	823/00531		Washer			2
11	1370/0403Z		Nut, M12			2



L1 ENGINE BLOCK & SUB-ASSEMBLIES
● L2 CYLINDER HEAD & SUB-ASSEMBLIES
L3 INDUCTION & EXHAUST SYSTEM
L4 COOLING SYSTEM
L5 LUBRICATION SYSTEM
L6 FUEL SYSTEM
L7 AUXILIARY EQUIPMENT
L8 GASKET SETS

ENGLISH

L2-1-1 CYLINDER HEAD, NAT ASP, P4001 8C88
L2-1-2 CYLINDER HEAD, TURBO, P4001T 8C89
L2-2-1 ROCKER ASSEMBLY, PUSH RODS & TAPPETS, P4001/P4001T NAT ASP & TURBO 8C88/8C89
L2-3-1 ROCKER COVER, NAT ASP & TURBO, P4001 & P4001T 8C88/8C89
L2-4-1 LIFTING PLATES, ENGINE, P4001/P4001T NAT ASP & TURBO 8C88/8C89

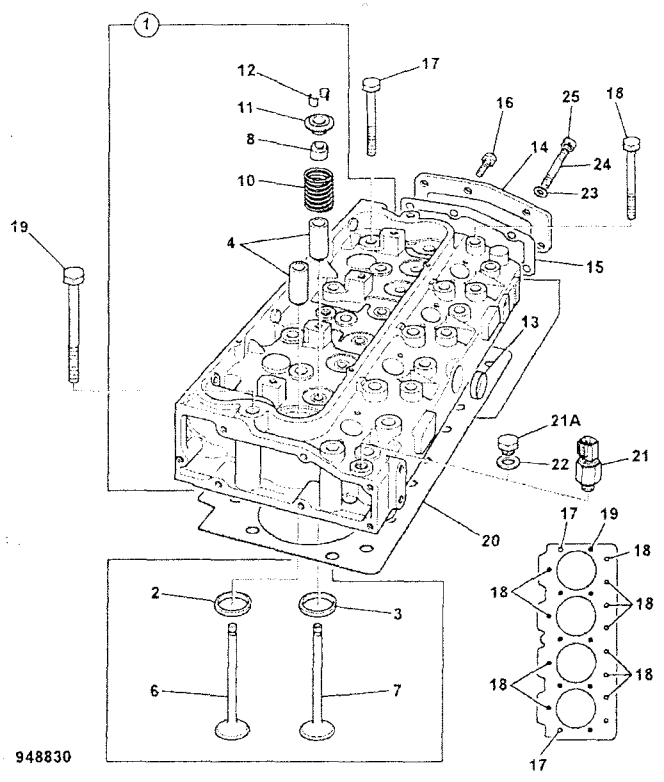

	FROM	TO	FROM	TO
3C PLUS				
3C 14				

ITEM	PART NO	CHANGE NO	DESCRIPTION	REMARKS	USAGE CODE	QTY
1	02/103705		Head, cylinder			1
2	02/103466		:Insert, exhaust			4
3	02/103467		:Insert, inlet			4
4	02/130064		:Guide, valve	EXHAUST		8
6	02/103710		:Valve, exhaust			4
7	02/103709		:Valve, inlet			4
8	02/103471		:Seal			8
9	02/100638		:Seat, spring			8
10	02/103472		:Spring, outer			8
11	02/103474		:Holder, Collet			16
12	02/103473		:Collet			16
13	02/103402		:Plug			1
14	02/103478		:Cover, rear			1
15	02/103533		:Gasket			1
16	02/103450		:Bolt			4
17	02/103711		Bolt, 1/2x140			2
18	02/103712		Bolt, 1/2x119			12
19	02/103713		Bolt, 1/2x103			8
20	02/103707		Gasket, cylinder head			1
21	701/80317		Switch, water temperature			1
21A	*02/103603		Plug			1
22	02/103604		Washer			1

L2-1-1 CYLINDER HEAD, NAT ASP, P4001 8C88

9812/0080U
ISSUE 1

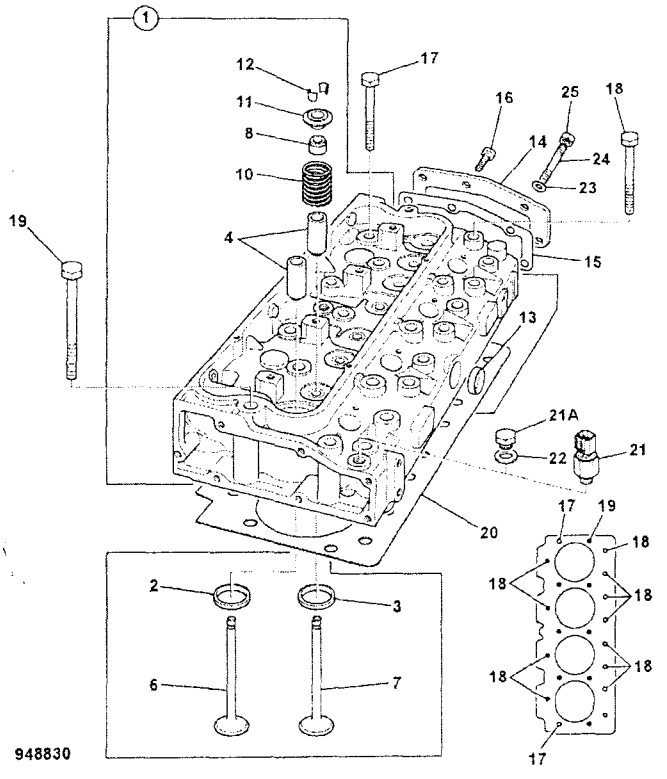

ITEM	PART NO	CHANGE NO	DESCRIPTION	REMARKS	USAGE CODE	QTY
23	1416/0005		Washer			4
24	822/00119		Stud			2
25	1340/0101		Nut			2

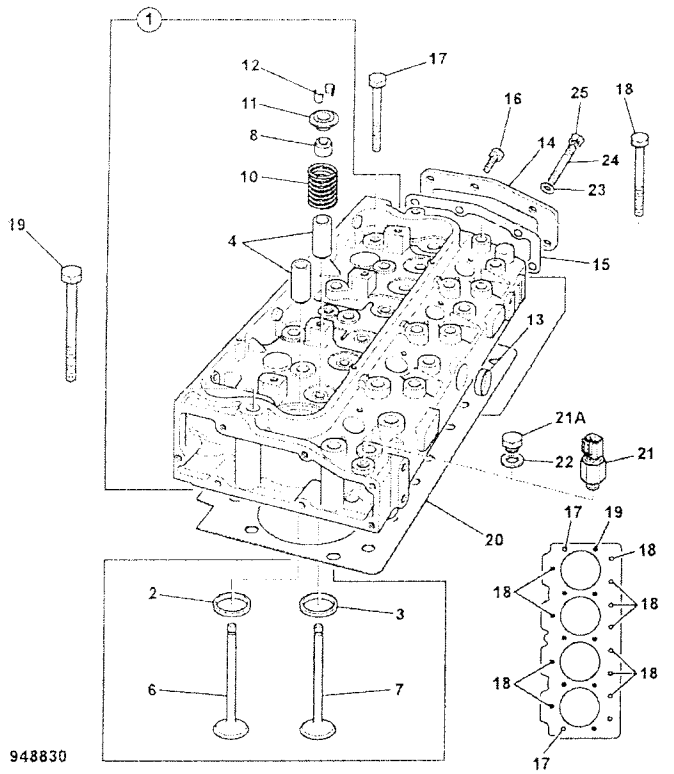

	FROM	TO	FROM	TO
3C PLUS				
3C 14				

ITEM	PART NO	CHANGE NO	DESCRIPTION	REMARKS	USAGE CODE	QTY
1	02/103706		Head, cylinder			1
2	02/103480		:Insert, exhaust			4
3	02/103481		:Insert, inlet			4
4	02/130064		:Guide, valve	EXHAUST		8
6	02/103710		:Valve, exhaust			4
7	02/103708		:Valve, inlet			4
8	02/103471		:Seal			8
9	02/100638		:Seat, spring			8
10	02/103472		:Spring, outer			8
11	02/103474		:Holder, Collet			16
12	02/103473		:Collet			16
13	02/103402		:Plug			1
14	02/103478		:Cover, rear			1
15	02/103533		:Gasket			1
16	02/103450		:Bolt			4
17	02/103711		Bolt, 1/2x140			2
18	02/103712		Bolt, 1/2x119			12
19	02/103713		Bolt, 1/2x103			8
20	02/103707		Gasket, cylinder head			1
21	701/80317		Switch, water temperature			1
21A	*02/103603		Plug			1
22	02/103604		Washer			1

L2-1-2 CYLINDER HEAD, TURBO, P4001T 8C89

9812/0080U
ISSUE 1

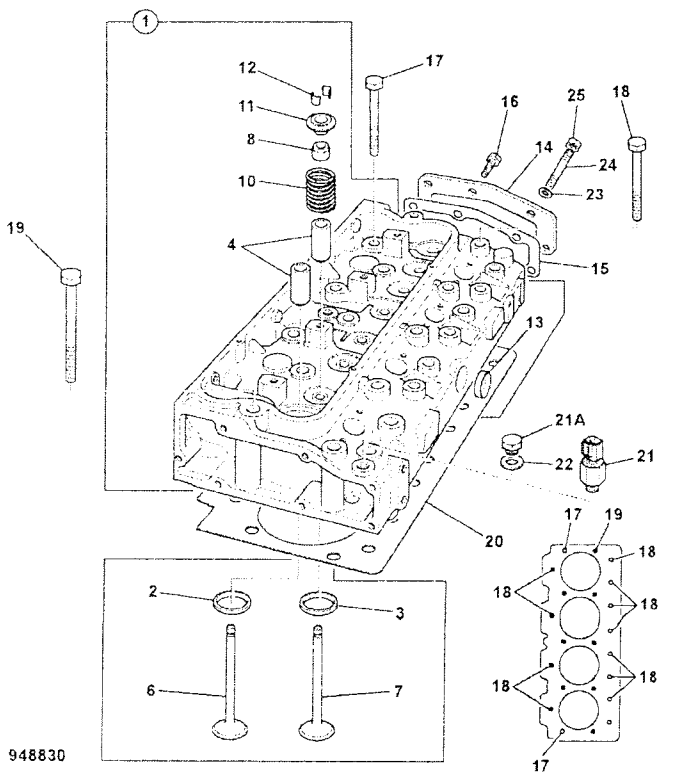

ITEM	PART NO	CHANGE NO	DESCRIPTION	REMARKS	USAGE CODE	QTY
23	1416/0005		Washer			4
24	822/00119		Stud			2
25	1340/0101		Nut			2

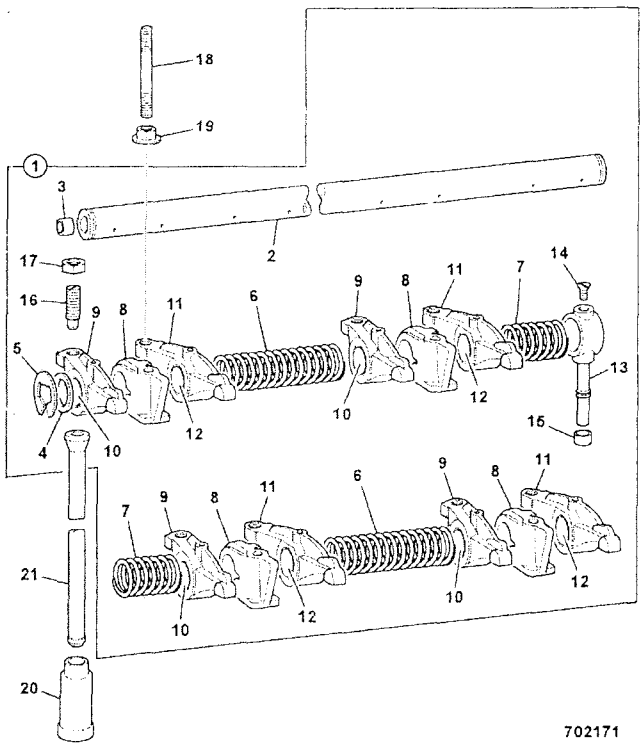

	FROM	TO	FROM	TO
3C PLUS				
3C 14				

ITEM	PART NO	CHANGE NO	DESCRIPTION	REMARKS	USAGE CODE	QTY
1	02/103483		Assembly, rocker shaft			1
2	02/103484		Shaft			2
3	02/100152		Plug, core, D=11mm			2
4	02/103714		Washer, washer			2
5	02/100287		Circlip			2
6	02/100028		Spring, long			2
7	02/103717		Spring, spring			2
8	02/103485		Bracket			4
9	02/103715		Lever, rocker			4
10	02/192050		Bush			4
11	02/103716		Lever, rocker			4
12	02/192050		Bush			4
13	02/103718		Pipe, pipe			1
14	826/00124		Screw			1
15	816/60170		Olive			1
16	02/100032		Screw			8
17	02/101203		Nut, lock			8
18	02/103489		Stud			4
19	02/103490		Nut			4
20	02/103719		Tappet, tappets			8
21	02/103487		Rod, push			8

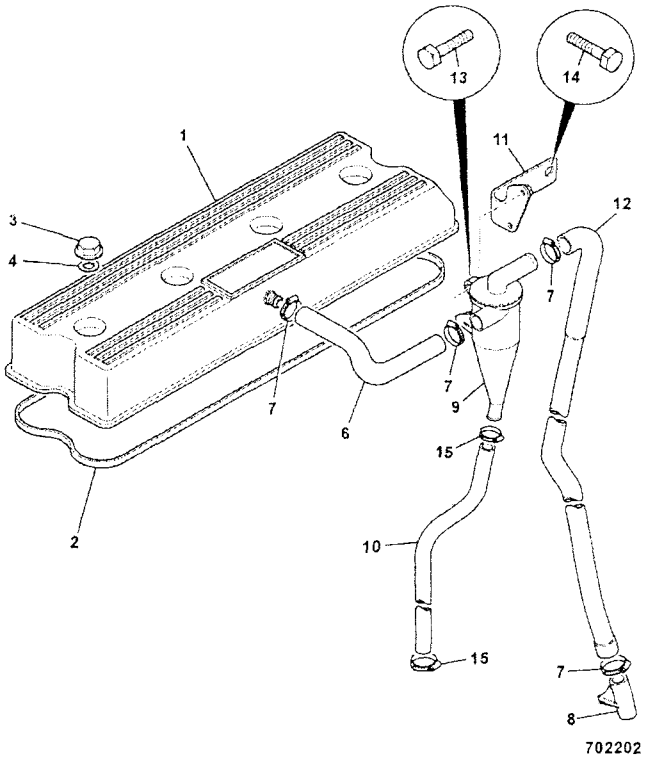

	FROM	TO	FROM	TO
3C PLUS				
3C 14				

ITEM	PART NO	CHANGE NO	DESCRIPTION	REMARKS	USAGE CODE	QTY
1	02/103733		Cover, cover			1
2	02/103526		Gasket			1
3	02/103527		Nut			4
4	02/192069		Bush	TURBO ONLY		4
6	02/103605		Hose			1
7	02/103524		Clamp			4
8	02/100180		Pipe			1
9	02/103673		Valve			1
10	02/103674		Hose			1
11	02/103675		Bracket			1
12	02/103676		Hose			1
13	02/103677		Bolt			2
14	02/103750		Bolt, bolt			2
15	02/103606		Clamp			2

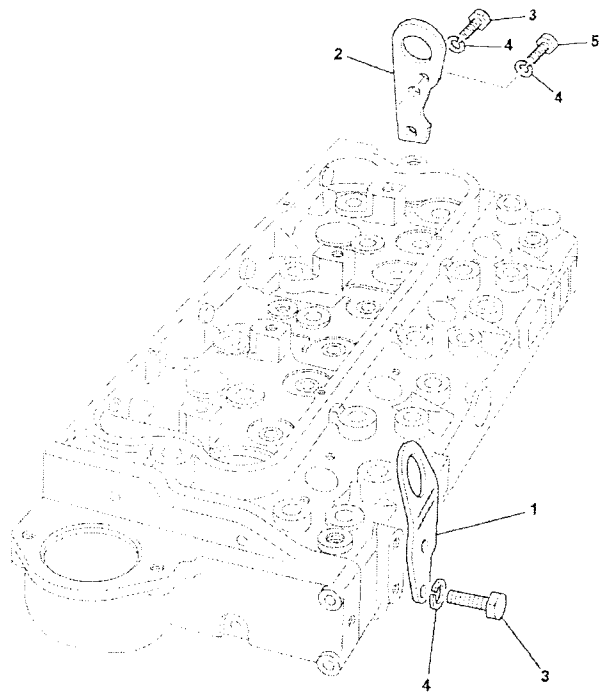

705981

	FROM	TO	FROM	TO
3C PLUS				
3C 14				

ITEM	PART NO	CHANGE NO	DESCRIPTION	REMARKS	USAGE CODE	QTY
1	02/103532		Plate, lifting			1
2	02/100157		Plate, lifting			1
3	1305/0205		Bolt			2
4	1416/0006		Washer			4
5	1305/3207		Bolt			1

L

L1 ENGINE BLOCK & SUB-ASSEMBLIES
L2 CYLINDER HEAD & SUB-ASSEMBLIES
● L3 INDUCTION & EXHAUST SYSTEM
L4 COOLING SYSTEM
L5 LUBRICATION SYSTEM
L6 FUEL SYSTEM
L7 AUXILIARY EQUIPMENT
L8 GASKET SETS

ENGLISH

L3-1-1 MANIFOLD, INDUCTION, NATURALLY ASPIRATED, P4001 8C88

L3-1-2 MANIFOLD, INDUCTION, TURBOCHARGED, P4001T 8C89

L3-2-1 MANIFOLD, EXHAUST, NATURALLY ASPIRATED, P4001 8C88

L3-2-2 MANIFOLD, EXHAUST, TURBOCHARGED, P4001T 8C89

L3-3-1 FILTER, AIR, NATURALLY ASPIRATED, P4001, 8C88

L3-3-2 FILTER, AIR, TURBOCHARGED, P4001T, 8C89

L3-4-1 SILENCER & EXTENSION, NATURALLY ASPIRATED, P4001, 8C88

L3-4-2 SILENCER & EXTENSION, TURBOCHARGED, P4001T, 8C89

L3-5-1 AIR INDUCTION HOSES, NATURALLY ASPIRATED, P4001, 8C88

L3-5-2 AIR INDUCTION HOSES, TURBOCHARGED, P4001T, 8C89

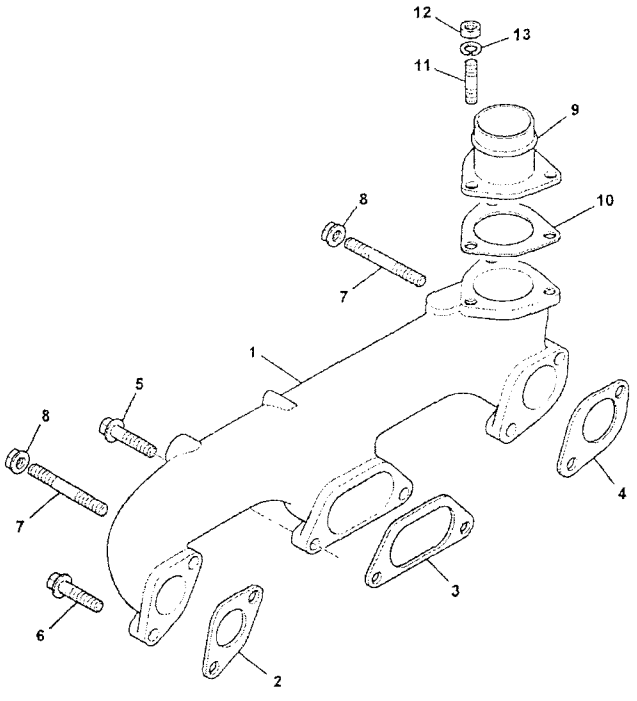

705711

	FROM	TO	FROM	TO
3C PLUS				
3C 14				

ITEM	PART NO	CHANGE NO	DESCRIPTION	REMARKS	USAGE CODE	QTY
1	02/103540		Manifold			1
2	02/101408		Gasket			1
3	02/101409		Gasket			1
4	02/101407		Gasket			1
5	02/103738		Bolt, bolt			2
6	02/103541		Bolt			2
7	02/103542		Stud			2
8	02/103544		Nut			2
9	02/103637		Connector, air inlet			1
10	02/103679		Gasket			1
11	822/00126		Stud			3
12	1340/0101		Nut			3
13	1416/0005		Washer			3

L3-1-2 MANIFOLD, INDUCTION, TURBOCHARGED, P4001T 8C89

	FROM	TO	FROM	TO
3C PLUS				
3C 14				

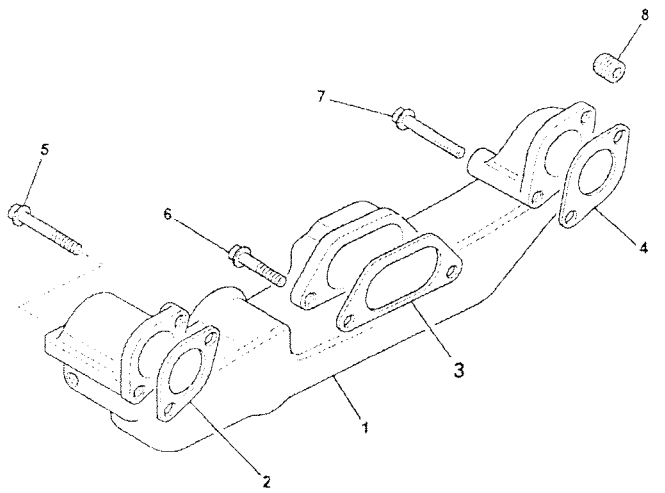

ITEM	PART NO	CHANGE NO	DESCRIPTION	REMARKS	USAGE CODE	QTY
1	02/103545		Manifold, induction			1
2	02/101408		Gasket			1
3	02/101409		Gasket			1
4	02/101407		Gasket			1
5	02/103547		Bolt			1
6	02/103548		Bolt			2
7	02/103546		Bolt			1
8	02/103515		Plug			1

705722

L3-2-1 MANIFOLD, EXHAUST, NATURALLY ASPIRATED, P4001 8C88

	FROM	TO	FROM	TO
3C PLUS				
3C 14				

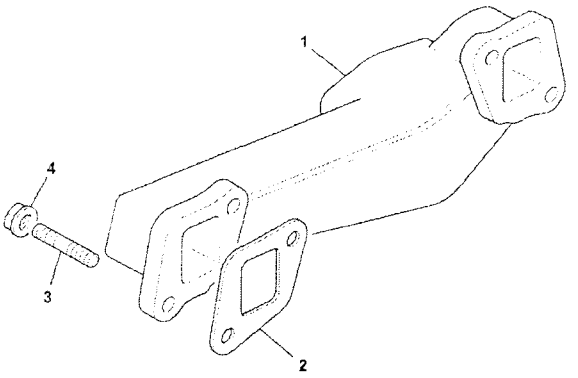

ITEM	PART NO	CHANGE NO	DESCRIPTION	REMARKS	USAGE CODE	QTY
1	02/100049		Manifold, Exhaust			1
2	02/200501		Gasket			1
3	822/00142		Stud			4
4	02/103558		Nut			4
5	02/103681		Gasket			1

705740

L3-2-2 MANIFOLD, EXHAUST, TURBOCHARGED, P4001T 8C89

	FROM	TO	FROM	TO
3C PLUS				
3C 14				

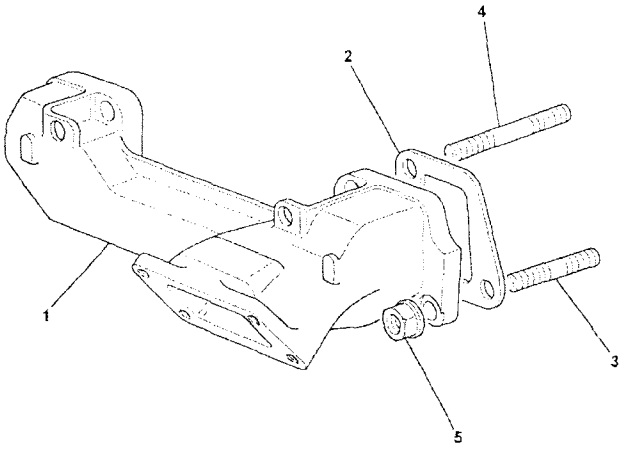

705751

ITEM	PART NO	CHANGE NO	DESCRIPTION	REMARKS	USAGE CODE	QTY
1	02/103559		Manifold, exhaust			1
2	02/200501		Gasket			2
3	822/00142		Stud			2
4	02/103542		Stud			2
5	02/103558		Nut			4

L3-3-1 FILTER, AIR, NATURALLY ASPIRATED, P4001, 8C88

	FROM	TO	FROM	TO
3C PLUS				
3C 14				

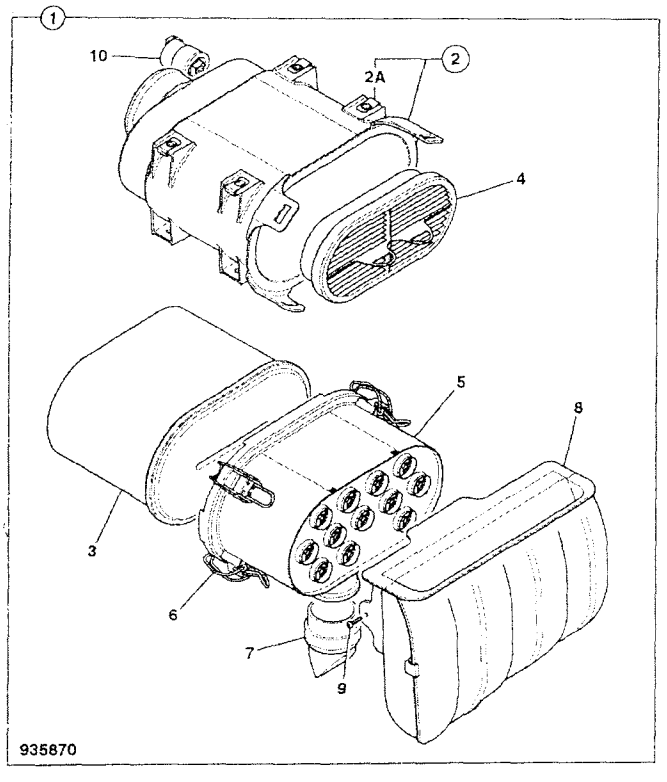

935870

ITEM	PART NO	CHANGE NO	DESCRIPTION	REMARKS	USAGE CODE	QTY
1	32/926084		Filter, air, assembly			1
2	N.S.P		:None serviced part			1
2A	32/926114		:Nut, 'U'			1
3	32/925682		:Element, air filter, main			1
4	32/925683		:Element, air filter, safety			1
5	32/926113		:Filter, pre-cleaner			1
6	32/925364		:Clip, overcentre			2
7	32/926115		:Valve, vacuator			1
8	32/925716		:Filter, air intake			1
9	32/925711		:Screw			2
10	32/925686		:Switch, vacuum sensor			1

L3-3-2 FILTER, AIR, TURBOCHARGED, P4001T, 8C89

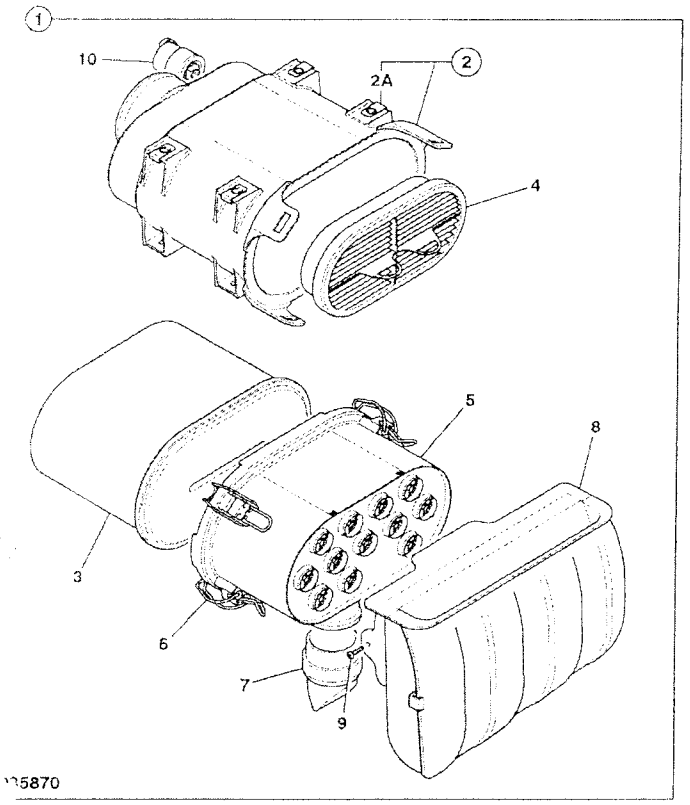

115870

	FROM	TO	FROM	TO
3C PLUS				
3C 14				

ITEM	PART NO	CHANGE NO	DESCRIPTION	REMARKS	USAGE CODE	C
1	32/926084		Filter, air, assembly			
2	N.S.P		None serviced part			
2A	32/926114		Nut, 'U'			
3	32/925682		Element, air filter, main			
4	32/925683		Element, air filter, safety			
5	32/926113		Filter, pre-cleaner			
6	32/925364		Clip, overcentre			
7	32/926115		Valve, vacuator			
8	32/925716		Filter, air intake			
9	32/925711		Screw			
10	32/925686		Switch, vacuum sensor			

L3-4-1 SILENCER & EXTENSION, NATURALLY ASPIRATED, P4001, 8C88

Our Apologies, No Illustration is Currently Available.

	FROM	TO	FROM	TO
3C PLUS				
3C 14				

ITEM	PART NO	CHANGE NO	DESCRIPTION	REMARKS	USAGE CODE	C
1	332/C2867		Silencer, nat asp, brazil			
2	332/D6707		Bracket, mounting, exhaust silencer			
3	331/55522		Bracket, exhaust mounting			
4	813/00349		Gasket			
5	1420/0008Z		Washer, Plain M10			
6	1370/0303Z		Nut, lock, M10			
7	1315/0409Z		Screw, hex. head			
8	1305/0205Z		Bolt			
9	1315/0407Z		Bolt, M10x25			
10	1305/0210Z		Bolt			
11	1305/0108Z		Bolt			
12	331/53874		Pipe, exhaust extension			
13	814/10177		Spring, extension			

	FROM	TO	FROM	TO
3C PLUS				
3C 14				

Our Apologies, No Illustration is Currently Available.

ITEM	PART NO	CHANGE NO	DESCRIPTION	REMARKS	USAGE CODE	QTY
1	332/C2872		Silencer, exhaust, turbo			1
2	332/D6707		Bracket, mounting, exhaust silencer			1
3	331/55522		Bracket, exhaust mounting			1
4	813/00349		Gasket			1
5	1420/0008Z		Washer, Plain M10			8
6	1370/0303Z		Nut, lock, M10			2
7	1315/0409Z		Screw, hex. head			2
8	1305/0205Z		Bolt			2
9	1315/0407Z		Bolt, M10x25			2
10	1305/0210Z		Bolt			1
11	1305/0108Z		Bolt			2
12	331/53874		Pipe, exhaust extension			1
13	814/10177		Spring, extension			2

	FROM	TO	FROM	TO
3C PLUS				
3C 14				

Our Apologies, No Illustration is Currently Available.

ITEM	PART NO	CHANGE NO	DESCRIPTION	REMARKS	USAGE CODE	QTY
1			'See Remark'	Induction filter, see index L3-3-1		1
2	1315/0205Z		Bolt			4
3	1420/0006Z		Washer M6			4
4	332/C2994		Hose, induction n/asp, international engine			1
5	2201/0016		Clip, jubilee			1
6	2201/0015		Clip, jubilee			1

	FROM	TO	FROM	TO
3C PLUS				
3C 14				

Our Apologies, No Illustration is Currently Available.

ITEM	PART NO	CHANGE NO	DESCRIPTION	REMARKS	USAGE CODE	QTY
1			'See Remark'	Induction filter, see L3-3-2		1
2	1315/0205Z		Bolt			4
3	1420/0006Z		Washer, M6			4
4	332/C2878		Hose, induction turbo, international engine			1
5	2201/0016		Clip, jubilee			1
6	2201/0014		Clip, jubilee			1
7	2201/0007		Clip, jubilee			1
10	128/15558		Guide, hose			1

L

L1 ENGINE BLOCK & SUB-ASSEMBLIES
L2 CYLINDER HEAD & SUB-ASSEMBLIES
L3 INDUCTION & EXHAUST SYSTEM
● L4 COOLING SYSTEM
L5 LUBRICATION SYSTEM
L6 FUEL SYSTEM
L7 AUXILIARY EQUIPMENT
L8 GASKET SETS

ENGLISH

L4-1-1 PUMP, WATER, NAT ASP & TURBO, P4001/P4001T 8C88/8C89
L4-2-1 THERMOSTAT, HOUSING, INLET & OUTLET, P4001/P4001T NAT ASP & TURBO 8C88/8C89
L4-3-1 RADIATOR, FITTINGS & MOUNTINGS, 2WS - 18" FAN
L4-3-2 RADIATOR, FITTINGS & MOUNTINGS, 2WS - 20" FAN
L4-4-1 RADIATOR & HOSES, 2WS - 18" FAN
L4-4-2 RADIATOR & HOSES, 2WS - 20" FAN

L4-1-1 PUMP, WATER, NAT ASP & TURBO, P4001/P4001T 8C88/8C89

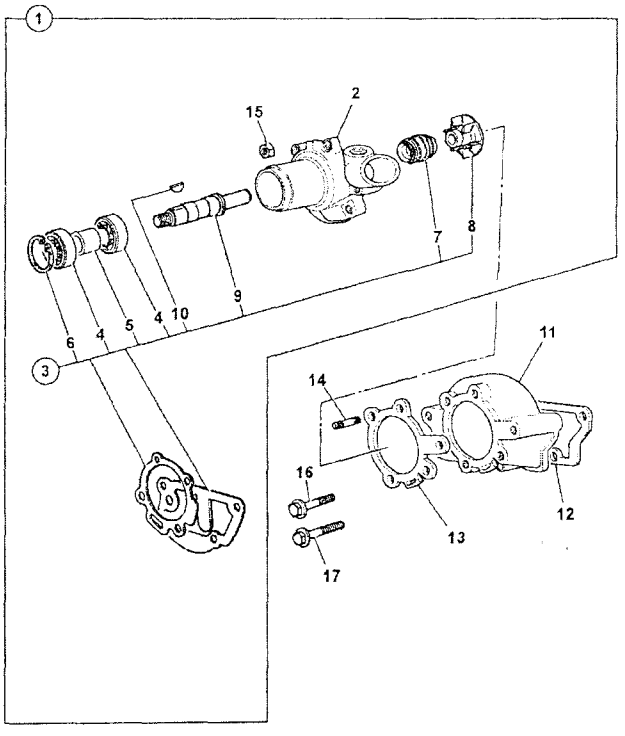

702162

	FROM	TO	FROM	TO
3C PLUS				
3C 14				

ITEM	PART NO	CHANGE NO	DESCRIPTION	REMARKS	USAGE CODE	QTY
1	02/103611		Pump, water			1
2	NSP		:None serviced part	Front body		1
3	*02/103758		:Kit, repair			1
4	NSP		:None serviced part	Bearing		2
5	NSP		:None serviced part	Spacer		1
6	2203/1055		:Circlip, internal			1
7	NSP		:None serviced part	Seal		1
8	NSP		:None serviced part	Impeller		1
9	*NSP		:None serviced part	Shaft		1
10	*02/100096		:Key			1
11	*02/103613		:Body, rear			1
12	*02/103751		:Gasket, water pump			1
13	*02/103752		:Gasket, water pump			1
14	02/103614		:Stud			4
15	*1340/0101		:Nut			4
16	*1305/3226		Bolt, L=1.3/4"			2
17	*1305/3218		Bolt			2

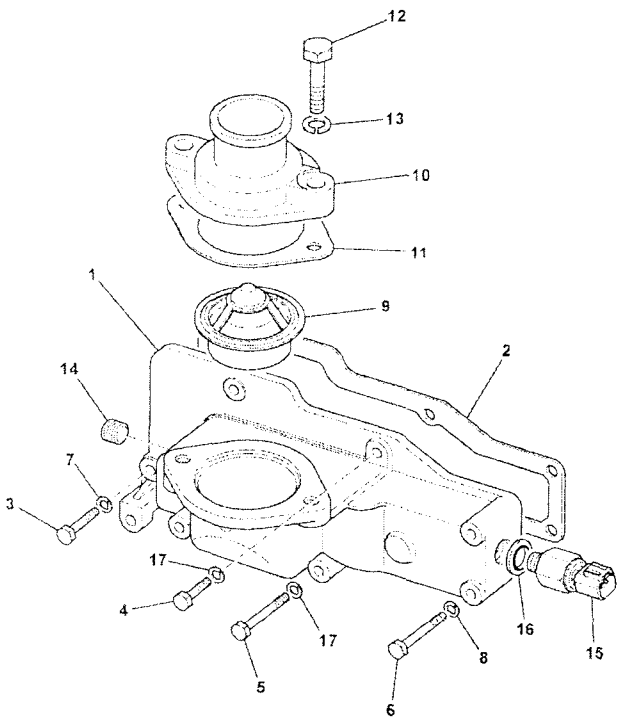

705663

	FROM	TO	FROM	TO
3C PLUS				
3C 14				

ITEM	PART NO	CHANGE NO	DESCRIPTION	REMARKS	USAGE CODE	QTY
1	02/103535		Housing			1
2	02/103766		Gasket, thermostat			1
3	1305/3124		Bolt			2
4	1305/3207		Bolt			2
5	1305/3107		Bolt			1
6	1305/3216		Bolt			2
7	1416/0006		Washer			1
8	1416/0006		Washer			1
9	02/103536		Thermostat			1
10	02/103537		Connector			3
11	02/103538		Gasket			1
12	02/103736		Bolt, bolt			2
13	1416/0006		Washer			2
14	*02/103602		Plug			1
15	*716/30126		Sender, water temperature			1
16	*02/103604		Washer			1
17	1416/0005		Washer			3

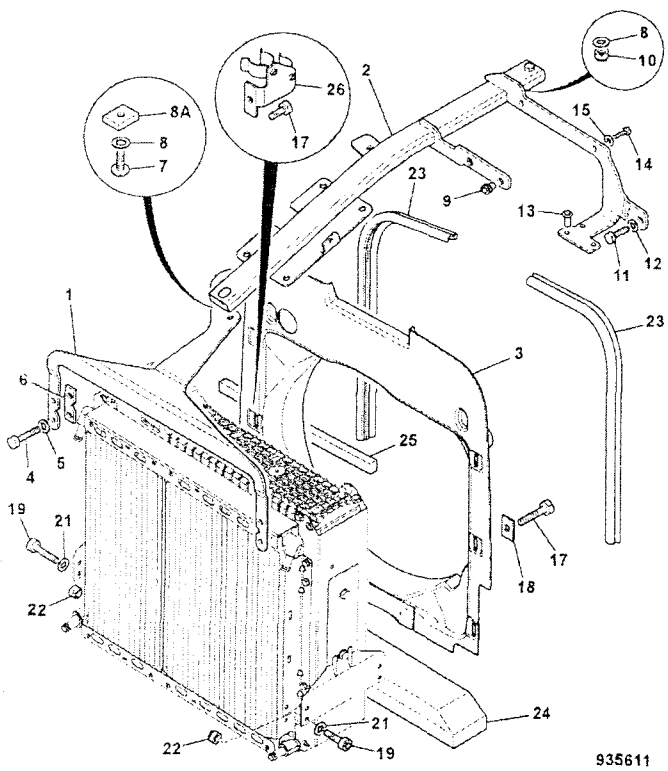

935611

	FROM	TO	FROM	TO
3C PLUS				
3C 14				

ITEM	PART NO	CHANGE NO	DESCRIPTION	REMARKS	USAGE CODE	QTY
1	332/C8208		Bracket, centre beam mounting, front 2ws			1
2	128/C1776		Beam, centre mounting			1
3	346/90037		Cowling, fan cowl 18" brazil			1
4	1315/0307Z		Screw, M8 X 25			4
5	1420/0007Z		Washer, plain, M8			4
6	331/48338		Plate, spacer			2
7	826/01616		Screw, M10 x 25mm, hex/ skt button head			1
8	1412/0003Z		Washer			1
8A	332/D5851		Block, clamping			1
9	826/01105		Nut, rivet,M10 open ended			2
10	1370/0303Z		Nut, lock, M10			1
11	1315/0308Z		Screw, M8x30			1
12	1420/0007Z		Washer, plain, M8			1
13	826/01810		Nut, rivet, M6 open end, for 5.5 to 8mm plate			3
14	1315/0207Z		Screw, M6 x 25mm long			2
15	1411/0001Z		Washer			4
17	1315/0305Z		Screw, M8 x 20mm long			6
18	123/06362		Washer, spreader			5
19	1391/3409Z		Capscrew, M10 x 35mm			4
21	1411/0004Z		Washer			8

L4-3-1 RADIATOR, FITTINGS & MOUNTINGS, 2WS - 18" FAN

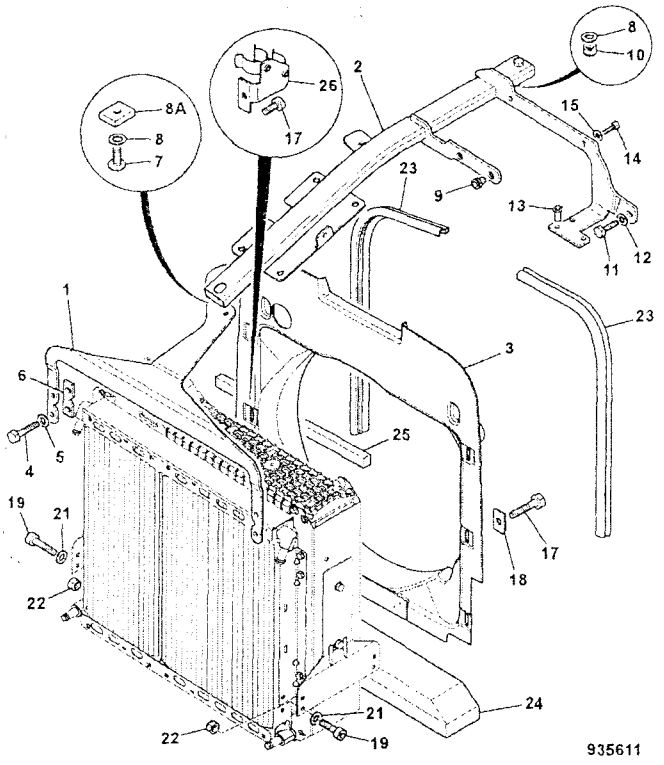

935611

ITEM	PART NO	CHANGE NO	DESCRIPTION	REMARKS	USAGE CODE	QTY
22	1370/0303Z		Nut, lock, M10			4
23	926/51301		Strip, sealing, L=640mm			2
24	331/36060		Seal, anti-recirculation			1
25	331/52016		Seal, anti-recirculation			2
26	128/15495		Bracket, hose clip, assembly			1

L4-3-2 RADIATOR, FITTINGS & MOUNTINGS, 2WS - 20" FAN

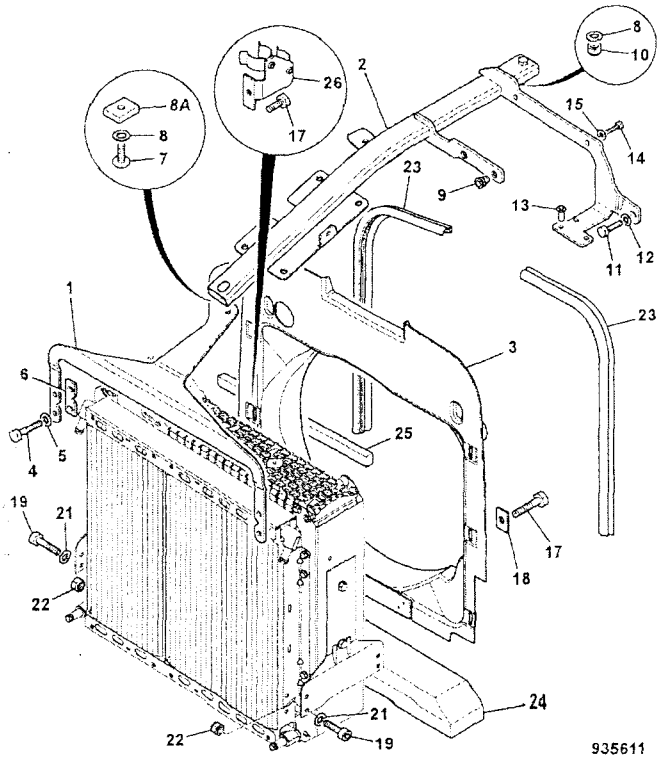

935611

	FROM	TO	FROM	TO
3C PLUS				
3C 14				

ITEM	PART NO	CHANGE NO	DESCRIPTION	REMARKS	USAGE CODE	QTY
1	332/C8208		Bracket, centre beam mounting, front 2ws			1
2	128/C1776		Beam, centre mounting			1
3	332/C1667		Cowling, fan 20inch 2ws			1
4	1315/0307Z		Screw, M8 X 25			4
5	1420/0007Z		Washer, plain, M8			4
6	331/46338		Plate, spacer			2
7	826/01616		Screw, M10 x 25mm, hex/ skt button head			1
8	1412/0003Z		Washer			1
8A	332/D5851		Block, clamping			1
9	826/01105		Nut, rivet,M10 open ended			2
10	1370/0303Z		Nut, lock, M10			1
11	1315/0308Z		Screw, M8x30			1
12	1420/0007Z		Washer, plain, M8			1
13	826/01810		Nut, rivet, M6 open end, for 5.5 to 8mm plate			3
14	1315/0207Z		Screw, M6 x 25mm long			2
15	1411/0001Z		Washer			4
17	1315/0305Z		Screw, M8 x 20mm long			6
18	123/06362		Washer, spreader			5
19	1391/3409Z		Capscrew, M10 x 35mm			4
21	1411/0004Z		Washer			8

L4-3-2 RADIATOR, FITTINGS & MOUNTINGS, 2WS - 20" FAN

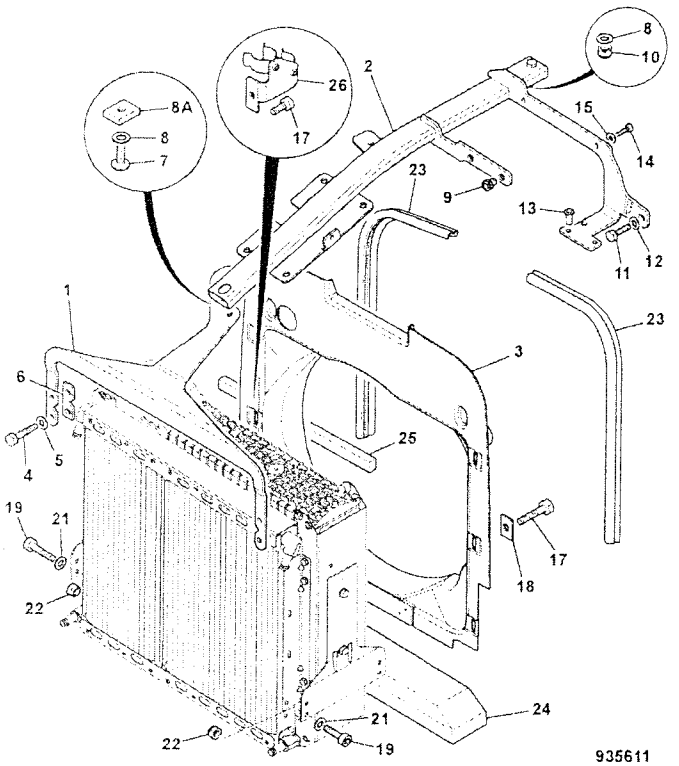

935611

ITEM	PART NO	CHANGE NO	DESCRIPTION	REMARKS	USAGE CODE	QTY
22	1370/0303Z		Nut, lock M10			4
23	926/51301		Strip, sealing, L=640mm			2
24	331/36060		Seal, anti-recirculation			1
25	331/52016		Seal, anti-recirculation			2
26	128/D5873		Clip, hose			1

L4-4-1 RADIATOR & HOSES, 2WS - 18" FAN

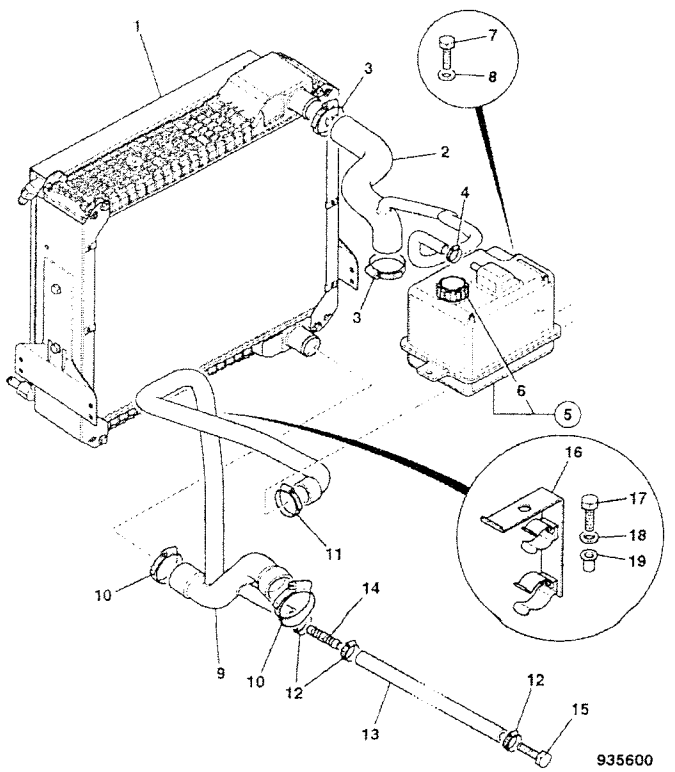

935600

	FROM	TO	FROM	TO
3C PLUS				
3C 14				

ITEM	PART NO	CHANGE NO	DESCRIPTION	REMARKS	USAGE CODE	QTY
1	128/14326		Cooler, assembly 5row, 2ws non CAC	For Service Parts, See frame V47-11-1		1
2	332/C2879		Hose, top P600 brazil			1
3	2201/0011		Clip, jubilee			2
4	2201/0005		Clip, jubilee			1
5	128/15480		Tank, expansion no sensor, assembly			1
6	477/00223		Cap, Expansion Bottle			1
7	1315/0310Z		Bolt, M8x40			2
8	1420/0007Z		Washer, plain, M8			2
9	332/C2880		Hose, bottom P600 brazil			1
10	2201/0012		Clip, jubilee			2
11	2201/0010		Clip, jubilee			1
12	2201/0006		Clip, jubilee			1
13	.		'See Remark'	See cab heater circuit		1
14	650/10166		Adapter, hose connecter, 16mm OD			1
15	1315/3714Z		Bolt			1
16	128/15558		Guide, hose			1
17	1315/0307Z		Screw, M8 X 25			1
18	1420/0007Z		Washer, plain, M8			1
19	826/01102		Nut, rivet,M8 open ended			1

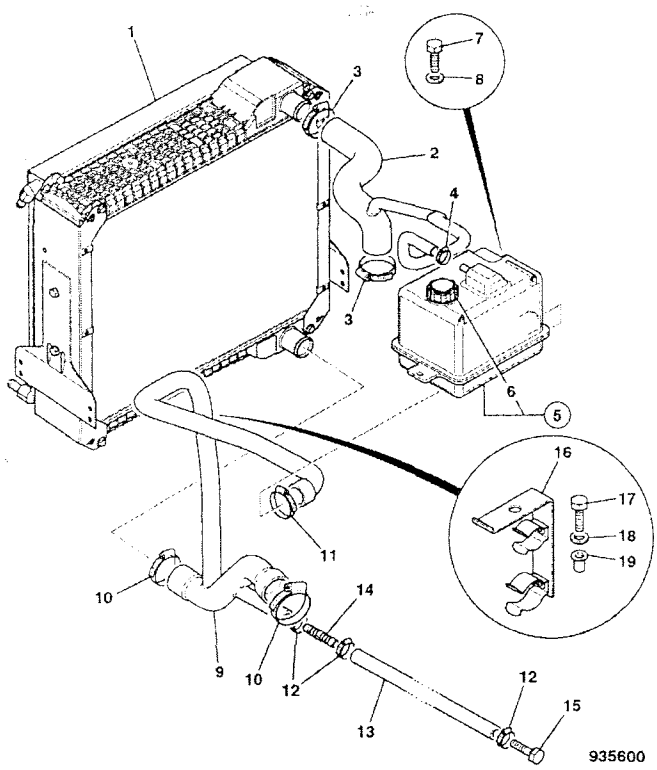

	FROM	TO	FROM	TO
3C PLUS				
3C 14				

ITEM	PART NO	CHANGE NO	DESCRIPTION	REMARKS	USAGE CODE	QTY
1	128/14326		Cooler, assembly 5row, 2ws non CAC	For Service Parts, See frame V47-11-1		1
2	834/11380		Hose, radiaor top, 2wsON INSERT AT JUNC			1
3	2201/0011		Clip, jubilee			2
4	2201/0005		Clip, jubilee			1
5	128/15480		Tank, expansion no sensor, assembly			1
6	477/00223		Cap, Expansion Bottle			1
7	1315/0310Z		Bolt, M8x40			2
8	1420/0007Z		Washer, plain, M8			2
9	128/C8166		Hose, bottom 2ws tier @#			1
10	2201/0012		Clip, jubilee			2
11	2201/0010		Clip, jubilee			1
12	2201/0006		Clip, jubilee			1
13	.		'See Remark'	See cab heater circuit		1
14	650/10166		Adapter, hose connecter, 16mm OD			1
15	1315/3714Z		Bolt			1
16	128/15558		Guide, hose			1
17	1315/0307Z		Screw, M8 X 25			1
18	1420/0007Z		Washer, plain, M8			1

L4-4-2 RADIATOR & HOSES, 2WS - 20" FAN

9812/0080U
ISSUE 1

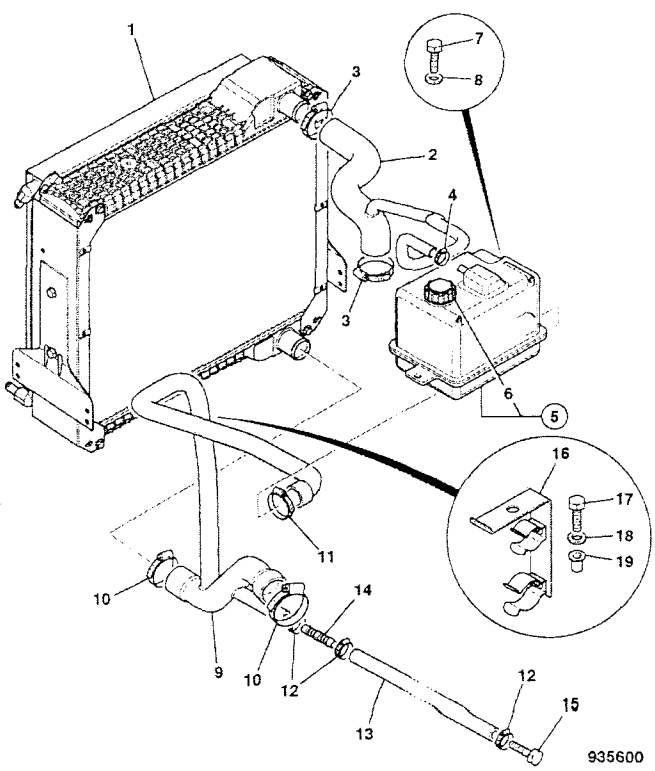

ITEM	PART NO	CHANGE NO	DESCRIPTION	REMARKS	USAGE CODE	QTY
19	826/01102		Nut, rivet,M8 open ended			1

L

L1 ENGINE BLOCK & SUB-ASSEMBLIES
L2 CYLINDER HEAD & SUB-ASSEMBLIES
L3 INDUCTION & EXHAUST SYSTEM
L4 COOLING SYSTEM
● L5 LUBRICATION SYSTEM
L6 FUEL SYSTEM
L7 AUXILIARY EQUIPMENT
L8 GASKET SETS

ENGLISH

L5-1-1 SUMP, OIL PUMP, & FITTINGS NAT ASP, P4001 8C88
L5-1-2 SUMP, OIL PUMP, & FITTINGS TURBO, P4001T 8C89
L5-2-1 PUMP, OIL, & RELIEF VALVE, P4001 NAT ASP 8C88
L5-2-2 PUMP, OIL, & RELIEF VALVE, P4001T TURBO 8C89
L5-3-1 PISTON COOLING JETS, TURBO, P4001T 8C89
L5-4-1 FILTER, OIL & COOLER, NAT ASP & TURBO, P4001/P4001T 8C88/8C89

L5-1-1 SUMP, OIL PUMP, & FITTINGS NAT ASP, P4001 8C88

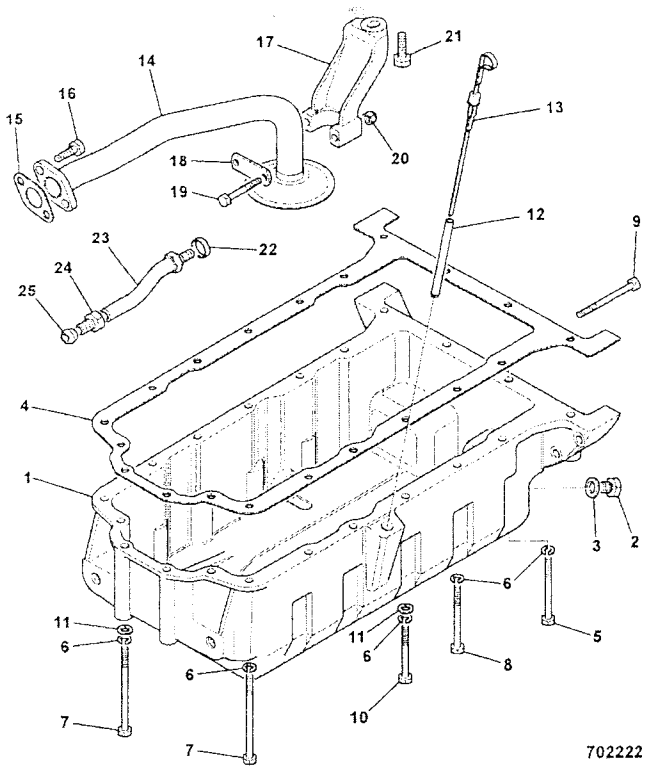

	FROM	TO	FROM	TO
3C PLUS				
3C 14				

ITEM	PART NO	CHANGE NO	DESCRIPTION	REMARKS	USAGE CODE	QTY
1	02/103504		Sump			1
2	02/103499		Plug			1
3	02/103501		Washer			1
4	02/100060		Gasket, oil sump			1
5	1305/3127Z		Bolt			2
6	1416/0005		Washer			20
7	1305/3136		Bolt			6
8	1305/3124		Bolt			11
10	02/103726		Bolt, bolt			1
11	1410/0002		Washer			9
12	02/103502		Tube, dipstick			1
13	02/103771		Dipstick, dipstick			1
14	02/103728		Pipe, suction			1
15	02/103507		Gasket			1
16	02/103506		Bolt			2
17	02/103649		Bracket, support			1
18	02/103646		Plate			1
19	02/103657		Bolt			2
20	02/103654		Nut			2
21	02/103450		Bolt			1
22	02/103645		O Ring			2
23	02/103647		Pipe, oil suction			1

JCB L5-1-1 SUMP, OIL PUMP, & FITTINGS NAT ASP, P4001 8C88
9812/0080U
ISSUE 1

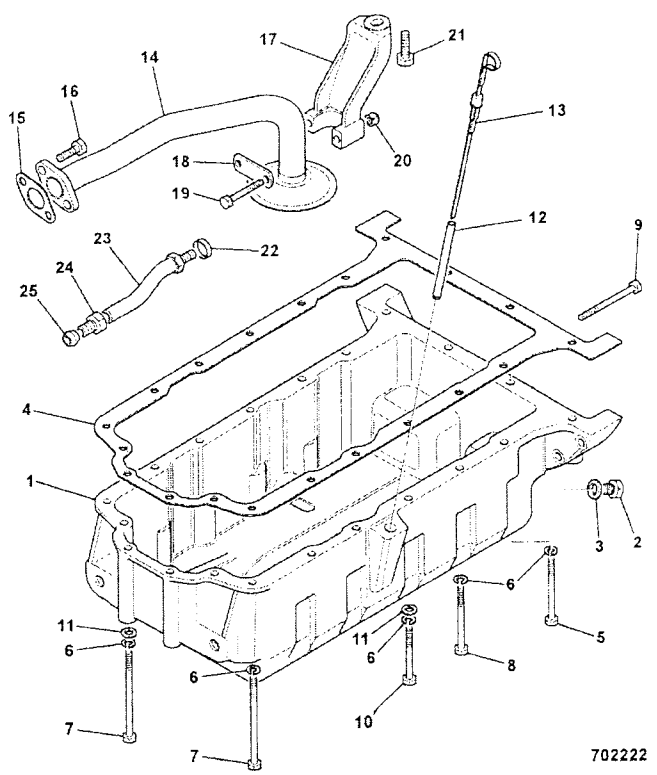

ITEM	PART NO	CHANGE NO	DESCRIPTION	REMARKS	USAGE CODE	QTY
24	02/100316		Nut			1
25	02/103729		Olive, olive			1

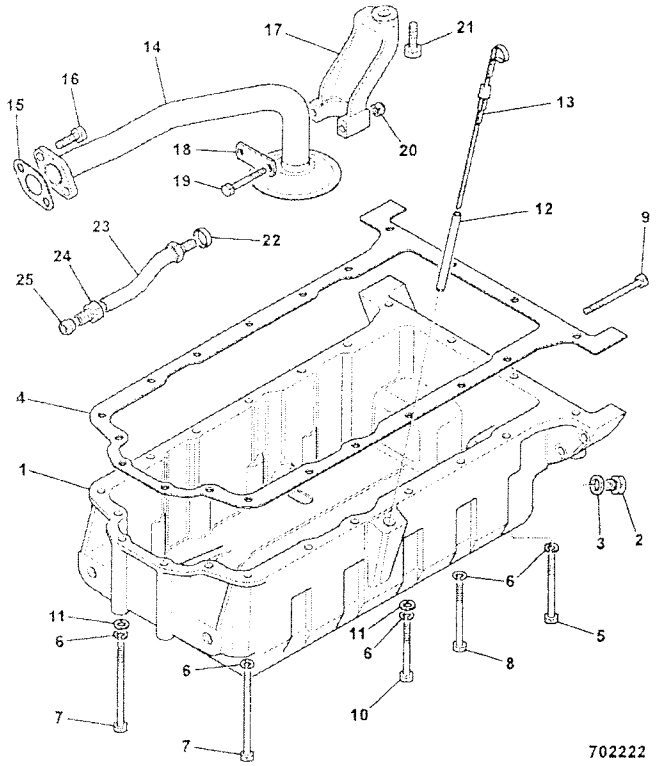

	FROM	TO	FROM	TO
3C PLUS				
3C 14				

ITEM	PART NO	CHANGE NO	DESCRIPTION	REMARKS	USAGE CODE	QTY
1	02/103504		Sump			1
2	02/103499		Plug			1
3	02/103501		Washer			1
4	02/100060		Gasket, oil sump			1
5	1305/3127Z		Bolt			2
6	1416/0005		Washer			20
7	1305/3136		Bolt			6
8	1305/3124		Bolt			11
10	02/103726		Bolt, bolt			1
11	1410/0002		Washer			9
12	02/103502		Tube, dipstick			1
13	02/103505		Dipstick			1
14	02/103650		Tube, oil suction			1
15	02/100873		Gasket			1
16	02/103506		Bolt			2
17	02/103649		Bracket, support			1
18	02/103646		Plate			1
19	02/103657		Bolt			2
20	02/103654		Nut			2
21	02/103450		Bolt			1
22	02/103645		O Ring			2
23	02/103644		Tube, oil suction			1

L5-1-2 SUMP, OIL PUMP, & FITTINGS TURBO, P4001T 8C89

9812/0080U
ISSUE 1

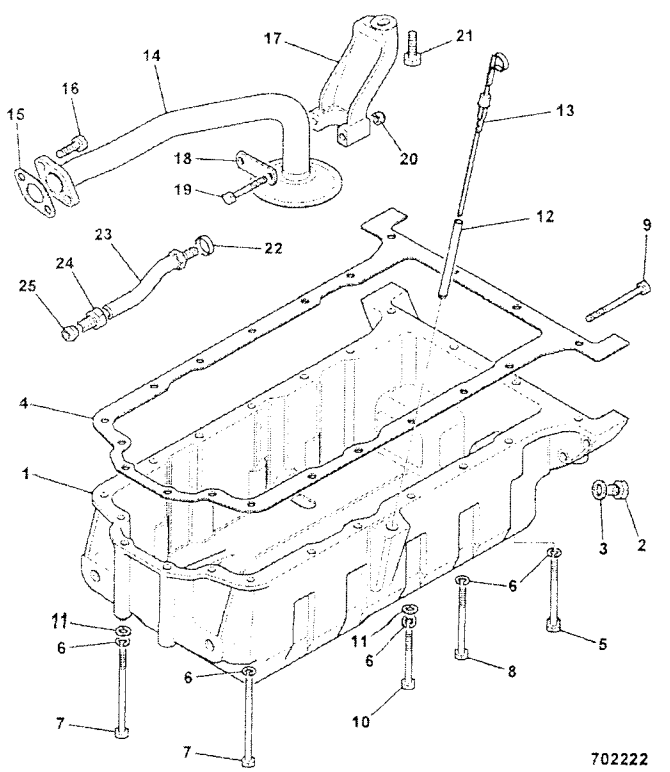

ITEM	PART NO	CHANGE NO	DESCRIPTION	REMARKS	USAGE CODE	QTY
24	02/100316		Nut			1
25	02/103729		Olive, olive			1

L5-2-1 PUMP, OIL, & RELIEF VALVE, P4001 NAT ASP 8C88

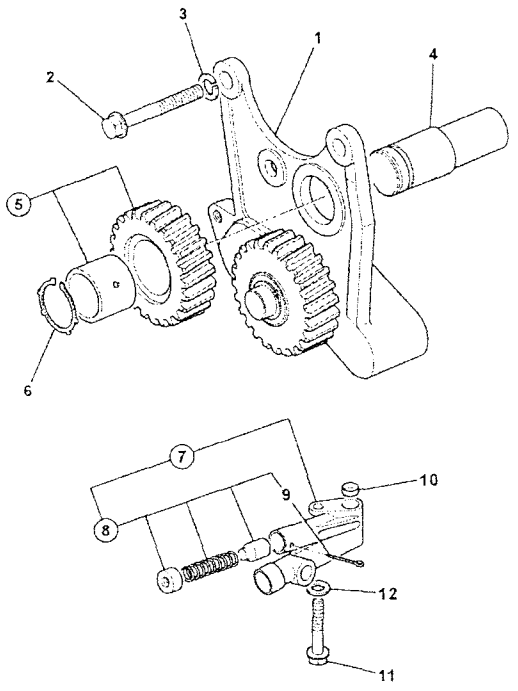

705621

	FROM	TO	FROM	TO
3C PLUS				
3C 14				

ITEM	PART NO	CHANGE NO	DESCRIPTION	REMARKS	USAGE CODE	QTY
1	02/103703		Pump, oil			1
2	02/103450		Bolt			3
3	1416/0005Z		Washer, spring			3
4	02/100161		Shaft, idler, oil pump			1
5	02/103451		Gear			1
6	02/103452		Circlip			1
7	02/103643		Valve. Relief			1
8	02/103454		:Kit, repair			1
9	2103/0710		:Pin, split			1
10	02/100319		Thimble			1
11	02/103458		Bolt			1
12	1416/0006		Washer			1

L5-2-2 PUMP, OIL, & RELIEF VALVE, P4001T TURBO 8C89

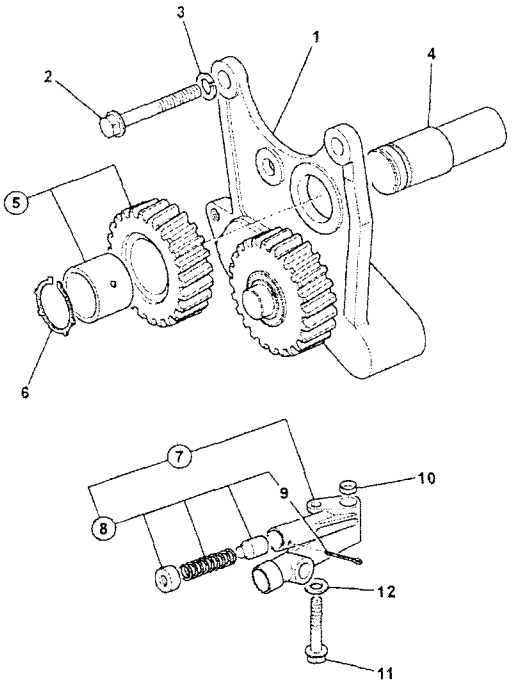

705621

	FROM	TO	FROM	TO
3C PLUS				
3C 14				

ITEM	PART NO	CHANGE NO	DESCRIPTION	REMARKS	USAGE CODE	QTY
1	02/103704		Pump, oil			1
2	02/103450		Bolt			3
3	1416/0005Z		Washer, spring			3
4	02/100161		Shaft, idler, oil pump			1
5	02/103451		Gear			1
6	02/103452		Circlip			1
7	02/103453		Valve, relief			1
8	02/103454		:Kit, repair			1
9	2103/0710		:Pin, split			1
10	02/100319		Thimble			1
11	02/103458		Bolt			1
12	1416/0006		Washer			1

	FROM	TO	FROM	TO
3C PLUS				
3C 14				

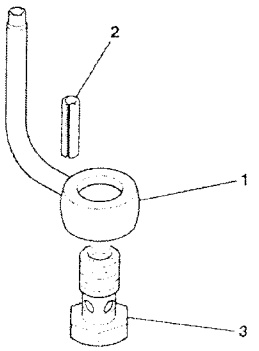

ITEM	PART NO	CHANGE NO	DESCRIPTION	REMARKS	USAGE CODE	QTY
1	02/103459		Pipe, piston cooling			1
2	2102/0403		Pin, tension			1
3	02/103460		Valve			1

706110

	FROM	TO	FROM	TO
3C PLUS				
3C 14				

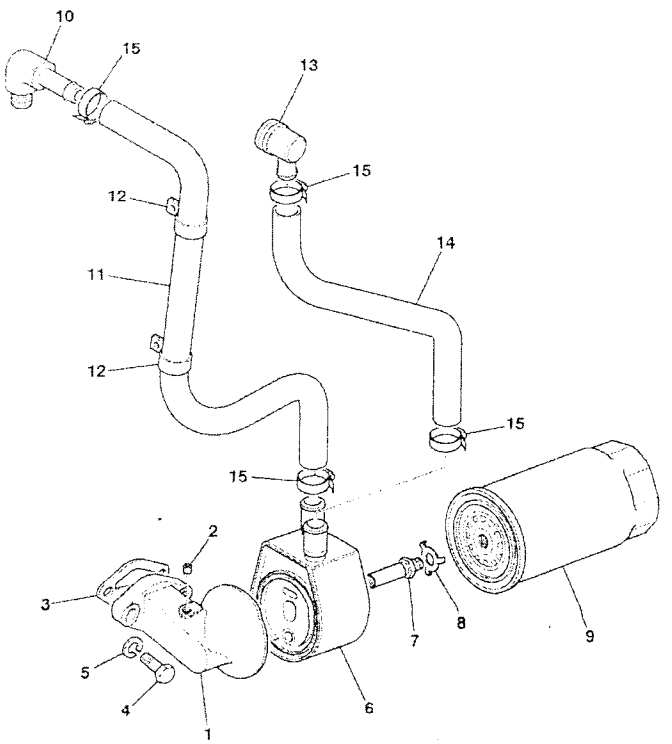

ITEM	PART NO	CHANGE NO	DESCRIPTION	REMARKS	USAGE CODE	QTY
1	02/103730		Head, filter			1
2	02/103515		Plug			1
3	02/103514		Gasket			1
4	1305/3308		Bolt			2
5	823/00280		Washer, Spring			1
6	02/103516		Cooler, oil			1
7	02/103518		Connector			1
8	02/103517		Washer, tab washer			1
9	02/103513		Element, oil filter			1
10	02/103731		Elbow, elbow			1
11	02/103732		Pipe, pipe			1
12	02/103521		Clip			2
13	02/103522		Adapter, elbow			1
14	02/103520		Hose			1
15	02/103524		Clamp			4

705771

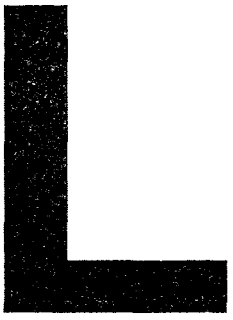

L1 ENGINE BLOCK & SUB-ASSEMBLIES
L2 CYLINDER HEAD & SUB-ASSEMBLIES
L3 INDUCTION & EXHAUST SYSTEM
L4 COOLING SYSTEM
L5 LUBRICATION SYSTEM
● L6 FUEL SYSTEM
L7 AUXILIARY EQUIPMENT
L8 GASKET SETS

ENGLISH

L6-1-1 PUMP, FUEL INJECTION, NAT ASP, P4001 8C88
L6-1-2 PUMP, FUEL INJECTION, TURBO, P4001T 8C89
L6-2-1 INJECTORS, FUEL, & INJECTION PIPES, P4001 NAT ASP 8C88
L6-2-2 INJECTORS, FUEL, & INJECTION PIPES, P4001T TURBO 8C89
L6-3-1 FUEL PIPES, FUEL FEED & RETURN, P4001, NAT/ ASPIRATED 8C88
L6-3-2 FUEL PIPES, FUEL FEED & RETURN, P4001T, TURBO 8C89
L6-4-1 FUEL HEATER & PIPE, NAT ASP & TURBO, P4001 P4001T, 8C88/8C89
L6-5-1 FUEL PIPES, FUEL TANK TO FILTER, P4001/ P4001T NAT ASP & TURBO 8C88/8C89
L6-6-1 FILTER,30 MICRON, FUEL SEDIMENT, WITH HAND PRIMER

L6-1-1 PUMP, FUEL INJECTION, NAT ASP, P4001 8C88

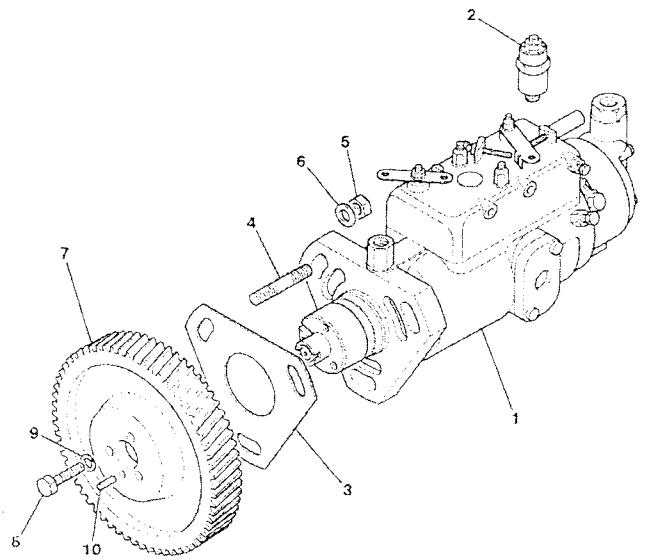

	FROM	TO	FROM	TO
3C PLUS				
3C 14				

ITEM	PART NO	CHANGE NO	DESCRIPTION	REMARKS	USAGE CODE	QTY
1	17/920600		Pump, fuel injection			1
2	716/30199		.Solenoid, engine stop			1
3	02/103552		Gasket			1
4	02/103553		Stud			3
5	02/103554		Nut			3
6	02/101686		Washer			3
7	02/103767		Gear, injection pump			1
8	1305/0104		Bolt			3
9	1416/0005		Washer			3
10	02/130146		Dowel			1

705580

L6-1-2 PUMP, FUEL INJECTION, TURBO, P4001T 8C89

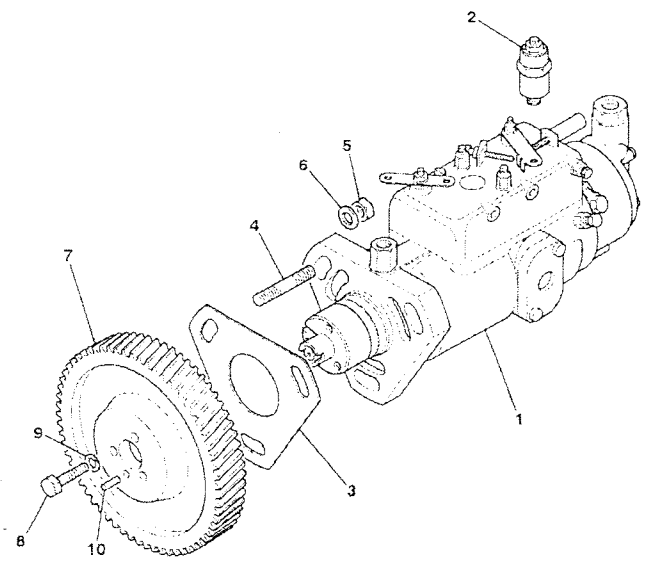

	FROM	TO	FROM	TO
3C PLUS				
3C 14				

ITEM	PART NO	CHANGE NO	DESCRIPTION	REMARKS	USAGE CODE	QTY
1	17/920700		Pump, fuel injection			1
2	716/30199		.Solenoid, engine stop			1
3	02/103552		Gasket			1
4	02/103553		Stud			3
5	02/103554		Nut			3
6	02/101686		Washer			3
7	02/103556		Gear			1
8	1305/0104		Bolt			3
9	1416/0005		Washer			3
10	02/130146		Dowel			1

705580

L6-2-1 INJECTORS, FUEL, & INJECTION PIPES, P4001 NAT ASP 8C88

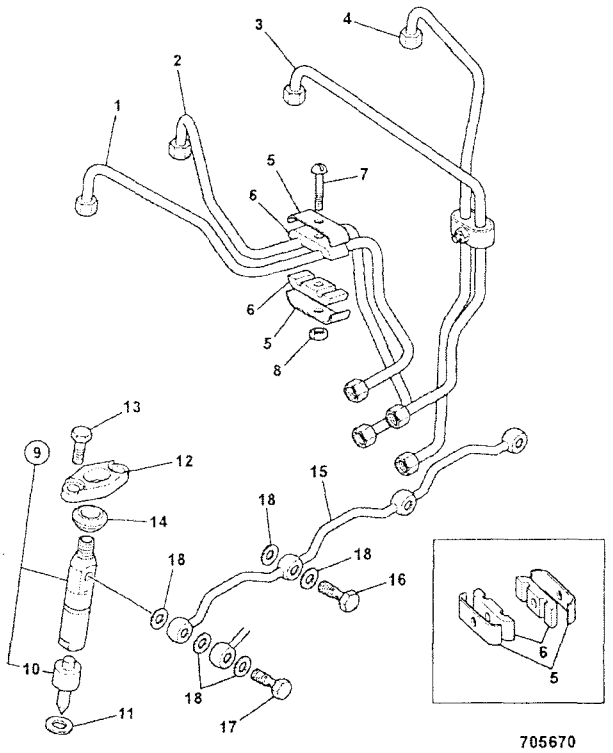

705670

	FROM	TO	FROM	TO
3C PLUS				
3C 14				

ITEM	PART NO	CHANGE NO	DESCRIPTION	REMARKS	USAGE CODE	QTY
1	02/103584		Pipe, 1 cyl			1
2	02/103585		Pipe, 2 cyl			1
3	02/103586		Pipe, 3 cyl			1
4	02/103587		Pipe, 4 cyl			1
5	02/103746		Clip, clip			4
6	02/103588		Damper			4
7	02/103747		Bolt, bolt			2
8	02/103590		Nut			2
9	17/920900		Atomiser, assembly			4
10	17/920901		Nozzle			1
11	02/103589		Washer			4
12	02/101392		Clamp			4
13	1305/3108		Bolt			8
14	02/103591		Seal			4
15	02/101391		Pipe, assembly			1
16	02/100290		Bolt			3
17	02/103576		Bolt			1
18	02/103577		Washer			9

L6-2-2 INJECTORS, FUEL, & INJECTION PIPES, P4001T TURBO 8C89

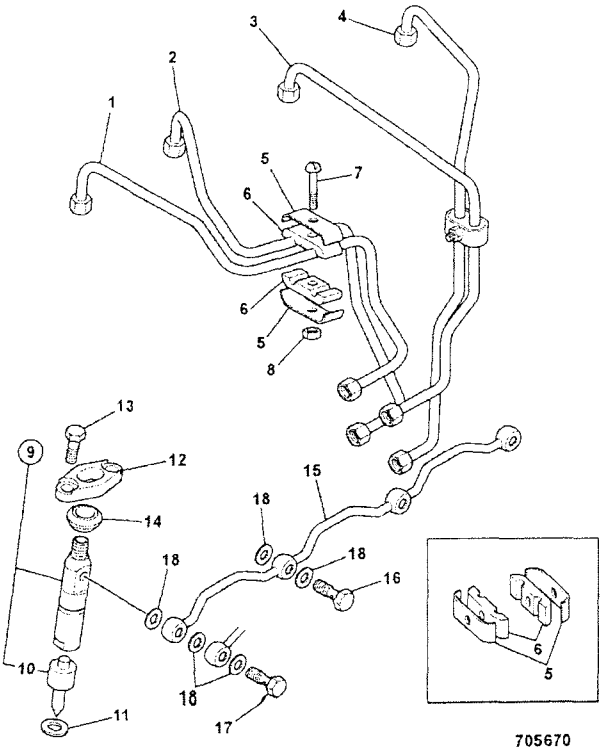

705670

	FROM	TO	FROM	TO
3C PLUS				
3C 14				

ITEM	PART NO	CHANGE NO	DESCRIPTION	REMARKS	USAGE CODE	QTY
1	02/103592		Pipe, 1 cyl			1
2	02/103593		Pipe, 2 cyl			1
3	02/103594		Pipe, 3 cyl			1
4	02/103745		Pipe, fuel injection			1
5	02/103746		Clip, clip			4
6	02/103588		Damper			4
7	02/103747		Bolt, bolt			2
8	02/103590		Nut			2
9	17/921000		Atomiser, assembly			4
10	17/920901		Nozzle			1
11	02/103589		Washer			4
12	02/101392		Clamp			4
13	1305/3108		Bolt			8
14	02/103591		Seal			4
15	02/101391		Pipe, assembly			1
16	02/100290		Bolt			3
17	02/103576		Bolt			1
18	02/103577		Washer			9

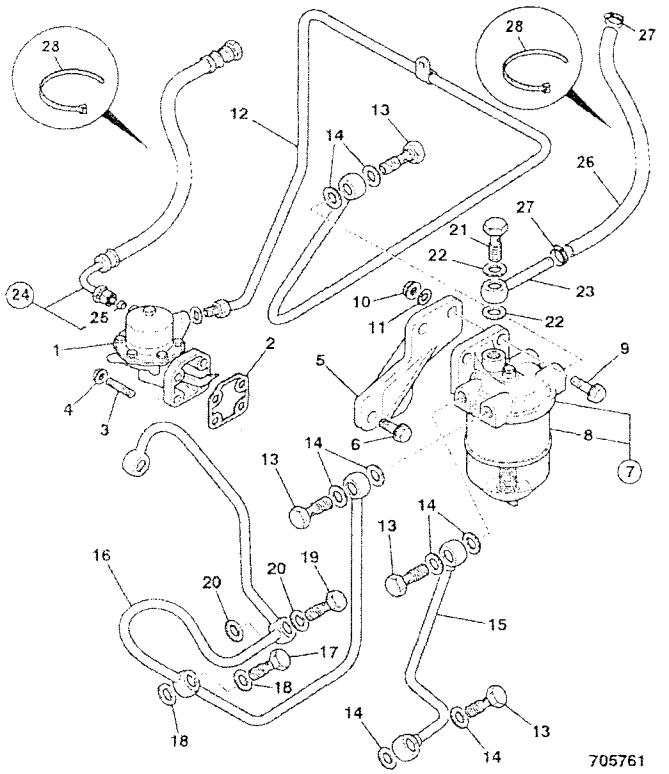

	FROM	TO	FROM	TO
3C PLUS				
3C 14				

ITEM	PART NO	CHANGE NO	DESCRIPTION	REMARKS	USAGE CODE	QTY
1	17/920800		Pump, fuel lift			1
2	02/103740		Gasket, gasket			1
3	02/103562		Stud			4
4	02/103554		Nut			4
5	02/103564		Bracket			1
6	02/103578		Bolt			2
7	02/103741		Filter, filter			1
8	32/925587		Element, fuel filter			1
9	02/103548		Bolt			2
10	02/103544		Nut			2
11	.		'See Remark'	No longer required		
12	02/103571		Pipe, fuel, I/pump to f/filter			1
13	02/103569		Bolt, banjo			4
14	02/103570		Washer			8
15	02/103568		Pipe, fuel, filter to inj/pump			1
16	02/103572		Pipe, fuel, inj/pump to f/ filter			1
17	02/103573		Bolt, Banjo			1
18	02/103575		Washer			2
19	02/103580		Bolt, banjo			1
20	02/103575		Washer			2
21	02/103742		Bolt, bolt			1
22	02/103570		Washer			2

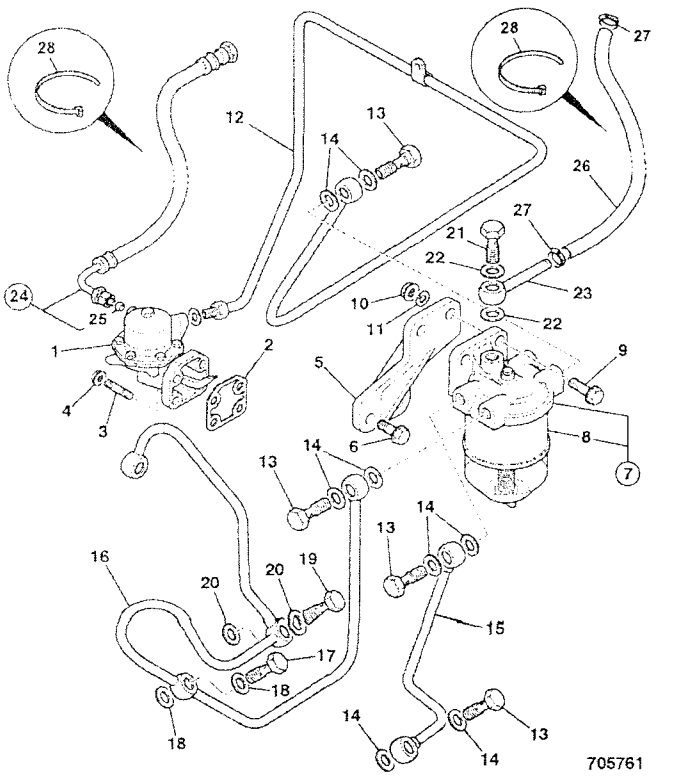

ITEM	PART NO	CHANGE NO	DESCRIPTION	REMARKS	USAGE CODE	QTY
23	02/103768		Connector, outlet			1

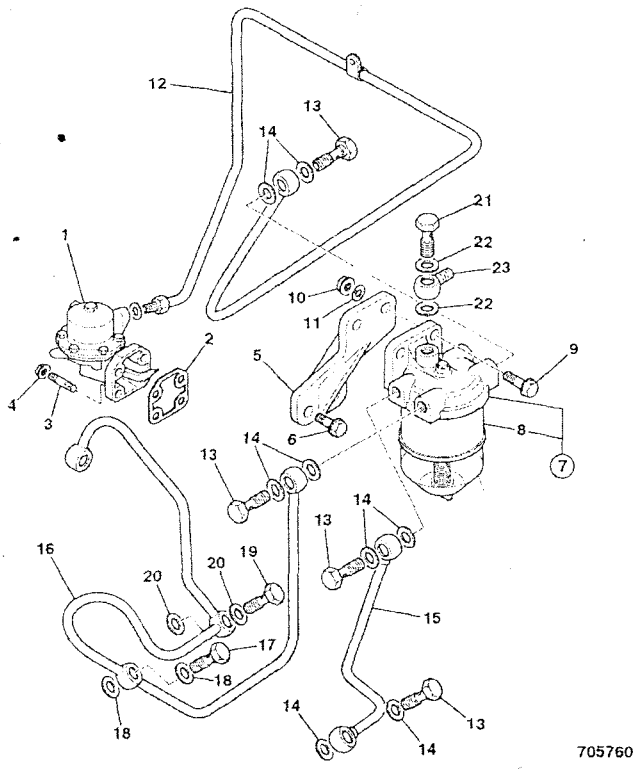

	FROM	TO	FROM	TO
3C PLUS				
3C 14				

ITEM	PART NO	CHANGE NO	DESCRIPTION	REMARKS	USAGE CODE	QTY
1	17/920800		*Pump, fuel lift*			1
2	02/103740		Gasket, gasket			1
3	02/103562		Stud			4
4	02/103554		Nut			4
5	02/103564		Bracket			1
6	02/103578		Bolt			2
7	02/103741		Filter, filter			1
8	32/925587		Element, fuel filter			1
9	02/103548		Bolt			2
10	02/103544		Nut			2
11	.		*'See Remark'*	*No longer required*		
12	02/103571		Pipe, fuel, l/pump to f/filter			1
13	02/103569		Bolt, banjo			4
14	02/103570		Washer			6
15	02/103568		Pipe, fuel, filter to inj/pump			1
16	02/103572		*Pipe, fuel, inj/pump to f/ filter*			1
17	02/103573		Bolt, Banjo			1
18	02/103575		Washer			2
19	02/103580		Bolt, banjo			1
20	02/103575		Washer			2
21	02/103742		Bolt, bolt			1
22	02/103570		Washer			2

L6-3-2 FUEL PIPES, FUEL FEED & RETURN, P4001T, TURBO 8C89

9812/0080U
ISSUE 1

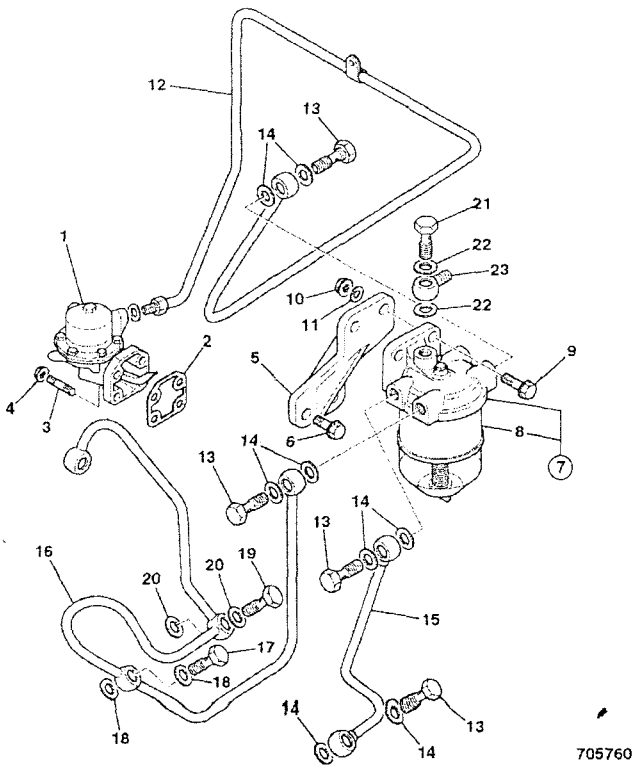

ITEM	PART NO	CHANGE NO	DESCRIPTION	REMARKS	USAGE CODE	QTY
23	02/103768		Connector, outlet			1

L6-4-1 FUEL HEATER & PIPE, NAT ASP & TURBO, P4001 P4001T, 8C88/8C89

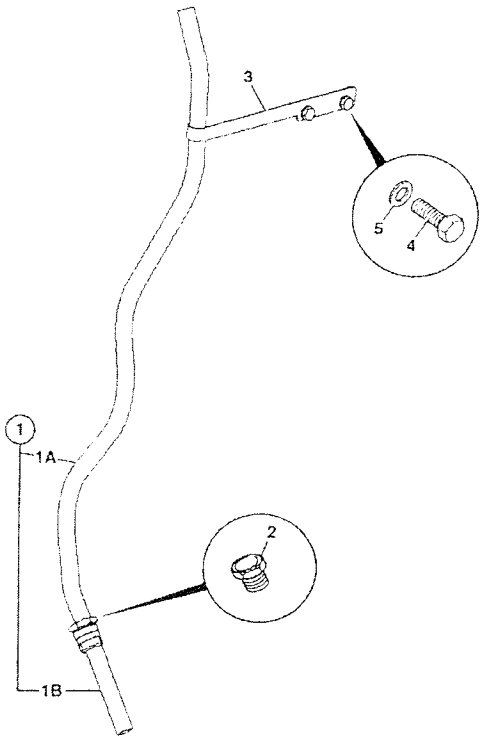

798750

	FROM	TO	FROM	TO
3C PLUS				
3C 14				

ITEM	PART NO	CHANGE NO	DESCRIPTION	REMARKS	USAGE CODE	QTY
1	02/103686		Pipe, fuel heater			1
2	02/103739		Plug, glow plug			1
3	02/103569		Bolt, banjo			1
4	02/103570		Washer			2

L6-5-1 FUEL PIPES, FUEL TANK TO FILTER, P4001/P4001T NAT ASP & TURBO 8C88/8C89

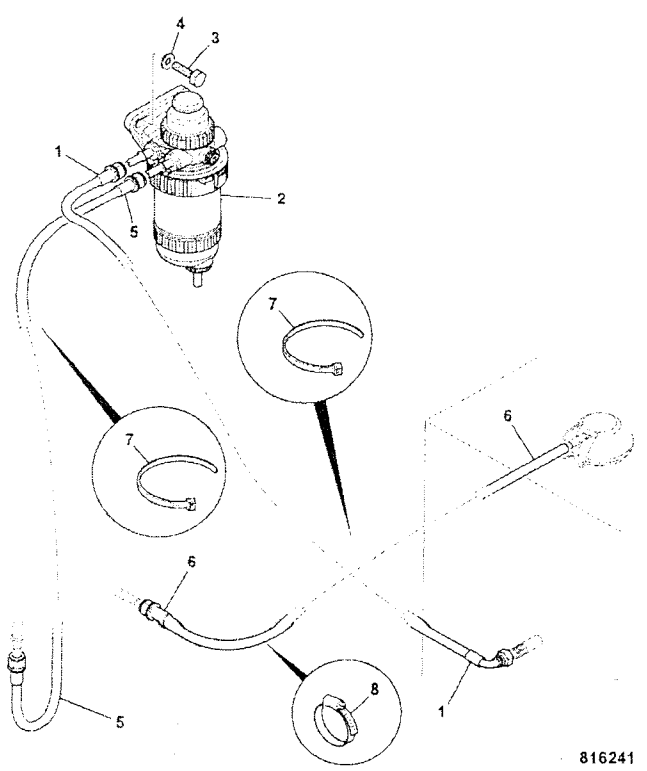

816241

	FROM	TO	FROM	TO
3C PLUS				
3C 14				

ITEM	PART NO	CHANGE NO	DESCRIPTION	REMARKS	USAGE CODE	QTY
1	649/51784		Hose, diesel fuel, L=1850			1
2	32/925914		Filter, fuel sediment 30m, reverse flow	For Service Parts, See Index		1
3	1315/0410Z		Bolt, M10 x 40			2
4	1420/0008Z		Washer, Plain M10			2
5	649/52236		Hose, fuel hose 1200Lg			1
6	648/03505		Hose, 8mm bore x1620mm			1
7	826/01144		Tie, cable, 200mm long			7
8	821/00520		Clip			2

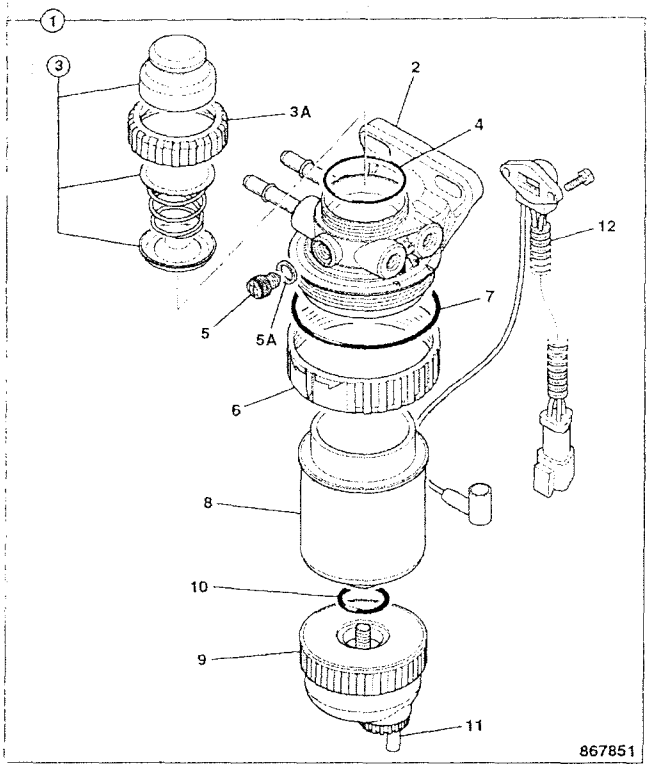

	FROM	TO	FROM	TO
3C PLUS				
3C 14				

ITEM	PART NO	CHANGE NO	DESCRIPTION	REMARKS	USAGE CODE	QTY
1	32/925914		Filter, fuel sediment 30m, reverse flow			1
2	NSP		None serviced part			1
3	32/926045		Kit-hand primer, reverse flow			1
3A	32/926044		Ring, cap locking			1
4	32/925906		Seal			1
5	32/926040		Plug, air vent			1
5A	32/925973		O Ring			1
6	32/921002		Ring, retaining			1
7	32/921003		Seal, dust			1
8	32/925915		Element, fuel filter, reverse flow	STANDARD		1
9	32/925708		Bowl, assembly			1
10	32/925733		Seal, o'ring			1
11	32/925818		Kit-drain valve, c/w wif sensor, & seal			1
12	32/925709		Kit-sensor, water in fuel			1

L

L1 ENGINE BLOCK & SUB-ASSEMBLIES
L2 CYLINDER HEAD & SUB-ASSEMBLIES
L3 INDUCTION & EXHAUST SYSTEM
L4 COOLING SYSTEM
L5 LUBRICATION SYSTEM
L6 FUEL SYSTEM
● L7 AUXILIARY EQUIPMENT
L8 GASKET SETS

ENGLISH

L7-1-1 TURBOCHARGER, P4001T 8C89

L7-2-1 TURBOCHARGER, PIPEWORK & MOUNTINGS, P4001T, 8C89

L7-1-1 TURBOCHARGER, P4001T 8C89

	FROM	TO	FROM	TO
3C PLUS				
3C 14				

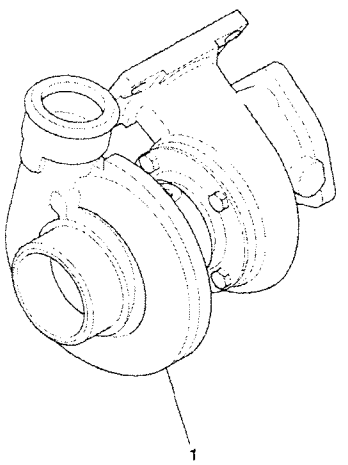

706170

ITEM	PART NO	CHANGE NO	DESCRIPTION	REMARKS	USAGE CODE	QTY
1	02/103618		Turbocharger			1

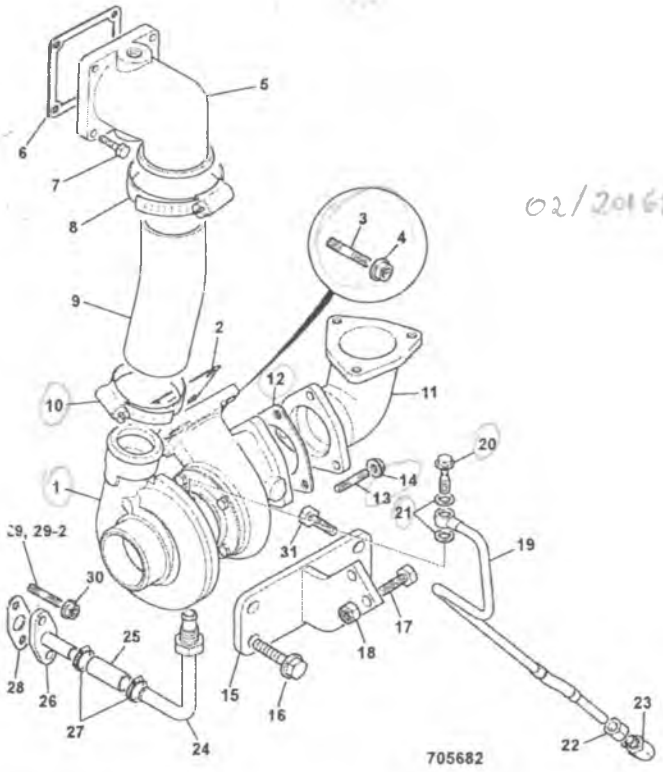

	FROM	TO	FROM	TO
3C PLUS				
3C 14				

ITEM	PART NO	CHANGE NO	DESCRIPTION	REMARKS	USAGE CODE	QTY
	02/103618		Turbocharger			1
2	TBA		Part number, Not Yet Known			4
3	826/01200		Stud			4
4	02/103619		Nut			4
5	02/103629		Diffuser			1
6	02/103764		Gasket, gasket			1
7	02/103450		Bolt			4
8	02/103760		Clamp, clamp			1
9	02/103627		Hose			1
10	02/103628		Clamp			2
11	02/103633		Elbow			1
12	02/103631		Gasket			1
13	02/291002		Stud			3
14	02/103759		Nut, nut			3
15	02/103634		Bracket, support			1
16	02/103450		Bolt			1
17	02/103541		Bolt			2
18	TBA		Part number, Not Yet Known			1
19	02/103624		Pipe			1
20	02/103683		Bolt, banjo			1
21	02/103761		Washer, sealing			2

L7-2-1 TURBOCHARGER, PIPEWORK & MOUNTINGS, P4001T, 8C89

9812/0080U
ISSUE 1

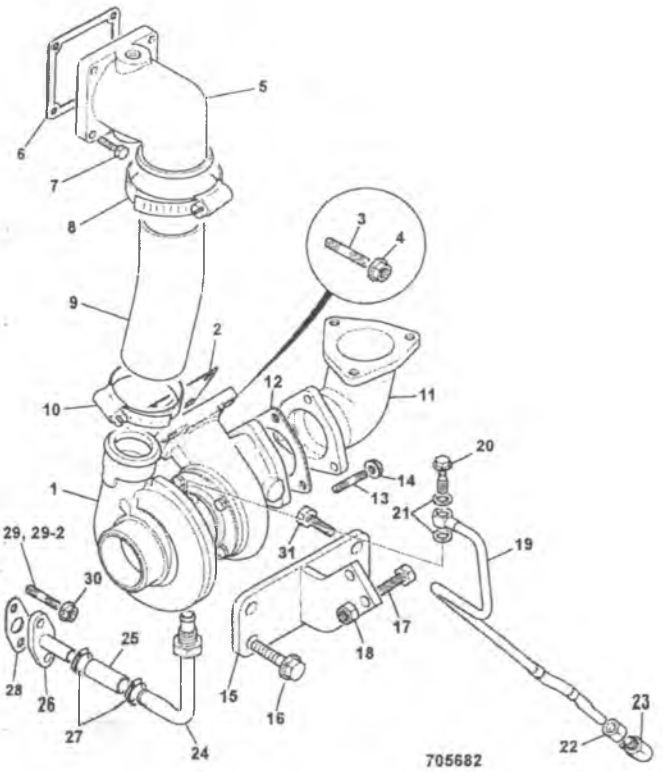

ITEM	PART NO	CHANGE NO	DESCRIPTION	REMARKS	USAGE CODE	QTY
22	TBA		Part number, Not Yet Known			1
23	02/103622		Connector, elbow			1
24	02/103623		Pipe			1
25	02/100684		Hose, oil drain			1
26	02/103620		Pipe			1
27	02/103524		Clamp			2
28	02/101253		Gasket			1
29	02/103562		Stud			1
	822/00122		Stud			1
30	02/103554		Nut			2
31	02/103762		Bolt, bolt			2

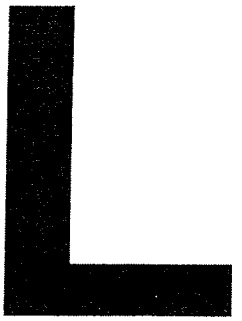

L1 ENGINE BLOCK & SUB-ASSEMBLIES
L2 CYLINDER HEAD & SUB-ASSEMBLIES
L3 INDUCTION & EXHAUST SYSTEM
L4 COOLING SYSTEM
L5 LUBRICATION SYSTEM
L6 FUEL SYSTEM
L7 AUXILIARY EQUIPMENT
● L8 GASKET SETS

ENGLISH

L8-1-1 GASKET SET, TOP, P4001/P400T 8C88/8C89
L8-2-1 GASKET SET, BOTTOM, P4001/P4001T 8C88/8C89

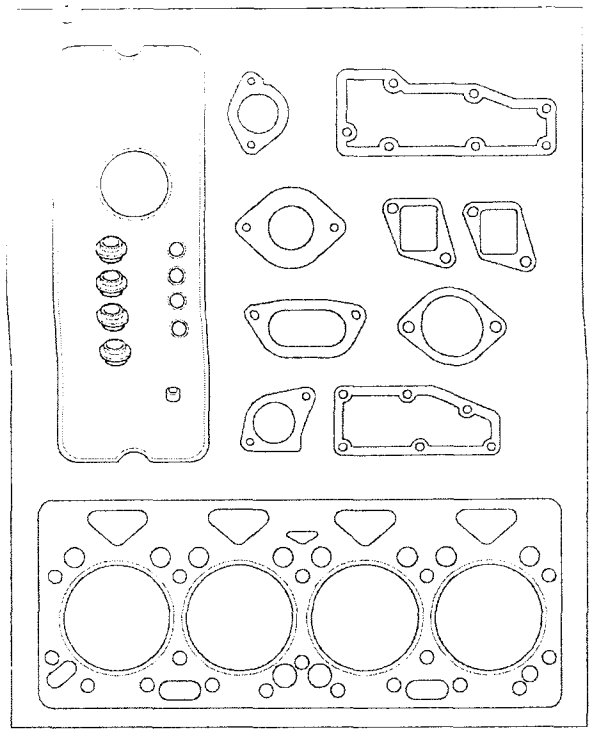

702490

FROM TO FROM TO

3C PLUS
3C 14

ITEM	PART NO	CHANGE NO	DESCRIPTION	REMARKS	USAGE CODE	QTY
1	02/103688		Gasket, set upper			1

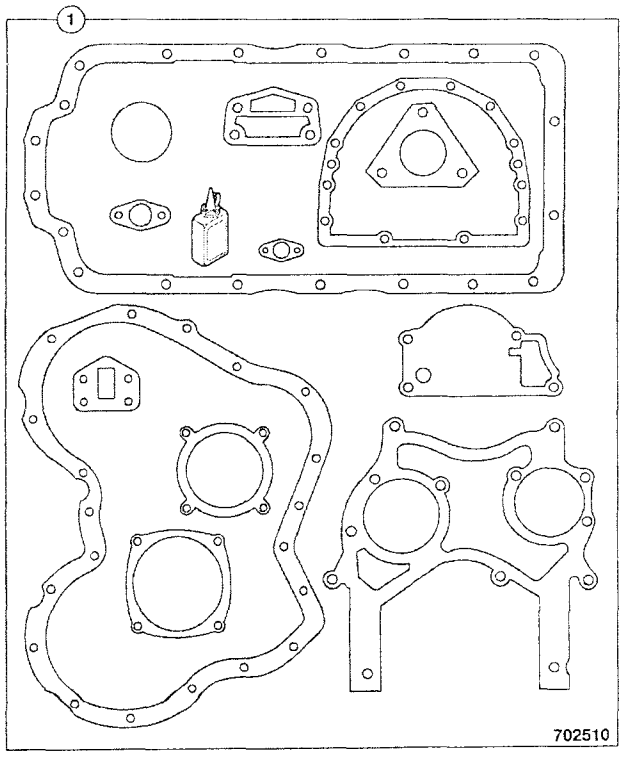

702510

FROM TO FROM TO

3C PLUS
3C 14

ITEM	PART NO	CHANGE NO	DESCRIPTION	REMARKS	USAGE CODE	QTY
	02/103689		Gasket, set lower			1

V

- V41 ENGINE ASSEMBLYS
- V42 ENGINE MOUNTINGS
- V43 AIR FILTERS
- V44 AIR INDUCTION HOSES
- V45 EXHAUST SYSTEMS
- V46 RADIATOR FITTINGS & MOUNTINGS
- V47 COMBINATION COOLERS
- V48 RADIATOR & HOSES
- V49 FRONT END DRIVE
- V50 LOW PRESSURE FUEL SYSTEM
- V51 FUEL SEDIMENT FILTERS
- V52 EXHAUSTER SERVO BRAKES
- V55 OIL LEVEL DIPSTICK & TUBE
- V56 AIR CONDITIONING COMPRESSOR
- V57 ENGINE OIL DRAIN

ENGLISH

V41-1-1 ENGINE ASSEMBLY, 320/40004, 82.5BHP, SEE CATALOGUE 9802/2910

V41-2-1 ENGINE ASSEMBLY, 320/40239, 82.5BHP, SEE CATALOGUE 9802/2910

V41-10-1 ENGINE ASSEMBLY, 320/40064, 91BHP, SEE CATALOGUE 9802/2940

V41-11-1 ENGINE ASSEMBLY, 320/40241, 91BHP, SEE CATALOGUE 9802/2940

V41-1-1 ENGINE ASSEMBLY, 320/40004, 82.5BHP, SEE CATALOGUE 9802/2910

FROM TO FROM TO

3C 14

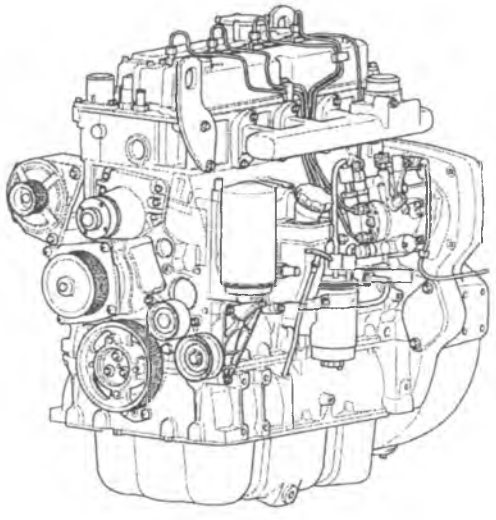

ITEM	PART NO	CHANGE NO	DESCRIPTION	REMARKS	USAGE CODE	QTY
	320/40004		Engine, assembly 84. 5bhp 12v, nat/asp W300 T/C	For Service Parts, See Catalogue 9802/2910		1

741840

V41-2-1 ENGINE ASSEMBLY, 320/40239, 82.5BHP, SEE CATALOGUE 9802/2910

FROM TO FROM TO

3C 14

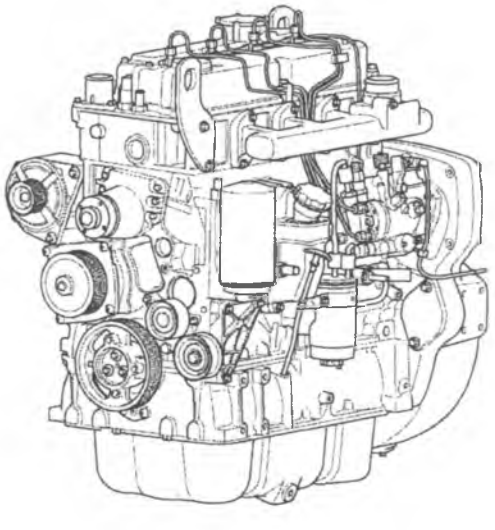

ITEM	PART NO	CHANGE NO	DESCRIPTION	REMARKS	USAGE CODE	QTY
	320/40239		Engine, assembly 82. 5bhp-12v, nat/asp W300 T/C	For Service Parts, See Catalogue 9802/2910		1

741840

V

V41 ENGINE ASSEMBLYS
V42 ENGINE MOUNTINGS
V43 AIR FILTERS
V44 AIR INDUCTION HOSES
V45 EXHAUST SYSTEMS
V46 RADIATOR FITTINGS & MOUNTINGS
V47 COMBINATION COOLERS
V48 RADIATOR & HOSES
V49 FRONT END DRIVE
V50 LOW PRESSURE FUEL SYSTEM
V51 FUEL SEDIMENT FILTERS
V52 EXHAUSTER SERVO BRAKES
V55 OIL LEVEL DIPSTICK & TUBE
V56 AIR CONDITIONING COMPRESSOR
V57 ENGINE OIL DRAIN

ENGLISH

V42-1-1 ENGINE MOUNTINGS, 2WS

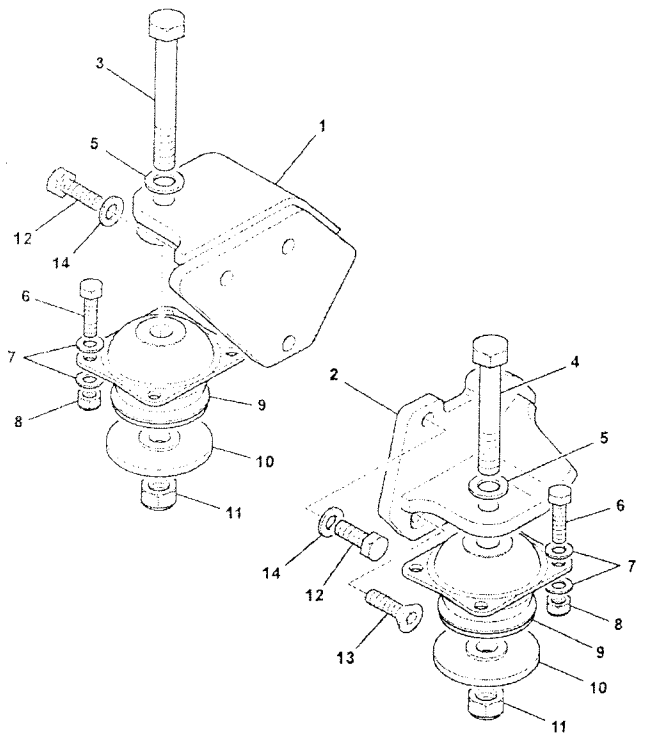

742160

	FROM	TO	FROM	TO
3C PLUS				
3C 14				

ITEM	PART NO	CHANGE NO	DESCRIPTION	REMARKS	USAGE CODE	QTY
	335/08918		Bracket, engine mounting, right hand			1
2	335/08805		Bracket, engine mounting, left hand			1
3	1315/3724Z		Bolt, M16 x 140			1
4	1315/3722Z		Bolt, M16 x 120			1
5	1420/0011Z		Washer, M16 plain			2
6	1315/3410Z		Bolt, M10 x 40			8
7	1420/0008Z		Washer, Plain M10			16
8	1370/0303Z		Nut, lock, M10			8
9	331/40347		Mounting, resilient			2
10	829/31165	Superseded	Washer, rebound, 16x80x9.5			2
	829/31272		Washer, rebound, 16x75x8			2
11	1370/0603Z		Nut, M16			2
12	1315/0509Z		Screw, M12 x 35mm			6
13	1420/0009Z		Washer, Plain M12			6
14	826/11274		Screw, M12x35, countersunk head			2

V

V41 ENGINE ASSEMBLYS
V42 ENGINE MOUNTINGS
● V43 AIR FILTERS
V44 AIR INDUCTION HOSES
V45 EXHAUST SYSTEMS
V46 RADIATOR FITTINGS & MOUNTINGS
V47 COMBINATION COOLERS
V48 RADIATOR & HOSES
V49 FRONT END DRIVE
V50 LOW PRESSURE FUEL SYSTEM
V51 FUEL SEDIMENT FILTERS
V52 EXHAUSTER SERVO BRAKES
V55 OIL LEVEL DIPSTICK & TUBE
V56 AIR CONDITIONING COMPRESSOR
V57 ENGINE OIL DRAIN

ENGLISH

V43-1-1 FILTER, AIR, 2WS
V43-2-1 FILTER, AIR, 2WS

V43-1-1 FILTER, AIR, 2WS

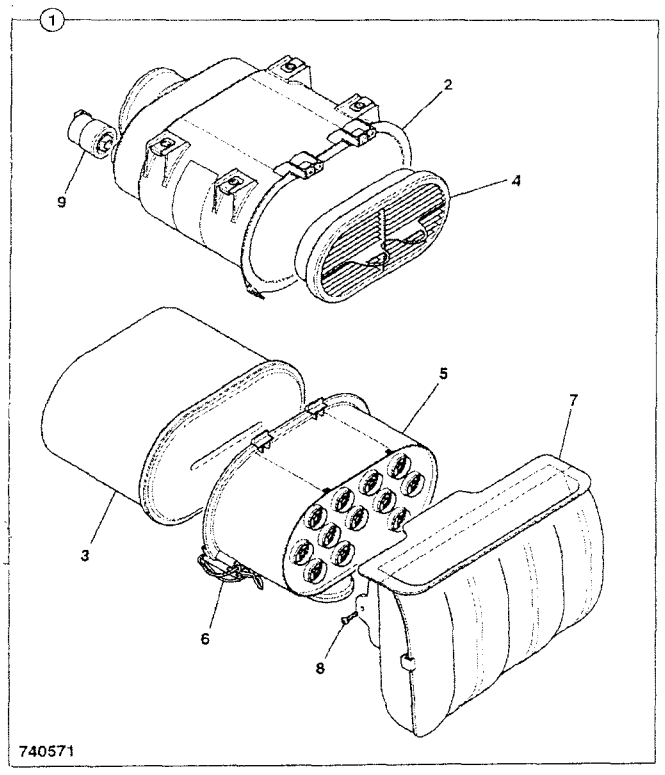

	FROM	TO	FROM	TO
3C PLUS				
3C 14				

ITEM	PART NO	CHANGE NO	DESCRIPTION	REMARKS	USAGE CODE	QTY
1	32/925684		Filter, air, assembly			1
2	N.S.P		None serviced part			1
3	32/925682		Element, air filter, main			1
4	32/925683		Element, air filter, safety			1
5	580/12174		Filter, pre-cleaner			1
6	32/925364		Clip, overcentre			2
7	32/925716		Filter, air intake			1
8	32/925711		Screw			2
9	32/925686		Switch, vacuum sensor			1

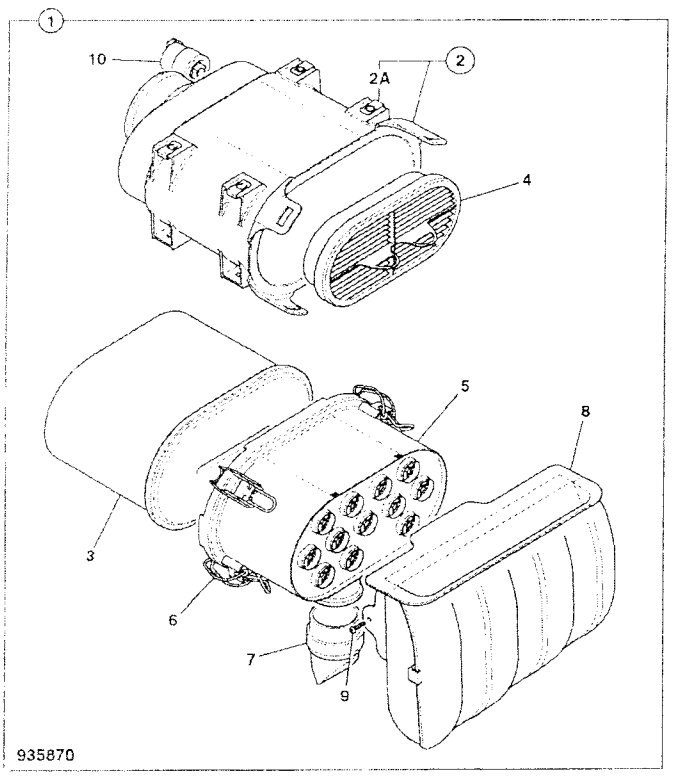

	FROM	TO	FROM	TO
3C PLUS				
3C 14				

ITEM	PART NO	CHANGE NO	DESCRIPTION	REMARKS	USAGE CODE	QTY
1	32/926084		Filter, air, assembly			1
2	N.S.P		None serviced part			1
2A	32/926114		Nut, 'U'			1
3	32/925682		Element, air filter, main			1
4	32/925683		Element, air filter, safety			1
5	32/926113		Filter, pre-cleaner			1
6	32/925364		Clip, overcentre			2
7	32/926115		Valve, vacuator			1
8	32/925716		Filter, air intake			1
9	32/925711		Screw			2
10	32/925686		Switch, vacuum sensor			1

V

V41 ENGINE ASSEMBLYS
V42 ENGINE MOUNTINGS
V43 AIR FILTERS
● V44 AIR INDUCTION HOSES
V45 EXHAUST SYSTEMS
V46 RADIATOR FITTINGS & MOUNTINGS
V47 COMBINATION COOLERS
V48 RADIATOR & HOSES
V49 FRONT END DRIVE
V50 LOW PRESSURE FUEL SYSTEM
V51 FUEL SEDIMENT FILTERS
V52 EXHAUSTER SERVO BRAKES
V55 OIL LEVEL DIPSTICK & TUBE
V56 AIR CONDITIONING COMPRESSOR
V57 ENGINE OIL DRAIN

ENGLISH

V44-1-1 AIR INDUCTION HOSES, 2WS NAT/ASP
V44-4-1 AIR INDUCTION HOSES, 2WS TURBO
V44-6-1 AIR INDUCTION HOSES, 2WS TURBO

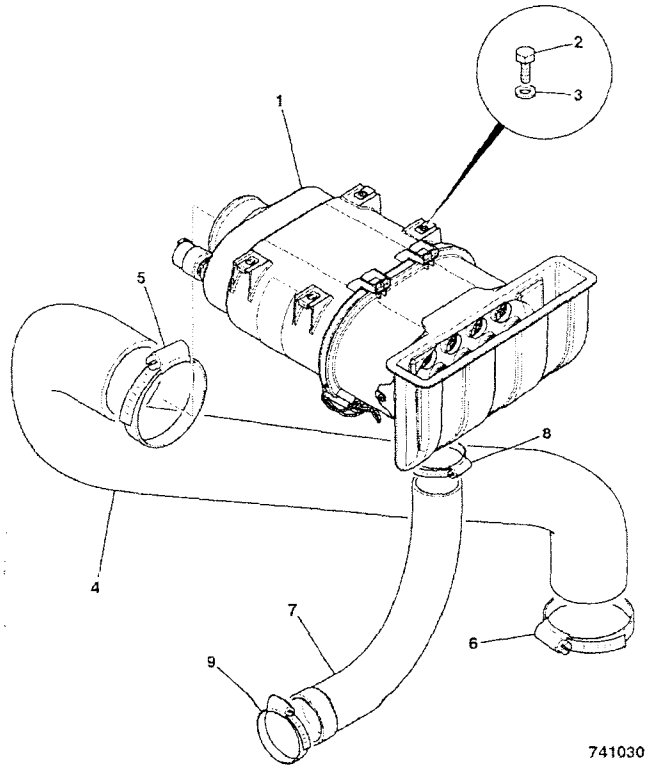

741030

	FROM	TO	FROM	TO
3C 14				

ITEM	PART NO	CHANGE NO	DESCRIPTION	REMARKS	USAGE CODE	QTY
1	.		'See Remark'	See Index		1
2	1315/0205Z		Bolt			4
3	1420/0006Z		Washer, M6			4
4	834/10967		Hose, air induction, nat/ asp			1
5	2201/0016		Clip, jubilee			1
6	2201/0015		Clip, jubilee			1
7	834/11028		Hose, air scavenge, 2ws			1
8	2201/0012		Clip, jubilee			1
9	2201/0013		Clip, jubilee			1

V44-4-1 AIR INDUCTION HOSES, 2WS TURBO

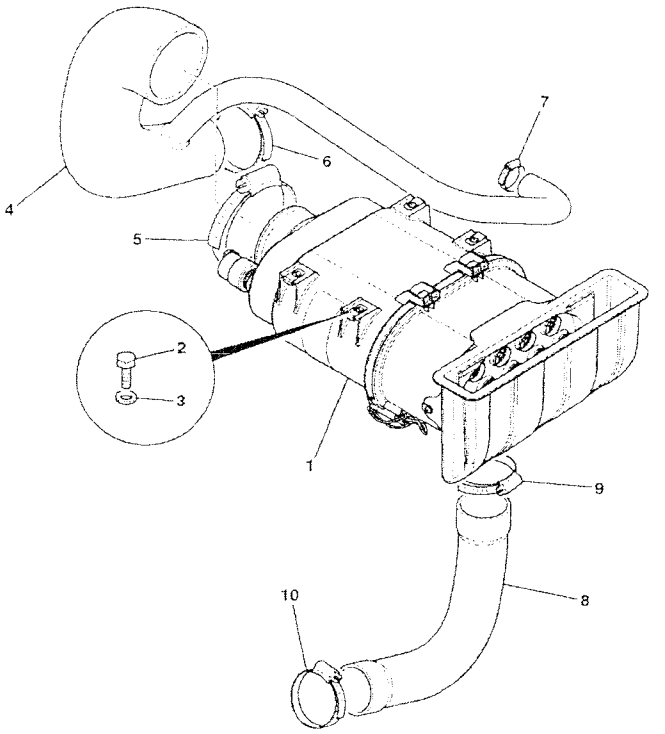

788340

FROM TO FROM TO

3C PLUS

ITEM	PART NO	CHANGE NO	DESCRIPTION	REMARKS	USAGE CODE	QTY
1			'See Remark'	See Index		1
2	1315/0205Z		Bolt			4
3	1420/0006Z		Washer, M6			4
4	834/11203		Hose, air induction, 2ws turbo			1
5	2201/0016		Clip, jubilee			1
6	2201/0014		Clip, jubilee			1
7	2201/0007		Clip, jubilee			1
8	834/11028		Hose, air scavenge, 2ws			1
9	2201/0012		Clip, jubilee			1
10	2201/0013		Clip, jubilee			1

V44-6-1 AIR INDUCTION HOSES, 2WS TURBO

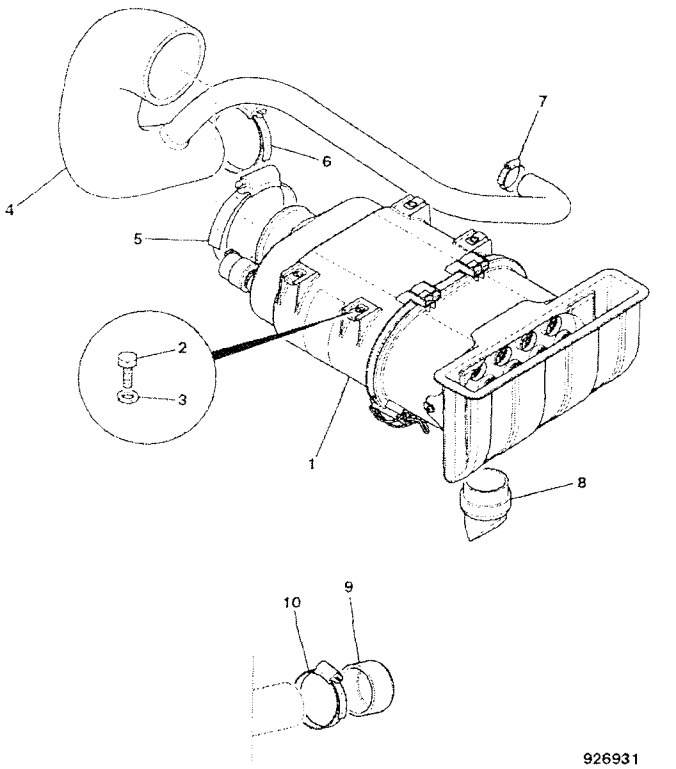

926931

FROM TO FROM TO

3C PLUS

ITEM	PART NO	CHANGE NO	DESCRIPTION	REMARKS	USAGE CODE	QTY
1			'See Remark'	See Index		1
2	1315/0205Z		Bolt			4
3	1420/0006Z		Washer, M6			4
4	834/11383		Hose, air induction, turbo 2WS			1
5	2201/0016		Clip, jubilee			1
6	2201/0014		Clip, jubilee			1
7	2201/0007		Clip, jubilee			1
8	332/C4909		Valve, vacuum dump			1
9	835/10114		Cap, PVC flexible			1
10	2201/0012		Clip, jubilee			2



V41 ENGINE ASSEMBLYS
V42 ENGINE MOUNTINGS
V43 AIR FILTERS
V44 AIR INDUCTION HOSES
● V45 EXHAUST SYSTEMS
V46 RADIATOR FITTINGS & MOUNTINGS
V47 COMBINATION COOLERS
V48 RADIATOR & HOSES
V49 FRONT END DRIVE
V50 LOW PRESSURE FUEL SYSTEM
V51 FUEL SEDIMENT FILTERS
V52 EXHAUSTER SERVO BRAKES
V55 OIL LEVEL DIPSTICK & TUBE
V56 AIR CONDITIONING COMPRESSOR
V57 ENGINE OIL DRAIN

ENGLISH

V45-1-2 SILENCER & EXTENSION, 2WS NAT/ASP
V45-2-3 SILENCER & EXTENSION, 2WS & AWS TURBO, 91/99BHP

V45-1-2 SILENCER & EXTENSION, 2WS NAT/ASP

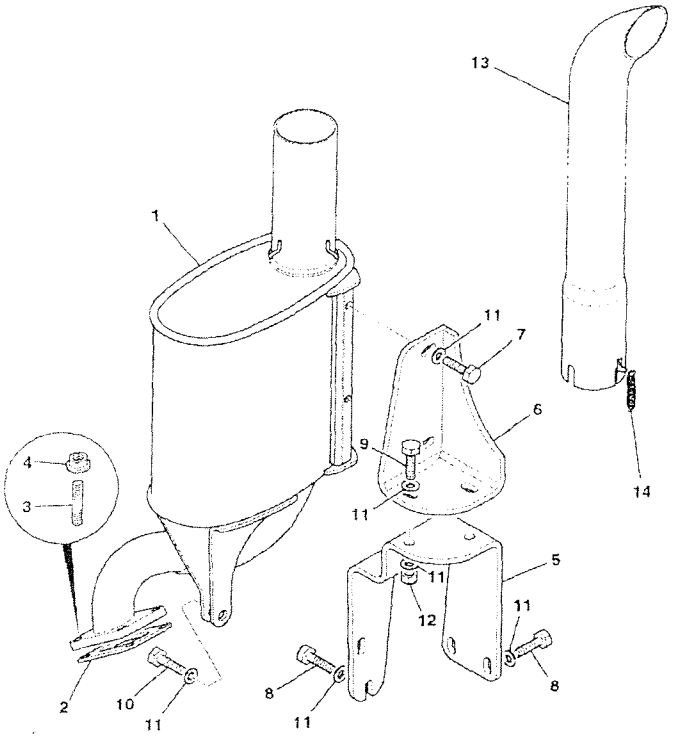

742684

FROM TO FROM TO

3C 14

ITEM	PART NO	CHANGE NO	DESCRIPTION	REMARKS	USAGE CODE	QTY
1	*331/60549		Silencer, exhaust			1
2	320/06006		Gasket			1
3	320/07063		Stud, M8 X 1.25			4
4	02/291116		Nut			4
5	331/44900		Bracket, exhaust mounting			1
6	*331/55522		Bracket, exhaust mounting			1
7	1315/0407Z		Bolt, M10x25			2
8	1315/0408Z		Bolt, M10x30			4
9	1315/0409Z		Screw, hex. head			2
10	1315/0410Z		Bolt, M10 x 40			1
11	1420/0008Z		Washer, Plain M10			11
12	1370/0303Z		Nut, lock, M10			2
13	331/53874		Pipe, exhaust extension			1
14	814/10177		Spring, extension			2

V45-2-3 SILENCER & EXTENSION, 2WS & AWS TURBO, 91/99BHP

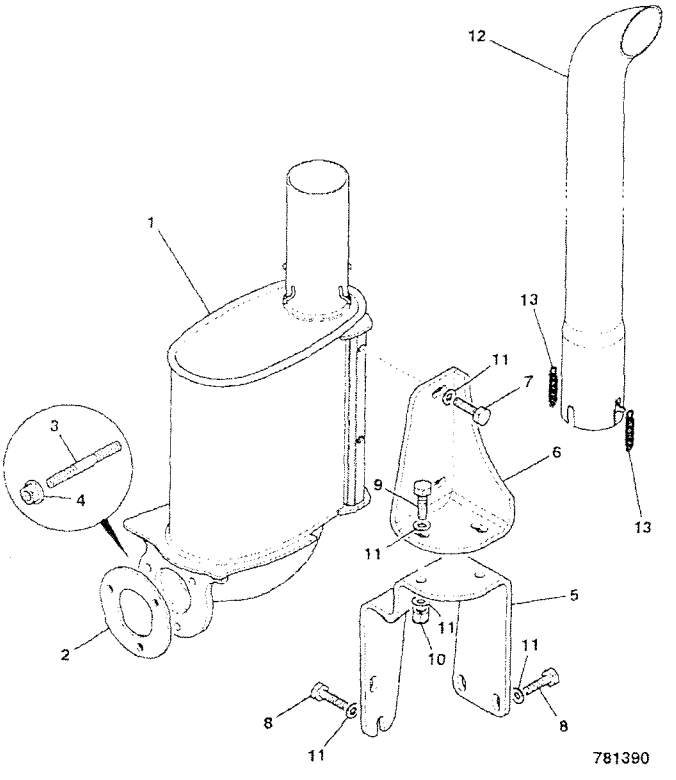

781390

FROM TO FROM TO

3C PLUS

ITEM	PART NO	CHANGE NO	DESCRIPTION	REMARKS	USAGE CODE	QTY
1	331/52383		Silencer, exhaust			1
2	813/10258		Gasket, exhaust			1
3	826/11384		Stud, M10 X 37			3
4	02/291135		Nut, anti-seize			3
5	331/44900		Bracket, exhaust mounting			1
6	331/55522		Bracket, exhaust mounting			1
7	1315/0407Z		Bolt, M10x25			2
8	1315/0408Z		Bolt, M10x30			4
9	1315/0409Z		Screw, hex. head			2
10	1370/0303Z		Nut, lock, M10			2
11	1420/0008Z		Washer, Plain M10			10
12	331/53874		Pipe, exhaust extension			1
13	814/10177		Spring, extension			2

V

V41 ENGINE ASSEMBLYS
V42 ENGINE MOUNTINGS
V43 AIR FILTERS
V44 AIR INDUCTION HOSES
V45 EXHAUST SYSTEMS
● V46 RADIATOR FITTINGS & MOUNTINGS
V47 COMBINATION COOLERS
V48 RADIATOR & HOSES
V49 FRONT END DRIVE
V50 LOW PRESSURE FUEL SYSTEM
V51 FUEL SEDIMENT FILTERS
V52 EXHAUSTER SERVO BRAKES
V55 OIL LEVEL DIPSTICK & TUBE
V56 AIR CONDITIONING COMPRESSOR
V57 ENGINE OIL DRAIN

ENGLISH

V46-1-3 RADIATOR, FITTINGS & MOUNTINGS, 2WS
V46-11-1 RADIATOR NON CAC, FITTINGS & MOUNTINGS, 2WS - 20" FAN

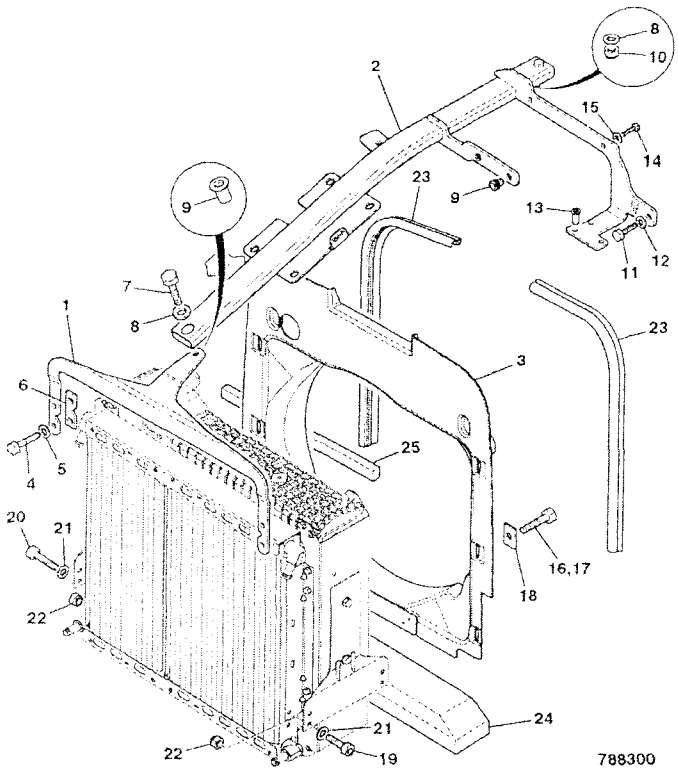

	FROM	TO	FROM	TO
3C PLUS				
3C 14				

ITEM	PART NO	CHANGE NO	DESCRIPTION	REMARKS	USAGE CODE	QTY
1	331/44276		Bracket, centre beam mounting, front 2WS			1
2	335/10222		Beam, centre mounting			1
3	*346/00104	To M.TBA	Cowling, fan 20", 2ws			1
	*332/C1667	M.TBA on	Cowling, fan 20inch 2ws			1
4	1315/0307Z		Screw, M8 X 25			4
5	1420/0007Z		Washer, plain, M8			4
6	331/48338		Plate, spacer			2
7	1315/0414Z		Bolt			1
8	1420/0008Z		Washer, Plain M10			2
9	826/01105		Nut, rivet M10 open ended			3
10	1370/0303Z		Nut, lock, M10			1
11	1315/0308Z		Screw, M8x30			1
12	1420/0007Z		Washer, plain, M8			1
13	826/01810		Nut, rivet, M6 open end, for 5.5 to 8mm plate			1
14	1315/0207Z		Screw, M6 x 25mm long			2
15	1411/0001Z		Washer			4
16	1315/0307Z		Screw, M8 X 25			4
17	1315/0305Z		Screw, M8 x 20mm long			2
18	123/06362		Washer, spreader			6
19	1391/3409Z		Capscrew, M10 x 35mm			2
20	1391/3410Z		Capscrew			2

V46-1-3 RADIATOR, FITTINGS & MOUNTINGS, 2WS

9812/0080U
ISSUE 1

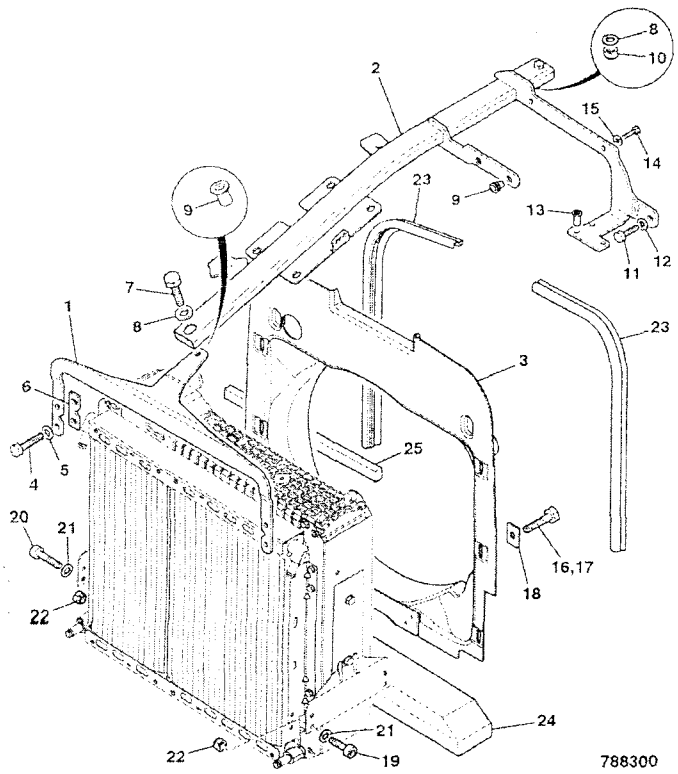

ITEM	PART NO	CHANGE NO	DESCRIPTION	REMARKS	USAGE CODE	QTY
21	1411/0004Z		Washer			8
22	1370/0303Z		Nut, lock, M10			4
23	926/51301		Strip, sealing, L=640mm			2
24	331/36060		Seal, anti-recirculation			1
25	331/52016		Seal, anti-recirculation			2

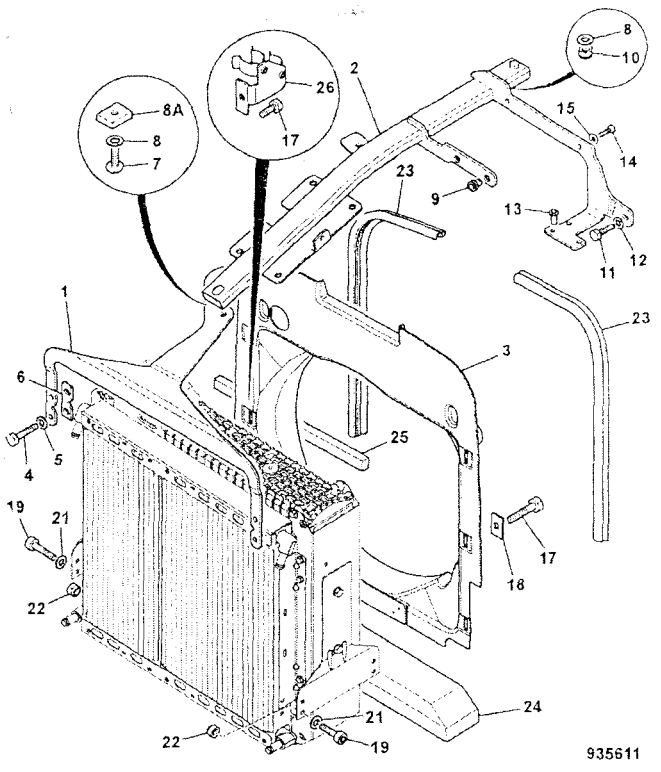

935611

	FROM	TO	FROM	TO
3C PLUS				
3C 14				

ITEM	PART NO	CHANGE NO	DESCRIPTION	REMARKS	USAGE CODE	QTY
1	332/C8208		Bracket, centre beam mounting, front 2ws			1
2	128/C1776		Beam, centre mounting			1
3	332/C1667		Cowling, fan 20inch 2ws			1
4	1315/0307Z		Screw, M8 X 25			4
5	1420/0007Z		Washer, plain, M8			4
6	331/48338		Plate, spacer			2
7	826/01616		Screw, M10 x 25mm, hex/ skt button head			1
8	1412/0003Z		Washer			1
8A	332/D5851		Block, clamping			1
9	826/01105		Nut, rivet,M10 open ended			2
10	1370/0303Z		Nut, lock, M10			1
11	1315/0308Z		Screw, M8x30			1
12	1420/0007Z		Washer, plain, M8			1
13	826/01810		Nut, rivet, M6 open end, for 5.5 to 8mm plate			3
14	1315/0207Z		Screw, M6 x 25mm long			2
15	1411/0001Z		Washer			4
17	1315/0305Z		Screw, M8 x 20mm long			6
18	123/06362		Washer, spreader			5
19	1391/3409Z		Capscrew, M10 x 35mm			4
21	1411/0004Z		Washer			8

V46-11-1 RADIATOR NON CAC, FITTINGS & MOUNTINGS, 2WS - 20" FAN

9812/0080U
ISSUE 1

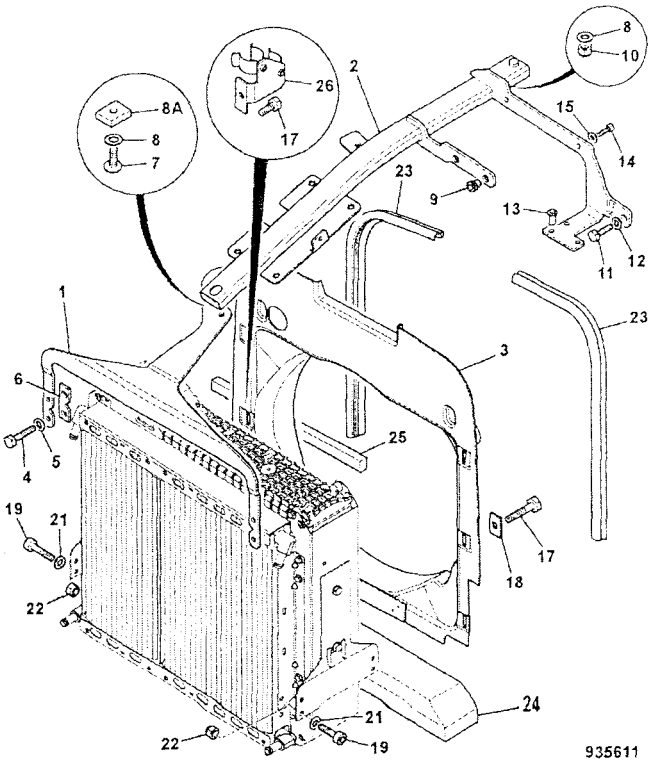

935611

ITEM	PART NO	CHANGE NO	DESCRIPTION	REMARKS	USAGE CODE	QTY
22	1370/0303Z		Nut, lock, M10			4
23	926/51301		Strip, sealing, L=640mm			2
24	331/36060		Seal, anti-recirculation			1
25	331/52016		Seal, anti-recirculation			2
26	128/D5873		Clip, hose			1

V

V41 ENGINE ASSEMBLYS
V42 ENGINE MOUNTINGS
V43 AIR FILTERS
V44 AIR INDUCTION HOSES
V45 EXHAUST SYSTEMS
V46 RADIATOR FITTINGS & MOUNTINGS
● V47 COMBINATION COOLERS
V48 RADIATOR & HOSES
V49 FRONT END DRIVE
V50 LOW PRESSURE FUEL SYSTEM
V51 FUEL SEDIMENT FILTERS
V52 EXHAUSTER SERVO BRAKES
V55 OIL LEVEL DIPSTICK & TUBE
V56 AIR CONDITIONING COMPRESSOR
V57 ENGINE OIL DRAIN

ENGLISH

V47-1-1 COMBINATION COOLER, 2WS ASSEMBLY
V47-11-1 COMBINATION COOLER, ASSEMBLY 2WS 20" FAN, NON CAC

V47-1-1 COMBINATION COOLER, 2WS ASSEMBLY

9812/0080U
ISSUE 1

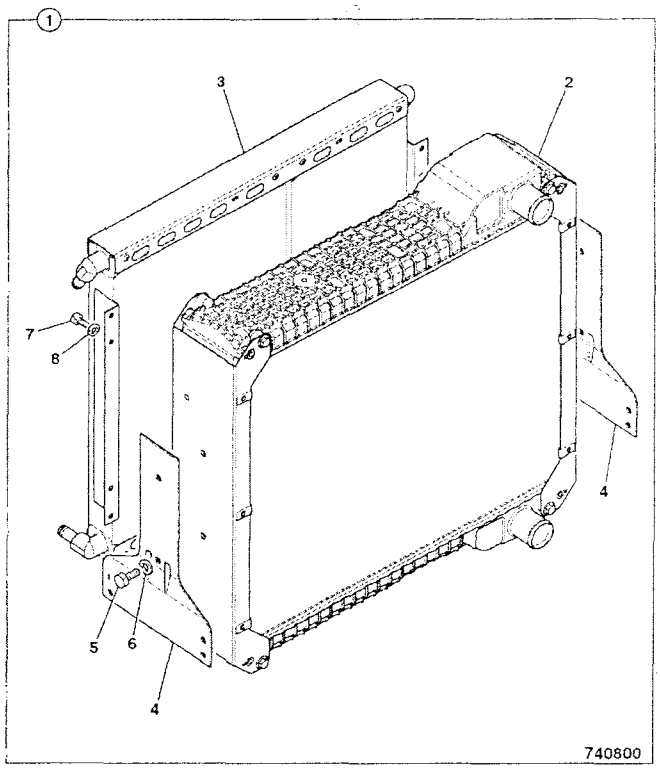

	FROM	TO	FROM	TO
3C PLUS				
3C 14				

ITEM	PART NO	CHANGE NO	DESCRIPTION	REMARKS	USAGE CODE	QTY
1	128/14326		Cooler, assembly 5row, 2ws non CAC			1
2	30/915200		:Radiator, assembly, 5row-9fpi, Blue spot			1
3	30/925615		:Cooler, oil, double, 14plates + 21 plates			1
4	30/926257		:Bracket, radiator mounting			2
5	30/926035		:Bolt			4
6	30/926036		:Washer			4
7	1315/0301Z		Screw, hex head, M8 X 12			8
8	826/00846		Nut, 'u'			8

V47-11-1 COMBINATION COOLER, ASSEMBLY 2WS 20" FAN, NON CAC

9812/0080U
ISSUE 1

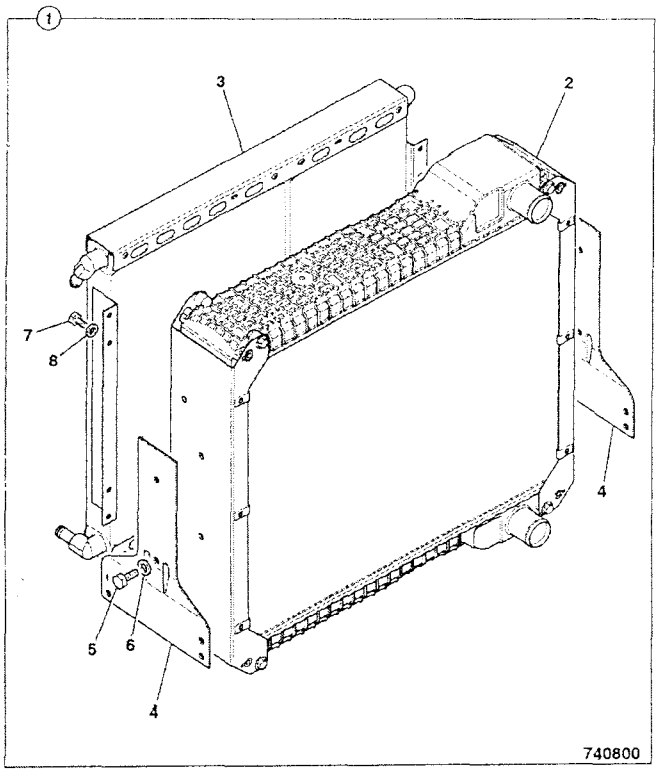

	FROM	TO	FROM	TO
3C PLUS				
3C 14				

ITEM	PART NO	CHANGE NO	DESCRIPTION	REMARKS	USAGE CODE	QTY
1	128/14326		Cooler, assembly 5row, 2ws non CAC			1
2	30/915200		:Radiator, assembly, 5row-9fpi, Blue spot			1
3	30/925615		:Cooler, oil, double, 14plates + 21 plates			1
4	30/926257		:Bracket, radiator mounting			2
5	30/926035		:Bolt			4
6	30/926036		:Washer			4
7	1315/0301Z		Screw, hex head, M8 X 12			8
8	826/00846		Nut, 'u'			8

V

V41 ENGINE ASSEMBLYS
V42 ENGINE MOUNTINGS
V43 AIR FILTERS
V44 AIR INDUCTION HOSES
V45 EXHAUST SYSTEMS
V46 RADIATOR FITTINGS & MOUNTINGS
V47 COMBINATION COOLERS
● V48 RADIATOR & HOSES
V49 FRONT END DRIVE
V50 LOW PRESSURE FUEL SYSTEM
V51 FUEL SEDIMENT FILTERS
V52 EXHAUSTER SERVO BRAKES
V55 OIL LEVEL DIPSTICK & TUBE
V56 AIR CONDITIONING COMPRESSOR
V57 ENGINE OIL DRAIN

9812/0080U

V48-0-1 Also see the main index for machine applicability

9812/0080U
ISSUE 1

ENGLISH

RADIATOR & HOSES, 2WS BUILDS
RADIATOR & HOSES
RADIATOR & HOSES, 2WS-20" FAN NON CAC, T2/T3

9812/0080U

V48-5-1 RADIATOR & HOSES, 2WS BUILDS

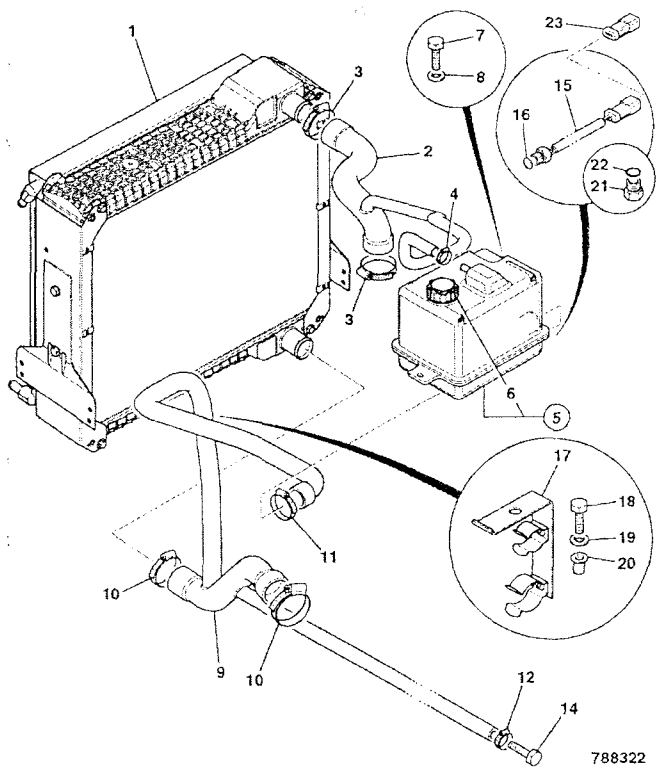

	FROM	TO	FROM	TO
3C PLUS				
3C 14				

ITEM	PART NO	CHANGE NO	DESCRIPTION	REMARKS	USAGE CODE	QTY
1	128/14326		Cooler, assembly 5row, 2ws non CAC	For Service Parts, See frame V47-1-1		1
2	834/11195		Hose, radiator top, 2ws			1
3	2201/0011		Clip, jubilee			2
4	2201/0005		Clip, jubilee			1
5	128/15479		Tank, expansion for sensor, assembly			1
6	477/00223		Cap, Expansion Bottle			1
7	1315/0310Z		Bolt, M8x40			2
8	1420/0007Z		Washer, plain, M8			2
9	834/10991		Hose, radiator bottom, 2ws			1
10	2201/0012		Clip, jubilee			2
11	2201/0010		Clip, jubilee			1
12	2201/0006		Clip, jubilee			1
13	2201/0005		Clip, jubilee			1
14	1315/3714Z		Bolt			1
15	*701/80513	To M.TBA	Sensor, water level	see bulletin 2/487		1
16	*828/10310	To M.TBA	O Ring			1
17	128/15558		Guide, hose			1
18	1315/0307Z		Screw, M8 X 25			1
19	1420/0007Z		Washer, plain, M8			1
20	826/01102		Nut, rivet,M8 open ended			1

V48-5-1 RADIATOR & HOSES, 2WS BUILDS
9812/0080U
ISSUE 1

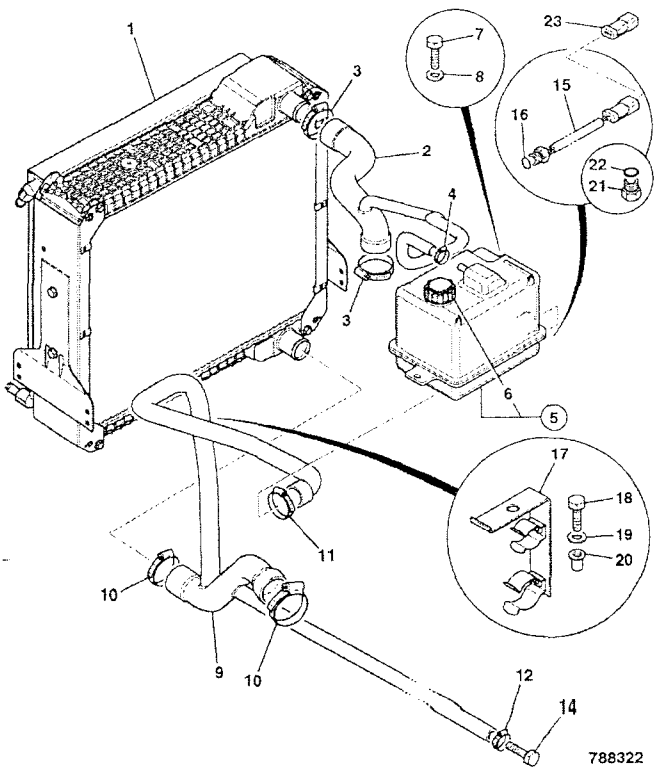

ITEM	PART NO	CHANGE NO	DESCRIPTION	REMARKS	USAGE CODE	QTY
21	*816/90702	M.TBA on	Plug, 1/2"UNF with O-Ring			1
22	*2401/0504	M.TBA on	O Ring			1
23	*715/20029	M.TBA on	Plug, blanking 3-way, deutsch DTM			1

V48-7-1 RADIATOR & HOSES

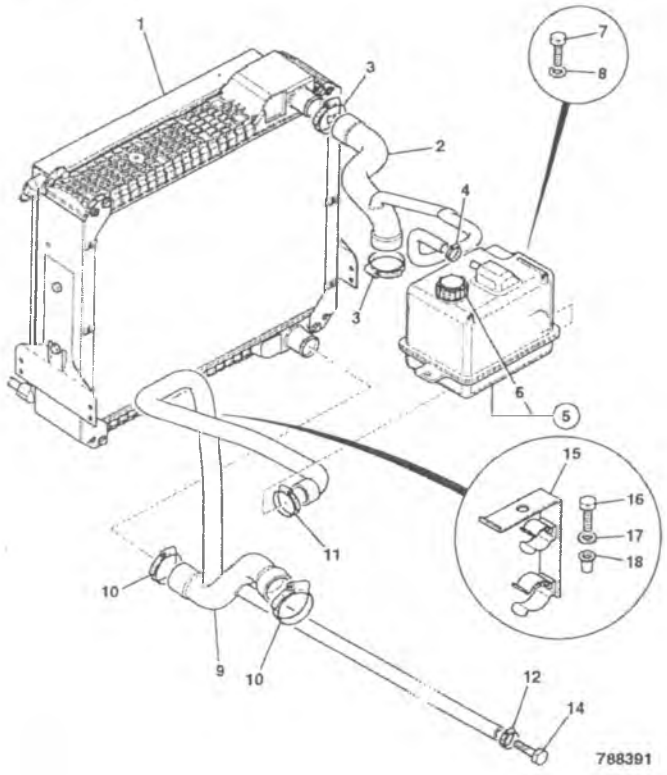

	FROM	TO	FROM	TO
3C PLUS				
3C 14				

ITEM	PART NO	CHANGE NO	DESCRIPTION	REMARKS	USAGE CODE	QTY
1	128/14326		Cooler, assembly 5row, 2ws non CAC	For Service Parts, See frame V47-1-1		1
2	834/11195		Hose, radiator top, 2ws			1
3	2201/0011		Clip, jubilee			2
4	2201/0005		Clip, jubilee			1
5	128/15480		Tank, expansion no sensor, assembly			1
6	477/00223		:Cap, Expansion Bottle			1
7	1315/0310Z		Bolt, M8x40			2
8	1420/0007Z		Washer, plain, M8			2
9	834/10991		Hose, radiator bottom, 2ws			1
10	2201/0012		Clip, jubilee			2
11	2201/0010		Clip, jubilee			1
12	2201/0006		Clip, jubilee			1
13	2201/0005		Clip, jubilee			1
14	1315/3714Z		Bolt			1
15	128/15558		Guide, hose			1
16	1315/0307Z		Screw, M8 X 25			1
17	1420/0007Z		Washer, plain, M8			1
18	826/01102		Nut, rivet,M8 open ended			1

V48-11-1 RADIATOR & HOSES, 2WS-20" FAN NON CAC, T2/T3

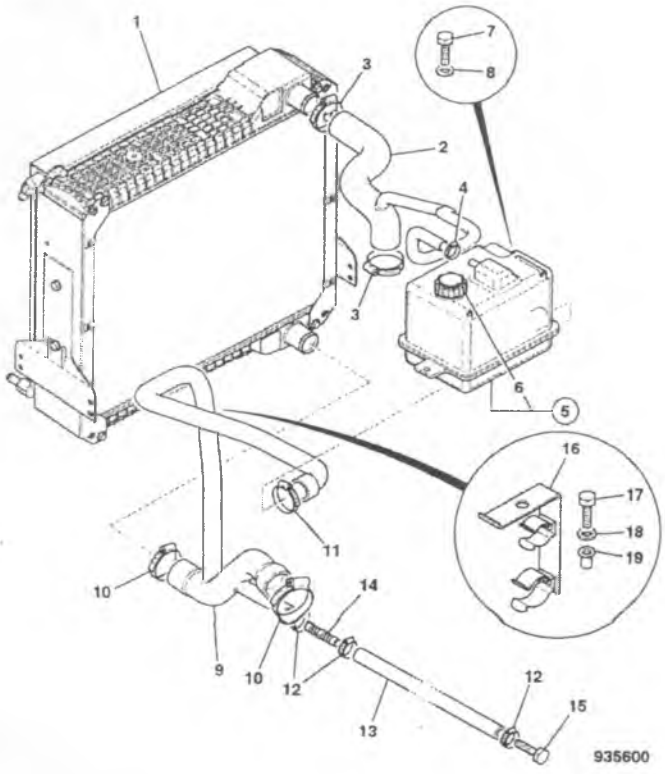

	FROM	TO	FROM	TO
3C PLUS				
3C 14				

ITEM	PART NO	CHANGE NO	DESCRIPTION	REMARKS	USAGE CODE	QTY
1	128/14326		Cooler, assembly 5row, 2ws non CAC	For Service Parts, See frame V47-11-1		1
2	834/11380		Hose, radiaor top, 2wsON INSERT AT JUNC			1
3	2201/0011		Clip, jubilee			2
4	2201/0005		Clip, jubilee			1
5	128/15480		Tank, expansion no sensor, assembly			1
6	477/00223		:Cap, Expansion Bottle			1
7	1315/0310Z		Bolt, M8x40			2
8	1420/0007Z		Washer, plain, M8			2
9	128/C8166		Hose, bottom 2ws tier @#			1
10	2201/0012		Clip, jubilee			2
11	2201/0010		Clip, jubilee			1
12	2201/0006		Clip, jubilee			1
13	.		'See Remark'	See Cab Heater Circuit		1
14	650/10166		Adapter, hose connecter, 16mm OD	Heater Builds		1
15	1315/3714Z		Bolt	Heaterless Builds		1
16	128/15558		Guide, hose			1
17	1315/0307Z		Screw, M8 X 25			1
18	1420/0007Z		Washer, plain, M8			1

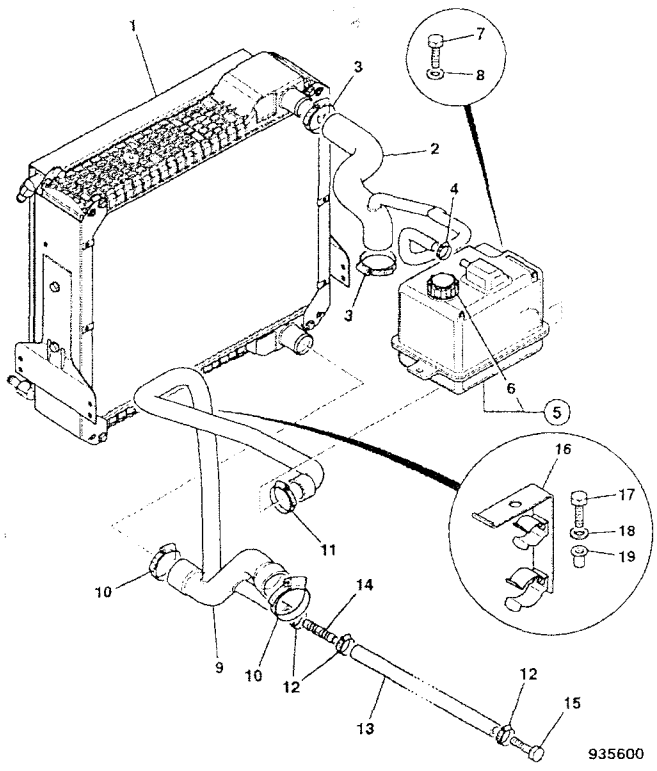

ITEM	PART NO	CHANGE NO	DESCRIPTION	REMARKS	USAGE CODE	QTY
19	826/01102		Nut, rivet,M6 open ended			1

V

V41 ENGINE ASSEMBLYS
V42 ENGINE MOUNTINGS
V43 AIR FILTERS
V44 AIR INDUCTION HOSES
V45 EXHAUST SYSTEMS
V46 RADIATOR FITTINGS & MOUNTINGS
V47 COMBINATION COOLERS
V48 RADIATOR & HOSES
● V49 FRONT END DRIVE
V50 LOW PRESSURE FUEL SYSTEM
V51 FUEL SEDIMENT FILTERS
V52 EXHAUSTER SERVO BRAKES
V55 OIL LEVEL DIPSTICK & TUBE
V56 AIR CONDITIONING COMPRESSOR
V57 ENGINE OIL DRAIN

ENGLISH

V49-1-1 COOLING FAN & SPACER, 2WS BUILDS
V49-3-1 FRONT END DRIVE, ACCESSORIES, NON AIRCON
V49-4-1 FRONT END DRIVE, ACCESSORIES, AIR CONDITIONING
V49-5-2 FRONT END DRIVE, ACCESSORIES, NON AIRCON
V49-6-2 FRONT END DRIVE, ACCESSORIES, AIR CONDITIONING
V49-8-2 FRONT END DRIVE, ACCESSORIES, AIR CONDITIONING
V49-20-1 LOWER IDLER PULLEY, SMALL

V49-1-1 COOLING FAN & SPACER, 2WS BUILDS

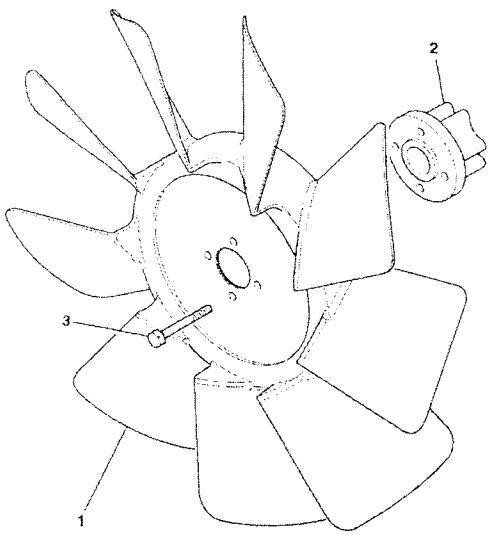

	FROM	TO	FROM	TO
3C PLUS				
3C 14				

ITEM	PART NO	CHANGE NO	DESCRIPTION	REMARKS	USAGE CODE	QTY
1	30/925526		Fan, D=20" puller			1
2	331/47063		Spacer, fan, T=42.5mm			1
3	1315/3315Z		Bolt, star drive, M8 x 65mm			4

774920

V49-3-1 FRONT END DRIVE, ACCESSORIES, NON AIRCON

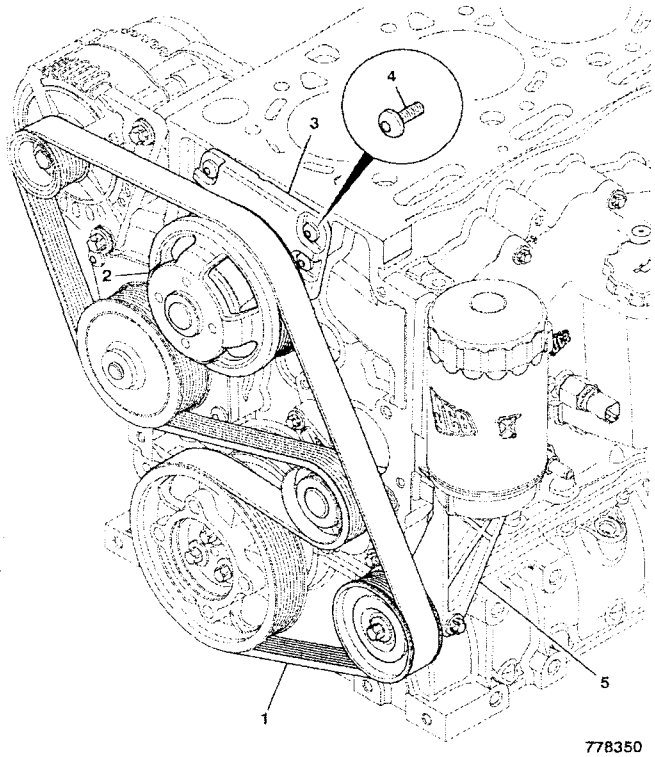

778350

	FROM	TO	FROM	TO
3C PLUS				
3C 14				

ITEM	PART NO	CHANGE NO	DESCRIPTION	REMARKS	USAGE CODE	QTY
1	320/08598		Belt, drive, L=1835			1
2	320/08572		Pulley, fan, D=166, ratio 1:1			1
3	320/08500		Hub, fan drive, assembly			1
4	320/08541		Screw, pan head, M8 x 20			1
5	.		'See Remark'	See frame V49-20-1		1

V49-4-1 FRONT END DRIVE, ACCESSORIES, AIR CONDITIONING

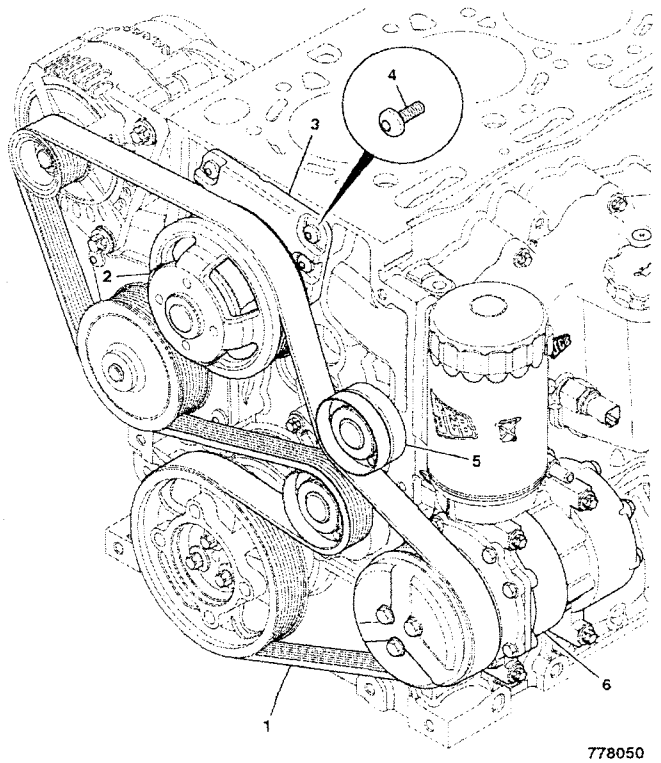

778050

	FROM	TO	FROM	TO
3C PLUS				
3C 14				

ITEM	PART NO	CHANGE NO	DESCRIPTION	REMARKS	USAGE CODE	QTY
1	320/08603		Belt, drive, L=1988			1
2	320/08572		Pulley, fan, D=166, ratio 1:1			1
3	320/08500		Hub, fan drive, assembly			1
4	320/08541		Screw, pan head, M8 x 20			4
5	320/08530		Pulley, idler, long			1
6	.		'See Remark'	Refer to frame V56-1-1		1

V49-5-2 FRONT END DRIVE, ACCESSORIES, NON AIRCON

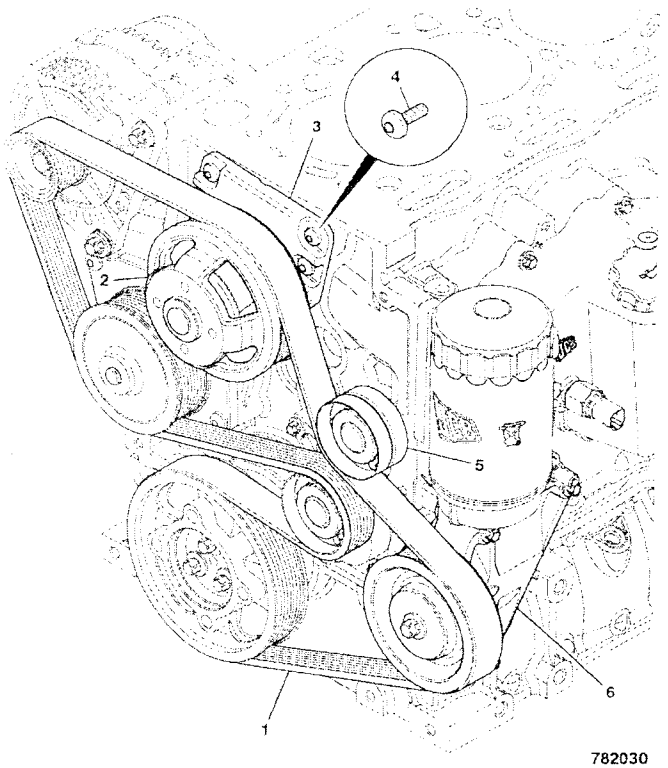

782030

	FROM	TO	FROM	TO
3C PLUS				

ITEM	PART NO	CHANGE NO	DESCRIPTION	REMARKS	USAGE CODE	QTY
1	320/08608		Belt, drive, L=2002			1
2	320/08583		Pulley, cooling fan 1.16:1, D=143mm			1
3	320/08500		Hub, fan drive, assembly			1
4	320/08541		Screw, pan head, M8 x 20			4
5	320/08530		Pulley, idler, long			1
6	.		'See Remark'	Refer to frame V49-21-1		1

V49-6-2 FRONT END DRIVE, ACCESSORIES, AIR CONDITIONING

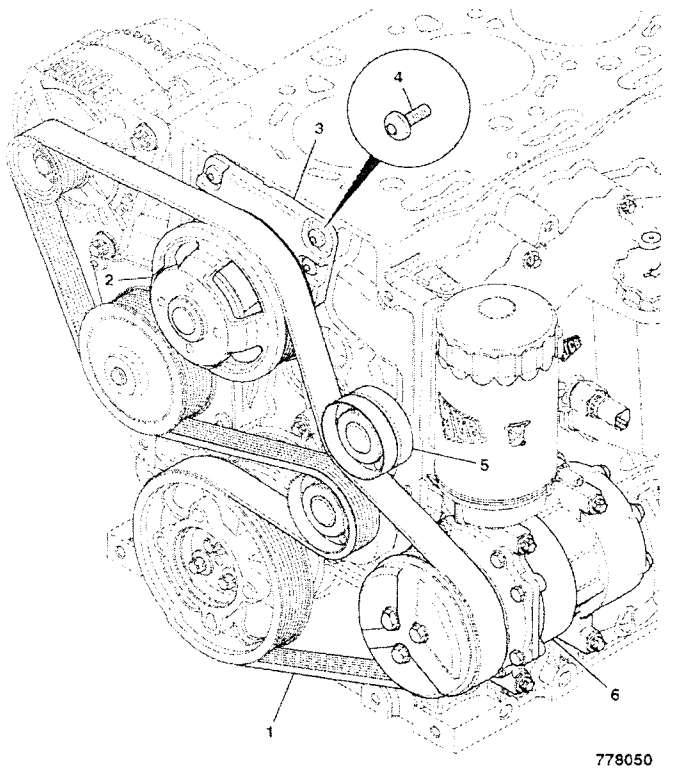

778050

	FROM	TO	FROM	TO
3C PLUS				
3C 14				

ITEM	PART NO	CHANGE NO	DESCRIPTION	REMARKS	USAGE CODE	QTY
1	320/08608		Belt, drive, L=2002			1
2	320/08583		Pulley, cooling fan 1.16:1, D=143mm			1
3	320/08500		Hub, fan drive, assembly			1
4	320/08541		Screw, pan head, M8 x 20			4
5	320/08530		Pulley, idler, long			1
6	.		'See Remark'	Refer to frame V56-1-1		1

V49-8-2 FRONT END DRIVE, ACCESSORIES, AIR CONDITIONING

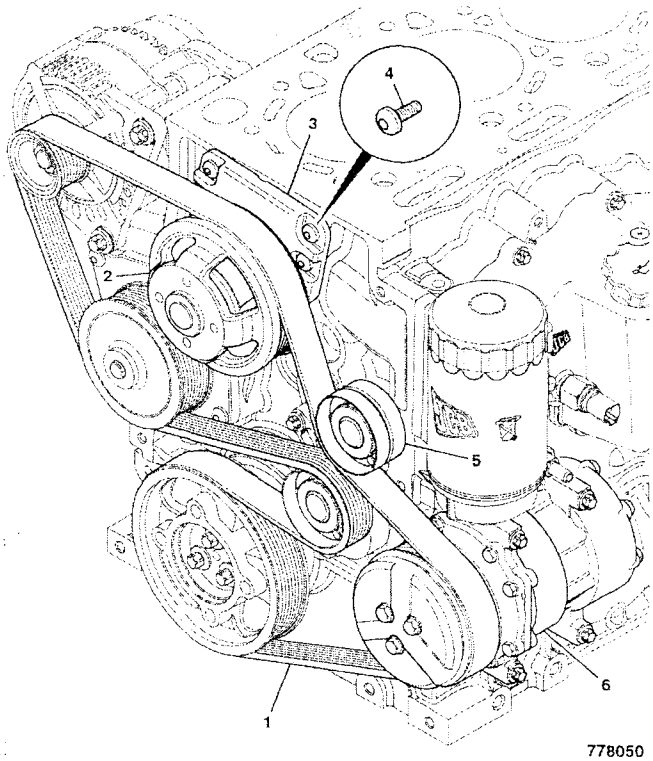

778050

FROM TO FROM TO

3C PLUS

ITEM	PART NO	CHANGE NO	DESCRIPTION	REMARKS	USAGE CODE	QTY
1	320/08609		Belt, drive, L=1995			1
2	320/08503		Pulley, cooling fan 1.25:1, D=133mm			1
3	320/08500		Hub, fan drive, assembly			1
4	320/08541		Screw, pan head, M8 x 20			4
5	320/08530		Pulley, idler, long			1
6	.		'See Remark'	Refer to frame V56-1-1		1

V49-20-1 LOWER IDLER PULLEY, SMALL

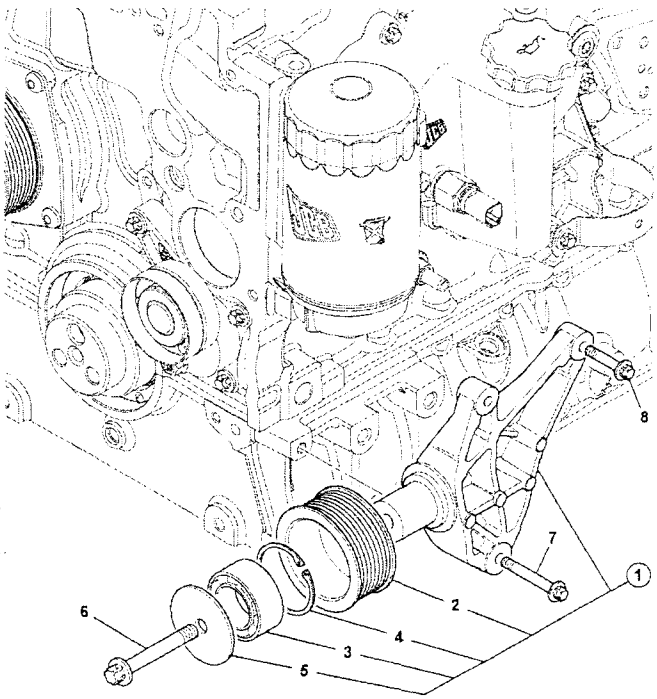

736420

FROM TO FROM TO

3C PLUS
3C 14

ITEM	PART NO	CHANGE NO	DESCRIPTION	REMARKS	USAGE CODE	QTY
1	320/08586		Pulley, lower idler, assembly			1
2	320/08592		.Pulley, idler, D=79mm			1
3	320/08595		.Bearing, idler pulley			1
4	320/08594		.Circlip			1
5	320/08593		.Washer, idler retainer			1
6	826/10613		Screw, flanged, M10 X 50			1
7	1319/03092		Screw, star drive, M8 x 35			2
8	1319/03112		Screw, star drive, M8 x 45			1

V

V41 ENGINE ASSEMBLYS
V42 ENGINE MOUNTINGS
V43 AIR FILTERS
V44 AIR INDUCTION HOSES
V45 EXHAUST SYSTEMS
V46 RADIATOR FITTINGS & MOUNTINGS
V47 COMBINATION COOLERS
V48 RADIATOR & HOSES
V49 FRONT END DRIVE
● V50 LOW PRESSURE FUEL SYSTEM
V51 FUEL SEDIMENT FILTERS
V52 EXHAUSTER SERVO BRAKES
V55 OIL LEVEL DIPSTICK & TUBE
V56 AIR CONDITIONING COMPRESSOR
V57 ENGINE OIL DRAIN

ENGLISH

V50-2-1 FUEL PIPES, FUEL TANK TO FILTER

V49-8-2 FRONT END DRIVE, ACCESSORIES, AIR CONDITIONING

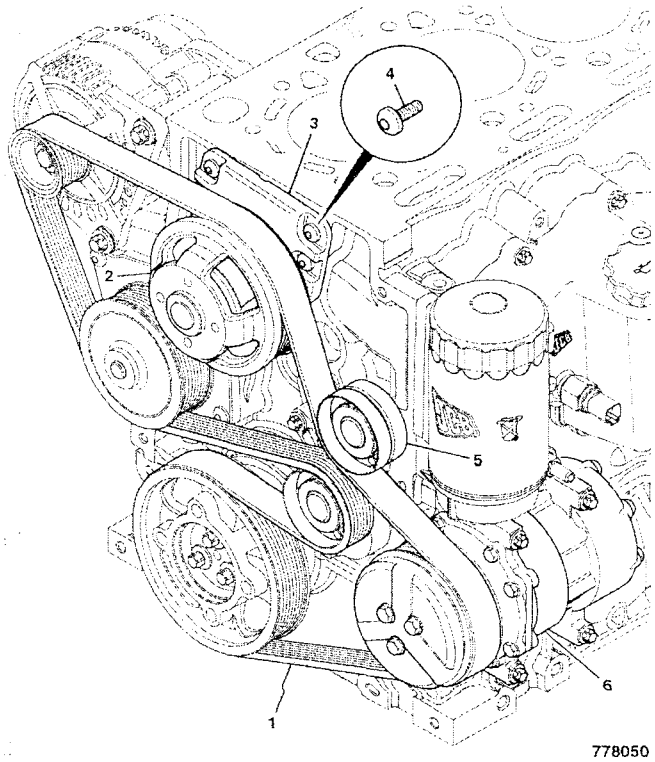

778050

	FROM	TO	FROM	TO
3C PLUS				

ITEM	PART NO	CHANGE NO	DESCRIPTION	REMARKS	USAGE CODE	QTY
1	320/08609		Belt, drive, L=1995			1
2	320/08503		Pulley, cooling fan 1.25:1, D=133mm			1
3	320/08500		Hub, fan drive, assembly			1
4	320/08541		Screw, pan head, M8 x 20			4
5	320/08530		Pulley, idler, long			1
6	.		'See Remark'	Refer to frame V56-1-1		1

V49-20-1 LOWER IDLER PULLEY, SMALL

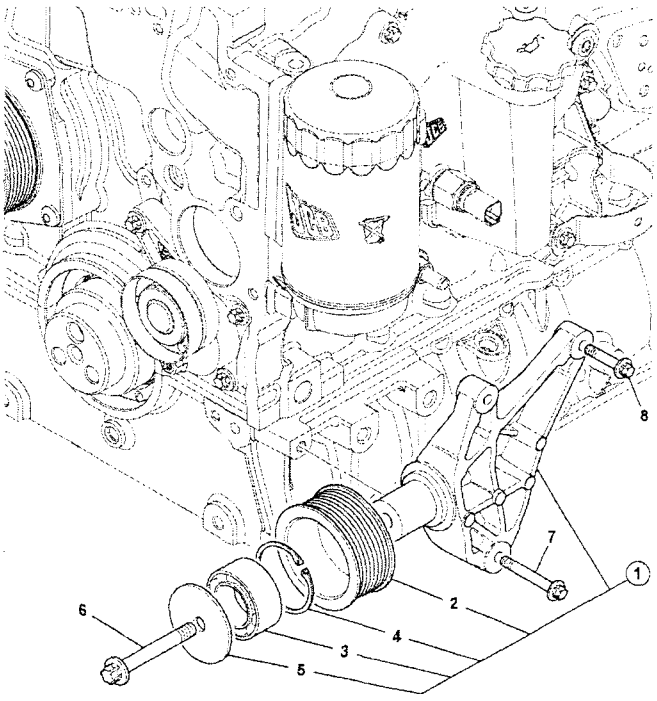

736420

	FROM	TO	FROM	TO
3C PLUS				
3C 14				

ITEM	PART NO	CHANGE NO	DESCRIPTION	REMARKS	USAGE CODE	QTY
1	320/08586		Pulley, lower idler, assembly			1
2	320/08592		Pulley, idler, D=79mm			1
3	320/08595		Bearing, idler pulley			1
4	320/08594		Circlip			1
5	320/08593		Washer, idler retainer			1
6	826/10613		Screw, flanged, M10 X 50			1
7	1319/0309Z		Screw, star drive, M8 x 35			2
8	1319/0311Z		Screw, star drive, M8 x 45			1

V

V41 ENGINE ASSEMBLYS
V42 ENGINE MOUNTINGS
V43 AIR FILTERS
V44 AIR INDUCTION HOSES
V45 EXHAUST SYSTEMS
V46 RADIATOR FITTINGS & MOUNTINGS
V47 COMBINATION COOLERS
V48 RADIATOR & HOSES
V49 FRONT END DRIVE
● V50 LOW PRESSURE FUEL SYSTEM
V51 FUEL SEDIMENT FILTERS
V52 EXHAUSTER SERVO BRAKES
V55 OIL LEVEL DIPSTICK & TUBE
V56 AIR CONDITIONING COMPRESSOR
V57 ENGINE OIL DRAIN

ENGLISH

V50-2-1 FUEL PIPES, FUEL TANK TO FILTER

V50-2-1 FUEL PIPES, FUEL TANK TO FILTER

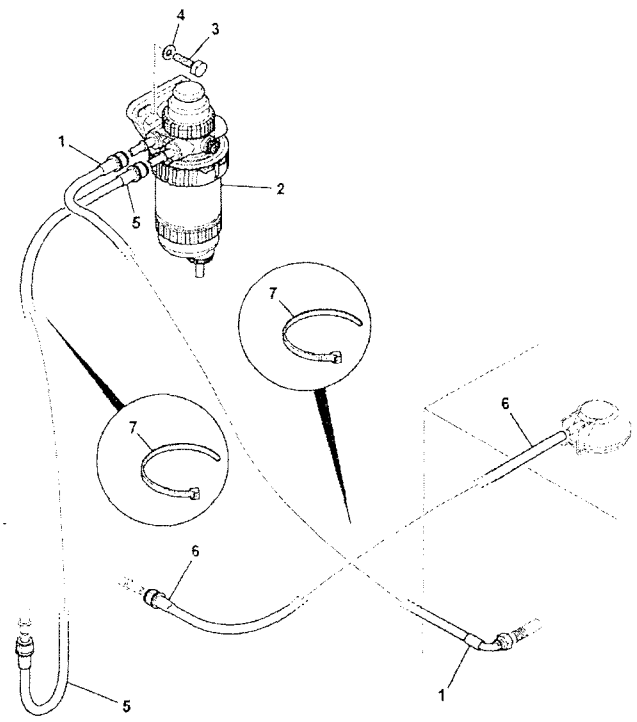

816240

	FROM	TO	FROM	TO
3C PLUS				
3C 14				

ITEM	PART NO	CHANGE NO	DESCRIPTION	REMARKS	USAGE CODE	QTY
1	649/51784		Hose, diesel fuel, L=1850			1
2	32/925765		Filter, fuel sediment, 30 micron	For Service Parts, See Index		1
3	1315/0408Z		Bolt, M10x30			2
4	1420/0008Z		Washer, Plain M10			2
5	649/51777		Hose, diesel fuel, L=1600mm			1
6	649/51854		Hose, diesel fuel500mm, L=1500mm			1
7	826/01144		Tie, cable, 200mm long			6

V51-0-1

V

V41 ENGINE ASSEMBLYS
V42 ENGINE MOUNTINGS
V43 AIR FILTERS
V44 AIR INDUCTION HOSES
V45 EXHAUST SYSTEMS
V46 RADIATOR FITTINGS & MOUNTINGS
V47 COMBINATION COOLERS
V48 RADIATOR & HOSES
V49 FRONT END DRIVE
V50 LOW PRESSURE FUEL SYSTEM
● V51 FUEL SEDIMENT FILTERS
V52 EXHAUSTER SERVO BRAKES
V55 OIL LEVEL DIPSTICK & TUBE
V56 AIR CONDITIONING COMPRESSOR
V57 ENGINE OIL DRAIN

ENGLISH

V51-5-1 FILTER, FUEL SEDIMENT, 2WS & AWS

V51-5-1 FILTER, FUEL SEDIMENT, 2WS & AWS

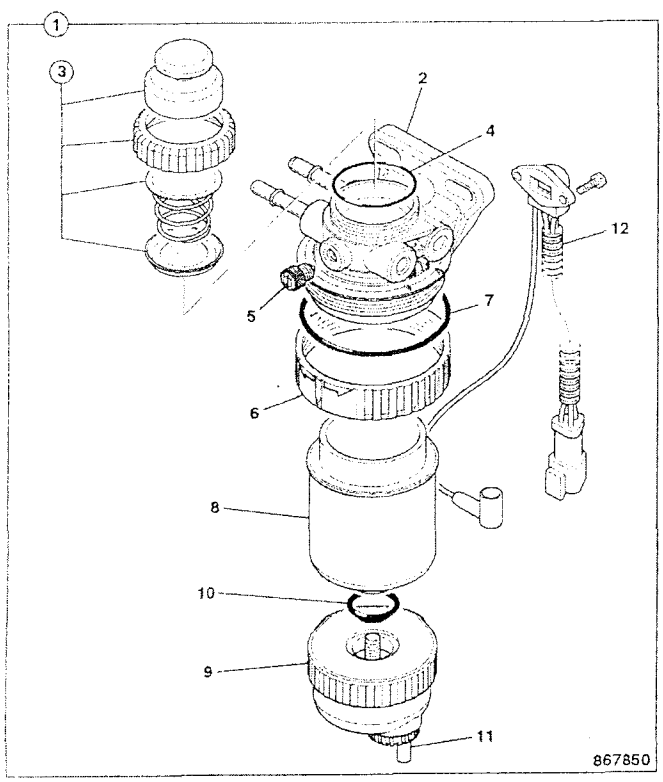

	FROM	TO	FROM	TO
3C PLUS				
3C 14				

ITEM	PART NO	CHANGE NO	DESCRIPTION	REMARKS	USAGE CODE	QTY
1	32/925914		Filter, fuel sediment 30m, reverse flow			1
2	NSP		:None serviced part			1
3	32/926045		:Kit-hand primer, reverse flow			1
4	32/925906		:Seal			1
5	32/925973		:O Ring			1
6	32/921002		:Ring, retaining			1
7	32/921003		:Seal, dust			1
8	32/925915		:Element, fuel filter, reverse flow			1
9	32/925708		:Bowl, assembly			1
10	32/925733		:Seal, o'ring			1
11	32/925818		:Kit-drain valve, c/w wif sensor, & seal			1
12	32/925709		:Kit-sensor, water in fuel			1

V

V41 ENGINE ASSEMBLYS
V42 ENGINE MOUNTINGS
V43 AIR FILTERS
V44 AIR INDUCTION HOSES
V45 EXHAUST SYSTEMS
V46 RADIATOR FITTINGS & MOUNTINGS
V47 COMBINATION COOLERS
V48 RADIATOR & HOSES
V49 FRONT END DRIVE
V50 LOW PRESSURE FUEL SYSTEM
V51 FUEL SEDIMENT FILTERS
● V52 EXHAUSTER SERVO BRAKES
V55 OIL LEVEL DIPSTICK & TUBE
V56 AIR CONDITIONING COMPRESSOR
V57 ENGINE OIL DRAIN

ENGLISH

V52-1-1 EXHAUSTER, SERVO BRAKES

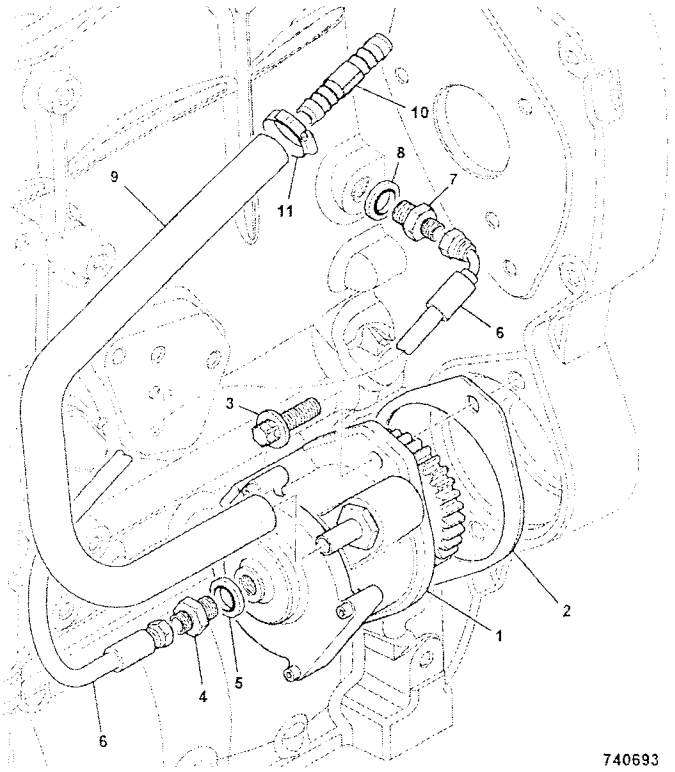

740693

	FROM	TO	FROM	TO
3C PLUS				
3C 14				

ITEM	PART NO	CHANGE NO	DESCRIPTION	REMARKS	USAGE CODE	QTY
1	160/15137		Exhauster, assembly			1
2	813/10143		Gasket			1
3	1319/0408Z		Screw, star drive, M10 x 30			2
4	816/90727		Adapter, 3mm restricting			1
5	823/10633		Washer, bonded 1/4"BSP, with centering lip			1
6	649/51208		Hose, exhauster			1
7	816/90768		Adapter, 1/8"BSP-M12			1
8	320/04521		Seal, bonded			1
9	648/31003		Hose, brake vacuum, 9.5mm bore x 400mm			1
10	650/10205		Connector, hose			1
11	2201/0004		Clip, jubilee			2

V

V41 ENGINE ASSEMBLYS
V42 ENGINE MOUNTINGS
V43 AIR FILTERS
V44 AIR INDUCTION HOSES
V45 EXHAUST SYSTEMS
V46 RADIATOR FITTINGS & MOUNTINGS
V47 COMBINATION COOLERS
V48 RADIATOR & HOSES
V49 FRONT END DRIVE
V50 LOW PRESSURE FUEL SYSTEM
V51 FUEL SEDIMENT FILTERS
V52 EXHAUSTER SERVO BRAKES
● V55 OIL LEVEL DIPSTICK & TUBE
V56 AIR CONDITIONING COMPRESSOR
V57 ENGINE OIL DRAIN

ENGLISH

V55-1-1 OIL LEVEL DIPSTICK, & TUBE, STANDARD
V55-1-2 OIL LEVEL DIPSTICK, & TUBE, STANDARD

V55-1-1 OIL LEVEL DIPSTICK, & TUBE, STANDARD

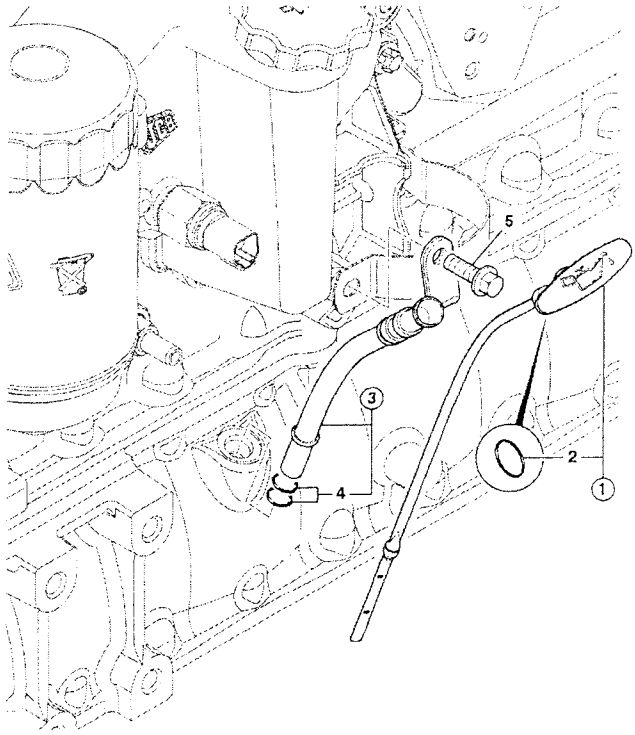

734741

	FROM	TO	FROM	TO
3C PLUS				
3C 14				

ITEM	PART NO	CHANGE NO	DESCRIPTION	REMARKS	USAGE CODE	QTY
1	320/04196		Dipstick, engine oil short			1
2	320/04129		:O Ring			1
3	320/04195		Tube, engine oil dipstick, short		4	1
4	320/04127		:O Ring			2
5	1317/3305Z		Bolt, flange head, M8 x 20 lg			1

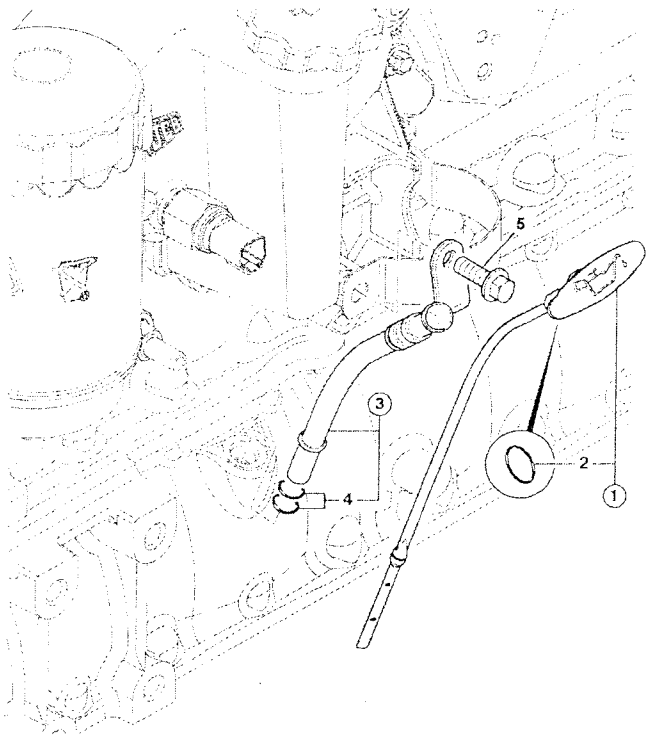

734741

	FROM	TO	FROM	TO
3C PLUS				
3C 14				

ITEM	PART NO	CHANGE NO	DESCRIPTION	REMARKS	USAGE CODE	QTY
1	320/04249		Dipstick, short			1
2	320/04129		:O Ring			1
3	320/04195		Tube, engine oil dipstick, short			1
4	320/04127		:O Ring			2
5	1317/3305Z		Bolt, flange head, M8 x 20 lg			1

V

V41 ENGINE ASSEMBLYS
V42 ENGINE MOUNTINGS
V43 AIR FILTERS
V44 AIR INDUCTION HOSES
V45 EXHAUST SYSTEMS
V46 RADIATOR FITTINGS & MOUNTINGS
V47 COMBINATION COOLERS
V48 RADIATOR & HOSES
V49 FRONT END DRIVE
V50 LOW PRESSURE FUEL SYSTEM
V51 FUEL SEDIMENT FILTERS
V52 EXHAUSTER SERVO BRAKES
V55 OIL LEVEL DIPSTICK & TUBE
● V56 AIR CONDITIONING COMPRESSOR
V57 ENGINE OIL DRAIN

ENGLISH

V56-1-1 COMPRESSOR, AIR CONDITIONING

V56-1-1 COMPRESSOR, AIR CONDITIONING

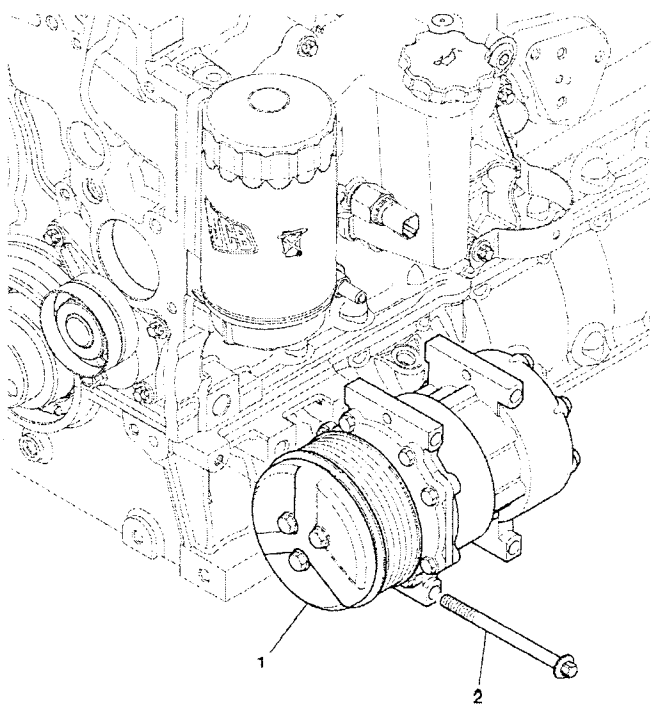

735741

	FROM	TO	FROM	TO
3C PLUS				
3C 14				

ITEM	PART NO	CHANGE NO	DESCRIPTION	REMARKS	USAGE CODE	QTY
1	320/08562		Compressor, air conditioning, 12v			1
2	1319/3320Z		Bolt, star drive, M8 x 100mm			3

V

V41 ENGINE ASSEMBLYS
V42 ENGINE MOUNTINGS
V43 AIR FILTERS
V44 AIR INDUCTION HOSES
V45 EXHAUST SYSTEMS
V46 RADIATOR FITTINGS & MOUNTINGS
V47 COMBINATION COOLERS
V48 RADIATOR & HOSES
V49 FRONT END DRIVE
V50 LOW PRESSURE FUEL SYSTEM
V51 FUEL SEDIMENT FILTERS
V52 EXHAUSTER SERVO BRAKES
V55 OIL LEVEL DIPSTICK & TUBE
V56 AIR CONDITIONING COMPRESSOR
● V57 ENGINE OIL DRAIN

ENGLISH

V57-1-1 ENGINE OIL DRAIN

V57-1-1 ENGINE OIL DRAIN

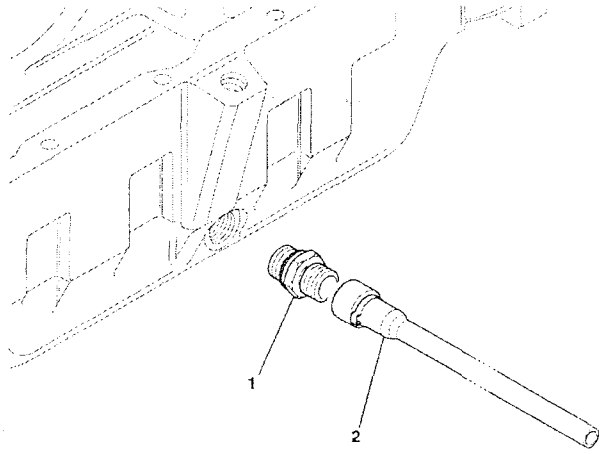

	FROM	TO	FROM	TO
3C PLUS				
3C 14				

ITEM	PART NO	CHANGE NO	DESCRIPTION	REMARKS	USAGE CODE	QTY
1	25/222662		Plug, oil drain			1
2	*332/C3428		Tube, oil sump drain			1

873161

1 GENERAL INDEX

DESCRIPTION	PAGE NUMBER	ITEM NUMBER
'		
'See Remark'	V44-1-1	1
A		
Adapter, elbow	L5-4-1	13
Adapter, hose connecter, 16mm OD	V48-11-1	14
Adapter, 1/8"BSP-M12	V52-1-1	7
Adapter, 3mm restricting	V52-1-1	4
Alternator, 12V-95AMP	C2-4-1	1
Assembly, rocker shaft	L2-2-1	1
Atomiser, assembly	L6-2-1	9
Atomiser, assembly	L6-2-2	9
B		
Base, engine immobiliser	C2-6-1	3
Battery, type 31 950cc, Savannah	C1-2-11	1
Beam, centre mounting	L4-3-1	2
Beam, centre mounting	L4-3-2	2
Beam, centre mounting	V46-1-3	2
Beam, centre mounting	V46-11-1	2
Bearing, idler pulley	V49-20-1	3
Belt	L1-5-1	8
Belt, drive, L=1835	V49-3-1	1
Belt, drive, L=1988	V49-4-1	1
Belt, drive, L=1995	V49-8-2	1
Belt, drive, L=2002	V49-5-2	1
Belt, drive, L=2002	V49-6-2	1
Block, clamping	L4-3-1	8
Block, clamping	L4-3-2	8
Block, clamping	V46-11-1	8
Block, engine 8C30/8C88	L1-3-1	1
Block, engine 8C31/8C89	L1-3-2	1
Body, rear	L4-1-1	11
Bolt	D2-1-1	14
Bolt	D2-2-1	14
Bolt	E1-18-1	5
Bolt	V44-1-1	2
Bolt	V44-4-1	2
Bolt	V44-6-1	2
Bolt	V46-1-3	7
Bolt	V47-1-1	5
Bolt	V47-11-1	5
Bolt	V48-5-1	14
Bolt	V48-7-1	14
Bolt	V48-11-1	15
Bolt, banjo	L6-3-1	13
Bolt, banjo	L6-3-1	19
Bolt, banjo	L6-3-2	19
Bolt, banjo	L6-3-2	13
Bolt, banjo	L6-4-1	3
Bolt, bolt	L6-3-1	21
Bolt, bolt	L6-3-2	21
Bolt, flange head, M8 x 20 lg	V55-1-1	5
Bolt, flange head, M8 x 20 lg	V55-1-2	5
Bolt, star drive, M10 x 120	C2-4-1	7
Bolt, star drive, M8 x 100mm	V56-1-1	2
Bolt, star drive, M8 x 65mm	V49-1-1	3
Bolt, Banjo	L6-3-1	17
Bolt, Banjo	L6-3-2	17
Bolt, M10 x 40	L6-5-1	3
Bolt, M10 x 40	V42-1-1	6
Bolt, M10 x 40	V45-1-2	10
Bolt, M10x25	V45-1-2	7
Bolt, M10x25	V45-2-3	7
Bolt, M10x30	V45-1-2	8
Bolt, M10x30	V45-2-3	8
Bolt, M10x30	V50-2-1	3
Bolt, M16 x 120	V42-1-1	4
Bolt, M16 x 140	V42-1-1	3
Bolt, M6 shear, shear @ 11Nm	C2-6-1	9
Bolt, M6x27 shear	C2-6-1	2
Bolt, M8x40	C2-2-1	12
Bolt, M8x40	L4-4-1	7
Bolt, M8x40	L4-4-2	7
Bolt, M8x40	V48-5-1	7
Bolt, M8x40	V48-7-1	7
Bolt, M8x40	V48-11-1	7
Bottle, front screen wash	B2-8-1	1
Bottle, screenwash	B2-8-2	1
Bowl, assembly	L6-6-1	9
Bowl, assembly	V51-5-1	9
Bracket	L2-3-1	11
Bracket	L6-3-1	5
Bracket	L6-3-2	5
Bracket, centre beam mounting, front 2ws	L4-3-1	1
Bracket, centre beam mounting, front 2ws	L4-3-2	1
Bracket, centre beam mounting, front 2ws	V46-11-1	1
Bracket, centre beam mounting, front 2WS	V46-1-3	1
Bracket, engine mounting, left hand	L1-8-1	1

DESCRIPTION	PAGE NUMBER	ITEM NUMBER
Bracket, engine mounting, left hand	V42-1-1	2
Bracket, engine mounting, right hand	L1-8-1	2
Bracket, engine mounting, right hand	V42-1-1	1
Bracket, exhaust mounting	V45-1-2	6
Bracket, exhaust mounting	V45-1-2	5
Bracket, exhaust mounting	V45-2-3	6
Bracket, exhaust mounting	V45-2-3	5
Bracket, mounting, hand throttle	D2-1-1	10
Bracket, mounting, hand throttle	D2-2-1	10
Bracket, radiator mounting	E1-18-1	4
Bracket, radiator mounting	V47-1-1	4
Bracket, radiator mounting	V47-11-1	4
Bracket, sensor mounting	C2-5-1	19
Bracket, sensor mounting	C2-5-2	19
Bracket, support	L5-1-1	17
Bracket, support	L5-1-2	17
Bracket, support	L7-2-1	15
Bracket, throttle reaction	D2-2-1	11
Bracket, throttle, international engine	D2-1-1	11
Brake, caliper, parkbrake, Hayes, booted	G1-3-1	1
Bush	L1-3-1	13
Bush	L1-3-2	13

C

Cable, throttle control, assembly	D2-1-1	1
Cable, throttle control, assembly	D2-2-1	1
Camshaft, camshaft	L1-6-1	1
Camshaft, camshaft	L1-6-2	1
Cap, Expansion Bottle	L4-4-1	6
Cap, Expansion Bottle	L4-4-2	6
Cap, Expansion Bottle	V48-5-1	6
Cap, Expansion Bottle	V48-7-1	6
Cap, Expansion Bottle	V48-11-1	6
Cap, PVC flexible	V44-6-1	9
Capscrew	V46-1-3	20
Capscrew, M10 x 35mm	L4-3-1	19
Capscrew, M10 x 35mm	L4-3-2	19
Capscrew, M10 x 35mm	V46-1-3	19
Capscrew, M10 x 35mm	V46-11-1	19
Circlip	V49-20-1	4
Clip	C2-2-1	3
Clip	C2-5-1	14
Clip	C2-5-2	14
Clip, cable	C2-2-1	9
Clip, cable	C2-5-1	17
Clip, cable	C2-5-2	17
Clip, harness	C2-2-1	2
Clip, harness support	C2-2-1	8
Clip, jubilee	L4-4-1	4
Clip, jubilee	L4-4-1	3
Clip, jubilee	L4-4-2	4
Clip, jubilee	L4-4-2	3
Clip, jubilee	V44-1-1	9
Clip, jubilee	V44-1-1	8
Clip, jubilee	V44-1-1	6
Clip, jubilee	V44-1-1	5
Clip, jubilee	V44-4-1	9
Clip, jubilee	V44-4-1	7
Clip, jubilee	V44-4-1	6
Clip, jubilee	V44-4-1	5
Clip, jubilee	V44-4-1	10
Clip, jubilee	V44-6-1	7
Clip, jubilee	V44-6-1	6
Clip, jubilee	V44-6-1	5
Clip, jubilee	V44-6-1	10
Clip, jubilee	V48-5-1	13
Clip, jubilee	V48-5-1	12
Clip, jubilee	V48-5-1	11
Clip, jubilee	V48-5-1	10
Clip, jubilee	V48-5-1	4
Clip, jubilee	V48-5-1	3
Clip, jubilee	V48-7-1	13
Clip, jubilee	V48-7-1	12
Clip, jubilee	V48-7-1	11
Clip, jubilee	V48-7-1	10
Clip, jubilee	V48-7-1	4
Clip, jubilee	V48-7-1	3
Clip, jubilee	V48-11-1	12
Clip, jubilee	V48-11-1	11
Clip, jubilee	V48-11-1	10
Clip, jubilee	V48-11-1	4
Clip, jubilee	V48-11-1	3
Clip, jubilee	V52-1-1	11
Clip, overcentre	L3-3-1	6
Clip, overcentre	L3-3-2	6
Clip, overcentre	V43-1-1	6
Clip, overcentre	V43-2-1	6
Clip, Deutsch DT Mtg Clip	C2-2-1	13
Compressor, air conditioning, 12v	V56-1-1	1
Connector	L4-2-1	10
Connector	L5-4-1	7

DESCRIPTION	PAGE NUMBER	ITEM NUMBER
Connector, air inlet	L3-1-1	9
Connector, hose	V52-1-1	10
Connector, outlet	L6-3-1	23
Connector, outlet	L6-3-2	23
Cooler, assembly 5row, 2ws non CAC	E1-18-1	1
Cooler, assembly 5row, 2ws non CAC	L4-4-1	1
Cooler, assembly 5row, 2ws non CAC	L4-4-2	1
Cooler, assembly 5row, 2ws non CAC	V47-1-1	1
Cooler, assembly 5row, 2ws non CAC	V47-11-1	1
Cooler, assembly 5row, 2ws non CAC	V48-5-1	1
Cooler, assembly 5row, 2ws non CAC	V48-7-1	1
Cooler, assembly 5row, 2ws non CAC	V48-11-1	1
Cooler, oil	L5-4-1	6
Cooler, oil, double, 14plates + 21 plates	E1-18-1	3
Cooler, oil, double, 14plates + 21 plates	V47-1-1	3
Cooler, oil, double, 14plates + 21 plates	V47-11-1	3
Cover, cover	L2-3-1	1
Cover, rear	L2-1-1	14
Cover, rear	L2-1-2	14
Cowling, fan cowl 18" brazil	L4-3-1	3
Cowling, fan 20", 2ws	V46-1-3	3
Cowling, fan 20inch 2ws	L4-3-2	3
Cowling, fan 20inch 2ws	V46-1-3	3
Cowling, fan 20inch 2ws	V46-11-1	3

D

Diffuser	L7-2-1	5
Dipstick	L5-1-2	13
Dipstick, dipstick	L5-1-1	13
Dipstick, engine oil short	V55-1-1	1
Dipstick, short	V55-1-2	1

E

Elbow	L7-2-1	11
Elbow, elbow	L5-4-1	10
Element, air filter, main	L3-3-1	3
Element, air filter, main	L3-3-2	3
Element, air filter, main	V43-1-1	3
Element, air filter, main	V43-2-1	3
Element, air filter, safety	L3-3-1	4
Element, air filter, safety	L3-3-2	4
Element, air filter, safety	V43-1-1	4
Element, air filter, safety	V43-2-1	4
Element, fuel filter	L6-3-1	8
Element, fuel filter	L6-3-2	8
Element, fuel filter, reverse flow	L6-6-1	8
Element, fuel filter, reverse flow	V51-5-1	8
Element, oil filter	L5-4-1	9
Engine, assembly 68kW 12v	V41-11-1	1
Engine, assembly 82.5bhp-12v, nat/asp W300 T/	V41-2-1	1
Engine, assembly 84.5bhp 12v, nat/asp W300 T/	V41-1-1	1
Engine, assembly 99bhp-12v, turbo W300 T/C	V41-10-1	1
Engine, naturally aspirated, INTERNATIONAL, 7	L1-1-1	1
Engine, turbocharged, INTERNATIONAL, 92bhp	L1-1-2	1
Exhauster, assembly	V52-1-1	1

F

Fan, D=20" puller	V49-1-1	1
Fan, 18" cooling	L1-5-1	10
Fender, left hand, yellow, 214e	B1-8-20	1
Fender, right hand, yellow, 214e	B1-8-20	2
Filter, air intake	L3-3-1	8
Filter, air intake	L3-3-2	8
Filter, air intake	V43-1-1	7
Filter, air intake	V43-2-1	8
Filter, air, assembly	L3-3-1	1
Filter, air, assembly	L3-3-2	1
Filter, air, assembly	V43-1-1	1
Filter, air, assembly	V43-2-1	1
Filter, filter	L6-3-1	7
Filter, filter	L6-3-2	7
Filter, fuel sediment 30m, reverse flow	L6-5-1	2
Filter, fuel sediment 30m, reverse flow	L6-6-1	1
Filter, fuel sediment 30m, reverse flow	V51-5-1	1
Filter, fuel sediment, 30 micron	V50-2-1	2
Filter, pre-cleaner	L3-3-1	5
Filter, pre-cleaner	L3-3-2	5

DESCRIPTION	PAGE NUMBER	ITEM NUMBER
Filter, pre-cleaner	V43-1-1	5
Filter, pre-cleaner	V43-2-1	5
Frame, rear window	B2-5-11	1
Frame, window	B2-4-11	1
Fuse, 150Amp MEGAVAL	C2-5-1	3
Fuse, 150Amp MEGAVAL	C2-5-2	3

G

Gasket	L1-6-1	16
Gasket	L1-6-2	16
Gasket	L2-1-1	15
Gasket	L2-1-2	15
Gasket	L2-3-1	2
Gasket	L3-1-1	4
Gasket	L3-1-1	3
Gasket	L3-1-1	2
Gasket	L3-1-2	3
Gasket	L3-1-2	2
Gasket	L3-1-2	4
Gasket	L3-2-1	2
Gasket	L5-1-1	15
Gasket	L5-1-2	15
Gasket	L5-4-1	3
Gasket	L6-1-1	3
Gasket	L7-2-1	28
Gasket	V45-1-2	2
Gasket	V52-1-1	2
Gasket, cylinder head	L1-3-1	16
Gasket, cylinder head	L1-3-2	16
Gasket, cylinder head	L2-1-1	20
Gasket, cylinder head	L2-1-2	20
Gasket, exhaust	V45-2-3	2
Gasket, gasket	L1-3-1	19
Gasket, gasket	L1-3-2	19
Gasket, oil sump	L5-1-1	4
Gasket, oil sump	L5-1-2	4
Gasket, water pump	L4-1-1	13
Gasket, water pump	L4-1-1	12
Gear	L5-2-1	5
Gear	L5-2-2	5
Gear	L6-1-2	7
Gear, camshaft	L1-6-1	2
Gear, camshaft	L1-6-2	2
Gear, idler assembly	L1-6-1	11
Gear, idler assembly	L1-6-2	11
Gear, injection pump	L6-1-1	7
Grille, housing	B1-6-21	3
Grille, housing, 2WS	B1-6-11	3
Grille, side LH, 2WS	B1-6-11	1
Grille, side,RH, 2WS	B1-6-11	2
Grille, LH side 2WS	B1-6-21	1
Grille, RH side 2WS	B1-6-21	2
Grommet	D2-1-1	9
Grommet	D2-2-1	9
Grommet, hole dia 12.7mm, panel thknss 5-6mm	C2-2-1	10
Grommet, hole dia 12.7mm, panel thknss 5-6mm	C2-5-1	15
Grommet, hole dia 12.7mm, panel thknss 5-6mm	C2-5-2	15
Guard, immobiliser	C2-6-1	8
Guide, hose	L4-4-1	16
Guide, hose	L4-4-2	16
Guide, hose	V48-5-1	17
Guide, hose	V48-7-1	15
Guide, hose	V48-11-1	16
Guide, valve	L2-1-1	4
Guide, valve	L2-1-2	4

H

Harness, ECU to heater relay	C2-5-1	5
Harness, ECU to heater relay	C2-5-2	5
Harness, ESOS link	C2-2-1	1
Harness, 120V block heater, mains power lead	C2-7-1	3
Head, cylinder	L2-1-1	1
Head, cylinder	L2-1-2	1
Head, filter	L5-4-1	1
Heater, air intake -12v	C2-5-1	7
Heater, air intake -12v	C2-5-2	7
Heater, cylinder block, 1000w - 120v mains	C2-7-1	2
Hose	L2-3-1	12
Hose	L2-3-1	10
Hose	L2-3-1	6
Hose	L5-4-1	14
Hose	L7-2-1	9
Hose, air induction, nat/asp	V44-1-1	4
Hose, air induction, turbo 2WS	V44-6-1	4
Hose, air induction, 2ws turbo	V44-4-1	4
Hose, air scavenge, 2ws	V44-1-1	7
Hose, air scavenge, 2ws	V44-4-1	8
Hose, bottom P600 brazil	L4-4-1	9
Hose, bottom 2ws tier @#	L4-4-2	9
Hose, bottom 2ws tier @#	V48-11-1	9
Hose, brake vacuum, 9.5mm bore x 400mm	V52-1-1	9
Hose, diesel fuel, L=1600mm	V50-2-1	5
Hose, diesel fuel, L=1850	L6-5-1	1
Hose, diesel fuel, L=1850	V50-2-1	1
Hose, diesel fuel500mm, L=1500mm	V50-2-1	6
Hose, exhauster	V52-1-1	6
Hose, fuel hose 1200Lg	L6-5-1	5
Hose, oil drain	L7-2-1	25
Hose, radiaor top, 2wsON INSERT AT JUNC	L4-4-2	2
Hose, radiaor top, 2wsON INSERT AT JUNC	V48-11-1	2
Hose, radiator bottom, 2ws	V48-5-1	9
Hose, radiator bottom, 2ws	V48-7-1	9
Hose, radiator top, 2ws	V48-5-1	2
Hose, radiator top, 2ws	V48-7-1	2
Hose, top P600 brazil	L4-4-1	2
Hose, 8mm bore x1620mm	L6-5-1	6
Housing, timing case	L1-6-1	15
Housing, timing case	L1-6-2	15
Hub, fan drive, assembly	V49-3-1	3
Hub, fan drive, assembly	V49-4-1	3
Hub, fan drive, assembly	V49-5-2	3
Hub, fan drive, assembly	V49-6-2	3
Hub, fan drive, assembly	V49-8-2	3

I

Insert, exhaust	L2-1-1	2
Insert, exhaust	L2-1-2	2
Insert, inlet	L2-1-1	3
Insert, inlet	L2-1-2	3

K

Key	L1-6-1	3
Key	L1-6-2	3
Kit-brush	C2-4-1	6
Kit-cover, immobiliser	C2-6-1	1
Kit-drain valve, c/w wif sensor, & seal	L6-6-1	11
Kit-drain valve, c/w wif sensor, & seal	V51-5-1	11
Kit-hand primer, reverse flow	L6-6-1	3
Kit-hand primer, reverse flow	V51-5-1	3
Kit-heater, engine Block, 120V	C2-7-1	1
Kit-nut & spacer	C2-4-1	4
Kit-pad, brake Pad	G1-3-1	12
Kit-sensor, water in fuel	L6-6-1	12
Kit-sensor, water in fuel	V51-5-1	12
Kit-through bolt	C2-4-1	2
Kit, repair	L4-1-1	3
Kit, repair	L5-2-1	8
Kit, repair	L5-2-2	8
Knob, red, throttle lever	D2-1-1	3
Knob, red, throttle lever	D2-2-1	3

L

Lead, grid heater +ve, feed	C2-5-1	2
Lead, grid heater +ve, feed	C2-5-2	2
Lead, grid heater +ve, NA	C2-5-1	4
Lead, grid heater +ve, TURBO	C2-5-2	4
Lever, assembly, throttle control	D2-1-1	2
Lever, assembly throttle control	D2-2-1	2
Lever, loader control	D1-1-31	2
Liner	L1-3-1	4
Liner	L1-3-2	4

M

Manifold	L3-1-1	1
Manifold, induction	L3-1-2	1
Manifold, Exhaust	L3-2-1	1
Mounting, resilient	V42-1-1	9
Mounting, rubber	L1-8-1	9

N

None serviced part	B1-6-11	11
None serviced part	L6-6-1	2
None serviced part	V51-5-1	2
Nozzle	L6-2-1	10
Nozzle	L6-2-2	10
Nut	C2-5-1	20
Nut	C2-5-2	20
Nut	V45-1-2	4
Nut, 'u'	E1-18-1	8
Nut, 'u'	V47-1-1	8
Nut, 'u'	V47-11-1	8
Nut, 'U'	L3-3-1	2
Nut, 'U'	L3-3-2	2

DESCRIPTION	PAGE NUMBER	ITEM NUMBER
Hose, bottom 2ws tier @#	L4-4-2	9
Hose, bottom 2ws tier @#	V48-11-1	9
Hose, brake vacuum, 9.5mm bore x 400mm	V52-1-1	9
Hose, diesel fuel, L=1600mm	V50-2-1	5
Hose, diesel fuel, L=1850	L6-5-1	1
Hose, diesel fuel, L=1850	V50-2-1	1
Hose, diesel fuel500mm, L=1500mm	V50-2-1	6
Hose, exhauster	V52-1-1	6
Hose, fuel hose 1200Lg	L6-5-1	5
Hose, oil drain	L7-2-1	25
Hose, radiaor top, 2wsON INSERT AT JUNC	L4-4-2	2
Hose, radiaor top, 2wsON INSERT AT JUNC	V48-11-1	2
Hose, radiator bottom, 2ws	V48-5-1	9
Hose, radiator bottom, 2ws	V48-7-1	9
Hose, radiator top, 2ws	V48-5-1	2
Hose, radiator top, 2ws	V48-7-1	2
Hose, top P600 brazil	L4-4-1	2
Hose, 8mm bore x1620mm	L6-5-1	6
Housing, timing case	L1-6-1	15
Housing, timing case	L1-6-2	15
Hub, fan drive, assembly	V49-3-1	3
Hub, fan drive, assembly	V49-4-1	3
Hub, fan drive, assembly	V49-5-2	3
Hub, fan drive, assembly	V49-6-2	3
Hub, fan drive, assembly	V49-8-2	3

I

Insert, exhaust	L2-1-1	2
Insert, exhaust	L2-1-2	2
Insert, inlet	L2-1-1	3
Insert, inlet	L2-1-2	3

K

Key	L1-6-1	3
Key	L1-6-2	3
Kit-brush	C2-4-1	6
Kit-cover, immobiliser	C2-6-1	1
Kit-drain valve, c/w wif sensor, & seal	L6-6-1	11
Kit-drain valve, c/w wif sensor, & seal	V51-5-1	11
Kit-hand primer, reverse flow	L6-6-1	3
Kit-hand primer, reverse flow	V51-5-1	3
Kit-heater, engine Block, 120V	C2-7-1	1
Kit-nut & spacer	C2-4-1	4
Kit-pad, brake Pad	G1-3-1	12
Kit-sensor, water in fuel	L6-6-1	12
Kit-sensor, water in fuel	V51-5-1	12
Kit-through bolt	C2-4-1	2
Kit, repair	L4-1-1	3
Kit, repair	L5-2-1	8
Kit, repair	L5-2-2	8
Knob, red, throttle lever	D2-1-1	3
Knob, red, throttle lever	D2-2-1	3

L

Lead, grid heater +ve, feed	C2-5-1	2
Lead, grid heater +ve, feed	C2-5-2	2
Lead, grid heater +ve, NA	C2-5-1	4
Lead, grid heater +ve, TURBO	C2-5-2	4
Lever, assembly, throttle control	D2-1-1	2
Lever, assembly throttle control	D2-2-1	2
Lever, loader control	D1-1-31	2
Liner	L1-3-1	4
Liner	L1-3-2	4

M

Manifold	L3-1-1	1
Manifold, induction	L3-1-2	1
Manifold, Exhaust	L3-2-1	1
Mounting, resilient	V42-1-1	9
Mounting, rubber	L1-8-1	9

N

None serviced part	B1-6-11	11
None serviced part	L6-6-1	2
None serviced part	V51-5-1	2
Nozzle	L6-2-1	10
Nozzle	L6-2-2	10
Nut	C2-5-1	20
Nut	C2-5-2	20
Nut	V45-1-2	4
Nut, 'u'	E1-18-1	8
Nut, 'u'	V47-1-1	8
Nut, 'u'	V47-11-1	8
Nut, 'U'	L3-3-1	2
Nut, 'U'	L3-3-2	2

DESCRIPTION	PAGE NUMBER	ITEM NUMBER
Nut, 'U'	V43-2-1	2
Nut, anti-seize	V45-2-3	4
Nut, lock, M10	L4-3-1	22
Nut, lock, M10	L4-3-1	10
Nut, lock, M10	L4-3-2	22
Nut, lock, M10	L4-3-2	10
Nut, lock, M10	V42-1-1	8
Nut, lock, M10	V45-1-2	12
Nut, lock, M10	V45-2-3	10
Nut, lock, M10	V46-1-3	22
Nut, lock, M10	V46-1-3	10
Nut, lock, M10	V46-11-1	10
Nut, lock, M10	V46-11-1	22
Nut, nyloc M5	C2-2-1	6
Nut, nyloc M8	C2-2-1	7
Nut, rivet, M6 open end, for 5.5 to 8mm plate	L4-3-1	13
Nut, rivet, M6 open end, for 5.5 to 8mm plate	L4-3-2	13
Nut, rivet, M6 open end, for 5.5 to 8mm plate	V46-1-3	13
Nut, rivet, M6 open end, for 5.5 to 8mm plate	V46-11-1	13
Nut, rivet,M10 open ended	L4-3-1	9
Nut, rivet,M10 open ended	L4-3-2	9
Nut, rivet,M10 open ended	V46-1-3	9
Nut, rivet,M10 open ended	V46-11-1	9
Nut, rivet,M6 open ended, for 3 to 5.5mm plt	D2-2-1	7
Nut, rivet,M8	C2-5-1	13
Nut, rivet,M8	C2-5-2	13
Nut, rivet,M8 open ended	L4-4-1	19
Nut, rivet,M8 open ended	L4-4-2	19
Nut, rivet,M8 open ended	V48-5-1	20
Nut, rivet,M8 open ended	V48-7-1	18
Nut, rivet,M8 open ended	V48-11-1	19
Nut, M16	V42-1-1	11
Nut, M5-8	D2-1-1	18
Nut, M5-8	D2-1-1	7
Nut, M5-8	D2-2-1	18
Nut, M6 lock	D2-1-1	13
Nut, M6 rivet	C2-5-1	10
Nut, M6 rivet	C2-5-2	10
Nut, Self lock, M6	D2-1-1	15
Nut, Self lock, M6	D2-2-1	15

O

O Ring	L6-6-1	5
O Ring	V48-5-1	22
O Ring	V48-5-1	16
O Ring	V51-5-1	5
O Ring	V55-1-1	4
O Ring	V55-1-1	2
O Ring	V55-1-2	2
O Ring	V55-1-2	4

P

Pedal, assembly, throttle control	D2-1-1	8
Pedal, assembly, throttle control	D2-2-1	8
Pipe	L2-3-1	8
Pipe	L7-2-1	19
Pipe	L7-2-1	24
Pipe	L7-2-1	26
Pipe, assembly	L6-2-1	15
Pipe, assembly	L6-2-2	15
Pipe, exhaust extension	V45-1-2	13
Pipe, exhaust extension	V45-2-3	12
Pipe, fuel heater	L6-4-1	1
Pipe, fuel injection	L6-2-2	4
Pipe, fuel, filter to inj/pump	L6-3-1	15
Pipe, fuel, filter to inj/pump	L6-3-2	15
Pipe, fuel, inj/pump to f/filter	L6-3-1	16
Pipe, fuel, inj/pump to f/filter	L6-3-2	16
Pipe, fuel, l/pump to f/filter	L6-3-1	12
Pipe, fuel, l/pump to f/filter	L6-3-2	12
Pipe, pipe	L5-4-1	11
Pipe, piston cooling	L5-3-1	1
Pipe, suction	L5-1-1	14
Pipe, 1 cyl	L6-2-1	1
Pipe, 1 cyl	L6-2-2	1
Pipe, 2 cyl	L6-2-1	2
Pipe, 2 cyl	L6-2-2	2
Pipe, 3 cyl	L6-2-1	3
Pipe, 3 cyl	L6-2-2	3
Pipe, 4 cyl	L6-2-1	4
Plate	L5-1-1	18
Plate	L5-1-2	18
Plate, lifting	L2-4-1	2
Plate, lifting	L2-4-1	1
Plate, spacer	L4-3-1	6
Plate, spacer	L4-3-2	6
Plate, spacer	V46-1-3	6
Plate, spacer	V46-11-1	6
Plug	L5-1-1	2

DESCRIPTION	PAGE NUMBER	ITEM NUMBER
Plug	L5-1-2	2
Plug, air vent	L6-6-1	5
Plug, blanking 3-way, deutsch DTM	V48-5-1	23
Plug, glow plug	L6-4-1	2
Plug, oil drain	V57-1-1	1
Plug, 1/2"UNF with O-Ring	V48-5-1	21
Pulley	L1-5-1	4
Pulley	L1-5-1	1
Pulley, alternator	C2-4-1	3
Pulley, cooling fan 1.16:1, D=143mm	V49-5-2	2
Pulley, cooling fan 1.16:1, D=143mm	V49-6-2	2
Pulley, cooling fan 1.25:1, D=133mm	V49-8-2	2
Pulley, fan, D=166, ratio 1:1	V49-3-1	2
Pulley, fan, D=166, ratio 1:1	V49-4-1	2
Pulley, idler, long	V49-4-1	5
Pulley, idler, long	V49-5-2	5
Pulley, idler, long	V49-6-2	5
Pulley, idler, long	V49-8-2	5
Pulley, idler, D=79mm	V49-20-1	2
Pulley, lower idler, assembly	V49-20-1	1
Pulley, water pump	L1-5-1	13
Pump, fuel injection	L6-1-1	1
Pump, fuel injection	L6-1-2	1
Pump, fuel lift	L6-3-1	1
Pump, fuel lift	L6-3-2	1
Pump, oil	L5-2-1	1
Pump, oil	L5-2-2	1
Pump, water	L4-1-1	1
Radiator, assembly, 5row-9fpi, Blue spot	E1-18-1	2
Radiator, assembly, 5row-9fpi, Blue spot	V47-1-1	2
Radiator, assembly, 5row-9fpi, Blue spot	V47-11-1	2
Regulator, & brush box, assembly	C2-4-1	5
Relay, grid heater	C2-5-1	1
Relay, grid heater	C2-5-2	1
Ring, cap locking	L6-6-1	3
Ring, retaining	L6-6-1	6
Ring, retaining	V51-5-1	6
Screw	L3-3-1	9
Screw	L3-3-2	9
Screw	V43-1-1	8
Screw	V43-2-1	9
Screw, flanged, M10 X 50	V49-20-1	6
Screw, hex head, M8 X 12	E1-18-1	7
Screw, hex head, M8 X 12	V47-1-1	7
Screw, hex head, M8 X 12	V47-11-1	7
Screw, hex, head	V45-1-2	9
Screw, hex, head	V45-2-3	9
Screw, pan head, M8 x 20	V49-3-1	4
Screw, pan head, M8 x 20	V49-4-1	4
Screw, pan head, M8 x 20	V49-5-2	4
Screw, pan head, M8 x 20	V49-6-2	4
Screw, pan head, M8 x 20	V49-8-2	4
Screw, raised c/sk. head	D2-1-1	17
Screw, raised c/sk. head	D2-2-1	17
Screw, star drive, M10 x 30	C2-3-1	6
Screw, star drive, M10 x 30	C2-4-1	8
Screw, star drive, M10 x 30	V52-1-1	3
Screw, star drive, M8 x 35	V49-20-1	7
Screw, star drive, M8 x 45	V49-20-1	8
Screw, taptite	D2-1-1	4
Screw, taptite	D2-2-1	4
Screw, M10 x 25mm, hex/skt button head	L4-3-1	7
Screw, M10 x 25mm, hex/skt button head	L4-3-2	7
Screw, M10 x 25mm, hex/skt button head	V46-11-1	7
Screw, M12 x 35mm	V42-1-1	12
Screw, M12x35, countersunk head	V42-1-1	14
Screw, M6 x 25mm long	L4-3-1	14
Screw, M6 x 25mm long	L4-3-2	14
Screw, M6 x 25mm long	V46-1-3	14
Screw, M6 x 25mm long	V46-11-1	14
Screw, M6x16	C2-5-1	8
Screw, M6x16	C2-5-2	8
Screw, M8 x 20mm long	L4-3-1	17
Screw, M8 x 20mm long	L4-3-2	17
Screw, M8 x 20mm long	V46-1-3	17
Screw, M8 x 20mm long	V46-11-1	17
Screw, M8 X 25	C2-5-1	11
Screw, M8 X 25	C2-5-2	11
Screw, M8 X 25	D2-2-1	12
Screw, M8 X 25	L4-3-1	4
Screw, M8 X 25	L4-3-2	4