JCB 3CX 4CX 214 215 217

Catálogo de productos \ CONSTRUCTION \ REST OF WORLD \ CONSTRUCTION / INDUSTRIAL \ BACKHOE LOADER 3CX,4CX,214,215,217 \ 3CX 00960000-00989999,01297000-01297999,01327000-01349999,01616000-01625999,01705500-01709999 84hp 9812/0010 \ A ACCESORIOS \ A01 PALAS

2022

9812/0010 A1-1-3 PALA G\P\ 1,3M3, , 2438MM (8'0") WIDE

RUTHZIL TRATOR COMERCIAL DE PEÇAS LTDA 11 97083-6812 ROLANDO CITRANGULO

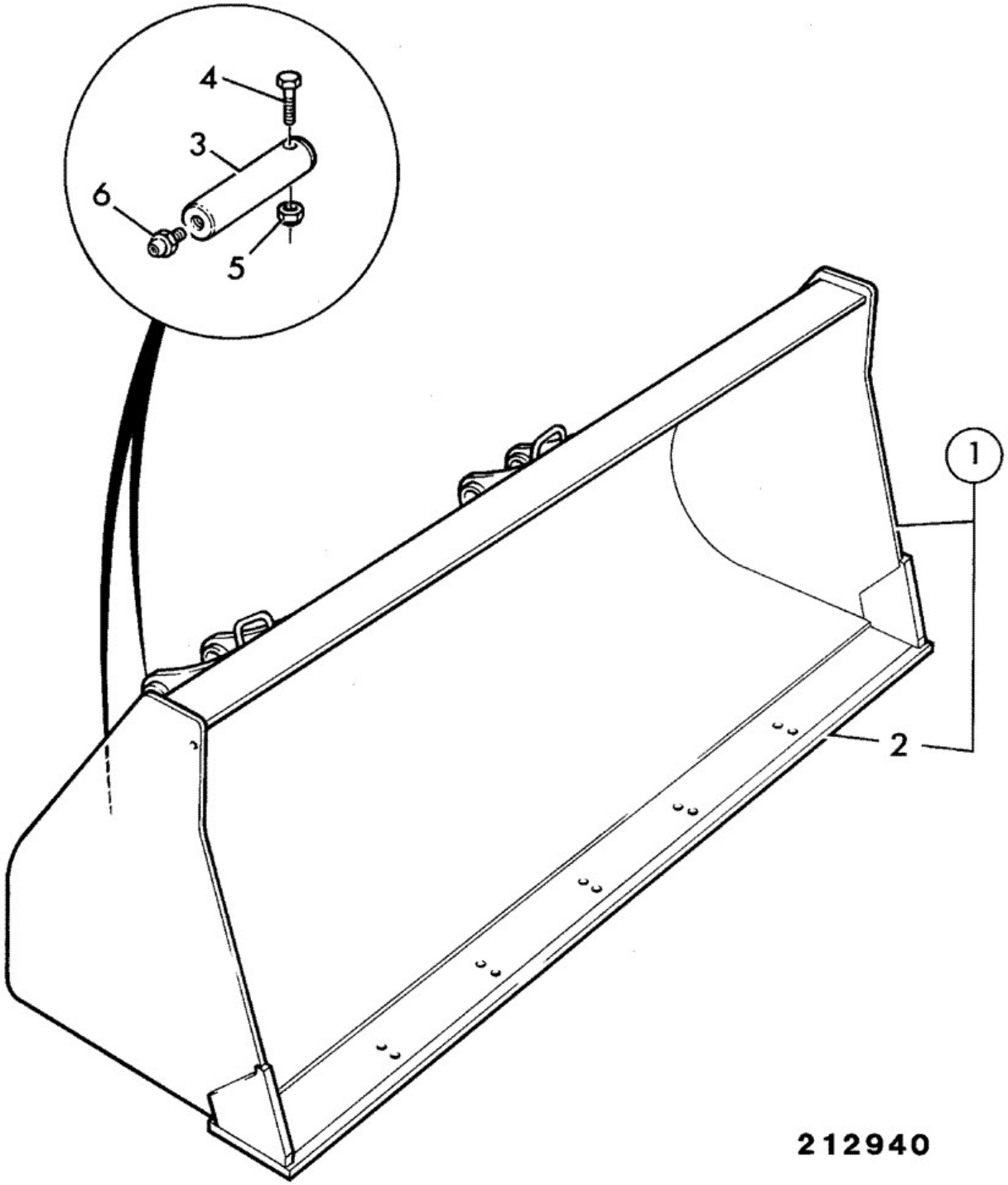

Elemento	Pieza Nº	Cambiar número	Descripción	Código de uso	CANT.
1	125/00447		Pala 1.1m3 8' wide heavy duty		1

2	:123/07564		Puntera 8' wide		1
3	811/80001		Pasador pivot		4
4	1305/3222Z		Tornillo 3/8"UNF x 3"		4
5	1340/0203Z		Tuerca		4
6	1450/0001		Engrasador grease, straight 1/8 BSP		4

Catálogo de productos \ CONSTRUCTION \ REST OF WORLD \ CONSTRUCTION / INDUSTRIAL \ BACKHOE LOADER 3CX,4CX,214,215,217 \ 3CX 00960000-00989999,01297000-01297999,01327000-01349999,01616000-01625999,01705500-01709999 84hp 9812/0010 \ A ACCESORIOS \ A01 PALAS

9812/0010 A1-1-5 PALA G\P\ 1,1M3, 2350MM (7'8,5") ANCHO, 0

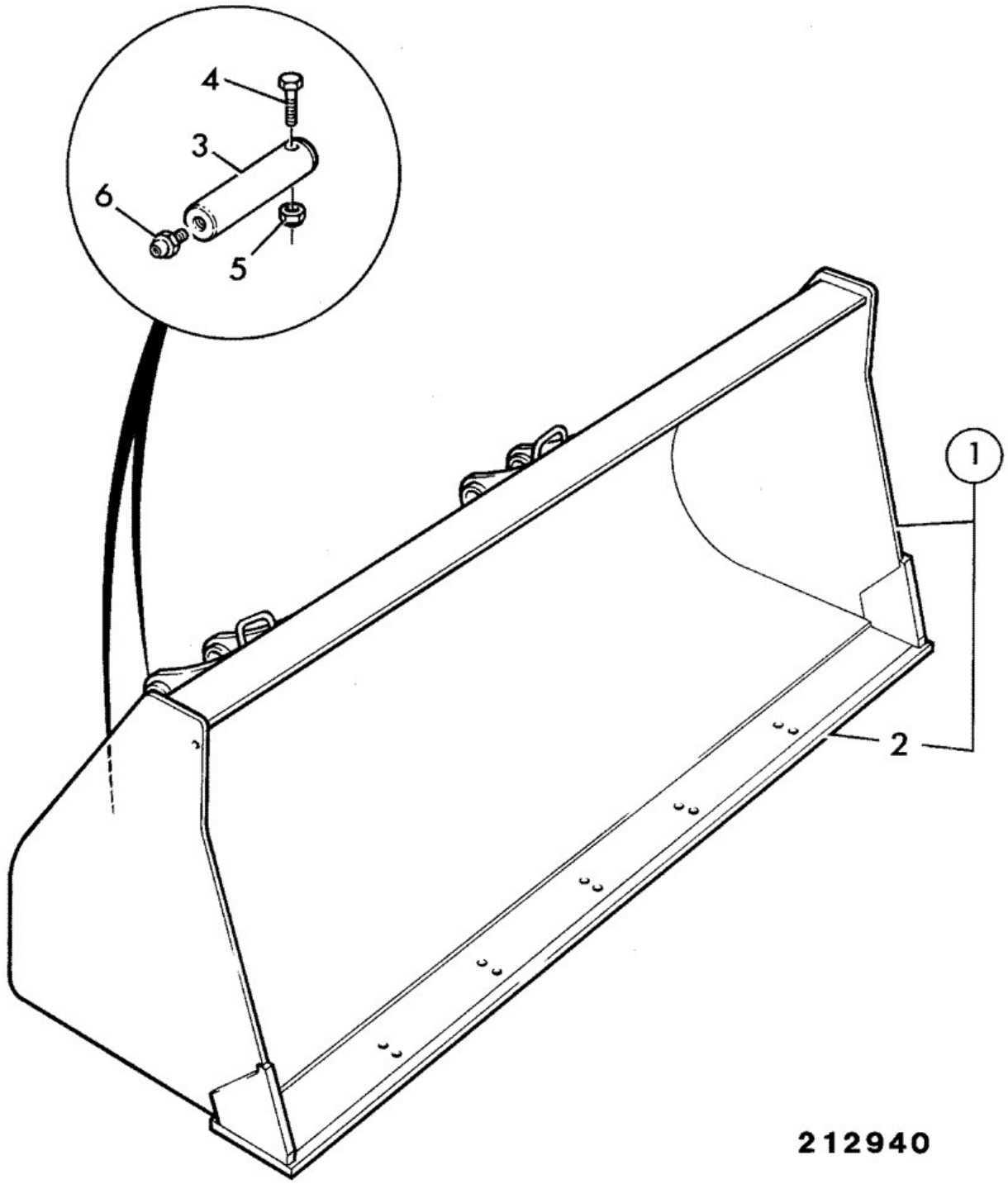

Elemento	Pieza Nº	Cambiar	Descripción	Código de uso	CANT.

		número			
1	125/36800		Pala GP 1.1m3 2350mm (7'8.5") wide	A	1
1	125/36900		Pala GP 1.1M3 heavy duty 2350MM (7.8") wide	B	1
1	128/D5313		Pala GP 1.1m3 heavy duty 2350 wide s/special	B	1
2	:123/04255		Puntera	A	1
2	:123/04004		Puntera	B	1
3	811/80001		Pasador pivot		4
4	1305/3222Z		Tornillo 3/8"UNF x 3"		4
5	1340/0203Z		Tuerca		4
6	1450/0001		Engrasador grease, straight 1/8 BSP		4

9812/0010 A1-1-7 PALA G\P\ 1,3M3, 2350MM (7'8,5") ANCHO, ALTO RENDIMIENTO

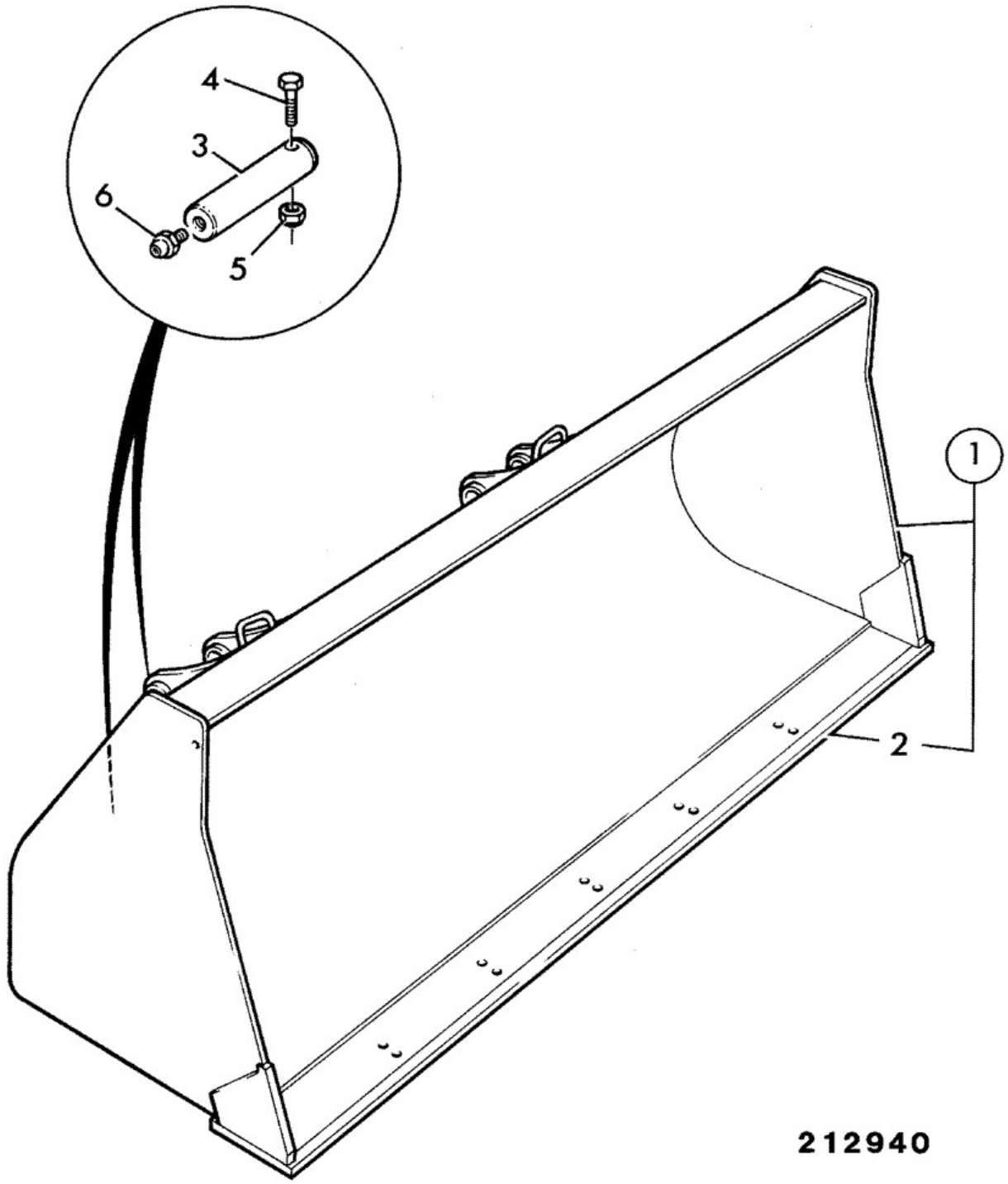

Elemento	Pieza Nº	Cambiar	Descripción	Código de uso	CANT.

		número			
1	125/37000		Pala GP 1.3m3 heavy duty 2350mm (7.8.5") wide		1
2	:123/04014		Puntera		1
3	811/80001		Pasador pivot		4
4	1305/3222Z		Tornillo 3/8"UNF x 3"		4
5	1340/0203Z		Tuerca		4
6	1450/0001		Engrasador grease, straight 1/8 BSP		4

9812/0010 A1-1-9 PALA G\P\ 1,1M3, 2350MM (7'8,5") ANCHO, ALEMÁN

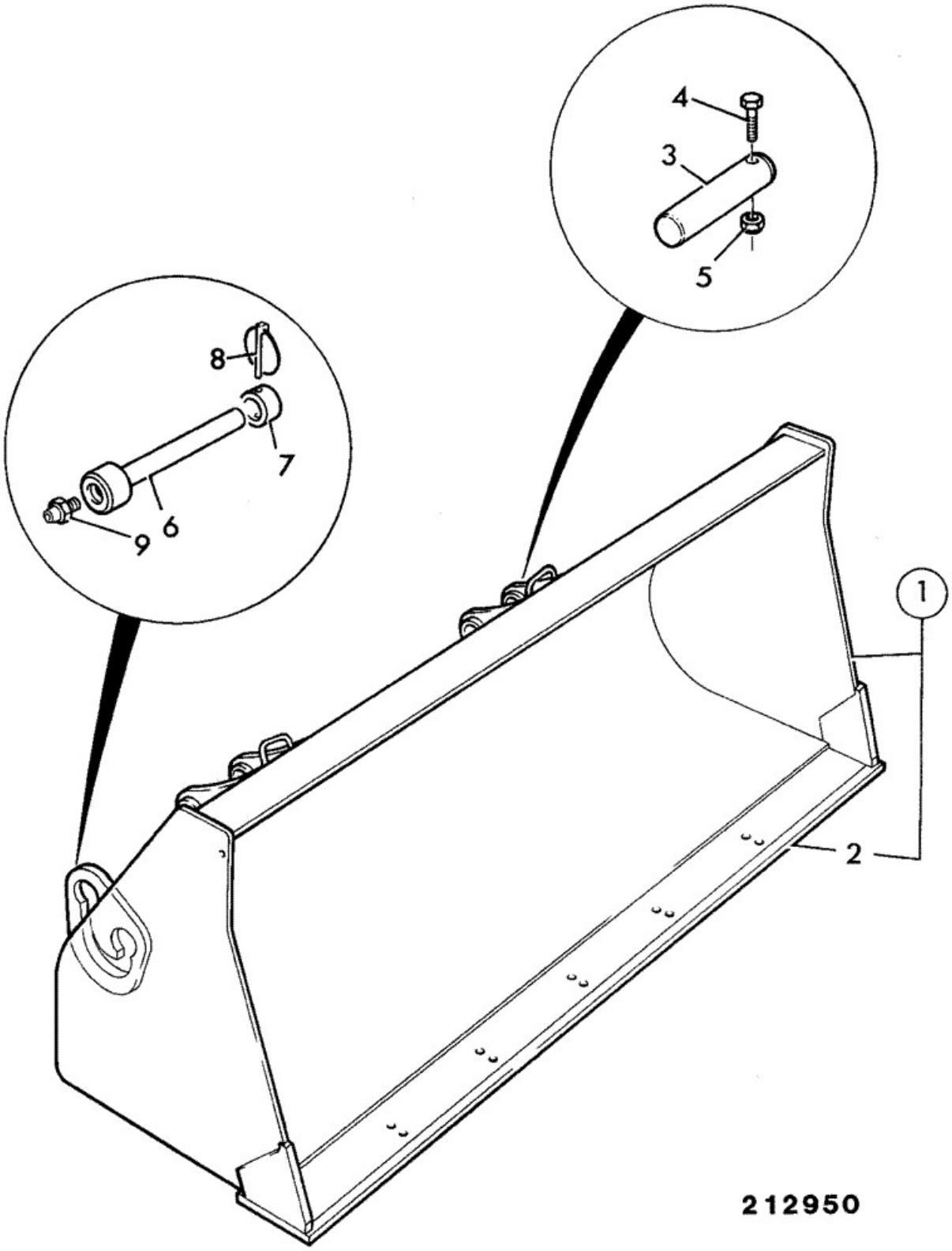

Elemento	Pieza Nº	Cambiar número	Descripción	Código de uso	CANT.
1	125/37400		Pala GP 1.1M3 German 7'8.5" wide H duty		1
2	:123/04004		Puntera		1
3	811/80001		Pasador pivot		2
4	1305/3222Z		Tornillo 3/8"UNF x 3"		2
5	1340/0203Z		Tuerca		2

6	911/26000		Pasador pivot		2
7	123/00320		Saliente		2
8	826/00819		Pasador lynch with chain		2
9	1450/0002		Engrasador grease, straight 1/4		4

9812/0010 A1-1-20 PLACA PATÍN, PALA G\P, ESQUEMA SUSTITUCIÓN

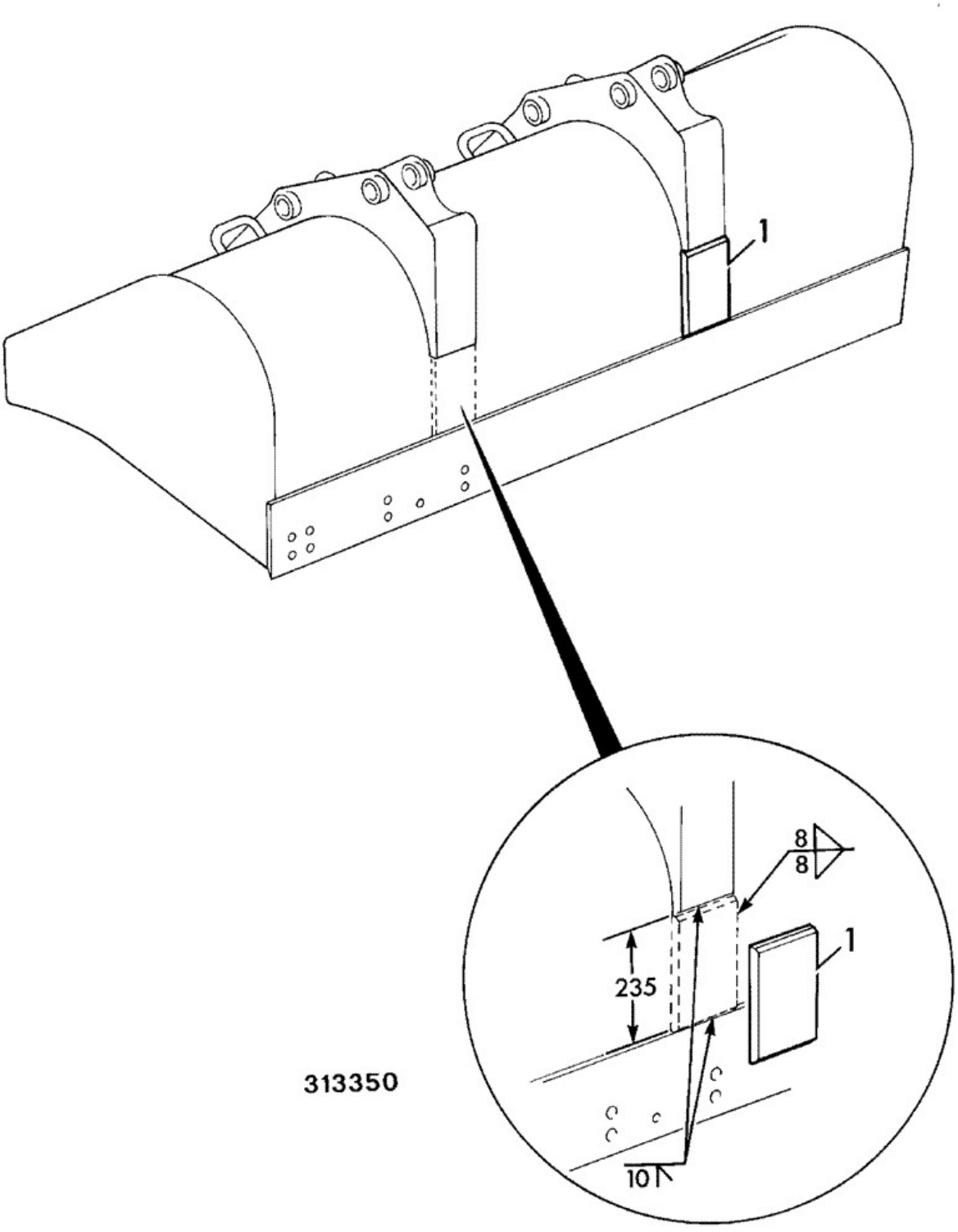

Elemento	Pieza Nº	Cambiar número	Descripción	Código de uso	CANT.
1	123/07706		Placa skid		2

9812/0010 A1-3-2 PALA G\P\ 1,0M3, 2253MM (7'4") ANCHO, 0

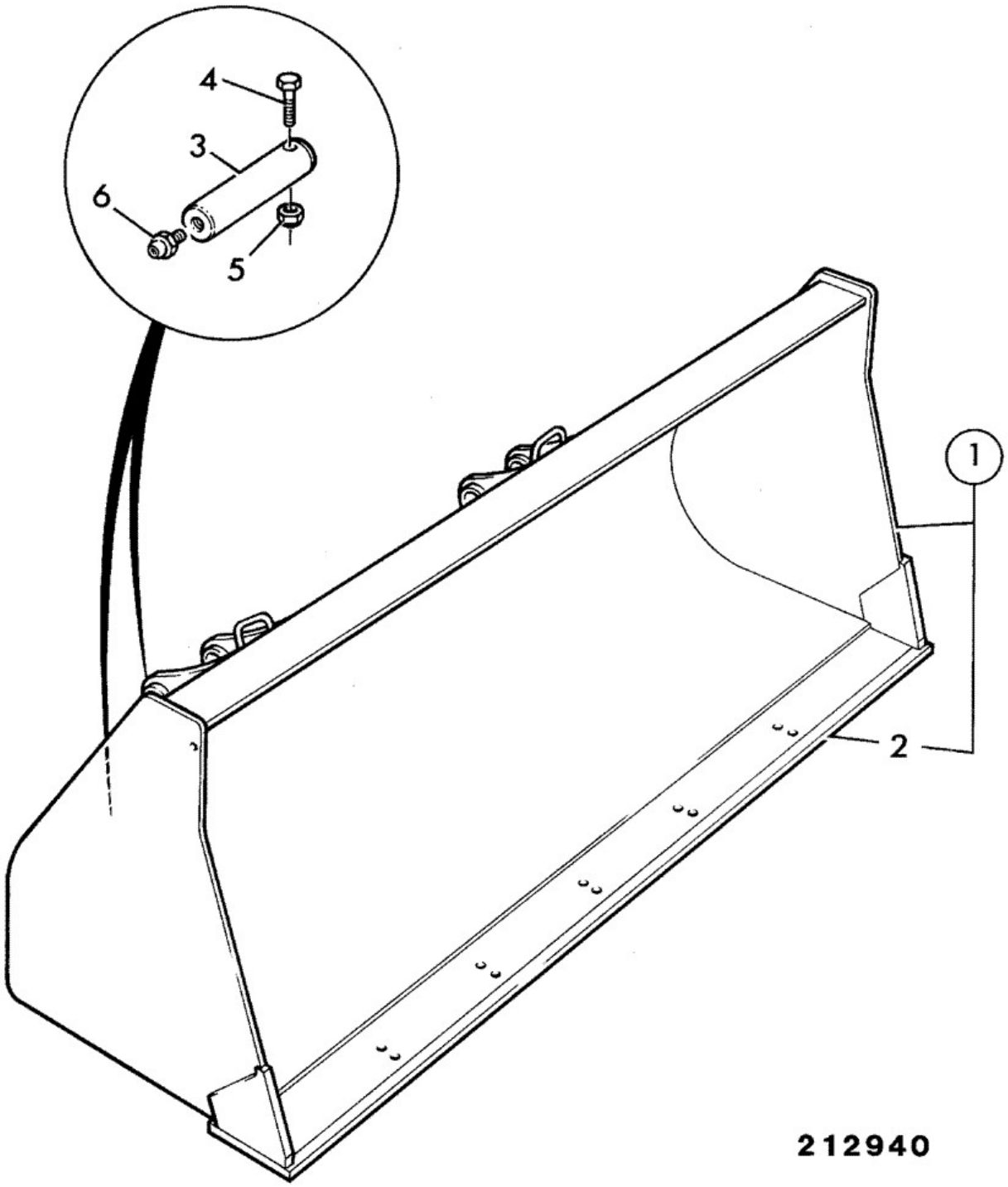

Elemento	Pieza Nº	Cambiar	Descripción	Código de uso	CANT.

		número			
1	125/36700		Pala GP 1.0m3 2235mm (7'4") wide		1
1	125/38900		Pala GP 1.0m3 Heavy duty 2235mm (7'4") wide		1
2	:123/04023		Puntera		1
3	811/80001		Pasador pivot		4
4	1305/3222Z		Tornillo 3/8"UNF x 3"		4
5	1340/0203Z		Tuerca		4
6	1450/0001		Engrasador grease, straight 1/8 BSP		4

9812/0010 A1-4-2 PALA G\P\ 1,1M3, 2350MM (7'8,5") ANCHO, ENG\ RÁP\

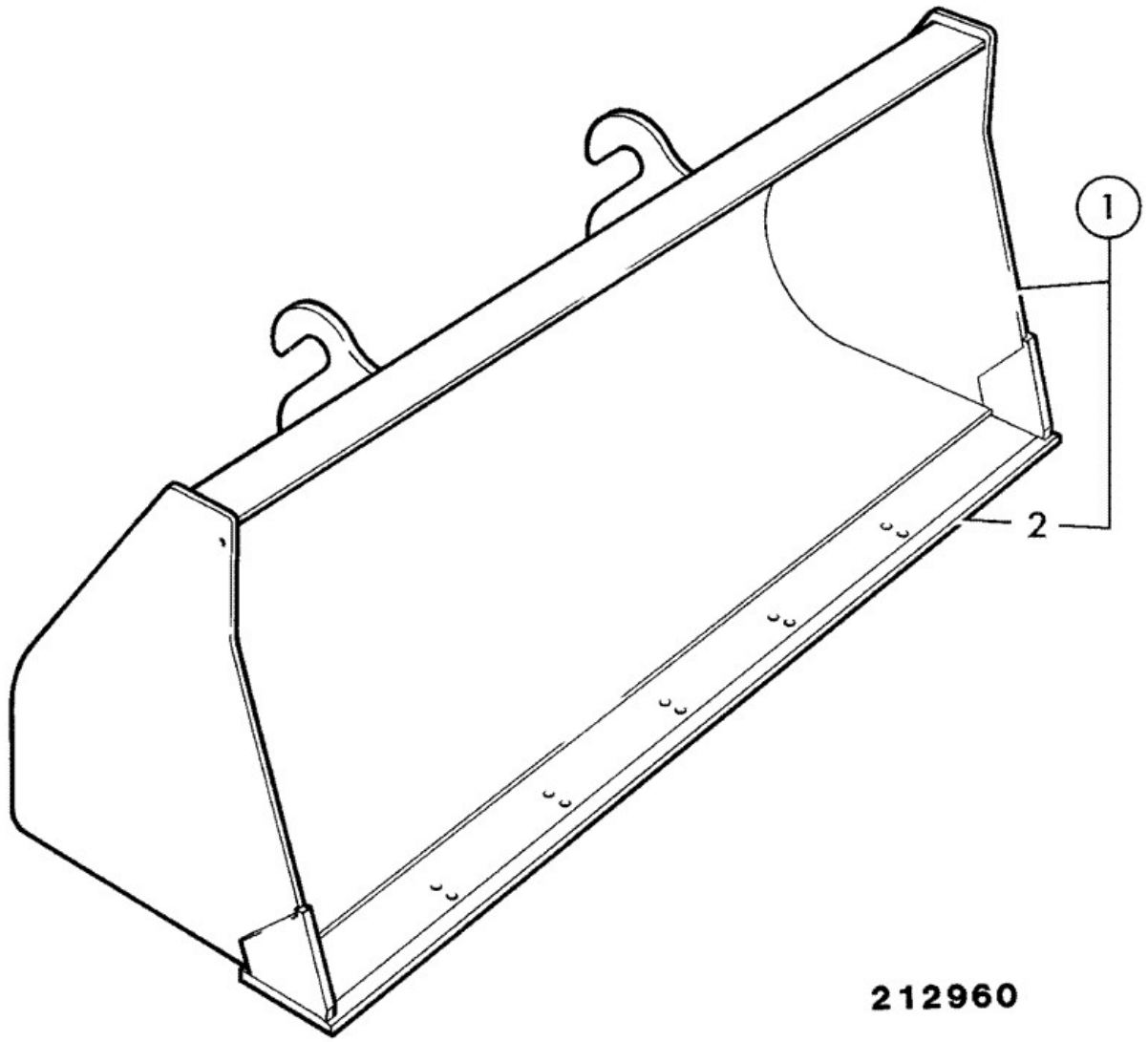

Elemento	Pieza Nº	Cambiar número	Descripción	Código de uso	CANT.
1	126/00186		Pala GP 1.1m3 heavy duty quickhitch 2350mm		1
2	:123/04004		Puntera		1

9812/0010 A1-4-4 PALA G\P\ 1,2M3, 8' ANCHO, PORTAHERRAMIENTA

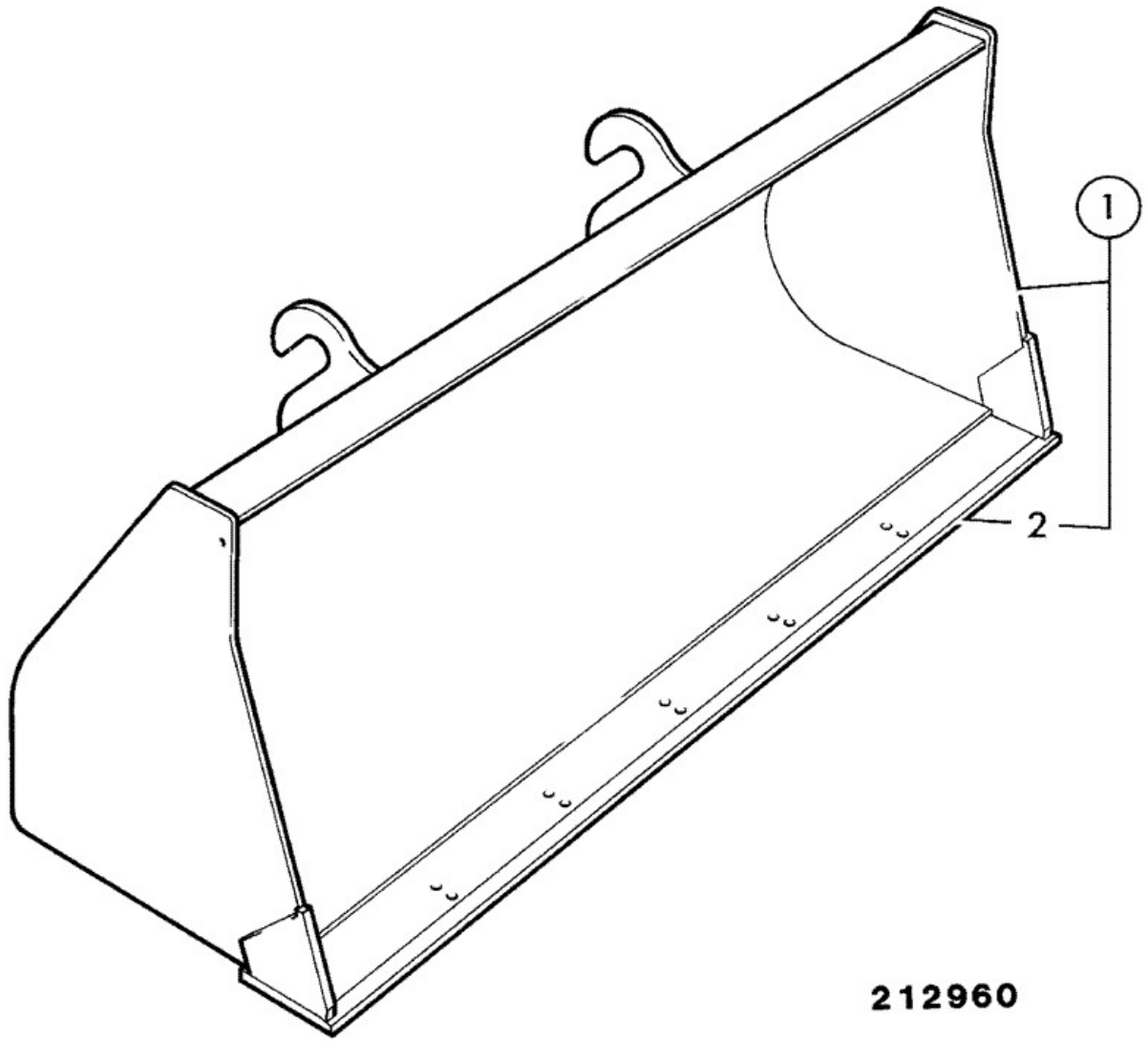

Elemento	Pieza Nº	Cambiar número	Descripción	Código de uso	CANT.
1	126/03151		Pala GP 1.2m3 quickhitch 8' wide		1
2	:123/07564		Puntera 8' wide		1

9812/0010 A1-5-2 PALA, CUCHARA 6 EN 1, 2350MM (7'8,5")ANCHO, 1,0M3

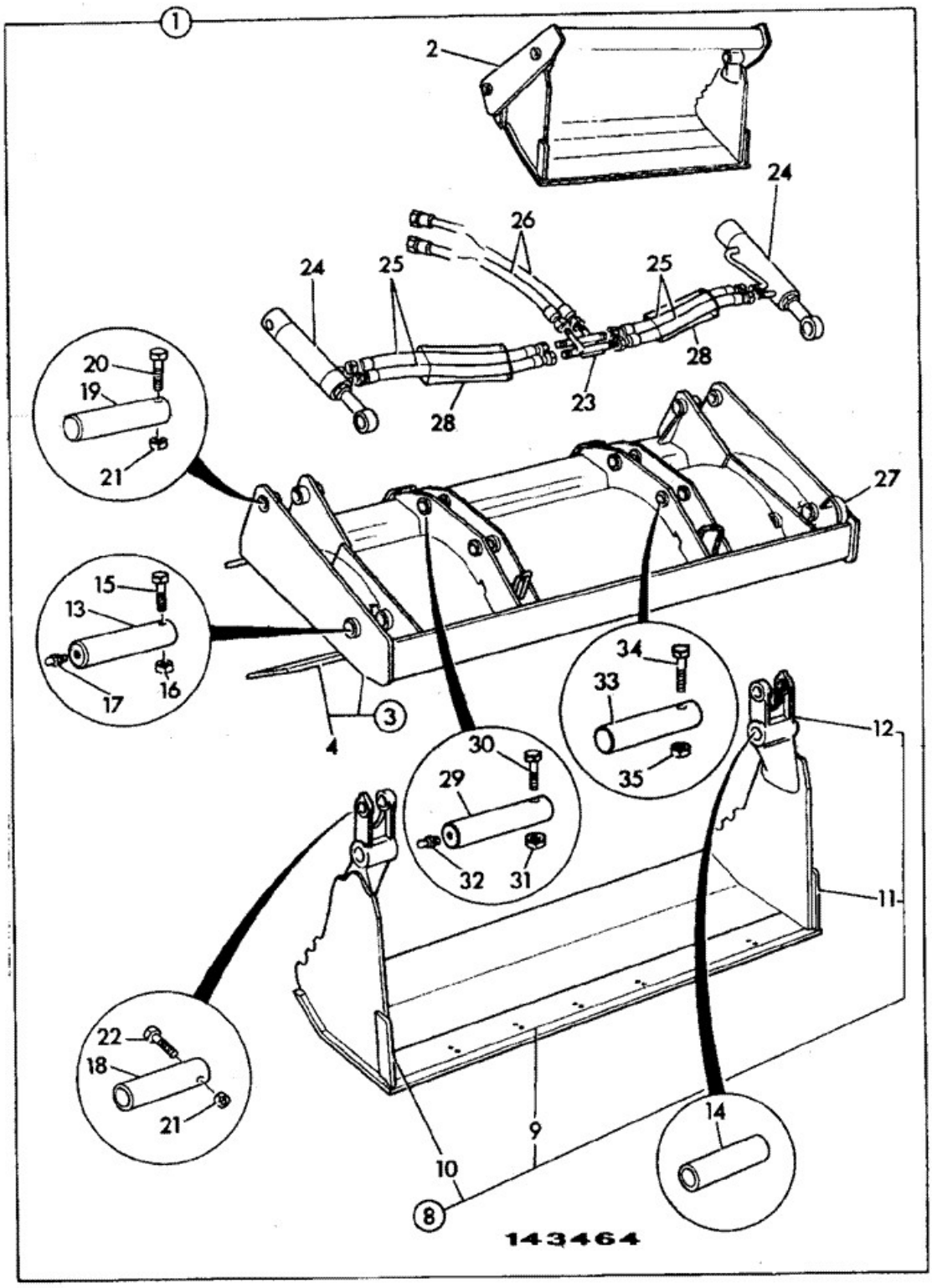

Elemento	Pieza Nº	Cambiar número	Descripción	Código de uso	CANT.
1	126/00578	<M1617692	Pala 6 in 1 clam 1.0m3 7'8" wide *2WS, AWS, see A1-25-1 for later machines*		1
1	126/00577	<M0966928	Pala 6 in 1 clam + forks 2350mm (7'8.5") *2WS*		1
1	126/00576	<M1617692	Pala 6 in 1 clam + forks 1.0m3, 7'8.5" *2WS, AWS, see A1-25-1 for later machines*		1

2	****		Pieza no reparable		1
3	:125/00168	<M1617692	Hoja back 2350mm (7'8.5") *see A1-25-1 for later machines*		1
3	:125/00169	<M0966938	Hoja back 2350mm (7'8.5") + fork pivots 2WS		1
3	:125/00170	<M1617692	Hoja back 2350mm (7'8.5") + fork pivots *2WS, AWS see, A1-25-1 for later machines*		1
4	::123/02362		Puntera 2343mm long		1
8	:125/50100		Mordaza clamshovel 2350mm (7'8.5") wide		1
9	::123/04144		Puntera 6 in 1 7'8" wide		1
10	::123/04423		Cortador lateral right hand		1
11	::123/04422		Cortador lateral left hand		1
12	::123/04274		Pivote casting right hand		1
12	::123/04275		Pivote casting left hand		1
13	:811/80007		Pasador pivot		2
13A	:811/80007A		Pasador pivot 0.1mm oversize		2
13B	:811/80007B		Pasador pivot 0.25mm oversize		2
14	:1208/0023		Casquillo		2
15	:1305/3226Z		Tornillo		2
16	:1340/0204Z		Tuerca philidas thin		2
17	:1450/1001		Engrasador grease 90deg. angle		2
18	:811/50398		Pasador pivot		2
18A	:811/50398A		Pasador pivot 0.1mm oversize		2
18B	:811/50398B		Pasador pivot 0.25mm oversize		2
19	:811/80018		Pasador pivot		2
20	:1305/3222Z		Tornillo 3/8"UNF x 3"		2
21	:1340/0203Z		Tuerca		5
22	:1305/3226Z		Tornillo		2
23	:123/05538	Superseded	Tubería assembly backblade		1
23	:335/13748		Tubería assembly, backblade		1
24	:556/60077		Pistón clamshovel black *see A1-25-1 for later machines*	<M1617692	2
25	:612/07700		Manguito 3/8BSPx405		4
26	612/80156		Manguito 3/8 BSP 800mm *not supplied with shovel*		2
27	:817/03808		Etiqueta indicator		1
28	****		*Not fitted*		0
29	811/80001		Pasador pivot		2
30	1305/3222Z		Tornillo 3/8"UNF x 3"		2
31	1340/0203Z		Tuerca		2
32	1450/0001		Engrasador grease, straight 1/8 BSP		2
33	811/80001		Pasador pivot		2
34	1305/3222Z		Tornillo 3/8"UNF x 3"		2
35	1340/0203Z		Tuerca		2
51	835/10135		Tapón blanking forkrail mtg bkt		6

9812/0010 A1-5-12 PALA, CUCHARA 6 EN 1, 2350MM (7'8,5")ANCHO, 1,0M3 ALEMANIA

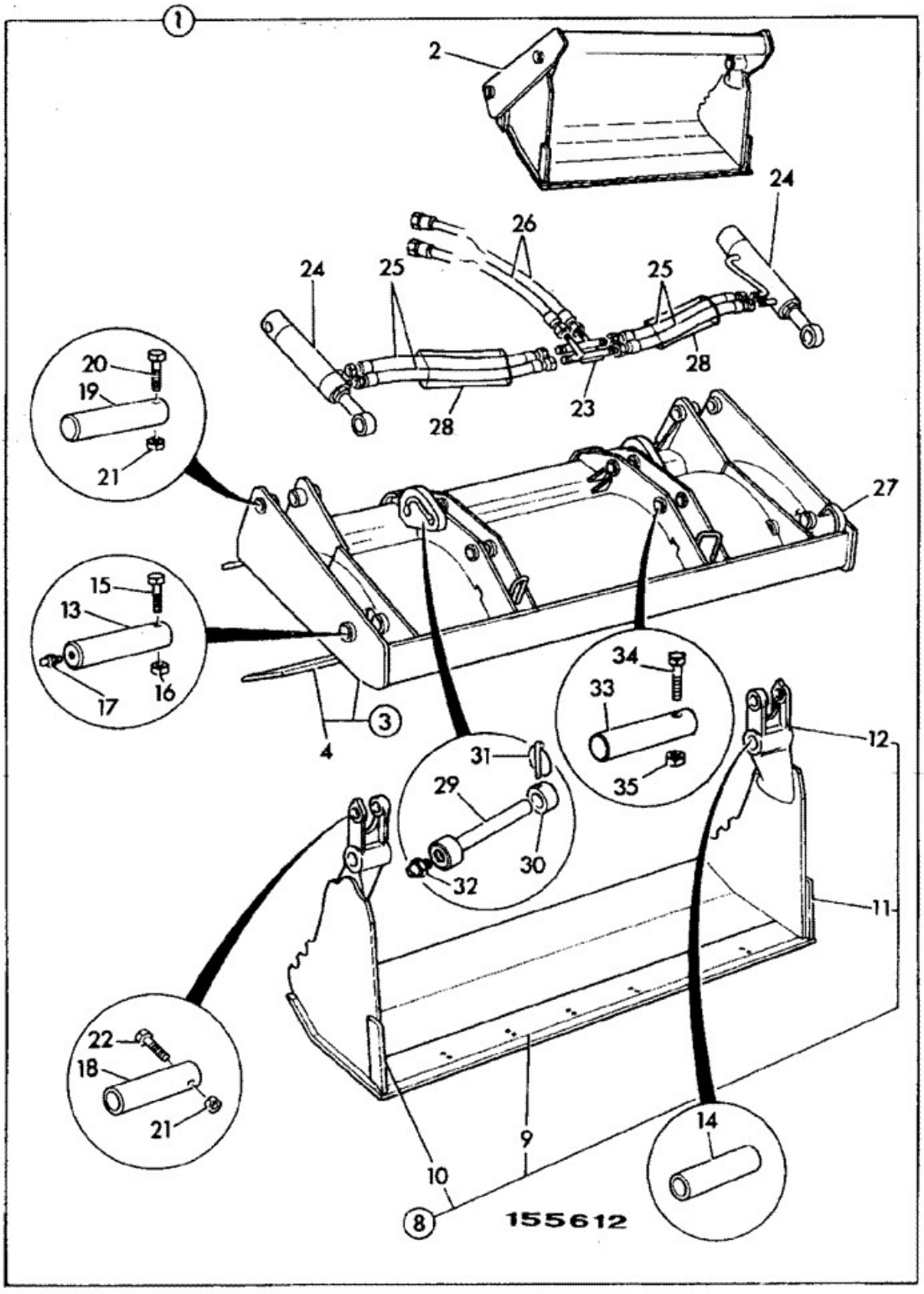

Elemento	Pieza Nº	Cambiar número	Descripción	Código de uso	CANT.
1	126/00580		Pala 6 in 1 clam 1.0M3 x 92" German		1
1	126/00579		Pala 6 in 1 + clam forks German 7'8" 1.2m3		1
2	****		Pieza no reparable		1
3	:125/00171		Hoja back 7'8" German		1
3	:125/00172		Hoja back 7'8" fork pivots, German		1

4	::123/02362		Puntera 2343mm long		1
8	:125/50100		Mordaza clamshovel 2350mm (7'8.5") wide		1
9	::123/04144		Puntera 6 in 1 7'8" wide		1
9A	::123/03338		Placa		1
10	::123/04423		Cortador lateral right hand		1
11	::123/04422		Cortador lateral left hand		1
12	::123/04274		Pivote casting right hand		1
12	::123/04275		Pivote casting left hand		1
13	:811/80007		Pasador pivot		2
13A	:811/80007A		Pasador pivot 0.1mm oversize		2
13B	:811/80007B		Pasador pivot 0.25mm oversize		2
14	:1208/0023		Casquillo		2
15	:1305/3226Z		Tornillo		2
16	:1340/0204Z		Tuerca philidas thin		2
17	:1450/1001		Engrasador grease 90deg. angle		2
18	:811/50398		Pasador pivot		2
18A	:811/50398A		Pasador pivot 0.1mm oversize		2
18B	:811/50398B		Pasador pivot 0.25mm oversize		2
19	:811/80018		Pasador pivot		2
20	:1305/3222Z		Tornillo 3/8"UNF x 3"		2
21	:1340/0203Z		Tuerca		5
22	:1305/3226Z		Tornillo		2
23	:531/38500		Tubería assembly		1
24	:556/60077		Pistón clamshovel black *For components see index E4*		2
25	:612/03300		Manguito 3/8"BSP x 950mm		4
26	612/80156		Manguito 3/8 BSP 800mm *not supplied with shovel*		2
27	:817/03808		Etiqueta indicator		1
28	647/02703		Tubo black pvc 2400mm		0
29	911/26000		Pasador pivot		2
30	123/00320		Saliente		2
31	826/00819		Pasador lynch with chain		2
32	1450/0001		Engrasador grease, straight 1/8 BSP		2
33	811/80001		Pasador pivot		2
34	1305/3222Z		Tornillo 3/8"UNF x 3"		2
35	1340/0203Z		Tuerca		2
51	835/10135		Tapón blanking forkrail mtg bkt		6

9812/0010 A1-7-2 PALA, CUCHARA 6 EN 1, 2235MM (7'4") ANCHO, 0

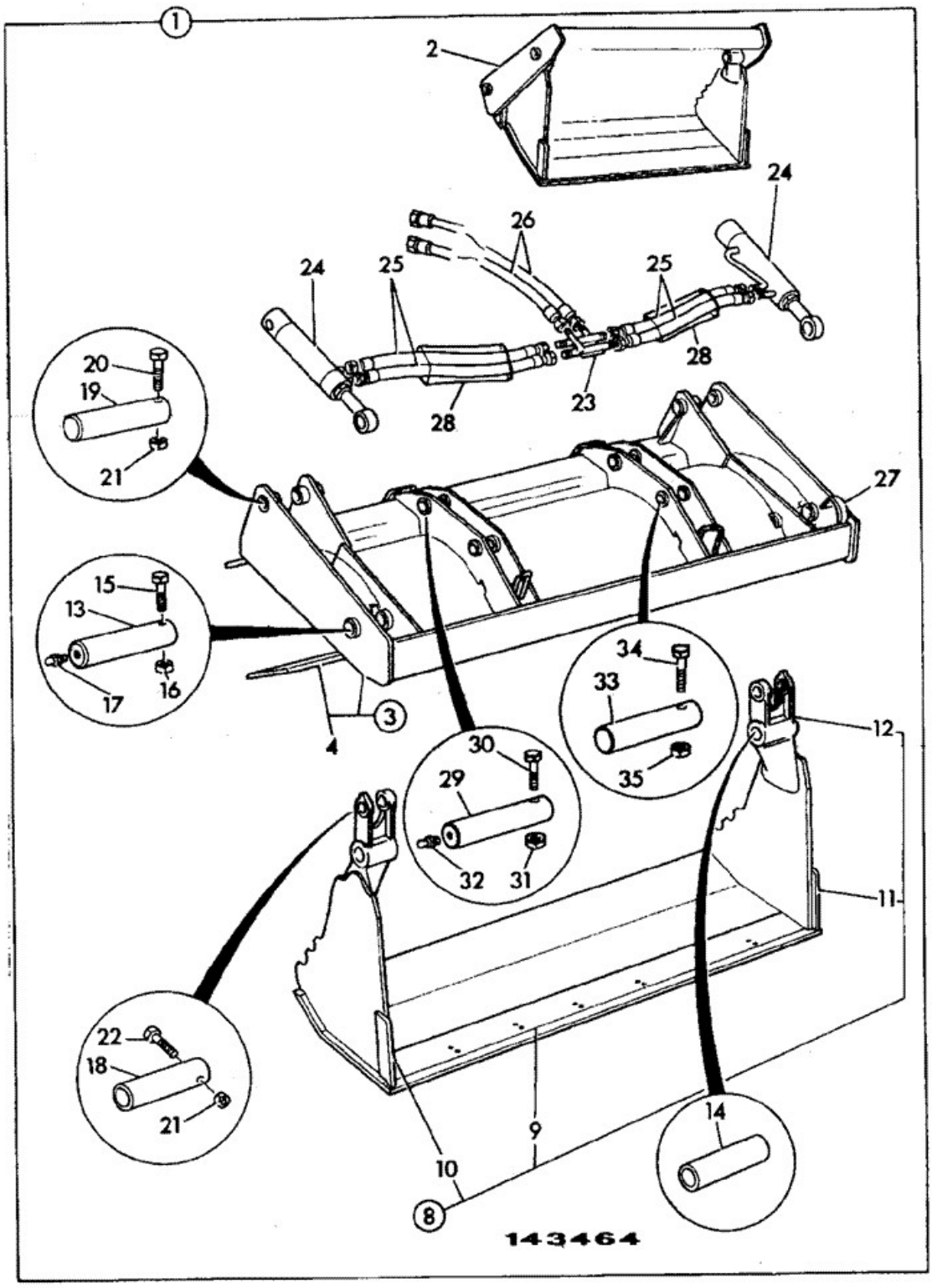

Elemento	Pieza Nº	Cambiar número	Descripción	Código de uso	CANT.
1	126/00583	<M1617591	Pala 6 in 1 clam, 1.0m3 2253mm (7'4") wide *2WS, AWS, see A1-21-1 for later machines*		1
1	126/00582	<M0966938	Pala 6 in 1 clam + forks 2235mm (7'4") wide *2WS*		1
1	126/01541	<M1617591	Pala 6in1 clam 1.0m3 + forks 2253mm (7'4") *2WS, AWS, see A1-21-1 for later machines*		1

2	****		Pieza no reparable		1
3	:125/00165	<M1617591	Hoja back 2253mm 1.0m3 *2WS, AWS, see A1-21-1 for later machines*		1
3	:125/00166	<M0966938	Hoja back 2253mm 1.0m3 + fork pivots 2WS *2WS*		1
3	:125/00167	<M1617591	Hoja back 2253mm 1.0m3 + fork pivots AWS *2WS, AWS, see A1-21-1 for later machines*		1
3A	::123/04049		Soporte indicator		1
4	::531/38111		Puntera 2253mm (7'4") wide		1
8	:125/50200		Mordaza clamshovel		1
9	::123/04145		Puntera 6 in 1 shovel 7'4" wide		1
10	::123/04423		Cortador lateral right hand		1
11	::123/04422		Cortador lateral left hand		1
12	::123/04274		Pivote casting right hand		1
12	::123/04275		Pivote casting left hand		1
13	:811/80007		Pasador pivot		2
13A	:811/80007A		Pasador pivot 0.1mm oversize		2
13B	:811/80007B		Pasador pivot 0.25mm oversize		2
14	:1208/0023		Casquillo		2
15	:1305/3226Z		Tornillo		2
16	:1340/0204Z		Tuerca philidas thin		2
17	:1450/1001		Engrasador grease 90deg. angle		2
18	:811/50398		Pasador pivot		2
18A	:811/50398A		Pasador pivot 0.1mm oversize		2
18B	:811/50398B		Pasador pivot 0.25mm oversize		2
19	:811/80018		Pasador pivot		2
20	:1305/3222Z		Tornillo 3/8"UNF x 3"		2
21	:1340/0203Z		Tuerca		5
22	:1305/3226Z		Tornillo		2
23	:123/05538	Superseded	Tubería assembly backblade		1
23	:335/13748		Tubería assembly, backblade		1
24	:556/60077	<M1617591	Pistón clamshovel black *see A1-21-1 for later machines*		2
25	:612/02900		Manguito 3/8"BSP x 360mm		4
26	612/80156		Manguito 3/8 BSP 800mm *not supplied with shovel*		2
27	:817/03808		Etiqueta indicator		1
28	****		*Not fitted*		0
29	811/80001		Pasador pivot		2
30	1305/3222Z		Tornillo 3/8"UNF x 3"		2
31	1340/0203Z		Tuerca		2
32	1450/0001		Engrasador grease, straight 1/8 BSP		2
33	811/80001		Pasador pivot		2
34	1305/3222Z		Tornillo 3/8"UNF x 3"		2
35	1340/0203Z		Tuerca		2
51	835/10135		Tapón blanking forkrail mtg bkt		6

9812/0010 A1-8-1 PALA, CUCHARA 6 EN 1, 2450MM (8'0") ANCHO, ENG\ RÁP\

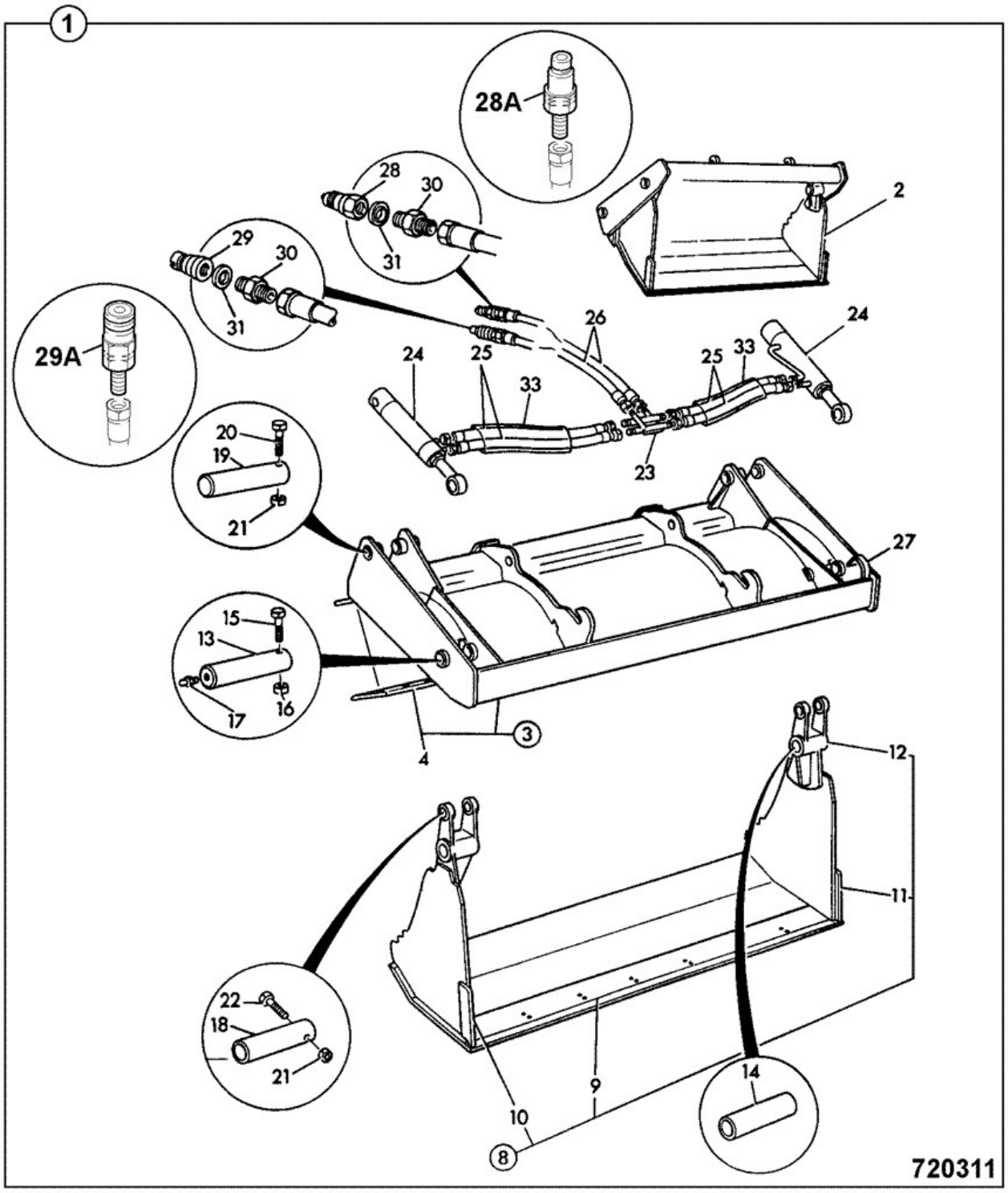

Elemento	Pieza Nº	Cambiar número	Descripción	Código de uso	CANT.

1	126/01532	<M1617776	Pala 6in1 quickhitch 2450mm wide 8'0" *see A1-24-1 for later machines*		1
2	****		Pieza no reparable		1
3	:125/00203	<M1617776	Hoja clam 1.3m3 quickhitch *see A1-24-1 for later machines*		1
4	::123/05115		Puntera 2450mm (8'0") wide		1
8	:125/76000		BOCA clamshovel 96"		1
9	::123/05119		Puntera 2450mm (8'0") wide		1
10	::123/04423		Cortador lateral right hand		1
11	::123/04422		Cortador lateral left hand		1
12	::123/04274		Pivote casting right hand		2
12	::123/04275		Pivote casting left hand		1
13	:811/80007		Pasador pivot		2
13A	:811/80007A		Pasador pivot 0.1mm oversize		2
13B	:811/80007B		Pasador pivot 0.25mm oversize		2
14	:1208/0023		Casquillo		2
15	:1305/3226Z		Tornillo		2
16	:1340/0204Z		Tuerca philidas thin		2
17	:1450/1001A		Engrasador		2
18	:811/50398		Pasador pivot		2
18A	:811/50398A		Pasador pivot 0.1mm oversize		2
18B	:811/50398B		Pasador pivot 0.25mm oversize		2
19	:811/80018		Pasador pivot		2
20	:1305/3222Z		Tornillo 3/8"UNF x 3"		2
21	:1340/0203Z		Tuerca		5
22	:1305/3226Z		Tornillo		2
23	:123/05538	Superseded	Tubería assembly backblade		1
23	:335/13748		Tubería assembly, backblade		1
24	:556/60077	<M1617776	Pistón clamshovel black *see A1-24-1 for later machines*		2
25	:612/02500		Manguito 3/8BSPx465		4
26	:612/21600		Manguito 3/8"BSP x 1050mm		2
27	:817/03808		Etiqueta indicator		1
28	:45/910700		Acoplamiento 3/8" BSP male quick hitch		1
28A	:45/920067		Acoplamiento 3/8"BSP male quick release		1
29	:45/910600		Acoplamiento 3/8" BSP female quick release		1
29A	:45/920066		Acoplamiento 3/8"BSP female quick release		1
29A	:835/10082		Tapa flip top protection to fit 3/8 female *to fit 45/920066*		1
30	:1604/0003		Adaptador male/male		2
31	:1406/0015		Arandela seal		2
32	1612/0003		Adaptador male/female		2
33	****		*Not fitted*		0

9812/0010 A1-8-2 PALA, CUCHARA 6 EN 1, 2350MM (7'8,5")ANCHO, ENG\ RÁP\

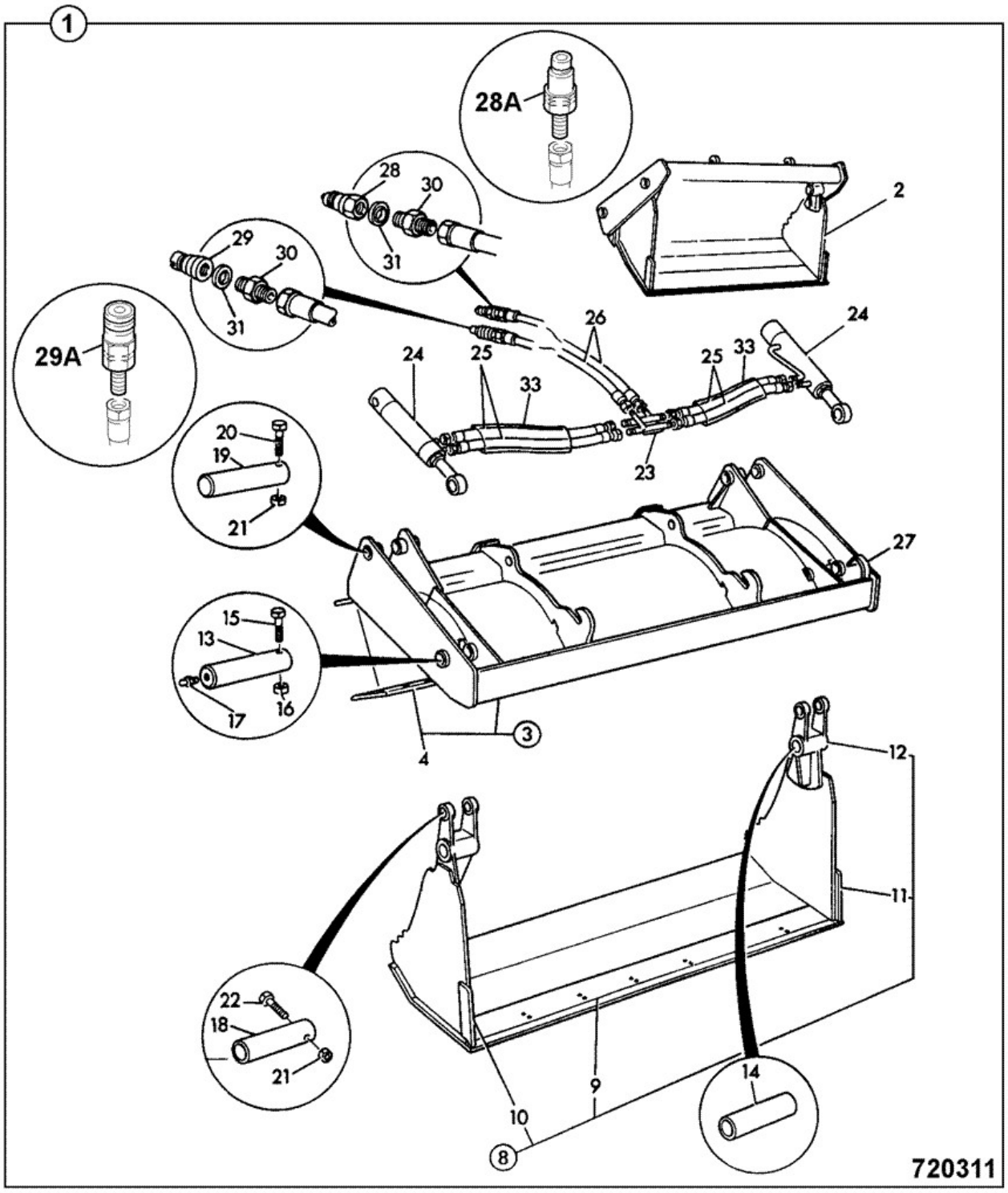

Elemento	Pieza Nº	Cambiar número	Descripción	Código de uso	CANT.

1	126/00581	<M1618047	Pala 6 in 1 quickhitch 2350mm (7'8.5") wide *1.0m3 SAE struck capacity. see A1-26-1 for later machines*	A	1
1	126/00649		Pala 6 in 1 quickhitch 7'8" wide *1.2m3 SAE struck capacity*	B	1
2	****		Pieza no reparable		1
3	:125/00173	<M1618047	Hoja back quickhitch 2350mm (7'8.5") wide *1.0m3 SAE struck capacity. see A1-26-1 for later machines*	A	1
3	:125/00179		Hoja clam 7'8" quickhitch *1.2m3 SAE struck capacity.*	B	1
4	::123/02362		Puntera 2343mm long		1
8	:125/50100		Mordaza clamshovel 2350mm (7'8.5") wide		1
9	::123/04144		Puntera 6 in 1 7'8" wide		1
10	::123/04423		Cortador lateral right hand		1
11	::123/04422		Cortador lateral left hand		1
12	::123/04274		Pivote casting right hand		1
12	::123/04275		Pivote casting left hand		1
13	:811/80007		Pasador pivot		2
13A	:811/80007A		Pasador pivot 0.1mm oversize		2
13B	:811/80007B		Pasador pivot 0.25mm oversize		2
14	:1208/0023		Casquillo		2
15	:1305/3226Z		Tornillo		2
16	:1340/0204Z		Tuerca philidas thin		2
17	:1450/1001		Engrasador grease 90deg. angle		2
18	:811/50398		Pasador pivot		2
18A	:811/50398A		Pasador pivot 0.1mm oversize		2
18B	:811/50398B		Pasador pivot 0.25mm oversize		2
19	:811/80018		Pasador pivot		2
20	:1305/3222Z		Tornillo 3/8"UNF x 3"		2
21	:1340/0203Z		Tuerca		5
22	:1305/3226Z		Tornillo		2
23	:123/05538	Superseded	Tubería assembly backblade		1
23	:335/13748		Tubería assembly, backblade		1
24	:556/60331	Superseded	Pistón clamshovel *For components see index E4*		2
24	:556/60401	<M1617893	Pistón clamshovel 557 closed centres *see A1-26-1 for later machines*	A	2
24	:556/60401		Pistón clamshovel 557 closed centres	B	2
25	:612/07700		Manguito 3/8BSPx405		4
26	:612/00800		Manguito		2
27	:817/03808		Etiqueta indicator		1
28	:45/910700		Acoplamiento 3/8" BSP male quick hitch		1
28A	:45/920067		Acoplamiento 3/8"BSP male quick release		1
29	:45/910600		Acoplamiento 3/8" BSP female quick release		1
29A	:45/920066		Acoplamiento 3/8"BSP female quick release		1
29A	:835/10082		Tapa flip top protection to fit 3/8 female *to fit 45/920066*		1
30	:1604/0003		Adaptador male/male		2
30	1612/0003		Adaptador male/female		2
31	:1406/0015		Arandela seal		2
33	****		*Not fitted*		0

9812/0010 A1-8-3 SHOVEL, CLAM, 6 IN 1, 2350MM (7'8.5") WIDE, TOOL CARRIER (5/8 BSP PIPEWORK)

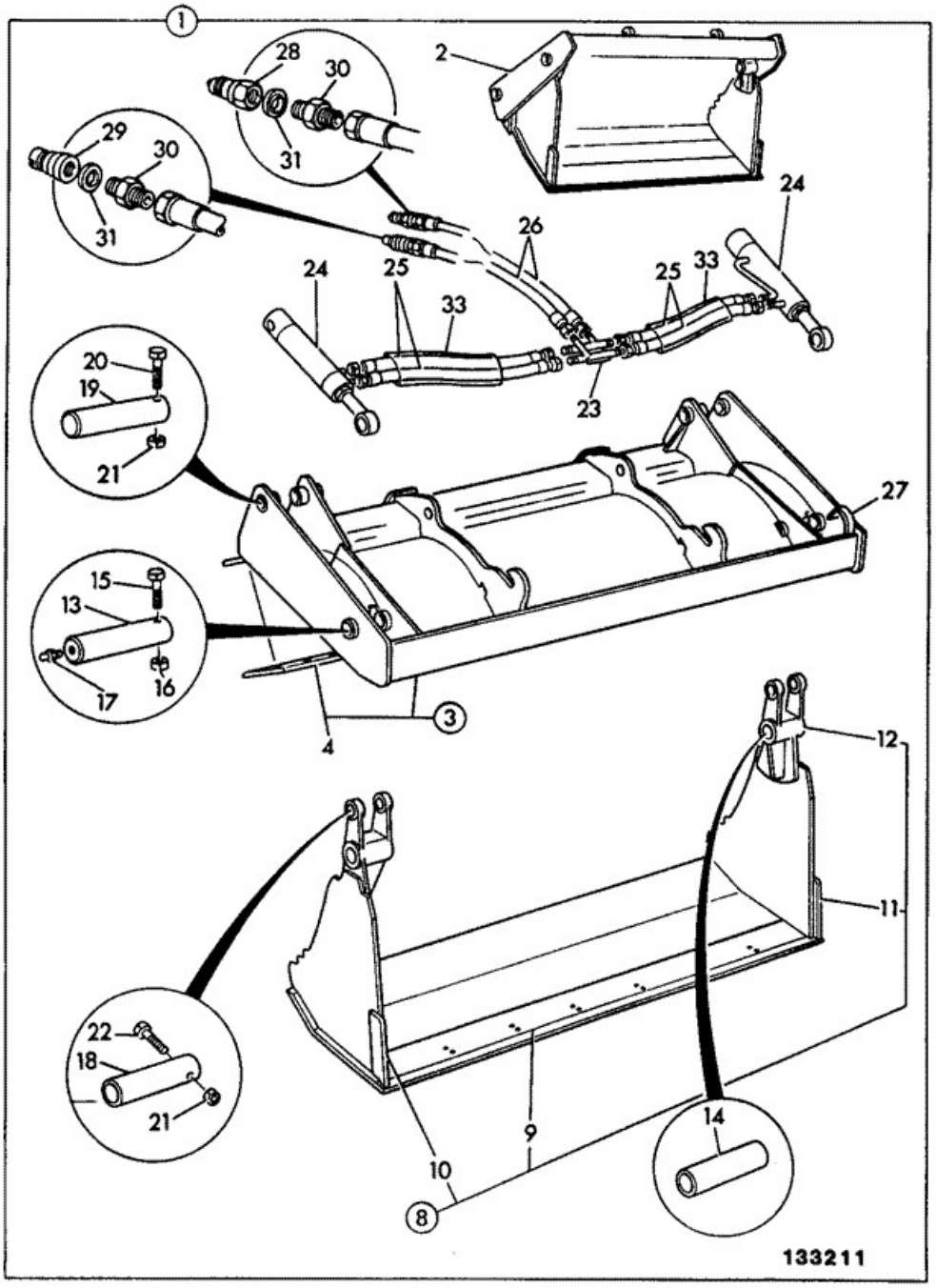

Elemento	Pieza Nº	Cambiar número	Descripción	Código de uso	CANT.
1	128/10470		Pala 6in1 1.0m3 clam 7'8" Tool Carrier		1
2	****		Pieza no reparable		1
3	:125/00477		Hoja back quickhitch 2350mm (7'8.5") wide *1.0m3 SAE struck capacity.*		1
4	::123/02362		Puntera 2343mm long		1

8	:125/50100		Mordaza clamshovel 2350mm (7'8.5") wide		1
9	::123/04144		Puntera 6 in 1 7'8" wide		1
10	::123/04423		Cortador lateral right hand		1
11	::123/04422		Cortador lateral left hand		1
12	::123/04274		Pivote casting right hand		1
12	::123/04275		Pivote casting left hand		1
13	:811/80007		Pasador pivot		2
13A	:811/80007A		Pasador pivot 0.1mm oversize		2
13B	:811/80007B		Pasador pivot 0.25mm oversize		2
14	:1208/0023		Casquillo		2
15	:1305/3226Z		Tornillo		2
16	:1340/0204Z		Tuerca philidas thin		2
17	:1450/1001		Engrasador grease 90deg. angle		2
18	:811/50398		Pasador pivot		2
18A	:811/50398A		Pasador pivot 0.1mm oversize		2
18B	:811/50398B		Pasador pivot 0.25mm oversize		2
19	:811/80018		Pasador pivot		2
20	:1305/3222Z		Tornillo 3/8"UNF x 3"		2
21	:1340/0203Z		Tuerca		5
22	:1305/3226Z		Tornillo		2
23	:123/07796		Tubería assembly backblade		1
24	:556/60234		Pistón assembly, clamshovel *See index E4 for components*		2
25	:612/07700		Manguito 3/8BSPx405		4
26	:612/21600		Manguito 3/8"BSP x 1050mm		2
27	:817/03808		Etiqueta indicator		1
28	:45/910700		Acoplamiento 3/8" BSP male quick hitch		1
28A	:45/920067		Acoplamiento 3/8"BSP male quick release		1
29	:45/910600		Acoplamiento 3/8" BSP female quick release		1
29A	:45/920066		Acoplamiento 3/8"BSP female quick release		1
29A	:835/10082		Tapa flip top protection to fit 3/8 female *to fit 45/920066*		1
30	:1604/0003		Adaptador male/male		2
30	1612/0003		Adaptador male/female		2
31	:1406/0015		Arandela seal		2
33	****		*Not fitted*		0
34	1315/0411Z		Tornillo M10 x 45		2
35	1315/0409Z		M10 X 35		1
36	1370/0303Z		Tuerca lock M10		3
37	1420/0008Z		Arandela Plain M10		3
38	123/05553		Espaciador steel		5

9812/0010 A1-10-1 PALA, CUCHARA 6 EN 1, 2450MM (8'0") ANCHO, 1,3M3

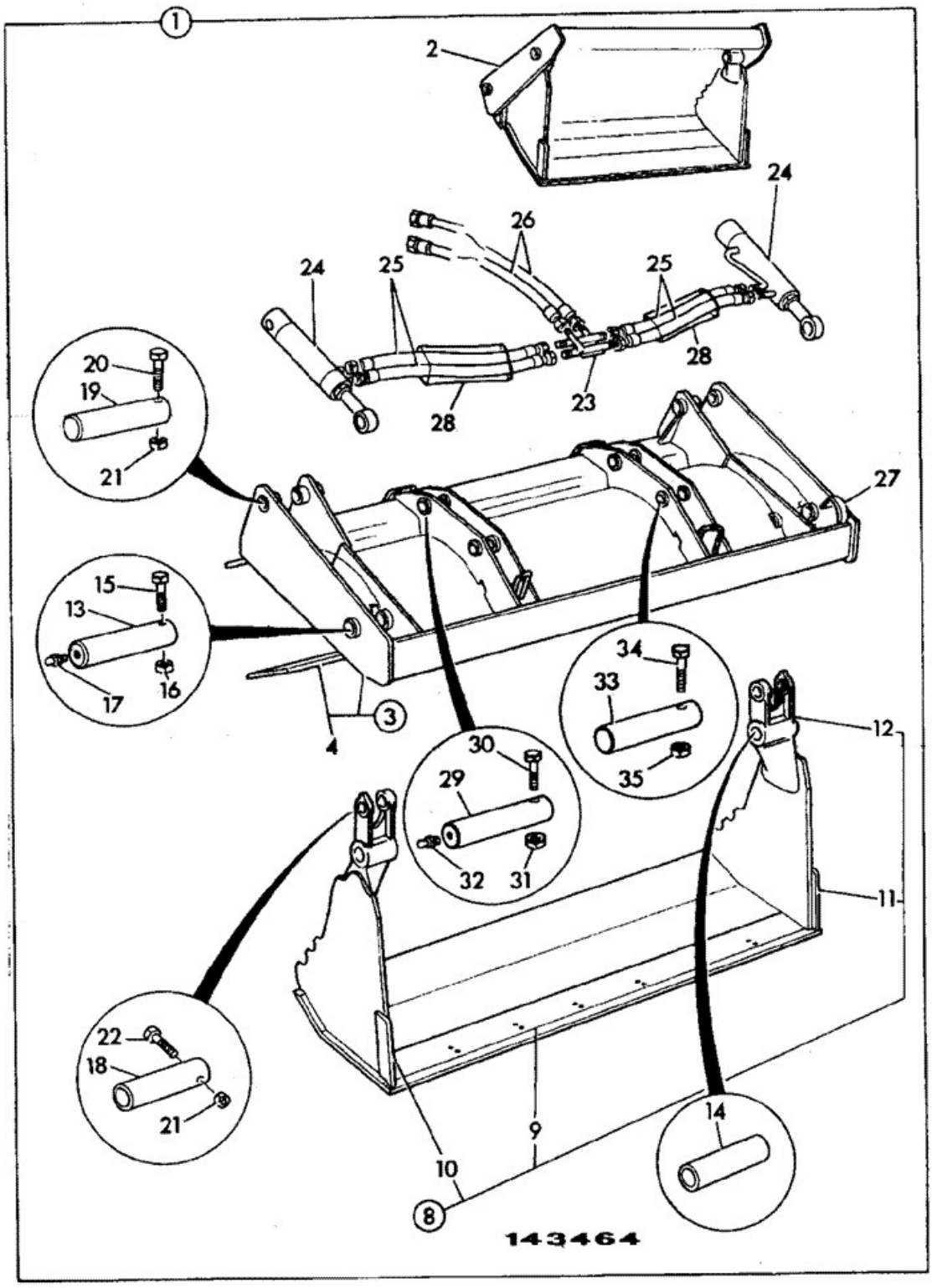

Elemento	Pieza Nº	Cambiar número	Descripción	Código de uso	CANT.
1	126/01526		Pala 6 in 1 2450mm (8'0") wide *2WS, AWS*		1
1	126/01530		Pala 6 in 1 c/w forks 2450mm (8'0") wide *2WS, AWS*		1
2	****		Pieza no reparable		1

3	:125/00180		Hoja back 1.3m3. 8' wide *2WS, AWS*		1
3	:125/00182		Hoja back 1.3m3. 8' wide + fork pivots AWS *2WS, AWS*		1
4	::123/05115		Puntera 2450mm (8'0") wide		1
8	:125/76000		BOCA clamshovel 96"		1
9	::123/05119		Puntera 2450mm (8'0") wide		1
10	::123/04423		Cortador lateral right hand		1
11	::123/04422		Cortador lateral left hand		1
12	::123/04274		Pivote casting right hand		2
12	::123/04275		Pivote casting left hand		1
13	:811/80007		Pasador pivot		2
13A	:811/80007A		Pasador pivot 0.1mm oversize		2
13B	:811/80007B		Pasador pivot 0.25mm oversize		2
14	:1208/0023		Casquillo		2
15	:1305/3226Z		Tornillo		2
16	:1340/0204Z		Tuerca philidas thin		2
17	:1450/1001A		Engrasador		2
18	:811/50398		Pasador pivot		2
18A	:811/50398A		Pasador pivot 0.1mm oversize		2
18B	:811/50398B		Pasador pivot 0.25mm oversize		2
19	:811/80018		Pasador pivot		2
20	:1305/3222Z		Tornillo 3/8"UNF x 3"		2
21	:1340/0203Z		Tuerca		5
22	:1305/3226Z		Tornillo		2
23	:123/05538	Superseded	Tubería assembly backblade		1
23	:335/13748		Tubería assembly, backblade		1
24	:556/60077		Pistón clamshovel black *For components see index E4*	P/Ex	2
25	:612/02500		Manguito 3/8BSPx465		4
26	612/80156		Manguito 3/8 BSP 800mm *not supplied with shovel*		2
27	:817/03808		Etiqueta indicator		1
28	****		*Not fitted.*		0
29	811/80001		Pasador pivot		2
30	1305/3222Z		Tornillo 3/8"UNF x 3"		2
31	1340/0203Z		Tuerca		2
32	1450/0001		Engrasador grease, straight 1/8 BSP		2
33	1305/3222Z		Tornillo 3/8"UNF x 3"		2
34	1340/0203Z		Tuerca		2
51	835/10135		Tapón blanking forkrail mtg bkt		6

9812/0010 A1-14-1 BARREDERA, CABINA ABIERTA, CONJUNTO CUBIERTA

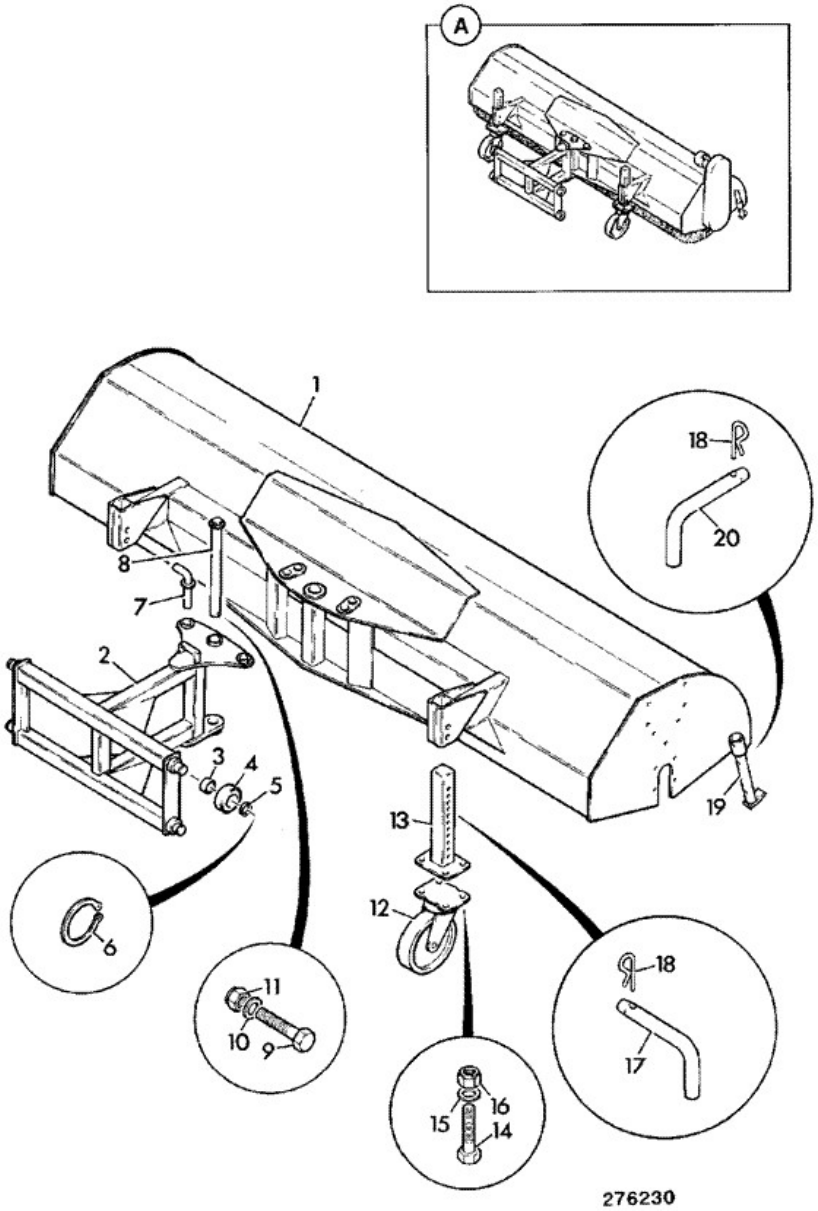

Elemento	Pieza Nº	Cambiar número	Descripción	Código de uso	CANT.

A	980/34500		Accesorio sweeper assembly		1
1	:1				1
2	:983/10415		Bastidor sweeper		1
3	:980/40941		Cojinete		4
4	:980/40940		Rodillo		4
5	:980/40942		Arandela roller		4
6	:980/40943		Arandela elástica		4
7	:1				1
8	:1				1
10	:1				1
11	:1				1
12	:980/40960		Rueda canopy castor		2
13	:980/40937		Pata castor		2
14	:1				8
15	:1				8
16	:980/71615		Tuerca		8
17	:980/40938		Pasador castor adjustment		2
18	:980/40939		Pasador 'R'		4
19	:1				2
20	:1				2

9812/0010 A1-14-2 BARREDERA, CONJUNTO ACC/CEPILLO, 0

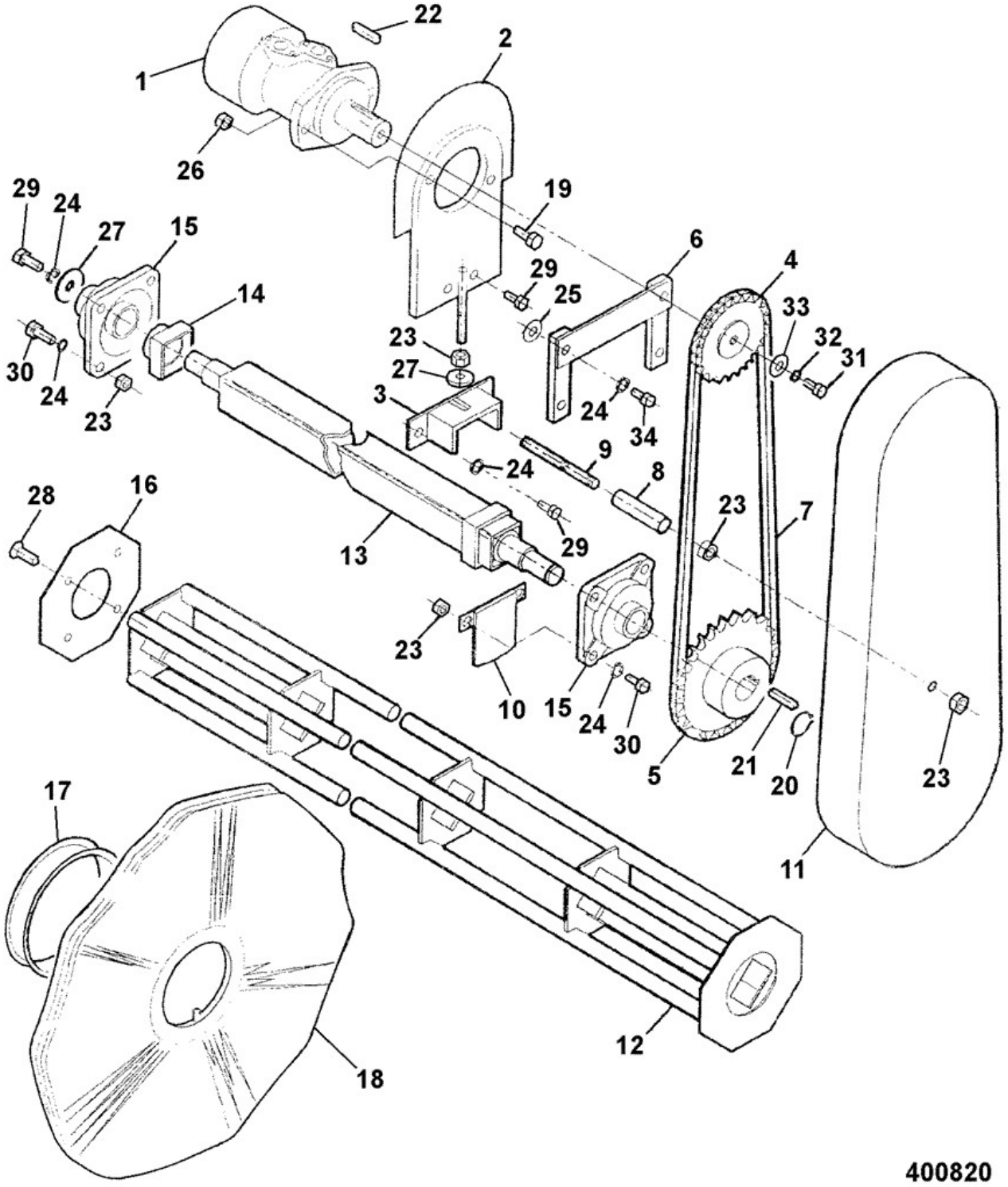

Elemento	Pieza Nº	Cambiar número	Descripción	Código de uso	CANT.

1	980/40912		Motor		1
1A	:980/40971		Kit seal motor		1
2	980/40913		Placa motor mounting		1
3	980/40914		Soporte adjustment		1
4	980/40915		Engranaje motor drive sprocket		1
5	980/40916		Engranaje brush shaft sprocket		1
6	980/40917		Abrazadera		1
7	980/40918		Cadena		1
8	980/40919		Espaciador tube		1
9	980/40920		Espaciador tube studding		1
10	980/40921		Placa end filler		1
11	980/40922		Tapa chain		1
12	980/40924		Eje brush core		1
13	980/40926		Eje brush shaft		1
14	980/40927		Espaciador brush shaft		1
15	980/40928		Cojinete		2
16	980/40929		Placa brush core end Bolt=980/40933		1
17	980/15917		Espaciador		52
18	980/15916		Escobilla polypropelene (plastic)		53
18	980/15915		Escobilla wire		53
19	1315/0511Z		Tornillo M12 x 45mm		2
20	980/40930		Arandela elástica		1
21	980/40931		Llave		1
22	980/40932		Llave motor		1
23	1370/0301Z		Tuerca		11
24	1425/0008Z		Arandela Spring M10		15
25	1420/0008Z		Arandela Plain M10		4
26	1370/0403Z		Tuerca M12		2
27	980/16019		Arandela rtetaining		2
29	1315/0407Z		Tornillo M10 x 25mm		5
30	1315/0409Z		M10 X 35		8
31	1315/0307Z		Tornillo Hexagon M8 X 25		1
32	1425/0007Z		Arandela spring		1
33	980/16020		Arandela		1
34	1315/0410Z		Tornillo M10 x 40		4

9812/0010 A1-14-3 BARREDERA, CIRCUITO HIDRÁULICO, 0

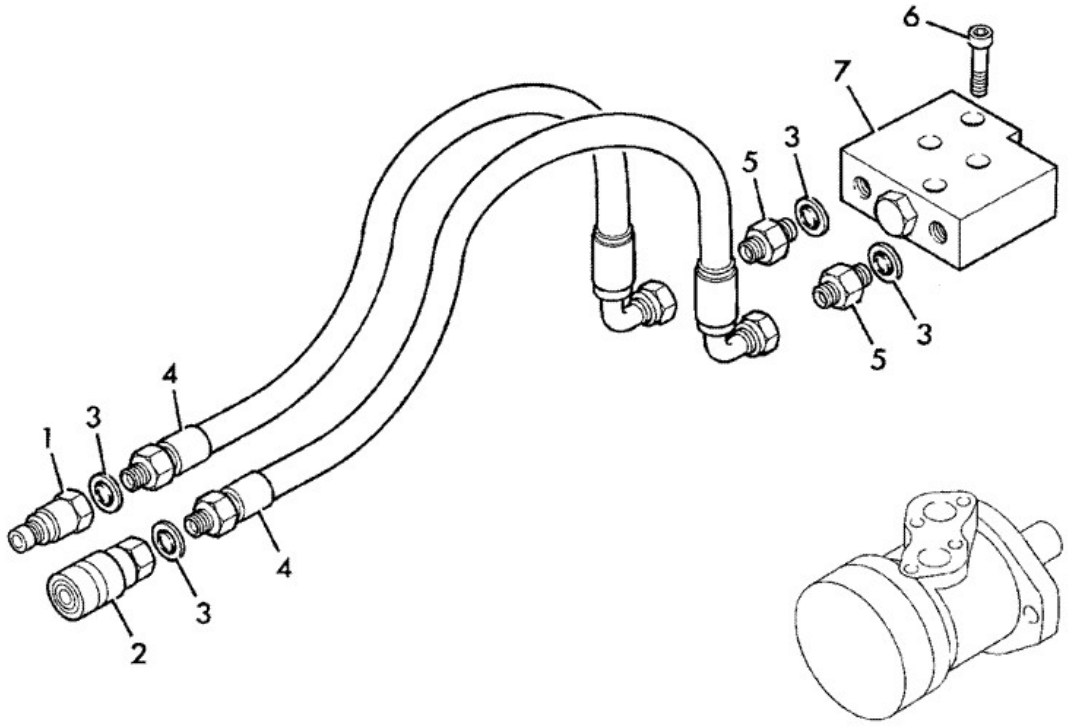

274280

Elemento	Pieza Nº	Cambiar número	Descripción	Código de uso	CANT.

1	45/910700		Acoplamiento 3/8" BSP male quick hitch		1
2	45/910600		Acoplamiento 3/8" BSP female quick release		1
3	1406/0015		Arandela seal		4
4	980/32778		Manguito		2
5	1606/0007		Adaptador		2
5	1604/0004		Adaptor Male		2
6	1				4
7	1				1

9812/0010 A1-14-4 BARREDERA, BASTIDOR, 0

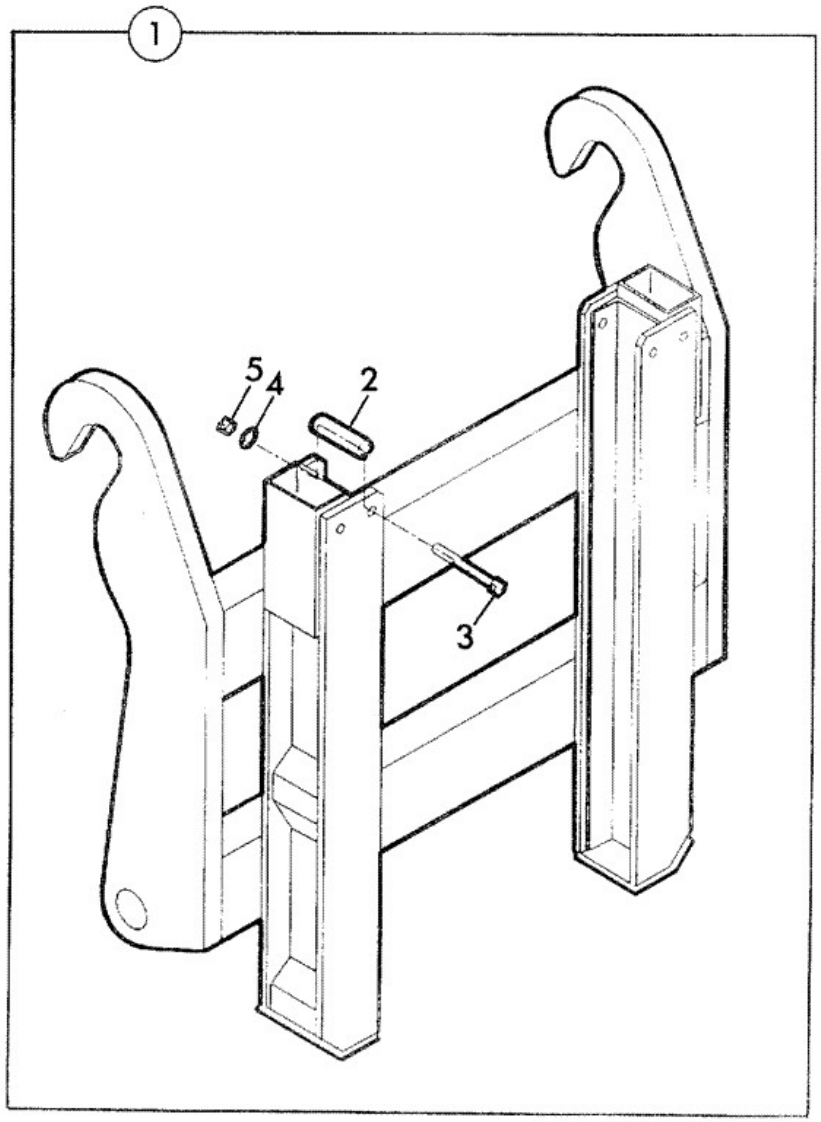

201150

Elemento	Pieza Nº	Cambiar número	Descripción	Código de uso	CANT.
1	980/41100		Bastidor mounting		1

2	:980/40936		Tope slider stop collar		1
3	:1315/3523Z		Tornillo M12x130		2
4	:1420/0009Z		Arandela Plain M12		2
5	:1370/0403Z		Tuerca M12		2

9812/0010 A1-16-1 BARREDERA, CABINA ABIERTA, CONJUNTO CUBIERTA

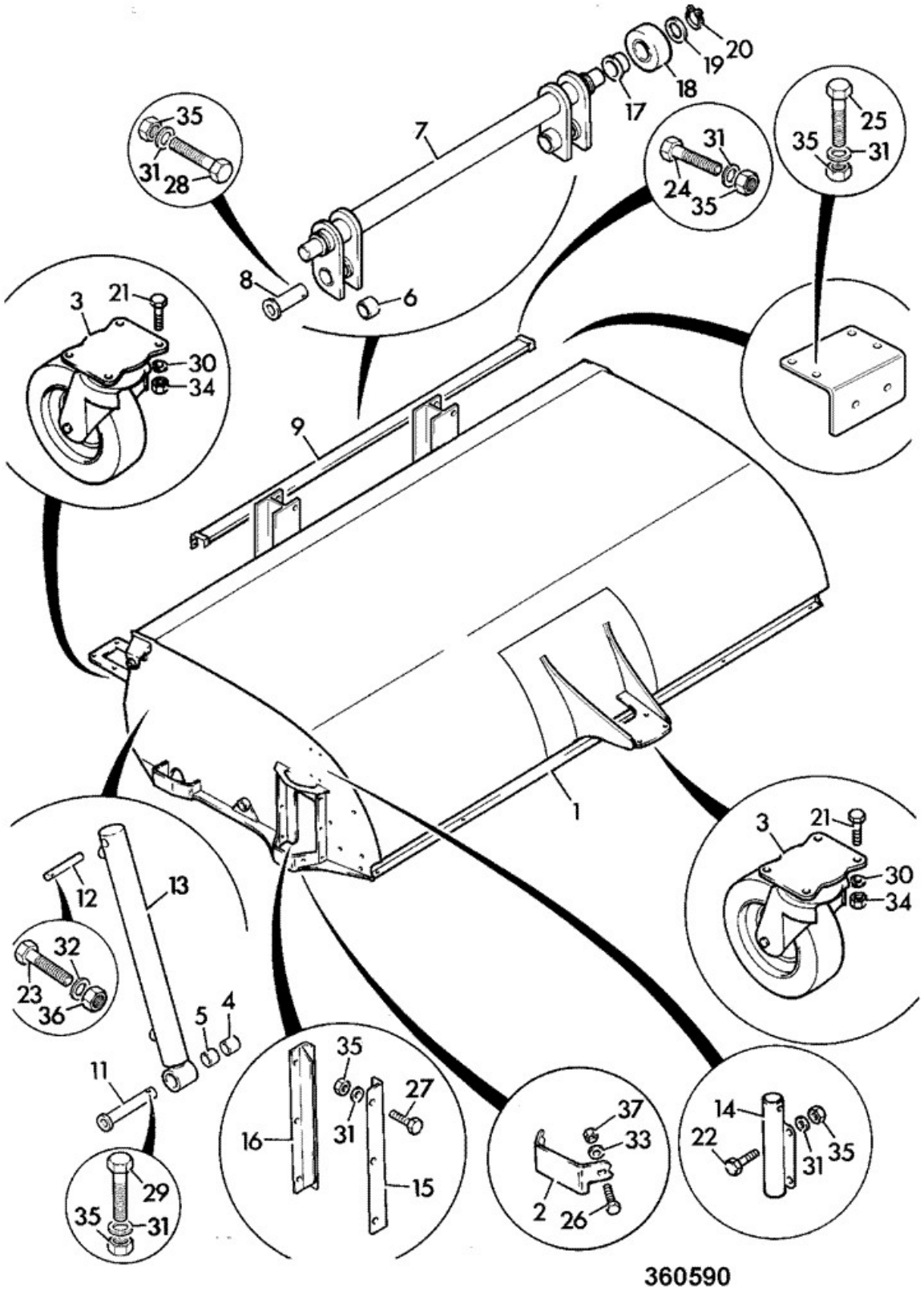

Elemento	Pieza Nº	Cambiar número	Descripción	Código de uso	CANT.
A	980/88957		Barredera 8ft 3CX,4CX Q. hitch left hand sweep		1
A	980/88960		Barredera 8ft 3CX,4CX Q. hitch right hand sweep		1
1	331/14755		Cab abierta 8FT sweeper		1
2	983/10072		Proteccion Bumper		2
			Rueda castor		

3	331/22407		*NLA*		3
3A	332/A4839	>10/2008	Assembly CASTOR WHEEL		3
3B	:332/A4551		RUEDA		3
4	983/10125		Casquillo Pivot		2
5	983/10135		Casquillo pivot		2
6	831/10206		Cojinete		2
7	331/14848		Eje wheel		1
8	811/50394		Pivote pin		2
9	331/22387		Proteccion hose		1
10	331/14658		Soporte valve mounting		1
11	811/90126		Pasador ram eye end pivot		2
12	811/90128		Pasador dump end pivot		2
13	983/10140		Pistón Hopper door		2
14	331/14058		Regulador housing		2
15	331/14090		Soporte motor slide front		2
16	331/14091		Soporte motor slide rear		2
17	831/10207		Cojinete flanged		4
18	331/14966		Rueda float		4
19	1406/0024		Arandela bonded		4
20	2203/0041		Arandela elástica		4
21	1315/0509Z		Tornillo M12 x 35mm		12
22	1315/3320Z		Tornillo		8
23	1315/3211Z		Tornillo M6 x 45 lg		2
24	1315/0303Z		Tornillo M8 x 16		2
25	1315/0303Z		Tornillo M8 x 16		4
26	1315/0408Z		Tornillo M10 x 30		4
27	1315/0307Z		Tornillo Hexagon M8 X 25		12
28	1315/3314Z		Tornillo		2
29	1315/3313Z		Tornillo M8 X 55		2
30	1420/0009Z		Arandela Plain M12		12
31	1420/0007Z		Arandela plain M8		30
32	1420/0006Z		Arandela M6		6
33	1420/0008Z		Arandela Plain M10		4
34	1370/0403Z		Tuerca M12		12
35	1370/0203Z		Tuerca self lock M8		30
36	1370/0103Z		Tuerca Self lock M6		2
37	1370/0303Z		Tuerca lock M10		4

9812/0010 A1-16-2 COLECTOR BARREDERA , CONJ\ NÚCLEO CEPILLO, 0

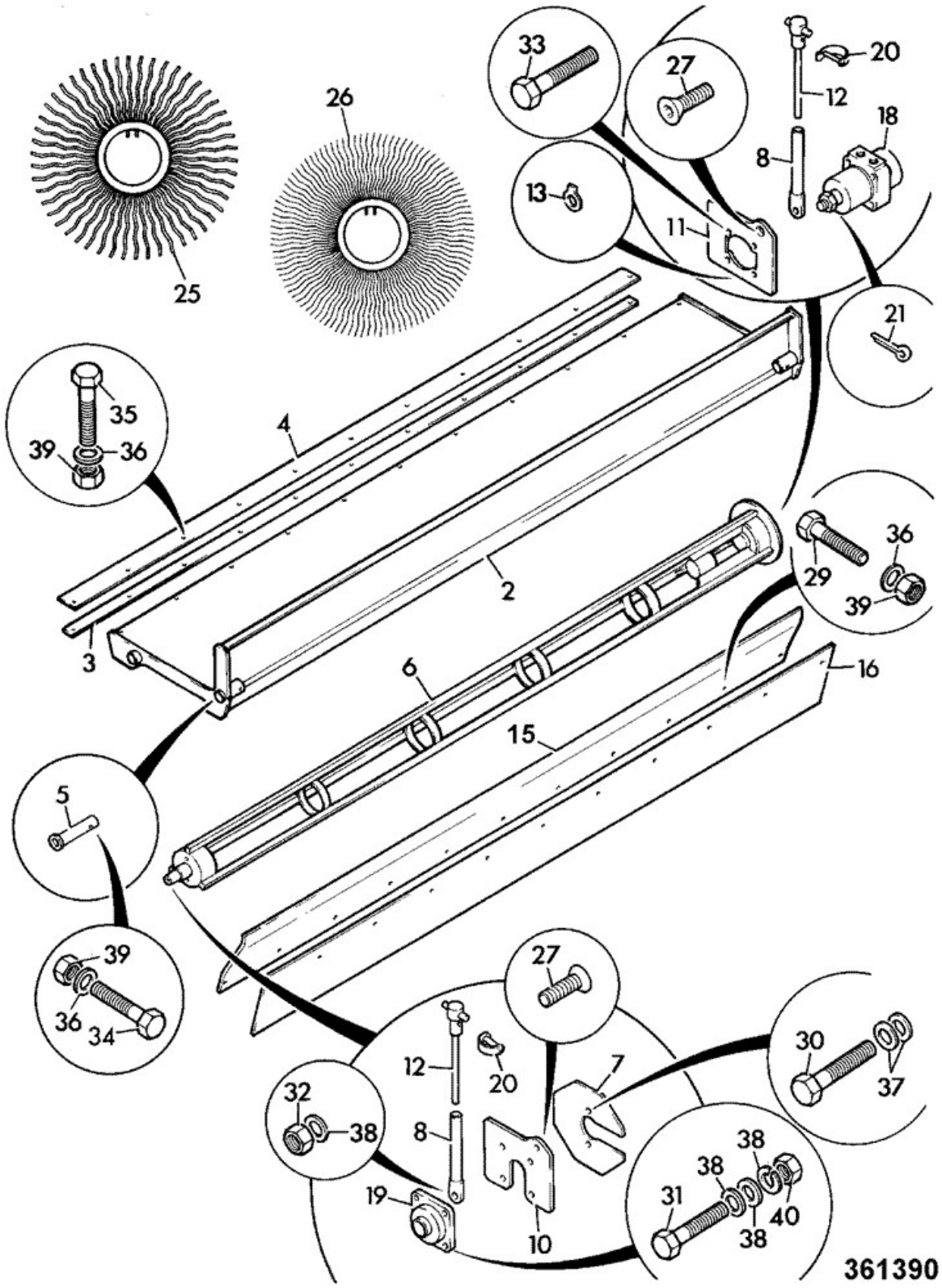

Elemento	Pieza Nº	Cambiar número	Descripción	Código de uso	CANT.
2	331/14757		Tolva 8ft sweeper		1
3	331/14065		Regleta skirt back		1
4	331/14062		Regleta door rubber		1
5	811/90127		Pasador hopper door pivot		2
6	331/14756		Eje 8ft brush core		1

7	331/14575		Placa brush		1
8	331/14056		Regulador bottom		2
10	331/14086		Placa bearing mounting left hand		1
10	331/19014		Placa bearing mounting right hand		1
11	331/14087		Placa motor mounting left hand		1
11	331/19015		Placa motor mounting right hand		1
12	331/14057		Regulador top		2
15	331/18729		Placa Skirt Bracket		1
16	331/14060		Regleta front skirt		1
18	20/925205		Motor hydraulic brush		1
18A	:25/221437		Kit junta Sweeper motor		1
18B	:20/951646		Llave drive 5 x 5 x 14		1
18C	:20/951647		Tuerca		1
18D	:20/951648		Arandela		1
19	916/10000		Cojinete		1
20	826/01818		Clip spring		2
21	2103/0711		Pasador split 1/8" x 1.1/2"lg		1
25	331/18029		Escobilla segment poly		31
26	331/18028		Escobilla segment wire		28
27	826/10531		Fijación M12 x 40 CSK Screw H		2
29	1315/0307Z		Tornillo Hexagon M8 X 25		11
29A	1420/0007Z		Arandela plain M8		11
29B	1370/0203Z		Tuerca self lock M8		11
30	1315/0408Z		Tornillo M10 x 30		2
30A	1420/0008Z		Arandela Plain M10		2
31	1315/3510Z		Tornillo		4
31A	1420/0009Z		Arandela Plain M12		4
31B	1425/0009Z		Arandela Spring M12		4
31C	1370/0402Z		Tuerca M12		4
32	1370/0403Z		Tuerca M12		2
32A	1420/0009Z		Arandela Plain M12		2
33	1315/0407Z		Tornillo M10 x 25mm		4
34	1315/3313Z		Tornillo M8 X 55		2
34A	1420/0007Z		Arandela plain M8		2
34B	1370/0203Z		Tuerca self lock M8		2
35	1315/0307Z		Tornillo Hexagon M8 X 25		11
35A	1420/0007Z		Arandela plain M8		11
35B	1370/0203Z		Tuerca self lock M8		11

9812/0010 A1-16-3 COLECTOR BARREDERA , CIRCUITO HIDRÁULICO, OPC\ CEPILLO CUNETAS

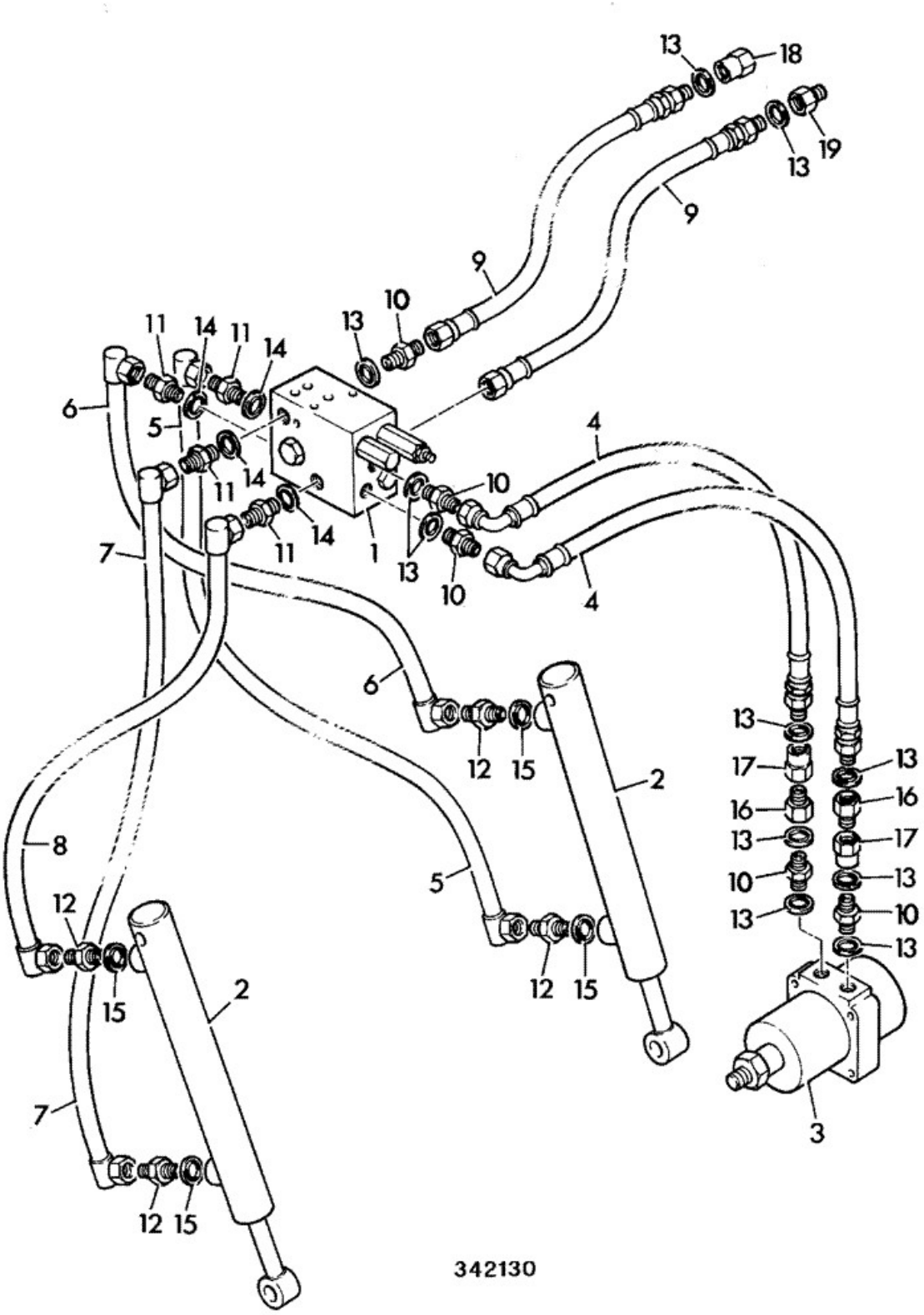

Elemento	Pieza Nº	Cambiar número	Descripción	Código de uso	CANT.
1	928/60028	Superseded	Válvula sequence Sweeper collector		1
1	928/60342		Válvula Sequence		1
2	551/60133		Pistón Sweeper door		2
2A	998/11042		Kit seal *For item 2*		1

3	20/925205		Motor hydraulic brush		1
3A	:25/221437		Kit junta Sweeper motor		1
3B	:20/951646		Llave drive 5 x 5 x 14		1
3C	:20/951647		Tuerca		1
3D	:20/951648		Arandela		1
4	613/21300		Manguito 1/2" str/elb 2160mm		2
5	1				1
6	1				1
7	1				1
8	1				1
9	613/33700		Manguito 1/2"BSP x 1060mm 90-Straight		2
10	1604/0004		Adaptor Male		5
11	1606/0003		Adaptador		4
12	1604/0002		Adaptador 1/4" BSP M/M		4
13	1406/0018		Junta bonded 1/2" BSP		9
14	1406/0015		Arandela seal		4
15	1406/0011		Junta bonded		4
16	45/910700		Acoplamiento 3/8" BSP male quick hitch		2
17	45/910600		Acoplamiento 3/8" BSP female quick release		2
18	45/910400		Acoplamiento 1/2" BSP female quick release		1
19	45/910500		Acoplamiento 1/2" BSP male quick release		1

9812/0010 A1-16-4 COLECTOR BARREDERA , CIRCUITO HIDRÁULICO, OPC\ CEPILLO CUNETAS

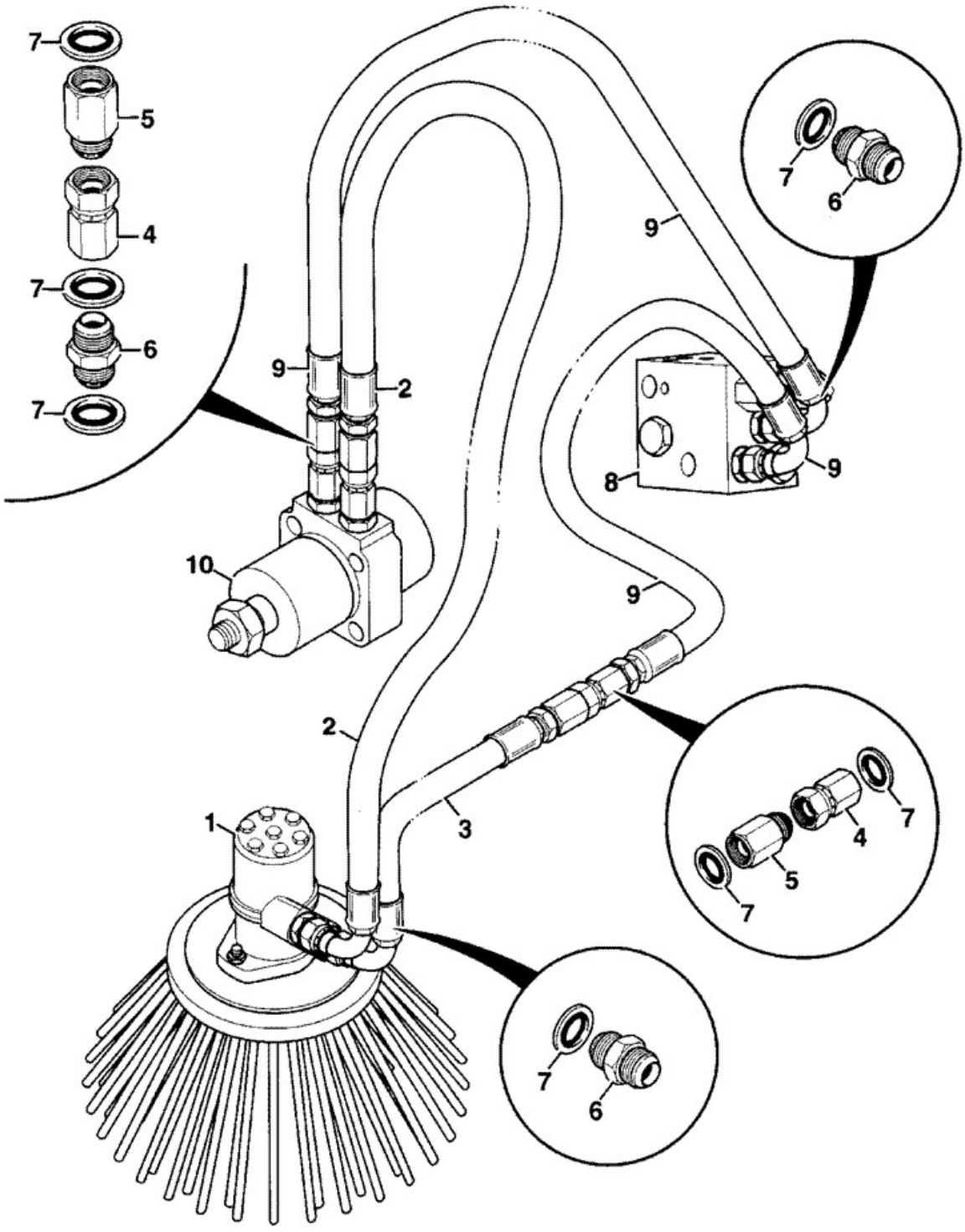

342210

Elemento	Pieza Nº	Cambiar número	Descripción	Código de uso	CANT.
1	983/10106		Motor Hydraulic Gutter brush		1
1A	:983/10338		Kit reparación motor repair		1
2	1				1
3	1				1
4	45/910400		Acoplamiento 1/2" BSP female quick release		2

5	45/910500		Acoplamiento 1/2" BSP male quick release		2
6	1604/0004		Adaptor Male		6
7	1406/0018		Junta bonded 1/2" BSP		12
8	:928/60043		Válvula Combination valve Gutter brush		1
9	1				2
10	20/925235		Motor		1
10A	:983/10339		Kit reparación MOTOR REPAIR		1

9812/0010 A1-16-5 COLECTOR BARREDERA , CEPILLO CUNETA, 0

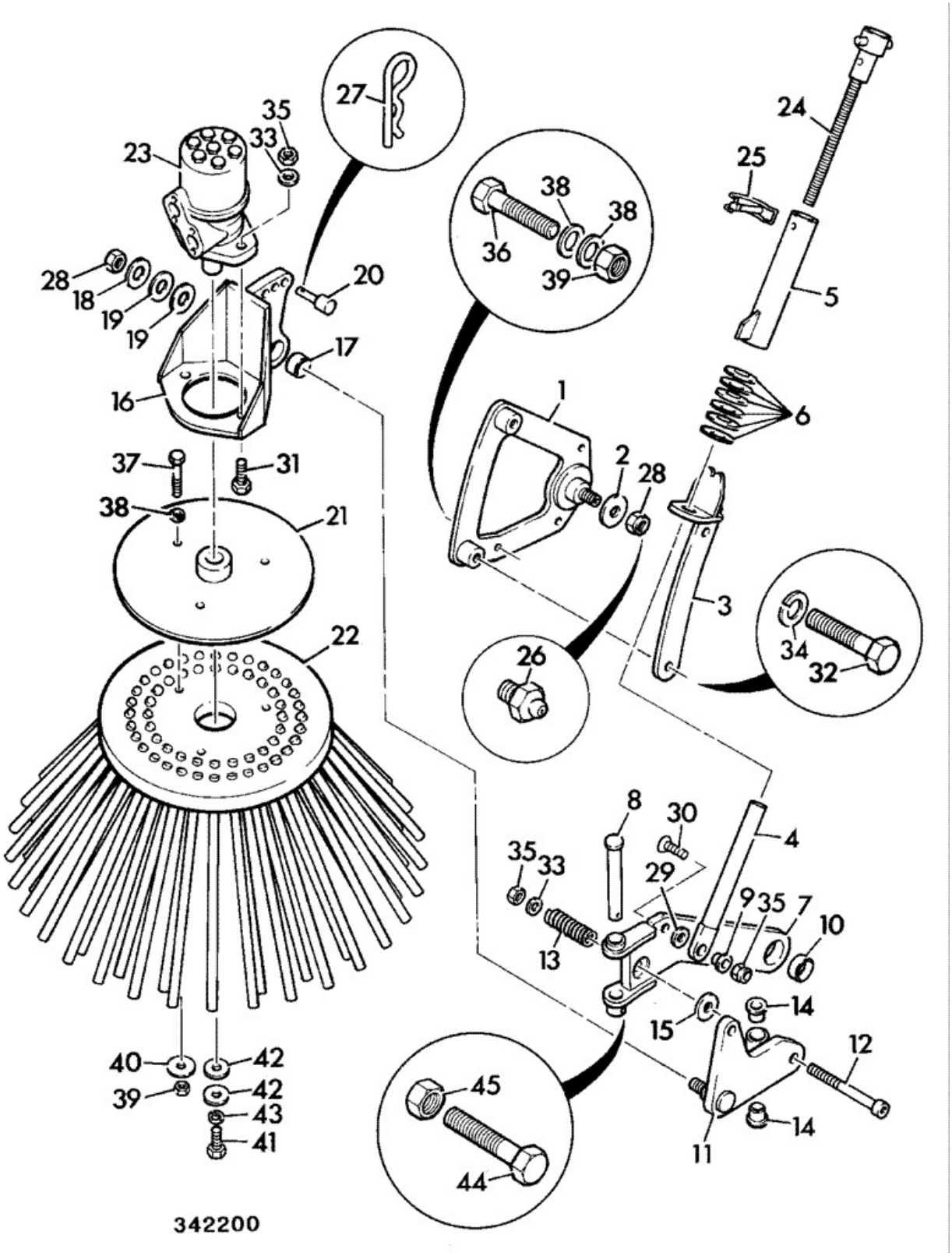

Elemento	Pieza Nº	Cambiar número	Descripción	Código de uso	CANT.
A	980/88695		Accesorio sweeper collector		1
B	980/88678		Escobilla assembly left hand gutter		1
1	:983/10084		Placa Side left hand drive		1
2	:983/10085		Arandela arm pivot Gutter brush		1
3	:983/10086		Soporte adjusting mount Gutter brush		1

4	:983/10087		Barra adjuster Gutter brush		1
5	:983/10088		Tubo adjuster lift Gutter brush		1
6	:983/10089		Disco spring		6
7	:983/10090		Soporte lower arm Gutter brush		1
8	:983/10091		Pasador arm pivot Gutter brush		1
9	:983/10092		Saliente Lower arm Gutter brush		1
10	:983/10093		Casquillo lower arm Gutter brush		1
11	:983/10094		Barra upper Gutter brush		1
12	:983/10095		Tornillo Tension		1
13	:983/10096		Muelle		1
14	:983/10097		Casquillo Flanged		2
15	:983/10098		Espaciador arm		1
16	:983/10099		Cabeza Swivel		1
17	:983/10100		Casquillo Swivel		1
18	:983/10101		Muelle disc		1
19	:983/10102		Muelle Disc		2
20	:983/10103		Pasador swivel head		1
21	:983/10104		Placa Brush drive		1
22	:983/10105		Escobilla Gutter		1
23	:983/10106		Motor Hydraulic Gutter brush		1
23A	::983/10338		Kit reparación motor repair		1
24	:983/10083		Mango adjusting gutter brush		1
25	:983/10107		Pasador Shaft Locking		1
26	:1450/0001		Engrasador grease, straight 1/8 BSP		1
27	:1				1
28	:1370/0603Z		Tuerca M16		2
29	:1420/0011		Arandela		1
30	:1				1
31	:1315/3510Z		Tornillo		4
32	:1315/0507Z		Tornillo		2
33	:1420/0009Z		Arandela Plain M12		3
34	:1425/0009Z		Arandela Spring M12		2
35	:1370/0403Z		Tuerca M12		4
36	:1315/0408Z		Tornillo M10 x 30		4
37	:1315/3415Z		Tornillo M10 x 65		3
38	:1420/0008Z		Arandela Plain M10		11
39	:1370/0303Z		Tuerca lock M10		7
40	:1				3
41	:1315/0307Z		Tornillo Hexagon M8 X 25		1
42	:1				2
43	:1425/0007Z		Arandela spring		1
44	:1315/0209Z		Tornillo M6 x 35		1
45	:1370/0103Z		Tuerca Self lock M6		1

9812/0010 A1-16-6 COLECTOR BARREDERA , CONJ\ ASPERSIÓN, 0

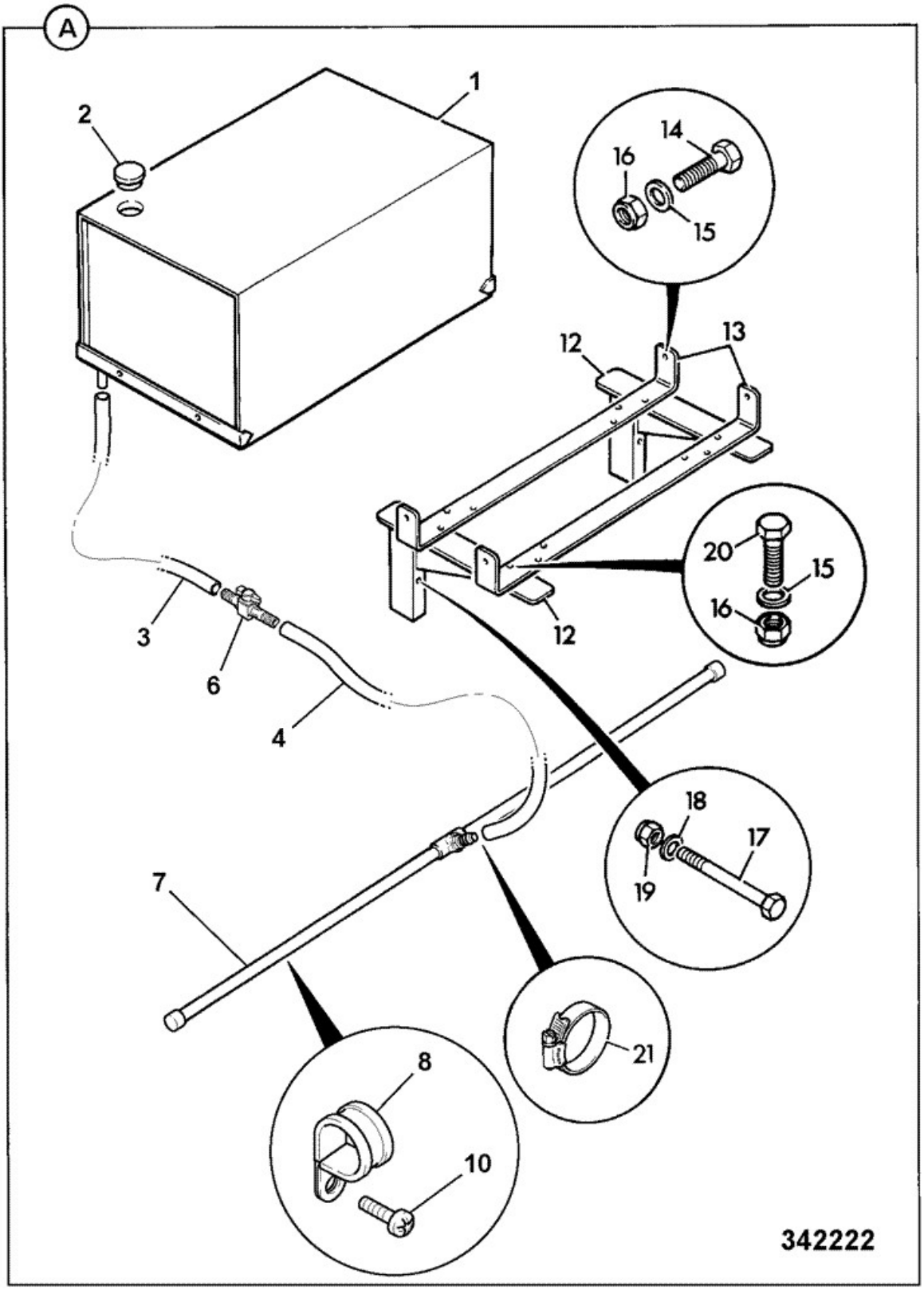

Elemento	Pieza Nº	Cambiar número	Descripción	Código de uso	CANT.
A	980/89080		Kit aspersor 7' assembly 3CX/4CX QFIT		1
A	980/88675		Kit aspersor 8'assembly 3CX/4CX QFIT		1
1	:980/89076		Depósito assemble 3cx/4cx QFIT		1
2	::1				1
3	:834/10349		Manguito WATER 1.5M		1

4	:834/10350		Manguito WATER 300mm		1
6	:816/60242		Grifo		1
7	:980/89078		Barra 7' sprinkler		1
7	:980/89079		Barra 8' sprinkler		1
8	:821/00474		Clip 'P'		4
10	:826/01461		Tornillo pan head		4
12	:335/01784		Soporte Q hitch water tank right hand		1
12	:335/01926		Soporte Q hitch water tank left hand		1
13	:331/19990		Soporte tank support		2
14	:1315/3509Z		Tornillo M12x35 Grade 8.8		4
15	:1420/0009Z		Arandela Plain M12		12
16	:1370/0403Z		Tuerca M12		12
17	1315/3522Z		Tornillo M12 x 120		2
18	1420/0009Z		Arandela Plain M12		2
19	1370/0403Z		Tuerca M12		2
21	:2201/0002		Clip jubilee		2

9812/0010 A1-16-7 COLECTOR BARREDERA , BASTIDOR, 0

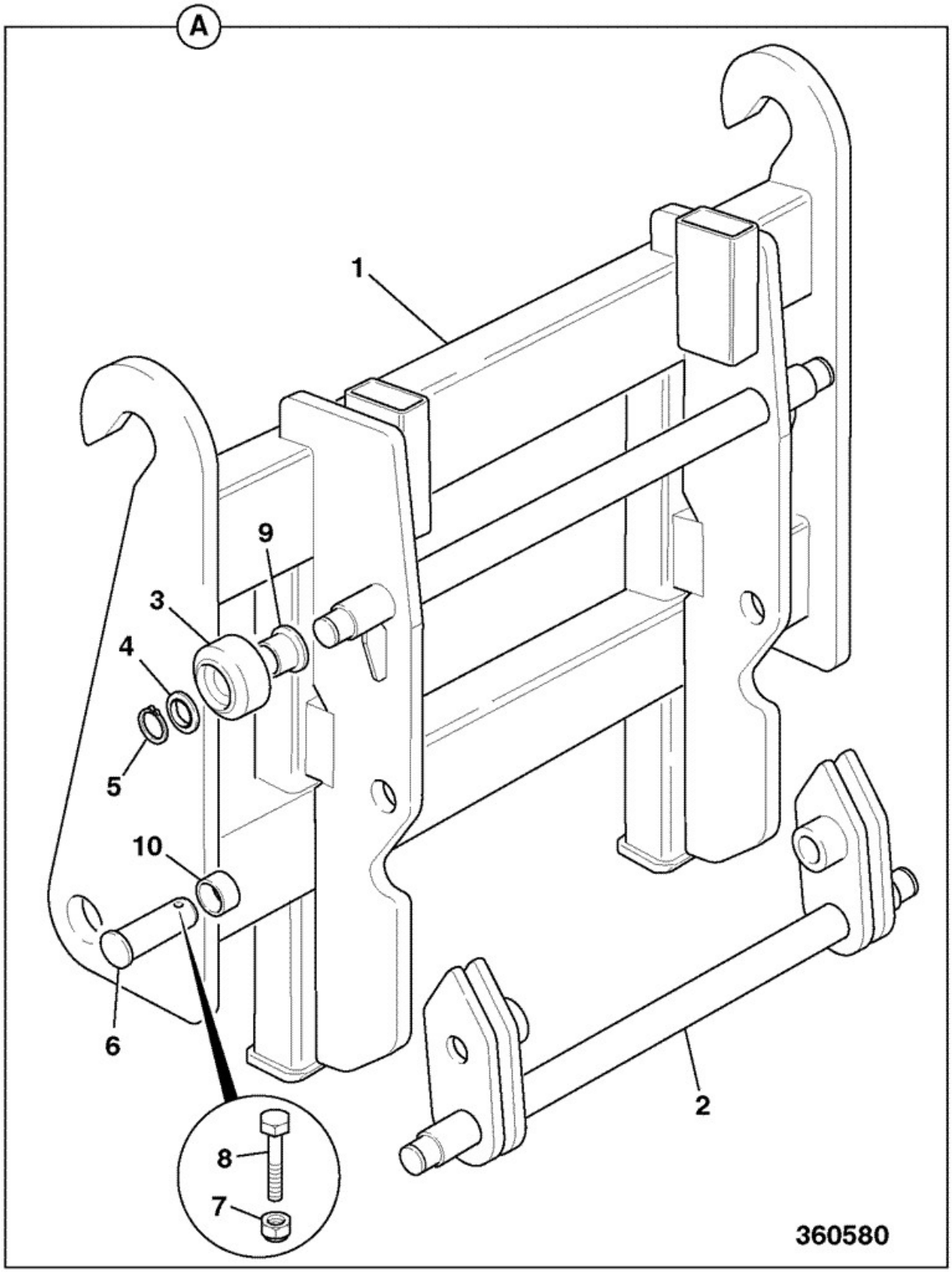

Elemento	Pieza Nº	Cambiar número	Descripción	Código de uso	CANT.
A	980/88990		Bastidor Q.hitch assemby 8ft sweeper 3CX,4CX		1
1	:331/18789		Bastidor Q-HITCH 3CX, 4CX Sweeper collector		1
2	:331/14848		Eje wheel		1
3	:331/14966		Rueda float		4
4	:1406/0024		Arandela bonded		4
5	:2203/0041		Arandela elástica		4
6	:811/50394		Pivote pin		2
7	:1370/0203Z		Tuerca self lock M8		2
8	:1315/3314Z		Tornillo		2
9	:831/10207		Cojinete flanged		4
10	:831/10206		Cojinete		2

9812/0010 A1-16-8 COLECTOR BARREDERA , RÓTULO ADHESIVO, 0

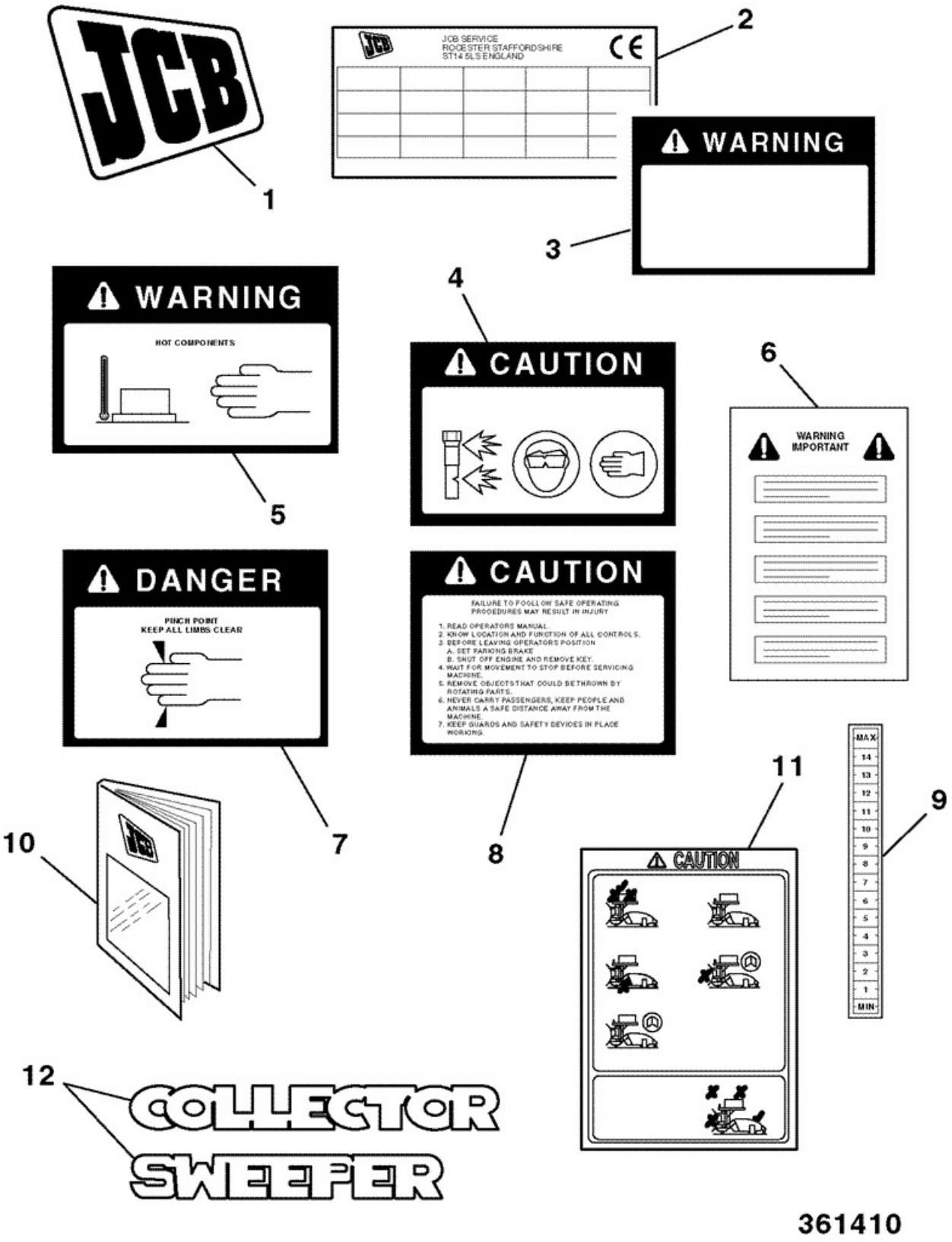

Elemento	Pieza Nº	Cambiar número	Descripción	Código de uso	CANT.
1	817/04190		Rótulo JCB insignia 375 x 300mm		1
2	****		Placa Data		1
3	817/04411		Rótulo WARNING		1
4	817/16946		Rótulo CAUTION HIGH PRESSURE FLUID		1
5	817/16947		Rótulo WARNING hot component		1

6	817/02742		Rótulo warning before operating		4
7	817/16962		Rótulo DANGER pinch point		2
8	817/16962		Rótulo DANGER pinch point		1
9	817/16945		Rótulo GENERAL CAUTION		2
10	9801/8502		Libro owners manual		1
11	817/05357		Rótulo Sweeper Operation		1
12	817/04410		Rótulo Sweeper Collector Operation		3

9812/0010 A1-20-1 126/01913, Pala-cucharón 6 en 1, 1.2M3 X 92", QUICKHITCH

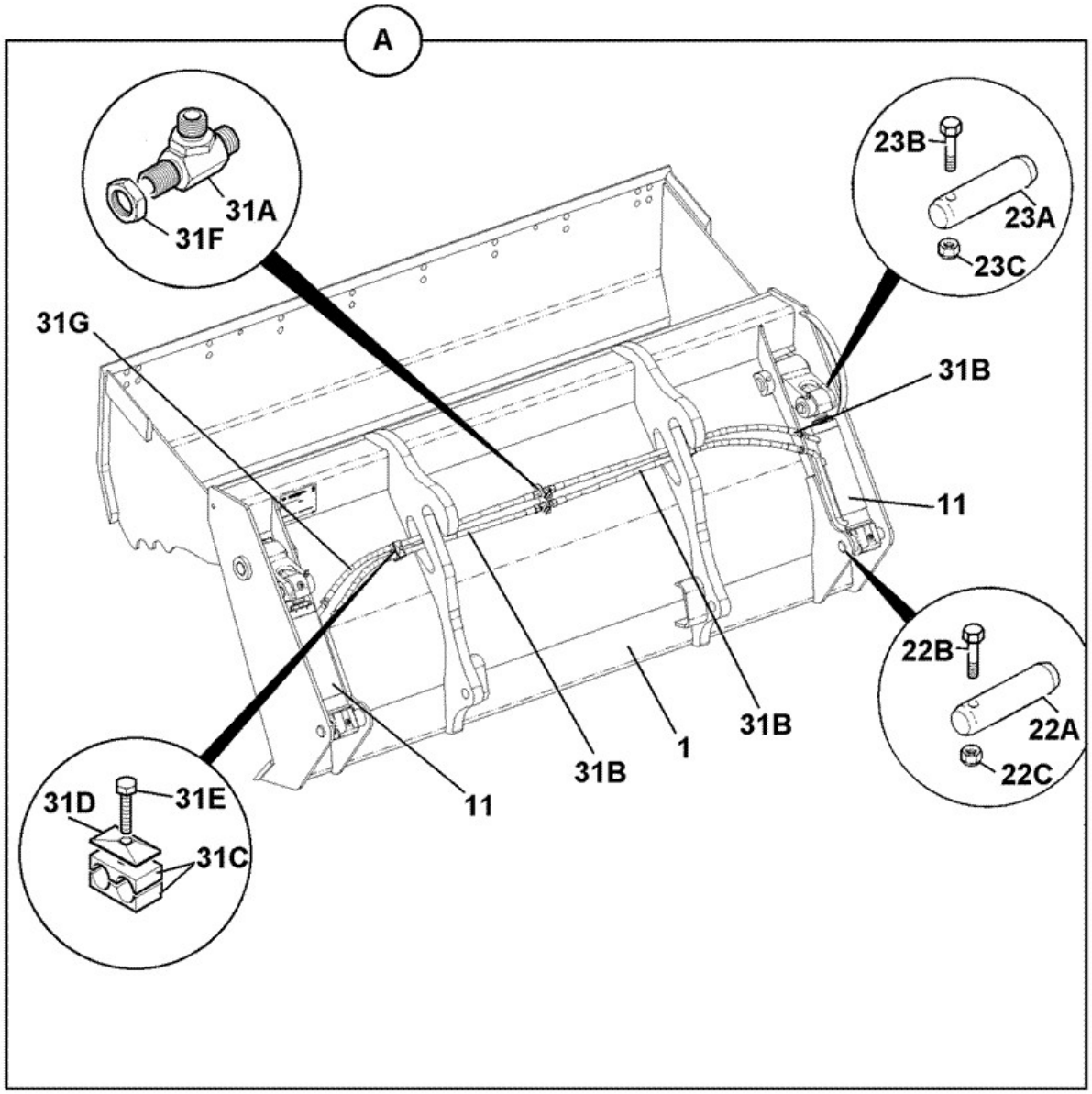

126-03150-8

Elemento	Pieza Nº	Cambiar número	Descripción	Código de uso	CANT.

A	****		CUCHARA ALMEJA assembly 1.2m3 x 92", Quickhitch		1
1	:128/17642		CUCHARA ALMEJA clam, ABI 1.2m3 x 92", Quickhitch		1
11	:556/60367	<M1705841	Pistón clamshovel 466 closed centres		2
11	:556/60459	>M1705842	Cilindro hidráulico clamshovel 70x40, 470 closed centres		2
22A	:332/D3033		CHAVETA 38.1 dia x181		2
22B	:1305/3222Z		Tornillo 3/8"UNF x 3"		2
22C	:1340/0203Z		Tuerca		2
23A	:811/90478		Pasador pivot black		2
23B	:1305/3226Z		Tornillo		2
23C	:1340/0203Z		Tuerca		2
31A	:816/90801		Adaptador tee,bulkhead 3/8"M/M/M		2
31B	:612/80415		Manguito 3/8BSPx1000mm		3
31C	:821/00347		Abrazadera twin		2
31D	:821/00169		Placa cover		2
31E	:1315/0309Z		Tornillo fijación M8x35		2
31F	:1356/0203Z		Tuerca backing		2
31G	:612/80416		MANGUERA 3/8BSP x 1050mm		1
31H	:1612/2051		Adaptador *fitted to top 31A on early shovels*		1
31J	:332/G3419		ABRAZADERA anti rotation *fits to 31A*		2

9812/0010 A1-20-11 128/17642, Pala-cucharón 6 en 1, CLAM, 1.2M3 X 92", QUICKHITCH

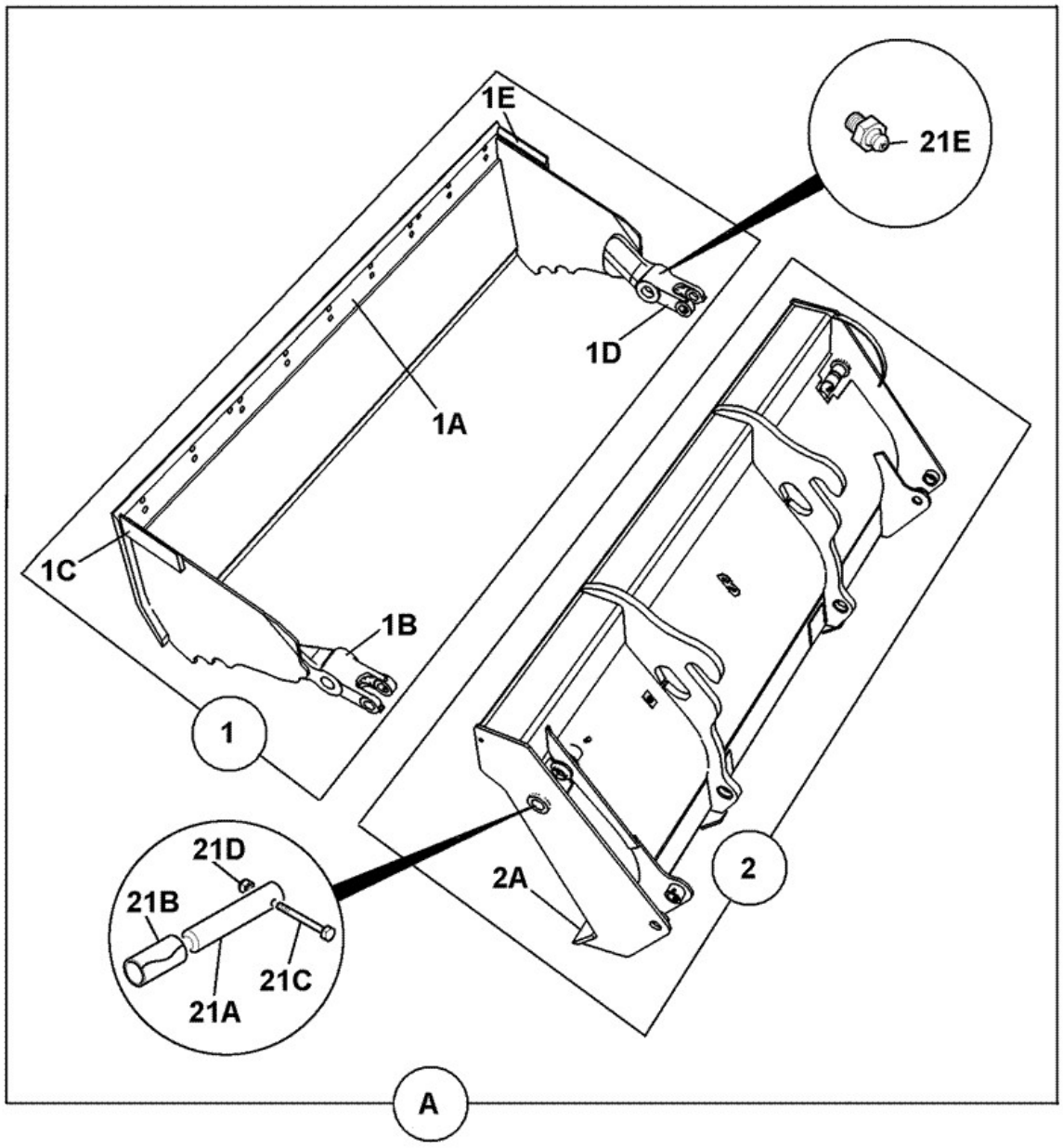

128-17644-2

Elemento	Pieza Nº	Cambiar número	Descripción	Código de uso	CANT.

A	128/17642		CUCHARA ALMEJA clam, ABI 1.2m3 x 92", Quickhitch		1
1	:125/50100		Mordaza clamshovel 2350mm (7'8.5") wide		1
1A	::125/45400		EXTREMO DE PALA assembly jaw, 92"		1
1B	::123/04275		Pivote casting left hand		1
1C	::123/04422		Cortador lateral left hand		1
1D	::123/04274		Pivote casting right hand		1
1E	::123/04423		Cortador lateral right hand		1
2	:335/14427		HOJA DORSAL 1.2m3 x 92" Quickhitch		1
2A	::123/02362		Puntera 2343mm long		1
21A	:811/90469		Pasador pivot, 44.45x213mm black		2
21B	:1208/0023		Casquillo		2
21C	:1305/3226Z		Tornillo		2
21D	:1340/0204Z		Tuerca philidas thin		2
21E	:1450/0001		Engrasador grease, straight 1/8 BSP		2

9812/0010 A1-21-1 128/17423, Pala-cucharón 6 en 1, 1.0M3 X 88"

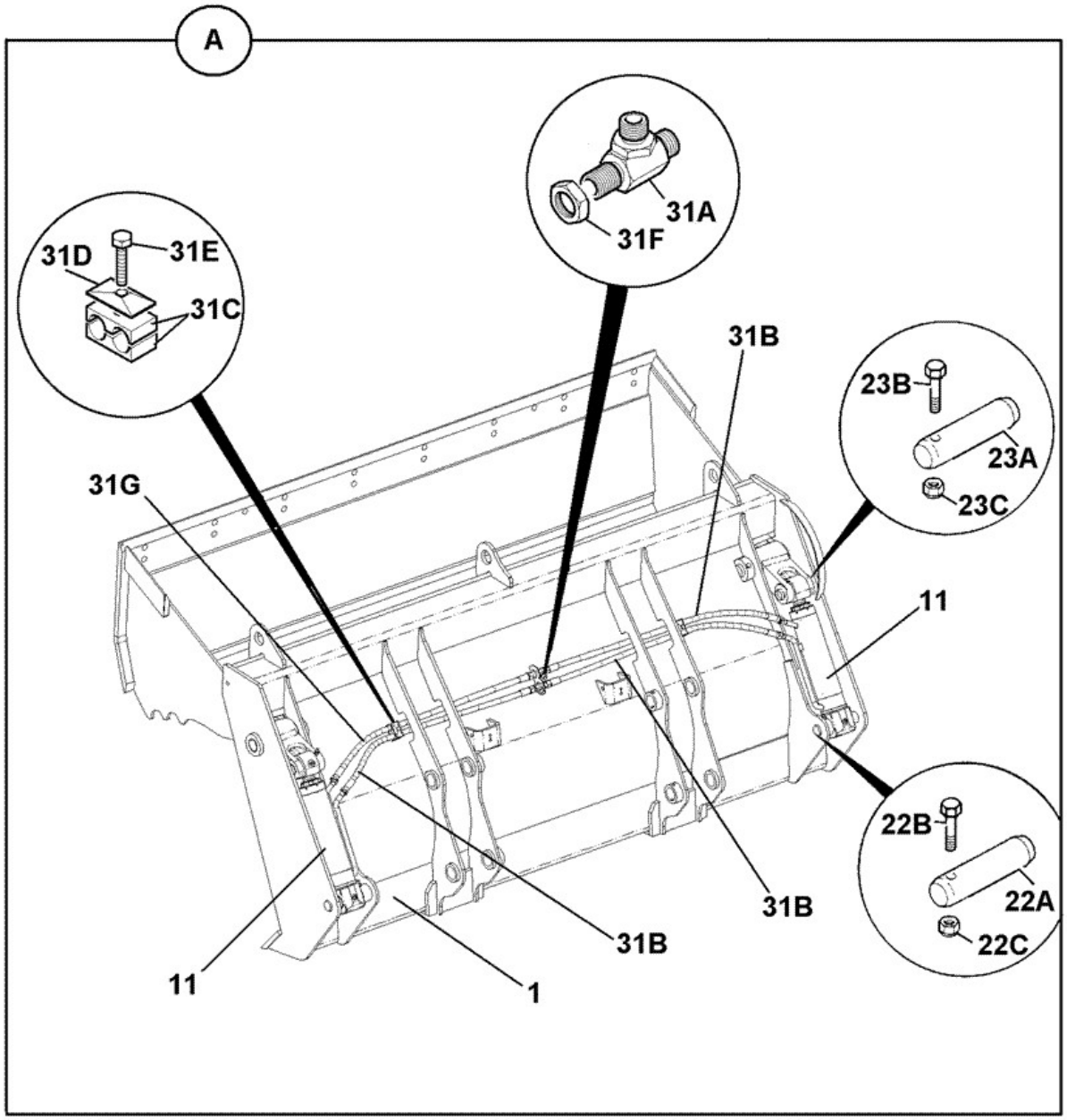

128-17423-3

Elemento	Pieza Nº	Cambiar número	Descripción	Código de uso	CANT.

A	****		CUCHARA ALMEJA assembly 1.0m3 x 88"		1
1	:128/17555		CUCHARA ALMEJA Clam ABI, 1.0m3 x 88"		1
11	:556/60367	<M1705841	Pistón clamshovel 466 closed centres		2
11	:556/60459	>M1705842	Cilindro hidráulico clamshovel 70x40, 470 closed centres		2
22A	:332/D3033		CHAVETA 38.1 dia x181		2
22B	:1305/3222Z		Tornillo 3/8"UNF x 3"		2
22C	:1340/0203Z		Tuerca		2
23A	:811/90478		Pasador pivot black		2
23B	:1305/3226Z		Tornillo		2
23C	:1340/0203Z		Tuerca		2
31A	:816/90801		Adaptador tee,bulkhead 3/8"M/M/M		2
31B	:612/80414		MANGUERA 3/8BSP x 950mm		3
31C	:821/00347		Abrazadera twin		2
31D	:821/00169		Placa cover		2
31E	:1315/0309Z		Tornillo fijación M8x35		2
31F	:1356/0203Z		Tuerca backing		2
31G	:612/80415		Manguito 3/8BSPx1000mm		1
31H	:332/G3419		ABRAZADERA anti rotation *fits to item31A*		2
31J	:1612/2051		Adaptador *fits to top 31A on early shovels*		1

9812/0010 A1-21-11 128/17555, Pala-cucharón 6 en 1, CLAM, 1.0M3 X 88"

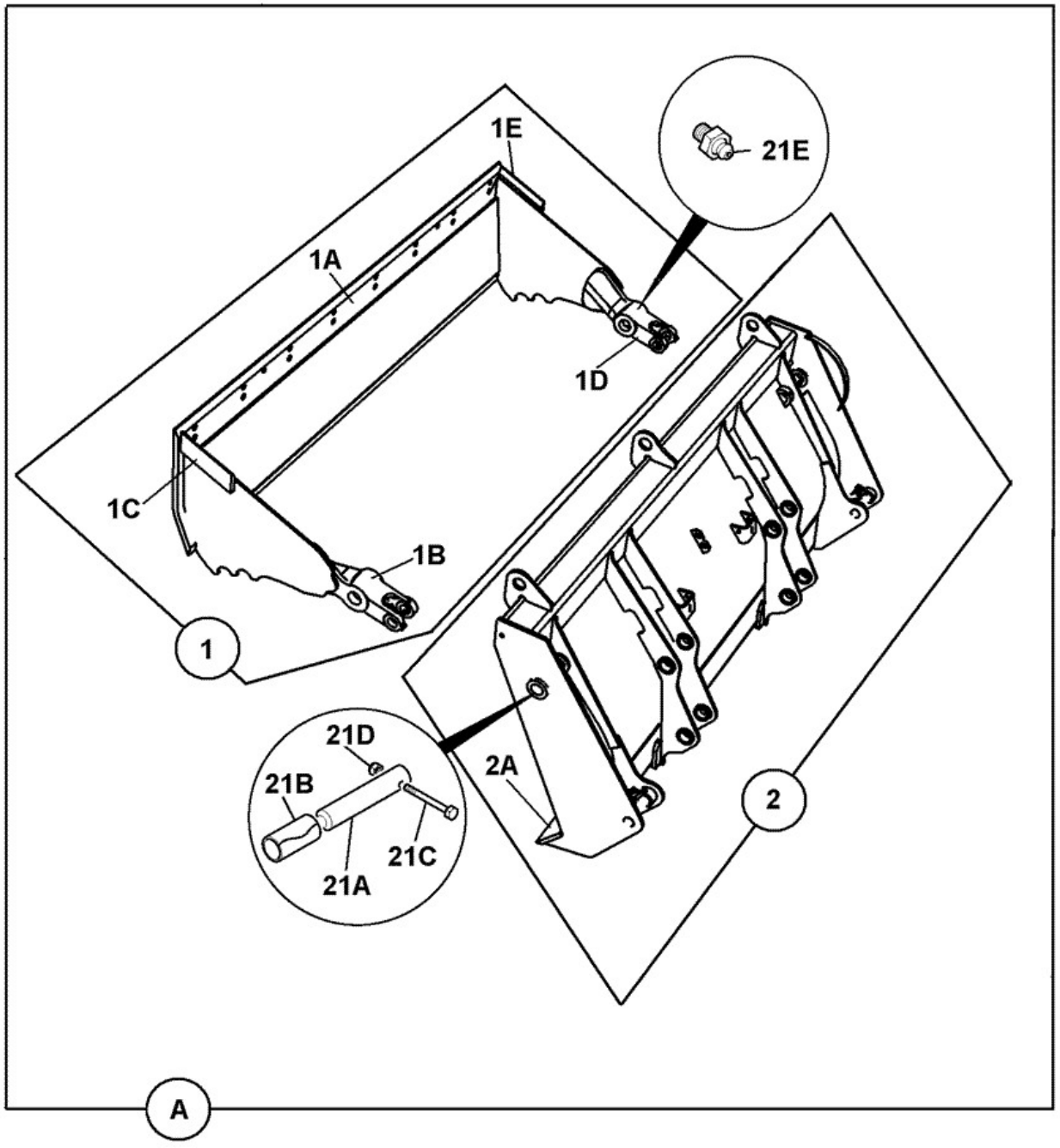

128-17555-2

Elemento	Pieza Nº	Cambiar número	Descripción	Código de uso	CANT.

A	128/17555		CUCHARA ALMEJA Clam ABI, 1.0m3 x 88"		1
1	:125/50200		Mordaza clamshovel		1
1A	::125/45500		EXTREMO DE PALA assembly jaw, 88"		1
1B	::123/04275		Pivote casting left hand		1
1C	::123/04422		Cortador lateral left hand		1
1D	::123/04274		Pivote casting right hand		1
1E	::123/04423		Cortador lateral right hand		1
2	:335/14029		HOJA DORSAL clamshovel 1.0m3 x 88"		1
2A	::531/38111		Puntera 2253mm (7'4") wide		1
21A	:811/90469		Pasador pivot, 44.45x213mm black		2
21B	:1208/0023		Casquillo		2
21C	:1305/3226Z		Tornillo		2
21D	:1340/0204Z		Tuerca philidas thin		2
21E	:1450/0001		Engrasador grease, straight 1/8 BSP		2

9812/0010 A1-22-1 128/17422, Pala-cucharón 6 en 1, 1.2M3 X 92"

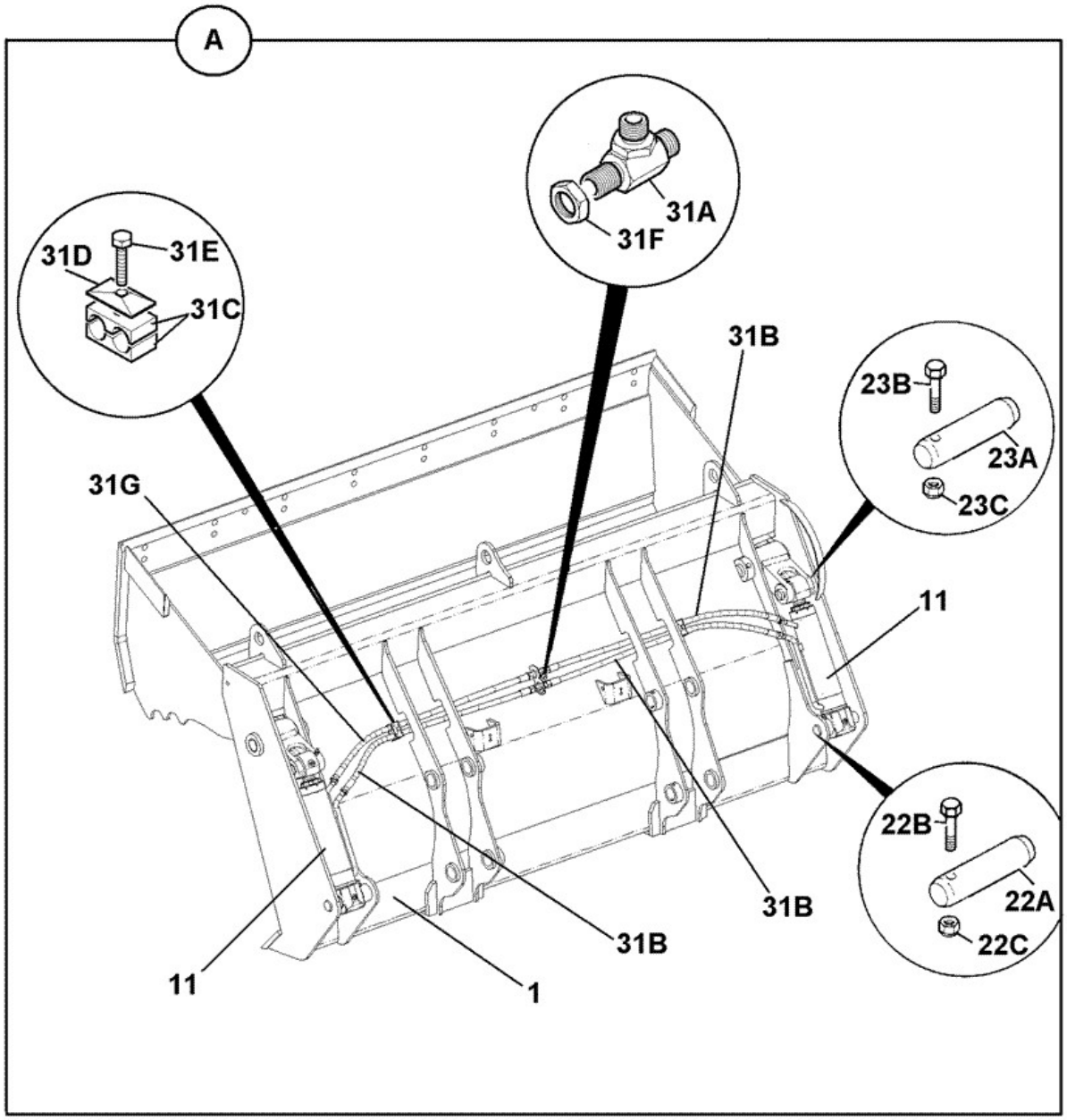

128-17423-3

Elemento	Pieza Nº	Cambiar número	Descripción	Código de uso	CANT.

A	****		CUCHARA ALMEJA assembly 1.2m3 x 92"		1
1	:128/17638		CUCHARA ALMEJA Clam ABI 1.2m3 x 92"		1
11	:556/60367	<M1705841	Pistón clamshovel 466 closed centres		2
11	:556/60459	>M1705842	Cilindro hidráulico clamshovel 70x40, 470 closed centres		2
22A	:332/D3033		CHAVETA 38.1 dia x181		2
22B	:1305/3222Z		Tornillo 3/8"UNF x 3"		2
22C	:1340/0203Z		Tuerca		2
23A	:811/90478		Pasador pivot black		2
23B	:1305/3226Z		Tornillo		2
23C	:1340/0203Z		Tuerca		2
31A	:816/90801		Adaptador tee,bulkhead 3/8"M/M/M		2
31B	:612/80415		Manguito 3/8BSPx1000mm		3
31C	:821/00347		Abrazadera twin		2
31D	:821/00169		Placa cover		2
31E	:1315/0309Z		Tornillo fijación M8x35		2
31F	:1356/0203Z		Tuerca backing		2
31G	:612/80416		MANGUERA 3/8BSP x 1050mm		1
31H	:332/G3419		ABRAZADERA anti rotation *fits to item 31A*		2
31J	:1612/2051		Adaptador *fit to top item 31A on early shovels*		1

9812/0010 A1-22-11 128/17638, Pala-cucharón 6 en 1, CLAM, 1.2M3 X 92"

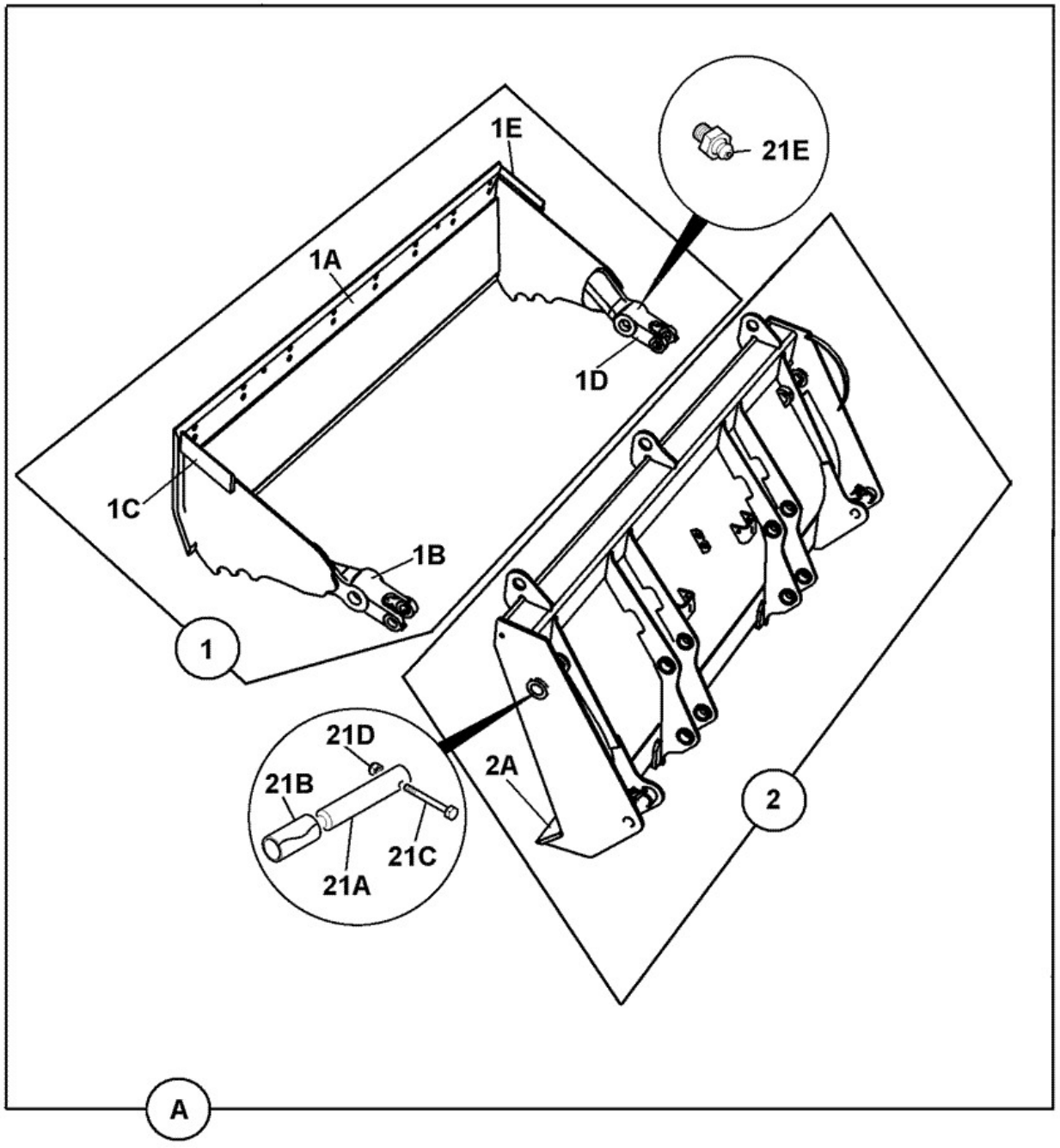

128-17555-2

Elemento	Pieza Nº	Cambiar número	Descripción	Código de uso	CANT.

A	128/17638		CUCHARA ALMEJA Clam ABI 1.2m3 x 92"		1
1	:125/50100		Mordaza clamshovel 2350mm (7'8.5") wide		1
1A	::125/45400		EXTREMO DE PALA assembly jaw, 92"		1
1B	::123/04275		Pivote casting left hand		1
1C	::123/04422		Cortador lateral left hand		1
1D	::123/04274		Pivote casting right hand		1
1E	::123/04423		Cortador lateral right hand		1
2	:335/14052		HOJA DORSAL clamshovel 1.2m3 x 92"		1
2A	::123/02362		Puntera 2343mm long		1
21A	::811/90469		Pasador pivot, 44.45x213mm black		2
21B	::1208/0023		Casquillo		2
21C	::1305/3226Z		Tornillo		2
21D	::1340/0204Z		Tuerca philidas thin		2
21E	:1450/0001		Engrasador grease, straight 1/8 BSP		2

9812/0010 A1-23-1 126/03150, Pala-cucharón 6 en 1, 1.0M3 X 92", TOOL CARRIER

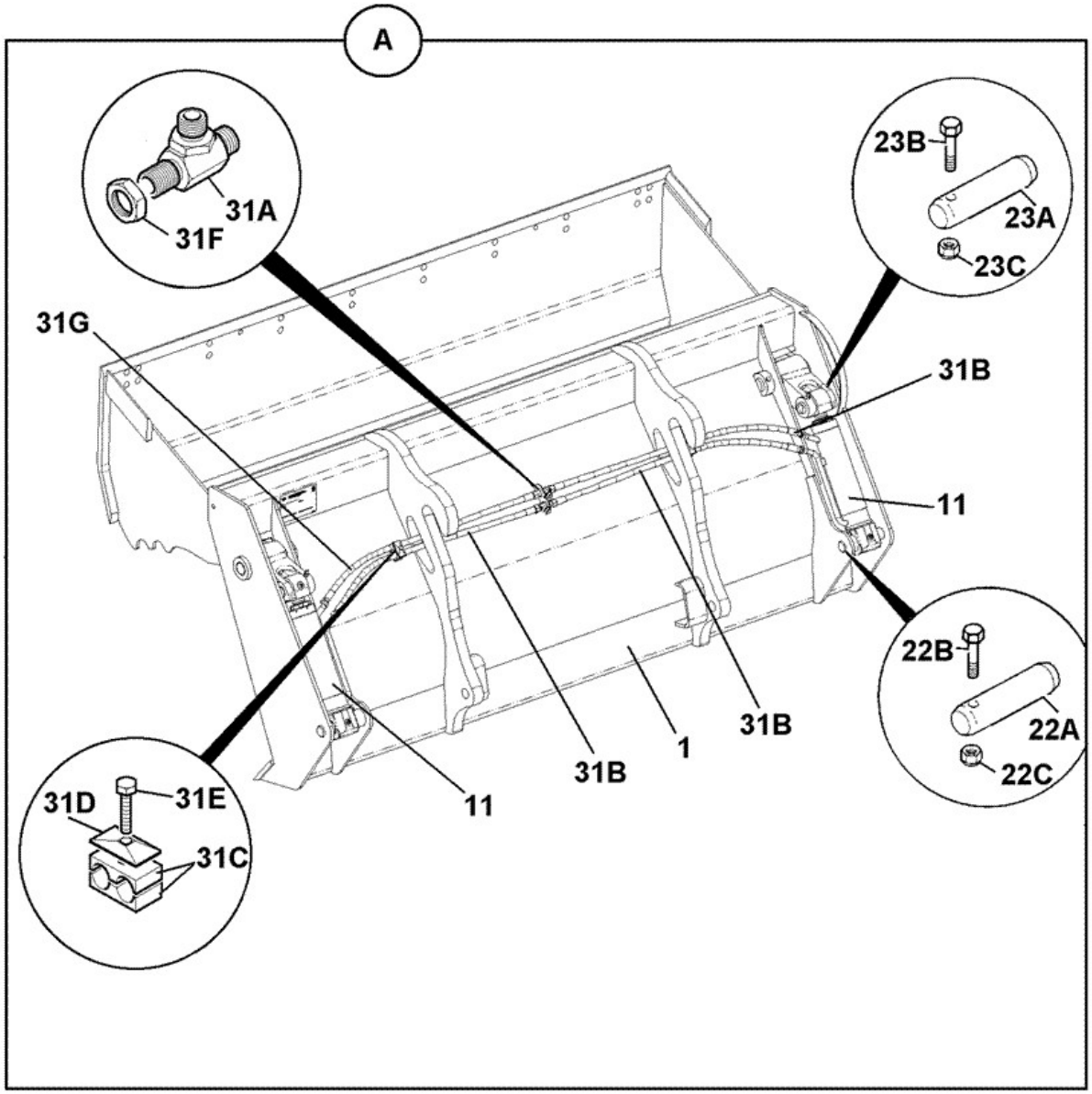

126-03150-8

Elemento	Pieza Nº	Cambiar número	Descripción	Código de uso	CANT.

A	****		CUCHARA ALMEJA assembly 1.0m3 x 92", Tool Carrier		1
1	:128/17644		CUCHARA ALMEJA Clam ABI 1.0m3 x 92" Tool Carrier		1
11	:556/60367	<M1705841	Pistón clamshovel 466 closed centres		2
11	:556/60459	>M1705842	Cilindro hidráulico clamshovel 70x40, 470 closed centres		2
22A	:332/D3033		CHAVETA 38.1 dia x181		2
22B	:1305/3222Z		Tornillo 3/8"UNF x 3"		2
22C	:1340/0203Z		Tuerca		2
23A	:811/90478		Pasador pivot black		2
23B	:1305/3226Z		Tornillo		2
23C	:1340/0203Z		Tuerca		2
31A	:816/90801		Adaptador tee,bulkhead 3/8"M/M/M		2
31B	:612/80415		Manguito 3/8BSPx1000mm		3
31C	:821/00347		Abrazadera twin		2
31D	:821/00169		Placa cover		2
31E	:1315/0309Z		Tornillo fijación M8x35		2
31F	:1356/0203Z		Tuerca backing		2
31G	:612/80416		MANGUERA 3/8BSP x 1050mm		1
31H	:332/G3419		ABRAZADERA anti rotation *fits to item 31A*		2
31J	:1612/2051		Adaptador *fit to top item 31A on early shovels*		1

9812/0010 A1-23-11 128/17644, Pala-cucharón 6 en 1, CLAM, 1.0M3 X 92", TOOL CARRIER

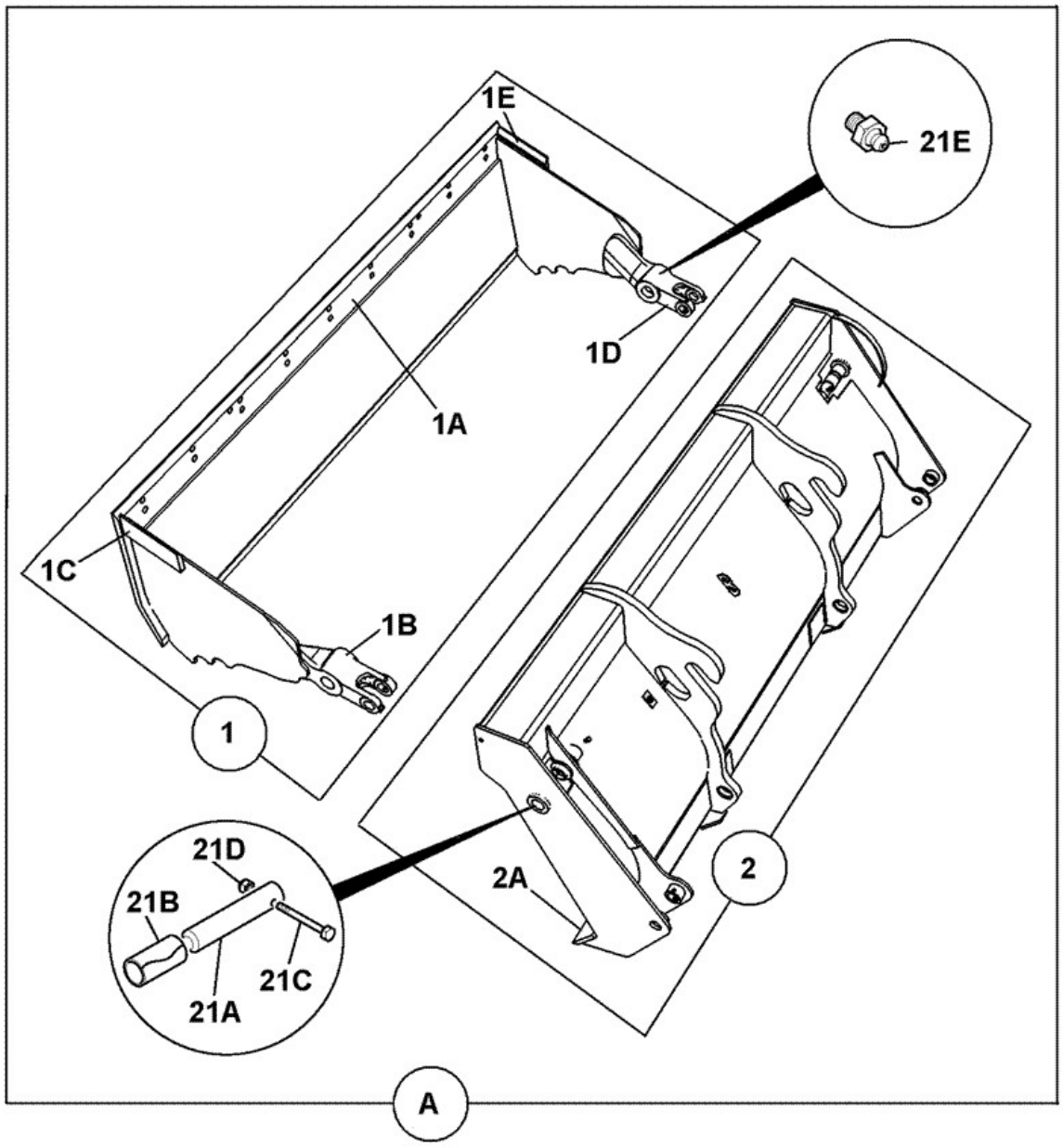

128-17644-2

Elemento	Pieza Nº	Cambiar número	Descripción	Código de uso	CANT.

A	128/17644		CUCHARA ALMEJA Clam ABI 1.0m3 x 92" Tool Carrier		1
1	:125/50100		Mordaza clamshovel 2350mm (7'8.5") wide		1
1A	::125/45400		EXTREMO DE PALA assembly jaw, 92"		1
1B	::123/04275		Pivote casting left hand		1
1C	::123/04422		Cortador lateral left hand		1
1D	::123/04274		Pivote casting right hand		1
1E	::123/04423		Cortador lateral right hand		1
2	:335/14430		HOJA DORSAL clamshovel 1.0M3 x 92", Tool carrier		1
2A	::123/02362		Puntera 2343mm long		1
21A	:811/90469		Pasador pivot, 44.45x213mm black		2
21B	:1208/0023		Casquillo		2
21C	:1305/3226Z		Tornillo		2
21D	:1340/0204Z		Tuerca philidas thin		2
21E	:1450/0001		Engrasador grease, straight 1/8 BSP		2

9812/0010 A1-24-1 126/01919, Pala-cucharón 6 en 1, 1.3M3 X 96", QUICKHITCH

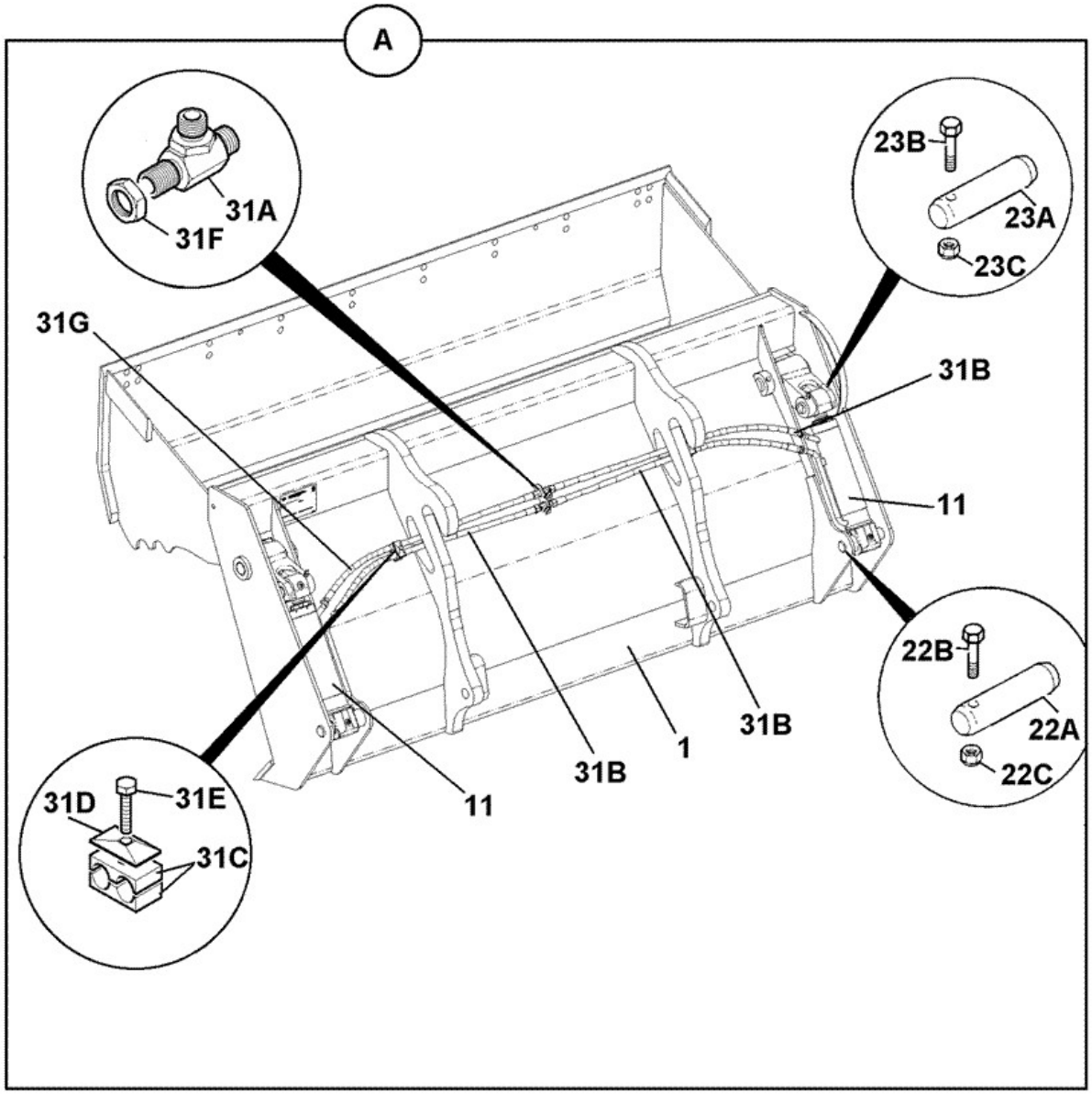

126-03150-8

Elemento	Pieza Nº	Cambiar número	Descripción	Código de uso	CANT.

A	****		CUCHARA ALMEJA assembly 1.3m3 x 96", quickhitch		1
1	:128/17643		CUCHARA ALMEJA Clam ABI 1.3m3 x 96", Quickhitch		1
11	:556/60367	<M1705841	Pistón clamshovel 466 closed centres		2
11	:556/60459	>M1705842	Cilindro hidráulico clamshovel 70x40, 470 closed centres		2
22A	:332/D3033		CHAVETA 38.1 dia x181		2
22B	:1305/3222Z		Tornillo 3/8"UNF x 3"		2
22C	:1340/0203Z		Tuerca		2
23A	:811/90478		Pasador pivot black		2
23B	:1305/3226Z		Tornillo		2
23C	:1340/0203Z		Tuerca		2
31A	:816/90801		Adaptador tee,bulkhead 3/8"M/M/M		2
31B	:612/80416		MANGUERA 3/8BSP x 1050mm		3
31C	:821/00347		Abrazadera twin		2
31D	:821/00169		Placa cover		2
31E	:1315/0309Z		Tornillo fijación M8x35		2
31F	:1356/0203Z		Tuerca backing		2
31G	:332/G1817		MANGUERA 3/8BSP X 1100		1
31H	:332/G3419		ABRAZADERA anti rotation *fits to item 31A*		2
31J	:1612/2051		Adaptador *fit to top item 31A on early shovels*		1

9812/0010 A1-24-11 128/17643, Pala-cucharón 6 en 1, CLAM, 1.3M3 X 96", QUICKHITCH

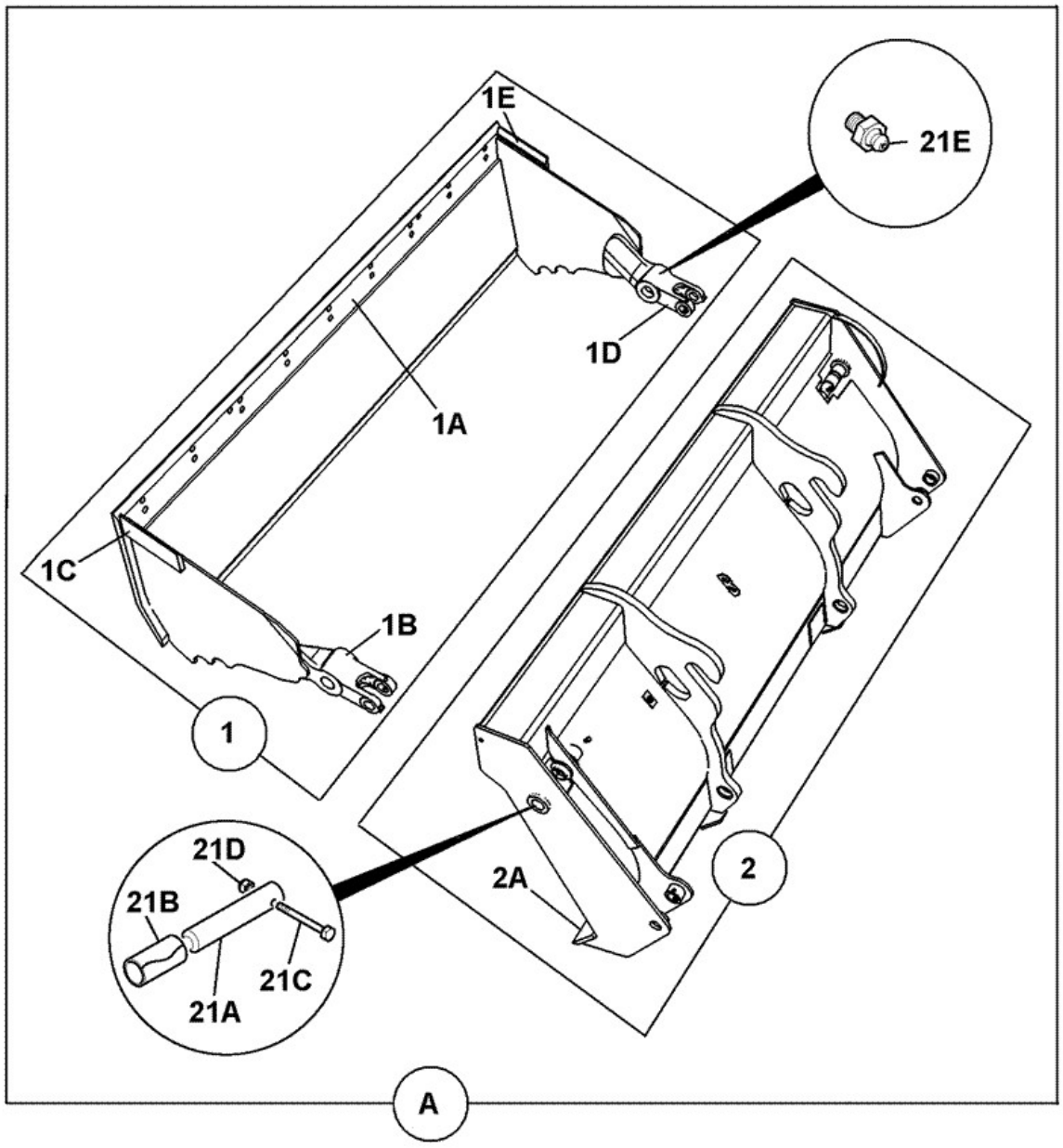

128-17644-2

Elemento	Pieza Nº	Cambiar número	Descripción	Código de uso	CANT.

A	128/17643		CUCHARA ALMEJA Clam ABI 1.3m3 x 96", Quickhitch		1
1	:125/76000		BOCA clamshovel 96"		1
1A	::125/75700		EXTREMO DE PALA assembly jaw 96"		1
1B	::123/04275		Pivote casting left hand		1
1C	::123/04422		Cortador lateral left hand		1
1D	::123/04274		Pivote casting right hand		1
1E	::123/04423		Cortador lateral right hand		1
2	:335/14428		HOJA DORSAL clamshovel 1.3m3 x 96", Quickhitch		1
2A	::123/05115		Puntera 2450mm (8'0") wide		1
21A	:811/90469		Pasador pivot, 44.45x213mm black		2
21B	:1208/0023		Casquillo		2
21C	:1305/3226Z		Tornillo		2
21D	:1340/0204Z		Tuerca philidas thin		2
21E	:1450/0001		Engrasador grease, straight 1/8 BSP		2

Catálogo de productos \ CONSTRUCTION \ REST OF WORLD \ CONSTRUCTION / INDUSTRIAL \ BACKHOE LOADER 3CX,4CX,214,215,217 \ 3CX 00960000-00989999,01297000-01297999,01327000-01349999,01616000-01625999,01705500-01709999 84hp 9812/0010 \ A ACCESORIOS \ A01 PALAS

9812/0010 A1-25-1 128/17424, Pala-cucharón 6 en 1, 1.0M3 X 92"

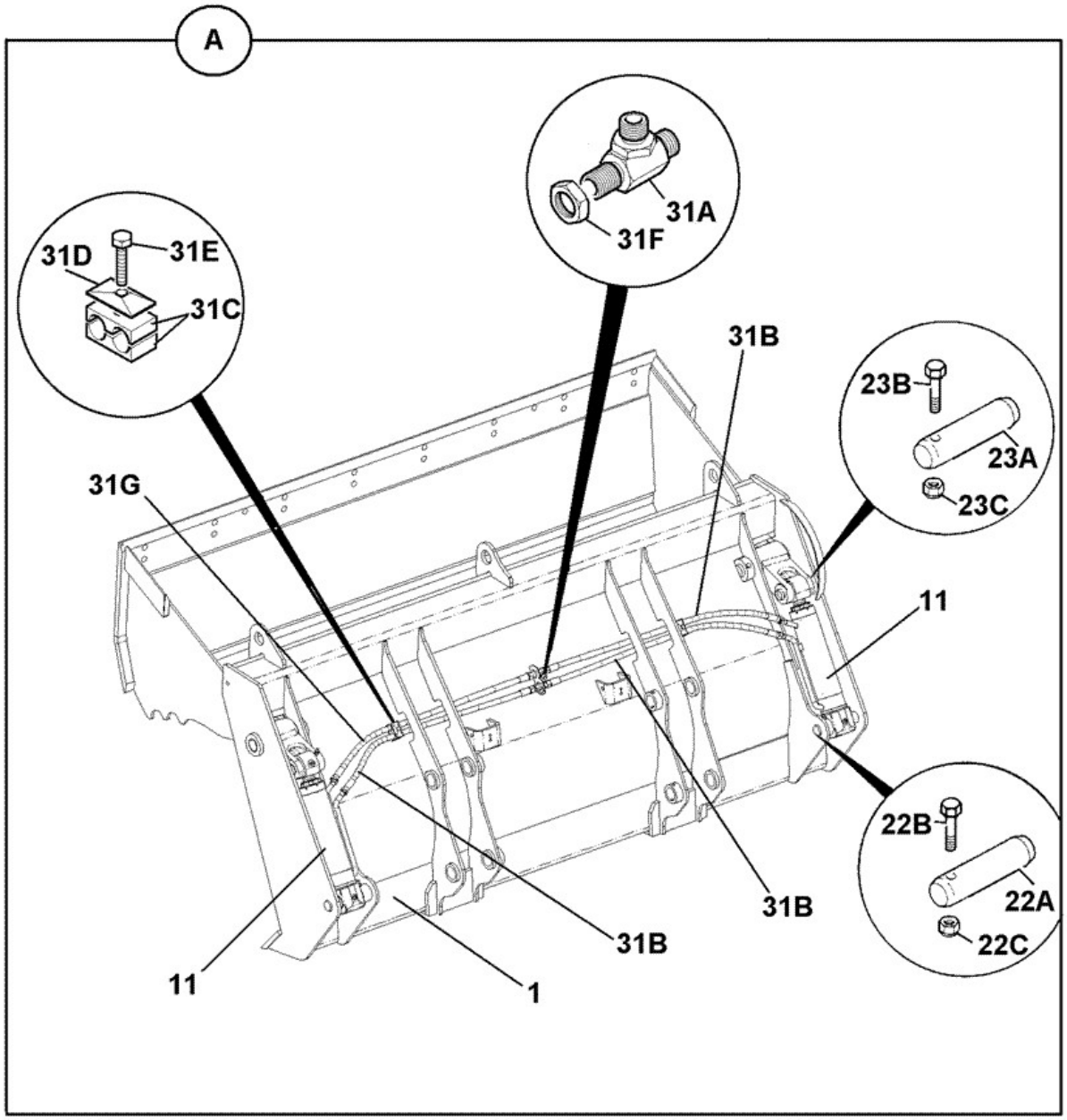

128-17423-3

Elemento	Pieza Nº	Cambiar número	Descripción	Código de uso	CANT.

A	****		CUCHARA ALMEJA assembly 1.0m3 x 92"		1
1	:128/17556		CUCHARA ALMEJA Clam ABI 1.0m3 x 92"		1
11	:556/60367	<M1705841	Pistón clamshovel 466 closed centres		2
11	:556/60459	>M1705842	Cilindro hidráulico clamshovel 70x40, 470 closed centres		2
22A	:332/D3033		CHAVETA 38.1 dia x181		2
22B	:1305/3222Z		Tornillo 3/8"UNF x 3"		2
22C	:1340/0203Z		Tuerca		2
23A	:811/90478		Pasador pivot black		2
23B	:1305/3226Z		Tornillo		2
23C	:1340/0203Z		Tuerca		2
31A	:816/90801		Adaptador tee,bulkhead 3/8"M/M/M		2
31B	:612/80415		Manguito 3/8BSPx1000mm		3
31C	:821/00347		Abrazadera twin		2
31D	:821/00169		Placa cover		2
31E	:1315/0309Z		Tornillo fijación M8x35		2
31F	:1356/0203Z		Tuerca backing		2
31G	:612/80416		MANGUERA 3/8BSP x 1050mm		1
31H	:332/G3419		ABRAZADERA anti rotation *fits to item 31A*		2
31J	:1612/2051		Adaptador *fit to top item 31A on early shovels*		1

9812/0010 A1-25-11 128/17556, Pala-cucharón 6 en 1, CLAM, 1.0M3 X 92"

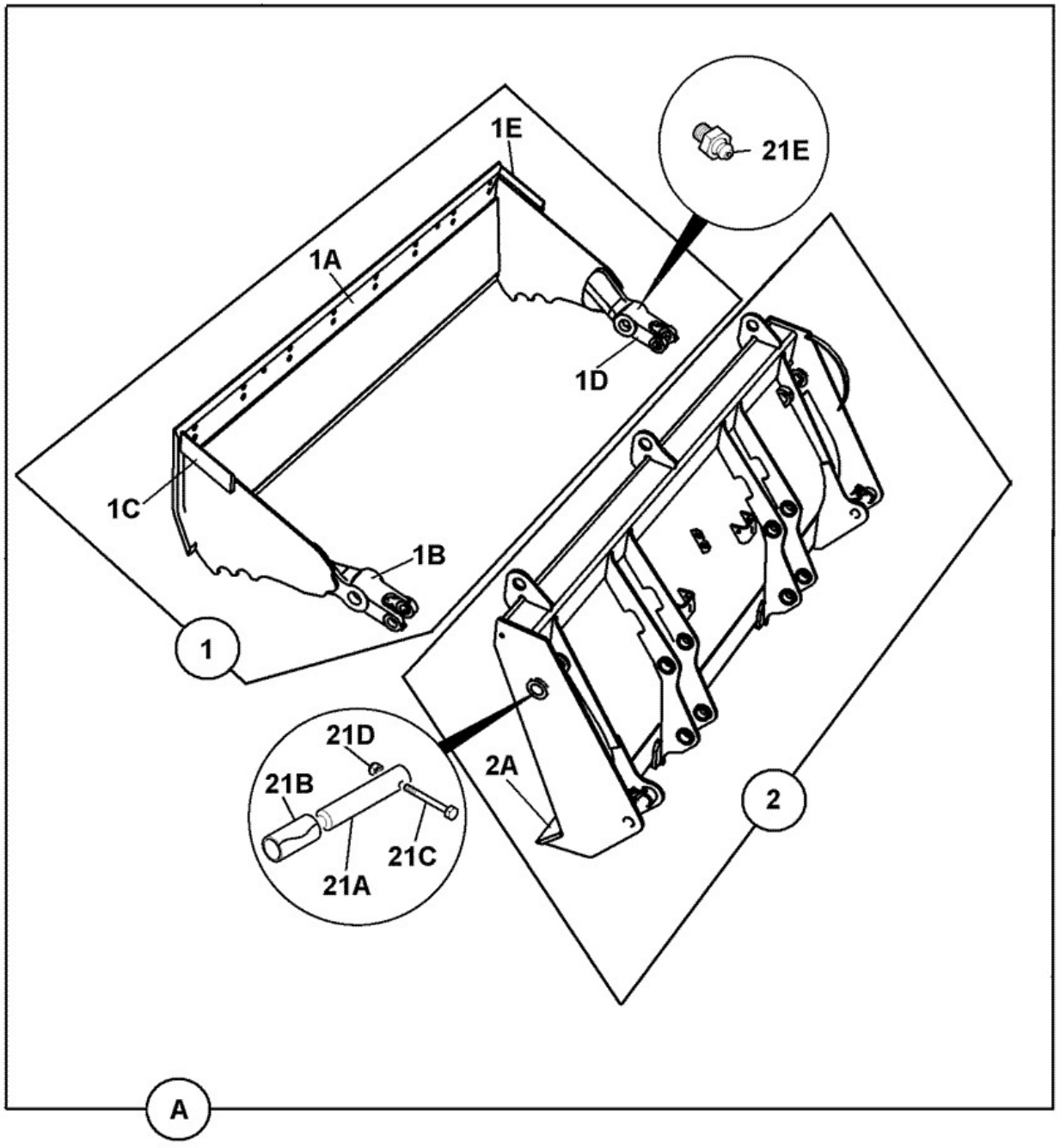

128-17555-2

Elemento	Pieza Nº	Cambiar número	Descripción	Código de uso	CANT.

A	128/17556		CUCHARA ALMEJA Clam ABI 1.0m3 x 92"		1
1	:125/50100		Mordaza clamshovel 2350mm (7'8.5") wide		1
1A	::125/45400		EXTREMO DE PALA assembly jaw, 92"		1
21A	::811/90469		Pasador pivot, 44.45x213mm black		2
21B	::1208/0023		Casquillo		2
1B	::123/04275		Pivote casting left hand		1
21C	::1305/3226Z		Tornillo		2
1C	::123/04422		Cortador lateral left hand		1
21D	::1340/0204Z		Tuerca philidas thin		2
1D	::123/04274		Pivote casting right hand		1
21E	::1450/0001		Engrasador grease, straight 1/8 BSP		2
1E	::123/04423		Cortador lateral right hand		1
2	:335/14033		HOJA DORSAL clamshovel 1.0m3 x 92"		1
2A	::123/02362		Puntera 2343mm long		1

9812/0010 A1-26-1 126/01907, Pala-cucharón 6 en 1, 1.0M3 X 92", QUICKHITCH

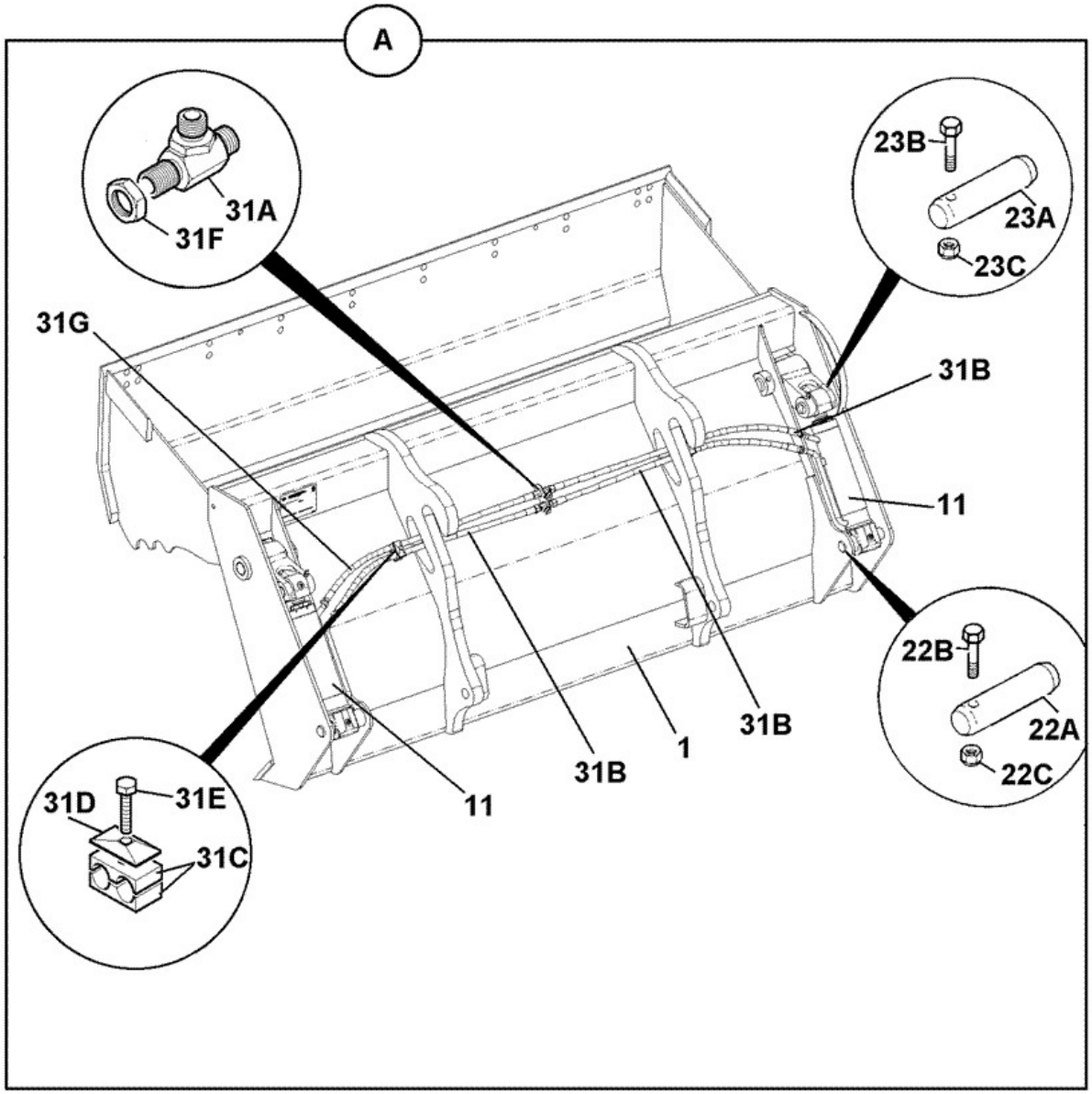

126-03150-8

Elemento	Pieza Nº	Cambiar número	Descripción	Código de uso	CANT.

A	****		CUCHARA ALMEJA assembly, 1.0m3x92" quickhitch		1
1	:128/17641		CUCHARA ALMEJA clam ABI 1.0m3 92" Quickhitch		1
11	:556/60367	<M1705841	Pistón clamshovel 466 closed centres		2
11	:556/60459	>M1705842	Cilindro hidráulico clamshovel 70x40, 470 closed centres		2
22A	:332/D3033		CHAVETA 38.1 dia x181		2
22B	:1305/3222Z		Tornillo 3/8"UNF x 3"		2
22C	:1340/0203Z		Tuerca		2
23A	:811/90478		Pasador pivot black		2
23B	:1305/3226Z		Tornillo		2
23C	:1340/0203Z		Tuerca		2
31A	:816/90801		Adaptador tee,bulkhead 3/8"M/M/M		2
31B	:612/80415		Manguito 3/8BSPx1000mm		2
31C	:821/00347		Abrazadera twin		2
31D	:821/00169		Placa cover		2
31E	:1315/0309Z		Tornillo fijación M8x35		2
31F	:1356/0203Z		Tuerca backing		2
31G	:612/80416		MANGUERA 3/8BSP x 1050mm		1
31H	:332/G3419		ABRAZADERA anti rotation *fits between item 31A and 1*		2
31J	:1612/2051		Adaptador *fit to top 31A on early shovels*		1

9812/0010 A1-26-11 128/17641, Pala-cucharón 6 en 1, CLAM, 1.0M3 X 92" QUICKHITCH

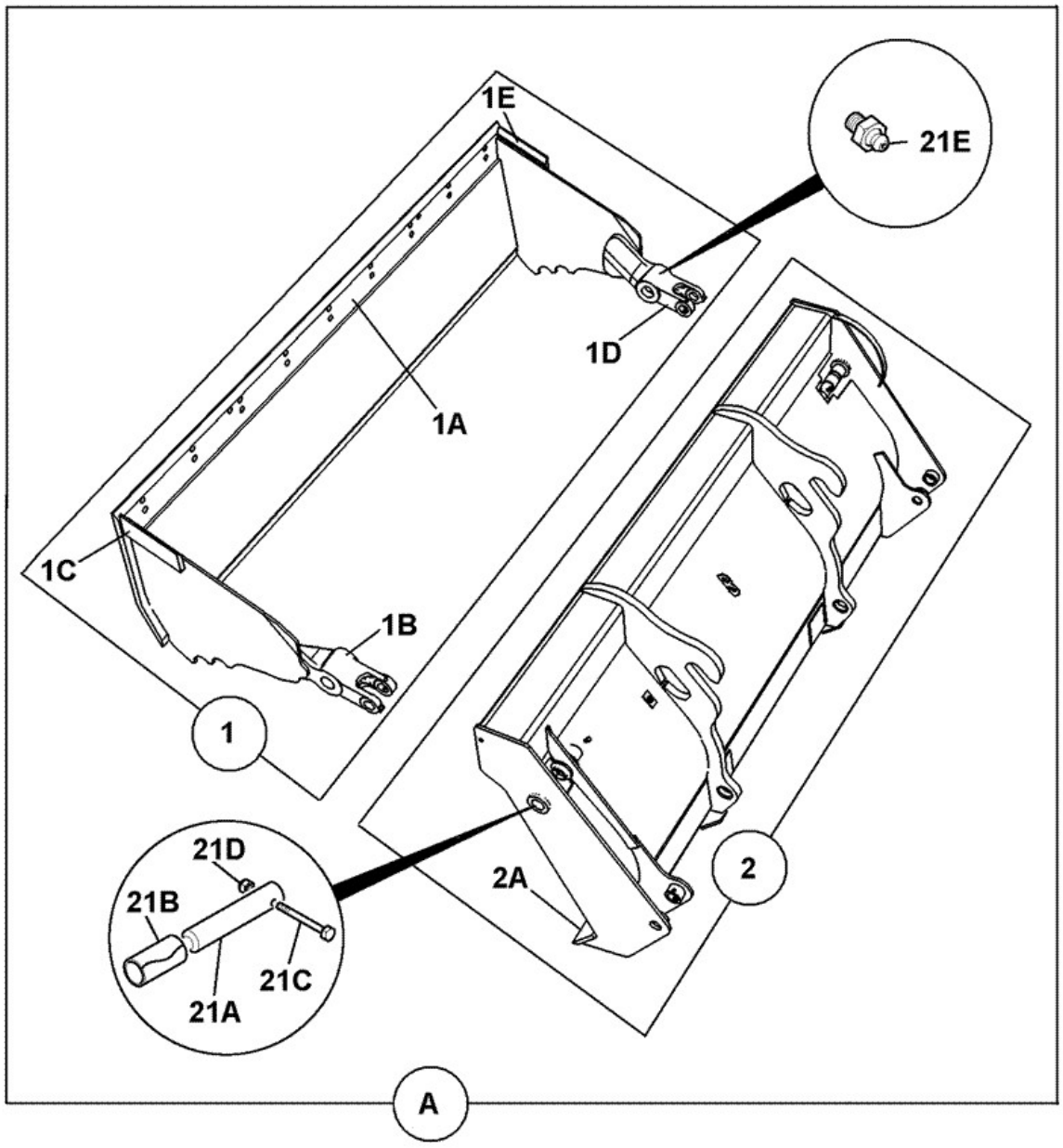

128-17644-2

Elemento	Pieza Nº	Cambiar número	Descripción	Código de uso	CANT.

A	128/17641		CUCHARA ALMEJA clam ABI 1.0m3 92" Quickhitch		1
1	:125/50100		Mordaza clamshovel 2350mm (7'8.5") wide		1
1A	::125/45400		EXTREMO DE PALA assembly jaw, 92"		1
1B	::123/04275		Pivote casting left hand		1
1C	::123/04422		Cortador lateral left hand		1
1D	::123/04274		Pivote casting right hand		1
1E	::123/04423		Cortador lateral right hand		1
2	335/14426		HOJA DORSAL 1.0m3 x 92" Quickhitch		1
2A	::123/02362		Puntera 2343mm long		1
21A	:811/90469		Pasador pivot, 44.45x213mm black		2
21B	:1208/0023		Casquillo		2
21C	:1305/3226Z		Tornillo		2
21D	:1340/0204Z		Tuerca philidas thin		2
21E	:1450/0001		Engrasador grease, straight 1/8 BSP		2

9812/0010 A1-28-1 128/17425, Pala-cucharón 6 en 1, 1.0M3 X 92", GERMAN

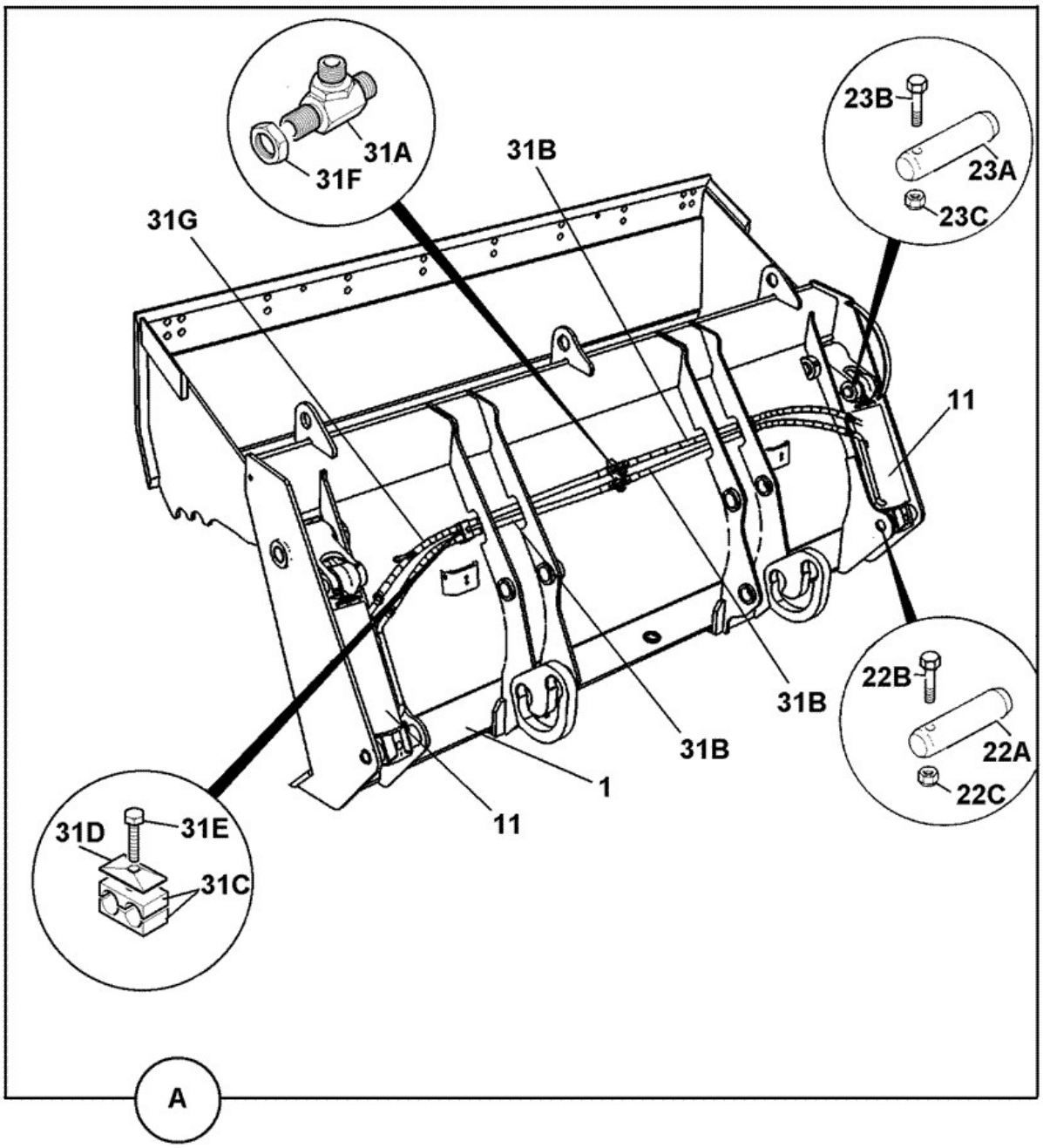

128-17425-3

Elemento	Pieza Nº	Cambiar número	Descripción	Código de uso	CANT.

A	****		CUCHARA ALMEJA assembly, 1.0m3 92" German		1
1	:128/17557		CUCHARA ALMEJA clam, ABI 1.0m3 92" German		1
11	:556/60367	<M1705841	Pistón clamshovel 466 closed centres		2
11	:556/60459	>M1705842	Cilindro hidráulico clamshovel 70x40, 470 closed centres		2
22A	:332/D3033		CHAVETA 38.1 dia x181		2
22B	:1305/3222Z		Tornillo 3/8"UNF x 3"		2
22C	:1340/0203Z		Tuerca		2
23A	:811/90478		Pasador pivot black		2
23B	:1305/3226Z		Tornillo		2
23C	:1340/0203Z		Tuerca		2
31A	:816/90801		Adaptador tee,bulkhead 3/8"M/M/M		2
31B	:612/80415		Manguito 3/8BSPx1000mm		3
31C	:821/00347		Abrazadera twin		2
31D	:821/00169		Placa cover		2
31E	:1315/0309Z		Tornillo fijación M8x35		2
31F	:1356/0203Z		Tuerca backing		2
31G	:612/80416		MANGUERA 3/8BSP x 1050mm		1
31H	:332/G3419		ABRAZADERA anti rotation *fits around 31A*		2
31J	:1612/2051		Adaptador *fit to top 31A on early shovels*		1

9812/0010 A1-28-11 128/17557, Pala-cucharón 6 en 1, CLAM, 1.0M3 X 92", GERMAN

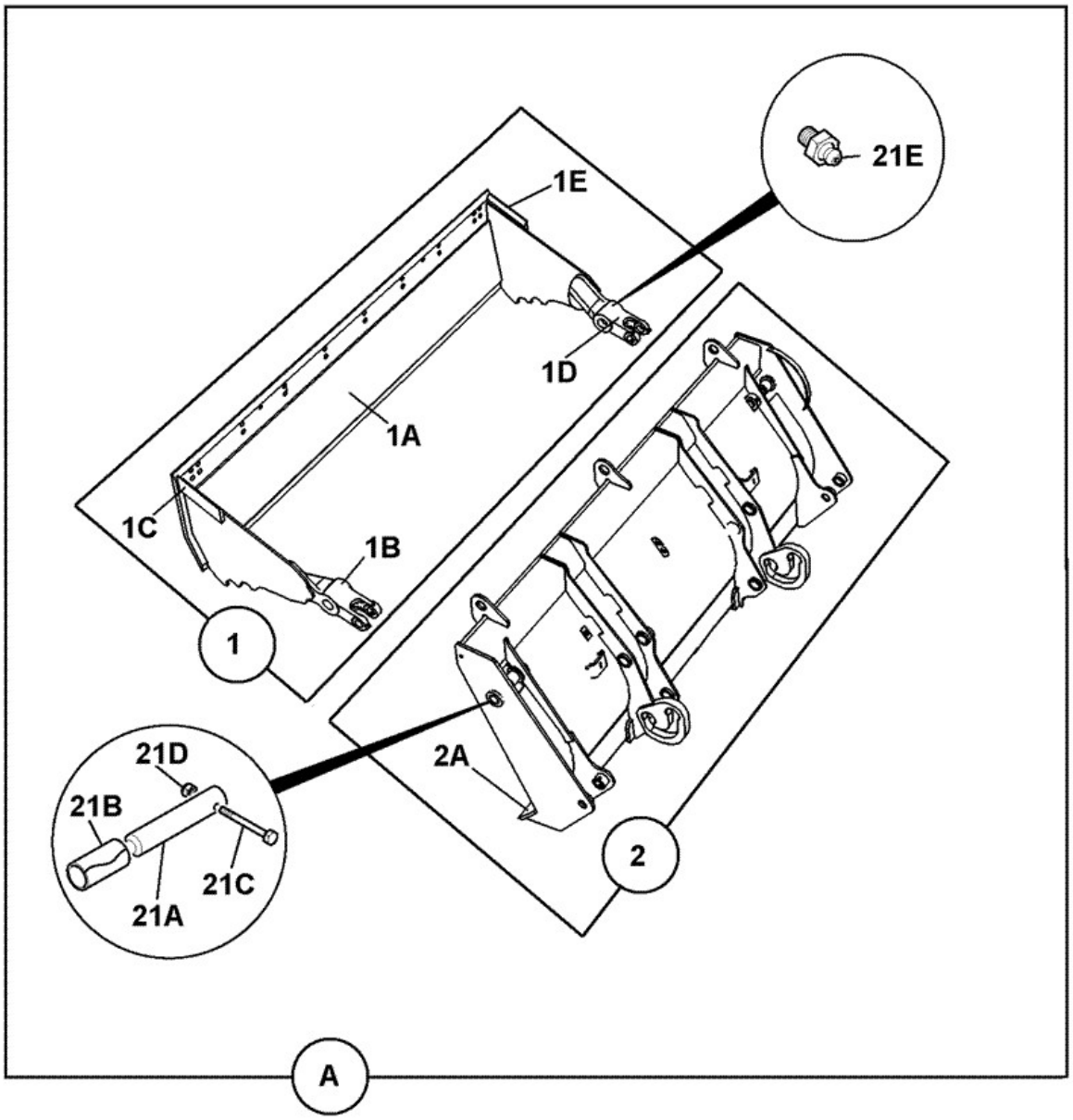

128-17557-2

Elemento	Pieza Nº	Cambiar número	Descripción	Código de uso	CANT.

A	128/17557		CUCHARA ALMEJA clam, ABI 1.0m3 92" German		1
1	:125/50100		Mordaza clamshovel 2350mm (7'8.5") wide		1
1A	::125/45400		EXTREMO DE PALA assembly jaw, 92"		1
1B	::123/04274		Pivote casting right hand		1
1C	::123/04423		Cortador lateral right hand		1
1D	::123/04275		Pivote casting left hand		1
1E	::123/04422		Cortador lateral left hand		1
2	:335/14034		HOJA DORSAL clamshovel 1.0m3 x 92", German		1
2A	::123/02362		Puntera 2343mm long		1
21A	:811/90469		Pasador pivot, 44.45x213mm black		2
21B	:1208/0023		Casquillo		2
21C	:1305/3226Z		Tornillo		2
21D	:1340/0204Z		Tuerca philidas thin		2
21E	:1450/0001		Engrasador grease, straight 1/8 BSP		2

9812/0010 A1-29-1 128/17421, Pala-cucharón 6 en 1, 1.3M3 X 96"

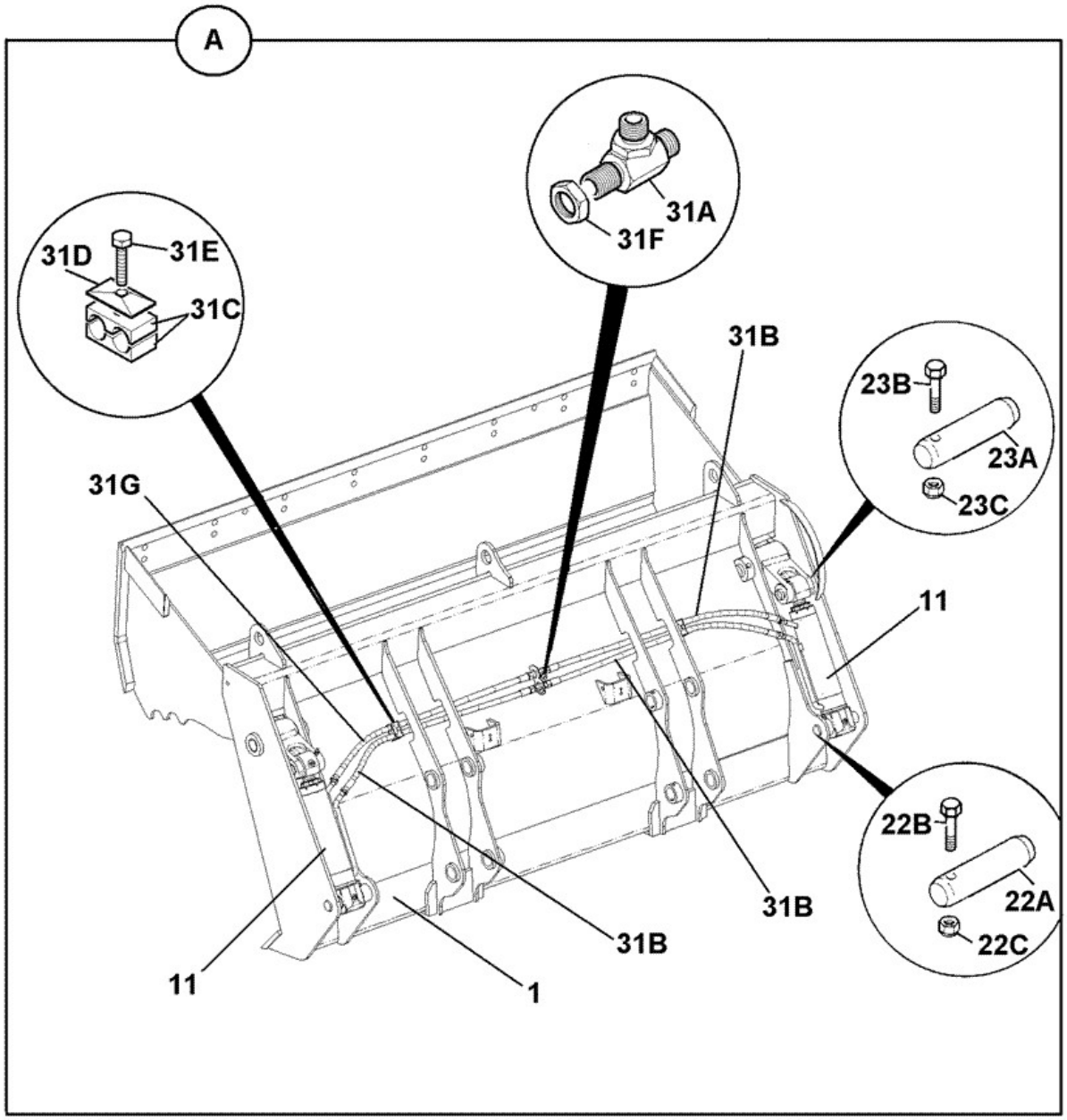

128-17423-3

Elemento	Pieza Nº	Cambiar número	Descripción	Código de uso	CANT.

A	****		CUCHARA ALMEJA assembly 1.3m3 x 96"		1
1	:128/17639		CUCHARA ALMEJA clam ABI 1.3m3 x 96"		1
11	:556/60367	<M1705841	Pistón clamshovel 466 closed centres		2
11	:556/60459	>M1705842	Cilindro hidráulico clamshovel 70x40, 470 closed centres		2
22A	:332/D3033		CHAVETA 38.1 dia x181		2
22B	:1305/3222Z		Tornillo 3/8"UNF x 3"		2
22C	:1340/0203Z		Tuerca		2
23A	:811/90478		Pasador pivot black		2
23B	:1305/3226Z		Tornillo		2
23C	:1340/0203Z		Tuerca		2
31A	:816/90801		Adaptador tee,bulkhead 3/8"M/M/M		2
31B	:612/80416		MANGUERA 3/8BSP x 1050mm		3
31C	:821/00347		Abrazadera twin		2
31D	:821/00169		Placa cover		2
31E	:1315/0309Z		Tornillo fijación M8x35		2
31F	:1356/0203Z		Tuerca backing		2
31G	:332/G1817		MANGUERA 3/8BSP X 1100		1
31H	:1612/2051		Adaptador *fit to top item 31A on early shovels*		2
31J	:332/G3419		ABRAZADERA anti rotation *fit to item 31A*		2

9812/0010 A1-29-11 128/17639, Pala-cucharón 6 en 1, CLAM, 1.3M3 X 96"

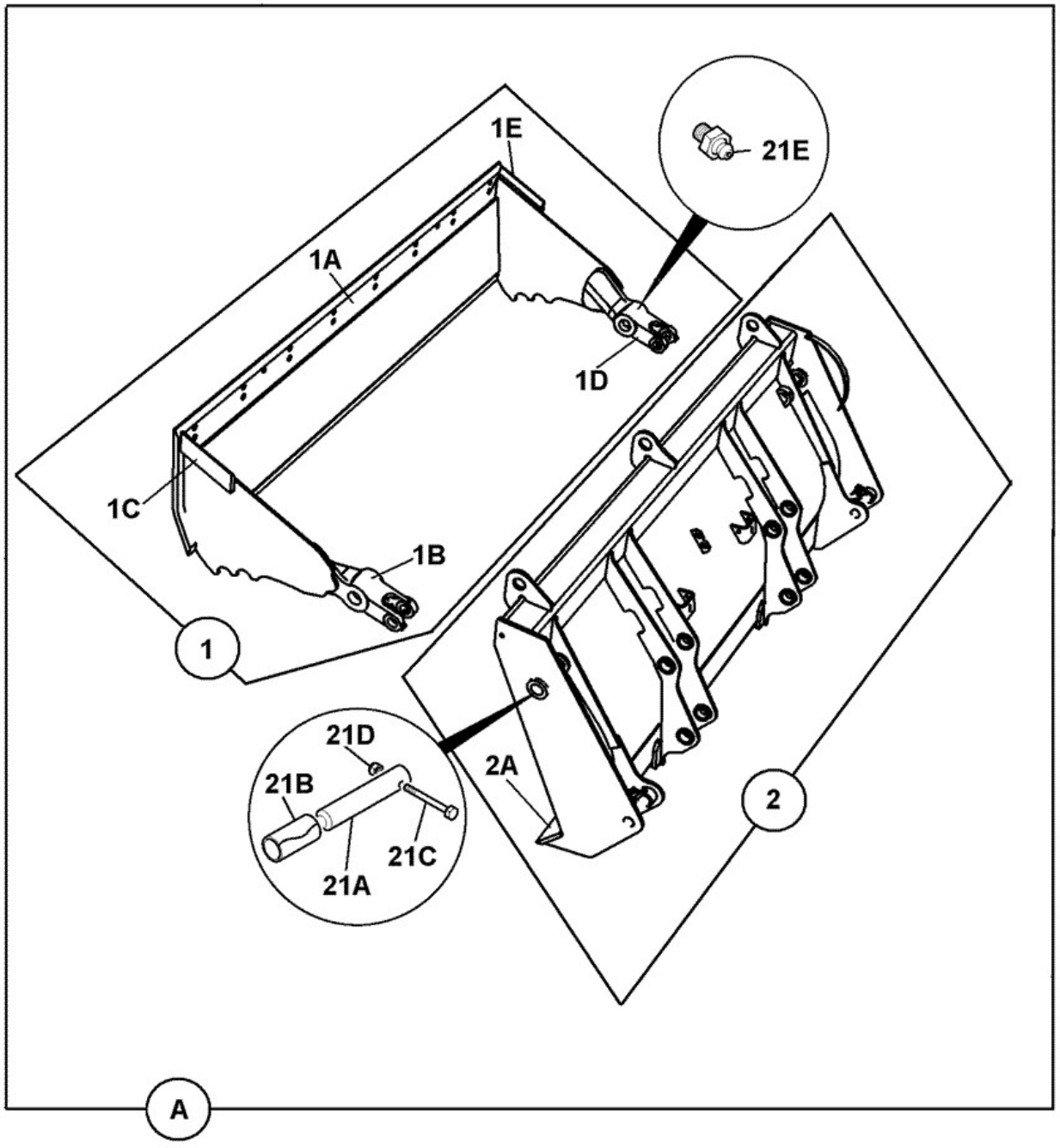

128-17555-2

Elemento	Pieza Nº	Cambiar número	Descripción	Código de uso	CANT.

A	128/17639		CUCHARA ALMEJA clam ABI 1.3m3 x 96"		1
1	:125/76000		BOCA clamshovel 96"		1
1A	::125/75700		EXTREMO DE PALA assembly jaw 96"		1
1B	::123/04275		Pivote casting left hand		1
1C	::123/04422		Cortador lateral left hand		1
1D	::123/04274		Pivote casting right hand		1
1E	::123/04423		Cortador lateral right hand		1
2	:335/14058		HOJA DORSAL clamshovel 1.3m3 x 96"		1
2A	::123/05115		Puntera 2450mm (8'0") wide		1
21A	:811/90469		Pasador pivot, 44.45x213mm black		2
21B	:1208/0023		Casquillo		2
21C	:1305/3226Z		Tornillo		2
21D	:1340/0204Z		Tuerca philidas thin		2
21E	:1450/0001		Engrasador grease, straight 1/8 BSP		2

9812/0010 A1-30-1 128/17426, Pala-cucharón 6 en 1, 1.2M3 X 92", GERMAN

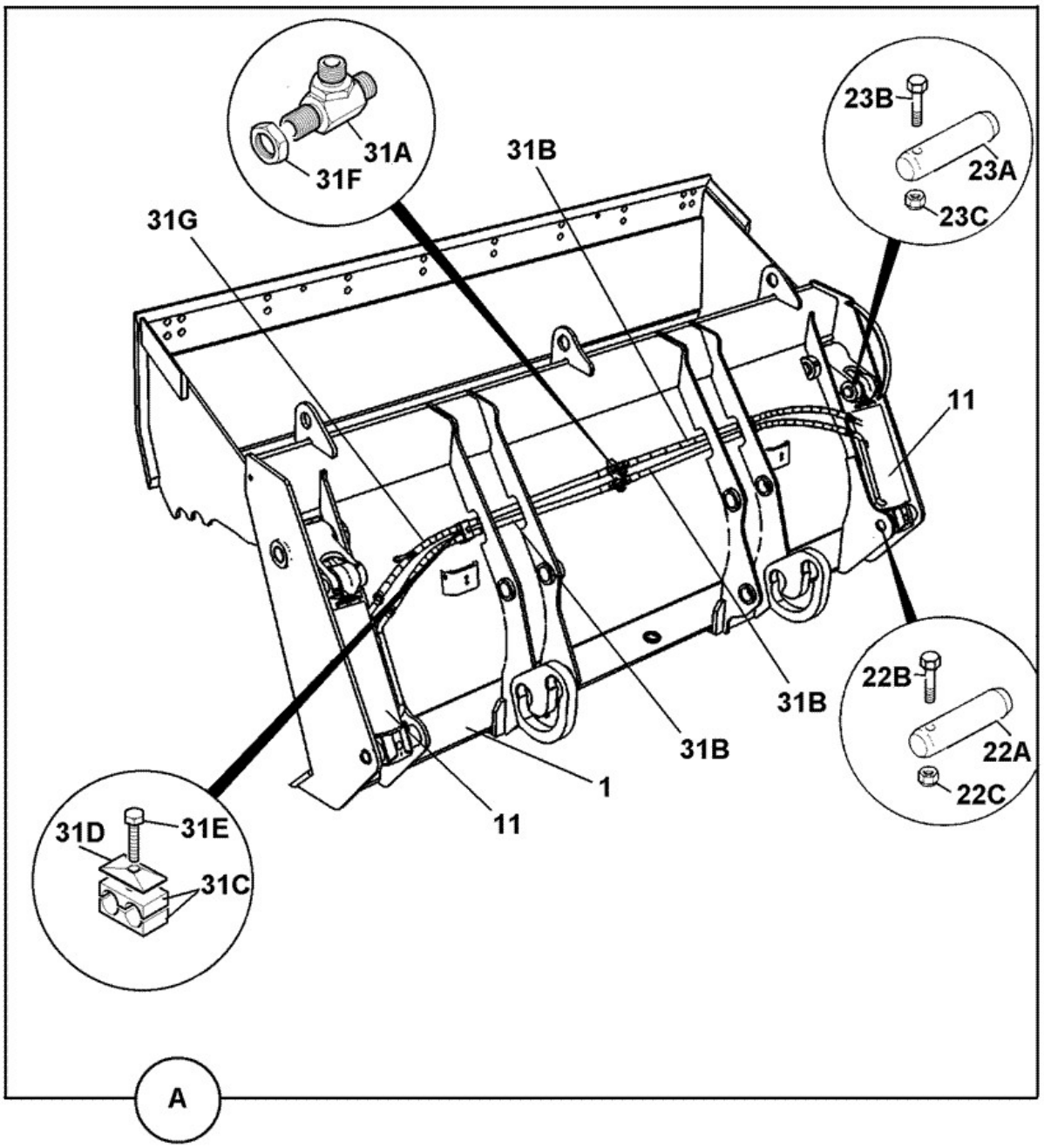

128-17425-3

Elemento	Pieza Nº	Cambiar número	Descripción	Código de uso	CANT.

A	****		CUCHARA ALMEJA assembly 1.2m3 x 92", German		1
1	128/17640		CUCHARA ALMEJA clam, ABI 1.2m3 x 92", German		1
11	556/60367	<M1705841	Pistón clamshovel 466 closed centres		2
11	:556/60459	>M1750842	Cilindro hidráulico clamshovel 70x40, 470 closed centres		2
22A	332/D3033		CHAVETA 38.1 dia x181		2
22B	1305/3222Z		Tornillo 3/8"UNF x 3"		2
22C	1340/0203Z		Tuerca		2
23	****		Inst\ pivots ram clam eye end		1
23B	1305/3226Z		Tornillo		2
23C	1340/0203Z		Tuerca		2
31A	816/90801		Adaptador tee,bulkhead 3/8"M/M/M		2
31B	612/80415		Manguito 3/8BSPx1000mm		3
31C	821/00347		Abrazadera twin		2
31D	821/00169		Placa cover		2
31E	1315/0309Z		Tornillo fijación M8x35		2
31F	1356/0203Z		Tuerca backing		2
31G	612/80416		MANGUERA 3/8BSP x 1050mm		1
31H	1612/2051		Adaptador *fit to top31A on early shovels*		1
31J	332/G3419		ABRAZADERA anti rotation *fits to 31A*		2

9812/0010 A1-30-11 128/17640, Pala-cucharón 6 en 1, CLAM, 1.2M3 X 92", GERMAN

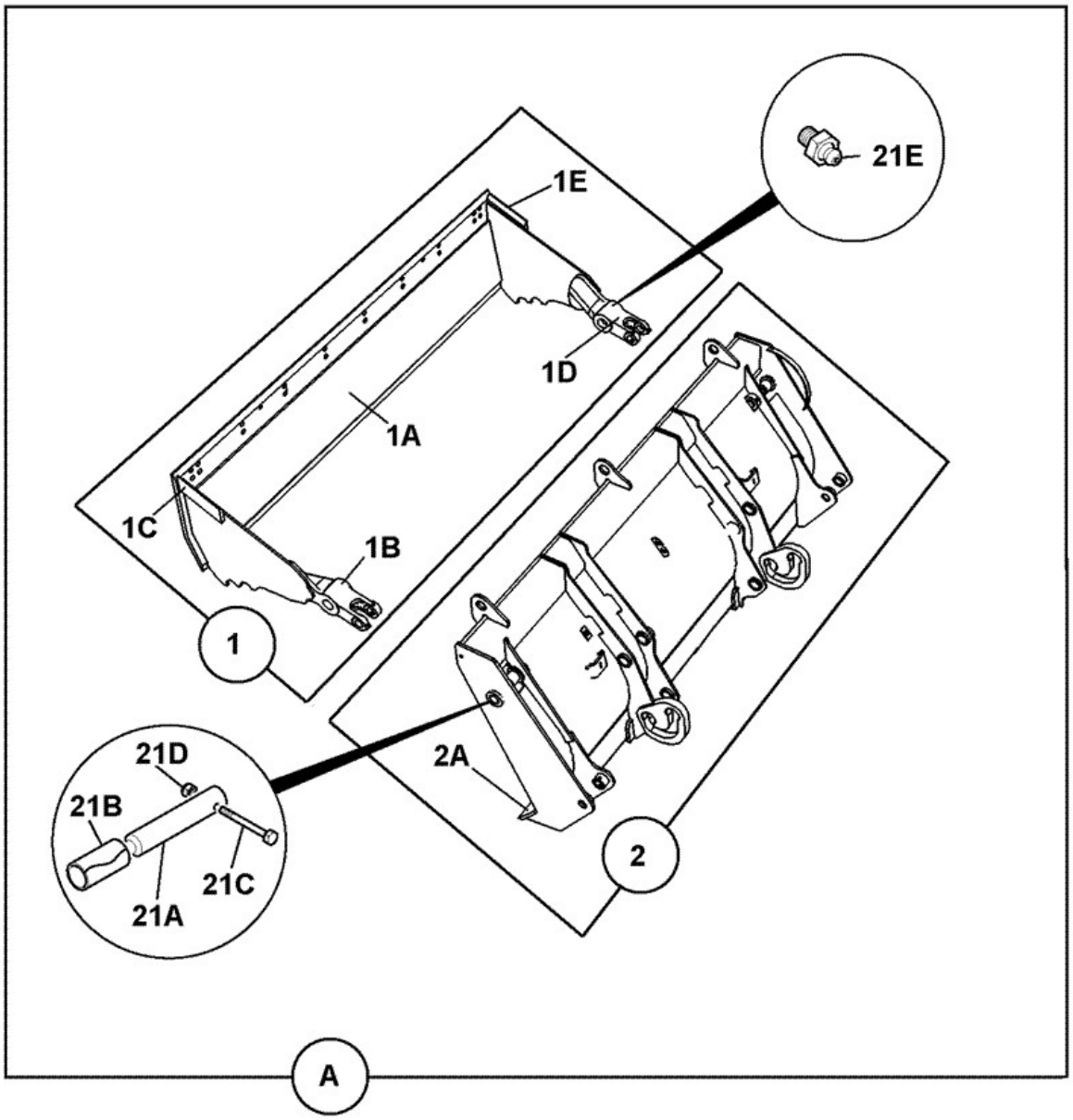

128-17557-2

Elemento	Pieza Nº	Cambiar número	Descripción	Código de uso	CANT.

A	128/17640		CUCHARA ALMEJA clam, ABI 1.2m3 x 92", German		1
1	:125/50100		Mordaza clamshovel 2350mm (7'8.5") wide		1
1A	::125/45400		EXTREMO DE PALA assembly jaw, 92"		1
1B	::123/04274		Pivote casting right hand		1
1C	::123/04423		Cortador lateral right hand		1
1D	::123/04275		Pivote casting left hand		1
1E	::123/04422		Cortador lateral left hand		1
2	:335/14064		HOJA DORSAL clamshovel 1.2m3 x 92", German		1
2A	::123/02362		Puntera 2343mm long		1
21A	:811/90469		Pasador pivot, 44.45x213mm black		2
21B	:1208/0023		Casquillo		2
21C	:1305/3226Z		Tornillo		2
21D	:1340/0204Z		Tuerca philidas thin		2
21E	:1450/0001		Engrasador grease, straight 1/8 BSP		2

9812/0010 A1-31-1 128/17393, HORQUILLA, MOUNTING, 1.0M3

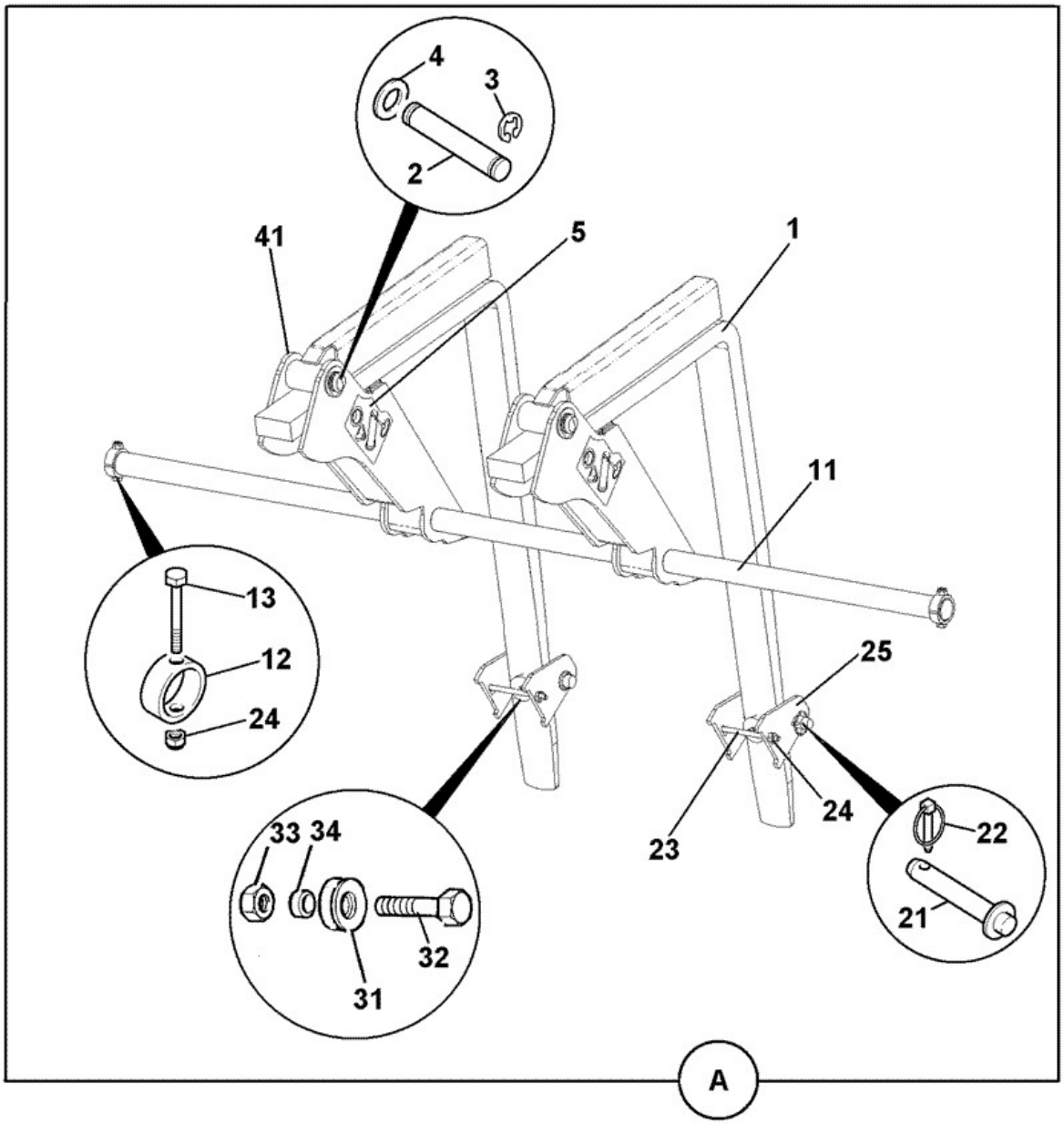

128-17393-4

Elemento	Pieza Nº	Cambiar número	Descripción	Código de uso	CANT.

A	128/17393		Kit fork mounting 1.0 m3		1
1	:123/04827		Horquilla		2
2	:811/70116		Pasador pivot		2
3	:821/00309		Clip 'E'		4
4	:332/C7128		Arandela 39x60x3.2mm		4
5	:817/04503		Rótulo		2
11	:123/06667		Pasador pivot		1
12	:123/06668		Casquillo		2
13	:1315/3416Z		Tornillo hex. head M10 x 70		2
21	:123/00932		Pasador pivot		2
22	:826/00600		Pasador linch		2
23	:1315/3424Z		Tornillo M10 x 140		2
24	:1370/0303Z		Tuerca lock M10		4
25	:332/G2073		Placa fork stowage		4
31	:331/63386		AMORTIGUADOR fork		2
32	:1315/0308Z		Tornillo M8x30		2
33	:1370/0203Z		Tuerca self lock M8		2
34	:123/05863		Espaciador		2
41	:125/00409		Soporte fork carrier 1.0m3		2

9812/0010 A1-31-11 128/17399, HORQUILLA, MOUNTING, 1.0M3, GERMAN

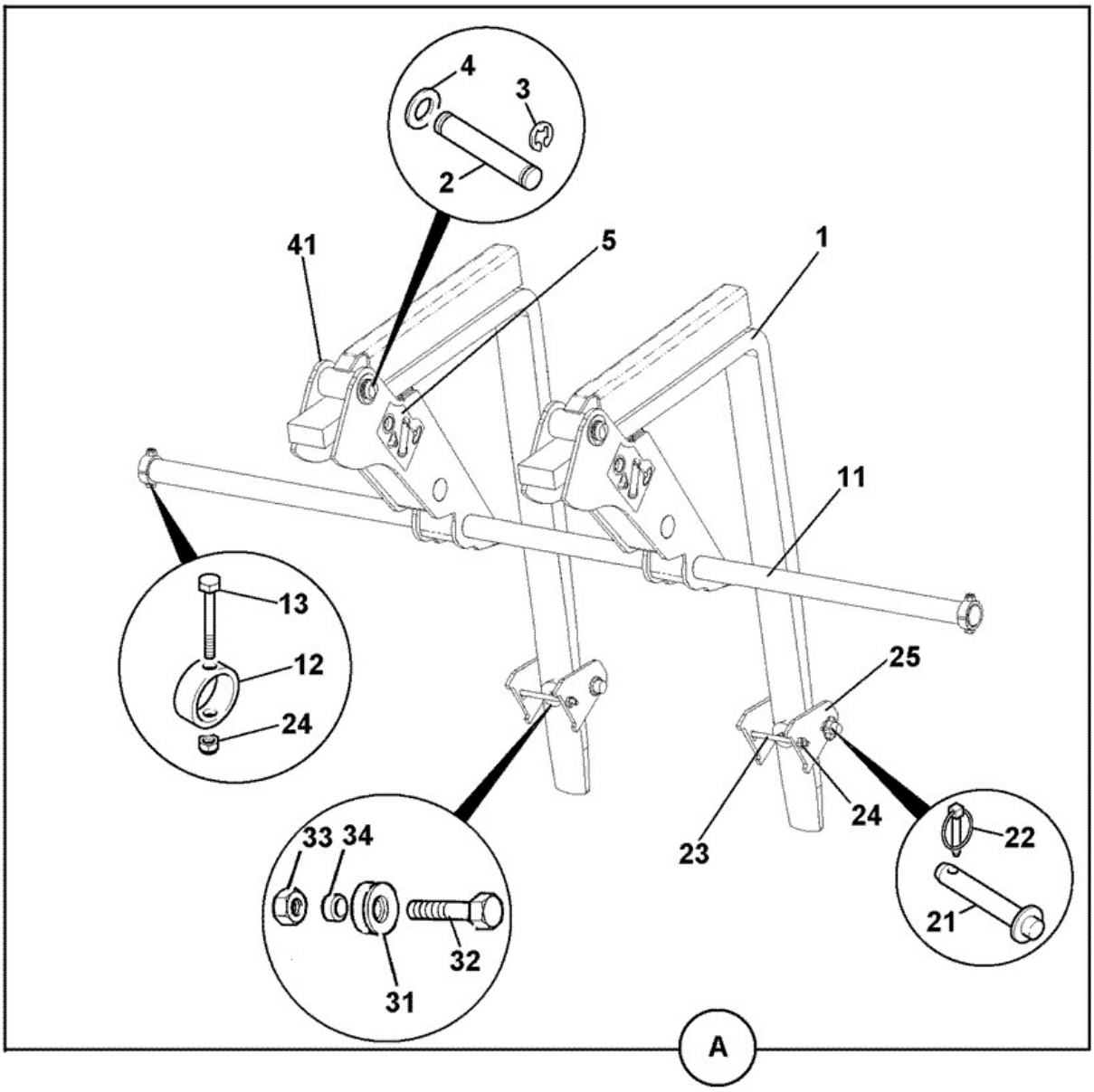

128-17399-4

Elemento	Pieza Nº	Cambiar número	Descripción	Código de uso	CANT.

A	128/17399		Kit fork mounting 1.0m3 German		1
1	:123/04827		Horquilla		2
2	:811/70116		Pasador pivot		2
3	:821/00309		Clip 'E'		4
4	:332/C7128		Arandela 39x60x3.2mm		4
5	:817/04503		Rótulo		2
11	:123/06667		Pasador pivot		1
12	:123/06668		Casquillo		2
13	:1315/3416Z		Tornillo hex. head M10 x 70		2
21	:123/00932		Pasador pivot		2
22	:826/00600		Pasador linch		2
23	:1315/3424Z		Tornillo M10 x 140		2
24	:1370/0303Z		Tuerca lock M10		4
25	:332/G2073		Placa fork stowage		4
31	:331/63386		AMORTIGUADOR fork		2
32	:1315/0308Z		Tornillo M8x30		2
33	:1370/0203Z		Tuerca self lock M8		2
34	:123/05863		Espaciador		2
41	:125/00410		Soporte link arm		2

9812/0010 A1-31-21 128/17394, HORQUILLA, MOUNTING, 1.2M3 & 1.3M3

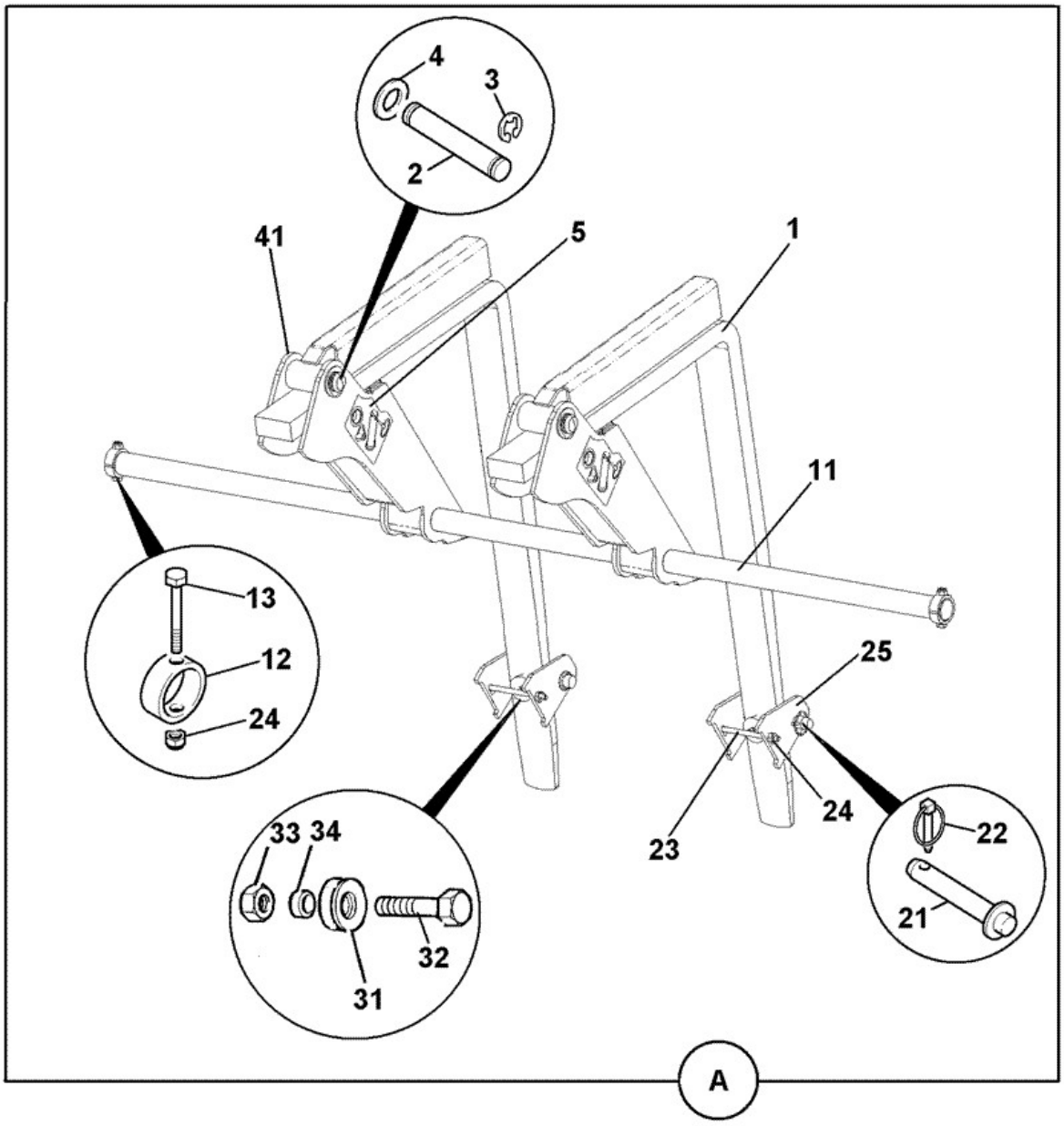

128-17393-4

Elemento	Pieza Nº	Cambiar número	Descripción	Código de uso	CANT.

A	128/17394		Kit fork mounting 1.2 m3		1
1	123/04827		Horquilla		2
2	:811/70116		Pasador pivot		2
3	:821/00309		Clip 'E'		4
4	:332/C7128		Arandela 39x60x3.2mm		4
5	:817/04503		Rótulo		2
11	:123/06667		Pasador pivot		1
12	:123/06668		Casquillo		2
13	:1315/3416Z		Tornillo hex. head M10 x 70		2
21	:123/00932		Pasador pivot		2
22	:826/00600		Pasador linch		2
23	:1315/3424Z		Tornillo M10 x 140		2
24	:1370/0303Z		Tuerca lock M10		4
25	:332/G2073		Placa fork stowage		4
31	:331/63386		AMORTIGUADOR fork		2
32	:1315/0308Z		Tornillo M8x30		2
33	:1370/0203Z		Tuerca self lock M8		2
34	:123/05863		Espaciador		2
41	:125/00411		ABRAZADERA fork carrier 1.2m3		2

9812/0010 A1-31-31 128/17429, HORQUILLA, MOUNTING, 1.2M3 GERMAN

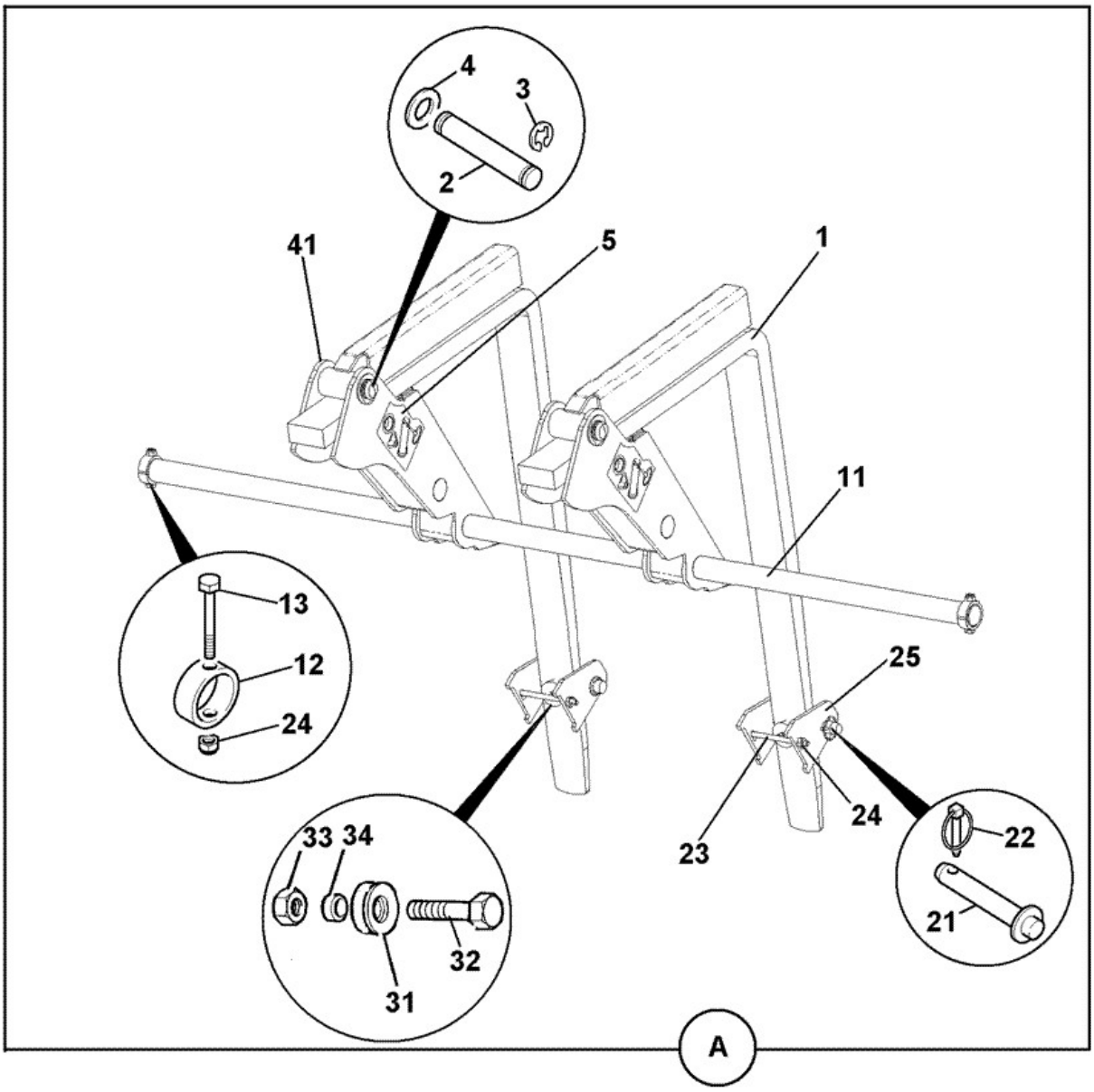

128-17399-4

Elemento	Pieza Nº	Cambiar número	Descripción	Código de uso	CANT.

A	128/17429		Kit fork mounting 1.2m3 German		1
1	:123/04827		Horquilla		2
2	:811/70116		Pasador pivot		2
3	:821/00309		Clip 'E'		4
4	:332/C7128		Arandela 39x60x3.2mm		4
5	:817/04503		Rótulo		2
11	:123/06667		Pasador pivot		1
12	:123/06668		Casquillo		2
13	:1315/3416Z		Tornillo hex. head M10 x 70		2
21	:123/00932		Pasador pivot		2
22	:826/00600		Pasador linch		2
23	:1315/3424Z		Tornillo M10 x 140		2
24	:1370/0303Z		Tuerca lock M10		4
25	:332/G2073		Placa fork stowage		4
31	:331/63386		AMORTIGUADOR fork		2
32	:1315/0308Z		Tornillo M8x30		2
33	:1370/0203Z		Tuerca self lock M8		2
34	:123/05863		Espaciador		2
41	:125/00412		Soporte link arm 1.2mm shovel		2

9812/0010 A1-41-1 Kit obturación, Pala-cucharón 6 en 1, NO FORKS FITTED

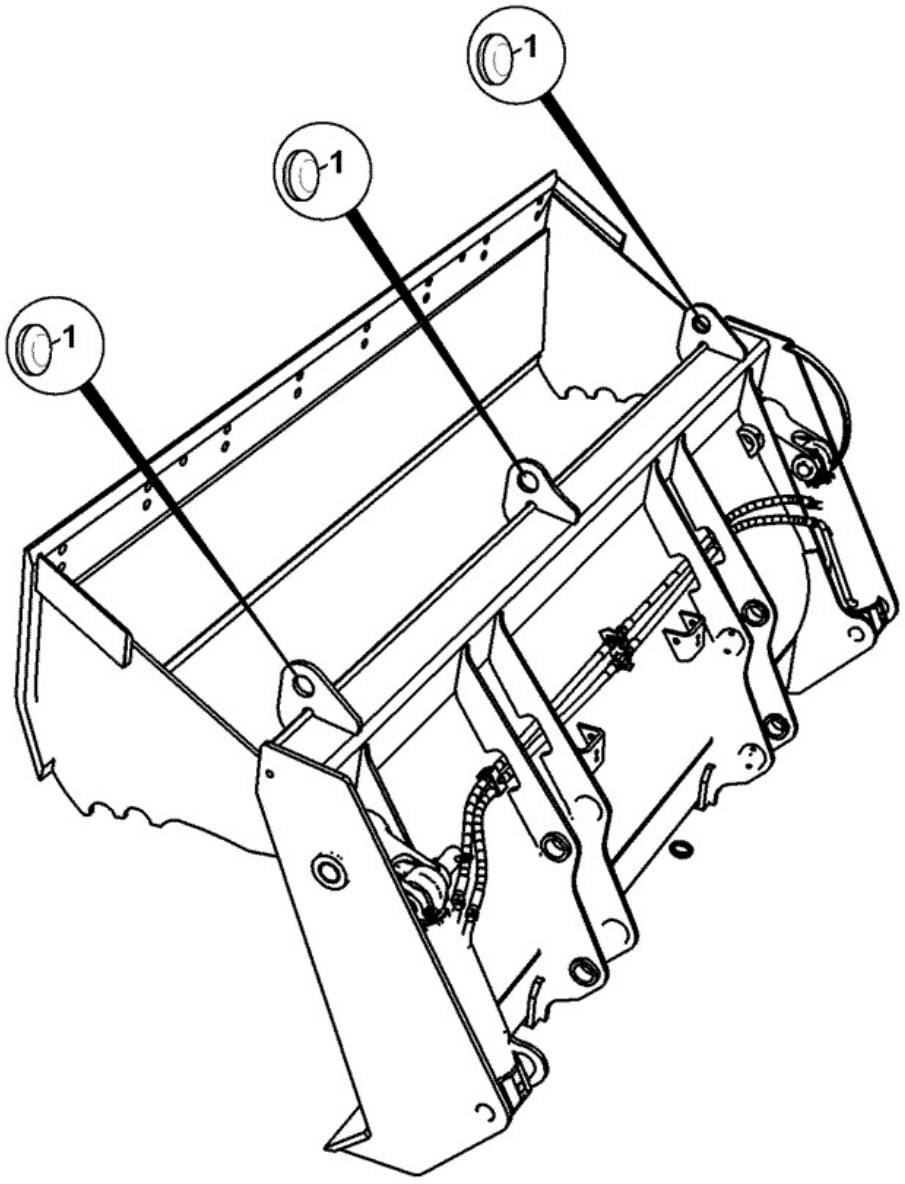

128-17615-2

Elemento	Pieza Nº	Cambiar número	Descripción	Código de uso	CANT.

A	****		Inst\ blanking plugs shovel no forks		1
1	835/10135		Tapón blanking forkrail mtg bkt		6

9812/0010 A1-51-1 Pala, Conectores, PINS & HOSES TO LOADER ARMS

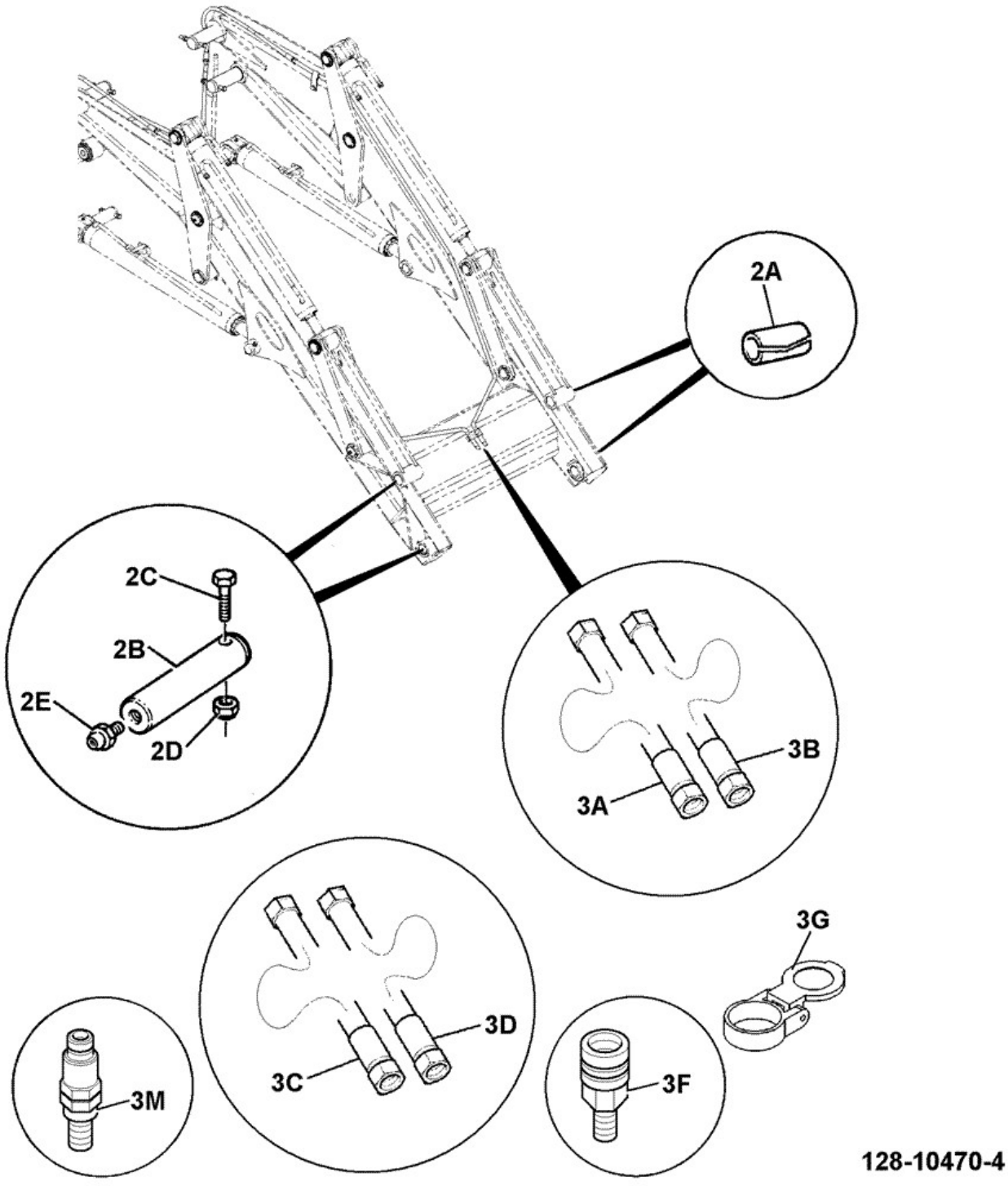

Elemento	Pieza Nº	Cambiar número	Descripción	Código de uso	CANT.

2A	1208/0023		Casquillo		4
2B	811/90483		Pasador pivot black		4
2C	1305/3222Z		Tornillo 3/8"UNF x 3"		4
2D	1340/0203Z		Tuerca		4
2E	1450/0001		Engrasador grease, straight 1/8 BSP		4
3A	332/G3386		MANGUERA 3/8"BSP x 850mm *pin mounted shovels*		1
3A	332/F9671		MANGUERA 3/8BSPx405 armoured *arms to Quickhitch or Tool Carrier*		1
3A	332/G3411		MANGUERA 3/8"BSP x 730mm *if Aux lockout fitted*		1
3B	332/G3386		MANGUERA 3/8"BSP x 850mm *pin mounted shovels*		1
3B	332/F9671		MANGUERA 3/8BSPx405 armoured *arms to Quickhitch or Tool Carrier*		1
3B	332/G3411		MANGUERA 3/8"BSP x 730mm *if Aux lockout fitted*		1
3C	612/21600		Manguito 3/8"BSP x 1050mm *Quickhitch or Tool Carrier to shovel*		1
3D	612/21600		Manguito 3/8"BSP x 1050mm *Quickhitch or Tool Carrier to shovel*		1
3F	45/920066		Acoplamiento 3/8"BSP female quick release		1
3G	835/10082		Tapa flip top protection to fit 3/8 female		1
3M	45/920067		Acoplamiento 3/8"BSP male quick release		1

9812/0010 A1-51-11 Pala, Conectores, PINS & HOSES TO LOADER ARMS GERMAN BUILDS

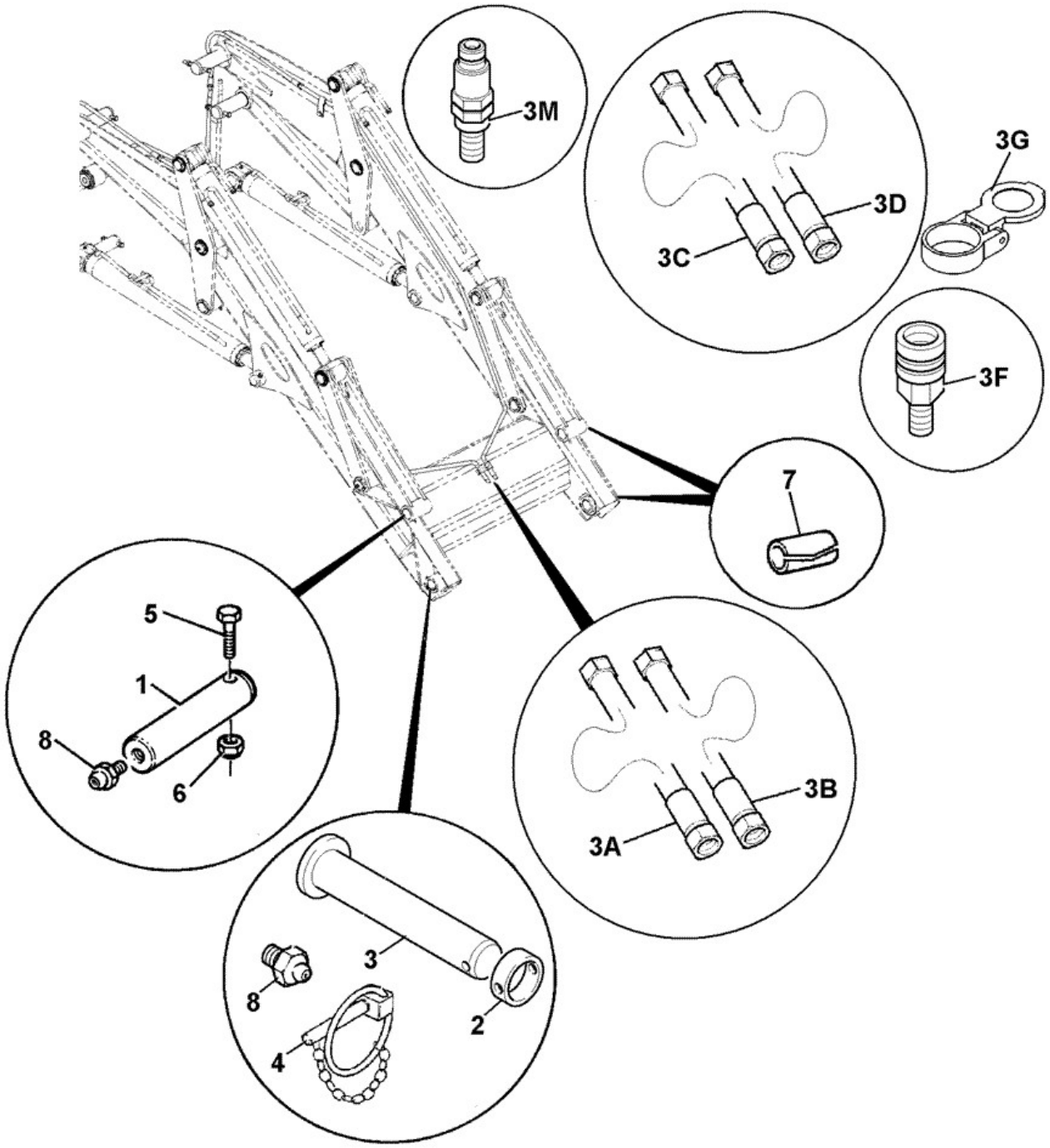

126-25600-9

Elemento	Pieza Nº	Cambiar número	Descripción	Código de uso	CANT.

1	811/90483		Pasador pivot black		2
2	123/00320		Saliente		2
3	911/26000		Pasador pivot		2
3A	332/F9671		MANGUERA 3/8BSPx405 armoured *arms to quickhitch*		1
3B	332/F9671		MANGUERA 3/8BSPx405 armoured *arms to quickhitch*		1
3C	612/21600		Manguito 3/8"BSP x 1050mm *quickhitch to shovel*		1
3D	612/21600		Manguito 3/8"BSP x 1050mm *quickhitch to shovel*		1
3F	45/920066		Acoplamiento 3/8"BSP female quick release		1
3G	835/10082		Tapa flip top protection to fit 3/8 female		1
3M	45/920067		Acoplamiento 3/8"BSP male quick release		1
4	826/00819		Pasador lynch with chain		2
5	1305/3222Z		Tornillo 3/8"UNF x 3"		2
6	1340/0203Z		Tuerca		2
7	1208/0023		Casquillo		4
8	1450/0001		Engrasador grease, straight 1/8 BSP		4

Catálogo de productos \ CONSTRUCTION \ REST OF WORLD \ CONSTRUCTION / INDUSTRIAL \ BACKHOE LOADER 3CX,4CX,214,215,217 \ 3CX 00960000-00989999,01297000-01297999,01327000-01349999,01616000-01625999,01705500-01709999 84hp 9812/0010 \ A ACCESORIOS \ A02 CUCHARAS

9812/0010 A2-1-1 CUCHARA, ESTÁNDAR, 0

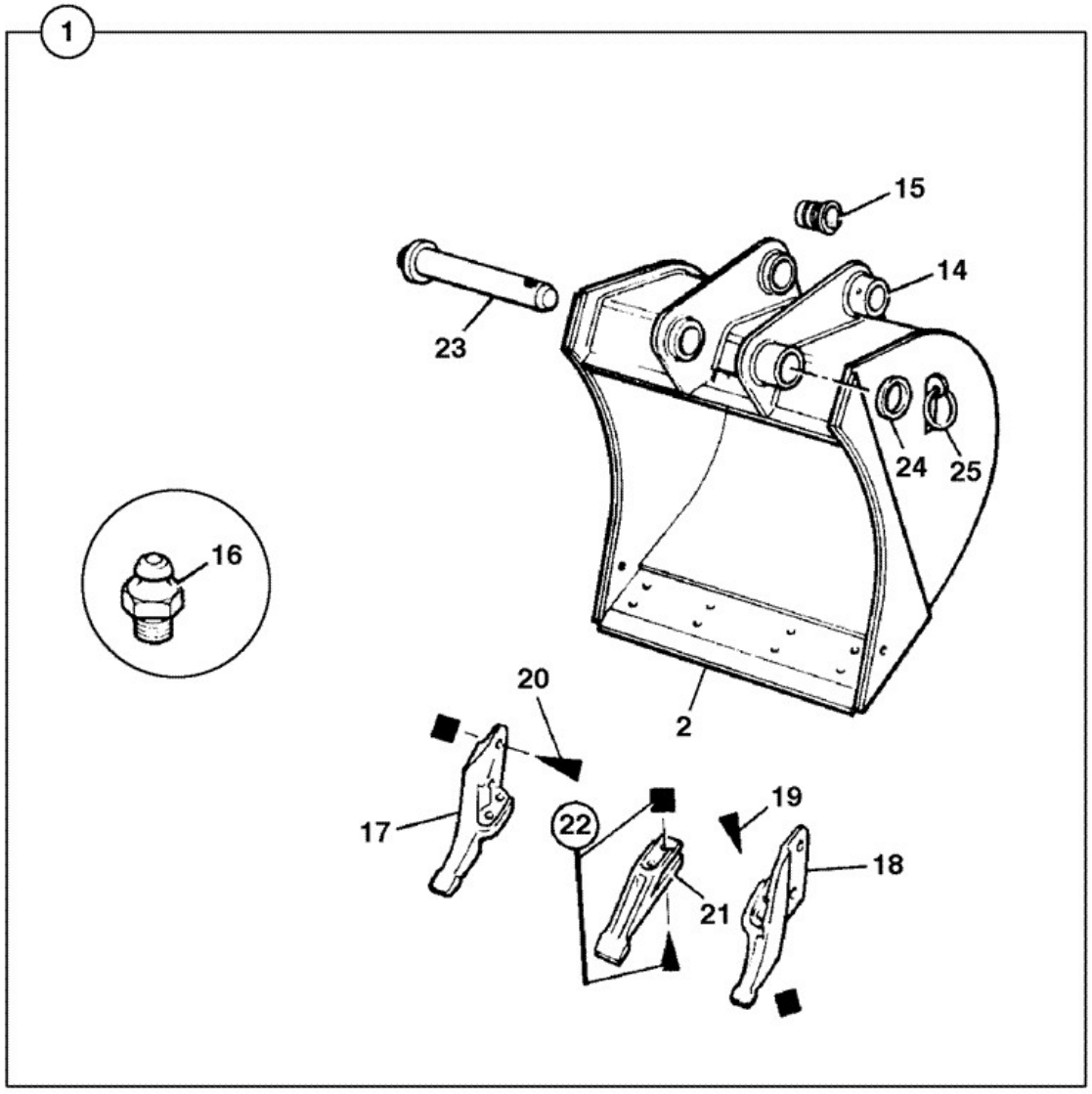

Elemento	Pieza Nº	Cambiar número	Descripción	Código de uso	CANT.
1	980/89817		Cuchara 9in (230mm)	A	1

1	980/89988		CUCHARA general purpose 250mm	L	1
1	980/89818		Cuchara 12in (305mm)	B	1
1	980/89989		CUCHARA general purpose 300mm	M	1
1	980/89881		Cuchara general purpose 14in (350mm)	C	1
1	980/89819		Cuchara 16in (405mm) 3CX/4CX BHL	D	1
1	980/89820		Cuchara 18in (455mm)	E	1
1	980/90034		Cuchara 20in (510mm)	F	1
1	980/89870		Cuchara 24in (610mm)	G	1
1	980/89822		Cuchara 32in (815mm)	H	1
1	980/89823		Cuchara 37in (940mm)	I	1
1	980/89821		Cuchara general purpose 43in (1090mm)	J	1
1	NLA		No disponible *NLA*	K	1
2	331/36211		Puntera 9in bucket	A	1
2	331/49451		Puntera 250mm bucket	L	1
2	531/24703		Puntera 12in bucket	B	1
2	331/47988		Puntera 14" bucket	C	1
2	531/16502		Puntera 16in bucket	D	1
2	531/23301		Puntera 18" bucket	E	1
2	331/49035		Puntera 20in bucket	F	1
2	531/23601		Puntera 24" bucket	G	1
2	531/16802		Puntera 32in bucket	H	1
2	531/16902		Puntera 37in bucket	I	1
2	531/21504		Puntera 42in bucket	J	1
2	331/49036		Puntera 48in (1220mm)	K	1
2	331/49457		Puntera 300mm bucket	M	1
14	****		Pieza no reparable	A to K	4
15	G65/0		Casquillo pivot	CDEFGHIJK	4
15	809/10032		Casquillo Spring *12in (305mm) bucket only*	B	4
16	1450/0001		Engrasador grease, straight 1/8 BSP	A to K	4
17	531/03208		Cortador lateral double flange right hand	A to K	1
18	531/03209		Cortador lateral double flange left hand	A to K	1
19	826/00303		Perno pasante 3/4unf x 70mm	A to K	4
19	1340/0701Z		Tuerca	A to K	4
20	1305/0714Z		Tornillo	A to K	2
21	531/03205		Diente	BCDEFGHIJK	0
22	:826/00303		Perno pasante 3/4unf x 70mm	BCDEFGHIJK	0
22	:1340/0701Z		Tuerca	BCDEFGHIJK	0
23	911/12400		Pasador pivot 306 long	CDEFGHIJK	2
23	990/88201		Pasador pivot 230mm *9in (230mm) bucket only*	A	2
23	911/16600		Pasador pivot 305mm *12in (305mm) bucket only*	B	2
23	826/01598		Pasador lynch	LM	2
23	1019/2053		Pasador pivot 44.45 X 273 long	L	2
23	1019/2073		Pasador pivot 44.45 X 340 long	M	2
24	823/00470		Arandela	A to K	2
25	826/00512		Pasador lynch	B to K	2
25	1305/3224Z		Tornillo	A	2
25	1340/0203Z		Tuerca	A	2

9812/0010 A2-1-2 CUCHARA, USO GENERAL, DIENTES EMPERN\

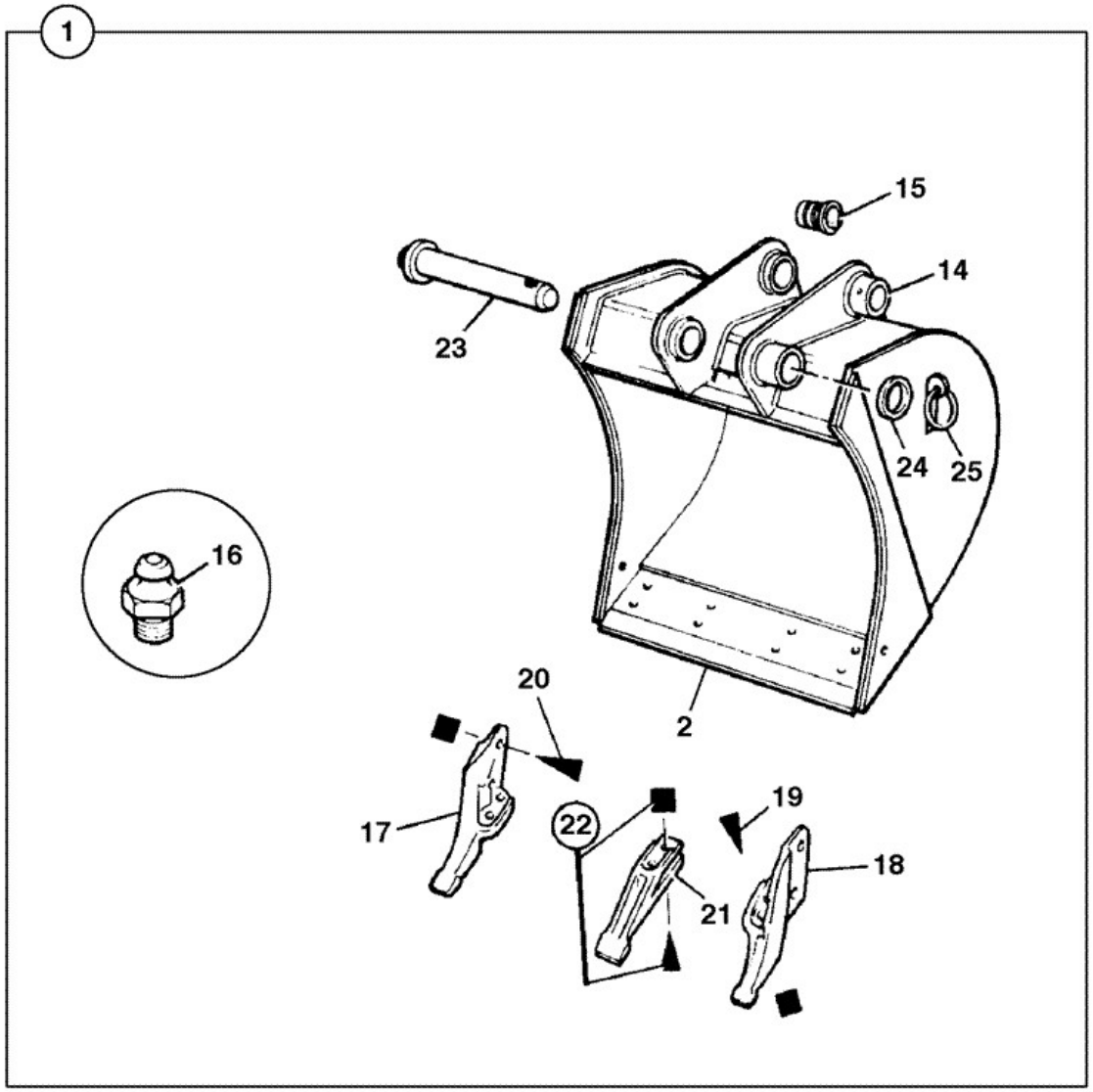

Elemento	Pieza Nº	Cambiar número	Descripción	Código de uso	CANT.

1	980/89817		Cuchara 9in (230mm)	A	1
1	980/89988		CUCHARA general purpose 250mm	L	1
1	980/89818		Cuchara 12in (305mm)	B	1
1	980/89989		CUCHARA general purpose 300mm	M	1
1	980/89881		Cuchara general purpose 14in (350mm)	C	1
1	980/89990		Cuchara general purpose 400mm	D	1
1	980/89991		Cuchara general purpose 450mm	E	1
1	980/89992		Cuchara general purpose 500mm	F	1
1	980/89993		Cuchara general purpose 600mm	G	1
1	980/89994		Cuchara general purpose 800mm	H	1
1	980/89995		Cuchara general purpose 900mm	I	1
1	980/89821		Cuchara general purpose 43in (1090mm)	J	1
1	NLA		No disponible *NLA*	K	1
2	:331/36211		Puntera 9in bucket	A	1
2	:531/24703		Puntera 12in bucket	B	1
2	:331/47988		Puntera 14" bucket	C	1
2	:331/49462		Puntera 400mm bucket	D	1
2	:331/49466		Puntera 450mm bucket	E	1
2	:331/49468		Puntera 500mm bucket	F	1
2	:331/49470		Puntera 600mm bucket	G	1
2	:331/49472		Puntera 800mm bucket	H	1
2	:331/49475		Puntera 900mm bucket	I	1
2	:531/21504		Puntera 42in bucket	J	1
2	:331/49036		Puntera 48in (1220mm)	K	1
2	:331/49451		Puntera 250mm bucket	L	1
2	:331/49457		Puntera 300mm bucket	M	1
14	****		Pieza no reparable		1
15	:G65/0		Casquillo pivot	CDEFGHIJK	4
15	:809/10032		Casquillo Spring *12" bucket only*	B	4
16	:1450/0001		Engrasador grease, straight 1/8 BSP	A to K	4
17	:531/03208		Cortador lateral double flange right hand	A to K	1
18	:531/03209		Cortador lateral double flange left hand	A to K	1
19	:826/00303		Perno pasante 3/4unf x 70mm	A to K	4
19	:1340/0701Z		Tuerca	A to K	4
20	:1305/0714Z		Tornillo	B to K	2
20	:1340/0701Z		Tuerca	B to K	2
21	:531/03205		Diente	B to K	0
22	:826/00303		Perno pasante 3/4unf x 70mm	B to K	0
22	:1340/0701Z		Tuerca	B to K	0
23	911/12400		Pasador pivot 306 long	C to K	2
23	990/88201		Pasador pivot 230mm *9" bucket only*	A	2
23	911/16600		Pasador pivot 305mm *12" bucket only*	B	2
23	826/01598		Pasador lynch	LM	2
23	1019/2053		Pasador pivot 44.45 X 273 long	L	2
23	1019/2073		Pasador pivot 44.45 X 340 long	M	2
24	823/00470		Arandela	A to K	2
25	826/00512		Pasador lynch	B to K	2
25	1305/3224Z		Tornillo	A	2

25	1340/0203Z		Tuerca	A	2

9812/0010 A2-1-10 CUCHARA, ALTO REND\, VER\ ESPAÑA, 0

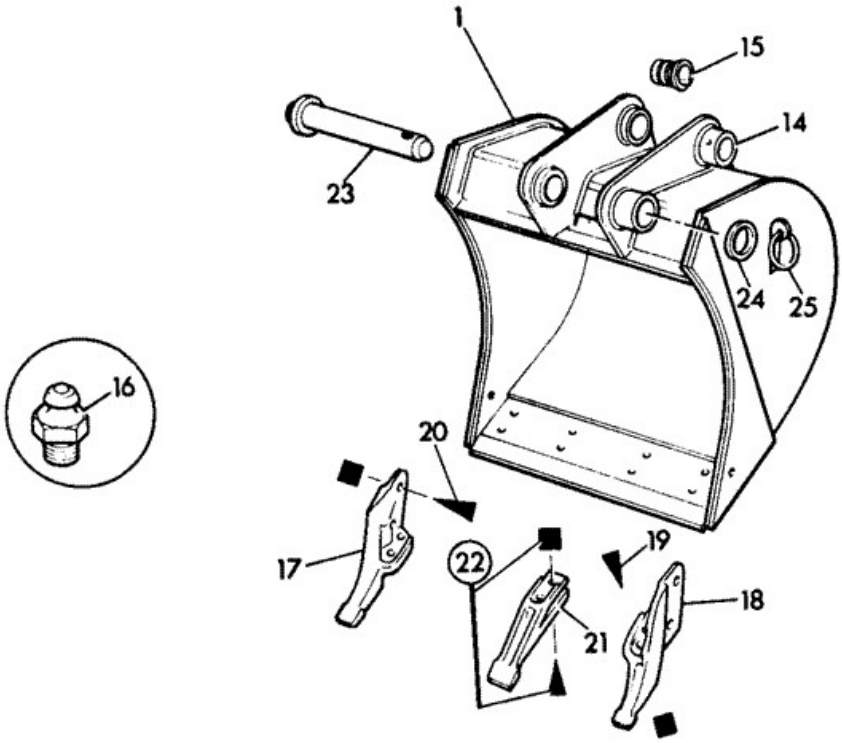

078280

Elemento	Pieza Nº	Cambiar número	Descripción	Código de uso	CANT.
1	980/90006S		Cuchara 300mm DIRECT DELIVER TO SPAIN	A	1
1	980/90007S		Cuchara 400mm DIRECT DELIVER TO SPAIN	B	1
1	980/90008S		Cuchara 450mm DIRECT DELIVER TO SPAIN	C	1
1	980/90010S		Cuchara 600mm DIRECT DELIVER TO SPAIN	D	1
1	980/90011S		Cuchara 800mm DIRECT DELIVER TO SPAIN	E	1

1	980/90012S		Cuchara 900mm DIRECT DELIVER TO SPAIN	F	1
1	980/90005S		Cuchara 250mm DIRECT DELIVER TO SPAIN		1
14	:829/04010		Saliente pivot	A	4
14	:1096/2004		Saliente pivot	BCDEF	4
15	:809/10032		Casquillo Spring	A	4
15	:G65/0		Casquillo pivot	BCDEF	4
16	:1450/0001		Engrasador grease, straight 1/8 BSP	ABCDEF	4
17	:531/03206		Cortador lateral single flange	ABCDEF	1
18	:531/03207		Cortador lateral single flange	ABCDEF	1
19	:826/00303		Perno pasante 3/4unf x 70mm	ABCDEF	4
19	:1340/0701		Tuerca	ABCDEF	4
20	:1305/0714		Tornillo	ABCDEF	2
20	:1340/0701		Tuerca	ABCDEF	2
21	:531/03205		Diente	ABCDEF	0
22	:826/00303		Perno pasante 3/4unf x 70mm	ABCDEF	0
22	:1340/0701Z		Tuerca	ABCDEF	0
23	911/12400		Pasador pivot 306 long	ABCDEF	2
24	823/00250		Suplemento	ABCDEF	2
25	826/00512		Pasador lynch	ABCDEF	2

Catálogo de productos \ CONSTRUCTION \ REST OF WORLD \ CONSTRUCTION / INDUSTRIAL \ BACKHOE LOADER 3CX,4CX,214,215,217 \ 3CX 00960000-00989999,01297000-01297999,01327000-01349999,01616000-01625999,01705500-01709999 84hp 9812/0010 \ A ACCESORIOS \ A02 CUCHARAS

9812/0010 A2-1-13 CUCHARA, ALTO RENDIMIENTO, 0

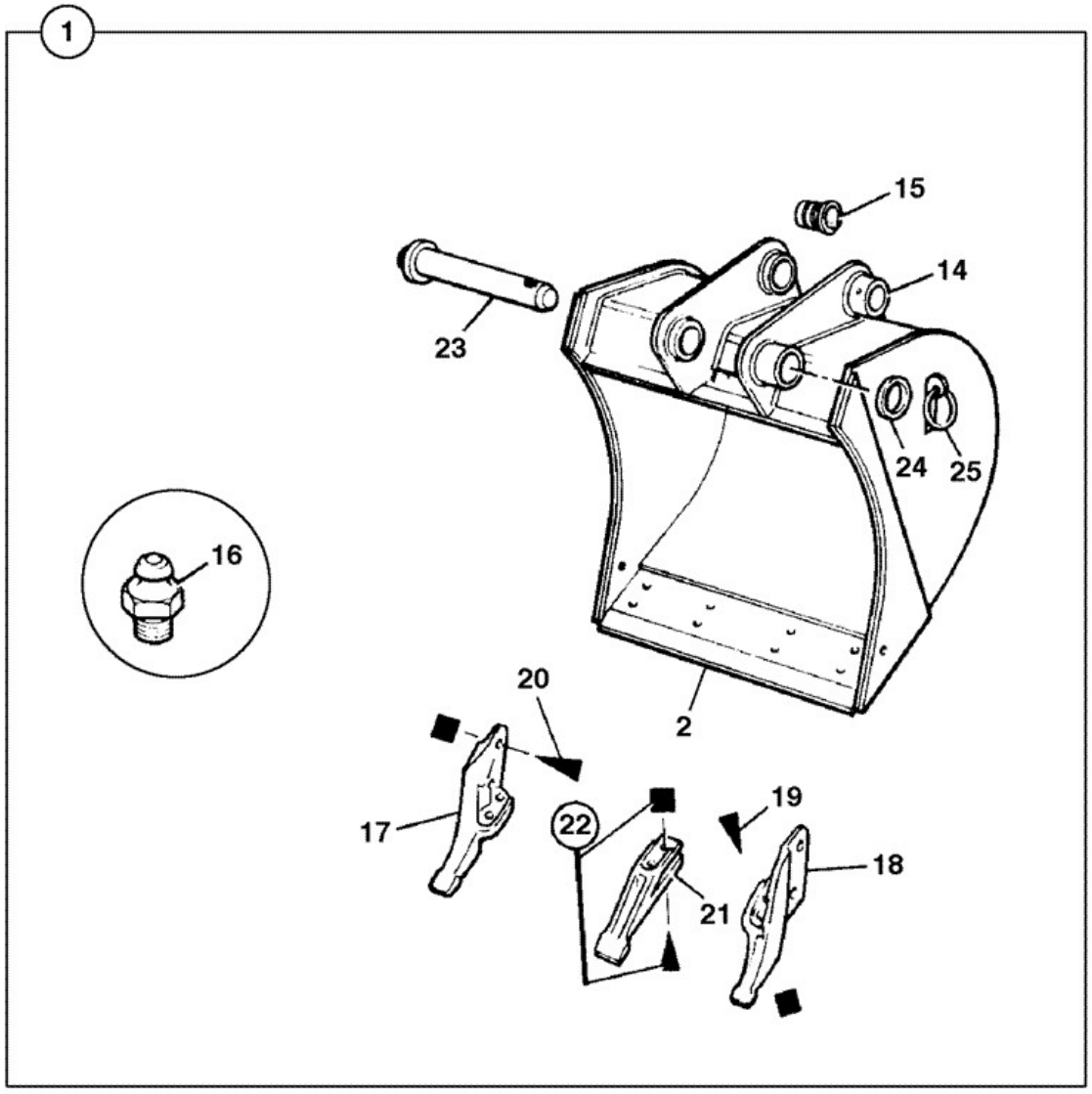

Elemento	Pieza Nº	Cambiar número	Descripción	Código de uso	CANT.
1	980/89960		Cuchara 12in (305mm) heavy duty	A	1

1	980/89961		Cuchara 14in (355mm) heavy duty	B	1
1	980/89962		Cuchara 16in (405mm) heavy duty	C	1
1	980/89963		Cuchara 18in (455mm)	D	1
1	980/89964		Cuchara 20in (510mm) heavy duty	E	1
1	980/89965		Cuchara 24in (610mm) heavy duty	F	1
1	980/89966		Cuchara 32in (815mm) heavy duty	G	1
1	980/89967		Cuchara 37in (940mm) heavy duty	H	1
1	980/89968		Cuchara 43in (1090mm) heavy duty	I	1
1	980/89969		Cuchara 48in (1220mm) heavy duty	J	1
2	531/24703		Puntera 12in bucket	A	1
2	331/47988		Puntera 14" bucket	B	1
2	531/16502		Puntera 16in bucket	C	1
2	531/23301		Puntera 18" bucket	D	1
2	331/49035		Puntera 20in bucket	E	1
2	531/23601		Puntera 24" bucket	F	1
2	531/16802		Puntera 32in bucket	G	1
2	531/16902		Puntera 37in bucket	H	1
2	531/21504		Puntera 42in bucket	I	1
2	331/49036		Puntera 48in (1220mm)	J	1
14	****		Pieza no reparable	A to J	1
15	G65/0		Casquillo pivot	BCDEFGHIJ	4
15	809/10032		Casquillo Spring	A	4
16	1450/0001		Engrasador grease, straight 1/8 BSP	BCDEFGHIJ	4
17	531/03208		Cortador lateral double flange right hand	A to J	1
18	531/03209		Cortador lateral double flange left hand	A to J	1
19	826/00303		Perno pasante 3/4unf x 70mm	A to J	4
19	1340/0701Z		Tuerca	A to J	6
20	1305/0714Z		Tornillo	A to J	2
21	531/03205		Diente	A to J	0
22	:826/00303		Perno pasante 3/4unf x 70mm	A to J	0
22	:1340/0701Z		Tuerca	A to J	0

9812/0010 A2-1-14 CUCHARA, ALTO RENDIMIENTO, DIENTES EMPERN\

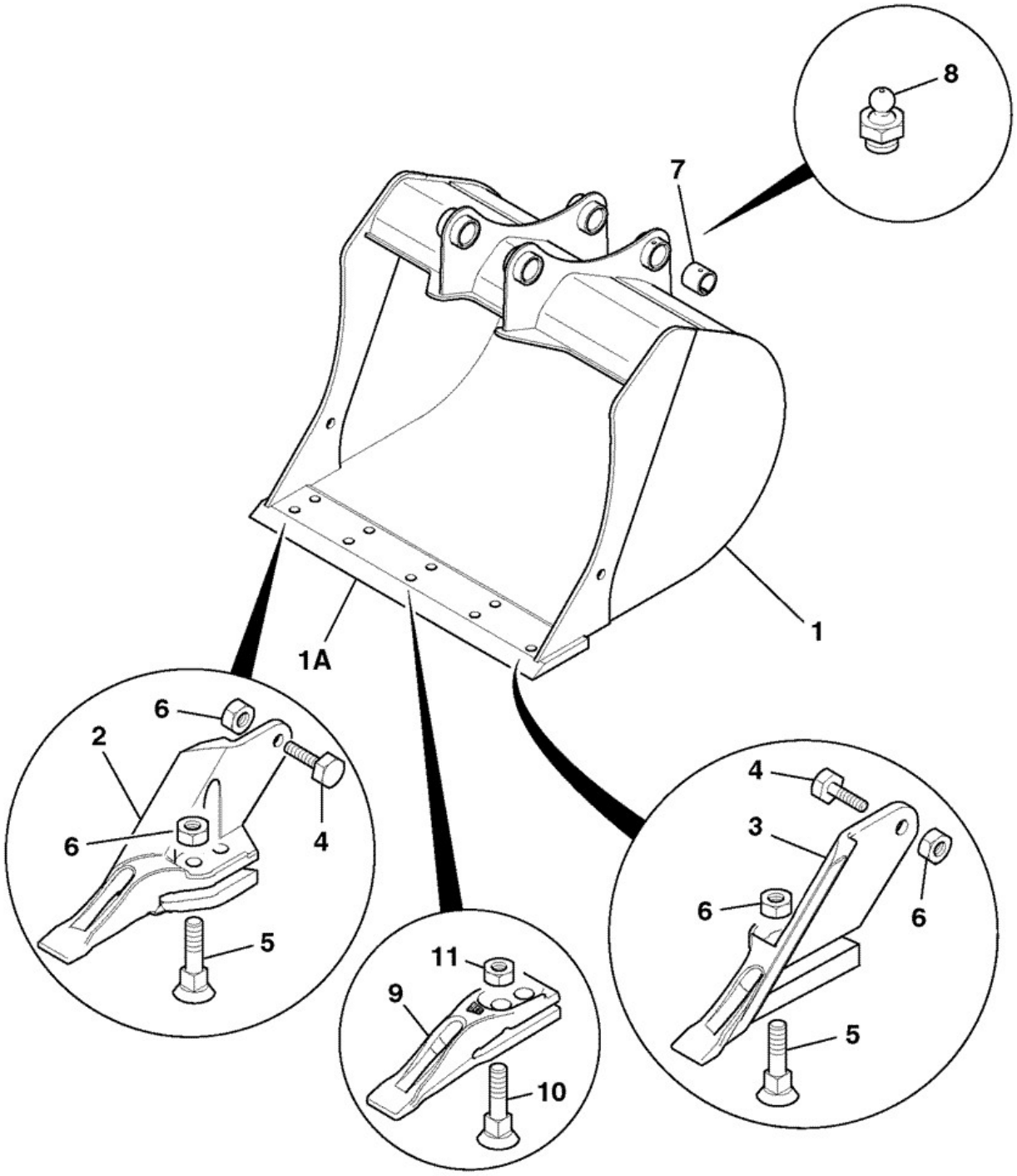

Elemento	Pieza Nº	Cambiar número	Descripción	Código de uso	CANT.

1	980/90005		Cuchara 250mm heavy duty	A	1
1	980/90006		Cuchara 300mm heavy duty	B	1
1	980/90007		Cuchara 400mm heavy duty	C	1
1	980/90008		Cuchara 450mm heavy duty	D	1
1	980/90009		Cuchara 500mm heavy duty	E	1
1	980/90010		Cuchara 600mm heavy duty	F	1
1	980/90011		Cuchara 800mm heavy duty	G	1
1	980/90012		Cuchara 900mm heavy duty	H	1
1A	:331/49451		Puntera 250mm bucket	A	1
1A	:331/49457		Puntera 300mm bucket	B	1
1A	:331/49462		Puntera 400mm bucket	C	1
1A	:331/49466		Puntera 450mm bucket	D	1
1A	:331/49468		Puntera 500mm bucket	E	1
1A	:331/49470		Puntera 600mm bucket	F	1
1A	:331/49472		Puntera 800mm bucket	G	1
1A	:331/49475		Puntera 900mm bucket	H	1
2	:531/03208		Cortador lateral double flange right hand	A to H	1
3	:531/03209		Cortador lateral double flange left hand	A to H	1
4	:1305/0714Z		Tornillo	A to H	2
5	:826/00303		Perno pasante 3/4unf x 70mm	A to H	4
6	:1340/0701Z		Tuerca	A to H	6
7	:G65/0		Casquillo pivot	C to H	4
8	:1450/0001		Engrasador grease, straight 1/8 BSP	C to H	4
9	:531/03205		Diente	C to H	0
10	:826/00303		Perno pasante 3/4unf x 70mm	C to H	0
11	:1340/0701Z		Tuerca	C to H	0
19	340/00582		Kit bucket pins 250mm buckets	A	1
20	340/00584		Kit bucket pins 300mm GP buckets	B	1

9812/0010 A2-1-21 CUCHARA, PERFIL PROFUNDO, DIENTES EMPERN\

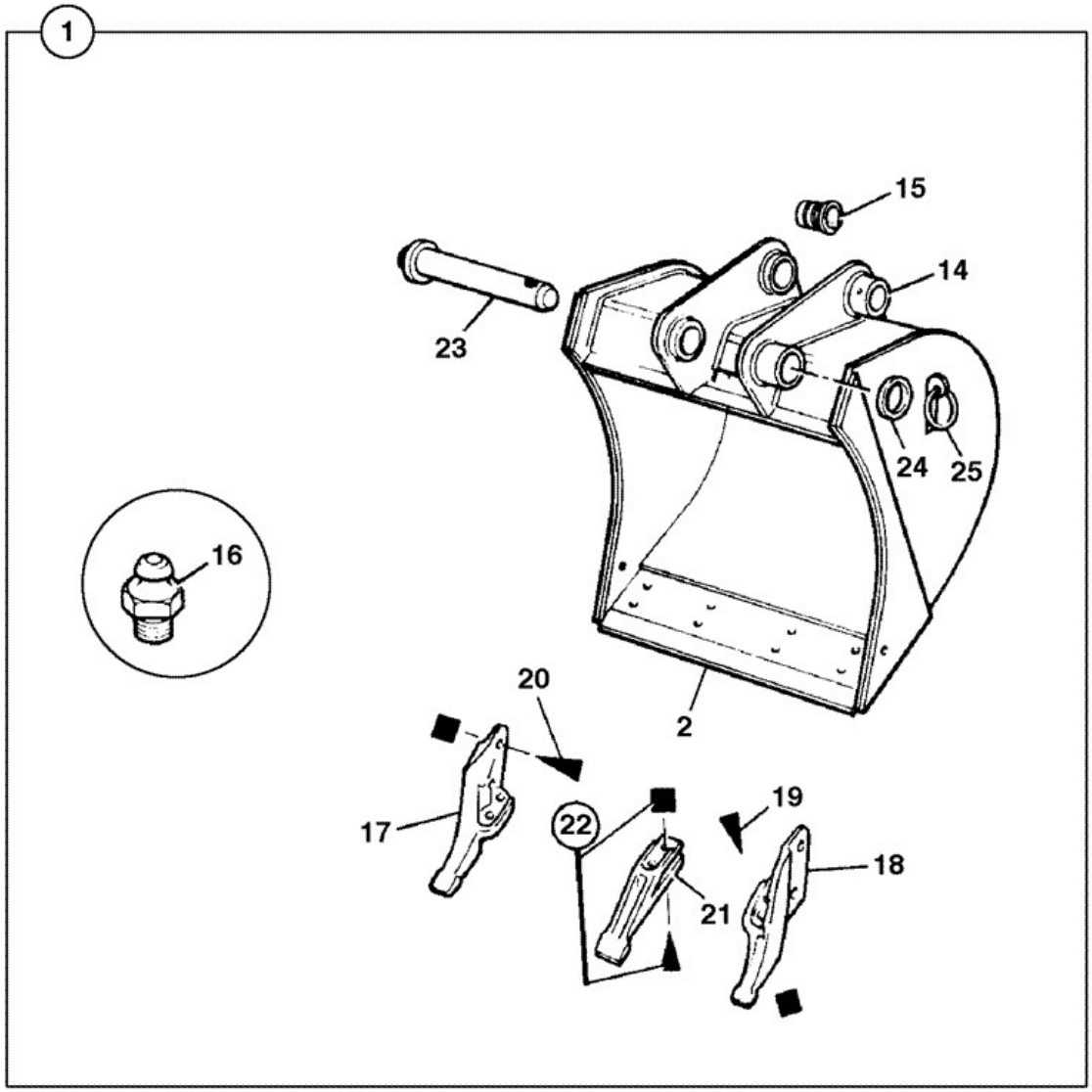

Elemento	Pieza Nº	Cambiar número	Descripción	Código de uso	CANT.

1	980/89980		Cuchara 300mm deep profile	A	1
1	980/89981		Cuchara 350mm deep profile	B	1
1	980/89982		Cuchara 400mm deep profile	C	1
1	980/89983		Cuchara 450mm deep profile	D	1
1	980/89984		Cuchara 600mm deep profile	E	1
1	980/89985		Cuchara 800mm deep profile	F	1
1	980/89986		Cuchara 900mm deep profile	G	1
1	980/89987		Cuchara 1100mm deep profile	H	1
2	:531/24703		Puntera 12in bucket	A	1
2	:531/23301		Puntera 18" bucket	D	1
2	:531/23601		Puntera 24" bucket	E	1
2	:531/16802		Puntera 32in bucket	F	1
2	:531/16902		Puntera 37in bucket	F	1
2	:531/21504		Puntera 42in bucket	H	1
14	****		Pieza no reparable		1
15	:G65/0		Casquillo pivot	B to H	4
15	:809/10032		Casquillo Spring *12" bucket only*	A	4
16	:1450/0001		Engrasador grease, straight 1/8 BSP	A to H	4
17	:531/03208		Cortador lateral double flange right hand	A to H	1
18	:531/03209		Cortador lateral double flange left hand	A to H	1
19	:826/00303		Perno pasante 3/4unf x 70mm	A to H	4
19	:1340/0701Z		Tuerca	A to H	4
20	:1305/0714Z		Tornillo	A to H	2
21	:531/03205		Diente	A to H	0
22	:826/00303		Perno pasante 3/4unf x 70mm	A to H	0
22	:1340/0701Z		Tuerca	A to H	0
23	911/12400		Pasador pivot 306 long	B to H	2
23	:911/16600		Pasador pivot 305mm	A	2
24	823/00470		Arandela	A to H	1
25	826/00512		Pasador lynch	A to H	2

9812/0010 A2-2-1 ACCESORIOS, RETROEXC, DIENTE DESFONDADORA, Y CUCHARA CÓNICA ZANJA

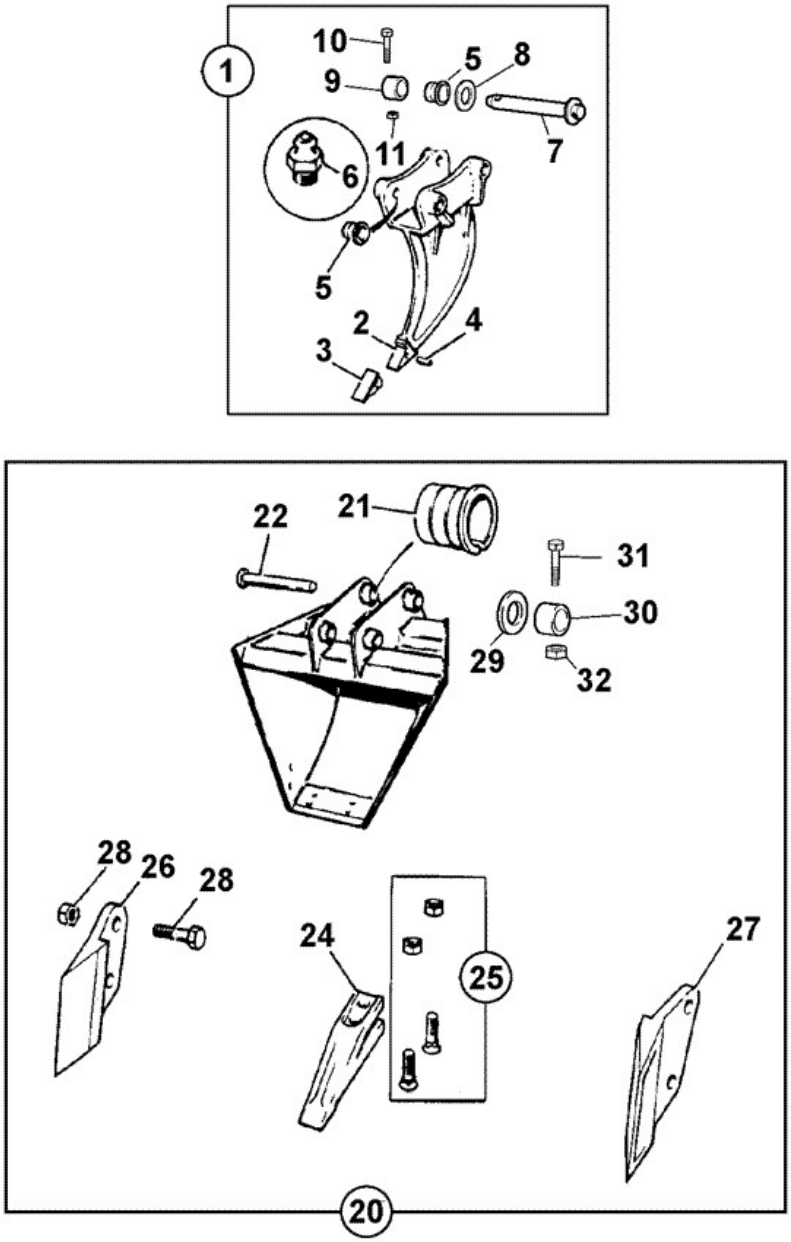

425160

Elemento	Pieza Nº	Cambiar número	Descripción	Código de uso	CANT.

1	529/03000		Diente Ripper Fabrication	A	1
1	990/81700		Accesorio ripper tooth fabricated	B	1
2	:529/03102		Sujeción tooth,ripper casting *Welded*	A & B	1
3	:529/03001		Diente tip	A	1
3	:529/03001	<APR 2005	Diente tip	B	1
3	:997/25091	>APR 2005	Diente tip Cat 205 style	B	1
4	:529/03002		Pasador flex	A	1
4	:529/03002	<APR 2005	Pasador flex	B	1
4	:997/25094	>APR 2005	Pasador locking Cat 205 style	B	1
4A	:997/25095	>APR 2005	Retenida Cat 205 style *fits 997/25094*	B	1
5	:G65/0		Casquillo pivot	A	4
6	:1450/0001		Engrasador grease, straight 1/8 BSP	A	1
7	:911/12400		Pasador pivot 306 long	A	2
8	:823/00470		Arandela	A	2
9	:123/06668		Casquillo	A	2
10	:1315/3416Z		Tornillo hex. head M10 x 70	A	2
11	:1371/0303Z		Tuerca	A	2
20	531/02700		Cuchara taper 15" to 66"	G	1
20	537/16100		Cuchara taper ditching	G	1
21	:G65/0		Casquillo pivot	G	4
22	:911/12400		Pasador pivot 306 long	G	2
24	:531/03205		Diente	G	0
25	:826/00303		Perno pasante 3/4unf x 70mm	G	1
25	:1340/0701Z		Tuerca	G	1
26	:535/00103		Cortador lateral	G	1
27	:535/00102		Cortador lateral	G	1
28	:990/14900		Tornillo with nut	G	4
29	:823/00470		Arandela	G	2
30	:123/06668		Casquillo	G	2
31	:1315/3416Z		Tornillo hex. head M10 x 70	G	2
32	:1371/0303Z		Tuerca	G	2

9812/0010 A2-3-1 PALA, NIVELACIÓN 5', 0, 0

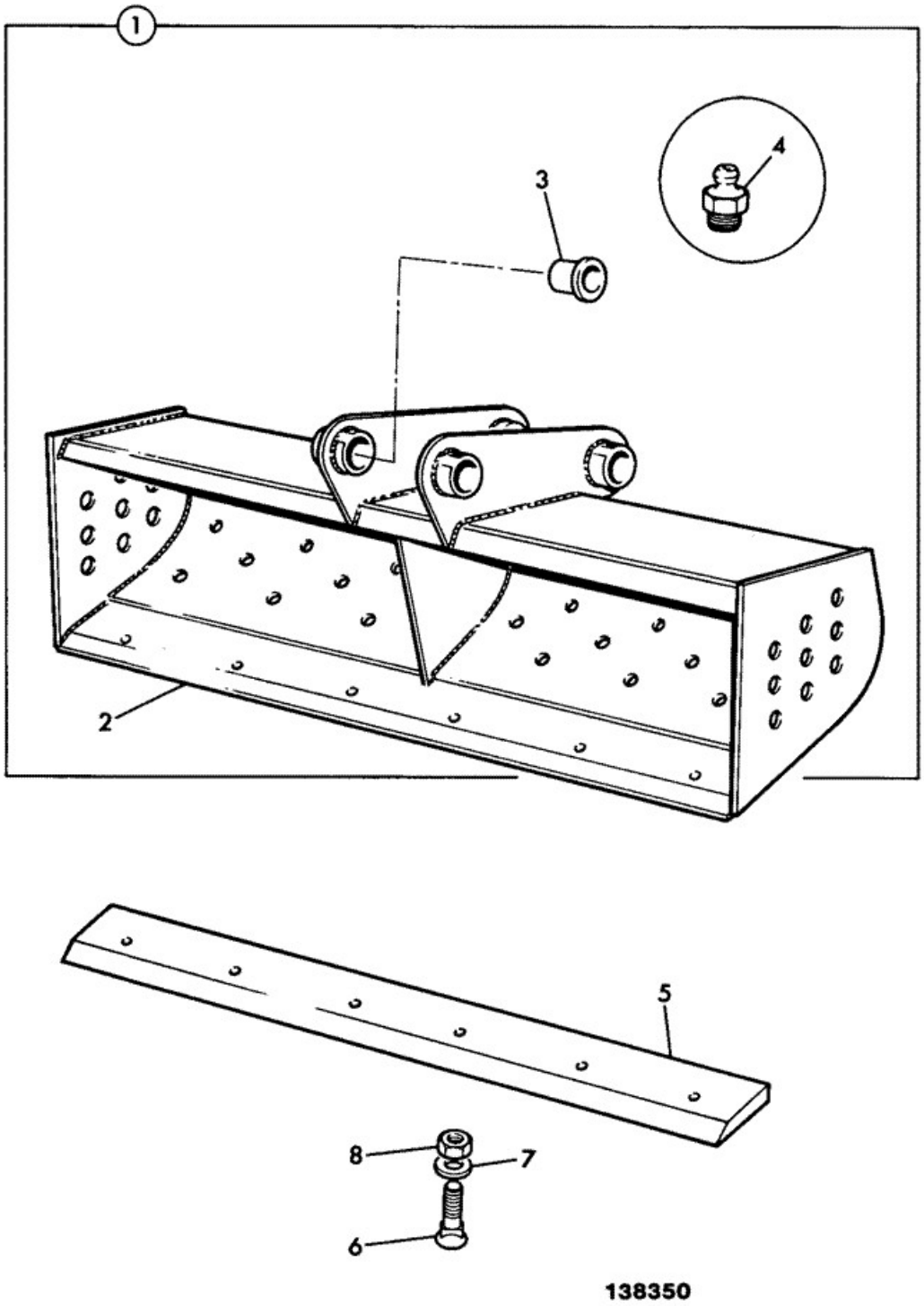

Elemento	Pieza Nº	Cambiar número	Descripción	Código de uso	CANT.
1	980/86061		Cuchara grading,1524mm wide		1
2	:993/32301		Puntera 5'		1
3	:G65/0		Casquillo pivot		4
4	:1450/0002		Engrasador grease, straight 1/4		4
5	993/32302		Puntera 5' *Bolt on type*		1
6	826/00303		Perno pasante 3/4unf x 70mm		6
7	1416/0011		Arandela		6
8	1340/0701Z		Tuerca		6

9812/0010 A2-3-2 PALA, NIVELACIÓN 6', 0, 0

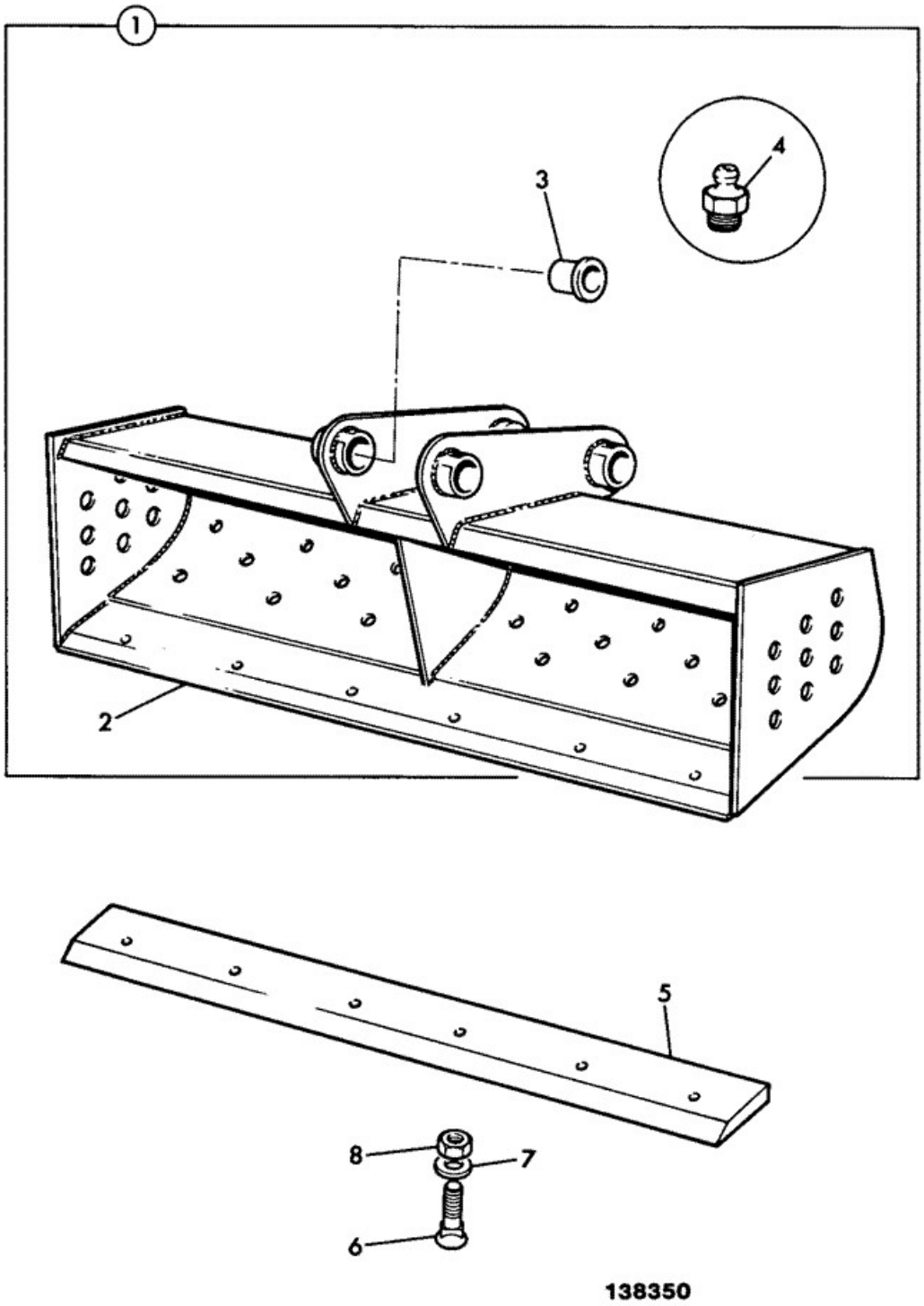

Elemento	Pieza Nº	Cambiar número	Descripción	Código de uso	CANT.
1	980/86060		Cuchara grading 1830mm wide		1
2	:993/32102		Puntera 6'		1
3	:G65/0		Casquillo pivot		4
4	:1450/0002		Engrasador grease, straight 1/4		4
5	993/32104		Puntera 6' *Bolt on type*		1
6	826/00303		Perno pasante 3/4unf x 70mm		8
7	1416/0011		Arandela		8
8	1340/0701Z		Tuerca		8

9812/0010 A2-6-1 CUCHARA ZANJEO, DIENT SLDADOS ESPAÑA, 9 PULGADAS

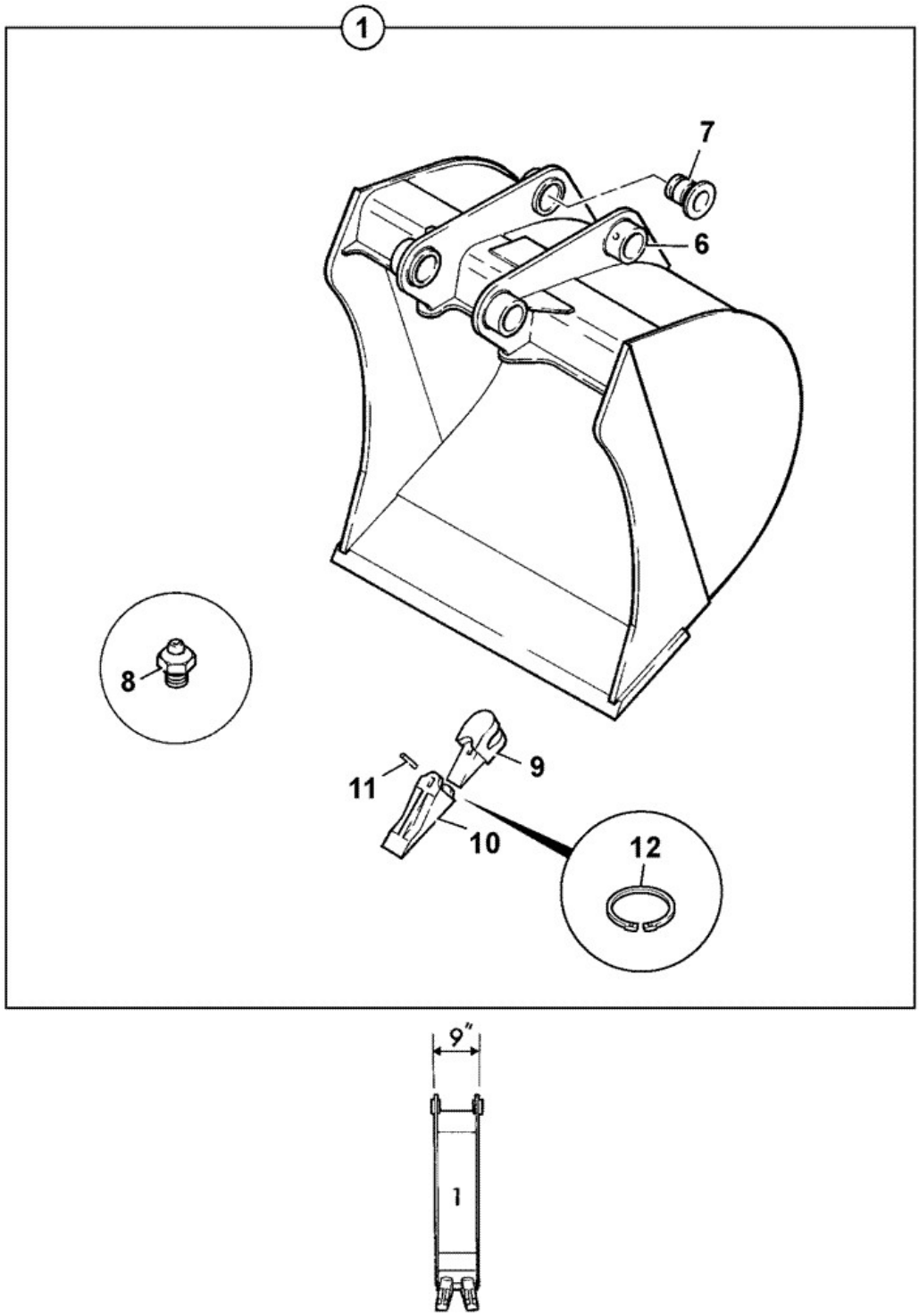

Elemento	Pieza Nº	Cambiar número	Descripción	Código de uso	CANT.

1	980/89434		Cuchara Spain weld on teeth		1
9	:993/99538		Diente shank		2
10	:993/99537		Diente tip		2
11	:993/99539		Pasador flex		2
12	:993/99540		Aro de refuerzo		2

9812/0010 A2-6-2 CUCHARA ALTO REND\, DIENTE EMPERN ESPAÑA, 9 PULGADAS

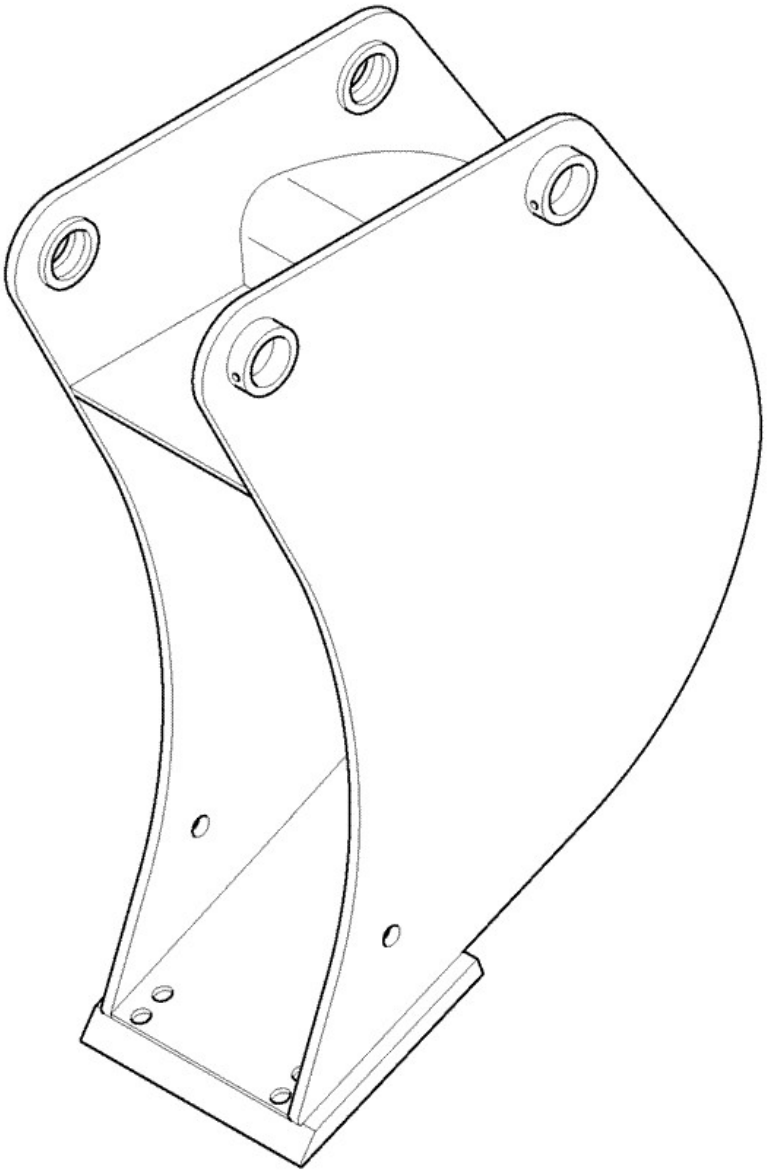

777270

Elemento	Pieza Nº	Cambiar número	Descripción	Código de uso	CANT.

1	980/89433		Cuchara 9in heavy duty bolt on teeth Spain		1

Catálogo de productos \ CONSTRUCTION \ REST OF WORLD \ CONSTRUCTION / INDUSTRIAL \ BACKHOE LOADER 3CX,4CX,214,215,217 \ 3CX 00960000-00989999,01297000-01297999,01327000-01349999,01616000-01625999,01705500-01709999 84hp 9812/0010 \ A ACCESORIOS \ A02 CUCHARAS

9812/0010 A2-6-3 CUCHARA, 500MM, DIENTES EMPERN HD, 0

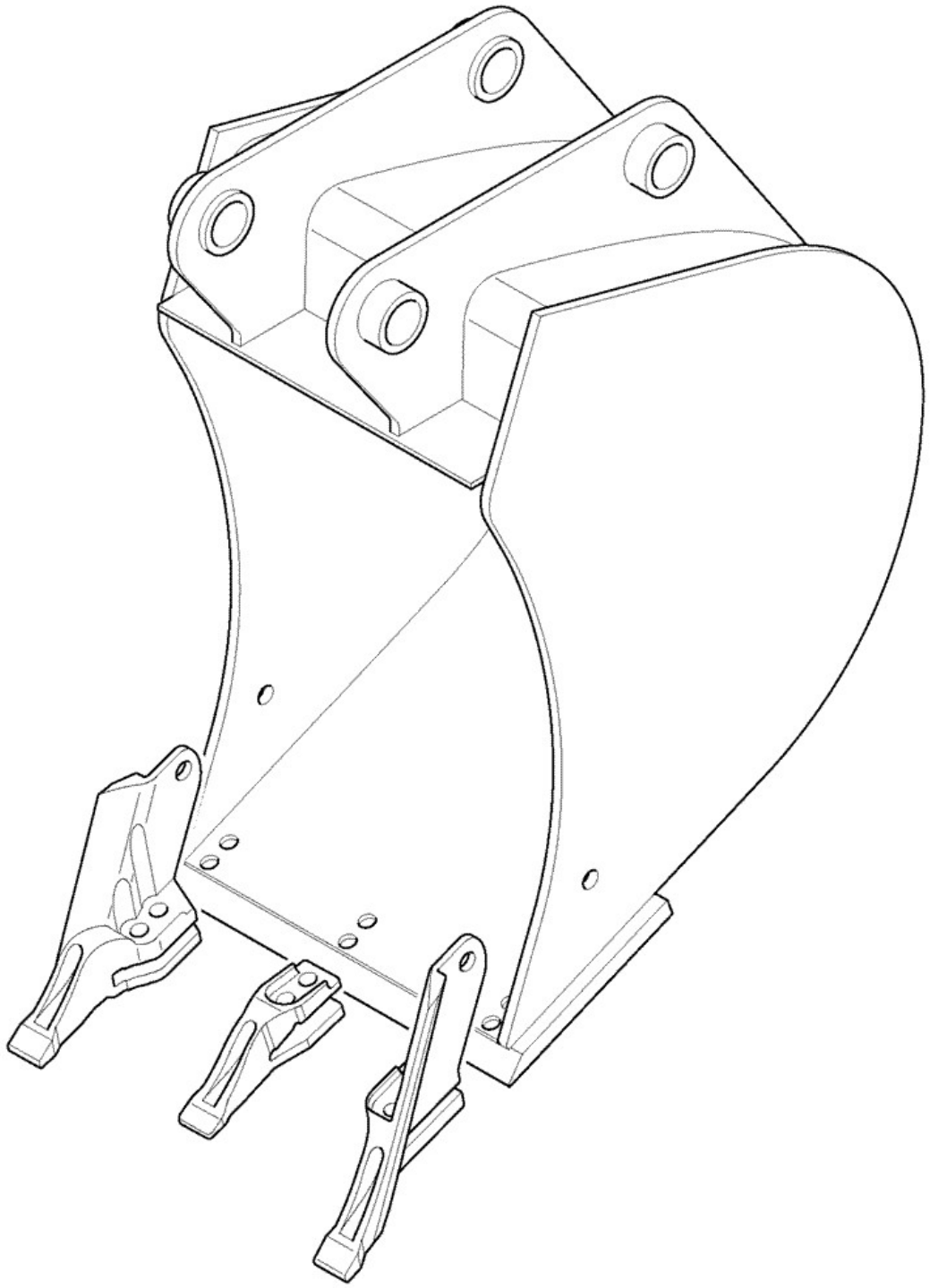

777290

Elemento	Pieza Nº	Cambiar número	Descripción	Código de uso	CANT.

1	980/89540		Cuchara Spanish HD Bolt on teeth		1

9812/0010 A3-1-5 HORQUILLA ELEV\, PALA-CUCH\ 6 EN 1, MONTADO 1,0M3

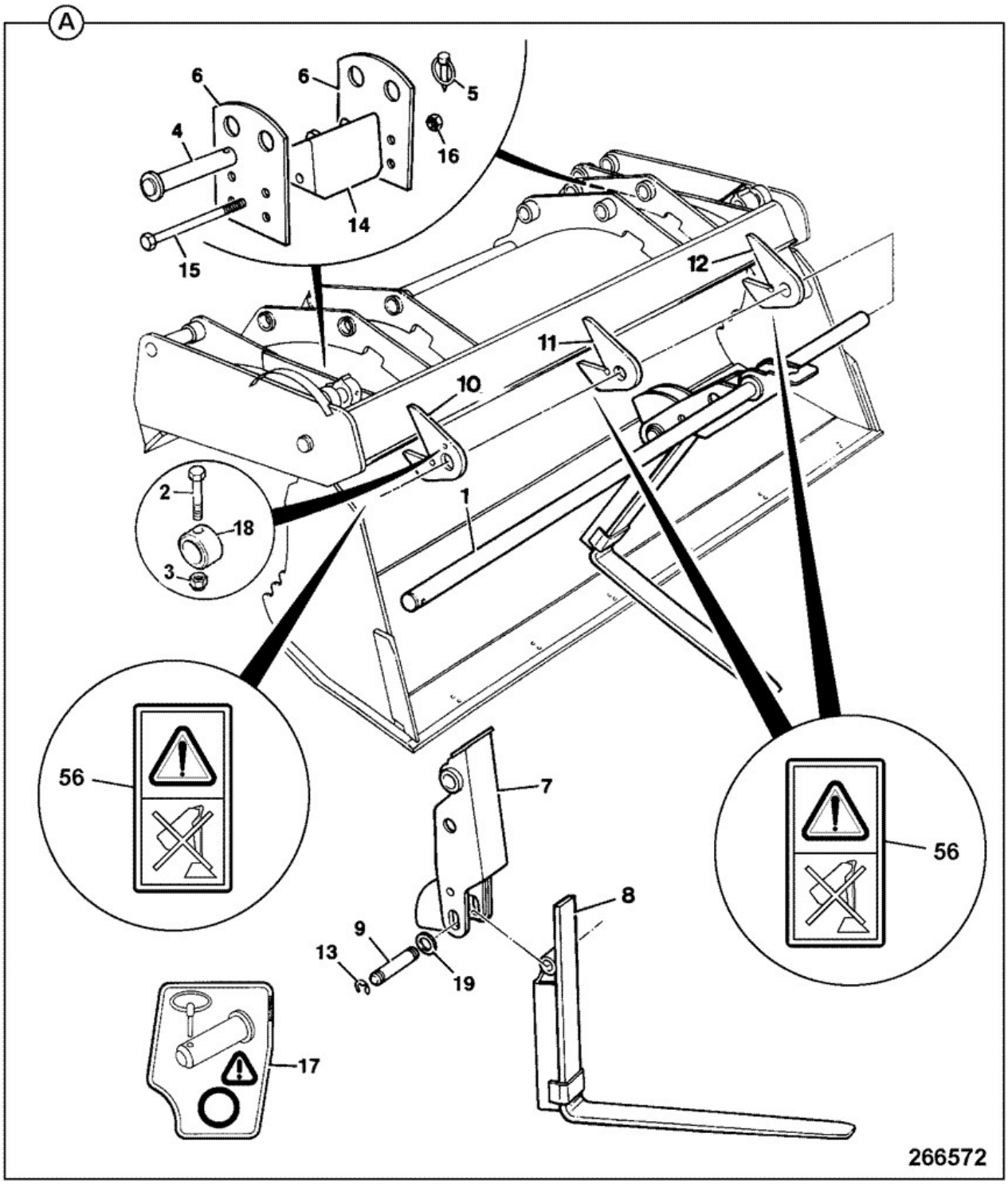

Elemento	Pieza Nº	Cambiar número	Descripción	Código de uso	CANT.

1	123/06667		Pasador pivot		1
2	1315/3416Z		Tornillo hex. head M10 x 70		2
3	1370/0303Z		Tuerca lock M10		1
4	123/00932		Pasador pivot		2
5	826/00600		Pasador linch		2
6	123/06279		Soporte fork retaining		4
7	125/00410		Soporte link arm		2
8	123/04827		Horquilla		2
9	811/70109		Pasador pivot		2
10	123/04293		Soporte fork rail support		1
11	123/04294		Soporte fork rail support		1
12	123/04293		Soporte fork rail support		1
13	821/00309		Clip 'E'		4
14	123/06296		Bloque rubber pad		2
15	1315/3424Z		Tornillo M10 x 140		2
16	1370/0303Z		Tuerca lock M10		2
17	817/04503		Rótulo		2
18	123/06668		Casquillo		2
19	823/00569	Superseded	Espaciador		4
19	332/C7128		Arandela 39x60x3.2mm		4
56	817/70144		Etiqueta no pull		3

Catálogo de productos \ CONSTRUCTION \ REST OF WORLD \ CONSTRUCTION / INDUSTRIAL \ BACKHOE LOADER 3CX,4CX,214,215,217 \ 3CX 00960000-00989999,01297000-01297999,01327000-01349999,01616000-01625999,01705500-01709999 84hp 9812/0010 \ A ACCESORIOS \ A03 ACCESORIOS

9812/0010 A3-1-6 HORQUILLA ELEV\, MNT\ PALA GP, 0

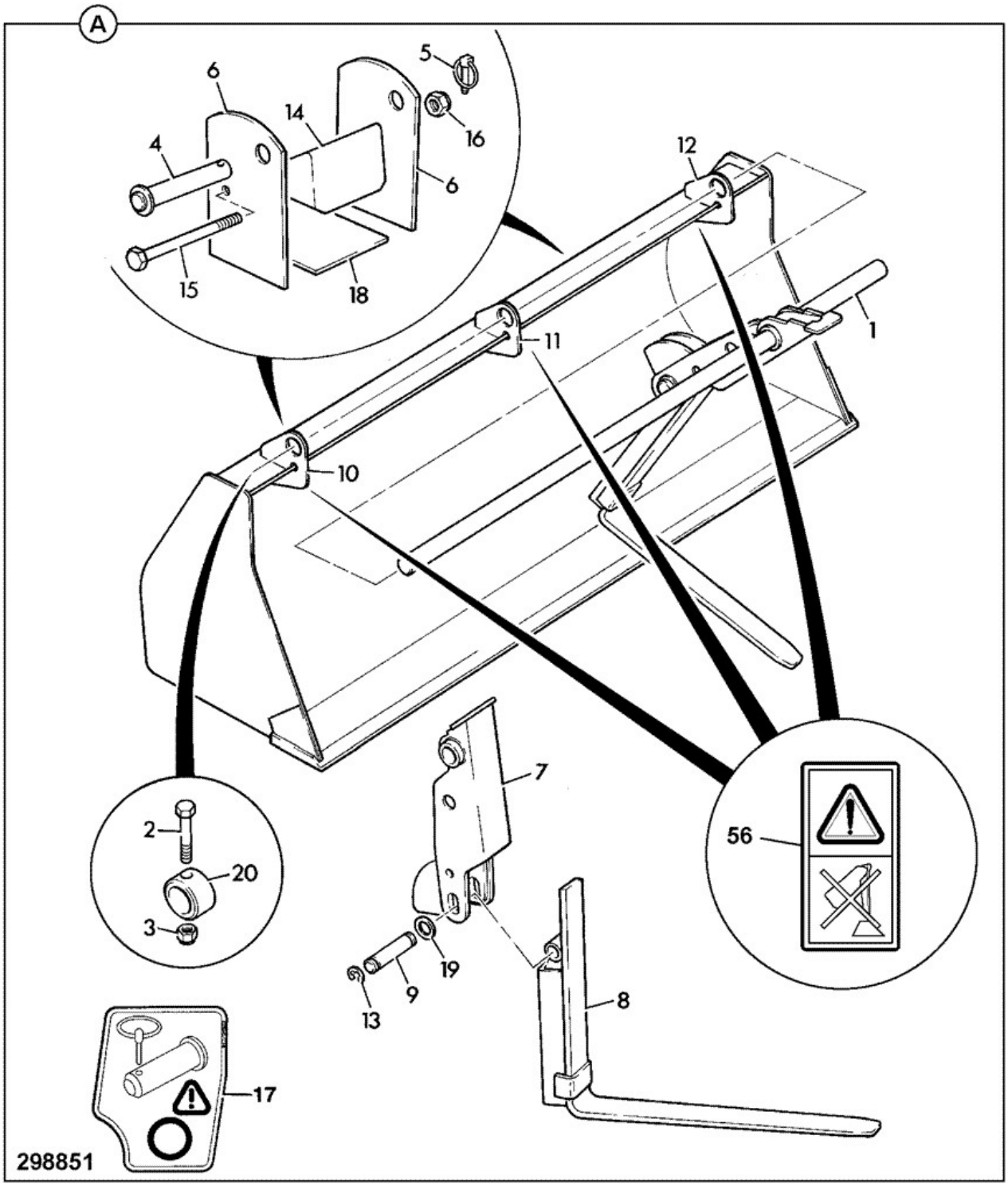

Elemento	Pieza Nº	Cambiar número	Descripción	Código de uso	CANT.
A	980/88474		Kit horquilla elev assembly, GP Shovel		1

A	980/A5839		Kit FORK KIT - GENERAL P	A	1
1	:123/06667		Pasador pivot		1
2	:1315/3416Z		Tornillo hex. head M10 x 70		2
3	:1370/0303Z		Tuerca lock M10		1
4	:123/00932		Pasador pivot		2
5	:826/00600		Pasador linch		2
6	:123/07129		Placa fork retaining		8
7	:125/00410		Soporte link arm		2
8	:123/04827		Horquilla		2
9	:811/70116		Pasador pivot		2
10	:123/07128		Placa fork rail		1
11	:123/07128		Placa fork rail		1
12	:123/07128		Placa fork rail		1
13	:821/00309		Clip 'E'		4
14	:123/06296		Bloque rubber pad		2
15	:1315/3424Z		Tornillo M10 x 140		2
16	:1370/0303Z		Tuerca lock M10		2
17	:817/04503		Rótulo		2
18	:123/07130		Placa		4
19	:823/00569	Superseded	Espaciador		4
19	:332/C7128		Arandela 39x60x3.2mm		4
20	:123/06668		Casquillo		2
21	:817/70144		Etiqueta no pull	A	3

9812/0010 A3-2-1 PROTECTOR, DIENTE, OPCIONAL, PALAS 2350MM (7'8,5") ANCHO

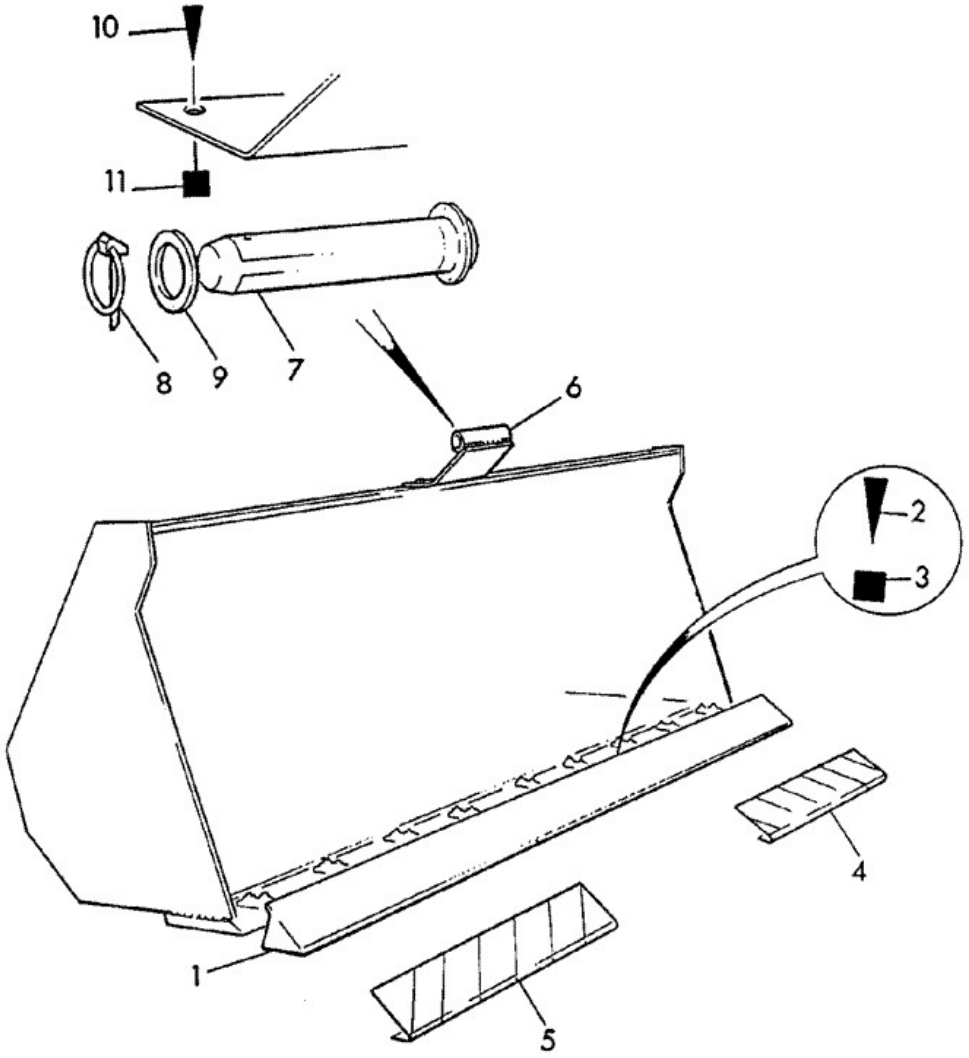

Elemento	Pieza Nº	Cambiar número	Descripción	Código de uso	CANT.

1	125/07900		Proteccion tooth 2350mm (7'8.5") wide		1
2	1305/0414Z		Tornillo		2
3	1340/0403Z		Tuerca *Welded to guard*		2
4	817/00054		Etiqueta outline sticker L.H.		1
5	817/00055		Etiqueta outline sticker R.H.		1
6	120/87300		Soporte		1
7	911/12400		Pasador pivot 306 long		1
8	826/00512		Pasador lynch		1
9	823/00470		Arandela		1
10	1305/0410Z		Tornillo 1/2" x 1.1/2" long		2
11	1340/0403Z		Tuerca		2

9812/0010 A3-2-3 PROTECTOR, DIENTE, OPCIONAL, PALAS 2253MM (7'4") ANCHO

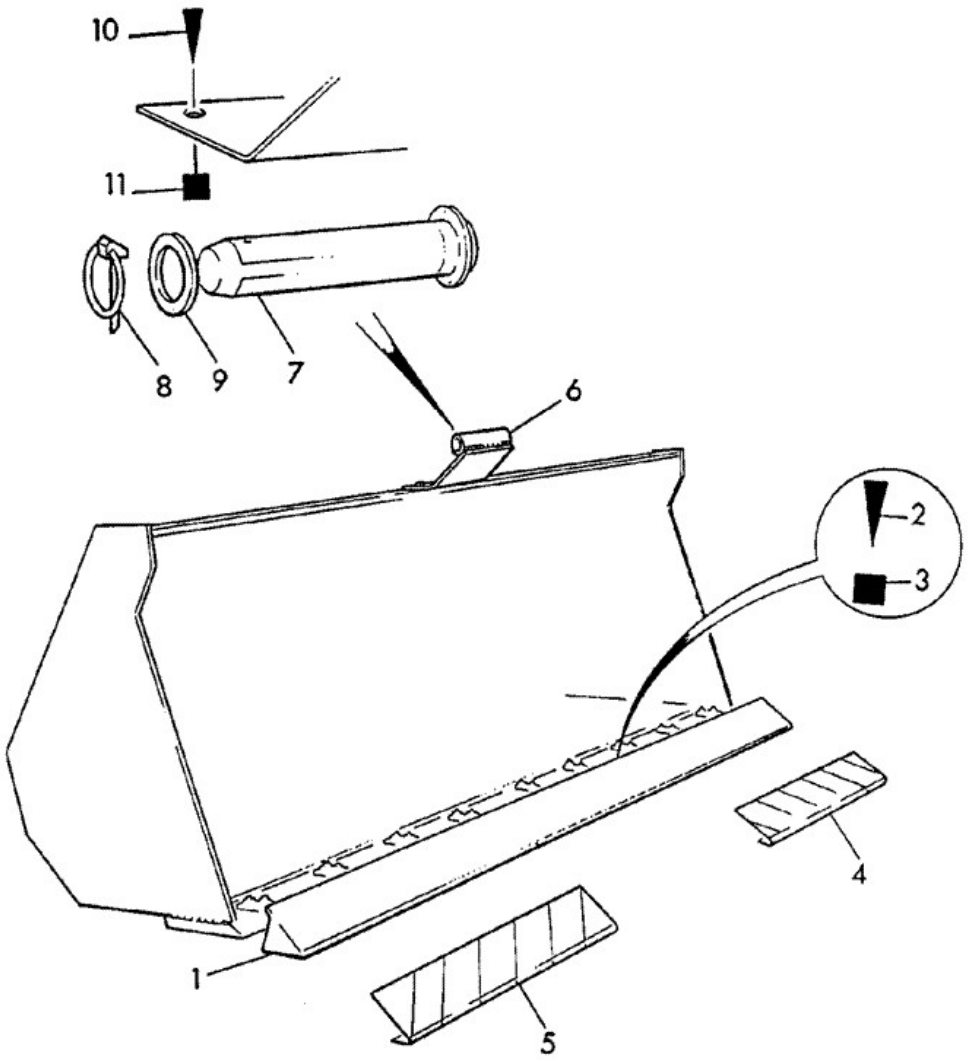

Elemento	Pieza Nº	Cambiar número	Descripción	Código de uso	CANT.

1	120/73800		Proteccion tooth		1
2	1305/0414Z		Tornillo		2
3	1340/0403Z		Tuerca *Welded to guard*		2
4	817/00054		Etiqueta outline sticker L.H.		1
5	817/00055		Etiqueta outline sticker R.H.		1
6	120/87300		Soporte		1
7	911/12400		Pasador pivot 306 long		1
8	826/00512		Pasador lynch		1
9	823/00470		Arandela		1
10	1305/0410Z		Tornillo 1/2" x 1.1/2" long		2
11	1340/0403Z		Tuerca		2

9812/0010 A3-3-1 MARTILLO, CONJUNTO, HAMMERMASTER 260 MK2, C/PLACAS LAT

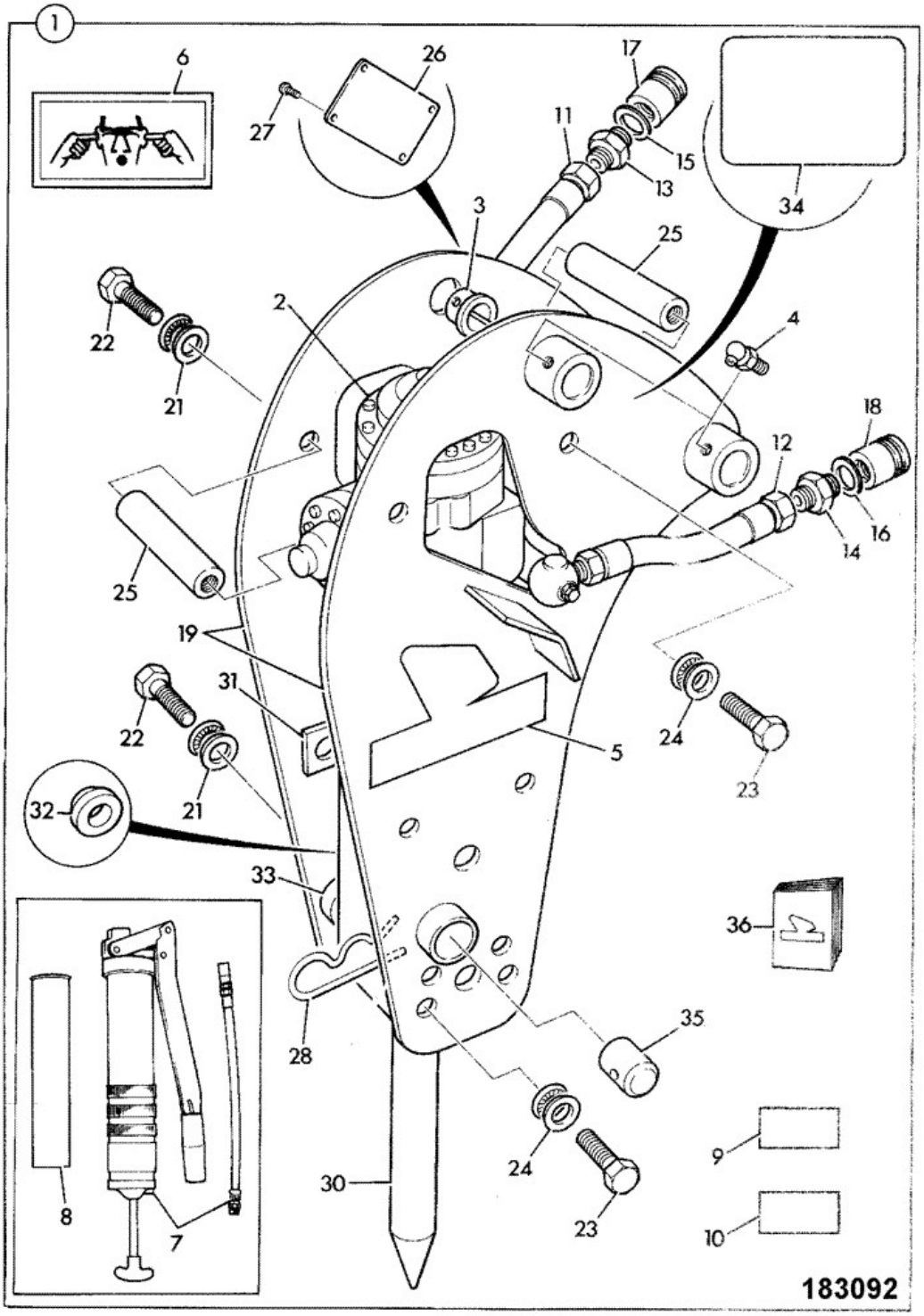

Elemento	Pieza Nº	Cambiar número	Descripción	Código de uso	CANT.

1	980/30100		Martillo hammermaster 260 MK2		1
2	:903/05600		Martillo hammermaster JCB260 *For components see frame A3-3-11*		1
3	:G65/0		Casquillo pivot		4
4	:1450/0001		Engrasador grease, straight 1/8 BSP		4
5	:993/30802		Rótulo hammermaster 260		2
6	:817/00592		Etiqueta		1
7	:992/11300		Herramienta grease gun		1
8	:4003/1109		Cartucho grease		1
9	:817/02727		Rótulo warning		1
10	:993/50003		Rótulo greasing		1
11	:607/00200		Manguito 1900mm		1
12	:607/00200		Manguito 1900mm		1
13	:1604/0006		Adaptador 3/4" BSP M/M		1
14	:1606/0012		Adaptador		1
15	:1406/0021		Junta bonded 3/4" BSP		1
16	:1406/0026		Arandela seal		1
17	:45/904400		Acoplamiento male 3/4"		1
18	:45/904600		Acoplamiento male 1" BSP quick release		1
19	:903/05621		Kit placas lado assembly left hand/right hand		1
21	:903/05622		Arandela lock		6
22	:903/05623		Tornillo		6
23	:903/05623		Tornillo		6
24	:903/05622		Arandela lock		6
25	:903/05624		Espaciador tube		2
26	:N.S.P.		Pieza no reparable		1
27	:N.S.P.		Pieza no reparable		4
28	:903/05408		Clip R		1
30	:903/03202		Herramienta chisel		1
30	:903/03201		Herramienta moil point		1
31	:903/05627		Espaciador		1
32	:980/00901		Espaciador		1
33	:903/05628		Casquillo fixing		1
34	:817/02837		Rótulo hammermaster 260 caution		1
35	:903/03248		Amortiguador		1
36	:9801/0170		Manual SMALL HAMER MANUAL. HM160 TO HM850		1
37	817/19810		Rótulo HM260		2

9812/0010 A3-3-11 MARTILLO, DETALLES, HAMMERMASTER 260 MK2, 0

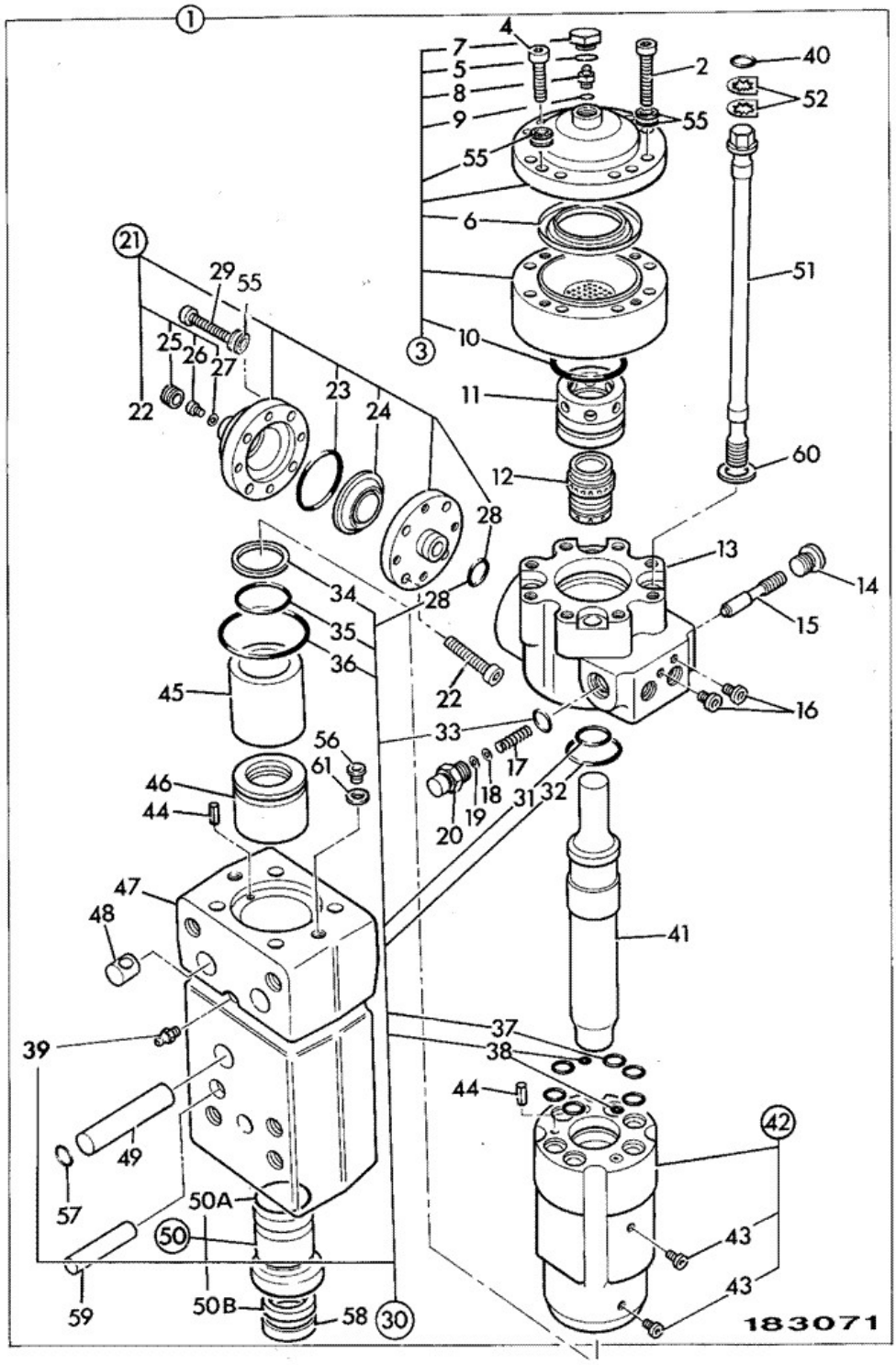

Elemento	Pieza Nº	Cambiar número	Descripción	Código de uso	CANT.

1	903/05600		Martillo hammermaster JCB260		1
2	:903/05617		Tornillo de cierre		8
3	:903/05601		Acumulador assembly low pressure		1
4	::903/05618		Tornillo de cierre		4
5	::903/04612		Junta tórica		1
6	::903/05631		Diafragma		1
7	::903/05450		Tapón		1
8	::903/03210		Tapón filler		1
9	::903/03211		Junta		1
10	::903/03212		Junta tórica		1
11	:903/05612		Tapa distributor		1
12	:903/05611		Distribuidor		1
13	:903/05603		Carcasa valve		1
14	:903/03216		Tapón		1
15	:903/03217		Carrete pressure adjusting		1
16	:903/04712		Tapón		2
17	:903/03219		Muelle		1
18	:903/04739		Suplemento 1.0mm		1
19	:903/03221		Suplemento 0.5mm		1
20	:903/03222		Tapa spring		1
21	:903/05602		Acumulador assembly high pressure		1
22	::903/05630		Tornillo de cierre		4
23	****		*Not required use only 903/05629.*		0
24	::903/05629		Diafragma		1
25	::903/05450		Tapón		1
26	::903/03210		Tapón filler		1
27	::903/03211		Junta		1
28	::903/03226		Junta tórica		1
29	:903/05618		Tornillo de cierre		4
30	:903/05632		Kit junta		1
31	::903/03228		Junta		1
32	::903/03229		Junta tórica		1
33	::903/05615		Junta		1
34	::903/03231		Junta		1
35	::903/03232		Junta wiper		1
36	::903/03233		Junta		1
37	::903/03234		Junta tórica		6
38	::903/03235		Junta tórica		2
39	::1450/0002		Engrasador grease, straight 1/4		1
40	::903/03226		Junta tórica		4
41	:903/05605		Pistón		1
42	:903/05604		Cilindro *HM260, HM260Q*		1
42	:983/10334		Cilindro HM260L & HM260LQ short stroke		1
43	::903/03238		Tapón		2
44	:903/04634		Pasador dowel		2
45	:903/05608		Anillo thrust		1
46	:903/05607		Casquillo upper tool		1
47	:903/05606		Cabeza front		1
48	:903/03243		Tuerca		4
49	:903/05609		Pasador retaining		1

50	:903/03254		Casquillo lower tool		1
50A	::903/05233		Junta tórica		1
50B	::903/05633		Junta wiper		1
51	:903/05610		Varilla tie		4
52	:903/03247		Placa lock		8
53	:903/05614		Tapón flange		1
54	:903/05616		Junta tórica		2
55	:903/03249		Arandela lock		24
56	:903/05614	<H260650	Tapón flange		1
56	903/04737		Tapón		1
57	:903/05616		Junta tórica		2
58	:903/05619		Tapón dust		1
59	:903/05154		Pasador split 100 x 21mm *from 04/2001*		2
59	:903/04642		Pasador locking 40 x 21mm		2
60	:903/05620		Arandela		4
61	:903/04735		Arandela lock		1
62	:903/03218	<H260650	Tapón		1
62	:903/05056		Tapón		1

9812/0010 A3-4-1 GRÚA, MONTADO HORQ, 0

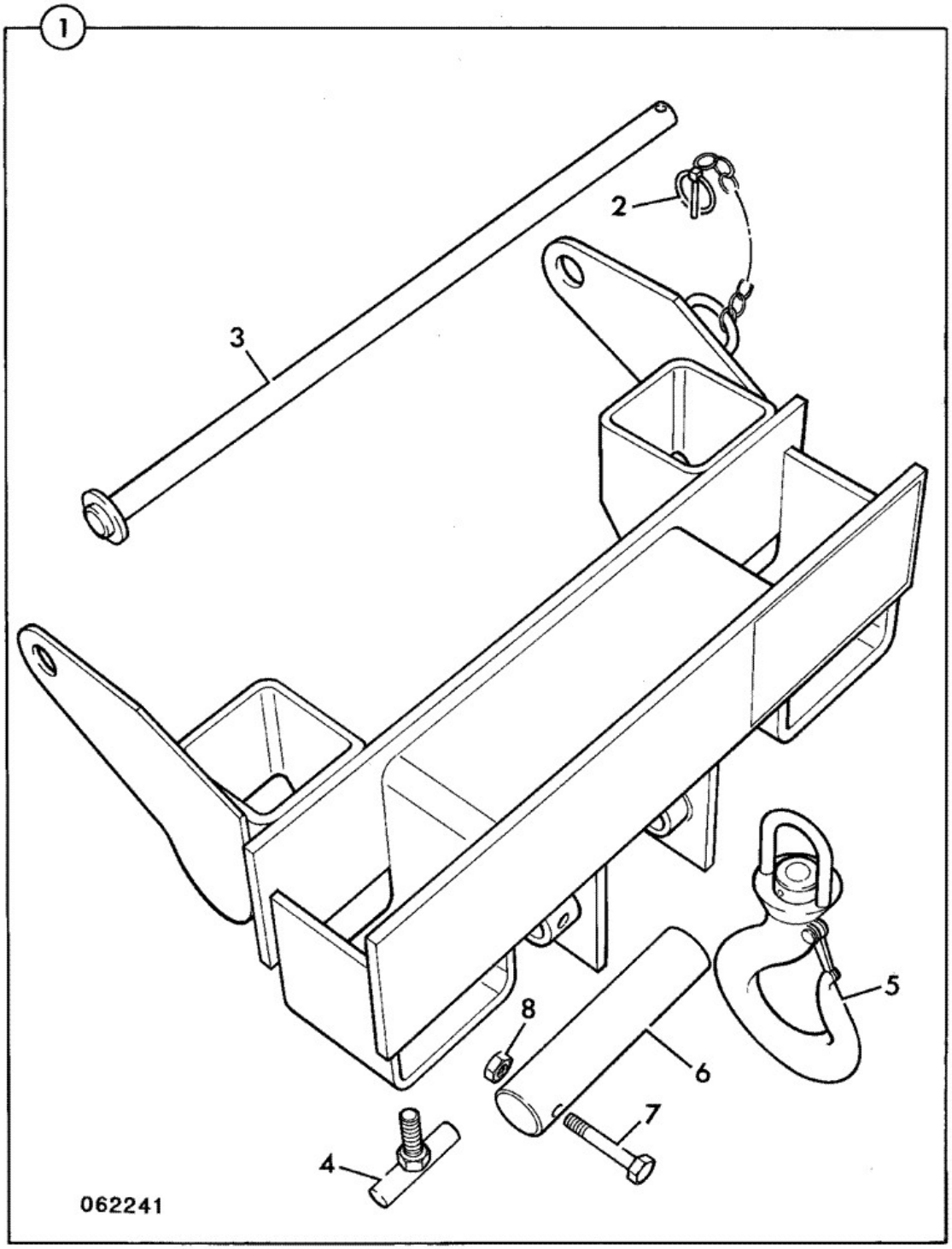

Elemento	Pieza Nº	Cambiar número	Descripción	Código de uso	CANT.
1	126/01539		Accesorio crane hook assembly fork mounted		1

2	:114/17600		Pasador Lynch with chain		1
3	:547/50400		Pasador lock		1
4	:547/50100		Tornillo handle		2
5	:918/00200		Gancho Swivel		1
6	:1019/2023		Pasador pivot		1
7	:1305/3222Z		Tornillo 3/8"UNF x 3"		1
8	:1340/0204Z		Tuerca philidas thin		1

9812/0010 A3-6-2 ENGANCHE RÁPIDO, ACCESORIO, CARGADORA, 0

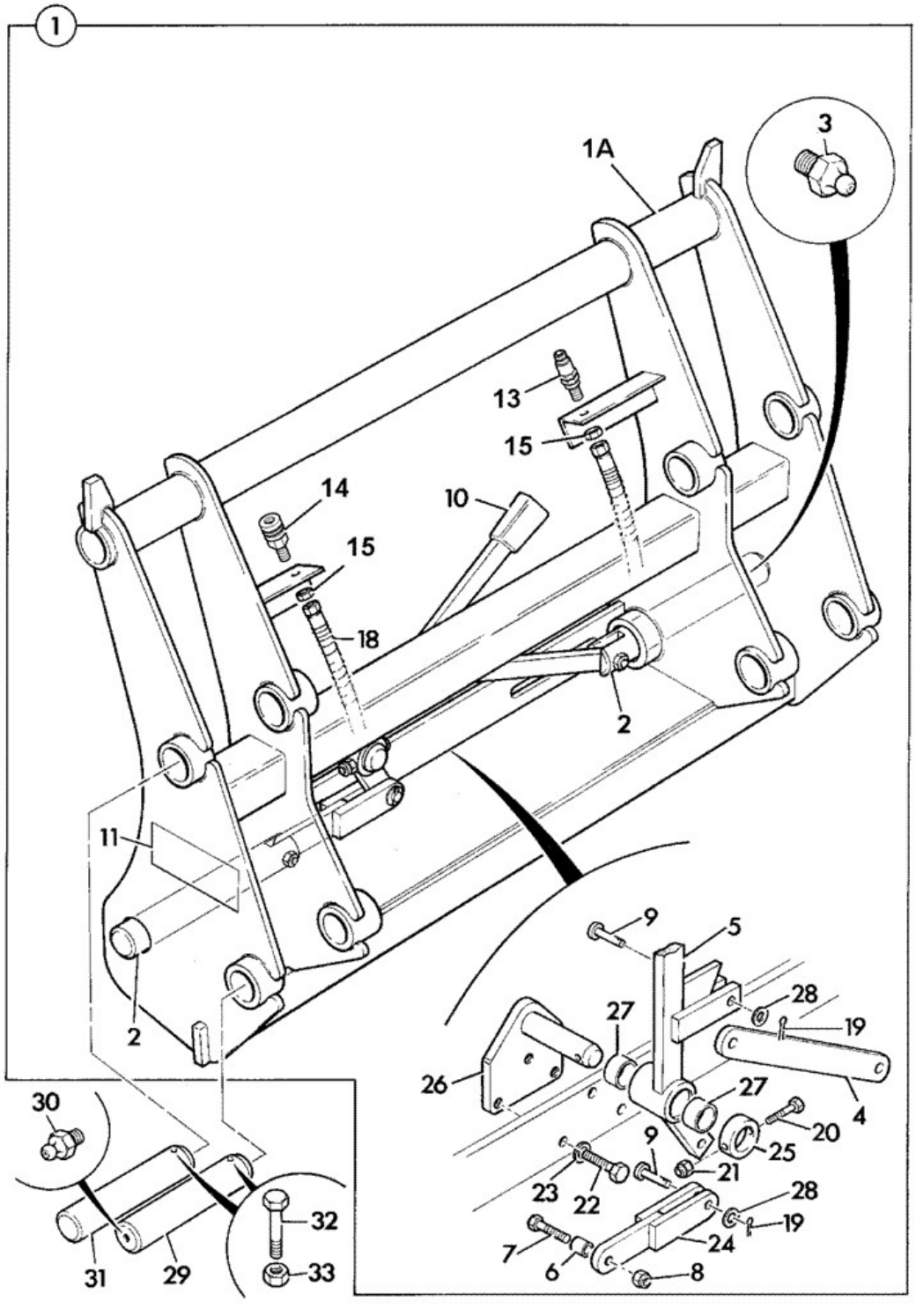

Elemento	Pieza Nº	Cambiar número	Descripción	Código de uso	CANT.

1	980/89487		assembly mechanical		1
1A	:N.S.P.		Pieza no reparable		1
2	:980/11401		Pasador pivot		2
3	:1450/0001A		Engrasador grease		2
4	:980/84223		Eslabón LONG		1
5	:980/86033		Mango		1
6	:980/82200		Espaciador 22mm long		2
7	:1315/3419Z		Tornillo M10x90mm		2
8	:1370/0303Z		Tuerca lock M10		2
9	:980/84225		Pasador		3
10	:123/01256		Mango grip		1
11	****		Pieza no reparable		1
13	:45/920067		Acoplamiento 3/8"BSP male quick release		1
14	:45/920066		Acoplamiento 3/8"BSP female quick release		1
14	:835/10082		Tapa flip top protection to fit 3/8 female *to fit 45/920066*		1
15	:1356/0203Z		Tuerca backing		2
18	:612/07600		Manguito high pressure, 3/8" L=610		2
19	:2103/0709		Pasador split		2
20	:1315/3213Z		Tornillo M6x55		1
21	:1370/0103Z		Tuerca Self lock M6		1
22	:1315/0507Z		Tornillo		3
23	:1425/0009Z		Arandela Spring M12		3
24	:980/86035		Eslabón short		1
25	:980/84224		Saliente		1
26	:980/86034		Soporte		1
27	:980/11402		Casquillo		1
28	:1420/0008Z		Arandela Plain M10		2
29	811/80001		Pasador pivot		2
30	1450/0001		Engrasador grease, straight 1/8 BSP		2
31	811/80009		Pasador pivot		2
32	1305/3222Z		Tornillo 3/8"UNF x 3"		4
33	1340/0203Z		Tuerca		4

9812/0010 A3-6-6 PORTAHERRAMIENTA, ENG\ RÁP\ HIDR\, INDUSTRIAL, PORTAHERRAMIENTA

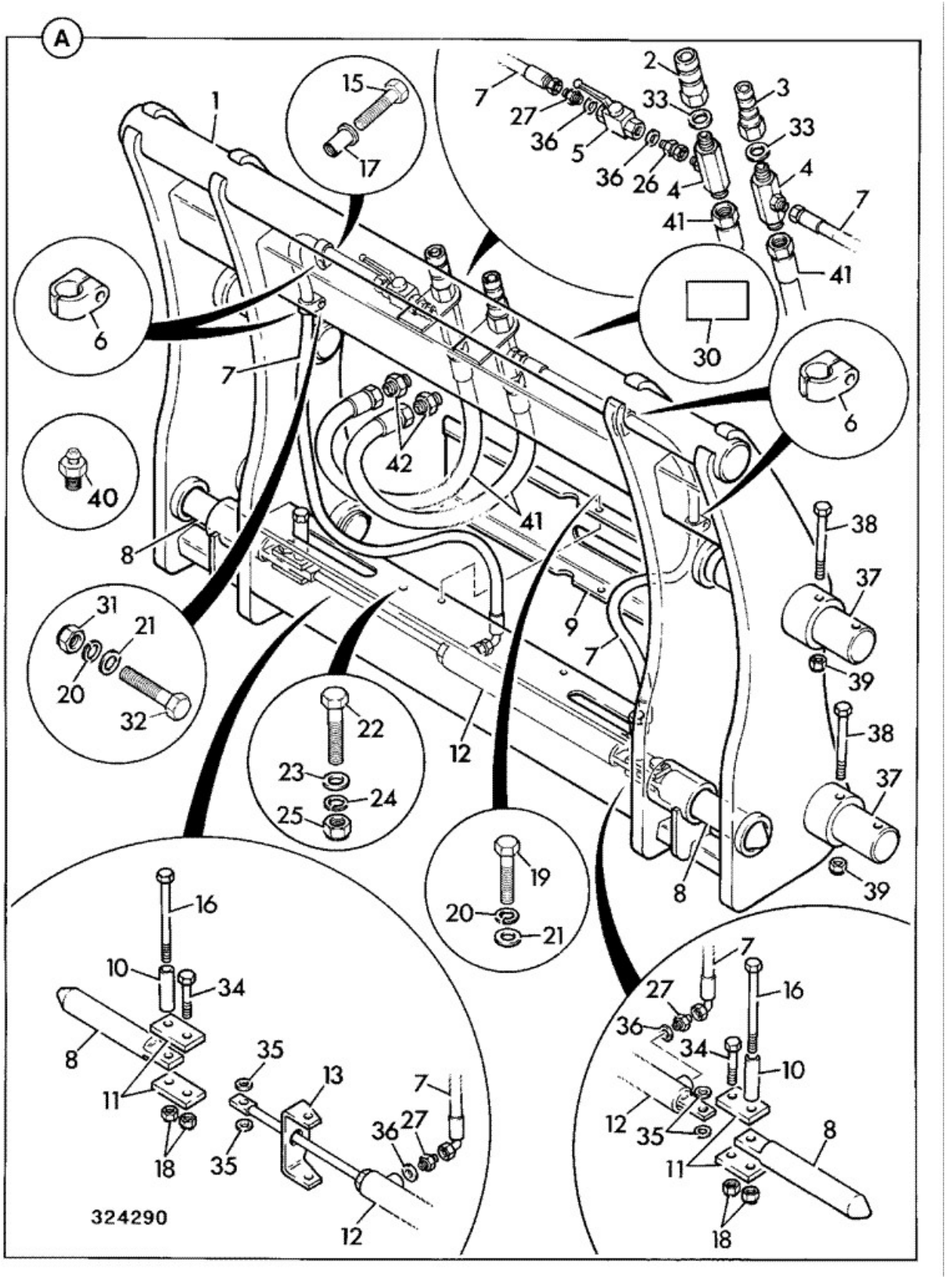

Elemento	Pieza Nº	Cambiar número	Descripción	Código de uso	CANT.
A	126/03060		Bastidor tool carrier quickhitch assembly		1
1	:125/00472		Bastidor carrier		1
2	:45/920049		Acoplamiento female 3/4"UNF		1
3	:45/920050		Acoplamiento quick release,male 3/4"UNF		1
4	:816/90672		Adaptador Tee M/M/M		2

5	:25/961900		Válvula ball		1
6	:123/07848		Abrazadera		4
7	:611/24100		Manguito 1/4"BSP x 820mm		2
8	:125/00475		Pasador locking		2
9	:123/07749		Placa cover		1
10	:123/07830		Espaciador		2
11	:123/10814		Eslabón ram		4
12	:531/96700		Pistón complete (1/4 BSP ports)		1
13	:123/07748		Guía ram		1
14	:835/10082		Tapa flip top protection to fit 3/8 female		1
15	:1315/0205Z		Tornillo		2
16	:1315/3422Z		Tornillo M10 x 120		2
17	:826/01101		Tuerca rivet,M6 open ended for 3 to 5.5mm plt		1
18	:1370/0303Z		Tuerca lock M10		2
19	:1315/0203Z		Tornillo M6x16		4
20	:1425/0006Z		Arandela Spring		8
21	:1420/0006Z		Arandela M6		8
22	:1315/0311Z		Tornillo		2
23	:1425/0007Z		Arandela spring		2
24	:1420/0007Z		Arandela plain M8		2
25	:1370/0203Z		Tuerca self lock M8		2
26	:1612/0002		Adaptador		1
27	:1604/0002		Adaptador 1/4" BSP M/M		3
28	:835/10109		Tapa Plastic protection		1
30	:817/05299		Rótulo saftey tool carrier		1
31	:1370/0103Z		Tuerca Self lock M6		2
32	:1315/0212Z		Tornillo M6 x 50		2
33	2401/0506		Junta tórica *supplied with adapters*		2
34	:1315/3414Z		Tornillo M10x60		2
35	:823/00171		Espaciador		4
36	:1406/0011		Junta bonded		3
37	811/90470		Pasador pivot, 44.45x244mm black		4
38	1305/3222Z		Tornillo 3/8"UNF x 3"		4
39	1340/0203Z		Tuerca		4
40	1450/0001		Engrasador grease, straight 1/8 BSP		4
41	612/80156		Manguito 3/8 BSP 800mm		2
42	816/20064		Adaptador		4

9812/0010 A3-6-7 TOOL CARRIER, HYDRAULIC QUICKHITCH, INDUSTRIAL, TOOL CARRIER

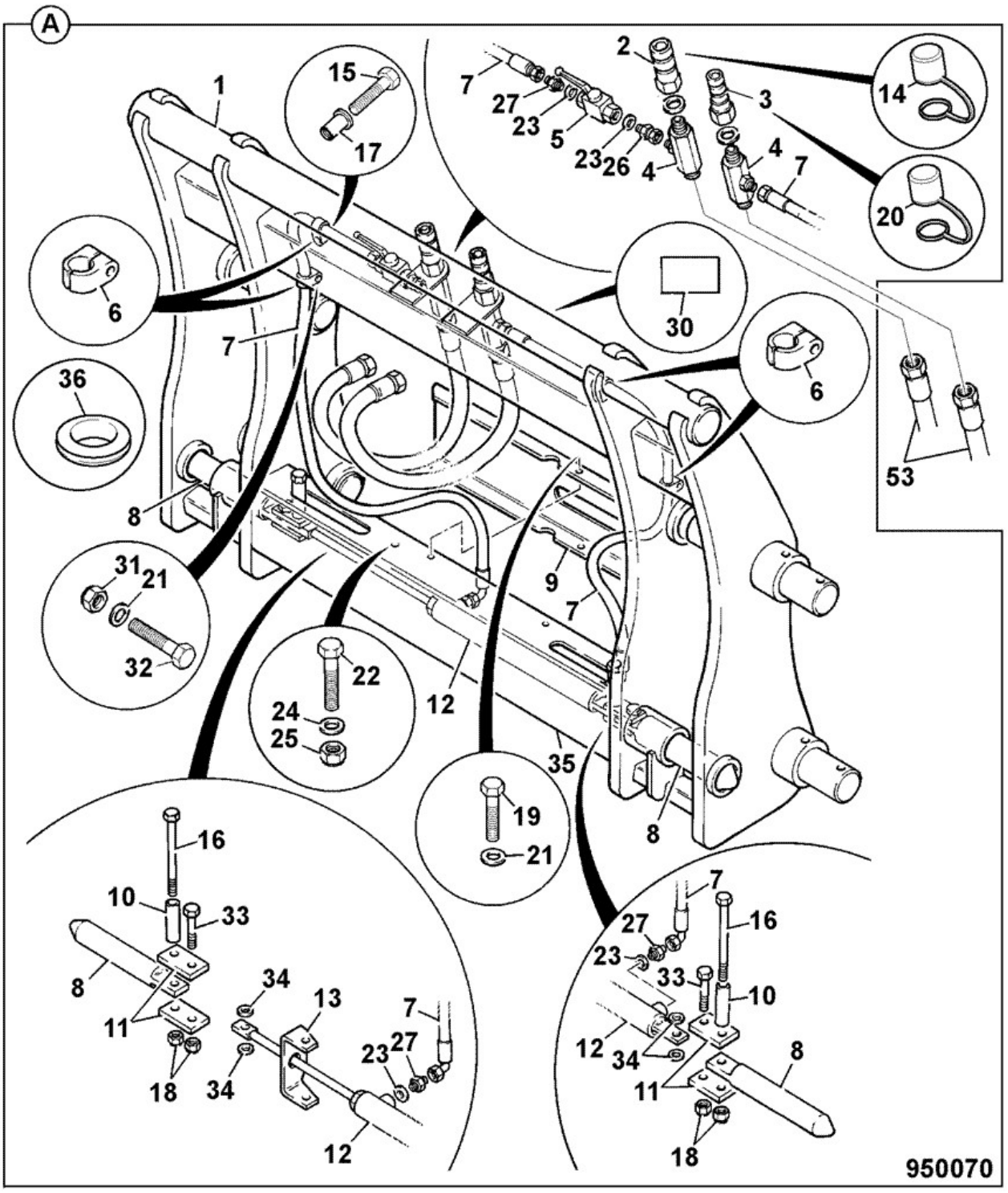

Elemento	Pieza Nº	Cambiar número	Descripción	Código de uso	CANT.

A	128/C0346		Enganche rápido tool carrier assembly		1
1	:128/C0347		Bastidor toolcarrier		1
2	:45/920049		Acoplamiento female 3/4"UNF		1
3	:45/920050		Acoplamiento quick release,male 3/4"UNF		1
4	:816/90672		Adaptador Tee M/M/M		2
5	:25/961900		Válvula ball		1
6	:123/07848		Abrazadera		4
7	:332/E6611	<M1620100	Manguito 1/4BSP x 1430		2
7	:332/G2561	>M1620101	MANGUERA 1/4 BSP x 1430mm		2
8	:125/00475		Pasador locking		2
9	:128/C0383		Tapa top		1
10	:332/E4505		Indicador vertical		2
11	:123/10814		Eslabón ram		4
12	:531/96700		Pistón complete (1/4 BSP ports)		1
13	:123/07748		Guía ram		1
14	:835/10082		Tapa flip top protection to fit 3/8 female		1
15	:1315/0209Z		Tornillo M6 x 35		2
16	:511/54702		Pasador indicator nylon		2
17	:826/01101		Tuerca rivet,M6 open ended for 3 to 5.5mm plt		2
18	:1370/0303Z		Tuerca lock M10		2
19	:1315/0205Z		Tornillo		8
20	:980/67301		Tapa coupling cap to fit 1/2 male		1
21	:1420/0006Z		Arandela M6		14
22	:1315/0308Z		Tornillo M8x30		2
23	:1406/0011		Junta bonded		4
24	:1420/0007Z		Arandela plain M8		4
25	:1370/0203Z		Tuerca self lock M8		2
26	:1612/2050		Adaptador		1
27	:1604/2051		Adaptor		3
30	:817/05299		Rótulo saftey tool carrier		1
31	:1370/0103Z		Tuerca Self lock M6		2
32	:1315/3213Z		Tornillo M6x55		2
33	:1315/3413Z		Tornillo M10 x 55		2
34	:823/00171		Espaciador		4
35	:128/C0384		Tapa rear		1
36	:2410/0109		Aro de refuerzo		2
53	332/E6946		Manguito 3/8BSPx685 *from tee to aux pipes not part of 128/C0346*		2

Catálogo de productos \ CONSTRUCTION \ REST OF WORLD \ CONSTRUCTION / INDUSTRIAL \ BACKHOE LOADER 3CX,4CX,214,215,217 \ 3CX 00960000-00989999,01297000-01297999,01327000-01349999,01616000-01625999,01705500-01709999 84hp 9812/0010 \ A ACCESORIOS \ A03 ACCESORIOS

9812/0010 A3-6-8 ENGANCHE RÁPIDO, INDUSTRIAL, HIDR, 0

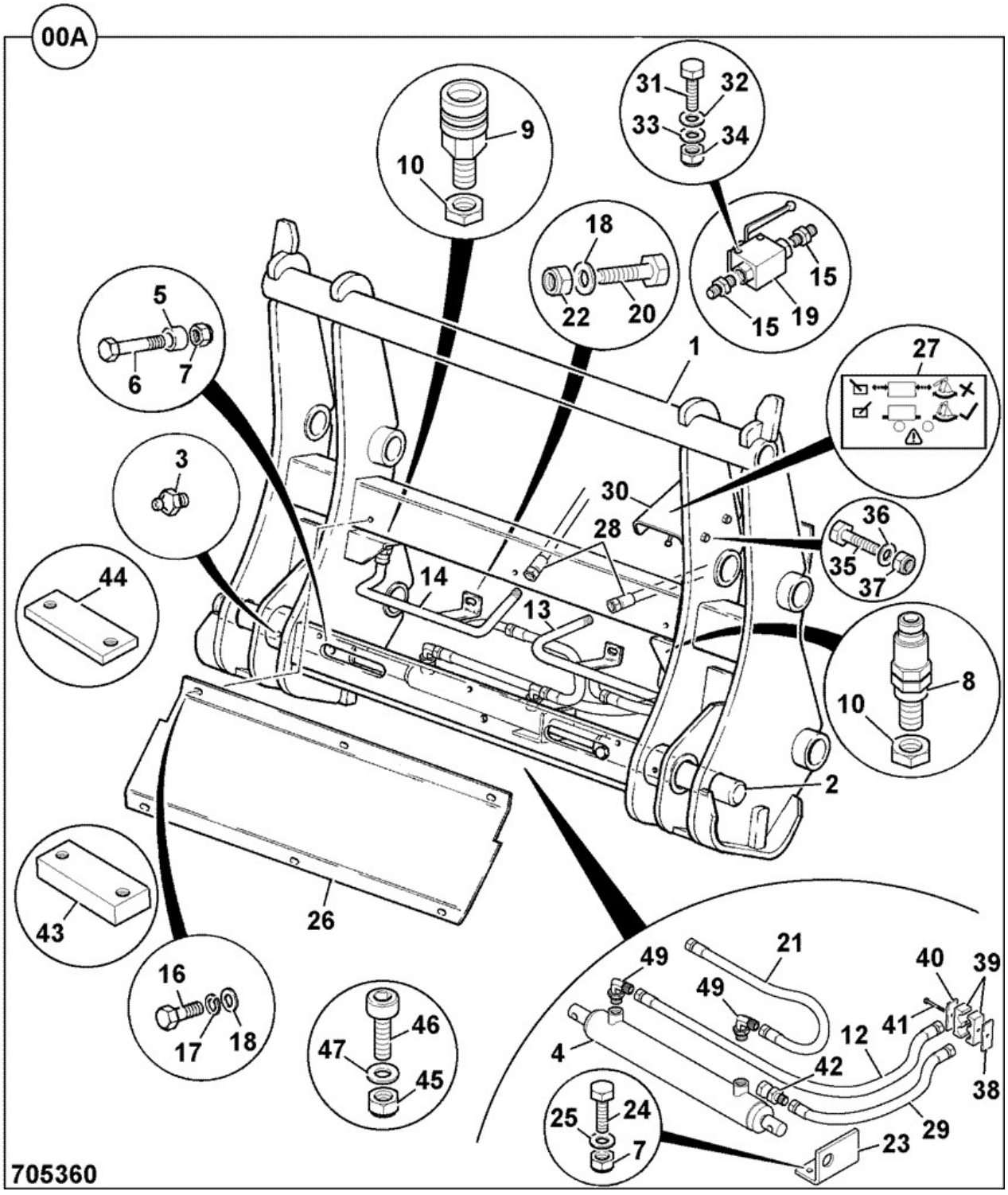

Elemento	Pieza Nº	Cambiar número	Descripción	Código de uso	CANT.

A	980/89488		Bastidor Quickhitch assembly Hydraulic		1
1	:335/02951		Bastidor WA,quickhitch		1
2	:980/11401		Pasador pivot		2
3	:1450/0001A		Engrasador grease		2
4	:903/20459		Pistón complete,quickhitch (7/16"UNF ports)		1
5	:980/82200		Espaciador 22mm long		2
6	:1315/3419Z		Tornillo M10x90mm		2
7	:1370/0303Z		Tuerca lock M10		2
8	:45/920067		Acoplamiento 3/8"BSP male quick release		1
9	:45/920066		Acoplamiento 3/8"BSP female quick release		1
9	:835/10082		Tapa flip top protection to fit 3/8 female *to fit 45/920066*		1
10	:1356/0203Z		Tuerca backing		2
12	:611/00200		Manguito		1
13	:335/04877		Tubería left hand,aux.feed		1
14	:335/04878		Tubería right hand,aux.feed		1
15	:JHJ0149		Adaptador		2
16	:1315/0203Z		Tornillo M6x16		8
17	:1425/0006Z		Arandela Spring		8
18	:1411/0001Z		Arandela		12
19	:25/220995		Válvula ball		1
20	:1315/0205Z		Tornillo		2
21	:611/02600		Manguito		1
22	:1370/0103Z		Tuerca Self lock M6		2
23	:335/04949		Placa stop		1
24	:1315/0410Z		Tornillo M10 x 40		2
25	:1420/0008Z		Arandela Plain M10		4
26	:331/25075		Placa front cover,qckhitch		1
27	:817/17512		Rótulo saftey q hitch ball valve		1
28	:612/00800		Manguito		2
29	:611/02000		Manguito 1/4"BSP x 650mm		1
30	:331/24479		Placa ball valve mounting		1
31	:1315/0111Z		Tornillo		2
32	:1425/0005Z		Arandela spring M5		2
33	:1420/0005Z		Arandela M5		4
34	:1370/0003Z		Tuerca lock M5		2
35	:1315/0309Z		Tornillo fijación M8x35		2
36	:1420/0007Z		Arandela plain M8		2
37	:1370/0203Z		Tuerca self lock M8		2
38	:821/00235		Base M8 30mm x 55mm		1
39	:821/00234		Abrazadera 16mm/16mm holes 26mm high		2
40	:821/00335		Tapa		1
41	:1315/3309Z		Tornillo M8 x 35mm		1
42	:816/20068		Limitador		1
43	:123/03326		Placa shovel stop 12mm *Supplied loose*		2
44	:331/30323		Tope shovel, 25mm quickhitch *Supplied loose*		2
45	:826/01249		Tuerca rivet M10 open end for 6 to 8.5mm plate *Fit to loader arm*		4
46	:1391/3411Z		Tornillo de cierre		4
47	:1425/0008Z		Arandela Spring M10 *no longer fitted*		4

49	:816/13357		Adaptador elbow		2

9812/0010 A3-6-17 QUICKHITCH, LOCK PINS,COMPATIBLE, WITH 128/10679 & 128/10778 ONLY

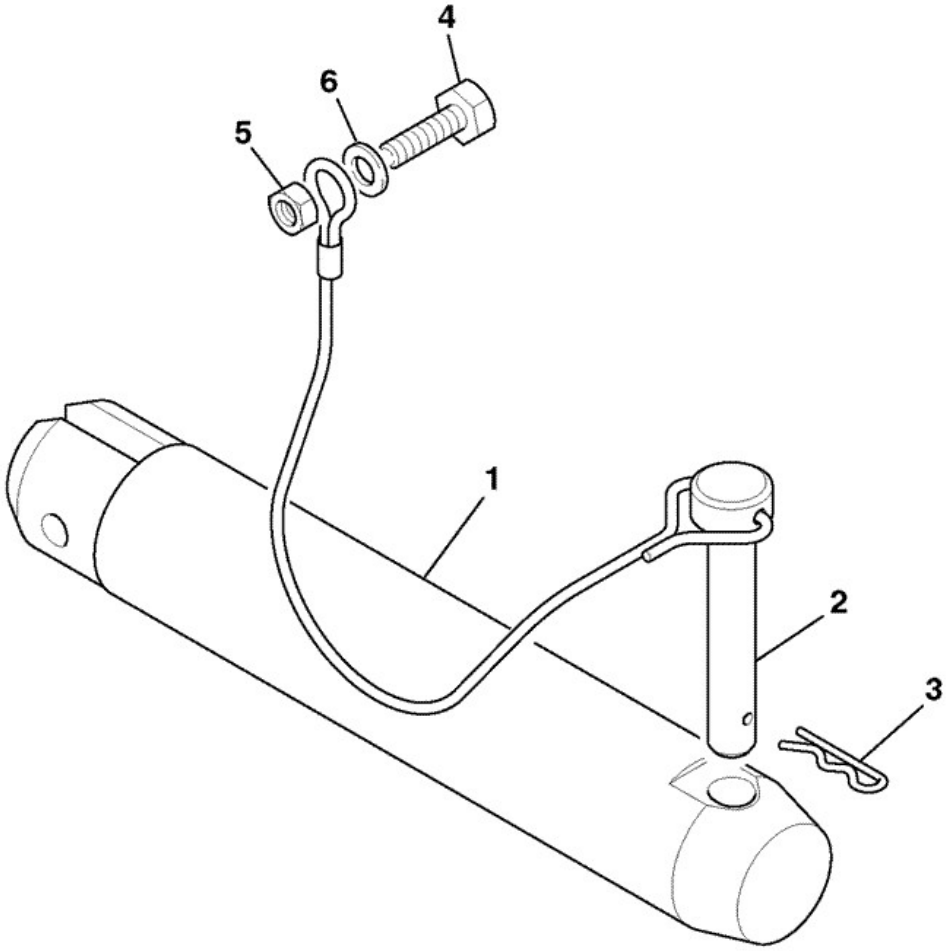

738410

Elemento	Pieza Nº	Cambiar número	Descripción	Código de uso	CANT.

1	811/90529		Pasador locking		2
2	128/14575		Pasador retaining, with cable		2
3	826/00479		Clip 'R'		2
4	1315/0409Z		M10 X 35		2
5	1370/0303Z		Tuerca lock M10		2
6	1420/0008Z		Arandela Plain M10		2

Catálogo de productos \ CONSTRUCTION \ REST OF WORLD \ CONSTRUCTION / INDUSTRIAL \ BACKHOE LOADER 3CX,4CX,214,215,217 \ 3CX 00960000-00989999,01297000-01297999,01327000-01349999,01616000-01625999,01705500-01709999 84hp 9812/0010 \ A ACCESORIOS \ A03 ACCESORIOS

9812/0010 A3-6-20 ENGANCHE RÁPIDO, CARGADORA, ELEC/HIDR INCL\ HORQ

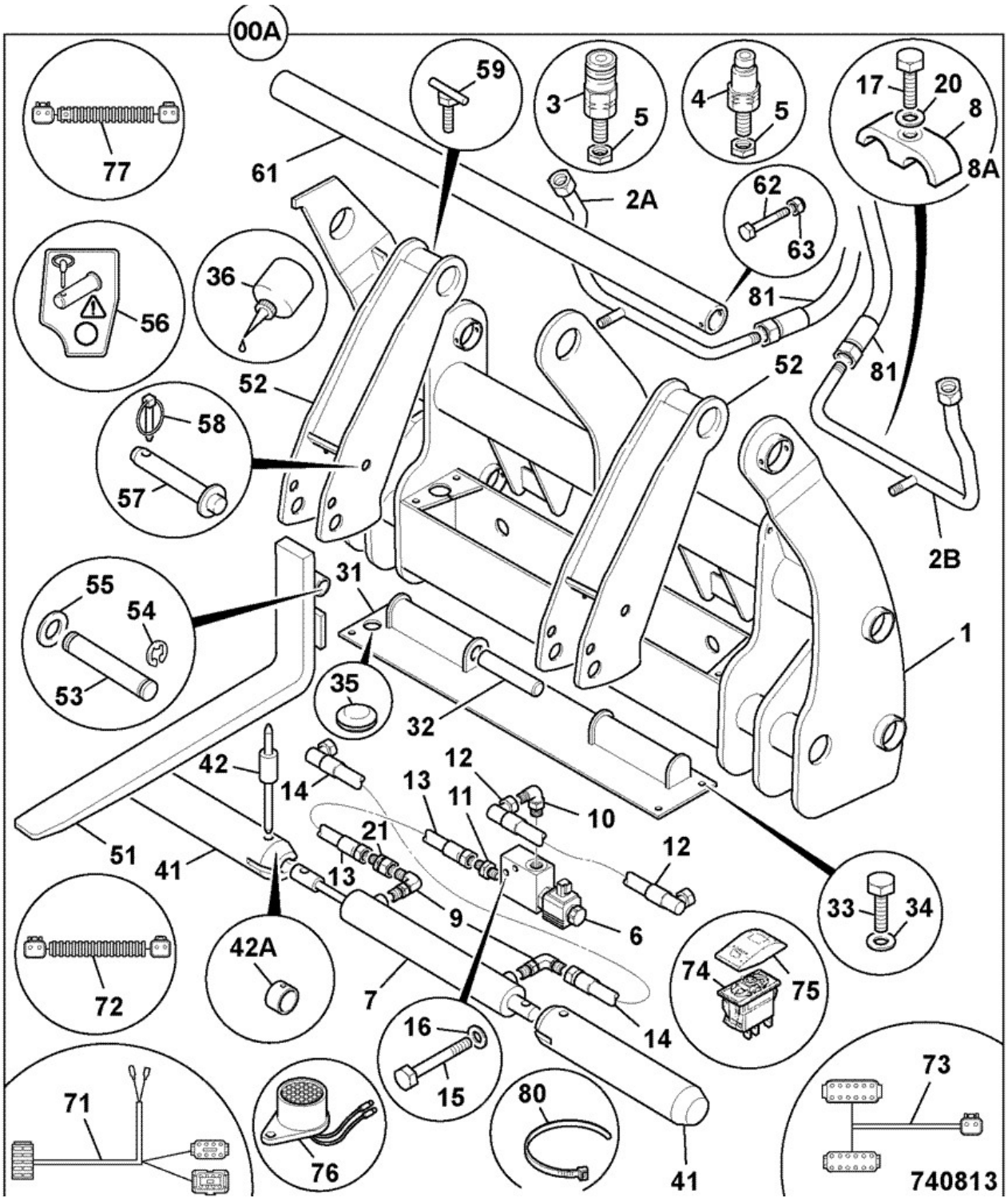

Elemento	Pieza Nº	Cambiar número	Descripción	Código de uso	CANT.

A	128/14292		Enganche rápido loader, hydraulic c/w forks	Std	1
A	128/14680		Enganche rápido loader, hydraulic C/W forks,Asia Pacif	Asia/Pacif	1
1	:335/06624		Bastidor quickhitch	Std	1
1	331/45475		Bastidor quickhitch, loader Asia Pacific	Asia/Pacif	1
2A	:335/06774		Tubería assembly, auxiliary R.H.		1
2B	:335/06773		Tubería assembly, auxiliary L.H.		1
3	:45/920066		Acoplamiento 3/8"BSP female quick release		1
4	:45/920067		Acoplamiento 3/8"BSP male quick release		1
5	:1356/0203Z		Tuerca backing		2
6	:25/221953		Válvula solenoid		1
7	:903/20459		Pistón complete,quickhitch (7/16"UNF ports)		1
8	:331/46827		Abrazadera pipe		2
8A	:829/30653		Espaciador		2
9	:816/90459		Adaptador elbow 7/16SAE x 1/4BSP		2
10	:816/90618		Adaptador elbow 1/4BSP x 9/16SAE		1
11	:1620/2051		Adaptor 1/4"BSP x 9/16"SAE		1
12	:611/45200		Manguito 1/4"BSP x 230mm		1
13	:611/05100		Manguito 1/4" 575mm long		1
14	:611/21800		Manguito		1
15	:1315/0212Z		Tornillo M6 x 50		2
16	:1420/0006Z		Arandela M6		2
17	:1315/0310Z		Tornillo M8x40		2
20	:1420/0007Z		Arandela plain M8		2
21	:816/90195		Limitador adapter,1.2mm M/F		1
21A	1417/0016Z		Arandela		2
31	:335/06487		Tapa plate		1
32	:511/54702		Pasador indicator nylon		2
33	:1315/0307Z		Tornillo Hexagon M8 X 25		4
34	:1420/0007Z		Arandela plain M8		4
35	:2410/1313		Aro de refuerzo blind, approx 40mm		1
36	:4102/0900		Sellador		0
41	:811/90504		Pasador pivot *See A3-6-17 for locking pins*		2
42	:331/47206		Indicador peg		2
42A	:829/31177		Espaciador indicator peg		2
51	:331/14472		Horquilla quickhitch loader		2
52	:331/14569		Soporte fork loader quickhitch		2
53	:811/70116		Pasador pivot		2
54	:821/00309		Clip 'E'		2
55	:823/00569	Superseded	Espaciador		4
55	:332/C7128		Arandela 39x60x3.2mm		4
56	:817/04503		Rótulo		2
57	:123/00932		Pasador pivot		2
58	:826/00600		Pasador linch		2
59	:545/21338		Mango locking (Metric)		2
61	:830/10420		Tubo quickhitch pick up loader		1
62	:1315/3419Z		Tornillo M10x90mm		1
63	:1370/0303Z		Tuerca lock M10		1
71	:721/11703	<M1616606	Cableado quickhitch		1
71	332/E9956	>M1616607	Cableado quickhitch		1
72	:721/11702		Cableado quickhitch link 4500mm long		1

73	:721/11704		Cableado quickhitch solenoid		1
74	:701/60008		Interruptor 12V		1
75	:701/58834		Tapa indicators switch decal		1
76	:704/26400		Alarma pulse buzzer		1
77	:721/11916		Cableado link,400mm long *Replaces 721/11361 (1200mm long)*		1
80	:204/07007		Abrazadera cable - 100mm Long		25
81	612/04900	<M TBA	Manguito 3/8BSPx405mm *use 332/F9671*		2
81	332/F9671		MANGUERA 3/8BSPx405 armoured		2

Catálogo de productos \ CONSTRUCTION \ REST OF WORLD \ CONSTRUCTION / INDUSTRIAL \ BACKHOE LOADER 3CX,4CX,214,215,217 \ 3CX 00960000-00989999,01297000-01297999,01327000-01349999,01616000-01625999,01705500-01709999 84hp 9812/0010 \ A ACCESORIOS \ A03 ACCESORIOS

9812/0010 A3-6-21 ENGANCHE RÁPIDO, CARGADORA, ELEC/HIDR INCL\ HORQ

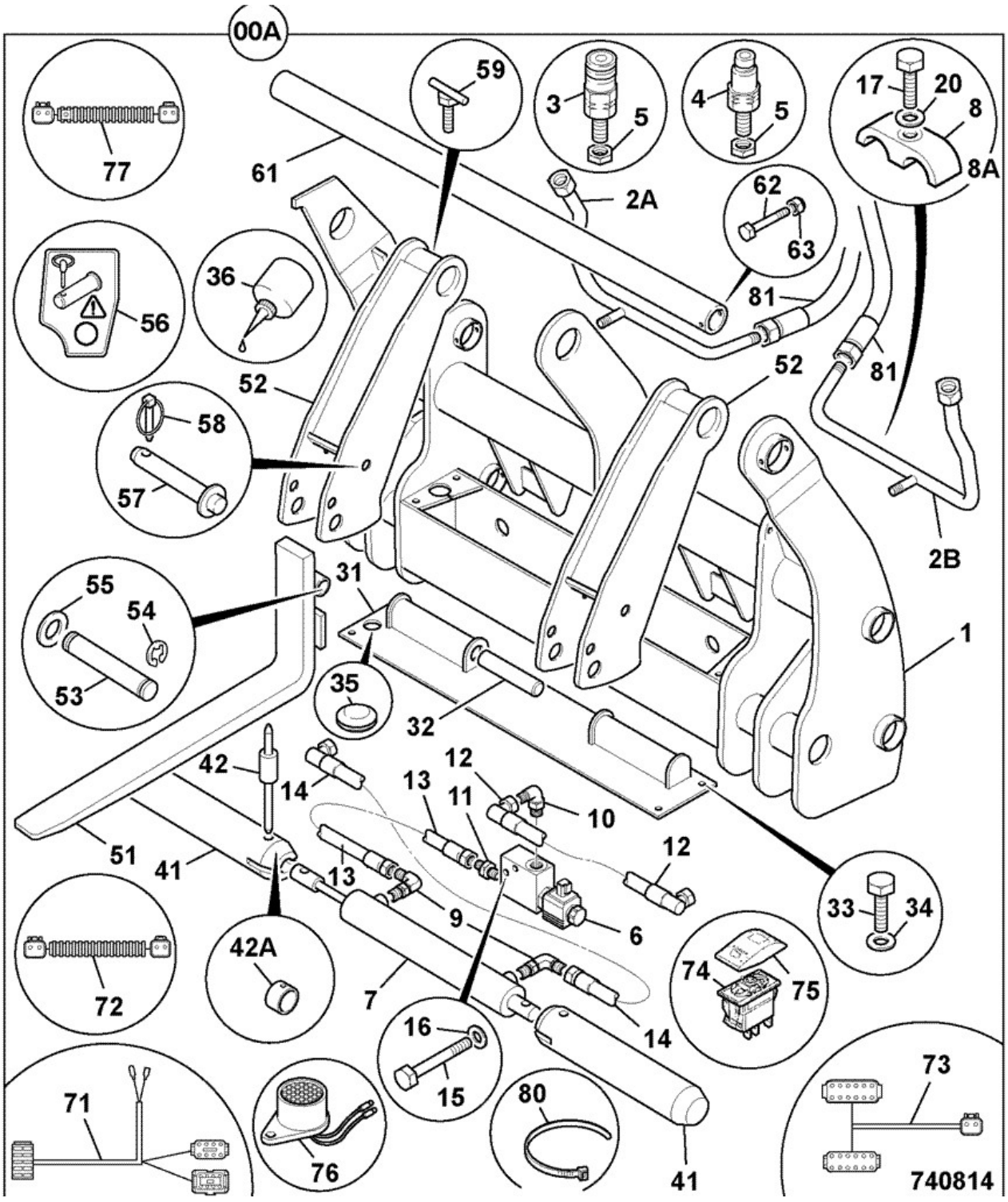

Elemento	Pieza Nº	Cambiar número	Descripción	Código de uso	CANT.

A	128/14292		Enganche rápido loader, hydraulic c/w forks	Std	1
A	128/14680		Enganche rápido loader, hydraulic C/W forks,Asia Pacif	Asia/Pacif	1
1	:335/06624		Bastidor quickhitch	Std	1
1	331/45475		Bastidor quickhitch, loader Asia Pacific	Asia/Pacif	1
2A	:335/06774		Tubería assembly, auxiliary R.H.		1
2B	:335/06773		Tubería assembly, auxiliary L.H.		1
3	:45/920066		Acoplamiento 3/8"BSP female quick release		1
3	:835/10082		Tapa flip top protection to fit 3/8 female *to fit 45/920066*		1
4	:45/920067		Acoplamiento 3/8"BSP male quick release		1
5	:1356/0203Z		Tuerca backing		2
6	:25/221953		Válvula solenoid		1
7	:903/20459		Pistón complete,quickhitch (7/16"UNF ports)		1
8	:331/46827		Abrazadera pipe		2
8A	:829/31263		Espaciador 10.2x20x16long *was 829/30653*		2
9	:816/90459		Adaptador elbow 7/16SAE x 1/4BSP		2
10	:816/90618		Adaptador elbow 1/4BSP x 9/16SAE		1
11	:332/F2579		Adaptor 1/4BSP X 9/16 SAE restrictor		1
12	:611/45200		Manguito 1/4"BSP x 230mm		1
13	:611/05100		Manguito 1/4" 575mm long		1
14	:611/21800		Manguito		1
15	:1315/0212Z		Tornillo M6 x 50		2
16	:1420/0006Z		Arandela M6		2
17	:1315/0310Z		Tornillo M8x40		2
20	:1420/0007Z		Arandela plain M8		2
31	:335/06487		Tapa plate		1
32	:511/54702		Pasador indicator nylon		2
33	:1315/0307Z		Tornillo Hexagon M8 X 25		4
34	:1420/0007Z		Arandela plain M8		4
35	:2410/1313		Aro de refuerzo blind, approx 40mm		1
36	:4102/0900		Sellador		0
41	:811/90504		Pasador pivot *See A3-6-17 for locking pins*		2
42	:331/47206		Indicador peg		2
42A	:829/31177		Espaciador indicator peg		2
51	:331/14472		Horquilla quickhitch loader		2
52	:331/14569		Soporte fork loader quickhitch		2
53	:811/70116		Pasador pivot		2
54	:821/00309		Clip 'E'		2
55	:332/C7128		Arandela 39x60x3.2mm		4
56	:817/04503		Rótulo		2
57	:123/00932		Pasador pivot		2
58	:826/00600		Pasador linch		2
59	:545/21338		Mango locking (Metric)		2
61	:830/10420		Tubo quickhitch pick up loader		1
62	:1315/3419Z		Tornillo M10x90mm		1
63	:1370/0303Z		Tuerca lock M10		1
71	:332/E9956		Cableado quickhitch		1
72	:721/11702		Cableado quickhitch link 4500mm long		1
73	:721/11704		Cableado quickhitch solenoid		1
74	:701/60008		Interruptor 12V		1

75	:701/58834		Tapa indicators switch decal		1
76	:704/26400		Alarma pulse buzzer		1
77	:721/11916		Cableado link,400mm long *Replaces 721/11361 (1200mm long)*		1
80	:204/07007		Abrazadera cable - 100mm Long		25
81	332/F9671		MANGUERA 3/8BSPx405 armoured		2

9812/0010 A3-7-1 DIENTE Y PUNTERA, OPCIONES 7'8", (PALAS 2350MM ANCHO)

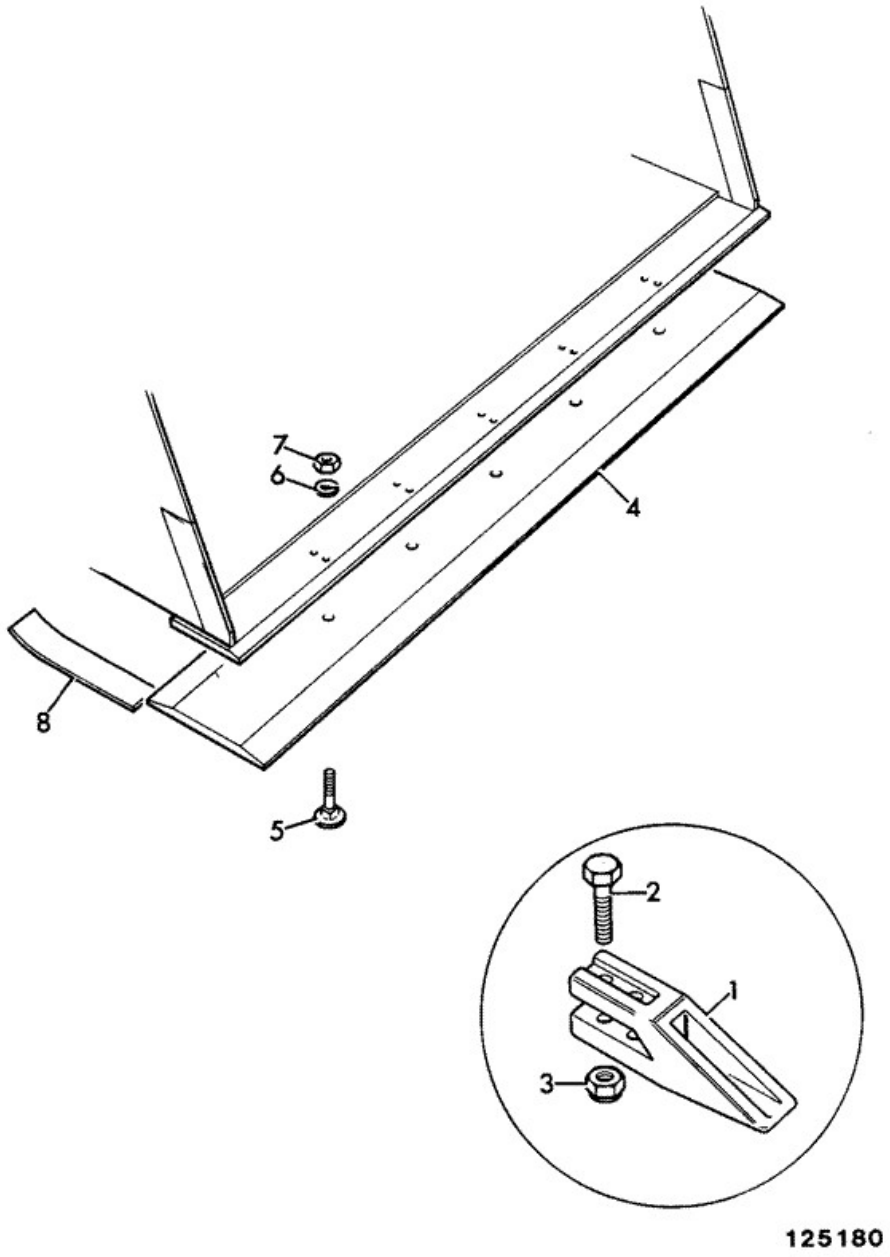

Elemento	Pieza Nº	Cambiar número	Descripción	Código de uso	CANT.
1	531/03205		Diente		8
2	826/00303		Perno pasante 3/4unf x 70mm		16
3	1340/0701Z		Tuerca		16
4	993/99189		Puntera 8 hole, bolt on type 295mm x 2350mm long *Double cutting edge.*		1

4	993/99390		Puntera bolt on type 2350mm long *Single cutting edge.*		1
5	826/00217		Perno pasante 3/4UNF x 2 1/4		8
6	1416/0011		Arandela		8
7	1340/0701		Tuerca		8
8	990/70001		Regleta reinforcing *Weld to shovel*		4

9812/0010 A3-7-11 TOOTH & TOEPLATE, SHOVEL, DOUBLE EDGE

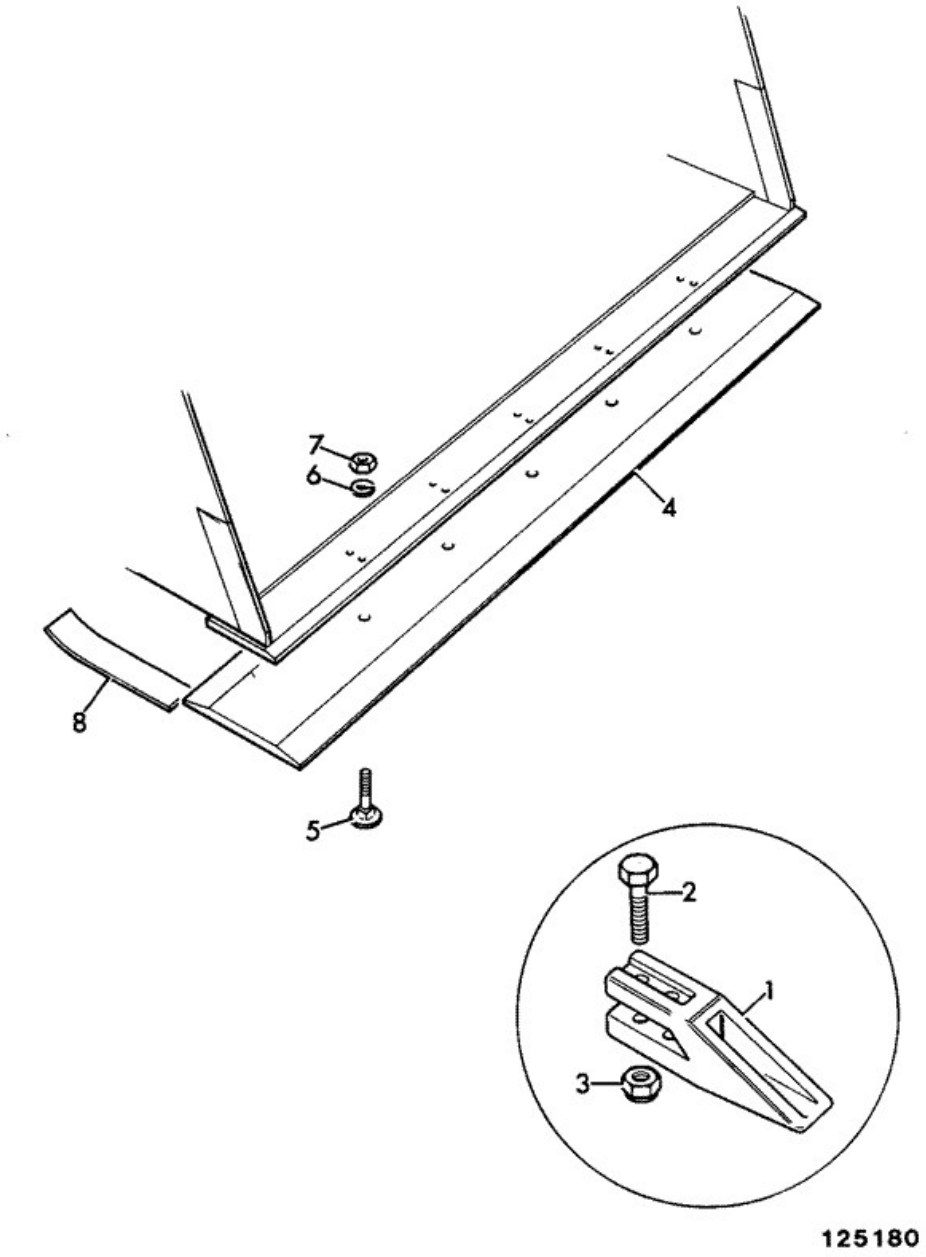

Elemento	Pieza Nº	Cambiar número	Descripción	Código de uso	CANT.
1	531/03205		Diente		0
2	826/00303		Perno pasante 3/4unf x 70mm *2 per tooth*		0
3	1340/0701Z		Tuerca		0
4	993/99391		Puntera 8 hole, bolt on type 295mm x 200mm long		1

			double cutting edge		
4	993/99189		Puntera 8 hole, bolt on type 295mm x 2350mm long *double cutting edge*		1
4	990/69901		Puntera 2438mm (8'0") wide *double cutting edge*		1
5	826/00217		Perno pasante 3/4UNF x 2 1/4		0
6	1416/0011		Arandela		0
7	1340/0701Z		Tuerca		0

9812/0010 A3-8-1 BASTIDOR HORQ Y HORQ, INDUSTRIAL, QUICKHITCH

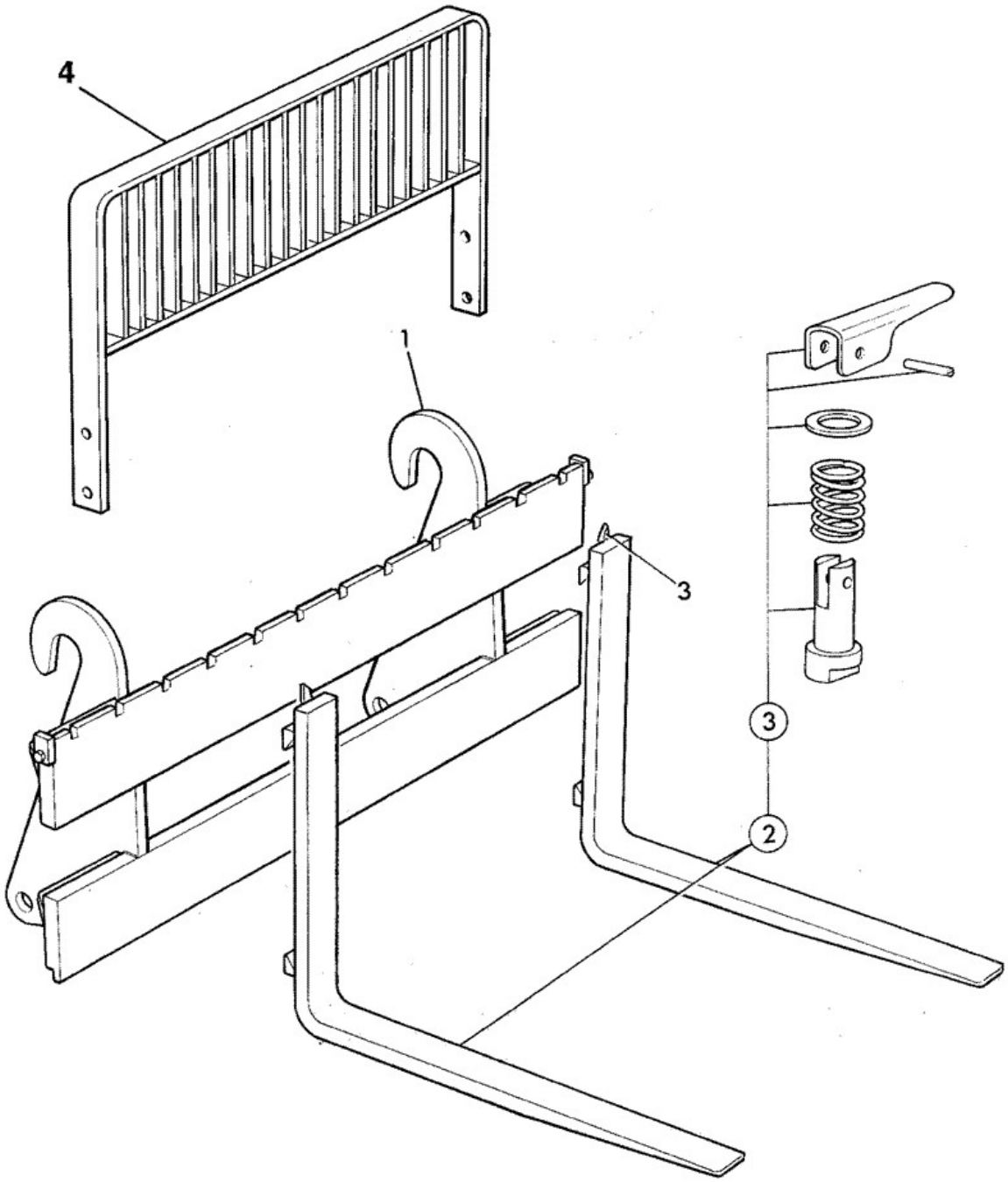

Elemento	Pieza Nº	Cambiar número	Descripción	Código de uso	CANT.

1	980/07200		Bastidor fork industrial		1
2	123/01374		Horquilla set 2T S.W.L.		1
3	993/51100		Kit ret. horquilla Class 2 fork		1
4	980/14200		Proteccion load		1

9812/0010 A3-8-2 BASTIDOR HORQ Y HORQ, INDUSTRIAL, 4'6", TOOL CARRIER (Q-FIT)

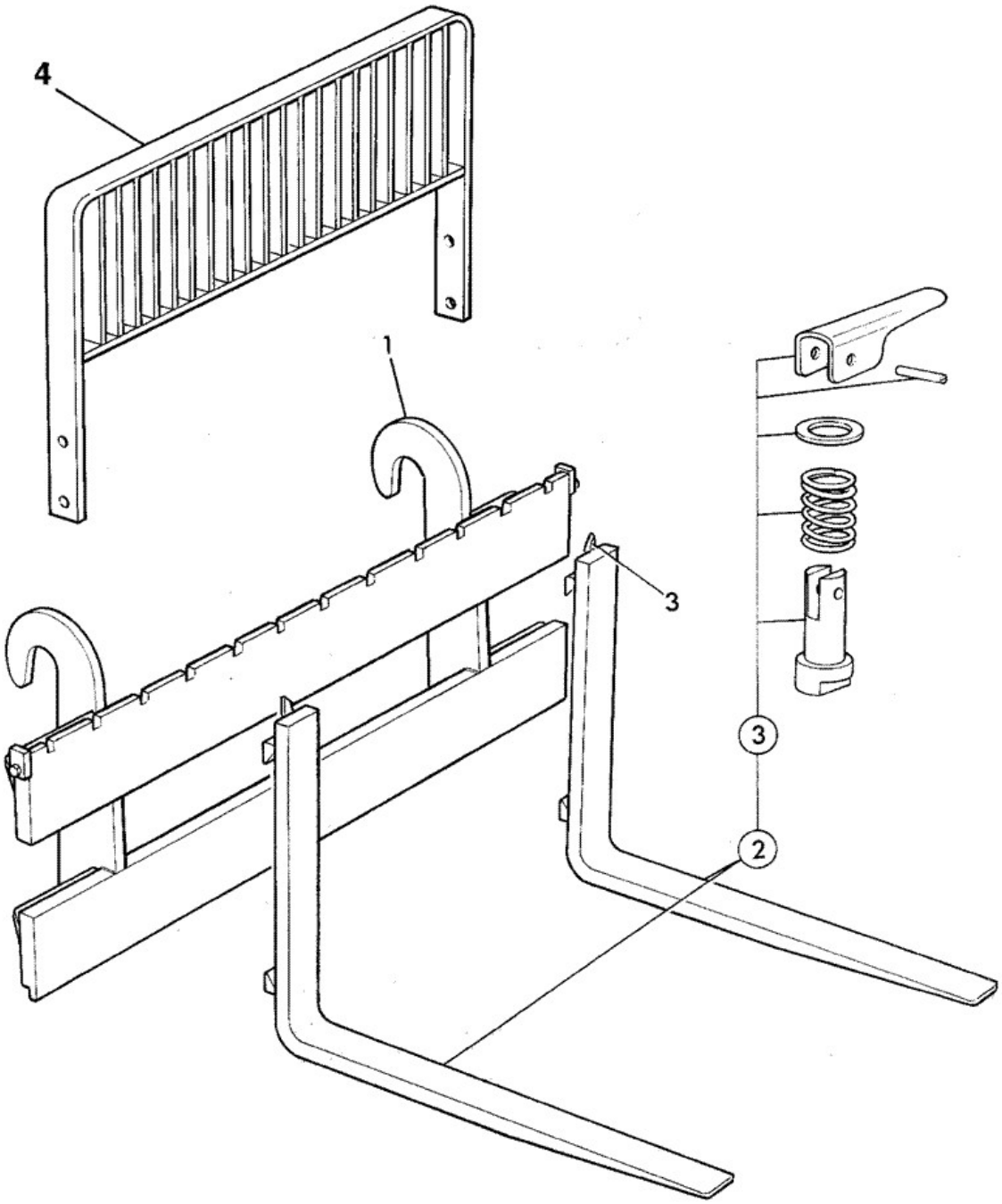

251311

Elemento	Pieza Nº	Cambiar número	Descripción	Código de uso	CANT.

1	126/03147		Bastidor fork		1
2	547/08500		Horquilla industrial 100W x 45T x 1200L		1
3	:993/51100		Kit ret. horquilla Class 2 fork *Fork retention*		1
4	****		*Not fitted*		0

9812/0010 A3-9-1 CUBO DE HORMIGÓN, 0, 0

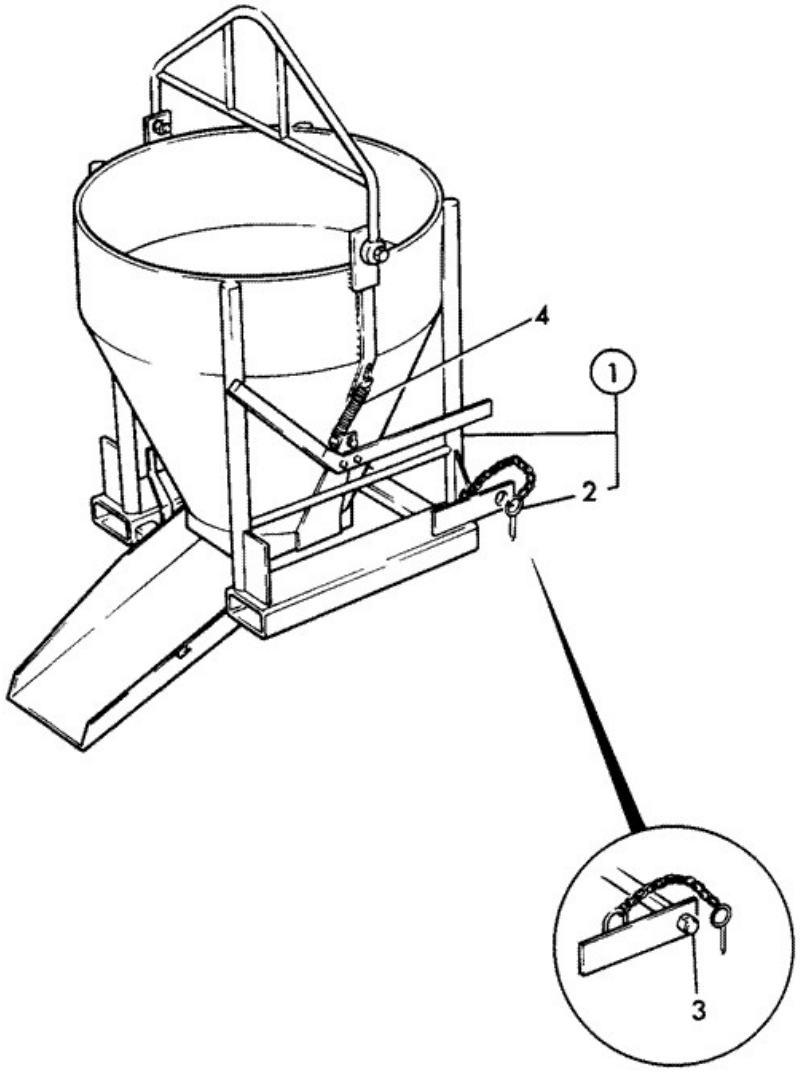

085711

Elemento	Pieza Nº	Cambiar número	Descripción	Código de uso	CANT.
1	547/51600		Cucharón assembly		1
2	:114/17600		Pasador Lynch with chain		1
3	:547/51800		Eje lock		1
4	:547/51601		Muelle shuttle		2

9812/0010 A3-10-1 QUITANIEVE, 0, 0

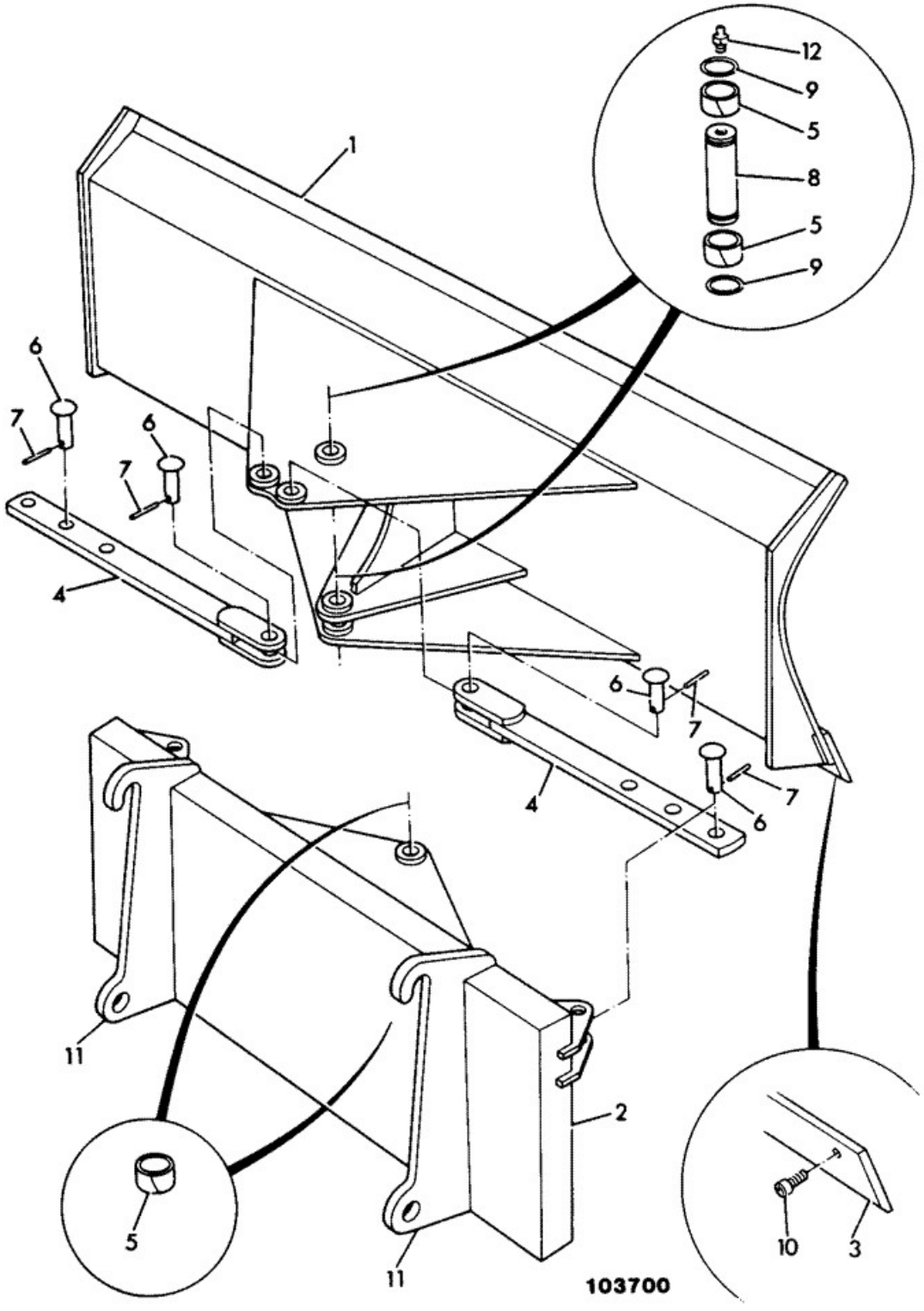

Elemento	Pieza Nº	Cambiar número	Descripción	Código de uso	CANT.
1	993/21100		Hoja dozer snow		1
2	993/21101		Bastidor		1
3	993/21102		Puntera		1
4	993/21103		Barra lock		2
5	993/21104		Casquillo		6
6	993/21105		Tornillo		4
7	993/21106		Pasador lock		4
8	993/21107		Tornillo *145x38*		2
9	993/21108		Arandela elástica		4
10	993/21109		Tornillo		14
11	993/21110		Soporte quick hitch		2
12	993/21111		Engrasador grease		2

9812/0010 A3-22-4 CIRCUITO, ROD BACHEAR, 400MK2, 0

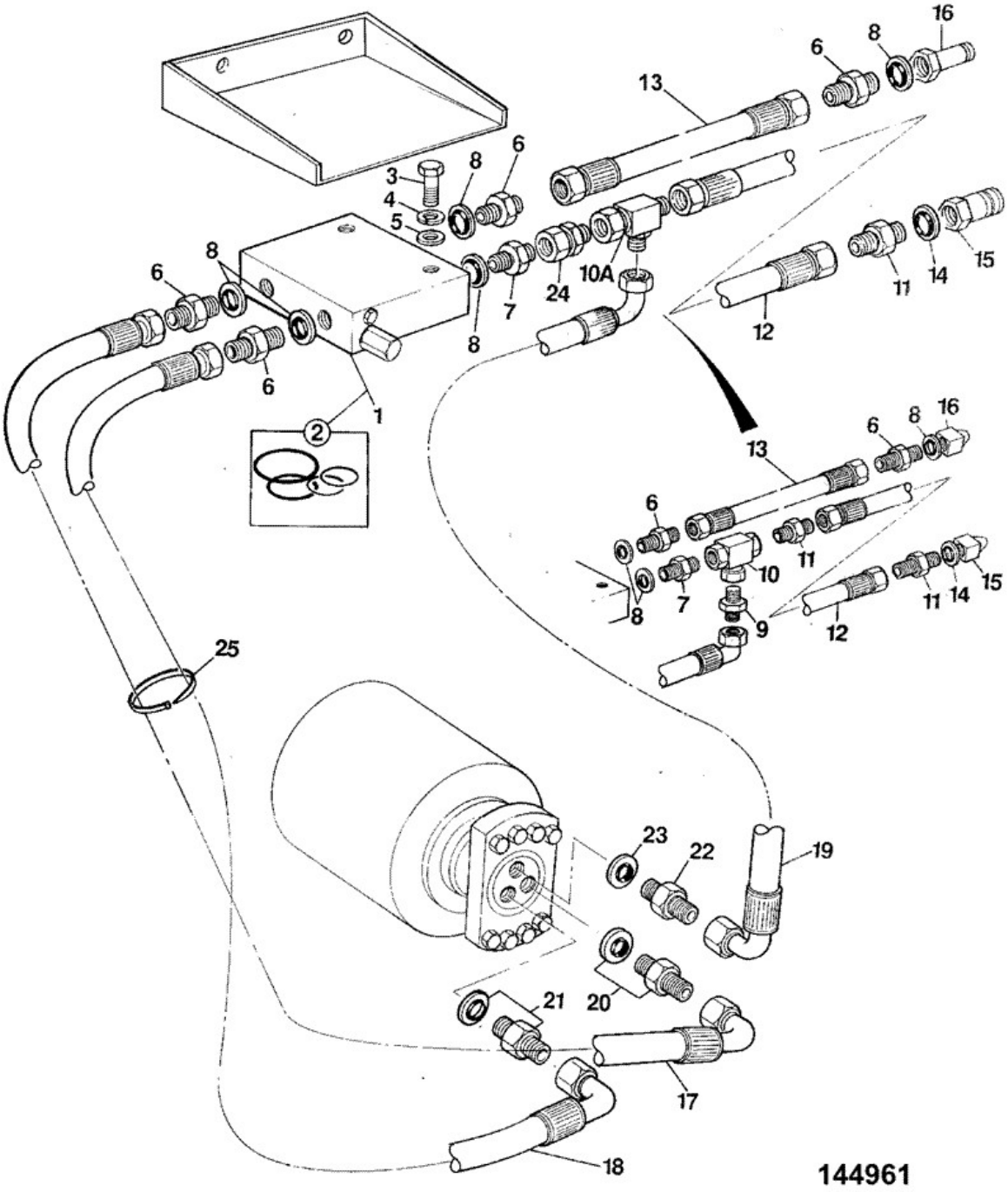

Elemento	Pieza Nº	Cambiar número	Descripción	Código de uso	CANT.
1	903/03829		Válvula anti cavitation		1

2	:903/03839		Kit junta valve anticavitation		1
3	1315/3419Z		Tornillo M10x90mm		2
4	1425/0008Z		Arandela Spring M10		2
5	1420/0008Z		Arandela Plain M10		2
6	1604/0006		Adaptador 3/4" BSP M/M		5
8	1406/0021		Junta bonded 3/4" BSP		5
10A	816/50003		Adaptador Tee		1
11	1604/0008		Adaptador		1
12	617/01400		Manguito 1990mm		1
13	615/00800		Manguito 1980mm		1
14	1406/0026		Arandela seal		1
15	45/910200		Acoplamiento 1"BSP male quick release		1
16	45/910300		Acoplamiento 3/4" BSP male quick release		1
17	615/20800		Manguito 890mm		1
18	615/20800		Manguito 890mm		1
19	613/43900		Manguito 1205mm		1
20	903/03835		Adaptador c/w O Ring		2
21	903/03835		Adaptador c/w O Ring		1
22	903/03836		Adaptador		1
23	903/03837		Junta tórica		1
24	816/20013		Adaptador 1" x 3/4"		1
25	200/77109		Abrazadera Cable L=272mm x W=7.6mm		2
26	983/10243		Tubería		1

Catálogo de productos \ CONSTRUCTION \ REST OF WORLD \ CONSTRUCTION / INDUSTRIAL \ BACKHOE LOADER 3CX,4CX,214,215,217 \ 3CX 00960000-00989999,01297000-01297999,01327000-01349999,01616000-01625999,01705500-01709999 84hp 9812/0010 \ A ACCESORIOS \ A03 ACCESORIOS

9812/0010 A3-22-5 ROD\ BACHEAR, 400MK2, 0, 0

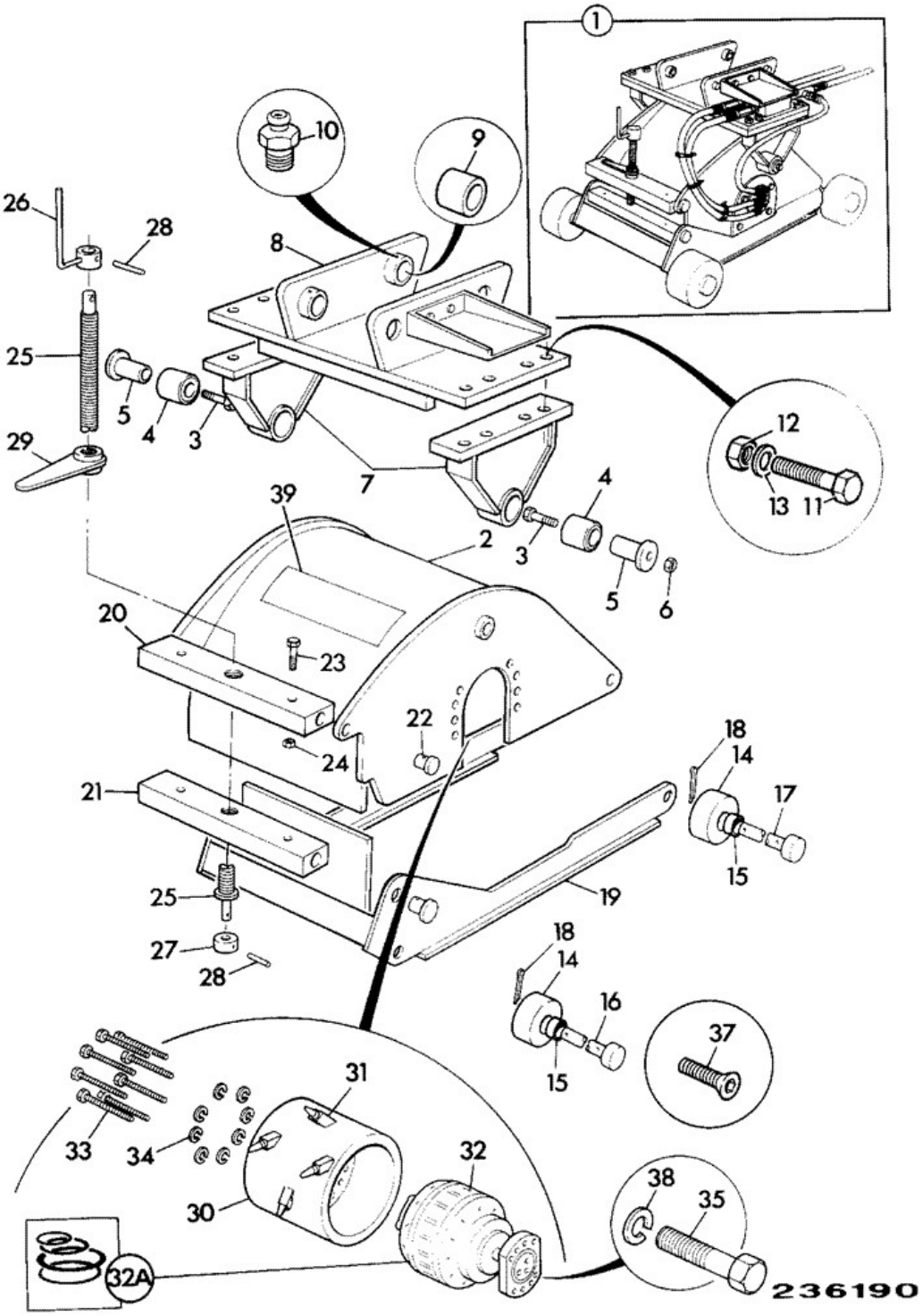

Elemento	Pieza Nº	Cambiar número	Descripción	Código de uso	CANT.
1	980/13400		Accesorio patch planer		1

2	:980/13405		Cuerpo		1
3	:1315/3825Z		Tornillo		2
4	:980/13403		Casquillo		2
5	:980/13404		Pasador pivot		1
6	:1370/0703Z		Tuerca M20		2
7	:980/13402		Soporte carridge		2
8	:980/13401		Soporte hanger		1
9	:G65/0		Casquillo pivot		4
10	:980/13421		Engrasador grease		4
11	:1315/3814Z		Tornillo M20 x 60mm		8
12	1370/0703Z		Tuerca M20		8
13	:1425/0012Z		Arandela		8
14	:980/99048		Rueda		4
15	:903/03825		Casquillo		4
16	:980/99049		Pasador axle pivot front		2
17	:980/99050		Pasador axle pivot rear		2
18	:2103/1116		Pasador split		4
19	:980/13406		Soporte skid, right hand		1
20	:980/13408		Viga adjusting, upper		1
21	:980/13407		Viga adjusting, lower		1
22	:980/13409		Pasador adjusting beam		4
23	:1315/3314Z		Tornillo		4
24	:1370/0203Z		Tuerca self lock M8		4
25	:980/13412		Tornillo adjusting		1
26	:980/13414		Mango		1
27	:980/13410		Casquillo		1
28	:980/13411		Pasador		1
29	:980/13413		Mango locking		1
30	:980/13415		Tambor		1
31	:903/01101		Herramienta asphalt pick		52
32	903/03826		Motor hydraulic		1
32A	::980/13426		Kit reparación hyd motor		1
33	:1391/3410		Tornillo cap		20
34	:980/13424		Arandela		20
35	:980/13422		Tornillo		8
37	:980/13423		Tornillo		3
38	:980/13425		Arandela		8

9812/0010 A3-22-6 ROD\ BACHEAR, 400MK2, MOTOR HIDRÁULICO, 0

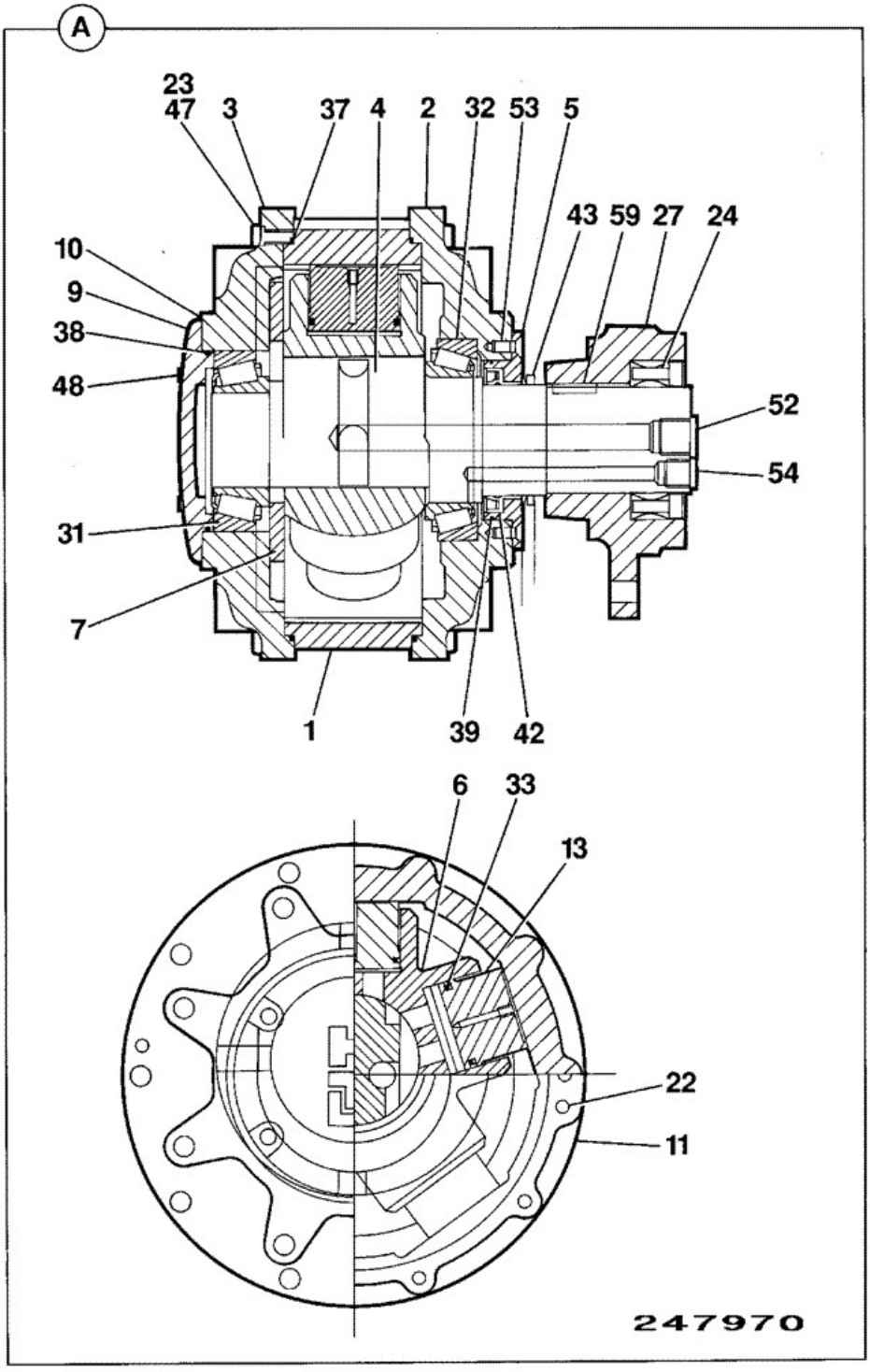

Elemento	Pieza Nº	Cambiar número	Descripción	Código de uso	CANT.

A	903/03826		Motor hydraulic		1
5	:983/10021		Carcasa motor seal		1
9	:980/13417		Placa end		1
38	:980/13418		Junta tórica		1
39	:983/00445		Junta tórica		1
42	:983/00443		Junta		1
43	:983/00444		Anillo 'V'		1
48	:980/13419		Tornillo de cierre		5
53	:983/00446		Tornillo de cierre		6
59	:980/13427		Llave		1
60	:980/13426		Kit reparación hyd motor *Comprising items 10, 33, 37, 38, 42, 43.*		1

Catálogo de productos \ CONSTRUCTION \ REST OF WORLD \ CONSTRUCTION / INDUSTRIAL \ BACKHOE LOADER 3CX,4CX,214,215,217 \ 3CX 00960000-00989999,01297000-01297999,01327000-01349999,01616000-01625999,01705500-01709999 84hp 9812/0010 \ A ACCESORIOS \ A03 ACCESORIOS

9812/0010 A3-23-2 BARRENA TIERRA, 0, 0

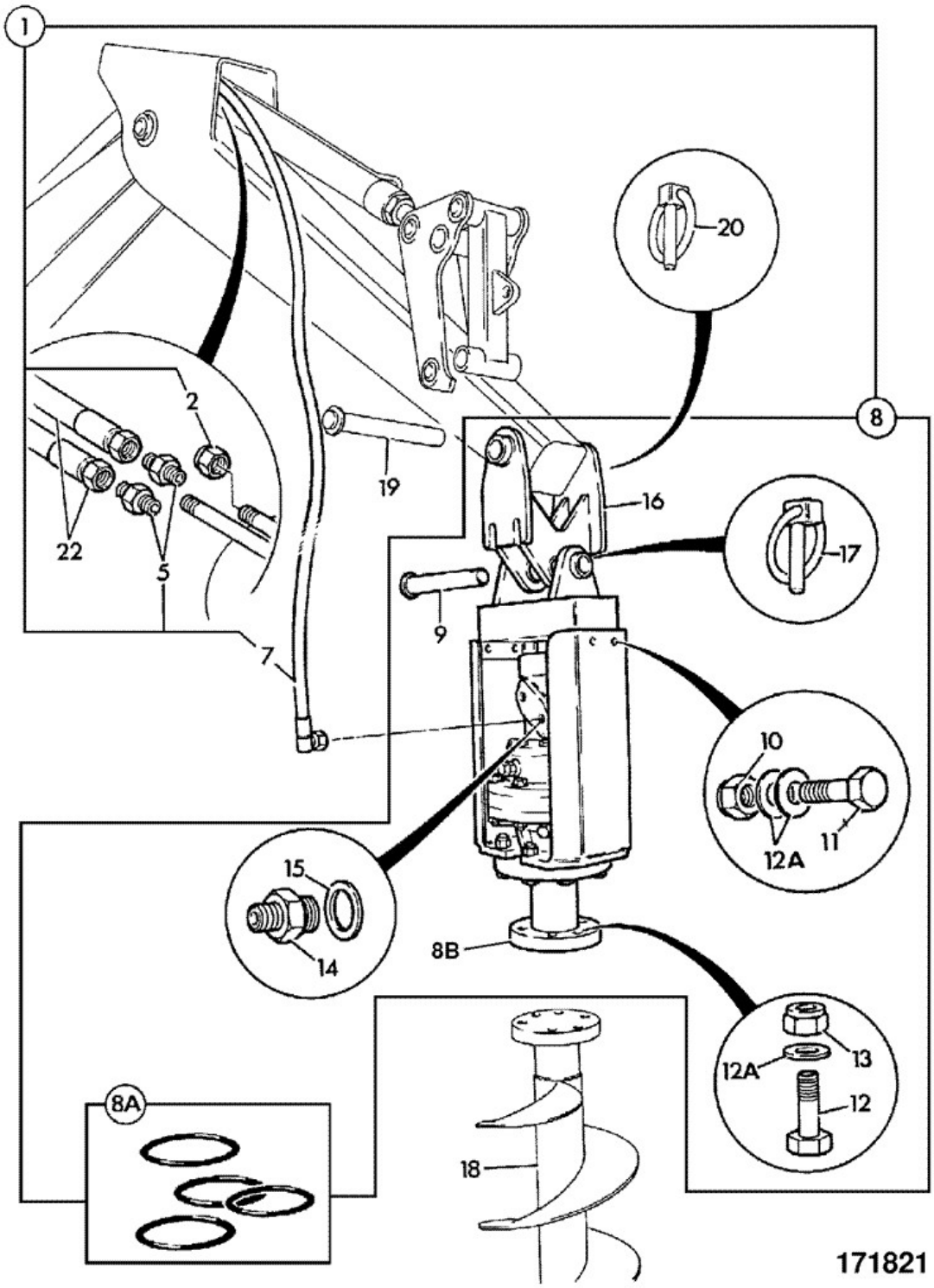

Elemento	Pieza Nº	Cambiar número	Descripción	Código de uso	CANT.
1	980/03400		Ahoyador assembly, yellow		1

1A	:980/03401		Placa side		2
5	:1604/0004		Adaptor Male		4
6	:1612/0003		Adaptador male/female		2
7	:613/27700		Manguito		2
8	:980/04100		Cabeza auger		1
8A	::980/04321		Kit junta		1
8B	::980/04101		Brida drive with plate & screws		1
9	****		*Pivot pin*		1
10	::1370/0603Z		Tuerca M16		4
11	::1315/3710Z		Tornillo		4
12	::1315/3714Z		Tornillo M16x60		6
12A	::1420/0011Z		Arandela M16 plain		6
13	::1370/0603Z		Tuerca M16		6
14	::1606/0007		Adaptador		2
15	::1406/0018		Junta bonded 1/2" BSP		2
16	::980/04110		Soporte earth drill		1
17	::826/00512		Pasador lynch		1
18	****		*Earth Drill Attachments See A3-23-10*		1
19	****		*Existing pivot pin*		1
20	****		*Existing linch pin*		1
21	****		*Existing hose*		1
22	****		*Existing hose*		1

9812/0010 A3-23-3 BARRENA, TRANSM, 0, 0

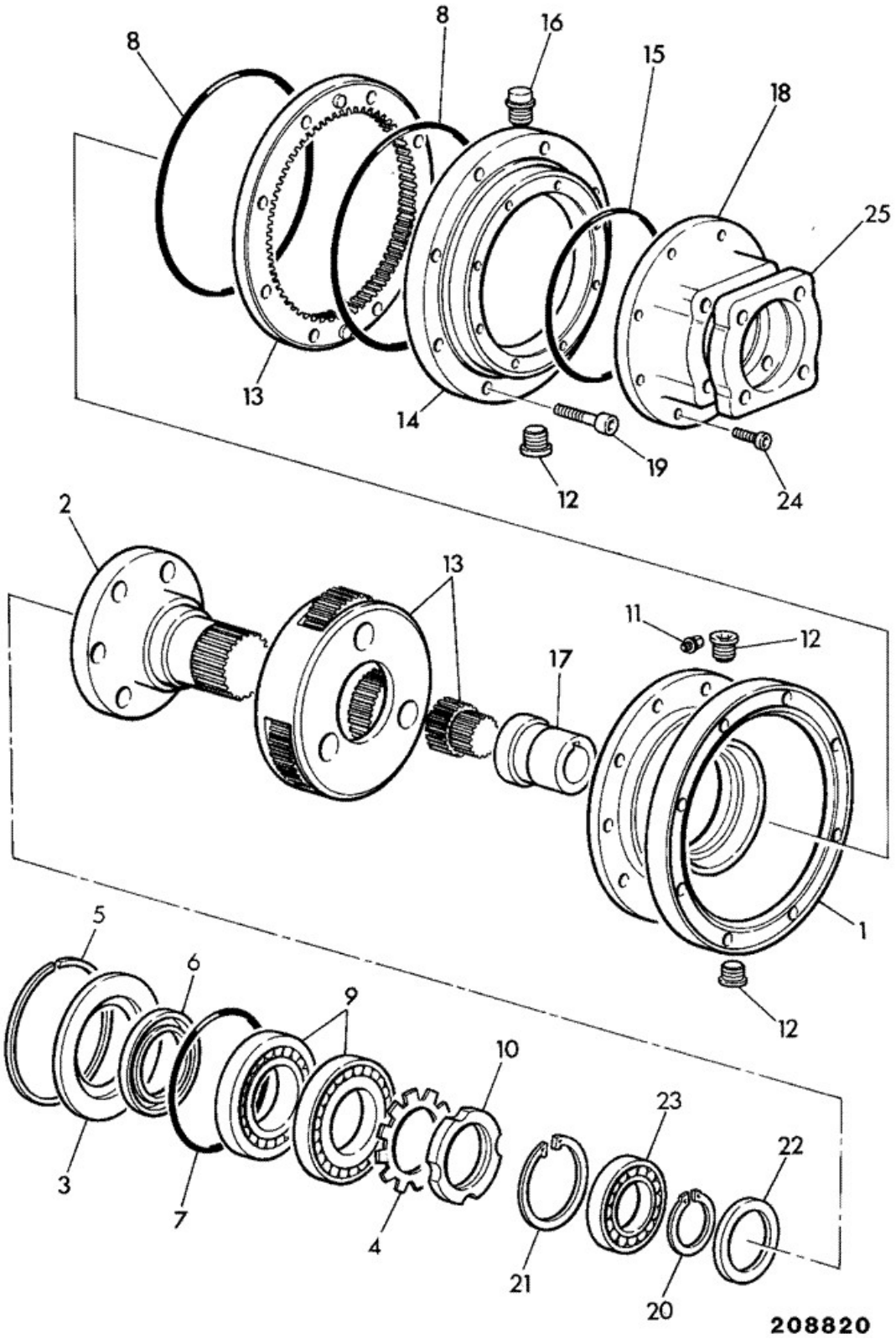

Elemento	Pieza Nº	Cambiar número	Descripción	Código de uso	CANT.
A	980/04102		Transmisión earth drill		1
1	:980/04103		Carcasa output		1
2	:980/04104		Eje output		1
3	:980/04105		Tapa end		1
4	:980/04106		Arandela lock		1
5	:980/04107		Arandela elástica		1
6	:980/04108		Junta oil		1
7	:980/04109		Junta tórica		1
8	:980/04111		Junta tórica		2
9	:980/04112		Cojinete roller		2
10	:980/04113		Tuerca ring		1
11	:980/04114		Tapón		1
12	:980/04115		Tapón		3
13	:980/04116		Engranaje planetary assembly		1
14	:980/04117		Carcasa adapter		1
15	:980/04118		Junta tórica		1
16	:980/04119		Tapón vent		1
17	:980/04120		Acoplamiento		1
18	:980/04121		Carcasa flange		1
19	:980/04122		Tornillo de cierre		8
20	:980/06402		Arandela elástica external		1
21	:980/04123		Arandela elástica internal		1
22	:980/04128		Junta oil		1
23	:980/04214		Cojinete		1
24	:980/04126		Tornillo de cierre		8
25	:980/04127		Placa adapter		1

9812/0010 A3-23-4 BARRENA, MOTOR, 0, 0

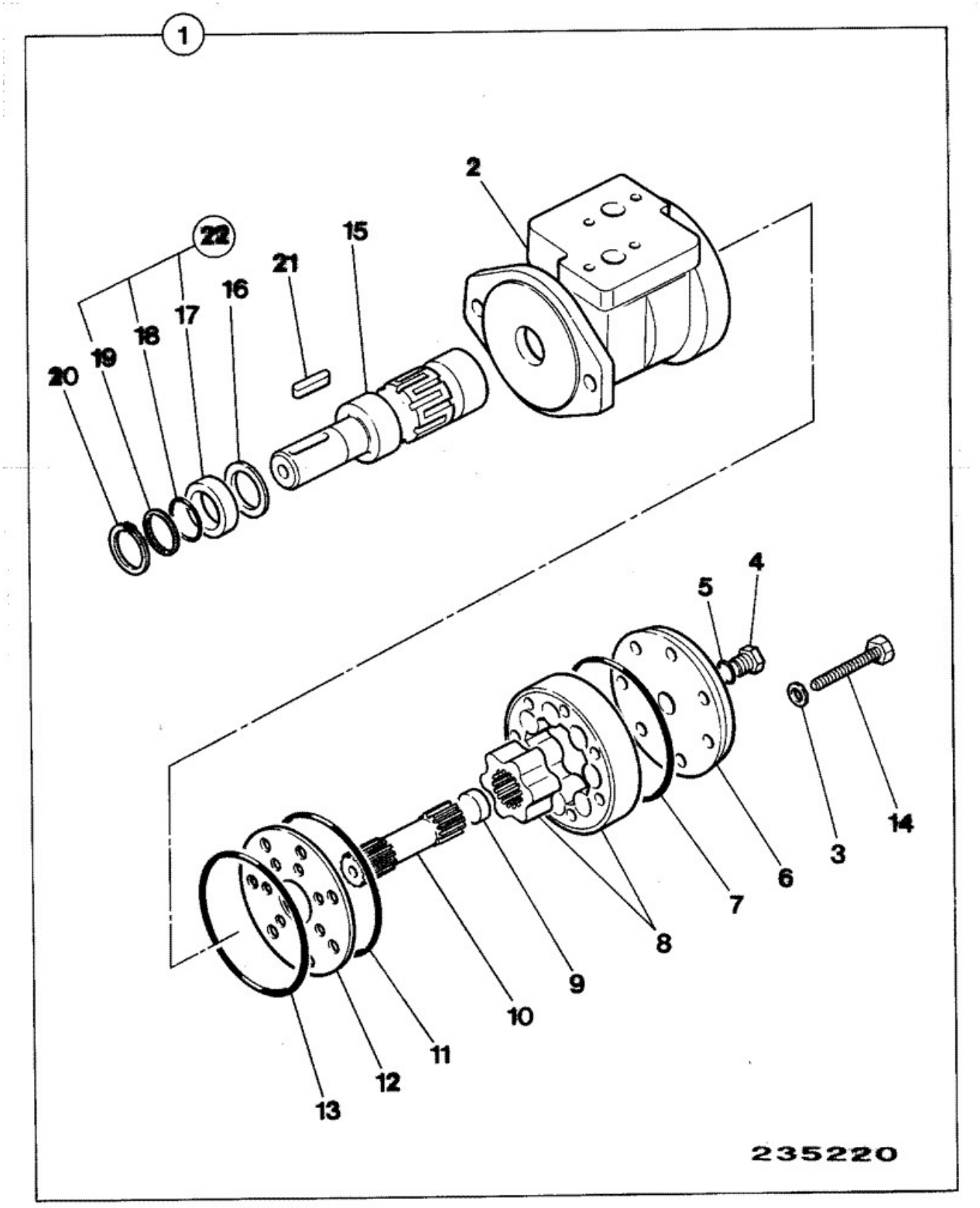

		Cambiar			

Elemento	Pieza Nº	número	Descripción	Código de uso	CANT.
1	983/00780		Motor earth drill		1
2	****		*All components are nsp apart from item 22*		1
21	:920/00771		Llave		1
22	:993/99621		Kit junta Earthdrill motor		1

9812/0010 A3-23-10 BARRENA TIERRA, ACCESORIOS, 0

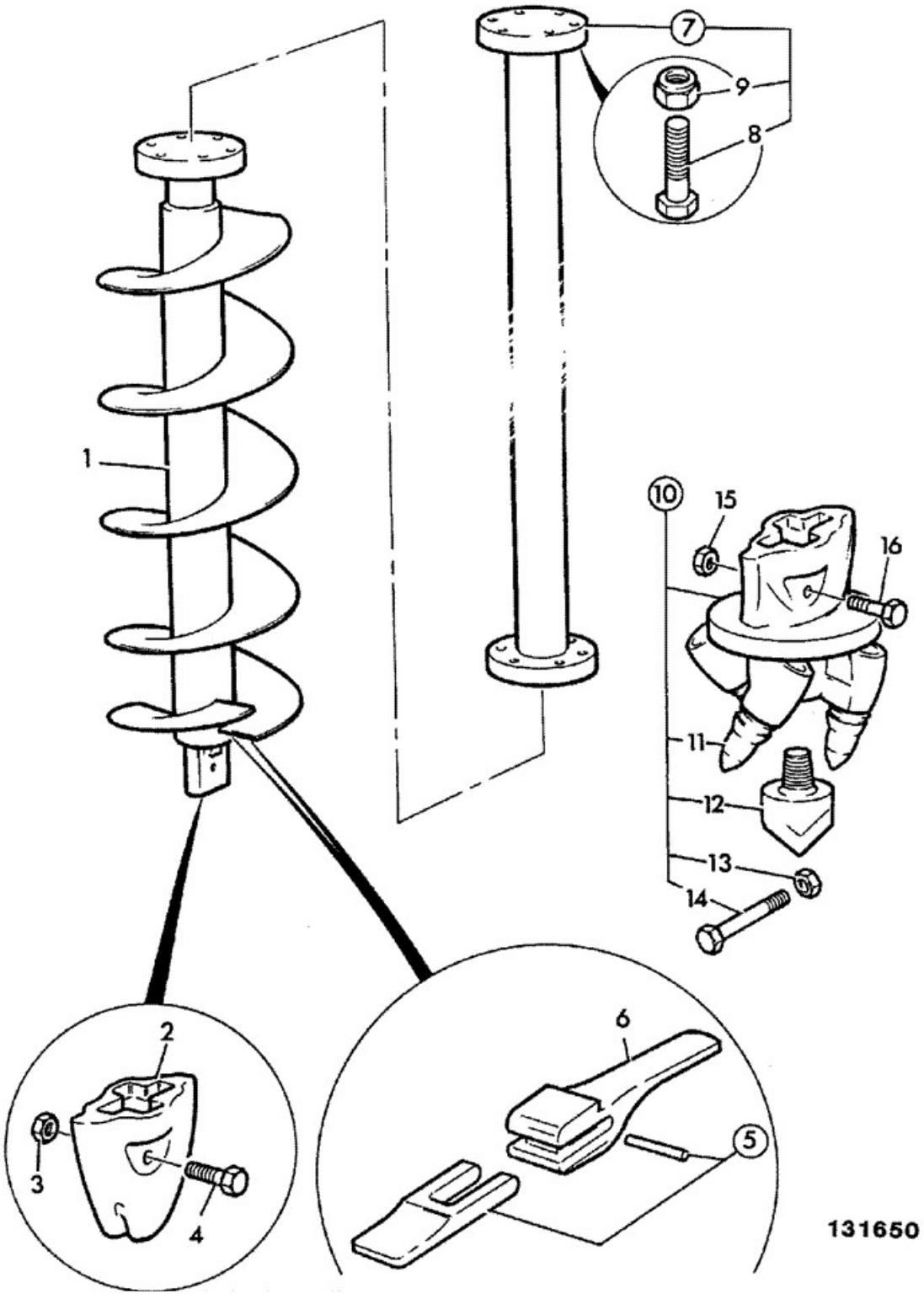

Elemento	Pieza Nº	Cambiar número	Descripción	Código de uso	CANT.
1	980/03500		Herramienta auger, 289mm dia.		1
1	980/03600		Herramienta auger, 305mm dia.		1
1	980/03700		Herramienta auger, 381mm dia.		1
1	980/03800		Herramienta auger, 457mm dia.		1
1	980/03900		Herramienta auger, 610mm dia		1
1	980/05800		Herramienta auger,762mm dia		1
2	980/03510		Herramienta pilot bit		1
3	1370/0203Z		Tuerca self lock M8		1
4	1315/3314Z		Tornillo		1
5	980/03511		Diente steel, standard *QTY:A/R*		0
5	980/03513		Diente carbide tip *QTY:A/R*		0
5A	980/06416		Cierre rubber *QTY:A/R*		0
6	980/03512		Sujeción tooth		0
7	980/04000		Herramienta extension, 1000mm	A	1
7	980/04010		Herramienta extension, 1500mm	B	1
8	:1315/3714Z		Tornillo M16x60	A,B	6
9	:1370/0603Z		Tuerca M16	A,B	6
10	980/06600		Herramienta pilot bit, tungston		1
11	:903/01101		Herramienta asphalt pick		4
12	:980/06610		Herramienta pilot bit, centre		1
13	:1370/0203Z		Tuerca self lock M8		1
14	:1315/3314Z		Tornillo		1
15	1370/0203Z		Tuerca self lock M8		1
16	1315/3314Z		Tornillo		1

9812/0010 A3-23-21 BARRENA JCB 2150, COMPONENTES, 0

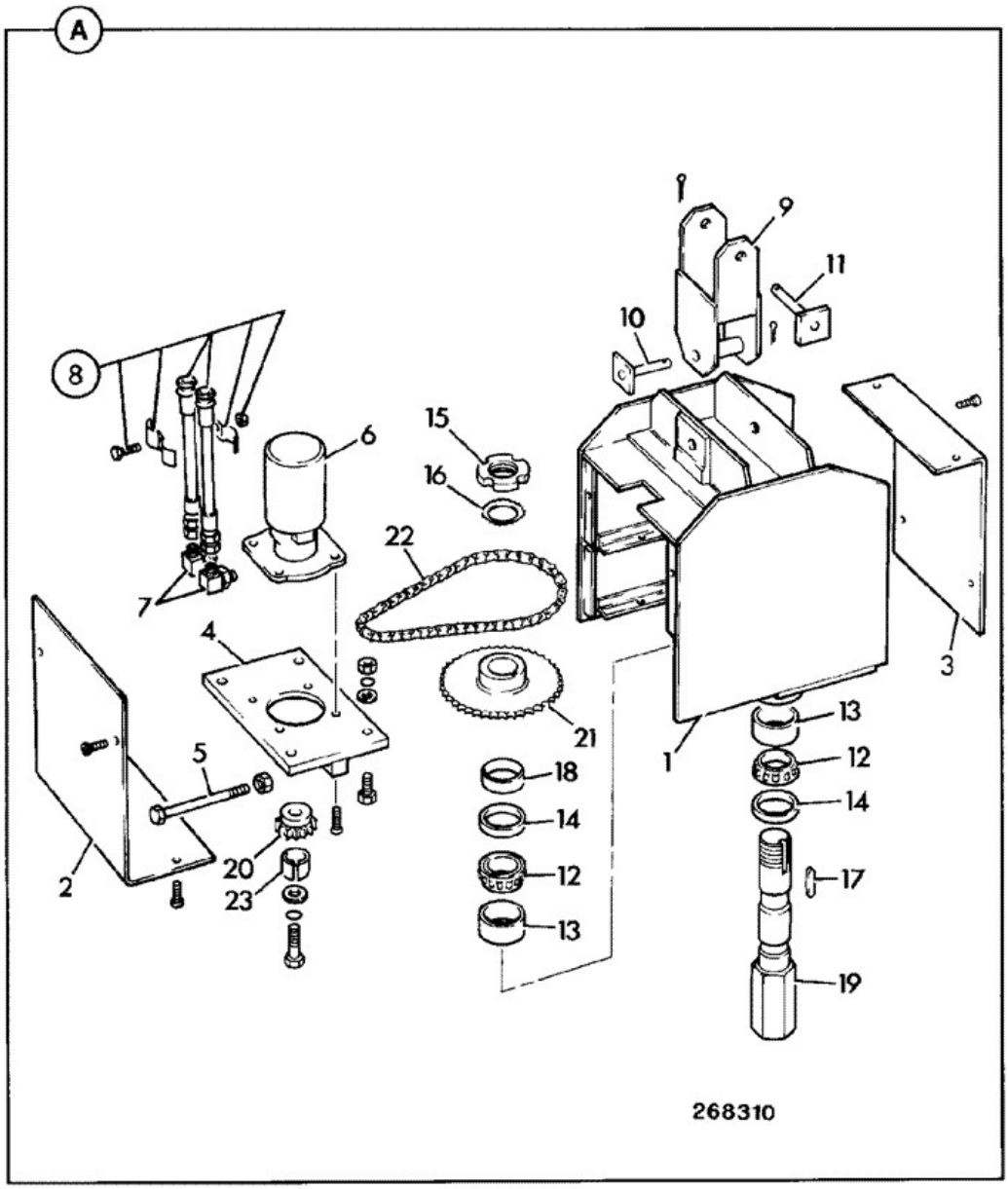

Elemento	Pieza Nº	Cambiar número	Descripción	Código de uso	CANT.

A	980/88188		Kit earth drill		1
1	:983/00202		Carcasa drive		1
2	:983/00203		Tapa front		1
3	:983/00204		Tapa rear		1
4	:983/00205		Placa motor		1
5	:983/00206		Varilla adjusting		2
6	:983/00207		Motor hydraulic		1
7	:983/00196		Codo		2
8	:983/00208		Manguito assembly		1
9	:983/00187		Eslabón universal		1
10	:983/00185		Pasador clevis, drive side		1
11	:983/00186		Pasador clevis mounting side		1
12	:983/00182		Cojinete cone		2
13	:983/00181		Cubeta bearing		2
14	:983/00183		Junta oil		2
15	:983/00198		Tuerca		1
16	:983/00199		Arandela lock		1
17	:983/00200		Llave		1
18	:983/00201		Espaciador		1
19	:983/00184		Eje c/w nut,washer & key		1
20	:983/00177		Piñón		1
21	:983/00189		Piñón driven		1
22	:983/00178		Cadena drive		1
22A	::983/00179		Eslabón		0
23	:983/00209		Espaciador		1
25	983/00210		Kit junta motor		1

9812/0010 A3-23-22 BARRENA TIERRA, ACCESORIOS, SERIE LP

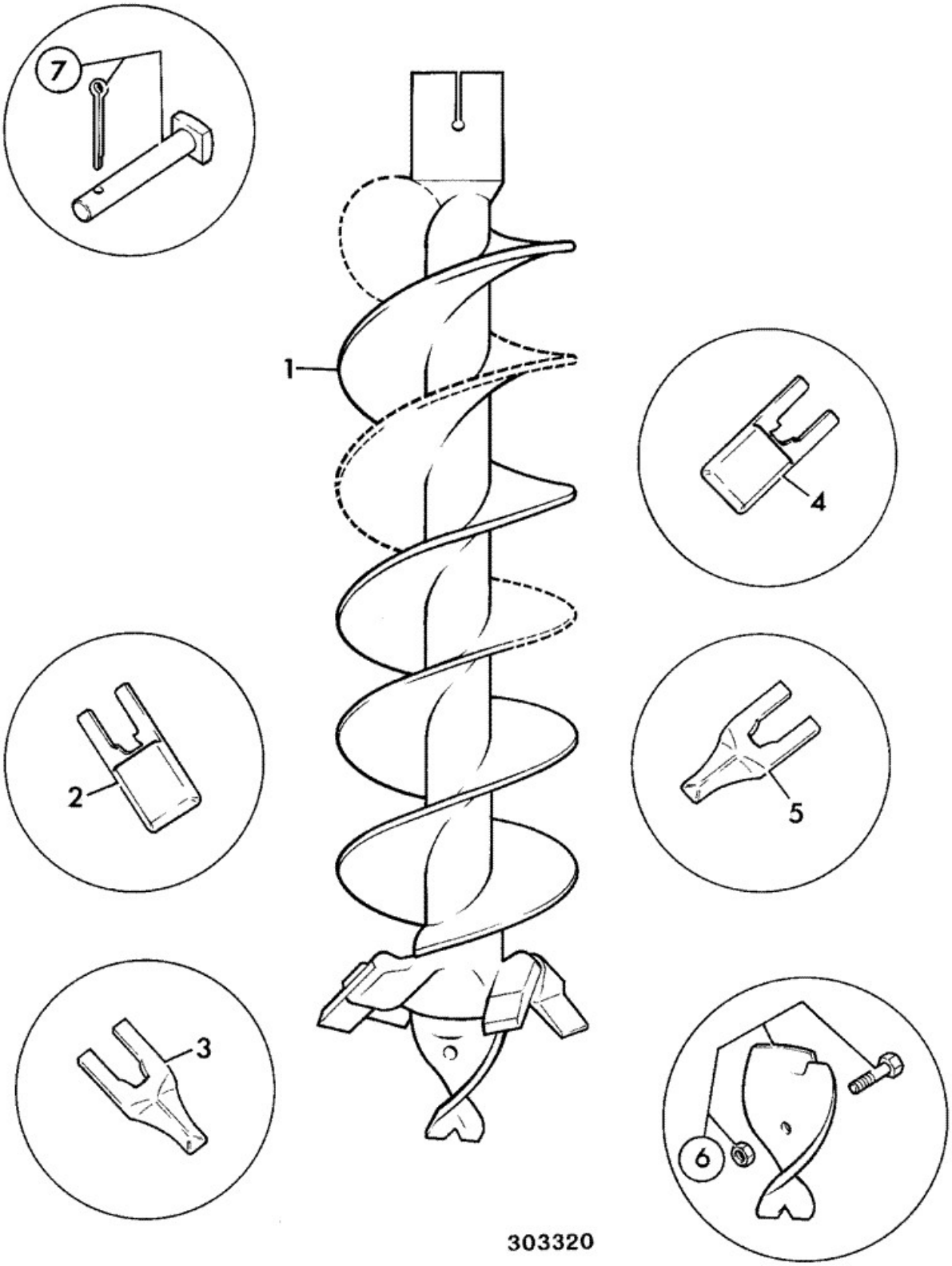

Elemento	Pieza Nº	Cambiar número	Descripción	Código de uso	CANT.
1	980/84304		Barrena earth drill 12" heavy duty		1
1	980/84305		Barrena 18" earth drill heavy duty		1
1	980/84306		Barrena 24" earth drill heavy duty		1
2	983/00167		Diente drive-on, dirt outside tooth pocket		1
3	983/00168		Diente drive-on, chisel inside tooth pocket		1

4	983/00169		Diente carbide edged outside pocket		1
5	983/00170		Diente carbide edged inside pocket		1
6	983/00171		Herramienta centre point		1
6	983/00172		Herramienta centre point carbide tipped		1
7	983/00180		Pasador auger, 3/4in.		1
8	980/84307		Accesorio 14" extension		1
8	980/84308		Accesorio 24" extension		1
8	980/84309		Accesorio 36" extension		1
8	980/84310		Accesorio 60" extension		1

9812/0010 A3-23-23 BARRENA TIERRA, ACCESORIOS, SERIE DFB

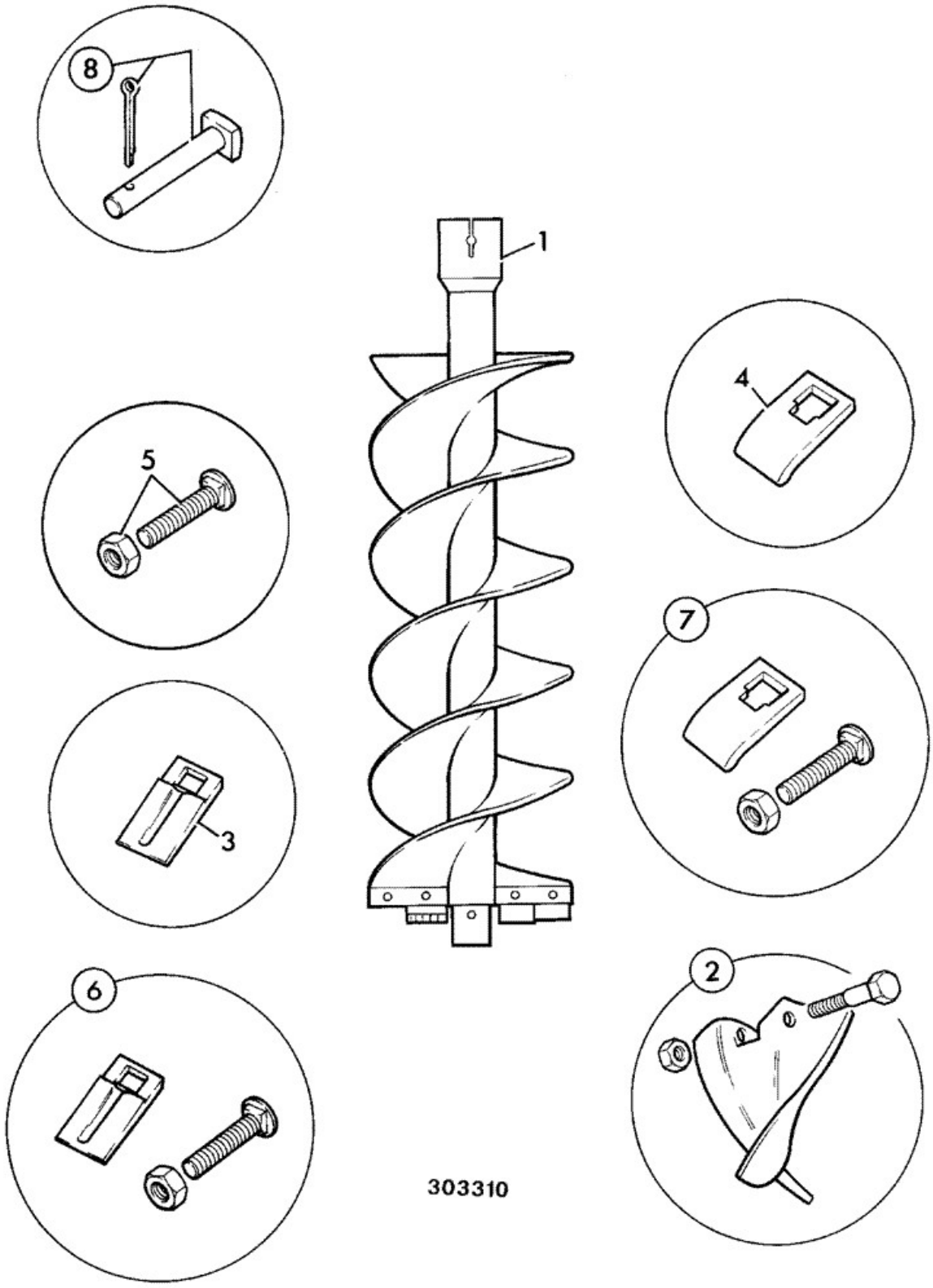

Elemento	Pieza Nº	Cambiar número	Descripción	Código de uso	CANT.
1	980/84297		Barrena 6" earth drill light duty		1
1	980/84298		Barrena 9" earth drill light duty		1
1	980/84299		Barrena 12" earth drill light duty		1
1	980/84300		Barrena 15" earth drill light duty		1
1	980/84301		Barrena 18" earth drill light duty		1

1	980/84302		Barrena 24" earth drill light duty		1
1	980/84303		Barrena 30" earth drill light duty		1
2	983/00164		Herramienta centre point, ADI		1
3	983/00165		Diente auger, forged		1
4	983/00166		Diente auger, carbide tip		1
5	983/00406		Tornillo & nut assembly		1
6	983/00162		Diente auger, forged c/w bolt & nut		1
7	983/00163		Diente auger, carbide tip c/w bolt & nut		1
8	983/00180		Pasador auger, 3/4in.		1
9	980/84307		Accesorio 14" extension		1
9	980/84307		Accesorio 14" extension		1
9	980/84308		Accesorio 24" extension		1
9	980/84309		Accesorio 36" extension		1
9	980/84310		Accesorio 60" extension		1

9812/0010 A3-24-5 ENGANCHE RÁPIDO, ACCESORIO, RETROEXCAV

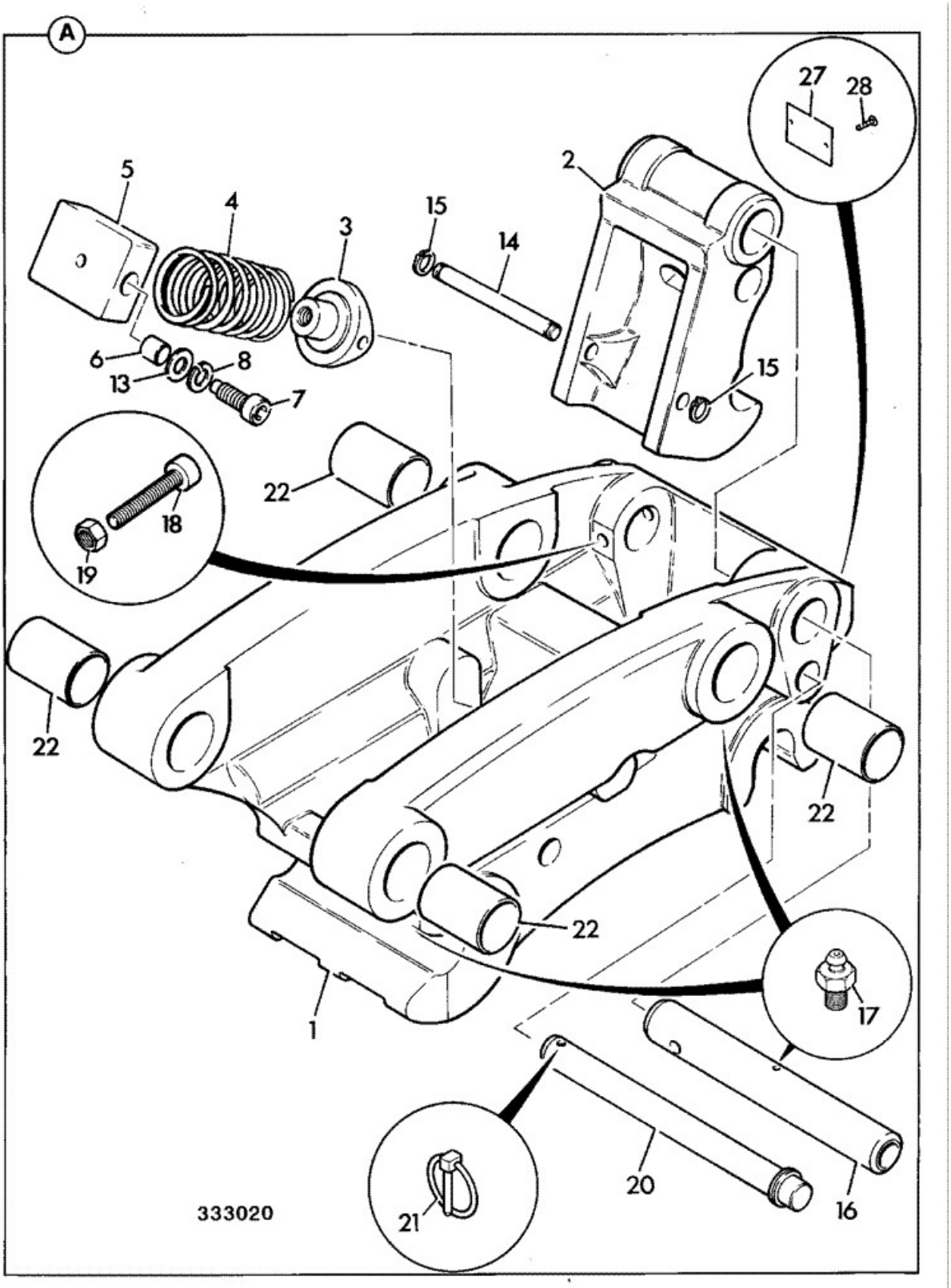

Elemento	Pieza Nº	Cambiar número	Descripción	Código de uso	CANT.
A	980/88833		Kit enganche rápido mechanical		1
1	:128/10412		Cuerpo c/w bearings quickhitch		1
2	:123/07757		Retenida		1
3	:123/07772		Pivote quickhitch		1
4	:814/10143		Muelle off-pins quichhitch		1

5	:128/10413		Bloque pivot c/w bearings		1
6	::831/00137		Casquillo		2
7	:123/07761		Tornillo trunnion		2
8	:1425/0014Z		Arandela		2
13	:1420/0012Z		Arandela M20		2
14	:123/07762		Pasador pivot		1
15	:826/00614		Arandela elástica		2
16	:811/50578		Pasador pivot		1
17	:1450/0001		Engrasador grease, straight 1/8 BSP		5
18	:1391/3419Z		Tornillo de cierre		1
19	:1370/0303Z		Tuerca lock M10		1
20	:123/07763		Pasador lock		1
21	:826/00600		Pasador linch		1
22	:809/00192		Cojinete		4
27	:123/09001		Placa SWL 1 ton		1
28	:826/00562		Tornillo hammer drive		2

9812/0010 A3-24-6 ENGANCHE RÁPIDO, ACCESORIO, RETROEXCAV, HIDRÁULICA

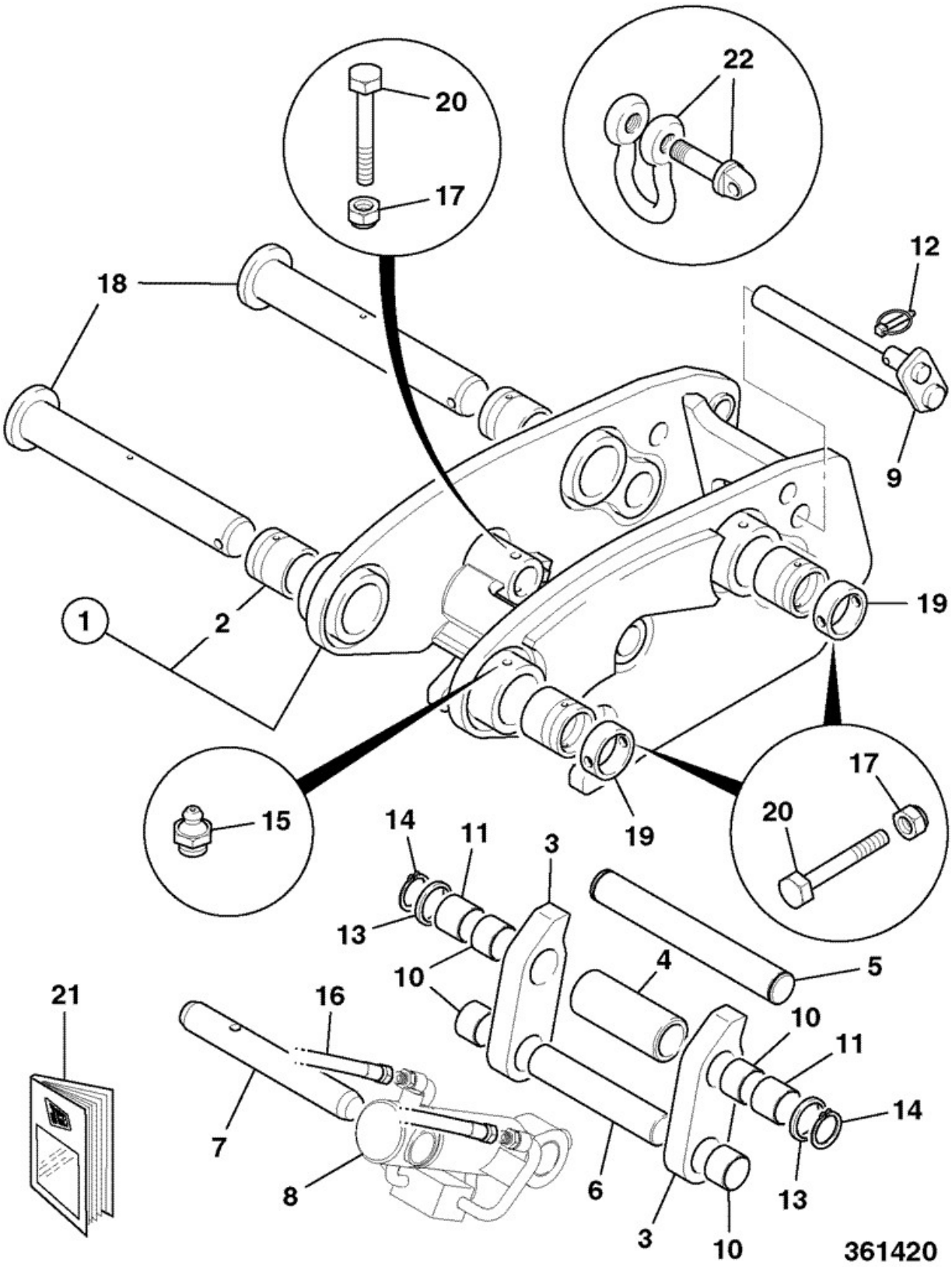

Elemento	Pieza Nº	Cambiar número	Descripción	Código de uso	CANT.
A	980/88854		Enganche rápido assembly 3CX/4CX		1
1	:980/88932		Enganche rápido 3cx/4cx		1
2	::831/10216		Cojinete		4
3	:331/17444		Palanca locking		2
4	:829/30521		Espaciador		1

5	:811/90160		Pasador pivot		1
6	:811/90161		Pasador pivot		1
7	:811/90163		Pasador pivot		1
8	:551/60137		Pistón 50mm cyl x 25mm rod		1
9	:331/17446		Pasador safety		1
10	:831/10215		Cojinete		4
11	:831/10217		Cojinete bronze 35ID-39OD-35LG		2
12	:826/00600		Pasador linch		1
13	:1406/0027		Junta		1
14	:2203/0048		Arandela elástica		2
15	:1450/0001		Engrasador grease, straight 1/8 BSP		6
16	:611/80007		Manguito		2
17	:1370/0303Z		Tuerca lock M10		2
18	:911/40046		Pasador pivot		2
19	:123/06668		Casquillo		2
20	:1315/3416Z		Tornillo hex. head M10 x 70		3
21	:9801/8535		Manual Dedicated hydraulic q/hitch		1
22	918/66900		Shackle bow SWL 1 ton, 7/8" dia shaft *not supplied with quickhitch*		1

9812/0010 A3-24-7 ENGANCHE RÁPIDO, ACCESORIO, RETROEXCAV, HIDRÁULICA

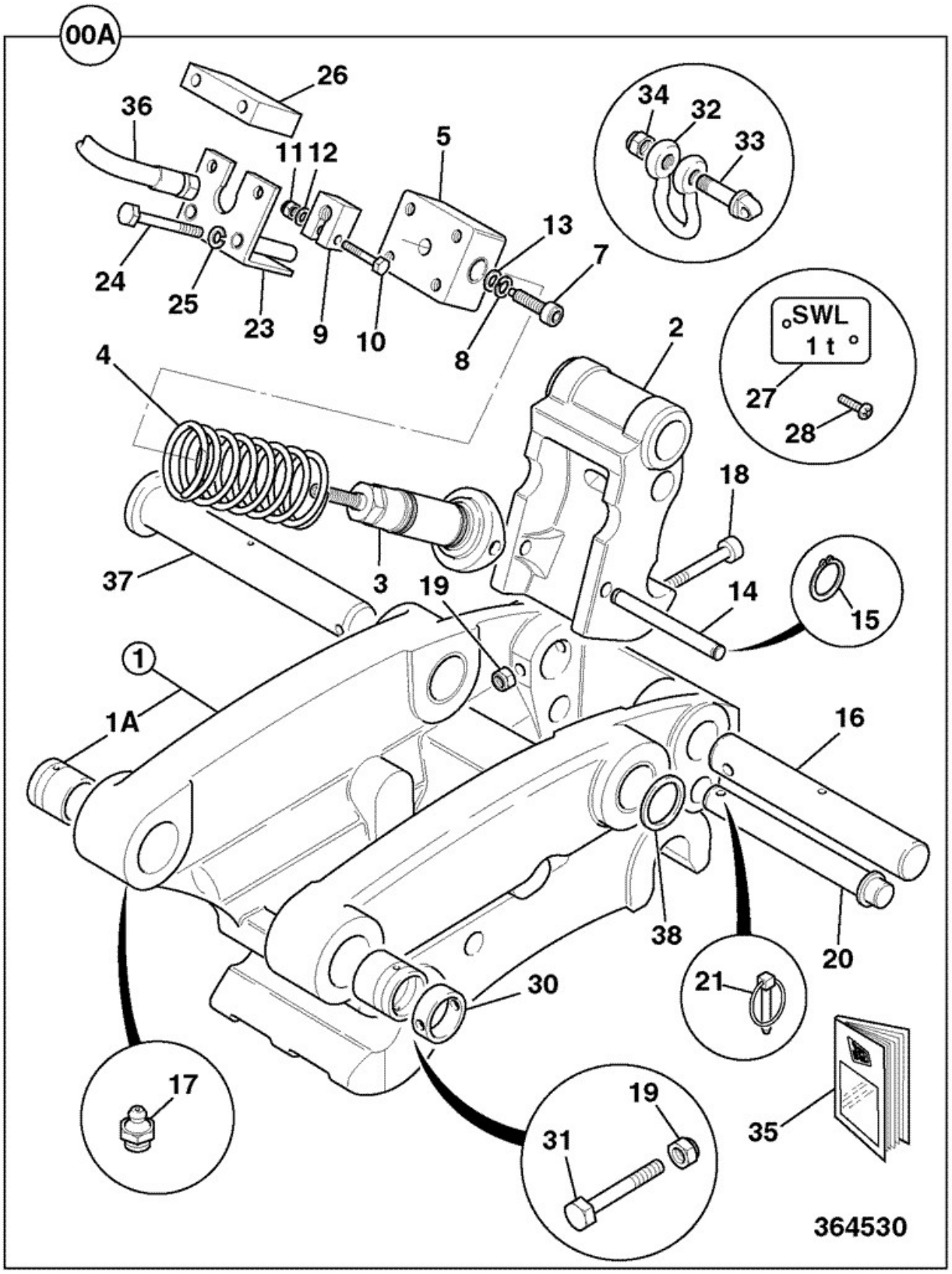

Elemento	Pieza Nº	Cambiar número	Descripción	Código de uso	CANT.
A	980/89086		Enganche rápido assembly 3CX 4CX excavator *Attachment field fit*		1
B	:126/03076		Enganche rápido assembly, hydraulic excavator *BHL Production line fit.*		1
1	:128/10412		Cuerpo c/w bearings quickhitch		1

1A	::809/00192		Cojinete		4
2	:123/07757		Retenida		1
3	:123/07760		Pistón quickhitch		1
3A	::991/10143		Kit seal		1
4	:814/00436		Muelle compression .		1
5	:980/89087		Bloque pivot assembly hyd quickhitch		1
7	:123/07761		Tornillo trunnion		2
8	:1425/0014Z		Arandela		2
9	:123/07759		Casquillo lock		1
10	:1315/3311Z		Tornillo M8 X 45		1
11	:1370/0203Z		Tuerca self lock M8		1
12	:1420/0007Z		Arandela plain M8		1
13	:1420/0012Z		Arandela M20		2
14	:123/07762		Pasador pivot		1
15	:826/00614		Arandela elástica		2
16	:811/50578		Pasador pivot		1
17	:1450/0001		Engrasador grease, straight 1/8 BSP		5
18	:1391/3419Z		Tornillo de cierre		1
19	:1370/0303Z		Tuerca lock M10		1
20	:123/07763		Pasador lock		1
21	:826/00600		Pasador linch		1
23	:123/07864		Tapa		1
24	:1315/3419Z		Tornillo M10x90mm		4
25	:1425/0008Z		Arandela Spring M10		4
26	:123/07863		Bloque		1
27	:123/09001		Placa SWL 1 ton		1
28	:826/00562		Tornillo hammer drive		2
30	:123/06668		Casquillo		2
31	:1315/3416Z		Tornillo hex. head M10 x 70		2
32	918/66900		Shackle bow SWL 1 ton, 7/8" dia shaft *not supplied with quickhitch*		1
33	:1315/3814Z		Tornillo M20 x 60mm		1
34	:1370/0703Z		Tuerca M20		1
35	9801/8641		Libro Owners manual 3CX 4CX excavator		1
36	:611/80025		Manguito		1
37	:911/12400		Pasador pivot 306 long		2
38	:823/00470		Arandela		2

9812/0010 A3-24-10 ENGANCHE RAPIDO ACCE, SORIO RETROEXCAVADOR, A

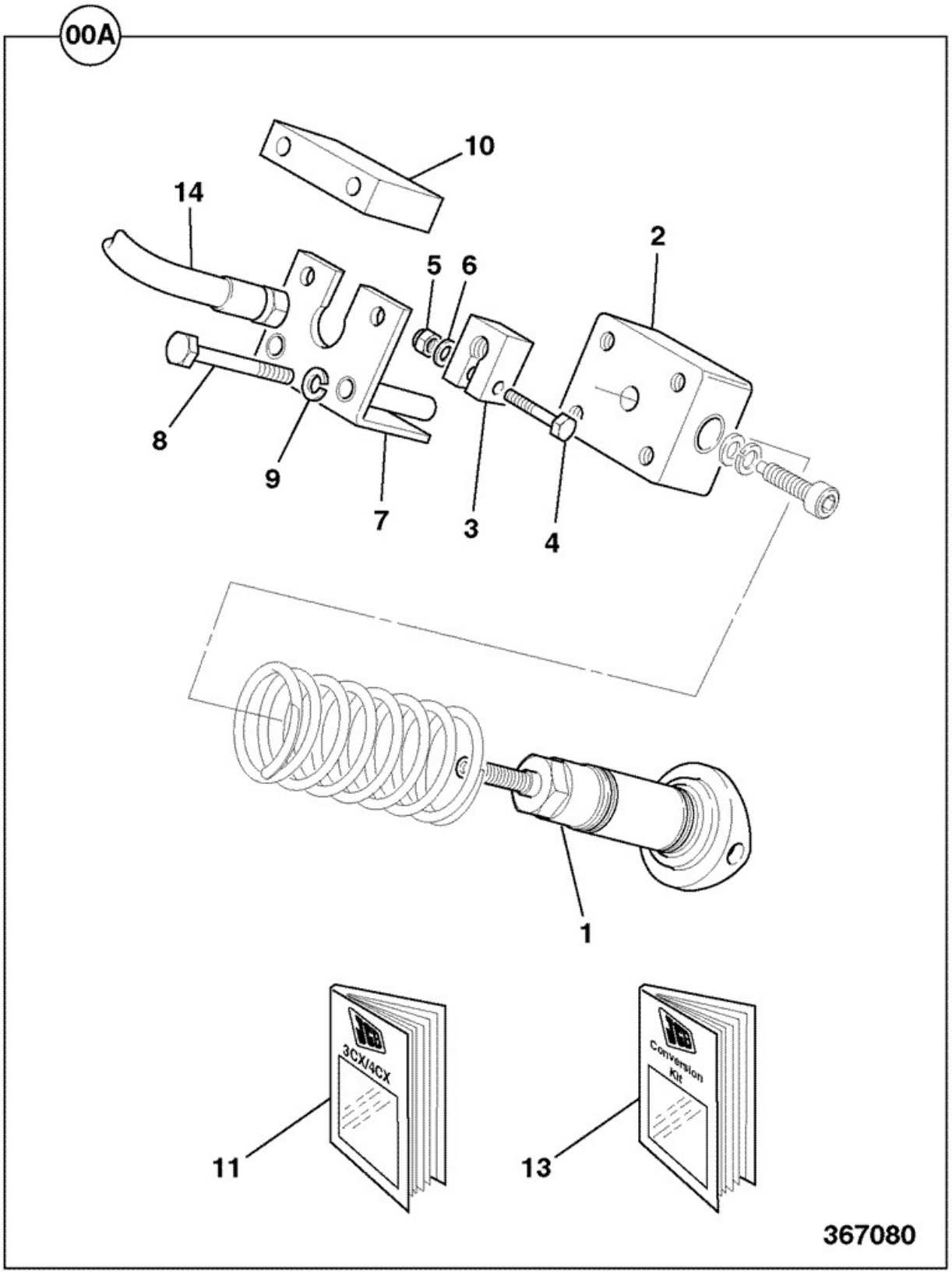

Elemento	Pieza Nº	Cambiar número	Descripción	Código de uso	CANT.
A	980/89090		Kit conversión Q hitch, mech to hyd 3CX 4CX		1
1	:123/07760		Pistón quickhitch		1
1A	::991/10143		Kit seal		1
2	:980/89087		Bloque pivot assembly hyd quickhitch		1
3	:123/07759		Casquillo lock		1

4	:1315/3311Z		Tornillo M8 X 45		1
5	:1370/0203Z		Tuerca self lock M8		1
6	:1420/0007Z		Arandela plain M8		1
7	:123/07864		Tapa		1
8	:1315/3419Z		Tornillo M10x90mm		4
9	:1425/0008Z		Arandela Spring M10		4
10	:123/07863		Bloque		1
11	:9801/8641		Libro Owners manual 3CX 4CX excavator		1
13	:9814/0336		Libro kit-conversion fitting instructions		1
14	:611/80025		Manguito		1
15	:1315/3525Z		Tornillo		1
16	:1420/0009Z		Arandela Plain M12		1
18	:123/07762		Pasador pivot		1
19	:826/00614		Arandela elástica		2
20	817/17365		Etiqueta JCB Quickhitch		1

9812/0010 A3-24-15 KIT, QUICKHITCH, MAINFRAME 980/89266

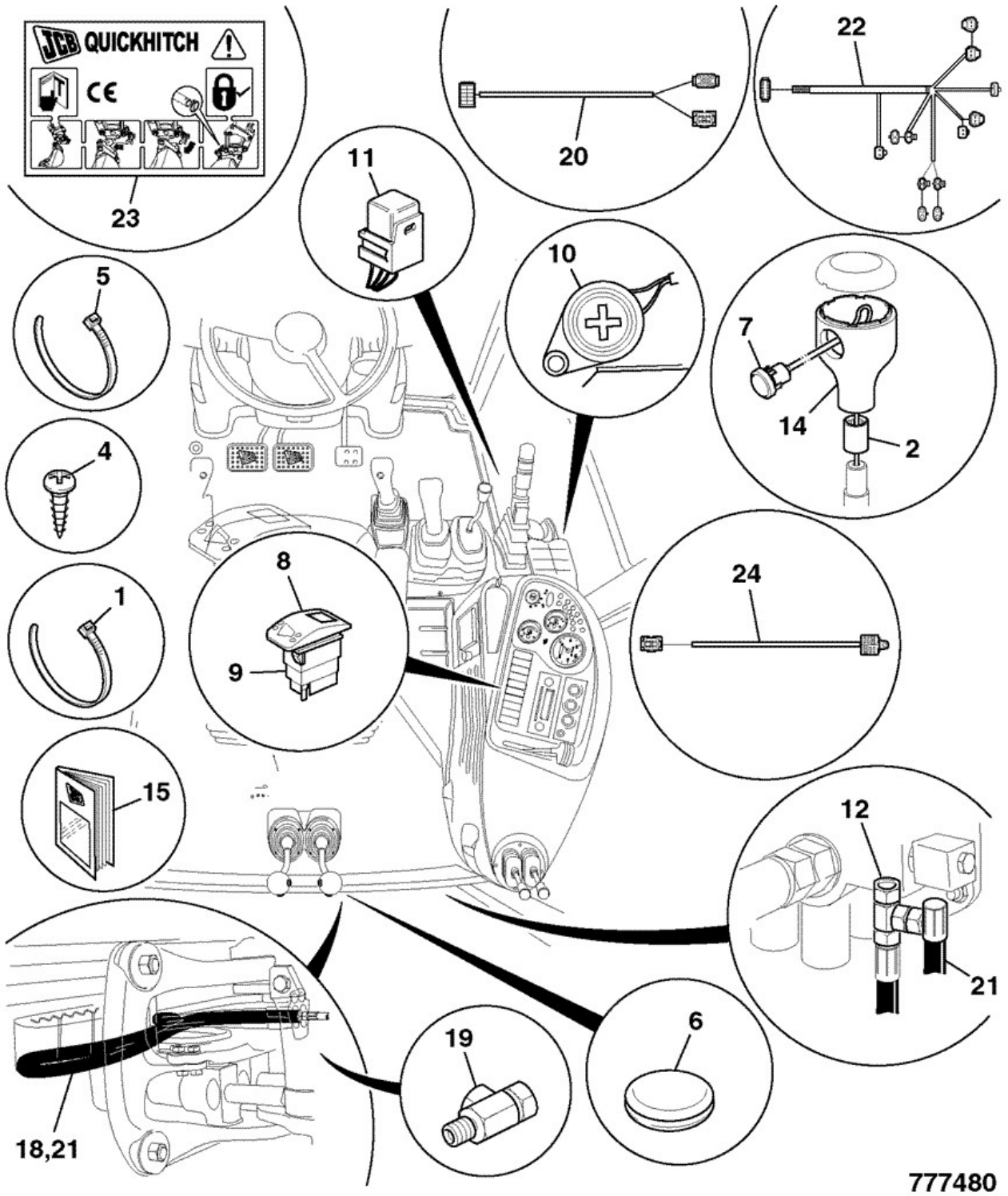

Elemento	Pieza Nº	Cambiar número	Descripción	Código de uso	CANT.

A	980/89266		Kit Q/Hitch mainframe		1
1	:121/77603		Abrazadera cable L=300mm x W=7.6mm		10
2	:122/67459A		Anillo tolerance		2
4	:1430/0304		Tornillo Self tapping		2
5	:204/07007		Abrazadera cable - 100mm Long		6
6	:2410/1106		Aro de refuerzo blind Noml dia 20mm		2
7	:701/49800		Interruptor micro		2
8	:701/58834		Tapa indicators switch decal		1
9	:701/60002		Interruptor 12V		1
10	:704/26400		Alarma pulse buzzer		1
11	:716/30149	Superseded	Relé 12v micro		1
11	:332/C3148		RELE 12v micro high capacity		1
12	:816/50031		Adaptador Tee		1
14	:331/29408		Base Knob, 2 Button Black		2
15	:9814/0377		Kit fitting instruction		1
18	:611/03900		Manguito		1
19	:816/50014		Adaptador tee		1
20	:721/11308	<M1349884	Cableado HTC & Q/H switch		1
20	:332/F6683	>M1349885	Cableado HTC & Q/H switch		1
21	:611/23300		Manguito		1
22	:721/11718		Cableado Q/Hitch & Aux		1
23	:817/17365		Etiqueta JCB Quickhitch		1
24	:721/11309		Cableado Q/Hitch relay		1
25	:721/11557		Cableado Q/Hitch link PC *Required for Precise control machines.*		1

9812/0010 A3-25-3 COMPACTADOR, ACCSRIO\ RETROEXCAV, 0

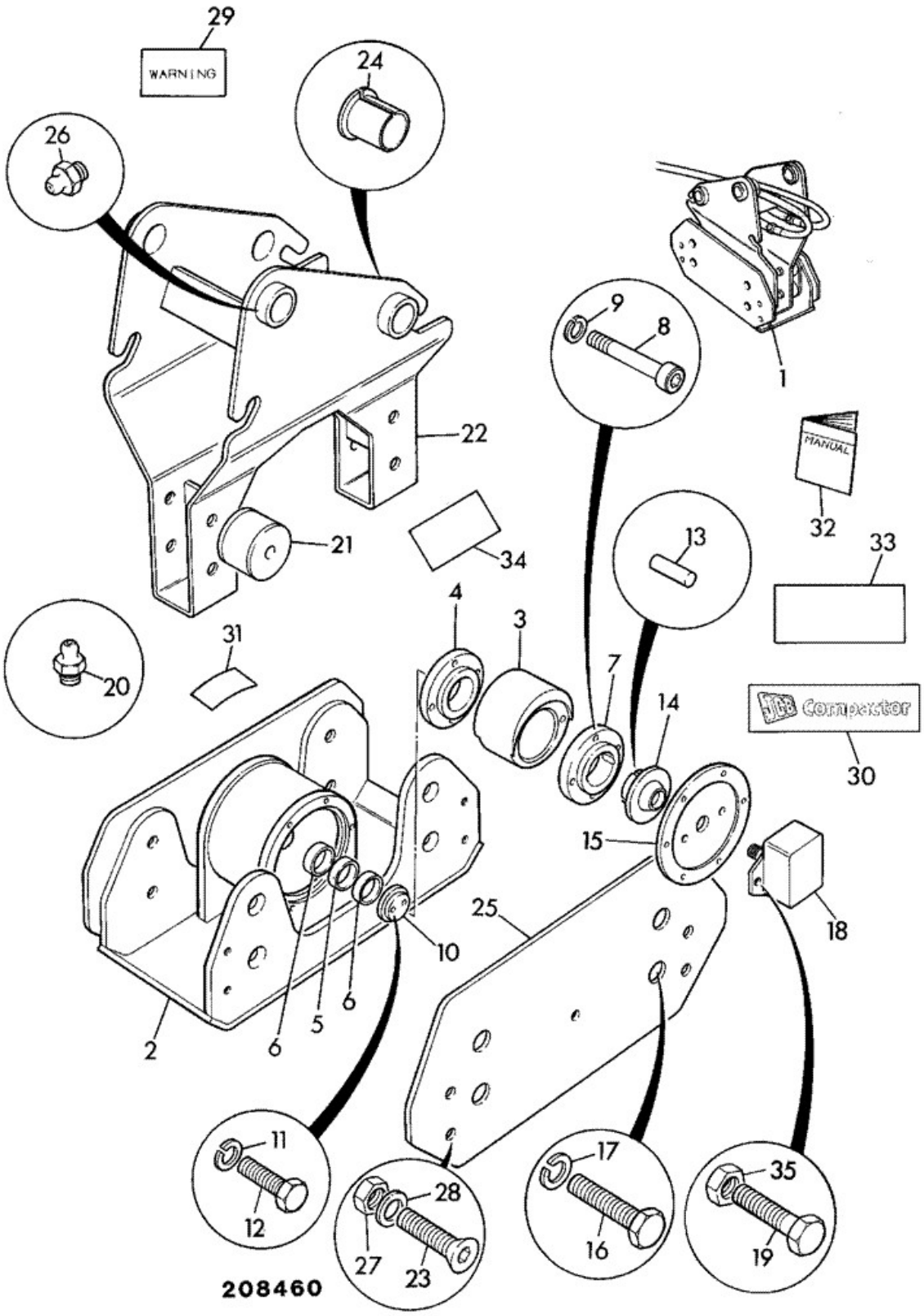

Elemento	Pieza Nº	Cambiar número	Descripción	Código de uso	CANT.
1	980/32000		Accesorio compactor		1
2	:980/30410		Base compactor		1
2	332/A1595		Placa COMPACTOR FOOT PLATE	A	1
2	826/01608		Tornillo	A	4
2	1420/0011Z		Arandela M16 plain	A	4

2	1370/0603Z		Tuerca M16	A	4
3	::903/04402		Anillo eccentric weight		1
4	::903/04403		Placa end		1
5	::903/04404		Espaciador		1
6	::903/04405		Cojinete		2
7	::903/04406		Placa drive end		1
8	::1391/3421		Tornillo de cierre		4
9	::1425/0008Z		Arandela Spring M10		6
10	::903/04407		Placa end		1
11	::903/04408		Arandela tab		1
12	::1315/0407Z		Tornillo M10 x 25mm		2
13	::903/04409		Rodillo		3
14	::903/04411		Acoplamiento motor drive		1
15	::903/04410		Placa motor adapter		1
16	:1315/0707Z		Tornillo		16
17	:1425/0011Z		Arandela spring		16
18	:20/301100		Motor compactor 4 bolt mounting Seal Kit 20/951234		1
18	:20/950670		Motor compactor 4 bolt mounting Seal Kit 20/301001		1
19	:1391/3308Z		Tornillo de cierre		4
20	:1450/0001		Engrasador grease, straight 1/8 BSP		1
21	:980/30403		Montaje rubber		4
22	:980/30405		Soporte top		1
23	:826/01359		Tornillo de cierre		8
24	:G65/0		Casquillo pivot		4
25	:980/30401		Placa backfill		2
26	:1450/1002		Engrasador grease 1/4" BSP 90deg.		4
27	:1370/0603Z		Tuerca M16		8
28	:1420/0011Z		Arandela M16 plain		8
29	:817/02742		Rótulo warning before operating		1
30	:817/03141		Rótulo "Compactor"		2
31	:993/50003		Rótulo greasing		1
32	:9801/0144		Manual owners		1
33	:817/00592		Etiqueta		1
34	:817/03292		Rótulo caution		1
35	:823/00523		Arandela locking		4

9812/0010 A3-25-4 CIRCUITO COMPACTADOR, ACCSRIO\ RETROEXCAV, 0

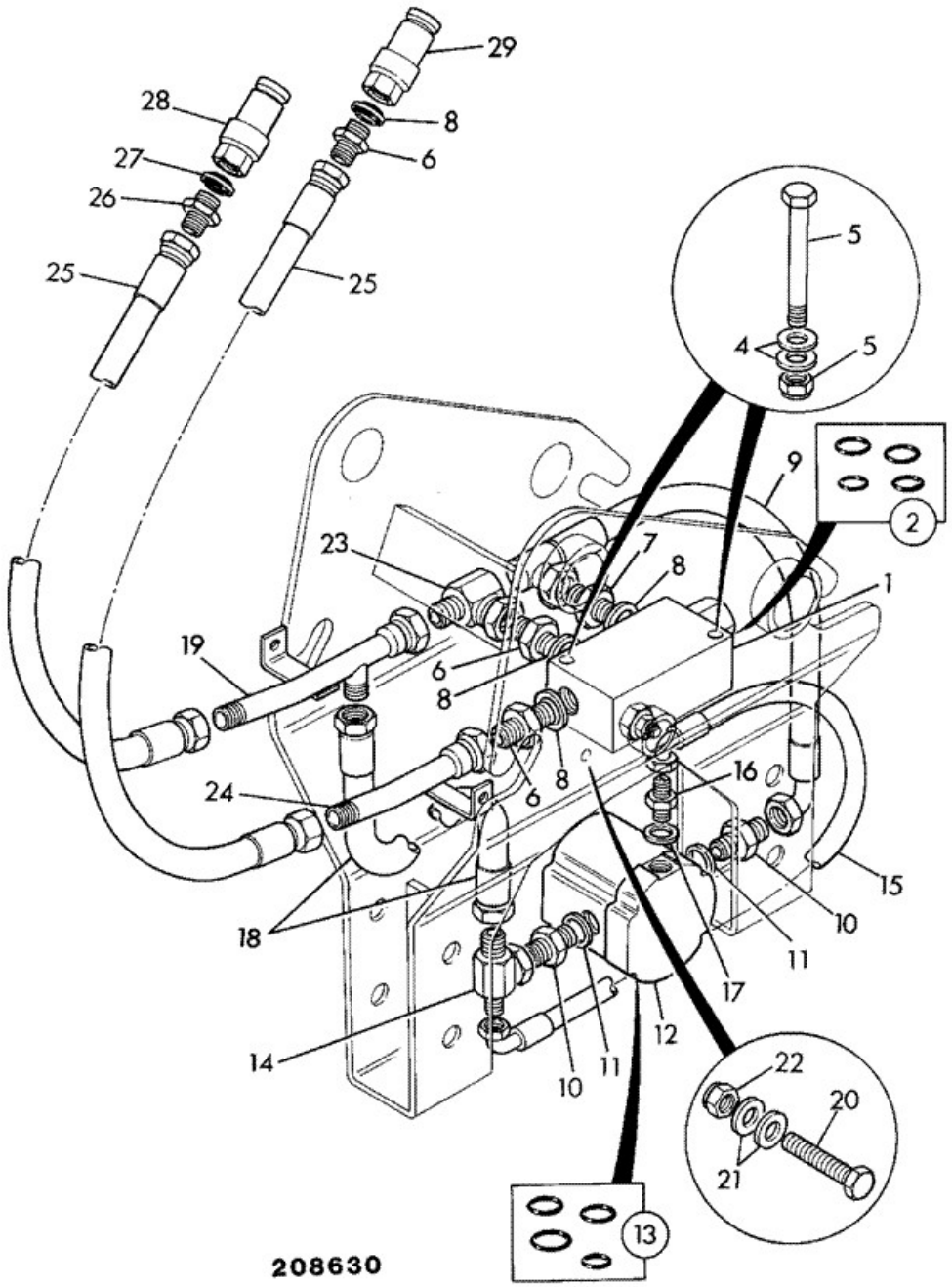

Elemento	Pieza Nº	Cambiar número	Descripción	Código de uso	CANT.
1	25/973300		Válvula compactor Seal Kit 25/973301		1
2	:25/973301		Kit junta		1
3	1315/3418Z		Tornillo M10x80		2
4	1420/0008Z		Arandela Plain M10		4
5	1370/0303Z		Tuerca lock M10		2

6	1604/0006		Adaptador 3/4" BSP M/M		3
7	1606/0009		Adaptador reducing		1
8	1406/0021		Junta bonded 3/4" BSP		4
9	613/47400		Manguito 1/2"BSP x 340mm *Motor feed*		1
10	1604/0004		Adaptor Male		2
11	1406/0018		Junta bonded 1/2" BSP		2
12	20/301100		Motor compactor 4 bolt mounting Seal Kit 20/951234		1
12	20/950670		Motor compactor 4 bolt mounting Seal Kit 20/301001		1
13	:20/301001		Kit junta compactor motor		1
14	816/50014		Adaptador tee		1
15	611/26300		Manguito *Motor drain*		1
16	1604/0002		Adaptador 1/4" BSP M/M		1
17	1406/0011		Junta bonded		1
18	613/06900		Manguito 205mm *Motor return*		1
19	980/33000		Tubería		1
20	1315/0405Z		Tornillo M10 x 20mm long		2
21	1411/0001Z		Arandela		4
22	1370/0103Z		Tuerca Self lock M6		2
23	816/00335		Adaptador 90 elbow		1
24	980/32900		Tubería		1
25	607/00200		Manguito 1900mm		2
26	1606/0012		Adaptador		1
27	1406/0026		Arandela seal		1
28	45/904400		Acoplamiento male 3/4"		1
29	45/904600		Acoplamiento male 1" BSP quick release		1

Catálogo de productos \ CONSTRUCTION \ REST OF WORLD \ CONSTRUCTION / INDUSTRIAL \ BACKHOE LOADER 3CX,4CX,214,215,217 \ 3CX 00960000-00989999,01297000-01297999,01327000-01349999,01616000-01625999,01705500-01709999 84hp 9812/0010 \ A ACCESORIOS \ A03 ACCESORIOS

9812/0010 A3-26-1 CORTADOR/TRITURADOR, 0, CM500

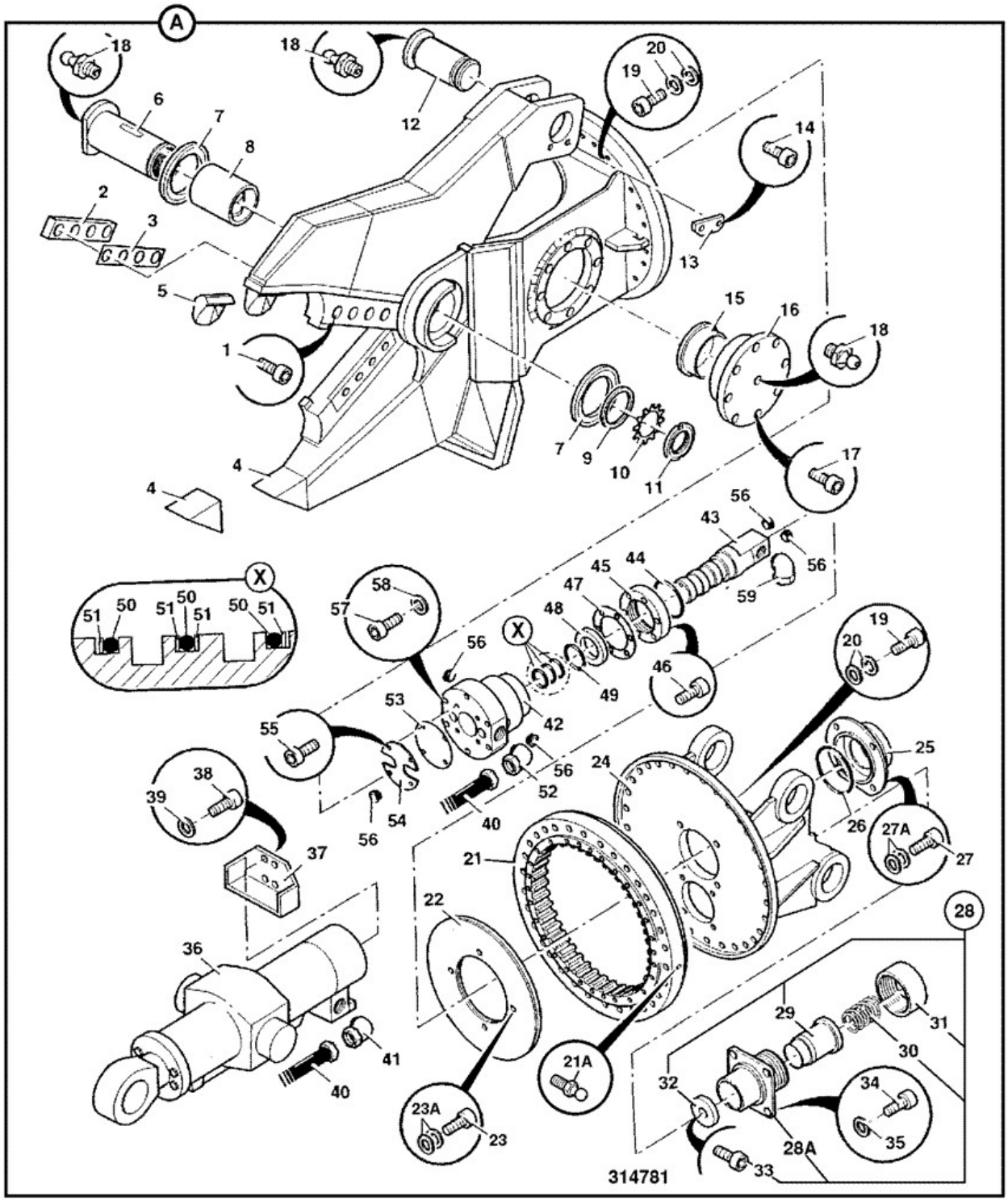

Elemento	Pieza Nº	Cambiar número	Descripción	Código de uso	CANT.
A	NLA		No disponible		1

1	:903/05156		Tornillo de cierre		8
2	:983/00545		Hoja cutter		2
3	:983/00546		Suplemento		0
4	:983/00547		Diente		1
5	:983/00548		Martillo		1
6	:983/00549		Eje		1
7	:983/00550		Placa spacer		2
8	:983/00551		Casquillo		1
9	:983/00552		Arandela		1
10	:983/00553		Arandela lock		1
11	:983/00554		Tuerca axle		1
12	:983/00555		Eje		1
13	:983/00556		Barra		1
14	:983/00079		Tornillo de cierre		2
15	:983/00557		Casquillo		1
16	:983/00558		Tapa		1
17	:983/00559		Tornillo de cierre M12 x 25		8
18	:903/04643		Engrasador grease		4
19	:1391/3516		Tornillo cap		60
20	:903/04849		Arandela locking		60
21	:983/10115		Anillo slew		1
21A	:983/00021		Engrasador grease		1
21B	:983/10120		Junta Slew ring Cutter crusher		1
22	:983/00563		Placa		1
23	:983/00079		Tornillo de cierre		4
24	:983/10116		Cuerpo end Cutter crusher		1
24A	:983/00561		Arandela lock		12
25	:983/10117		Tope slew stop Cutter crusher		1
26	:983/00566		Junta tórica		1
27	:903/05156		Tornillo de cierre		4
28	:983/10119		Freno assembly Cutter crusher		1
28A	::983/00568		Cuerpo		1
29	::983/00569		Guía spring		1
30	::983/00570		Muelle		1
31	::983/00571		Tapa		1
32	::983/10118		Placa cutter crusher		1
33	::826/10478		Tornillo de cierre		1
34	:983/00559		Tornillo de cierre M12 x 25		4
35	:903/04849		Arandela locking		4
36	:983/00576		Pistón hydraulic cylinder Cutter crusher		1
37	:983/00577		Caja		1
38	:983/00578		Tornillo de cierre M10 x 16		4
39	:983/00579		Arandela spring		4
40	:983/00580		Manguito		2
41	:983/00581		Codo		1
42	:983/00582		Cuerpo		1
43	:983/00583		Carrete		1
44	:983/00584		Limpiaparabrisas		1
45	:983/00585		Tapa		1
46	:983/00586		Tornillo de cierre M6 x 16		6
47	:983/00587		Junta		1

48	:983/00595		Cojinete ball		1
49	:983/00588		Anillo retaining		1
50	:983/00589		Junta tórica		3
51	:983/00590		Anillo supporting		4
52	:983/00591		Codo		1
53	:983/00592		Junta		1
54	:983/00593		Tapa		1
55	:983/00057		Tornillo de cierre		4
56	:903/03218		Tapón		2
57	:983/00594		Tornillo de cierre M8 x 60		6
58	:983/00561		Arandela lock		6
59	:983/00591		Codo		1
60	613/07700		Manguito 980 lg		2
61	1604/0004		Adaptor Male		4
62	1406/0018		Junta bonded 1/2" BSP		4
63	816/40014		Adaptador		2
64	45/910400		Acoplamiento 1/2" BSP female quick release		1
65	45/910500		Acoplamiento 1/2" BSP male quick release		1

9812/0010 A3-30-1 Kit obturación, Elevación, HOOK

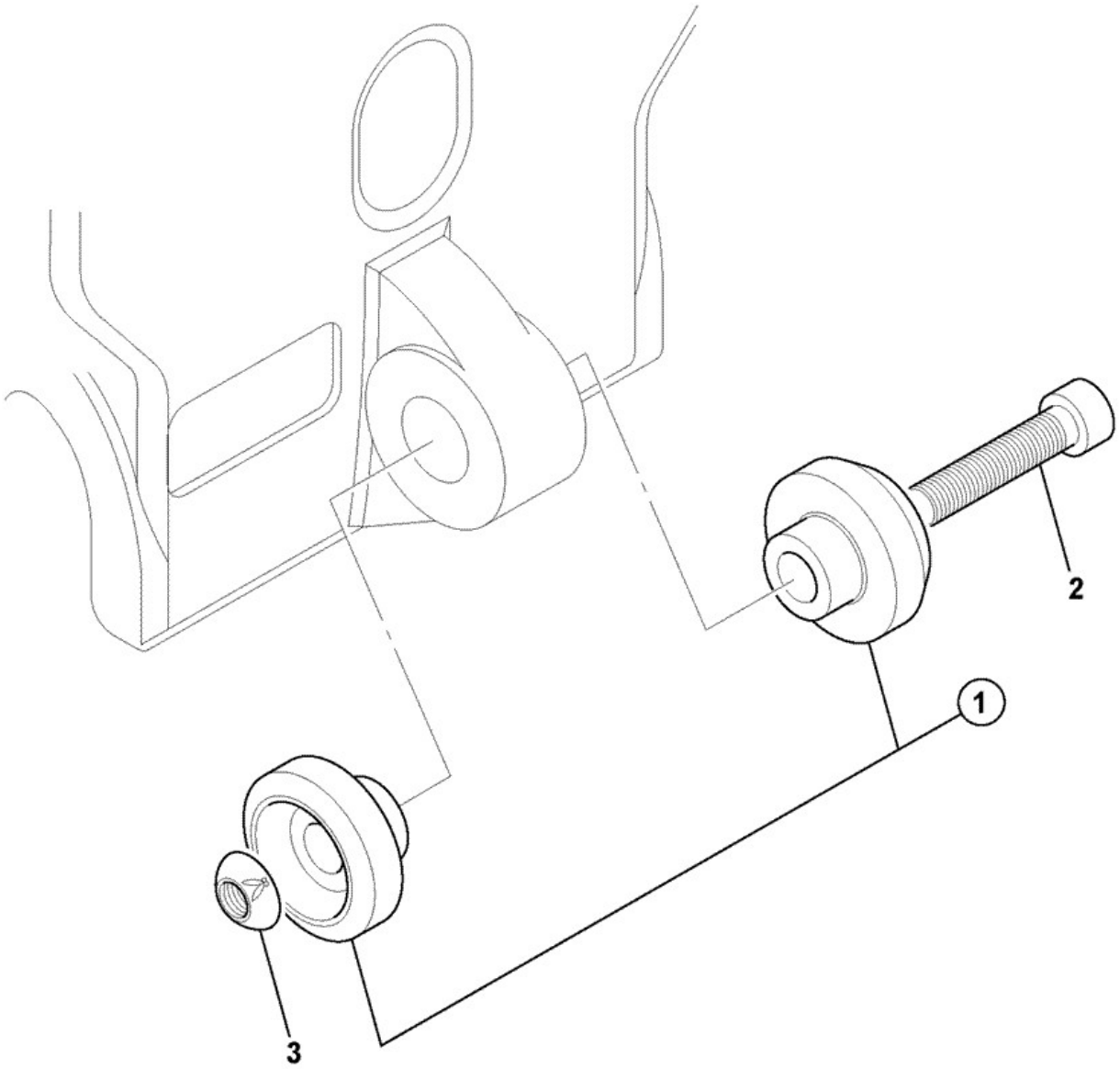

954600

Elemento	Pieza Nº	Cambiar número	Descripción	Código de uso	CANT.
A	****		Inst\ Shackle Blank EU Territory EN474		1

1	332/C5655		shackle EU Territory EN474		2
2	1391/3511D		Tornillo de cierre		1
3	332/C6066		TUERCA M12 security scroll nut		1

9812/0010 A3-34-1 BOMBA, SUMERGIBLE, 0, 0

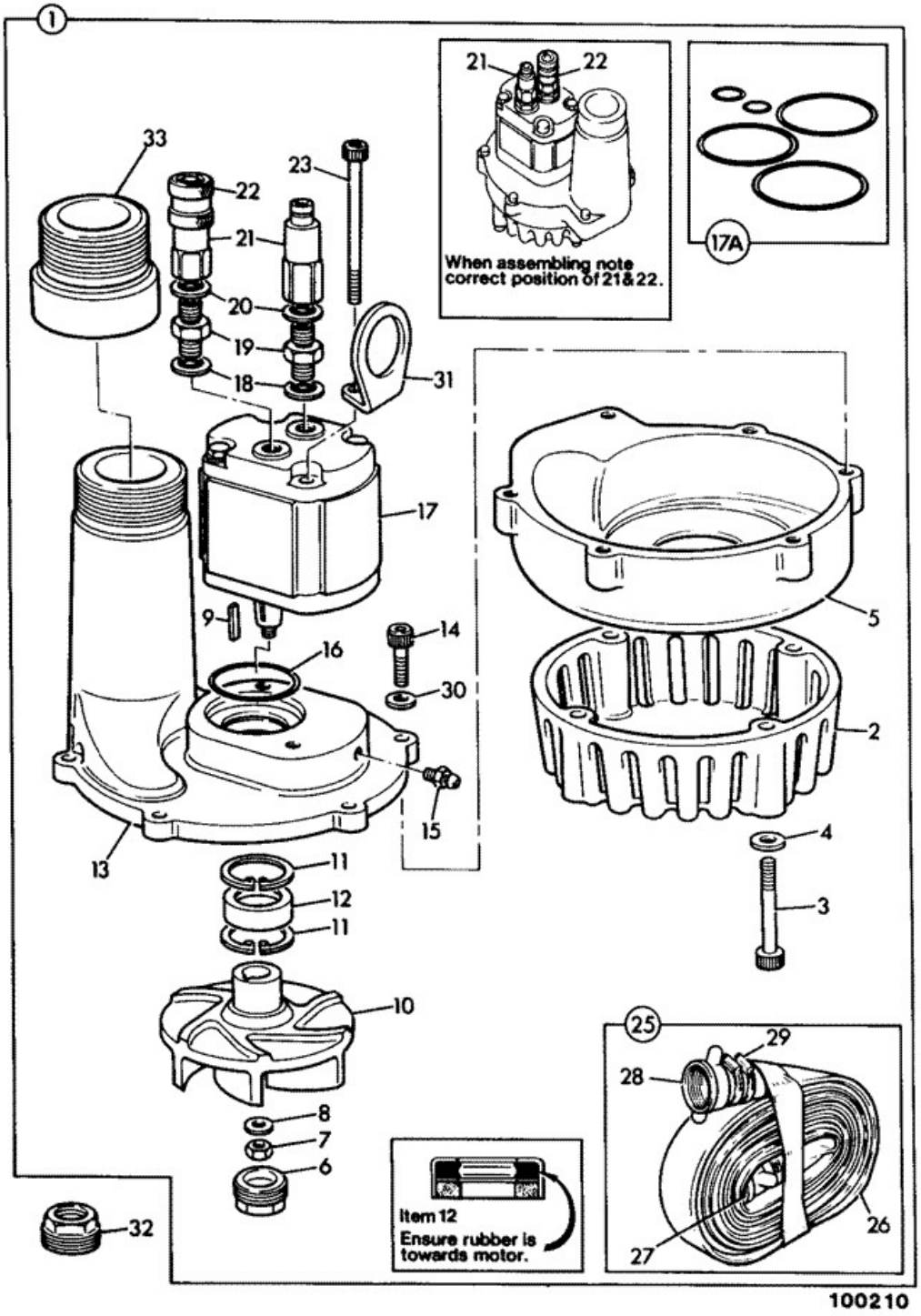

Elemento	Pieza Nº	Cambiar número	Descripción	Código de uso	CANT.
1	929/04500		Bomba & hose assembly submersible		1
2	:929/03902		Cuerpo strainer		1
3	:1315/3315Z		Tornillo star drive M8 x 65mm		4
4	:1420/0008Z		Arandela Plain M10		4
5	:929/04800		Carcasa impellor		1
6	:929/03911		Tapón		1
7	:1340/0302		Tuerca		1
8	:929/03913		Arandela lock		1
9	:929/03912		Llave drive		1
10	:929/04501		Rotor		1
11	:2203/1043		Arandela elástica		2
12	:929/03906		Junta		1
13	:929/04700		Cuerpo casting		1
14	:1391/3308Z		Tornillo de cierre		6
15	:1450/0003		Engrasador grease		1
16	:2401/0127		Junta tórica		1
17	:929/04503		Motor hydraulic		1
17A	::929/03914		Kit junta motor		1
18	:1406/0018		Junta bonded 1/2" BSP		2
19	:1606/0007		Adaptador		2
20	:1406/0015		Arandela seal		2
21	:PP/1200		Acoplamiento male quick release		1
22	:PP/1201		Acoplamiento female quick release		1
23	:1391/3420		Tornillo cap M10 x 100		2
25	:97074		Manguito discharge 2in		1
26	::PP/4035		Manguito		1
27	::PP/4004		Tobera discharge		1
28	::PP/4034		Adaptador discharge pump end		1
29	::2201/0010		Clip jubilee		4
30	:1420/0007Z		Arandela plain M8		6
31	:929/03910		Gancho lifting pump		1
32	929/04900		Herramienta extraction		1
33	929/04701		Adaptador steel hose		1

Catálogo de productos \ CONSTRUCTION \ REST OF WORLD \ CONSTRUCTION / INDUSTRIAL \ BACKHOE LOADER 3CX,4CX,214,215,217 \ 3CX 00960000-00989999,01297000-01297999,01327000-01349999,01616000-01625999,01705500-01709999 84hp 9812/0010 \ B CARROCERIA, CABINA SECCION CARGADORA \ B01 CARROCERIA/BASTIDOR

9812/0010 B1-1-1 CHASIS DESPL LATERAL, 2RD, 0

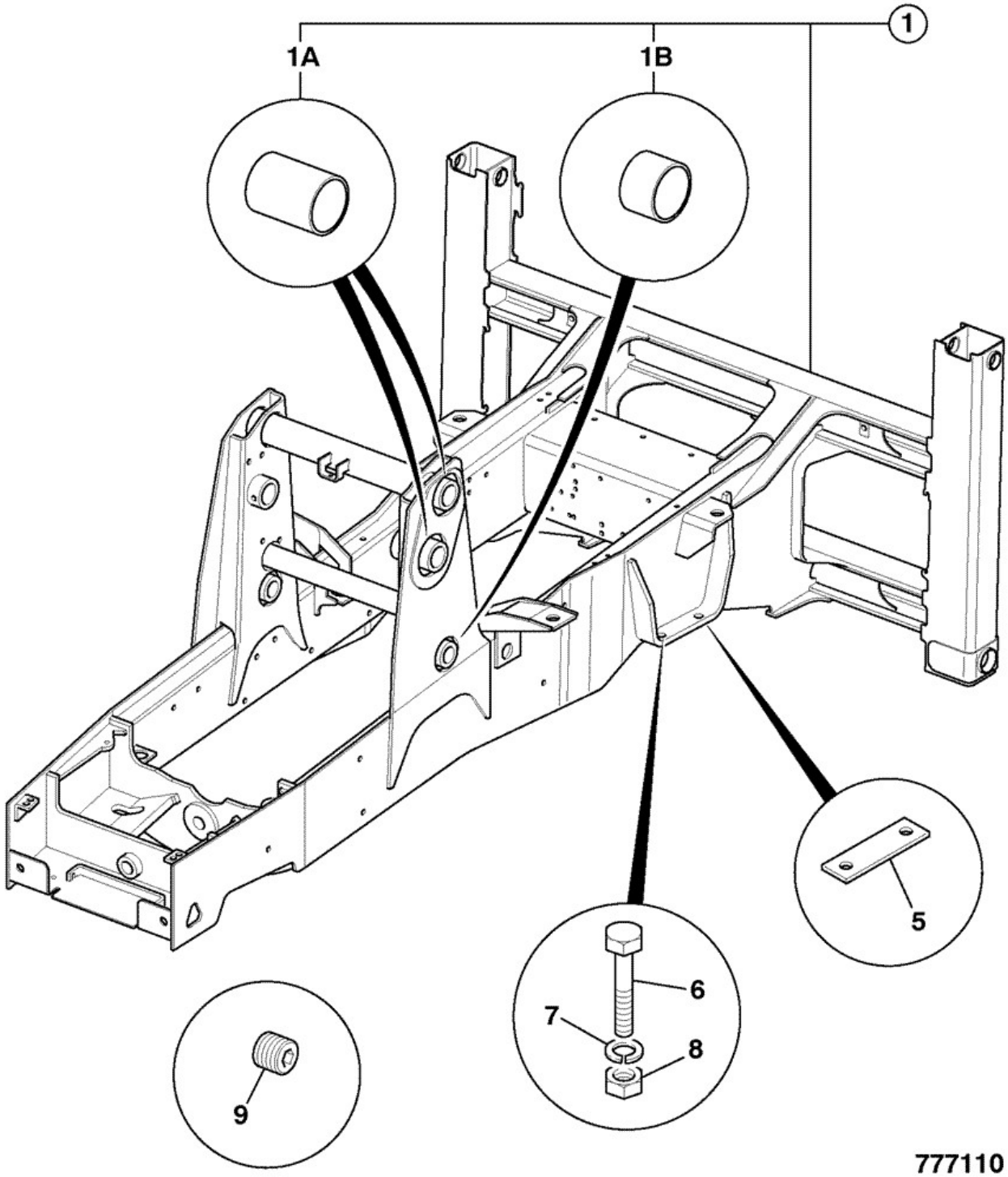

Elemento	Pieza Nº	Cambiar número	Descripción	Código de uso	CANT.
1	128/15154		Chasis 2WS, sideshift 88"		1

1	128/15155		Chasis 2WS, sideshift 92"		1
1A	:809/00102		Cojinete liner		4
1B	:809/00093		Cojinete liner		2
5	123/06350		Espaciador rear axle 25mm *use with 16" Armstrong or 20" front wheels*	A	2
5	331/17737		Espaciador rear axle 20mm *use with 826/01712 FOR 17.5" front wheels*	B	2
6	826/11353		Tornillo 1"unf X 8" long *2WS SS and PS*		4
6	826/01712		Tornillo 1"unf X 9" long *Autoshift or 16" Armstrong OR 20" front wheel*	A	4
6	826/11352		Tornillo 1"unf X 9 1/2" long *2WS SS or PS usage code B*	B	4
6	826/01713		Tornillo 1"unf X 10" long *A/shift with 16" Armstrong or 20" front wheel*	A	4
6	826/01665		Tornillo 1"unf X 10 1/2"long *Autoshift with 17.5" front wheels*	B	4
7	823/00578		Arandela		4
8	826/01714		Tuerca		4
9	835/10026		Tapón plastic		17

Catálogo de productos \ CONSTRUCTION \ REST OF WORLD \ CONSTRUCTION / INDUSTRIAL \ BACKHOE LOADER 3CX,4CX,214,215,217 \ 3CX 00960000-00989999,01297000-01297999,01327000-01349999,01616000-01625999,01705500-01709999 84hp 9812/0010 \ B CARROCERIA, CABINA SECCION CARGADORA \ B01 CARROCERIA/BASTIDOR

9812/0010 B1-1-2 CHASSIS SIDESHIFT, 2WS, TIER 3

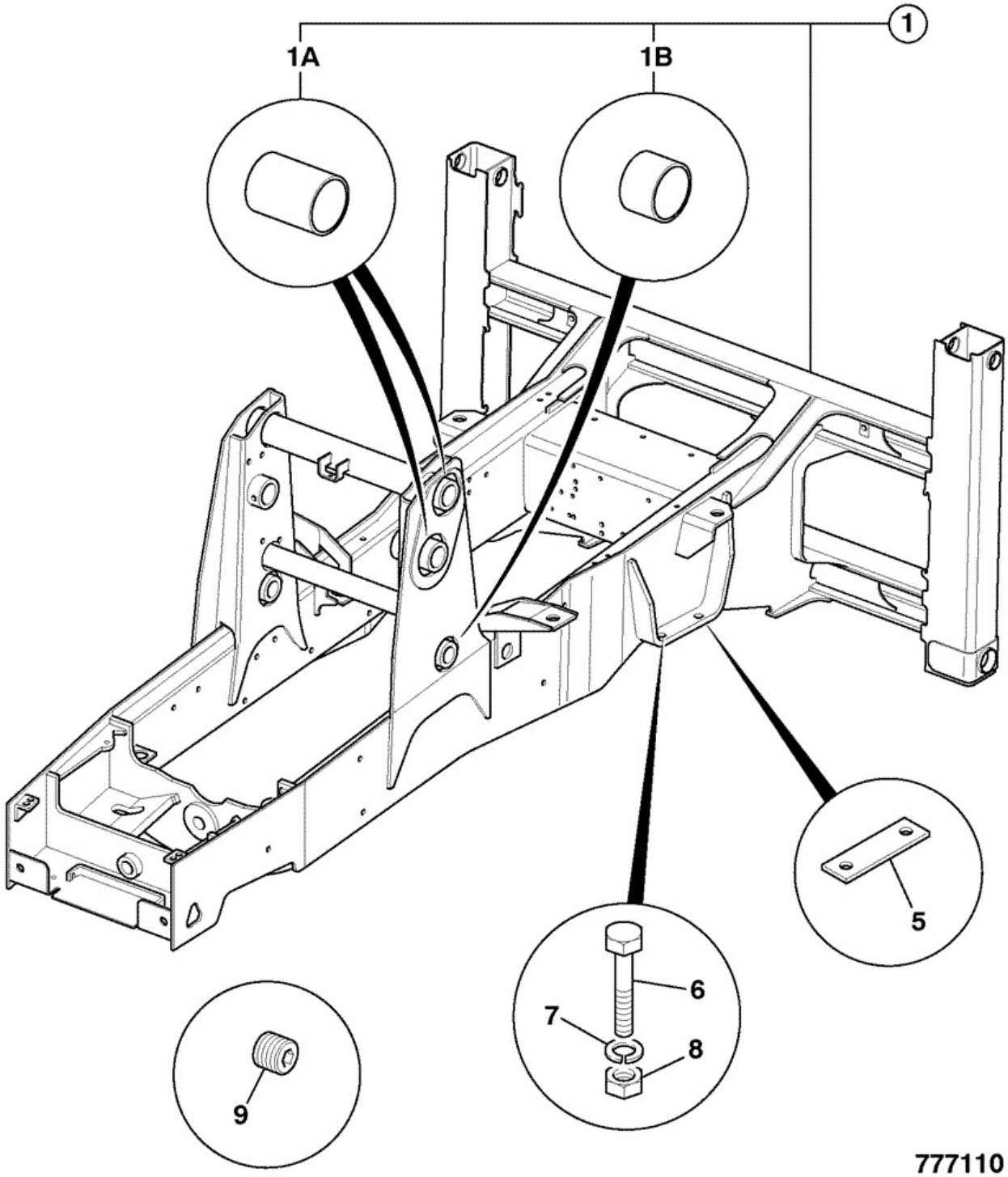

Elemento	Pieza Nº	Cambiar número	Descripción	Código de uso	CANT.
1	128/C0354		Chasis 2WS, sideshift 88"		1

1	128/C0344		Chasis 2WS, sideshift 92"		1
1A	:809/00102		Cojinete liner		4
1B	:809/00093		Cojinete liner		2
5	123/06350	<M1617261	Espaciador rear axle 25mm *use with 16" Armstrong or 20" front wheels*	A	2
5	332/E6439	>M1617262	PIEZA DISTANCIADOR rear axle 6mm *use with 331/17737 FOR 16" Armstrong or 20" front wheels*	A	2
5	331/17737		Espaciador rear axle 20mm *use with 826/01712 FOR 17.5" front wheels*	A, B	2
6	826/11353		Tornillo 1"unf X 8" long *2WS SS and PS*		4
6	826/01712		Tornillo 1"unf X 9" long *Autoshift or 16" Armstrong OR 20" front wheel*	A	4
6	826/11352		Tornillo 1"unf X 9 1/2" long *2WS SS or PS usage code B*	B	4
6	826/01713		Tornillo 1"unf X 10" long *A/shift with 16" Armstrong or 20" front wheel*	A	4
6	826/01665		Tornillo 1"unf X 10 1/2"long *Autoshift with 17.5" front wheels*	B	4
7	823/00578		Arandela		4
8	826/01714		Tuerca		4
9	835/10026		Tapón plastic		17

Catálogo de productos \ CONSTRUCTION \ REST OF WORLD \ CONSTRUCTION / INDUSTRIAL \ BACKHOE LOADER 3CX,4CX,214,215,217 \ 3CX 00960000-00989999,01297000-01297999,01327000-01349999,01616000-01625999,01705500-01709999 84hp 9812/0010 \ B CARROCERIA, CABINA SECCION CARGADORA \ B01 CARROCERIA/BASTIDOR

9812/0010 B1-1-3 CHASSIS SIDESHIFT, 2RD,

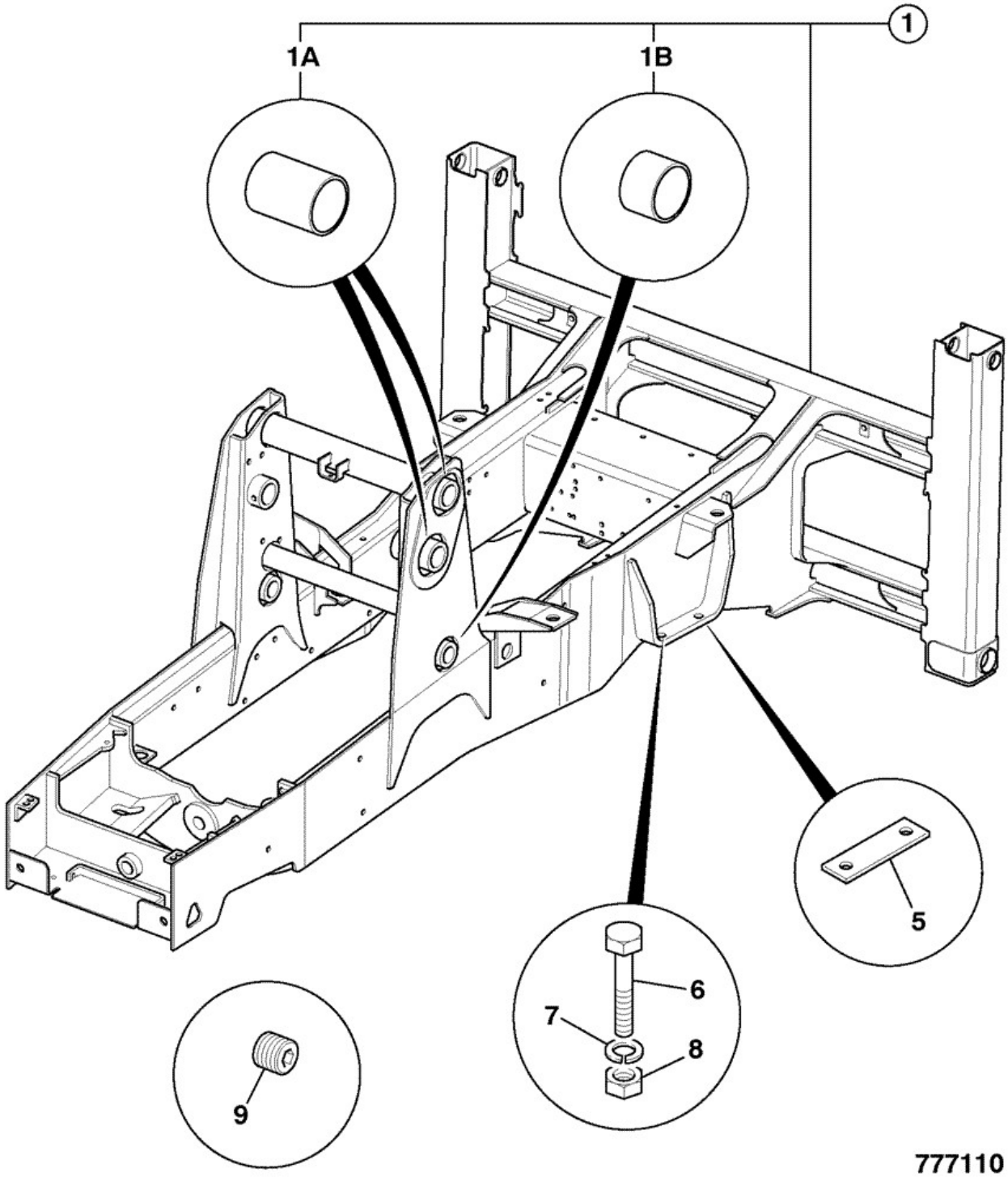

Elemento	Pieza Nº	Cambiar número	Descripción	Código de uso	CANT.
1	128/C0512		Chasis sideshift, 2WS, 88"		1

1	128/C0513		Chasis sideshift, 2WS, 92"		1
1A	:809/00102		Cojinete liner		4
1B	:809/00093		Cojinete liner		2
5	123/06350		Espaciador rear axle 25mm *use with 16" Armstrong or 20" front wheels*	A	2
5	331/17737		Espaciador rear axle 20mm *use with 826/01712 FOR 17.5" front wheels*	B	2
6	826/11353		Tornillo 1"unf X 8" long *2WS SS and PS*		4
6	826/01712		Tornillo 1"unf X 9" long *Autoshift or 16" Armstrong OR 20" front wheel*	A	4
6	826/11352		Tornillo 1"unf X 9 1/2" long *2WS SS or PS usage code B*	B	4
6	826/01713		Tornillo 1"unf X 10" long *A/shift with 16" Armstrong or 20" front wheel*	A	4
6	826/01665		Tornillo 1"unf X 10 1/2"long *Autoshift with 17.5" front wheels*	B	4
7	823/00578		Arandela		4
8	826/01714		Tuerca		4
9	835/10026		Tapón plastic		17

Catálogo de productos \ CONSTRUCTION \ REST OF WORLD \ CONSTRUCTION / INDUSTRIAL \ BACKHOE LOADER 3CX,4CX,214,215,217 \ 3CX 00960000-00989999,01297000-01297999,01327000-01349999,01616000-01625999,01705500-01709999 84hp 9812/0010 \ B CARROCERIA, CABINA SECCION CARGADORA \ B01 CARROCERIA/BASTIDOR

9812/0010 B1-1-21 CHASIS MONT\ CENTRAL, 2RD, 0

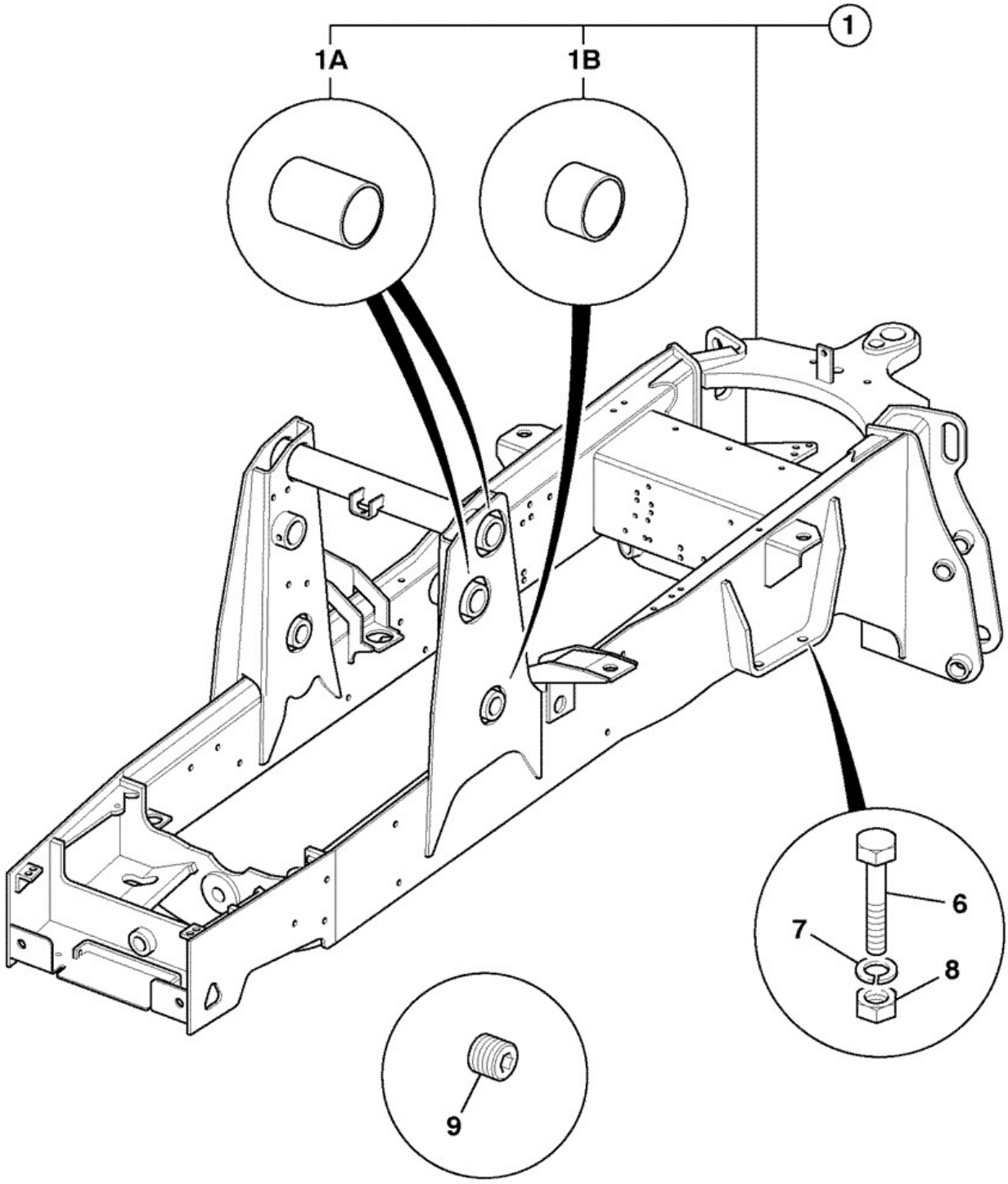

777170

Elemento	Pieza Nº	Cambiar número	Descripción	Código de uso	CANT.
1	128/15152		Chasis 2WS centremount 14'		1

1	128/15153		Chasis 2WS, centremount 15/17'		1
1A	:809/00102		Cojinete liner		4
1B	:809/00093		Cojinete liner		2
5	123/06350		Espaciador rear axle 25mm *use with 16" Armstrong or 20" front wheels*	A	2
5	331/17737		Espaciador rear axle 20mm *use with 826/01712 for 17.5" front wheels*	B	2
6	826/11353		Tornillo 1"unf X 8" long *2WS SS and PS*		4
6	826/01712		Tornillo 1"unf X 9" long *Autoshift or 16" Armstrong or 20"front wheels*	A	4
6	826/11352		Tornillo 1"unf X 9 1/2" long *2WS SS or PS usage code B*	B	4
6	826/01713		Tornillo 1"unf X 10" long *A/shift with 16" Armstrong or 20" front wheel*	A	4
6	826/01665		Tornillo 1"unf X 10 1/2"long *Autoshift with 17.5" front wheels*	B	4
7	823/00578		Arandela		4
8	826/01714		Tuerca		4
9	835/10026		Tapón plastic		17

Catálogo de productos \ CONSTRUCTION \ REST OF WORLD \ CONSTRUCTION / INDUSTRIAL \ BACKHOE LOADER 3CX,4CX,214,215,217 \ 3CX 00960000-00989999,01297000-01297999,01327000-01349999,01616000-01625999,01705500-01709999 84hp 9812/0010 \ B CARROCERIA, CABINA SECCION CARGADORA \ B01 CARROCERIA/BASTIDOR

9812/0010 B1-1-22 CHASSIS CENTREMOUNT, 2WS, TIER 3

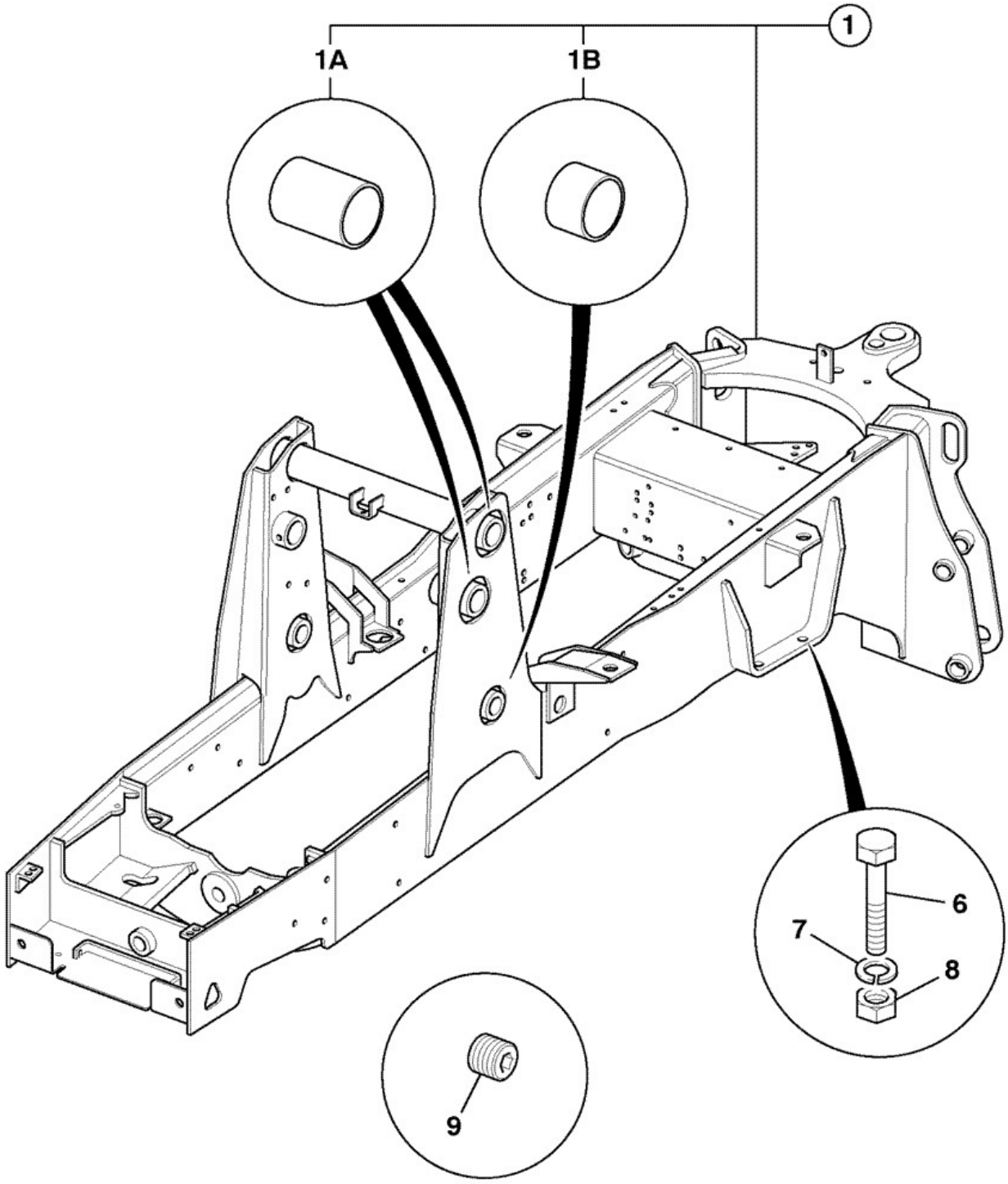

777170

Elemento	Pieza Nº	Cambiar número	Descripción	Código de uso	CANT.
1	128/C0367		Chasis 2WS, centremount 14' 14'		1

1	128/C0360		Chasis 2WS, centremount 15' and 17'		1
1A	:809/00102		Cojinete liner		4
1B	:809/00093		Cojinete liner		2
5	123/06350	<M1617261	Espaciador rear axle 25mm *use with 16" Armstrong or 20" front wheels*	A	2
5	332/E6439	>M1617262	PIEZA DISTANCIADOR rear axle 6mm *use with 331/17737 for 16" Armstrong or 20" front wheels*	A	2
5	331/17737		Espaciador rear axle 20mm *use with 826/01712 for 17.5" front wheels*	A, B	2
6	826/11353		Tornillo 1"unf X 8" long *2WS SS and PS*		4
6	826/01712		Tornillo 1"unf X 9" long *Autoshift or 16" Armstrong or 20" front wheel*	A	4
6	826/11352		Tornillo 1"unf X 9 1/2" long *2WS SS or PS usage code B*	B	4
6	826/01713		Tornillo 1"unf X 10" long *A/shift with 16" Armstrong or 20" front wheel*	A	4
6	826/01665		Tornillo 1"unf X 10 1/2"long *Autoshift with 17.5" front wheels*	B	4
7	823/00578		Arandela		4
8	826/01714		Tuerca		4
9	835/10026		Tapón plastic		17

Catálogo de productos \ CONSTRUCTION \ REST OF WORLD \ CONSTRUCTION / INDUSTRIAL \ BACKHOE LOADER 3CX,4CX,214,215,217 \ 3CX 00960000-00989999,01297000-01297999,01327000-01349999,01616000-01625999,01705500-01709999 84hp 9812/0010 \ B CARROCERIA, CABINA SECCION CARGADORA \ B01 CARROCERIA/BASTIDOR

9812/0010 B1-1-23 CHASSIS CENTREMOUNT, 2RD,

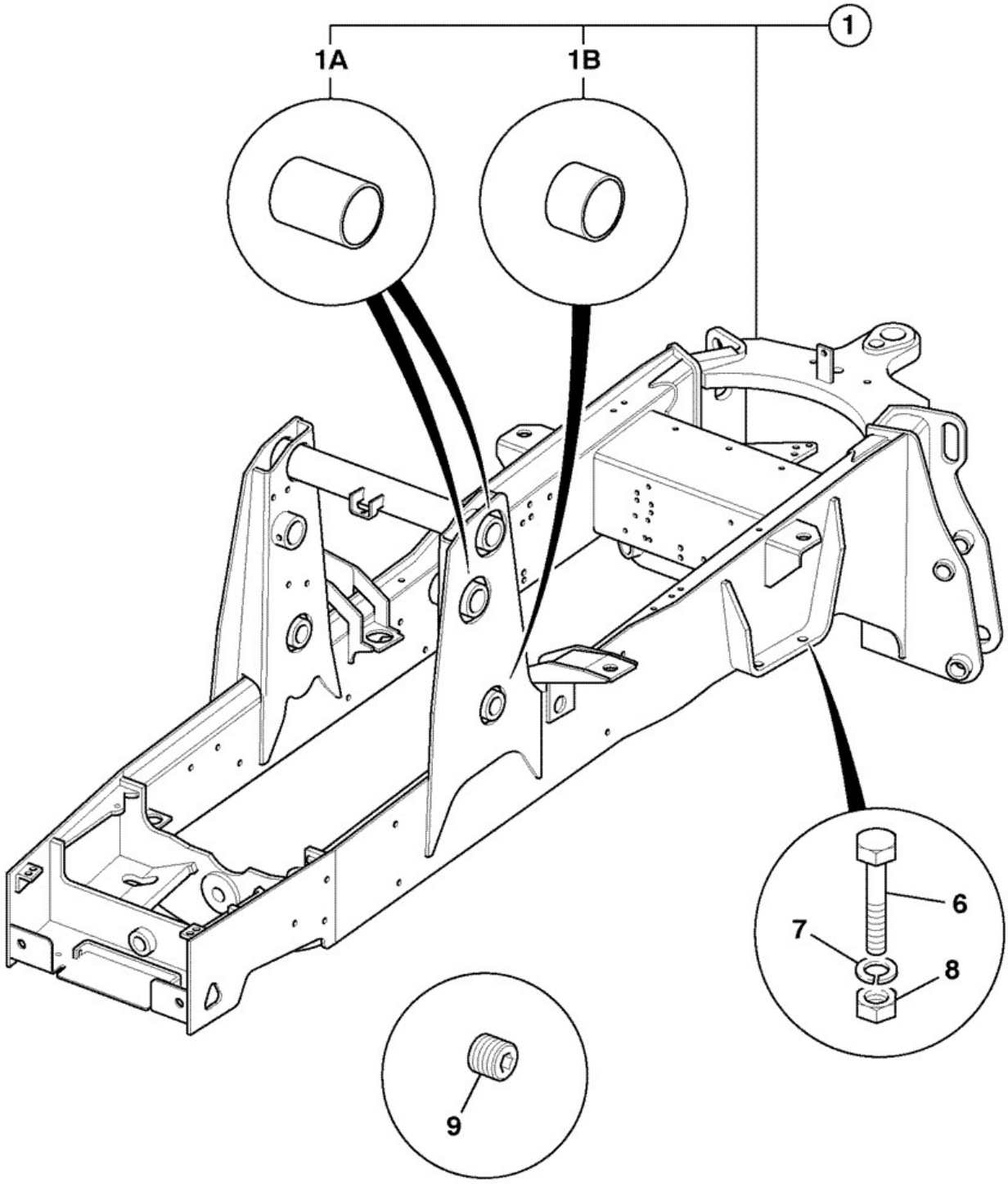

777170

Elemento	Pieza Nº	Cambiar número	Descripción	Código de uso	CANT.
1	128/C0514		Chasis centremount, 2SW, 14'		1

1	128/C0515		Chasis centremount, 2WS, 15' and 17'		1
1A	:809/00102		Cojinete liner		4
1B	:809/00093		Cojinete liner		2
5	123/06350	<M1617261	Espaciador rear axle 25mm *use with 16" Armstrong or 20" front wheels*	A	2
5	332/E6439	>M1617262	PIEZA DISTANCIADOR rear axle 6mm *use with 331/17737 for 16" Armstrong or 20" front wheels*	A	2
5	331/17737		Espaciador rear axle 20mm *use with 826/01712 for 17.5" front wheels*	A, B	2
6	826/11353		Tornillo 1"unf X 8" long *2WS SS and PS*		4
6	826/01712		Tornillo 1"unf X 9" long *Autoshift or 16" Armstrong or 20" front wheel*	A	4
6	826/11352		Tornillo 1"unf X 9 1/2" long *2WS SS or PS usage code B*	B	4
6	826/01713		Tornillo 1"unf X 10" long *A/shift with 16" Armstrong or 20" front wheel*	A	4
6	826/01665		Tornillo 1"unf X 10 1/2"long *Autoshift with 17.5" front wheels*	B	4
7	823/00578		Arandela		4
8	826/01714		Tuerca		4
9	835/10026		Tapón plastic		17

Catálogo de productos \ CONSTRUCTION \ REST OF WORLD \ CONSTRUCTION / INDUSTRIAL \ BACKHOE LOADER 3CX,4CX,214,215,217 \ 3CX 00960000-00989999,01297000-01297999,01327000-01349999,01616000-01625999,01705500-01709999 84hp 9812/0010 \ B CARROCERIA, CABINA SECCION CARGADORA \ B01 CARROCERIA/BASTIDOR

9812/0010 B1-2-1 DEP\ LÍQ\ HIDRÁULICO, 0, 0

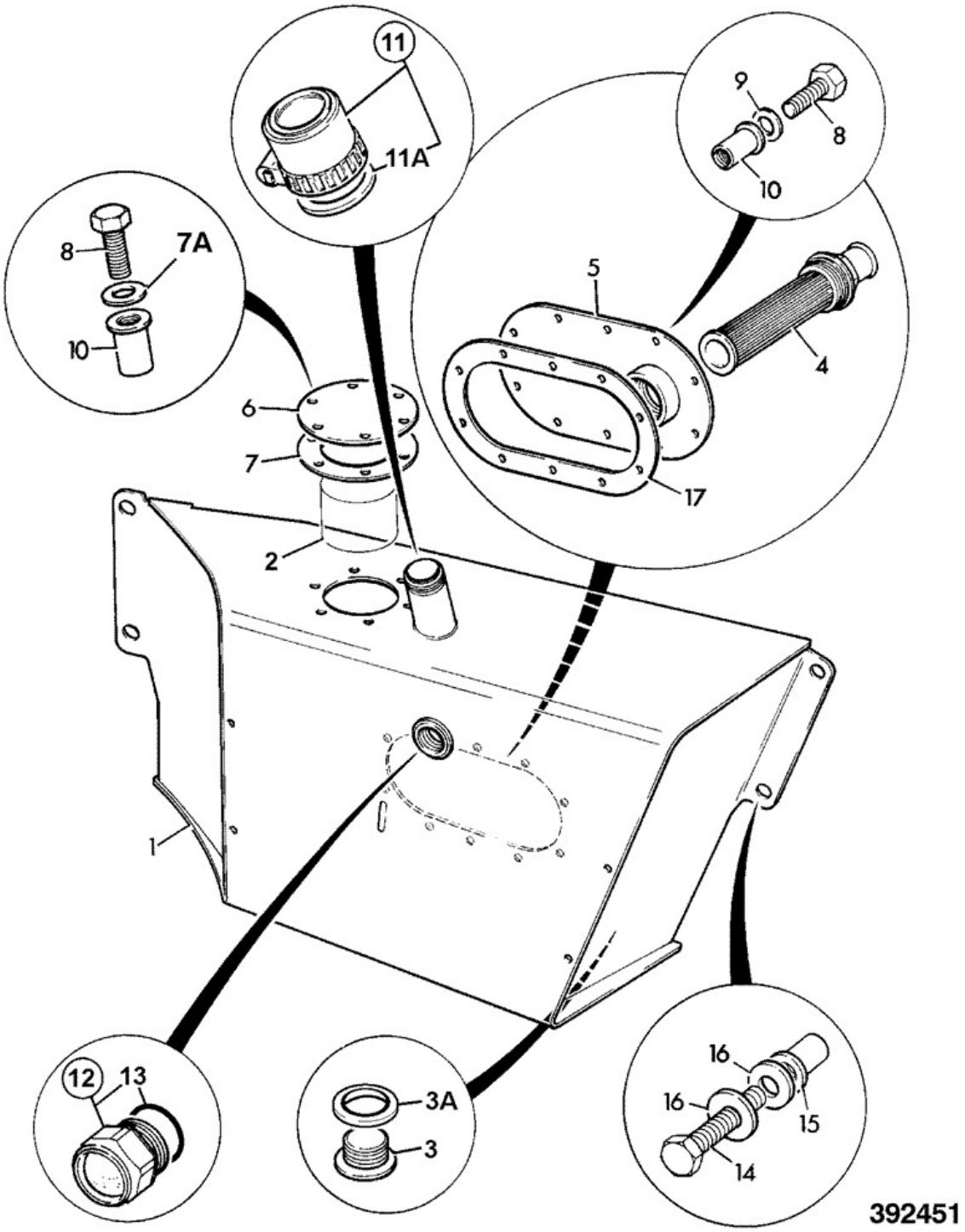

Elemento	Pieza Nº	Cambiar número	Descripción	Código de uso	CANT.
1	128/13686		Depósito hydraulic assembly toolbox compatible		1

1	128/14330	<M0965112	Depósito hydraulic step compatible		1
1	128/15164		Depósito hydraulic step compatible		1
2	****		*Hyd filter see E3*		1
3	:32/925390		Tapón drain		1
3A	::2401/0510		Junta tórica		1
4	:32/920300		Elemento suction		1
4A	:32/920301		Junta tórica		1
5	:125/00579		Tapa tank inspection		1
6	:123/06717		Tapa plate		1
7	:813/00466	<M0980247	Junta	A	1
7	:813/10186		Junta hyd filter cover	B	1
7A	:1420/0007Z	<M0980247	Arandela plain M8	A	6
7A	:823/10874		Arandela sealing,M8	B	6
8	:1315/0305Z		Tornillo Hexagon M8 x 20mm long		16
9	:823/10874		Arandela sealing,M8		10
10	:826/10381		Remache nut M8 closed		16
11	32/925421		Tapa filler/breather lockable		1
11A	::123/04056		Junta cap		1
11B	701/45501		Llave Door/Ignition Ref 14657 *not supplied with cap*		1
12	:123/08053		Indicador sight		1
13	::25/700013		Junta tórica		1
14	1315/0510Z		Tornillo M12x40		4
15	826/01717		Tuerca rivet M12		4
16	823/00589		Arandela		4
17	123/09018		Junta hydraulic tank		1

Catálogo de productos \ CONSTRUCTION \ REST OF WORLD \ CONSTRUCTION / INDUSTRIAL \ BACKHOE LOADER 3CX,4CX,214,215,217 \ 3CX 00960000-00989999,01297000-01297999,01327000-01349999,01616000-01625999,01705500-01709999 84hp 9812/0010 \ B CARROCERIA, CABINA SECCION CARGADORA \ B01 CARROCERIA/BASTIDOR

9812/0010 B1-2-2 DEP\ LÍQ\ HIDRÁULICO, 0, 0

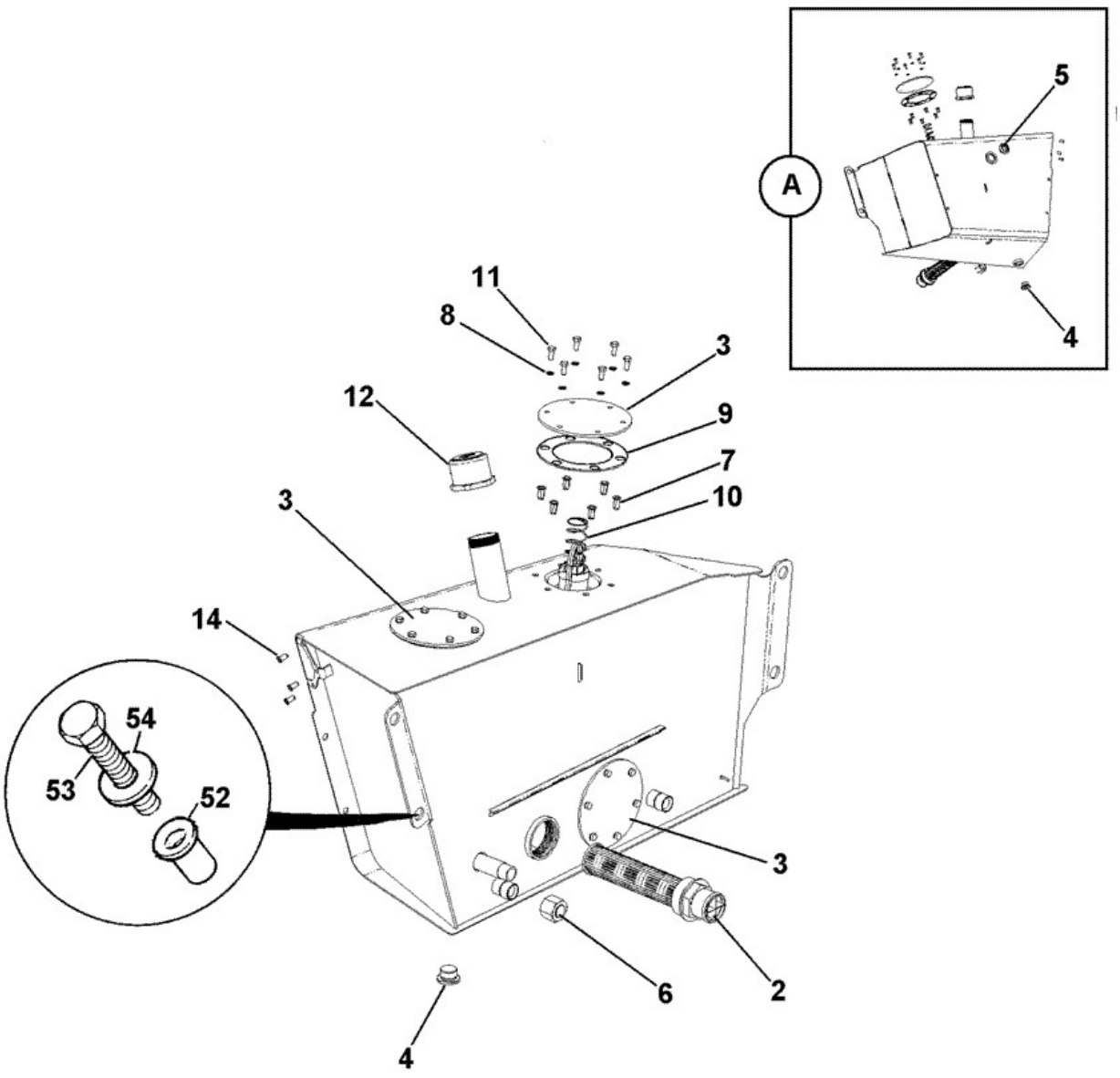

392452

Elemento	Pieza Nº	Cambiar número	Descripción	Código de uso	CANT.
A	128/F5310		Deposito hydraulic compatible with toolbox		1

A	128/P4420		Deposito hydraulic step compatable		1
2	:32/920300		Elemento suction		1
3	:123/06717		Tapa plate		3
4	:32/925390		Tapón drain		1
5	:123/08053		Indicador sight		1
6	:816/90205		Tapa blanking 1" BSP female		1
7	:826/10381		Remache nut M8 closed		18
8	:823/10874		Arandela sealing,M8		18
9	:813/10186		Junta hyd filter cover		3
10	****		*Hydraulic Filter see section E3*		1
11	:1315/0305Z		Tornillo Hexagon M8 x 20mm long		18
12	:123/04055		Tapa hydraulic filler non lockable		1
12	32/925421		Tapa filler/breather lockable		1
13	:4102/1903		Adhesivo Loctite 577 *QTY:A/R*		0
14	:826/01101		Tuerca rivet,M6 open ended for 3 to 5.5mm plt		3
52	826/01717		Tuerca rivet M12 *not supplied with item A*		4
53	1315/0510Z		Tornillo M12x40 *not supplied with item A*		4
54	823/00589		Arandela *not supplied with item A*		4

Catálogo de productos \ CONSTRUCTION \ REST OF WORLD \ CONSTRUCTION / INDUSTRIAL \ BACKHOE LOADER 3CX,4CX,214,215,217 \ 3CX 00960000-00989999,01297000-01297999,01327000-01349999,01616000-01625999,01705500-01709999 84hp 9812/0010 \ B CARROCERIA, CABINA SECCION CARGADORA \ B01 CARROCERIA/BASTIDOR

9812/0010 B1-3-3 DEPÓSITO GASÓLEO, 150 L, 0

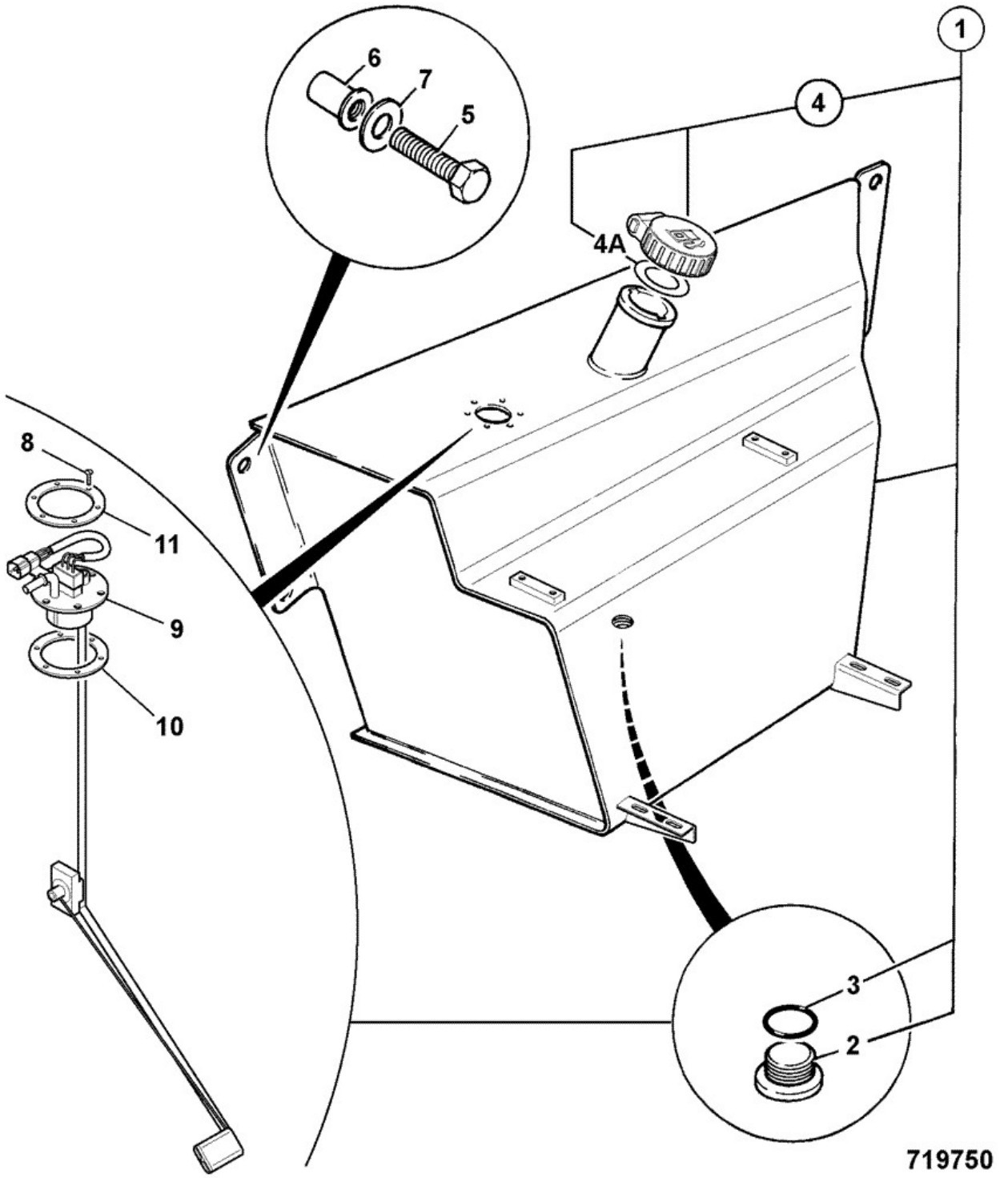

Elemento	Pieza Nº	Cambiar número	Descripción	Código de uso	CANT.
1	128/14493		Depósito diesel fuel 150 ltr standard		1

1	128/14502		Depósito diesel fuel 150 ltr power tool circuit		1
2	:32/925390		Tapón drain		1
3	::2401/0510		Junta tórica		1
4	:331/45908		Tapa filler, diesel lockable *For key use 701/45501*		1
4A	:904/20333		Junta fuel cap		1
5	1315/0510Z		Tornillo M12x40		4
6	826/01717		Tuerca rivet M12		4
7	823/00589		Arandela		4
8	:826/00520		Tornillo		6
9	:716/30202		Sensor fuel level		1
10	:103/77101		Junta		1
11	:331/13063		Placa clamp		1

Catálogo de productos \ CONSTRUCTION \ REST OF WORLD \ CONSTRUCTION / INDUSTRIAL \ BACKHOE LOADER 3CX,4CX,214,215,217 \ 3CX 00960000-00989999,01297000-01297999,01327000-01349999,01616000-01625999,01705500-01709999 84hp 9812/0010 \ B CARROCERIA, CABINA SECCION CARGADORA \ B01 CARROCERIA/BASTIDOR

9812/0010 B1-3-4 DEPÓSITO GASÓLEO, 150 L, 0

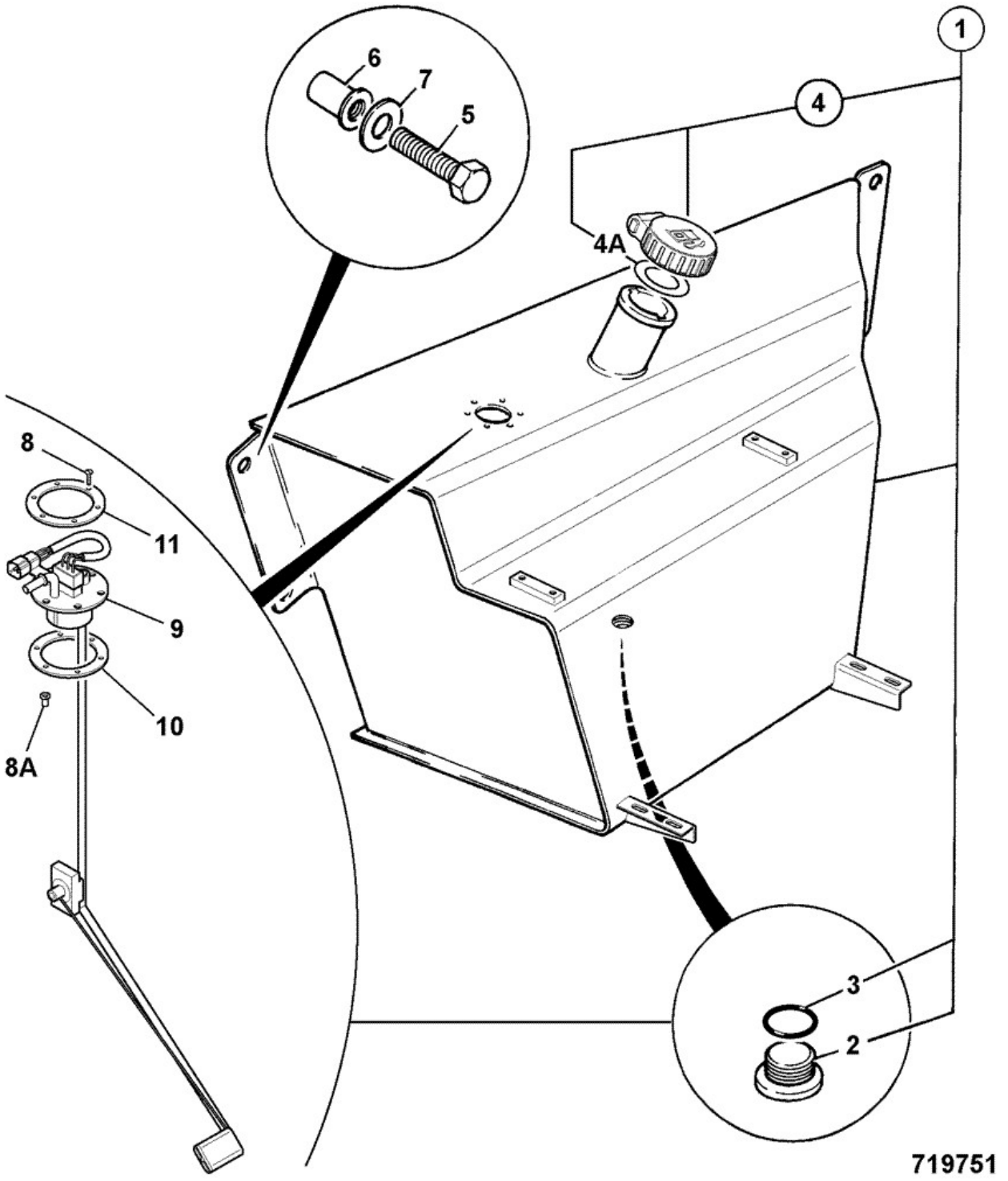

Elemento	Pieza Nº	Cambiar número	Descripción	Código de uso	CANT.
1	128/15223		Depósito diesel fuel 150 ltr standard		1

1	128/15224		Depósito diesel tank 150 ltr power tool circuit		1
2	:32/925390		Tapón drain		1
3	::2401/0510		Junta tórica		1
4	:331/45908	<M0979680	Tapa filler, diesel lockable *For key use 701/45501*		1
4	:123/05892		Tapa filler, lockable supplied without key *for key use 701/45501*		1
4A	:904/20333	<M0979680	Junta fuel cap		1
4A	::123/06343		Junta		1
5	1315/0510Z		Tornillo M12x40		4
6	826/01717		Tuerca rivet M12		4
7	823/00589		Arandela		4
8	:1315/0105Z		Tornillo M5 x 20mm long		6
8A	:826/11361		Tuerca rivetnut M5		6
9	:716/30202		Sensor fuel level		1
10	:103/77101		Junta		1
11	:331/13063		Placa clamp		1

Catálogo de productos \ CONSTRUCTION \ REST OF WORLD \ CONSTRUCTION / INDUSTRIAL \ BACKHOE LOADER 3CX,4CX,214,215,217 \ 3CX 00960000-00989999,01297000-01297999,01327000-01349999,01616000-01625999,01705500-01709999 84hp 9812/0010 \ B CARROCERIA, CABINA SECCION CARGADORA \ B01 CARROCERIA/BASTIDOR

9812/0010 B1-3-5 Deposito, Combustible,

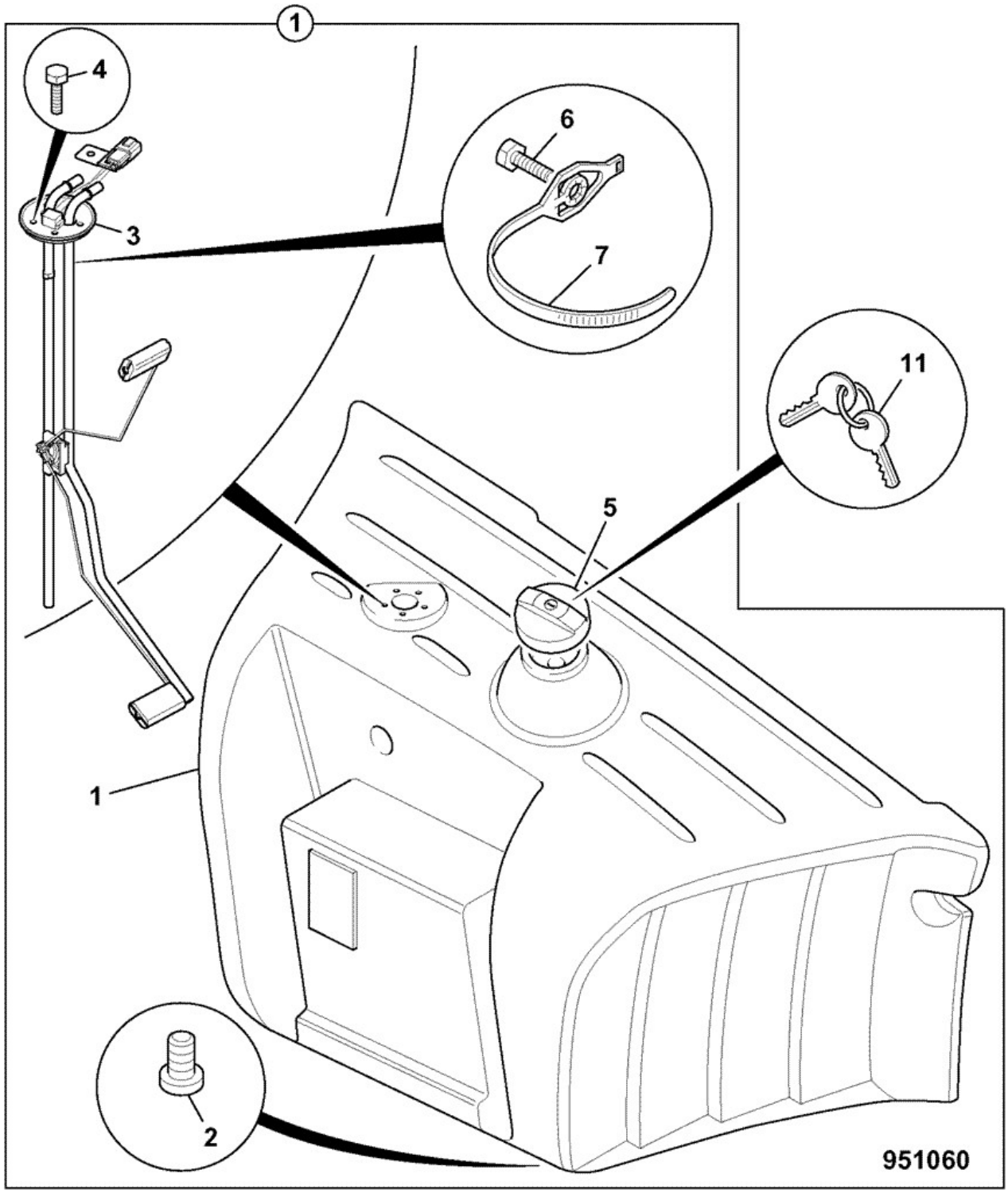

Elemento	Pieza Nº	Cambiar número	Descripción	Código de uso	CANT.
1	128/C2000		Deposito Diesel, plastic		1

2	:332/C8959		TAPON/ENCHUFE MACHO drain 1" BSP		1
3	:716/30360	<M1349884	Sensor fuel level feed & return		1
3	:332/F5833	>M1349885	Sensor fuel level feed & return		1
3A	::332/F7495		Gasket seal		1
4	:1315/0105Z		Tornillo M5 x 20mm long		5
5	:333/C0880		TAPON vented, diesel, lockable (excludes key)		1
5A	::332/F8101		CADENA retaining		1
6	:1315/0205Z	<M1348998	Tornillo *if fitted*		1
7	:826/01347	<M1348998	Abrazadera cable c/w mounting 4.6mm x 190mm *if fitted*		1
11	701/45501		Llave Door/Ignition Ref 14657		1

Catálogo de productos \ CONSTRUCTION \ REST OF WORLD \ CONSTRUCTION / INDUSTRIAL \ BACKHOE LOADER 3CX,4CX,214,215,217 \ 3CX 00960000-00989999,01297000-01297999,01327000-01349999,01616000-01625999,01705500-01709999 84hp 9812/0010 \ B CARROCERIA, CABINA SECCION CARGADORA \ B01 CARROCERIA/BASTIDOR

9812/0010 B1-3-11 PROTECCION, Depósito comb\,

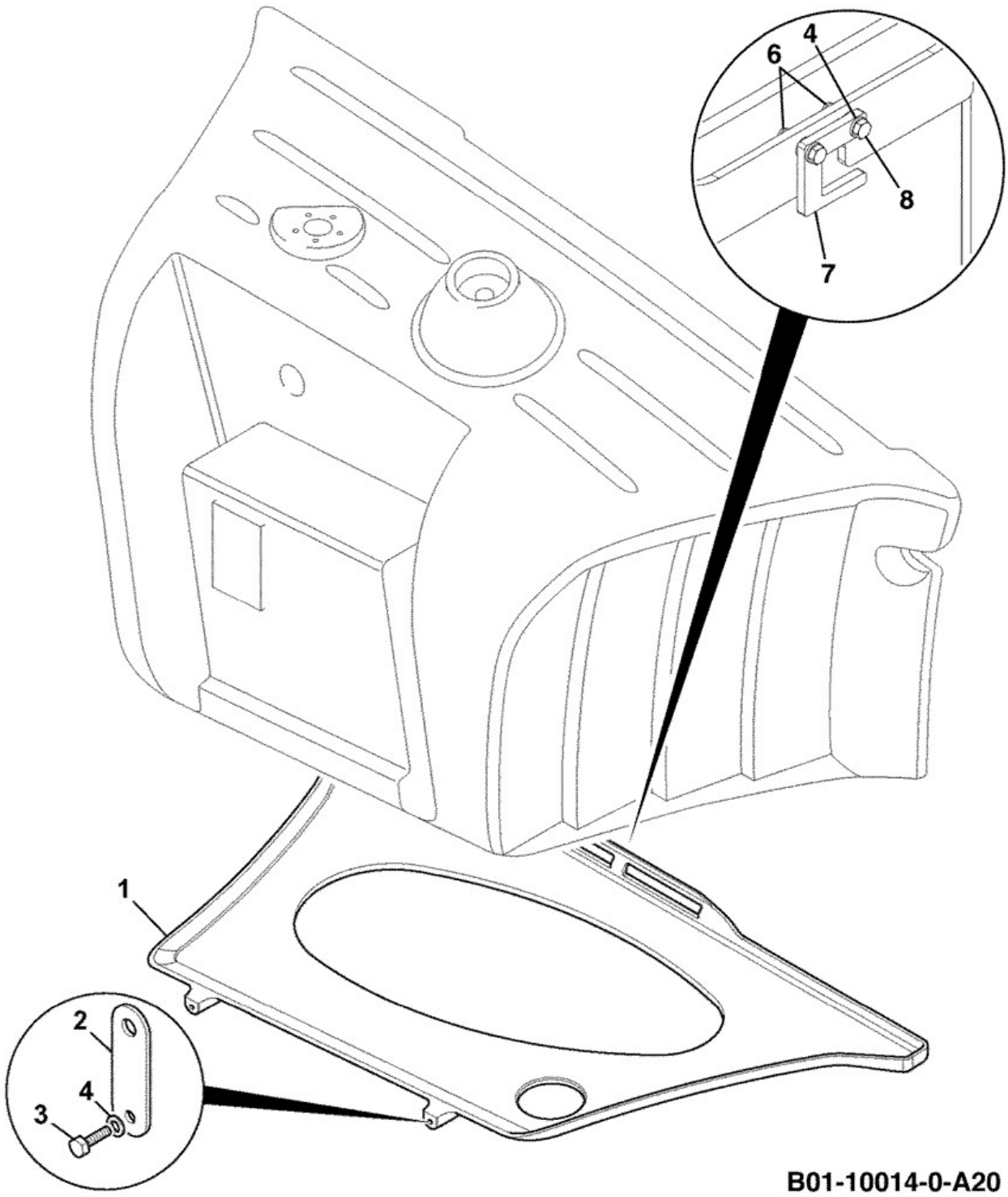

Elemento	Pieza Nº	Cambiar número	Descripción	Código de uso	CANT.
1	346/90033		PROTECCION plastic diesel tank		1

2	332/C7217		Montaje fuel tank guard		2
3	1315/0205Z		Tornillo		2
4	1420/0006Z		Arandela M6		4
6	826/01101	>M1616449	Tuerca rivet,M6 open ended for 3 to 5.5mm plt *fastens to step mounting bracket 128/C8993*		2
7	332/F4994	>M1616449	ABRAZADERA rear retainer		1
8	1315/0207Z	>M1616449	Tornillo M6 x 25mm long		2

9812/0010 B1-4-1 ESTABILIZADOR, DESPLAZAMIENTO LAT, 0

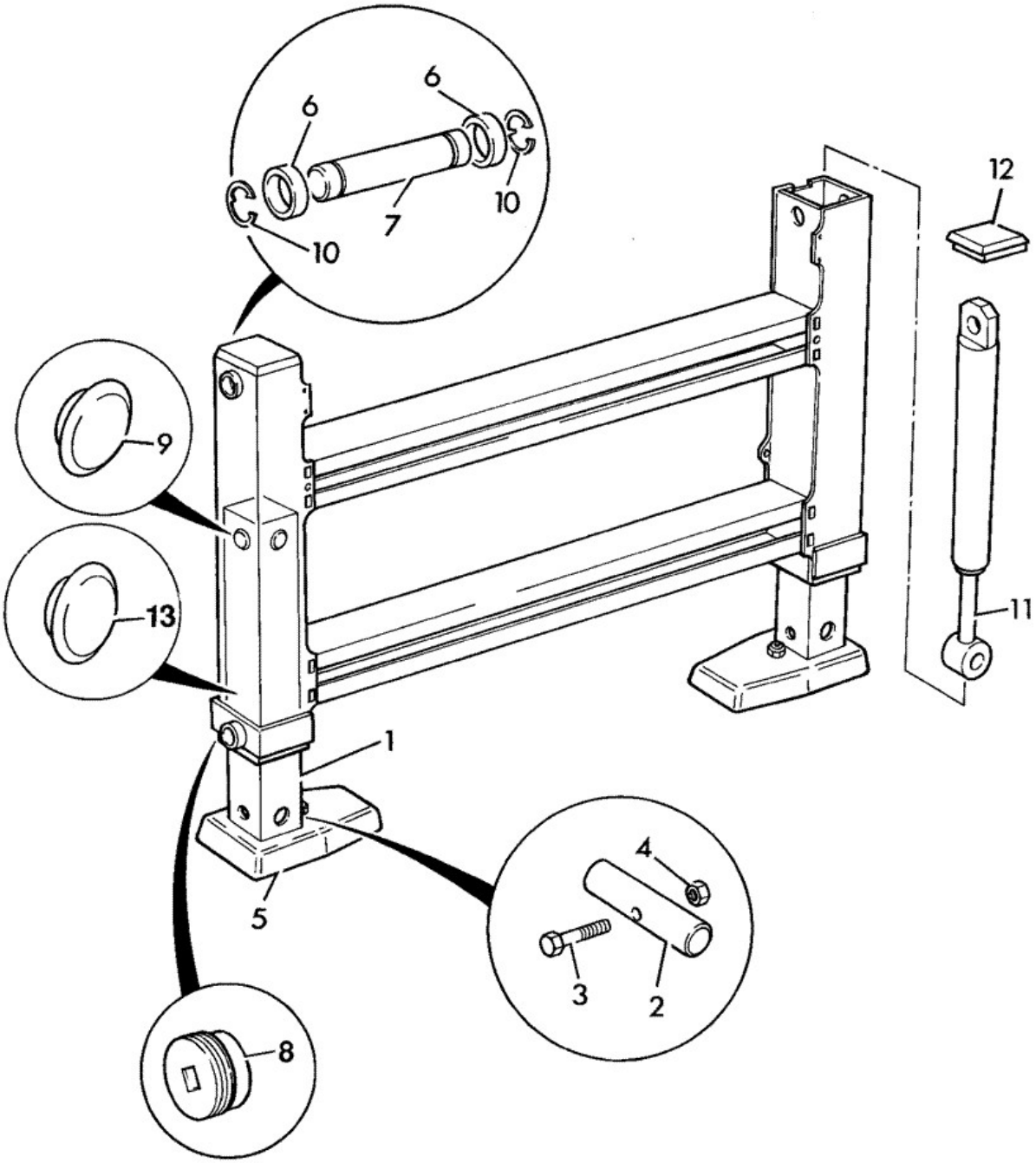

266132

Elemento	Pieza Nº	Cambiar número	Descripción	Código de uso	CANT.

1	335/08022	<M1617730	Pata inner sideshift		2
1	128/G3070	>M1617731	PATA inner sideshift		2
2	811/50530	Superseded	Pasador pivot		2
2	811/90590		Pasador pivot		2
3	1315/3420Z		Tornillo M10 X 100		2
4	1370/0303Z		Tuerca lock M10		2
5	123/06022		Pie sideshift stabiliser		2
6	123/06012		Espaciador		4
7	811/70108	Superseded	Pasador pivot		2
7	811/90587		Pasador pivot		2
8	128/10850		Pastilla assembly wear stabiliser leg		4
8A	123/06409		Carcasa wear pad *welded to stabiliser leg*		4
9	331/20550		Pastilla wear,upper 5mm thick		8
9	331/20552		Pastilla wear, upper 6mm thick		8
9	331/20556		Pastilla wear, upper 7mm thick		8
10	2203/0060		Arandela elástica		4
11	556/60078	<M0967612	Pistón sideshift stabiliser 40mm rod x 70mm cyl		2
11	556/60348	Superseded	Pistón sideshift stabiliser 40mm rod x 70mm cyl		2
11	556/60380	Superseded	Pistón stabiliser 1813.0oc 1123.0cc		2
11	556/60386	Superseded	Pistón sideshift stabiliser 40x70		2
11	556/60402		Pistón stabilier, 70X40		2
12	123/06023		Tapa sideshift stabiliser		2
13	123/06014		Pastilla lower wear colour black		4

Catálogo de productos \ CONSTRUCTION \ REST OF WORLD \ CONSTRUCTION / INDUSTRIAL \ BACKHOE LOADER 3CX,4CX,214,215,217 \ 3CX 00960000-00989999,01297000-01297999,01327000-01349999,01616000-01625999,01705500-01709999 84hp 9812/0010 \ B CARROCERIA, CABINA SECCION CARGADORA \ B01 CARROCERIA/BASTIDOR

9812/0010 B1-4-2 ESTABILIZADOR, Mont\ central,

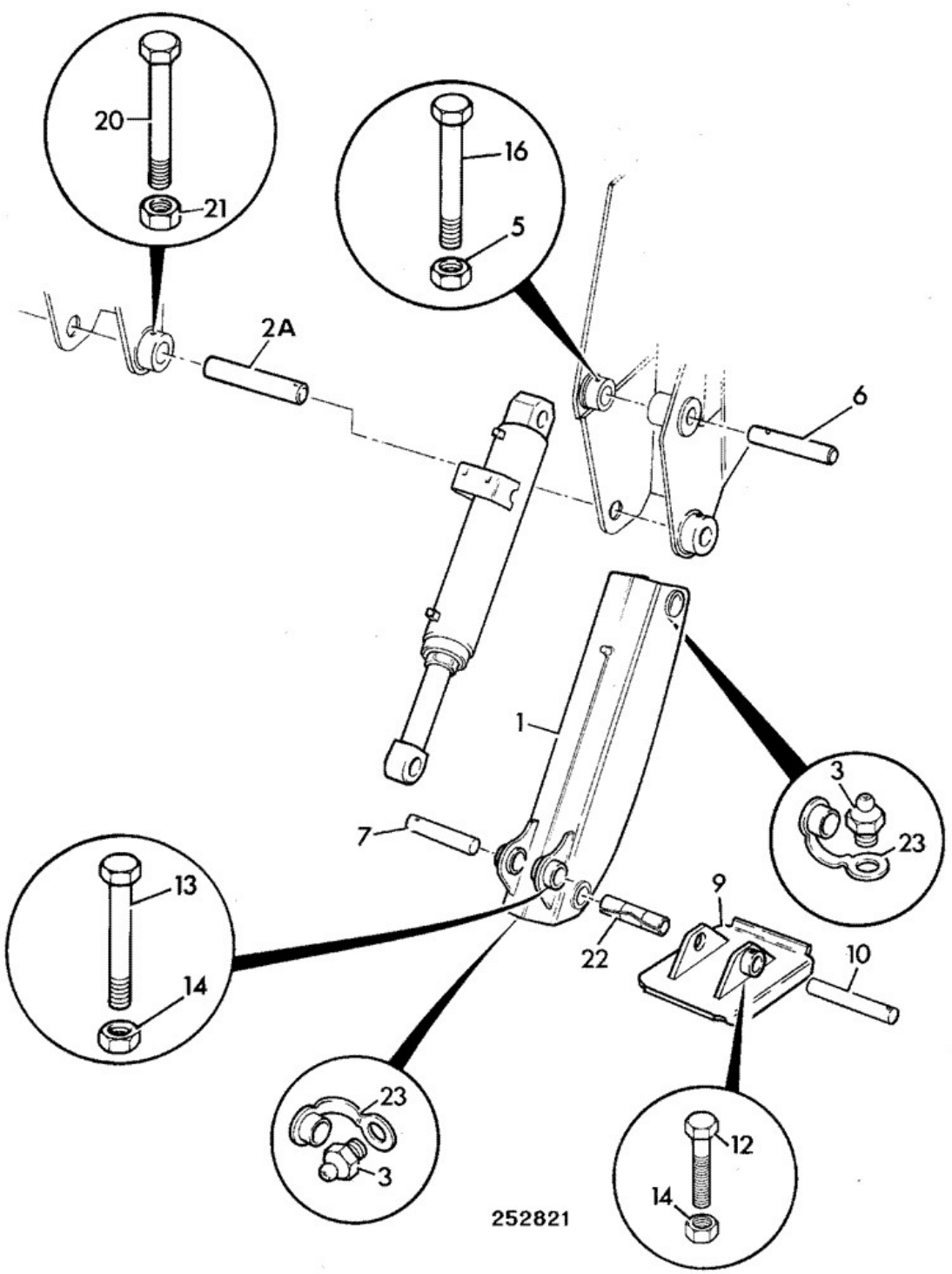

Elemento	Pieza Nº	Cambiar número	Descripción	Código de uso	CANT.
1	125/00555		Pata stabiliser		2

2A	811/50536		Pasador pivot		2
2A	811/50536A		Pasador pivot plus 0.005"		2
2A	811/50536B		Pasador pivot plus 0.010"		2
3	1450/0002		Engrasador grease, straight 1/4		2
5	1370/0403Z		Tuerca M12		4
6	811/10025		Pasador pivot		2
7	811/90339		Pasador black version of 1019/2019		2
8	****		*See section E4*		1
9	125/98000		Pie Stabiliser		2
10	811/50557		Pasador pivot		2
12	1305/3224Z		Tornillo		2
13	1305/3226Z		Tornillo		2
14	1340/0203Z		Tuerca		6
16	1315/3518Z		Tornillo M12 x 80mm		2
20	1315/3520Z		Tornillo M12 x 100mm		2
21	1370/0403Z		Tuerca M12		2
22	****		*not fitted*		1
23	835/00017		Tapa grease nipple		8
24	835/00174		Tapón plastic,black		2

9812/0010 B1-4-41 GUARD, STABILISER RAM, CENTREMOUNT

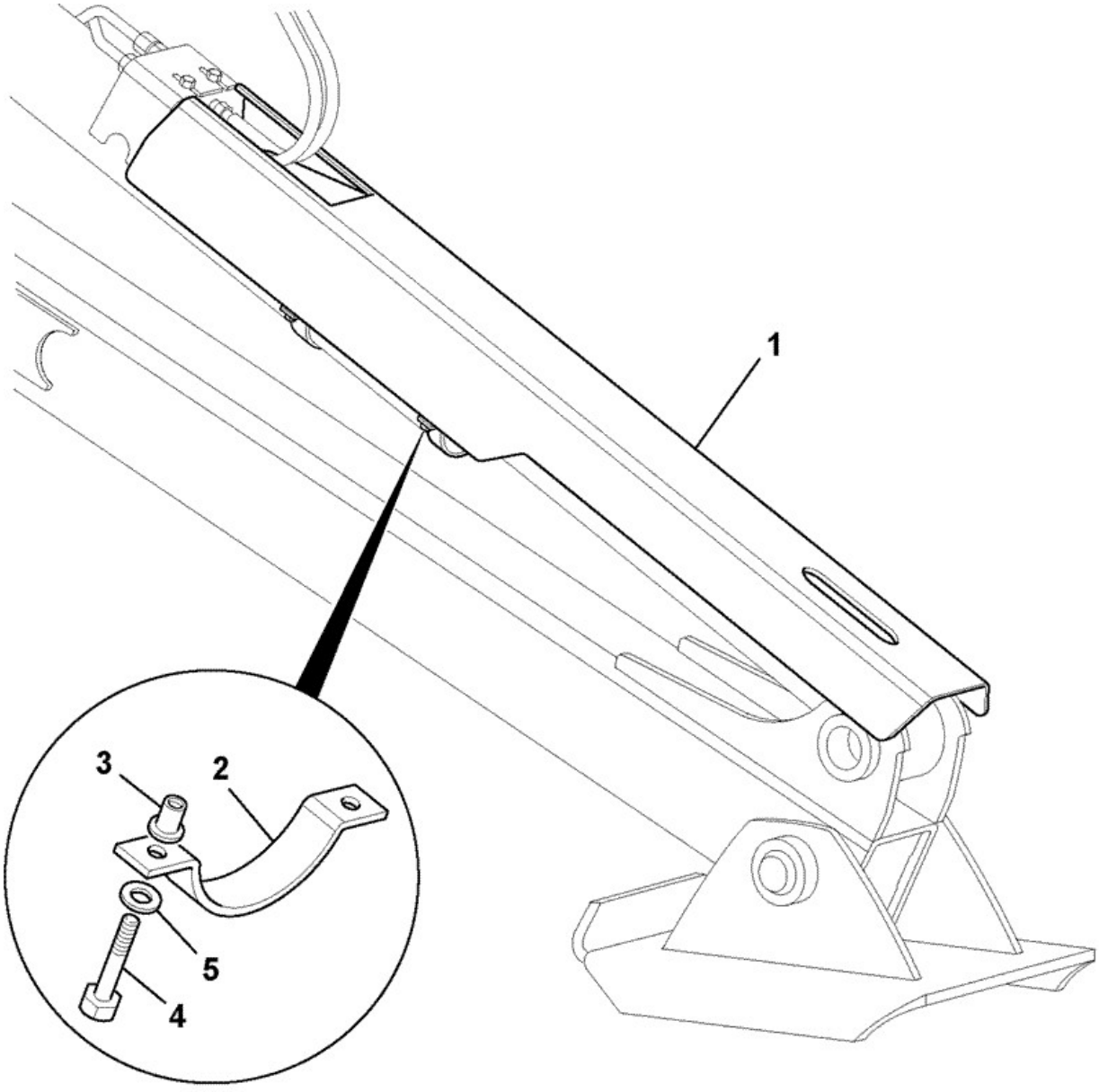

868120

Elemento	Pieza Nº	Cambiar número	Descripción	Código de uso	CANT.
1	331/56688		Proteccion stabiliser ram		2
2	331/59515		Abrazadera stabiliser guard		4
3	826/11551		Tuerca rivet,M12		8
4	1315/3510Z		Tornillo		8
5	1420/0009Z		Arandela Plain M12		8

Catálogo de productos \ CONSTRUCTION \ REST OF WORLD \ CONSTRUCTION / INDUSTRIAL \ BACKHOE LOADER 3CX,4CX,214,215,217 \ 3CX 00960000-00989999,01297000-01297999,01327000-01349999,01616000-01625999,01705500-01709999 84hp 9812/0010 \ B CARROCERIA, CABINA SECCION CARGADORA \ B01 CARROCERIA/BASTIDOR

9812/0010 B1-5-1 CONJ\ CAPÓ, 2RD, 0

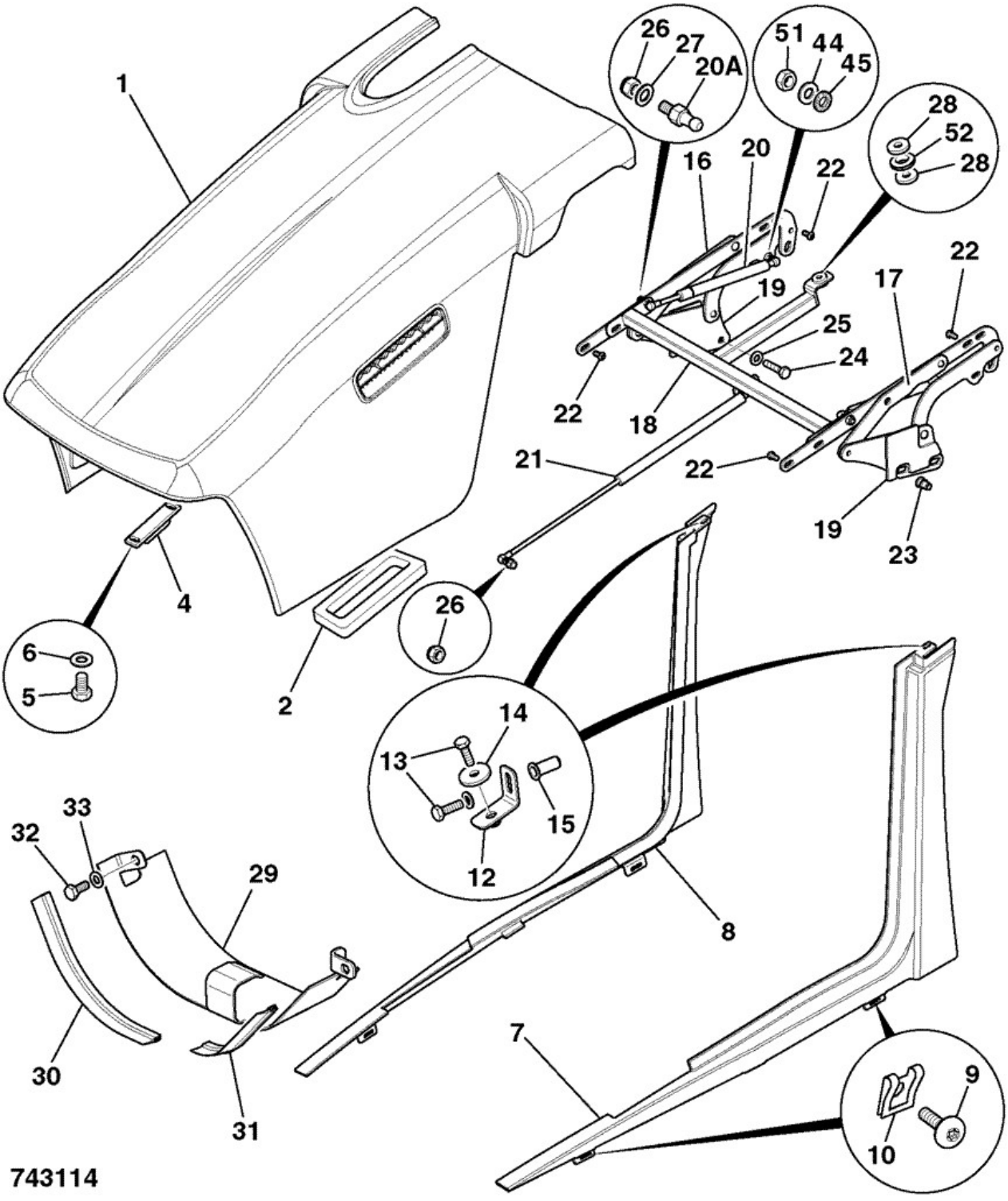

Elemento	Pieza Nº	Cambiar número	Descripción	Código de uso	CANT.
1	346/90001	Superseded	Capó	A	1

1	346/90019		Capó	B	1
1	128/15282		Capó loxam red *Loxam red*		1
1A	:346/00071		Rejilla side, air induction	A	1
1A	:128/15667		Respiradero assembly air induction	B	1
1B	:826/11263		Tornillo self tapper 55 long *to hold 1A to 1*	A	2
1B	:1430/1206Z		Tornillo No 8 x 1 1/4"	B	2
2	926/51401		Junta air intake		1
4	331/26981		Pestillo bonnet		1
5	1315/0301Z		Tornillo hex head M8 X 12		2
6	1420/0007Z		Arandela plain M8		2
7	346/00064		Raíl bonnet LH, 2WS NLA see TI 2/503		1
7	128/15283		Raíl bonnet LH 2ws Loxam red, NLA see TI 2/503 *Loxam red*		1
8	346/00065		Raíl bonnet RH, 2WS NLA see TI 2/503		1
8	128/15284		Raíl bonnet RH 2ws Loxam red, NLA see TI 2/503		1
9	826/01768		Tornillo M6x25mm		6
10	826/01465		Retenida "U" nut		6
12	331/47298		Soporte upper rail		2
13	1315/0205Z		Tornillo		4
14	823/00030		Arandela 25mm o/dia 7mm i/dia		2
15	826/01810		Tuerca rivet, M6 open end for 5.5 to 8mm plate		2
16	128/14553		Gozne bonnet RH		1
17	128/14552		Gozne bonnet LH		1
18	335/07952		Gozne torsion beam		1
19	331/45146	<M0966000	Montaje bonnet hinge		2
20	331/60675	Superseded	Puntal gas 244-390 *see item 20A*		2
20	331/66727		Puntal gas 235-390		2
20A	331/60391		Bola fitting 10 X M8		2
21	331/47026	Superseded	Puntal gas 335-585		1
21	331/66785		Puntal gas 585x327		1
22	826/11284		Tornillo M8x16 button head		8
23	826/01249		Tuerca rivet M10 open end for 6 to 8.5mm plate		4
24	1315/0409Z		M10 X 35		4
25	1420/0008Z		Arandela Plain M10		4
26	1371/0203Z		Tuerca		3
27	1420/0007Z		Arandela plain M8		4
28	823/10639		Arandela 9x26x5		2
29	****		*only used on 4WS*		1
44	1418/0011Z		Arandela lock		2
45	1370/0202Z		Tuerca M8		4
51	1370/0201Z		Tuerca M8		2
52	2410/0304		Aro de refuerzo		1

Catálogo de productos \ CONSTRUCTION \ REST OF WORLD \ CONSTRUCTION / INDUSTRIAL \ BACKHOE LOADER 3CX,4CX,214,215,217 \ 3CX 00960000-00989999,01297000-01297999,01327000-01349999,01616000-01625999,01705500-01709999 84hp 9812/0010 \ B CARROCERIA, CABINA SECCION CARGADORA \ B01 CARROCERIA/BASTIDOR

9812/0010 B1-5-2 BONNET ASSEMBLY, 2WS

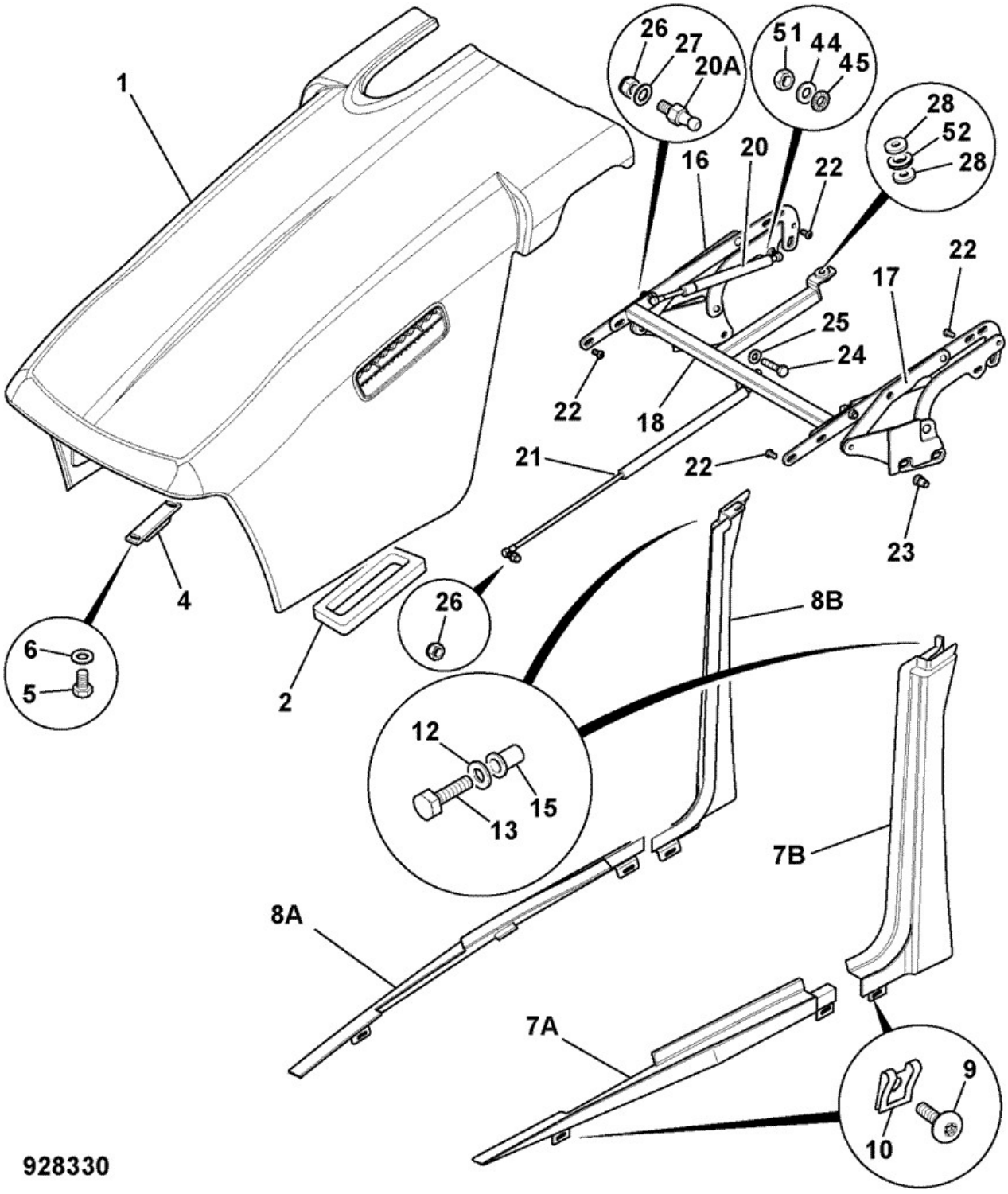

Elemento	Pieza Nº	Cambiar número	Descripción	Código de uso	CANT.
1	346/90019	Superseded	Capó		1

1	128/C6611		Capó		1
1	128/15282		Capó loxam red *Loxam red*		1
1A	:128/15667		Respiradero assembly air induction		1
1B	:1430/1206Z		Tornillo No 8 x 1 1/4" *to hold 1A to 1*		2
2	926/51401		Junta air intake		1
4	331/26981		Pestillo bonnet		1
5	1315/0301Z		Tornillo hex head M8 X 12		2
6	1420/0007Z		Arandela plain M8		2
7A	346/00565		Raíl bonnet lower LH yellow		1
7A	128/17749		Raíl bonnet lower LH Loxam red		1
7B	346/00563		Raíl bonnet upper LH yellow		1
7B	128/17722		Raíl bonnet upper LH Loxam red		1
8A	346/00566		Raíl bonnet lower RH yellow		1
8A	128/17751		Raíl bonnet lower RH Loxam red		1
8B	346/00564		Raíl bonnet upper RH yellow		1
8B	128/17745		Raíl bonnet upper RH Loxam red		1
9	826/11692		Tornillo Torx M6x35		4
10	826/01465		Retenida "U" nut		4
12	1420/0006Z		Arandela M6		2
13	1315/0207Z		Tornillo M6 x 25mm long		2
15	826/01810		Tuerca rivet, M6 open end for 5.5 to 8mm plate		2
16	128/14553	<M1332669	Gozne bonnet RH		1
16	128/C1888		Gozne bonnet, RH		1
17	128/14552	<M1332669	Gozne bonnet LH		1
17	128/C1889		Gozne bonnet, LH		1
18	335/07952		Gozne torsion beam		1
20	331/66727		Puntal gas 235-390		2
20A	331/60391		Bola fitting 10 X M8		1
21	331/66785		Puntal gas 585x327		1
22	826/11284		Tornillo M8x16 button head		8
23	826/01249		Tuerca rivet M10 open end for 6 to 8.5mm plate		4
24	1315/0409Z		M10 X 35		4
25	1420/0008Z		Arandela Plain M10		4
26	1371/0203Z		Tuerca		3
27	1420/0007Z		Arandela plain M8		4
28	823/10639		Arandela 9x26x5		2
44	1418/0011Z		Arandela lock		2
45	1370/0202Z		Tuerca M8		4
51	1370/0201Z		Tuerca M8		2
52	2410/0304		Aro de refuerzo		1

Catálogo de productos \ CONSTRUCTION \ REST OF WORLD \ CONSTRUCTION / INDUSTRIAL \ BACKHOE LOADER 3CX,4CX,214,215,217 \ 3CX 00960000-00989999,01297000-01297999,01327000-01349999,01616000-01625999,01705500-01709999 84hp 9812/0010 \ B CARROCERIA, CABINA SECCION CARGADORA \ B01 CARROCERIA/BASTIDOR

9812/0010 B1-5-3 BONNET ASSEMBLY, 2WS

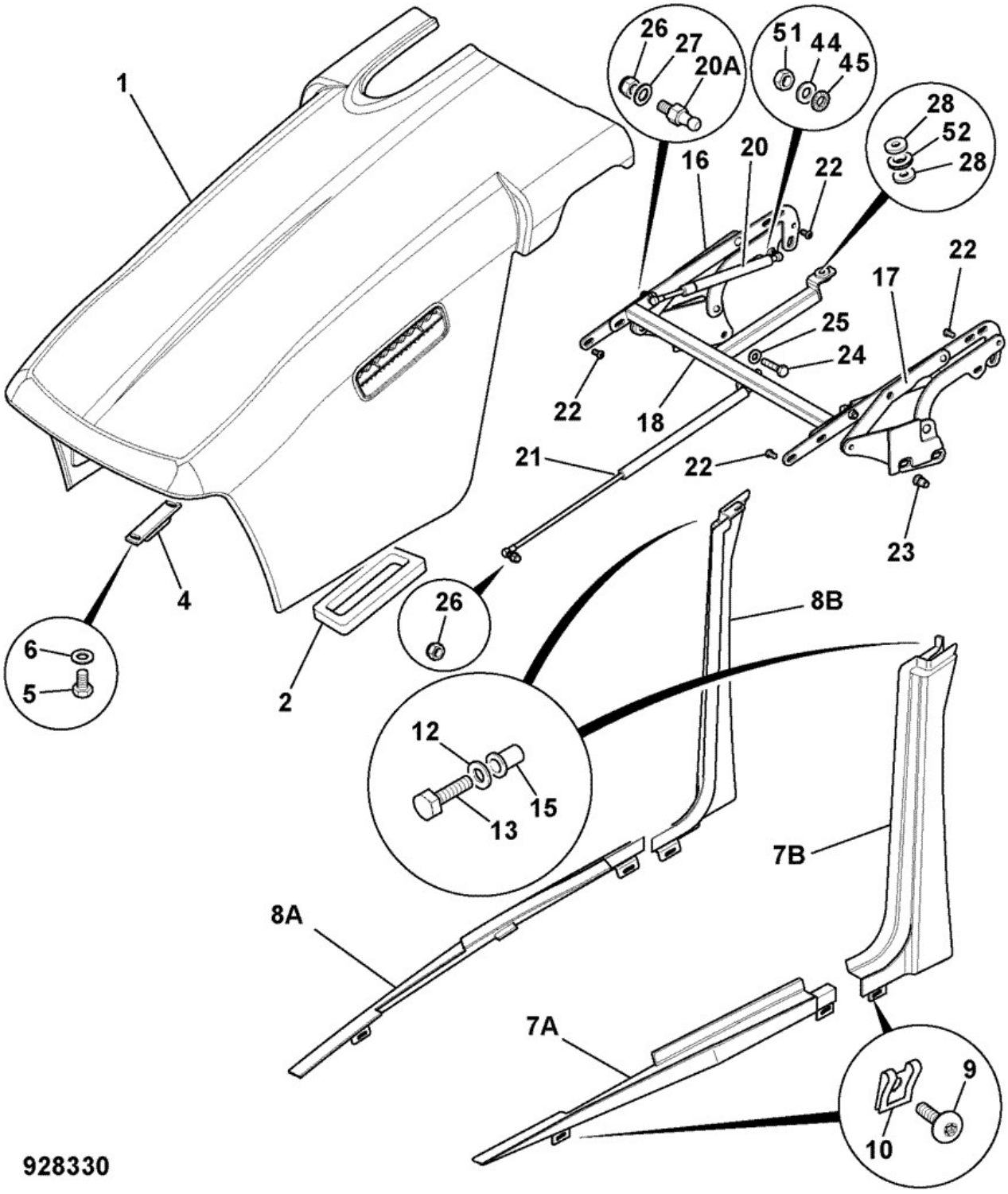

Elemento	Pieza Nº	Cambiar número	Descripción	Código de uso	CANT.
1	128/C6611	<M1346073	Capó	A	1

1	128/C0484	>M1346074	Capó	B	1
1A	:128/15667		Respiradero assembly air induction	A	1
1A	:128/C0485		RESPIRADERO assembly air induction	B	1
1B	:1430/1206Z		Tornillo No 8 x 1 1/4" *to hold 1A to 1*	A	2
1B	:1430/1205Z		Tornillo No 8x1"	B	2
2	926/51401	Superseded	Junta air intake		1
2	332/D5552		Junta air filter		1
4	332/C0442		Pestillo bonnet striker		1
5	1315/0301Z		Tornillo hex head M8 X 12		2
6	1420/0007Z		Arandela plain M8		2
7A	346/00565	<M1348923	Raíl bonnet lower LH yellow		1
7A	332/P5275		CARRIL bonnet lower LH yellow		1
7B	346/00563	<M1348923	Raíl bonnet upper LH yellow		1
7B	332/P5245		CARRIL bonnet upper LH yellow		1
8A	346/00566	<M1347491	Raíl bonnet lower RH yellow		1
8A	332/P5292		CARRIL bonnet lower RH yellow		1
8B	346/00564	<M1347491	Raíl bonnet upper RH yellow		1
8B	332/P5260		CARRIL bonnet, upper RH yellow		1
9	826/11692		Tornillo Torx M6x35		4
10	826/01465		Retenida "U" nut		4
12	1420/0006Z		Arandela M6		2
13	1315/0207Z		Tornillo M6 x 25mm long		2
15	826/01810		Tuerca rivet, M6 open end for 5.5 to 8mm plate		2
16	128/C1888		Gozne bonnet, RH		1
17	128/C1889		Gozne bonnet, LH		1
18	335/07952		Gozne torsion beam		1
20	331/66727		Puntal gas 235-390		2
20A	331/60391		Bola fitting 10 X M8		1
21	331/66785		Puntal gas 585x327		1
22	826/11284		Tornillo M8x16 button head		8
23	826/01249		Tuerca rivet M10 open end for 6 to 8.5mm plate		4
24	1315/0409Z		M10 X 35		4
25	1420/0008Z		Arandela Plain M10		4
26	1371/0203Z		Tuerca		3
27	1420/0007Z		Arandela plain M8		4
28	823/10639		Arandela 9x26x5		2
44	1418/0011Z		Arandela lock		2
45	1370/0202Z		Tuerca M8		4
51	1370/0201Z		Tuerca M8		2
52	2410/0304		Aro de refuerzo		1

9812/0010 B1-6-1 REJILLA, DELANT\, 2RD, 0

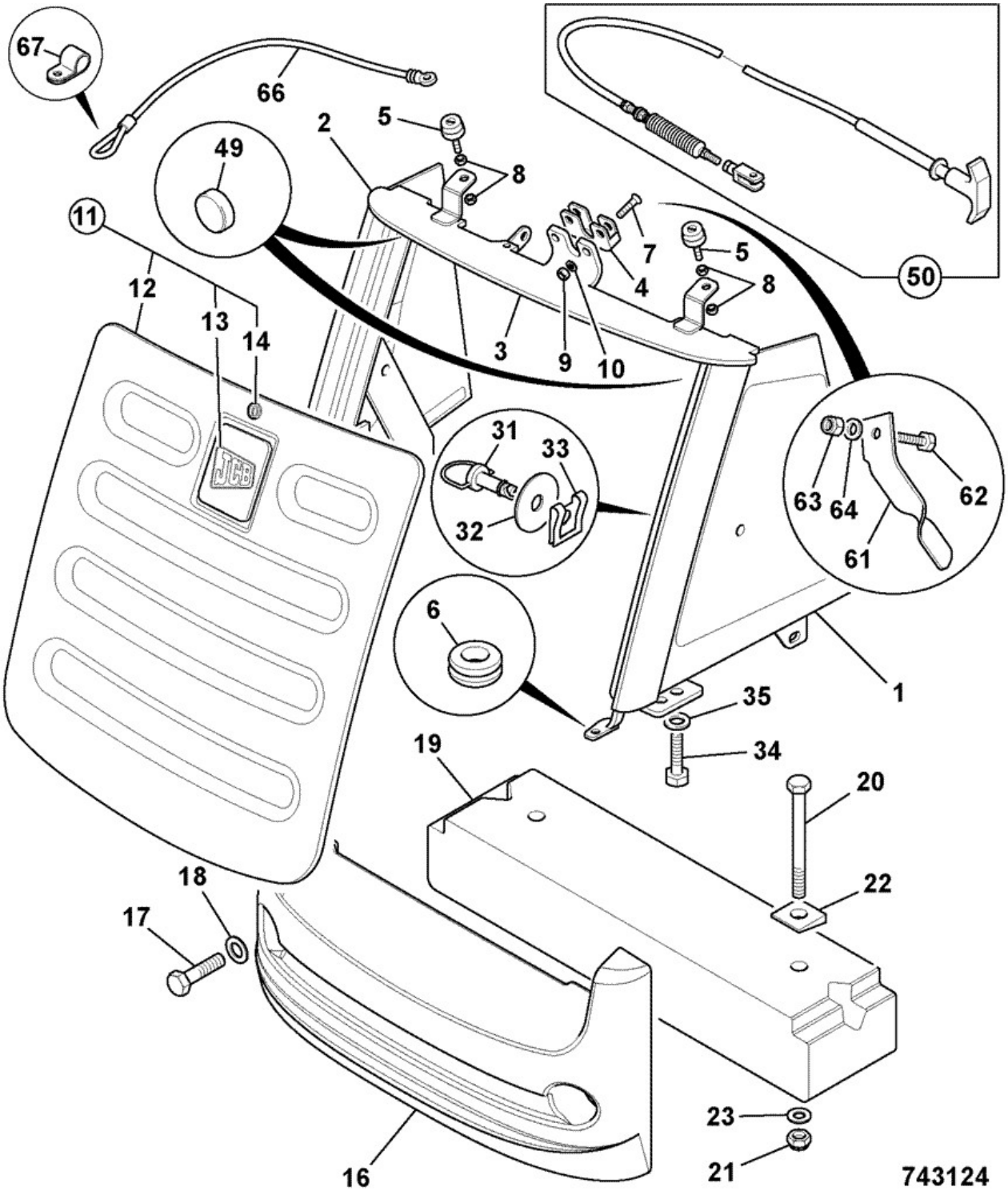

Elemento	Pieza Nº	Cambiar número	Descripción	Código de uso	CANT.
1	335/08369		Rejilla side LH 2WS		1

1	128/15280		Rejilla side LH 2WS Loxam red *Loxam red*		1
2	335/08370		Rejilla side,RH 2WS		1
2	128/15281		Rejilla side RH 2WS Loxam red *Loxam red*		1
3	335/08371		Rejilla housing 2WS		1
3	128/15279		Rejilla housing 2WS Loxam red *Loxam red*		1
4	331/27126		Cierre bonnet		1
5	835/10108		Amortiguador M8x35		2
6	2410/0304		Aro de refuerzo		2
7	826/01814		Tornillo M8x35 countersunk		2
8	1370/0202Z		Tuerca M8		4
9	1370/0203Z		Tuerca self lock M8		2
10	1420/0007Z		Arandela plain M8		2
11	N.S.P.		Pieza no reparable		1
12	335/08180		Rejilla front black		1
12	128/15278		Rejilla front Loxam red *Loxam red*		1
13	817/19661		Rótulo JCB logo 100x100		1
14	162/03434		Cierre barrel assembly		1
16	331/46249		Paragolpes front 46kg *Standard*	A	1
16	128/15285		Paragolpes front 46kg Loxam grey *Loxam grey*	A	1
16	331/46250		Paragolpes front 100kg	A	1
16	331/46251		Paragolpes front 180kg	B	1
17	1315/3816Z		Tornillo M20 x 70	A	2
17	1315/3820Z		Tornillo M20 x 100mm	B	2
18	1420/0012Z		Arandela M20		2
19	331/34480		Contrapeso 2WS only, 156 Kg *If fitted*	B	1
20	1315/3824Z		Tornillo M20 x 140lg *To fit item 19*		2
21	1370/0703Z		Tuerca M20 *To fit item 19*		2
22	823/10429		Arandela taper M20 *To fit item 19*		2
23	1420/0012Z		Arandela M20 *To fit item 19*		2
31	826/11306	<M0962640	Fijación 1/4 turn male *Véase la nota 1*	C	2
31	1315/0205Z		Tornillo	D	2
32	1412/0002Z	<M0962640	Arandela	C	2
32	1412/0001Z		Arandela	D	2
33	826/11307	<M0962641	Fijación 1/4 turn female	C	2
33	826/11392		Tuerca M6 clip on	D	2
34	1315/0408Z		Tornillo M10 x 30		4
35	1420/0008Z		Arandela Plain M10		4
49	926/22100		Espaciador block		2
50	910/60199		Cable bonnet release *Cab builds only*		1
61	331/48761		Palanca bonnet release *Canopy builds only*		1
62	1315/0205Z		Tornillo		1

			Canopy builds only#		
63	1370/0103Z		Tuerca Self lock M6 *Canopy builds only*		1
64	1420/0006Z		Arandela M6 *Canopy builds only*		1
66	331/47156		Alambre bonnet pull down 1800mm long		1
67	821/10227		Clip P		1
67A	1412/0002Z		Arandela		1
67B	1370/0203Z		Tuerca self lock M8		1

Nota 1: Items 31, 32 & 33 marked usage code D can be used to replace 31,32 & 33 marked code C

Catálogo de productos \ CONSTRUCTION \ REST OF WORLD \ CONSTRUCTION / INDUSTRIAL \ BACKHOE LOADER 3CX,4CX,214,215,217 \ 3CX 00960000-00989999,01297000-01297999,01327000-01349999,01616000-01625999,01705500-01709999 84hp 9812/0010 \ B CARROCERIA, CABINA SECCION CARGADORA \ B01 CARROCERIA/BASTIDOR

9812/0010 B1-6-11 REJILLA, DELANT\, 2RD, 0

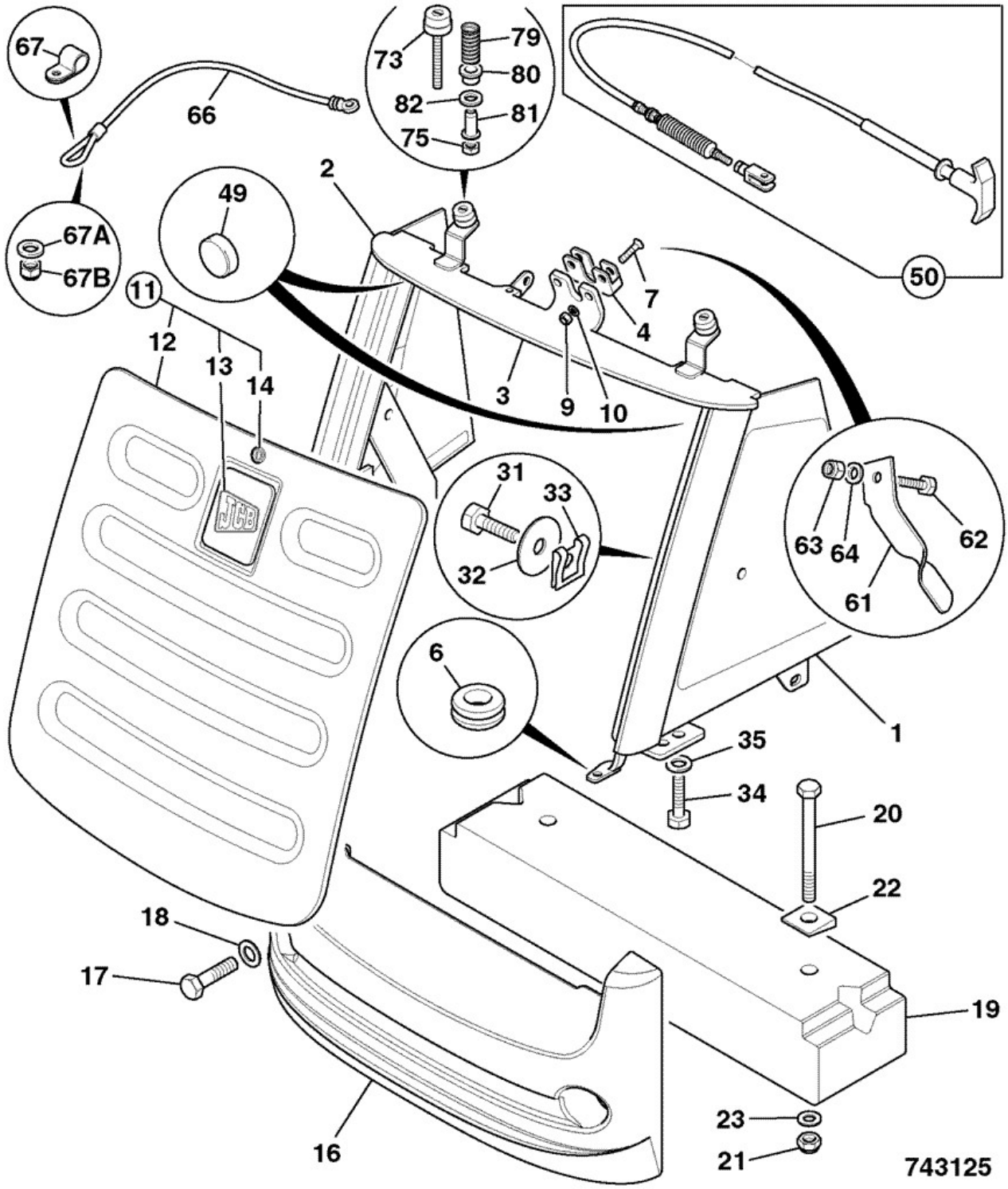

Elemento	Pieza Nº	Cambiar número	Descripción	Código de uso	CANT.
1	335/08369		Rejilla side LH 2WS		1

1	128/15280		Rejilla side LH 2WS Loxam red *Loxam red*		1
2	335/08370		Rejilla side,RH 2WS		1
2	128/15281		Rejilla side RH 2WS Loxam red *Loxam red*		1
3	335/09817	<Sept 2006	Rejilla housing, 2WS		1
3	335/12435	>Oct 2006	Rejilla housing,2WS		1
3	128/15279		Rejilla housing 2WS Loxam red *loxam red*		0
4	331/27126		Cierre bonnet		1
6	2410/0304		Aro de refuerzo		2
7	826/01814		Tornillo M8x35 countersunk		2
9	1370/0203Z		Tuerca self lock M8		2
10	1420/0007Z		Arandela plain M8		2
11	N.S.P.		Pieza no reparable		1
12	335/08180		Rejilla front black		1
12	128/15278		Rejilla front Loxam red *Loxam red*		1
13	817/19661		Rótulo JCB logo 100x100		1
14	162/03434		Cierre barrel assembly		1
16	331/46249		Paragolpes front 46kg *Standard*	A	1
16	128/15285		Paragolpes front 46kg Loxam grey *Loxam grey*	A	1
16	331/46250		Paragolpes front 100kg	A	1
16	331/46251		Paragolpes front 180kg	B	1
17	1315/3816Z		Tornillo M20 x 70	A	2
17	1315/3820Z		Tornillo M20 x 100mm	B	2
18	1420/0012Z		Arandela M20		2
19	331/34480		Contrapeso 2WS only, 156 Kg *If fitted*	B	1
20	1315/3824Z		Tornillo M20 x 140lg *To fit item 19*		2
21	1370/0703Z		Tuerca M20 *To fit item 19*		2
22	823/10429		Arandela taper M20 *To fit item 19*		2
23	1420/0012Z		Arandela M20 *To fit item 19*		2
31	1315/0205Z		Tornillo		2
32	1412/0001Z		Arandela		2
33	826/11392		Tuerca M6 clip on		2
34	1315/0408Z		Tornillo M10 x 30		4
35	1420/0008Z		Arandela Plain M10		4
49	926/22100		Espaciador block		2
50	910/60199		Cable bonnet release *Cab builds only*		1
61	331/48761		Palanca bonnet release *Canopy builds only*		1
62	1315/0205Z		Tornillo *Canopy builds only#*		1
63	1370/0103Z		Tuerca Self lock M6 *Canopy builds only*		1
64	1420/0006Z		Arandela M6 *Canopy builds only*		1

66	331/47156		Alambre bonnet pull down 1800mm long		1
67	821/10227		Clip P		1
67A	1412/0002Z		Arandela		1
67B	1370/0203Z		Tuerca self lock M8		1
73	835/10129		Amortiguador M8x65		2
75	1370/0203Z		Tuerca self lock M8		2
79	814/10201	Superseded	Muelle compression		2
79	814/10213		Muelle compression		2
80	829/31270		Casquillo		2
81	826/01627		Tuerca rivet M8 open end for 8 to 10.5mm plt.		2
82	1411/0004Z		Arandela		2

Catálogo de productos \ CONSTRUCTION \ REST OF WORLD \ CONSTRUCTION / INDUSTRIAL \ BACKHOE LOADER 3CX,4CX,214,215,217 \ 3CX 00960000-00989999,01297000-01297999,01327000-01349999,01616000-01625999,01705500-01709999 84hp 9812/0010 \ B CARROCERIA, CABINA SECCION CARGADORA \ B01 CARROCERIA/BASTIDOR

9812/0010 B1-6-21 GRILLE, FRONT, 2WS

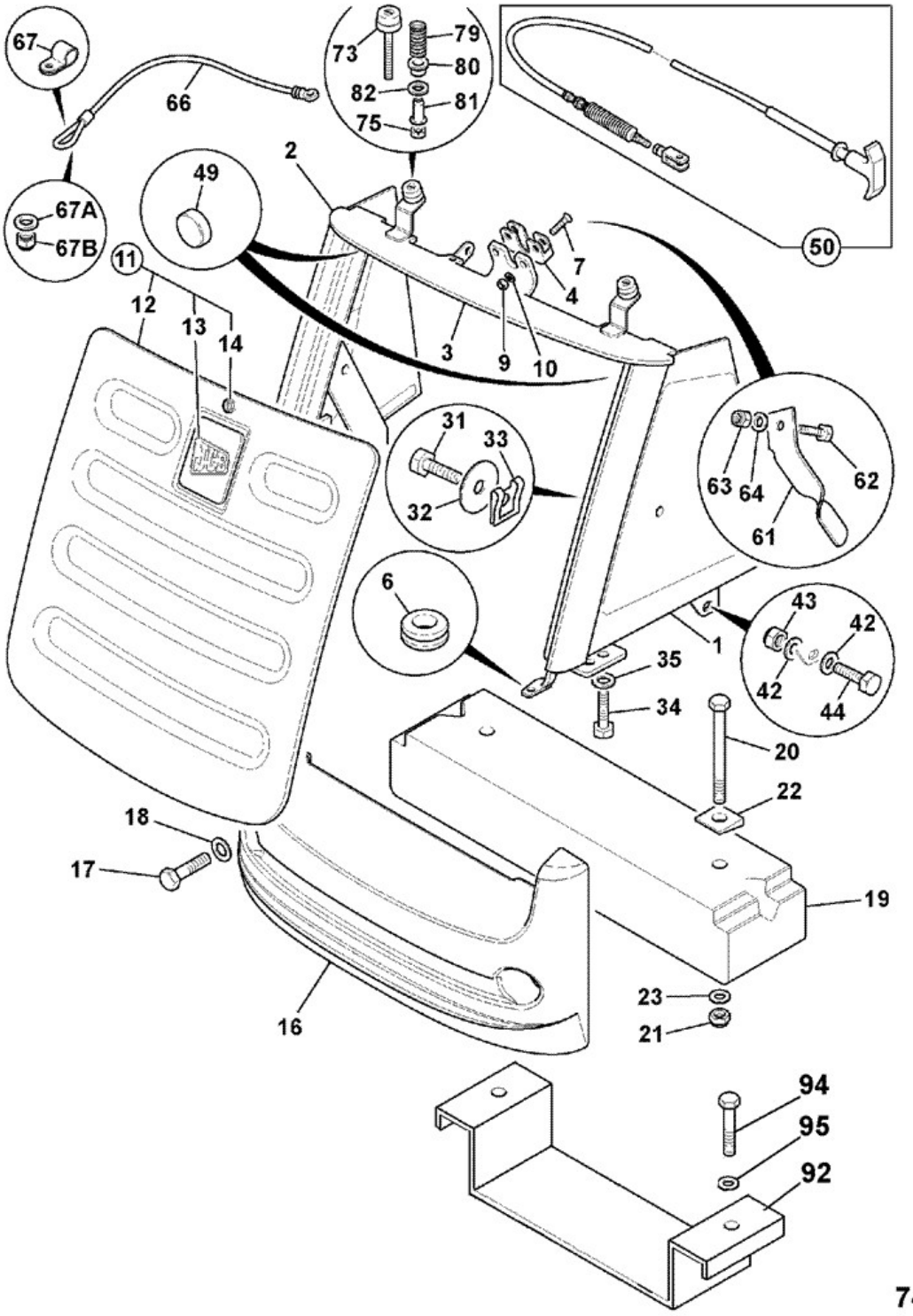

Elemento	Pieza Nº	Cambiar número	Descripción	Código de uso	CANT.
1	128/C6734		Rejilla LH side 2WS		1

2	128/C6733		Rejilla RH side 2WS		1
3	128/C0428		Rejilla housing		1
4	331/27126		Cierre bonnet		1
6	2410/0304		Aro de refuerzo		2
7	826/01814		Tornillo M8x35 countersunk		2
9	1370/0203Z		Tuerca self lock M8		2
10	1420/0007Z		Arandela plain M8		2
11	128/14741		Rejilla assembly front		1
12	:335/08180		Rejilla front black		1
13	:817/19661		Rótulo JCB logo 100x100		1
14	:162/03434		Cierre barrel assembly		1
16	331/46249		Paragolpes front 46kg *Standard*	A	1
16	128/15285		Paragolpes front 46kg Loxam grey *Loxam grey*	A	1
16	331/46250		Paragolpes front 100kg	A	1
16	331/46251		Paragolpes front 180kg	B	1
17	1315/3816Z		Tornillo M20 x 70	A	2
17	1315/3820Z		Tornillo M20 x 100mm	B	2
18	1420/0012Z		Arandela M20		2
19	331/34480		Contrapeso 2WS only, 156 Kg *If fitted*	B	1
20	1315/3824Z		Tornillo M20 x 140lg *To fit item 19*		2
21	1370/0703Z		Tuerca M20 *To fit item 19*		2
22	823/10429		Arandela taper M20 *To fit item 19*		2
23	1420/0012Z		Arandela M20 *To fit item 19*		2
31	1315/0205Z		Tornillo		2
32	1412/0001Z		Arandela		2
33	826/11392		Tuerca M6 clip on *supplied with items 1 & 2*		2
34	1315/0408Z		Tornillo M10 x 30		4
35	1420/0008Z		Arandela Plain M10		4
42	1411/0004Z		Arandela		4
43	1370/0303Z		Tuerca lock M10		2
44	1315/0410Z		Tornillo M10 x 40		2
49	926/22100		Espaciador block		2
50	332/C7664		Cable bonnet release *Cab builds only*		1
50A	826/01144		Abrazadera cable 200mm long *for item 50*		3
61	331/48761		Palanca bonnet release *Canopy builds only*		1
62	1315/0205Z		Tornillo *Canopy builds only#*		1
63	1370/0103Z		Tuerca Self lock M6 *Canopy builds only*		1
64	1420/0006Z		Arandela M6 *Canopy builds only*		1
66	331/47156	<M1617665	Alambre bonnet pull down 1800mm long		1
66	332/E9193	>M1617666	BANDA webbing		1
67	821/10227		Clip P		1

67A	1412/0002Z	<M1617665	Arandela		1
67A	1411/0002Z	>M1617666	Arandela		1
67B	1370/0203Z	<M1617665	Tuerca self lock M8		1
67B	1315/0303Z	>M1617666	Tornillo M8 x 16		1
73	835/10129		Amortiguador M8x65		2
75	1370/0203Z		Tuerca self lock M8		2
79	814/10201	Superseded	Muelle compression		2
79	814/10213		Muelle compression		2
80	829/31270		Casquillo		2
81	826/01627		Tuerca rivet M8 open end for 8 to 10.5mm plt.		2
82	1411/0004Z		Arandela		2
92	332/G7286	>M1621152	ABRAZADERA support 2WS		1
94	1315/0810Z	>M1621152	Tornillo M20 x 40 lg		2
95	1420/0012Z	>M1621152	Arandela M20		2

Catálogo de productos \ CONSTRUCTION \ REST OF WORLD \ CONSTRUCTION / INDUSTRIAL \ BACKHOE LOADER 3CX,4CX,214,215,217 \ 3CX 00960000-00989999,01297000-01297999,01327000-01349999,01616000-01625999,01705500-01709999 84hp 9812/0010 \ B CARROCERIA, CABINA SECCION CARGADORA \ B01 CARROCERIA/BASTIDOR

9812/0010 B1-6-41 GRILLE, FRONT, 2WS, TRAILER IMPACT PROTECTION

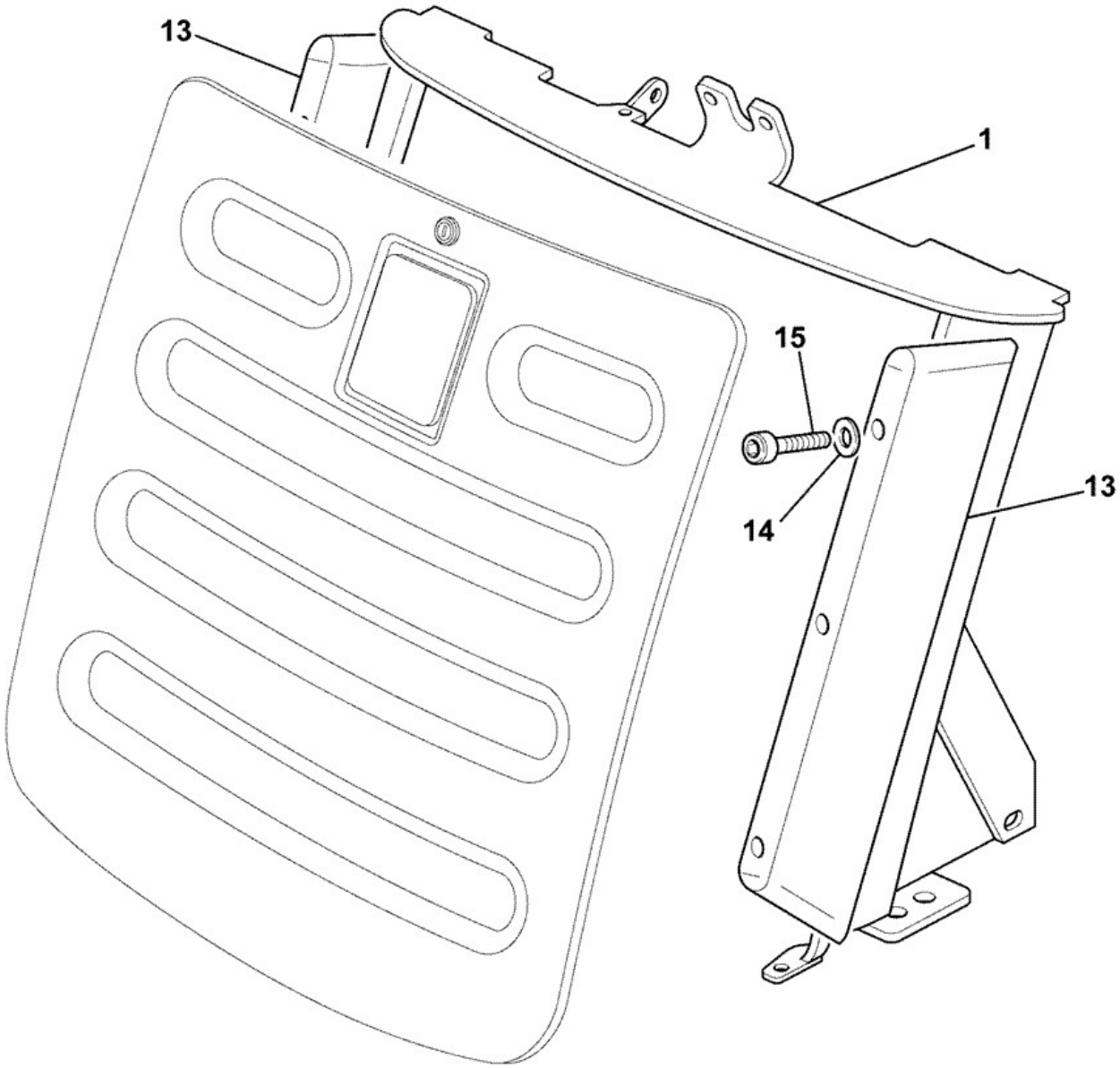

942910

Elemento	Pieza Nº	Cambiar número	Descripción	Código de uso	CANT.

1	128/C0429		Rejilla housing 2WS trailer impact protected		1
1A	:826/01104		Tuerca rivet *for item 15*		6
13	332/D9024		Regleta impact protection		2
14	1420/0009Z		Arandela Plain M12		18
15	1391/3416Z		Tornillo de cierre M10 x 70mm		6

Catálogo de productos \ CONSTRUCTION \ REST OF WORLD \ CONSTRUCTION / INDUSTRIAL \ BACKHOE LOADER 3CX,4CX,214,215,217 \ 3CX 00960000-00989999,01297000-01297999,01327000-01349999,01616000-01625999,01705500-01709999 84hp 9812/0010 \ B CARROCERIA, CABINA SECCION CARGADORA \ B01 CARROCERIA/BASTIDOR

9812/0010 B1-7-3 ESCALÓN, ACCESO CAB, 0, 0

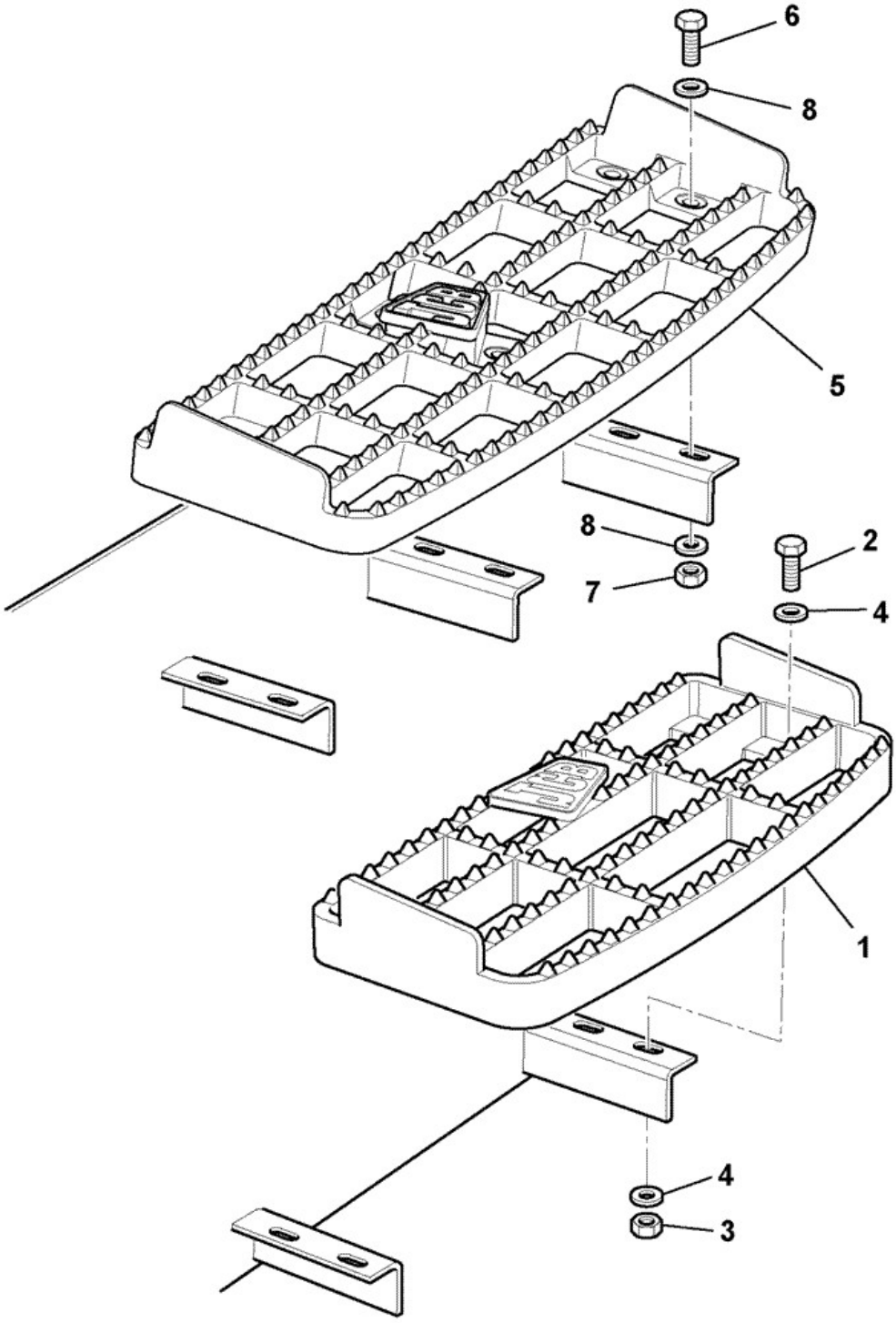

Elemento	Pieza Nº	Cambiar número	Descripción	Código de uso	CANT.
1	331/27034		Escalón unpainted 410 wide		3

2	1315/0308Z		Tornillo M8x30		12
3	1370/0203Z		Tuerca self lock M8		12
4	1420/0007Z		Arandela plain M8		24
5	331/39996		Escalón 616mm wide,6 hole *top step-hydraulic tank*		1
6	1315/0308Z		Tornillo M8x30		6
7	1370/0203Z		Tuerca self lock M8		6
8	1420/0007Z		Arandela plain M8		12

Catálogo de productos \ CONSTRUCTION \ REST OF WORLD \ CONSTRUCTION / INDUSTRIAL \ BACKHOE LOADER 3CX,4CX,214,215,217 \ 3CX 00960000-00989999,01297000-01297999,01327000-01349999,01616000-01625999,01705500-01709999 84hp 9812/0010 \ B CARROCERIA, CABINA SECCION CARGADORA \ B01 CARROCERIA/BASTIDOR

9812/0010 B1-7-4 ESCALÓN, ACCESO CAB, 0, 0

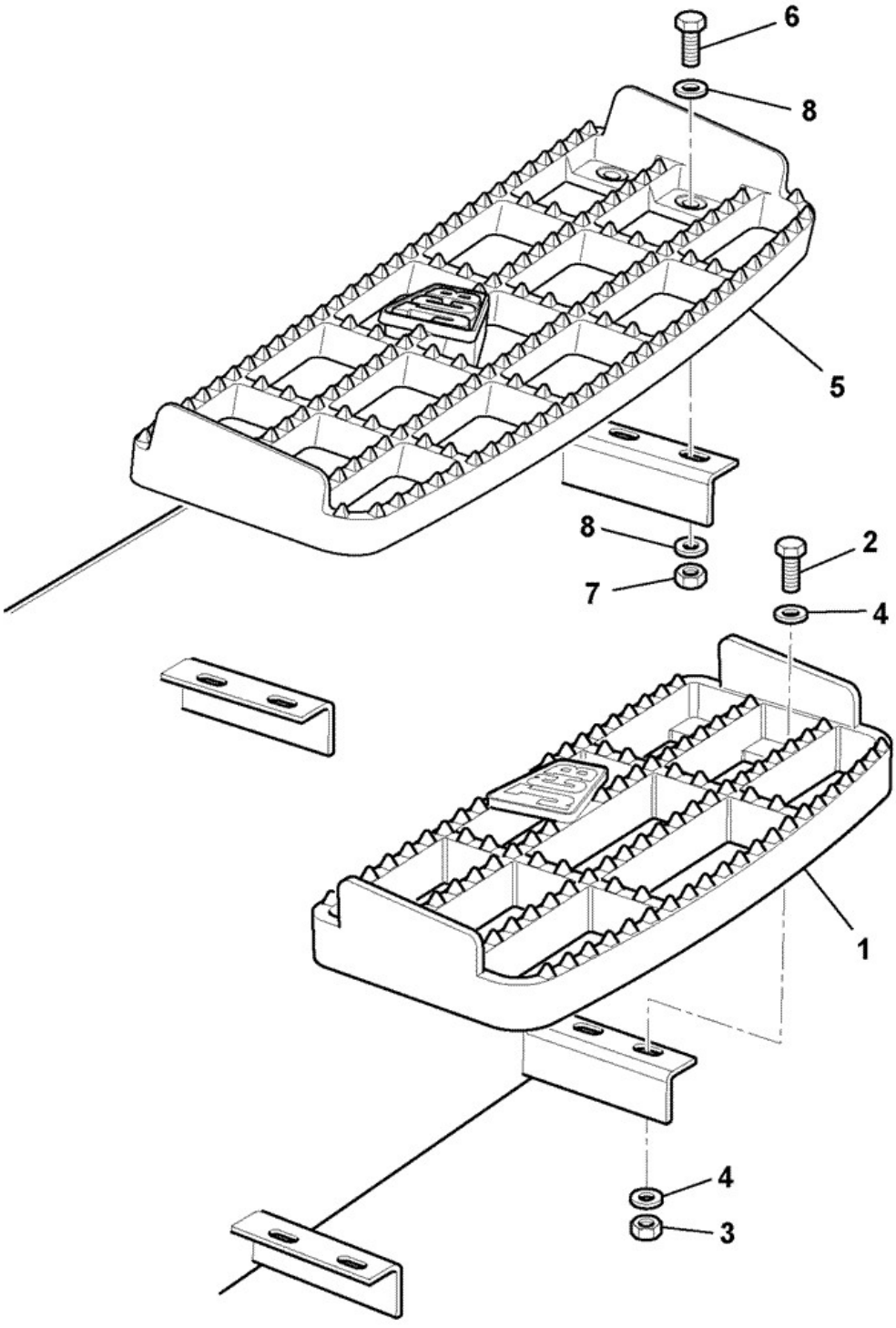

Elemento	Pieza Nº	Cambiar número	Descripción	Código de uso	CANT.
1	331/27034		Escalón unpainted 410 wide		3

2	1315/0308Z		Tornillo M8x30		12
3	1370/0203Z		Tuerca self lock M8		12
4	1420/0007Z		Arandela plain M8		24
5	331/48582		Escalón 616mm wide 4 hole mounting *top step-hydraulic tank*		1
6	1315/0308Z		Tornillo M8x30		4
7	1370/0203Z		Tuerca self lock M8		4
8	1420/0007Z		Arandela plain M8		8

Catálogo de productos \ CONSTRUCTION \ REST OF WORLD \ CONSTRUCTION / INDUSTRIAL \ BACKHOE LOADER 3CX,4CX,214,215,217 \ 3CX 00960000-00989999,01297000-01297999,01327000-01349999,01616000-01625999,01705500-01709999 84hp 9812/0010 \ B CARROCERIA, CABINA SECCION CARGADORA \ B01 CARROCERIA/BASTIDOR

9812/0010 B1-7-11 ESCALON, Lad dep líquido hidr,

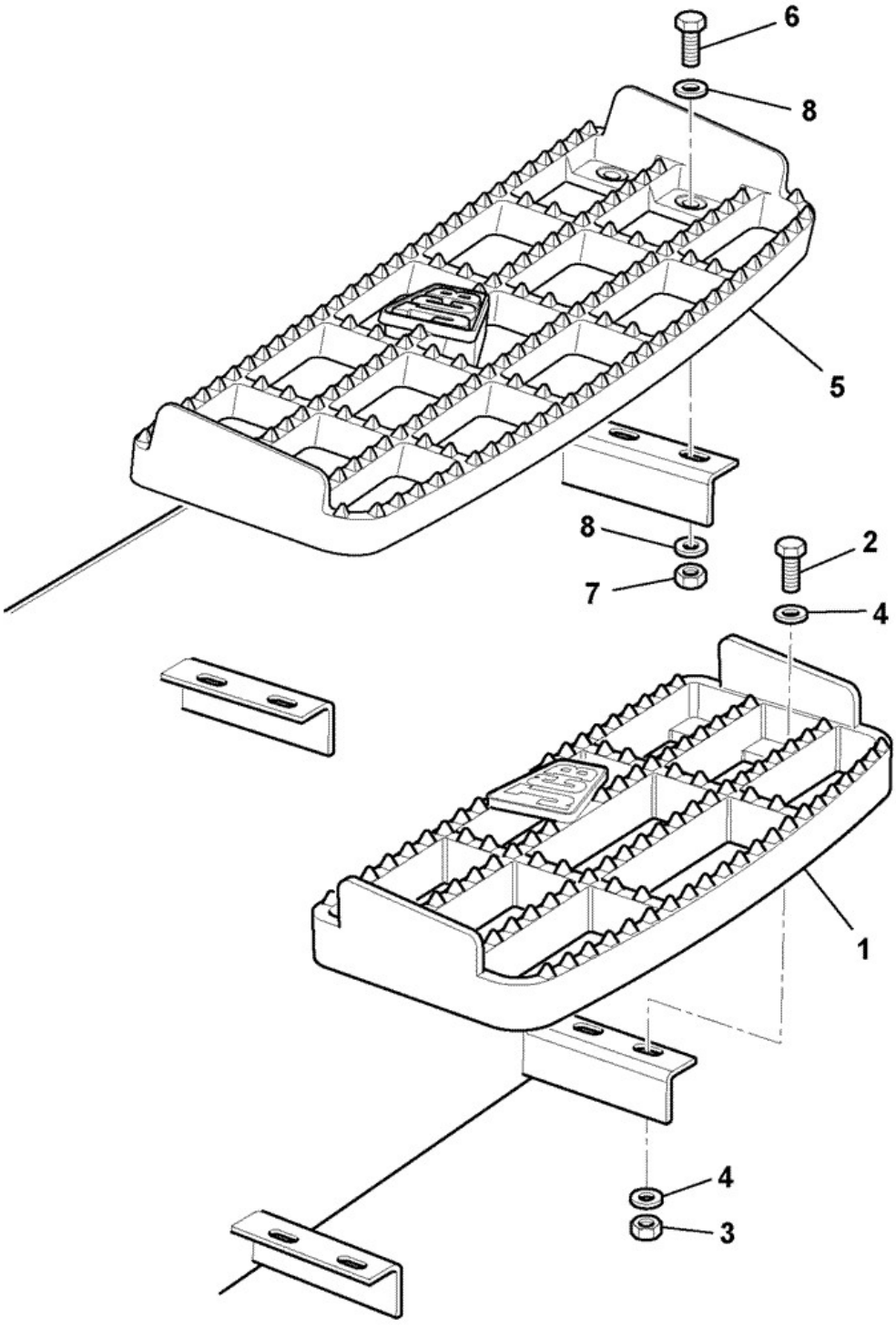

Elemento	Pieza Nº	Cambiar número	Descripción	Código de uso	CANT.
1	331/27034		Escalón unpainted 410 wide *Bottom*		1

2	1315/0308Z		Tornillo M8x30		4
3	1370/0203Z		Tuerca self lock M8		4
4	1420/0007Z		Arandela plain M8		8
5	331/48582		Escalón 616mm wide 4 hole mounting *Top*		1
6	1315/0308Z		Tornillo M8x30		4
7	1370/0203Z		Tuerca self lock M8		4
8	1420/0007Z		Arandela plain M8		8

Catálogo de productos \ CONSTRUCTION \ REST OF WORLD \ CONSTRUCTION / INDUSTRIAL \ BACKHOE LOADER 3CX,4CX,214,215,217 \ 3CX 00960000-00989999,01297000-01297999,01327000-01349999,01616000-01625999,01705500-01709999 84hp 9812/0010 \ B CARROCERIA, CABINA SECCION CARGADORA \ B01 CARROCERIA/BASTIDOR

9812/0010 B1-7-12 ESCALON, Lad dep líquido hidr,

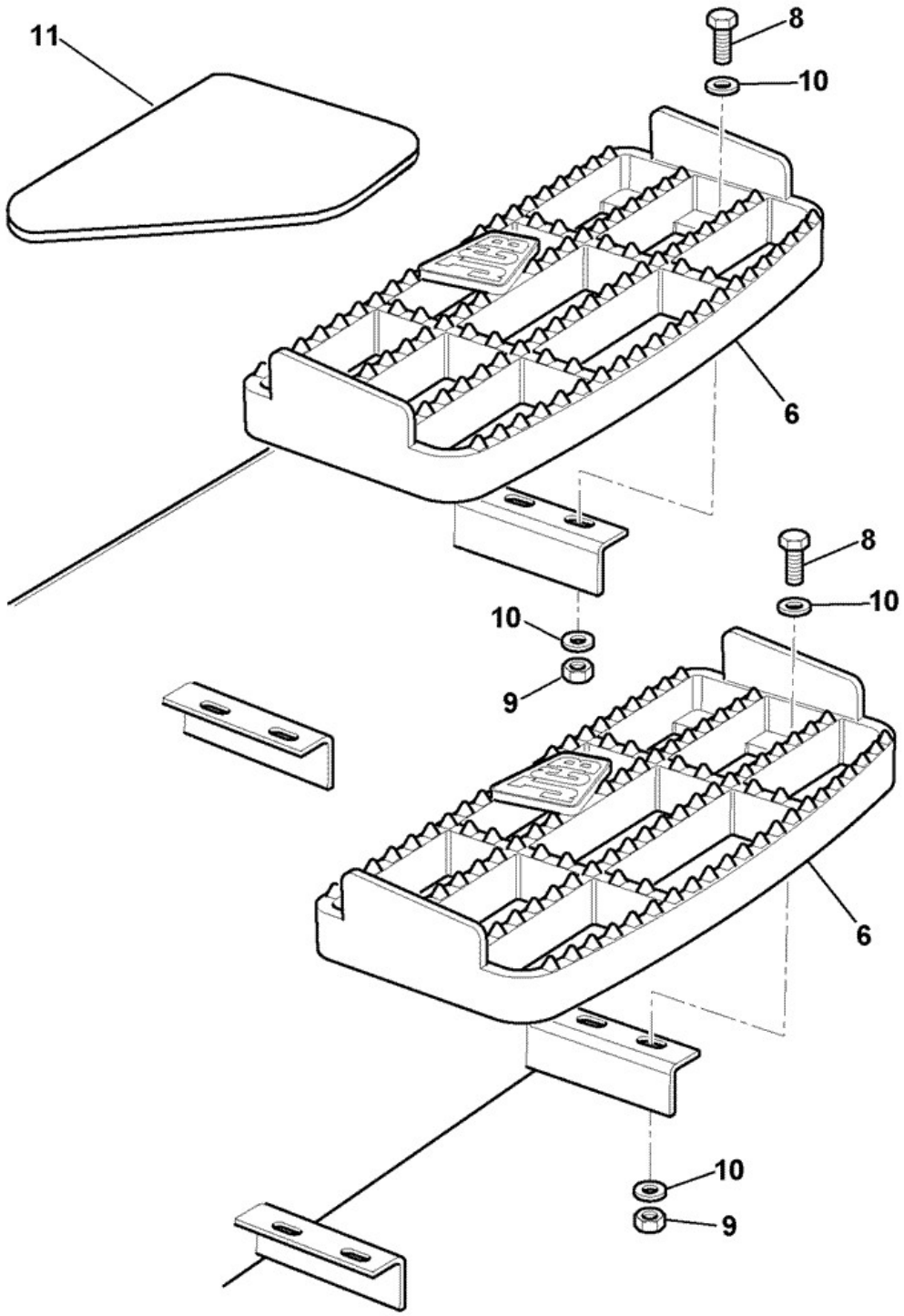

Elemento	Pieza Nº	Cambiar número	Descripción	Código de uso	CANT.
6	331/27034		Escalón unpainted 410 wide		2

8	1315/0308Z		Tornillo M8x30		8
9	1370/0203Z		Tuerca self lock M8		8
10	1420/0007Z		Arandela plain M8		16
11	332/P0162		COJIN AMORTIGUADOR anti-slip		1

Catálogo de productos \ CONSTRUCTION \ REST OF WORLD \ CONSTRUCTION / INDUSTRIAL \ BACKHOE LOADER 3CX,4CX,214,215,217 \ 3CX 00960000-00989999,01297000-01297999,01327000-01349999,01616000-01625999,01705500-01709999 84hp 9812/0010 \ B CARROCERIA, CABINA SECCION CARGADORA \ B01 CARROCERIA/BASTIDOR

9812/0010 B1-7-21 ESCALON, FUEL TANK,

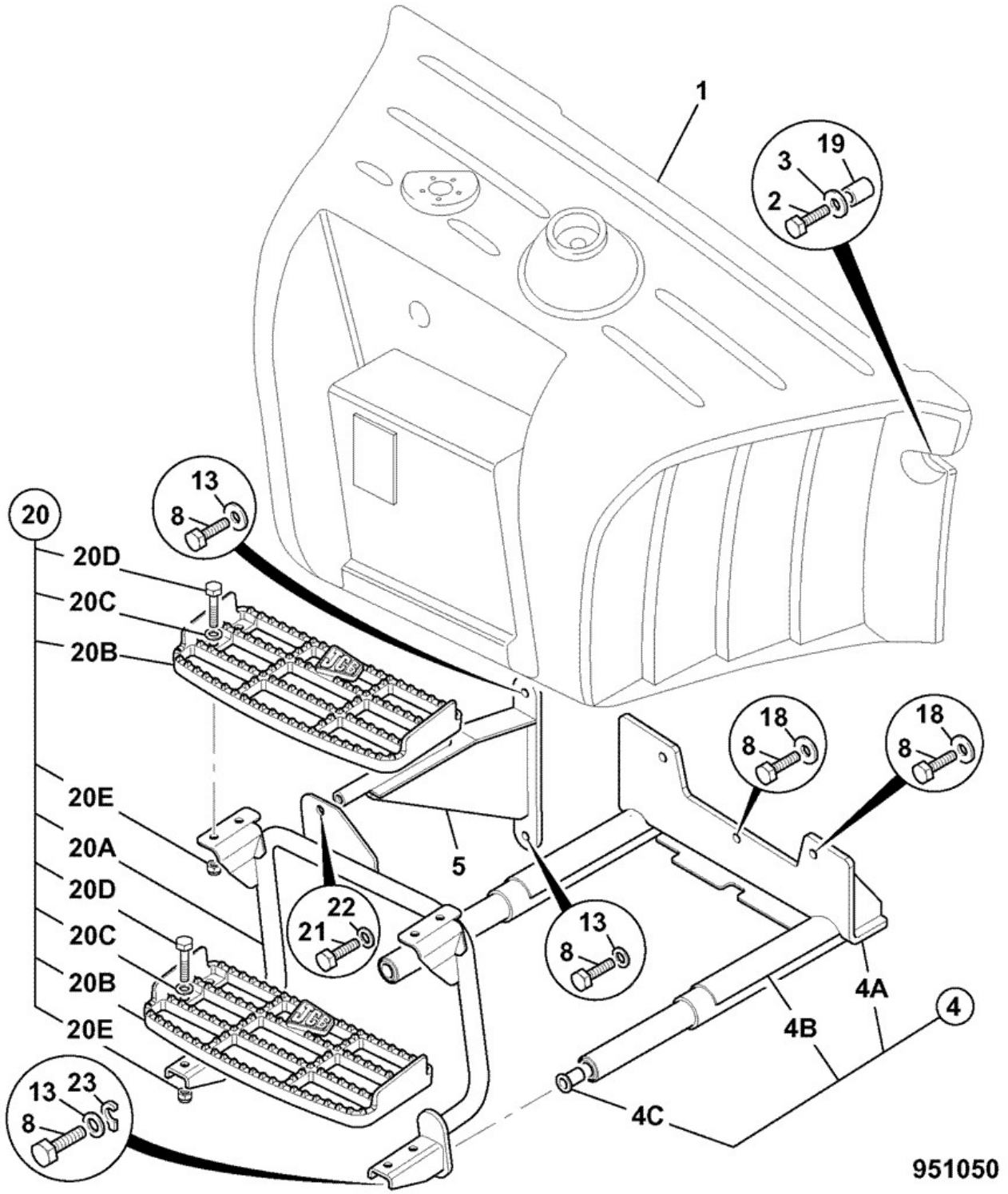

Elemento	Pieza Nº	Cambiar número	Descripción	Código de uso	CANT.
A	****		Inst\ fuel tank		1

1	128/C2000		Deposito Diesel, plastic		1
2	1315/0312Z		Tornillo M8x50		2
3	332/F1384		ARANDELA 8.5x40x4		4
4	128/C8993		ABRAZADERA lower step mounting assembly		1
4A	:128/C1363		ABRAZADERA lower step mounting		1
4B	:331/68046		REGLETA neoprene 260mm long		2
4C	:826/01617		Tuerca rivet M10 open end for 8.5 to 11mm plt		5
5	128/C1369		Montaje step, upper		1
8	1315/0412Z		Tornillo M10 x 1.5 x 50		6
13	1420/0008Z		Arandela Plain M10		3
18	332/D4088		ARANDELA 10.7x38x3		3
19	123/06253		Espaciador		2
20	****		Inst\ steps fuel tank		1
20A	128/C1390		ABRAZADERA step mounting		1
20B	331/27034		Escalón unpainted 410 wide		2
20C	1420/0007Z		Arandela plain M8		16
20D	1315/0308Z		Tornillo M8x30		8
20E	1370/0203		Tuerca		8
21	1315/0408Z		Tornillo M10 x 30		1
22	1411/0004Z		Arandela		1
23	332/F0162		PIEZA DISTANCIADOR *If fitted*		2

9812/0010 B1-8-1 GUARDABARROS TRASERO, AMARILLO, 0

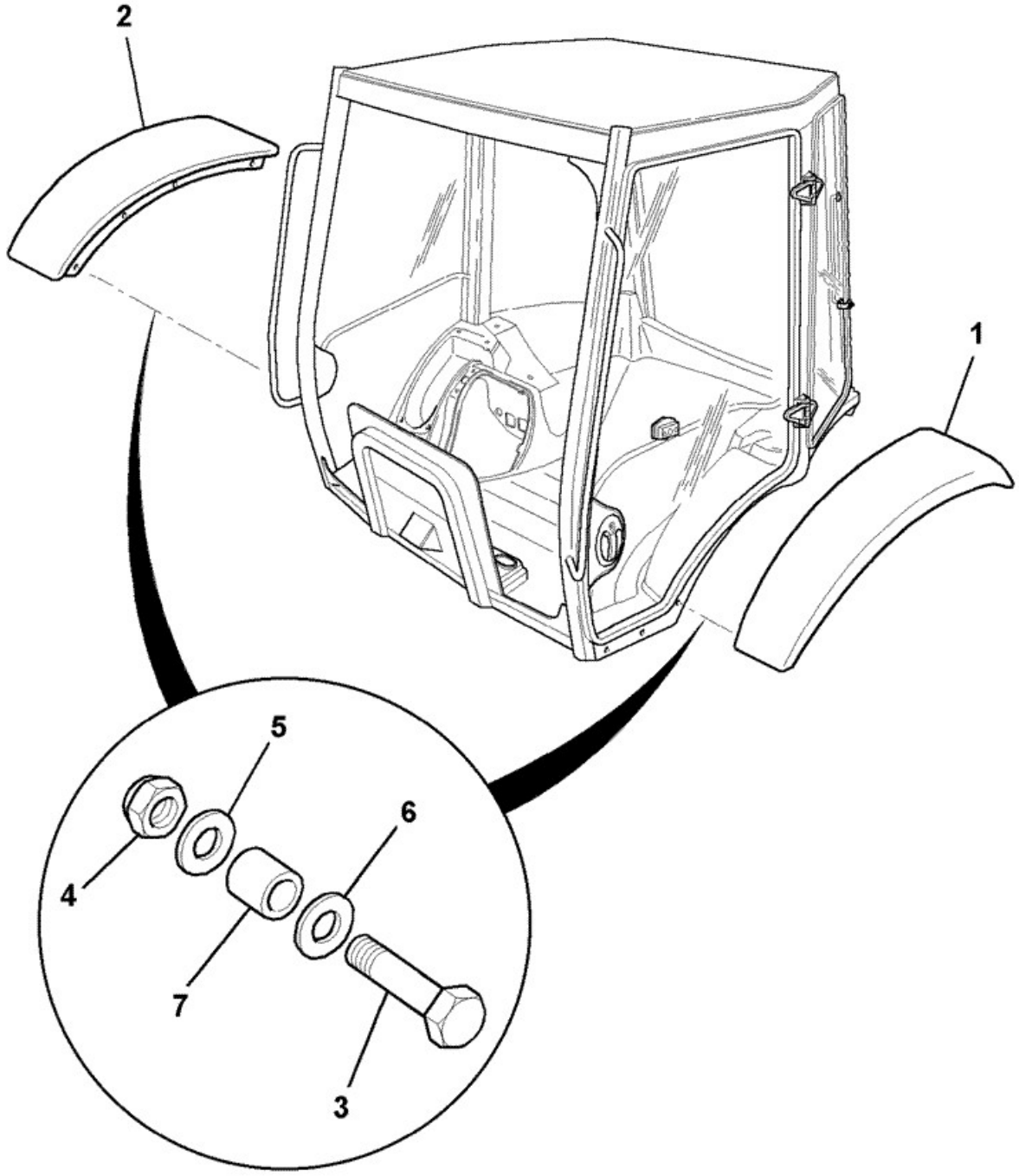

394310

Elemento	Pieza Nº	Cambiar número	Descripción	Código de uso	CANT.
1	331/25644		Guardabarros left hand rear 3CX cab		1
2	331/25645		Guardabarros right hand rear 3CX cab		1
3	1315/0408Z		Tornillo M10 x 30		12
4	1370/0303Z		Tuerca lock M10		12
5	1420/0008Z		Arandela Plain M10		12

6	823/00326		Arandela outside		12
7	****		*not used*		1
8	826/01768		Tornillo M6x25mm *fitted to item 8*		2
9	823/00516		Arandela nylon M6 *fitted to item 8*		2
10	1370/0103Z		Tuerca Self lock M6 *fitted to item 8*		2
11	1420/0006Z		Arandela M6 *fitted to item 8*		2

9812/0010 B1-8-2 GUARDABARROS TRASERO, AMARILLO, 0

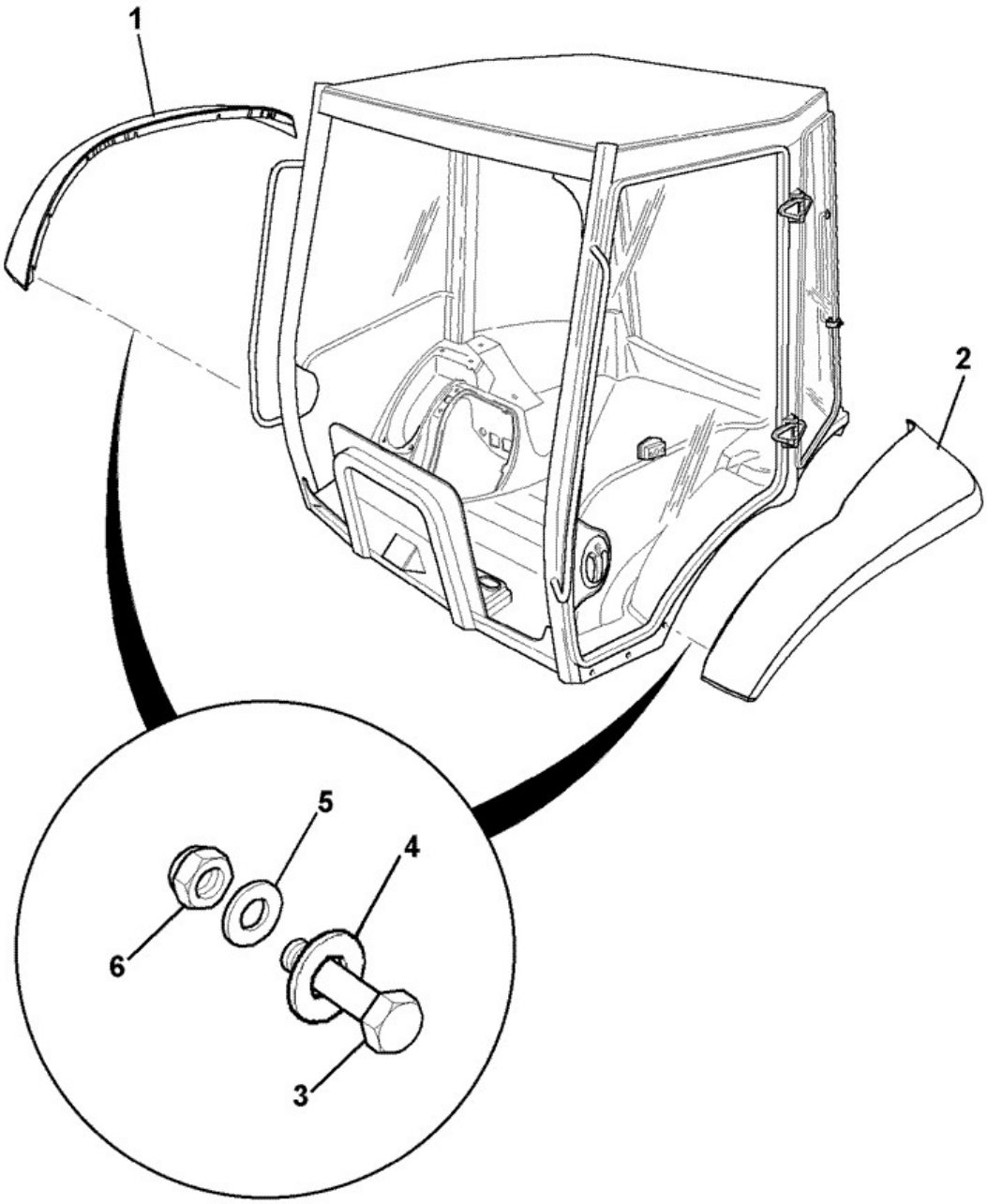

394311

		Cambiar			

Elemento	Pieza Nº	número	Descripción	Código de uso	CANT.
A	****		Inst\ rear fenders yellow		1
1	331/25645		Guardabarros right hand rear 3CX cab		1
2	331/25644		Guardabarros left hand rear 3CX cab		1
3	1315/0408Z		Tornillo M10 x 30		12
4	823/00326		Arandela outside		12
5	1420/0008Z		Arandela Plain M10		12
6	1370/0303Z		Tuerca lock M10		12

9812/0010 B1-8-10 GUARDABARROS TRASERO, Negro, 0

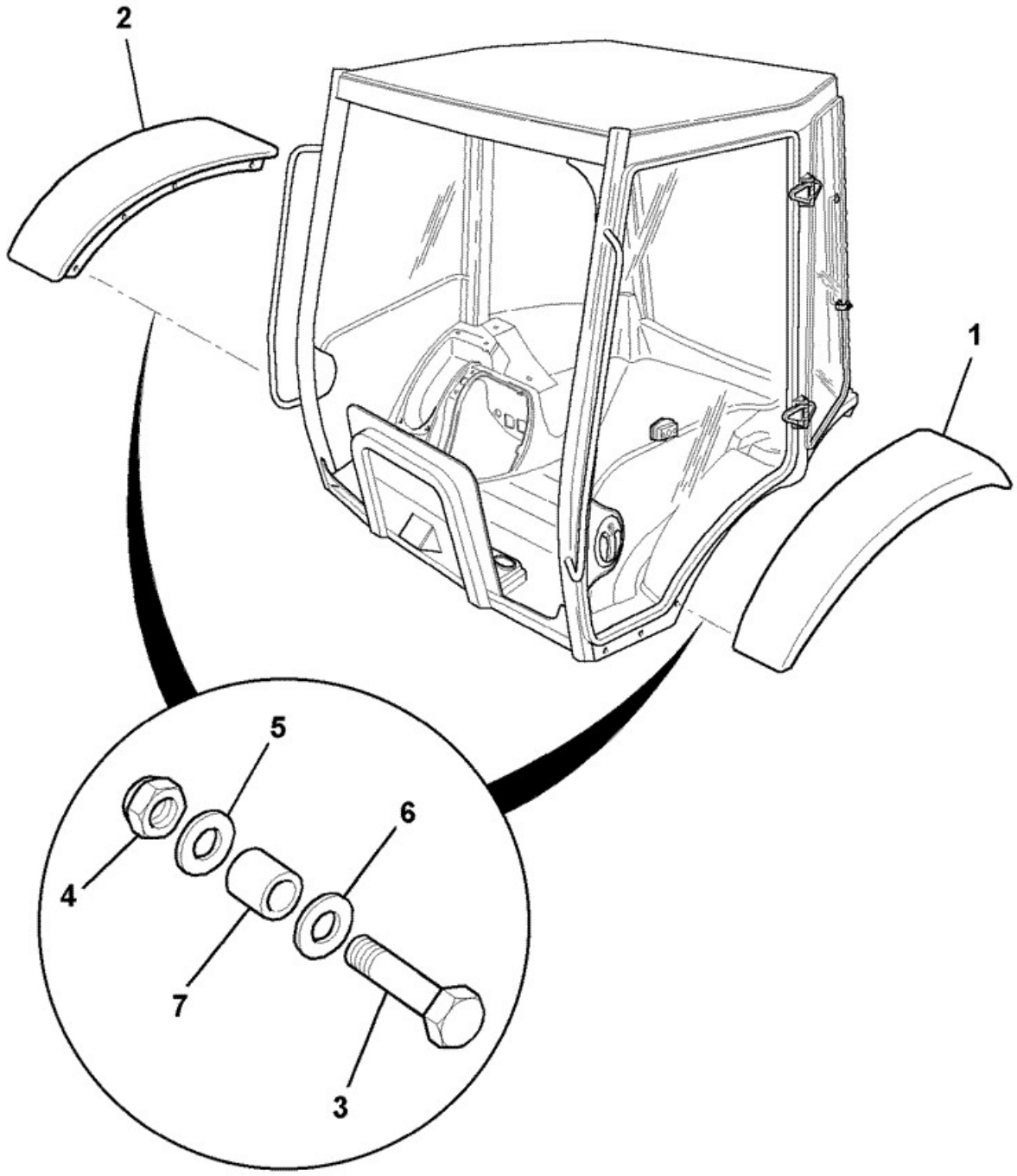

394310

Elemento	Pieza Nº	Cambiar número	Descripción	Código de uso	CANT.
1	331/27634		Guardabarros left hand rear black		1
2	331/27635		Guardabarros right hand rear black		1
3	1315/0408Z		Tornillo M10 x 30		10
4	1370/0303Z		Tuerca lock M10		10
5	1420/0008Z		Arandela Plain M10		10
6	823/00326		Arandela outside		10
7	826/01768		Tornillo M6x25mm		2
8	823/00516		Arandela nylon M6		2
9	1370/0103Z		Tuerca Self lock M6		2
10	1420/0006Z		Arandela M6		2

9812/0010 B1-8-11 GUARDABARROS TRASERO, Negro, SIDESHIFT, TEXTURED

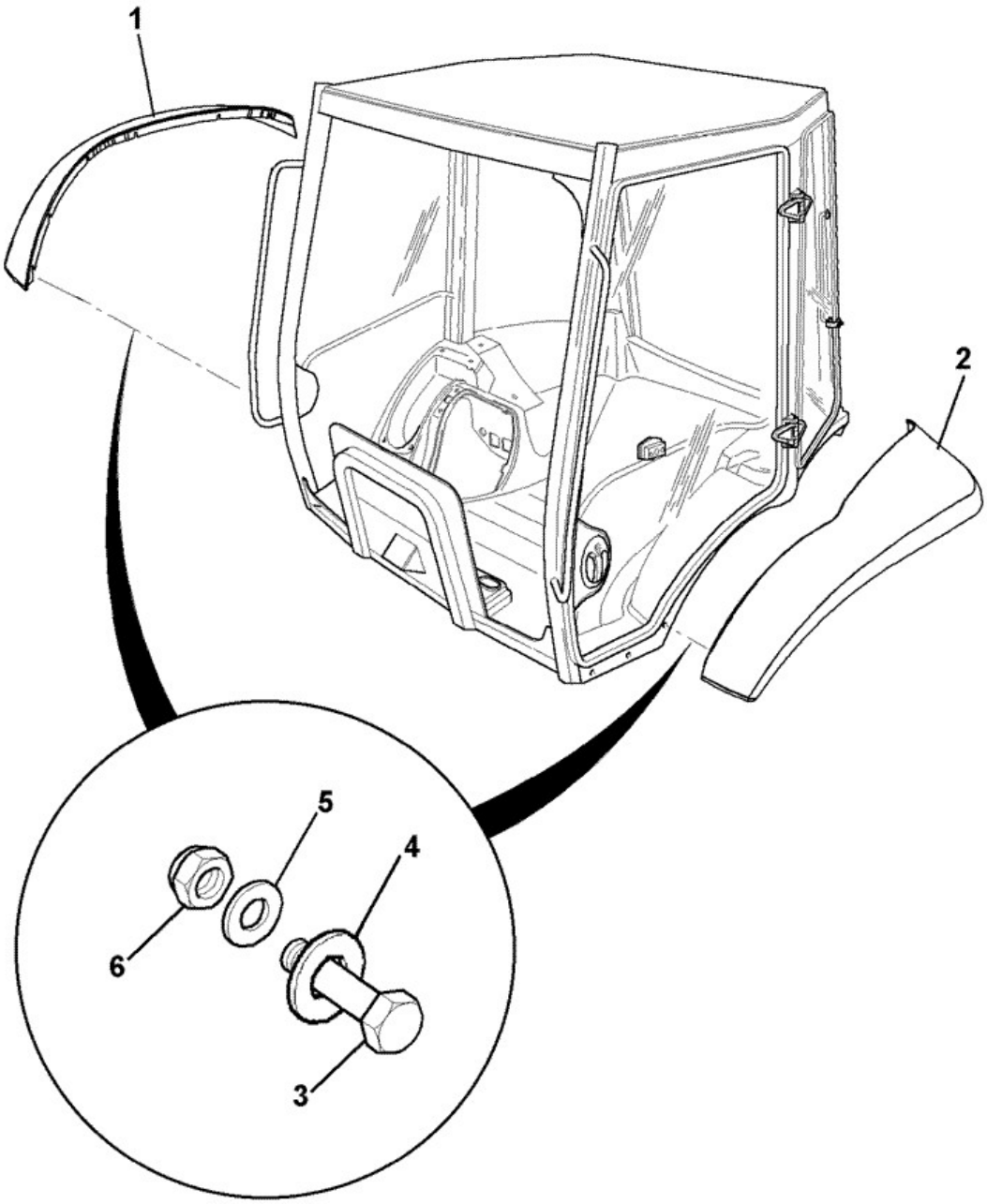

394311

		Cambiar			

Elemento	Pieza Nº	número	Descripción	Código de uso	CANT.
A	****		Inst\ rear fenders black textured		1
1	332/D4972		GUARDA BARRO RH rear black textured		1
2	332/D4971		GUARDA BARRO LH rear black textured		1
3	1315/0308Z		Tornillo M8x30		12
4	332/F1384		ARANDELA 8.5x40x4		12
5	1412/0002Z		Arandela		12
6	826/10826		Tuerca nyloc M8		12

9812/0010 B1-8-15 GUARDABARROS TRASERO, Negro, CENTREMOUNT, SMOOTH

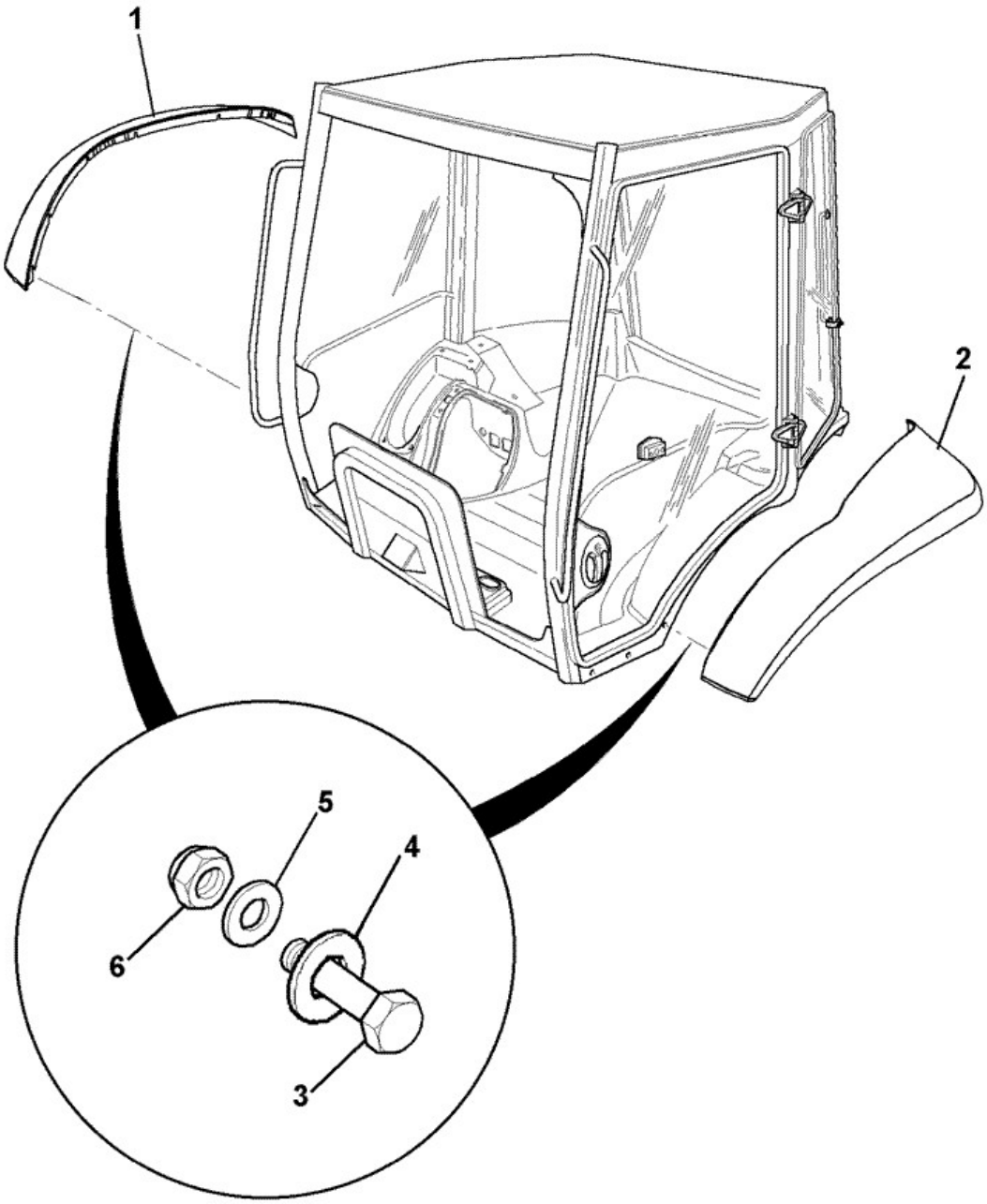

394311

		Cambiar			

Elemento	Pieza Nº	número	Descripción	Código de uso	CANT.
1	331/27635		Guardabarros right hand rear black		1
2	331/27634		Guardabarros left hand rear black		1
3	1315/0408Z		Tornillo M10 x 30		12
4	823/00326		Arandela outside		12
5	1420/0008Z		Arandela Plain M10		12
6	1370/0303Z		Tuerca lock M10		12

Catálogo de productos \ CONSTRUCTION \ REST OF WORLD \ CONSTRUCTION / INDUSTRIAL \ BACKHOE LOADER 3CX,4CX,214,215,217 \ 3CX 00960000-00989999,01297000-01297999,01327000-01349999,01616000-01625999,01705500-01709999 84hp 9812/0010 \ B CARROCERIA, CABINA SECCION CARGADORA \ B01 CARROCERIA/BASTIDOR

9812/0010 B1-9-12 GUARDABARROS DELANT\, Negro, 2RD, 18"

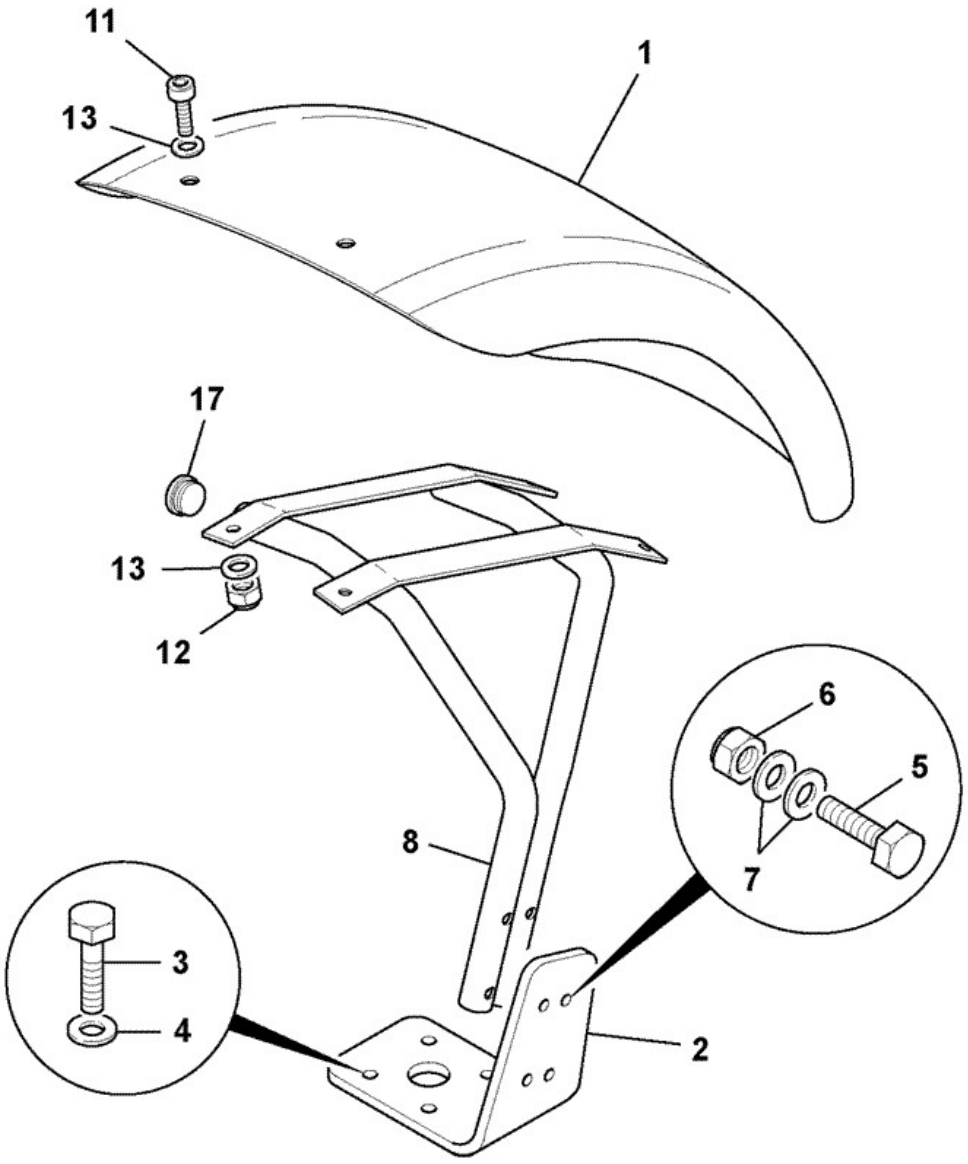

702950

Elemento	Pieza Nº	Cambiar número	Descripción	Código de uso	CANT.

1	331/31574		Guardabarros Front, LH 2WS, 343mm wide	A	1
1	331/31575		Guardabarros Front, RH 2WS, 343mm wide	B	1
2	331/31147		Soporte Left Hand, Fender	A	1
2	331/31148		Soporte Right Hand, Fender	B	1
3	1318/3512Z		Tornillo M12X50mm long TUF-LOK		8
4	1420/0009Z		Arandela Plain M12		8
5	1315/3416Z		Tornillo hex. head M10 x 70		8
6	1370/0303Z		Tuerca lock M10		8
7	1420/0008Z		Arandela Plain M10		16
8	335/04161		Soporte Upper Left Hand	A	1
8	335/04162		Soporte Upper Right Hand	B	1
11	1315/0308Z		Tornillo M8x30		8
12	1370/0203Z		Tuerca self lock M8		8
13	1411/0002Z		Arandela		16
17	331/19852		Tapa blanking		4

9812/0010 B1-9-13 GUARDABARROS DELANT\, Negro, 2RD, 418MM ANCHO, INCL\ NEUMÁTICOS 20"

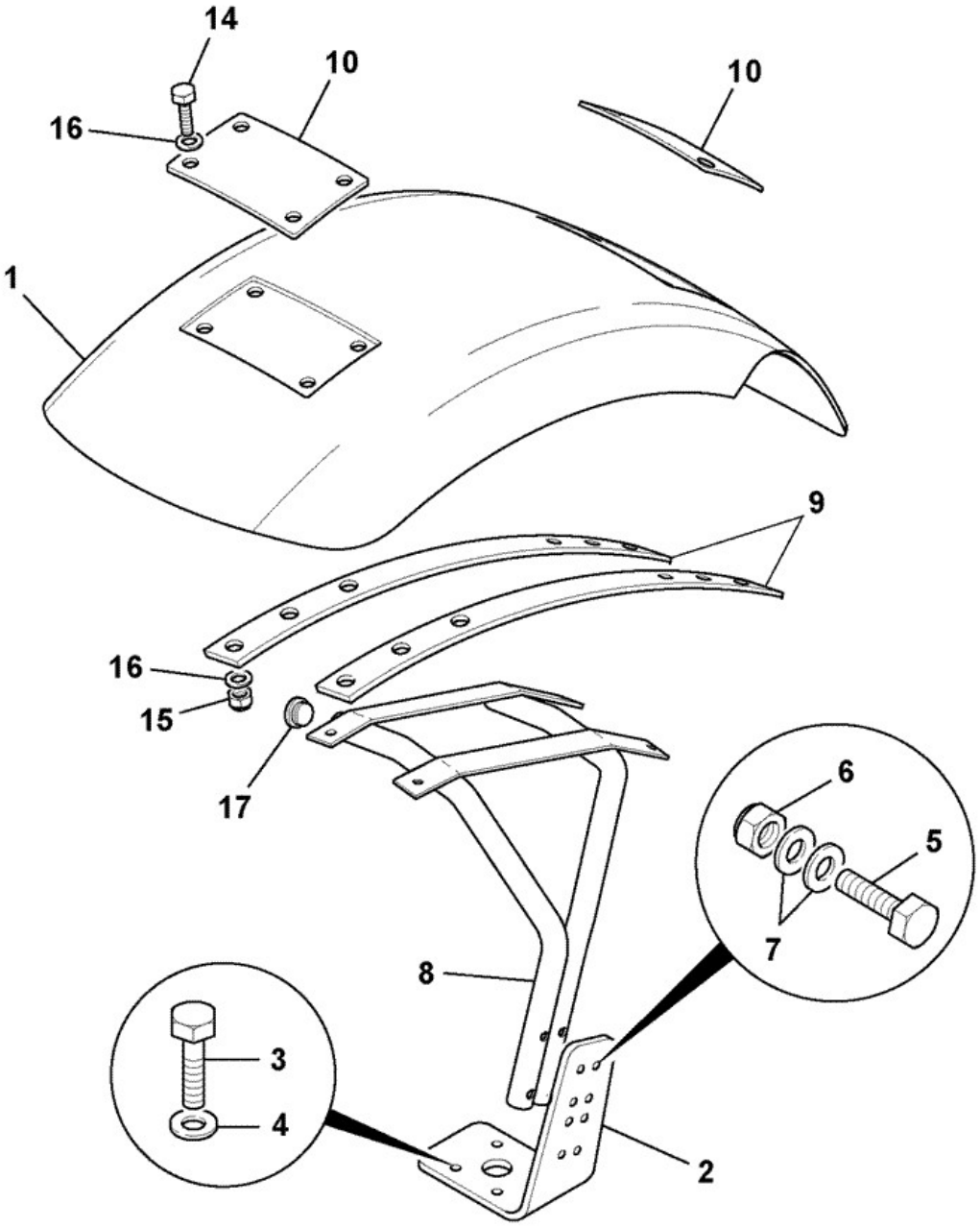

702960

Elemento	Pieza Nº	Cambiar número	Descripción	Código de uso	CANT.

1	331/23632		Guardabarros left hand front 418mm wide	A	1
1	331/23631		Guardabarros right hand front 418mm wide	B	1
2	331/31864		Soporte Left Hand, Fender	A	1
2	331/31865		Soporte Right Hand, Fender	B	1
3	1318/3512Z		Tornillo M12X50mm long TUF-LOK		8
4	1420/0009Z		Arandela Plain M12		8
5	1315/3416Z		Tornillo hex. head M10 x 70		8
6	1370/0303Z		Tuerca lock M10		8
7	1420/0008Z		Arandela Plain M10		16
8	335/04161		Soporte Upper Left Hand	A	1
8	335/04162		Soporte Upper Right Hand	B	1
9	331/32030		Regleta Fender Mounting 20"		4
10	265/00533		Placa back		4
14	1315/0310Z		Tornillo M8x40		16
15	1370/0203Z		Tuerca self lock M8		16
16	1411/0005Z		Arandela 1/2" Medium		32
17	331/19852		Tapa blanking		4

9812/0010 B1-9-14 GUARDABARROS DELANT\, Negro, 2RD, 343MM ANCHO, INCL\ NEUMÁTICOS 20"

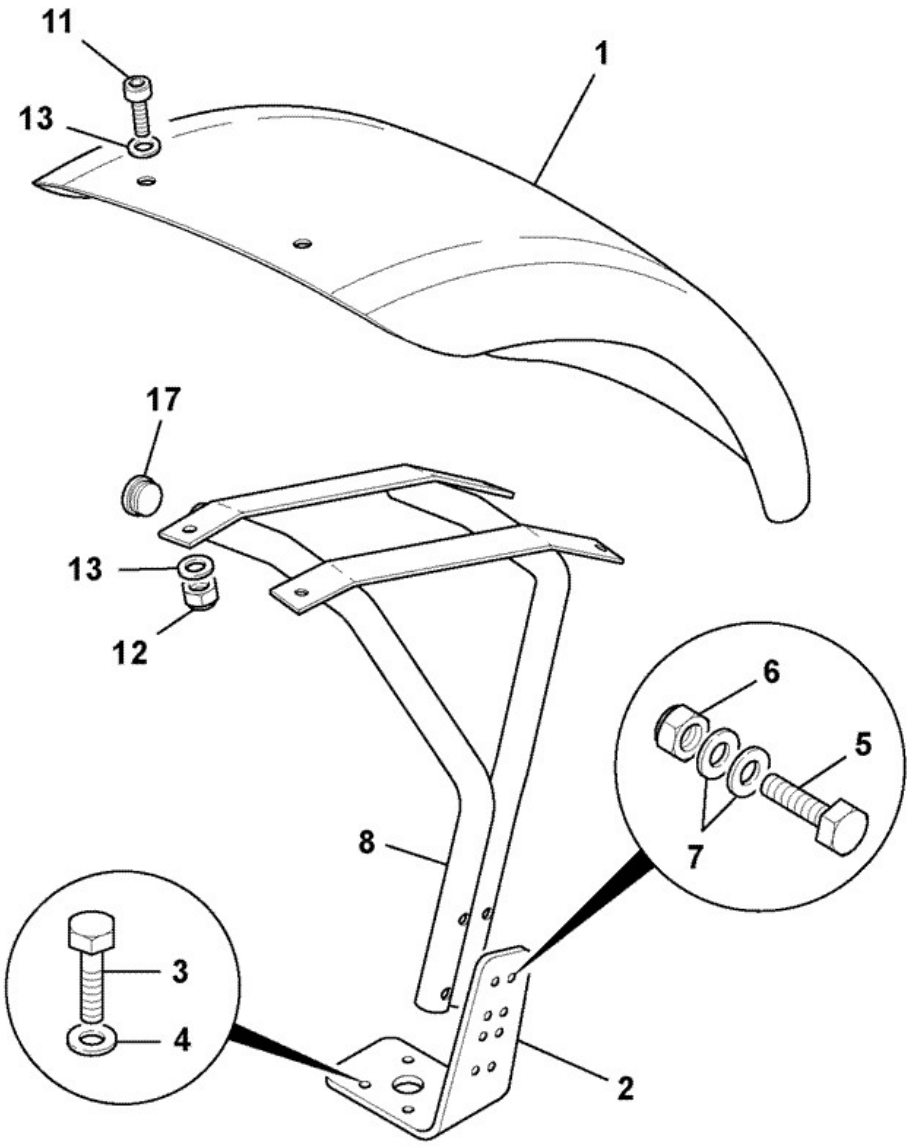

702970

Elemento	Pieza Nº	Cambiar número	Descripción	Código de uso	CANT.

1	331/31574		Guardabarros Front, LH 2WS, 343mm wide	A	1
1	331/31575		Guardabarros Front, RH 2WS, 343mm wide	B	1
2	331/31864		Soporte Left Hand, Fender	A	1
2	331/31865		Soporte Right Hand, Fender	B	1
3	1318/3512Z		Tornillo M12X50mm long TUF-LOK		8
4	1420/0009Z		Arandela Plain M12		8
5	1315/3416Z		Tornillo hex. head M10 x 70		8
6	1370/0303Z		Tuerca lock M10		8
7	1420/0008Z		Arandela Plain M10		16
8	335/04161		Soporte Upper Left Hand	A	1
8	335/04162		Soporte Upper Right Hand	B	1
11	1315/0308Z		Tornillo M8x30		8
12	1370/0203Z		Tuerca self lock M8		8
13	1411/0002Z		Arandela		16
17	331/19852		Tapa blanking		4

9812/0010 B1-10-1 PASTILLAS, CALLE, ESTABILIZADOR, DESPL\ LATERAL OPCIONAL

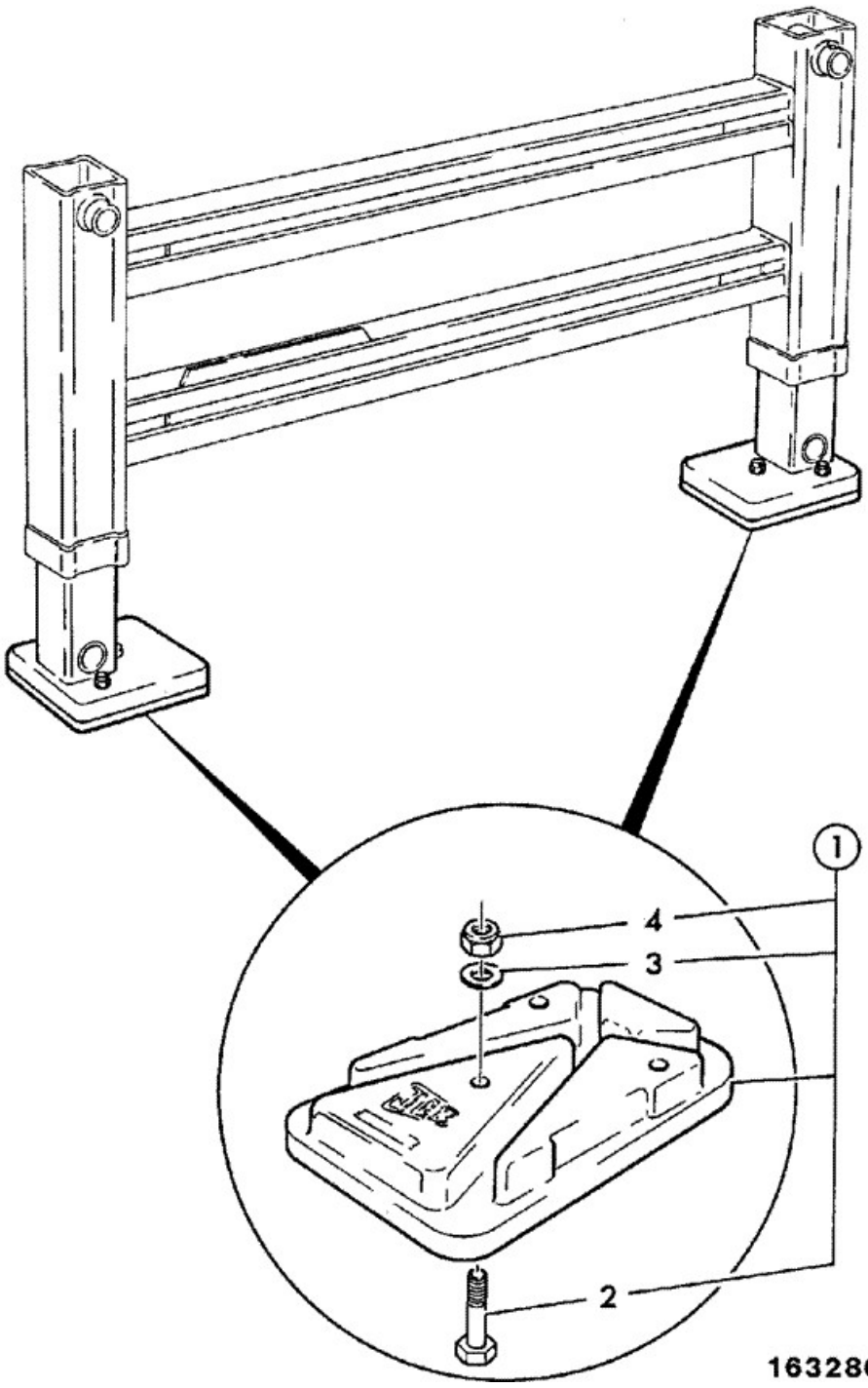

Elemento	Pieza Nº	Cambiar número	Descripción	Código de uso	CANT.
1	980/88215		Pastilla street rubber		2
2	:826/01476		Tornillo		3
3	:1410/0007Z		Arandela		3
4	:1340/0603Z		Tuerca lock		3

9812/0010 B1-11-1 NOISE INSULATION, 84HP ONLY

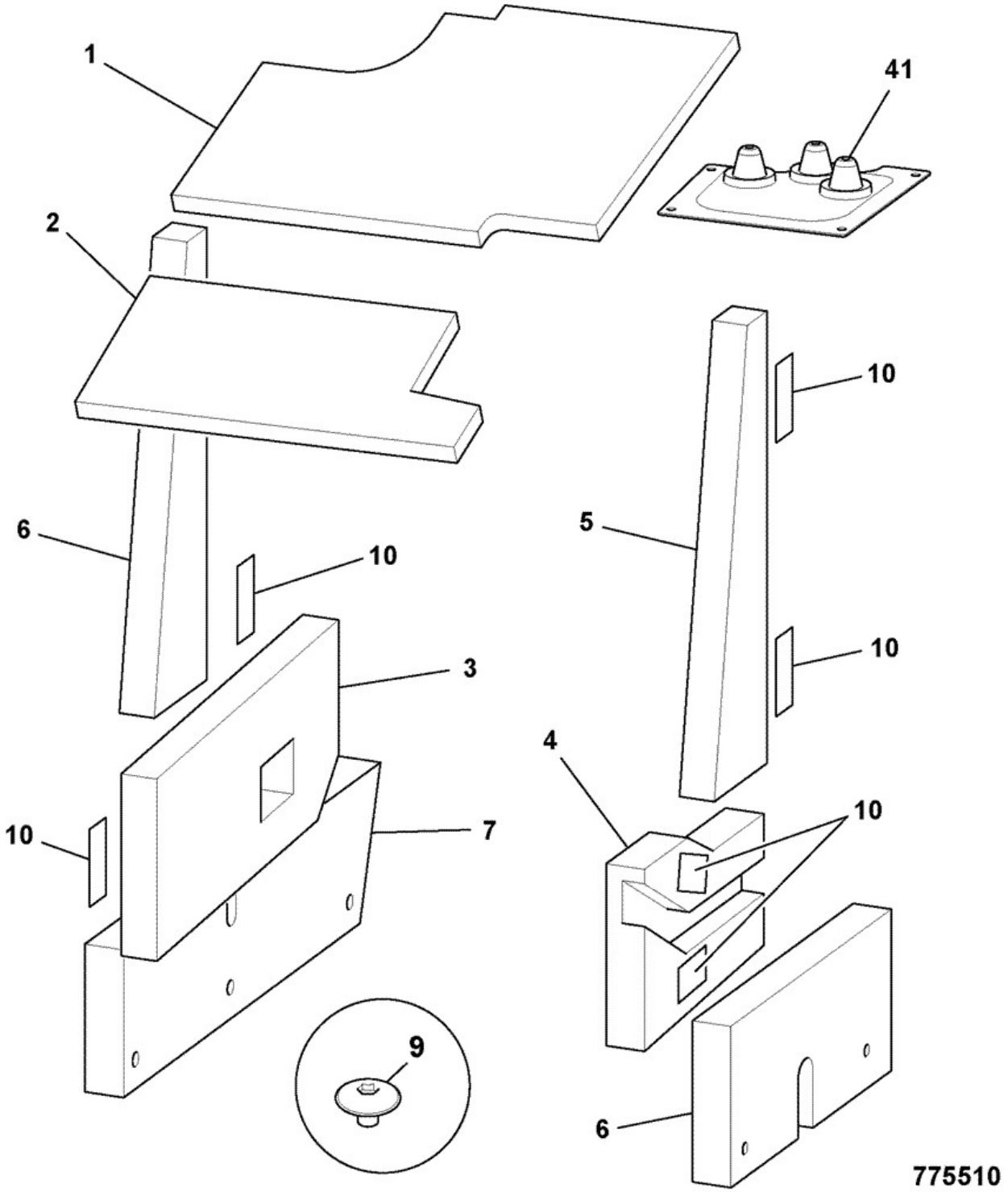

Elemento	Pieza Nº	Cambiar número	Descripción	Código de uso	CANT.
1	331/47898		Panel noise, bonnet upper rear		1

2	331/47901	<M1332164	Panel noise, bonnet front upper		1
2	332/C4378	>M1332165	Panel noise, bonnet front upper		1
3	331/47916		Panel noise, chassis RHS		1
4	331/47915		Panel noise, chassis LHS *if fitted*		1
5	331/47905		Panel noise, tower LHS		1
6	331/47906		Panel noise, tower RHS		1
7	331/47917		Panel noise, fuel tank		1
8	331/47918		Panel noise, hyd. tank		1
9	826/01308		Retenida insulation		5
10	331/25390		Pastilla velcro		8
41	331/39394		Junta loader control soundproofing *fitted under loader control console*		1

9812/0010 B1-12-1 PLACA, LLENADO, TORRE CARG, 0

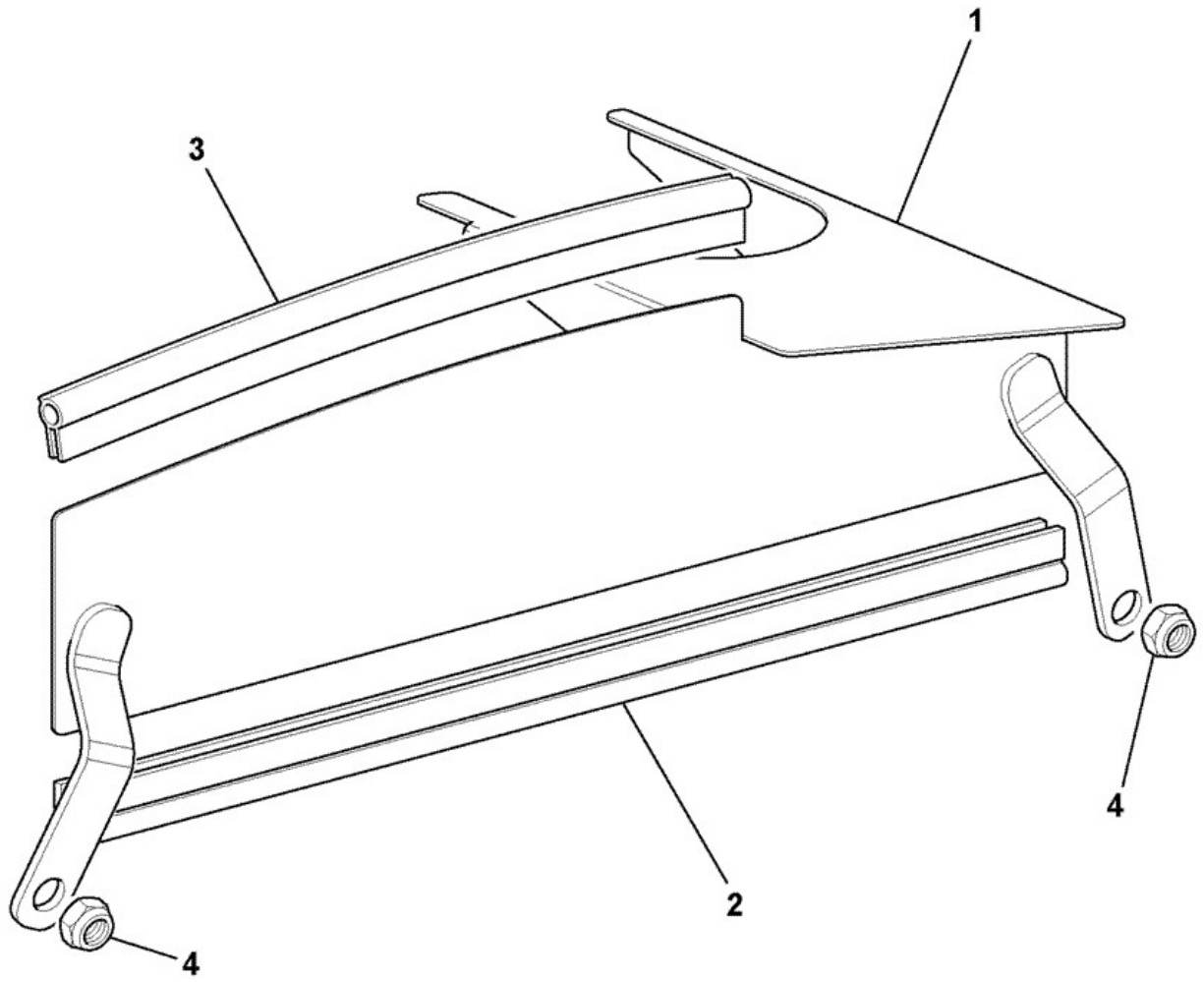

743240

Elemento	Pieza Nº	Cambiar número	Descripción	Código de uso	CANT.
1	335/08106	<M0967723	Placa tower,sealing		1

1	335/10262		Placa tower sealing		1
2	926/01100		Regleta sealing *Approx 520mm long*		0
3	926/01100		Regleta sealing *Approx 360mm long*		0
4	1370/0403Z		Tuerca M12		2

9812/0010 B1-13-2 MONTAJE VÁLVULA, EXCAV/ESTABILIZADOR, 0

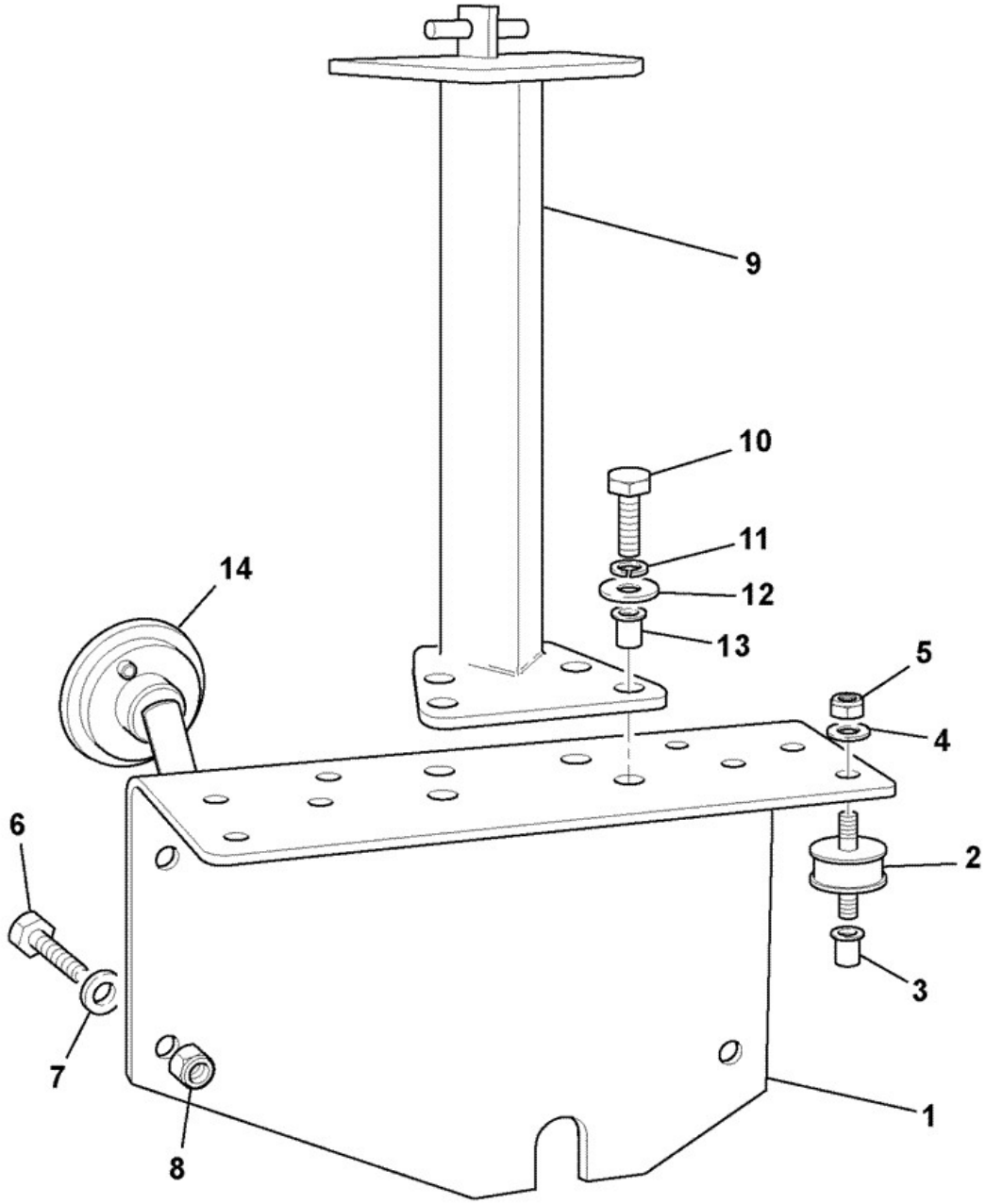

442900

Elemento	Pieza Nº	Cambiar número	Descripción	Código de uso	CANT.

1	331/34428		Soporte excavator valve mounting		1
2	331/36508	<M1620235	Montaje rubber *was 123/06559*		3
2	332/F7840	>M1620236	Montaje rubber M10		3
3	826/01249		Tuerca rivet M10 open end for 6 to 8.5mm plate		3
4	1420/0008Z		Arandela Plain M10		3
4	1412/0003Z		Arandela		1
5	1370/0303Z		Tuerca lock M10		3
5	826/01787		Tuerca flanged *replaces item 4 and 1370/0303Z*		3
6	1315/3414Z		Tornillo M10x60		3
7	1420/0008Z		Arandela Plain M10		3
8	1370/0303Z		Tuerca lock M10		3
9	335/05615		Soporte excavator control JCB Diagonal "X"		0
9	335/05616		Soporte excavator controls SAE / ISO Plus "+"		0
9	335/05467		Soporte excavator controls Travel lock.+pattern		0
10	1315/0408Z		Tornillo M10 x 30		4
11	1425/0008Z		Arandela Spring M10		4
12	823/00377		Arandela plain M10		4
13	826/01249		Tuerca rivet M10 open end for 6 to 8.5mm plate		4
14	704/37300		Bocina disc 12V *Rear*		1

Catálogo de productos \ CONSTRUCTION \ REST OF WORLD \ CONSTRUCTION / INDUSTRIAL \ BACKHOE LOADER 3CX,4CX,214,215,217 \ 3CX 00960000-00989999,01297000-01297999,01327000-01349999,01616000-01625999,01705500-01709999 84hp 9812/0010 \ B CARROCERIA, CABINA SECCION CARGADORA \ B01 CARROCERIA/BASTIDOR

9812/0010 B1-13-5 MONTAJE VÁLVULA, CARGADORA, 0

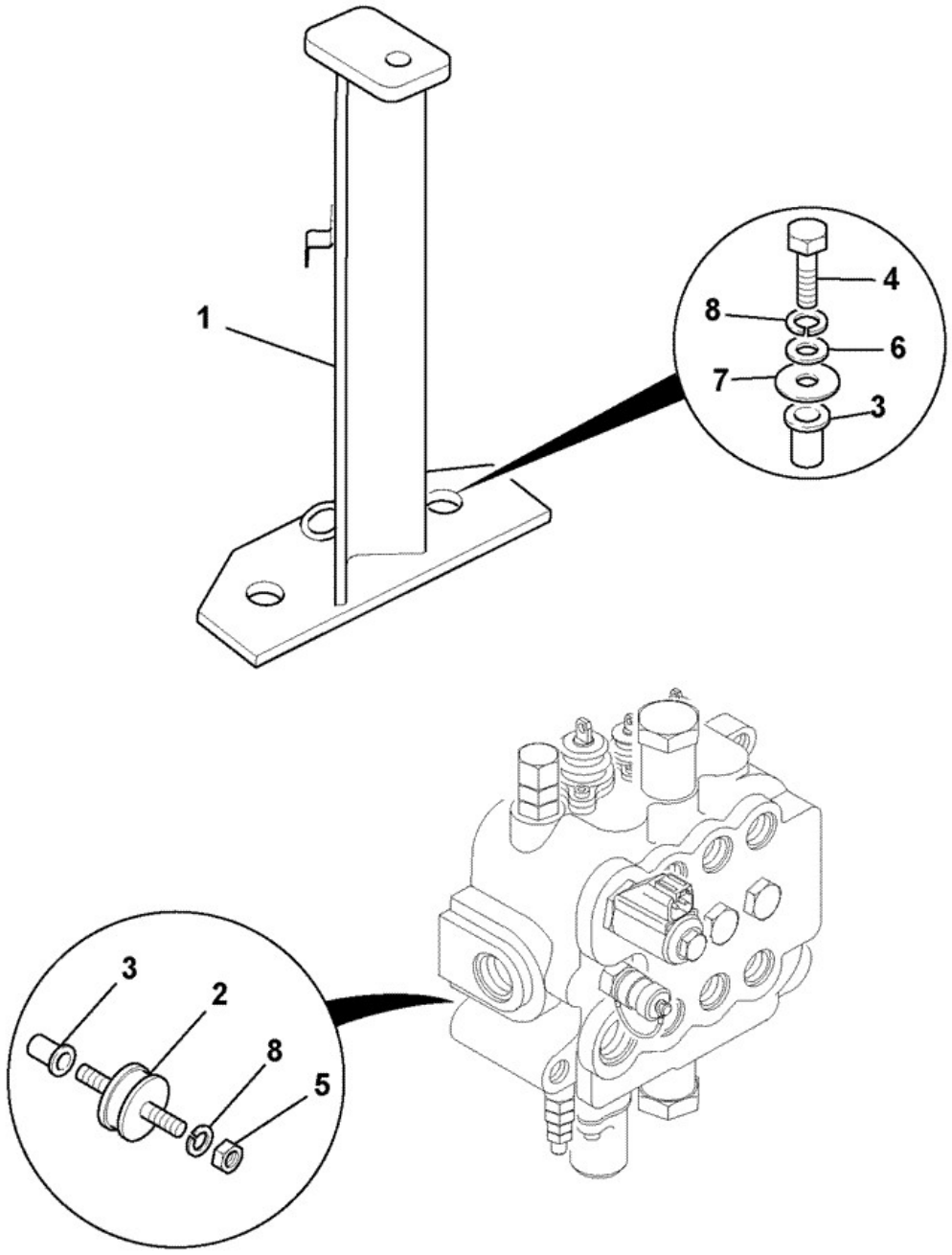

704360

Elemento	Pieza Nº	Cambiar número	Descripción	Código de uso	CANT.
1	335/05064	<M1618462	Soporte loader lever mount *not compatible with travel lock option*		1

1	128/F9823	>M1618463	ABRAZADERA loader lever mount		1
2	331/28278		Montaje resilient		3
3	826/01249		Tuerca rivet M10 open end for 6 to 8.5mm plate		5
4	1315/0410Z		Tornillo M10 x 40		2
5	1370/0303Z		Tuerca lock M10		3
6	1420/0008Z		Arandela Plain M10		5
7	929/14907		Arandela		2
8	****		*no longer fitted*		5

9812/0010 B1-13-6 VALVE MOUNTING, LOADER, TRAVEL LOCK OPTION GERMAN ITALIAN

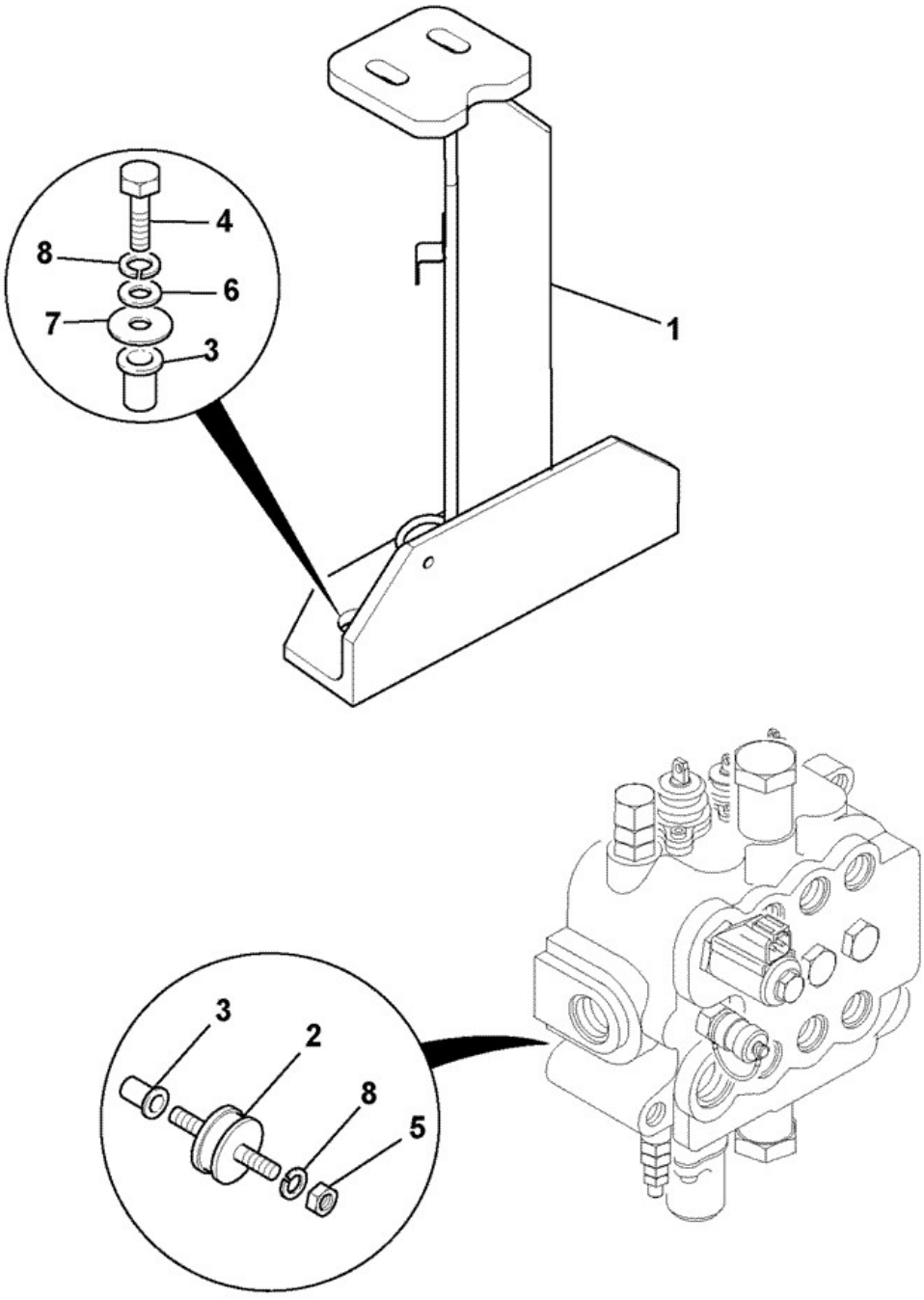

704350

Elemento	Pieza Nº	Cambiar número	Descripción	Código de uso	CANT.

1	335/05281		Soporte Loader Lever Mount *can be used with travel lock*		1
2	123/03946		Montaje rubber		3
3	826/01249		Tuerca rivet M10 open end for 6 to 8.5mm plate		5
4	1315/0410Z		Tornillo M10 x 40		2
5	1370/0303Z		Tuerca lock M10		3
6	1420/0008Z		Arandela Plain M10		5
7	929/14907		Arandela		2
8	1425/0008Z		Arandela Spring M10		5

9812/0010 B1-14-4 CJA HERRAM, MONTJE ESCALÓN ANCHO, 0

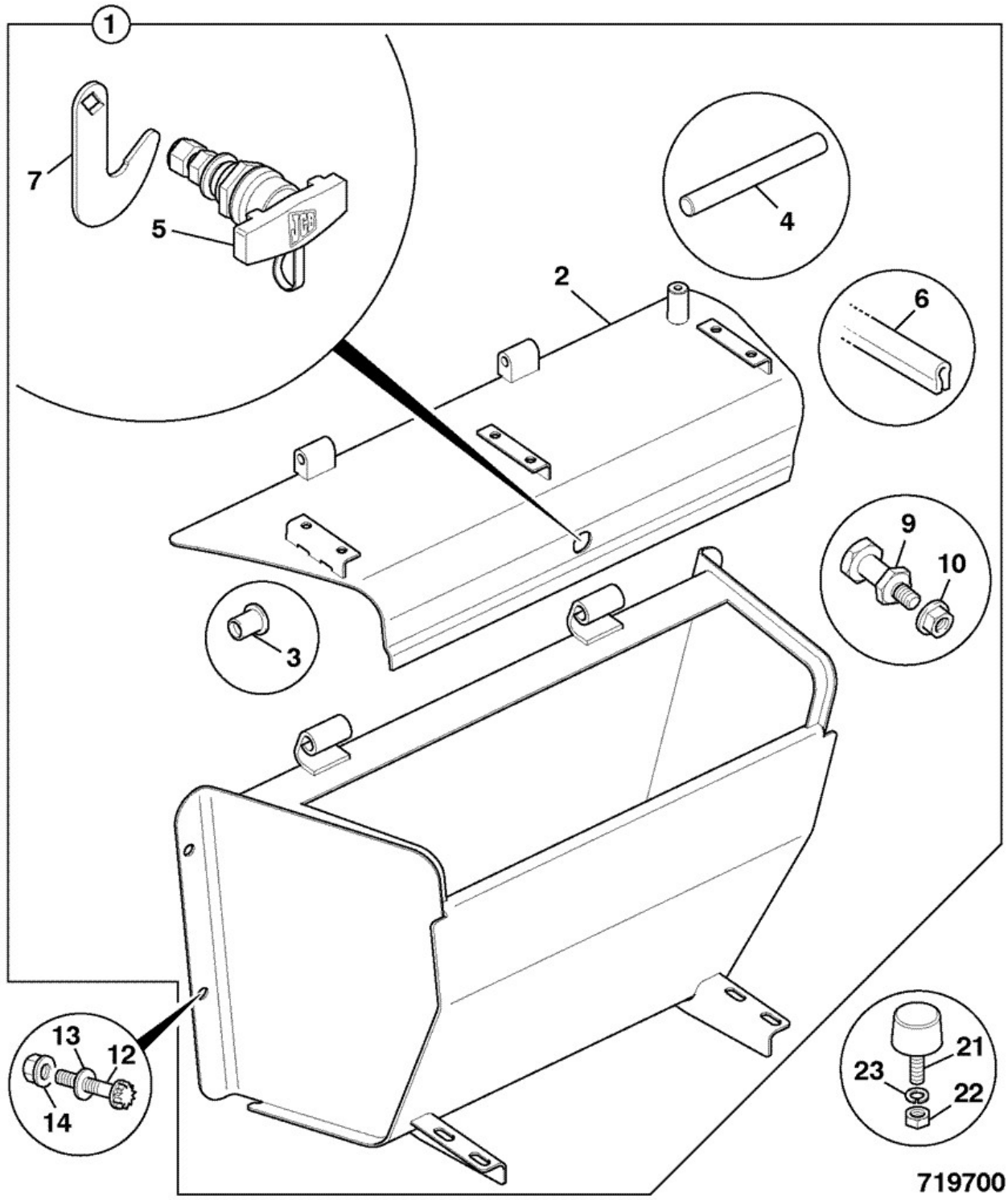

Elemento	Pieza Nº	Cambiar número	Descripción	Código de uso	CANT.

1	128/14332		Caja tool,complete,ABI wide step mount		1
2	:335/06663		Tapa toolbox lid 6-hole step mounting		1
3	:122/67479		Casquillo hinge		2
4	:123/08089		Pasador hinge		2
5	:123/08087		Mango locking		1
6	:904/20284		Junta toolbox lid		1
7	:331/13500		Placa latch		1
9	:331/36035		Eje latch		1
10	:1370/0303Z		Tuerca lock M10		1
12	1315/0507Z		Tornillo		4
13	1420/0009Z		Arandela Plain M12		4
14	1370/0403Z		Tuerca M12		4
21	123/07243		Amortiguador		1
22	1370/0202Z		Tuerca M8		1
23	1418/0011Z		Arandela lock		1

9812/0010 B1-14-5 CJA HERRAM, MONTJE ESCALÓN ANCHO, 0

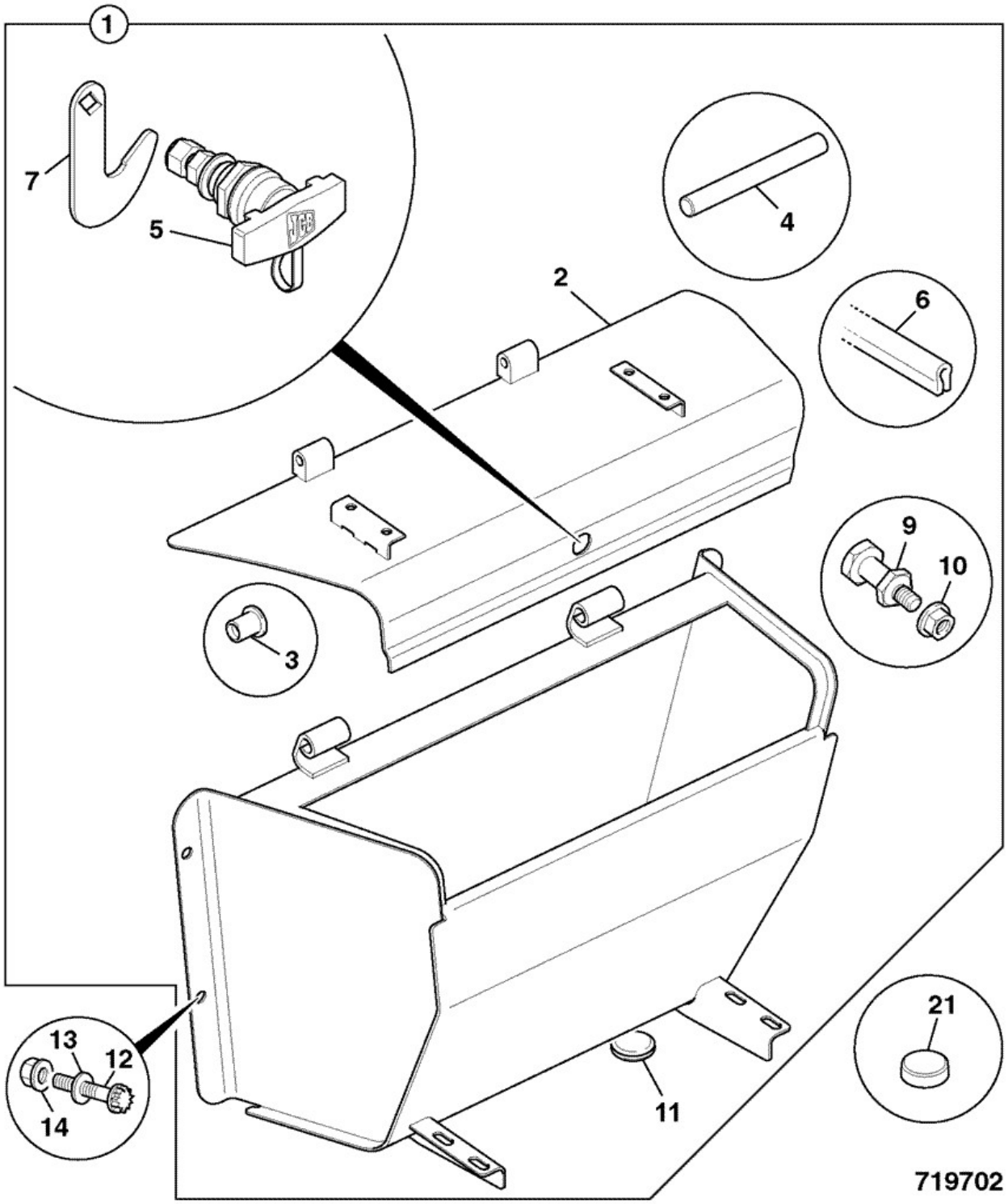

Elemento	Pieza Nº	Cambiar número	Descripción	Código de uso	CANT.

1	128/15188		Caja tool, complete, ABI 2 step mtg brks		1
2	:335/08951		Tapa tool box lid 2 step mtg brks		1
3	:122/67479		Casquillo hinge		2
4	:123/08089		Pasador hinge		2
5	:123/08087		Mango locking		1
6	:904/20284		Junta toolbox lid		1
7	:331/13500		Placa latch		1
9	:331/36035		Eje latch		1
10	:1370/0303Z		Tuerca lock M10		1
11	:2410/1109		Aro de refuerzo		2
12	1315/0507Z		Tornillo		4
13	1420/0009Z		Arandela Plain M12		4
14	1370/0403Z		Tuerca M12		4
21	835/10113		Pastilla self-adhesive 45mm dia X 15		1

9812/0010 B1-14-6 CJA HERRAM, ESCALON, MOUNTING

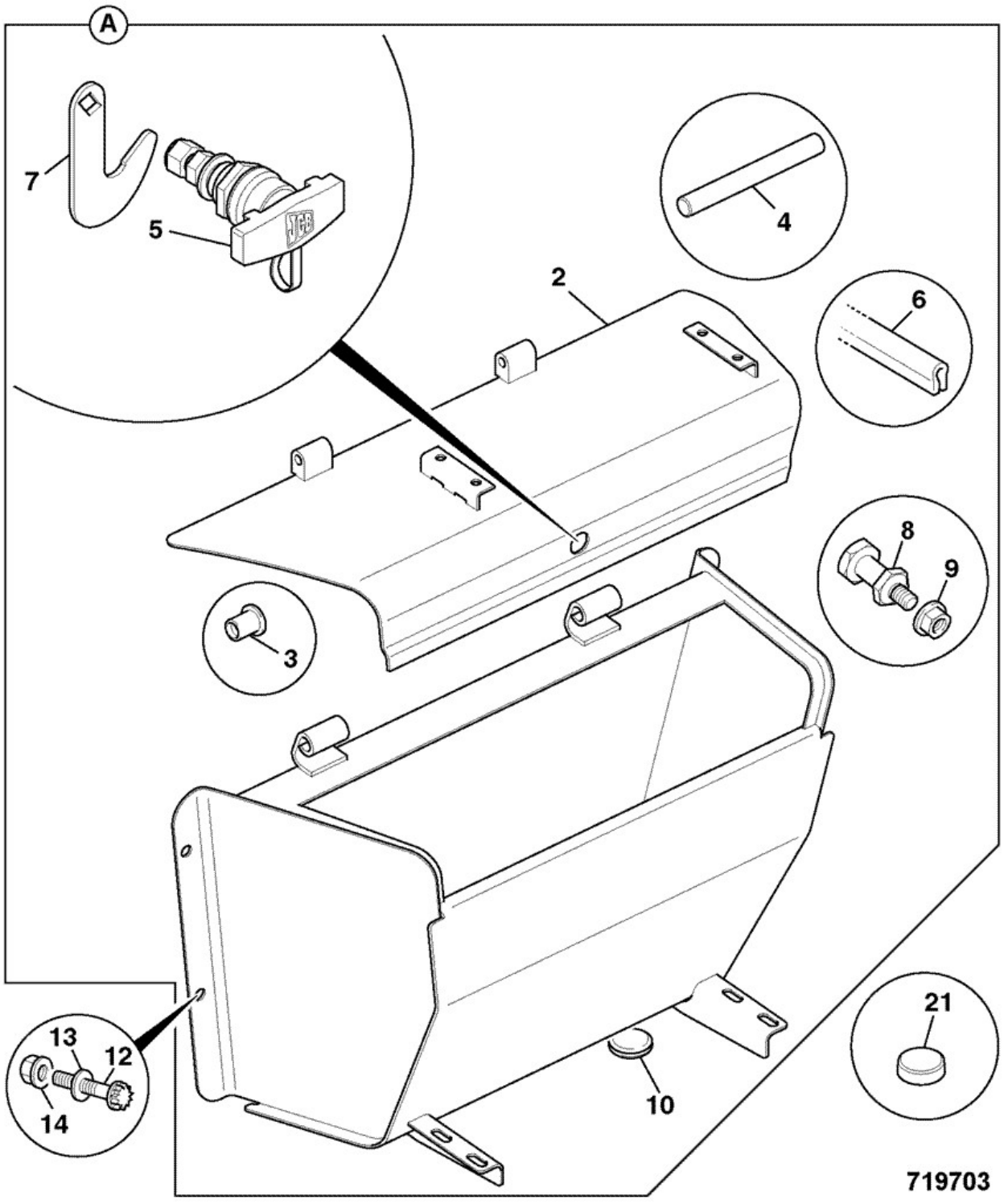

Elemento	Pieza Nº	Cambiar número	Descripción	Código de uso	CANT.
A	128/P4338		CAJA tool, ABI		1

2	332/P4337		COVER LID toolbox		1
3	122/67479		Casquillo hinge		2
4	123/08089		Pasador hinge		2
5	123/08087		Mango locking		1
6	904/20284		Junta toolbox lid		1
7	331/13500		Placa latch		1
8	331/36035		Eje latch		1
9	1370/0303Z		Tuerca lock M10		1
10	2410/1109		Aro de refuerzo		2
12	1315/0507Z		Tornillo		4
13	1420/0009Z		Arandela Plain M12		4
14	1370/0403		Tuerca		4
21	332/P0161		COJIN AMORTIGUADOR rubber 45dia x 10thk		1

Catálogo de productos \ CONSTRUCTION \ REST OF WORLD \ CONSTRUCTION / INDUSTRIAL \ BACKHOE LOADER 3CX,4CX,214,215,217 \ 3CX 00960000-00989999,01297000-01297999,01327000-01349999,01616000-01625999,01705500-01709999 84hp 9812/0010 \ B CARROCERIA, CABINA SECCION CARGADORA \ B01 CARROCERIA/BASTIDOR

9812/0010 B1-14-21 Cja herram, Pequeña,

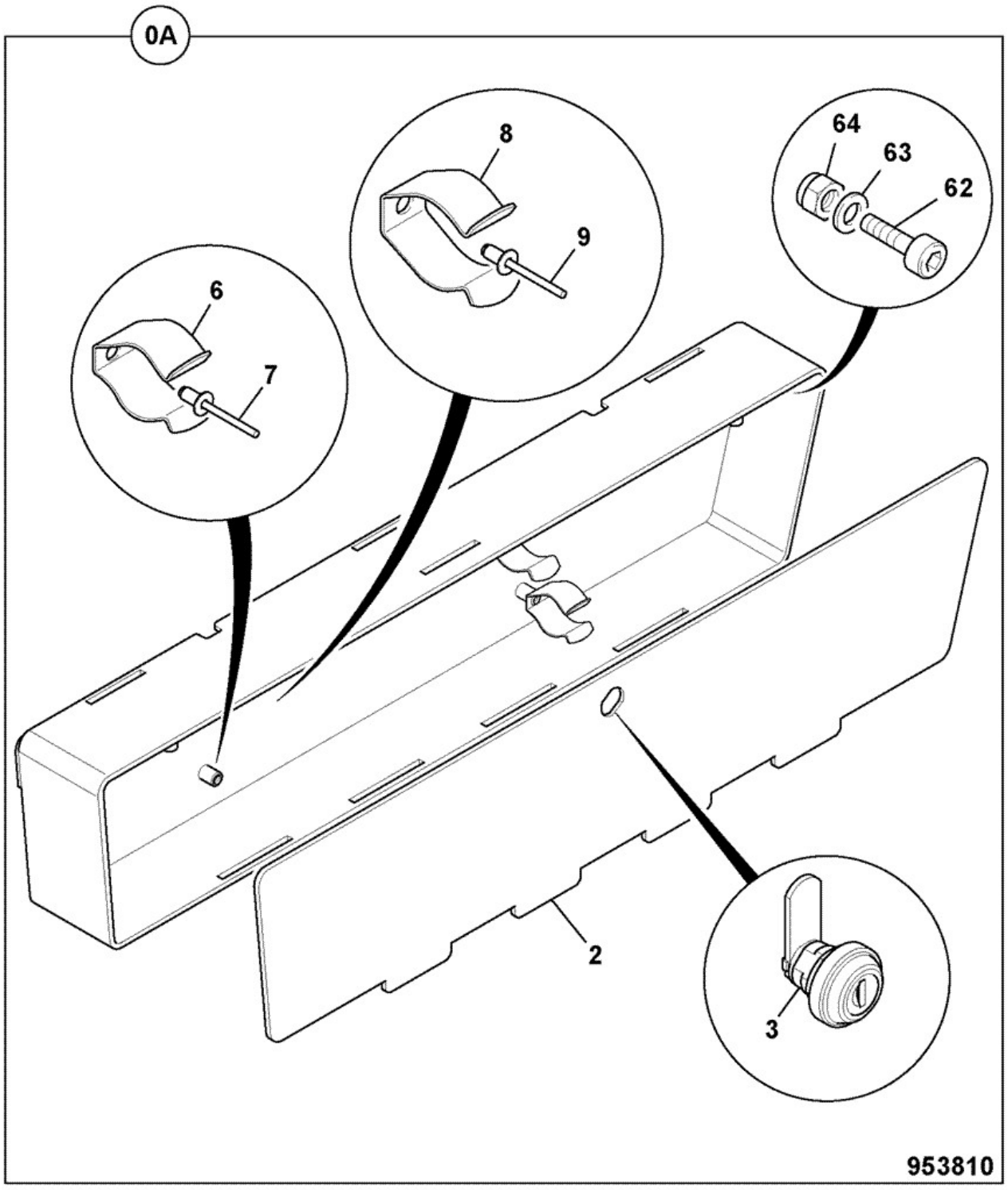

Elemento	Pieza Nº	Cambiar número	Descripción	Código de uso	CANT.
00A	128/C0447		CAJA tool, small		1

2	:332/E9387		Válvula derivadora toolbox		1
3	:162/03434		Cierre barrel assembly		1
6	:821/00223		Clip		2
7	:332/F1988		SEGURO pop rivet		2
8	:821/00328		Clip		2
9	:826/01547		Remache pop		2
51	701/45501		Llave Door/Ignition Ref 14657 *not supplied with 00A*		1
62	1391/3509Z		Tornillo de cierre		2
63	1420/0009Z		Arandela Plain M12		2
64	1370/0403Z		Tuerca M12		2

Catálogo de productos \ CONSTRUCTION \ REST OF WORLD \ CONSTRUCTION / INDUSTRIAL \ BACKHOE LOADER 3CX,4CX,214,215,217 \ 3CX 00960000-00989999,01297000-01297999,01327000-01349999,01616000-01625999,01705500-01709999 84hp 9812/0010 \ B CARROCERIA, CABINA SECCION CARGADORA \ B01 CARROCERIA/BASTIDOR

9812/0010 B1-16-2 EXT\ GUARDABARROS, 0, 0

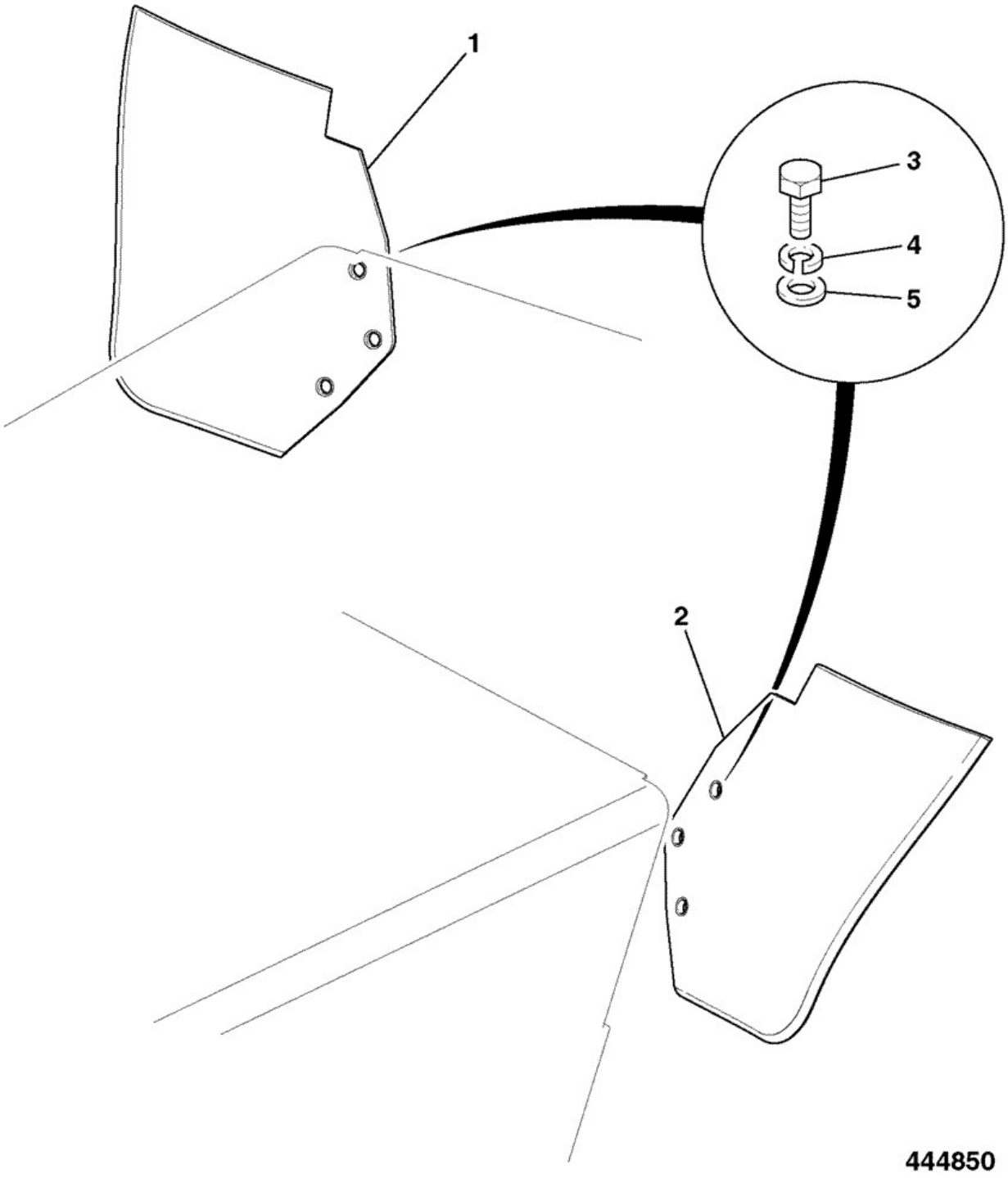

Elemento	Pieza Nº	Cambiar número	Descripción	Código de uso	CANT.
1	331/32691		Proteccion fender extension RH *Right Hand*		1

2	331/32692		Proteccion fender extension LH *Left Hand*		1
3	1315/0305Z		Tornillo Hexagon M8 x 20mm long		6
4	1416/0005Z		Arandela spring - 5/16" Zinc plated		6
5	1412/0003Z		Arandela		6

9812/0010 B1-16-3 MUDGUARD EXTENSION, ,

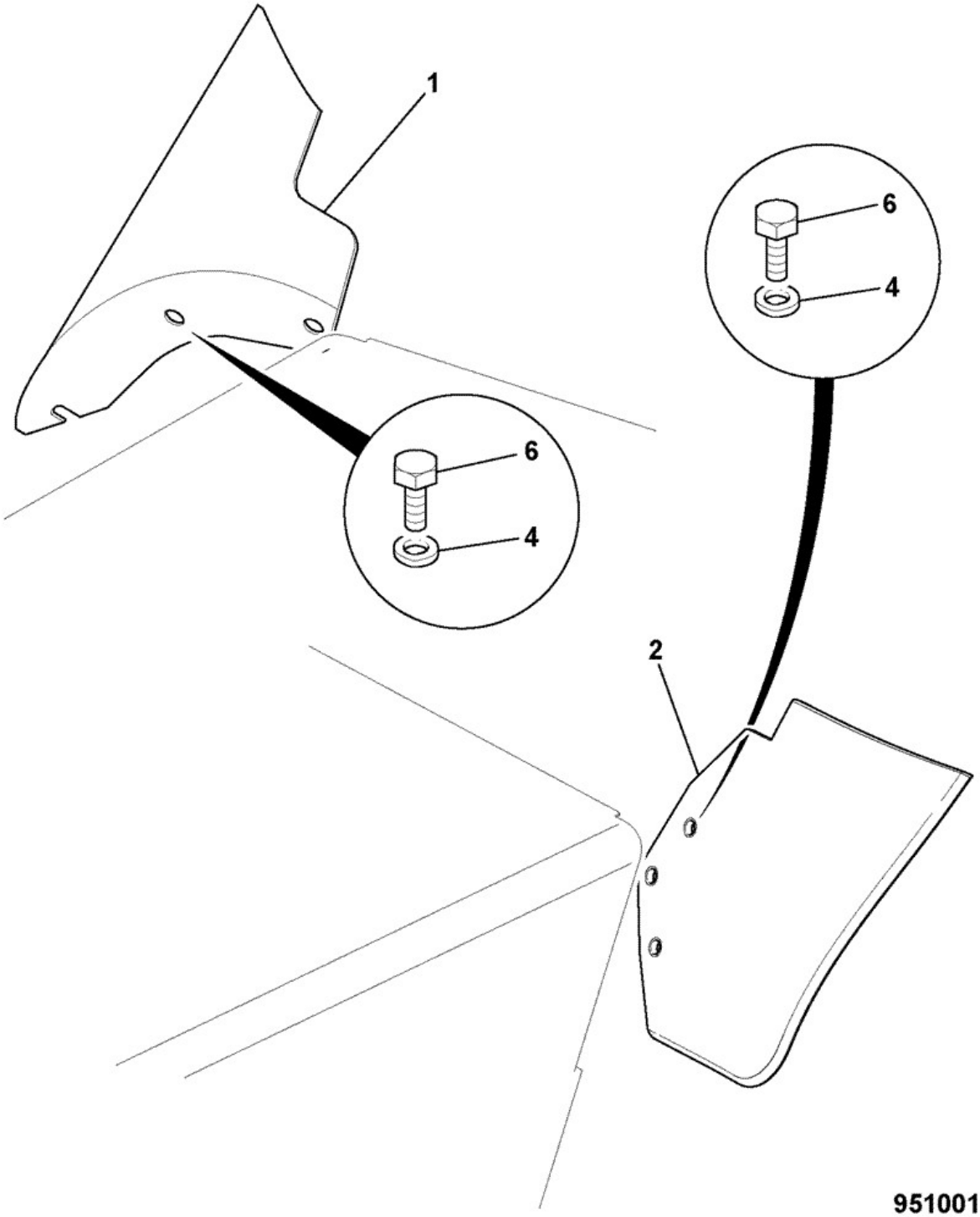

Elemento	Pieza Nº	Cambiar número	Descripción	Código de uso	CANT.
A	****		Inst\ fender extensions plastic tank		1

1	331/66807		PROTECCION fender extension RH plastic diesel tank *Right Hand*		1
2	331/32692		Proteccion fender extension LH *Left Hand*		1
4	1412/0001Z		Arandela		6
6	1315/0201Z		Tornillo fijación M6 x 12mm long		6

9812/0010 B1-17-1 PROTECCION PIEDRAS, GUÍA MANGUITO, DESPL\ LATERAL BAST\ TRAS\

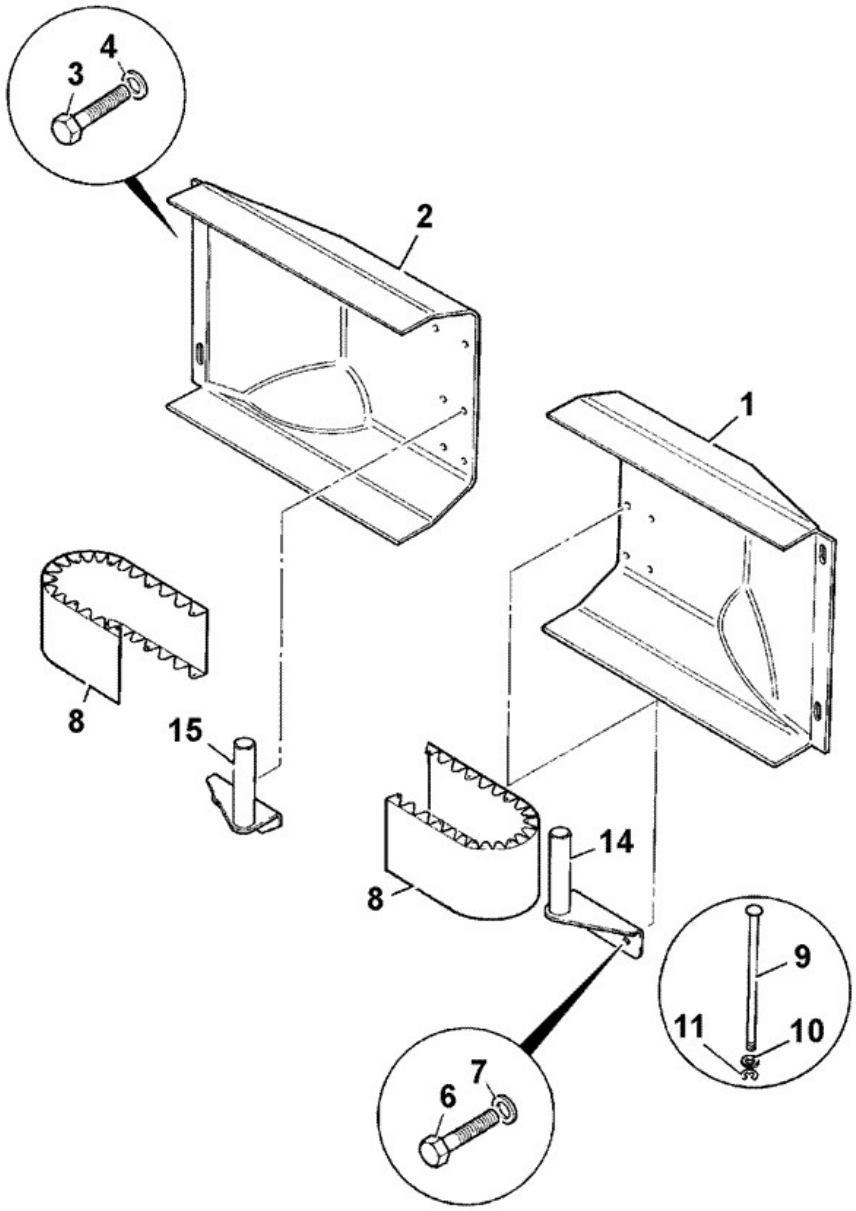

266642

Elemento	Pieza Nº	Cambiar número	Descripción	Código de uso	CANT.

1	123/05550		Proteccion stone, right hand yellow		1
1	123/07178		Proteccion stone right hand, black		1
2	123/05549		Proteccion stone, left hand yellow		1
2	123/07177		Proteccion stone left hand, black		1
3	1315/0408Z		Tornillo M10 x 30		6
4	823/00326		Arandela outside		6
6	1315/0408Z		Tornillo M10 x 30		4
7	1420/0008Z		Arandela Plain M10		4
8	346/00138		Bandeja hose retaining 126mm wide	A	2
8	123/08014		Bandeja hose retaining 160mm wide *if hammer return fitted*	B	1
9	123/01426		Pasador hose retainer	A	12
9	123/08015	<M1619133	Pasador hose retainer *if hammer return fitted*	B	6
9	332/D9617		CHAVETA hose retainer *if hammer return fitted*	B	6
10	823/00592		Arandela		12
11	821/00332		Clip E type		12
12	826/01249		Tuerca rivet M10 open end for 6 to 8.5mm plate		6
13	1370/0303Z		Tuerca lock M10		4
14	331/26487		Guía left hand hose		1
15	331/26488		Guía right hand hose		1

9812/0010 B1-17-2 Proteccion piedras, Guía manguito, SIDESHIFT REARFRAME

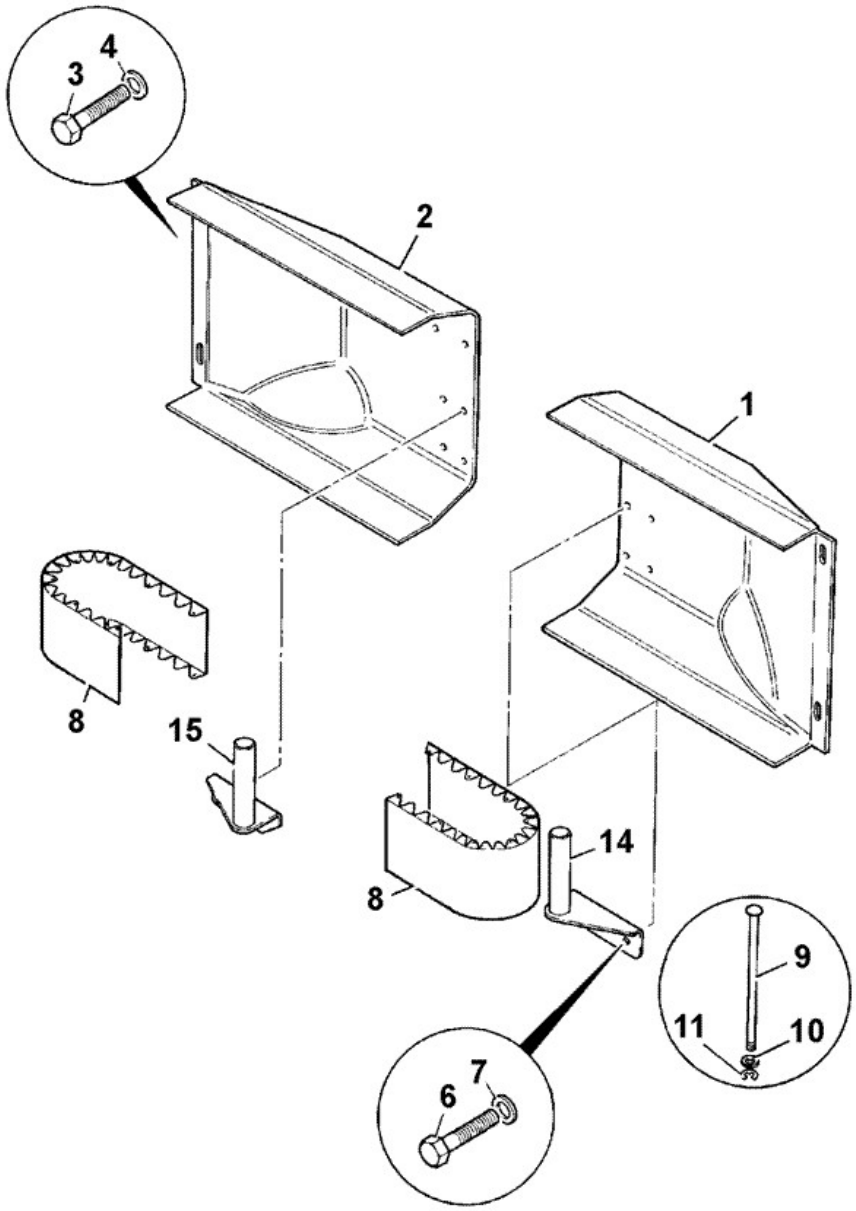

266642

Elemento	Pieza Nº	Cambiar número	Descripción	Código de uso	CANT.

1	123/05550	<M1346142	Proteccion stone, right hand yellow		1
1	332/E9991	<M1349011	PROTECCION stone, right hand yellow		1
1	****		*yellow stone guards not fitted after this serial number*		1
1	123/07178	<M1346142	Proteccion stone right hand, black		1
1	332/F0084	<M1349011	PROTECCION stone, right hand black		1
1	332/E0830		PROTECCION stone, right hand black		1
2	123/05549	<M1346142	Proteccion stone, left hand yellow		1
2	332/E9995	<M1349011	PROTECCION stone, left hand yellow		1
2	****		*yellow stone guards not fitted after this serial number*		1
2	123/07177	<M1346142	Proteccion stone left hand, black		1
2	332/F0090	<M1349011	PROTECCION stone, left hand black		1
2	332/E0833		PROTECCION stone, left hand black		1
3	1315/0408Z		Tornillo M10 x 30		6
4	823/00326		Arandela outside		6
6	1315/0409Z		M10 X 35		4
7	1420/0008Z		Arandela Plain M10		6
8	346/00138		Bandeja hose retaining 126mm wide	A	2
8	123/08014		Bandeja hose retaining 160mm wide *if hammer return fitted*	B	1
9	123/01426		Pasador hose retainer	A	12
9	123/08015	<M1619133	Pasador hose retainer *if hammer return fitted*	B	6
9	332/D9617		CHAVETA hose retainer *if hammer return fitted*	B	6
10	823/00592		Arandela		12
11	821/00332		Clip E type		12
12	826/01249		Tuerca rivet M10 open end for 6 to 8.5mm plate		6
13	1370/0303Z		Tuerca lock M10		4
14	128/D6909		GUIA left hand hose		1
15	128/D7769		GUIA right hand hose		1

9812/0010 B1-18-1 ESTABILIZADOR, RETENIDA PIE, DESPLAZAMIENTO LATERAL

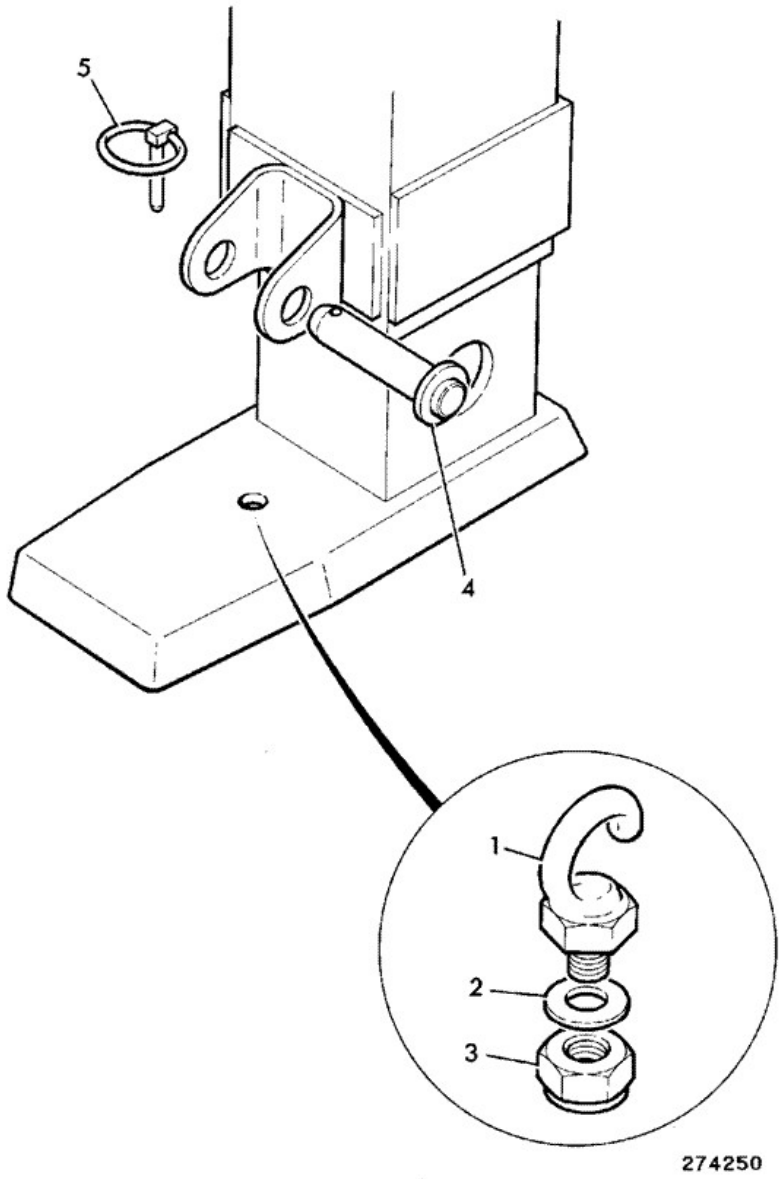

Elemento	Pieza Nº	Cambiar número	Descripción	Código de uso	CANT.

1	122/32900		Tornillo hook		2
2	1411/0007Z		Arandela 5/8" Medium		2
3	1340/0603Z		Tuerca lock		2
4	123/00932		Pasador pivot		2
5	826/00600		Pasador linch		2

Catálogo de productos \ CONSTRUCTION \ REST OF WORLD \ CONSTRUCTION / INDUSTRIAL \ BACKHOE LOADER 3CX,4CX,214,215,217 \ 3CX 00960000-00989999,01297000-01297999,01327000-01349999,01616000-01625999,01705500-01709999 84hp 9812/0010 \ B CARROCERIA, CABINA SECCION CARGADORA \ B01 CARROCERIA/BASTIDOR

9812/0010 B1-19-2 MONTAJE, CALZO RUEDA, 0

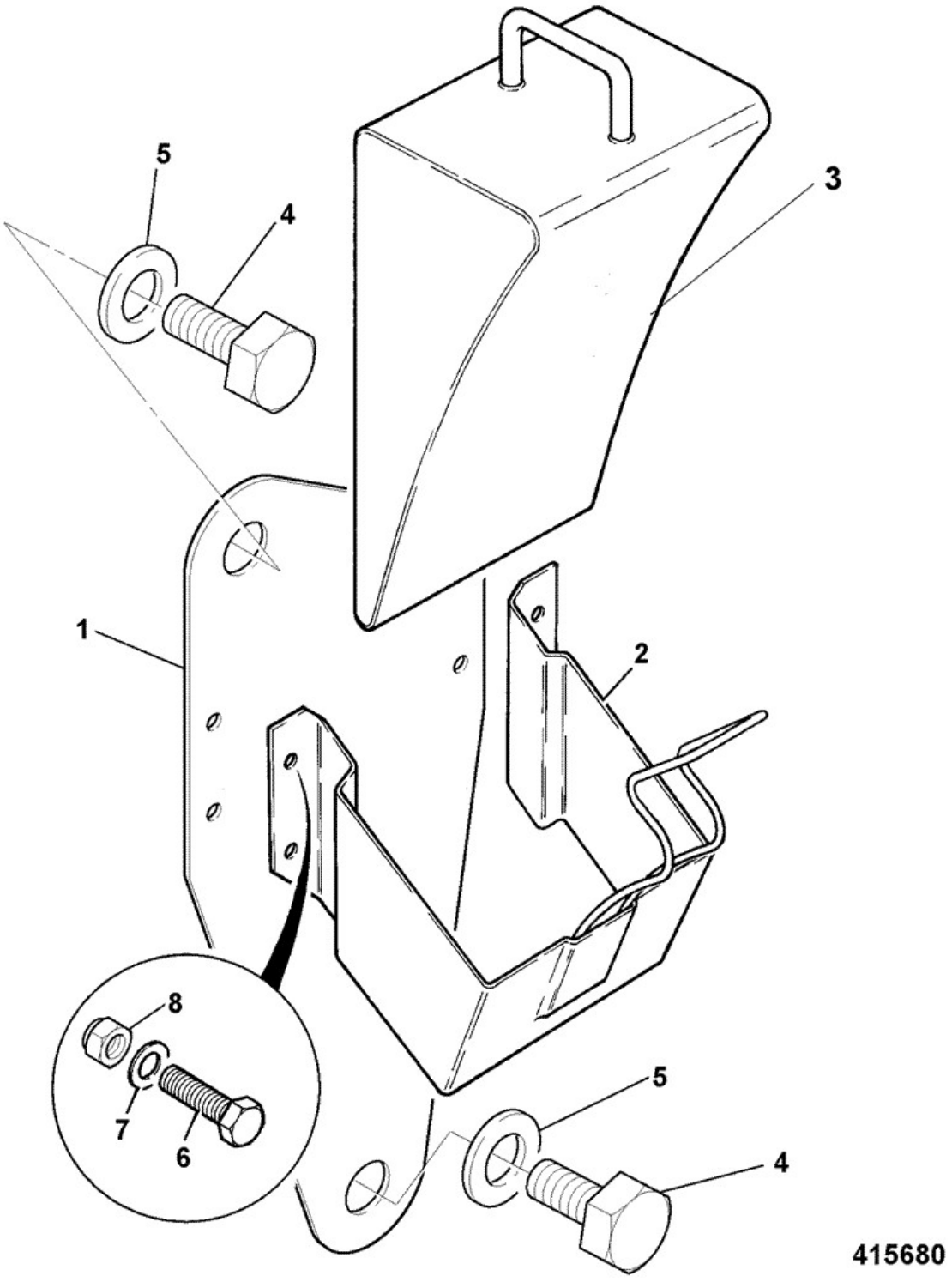

Elemento	Pieza Nº	Cambiar número	Descripción	Código de uso	CANT.
1	331/31508		Placa mounting wheel chock		2

2	160/01192	<M1348678	Montaje Chock Holder		2
2	331/48831	>M1348679	Soporte chock mounting		2
3	123/05128	<M1348678	Rueda chock.		2
3	331/48830	>M1348679	Calzo wheel		2
4	1315/1010Z		Tornillo		2
4	1315/1012Z		Tornillo M24x50 *AWS*		2
5	1420/0014Z		Arandela M24 *2WS*		10
5	1420/0014Z		Arandela M24 *AWS*		18
6	1315/0205Z		Tornillo		8
7	1420/0006Z		Arandela M6		16
8	1370/0203Z		Tuerca self lock M8		8

9812/0010 B1-21-1 CORREAS SUJ\, EXTR\ CARGADORA, EXTREMO DE LA EXCAV

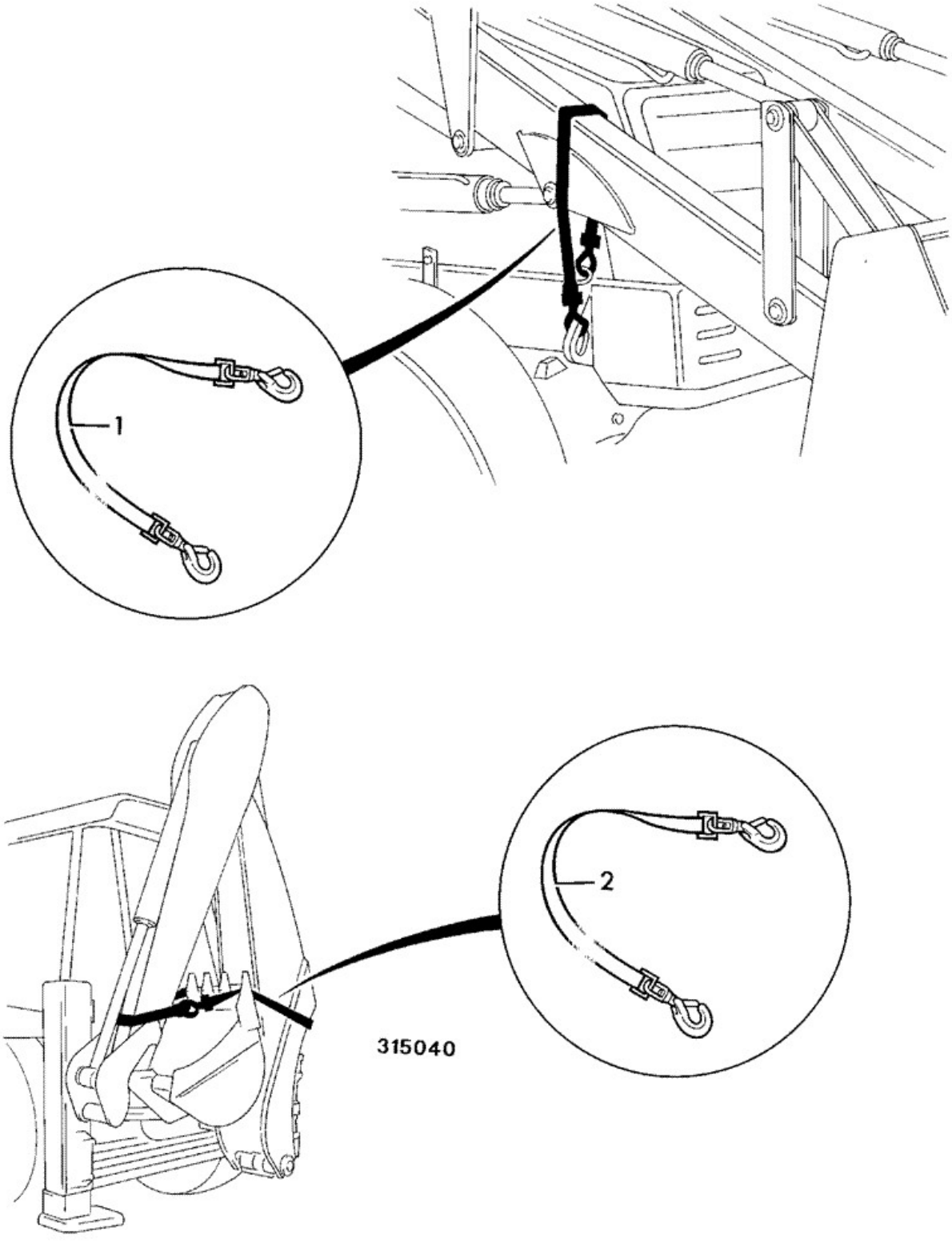

Elemento	Pieza Nº	Cambiar número	Descripción	Código de uso	CANT.
1	123/07622		Correa retaining loader arm 1060mm long		1
2	123/07623		Correa retaining excavator 3550mm long *3CX, 4CX*		1
2	123/07624		Correa retaining excavator 3900mm long *4CX Super*		1

Catálogo de productos \ CONSTRUCTION \ REST OF WORLD \ CONSTRUCTION / INDUSTRIAL \ BACKHOE LOADER 3CX,4CX,214,215,217 \ 3CX 00960000-00989999,01297000-01297999,01327000-01349999,01616000-01625999,01705500-01709999 84hp 9812/0010 \ B CARROCERIA, CABINA SECCION CARGADORA \ B01 CARROCERIA/BASTIDOR

9812/0010 B1-22-1 ESCALÓN, BARRA CARGADORA 2RD, 0

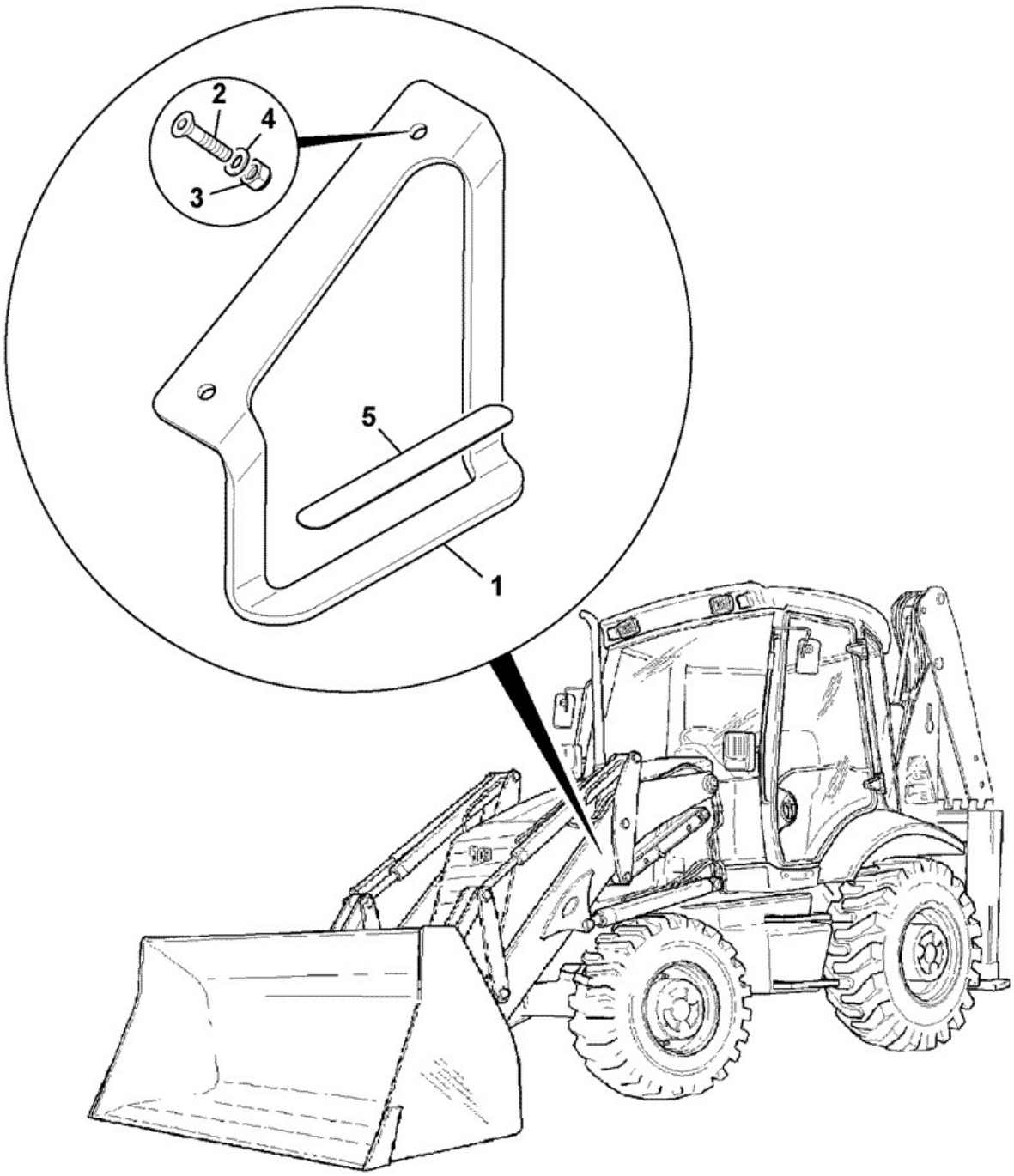

720090

Elemento	Pieza Nº	Cambiar número	Descripción	Código de uso	CANT.
1	331/39791		Escalón service loader arm		1

2	826/00853		Tornillo M8x30 csk head		2
3	1371/0203Z		Tuerca		2
4	1420/0007Z		Arandela plain M8		2
5	331/41044		Pastilla anti-slip		1

Catálogo de productos \ CONSTRUCTION \ REST OF WORLD \ CONSTRUCTION / INDUSTRIAL \ BACKHOE LOADER 3CX,4CX,214,215,217 \ 3CX 00960000-00989999,01297000-01297999,01327000-01349999,01616000-01625999,01705500-01709999 84hp 9812/0010 \ B CARROCERIA, CABINA SECCION CARGADORA \ B02 CABINA

9812/0010 B2-1-11 CABINA DOS PUERTAS, 0, 0

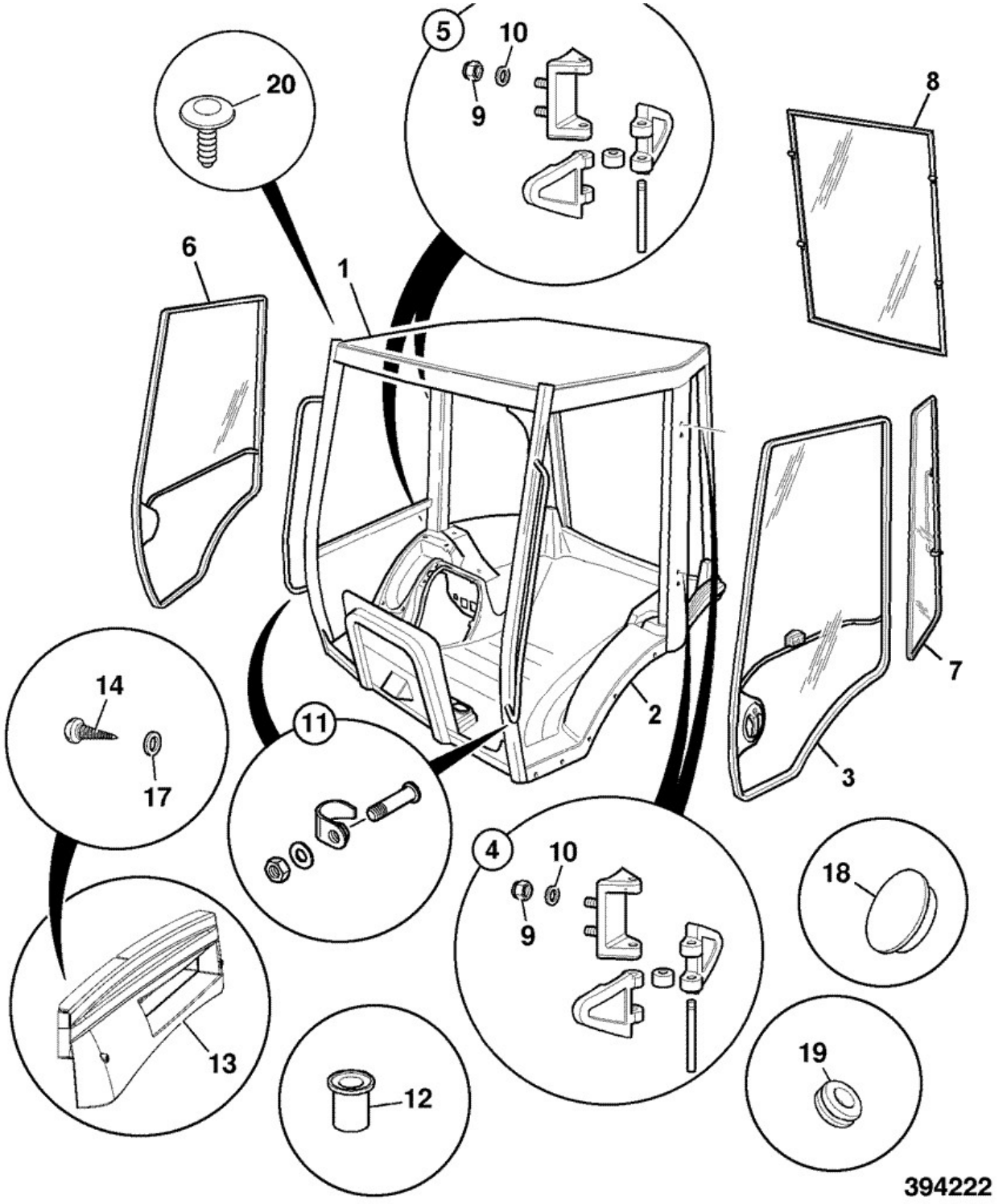

Elemento	Pieza Nº	Cambiar número	Descripción	Código de uso	CANT.
1	128/15024		Cabina assembly 2 door as supplied		1

1	128/15025		Cabina assembly 2 door aircon as supplied		1
1	128/15022		Cabina assembly, 2 door heater, Loxam Red		1
2	****		Pieza no reparable		1
3	****		*Door left hand side see B2*		1
4	:128/11287		Gozne assy, door & window as supplied		2
5	:128/11287		Gozne assy, door & window as supplied		2
6	****		*Right hand door see B2*		1
7	****		*Rear side window B2*		1
8	:128/14450		Ventana assembly- rear as supplied		1
9	:1370/0303Z		Tuerca lock M10 *Hinge*		4
10	:1420/0008Z		Arandela Plain M10 *Hinge*		4
11	:331/27345		Tornillo striker		1
12	:826/01249		Tuerca rivet M10 open end for 6 to 8.5mm plate *M10*		7
12	:826/01105		Tuerca rivet,M10 open ended		5
12	:826/01102		Tuerca rivet,M8 open ended *M8*		7
12	:826/01101		Tuerca rivet,M6 open ended for 3 to 5.5mm plt *M6*		6
12	:826/01810		Tuerca rivet, M6 open end for 5.5 to 8mm plate		16
12	:332/A2781		Tuerca rivet, M6, hexagonal		13
12	:826/10897		Suplemento boom lock cable		1
13	:331/25921		Carcasa fresh air filter cab		1
14	:1315/0208D		Tornillo M6 X 30		3
15	:826/11074		Tornillo button head M10 stainless *Floor to cab*		5
16	:823/10538		Arandela M10 large stainless *Floor to cab*		5
17	:1412/0001Z		Arandela		2
18	:123/05740		Tapón blanking 30mm		7
19	:835/10086		Tapón blanking black,9mm *Right hand A post*		2
20	826/10758		Fijación Fir Tree *Roof blanking plug*		7

Catálogo de productos \ CONSTRUCTION \ REST OF WORLD \ CONSTRUCTION / INDUSTRIAL \ BACKHOE LOADER 3CX,4CX,214,215,217 \ 3CX 00960000-00989999,01297000-01297999,01327000-01349999,01616000-01625999,01705500-01709999 84hp 9812/0010 \ B CARROCERIA, CABINA SECCION CARGADORA \ B02 CABINA

9812/0010 B2-1-12 CAB TWO DOOR

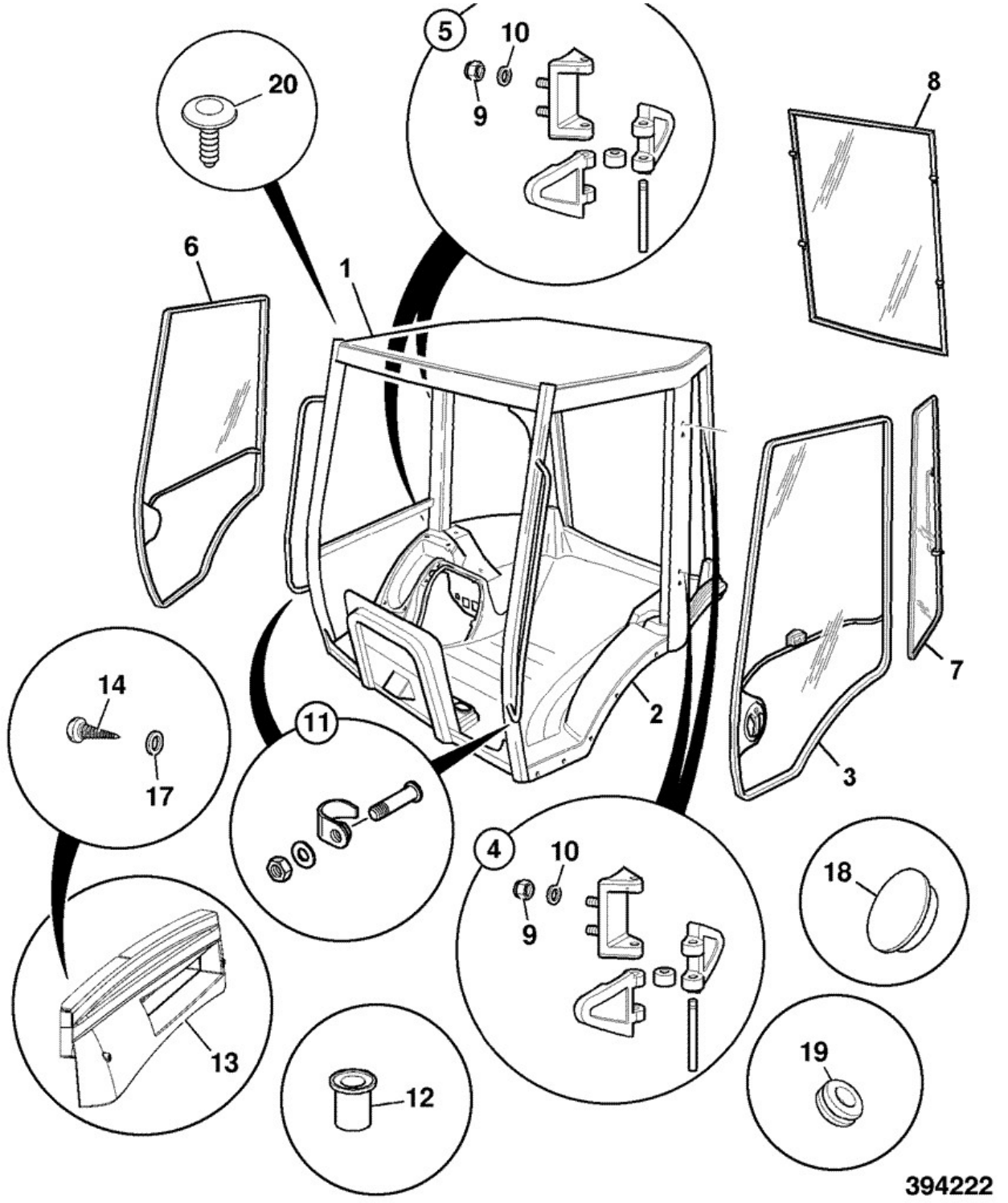

Elemento	Pieza Nº	Cambiar número	Descripción	Código de uso	CANT.
1	128/C0288	<M1618741	Cabina ABI, non aircon *Véase la nota 1*		1

1	128/C3001	>M1618742	Cabina non aircon ABI *see note 1*		1
1	128/C0289	<M1618741	Cabina ABI, aircon *see note 1*		1
1	128/C3000	>M1618742	Cabina aircon ABI *see note 1*		1
2	****		Pieza no reparable		1
3	****		*Door left hand side see B2*		1
4	:128/11287		Gozne assy, door & window as supplied		2
5	:128/11287		Gozne assy, door & window as supplied		2
6	****		*Right hand door see B2*		1
7	****		*Rear side window B2*		1
8	****		*see index B2*		1
9	:1370/0303Z		Tuerca lock M10 *Hinge*		4
10	:1420/0008Z		Arandela Plain M10 *Hinge*		4
11	:331/27345		Tornillo striker		1
12	:826/01249		Tuerca rivet M10 open end for 6 to 8.5mm plate *M10*		7
12	:826/01105		Tuerca rivet,M10 open ended		5
12	:826/01102		Tuerca rivet,M8 open ended *M8*		7
12	:826/01464	>M1618742	Tuerca rivet *M8 roof*		2
12	:826/01101		Tuerca rivet,M6 open ended for 3 to 5.5mm plt *M6*		6
12	:826/01810		Tuerca rivet, M6 open end for 5.5 to 8mm plate		16
12	:332/A2781		Tuerca rivet, M6, hexagonal		13
12	:826/10897		Suplemento boom lock cable		1
13	:331/25921		Carcasa fresh air filter cab		1
14	:1315/0208D		Tornillo M6 X 30		3
15	:826/11074		Tornillo button head M10 stainless *Floor to cab*		5
16	:823/10538		Arandela M10 large stainless *Floor to cab*		5
17	:1412/0001Z		Arandela		2
18	:123/05740		Tapón blanking 30mm		7
19	:835/10086		Tapón blanking black,9mm *Right hand A post*		2
20	826/10758		Fijación Fir Tree *Roof blanking plug*		7

Nota 1: includes side windows and doors

Catálogo de productos \ CONSTRUCTION \ REST OF WORLD \ CONSTRUCTION / INDUSTRIAL \ BACKHOE LOADER 3CX,4CX,214,215,217 \ 3CX 00960000-00989999,01297000-01297999,01327000-01349999,01616000-01625999,01705500-01709999 84hp 9812/0010 \ B CARROCERIA, CABINA SECCION CARGADORA \ B02 CABINA

9812/0010 B2-1-31 CABINA ABIERTA, 0, 0

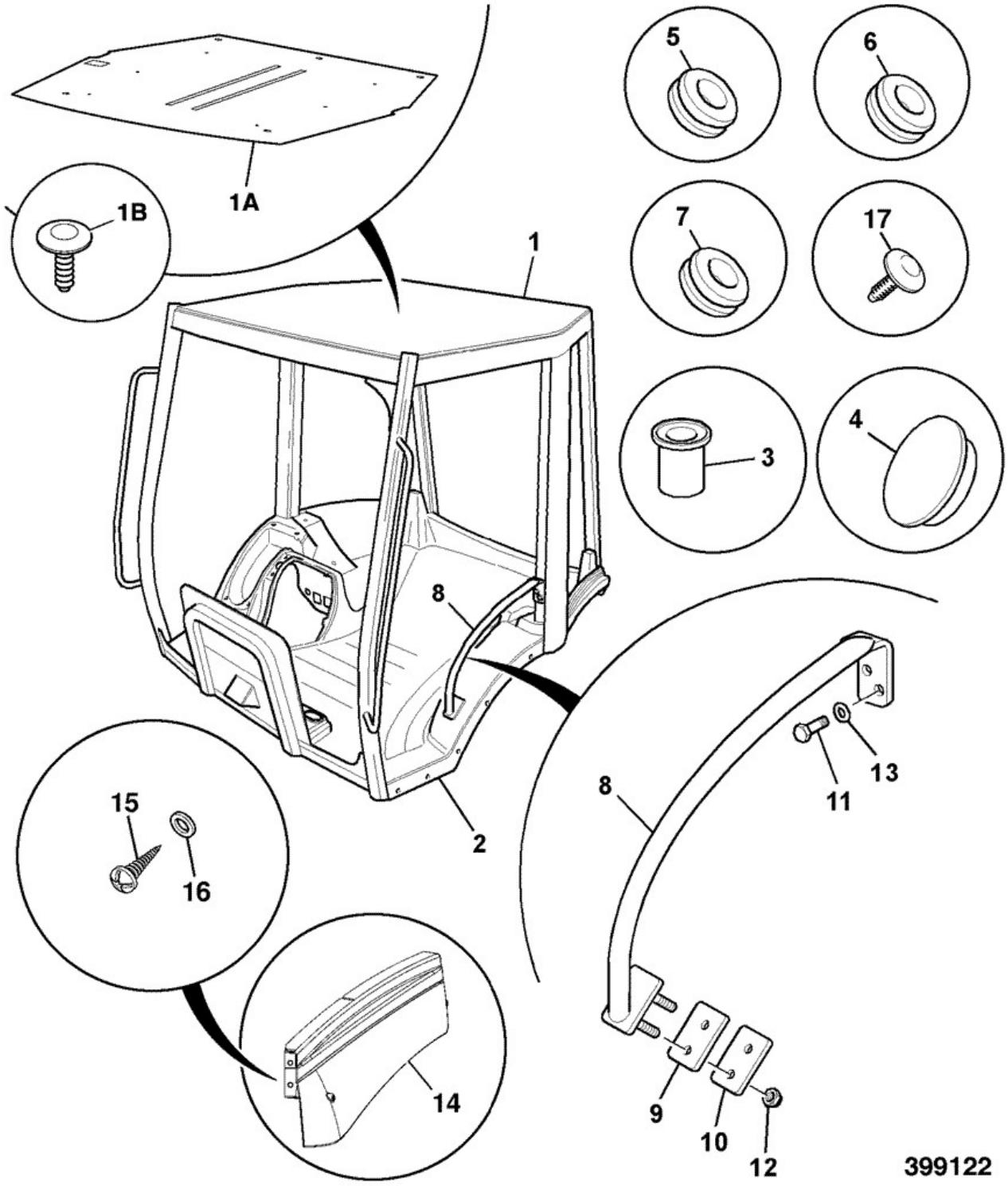

Elemento	Pieza Nº	Cambiar número	Descripción	Código de uso	CANT.
1	128/15023		Cab abierta assembly as supplied		1

1A	331/47846		Forro canopy roof		1
1B	826/10758		Fijación Fir Tree		7
2	****		Pieza no reparable		1
3	:826/01249		Tuerca rivet M10 open end for 6 to 8.5mm plate *M10 rivet nut*		7
3	:826/01105		Tuerca rivet,M10 open ended		5
3	:826/01102		Tuerca rivet,M8 open ended *M8 Rivet nut*		7
3	:826/01101		Tuerca rivet,M6 open ended for 3 to 5.5mm plt *M6 Rivet nut*		20
3	:826/11015		Tuerca rivet,splined M6 *cab floor*		50
3	:826/10897		Suplemento boom lock cable		1
4	:123/05740		Tapón blanking 30mm *inner B post*		7
5	:835/10084		Tapón blanking black,11mm *Rear window rail*		3
6	:835/10085		Tapón blanking black,12mm *Outer B post*		8
7	:835/10086		Tapón blanking black,9mm *Roof and right hand A post*		6
7	:826/10901		Tapón blanking,black,8mm fir tree		4
8	:331/26559		Raíl left hand grab canopy build		1
9	:331/25550		Junta grab handle canopy		1
10	:331/34377		Placa spreader canopy grab rail *not fitted after March 2007*		1
10A	1412/0002D		Arandela large		2
11	:826/01768		Tornillo M6x25mm		2
12	:1370/0201Z		Tuerca M8		2
13	:1420/0008Z		Arandela Plain M10		2
14	:331/25920		Moldeo blank filter housing canopy		1
14A	826/01314		Tuerca M6 jacknut		2
15	:1315/0207Z		Tornillo M6 x 25mm long		4
16	:1412/0001Z		Arandela		2
17	:826/10901		Tapón blanking,black,8mm fir tree *Top rail*		2
18	****		*C post mouldings see B2*		1
99	4103/3201		Adhesivo Sika 552, 310ml Black *to hold item 1A*		0

Catálogo de productos \ CONSTRUCTION \ REST OF WORLD \ CONSTRUCTION / INDUSTRIAL \ BACKHOE LOADER 3CX,4CX,214,215,217 \ 3CX 00960000-00989999,01297000-01297999,01327000-01349999,01616000-01625999,01705500-01709999 84hp 9812/0010 \ B CARROCERIA, CABINA SECCION CARGADORA \ B02 CABINA

9812/0010 B2-1-32 CANOPY

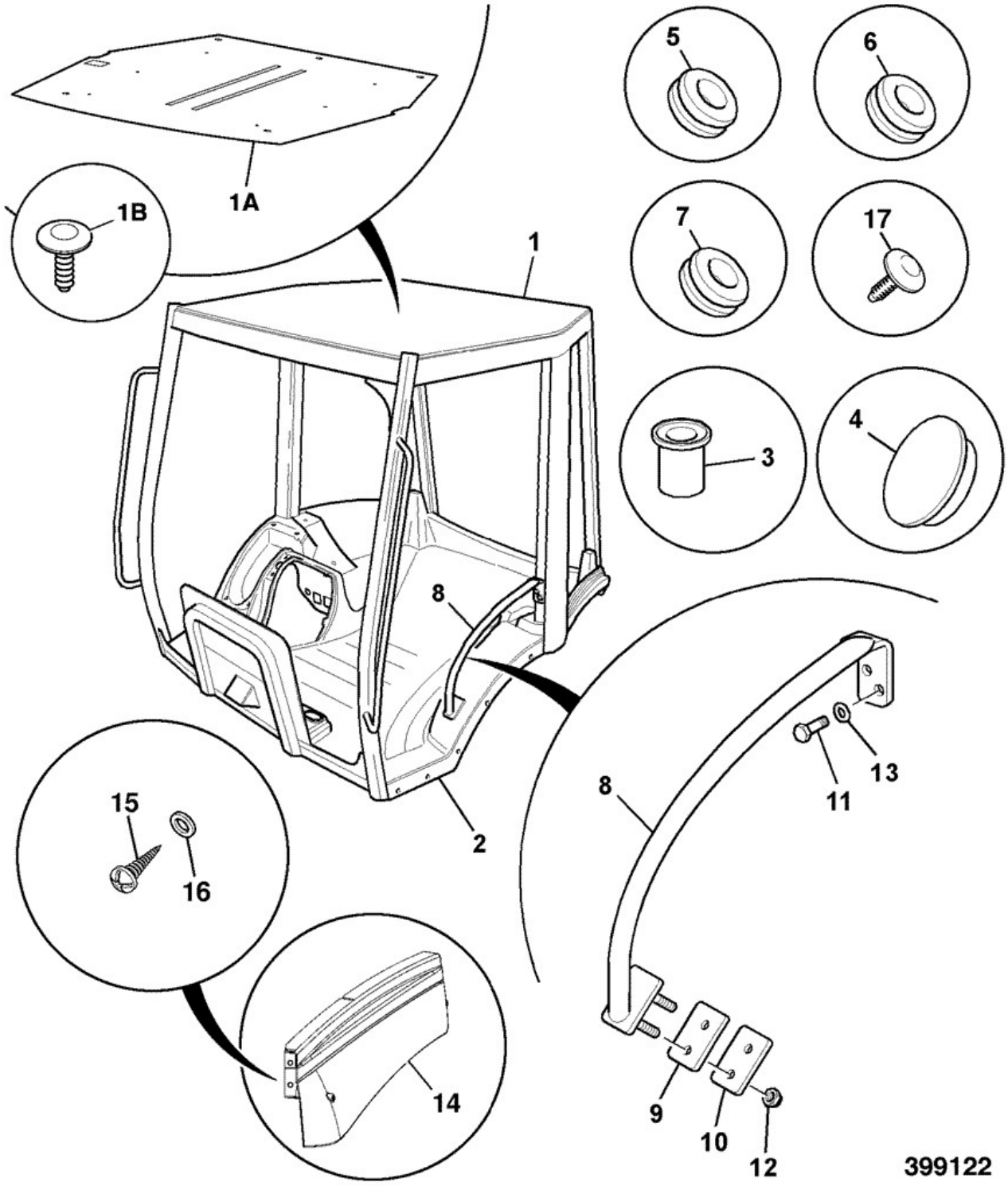

Elemento	Pieza Nº	Cambiar número	Descripción	Código de uso	CANT.
1	128/C0287	<M1618741	Cab abierta ABI *Véase la nota 1*		1

1	128/C3002	>M1618742	Árbol levas y engr\ ABI		1
1A	331/47846		Forro canopy roof		1
1B	826/10758		Fijación Fir Tree		7
2	****		Pieza no reparable		1
3	:826/01249		Tuerca rivet M10 open end for 6 to 8.5mm plate *M10 rivet nut*		7
3	:826/01105		Tuerca rivet,M10 open ended		5
3	:826/01102		Tuerca rivet,M8 open ended *M8 Rivet nut*		7
3	:826/01464	>M1618742	Tuerca rivet *M8 roof*		2
3	:826/01101		Tuerca rivet,M6 open ended for 3 to 5.5mm plt *M6 Rivet nut*		20
3	:826/11015		Tuerca rivet,splined M6 *cab floor*		50
3	:826/10897		Suplemento boom lock cable		1
4	:123/05740		Tapón blanking 30mm *inner B post*		7
5	:835/10084		Tapón blanking black,11mm *Rear window rail*		3
6	:835/10085		Tapón blanking black,12mm *Outer B post*		8
7	:835/10086		Tapón blanking black,9mm *Roof and right hand A post*		6
7	:826/10901		Tapón blanking,black,8mm fir tree		4
8	:331/26559		Raíl left hand grab canopy build		1
9	:331/25550		Junta grab handle canopy		1
10	:331/34377		Placa spreader canopy grab rail *not fitted after March 2007*		1
10A	1412/0002D		Arandela large		2
11	:826/01768		Tornillo M6x25mm		2
12	:1370/0201Z		Tuerca M8		2
13	:1420/0008Z		Arandela Plain M10		2
14	:331/25920		Moldeo blank filter housing canopy		1
14A	826/01314		Tuerca M6 jacknut		2
15	:1315/0207Z		Tornillo M6 x 25mm long		4
16	:1412/0001Z		Arandela		2
17	:826/10901		Tapón blanking,black,8mm fir tree *Top rail*		2
18	****		*C post mouldings see B2*		1
99	4103/3201		Adhesivo Sika 552, 310ml Black *to hold item 1A*		0

Nota 1: includes front glass, wiper motor, kickstripsroof lining and B post mouldings

9812/0010 B2-2-1 CRISTAL CABINA, VENT\ LATERAL PLANAS, 0

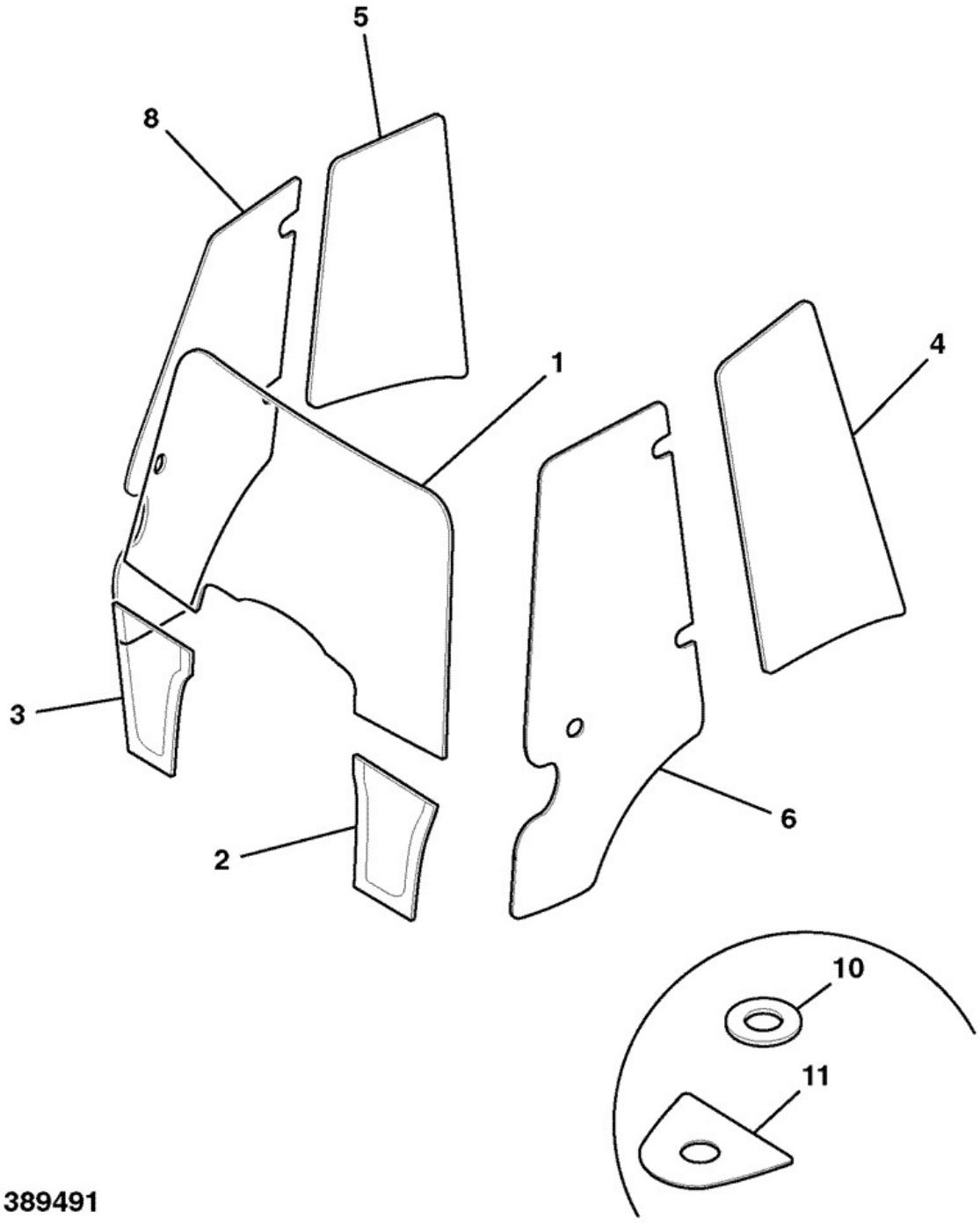

Elemento	Pieza Nº	Cambiar número	Descripción	Código de uso	CANT.

1	827/80139		Cristal front screen,tinted with shade band		1
1	827/80223		Cristal front screen,tinted without shade band		1
2	827/80141		Cristal left hand front quarter light		1
3	827/80142		Cristal right hand front quarter light		1
4	827/80269		Cristal Left side window flat		1
5	827/80249		Cristal right side window flat		1
6	827/80143		Cristal left hand door tinted		1
6	827/80361		Cristal LH door 60th Anniversary *No JCB logo SS8857, 9557 & 9608*		1
8	827/80144		Cristal right hand side		1
8	827/80362		Cristal RH door 60th anniversary *No JCB logo SS8857, 9557 & 9608*		1
10	813/10169		Junta window 3cx cab		5
11	813/10167		Junta window-hinge 3cx cab *Flat glass*		7

9812/0010 B2-2-20 CRISTAL CAB ABIERTA, 0, 0

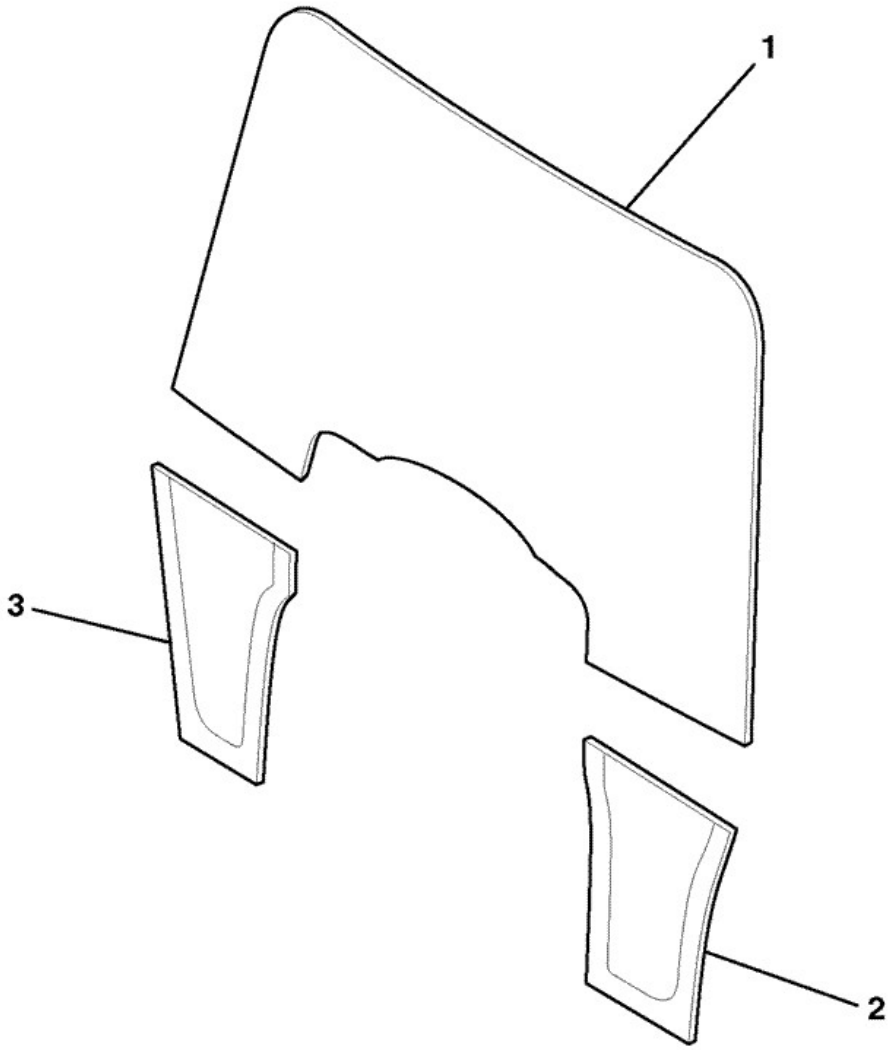

389510

Elemento	Pieza Nº	Cambiar número	Descripción	Código de uso	CANT.
1	827/80139		Cristal front screen,tinted with shade band		1

1	827/80223		Cristal front screen,tinted without shade band		1
2	827/80141		Cristal left hand front quarter light		1
3	827/80142		Cristal right hand front quarter light		1

Catálogo de productos \ CONSTRUCTION \ REST OF WORLD \ CONSTRUCTION / INDUSTRIAL \ BACKHOE LOADER 3CX,4CX,214,215,217 \ 3CX 00960000-00989999,01297000-01297999,01327000-01349999,01616000-01625999,01705500-01709999 84hp 9812/0010 \ B CARROCERIA, CABINA SECCION CARGADORA \ B02 CABINA

9812/0010 B2-3-3 PUERTA, IZQUIERDA, 0, 0

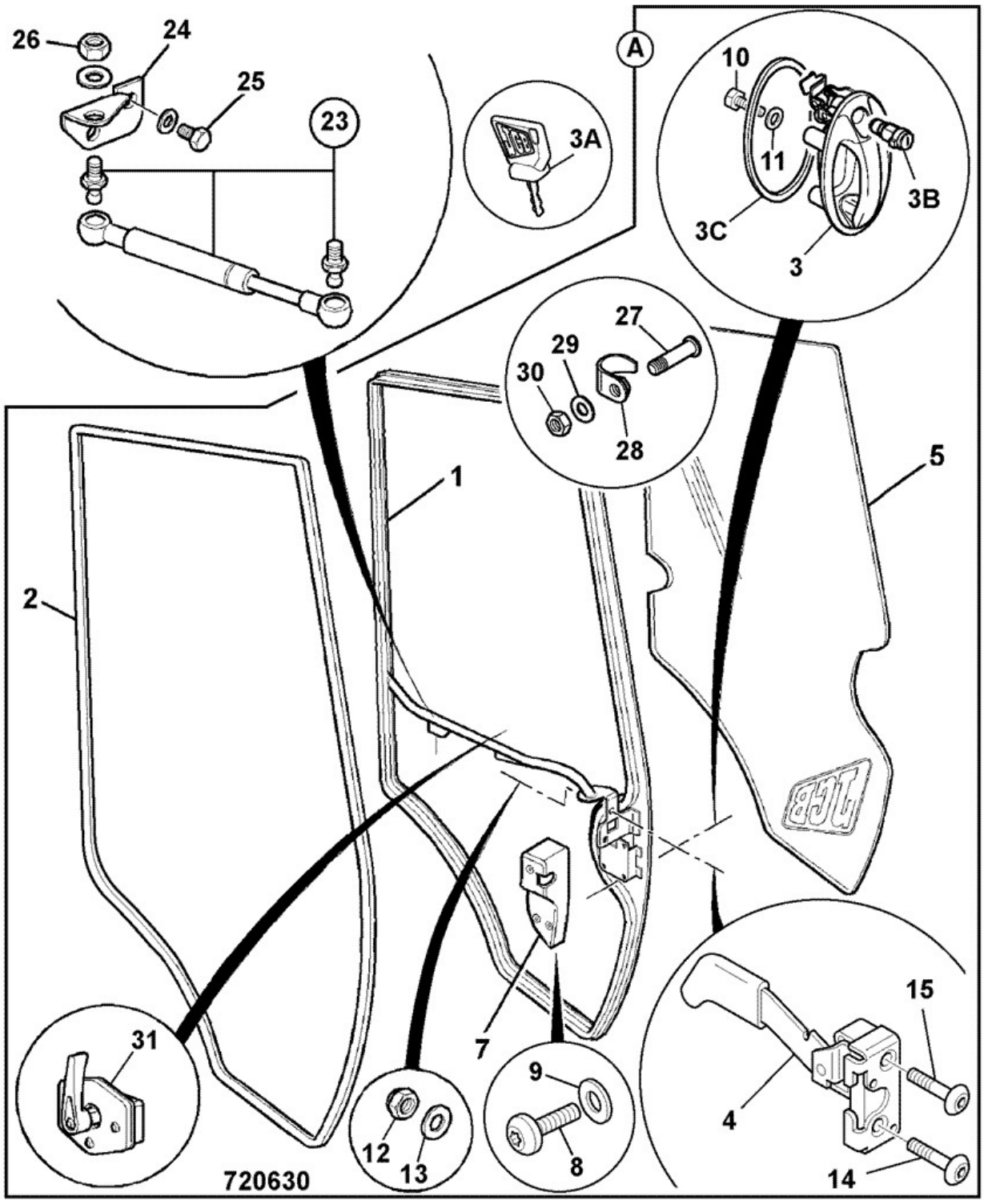

Elemento	Pieza Nº	Cambiar número	Descripción	Código de uso	CANT.
A	128/13862		Puerta LH assembly *when ordering a replacement door new striker bolt*		1

			332/A4841 is also required		
A	128/17807		Puerta LH Assembly No JCB logo SS 8857 *SS8857 only when ordering a replacement door new striker bolt 332/A4841 is also required*	B	1
1	:335/07625		Puerta frame LH side		1
2	:331/23358		Junta door 4380mm long		1
3	:331/31709	Superseded	Mango left hand door *Includes item 3B*		1
3	:331/43118	Superseded	Mango left hand door		1
3	:332/A3731		Mango Door L/H		1
3A	331/26790		Llave cab door		2
3B	****		Pieza no reparable		1
3C	:813/10185		Junta door handle		1
4	:826/11105	Superseded	Retenida lever release *used on LH door*		1
4	:826/11627		Retenida lever release		1
5	:827/80143		Cristal left hand door tinted		1
5	:827/80361		Cristal LH door 60th Anniversary *SS8857 only*	B	1
7	:331/44207		Tapa LH door lock 3CX cab		1
8	:826/10887		Tornillo button head torx *Use with item 7*		2
9	:823/00516		Arandela nylon M6 *Use with item 7*		3
10	:1315/0201D		Tornillo set M6x12 *Use with item 3*		2
11	:1420/0006D		ARANDELA M6 plain *Use with item 3*		2
12	:1370/0203D		Tuerca self lock M8 Grade 8 *Use with item 4*		2
13	:1420/0007D		Arandela M8 plain *Use with item 4*		2
14	:826/10481		Tornillo socket M8 x 40mm *Use with item 4*		1
15	:826/11053		Tornillo M8 csk.head setscrew		1
23	128/13052		Puntal gas assembly		1
24	331/25508		Soporte left hand gas strut 3CX cab		1
25	826/01768		Tornillo M6x25mm		2
26	1370/0101Z		Tuerca		2
27	331/30951		Tornillo door striker		1
28	331/26791		Proteccion striker		1
29	823/10410		Arandela plain		1
30	826/10947		Tuerca plain,M12		1
31	331/31071		Pestillo window lockback *Ref B2-26-1*		1

9812/0010 B2-3-4 Válvula derivadora, Izquierda,

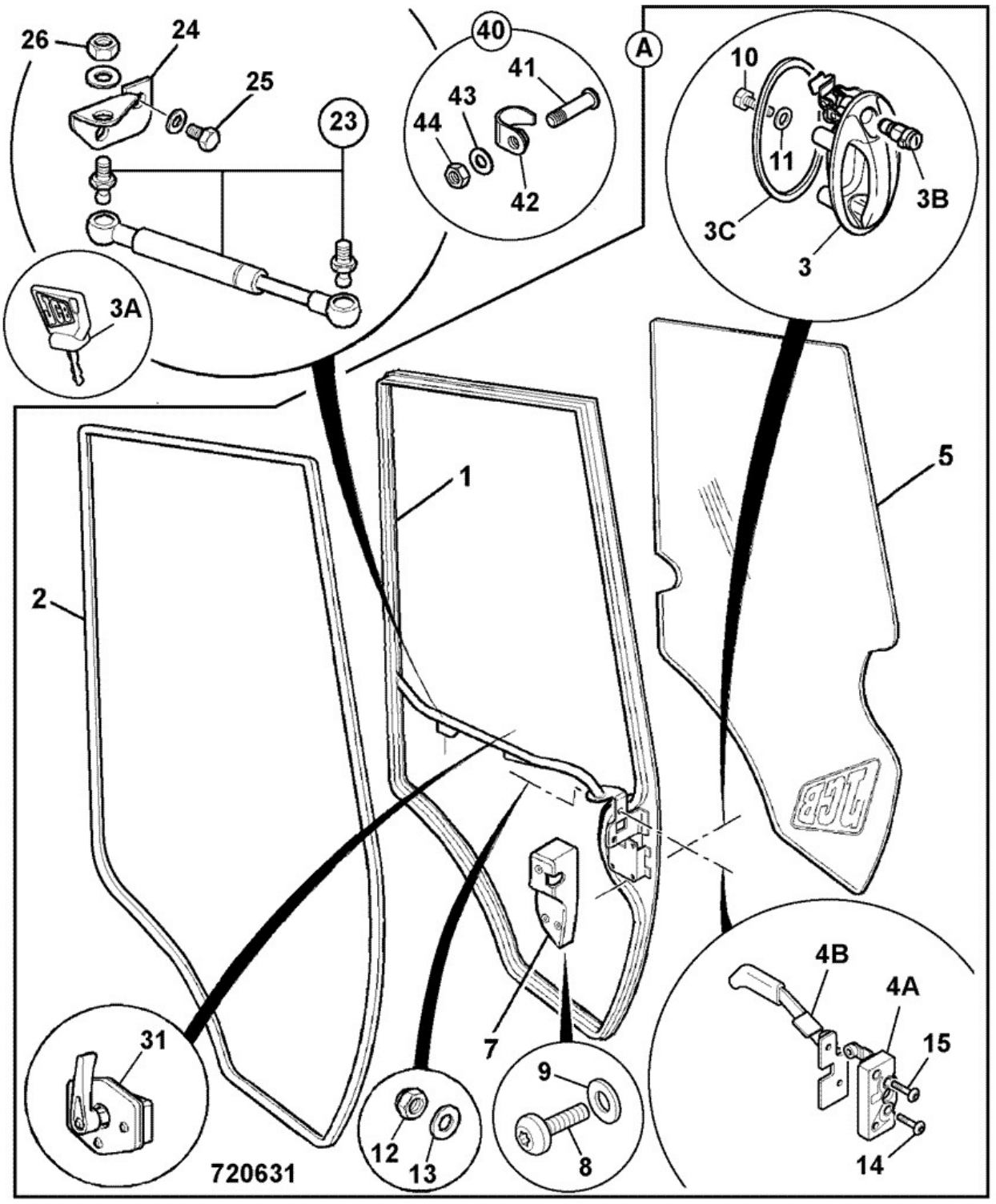

Elemento	Pieza Nº	Cambiar número	Descripción	Código de uso	CANT.
A	128/13862		Puerta LH assembly		1

A	128/17807		Puerta LH Assembly No JCB logo SS 8857 *SS8857 only*	B	1
1	:335/07625		Puerta frame LH side		1
2	:331/23358		Junta door 4380mm long		1
3	:332/A3731		Mango Door L/H		1
3A	331/26790		Llave cab door		2
3B	****		Pieza no reparable		1
3C	:813/10185		Junta door handle		1
4A	:332/A5004		Retenida door		1
4B	:332/A5007	Superseded	Mango door Latch - LH		1
4B	:332/A5642		ASIDERO latch LH		1
5	:827/80143		Cristal left hand door tinted		1
5	:827/80361		Cristal LH door 60th Anniversary *SS8857 only*	B	1
7	:331/44207		Tapa LH door lock 3CX cab		1
8	:826/10887		Tornillo button head torx		2
9	:823/00516		Arandela nylon M6		3
10	:1315/0201D		Tornillo set M6x12		2
11	:1420/0006D		ARANDELA M6 plain		2
12	:1370/0203D		Tuerca self lock M8 Grade 8		2
13	:1420/0007D		Arandela M8 plain		2
14	:826/10481		Tornillo socket M8 x 40mm		1
15	:826/11053		Tornillo M8 csk.head setscrew		1
23	128/13052		Puntal gas assembly		1
24	331/25508		Soporte left hand gas strut 3CX cab		1
25	826/01768		Tornillo M6x25mm		2
26	1370/0101Z		Tuerca		2
31	331/31071		Pestillo window lockback		1
40	:332/A4841		TORNILLO striker assembly cab door lock		1
41	332/A4843		TORNILLO door striker		1
42	332/A4842		PROTECCION door striker		1
43	823/10410		Arandela plain		1
44	826/10947		Tuerca plain,M12		1

Catálogo de productos \ CONSTRUCTION \ REST OF WORLD \ CONSTRUCTION / INDUSTRIAL \ BACKHOE LOADER 3CX,4CX,214,215,217 \ 3CX 00960000-00989999,01297000-01297999,01327000-01349999,01616000-01625999,01705500-01709999 84hp 9812/0010 \ B CARROCERIA, CABINA SECCION CARGADORA \ B02 CABINA

9812/0010 B2-3-12 PUERTA, DERECHA, 0, 0

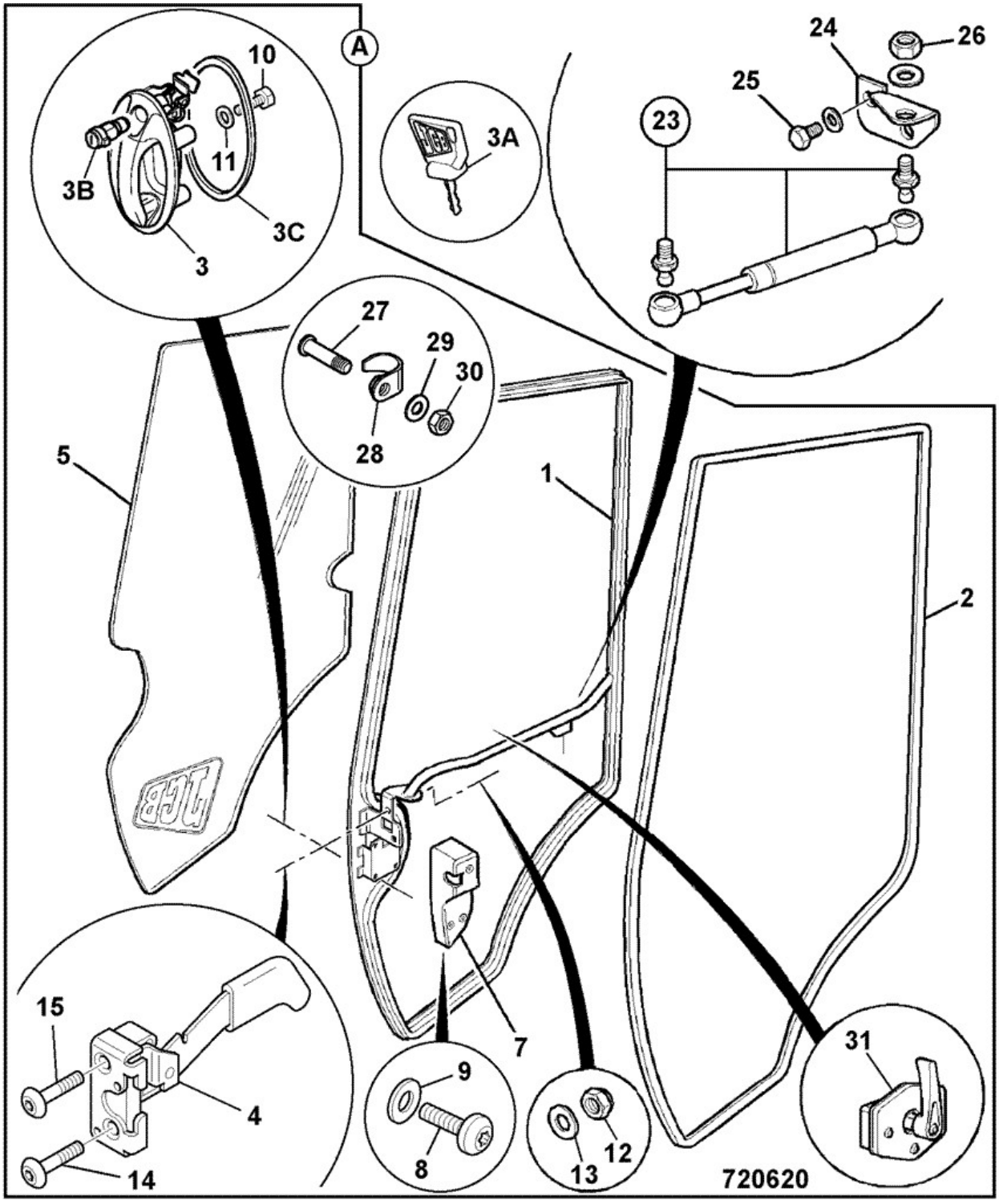

Elemento	Pieza Nº	Cambiar número	Descripción	Código de uso	CANT.
A	128/13863		Puerta RH assembly *when ordering a replacement door new striker bolt*		1

			332/A4841 is also required		
A	128/17808		Puerta RH Assembly No JCB logo SS8857 *SS8857 only when ordering a replacement door new striker bolt 332/A4841 is also required*	B	1
1	:335/07626		Puerta frame RH side		1
2	:331/23358		Junta door 4380mm long		1
3	:331/31710	Superseded	Mango right hand door *Includes item 3B*		1
3	:331/43119	Superseded	ASIDERO right hand door		1
3	:332/A3732		Mango Door R/H		1
3A	331/26790		Llave cab door		2
3B	****		Pieza no reparable		1
3C	:813/10185		Junta door handle		1
4	:826/11106	Superseded	Retenida lever release *used on RH door*		1
4	:826/11628		Retenida lever release		1
5	:827/80144		Cristal right hand side		1
5	:827/80362		Cristal RH door 60th anniversary *SS8857 only*	B	1
6	:331/35872		Palanca righthand,door latch 3CX cab		1
7	:331/44208		Tapa RH door lock 3CX cab		1
8	:826/10887		Tornillo button head torx *Use with item 7*		2
9	:823/00516		Arandela nylon M6 *Use with item 7*		3
10	:1315/0201D		Tornillo set M6x12 *Use with item 3*		2
11	:1420/0006D		ARANDELA M6 plain *Use with item 3*		2
12	:1370/0203D		Tuerca self lock M8 Grade 8 *Use with item 4*		2
13	:1420/0007D		Arandela M8 plain *Use with item 4*		2
14	:826/10481		Tornillo socket M8 x 40mm *Use with item 4*		1
15	:826/11053		Tornillo M8 csk.head setscrew		1
23	128/13052		Puntal gas assembly		1
24	331/25517		Soporte right hand gas strut		1
25	826/01768		Tornillo M6x25mm		2
26	1370/0101Z		Tuerca		2
27	331/30951		Tornillo door striker		1
28	331/26791		Proteccion striker		1
29	823/10410		Arandela plain		1
30	826/10947		Tuerca plain,M12		1
31	331/31071		Pestillo window lockback *Ref B2-26-1*		1

9812/0010 B2-3-13 Válvula derivadora, Derecha,

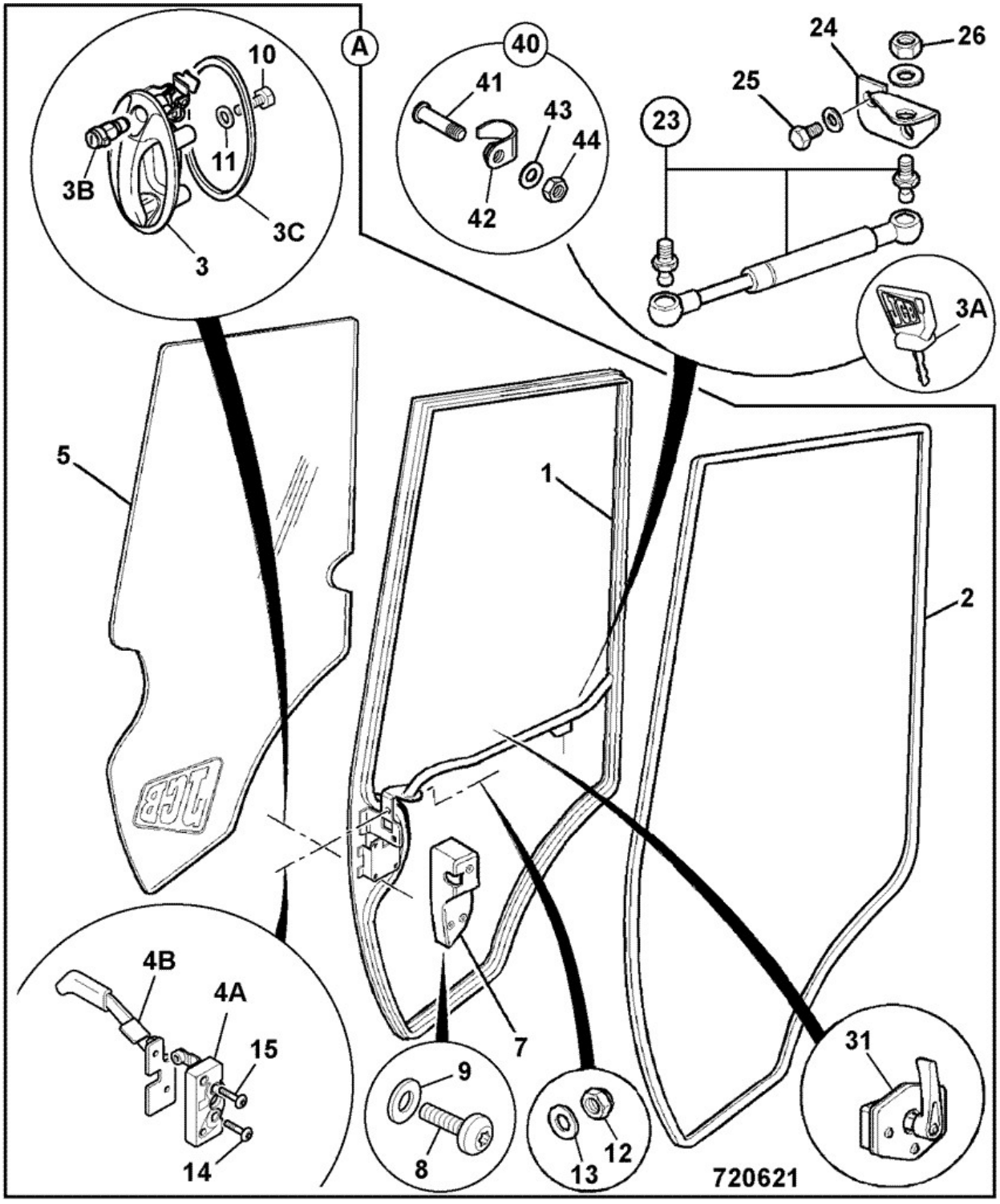

Elemento	Pieza Nº	Cambiar número	Descripción	Código de uso	CANT.
A	128/13863		Puerta RH assembly		1

A	128/17808		Puerta RH Assembly No JCB logo SS8857	B	1
1	:335/07626		Puerta frame RH side		1
2	:331/23358		Junta door 4380mm long		1
3	:332/A3732		Mango Door R/H		1
3A	331/26790		Llave cab door		2
3B	****		Pieza no reparable		1
3C	:813/10185		Junta door handle		1
4A	:332/A5005		SEGURO door		1
4B	:332/A5014	Superseded	ASIDERO door latch - RH		1
4B	:332/A5708		ASIDERO latch RH		1
5	:827/80144		Cristal right hand side		1
5	:827/80362		Cristal RH door 60th anniversary	B	1
7	:331/44208		Tapa RH door lock 3CX cab		1
8	:826/10887		Tornillo button head torx		2
9	:823/00516		Arandela nylon M6		3
10	:1315/0201D		Tornillo set M6x12		2
11	:1420/0006D		ARANDELA M6 plain		2
12	:1370/0203D		Tuerca self lock M8 Grade 8		2
13	:1420/0007D		Arandela M8 plain		2
14	:826/10481		Tornillo socket M8 x 40mm		1
15	:826/11053		Tornillo M8 csk.head setscrew		1
23	128/13052		Puntal gas assembly		1
24	331/25517		Soporte right hand gas strut		1
25	826/01768		Tornillo M6x25mm		2
31	331/31071		Pestillo window lockback		1
26	1370/0101Z		Tuerca		2
40	332/A4841		TORNILLO striker assembly cab door lock		1
41	:332/A4843		TORNILLO door striker		1
42	:332/A4842		PROTECCION door striker		1
43	:823/10410		Arandela plain		1
44	:826/10947		Tuerca plain,M12		1

Catálogo de productos \ CONSTRUCTION \ REST OF WORLD \ CONSTRUCTION / INDUSTRIAL \ BACKHOE LOADER 3CX,4CX,214,215,217 \ 3CX 00960000-00989999,01297000-01297999,01327000-01349999,01616000-01625999,01705500-01709999 84hp 9812/0010 \ B CARROCERIA, CABINA SECCION CARGADORA \ B02 CABINA

9812/0010 B2-4-2 VENTANA, LADO, VIDRIO PLANO, 0

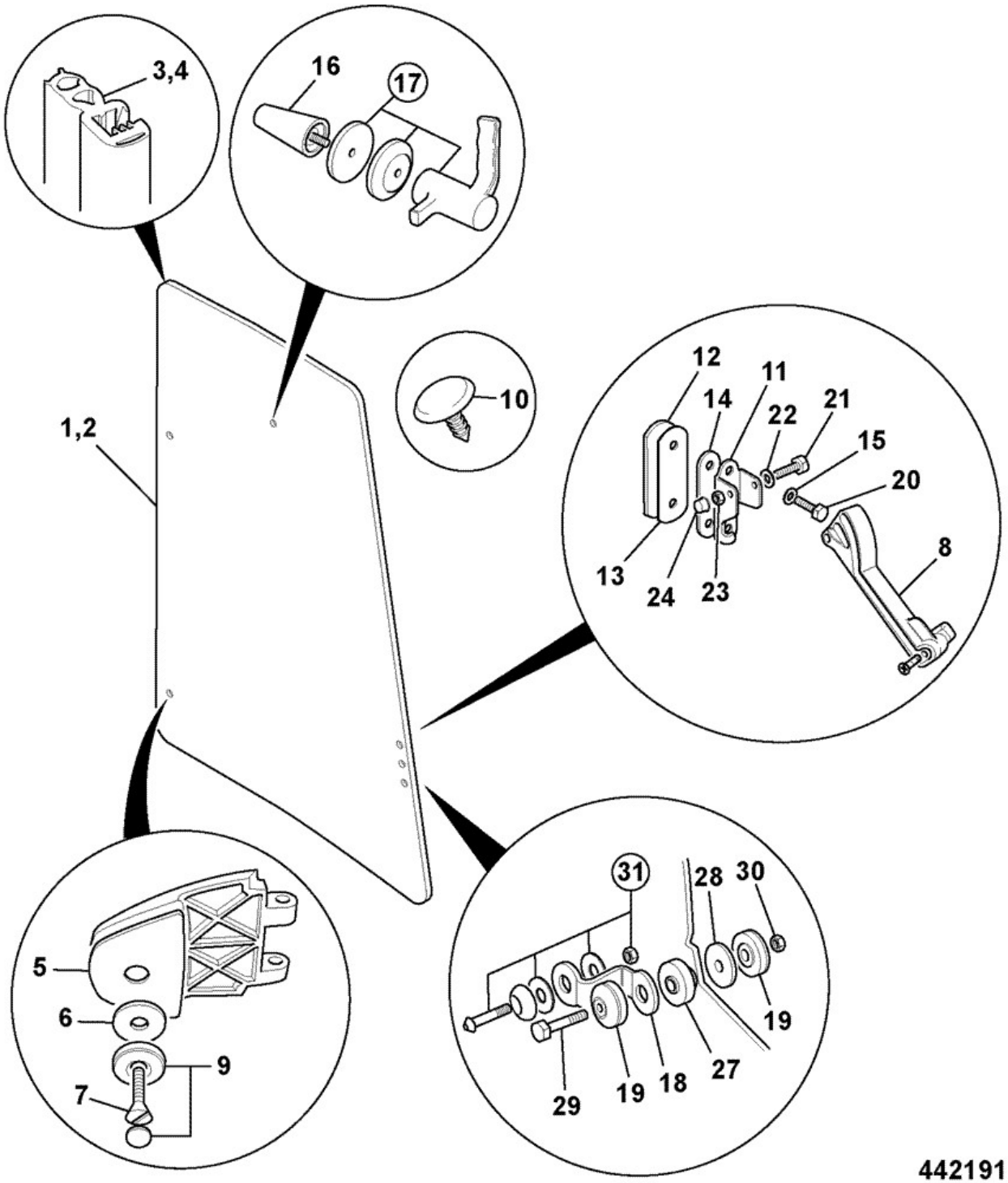

Elemento	Pieza Nº	Cambiar número	Descripción	Código de uso	CANT.
1	827/80269		Cristal Left side window flat		1

2	827/80249		Cristal right side window flat		1
3	331/23360		Junta rear window lefthand flat glass 3563mm		1
4	331/23362		Junta rear window r. hand flat glass 3286mm		1
5	813/10167		Junta window-hinge 3cx cab		4
6	813/10233		Junta window,cab		4
7	826/10349		Tornillo de cierre M8 x 25mm		4
8	331/38532		Mango side window		2
9	331/23194		Tapa plastic door hinges		4
10	826/10901		Tapón blanking,black,8mm fir tree		4
11	331/35450		Soporte Left,stay mounting cab window		1
11	331/35451		Soporte right,stay mounting cab window		1
12	331/36314		Placa metal,outer clamp window	A	2
12	331/35756		Moldeo plastic,outer clamp window	B	2
13	813/10238		Junta outer clamp,window	A	2
13	813/10244		Junta outer clamp,window	B	2
14	813/10239		Junta inner clamp,window		2
15	823/00529		Arandela M8 black		4
16	331/34878		Amortiguador window		2
17	331/34994		Mango left,upper,locking window		1
17	331/34996		Mango right,upper,locking window		1
18	331/35480		Soporte mounting,lockback cab		2
19	123/06916		Tapa		2
20	826/11040		Tornillo Set Screw M8 X 20		2
21	1315/3212Z		Tornillo M6 x 50		2
22	1420/0006Z		Arandela M6		2
23	1370/0103Z		Tuerca Self lock M6		2
24	835/00074		Tapa		2
25	826/11100		Tornillo socket M8x40mm Csk. black	A	2
25	826/11183		Tornillo socket M8x45 Csk. black	B	2
26	826/11042		Tuerca Lock, M8, Black		2
27	813/10243		Junta window,black		1
28	813/10169		Junta window 3cx cab		1
29	1315/0208Z		Tornillo M6 x 30mm long		1
30	1370/0101Z		Tuerca		1
31	331/31071		Pestillo window lockback *Ref B2-26-1*		2

9812/0010 B2-5-3 VENTANA, TRASERA, 0, 0

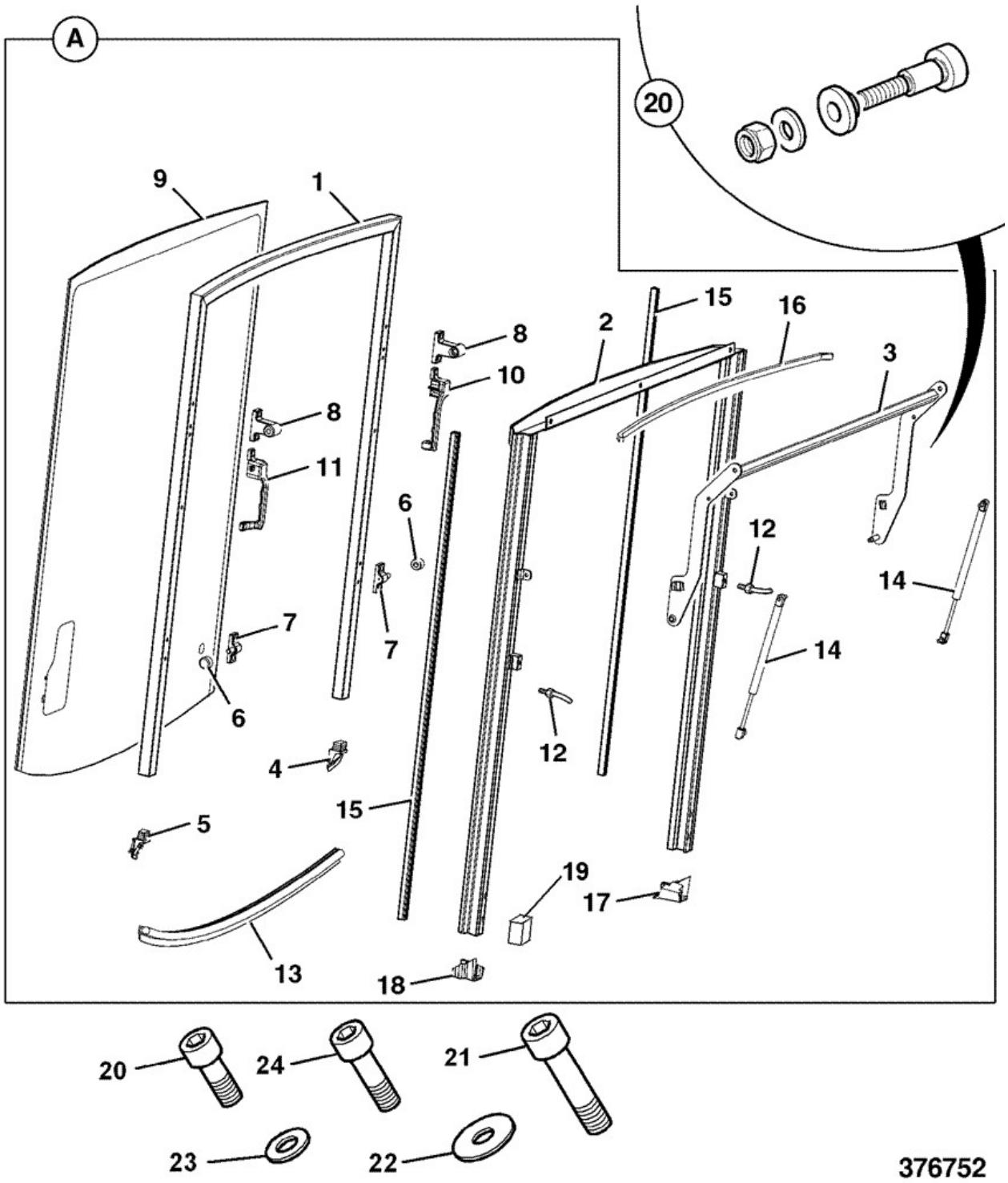

Elemento	Pieza Nº	Cambiar número	Descripción	Código de uso	CANT.
A	128/14450		Ventana assembly- rear as supplied		1

1	****		Pieza no reparable		1
2	****		Pieza no reparable		1
3	:335/03712		Barra torsion		1
4	:331/28221		Junta rear window left hand end		1
5	:331/28222		Junta rear window right hand end		1
6	:331/28223		Cojinete roller (28cm across 20cm width, hole is 12cm)		2
7	:331/28224		Bloque roller		2
8	:331/28226		Soporte pivot		2
9	:827/80310		Cristal rear window		1
10	:331/28233		Retenida left hand assembly		1
10A	:331/43562		Tornillo de cierre encapsulated *holds 7,8,10 & 11 to frame*		12
11	:331/28235		Retenida right hand assembly		1
12	:331/28239		Barra locking		2
13	:904/20260		Junta rear window,bottom		1
14	:331/28215		Puntal gas 287 closed, 475 open		2
15	:904/20302		Junta window side seal		2
16	:904/20241		Junta rear window top		1
17	:331/33723		Funda left hand,rubber		1
18	:331/33725		Funda right hand,rubber		1
19	:332/C7403		Tope rubber		2
20	826/10875		Tornillo de cierre shouldered, M8x12		2
20A	1370/0203D		Tuerca self lock M8 Grade 8 *fit to item 20 if required*		2
21	826/10878		Tornillo button head		3
22	823/10409		Arandela black		3
23	823/00529		Arandela M8 black		4
23	1420/0007D		Arandela M8 plain		2
24	826/10948		Tornillo de cierre		4
25	813/10216		Junta foam,left hand C-post		1
26	813/10201		Junta foam right hand C post		1
27	926/46400		Regleta cab sealing 8 x 3 thk x 100 long		2
28	4103/3201		Adhesivo Sika 552, 310ml Black		0
29	4104/1203		Limpiador primer SIKA 205 250ml		0

Catálogo de productos \ CONSTRUCTION \ REST OF WORLD \ CONSTRUCTION / INDUSTRIAL \ BACKHOE LOADER 3CX,4CX,214,215,217 \ 3CX 00960000-00989999,01297000-01297999,01327000-01349999,01616000-01625999,01705500-01709999 84hp 9812/0010 \ B CARROCERIA, CABINA SECCION CARGADORA \ B02 CABINA

9812/0010 B2-5-4 VENTANA, TRASERA, 0, 0

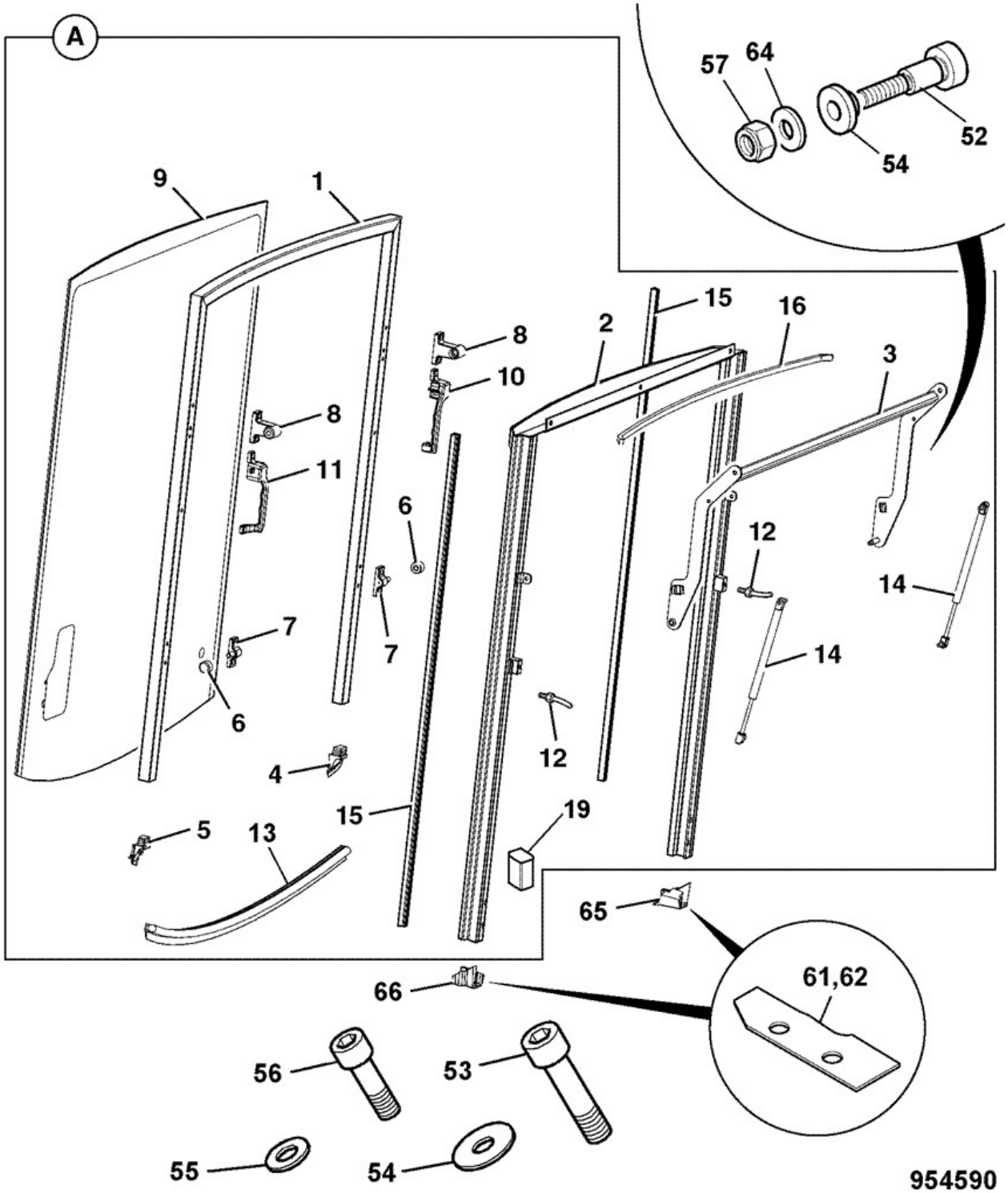

Elemento	Pieza Nº	Cambiar número	Descripción	Código de uso	CANT.
00A	332/A0160	Superseded	WINDOW assembly rear, ABI	A	1

00A	332/F5272		WINDOW assembly rear ABI	A	1
00A	128/D3895		WINDOW assembly rear, protected, ABI *protected*	B	1
1	****		Pieza no reparable		1
2	****		Pieza no reparable		1
3	:335/03712		Barra torsion		1
4	:331/28221		Junta rear window left hand end		1
5	:331/28222		Junta rear window right hand end		1
6	:331/28223		Cojinete roller (28cm across 20cm width, hole is 12cm)		2
7	:332/C8814		Rodillo block		2
8	:332/C8813		Bloque pivot		2
9	:827/80310		Cristal rear window	A	1
9	:128/E4707		VIDRIO rear window protected	B	1
9	::332/E5443		CALCAMONIA impact protection	B	1
10	:331/28233		Retenida left hand assembly		1
11	:331/28235		Retenida right hand assembly		1
12	:332/D5650		Barra locking		2
13	:904/20260		Junta rear window,bottom		1
14	:331/28215		Puntal gas 287 closed, 475 open		2
15	:904/20302		Junta window side seal		2
16	:904/20241		Junta rear window top		1
19	:332/C7403		Tope rubber		2
52	826/10875		Tornillo de cierre shouldered, M8x12		2
53	826/10878		Tornillo button head		3
54	823/10409		Arandela black		3
55	823/00529		Arandela M8 black		4
56	826/10948		Tornillo de cierre		4
57	1370/0203D		Tuerca self lock M8 Grade 8		2
61	813/10216		Junta foam,left hand C-post		1
62	813/10201		Junta foam right hand C post		1
64	1420/0007D		Arandela M8 plain		2
65	332/A3514		LH rubber		1
66	332/A3515		RH rubber		1

Catálogo de productos \ CONSTRUCTION \ REST OF WORLD \ CONSTRUCTION / INDUSTRIAL \ BACKHOE LOADER 3CX,4CX,214,215,217 \ 3CX 00960000-00989999,01297000-01297999,01327000-01349999,01616000-01625999,01705500-01709999 84hp 9812/0010 \ B CARROCERIA, CABINA SECCION CARGADORA \ B02 CABINA

9812/0010 B2-6-1 ALFOMBRILLA, BASE CAB, 0

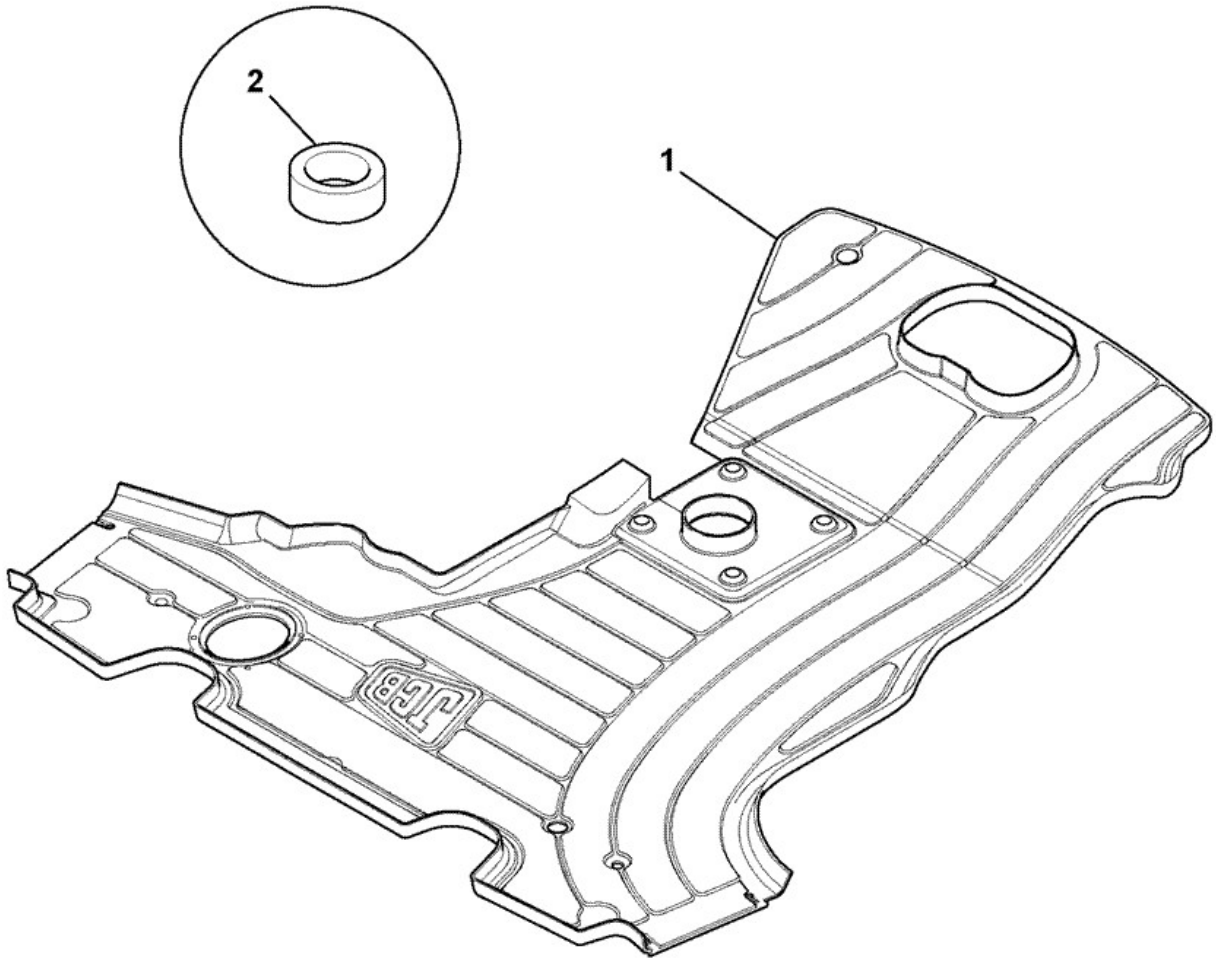

414810

Elemento	Pieza Nº	Cambiar número	Descripción	Código de uso	CANT.
1	331/45950		Alfombrilla cab floor		1

2	823/10371		Espaciador		11

9812/0010 B2-6-20 ROOF LINER, TWIN SPEAKERS AND INTERIOR LIGHT

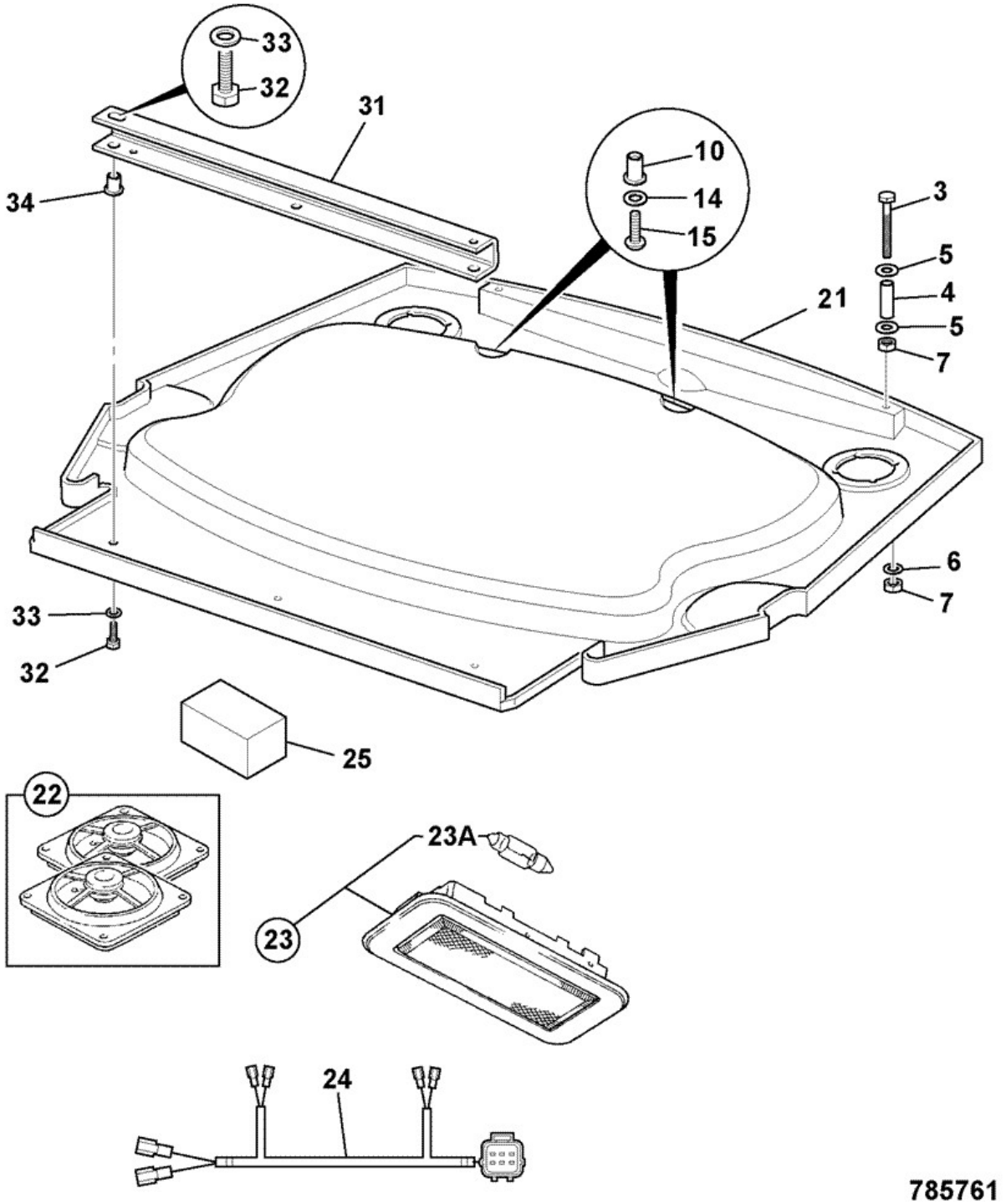

Elemento	Pieza Nº	Cambiar número	Descripción	Código de uso	CANT.

3	1315/0217Z		Tornillo cap		2
4	123/04547	Superseded	Espaciador		2
4	332/C7136		Espaciador 12.6OD x14swg x 38mm long		2
5	1412/0001Z		Arandela		4
6	1420/0006Z		Arandela M6		2
7	1370/0103Z		Tuerca Self lock M6		4
8	826/01768		Tornillo M6x25mm		3
9	823/00516		Arandela nylon M6		3
10	331/30827	<M0963058	Espaciador adaptor,headliner		2
10	826/01101		Tuerca rivet,M6 open ended for 3 to 5.5mm plt		2
14	823/00516	<M0963058	Arandela nylon M6		2
14	823/00554		Arandela plain		2
15	826/01768	<M0963058	Tornillo M6x25mm		2
15	826/10885		Tornillo button head torx		2
21	331/35255		Forro cab roof,WITHOUT stowage cut-out		1
22	717/20020		Altavoz Kit (2 speakers/grilles+ 8 spire nuts + 8 fixing screws)		1
23	700/20500		Luz cab interior assembly		1
23A	:720/10054		Bombilla 12V-10W - festoon		1
24	721/11050		Cableado interior light & speakers		1
25	331/35940		Bloque foam rooflining		2
31	331/30830	Superseded	Soporte		1
31	332/A4165		Soporte mounting roof liner		1
32	1315/0203Z		Tornillo M6x16		2
33	1420/0006Z		Arandela M6		2
34	826/01099		Tuerca rivet,M6 open ended		3

9812/0010 B2-6-30 INSONORIZACIÓN, A/A CABINA, KIT SERVICIO

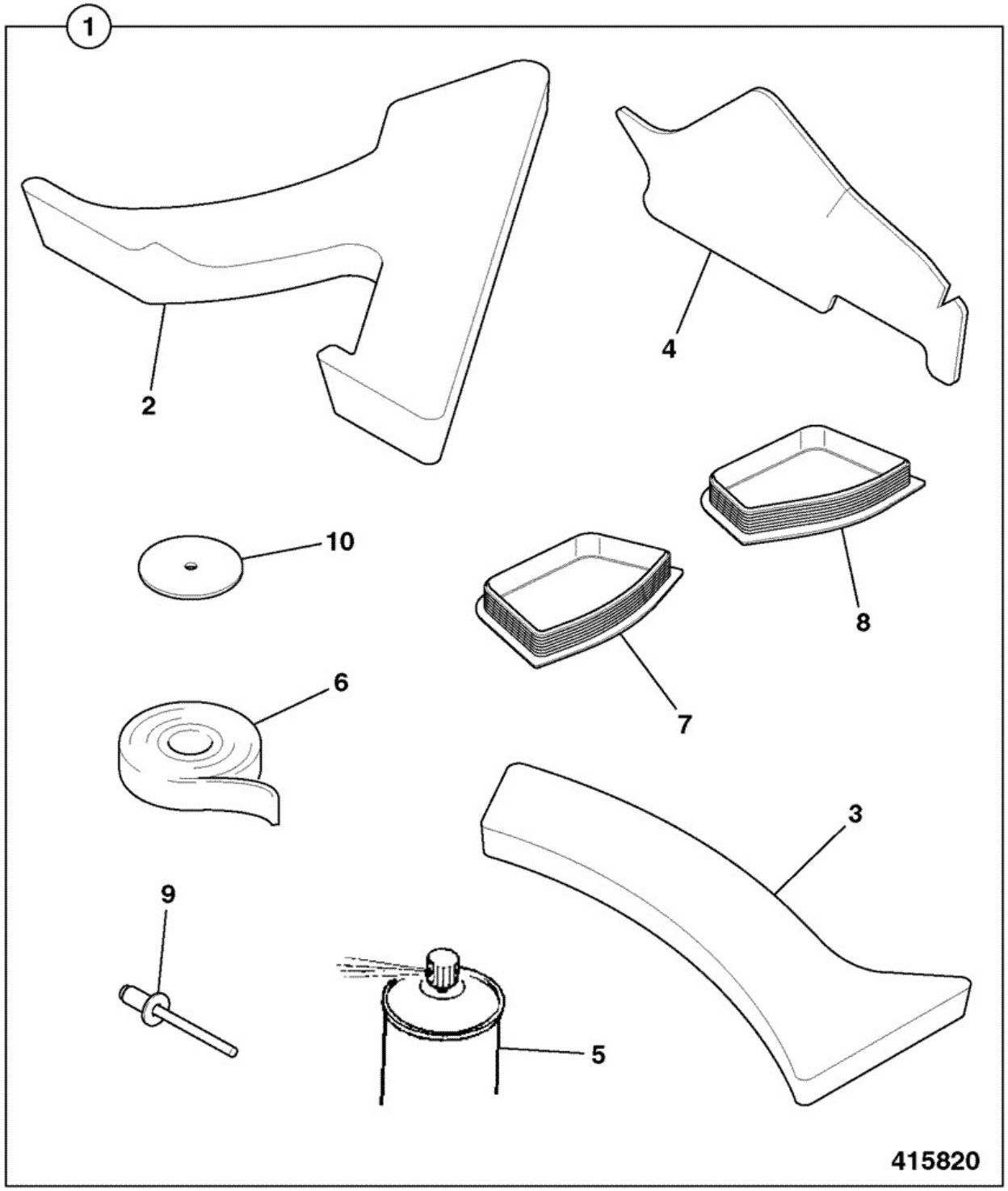

Elemento	Pieza Nº	Cambiar número	Descripción	Código de uso	CANT.

1	128/12769		Kit servicio air conditioning insulation		1
2	:331/31636		Panel Y duct insulation under floor, front		1
3	:331/31637		Panel crossduct insulation under floor, rear		1
4	:331/31638		Panel duct insulation under floor, rh side		1
5	:331/31654		Adhesivo heavy duty 400ml spray can		1
6	:331/31661		Cinta aluminium foil 50mm WIDE, 45M roll		1
7	:331/31738		Tapa blanking lower lh B post		1
8	:331/31741		Tapa blanking lower rh B post		1
9	:826/01345		Remache pop		12
10	:823/10435		Arandela		12

9812/0010 B2-6-40 CONDUCTOS BAJO SUELO, CALEFACCIÓN, 0

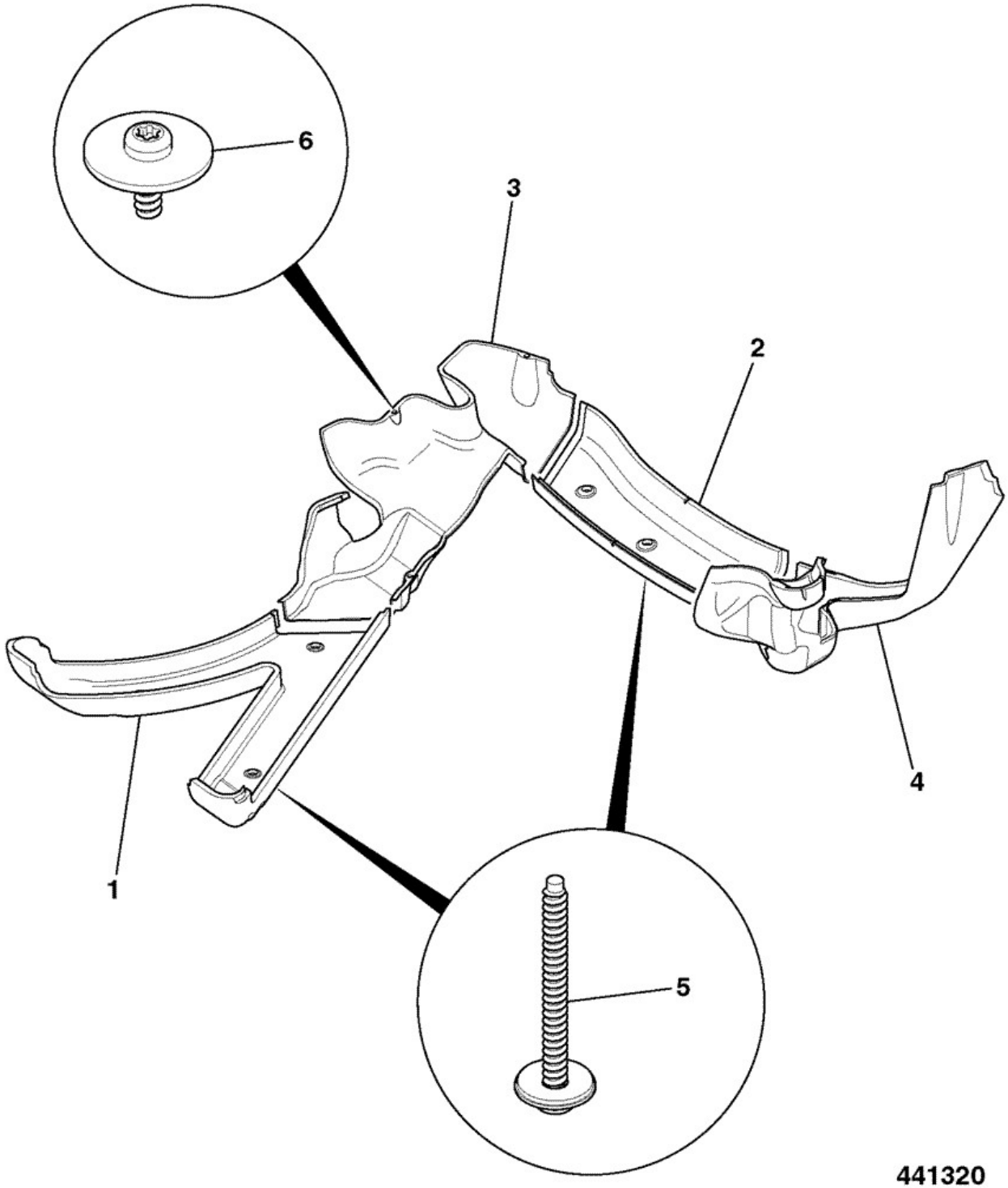

Elemento	Pieza Nº	Cambiar número	Descripción	Código de uso	CANT.

1	331/33097		Conducto front"Y" heater		1
2	331/33098		Conducto rear cross heater		1
3	331/33099		Conducto right side heater		1
4	331/33100		Conducto left side heater		1
5	826/11058		Tornillo Delta PT M5x50		5
6	826/11059		Tornillo Delta PT M5x15		6
7	4104/2303		Sellador mastic primer SIKA 209 -250ml Gan		0
8	4103/3440		Adhesivo SIKAFLEX 264 cartridge 310ml		0

9812/0010 B2-6-50 CONDUCTOS BAJO SUELO, A/A (AISLADO), 0

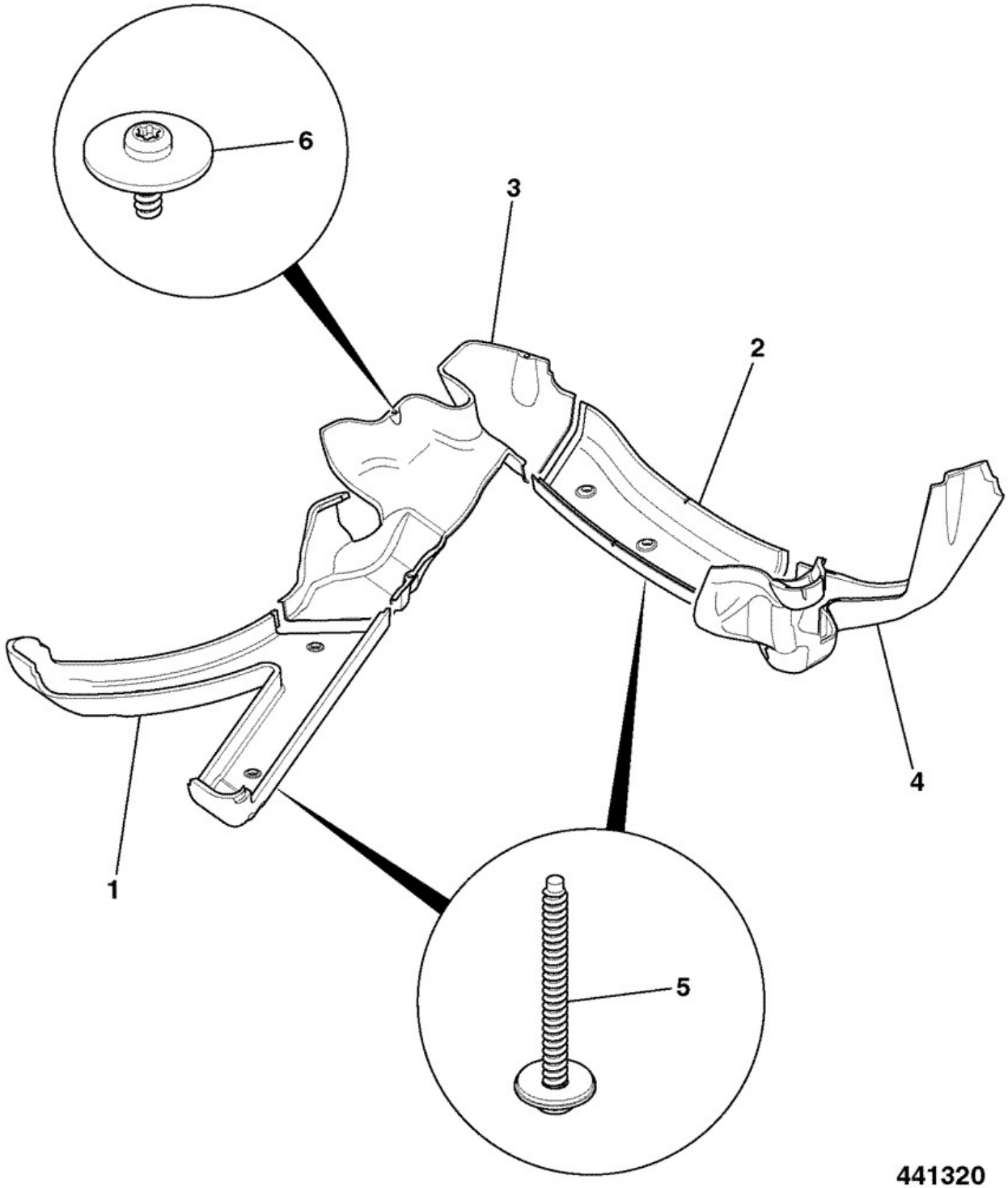

Elemento	Pieza Nº	Cambiar número	Descripción	Código de uso	CANT.

1	331/33101		Conducto front"Y" air con-(insulated)		1
2	331/33102		Conducto rear cross air con-insulated		1
3	331/33103		Conducto right side air con-insulated		1
4	331/33104		Conducto left side air con-insulated		1
5	826/11058		Tornillo Delta PT M5x50		5
6	826/11059		Tornillo Delta PT M5x15		6
7	4104/2303		Sellador mastic primer SIKA 209 -250ml Gan		0
8	4103/3440		Adhesivo SIKAFLEX 264 cartridge 310ml		0

Catálogo de productos \ CONSTRUCTION \ REST OF WORLD \ CONSTRUCTION / INDUSTRIAL \ BACKHOE LOADER 3CX,4CX,214,215,217 \ 3CX 00960000-00989999,01297000-01297999,01327000-01349999,01616000-01625999,01705500-01709999 84hp 9812/0010 \ B CARROCERIA, CABINA SECCION CARGADORA \ B02 CABINA

9812/0010 B2-7-2 ASIENTO, ESTÁTICO, 0, 0

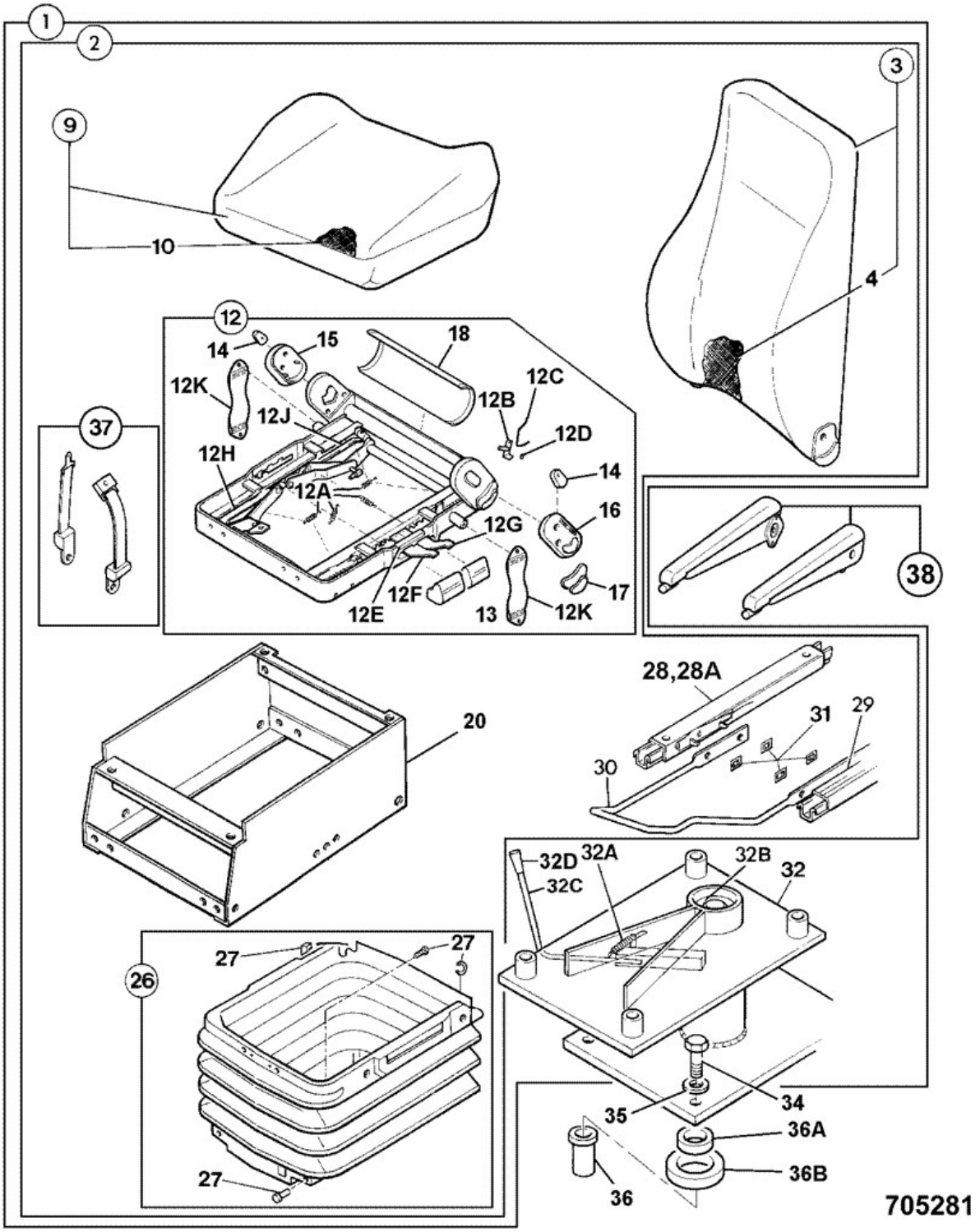

Elemento	Pieza Nº	Cambiar número	Descripción	Código de uso	CANT.
1	128/13560		Asiento assy,static vinyl as supplied		1

2	:40/910726		Asiento Seat ,static,vinyl		1
3	::40/910735		Almohadilla Cushion,squab assy,v		1
4	:::40/910397		Tapa Seat, vinyl		1
9	::40/910518		Almohadilla seat assy Vinyl high back		1
10	:::40/910402		Tapa seat cushion, vinyl		1
12	::40/910430		Bastidor assembly		1
12A	:::40/910445		Kit muelle 2 lever height rise		1
12B	:::40/910446		Mango squab		1
12C	:::40/910447		Muelle squab handle		1
12D	:::40/910448		Arandela elástica height adjuster		1
12E	:::40/910141		Clip black cushion frame		1
12F	:::40/910142		Mango height adjustment front		1
12G	:::40/910143		Mango height adjustment rear		1
12H	:::40/910145		Regulador height rear		1
12J	:::40/910737		Mango height adjust		1
12K	:::40/910146		Correa suspension unit		2
13	:::40/910404		Mango grip front		1
13	:::40/910405		Mango grip rear		1
14	:::40/903108		Tapa side plate		2
15	:::40/903109		Tapa slave right hand sideplate		1
16	:::40/903110		Tapa upper left hand sideplate		1
17	:::40/910406		Mango grip, squab recline		1
18	:::40/903112		Placa cushion frame back		1
20	::40/910736		Pedestal pedestal		1
26	::40/905204		Kit fuelle		1
27	:::40/903116		Kit bellow fixings		1
28	:40/910410		Corredera seat, right hand		1
28A	40/905207		Tornillo		4
28A	1315/0305Z		Tornillo Hexagon M8 x 20mm long		4
28A	1391/3305Z		Tornillo de cierre		4
29	::40/910409		Corredera left hand		1
30	::40/910411		Mango slide		1
31	::40/903125		Clip slide rail		4
32	:40/910412		Pedestal assembly		1
32A	::814/10156		Muelle		1
32B	::40/910413		Kit tuerca-tornillo pedestal swivel		1
32C	::40/910414		Mango assembly		1
32E	::40/911175		Arandela thrust, in pedestal base		1
33	::40/910415		Mango grip		1
34	1315/3412Z		Tornillo		4
35	1417/0013Z		Arandela lock ,7/16"		4
36	826/01105		Tuerca rivet,M10 open ended		4
36A	332/A1009		PIEZA DISTANCIADOR inner seat mounting		4
36B	823/10441		Espaciador outer seat mounting		4
37	:40/904700		Kit cinturón 50" long		1
38	128/C7269		Kit 2 armrests & fixings *not supplied with 128/13560*		1

Catálogo de productos \ CONSTRUCTION \ REST OF WORLD \ CONSTRUCTION / INDUSTRIAL \ BACKHOE LOADER 3CX,4CX,214,215,217 \ 3CX 00960000-00989999,01297000-01297999,01327000-01349999,01616000-01625999,01705500-01709999 84hp 9812/0010 \ B CARROCERIA, CABINA SECCION CARGADORA \ B02 CABINA

9812/0010 B2-7-11 ASIENTO, SUSPENSIÓN, 0, 0

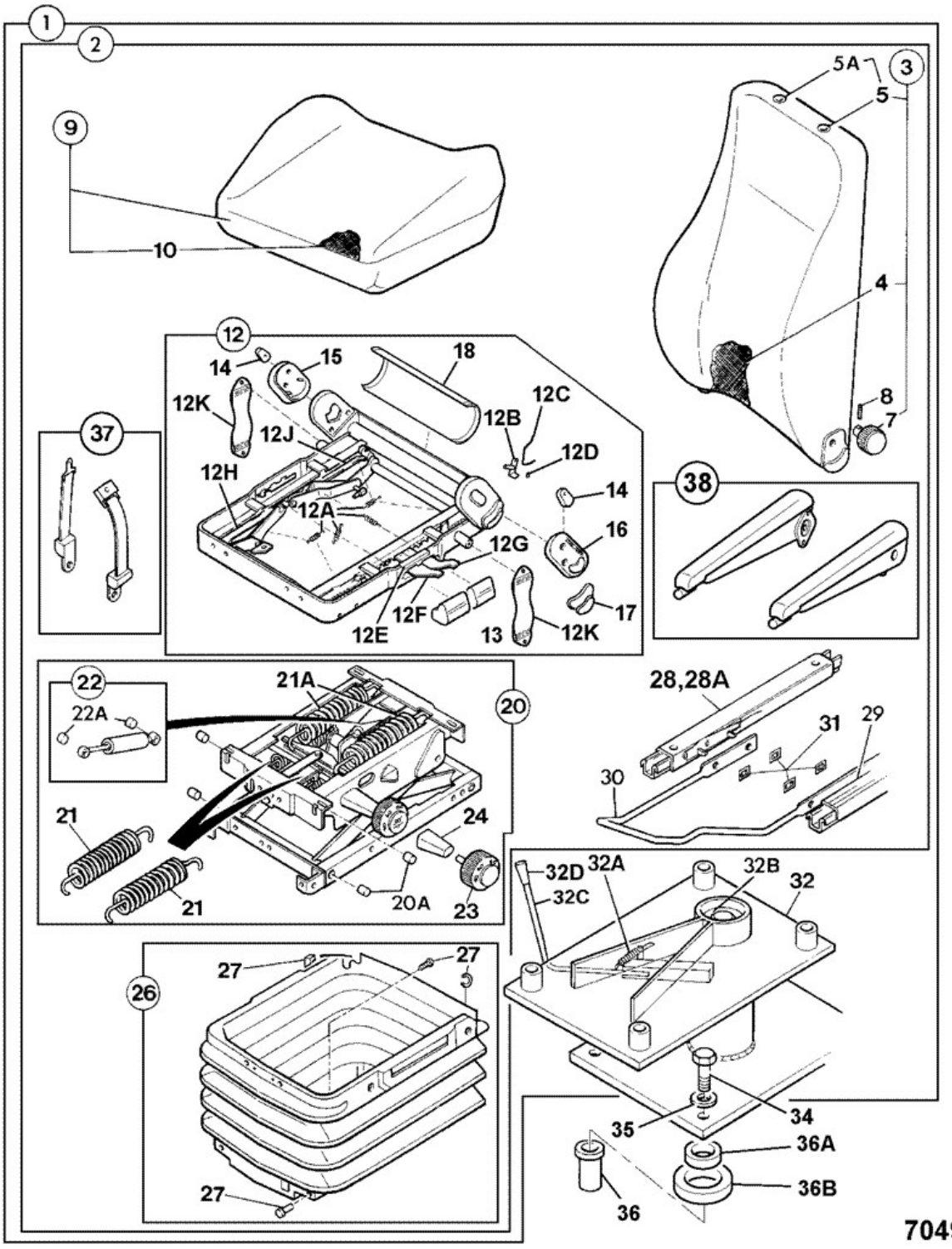

Elemento	Pieza Nº	Cambiar número	Descripción	Código de uso	CANT.
1	128/13561		Asiento assy,suspen cloth armrest & lumbar		1

1	128/13564		Asiento assy,suspen. cloth without armrests *No armrests,headrest fixing,or lumbar support*		1
1	128/13565		Asiento assy,suspen.vinyl without armrests *No armrests,headrest fixing,or lumbar support*		1
2	:40/910709		Asiento mech.suspn. cloth		1
3	::40/910713		Almohadilla squab assy,cloth		1
4	:::40/910714		Tapa squab assy,cloth		1
4A	:::40/903132		Clip		0
5	:::40/903120		Tapón headrest		2
5A	:::40/906903		Clip headrest		2
7	:::40/903119		Mando adjuster		1
8	:::40/903121		Pasador tension		1
9	::40/910710		Almohadilla seat, cloth		1
10	:::40/910711		Tapa seat base,cloth		1
10A	:::40/903132		Clip		0
12	::40/910506		Bastidor seat base		1
12A	:::40/910445		Kit muelle 2 lever height rise		1
12B	::40/910446		Mango squab		1
12C	::40/910447		Muelle squab handle		1
12D	::40/910448		Arandela elástica height adjuster		1
12E	::40/910141		Clip black cushion frame		1
12F	::40/910142		Mango height adjustment front		1
12G	::40/910143		Mango height adjustment rear		1
12H	::40/910144		Regulador height		1
12J	::40/910145		Regulador height rear		1
13	:::40/910404		Mango grip front		1
13	:::40/910405		Mango grip rear		1
14	:::40/903108		Tapa side plate		2
15	::40/903109		Tapa slave right hand sideplate		1
16	:::40/903110		Tapa upper left hand sideplate		1
17	:::40/910406		Mango grip, squab recline		1
18	:::40/903112		Placa cushion frame back		1
20	::40/910707		Kit -suspension unit		1
20A	:::40/906906		Kit buje bolt		1
21	:::40/910140		Muelle		2
21A	:::40/903102		Muelle tension		2
22	:::40/910298		Amortiguador Seat		1
22A	:::40/906905		Casquillo shock absorber		2
23	:::40/910706		Mando ,suspension adjust		1
24	:::40/910708		Soporte support,handwheel		1
26	::40/905204		Kit fuelle		1
27	:::40/903116		Kit bellow fixings		1
28	::40/910410		Corredera seat, right hand		1
28A	::40/905207		Tornillo *Slide to seat*		4
28A	::1315/0305Z		Tornillo Hexagon M8 x 20mm long *Slide to pedestal*		4
28A	::1391/3305Z		Tornillo de cierre		4
29	::40/910409		Corredera left hand *Part of item 28*		1
30	::40/910411		Mango slide		1
31	::40/903125		Clip slide rail		4
32	:40/910412		Pedestal assembly		1

32A	::814/10156		Muelle		1
32B	::40/910413		Kit tuerca-tornillo pedestal swivel		1
32C	::40/910414		Mango assembly		1
32D	::40/910415		Mango grip		1
32E	::40/911175		Arandela thrust, in pedestal base		1
34	1315/3412Z		Tornillo		4
35	1417/0013Z		Arandela lock ,7/16"		4
36	826/01105		Tuerca rivet,M10 open ended		4
36A	332/A1009		PIEZA DISTANCIADOR inner seat mounting		4
36B	823/10441		Espaciador outer seat mounting		4
37	:40/904700		Kit cinturón 50" long *Included with seat assy*		1
38	:40/910416		Kit reposabrazos pair *Included with seat assembly*		1
39	40/910417		Kit reposacabezas restraint *Not included with seat assy*		1

Catálogo de productos \ CONSTRUCTION \ REST OF WORLD \ CONSTRUCTION / INDUSTRIAL \ BACKHOE LOADER 3CX,4CX,214,215,217 \ 3CX 00960000-00989999,01297000-01297999,01327000-01349999,01616000-01625999,01705500-01709999 84hp 9812/0010 \ B CARROCERIA, CABINA SECCION CARGADORA \ B02 CABINA

9812/0010 B2-7-21 ASIENTO, SUSPENSIÓN, 5000 LB, 0

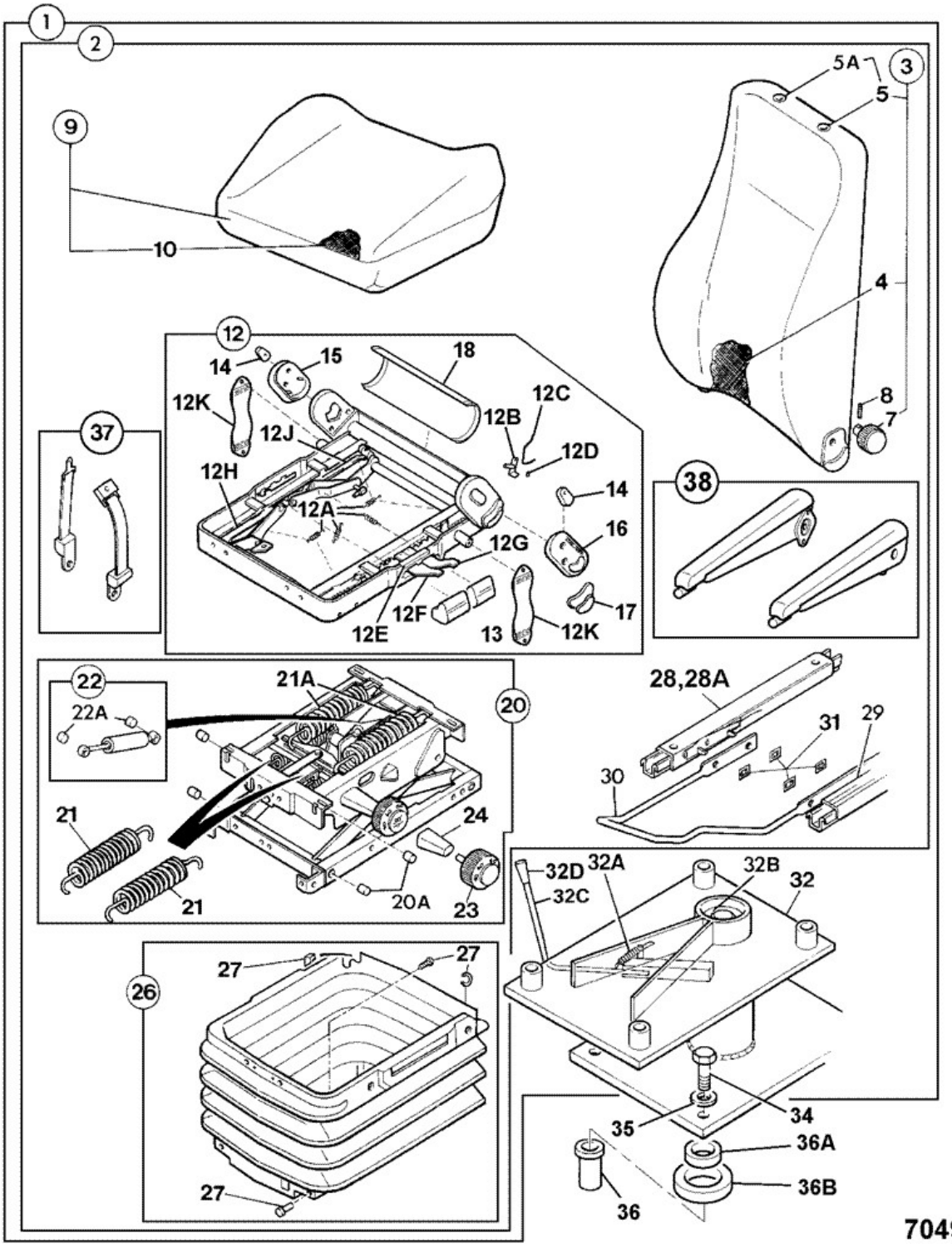

Elemento	Pieza Nº	Cambiar número	Descripción	Código de uso	CANT.
1	128/13562		Asiento assy,suspen. cloth 5000lb *Cloth*		1

1	128/13566		Asiento assy,suspen. vinyl 5000lb *Vinyl*		1
2	:40/910712		Asiento 5000lb suspension cloth		1
2	:40/910723		Asiento 5000lb suspension vinyl		1
3	::40/910713		Almohadilla squab assy,cloth		1
3	::40/910734		Almohadilla squab assembly,vinyl		1
4	:::40/910714		Tapa squab assy,cloth		1
4	:::40/910397		Tapa Seat, vinyl		1
4A	:::40/903132		Clip		0
5	:::40/903120		Tapón headrest		2
5A	:::40/906903		Clip headrest		2
7	:::40/903119		Mando adjuster		1
8	:::40/903121		Pasador tension		1
9	::40/910710		Almohadilla seat, cloth		1
9	::40/910518		Almohadilla seat assy Vinyl high back		1
10	:::40/910711		Tapa seat base,cloth		1
10	:::40/910402		Tapa seat cushion, vinyl		1
10A	:::40/903132		Clip		0
12	::40/910506		Bastidor seat base		1
12A	:::40/910445		Kit muelle 2 lever height rise		1
12B	:::40/910446		Mango squab		1
12C	:::40/910447		Muelle squab handle		1
12D	:::40/910448		Arandela elástica height adjuster		1
12E	:::40/910141		Clip black cushion frame		1
12F	:::40/910142		Mango height adjustment front		1
12G	:::40/910143		Mango height adjustment rear		1
12H	:::40/910144		Regulador height		1
12J	:::40/910145		Regulador height rear		1
12K	:::40/910146		Correa suspension unit		2
13	:::40/910404		Mango grip front		1
13	:::40/910405		Mango grip rear		1
14	:::40/903108		Tapa side plate		2
15	:::40/903109		Tapa slave right hand sideplate		1
16	:::40/903110		Tapa upper left hand sideplate		1
17	:::40/910406		Mango grip, squab recline		1
18	:::40/903112		Placa cushion frame back		1
20	::40/910715		Kit -suspension unit 5000lb		1
20A	:::40/910716		Kit bush + bolt 5000lb suspension		1
21	:::40/910140		Muelle		2
21A	:::40/903102		Muelle tension		2
22	:::40/906902		Amortiguador		1
22A	:::40/906905		Casquillo shock absorber		2
22B	:40/911070		Tornillo *not supplied with item 22*		2
22C	:40/905208		Tuerca *not supplied with item 22*		2
23	:::40/910706		Mando ,suspension adjust		1
24	:::40/910708		Soporte support,handwheel		1
26	::40/905204		Kit fuelle		1
27	:::40/903116		Kit bellow fixings		1
28	::40/910410		Corredera seat, right hand		1
28A	::40/905207		Tornillo		4

			Slide to seat		
28A	::1315/0305Z		Tornillo Hexagon M8 x 20mm long *Slide to pedestal*		4
28A	::1391/3305Z		Tornillo de cierre		4
29	::40/910409		Corredera left hand *Part of item 28*		1
30	::40/910411		Mango slide		1
31	::40/903125		Clip slide rail		4
32	:40/910412		Pedestal assembly		1
32A	::814/10156		Muelle		1
32B	::40/910413		Kit tuerca-tornillo pedestal swivel		1
32C	::40/910414		Mango assembly		1
32D	::40/910415		Mango grip		1
32E	::40/911175		Arandela thrust, in pedestal base		1
34	1315/3412Z		Tornillo		4
35	1417/0013Z		Arandela lock ,7/16"		4
36	826/01105		Tuerca rivet,M10 open ended		4
36A	332/A1009		PIEZA DISTANCIADOR inner seat mounting		4
36B	823/10441		Espaciador outer seat mounting		4
37	:40/904700		Kit cinturón 50" long *Included with seat assy*		1
38	:40/910416		Kit reposabrazos pair *Included with seat assembly*		1
39	40/910417		Kit reposacabezas restraint *Not included with seat assy*		1

Catálogo de productos \ CONSTRUCTION \ REST OF WORLD \ CONSTRUCTION / INDUSTRIAL \ BACKHOE LOADER 3CX,4CX,214,215,217 \ 3CX 00960000-00989999,01297000-01297999,01327000-01349999,01616000-01625999,01705500-01709999 84hp 9812/0010 \ B CARROCERIA, CABINA SECCION CARGADORA \ B02 CABINA

9812/0010 B2-7-41 ASIENTO SUSP NEUM\, 0, 0

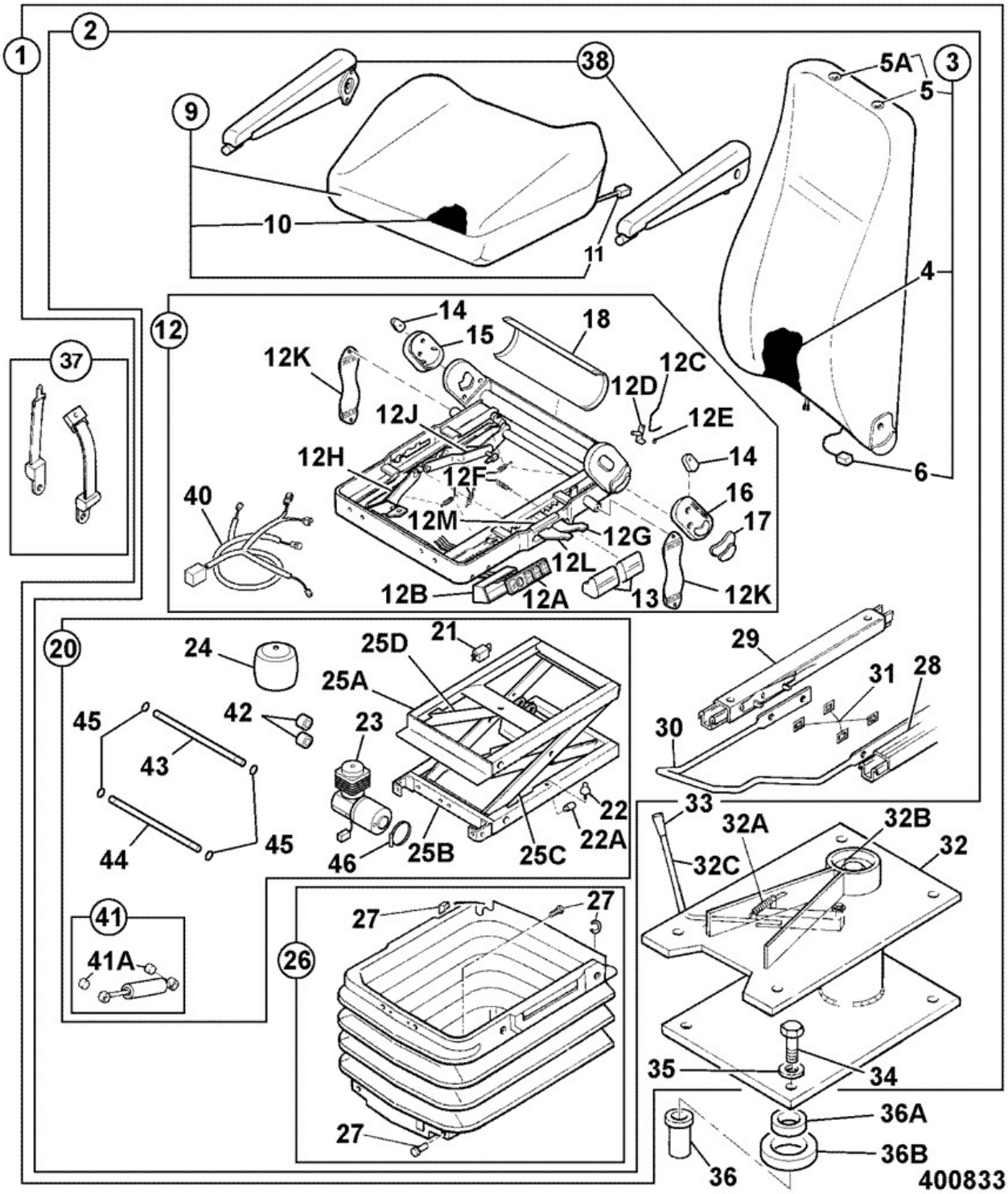

Elemento	Pieza Nº	Cambiar número	Descripción	Código de uso	CANT.
1	128/13563		Asiento assy, air suspen. heated 5000lb cloth		1

2	:40/910761		Asiento assy.air suspn.cloth heated,2"belt,armrst		1
3	::40/910762		Kit rear squab assembly		1
4	:::40/910714		Tapa squab assy,cloth		1
4A	:::40/903132		Clip		0
5	:::40/903120		Tapón headrest		2
5A	:::40/910449		Clip headrest		2
6	:::40/903302		Elemento heater rear squab		1
9	::40/910764		Almohadilla seat assembly		1
10	:::40/910711		Tapa seat base,cloth		1
10A	:::40/903132		Clip		0
11	:::40/903304		Elemento heater seat cushion		1
12	::40/910442		Bastidor assembly		1
12A	:::40/910450		Interruptor air control Heater control		1
12B	:::40/910456		Tapa air lumbar switch		1
12C	:::40/910447		Muelle squab handle		1
12D	:::40/910446		Mango squab		1
12E	:::40/910448		Arandela elástica height adjuster		1
12F	:::40/910445		Kit muelle 2 lever height rise		1
12G	:::40/910143		Mango height adjustment rear		1
12H	:::40/910784		Regulador height,front		1
12J	:::40/910144		Regulador height		1
12K	:::40/910146		Correa suspension unit		2
12L	:::40/910142		Mango height adjustment front		1
12M	:::40/910141		Clip black cushion frame		1
13	:::40/910404		Mango grip front		1
13	:::40/910405		Mango grip rear		1
14	:::40/903108		Tapa side plate		2
15	::40/903109		Tapa slave right hand sideplate		1
16	:::40/903110		Tapa upper left hand sideplate		1
17	:::40/910406		Mango grip, squab recline		1
18	:::40/903112		Placa cushion frame back		1
20	::40/910451		Bastidor suspension assembly		1
21	:::40/910454		Relé suspension		1
22	:::40/910452		Amortiguador suspension rubber		2
22A	:::40/910453		Amortiguador suspension rubber		2
23	:::40/910335		Compresor air seat		1
24	:::40/910444		Kit muelle neumático		1
24A	:::40/910860		Codo air sack		1
24B	:::332/C2221		Tuerca plastic		1
25A	****		Pieza no reparable		1
25B	****		Pieza no reparable		1
25C	****		Pieza no reparable		1
25D	****		Pieza no reparable		1
26	::40/905204		Kit fuelle		1
27	:::40/903116		Kit bellow fixings		1
28	::40/910409		Corredera left hand		1
29	::40/910410		Corredera seat, right hand		1
30	::40/910411		Mango slide		1
31	::40/903125		Clip slide rail		1
32	:40/910455		Pedestal		1
32A	::814/10156		Muelle		1

32B	::40/910413		Kit tuerca-tornillo pedestal swivel		1
32C	::40/910414		Mango assembly		1
33	::40/910415		Mango grip		1
34	1315/3412Z		Tornillo		4
35	1417/0013Z		Arandela lock ,7/16"		4
36	826/01105		Tuerca rivet,M10 open ended		4
36A	332/A1009		PIEZA DISTANCIADOR inner seat mounting		4
36B	823/10441		Espaciador outer seat mounting		4
37	::40/904700		Kit cinturón 50" long		1
38	::40/910416		Kit reposabrazos pair		1
39	40/910417		Kit reposacabezas restraint		1
40	:::40/910741		Cableado seat		1
41	:::40/906902		Amortiguador		1
41A	::::40/906905		Casquillo shock absorber		2
41B	:40/911070		Tornillo *not supplied with item 41*		2
41C	:40/905208		Tuerca *not supplied with item 41*		2
42	:::40/910763		Casquillo roller		4
43	:::40/910765		Eje upper		1
44	:::40/910766		Eje lower		1
45	:::40/910767		Arandela elástica spindle		4
46	:::40/910768		Clip jubilee		1
60	40/911139		Kit air hose repair kit		1

Catálogo de productos \ CONSTRUCTION \ REST OF WORLD \ CONSTRUCTION / INDUSTRIAL \ BACKHOE LOADER 3CX,4CX,214,215,217 \ 3CX 00960000-00989999,01297000-01297999,01327000-01349999,01616000-01625999,01705500-01709999 84hp 9812/0010 \ B CARROCERIA, CABINA SECCION CARGADORA \ B02 CABINA

9812/0010 B2-8-1 LIMPIA/LAVA, CABINA ABIERTA, 0

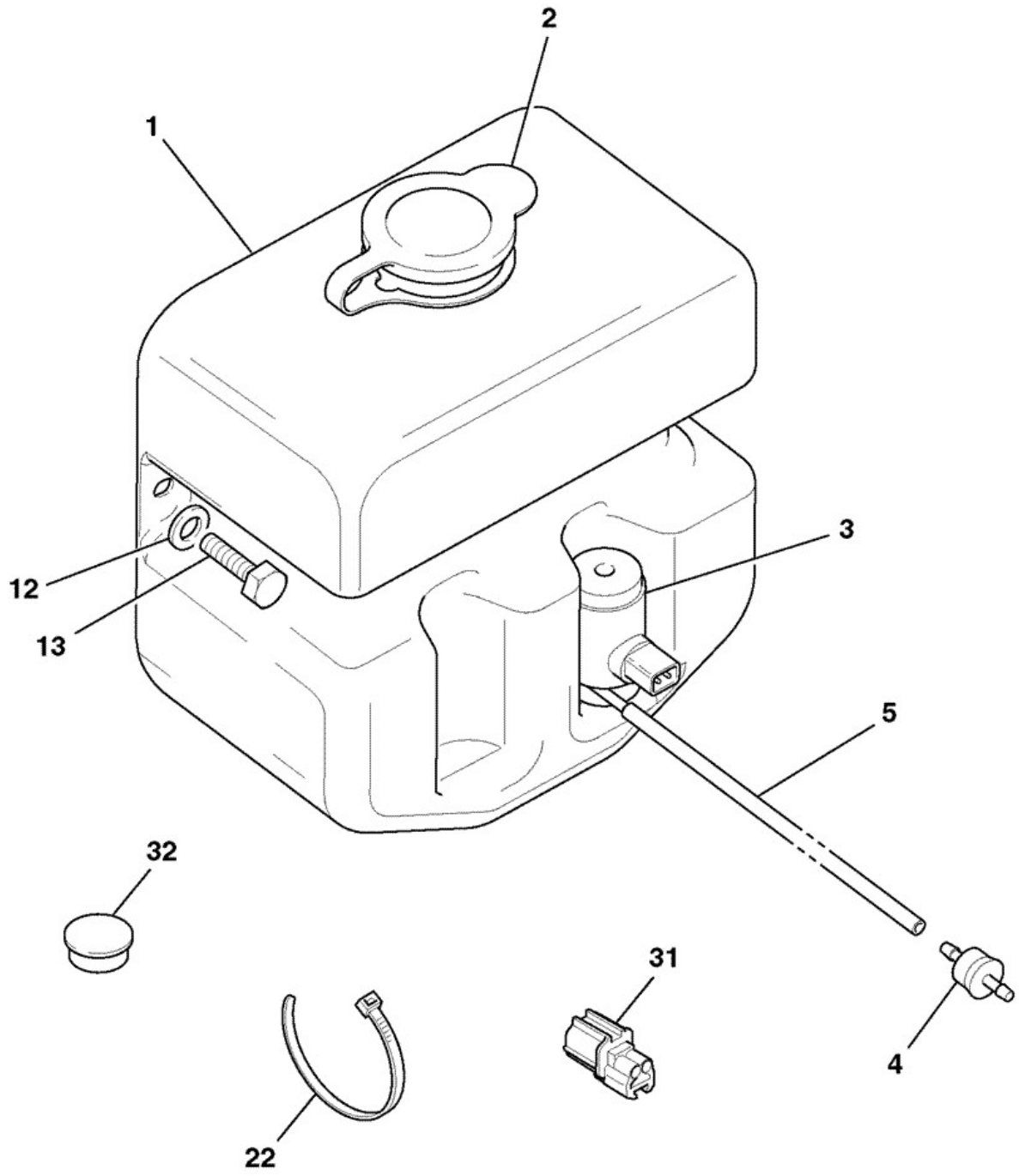

774811

Elemento	Pieza Nº	Cambiar número	Descripción	Código de uso	CANT.
1	331/46930		Depósito front screen wash *Canopy build single pump*		1

2	717/06031		Tapa washer bottle		1
3	714/20600		Bomba twin motor 12 volt		1
4	534/09703		Válvula non-return		1
5	647/02000		Tubo		0
12	1420/0007Z	<M0963678	Arandela plain M8		2
13	1315/0307Z	<M0963678	Tornillo Hexagon M8 X 25		2
22	826/01144		Abrazadera cable 200mm long		1
31	715/06200		Tapón dummy, 2 way sealed		1
32	835/10086		Tapón blanking black,9mm		1

Catálogo de productos \ CONSTRUCTION \ REST OF WORLD \ CONSTRUCTION / INDUSTRIAL \ BACKHOE LOADER 3CX,4CX,214,215,217 \ 3CX 00960000-00989999,01297000-01297999,01327000-01349999,01616000-01625999,01705500-01709999 84hp 9812/0010 \ B CARROCERIA, CABINA SECCION CARGADORA \ B02 CABINA

9812/0010 B2-8-2 LIMPIA/LAVA, PARABRISAS/LUNA TR, 0

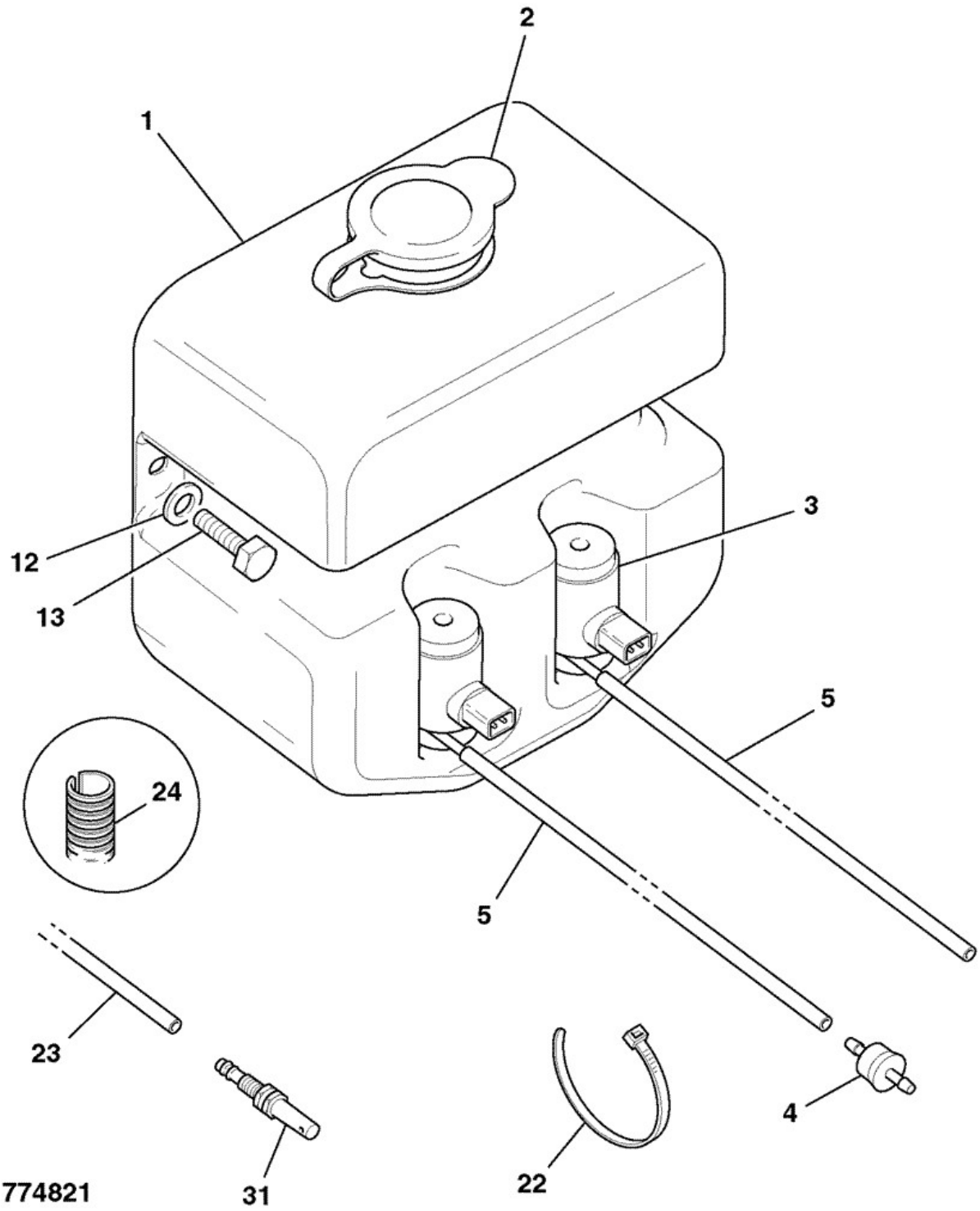

Elemento	Pieza Nº	Cambiar número	Descripción	Código de uso	CANT.
1	331/46268		Depósito screenwash		1

2	717/06031		Tapa washer bottle		1
3	714/20600		Bomba twin motor 12 volt		2
4	534/09703		Válvula non-return		2
5	647/02027		Tubo 620mm long *620mm long*		2
5	647/02000		Tubo *6500mm roll*		0
12	1420/0007Z	<M0963678	Arandela plain M8		2
13	1315/0307Z	<M0963678	Tornillo Hexagon M8 X 25		2
22	826/01144		Abrazadera cable 200mm long		1
23	647/02000		Tubo		0
24	331/20304		Tubo split conduit		1
31	255/27003		Chorro Screen washer		1

Catálogo de productos \ CONSTRUCTION \ REST OF WORLD \ CONSTRUCTION / INDUSTRIAL \ BACKHOE LOADER 3CX,4CX,214,215,217 \ 3CX 00960000-00989999,01297000-01297999,01327000-01349999,01616000-01625999,01705500-01709999 84hp 9812/0010 \ B CARROCERIA, CABINA SECCION CARGADORA \ B02 CABINA

9812/0010 B2-8-3 LIMPIA/LAVA, CABINA ABIERTA, 0

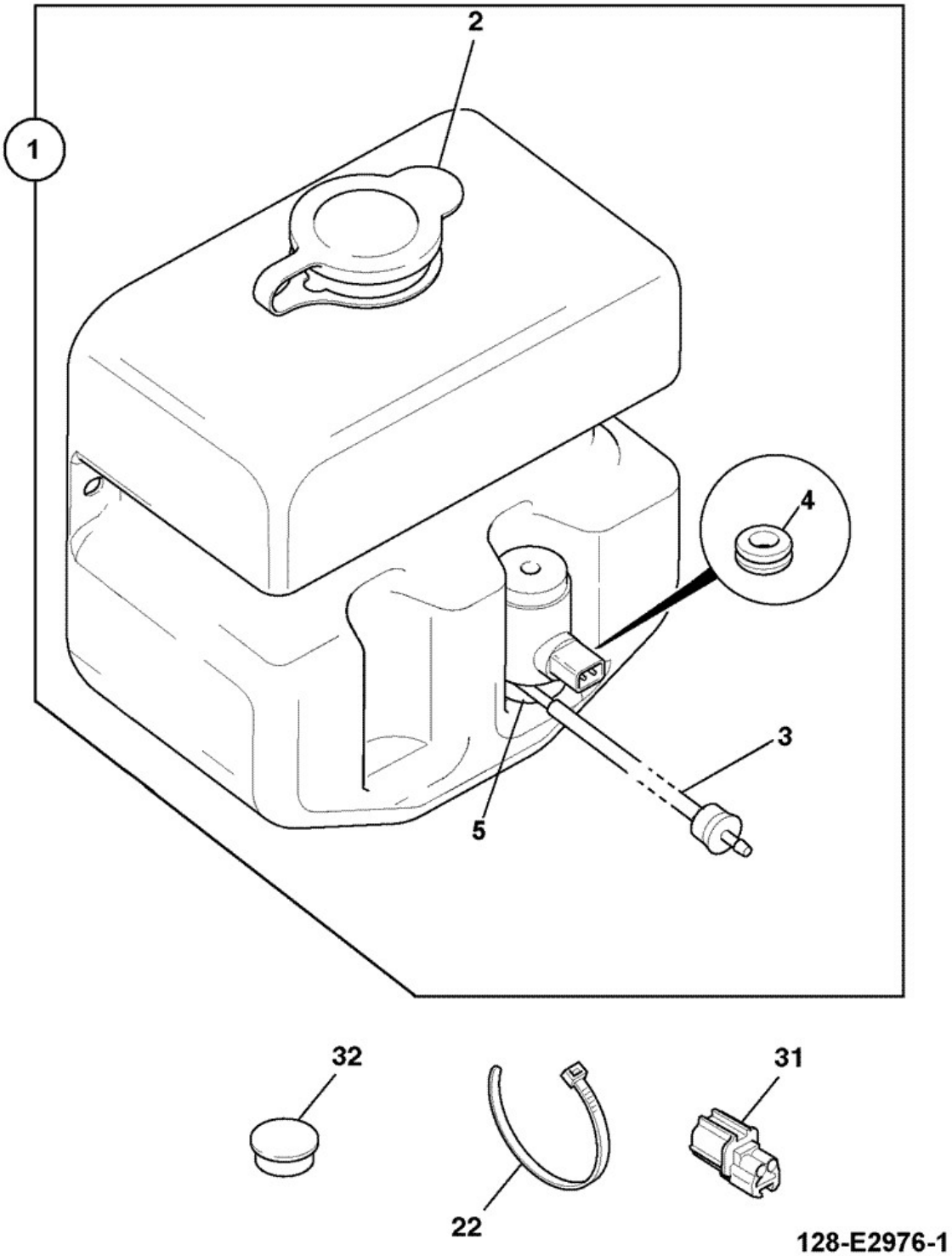

Elemento	Pieza Nº	Cambiar número	Descripción	Código de uso	CANT.
1	****		*128/E2976*		1

2	:332/G1893		Cap blue		1
3	:332/G1894		Tube PVC 600mm		1
4	:332/G1896		Grommet		1
5	:332/G1897		Motor pump		1
22	826/01144		Abrazadera cable 200mm long		1
31	715/06200		Tapón dummy, 2 way sealed		1
32	835/10086		Tapón blanking black,9mm		1

Catálogo de productos \ CONSTRUCTION \ REST OF WORLD \ CONSTRUCTION / INDUSTRIAL \ BACKHOE LOADER 3CX,4CX,214,215,217 \ 3CX 00960000-00989999,01297000-01297999,01327000-01349999,01616000-01625999,01705500-01709999 84hp 9812/0010 \ B CARROCERIA, CABINA SECCION CARGADORA \ B02 CABINA

9812/0010 B2-8-4 LIMPIA/LAVA, PARABRISAS/LUNA TR, 0

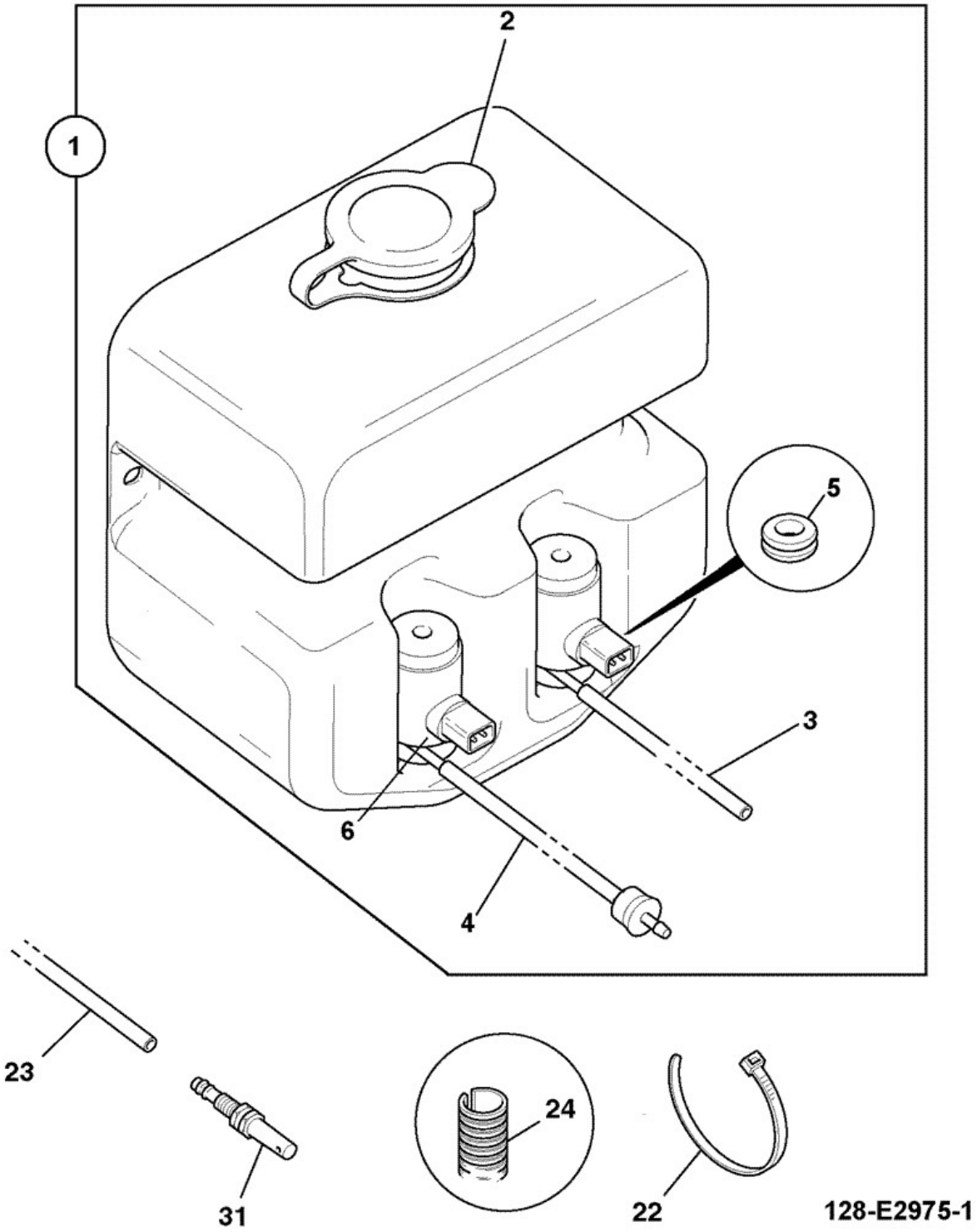

Elemento	Pieza Nº	Cambiar número	Descripción	Código de uso	CANT.
1	128/E2975		BOTELLA screen washer bottle cab		1

2	:332/G1893		Cap blue		1
3	:332/G1894		Tube PVC 600mm		1
4	:332/G1895		Tube PVC 600mm with non return valve		1
5	:332/G1896		Grommet		2
6	:332/G1897		Motor pump		2
22	826/01144		Abrazadera cable 200mm long		1
23	647/02000		Tubo		1
24	331/20304		Tubo split conduit		1
31	255/27003		Chorro Screen washer		1

Catálogo de productos \ CONSTRUCTION \ REST OF WORLD \ CONSTRUCTION / INDUSTRIAL \ BACKHOE LOADER 3CX,4CX,214,215,217 \ 3CX 00960000-00989999,01297000-01297999,01327000-01349999,01616000-01625999,01705500-01709999 84hp 9812/0010 \ B CARROCERIA, CABINA SECCION CARGADORA \ B02 CABINA

9812/0010 B2-9-2 VISERA SOLAR ABAT\, 0, 0

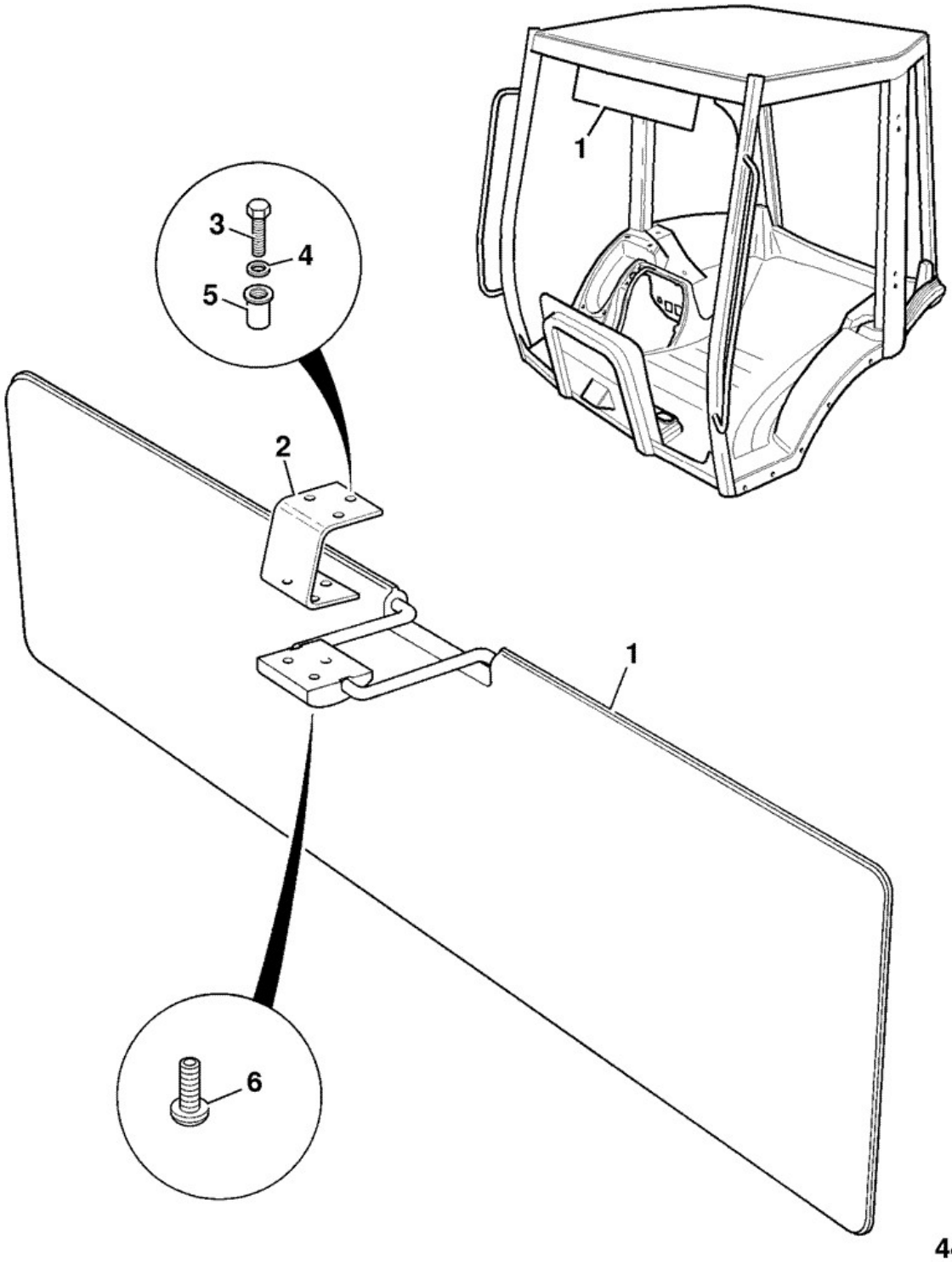

Elemento	Pieza Nº	Cambiar número	Descripción	Código de uso	CANT.
1	123/03384		Cortina sun visor (flap type)		1

2	331/46852		Soporte sunvisor		1
3	1315/0205D		Tornillo fijación M6 x 20mm long		3
4	1420/0006D		ARANDELA M6 plain		3
5	826/01810		Tuerca rivet, M6 open end for 5.5 to 8mm plate		3
6	826/01521		Tornillo M6 X 20		3

Catálogo de productos \ CONSTRUCTION \ REST OF WORLD \ CONSTRUCTION / INDUSTRIAL \ BACKHOE LOADER 3CX,4CX,214,215,217 \ 3CX 00960000-00989999,01297000-01297999,01327000-01349999,01616000-01625999,01705500-01709999 84hp 9812/0010 \ B CARROCERIA, CABINA SECCION CARGADORA \ B02 CABINA

9812/0010 B2-10-2 SOPORTES CABINA, 0, 0

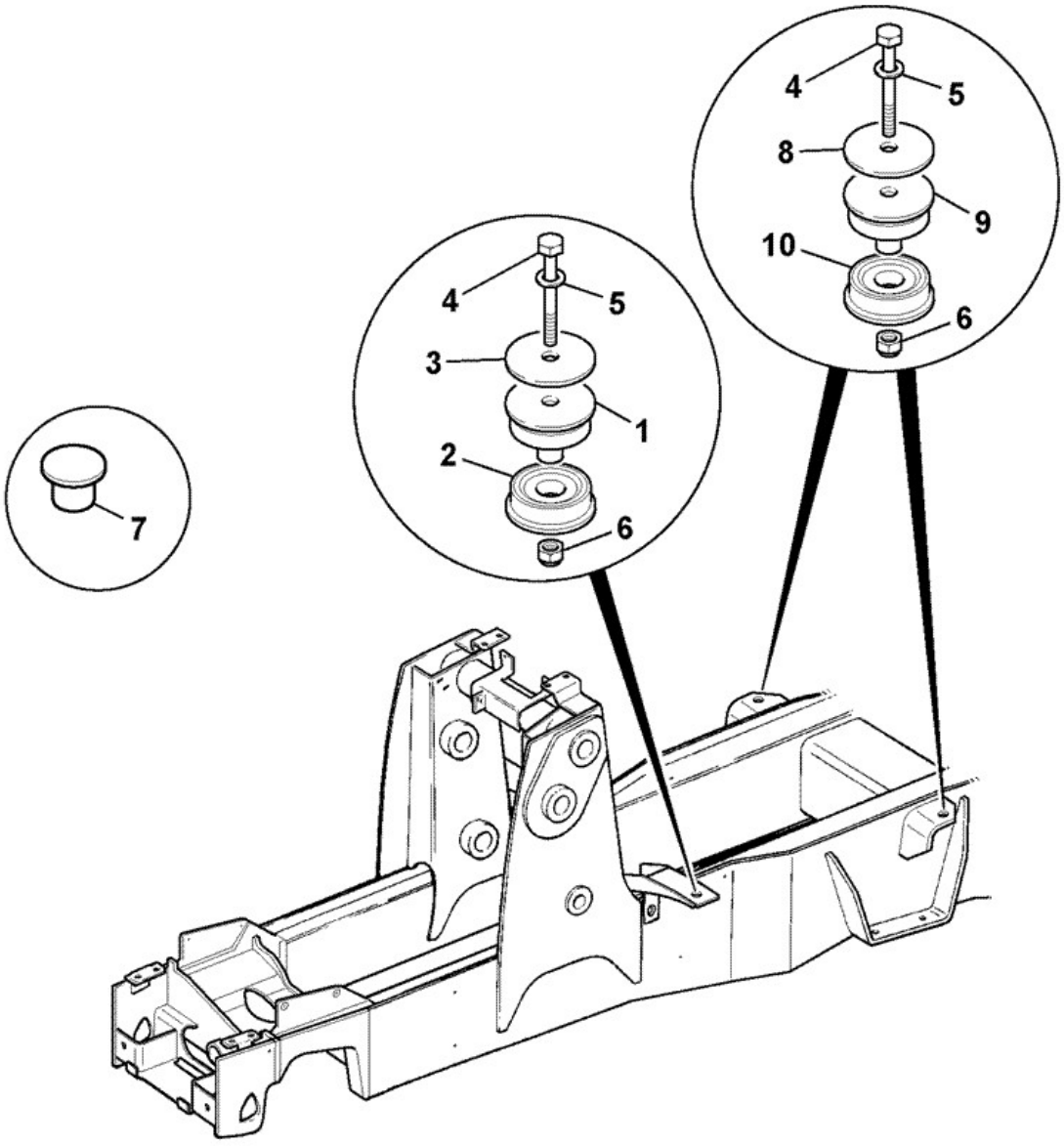

703131

Elemento	Pieza Nº	Cambiar número	Descripción	Código de uso	CANT.
1	331/34392	<M0966912	Montaje cab upper blue		2

1	331/18441	<M0980229	Montaje cab upper		2
1	331/34392		Montaje cab upper blue		2
2	331/18442		Montaje cab lower		2
3	****		*not fitted*		2
4	1315/3721Z	<M0966912	Tornillo M16 x 110		4
4	1315/3722Z	<M0980229	Tornillo M16 x 120		4
4	1315/3721Z	<M1341245	Tornillo M16 x 110		4
4	1315/3722Z		Tornillo M16 x 120		4
5	1420/0011Z	<M1341245	Arandela M16 plain		4
5	1420/0011Z		Arandela M16 plain *front mounts only*		2
6	1370/0603Z		Tuerca M16		4
7	331/24813		Tapón *Plug Holes in Floor*		2
8	****	<M1341245	*not fitted*		2
8	332/D4249		Placa compression		2
9	331/34393	<M0966912	Montaje cab upper green		2
9	331/25995	<M0980229	Montaje cab upper RED		2
9	331/34393		Montaje cab upper green		2
10	331/25996		Montaje cab lower red		2
11	335/05455		Montaje Gearbox, WA *Synchro Shuttle*		1
11	335/05456		Soporte transmission mount *Auto Shift & Power Shift*		1
12	1315/3717Z		Tornillo M16 x 75mm *gearbox to item 11*		2
13	1370/0603Z		Tuerca M16 *fit to item 12*		2
14	1420/0011Z		Arandela M16 plain *fit to item 13*		2

9812/0010 B2-10-99 SEATBELT, , 3" OPTION

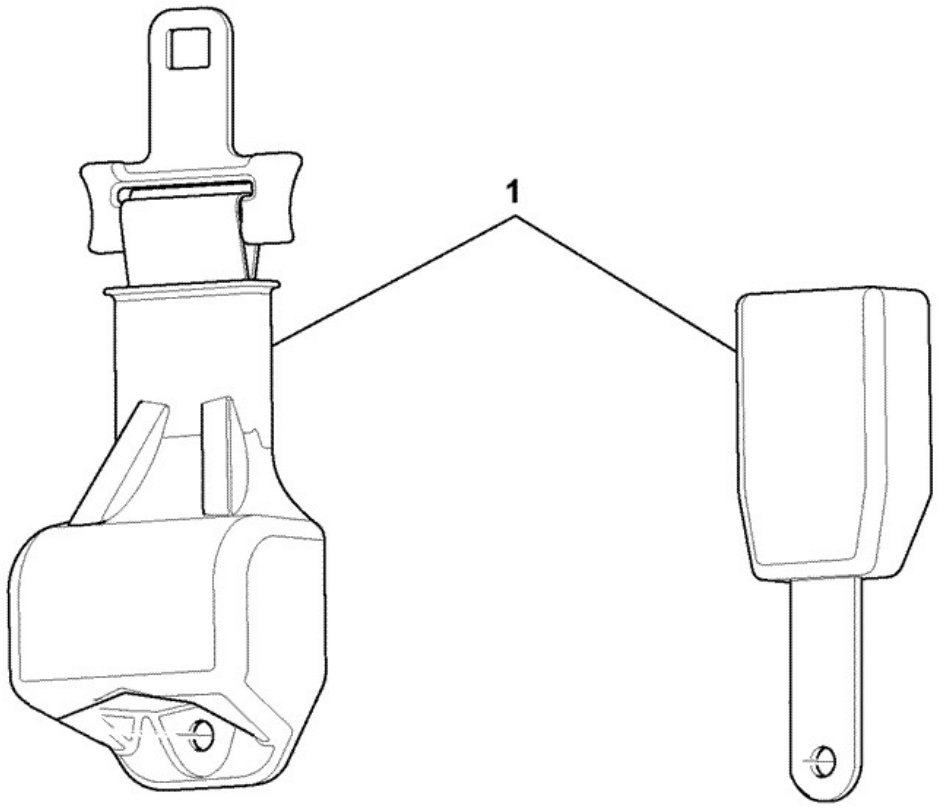

818911

Elemento	Pieza Nº	Cambiar número	Descripción	Código de uso	CANT.
1	332/F5230		JGO CINTURON SEGURID 3" wide, 52" long		1

9812/0010 B2-11-2 ESPEJO, EXTERIOR E INTERIOR, 0

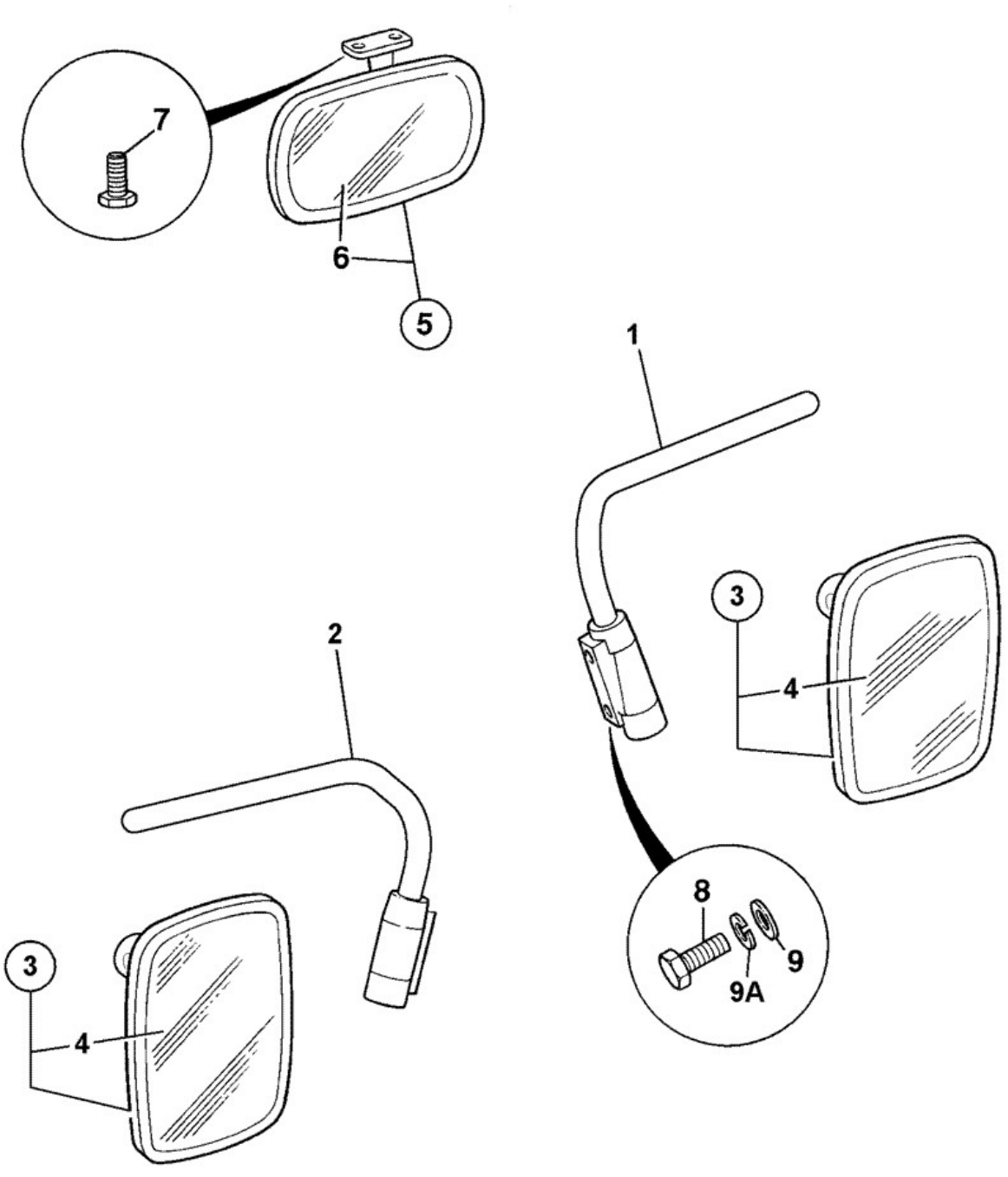

393001

Elemento	Pieza Nº	Cambiar número	Descripción	Código de uso	CANT.
A	128/13596		Espejo assembly R.H. *Items 1 & 3*		1

B	128/13595		Espejo assembly L.H. *Items 2 & 3*		1
1	331/40307		Barra right hand,mirror		1
2	331/40306		Barra left hand,mirror		1
3	123/04970		Espejo exterior head assy		2
4	:123/04974		Cristal convex mirror		1
5	123/04971		Espejo interior assembly		1
6	:123/04975		Cristal interior mirror		1
7	826/01524		Tornillo selftap		2
8	826/01591		Tornillo		4
9	823/00554		Arandela plain		4
9A	823/00597		Arandela spring		4

Catálogo de productos \ CONSTRUCTION \ REST OF WORLD \ CONSTRUCTION / INDUSTRIAL \ BACKHOE LOADER 3CX,4CX,214,215,217 \ 3CX 00960000-00989999,01297000-01297999,01327000-01349999,01616000-01625999,01705500-01709999 84hp 9812/0010 \ B CARROCERIA, CABINA SECCION CARGADORA \ B02 CABINA

9812/0010 B2-12-2 CAB DELANTE JUNTA, 0, 0

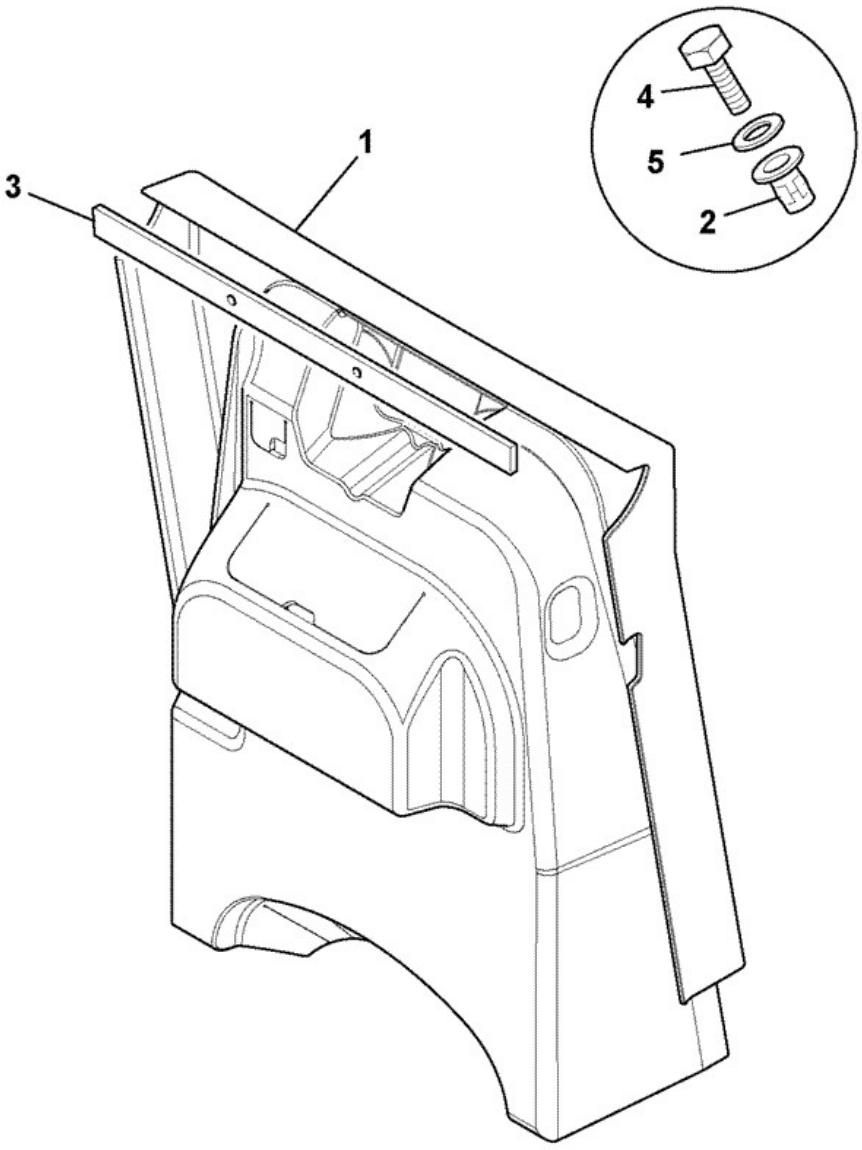

412580

Elemento	Pieza Nº	Cambiar número	Descripción	Código de uso	CANT.
1	331/39775	Superseded	Tapa brake cylinders 3CX cab		1

1	331/47824		Tapa brake cylinders		1
2	826/01101		Tuerca rivet,M6 open ended for 3 to 5.5mm plt		7
3	331/12683		Regleta seal retainer *no longer fitted*		1
4	1315/0207Z		Tornillo M6 x 25mm long		7
5	1412/0001Z		Arandela		7
6	123/05247		Clip cable		3

9812/0010 B2-13-2 CAB TRAS DOSEL, VER\ DESPL LATERAL, 0

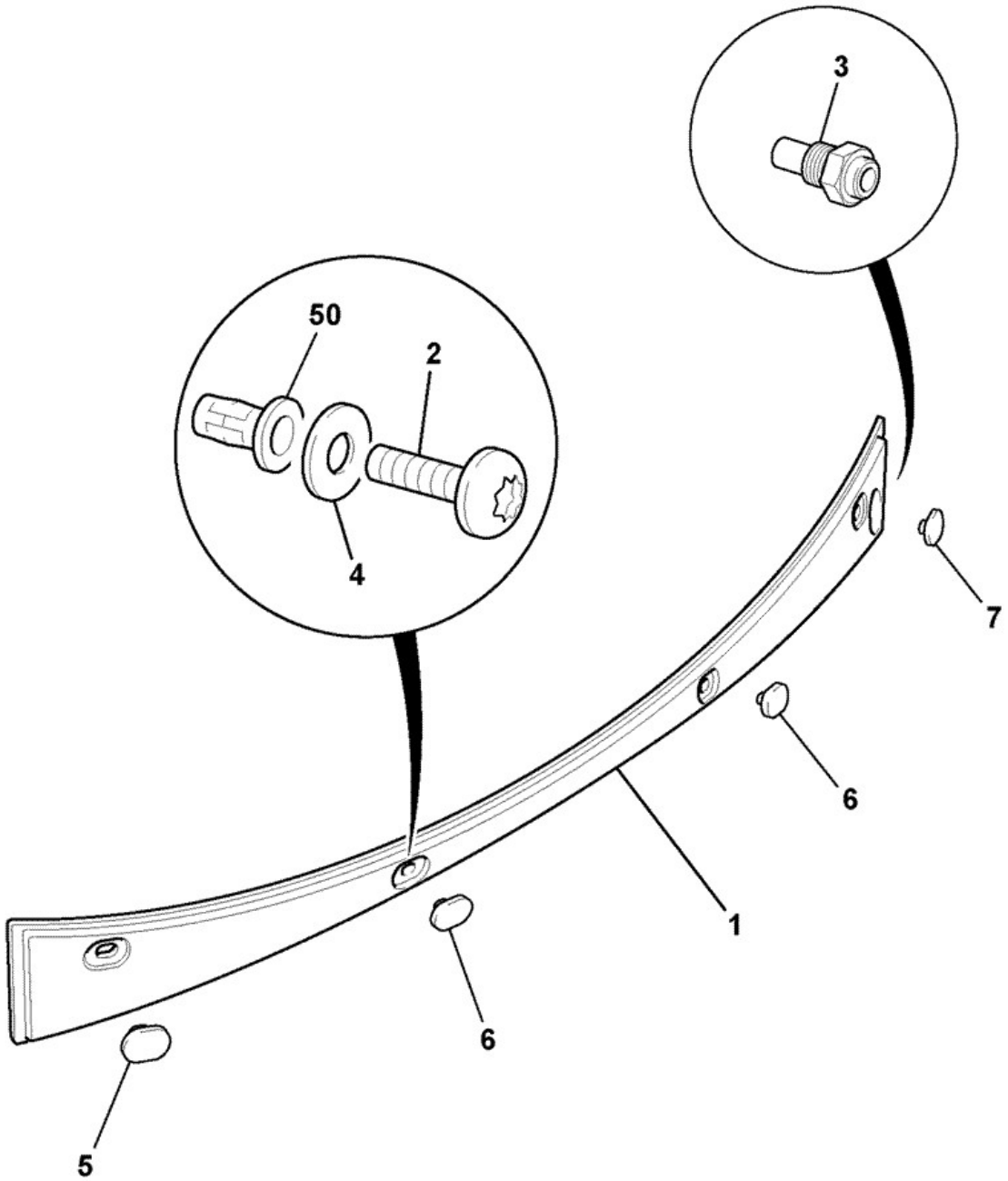

392941

Elemento	Pieza Nº	Cambiar número	Descripción	Código de uso	CANT.

1B	346/00114		Tapa rear valance, black sideshift		1
1R	346/00115		Tapa rear valance, red sideshift		1
1Y	346/00058		Tapa rear valance, yellow sideshift		1
2	826/01768		Tornillo M6x25mm		4
3	715/04300		Casquillo Beacon		1
4	823/00516		Arandela nylon M6		4
5B	346/00119		Tapón L.H. black		1
5R	346/00122		Tapón L.H. red		1
5Y	346/00116		Tapón L.H. yellow		1
6B	346/00120		Tapón centre, black		2
6R	346/00123		Tapón centre, red		2
6Y	346/00117		Tapón centre, yellow		2
7B	346/00121		Tapón R.H. black		1
7R	346/00124		Tapa R.H. red		1
7Y	346/00118		Tapón R.H. yellow		1
50	826/01101		Tuerca rivet,M6 open ended for 3 to 5.5mm plt		4
51	926/13200		Regleta foam seal *fit between rear valance and rear fender*		0

9812/0010 B2-13-3 CAB TRAS DOSEL, VER\ DESPL LATERAL, 0

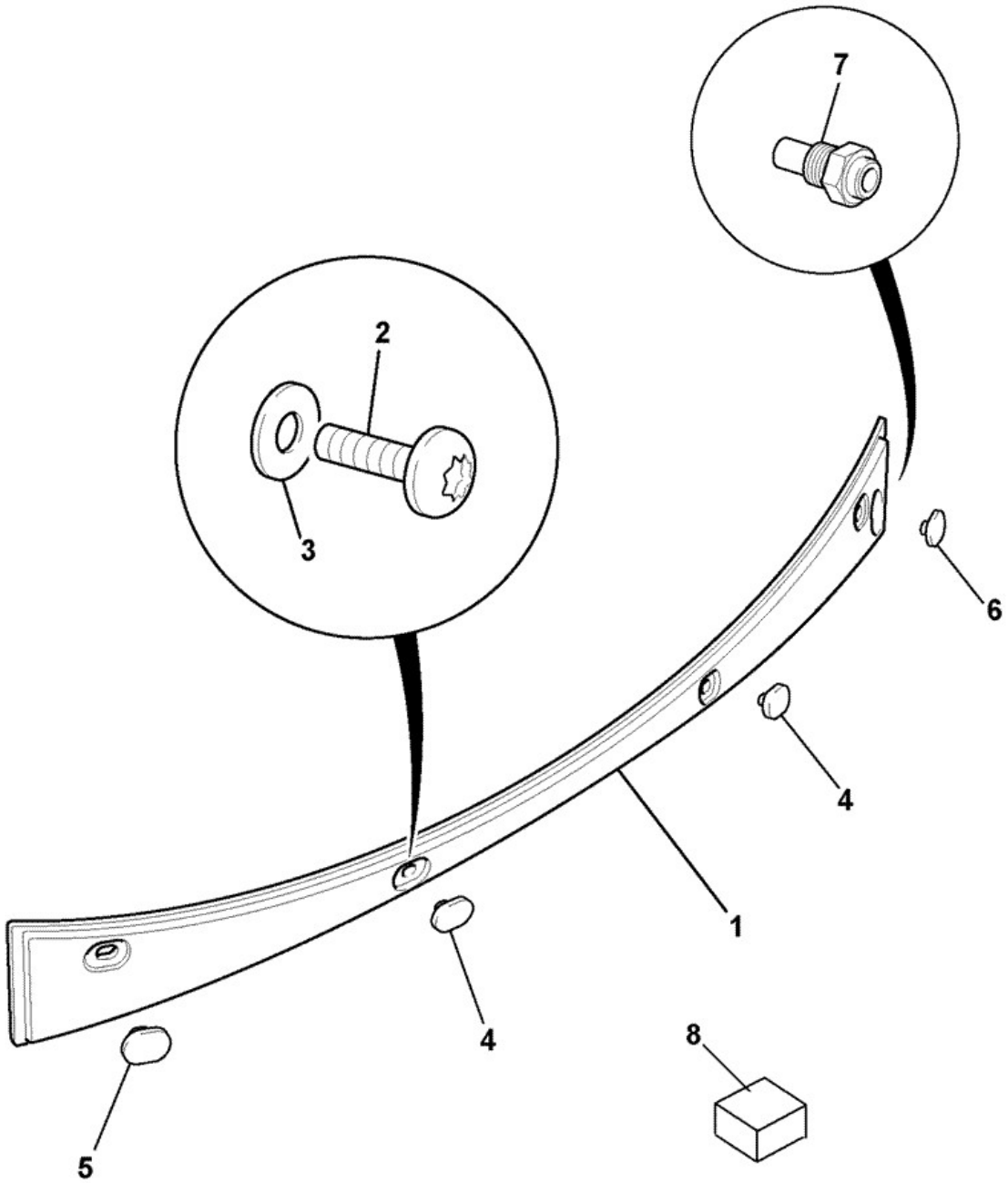

128-C9960-1

Elemento	Pieza Nº	Cambiar número	Descripción	Código de uso	CANT.

1	332/G0094		COVER rear valance, sideshift black, textured		1
1	346/00058		Tapa rear valance, yellow sideshift		1
2	826/01768		Tornillo M6x25mm		4
3	823/00516		Arandela nylon M6		4
4	332/G0111		PLUG centre black, textured		2
4	346/00117		Tapón centre, yellow		2
5	332/G0108		PLUG LH black, textured		1
5	346/00116		Tapón L.H. yellow		1
6	332/G0112		PLUG RH black, textured		1
6	346/00118		Tapón R.H. yellow		1
7	715/04300		Casquillo Beacon		1
8	926/13200		Regleta foam seal *2 pieces 40 x 30 x 20 required*		0
50	826/01101		Tuerca rivet,M6 open ended for 3 to 5.5mm plt		4

9812/0010 B2-13-10 CAB TRAS DOSEL, VER\ MONT\ CENTRAL, 0

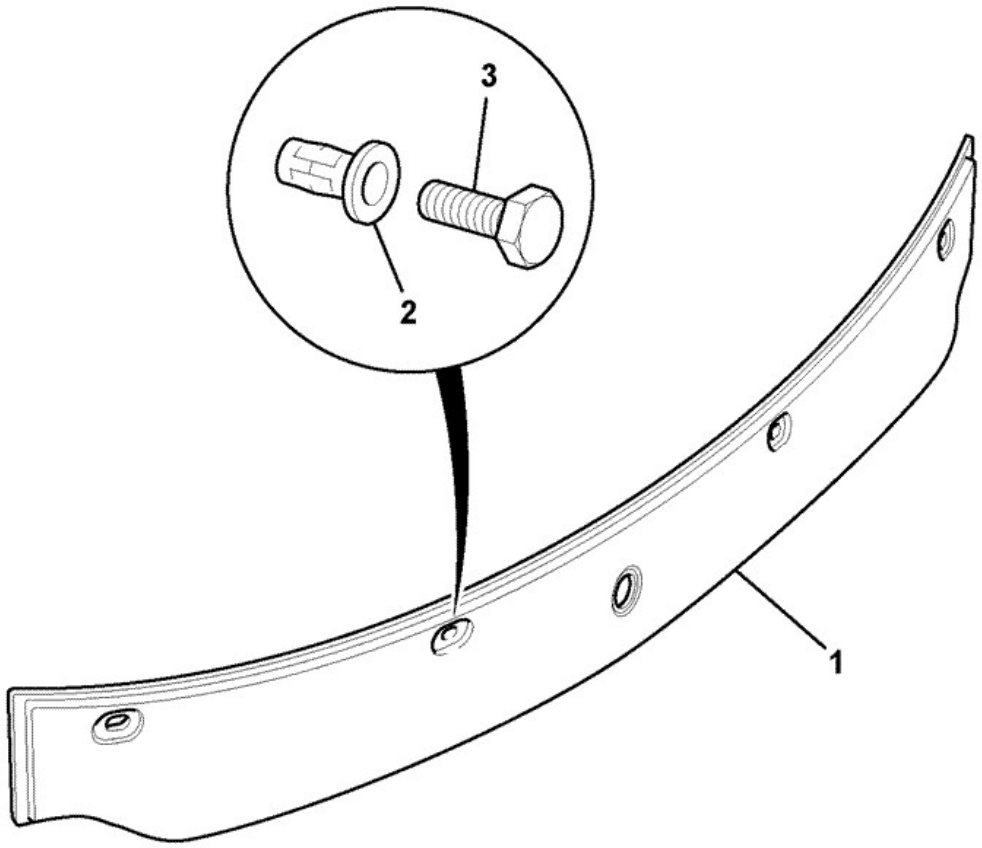

392930

Elemento	Pieza Nº	Cambiar número	Descripción	Código de uso	CANT.

1	331/33488		Tapa rear valance centremount, yellow *ROW*		1
1	331/33489		Tapa rear valance,black centremount *ROW*		1
1	331/31963		Tapa rear valance centremount, yellow *USA*		1
1	331/27640		Tapa rear valance black centremount *USA*		1
2	826/01101		Tuerca rivet,M6 open ended for 3 to 5.5mm plt		4
3	826/01768		Tornillo M6x25mm		4
51	926/13200		Regleta foam seal *fit between rear valance and rear fender*		0

Catálogo de productos \ CONSTRUCTION \ REST OF WORLD \ CONSTRUCTION / INDUSTRIAL \ BACKHOE LOADER 3CX,4CX,214,215,217 \ 3CX 00960000-00989999,01297000-01297999,01327000-01349999,01616000-01625999,01705500-01709999 84hp 9812/0010 \ B CARROCERIA, CABINA SECCION CARGADORA \ B02 CABINA

9812/0010 B2-14-4 TAPA,JCB,EXCAVADORA, MANDOS Y PORTAVASOS, 0

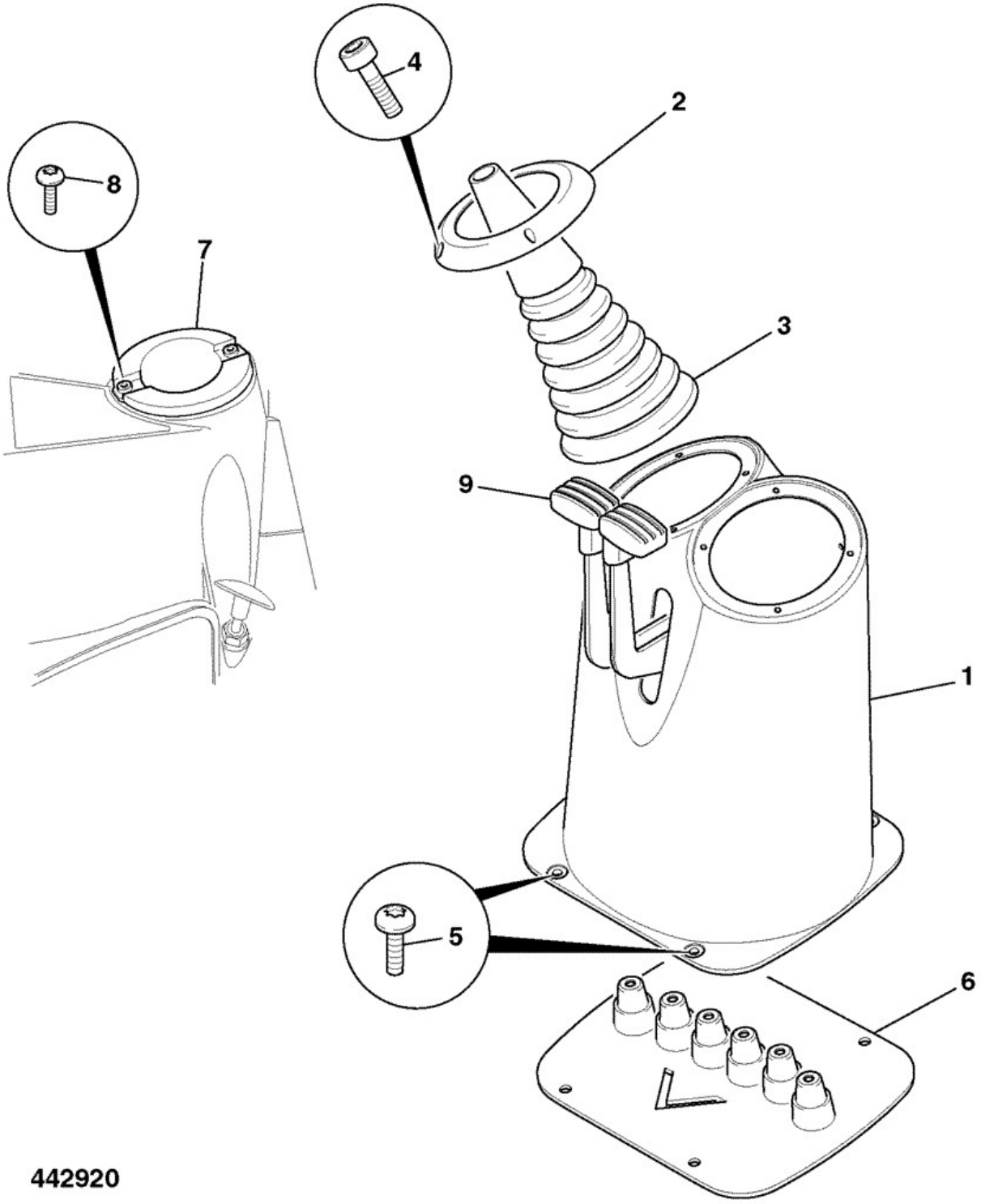

Elemento	Pieza Nº	Cambiar número	Descripción	Código de uso	CANT.

1	331/34875	<M1348543	Tapa excavator controls		1
1	332/F0997		COVER excavator controls		1
2	821/10218	<M1347848	Abrazadera ring excavator gaiter		2
2	332/F1142		ABRAZADERA ring excavator gaiter		2
3	331/31205	<M1347848	Protector excavator lever		2
3	332/F1130		POLAINA excavator control		2
4	1391/3105Z		Tornillo M5 x 20		8
5	826/01768		Tornillo M6x25mm		4
6	813/10231	Superseded	Junta excavator controls		1
6	331/39392		Junta excavator controls		1
7	331/35247		Sujeción Cup		1
8	826/01768		Tornillo M6x25mm		2
9	331/30884		Mando throttle/ stabiliser control		2
10	828/10283		Aro de refuerzo blind, oval *Fits slot in floor under side console*		1
10	828/10314		Aro de refuerzo round		1

9812/0010 B2-15-1 TAPA, MANDOS CARGADORA, TAPA FUSIBLES

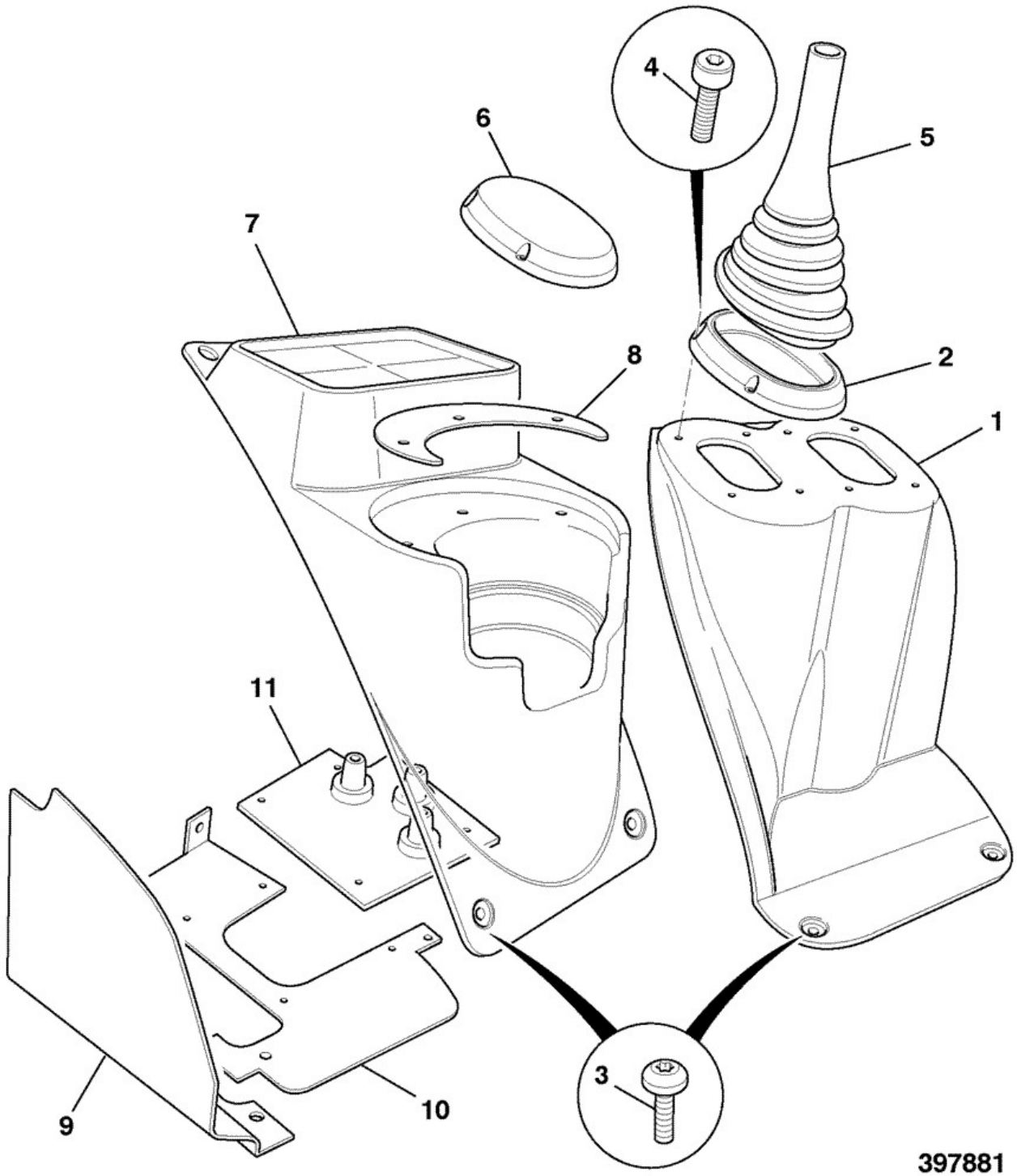

Elemento	Pieza Nº	Cambiar número	Descripción	Código de uso	CANT.

1	331/25872		Tapa loader levers 3CX cab		1
1	331/31503		Tapa loader levers lever locks *German*		1
2	821/10159		Abrazadera ring loader lever gaiter		2
3	826/01768		Tornillo M6x25mm		5
3	826/10956	Superseded	Tornillo thumb M6 X 25		2
3	826/11531		Tornillo thumb, M6x25 *fusebox cover*		2
4	1391/3105Z	<M0962988	Tornillo M5 x 20		8
4	1391/3105Z		Tornillo M5 x 20		4
4	826/10984		Tornillo M5 X 20 csk head *Use with 346/00172*		4
5	331/25685		Protector		1
6	331/28640	<M0962988	Obt. 3rd spool auxiliary *use with 1391/3105Z X 4*		1
6	346/00172		Obt. plate,loader control *use with 826/10984 X 4*		4
7	331/25626		Tapa fuse relay beacon mount		1
8	****		Pieza no reparable		1
9	335/03806	<M1331560	Tapa loader *Véase la nota 1*		1
9	331/64868		Tapa loader polypropylene		1
10	128/14075	<M1331560	Placa loader cover *see note 1*		1
10	335/13440		Tapa loader protection plate		1
10A	926/04812		Regleta		1
11	331/39394		Junta loader control soundproofing		1
12	1315/0305Z		Tornillo Hexagon M8 x 20mm long		2
13	1420/0007Z		Arandela plain M8		2
14	1315/0205Z		Tornillo		0
15	1420/0006Z		Arandela M6		0
16	826/01546		Tornillo M6 x 30mm long		1
17	331/28217		Moldeo infill panel beacon housing cable		1

Nota 1: 331/64868 and 335/13440 can be used to replace 128/14075 and 335/03806

9812/0010 B2-15-11 BLOQ\ DESPL\, PALANCA CARGADORA, 0

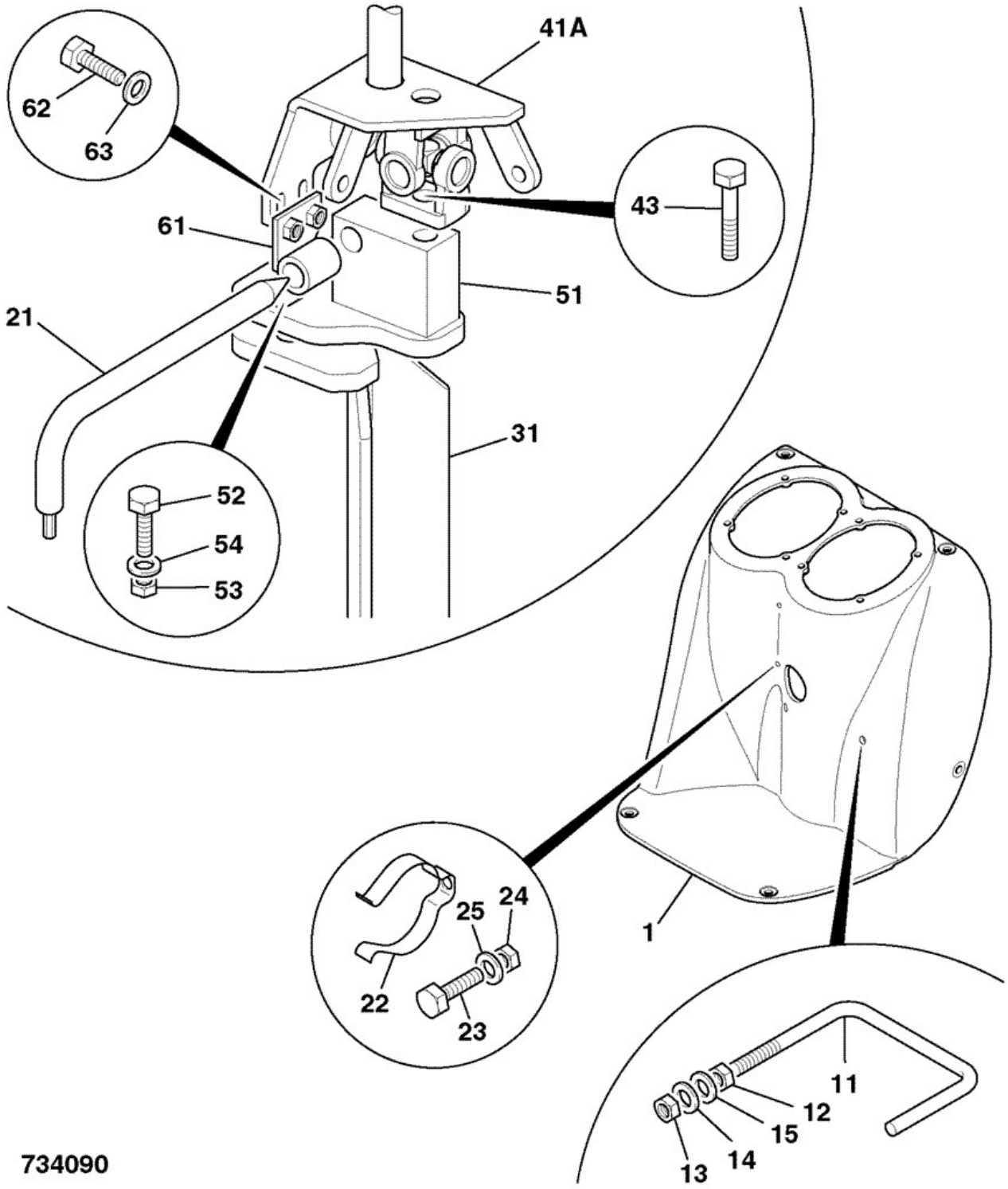

Elemento	Pieza Nº	Cambiar número	Descripción	Código de uso	CANT.

1	331/31503		Tapa loader levers lever locks		1
11	331/31502		Barra retaining travel lock		1
12	1370/0201Z		Tuerca M8		1
13	1370/0203Z		Tuerca self lock M8		1
14	1420/0007Z		Arandela plain M8		1
15	1412/0002Z		Arandela		1
21	331/30120		Barra locking		1
22	821/00362		Clip		2
23	826/00872		Tornillo M5 x 16		2
24	1370/0003Z		Tuerca lock M5		2
25	1420/0005Z		Arandela M5		2
31	335/05281		Soporte Loader Lever Mount		1
41A	128/14595		Palanca including bushes		1
43	1305/0420Z		Tornillo		1
51	335/90134		Soporte assembly		1
52	1315/0409Z		M10 X 35		2
53	1370/0303Z		Tuerca lock M10		2
54	1420/0008Z		Arandela Plain M10		2
61	335/07472		Soporte lock tube		1
62	1315/0203Z		Tornillo M6x16		2
63	1420/0006Z		Arandela M6		2

Catálogo de productos \ CONSTRUCTION \ REST OF WORLD \ CONSTRUCTION / INDUSTRIAL \ BACKHOE LOADER 3CX,4CX,214,215,217 \ 3CX 00960000-00989999,01297000-01297999,01327000-01349999,01616000-01625999,01705500-01709999 84hp 9812/0010 \ B CARROCERIA, CABINA SECCION CARGADORA \ B02 CABINA

9812/0010 B2-16-1 COFRE, 0, 0

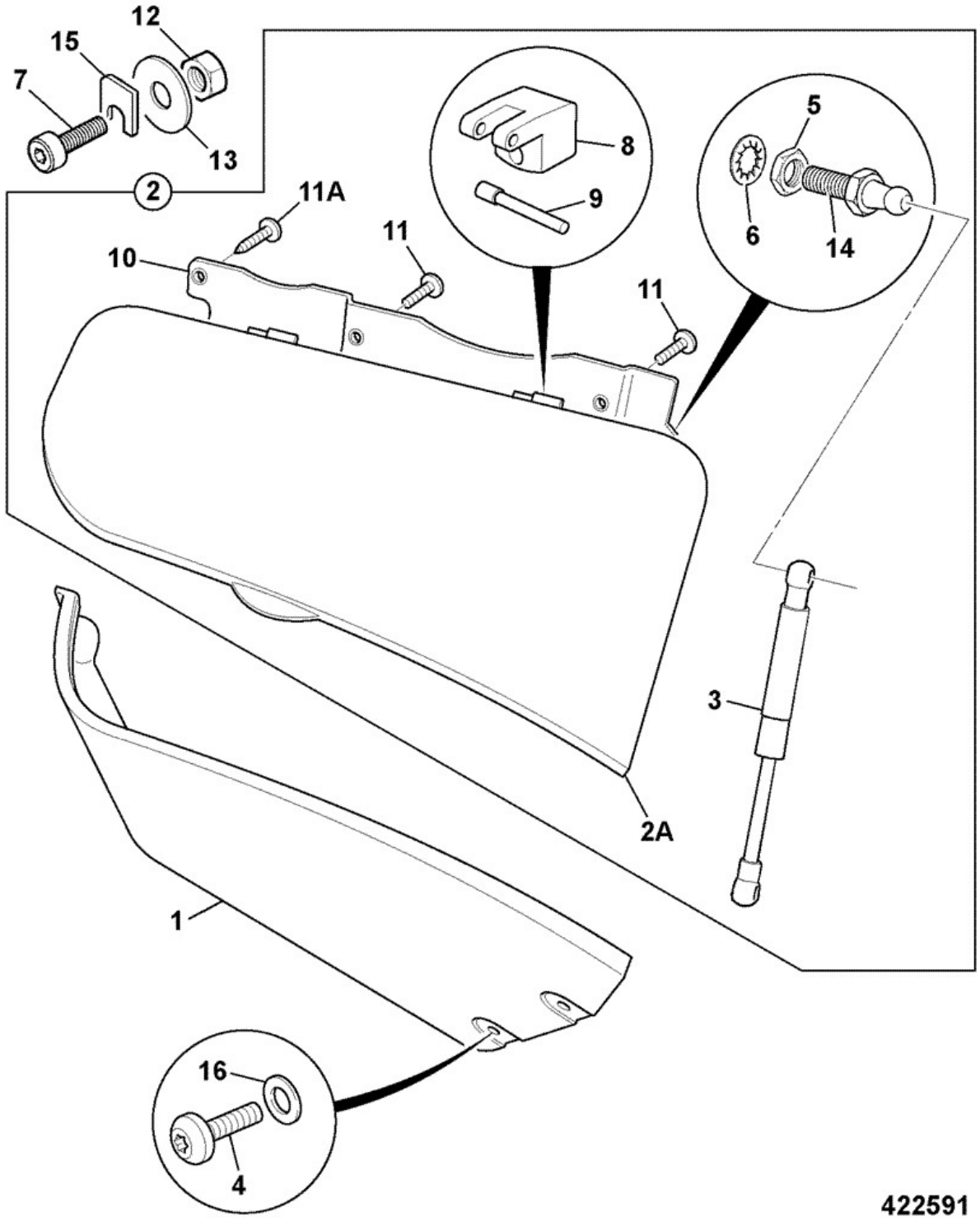

Elemento	Pieza Nº	Cambiar número	Descripción	Código de uso	CANT.
1	331/25632		Panel stowage box side panel		1

2	128/13458		Tapa assembly,stowage box		1
2A	:331/25633		Tapa stowage box 3CX CAB		1
3	:331/25635		Puntal gas stowage box lid		1
3A	:331/31200		Espárrago ball, gas strut 8mm ball, M6 thread x 15mm		1
4	826/01768		Tornillo M6x25mm		4
5	:1370/0202Z		Tuerca M8		1
6	:1418/0011Z		Arandela lock		1
7	826/10565		Tornillo de cierre M4 X 30LG		2
8	:331/33655		Gozne stowbox		2
9	:826/10893		Pasador hinge toolbox lid		2
10	:331/28273		Moldeo booklet holder toolbox		1
11	:1430/0202		Tornillo No 8x1/2"		2
11A	:1430/0201		Tornillo self tapping		1
12	1370/9401Z		Tuerca *Use with item 7*		2
13	1412/0001Z		Arandela *Use with item 7*		2
14	331/31200		Espárrago ball, gas strut 8mm ball, M6 thread x 15mm		1
15	813/10213		Espaciador		2
16	823/00529		Arandela M8 black		4

9812/0010 B2-16-5 COFRE, FORRO TECHO, 0

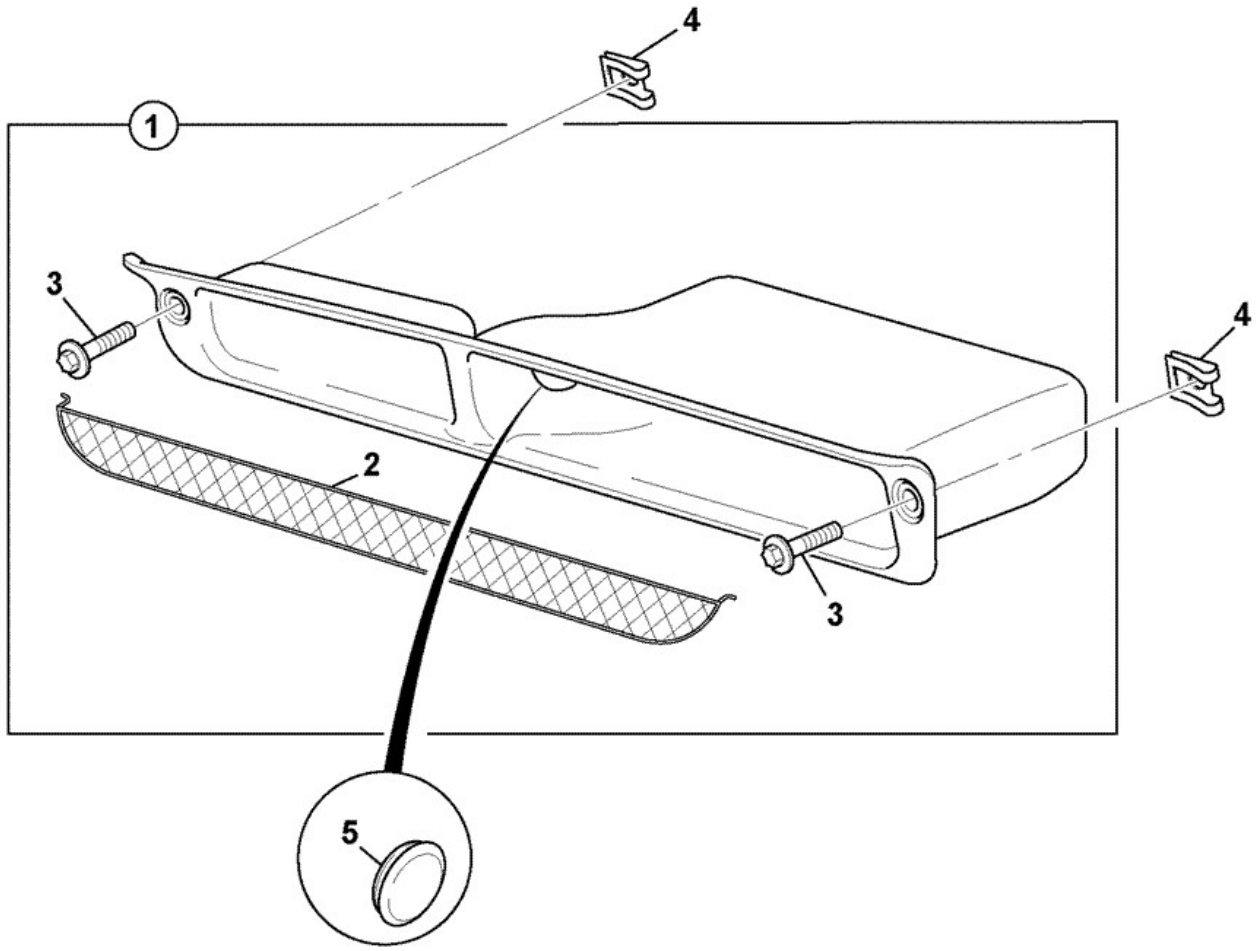

427770

Elemento	Pieza Nº	Cambiar número	Descripción	Código de uso	CANT.
1	331/30826		Moldeo Stowage box(roof) 3CX cab		1

2	:331/35679		Bolsa net,black		1
3	826/01768		Tornillo M6x25mm		2
4	826/10916		Tuerca lug torque M6		2
5	2410/1313		Aro de refuerzo blind, approx 40mm		1

9812/0010 B2-18-1 INST CRISTAL DIRECT, MATERIAL REPUESTO, 0

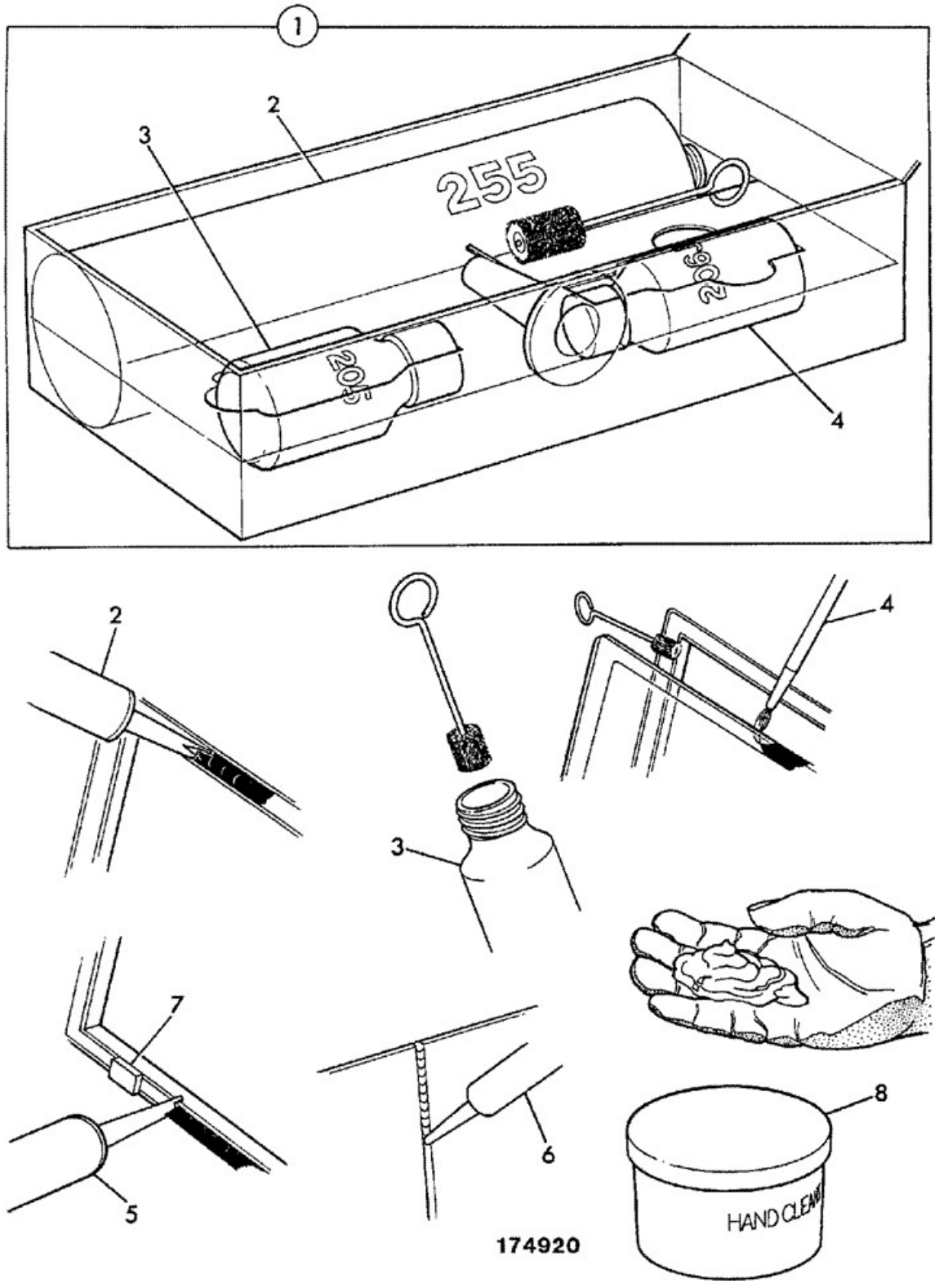

Elemento	Pieza Nº	Cambiar número	Descripción	Código de uso	CANT.
1	993/55700		Adhesivo kit-JCB ultrafast glazing		1
2	:4103/2109		Adhesivo JCB ultrafast 310ml cartridge *See foot note 1*		0
3	:4104/1206		Limpiador active wiper 205 30ml		0
3	:4104/1203		Limpiador primer SIKA 205 250ml		0

4	:4201/4906		Pintura black primer 206J 30ml *Black ceramic ink band around glass border.*		0
4	:4201/4911		Pintura black primer 206J 200gm		0
5	4102/2309		Sellador black acrylic 221 310ml cartridge		0
6	4102/0933		Sellador DP2205 clear silicone		0
7	926/15500		Espaciador block 6x15x4		34
7	926/22100		Espaciador block		2
8	4104/1310		Limpiador hand, polyurethane 454gm/1lb		0

9812/0010 B2-18-1 INST CRISTAL DIRECT, MATERIAL REPUESTO, 0

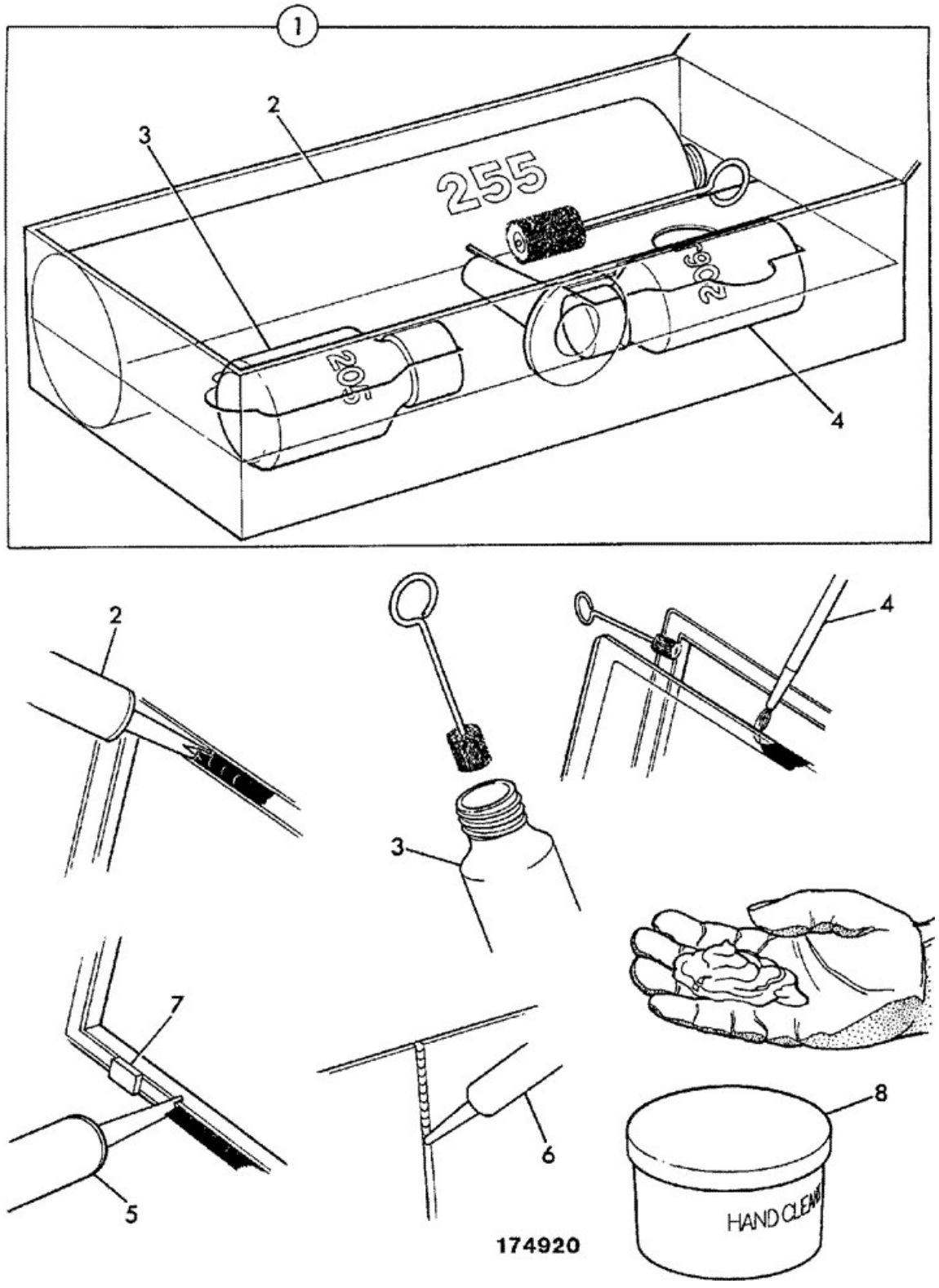

Elemento	Pieza Nº	Cambiar número	Descripción	Código de uso	CANT.
1	993/55700		Adhesivo kit-JCB ultrafast glazing		1
2	:4103/2109		Adhesivo JCB ultrafast 310ml cartridge *See foot note 1*		0
3	:4104/1206		Limpiador active wiper 205 30ml		0
3	:4104/1203		Limpiador primer SIKA 205 250ml		0

4	:4201/4906		Pintura black primer 206J 30ml *Black ceramic ink band around glass border.*		0
4	:4201/4911		Pintura black primer 206J 200gm		0
5	4102/2309		Sellador black acrylic 221 310ml cartridge		0
6	4102/0933		Sellador DP2205 clear silicone		0
7	926/15500		Espaciador block 6x15x4		34
7	926/22100		Espaciador block		2
8	4104/1310		Limpiador hand, polyurethane 454gm/1lb		0

9812/0010 B2-19-2 COVER, VANDAL PROOF, INSTRUMENT PANEL(USES IGNITION/DOOR KEY)

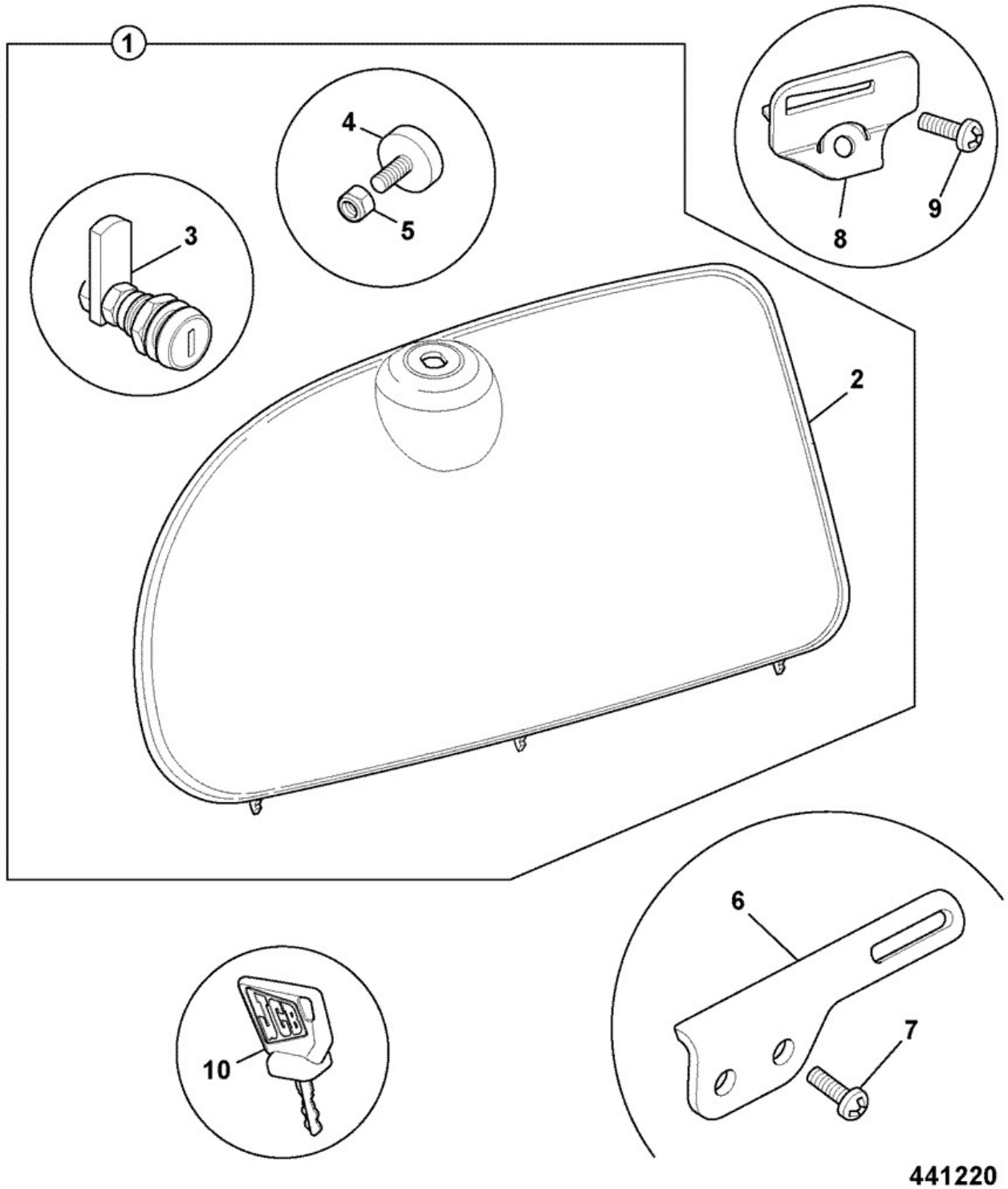

Elemento	Pieza Nº	Cambiar número	Descripción	Código de uso	CANT.

1	128/12935	Superseded	Tapa assembly, vandal aluminium, ABI	A	1
1	128/D0211		Tapa assembly, vandal polycarbonate, ABI	B	1
2	****		Pieza no reparable		1
3	:826/11000		Cierre key operated barrel vandal cover	A	1
3	:332/C8577		Cierre key operated barrel vandal cover	B	1
4	:236/05133		Tope rubber,M6		2
5	:1370/0102Z		Tuerca		2
6	331/33400		Soporte stowage,vandal cover 3CX cab *fit to side console*		1
7	826/10887		Tornillo button head torx		2
8	331/32995		Soporte latch,locking anti-vandal *fit to instrument panel*		1
9	826/10885		Tornillo button head torx		1
10	701/45501		Llave Door/Ignition Ref 14657		2

9812/0010 B2-20-2 TAPAS, TUBERÍA, Y REGLETA PUERTA, 0

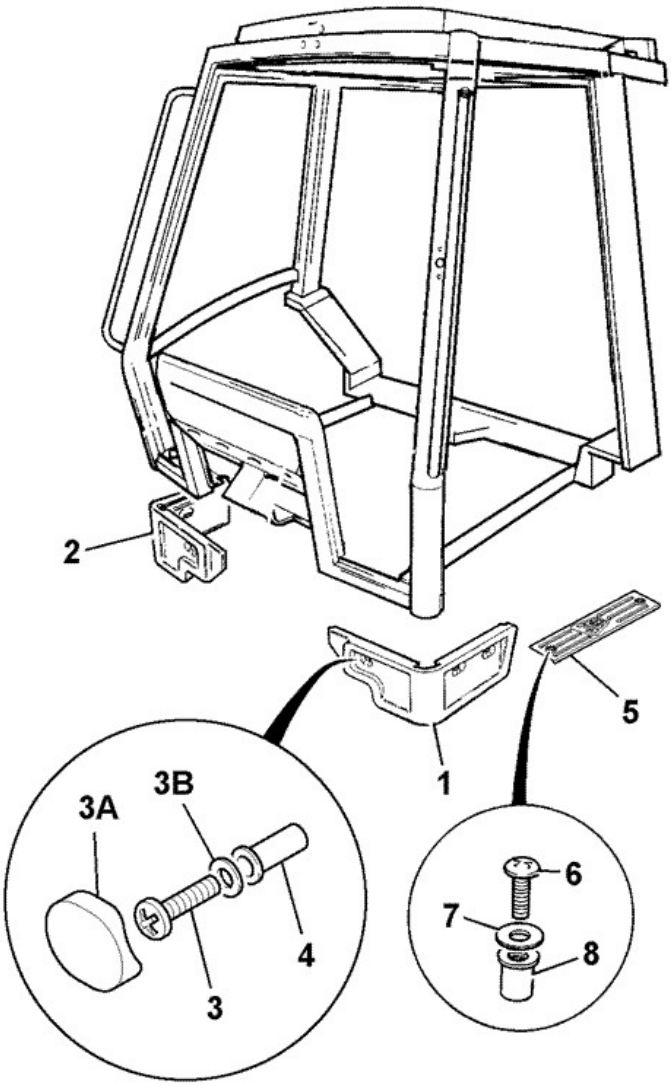

393041

Elemento	Pieza Nº	Cambiar número	Descripción	Código de uso	CANT.

1	331/37824		Tapa left hand pipe yellow *Standard*		1
1	331/37836		Tapa left hand pipe black *Standard*		1
1	331/38014		Tapa left hand pipe red *Standard*		1
1	331/37828		Tapa left hand pipe batt.isolator,yellow *Optional-use with battery isolator*		1
1	331/37839		Tapa left hand pipe,black battery isolator *Optional-use with battery isolator*		1
1	331/37829		Tapa lefthand pipe,yellow Austria(7pin socket) *Austrian standard(7pin socket)*		1
1	331/37840		Tapa left hand pipe,black Austria(7pin socket) *Austrian standard(7pin socket)*		1
1	331/37830		Tapa lefthand pipe,yellow batt.isol/7pin sckt. *Austrian option(batt.isolator/7pin socket)*		1
1	331/37841		Tapa lefthand pipe,black Austria batt.isolatr *Austrian option(batt.isolator/7pin socket)*		1
2	331/37825		Tapa right hand pipe yellow		1
2	331/37837		Tapa right hand pipe black		1
2	331/38016		Tapa right hand pipe red		1
3	826/01768		Tornillo M6x25mm		6
3A	331/37826		Tapa screw blanking yellow *Use with yellow covers only*		6
3A	331/37838		Tapa screw blanking black *Use with black covers only*		6
3A	331/38019		Tapa screw blanking red *Use with red covers only*		6
3B	823/00529		Arandela M8 black		6
4	826/01101		Tuerca rivet,M6 open ended for 3 to 5.5mm plt		6
5	331/25713	<M1616689	Regleta door entry kickstrip		2
5	332/F3954	>M1616690	REGLETA anti slip self adhesive 51 x 240 *51 X 240mm*		2
6	826/10529	<M1616689	Tornillo socket head M6x35		4
7	****	<M1616689	Referencia Not Yet Known		4
8	826/01101	<M1616689	Tuerca rivet,M6 open ended for 3 to 5.5mm plt		4

9812/0010 B2-20-3 TAPAS, TUBERÍA, Y REGLETA PUERTA, 0

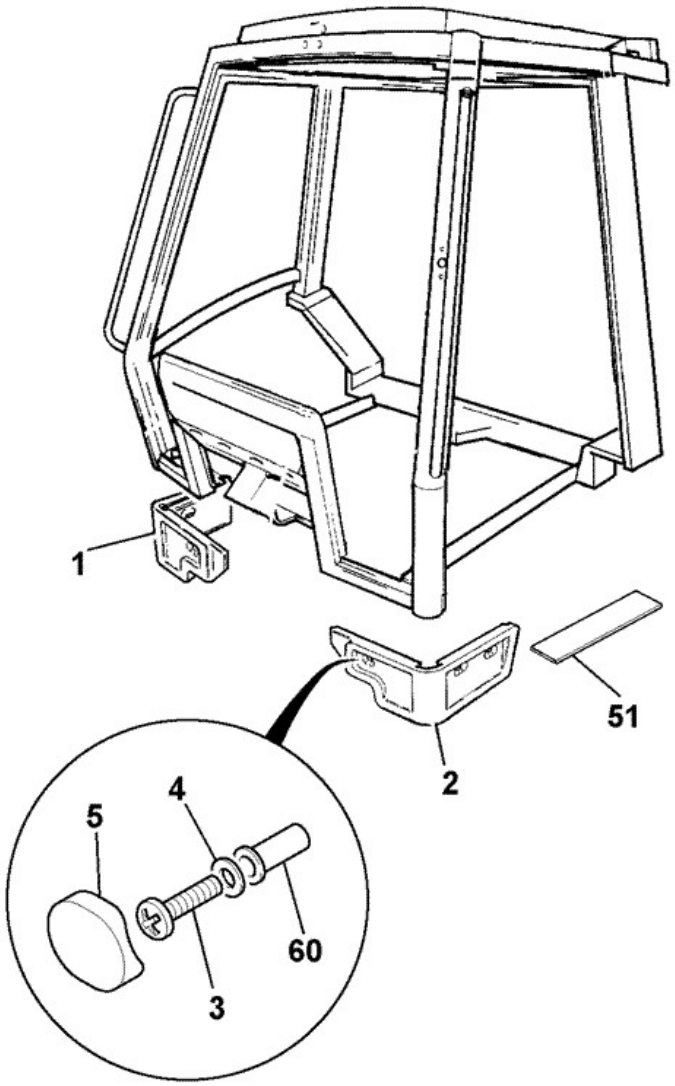

128-C9958-1

Elemento	Pieza Nº	Cambiar número	Descripción	Código de uso	CANT.

1	332/F9933	<M1707233	COVER right hand pipe black, textured *sideshift*	A	1
1	333/P6526	>M1707234	COVER RH, pipe black textured *sideshift*	A	1
1	331/37837		Tapa right hand pipe black *centremount*	B	1
1	331/37825		Tapa right hand pipe yellow *sideshift*	C	1
2	332/F9932	<M1707233	COVER left hand pipe black, textured *sideshift*	A	1
2	333/P6466	>M1707234	COVER LH, pipe black textured *sideshift*	A	1
2	331/37836		Tapa left hand pipe black *centremount*	B	1
2	331/37824		Tapa left hand pipe yellow *sideshift*	C	1
2	332/G0038		COVER left hand pipe black, textured, Austrian *Austrian*	A	1
2	331/37829		Tapa lefthand pipe,yellow Austria(7pin socket)	C	1
3	826/01768		Tornillo M6x25mm		6
4	823/00529		Arandela M8 black		6
5	332/G0061		TAPON screw blanking black textured	A	6
5	331/37838		Tapa screw blanking black	B	6
5	331/37826		Tapa screw blanking yellow	C	6
51	332/F3954		REGLETA anti slip self adhesive 51 x 240		1
60	826/01101		Tuerca rivet,M6 open ended for 3 to 5.5mm plt		6

Catálogo de productos \ CONSTRUCTION \ REST OF WORLD \ CONSTRUCTION / INDUSTRIAL \ BACKHOE LOADER 3CX,4CX,214,215,217 \ 3CX 00960000-00989999,01297000-01297999,01327000-01349999,01616000-01625999,01705500-01709999 84hp 9812/0010 \ B CARROCERIA, CABINA SECCION CARGADORA \ B02 CABINA

9812/0010 B2-23-1 TECHO CAB RU Y MUNDO, 0, 0

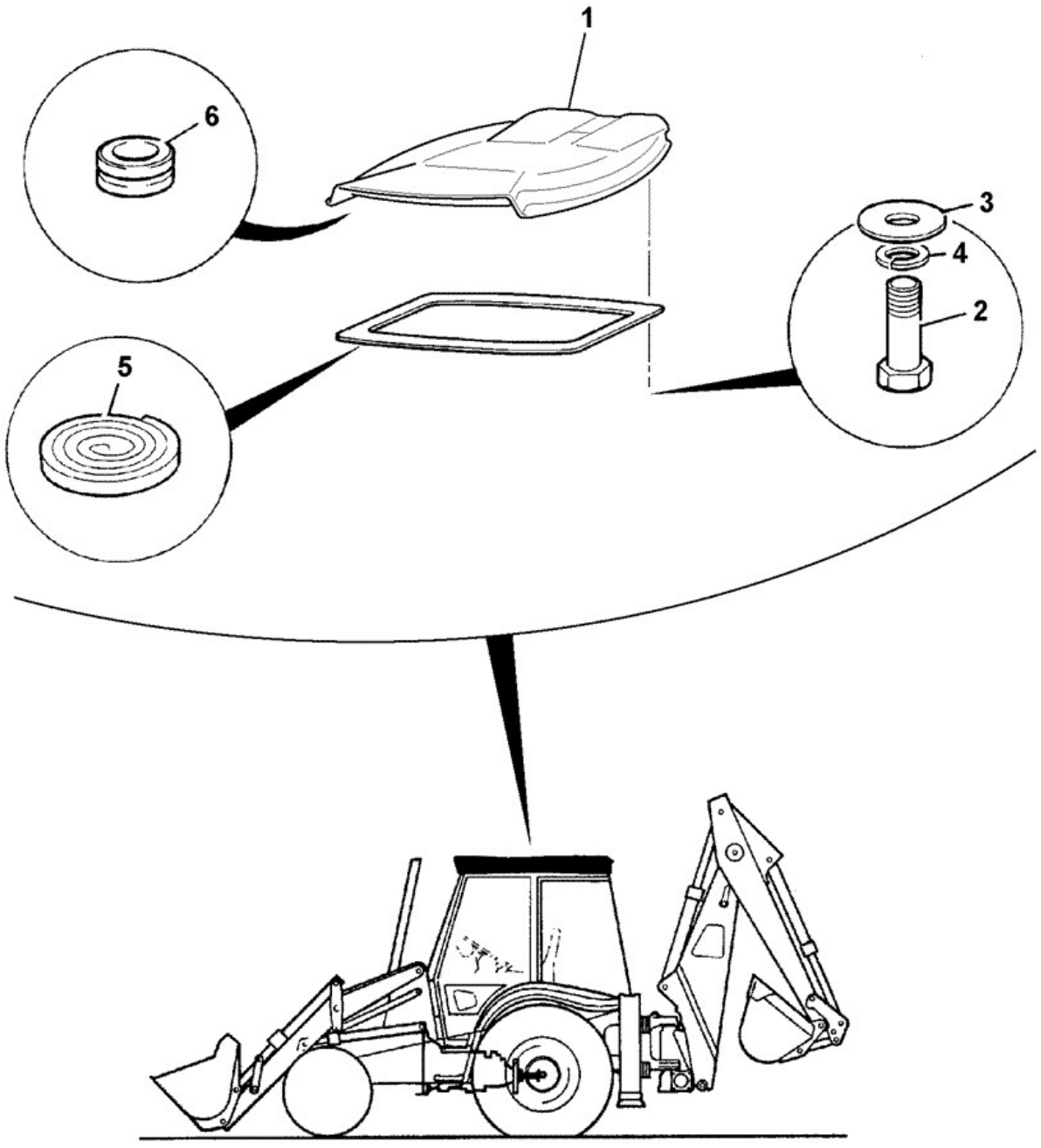

398060

Elemento	Pieza Nº	Cambiar número	Descripción	Código de uso	CANT.
1	331/39807		Techo cab UK & World Yellow		1

1	331/40634		Techo cab UK & World black		1
1	332/G0854		ROOF cab, ROW, green *SS/0683 only*		1
1	331/40635		Techo cab, World red		1
2	826/10881		Tornillo M8 x 40 LG black flanged button head		4
3	823/00529		Arandela M8 black		4
4	****		*Not fitted*		0
5	926/13200		Regleta foam seal		1
6	828/10333		Tapón blanking *Rear beacon*		1
6	2410/1302		Aro de refuerzo *Aerial*		1
11	331/30999		Espuma spacer roof support		1

9812/0010 B2-23-11 Cabina, ROOF, INSTALLATION, YELLOW, ROW

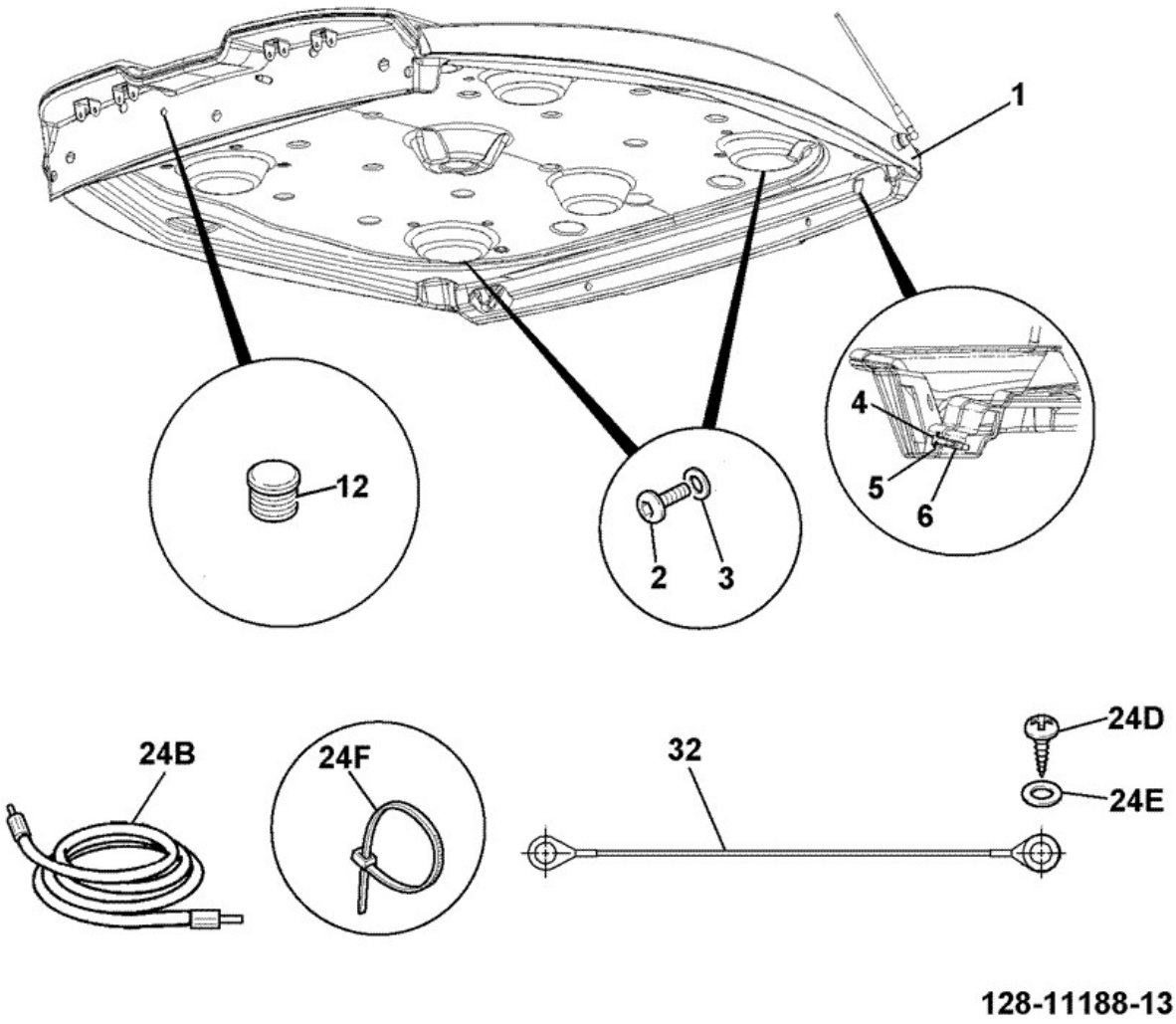

Elemento	Pieza Nº	Cambiar número	Descripción	Código de uso	CANT.

1	128/C3500		ROOF cab, yellow, ROW ABI		1
2	826/10881		Tornillo M8 x 40 LG black flanged button head		4
3	823/00529		Arandela M8 black		4
4	1315/0314D		Tornillo M8 x 60		2
5	823/00322		Arandela		2
6	332/C7136		Espaciador 12.6OD x14swg x 38mm long		2
12	828/10333		Tapón blanking		2
24B	717/09100		Cable aerial extention 4 metres long		1
24D	826/01521		Tornillo M6 X 20		1
24E	1420/0006D		ARANDELA M6 plain		1
24F	826/01144		Abrazadera cable 200mm long		3
32	718/20088		Cable radio earth		1

9812/0010 B2-23-16 Cabina, ROOF, YELLOW, ROW

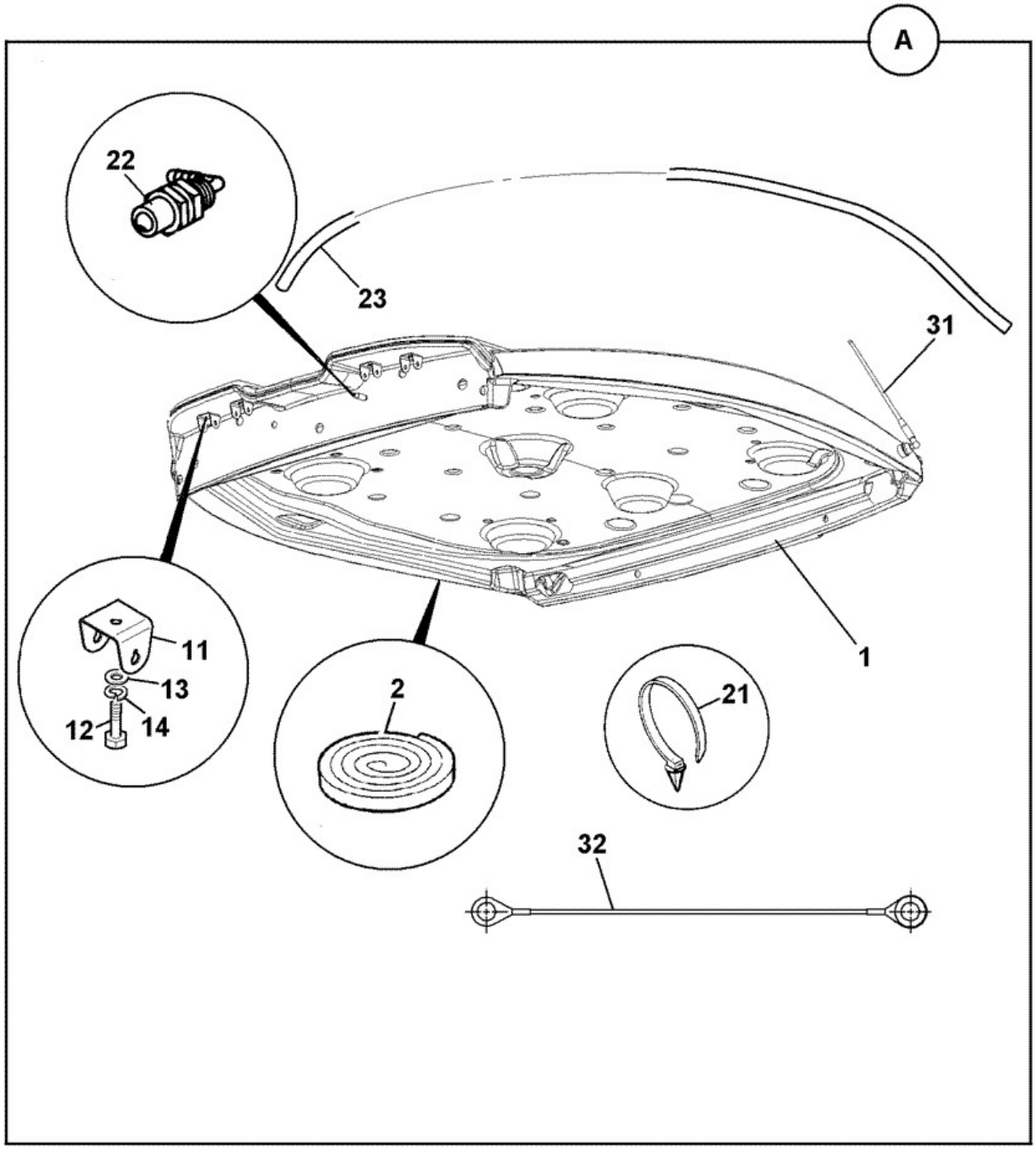

128-C3500-2

Elemento	Pieza Nº	Cambiar número	Descripción	Código de uso	CANT.
A	128/C3500		ROOF cab, yellow, ROW ABI		1

1	:332/G1274		ROOF yellow, ROW		1
2	:926/13200		Regleta foam seal *24' Required*		1
11	:123/06305		Soporte		4
12	:1315/0305Z		Tornillo Hexagon M8 x 20mm long		4
13	:1420/0007Z		Arandela plain M8		4
14	:1425/0007Z		Arandela spring		4
21	:826/01162		Abrazadera cable		13
22	:255/27003		Chorro Screen washer		1
23	:647/02000		Tubo		1
31	:717/00500		Antena		1
32	:718/20088		Cable radio earth		1

9812/0010 B2-23-31 Cabina, ROOF, INSTALLATION, BLACK, ROW

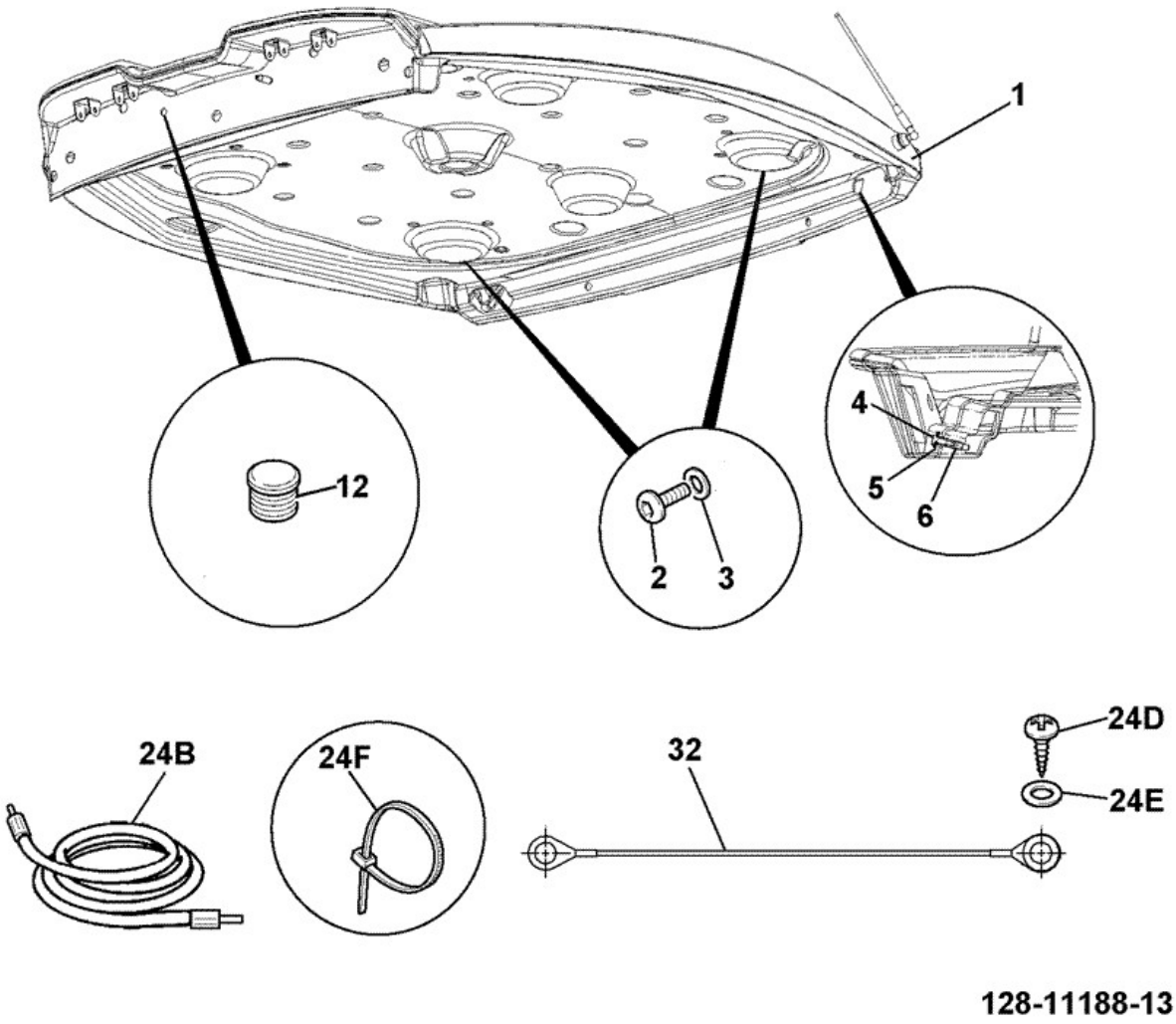

Elemento	Pieza Nº	Cambiar número	Descripción	Código de uso	CANT.

1	128/C3502		ROOF cab, black, ROW ABI		1
2	826/10881		Tornillo M8 x 40 LG black flanged button head		4
3	823/00529		Arandela M8 black		4
4	1315/0314D		Tornillo M8 x 60		2
5	823/00322		Arandela		2
6	332/C7136		Espaciador 12.6OD x14swg x 38mm long		2
12	828/10333		Tapón blanking		2
24B	717/09100		Cable aerial extention 4 metres long		1
24D	826/01521		Tornillo M6 X 20		1
24E	1420/0006D		ARANDELA M6 plain		1
24F	826/01144		Abrazadera cable 200mm long		3
32	718/20088		Cable radio earth		1

Catálogo de productos \ CONSTRUCTION \ REST OF WORLD \ CONSTRUCTION / INDUSTRIAL \ BACKHOE LOADER 3CX,4CX,214,215,217 \ 3CX 00960000-00989999,01297000-01297999,01327000-01349999,01616000-01625999,01705500-01709999 84hp 9812/0010 \ B CARROCERIA, CABINA SECCION CARGADORA \ B02 CABINA

9812/0010 B2-23-36 Cabina, ROOF, BLACK, ROW

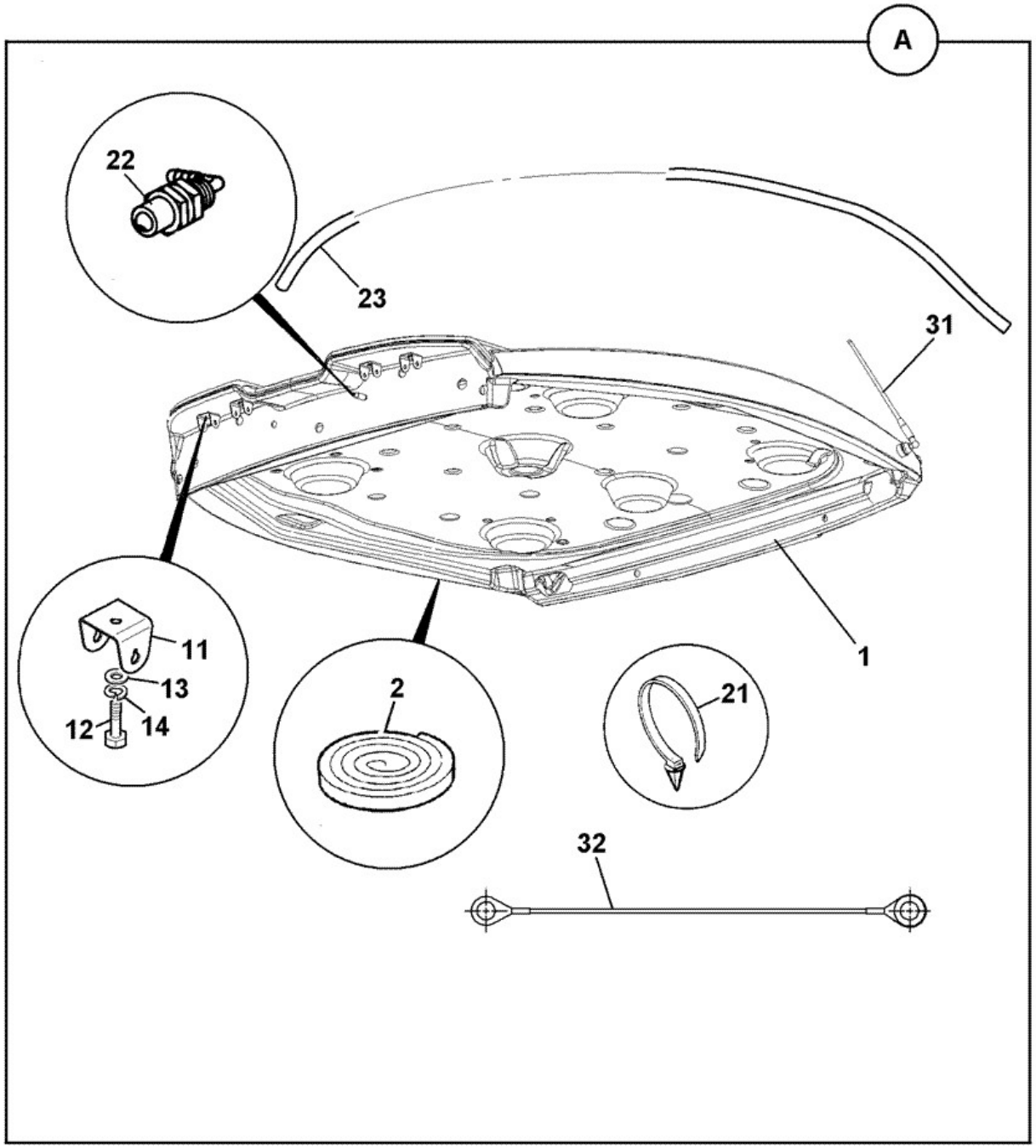

128-C3500-2

Elemento	Pieza Nº	Cambiar número	Descripción	Código de uso	CANT.
A	128/C3502		ROOF cab, black, ROW ABI		1

1	:332/G1276		ROOF black, ROW		1
2	:926/13200		Regleta foam seal *24' REQUIRED*		1
11	:123/06305		Soporte		4
12	:1315/0305Z		Tornillo Hexagon M8 x 20mm long		4
13	:1420/0007Z		Arandela plain M8		4
14	:1425/0007Z		Arandela spring		4
21	:826/01162		Abrazadera cable		13
22	:255/27003		Chorro Screen washer		1
23	:647/02000		Tubo		1
31	:717/00500		Antena		1
32	:718/20088		Cable radio earth		1

9812/0010 B2-23-41 Árbol levas y engr\, ROOF, INSTALLATION, YELLOW, ROW

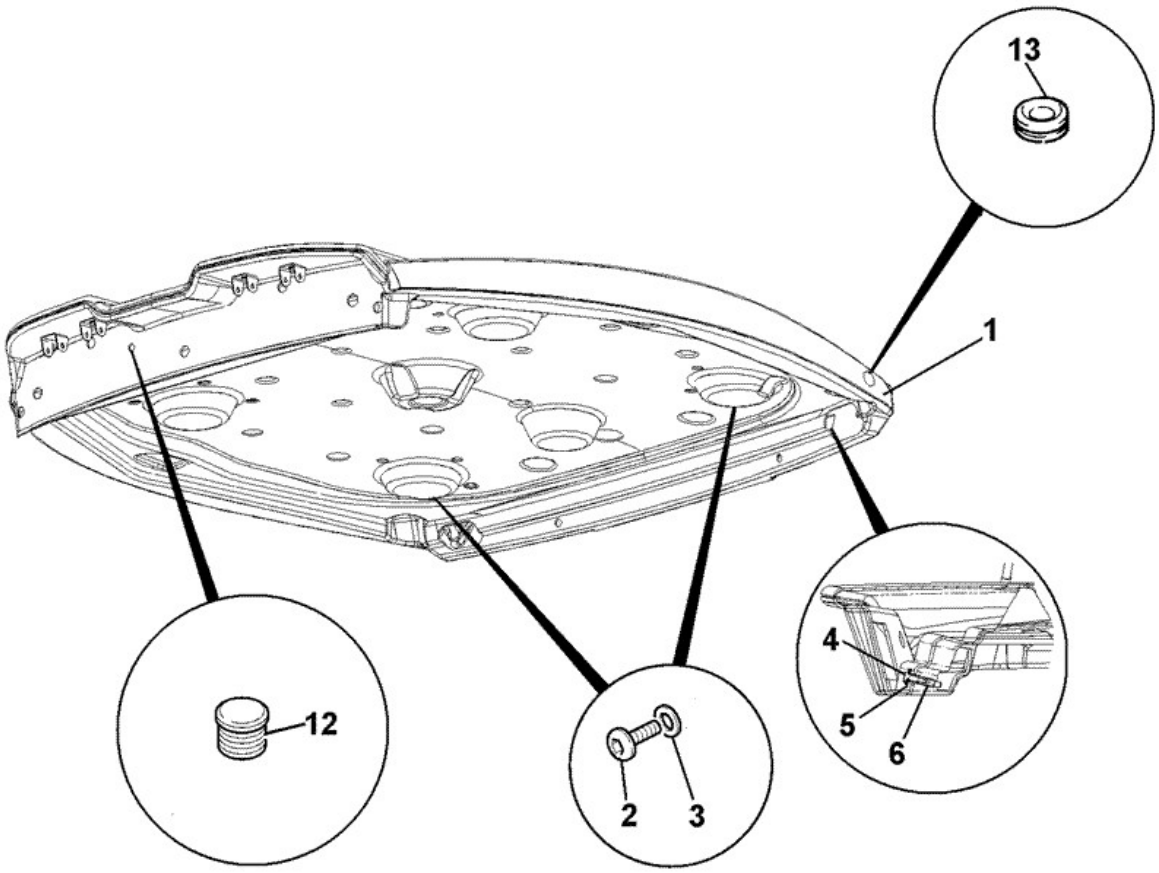

128-17302-4

Elemento	Pieza Nº	Cambiar número	Descripción	Código de uso	CANT.

1	128/C3504		ROOF canopy, yellow, ROW ABI		1
2	826/10881		Tornillo M8 x 40 LG black flanged button head		4
3	823/00529		Arandela M8 black		4
4	1315/0314D		Tornillo M8 x 60		2
5	823/00322		Arandela		2
6	332/C7136		Espaciador 12.6OD x14swg x 38mm long		2
12	828/10333		Tapón blanking		2
13	2410/1302		Aro de refuerzo *aerial hole*		1

9812/0010 B2-23-46 Árbol levas y engr\, ROOF, YELLOW, ROW

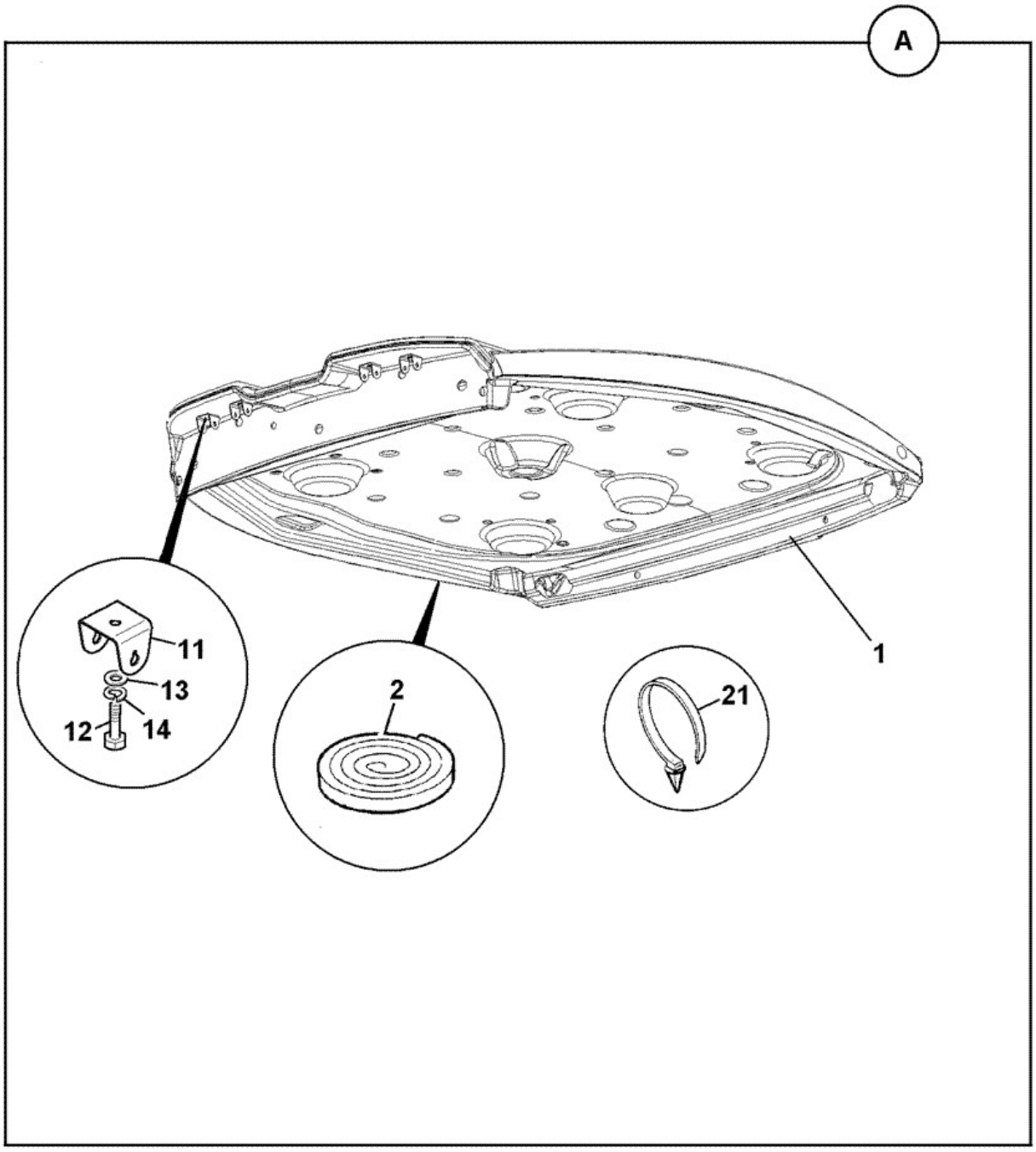

128-C3504-2

Elemento	Pieza Nº	Cambiar número	Descripción	Código de uso	CANT.

A	128/C3504		ROOF canopy, yellow, ROW ABI		1
1	:332/G1274		ROOF yellow, ROW		1
2	:926/13200		Regleta foam seal *24' REQUIRED*		1
11	:123/06305		Soporte		4
12	:1315/0305Z		Tornillo Hexagon M8 x 20mm long		4
13	:1420/0007Z		Arandela plain M8		4
14	:1425/0007Z		Arandela spring		4
21	:826/01162		Abrazadera cable		13

9812/0010 B2-23-91 Árbol levas y engr\, ROOF, INSTALLATION, BLACK, ROW

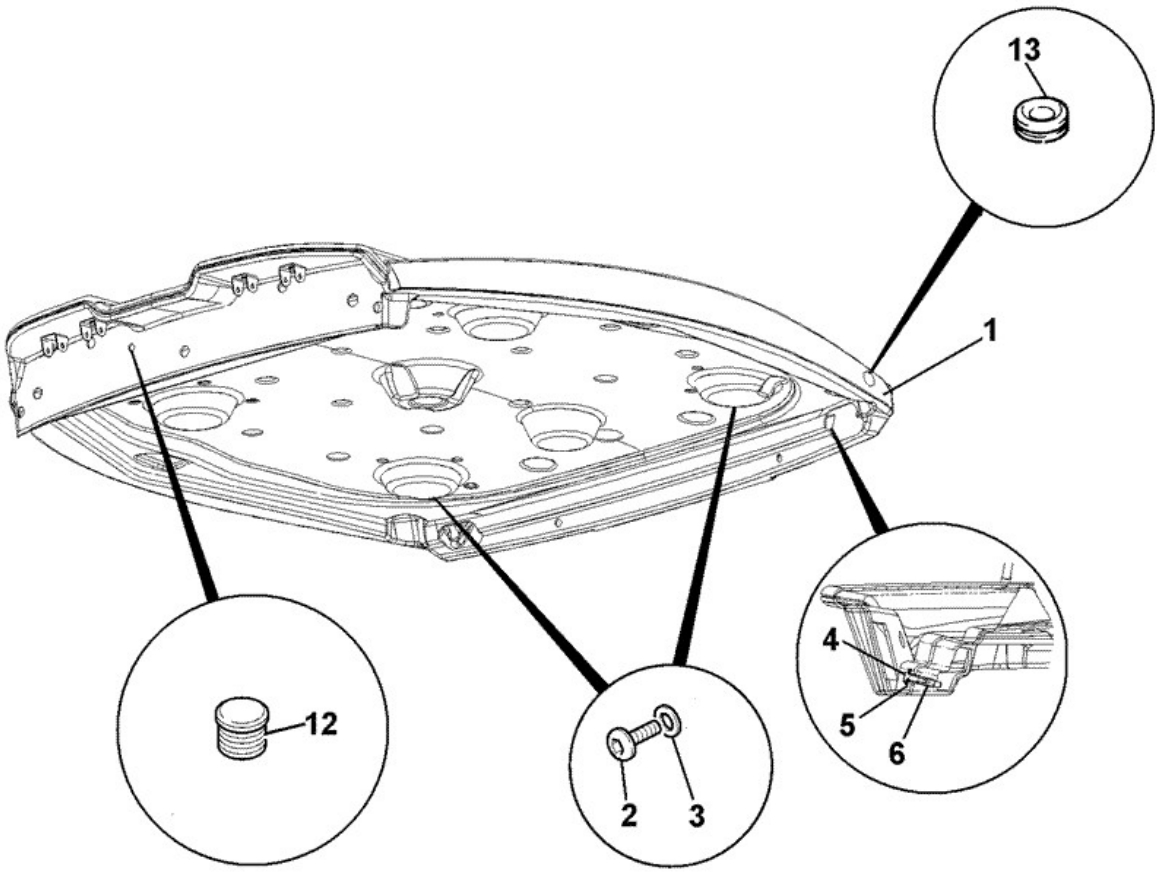

128-17302-4

Elemento	Pieza Nº	Cambiar número	Descripción	Código de uso	CANT.

1	128/C3506		ROOF canopy, black, ROW ABI		1
2	826/10881		Tornillo M8 x 40 LG black flanged button head		4
3	823/00529		Arandela M8 black		4
4	1315/0314D		Tornillo M8 x 60		2
5	823/00322		Arandela		2
6	332/C7136		Espaciador 12.6OD x14swg x 38mm long		2
12	828/10333		Tapón blanking		2
13	2410/1302		Aro de refuerzo *aerial hole*		1

9812/0010 B2-23-96 Árbol levas y engr\, ROOF, BLACK, ROW

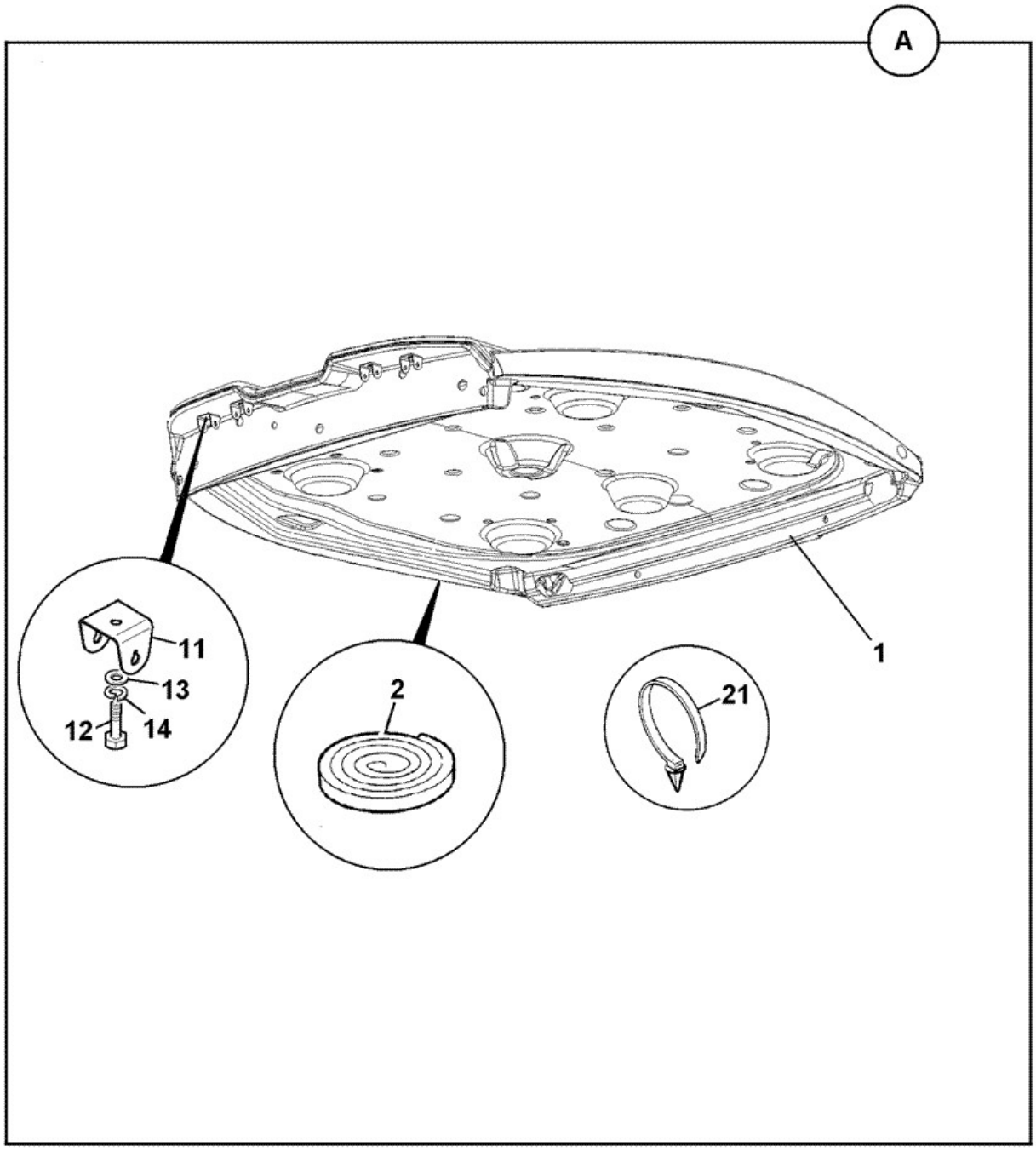

128-C3504-2

Elemento	Pieza Nº	Cambiar número	Descripción	Código de uso	CANT.

A	128/C3506		ROOF canopy, black, ROW ABI		1
1	:332/G1276		ROOF black, ROW		1
2	:926/13200		Regleta foam seal *24' REQUIRED*		1
11	:123/06305		Soporte		4
12	:1315/0305Z		Tornillo Hexagon M8 x 20mm long		4
13	:1420/0007Z		Arandela plain M8		4
14	:1425/0007Z		Arandela spring		4
21	:826/01162		Abrazadera cable		13

9812/0010 B2-24-1 BARRA PUERTA, 0, 0

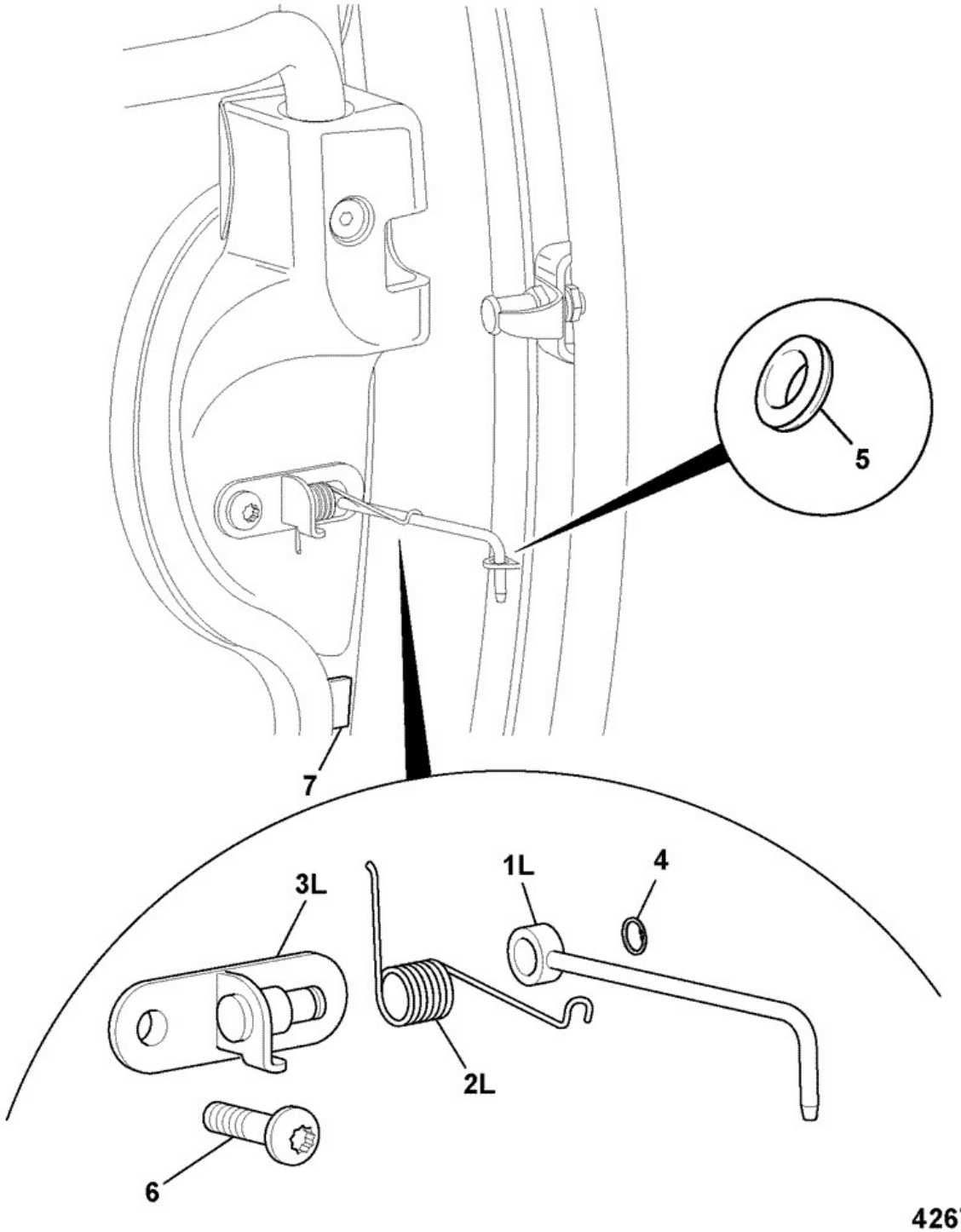

Elemento	Pieza Nº	Cambiar número	Descripción	Código de uso	CANT.
1L	331/31135		Barra left hand door ajar *left hand side (as illustrated)*		1

1R	331/31136		Barra right hand door ajar *right hand side*		1
2L	814/00317		Muelle door stay left hand *left hand side*		1
2R	814/00318		Muelle door stay right hand *right hand side*		1
3L	335/04779		Soporte left hand *left hand side*		1
3R	335/04780		Soporte right hand *right hand side*		1
4	826/00614		Arandela elástica		1
5	828/00400		Aro de refuerzo		1
6	826/01768		Tornillo M6x25mm		2
7	274/00820		Pastilla rubber		1

Catálogo de productos \ CONSTRUCTION \ REST OF WORLD \ CONSTRUCTION / INDUSTRIAL \ BACKHOE LOADER 3CX,4CX,214,215,217 \ 3CX 00960000-00989999,01297000-01297999,01327000-01349999,01616000-01625999,01705500-01709999 84hp 9812/0010 \ B CARROCERIA, CABINA SECCION CARGADORA \ B02 CABINA

9812/0010 B2-25-1 GUARN\ POSTE B TAPAS, CABINA, 0

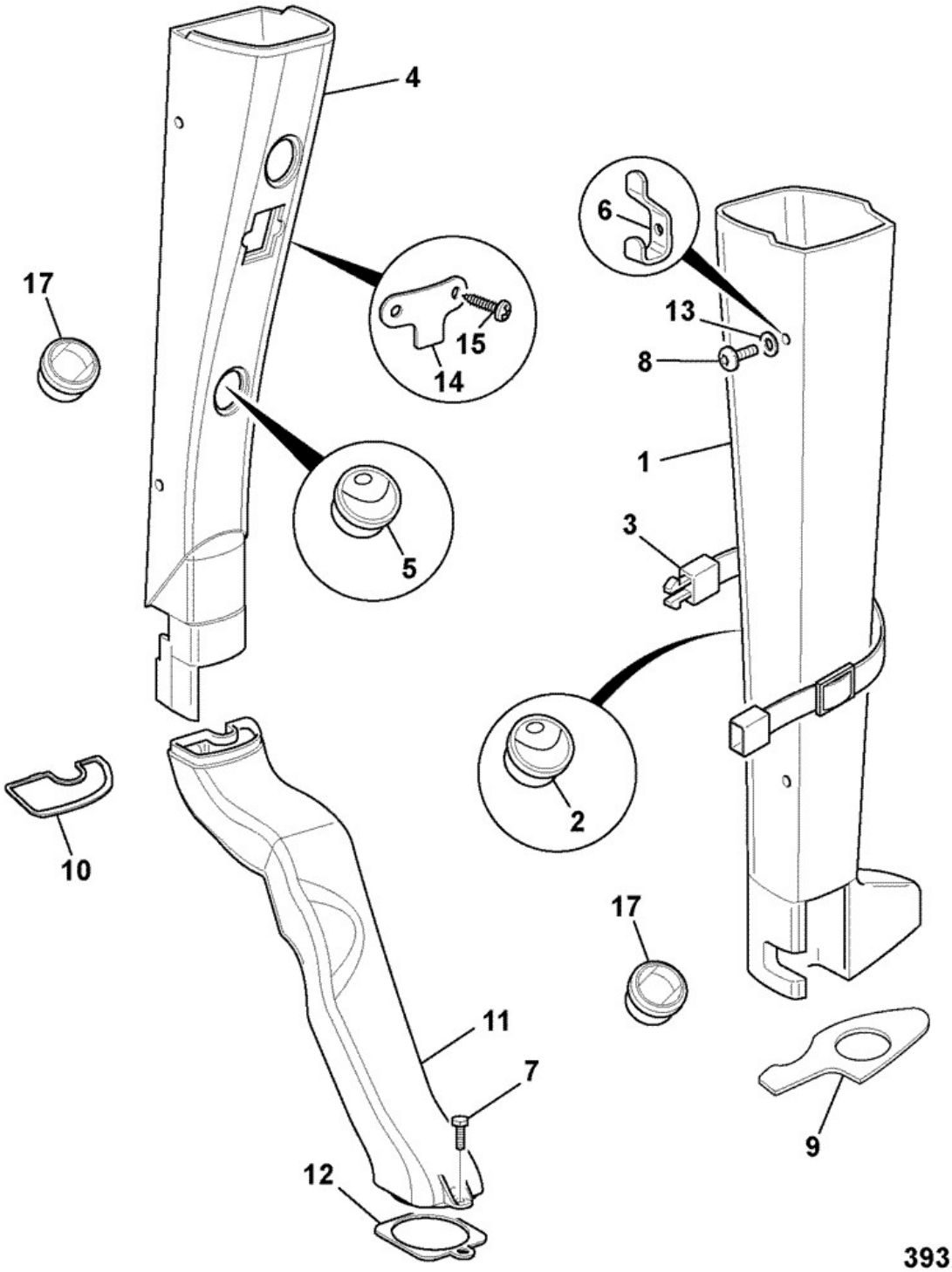

Elemento	Pieza Nº	Cambiar número	Descripción	Código de uso	CANT.
1	331/31027	<M1347601	Conducto left hand B post 3CX cab		1

1	332/P5237		CONDUCTO left hand B post 3CX cab		1
2	331/31000		Respiradero air,(60mm dia.hole)		4
3	826/10842		Correa black,left B post 3CX cab		1
4	331/31028	<M JAN-09	Conducto right hand B post		1
4	332/D1608	>M JAN-09	Conducto right hand B post		1
4	332/P1583	>M JAN-09	CONDUCTO right hand B post		1
5	331/31000		Respiradero air,(60mm dia.hole)		8
6	142/01083		Gancho coat		1
7	826/01768		Tornillo M6x25mm		1
8	826/10885		Tornillo button head torx		8
8	823/00516		Arandela nylon M6		8
8	332/P7271	>M1347602	PIEZA DISTANCIADOR 8 x 18		4
9	813/10180		Junta left hand B post 3CX cab		1
10	813/10181	<M JAN-09	Junta right hand B post 3CX cab		1
10	332/D8524	>M JAN-09	Junta right hand B post		1
11	331/26386	<M JAN-09	Conducto right hand moulding lower B post		1
11	332/D1535	>M JAN-09	Conducto right hand moulding lower B post		1
12	813/10182		Junta duct right hand		1
13	823/00516		Arandela nylon M6		4
14	331/26582		Placa retaining right hand B post		1
15	826/10887		Tornillo button head torx		2
17	331/26974		Respiradero air(76.5mm dia.hole)		3
17	331/25505		Respiradero air,(55mm dia.hole)		1

9812/0010 B2-25-10 GUARN\ POSTE B TAPAS, CABINA ABIERTA, 0

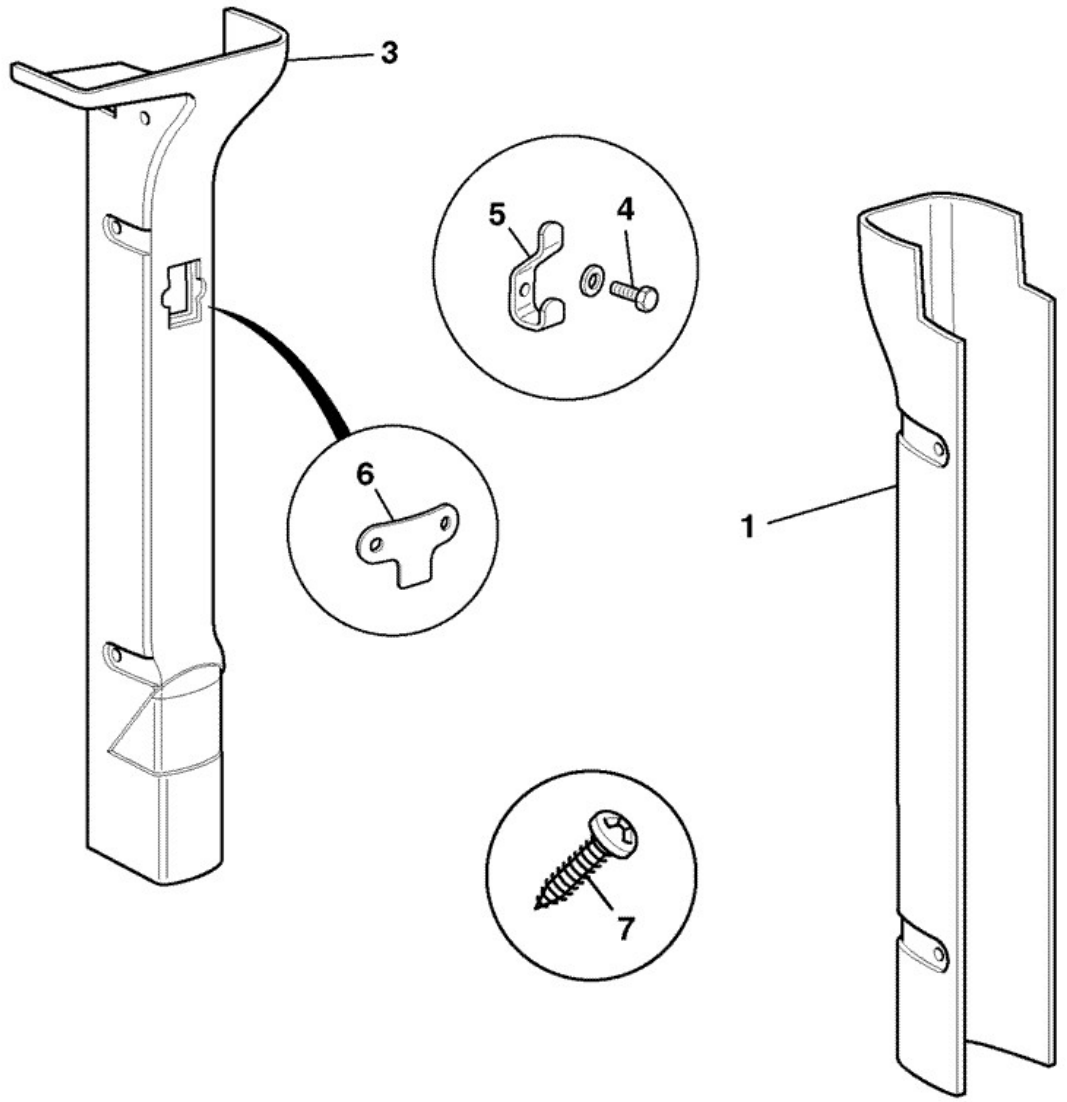

412640

Elemento	Pieza Nº	Cambiar número	Descripción	Código de uso	CANT.

1	331/25943		Conducto left hand B post canopy		1
2	826/10842		Correa black,left B post 3CX cab		1
3	331/25944		Conducto R.H. B post, canopy		1
4	826/01768		Tornillo M6x25mm		10
5	142/01083		Gancho coat		1
6	331/26582		Placa retaining right hand B post		1
7	1430/0203		Tornillo self tapping		2

9812/0010 B2-25-20 GUARNICIÓN, POSTE C TAPAS-SUELO, CABINA ABIERTA

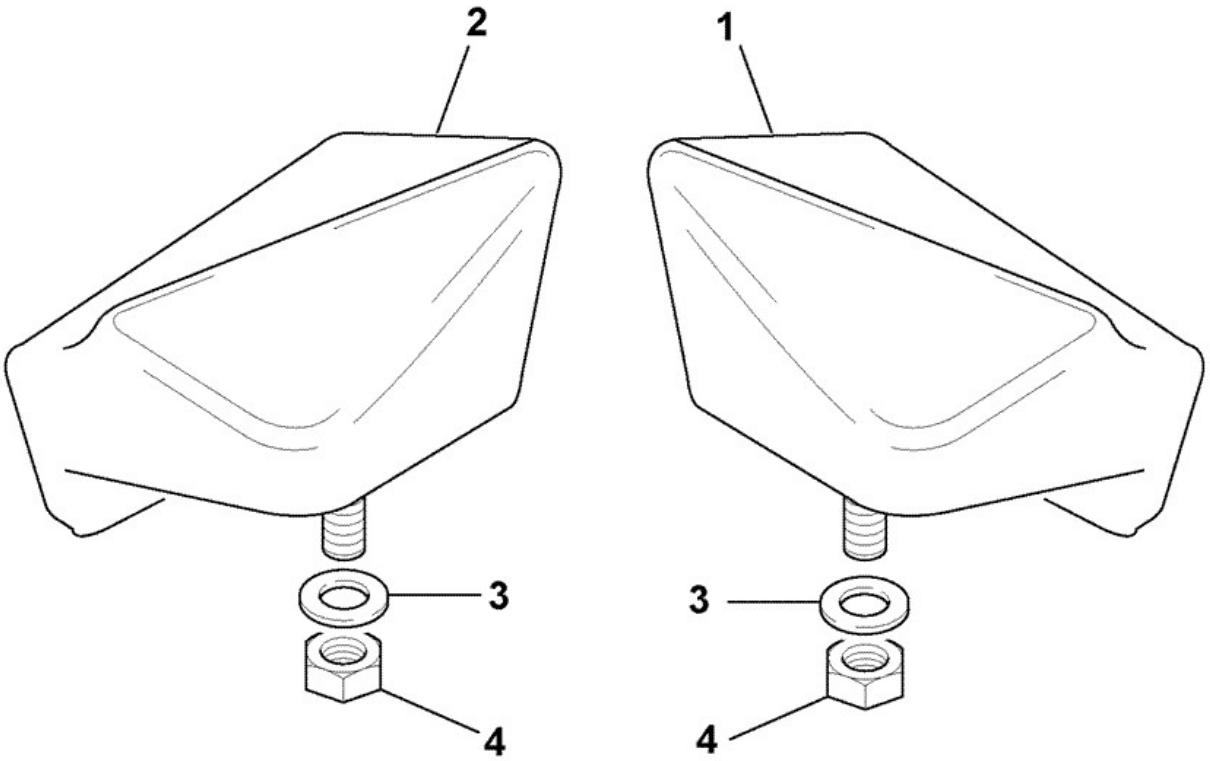

441330

Elemento	Pieza Nº	Cambiar número	Descripción	Código de uso	CANT.

1	331/32381		Tapa moulding,right side "C"post blanking		1
2	331/32416		Tapa moulding,left side "C"post blanking		1
3	1420/0006Z		Arandela M6		2
4	1370/0101Z		Tuerca		2

Catálogo de productos \ CONSTRUCTION \ REST OF WORLD \ CONSTRUCTION / INDUSTRIAL \ BACKHOE LOADER 3CX,4CX,214,215,217 \ 3CX 00960000-00989999,01297000-01297999,01327000-01349999,01616000-01625999,01705500-01709999 84hp 9812/0010 \ B CARROCERIA, CABINA SECCION CARGADORA \ B02 CABINA

9812/0010 B2-26-1 BLOQ\ PUERTA CAB, 0, 0

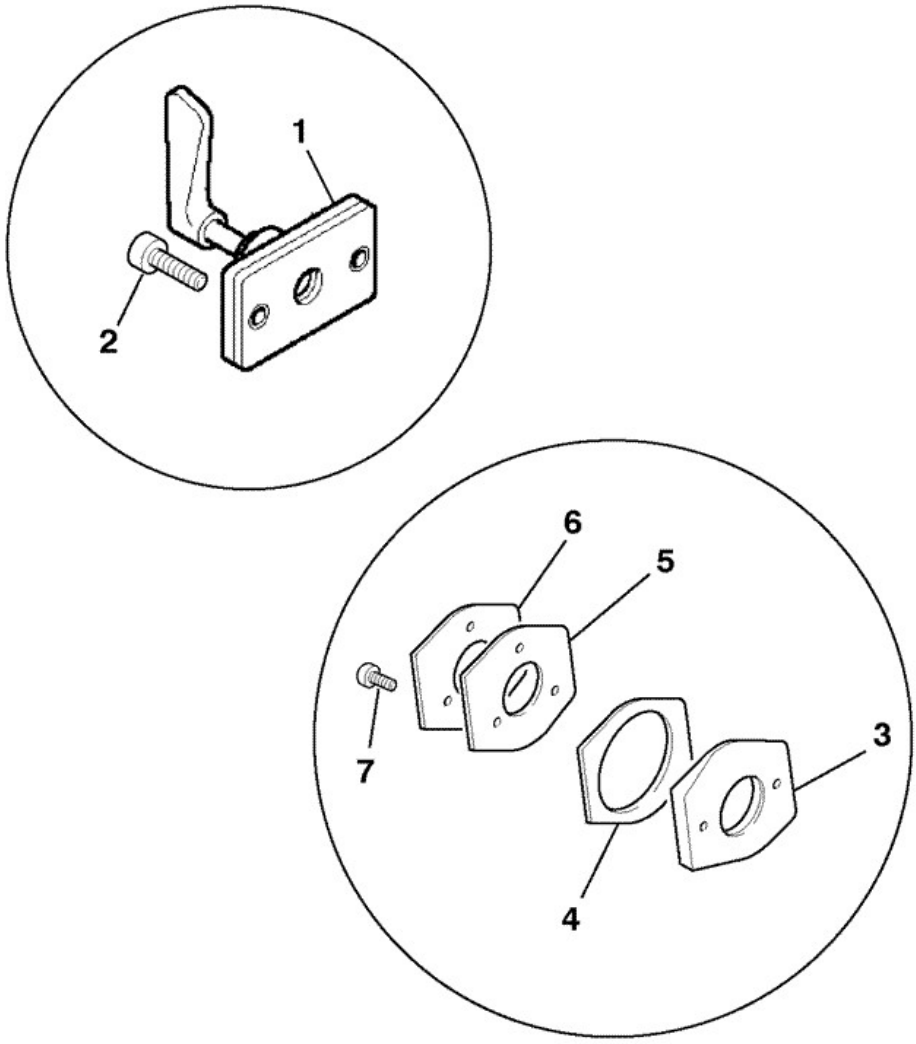

393350

Elemento	Pieza Nº	Cambiar número	Descripción	Código de uso	CANT.
1	331/31071		Pestillo window lockback		1

2	826/01406		Tornillo socket flange head M5 x 20		2
3	123/09052		Casquillo lockback		1
4	123/09053		Junta		1
5	123/09054		Junta		1
6	123/09055		Placa backing		1
7	826/01723		Tornillo de cierre		3

Catálogo de productos \ CONSTRUCTION \ REST OF WORLD \ CONSTRUCTION / INDUSTRIAL \ BACKHOE LOADER 3CX,4CX,214,215,217 \ 3CX 00960000-00989999,01297000-01297999,01327000-01349999,01616000-01625999,01705500-01709999 84hp 9812/0010 \ B CARROCERIA, CABINA SECCION CARGADORA \ B02 CABINA

9812/0010 B2-27-2 PLACAS OBTUR\, SUELO TRASERO, 0

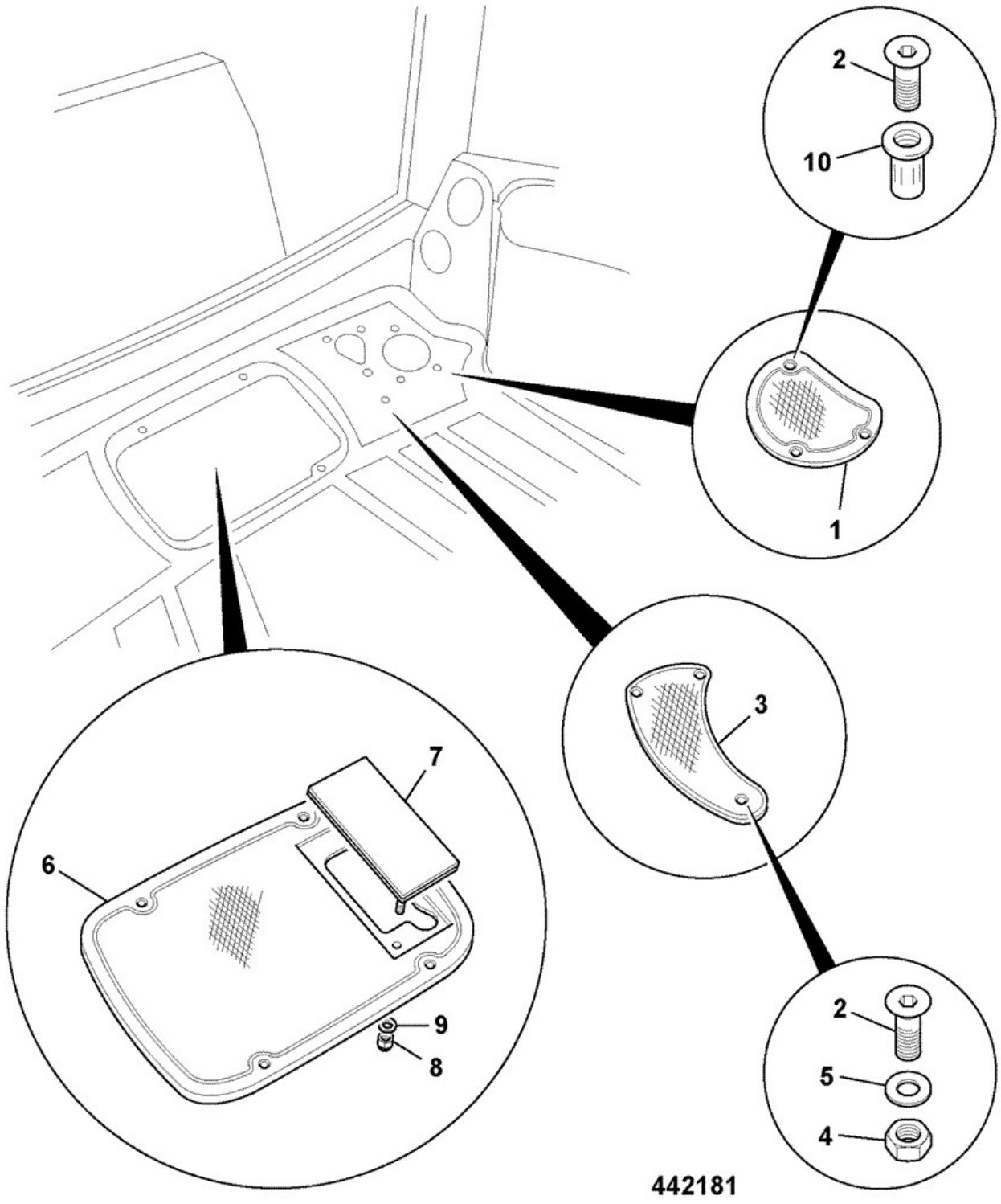

Elemento	Pieza Nº	Cambiar número	Descripción	Código de uso	CANT.
1	589/10151		Obt. floor aux pedal position *not fitted*		1

2	826/10529		Tornillo socket head M6x35		7
3	346/00063		Obt. floor aux. pedal *If fitted*		1
4	1370/0101Z		Tuerca		3
5	1420/0006Z		Arandela M6		3
6	589/10150	<M0962302	Obt. floor,exc.controls *if fitted*		1
6	346/00179	Superseded	Obt. floor exc. controls *nylon*		1
6	346/00509		Obt. floor excavator controls		1
6	331/35757	<M0962302	Obt. floor sae/iso exc.controls *SAE/ISO switch mounting*		1
6	331/47286	Superseded	Obt. floor sae/iso exc.controls *SAE/ISO switch mounting, nylon*		1
6	331/63840		Plancha suelo sae/iso exc controls		1
6A	813/10241	<M0962302	Junta *for item 6*		1
7	335/04759	<M0962302	Obt. plate		1
8	1370/0203Z	<M0962302	Tuerca self lock M8		2
9	1420/0007Z	<M0962302	Arandela plain M8		2
10	826/11015		Tuerca rivet,splined M6		7

9812/0010 B2-28-2 BULKHEAD PLATE, CAB/CANOPY ELECTRICS

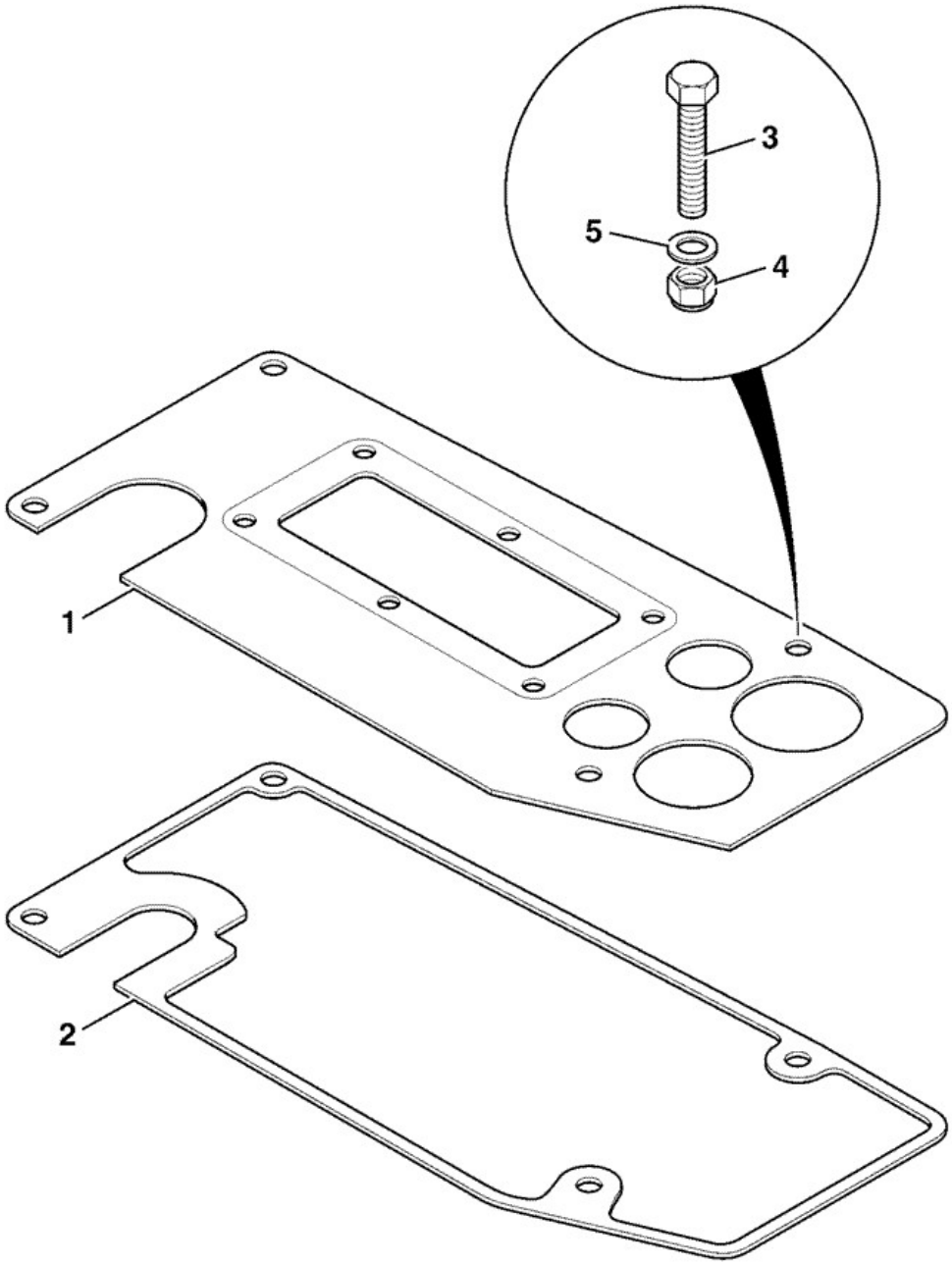

704700

Elemento	Pieza Nº	Cambiar número	Descripción	Código de uso	CANT.

1	331/35028	<M0982925	Placa cab bulkhead electrical		1
1	331/64436	>M0982926	Placa cab bulkhead		1
1	331/38428		Placa canopy bulkhead electrical *Canopy only,no holes for heater/aircon*		1
2	813/10232		Junta bulkhead plate cab/canopy		1
3	1315/0207Z		Tornillo M6 x 25mm long		4
4	1370/0103Z		Tuerca Self lock M6		4
5	1412/0001Z		Arandela		4

9812/0010 B2-28-3 BULKHEAD PLATE, CAB/CANOPY ELECTRICS

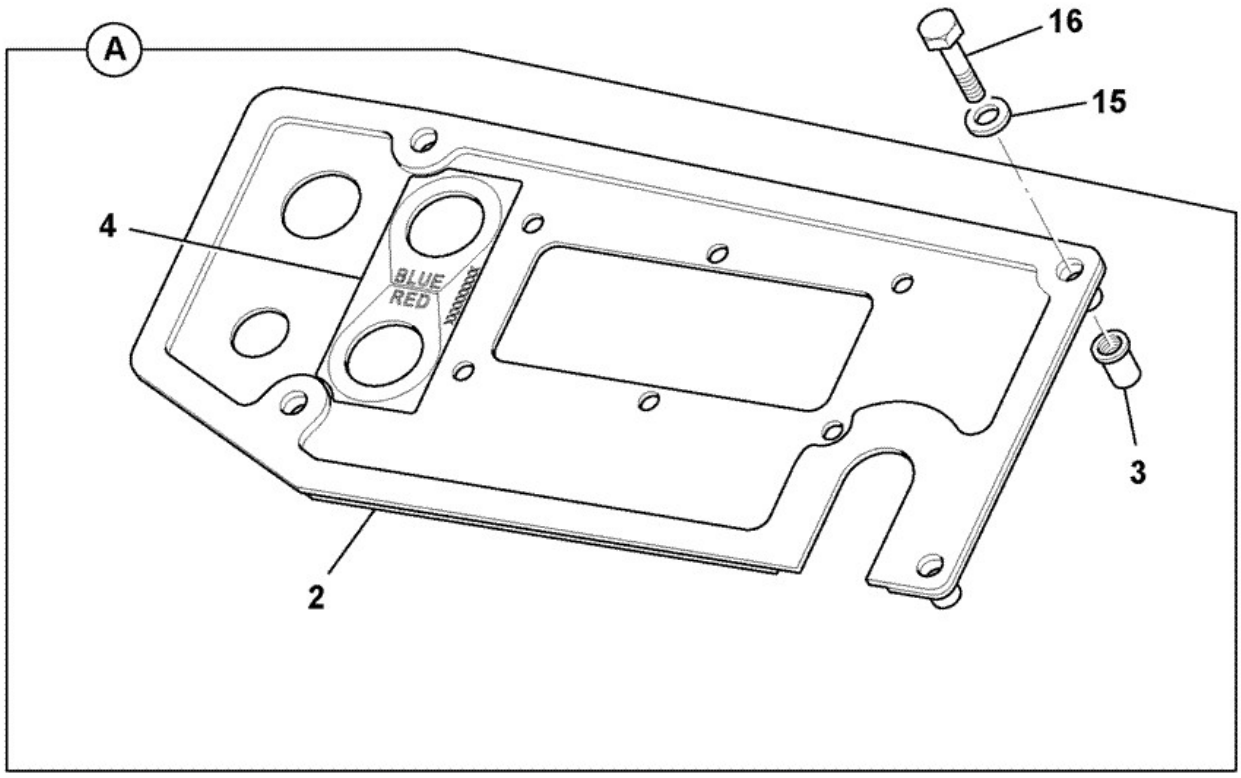

931530

Elemento	Pieza Nº	Cambiar número	Descripción	Código de uso	CANT.

A	128/C2564		Placa cab junction	A	1
A	128/C2583		Placa canopy junction	B	1
2	:813/10232		Junta bulkhead plate cab/canopy	A & B	1
3	:826/11523		Tuerca rivet nut M6	A & B	4
4	:332/C7579		Rótulo junction plate	A	1
15	1412/0001D		Arandela		4
16	1315/0207D		Tornillo M6 x 25mm		4

9812/0010 B2-28-4 BULKHEAD PLATE, CAB/CANOPY ELECTRICS,

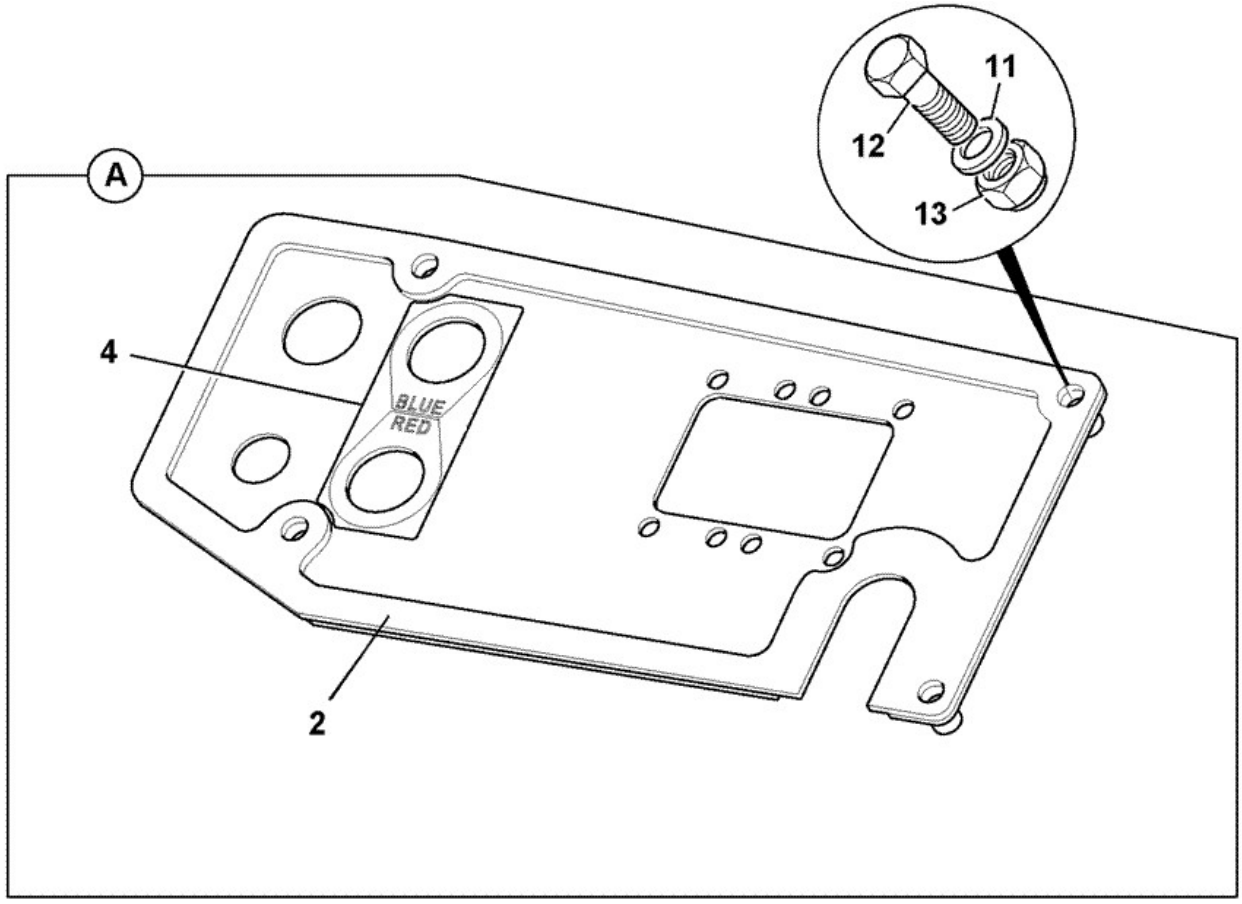

931531

Elemento	Pieza Nº	Cambiar número	Descripción	Código de uso	CANT.

A	128/F4492		Placa cab junction *cab builds*	A	1
A	128/F4493		Placa canopy junction *canopy builds*	B	1
2	813/10232		Junta bulkhead plate cab/canopy	A, B	1
4	332/C7579		Rótulo junction plate	A	1
11	1412/0001D		Arandela	A, B	4
12	1315/0207D		Tornillo M6 x 25mm	A, B	4
13	1370/0103D		Tuerca M6 lock	A, B	4

Catálogo de productos \ CONSTRUCTION \ REST OF WORLD \ CONSTRUCTION / INDUSTRIAL \ BACKHOE LOADER 3CX,4CX,214,215,217 \ 3CX 00960000-00989999,01297000-01297999,01327000-01349999,01616000-01625999,01705500-01709999 84hp 9812/0010 \ B CARROCERIA, CABINA SECCION CARGADORA \ B02 CABINA

9812/0010 B2-28-11 PLACA OBTURADORA, MAMPARO DELANT\, 0

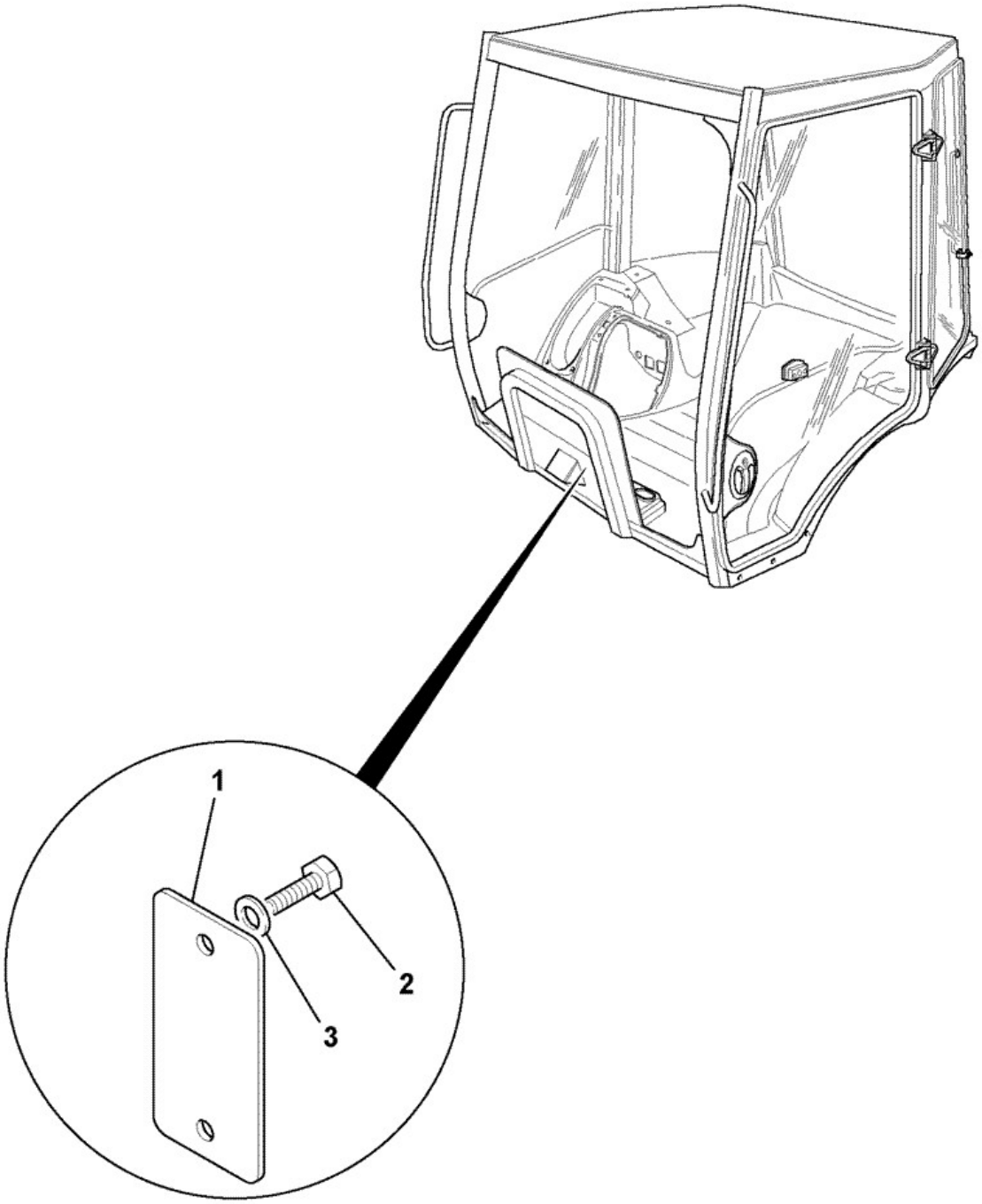

775600

Elemento	Pieza Nº	Cambiar número	Descripción	Código de uso	CANT.

1	331/48352		Tapa front bulkhead		1
2	1315/0103Z		Tornillo		2
3	1420/0005Z		Arandela M5		2

Catálogo de productos \ CONSTRUCTION \ REST OF WORLD \ CONSTRUCTION / INDUSTRIAL \ BACKHOE LOADER 3CX,4CX,214,215,217 \ 3CX 00960000-00989999,01297000-01297999,01327000-01349999,01616000-01625999,01705500-01709999 84hp 9812/0010 \ B CARROCERIA, CABINA SECCION CARGADORA \ B03 SECCION CARGADORA

9812/0010 B3-1-2 BRAZOS CARGADORA, 0, 0

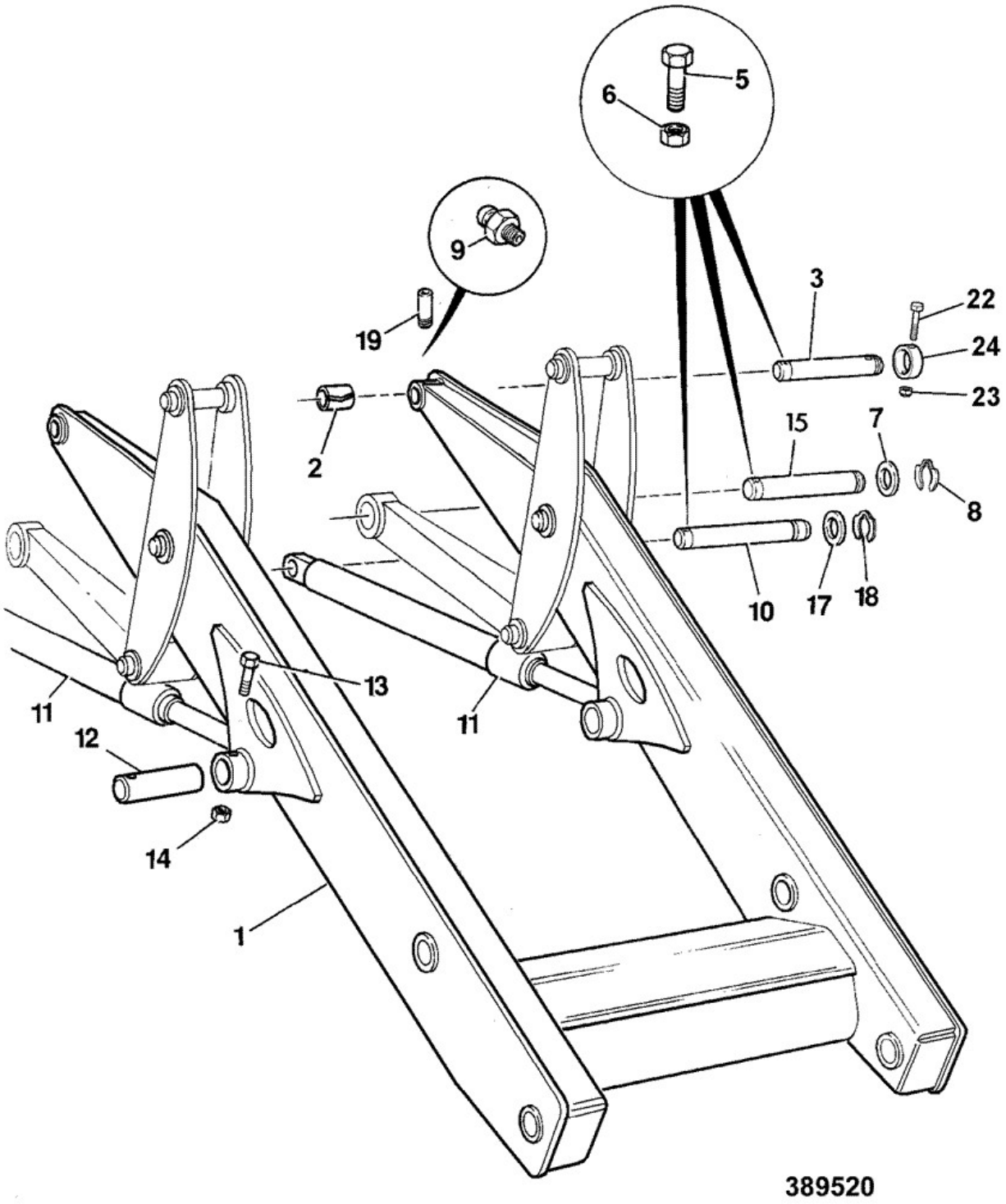

Elemento	Pieza Nº	Cambiar número	Descripción	Código de uso	CANT.
1	128/14592		Barra loader, short 2500mm long		1

2	:808/00296		Casquillo		2
3	811/90486		Pasador pivot 60 x 260		2
5	1315/3520Z		Tornillo M12 x 100mm *Lift ram to frame.*		2
5	1315/3523Z		Tornillo M12x130 *Link to frame pivot*		2
5	1315/3524Z		Tornillo M12 x 140 Lg. *Arm to frame pivot*		2
6	1370/0403Z		Tuerca M12		8
6	1370/0401Z		Tuerca		2
7	823/00471		Arandela 1.45mm max		2
8	821/00517		Arandela elástica 60mm pin		2
9	1450/1007		Engrasador grease 45 deg. angle		2
10	811/90593		Pasador pivot, 50.8 diax251		2
10	811/90592		Pasador pivot 50.8diax265 *if heavy lift rams fitted*		2
11	****		*Lift ram see index E4*		2
12	811/80004		Pasador pivot		2
13	1315/3418Z		Tornillo M10x80		2
14	1370/0303Z		Tuerca lock M10		2
15	811/10111		Pasador pivot loader arms		2
17	823/00220		Arandela 1.40mm thick		6
17	823/00237		Suplemento 0.95mm thick		1
17	819/00097		Espaciador		4
18	826/00874		Arandela elástica		4
19	653/00162		Tubería grease		2
20	835/00017		Tapa grease nipple		4
21	2410/1308		Aro de refuerzo blind *Use with item 10.*		2
22	1315/3520Z		Tornillo M12 x 100mm		2
23	1370/0403Z		Tuerca M12		2
24	821/10110		Anillo retaining		2

9812/0010 B3-1-3 ARMS, LOADER

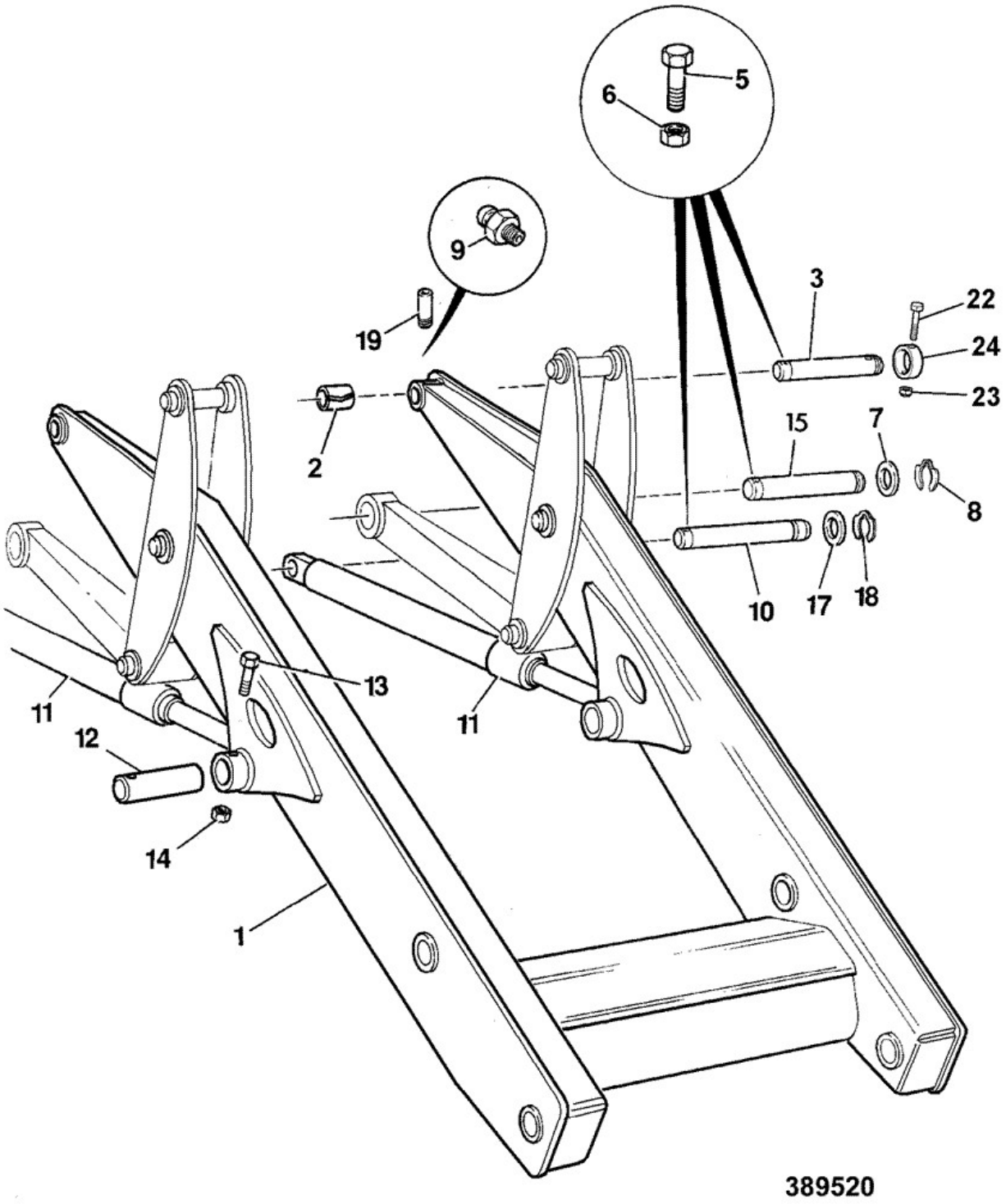

Elemento	Pieza Nº	Cambiar número	Descripción	Código de uso	CANT.
1	128/16333		Barra loader, short, 2WS 2500 ctrs		1

2	:808/00296		Casquillo		2
3	811/90486		Pasador pivot 60 x 260		2
5	1315/3520Z		Tornillo M12 x 100mm *Lift ram to frame.*		2
5	1315/3523Z		Tornillo M12x130 *Link to frame pivot*		2
5	1315/3524Z		Tornillo M12 x 140 Lg. *Arm to frame pivot*		2
6	1370/0403Z		Tuerca M12		8
6	1370/0401Z		Tuerca		2
7	823/00471		Arandela 1.45mm max		2
8	821/00517		Arandela elástica 60mm pin		2
9	1450/1007		Engrasador grease 45 deg. angle		2
10	811/90677		Pasador 50.8x259		2
10	811/90592		Pasador pivot 50.8diax265 *if heavy lift rams fitted*		2
11	****		*Lift ram see index E4*		2
12	811/90676		Pasador pivot, 44.35x169		2
13	1315/3418Z		Tornillo M10x80		2
14	1370/0303Z		Tuerca lock M10		2
15	811/10111		Pasador pivot loader arms		2
17	823/00220		Arandela 1.40mm thick		6
17	823/00237		Suplemento 0.95mm thick		1
17	819/00097		Espaciador		4
17	823/10750		Espaciador 51.2 x 75 x 4mm *fit between chassis and ram dump end*		2
18	826/00874		Arandela elástica		4
19	653/00162		Tubería grease		2
20	835/00017		Tapa grease nipple		4
21	2410/1308		Aro de refuerzo blind *Use with item 10.*		2
22	1315/3520Z		Tornillo M12 x 100mm		2
23	1370/0403Z		Tuerca M12		2
24	821/10110		Anillo retaining		2

Catálogo de productos \ CONSTRUCTION \ REST OF WORLD \ CONSTRUCTION / INDUSTRIAL \ BACKHOE LOADER 3CX,4CX,214,215,217 \ 3CX 00960000-00989999,01297000-01297999,01327000-01349999,01616000-01625999,01705500-01709999 84hp 9812/0010 \ B CARROCERIA, CABINA SECCION CARGADORA \ B03 SECCION CARGADORA

9812/0010 B3-2-1 BRAZOS CARGADORA, ARTICULACIÓN, 0

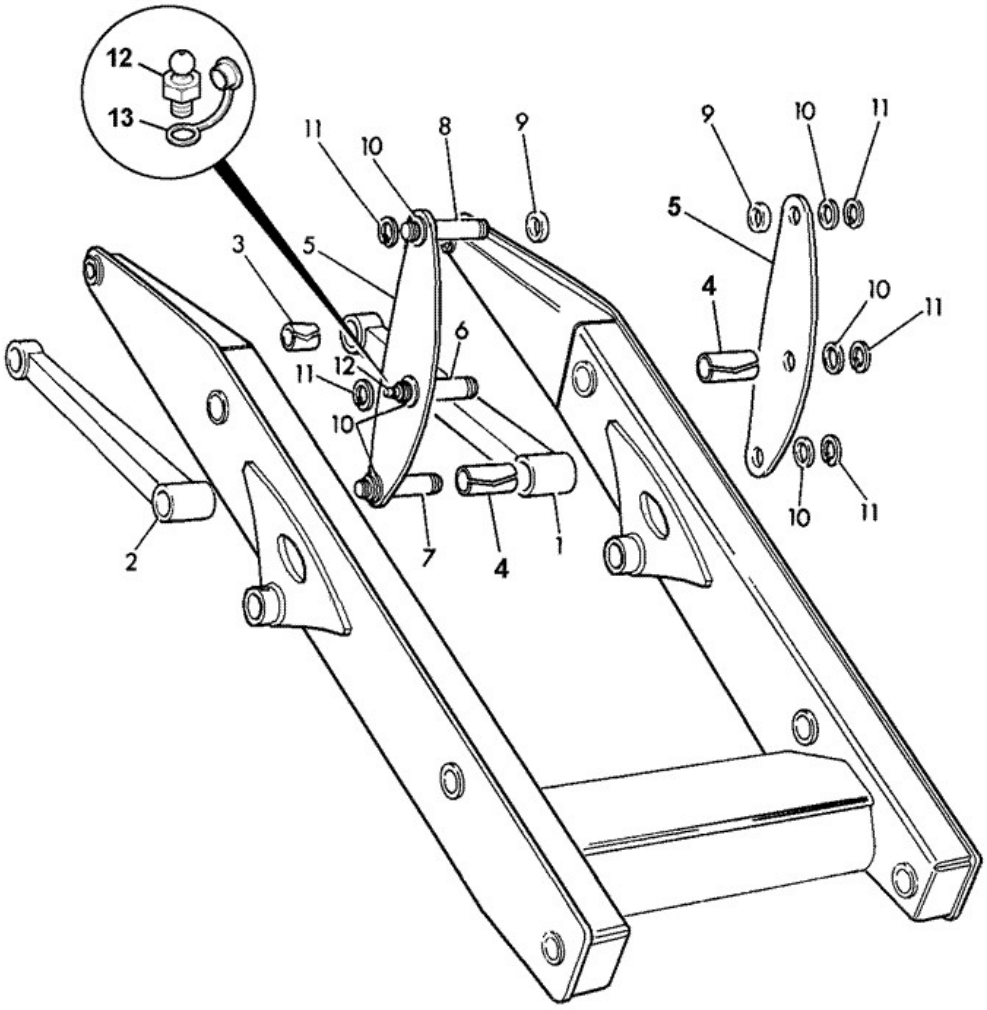

389541

Elemento	Pieza Nº	Cambiar número	Descripción	Código de uso	CANT.
1	335/03113		Eslabón level,left hand with strut mounts		1

1A	1450/0002		Engrasador grease, straight 1/4 *fitted to link*		2
2	335/03114		Eslabón level,right hand plain		1
2A	1450/0002		Engrasador grease, straight 1/4 *fitted to link*		2
3	808/00297		Casquillo		2
4	1208/0023		Casquillo		4
5	331/43848		Placa interlever 644 ctrs		4
6	811/90472		Pasador pivot black		2
7	811/90471		Pasador pivot black		2
8	811/90471		Pasador pivot black		2
9	120/38003		Espaciador		4
10	819/00049		Suplemento 1.4mm *Qty Max=8 Min=2*		8
10	819/00148		Espaciador 3mm *Qty Max=2 Min=0*		2
10	823/10347		Suplemento 0.5/0.6mm o/dia 65mm		8
11	823/00334		Clip		12
12	1450/0001		Engrasador grease, straight 1/8 BSP *fitted to item 6*		2
13	835/00017		Tapa grease nipple		2

9812/0010 B3-3-1 BRAZOS CARGADORA ART, ICULACION PALA,

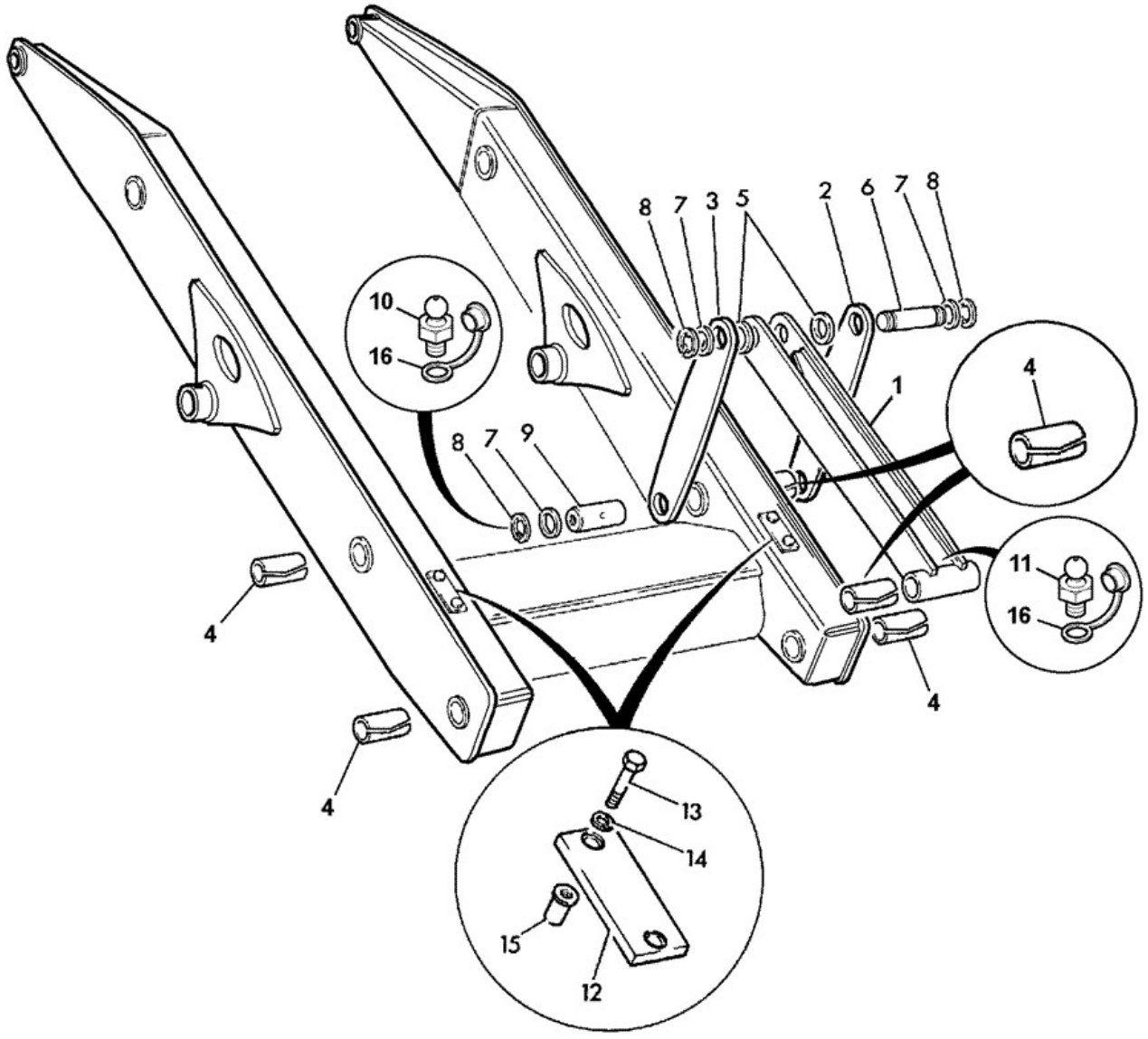

389571

Elemento	Pieza Nº	Cambiar número	Descripción	Código de uso	CANT.

1	125/35100		Eslabón crowd 670mm long		2
2	331/43840		Palanca crowd, short 478.5mm ctrs		2
3	331/43840		Palanca crowd, short 478.5mm ctrs		2
4	1208/0023		Casquillo		6
5	809/10030		Casquillo		4
6	811/90471		Pasador pivot black		2
7	819/00049		Suplemento 1.4mm		8
7	823/10347		Suplemento 0.5/0.6mm o/dia 65mm		8
7	819/00148		Espaciador 3mm		4
8	823/00334		Clip		8
9	811/90472		Pasador pivot black		2
10	1450/0001		Engrasador grease, straight 1/8 BSP		2
11	1450/0002		Engrasador grease, straight 1/4		2
12	123/03326		Placa shovel stop 12mm		2
12	331/30323		Tope shovel, 25mm quickhitch		2
13	1315/0408Z		Tornillo M10 x 30		4
13	1391/3411Z		Tornillo de cierre *Use with industrial Q hitch + forks.*		4
14	1425/0008Z		Arandela Spring M10 *no longer fitted*		4
15	826/01249		Tuerca rivet M10 open end for 6 to 8.5mm plate		4
16	835/00017		Tapa grease nipple		6

9812/0010 B3-3-5 BRAZOS CARGADORA ART, ICULACION PALA AUSTR, IA,SUIZA,ITALIA

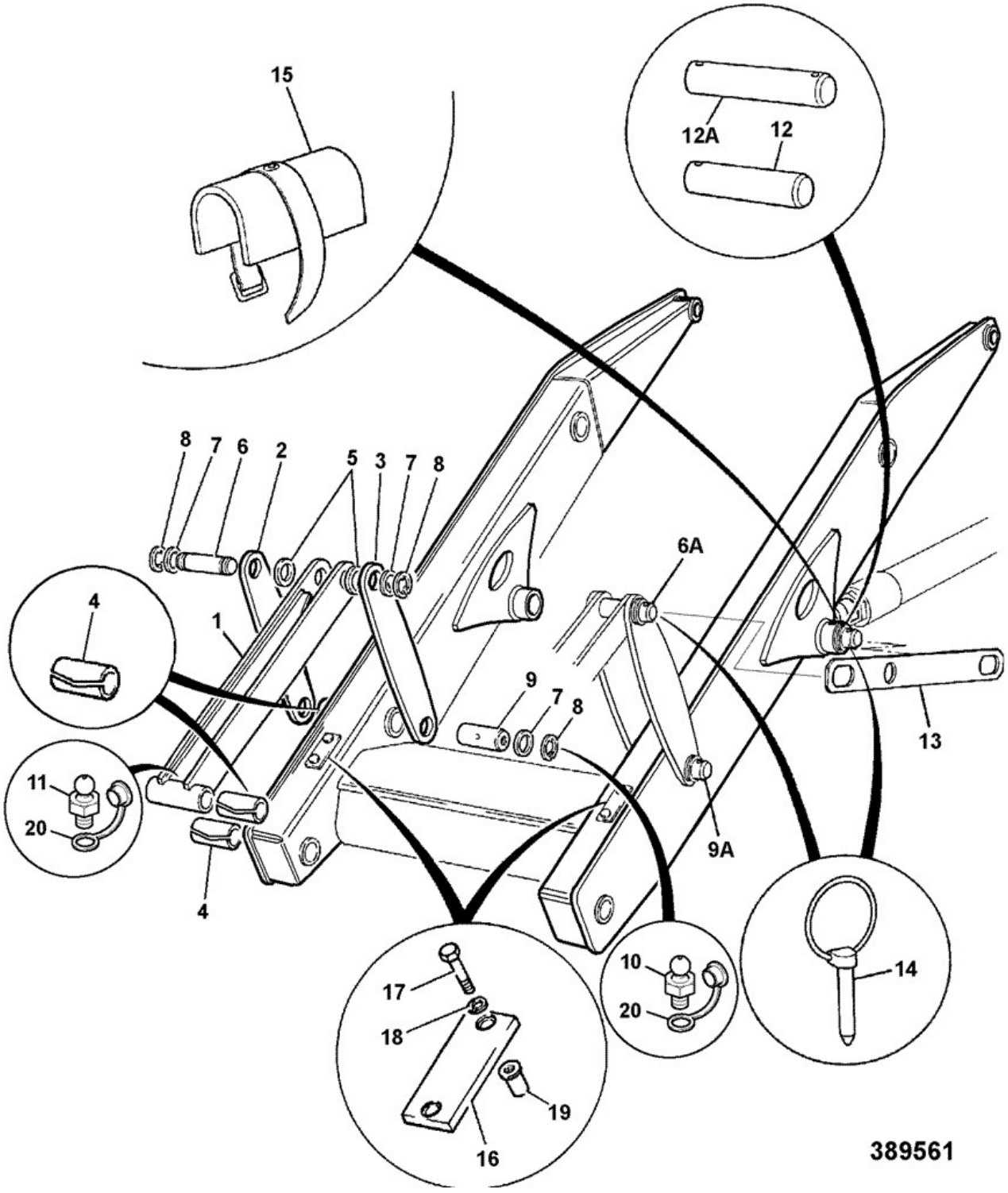

Elemento	Pieza Nº	Cambiar número	Descripción	Código de uso	CANT.

1	125/35100		Eslabón crowd 670mm long		2
2	331/43840		Palanca crowd, short 478.5mm ctrs		2
3	331/43840		Palanca crowd, short 478.5mm ctrs		2
4	1208/0023		Casquillo		6
5	809/10030		Casquillo		4
6	811/90471		Pasador pivot black		1
6A	811/70014		Pasador pivot		1
7	819/00049		Suplemento 1.4mm		8
7	823/10347		Suplemento 0.5/0.6mm o/dia 65mm		8
7	819/00148		Espaciador 3mm		4
8	823/00334		Clip		8
9	811/90472		Pasador pivot black		1
9A	811/70014		Pasador pivot		1
10	1450/0001		Engrasador grease, straight 1/8 BSP		2
11	1450/0002		Engrasador grease, straight 1/4		2
12	811/80004		Pasador pivot		1
12A	811/60009		Pasador pivot		1
13	123/02749		Puntal		1
14	826/00512		Pasador lynch		2
15	126/00740		Puntal jury		1
16	123/03291		Placa stop		2
17	1315/0408Z		Tornillo M10 x 30		4
18	1425/0008Z		Arandela Spring M10 *no longer fitted*		4
19	826/01105		Tuerca rivet,M10 open ended		4
20	835/00017		Tapa grease nipple		6

9812/0010 B3-4-2 PUNTAL SEGURIDAD, BARRAS CARGADORA, 0

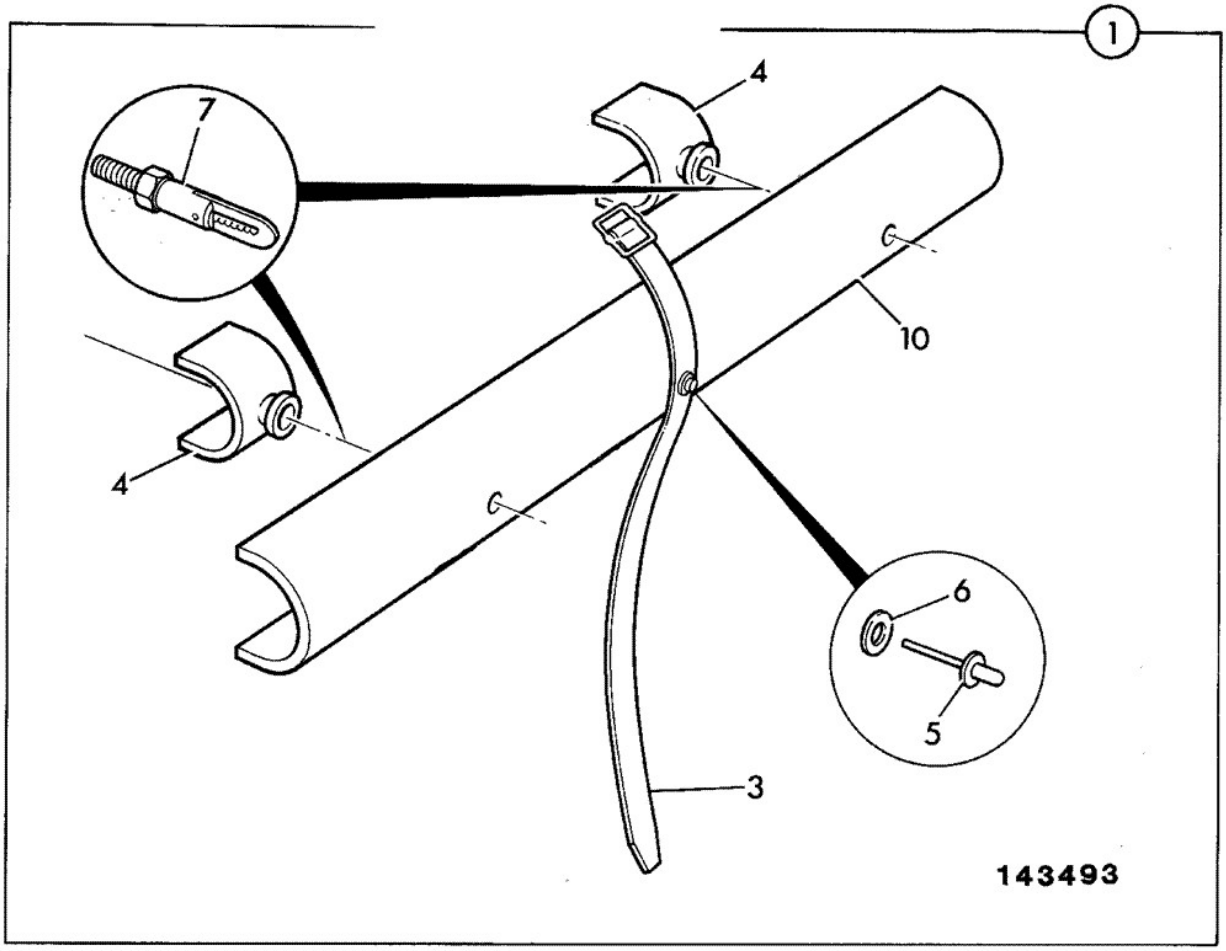

Elemento	Pieza Nº	Cambiar número	Descripción	Código de uso	CANT.
1	128/14206		Puntal safety,assembly loader arms,Tier 2		1
3	:123/04744		Correa		1
4	:123/02971		Tope		2
5	:826/01345		Remache pop		1
6	:1414/0011Z		Arandela 2 BA		1
7	123/04734		Fijación antiluce		2
10	:331/39126		Puntal safety 690mm		1
11	1370/0301Z		Tuerca		2

Catálogo de productos \ CONSTRUCTION \ REST OF WORLD \ CONSTRUCTION / INDUSTRIAL \ BACKHOE LOADER 3CX,4CX,214,215,217 \ 3CX 00960000-00989999,01297000-01297999,01327000-01349999,01616000-01625999,01705500-01709999 84hp 9812/0010 \ B CARROCERIA, CABINA SECCION CARGADORA \ B04 EXCAVADORA

9812/0010 B4-1-1 PUNTAL CARRO, DESPL\ LATERAL, 0

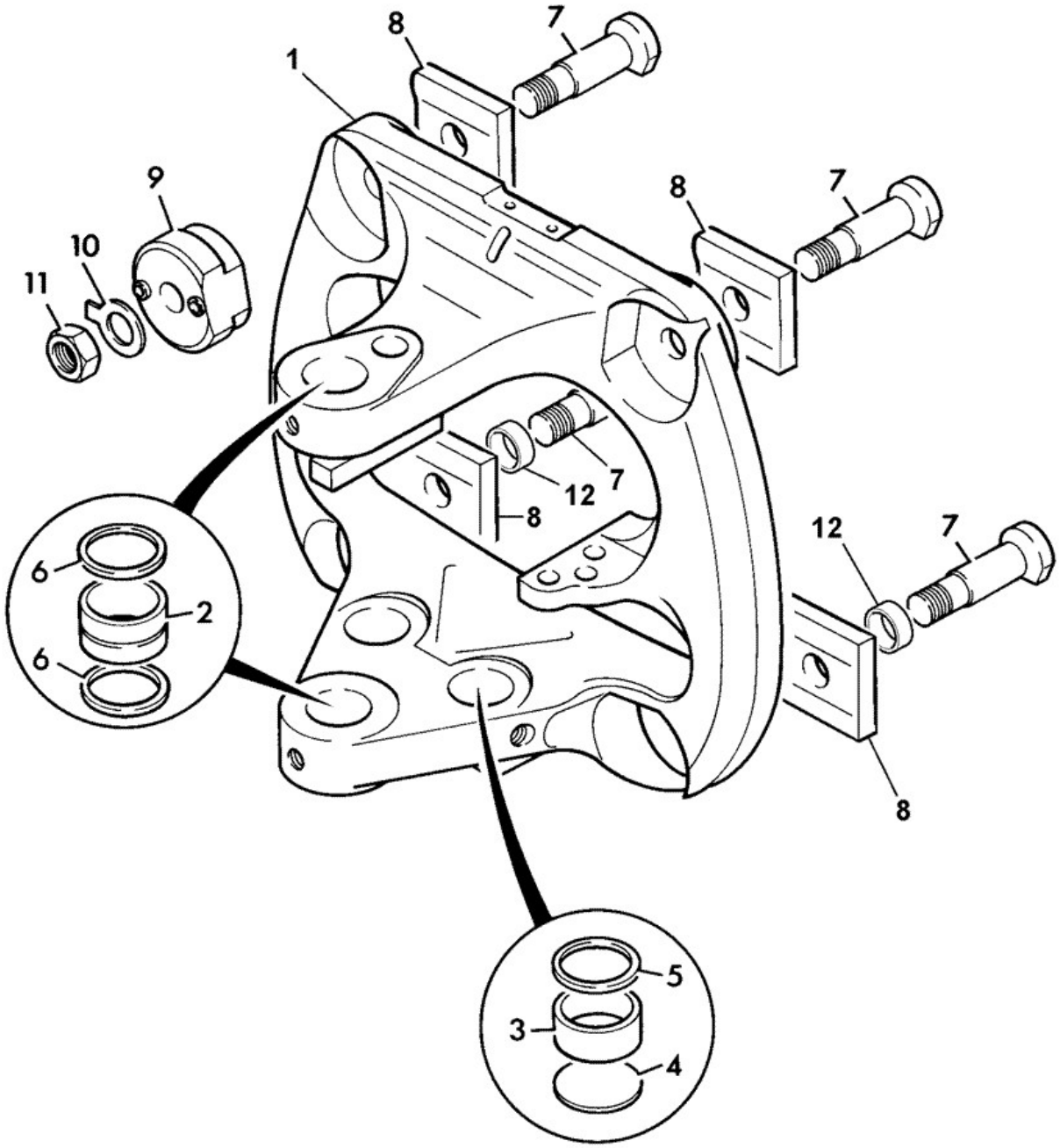

442840

Elemento	Pieza Nº	Cambiar número	Descripción	Código de uso	CANT.
1	589/10273		Carro kingpost sideshift		1

2	831/10211		Cojinete liner, 70x84x57 slew pivot		2
3	808/00388		Cojinete liner		2
4	123/05228		Disco blanking		2
5	123/04237		Junta		2
6	813/00456		Junta pivot pin grease		4
7	826/11235		Tornillo lock 1.5UNF x 205mm long		4
7	826/11511	<M1617293	Tornillo lock 1.5UNF x 185mm long *15'6" non power-slide builds only*		4
7	826/11235	<M1707769	Tornillo lock 1.5UNF x 205mm long *15'6" non power-slide builds only*		4
7	826/11511	>M1707770	Tornillo lock 1.5UNF x 185mm long *15'6" non power-slide builds only*		4
8	120/13021P	<M1617293	Bloque		4
8	331/56478	>M1617294	Placa clamp		4
9	****		*See Circuit, hydra clamp Section E1.*		4
10	823/10331		Arandela tab, L.H.		2
10	823/10332		Arandela tab, R.H.		2
11	826/00820		Tuerca		4
12	****		*not fitted*		1

9812/0010 B4-1-10 PUNTAL CARRO, DESPL\ LATERAL, DESPL\ LATERAL ASIST\

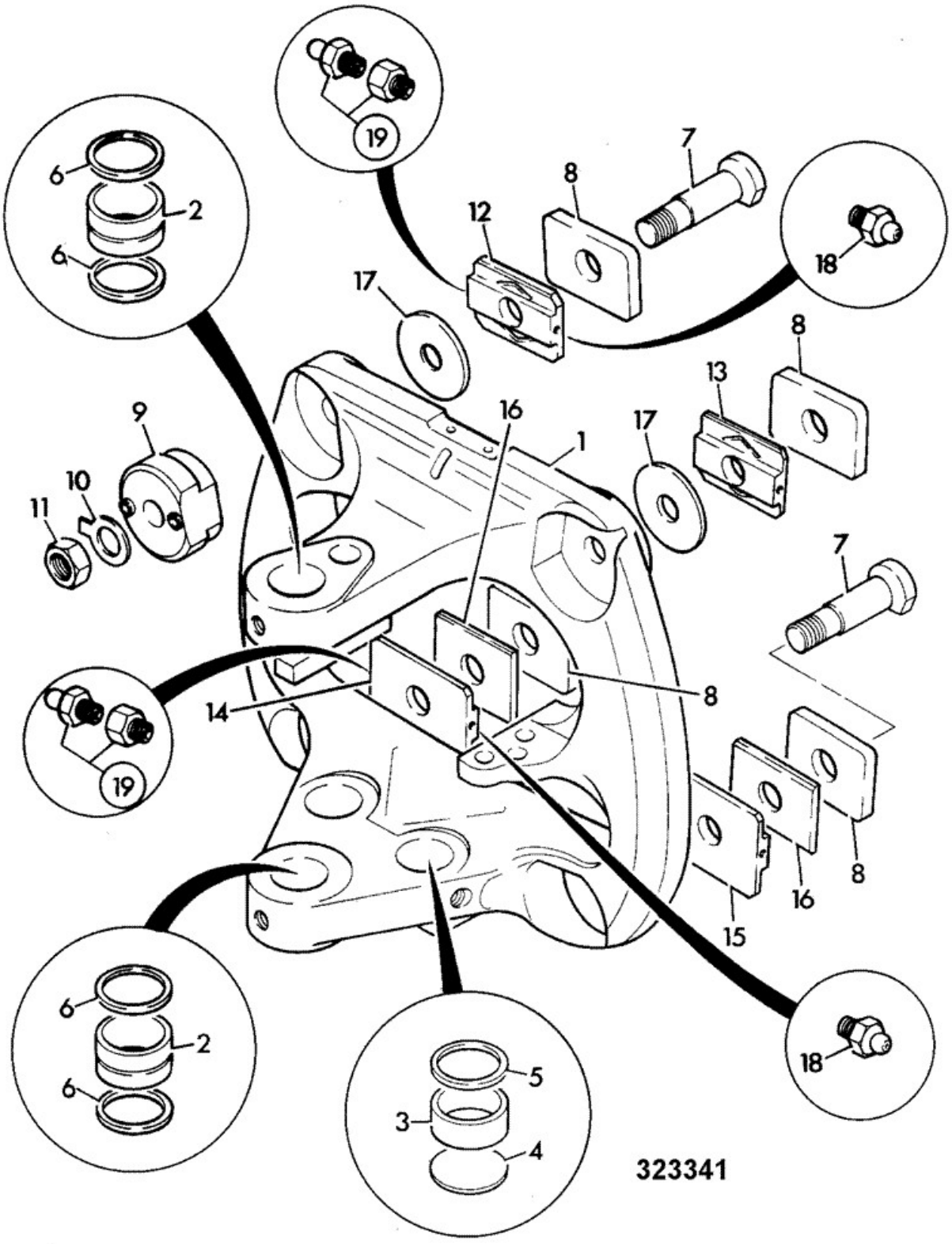

Elemento	Pieza Nº	Cambiar número	Descripción	Código de uso	CANT.
1	589/10275		Carro kingpost powerslide		1
2	808/00396		Cojinete liner		2
3	808/00388		Cojinete liner		2
4	123/05228		Disco blanking		2
5	123/04237		Junta		2

6	813/00456		Junta pivot pin grease		4
7	826/11235		Tornillo lock 1.5UNF x 205mm long		4
8	123/07939	Superseded	Placa clamp		4
8	331/56478		Placa clamp		4
9	****		*See Circuit, hydra clamp Section E1.*		4
10	823/00576		Arandela clamp left hand		2
10	823/00577		Arandela clamp right hand		2
11	826/00820		Tuerca		4
12	831/10186	Superseded	Bloque wear slider top powered sideshift		1
12	331/56475	Superseded	Bloque wear slider top powered sideshift		1
12	332/D1432		Bloque wear, slider top powered sideshift		1
13	831/10186	Superseded	Bloque wear slider top powered sideshift		1
13	331/56475	Superseded	Bloque wear slider top powered sideshift		1
13	332/D1432		Bloque wear, slider top powered sideshift		1
14	831/10185	Superseded	Bloque wear slider bottom powered sideshift		1
14	331/56477	Superseded	Bloque wear slider bottom powered sideshift		1
14	332/D1433		Bloque wear, slider bottom powered sideshift		1
15	831/10185	Superseded	Bloque wear slider bottom powered sideshift		1
15	331/56477	Superseded	Bloque wear slider bottom powered sideshift		1
15	332/D1433		Bloque wear, slider bottom powered sideshift		1
16	123/08030		Bloque slide bottom inner		2
17	123/08025		Espaciador		2
18	1450/1007		Engrasador grease 45 deg. angle		4
18	1450/0001		Engrasador grease, straight 1/8 BSP		4
19	816/25038	Superseded	Adaptador		4
19	816/90892		Adaptador		4

9812/0010 B4-2-1 GIRO/BASCULAMIENTO, COMPONENTES, DESPLAZAMIENTO LATERAL

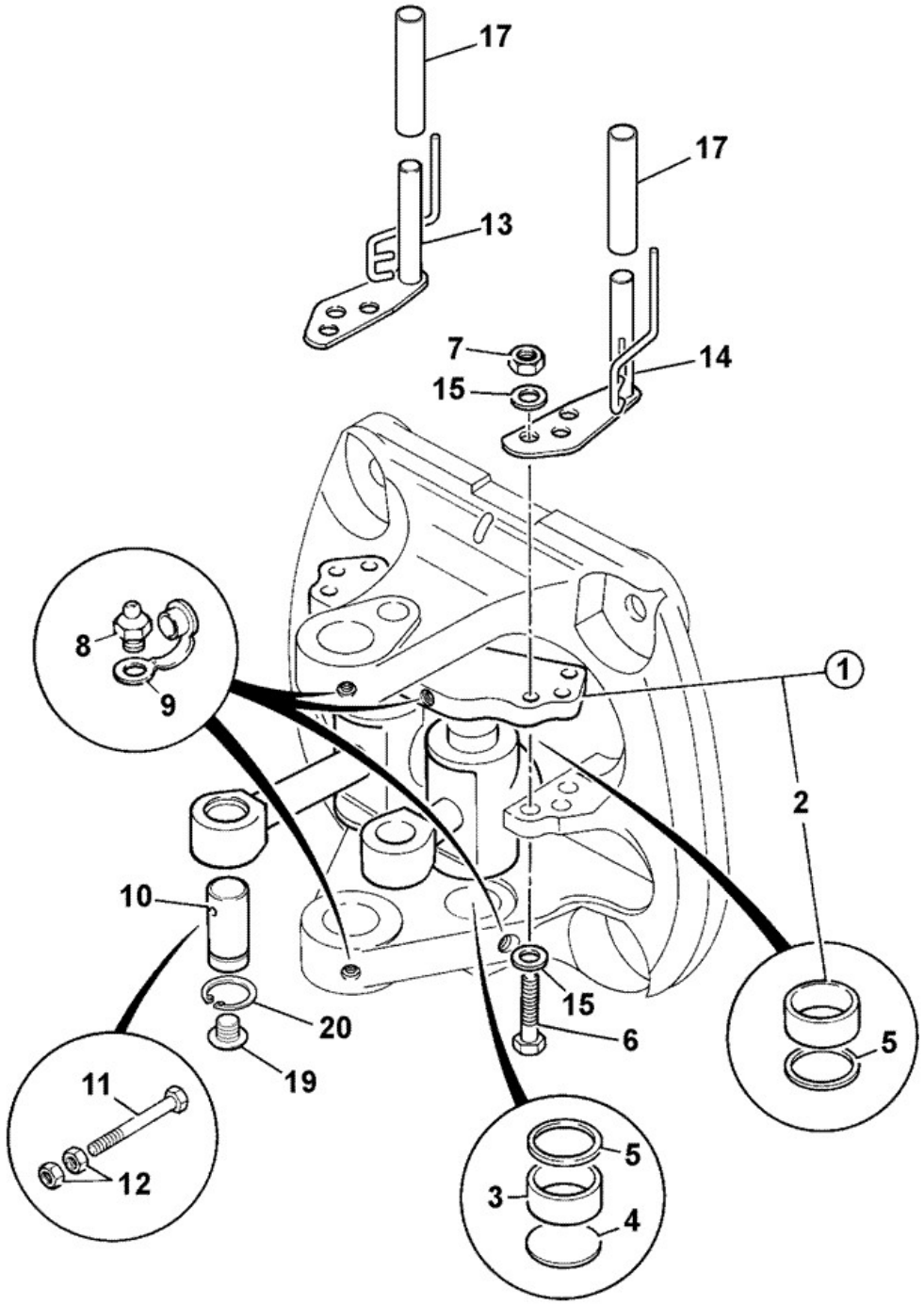

Elemento	Pieza Nº	Cambiar número	Descripción	Código de uso	CANT.

1	126/01082		Soporte trunnion		1
2	:808/00388		Cojinete liner		2
3	808/00388		Cojinete liner		2
4	123/05228		Disco blanking		1
5	123/04237		Junta		4
6	1316/3818	<M0980445	Tornillo *Véase la nota 1*	A	6
6	1316/3818Z		Tornillo M20 x 80 (10.9)	B	6
7	1371/0701	<M0980445	Tuerca *see note 1*	A	6
7	1371/0701Z		Tuerca hex M20 high strength	B	6
8	1450/0001		Engrasador grease, straight 1/8 BSP		2
9	835/00017		Tapa grease nipple		2
10	811/90198		Pasador pivot, 172mm long with groove		2
11	1315/3526Z	<M1708062	Tornillo M12 x160		2
11	1315/3527Z	>M1708063	TORNILLO M12 x170		2
12	1370/0402Z		Tuerca M12		4
13	125/00456		Guía left hand hose		1
13	125/00549		Guía left hand hose powered sideshift *powered sideshift only*		1
14	125/00457		Guía right hand hose sideshift		1
14	125/00550		Guía right hand hose powered sideshift *powered sideshift only*		1
15	823/00353	Superseded	Arandela hardened M20	A	12
15	823/00604		Arandela hardened,zinc plated M20	B	12
17	123/07492		Tubo wear nylon		2
17	123/07938		Tubo wear *powered sideshift only*		2
18	123/07540		Tapa bolt cover		2
19	835/00188		Tapón *Use with item 10*		2
20	2203/0067		Arandela elástica		2

Nota 1: do not mix plated and unplated fasteners

9812/0010 B4-3-1 PUNTAL-DESPL LATERAL, 14'0 RETROEXCAV, 0

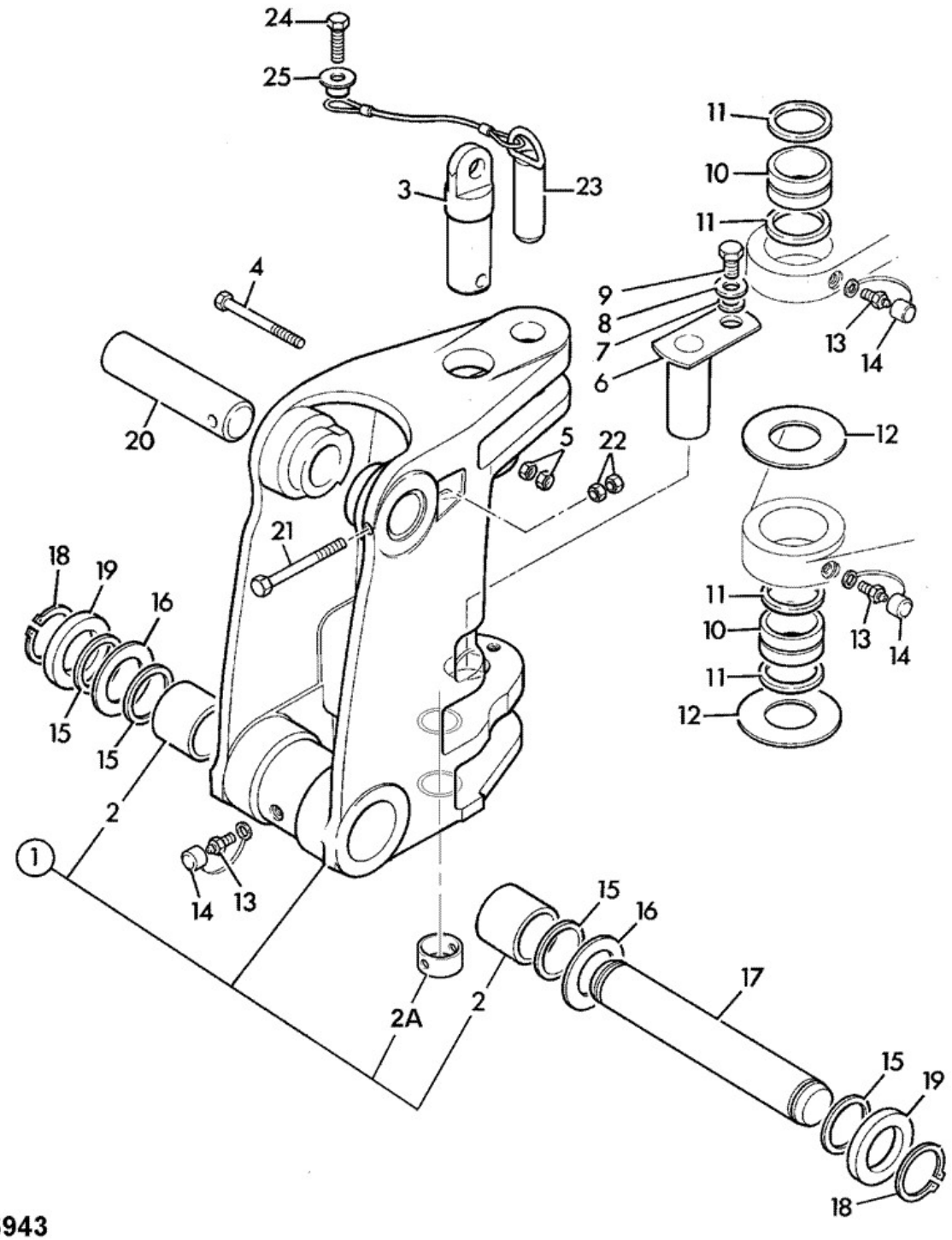

246943

Elemento	Pieza Nº	Cambiar número	Descripción	Código de uso	CANT.

A	128/10855		Kit Service kingpost 14' & top btm & slew pin		1
1	NLA		No disponible *Use service kit 128/10855* *Véase la nota 1*		1
2	:808/00385		Cojinete liner 70mm OD x 60mm ID.		2
2A	:831/10229		Cojinete liner		4
3	811/90165		Pasador k.post top pivot sideshift		1
4	1391/3530D		Tornillo de cierre M12x200 Dacromet coated		1
5	1370/0402Z		Tuerca M12		2
6	911/40048		Pasador k.post bottom pivot sideshift		1
7	123/05226		Espaciador		1
8	1412/0005Z		Arandela plain 1/2" X 41mm OD		1
9	826/11163		Tornillo M12x30		1
10	831/10211		Cojinete liner, 70x84x57 slew pivot		2
11	813/00456		Junta pivot pin grease		4
12	823/10270		Arandela thrust, 71x150x6.05		2
12	998/00007		Arandela 4mm thrust		0
12	998/00006		Arandela 7mm thust		0
13	1450/0001		Engrasador grease, straight 1/8 BSP		3
14	835/00017		Tapa grease nipple		3
15	813/00427		Junta grease *Kingpost*		2
16	819/00143		Suplemento 1.4mm		2
17	811/70098		Pasador pivot		1
17	811/70098A		Pasador pivot, 60X440mm 0.1mm O/S		1
17	811/70098B		Pasador pivot, 60X440mm 0.25mm O/S		1
18	821/00297		Arandela elástica		2
19	819/00099		Espaciador 5mm		0
19	819/00144		Espaciador 6mm		0
19	819/00145		Espaciador 8mm		0
20	811/50483		Pasador pivot *Boom ram pivot*		1
20	811/50483A		Pasador pivot, 50X250mm 0.1mm O/S		1
20	811/50483B		Pasador pivot, 50X250mm 0.25mm O/S		1
21	1315/3524Z		Tornillo M12 x 140 Lg.		1
22	1370/0402Z		Tuerca M12		2
23	125/81200		Pasador slewlock		1
24	1315/0409Z		M10 X 35		1
25	123/05243		Espaciador		1

Nota 1: See TI 2/266

9812/0010 B4-3-2 PUNTAL-DESPL LATERAL, 14'0 RETROEXCAV, 0

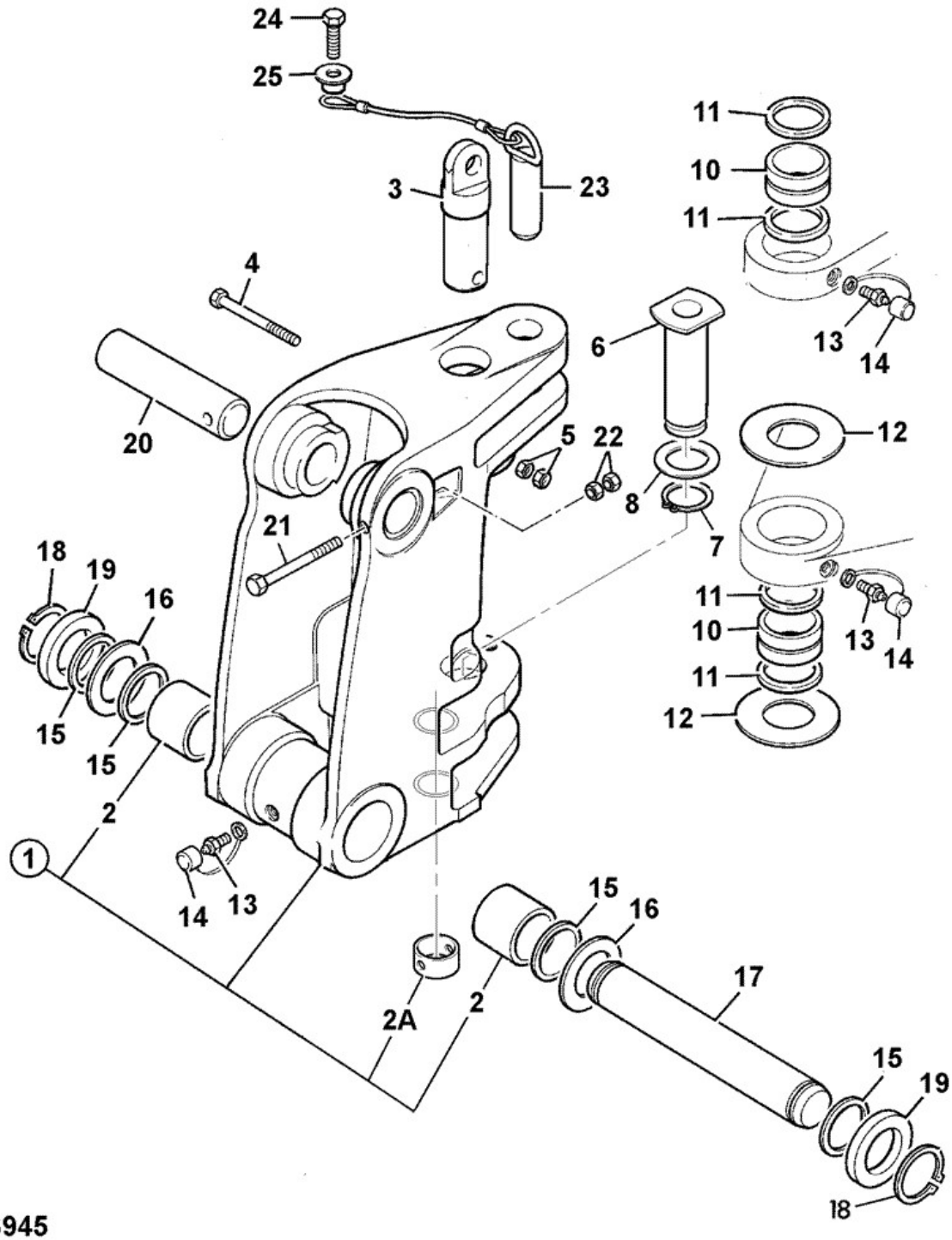

246945

Elemento	Pieza Nº	Cambiar número	Descripción	Código de uso	CANT.

A	128/10855		Kit Service kingpost 14' & top btm & slew pin		1
1	128/10726		Puntal 14'0 backhoe sideshift		1
2	:808/00385		Cojinete liner 70mm OD x 60mm ID.		2
2A	:831/10229		Cojinete liner		4
3	811/90165		Pasador k.post top pivot sideshift		1
4	1391/3530D		Tornillo de cierre M12x200 Dacromet coated		1
5	1370/0402Z		Tuerca M12		2
6	911/40104		Pasador SS k/post bttm pivot circlip retention		1
7	821/10354		Arandela elástica		1
8	823/10638		Suplemento 82od x 71id x 0.5thk		0
8	823/10704		Suplemento 82od x 71id X 1.5thk		0
10	831/10211		Cojinete liner, 70x84x57 slew pivot		2
11	813/00456		Junta pivot pin grease		4
12	823/10270		Arandela thrust, 71x150x6.05		2
12	998/00007		Arandela 4mm thrust		0
12	998/00006		Arandela 7mm thust		0
13	1450/0001		Engrasador grease, straight 1/8 BSP		3
14	835/00017		Tapa grease nipple		3
15	813/00427		Junta grease *Kingpost*		2
16	819/00143		Suplemento 1.4mm		2
17	811/70098		Pasador pivot		1
17	811/70098A		Pasador pivot, 60X440mm 0.1mm O/S		1
17	811/70098B		Pasador pivot, 60X440mm 0.25mm O/S		1
18	821/00297		Arandela elástica		2
19	819/00099		Espaciador 5mm		0
19	819/00144		Espaciador 6mm		0
19	819/00145		Espaciador 8mm		0
20	811/50483		Pasador pivot *Boom ram pivot*		1
20	811/50483A		Pasador pivot, 50X250mm 0.1mm O/S		1
20	811/50483B		Pasador pivot, 50X250mm 0.25mm O/S		1
21	1315/3524Z		Tornillo M12 x 140 Lg.		1
22	1370/0402Z		Tuerca M12		2
23	125/81200		Pasador slewlock		1
24	1315/0409Z		M10 X 35		1
25	123/05243		Espaciador		1

Catálogo de productos \ CONSTRUCTION \ REST OF WORLD \ CONSTRUCTION / INDUSTRIAL \ BACKHOE LOADER 3CX,4CX,214,215,217 \ 3CX 00960000-00989999,01297000-01297999,01327000-01349999,01616000-01625999,01705500-01709999 84hp 9812/0010 \ B CARROCERIA, CABINA SECCION CARGADORA \ B04 EXCAVADORA

9812/0010 B4-3-3 KINGPOST-SIDESHIFT, 14'0 BACKHOE

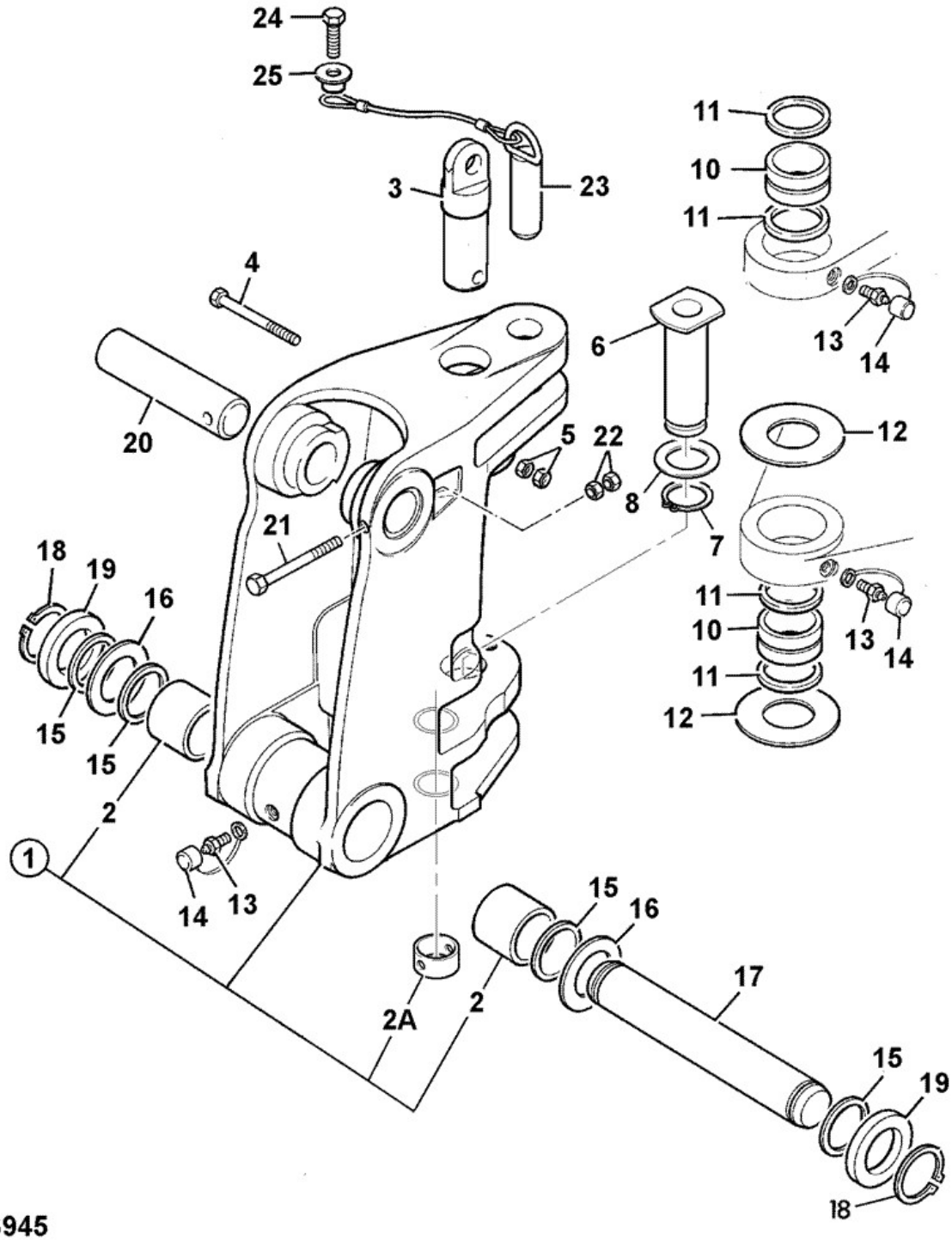

246945

Elemento	Pieza Nº	Cambiar número	Descripción	Código de uso	CANT.
1	128/15202		Puntal s/s 14ft		1

2	:808/00385		Cojinete liner 70mm OD x 60mm ID.		2
2A	:831/10229		Cojinete liner		4
3	811/90165		Pasador k.post top pivot sideshift		1
4	1391/3530D		Tornillo de cierre M12x200 Dacromet coated		1
5	1370/0402Z		Tuerca M12		2
6	911/40104		Pasador SS k/post bttm pivot circlip retention		1
7	821/10354		Arandela elástica		1
8	823/10638		Suplemento 82od x 71id x 0.5thk		0
8	823/10704		Suplemento 82od x 71id X 1.5thk		0
10	831/10211		Cojinete liner, 70x84x57 slew pivot		2
11	813/00456		Junta pivot pin grease		4
12	823/10270		Arandela thrust, 71x150x6.05		2
12	998/00007		Arandela 4mm thrust		0
12	998/00006		Arandela 7mm thust		0
13	1450/0001		Engrasador grease, straight 1/8 BSP		3
14	835/00017		Tapa grease nipple		3
15	813/00427		Junta grease *Kingpost*		2
16	819/00143		Suplemento 1.4mm		2
17	811/70098		Pasador pivot		1
17	811/70098A		Pasador pivot, 60X440mm 0.1mm O/S		1
17	811/70098B		Pasador pivot, 60X440mm 0.25mm O/S		1
18	821/00297		Arandela elástica		2
19	819/00099		Espaciador 5mm		0
19	819/00144		Espaciador 6mm		0
19	819/00145		Espaciador 8mm		0
20	811/50483		Pasador pivot *Boom ram pivot*		1
20	811/50483A		Pasador pivot, 50X250mm 0.1mm O/S		1
20	811/50483B		Pasador pivot, 50X250mm 0.25mm O/S		1
21	1315/3524Z		Tornillo M12 x 140 Lg.		1
22	1370/0402Z		Tuerca M12		2
23	125/81200		Pasador slewlock		1
24	1315/0409Z		M10 X 35		1
25	123/05243		Espaciador		1

9812/0010 B4-4-1 PLUMA, ,

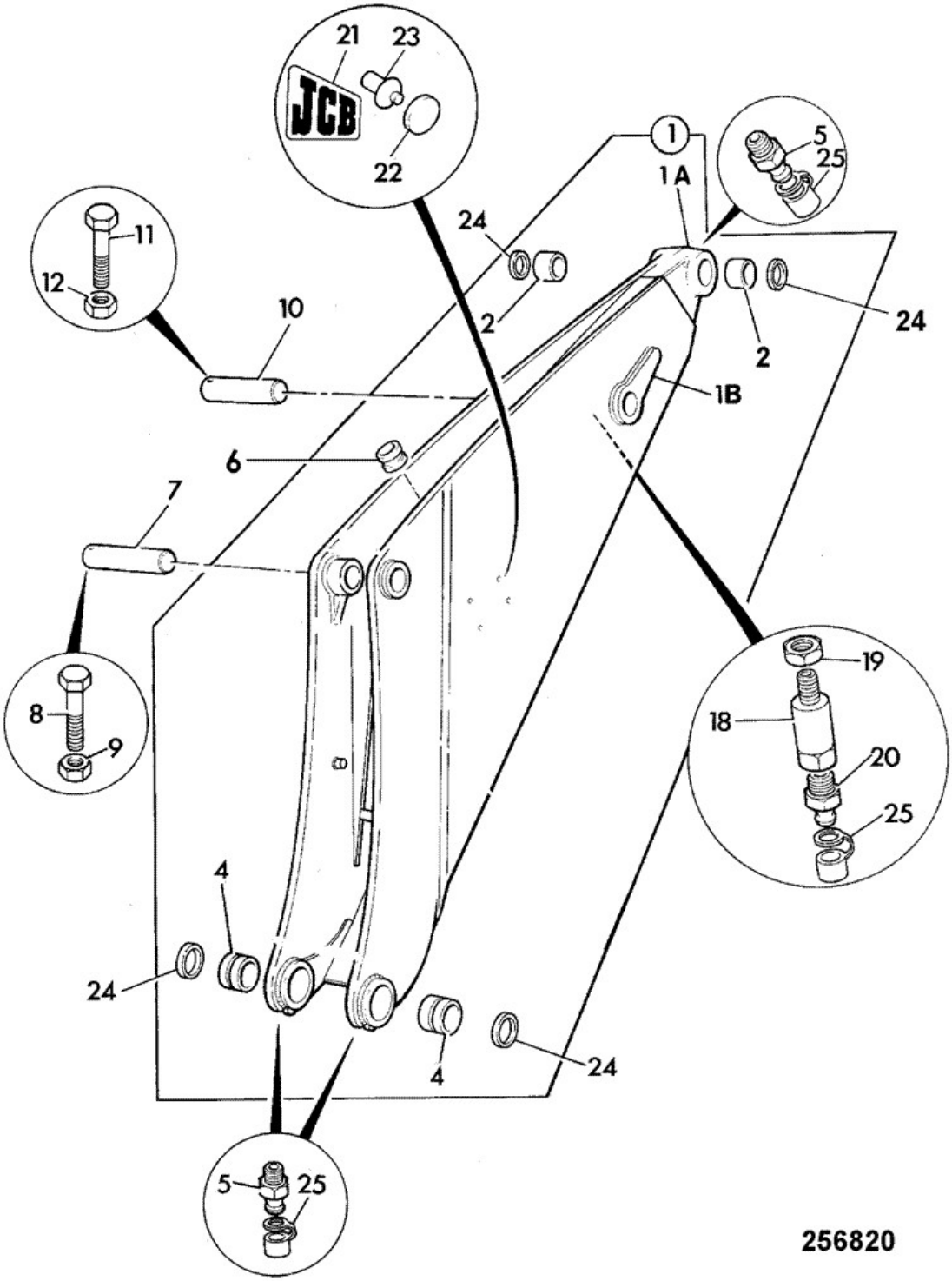

Elemento	Pieza Nº	Cambiar número	Descripción	Código de uso	CANT.
1	126/02983		Brazo assembly 14' heavy lift		1

1A	****		Pieza no reparable		1
1B	****		Pieza no reparable		1
2	:809/00131		Cojinete liner 60.06IDx70.07ODx62lg		2
4	:809/00131		Cojinete liner 60.06IDx70.07ODx62lg		2
5	1450/0001		Engrasador grease, straight 1/8 BSP		4
6	830/00314		Férula rubber		6
7	811/50569		Pasador pivot		1
7	811/50569A		Pasador pivot, 60X322mm 0.1mm O/S		1
7	811/50569B		Pasador pivot, 60X322mm 0.25mm O/S		1
8	1315/3520Z		Tornillo M12 x 100mm		1
9	1370/0403Z		Tuerca M12		1
10	811/50520		Pasador pivot		1
10	811/50520A		Pasador pivot, 50X275mm 0.1mm O/S		1
10	811/50520B		Pasador pivot, 50X275mm 0.25mm O/S		1
11	1315/3520Z		Tornillo M12 x 100mm		1
12	1370/0403Z		Tuerca M12		1
18	816/20049		Adaptador		1
19	826/00871		Tuerca		1
20	1450/0001		Engrasador grease, straight 1/8 BSP		1
21	817/17454	<M1348339	Rótulo JCB insignia 350mm high		2
21	817/17422	>M1348240	Rótulo JCB Insignia (Black)		2
22	835/00049	<M1348339	Tapón blanking		8
22	332/E8179	>M1348240	PLUG blanking 25mm dia *to fill 25mm tooling holes*		2
23	826/00867	<M1348339	Remache logo		8
24	813/00427		Junta grease		4
25	835/00017		Tapa grease nipple		5
26	835/10026		Tapón plastic		12

Catálogo de productos \ CONSTRUCTION \ REST OF WORLD \ CONSTRUCTION / INDUSTRIAL \ BACKHOE LOADER 3CX,4CX,214,215,217 \ 3CX 00960000-00989999,01297000-01297999,01327000-01349999,01616000-01625999,01705500-01709999 84hp 9812/0010 \ B CARROCERIA, CABINA SECCION CARGADORA \ B04 EXCAVADORA

9812/0010 B4-5-1 DIPPER (STICK), MONO, 14'

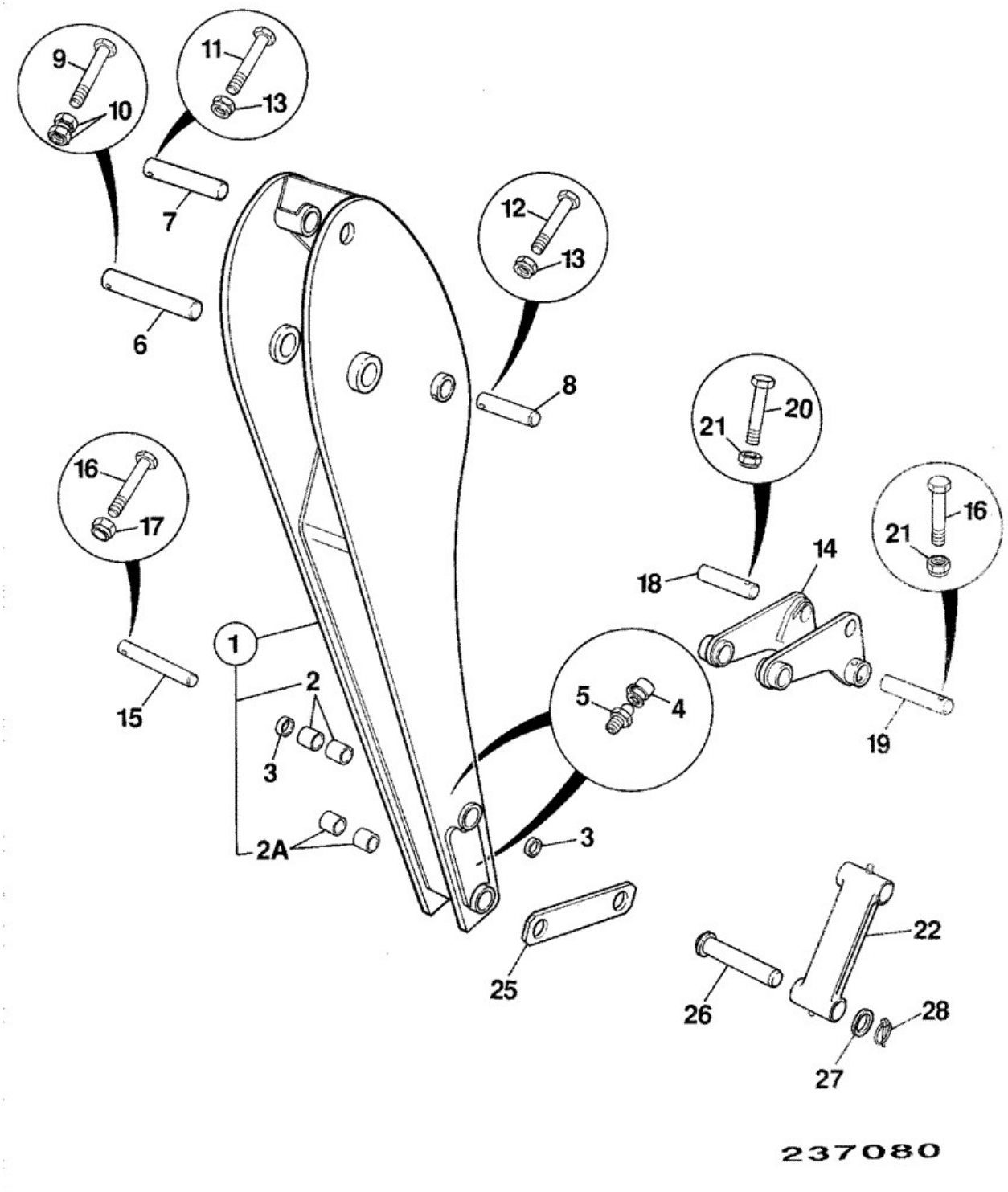

Elemento	Pieza Nº	Cambiar número	Descripción	Código de uso	CANT.
1	126/01881	Superseded	Balancín mono standard lift *Standard duty*		1

1	128/15167	>M0960681	Balancín assembly 14' mono standard lift *Standard duty*		1
1	128/15170	>M0960696	Balancín assembly 14' mono heavy lift *Heavy duty*		1
1	126/00982	Superseded	Balancín STD, Hammer *Heavy lift*		1
1	128/15174	>M0960696	Balancín assembly mono Hammer builds *Heavy lift*		1
1	126/01596	Superseded	Balancín Jaw auxiliary. *Heavy lift*		1
1	128/15172		Balancín Jaw auxiliary *Heavy lift*		1
1	:829/08117		Saliente pivot *Bucket/lever pivot*		2
2	:809/00125		Cojinete liner 45mm pivot bore		2
2A	809/00176		Cojinete liner 44.5IDx55.5ODx50long		2
3	813/00425		Junta pivot pin grease		2
4	835/00017		Tapa grease nipple		2
5	1450/0001		Engrasador grease, straight 1/8 BSP		2
6	811/50372		Pasador pivot *Boom, dipper pivot*		1
6	811/50372A		Pasador pivot 60x350mm, 0.1mm O/S		1
6	811/50372B		Pasador pivot 60x350mm, 0.25mm O/S		1
6A	823/10536		Suplemento 2mm		1
7	811/50381		Pasador pivot *dipper ram eye end pivot. std duty dipper*		1
7	811/50381A		Pasador pivot 50x340mm, 0.1mm O/S		1
7	811/50381B		Pasador pivot, 50X340mm 0.25mm O/S		1
7	811/50437		Pasador pivot *Heavy duty*		1
7	811/50437A		Pasador pivot, 50X266mm 0.1mm O/S		1
7	811/50437B		Pasador pivot, 50X266mm 0.25mm O/S		1
8	811/50375		Pasador pivot *Bucket ram dump end*		1
9	826/01642		Tornillo de cierre		1
10	1370/0403Z		Tuerca M12		1
11	1315/3521Z		Tornillo M12x110		1
12	1315/3418Z		Tornillo M10x80		1
13	1370/0303Z		Tuerca lock M10 *Bucket ram*		1
13	1370/0403Z		Tuerca M12 *Dipper ram*		1
14	335/05602	<M960417	Palanca tipping, 14'0" 4 holes per side		1
14	335/08302	<M963959	Palanca tipping,14'0" speed and power *use with bucket ram 557/60139 only*		1
14	335/05602		Palanca tipping, 14'0" 4 holes per side		1
14	335/05603	<M960417	Palanca tipping, 14'0" 4 holes + guide/side		1
14	335/08303	<M963959	Palanca tipping,14'0" speed/power + guides *use with bucket ram 557/60139 only*		1
14	335/05603		Palanca tipping, 14'0" 4 holes + guide/side		1
14	335/05601	<M960417	Palanca tipping, 14'0" 3 holes per side		1
14	335/08301	<M963959	Palanca tipping,14'0" single link position *use with bucket ram 557/60139 only*		1
14	335/05601		Palanca tipping, 14'0" 3 holes per side		1
15	811/20061		Pasador pivot 45X300MM		1

16	1315/3418Z		Tornillo M10x80		3
17	1370/0303Z		Tuerca lock M10		2
18	811/90409		Pasador Pivot 45 x 206		1
19	811/50369		Pasador pivot 45X290MM		1
20	1315/3419Z		Tornillo M10x90mm		1
21	1370/0303Z		Tuerca lock M10		2
22	****		*Tipping link, see B4 index.*		1
25	106/50001		Correa *Optional*		1
26	911/12400		Pasador pivot 306 long		2
27	823/00470		Arandela		2
28	826/00512		Pasador lynch		2
29	819/00100		Suplemento 120x60.5x1.4thick		0

Catálogo de productos \ CONSTRUCTION \ REST OF WORLD \ CONSTRUCTION / INDUSTRIAL \ BACKHOE LOADER 3CX,4CX,214,215,217 \ 3CX 00960000-00989999,01297000-01297999,01327000-01349999,01616000-01625999,01705500-01709999 84hp 9812/0010 \ B CARROCERIA, CABINA SECCION CARGADORA \ B04 EXCAVADORA

9812/0010 B4-6-1 BRAZO PENET.(BAST.), EXTRADIG,

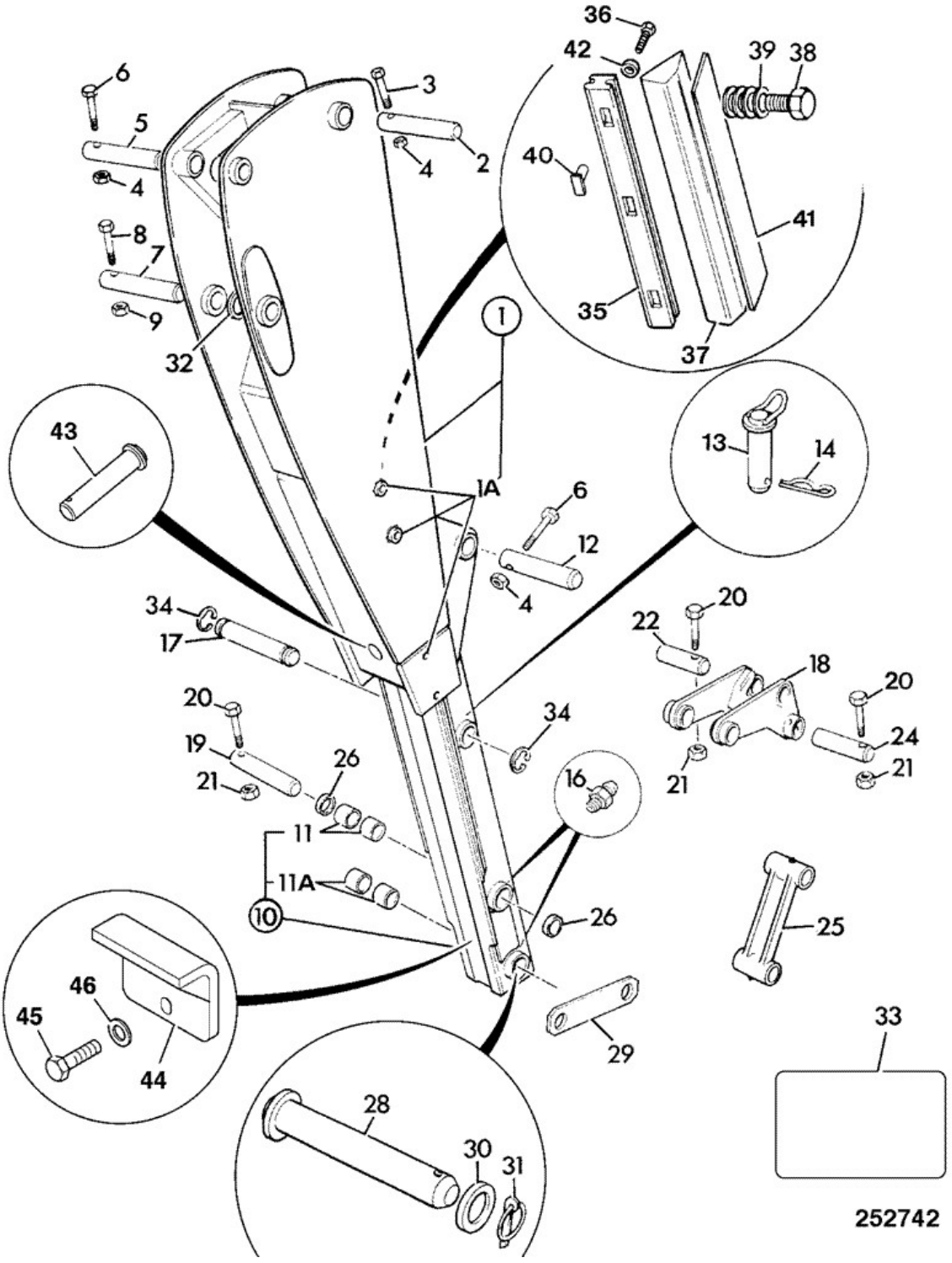

Elemento	Pieza Nº	Cambiar número	Descripción	Código de uso	CANT.
1	331/19806		Soporte 14' extradig S/L		1

1	331/19807		Soporte 14' extradig H/L		1
1	125/76400		Soporte 14', heavy lift suitable for jaw hyd		1
1	335/07836		Soporte 14' extradig sales special		1
1A	:826/10345		Saliente wear pad adjuster M20 thread		8
2	811/50373	Superseded	Pasador pivot		1
2	811/90583		Pasador pivot		1
3	1315/3317Z		Tornillo M8 x75mm long		2
4	1370/0203Z		Tuerca self lock M8 *use with item 2*		1
4	1370/0303Z		Tuerca lock M10 *use with item 12*		1
4	1370/0403Z		Tuerca M12 *For use with item 5*		1
5	811/90183		Pasador pivot		1
5	811/90183A		Pasador pivot		1
5	811/90183B		Pasador pivot		1
6	1315/3418Z		Tornillo M10x80 *For use with item 12*		1
6	1315/3520Z		Tornillo M12 x 100mm *For use with item 5*		1
7	811/50372		Pasador pivot		1
7	811/50372A		Pasador pivot 60x350mm, 0.1mm O/S		1
7	811/50372B		Pasador pivot 60x350mm, 0.25mm O/S		1
7A	823/10536		Suplemento 2mm		1
8	826/01642		Tornillo de cierre		1
9	1370/0403Z		Tuerca M12		1
10	128/10774		Balancín assembly inner, 14'		1
10	128/15149		Balancín inner *sales special SS/8033 with item 1 335/07836*		1
10A	:829/01201		Saliente locking		1
10A	:829/31219		Saliente locking *sales special SS/8033 with item 1 335/07836*		1
11	:809/00125		Cojinete liner 45mm pivot bore *Lever pivot*		2
11A	:809/00176		Cojinete liner 44.5IDx55.5ODx50long		2
12	811/50367		Pasador pivot		1
13	911/40092		Pasador locking		1
14	122/34401		Clip		1
16	1450/0002		Engrasador grease, straight 1/4		2
17	811/70080	Superseded	Pasador pivot		1
17	811/90585		Pasador pivot		1
18	335/05602	<M960417	Palanca tipping, 14'0" 4 holes per side		1
18	335/08302	<M963954	Palanca tipping,14'0" speed and power *use with bucket ram 557/60138 only*		1
18	335/05602		Palanca tipping, 14'0" 4 holes per side		1
18	335/05603	<M960417	Palanca tipping, 14'0" 4 holes + guide/side		1
18	335/08303	<M963954	Palanca tipping,14'0" speed/power + guides *use with bucket ram 557/60138 only*		1
18	335/05603		Palanca tipping, 14'0" 4 holes + guide/side		1
18	335/05601	<M960417	Palanca tipping, 14'0" 3 holes per side		1
18	335/08301	<M963954	Palanca tipping,14'0" single link position *use with bucket ram 557/60138 only*		1
18	335/05601		Palanca tipping, 14'0" 3 holes per side		1
19	811/20061		Pasador pivot 45X300MM		1

20	1305/3418Z		Tornillo M10x80 *items 19 & 24*		2
20	1315/3419Z		Tornillo M10x90mm *item 22*		1
21	1370/0303Z		Tuerca lock M10		4
22	811/90409		Pasador Pivot 45 x 206		1
23	1305/3226Z		Tornillo		1
24	811/50369		Pasador pivot 45X290MM		1
25	****		*Tipping link, B4 index*		1
26	813/00425		Junta pivot pin grease		2
27	1416/0008Z		Arandela spring		8
28	911/12400		Pasador pivot 306 long		2
29	106/50001		Correa		1
30	823/00470		Arandela		2
31	826/00512		Pasador lynch		2
32	819/00100		Suplemento 120x60.5x1.4thick		0
33	817/00502		Etiqueta greasing		1
34	823/00334		Clip		1
35	123/06189		Pastilla top wear		4
36	1318/3410Z		Tornillo		8
37	331/27389		Pastilla wear strip bottom, red		4
38	1315/0811Z		Tornillo M20 X 45 long *Was 1390/0810Z - 8 off*		8
39	1370/0702Z		Tuerca thin M20 *Was 823/00302 - 24 off*		8
40	****		Pieza no reparable *Now part of item 35.*		8
41	123/04207		Placa spreader *Service only*		4
42	123/06256		Espaciador steel *Fitted between item 36 & 35*		8
42	1420/0008Z		Arandela Plain M10 *replaces 123/06256*		16
43	911/16600		Pasador pivot 305mm *sales special SS/8033 with item 1 335/07836*		1
44	335/08895		Tope extending dipper *sales special SS/8033 with item 1 335/07836*		1
45	1316/3507Z		Tornillo *sales special SS/8033 with item 1 335/07836*		3
46	1420/0009Z		Arandela Plain M12 *sales special SS/8033 with item 1 335/07836*		3

9812/0010 B4-6-50 DIPPER (STICK), EXTRADIG, RATTIGAN

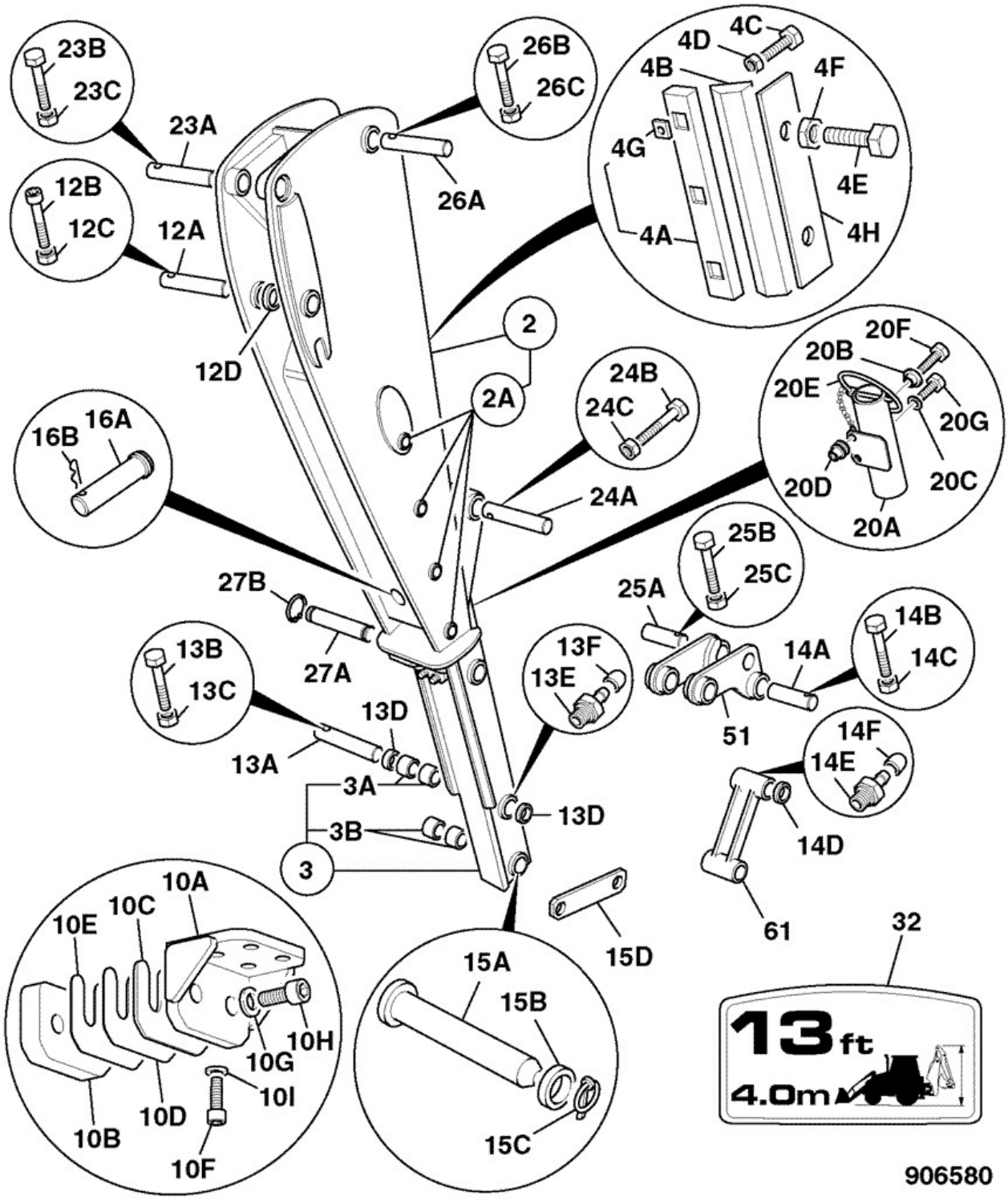

Elemento	Pieza Nº	Cambiar número	Descripción	Código de uso	CANT.
2	335/07839		Soporte Rattigan		1

2A	:826/10345		Saliente wear pad adjuster M20 thread		8
3	128/15149		Balancín inner		1
3A	:809/00125		Cojinete liner 45mm pivot bore *lever pivot*		2
3B	:809/00176		Cojinete liner 44.5IDx55.5ODx50long *bucket pivot*		2
4A	123/06189		Pastilla top wear		4
4B	331/27389		Pastilla wear strip bottom, red		4
4C	1318/3410Z		Tornillo		8
4D	1420/0008Z		Arandela Plain M10		16
4E	1315/0811Z		Tornillo M20 X 45 long		8
4F	1370/0702Z		Tuerca thin M20		8
4G	:826/01588		Suplemento M10 *supplied with 4A*		2
4H	331/30894		Placa spreader		4
10A	335/14651		Tope extending dipper		1
10B	331/69000		Placa impact		1
10C	331/69018		Suplemento 5mm		1
10D	331/69032		Suplemento 0.25mm		0
10E	331/69031		Suplemento 1mm		0
10F	1391/3508D		Tornillo de cierre M12 x 30		4
10G	1420/0011D		Arandela M16		2
10H	1391/3710D		Tornillo de cierre		2
10I	1422/0009D		Arandela hardened		4
12A	811/50372		Pasador pivot		1
12B	826/01642		Tornillo de cierre		1
12C	1370/0403Z		Tuerca M12		1
12D	819/00100		Suplemento 120x60.5x1.4thick		2
13A	811/20061		Pasador pivot 45X300MM		1
13B	1315/3418Z		Tornillo M10x80		2
13C	1370/0303Z		Tuerca lock M10		2
13D	813/00425		Junta pivot pin grease		2
13E	1450/0001		Engrasador grease, straight 1/8 BSP		2
13F	835/00017		Tapa grease nipple		2
14A	811/50369		Pasador pivot 45X290MM		1
14B	1315/3418Z		Tornillo M10x80		1
14C	1370/0303Z		Tuerca lock M10		1
14D	813/00425		Junta pivot pin grease		2
14E	1450/0001		Engrasador grease, straight 1/8 BSP		1
14F	835/00017		Tapa grease nipple		1
15A	911/12400		Pasador pivot 306 long		2
15B	823/00470		Arandela		2
15C	826/00512		Pasador lynch		2
15D	106/50001		Correa		1
16A	911/16600		Pasador pivot 305mm		1
16B	122/34401		Clip		1
20A	335/14995	<M1348638	Soporte locking pin holster *not fitted after March 2009*		1
20B	123/05243	<M1348638	Espaciador *not fitted after March 2009*		1
20C	1420/0008D	<M1348638	Arandela M10 *not fitted after March 2009*		1
			Tuerca rivet M10 open end for 6 to 8.5mm plate		

20D	826/01249	<M1348638	*not fitted after March 2009*		2
20E	826/00819	<M1348638	Pasador lynch with chain *not fitted after March 2009*		1
20F	1315/0409Z	<M1348638	M10 X 35 *not fitted after March 2009*		1
20G	1315/0407Z	<M1348638	Tornillo M10 x 25mm *not fitted after March 2009*		1
23A	811/90183		Pasador pivot		1
23B	1315/3520Z		Tornillo M12 x 100mm		1
23C	1370/0403Z		Tuerca M12		1
24A	811/50367		Pasador pivot		1
24B	1315/3418Z		Tornillo M10x80		1
24C	1370/0303Z		Tuerca lock M10		1
25A	811/90409		Pasador Pivot 45 x 206		1
25B	1315/3419Z		Tornillo M10x90mm		1
25C	1370/0303Z		Tuerca lock M10		1
26A	811/90583		Pasador pivot		1
26B	1315/3317Z		Tornillo M8 x75mm long		1
26C	1370/0203Z		Tuerca self lock M8		1
27A	811/90585		Pasador pivot		1
27B	823/00334		Clip		2
32	817/18742		Etiqueta WARNING-height 13ft/4.0m *fitted inside cab*		1
51	335/05601		Palanca tipping, 14'0" 3 holes per side		1
51	335/05602		Palanca tipping, 14'0" 4 holes per side		1
51	335/05603		Palanca tipping, 14'0" 4 holes + guide/side		1
61	****		*see tipping link B4 index*		1

9812/0010 B4-8-1 BRAZO BASC\, ESTÁNDAR, 0

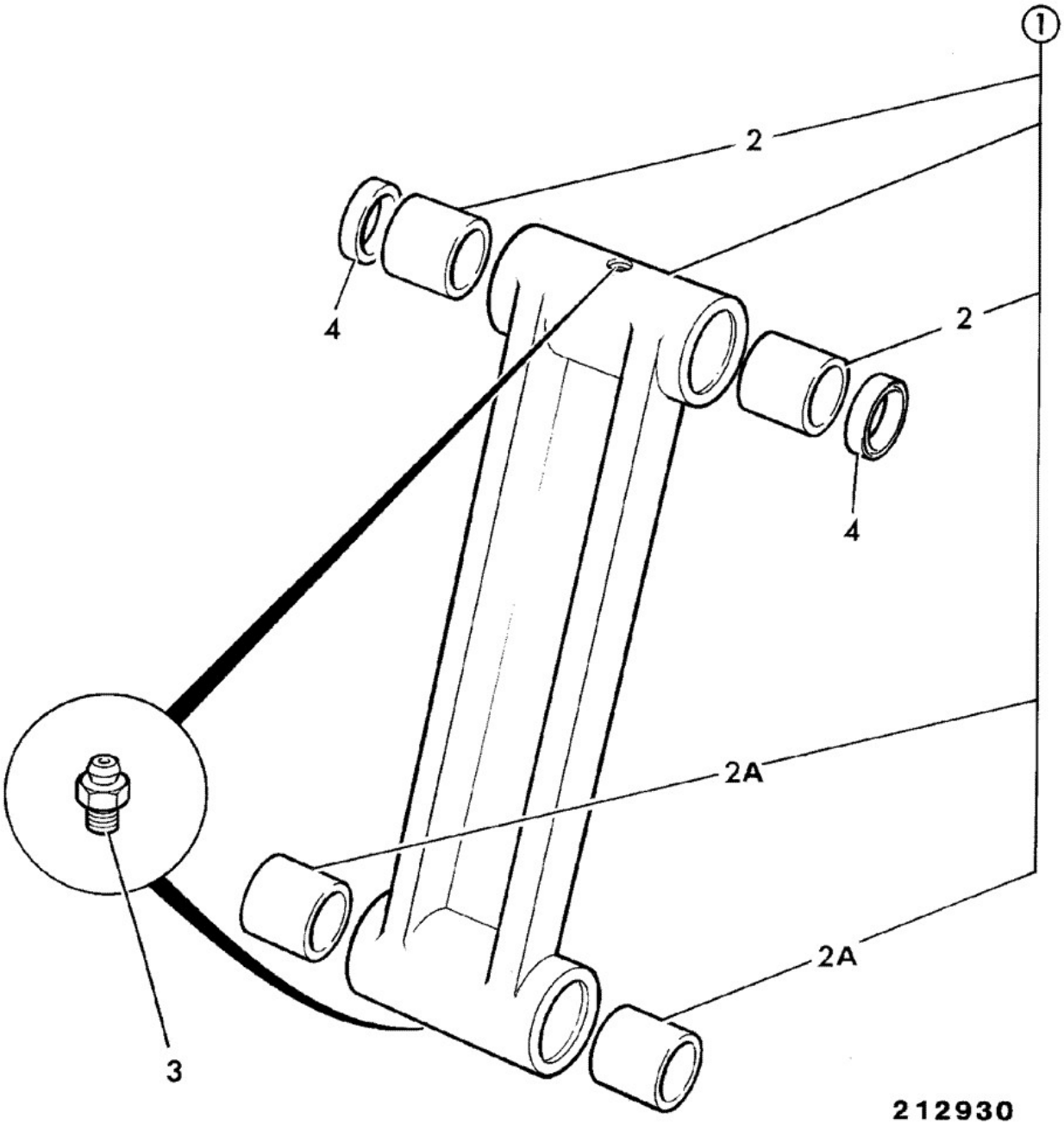

Elemento	Pieza Nº	Cambiar número	Descripción	Código de uso	CANT.
1	126/00247		Eslabón tipping		1
2	:809/00125		Cojinete liner 45mm pivot bore		2
2A	809/00176		Cojinete liner 44.5IDx55.5ODx50long		2
3	1450/0002		Engrasador grease, straight 1/4		2

4	813/00425		Junta pivot pin grease		2

Catálogo de productos \ CONSTRUCTION \ REST OF WORLD \ CONSTRUCTION / INDUSTRIAL \ BACKHOE LOADER 3CX,4CX,214,215,217 \ 3CX 00960000-00989999,01297000-01297999,01327000-01349999,01616000-01625999,01705500-01709999 84hp 9812/0010 \ B CARROCERIA, CABINA SECCION CARGADORA \ B04 EXCAVADORA

9812/0010 B4-8-10 BRAZO BASC\, CON GRILLETE ELEV\, 0

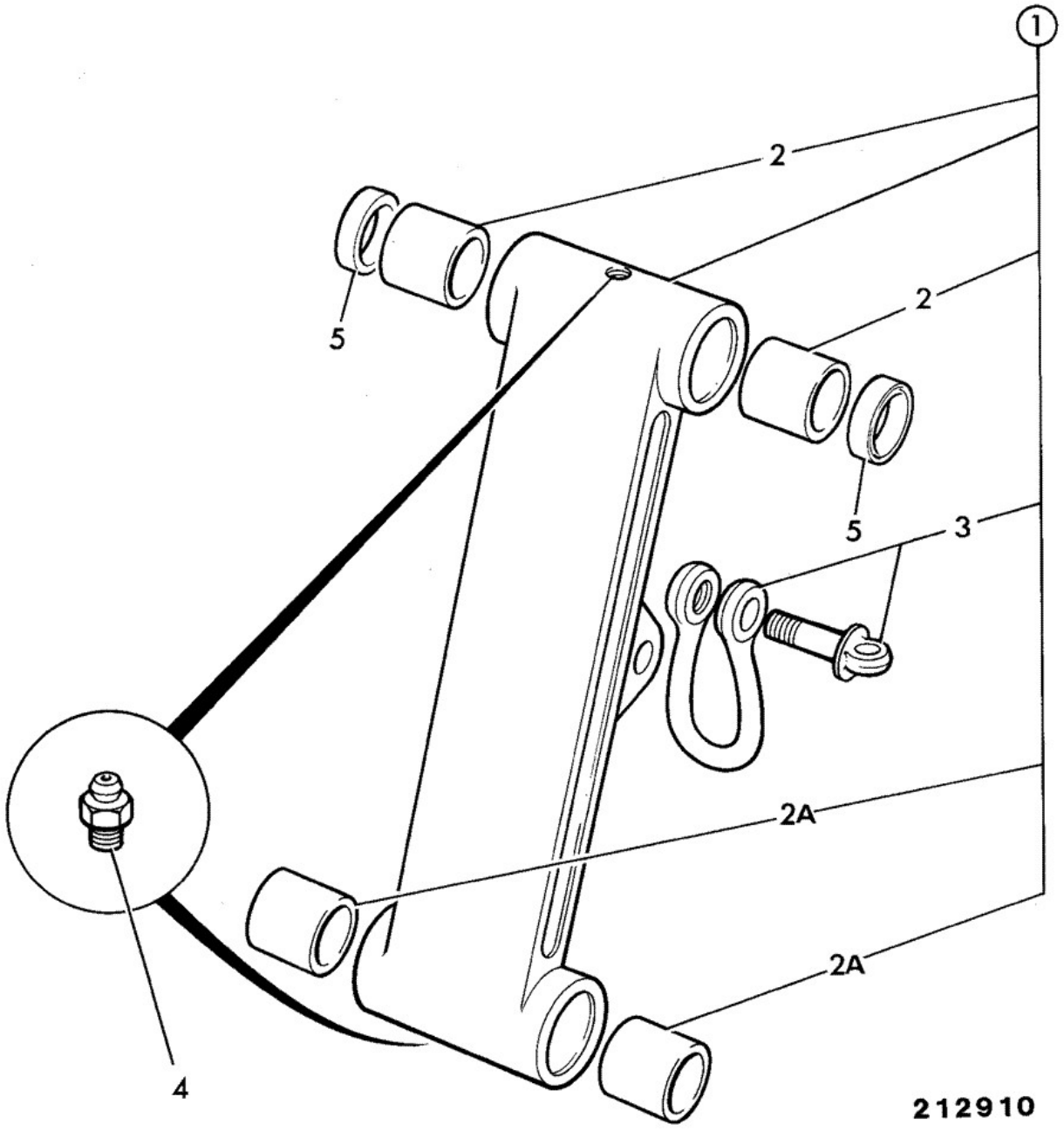

Elemento	Pieza Nº	Cambiar número	Descripción	Código de uso	CANT.
1	126/00248		Eslabón tipping with 1 ton bow shackle		1
2	:809/00125		Cojinete liner 45mm pivot bore		2
2A	:809/00129		Cojinete liner 44.5IDx55.5ODx50long *Link to bucket pivot*		2

3	:918/66900		Shackle bow SWL 1 ton, 7/8" dia shaft		1
4	1450/0001		Engrasador grease, straight 1/8 BSP		2
5	813/00425		Junta pivot pin grease *Link to lever pivot*		2

9812/0010 B4-8-20 BRAZO BASC\, CON GANCHO ELEVACIÓN, ELEVACIÓN 2 T

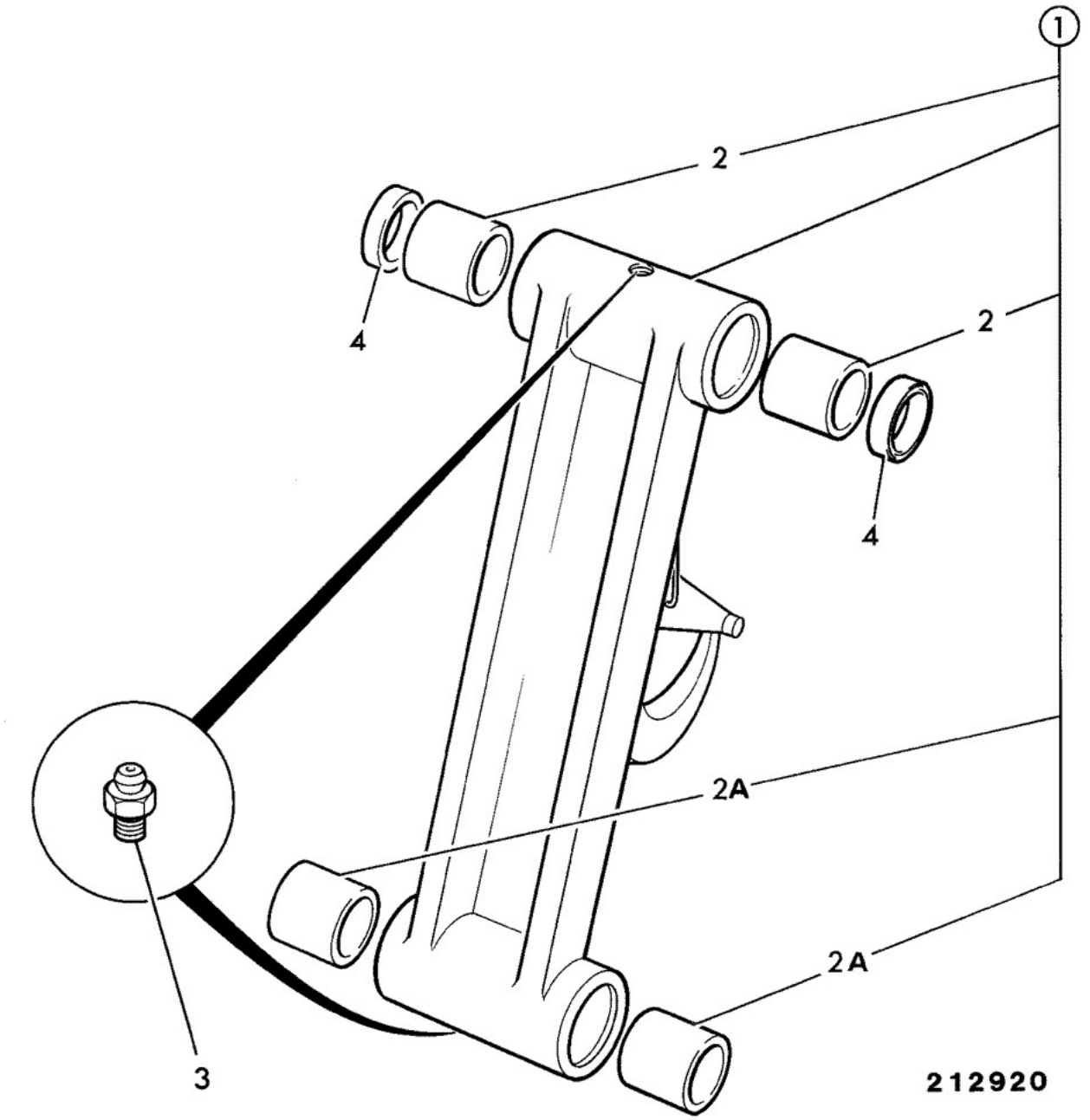

Elemento	Pieza Nº	Cambiar número	Descripción	Código de uso	CANT.
1	126/00250		Eslabón tipping		1
1A	:918/02101		Kit reparación		1
1A	:998/11259		Kit reparación marked with letter Y		1

2	:809/00125		Cojinete liner 45mm pivot bore *Link to lever pivot*		2
2A	:809/00129		Cojinete liner 44.5IDx55.5ODx50long *Link to bucket pivot*		2
3	1450/0002		Engrasador grease, straight 1/4		2
4	813/00425		Junta pivot pin grease *Link to lever pivot*		2

Catálogo de productos \ CONSTRUCTION \ REST OF WORLD \ CONSTRUCTION / INDUSTRIAL \ BACKHOE LOADER 3CX,4CX,214,215,217 \ 3CX 00960000-00989999,01297000-01297999,01327000-01349999,01616000-01625999,01705500-01709999 84hp 9812/0010 \ B CARROCERIA, CABINA SECCION CARGADORA \ B04 EXCAVADORA

9812/0010 B4-8-30 BRAZO BASC\, With, LIFTING HOOK

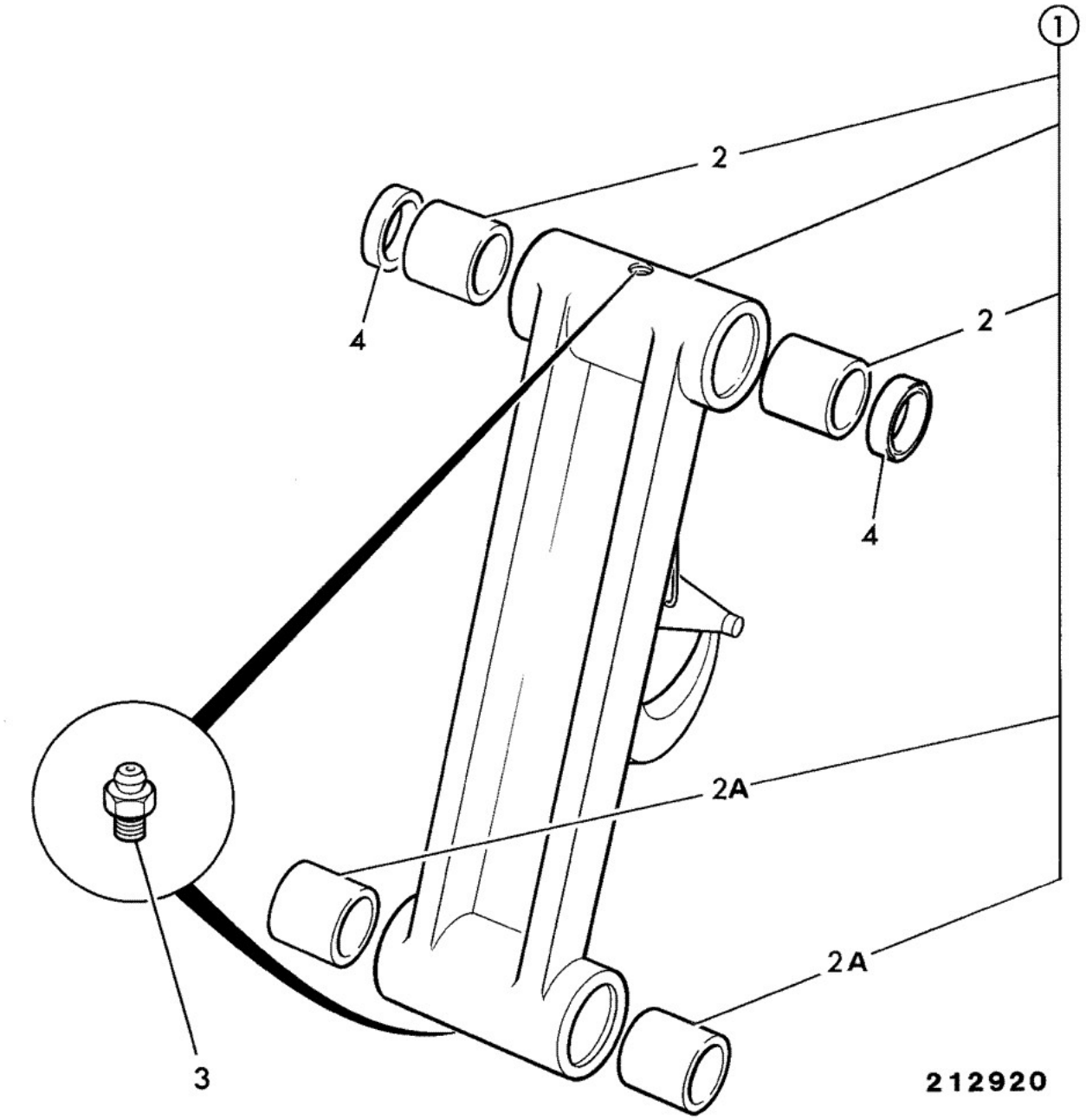

Elemento	Pieza Nº	Cambiar número	Descripción	Código de uso	CANT.
1	126/00249		Eslabón tipping MAX S.W.L. '5ton'		1
1A	:918/02101		Kit reparación		1
1A	:998/11259		Kit reparación marked with letter Y		1
2	:809/00125		Cojinete liner 45mm pivot bore *Link to lever pivot*		2

2A	:809/00129		Cojinete liner 44.5IDx55.5ODx50long *Link to bucket pivot*		2
3	1450/0002		Engrasador grease, straight 1/4		2
4	813/00425		Junta pivot pin grease *Link to lever pivot*		2

9812/0010 B4-8-31 BRAZO BASC\, With, LIFTING SHACKLE, 5 TON

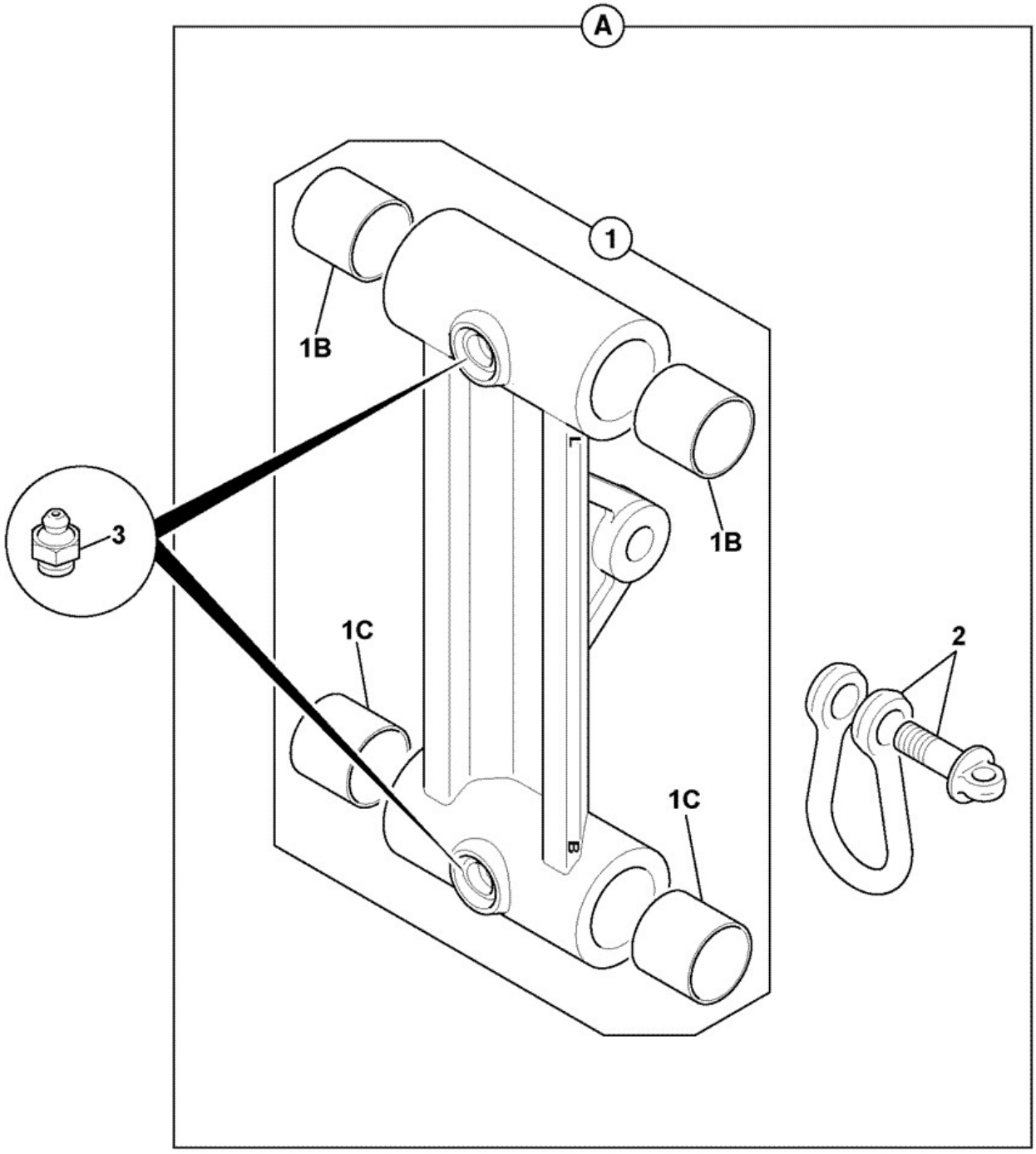

128-G2084-1

Elemento	Pieza Nº	Cambiar número	Descripción	Código de uso	CANT.

A	128/G2084		Eslabón tipping with 5 tonne D shackle		1
1	:128/G2082		Eslabón bucket		1
1B	::809/00125		Cojinete liner 45mm pivot bore *lever end*		2
1C	::809/00176		Cojinete liner 44.5IDx55.5ODx50long *bucket end*		2
2	:332/G2035		Shackle "D" SWL 5 tonne		1
3	:1450/0001		Engrasador grease, straight 1/8 BSP		2

9812/0010 B4-9-1 INSTALACIÓN, BALIZA, MONTADO EXTREMO EXCAV

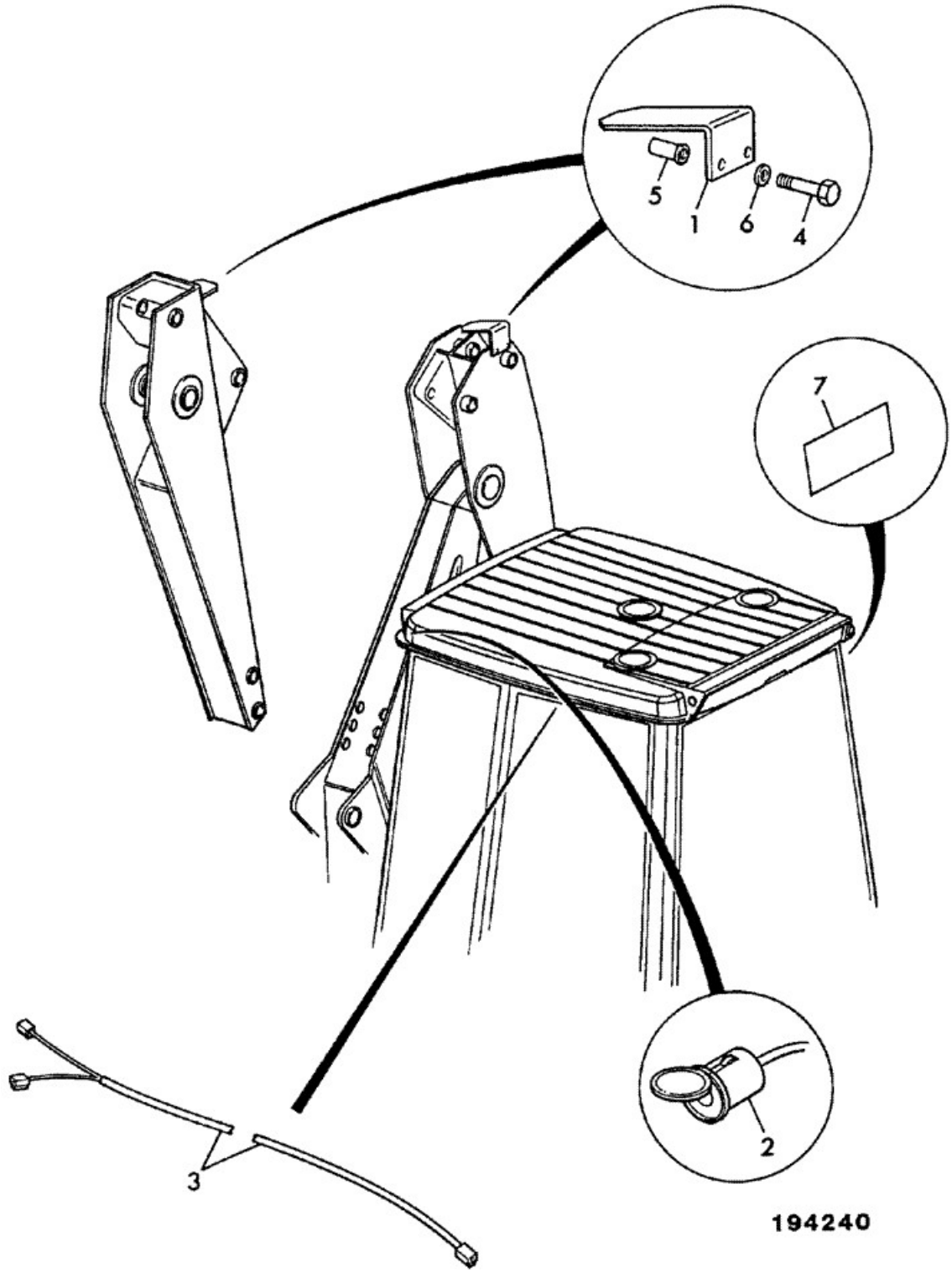

Elemento	Pieza Nº	Cambiar número	Descripción	Código de uso	CANT.
1	123/03911		Soporte beacon mounting basic dipper		1
1	123/03991		Soporte beacon light extradig dipper		1
2	715/04300		Casquillo Beacon		1
3	721/00340		Cableado auxiliary beacon light s/shift		1
3	721/00405		Cableado socket extension		1

4	1315/0408Z		Tornillo M10 x 30 *Basic excavator end*		2
4	1315/0409Z		M10 X 35 *Extradig dipper*		2
5	826/01105		Tuerca rivet,M10 open ended *Basic dipper*		2
5	1370/0303Z		Tuerca lock M10 *Extadig dipper*		2
6	1420/0008Z		Arandela Plain M10		2
7	817/18742		Etiqueta WARNING-height 13ft/4.0m		1
7	817/18743		Etiqueta WARNING-height 14ft/ 4.3m		1

9812/0010 B4-10-1 BLOQ\ BRAZO, MANDOS CABINA, DESPLAZAMIENTO LATERAL

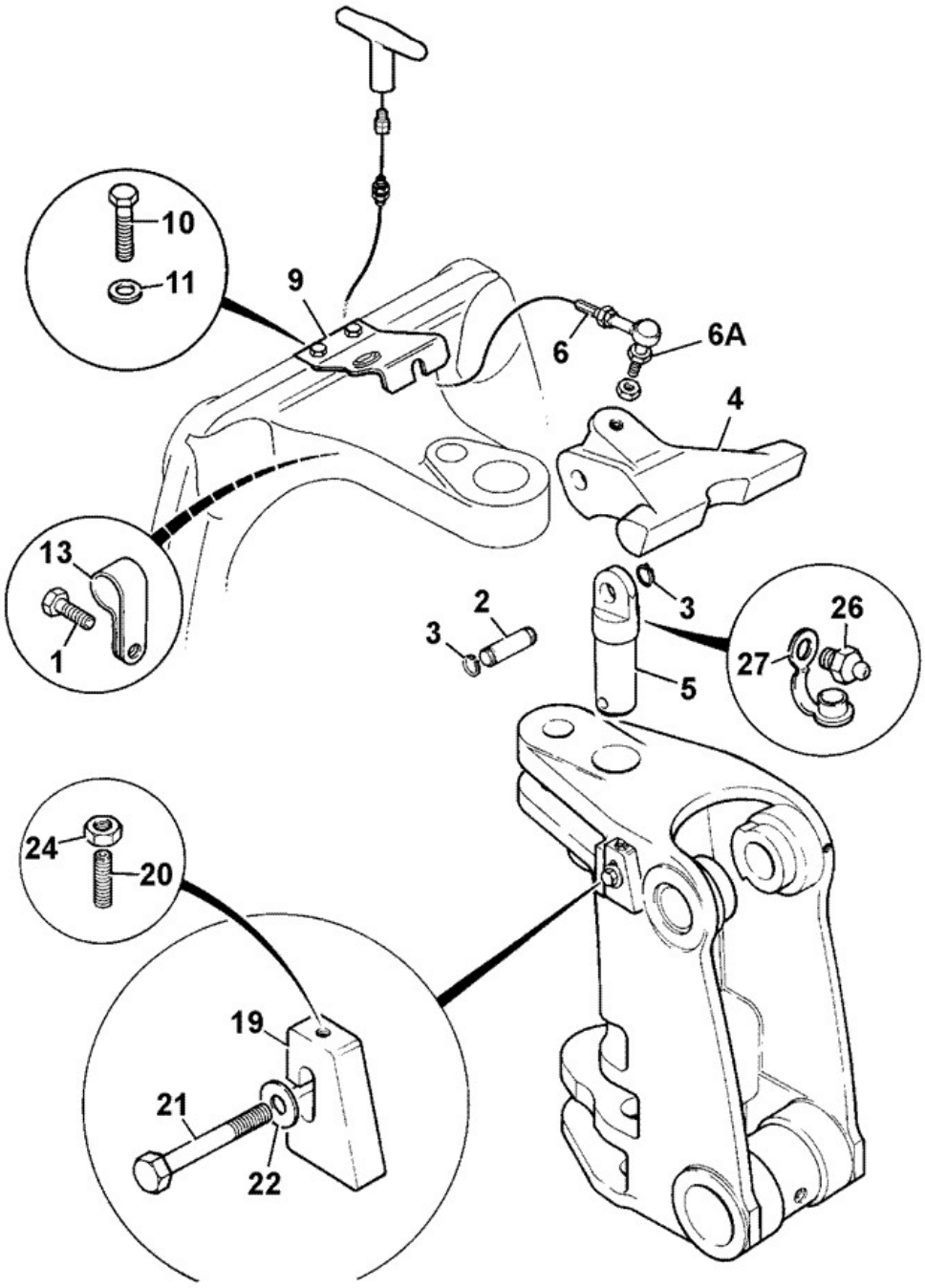

Elemento	Pieza Nº	Cambiar número	Descripción	Código de uso	CANT.

1	1315/0203Z		Tornillo M6x16		1
2	811/70099		Pasador boomlock		1
3	2203/0035		Arandela elástica		2
4	123/05862	Superseded	Fundición boom lock 14'0 (Yellow)		1
4	332/C1897		Fundición boom lock		1
5	811/90165		Pasador k.post top pivot sideshift		1
6	910/60106		Cable boomlock, sideshift as supplied		1
6A	:123/07652		Unión ball end		1
6B	:331/44709		Mango		1
6C	332/C2201		Tuerca face		1
6C	:332/C2201		Tuerca face		1
7	826/10937		Aro de refuerzo		1
8	826/10938		Arandela		1
9	335/04117		Soporte reaction		1
10	1315/0409Z		M10 X 35		2
11	1420/0007Z		Arandela plain M8		2
12	823/00599		Arandela M10 hardened *cable to boomlock*		1
13	821/00229		Clip 'P ' D=12mm cable		1
19	331/19613	<M1706415	Placa boom stop		1
19	332/D8633	>M1706416	Placa boom stop		1
19	123/07618		Placa boom stop *Knuckle boom only*		1
20	1390/0412Z		Tornillo grub M10x50 long		1
21	1315/3814Z		Tornillo M20 x 60mm		1
22	823/00491		Arandela spacer		1
24	1370/0302Z		Tuerca lock		1
26	1450/0001		Engrasador grease, straight 1/8 BSP		1
27	835/00017		Tapa grease nipple		1
28	835/00166		Tapón		1
29	835/00176		Tapa 16mm black plastic		1

Catálogo de productos \ CONSTRUCTION \ REST OF WORLD \ CONSTRUCTION / INDUSTRIAL \ BACKHOE LOADER 3CX,4CX,214,215,217 \ 3CX 00960000-00989999,01297000-01297999,01327000-01349999,01616000-01625999,01705500-01709999 84hp 9812/0010 \ B CARROCERIA, CABINA SECCION CARGADORA \ B04 EXCAVADORA

9812/0010 B4-10-11 BLOQ\ BRAZO, MANDOS CABINA, CENTREMOUNT

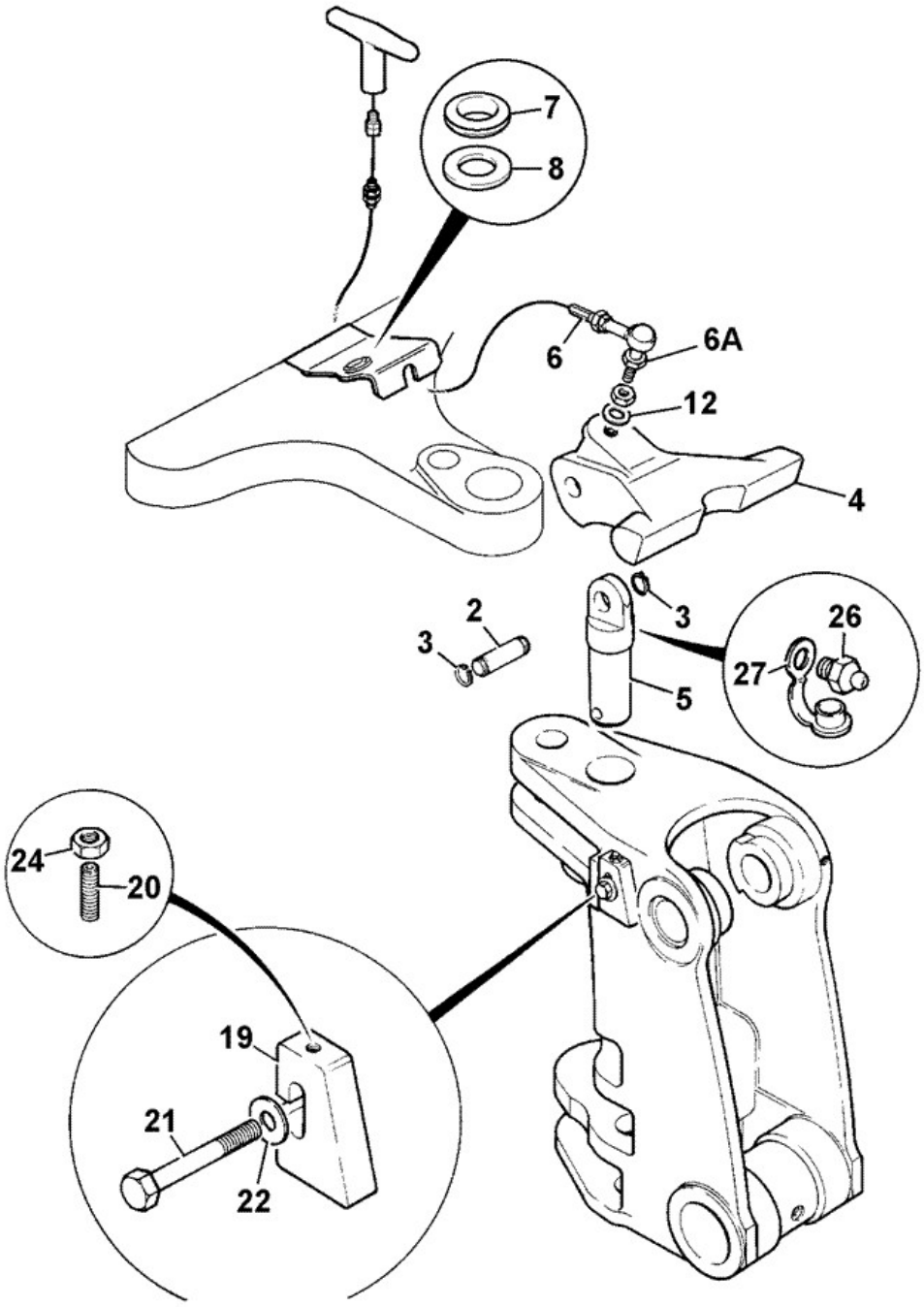

398452

Elemento	Pieza Nº	Cambiar número	Descripción	Código de uso	CANT.

2	811/70099		Pasador boomlock		1
3	2203/0035		Arandela elástica		2
4	123/05862	Superseded	Fundición boom lock 14'0 (Yellow)		1
4	332/C1897		Fundición boom lock *14'*		1
4	332/F8666		boom lock 15'6" *15'6"*		1
4	123/06185		Fundición boom lock 17'0 *17'*		1
5	913/10079		Pasador kingpost top centremount		1
6	910/60107		Cable boomlock, c. mount as supplied		1
6A	:123/07652		Unión ball end		1
7	826/10937		Aro de refuerzo		1
8	826/10938		Arandela		1
12	823/00599		Arandela M10 hardened		1
19	123/05236		Placa boom stop		1
20	1390/0412Z		Tornillo grub M10x50 long		1
21	1315/3814Z		Tornillo M20 x 60mm		1
22	823/00491		Arandela spacer		1
24	1370/0302Z		Tuerca lock		1
26	1450/0001		Engrasador grease, straight 1/8 BSP		1
27	835/00017		Tapa grease nipple		1

9812/0010 B4-11-1 PUNTAL, MAMPARO, DESPLAZAMIENTO LAT, 0

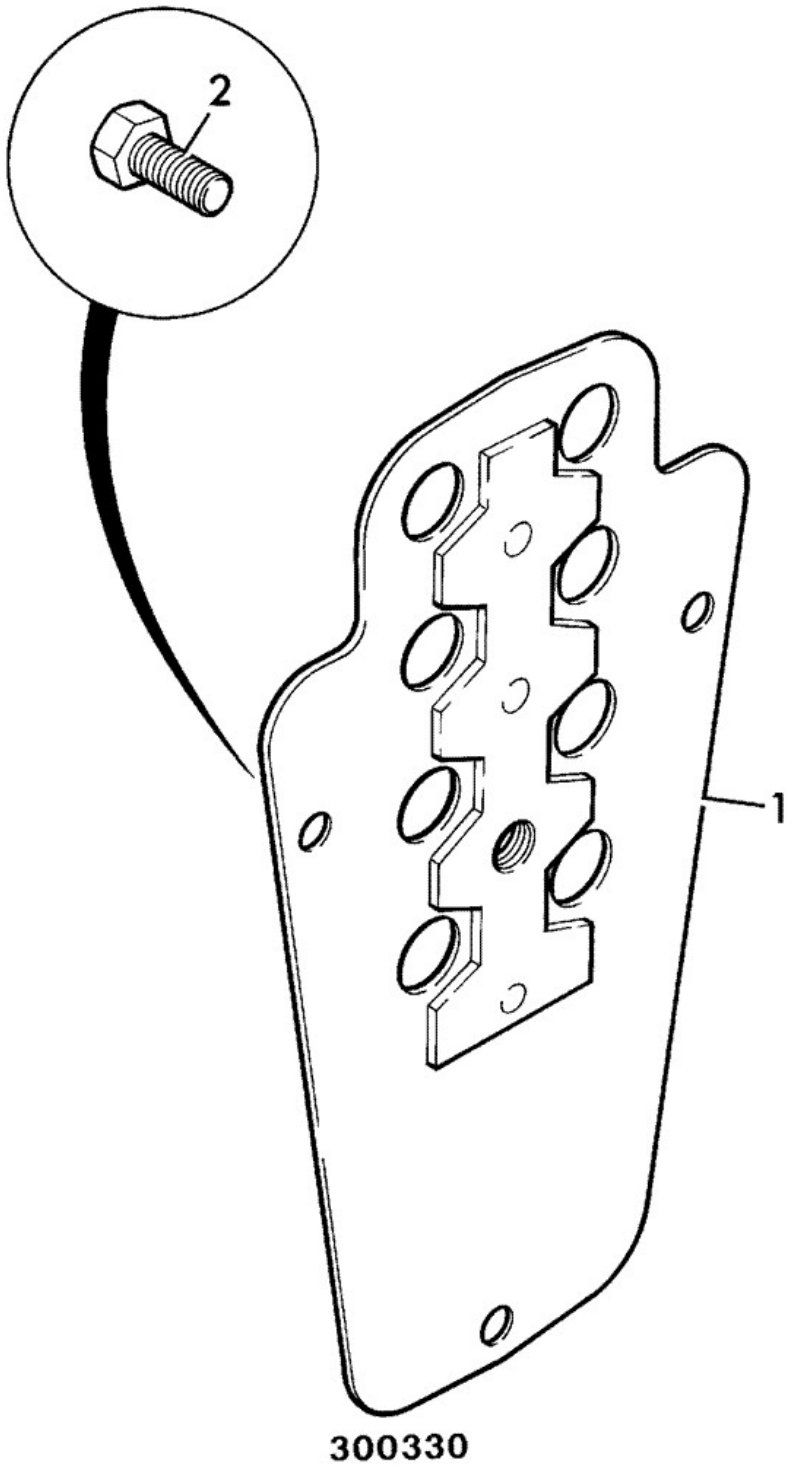

Elemento	Pieza Nº	Cambiar número	Descripción	Código de uso	CANT.

1	331/33335	Superseded	Placa bulkhead,kingpost sideshift *3CX & 4CX*		1
1	331/64231		Placa bulkhead sideshift kingpost		1
1	331/60938		Placa bulkhead, kingpost JCB 3C *3C only*		1
2	1315/0408Z		Tornillo M10 x 30		2

Catálogo de productos \ CONSTRUCTION \ REST OF WORLD \ CONSTRUCTION / INDUSTRIAL \ BACKHOE LOADER 3CX,4CX,214,215,217 \ 3CX 00960000-00989999,01297000-01297999,01327000-01349999,01616000-01625999,01705500-01709999 84hp 9812/0010 \ B CARROCERIA, CABINA SECCION CARGADORA \ B04 EXCAVADORA

9812/0010 B4-11-11 PUNTAL, MAMPARO, SPTE\ CENTRAL, 0

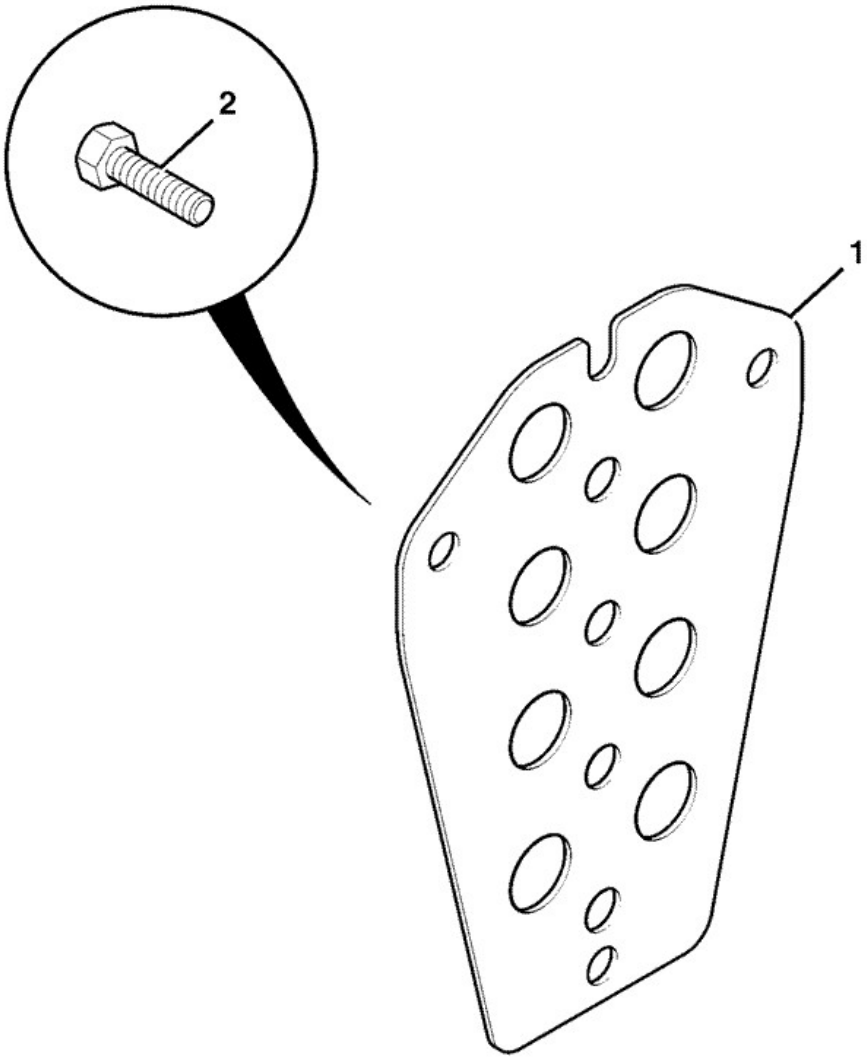

708720

Elemento	Pieza Nº	Cambiar número	Descripción	Código de uso	CANT.

1	331/33337	Superseded	Placa bulkhead,kingpost centremount		1
1	331/64233		Placa bulkhead, kingpost centremount		1
1	332/E8589		Placa bulkhead centremount PCH with bi-directional control *PCH with bi-directional comtrol*		1
2	1315/0408Z		Tornillo M10 x 30		3

Catálogo de productos \ CONSTRUCTION \ REST OF WORLD \ CONSTRUCTION / INDUSTRIAL \ BACKHOE LOADER 3CX,4CX,214,215,217 \ 3CX 00960000-00989999,01297000-01297999,01327000-01349999,01616000-01625999,01705500-01709999 84hp 9812/0010 \ B CARROCERIA, CABINA SECCION CARGADORA \ B04 EXCAVADORA

9812/0010 B4-12-1 DESPL\ LATERAL ASIST, 0, 0

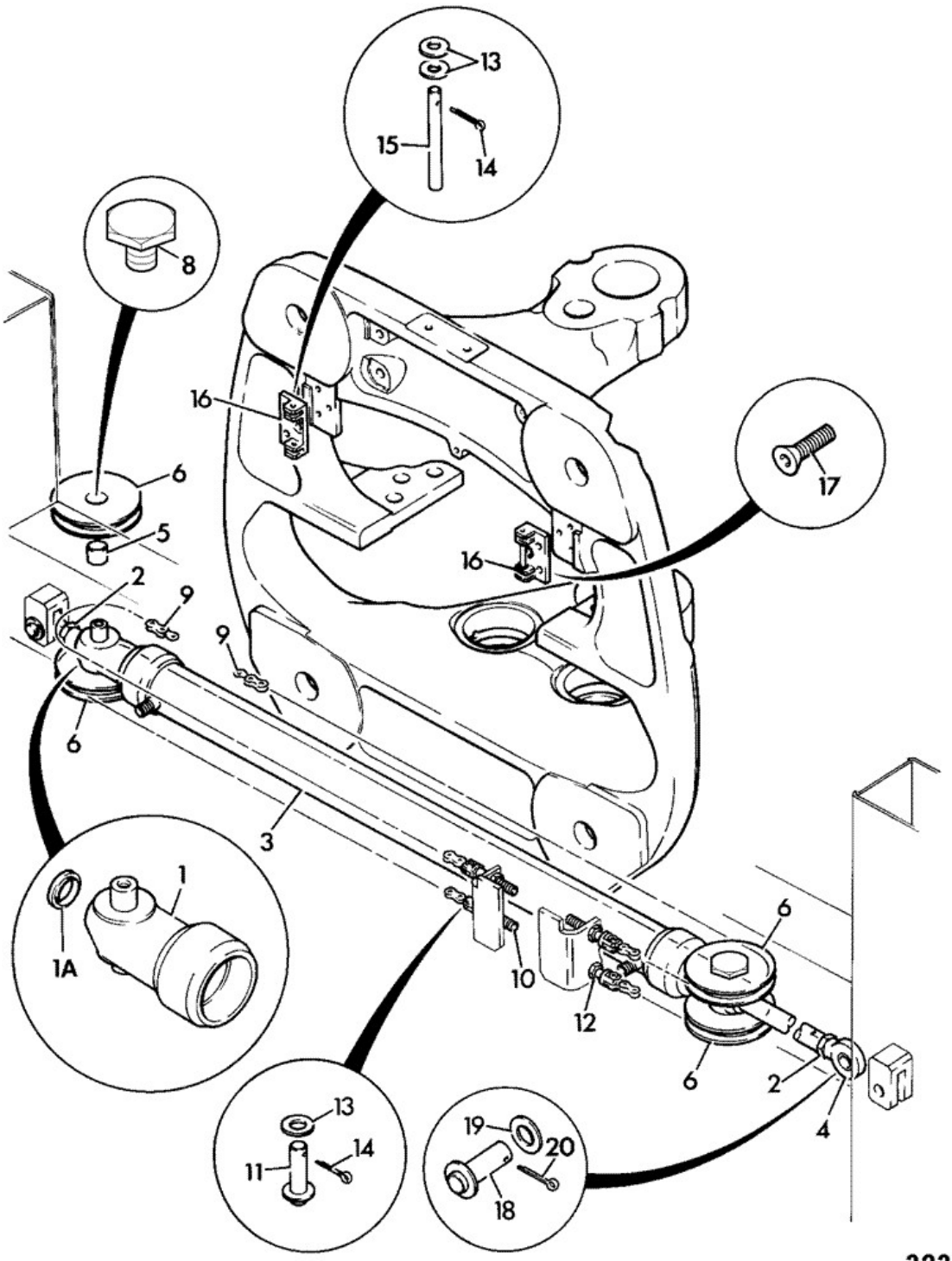

Elemento	Pieza Nº	Cambiar número	Descripción	Código de uso	CANT.
1	331/22712		Muñón cylinder mount		2

1A	2411/8601		Junta wiper		2
2	1370/0601Z		Tuerca		2
3	****		*See index E4*		1
4	913/00050	<M961500	Extremo en argolla rod		2
4	913/10329		Horquilla fork,		2
5	123/07927		Cojinete		4
6	123/07929		Rueda chain		4
8	826/10649		Tornillo retaining powerslide ram		4
9	123/07926		Cadena		4
10	123/07930		TORNILLO anchor clevis		4
11	123/07928		Pasador anchor		4
12	1370/0402Z		Tuerca M12		8
13	1420/0006Z		Arandela M6		10
14	2103/0305		Pasador Split		10
15	913/10108		Pasador anchor		2
16	123/07935		Soporte anchor		1
17	826/01245		Tornillo M8 X 20 x gr10.9 socket drive countersunk head		6
18	123/07931	<M961500	Pasador pivot		2
18	913/10328		Pasador clevis		2
19	1420/0011Z		Arandela M16 plain		2
20	2103/0709		Pasador split		2
99	125/00535	<M961500	Kit chassis conversion powered sideshift		1
99	335/08571		Kit chassis conversion powered sideshift		1

Catálogo de productos \ CONSTRUCTION \ REST OF WORLD \ CONSTRUCTION / INDUSTRIAL \ BACKHOE LOADER 3CX,4CX,214,215,217 \ 3CX 00960000-00989999,01297000-01297999,01327000-01349999,01616000-01625999,01705500-01709999 84hp 9812/0010 \ B CARROCERIA, CABINA SECCION CARGADORA \ B04 EXCAVADORA

9812/0010 B4-12-1 DESPL\ LATERAL ASIST, 0, 0

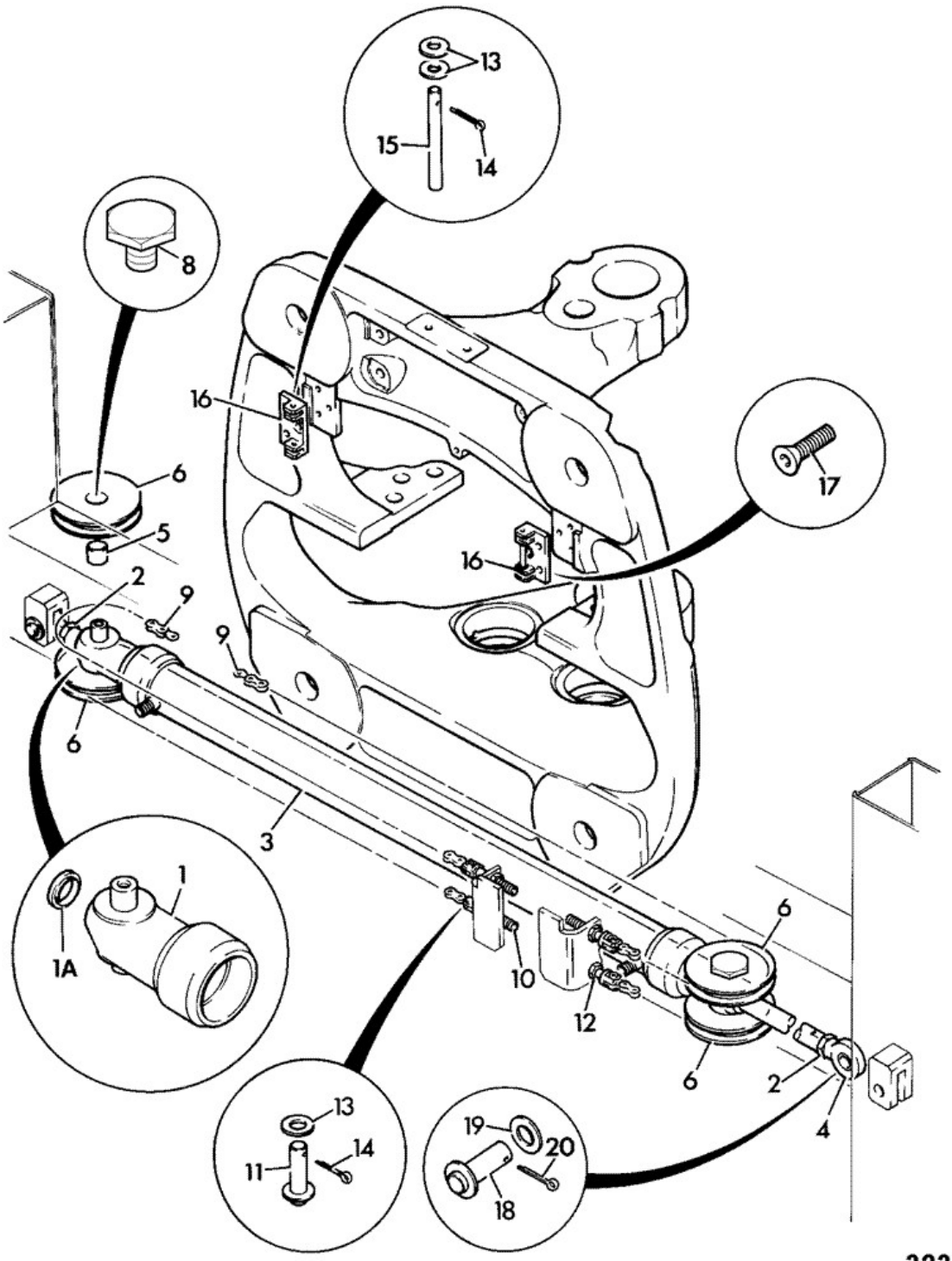

Elemento	Pieza Nº	Cambiar número	Descripción	Código de uso	CANT.
1	331/22712		Muñón cylinder mount		2

1A	2411/8601		Junta wiper		2
2	1370/0601Z		Tuerca		2
3	****		*See index E4*		1
4	913/00050	<M961500	Extremo en argolla rod		2
4	913/10329		Horquilla fork,		2
5	123/07927		Cojinete		4
6	123/07929		Rueda chain		4
8	826/10649		Tornillo retaining powerslide ram		4
9	123/07926		Cadena		4
10	123/07930		TORNILLO anchor clevis		4
11	123/07928		Pasador anchor		4
12	1370/0402Z		Tuerca M12		8
13	1420/0006Z		Arandela M6		10
14	2103/0305		Pasador Split		10
15	913/10108		Pasador anchor		2
16	123/07935		Soporte anchor		1
17	826/01245		Tornillo M8 X 20 x gr10.9 socket drive countersunk head		6
18	123/07931	<M961500	Pasador pivot		2
18	913/10328		Pasador clevis		2
19	1420/0011Z		Arandela M16 plain		2
20	2103/0709		Pasador split		2
99	125/00535	<M961500	Kit chassis conversion powered sideshift		1
99	335/08571		Kit chassis conversion powered sideshift		1

9812/0010 B4-13-1 PUNTAL DE SEGURIDAD, CILINDRO EMPUJE CUCH, 0

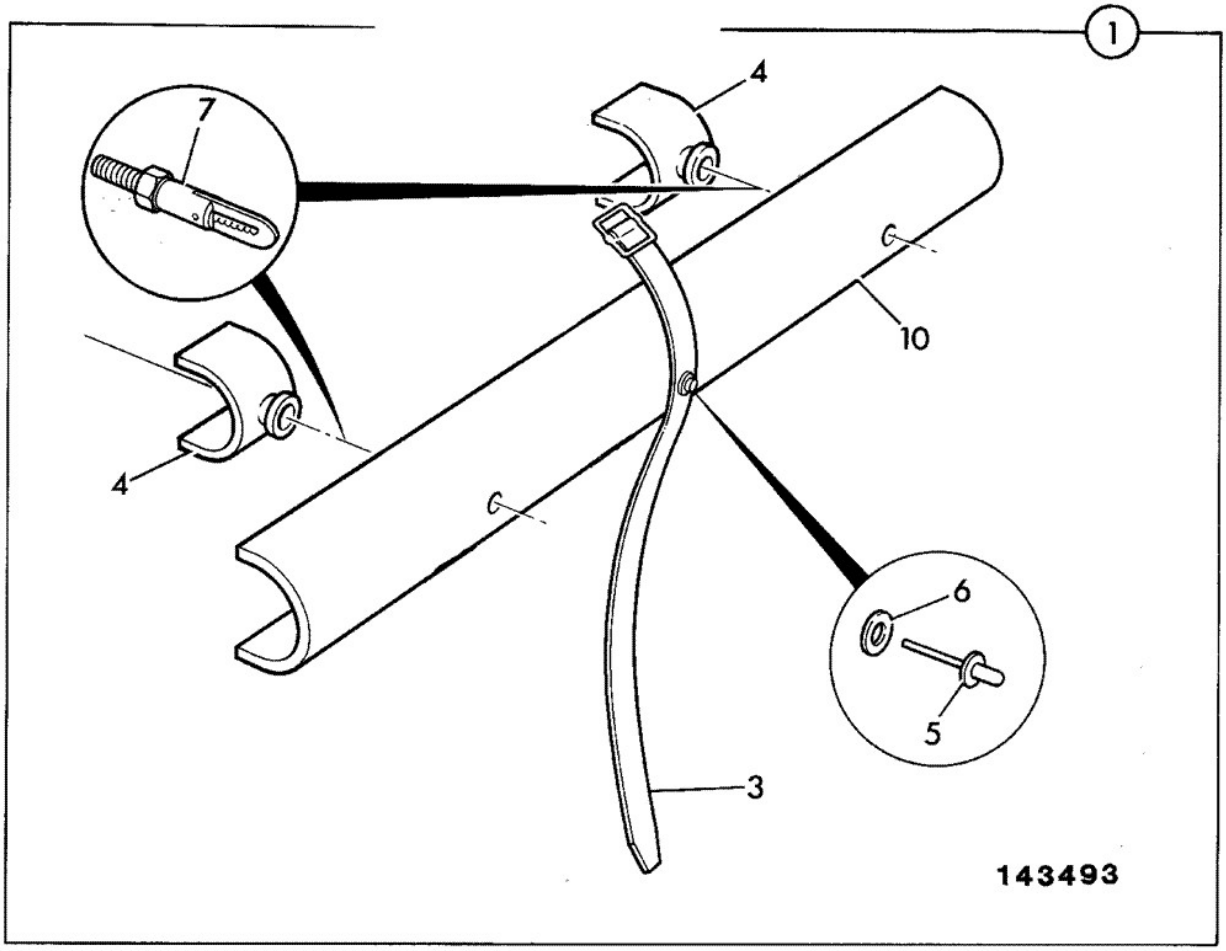

Elemento	Pieza Nº	Cambiar número	Descripción	Código de uso	CANT.
1	126/00741		Puntal safety, bucket ram		1
3	:123/04744		Correa		1
4	:122/82502		Tope		2
5	:826/01345		Remache pop		1
6	:1414/0011Z		Arandela 2 BA		1
7	****		*Not fitted*		0
10	:331/23368		Puntal bucket ram travel		1

9812/0010 B5-0-21 RÓTULOS, COMPRA RU, 0



867901

Elemento	Pieza Nº	Cambiar número	Descripción	Código de uso	CANT.
1	817/20602		CALCAMONIA buy British 73 X 95mm (A Great British Product) Union Jack		2

			fix to cab B post		
2	817/00884		Rótulo coat of arms *fix to frontscreen*		1

9812/0010 B5-1-4 RÓTULOS, MANDOS, EXCAV/ESTABILIZADOR, (PORTAVASOS)

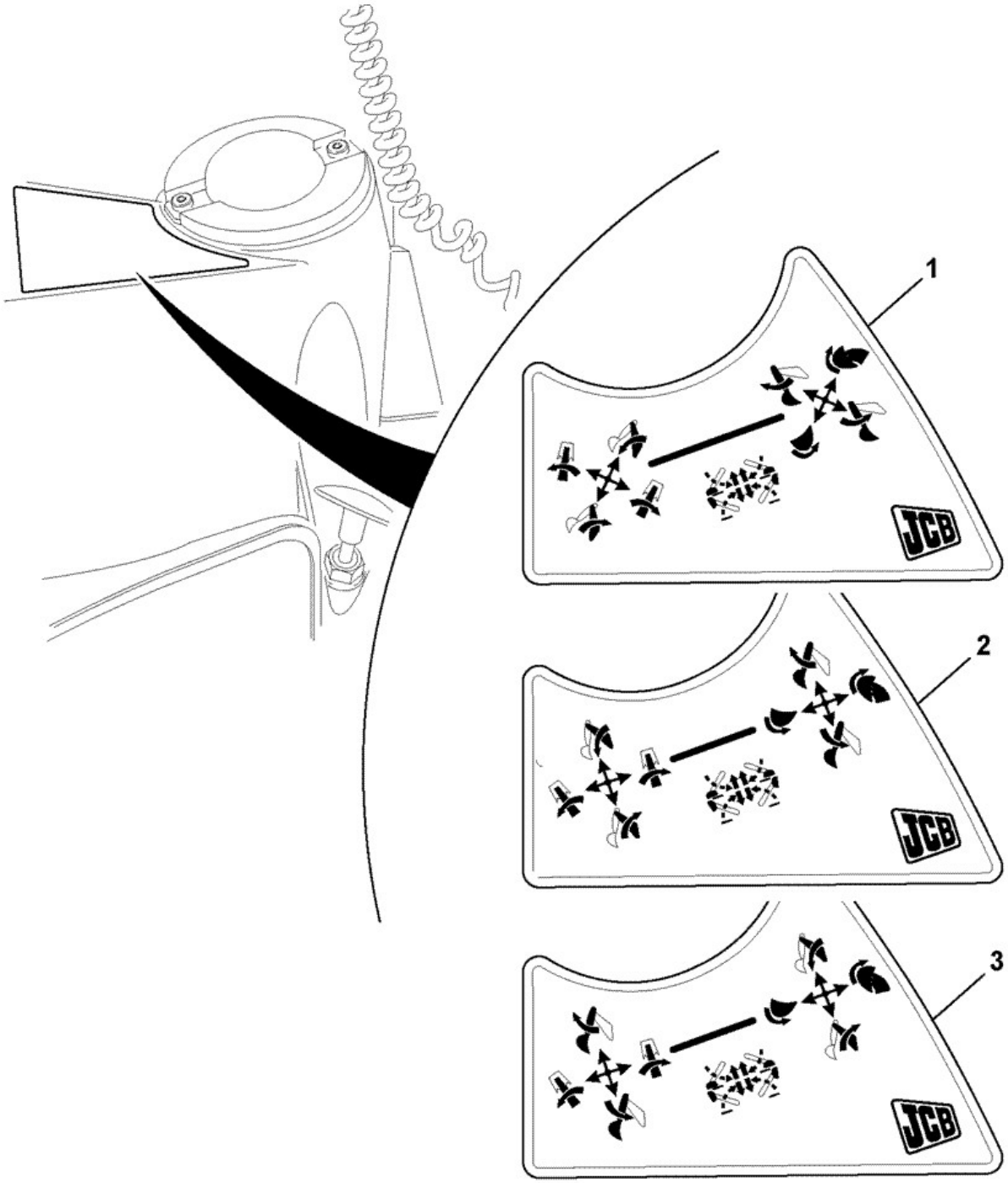

443530

Elemento	Pieza Nº	Cambiar número	Descripción	Código de uso	CANT.

1	817/18688		Rótulo exc.& stab. controls JCB "x" pattern		0
2	817/18689		Rótulo exc.& stab. controls SAE "+" pattern		0
3	817/18690		Rótulo exc.& stab. controls ISO "+" pattern		0

9812/0010 B5-1-5 RÓTULOS, MANDOS, EXCAV/ESTABILIZADOR, (PORTAVASOS)

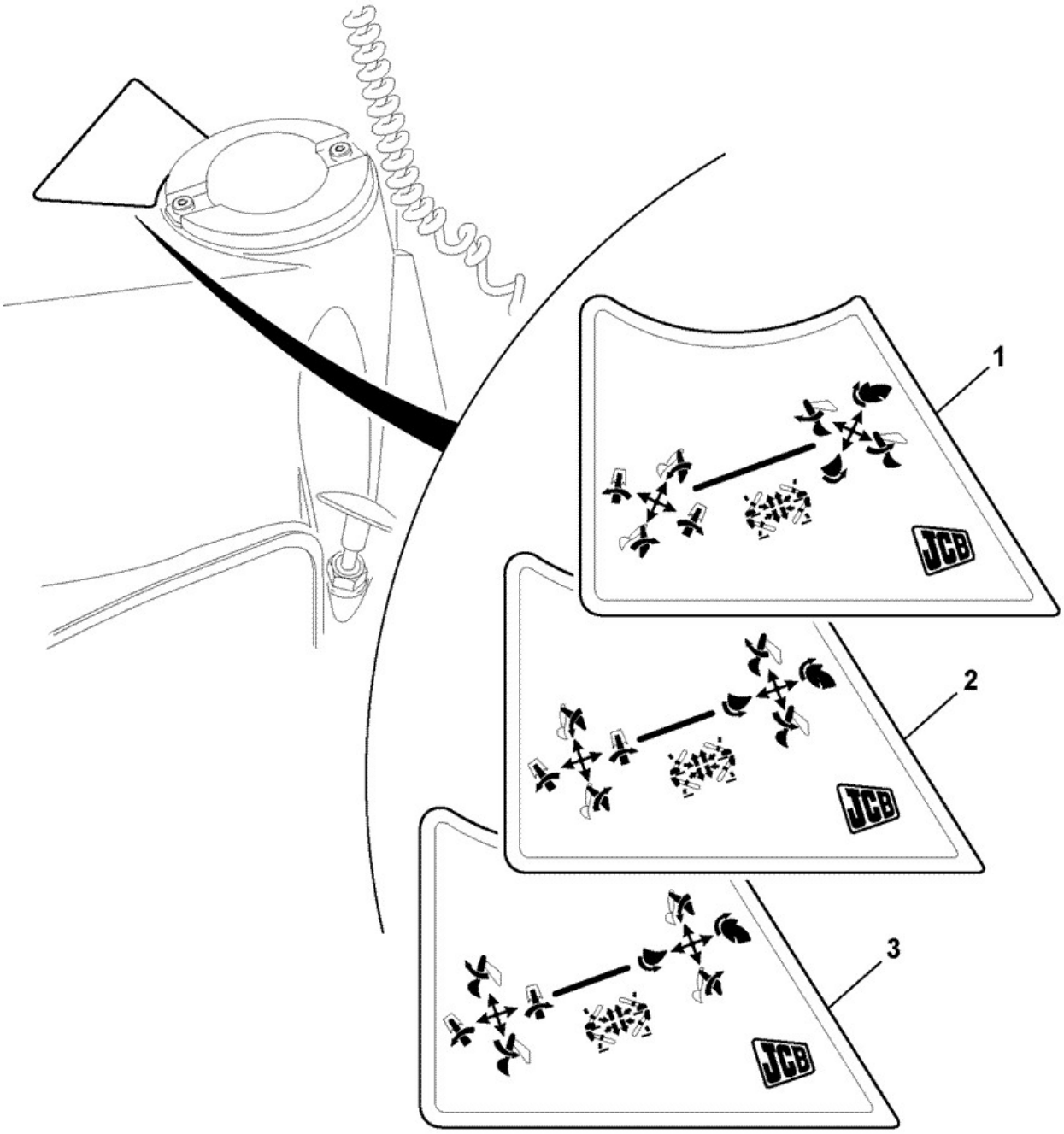

443531

Elemento	Pieza Nº	Cambiar número	Descripción	Código de uso	CANT.

1	332/F0585		ETIQUETA exc. & stab controls JCB X pattern		0
2	332/F0582		ETIQUETA exc. & stab controls SAE + pattern		0
3	332/F0317		ETIQUETA exc. & stab controls ISO + pattern		0

9812/0010 B5-2-20 RÓTULO, AVISO, 3CX, 4CX, 0

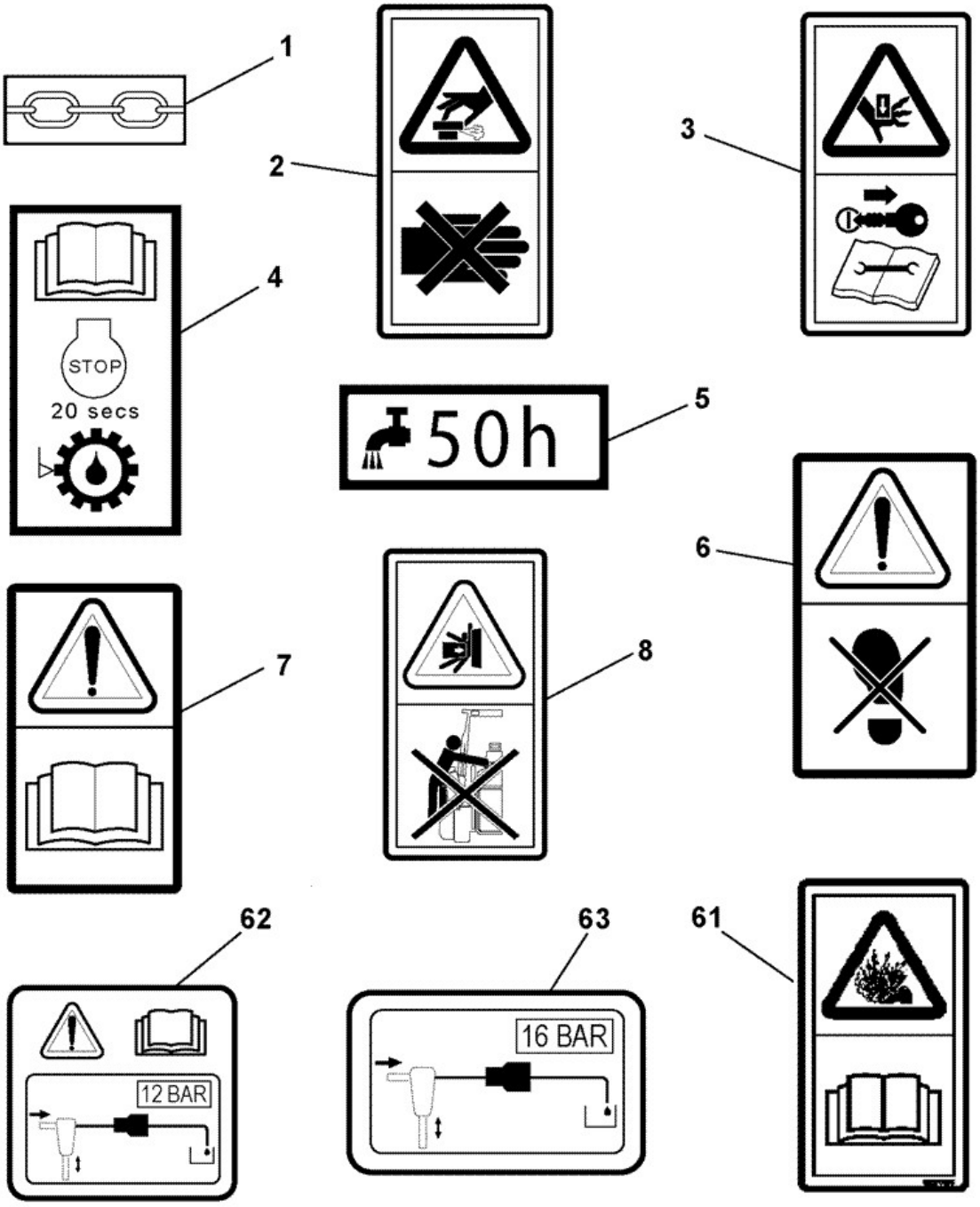

775195

Elemento	Pieza Nº	Cambiar número	Descripción	Código de uso	CANT.
1	817/01087		Rótulo tie down (chain)		4

2	817/70005		Rótulo warning,hot fluid under pressure		1
3	817/70102		Rótulo warning,Moving parts remove key		2
4	817/19906		Rótulo transmission oil 49mm X 24mm		1
5	817/00380		Etiqueta Drain Every 50 Hours		1
6	817/70024		Etiqueta warning do not use as step		1
7	817/18825		Etiqueta product liability read operator h.book		1
8	817/70018		Rótulo warning,operate from operators seat only *fit to boom by dipper ram pivot*		2
61	332/F5855		CALCAMONIA Pressure Hazard Read Handbook		2
62	817/16593		Etiqueta back-pressure Breaker		1
63	817/70147		Rótulo warning return back pressure *PCH*		1

Catálogo de productos \ CONSTRUCTION \ REST OF WORLD \ CONSTRUCTION / INDUSTRIAL \ BACKHOE LOADER 3CX,4CX,214,215,217 \ 3CX 00960000-00989999,01297000-01297999,01327000-01349999,01616000-01625999,01705500-01709999 84hp 9812/0010 \ B CARROCERIA, CABINA SECCION CARGADORA \ B05 MATERIAL REACONDICIONAMIENTO

9812/0010 B5-2-21 LABEL, WARNING, 3CX, 4CX

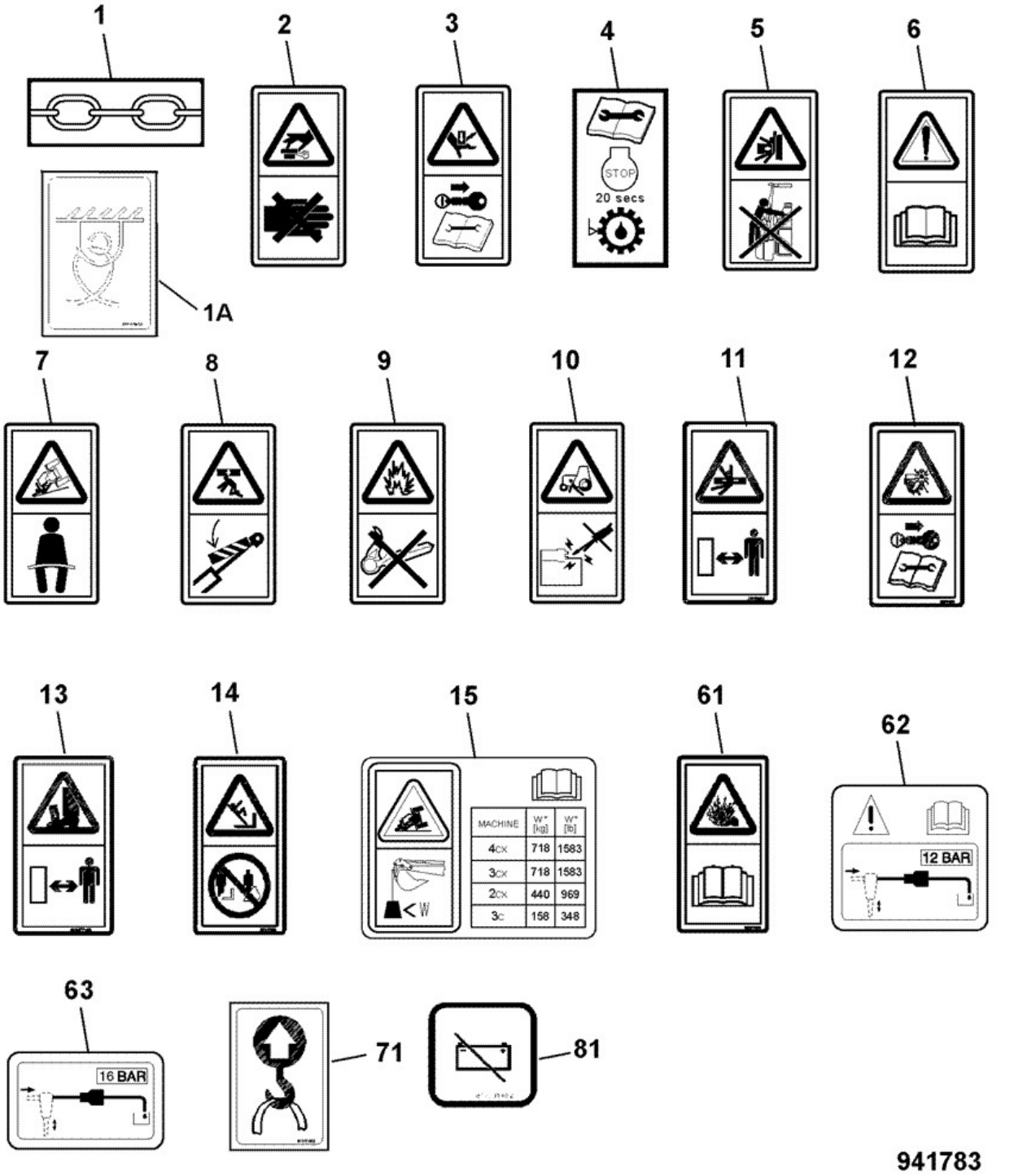

Elemento	Pieza Nº	Cambiar número	Descripción	Código de uso	CANT.
1	817/01087		Rótulo tie down (chain)		4

1A	332/S5833		Etiqueta Tie Down Point		4
2	817/70005		Rótulo warning,hot fluid under pressure		1
3	817/70102		Rótulo warning,Moving parts remove key		2
4	817/19906		Rótulo transmission oil 49mm X 24mm		1
5	817/70018		Rótulo warning,operate from operators seat only		2
6	817/70014		Rótulo Warning, read manual before operating m/c		1
7	817/70029		Rótulo warning,overturn risk-wear seatbelt		1
8	817/70104		Rótulo warning,safety strut		2
9	817/70042		Rótulo explosion hazard remove ignitn.source		1
10	817/70012		Rótulo Warning,start engine from operators seat		1
11	817/70112		Rótulo Warning crush hazard		2
12	332/P4679		CALCAMONIA warning fan blades remove key from ignition		1
13	332/P7135		CALCAMONIA warning crush hazard keep a safe distance		2
14	817/70108		Rótulo warning,do not stand on bucket/fork		2
15	332/E2601		Rótulo safe load, ISO		1
61	332/F5855		CALCAMONIA Pressure Hazard Read Handbook		2
62	817/16593		Etiqueta back-pressure Breaker		1
63	817/70147		Rótulo warning return back pressure		1
71	817/01803		Etiqueta Sling Point		4
81	817/01452		Etiqueta battery isolator		1

9812/0010 B5-2-30 DECALS, MACHINE, 3CX, 4CX

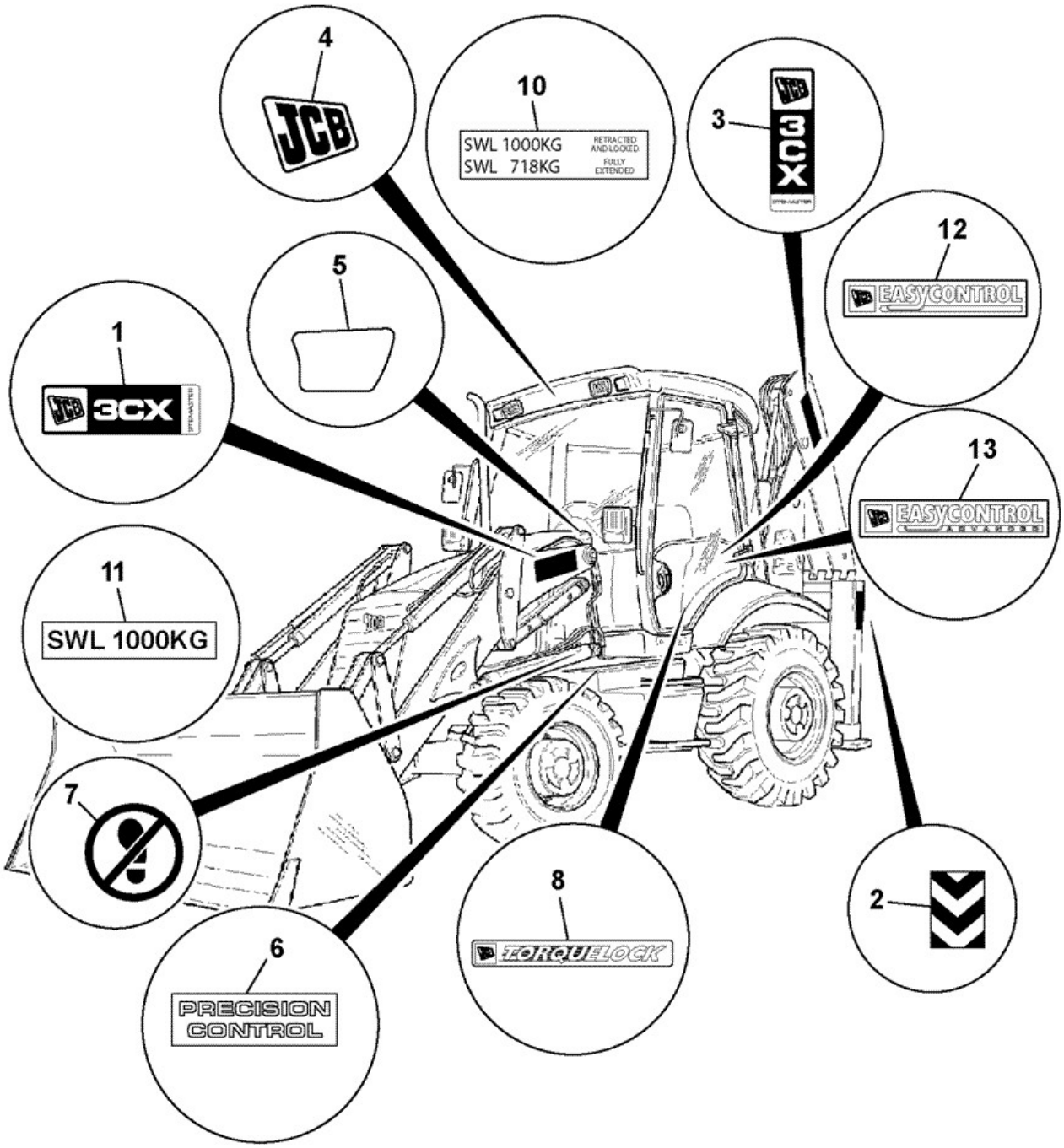

443959

Elemento	Pieza Nº	Cambiar número	Descripción	Código de uso	CANT.
1	817/17858		Rótulo 3CX loader arm		2

1	817/17860		Rótulo 3CX super loader arm		2
1	817/17861		Rótulo 3CX sitemaster loader arm		2
1	817/17862		Rótulo 3CX Sitemaster super loader arm		2
1	817/17863		Rótulo 3CX sitemaster plus loader arm		2
1	817/17864		Rótulo 3CX contractor loader arm		2
1	817/17865		Rótulo 4C loader arm		2
1	817/17866		Rótulo 4C Super loader arm		2
1	817/17867		Rótulo 4CN loader arm		2
1	817/17868		Rótulo 4CN Super loader arm		2
1	817/17869		Rótulo 4CX loader arm		2
1	817/17870		Rótulo 4CX Super loader arm		2
1	817/17871		Rótulo 4CX Sitemaster loader arm		2
1	817/17872		Rótulo 4CX Sitemaster super loader arm		2
1	817/17873		Rótulo 3CX Digmaster loader arm		2
1	817/17874		Rótulo 3CX Super digmaster loader arm		2
1	817/17875		Rótulo 4CX Digmaster loader arm		2
1	817/17876		Rótulo 3CX LA Turbo loader arm		2
1	817/17877		Rótulo 3CX LA Turbo Combi loader arm		2
1	817/17878		Rótulo 3CX LA Turbo plus loader arm		2
1	817/17879		Rótulo 3CX Turbomaster loader arm		2
1	817/17946		Rótulo 3CX Turbo Combi plus loader arm		2
1	817/19114		Rótulo 3CX Contractor Plus loader arm		2
1	817/19232		Rótulo 3CX Summum loader arm		2
1	817/19234		Rótulo 3CX Combi Summum loader arm		2
1	817/19236		Rótulo 4CX Summum loader arm		2
1	817/19238		Rótulo 4CX Combi Summum loader arm		2
1	817/17880		Rótulo 214 loader arm		2
1	817/17881		Rótulo 214 Sitemaster loader arm		2
1	817/20025		Rótulo 3CX 14ft loader arms		2
1	332/F9653		CALCAMONIA 3CX Contractor Pro loader arm		2
2	817/03401		Rótulo chevron red/white		2
2	817/16552		Rótulo black chevrons		2
3	817/17893		Rótulo 3CX dipper		2
3	817/17911		Rótulo 3CX super dipper		2
3	817/17912		Rótulo 3CX sitemaster dipper		2
3	817/17913		Rótulo 3CX Sitemaster super dipper		2
3	817/17914		Rótulo 3CX sitemaster plus dipper		2
3	817/17915		Rótulo 3CX Contractor dipper		2
3	817/17916		Rótulo 4C dipper		2
3	817/17917		Rótulo 4C Super dipper		2
3	817/17918		Rótulo 4CN dipper		2
3	817/17919		Rótulo 4CN Super dipper		2
3	817/17920		Rótulo 4CX dipper		2
3	817/17921		Rótulo 4CX Super dipper		2
3	817/17922		Rótulo 4CX Sitemaster dipper		2
3	817/17923		Rótulo 4CX Sitemaster super dipper		2
3	817/17924		Rótulo 3CX Digmaster dipper		2
3	817/17925		Rótulo 3CX Super digmaster dipper		2
3	817/17926		Rótulo 4CX Digmaster dipper		2
3	817/17927		Rótulo 3CX LA Turbo dipper		2
3	817/17928		Rótulo 3CX LA Turbo Combi dipper		2

3	817/17929		Rótulo 3CX LA Turbo plus dipper		2
3	817/17930		Rótulo 3CX Turbomaster dipper		2
3	817/17948		Rótulo 3CX Turbo Combi plus dipper		2
3	817/19115		Rótulo 3CX Contractor Plus dipper		2
3	817/19233		Rótulo 3CX Summum dipper		2
3	817/19235		Rótulo 3CX Combi Summum dipper		2
3	817/19237		Rótulo 4CX Summum dipper		2
3	817/19239		Rótulo 4CX Combi Summum dipper		2
3	817/17931		Rótulo 214 dipper		2
3	817/17932		Rótulo 214 Sitemaster dipper		2
3	817/20026		Rótulo 3CX 14ft dipper		2
3	332/F9658		CALCAMONIA 3CX Contractor Pro dipper		2
4	817/18078		Rótulo JCB Logo black		1
4	817/18079		Rótulo cab roof front yellow		1
5	817/18074		Rótulo protection bonnet, left hand *2WS*		1
5	817/18075		Rótulo protection bonnet, right hand *2WS*		1
5	817/18076		Rótulo protection bonnet, left hand *AWS*		1
5	817/18077		Rótulo protection bonnet, right hand *AWS*		1
6	****		*no longer fitted*		1
7	817/18566		Rótulo Warning No Step		1
8	817/20040		Rótulo Torquelock		2
10	817/01540		Etiqueta safe lifting excavator *extending dipper*		0
11	817/01208		Etiqueta swl 1000kg loader arm *loaderarm/fixed dipper*		1
12	332/E5958		Rótulo Easycontrol		2
13	332/E5959		Rótulo Easycontrol Advanced		2

9812/0010 B5-3-2 JUEGO HERRAMIENTAS, 0, 0

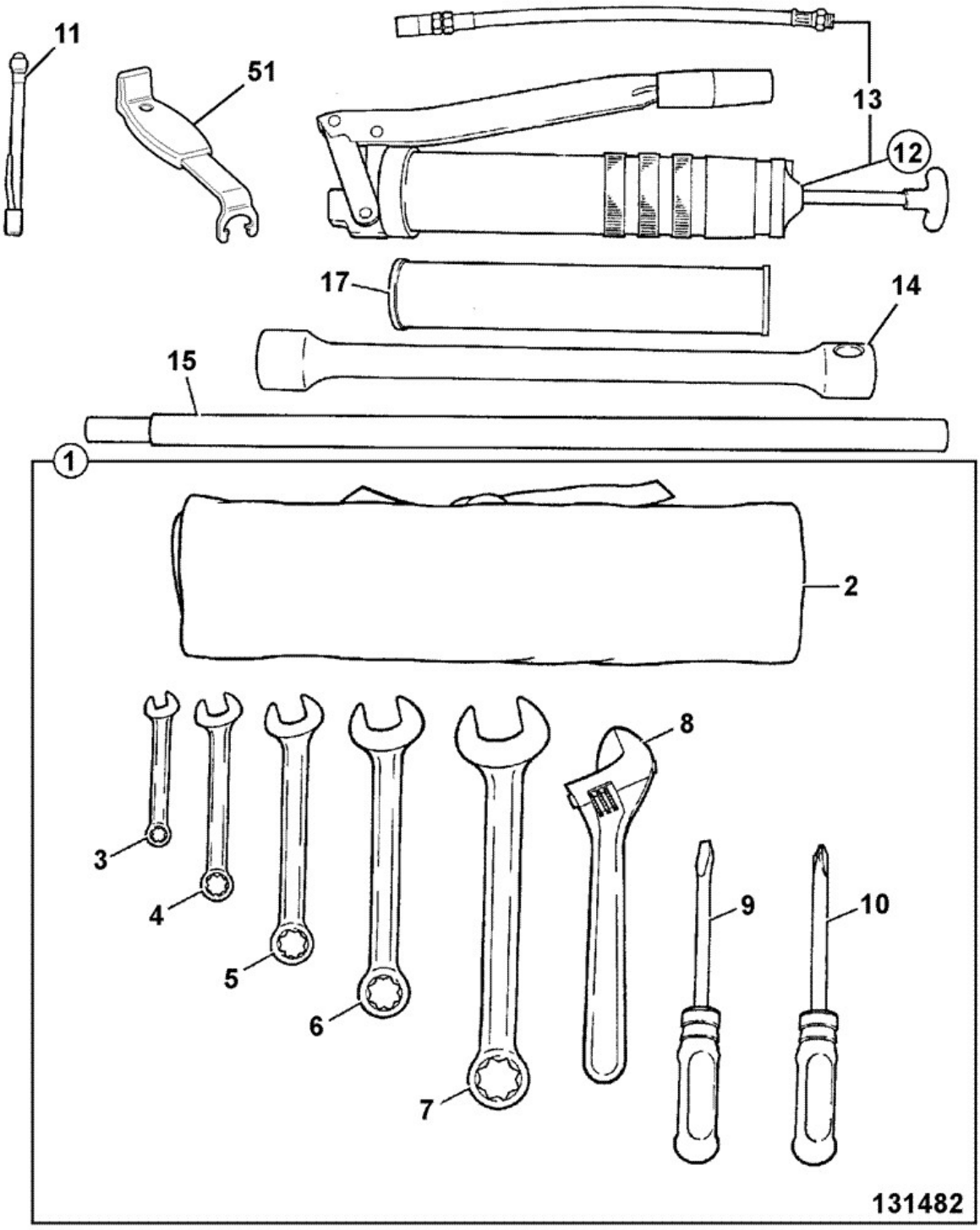

Elemento	Pieza Nº	Cambiar número	Descripción	Código de uso	CANT.
1	915/10300		Kit herramientas		1

2	:270/48800		Bolsa tool		1
3	:825/99842		Llave fija 10mm combination		1
4	:825/99843		Llave fija 11mm combination		1
5	:825/99844		Llave fija 13mm combination		1
6	:825/99845		Llave fija 17mm combination		1
7	:825/99846		Llave fija 19mm combination		1
8	:825/99821		Llave fija adjustable 10in.		1
9	:825/99808		Destornillador		1
10	:825/99839		Herramienta posidriver		1
11	915/03600		Indicador tyre pressure		1
12	992/11300		Herramienta grease gun		1
13	:915/07301		Conector flexible		1
14	825/99928		Herramienta wrench wheel nut 28.83-28.57mm A/F		1
15	915/10100		Barra telescopic tommy		1
17	4003/1327		Grasa cartridge, 400g		1
51	825/10053		Herramienta hose release		1

9812/0010 B5-3-3 JUEGO HERRAMIENTAS, MARTILLO Y BARRENA, 0

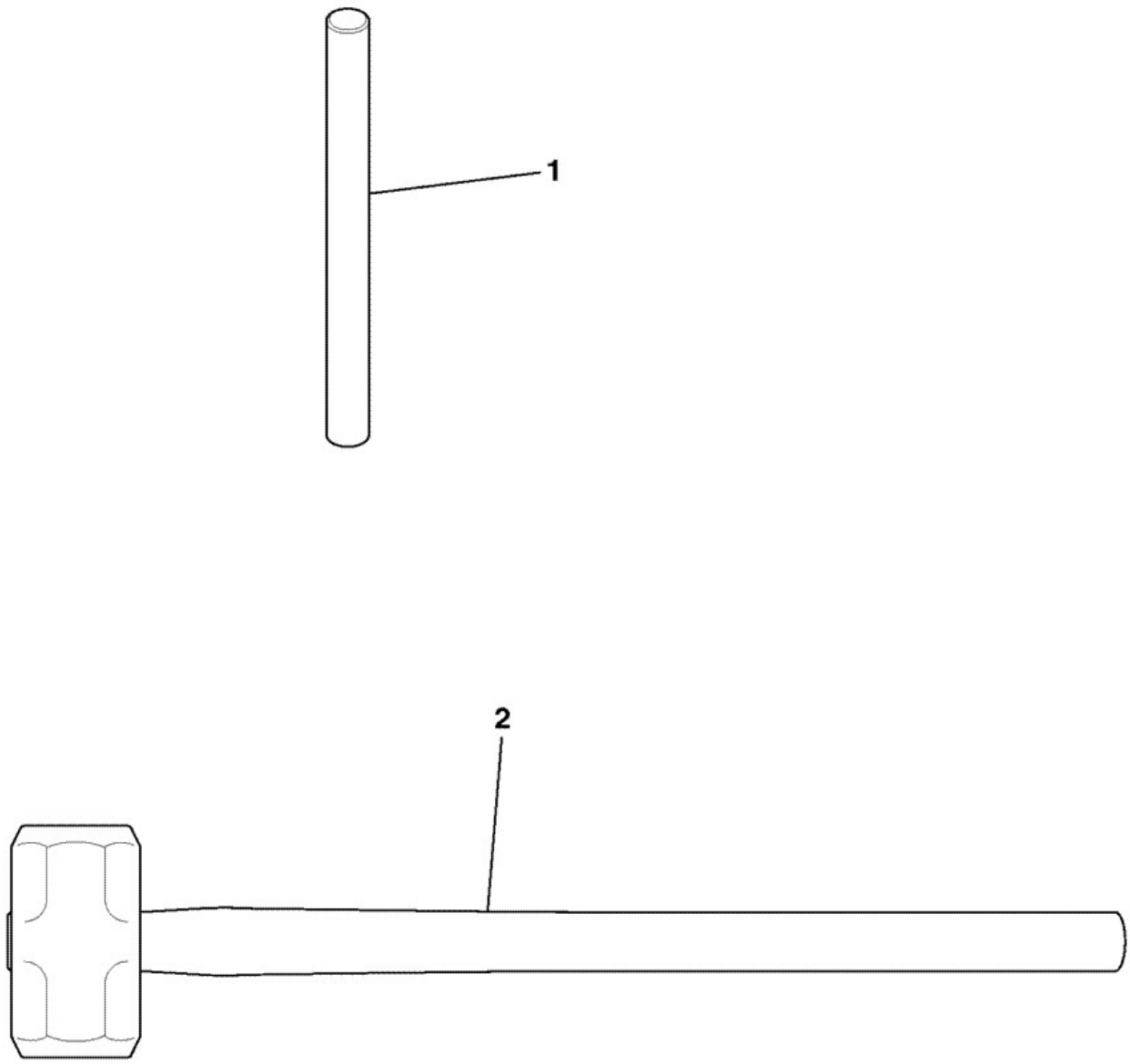

775430

Elemento	Pieza Nº	Cambiar número	Descripción	Código de uso	CANT.

1	121/79001		Pasador		1
2	825/99838		Herramienta hammer sledge		1

Catálogo de productos \ CONSTRUCTION \ REST OF WORLD \ CONSTRUCTION / INDUSTRIAL \ BACKHOE LOADER 3CX,4CX,214,215,217 \ 3CX 00960000-00989999,01297000-01297999,01327000-01349999,01616000-01625999,01705500-01709999 84hp 9812/0010 \ B CARROCERIA, CABINA SECCION CARGADORA \ B05 MATERIAL REACONDICIONAMIENTO

9812/0010 B5-4-1 EXTINTOR, ITALIA, 0

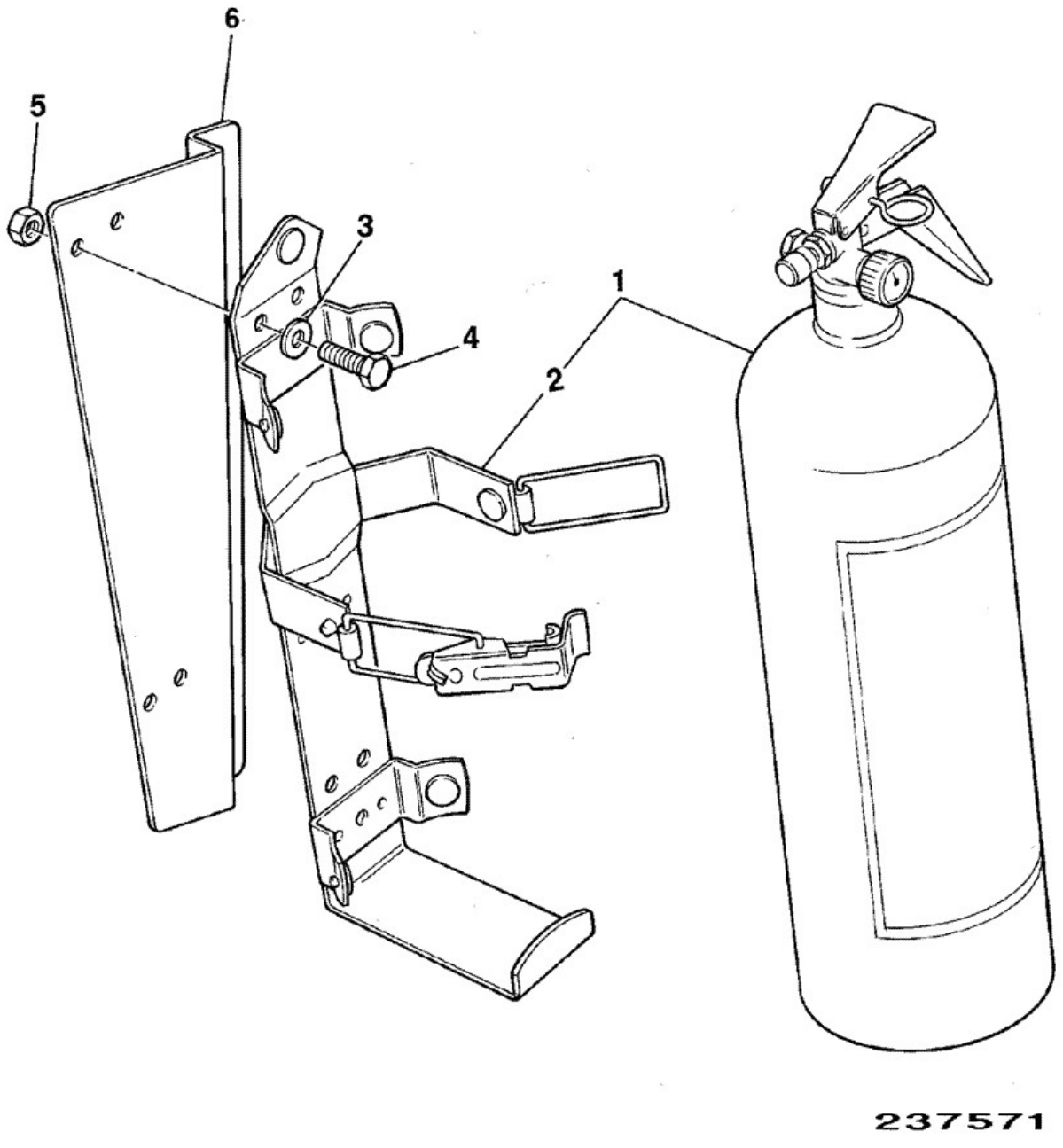

Elemento	Pieza Nº	Cambiar número	Descripción	Código de uso	CANT.
1	****		*Supplied by SPA*		1

2	****		*Supplied by SPA*		1
3	1315/0103Z		Tornillo		4
4	1370/0103Z		Tuerca Self lock M6		4
5	1420/0001Z		Arandela		4
6	123/10636		Montaje fire extinguisher		1

9812/0010 B5-4-2 EXTINTOR, 0, 0

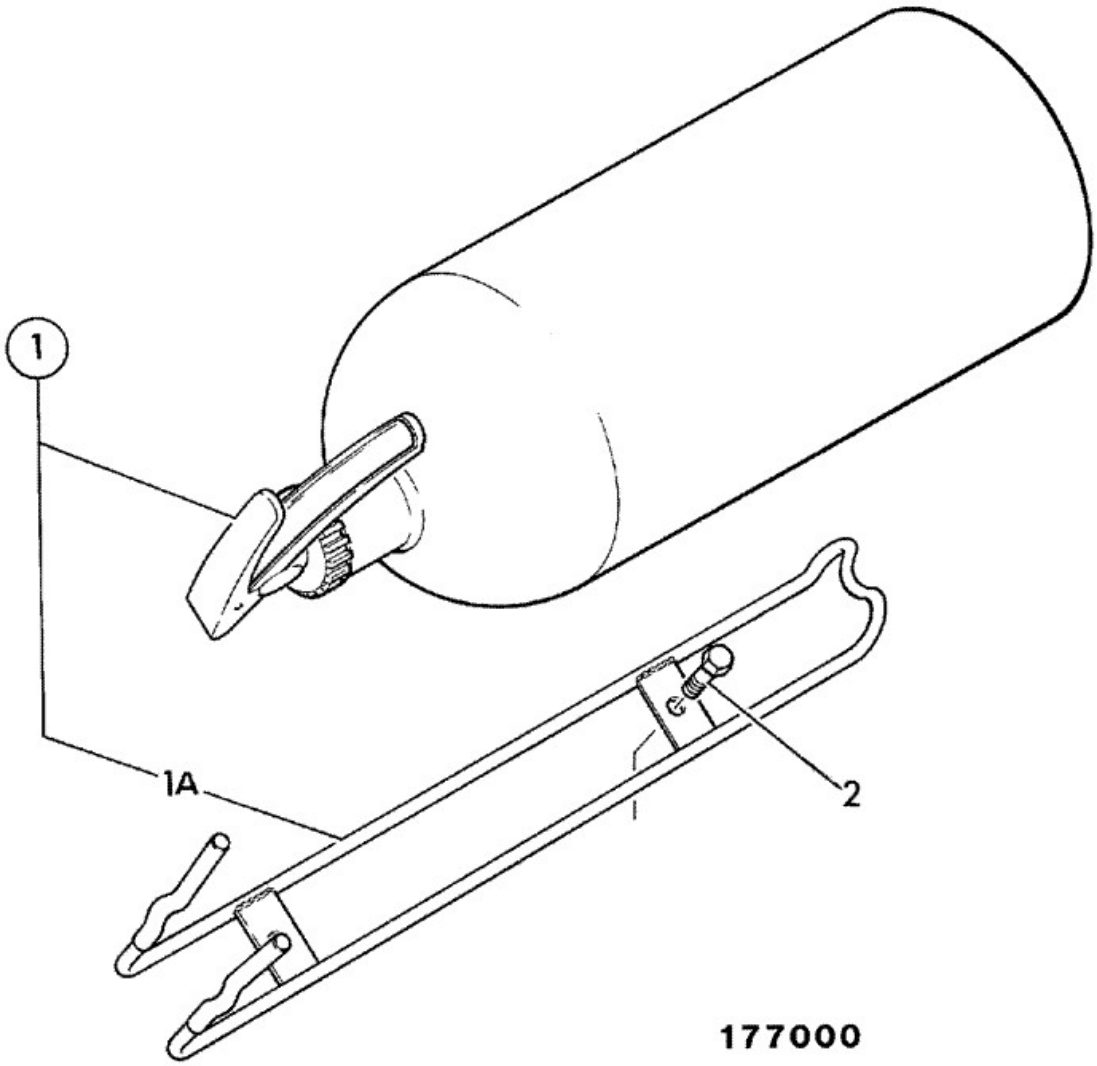

Elemento	Pieza Nº	Cambiar número	Descripción	Código de uso	CANT.
1	265/02895		Extintor fire c/w cradle		1
1A	****		Pieza no reparable		1
1B	:265/02967		Extintor fire excludes cradle		1
2	826/01683		Tornillo M6 X 25		2
3	826/01232		Tuerca M6 jack		2

9812/0010 B5-5-1 PINTURA, 0, 0

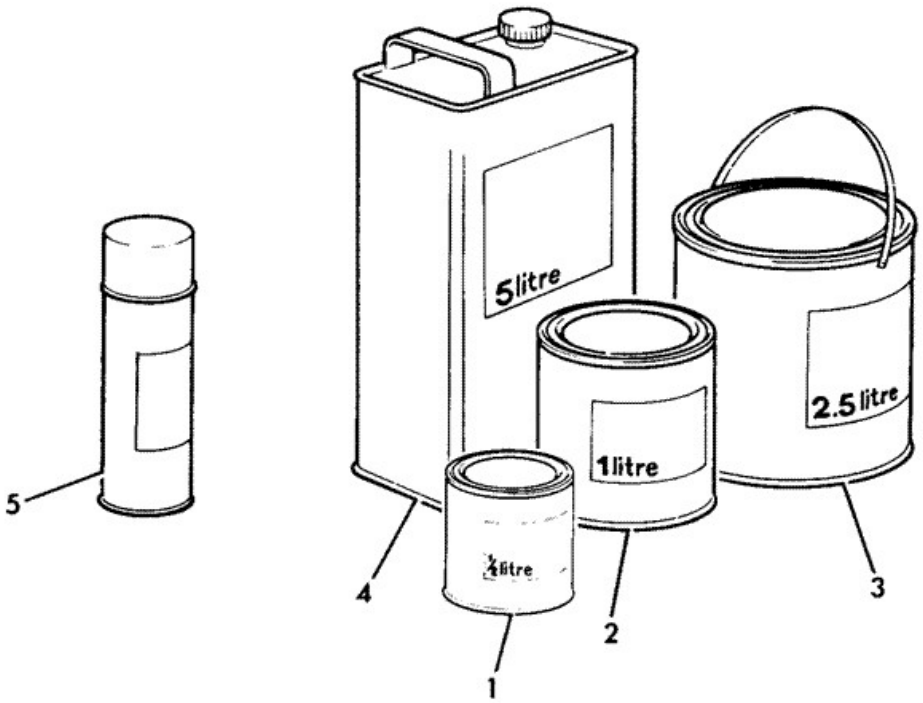

154940

Elemento	Pieza Nº	Cambiar número	Descripción	Código de uso	CANT.
1	4201/1340		Pintura undercoat, 0.5 litre two pack yellow		0
1	4201/1240		Pintura gloss, 0.5 litre two pack yellow		0
2	4200/5502		Pintura undercoat grey 1 lts		0
2	4201/0541		Pintura storm gray gloss 1 litre		0
2	4200/9201		Diluyentes 1 litre 2-pack		0
3	4200/5503		Pintura undercoat grey 2.5 lts		0
3	4201/0542		Pintura storm gray gloss 2.5 litre		0
4	4201/1343		Pintura undercoat, 5 litre two pack yellow		0
4	4201/1243		Pintura gloss, 5 litre two pack yellow		0
4	4200/5501		Pintura undercoat grey 5 lts		0
4	4201/0543		Pintura storm gray gloss 5 litre		0
4	4200/9203		Diluyentes 5 litre 2-pack *For use with two pack paint*		0
4	4200/2701		Diluyentes 5 litres *For use with gray paint*		0
5	4201/0546		Pintura storm grey gloss aerosol		1
5	4203/6446		Pintura metalic silver 400ml aerosol		1
5	4203/6546		Pintura graphite black 400ml aerosol		1
6	4102/3143		Cartucho forgeway 240 sealent 290 ML		0

9812/0010 B5-6-1 RÓTULOS, NIVEL RUIDO, 0

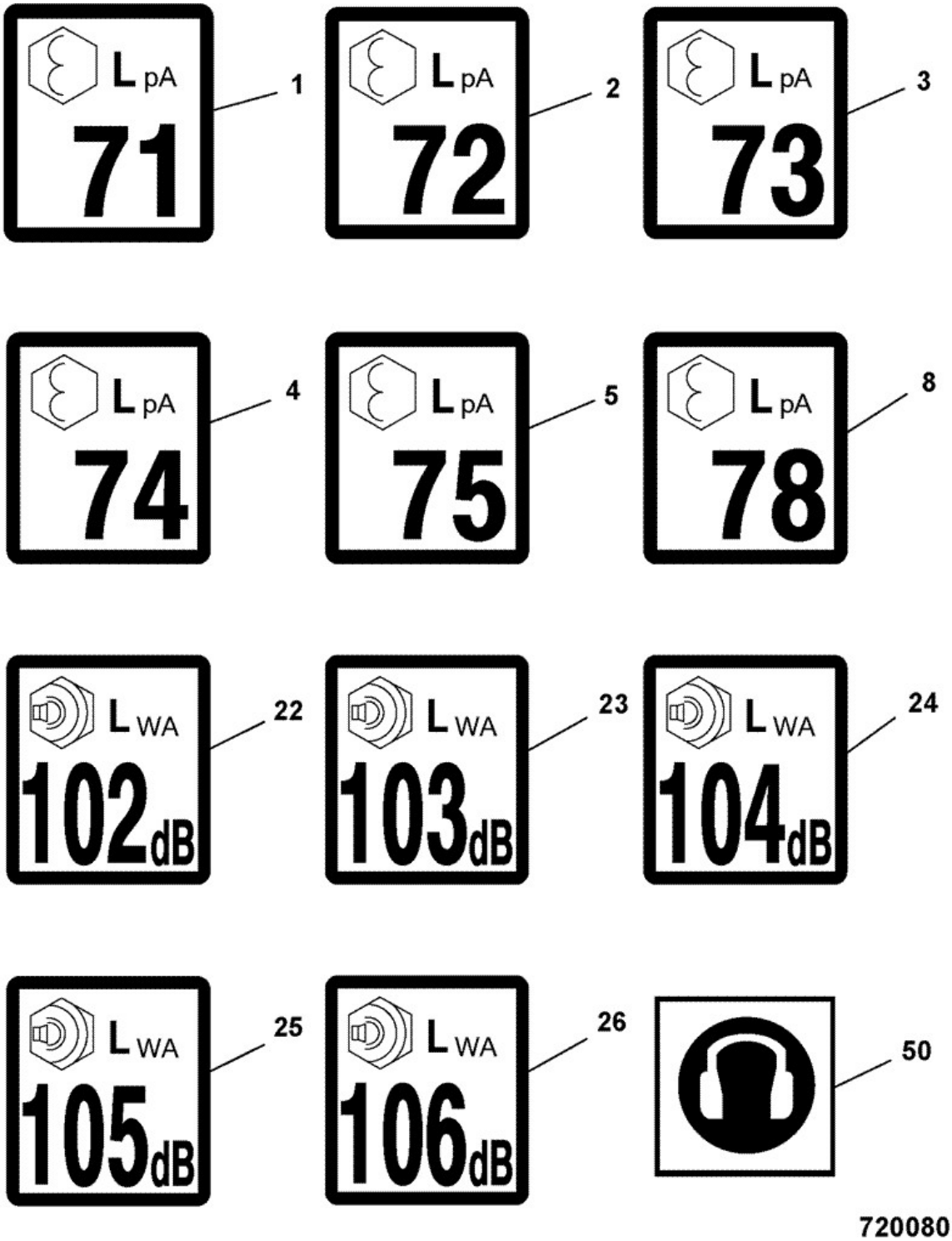

Elemento	Pieza Nº	Cambiar número	Descripción	Código de uso	CANT.
1	817/19297		Etiqueta sound pressure level 71 LpA		1

2	817/18821		Etiqueta sound pressure 72 LpA		1
3	817/18822		Etiqueta sound pressure 73LpA		1
4	817/18388		Etiqueta sound pressure 74LpA		1
5	817/18389		Etiqueta sound pressure 75LpA		1
8	817/19306		Etiqueta sound pressure 78LpA		1
22	817/17527		Etiqueta sound pressure level internal 102 dB LWA		1
23	817/17528		Etiqueta sound pressure level internal 103LWA		1
24	817/17529		Etiqueta sound pressure 104dB LWA		1
25	817/17530		Etiqueta sound pressure 105dB LWA		1
26	817/17531		Etiqueta sound pressure 106dB LWA		1
50	817/03908		Etiqueta ear protection		0
50	817/70021		Rótulo noise warning		0

9812/0010 B5-7-1 RÓTULOS, SUPLEMENTARIO, HOMOLOGACIÓN ITALIA

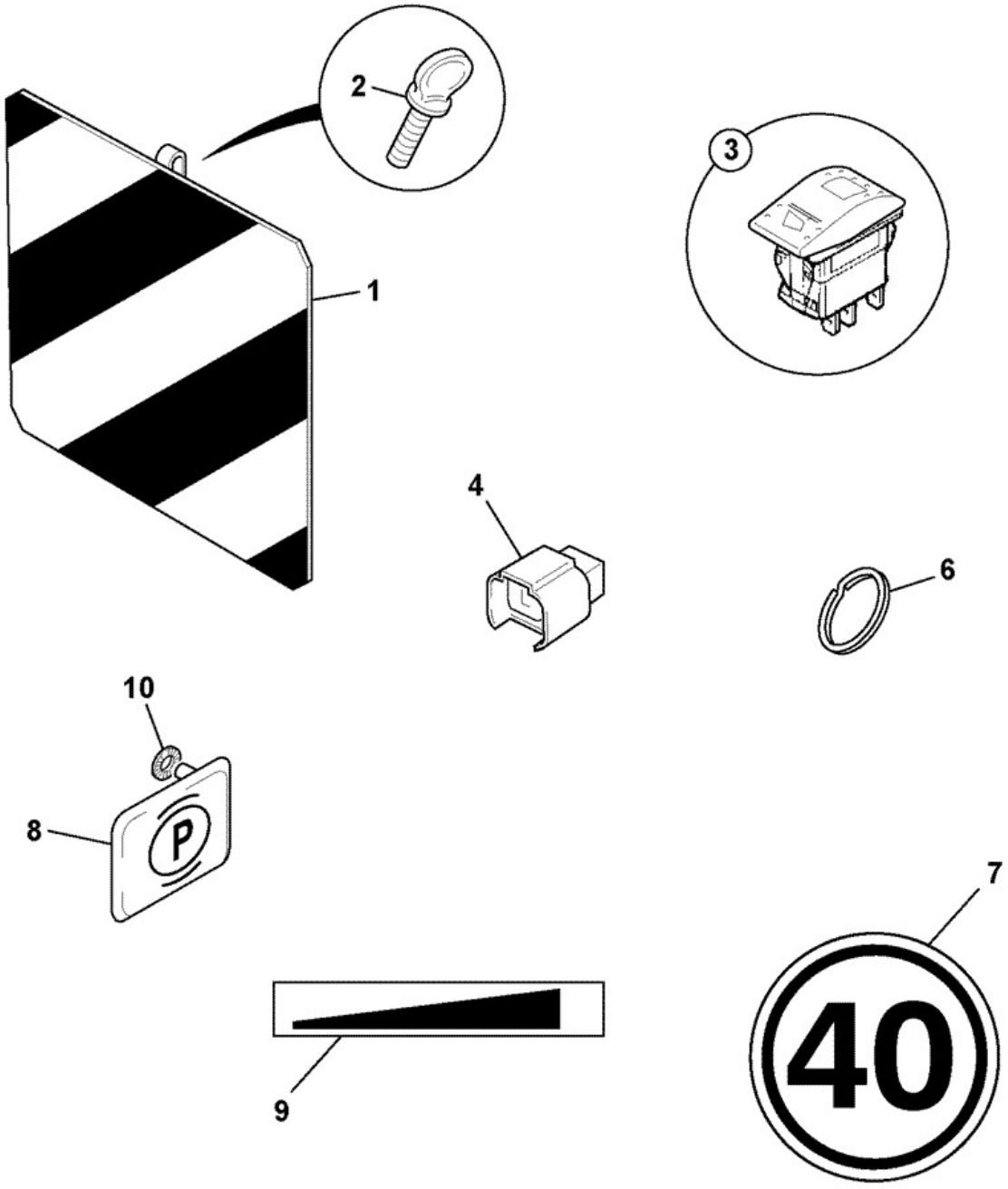

414470

Elemento	Pieza Nº	Cambiar número	Descripción	Código de uso	CANT.

1	123/03199		Placa hazard warning		3
2	826/00649		Tornillo thumb		3
3	701/60016		Interruptor 3 position 12V		1
4	719/10101		Tapón harness blanking 2-way, sealed		1
6	259/93303		Anillo key		1
7	817/04438		Rótulo 40 KPH		1
8	817/05140		Rótulo Handbrake Italian		1
9	817/05141		Rótulo throttle		1
10	826/00711		Arandela M4'starloc'		2

9812/0010 B5-11-1 Rótulos, Gráficos de carga,

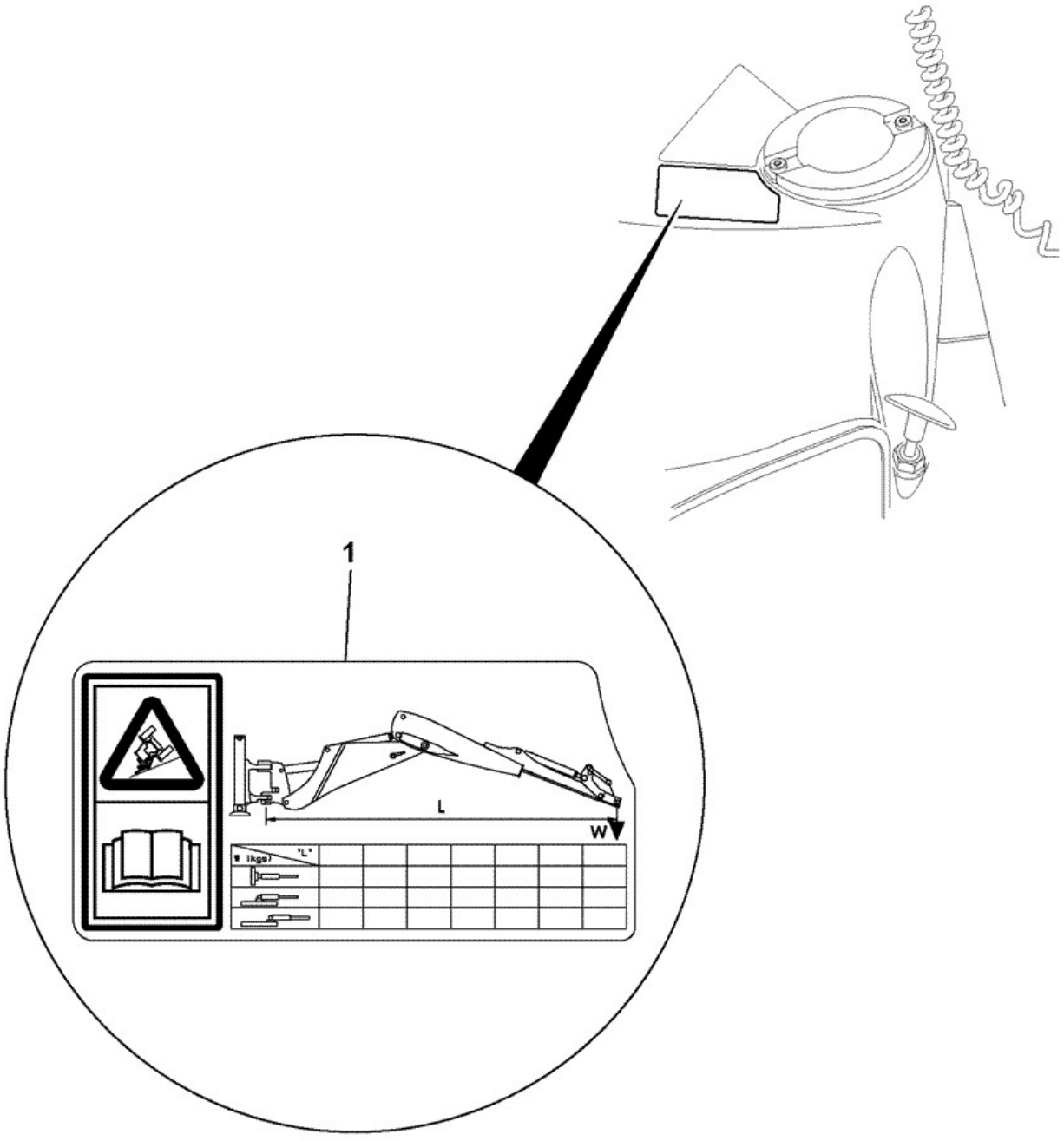

955810

Elemento	Pieza Nº	Cambiar número	Descripción	Código de uso	CANT.
1	332/D6029		ETIQUETA lift chart non EN474		1

1	332/F0476		ETIQUETA lift chart 88" 14 fix S/L		1
1	332/F0478		ETIQUETA lift chart 88" 14 fix H/L		1
1	332/F0560		ETIQUETA lift chart 88" 14 ext S/L		1
1	332/F0558		ETIQUETA lift chart 88" 14 ext H/L		1
1	332/F0474		ETIQUETA lift chart 92" 14 fix S/L		1
1	332/F0242		ETIQUETA lift chart 92" 14 fix H/L		1
1	332/F0529		ETIQUETA lift chart 92" 14 ext S/L		1
1	332/F0528		ETIQUETA lift chart 92" 14 ext H/L		1
1	332/F0536		ETIQUETA lift chart 92" 15 fix		1
1	332/F0555		ETIQUETA lift chart 92" 15 ext		1
1	332/F0631		ETIQUETA lift chart C/M 14 fix S/L		1
1	332/F0630		ETIQUETA lift chart C/M 14 fix H/L		1
1	332/F0633		ETIQUETA lift chart C/M 14 ext S/L		1
1	332/F0632		ETIQUETA lift chart C/M 14 ext H/L		1

9812/0010 C1-1-1 HARNESS CAB/CANOPY, MACHINE

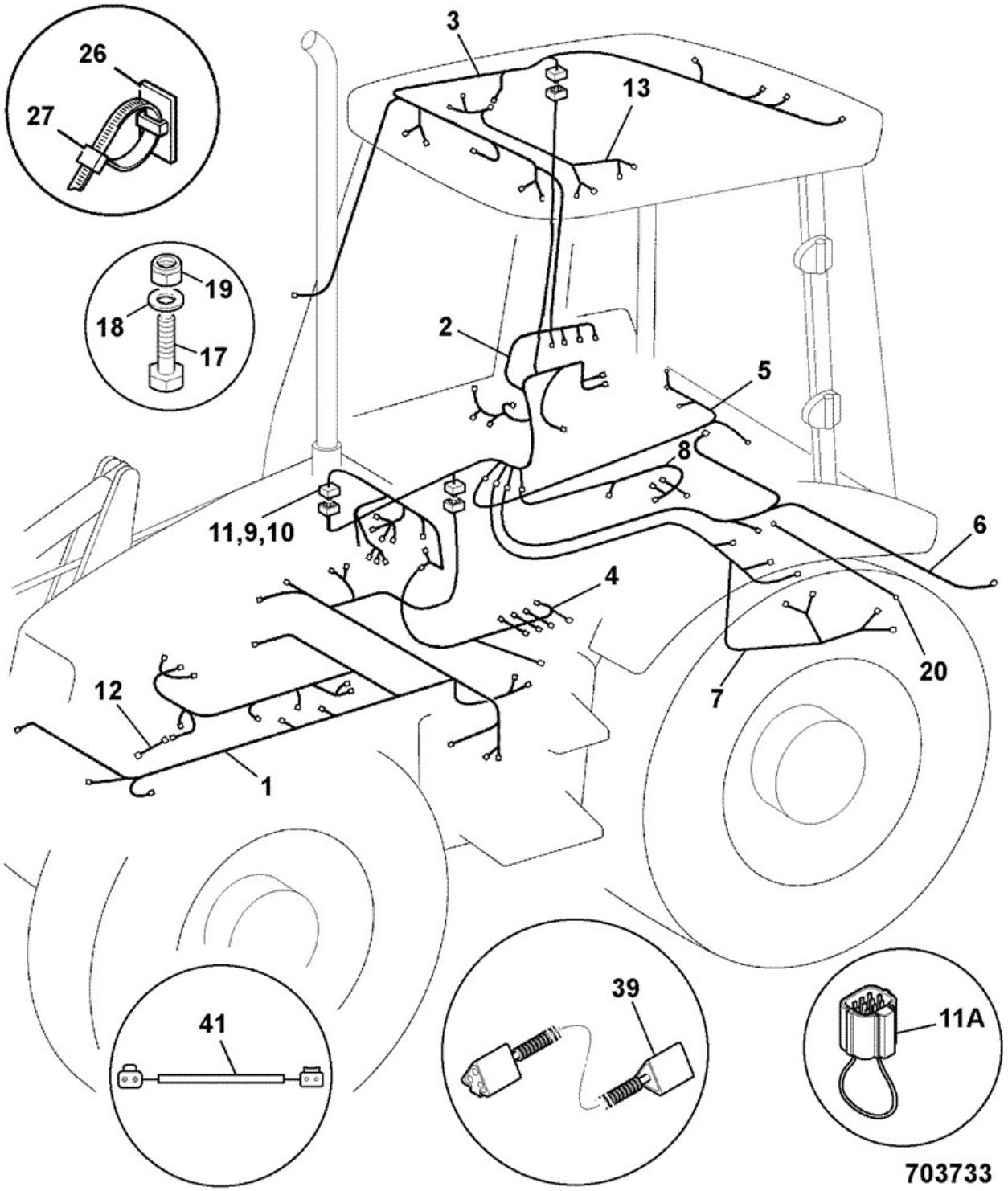

Elemento	Pieza Nº	Cambiar número	Descripción	Código de uso	CANT.
1	721/11727	Superseded	Cableado chassis/engine		1

1	721/12351		Cableado chassis		1
2	721/11681	<M0968664	Cableado cab side console		1
2	721/12167		Cableado cab, side console		1
2A	:704/50190		Tapón 7 diodes		1
2B	:7219/0017		Carcasa DT flanged 12 way		1
3	721/11153		Cableado cab roof ROW		1
3A	826/01162		Abrazadera cable *to secure roof harness*		10
4	721/11679		Cableado manual gearbox *Gearbox,manual*		1
4	721/11680		Cableado powershift 4 speed gearbox *NOT German or LUC transmissions*		1
4	721/11678		Cableado autoshift 6 speed gearbox *Also used on German and LUC PS transmissions*		1
4A	826/01144		Abrazadera cable 200mm long *use with item 4*		2
4B	826/01347		Abrazadera cable c/w mounting 4.6mm x 190mm *use with item 4*		2
4C	826/01106		Tuerca rivet,M8 *use with item 4D*		2
4D	331/43850		Soporte mounting transmission harness *to hold item 4*		1
4E	1317/3305Z		Tornillo flange head M8 x 20 lg *use with item 4D*		2
4L	721/11124		Tapón harness link *German builds*		1
4P	716/20500		Tapón 5 diode 2WS *German builds*		1
5	721/11543		Cableado rear cab UK market		1
5	721/11544		Cableado rear cab rest of the world		1
6	721/11201		Cableado rearlights,sideshift *Sideshift*		1
6	721/11202		Cableado rearlights,centremount *Centremount*		1
7	721/11719		Cableado auxiliary hammer/jaw		1
8	721/11698	<JUNE 2007	Cableado steer mode AWS *use with valve 25/222466*		1
8	721/11205	<JUNE 2007	Cableado steer mode AWS *use with valve 25/221090*		1
8	721/12300		Cableado steer mode AWS *use with valve 25/223534*		1
8	721/11206	<M0961945	Cableado steer mode no crab		1
8	721/11699	<JUNE 2007	Cableado steer mode no crab		1
8	721/12301	Superseded	Cableado steer mode no crab		1
8	M.S.S.		Supersesión múltiple *parts usage code A*		1
8	721/12300		Cableado steer mode AWS	A	1
8	715/20009		Tapón male,2 way Deutsch *fit to plug B*	A	1
8	332/C4758		Resistencia gate *fit to plug C*	A	1
9	721/10580		Tapón link,white,3CX 2 diodes,		1
9	721/10581		Tapón link,red,4CX 2 diodes		1
10	721/10872		Tapón link,green,german 1 diode		1
11	721/11687	<JUNE 2007	Cableado front console powershift & manual *Use with items 28,29,30,31,32,33. 2WS & AWS* *Véase la nota 1*		1

11	721/11687	>JUNE 2007	Cableado front console powershift & manual *2WS ONLY*		1
11	721/12290	>JUNE 2007	Cableado front console powershift & manual *AWS ONLY*		1
11	721/11688	<JUNE 2007	Cableado front console A/S & LUC P/Shift *Use with items 32,33,34,35*		1
11	721/12291	>JUNE 2007	Cableado front console Autoshift		1
11	721/12314	>JUNE 2007	Cableado front console German P/S & S/S		1
11A	721/11864		Cableado 4wd link *plugs into 721/11687 when fitted*		1
12	721/11639		Cableado ESOS link		1
13	721/11050		Cableado interior light & speakers		1
14	721/10987		Cableado panel link shovel lights		1
15	721/11046		Cableado lights shovel mounted		1
16	718/20119		Cable earth link 625mm long *Use with items 17,18 & 19*		1
17	1315/0405Z		Tornillo M10 x 20mm long		1
18	1420/0008Z		Arandela Plain M10		2
19	1370/0303Z		Tuerca lock M10		1
20	721/11361		Cableado link 1200mm long		1
24	721/10822		Cableado 2-way link 40mm long Deutsch-AMP/Jnrtimer		1
25	331/30579		Kit reparación harness conduit P21		1
26	122/40304		Pastilla cable tie mounting self adhesive		1
27	826/01144		Abrazadera cable 200mm long		26
28	7210/0071		Conector mounting flange		1
28A	:7210/0084		Clip spring, DRB flange		2
29	1315/0103Z		Tornillo		4
30	1420/0006Z		Arandela M6		1
31	1370/0103Z		Tuerca Self lock M6		1
32	1315/0107Z		Tornillo		2
33	1420/0005Z		Arandela M5		2
34	826/01521		Tornillo M6 X 20		1
35	716/30149	Superseded	Relé 12v micro		5
35	332/C3148		RELE 12v micro high capacity		5
36	721/11411		Cableado immobiliser		1
37	123/05247		Clip cable *to mount item 4*		3
38	2410/0205		Aro de refuerzo hole dia 12.7mm panel thknss 5-6mm *use with item 37*		3
39	721/11862		Cableado speed sensor to gearbox harness *engine speed sensor to LUC transmission*		1
40	721/10969		Cableado heater link 3CX, 4CX *breaker*		1
41	721/11916		Cableado link,400mm long *links 4 to switch*		1

Nota 1: not used on LUC Powershift

Catálogo de productos \ CONSTRUCTION \ REST OF WORLD \ CONSTRUCTION / INDUSTRIAL \ BACKHOE LOADER 3CX,4CX,214,215,217 \ 3CX 00960000-00989999,01297000-01297999,01327000-01349999,01616000-01625999,01705500-01709999 84hp 9812/0010 \ C INSTALACION ELECTRICA-MAQUINA CABINA Y MOTOR \ C01 INSTALACION ELECTRICA PRAL.

9812/0010 C1-1-2 HARNESS CAB/CANOPY, MACHINE,

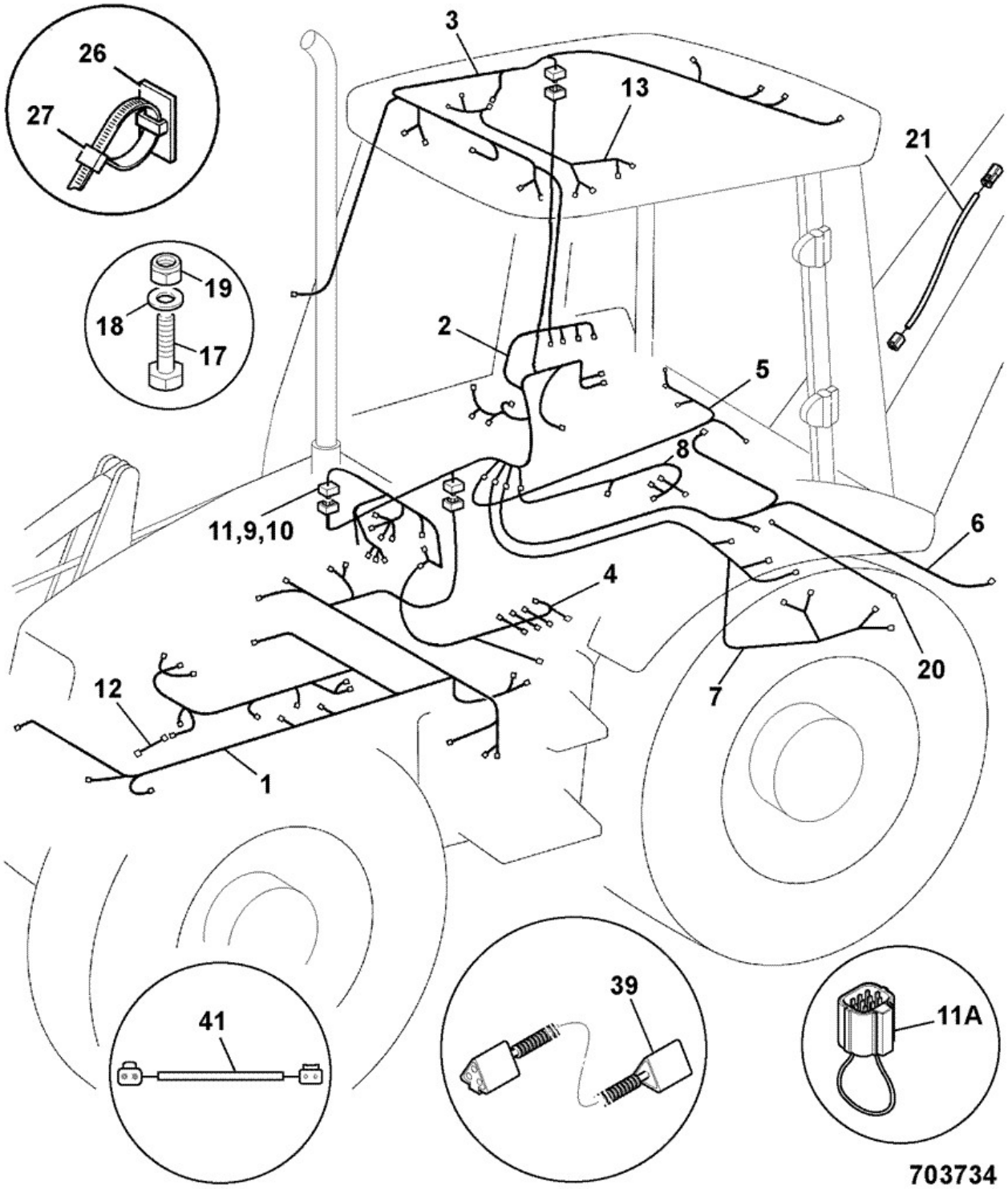

Elemento	Pieza Nº	Cambiar número	Descripción	Código de uso	CANT.
1	721/12351		Cableado chassis		1

1A	332/F2545		Cableado fused earth link 200mm long *fuse 716/05704*		1
1B	892/00352		Conector 1.5-2.5MM cable splice blue		1
2	332/E6593		Cableado cab, panel		1
2A	:704/50190		Tapón 7 diodes		1
2B	:7219/0017		Carcasa DT flanged 12 way		1
2E	:704/50132		Tapón diode pack 3 pin		1
3	721/11153		Cableado cab roof ROW		1
3A	826/01162		Abrazadera cable *to secure roof harness*		10
4	721/11679		Cableado manual gearbox *Gearbox,manual*		1
4	721/11680		Cableado powershift 4 speed gearbox *NOT German or LUC transmissions*		1
4	721/11678		Cableado autoshift 6 speed gearbox *Also used on German and LUC PS transmissions*		1
4A	826/01144		Abrazadera cable 200mm long *use with item 4*		2
4B	826/01347		Abrazadera cable c/w mounting 4.6mm x 190mm *use with item 4*		2
4C	826/01106		Tuerca rivet,M8 *use with item 4D*		2
4D	331/43850		Soporte mounting transmission harness *to hold item 4*		1
4E	1317/3305Z		Tornillo flange head M8 x 20 lg *use with item 4D*		2
4L	721/11124		Tapón harness link *German builds*		1
4P	716/20500		Tapón 5 diode 2WS *German builds*		1
5	721/11543		Cableado rear cab UK market		1
5	721/11544		Cableado rear cab rest of the world		1
6	721/11201		Cableado rearlights,sideshift *Sideshift without stabiliser warning*		1
6	332/E6619		Cableado rear lights sideshift *Sideshift with stabiliser warning*		1
6	332/D4386		Cableado rear lights. CM *Centremount*		1
7	721/11719		Cableado auxiliary hammer/jaw		1
8	721/12300		Cableado steer mode AWS		1
8	715/20009		Tapón male,2 way Deutsch *fit to plug B if no crab steer (3CXS)*		1
8	332/C4758		Resistencia gate *fit to plug C if no crab steer (3CXS)*		1
9	721/10580		Tapón link,white,3CX 2 diodes,		1
9	721/10581		Tapón link,red,4CX 2 diodes		1
10	721/10872		Tapón link,green,german 1 diode		1
11	332/D1059		Cableado front console S/shuttle & P/shift *2WS ONLY*		1
11	332/D2080		Cableado front console S/shuttle & P/shift *AWS ONLY*		1
11	332/E6754		Cableado front console *Autoshift*		1
11	332/D2154		Cableado front console German P/S & A/S		1
12	721/11639		Cableado ESOS link		1
13	721/11050		Cableado interior light & speakers		1
14	721/10987		Cableado panel link shovel lights		1

15	721/11046		Cableado lights shovel mounted		1
16	718/20119		Cable earth link 625mm long *Use with items 17,18 & 19*		1
17	1315/0405Z		Tornillo M10 x 20mm long		1
18	1420/0008Z		Arandela Plain M10		2
19	1370/0303Z		Tuerca lock M10		1
20	721/11361		Cableado link 1200mm long		1
21	332/E9078		Cableado boom link 1000mm long *never used in production*		1
21	332/E9050		Cableado boom link 3000mm long		1
24	721/10822		Cableado 2-way link 40mm long Deutsch-AMP/Jnrtimer		1
25	331/30579		Kit reparación harness conduit P21		1
26	122/40304		Pastilla cable tie mounting self adhesive		1
27	826/01144		Abrazadera cable 200mm long		26
28	7210/0071		Conector mounting flange		1
28A	:7210/0084		Clip spring, DRB flange		2
29	1315/0103Z		Tornillo		4
30	1420/0006Z		Arandela M6		1
31	1370/0103Z		Tuerca Self lock M6		1
32	1315/0107Z		Tornillo		2
33	1420/0005Z		Arandela M5		2
34	826/01521		Tornillo M6 X 20		1
35	716/30149	Superseded	Relé 12v micro		5
35	332/C3148		RELE 12v micro high capacity		5
36	721/11411		Cableado immobiliser		1
37	123/05247		Clip cable *to mount item 4*		3
38	2410/0205		Aro de refuerzo hole dia 12.7mm panel thknss 5-6mm *use with item 37*		3
39	721/11862		Cableado speed sensor to gearbox harness *engine speed sensor to LUC transmission*		1
40	721/10969		Cableado heater link 3CX, 4CX *breaker*		1
41	721/11916		Cableado link,400mm long *links 4 to switch*		1

Catálogo de productos \ CONSTRUCTION \ REST OF WORLD \ CONSTRUCTION / INDUSTRIAL \ BACKHOE LOADER 3CX,4CX,214,215,217 \ 3CX 00960000-00989999,01297000-01297999,01327000-01349999,01616000-01625999,01705500-01709999 84hp 9812/0010 \ C INSTALACION ELECTRICA-MAQUINA CABINA Y MOTOR \ C01 INSTALACION ELECTRICA PRAL.

9812/0010 C1-1-3 HARNESS CAB/CANOPY, MACHINE,

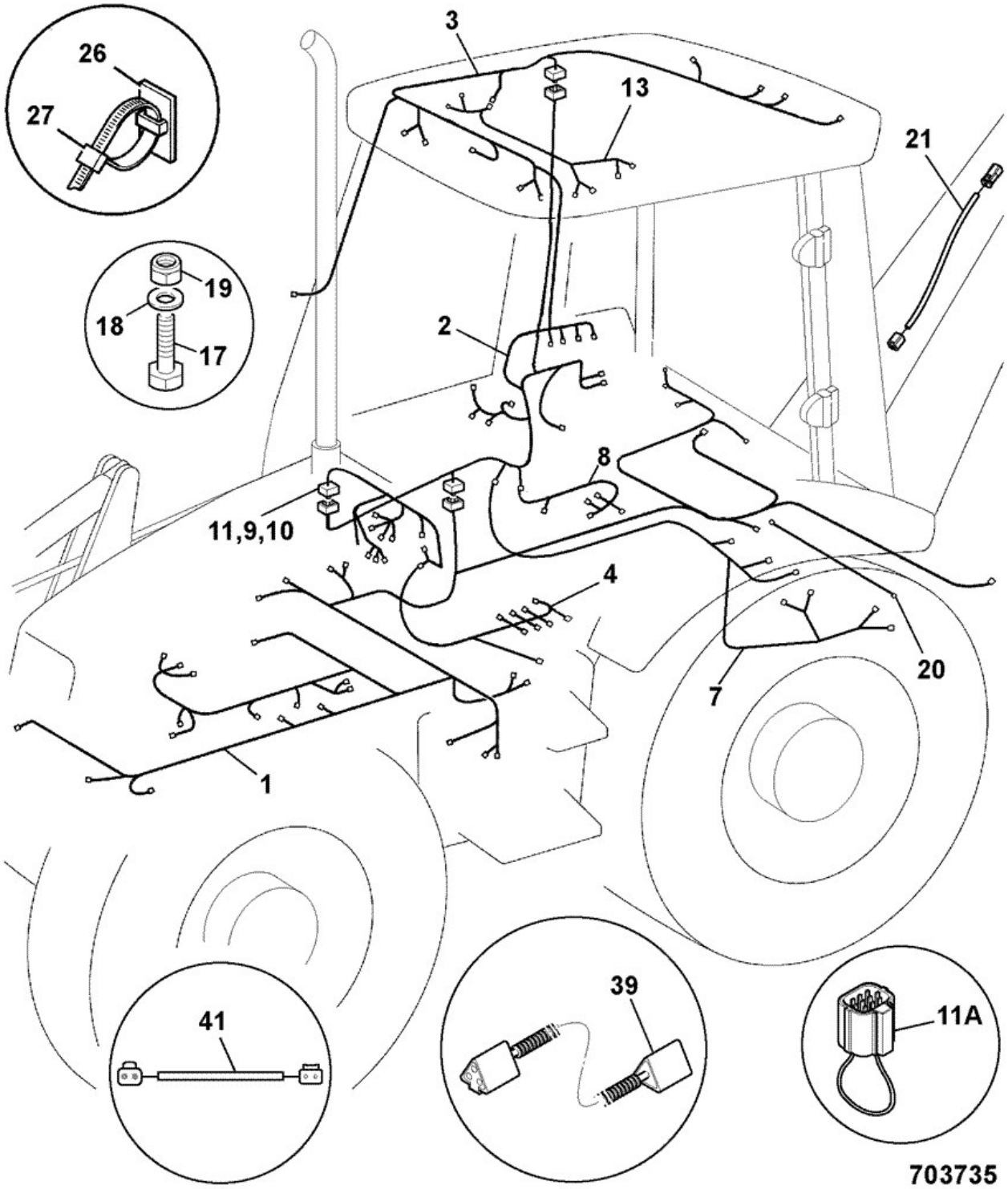

Elemento	Pieza Nº	Cambiar número	Descripción	Código de uso	CANT.
			Cableado chassis, sideshift		

1	332/F0708		*sideshift builds*		1
1	332/F3743		Cableado chassis, centremount *centremount builds*		1
1A	332/F2545		Cableado fused earth link 200mm long *fuse 716/05704*		1
1B	892/00352		Conector 1.5-2.5MM cable splice blue		1
2	332/E7211		Cableado cab, panel		1
2	721/F8615		Cableado cab, panel China builds only *China builds only*		1
2A	:704/50190		Tapón 7 diodes		1
2B	:7219/0017		Carcasa DT flanged 12 way		1
3	721/11153		Cableado cab roof ROW		1
3A	826/01162		Abrazadera cable *to secure roof harness*		10
4	332/E9959		Cableado gearbox, manual *Gearbox,manual*		1
4	332/E9971		Cableado gearbox, powershift *NOT German or LUC transmissions*		1
4	332/E9968		Cableado gearbox, autoshift (6 speed) *Also used on German and LUC PS transmissions*		1
4A	826/01144		Abrazadera cable 200mm long *use with item 4*		2
4B	826/01347		Abrazadera cable c/w mounting 4.6mm x 190mm *use with item 4*		2
4L	721/11124		Tapón harness link *German builds*		1
4P	716/20500		Tapón 5 diode 2WS *German builds*		1
7	721/11719		Cableado auxiliary hammer/jaw		1
8	721/12300		Cableado steer mode AWS		1
8	715/20009		Tapón male,2 way Deutsch *fit to plug B if no crab steer (3CXS)*		1
8	332/C4758		Resistencia gate *fit to plug C if no crab steer (3CXS)*		1
9	721/10580		Tapón link,white,3CX 2 diodes,		1
9	721/10581		Tapón link,red,4CX 2 diodes		1
10	721/10872		Tapón link,green,german 1 diode		1
11	332/D1059		Cableado front console S/shuttle & P/shift *2WS ONLY*		1
11	332/D2080		Cableado front console S/shuttle & P/shift *AWS ONLY*		1
11	332/E6754		Cableado front console *Autoshift*		1
11	332/D2154		Cableado front console German P/S & A/S		1
13	721/11050		Cableado interior light & speakers		1
14	721/10987		Cableado panel link shovel lights		1
15	721/11046		Cableado lights shovel mounted		1
16	718/20119		Cable earth link 625mm long *Use with items 17,18 & 19*		1
17	1315/0405Z		Tornillo M10 x 20mm long		1
18	1420/0008Z		Arandela Plain M10		2
19	1370/0303Z		Tuerca lock M10		1
20	721/11361		Cableado link 1200mm long		1
21	332/E9050		Cableado boom link 3000mm long		1
24	721/10822		Cableado 2-way link 40mm long Deutsch-AMP/Jnrtimer		1
25	331/30579		Kit reparación harness conduit P21		1

26	122/40304		Pastilla cable tie mounting self adhesive		1
27	826/01144		Abrazadera cable 200mm long		26
28	7210/0071		Conector mounting flange		1
28A	:7210/0084		Clip spring, DRB flange		2
29	1315/0103Z		Tornillo		4
30	1420/0006Z		Arandela M6		1
31	1370/0103Z		Tuerca Self lock M6		1
32	1315/0107Z		Tornillo		2
33	1420/0005Z		Arandela M5		2
34	826/01521		Tornillo M6 X 20		1
35	716/30149	Superseded	Relé 12v micro		5
35	332/C3148		RELE 12v micro high capacity		5
37	123/05247		Clip cable *to mount item 4*		3
38	2410/0205		Aro de refuerzo hole dia 12.7mm panel thknss 5-6mm *use with item 37*		3
39	721/11862		Cableado speed sensor to gearbox harness *engine speed sensor to LUC transmission*		1
40	721/10969		Cableado heater link 3CX, 4CX *breaker*		1
41	721/11916		Cableado link,400mm long *links 4 to switch*		1

Catálogo de productos \ CONSTRUCTION \ REST OF WORLD \ CONSTRUCTION / INDUSTRIAL \ BACKHOE LOADER 3CX,4CX,214,215,217 \ 3CX 00960000-00989999,01297000-01297999,01327000-01349999,01616000-01625999,01705500-01709999 84hp 9812/0010 \ C INSTALACION ELECTRICA-MAQUINA CABINA Y MOTOR \ C01 INSTALACION ELECTRICA PRAL.

9812/0010 C1-1-21 CABLADO LADO CONSOLA, INST\, 0

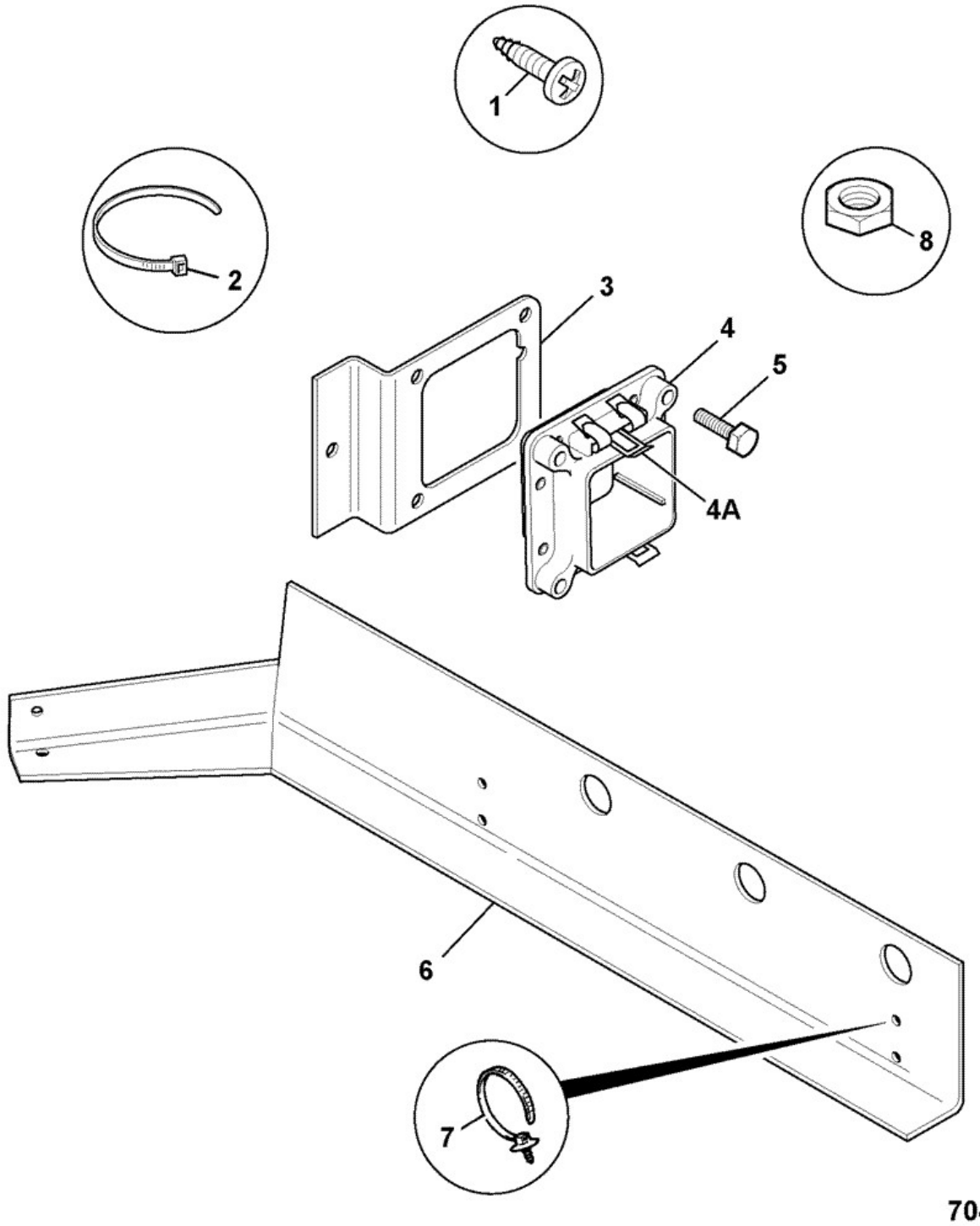

Elemento	Pieza Nº	Cambiar número	Descripción	Código de uso	CANT.
1	826/01521		Tornillo M6 X 20		2

1	826/01520		Tornillo M5 X 20 *for item 3*		1
2	826/01144		Abrazadera cable 200mm long		8
3	331/35029	Superseded	Soporte connector		1
3	346/00574		Soporte coupling *replaces 3, 4, 4A & 5*		1
4	7210/0071		Conector mounting flange		1
4A	:7210/0084		Clip spring, DRB flange		2
5	1315/0103Z		Tornillo		4
6	335/05403		Guía side console harness 3CX		1
6	1315/0305Z		Tornillo Hexagon M8 x 20mm long		1
6	1412/0002Z		Arandela		1
7	826/10711		Abrazadera cable, fir tree, 150mm long		6
8	826/11137		Tuerca M12 x 1 thin *parkbrake switch link if fitted*		1