RUTHZIL TRATOR COMERCIAL DE PEÇAS LTDA 11 97083-6812 ROLANDO CITRANGULO

404C - 22T - TW60

PERKINS

HR81486U	HR81486U
404C-22T	2006/08/31

APLICAÇÃO MINI CARREGADEIRA CASE SV185B

The information given within this parts book was correct at the time of printing and is subject to change without notice. Always refer to your local Perkins outlet for the latest information. Only fully trained personnel should carry out servicing of engines. Before working on any engine always refer to the correct user service and maintenance manual.

Always refer to your local Perkins outlet before purchasing any parts

Subject to any existing rights of third parties, the information given in this document is the property of Perkins Engines Limited and should not be copied, in whole or part, without the prior written consent of the Company.

Contents

1.	Introduction	Pg. 4
2.	How To Use Your Parts Book	Pg. 4
3.	Engine Breakdown	Pg. 5
4.	Symbol Descriptions	Pg. 9
5.	Parts Lists & Illustrations	Pg. 11
6.	Parts Index	Pg. 128

Introduction

The build list of your engine, found on the front page of this parts book, provides a unique reference to the components fitted to your engine; therefore this parts book is only applicable to this particular engine

Always quote your build list and engine serial number when contacting your Perkins outlet.

How to use your Parts Book

This parts book has been designed to provide you with all the information you need to identify parts to service your engine. There are several features within the book to make it easy to find the parts you require.

Front Page

This lists your build list number and the date of publication of this book

Symbol Descriptions

Provides a quick reference guide to the symbols used within the book.

Engine Breakdown

Use this to identify all the major sections of your engine and the relevant pages within the book.

Parts Lists & Illustrations

This section shows each major section of your engine broken down into individual part numbers along with an associated illustration for identifying the parts you require.

The illustrations used in this parts book are representational only and should only be used for identification purposes.

For fitting instructions please refer to your engine Service Manual.

Parts Index

Using either the part number or description of the part you require this section will help you locate the page within the **Parts Lists & Illustrations** section where the part appears.

Section	Page
Long Engine ACEH0829	11
Cylinder Block A6CH	13
Crankshaft & Bearings A6CH	15
Pistons & Rings A6CH	17
Cylinder Head Assembly B6CH	19
Rocker Shaft Assembly B6CH	21
Timing Case C6MH	23
Timing Case C6MH	25
Timing Case C6MH	27
Stop Solenoid Control C6MH	29
Camshaft & Gears C6MH	31
Timing Case C6VH	33
Timing Case C6VH	35

Section	Page
Timing Case C6VH	37
Timing Case C6VH	39
Camshaft & Gears C6VH	41
Fuel Injection Pump D6AH	43
High Pressure Fuel Pipes D6AH	45
Atomisers D6AH	47
Fuel Injection Pump D6MH	49
High Pressure Fuel Pipes D6MH	51
Atomisers D6MH	53
Fuel Injection Pump D6QH	55
High Pressure Fuel Pipes D6QH	57
Atomisers D6QH	59
Cold Start System E6AK	61

Engine Breakdown

Section	Page
Fan Drive **F4DK**	**63**
Water Pump **F6XH**	**65**
Water Pump **F6XH**	**67**
Oil Pump & Connections **F6XH**	**69**
Pulleys **F8CH**	**71**
Sump **G6BH**	**73**
Oil Filter **G6BH**	**75**
Oil Leak-Off Pipes **G6BH**	**77**
Rotor **G6BH**	**79**
Fuel Filter **H6FH**	**81**
Pipes **H6FH**	**83**
Lift Pump **H7CK**	**85**
Back End Group **J6LK**	**87**

Section	Page
Starter Group **K6EK**	**89**
Starter Group **K6EK**	**91**
Exhaust Manifold **L6AH**	**93**
Alternator **N6GH**	**95**
Engine Lifting Eyes **O6BH**	**97**
Auxiliary Drive **P6AH**	**99**
Instrumentation **Q6AH**	**101**
Instrumentation **Q6QH**	**103**
Inlet Manifold **S6EH**	**105**
Turbocharger **S6EH**	**107**
Exhaust **Z1AK**	**109**
Electrical **Z3AH**	**111**

Section	Page
Electrical **Z3FH**	**113**
Electrical **Z3PK**	**115**
Miscellaneous **Z3YK**	**117**
Fan **Z5DH**	**119**
Miscellaneous **Z6AK**	**121**
Miscellaneous **Z6AK**	**123**
Miscellaneous **Z6CK**	**125**
Miscellaneous **Z6DK**	**127**

Engine Breakdown

Symbols and Notes

Symbol	Description
	From Engine Number
	Upto Engine Number
	Repairs and Replaces
	See Appropriate Section - Reference Number
	Alternative
	Order
	Remanufactured Part
	New for Old Part
	Number of Teeth
	Thickness
	Bottom
	Top
	Left Hand
	Right Hand
	Reference for Detailed Breakdown
	Other Service Options Available
	Cylinder Number
	See History Section

Long Engine	Plate A
	ACEH0829

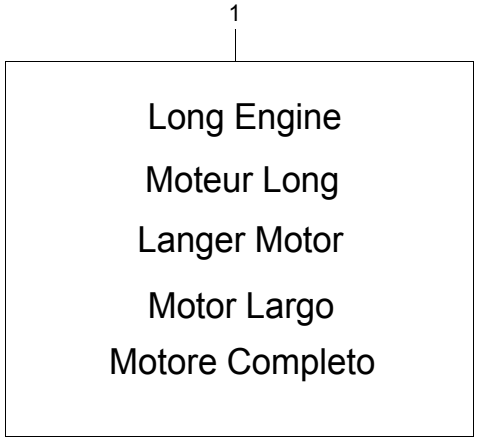

Long Engine	Plate A
	ACEH0829

Item	Part No.	References	Qty.	Description	Notes
1	HR30829U		1	LONG ENGINE - ASSEMBLY	(A)

Footnotes	
(A)	Order parts book HR30829UPB for details

Cylinder Block	Plate A
	A6CH

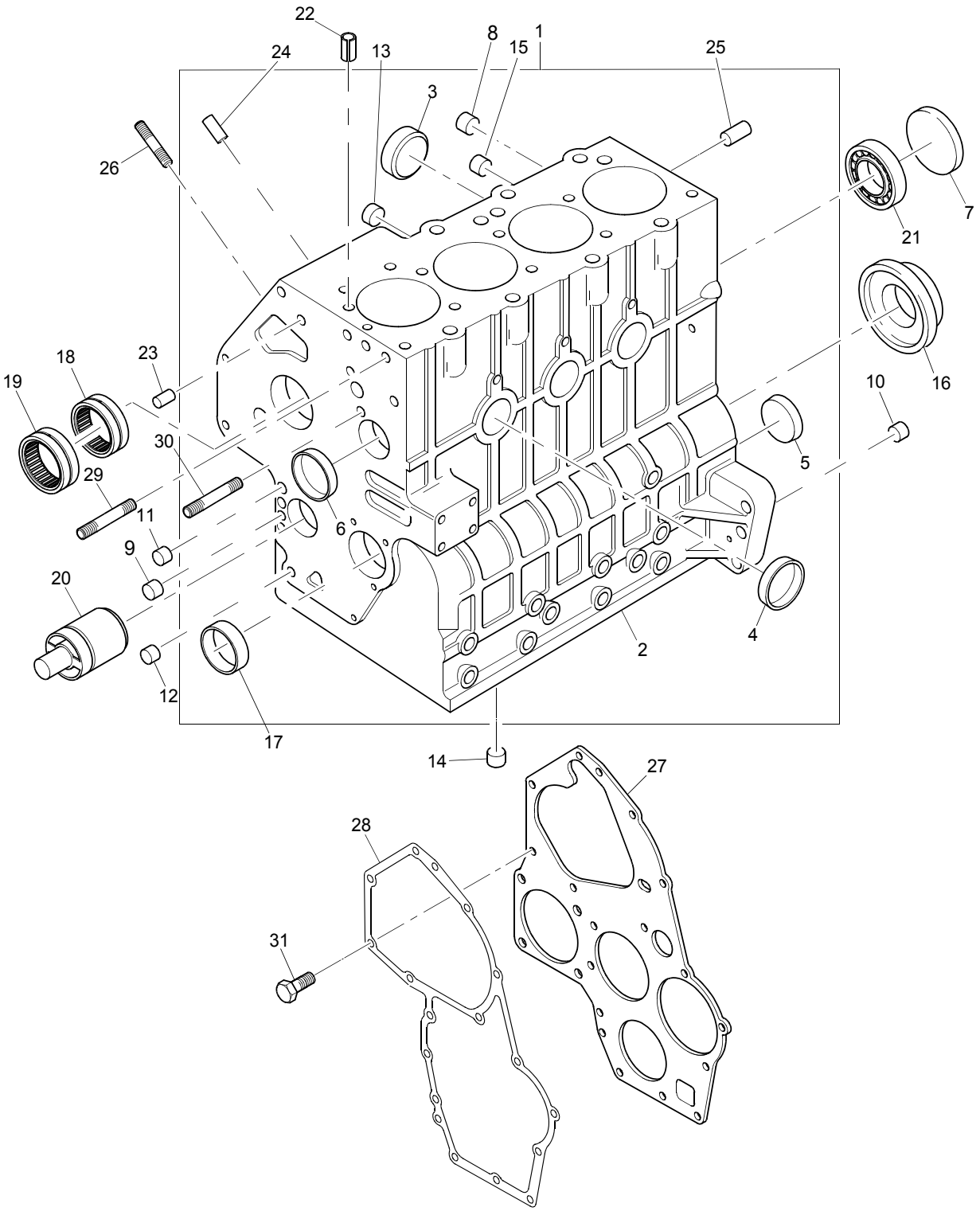

Cylinder Block **Plate A**

A6CH

Item	Part No.	References	Qty.	Description	Notes
1		LONG ENGINE	1	CYLINDER BLOCK KIT	
2		LONG ENGINE	1	CYLINDER BLOCK ASSEMBLY	
3	064200025		2	PLUG	
4	064200040		3	PLUG	
5	064200040		1	PLUG	
6	064200040		1	PLUG	
7	064100045		1	PLUG	
8	198466010		3	PLUG	
9	198466010		1	PLUG	
10	198466010		1	PLUG	
11	198466020		1	PLUG	
12	198466020		1	PLUG	
13	198466940		3	PLUG	
14	198466920		1	PLUG	
15	198466920		1	PLUG	
16	050209083		1	SEAL - REAR END OIL	
17	198517222	S a.	1	BUSH	
18	042309017		1	NEEDLE BEARING	
19	042309018		1	NEEDLE BEARING	
20	165296132		1	SHAFT	
21	040106203		1	BALL BEARING	
22	030309005		2	PIN	
23	030500616		2	DOWEL	
24	030500612		1	DOWEL	
25	030501025		2	DOWEL	
26	010109441		3	STUD	
27	165166221		1	PLATE	
28	165996590		1	GASKET - TIMING CASE	
29	012110635		1	STUD	
30	012110660		1	STUD	
31	011310612		2	SCREW	
Service Options					
17	198517226	(-)0.25MM	1	BUSH	
17	198517229	(-)0.50MM	1	BUSH	

History

a.

17	198517550		1	BUSH	

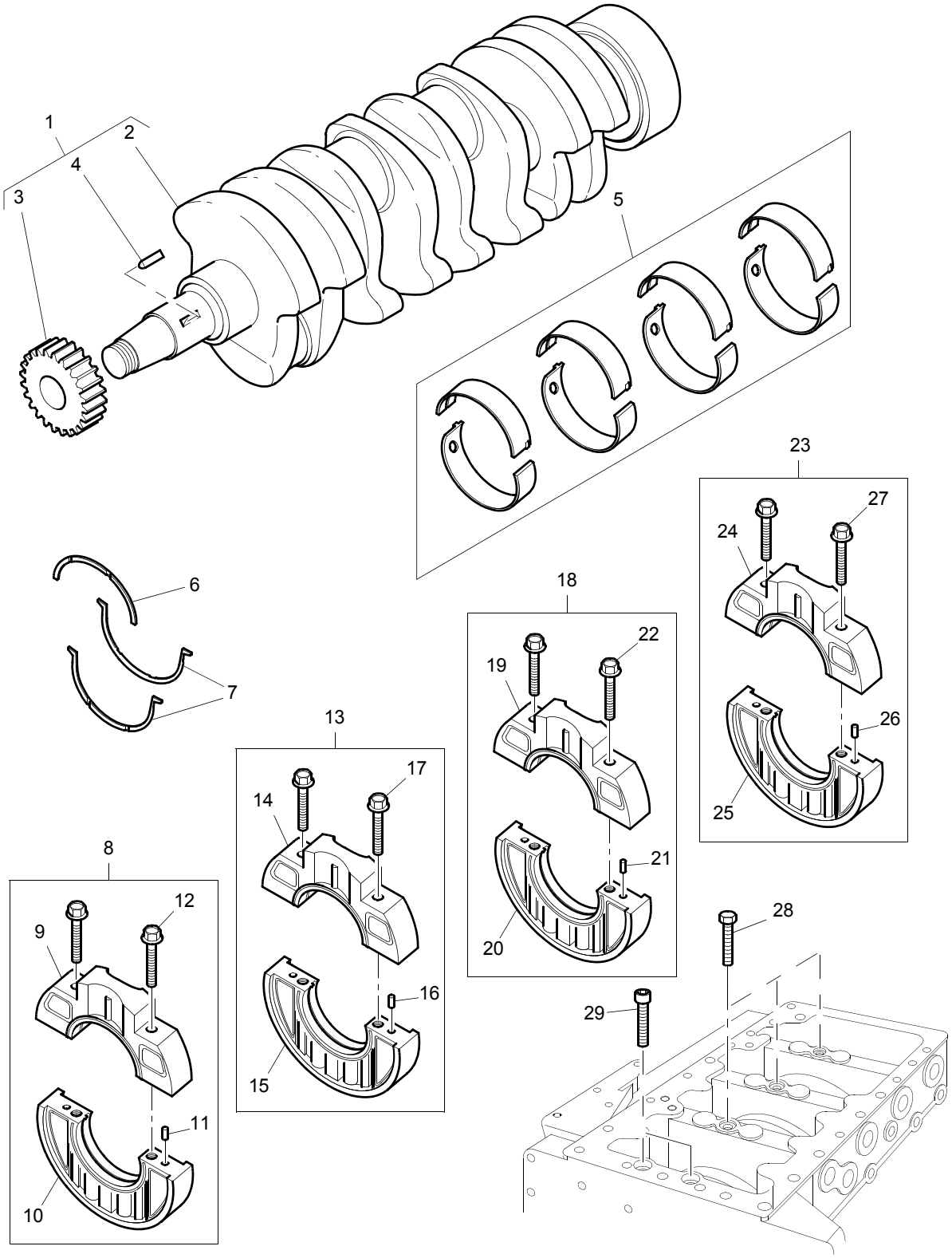
1
2
3
4
5
6
7
8
9
10
11
12
13
14
15
16
17
18
19
20
21
22
23
24
25
26
27
28
29

Crankshaft & Bearings	Plate A
	A6CH

Item	Part No.	References	Qty.	Description	Notes
1	115256750		1	CRANKSHAFT KIT	
2	├─	➡ 115256750	1	CRANKSHAFT	
3	├─115276200		1	CRANKSHAFT GEAR	
4	└─030509020		1	KEY	
5	198586140		1	MAIN BEARING KIT	(A)
6	199266210		1	THRUST WASHER	
7	199266200		2	THRUST WASHER	
8	110156360	🛢 1	1	HOLDER	
9	├─	➡ 110156360	1	CAP	
10	├─	➡ 110156360	1	CAP	
11	├─030500612		2	DOWEL	
12	└─010109406		2	SCREW	
13	110156370	🛢 2	1	HOLDER	
14	├─	➡ 110156370	1	CAP	
15	├─	➡ 110156370	1	CAP	
16	├─030500612		2	DOWEL	
17	└─010109406		2	SCREW	
18	110156380	🛢 3	1	HOLDER	
19	├─	➡ 110156380	1	CAP	
20	├─	➡ 110156380	1	CAP	
21	├─030500612		2	DOWEL	
22	└─010109406		2	SCREW	
23	110156390	🛢 4	1	HOLDER	
24	├─	➡ 110156390	1	CAP	
25	├─	➡ 110156390	1	CAP	
26	├─030500612		2	DOWEL	
27	└─010109406		2	SCREW	
28	011511070		3	SCREW	
29	010700860		1	BOLT	
Service Options					
5	198586160	⏚ (-)0.50MM	1	MAIN BEARING KIT - O/S	(A)
5	198586150	⏚ (-)0.25MM	1	MAIN BEARING KIT - O/S	(A)

Footnotes

(A)	BEARINGS ARE PRE-FINISHED

Pistons & Rings	Plate A
	A6CH

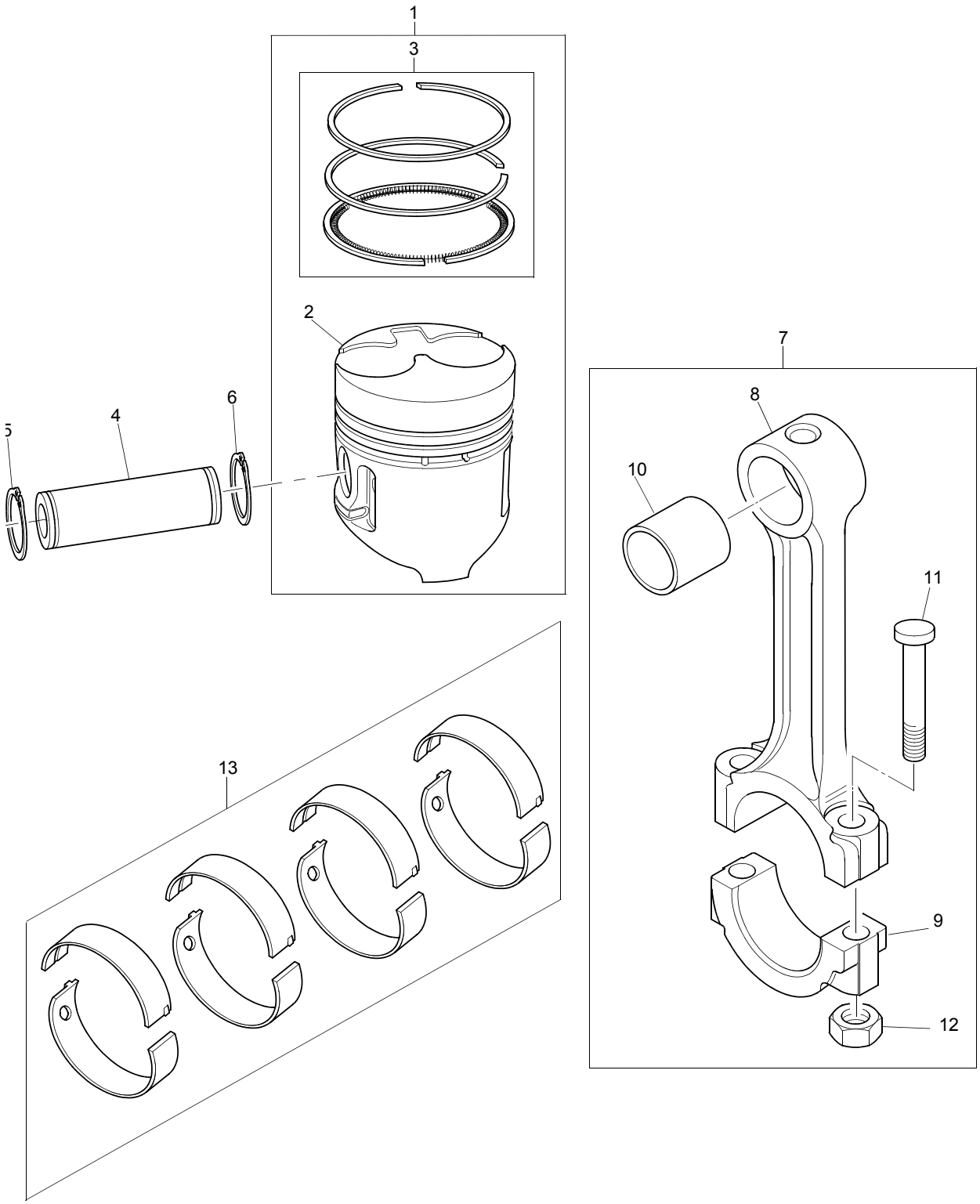

Pistons & Rings **Plate A**

A6CH

Item	Part No.	References	Qty.	Description	Notes
1	115017581	a.	1	PISTON AND RING KIT	
2	├	⇨ 115017581	1	PISTON	
3	└115104021		1	PISTON RING KIT	
4	115326220		4	GUDGEON PIN	
5	036500028		4	CIRCLIP	
6	036500028		4	CIRCLIP	
7	115026330		4	CON ROD ASSEMBLY	
8	├	⇨ 115026330	1	ROD	
9	├	⇨ 115026330	1	CAP	
10	├198517265		1	SMALL END BUSH	
11	├115176140		2	CON ROD BOLT	
12	└020109120		2	CON ROD NUT	
13	U5ME0011		1	BIG END BEARING KIT	(A)

History

a.

1	115017580	4	PISTON AND RING KIT	

Footnotes

(A)	BEARINGS ARE PRE-FINISHED

Cylinder Head Assembly	Plate A
	B6CH

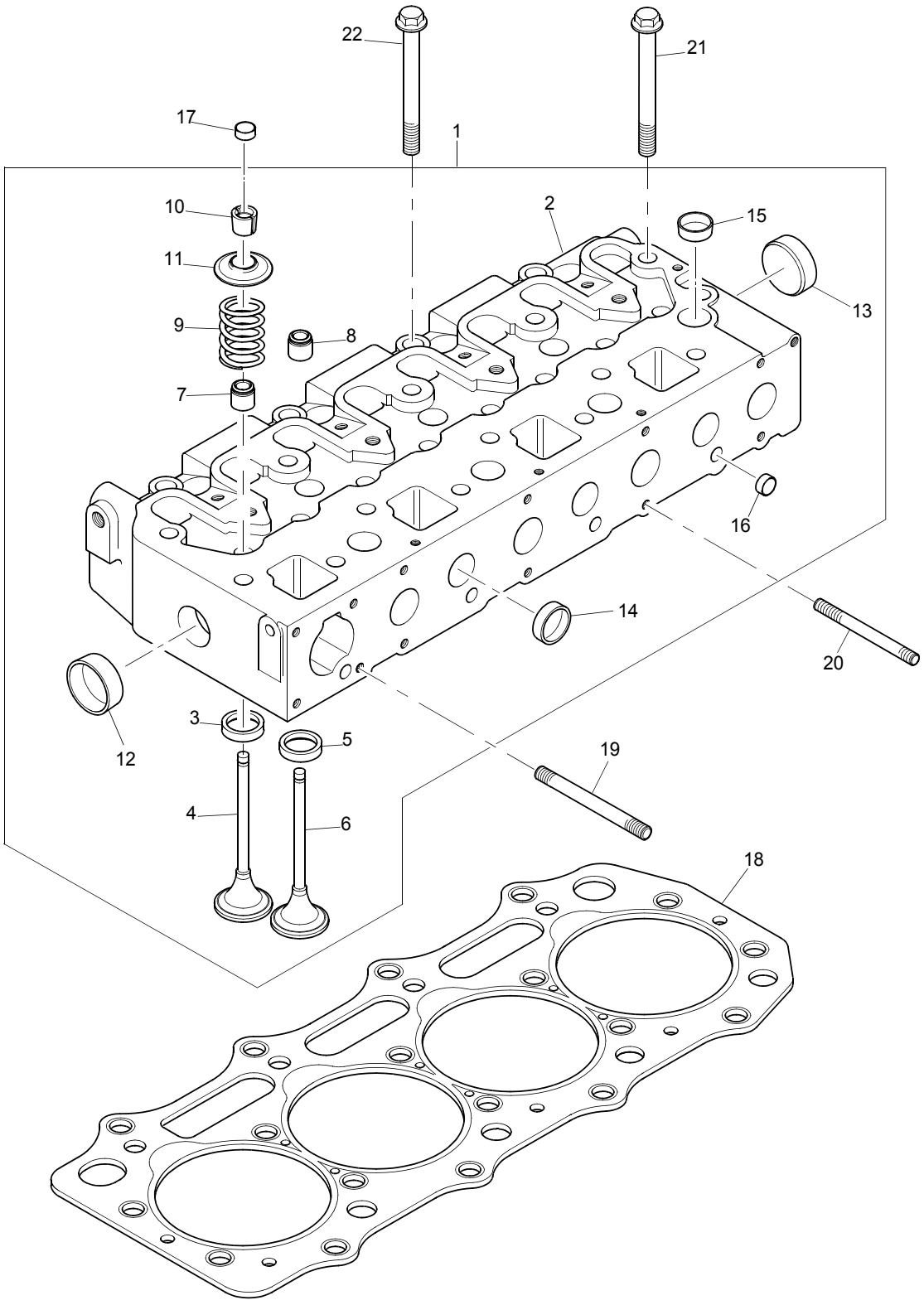

Cylinder Head Assembly	Plate A
	B6CH

Item	Part No.	References	Qty.	Description	Notes
1	TPN488		1	CYLINDER HEAD ASSEMBLY	
2	└	✏ TPN488	1	CYLINDER HEAD KIT	
3	└ TPN646		3	VALVE SEAT INSERT	
4	└ 120166350		4	INTAKE VALVE	
5	└ TPN645		3	SEAT	
6	└ 120176360		4	EXHAUST VALVE	
7	└ 120406050		4	VALVE SPRING SEAT	(A)
8	└ 120406070		4	SEAL - VALVE STEM	(B)
9	└ 198216700		8	VALVE SPRING	
10	└ 120226070		16	VALVE COLLET	
11	└ 120186080		8	CAP	
12	└ 064210030		1	CAP	
13	└ 064210030		1	CAP	
14	└ 064210025		5	PLUG	
15	└ 064210018		7	CAP	
16	└ 064210010		3	PLUG	
17	120216040		8	CAP	
18	111147591	≑ (+) 0.5MM	1	GASKET - CYLINDER HEAD	
19	012110660		1	STUD	
20	012110860		4	STUD	
21	111136480		14	SCREW	
22	111136490		4	SCREW	

Footnotes	
(A)	EXHAUST
(B)	INLET

Rocker Shaft Assembly	Plate A
	B6CH

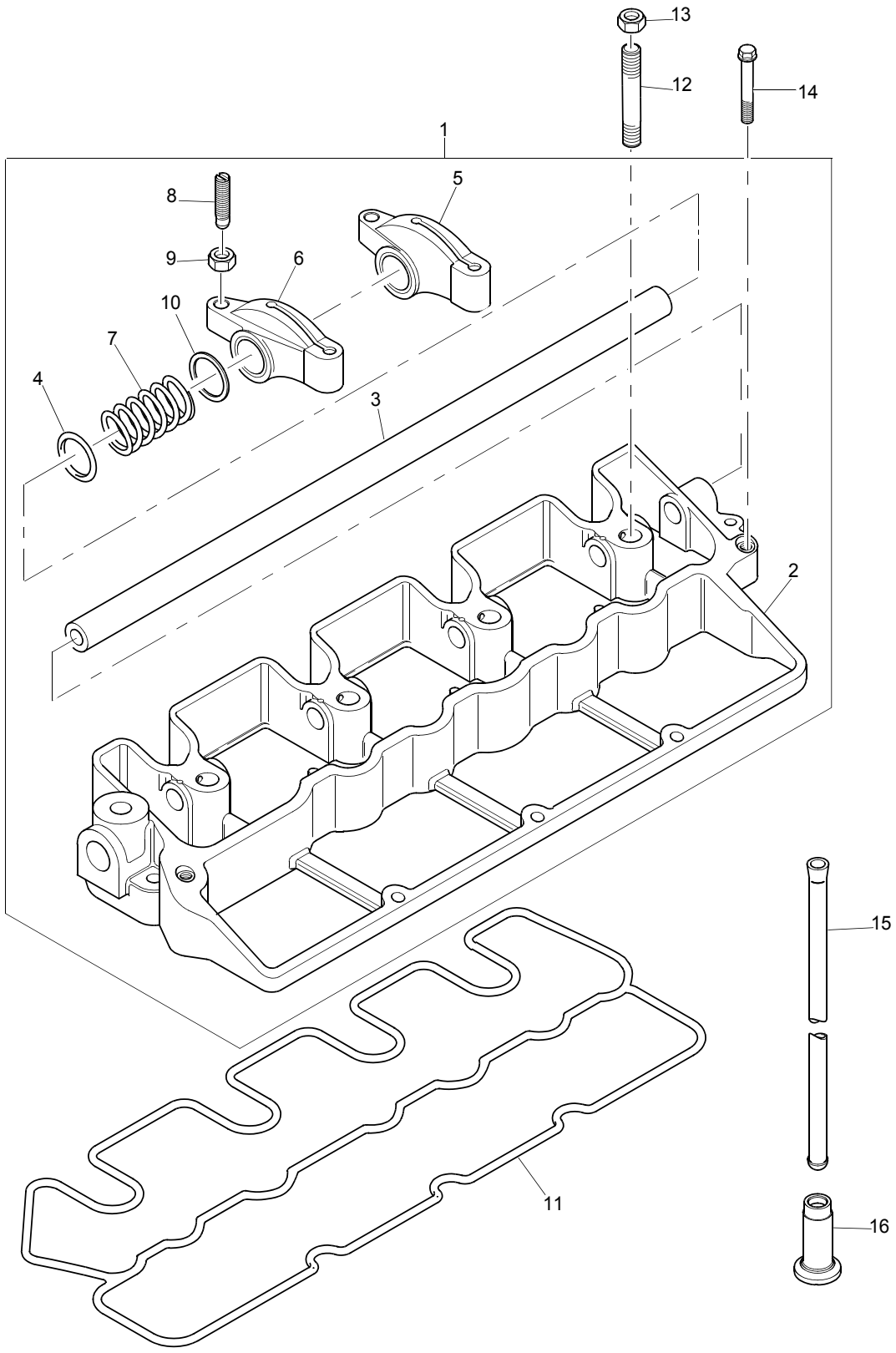

Rocker Shaft Assembly **Plate A**

B6CH

Item	Part No.	References	Qty.	Description	Notes
1	120036821	b.	1	ROCKER BOX	
2		120036821	1	ROCKER BOX	
3	120316201		2	ROCKER SHAFT	
4	052109076		2	SEAL - O RING	
5	120356131		8	ROCKER ARM ASSEMBLY	INLET
6	120356141		8	ROCKER ARM ASSEMBLY	EXHAUST
7	198217170		6	ROCKER SHAFT SPRING	
8	199486220		16	ADJUSTING SCREW	
9	020109076		16	NUT	
10	199280300		12	WASHER	
11	120996130		1	SEAL - ROCKER BOX	
12	012109044		4	STUD	
13	023100010		4	NUT	
14	011310640	a.	2	SCREW	
15	120456310		8	PUSHROD	
16	120116160		8	TAPPET	

History

a.

14	011310635		2	SCREW	

b.

1	120036830		1	ROCKER BOX ASSEMBLY	

Timing Case	Plate A
→I U909865L	C6MH

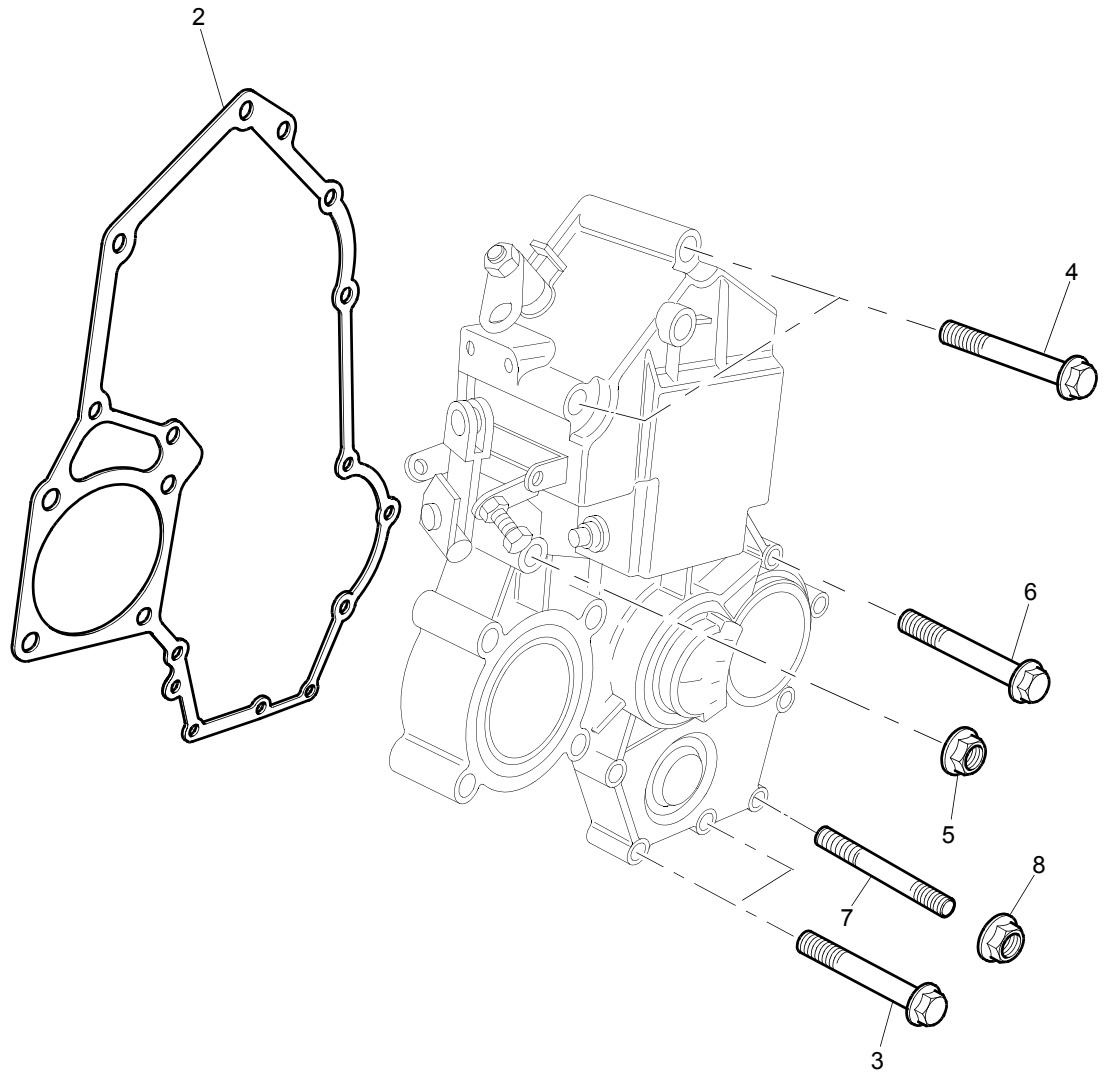

Timing Case	Plate A
→| U909865L	C6MH

Item	Part No.	References	Qty.	Description	Notes
2	165996600		1	GASKET - TIMING CASE COVER	
3	011310680		2	SCREW	
4	011310645		6	SCREW	
5	023100006		1	NUT	
6	011310660		3	SCREW	
7	012110645		1	STUD	
8	023100006		1	NUT	

Timing Case	Plate B
→ U909865L	C6MH

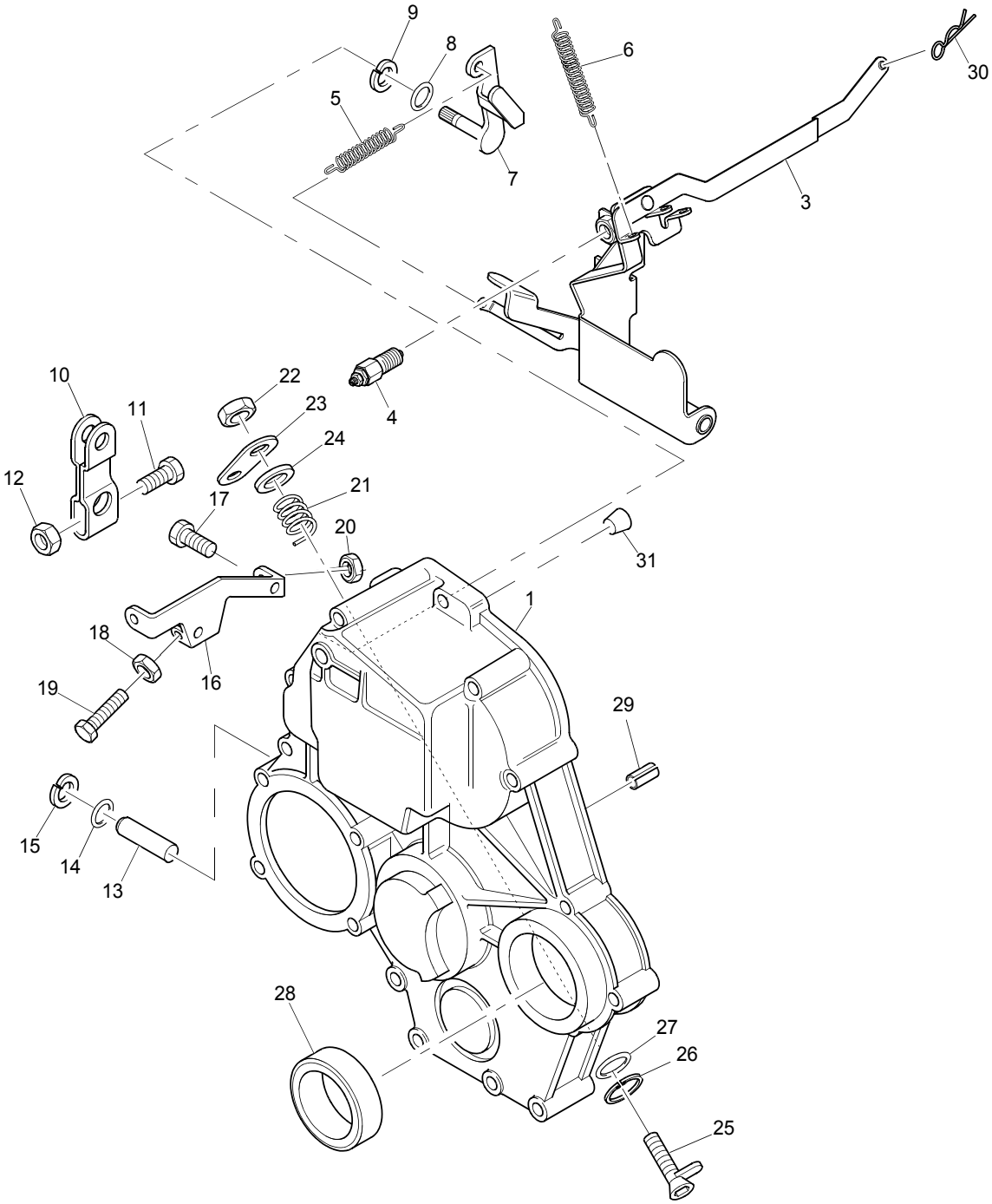

Timing Case	Plate B
→| U909865L	C6MH

Item	Part No.	References	Qty.	Description	Notes
1	165106350		1	TIMING GEAR CASE	
2	└030300414		1	PIN	
3	125046350		1	LEVER	
4	131046450		1	ANGLEICH SWITCH	
5	198217570		1	SPRING	
6	198216731		1	SPRING	
7	125156170		1	ARM	
8	052100070		1	SEAL - O RING	
9	036800008		1	SNAP RING	
10	125416020		1	LEVER	
11	010110630		1	SCREW	
12	023100006		1	NUT	
13	125116141		1	SHAFT	
14	052100030		1	SEAL - O RING	
15	036800005		1	CIRCLIP	
16	125976120		1	STAY	
17	011310616		1	SCREW	
18	2318A207		1	NUT	
19	2315C039		1	SCREW	
20	2648A120		1	NUT	
21	198216760		1	STOP SPRING	
22	020700008		1	NUT	
23	125176150		1	STOP LEVER	
24	026200008		1	WASHER	
25	125156180		1	ARM	
26	036800006		1	CIRCLIP	
27	052100050		1	SEAL - O RING	
28	198636160		1	SEAL - FRONT END OIL	
29	030300414		1	PIN	
30	031100004		1	PIN	
31	TPN830		1	PLUG	

Timing Case	Plate C
→ U909865L	C6MH

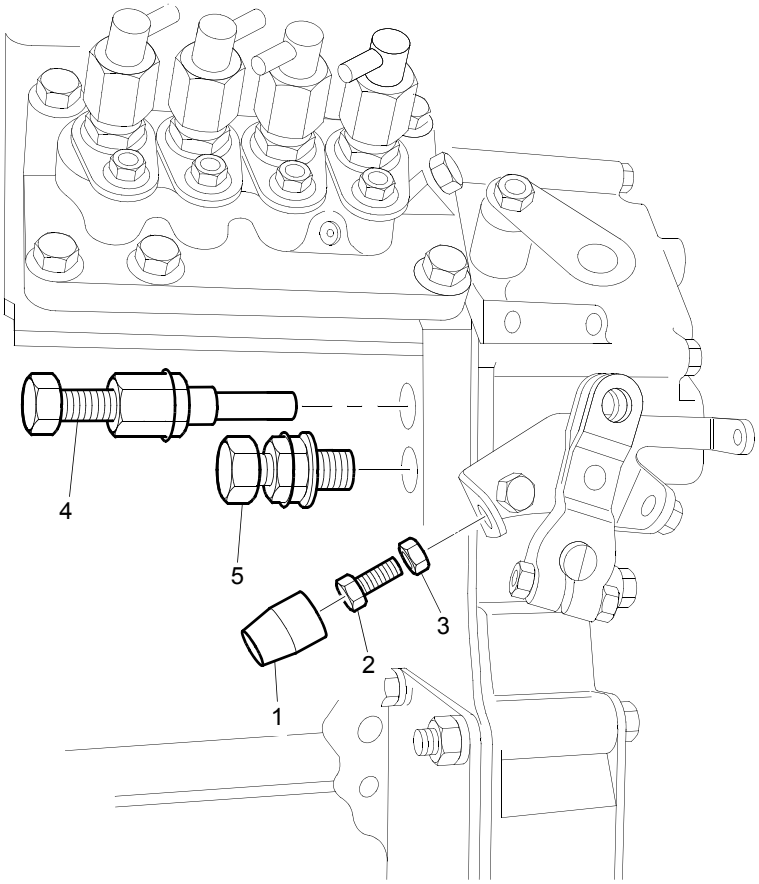

Timing Case	Plate C
→| U909865L	C6MH

Item	Part No.	References	Qty.	Description	Notes
1	26420462		1	ANTI-TAMPER CAP	
2	2315C039		1	SCREW	(A)
3	2648A120		1	NUT	
4		⇜ FOLLOWING	1	BOLT	
5		⇜ FOLLOWING	1	BOLT ASSEMBLY	

Footnotes	
(A)	HIGH IDLE SETTING

Stop Solenoid Control	Plate A
→I U909865L	C6MH

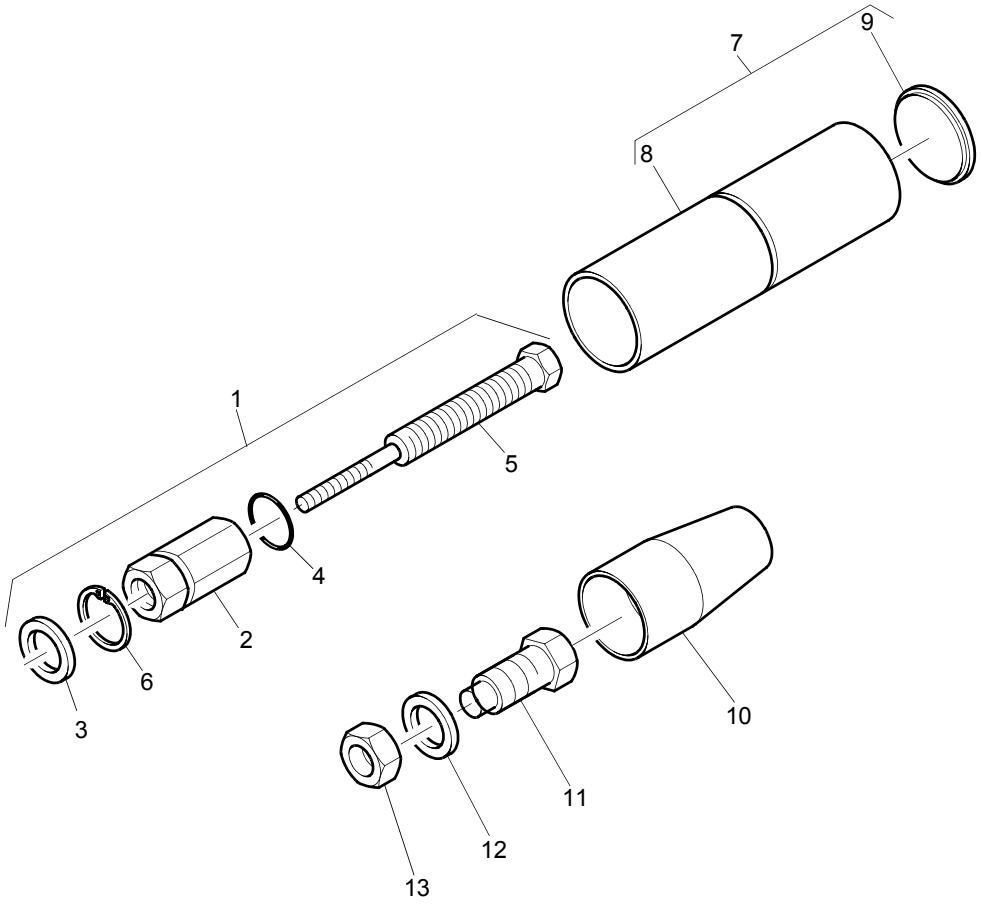

Stop Solenoid Control	Plate A
→| U909865L	C6MH

Item	Part No.	References	Qty.	Description	Notes
1	131046410		1	BOLT ASSEMBLY	
2	┣020109176		1	NUT	
3	┣025100010		1	WASHER	
4	┣052109100		1	SEAL - O RING	
5	┣131466210		1	BOLT	
6	┗198346150		1	CIRCLIP	
7	U5MK0619		1	ANTI-TAMPER CAP	
8	┣	⇨ U5MK0619	1	ANTI-TAMPER CAP	
9	┗064209053		1	END CAP	
10	131276440		1	ANTI-TAMPER CAP	
11	199486330		1	BOLT	
12	025100010		1	WASHER	
13	020109177		1	NUT	

Camshaft & Gears	Plate A
→| U909865L	C6MH

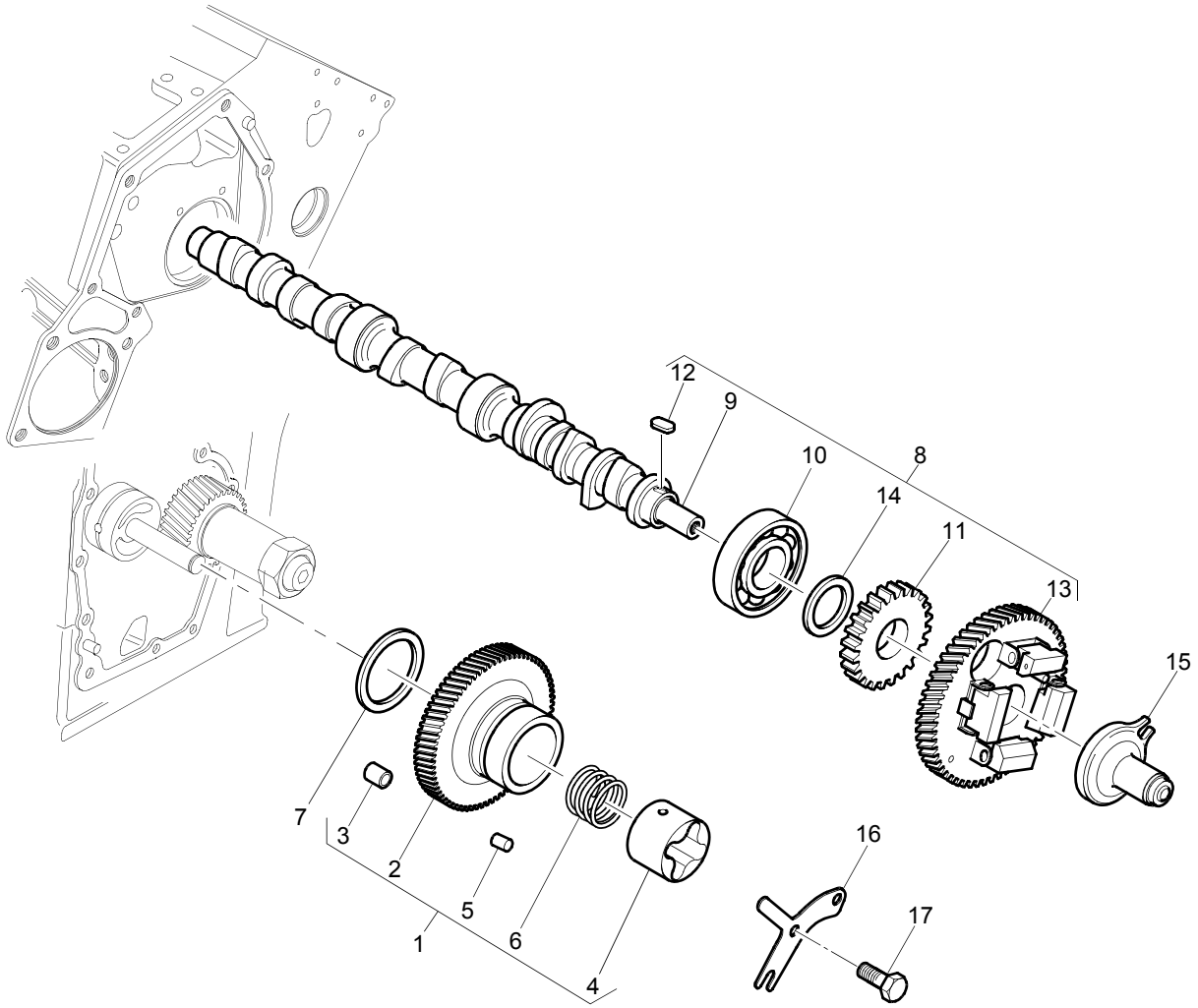

Camshaft & Gears **Plate A**

→| U909865L	C6MH

Item	Part No.	References	Qty.	Description	Notes
1	165026120		1	OIL PUMP IDLER GEAR	
2	┣		1	GEAR	
3	┣ 198517290		3	BUSH	
4	┣ 140166170		1	ROTOR	
5	┣ 030509018		3	DOWEL	
6	┗ 198216821		1	SPRING	
7	199266180		1	WASHER	
8	120026550		1	CAMSHAFT ASSEMBLY	
9	┣	✏ 120026550	1	CAMSHAFT	
10	┣ 040109057		1	BALL BEARING	
11	┣ 120736081		1	CAMSHAFT GEAR	
12	┣ 034100508		1	WOODRUFF KEY	
13	┣ 120016050		1	CAMSHAFT GEAR	
14	┗ 199216320		1	SPACER	
15	125256190		1	TAPPET	
16	199566750		1	PLATE	
17	011310612		2	SCREW	

Timing Case	Plate A
↦ U909866L	C6VH

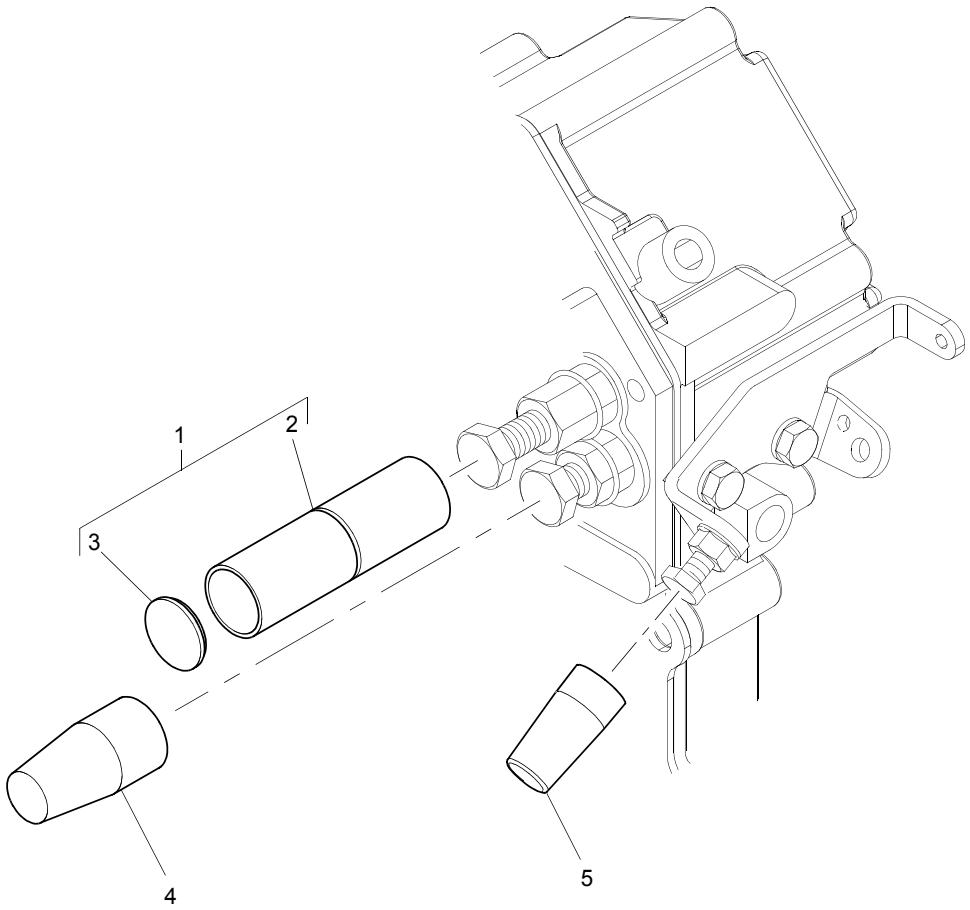

Timing Case	Plate A
↦ **U909866L**	**C6VH**

Item	Part No.	References	Qty.	Description	Notes
1	U5MK0619		1	ANTI-TAMPER CAP	
2	┣	✏ U5MK0619	1	ANTI-TAMPER CAP	
3	┗064209053		1	END CAP	
4	131276440		1	ANTI-TAMPER CAP	
5	26420462		1	ANTI-TAMPER CAP	

Timing Case	Plate B
↦ U909866L	C6VH

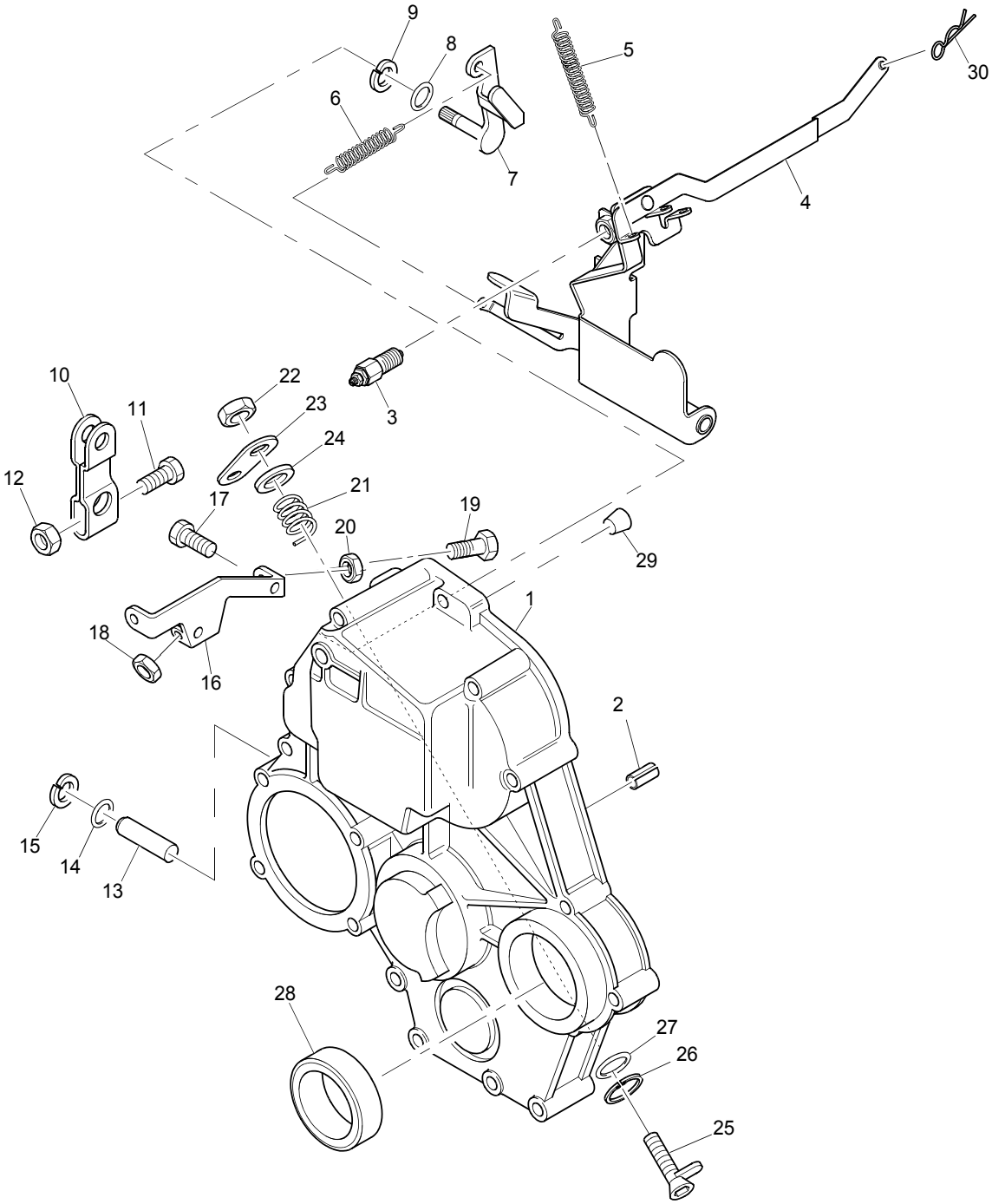

Timing Case	Plate B
↦ U909866L	C6VH

Item	Part No.	References	Qty.	Description	Notes
1	165106350		1	TIMING GEAR CASE	
2	└030300414		1	PIN	
4	125046350		1	LEVER	
3	131046450		1	ANGLEICH SWITCH	
5	198217560		1	SPRING	
6	198217670		1	SPRING	
7	125156170		1	ARM	
8	052100070		1	SEAL - O RING	
9	036800008		1	SNAP RING	
10	125416020		1	LEVER	
11	010110630		1	SCREW	
12	023100006		1	NUT	
13	125116141		1	SHAFT	
14	052100030		1	SEAL - O RING	
15	036800005		1	CIRCLIP	
16	125976120		1	STAY	
17	010109600		2	SCREW	
18	2318A207		1	NUT	
19	2315C039	⇜ FOLLOWING	1	SCREW	
20	2648A120	⇜ FOLLOWING	1	NUT	
21	198216760		1	STOP SPRING	
22	020700008		1	NUT	
23	125176180		1	STOP LEVER	
24	026200008		1	WASHER	
25	125156180		1	ARM	
26	036800006		1	CIRCLIP	
27	052100050		1	SEAL - O RING	
28	198636160		1	SEAL - FRONT END OIL	
29	TPN830		1	PLUG	
30	031100004		1	PIN	

Timing Case	Plate C
↦ U909866L	C6VH

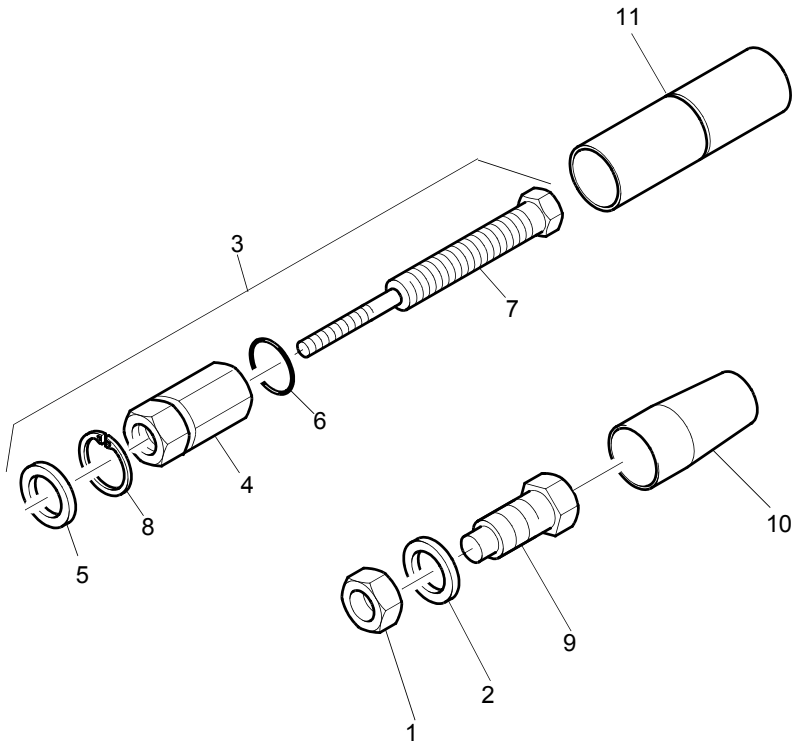

Timing Case	Plate C
↦ **U909866L**	**C6VH**

Item	Part No.	References	Qty.	Description	Notes
1	020109177		1	NUT	
2	025100010		1	WASHER	
3	131046410		1	BOLT ASSEMBLY	
4	└020109176		1	NUT	
5	└025100010		1	WASHER	
6	└052109100		1	SEAL - O RING	
7	└131466210		1	BOLT	
8	└198346150		1	CIRCLIP	
9	199486330		1	BOLT	
10		⇜ FOLLOWING	1	ANTI-TAMPER CAP	
11		⇜ FOLLOWING	1	ANTI-TAMPER CAP	

Timing Case	Plate D
↦ U909866L	C6VH

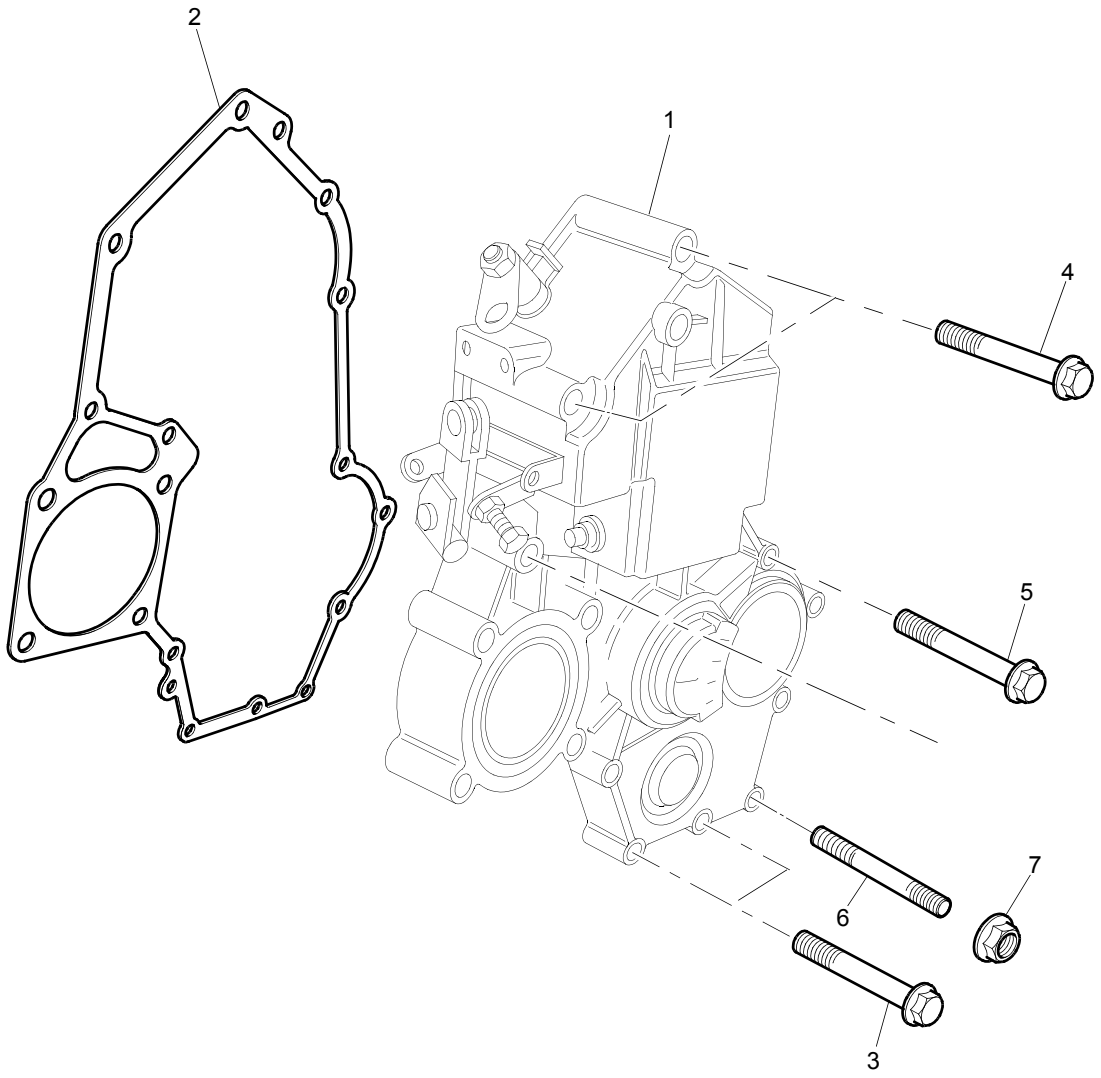

Timing Case	Plate D
↦ **U909866L**	**C6VH**

Item	Part No.	References	Qty.	Description	Notes
1		⇦ FOLLOWING	1	TIMING CASE	
2	165996600		1	GASKET - TIMING CASE COVER	
3	011310680		2	SCREW	
4	011310645		6	SCREW	
5	011310660		3	SCREW	
6	012110645		1	STUD	
7	023100006		1	NUT	

Camshaft & Gears	Plate A
↦ U909866L	C6VH

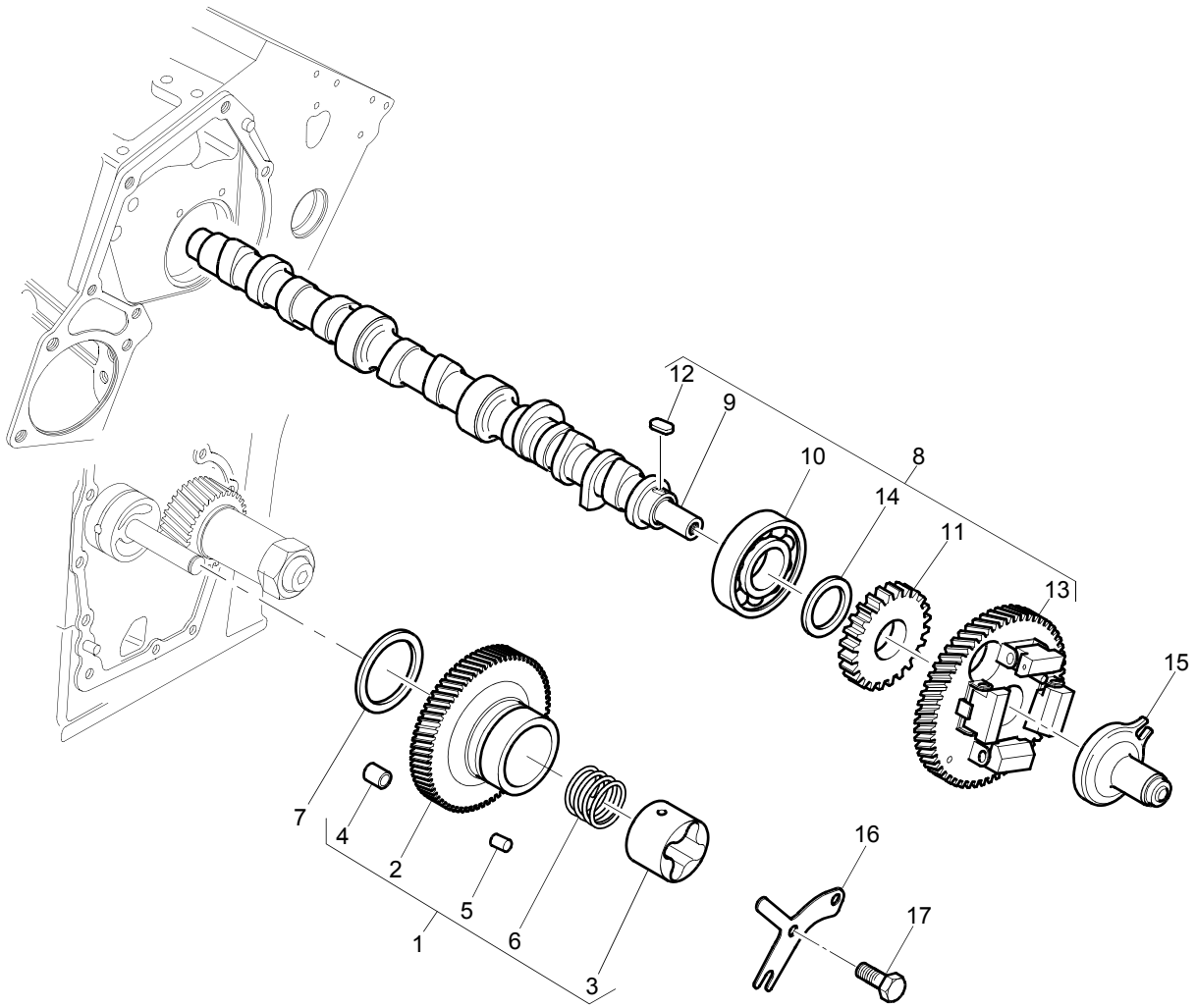

Camshaft & Gears	Plate A
↦ **U909866L**	**C6VH**

Item	Part No.	References	Qty.	Description	Notes
1	165026120		1	OIL PUMP IDLER GEAR	
2	┗	✏ 165026120	1	OIL PUMP IDLER GEAR	
3	┣ 140166170		1	ROTOR	
4	┣ 198517290		1	BUSH	
5	┣ 030509018		3	DOWEL	
6	┗ 198216821		1	SPRING	
7	199266180		1	WASHER	
8	120026550		1	CAMSHAFT ASSEMBLY	
9	┗	✏ 120026550	1	CAMSHAFT	
10	┣ 040109057		1	BALL BEARING	
11	┣ 120736081		1	CAMSHAFT GEAR	
12	┣ 034100508		1	WOODRUFF KEY	
13	┣ 120016050		1	CAMSHAFT GEAR	
14	┗ 199216320		1	SPACER	
15	125256190		1	TAPPET	
16	199566750		1	PLATE	
17	011310612		2	SCREW	

Fuel Injection Pump	Plate A
→| 526521M	D6AH

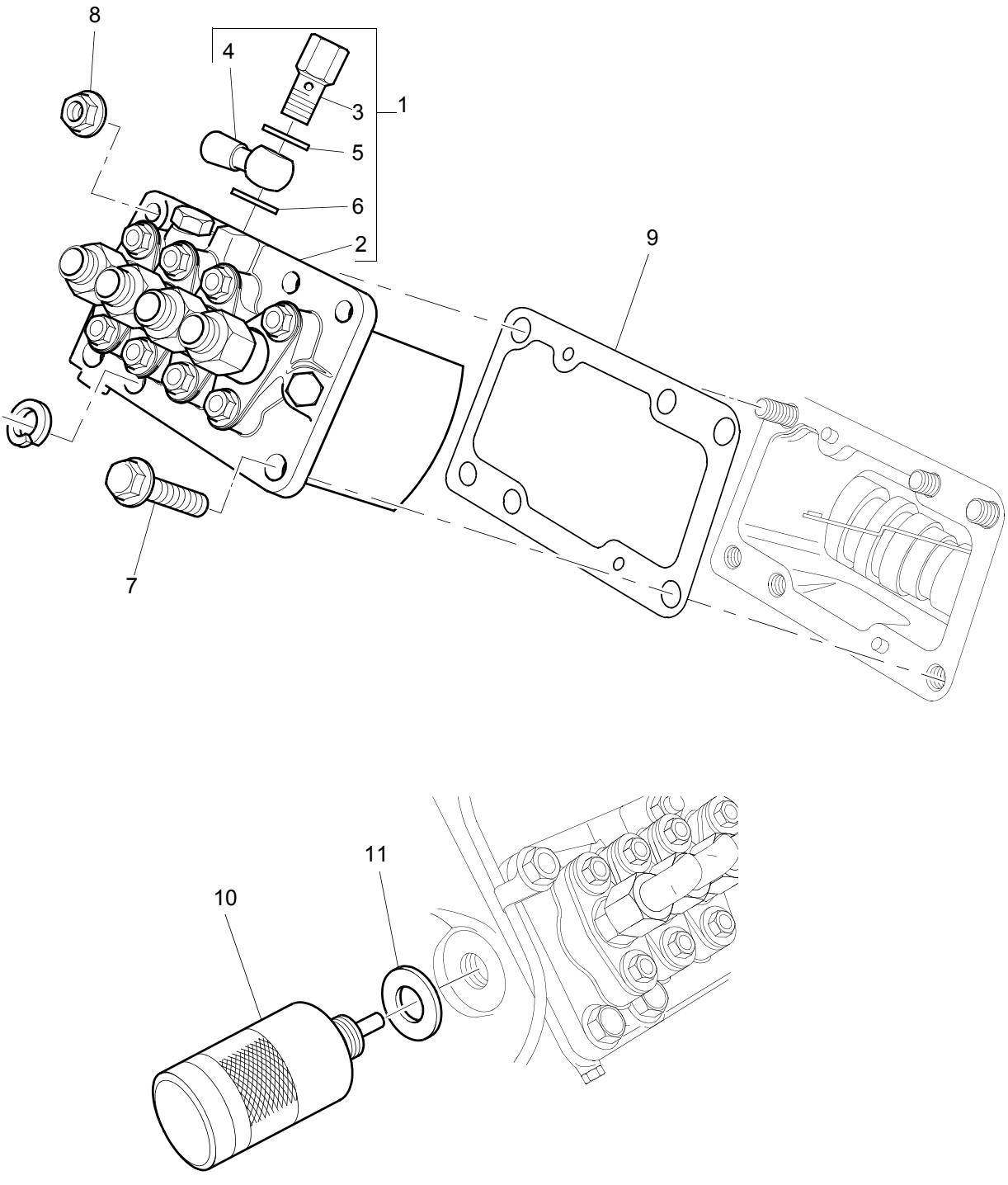

Fuel Injection Pump	Plate A
→| 526521M	D6AH

Item	Part No.	References	Qty.	Description	Notes
1	131010031	a.	1	FUEL INJECTION PUMP	
2	└	131010031	1	FUEL INJECTION PUMP	
3	└131246170		1	BOLT	
4	└131246010		1	CONNECTION	
5	└131296255		1	WASHER	
6	└131296255		1	WASHER	
7	010800820		3	SCREW	
8	023100008		3	NUT	
9		SERVICE OPTION	1	SHIM	
10	185206420		1	SOLENOID	
11	025100016		1	WASHER	
Service Options					
9	131437490	(+) 0.2MM	1	SHIM	
9	131437500	(+) 0.3MM	1	SHIM	
9	131437510	(+) 0.4MM	1	SHIM	
9	131437520	(+) 0.5MM	1	SHIM	
9	131437530	(+) 0.5MM	1	SHIM	(A)

History				
a.				
1	131017800	1	FUEL INJECTION PUMP	

Footnotes	
(A)	FLAT

High Pressure Fuel Pipes	Plate A
→| 526521M	D6AH

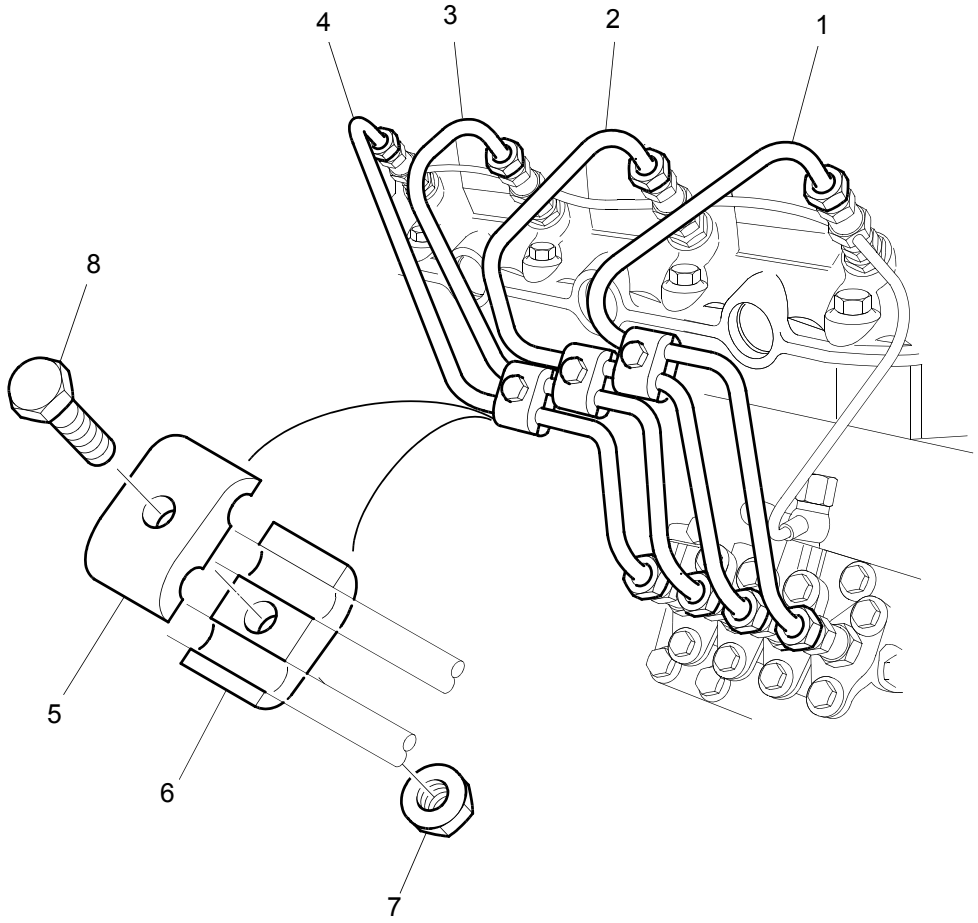

High Pressure Fuel Pipes **Plate A**

→| 526521M	D6AH

Item	Part No.	References	Qty.	Description	Notes
1	131507700	1	1	PIPE - FUEL INJ NO 1 CYL	
2	131507710	2	1	PIPE - FUEL INJ NO 2 CYL	
3	131507720	3	1	PIPE - FUEL INJ NO 3 CYL	
4	131507730	4	1	PIPE - FUEL INJ NO 4 CYL	
5	199106021	a.	3	CLAMP	
6	199106021	a.	3	CLAMP	
7	023100006		3	NUT	
8	010110625		3	SCREW	

History

a.

5	199106020		3	DAMPER	
6	199106020		3	DAMPER	

Atomisers	Plate A
→| 526521M	D6AH

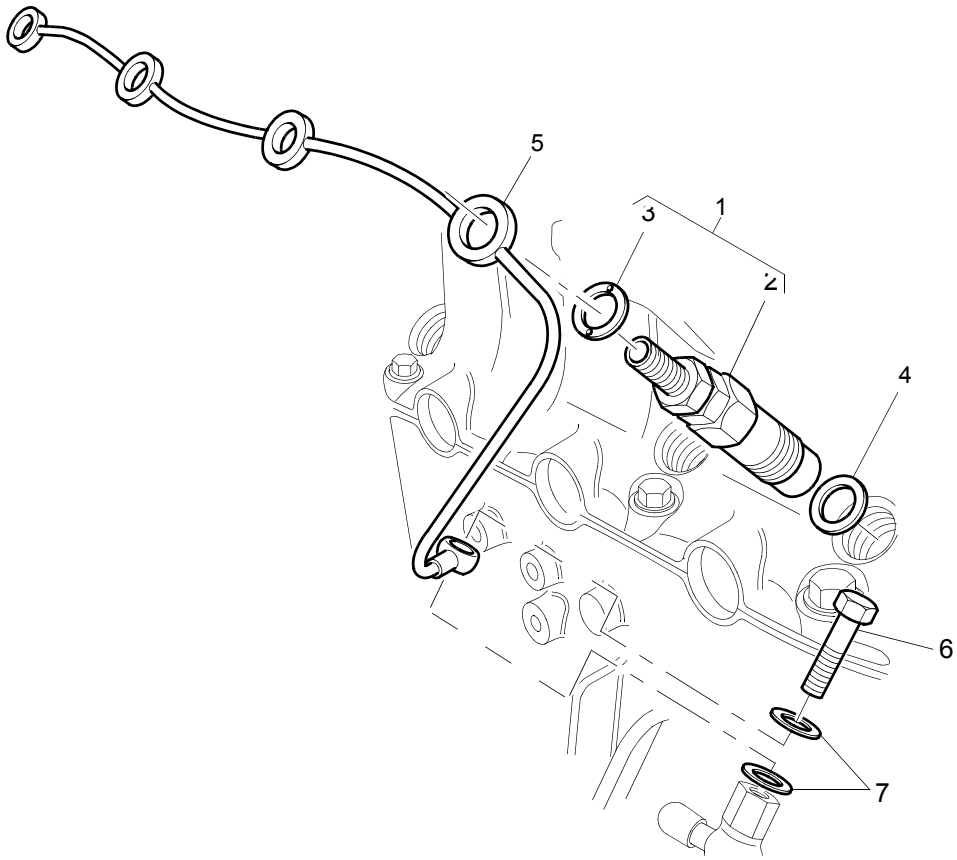

Atomisers **Plate A**

→| 526521M	D6AH

Item	Part No.	References	Qty.	Description	Notes
1	131406490		4	ATOMISER	
2	┌	✏ 131406490	1	BODY	
3	└131426230		1	SEAL - INJECTOR	
4	131426200		4	SEAL - INJECTOR	
5	131606900		1	PIPE - LEAK OFF	
6	198487450		1	BOLT	
7	025100008		2	WASHER	

Fuel Injection Pump	Plate A
↦ 526522M ↦ U909865L	D6MH

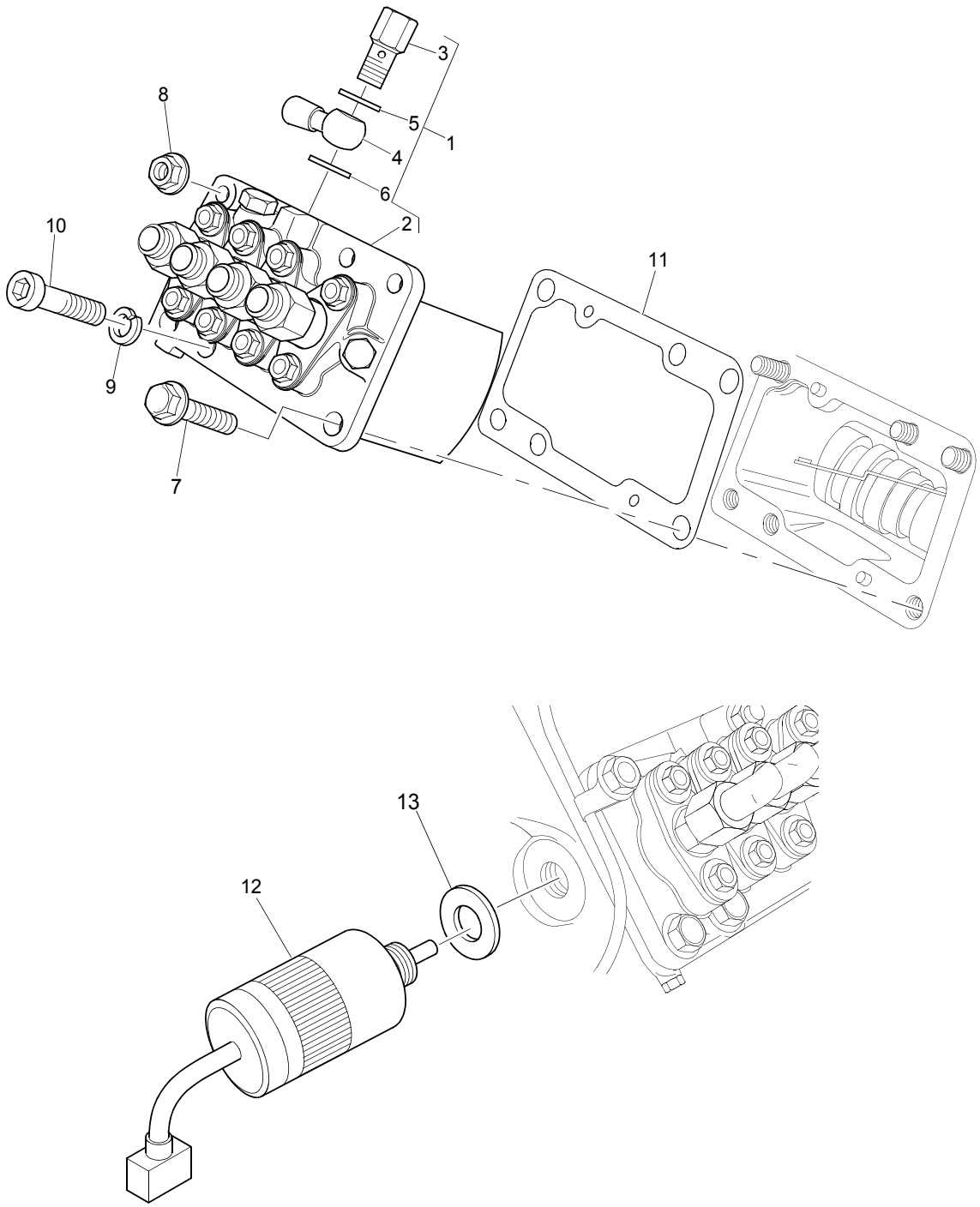

Fuel Injection Pump **Plate A**

↦ 526522M →| U909865L	D6MH

Item	Part No.	References	Qty.	Description	Notes
1	131010031	a.	1	FUEL INJECTION PUMP	
2	└	131010031	1	FUEL INJECTION PUMP	
3	└131246170		1	BOLT	
4	└131246010		1	CONNECTION	
5	└131296255		1	WASHER	
6	└131296255		1	WASHER	
7	010800820		2	SCREW	
8	023100008		3	NUT	
9	027100008		1	WASHER	
10	010700820		1	SCREW	
11		SERVICE OPTION Ⓢ	1	SHIM	
12	185206450		1	SOLENOID	
13	025100016		1	WASHER	
Service Options					
11	131437490	(+) 0.2MM	1	SHIM	
11	131437500	(+) 0.3MM	1	SHIM	
11	131437510	(+) 0.4MM	1	SHIM	
11	131437520	(+) 0.5MM	1	SHIM	
11	131437530	(+) 0.5MM	1	SHIM	(A)

History

a.

1	131017800	1	FUEL INJECTION PUMP	

Footnotes

(A)	FLAT

High Pressure Fuel Pipes	Plate A
↦ 526522M →I U909865L	D6MH

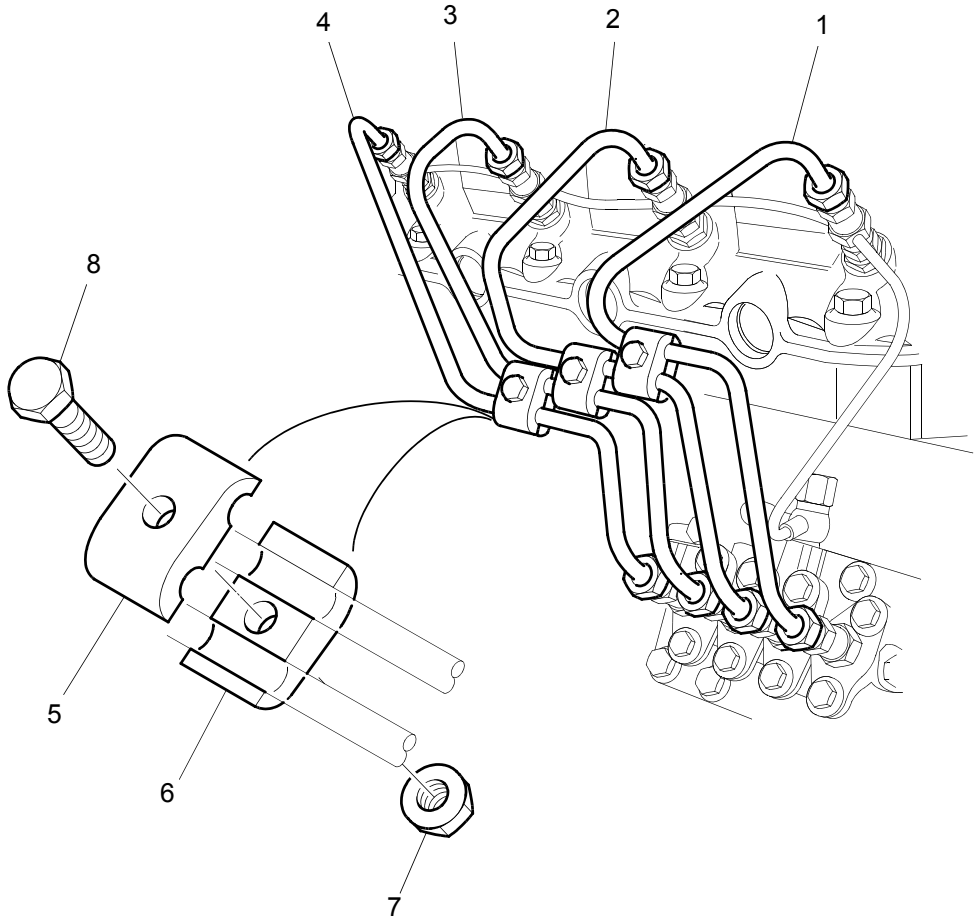

High Pressure Fuel Pipes **Plate A**

↦ 526522M →| U909865L	D6MH

Item	Part No.	References	Qty.	Description	Notes
1	131507700	1	1	PIPE - FUEL INJ NO 1 CYL	
2	131507710	2	1	PIPE - FUEL INJ NO 2 CYL	
3	131507720	3	1	PIPE - FUEL INJ NO 3 CYL	
4	131507730	4	1	PIPE - FUEL INJ NO 4 CYL	
5	199106021	a.	3	CLAMP	
6	199106021	a.	3	CLAMP	
7	023100006		3	NUT	
8	010110625		3	SCREW	

History

a.

5	199106020	3	DAMPER	
6	199106020	3	DAMPER	

Atomisers	Plate A
↦ 526522M →I U909865L	D6MH

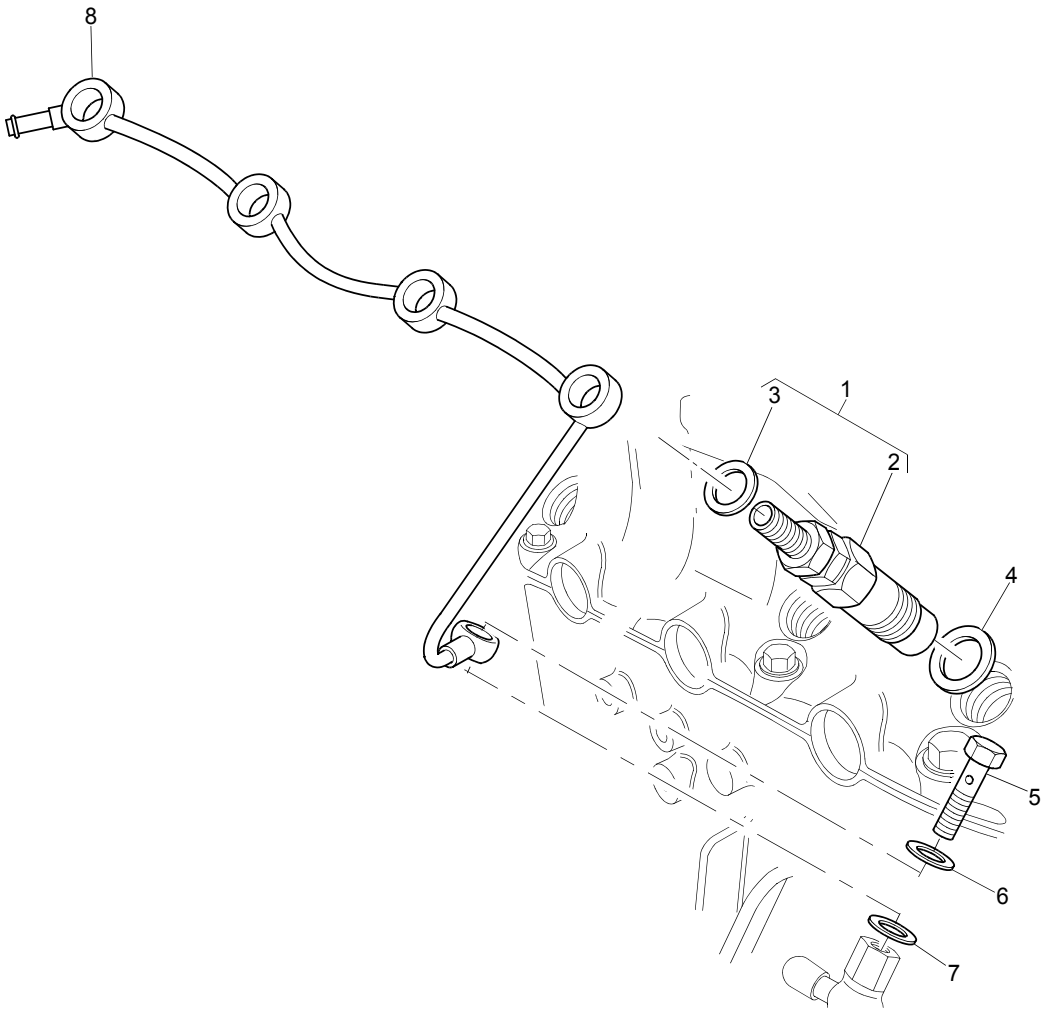

Atomisers	Plate A
↦ 526522M ⇥ U909865L	D6MH

Item	Part No.	References	Qty.	Description	Notes
1	131406490		4	ATOMISER	
2	┬	✏ 131406490	1	BODY	
3	└131426230		1	SEAL - INJECTOR	
4	131426200		4	SEAL - INJECTOR	
5	198487450		1	BOLT	
6	025100008		2	WASHER	
7	025100008		1	WASHER	
8	TPN711		1	PIPE - LEAK OFF	

Fuel Injection Pump	Plate A
↦ U909866L	D6QH

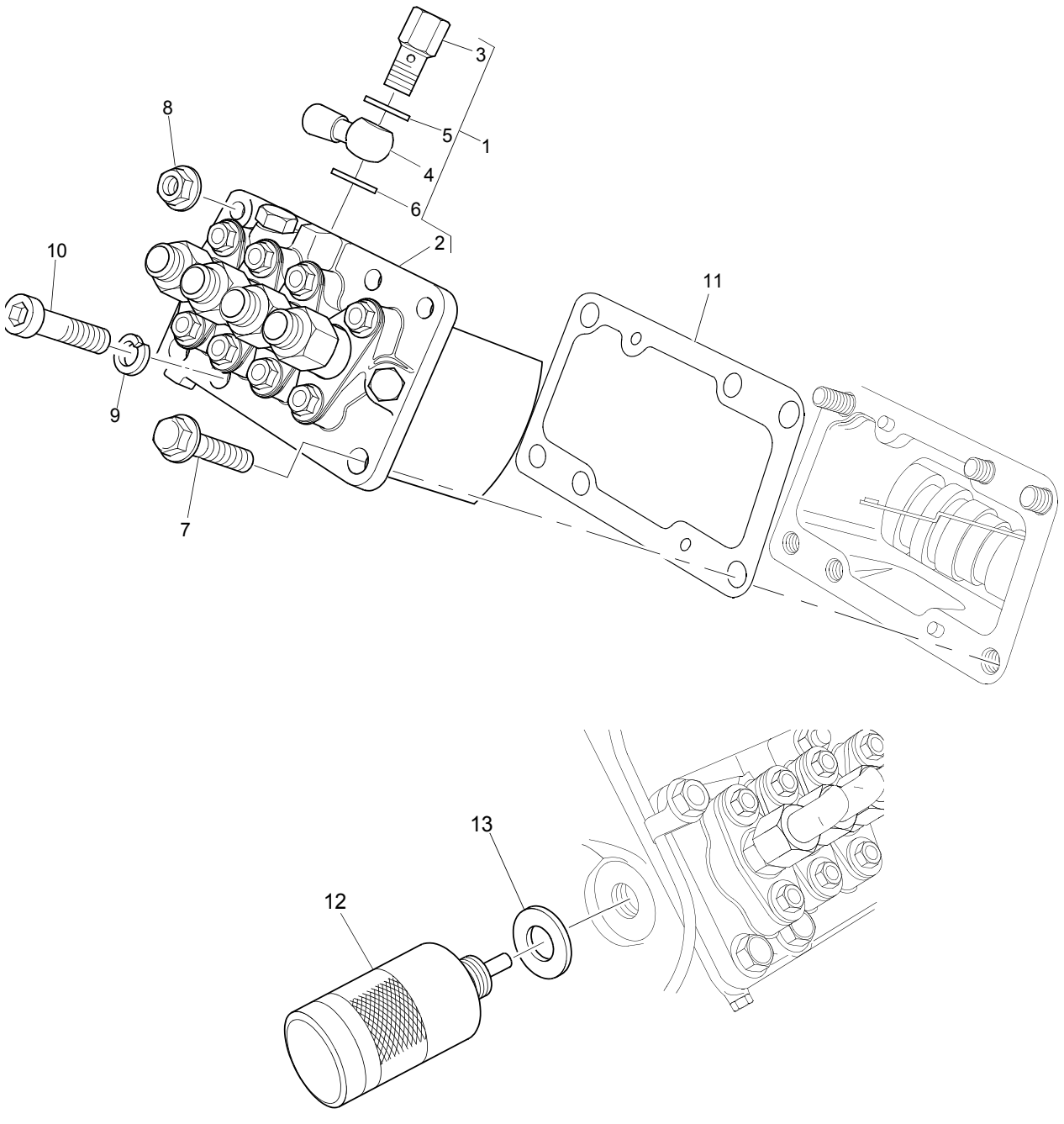

Fuel Injection Pump	Plate A
↦ U909866L	D6QH

Item	Part No.	References	Qty.	Description	Notes
1	131010031		1	FUEL INJECTION PUMP	
2	⌐	⇨ 131010031	1	FUEL INJECTION PUMP	
3	├ 131246170		1	BOLT	
4	├ 131246010		1	CONNECTION	
5	├ 131296255		1	WASHER	
6	└ 131296255		1	WASHER	
7	010800820		2	SCREW	
8	023100008		3	NUT	
9	027100008		1	WASHER	
10	010700820		1	SCREW	
11		⇨ SERVICE OPTION Ⓢ	1	SHIM	
12	185206450		1	SOLENOID	
13	025100016		1	WASHER	
Service Options					
11	131437490	≒ (+) 0.2MM	1	SHIM	
11	131437500	≒ (+) 0.3MM	1	SHIM	
11	131437510	≒ (+) 0.4MM	1	SHIM	
11	131437520	≒ (+) 0.5MM	1	SHIM	
11	131437530	≒ (+) 0.5MM	1	SHIM	(A)

Footnotes	
(A)	FLAT

High Pressure Fuel Pipes	Plate A
↦ U909866L	D6QH

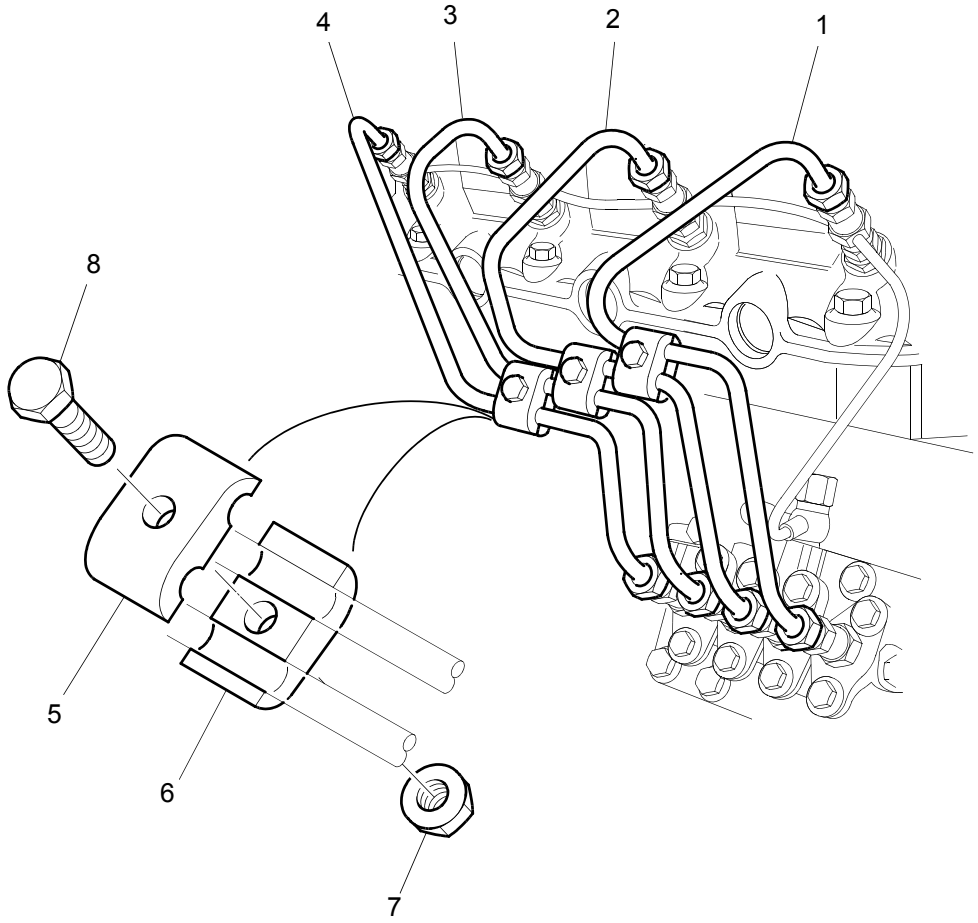

High Pressure Fuel Pipes **Plate A**

↦ **U909866L**	**D6QH**

Item	Part No.	References	Qty.	Description	Notes
1	131507700	1	1	PIPE - FUEL INJ NO 1 CYL	
2	131507710	2	1	PIPE - FUEL INJ NO 2 CYL	
3	131507720	3	1	PIPE - FUEL INJ NO 3 CYL	
4	131507730	4	1	PIPE - FUEL INJ NO 4 CYL	
5	199106021		1	CLAMP	
6	199106021		3	CLAMP	
7	023100006		3	NUT	
8	010110625		3	SCREW	

Atomisers	Plate A
↦ U909866L	D6QH

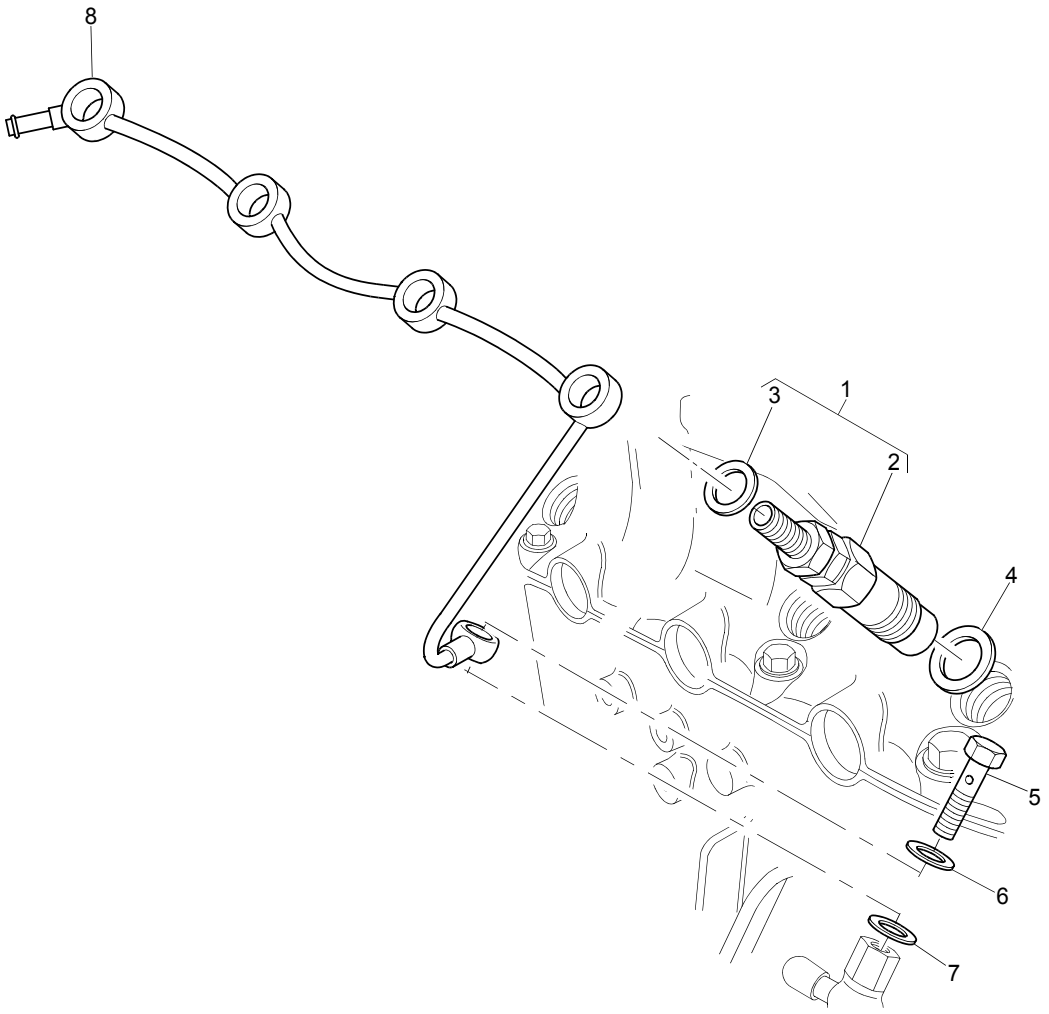

Atomisers	Plate A
↦ **U909866L**	**D6QH**

Item	Part No.	References	Qty.	Description	Notes
1	131406490		4	ATOMISER	
2	┬	✏ 131406490	1	BODY	
3	└131426230		1	SEAL - INJECTOR	
4	131426200		4	SEAL - INJECTOR	
5	198487450		1	BOLT	
6	025100008		2	WASHER	
7	025100008		1	WASHER	
8	TPN711		1	PIPE - LEAK OFF	

Cold Start System	Plate A
	E6AK

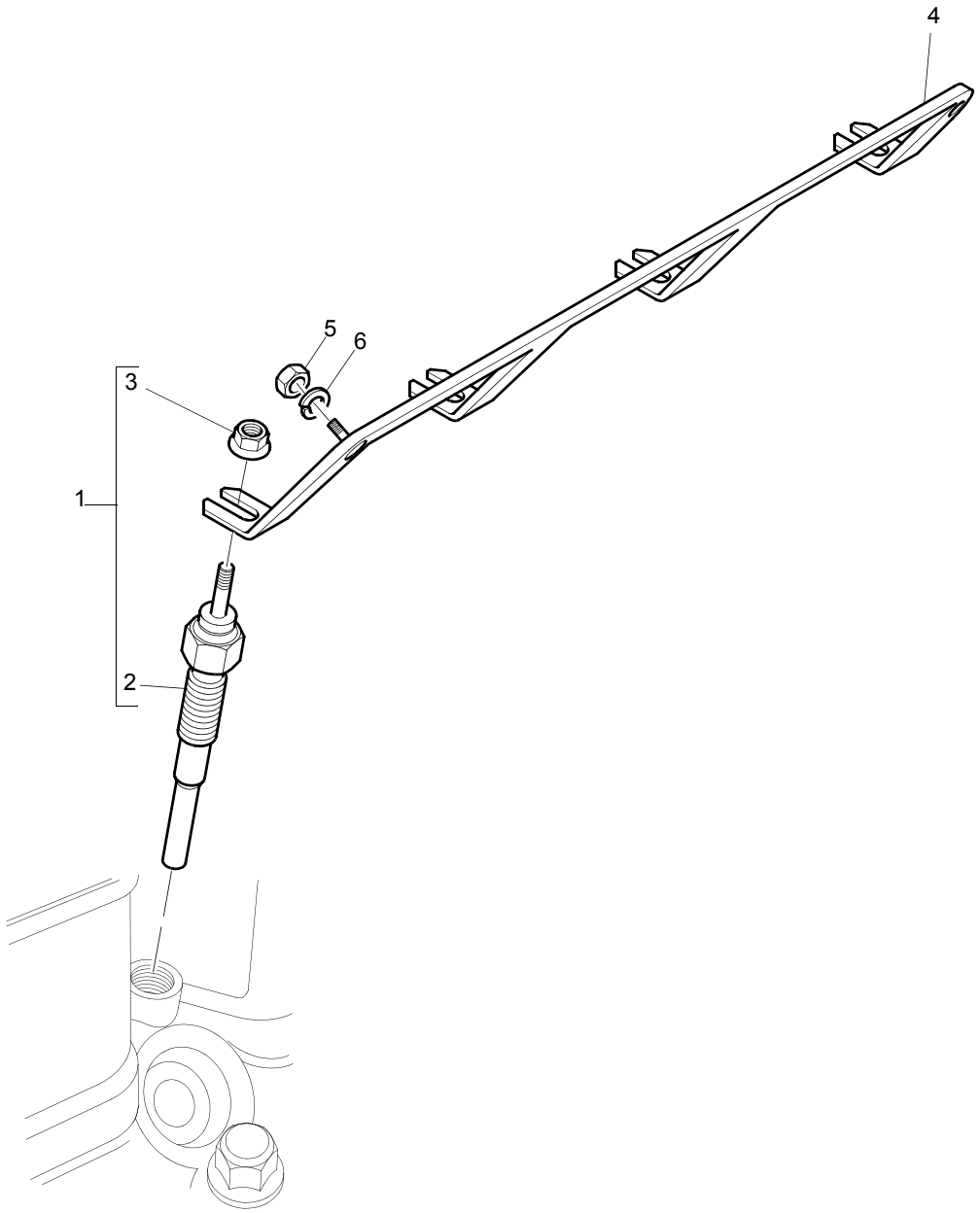

Cold Start System **Plate A**

E6AK

Item	Part No.	References	Qty.	Description	Notes
1	185366190		4	GLOWPLUG	
2	┌	✏ 185366190	1	GLOWPLUG	
3	└	✏ 185366190	1	NUT	
4	185376150		1	BAR	
5	020100004		1	NUT	
6	027100004		1	WASHER	

Fan Drive	Plate A
	F4DK

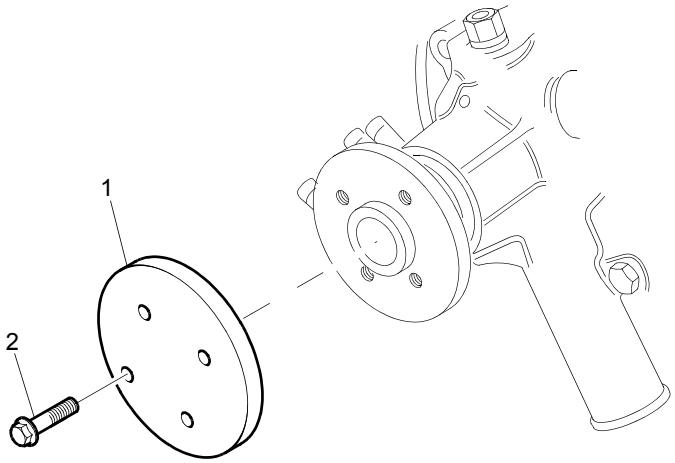

Fan Drive	Plate A
	F4DK

Item	Part No.	References	Qty.	Description	Notes
1	145386390		1	PLATE	
2	011310620		4	SCREW	

Water Pump	Plate A
●○ F6EH	F6XH

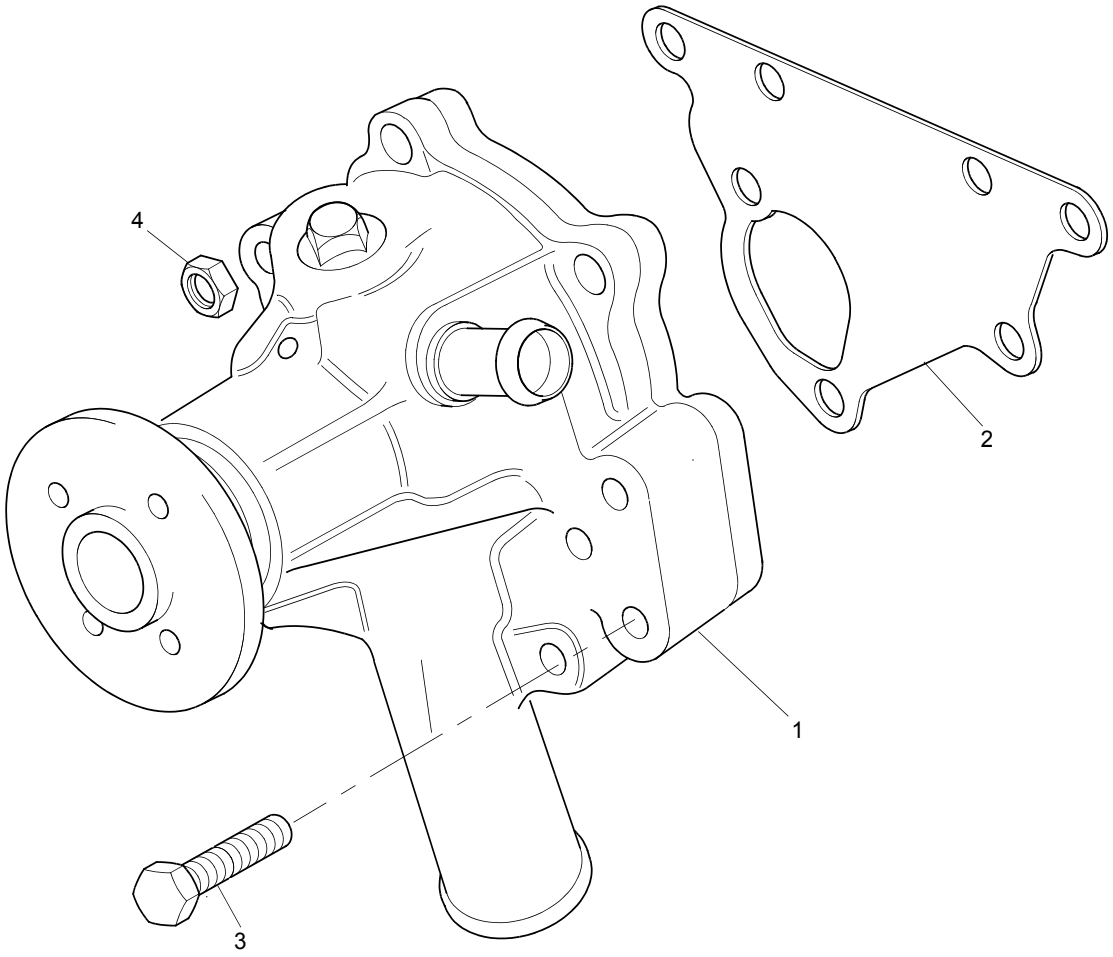

Water Pump **Plate A**

●○ F6EH	F6XH

Item	Part No.	References	Qty.	Description	Notes
1	145010060	a.	1	WATER PUMP	
2	145996920		1	GASKET - WATER PUMP	
3	011310635		4	SCREW	
4	023100006		1	NUT	

History

a.

1	145010070	1	WATER PUMP	

Water Pump	Plate B
●○ F6EH	F6XH

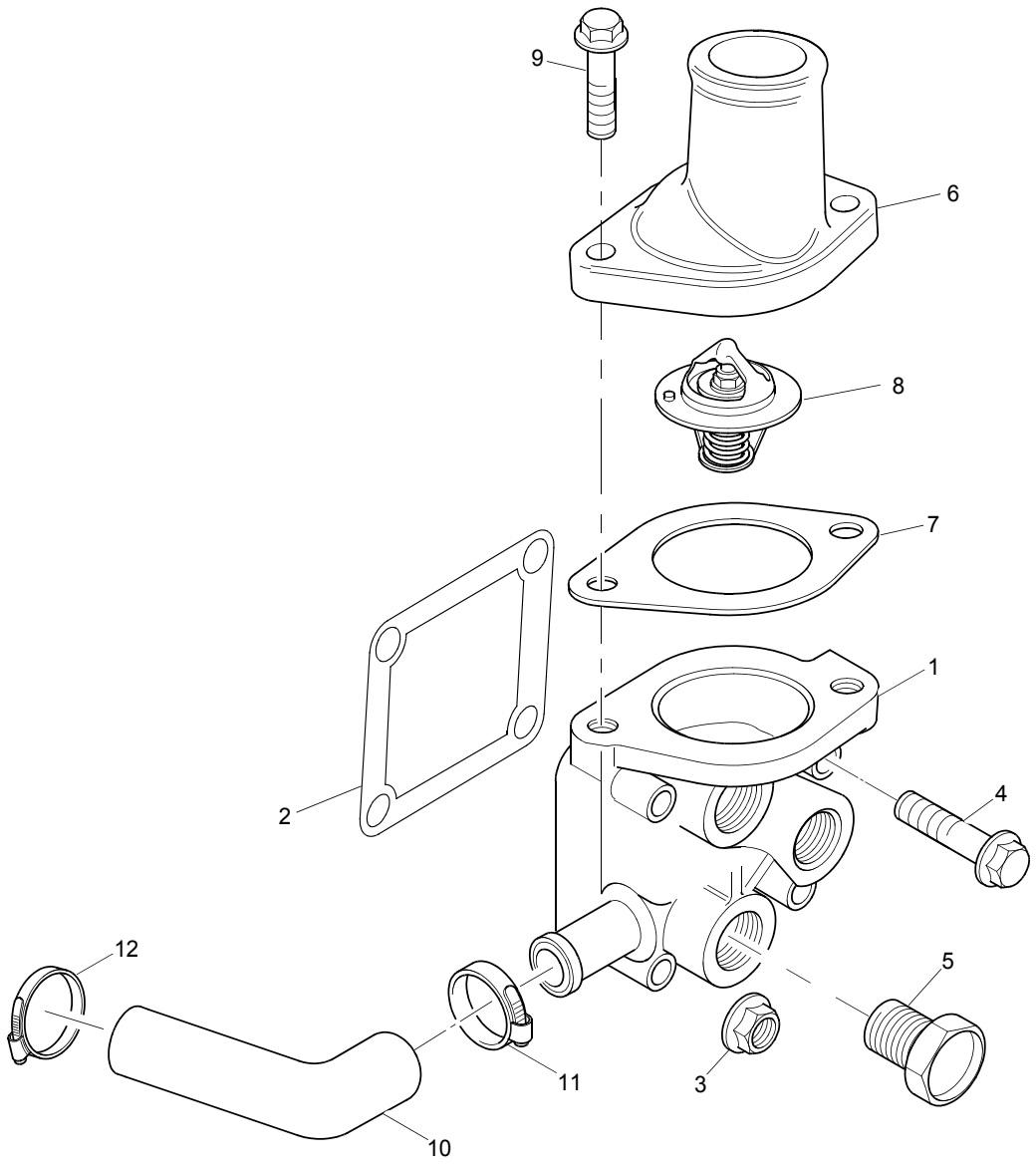

Water Pump	Plate B

●○ F6EH	F6XH

Item	Part No.	References	Qty.	Description	Notes
1	145046110		1	THERMOSTAT HOUSING	
2	145996930		1	GASKET - THERMOSTAT HSG	
3	023100006		2	NUT	
4	011310635		2	SCREW	
5	064500030		3	PLUG	
6	145226340		1	CONNECTION	
7	145996051		1	GASKET - THERMOSTAT HSG	
8	145206230		1	THERMOSTAT	
9	011510825		2	SCREW	
10	145537300		1	HOSE	
11	21825198		1	CLIP	
12	2481883		1	CLIP	

Oil Pump & Connections	Plate A

●○ F6EH	F6XH

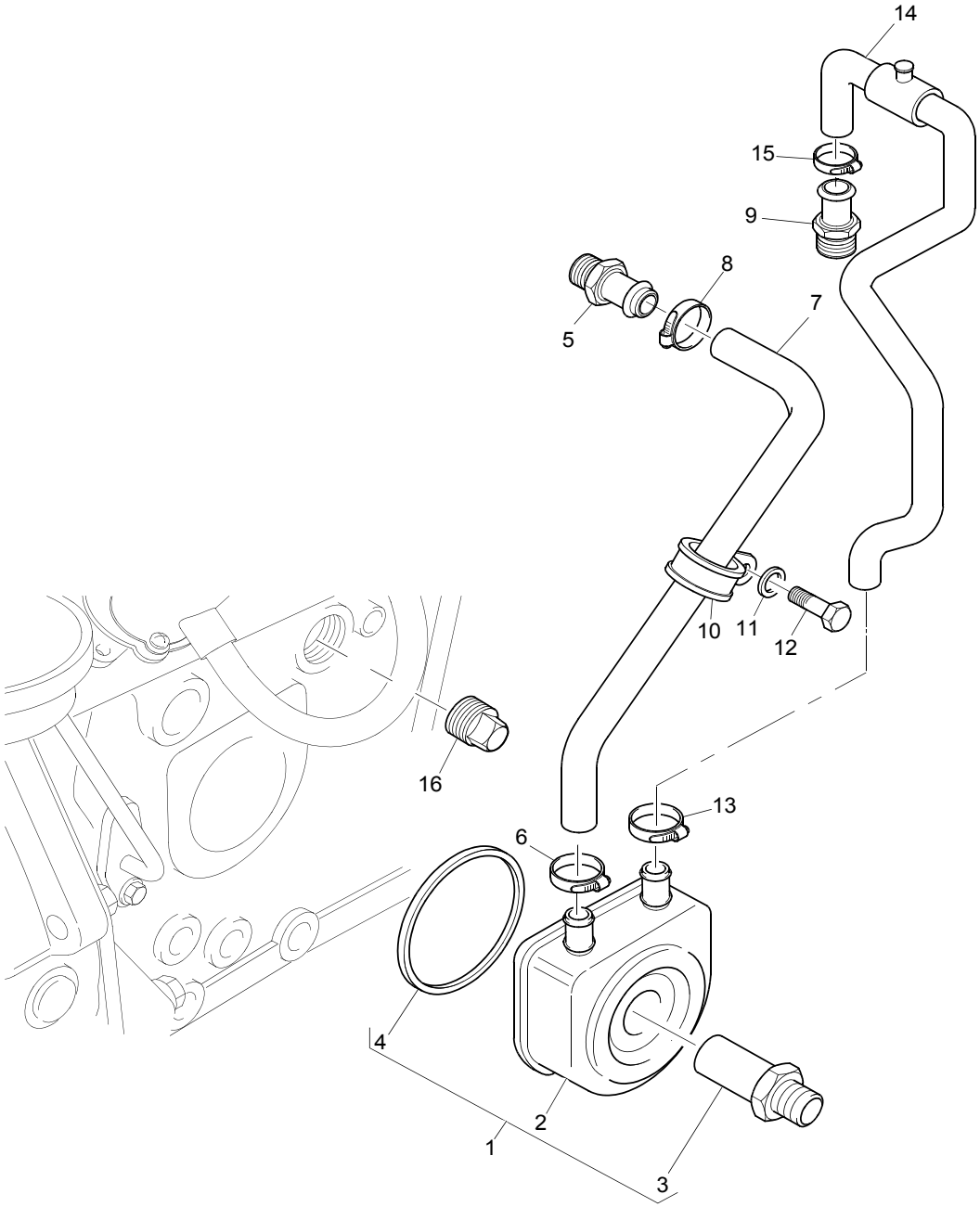

Oil Pump & Connections **Plate A**

●○ F6EH	F6XH

Item	Part No.	References	Qty.	Description	Notes
1	2486A218		1	OIL COOLER	
2	┗	✏ 2486A218	1	OIL COOLER	
3	┣2486A225		1	ADAPTOR	
4	┗2486A223		1	SEAL - O RING	
5	198487890		1	CONNECTION	
6	2481883		1	CLIP	
7	TPN636		1	HOSE	
8	2481883		1	CLIP	
9	198487880		1	CONNECTION	
10	2481D156		1	CLIP	
11	026100008		1	WASHER	
12	011510812		1	SCREW	
13	2481883		1	CLIP	
14	TPN715		1	HOSE	
15	2481883		1	CLIP	
16	064510060		1	PLUG	

Pulleys	Plate A
	F8CH

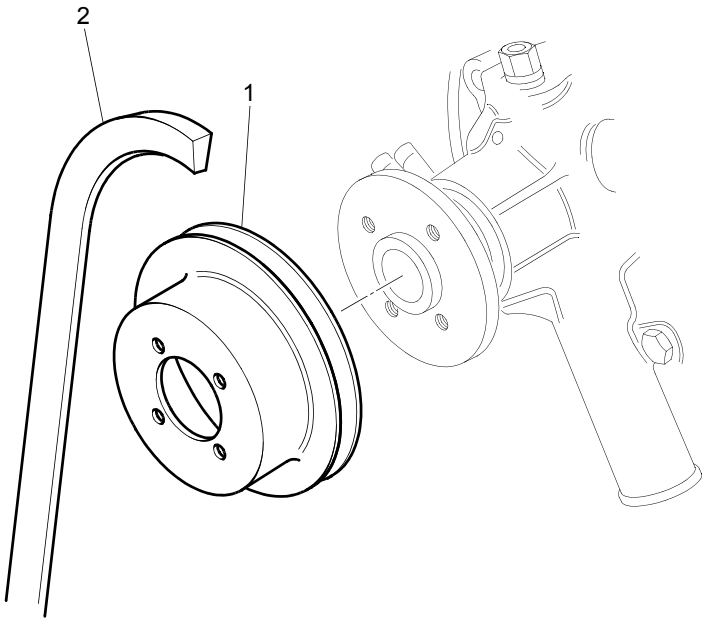

Pulleys	Plate A
	F8CH

Item	Part No.	References	Qty.	Description	Notes
1	145337030		1	1 GROOVE WATERPUMP PULLEY	
2	080109109		1	V BELT	

Sump	Plate A
	G6BH

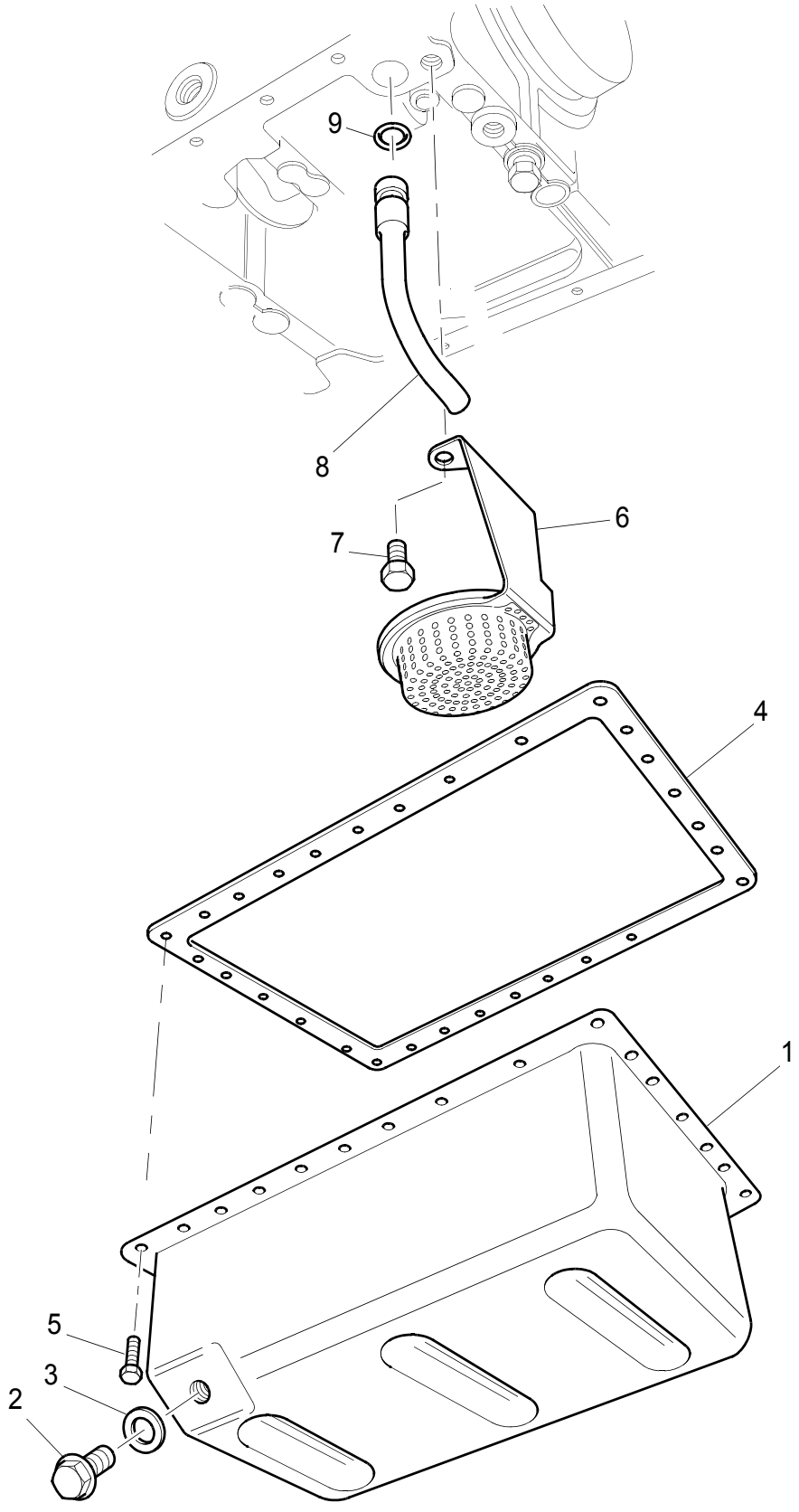

Sump	Plate A
	G6BH

Item	Part No.	References	Qty.	Description	Notes
1	110708390		1	SUMP	
2	010109238		2	SCREW	
3	025100016		2	WASHER	
4	110996920	a.	1	GASKET - SUMP	
5	010109235		30	SCREW	
6	140406360		1	STRAINER	
7	011310612		2	SCREW	
8	140986630		1	OIL PIPE	
9	052109076		1	SEAL - O RING	

History

a.

4	110996860	1	GASKET - SUMP	

Oil Filter	Plate A
	G6BH

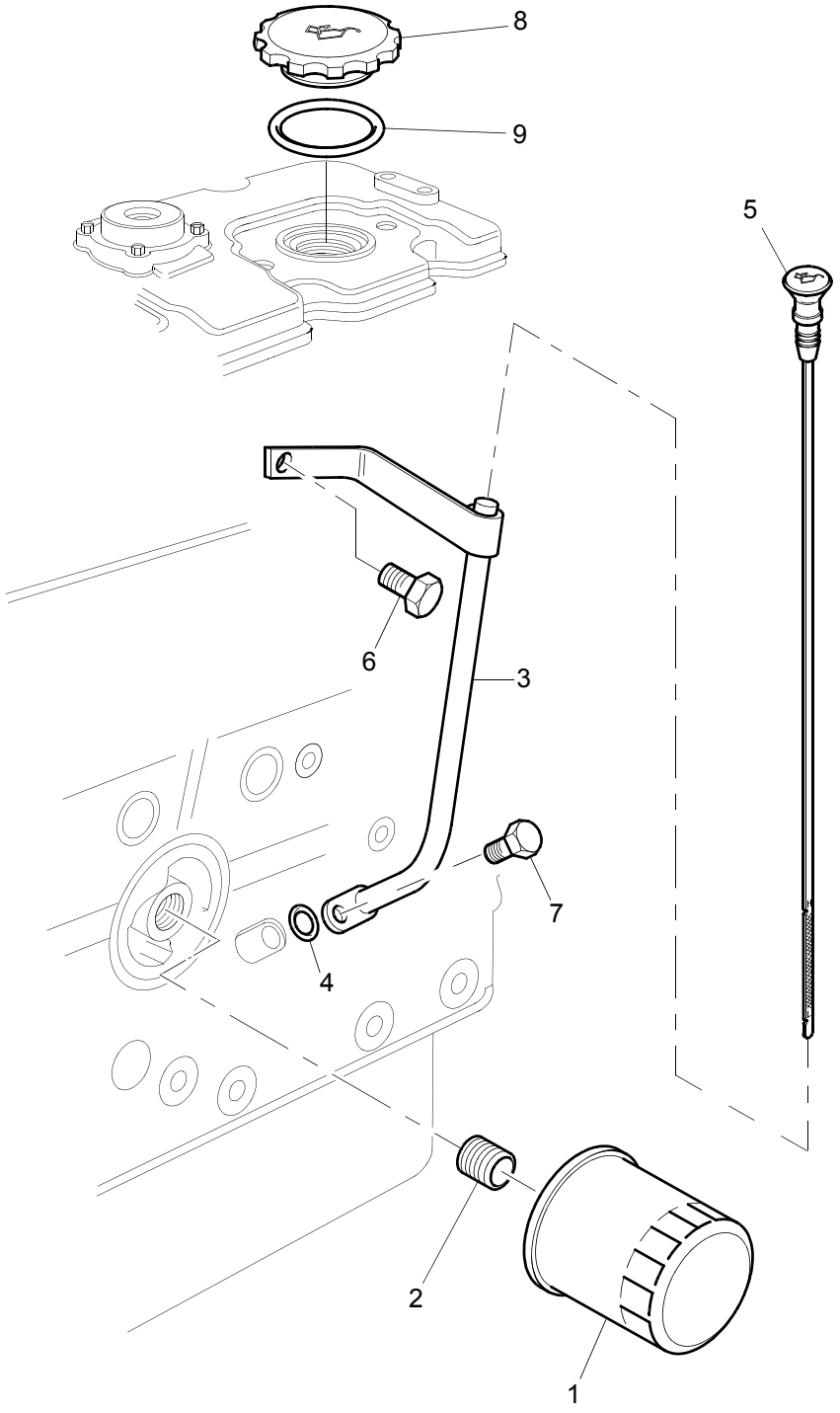

Oil Filter **Plate A**

G6BH

Item	Part No.	References	Qty.	Description	Notes
1	140517050		1	OIL FILTER	
2	140546020		1	CONNECTION	
3	110756590		1	DIPSTICK TUBE	
4	052100100		2	SEAL - O RING	
5	198416710		1	DIPSTICK	429MM
6	011510812		1	SCREW	
7	011310612		1	SCREW	
8	198436350		1	OIL FILLER CAP	
9	052100400		1	SEAL - O RING	

Oil Leak-Off Pipes	Plate A
	G6BH

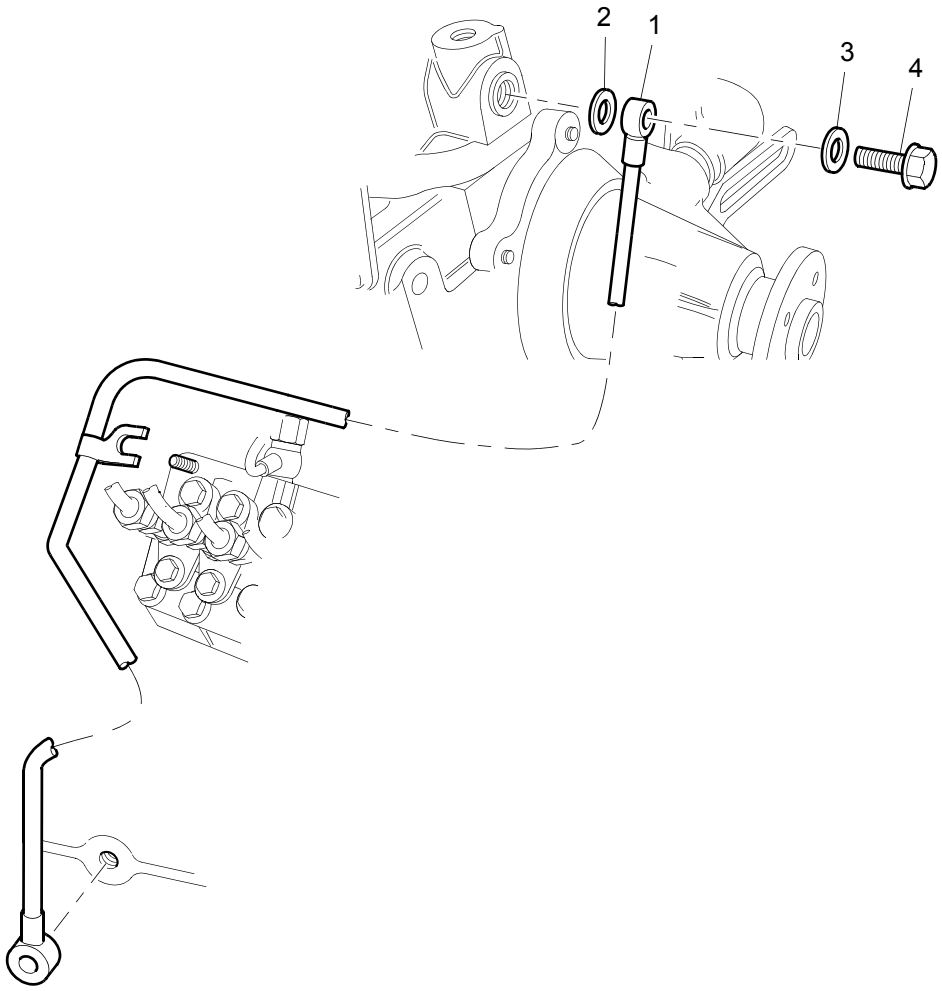

Oil Leak-Off Pipes **Plate A**

G6BH

Item	Part No.	References	Qty.	Description	Notes
1	140607020		1	OIL PIPE	
2	140996260		1	WASHER	
3	140996260		1	WASHER	
4	198486780		1	BOLT	

Rotor	Plate A
	G6BH

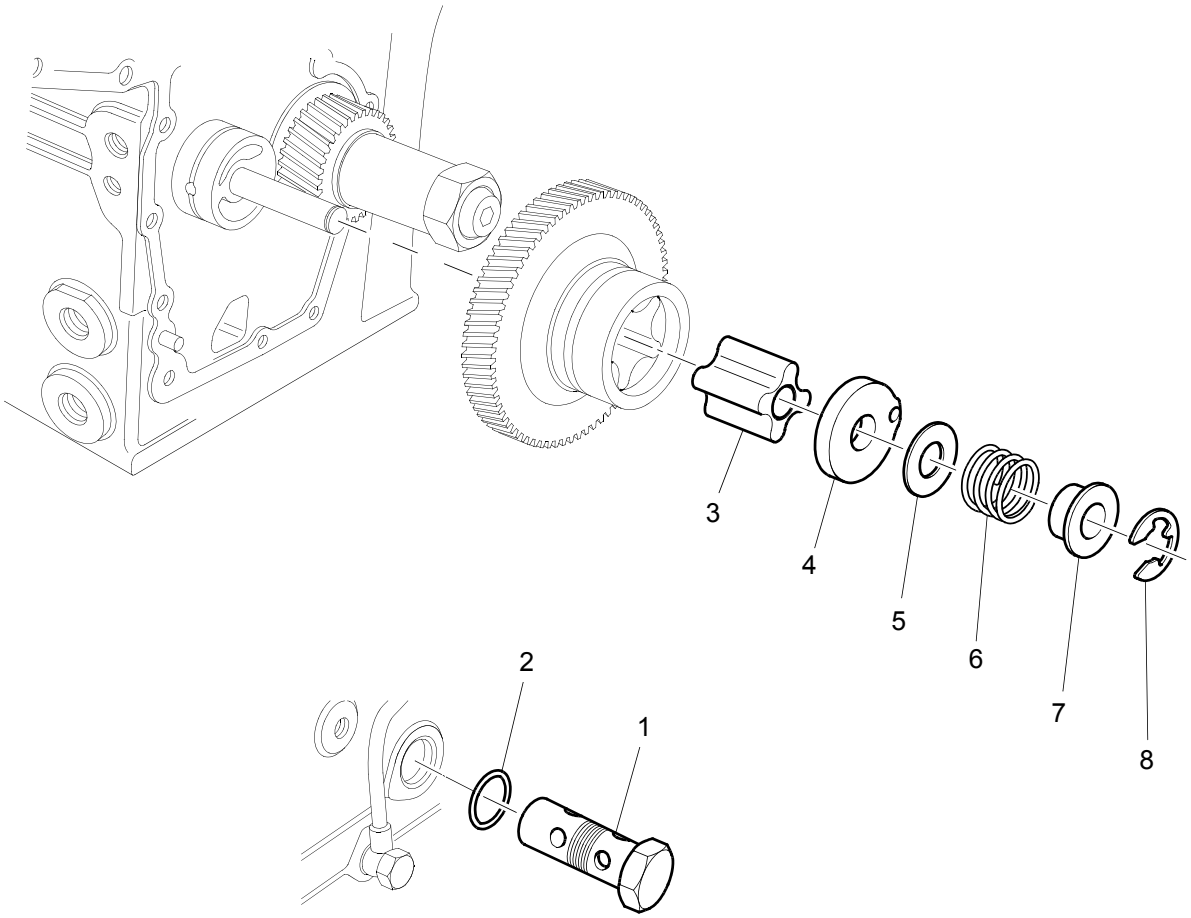

Rotor	Plate A
	G6BH

Item	Part No.	References	Qty.	Description	Notes
1	140036220		1	RELIEF VALVE	
2	052109078		1	SEAL - O RING	
3	140166140		1	ROTOR	
4	140116140		1	COVER	
5		Ⓢ ⌨ SERVICE OPTION	1	SHIM	
6	198216720		1	SPRING	
7	199236540		1	COLLAR	
8	036800010		1	CIRCLIP	
Service Options					
5	199286150	⧺ (+)0.10MM Ⓢ	1	SHIM	
5	199286160	⧺ (+)0.15MM	1	SHIM	
5	199286170	⧺ (+)0.20MM	1	SHIM	
5	199286180	⧺ (+)0.50MM	1	SHIM	

Fuel Filter	Plate A
	H6FH

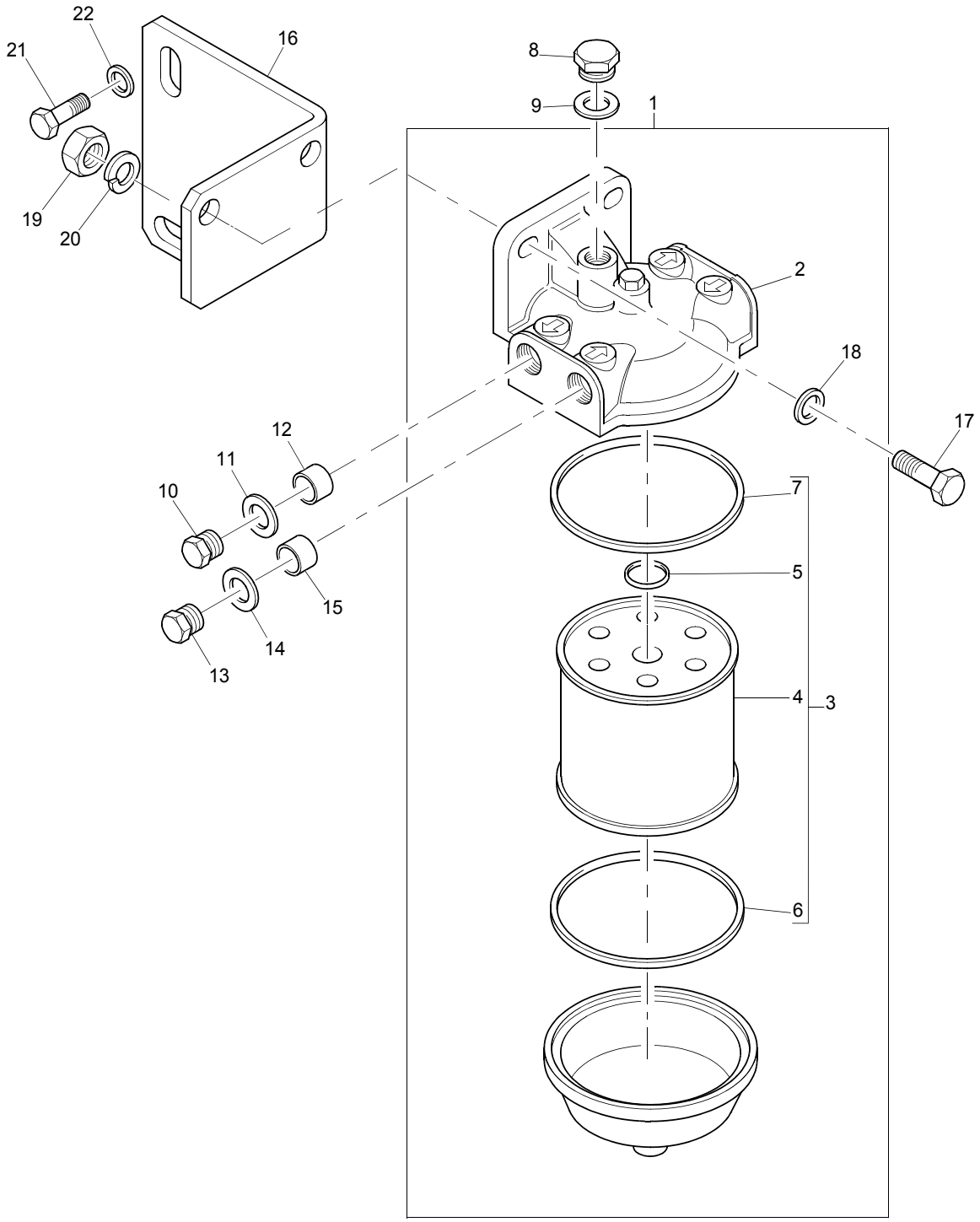

Fuel Filter	Plate A
	H6FH

Item	Part No.	References	Qty.	Description	Notes
1	2656613		1	FUEL FILTER ASSEMBLY	
2	┣	✏ 2656613	1	BOWL	
3	┗26560017		1	FUEL FILTER KIT	
4	┃ ┣	✏ 26560017	1	ELEMENT	
5	┃ ┣26560014		2	SEAL	
6	┃ ┣0490786		1	SEAL - O RING	
7	┃ ┗0490786		1	SEAL - O RING	
8	32184226		1	PLUG	
9	0920154		1	WASHER	
10	0650204		1	PLUG	
11	0920146		1	WASHER	
12	2487F001		1	PLUG	
13	0650204		1	PLUG	
14	0920146		1	WASHER	
15	2487F001		1	PLUG	
16	TPN508		1	SUPPORT BRACKET	
17	010111030		2	BOLT	
18	026200010		2	WASHER	
19	020900010		2	NUT	
20	027100010		2	WASHER	
21	011510820		2	SCREW	
22	026100008		2	WASHER	

Pipes	Plate A
	H6FH

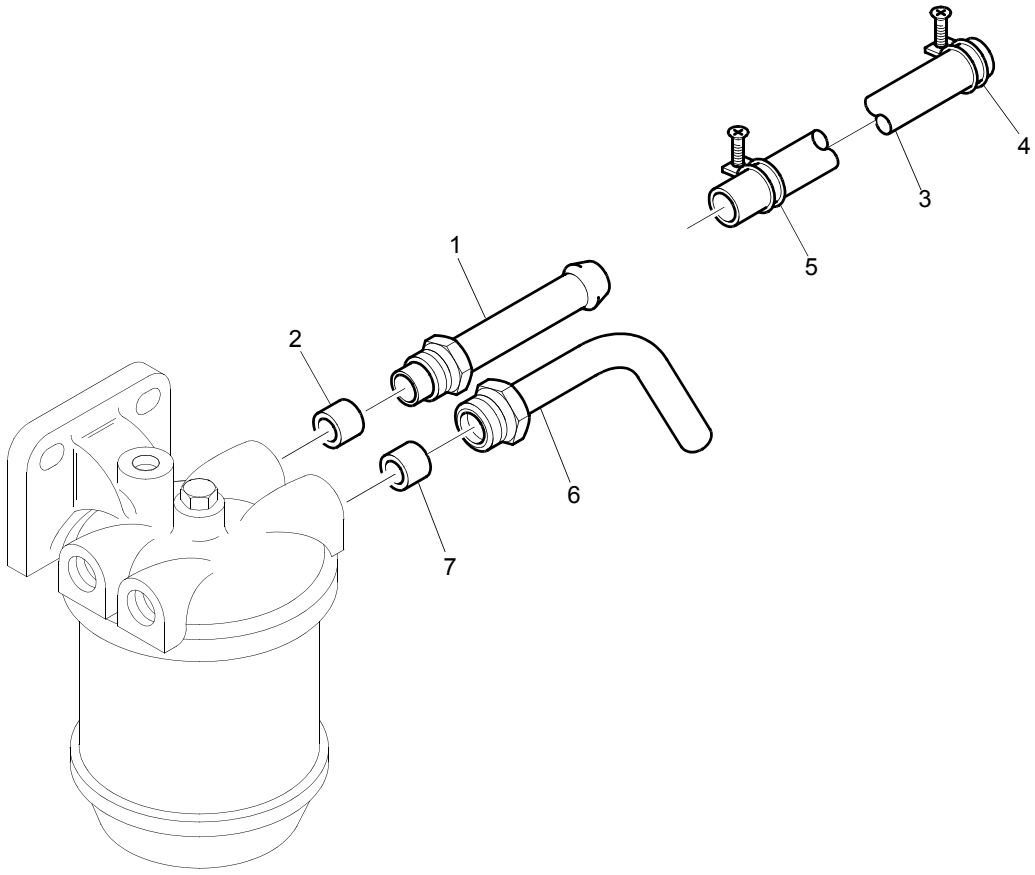

Pipes	Plate A
	H6FH

Item	Part No.	References	Qty.	Description	Notes
1	TPN449		1	FUEL PIPE	
2	33811114		1	OLIVE	
3	068209227		1	FUEL PIPE	
4	067100015		1	CLIP	
5	067100015		1	CLIP	
6	131246270		1	FUEL PIPE	
7	33811114		1	OLIVE	

Lift Pump	Plate A
	H7CK

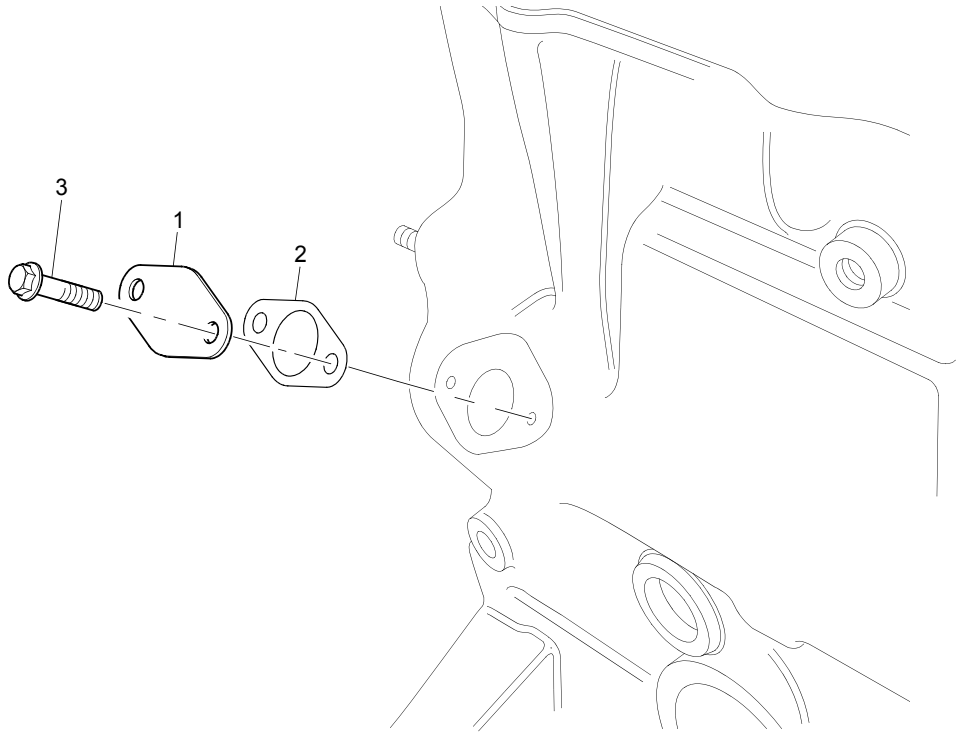

Lift Pump	Plate A
	H7CK

Item	Part No.	References	Qty.	Description	Notes
1	165206340		1	COVER	
2	130996140		1	GASKET - LIFT PUMP	
3	011310612		2	SCREW	

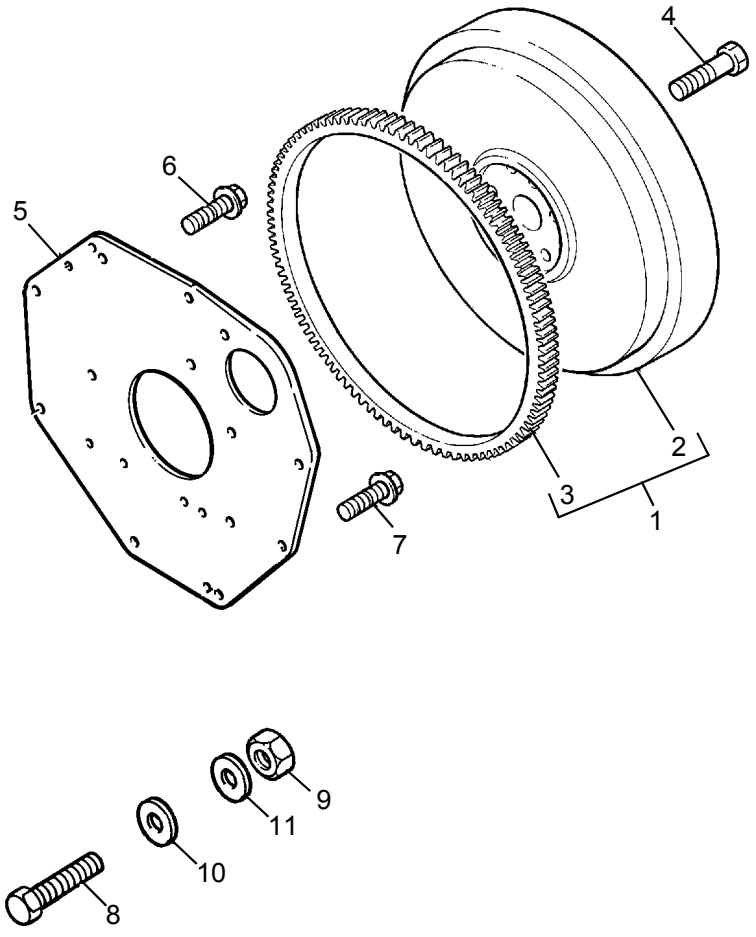
4
6
5
2
3
1
7
9
11
10
8

Back End Group	Plate B
	J6LK

Item	Part No.	References	Qty.	Description	Notes
1	115357460		1	FLYWHEEL	
2	┣	✏ REF.1	1	FLYWHEEL	
3	┗115376160		1	STARTER RING	
4	010109341		6	BOLT	
5	110367580		1	PLATE	
6	011511220		2	SCREW	
7	011510816		10	SCREW	

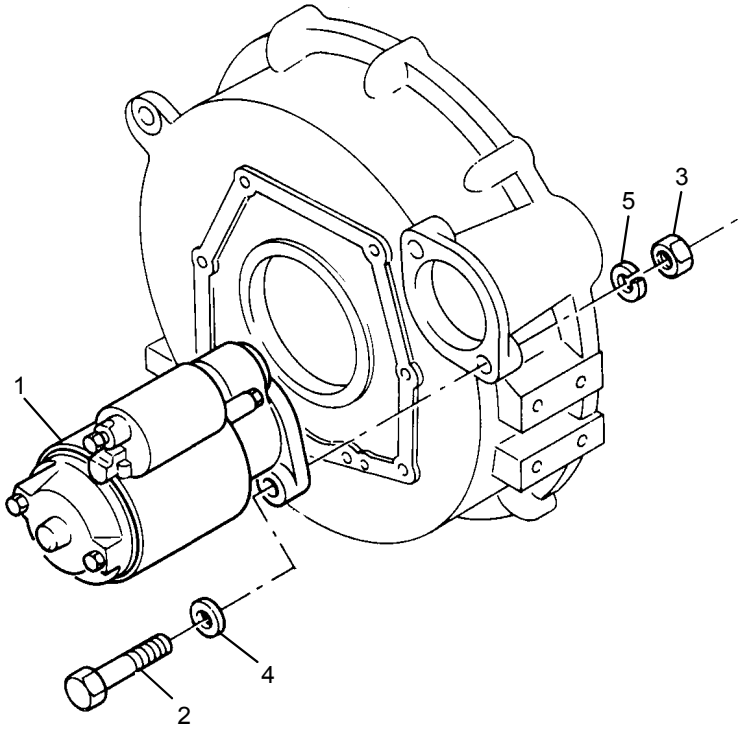
1
2
3
4
5

Starter Group	Plate B
	K6EK

Item	Part No.	References	Qty.	Description	Notes
1	185086600		1	STARTER MOTOR	(A)
2	010301030		2	SCREW	
3	020900010		2	NUT	
4	026200010		2	WASHER	
5	027100010		2	WASHER	

Footnotes	
(A)	FOR BREAKDOWN DETAILS SEE FOLLOWING PAGES

Starter Group	Plate K
	K6EK

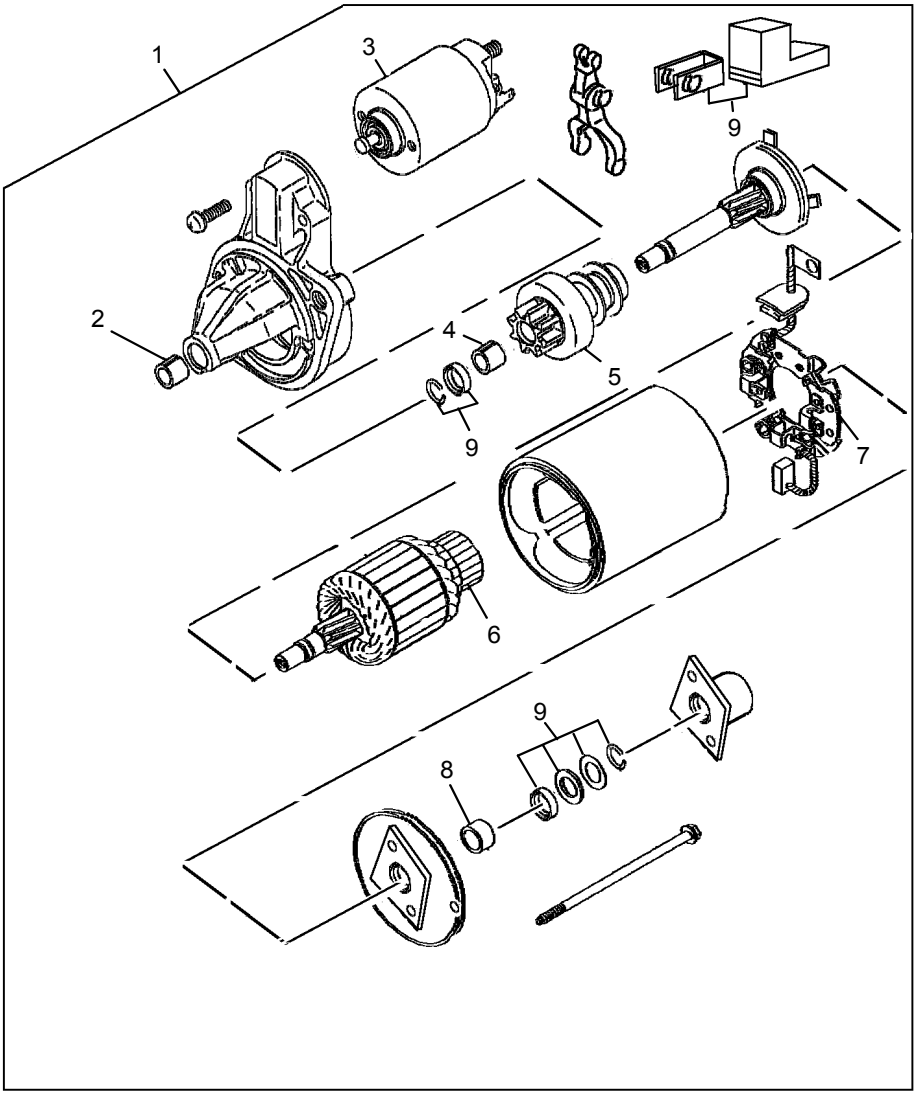

Starter Group	Plate K
	K6EK

Item	Part No.	References	Qty.	Description	Notes
1	185086600		1	STARTER MOTOR	
2	└─28730303		1	BUSH	
3	└─28730304		1	SOLENOID	
4	└─28730302		1	BUSH	
5	└─28730301		1	DRIVE	
6	└─28730305		1	ARMATURE	
7	└─28730307		1	HOLDER	
8	└─28730306		1	BUSH	
9	└─28730308		1	KIT	

Exhaust Manifold	Plate A
	L6AH

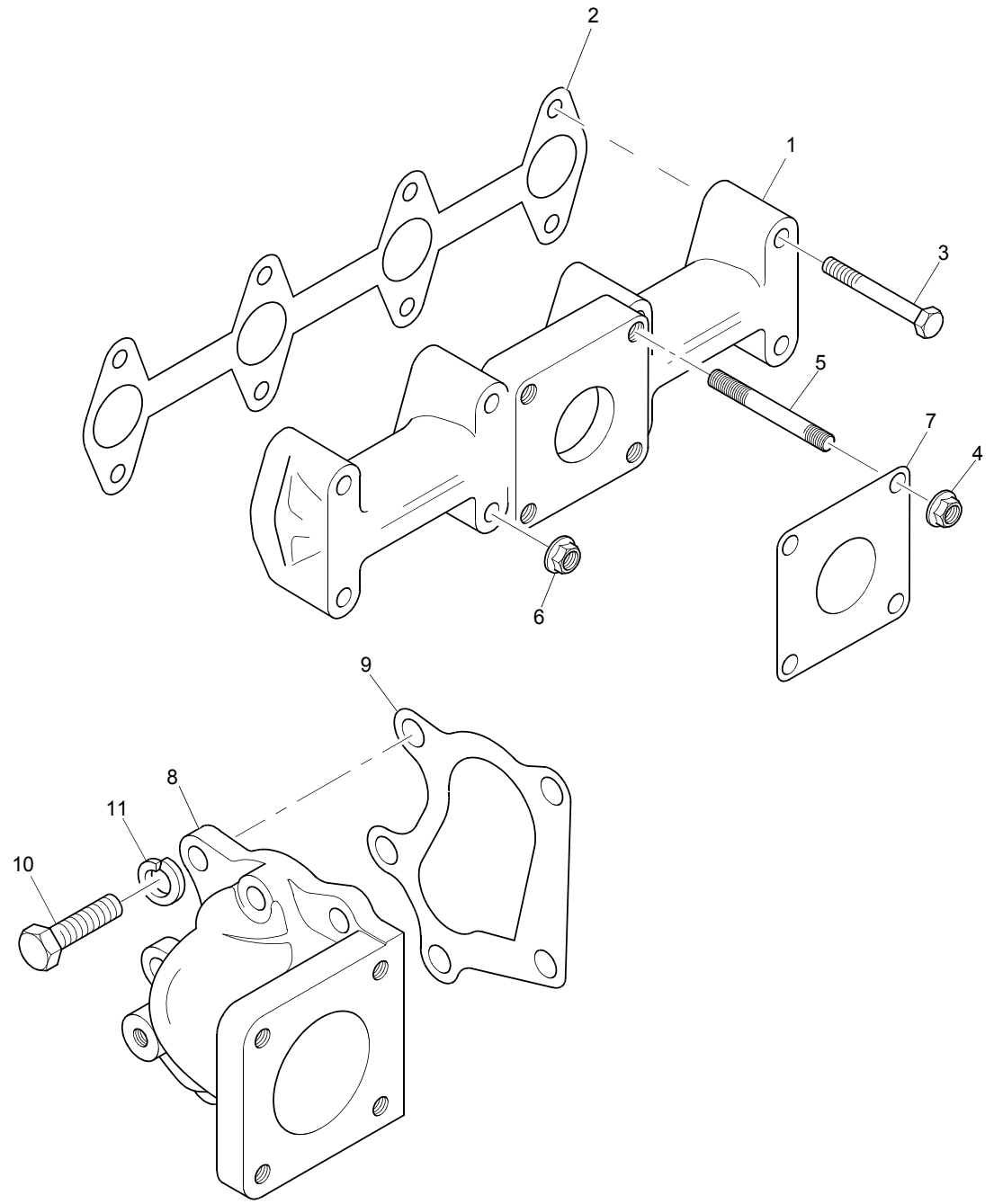

Exhaust Manifold **Plate A**

L6AH

Item	Part No.	References	Qty.	Description	Notes
1	135617460		1	EXHAUST MANIFOLD	
2	135996780		1	GASKET - EXHAUST MANIFOLD	
3	011510860		4	SCREW	
4	023100008		4	NUT	
5	012109235		4	STUD	
6	023100008		4	NUT	
7	135997020		1	GASKET - TURBOCHARGER	
8	135617480		1	EXHAUST ELBOW	
9	135997031	a.	1	GASKET	
10	010700825		5	BOLT	
11	027100008		5	WASHER	

History

a.

9	135997030		1	GASKET	

Alternator	Plate A
	N6GH

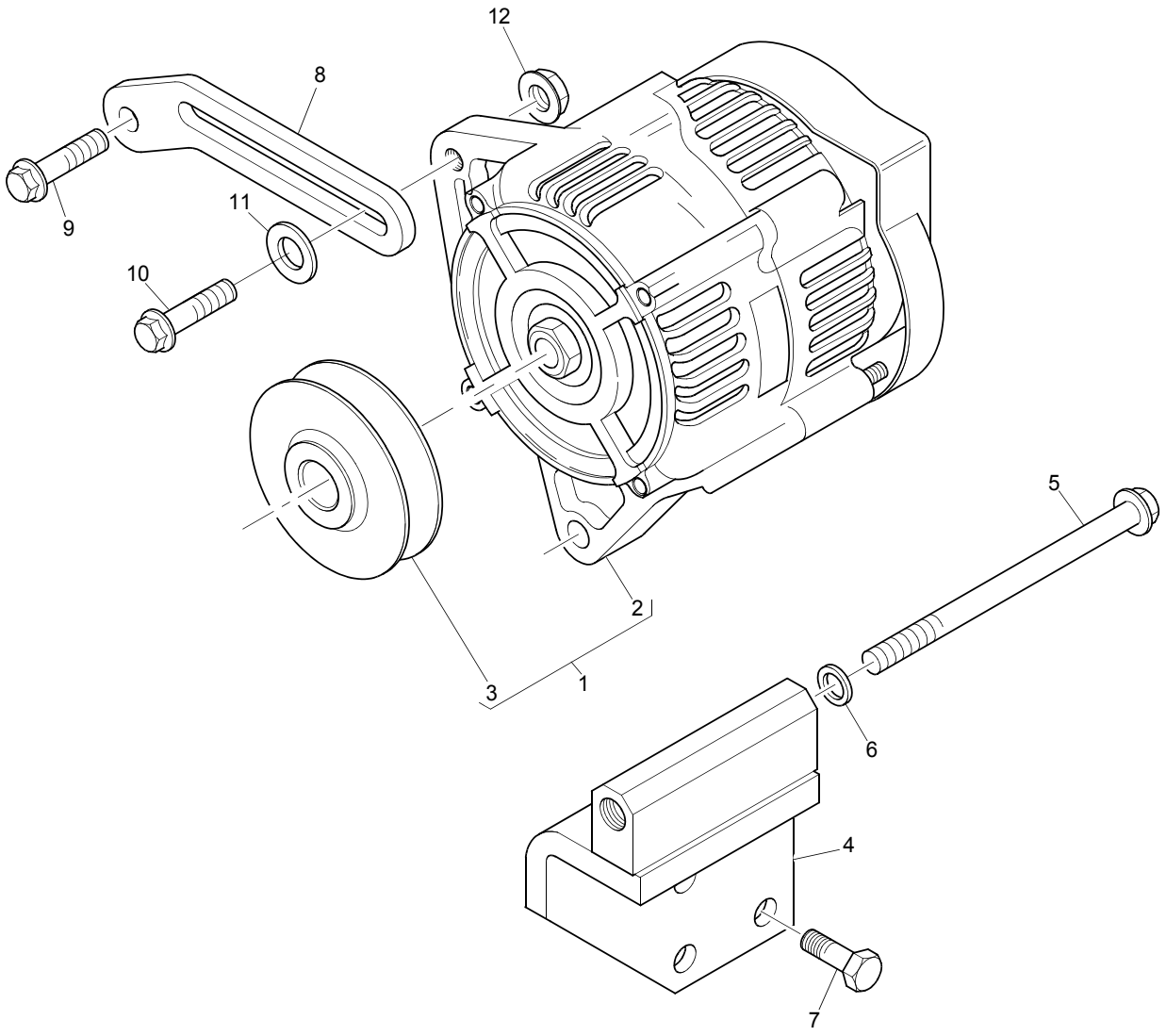

Alternator	Plate A
	N6GH

Item	Part No.	References	Qty.	Description	Notes
1	TPN766		1	ALTERNATOR	
2	┣	⇨ TPN766	1	ALTERNATOR	
3	┗3113E031		1	ALTERNATOR PULLEY	
4	TPN744		1	ALTERNATOR BRACKET	
5	2314H052		1	SCREW	
6	026100008		1	WASHER	
7	011510820		3	SCREW	
8	185727130		1	LEVER	
9	011510825		1	SCREW	
10	011510825		1	SCREW	
11	026109017		1	WASHER	
12	023100008		1	NUT	

Engine Lifting Eyes	Plate A
	O6BH

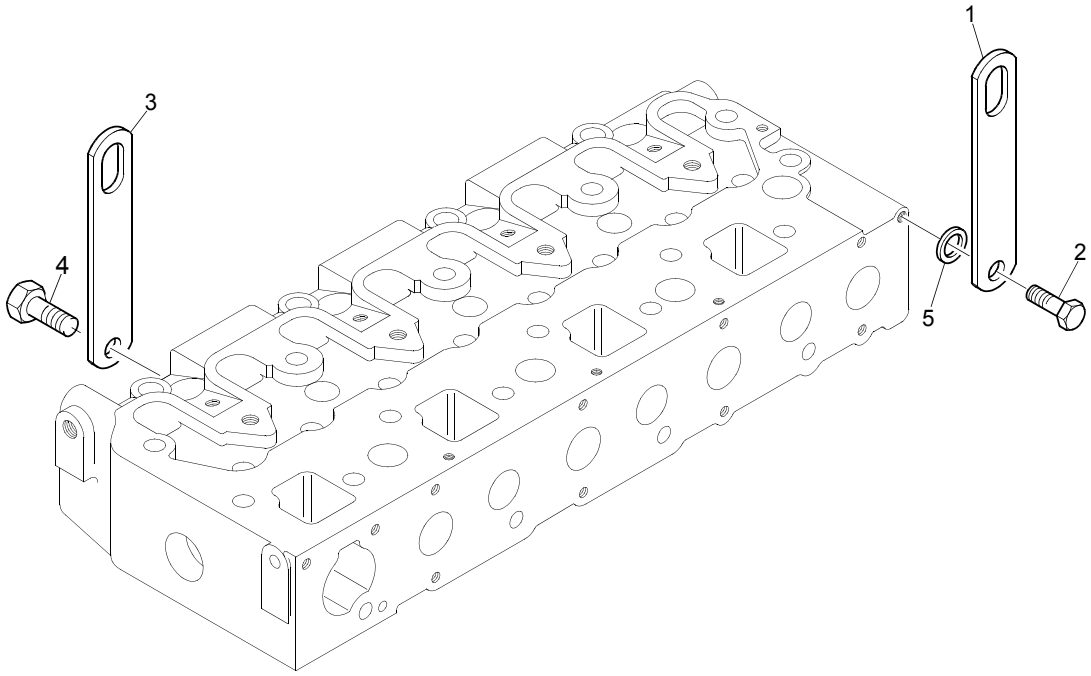

Engine Lifting Eyes	Plate A
	O6BH

Item	Part No.	References	Qty.	Description	Notes
1	195816100		1	LIFTING EYE	
2	011510820		1	SCREW	
3	195816100		1	LIFTING EYE	
4	011510820		1	SCREW	
5	026100008		2	WASHER	

Auxiliary Drive	Plate A
	P6AH

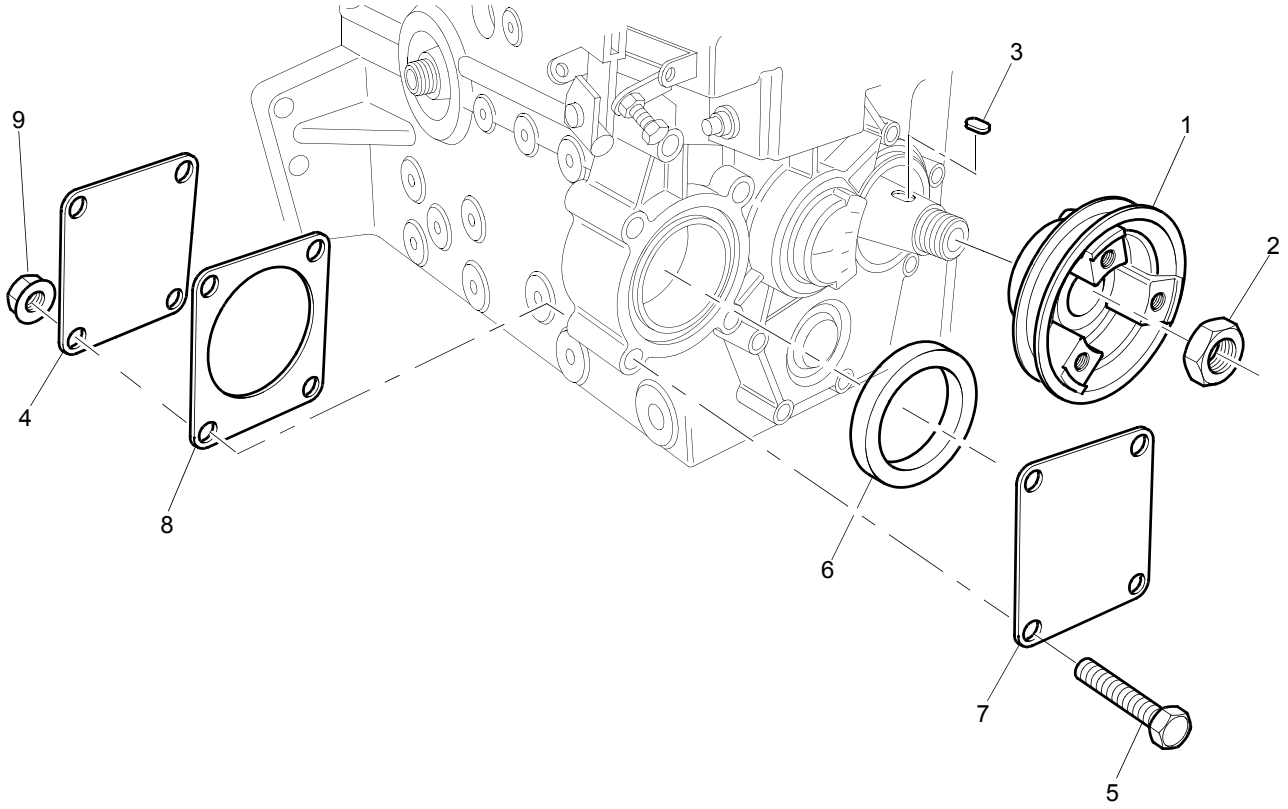

Auxiliary Drive	Plate A
	P6AH

Item	Part No.	References	Qty.	Description	Notes
1	115397400		1	CRANKSHAFT PULLEY	
2	020109086		1	NUT	
3	034100508		1	WOODRUFF KEY	
4	165206010		1	PLATE	
5	010310865		4	BOLT	
6	052300600		1	SEAL - O RING	
7	165206010		1	PLATE	
8	165996110		1	GASKET - OIL FILLER	
9	023100008		4	NUT	

Instrumentation	Plate A
→| 526521M	Q6AH

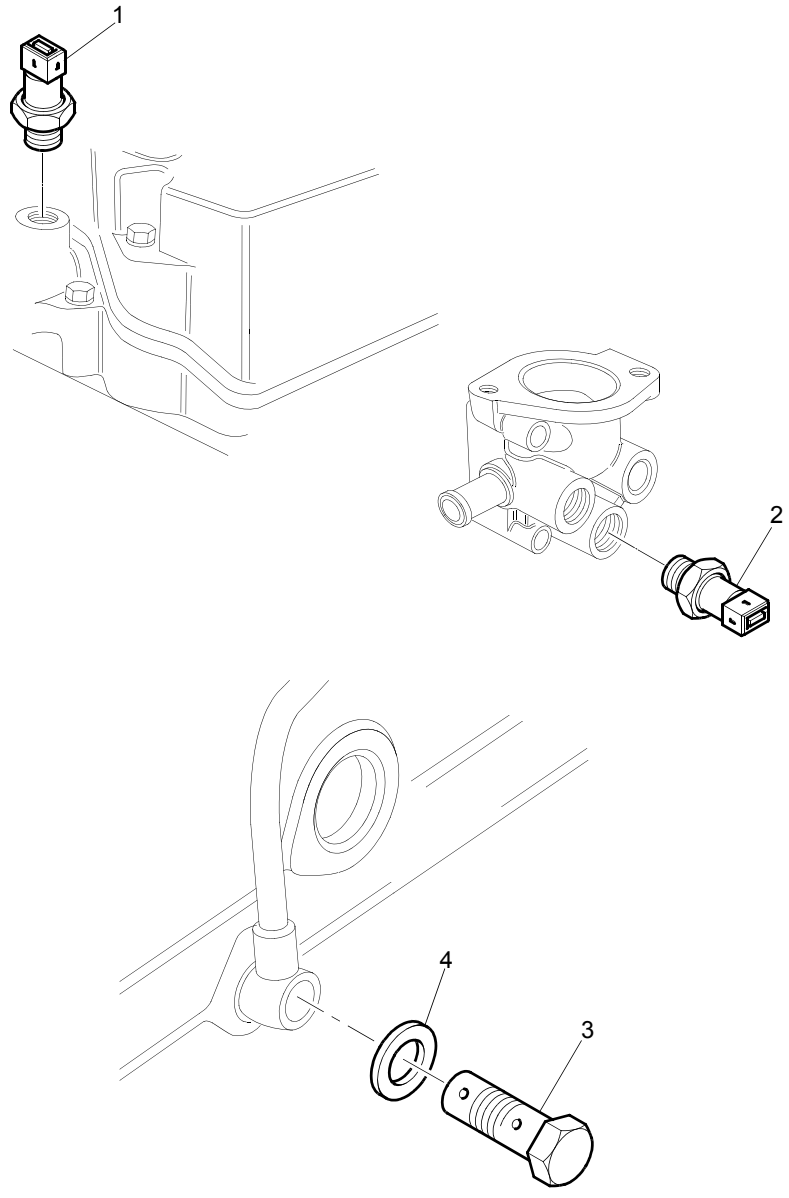

Instrumentation	Plate A
→| 526521M	Q6AH

Item	Part No.	References	Qty.	Description	Notes
1	185246170		1	OIL PRESSURE SWITCH	
2	385720480		1	WATER TEMPERATURE SWITCH	
3	198486780		1	BOLT	
4	140996260		1	WASHER	

Instrumentation	Plate A
↦ 526522M	Q6QH

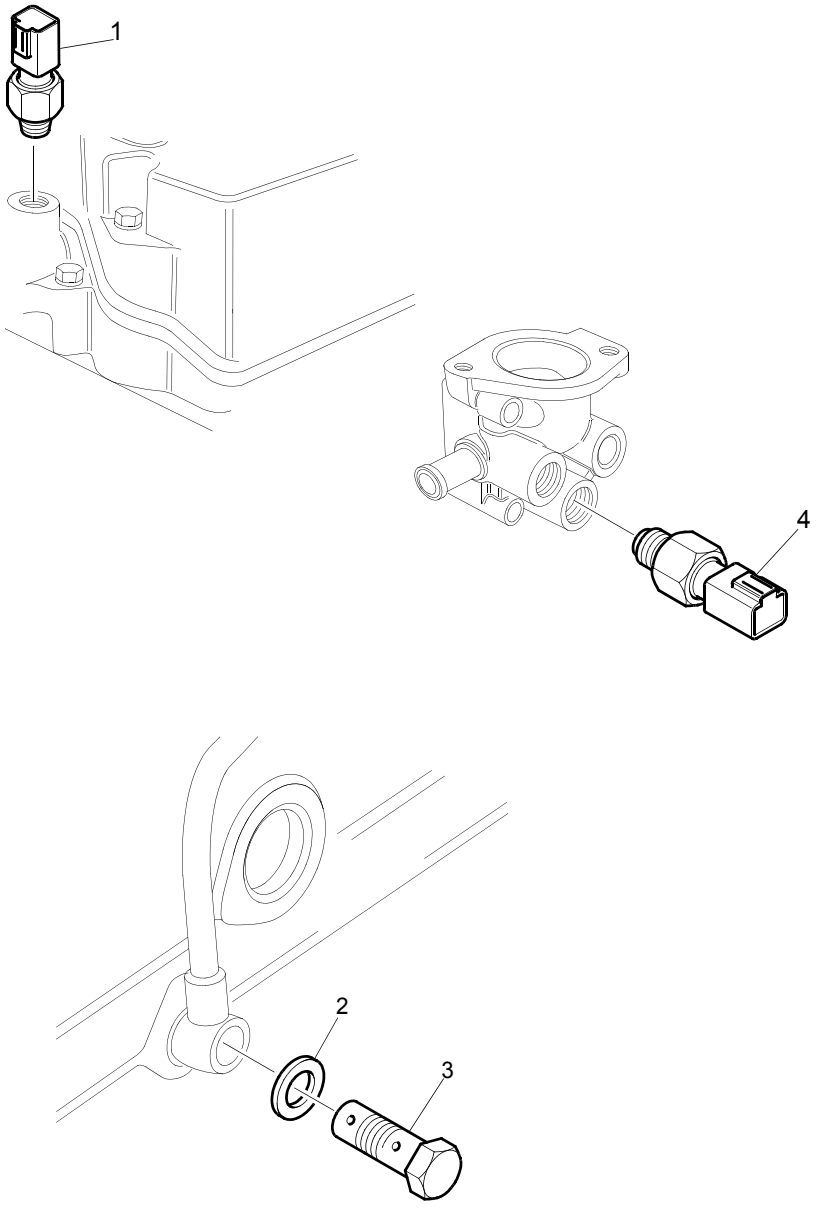

Instrumentation	Plate A
↦ 526522M	Q6QH

Item	Part No.	References	Qty.	Description	Notes
1	185246210		1	OIL PRESSURE SWITCH	
2	140996260		2	WASHER	
3	198486780		1	BOLT	
4	385720510		1	WATER TEMPERATURE SWITCH	

Inlet Manifold	Plate A
	S6EH

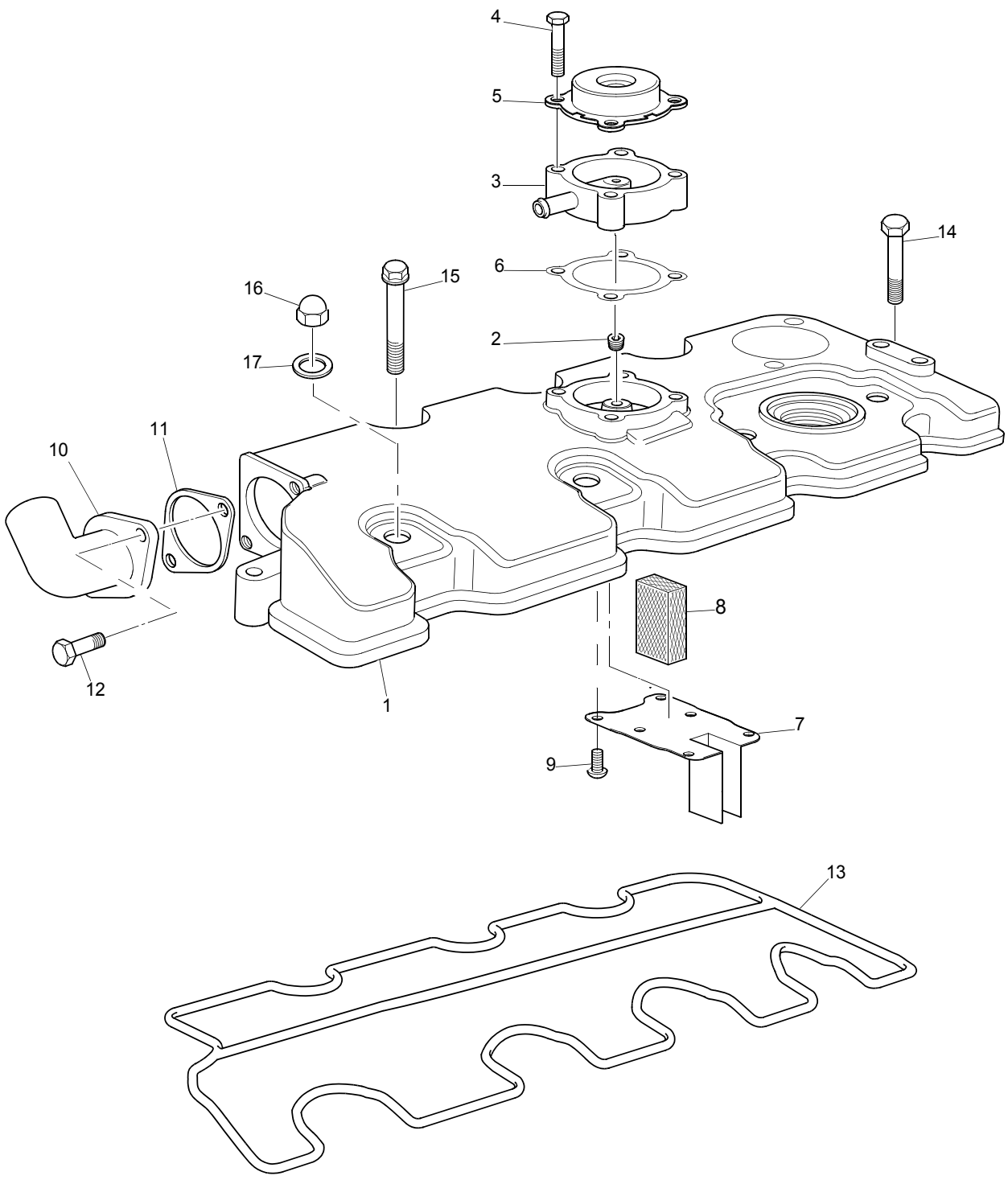

Inlet Manifold	Plate A
	S6EH

Item	Part No.	References	Qty.	Description	Notes
1	111217520		1	CYLINDER HEAD COVER	
2	064400010		1	PLUG	
3	110566130		1	ADAPTOR	
4	011100430		1	BOLT	
5	110566080		1	BREATHER VALVE	
6	110998331		1	GASKET	
7	110666210		1	RETAINING PLATE	
8	110666060		1	GAUZE	
9	015600406		6	SCREW	
10	135566500	↦ 979653K	1	PIPE - AIR	
11	135996950		1	GASKET	
12	011310620		2	SCREW	
13	111996401		1	GASKET - CYL. HEAD COVER	
14	011310635		2	SCREW	
15	011310660		3	SCREW	
16	024600010		4	NUT	
17	140996270		4	WASHER	

Turbocharger	Plate A
	S6EH

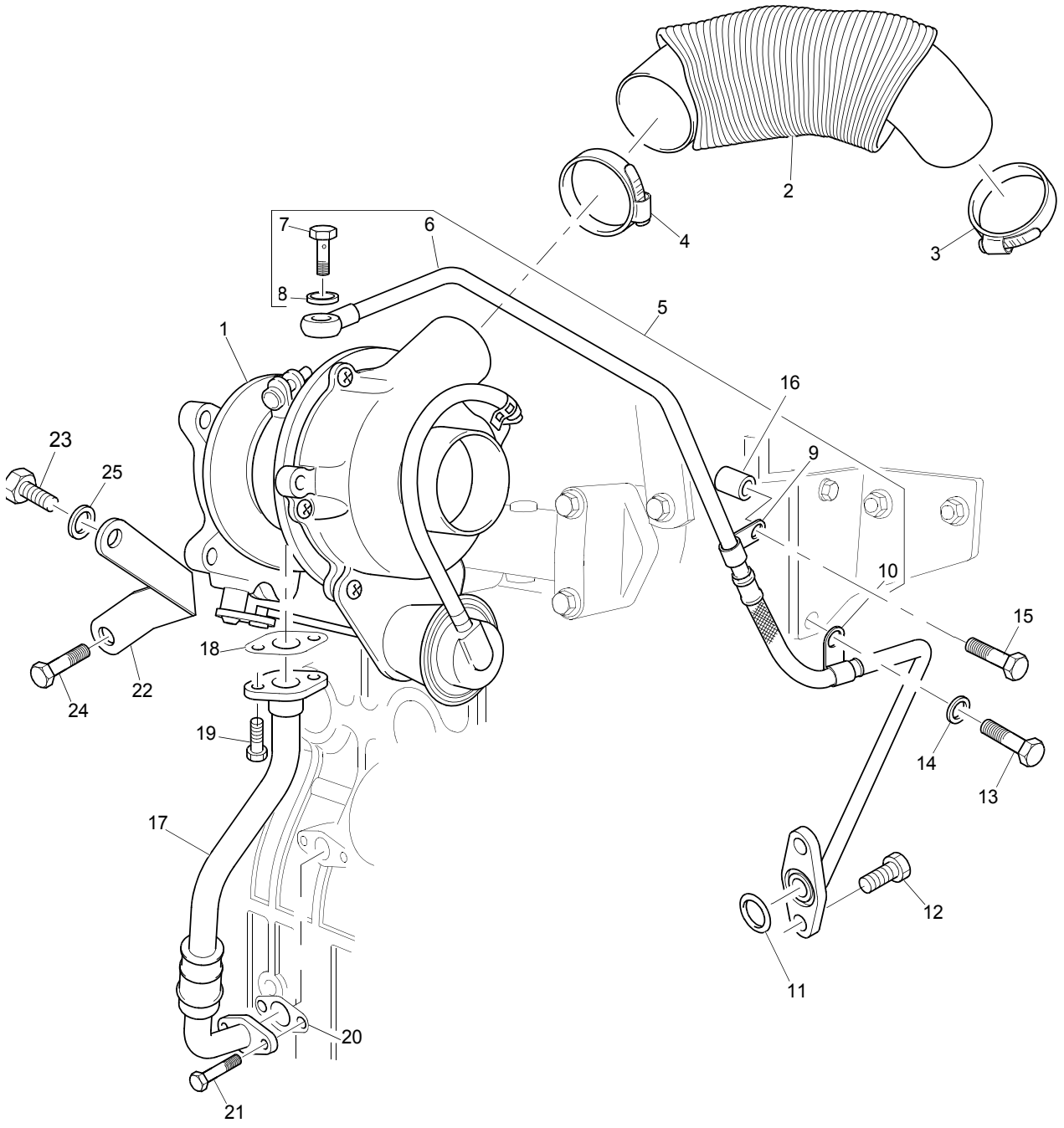

Turbocharger **Plate A**

S6EH

Item	Part No.	References	Qty.	Description	Notes
1	135756180		1	TURBOCHARGER	
2	135597780	↦ 979653K	1	HOSE	
3	0180067		1	CLIP	
4	0180067		1	CLIP	
5	TPN491		1	PIPE - TURBO OIL DRAIN	
6	┬	⇨ TPN491	1	TURBO FEED PIPE	
7	├TPN532		1	BANJO BOLT	
8	├2131A506		2	WASHER	
9	├TPN572		1	PIPE CLIP	
10	└TPN572		1	PIPE CLIP	
11	052109078		1	SEAL - O RING	
12	010109600	a.	2	SCREW	
13	011510825		1	SCREW	
14	026100008		1	WASHER	
15	011510825		1	SCREW	
16	199237000		1	SPACER	
17	TPN490		1	PIPE - TURBO OIL DRAIN	
18	3688A035		1	GASKET	
19	011310616		2	SCREW	
20	3688A035		1	GASKET	
21	011310616		1	SCREW	
22	130976650		1	STAY	
23	011510820		1	SCREW	
24	011510816		1	SCREW	
25	026100008		1	WASHER	

History

a.

12	011310612		2	SCREW

Exhaust	Plate A
	Z1AK

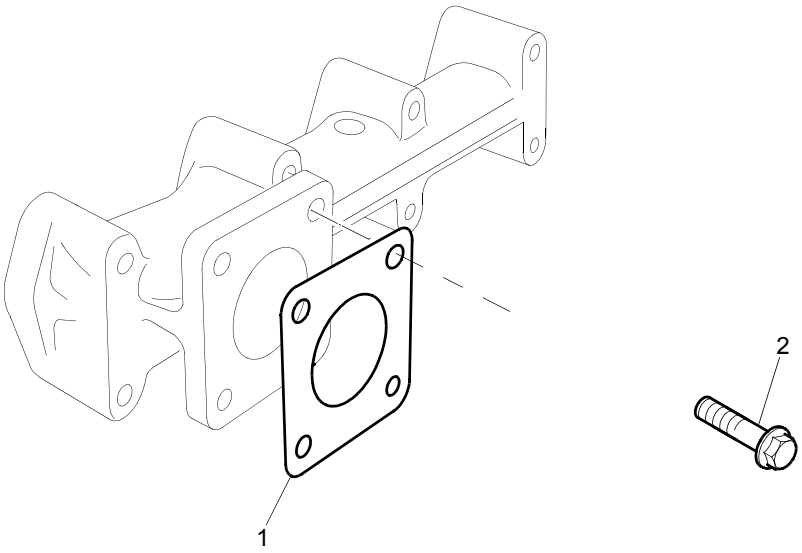

Exhaust	Plate A
	Z1AK

Item	Part No.	References	Qty.	Description	Notes
1	314990013		1	GASKET - EXHAUST	
2	011510825		4	SCREW	

Z3AH

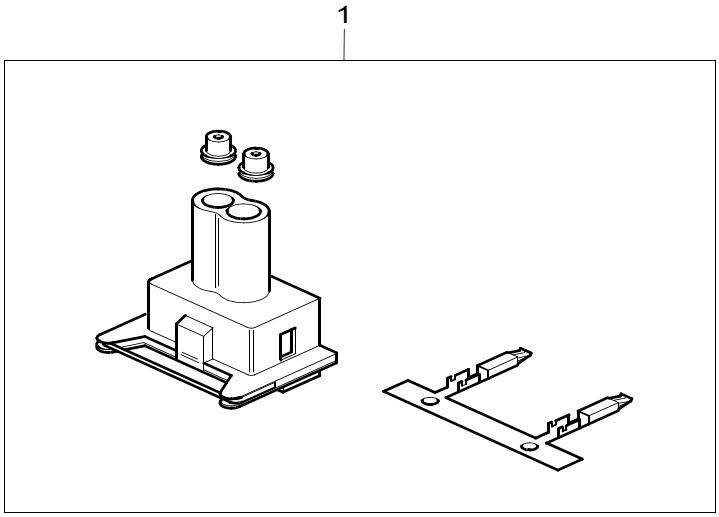

Electrical	Plate A
	Z3AH

Item	Part No.	References	Qty.	Description	Notes
1	4181V013		3	CONNECTOR	(A)

Footnotes	
(A)	SUPPLIED LOOSE.

Electrical	Plate A
↦ 526522M	Z3FH

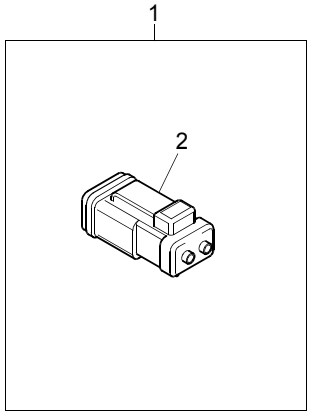

Electrical	Plate A
↦ **526522M**	**Z3FH**

Item	Part No.	References	Qty.	Description	Notes
1	20195		1	CONNECTION KIT	
2	└	✏ 20195	3	CONNECTION	

Electrical	Plate A
→| 526521M	Z3PK

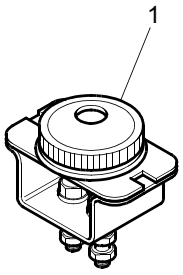

Electrical	Plate A
→| 526521M	Z3PK

Item	Part No.	References	Qty.	Description	Notes
1	185306101		1	LAMP	

Z3YK

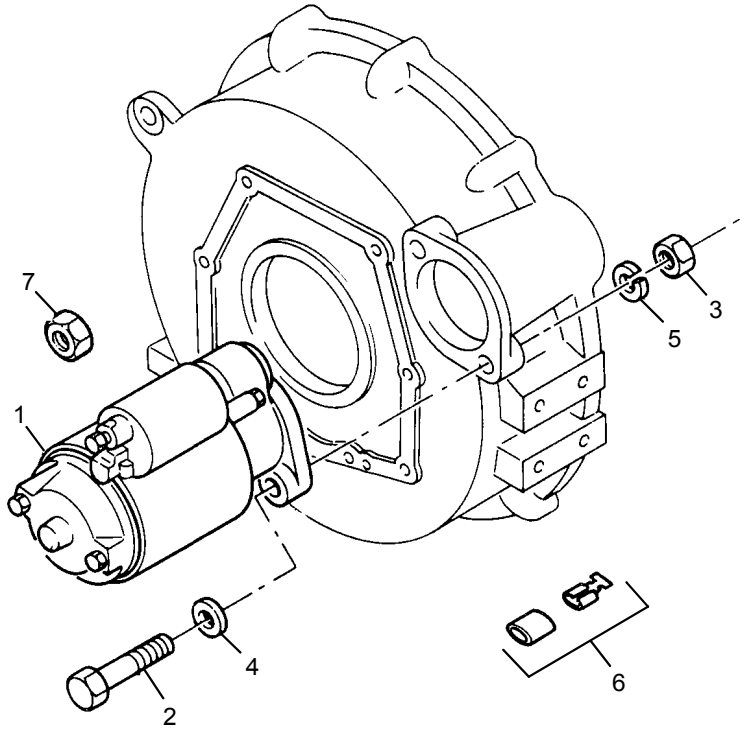

Miscellaneous	Plate E
	Z3YK

Item	Part No.	References	Qty.	Description	Notes
6	385620200		2	CONNECTION	(A)

Footnotes	
(A)	STARTER MOTOR

Fan	Plate A
	Z5DH

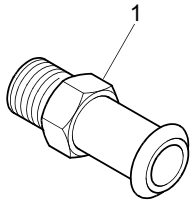

Fan	Plate A
	Z5DH

Item	Part No.	References	Qty.	Description	Notes
1	3355A004		2	CONNECTION	(A)

Footnotes	
(A)	ADAPTOR CAB HEATER FEED PIPE

Miscellaneous	Plate C
→| 917067M	Z6AK

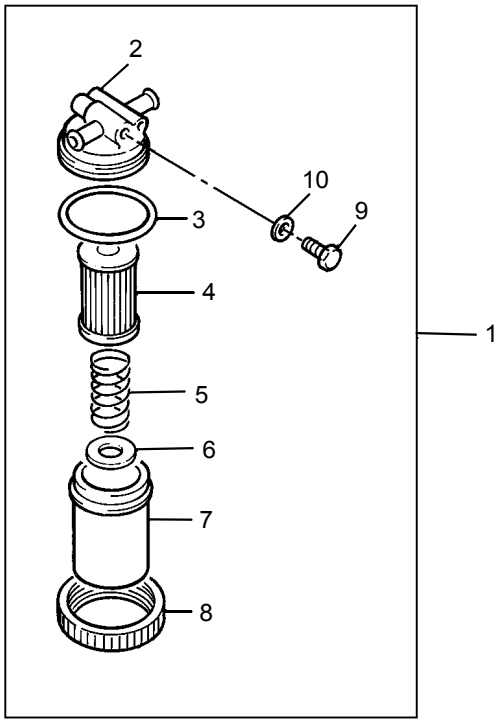

Miscellaneous	Plate C
→| 917067M	Z6AK

Item	Part No.	References	Qty.	Description	Notes
1	130306180		1	PRE-FUEL FILTER ASSY	
2	└	✏ REF.1	1	HEAD	
3	└052100440		1	SEAL - O RING	
4	└130366110		1	PRE-FUEL FILTER	
5	└130446120		1	SPRING	
6	└130356010		1	FLOAT	
7	└130336070		1	CUP	
8	└130446090		1	RING	
9	└130446100		1	SCREW	
10	└130446110		1	WASHER	

Miscellaneous	Plate C
↦ 917068M	Z6AK

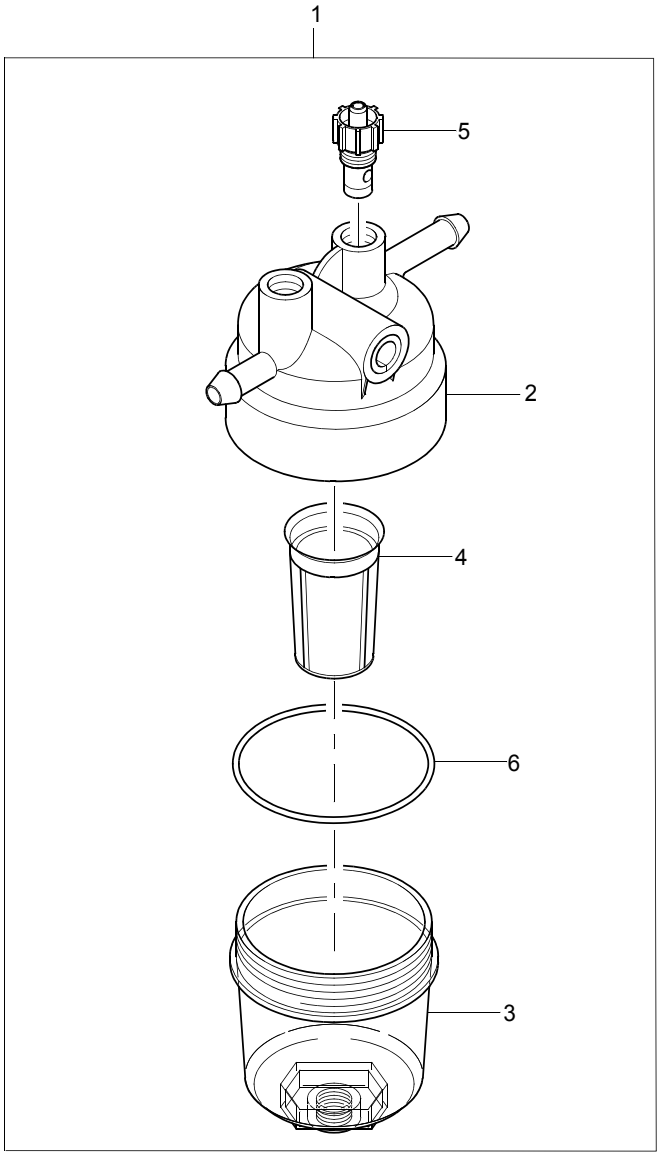

Miscellaneous	Plate C
↦ **917068M**	**Z6AK**

Item	Part No.	References	Qty.	Description	Notes
1	130306380		1	PRE-FUEL FILTER ASSY	
2	└	✏ 130306380	1	FUEL FILTER HEAD	
3	├ 26560182		1	FUEL FILTER BOWL	
5	├ 26560183		3	DRAIN PLUG	
4	├ 130306360		1	FUEL FILTER	
6	└ 26560184		1	SEAL - O RING	

Miscellaneous	Plate A
	Z6CK

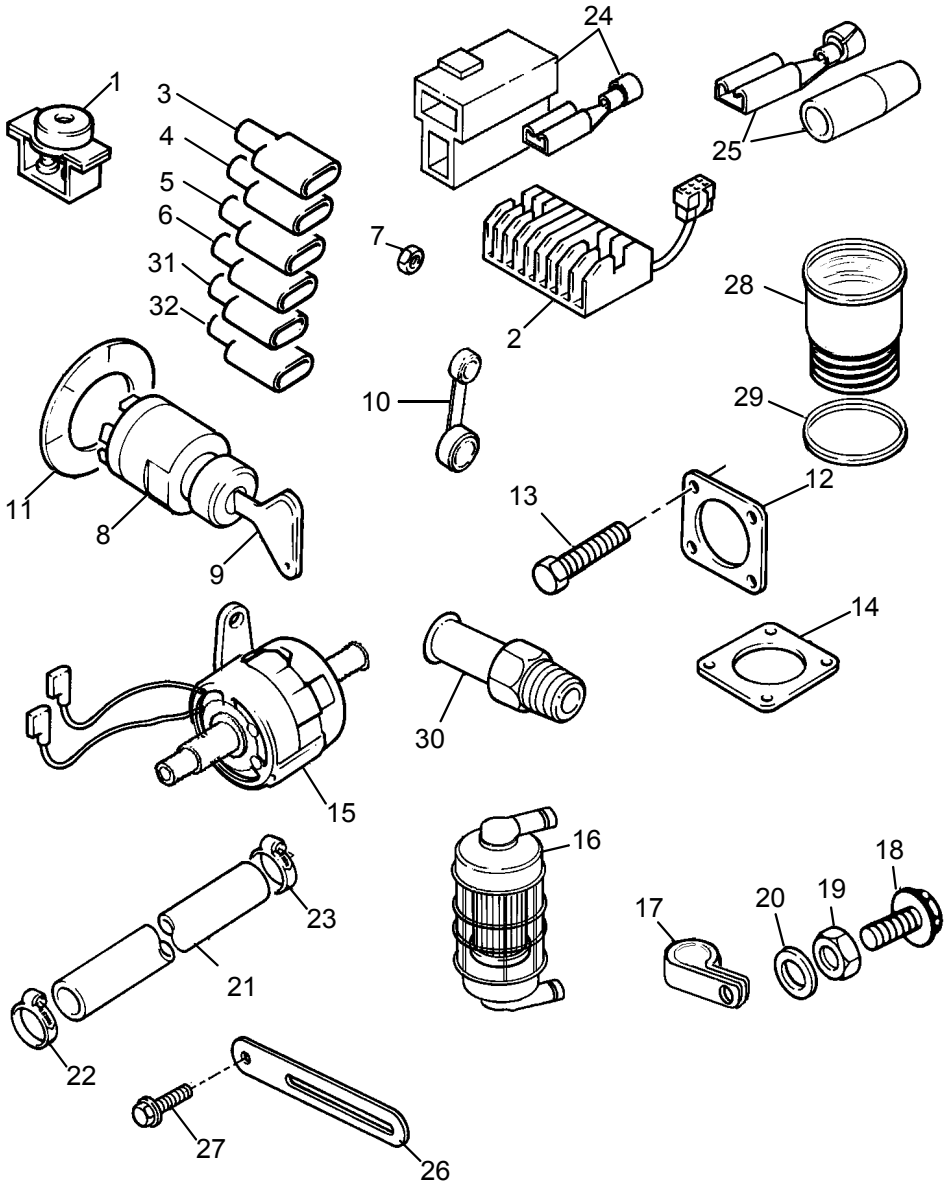

Miscellaneous	Plate A
	Z6CK

Item	Part No.	References	Qty.	Description	Notes
15	485510011		1	LIFT PUMP	

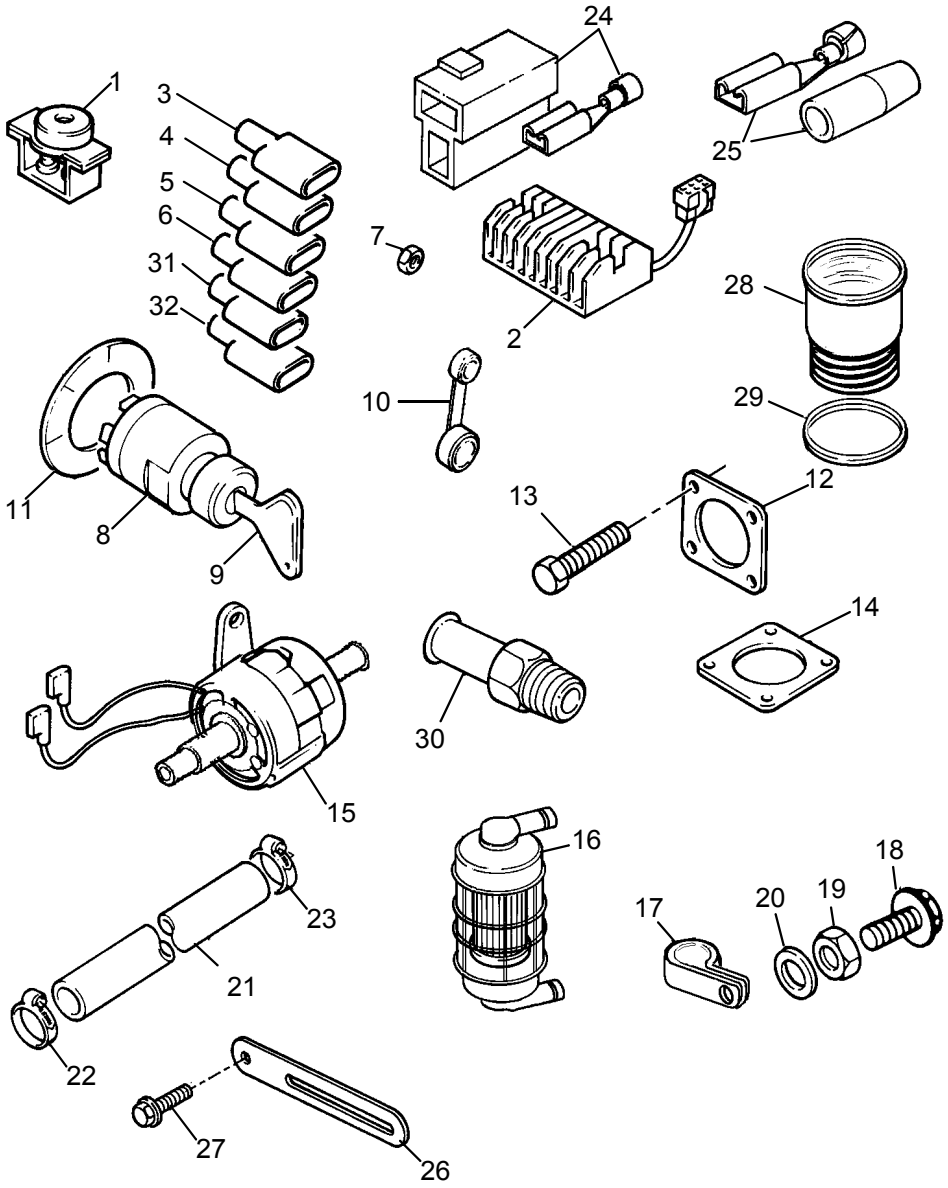
1
3
4
5
6
31
32
24
25
7
2
28
29
10
11
8
9
13
12
14
30
15
16
17
20
19
18
23
21
22
27
26

Miscellaneous	Plate A
	Z6DK

Item	Part No.	References	Qty.	Description	Notes
16	130306131		1	FUEL FILTER	
17	130976520		1	BRACKET	
18	011500820		1	SCREW	
19	023100008		1	NUT	
20	026100008		1	WASHER	
25	385620270		1	CONNECTION	(A)

Footnotes	
(A)	TEMP SENDER

Parts Index

Description	Part No.	Page
1 GROOVE WATERPUMP PULLEY	145337030	71
ADAPTOR	110566130	105
	2486A225	69
ADJUSTING SCREW	199486220	21
ALTERNATOR	TPN766	95
ALTERNATOR BRACKET	TPN744	95
ALTERNATOR PULLEY	3113E031	95
ANGLEICH SWITCH	131046450	25, 35
ANTI-TAMPER CAP	131276440	29, 33
	26420462	27, 33
	U5MK0619	29, 33
ARM	125156170	25, 35
	125156180	25, 35
ARMATURE	28730305	91
ATOMISER	131406490	47, 53, 59
BALL BEARING	040106203	13
	040109057	31, 41
BANJO BOLT	TPN532	107
BAR	185376150	61
BIG END BEARING KIT	U5ME0011	17
BOLT	010109341	87
	010111030	81
	010310865	99
	010700825	93
	010700860	15
	011100430	105
	131246170	43, 49, 55
	131466210	29, 37
	198486780	77, 101, 103
	198487450	47, 53, 59
	199486330	29, 37
BOLT ASSEMBLY	131046410	29, 37
BRACKET	130976520	127
BREATHER VALVE	110566080	105
BUSH	198517222	13
	198517226	13
	198517229	13
	198517290	31, 41
	198517550	13
	28730302	91
	28730303	91
	28730306	91
CAMSHAFT ASSEMBLY	120026550	31, 41
CAMSHAFT GEAR	120016050	31, 41
	120736081	31, 41
CAP	064210018	19
	064210030	19, 19
	120186080	19
	120216040	19
CIRCLIP	036500028	17, 17
	036800005	25, 35

Description	Part No.	Page
	036800006	25, 35
	036800010	79
	198346150	29, 37
CLAMP	199106021	45, 45, 51, 51, 57, 57
CLIP	0180067	107, 107
	067100015	83, 83
	21825198	67
	2481883	67, 69, 69, 69, 69
	2481D156	69
COLLAR	199236540	79
CON ROD ASSEMBLY	115026330	17
CON ROD BOLT	115176140	17
CON ROD NUT	020109120	17
CONNECTION	131246010	43, 49, 55
	140546020	75
	145226340	67
	198487880	69
	198487890	69
	3355A004	119
	385620200	117
	385620270	127
CONNECTION KIT	20195	113
CONNECTOR	4181V013	111
COVER	140116140	79
	165206340	85

Description	Part No.	Page
CRANKSHAFT GEAR	115276200	15
CRANKSHAFT KIT	115256750	15
CRANKSHAFT PULLEY	115397400	99
CUP	130336070	121
CYLINDER HEAD ASSEMBLY	TPN488	19
CYLINDER HEAD COVER	111217520	105
DAMPER	199106020	45, 45, 51, 51
DIPSTICK	198416710	75
DIPSTICK TUBE	110756590	75
DOWEL	030500612	13, 15, 15, 15, 15
	030500616	13
	030501025	13
	030509018	31, 41
DRAIN PLUG	26560183	123
DRIVE	28730301	91
END CAP	064209053	29, 33
EXHAUST ELBOW	135617480	93
EXHAUST MANIFOLD	135617460	93
EXHAUST VALVE	120176360	19
FLOAT	130356010	121
FLYWHEEL	115357460	87
FUEL FILTER	130306131	127
	130306360	123

Description	Part No.	Page
FUEL FILTER ASSEMBLY	2656613	81
FUEL FILTER BOWL	26560182	123
FUEL FILTER KIT	26560017	81
FUEL INJECTION PUMP	131010031	43, 49, 55
	131017800	43, 49
FUEL PIPE	068209227	83
	131246270	83
	TPN449	83
GASKET	110998331	105
	135996950	105
	135997030	93
	135997031	93
	3688A035	107, 107
GASKET - CYL. HEAD COVER	111996401	105
GASKET - CYLINDER HEAD	111147591	19
GASKET - EXHAUST	314990013	109
GASKET - EXHAUST MANIFOLD	135996780	93
GASKET - LIFT PUMP	130996140	85
GASKET - OIL FILLER	165996110	99
GASKET - SUMP	110996860	73
	110996920	73
GASKET - THERMOSTAT HSG	145996051	67
	145996930	67
GASKET - TIMING CASE	165996590	13
GASKET - TIMING CASE COVER	165996600	23, 39
GASKET - TURBOCHARGER	135997020	93
GASKET - WATER PUMP	145996920	65
GAUZE	110666060	105
GLOWPLUG	185366190	61
GUDGEON PIN	115326220	17
HOLDER	110156360	15
	110156370	15
	110156380	15
	110156390	15
	28730307	91
HOSE	135597780	107
	145537300	67
	TPN636	69
	TPN715	69
INTAKE VALVE	120166350	19
KEY	030509020	15
KIT	28730308	91
LAMP	185306101	115
LEVER	125046350	25, 35
	125416020	25, 35
	185727130	95
LIFT PUMP	485510011	125

Description	Part No.	Page
LIFTING EYE	195816100	97, 97
LONG ENGINE - ASSEMBLY	HR30829U	11
MAIN BEARING KIT	198586140	15
MAIN BEARING KIT - O/S	198586150	15
	198586160	15
NEEDLE BEARING	042309017	13
	042309018	13
NUT	020100004	61
	020109076	21
	020109086	99
	020109176	29, 37
	020109177	29, 37
	020700008	25, 35
	020900010	81, 89
	023100006	23, 23, 25, 35, 39, 45, 51, 57, 65, 67
	023100008	43, 49, 55, 93, 93, 95, 99, 127
	023100010	21
	024600010	105
	2318A207	25, 35
	2648A120	25, 27, 35
OIL COOLER	2486A218	69
OIL FILLER CAP	198436350	75

Description	Part No.	Page
OIL FILTER	140517050	75
OIL PIPE	140607020	77
	140986630	73
OIL PRESSURE SWITCH	185246170	101
	185246210	103
OIL PUMP IDLER GEAR	165026120	31, 41
OLIVE	33811114	83, 83
PIN	030300414	25, 25, 35
	030309005	13
	031100004	25, 35
PIPE - AIR	135566500	105
PIPE - FUEL INJ NO 1 CYL	131507700	45, 51, 57
PIPE - FUEL INJ NO 2 CYL	131507710	45, 51, 57
PIPE - FUEL INJ NO 3 CYL	131507720	45, 51, 57
PIPE - FUEL INJ NO 4 CYL	131507730	45, 51, 57
PIPE - LEAK OFF	131606900	47
	TPN711	53, 59
PIPE - TURBO OIL DRAIN	TPN490	107
	TPN491	107
PIPE CLIP	TPN572	107, 107
PISTON AND RING KIT	115017580	17
	115017581	17
PISTON RING KIT	115104021	17

Description	Part No.	Page
PLATE	110367580	87
	145386390	63
	165166221	13
	165206010	99, 99
	199566750	31, 41
PLUG	064100045	13
	064200025	13
	064200040	13, 13, 13
	064210010	19
	064210025	19
	064400010	105
	064500030	67
	064510060	69
	0650204	81, 81
	198466010	13, 13, 13
	198466020	13, 13
	198466920	13, 13
	198466940	13
	2487F001	81, 81
	32184226	81
	TPN830	25, 35
PRE-FUEL FILTER	130366110	121
PRE-FUEL FILTER ASSY	130306180	121
	130306380	123
PUSHROD	120456310	21
RELIEF VALVE	140036220	79
RETAINING PLATE	110666210	105

Description	Part No.	Page
RING	130446090	121
ROCKER ARM ASSEMBLY	120356131	21
	120356141	21
ROCKER BOX	120036821	21
ROCKER BOX ASSEMBLY	120036830	21
ROCKER SHAFT	120316201	21
ROCKER SHAFT SPRING	198217170	21
ROTOR	140166140	79
	140166170	31, 41
SCREW	010109235	73
	010109238	73
	010109406	15, 15, 15, 15
	010109600	35, 107
	010110625	45, 51, 57
	010110630	25, 35
	010301030	89
	010700820	49, 55
	010800820	43, 49, 55
	011310612	13, 31, 41, 73, 75, 85, 107
	011310616	25, 107, 107
	011310620	63, 105
	011310635	21, 65, 67, 105

Description	Part No.	Page
	011310640	21
	011310645	23, 39
	011310660	23, 39, 105
	011310680	23, 39
	011500820	127
	011510812	69, 75
	011510816	87, 107
	011510820	81, 95, 97, 97, 107
	011510825	67, 95, 95, 107, 107, 109
	011510860	93
	011511070	15
	011511220	87
	015600406	105
	111136480	19
	111136490	19
	130446100	121
	2314H052	95
	2315C039	25, 27, 35
SEAL	26560014	81
SEAL - FRONT END OIL	198636160	25, 35
SEAL - INJECTOR	131426200	47, 53, 59
	131426230	47, 53, 59
SEAL - O RING	0490786	81, 81
	052100030	25, 35

Description	Part No.	Page
	052100050	25, 35
	052100070	25, 35
	052100100	75
	052100400	75
	052100440	121
	052109076	21, 73
	052109078	79, 107
	052109100	29, 37
	052300600	99
	2486A223	69
	26560184	123
SEAL - REAR END OIL	050209083	13
SEAL - ROCKER BOX	120996130	21
SEAL - VALVE STEM	120406070	19
SEAT	TPN645	19
SHAFT	125116141	25, 35
	165296132	13
SHIM	131437490	43, 49, 55
	131437500	43, 49, 55
	131437510	43, 49, 55
	131437520	43, 49, 55
	131437530	43, 49, 55
	199286150	79
	199286160	79
	199286170	79
	199286180	79

Description	Part No.	Page
SMALL END BUSH	198517265	17
SNAP RING	036800008	25, 35
SOLENOID	185206420	43
	185206450	49, 55
	28730304	91
SPACER	199216320	31, 41
	199237000	107
SPRING	130446120	121
	198216720	79
	198216731	25
	198216821	31, 41
	198217560	35
	198217570	25
	198217670	35
STARTER MOTOR	185086600	89, 91
STARTER RING	115376160	87
STAY	125976120	25, 35
	130976650	107
STOP LEVER	125176150	25
	125176180	35
STOP SPRING	198216760	25, 35
STRAINER	140406360	73
STUD	010109441	13
	012109044	21
	012109235	93
	012110635	13
	012110645	23, 39

Description	Part No.	Page
	012110660	13, 19
	012110860	19
SUMP	110708390	73
SUPPORT BRACKET	TPN508	81
TAPPET	120116160	21
	125256190	31, 41
THERMOSTAT	145206230	67
THERMOSTAT HOUSING	145046110	67
THRUST WASHER	199266200	15
	199266210	15
TIMING GEAR CASE	165106350	25, 35
TURBOCHARGER	135756180	107
V BELT	080109109	71
VALVE COLLET	120226070	19
VALVE SEAT INSERT	TPN646	19
VALVE SPRING	198216700	19
VALVE SPRING SEAT	120406050	19
WASHER	025100008	47, 53, 53, 59, 59
	025100010	29, 29, 37, 37
	025100016	43, 49, 55, 73
	026100008	69, 81, 95, 97, 107, 107, 127
	026109017	95

Description	Part No.	Page
	026200008	25, 35
	026200010	81, 89
	027100004	61
	027100008	49, 55, 93
	027100010	81, 89
	0920146	81, 81
	0920154	81
	130446110	121
	131296255	43, 43, 49, 49, 55, 55
	140996260	77, 77, 101, 103
	140996270	105
	199266180	31, 41
	199280300	21
	2131A506	107
WATER PUMP	145010060	65
	145010070	65
WATER TEMPERATURE SWITCH	385720480	101
	385720510	103
WOODRUFF KEY	034100508	31, 41, 99