410D and 510D
Backhoe
Loaders

RUTHZIL TRATOR COMERCIAL DE PEÇAS LTDA 11 97083-6812 ROLANDO

JOHN DEERE

PARTS CATALOG

410D AND 510D
BACKHOE LOADERS

PC2322 (Sep-04)

SETEMBRO 2004

Worldwide Construction and Forestry Division
WORLDWIDE EDITION
Litho in U.S.A. (Revised)

INTRODUCTION AND CUSTOMER INFORMATION

TP40523 -UN-01JAN94

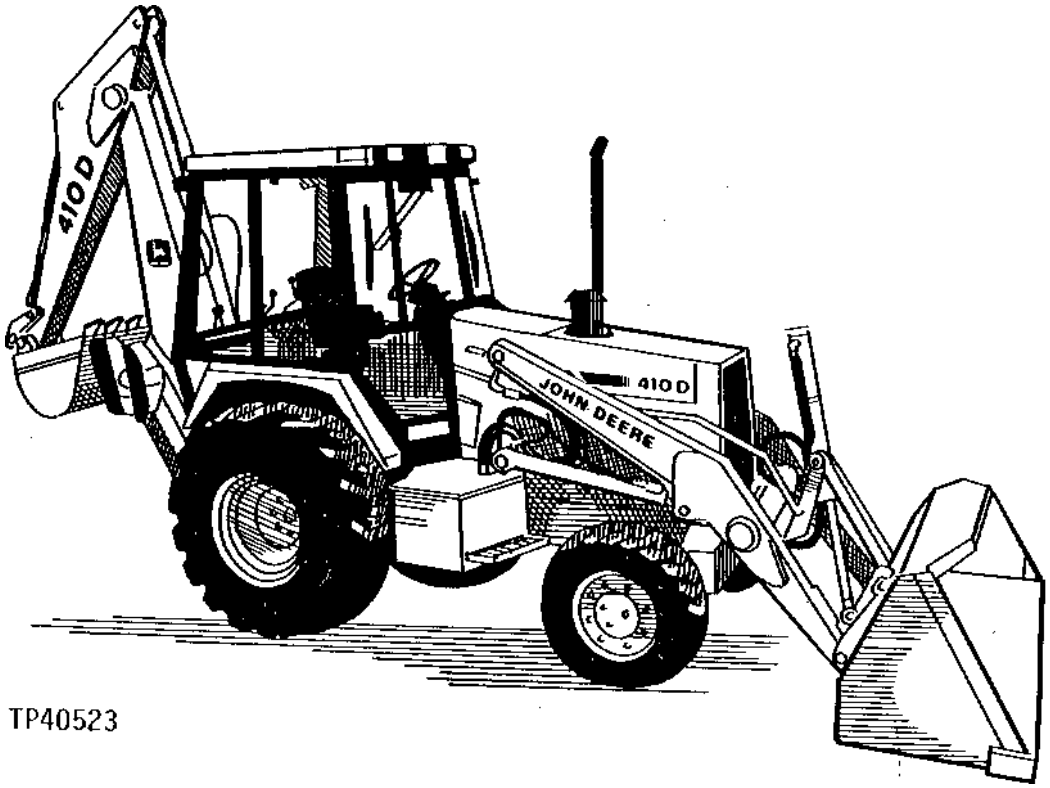

RIGHT-HAND SIDE VIEW OF JOHN DEERE 410D BACKHOE LOADER (MANUFACTURED 1991-1996)

TO THE CUSTOMER

THE PART NUMBERS IN THIS PARTS CATALOG WERE CORRECT AT THE TIME YOUR CATALOG WAS PUBLISHED. IT IS OUR POLICY TO CONSTANTLY IMPROVE OUR MACHINES AND, THEREFORE, PART NUMBERS MAY CHANGE. WHEN ORDERING PARTS, VERIFY PART NUMBERS THROUGH YOUR DEALER'S MICROFICHE WHICH IS UP-TO-DATE.

(SPECIFICATIONS AND DESIGN SUBJECT TO CHANGE WITHOUT NOTICE.)

COPYRIGHT © 2004 DEERE & COMPANY Moline, Illinois All rights reserved

INTRODUCTION AND CUSTOMER INFORMATION

TP40524 -UN-01JAN94

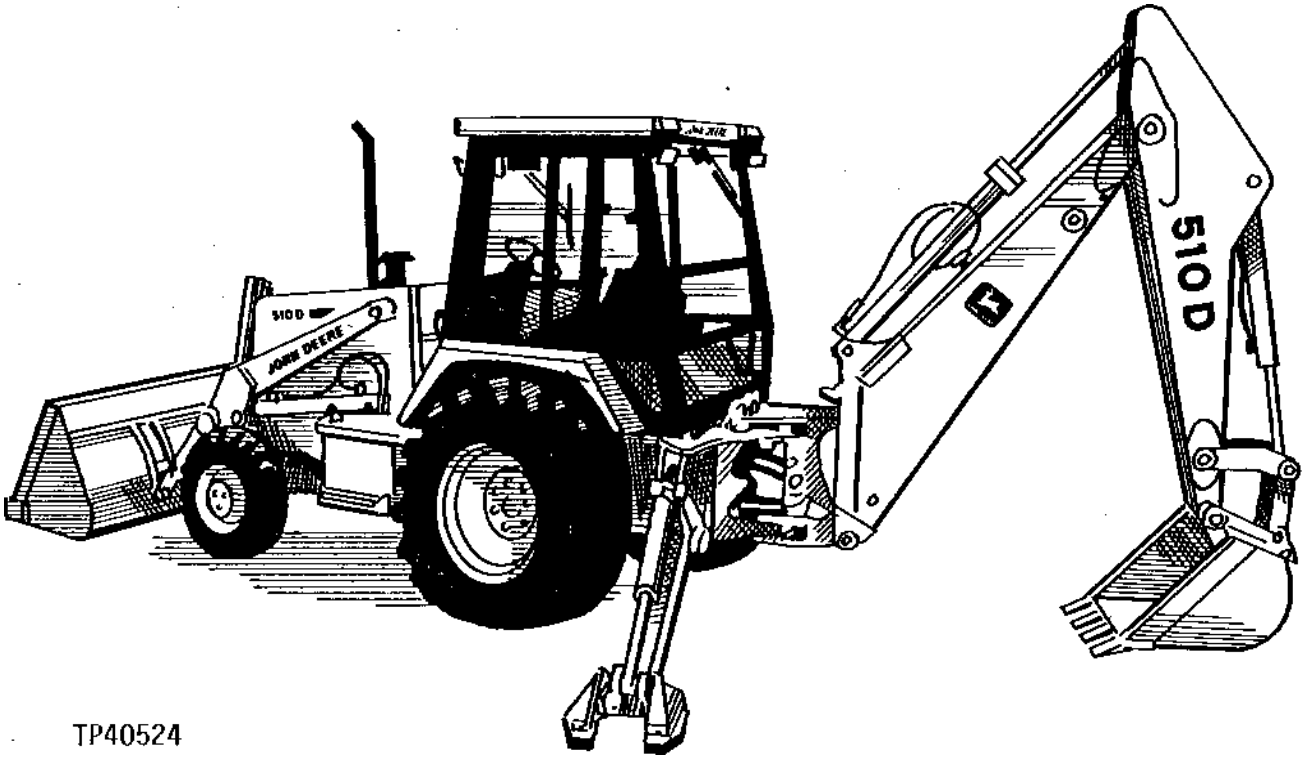

LEFT-HAND SIDE VIEW OF JOHN DEERE 510D BACKHOE LOADER
(MANUFACTURED 1991-)

TO THE CUSTOMER

THE PART NUMBERS IN THIS PARTS CATALOG WERE CORRECT AT THE TIME YOUR CATALOG WAS PUBLISHED. IT IS OUR POLICY TO CONSTANTLY IMPROVE OUR MACHINES AND, THEREFORE, PART NUMBERS MAY CHANGE. WHEN ORDERING PARTS, VERIFY PART NUMBERS THROUGH YOUR DEALER'S MICROFICHE WHICH IS UP-TO-DATE.

(SPECIFICATIONS AND DESIGN SUBJECT TO CHANGE WITHOUT NOTICE.)

SERIAL NUMBER LOCATIONS

EACH 410D AND 510D BACKHOE LOADER MAY HAVE SEVEN SERIAL NUMBERS: A PRODUCT IDENTIFICATION NUMBER PLATE, AN ENGINE SERIAL NUMBER PLATE, A HYDRAULIC PUMP SERIAL NUMBER PLATE, A REVERSER SERIAL NUMBER, A MFWD AXLE SERIAL NUMBER PLATE, AN EXTENDIBLE DIPPERSTICK SERIAL NUMBER AND A TRANSMISSION SERIAL NUMBER.

THE PRODUCT IDENTIFICATION NUMBER PLATE IS LOCATED ON THE LEFT-HAND SIDE FRAME NEAR THE FRONT SUPPORT OR ON THE LEFT-HAND SIDE OF THE LOADER FRAME JUST ABOVE THE LIFT CYLINDER PIVOT BOSS.

THE ENGINE SERIAL NUMBER PLATE IS LOCATED ON THE RIGHT-HAND SIDE OF THE CYLINDER BLOCK NEAR THE FUEL PUMP.

THE REVERSER SERIAL NUMBER IS ON THE TOP LEFT-HAND SIDE OF THE REVERSER HOUSING.

THE EXTENDIBLE DIPPERSTICK SERIAL NUMBER IS STAMPED ON THE TOP OF THE DIPPERSTICK NEAR THE BUCKET CYLINDER MOUNT.

THE MFWD AXLE SERIAL NUMBER PLATE IS LOCATED ON THE LEFT-HAND (REAR) SIDE OF THE MFWD AXLE HOUSING.

THE HYDRAULIC PUMP SERIAL NUMBER PLATE IS LOCATED ON THE TOP SIDE OF THE HYDRAULIC PUMP.

THE TRANSMISSION SERIAL NUMBER IS STAMPED ON THE TOP RIGHT-HAND SIDE OF THE TRANSMISSION.

LEFT-HAND SIDE, RIGHT-HAND SIDE, FRONT AND REAR OF THE BACKHOE LOADER ARE VIEWED BY FACING IN THE DIRECTION OF THE BACKHOE LOADER FORWARD TRAVEL.

LEFT-HAND SIDE, RIGHT-HAND SIDE, FRONT AND REAR OF THE BACKHOE AND BACKHOE COMPONENTS ARE DETERMINED WHEN SEATED IN THE BACKHOE OPERATING POSITION.

IF PRODUCT IDENTIFICATION NUMBERS OR SERIAL NUMBERS ARE REQUIRED FOR WARRANTY CLAIMS OR CORRESPONDENCE PERTAINING TO THIS PRODUCT, IT IS EXTEMELY IMPORTANT THAT ALL CHARACTERS BE FURNISHED. THIS POINT CANNOT BE OVEREMPHASIZED.

PRODUCT IDENTIFICATION NUMBER

TP16004 -UN-01JAN94

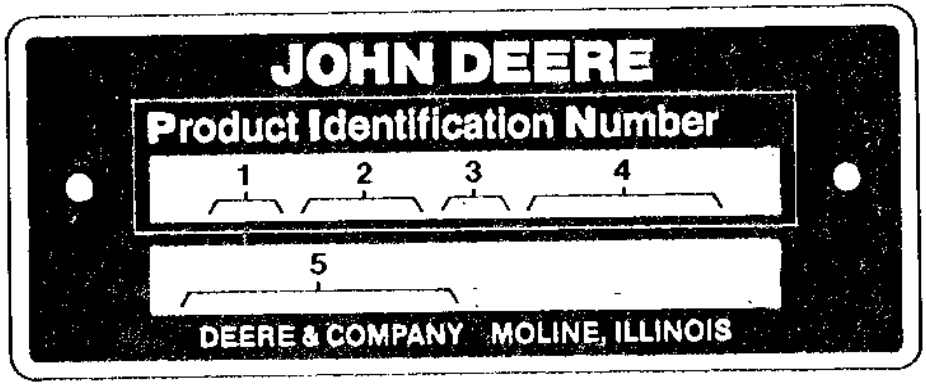

TP16004

PRODUCT IDENTIFICATION NUMBER

1. DESIGNATES BACKHOE LOADER MANUFACTURERTO - JOHN DEERE DUBUQUE WORKS
2. DESIGNATES BACKHOE LOADER MODEL 410D OR 510D
3. DESIGNATES BACKHOE LOADER CONFIGURATIONA - COLLAR SHIFT WITH REVERSER
4. DESIGNATES BACKHOE LOADER SERIAL NUMBER123456
5. DESIGNATES UNIT TYPE BACKHOE LOADER

ENGINE SERIAL NUMBER PLATE

TP8011 -UN-01JAN94

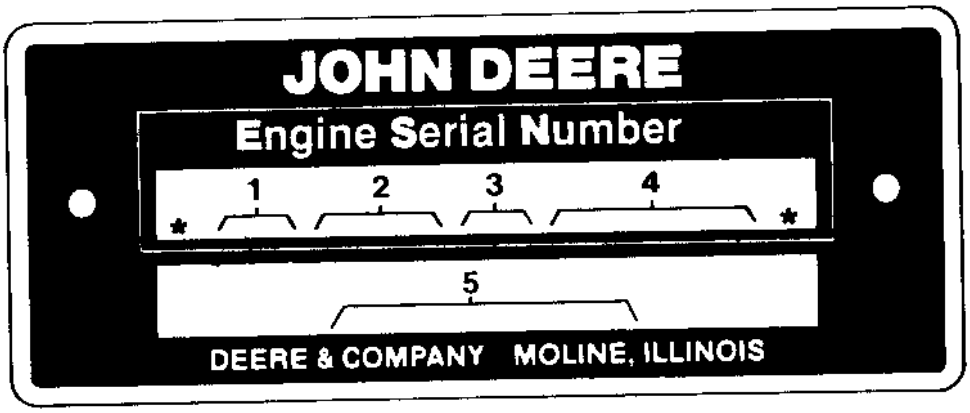

1. DESIGNATES ENGINE MANUFACTURER	T-JOHN DEERE DUBUQUE WORKS
2. DESIGNATES NUMBER OF CYLINDERS AND LITERS	4045 (4.5 LITER)
3. DESIGNATES FUEL TYPE OR SPECIAL CONDITION	TT TURBOCHARGED ENGINE DT NON-TURBOCHARGED ENGINE
4 DESIGNATES ENGINE SERIAL NUMBER	123456
5. DESIGNATES THE ENGINE APPLICATION AND FACTORY USER.	4045TT010 (410D) (WITH TURBOCHARGER) (ENGINE SERIAL NO. -XXXXXX) 4045TT018 (410D (WITH TURBOCHARGER) (ENGINE SERIAL NO. XXXXXX-) 4045DT005 (410D) (WITHOUT TURBOCHARGER) (ENGINE SERIAL NO. -XXXX) ^4045TT011 (510D) (WITH TURBOCHARGER) ^(ENGINE SERIAL NO. -XXXXXX) ^4045TT019 (510D) (WITH TURBOCHARGER) ^(ENGINE SERIAL NO. XXXXXX-)

SERIAL NUMBER LISTING INFORMATION

SERIAL NUMBER INFORMATION IS LISTED TO SHOW ON WHICH MACHINES EACH PART CAN BE USED; FOR EXAMPLE:

-	THE PART CAN BE USED ON ALL MACHINES.
000000-	THE PART CAN BE USED ON ALL MACHINES BEGINNING WITH THE SERIAL NUMBER LISTED.
-000000	THE PART CAN BE USED ON ALL MACHINES UP TO AND INCLUDING THE SERIAL NUMBER LISTED.
000000-000000	THE PART CAN BE USED ON ALL MACHINES BETWEEN AND INCLUDING THE SERIAL NUMBERS LISTED.

WHEN XXXXXX'S ARE LISTED IN PLACE OF A SERIAL NUMBER, A SERIAL NUMBER CHANGE WAS MADE BUT THE EXACT SERIAL NUMBER WAS NOT AVAILABLE WHEN THE CATALOG WAS PRODUCED.

DIRECTION ARROW

ARROWS ARE USED WITH ILLUSTRATIONS TO INDICATE THE FRONT OF THE UNIT. "RIGHT-HAND" AND "LEFT-HAND" SIDES OF THE LOADER OR TRACTOR PARTS ARE DETERMINED BY FACING IN THE DIRECTION OF MACHINE FORWARD TRAVEL

EXCEPTION: FOR ALL BACKHOE PARTS, "RIGHT-HAND" AND "LEFT-HAND" SIDES, "FRONT" AND "REAR" ARE DETERMINED WHEN SEATED FOR BACKHOE OPERATION.

BOX-ENCLOSED ILLUSTRATIONS

A KEY NUMBER, SHOWN IN THE PARTS LIST, IS ASSIGNED TO A BOX ENCLOSING ALL PARTS SOLD AS A SERVICE ASSEMBLY.

BOLT AND CAP SCREW STRENGTH IDENTIFICATION

BOLTS AND CAP SCREWS REQUIRED TO HAVE HIGH-STRENGTH QUALITIES EQUIVALENT TO SAE GRADE 8 ARE IDENTIFIED THROUGHOUT THIS CATALOG BY THE DESCRIPTION HS SAE 8. ALL STANDARD BOLTS AND CAP SCREWS ARE SAE GRADE 5 OR LOWER.

COMPLETE GOODS LISTINGS

COMPLETE GOODS ARE LISTED IN BOLD FACE TYPE. ORDER SEPARATELY. DO NOT INCLUDE ON REPLACEMENT PARTS ORDER.

SI UNITS OF MEASURE

METRIC DIMENSIONS ARE GIVEN, WHERE APPLICABLE, THROUGHOUT THIS PARTS CATALOG.

CHANGE INDICATOR LINE

CHANGES AFFECTING THE ORDERING OF PARTS ARE IDENTIFIED BY VERTICAL LINES MARKED IN THE LEFT-HAND MARGIN OF REVISED PARTS LISTING IMAGES. A LINE IS ALSO AT THE LEFT-HAND EDGE OF THE SAME PART NUMBER IN THE NUMERICAL INDEX TO SHOW THE LOCATION OF REVISED INFORMATION.

MFWD AXLE SERIAL NUMBER PLATE

TP19438 -UN-01JAN94

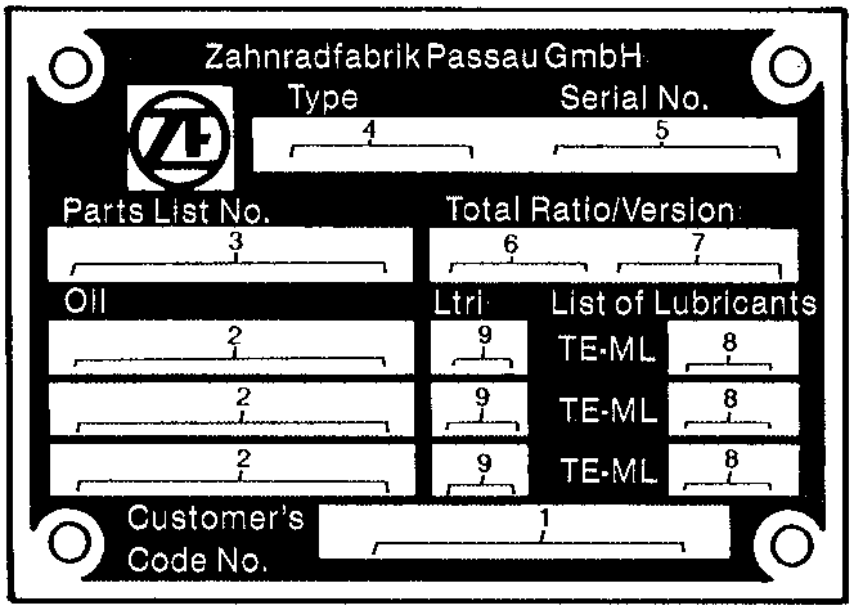

TP19438

1. DESIGNATES CUSTOMER'S CODE NUMBER	JOHN DEERE PART NUMBER
2. DESIGNATES TYPE OF LUBRICANT	M1L-L-2105B, SAE90
3. DESIGNATES ZF-PARTS-LIST NUMBER	4464 006 101
4. DESIGNATES AXLE TYPE	AP-11H
5. DESIGNATES AXLE SERIAL NUMBER	12345
6. DESIGNATES TOTAL - RATIO OF THE AXLE	20.28
7. DESIGNATES VERSION	SP. DIFF. (WITH OR WITHOUT SELF-LOCKING DIFFERENTIAL)
8. DESIGNATES LUBRICANT SPECIFICATION	05
9. DESIGNATES CAPACITY	LTR (DIFFERENTIAL CARRIER AND PLANETARY GEAR ASSEMBLY

MEMORANDA

HYDRAULIC PUMP SERIAL NUMBER PLATE

RP4098 -UN-01JAN94

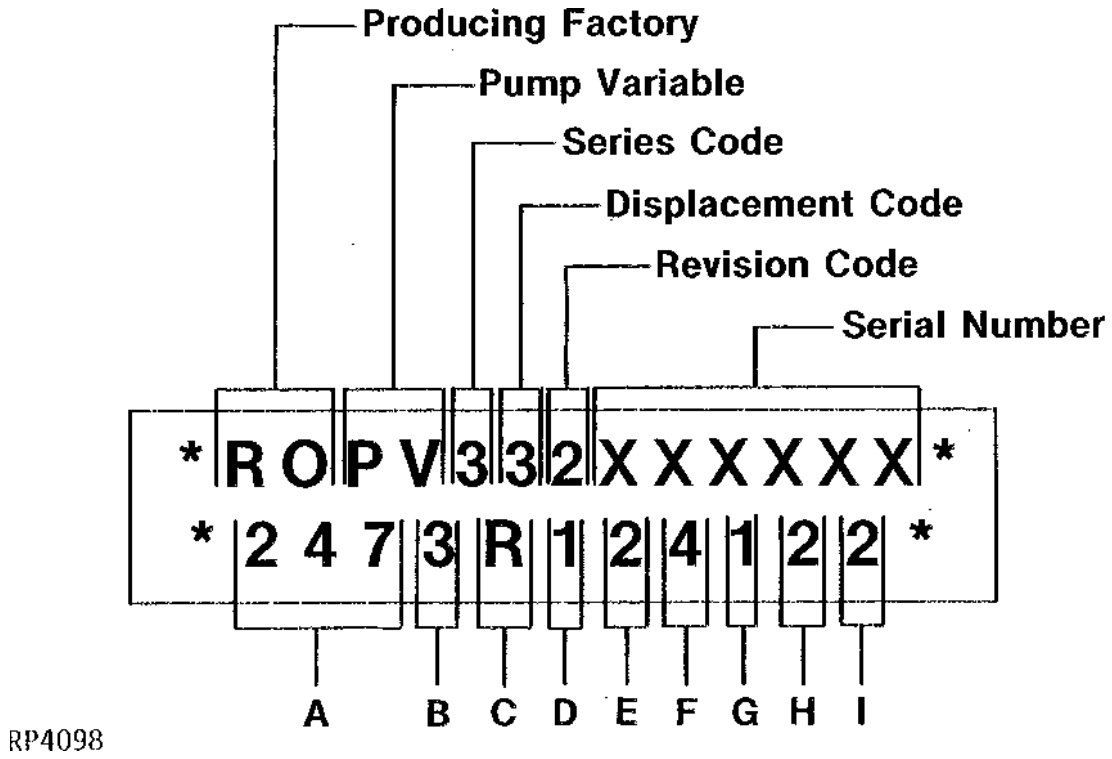

RP4098

HYDRAULIC PUMP SERIAL NUMBER PLATE - CONTINUED

PUMP IDENTITY IS DETERMINED BY THE INFORMATION (CONFIGURATION CODE) ON THE SECOND LINE OF THE SERIAL PLATE. SOME KEYED PARTS WILL REFER TO CONFIGURATION CODES IN THE REMARKS COLUMN. THESE PARTS ARE GENERALLY REFERENCED TO OTHER CATALOG PAGES.

A - MASTER MACHINE CODE (247)

B - DISPLACEMENT
- 1 - 40 CM3 (2.4 IN.3)
- 2 - 52 CM3 (3 IN.3)
- 3 - 65 CM3 (4 IN.3)
- 4 - NOT CURRENTLY USED
- 5 - 104 CM3 (6 IN.3)
- 6 - 115 CM3 (7 IN.3)
- 7 - 130 CM3 (8 IN.3)

C - MANUFACTURING UNIT (R)

D - OUTPUT DRIVE
- 1 - NONE
- 2 - AUXILIARY SAE "B" DRIVE
- 3 - THRU DRIVE
- 4 - TANDEM GEAR PUMP
- 5 - NOT CURRENTLY USED

E - INLET PORT
- 1 - 4 BOLT FLANGE
- 2 - "O" RING PORT

F - PRESSURE SETTING
- 1 - 10,000 KPA (1450 PSI)
- 2 - 16,000 KPA (2300 PSI)
- 3 - 17,500 KPA (2550 PSI)
- 4 - 19,000 KPA (2750 PSI)
- 5 - 22,500 KPA (3250 PSI)

G - CONTROL TYPE
- 1 - PRESSURE COMPENSATED - STANDARD SHUTTLE VALVE
- 2 - NOT CURRENTLY USED
- 3 - PRESSURE COMPENSATED - SHUTTLE VALVE FOR EXTERNAL CONTROL

H - INPUT DRIVE
- 1 - SAE "C" MOUNT
- 2 - JOHN DEERE MOUNT

I - DESTROKE
- 1 - NONE
- 2 - MANUAL
- 3 - 6V ELECTRIC
- 4 - 12V ELECTRIC

AXLE SERIAL NUMBER

RP3532 -UN-01JAN94

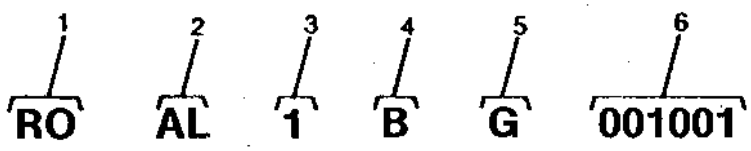

RP3532

1. DESIGNATES MANUFACTURING FACTORY
2. DESIGNATES COMPONENT IDENTIFICATION

RO - JOHN DEERE COMPONENT WORKS
AL - AXLE, WITH DIFFERENTIAL LOCK
AB - AXLE, WITH NO DIFFERENTIAL
AS - AXLE, WITH NO-SPIN DIFFERENTIAL
AR - AXLE, WITH STANDARD DIFFERENTIAL
DP - DIFFERENTIAL ASSEMBLY

3. DESIGNATES SERIES NUMBER
4. DESIGNATES OVERALL REDUCTION RATES
5. DESIGNATES CONFIGURATION IDENTIFIER
6. DESIGNATES SERIAL NUMBER

RP3890 -UN-01JAN94

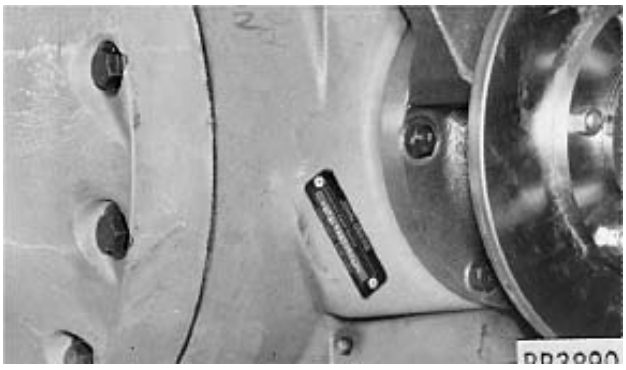

THE AXLE SERIAL NUMBER PLATE IS LOCATED ON THE LOWER LEFT-HAND SIDE OF THE CASE BY INPUT QUILL.

ALPHABETICAL INDEX

GRID		PAGE
	A	
2F3	ACCESSORY RELAY	1674 - 8
2F5	ACCESSORY RELAY	1674 - 10
2F7	ACCESSORY RELAY	1674 - 12
2F9	ACCESSORY RELAY	1674 - 14
2C18	ACTUATOR, PARK BRAKE	1115 - 2
1G10	ADAPTER, ENGINE OIL FILTER	0407 - 2
1G11	ADAPTER, ENGINE OIL FILTER	0407 - 2A
2D13	ADHESIVE, SILICONE RUBBER	1330 - 1
3D7	ADJUSTER LATCH KIT	1821 - 10
3D7	ADJUSTER PUCK KIT	1821 - 10
3C24	ADJUSTER, SEAT WITH SUSPENDED SEAT	1821 - 2
1H23	ADJUSTING STRAP, ALTERNATOR	0423 - 1
1I24	AIR CLEANER	0520 - 6
1I21	AIR CLEANER (WITHOUT TURBOCHARGER)	0520 - 3
1I19	AIR CLEANER (WITH TURBOCHARGER)	0520 - 1
1I24	AIR CLEANER AIR STACK	0520 - 6
1I22	AIR CLEANER BRACKET (WITHOUT TURBOCHARGER)	0520 - 4
1I20	AIR CLEANER BRACKET (WITH TURBOCHARGER)	0520 - 2
1I21	AIR CLEANER ELEMENT (WITHOUT TURBOCHARGER)	0520 - 3
1I19	AIR CLEANER ELEMENT (WITH TURBOCHARGER)	0520 - 1
1I19	AIR CLEANER FILTER	0520 - 1
1I21	AIR CLEANER FILTER	0520 - 3
2E3	AIR CLEANER FILTER	1399 - 3
1I22	AIR CLEANER HOSE (WITHOUT TURBOCHARGER)	0520 - 4
1I20	AIR CLEANER HOSE (WITH TURBOCHARGER)	0520 - 2
1I23	AIR CLEANER VACUUM SENSOR	0520 - 5
3E19	AIR COMPRESSOR CLUTCH KIT	1830 - 30
3E19	AIR COMPRESSOR STATOR KIT	1830 - 30
2D13	AIR CONDITIONER O-RING REPAIR KIT	1330 - 1
3E5	AIR CONDITIONING (FREEZE/COMPRESSOR) SWI TCH	1830 - 16
3D23	AIR CONDITIONING BOX	1830 - 10
3E1	AIR CONDITIONING BOX	1830 - 12
3E3	AIR CONDITIONING BOX	1830 - 14
3E5	AIR CONDITIONING BOX	1830 - 16
3E9	AIR CONDITIONING BRACKETS	1830 - 20
3E19	AIR CONDITIONING COMPRESSOR	1830 - 30
3E23	AIR CONDITIONING COMPRESSOR BRACKETS	1830 - 34
3E23	AIR CONDITIONING COMPRESSOR DRIVE BELT	1830 - 34
3E23	AIR CONDITIONING COMPRESSOR SUPPORT	1830 - 34
3D17	AIR CONDITIONING DUCTS	1830 - 4
3D19	AIR CONDITIONING DUCTS	1830 - 6
3D21	AIR CONDITIONING DUCTS	1830 - 8
3D23	AIR CONDITIONING EVAPORATOR COIL	1830 - 10
3E1	AIR CONDITIONING EVAPORATOR COIL	1830 - 12
3E3	AIR CONDITIONING EVAPORATOR COIL	1830 - 14
3E5	AIR CONDITIONING EVAPORATOR COIL	1830 - 16
3D23	AIR CONDITIONING FILTERS	1830 - 10
3E1	AIR CONDITIONING FILTERS	1830 - 12
3E3	AIR CONDITIONING FILTERS	1830 - 14
3E5	AIR CONDITIONING FILTERS	1830 - 16
3D17	AIR CONDITIONING FRESH AIR INTAKE	1830 - 4
3D19	AIR CONDITIONING FRESH AIR INTAKE	1830 - 6
3D21	AIR CONDITIONING FRESH AIR INTAKE	1830 - 8
3F1	AIR CONDITIONING HOSES	1830 - 36
3F3	AIR CONDITIONING HOSES	1830 - 38
3D23	AIR CONDITIONING HOUSING	1830 - 10
3E1	AIR CONDITIONING HOUSING	1830 - 12
3E3	AIR CONDITIONING HOUSING	1830 - 14
3E5	AIR CONDITIONING HOUSING	1830 - 16
3E23	AIR CONDITIONING KIT	1830 - 34
3F1	AIR CONDITIONING KIT	1830 - 36
3F3	AIR CONDITIONING KIT	1830 - 38
2D15	AIR CONDITIONING LUBRICANT	1369 - 1
3E9	AIR CONDITIONING MOTOR	1830 - 20
3E11	AIR CONDITIONING MOTOR	1830 - 22
3E13	AIR CONDITIONING MOTOR	1830 - 24
3E11	AIR CONDITIONING MOTOR RESISTOR	1830 - 22
3E23	AIR CONDITIONING MPRESSOR	1830 - 34
3E22	AIR CONDITIONING REFRIGERANT COMPRESSOR MOUNT	1830 - 33
2G7	AIR CONDITIONING SWITCH	1676 - 2
2G9	AIR CONDITIONING SWITCH	1676 - 4
3F1	AIR CONDITIONING VALVE	1830 - 36
3F3	AIR CONDITIONING VALVE	1830 - 38
2F21	AIR CONDITIONING WIRING HARNESS	1674 - 24
3E5	AIR CONDITIONING,HEATING,VENTILATION	1830 - 16
1H2	AIR INTAKE SYSTEM	0414 - 1
1H3	AIR INTAKE SYSTEM (WITHOUT TURBOCHARGER)	0414 - 2
1I24	AIR STACK CAP, AIR CLEANER	0520 - 6
3F24	ALARM, BACK-UP	2004 - 2
3F25	ALARM, BACK-UP	2004 - 3
2E12	ALTERNATOR	1672 - 2
2E13	ALTERNATOR	1672 - 3
2E14	ALTERNATOR	1672 - 4
2E15	ALTERNATOR	1672 - 5
1H23	ALTERNATOR ADJUSTING STRAP	0423 - 1
2E12	ALTERNATOR ATTACHING PARTS	1672 - 2
2E15	ALTERNATOR ATTACHING PARTS	1672 - 5
2E15	ALTERNATOR CAPACITOR	1672 - 5
2E15	ALTERNATOR FAN	1672 - 5
2F11	ALTERNATOR HARNESS DIODE	1674 - 16
2F13	ALTERNATOR HARNESS DIODE	1674 - 18
2F15	ALTERNATOR HARNESS DIODE	1674 - 19A
1H23	ALTERNATOR MOUNTING BRACKETS	0423 - 1
2E12	ALTERNATOR PULLEY	1672 - 2
2E15	ALTERNATOR PULLEY	1672 - 5
2F5	ALTERNATOR RELAY (6 VOLT)	1674 - 10
2F7	ALTERNATOR RELAY (6 VOLT)	1674 - 12
2F3	ALTERNATOR RELAY, 6-VOLT	1674 - 8
2F9	ALTERNATOR RELAY, 6-VOLT	1674 - 14
2E12	ALTERNATOR SHIELD	1672 - 2
2E14	ALTERNATOR WIRING HARNESS	1672 - 4
3F19	ANTENNA, RADIO	2001 - 2
3D5	ARM RESTS WITH NON-SUSPENDED SEAT	1821 - 8
1B20	ARM, DIFFERENTIAL LOCK	0210 - 2
3C11	ARM, WIPER (FRONT RIGHT CAB WINDSHIELD, WITHOUT DOOR	1810 - 18
1H19	ARMATURE, STARTING MOTOR	0422 - 2
4C13	ARMS, LOADER LIFT	3140 - 2
1F19	ARMS, ROCKER	0402 - 3
1J1	ASPIRATOR HOSE (WITH TURBOCHARGER)	0530 - 1
1C6	ASSEMBLY, AXLE JOINT (MFWD)	0250 - 6
1C8	ASSEMBLY, AXLE JOINT (MFWD)	0250 - 8
1C6	ASSEMBLY, BALL JOINT (MFWD)	0250 - 6
1C8	ASSEMBLY, BALL JOINT (MFWD)	0250 - 8
3E13	ASSEMBLY, BLOWER	1830 - 24
2E12	ATTACHING PARTS, ALTERNATOR	1672 - 2
2E15	ATTACHING PARTS, ALTERNATOR	1672 - 5
5C11	ATTACHING PINS KIT	3302 - 11C
3G12	AUXILIARY CHARGE PUMP OVERHAUL KIT	2160 - 8
3I5	AUXILIARY CONTROL, ROCKER SWITCH	2160 - 38
3I7	AUXILIARY CONTROL, ROCKER SWITCH	2160 - 40
5G22	AUXILIARY SECTION SECTION SEAL KIT	3360 - 21
5G22	AUXILIARY SECTION SPOOL SEAL KIT	3360 - 21
5G21	AUXILIARY SECTION, BACKHOE CONTROL VALVE (WITH 5-FUNCTION VALVE)	3360 - 20
5H1	AUXILIARY SECTION, BACKHOE VALVE	3360 - 26

ALPHABETICAL INDEX - CONTINUED

GRID		PAGE
3I13	AUXILIARY SOLENOID VALVE KIT, LOW FLOW	2160 - 46
3I15	AUXILIARY SOLENOID VALVE KIT, LOW FLOW	2160 - 48
3I11	AUXILIARY SOLENOID VALVE, LOW FLOW	2160 - 44
4C25	AUXILIARY VALVE, LOADER	3160 - 11
4D8	AUXILIARY VALVE, LOADER	3160 - 19
1C16	AXLE BEVEL, DIFFERENTIAL (MFWD)	0250 - 16
1C6	AXLE CASING (MFWD)	0250 - 6
1C8	AXLE CASING (MFWD)	0250 - 8
1C8	AXLE HOUSING ASSEMBLY (MFWD)	0250 - 8
1C6	AXLE JOINT ASSEMBLY (MFWD)	0250 - 6
1C8	AXLE JOINT ASSEMBLY (MFWD)	0250 - 8
1C23	AXLE PIVOT PIN	0250 - 23
1C16	AXLE, DIFFERENTIAL (MFWD)	0250 - 16
1C1	AXLE, FRONT (MFWD)	0250 - 1
1C2	AXLE, FRONT (MFWD)	0250 - 2
1B23	AXLE, FRONT (WITHOUT MFWD)	0230 - 2
1B18	AXLE, REAR TIE BOLTS	0201 - 2

B

1E8	BACK UP ALARM SWITCH	0341 - 16
1E10	BACK UP ALARM SWITCH	0341 - 18
3F24	BACK-UP ALARM	2004 - 2
3F25	BACK-UP ALARM	2004 - 3
3F24	BACK-UP ALARM SWITCH	2004 - 2
5F10	BACKHOE BOOM	3340 - 14
5F12	BACKHOE BOOM	3340 - 16
5J1	BACKHOE BOOM CYLINDER	3360 - 74
5J3	BACKHOE BOOM CYLINDER	3360 - 76
5J9	BACKHOE BOOM CYLINDER	3360 - 82
5J11	BACKHOE BOOM CYLINDER	3360 - 84
5J5	BACKHOE BOOM CYLINDER (310D, 315D)	3360 - 78
5J7	BACKHOE BOOM CYLINDER (310D, 315D)	3360 - 80
5J1	BACKHOE BOOM CYLINDER PINS	3360 - 74
5J3	BACKHOE BOOM CYLINDER PINS	3360 - 76
5J9	BACKHOE BOOM CYLINDER PINS	3360 - 82
5J5	BACKHOE BOOM CYLINDER PINS (310D, 315D)	3360 - 78
5J7	BACKHOE BOOM CYLINDER PINS (310D, 315D)	3360 - 80
5J1	BACKHOE BOOM CYLINDER REPAIR KIT	3360 - 74
5J3	BACKHOE BOOM CYLINDER REPAIR KIT	3360 - 76
5J9	BACKHOE BOOM CYLINDER REPAIR KIT	3360 - 82
5J5	BACKHOE BOOM CYLINDER REPAIR KITS (310D, 315D)	3360 - 78
5J7	BACKHOE BOOM CYLINDER REPAIR KITS (310D, 315D)	3360 - 80
5F10	BACKHOE BOOM PINS	3340 - 14
5F12	BACKHOE BOOM PINS	3340 - 16
5B22	BACKHOE BUCKET COUPLER	3302 - 2
5B23	BACKHOE BUCKET COUPLER	3302 - 2A
5C11	BACKHOE BUCKET CUTTING EDGE	3302 - 11C
5J13	BACKHOE BUCKET CYLINDER	3360 - 86
5J15	BACKHOE BUCKET CYLINDER	3360 - 88
6B14	BACKHOE BUCKET CYLINDER	3360A - 2
6B16	BACKHOE BUCKET CYLINDER	3360A - 4
5J13	BACKHOE BUCKET CYLINDER PINS	3360 - 86
5J15	BACKHOE BUCKET CYLINDER PINS	3360 - 88
6B14	BACKHOE BUCKET CYLINDER PINS	3360A - 2
6B16	BACKHOE BUCKET CYLINDER PINS	3360A - 4
5J13	BACKHOE BUCKET CYLINDER REPAIR KITS	3360 - 86
5J15	BACKHOE BUCKET CYLINDER REPAIR KITS	3360 - 88
6B14	BACKHOE BUCKET CYLINDER REPAIR KITS	3360A - 2
6B16	BACKHOE BUCKET CYLINDER REPAIR KITS	3360A - 4
5C13	BACKHOE BUCKET DATA	3302 - 12
5C14	BACKHOE BUCKET DATA	3302 - 14
5C11	BACKHOE BUCKET PINS	3302 - 11C
5F24	BACKHOE BUCKET PINS	3340 - 28
5F25	BACKHOE BUCKET PINS	3340 - 29
5E23	BACKHOE BUCKET PINS (CASE BUCKET)	3340 - 1
5B24	BACKHOE BUCKET PINS, 304 MM (12")	3302 - 3
5C1	BACKHOE BUCKET PINS, 457 MM (18")	3302 - 4
5C3	BACKHOE BUCKET PINS, 610 MM (24")	3302 - 6
5B24	BACKHOE BUCKET SHANK, 304 MM (12")	3302 - 3
5C1	BACKHOE BUCKET SHANK, 457 MM (18")	3302 - 4
5C3	BACKHOE BUCKET SHANK, 610 MM (24")	3302 - 6
5C5	BACKHOE BUCKET SHANK, 762 MM (30")	3302 - 8
5C6	BACKHOE BUCKET SHANK, 762 MM (30")	3302 - 8A
5C7	BACKHOE BUCKET SHANK, 914 MM (36")	3302 - 9
5B24	BACKHOE BUCKET TOOTH, 304 MM (12")	3302 - 3
5C1	BACKHOE BUCKET TOOTH, 457 MM (18")	3302 - 4
5C3	BACKHOE BUCKET TOOTH, 610 MM (24")	3302 - 6
5C5	BACKHOE BUCKET TOOTH, 762 MM (30")	3302 - 8
5C6	BACKHOE BUCKET TOOTH, 762 MM (30")	3302 - 8A
5C7	BACKHOE BUCKET TOOTH, 914 MM (36")	3302 - 9
5C9	BACKHOE BUCKET, REPLACEMENT	3302 - 11A
5C11	BACKHOE BUCKET, REPLACEMENT	3302 - 11C
5C5	BACKHOE BUCKET, 762 MM (30")	3302 - 8
5C6	BACKHOE BUCKET, 762 MM (30")	3302 - 8A
5C7	BACKHOE BUCKET, 914 MM (36")	3302 - 9
5B24	BACKHOE BUCKETS, 304 MM(12")	3302 - 3
5C1	BACKHOE BUCKETS, 457 MM(18")	3302 - 4
5C3	BACKHOE BUCKETS, 610 MM (24")	3302 - 6
5D9	BACKHOE CONTROL LEVER LABEL	3315 - 16
5D13	BACKHOE CONTROL LEVER LABEL	3315 - 20
5E15	BACKHOE CONTROL LEVER LABEL	3315 - 38
5D15	BACKHOE CONTROL LEVER LINKAGE, TWO LEVER	3315 - 22
5D17	BACKHOE CONTROL LEVER LINKAGE, TWO LEVER	3315 - 24
5D19	BACKHOE CONTROL LEVER LINKAGE, TWO LEVER	3315 - 26
5D21	BACKHOE CONTROL LEVER LINKAGE, TWO LEVER KIT	3315 - 28
5D9	BACKHOE CONTROL LEVER LINKAGE, 2-LEVER FOR EXTENDIBLE DIPPERSTICK	3315 - 16
5D13	BACKHOE CONTROL LEVER LINKAGE, 2-LEVER FOR FIFTH FUNCTION PEDAL KIT	3315 - 20
5E15	BACKHOE CONTROL LEVER LINKAGE, 2-LEVER FOR STANDARD DIPPERSTICK KIT	3315 - 38
5D7	BACKHOE CONTROL LINKAGE AND VALVE, FOOT, SIXTH FUNCTION (TWO LEVER)	3315 - 14
5G5	BACKHOE CONTROL VALVE	3360 - 2
5G23	BACKHOE CONTROL VALVE	3360 - 22
5G24	BACKHOE CONTROL VALVE	3360 - 23
5G5	BACKHOE CONTROL VALVE AND ATTACHING HARDWARE	3360 - 2
5G21	BACKHOE CONTROL VALVE AUXILIARY SECTION (WITH 5-FUNCTION VALVE)	3360 - 20
5G13	BACKHOE CONTROL VALVE BOOM SECTION	3360 - 12
5G15	BACKHOE CONTROL VALVE BUCKET SECTION	3360 - 14
5G17	BACKHOE CONTROL VALVE CROWD SECTION WITH RIGHT END PLATE	3360 - 16
5G22	BACKHOE CONTROL VALVE SEAL KIT	3360 - 21
5G7	BACKHOE CONTROL VALVE SWING SECTION	3360 - 6
6B22	BACKHOE CROWD CYLINDER	3360A - 10
6B24	BACKHOE CROWD CYLINDER	3360A - 12
6B22	BACKHOE CROWD CYLINDER PINS	3360A - 10
6B24	BACKHOE CROWD CYLINDER PINS	3360A - 12
6B22	BACKHOE CROWD CYLINDER REPAIR KIT	3360A - 10
6B24	BACKHOE CROWD CYLINDER REPAIR KIT	3360A - 12
5C8	BACKHOE DITCHING BUCKET, 914 MM (36")	3302 - 10
5D9	BACKHOE LINKAGE FIELD KIT, 2-LEVER FOR EXTENDIBLE DIPPERSTICK	3315 - 16
5D13	BACKHOE LINKAGE FIELD KIT, 2-LEVER FOR FIFTH FUNCTION PEDAL	3315 - 20
5E15	BACKHOE LINKAGE FIELD KIT, 2-LEVER FOR STANDARD DIPPERSTICK	3315 - 38

ALPHABETICAL INDEX - CONTINUED

GRID		PAGE
5G3	BACKHOE LINKAGE SHIELDS	3340 - 32
5G4	BACKHOE LINKAGE SHIELDS	3340 - 33
5E13	BACKHOE LINKAGE, FIFTH FN LEVER FOR THREE LEVER CONTROLS	3315 - 36
5D11	BACKHOE LINKAGE, SIXTH FUNCTION FOOT CONTROL (TWO LEVER)	3315 - 18
5D15	BACKHOE LINKAGE, SIXTH FUNCTION FOOT PEDAL CONTROL FIELD KIT	3315 - 22
5H4	BACKHOE RELIEF VALVES AND KITS	3360 - 29
5H5	BACKHOE RELIEF VALVES AND KITS	3360 - 30
5H6	BACKHOE RELIEF VALVES AND KITS	3360 - 31
5B21	BACKHOE RIPPER TOOTH	3301 - 1
5E25	BACKHOE STREET PADS	3340 - 3
5H1	BACKHOE VALVE BOOM SECTION	3360 - 26
5H1	BACKHOE VALVE BUCKET SECTION	3360 - 26
5H1	BACKHOE VALVE CROWD	3360 - 26
5H2	BACKHOE VALVE OUTLET SECTION	3360 - 27
5E17	BACKHOE VALVE PANEL, FOUR LEVER	3315 - 40
3B19	BACKHOE VALVE PANEL, TWO LEVER	1810 - 4
5E19	BACKHOE VALVE PANEL,FOUR LEVER	3315 - 42
5E3	BACKHOE VALVE PANEL,THREE LEVER	3315 - 31A
5E9	BACKHOE VALVE PANEL,THREE LEVER	3315 - 34
5H9	BACKHOE VALVE PRESSURE AND RETURN HYDRAULICS	3360 - 34
5H11	BACKHOE VALVE PRESSURE AND RETURN HYDRAULICS	3360 - 36
5H3	BACKHOE VALVE, INLET SECTION	3360 - 28
5G25	BACKHOE VALVE, SWING SECTION	3360 - 25
5E17	BACKHOE, FOUR-LEVER CONTROLS, STANDARD	3315 - 40
5E19	BACKHOE, FOUR-LEVER CONTROLS, STANDARD	3315 - 42
5E21	BACKHOE, FOUR-LEVER CONTROLS, STANDARD	3315 - 44
5E9	BACKHOE, THREE LEVER CONTROL VALVE LINKAGE,	3315 - 34
5E11	BACKHOE, THREE LEVER CONTROL VALVE LINKAGE,	3315 - 35A
5E5	BACKHOE, THREE LEVER CONTROL VALVE LINKAGE, EXTENDIBLE	3315 - 32
5E7	BACKHOE, THREE LEVER CONTROL VALVE LINKAGE, EXTENDIBLE	3315 - 33A
5E1	BACKHOE, THREE LEVER CONTROL VALVE LINKAGE, STANDARD	3315 - 30
5E3	BACKHOE, THREE LEVER CONTROL VALVE LINKAGE, STANDARD	3315 - 31A
1I12	BAFFLE,RADIATOR	0510 - 3A
1C6	BALL JOINT ASSEMBLY (MFWD)	0250 - 6
1C8	BALL JOINT ASSEMBLY (MFWD)	0250 - 8
2E2	BANK, FRONT AXLE GREASE	1370 - 1
2D3	BAR, CYLINDER SERVICE LOCK	1313 - 1
2D4	BAR, CYLINDER SERVICE LOCK	1313 - 2
2B20	BARREL, STEERING CYLINDER (MFWD)	0960 - 6
3D7	BASE, SEAT WITH NON-SUSPENDED SEAT	1821 - 10
3D1	BASE, SEAT WITH SUSPENDED SEAT	1821 - 4
3D3	BASE, SEAT WITH SUSPENDED SEAT	1821 - 6
3F10	BATTERY BOX	1913 - 2
3F11	BATTERY BOX	1913 - 3
2E10	BATTERY CABLES, DUAL	1671 - 4
2E8	BATTERY CABLES, SINGLE	1671 - 2
2E8	BATTERY CLAMP, SINGLE	1671 - 2
2E10	BATTERY CLAMPS, DUAL	1671 - 4
3F10	BATTERY COVER	1913 - 2
3F11	BATTERY COVER	1913 - 3
2E8	BATTERY COVER, SINGLE	1671 - 2
2E10	BATTERY COVERS, DUAL	1671 - 4
2E10	BATTERY INSTALLATION, DUAL	1671 - 4
2E8	BATTERY INSTALLATION, SINGLE	1671 - 2
2E16	BEACON, ROTATING	1673 - 1
1C10	BEARING BOLT (MFWD)	0250 - 10
1C12	BEARING BOLT (MFWD)	0250 - 12
1F23	BEARING CAPS, MAIN	0404 - 1
2E14	BEARING, ALTERNATOR	1672 - 4
1F17	BEARINGS CRANKSHAFT	0401 - 3A
1F15	BEARINGS, MAIN	0401 - 2
1B22	BEARINGS, WHEEL, FRONT	0230 - 1
1F22	BEARINGS,CONNECTING ROD	0403 - 2
3E22	BELT, AIR CONDITIONING COMPRESSOR	1830 - 33
3D9	BELT, TETHER	1821 - 12
1H24	BELTS, FAN	0429 - 2
3D5	BELTS, SEAT WITH NON-SUSPENDED SEAT	1821 - 8
3C24	BELTS, SEAT WITH SUSPENDED SEAT	1821 - 2
3D7	BELTS, TETHER WITH NON-SUSPENDED SEAT	1821 - 10
1C16	BEVEL GEARS, DIFFERENTIAL (MFWD)	0250 - 16
1C18	BEVEL GEARS, DIFFERENTIAL (MFWD)	0250 - 18
1C20	BEVEL GEARS, DIFFERENTIAL (MFWD)	0250 - 20
1I16	BLADE, FAN	0510 - 6
3C7	BLADE, WIPER	1810 - 14
1F23	BLOCK, CYLINDER	0404 - 1
1G1	BLOCK, ENGINE SHORT	0404 - 4
1G3	BLOCK, ENGINE SHORT	0404 - 6
2G14	BLOCK, MAIN FRAME TRUNNION	1740 - 5
3E13	BLOWER ASSEMBLY	1830 - 24
3E9	BLOWER MOTORS, STANDARD HEATER	1830 - 20
4D11	BODY, RELIEF VALVE	3160 - 22
1C12	BOLT, BEARING (MFWD)	0250 - 12
4C17	BOLTS, TIE, LOADER VALVE	3160 - 2
6C16	BOOM CYL.KIT, CONTOLLED LOWERING DEVICE	3360A - 32
6C20	BOOM CYL.KIT, CONTOLLED LOWERING DEVICE	3360A - 36
6C16	BOOM CYL.KIT, LOWERING DEVICE,CONTOLLED	3360A - 32
6C20	BOOM CYL.KIT, LOWERING DEVICE,CONTOLLED	3360A - 36
4E6	BOOM CYLINDER	3160 - 39
4E7	BOOM CYLINDER	3160 - 40
5H21	BOOM CYLINDER CLAMPS	3360 - 46
5I7	BOOM CYLINDER CLAMPS	3360 - 56
5H19	BOOM CYLINDER CLAMPS (410D)	3360 - 44
5I5	BOOM CYLINDER CLAMPS (410D)	3360 - 54
5H21	BOOM CYLINDER FITTINGS	3360 - 46
5I7	BOOM CYLINDER FITTINGS	3360 - 56
5H19	BOOM CYLINDER FITTINGS (410D)	3360 - 44
5I5	BOOM CYLINDER FITTINGS (410D)	3360 - 54
5H21	BOOM CYLINDER HOSES	3360 - 46
5I7	BOOM CYLINDER HOSES	3360 - 56
5H19	BOOM CYLINDER HOSES (410D)	3360 - 44
5I5	BOOM CYLINDER HOSES (410D)	3360 - 54
5H21	BOOM CYLINDER HYDRAULICS	3360 - 46
5I7	BOOM CYLINDER HYDRAULICS	3360 - 56
5H19	BOOM CYLINDER HYDRAULICS (410D)	3360 - 44
5I5	BOOM CYLINDER HYDRAULICS (410D)	3360 - 54
4D13	BOOM CYLINDER HYDRAULICS, LOADER	3160 - 24
4D15	BOOM CYLINDER HYDRAULICS, LOADER	3160 - 26
4D17	BOOM CYLINDER HYDRAULICS, LOADER	3160 - 28
5J1	BOOM CYLINDER PINS, BACKHOE	3360 - 74
5J3	BOOM CYLINDER PINS, BACKHOE	3360 - 76
5J9	BOOM CYLINDER PINS, BACKHOE	3360 - 82
5J11	BOOM CYLINDER PINS, BACKHOE	3360 - 84
5J5	BOOM CYLINDER PINS, BACKHOE (310D, 315D)	3360 - 78
5J7	BOOM CYLINDER PINS, BACKHOE (310D, 315D)	3360 - 80
5J1	BOOM CYLINDER REPAIR KIT, BACKHOE	3360 - 74
5J3	BOOM CYLINDER REPAIR KIT, BACKHOE	3360 - 76
5J9	BOOM CYLINDER REPAIR KIT, BACKHOE	3360 - 82
5J5	BOOM CYLINDER REPAIR KITS, BACKHOE (310D, 315D)	3360 - 78
5J7	BOOM CYLINDER REPAIR KITS, BACKHOE (310D, 315D)	3360 - 80
5J1	BOOM CYLINDER, BACKHOE	3360 - 74
5J3	BOOM CYLINDER, BACKHOE	3360 - 76

ALPHABETICAL INDEX - CONTINUED

GRID		PAGE
5J9	BOOM CYLINDER, BACKHOE	3360 - 82
5J5	BOOM CYLINDER, BACKHOE (310D, 315D)	3360 - 78
5J7	BOOM CYLINDER, BACKHOE (310D, 315D)	3360 - 80
5J11	BOOM CYLINDER,BACKHOE	3360 - 84
4E6	BOOM LIFT CYLINDER PINS	3160 - 39
4E7	BOOM LIFT CYLINDER PINS	3160 - 40
4E6	BOOM LIFT CYLINDER REPAIR KITS	3160 - 39
4E7	BOOM LIFT CYLINDER REPAIR KITS	3160 - 40
5F2	BOOM LOCK	3340 - 6
5F4	BOOM LOCK (510D)	3340 - 8
5C17	BOOM LOCK CONTROL	3315 - 3A
5C21	BOOM LOCK CONTROL	3315 - 5A
5C15	BOOM LOCK CONTROL (410D)	3315 - 2
5C17	BOOM LOCK CONTROL(WITH LINKAGE CONTROL)	3315 - 3A
5C21	BOOM LOCK CONTROL(WITH LINKAGE CONTROL)	3315 - 5A
5C17	BOOM LOCK LINKAGE	3315 - 3A
5C21	BOOM LOCK LINKAGE	3315 - 5A
5C15	BOOM LOCK LINKAGE (410D)	3315 - 2
5C19	BOOM LOCK LINKAGE(510D)	3315 - 4
5F10	BOOM PINS, BACKHOE	3340 - 14
5F12	BOOM PINS, BACKHOE	3340 - 16
4C24	BOOM SECTION FLOAT POSITIONER	3160 - 10
4C23	BOOM SECTION LOADER CONTROL VALVE	3160 - 9
5G22	BOOM SECTION SECTION SEAL KIT	3360 - 21
5G22	BOOM SECTION SPOOL SEAL KIT	3360 - 21
5G13	BOOM SECTION, BACKHOE CONTROL VALVE	3360 - 12
5H1	BOOM SECTION, BACKHOE VALVE	3360 - 26
4D6	BOOM SECTION, LOADER CONTROL VALVE	3160 - 17
2D3	BOOM SERVICE LOCK BAR	1313 - 1
2D4	BOOM SERVICE LOCK BAR	1313 - 2
5F10	BOOM, BACKHOE	3340 - 14
5F12	BOOM, BACKHOE	3340 - 16
4C13	BOOM, LOADER	3140 - 2
4C9	BOOT, CLUTCH DISCONNECT SWITCH	3115 - 6
2C5	BOOT, TILT STEERING COLUMN	0960 - 16
1D7	BOOT, TRANSMISSION SHIFTER	0315 - 4
1D9	BOOT, TRANSMISSION SHIFTER	0315 - 6
1D11	BOOT, TRANSMISSION SHIFTER LEVER	0315 - 8
5F15	BOTTOM WEAR PAD	3340 - 19
5F15	BOTTOM WEAR PAD, EXTENDIBLE DIPPERSTICK	3340 - 19
3D23	BOX, AIR CONDITIONING	1830 - 10
3E1	BOX, AIR CONDITIONING	1830 - 12
3E3	BOX, AIR CONDITIONING	1830 - 14
3E5	BOX, AIR CONDITIONING	1830 - 16
3F10	BOX, BATTERY	1913 - 2
3F11	BOX, BATTERY	1913 - 3
3D23	BOX, CAB HEATER	1830 - 10
3E1	BOX, CAB HEATER	1830 - 12
3E3	BOX, CAB HEATER	1830 - 14
3E5	BOX,CAB HEATER	1830 - 16
1I22	BRACKET, AIR CLEANER (WITHOUT TURBOCHARGER)	0520 - 4
1I20	BRACKET, AIR CLEANER (WITH TURBOCHARGER)	0520 - 2
3F19	BRACKET, ANTENNA	2001 - 2
5H23	BRACKET, BUCKET CYLINDER	3360 - 48
5I9	BRACKET, BUCKET CYLINDER	3360 - 58
3F21	BRACKET, INTERIOR REAR VIEW MIRROR	2002 - 1
1D15	BRACKET, MFWD SOLENOID	0315 - 12
4C11	BRACKET, MOUNTING, CONTROL VALVE	3115 - 8
1I9	BRACKET, RADIATOR ROD	0510 - 1
2C5	BRACKET, STEERING COLUMN	0960 - 16
3G1	BRACKET, TOOLBOX	2005 - 2
1I9	BRACKET, WATER PUMP	0510 - 1
3C22	BRACKET, WINDSHIELD WASHER RESERVOIR	1810 - 30
1H13	BRACKET,FUEL FILTER	0420 - 2
1F8	BRACKET,TRANSMISSION OIL PUMP	0360 - 16
1D11	BRACKET,TRANSMISSION SHIFTER LEVER	0315 - 8
3D5	BRACKETS WITH NON-SUSPENDED SEAT, SEAT	1821 - 8
3E9	BRACKETS, AIR CONDITIONING	1830 - 20
1H23	BRACKETS, ALTERNATOR MOUNTING	0423 - 1
3E9	BRACKETS, CAB HEATER	1830 - 20
3F1	BRACKETS, CONDENSER	1830 - 36
3F3	BRACKETS, CONDENSER	1830 - 38
3E23	BRACKETS,AIR CONDITIONING COMPRESSOR	1830 - 34
2C17	BRAKE BAND	1115 - 1
2C9	BRAKE DISK	1011 - 1
2C12	BRAKE HYDRAULICS, SERVICE	1060 - 4
2C14	BRAKE HYDRAULICS, SERVICE	1060 - 6
2E19	BRAKE LIGHT (ROPS)	1673 - 4
2C10	BRAKE LIGHT SWITCH	1060 - 2
1F6	BRAKE LINE,TRANSMISSION	0360 - 14
1F10	BRAKE LINE,TRANSMISSION	0360 - 18
1F11	BRAKE LINE,TRANSMISSION	0360 - 19
2C12	BRAKE LINES	1060 - 4
2C14	BRAKE LINES	1060 - 6
2C17	BRAKE LINING	1115 - 1
2C17	BRAKE LINKAGE	1115 - 1
1E17	BRAKE PACKS, FORWARD AND REVERSE	0350 - 4
2C10	BRAKE PEDAL	1060 - 2
2C9	BRAKE PLATE AND FACINGS	1011 - 1
2C9	BRAKE PRESSURE PLATE	1011 - 1
2C10	BRAKE VALVE	1060 - 2
2C18	BRAKE, PARK	1115 - 2
1F8	BRAKE,TRANSMISSION OIL PUMP	0360 - 16
3H7	BREATHER FILTER, HYDRAULIC RESERVOIR	2160 - 24
3H9	BREATHER FILTER, HYDRAULIC RESERVOIR	2160 - 25A
2E14	BRUSH, ALTERNATOR	1672 - 4
5B22	BUCKET COUPLER, BACKHOE	3302 - 2
5B23	BUCKET COUPLER, BACKHOE	3302 - 2A
4B15	BUCKET CUTTING EDGE	3102 - 2
4B17	BUCKET CUTTING EDGE	3102 - 4
4B19	BUCKET CUTTING EDGE	3102 - 6
4C3	BUCKET CUTTING EDGE, MULTI-PURPOSE	3102 - 14
5H23	BUCKET CYLINDER BRACKET	3360 - 48
5I9	BUCKET CYLINDER BRACKET	3360 - 58
5F22	BUCKET CYLINDER EXTENSION PIN	3340 - 26
5H23	BUCKET CYLINDER FITTINGS	3360 - 48
5I9	BUCKET CYLINDER FITTINGS	3360 - 58
5H23	BUCKET CYLINDER HOSE CLAMPS	3360 - 48
5I9	BUCKET CYLINDER HOSE CLAMPS	3360 - 58
5H23	BUCKET CYLINDER HOSES	3360 - 48
5I9	BUCKET CYLINDER HOSES	3360 - 58
4D19	BUCKET CYLINDER HYDRAULICS	3160 - 30
4D23	BUCKET CYLINDER HYDRAULICS	3160 - 34
4E1	BUCKET CYLINDER HYDRAULICS	3160 - 36
5H23	BUCKET CYLINDER HYDRAULICS	3360 - 48
5I9	BUCKET CYLINDER HYDRAULICS	3360 - 58
5I3	BUCKET CYLINDER HYDRAULICS, EXTENDIBLE DIPPERSTICK	3360 - 52
5I13	BUCKET CYLINDER HYDRAULICS, EXTENDIBLE DIPPERSTICK	3360 - 62
5I15	BUCKET CYLINDER HYDRAULICS, EXTENDIBLE DIPPERSTICK	3360 - 64
5I9	BUCKET CYLINDER LINES, STANDARD AND EXTE NDIBLE	3360 - 58
4C15	BUCKET CYLINDER LINKAGE, LOADER	3140 - 4
4E8	BUCKET CYLINDER LOADER (410D)	3160 - 41
4E9	BUCKET CYLINDER LOADER (410D)	3160 - 42
4E10	BUCKET CYLINDER LOADER (510D)	3160 - 43
4E11	BUCKET CYLINDER LOADER (510D)	3160 - 44
5J13	BUCKET CYLINDER PINS, BACKHOE	3360 - 86
5J15	BUCKET CYLINDER PINS, BACKHOE	3360 - 88
6B14	BUCKET CYLINDER PINS, BACKHOE	3360A - 2
6B16	BUCKET CYLINDER PINS, BACKHOE	3360A - 4

ALPHABETICAL INDEX - CONTINUED

GRID		PAGE
5J13	BUCKET CYLINDER REPAIR KITS, BACKHOE	3360 - 86
5J15	BUCKET CYLINDER REPAIR KITS, BACKHOE	3360 - 88
6B14	BUCKET CYLINDER REPAIR KITS, BACKHOE	3360A - 2
6B16	BUCKET CYLINDER REPAIR KITS, BACKHOE	3360A - 4
5J13	BUCKET CYLINDER, BACKHOE	3360 - 86
5J15	BUCKET CYLINDER, BACKHOE	3360 - 88
6B14	BUCKET CYLINDER, BACKHOE	3360A - 2
4E3	BUCKET CYLINDER, MULTI-PURPOSE	3160 - 38
4E4	BUCKET CYLINDER, MULTI-PURPOSE	3160 - 38A
4E5	BUCKET CYLINDER, MULTI-PURPOSE	3160 - 38B
5F24	BUCKET LINKS, BACKHOE	3340 - 28
5F25	BUCKET LINKS, BACKHOE	3340 - 29
5F24	BUCKET PINS, BACKHOE	3340 - 28
5F25	BUCKET PINS, BACKHOE	3340 - 29
5E23	BUCKET PINS, BACKHOE (CASE BUCKET)	3340 - 1
4B21	BUCKET PINS, LOADER	3102 - 8
5B24	BUCKET PINS, 304 MM (12") BACKHOE	3302 - 3
5C1	BUCKET PINS, 457 MM (18") BACKHOE	3302 - 4
5C3	BUCKET PINS, 610 MM (24") BACKHOE	3302 - 6
4C19	BUCKET SECTION LOADER VALVE	3160 - 4
5G22	BUCKET SECTION SECTION SEAL KIT	3360 - 21
4C22	BUCKET SECTION SOLENOID	3160 - 8
5G22	BUCKET SECTION SPOOL SEAL KIT	3360 - 21
5G15	BUCKET SECTION, BACKHOE CONTROL VALVE	3360 - 14
5H1	BUCKET SECTION, BACKHOE VALVE	3360 - 26
4D5	BUCKET SECTION, WITH RETURN-TO-DIG LOADER CONTROL VALVE	3160 - 16
4C3	BUCKET SHANK, MULTI-PURPOSE	3102 - 14
5B24	BUCKET SHANK, 304 MM (12") BACKHOE	3302 - 3
5C1	BUCKET SHANK, 457 MM (18") BACKHOE	3302 - 4
5C3	BUCKET SHANK, 610 MM (24") BACKHOE	3302 - 6
5C5	BUCKET SHANK, 762 MM (30") BACKHOE	3302 - 8
5C6	BUCKET SHANK, 762 MM (30") BACKHOE	3302 - 8A
5C7	BUCKET SHANK, 914 MM (36") BACKHOE	3302 - 9
4C3	BUCKET TOOTH, MULTI-PURPOSE	3102 - 14
5B24	BUCKET TOOTH, 304 MM (12") BACKHOE	3302 - 3
5C1	BUCKET TOOTH, 457 MM (18") BACKHOE	3302 - 4
5C3	BUCKET TOOTH, 610 MM (24") BACKHOE	3302 - 6
5C5	BUCKET TOOTH, 762 MM (30") BACKHOE	3302 - 8
5C6	BUCKET TOOTH, 762 MM (30") BACKHOE	3302 - 8A
5C7	BUCKET TOOTH, 914 MM (36") BACKHOE	3302 - 9
5C13	BUCKET, BACKHOE DATA	3302 - 12
5C14	BUCKET, BACKHOE DATA	3302 - 14
5C8	BUCKET, BACKHOE DITCHING, 914 MM (36")	3302 - 10
5C9	BUCKET, BACKHOE, REPLACEMENT	3302 - 11A
5C7	BUCKET, BACKHOE, 914 MM (36")	3302 - 9
4C1	BUCKET, HYDRAULICS, THIRD FUNCTION MULTI-PURPOSE	3102 - 12
4C5	BUCKET, LEVELING LINKAGE	3115 - 2
4C7	BUCKET, LEVELING LINKAGE	3115 - 4
4B15	BUCKET, LOADER	3102 - 2
4B17	BUCKET, LOADER	3102 - 4
4B19	BUCKET, LOADER	3102 - 6
4C3	BUCKET, MULTI-PURPOSE	3102 - 14
5C5	BUCKET, 762 MM (30") BACKHOE	3302 - 8
5C6	BUCKET, 762 MM (30") BACKHOE	3302 - 8A
5C9	BUCKET,BACKHOE REPLACEMENT PINS	3302 - 11A
5C11	BUCKET,BACKHOE, REPLACEMENT	3302 - 11C
5B24	BUCKETS, BACKHOE, 304 MM(12")	3302 - 3
5C1	BUCKETS, BACKHOE, 457 MM(18")	3302 - 4
5C3	BUCKETS, BACKHOE, 610 MM (24")	3302 - 6
2E23	BULB, TURN SIGNAL	1674 - 4
2G13	BUMPER, CAB DOOR	1740 - 4
3F6	BUMPER, CAB DOOR	1910 - 2
2G13	BUMPER, MAIN FRAME	1740 - 4
2G14	BUMPER, MAIN FRAME FRONT	1740 - 5
5F18	BUSHINBG, EXTENSION DIPPERSTICK	3340 - 22
5F17	BUSHING, EXTENSION DIPPERSTICK	3340 - 21
5F20	BUSHING, EXTENSION DIPPERSTICK	3340 - 24
1C8	BUSHINGS, AXLE SHAFT (MFWD)	0250 - 8
1C6	BUSHINGS, STUB SHAFT (MFWD)	0250 - 6
3H13	BYPASS VALVE, OIL COOLER	2160 - 29

C

3B21	CAB	1810 - 5B
3C3	CAB DOME LIGHT	1810 - 10
2G13	CAB DOOR BUMPER	1740 - 4
3F6	CAB DOOR BUMPER	1910 - 2
3C15	CAB DOOR CYLINDER	1810 - 22
3C7	CAB DOOR HINGE	1810 - 14
3C15	CAB DOOR LATCH	1810 - 22
3C15	CAB DOOR LATCH COVER	1810 - 22
3C15	CAB DOOR PULL HANDLE	1810 - 22
3C7	CAB DOOR, LEFT-HAND	1810 - 14
3C3	CAB FENDER COVER	1810 - 10
3C17	CAB FLOOR FRONT COVER	1810 - 24
3B22	CAB FRAME	1810 - 6
3B22	CAB FRAME LABEL	1810 - 6
3B22	CAB FRONT ROOF SUPPORT	1810 - 6
3C3	CAB HEADLINERS	1810 - 10
3D23	CAB HEATER BOX	1830 - 10
3E1	CAB HEATER BOX	1830 - 12
3E3	CAB HEATER BOX	1830 - 14
3E5	CAB HEATER BOX	1830 - 16
3E9	CAB HEATER BRACKETS	1830 - 20
3D23	CAB HEATER CORE	1830 - 10
3E1	CAB HEATER CORE	1830 - 12
3E3	CAB HEATER CORE	1830 - 14
3E5	CAB HEATER CORE	1830 - 16
3D17	CAB HEATER DUCTS	1830 - 4
3D19	CAB HEATER DUCTS	1830 - 6
3D21	CAB HEATER DUCTS	1830 - 8
3D23	CAB HEATER FILTERS	1830 - 10
3E1	CAB HEATER FILTERS	1830 - 12
3E3	CAB HEATER FILTERS	1830 - 14
3E5	CAB HEATER FILTERS	1830 - 16
3D17	CAB HEATER FRESH AIR INTAKE	1830 - 4
3D19	CAB HEATER FRESH AIR INTAKE	1830 - 6
3D21	CAB HEATER FRESH AIR INTAKE	1830 - 8
3D15	CAB HEATER HOSE	1830 - 2
3E9	CAB HEATER MOTOR	1830 - 20
3E11	CAB HEATER MOTOR	1830 - 22
3E13	CAB HEATER MOTOR	1830 - 24
3D23	CAB HEATER RESISTOR	1830 - 10
3E1	CAB HEATER RESISTOR	1830 - 12
3E3	CAB HEATER RESISTOR	1830 - 14
3E5	CAB HEATER RESISTOR	1830 - 16
3D15	CAB HEATER SHUT-OFF VALVE	1830 - 2
3C1	CAB LOWER REAR WINDOW	1810 - 9A
3B22	CAB MOUNTING ISOLATORS	1810 - 6
3B22	CAB REAR MARKER REFLECTOR	1810 - 6
3C1	CAB REAR WINDOW LATCH	1810 - 9A
3C11	CAB RIGHT HAND ONE PIECE FRONT WINDSHIELD GLASS & WIPER MOTOR	1810 - 18
3C20	CAB ROOF	1810 - 28
3C5	CAB SIDE WINDOW LATCH	1810 - 12
3C5	CAB SIDE WINDOWS	1810 - 12
3C1	CAB WINDOW, LOWER REAR	1810 - 9A
3B24	CAB WINDOW, UPPER REAR	1810 - 8
2F17	CAB WIRING HARNESS	1674 - 20
3C1	CAB, LOWER REAR SIDE WINDOW	1810 - 9A
1I17	CABLE, ENGINE SPEED CONTROL	0515 - 2

ALPHABETICAL INDEX - CONTINUED

GRID		PAGE
3D15	CABLE, HEATER VALVE CONTROL	1830 - 2
3F19	CABLE, RADIO	2001 - 2
2E10	CABLES, DUAL BATTERY	1671 - 4
2E8	CABLES, SINGLE BATTERY	1671 - 2
4C5	CAM, RETURN-TO-DIG	3115 - 2
4C7	CAM, RETURN-TO-DIG	3115 - 4
1F18	CAMSHAFT	0402 - 2
1F18	CAMSHAFT GEAR	0402 - 2
2D20	CAP AND PLUG FITTINGS, O-RING FLAT FACE SEAL	1369 - 6
1F20	CAP, ENGINE OIL FILLER	0402 - 4
1J4	CAP, FUEL TANK	0560 - 2
1J6	CAP, FUEL TANK	0560 - 4
1B22	CAP, HUB, FRONT WHEEL	0230 - 1
1I10	CAP, RADIATOR	0510 - 2
1I12	CAP, RADIATOR	0510 - 3A
2E15	CAPACITOR, ALTERNATOR	1672 - 5
1C18	CARRIER, DIFFERENTIAL (MFWD)	0250 - 18
1E16	CARRIER, PLANET PINION	0350 - 3
1C24	CARRIER, PLANETARY PINION	0250 - 24
1F3	CARTRIDGE VALVE AND COIL ASSEMBLY	0360 - 10
1F3	CARTRIDGE, VALVE, REVERSER	0360 - 10
3E7	CASE SEALS, HEATER AND HVAC MODULE	1830 - 18
1C14	CASE, DIFFERENTIAL (MFWD)	0250 - 14
1C16	CASE, DIFFERENTIAL (MFWD)	0250 - 16
1E8	CASE, REVERSER	0341 - 16
1E10	CASE, REVERSER	0341 - 18
1D17	CASE, TRANSMISSION	0341 - 1
1D19	CASE, TRANSMISSION (WITH MFWD)	0341 - 3
1D18	CASE, TRANSMISSION (WITHOUT MFWD)	0341 - 2
1C6	CASING, AXLE (MFWD)	0250 - 6
1C8	CASING, AXLE (MFWD)	0250 - 8
1H5	CENTER AND ROTATING HOUSING	0416 - 2
2E2	CENTRAL LUBRICATION SYSTEM, FRONT AXLE	1370 - 1
3G10	CHARGE PUMP, HYDRAULIC	2160 - 6
4C21	CHECK PLUG, LOAD, BUCKET SECTION	3160 - 6
2E8	CLAMP, SINGLE BATTERY	1671 - 2
1C6	CLAMP, TRACK ROD ASSEMBLY (MFWD)	0250 - 6
1C8	CLAMP, TRACK ROD ASSEMBLY (MFWD)	0250 - 8
5H21	CLAMPS, BOOM CYLINDER	3360 - 46
5I7	CLAMPS, BOOM CYLINDER	3360 - 56
5H19	CLAMPS, BOOM CYLINDER (410D)	3360 - 44
5I5	CLAMPS, BOOM CYLINDER (410D)	3360 - 54
5H23	CLAMPS, BUCKET CYLINDER HOSE	3360 - 48
5I9	CLAMPS, BUCKET CYLINDER HOSE	3360 - 58
2E10	CLAMPS, DUAL BATTERY	1671 - 4
3H22	CLAMPS, REAR EQUIPMENT	2160 - 35A
5H13	CLAMPS, STABILIZER CYLINDER	3360 - 38
1I21	CLEANER, AIR (WITHOUT TURBOCHARGER)	0520 - 3
1I19	CLEANER, AIR (WITH TURBOCHARGER)	0520 - 1
5F18	CLEVIS, EXTENDIBLE DIPPERSTICK	3340 - 22
5F20	CLEVIS, EXTENDIBLE DIPPERSTICK	3340 - 24
1D9	CLUTCH DISCONNECT SWITCH	0315 - 6
2F7	CLUTCH DISCONNECT SWITCH	1674 - 12
4C9	CLUTCH DISCONNECT SWITCH BOOT	3115 - 6
1E3	CLUTCH PLATE (MFWD)	0341 - 12
3E18	CLUTCH, AIR CONDITIONER COMPRESSOR	1830 - 29
3C9	COAT HOOOK	1810 - 16
1F3	COIL ASSEMBLY, REVERSER	0360 - 10
3D23	COIL, AIR CONDITIONING EVAPORATOR	1830 - 10
3E1	COIL, AIR CONDITIONING EVAPORATOR	1830 - 12
3E3	COIL, AIR CONDITIONING EVAPORATOR	1830 - 14
3E5	COIL, AIR CONDITIONING EVAPORATOR	1830 - 16
1I7	COLD WEATHER STARTING AID	0505 - 2
2C5	COLUMN, STEERING	0960 - 16
3E22	COMPRESSOR BELT, AIR CONDITIONING	1830 - 33
3E18	COMPRESSOR CLUTCH	1830 - 29
3E20	COMPRESSOR HARDWARE KIT	1830 - 31
3E21	COMPRESSOR HARDWARE KIT	1830 - 32
3F1	COMPRESSOR HOSES	1830 - 36
3F3	COMPRESSOR HOSES	1830 - 38
3E15	COMPRESSOR KIT, AIR CONDTIONING	1830 - 26
3E22	COMPRESSOR, AIR CONDITIONING REFRIGERANT MOUNT	1830 - 33
3E19	COMPRESSOR,AIR CONDITIONING	1830 - 30
3E23	COMPRESSOR,AIR CONDITIONING	1830 - 34
3F1	CONDENSER	1830 - 36
3F3	CONDENSER	1830 - 38
3F1	CONDENSER BRACKETS	1830 - 36
3F3	CONDENSER BRACKETS	1830 - 38
3F1	CONDENSER HOSES	1830 - 36
3F3	CONDENSER HOSES	1830 - 38
2D21	CONDITIONER, ENGINE COOLANT	1369 - 7
1F22	CONNECTING ROD	0403 - 2
1F22	CONNECTING ROD BEARINGS	0403 - 2
2F3	CONNECTOR, LOADER LEVER	1674 - 8
2F5	CONNECTOR, LOADER LEVER	1674 - 10
2F7	CONNECTOR, LOADER LEVER	1674 - 12
2F9	CONNECTOR, LOADER LEVER	1674 - 14
2F11	CONNECTOR, RETURN-TO-DIG	1674 - 16
2F13	CONNECTOR, RETURN-TO-DIG	1674 - 18
2F15	CONNECTOR, RETURN-TO-DIG	1674 - 19A
2F19	CONNECTOR, ROPS HARNESS	1674 - 22
2G3	CONNECTORS, WEATHERPACK	1674 - 30
2E23	CONSOLE WIRING HARNESS	1674 - 4
1I7	CONTAINER, SOLENOID	0505 - 2
6C16	CONTOLLED LOWERING DEVICE, BOOM CYL.KIT	3360A - 32
6C20	CONTOLLED LOWERING DEVICE, BOOM CYL.KIT	3360A - 36
6C18	CONTOLLED LOWERING DEVICE, CROWD CYL.KIT	3360A - 34
5D9	CONTROL LEVER LINKAGE, BACKHOE 2-LEVER FOR EXTENDIBLE DIPPERSTICK	3315 - 16
5D13	CONTROL LEVER LINKAGE, BACKHOE 2-LEVER FOR FIFTH FUNCTION PEDAL KIT	3315 - 20
5E15	CONTROL LEVER LINKAGE, BACKHOE 2-LEVER FOR STANDARD DIPPERSTICK KIT	3315 - 38
5D15	CONTROL LEVER LINKAGE, BACKHOE/TWO LEVER	3315 - 22
5D3	CONTROL LINKAGE AND VALVE, FOOT, FIFTH FUNCTION (TWO-LEVER)	3315 - 10
5D5	CONTROL LINKAGE AND VALVE, FOOT, FIFTH FUNCTION (TWO-LEVER)	3315 - 12
5D7	CONTROL LINKAGE AND VALVE, FOOT, SIXTH FUNCTION (TWO-LEVER)	3315 - 14
5D11	CONTROL LINKAGE BACKHOE, FOOT, SIXTH FUNCTION (TWO-LEVER)	3315 - 18
5D17	CONTROL LINKAGE, BACKHOE, TWO LEVER	3315 - 24
5D19	CONTROL LINKAGE, BACKHOE, TWO LEVER	3315 - 26
5D21	CONTROL LINKAGE, BACKHOE, TWO LEVER KIT	3315 - 28
5G17	CONTROL VALVE CROWD SECTION, BACKHOE	3360 - 16
5C23	CONTROL VALVE LINKAGE, STABILIZER	3315 - 6
5D1	CONTROL VALVE LINKAGE, STABILIZER	3315 - 8
5E9	CONTROL VALVE LINKAGE, THREE LEVER, BACKHOE	3315 - 34
5E11	CONTROL VALVE LINKAGE, THREE LEVER, BACKHOE	3315 - 35A
5E5	CONTROL VALVE LINKAGE, THREE LEVER, EXTENDIBLE BACKHOE	3315 - 32
5E7	CONTROL VALVE LINKAGE, THREE LEVER, EXTENDIBLE BACKHOE	3315 - 33A
5E1	CONTROL VALVE LINKAGE, THREE LEVER, STANDARD BACKHOE	3315 - 30
5E3	CONTROL VALVE LINKAGE, THREE LEVER, STANDARD BACKHOE	3315 - 31A

ALPHABETICAL INDEX - CONTINUED

GRID		PAGE
4C9	CONTROL VALVE MOUNTING BRACKET	3115 - 6
4C11	CONTROL VALVE MOUNTING BRACKET	3115 - 8
5G5	CONTROL VALVE, BACKHOE	3360 - 2
5G23	CONTROL VALVE, BACKHOE	3360 - 22
5G24	CONTROL VALVE, BACKHOE	3360 - 23
5G21	CONTROL VALVE, BACKHOE AUXILIARY SECTION (WITH 5-FUNCTION VALVE)	3360 - 20
5G13	CONTROL VALVE, BACKHOE BOOM SECTION	3360 - 12
5G15	CONTROL VALVE, BACKHOE BUCKET SECTION	3360 - 14
5G7	CONTROL VALVE, BACKHOE SWING SECTION	3360 - 6
4C16	CONTROL VALVE, LOADER	3160 - 1
4C9	CONTROL VALVE, LOADER LINKAGE	3115 - 6
4C11	CONTROL VALVE, LOADER LINKAGE, THIRD FUNCTION	3115 - 8
1D13	CONTROL VALVE, MFWD	0315 - 10
1F3	CONTROL VALVE, REVERSER	0360 - 10
5C17	CONTROL, BOOM LOCK	3315 - 3A
5C21	CONTROL, BOOM LOCK	3315 - 5A
5C15	CONTROL, BOOM LOCK (410D)	3315 - 2
5C19	CONTROL, BOOM LOCK (510D)	3315 - 4
1D4	CONTROL, REVERSE WITH GUARD	0315 - 1
5C17	CONTROL,BOOM LOCK(WITH LINKAGE CONTROL)	3315 - 3A
5C21	CONTROL,BOOM LOCK(WITH LINKAGE CONTROL)	3315 - 5A
1D15	CONTROLS FOR MFWD, SOLENOID	0315 - 12
5E17	CONTROLS, FOUR-LEVER STANDARD BACKHOE	3315 - 40
5E19	CONTROLS, FOUR-LEVER STANDARD BACKHOE	3315 - 42
5E21	CONTROLS, FOUR-LEVER STANDARD BACKHOE	3315 - 44
1E7	CONVENIENCE ASSEMBLY, TRANSMISSION	0341 - 15A
1J10	CONVERTER, TORQUE	0641 - 1
2D21	COOLANT CONDITIONER	1369 - 7
1I14	COOLANT RECOVERY TANK	0510 - 4
1I15	COOLANT RECOVERY TANK	0510 - 5
1H10	COOLER, ENGINE OIL	0419 - 2
3H16	COOLER, HYDRAULIC OIL	2160 - 32
3H18	COOLER, HYDRAULIC OIL	2160 - 33A
3H14	COOLER, TRANSMISSION OIL	2160 - 30
2D24	COOLSCAN PLUS TEST KIT, FLUID ANALYSIS PRODUCTS	1369 - 12
3D23	CORE, CAB HEATER	1830 - 10
3E1	CORE, CAB HEATER	1830 - 12
3E3	CORE, CAB HEATER	1830 - 14
3E5	CORE,CAB HEATER	1830 - 16
2G18	COUNTERWEIGHT	1749 - 1
2G19	COUNTERWEIGHT FRAME	1749 - 2
2G20	COUNTERWEIGHT FRAME	1749 - 3
5B22	COUPLER, BACKHOE BUCKET	3302 - 2
5B23	COUPLER, BACKHOE BUCKET	3302 - 2A
5B22	COUPLER, QUICK	3302 - 2
5E17	COVER, BACKHOE VALVE LEVER PANEL	3315 - 40
5E19	COVER, BACKHOE VALVE LEVER PANEL	3315 - 42
3F10	COVER, BATTERY	1913 - 2
3F11	COVER, BATTERY	1913 - 3
3C15	COVER, CAB DOOR LATCH	1810 - 22
3C3	COVER, CAB FENDER	1810 - 10
3B19	COVER, DIPPERSTICK LEVER	1810 - 4
3C15	COVER, FRONT WIPER MOTOR, LEFT AND RIGHT	1810 - 22
5G9	COVER, INLET BACKHOE VALVE	3360 - 8
5G11	COVER, INLET BACKHOE VALVE	3360 - 10
3B19	COVER, LOADER LINKAGE	1810 - 4
1J2	COVER, MUFFLER	0530 - 2
1G13	COVER, OIL FILLER OPENING	0407 - 4
5G9	COVER, RELIEF VALVE (LEFT)	3360 - 8
5G11	COVER, REPLACEMENT RELIEF VALVE	3360 - 10
2E21	COVER, RETURN-TO-DIG SWITCH	1674 - 2
1F20	COVER, ROCKER ARM	0402 - 4
2E8	COVER, SINGLE BATTERY	1671 - 2
3B19	COVER, STABILIZER LINKAGE	1810 - 4
1H16	COVER, STARTER SOLENOID	0422 - 1
1H17	COVER, STARTER SOLENOID	0422 - 1A
1H21	COVER, STARTER SOLENOID	0422 - 4
3B17	COVER, STEERING COLUMN	1810 - 2
5E9	COVER, THREE LEVER BACKHOE VALVE	3315 - 34
2C5	COVER, TILT STEERING COLUMN COVER	0960 - 16
1F21	COVER, TIMING GEAR	0402 - 5
1E1	COVER, TRANSMISSION FRONT (WITHOUT MFWD)	0341 - 10
1E6	COVER, TRANSMISSION TOP	0341 - 15
1E5	COVER, TRANSMISSION, TOP	0341 - 14
5E3	COVER,THREE LEVER BACKHOE VALVE	3315 - 31A
2E10	COVERS, DUAL BATTERY	1671 - 4
3F6	COWL SUPPORT	1910 - 2
3F8	COWL SUPPORT	1910 - 4
1F15	CRANKSHAFT	0401 - 2
1F17	CRANKSHAFT BEARINGS	0401 - 3A
1F15	CRANKSHAFT IDLER GEARS	0401 - 2
1H24	CRANKSHAFT PULLEY	0429 - 2
6C18	CROWD CYL.KIT, CONTOLLED LOWERING DEVICE	3360A - 34
6C18	CROWD CYL.KIT, LOWERING DEVICE,CONTOLLED	3360A - 34
6B18	CROWD CYLINDER	3360A - 6
6B20	CROWD CYLINDER (REPLACEMENT)	3360A - 8
5I1	CROWD CYLINDER FITTINGS	3360 - 50
5I11	CROWD CYLINDER FITTINGS	3360 - 60
5I1	CROWD CYLINDER HOSES	3360 - 50
5I11	CROWD CYLINDER HOSES	3360 - 60
5I1	CROWD CYLINDER HYDRAULICS	3360 - 50
5I11	CROWD CYLINDER HYDRAULICS	3360 - 60
6B18	CROWD CYLINDER PINS	3360A - 6
6B20	CROWD CYLINDER PINS	3360A - 8
6B22	CROWD CYLINDER PINS, BACKHOE	3360A - 10
6B24	CROWD CYLINDER PINS, BACKHOE	3360A - 12
6B18	CROWD CYLINDER REPAIR KIT	3360A - 6
6B20	CROWD CYLINDER REPAIR KIT	3360A - 8
6B22	CROWD CYLINDER REPAIR KIT, BACKHOE	3360A - 10
6B24	CROWD CYLINDER REPAIR KIT, BACKHOE	3360A - 12
6B22	CROWD CYLINDER, BACKHOE	3360A - 10
6B24	CROWD CYLINDER, BACKHOE	3360A - 12
5G22	CROWD SECTION SECTION SEAL KIT	3360 - 21
5G22	CROWD SECTION SPOOL SEAL KIT	3360 - 21
5G17	CROWD SECTION, BACKHOE CONTROL VALVE	3360 - 16
5H1	CROWD SECTION, BACKHOE VALVE	3360 - 26
3D5	CUSHIONS, SEAT WITH NON-SUSPENDED SEAT	1821 - 8
4B15	CUTTING EDGE, BUCKET	3102 - 2
4B17	CUTTING EDGE, BUCKET	3102 - 4
4B19	CUTTING EDGE, BUCKET	3102 - 6
4C3	CUTTING EDGE, MULTI-PURPOSE BUCKET	3102 - 14
5C11	CUTTING EDGE,BACKHOE BUCKET	3302 - 11C
1F23	CYLINDER BLOCK	0404 - 1
6B18	CYLINDER CROWD	3360A - 6
6B20	CYLINDER CROWD	3360A - 8
1G17	CYLINDER HEAD	0409 - 2
1G17	CYLINDER HEAD GASKET	0409 - 2
1I1	CYLINDER HEAD REMOVAL GASKET KIT	0452 - 1
5H21	CYLINDER HYDRAULICS, BOOM	3360 - 46
5I7	CYLINDER HYDRAULICS, BOOM	3360 - 56
5H19	CYLINDER HYDRAULICS, BOOM (410D)	3360 - 44
5I5	CYLINDER HYDRAULICS, BOOM (410D)	3360 - 54
5I1	CYLINDER HYDRAULICS, CROWD	3360 - 50
5I11	CYLINDER HYDRAULICS, CROWD	3360 - 60
5H13	CYLINDER HYDRAULICS, STABILIZER	3360 - 38
1F22	CYLINDER LINER	0403 - 2
2D21	CYLINDER LINER PACKING LUBRICANT	1369 - 7
4E8	CYLINDER LOADER BUCKET (410D)	3160 - 41
4E9	CYLINDER LOADER BUCKET (410D) (REPLACEMENT)	3160 - 42
4E10	CYLINDER LOADER BUCKET (510D)	3160 - 43

ALPHABETICAL INDEX - CONTINUED

GRID		PAGE
4E11	CYLINDER LOADER BUCKET (510D)	3160 - 44
5J9	CYLINDER PINS, BACKHOE BOOM	3360 - 82
5J5	CYLINDER PINS, BACKHOE BOOM (310D, 315D)	3360 - 78
5J7	CYLINDER PINS, BACKHOE BOOM (310D, 315D)	3360 - 80
5J13	CYLINDER PINS, BACKHOE BUCKET	3360 - 86
5J15	CYLINDER PINS, BACKHOE BUCKET	3360 - 88
6B14	CYLINDER PINS, BACKHOE BUCKET	3360A - 2
6B16	CYLINDER PINS, BACKHOE BUCKET	3360A - 4
6B18	CYLINDER PINS, CROWD	3360A - 6
6B20	CYLINDER PINS, CROWD	3360A - 8
6C12	CYLINDER PINS, STABILIZER	3360A - 28
6C14	CYLINDER PINS, STABILIZER	3360A - 30
5J9	CYLINDER REPAIR KIT, BACKHOE BOOM	3360 - 82
6B22	CYLINDER REPAIR KIT, BACKHOE CROWD	3360A - 10
6B24	CYLINDER REPAIR KIT, BACKHOE CROWD	3360A - 12
6B18	CYLINDER REPAIR KIT, CROWD	3360A - 6
6B20	CYLINDER REPAIR KIT, CROWD	3360A - 8
5I19	CYLINDER REPAIR KIT, SWING	3360 - 68
5I21	CYLINDER REPAIR KIT, SWING	3360 - 70
5I20	CYLINDER REPAIR KIT, SWING (310D)	3360 - 69
5I22	CYLINDER REPAIR KIT, SWING (310D)	3360 - 71
5J5	CYLINDER REPAIR KITS, BACKHOE BOOM (310D, 315D)	3360 - 78
5J7	CYLINDER REPAIR KITS, BACKHOE BOOM (310D, 315D)	3360 - 80
5J13	CYLINDER REPAIR KITS, BACKHOE BUCKET	3360 - 86
5J15	CYLINDER REPAIR KITS, BACKHOE BUCKET	3360 - 88
6B14	CYLINDER REPAIR KITS, BACKHOE BUCKET	3360A - 2
6B16	CYLINDER REPAIR KITS, BACKHOE BUCKET	3360A - 4
6C12	CYLINDER REPAIR KITS, STABLILZER	3360A - 28
6C14	CYLINDER REPAIR KITS, STABLILZER	3360A - 30
2D3	CYLINDER ROD LOCK BAR	1313 - 1
2D4	CYLINDER ROD LOCK BAR	1313 - 2
6C5	CYLINDER STOP, EXTENDIBLE DIPPERSTICK	3360A - 19
6C11	CYLINDER STOP, EXTENDIBLE DIPPERSTICK	3360A - 27
5J1	CYLINDER, BACKHOE BOOM	3360 - 74
5J3	CYLINDER, BACKHOE BOOM	3360 - 76
5J9	CYLINDER, BACKHOE BOOM	3360 - 82
5J5	CYLINDER, BACKHOE BOOM (310D, 315D)	3360 - 78
5J7	CYLINDER, BACKHOE BOOM (310D, 315D)	3360 - 80
5J13	CYLINDER, BACKHOE BUCKET	3360 - 86
5J15	CYLINDER, BACKHOE BUCKET	3360 - 88
6B14	CYLINDER, BACKHOE BUCKET	3360A - 2
6B16	CYLINDER, BACKHOE BUCKET	3360A - 4
6B22	CYLINDER, BACKHOE CROWD	3360A - 10
6B24	CYLINDER, BACKHOE CROWD	3360A - 12
4E6	CYLINDER, BOOM	3160 - 39
4E7	CYLINDER, BOOM	3160 - 40
5J11	CYLINDER, BOOM, BACKHOE	3360 - 84
4D19	CYLINDER, BUCKET LIFT HYDRAULICS	3160 - 30
4D23	CYLINDER, BUCKET LIFT HYDRAULICS	3160 - 34
4E1	CYLINDER, BUCKET LIFT HYDRAULICS	3160 - 36
5I13	CYLINDER, BUCKET, EXTENDIBLE DIPPERSTICK HYDRAULICS	3360 - 62
3C15	CYLINDER, CAB DOOR	1810 - 22
6C1	CYLINDER, EXTENDIBLE DIPPERSTICK	3360A - 14
6C3	CYLINDER, EXTENDIBLE DIPPERSTICK	3360A - 16
6C4	CYLINDER, EXTENDIBLE DIPPERSTICK	3360A - 17
6C5	CYLINDER, EXTENDIBLE DIPPERSTICK	3360A - 19
6C6	CYLINDER, EXTENDIBLE DIPPERSTICK	3360A - 20
6C8	CYLINDER, EXTENDIBLE DIPPERSTICK	3360A - 22
6C9	CYLINDER, EXTENDIBLE DIPPERSTICK	3360A - 24
6C10	CYLINDER, EXTENDIBLE DIPPERSTICK	3360A - 25
6C11	CYLINDER, EXTENDIBLE DIPPERSTICK	3360A - 27
5I3	CYLINDER, EXTENDIBLE DIPPERSTICK EXTENSION HYDRAULICS	3360 - 52
5I15	CYLINDER, EXTENDIBLE DIPPERSTICK EXTENSION HYDRAULICS	3360 - 64
4E7	CYLINDER, LIFT	3160 - 40
4D13	CYLINDER, LOADER BOOM HYDRAULICS	3160 - 24
4D15	CYLINDER, LOADER BOOM HYDRAULICS	3160 - 26
4D17	CYLINDER, LOADER BOOM HYDRAULICS	3160 - 28
4E3	CYLINDER, MULTI-PURPOSE BUCKET	3160 - 38
4E4	CYLINDER, MULTI-PURPOSE BUCKET	3160 - 38A
4E5	CYLINDER, MULTI-PURPOSE BUCKET	3160 - 38B
2B14	CYLINDER, POWER STEERING (WITHOUT MFWD)	0960 - 1
2B15	CYLINDER, POWER STEERING (WITHOUT MFWD)	0960 - 1A
2B16	CYLINDER, POWER STEERING (WITHOUT MFWD)	0960 - 2
2B17	CYLINDER, POWER STEERING (WITHOUT MFWD)	0960 - 3
3B24	CYLINDER, REAR CAB WINDOW	1810 - 8
6C12	CYLINDER, STABLILZER	3360A - 28
6C14	CYLINDER, STABLILZER	3360A - 30
1C1	CYLINDER, STEERING (MFWD)	0250 - 1
2B22	CYLINDER, STEERING, HYDRAULICS	0960 - 8
2B18	CYLINDER, STEERING, MECHANICAL FRONT WHEEL DRIVE	0960 - 4
2B20	CYLINDER, STEERING, MECHANICAL FRONT WHEEL DRIVE (MFWD)	0960 - 6
5I17	CYLINDER, SWING	3360 - 66
5I18	CYLINDER, SWING	3360 - 67
5I19	CYLINDER, SWING	3360 - 68
5I21	CYLINDER, SWING	3360 - 70
5I20	CYLINDER, SWING (310D)	3360 - 69
5I22	CYLINDER, SWING (310D)	3360 - 71
2C5	CYLINDER, TILT STEERING COLUMN	0960 - 16

D

2D12	DECAL KIT (MODIFIED CONTROL LEVER PATTERN)	1320 - 6
2G7	DECAL, INSTRUMENT PANEL	1676 - 2
2G9	DECAL, INSTRUMENT PANEL	1676 - 4
2D6	DECALS	1320 - 2
2D8	DECALS	1320 - 4
2D10	DECALS	1320 - 5A
3G11	DESTROKE SOLENOID, HYDRAULIC PUMP	2160 - 7
2G6	DEUTSCH TERMINALS	1674 - 33
6C16	DEVICE,CONTROLLED LOWERING,BOOM CYL.KIT	3360A - 32
6C20	DEVICE,CONTROLLED LOWERING,BOOM CYL.KIT	3360A - 36
6C18	DEVICE,CONTROLLED LOWERING,CROWD CYL.KIT	3360A - 34
2D25	DIESELSCAN TEST KIT, FLUID ANALYSIS PRODUCTS	1369 - 13
1B19	DIFFERENTIAL ASSEMBLY	0210 - 1
1C16	DIFFERENTIAL AXLE (MFWD)	0250 - 16
1C16	DIFFERENTIAL AXLE BEVEL GEARS (MFWD)	0250 - 16
1C16	DIFFERENTIAL BEVEL GEARS (MFWD)	0250 - 16
1C18	DIFFERENTIAL BEVEL GEARS (MFWD)	0250 - 18
1C20	DIFFERENTIAL BEVEL GEARS (MFWD)	0250 - 20
1C18	DIFFERENTIAL CARRIER (MFWD)	0250 - 18
1C16	DIFFERENTIAL CASE (MFWD)	0250 - 16
1C14	DIFFERENTIAL CASE AND GEARS (MFWD)	0250 - 14
1E15	DIFFERENTIAL DRIVE SHAFT	0350 - 2
1B19	DIFFERENTIAL HOUSING	0210 - 1
1B20	DIFFERENTIAL LOCK ARM	0210 - 2
1B20	DIFFERENTIAL LOCK PEDAL	0210 - 2
2E14	DIODE	1672 - 4
2E13	DIODE, ALTERNATOR	1672 - 3
2F11	DIODE, ALTERNATOR HARNESS AND REVERSER	1674 - 16
2F13	DIODE, ALTERNATOR HARNESS AND REVERSER	1674 - 18
2F15	DIODE, ALTERNATOR HARNESS AND REVERSER	1674 - 19A
2E23	DIODE, FLASHER	1674 - 4
5G1	DIPPERSTICK	3340 - 30

ALPHABETICAL INDEX - CONTINUED

GRID		PAGE
5F20	DIPPERSTICK CYLINDER EXTENSION	3340 - 24
6C5	DIPPERSTICK CYLINDER STOP, EXTENDIBLE	3360A - 19
6C11	DIPPERSTICK CYLINDER STOP, EXTENDIBLE	3360A - 27
6C1	DIPPERSTICK CYLINDER, EXTENDIBLE	3360A - 14
6C3	DIPPERSTICK CYLINDER, EXTENDIBLE	3360A - 16
6C6	DIPPERSTICK CYLINDER, EXTENDIBLE	3360A - 20
6C9	DIPPERSTICK CYLINDER, EXTENDIBLE	3360A - 24
6C10	DIPPERSTICK CYLINDER, EXTENDIBLE	3360A - 25
5F14	DIPPERSTICK HOUSING, EXTENDIBLE	3340 - 18
5F15	DIPPERSTICK HOUSING, EXTENDIBLE	3340 - 19
5F16	DIPPERSTICK HOUSING, EXTENDIBLE	3340 - 20
3B19	DIPPERSTICK LEVER COVER	1810 - 4
6C8	DIPPERSTICK, CYLINDER	3360A - 22
6C4	DIPPERSTICK, CYLINDER EXTENDIBLE	3360A - 17
6C5	DIPPERSTICK, CYLINDER EXTENDIBLE	3360A - 19
6C11	DIPPERSTICK, CYLINDER EXTENDIBLE	3360A - 27
5I3	DIPPERSTICK, EXTENDIBLE EXTENSION CYLINDER HYDRAULICS	3360 - 52
5I15	DIPPERSTICK, EXTENDIBLE EXTENSION CYLINDER HYDRAULICS	3360 - 64
1G12	DIPSTICK, ENGINE OIL	0407 - 3
3H7	DIPSTICK, HYDRAULIC RESERVOIR	2160 - 24
3H9	DIPSTICK, HYDRAULIC RESERVOIR	2160 - 25A
1E8	DIPSTICK, REVERSER OIL	0341 - 16
1E10	DIPSTICK, REVERSER OIL	0341 - 18
1E6	DIPSTICK, TRANSMISSION	0341 - 15
1E1	DIPSTICK, TRANSMISSION OIL (WITHOUT MFWD)	0341 - 10
1D22	DIPSTICK, TRANSMISSION OIL (MFWD)	0341 - 6
2C9	DISK, BRAKE	1011 - 1
5C8	DITCHING BUCKET, BACKHOE, 914MM (36")	3302 - 10
3C3	DOME LIGHT, CAB	1810 - 10
3C9	DOOR FRAME, RIGHT-HAND	1810 - 16
3C9	DOOR HANDLE, RIGHT-HAND	1810 - 16
3C9	DOOR HINGE, RIGHT-HAND	1810 - 16
3C1	DOOR SEALS	1810 - 9A
3C9	DOOR WINDOW, RIGHT-HAND	1810 - 16
3C1	DOOR WINDOWS	1810 - 9A
3C7	DOOR, LEFT-HAND CAB	1810 - 14
3C9	DOOR, RIGHT-HAND CAB	1810 - 16
3C1	DOORS	1810 - 9A
1C22	DOUBLE JOINT, FRONT WHEEL (MFWD)	0250 - 22
1C22	DOUBLE UNIVERSAL JOINT	0250 - 22
3H7	DRAIN PLUGS, MAIN HYDRAULIC RESERVOIR	2160 - 24
3H9	DRAIN PLUGS, MAIN HYDRAULIC RESERVOIR	2160 - 25A
1I12	DRAIN VALVE,RADIATOR	0510 - 3A
3E23	DRIVE BELT,AIR CONDITIONING COMPRESSOR	1830 - 34
1J10	DRIVE PLATE, TORQUE CONVERTER	0641 - 1
1C3	DRIVE SHAFT (MFWD)	0250 - 3
1E14	DRIVE SHAFT ASSEMBLY, TRANSMISSION	0350 - 1
1E15	DRIVE SHAFT, DIFFERENTIAL	0350 - 2
3G16	DRIVE SHAFT, HYDRAULIC PUMP	2160 - 12
2G16	DRIVE SHAFT, MECHANICAL FRONT WHEEL	1746 - 3
1D16	DRIVE SHAFT, TRANSMISSION	0325 - 2
1C4	DRIVE,PLANETARY	0250 - 4
1C5	DRIVE,PLANETARY (MFWD)	0250 - 5
1F8	DRIVESHAFT,TRANSMISSION OIL PUMP	0360 - 16
1E3	DRUM (MFWD)	0341 - 12
2E10	DUAL BATTERY CABLES	1671 - 4
2E10	DUAL BATTERY CLAMPS	1671 - 4
2E10	DUAL BATTERY COVERS	1671 - 4
2E10	DUAL BATTERY INSTALLATION	1671 - 4
3D17	DUCTS, AIR CONDITIONING	1830 - 4
3D19	DUCTS, AIR CONDITIONING	1830 - 6
3D21	DUCTS, AIR CONDITIONING	1830 - 8
3D17	DUCTS, CAB HEATER	1830 - 4
3D19	DUCTS, CAB HEATER	1830 - 6
3D21	DUCTS, CAB HEATER	1830 - 8
4C9	DUST COVER, CLUTCH DISCONNECT SWITCH	3115 - 6

E

3F6	EDGING, HOOD	1910 - 2
3F8	EDGING, HOOD	1910 - 4
1G19	ELBOW, EXHAUST	0410 - 2
5H13	ELBOWS, STABILIZER CYLINDER	3360 - 38
2F3	ELECTRICAL FUSES	1674 - 8
2F5	ELECTRICAL FUSES	1674 - 10
2F7	ELECTRICAL FUSES	1674 - 12
2F9	ELECTRICAL FUSES	1674 - 14
1I21	ELEMENT, AIR CLEANER (WITHOUT TURBOCHARGER)	0520 - 3
1I19	ELEMENT, AIR CLEANER (WITH TURBOCHARGER)	0520 - 1
1F10	ELEMENT, TRANSAXLE OIL FILTER	0360 - 18
1F11	ELEMENT, TRANSAXLE OIL FILTER	0360 - 19
1H13	ELEMENT,FUEL FILTER	0420 - 2
2C18	EMERGENCY BRAKE SENSING SWITCH	1115 - 2
2B20	END CAP, STEERING CYLINDER (MFWD)	0960 - 6
5G17	END PLATE, RIGHT, BACKHOE CONTROL VALVE	3360 - 16
2D21	ENGINE	1369 - 7
3F6	ENGINE ACCESS DOOR LOCK	1910 - 2
3F8	ENGINE ACCESS DOOR LOCK	1910 - 4
1H4	ENGINE BALANCER SHAFT	0415 - 1
1F24	ENGINE BASIC OVERHAUL KIT	0404 - 2
1G5	ENGINE BASIC OVERHAUL KIT	0404 - 8
1I14	ENGINE COOLANT RECOVERY HOSE	0510 - 4
1I15	ENGINE COOLANT RECOVERY HOSE	0510 - 5
1I14	ENGINE COOLANT RECOVERY TANK	0510 - 4
1I15	ENGINE COOLANT RECOVERY TANK	0510 - 5
2F11	ENGINE COOLANT TEMPERATURE SENDER	1674 - 16
2F13	ENGINE COOLANT TEMPERATURE SENDER	1674 - 18
2F15	ENGINE COOLANT TEMPERATURE SENDER	1674 - 19A
1I6	ENGINE COOLANT, HEATER	0505 - 1
1H25	ENGINE FLYWHEEL	0433 - 1
1H25	ENGINE FLYWHEEL HOUSING	0433 - 1
1G7	ENGINE FRONT PLATE	0404 - 10
1J3	ENGINE MOUNT	0540 - 1
2D15	ENGINE OIL	1369 - 1
1H10	ENGINE OIL COOLER	0419 - 2
1G12	ENGINE OIL DIPSTICK	0407 - 3
1F20	ENGINE OIL FILLER CAP	0402 - 4
1G10	ENGINE OIL FILTER	0407 - 2
1G11	ENGINE OIL FILTER	0407 - 2A
1G10	ENGINE OIL FILTER ADAPTER	0407 - 2
1G11	ENGINE OIL FILTER ADAPTER	0407 - 2A
1G8	ENGINE OIL PAN	0407 - 1A
2F11	ENGINE OIL PRESSURE SENDING UNIT	1674 - 16
2F13	ENGINE OIL PRESSURE SENDING UNIT	1674 - 18
2F15	ENGINE OIL PRESSURE SENDING UNIT	1674 - 19A
2F11	ENGINE OIL PRESSURE SWITCH	1674 - 16
2F13	ENGINE OIL PRESSURE SWITCH	1674 - 18
2F15	ENGINE OIL PRESSURE SWITCH	1674 - 19A
1G14	ENGINE OIL PUMP	0407 - 5
1G15	ENGINE OIL PUMP	0407 - 6
1I2	ENGINE OVERHAUL GASKET SET	0452 - 2
1F22	ENGINE PISTON	0403 - 2
1G1	ENGINE SHORT BLOCK	0404 - 4
1G3	ENGINE SHORT BLOCK	0404 - 6
3F6	ENGINE SIDE SHIELDS	1910 - 2
3F8	ENGINE SIDE SHIELDS	1910 - 4
1I17	ENGINE SPEED CONTROL	0515 - 2
1I17	ENGINE SPEED CONTROL CABLE	0515 - 2
1I17	ENGINE SPEED CONTROL LINKAGE	0515 - 2

ALPHABETICAL INDEX - CONTINUED

GRID		PAGE
1F19	ENGINE TAPPET	0402 - 3
1H9	ENGINE THERMOSTAT	0418 - 2
1H9	ENGINE THERMOSTAT HOUSING	0418 - 2
2D21	ENGINE VALVE STEM LUBRICANT	1369 - 7
1G16	ENGINE VENTILATOR TUBE	0408 - 2
2F11	ENGINE WIRING HARNESS	1674 - 16
2F13	ENGINE WIRING HARNESS	1674 - 18
2F15	ENGINE WIRING HARNESS	1674 - 19A
1G5	ENGINE,REMANUFACTURED	0404 - 8
3H20	EQUIPMENT, REAR MOUNTED	2160 - 34
3I1	EQUIPMENT, REAR MOUNTED	2160 - 36
3I3	EQUIPMENT, REAR MOUNTED	2160 - 37A
3F1	EVAPORATOR	1830 - 36
3F3	EVAPORATOR	1830 - 38
3D23	EVAPORATOR COIL, AIR CONDITIONING	1830 - 10
3E1	EVAPORATOR COIL, AIR CONDITIONING	1830 - 12
3E3	EVAPORATOR COIL, AIR CONDITIONING	1830 - 14
3E5	EVAPORATOR COIL, AIR CONDITIONING	1830 - 16
3E5	EVAPORATOR TEMPERATURE SWITCH	1830 - 16
1G19	EXHAUST ELBOW	0410 - 2
1J1	EXHAUST EXTENSION (WITH TURBOCHARGER)	0530 - 1
1J2	EXHAUST EXTENSION (WITHOUT TURBOCHARGER)	0530 - 2
1G19	EXHAUST MANIFOLD	0410 - 2
1G20	EXHAUST MANIFOLD	0410 - 3
1G17	EXHAUST VALVE	0409 - 2
5J13	EXTENDIBLE DIPPER KIT	3360 - 86
5J15	EXTENDIBLE DIPPER KIT	3360 - 88
6B14	EXTENDIBLE DIPPER KIT	3360A - 2
6B16	EXTENDIBLE DIPPER KIT	3360A - 4
6B22	EXTENDIBLE DIPPER KIT	3360A - 10
6B24	EXTENDIBLE DIPPER KIT	3360A - 12
6C4	EXTENDIBLE DIPPERSICK CYLINDER (REPLACEMENT)	3360A - 17
5F22	EXTENDIBLE DIPPERSTICK BUCKET CYLINDER	3340 - 26
5I3	EXTENDIBLE DIPPERSTICK BUCKET CYLINDER HYDRAULICS	3360 - 52
5I13	EXTENDIBLE DIPPERSTICK BUCKET CYLINDER HYDRAULICS	3360 - 62
5I15	EXTENDIBLE DIPPERSTICK BUCKET CYLINDER HYDRAULICS	3360 - 64
5F18	EXTENDIBLE DIPPERSTICK CLEVIS	3340 - 22
5F20	EXTENDIBLE DIPPERSTICK CLEVIS	3340 - 24
5F22	EXTENDIBLE DIPPERSTICK CROWD CYLINDER PIN	3340 - 26
6C1	EXTENDIBLE DIPPERSTICK CYLINDER	3360A - 14
6C3	EXTENDIBLE DIPPERSTICK CYLINDER	3360A - 16
6C5	EXTENDIBLE DIPPERSTICK CYLINDER	3360A - 19
6C6	EXTENDIBLE DIPPERSTICK CYLINDER	3360A - 20
6C8	EXTENDIBLE DIPPERSTICK CYLINDER	3360A - 22
6C9	EXTENDIBLE DIPPERSTICK CYLINDER	3360A - 24
6C11	EXTENDIBLE DIPPERSTICK CYLINDER	3360A - 27
6C10	EXTENDIBLE DIPPERSTICK CYLINDER (REPLACEMENT)	3360A - 25
6C4	EXTENDIBLE DIPPERSTICK CYLINDER PINS	3360A - 17
6C5	EXTENDIBLE DIPPERSTICK CYLINDER PINS	3360A - 19
6C8	EXTENDIBLE DIPPERSTICK CYLINDER PINS	3360A - 22
6C11	EXTENDIBLE DIPPERSTICK CYLINDER PINS	3360A - 27
6C1	EXTENDIBLE DIPPERSTICK CYLINDER REPAIR KIT	3360A - 14
6C3	EXTENDIBLE DIPPERSTICK CYLINDER REPAIR KIT	3360A - 16
6C5	EXTENDIBLE DIPPERSTICK CYLINDER STOP	3360A - 19
6C11	EXTENDIBLE DIPPERSTICK CYLINDER STOP	3360A - 27
5F17	EXTENDIBLE DIPPERSTICK EXTENSION	3340 - 21
5F18	EXTENDIBLE DIPPERSTICK EXTENSION	3340 - 22
5F20	EXTENDIBLE DIPPERSTICK EXTENSION	3340 - 24
5F17	EXTENDIBLE DIPPERSTICK EXTENSION BUSHINGS	3340 - 21
5I3	EXTENDIBLE DIPPERSTICK EXTENSION CYLINDER HYDRAULICS	3360 - 52
5I15	EXTENDIBLE DIPPERSTICK EXTENSION CYLINDER HYDRAULICS	3360 - 64
5F18	EXTENDIBLE DIPPERSTICK EXTENSION BUSHINGS	3340 - 22
5F20	EXTENDIBLE DIPPERSTICK EXTENSION BUSHINGS	3340 - 24
5F14	EXTENDIBLE DIPPERSTICK HOUSING	3340 - 18
5F15	EXTENDIBLE DIPPERSTICK HOUSING	3340 - 19
5F16	EXTENDIBLE DIPPERSTICK HOUSING	3340 - 20
5I13	EXTENDIBLE DIPPERSTICK HYDRAULICS	3360 - 62
5F18	EXTENDIBLE DIPPERSTICK PAD	3340 - 22
5F18	EXTENDIBLE DIPPERSTICK SHIM	3340 - 22
5F17	EXTENDIBLE DIPPERSTICK WEARSTRIPS	3340 - 21
5F18	EXTENDIBLE DIPPERSTICK WEARSTRIPS	3340 - 22
5F20	EXTENDIBLE DIPPERSTICK WEARSTRIPS	3340 - 24
5F15	EXTENDIBLE DIPPERSTICK,BOTTOM WEAR PAD	3340 - 19
5F15	EXTENDIBLE, DIPPERSTICK LOCK PIN	3340 - 19
5F22	EXTENSION CYLINDER ROD AND HEAD END PIN	3340 - 26
5F20	EXTENSION, DIPPERSTICK CYLINDER	3340 - 24
1J1	EXTENSION, EXHAUST (WITH TURBOCHARGER)	0530 - 1
1J2	EXTENSION, EXHAUST (WITHOUT TURBOCHARGER)	0530 - 2
5F17	EXTENSION, EXTENDIBLE DIPPERSTICK	3340 - 21
5F20	EXTENSION, EXTENDIBLE DIPPERSTICK	3340 - 24
5F18	EXTENSION, EXTENDIBLE DIPPERSTICK WEARSTRIPS, EXTENDIBLE DIPPERSTICK	3340 - 22
3F17	EXTENTIONS, FENDER	1927 - 4
3F22	EXTERNAL MIRROR	2002 - 2

F

1H24	FAN BELTS	0429 - 2
1I16	FAN BLADE	0510 - 6
1I10	FAN SHROUD, RADIATOR	0510 - 2
1I12	FAN SHROUD, RADIATOR	0510 - 3A
2E15	FAN, ALTERNATOR	1672 - 5
2G7	FAULT LAMP	1676 - 2
2G9	FAULT LAMP	1676 - 4
5E24	FEET, STABILIZER	3340 - 2
3C3	FENDER COVER CAB	1810 - 10
3F15	FENDER STRAPS	1927 - 2
3F17	FENDER, EXTENTIONS	1927 - 4
3F15	FENDERS, LEFT	1927 - 2
3F16	FENDERS, LEFT	1927 - 3
3F15	FENDERS, RIGHT	1927 - 2
3F16	FENDERS, RIGHT	1927 - 3
3F15	FENDERS, RIGHT AND LEFT	1927 - 2
3F16	FENDERS, RIGHT AND LEFT	1927 - 3
5E13	FIFTH FN LEVER FOR THREE LEVER CONTROLS	3315 - 36
5D3	FIFTH FUNCTION FOOT CONTROL LINKAGE AND VALVE (TWO-LEVER)	3315 - 10
5D5	FIFTH FUNCTION FOOT CONTROL LINKAGE AND VALVE (TWO-LEVER)	3315 - 12
2E3	FILTER RECIRCULATION	1399 - 3
3G17	FILTER RESTRICTION SWITCH, HYDRAULIC	2160 - 13
3G18	FILTER RESTRICTION SWITCH, HYDRAULIC	2160 - 13A
1I19	FILTER, AIR CLEANER	0520 - 1
1I21	FILTER, AIR CLEANER	0520 - 3
2E3	FILTER, AIR CLEANER	1399 - 3
3H7	FILTER, BREATHER, HYDRAULIC RESERVOIR	2160 - 24
3H9	FILTER, BREATHER, HYDRAULIC RESERVOIR	2160 - 25A
1G10	FILTER, ENGINE OIL	0407 - 2

ALPHABETICAL INDEX - CONTINUED

GRID		PAGE
1G11	FILTER, ENGINE OIL	0407 - 2A
2E3	FILTER, FRESH AIR	1399 - 3
1H12	FILTER, FUEL	0420 - 1
1H14	FILTER, FUEL	0420 - 3
2E3	FILTER, FUEL	1399 - 3
2E3	FILTER, HYDRAULIC BREATHER	1399 - 3
3G17	FILTER, HYDRAULIC OIL	2160 - 13
3G18	FILTER, HYDRAULIC OIL	2160 - 13A
3G20	FILTER, MAIN HYDRAULIC	2160 - 16
3H1	FILTER, MAIN HYDRAULIC	2160 - 20
3H5	FILTER, MAIN HYDRAULIC	2160 - 23A
1E21	FILTER, OIL, REVERSER	0360 - 4
1E23	FILTER, OIL, REVERSER	0360 - 6
1H13	FILTER,FUEL	0420 - 2
3D23	FILTERS, AIR CONDITIONING	1830 - 10
3E1	FILTERS, AIR CONDITIONING	1830 - 12
3E3	FILTERS, AIR CONDITIONING	1830 - 14
3D23	FILTERS, CAB HEATER	1830 - 10
3E1	FILTERS, CAB HEATER	1830 - 12
3E3	FILTERS, CAB HEATER	1830 - 14
2E3	FILTERS, MACHINE	1399 - 3
2E3	FILTERS, OIL	1399 - 3
3E5	FILTERS,AIR CONDITIONING	1830 - 16
3E5	FILTERS,CAB HEATER	1830 - 16
5H21	FITTINGS, BOOM CYLINDER	3360 - 46
5I7	FITTINGS, BOOM CYLINDER	3360 - 56
5H19	FITTINGS, BOOM CYLINDER (410D)	3360 - 44
5I5	FITTINGS, BOOM CYLINDER (410D)	3360 - 54
5H23	FITTINGS, BUCKET CYLINDER	3360 - 48
5I9	FITTINGS, BUCKET CYLINDER	3360 - 58
5I1	FITTINGS, CROWD CYLINDER	3360 - 50
5I11	FITTINGS, CROWD CYLINDER	3360 - 60
3H20	FITTINGS, REAR MOUNTED EQUIPMENT	2160 - 34
3I1	FITTINGS, REAR MOUNTED EQUIPMENT	2160 - 36
3I3	FITTINGS, REAR MOUNTED EQUIPMENT	2160 - 37A
5H15	FITTINGS, SWING CYLINDER	3360 - 40
5H17	FITTINGS, SWING CYLINDER	3360 - 42
1F6	FITTINGS,TRANSMISSION BRAKE	0360 - 14
1F10	FITTINGS,TRANSMISSION BRAKE	0360 - 18
1F11	FITTINGS,TRANSMISSION BRAKE	0360 - 19
3C11	FIXED WINDOW	1810 - 18
2E23	FLASHER, DIODE	1674 - 4
2F3	FLASHER, 12-VOLT	1674 - 8
2F5	FLASHER, 12-VOLT	1674 - 10
2F7	FLASHER, 12-VOLT	1674 - 12
2F9	FLASHER, 12-VOLT	1674 - 14
2E23	FLASHER, 4-WAY SWITCH	1674 - 4
2D20	FLAT FACE O-RING SEAL CAP AND PLUG FITTINGS	1369 - 6
3C17	FLOOR MAT	1810 - 24
3C17	FLOOR RAMPS	1810 - 24
2F1	FLOOR WIRING HARNESS	1674 - 6
2D24	FLUID ANALYSIS PRODUCTS (COOLSCAN PLUS TEST KIT)	1369 - 12
2E1	FLUID ANALYSIS PRODUCTS (CUSTOMER CONVENIENCE PACKS)	1369 - 14
2D25	FLUID ANALYSIS PRODUCTS (DIESELSCAN TEST KIT)	1369 - 13
2D22	FLUID ANALYSIS PRODUCTS OILSCAN PLUS TEST KIT)	1369 - 10
1I7	FLUID, STARTING	0505 - 2
1H25	FLYWHEEL HOUSING, ENGINE	0433 - 1
1H25	FLYWHEEL, ENGINE	0433 - 1
5D11	FOOT CONTROL BACKHOE LINKAGE, SIXTH FUNCTION (TWO-LEVER)	3315 - 18
5D3	FOOT CONTROL LINKAGE AND VALVE, FIFTH FUNCTION (TWO-LEVER)	3315 - 10
5D5	FOOT CONTROL LINKAGE AND VALVE, FIFTH FUNCTION (TWO-LEVER)	3315 - 12
5D7	FOOT CONTROL LINKAGE AND VALVE, SIXTH FUNCTION (TWO-LEVER)	3315 - 14
5D11	FOOT CONTROL LINKAGE, SIXTH FUNCTION (TWO-LEVER) BACKHOE	3315 - 18
5D15	FOOT PEDAL, SIXTH FUNCTION CONTROL FIELD KIT	3315 - 22
5F1	FOOT, REVERSIBLE STABILIZER	3340 - 4
1E17	FORWARD AND REVERSE BRAKE PACKS	0350 - 4
1D4	FORWARD/REVERSE LEVER	0315 - 1
5E17	FOUR LEVER BACKHOE VALVE PANEL	3315 - 40
5E19	FOUR LEVER BACKHOE VALVE PANEL	3315 - 42
3B22	FRAME, CAB	1810 - 6
2G19	FRAME, COUNTERWEIGHT	1749 - 2
2G20	FRAME, COUNTERWEIGHT	1749 - 3
2G12	FRAME, MAIN	1740 - 2
2G14	FRAME, MAIN	1740 - 5
2G13	FRAME, MAIN FRAME	1740 - 4
3C18	FRAME, ROPS	1810 - 26
5F6	FRAME, SWING (STANDARD BOOM)	3340 - 10
5F2	FRAME, SWING AND PINS	3340 - 6
5F4	FRAME, SWING AND PINS (510D)	3340 - 8
5F8	FRAME, SWING WITH 410D HEAVY LIFT BOOM (510D STANDARD)	3340 - 12
3F1	FREEZE CONTROL SWITCH	1830 - 36
3F3	FREEZE CONTROL SWITCH	1830 - 38
3E5	FREEZE/COMPRESSOR SWITCH, AIR CONDITIONI NG	1830 - 16
2E3	FRESH AIR FILTER	1399 - 3
3D17	FRESH AIR INTAKE, AIR CONDITIONING	1830 - 4
3D19	FRESH AIR INTAKE, AIR CONDITIONING	1830 - 6
3D21	FRESH AIR INTAKE, AIR CONDITIONING	1830 - 8
3D17	FRESH AIR INTAKE, CAB HEATER	1830 - 4
3D19	FRESH AIR INTAKE, CAB HEATER	1830 - 6
3D21	FRESH AIR INTAKE, CAB HEATER	1830 - 8
1C1	FRONT AXLE (MFWD)	0250 - 1
1C2	FRONT AXLE (MFWD)	0250 - 2
1B23	FRONT AXLE (WITHOUT MFWD)	0230 - 2
1C8	FRONT AXLE HOUSING (MFWD)	0250 - 8
2E2	FRONT AXLE LUBRICATION SYSTEM	1370 - 1
2G14	FRONT BUMPER, MAIN FRAME	1740 - 5
3C17	FRONT COVER, CAB FLOOR	1810 - 24
3C17	FRONT COVER, ROPS FLOOR	1810 - 24
2E23	FRONT LIGHT SWITCH	1674 - 4
3B17	FRONT LIGHT SWITCH	1810 - 2
2E19	FRONT LIGHTS (ROPS)	1673 - 4
2E17	FRONT LIGHTS, WITH CAB	1673 - 2
1G7	FRONT PLATE, ENGINE	0404 - 10
1J3	FRONT SUPPORT	0540 - 1
1B14	FRONT WHEEL	0120 - 2
1B22	FRONT WHEEL BEARINGS	0230 - 1
1C22	FRONT WHEEL DOUBLE JOINT (MFWD)	0250 - 22
1C6	FRONT WHEEL DRIVE CASING (MFWD)	0250 - 6
2G16	FRONT WHEEL DRIVE SHAFT	1746 - 3
1B22	FRONT WHEEL HUB	0230 - 1
1C22	FRONT WHEEL UNIVERSAL JOINT (MFWD)	0250 - 22
3C13	FRONT WINDOW WIPER MOTOR	1810 - 20
3B17	FRONT WINDSHIELD WASHER SWITCH	1810 - 2
3B17	FRONT WINDSHIELD WIPER SWITCH	1810 - 2
3C11	FRONT WINDSHIELD, RIGHT HAND ONE PIECE CAB GLASS AND WIPER MOTOR	1810 - 18
3C15	FRONT WIPER MOTOR COVER, LEFT AND RIGHT	1810 - 22
2E23	FRONT WIPER SWITCH	1674 - 4
1H12	FUEL FILTER	0420 - 1
1H13	FUEL FILTER	0420 - 2
1H14	FUEL FILTER	0420 - 3

ALPHABETICAL INDEX - CONTINUED

GRID		PAGE
2E3	FUEL FILTER	1399 - 3
1H13	FUEL FILTER BRACKET	0420 - 2
1H13	FUEL FILTER ELEMENT	0420 - 2
1H13	FUEL FILTER FUEL LINES	0420 - 2
2G7	FUEL GAUGE	1676 - 2
2G9	FUEL GAUGE	1676 - 4
1J4	FUEL GAUGE SENDER	0560 - 2
1J6	FUEL GAUGE SENDER	0560 - 4
1J4	FUEL HOSES	0560 - 2
1J6	FUEL HOSES	0560 - 4
1G22	FUEL INJECTION LEAK-OFF LINE	0413 - 4
1G22	FUEL INJECTION LINES	0413 - 4
1G21	FUEL INJECTION NOZZLE	0413 - 2
1G22	FUEL INJECTION PUMP	0413 - 4
1G22	FUEL INJECTION PUMP DRIVE GEAR	0413 - 4
1H1	FUEL INJECTION PUMP ELECTRIC SHUT-OFF KIT	0413 - 8
1G24	FUEL INJECTION PUMP REPLACEMENT PARTS	0413 - 6
1G22	FUEL INJECTION SYSTEM	0413 - 4
1H12	FUEL LINES	0420 - 1
1H14	FUEL LINES	0420 - 3
1H13	FUEL LINES,FUEL FILTER	0420 - 2
1H1	FUEL SHUTOFF SOLENOID	0413 - 8
1J4	FUEL TANK	0560 - 2
1J6	FUEL TANK	0560 - 4
1J4	FUEL TANK CAP	0560 - 2
1J6	FUEL TANK CAP	0560 - 4
1J8	FUEL TANK LOCK	0560 - 6
1J8	FUEL TANK PADLOCK AND KEY	0560 - 6
1H15	FUEL TRANSFER PUMP	0421 - 1
3B19	FUSE COVER	1810 - 4
2F3	FUSES, ELECTRICAL	1674 - 8
2F5	FUSES, ELECTRICAL	1674 - 10
2F7	FUSES, ELECTRICAL	1674 - 12
2F9	FUSES, ELECTRICAL	1674 - 14

G

1I1	GASKET KIT, CYLINDER HEAD REMOVAL	0452 - 1
1I2	GASKET SET, ENGINE OVERHAUL	0452 - 2
1G17	GASKET, CYLINDER HEAD	0409 - 2
1G13	GASKET, OIL FILLER OPENING	0407 - 4
1F20	GASKET, ROCKER ARM COVER	0402 - 4
1F3	GASKET, VALVE REVERSER CONTROL	0360 - 10
2G7	GAUGE, FUEL	1676 - 2
2G9	GAUGE, FUEL	1676 - 4
1D5	GEAR SHIFTERS	0315 - 2
1D6	GEAR SHIFTERS	0315 - 3
1C16	GEAR, AXLE BEVEL (MFWD)	0250 - 16
1C16	GEAR, BEVEL (MFWD)	0250 - 16
1F18	GEAR, CAMSHAFT	0402 - 2
1G22	GEAR, FUEL INJECTION PUMP DRIVE	0413 - 4
1B19	GEAR, PINION	0210 - 1
1C4	GEAR, PLANET	0250 - 4
1C5	GEAR, PLANET (MFWD)	0250 - 5
1B19	GEAR, RING	0210 - 1
1C4	GEAR, RING	0250 - 4
1C5	GEAR, RING (MFWD)	0250 - 5
1C20	GEARS, DIFFERENTIAL (MFWD)	0250 - 20
1C18	GEARS, DIFFERENTIAL BEVEL (MFWD)	0250 - 18
1C14	GEARS, DIFFERENTIAL CASE (MFWD)	0250 - 14
2E2	GREASE BANK, FRONT AXLE	1370 - 1
3F12	GRILLE	1921 - 1
3F13	GRILLE	1921 - 2
3F12	GRILLE HOUSING	1921 - 1
3F13	GRILLE HOUSING	1921 - 2
2G15	GUARD, MECHANICAL FRONT WHEEL DRIVE SHAFT	1746 - 2
2G16	GUARD, MECHANICAL FRONT WHEEL DRIVE SHAFT	1746 - 3
1I10	GUARD, RADIATOR FAN	0510 - 2
1I12	GUARD, RADIATOR FAN	0510 - 3A
1D4	GUARD, REVERSE CONTROL	0315 - 1
2G17	GUARD, STABILIZER	1746 - 4
3B19	GUARD, VANDAL	1810 - 4
5F2	GUIDE, ROD	3340 - 6
5F4	GUIDE, ROD	3340 - 8
2B18	GUIDE, STEERING CYLINDER	0960 - 4

H

3C15	HANDLE, CAB DOOR PULL	1810 - 22
3C7	HANDLE, LEFT-HAND DOOR	1810 - 14
5G5	HARDWARE, BACKHOE CONTROL VALVE	3360 - 2
2F21	HARNESS, AIR CONDITIONING WIRING	1674 - 24
2E14	HARNESS, ALTERNATOR LEAD	1672 - 4
2F17	HARNESS, CAB WIRING	1674 - 20
2F1	HARNESS, FLOOR, WIRING	1674 - 6
2E23	HARNESS, FRONT CONSOLE	1674 - 4
2E21	HARNESS, LOADER RETURN-TO-DIG	1674 - 2
3F19	HARNESS, RADIO	2001 - 2
2F19	HARNESS, ROPS CONNECTOR	1674 - 22
2F19	HARNESS, ROPS WIRING	1674 - 22
2F3	HARNESS, SIDE CONSOLE	1674 - 8
2F5	HARNESS, SIDE CONSOLE	1674 - 10
2F7	HARNESS, SIDE CONSOLE	1674 - 12
2F9	HARNESS, SIDE CONSOLE	1674 - 14
1G17	HEAD, CYLINDER	0409 - 2
3C18	HEADLINER, ROPS	1810 - 26
3C3	HEADLINERS, CAB	1810 - 10
3E7	HEATER AND HVAC MODULE CASE SEALS	1830 - 18
3E9	HEATER BLOWER MOTORS, STANDARD HEATER	1830 - 20
2G7	HEATER BLOWER SWITCH	1676 - 2
2G9	HEATER BLOWER SWITCH	1676 - 4
3D15	HEATER HOSE, CAB	1830 - 2
3D23	HEATER HOUSING	1830 - 10
3E1	HEATER HOUSING	1830 - 12
3E5	HEATER HOUSING	1830 - 16
3E3	HEATER MODULE	1830 - 14
3E11	HEATER MOTOR RESISTOR	1830 - 22
3D15	HEATER TEMP. SWITCH	1830 - 2
3D15	HEATER VALVE CONTROL	1830 - 2
3D15	HEATER VALVE CONTROL CABLE	1830 - 2
3D15	HEATER VALVE KNOB	1830 - 2
1I6	HEATER, ENGINE COOLANT	0505 - 1
3E5	HEATING,VENTILATION,AIR CONDITIONING	1830 - 16
3C7	HINGE, CAB DOOR	1810 - 14
3F6	HOOD	1910 - 2
3F8	HOOD	1910 - 4
3C9	HOOK, COAT	1810 - 16
3F23	HORN	2004 - 1
2G7	HORN SWITCH	1676 - 2
2G9	HORN SWITCH	1676 - 4
1I22	HOSE, AIR CLEANER (WITHOUT TURBOCHARGER)	0520 - 4
1I20	HOSE, AIR CLEANER (WITH TURBOCHARGER)	0520 - 2
1J1	HOSE, ASPIRATOR (WITH TURBOCHARGER)	0530 - 1
1I14	HOSE, ENGINE COOLANT RECOVERY	0510 - 4
1I15	HOSE, ENGINE COOLANT RECOVERY	0510 - 5
3H16	HOSE, HYDRAULIC OIL COOLER	2160 - 32
3H18	HOSE, HYDRAULIC OIL COOLER	2160 - 33A
3C22	HOSE, WINDSHIELD WASHER	1810 - 30

ALPHABETICAL INDEX - CONTINUED

GRID		PAGE
5H21	HOSES, BOOM CYLINDER	3360 - 46
5I7	HOSES, BOOM CYLINDER	3360 - 56
5H19	HOSES, BOOM CYLINDER (410D)	3360 - 44
5I5	HOSES, BOOM CYLINDER (410D)	3360 - 54
5H23	HOSES, BUCKET CYLINDER	3360 - 48
5I9	HOSES, BUCKET CYLINDER	3360 - 58
3F1	HOSES, COMPRESSOR	1830 - 36
3F3	HOSES, COMPRESSOR	1830 - 38
3F1	HOSES, CONDENSER	1830 - 36
3F3	HOSES, CONDENSER	1830 - 38
5I1	HOSES, CROWD CYLINDER	3360 - 50
5I11	HOSES, CROWD CYLINDER	3360 - 60
1J4	HOSES, FUEL	0560 - 2
1J6	HOSES, FUEL	0560 - 4
3H11	HOSES, HYDRAULIC OIL COOLER	2160 - 26
3G20	HOSES, MAIN HYDRAULIC	2160 - 16
3H1	HOSES, MAIN HYDRAULIC	2160 - 20
3H5	HOSES, MAIN HYDRAULIC	2160 - 23A
1I10	HOSES, RADIATOR	0510 - 2
1I12	HOSES, RADIATOR	0510 - 3A
3H22	HOSES, REAR EQUIPMENT	2160 - 35A
3H20	HOSES, REAR MOUNTED EQUIPMENT	2160 - 34
3I1	HOSES, REAR MOUNTED EQUIPMENT	2160 - 36
3I3	HOSES, REAR MOUNTED EQUIPMENT	2160 - 37A
5H13	HOSES, STABILIZER CYLINDER	3360 - 38
2B22	HOSES, STEERING	0960 - 8
2C1	HOSES, STEERING	0960 - 12
2C3	HOSES, STEERING	0960 - 14
2B24	HOSES, STEERING, PRIORITY, AND TRANSMISSION	0960 - 10
5H15	HOSES, SWING CYLINDER	3360 - 40
5H17	HOSES, SWING CYLINDER	3360 - 42
2G7	HOUR METER	1676 - 2
2G9	HOUR METER	1676 - 4
3D23	HOUSING, AIR CONDITIONING	1830 - 10
3E1	HOUSING, AIR CONDITIONING	1830 - 12
3E3	HOUSING, AIR CONDITIONING	1830 - 14
3E5	HOUSING, AIR CONDITIONING	1830 - 16
2E14	HOUSING, ALTERNATOR	1672 - 4
1H5	HOUSING, CENTER AND ROTATING	0416 - 2
1B19	HOUSING, DIFFERENTIAL	0210 - 1
5F14	HOUSING, EXTENDIBLE DIPPERSTICK	3340 - 18
5F15	HOUSING, EXTENDIBLE DIPPERSTICK	3340 - 19
5F16	HOUSING, EXTENDIBLE DIPPERSTICK	3340 - 20
1C8	HOUSING, FRONT AXLE (MFWD)	0250 - 8
3B17	HOUSING, FRONT INSTRUMENT PANEL	1810 - 2
3F12	HOUSING, GRILLE	1921 - 1
3F13	HOUSING, GRILLE	1921 - 2
3D23	HOUSING, HEATER	1830 - 10
3E1	HOUSING, HEATER	1830 - 12
1B17	HOUSING, REAR AXLE	0201 - 1
1E21	HOUSING, REVERSER OIL FILTER	0360 - 4
1E23	HOUSING, REVERSER OIL FILTER	0360 - 6
3B19	HOUSING, SIDE INSTRUMENT PANEL	1810 - 4
1H19	HOUSING, STARTING MOTOR DRIVE	0422 - 2
1C10	HOUSING, STEERING (MFWD)	0250 - 10
1C12	HOUSING, STEERING (MFWD)	0250 - 12
1B22	HUB CAP, FRONT WHEEL	0230 - 1
1B22	HUB, FRONT WHEEL	0230 - 1
1C10	HUB, STEERING (MFWD)	0250 - 10
1C12	HUB, STEERING (MFWD)	0250 - 12
3E5	HVAC MODULE	1830 - 16
3E7	HVAC MODULE CASE SEALS, HEATER	1830 - 18
3G10	HYDRAULIC CHARGE PUMP	2160 - 6
3G17	HYDRAULIC FILTER RESTRICTION SWITCH	2160 - 13
3G18	HYDRAULIC FILTER RESTRICTION SWITCH	2160 - 13A
3H20	HYDRAULIC LINES, REAR MOUNTED EQUIPMENT	2160 - 34
3I1	HYDRAULIC LINES, REAR MOUNTED EQUIPMENT	2160 - 36
3I3	HYDRAULIC LINES, REAR MOUNTED EQUIPMENT	2160 - 37A
3H16	HYDRAULIC OIL COOLER	2160 - 32
3H18	HYDRAULIC OIL COOLER	2160 - 33A
3H16	HYDRAULIC OIL COOLER HOSE	2160 - 32
3H18	HYDRAULIC OIL COOLER HOSE	2160 - 33A
3H11	HYDRAULIC OIL COOLER HOSES	2160 - 26
3G17	HYDRAULIC OIL FILTER	2160 - 13
3G18	HYDRAULIC OIL FILTER	2160 - 13A
1D13	HYDRAULIC OIL LINES, MFWD CONTROL VALVE	0315 - 10
3G6	HYDRAULIC PUMP	2160 - 2
3G5	HYDRAULIC PUMP ASSEMBLY	2160 - 1
3G11	HYDRAULIC PUMP DESTROKE SOLENOID	2160 - 7
3G16	HYDRAULIC PUMP DRIVE SHAFT	2160 - 12
3G14	HYDRAULIC PUMP OVERHAUL KIT	2160 - 10
3G12	HYDRAULIC PUMP OVERHAUL KIT (NON-UNITIZED)	2160 - 8
3G8	HYDRAULIC PUMP STROKE CONTROL VALVE (UNITIZED)	2160 - 4
1J3	HYDRAULIC PUMP SUPPORT	0540 - 1
3H7	HYDRAULIC RESERVOIR	2160 - 24
3H9	HYDRAULIC RESERVOIR	2160 - 25A
3H7	HYDRAULIC RESERVOIR BREATHER FILTER	2160 - 24
3H9	HYDRAULIC RESERVOIR BREATHER FILTER	2160 - 25A
3H7	HYDRAULIC RESERVOIR DIPSTICK	2160 - 24
3H9	HYDRAULIC RESERVOIR DIPSTICK	2160 - 25A
3G22	HYDRAULIC SYSTEM, MAIN	2160 - 18
3H3	HYDRAULIC SYSTEM, MAIN	2160 - 22
4D1	HYDRAULIC VALVE, LOADER	3160 - 12
4D2	HYDRAULIC VALVE, LOADER	3160 - 13
4D3	HYDRAULIC VALVE, LOADER	3160 - 14
4D4	HYDRAULIC VALVE, LOADER	3160 - 15
4D11	HYDRAULIC VALVE, RELIEF	3160 - 22
5H9	HYDRAULICS, BACKHOE VALVE PRESSURE AND RETURN	3360 - 34
5H11	HYDRAULICS, BACKHOE VALVE PRESSURE AND RETURN	3360 - 36
5H21	HYDRAULICS, BOOM CYLINDER	3360 - 46
5I7	HYDRAULICS, BOOM CYLINDER	3360 - 56
5H19	HYDRAULICS, BOOM CYLINDER (410D)	3360 - 44
5I5	HYDRAULICS, BOOM CYLINDER (410D)	3360 - 54
5H23	HYDRAULICS, BUCKET CYLINDER	3360 - 48
5I9	HYDRAULICS, BUCKET CYLINDER	3360 - 58
4C1	HYDRAULICS, BUCKET, THIRD FUNCTION, MULTI-PURPOSE	3102 - 12
5I1	HYDRAULICS, CROWD CYLINDER	3360 - 50
5I11	HYDRAULICS, CROWD CYLINDER	3360 - 60
5I3	HYDRAULICS, EXTENDIBLE DIPPERSTICK EXTENSION CYLINDER	3360 - 52
5I15	HYDRAULICS, EXTENDIBLE DIPPERSTICK EXTENSION CYLINDER	3360 - 64
4D13	HYDRAULICS, LOADER BOOM CYLINDER	3160 - 24
4D15	HYDRAULICS, LOADER BOOM CYLINDER	3160 - 26
4D17	HYDRAULICS, LOADER BOOM CYLINDER	3160 - 28
2C12	HYDRAULICS, SERVICE BRAKE	1060 - 4
2C14	HYDRAULICS, SERVICE BRAKE	1060 - 6
5H13	HYDRAULICS, STABILIZER CYLINDER	3360 - 38
5I13	HYDRAULICS, STANDARD BACKHOE WITH EXTENDIBLE DIPPERSTICK	3360 - 62
2C1	HYDRAULICS, STEERING	0960 - 12
2C3	HYDRAULICS, STEERING VALVE	0960 - 14
5H15	HYDRAULICS, SWING CYLINDER	3360 - 40
5H17	HYDRAULICS, SWING CYLINDER	3360 - 42
4D21	HYDRAULICS, THIRD FUNCTION	3160 - 32
5I3	HYDRAULICS,EXTENDIBLE DIPPERSTICK, BUCKET CYLINDER	3360 - 52

ALPHABETICAL INDEX - CONTINUED

GRID		PAGE
5I15	HYDRAULICS,EXTENDIBLE DIPPERSTICK, BUCKET CYLINDER	3360 - 64

I

1F15	IDLER GEARS, CRANKSHAFT	0401 - 2
2G7	IGNITION KEY	1676 - 2
2G9	IGNITION KEY	1676 - 4
2G7	IGNITION SWITCH	1676 - 2
2G9	IGNITION SWITCH	1676 - 4
2G7	INDICATOR, PARK BRAKE WARNING	1676 - 2
2G9	INDICATOR, PARK BRAKE WARNING	1676 - 4
3B17	INDICATOR, TURN SIGNAL	1810 - 2
5G9	INLET BACKHOE VALVE COVER	3360 - 8
5G11	INLET BACKHOE VALVE COVER	3360 - 10
5H3	INLET SECTION, BACKHOE VALVE	3360 - 28
4C17	INLET SECTION, LOADER VALVE	3160 - 2
4D7	INLET/PRIORITY VALVE	3160 - 18
4D9	INLET, LOADER CONTROL VALVE	3160 - 20
1C20	INPUT SHAFT (MFWD)	0250 - 20
1E1	INPUT SHAFT, TRANSMISSION (WITHOUT MFWD)	0341 - 10
3B17	INSTRUMENT PANEL	1810 - 2
2G7	INSTRUMENT PANEL DECAL	1676 - 2
2G9	INSTRUMENT PANEL DECAL	1676 - 4
2G7	INSTRUMENT PANEL SIDE	1676 - 2
2G9	INSTRUMENT PANEL SIDE	1676 - 4
1H2	INTAKE SYSTEM, AIR	0414 - 1
1H3	INTAKE SYSTEM, AIR (WITHOUT TURBOCHARGER)	0414 - 2
1G17	INTAKE VALVE	0409 - 2
3F21	INTERIOR REAR VIEW MIRROR	2002 - 1
1J3	ISOLATOR, ENGINE MOUNT	0540 - 1
3B22	ISOLATORS, CAB MOUNTING	1810 - 6
1I9	ISOLATORS, RADIATOR	0510 - 1
3C18	ISOLATORS, ROPS FRAME	1810 - 26

K

1J8	KEY, FUEL TANK LOCK	0560 - 6
2G7	KEY, IGNITION	1676 - 2
2G9	KEY, IGNITION	1676 - 4
3D7	KIT, ADJUSTER LATCH	1821 - 10
3D7	KIT, ADJUSTER PUCK	1821 - 10
3D11	KIT, ADJUSTER PUCK	1821 - 14
2D13	KIT, AIR CONDITIONER O-RING REPAIR	1330 - 1
5C11	KIT, ATTACHING PINS	3302 - 11C
5J1	KIT, BACKHOE BOOM CYLINDER REPAIR	3360 - 74
5J3	KIT, BACKHOE BOOM CYLINDER REPAIR	3360 - 76
5J9	KIT, BACKHOE BOOM CYLINDER REPAIR	3360 - 82
6B22	KIT, BACKHOE CROWD CYLINDER REPAIR	3360A - 10
6B24	KIT, BACKHOE CROWD CYLINDER REPAIR	3360A - 12
1F24	KIT, BASIC ENGINE OVERHAUL	0404 - 2
1G5	KIT, BASIC ENGINE OVERHAUL	0404 - 8
3G12	KIT, CHARGE PUMP OVERHAUL	2160 - 8
3E21	KIT, COMPRESSOR HARDWARE	1830 - 32
3E15	KIT, COMPRESSOR, AIR CONDITIONING	1830 - 26
1I1	KIT, CYLINDER HEAD REMOVAL GASKET	0452 - 1
2D12	KIT, DECAL (MODIFIED CONTROL LEVER PATTERN)	1320 - 6
1I2	KIT, ENGINE OVERHAUL GASKET	0452 - 2
5J13	KIT, EXTENDIBLE DIPPER	3360 - 86
5J15	KIT, EXTENDIBLE DIPPER	3360 - 88
6B14	KIT, EXTENDIBLE DIPPER	3360A - 2
6B16	KIT, EXTENDIBLE DIPPER	3360A - 4
6B22	KIT, EXTENDIBLE DIPPER	3360A - 10
6B24	KIT, EXTENDIBLE DIPPER	3360A - 12
6C1	KIT, EXTENDIBLE DIPPERSTICK REPAIR	3360A - 14
6C3	KIT, EXTENDIBLE DIPPERSTICK REPAIR	3360A - 16
5E13	KIT, FIFTH FN LEVER FOR THREE LEVER BACKHOE LINKAGE CONTROLS	3315 - 36
2E1	KIT, FLUID ANALYSIS PRODUCTS (CUSTOMER CONVENIENCE PACKS)	1369 - 14
2D21	KIT, FOR OFF-SEASON STORAGE	1369 - 7
1H1	KIT, FUEL INJECTION PUMP ELECTRIC SHUT-OFF	0413 - 8
3G14	KIT, HYDRAULIC PUMP OVERHAUL	2160 - 10
3G12	KIT, HYDRAULIC PUMP OVERHAUL (NON-UNITIZED)	2160 - 8
3D7	KIT, KNOB	1821 - 10
3D11	KIT, KNOB	1821 - 14
4D11	KIT, LOADER RELIEF VALVE	3160 - 22
2D14	KIT, LOCTITE SERVICE	1330 - 2
3I13	KIT, LOW FLOW AUXILIARY SOLENOID VALVE	2160 - 46
3I15	KIT, LOW FLOW AUXILIARY SOLENOID VALVE	2160 - 48
4E3	KIT, MULTI-PURPOSE BUCKET CYLINDER REPAIR	3160 - 38
2D16	KIT, O-RING	1369 - 2
2D18	KIT, O-RING	1369 - 4
2D20	KIT, O-RINGS, FLAT FACE SEAL	1369 - 6
2C5	KIT, OVERHAUL, TILT STEERING COLUMN	0960 - 16
1F22	KIT, PISTON-LINER	0403 - 2
2C7	KIT, POWER STEERING VALVE REPAIR	0960 - 18
3H22	KIT, REAR EQUIPMENT HOSES	2160 - 35A
3H22	KIT, REAR EQUIPMENT OIL LINES	2160 - 35A
3H20	KIT, REAR MOUNTED EQUIPMENT	2160 - 34
3I1	KIT, REAR MOUNTED EQUIPMENT	2160 - 36
3I3	KIT, REAR MOUNTED EQUIPMENT	2160 - 37A
5G22	KIT, SEAL, BACKHOE CONTROL VALVE	3360 - 21
5G19	KIT, SEAL, RELIEF VALVE	3360 - 18
5G20	KIT, SEAL, RELIEF VALVE	3360 - 19
4C18	KIT, SECTION SEAL	3160 - 3
5G22	KIT, SECTION SEAL, AUXILIARY SECTION	3360 - 21
5G22	KIT, SECTION SEAL, BOOM SECTION	3360 - 21
5G22	KIT, SECTION SEAL, BUCKET SECTION	3360 - 21
5G22	KIT, SECTION SEAL, CROWD SECTION	3360 - 21
5G22	KIT, SECTION SEAL, SWING SECTION	3360 - 21
3I5	KIT, SELECTIVE FLOW SOLENOID VALVE	2160 - 38
3I7	KIT, SELECTIVE FLOW SOLENOID VALVE	2160 - 40
3E17	KIT, SHAFT SEAL	1830 - 28
5D15	KIT, SIXTH FUNCTION FOOT PEDAL CONTROL FIELD	3315 - 22
5G22	KIT, SPOOL SEAL, AUXILIARY SECTION	3360 - 21
5G22	KIT, SPOOL SEAL, BOOM SECTION	3360 - 21
5G22	KIT, SPOOL SEAL, BUCKET SECTION	3360 - 21
5G22	KIT, SPOOL SEAL, CROWD SECTION	3360 - 21
5G22	KIT, SPOOL SEAL, SWING SECTION	3360 - 21
2G17	KIT, STABILIZER GUARD	1746 - 4
2B18	KIT, STEERING CYLINDER	0960 - 4
5I17	KIT, SWING CYLINDER REPAIR	3360 - 66
5I18	KIT, SWING CYLINDER REPAIR	3360 - 67
5I19	KIT, SWING CYLINDER REPAIR	3360 - 68
5I21	KIT, SWING CYLINDER REPAIR	3360 - 70
5I20	KIT, SWING CYLINDER REPAIR (310D)	3360 - 69
5I22	KIT, SWING CYLINDER REPAIR (310D)	3360 - 71
3D7	KIT, SWIVEL	1821 - 10
3D11	KIT, SWIVEL	1821 - 14
2C5	KIT, TILT STEERING COLUMN	0960 - 16
1H5	KIT, TURBOCHARGER HARDWARE	0416 - 2
5D21	KIT, TWO LEVER BACKHOE CONTROL LEVER LINKAGE	3315 - 28
1H8	KIT, WATER PUMP REPAIR	0417 - 2

ALPHABETICAL INDEX - CONTINUED

GRID		PAGE
5D9	KIT, 2-LEVER BACKHOE CONTROL LINKAGE FOR EXTENDIBLE DIPPERSTICK	3315 - 16
5D13	KIT, 2-LEVER BACKHOE CONTROL LINKAGE FOR FIFTH FUNCTION PEDAL	3315 - 20
5E15	KIT, 2-LEVER BACKHOE CONTROL LINKAGE FOR STANDARD DIPPERSTICK	3315 - 38
3E19	KIT,AIR COMPRESSOR CLUTCH	1830 - 30
3E19	KIT,AIR COMPRESSOR STATOR	1830 - 30
3E23	KIT,AIR CONDITIONING	1830 - 34
3F1	KIT,AIR CONDITIONING	1830 - 36
3F3	KIT,AIR CONDITIONING	1830 - 38
4E4	KIT,MULTI-PURPOSE BUCKET CYLINDER REPAIR	3160 - 38A
4E5	KIT,MULTI-PURPOSE BUCKET CYLINDER REPAIR	3160 - 38B
5J5	KITS, BACKHOE BOOM CYLINDER REPAIR (310D, 315D)	3360 - 78
5J7	KITS, BACKHOE BOOM CYLINDER REPAIR (310D, 315D)	3360 - 80
5J13	KITS, BACKHOE BUCKET CYLINDER REPAIR	3360 - 86
5J15	KITS, BACKHOE BUCKET CYLINDER REPAIR	3360 - 88
6B14	KITS, BACKHOE BUCKET CYLINDER REPAIR	3360A - 2
6B16	KITS, BACKHOE BUCKET CYLINDER REPAIR	3360A - 4
5H4	KITS, BACKHOE VALVE	3360 - 29
5H5	KITS, BACKHOE VALVE	3360 - 30
5H6	KITS, BACKHOE VALVE	3360 - 31
4E6	KITS, BOOM LIFT CYLINDER REPAIR	3160 - 39
4E7	KITS, BOOM LIFT CYLINDER REPAIR	3160 - 40
4D10	KITS, LOADER VALVE	3160 - 21
6C12	KITS, STABILIZER CYLINDER REPAIR	3360A - 28
6C14	KITS, STABILIZER CYLINDER REPAIR	3360A - 30
5H7	KITS, STABILIZER VALVE	3360 - 32
3D15	KNOB, HEATER VALVE	1830 - 2
3D7	KNOB, KIT	1821 - 10
3D11	KNOB, KIT	1821 - 14
3D9	KNOB, SEAT ADJUSTING	1821 - 12
1B23	KNUCKLE AND SPINDLE ASSEMBLY	0230 - 2

L

5D9	LABEL, BACKHOE CONTROL LEVER	3315 - 16
5D13	LABEL, BACKHOE CONTROL LEVER	3315 - 20
5E15	LABEL, BACKHOE CONTROL LEVER	3315 - 38
3B22	LABEL, CAB FRAME	1810 - 6
5D7	LABEL, SIXTH FUNCTION CONTROL LEVER	3315 - 14
5D11	LABEL, SIXTH FUNCTION CONTROL LEVER	3315 - 18
5E13	LABEL, THREE LEVER WITH EXTENDABLE	3315 - 36
2D6	LABELS	1320 - 2
2D8	LABELS	1320 - 4
2D10	LABELS	1320 - 5A
2G7	LAMP, FAULT	1676 - 2
2G9	LAMP, FAULT	1676 - 4
2E16	LAMP, ROTATING BEACON	1673 - 1
3D7	LATCH KIT, ADJUSTER	1821 - 10
3D11	LATCH KIT, ADJUSTER	1821 - 14
3D23	LATCH, CAB AIR FILTER	1830 - 10
3C15	LATCH, CAB DOOR	1810 - 22
3C1	LATCH, CAB REAR WINDOW	1810 - 9A
3B24	LATCH, REAR CAB WINDOW	1810 - 8
3C5	LATCH, SIDE WINDOW LATCH	1810 - 12
2F23	LEAD, WIRE, KIT	1674 - 26
2G1	LEAD, WIRE, KIT	1674 - 28
1G22	LEAK-OFF LINE, FUEL INJECTION	0413 - 4
3C7	LEFT-HAND CAB DOOR	1810 - 14
3C7	LEFT-HAND CAB DOOR WINDOW	1810 - 14
3C7	LEFT-HAND DOOR HANDLE	1810 - 14
3C7	LEFT-HAND DOOR SEAL	1810 - 14
5E13	LEVER, FIFTH FN FOR THREE LEVER CONTROLS	3315 - 36
5E17	LEVER, FOUR-LEVER CONTROLS, STANDARD BACKHOE	3315 - 40
5E19	LEVER, FOUR-LEVER CONTROLS, STANDARD BACKHOE	3315 - 42
5E21	LEVER, FOUR-LEVER CONTROLS, STANDARD BACKHOE	3315 - 44
2C18	LEVER, PARK BRAKE	1115 - 2
5C23	LEVER, STABILIZER	3315 - 6
5D1	LEVER, STABILIZER	3315 - 8
5E9	LEVER, THREE, BACKHOE CONTROL VALVE	3315 - 34
5E11	LEVER, THREE, BACKHOE CONTROL VALVE	3315 - 35A
5E5	LEVER, THREE, EXTENDIBLE BACKHOE CONTROL VALVE	3315 - 32
5E7	LEVER, THREE, EXTENDIBLE BACKHOE CONTROL VALVE	3315 - 33A
5E1	LEVER, THREE, STANDARD BACKHOE CONTROL VALVE	3315 - 30
5E3	LEVER, THREE, STANDARD BACKHOE CONTROL VALVE	3315 - 31A
1D9	LEVER, TRANSMISSION SHIFTER	0315 - 6
1D11	LEVER, TRANSMISSION SHIFTER	0315 - 8
4E6	LIFT CYLINDER	3160 - 39
4E7	LIFT CYLINDER	3160 - 40
4D19	LIFT CYLINDER HYDRAULICS	3160 - 30
4D23	LIFT CYLINDER HYDRAULICS	3160 - 34
4E1	LIFT CYLINDER HYDRAULICS	3160 - 36
2E19	LIGHT, BRAKE (ROPS)	1673 - 4
3C3	LIGHT, CAB DOME	1810 - 10
2E19	LIGHT, FRONT (ROPS)	1673 - 4
2E17	LIGHT, FRONT, WITH CAB	1673 - 2
2E17	LIGHT, REAR, WITH CAB	1673 - 2
2E17	LIGHT, STOP, WITH CAB	1673 - 2
2E19	LIGHT, TAIL (ROPS)	1673 - 4
2E17	LIGHT, TAIL, WITH CAB	1673 - 2
2E17	LIGHT, TURN SIGNAL LIGHT, WITH CAB	1673 - 2
2E19	LIGHTS, REAR (ROPS)	1673 - 4
2E19	LIGHTS, TURN SIGNAL (ROPS)	1673 - 4
3G20	LINE, LOADER VALVE	2160 - 16
3H1	LINE, LOADER VALVE	2160 - 20
3H5	LINE, LOADER VALVE	2160 - 23A
1F22	LINER, CYLINDER	0403 - 2
5I9	LINES, BUCKET CYLINDER,STANDARD AND EXTENDIBLE	3360 - 58
1H12	LINES, FUEL	0420 - 1
1H14	LINES, FUEL	0420 - 3
1G22	LINES, FUEL INJECTION	0413 - 4
1F4	LINES, TRANSMISSION LUBRICATION	0360 - 12
1H6	LINES, TURBOCHARGER OIL	0416 - 3
2C14	LINES,BRAKE	1060 - 6
2C17	LINING, BRAKE	1115 - 1
2C17	LINK, BRAKE ANCHOR	1115 - 1
4C11	LINKAGE AND PLUMBING THIRD FUNCTION KIT	3115 - 8
5D3	LINKAGE AND VALVE, FOOT CONTROL, FIFTH FUNCTION (TWO-LEVER)	3315 - 10
5D5	LINKAGE AND VALVE, FOOT CONTROL, FIFTH FUNCTION (TWO-LEVER)	3315 - 12
5D7	LINKAGE AND VALVE, FOOT CONTROL, SIXTH FUNCTION (TWO-LEVER)	3315 - 14
5E13	LINKAGE BACKHOE, FIFTH FN LEVER FOR THREE LEVER CONTROLS	3315 - 36
5D11	LINKAGE BACKHOE, FOOT CONTROL, SIXTH FUNCTION (TWO-LEVER)	3315 - 18

ALPHABETICAL INDEX - CONTINUED

GRID		PAGE
5D9	LINKAGE FIELD KIT, 2-LEVER BACKHOE FOR EXTENDIBLE DIPPERSTICK	3315 - 16
5D13	LINKAGE FIELD KIT, 2-LEVER BACKHOE FOR FIFTH FUNCTION PEDAL	3315 - 20
5E15	LINKAGE FIELD KIT, 2-LEVER BACKHOE FOR STANDARD DIPPERSTICK	3315 - 38
5E9	LINKAGE THREE LEVER BACKHOE CONTROL VALVE	3315 - 34
5E11	LINKAGE THREE LEVER BACKHOE CONTROL VALVE	3315 - 35A
5E5	LINKAGE THREE LEVER CONTROL VALVE EXTENDIBLE BACKHOE	3315 - 32
5E7	LINKAGE THREE LEVER CONTROL VALVE EXTENDIBLE BACKHOE	3315 - 33A
5E1	LINKAGE THREE LEVER CONTROL VALVE, STANDARD BACKHOE	3315 - 30
5E3	LINKAGE THREE LEVER CONTROL VALVE, STANDARD BACKHOE	3315 - 31A
5D15	LINKAGE, BACKHOE SIXTH FUNCTION FOOT PEDAL CONTROL FIELD KIT	3315 - 22
5C17	LINKAGE, BOOM LOCK	3315 - 3A
5C21	LINKAGE, BOOM LOCK	3315 - 5A
5C15	LINKAGE, BOOM LOCK (410D)	3315 - 2
5C19	LINKAGE, BOOM LOCK (510D)	3315 - 4
2C17	LINKAGE, BRAKE	1115 - 1
4C5	LINKAGE, BUCKET LEVELING	3115 - 2
4C7	LINKAGE, BUCKET LEVELING	3115 - 4
1I17	LINKAGE, ENGINE SPEED CONTROL	0515 - 2
5E17	LINKAGE, FOUR-LEVER CONTROL VALVE, STANDARD BACKHOE	3315 - 40
5E19	LINKAGE, FOUR-LEVER CONTROL VALVE, STANDARD BACKHOE	3315 - 42
5E21	LINKAGE, FOUR-LEVER CONTROL VALVE, STANDARD BACKHOE	3315 - 44
4C15	LINKAGE, LOADER BUCKET CYLINDER	3140 - 4
4C9	LINKAGE, LOADER CONTROL VALVE	3115 - 6
4C11	LINKAGE, LOADER CONTROL VALVE, THIRD FUNCTION	3115 - 8
2C18	LINKAGE, PARK BRAKE	1115 - 2
5C23	LINKAGE, STABILIZER VALVE	3315 - 6
5D1	LINKAGE, STABILIZER VALVE	3315 - 8
5D15	LINKAGE, TWO LEVER BACKHOE CONTROL LEVER	3315 - 22
5D17	LINKAGE, TWO LEVER BACKHOE CONTROL LEVER	3315 - 24
5D19	LINKAGE, TWO LEVER BACKHOE CONTROL LEVER	3315 - 26
5D21	LINKAGE, TWO LEVER BACKHOE CONTROL LEVER KIT	3315 - 28
5D9	LINKAGE, 2-LEVER BACKHOE CONTROL LEVER FOR EXTENDIBLE DIPPERSTICK	3315 - 16
5D13	LINKAGE, 2-LEVER BACKHOE CONTROL LEVER FOR FIFTH FUNCTION PEDAL KIT	3315 - 20
5E15	LINKAGE, 2-LEVER BACKHOE CONTROL LEVER FOR STANDARD DIPPERSTICK KIT	3315 - 38
5F24	LINKS, BACKHOE BUCKET	3340 - 28
5F25	LINKS, BACKHOE BUCKET	3340 - 29
4C21	LOAD CHECK PLUG, BUCKET SECTION	3160 - 6
4C13	LOADER BOOM	3140 - 2
4D13	LOADER BOOM CYLINDER HYDRAULICS	3160 - 24
4D15	LOADER BOOM CYLINDER HYDRAULICS	3160 - 26
4D17	LOADER BOOM CYLINDER HYDRAULICS	3160 - 28
2D3	LOADER BOOM SERVICE LOCK	1313 - 1
2D4	LOADER BOOM SERVICE LOCK	1313 - 2
4B15	LOADER BUCKET	3102 - 2
4B17	LOADER BUCKET	3102 - 4
4B19	LOADER BUCKET	3102 - 6
4E8	LOADER BUCKET CYLINDER (410D)	3160 - 41
4E9	LOADER BUCKET CYLINDER (410D)	3160 - 42
4E10	LOADER BUCKET CYLINDER (510D)	3160 - 43
4E11	LOADER BUCKET CYLINDER (510D)	3160 - 44
4C15	LOADER BUCKET CYLINDER LINKAGE	3140 - 4
4D19	LOADER BUCKET LIFT CYLINDER HYDRAULICS	3160 - 30
4D23	LOADER BUCKET LIFT CYLINDER HYDRAULICS	3160 - 34
4E1	LOADER BUCKET LIFT CYLINDER HYDRAULICS	3160 - 36
4B21	LOADER BUCKET PINS	3102 - 8
4B23	LOADER BUCKET,MULTI PURPOSE,92 INCH	3102 - 10
4C16	LOADER CONTROL VALVE	3160 - 1
4D1	LOADER CONTROL VALVE	3160 - 12
4D2	LOADER CONTROL VALVE	3160 - 13
4D3	LOADER CONTROL VALVE	3160 - 14
4D4	LOADER CONTROL VALVE	3160 - 15
4C9	LOADER CONTROL VALVE LINKAGE	3115 - 6
4D6	LOADER CONTROL VALVE, BOOM SECTION	3160 - 17
4D5	LOADER CONTROL VALVE, BUCKET SECTION WITH RETURN-TO-DIG	3160 - 16
4D7	LOADER CONTROL VALVE, INLET	3160 - 18
4D9	LOADER CONTROL VALVE, INLET SECTION	3160 - 20
4D9	LOADER CONTROL VALVE, OUTLET	3160 - 20
2E21	LOADER HARNESS, RETURN-TO-DIG	1674 - 2
2F3	LOADER LEVER CONNECTOR	1674 - 8
2F5	LOADER LEVER CONNECTOR	1674 - 10
2F7	LOADER LEVER CONNECTOR	1674 - 12
2F9	LOADER LEVER CONNECTOR	1674 - 14
2F3	LOADER LEVER, SWITCH	1674 - 8
2F5	LOADER LEVER, SWITCH	1674 - 10
2F7	LOADER LEVER, SWITCH	1674 - 12
2F9	LOADER LEVER, SWITCH	1674 - 14
4C13	LOADER LIFT ARMS	3140 - 2
3B19	LOADER LINKAGE COVER	1810 - 4
5G3	LOADER LINKAGE SHIELDS	3340 - 32
5G4	LOADER LINKAGE SHIELDS	3340 - 33
4D11	LOADER RELIEF VALVES	3160 - 22
4D10	LOADER RELIEF VALVES AND KITS	3160 - 21
4C17	LOADER VALVE BETWEEN SECTION O-RINGS	3160 - 2
4C23	LOADER VALVE BOOM SECTION	3160 - 9
4C19	LOADER VALVE BUCKET SECTION	3160 - 4
4C17	LOADER VALVE INLET SECTION	3160 - 2
3G20	LOADER VALVE LINE	2160 - 16
3H1	LOADER VALVE LINE	2160 - 20
3H5	LOADER VALVE LINE	2160 - 23A
4C22	LOADER VALVE SOLENOID, BUCKET SECTION	3160 - 8
4C17	LOADER VALVE TIE BOLTS	3160 - 2
4C25	LOADER VALVE, THIRD FUNCTION	3160 - 11
4D8	LOADER VALVE, THIRD FUNCTION	3160 - 19
2D3	LOCK BAR, BOOM SERVICE	1313 - 1
2D4	LOCK BAR, BOOM SERVICE	1313 - 2
5F15	LOCK PIN, EXTENDIBLE DIPPERSTICK	3340 - 19
5F2	LOCK, BOOM	3340 - 6
5F4	LOCK, BOOM (510D)	3340 - 8
3F6	LOCK, ENGINE ACCESS DOOR LOCK	1910 - 2
3F8	LOCK, ENGINE ACCESS DOOR LOCK	1910 - 4
1J8	LOCK, FUEL TANK	0560 - 6
3B19	LOCK, VANDAL GUARD	1810 - 4
5F2	LOCKING PIN, SWING FRAME	3340 - 6
2D14	LOCTITE SERVICE KIT	1330 - 2
2F3	LOGIC MODULE	1674 - 8
2F5	LOGIC MODULE	1674 - 10
2F7	LOGIC MODULE	1674 - 12
2F9	LOGIC MODULE	1674 - 14
3I11	LOW FLOW AUXILIARY SOLENOID VALVE	2160 - 44
3I13	LOW FLOW AUXILIARY SOLENOID VALVE KIT	2160 - 46
3I15	LOW FLOW AUXILIARY SOLENOID VALVE KIT	2160 - 48
3C1	LOWER REAR CAB WINDOW	1810 - 9A
6C16	LOWERING DEVICE,CONTOLLED, BOOM CYL.KIT	3360A - 32
6C20	LOWERING DEVICE,CONTOLLED, BOOM CYL.KIT	3360A - 36
6C18	LOWERING DEVICE,CONTOLLED, CROWD CYL.KIT	3360A - 34

ALPHABETICAL INDEX - CONTINUED

GRID		PAGE
2D15	LUBRICANT, AIR CONDITIONING	1369 - 1
2D21	LUBRICANT, CYLINDER LINER PACKING	1369 - 7
2D21	LUBRICANT, ENGINE VALVE STEM	1369 - 7
1F4	LUBRICATION LINES, TRANSMISSION	0360 - 12
2E2	LUBRICATION SYSTEM, FRONT AXLE	1370 - 1

M

2E3	MACHINE FILTERS	1399 - 3
1F23	MAIN BEARING CAPS	0404 - 1
1F15	MAIN BEARINGS	0401 - 2
2G12	MAIN FRAME	1740 - 2
2G13	MAIN FRAME	1740 - 4
2G14	MAIN FRAME	1740 - 5
2G13	MAIN FRAME BUMPER	1740 - 4
1B18	MAIN FRAME TIE BARS	0201 - 2
2G13	MAIN FRAME TRUNION	1740 - 4
2G14	MAIN FRAME TRUNNION BLOCK	1740 - 5
3G20	MAIN HYDRAULIC FILTER	2160 - 16
3H1	MAIN HYDRAULIC FILTER	2160 - 20
3H5	MAIN HYDRAULIC FILTER	2160 - 23A
3G20	MAIN HYDRAULIC HOSES	2160 - 16
3H1	MAIN HYDRAULIC HOSES	2160 - 20
3H5	MAIN HYDRAULIC HOSES	2160 - 23A
3G20	MAIN HYDRAULIC LINES	2160 - 16
3H1	MAIN HYDRAULIC LINES	2160 - 20
3H5	MAIN HYDRAULIC LINES	2160 - 23A
3G20	MAIN HYDRAULIC PUMP	2160 - 16
3H1	MAIN HYDRAULIC PUMP	2160 - 20
3H5	MAIN HYDRAULIC PUMP	2160 - 23A
3H7	MAIN HYDRAULIC RESERVOIR	2160 - 24
3H9	MAIN HYDRAULIC RESERVOIR	2160 - 25A
3G22	MAIN HYDRAULIC SYSTEM	2160 - 18
3H3	MAIN HYDRAULIC SYSTEM	2160 - 22
3G20	MAIN HYDRAULICS	2160 - 16
3H1	MAIN HYDRAULICS	2160 - 20
3H5	MAIN HYDRAULICS	2160 - 23A
1F1	MANIFOLD AND OIL PUMP, REVERSER	0360 - 8
1G19	MANIFOLD, EXHAUST	0410 - 2
1G20	MANIFOLD, EXHAUST	0410 - 3
3C17	MAT, FLOOR	1810 - 24
3D13	MATTING,SAFETY	1822 - 2
1D15	MECHANICAL FRONT WHEEL DRIVE	0315 - 12
2G15	MECHANICAL FRONT WHEEL DRIVE SHAFT GUARD	1746 - 2
2G16	MECHANICAL FRONT WHEEL DRIVE SHAFT GUARD	1746 - 3
1C10	MECHANICAL FRONT WHEEL DRIVE, HOUSING (MFWD)	0250 - 10
2B18	MECHANICAL FRONT WHEEL DRIVE, STEERING CYLINDER	0960 - 4
2B20	MECHANICAL FRONT WHEEL DRIVE, STEERING CYLINDER (MFWD)	0960 - 6
1C10	MECHANICAL FRONT WHEEL DRIVE, STEERING HUB (MFWD)	0250 - 10
2G7	METER, HOUR	1676 - 2
2G9	METER, HOUR	1676 - 4
1E3	MFWD CLUTCH PLATE	0341 - 12
1D13	MFWD CONTROL VALVE	0315 - 10
1D13	MFWD CONTROL VALVE HYDRAULIC OIL LINES	0315 - 10
1E3	MFWD DRUM	0341 - 12
1E3	MFWD PISTON	0341 - 12
1C3	MFWD SHAFT	0250 - 3
2G7	MFWD SWITCH	1676 - 2
2G9	MFWD SWITCH	1676 - 4
1D20	MFWD TRANSFER CASE	0341 - 4
1D24	MFWD TRANSFER CASE	0341 - 8
1D20	MFWD TRANSFER CASE BEARINGS	0341 - 4
1D24	MFWD TRANSFER CASE BEARINGS	0341 - 8
1D20	MFWD TRANSFER CASE GEARS	0341 - 4
1D24	MFWD TRANSFER CASE GEARS	0341 - 8
1D20	MFWD TRANSFER CASE SHAFTS	0341 - 4
1D24	MFWD TRANSFER CASE SHAFTS	0341 - 8
1D20	MFWD WIRING LEAD	0341 - 4
1D20	MFWD, INDICATOR LIGHT PRESSURE SWITCH	0341 - 4
3F21	MIRROR BRACKET, INTERIOR REAR VIEW	2002 - 1
3F22	MIRROR, EXTERNAL	2002 - 2
3F21	MIRROR, INTERIOR REAR VIEW	2002 - 1
2F3	MODULE LOGIC	1674 - 8
2F5	MODULE LOGIC	1674 - 10
2F7	MODULE LOGIC	1674 - 12
2F9	MODULE LOGIC	1674 - 14
3E5	MODULE, HVAC	1830 - 16
3E3	MODULE,HEATER	1830 - 14
3E9	MOTOR, AIR CONDITIONING	1830 - 20
3E11	MOTOR, AIR CONDITIONING	1830 - 22
3E13	MOTOR, AIR CONDITIONING	1830 - 24
3E9	MOTOR, CAB HEATER	1830 - 20
3E11	MOTOR, CAB HEATER	1830 - 22
3E13	MOTOR, CAB HEATER	1830 - 24
3C13	MOTOR, FRONT WINDOW WIPER	1810 - 20
1H16	MOTOR, STARTING	0422 - 1
1H17	MOTOR, STARTING, REPLACEMENT	0422 - 1A
1H21	MOTOR, STARTING, REPLACEMENT KIT	0422 - 4
3E9	MOTORS, STANDARD HEATER	1830 - 20
1J3	MOUNT, ENGINE	0540 - 1
1E13	MOUNT, REVERSER RESILIENT (REAR)	0342 - 1
3F1	MOUNTING BAR, RECEIVER DRYER	1830 - 36
3F3	MOUNTING BAR, RECEIVER DRYER	1830 - 38
4C9	MOUNTING BRACKET, CONTROL VALVE	3115 - 6
4C11	MOUNTING BRACKET, CONTROL VALVE	3115 - 8
3F19	MOUNTING PLATE, RADIO/SPEAKER	2001 - 2
1J1	MUFFLER (WITH TURBOCHARGER)	0530 - 1
1J2	MUFFLER (WITHOUT TURBOCHARGER)	0530 - 2
1J2	MUFFLER COVER	0530 - 2
1J2	MUFFLER SUPPORT	0530 - 2
4C3	MULTI-PURPOSE BUCKET	3102 - 14
4C3	MULTI-PURPOSE BUCKET CUTTING EDGE	3102 - 14
4E3	MULTI-PURPOSE BUCKET CYLINDER	3160 - 38
4E4	MULTI-PURPOSE BUCKET CYLINDER	3160 - 38A
4E5	MULTI-PURPOSE BUCKET CYLINDER	3160 - 38B
4E4	MULTI-PURPOSE BUCKET CYLINDER REPAIR KIT	3160 - 38A
4E5	MULTI-PURPOSE BUCKET CYLINDER REPAIR KIT	3160 - 38B
4C1	MULTI-PURPOSE BUCKET HYDRAULICS	3102 - 12
4C3	MULTI-PURPOSE BUCKET SHANK	3102 - 14
4C3	MULTI-PURPOSE BUCKET TOOTH	3102 - 14
4C1	MULTI-PURPOSE BUCKET, THIRD FUNCTION HYDRAULICS	3102 - 12
4B23	MULTI-PURPOSE LOADER BUCKET,92 INCH	3102 - 10

N

2F3	NEUTRAL START RELAY	1674 - 8
2F5	NEUTRAL START RELAY	1674 - 10
2F7	NEUTRAL START RELAY	1674 - 12
2F9	NEUTRAL START RELAY	1674 - 14
1D15	NEUTRAL START SWITCH FOR MFWD	0315 - 12
3D5	NON-SUSPENSION SEAT	1821 - 8
1G21	NOZZLE, FUEL INJECTION	0413 - 2

ALPHABETICAL INDEX - CONTINUED

GRID		PAGE
	O	
4D5	O-RING (BETWEEN SECTION)	3160 - 16
4D6	O-RING (BETWEEN SECTIONS)	3160 - 17
4D7	O-RING (END PLATE)	3160 - 18
4D9	O-RING (END PLATE)	3160 - 20
2D16	O-RING KIT	1369 - 2
2D18	O-RING KIT	1369 - 4
2D13	O-RING REPAIR KIT, AIR CONDITIONER	1330 - 1
2D20	O-RING, FLAT FACE SEAL CAP AND PLUG FITTINGS	1369 - 6
4C17	O-RINGS, BETWEEN SECTION, LOADER VALVE	3160 - 2
2D20	O-RINGS, FLAT FACE SEAL KIT	1369 - 6
2D21	OFF-SEASON STORAGE KIT	1369 - 7
3H13	OIL COOLER BYPASS VALVE	2160 - 29
3H14	OIL COOLER TO HYDRAULIC PUMP OIL LINES	2160 - 30
3H14	OIL COOLER TO TRANSMISSION OIL LINES	2160 - 30
1H10	OIL COOLER, ENGINE	0419 - 2
3H16	OIL COOLER, HYDRAULIC	2160 - 32
3H18	OIL COOLER, HYDRAULIC	2160 - 33A
3H14	OIL COOLER, TRANSMISSION	2160 - 30
1G13	OIL FILLER OPENING COVER	0407 - 4
1G10	OIL FILTER ADAPTER, ENGINE	0407 - 2
1G10	OIL FILTER, ENGINE	0407 - 2
1G11	OIL FILTER, ENGINE	0407 - 2A
3G17	OIL FILTER, HYDRAULIC	2160 - 13
3G18	OIL FILTER, HYDRAULIC	2160 - 13A
1E21	OIL FILTER, REVERSER	0360 - 4
1E23	OIL FILTER, REVERSER	0360 - 6
1F10	OIL FILTER, TRANSAXLE	0360 - 18
1F11	OIL FILTER,TRANSAXLE	0360 - 19
2E3	OIL FILTERS	1399 - 3
3H14	OIL LINES OIL COOLER TO TRANSMISSION	2160 - 30
3G20	OIL LINES, MAIN HYDRAULIC	2160 - 16
3H1	OIL LINES, MAIN HYDRAULIC	2160 - 20
3H5	OIL LINES, MAIN HYDRAULIC	2160 - 23A
3H22	OIL LINES, REAR EQUIPMENT	2160 - 35A
3H20	OIL LINES, REAR MOUNTED EQUIPMENT	2160 - 34
3I1	OIL LINES, REAR MOUNTED EQUIPMENT	2160 - 36
3I3	OIL LINES, REAR MOUNTED EQUIPMENT	2160 - 37A
3H11	OIL LINES, REVERSER	2160 - 26
1E23	OIL LINES, REVERSER OIL FILTER	0360 - 6
1H6	OIL LINES, TURBOCHARGER	0416 - 3
1F6	OIL LINES,TRANSMISSION BRAKE	0360 - 14
1F10	OIL LINES,TRANSMISSION BRAKE	0360 - 18
1F11	OIL LINES,TRANSMISSION BRAKE	0360 - 19
1G8	OIL PAN, ENGINE	0407 - 1A
1F1	OIL PUMP AND MANIFOLD, REVERSER	0360 - 8
1G14	OIL PUMP, ENGINE	0407 - 5
1F8	OIL PUMP,TRANSMISSION BRAKE	0360 - 16
1E19	OIL TEMPERATURE SENDER, TRANSMISSION	0360 - 2
2D15	OIL, ENGINE	1369 - 1
2D22	OILSCAN PLUS TEST KIT, FLUID ANALYSIS	1369 - 10
5H2	OUTLET SECTION, BACKHOE VALVE	3360 - 27
4D9	OUTLET, LOADER CONTROL VALVE	3160 - 20
1E16	OUTPUT SHAFT	0350 - 3
3G12	OVERHAUL KIT, CHARGE PUMP	2160 - 8
3G14	OVERHAUL KIT, HYDRAULIC PUMP	2160 - 10
3G12	OVERHAUL KIT, HYDRAULIC PUMP (NON-UNITIZED)	2160 - 8
2C5	OVERHAUL KIT, TILT STEERING COLUMN	0960 - 16
	P	
1E17	PACKS, BRAKE, FORWARD AND REVERSE	0350 - 4
5F15	PAD, BOTTOM WEAR	3340 - 19
5F18	PAD, EXTENDIBLE DIPPERSTICK	3340 - 22
5F15	PAD, SIDE WEAR	3340 - 19
5E25	PADS, STREET, BACKHOE	3340 - 3
1G8	PAN, ENGINE OIL	0407 - 1A
5E13	PANEL, BACKHOE VALVE COVER (THREE LEVER WITH EXTENDIBLE)	3315 - 36
3B17	PANEL, FRONT INSTRUMENT	1810 - 2
2G7	PANEL, INSTRUMENT SIDE	1676 - 2
2G9	PANEL, INSTRUMENT SIDE	1676 - 4
3F19	PANEL, RADIO TRIM	2001 - 2
2C18	PARK BRAKE ACTUATOR	1115 - 2
2C18	PARK BRAKE ACTUATOR SWITCH	1115 - 2
2F3	PARK BRAKE RELAY	1674 - 8
2F5	PARK BRAKE RELAY	1674 - 10
2F7	PARK BRAKE RELAY	1674 - 12
2F9	PARK BRAKE RELAY	1674 - 14
2C18	PARK BRAKE SENSING SWITCH	1115 - 2
2C18	PARK BRAKE SOLENOID	1115 - 2
2C20	PARK BRAKE SOLENOID	1115 - 4
2G7	PARK BRAKE WARNING INDICATOR	1676 - 2
2G9	PARK BRAKE WARNING INDICATOR	1676 - 4
2C17	PARK BRAKE, LINKAGE	1115 - 1
1D18	PARK BRAKE, LOWER ADJUSTER (WITHOUT MFWD)	0341 - 2
2F3	PARK LIGHT RELAY	1674 - 8
2F5	PARK LIGHT RELAY	1674 - 10
2F7	PARK LIGHT RELAY	1674 - 12
2F9	PARK LIGHT RELAY	1674 - 14
1G24	PARTS, FUEL INJECTION PUMP REPLACEMENT	0413 - 6
5D15	PEDAL FOOT, SIXTH FUNCTION CONTROL FIELD KIT	3315 - 22
2C10	PEDAL, BRAKE	1060 - 2
1B20	PEDAL, DIFFERENTIAL LOCK	0210 - 2
1C23	PIN AXLE PIVOT	0250 - 23
5J13	PIN, BACKHOE BUCKET CYLINDER	3360 - 86
5J15	PIN, BACKHOE BUCKET CYLINDER	3360 - 88
6B14	PIN, BACKHOE BUCKET CYLINDER	3360A - 2
6B16	PIN, BACKHOE BUCKET CYLINDER	3360A - 4
5F24	PIN, BACKHOE BUCKET CYLINDER ROD END	3340 - 28
5F25	PIN, BACKHOE BUCKET CYLINDER ROD END	3340 - 29
5F22	PIN, BUCKET CYLINDER EXTENSION	3340 - 26
4B17	PIN, BUCKET CYLINDER TO BUCKET	3102 - 4
4B19	PIN, BUCKET CYLINDER TO BUCKET	3102 - 6
4B17	PIN, BUCKET LINKS TO BUCKET	3102 - 4
4B19	PIN, BUCKET LINKS TO BUCKET	3102 - 6
5F22	PIN, EXTENDIBLE DIPPERSTICK BUCKET CYLINDER	3340 - 26
5F22	PIN, EXTENDIBLE DIPPERSTICK CROWD CYLINDER	3340 - 26
5F17	PIN, EXTENDIBLE DIPPERSTICK CYLINDER EXTENSION	3340 - 21
5F15	PIN, EXTENDIBLE DIPPERSTICK LOCK TRANSPO RT	3340 - 19
1B23	PIN, FRONT, AXLE PIVOT	0230 - 2
2C17	PIN, PARK BRAKE ANCHOR	1115 - 1
1E6	PIN, SHIFT TOWER	0341 - 15
1B19	PINION, GEAR	0210 - 1
5F10	PINS, BACKHOE BOOM	3340 - 14
5F12	PINS, BACKHOE BOOM	3340 - 16
5J1	PINS, BACKHOE BOOM CYLINDER	3360 - 74
5J3	PINS, BACKHOE BOOM CYLINDER	3360 - 76
5J9	PINS, BACKHOE BOOM CYLINDER	3360 - 82
5J5	PINS, BACKHOE BOOM CYLINDER (310D, 315D)	3360 - 78
5J7	PINS, BACKHOE BOOM CYLINDER (310D, 315D)	3360 - 80
5F24	PINS, BACKHOE BUCKET	3340 - 28

ALPHABETICAL INDEX - CONTINUED

GRID		PAGE
5F25	PINS, BACKHOE BUCKET	3340 - 29
5E23	PINS, BACKHOE BUCKET (CASE BUCKET)	3340 - 1
6B22	PINS, BACKHOE CROWD CYLINDER	3360A - 10
6B24	PINS, BACKHOE CROWD CYLINDER	3360A - 12
5J11	PINS, BOOM CYLINDER, BACKHOE	3360 - 84
4E6	PINS, BOOM LIFT CYLINDER	3160 - 39
4E7	PINS, BOOM LIFT CYLINDER	3160 - 40
4B17	PINS, BUCKET TO LIFT ARM	3102 - 4
4B19	PINS, BUCKET TO LIFT ARM	3102 - 6
4B21	PINS, BUCKET, LOADER	3102 - 8
6B18	PINS, CROWD CYLINDER	3360A - 6
6B20	PINS, CROWD CYLINDER	3360A - 8
6C4	PINS, EXTENDIBLE DIPPERSTICK CYLINDER	3360A - 17
6C5	PINS, EXTENDIBLE DIPPERSTICK CYLINDER	3360A - 19
6C8	PINS, EXTENDIBLE DIPPERSTICK CYLINDER	3360A - 22
6C11	PINS, EXTENDIBLE DIPPERSTICK CYLINDER	3360A - 27
4C13	PINS, LIFT ARMS TO FRAME	3140 - 2
5C9	PINS, REPLACEMENT BACKHOE BUCKETS	3302 - 11A
6C12	PINS, STABILIZER CYLINDER	3360A - 28
6C14	PINS, STABILIZER CYLINDER	3360A - 30
5I23	PINS, SWING CYLINDER	3360 - 72
5F2	PINS, SWING FRAME	3340 - 6
5F4	PINS, SWING FRAME (510D)	3340 - 8
5F6	PINS, SWING FRAME AND (STANDARD BOOM)	3340 - 10
5F8	PINS, SWING FRAME AND WITH 410D HEAVY LIFT BOOM (510D STANDARD)	3340 - 12
5F2	PINS, SWING FRAME LOCK	3340 - 6
5B24	PINS, 304 MM (12") BACKHOE BUCKET	3302 - 3
5C1	PINS, 457 MM (18") BACKHOE BUCKET	3302 - 4
5C3	PINS, 610 MM (24") BACKHOE BUCKET	3302 - 6
5C11	PINS,BACKHOE BUCKET	3302 - 11C
1E3	PISTON (MFWD)	0341 - 12
1F22	PISTON LINER KIT	0403 - 2
1F22	PISTON RINGS	0403 - 2
1F22	PISTON, ENGINE	0403 - 2
2B18	PISTON, STEERING CYLINDER	0960 - 4
1B23	PIVOT PIN FRONT AXLE	0230 - 2
1C4	PLANET GEAR	0250 - 4
1C5	PLANET GEAR (MFWD)	0250 - 5
1E16	PLANET PINION CARRIER	0350 - 3
1C4	PLANETARY DRIVE	0250 - 4
1C5	PLANETARY DRIVE (MFWD)	0250 - 5
1C24	PLANETARY PINION CARRIER	0250 - 24
5G17	PLATE, END, RIGHT, BACKHOE CONTROL VALVE	3360 - 16
3H22	PLATE, REAR EQUIPMENT	2160 - 35A
4C21	PLUG, LOAD CHECK, BUCKET SECTION	3160 - 6
1C6	PLUGS, AXLE CASING (MFWD)	0250 - 6
1C8	PLUGS, AXLE CASING (MFWD)	0250 - 8
4C11	PLUMBING AND LINKAGE THIRD FUNCTION KIT	3115 - 8
4C24	POSITIONER, BOOM SECTION FLOAT	3160 - 10
2B14	POWER STEERING CYLINDER (WITHOUT MFWD)	0960 - 1
2B15	POWER STEERING CYLINDER (WITHOUT MFWD)	0960 - 1A
2B16	POWER STEERING CYLINDER (WITHOUT MFWD)	0960 - 2
2B17	POWER STEERING CYLINDER (WITHOUT MFWD)	0960 - 3
2C7	POWER STEERING VALVE REPAIR KIT	0960 - 18
1I25	PRE-CLEANER	0520 - 7
5H9	PRESSURE HYDRAULICS, BACKHOE VALVE	3360 - 34
5H11	PRESSURE HYDRAULICS, BACKHOE VALVE	3360 - 36
1E19	PRESSURE REGULATING VALVE, TRANSMISSION	0360 - 2
2F11	PRESSURE SWITCH, ENGINE OIL	1674 - 16
2F13	PRESSURE SWITCH, ENGINE OIL	1674 - 18
2F15	PRESSURE SWITCH, ENGINE OIL	1674 - 19A
1D20	PRESSURE SWITCH, MFWD INDICATOR LIGHT	0341 - 4
2F11	PRESSURE SWITCH, REVERSER	1674 - 16
2F13	PRESSURE SWITCH, REVERSER	1674 - 18
2F15	PRESSURE SWITCH, REVERSER	1674 - 19A
3G19	PRIORITY VALVE	2160 - 14
2B24	PRIORITY VALVE HOSES	0960 - 10
4D7	PRIORITY/INLET VALVE	3160 - 18
3D7	PUCK KIT, ADJUSTER	1821 - 10
3D11	PUCK KIT, ADJUSTER	1821 - 14
2E12	PULLEY, ALTERNATOR	1672 - 2
2E15	PULLEY, ALTERNATOR	1672 - 5
1H24	PULLEY, CRANKSHAFT	0429 - 2
3G5	PUMP ASSEMBLY, HYDRAULIC	2160 - 1
1G14	PUMP, ENGINE OIL	0407 - 5
1G15	PUMP, ENGINE OIL	0407 - 6
1G22	PUMP, FUEL INJECTION	0413 - 4
1G24	PUMP, FUEL INJECTION, REPLACEMENT PARTS	0413 - 6
1H15	PUMP, FUEL TRANSFER	0421 - 1
3G6	PUMP, HYDRAULIC	2160 - 2
3G10	PUMP, HYDRAULIC CHARGE	2160 - 6
3G20	PUMP, MAIN HYDRAULIC	2160 - 16
3H1	PUMP, MAIN HYDRAULIC	2160 - 20
3H5	PUMP, MAIN HYDRAULIC	2160 - 23A
1H7	PUMP, WATER	0417 - 1
1I9	PUMP, WATER SUPPORT	0510 - 1
3C22	PUMP, WINDSHIELD WASHER	1810 - 30
1F8	PUMP,TRANSMISSION BRAKE OIL	0360 - 16
1F19	PUSH RODS	0402 - 3

Q

5B22	QUICK COUPLER	3302 - 2

R

1I10	RADIATOR	0510 - 2
1I12	RADIATOR	0510 - 3A
1I12	RADIATOR BAFFLE	0510 - 3A
1I10	RADIATOR CAP	0510 - 2
1I12	RADIATOR CAP	0510 - 3A
1I14	RADIATOR COOLANT RECOVERY TANK	0510 - 4
1I15	RADIATOR COOLANT RECOVERY TANK	0510 - 5
1I12	RADIATOR DRAIN VALVE	0510 - 3A
1I10	RADIATOR FAN GUARD	0510 - 2
1I12	RADIATOR FAN GUARD	0510 - 3A
1I10	RADIATOR FAN SHROUD	0510 - 2
1I12	RADIATOR FAN SHROUD	0510 - 3A
1I10	RADIATOR HOSES	0510 - 2
1I12	RADIATOR HOSES	0510 - 3A
1I9	RADIATOR ISOLATORS	0510 - 1
1I9	RADIATOR SUPPORTS	0510 - 1
3F19	RADIO	2001 - 2
3C17	RAMPS, FLOOR	1810 - 24
1B17	REAR AXLE HOUSING	0201 - 1
1B18	REAR AXLE LOWER MOUNTING PLATE	0201 - 2
1B18	REAR AXLE MOUNTING PLATES	0201 - 2
1C25	REAR AXLE SHAFT	0250 - 25
3B24	REAR CAB WINDOW WIPER	1810 - 8
3B24	REAR CAB WINDOW WIPER MOTOR	1810 - 8
1E8	REAR COVER, REVERSER	0341 - 16
1E10	REAR COVER, REVERSER	0341 - 18
1B13	REAR DRIVE WHEEL	0110 - 1
3H22	REAR EQUIPMENT HOSE KIT	2160 - 35A
3H22	REAR EQUIPMENT OIL LINE KIT	2160 - 35A
3H22	REAR EQUIPMENT OIL LINES	2160 - 35A
2G7	REAR LIGHT SWITCH	1676 - 2
2G9	REAR LIGHT SWITCH	1676 - 4
2E19	REAR LIGHTS (ROPS)	1673 - 4
2E17	REAR LIGHTS, WITH CAB	1673 - 2
3H20	REAR MOUNTED EQUIPMENT	2160 - 34

ALPHABETICAL INDEX - CONTINUED

GRID		PAGE
3I1	REAR MOUNTED EQUIPMENT	2160 - 36
3I3	REAR MOUNTED EQUIPMENT	2160 - 37A
3F21	REAR VIEW MIRROR, INTERIOR	2002 - 1
2G7	REAR WIPER SWITCH	1676 - 2
2G9	REAR WIPER SWITCH	1676 - 4
3F1	RECEIVER DRYER	1830 - 36
3F3	RECEIVER DRYER	1830 - 38
3F1	RECEIVER DRYER MOUNTING BAR	1830 - 36
3F3	RECEIVER DRYER MOUNTING BAR	1830 - 38
2E3	RECIRCULATION FILTER	1399 - 3
1I15	RECOVERY TANK,COOLANT	0510 - 5
3B22	REFLECTOR, CAB REAR MARKER	1810 - 6
3C18	REFLECTOR, ROPS FRAME	1810 - 26
1E19	REGULATING VALVE, TRANSMISSION PRESSURE	0360 - 2
2E13	REGULATOR, VOLTAGE	1672 - 3
2F3	RELAY, ACCESSORY	1674 - 8
2F5	RELAY, ACCESSORY	1674 - 10
2F7	RELAY, ACCESSORY	1674 - 12
2F9	RELAY, ACCESSORY	1674 - 14
2F5	RELAY, ALTERNATOR (6 VOLT)	1674 - 10
2F7	RELAY, ALTERNATOR (6 VOLT)	1674 - 12
2F3	RELAY, NEUTRAL START	1674 - 8
2F5	RELAY, NEUTRAL START	1674 - 10
2F7	RELAY, NEUTRAL START	1674 - 12
2F9	RELAY, NEUTRAL START	1674 - 14
2F3	RELAY, PARK BRAKE	1674 - 8
2F5	RELAY, PARK BRAKE	1674 - 10
2F7	RELAY, PARK BRAKE	1674 - 12
2F9	RELAY, PARK BRAKE	1674 - 14
2F3	RELAY, PARK LIGHT	1674 - 8
2F5	RELAY, PARK LIGHT	1674 - 10
2F7	RELAY, PARK LIGHT	1674 - 12
2F9	RELAY, PARK LIGHT	1674 - 14
2F3	RELAY, START AID	1674 - 8
2F5	RELAY, START AID	1674 - 10
2F7	RELAY, START AID	1674 - 12
2F9	RELAY, START AID	1674 - 14
2F11	RELAY, STARTER	1674 - 16
2F13	RELAY, STARTER	1674 - 18
2F15	RELAY, STARTER	1674 - 19A
2F3	RELAY, 6-VOLT ALTERNATOR	1674 - 8
2F9	RELAY, 6-VOLT ALTERNATOR	1674 - 14
5G9	RELIEF VALVE	3360 - 8
5G19	RELIEF VALVE	3360 - 18
5G20	RELIEF VALVE	3360 - 19
4C20	RELIEF VALVE BUCKET SECTION	3160 - 5
5G9	RELIEF VALVE COVER (LEFT)	3360 - 8
5G11	RELIEF VALVE COVER, REPLACEMENT	3360 - 10
5G19	RELIEF VALVE SEAL KIT	3360 - 18
5G20	RELIEF VALVE SEAL KIT	3360 - 19
4D11	RELIEF VALVE, HYDRAULIC	3160 - 22
5G11	RELIEF VALVE, REPLACEMENT	3360 - 10
5H4	RELIEF VALVES, BACKHOE	3360 - 29
5H5	RELIEF VALVES, BACKHOE	3360 - 30
5H6	RELIEF VALVES, BACKHOE	3360 - 31
4D10	RELIEF VALVES, LOADER	3160 - 21
4D11	RELIEF VALVES, LOADER	3160 - 22
1G5	REMANUFACTURED ENGINE	0404 - 8
5J1	REPAIR KIT, BACKHOE BOOM CYLINDER	3360 - 74
5J3	REPAIR KIT, BACKHOE BOOM CYLINDER	3360 - 76
5J9	REPAIR KIT, BACKHOE BOOM CYLINDER	3360 - 82
6B22	REPAIR KIT, BACKHOE CROWD CYLINDER	3360A - 10
6B24	REPAIR KIT, BACKHOE CROWD CYLINDER	3360A - 12
6B18	REPAIR KIT, CROWD CYLINDER	3360A - 6
6B20	REPAIR KIT, CROWD CYLINDER	3360A - 8
2C7	REPAIR KIT, POWER STEERING VALVE	0960 - 18
5I17	REPAIR KIT, SWING CYLINDER	3360 - 66
5I18	REPAIR KIT, SWING CYLINDER	3360 - 67
5I19	REPAIR KIT, SWING CYLINDER	3360 - 68
5I21	REPAIR KIT, SWING CYLINDER	3360 - 70
5I20	REPAIR KIT, SWING CYLINDER (310D)	3360 - 69
5I22	REPAIR KIT, SWING CYLINDER (310D)	3360 - 71
5J5	REPAIR KITS, BACKHOE BOOM CYLINDER (310D, 315D)	3360 - 78
5J7	REPAIR KITS, BACKHOE BOOM CYLINDER (310D, 315D)	3360 - 80
5J13	REPAIR KITS, BACKHOE BUCKET CYLINDER	3360 - 86
5J15	REPAIR KITS, BACKHOE BUCKET CYLINDER	3360 - 88
6B14	REPAIR KITS, BACKHOE BUCKET CYLINDER	3360A - 2
6B16	REPAIR KITS, BACKHOE BUCKET CYLINDER	3360A - 4
4E6	REPAIR KITS, BOOM LIFT CYLINDER	3160 - 39
4E7	REPAIR KITS, BOOM LIFT CYLINDER	3160 - 40
6C12	REPAIR KITS, STABLILZER CYLINDER	3360A - 28
6C14	REPAIR KITS, STABLILZER CYLINDER	3360A - 30
5C9	REPLACEMENT BACKHOE BUCKET	3302 - 11A
6B16	REPLACEMENT BUCKET CYLINDER, BACKHOE	3360A - 4
5C11	REPLACEMENT BUCKET, BACKHOE	3302 - 11C
1F17	REPLACEMENT CRANKSHAFT KIT	0401 - 3A
6C8	REPLACEMENT EXTENDABLE DIPPERSTICK CYLINDER	3360A - 22
5G11	REPLACEMENT RELIEF VALVE	3360 - 10
5G11	REPLACEMENT RELIEF VALVE COVER	3360 - 10
6C14	REPLACEMENT STABILIZER CYLINDER	3360A - 30
5I21	REPLACEMENT SWING CYLINDER	3360 - 70
5I22	REPLACEMENT SWING CYLINDER (310D)	3360 - 71
1E7	REPLACEMENT TRANSMISSION ASSEMBLY	0341 - 15A
5C9	REPLACEMENT, BACKHOE BUCKET PINS	3302 - 11A
3H7	RESERVOIR BREATHER FILTER, HYDRAULIC	2160 - 24
3H9	RESERVOIR BREATHER FILTER, HYDRAULIC	2160 - 25A
3H7	RESERVOIR, MAIN HYDRAULICS	2160 - 24
3H9	RESERVOIR, MAIN HYDRAULICS	2160 - 25A
3D23	RESISTOR, CAB HEATER	1830 - 10
3E1	RESISTOR, CAB HEATER	1830 - 12
3E3	RESISTOR, CAB HEATER	1830 - 14
3E11	RESISTOR,AIR CONDITIONING MOTOR	1830 - 22
3E5	RESISTOR,CAB HEATER	1830 - 16
3E11	RESISTOR,HEATER MOTOR	1830 - 22
3G17	RESTRICTION SWITCH, HYDRAULIC FILTER	2160 - 13
3G18	RESTRICTION SWITCH, HYDRAULIC FILTER	2160 - 13A
2E21	RETURN TO DIG SWITCH	1674 - 2
2F11	RETURN-TO-DIG CONNECTOR	1674 - 16
3F24	REVERSE ALARM	2004 - 2
1D4	REVERSE CONTROL SWITCH	0315 - 1
1D4	REVERSE CONTROL WITH GUARD	0315 - 1
1E8	REVERSER CASE	0341 - 16
1E10	REVERSER CASE	0341 - 18
1F3	REVERSER CONTROL VALVE	0360 - 10
1E8	REVERSER OIL DIPSTICK	0341 - 16
1E10	REVERSER OIL DIPSTICK	0341 - 18
1E21	REVERSER OIL FILTER	0360 - 4
1E23	REVERSER OIL FILTER	0360 - 6
1E23	REVERSER OIL FILTER HOUSING	0360 - 6
1E23	REVERSER OIL FILTER OIL LINES	0360 - 6
3H11	REVERSER OIL LINES	2160 - 26
1F1	REVERSER OIL PUMP AND MANIFOLD	0360 - 8
2F11	REVERSER PRESSURE SWITCH	1674 - 16
2F13	REVERSER PRESSURE SWITCH	1674 - 18
2F15	REVERSER PRESSURE SWITCH	1674 - 19A
1E8	REVERSER REAR COVER	0341 - 16
1E10	REVERSER REAR COVER	0341 - 18
1E13	REVERSER RESILIENT MOUNT (REAR)	0342 - 1
2F11	REVERSER TEMPERATURE SWITCH	1674 - 16
2F13	REVERSER TEMPERATURE SWITCH	1674 - 18
2F15	REVERSER TEMPERATURE SWITCH	1674 - 19A

ALPHABETICAL INDEX - CONTINUED

GRID		PAGE
1E8	REVERSER, TEMPERATUE SWITCH	0341 - 16
1E10	REVERSER, TEMPERATUE SWITCH	0341 - 18
5F1	REVERSIBLE STABILIZER FOOT	3340 - 4
3C11	RIGHT HAND ONE PIECE FRONT CAB WINDSHIELD AND WIPER MOTOR	1810 - 18
3C9	RIGHT-HAND CAB DOOR	1810 - 16
3C9	RIGHT-HAND DOOR FRAME	1810 - 16
3C9	RIGHT-HAND DOOR HANDLE	1810 - 16
3C9	RIGHT-HAND DOOR HINGE	1810 - 16
3C9	RIGHT-HAND DOOR SEAL	1810 - 16
3C9	RIGHT-HAND DOOR WINDOW	1810 - 16
3C9	RIGHT-HAND WIPER BLADE	1810 - 16
1B19	RING GEAR	0210 - 1
1C4	RING GEAR	0250 - 4
1C5	RING GEAR (MFWD)	0250 - 5
1F22	RINGS, PISTON	0403 - 2
5B21	RIPPER TOOTH, BACKHOE	3301 - 1
1F20	ROCKER ARM COVER	0402 - 4
1F19	ROCKER ARM SHAFT	0402 - 3
1F19	ROCKER ARMS	0402 - 3
3I5	ROCKER SWITCH, AUXILIARY CONTROL	2160 - 38
3I7	ROCKER SWITCH, AUXILIARY CONTROL	2160 - 40
5F2	ROD GUIDE	3340 - 6
5F4	ROD GUIDE	3340 - 8
4C5	ROD, BUCKET LEVELING	3115 - 2
4C7	ROD, BUCKET LEVELING	3115 - 4
1F22	ROD, CONNECTING	0403 - 2
2D3	ROD, CYLINDER LOCK BAR	1313 - 1
2D4	ROD, CYLINDER LOCK BAR	1313 - 2
2B18	ROD, STEERING CYLINDER	0960 - 4
2B20	ROD, STEERING CYLINDER (MFWD)	0960 - 6
1C1	ROD, TIE (MFWD)	0250 - 1
1B25	ROD, TIE, ASSEMBLY (WITHOUT MFWD)	0230 - 4
4C5	ROD, VALVE ACTUATOR BUCKET LEVEL	3115 - 2
4C7	ROD, VALVE ACTUATOR BUCKET LEVEL	3115 - 4
1F19	RODS, PUSH	0402 - 3
3C20	ROOF, CAB	1810 - 28
3C18	ROOF, ROPS	1810 - 26
3C17	ROPS FLOOR FRONT COVER	1810 - 24
3C18	ROPS FRAME	1810 - 26
3C18	ROPS FRAME ISOLATORS	1810 - 26
3C18	ROPS FRAME REFLECTOR	1810 - 26
2F19	ROPS HARNESS CONNECTOR	1674 - 22
3C18	ROPS HEADLINER	1810 - 26
2F19	ROPS WIRING HARNESS	1674 - 22
2E16	ROTATING BEACON	1673 - 1
2G7	ROTATING BEACON SWITCH	1676 - 2
2G9	ROTATING BEACON SWITCH	1676 - 4
3D23	RUBBER LATCH, CAB AIR FILTER	1830 - 10
4C5	RUTURN-TO-DIG LINKAGE	3115 - 2
4C7	RUTURN-TO-DIG LINKAGE	3115 - 4

S

3D13	SAFETY MATTING	1822 - 2
5G22	SEAL KIT, BACKHOE CONTROL VALVE	3360 - 21
3E15	SEAL KIT, COMPRESSOR	1830 - 26
5G19	SEAL KIT, RELIEF VALVE	3360 - 18
5G20	SEAL KIT, RELIEF VALVE	3360 - 19
4C18	SEAL KIT, SECTION	3160 - 3
5G22	SEAL KIT, SECTION, AUXILIARY SECTION	3360 - 21
5G22	SEAL KIT, SECTION, BOOM SECTION	3360 - 21
5G22	SEAL KIT, SECTION, BUCKET SECTION	3360 - 21
5G22	SEAL KIT, SECTION, CROWD SECTION	3360 - 21
5G22	SEAL KIT, SECTION, SWING SECTION	3360 - 21
5G22	SEAL KIT, SPOOL, AUXILIARY SECTION	3360 - 21
5G22	SEAL KIT, SPOOL, BOOM SECTION	3360 - 21
5G22	SEAL KIT, SPOOL, BUCKET SECTION	3360 - 21
5G22	SEAL KIT, SPOOL, CROWD SECTION	3360 - 21
5G22	SEAL KIT, SPOOL, SWING SECTION	3360 - 21
1C8	SEAL, AXLE SHAFT (MFWD)	0250 - 8
3C7	SEAL, LEFT-HAND DOOR	1810 - 14
3C9	SEAL, RIGHT-HAND DOOR	1810 - 16
1C6	SEAL, STUB SHAFT (MFWD)	0250 - 6
3E7	SEALS, HEATER AND HVAC MODULE CASE	1830 - 18
3C24	SEAT ADJUSTER WITH SUSPENDED SEAT	1821 - 2
3D9	SEAT ADJUSTING KNOB	1821 - 12
3D7	SEAT BASE WITH NON-SUSPENDED SEAT	1821 - 10
3D1	SEAT BASE WITH SUSPENDED SEAT	1821 - 4
3D3	SEAT BASE WITH SUSPENDED SEAT	1821 - 6
3D5	SEAT BELTS WITH NON-SUSPENDED SEAT	1821 - 8
3C24	SEAT BELTS WITH SUSPENDED SEAT	1821 - 2
3D5	SEAT BRACKETS WITH NON-SUSPENDED SEAT	1821 - 8
3D5	SEAT CUSHIONS WITH NON-SUSPENDED SEAT	1821 - 8
3D11	SEAT SLIDE	1821 - 14
3D7	SEAT SUPPORT WITH NON-SUSPENDED SEAT	1821 - 10
3C24	SEAT SUPPORT WITH SUSPENDED SEAT	1821 - 2
3D5	SEAT SUSPENSION	1821 - 8
3D1	SEAT TURNTABLE WITH SUSPENDED SEAT	1821 - 4
3D3	SEAT TURNTABLE WITH SUSPENDED SEAT	1821 - 6
3D23	SEAT, MOUNTING BOX	1830 - 10
3D5	SEAT, NON-SUSPENSION	1821 - 8
3D9	SEAT, SUSPENSION	1821 - 12
3D9	SEAT, SUSPENSION BEARING KIT	1821 - 12
3D9	SEAT, SUSPENSION SHOCK	1821 - 12
4C17	SECTION INLET, LOADER VALVE	3160 - 2
4C18	SECTION SEAL KIT	3160 - 3
4D6	SECTION, BOOM LOADER CONTROL VALVE	3160 - 17
4C23	SECTION, BOOM, LOADER CONTROL VALVE	3160 - 9
4C19	SECTION, LOADER CONTROL VALVE, BUCKET	3160 - 4
4D5	SECTION, LOADER CONTROL VALVE, BUCKET WITH RETURN-TO-DIG	3160 - 16
3I9	SELECTIVE FLOW SOLENOID VALVE	2160 - 42
3I5	SELECTIVE FLOW SOLENOID VALVE KIT	2160 - 38
3I7	SELECTIVE FLOW SOLENOID VALVE KIT	2160 - 40
3I5	SELECTIVE FLOW SOLENOID WIRING HARNESS	2160 - 38
3I7	SELECTIVE FLOW SOLENOID WIRING HARNESS	2160 - 40
2F11	SENDER, ENGINE COOLANT TEMPERATURE	1674 - 16
2F13	SENDER, ENGINE COOLANT TEMPERATURE	1674 - 18
2F15	SENDER, ENGINE COOLANT TEMPERATURE	1674 - 19A
1J4	SENDER, FUEL GAUGE	0560 - 2
1J6	SENDER, FUEL GAUGE	0560 - 4
1E19	SENDER, TRANSMISSION OIL TEMPERATURE	0360 - 2
2F11	SENDING UNIT, ENGINE OIL PRESSURE	1674 - 16
2F13	SENDING UNIT, ENGINE OIL PRESSURE	1674 - 18
2F15	SENDING UNIT, ENGINE OIL PRESSURE	1674 - 19A
1I23	SENSOR, AIR CLEANER VACUUM	0520 - 5
2C12	SERVICE BRAKE HYDRAULICS	1060 - 4
2C14	SERVICE BRAKE HYDRAULICS	1060 - 6
2D3	SERVICE LOCK BAR, BOOM	1313 - 1
2D4	SERVICE LOCK BAR, BOOM	1313 - 2
1C3	SHAFT (MFWD)	0250 - 3
3E17	SHAFT SEAL KIT	1830 - 28
1H4	SHAFT, ENGINE BALANCER	0415 - 1
3G16	SHAFT, HYDRAULIC PUMP DRIVE	2160 - 12
1C20	SHAFT, INPUT (MFWD)	0250 - 20
2G16	SHAFT, MECHANICAL FRONT WHEEL DRIVE	1746 - 3
1E16	SHAFT, OUTPUT	0350 - 3
1C25	SHAFT, REAR AXLE	0250 - 25
1F19	SHAFT, ROCKER ARM	0402 - 3
1C4	SHAFT, SUN GEAR	0250 - 4
1C5	SHAFT, SUN GEAR (MFWD)	0250 - 5
1D16	SHAFT, TRANSMISSION DRIVE	0325 - 2

ALPHABETICAL INDEX - CONTINUED

GRID		PAGE
1E14	SHAFT, TRANSMISSION DRIVE	0350 - 1
1C12	SHAFT, UNIVERSAL	0250 - 12
1D5	SHAFTS, SHIFTER	0315 - 2
1D6	SHAFTS, SHIFTER	0315 - 3
1C6	SHAFTS, STUB (MFWD)	0250 - 6
4C3	SHANK, MULTI-PURPOSE BUCKET	3102 - 14
5B24	SHANK, 304 MM (12") BACKHOE BUCKET	3302 - 3
5C1	SHANK, 457 MM (18") BACKHOE BUCKET	3302 - 4
5C3	SHANK, 610 MM (24") BACKHOE BUCKET	3302 - 6
5C5	SHANK, 762 MM (30") BACKHOE BUCKET	3302 - 8
5C6	SHANK, 762 MM (30") BACKHOE BUCKET	3302 - 8A
5C7	SHANK, 914 MM (36") BACKHOE BUCKET	3302 - 9
2E12	SHIELD, ALTERNATOR	1672 - 2
5G3	SHIELD, LOADER LINKAGE	3340 - 32
5G4	SHIELD, LOADER LINKAGE	3340 - 33
5G3	SHIELDS, BACKHOE LINKAGE	3340 - 32
5G4	SHIELDS, BACKHOE LINKAGE	3340 - 33
3F6	SHIELDS, ENGINE SIDE	1910 - 2
3F8	SHIELDS, ENGINE SIDE	1910 - 4
1D7	SHIFTER LEVER, TRANSMISSION	0315 - 4
1D9	SHIFTER LEVER, TRANSMISSION	0315 - 6
1D11	SHIFTER LEVER, TRANSMISSION	0315 - 8
1D5	SHIFTER SHAFTS	0315 - 2
1D6	SHIFTER SHAFTS	0315 - 3
1E6	SHIFTER, TOWER	0341 - 15
5F18	SHIM, EXTENDIBLE DIPPERSTICK	3340 - 22
5F20	SHIM, EXTENDIBLE DIPPERSTICK	3340 - 24
3D9	SHOCK, SUSPENSION SEAT	1821 - 12
1H1	SHUTOFF SOLENOID, FUEL	0413 - 8
2F3	SIDE CONSOLE WIRING HARNESS	1674 - 8
2F5	SIDE CONSOLE WIRING HARNESS	1674 - 10
2F7	SIDE CONSOLE WIRING HARNESS	1674 - 12
2F9	SIDE CONSOLE WIRING HARNESS	1674 - 14
3B19	SIDE INSTRUMENT PANEL HOUSING	1810 - 4
3F6	SIDE SHIELDS, ENGINE	1910 - 2
3F8	SIDE SHIELDS, ENGINE	1910 - 4
5F15	SIDE WEAR PAD	3340 - 19
3C1	SIDE WINDOW, CAB LOWER REAR	1810 - 9A
3C5	SIDE WINDOWS, CAB	1810 - 12
2D13	SILICONE RUBBER ADHESIVE	1330 - 1
2E8	SINGLE BATTERY CABLES	1671 - 2
2E8	SINGLE BATTERY CLAMP	1671 - 2
2E8	SINGLE BATTERY COVER	1671 - 2
2E8	SINGLE BATTERY INSTALLATION	1671 - 2
5D7	SIXTH FUNCTION CONTROL LEVER LABEL	3315 - 14
5D11	SIXTH FUNCTION CONTROL LEVER LABEL	3315 - 18
5D11	SIXTH FUNCTION FOOT CONTROL BACKHOE LINKAGE (TWO-LEVER)	3315 - 18
5D7	SIXTH FUNCTION FOOT CONTROL LINKAGE AND VALVE (TWO-LEVER)	3315 - 14
5D15	SIXTH FUNCTION FOOT PEDAL CONTROL FIELD KIT	3315 - 22
1F8	SLEEVE,TRANSMISSION OIL PUMP	0360 - 16
3D11	SLIDE, SEAT	1821 - 14
1I7	SOLENOID	0505 - 2
1D15	SOLENOID BRACKET, MFWD	0315 - 12
1I7	SOLENOID CONTAINER	0505 - 2
1D15	SOLENOID CONTROLS FOR MFWD	0315 - 12
1H16	SOLENOID COVER	0422 - 1
1H17	SOLENOID COVER	0422 - 1A
1H21	SOLENOID COVER	0422 - 4
3I13	SOLENOID VALVE KIT, LOW FLOW AUXILIARY	2160 - 46
3I15	SOLENOID VALVE KIT, LOW FLOW AUXILIARY	2160 - 48
3I5	SOLENOID VALVE KIT, SELECTIVE FLOW	2160 - 38
3I7	SOLENOID VALVE KIT, SELECTIVE FLOW	2160 - 40
3I11	SOLENOID VALVE, LOW FLOW AUXILIARY	2160 - 44
3I9	SOLENOID VALVE, SELECTIVE FLOW	2160 - 42
3I5	SOLENOID WIRING HARNESS, SELECTIVE FLOW	2160 - 38
3I7	SOLENOID WIRING HARNESS, SELECTIVE FLOW	2160 - 40
1H1	SOLENOID, FUEL SHUTOFF	0413 - 8
3G11	SOLENOID, HYDRAULIC PUMP DESTROKE	2160 - 7
4C22	SOLENOID, LOADER CONTROL VALVE BUCKET SECTION	3160 - 8
1D15	SOLENOID, MFWD	0315 - 12
2C18	SOLENOID, PARK BRAKE	1115 - 2
2C20	SOLENOID, PARK BRAKE	1115 - 4
1F3	SOLENOID, REVERSER VALVE CARTRIDGE	0360 - 10
3F19	SPEAKER, RADIO	2001 - 2
1I17	SPEED CONTROL ENIGNE	0515 - 2
1B23	SPINDLE AND KNUCKLE ASSEMBLY	0230 - 2
1F3	SPOOL, REVERSER VALVE	0360 - 10
3D9	SPRING, SUSPENSION	1821 - 12
3D9	SPRING, SUSPENSION SEAT	1821 - 12
5E24	STABILIZER	3340 - 2
6C12	STABILIZER CYLINDER	3360A - 28
5H13	STABILIZER CYLINDER CLAMPS	3360 - 38
5H13	STABILIZER CYLINDER ELBOWS	3360 - 38
5H13	STABILIZER CYLINDER HOSES	3360 - 38
5H13	STABILIZER CYLINDER HYDRAULICS	3360 - 38
6C12	STABILIZER CYLINDER REPAIR KITS	3360A - 28
6C14	STABILIZER CYLINDER REPAIR KITS	3360A - 30
5E24	STABILIZER FEET	3340 - 2
5F1	STABILIZER FOOT, REVERSIBLE	3340 - 4
2G17	STABILIZER GUARD KIT	1746 - 4
5C23	STABILIZER LEVER	3315 - 6
5D1	STABILIZER LEVER	3315 - 8
5C23	STABILIZER LINKAGE	3315 - 6
5D1	STABILIZER LINKAGE	3315 - 8
3B19	STABILIZER LINKAGE COVER	1810 - 4
5H7	STABILIZER VALVE	3360 - 32
5H9	STABILIZER VALVE HYDRAULICS	3360 - 34
5H11	STABILIZER VALVE HYDRAULICS	3360 - 36
5H7	STABILIZER VALVE KITS	3360 - 32
5C23	STABILIZER VALVE LINKAGE	3315 - 6
5D1	STABILIZER VALVE LINKAGE	3315 - 8
5I13	STANDARD BACKHOE HYDRAULICS, EXTENDIBLE DIPPERSTICK	3360 - 62
2F3	START AID RELAY	1674 - 8
2F5	START AID RELAY	1674 - 10
2F7	START AID RELAY	1674 - 12
2F9	START AID RELAY	1674 - 14
1D15	START SWITCH FOR MFWD, NEUTRAL	0315 - 12
2F11	STARTER RELAY	1674 - 16
2F13	STARTER RELAY	1674 - 18
2F15	STARTER RELAY	1674 - 19A
2G7	STARTING AID SWITCH	1676 - 2
2G9	STARTING AID SWITCH	1676 - 4
1I7	STARTING AID, COLD WEATHER	0505 - 2
1I7	STARTING FLUID	0505 - 2
1H16	STARTING MOTOR	0422 - 1
1H19	STARTING MOTOR	0422 - 2
1H19	STARTING MOTOR DRIVE HOUSING	0422 - 2
1H17	STARTING MOTOR, REPLACEMENT	0422 - 1A
1H21	STARTING MOTOR, REPLACEMENT KIT	0422 - 4
2C5	STEERING COLUMN	0960 - 16
2C5	STEERING COLUMN BOOT, TILT	0960 - 16
2C5	STEERING COLUMN BRACKET	0960 - 16
3B17	STEERING COLUMN COVER	1810 - 2
2C5	STEERING COLUMN COVER, TILT	0960 - 16
2C5	STEERING COLUMN CYLINDER, TILT	0960 - 16
2C5	STEERING COLUMN KIT, TILT	0960 - 16
2C5	STEERING COLUMN OVERHAUL KIT, TILT	0960 - 16
2C5	STEERING COLUMN, TILT	0960 - 16
2B18	STEERING CYLINDER GUIDE	0960 - 4

ALPHABETICAL INDEX - CONTINUED

GRID		PAGE
2B18	STEERING CYLINDER KIT	0960 - 4
2B18	STEERING CYLINDER PISTON	0960 - 4
2B18	STEERING CYLINDER ROD	0960 - 4
2B18	STEERING CYLINDER, MECHANICAL FRONT WHEEL DRIVE	0960 - 4
2B20	STEERING CYLINDER, MECHANICAL FRONT WHEEL DRIVE (MFWD)	0960 - 6
2B14	STEERING CYLINDER, POWER (WITHOUT MFWD)	0960 - 1
2B15	STEERING CYLINDER, POWER (WITHOUT MFWD)	0960 - 1A
2B16	STEERING CYLINDER, POWER (WITHOUT MFWD)	0960 - 2
2B17	STEERING CYLINDER, POWER (WITHOUT MFWD)	0960 - 3
1C1	STEERING CYLLINDER(MFWD)	0250 - 1
1C10	STEERING HOUSING (MFWD)	0250 - 10
1C12	STEERING HOUSING (MFWD)	0250 - 12
1C10	STEERING HUB (MFWD)	0250 - 10
1C12	STEERING HUB (MFWD)	0250 - 12
2C5	STEERING VALVE	0960 - 16
2B24	STEERING VALVE HOSES	0960 - 10
2B22	STEERING VALVE HYDRAULICS	0960 - 8
2C1	STEERING VALVE HYDRAULICS	0960 - 12
2C3	STEERING VALVE HYDRAULICS	0960 - 14
2C5	STEERING WHEEL	0960 - 16
1B13	STEM, VALVE	0110 - 1
1B14	STEM, VALVE	0120 - 2
3D13	STEPS	1822 - 2
2D21	STOP LEAK	1369 - 7
2C10	STOP LIGHT SWITCH	1060 - 2
2E17	STOP LIGHT, WITH CAB	1673 - 2
6C5	STOP, EXTENDIBLE DIPPERSTICK CYLINDER	3360A - 19
6C11	STOP, EXTENDIBLE DIPPERSTICK CYLINDER	3360A - 27
3H22	STRAP, REAR EQUIPMENT	2160 - 35A
3F15	STRAPS, FENDER	1927 - 2
3G8	STROKE CONTROL VALVE, HYDRAULIC PUMP (UNITIZED)	2160 - 4
1C6	STUB SHAFTS (MFWD)	0250 - 6
1C4	SUN GEAR SHAFT	0250 - 4
1C5	SUN GEAR SHAFT (MFWD)	0250 - 5
2G5	SUPPLEMENTARY TERMINALS, CONNECTORS AND REPAIR CONDUIT	1674 - 32
3B22	SUPPORT, CAB FRONT ROOF	1810 - 6
3F6	SUPPORT, COWL	1910 - 2
3F8	SUPPORT, COWL	1910 - 4
1J3	SUPPORT, HYDRAULIC PUMP	0540 - 1
4C9	SUPPORT, LOADER CONTROL VALVE	3115 - 6
4C11	SUPPORT, LOADER CONTROL VALVE, THIRD FUNCTION	3115 - 8
1J2	SUPPORT, MUFFLER	0530 - 2
3D7	SUPPORT, SEAT WITH NON-SUSPENDED SEAT	1821 - 10
3C24	SUPPORT, SEAT WITH SUSPENDED SEAT	1821 - 2
3E23	SUPPORT,AIR CONDITIONING COMPRESSOR	1830 - 34
1I9	SUPPORTS, RADIATOR	0510 - 1
3D5	SUSPENSION SEAT	1821 - 8
3D9	SUSPENSION SEAT	1821 - 12
3D9	SUSPENSION SPRING	1821 - 12
5I17	SWING CYLINDER	3360 - 66
5I19	SWING CYLINDER	3360 - 68
5I18	SWING CYLINDER (REPLACEMENT)	3360 - 67
5I20	SWING CYLINDER (310D)	3360 - 69
5H15	SWING CYLINDER FITTINGS	3360 - 40
5H17	SWING CYLINDER FITTINGS	3360 - 42
5H15	SWING CYLINDER HOSES	3360 - 40
5H17	SWING CYLINDER HOSES	3360 - 42
5H15	SWING CYLINDER HYDRAULICS	3360 - 40
5H17	SWING CYLINDER HYDRAULICS	3360 - 42
5I23	SWING CYLINDER PINS	3360 - 72
5I17	SWING CYLINDER REPAIR KIT	3360 - 66
5I18	SWING CYLINDER REPAIR KIT	3360 - 67
5I19	SWING CYLINDER REPAIR KIT	3360 - 68
5I21	SWING CYLINDER REPAIR KIT	3360 - 70
5I20	SWING CYLINDER REPAIR KIT (310D)	3360 - 69
5I22	SWING CYLINDER REPAIR KIT (310D)	3360 - 71
5F2	SWING FRAME AND PINS	3340 - 6
5F6	SWING FRAME AND PINS (STANDARD BOOM)	3340 - 10
5F4	SWING FRAME AND PINS (510D)	3340 - 8
5F8	SWING FRAME AND PINS WITH 410D HEAVY LIFT BOOM (510D STANDARD)	3340 - 12
5F2	SWING FRAME LOCKING PIN	3340 - 6
5G22	SWING SECTION SECTION SEAL KIT	3360 - 21
5G22	SWING SECTION SPOOL SEAL KIT	3360 - 21
5G7	SWING SECTION, BACKHOE CONTROL VALVE	3360 - 6
5G25	SWING SECTION, BACKHOE VALVE	3360 - 25
1D15	SWITCH FOR MFWD, NEUTRAL START	0315 - 12
2G7	SWITCH, AIR CONDITIONING	1676 - 2
2G9	SWITCH, AIR CONDITIONING	1676 - 4
3E5	SWITCH, AIR CONDITIONING (FREEZE/COMPRESSOR)	1830 - 16
1E8	SWITCH, BACK UP ALARM	0341 - 16
1E10	SWITCH, BACK UP ALARM	0341 - 18
3F24	SWITCH, BACK-UP	2004 - 2
2C10	SWITCH, BRAKE LIGHT	1060 - 2
1D9	SWITCH, CLUTCH DISCONNECT	0315 - 6
2F7	SWITCH, CLUTCH DISCONNECT	1674 - 12
2C18	SWITCH, EMERGENCY BRAKE SENSING	1115 - 2
2F11	SWITCH, ENGINE COOLANT	1674 - 16
2F13	SWITCH, ENGINE COOLANT	1674 - 18
2F15	SWITCH, ENGINE COOLANT	1674 - 19A
2F11	SWITCH, ENGINE OIL PRESSURE	1674 - 16
2F13	SWITCH, ENGINE OIL PRESSURE	1674 - 18
2F15	SWITCH, ENGINE OIL PRESSURE	1674 - 19A
2E23	SWITCH, FLASHER	1674 - 4
1D4	SWITCH, FORWARD/REVERSE	0315 - 1
3F1	SWITCH, FREEZE CONTROL	1830 - 36
3F3	SWITCH, FREEZE CONTROL	1830 - 38
3B17	SWITCH, FRONT LIGHT	1810 - 2
2E23	SWITCH, FRONT LIGHTS	1674 - 4
3B17	SWITCH, FRONT WINDSHIELD WASHER	1810 - 2
3B17	SWITCH, FRONT WINDSHIELD WIPER	1810 - 2
2E23	SWITCH, FRONT WIPER	1674 - 4
2G7	SWITCH, HEATER BLOWER	1676 - 2
2G9	SWITCH, HEATER BLOWER	1676 - 4
2G7	SWITCH, HORN	1676 - 2
2G9	SWITCH, HORN	1676 - 4
3G17	SWITCH, HYDRAULIC FILTER RESTRICTION	2160 - 13
3G18	SWITCH, HYDRAULIC FILTER RESTRICTION	2160 - 13A
2G7	SWITCH, IGNITION	1676 - 2
2G9	SWITCH, IGNITION	1676 - 4
2F3	SWITCH, LOADER LEVER	1674 - 8
2F5	SWITCH, LOADER LEVER	1674 - 10
2F7	SWITCH, LOADER LEVER	1674 - 12
2F9	SWITCH, LOADER LEVER	1674 - 14
2G7	SWITCH, MFWD	1676 - 2
2G9	SWITCH, MFWD	1676 - 4
2C18	SWITCH, PARK BRAKE ACTUATOR	1115 - 2
2C18	SWITCH, PARK BRAKE SENSING	1115 - 2
1D20	SWITCH, PRESSURE MFWD INDICATOR LIGHT	0341 - 4
2F11	SWITCH, PRESSURE, ENGINE OIL	1674 - 16
2F13	SWITCH, PRESSURE, ENGINE OIL	1674 - 18
2F15	SWITCH, PRESSURE, ENGINE OIL	1674 - 19A
2G7	SWITCH, REAR LIGHT	1676 - 2
2G9	SWITCH, REAR LIGHT	1676 - 4
2G7	SWITCH, REAR WIPER	1676 - 2
2G9	SWITCH, REAR WIPER	1676 - 4
2E21	SWITCH, RETURN-TO-DIG, LOADER	1674 - 2
3F24	SWITCH, REVERSE ALARM	2004 - 2

ALPHABETICAL INDEX - CONTINUED

GRID		PAGE
1D4	SWITCH, REVERSE CONTROL	0315 - 1
2F11	SWITCH, REVERSER PRESSURE	1674 - 16
2F13	SWITCH, REVERSER SWITCH	1674 - 18
2F15	SWITCH, REVERSER SWITCH	1674 - 19A
1E8	SWITCH, REVERSER TEMPERATURE	0341 - 16
1E10	SWITCH, REVERSER TEMPERATURE	0341 - 18
2F11	SWITCH, REVERSER TEMPERATURE	1674 - 16
2F13	SWITCH, REVERSER TEMPERATURE	1674 - 18
2F15	SWITCH, REVERSER TEMPERATURE	1674 - 19A
3I5	SWITCH, ROCKER, AUXILIARY CONTROL	2160 - 38
3I7	SWITCH, ROCKER, AUXILIARY CONTROL	2160 - 40
2G7	SWITCH, ROTATING BEACON	1676 - 2
2G9	SWITCH, ROTATING BEACON	1676 - 4
2G7	SWITCH, STARTING AID	1676 - 2
2G9	SWITCH, STARTING AID	1676 - 4
2C10	SWITCH, STOP LIGHT	1060 - 2
1D7	SWITCH, TRANSMISSION SHIFTER LEVER	0315 - 4
2E23	SWITCH, TURN SIGNAL	1674 - 4
3B17	SWITCH, TURN SIGNAL	1810 - 2
3B17	SWITCH, WARNING FLASHER	1810 - 2
2E23	SWITCH, WINDSHIELD WASHER	1674 - 4
3D7	SWIVEL KIT	1821 - 10
3D11	SWIVEL KIT	1821 - 14
1G22	SYSTEM, FUEL INJECTION	0413 - 4

T

2G7	TACHOMETER	1676 - 2
2G9	TACHOMETER	1676 - 4
2E19	TAIL LIGHT (ROPS)	1673 - 4
2E17	TAIL LIGHT, WITH CAB	1673 - 2
1I14	TANK, ENGINE COOLANT RECOVERY	0510 - 4
1I15	TANK, ENGINE COOLANT RECOVERY	0510 - 5
1J4	TANK, FUEL	0560 - 2
1J6	TANK, FUEL	0560 - 4
1F19	TAPPET, ENGINE	0402 - 3
2F11	TEMPERATURE SWITCH TRANSMISSION REVERSER	1674 - 16
2F13	TEMPERATURE SWITCH TRANSMISSION REVERSER	1674 - 18
2F15	TEMPERATURE SWITCH TRANSMISSION REVERSER	1674 - 19A
2F11	TEMPERATURE SWITCH, REVERSER	1674 - 16
2F13	TEMPERATURE SWITCH, REVERSER	1674 - 18
2F15	TEMPERATURE SWITCH, REVERSER	1674 - 19A
2F11	TEMPERATURE, ENGINE COOLANT SENDER	1674 - 16
2F13	TEMPERATURE, ENGINE COOLANT SENDER	1674 - 18
2F15	TEMPERATURE, ENGINE COOLANT SENDER	1674 - 19A
2E14	TERMINAL, ALTERNATOR RELAY	1672 - 4
2G6	TERMINALS, DEUTSCH	1674 - 33
2G5	TERMINALS, SUPPLEMENTARY	1674 - 32
2G3	TERMINALS, WEATHERPACK	1674 - 30
2D24	TEST KIT, FLUID ANALYSIS PRODUCTS (COOLSCAN)	1369 - 12
2E1	TEST KIT, FLUID ANALYSIS PRODUCTS (CUSTOMER CONVENIENCE PACKS)	1369 - 14
2D25	TEST KIT, FLUID ANALYSIS PRODUCTS (DIESELSCAN)	1369 - 13
2D22	TEST KIT, FLUID ANALYSIS PRODUCTS OILSCAN)	1369 - 10
3D9	TETHER BELT	1821 - 12
3D7	TETHER BELTS WITH NON-SUSPENDED SEAT	1821 - 10
1H9	THERMOSTAT HOUSING, ENGINE	0418 - 2
1H9	THERMOSTAT, ENGINE	0418 - 2
4D21	THIRD FUNCTION HYDRAULICS	3160 - 32
4C1	THIRD FUNCTION HYDRAULICS, MULTI-PURPOSE	3102 - 12
4C11	THIRD FUNCTION LOADER CONTROL VALVE LINKAGE	3115 - 8
4C25	THIRD FUNCTION LOADER VALVE	3160 - 11
4D8	THIRD FUNCTION LOADER VALVE	3160 - 19
4C11	THIRD FUNCTION, PLUMBING AND LINKAGE KIT	3115 - 8
5E9	THREE LEVER BACKHOE CONTROL VALVE LINKAGE	3315 - 34
5E11	THREE LEVER BACKHOE CONTROL VALVE LINKAGE	3315 - 35A
5E3	THREE LEVER BACKHOE VALVE PANEL	3315 - 31A
5E9	THREE LEVER BACKHOE VALVE PANEL	3315 - 34
5E13	THREE LEVER CONTROLS, FIFTH FN LEVER FOR	3315 - 36
5E5	THREE LEVER EXTENDIBLE BACKHOE CONTROL VALVE LINKAGE	3315 - 32
5E7	THREE LEVER EXTENDIBLE BACKHOE CONTROL VALVE LINKAGE	3315 - 33A
5E1	THREE LEVER STANDARD BACKHOE CONTROL VALVE LINKAGE	3315 - 30
5E3	THREE LEVER STANDARD BACKHOE CONTROL VALVE LINKAGE	3315 - 31A
1B18	TIE BARS, MAIN FRAME	0201 - 2
4C17	TIE BOLTS, LOADER VALVE	3160 - 2
1C1	TIE ROD (MFWD)	0250 - 1
1C8	TIE ROD ASSEMBLY (MFWD)	0250 - 8
1B25	TIE ROD ASSEMBLY (WITHOUT MFWD)	0230 - 4
2C5	TILT STEERING COLUMN	0960 - 16
2C5	TILT STEERING COLUMN BOOT	0960 - 16
2C5	TILT STEERING COLUMN COVER	0960 - 16
2C5	TILT STEERING COLUMN CYLINDER	0960 - 16
2C5	TILT STEERING COLUMN KIT	0960 - 16
2C5	TILT STEERING COLUMN OVERHAUL KIT	0960 - 16
1F21	TIMING GEAR COVER	0402 - 5
3G1	TOOLBOX	2005 - 2
3G1	TOOLBOX BRACKET	2005 - 2
3G1	TOOLBOX TRAY	2005 - 2
4C3	TOOTH, MULTI-PURPOSE BUCKET	3102 - 14
5B21	TOOTH, RIPPER, BACKHOE	3301 - 1
5B24	TOOTH, 304 MM (12") BACKHOE BUCKET	3302 - 3
5C1	TOOTH, 457 MM (18") BACKHOE BUCKET	3302 - 4
5C3	TOOTH, 610 MM (24") BACKHOE BUCKET	3302 - 6
5C5	TOOTH, 762 MM (30") BACKHOE BUCKET	3302 - 8
5C6	TOOTH, 762 MM (30") BACKHOE BUCKET	3302 - 8A
5C7	TOOTH, 914 MM (36") BACKHOE BUCKET	3302 - 9
1E5	TOP COVER, TRANSMISSION	0341 - 14
1J10	TORQUE CONVERTER	0641 - 1
1C6	TRACK ROD ASSEMBLY CLAMP (MFWD)	0250 - 6
1C8	TRACK ROD ASSEMBLY CLAMP (MFWD)	0250 - 8
1F11	TRANSAXLE OIL FILTER	0360 - 19
1F10	TRANSAXLE OIL FILTER ELEMENT	0360 - 18
1F11	TRANSAXLE OIL FILTER ELEMENT	0360 - 19
1D20	TRANSFER CASE (MFWD)	0341 - 4
1D24	TRANSFER CASE (MFWD)	0341 - 8
1D20	TRANSFER CASE BEARINGS (MFWD)	0341 - 4
1D24	TRANSFER CASE BEARINGS (MFWD)	0341 - 8
1D20	TRANSFER CASE GEARS (MFWD)	0341 - 4
1D24	TRANSFER CASE GEARS (MFWD)	0341 - 8
1D20	TRANSFER CASE SHAFTS (MFWD)	0341 - 4
1D24	TRANSFER CASE SHAFTS (MFWD)	0341 - 8
1E7	TRANSMISSION ASSEMBLY	0341 - 15A
1F6	TRANSMISSION BRAKE FITTINGS	0360 - 14
1F10	TRANSMISSION BRAKE FITTINGS	0360 - 18
1F11	TRANSMISSION BRAKE FITTINGS	0360 - 19
1F6	TRANSMISSION BRAKE LINES	0360 - 14
1F10	TRANSMISSION BRAKE LINES	0360 - 18
1F11	TRANSMISSION BRAKE LINES	0360 - 19
1F6	TRANSMISSION BRAKE OIL LINES	0360 - 14
1F10	TRANSMISSION BRAKE OIL LINES	0360 - 18
1F11	TRANSMISSION BRAKE OIL LINES	0360 - 19
1F8	TRANSMISSION BRAKE OIL PUMP	0360 - 16

ALPHABETICAL INDEX - CONTINUED

GRID		PAGE
1D17	TRANSMISSION CASE	0341 - 1
1D19	TRANSMISSION CASE (WITH MFWD)	0341 - 3
1D18	TRANSMISSION CASE (WITHOUT MFWD)	0341 - 2
1E7	TRANSMISSION CONVENIENCE ASSEMBLY	0341 - 15A
1D16	TRANSMISSION DRIVE SHAFT	0325 - 2
1E14	TRANSMISSION DRIVE SHAFT ASSEMBLY	0350 - 1
1E1	TRANSMISSION FRONT COVER (WITHOUT MFWD)	0341 - 10
2B24	TRANSMISSION HOSE	0960 - 10
1E1	TRANSMISSION INPUT SHAFT (WITHOUT MFWD)	0341 - 10
1F4	TRANSMISSION LUBRICATION LINES	0360 - 12
3H14	TRANSMISSION OIL COOLER	2160 - 30
1D22	TRANSMISSION OIL DIPSTICK (MFWD)	0341 - 6
1E1	TRANSMISSION OIL DIPSTICK (WITHOUT MFWD)	0341 - 10
1F8	TRANSMISSION OIL PUMP BRACKET	0360 - 16
1F8	TRANSMISSION OIL PUMP DRIVESHAFT	0360 - 16
1F8	TRANSMISSION OIL PUMP SLEEVE	0360 - 16
1F8	TRANSMISSION OIL PUMP TUBE	0360 - 16
1D7	TRANSMISSION SHIFTER BOOT	0315 - 4
1D7	TRANSMISSION SHIFTER LEVER	0315 - 4
1D9	TRANSMISSION SHIFTER LEVER	0315 - 6
1D11	TRANSMISSION SHIFTER LEVER	0315 - 8
1D11	TRANSMISSION SHIFTER LEVER BOOT	0315 - 8
1D11	TRANSMISSION SHIFTER LEVER BRACKET	0315 - 8
1D7	TRANSMISSION SHIFTER LEVER SWITCH	0315 - 4
2F11	TRANSMISSION TEMPERATURE SWITCH REVERSER	1674 - 16
2F13	TRANSMISSION TEMPERATURE SWITCH REVERSER	1674 - 18
2F15	TRANSMISSION TEMPERATURE SWITCH REVERSER	1674 - 19A
1E5	TRANSMISSION TOP COVER	0341 - 14
1E6	TRANSMISSION TOP COVER	0341 - 15
5F15	TRANSPORT LOCK PIN, EXTENDIBLE DIPPERSTICK	3340 - 19
3G1	TRAY, TOOLBOX	2005 - 2
2G13	TRUNION, MAIN FRAME	1740 - 4
2G14	TRUNNION BLOCK, MAIN FRAME	1740 - 5
1F8	TUBE,TRANSMISSION OIL PUMP	0360 - 16
1H5	TURBOCHARGER	0416 - 2
1H5	TURBOCHARGER HARDWARE KIT	0416 - 2
1H6	TURBOCHARGER OIL LINES	0416 - 3
3B17	TURN SIGNAL INDICATOR	1810 - 2
2E23	TURN SIGNAL LIGHT BULB	1674 - 4
2E17	TURN SIGNAL LIGHT, WITH CAB	1673 - 2
2E19	TURN SIGNAL LIGHTS (ROPS)	1673 - 4
2E23	TURN SIGNAL SWITCH	1674 - 4
3B17	TURN SIGNAL SWITCH	1810 - 2
3D1	TURNTABLE, SEAT WITH SUSPENDED SEAT	1821 - 4
3D3	TURNTABLE, SEAT WITH SUSPENDED SEAT	1821 - 6
5D15	TWO LEVER BACKHOE CONTROL LEVER LINKAGE	3315 - 22
5D17	TWO LEVER BACKHOE CONTROL LEVER LINKAGE	3315 - 24
5D19	TWO LEVER BACKHOE CONTROL LEVER LINKAGE	3315 - 26
5D9	TWO LEVER BACKHOE CONTROL LEVER LINKAGE FOR EXTENDIBLE DIPPERSTICK	3315 - 16
5D13	TWO LEVER BACKHOE CONTROL LEVER LINKAGE FOR FIFTH FUNCTION PEDAL KIT	3315 - 20
5E15	TWO LEVER BACKHOE CONTROL LEVER LINKAGE FOR STANDARD DIPPERSTICK KIT	3315 - 38
5D21	TWO LEVER BACKHOE CONTROL LEVER LINKAGE KIT	3315 - 28
5D9	TWO LEVER BACKHOE CONTROL LINKAGE FIELD KIT FOR EXTENDIBLE DIPPERSTICK	3315 - 16
5D13	TWO LEVER BACKHOE CONTROL LINKAGE FIELD KIT FOR FIFTH FUNCTION PEDAL	3315 - 20
5E15	TWO LEVER BACKHOE CONTROL LINKAGE FIELD KIT FOR STANDARD DIPPERSTICK	3315 - 38
3B19	TWO LEVER BACKHOE VALVE PANEL	1810 - 4

U

GRID		PAGE
1C3	UNIVERSAL JOINT (MFWD)	0250 - 3
1C22	UNIVERSAL JOINT, FRONT WHEEL (MFWD)	0250 - 22
1C12	UNIVERSAL SHAFT	0250 - 12
3B24	UPPER REAR CAB WINDOW	1810 - 8
3B24	UPPER REAR CAB WINDOW CYLINDER	1810 - 8
3B24	UPPER REAR CAB WINDOW LATCH	1810 - 8

V

1I23	VACUUM SENSOR, AIR CLEANER	0520 - 5
5D3	VALVE AND FOOT CONTROL LINKAGE, FIFTH FUNCTION (TWO-LEVER)	3315 - 10
5D5	VALVE AND FOOT CONTROL LINKAGE, FIFTH FUNCTION (TWO-LEVER)	3315 - 12
5D7	VALVE AND FOOT CONTROL LINKAGE, SIXTH FUNCTION (TWO-LEVER)	3315 - 14
5G9	VALVE COVER, RELIEF (LEFT)	3360 - 8
4D7	VALVE INLET/PRIORITY	3160 - 18
3I13	VALVE KIT, LOW FLOW AUXILIARY SOLENOID	2160 - 46
3I15	VALVE KIT, LOW FLOW AUXILIARY SOLENOID	2160 - 48
3I5	VALVE KIT, SELECTIVE FLOW SOLENOID	2160 - 38
3I7	VALVE KIT, SELECTIVE FLOW SOLENOID	2160 - 40
5C23	VALVE LINKAGE, STABILIZER	3315 - 6
5D1	VALVE LINKAGE, STABILIZER	3315 - 8
1B13	VALVE STEM	0110 - 1
1B14	VALVE STEM	0120 - 2
3F1	VALVE, AIR CONDITIONING	1830 - 36
3F3	VALVE, AIR CONDITIONING	1830 - 38
4C25	VALVE, AUXILIARY, LOADER	3160 - 11
4D8	VALVE, AUXILIARY, LOADER	3160 - 19
5H1	VALVE, BACKHOE AUXILIARY SECTION	3360 - 26
5G21	VALVE, BACKHOE AUXILIARY SECTION (WITH 5-FUNCTION VALVE)	3360 - 20
5H1	VALVE, BACKHOE BOOM SECTION	3360 - 26
5H1	VALVE, BACKHOE BUCKET SECTION	3360 - 26
5G5	VALVE, BACKHOE CONTROL	3360 - 2
5G13	VALVE, BACKHOE CONTROL BOOM SECTION	3360 - 12
5G15	VALVE, BACKHOE CONTROL BUCKET SECTION	3360 - 14
5G7	VALVE, BACKHOE CONTROL SWING SECTION	3360 - 6
5G22	VALVE, BACKHOE CONTROL, SEAL KIT	3360 - 21
5H1	VALVE, BACKHOE CROWD SECTION	3360 - 26
5H3	VALVE, BACKHOE INLET SECTION	3360 - 28
5H2	VALVE, BACKHOE OUTLET SECTION	3360 - 27
5H9	VALVE, BACKHOE PRESSURE AND RETURN HYDRAULICS	3360 - 34
5H11	VALVE, BACKHOE PRESSURE AND RETURN HYDRAULICS	3360 - 36
5G25	VALVE, BACKHOE SWING SECTION	3360 - 25
2C10	VALVE, BRAKE	1060 - 2
3D15	VALVE, CAB HEATER SHUT-OFF	1830 - 2
1G17	VALVE, EXHAUST	0409 - 2
1G17	VALVE, INTAKE	0409 - 2
4D11	VALVE, KIT LOADER RELIEF	3160 - 22
4C16	VALVE, LOADER CONTROL	3160 - 1
4D1	VALVE, LOADER CONTROL	3160 - 12
4D2	VALVE, LOADER CONTROL	3160 - 13
4D3	VALVE, LOADER CONTROL	3160 - 14
4D4	VALVE, LOADER CONTROL	3160 - 15
4C19	VALVE, LOADER CONTROL BUCKET SECTION	3160 - 4
4C9	VALVE, LOADER CONTROL MOUNTING BRACKET	3115 - 6
4C11	VALVE, LOADER CONTROL MOUNTING BRACKET	3115 - 8
4C23	VALVE, LOADER CONTROL, BOOM SECTION	3160 - 9
4C9	VALVE, LOADER CONTROL, LINKAGE	3115 - 6

ALPHABETICAL INDEX - CONTINUED

GRID		PAGE
4C11	VALVE, LOADER CONTROL, LINKAGE, THIRD FUNCTION	3115 - 8
4D11	VALVE, LOADER RELIEF KIT	3160 - 22
4C17	VALVE, LOADER, INLET SECTION	3160 - 2
3I11	VALVE, LOW FLOW AUXILIARY SOLENOID	2160 - 44
3H13	VALVE, OIL COOLER BYPASS	2160 - 29
3G19	VALVE, PRIORITY	2160 - 14
5G9	VALVE, RELIEF	3360 - 8
5G19	VALVE, RELIEF	3360 - 18
5G20	VALVE, RELIEF	3360 - 19
5G11	VALVE, RELIEF COVER, REPLACEMENT	3360 - 10
5G19	VALVE, RELIEF SEAL KIT	3360 - 18
4C20	VALVE, RELIEF, BUCKET SECTION	3160 - 5
5G11	VALVE, RELIEF, REPLACEMENT	3360 - 10
5G20	VALVE, RELIEF, SEAL KIT	3360 - 19
1F3	VALVE, REVERSER CONTROL	0360 - 10
4C22	VALVE, SOLENOID LOADER VALVE BUCKET SECTION	3160 - 8
3I9	VALVE, SOLENOID, SELECTIVE FLOW	2160 - 42
5H7	VALVE, STABILIZER	3360 - 32
2C5	VALVE, STEERING	0960 - 16
1E19	VALVE, TRANSMISSION PRESSURE REGULATING	0360 - 2
5H4	VALVES, BACKHOE RELIEF	3360 - 29
5H5	VALVES, BACKHOE RELIEF	3360 - 30
5H6	VALVES, BACKHOE RELIEF	3360 - 31
4D10	VALVES, LOADER RELIEF	3160 - 21
3B19	VANDAL GUARD	1810 - 4
3B19	VANDAL GUARD LOCK	1810 - 4
3E5	VENTILATION,HEATING,AIR CONDITIONING	1830 - 16
1G16	VENTILATOR TUBE, ENGINE	0408 - 2
2E12	VOLTAGE REGULATOR	1672 - 2
2E13	VOLTAGE REGULATOR	1672 - 3
2E15	VOLTAGE REGULATOR	1672 - 5

W

3B17	WARNING FLASHER SWITCH	1810 - 2
1H7	WATER PUMP	0417 - 1
1H8	WATER PUMP REPAIR KIT	0417 - 2
1I9	WATER PUMP SUPPORT	0510 - 1
5F15	WEAR PAD, BOTTOM, EXTENDIBLE DIPPERSTICK	3340 - 19
5F17	WEARSTRIPS, EXTENDIBLE DIPPERSTICK	3340 - 21
5F20	WEARSTRIPS, EXTENDIBLE DIPPERSTICK	3340 - 24
2G3	WEATHERPACK CONNECTORS	1674 - 30
2G3	WEATHERPACK TERMINALS	1674 - 30
1C10	WHEEL BOLT (MFWD)	0250 - 10
1B14	WHEEL, FRONT	0120 - 2
1B13	WHEEL, REAR DRIVE	0110 - 1
2C5	WHEEL, STEERING	0960 - 16
3C13	WINDOW WIPER MOTOR, FRONT	1810 - 20
3C1	WINDOW, CAB LOWER REAR	1810 - 9A
3C5	WINDOW, CAB SIDE	1810 - 12
3C1	WINDOW, DOOR	1810 - 9A
3C11	WINDOW, FIXED	1810 - 18
3C7	WINDOW, LEFT-HAND CAB DOOR	1810 - 14
3B24	WINDOW, REAR, UPPER	1810 - 8
3C22	WINDSHIELD WASHER HOSE	1810 - 30
3C22	WINDSHIELD WASHER PUMP	1810 - 30
3C22	WINDSHIELD WASHER RESERVOIR BRACKET	1810 - 30
2E23	WINDSHIELD WASHER SWITCH	1674 - 4
3C11	WINDSHIELD, RIGHT HAND ONE PIECE FRONT CAB GLASS AND WIPER MOTOR	1810 - 18
3C11	WIPER ARM, FRONT RIGHT CAB WINDSHIELD, WITHOUT DOOR	1810 - 18
3C7	WIPER BLADE	1810 - 14
3C9	WIPER BLADE, RIGHT-HAND	1810 - 16
3C15	WIPER MOTOR COVER, FRONT, LEFT AND RIGHT	1810 - 22
3B24	WIPER MOTOR, REAR CAB WINDOW	1810 - 8
2E23	WIPER, FRONT SWITCH	1674 - 4
3C13	WIPER, FRONT WINDOW, MOTOR	1810 - 20
3B24	WIPER, REAR CAB WINDOW	1810 - 8
2F23	WIRE LEAD KIT	1674 - 26
2G1	WIRE LEAD KIT	1674 - 28
2F21	WIRING HARNESS, AIR CONDITIONING	1674 - 24
2E14	WIRING HARNESS, ALTERNATOR	1672 - 4
2F17	WIRING HARNESS, CAB	1674 - 20
2E23	WIRING HARNESS, CONSOLE	1674 - 4
2F11	WIRING HARNESS, ENGINE	1674 - 16
2F13	WIRING HARNESS, ENGINE	1674 - 18
2F15	WIRING HARNESS, ENGINE	1674 - 19A
2F1	WIRING HARNESS, FLOOR	1674 - 6
2F19	WIRING HARNESS, ROPS	1674 - 22
3I5	WIRING HARNESS, SELECTIVE FLOW SOLENOID	2160 - 38
3I7	WIRING HARNESS, SELECTIVE FLOW SOLENOID	2160 - 40
1D20	WIRING LEAD (MFWD)	0341 - 4
2E21	WIRING, RETURN-TO-DIG, LOADER	1674 - 2

Y

4C5	YOKE, BUCKET LEVELING	3115 - 2
4C7	YOKE, BUCKET LEVELING	3115 - 4

REAR DRIVE WHEEL

TP41627 -UN-01JAN94

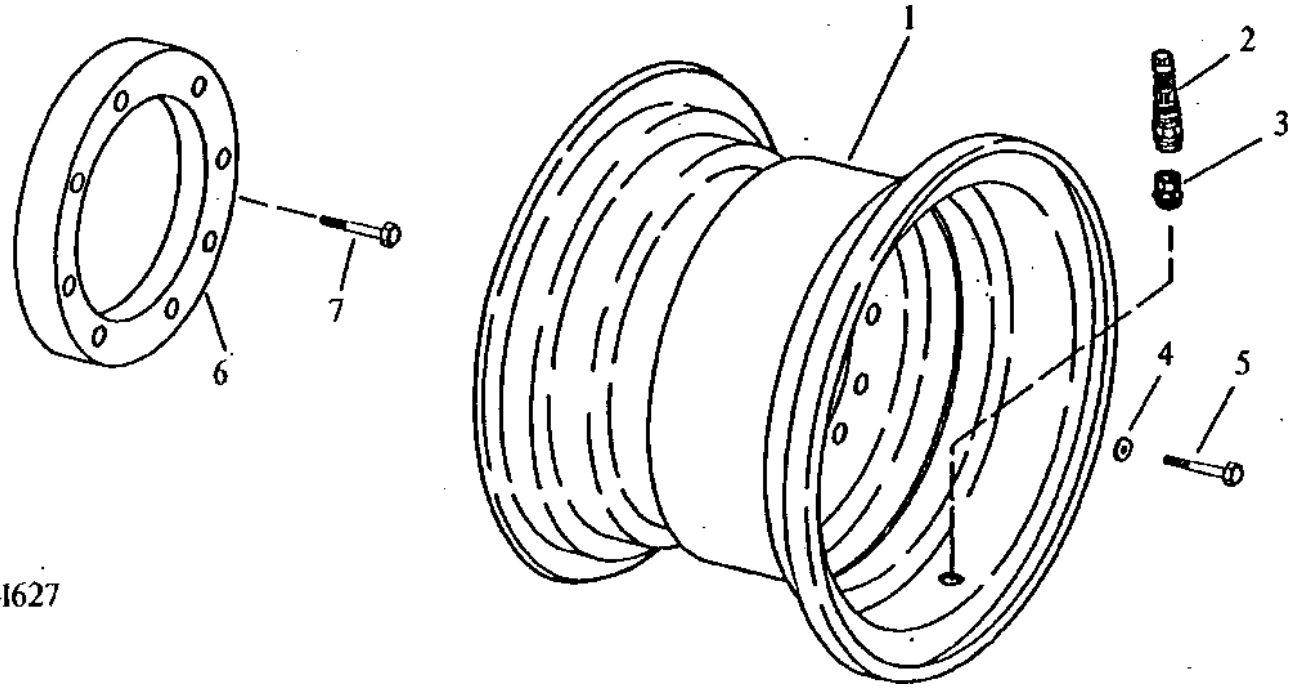

KEY	PART NO.	PART NAME	QTY	SERIAL NO.	410D	510D	REMARKS
1	AT309102	WHEEL	1		X		(FOR 16.9 X 24 AND 17.5L X 24 TIRES) (SUB FOR AT141444)
	AT66805	WHEEL	1		X	X	
	AT66136	RIM	1		X	X	(USE WITH 16.9 X 28 OR 18.4 X 28 TIRE)
	AT309112	WHEEL	1		X	X	(USE WITH 21 X 24 TIRE) (SUB FOR AT74891)
2	AN132749	TIRE VALVE STEM	1		X	X	(TUBELESS) (SUB FOR AT37037) (WITHOUT CALCIUM CHLORIDE)
	AT25226	TIRE VALVE STEM	1		X	X	(WITH CALCIUM CHLORIDE)
3	AH86866	PLUG	1		X	X	RIM HOLE, (USE WITH AT74891 AND AT197026)
4	R54124	WASHER	8		X	X	
5	19H2717	CAP SCREW	8		X	X	HS, SAE 8, 3/4" X 1-3/4"
6	T66860	SPACER	2		X	X	FOR USE WITH CHAINS
7	19H3196	CAP SCREW	16		X	X	HS, SAE 8, 3/4" X 4"

FRONT WHEEL

TP26668 -UN-01JAN94

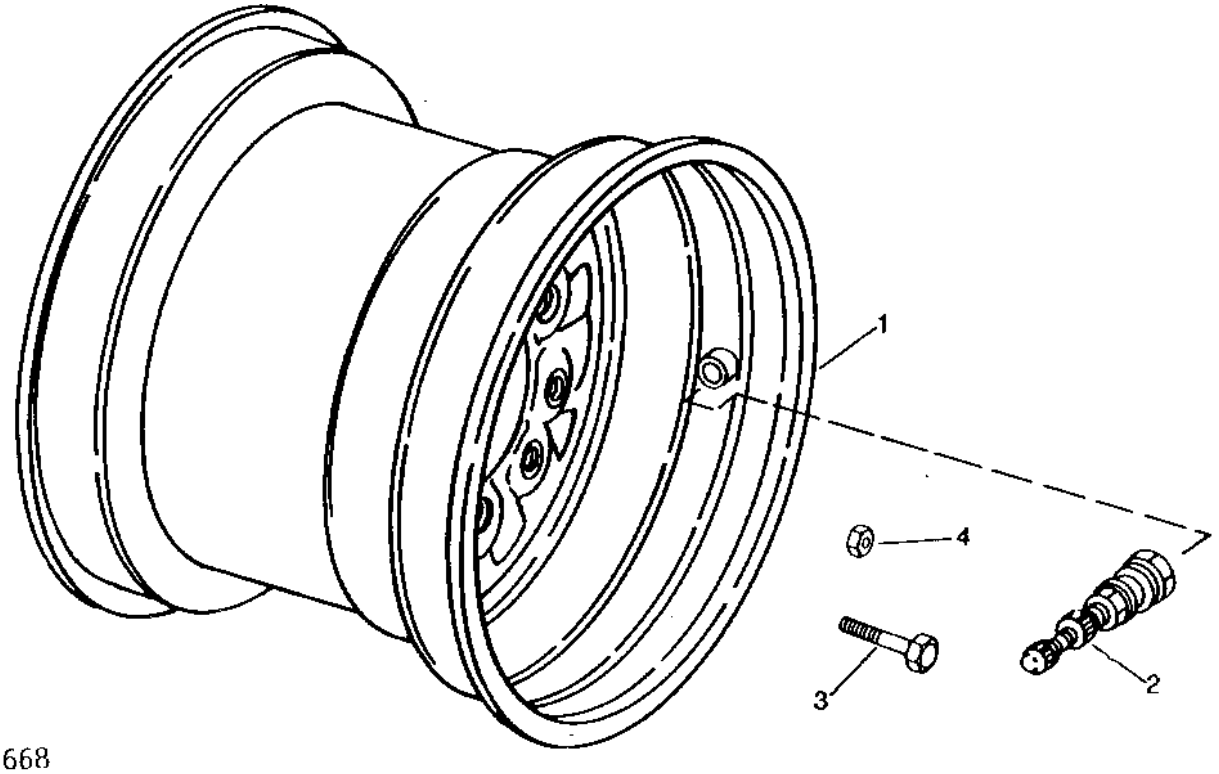

KEY	PART NO.	PART NAME	QTY	SERIAL NO.	410D	510D	REMARKS
1	AT309111	WHEEL	1		X	X	(USE WITH 11 X 15 TIRE) (USE WITH (8) JD27) (SUB FOR AT51878) (USE WITHOUT MFWD)
	AT310291	WHEEL	1		X	X	(USE WITH 11 X 16 TIRE) (USE WITH (8) JD27) (SUB FOR JD3216) (USE WITHOUT MFWD)
	AT133216	WHEEL	1		X	X	(USE WITH 14 X 17.5 TIRE) (USE WITH (8) JD27) (USE WITH MFWD) (USE WITH EXTENDIBLE DIPPERSTICK)
	AT309105	WHEEL	1		X	X	(FOR 12 X 16.5 TIRE) (USE WITH MFWD) (USE WITH EXTENDIBLE DIPPERSTICK) (USE WITH (8) JD27) (SUB FOR AT73984, AT114093 AND AT178499)
	.....	WHEEL	1		X	X	(USE WITH 14.5 X 75 16.1 TIRE) (AT63452 NO LONGER AVAILABLE) (USE WITH (8) JD27) (SUB AT309106) (ALSO ORDER (8) 19H3418) (SUB FOR AR90898) (USE WITHOUT MFWD)
	AT309106	WHEEL	1		X	X	(USE WITH 14.5 X 75 16.1 TIRE) (USE WITHOUT MFWD) (USE WITH (8) 19H3418) (SUB FOR AT187347)
2	AN132749	TIRE VALVE STEM	1		X	X	(TUBELESS) (SUB FOR AT37037) (WITHOUT CALCIUM CHLORIDE)
	AT25226	TIRE VALVE STEM	1		X	X	(WITH CALCIUM CHLORIDE) (WITH EXTENDIBLE DIPPERSTICK)
3	JD27	SCREW	8		X	X	HS, SAE 8, 5/8" X 2" (WITHOUT MFWD)
	19H3418	SCREW	8		X	X	5/8" X 1-1/2"
4	.....	FLANGE NUT	8		X	X	(WITH MFWD) (M18 X 1.5) (14M7332 NO LONGER AVAILABLE)

REAR AXLE HOUSING

TP52766 -UN-08MAY96

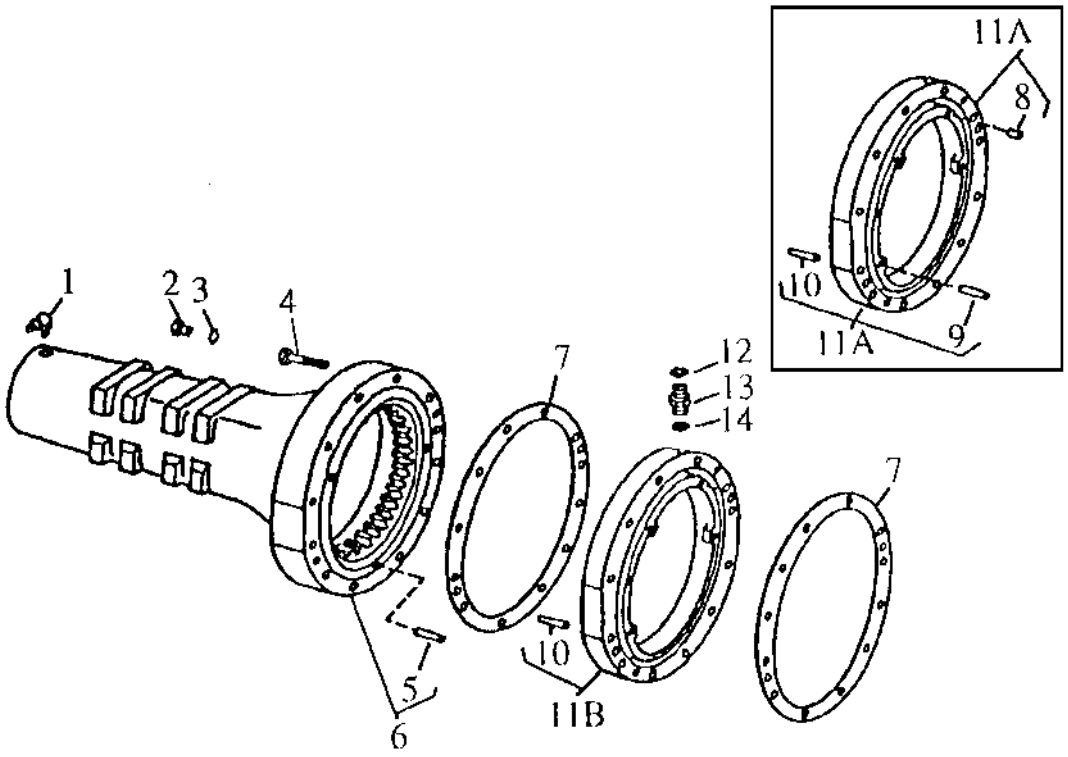

KEY	PART NO.	PART NAME	QTY	SERIAL NO.	4510 D	5100 D	REMARKS
1	JD7799	LUBRICATION FITTING	1		X	X	
2	R31631	DRAIN PLUG	2	-796854	X	X	
3	R26287	O-RING	1	-796854	X	X	
4	T125874	CAP SCREW	12		X	X	
5	R26198	DOWEL PIN	3		X	X	(RING GEAR TO HOUSING)
6	.....	HOUSING	1	-796854	X	X	(AT165409 NO LONGER AVAILABLE) (MARKED T76228) (SUB FOR AT133033) (SUB AT168435) (ALSO ORDER (4) 19M8415) REAR AXLE (MARKED T76228) WITH GEAR, (MARKED T125845)
	.....	HOUSING	1	796855-801199	X	X	(AT167550 NO LONGER AVAILABLE) (MARKED T76228) (SUB AT168435) (ALSO ORDER (4) 19M8415) WITH GEAR, (MARKED T151159)
	AT168435	HOUSING	1	801200-	X	X	(MARKED T149093) WITH GEAR, (MARKED T151159)
7	R98915	GASKET	2		X	X	
8	T81219	SPRING PIN	3		X	X	(BRAKE PISTON STOP)
9	R26650	DOWEL PIN	3		X	X	
10	T66915	DOWEL PIN	2		X	X	
11A	AT150682	HOUSING	1	-796854	X	X	(MARKED T140470)
11B	AT166609	HOUSING	1	796855-	X	X	(MARKED T149618)
12	T77814	O-RING	1	-801199	X	X	
13	38H1166	ADAPTER	1	-801199	X	X	L.H. (STRAIGHT)
	38H1524	ELBOW FITTING	1	-801199	X	X	R.H. (45°)
14	R26287	O-RING	1	-801199	X	X	

REAR AXLE LOWER MOUNTING PLATE AND MAIN FRAME TIE BARS

TP7517 -UN-01JAN94

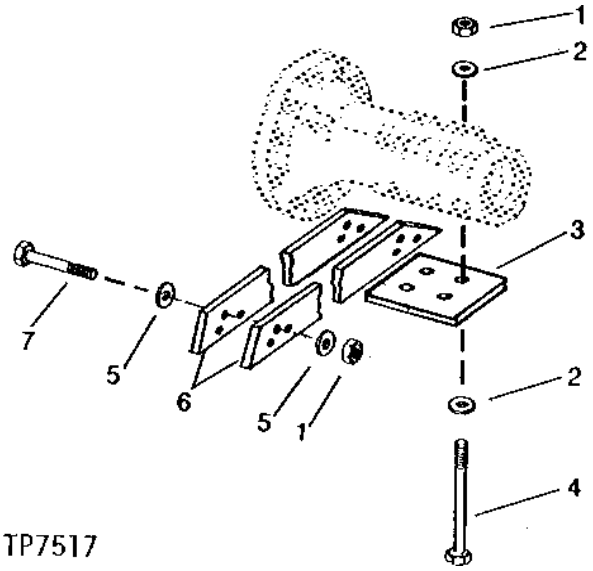

KEY	PART NO.	PART NAME	QTY	SERIAL NO.	410D	510D	REMARKS
1	14M7315	NUT	4		X	X	
	14M7315	NUT	6	-801199	X	X	
2	N231749	WASHER	8		X	X	(SUB FOR T33089)
3	T67056	PLATE	1	-801199	X	X	
	T147269	PLATE	1	801200-	X	X	
4	19M7779	CAP SCREW	4		X	X	M20 X 240
5	N231749	WASHER	12	-801199	X	X	(SUB FOR T33089)
6	T76186	PLATE	2	-801199	X	X	
7	19M7963	CAP SCREW	6	-801199	X	X	M20 X 100

DIFFERENTIAL ASSEMBLY WITH RING GEAR AND PINION

TP9566 -UN-01JAN94

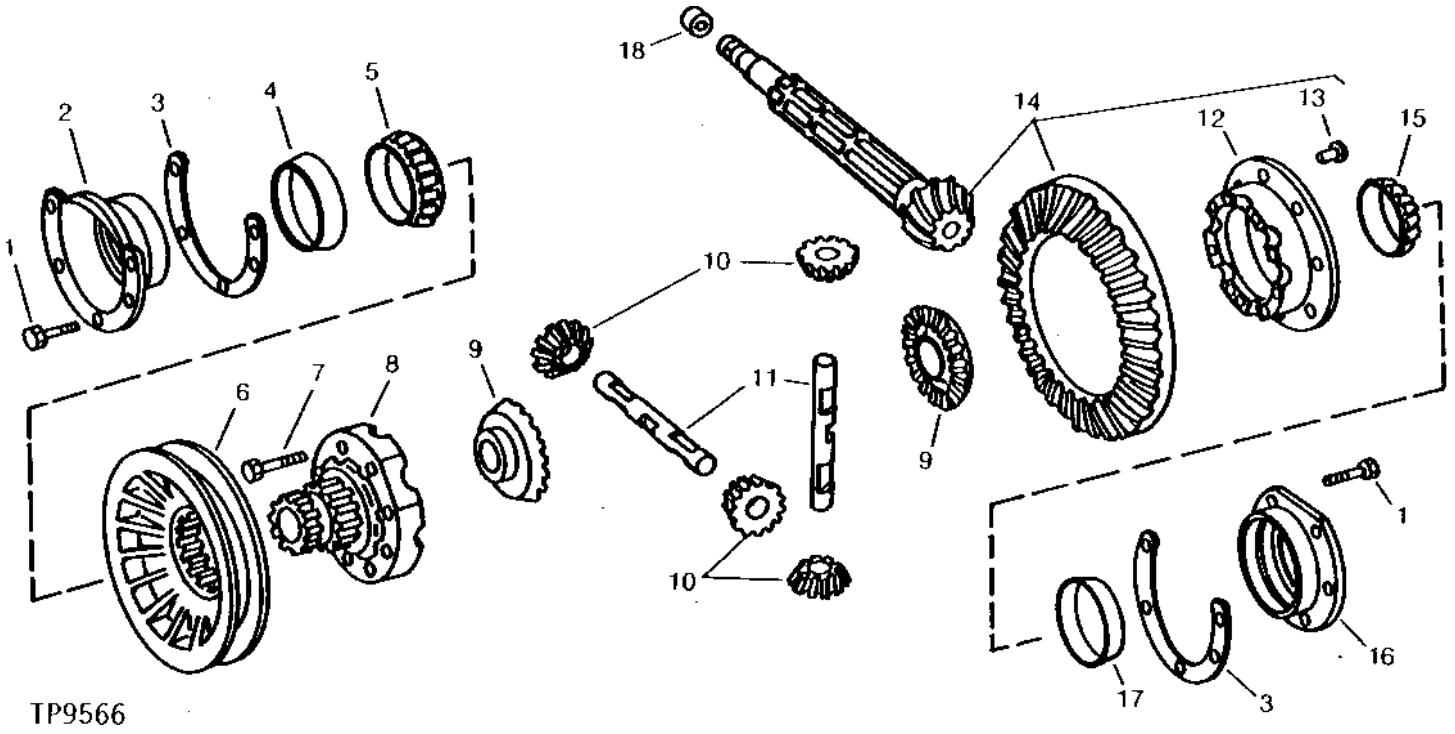

KEY	PART NO.	PART NAME	QTY	SERIAL NO.	410D	510D	REMARKS
1	T22874	BOLT	10		X	X	
2	T21433	BEARING HOUSING W/O BEARING	1		X	X	
3	T21434	SHIM	AR		X	X	0.08 MM (.003")
	T21435	SHIM	AR		X	X	0.13 MM (.005")
	T21436	SHIM	AR		X	X	0.25 MM (.010")
4	JD7425	BEARING CUP	1		X	X	
5	JD8147	BEARING CONE	1		X	X	
6	T21596	BRAKE DRUM	1		X	X	
7	T21430	CAP SCREW	8		X	X	
8	T21974	HOUSING	1		X	X	
9	T118949	BEVEL GEAR	2		X	X	
10	T118950	BEVEL GEAR	4		X	X	
11	T21875	PINION SHAFT	2		X	X	
12	T30253	HOUSING	1	-796854	X	X	(ALSO ORDER (8) T30254)
	T149743	HOUSING	1	796855-	X	X	(ALSO ORDER (8) T152922)
13	T30254	RIVET	8	-796854	X	X	7/16" X 1-11/16"
	T152922	RIVET	8	796855-	X	X	1/2" X 1 5/8"
14	AT166889	HOUSING	1	-796854	X	X	(CONTAINS T149743 AND (8) T152922) (SUB FOR AT146046) (MARKED T30253) (WITH SPIRAL BEVEL GEAR MARKED T149745) (35 TEETH) AND (BEVEL PINION SHAFT, MARKED T135019) (8 TEETH) (SUB FOR AT146046) (MARKED T30253) (WITH SPIRAL BEVEL GEAR MARKED T21401) (35 TEETH) (AND BEVEL PINION SHAFT) (MARKED T135019) (8 TEETH)
	AT164294	HOUSING	1	796855-	X	X	(CONTAINS T149743 AND (8) T152922) (MARKED T30253) (WITH SPIRAL BEVEL GEAR MARKED T149745) (35 TEETH) AND (BEVEL PINION SHAFT, MARKED T148347) (8 TEETH)
15	JD8946	BEARING CONE	1		X	X	
16	T21432	BEARING HOUSING W/O BEARING	1		X	X	
17	JD8206	BEARING CUP	1		X	X	
18	T71306	ORIFICE	1	-796854	X	X	
	15H558	PIPE PLUG	1	810474-	X	X	

DIFFERENTIAL LOCK MECHANISM

TP44786 -UN-01JAN94

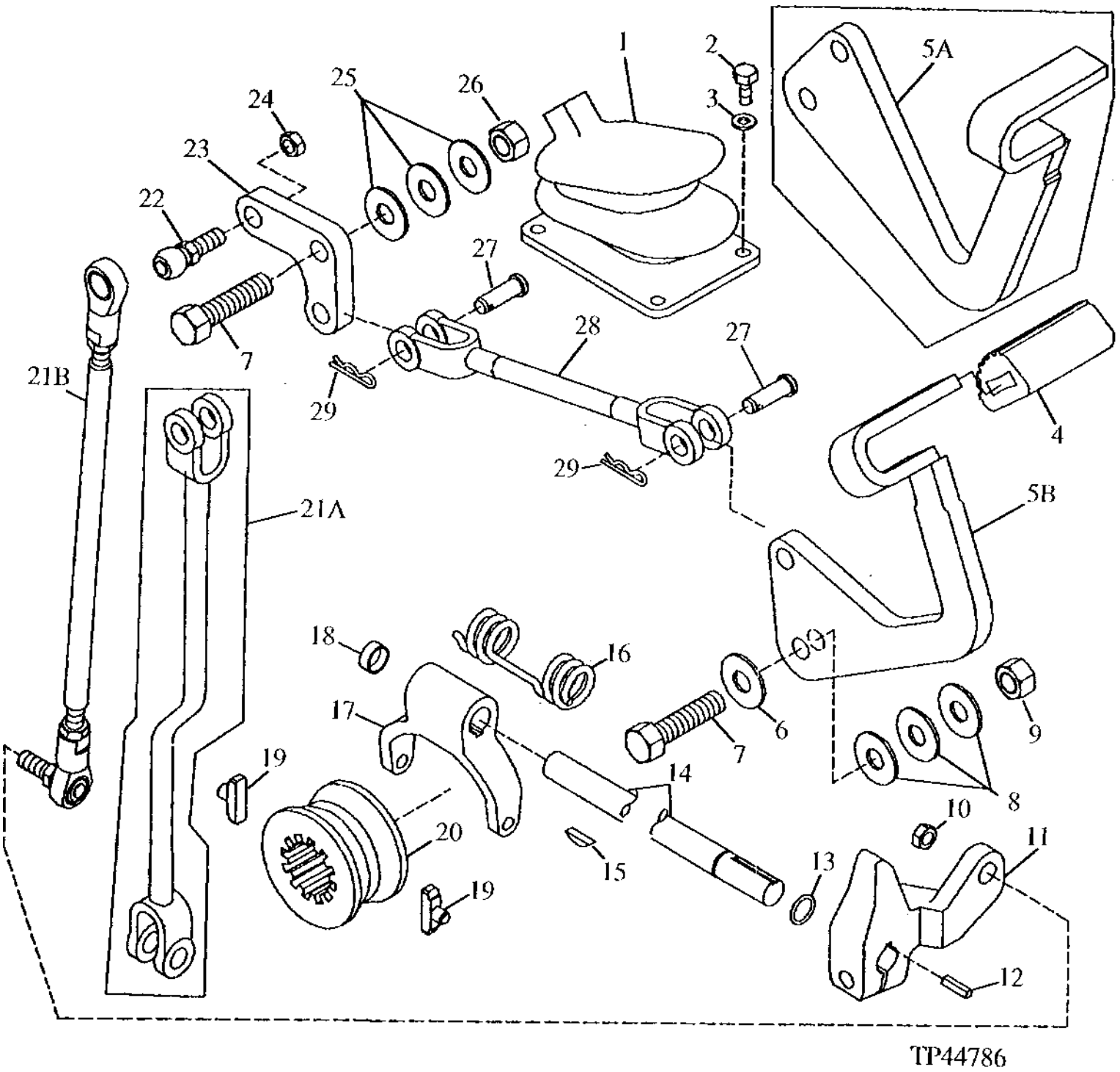

DIFFERENTIAL LOCK MECHANISM

KEY	PART NO.	PART NAME	QTY	SERIAL NO.	410D	510D	REMARKS
1	AT141227	BOOT	1		X	X	
2	T77834	SELF-LOCKING SCREW	4		X	X	
3	24M7293	WASHER	4		X	X	
4	T135373	PAD	1		X	X	
5A	AT148146	PEDAL	1	-801199	X	X	
5B	AT171183	PEDAL	1	801200-	X	X	(SUB FOR AT165124)
6	24H1226	WASHER	7		X	X	12.700 X 31.750 X 2.108 MM
7	19M7361	CAP SCREW	2		X	X	M12 X 50
8	24H1226	WASHER	7		X	X	
9	14M7168	LOCK NUT	2		X	X	
10	F3220R	LOCK NUT	1		X	X	(SUB FOR M68954)
11	T33389	ARM	1	-801199	X	X	
	T149894	ARM	1	801200-	X	X	
12	H410R	SHAFT KEY	1		X	X	
13	R28776	O-RING	1		X	X	
14	T21839	SHAFT	1		X	X	
15	26H77	SHAFT KEY	1		X	X	
16	R63850	SPRING	1		X	X	
17	T21840	YOKE	1		X	X	
18	T18891	PLUG	1		X	X	
19	T21841	SHOE	2		X	X	
20	T21819	SHIFT COLLAR	1		X	X	
21A	AT139723	LINK	1	-801199	X	X	
21B	AT171109	LINK	1	801200-	X	X	(SUB FOR AT165695)
22	T151914	BALL STUD	1	801200-	X	X	
23	T85308	BELLCRANK	1	-801199	X	X	
	T149893	BELLCRANK	1	801200-	X	X	
24	M68954	LOCK NUT	1	801200-	X	X	
25	24H1226	WASHER	7		X	X	1/2" X 1-1/4" X 0.083"
26	14M7168	LOCK NUT	2		X	X	M12
27	R72855	PIN FASTENER	2		X	X	
28	AT139737	LINK	1		X	X	
29	11H236	COTTER PIN	AR		X	X	

MEMORANDA

FRONT WHEEL HUB, CAP AND BEARINGS
(WITHOUT MECHANICAL FRONT WHEEL DRIVE)

TP3685 -UN-01JAN94

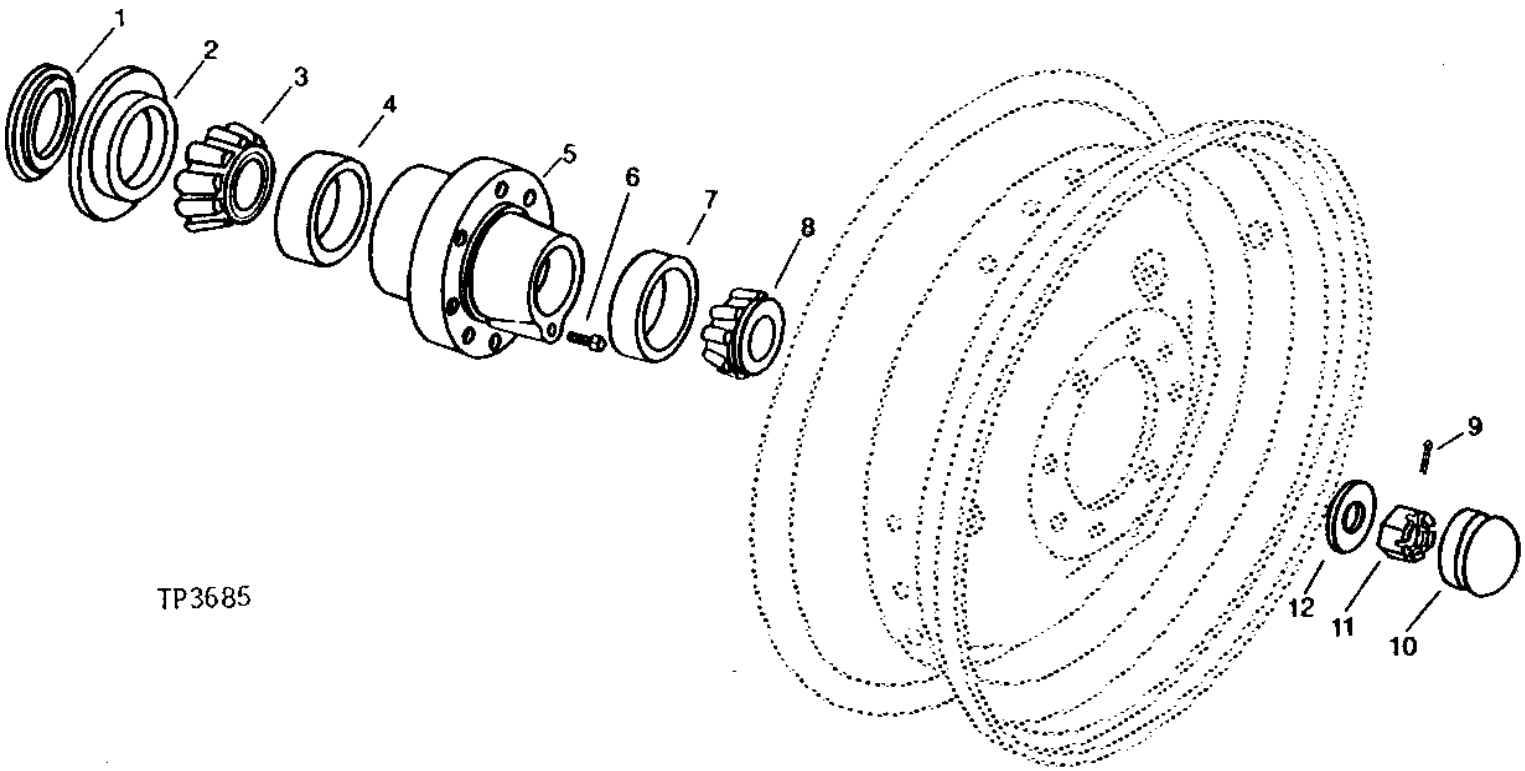

KEY	PART NO.	PART NAME	QTY	SERIAL NO.	410D 510D	REMARKS
1	AR27806	SEAL	1		X X	
2	R28574	SEAL	1		X X	
3	JD8961	BEARING CONE	1		X X	
4	JD7444	BEARING CUP	1		X X	
5	R63556	HUB	1		X X	
6	22H841	SET SCREW	1		X X	1/4" X 1/4"
7	JD7266	TAPERED ROLLER BEARING	1		X X	
8	JD10190	BEARING CONE	1		X X	
9	11M7030	COTTER PIN	1		X X	5 X 40 MM
10	DT2127W	CAP	1		X X	
11	14M7213	NUT	1		X X	M24
12	T75506	WASHER	1		X X	

FRONT AXLE, SPINDLE AND KNUCKLE ASSEMBLY
(WITHOUT MECHANICAL FRONT WHEEL DRIVE)

TP45432 -UN-01JAN94

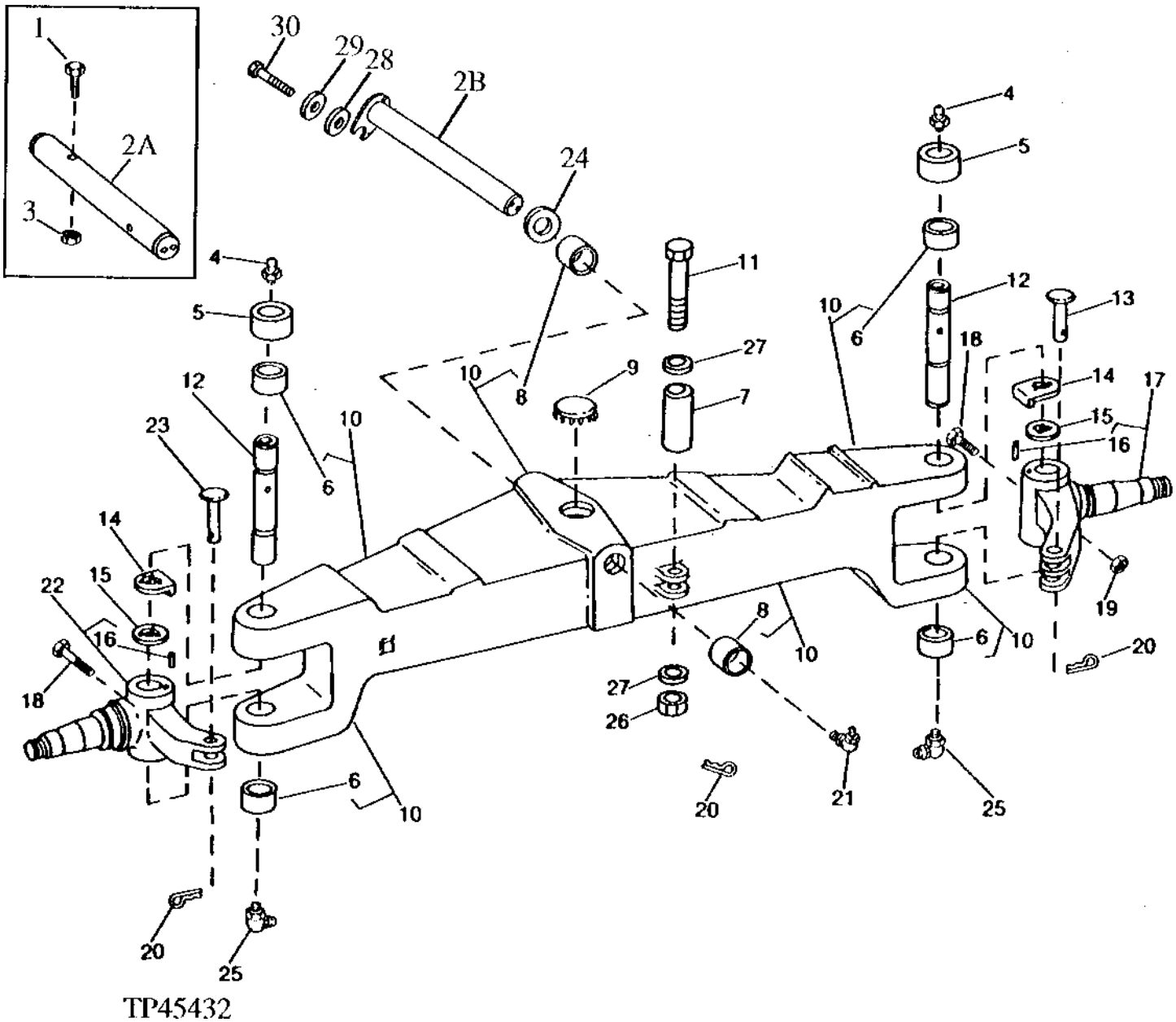

FRONT AXLE, SPINDLE AND KNUCKLE ASSEMBLY
(WITHOUT MECHANICAL FRONT WHEEL DRIVE)

KEY	PART NO.	PART NAME	QTY	SERIAL NO.	410D	510D	REMARKS
1	19M7949	CAP SCREW	1	-801199	X	X	M12 X 100
2A	T75383	PIN FASTENER	1	-801199	X	X	
2B	AT164442	PIN	1	801200-	X	X	
3	14M7319	LOCK NUT	1	-801199	X	X	M12
4	T162396	LUBRICATION FITTING	2		X	X	1/8", (SUB FOR JD7798)
5	T69027	SEAL	2		X	X	
6	T140207	BUSHING	4		X	X	
7	T100813	BUSHING	1		X	X	
8	T140211	BUSHING	2		X	X	
9	L2083C	PLUG	1		X	X	
10	AT106559	FRONT AXLE	1	-801199	X	X	(MARKED T106099)
	AT166010	FRONT AXLE	1	801200-	X	X	(MARKED T149772)
11	19M6575	CAP SCREW	1		X	X	M12 X 110
12	T184816	KINGPIN	2		X	X	(SUB FOR AT86426 AND T69365) (ALSO ORDER (4) T162396)
13	T69355	PIN	1		X	X	
14	T69364	THRUST WASHER	2		X	X	
15	T69363	THRUST WASHER	2		X	X	
16	34M7117	SPRING PIN	2		X	X	5 X 10 MM
17	AT182387	KNUCKLE	1		X	X	R.H. (MARKED T82851) (SUB FOR AT66370) (MARKED T82851)
18	19H3445	CAP SCREW	2		X	X	3/8" X 3-3/4"
19	T11234	LOCK NUT	2		X	X	3/8"
20	11M7030	COTTER PIN	2		X	X	5 X 40 MM
	11M7086	COTTER PIN	1		X	X	2.500 X 50 MM
21	JD7838	ADAPTER	2		X	X	1/8"
22	AT182388	KNUCKLE	1		X	X	L.H. (MARKED T82852) (SUB FOR AT66371) (MARKED T82852)
23	T69354	PIN	1		X	X	
24	R46973	THRUST WASHER	AR		X	X	
25	T162396	LUBRICATION FITTING	2		X	X	(SUB FOR JD7799, THIS APPLICATION) 90°
26	14M7184	NUT	1		X	X	M12
27	24H1162	WASHER	2		X	X	17/32" X 1-1/4" X 0.060"
28	28H3365	WASHER	1	801200-802450	X	X	0.742" X 1.050" X 5/16"
	T18145	BUSHING	1	802451-	X	X	41/64" X 1" X 17/32"
29	T119912	WASHER	1	801200-802450	X	X	21/32" X 1.620" X 1/4"
	24H1106	WASHER	1	802451-	X	X	11/16" X 1-3/4" X 0.134"
30	19M8035	CAP SCREW	1	801200-802450	X	X	M16 X 35
	19M7488	CAP SCREW	1	802451-	X	X	M16 X 40

TIE ROD ASSEMBLY
(WITHOUT MECHANICAL FRONT WHEEL DRIVE)

TP15881 -UN-01JAN94

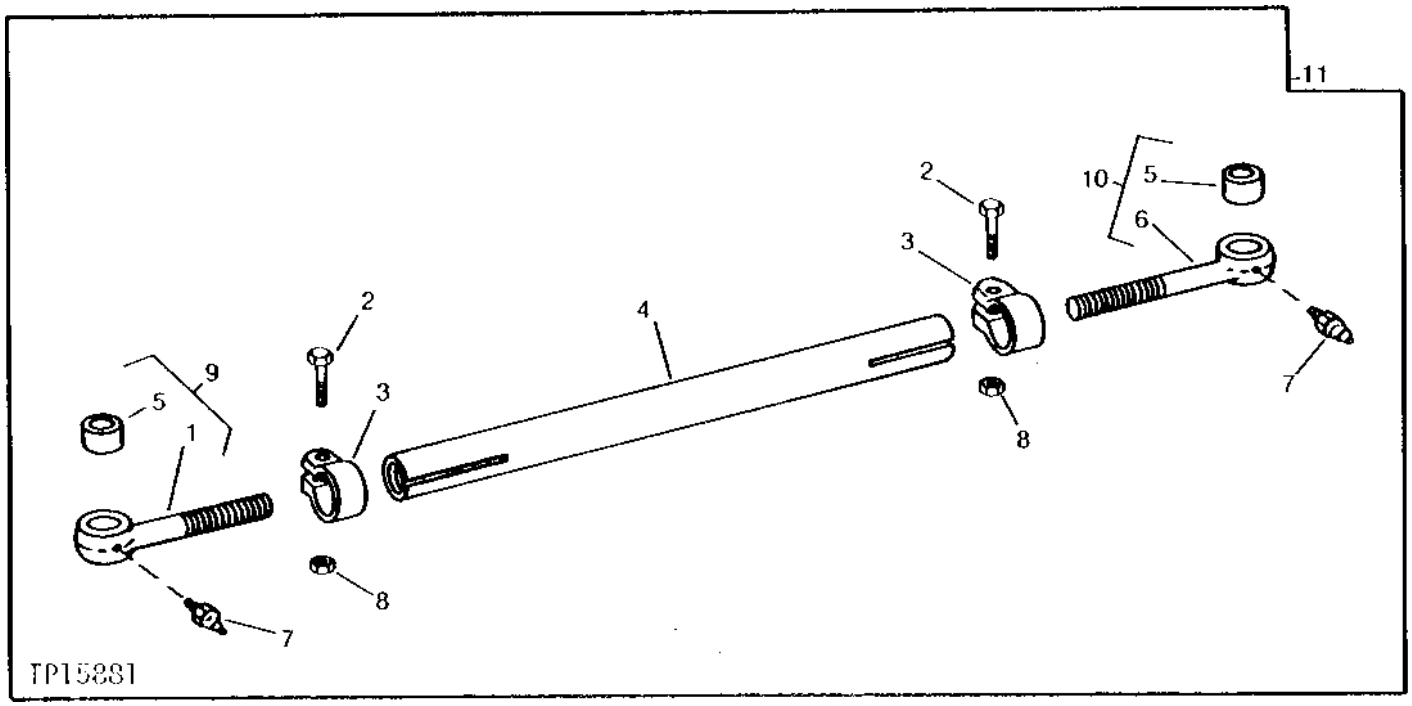

KEY	PART NO.	PART NAME	QTY	SERIAL NO.	410D 510D	REMARKS
1	.....	BOLT	1		X X	R.H.
2	19H1439	CAP SCREW	2		X X	5/8" X 3"
3	T69360	CLIP	2		X X	
4	T81963	TUBE	1		X X	
5	T79786	BUSHING	2		X X	
6	.....	BOLT	1		X X	L.H. (LEFT-HAND THREAD)
7	JD7797	LUBRICATION FITTING	2		X X	1/4"
8	U14555	LOCK NUT	2		X X	
9	AT79755	BOLT	1		X X	R.H.
10	AT79756	BOLT	1		X X	L.H. (LEFT-HAND THREADS)
11	AT79754	TIE ROD	1		X X	

FRONT AXLE WITH STEERING CYLINDER AND TIE ROD
(MECHANICAL FRONT WHEEL DRIVE)
(SERIAL NO. -796854)

TP45576 -UN-30NOV94

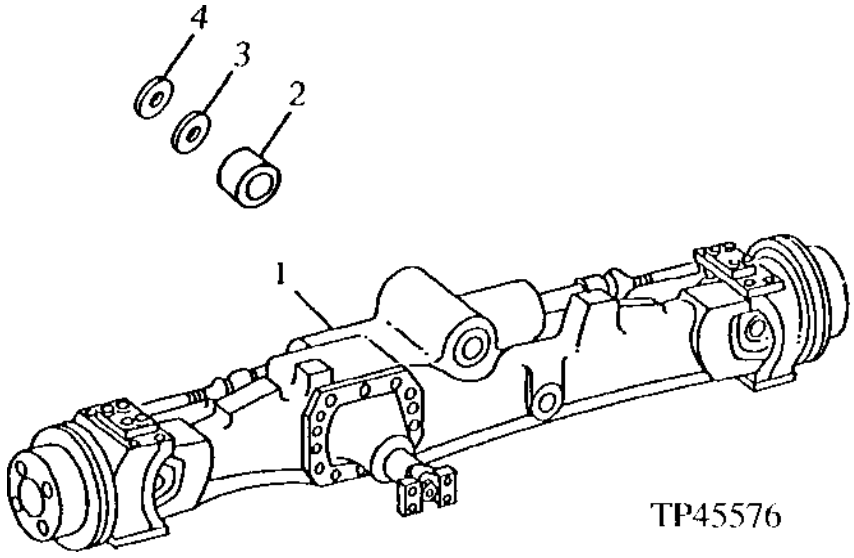

KEY	PART NO.	PART NAME	QTY	SERIAL NO.	410D	510D	REMARKS
1	AT114153	AXLE	1		X	X	
2	T140211	BUSHING	2		X	X	
3	T80027	THRUST WASHER	2		X	X	
4	R46973	THRUST WASHER	AR		X	X	

FRONT AXLE WITH STEERING CYLINDER AND TIE ROD
(MECHANICAL FRONT WHEEL DRIVE)
(SERIAL NO. 796855-)

TP46329 -UN-29SEP94

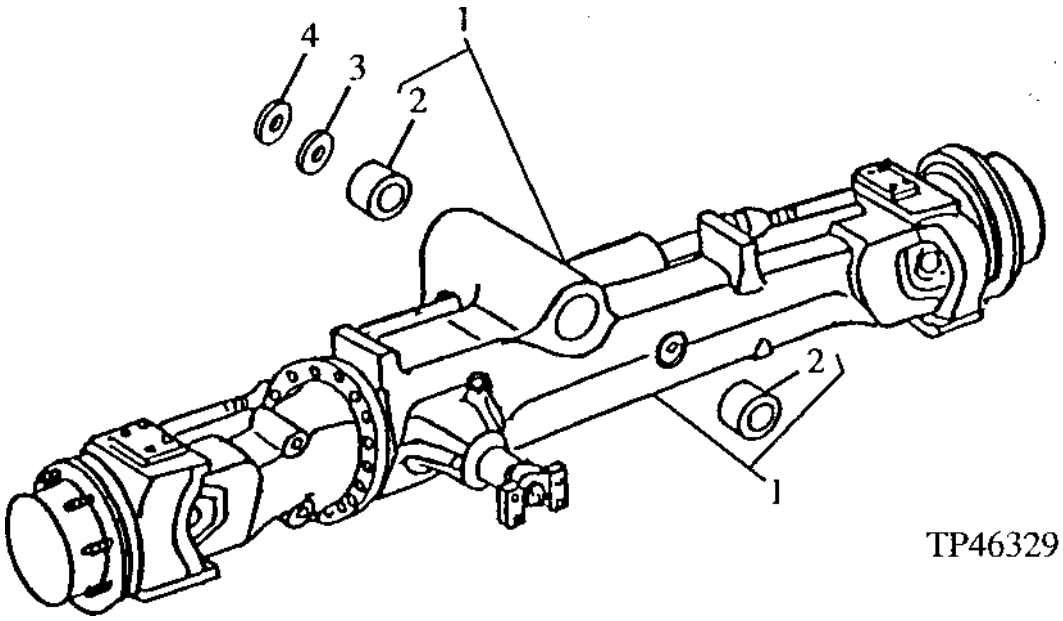

KEY	PART NO.	PART NAME	QTY	TRACTOR SERIAL NO.	410D	510D	REMARKS
1	AT169896	AXLE	1		X	X	CONVENIENCE ASSEMBLY, (SUB FOR AT162994)
2	T140211	BUSHING	2		X	X	
3	T80027	THRUST WASHER	2		X	X	
4	R46973	THRUST WASHER	AR		X	X	

DRIVE SHAFT
(MECHANICAL FRONT WHEEL DRIVE)

TP15709 -UN-01JAN94

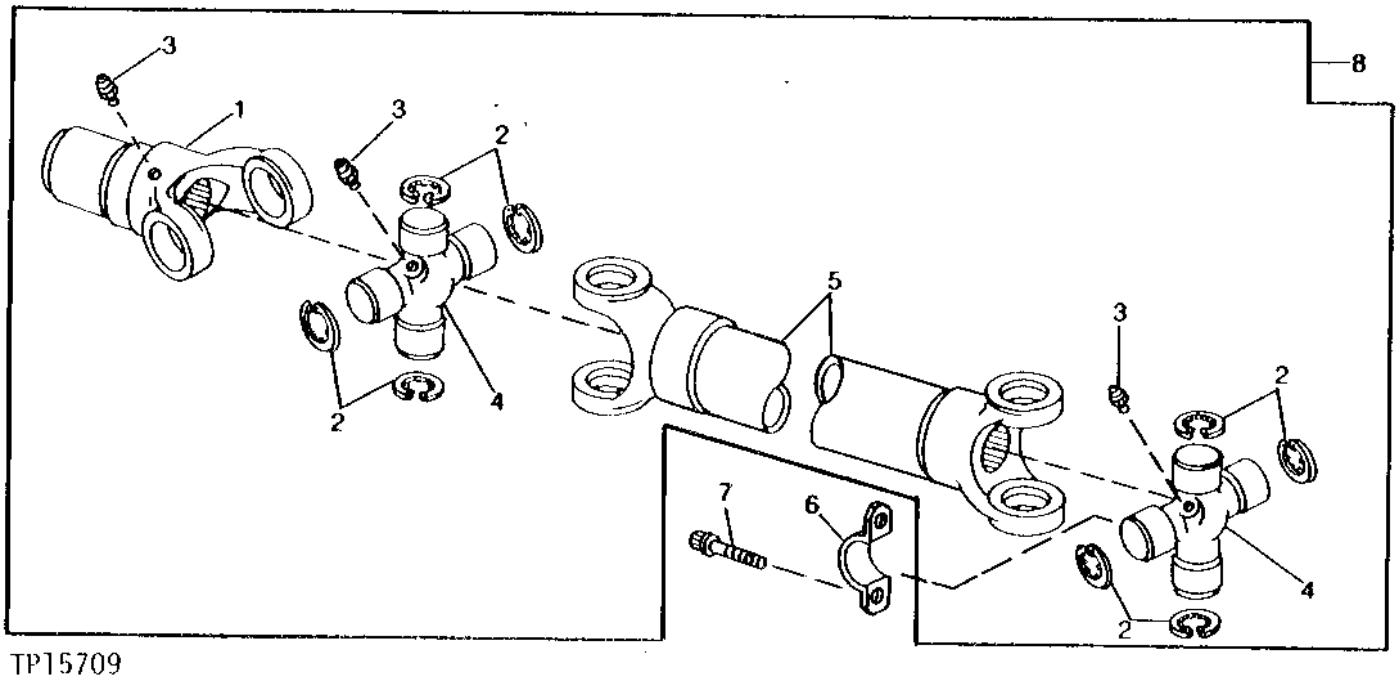

TP15709

KEY	PART NO.	PART NAME	QTY	SERIAL NO.	410D	510D	REMARKS
1	AT76182	YOKE	1		X	X	
2	N119316	SNAP RING	6		X	X	
3	JD7797	LUBRICATION FITTING	3		X	X	
4	AT76183	KIT	2		X	X	
5	.....	UNIVERSAL JOINT WITH SHAFT	1		X	X	
6	T69938	HALF CLAMP	2		X	X	
7	T113128	SCREW	4		X	X	
8	AT135460	DRIVE SHAFT	1	-796854	X	X	
	AT157672	UNIVERSAL DRIVESHAFT	1	796855-	X	X	

PLANETARY DRIVE
(MECHANICAL FRONT WHEEL DRIVE)
(SERIAL NO. -796854)

TP23994 -UN-01JAN94

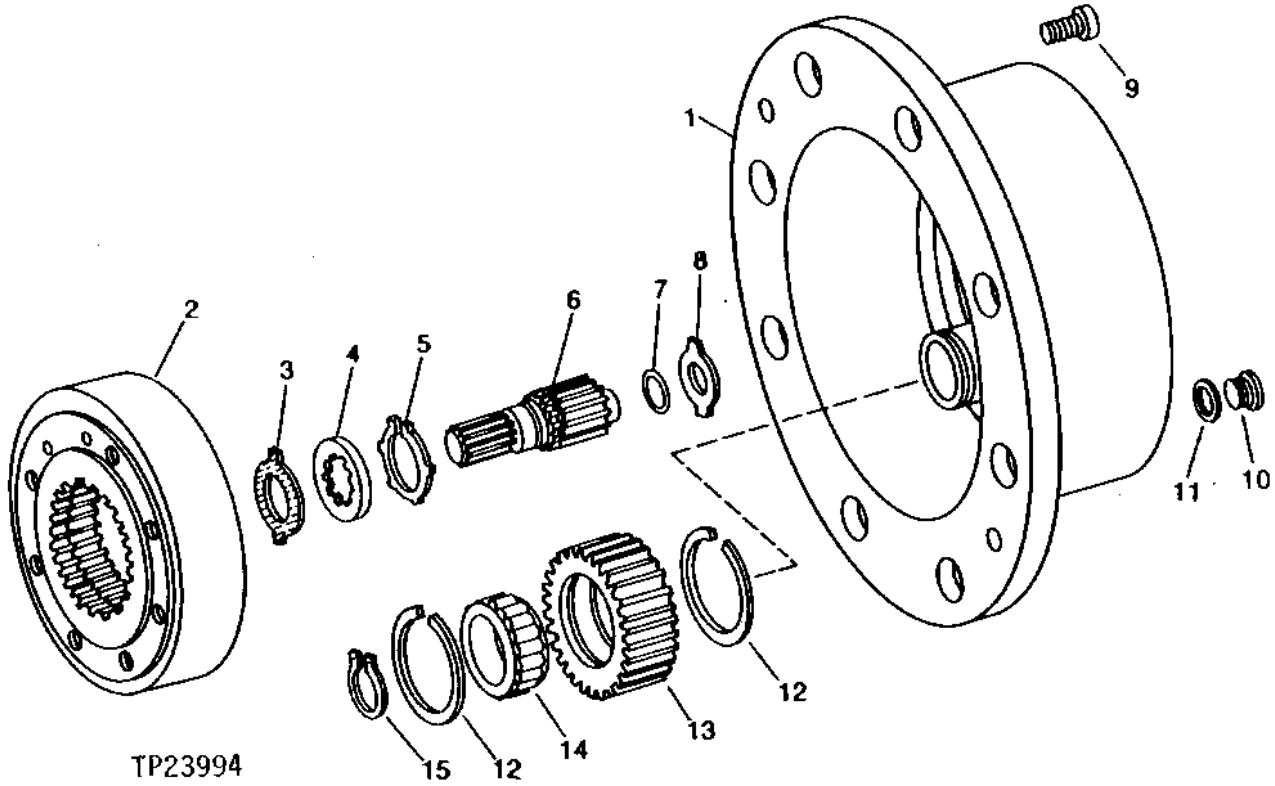

KEY	PART NO.	PART NAME	QTY	SERIAL NO.	410D	510D	REMARKS
1	T123047	PLANET PINION CARRIER	2		X	X	
2	T123043	RING GEAR	2		X	X	
3	T116795	THRUST WASHER	2		X	X	
4	T123045	THRUST WASHER	2		X	X	
5	T123046	SNAP RING	2		X	X	(SUB FOR T123046 AND 40M7180, THIS APPLICATION)
6	T123044	SHAFT	2		X	X	
7	T123050	SNAP RING	2		X	X	
8	T183678	WASHER	AR		X	X	1.5 MM (.059") (SUB FOR L39997, THIS APPLICATION)
	T183679	WASHER	AR		X	X	1.7 MM (.067") (SUB FOR L55602, THIS APPLICATION)
	T183680	WASHER	AR		X	X	2.0 MM (.079") (SUB FOR L40121, THIS APPLICATION)
	T183681	WASHER	AR		X	X	2.2 MM (.087") (SUB FOR L55603, THIS APPLICATION)
	T183682	WASHER	AR		X	X	2.5 MM (.098") (SUB FOR L41008, THIS APPLICATION)
	T183683	WASHER	AR		X	X	2.7 MM (.106")
	T183684	WASHER	AR		X	X	3.0 MM (.118") (SUB FOR L41170, THIS APPLICATION)
9	19M5039	SCREW	4		X	X	M10 X 20
10	15M7027	DRAIN PLUG	2		X	X	
11	L55601	O-RING	2		X	X	
12	T123049	RING	12		X	X	
13	T123048	GEAR	6		X	X	
14	AT117347	CYLINDRICAL ROLLER BEARING	6		X	X	
15	40M4624	SNAP RING	6		X	X	

PLANETARY DRIVE
(MECHANICAL FRONT WHEEL DRIVE)
(SERIAL NO. 796855-)

TP57921 -UN-04SEP98

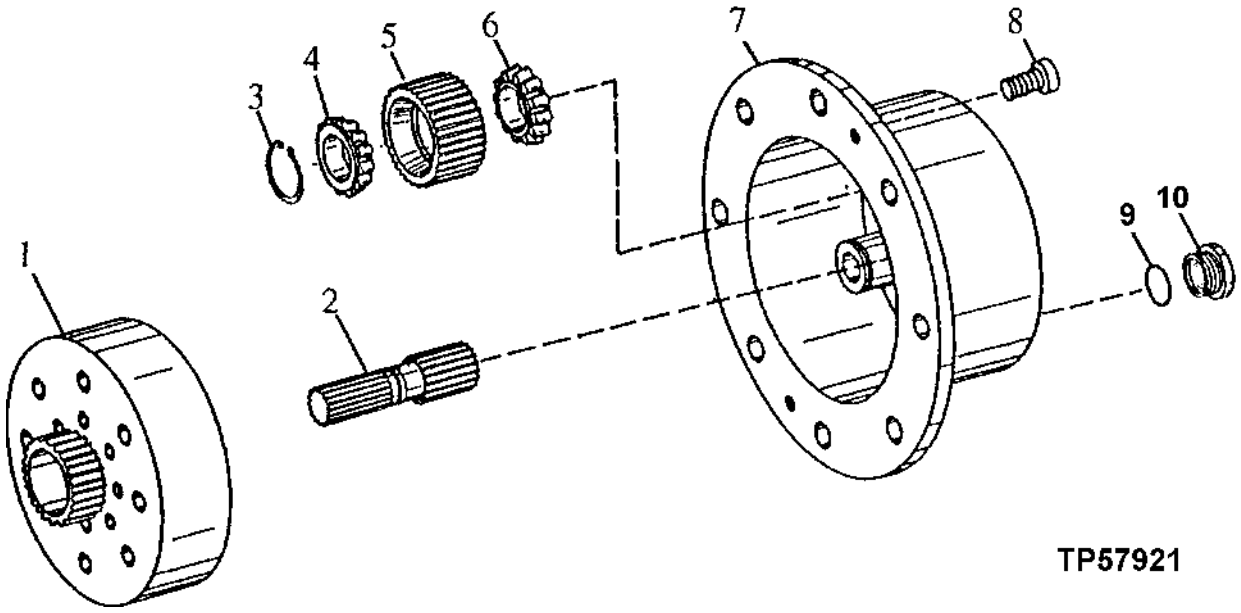

KEY	PART NO.	PART NAME	QTY	SERIAL NO.	410D	510D	REMARKS
1	L79729	RING GEAR	2		X	X	
2	T151085	PINION SHAFT	1		X	X	
3	L100169	SNAP RING	3		X	X	
4	AL79843	ROLLER BEARING	3		X	X	
5	L100241	PLANET PINION	3		X	X	
6	AL79904	ROLLER BEARING	3		X	X	
7	L100242	PLANET PINION CARRIER	1		X	X	
8	19M5039	SCREW	2		X	X	M10 X 20
9	L55580	O-RING	1		X	X	
10	15M7030	PIPE PLUG	1		X	X	

AXLE CASING WITH SHAFTS AND TRACK RODS
(MECHANICAL FRONT WHEEL DRIVE)
(SERIAL NO. -796854)

TP44561 -UN-01JAN94

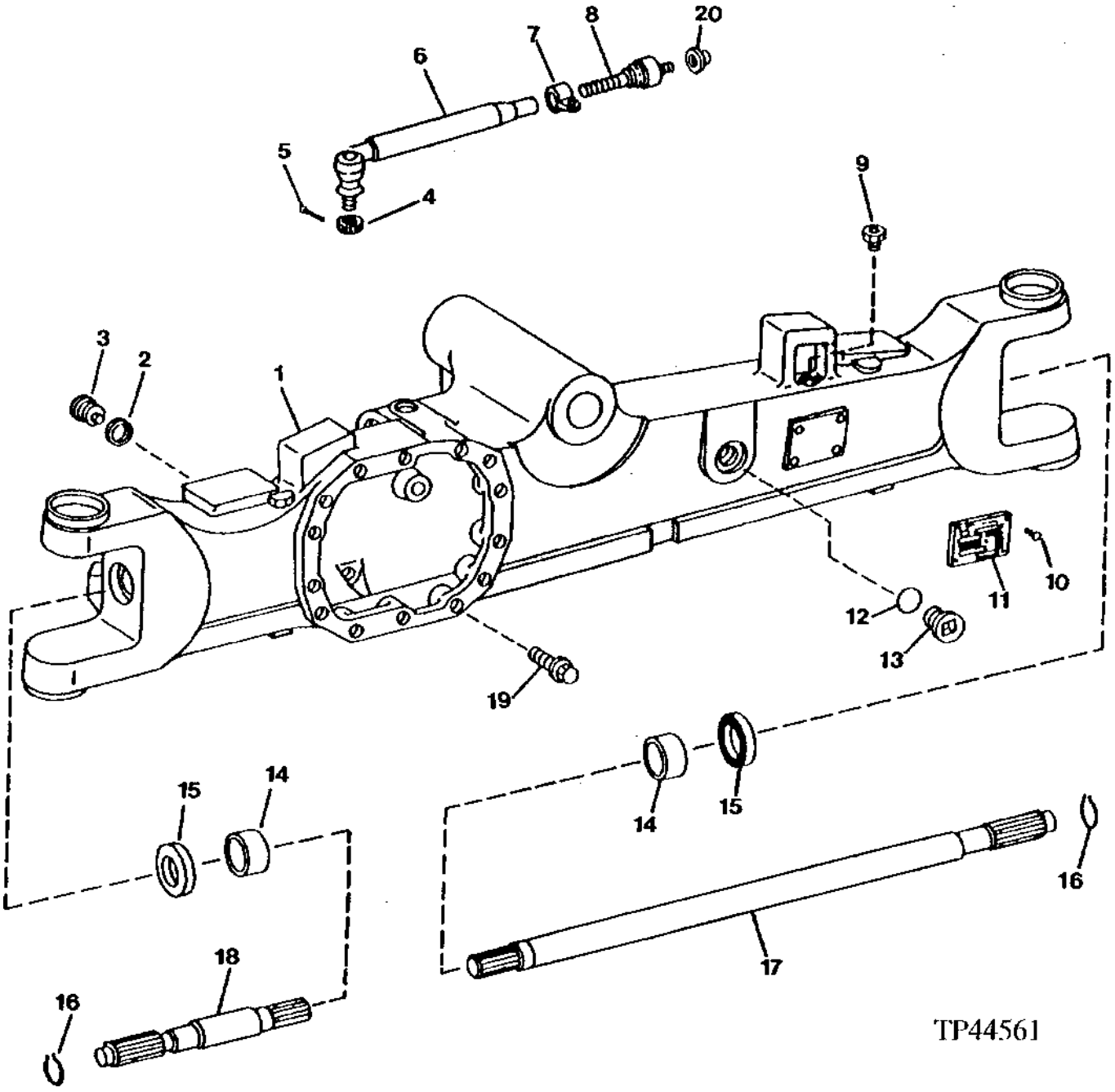

AXLE CASING WITH SHAFTS AND TRACK RODS
(MECHANICAL FRONT WHEEL DRIVE)
(SERIAL NO. -796854)

KEY	PART NO.	PART NAME	QTY	SERIAL NO.	410D	510D	REMARKS
1	AT108330	HOUSING	1		X	X	
2	R82198	O-RING	1		X	X	
3	R79496	FITTING PLUG	1		X	X	
4	14M5409	NUT	2		X	X	M20
5	11M7087	COTTER PIN	2		X	X	4 X 40 MM
6	AT86545	BALL JOINT	1		X	X	L.H.
	AT86546	BALL JOINT	1		X	X	R.H. (NOT SHOWN)
7	AL34261	CLAMP	2		X	X	
8	AL60161	BALL JOINT	2		X	X	(SUB FOR AT86544)
9	T84081	SCREW	1		X	X	
10	25M7021	GROOVE PIN	4		X	X	3 X 5 MM
11	.....	SERIAL NUMBER PLATE	1		X	X	
12	L55580	O-RING	1		X	X	
13	15M7030	PIPE PLUG	1		X	X	
14	L60088	BUSHING	2		X	X	
15	L110233	SEAL	2		X	X	(SUB FOR T116820)
16	L60092	SNAP RING	2		X	X	
17	T123035	SHAFT	1		X	X	R.H. (LONG)
18	T123036	SHAFT	1		X	X	L.H. (SHORT)
19	19M8031	SCREW	14		X	X	M14 X 40
20	T152301	SHIFT COLLAR	1		X	X	

AXLE CASINGS AND TRACK RODS
(MECHANICAL FRONT WHEEL DRIVE)
(SERIAL NO. 796855-)

TP58193 -UN-22MAR00

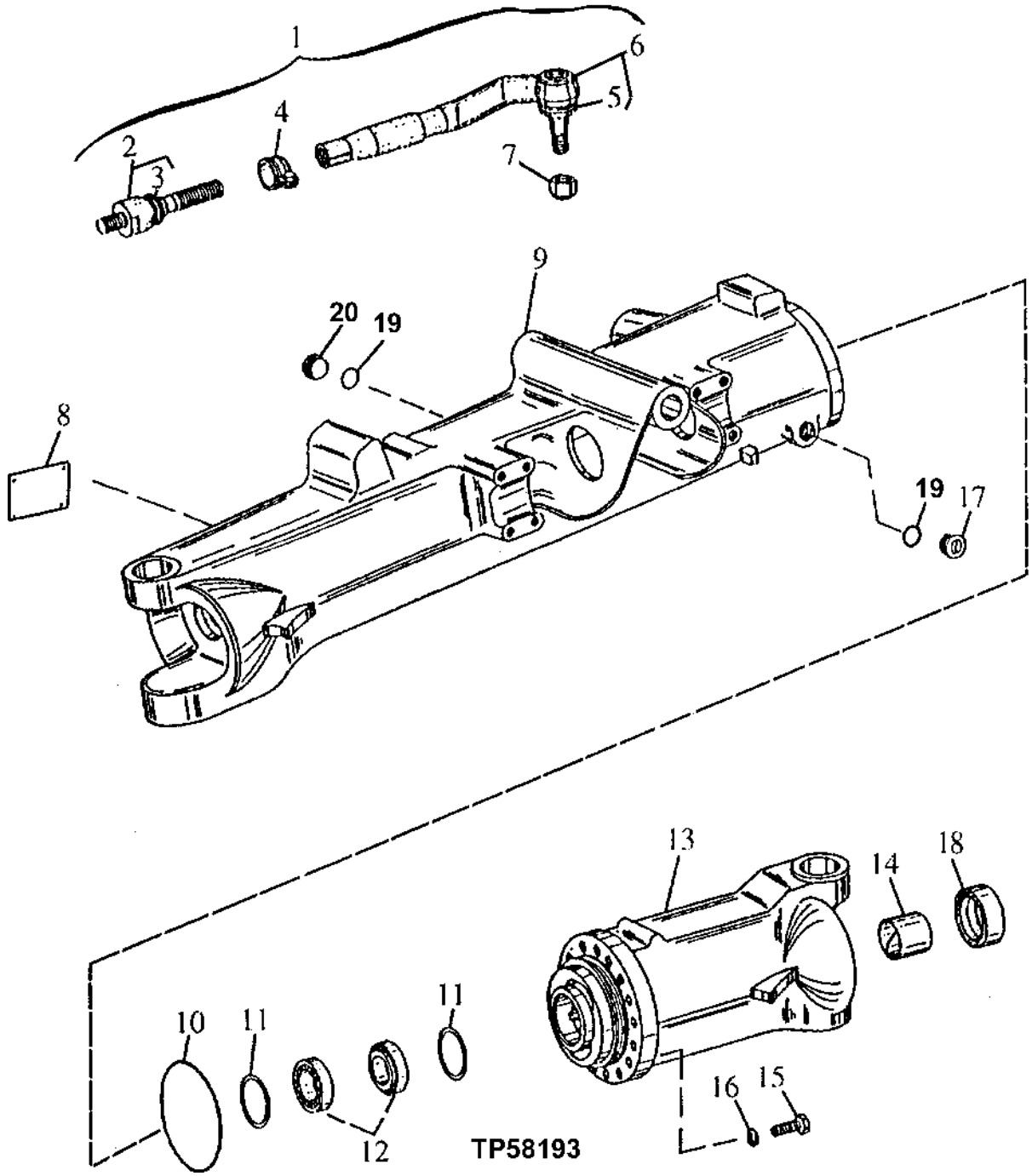

AXLE CASINGS AND TRACK RODS
(MECHANICAL FRONT WHEEL DRIVE)
(SERIAL NO. 796855-)

KEY	PART NO.	PART NAME	QTY	SERIAL NO.	410D	510D	REMARKS
1	AT170205	TIE ROD	1		X	X	L.H. (SUB FOR AT167325)
	AT309303	TIE ROD	1		X	X	R.H. (NOT ILLUSTRATED) (SUB FOR AT170204)
2	AL80542	TIE ROD	1		X	X	END, (SUB FOR AL81904)
3	AL113451	BOOT	1		X	X	
4	AT309307	CLAMP	1		X	X	(SUB FOR AT170209)
	L55605	NUT	1		X	X	M24
5	AL113460	BOOT	1		X	X	
6	AT170206	TIE ROD	1		X	X	L.H.
	AT309306	TIE ROD	1		X	X	R.H. (NOT ILLUSTRATED) (INCLUDES AL113460, BOOT) (SUB FOR AT170208)
7	14M7513	LOCK NUT	1		X	X	M22
8	.....	SERIAL NUMBER PLATE	1		X	X	
9	T206432	HOUSING	1		X	X	R.H. (SUB FOR T151262)
10	L40306	O-RING	1		X	X	
11	L100141	WASHER	AR		X	X	1.15MM (0.0453")
	L100145	WASHER	AR		X	X	1.35MM (0.0531")
	L61263	WASHER	AR		X	X	1.50MM (0.0591")
	L61267	WASHER	AR		X	X	1.70MM (0.0669)
	L61271	WASHER	AR		X	X	1.90MM (0.0748")
	L61275	WASHER	AR		X	X	2.10MM (0.0827")
12	AL79808	TAPERED ROLLER BEARING	2		X	X	
13	T151089	HOUSING	1		X	X	L.H.
14	L100228	BUSHING	2		X	X	
15	T151261	CAP SCREW	15		X	X	
16	L40014	WASHER	15		X	X	15 X 23.700 X 3 MM
17	L56822	PIPE PLUG	1		X	X	
18	L110233	SEAL	2		X	X	(SUB FOR T116820)
19	L55580	O-RING	2		X	X	
20	L100240	FITTING PLUG	1		X	X	

JOINT STEERING HOUSING AND HUB ASSEMBLY
(MECHANICAL FRONT WHEEL DRIVE)
(SERIAL NO. -796854)

TP44417 -UN-01JAN94

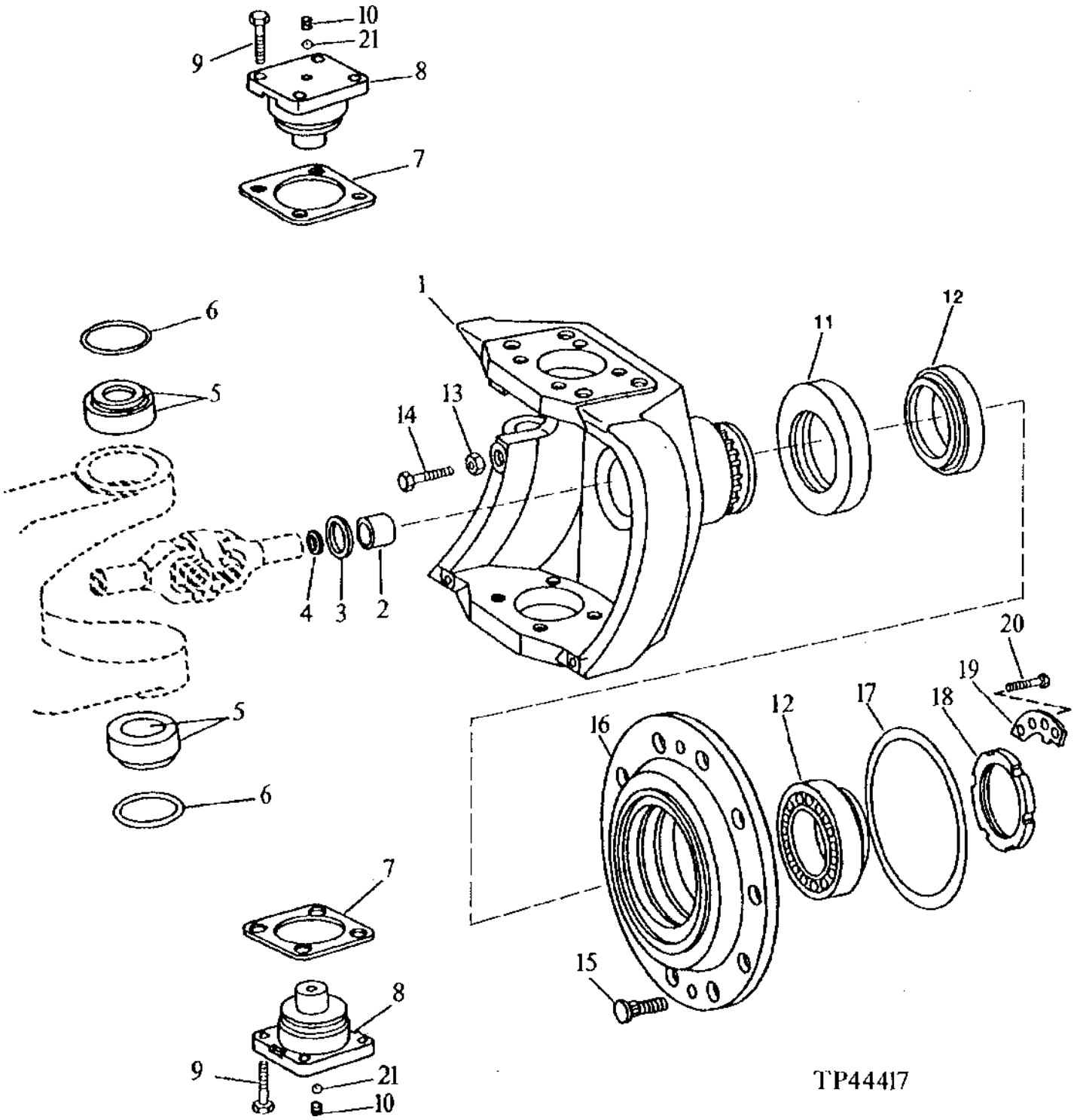

JOINT STEERING HOUSING AND HUB ASSEMBLY
(MECHANICAL FRONT WHEEL DRIVE)
(SERIAL NO. -796854)

KEY	PART NO.	PART NAME	QTY	SERIAL NO.	410D	510D	REMARKS
1	AT108331	HOUSING	1		X	X	L.H.
	AT108332	HOUSING	1		X	X	R.H.
2	L60088	BUSHING	2		X	X	
3	L110233	SEAL	2		X	X	(SUB FOR T116820)
4	L40276	SNAP RING	2		X	X	
5	JD8929	BEARING CONE	4		X	X	
	JD8251	BEARING CUP	4		X	X	
6	L53869	O-RING	4		X	X	
7	T116839	SHIM	AR		X	X	0.2 MM (.008")
	T116840	SHIM	AR		X	X	0.3 MM (.011")
	T116841	SHIM	AR		X	X	0.4 MM (.016")
	T116842	SHIM	AR		X	X	0.6 MM (.024")
	T116843	SHIM	AR		X	X	0.8 MM (.031")
	T116844	SHIM	AR		X	X	1.0 MM (.039")
	T116846	SHIM	AR		X	X	1.6 MM (.063")
	T116848	SHIM	AR		X	X	2.0 MM (.079")
8	T147497	KINGPIN	4		X	X	(SUB FOR (4) T116831)
9	19M8011	CAP SCREW	16		X	X	M12 X 30
	R75522	LOCK WASHER	16		X	X	
10	22M7083	SET SCREW	4		X	X	M6 X 12
11	AL68616	SEAL	2		X	X	(SUB FOR T116819)
12	JD10249	TAPERED ROLLER BEARING	4		X	X	
13	14M7437	NUT	2		X	X	M14, (SUB FOR T84069)
14	R83518	SCREW	2		X	X	
15	L55598	WHEEL BOLT	16		X	X	
16	AT108334	HUB	2		X	X	
17	L40317	O-RING	2		X	X	
18	T116822	NUT	2		X	X	
19	T116827	WASHER	2		X	X	
20	19M7902	SCREW	4		X	X	
21	T24653	BALL	4		X	X	

JOINT STEERING HOUSING AND HUB ASSEMBLY
(MECHANICAL FRONT WHEEL DRIVE)
(SERIAL NO. 796855-)

T144555 -UN-14AUG01

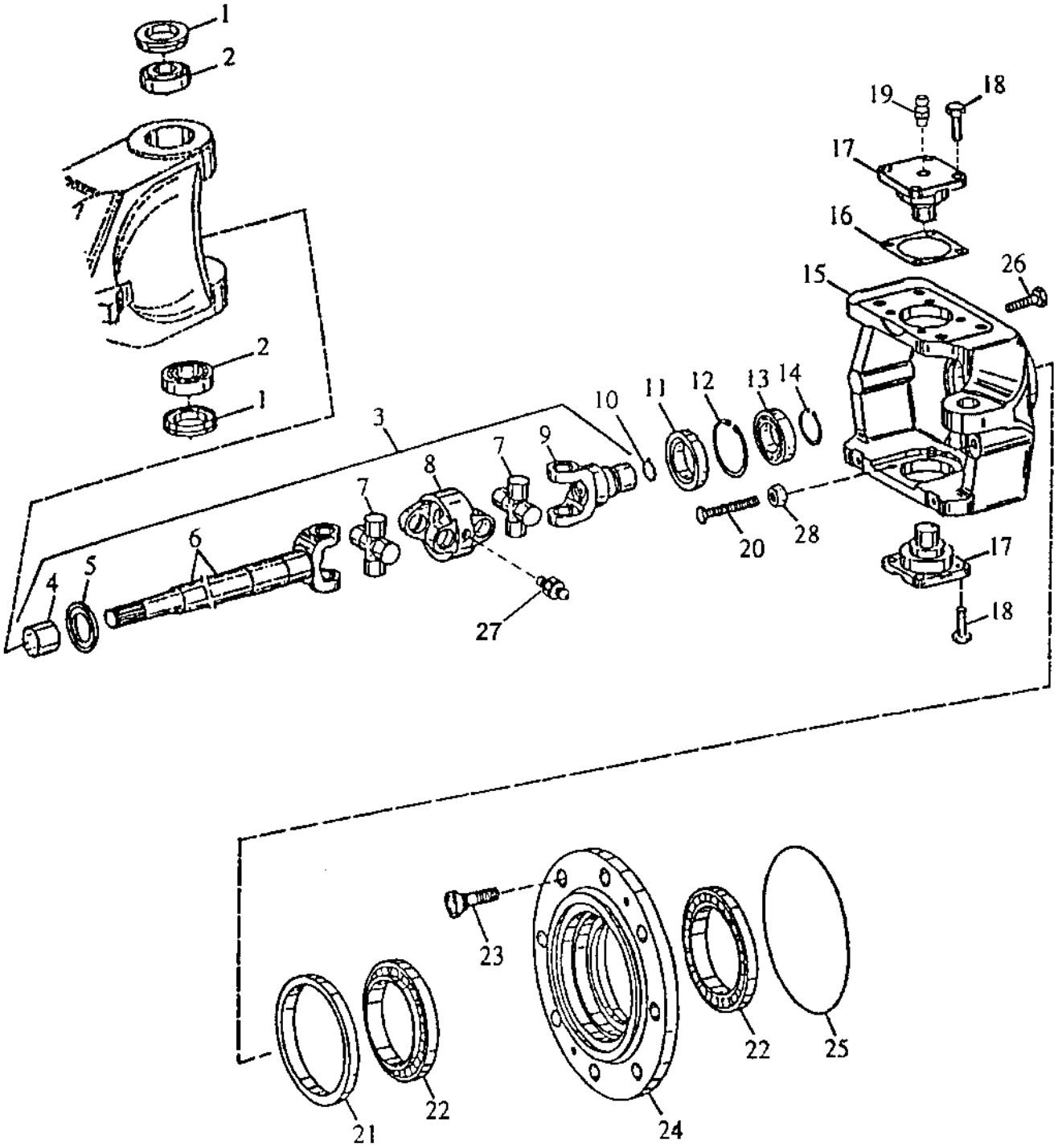

T144555

JOINT STEERING HOUSING AND HUB ASSEMBLY
(MECHANICAL FRONT WHEEL DRIVE)
(SERIAL NO. 796034-)

KEY	PART NO.	PART NAME	QTY	SERIAL NO.	410D	510D	REMARKS
1	AL79902	SEAL	2		X	X	
2	AL79901	TAPERED ROLLER BEARING	2		X	X	
3	AT167118	UNIVERSAL DRIVESHAFT	1		X	X	L.H.
	AT167119	UNIVERSAL DRIVESHAFT	1		X	X	R.H. (NOT ILLUSTRATED)
4	L100636	BUSHING	1		X	X	
5	L100635	SHEET	1		X	X	
6	T153722	SHAFT	1		X	X	L.H.
	T153721	SHAFT	1		X	X	R.H. (NOT ILLUSTRATED)
7	L100632	CROSS AND BEARING ASSEMBLY	2		X	X	
8	L100633	YOKE	1		X	X	
9	T153720	UNIVERSAL JOINT	1		X	X	
10	L40276	SNAP RING	1		X	X	
11	AL79951	SEAL	1		X	X	
12	40M5099	SNAP RING	1		X	X	
13	R115119	BALL BEARING	1		X	X	
14	T151264	SNAP RING	1		X	X	
15	T151088	HOUSING	1		X	X	L.H.
	T151087	HOUSING	1		X	X	R.H. (NOT ILLUSTRATED)
16	L100102	SHIM	AR		X	X	0.2 MM
	T166150	SHIM	AR				0.5 MM
	T166149	SHIM	AR				0.7 MM
	L100106	SHIM	AR				0.8 MM
	T166145	SHIM	AR				0.9 MM
	T166148	SHIM	AR				1.1 MM
	T166147	SHIM	AR				1.2 MM
	T166146	SHIM	AR				1.3 MM
	L100109	SHIM	AR				1.6 MM
17	T188397	PIN	2		X	X	(SUB FOR T151074, THIS APPLICATION) (ALSO ORDER 58M5573)
18	19M8011	CAP SCREW	8		X	X	
19	58M5573	LUBRICATION FITTING	2		X	X	
20	L100239	SCREW	1		X	X	
21	AL79950	SEAL	1		X	X	
22	JD10249	TAPERED ROLLER BEARING	2		X	X	(SUB FOR AT167333)
23	L55598	WHEEL BOLT	8		X	X	
24	L100238	HUB	1		X	X	
25	L40317	O-RING	1		X	X	
26	19M8738	CAP SCREW	16		X	X	
27	58M5574	LUBRICATION FITTING	2		X	X	
28	14M7345	NUT	1		X	X	M14

DIFFERENTIAL CASE AND GEARS
(MECHANICAL FRONT WHEEL DRIVE)
(SERIAL NO. -796854)

TP40429 -UN-01JAN94

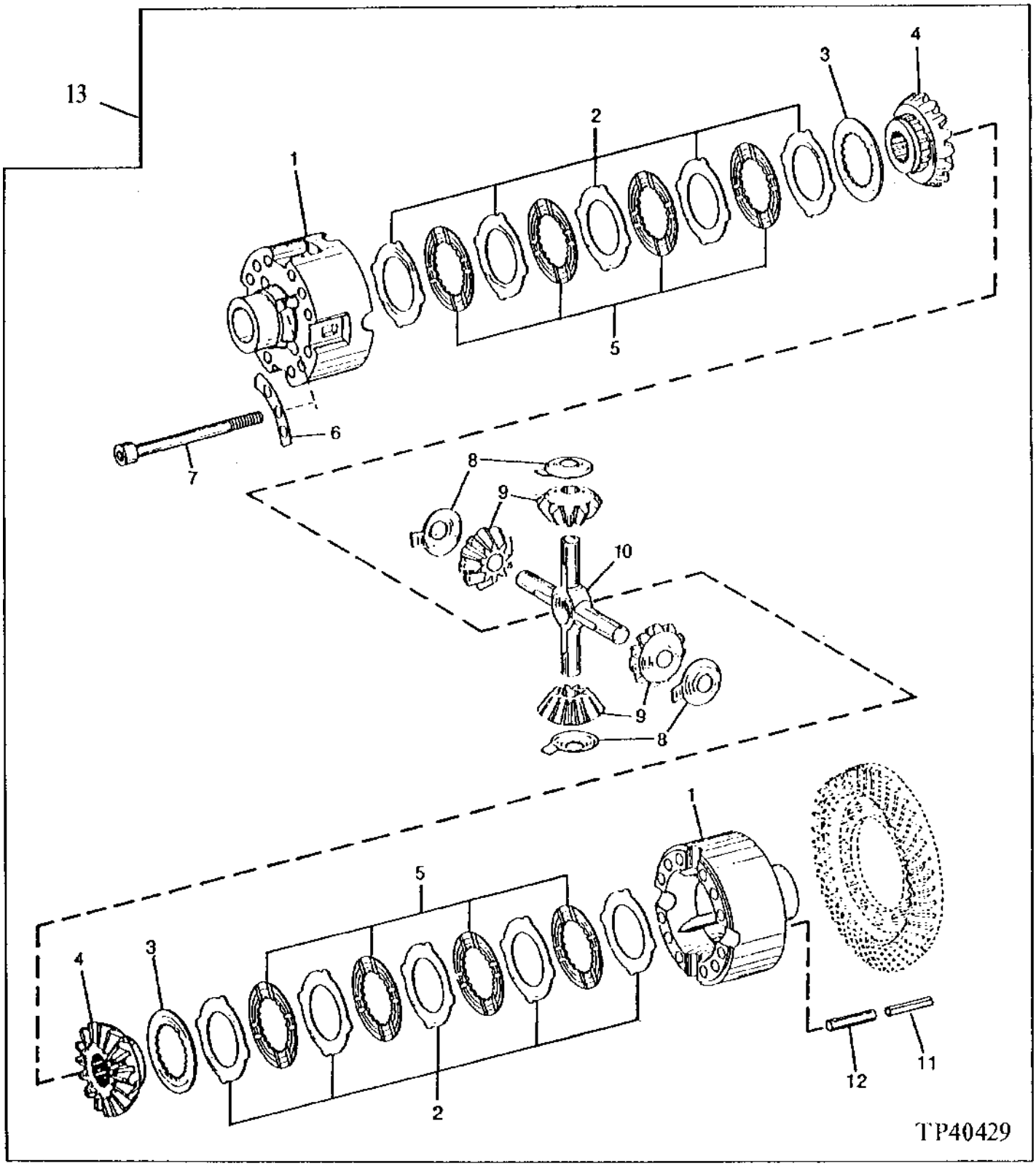

DIFFERENTIAL CASE AND GEARS
(MECHANICAL FRONT WHEEL DRIVE)
(SERIAL NO. -796854)

KEY	PART NO.	PART NAME	QTY	SERIAL NO.	410D	510D	REMARKS
1	AT84713	HOUSING	1		X	X	
2	L62419	DISK WITH OUTER SPLINE	AR		X	X	(SUB FOR T82535) 1.2 MM (.047")
	L35577	DISK WITH OUTER SPLINE	AR		X	X	1.3 MM (.051")
	L62420	DISK WITH OUTER SPLINE	AR		X	X	1.4 MM (.055")
3	L40130	DISK WITH INNER SPLINE	2		X	X	
4	L40208	BEVEL GEAR	2		X	X	
5	T123033	CLUTCH DISK	8		X	X	
6	.....	SECTOR	4		X	X	(SUB 12 R75522 FOR 4 L40254)
	R75522	LOCK WASHER	12		X	X	(SUB FOR (4) L40254)
7	19M8119	SCREW	12		X	X	M12 X 130
8	L40253	THRUST WASHER	4		X	X	
9	L101698	BEVEL GEAR	4		X	X	(SUB FOR L40192)
10	T123034	SPIDER	1		X	X	
11	34M7047	SPRING PIN	4		X	X	8 X 40 MM, (SUB FOR T82618)
12	34M7135	SPRING PIN	4		X	X	14 X 40 MM
13	AT117345	DIFFERENTIAL	1		X	X	

LIMITED SLIP DIFFERENTIAL
(MECHANICAL FRONT WHEEL DRIVE)
(SERIAL NO. 796855-)

TP44518 -UN-01JAN94

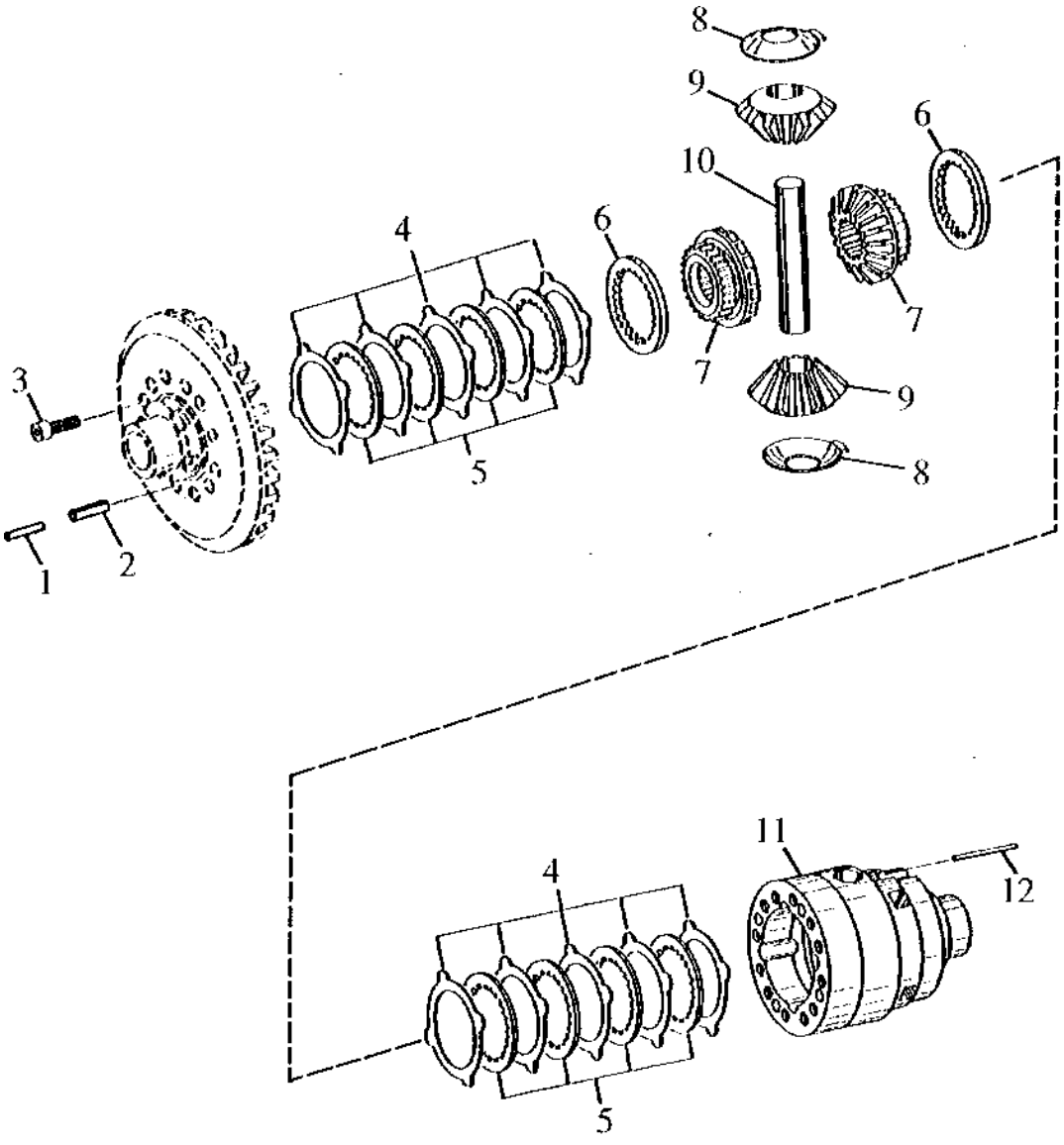

TP44518

LIMITED SLIP DIFFERENTIAL
(MECHANICAL FRONT WHEEL DRIVE)
(SERIAL NO. 796855-)

KEY	PART NO.	PART NAME	QTY	SERIAL NO.	410D	510D	REMARKS
1	34M7224	SPRING PIN	4		X	X	8 X 26 MM
2	L100158	SPRING PIN	4		X	X	
3	19M8533	SCREW	12		X	X	M10 X 25, (SUB FOR T151077)
4	L100150	DISK WITH OUTER SPLINE	AR		X	X	1.0MM (0.0394")
	L100151	DISK WITH OUTER SPLINE	AR		X	X	1.1MM (0.0433")
	L100152	DISK WITH OUTER SPLINE	AR		X	X	1.2MM (0.0472")
5	L100153	DISK WITH INNER SPLINE	8		X	X	
6	L100154	THRUST WASHER	2		X	X	
7	T151075	BEVEL GEAR DRIVE	2		X	X	
8	L60103	THRUST WASHER	2		X	X	
9	T116851	BEVEL GEAR	2		X	X	
10	L60104	PIN FASTENER	1		X	X	
11	L112197	HOUSING	1		X	X	(ALSO ORDER 34M5723) (SUB FOR T151080)
12	34M5723	SPRING PIN	1		X	X	5 X 55 MM

DIFFERENTIAL CARRIER
(MECHANICAL FRONT WHEEL DRIVE)
(SERIAL NO. -796854)

TP26636 -UN-01JAN94

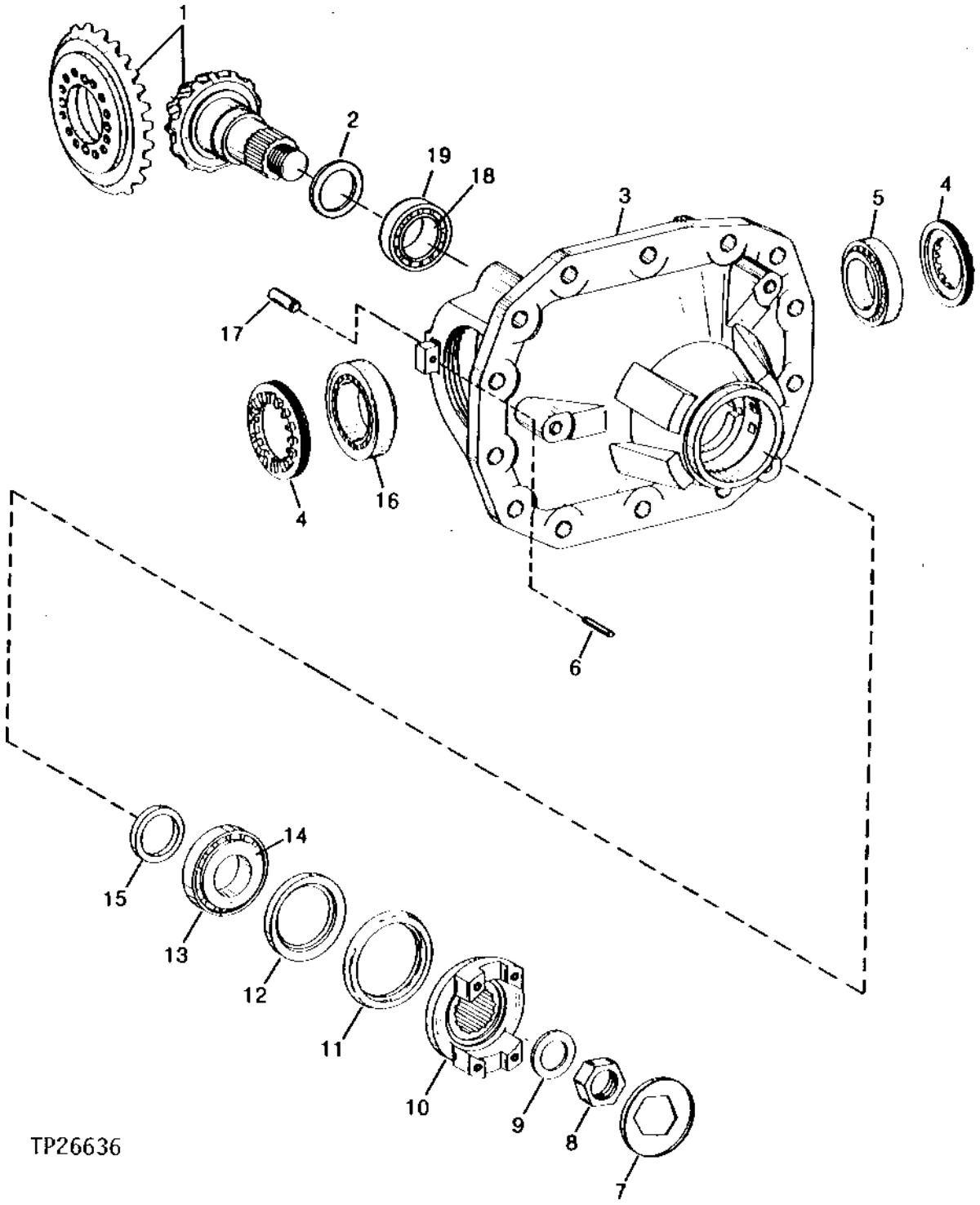

DIFFERENTIAL CARRIER
(MECHANICAL FRONT WHEEL DRIVE)
(SERIAL NO. -796854)

KEY	PART NO.	PART NAME	QTY	SERIAL NO.	410D	510D	REMARKS
1	AT117344	BEVEL GEAR DRIVE	1		X	X	
2	L55606	SHIM	AR		X	X	0.65 MM (.026")
	L55607	SHIM	AR		X	X	0.70 MM (.028")
	L55608	SHIM	AR		X	X	0.75 MM (.030")
	L55610	WASHER	AR		X	X	0.85 MM (.033")
	L40995	WASHER	AR		X	X	0.90 MM (.035")
	L40996	WASHER	AR		X	X	0.95 MM (.037")
	L40982	WASHER	AR		X	X	1.0 MM (.039")
	L40983	WASHER	AR		X	X	1.05 MM (.041")
	L40984	WASHER	AR		X	X	1.1 MM (.043")
	L40985	WASHER	AR		X	X	1.15 MM (.045")
	L40986	WASHER	AR		X	X	1.2 MM (.047")
	L40987	WASHER	AR		X	X	1.25 MM (.049")
	L40988	WASHER	AR		X	X	1.3 MM (.051")
	L40989	WASHER	AR		X	X	1.35 MM (.053")
	L40990	WASHER	AR		X	X	1.4 MM (.055")
	L40991	WASHER	AR		X	X	1.45 MM (.057")
	L40992	WASHER	AR		X	X	(SUB FOR T123022) 1.5 MM (.059")
	L40993	WASHER	AR		X	X	(SUB FOR T123023) 1.55 MM (.061")
	L40994	WASHER	AR		X	X	1.6 MM (.063")
3	T123001	HOUSING	1		X	X	
4	T82529	NUT	2		X	X	
5	JD37087	TAPERED ROLLER BEARING	1		X	X	(WITH RACE)
6	34M7216	SPRING PIN	2		X	X	6 X 35 MM, (SUB FOR 34M7041)
7	T116825	LOCKING COLLAR	1		X	X	
8	T116821	NUT	1		X	X	
9	T116794	WASHER	1		X	X	
10	T123030	FLANGE	1		X	X	
11	T123031	CAP	1		X	X	
12	AL79797	SEAL	1		X	X	(SUB FOR AT113921)
13	JD8257	BEARING CUP	1		X	X	
14	AR94761	BEARING CONE	1		X	X	
15	L100057	SPACER	AR		X	X	15.1 MM (.594")
	L100058	SPACER	AR		X	X	15.2 MM (.598")
	L100059	SPACER	AR		X	X	15.3 MM (.602")
	L100060	SPACER	AR		X	X	15.4 MM (.606")
	L100061	SPACER	AR		X	X	15.5 MM (.610")
	L100062	SPACER	AR		X	X	15.6 MM (.614")
	L100063	SPACER	AR		X	X	15.7 MM (.618")
	L100064	SPACER	AR		X	X	15.8 MM (.622")
	L100065	SPACER	AR		X	X	15.9 MM (.626")
	L100066	SPACER	AR		X	X	16.0 MM (.630")
	L100067	SPACER	AR		X	X	16.1 MM (.634")
	L100068	SPACER	AR		X	X	16.2 MM (.638")
	L100069	SPACER	AR		X	X	16.3 MM (.642")
	L100070	SPACER	AR		X	X	16.4 MM (.646")
16	JD37219	TAPERED ROLLER BEARING	1		X	X	
17	T82528	DOWEL PIN	2		X	X	
18	JD8901	BEARING CONE	1		X	X	
19	JD8236	BEARING CUP	1		X	X	

BEVEL GEAR AND INPUT FLANGE
(MECHANICAL FRONT WHEEL DRIVE)
(SERIAL NO. 796855-)

TP44517 -UN-01JAN94

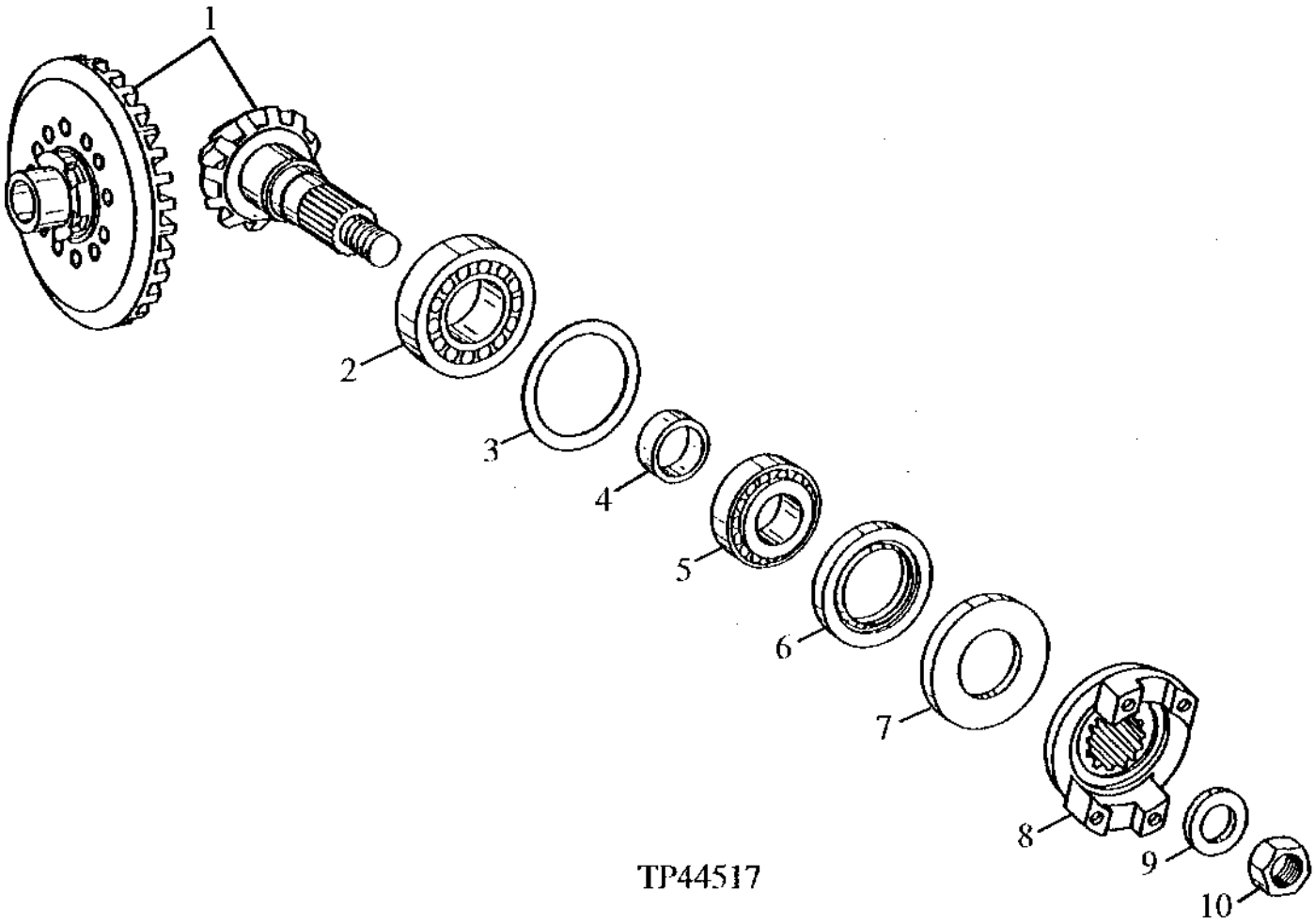

BEVEL GEAR AND INPUT FLANGE
(MECHANICAL FRONT WHEEL DRIVE)
(SERIAL NO. 796855-)

KEY	PART NO.	PART NAME	QTY	SERIAL NO.	410D	510D	REMARKS
1	AT167126	BEVEL GEAR	1		X	X	
2	AL79794	TAPERED ROLLER BEARING	1		X	X	
3	L55606	SHIM	AR		X	X	0.650 MM (0.026")
	L55610	WASHER	AR		X	X	72 X 88.600 X 0.850 MM (2.835" X 3.488" X 0.033")
	L40982	WASHER	AR		X	X	72 X 88.600 X 1 MM (2.835" X 3.488" X 0.039")
	L40985	WASHER	AR		X	X	72 X 88.600 X 1.150 MM (2.835" X 3.488" X 0.045")
	L40988	WASHER	AR		X	X	72 X 88.600 X 1.300 MM (2.835" X 3.488" X 0.051")
	L40991	WASHER	AR		X	X	72 X 88.600 X 1.450 MM (2.835" X 3.488" X 0.057")
	L40994	WASHER	AR		X	X	72 X 88.600 X 1.600 MM (2.835" X 3.488" X 0.063")
4	L100057	SPACER	AR		X	X	15.10MM (0.5945")
	L100092	SPACER	AR		X	X	15.33MM (0.6035")
	L100060	SPACER	AR		X	X	15.40MM (0.6063")
	L100089	SPACER	AR		X	X	15.46MM (0.6089")
	L100096	SPACER	AR		X	X	15.48MM (0.6094")
	L100086	SPACER	AR		X	X	15.63MM (0.6154")
	L100063	SPACER	AR		X	X	15.70MM (0.6181")
	L100083	SPACER	AR		X	X	15.76MM (0.6205")
	L100080	SPACER	AR		X	X	15.93MM (0.6272)
	L100066	SPACER	AR		X	X	16,00MM (0.6299")
	L100077	SPACER	AR		X	X	16.06MM (0.6323")
	L100074	SPACER	AR		X	X	16.23MM (0.6390")
	L100069	SPACER	AR		X	X	16.30MM (0.6417")
5	AL111096	BEARING	1		X	X	(SUB FOR AT117348)
6	AL79797	SEAL	1		X	X	
7	L100230	GUARD	1		X	X	
8	T151072	FLANGE	1		X	X	
9	L35714	WASHER	1		X	X	
10	14M7498	LOCK NUT	1		X	X	M24

FRONT WHEEL DOUBLE JOINT
(MECHANICAL FRONT WHEEL DRIVE)
(SERIAL NO. -796854)

TP40428 -UN-01JAN94

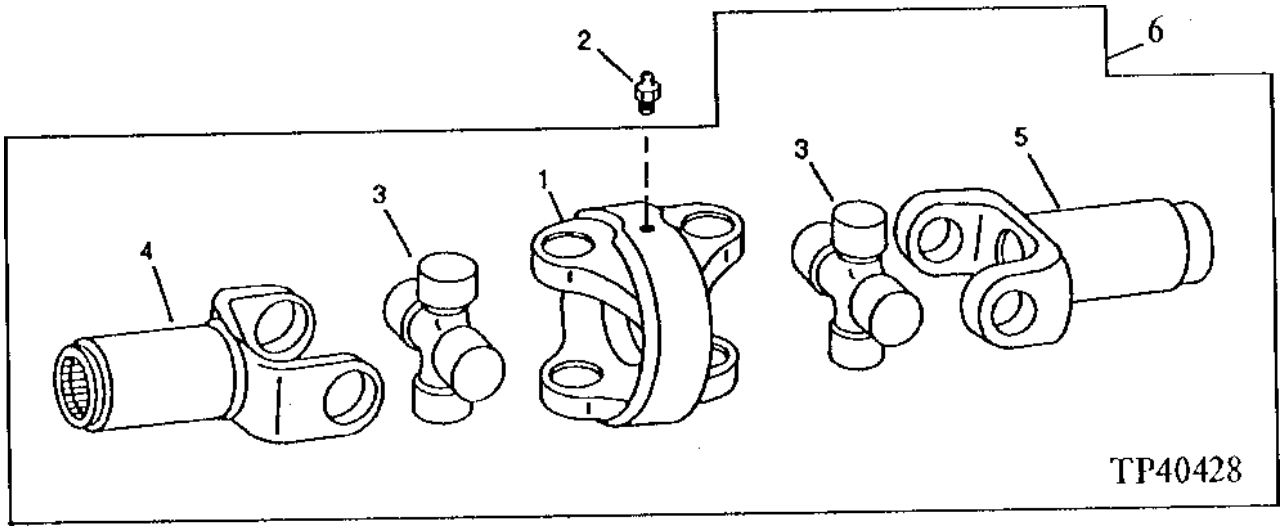

KEY	PART NO.	PART NAME	QTY	SERIAL NO.	410D	510D	REMARKS
1	.....	UNIVERSAL JOINT WITH SHAFT	1		X	X	(SUB AT117346)
2	58M5574	LUBRICATION FITTING	2		X	X	
3	AL64127	CROSS AND BEARING ASSEMBLY	2		X	X	
4	T148574	YOKE	1		X	X	(SUB FOR T127868) OUTER
5	T148573	UNIVERSAL JOINT YOKE	1		X	X	(SUB FOR AL64252) INNER
6	AT117346	UNIVERSAL JOINT	1		X	X	

AXLE SUPPORT
(MECHANICAL FRONT WHEEL DRIVE)

TP45435 -UN-01JAN94

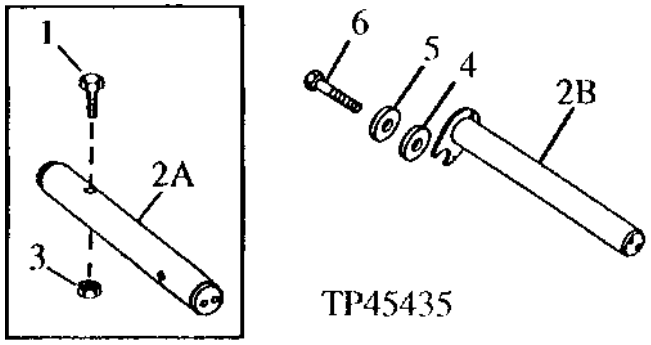

KEY	PART NO.	PART NAME	QTY	SERIAL NO.	410D	510D	REMARKS
1	19M7949	CAP SCREW	1	-801199	X	X	M12 X 100
2A	T75383	PIN FASTENER	1	-801199	X	X	
2B	AT164442	PIN	1	801200-	X	X	
3	14M7319	LOCK NUT	1	-801199	X	X	M12
4	28H3365	WASHER	1	801200-802450	X	X	0.742" X 1.050" X 5/16"
	T18145	BUSHING	1	802451-	X	X	41/64" X 1" X 17/32", (SUB FOR 28H1885, THIS APPLICATION)
5	T119912	WASHER	1	801200-802450	X	X	
	24H1106	WASHER	1	802451-	X	X	11/16" X 1-3/4" X 0.134"
6	19M8035	CAP SCREW	1	801200-802450	X	X	M16 X 35
	19M7488	CAP SCREW	1	802451-	X	X	M16 X 40

PLANETARY PINION CARRIER

TP44503 -UN-01JAN94

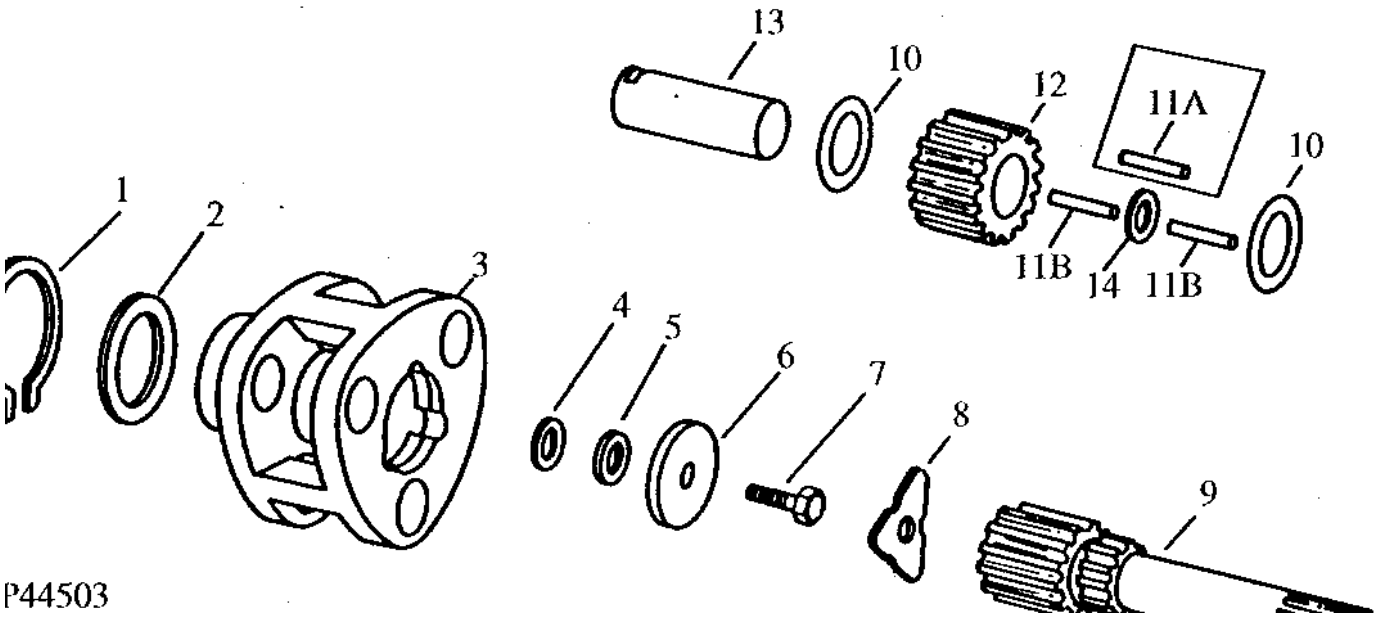

KEY	PART NO.	PART NAME	QTY	SERIAL NO.	4 5 1 1 0 0 D D	REMARKS
1	T152979	RING	1		X X	(SUB FOR T66911)
2	T66908	SHIM	1		X X	
3	T66909	PLANET PINION CARRIER	1		X X	
4	.....	SHIM	AR		X X	(M2054T NO LONGER AVAILABLE) (SUB AT146274) 0.13 MM (.005")
	.....	SHIM	AR		X X	(M2055T NO LONGER AVAILABLE) (SUB AT146274) 0.25 MM (.010")
5	T55420	WASHER	AR		X X	
6	T66912	WASHER	1		X X	
7	19H2407	CAP SCREW	1		X X	HS, SAE 8, 5/8" X 4-1/4"
8	T66913	LOCK PLATE	1		X X	
9	T66916	PINION SHAFT	1		X X	L.H.
	T66917	PINION SHAFT	1		X X	R.H.
10	T141566	THRUST WASHER	6		X X	(SUB FOR T21424)
11A	.....	PIN	69	-796214	X X	(T21418 NO LONGER AVAILABLE) (SUB (138) R109123) (ALSO ORDER (3) T149084)
11B	R109123	NEEDLE ROLLER	138	796215-	X X	
12	T66910	PINION	3		X X	(23 TEETH)
13	T149083	SHAFT	3		X X	(SUB FOR T38049)
14	T149084	WASHER	3	796215-	X X	

REAR AXLE SHAFT

TP3687 -UN-01JAN94

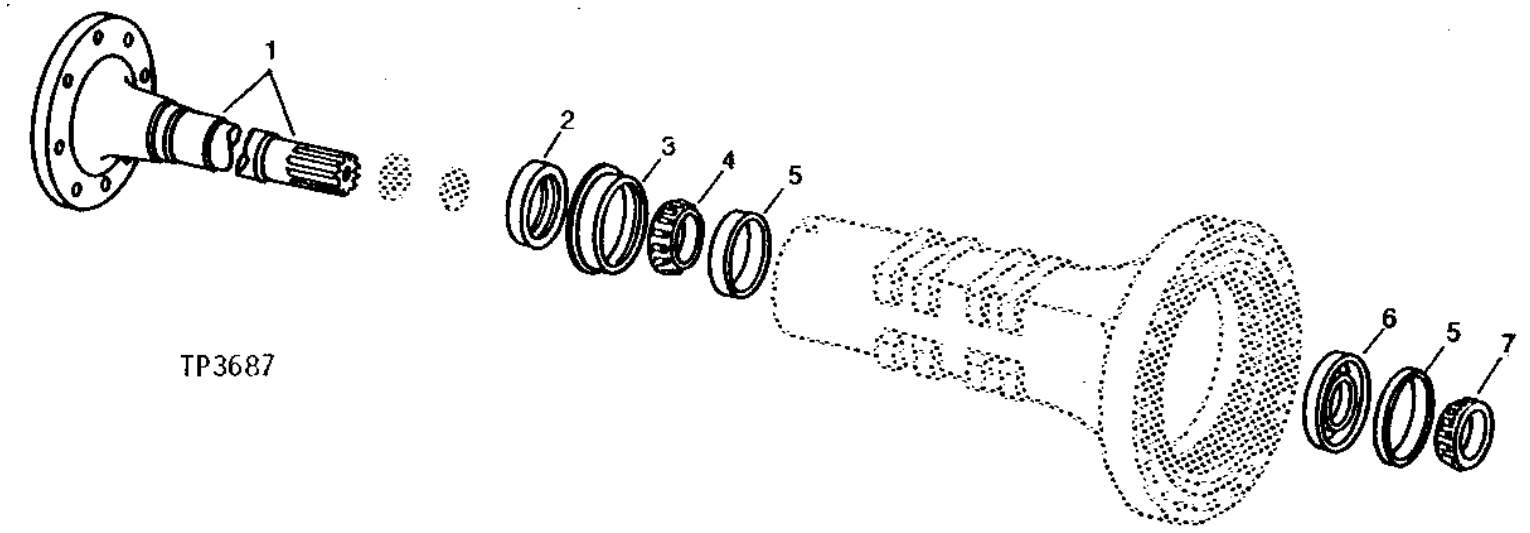

KEY	PART NO.	PART NAME	QTY	SERIAL NO.	410D	510D	REMARKS
1	T75656	SPINDLE	1	-798382	X	X	
	T152373	SPINDLE	1	798383-			
2	AT63496	SEAL	1		X	X	
3	T21429	BOWL	1		X	X	
4	JD8159	BEARING CONE	1		X	X	
5	JD8210	BEARING CUP	2		X	X	
6	AT167936	SEAL	1		X	X	(SUB FOR AT16431)
7	JD8159	BEARING CONE	1		X	X	

MEMORANDA

FORWARD AND NEUTRAL REVERSE CONTROL SWITCH AND LEVER

TP48808 -UN-26MAY95

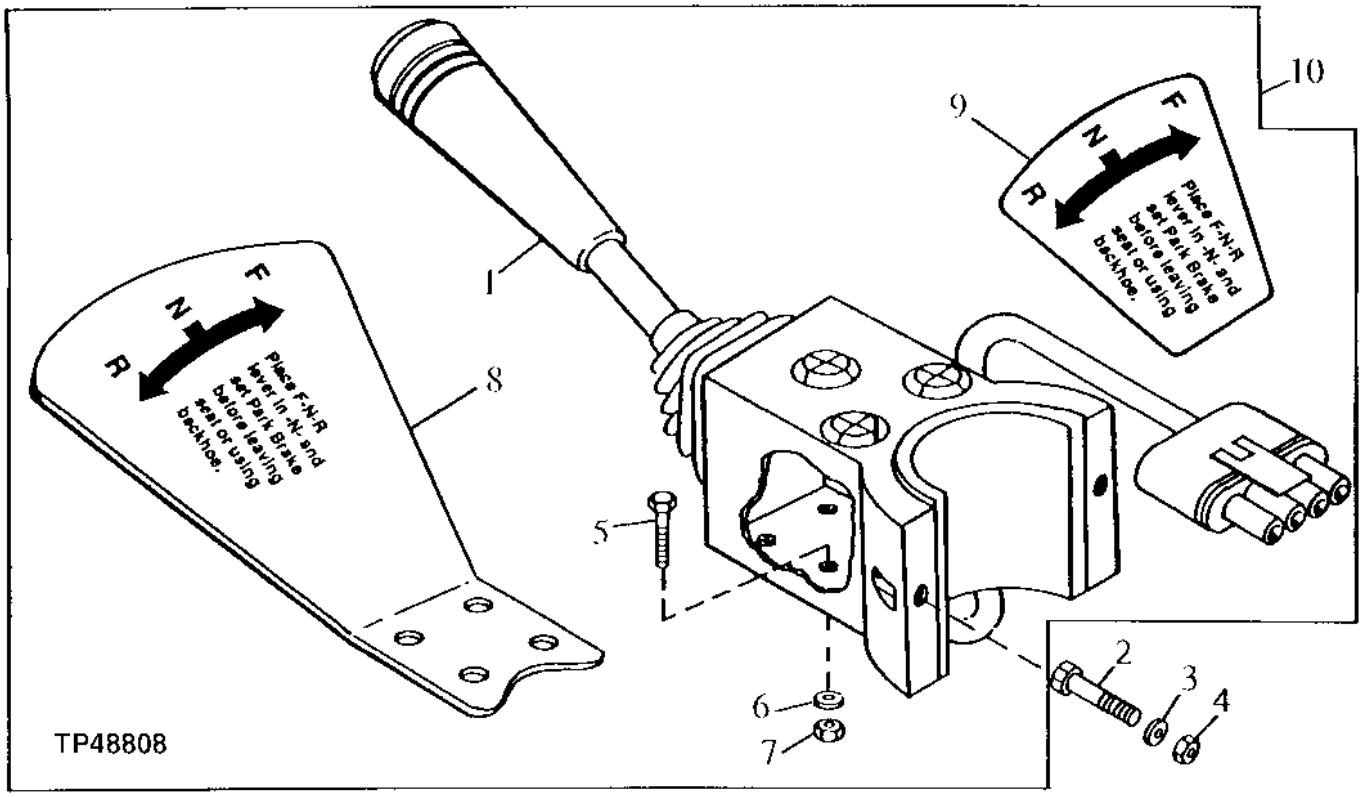

KEY	PART NO.	PART NAME	QTY	SERIAL NO.	4510 DD	REMARKS
1	.....	SWITCH	1		X X	
2	19M8581	SCREW	2		X X	M5 X 20
3	24H1283	WASHER	2		X X	7/32" X 1/2" X 0.049"
4	14M7375	FLANGE NUT	2		X X	M5
5	T131177	SCREW	4		X X	3.505 X 19.050 MM (0.138" X 3/4")
6	R44255	WASHER	AR		X X	0.156" X 0.300" X 0.048"
7	M90214	LOCK NUT	4		X X	3.505 MM (0.138")
8	.....	GUARD	1		X X	
9	T140923	LABEL	1		X X	FNR
10	AT180916	SWITCH	1		X X	(SUB FOR AT157471 AND AT151129)

GEAR SHIFTERS AND SHIFTER SHAFTS
(SERIAL NO. -796854)

TP40266 -UN-01JAN94

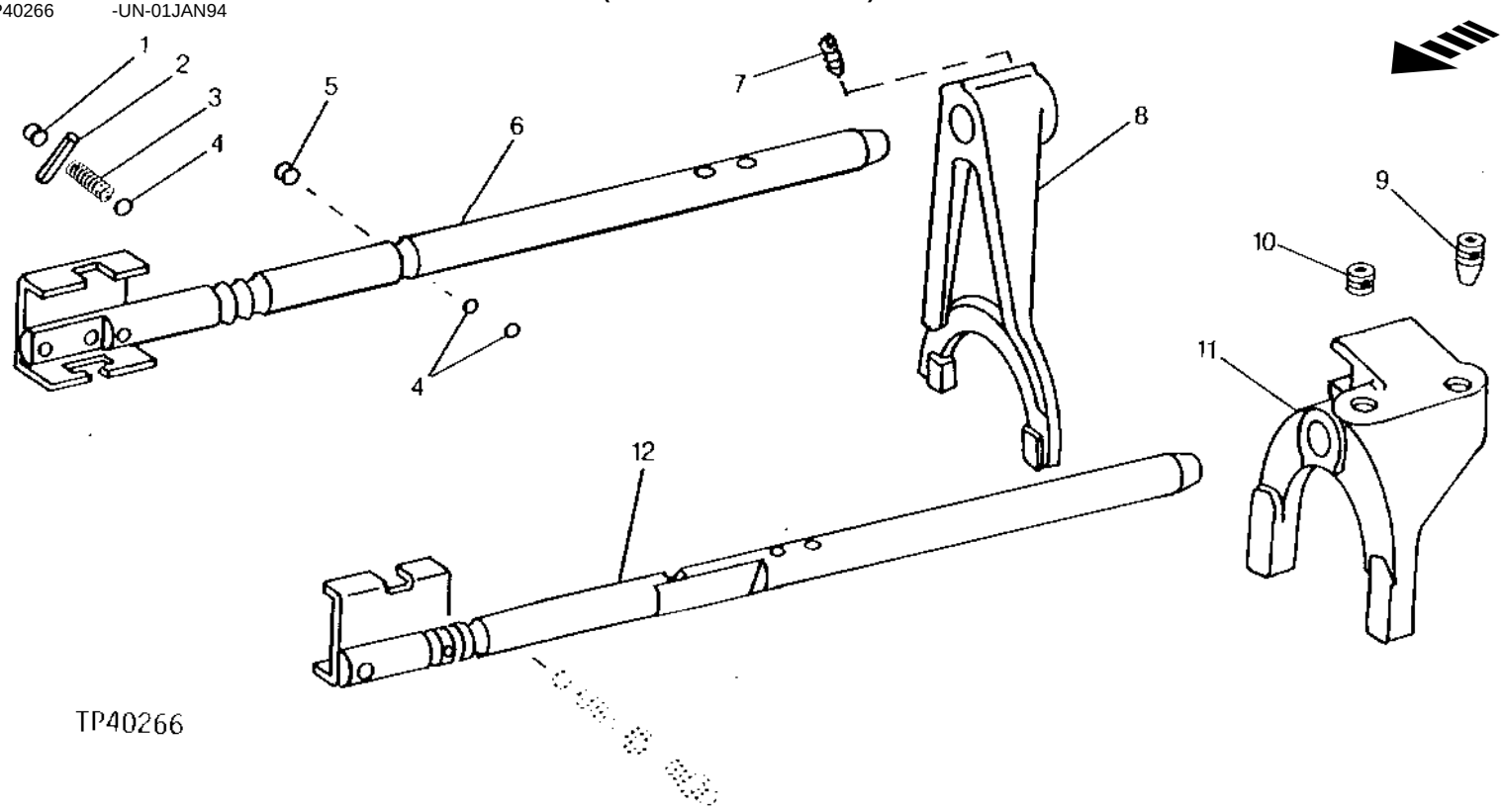

KEY	PART NO.	PART NAME	QTY	SERIAL NO.	4510 DD	REMARKS
1	M1102T	PLUG	1		X X	
2	34H251	SPRING PIN	1		X X	1/8" X 1"
3	T27716	SPRING	1		X X	
4	R26552	BALL	3		X X	
5	15H558	PIPE PLUG	1		X X	1/8"
6	AT148534	SHAFT	1		X X	LOW SPEED WITH GUIDE
7	T30053	SCREW	2		X X	(USE WITH FIRST AND SECOND SPEED SHIFTER SHAFT)
8	T135033	SHIFTER	1		X X	FIRST AND FIFTH, SECOND AND SIXTH SPEED
9	T25614	SET SCREW	1		X X	(USE WITH HIGH SPEED SHIFTER SHAFT)
10	AN122499	BOLT	1		X X	
11	T68725	SHIFTER	1		X X	HIGH SPEED
12	AT148535	SHAFT	1		X X	HIGH SPEED WITH GUIDE

GEAR SHIFTERS AND SHIFTER SHAFTS
(SERIAL NO. 796855-)

TP27881 -UN-01JAN94

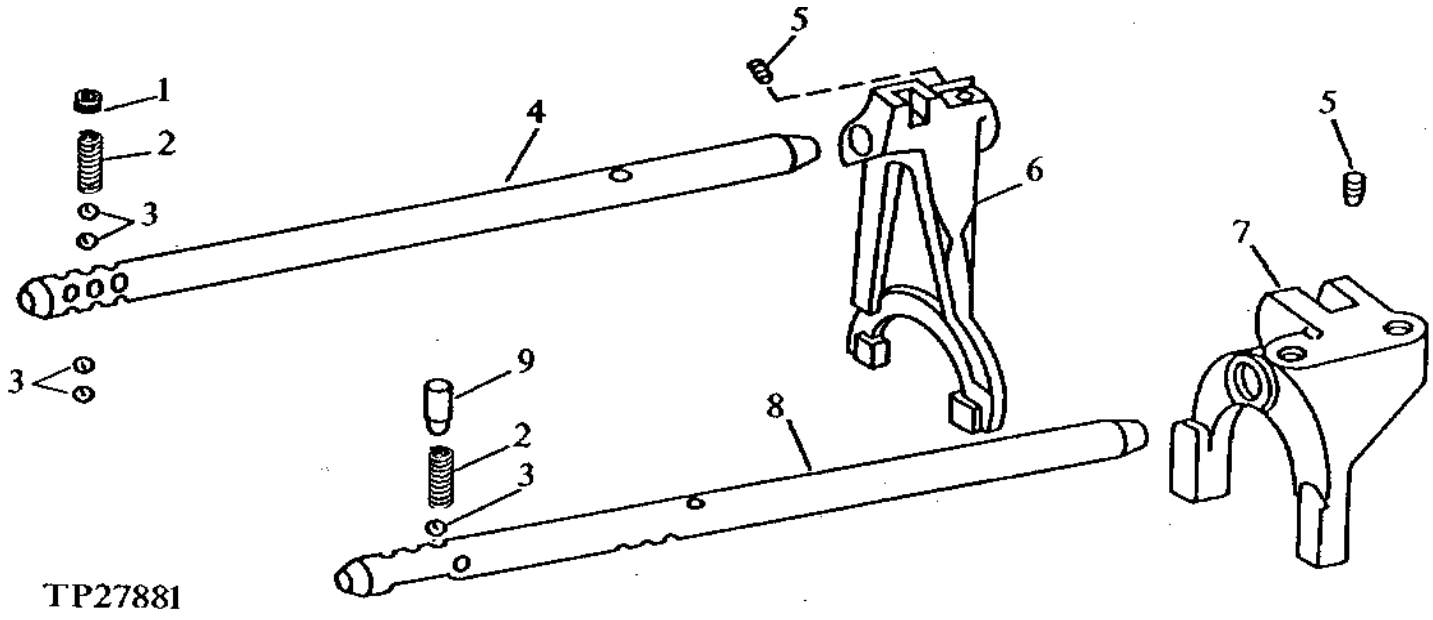

KEY	PART NO.	PART NAME	QTY	SERIAL NO.	410D	510D	REMARKS
1	T142616	PIPE PLUG	1		X	X	1/8"
2	T27716	SPRING	2		X	X	
3	R26552	BALL	5		X	X	
4	T134941	SHAFT	1		X	X	(FIRST AND SECOND SHIFTER)
5	T25614	SET SCREW	2		X	X	
6	T134671	SHIFTER	1		X	X	(FIRST AND SECOND SPEED)
7	T148397	SHIFTER	1		X	X	(THIRD AND FOURTH SPEED SHIFTER)
8	T148398	SHAFT	1		X	X	(THIRD AND FOURTH SPEED)
9	T135730	PIN	1		X	X	

TRANSMISSION SHIFTER LEVER
(SERIAL NO. -796854)

TP46920 -UN-10FEB95

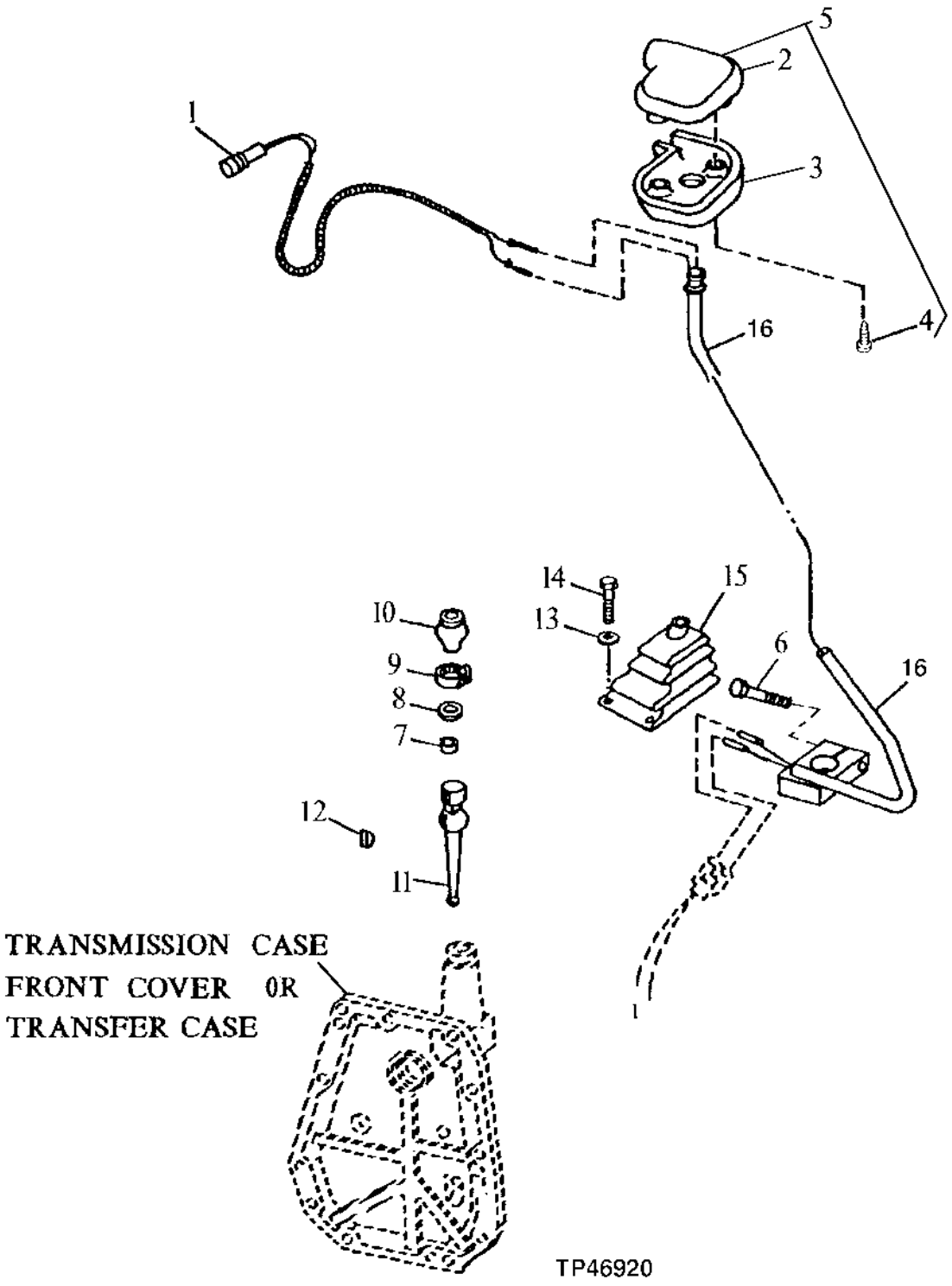

TRANSMISSION SHIFTER LEVER
(SERIAL NO. -796854)

KEY	PART NO.	PART NAME	QTY	SERIAL NO.	410D	510D	REMARKS
1	AT162180	SWITCH	1		X	X	(SUB FOR AT150623 AND AT151784) (TRANSMISSION SHIFTER LEVER)
2	.....	HANDLE	1		X	X	(SUB FOR T126974, THIS APPLICATION) (TOP HALF)
3	.....	HANDLE	1		X	X	(BOTTOM HALF)
4	37H95	SCREW	2		X	X	
5	AT171549	KNOB	1		X	X	(SUB FOR T142516 AND T126975) (INCLUDES (2) 37H95)
6	19M7658	CAP SCREW	1		X	X	M10 X 50
7	L4027T	BUSHING	1		X	X	
8	L4035T	SNAP RING	1		X	X	
9	TY22470	CLAMP	1		X	X	(SUB FOR AR21840, THIS APPLICATION)
10	T68670	BOOT	1		X	X	
11	T135176	ROD	1		X	X	
12	26H77	SHAFT KEY	1		X	X	3/16" X 3/4"
13	24M7293	WASHER	4		X	X	6.500 X 13 X 1.600 MM
14	T77834	SELF-LOCKING SCREW	4		X	X	
15	AT141235	BOOT	1		X	X	
16	AT151750	LEVER	1		X	X	(SUB FOR AT151023)

TRANSMISSION SHIFTER LEVER
(SERIAL NO. 796855-801199)

TP57735 -UN-07JUN97

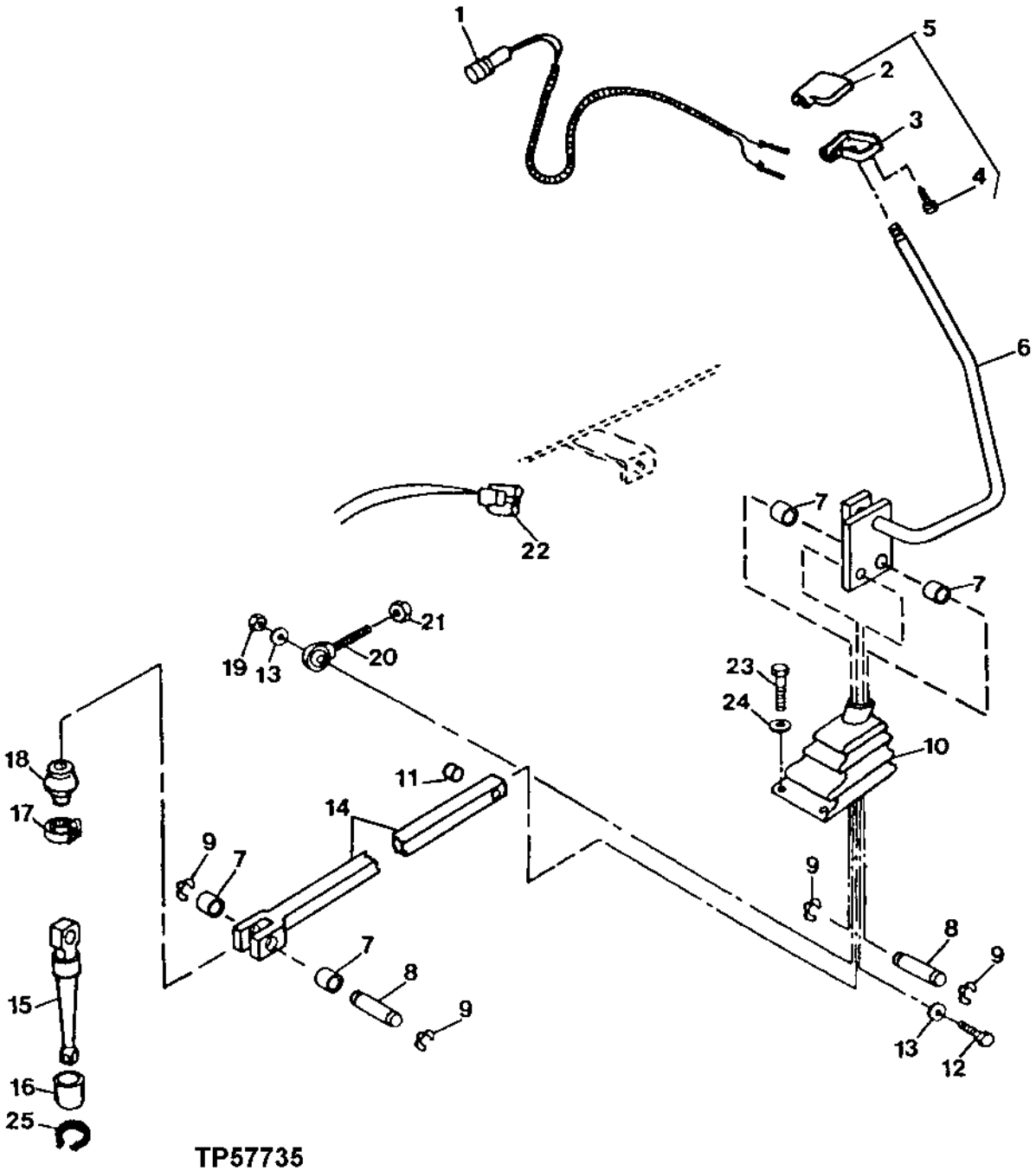

TRANSMISSION SHIFTER LEVER
(SERIAL NO. 796855-801199)

KEY	PART NO.	PART NAME	QTY	SERIAL NO.	410D	510D	REMARKS
1	AT162180	SWITCH	1		X	X	CABLE ASSEMBLY
2	.....	HANDLE	1		X	X	
3	.....	HANDLE	1		X	X	(BOTTOM HALF)
4	37H95	SCREW	2		X	X	
5	AT171549	KNOB	1		X	X	(SUB FOR T142516 AND T126975) (INCLUDES (2) 37H95)
6	AT162003	LEVER	1		X	X	(SUB FOR AT167273, THIS APPLICATION)
7	AM115376	NEEDLE BEARING	4		X	X	
8	T151148	PIN	2		X	X	12.683 X 53.500 MM (0.499" X 2.106")
9	T40187	SNAP RING	4		X	X	
10	AT141235	BOOT	1		X	X	
11	P44946	BUSHING	1		X	X	
12	19H1931	CAP SCREW	1		X	X	
13	R47172	WASHER	2		X	X	13.110 X 22.860 X 1.220 MM (0.516" X 0.900" X 0.048")
14	AT167057	LINK	1		X	X	
15	T154440	SHIFTER	1		X	X	(SUB FOR T151128)
16	R43206	BUSHING	1		X	X	
17	TY22470	CLAMP	1		X	X	(SUB FOR AR21840, THIS APPLICATION)
18	T68670	BOOT	1		X	X	
19	BP12214	LOCK NUT	1		X	X	12.700 MM (1/2")
20	AT132842	LINK END	1		X	X	
21	14H856	NUT	2		X	X	1/2"
22	RE12363	ELECTRICAL CONNECTOR ASSY	1		X	X	
23	T77834	SELF-LOCKING SCREW	4		X	X	M6 X 16
24	24M7293	WASHER	4		X	X	6.500 X 13 X 1.600 MM
25	R35226	SNAP RING	1		X	X	

TRANSMISSION SHIFTER LEVER AND BRACKET
(SERIAL NO. 801200-)

TP57722 -UN-07JUN97

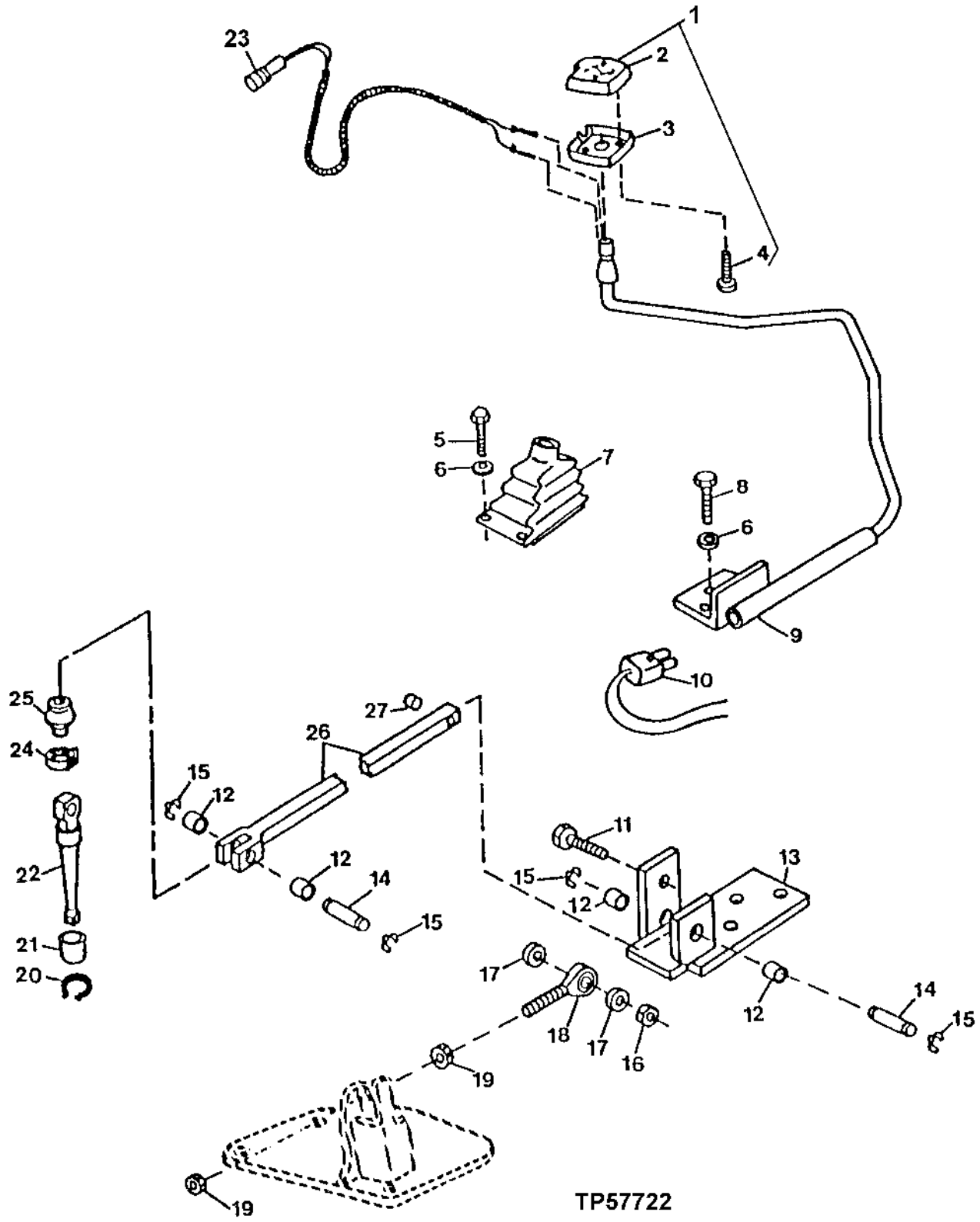

TRANSMISSION SHIFTER LEVER AND BRACKET
(SERIAL NO. 801200-)

KEY	PART NO.	PART NAME	QTY	SERIAL NO.	410D	510D	REMARKS
1	AT169304	KNOB	1		X	X	(SUB FOR T152233 AND T126975) (INCLUDES (2) 37H95)
2	.....	HANDLE	1		X	X	(TOP HALF)
3	.....	HANDLE	1		X	X	(BOTTOM HALF)
4	37H95	SCREW	2		X	X	
5	T77834	SELF-LOCKING SCREW	2	-825657	X	X	
	R55326	RIVET	1	825658-	X	X	
6	24M7293	WASHER	AR		X	X	6.500 X 13 X 1.600 MM
7	AT141235	BOOT	1		X	X	
8	19M7402	CAP SCREW	3		X	X	M10 X 25
9	AT168537	LEVER	1		X	X	
10	RE12363	ELECTRICAL CONNECTOR ASSY	1		X	X	
11	19H2735	CAP SCREW	1		X	X	1/2" X 2"
12	AM115376	NEEDLE BEARING	4		X	X	
13	AT168539	BRACKET	1		X	X	
14	T151148	PIN	2		X	X	
15	T40187	SNAP RING	4		X	X	
16	BP12214	LOCK NUT	1		X	X	
17	R47172	WASHER	2		X	X	
18	AT132842	LINK END	1		X	X	
19	14H865	NUT	2		X	X	1/2"
20	R35226	SNAP RING	1		X	X	
21	R43206	BUSHING	1		X	X	
22	T154440	SHIFTER	1		X	X	(SUB FOR T151128)
23	AT162180	SWITCH	1		X	X	
24	TY22470	CLAMP	1		X	X	(SUB FOR AR21840, THIS APPLICATION)
25	T68670	BOOT	1		X	X	
26	AT168536	LINK	1		X	X	
27	P44946	BUSHING	1		X	X	

MECHANICAL FRONT WHEEL DRIVE CONTROL VALVE AND HYDRAULIC HOSES
(SERIAL NO. -796854)

TP42323 -UN-01JAN94

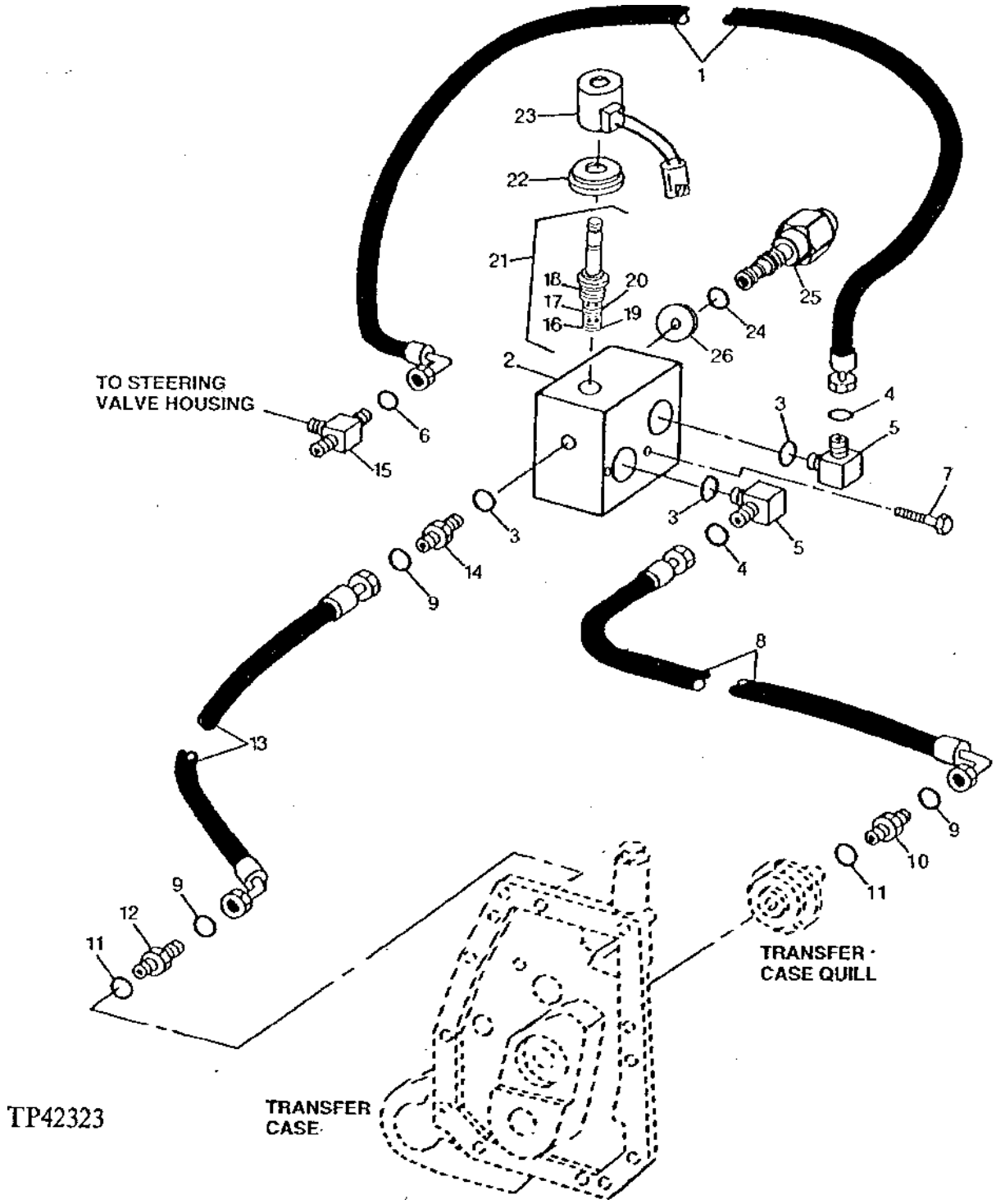

MECHANICAL FRONT WHEEL DRIVE CONTROL VALVE AND HYDRAULIC HOSES
(SERIAL NO. -796854)

KEY	PART NO.	PART NAME	QTY	SERIAL NO.	410D	510D	REMARKS
1	AT150120	HYDRAULIC HOSE - FABRICATE	1		X	X	11/16" X 625 MM (24-1/2") X 13/16"
2	AT151915	MANIFOLD	1		X	X	(SUB FOR AT146285)
3	R26375	O-RING	3		X	X	
4	T77613	O-RING	2		X	X	
5	38H1010	ELBOW FITTING	2		X	X	
6	T77857	O-RING	1		X	X	
7	19M7663	CAP SCREW	2		X	X	M8 X 70
8	AT150121	HYDRAULIC HOSE - FABRICATE	1		X	X	11/16" X 950 MM (37-1/2") X 9/16"
9	T77814	O-RING	3		X	X	
10	38H1168	ADAPTER	4		X	X	
11	R26448	O-RING	2		X	X	
12	38H1167	ADAPTER	1		X	X	
13	AT150123	HYDRAULIC HOSE - FABRICATE	1		X	X	9/16" X 860 MM (33-3/4") X 9/16"
14	38H1445	ADAPTER	1		X	X	
15	38H1031	TEE FITTING	1		X	X	
16	R42926	BACK-UP RING	1		X	X	
17	T81247	BACK-UP RING	1		X	X	
18	R26906	O-RING	1		X	X	
19	R28776	O-RING	1		X	X	
20	R33259	O-RING	1		X	X	
21	AT139432	HYD ACTUATED CONTROL VALVE	1		X	X	
22	AT139434	KIT	1		X	X	
23	AT147011	SOLENOID	1		X	X	
24	R26906	O-RING	1		X	X	
25	AT151916	PRESSURE RELIEF VALVE	1		X	X	
	AT216349	SEAL KIT	1		X	X	
26	T147761	ORIFICE	1		X	X	(SUB FOR T145291)

SOLENOID CONTROLS FOR MECHANICAL FRONT WHEEL DRIVE
(SERIAL NO 796854 -)

TP45468 -UN-01JAN94

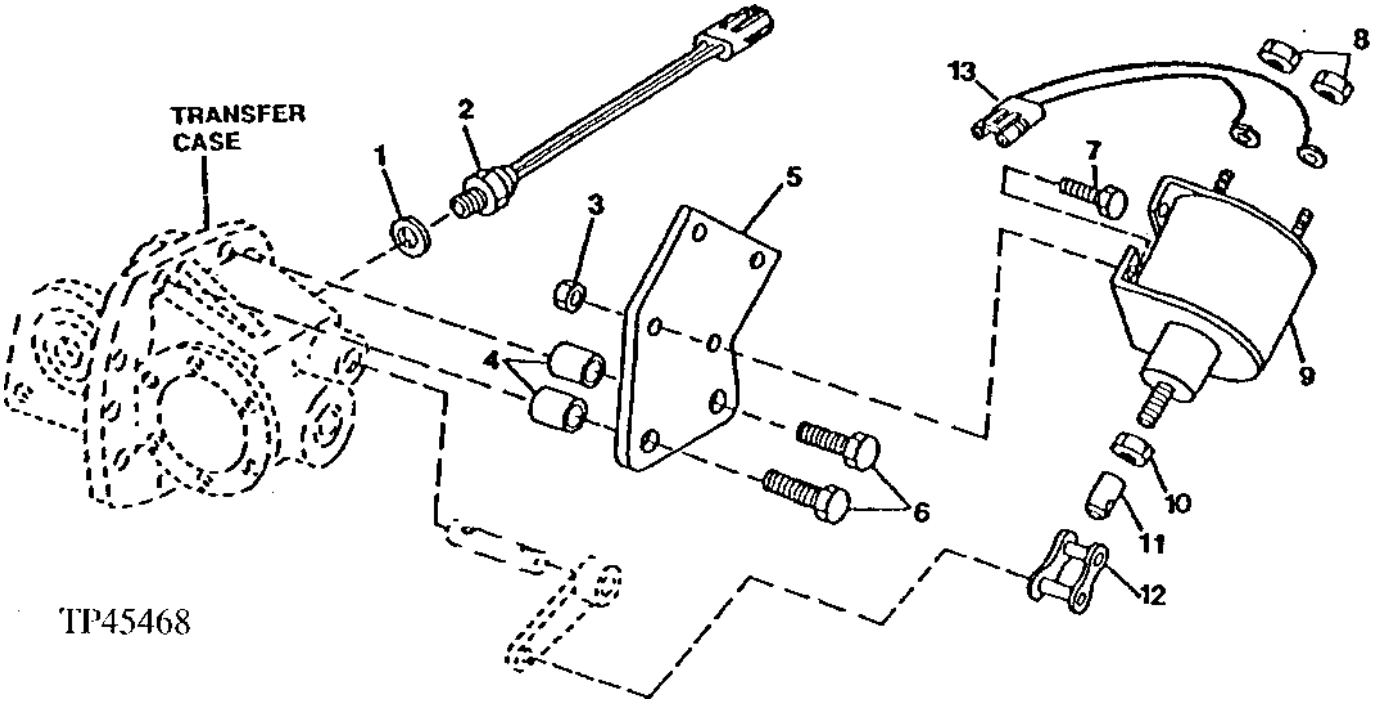

KEY	PART NO.	PART NAME	QTY	SERIAL NO.	410D	510D	REMARKS
1	R26448	O-RING	1		X	X	
2	AT86950	SWITCH	1		X	X	(NEUTRAL START)
3	14H786	NUT	4		X	X	1/4"
4	28H3364	BUSHING	2		X	X	
5	T134345	BRACKET	1		X	X	
6	19H3544	CAP SCREW	2		X	X	1/2" X 4-1/2"
7	T23876	SCREW	4		X	X	1/4" X 5/8"
8	14H631	NUT	2		X	X	0.190"
9	AT149770	SOLENOID	1		X	X	
10	14H649	NUT	1		X	X	1/4"
11	T134509	PIN FASTENER	1		X	X	
12	B5235H	CHAIN LINK	1		X	X	
13	AT156689	WIRING HARNESS	1		X	X	

MEMORANDA

TRANSMISSION DRIVE SHAFT

TP41259 -UN-01JAN94

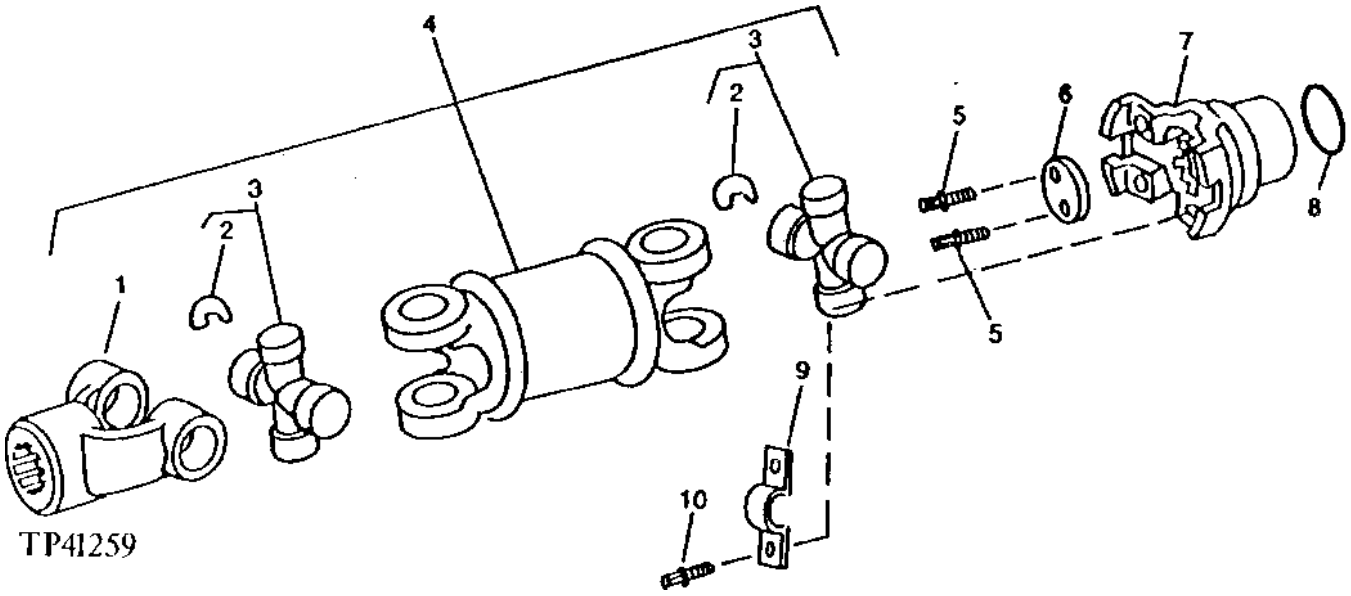

KEY	PART NO.	PART NAME	QTY	SERIAL NO.	410D	510D	REMARKS
1	T76788	YOKE	1	-796854	X	X	
	T100018	UNIVERSAL JOINT YOKE	1	796855-	X	X	
2	N34377	SNAP RING	6		X	X	
3	AN192734	CROSS AND BEARING ASSEMBLY	2		X	X	(LIFETIME LUBE)
4	AT118589	UNIVERSAL JOINT	1	-796854	X	X	
	AT118590	UNIVERSAL JOINT	1	796855-	X	X	
5	19M3129	CAP SCREW	2		X	X	M8 X 20
6	T67997	RETAINER	1		X	X	
7	T74664	UNIVERSAL JOINT	1		X	X	
8	R1225R	O-RING	1		X	X	
9	T67998	STRAP	2		X	X	
10	T113127	SCREW	4		X	X	

TRANSMISSION CASE
(SERIAL NO. 796854)

TP40453 -UN-01JAN94

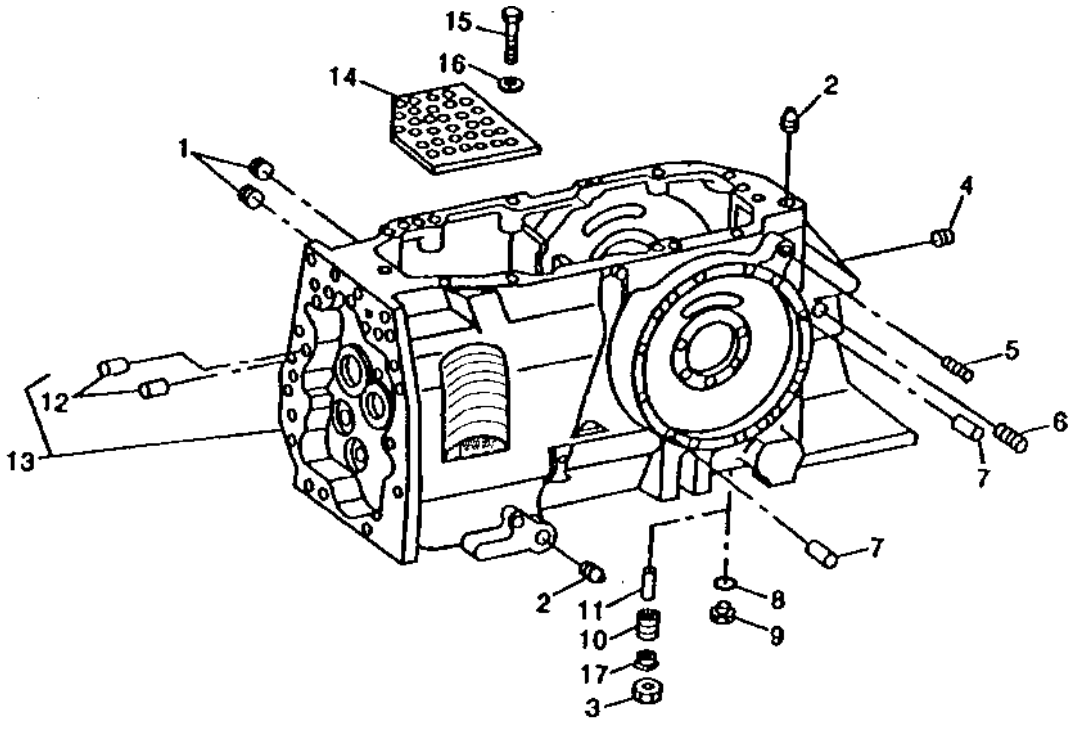

TP40453

KEY	PART NO.	PART NAME	QTY	SERIAL NO.	410D	510D	REMARKS
1	M1102T	PLUG	2		X	X	
2	15H562	PIPE PLUG	2		X	X	1"
3	14H971	NUT	1		X	X	1/2"
4	T18891	PLUG	1		X	X	
5	T21937	PLUG	1		X	X	
6	15H584	PIPE PLUG	1		X	X	1/2"
7	R48685	DOWEL PIN	4		X	X	
8	U17409	O-RING	2		X	X	
9	T78662	DRAIN PLUG	2		X	X	
10	22H993	SET SCREW	1		X	X	1/2" X 1-1/2"
11	.....	PIN	1		X	X	(R62129 - USE IF AVAILABLE)
	R64350	NEEDLE ROLLER	1		X	X	(SUB FOR R62129)
12	T26565	DOWEL PIN	2		X	X	
13	AT148262	TRANSMISSION CASE	1		X	X	(MARKED T135349) (ALSO ORDER T155333, T155426, T155750, T157600, 11M7087, 11M7015, 24M7338, (2) 11M7059)
14	AT75731	COVER	1		X	X	
15	19H1648	CAP SCREW	2		X	X	HS, SAE 8, 3/8" X 3/4"
16	24H1305	WASHER	2		X	X	13/32" X 13/16" X 0.065"
17	T118848	SEAL	1		X	X	

TRANSMISSION CASE
(WITHOUT MECHANICAL FRONT WHEEL DRIVE)
(SERIAL NO. 796855 -)

TP44571 -UN-01JAN94

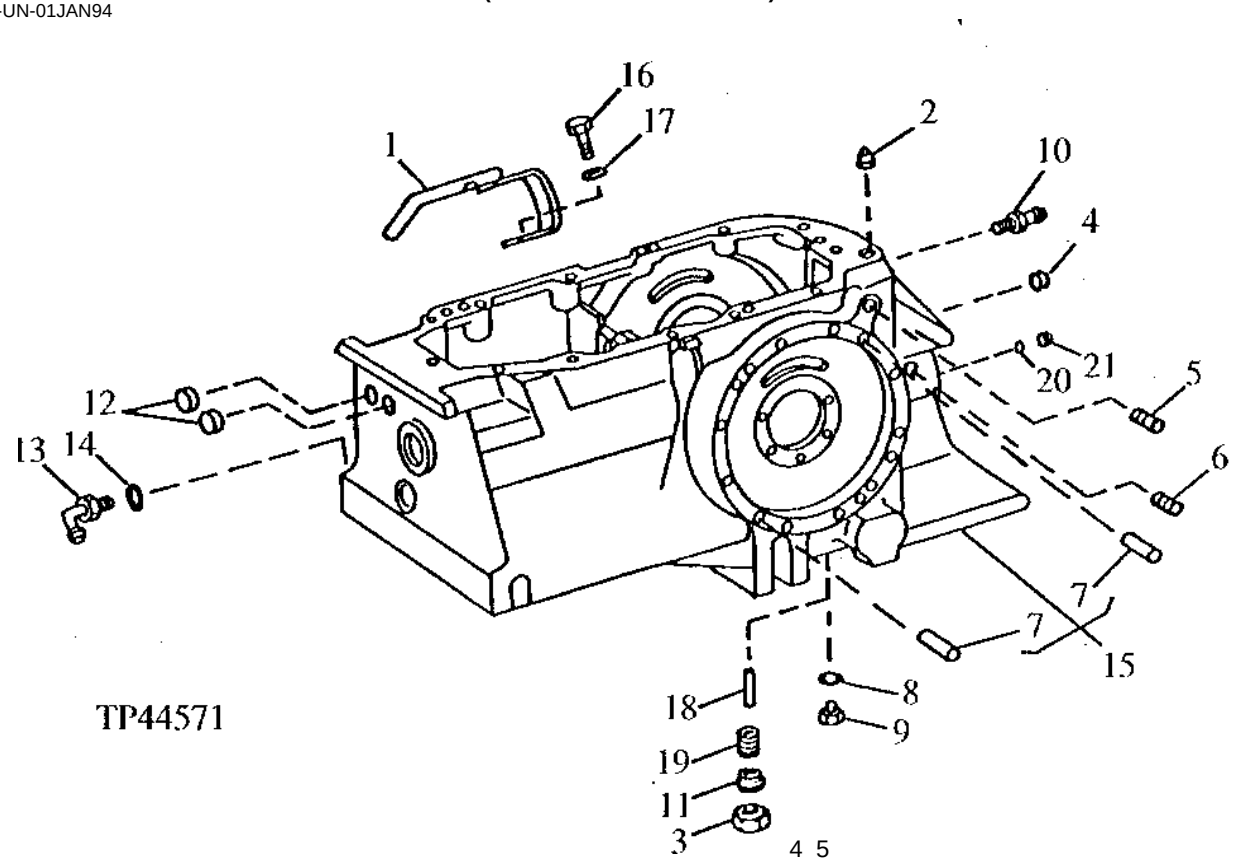

KEY	PART NO.	PART NAME	QTY	SERIAL NO.	410D	510D	REMARKS
1	T100628	TROUGH	1	-796024	X	X	
2	15H562	PIPE PLUG	1		X	X	1"
3	14H971	NUT	1		X	X	1/2"
4	T18891	PLUG	1		X	X	
5	T21937	PLUG	1		X	X	
6	15H584	PIPE PLUG	1		X	X	1/2"
7	R48685	DOWEL PIN	4		X	X	
8	U17409	O-RING	1		X	X	
9	T78662	DRAIN PLUG	1		X	X	
10	T126833	THREADED NIPPLE	1		X	X	
11	T118848	SEAL	1		X	X	
12	T113166	PLUG	2		X	X	
13	AR90369	ELBOW FITTING	1		X	X	
14	R26375	O-RING	1		X	X	16.358 X 2.210 MM (0.644" X 0.087")
15	AT166581	TRANSMISSION CASE	1		X	X	(MARKED T151753) (ALSO ORDER (4) R48685, T155333, T155426, T155750, T157600, 11M7087, 11M7015, 24M7338 AND (2) 11M7059)
16	19H1648	CAP SCREW	1		X	X	3/8" X 3/4"
17	24M7040	WASHER	1		X	X	11 X 20 X 2 MM
18	R64350	NEEDLE ROLLER	1		X	X	
19	22H993	SET SCREW	1		X	X	1/2" X 1-1/2"
20	R26906	O-RING	2		X	X	
21	T58477	FITTING	2		X	X	

TRANSMISSION CASE
(WITH MECHANICAL FRONT WHEEL DRIVE)
(SERIAL NO. 796855 -)

TP46333 -UN-27SEP94

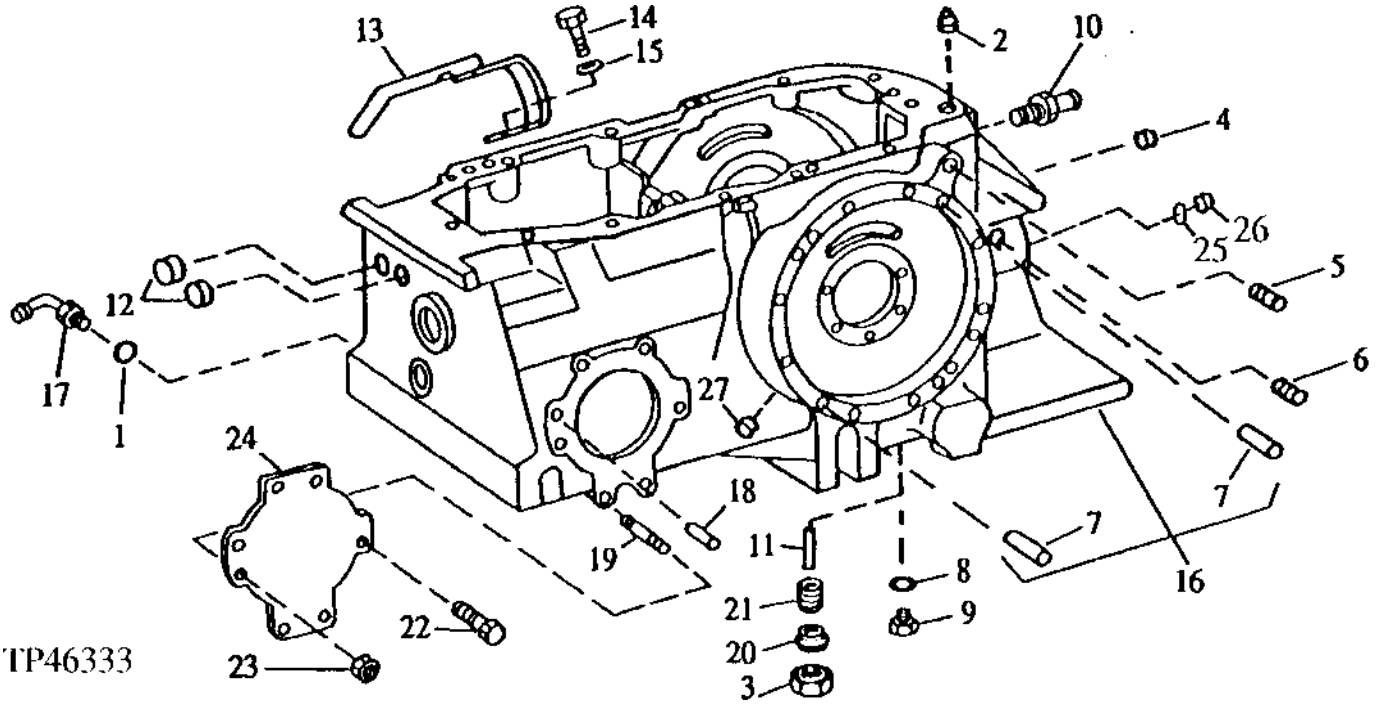

KEY	PART NO.	PART NAME	QTY	SERIAL NO.	4 5 1 1 0 0 D D	REMARKS
1	R26375	O-RING	1		X X	16.358 X 2.210 MM (0.644" X 0.087")
2	15H562	PIPE PLUG	1		X X	1"
3	14H971	NUT	1		X X	1/2"
4	T18891	PLUG	1		X X	
5	T21937	PLUG	1		X X	
6	15H584	PIPE PLUG	1		X X	1/2"
7	R48685	DOWEL PIN	4		X X	
8	U17409	O-RING	1		X X	
9	T78662	DRAIN PLUG	1		X X	
10	T126833	THREADED NIPPLE	1		X X	
11	R64350	NEEDLE ROLLER	1		X X	(SUB FOR R62129)
12	T113166	PLUG	2		X X	
13	T100628	TROUGH	1		X X	
14	19H1648	CAP SCREW	1		X X	3/8" X 3/4"
15	24M7040	WASHER	1		X X	11 X 20 X 2 MM
16	AT166585	TRANSMISSION	1		X X	(MARKED T151754) (ALSO ORDER (4) R48685, T155333, T155426, T155750, T157600, 11M7087, 11M7015, 24M7338 AND (2) 11M7059)
17	AR90369	ELBOW FITTING	1		X X	
18	R44742	DOWEL PIN	1		X X	
19	R32101	STUD	2		X X	
20	T118848	SEAL	1		X X	
21	22H993	SET SCREW	1		X X	1/2" X 1-1/2"
22	19H2993	CAP SCREW	4		X X	1/2" X 1-1/2"
23	14H1040	NUT	2		X X	1/2"
24	T113402	COVER	1		X X	
25	R26906	O-RING	2		X X	
26	T58477	FITTING	2		X X	
27	15H624	PIPE PLUG	2		X X	

TRANSFER CASE ASSEMBLY
(WITH MECHANICAL FRONT WHEEL DRIVE)
(SERIAL NO. -796854)

TP42383 -UN-01JAN94

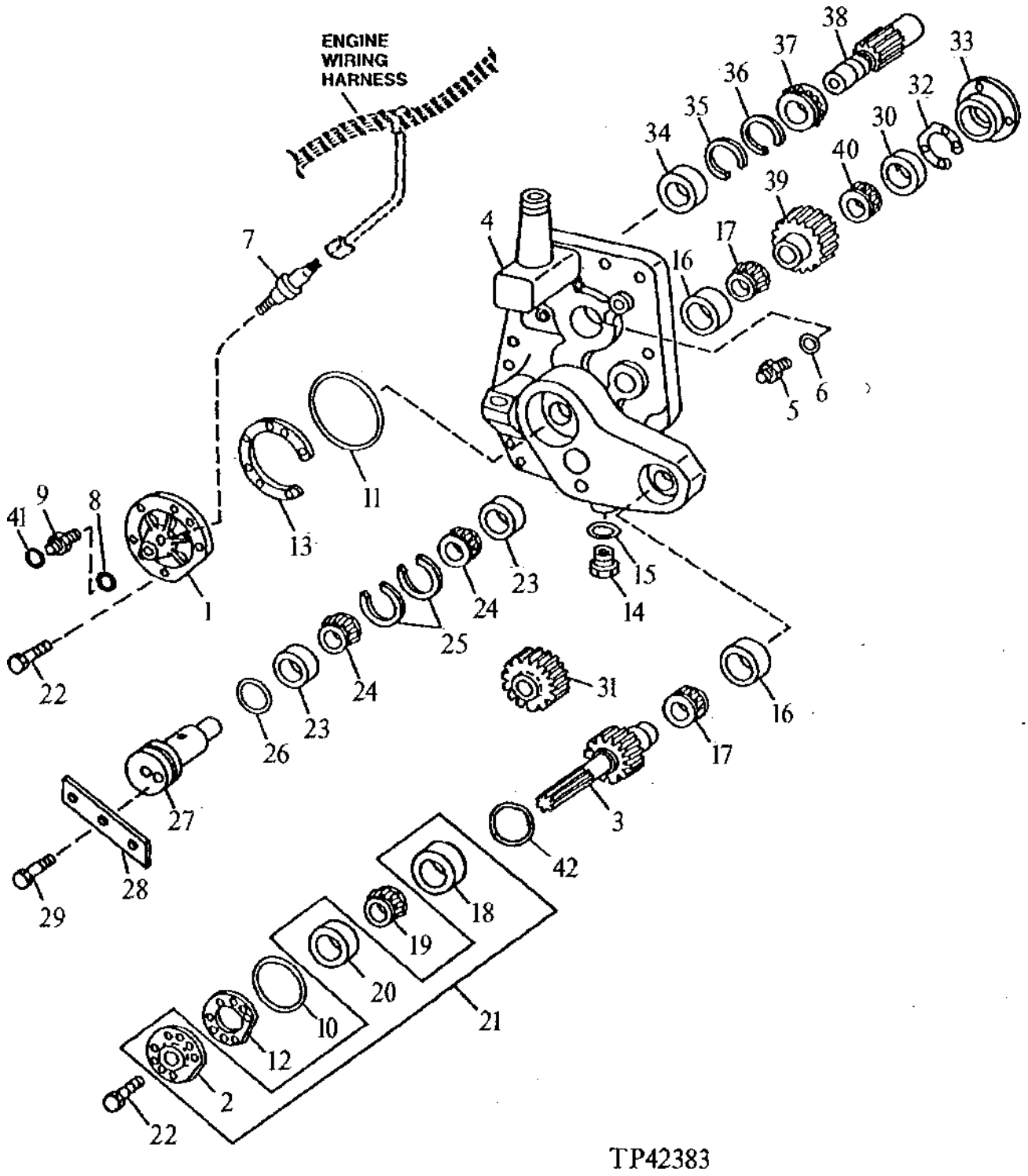

TRANSFER CASE ASSEMBLY-CONTINUED
(WITH MECHANICAL FRONT WHEEL DRIVE)
(SERIAL NO. -796854)

KEY	PART NO.	PART NAME	QTY	SERIAL NO.	410D	510D	REMARKS
1	T75868	BEARING HOUSING W/O BEARING	1		X	X	CLUTCH
2	.....	BEARING HOUSING W/O BEARING	1		X	X	OUTPUT
3	T145297	SHAFT	1		X	X	(SUB FOR T77530) (25 TEETH)
4	AT73986	COVER	1		X	X	(MARKED T75883)
5	38H1167	ADAPTER	1		X	X	
6	R26286	O-RING	1		X	X	
7	AT85174	SWITCH	1		X	X	(MFWD INDICATOR LIGHT)
8	R26448	O-RING	1		X	X	
9	38H1168	ADAPTER	1		X	X	
10	U10746	O-RING	1		X	X	
11	T41326	O-RING	1		X	X	
12	T75880	SHIM	AR		X	X	.003"
	T75881	SHIM	AR		X	X	.005"
	T75882	SHIM	AR		X	X	.010"
13	T75869	SHIM	AR		X	X	.003"
	T75870	SHIM	AR		X	X	.005"
	T75871	SHIM	AR		X	X	.010"
14	T78662	DRAIN PLUG	1		X	X	
15	U17409	O-RING	1		X	X	
16	JD9159	BEARING CUP	2		X	X	
17	JD9602	BEARING CONE	2		X	X	
18	JD7424	BEARING CUP	1		X	X	
19	JD8968	BEARING CONE	1		X	X	
20	AT157354	SEAL	1		X	X	(SUB FOR AT124414)
21	AT159829	BEARING HOUSING W/O BEARING	1		X	X	(SUB FOR AT73990)
22	19M7662	CAP SCREW	11		X	X	M10 X 30
23	JD7263	BEARING CUP	2		X	X	
24	JD8976	BEARING CONE	2		X	X	
25	U43882	SNAP RING	2		X	X	
26	F1870R	O-RING	1		X	X	
27	T76576	PIN FASTENER	1		X	X	
28	T48434	STRAP	1		X	X	
29	19M7938	CAP SCREW	3		X	X	M10 X 20
30	JD8206	BEARING CUP	1		X	X	
31	T75872	GEAR	1		X	X	(37 TEETH)
32	T75863	SHIM	AR		X	X	.003"
	T75864	SHIM	AR		X	X	.005"
	T75865	SHIM	AR		X	X	.010"
33	T75862	BEARING HOUSING W/O BEARING	1		X	X	INPUT
34	AR55966	SEAL	1		X	X	
35	M2353T	SNAP RING	1		X	X	
36	F2367R	SNAP RING	1		X	X	
37	JD9344	BALL BEARING	1		X	X	
38	T76479	SHAFT	1		X	X	(21 TEETH)
39	T75890	GEAR	1		X	X	DRIVE (27 TEETH)
40	JD8946	BEARING CONE	1		X	X	
41	T77814	O-RING	1		X	X	
42	AT159830	SEAL	1	784815-	X	X	
43	T33593	DOWEL PIN	2		X	X	7.163 X 15.240 MM (0.282" X 0.600")

TRANSMISSION OIL DIPSTICK AND DIPSTICK TUBE
(WITH MECHANICAL FRONT WHEEL DRIVE)
(SERIAL NO. -796854)

TP40276 -UN-01JAN94

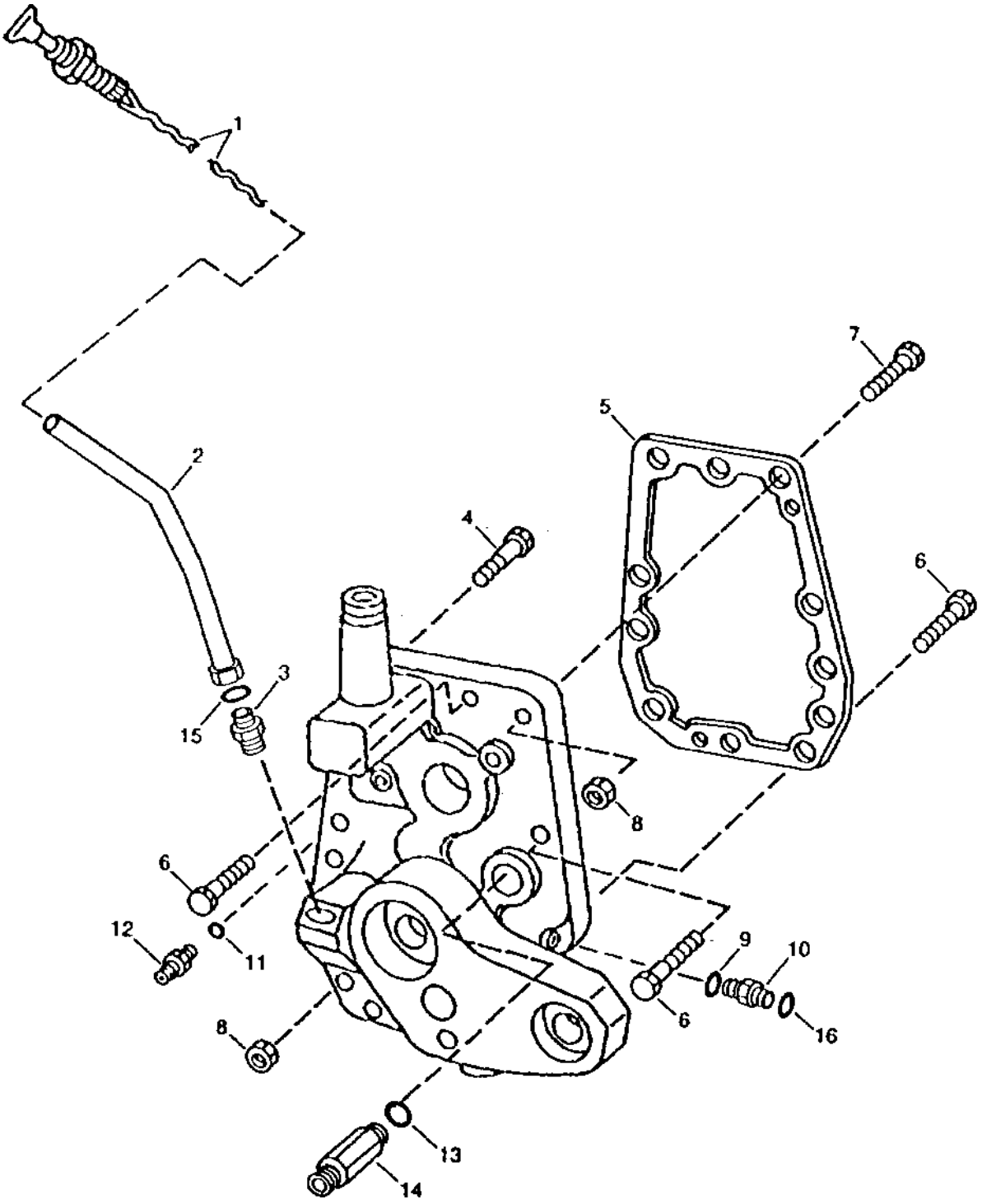

TRANSMISSION OIL DIPSTICK AND DIPSTICK TUBE
(WITH MECHANICAL FRONT WHEEL DRIVE)
(SERIAL NO. -796854)

KEY	PART NO.	PART NAME	QTY	SERIAL NO.	410D	510D	REMARKS
1	AT148417	DIPSTICK	1		X	X	
2	AT148416	OIL TUBE	1		X	X	
3	T100926	ADAPTER	1		X	X	
4	19H2735	CAP SCREW	4		X	X	HS, SAE 8, 1/2" X 2"
5	T68655	GASKET	1		X	X	
6	19H2993	CAP SCREW	5		X	X	HS, SAE 8, 1/2" X 1 1/2"
7	19H2644	CAP SCREW	1		X	X	HS, SAE 8, 1/2" X 2 1/2"
8	14H1040	NUT	4		X	X	1/2"
9	R26448	O-RING	1		X	X	
10	38H1173	ADAPTER	1		X	X	
11	R26906	O-RING	1		X	X	
12	38H1172	ADAPTER	1		X	X	
13	U13639	O-RING	1		X	X	
14	AT148125	PRESSURE RELIEF VALVE	1		X	X	(SUB FOR T29839, THIS APPLICATION)
15	T78612	O-RING	1		X	X	
16	T77857	O-RING	1		X	X	

TRANSFER CASE ASSEMBLY
(MECHANICAL FRONT WHEEL DRIVE)
(SERIAL NO. 796855-)

TP48802 -UN-18MAY95

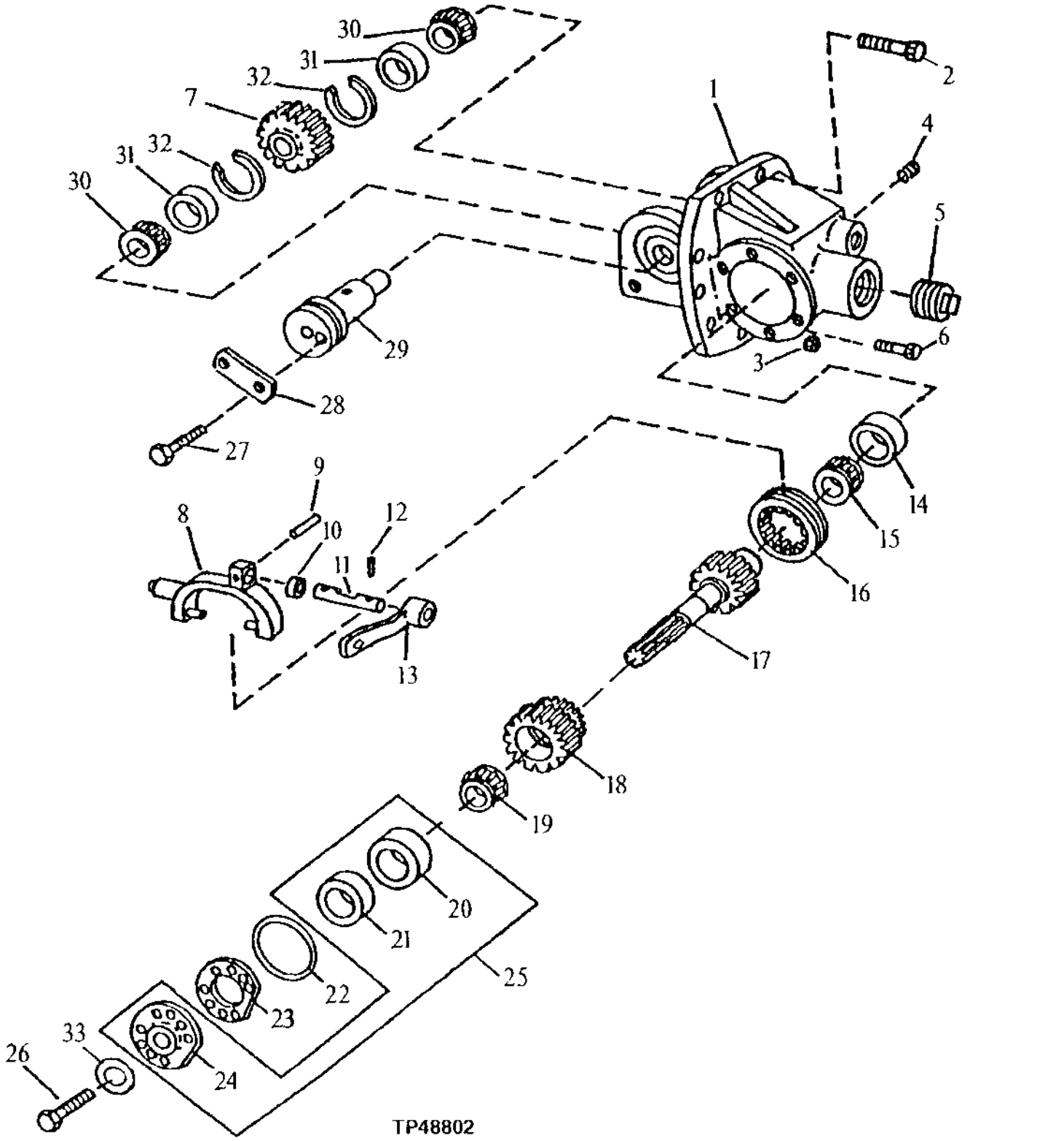

TP48802

TRANSFER CASE ASSEMBLY
(MECHANICAL FRONT WHEEL DRIVE)
(SERIAL NO. 796855-)

KEY	PART NO.	PART NAME	QTY	SERIAL NO.	410D	510D	REMARKS
1	T148000	HOUSING	1		X	X	FOR USE WITH 19.5L X 24, 21L X 24 REAR TIRES AND 12 X 16.5 FRONT TIRES
	T150511	HOUSING	1		X	X	FOR USE WITH 18.4 X 28 AND 14 X 17.5 TIRES
2	19H3544	CAP SCREW	2		X	X	HS, SAE 8, 1/2" X 4-1/2"
3	14H1040	NUT	2		X	X	1/2"
4	15H666	PIPE PLUG	1		X	X	3/8"
5	15H280	PIPE PLUG	1		X	X	1-1/4"
6	19H2993	CAP SCREW	2		X	X	1/2" X 1-1/2"
7	T105903	GEAR	1		X	X	IDLER (42 TEETH) FOR USE WITH 19.5L X 24, 21L X 24 REAR TIRES AND 12 X 16.5 FRONT TIRES
	T149964	HELICAL GEAR	1		X	X	IDLER (40 TEETH) FOR USE WITH 18.4 X 28 AND 14 X 17.5 TIRES
8	AT164952	YOKE	1		X	X	
9	25H522	GROOVE PIN	1		X	X	3/16" X 7/8"
10	AT124394	SEAL	1		X	X	
11	T133700	SHAFT	1		X	X	
12	34H312	SPRING PIN	1		X	X	1/4" X 1"
13	T133699	BELLCRANK	1		X	X	
14	JD9125	BEARING CUP	1		X	X	
15	JD9065	BEARING CONE	1		X	X	
16	T21970	SHIFT COLLAR	1		X	X	
17	T145295	SHAFT	1		X	X	(SUB FOR T105901)
18	T105902	GEAR	1		X	X	DRIVEN (28 TEETH) FOR USE WITH 19.5L X 24, 21L X 24 REAR TIRES AND 12 X 16.5 FRONT TIRES
	T149963	GEAR	1		X	X	DRIVEN (30 TEETH) FOR USE WITH 18.4 X 28 AND 14 X 17.5 TIRES
19	JD8968	BEARING CONE	1		X	X	
20	JD7424	BEARING CUP	1		X	X	
21	AT157354	SEAL	1		X	X	
22	T32341	O-RING	1		X	X	
23	T75880	SHIM	AR		X	X	.003"
	T75881	SHIM	AR		X	X	.005"
	T75882	SHIM	AR		X	X	.010"
24	.....	BEARING HOUSING W/O BEARING	1		X	X	
25	AT159829	BEARING HOUSING W/O BEARING	1		X	X	
26	19M7662	CAP SCREW	6		X	X	HS, 10.9, M10 X 30
27	19M7938	CAP SCREW	2		X	X	HS, 10.9, M10 X 20
28	M84110	STRAP	1		X	X	
29	T76576	PIN FASTENER	1		X	X	
30	JD8976	BEARING CONE	2		X	X	
31	JD7263	BEARING CUP	2		X	X	
32	U43882	SNAP RING	2		X	X	
33	AT159830	SEAL	1		X	X	

TRANSMISSION FRONT COVER, TRANSMISSION OIL DIPSTICK AND INPUT SHAFT
(WITHOUT MECHANICAL FRONT WHEEL DRIVE)
(SERIAL NO. 796854))

TP52914 -UN-13FEB97

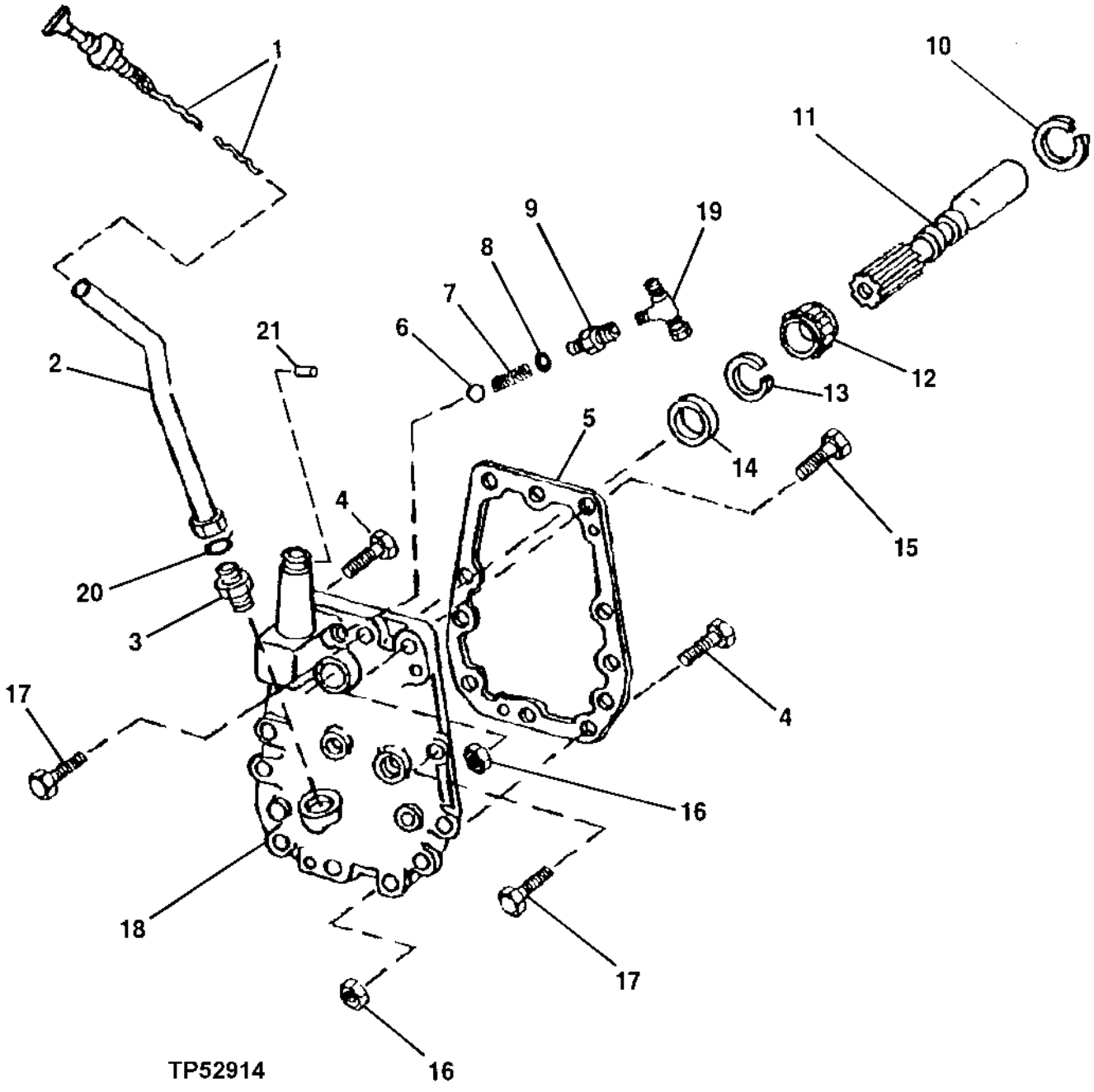

TRANSMISSION FRONT COVER, TRANSMISSION OIL DIPSTICK AND INPUT SHAFT
(WITHOUT MECHANICAL FRONT WHEEL DRIVE)
(SERIAL NO. -796854)

KEY	PART NO.	PART NAME	QTY	SERIAL NO.	410D	510D	REMARKS
1	AT148415	DIPSTICK	1		X	X	
2	AT148414	OIL LINE	1		X	X	
3	T100926	ADAPTER	1		X	X	
4	19H2735	CAP SCREW	7		X	X	HS, SAE 8, 1/2" X 2"
5	T68655	GASKET	1		X	X	
6	R26552	BALL	1		X	X	
7	T27716	SPRING	1		X	X	
8	R26287	O-RING	1		X	X	
9	R46704	FITTING	1		X	X	
10	F2367R	SNAP RING	1		X	X	
11	T76479	SHAFT	1		X	X	INPUT (18 TEETH)
12	JD9344	BALL BEARING	1		X	X	
13	M2353T	SNAP RING	1		X	X	
14	AL56820	SEAL	1		X	X	
15	19H2644	CAP SCREW	1		X	X	HS, SAE 8, 1/2" X 2 1/2"
16	14H1040	NUT	7		X	X	1/2"
17	19H2993	CAP SCREW	2		X	X	HS, SAE 8, 1/2" X 1 1/2"
18	AT65746	COVER	1		X	X	(MARKED T68654)
19	U45760	FITTING	1		X	X	
20	T78612	O-RING	1		X	X	
21	T33593	DOWEL PIN	2		X	X	7.163 X 15.240 MM (0.282" X 0.600")

MULTI-DISK CLUTCH
(WITH MECHANICAL FRONT WHEEL DRIVE)
(SERIAL NO. -796854)

TP44181 -UN-01JAN94

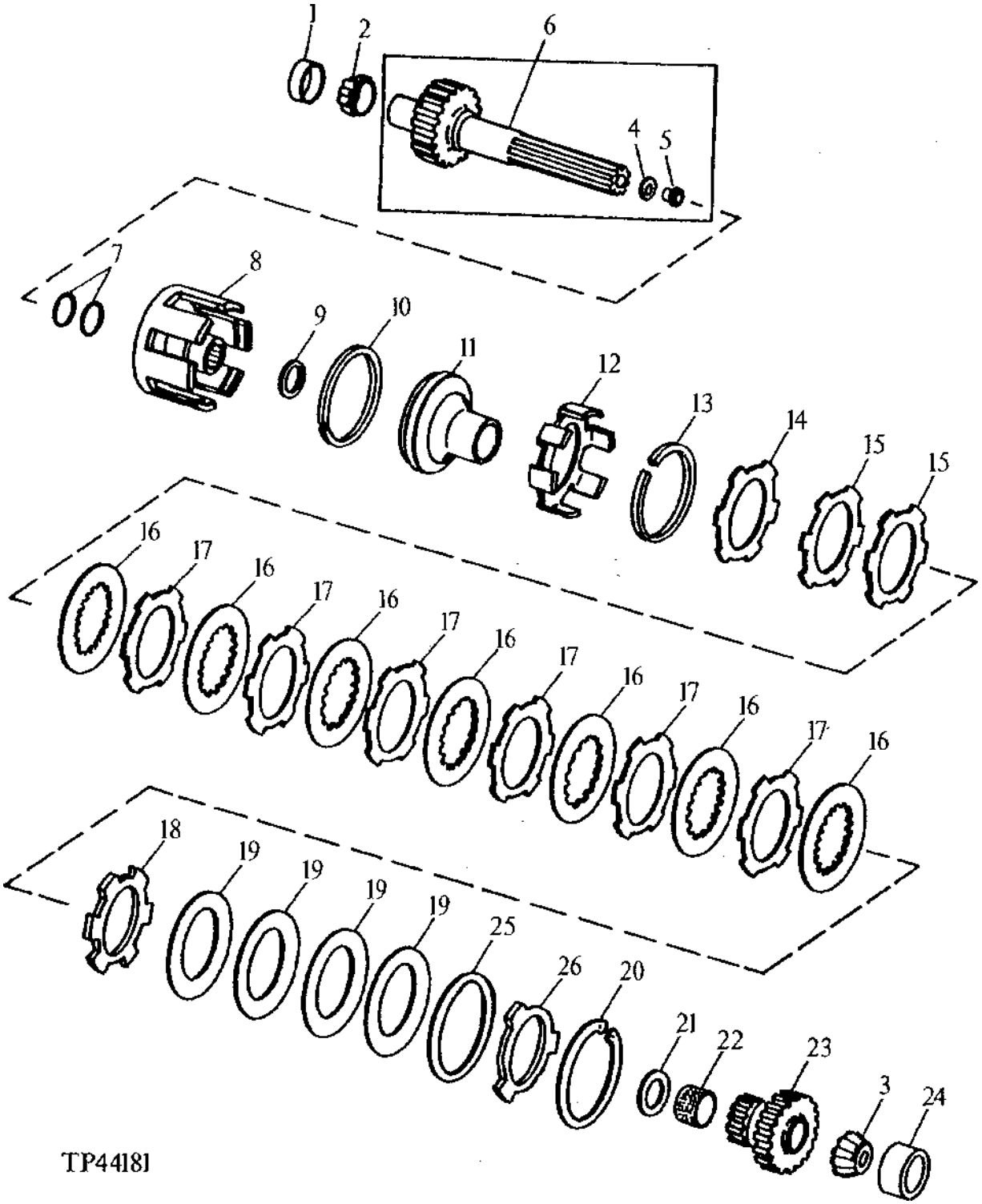

MULTI-DISK CLUTCH-CONTINUED
(WITH MECHANICAL FRONT WHEEL DRIVE)
(SERIAL NO. - 796855)

KEY	PART NO.	PART NAME	QTY	SERIAL NO.	410D	510D	REMARKS
1	JD8251	BEARING CUP	1		X	X	CUP
2	JD8929	BEARING CONE	1		X	X	
3	JD7241	BEARING CONE	1		X	X	(ALSO ORDER AT180884, 28H1527 AND 19H1801)
4	R34140	RING	1		X	X	SEALING
5	R39279	RETAINER	1		X	X	
6	AT73994	DRIVE SHAFT	1		X	X	(MARKED T75891) (25 TEETH)
7	H35244	RING	2		X	X	
8	L39840	DRUM	1	-794001	X	X	(ALSO ORDER T148812 AND T148813)
	L39840	DRUM	1	794002-	X	X	
9	R39304	WASHER	1		X	X	
10	L34060	PISTON RING	1		X	X	
11	L34059	PISTON	1		X	X	
12	L34061	DRUM	1		X	X	
13	L34067	SNAP RING	1		X	X	
14	L37025	PLATE	1		X	X	
15	L34063	DISK WITH OUTER SPLINE	2	-778040	X	X	
16	L34064	DISK WITH INNER SPLINE	7	-778040	X	X	INNER SPLINE
	L34064	DISK WITH INNER SPLINE	9	778041-	X	X	
17	L34062	DISK WITH OUTER SPLINE	6	-778040	X	X	OUTER SPLINE
	L34062	DISK WITH OUTER SPLINE	8	778041-	X	X	
18	L38258	CLUTCH PLATE	1		X	X	
19	L34068	DISK SPRING	4		X	X	
20	40M7067	SNAP RING	1		X	X	145 X 4 MM
21	T76712	THRUST WASHER	1		X	X	
22	T76713	BUSHING	1		X	X	
23	T75892	GEAR	1		X	X	DRIVEN (22 TEETH)
24	JD7291	BEARING CUP	1		X	X	CUP
25	T148812	LOCKING COLLAR	1	794002-	X	X	
26	T148813	PLATE	1	794002-	X	X	

TRANSMISSION TOP COVER
(SERIAL NO. -796854)

TP40513 -UN-01JAN94

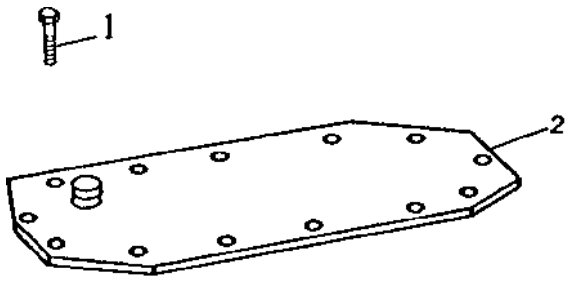

TP40513

KEY	PART NO.	PART NAME	QTY	SERIAL NO.	410D	510D	REMARKS
1	19H2472	CAP SCREW	12		X	X	HS, SAE 8, 1/2" X 1"
2	T78184	COVER	1		X	X	

TRANSMISSION TOP COVER
(SERIAL NO. -796854)

TP45436 -UN-01JAN94

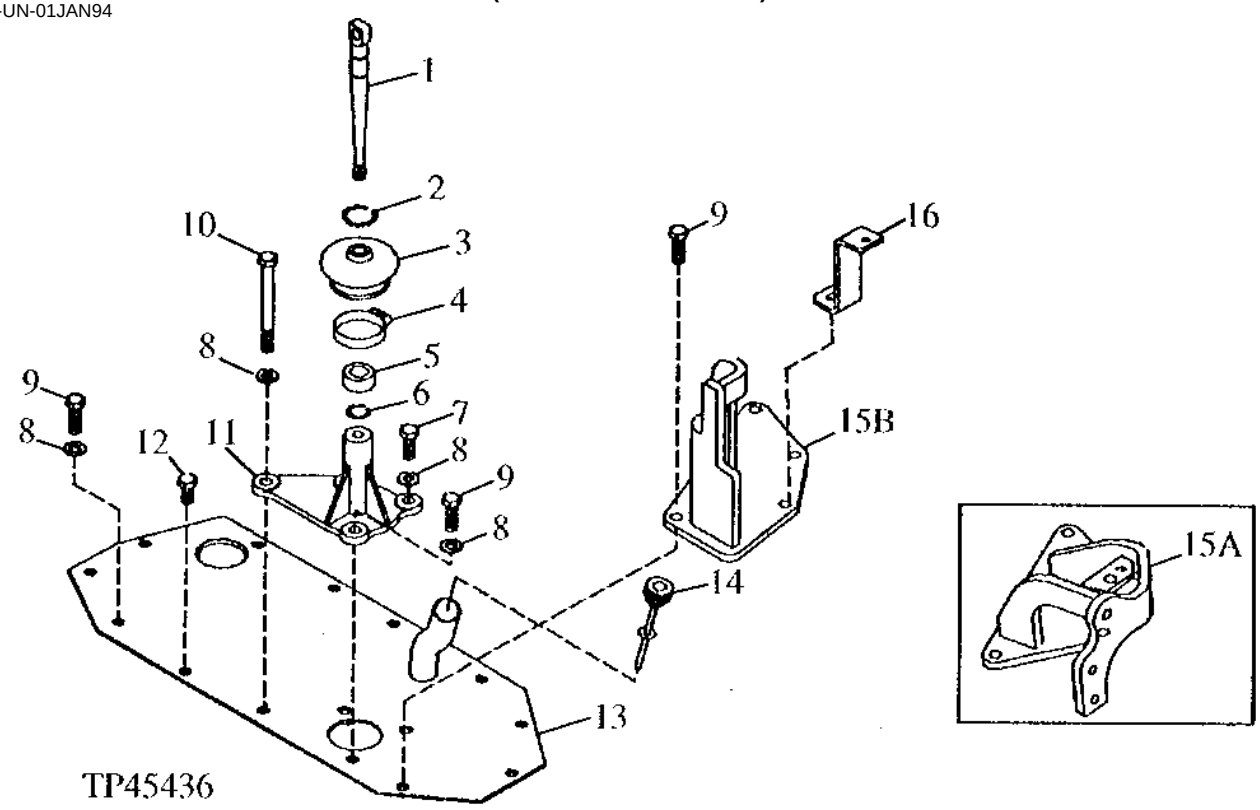

KEY	PART NO.	PART NAME	QTY	SERIAL NO.	4510 DD	REMARKS
1	T154440	SHIFTER	1		X X	(SUB FOR T151128)
2	L4035T	SNAP RING	1		X X	
3	T68670	BOOT	1		X X	
4	TY22470	CLAMP	1		X X	(SUB FOR AR21840, THIS APPLICATION)
5	R43206	BUSHING	1		X X	
6	R35226	SNAP RING	1		X X	
7	19H2898	CAP SCREW	2		X X	HS, SAE 8, 1/2" X 1 1/4"
8	24M7240	WASHER	5		X X	13 X 25 X 3 MM
9	19H2993	CAP SCREW	6		X X	HS, SAE 8, 1/2" X 1 1/2"
10	T27644	SCREW	1		X X	HS, SAE 8, 1/2" X 1/2"
11	T153243	SHIFTER	1		X X	(SUB FOR T151129) TOWER
12	19H2472	CAP SCREW	6		X X	HS, SAE 8, 1/2" X 1"
13	AT141162	COVER	1		X X	
14	AT141176	DIPSTICK	1		X X	VENTED
15A	AT163747	BRACKET	1	-801199	X X	
15B	AT168540	BRACKET	1	801200-	X X	
16	T152236	BRACKET	1	801200-	X X	

TRANSMISSION ASSEMBLY

TP52928 -UN-22FEB97

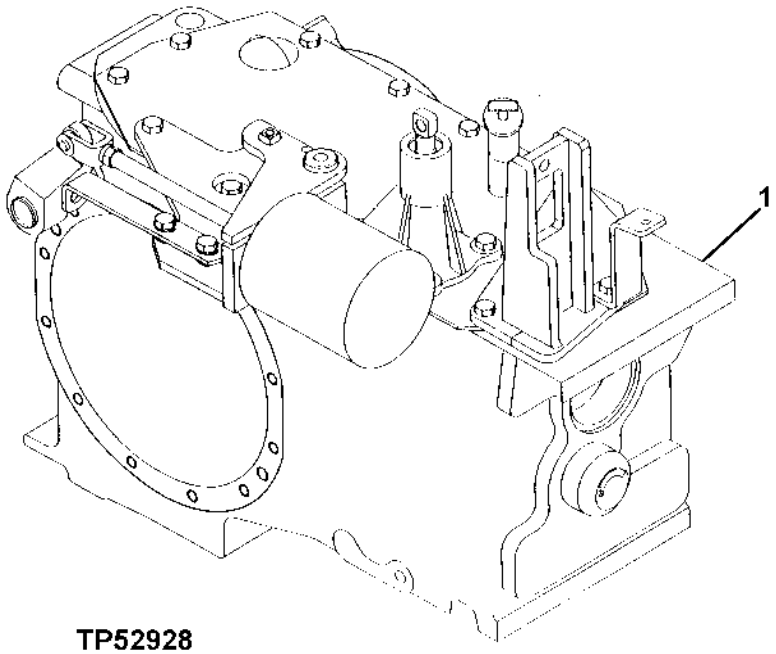

TP52928

KEY	PART NO.	PART NAME	QTY	SERIAL NO.	410D	510D	REMARKS
1	.....	TRANSMISSION	1		X	X	(2WD) (AT180833 NO LONGER AVAILABLE) (ORDER COMPONENTS) INCLUDES OIL PUMP, GEARS, SHAFTS, BEARINGS, FOUR PINION DIFFERENTIAL WITH LOCK AND PARK BRAKE ACTUATOR
	.....	TRANSMISSION	1		X	X	(4WD) (AT180834 NO LONGER AVAILABLE) (ORDER COMPONENTS) INCLUDES OIL PUMP, GEARS, SHAFTS, BEARINGS, FOUR PINION DIFFERENTIAL WITH LOCK AND PARK BRAKE ACTUATOR

MEMORANDA

REVERSER CASE AND REAR COVER

TP45431 -UN-01JAN94

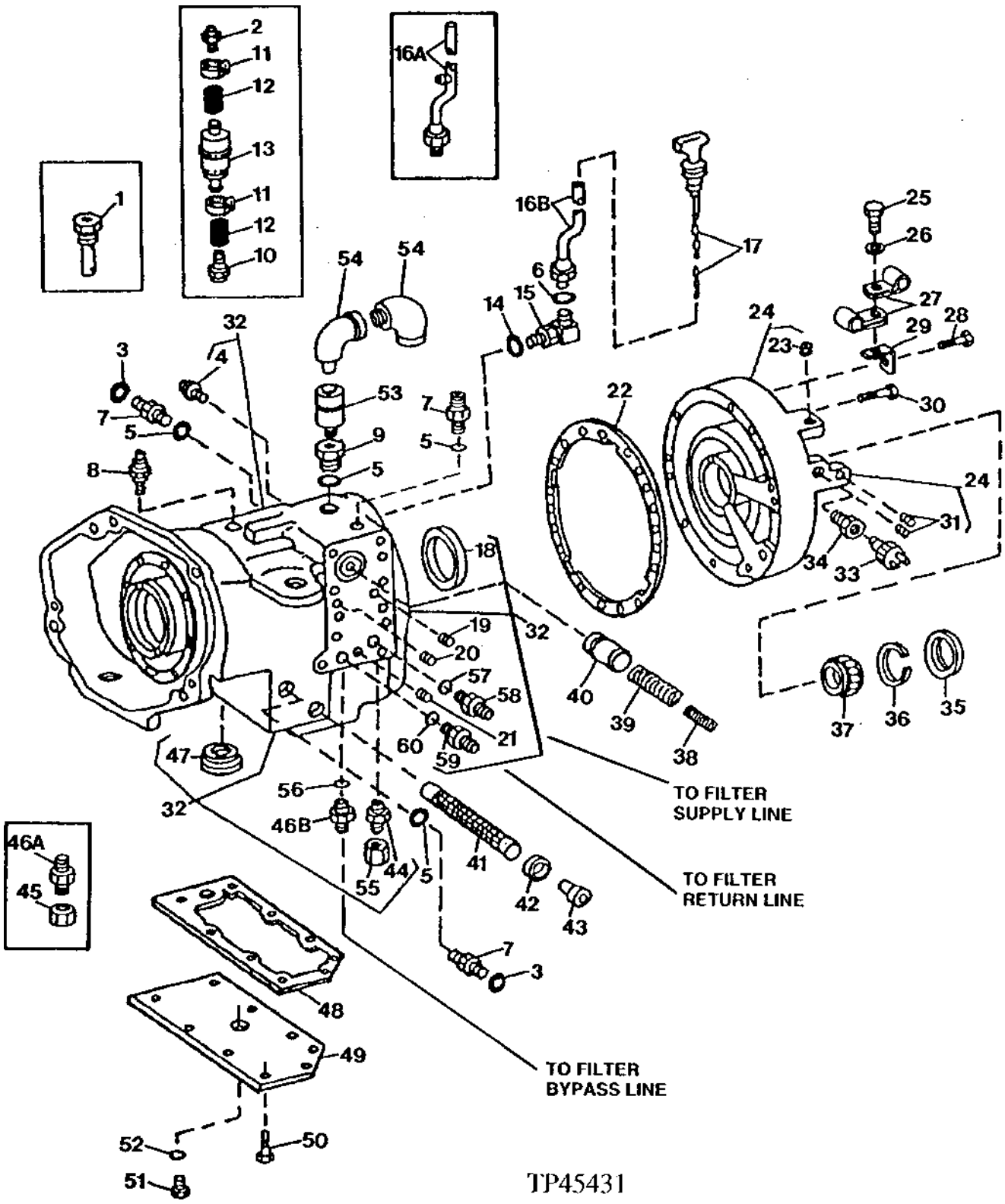

REVERSER CASE AND REAR COVER-CONTINUED

KEY	PART NO.	PART NAME	QTY	SERIAL NO.	410D	510D	REMARKS
1	AT85506	FITTING	1		X	X	
2	U14273	BREATHER	1	-787023	X	X	
3	T77857	O-RING	2		X	X	
4	15H561	PIPE PLUG	1		X	X	
5	U12547	O-RING	3	-796854	X	X	
	R26375	O-RING	3	796855-	X	X	
6	T78612	O-RING	1		X	X	
7	38H1175	ADAPTER	2	-796854	X	X	
	AT124317	ELBOW FITTING	3	796855-	X	X	
8	AT100083	SWITCH	1		X	X	REVERSER TEMPERATURE
9	AT85506	FITTING	1		X	X	
10	R67293	FITTING	1	-787023	X	X	
11	TY22462	CLAMP	2	-787023	X	X	(SUB FOR AR48236)
12	.....	HOSE	AR	-787023	X	X	(MAKE FROM M87571 BULK MATERIAL)
13	AT101565	AIR FILTER	1	-787023	X	X	BREATHER
14	U13639	O-RING	1		X	X	
15	38H1008	ELBOW FITTING	1		X	X	
16A	AT148406	OIL TUBE	1	-796854	X	X	
	AT165357	OIL LINE	1	796855-801199	X	X	
16B	AT170226	DIPSTICK TUBE	1	801200-	X	X	
17	AT148409	DIPSTICK	1		X	X	
18	R51328	BUSHING	1		X	X	
19	T71307	ORIFICE	1		X	X	
20	T71023	ORIFICE	1		X	X	
21	15H690	PIPE PLUG	1		X	X	3/4", 3/4"
22	T212520	GASKET	1		X	X	(SUB FOR T67198)
23	15H666	PIPE PLUG	1		X	X	3/8"
24	AT64180	COVER	1		X	X	(MARKED T67197)
25	19M7402	CAP SCREW	1		X	X	M10 X 25
26	24H1305	WASHER	1		X	X	13/32" X 13/16" X 0.065"
27	T74416	CLAMP	2		X	X	
28	19M8093	CAP SCREW	1	-796854	X	X	M10 X 100
	19M7358	CAP SCREW	1	796855-	X	X	M10 X 40
	19M8166	CAP SCREW	1	796855-	X	X	M10 X 110
29	AT141576	STRAP	1		X	X	
30	19M7662	CAP SCREW	AR		X	X	M10 X 30
31	15H275	PIPE PLUG	2		X	X	1/4"
32	.....	CASE	1	-796854	X	X	(AT148207 NO LONGER AVAILABLE) (MARKED T67196) (SUB AT169178) (ALSO ORDER AT164629, AT144995, AT120444, AT166681, AT166680, AT166683, 38H1404, 38H1175, 38H1376, (4) T77932, U12547, T77857)
	AT169178	CASE	1	796855-801199	X	X	(MARKED T148349) (SUB FOR AT148207 AND AT164296)
	AT169178	CASE	1	801200-	X	X	(MARKED T152709)

THIS PARTS LISTING IS CONTINUED

REVERSER CASE AND REAR COVER

TP45431 -UN-01JAN94

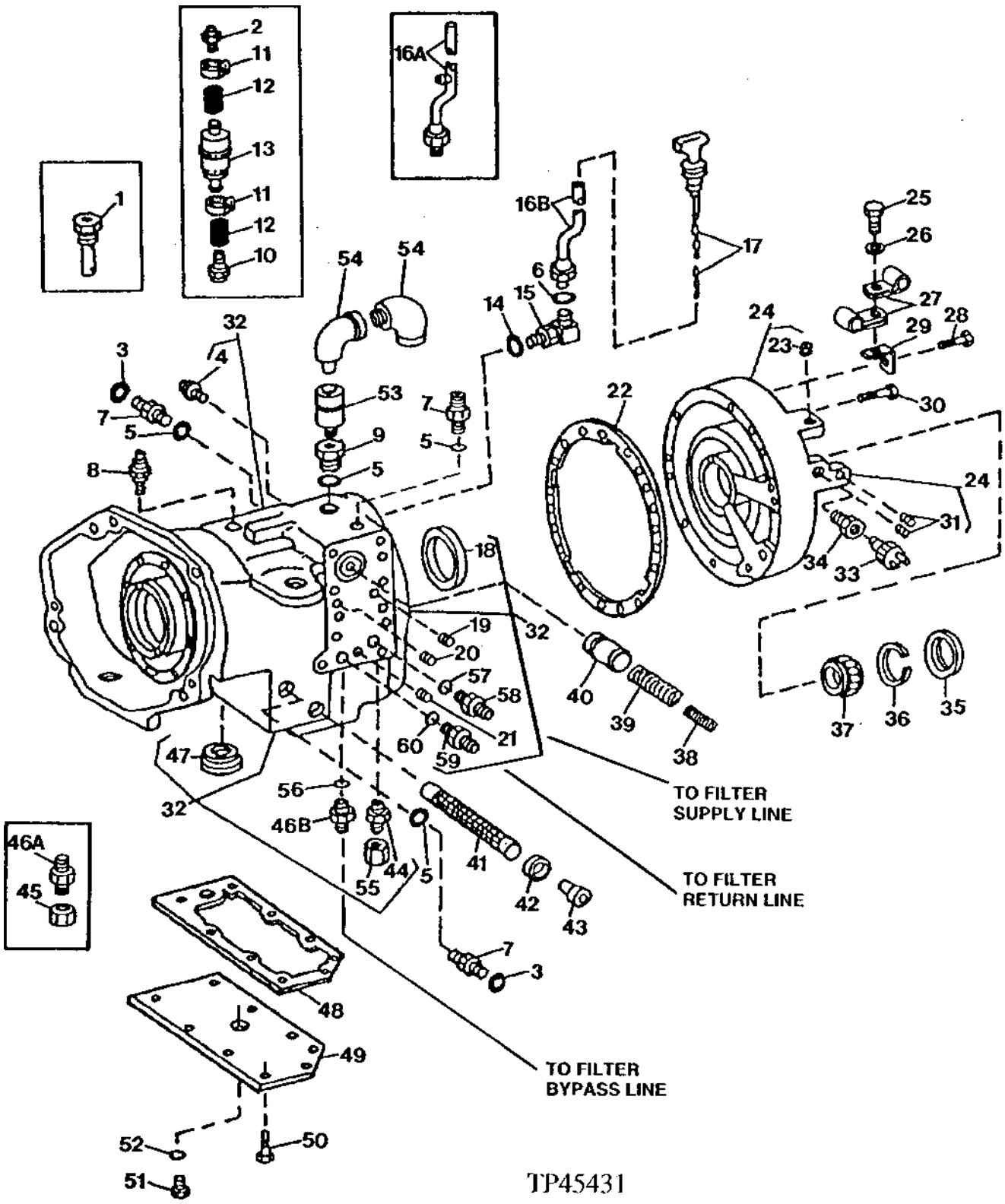

REVERSER CASE AND REAR COVER-CONTINUED

KEY	PART NO.	PART NAME	QTY	SERIAL NO.	410D	510D	REMARKS
33	AL67715	SWITCH	1		X	X	(BACKUP ALARM)
34	15H639	PIPE BUSHING	1		X	X	1/8"
35	R35643	SEAL	1		X	X	
36	F2367R	SNAP RING	1		X	X	
37	JD9344	BALL BEARING	1		X	X	
38	T72401	COMPRESSION SPRING	1		X	X	
39	R47449	SPRING	1		X	X	
40	R47319	PISTON	1		X	X	
41	R53169	SCREEN	1		X	X	
42	U15973	O-RING	1		X	X	
43	T77170	FITTING PLUG	1		X	X	
44	T76027	ADAPTER	1		X	X	3/4"
45	R39783	FITTING	2	-796854	X	X	
46A	R44795	ADAPTER	1	-796854	X	X	
46B	38H1173	ADAPTER	1	796855-	X	X	
47	T72326	PLUG	1		X	X	
48	T212522	GASKET	1		X	X	(SUB FOR T79450)
49	T76940	COVER	1		X	X	
50	19M7167	CAP SCREW	8		X	X	M10 X 25
51	T78662	DRAIN PLUG	1		X	X	
52	U17409	O-RING	1		X	X	
53	AT34816	FILTER	1	787024-	X	X	
54	T56112	ELBOW FITTING	2	787024-	X	X	3.175 MM (1/8")
55	R39783	FITTING	1		X	X	
56	R26448	O-RING	1		X	X	
57	U17409	O-RING	1		X	X	
58	38H1351	ADAPTER	1		X	X	
59	38H1162	ADAPTER	1		X	X	
60	R26906	O-RING	1		X	X	

MEMORANDA

TRANSMISSION OIL DIPSTICK AND DIPSTICK TUBE
(WITH MECHANICAL FRONT WHEEL DRIVE)
(SERIAL NO. -796854)

KEY	PART NO.	PART NAME	QTY	SERIAL NO.	410D	510D	REMARKS
1	AT148417	DIPSTICK	1		X	X	
2	AT148416	OIL TUBE	1		X	X	
3	T100926	ADAPTER	1		X	X	
4	19H2735	CAP SCREW	4		X	X	HS, SAE 8, 1/2" X 2"
5	T68655	GASKET	1		X	X	
6	19H2993	CAP SCREW	5		X	X	HS, SAE 8, 1/2" X 1 1/2"
7	19H2644	CAP SCREW	1		X	X	HS, SAE 8, 1/2" X 2 1/2"
8	14H1040	NUT	4		X	X	1/2"
9	R26448	O-RING	1		X	X	
10	38H1173	ADAPTER	1		X	X	
11	R26906	O-RING	1		X	X	
12	38H1172	ADAPTER	1		X	X	
13	U13639	O-RING	1		X	X	
14	AT148125	PRESSURE RELIEF VALVE	1		X	X	(SUB FOR T29839, THIS APPLICATION)
15	T78612	O-RING	1		X	X	
16	T77857	O-RING	1		X	X	

MEMORANDA

REVERSER RESILIENT MOUNT
(REAR)

TP40452 -UN-01JAN94

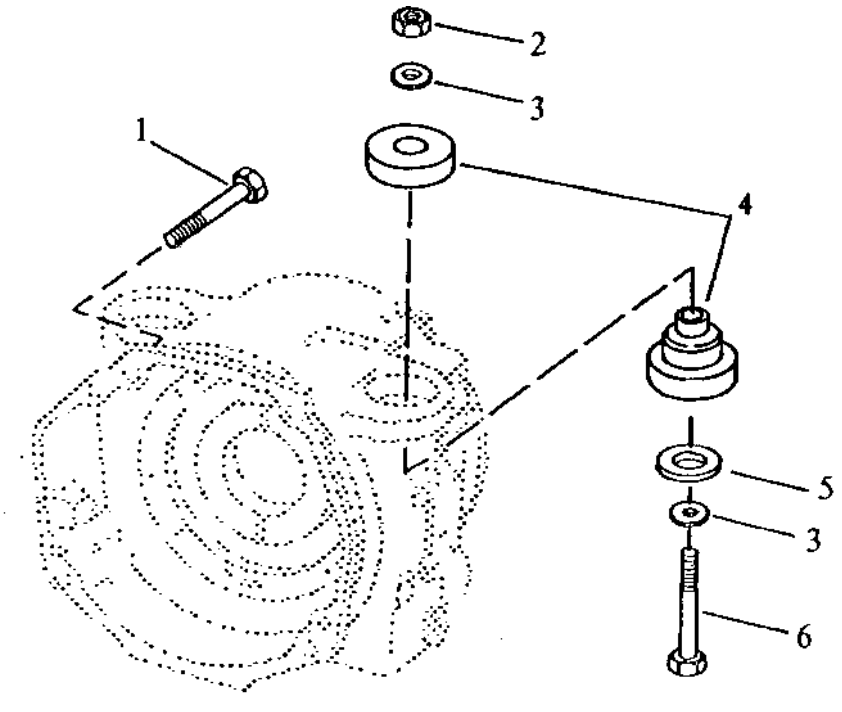

KEY	PART NO.	PART NAME	QTY	SERIAL NO.	410D	510D	REMARKS
1	19H3170	CAP SCREW	4		X	X	5/8" X 4-1/2"
2	A31870	LOCK NUT	2		X	X	LOCK
3	24M7242	WASHER	4		X	X	21.400 X 42 X 5 MM, (SUB FOR T19572, THIS APPLICATION)
4	AT102326	ISOLATOR	2		X	X	
5	T42977	WASHER	2		X	X	
6	19M7968	CAP SCREW	2		X	X	M20 X 130

MEMORANDA

TRANSMISSION DRIVE SHAFT ASSEMBLY

TP12482 -UN-01JAN94

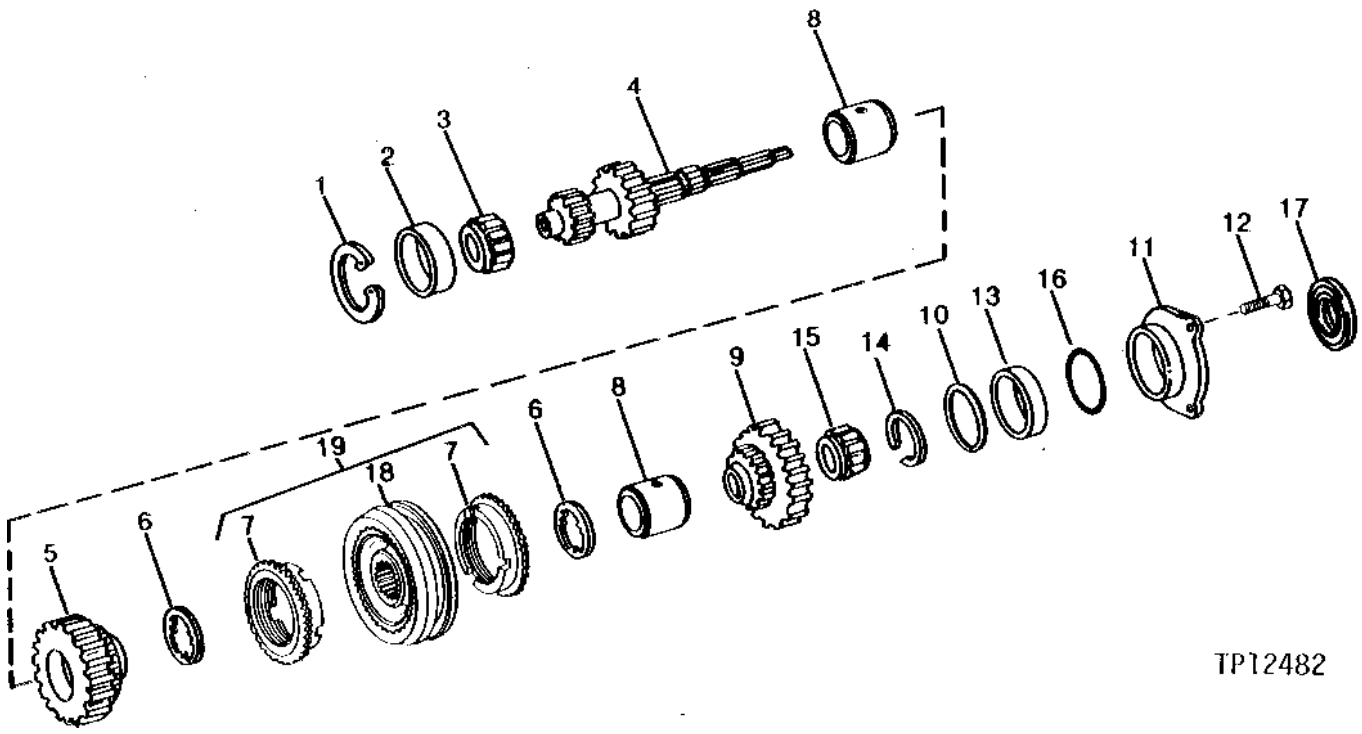

KEY	PART NO.	PART NAME	QTY	SERIAL NO.	410D	510D	REMARKS
1	D10259	SNAP RING	1		X	X	
2	JD7291	BEARING CUP	1		X	X	
3	JD7241	BEARING CONE	1		X	X	(ALSO ORDER AT180884, 28H1527 AND 19H1801)
4	T78394	DRIVE SHAFT	1	-796854	X	X	(11 AND 16 TEETH, 18 AND 24 SPLINES)
	T149301	SHAFT	1	796855-	X	X	
	34H266	SPRING PIN	1	-796854	X	X	5/32" X 1", (NOT ILLUSTRATED)
5	T78395	GEAR	1	-796854	X	X	(THIRD SPEED) (28 TEETH)
	T148396	GEAR	1	796855-	X	X	
6	T72837	GEAR	2		X	X	
7	.....	RING	2		X	X	
8	T76149	BUSHING	2		X	X	
9	T118733	GEAR	1	-781202	X	X	(FOURTH SPEED) (36TEETH)
	T140278	GEAR	1	781203-796854	X	X	(FOURTH SPEED) (34 TEETH)
	T148395	GEAR	1	796855-	X	X	
10	T21442	SHIM	AR		X	X	0.08 MM (.003")
	T21443	SHIM	AR		X	X	0.13 MM (.005")
	T21444	SHIM	AR		X	X	0.25 MM (.010")
11	T100924	BEARING HOUSING W/O BEARING	1	-796854	X	X	
	T100017	BEARING HOUSING W/O BEARING	1	796855-	X	X	
12	19H3239	CAP SCREW	3		X	X	3/8" X 1-1/4"
13	JD7262	BEARING CUP	1		X	X	
14	L33269	SNAP RING	1		X	X	(A) 2.0 MM
	L33271	SNAP RING	1		X	X	(A) 2.1 MM
	L33272	SNAP RING	1		X	X	(A) 2.2 MM
	C3937E	SNAP RING	1		X	X	(A) 1.9 MM
15	JD8114	BEARING CONE	1		X	X	
16	U10776	O-RING	1	796855-	X	X	
17	AT124395	SEAL	1	796855-	X	X	
18	.....	SYNCHRONIZER	1		X	X	
19	AT168826	SYNCHRONIZER	1		X	X	(SUB FOR AT150087)

(A) USE THICKEST SNAP RING WHICH FITS GROOVE, ONLY 1 OF 4 USED.

DIFFERENTIAL DRIVE SHAFT

TP44581 -UN-01JAN94

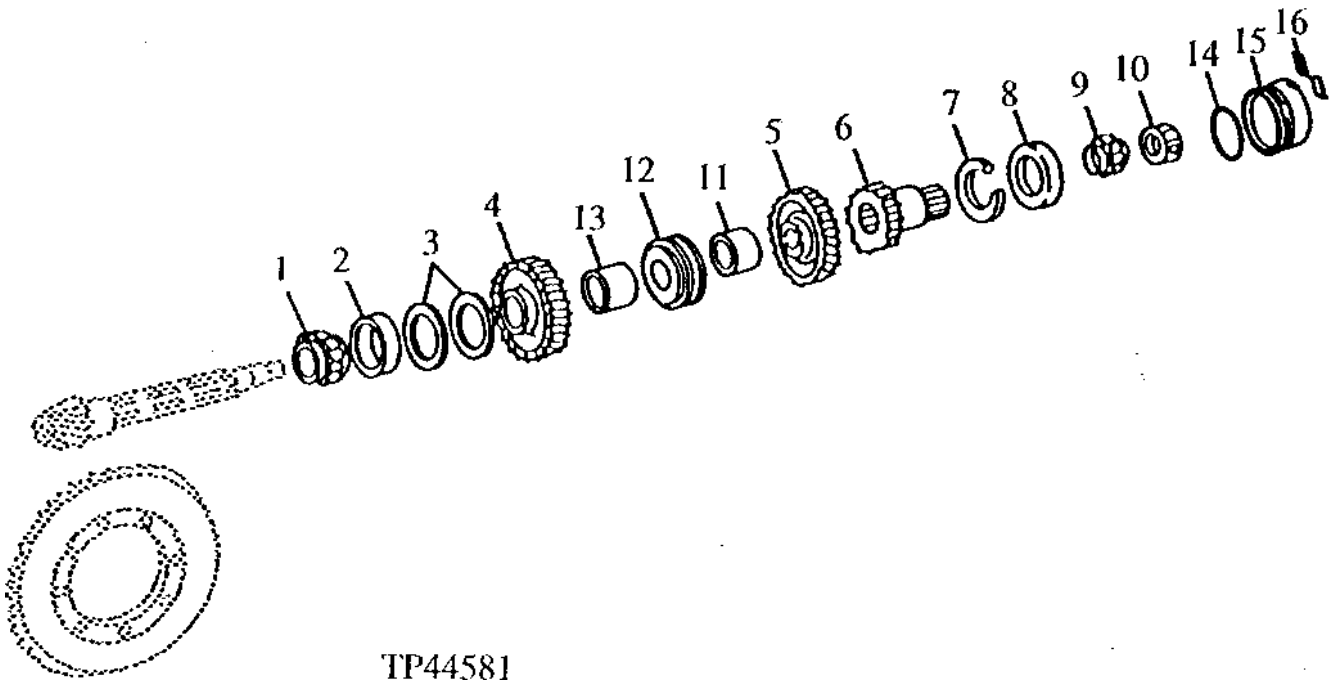

KEY	PART NO.	PART NAME	QTY	SERIAL NO.	410D	510D	REMARKS
1	JD8997	BEARING CONE	1		X	X	
2	JD8255	BEARING CUP	1		X	X	
3	T31792	SHIM	AR		X	X	(0.05MM (.002")
	T31793	SHIM	AR		X	X	(0.13MM (.005")
	T31794	SHIM	AR		X	X	(0.25MM (.010")
4	T159864	GEAR	1		X	X	(FIRST SPEED) (39-TEETH)
5	T134836	GEAR	1		X	X	(SECOND SPEED) (33-TEETH)
6	T134919	GEAR	1	-781202	X	X	(THIRD AND FOURTH SPEED) (19 AND 27 TEETH)
	T140277	GEAR	1	781203-	X	X	(THIRD AND FOURTH SPEED) (21 AND 27 TEETH)
7	T19242	SNAP RING	1		X	X	.140"
	T134923	SNAP RING	AR		X	X	.135"
	T134924	SNAP RING	AR		X	X	.130"
	T134938	SNAP RING	AR		X	X	.125"
	T140069	SNAP RING	AR		X	X	.120"
	T140070	SNAP RING	AR		X	X	.115"
8	JD8257	BEARING CUP	1		X	X	(THIRD AND FOURTH SPEED) (19 AND 27 TEETH)
9	AR94761	BEARING CONE	1		X	X	(FIRST SPEED)
10	T14045	NUT	1	-810473	X	X	1-3/8", (REQUIRES T43514 ADHESIVE)
	14H890	NUT	1	810474-	X	X	1-1/4", (REQUIRES T43514 ADHESIVE)
11	T134922	BUSHING	1		X	X	
12	AT145799	SYNCHRONIZER	1		X	X	
13	T134921	BUSHING	1		X	X	
14	T122076	O-RING	1		X	X	
15	T100019	COVER	1		X	X	
16	T100021	STRAP	1	796855-	X	X	

PLANET PINION CARRIER AND OUTPUT SHAFT

TP10744 -UN-01JAN94

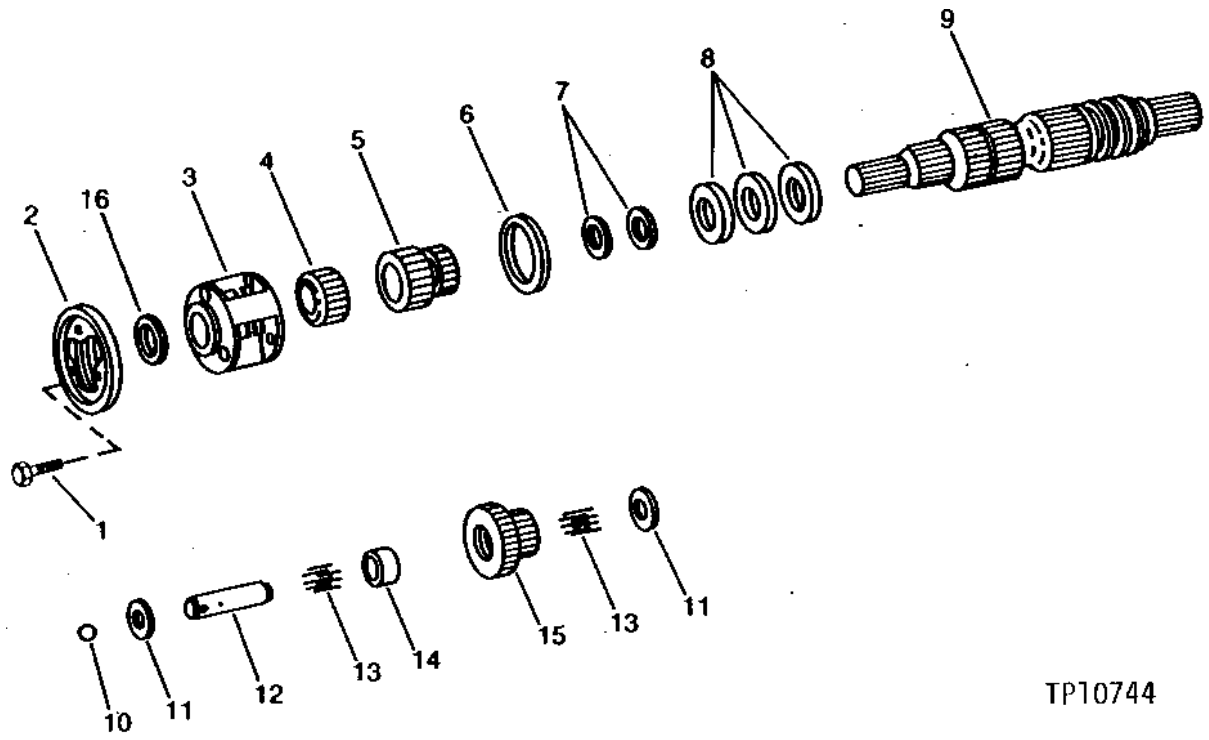

KEY	PART NO.	PART NAME	QTY	SERIAL NO.	4 5 1 1 0 0 D D	REMARKS
1	19M7557	CAP SCREW	3		X X	M10 X 16
2	R39125	ISOLATOR	1		X X	
3	AT66231	PLANET PINION CARRIER	1		X X	
4	T69204	PINION	1		X X	(17 TEETH)
5	AT66232	PINION	1		X X	(25 TEETH)
6	R76308	THRUST WASHER	1		X X	
7	R33255	PISTON RING	2		X X	
8	R43659	RING	3		X X	
9	AT107511	SHAFT	1		X X	(14, 18 AND 21 TEETH) (INCLUDES AT107510)
	AT107510	PLUG	1		X X	(NOT ILLUSTRATED) (8MM PLUG) (FITS IN SHAFTED END)
10	H871R	BALL	3		X X	
11	R66197	THRUST WASHER	6		X X	
12	T69201	PIN	3		X X	
13	R33058	NEEDLE ROLLER	186		X X	
14	T69202	SPACER	3		X X	
15	T150413	PINION	3		X X	(SUB FOR T69203) (17 AND 25 TEETH)
16	T68699	THRUST WASHER	1		X X	

FORWARD AND REVERSE BRAKE PACKS

TP58018 -UN-19MAR99

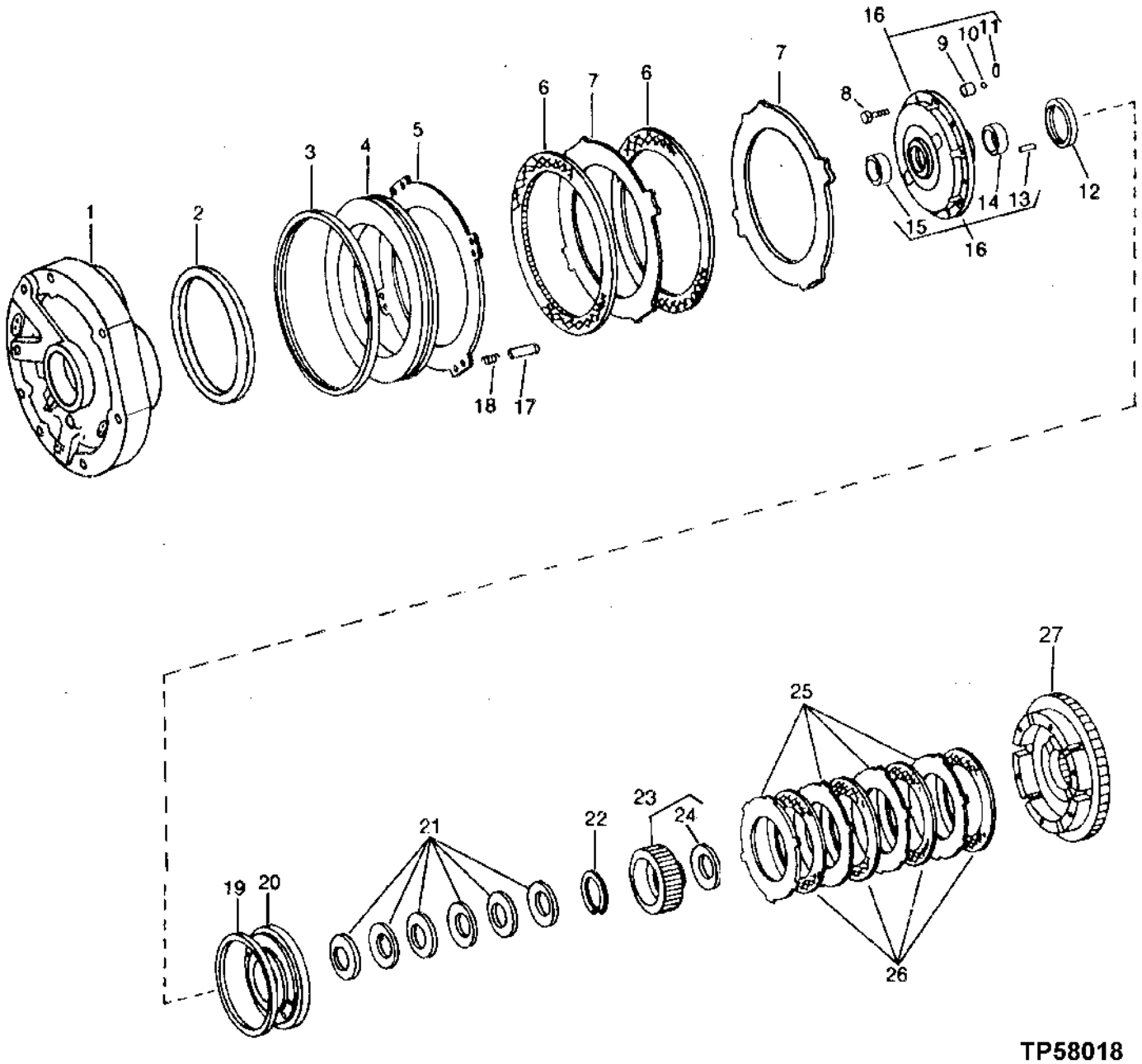

FORWARD AND REVERSE BRAKE PACKS-CONTINUED

KEY	PART NO.	PART NAME	QTY	SERIAL NO.	410D	510D	REMARKS
1	AT64180	COVER	1		X	X	WITH PLUGS, (MARKED T67197)
2	R44816	SEAL	1		X	X	
3	R44817	SEAL	1		X	X	
4	R81494	PISTON	1		X	X	
5	R48235	PLATE	1		X	X	
6	RE17162	DISK WITH INNER SPLINE	2		X	X	
7	R48236	PLATE	2		X	X	
8	R41035	CAP SCREW	6		X	X	
9	R68824	SEAT	1		X	X	
10	400R	BALL	1		X	X	
11	R68823	DOWEL PIN	1		X	X	
12	R33246	SEAL	1		X	X	
13	R44742	DOWEL PIN	1		X	X	
14	R79077	BUSHING	1		X	X	
15	R79078	BUSHING	1		X	X	
16	AR98338	HOUSING	1		X	X	(MARKED R33012)
17	T67706	PIN	8		X	X	
18	R74852	SPRING	8		X	X	
19	R41166	SEAL	1		X	X	
20	T74666	PISTON	1		X	X	
21	R67840	DISK SPRING	6		X	X	
22	R33247	SNAP RING	1		X	X	
23	AR103339	HUB	1		X	X	(54 TEETH)
24	R57100	WASHER	1		X	X	
25	R80813	CLUTCH PLATE	4		X	X	
26	AR94516	DISK WITH INNER SPLINE	4		X	X	
27	AT72276	DRUM	1		X	X	(MARKED T74665) (39 AND 95 TEETH)

TRANSMISSION PRESSURE REGULATING VALVE

TP40267 -UN-01JAN94

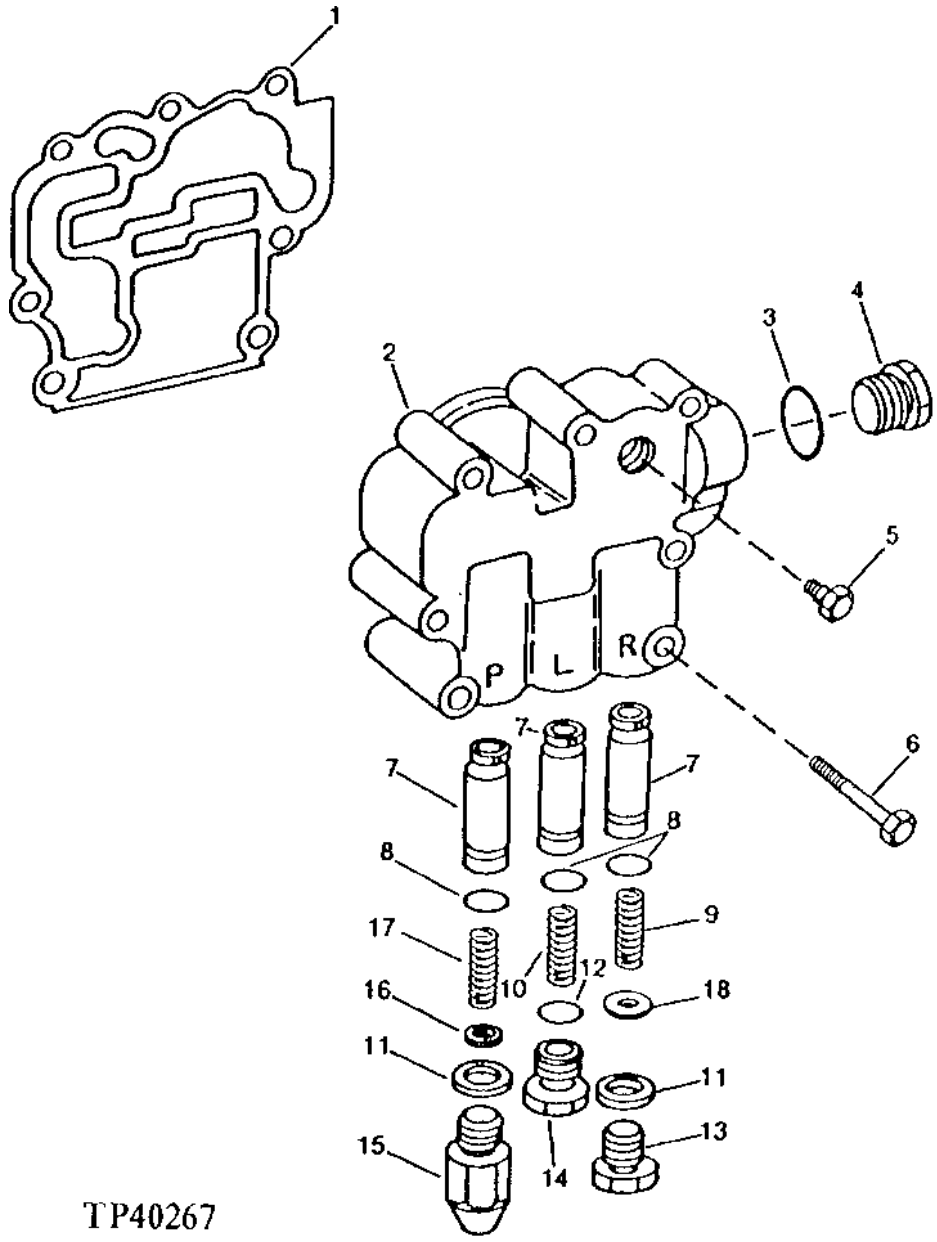

TRANSMISSION PRESSURE REGULATING VALVE-CONTINUED

KEY	PART NO.	PART NAME	QTY	SERIAL NO.	410D	510D	REMARKS
1	T66919	GASKET	1		X	X	
2	T66920	HOUSING	1		X	X	
3	U12547	O-RING	1		X	X	
4	R27175	DRAIN PLUG	1		X	X	
5	15H561	PIPE PLUG	1		X	X	1/2"
6	19M7181	CAP SCREW	7		X	X	
7	R63980	VALVE	3		X	X	
8	R28776	O-RING	3		X	X	
9	T68150	COMPRESSION SPRING	1		X	X	
10	T66921	SPRING	1		X	X	
11	R1742R	WASHER	2		X	X	
12	R26375	O-RING	1		X	X	
13	R52589	FITTING PLUG	1		X	X	
14	R39112	FITTING	1		X	X	
15	R51577	FITTING PLUG	1		X	X	
16	R33521	SHIM	5		X	X	
17	T60314	SPRING	1		X	X	
18	R33521	SHIM	4		X	X	

REVERSER OIL FILTERS
(SERIAL NO. -796854)

TP22839 -UN-01JAN94

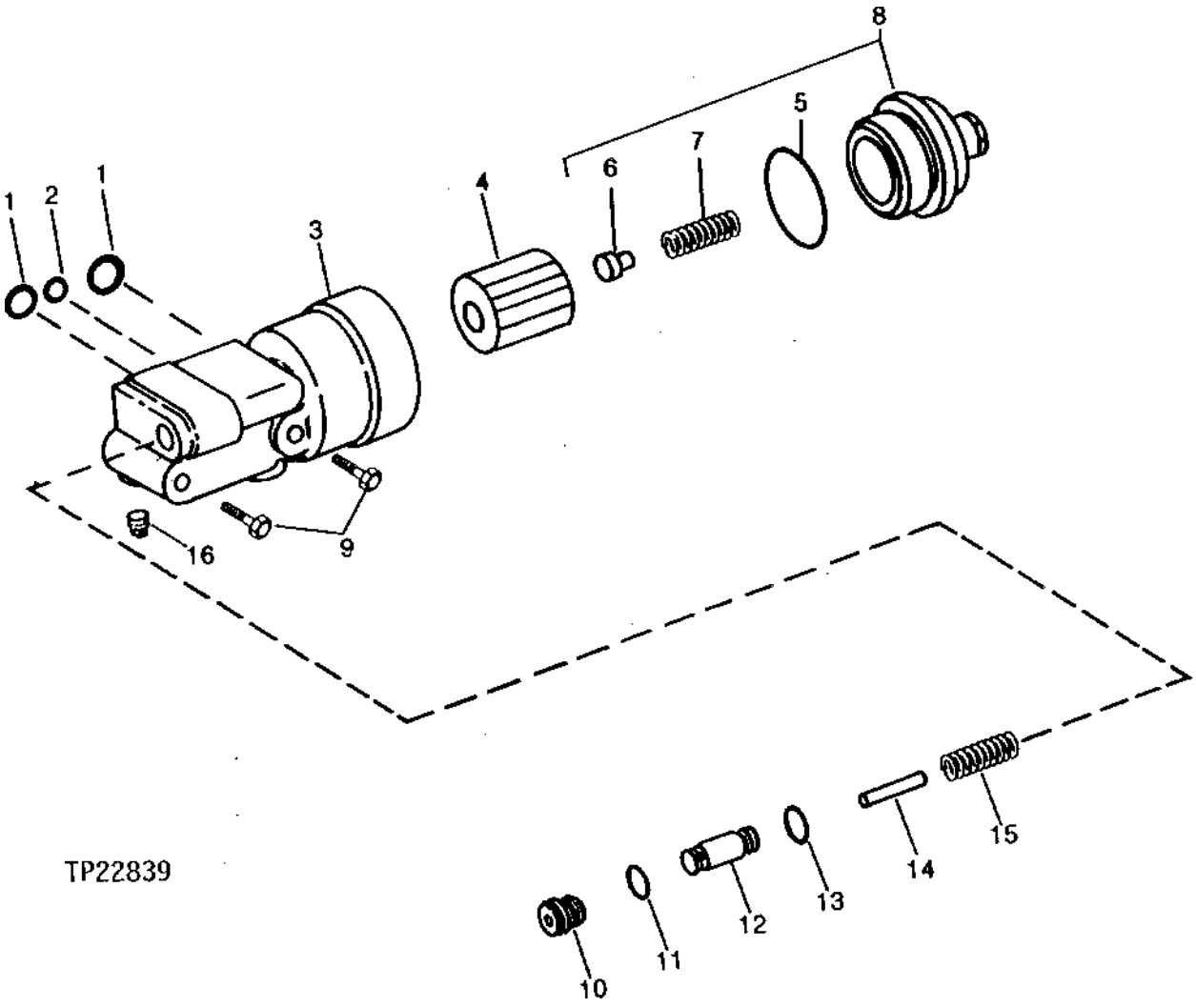

REVERSER OIL FILTERS
(SERIAL NO. -796854)

KEY	PART NO.	PART NAME	QTY	SERIAL NO.	410D	510D	REMARKS
1	A3606R	O-RING	2		X	X	
2	R394R	O-RING	1		X	X	
3	T81221	BASE	1		X	X	
4	AT67957	FILTER ELEMENT	1		X	X	
5	U43352	O-RING	1		X	X	
6	.....	RETAINER	1		X	X	
7	.....	SPRING	1		X	X	
8	AT67958	HOUSING	1		X	X	
9	19M7668	CAP SCREW	2		X	X	M10 X 100, (SUB FOR 19M7812, THIS APPLICATION)
10	R33138	FITTING	1		X	X	
11	R26375	O-RING	1		X	X	
12	R63980	VALVE	1		X	X	
13	R28776	O-RING	1		X	X	
14	34H305	SPRING PIN	1		X	X	7/32" X 2"
15	R26686	SPRING	1		X	X	
16	15H690	PIPE PLUG	2		X	X	3/4"

REVERSER OIL FILTER AND OIL LINES
(SERIAL NO 796855-)

TP48899 -UN-05MAR96

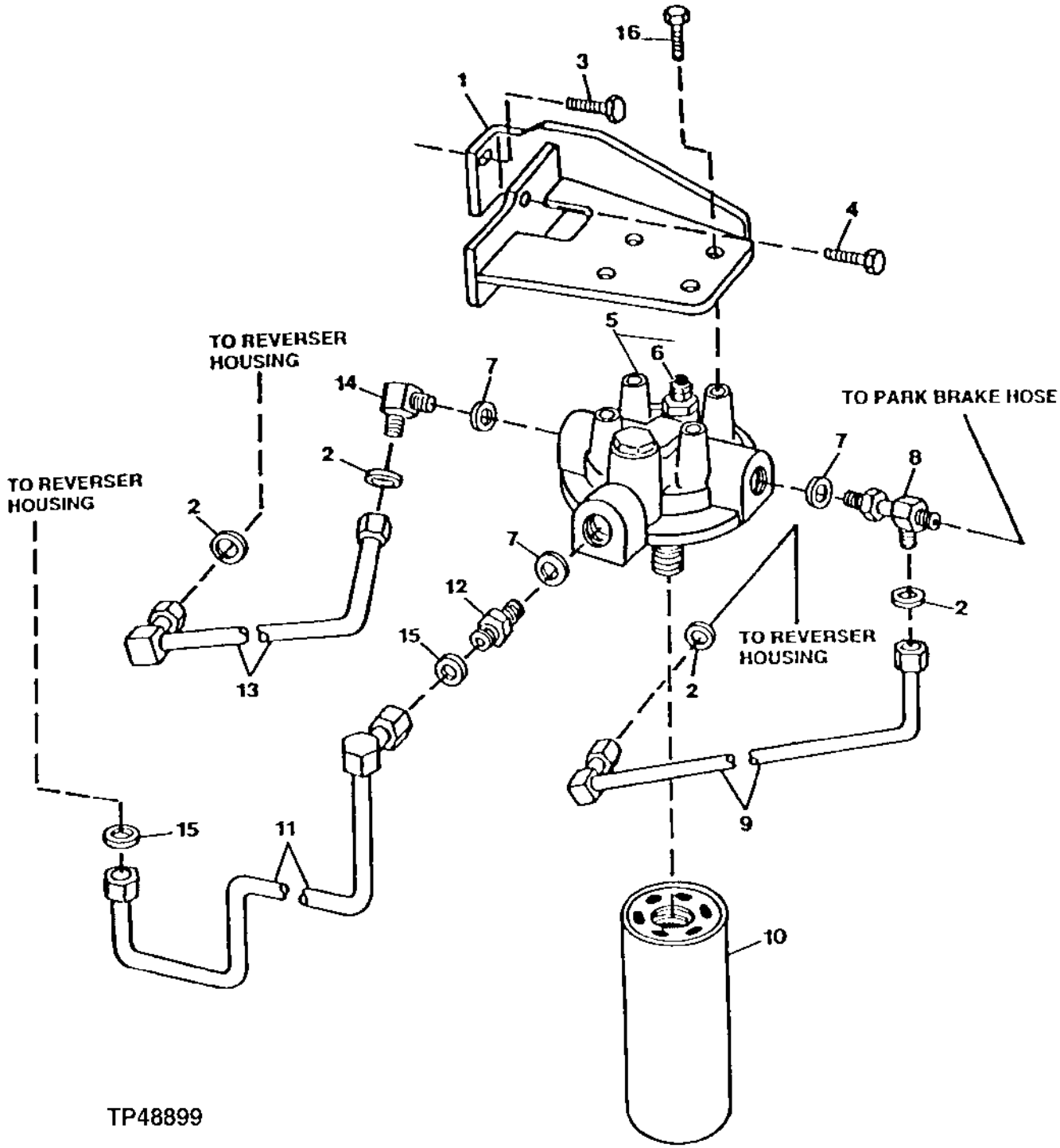

REVERSER OIL FILTER AND OIL LINES
(SERIAL NO. 796855-)

KEY	PART NO.	PART NAME	QTY	SERIAL NO.	410D	510D	REMARKS
1	AT164629	BRACKET	1		X	X	
2	T77932	O-RING	4		X	X	
3	19M7358	CAP SCREW	1		X	X	M10 X 40
4	19M8166	CAP SCREW	1		X	X	M10 X 110
5	AT144995	FILTER HEAD	1		X	X	
6	AT60644	SENDER	1		X	X	
	AT129419	KIT	1		X	X	
7	U12547	O-RING	3		X	X	
8	38H1404	ELBOW FITTING	1		X	X	
9	AT166681	OIL LINE	1		X	X	
10	AT120444	OIL FILTER	1		X	X	
11	AT166680	OIL LINE	1		X	X	
12	38H1175	ADAPTER	1		X	X	
13	AT166683	OIL LINE	1		X	X	
14	38H1376	TEE FITTING	1		X	X	
15	T77857	O-RING	2		X	X	
16	19M7662	CAP SCREW	4		X	X	M10 X 30

REVERSER OIL PUMP AND MANIFOLD

TP9679 -UN-01JAN94

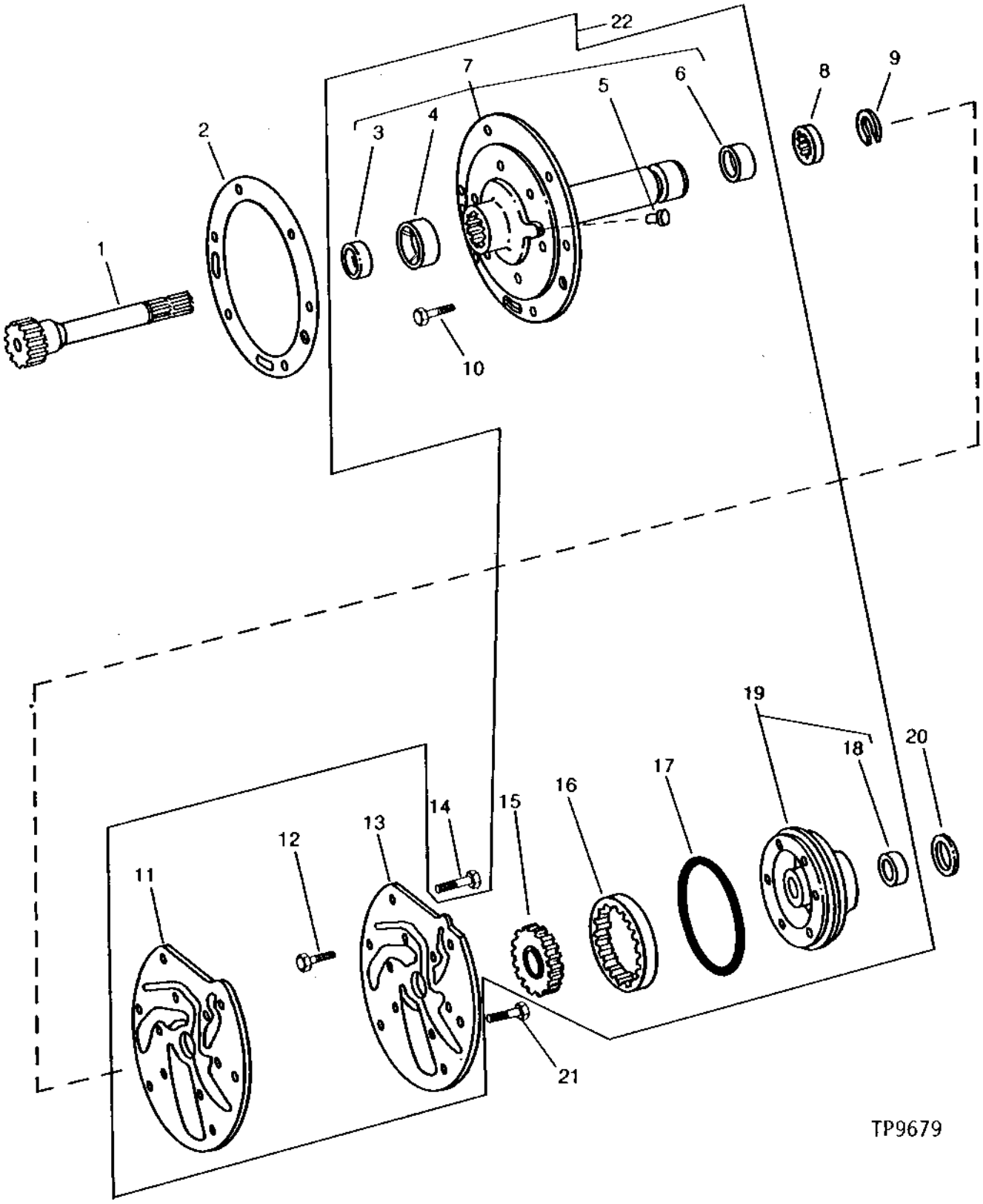

REVERSER OIL PUMP AND MANIFOLD-CONTINUED

KEY	PART NO.	PART NAME	QTY	SERIAL NO.	410D	510D	REMARKS
1	T69377	SHAFT	1		X	X	
2	T79154	GASKET	1		X	X	
3	T69374	WASHER	1		X	X	
4	T69376	BUSHING	1		X	X	
5	15H558	PIPE PLUG	1		X	X	1/8"
6	T69375	BUSHING	1		X	X	
7	AT66458	MANIFOLD	1		X	X	(MARKED T69373)
8	T69378	WASHER	1		X	X	
9	T28549	SNAP RING	1		X	X	
10	19H3130	CAP SCREW	6		X	X	5/16" X 1-3/4"
11	T212521	GASKET	1		X	X	(SUB FOR T69380)
12	19H2127	CAP SCREW	1		X	X	5/16" X 7/8"
13	T69379	HOUSING	1		X	X	
14	19H3065	CAP SCREW	2		X	X	3/8" X 2"
15	AT77699	GEAR	1		X	X	(30 TEETH)
16	T69383	GEAR	1		X	X	(37 TEETH)
17	R39876	PACKING	1		X	X	
18	T69382	BUSHING	1		X	X	
19	AT66459	HOUSING	1		X	X	(MARKED T69381)
20	AT66461	SEAL	1		X	X	
21	19H2633	CAP SCREW	4		X	X	3/8" X 1-1/2"
22	AT77700	PUMP	1		X	X	

REVERSER CONTROL VALVE

TP42237 -UN-01JAN94

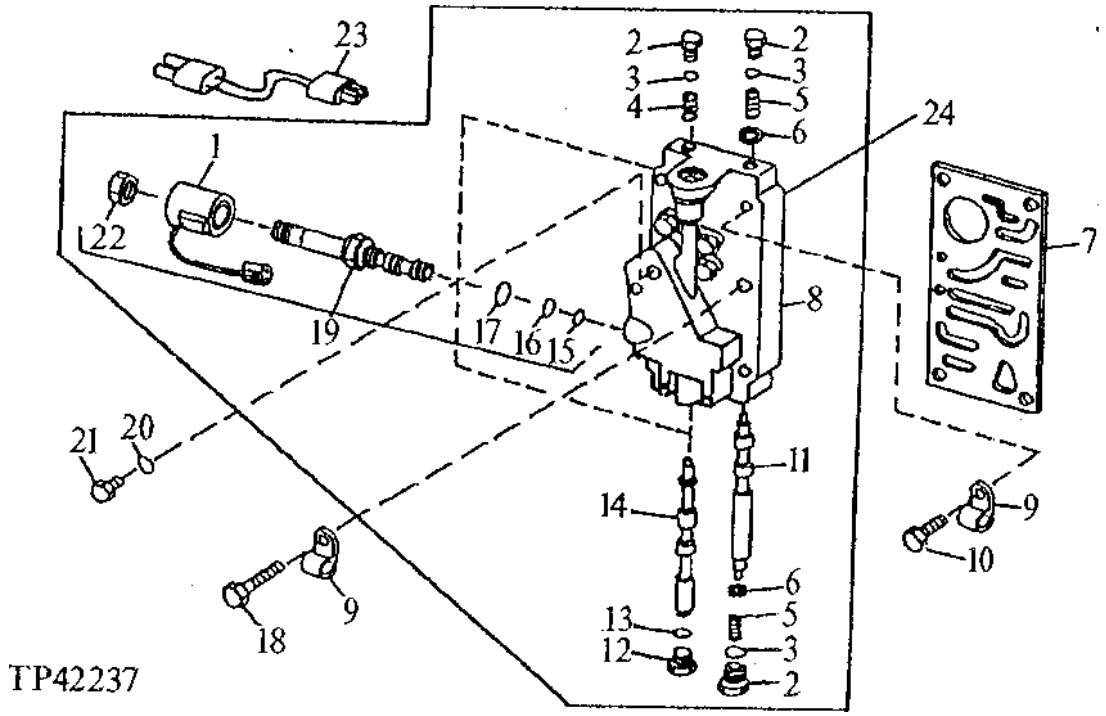

KEY	PART NO.	PART NAME	QTY	SERIAL NO.	410D	510D	REMARKS
1	AT157018	ELECTRICAL COIL	3	-778824	X	X	(SUB FOR AT148525) (REQUIRES AT156969)
	AT157018	ELECTRICAL COIL	3	778825-	X	X	(SUB FOR AT148525)
2	T141132	FITTING PLUG	3		X	X	
3	U12547	O-RING	3		X	X	(SUB FOR U12547, THIS APPLICATION)
4	T141375	SPRING	1		X	X	
5	T141131	SPRING	2		X	X	
6	T141130	WASHER	2		X	X	
7	T68686	GASKET	1		X	X	
8	AT156443	HOUSING	1		X	X	
9	T19935	CLAMP	3		X	X	
10	19M7668	CAP SCREW	1		X	X	M10 X 100
11	T141128	SPOOL	1		X	X	FORWARD AND REVERSE
12	T58477	FITTING	1		X	X	
13	R26906	O-RING	1		X	X	
14	T141426	SPOOL	1		X	X	CLUTCH
15	A3917R	O-RING	3		X	X	
16	T26209	RING	3		X	X	
17	R26375	O-RING	3		X	X	
18	19M7181	CAP SCREW	5		X	X	
19	AT148524	SOLENOID VALVE	3		X	X	
20	R26448	O-RING	4		X	X	
21	R27218	FITTING PLUG	4		X	X	
22	14H856	NUT	3		X	X	
23	AT156969	WIRING HARNESS	3	-778824	X	X	
24	AT151719	ELEC-HYD PROPORTIONAL VALVE	1		X	X	
..	AT184869	PLUG	1		X	X	SAE-2 (5/16"-24 UNF) (W/O-RING) (ORIFICE PORT)

MEMORANDA

TRANSMISSION LUBRICATION LINES
(SERIAL NO. -796854)

TP15898 -UN-01JAN94

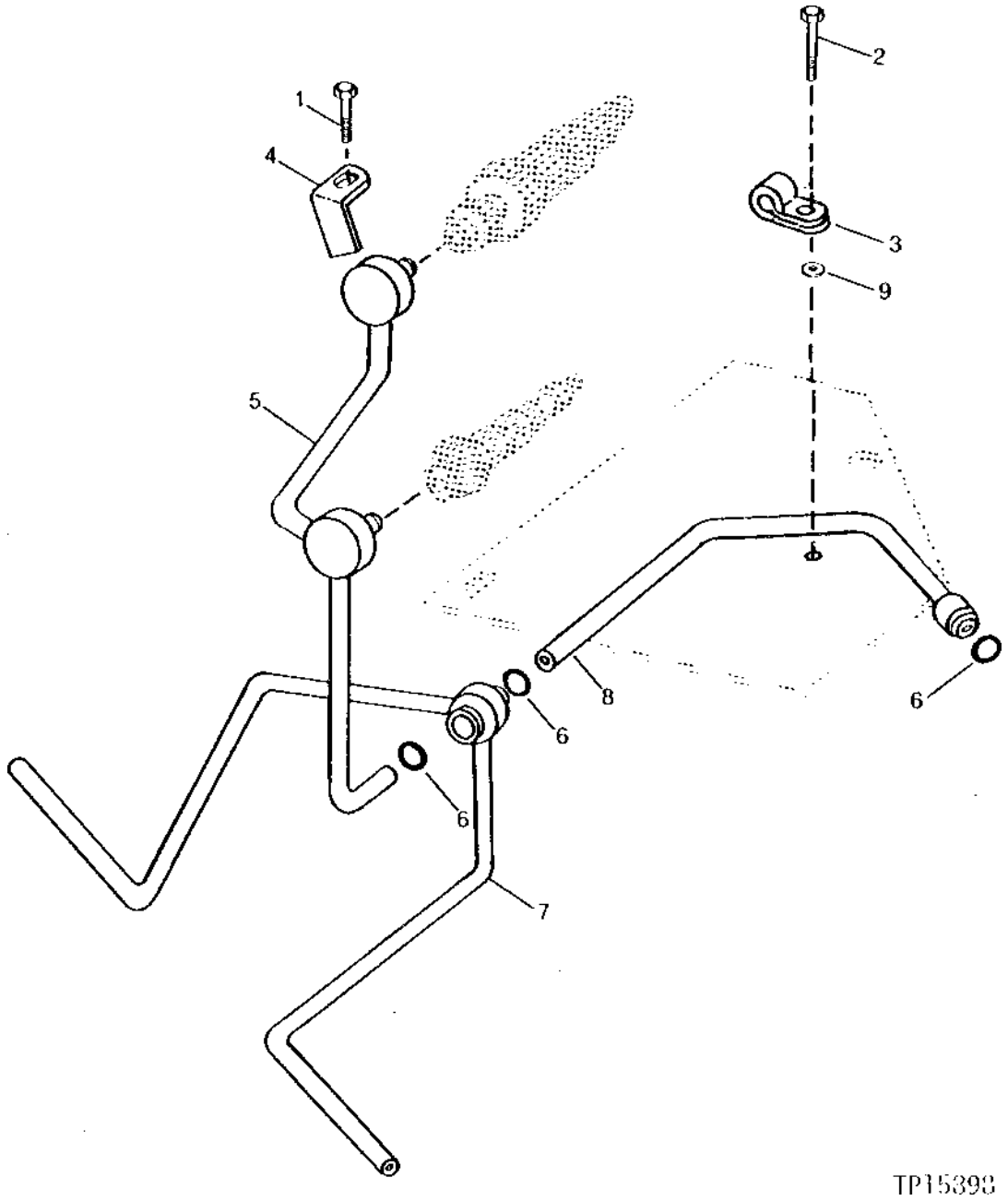

TRANSMISSION LUBRICATION LINES
(SERIAL NO. -796854)

KEY	PART NO.	PART NAME	QTY	SERIAL NO.	410D	510D	REMARKS
1	19H1648	CAP SCREW	1		X	X	3/8" X 3/4"
2	19M7784	SCREW	1		X	X	M10 X 20
3	AH76883	CLIP	1		X	X	
4	T69025	CLAMP	1		X	X	
5	AT66134	OIL LINE	1		X	X	OIL LUBE
6	A3917R	O-RING	3		X	X	
7	AT66133	OIL LINE	1		X	X	OIL BRAKE LUBE
8	AT67085	OIL TUBE	1		X	X	TRANSMISSION AND BRAKE LUBE
9	24M7296	WASHER	1		X	X	10.500 X 30 X 2.500 MM

TRANSMISSION BRAKE OIL LINES AND FITTINGS
(SERIAL NO. 796855-)

TP50591 -UN-04MAR97

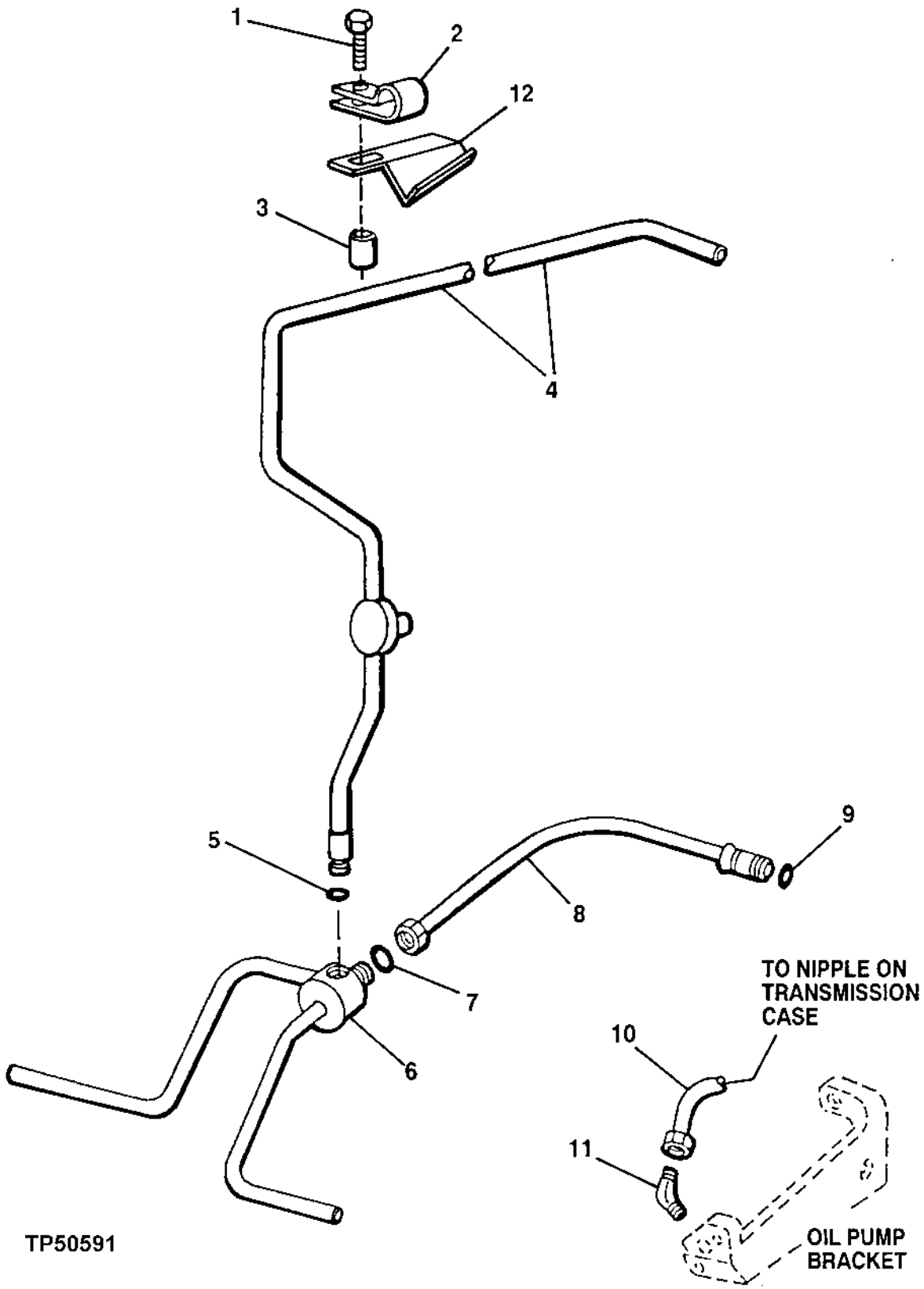

TRANSMISSION BRAKE OIL LINES AND FITTINGS
(SERIAL NO. 796855-)

KEY	PART NO.	PART NAME	QTY	SERIAL NO.	410D	510D	REMARKS
1	19H1801	CAP SCREW	1			X	
	24M7239	WASHER	1		X	X	
2	AH76883	CLIP	1		X	X	
3	28H1527	SPACER	1		X	X	
4	AT177879	OIL LINE	1		X	X	(SUB FOR AT164077)
5	A3917R	O-RING	1		X	X	
6	AT164078	OIL LINE	1		X	X	
7	T40308	O-RING	1		X	X	
8	AT166802	BRAKE LINE	1		X	X	
9	T40308	O-RING	1		X	X	
10	AT135679	OIL LINE	1		X	X	
11	T19898	FITTING	1		X	X	
12	AT180884	PLATE	1		X	X	

TRANSMISSION BRAKE OIL PUMP WITH BRACKET
(SERIAL NO. 796855 -)

TP44537 -UN-01JAN94

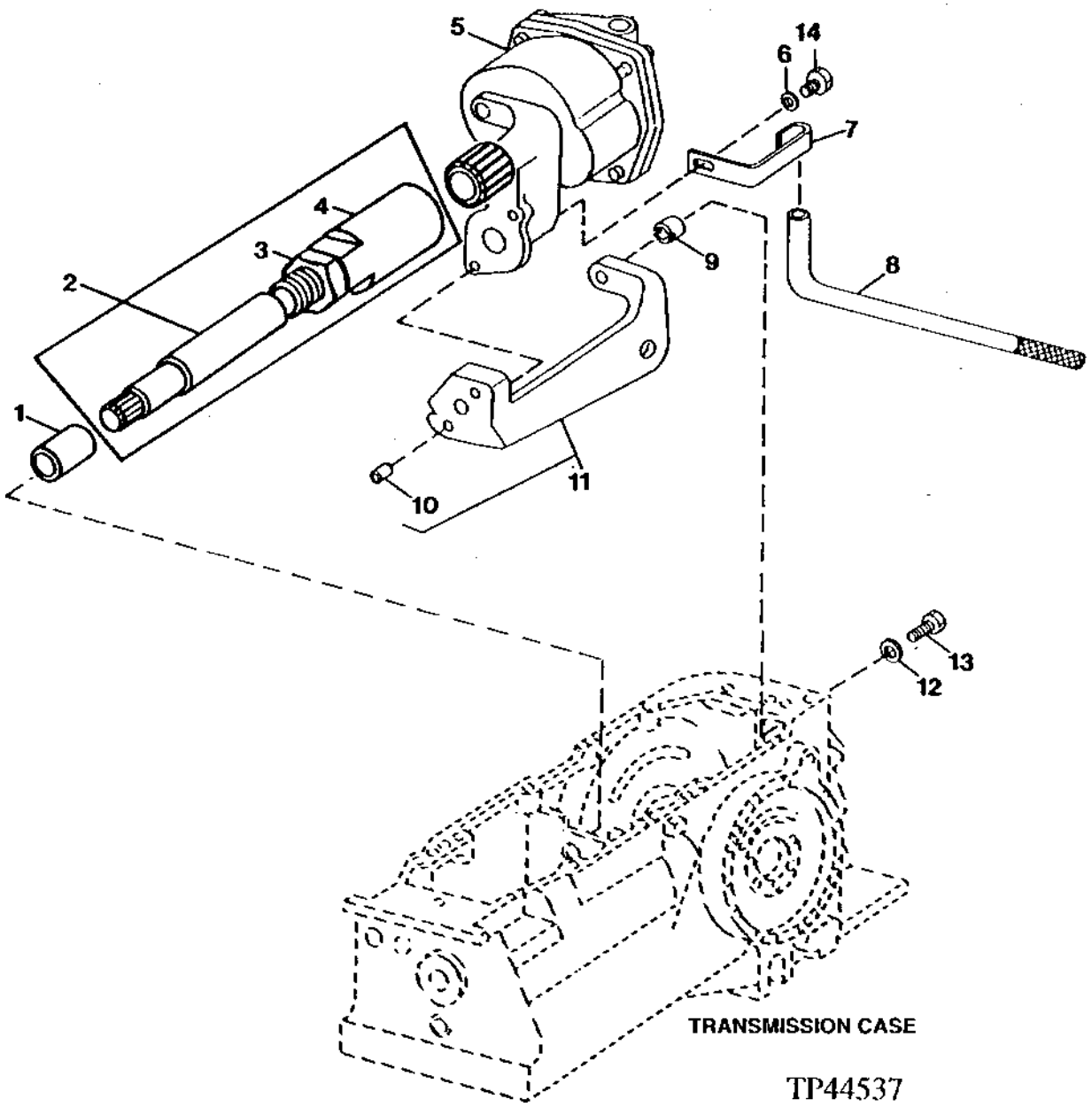

TRANSMISSION BRAKE OIL PUMP WITH BRACKET
(SERIAL NO. 796855-)

KEY	PART NO.	PART NAME	QTY	SERIAL NO.	410D	510D	REMARKS
1	M112886	BUSHING	1		X	X	
2	AT164599	DRIVE SHAFT	1		X	X	
3	14H793	NUT	1		X	X	3/4"
4	.....	LOCKING COLLAR	1		X	X	(ORDER AT164599)
5	AT168263	PUMP	1		X	X	(INCLUDES SLEEVE WITH GROOVE IN FRONT) (ALSO ORDER AT163895)
6	24H1296	WASHER	1		X	X	11/32" X 1-3/8" X 0.134"
7	T148738	STRAP	1		X	X	
8	AT163895	TUBE	1		X	X	
9	T126071	SLEEVE	1		X	X	
10	R39253	DOWEL PIN	2		X	X	
11	AT134839	BRACKET	1		X	X	
12	24H1292	WASHER	1		X	X	11/32" X 3/4" X 0.120"
13	19H2569	CAP SCREW	1		X	X	5/16" X 1-5/8"
14	19H2055	CAP SCREW	1		X	X	7/16" X 2-1/4"

TRANSAXLE FILTER ASSEMBLY
(SERIAL NO. 796855-801199)

TP44549 -UN-01JAN94

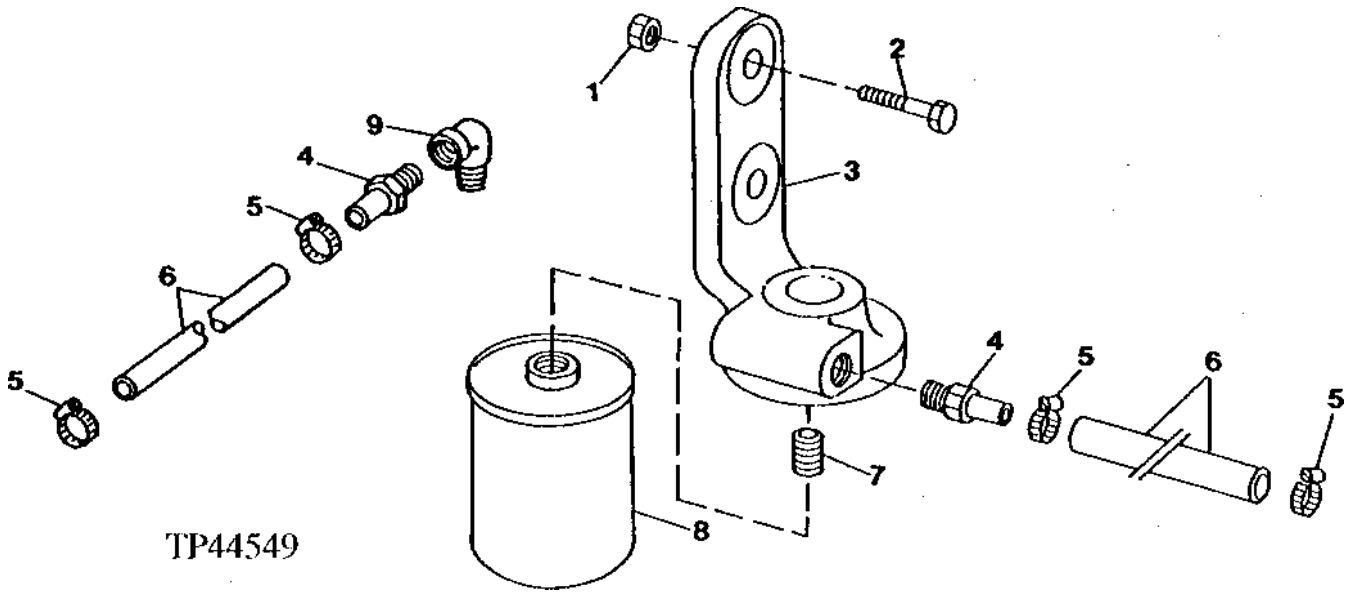

KEY	PART NO.	PART NAME	QTY	SERIAL NO.	4 5 1 1 0 0 D D	REMARKS
1	14M7274	NUT	2		X X	M10
2	19M7358	CAP SCREW	2		X X	M10 X 40
3	T81164	BASE	1		X X	
4	N85588	HOSE FITTING	2		X X	
5	TY22464	CLAMP	4		X X	(SUB FOR AR21836)
6	.....	HOSE	2		X X	(TY22562 BULK MATERIAL,CUT TO LENGTH)
7	T19042	INSERT	1		X X	
8	T19044	OIL FILTER	1		X X	
9	T37041	ELBOW FITTING	1		X X	12.700 MM (1/2")

TRANSAXLE FILTER ASSEMBLY
(SERIAL NO. 801200-)

TP45438 -UN-01JAN94

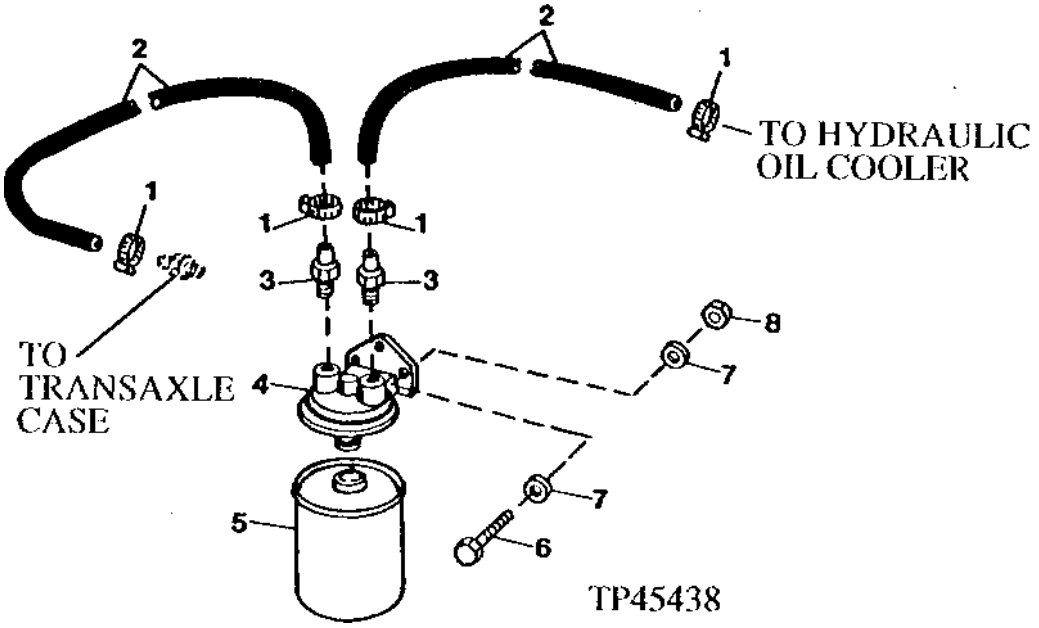

KEY	PART NO.	PART NAME	QTY	SERIAL NO.	4 5 1 1 0 0 D D	REMARKS
1	TY22464	CLAMP	4		X X	(SUB FOR AR21836)
2	.....	HOSE	2		X X	(MAKE FROM TY22562 BULK MATERIAL, CUT TO LENGTH) (15'7" TO TRANSAXLE)
3	N85588	HOSE FITTING	2		X X	
4	T150407	BASE	1		X X	
5	T19044	OIL FILTER	1		X X	
6	19M7933	CAP SCREW	3		X X	M6 X 25
7	24M7139	WASHER	6		X X	6.400 X 18 X 1.600 MM
8	14M7272	NUT	3		X X	M6

CRANKSHAFT, IDLER GEARS AND MAIN BEARINGS

TP29643 -UN-01JAN94

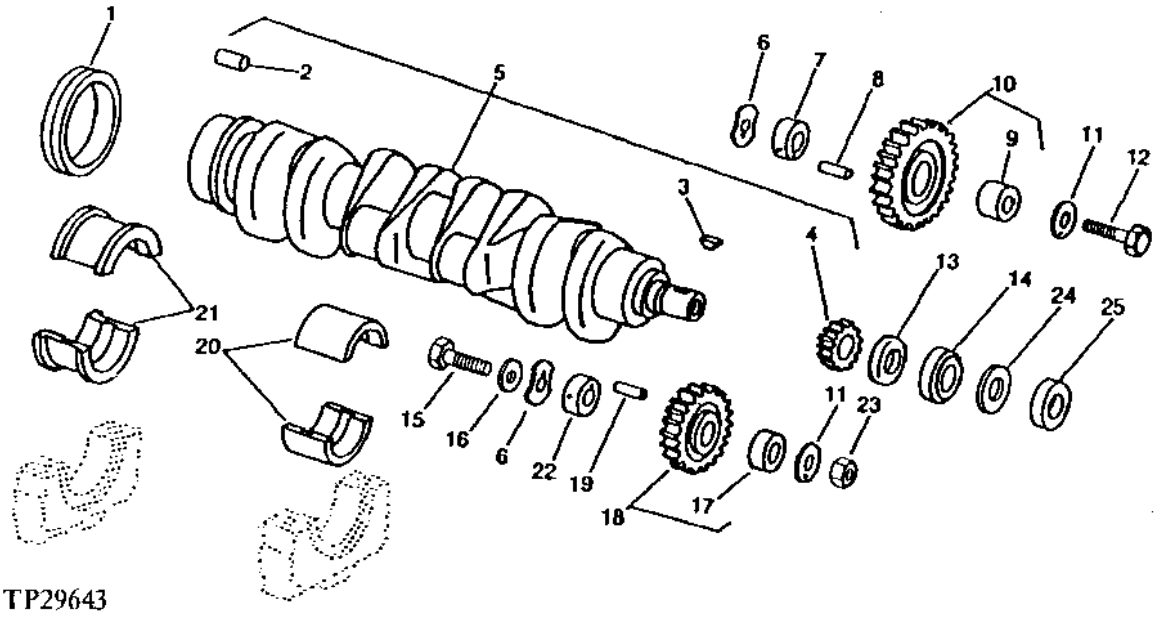

KEY	PART NO.	PART NAME	QTY	ENGINE SERIAL NO.	410D	510D	REMARKS
1	RE44574	SEAL	1		X	X	
2	R48685	DOWEL PIN	1		X	X	
3	26H72	SHAFT KEY	1		X	X	1/8" X 5/8"
4	T20094	HELICAL GEAR	1		X	X	(24 TEETH)
5	.....	CRANKSHAFT	1		X	X	RE55452,MARKED R108657 NO LONGER AVAILABLE (SUB FOR RE57661,MARKED R90825)SUB RE54883 CRANKSHAFT KIT
6	T26324	THRUST WASHER	2		X	X	
7	R89824	SHAFT	1		X	X	
8	34H283	SPRING PIN	1		X	X	3/16" X 1-1/8"
9	T20034	BUSHING	1		X	X	
10	AR91660	GEAR	1		X	X	(55 TEETH) (MARKED R70182)
11	T26326	THRUST WASHER	2		X	X	
12	T26327	SCREW	1		X	X	
13	T20046	OIL SLINGER	1		X	X	
14	AR67942	SEAL	1		X	X	
15	19H3183	CAP SCREW	1		X	X	HS, SAE 8, 1/2" X 2-1/8"
16	R100105	WASHER	1		X	X	
17	T26321	BUSHING	1		X	X	
18	AT24252	GEAR	1		X	X	(MARKED T26322) (45 TEETH)
19	34H286	SPRING PIN	1		X	X	3/16" X 1-1/2"

THIS PARTS LISTING IS CONTINUED

CRANKSHAFT, IDLER GEARS AND MAIN BEARINGS

KEY	PART NO.	PART NAME	QTY	ENGINE SERIAL NO.	410D	510D	REMARKS
20	AT21140	BEARING KIT	4		X	X	STANDARD (T23214)
	.....	BEARING	4		X	X	(AT21108 NO LONGER AVAILABLE) 0.05 MM (.002") UNDERSIZE (T23552)
	AT21110	BEARING	4		X	X	0.25 MM (.010") UNDERSIZE (T23554)
	AT21112	BEARING	4		X	X	0.51 MM (.020") UNDERSIZE (T23556)
	AT21114	BEARING	4		X	X	0.76 MM (.030") UNDERSIZE (T23558)
21	AT21139	BEARING	1		X	X	STANDARD (T23215)
	.....	BEARING	1		X	X	(AT21130 NO LONGER AVAILABLE) 0.05 MM (.002") UNDERSIZE (T23574)
	AT21132	BEARING	1		X	X	0.25 MM (.010") UNDERSIZE (T23576)
	AT21134	BEARING	1		X	X	0.51 MM (.020") UNDERSIZE (T23578)
	AT21136	BEARING	1		X	X	0.76 MM (.030") UNDERSIZE (T23580)
22	R89824	SHAFT	1		X	X	
23	E69392	NUT	1		X	X	
24	H35244	RING	1		X	X	
25	R81989	SLEEVE	1		X	X	

REPLACEMENT CRANKSHAFT KIT
CRANKSHAFT ,BEARING KIT(LONG NOSE)

TP61789 -UN-20NOV98

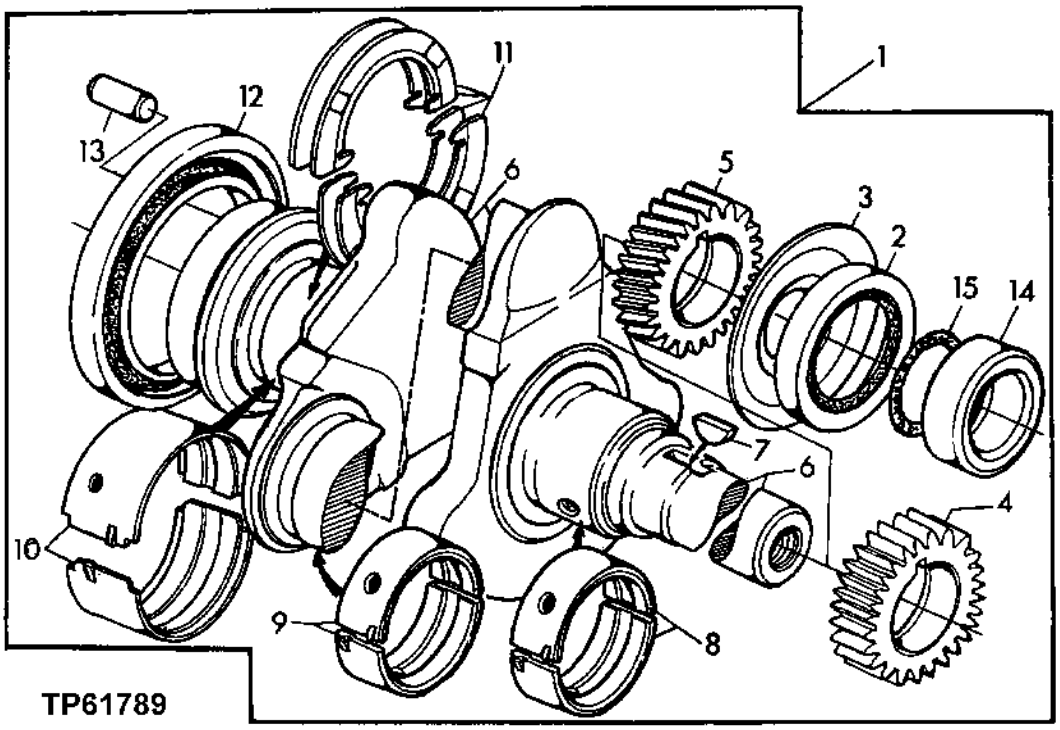

KEY	PART NO.	PART NAME	QTY	SERIAL NO.	410D	510D	REMARKS
1	RE54883	CRANKSHAFT	1		X	X	
2	AR67942	SEAL	1		X	X	
3	T20046	OIL SLINGER	1		X	X	
4	R100850	GEAR	1		X	X	
5	T20094	HELICAL GEAR	1		X	X	
6	.....	CRANKSHAFT	1		X	X	MARKED R120009
7	26H72	SHAFT KEY	1		X	X	1/8" X 5/8"
8	AT21140	BEARING KIT	4		X	X	
9	RE47867	BEARING	4		X	X	
10	RE57279	BEARING	1		X	X	(SUB FOR AR81786)
11	RE13571	KIT	1		X	X	
12	RE44574	SEAL	1		X	X	
13	R48685	DOWEL PIN	1		X	X	
14	R81989	SLEEVE	1		X	X	
15	H35244	RING	1		X	X	

MEMORANDA

CAMSHAFT

TP15128 -UN-01JAN94

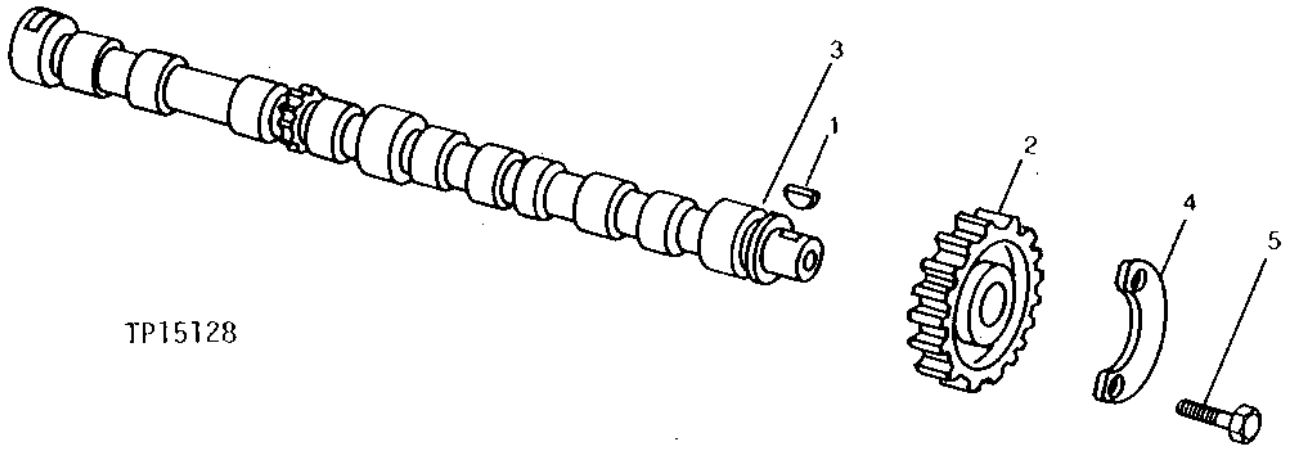

KEY	PART NO.	PART NAME	QTY	ENGINE SERIAL NO.	410D	510D	REMARKS
1	T28041	SHAFT KEY	1		X	X	
2	T20070	HELICAL GEAR	1		X	X	(48 TEETH)
3	R82820	CAMSHAFT	1		X	X	
4	T20072	PLATE	1		X	X	
5	19H2676	CAP SCREW	2		X	X	3/8" X 1"

ROCKER ARM SHAFT, PUSH RODS AND ROCKER ARMS

TP58476 -UN-27OCT99

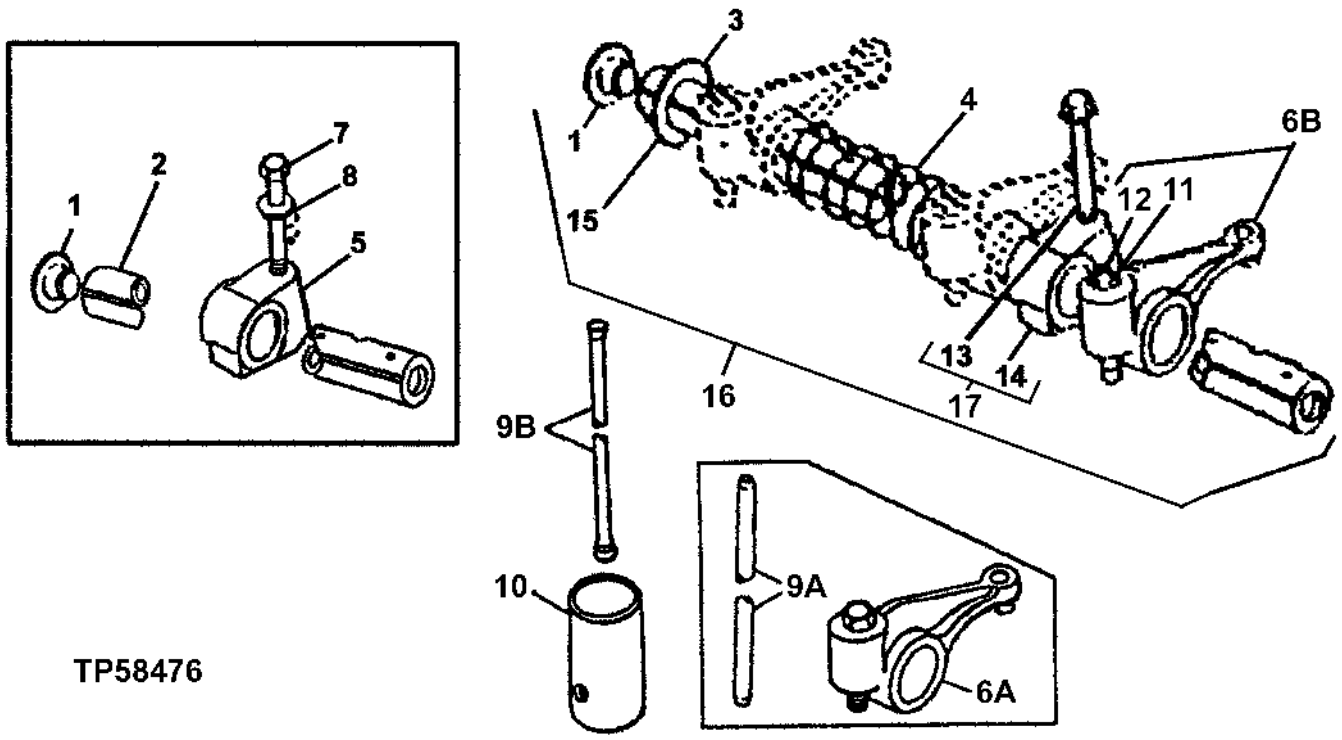

TP58476

KEY	PART NO.	PART NAME	QTY	ENGINE SERIAL NO.	410D	510D	REMARKS
1	R54565	PLUG	2		X	X	
2	DD12120	ROCKER ARM SHAFT	1		X	X	(SUB RE502874) (SUB FOR R54987) (INCLUDES (2) R54565) (USE WITH 19H3031 AND T20315)
3	T20316	WASHER	2		X	X	
4	T20314	SPRING	3		X	X	
5	T20315	SUPPORT	4		X	X	(SUB RE502861) (USE WITH 19H3031 AND R54987)
6A	RE31973	ROCKER ARM	8	-379968	X	X	(SUB FOR RE19031)
6B	RE62148	ROCKER ARM	8	379969-	X	X	(SUB FOR RE43384)
7	19H3031	CAP SCREW	4		X	X	3/8" X 2-1/2"
8	R42729	WASHER	4		X	X	
9A	R82896	PUSH ROD	8	-379968	X	X	
9B	R107731	PUSH ROD	8	379969-	X		
10	T20073	TAPPET	8		X		
11	R125881	LOCK NUT	8	379969-	X		(SUB FOR R119314)
12	R125880	SCREW	8	379969-	X		(SUB FOR R106116)
13	19H3733	SCREW	AR		X		3/8" X 2-1/2"
	19H3031	CAP SCREW	AR		X		3/8" X 2-1/2"
14	R123161	SUPPORT	4				
15	R123514	ROCKER ARM SHAFT	1				
16	RE502874	ROCKER ARM SHAFT	1				
17	RE502861	SUPPORT	1				

ROCKER ARM COVER

TP18553 -UN-01JAN94

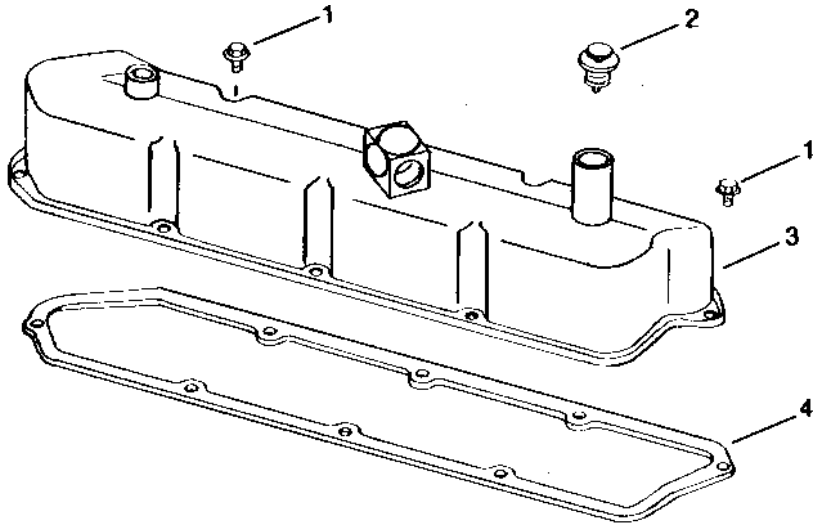

TP18553

KEY	PART NO.	PART NAME	QTY	ENGINE SERIAL NO.	4511 00 DD	REMARKS
1	AR103811	SCREW WITH WASHER	8		X X	(SUB FOR AR100124)
2	AR65864	FILLER CAP	1		X X	
3	AR71130	VALVE COVER	1		X X	(SUB FOR RE49600)
4	R73521	GASKET	1		X X	

TIMING GEAR COVER

TP43997 -UN-01JAN94

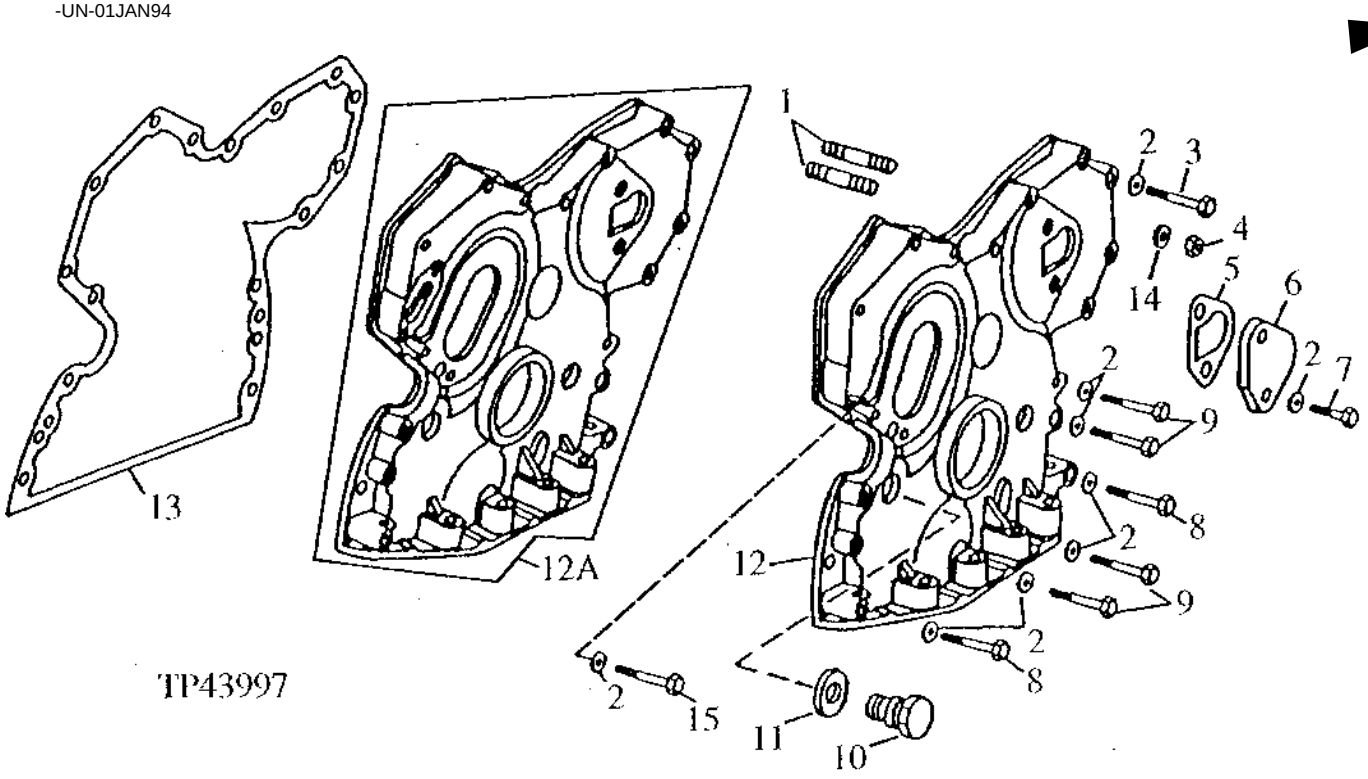

KEY	PART NO.	PART NAME	QTY	ENGINE SERIAL NO.	4 5 1 1 0 0 D D	REMARKS
1	R122226	STUD	2		X X	(SUB FOR R122226)
2	24H1304	WASHER	AR		X X	13/32" X 23/32" X 0.120"
3	19H2545	CAP SCREW	5		X X	3/8" X 1-3/8"
4	N10215	LOCK NUT	2		X X	3/8", (SUB FOR 14H812, THIS APPLICATION)
5	R125066	GASKET	1		X X	(SUB FOR R97773)
6	R126041	COVER	1		X X	(SUB FOR T20362)
7	R124277	SCREW	2		X X	(SUB FOR R122618, THIS APPLICATION)
8	19H3733	SCREW	2		X X	3/8" X 2-1/2"
9	19H3408	SCREW	5		X X	3/8" X 1-3/4"
10	T27657	FITTING PLUG	1		X X	
11	A4827R	WASHER	1		X X	
12A	RE39252	COVER	1	-426683	X X	(SUB FOR RE27895)
12B	RE56443	COVER	1	426684-	X X	
13	R121314	GASKET	1		X X	(SUB FOR R97454 OR R119269)
14	12H304	LOCK WASHER	AR		X X	3/8"
15	19H1819	CAP SCREW	1	426684-	X X	3/8" X 2-1/8"

CONNECTING ROD, PISTON, RINGS AND LINER

T159528 -UN-24SEP02

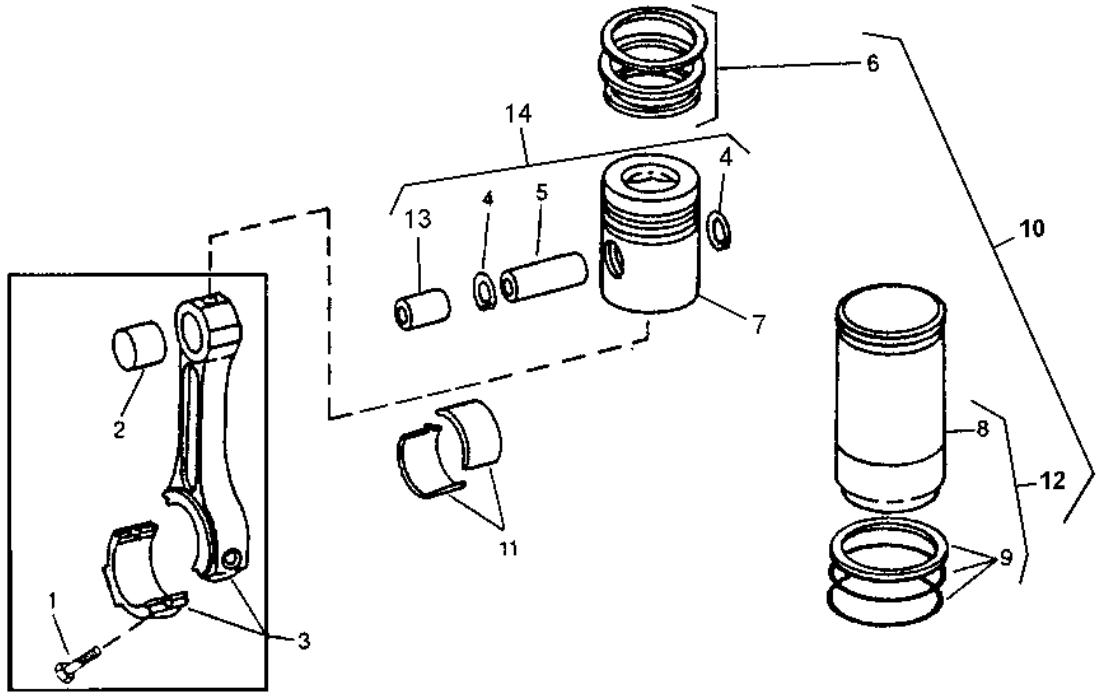

T159528

KEY	PART NO.	PART NAME	QTY	ENGINE SERIAL NO.	410D	510D	REMARKS
1	R74195	SCREW	8		X	X	
2	.....	BUSHING	4		X	X	(R56186 NO LONGER AVAILABLE)
3	RE53716	CONNECTING ROD	4		X	X	(MARKED R116851) (SUB FOR AR66400) (MARKED R56187)
4	R54114	SNAP RING	8		X	X	
5	.....	PIN	4		X	X	(R124230 NO LONGER AVAILABLE,FURNISH RE63913)
6	RE66820	PISTON RING KIT	4		X	X	(SUB FOR RE15674 AND RE48818)
7	RE28920	PISTON	4		X	X	(WITH TURBOCHARGER)(FURNISH RE53073)
	.....	PISTON	4		X		(WITHOUT TURBOCHARGER)(FURNISH RE28966)
8	R121867	CYLINDER LINER	4		X	X	(SUB FOR R80500) (SUB RE500024)
9	AR65507	O-RING KIT	4		X	X	
10	RE28966	KIT	4		X		(410D)
	RE53073	PISTON-LINER KIT	4			X	(510D) (SUB FOR RE28977)
11	AR97517	BEARING	4		X	X	STANDARD (SET OF (2) R72745)
	.....	BEARING	4		X	X	(AR97652 NO LONGER AVAILABLE) 0.05 MM (.002") UNDERSIZE (SET OF (2) R73595)
	AR97653	BEARING	4		X	X	0.25 MM (.010") UNDERSIZE (SET OF (2) R73596)
	AR97654	BEARING	4		X	X	0.51 MM (.020") UNDERSIZE (SET OF (2) R73597)
	AR97655	BEARING	4		X	X	0.76 MM (.030") UNDERSIZE (SET OF (2) R73598)
12	RE500024	CYLINDER LINER	4		X	X	
13	.....	BUSHING	4		X	X	
14	RE63913	KIT	4		X	X	

CYLINDER BLOCK AND MAIN BEARING CAPS
(ENGINE SERIAL NO. -362468)

TP25218 -UN-01JAN94

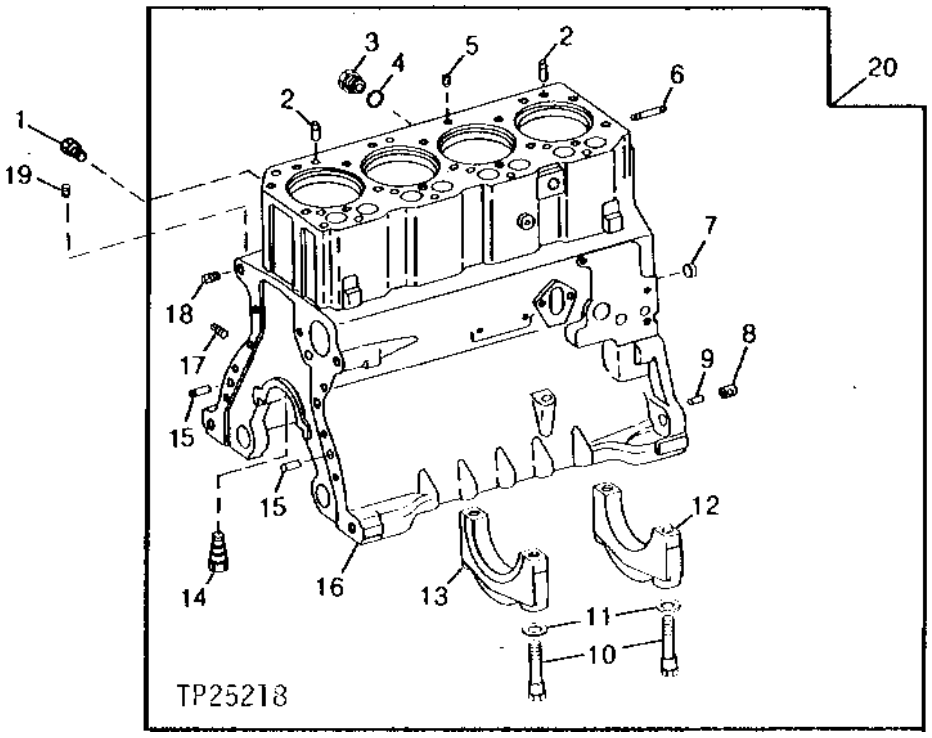

KEY	PART NO.	PART NAME	QTY	ENGINE SERIAL NO.	4 5 1 1 0 0 D D	REMARKS
1	R55233	PIPE PLUG	1		X X	
2	R48685	DOWEL PIN	2		X X	
3	R39741	DRAIN PLUG	1		X X	(WITHOUT ENGINE COOLANT HEATER)
4	U13639	O-RING	1		X X	(WITHOUT ENGINE COOLANT HEATER)
5	15H561	PIPE PLUG	1		X X	1/2"
6	T25701	STUD	1		X X	
	R122226	STUD	2		X X	(SUB FOR R122226)
7	T18891	PLUG	2		X X	
8	R57160	BUSHING	6		X X	
9	R26650	DOWEL PIN	2		X X	
10	T23474	CAP SCREW	10		X X	
11	T20168	WASHER	10		X X	
12	R65215	BEARING CAP	4		X X	
13	R79089	CAP	1		X X	
14	R54802	ORIFICE	4		X X	
15	R48685	DOWEL PIN	2		X X	
16	.....	CYLINDER BLOCK	1		X X	
17	R104592	PIPE PLUG	5		X X	
18	15H562	PIPE PLUG	1		X X	1"
19	15H624	PIPE PLUG	1		X X	(USE WITHOUT TURBOCHARGER)
20	RE31517	CYLINDER BLOCK	1		X X	(MARKED R90170) (SUB RE50671) (ALSO ORDER R83169, T27658, R111135, R111137 AND R112867)

CYLINDER BLOCK AND MAIN BEARING CAPS
(ENGINE SERIAL NO. 362469-)

TP41927 -UN-01JAN94

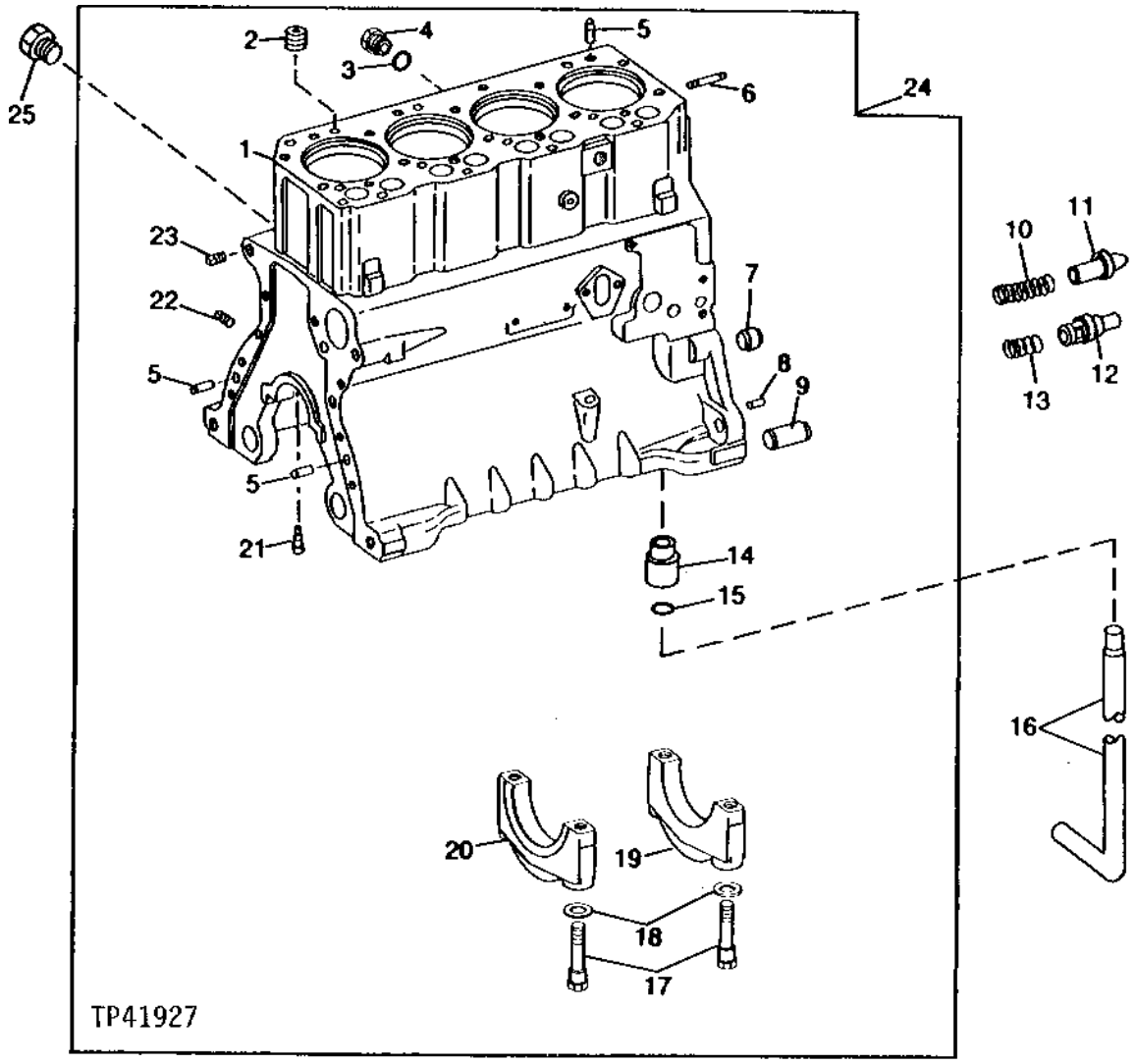

CYLINDER BLOCK AND MAIN BEARING CAPS
(ENGINE SERIAL NO. 362469-)

KEY	PART NO.	PART NAME	QTY	ENGINE SERIAL NO.	410D	510D	REMARKS
1	.....	CYLINDER BLOCK	1		X	X	
2	15H561	PIPE PLUG	1		X	X	1/2", (WITHOUT TURBOCHARGER)
3	U13639	O-RING	1		X	X	(WITHOUT ENGINE COOLANT HEATER)
4	R39741	DRAIN PLUG	1		X	X	(WITHOUT ENGINE COOLANT HEATER)
5	R48685	DOWEL PIN	2		X	X	
6	T25701	STUD	1		X	X	
	R122226	STUD	2		X	X	(SUB FOR T33279)
7	R26493	BUSHING	1		X	X	
8	R26650	DOWEL PIN	2		X	X	
9	R57160	BUSHING	6		X	X	
10	T27658	SPRING	1		X	X	
11	R83169	VALVE	1		X	X	
12	R111135	VALVE	1		X	X	
13	R111137	SPRING	1		X	X	
14	R115390	BUSHING	1		X	X	
15	R97185	O-RING	1		X	X	
16	R112867	OIL TUBE	1		X	X	ENGINE OIL PUMP
17	T23474	CAP SCREW	10		X	X	
18	T20168	WASHER	10		X	X	
19	R65215	BEARING CAP	4		X	X	
20	R79089	CAP	1		X	X	
21	R54802	ORIFICE	4		X	X	
22	R104592	PIPE PLUG	5		X	X	
23	15H562	PIPE PLUG	1		X	X	1"
24	RE50671	CYLINDER BLOCK	1		X	X	(MARKED R108755 OR R124851) (ALSO ORDER R83169, T27658, R111135, R111137 AND R112867)
25	R55233	PIPE PLUG	1		X	X	
26	15H623	PIPE PLUG	AR		X	X	3/8"

ENGINE SHORT BLOCK
(ENGINE SERIAL NO. -362468)

TP40556 -UN-01JAN94

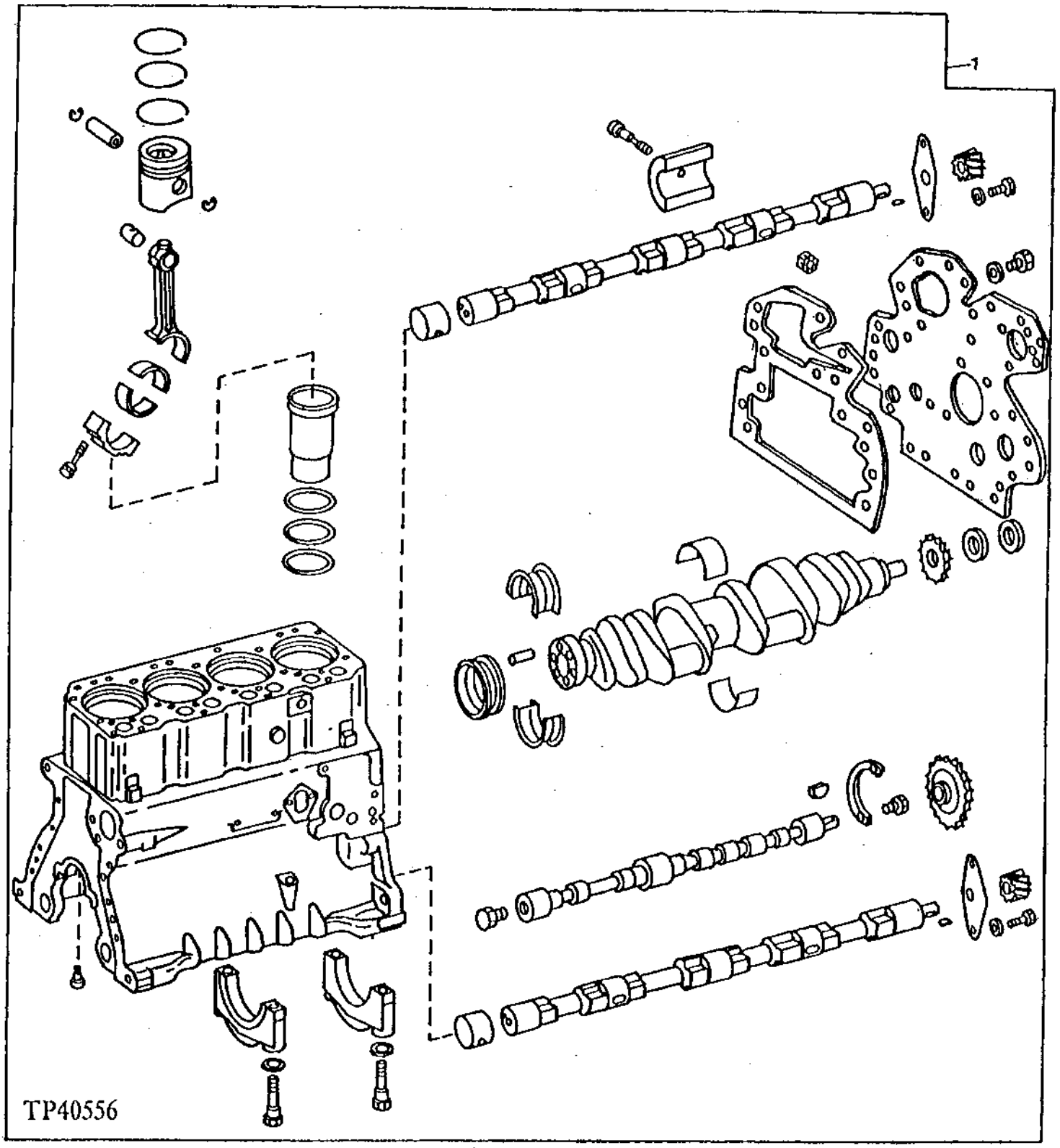

ENGINE SHORT BLOCK-CONTINUED
(ENGINE SERIAL NO. -362468)

KEY	PART NO.	PART NAME	QTY	ENGINE SERIAL NO.	410D	510D	REMARKS
1	.....	CYLINDER BLOCK	1		X		(MARKED R90170 OR R124851) (SUB RE57203) (ALSO ORDER R83169, T27658 AND R112867)
	RE44279	SHORT BLOCK ASSEMBLY	1			X	(MARKED R90170) (SUB RE57204) (ALSO ORDER R83169, T27658 AND R112867)

ENGINE SHORT BLOCK
(ENGINE SERIAL NO. 362469-)

TP41931 -UN-01JAN94

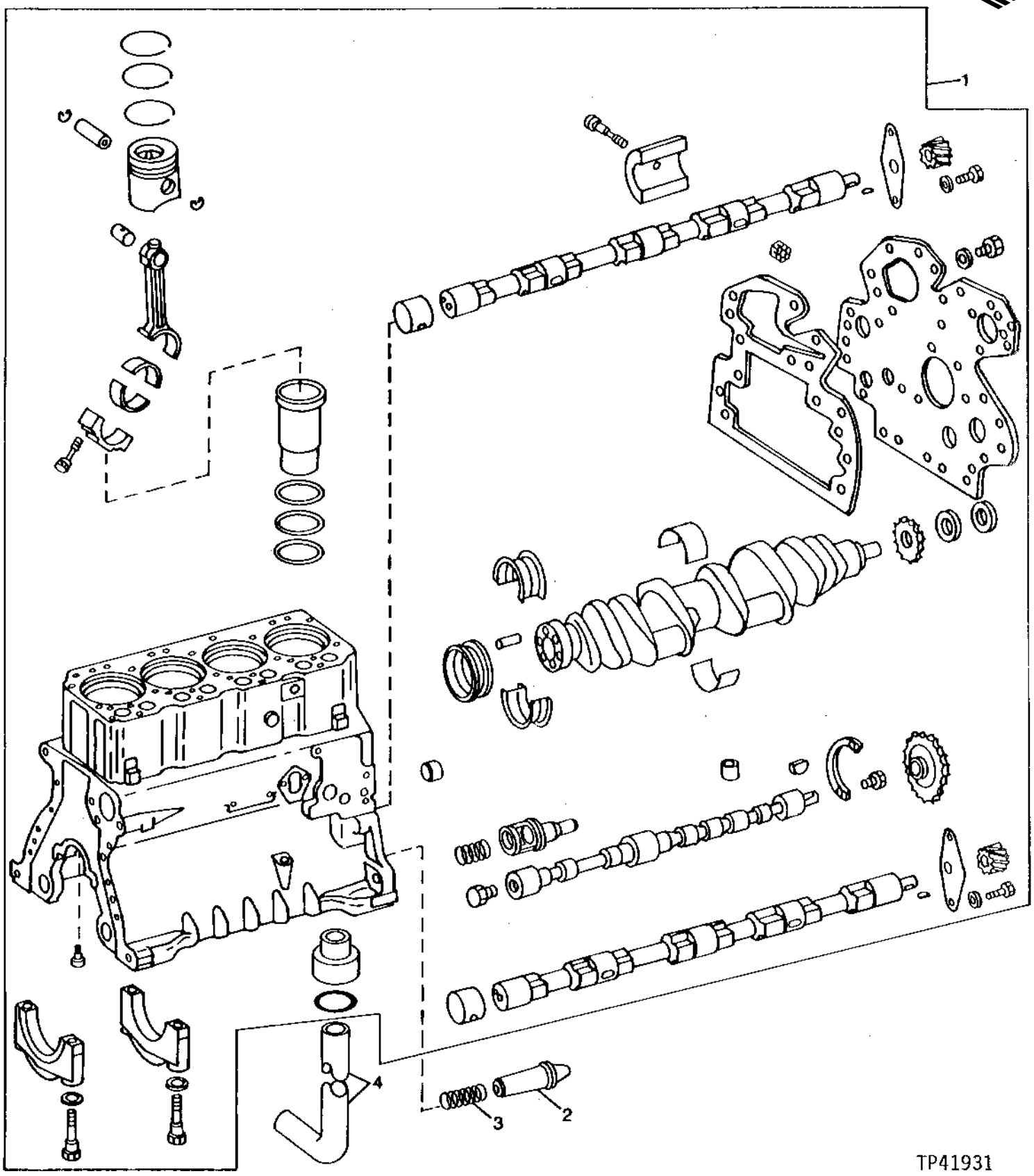

ENGINE SHORT BLOCK-CONTINUED
(ENGINE SERIAL NO. 362469-)

KEY	PART NO.	PART NAME	QTY	ENGINE SERIAL NO.	410D	510D	REMARKS
1	RE57203	SHORT BLOCK ASSEMBLY	1		X		(MARKED R108755 OR R124851) (ALSO ORDER R83169, T27658 AND R112867)
	RE57204	SHORT BLOCK ASSEMBLY	1			X	(MARKED R108755 OR R124851) (ALSO ORDER R83169, T27658 AND R112867)
2	R83169	VALVE	1		X	X	
3	T27658	SPRING	1		X	X	
4	R112867	OIL TUBE	1		X	X	

BASIC ENGINE OVERHAUL KIT AND REMANUFACTURED ENGINES

TP28491 -UN-01JAN94

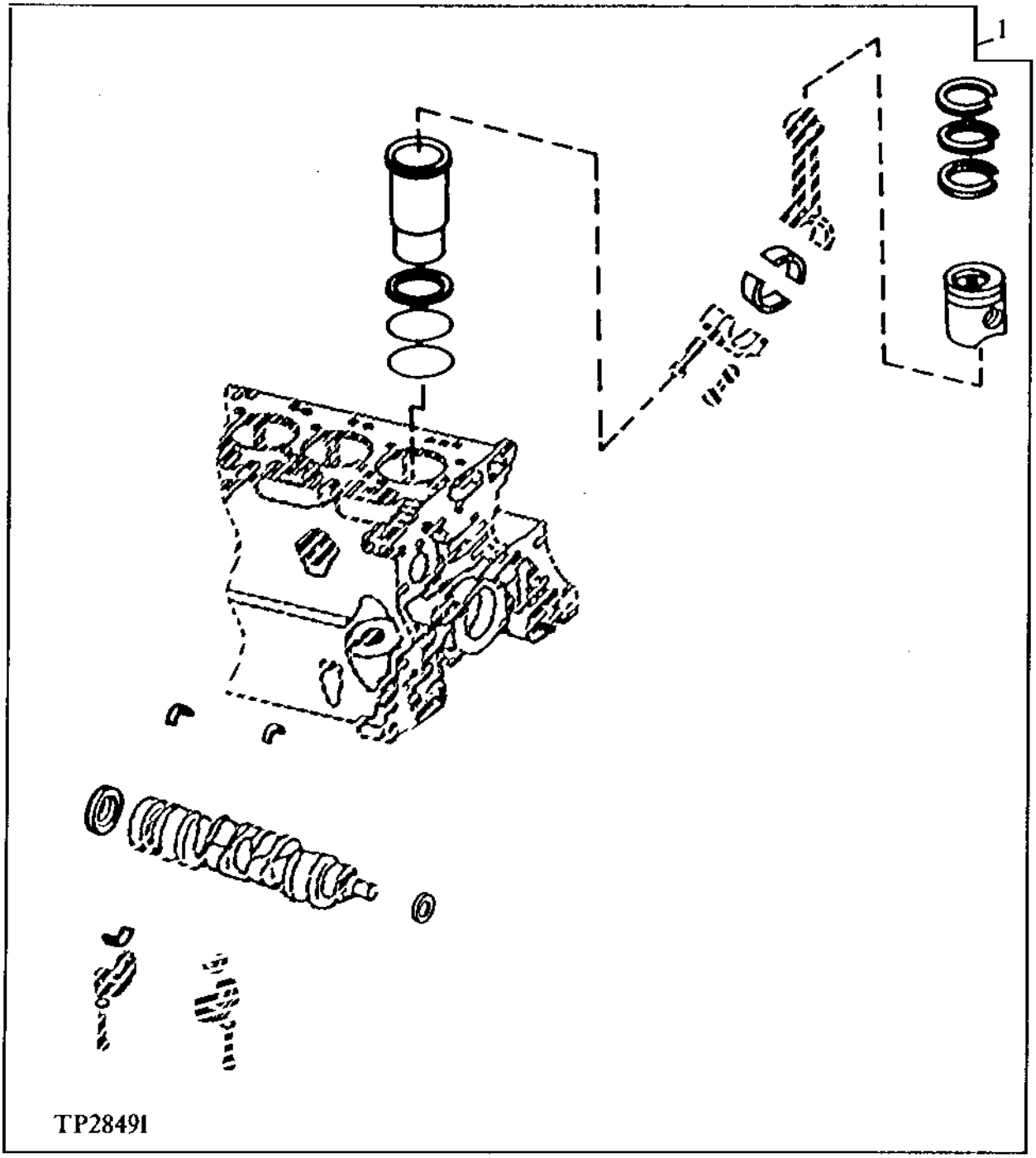

BASIC ENGINE OVERHAUL KIT AND REMANUFACTURED ENGINES

KEY	PART NO.	PART NAME	QTY	ENGINE SERIAL NO.	410D	510D	REMARKS
1	RE63694	ENGINE OVERHAUL KIT	1		X		BASIC ENGINE OVERHAUL KIT (WITHOUT TURBOCHARGER) (ALSO INCLUDES ENGINE OVERHAUL GASKET KIT) (ORDER ONE KIT PER ENGINE) (SUB FOR AT86988)
	.....	ENGINE OVERHAUL KIT	1			X	BASIC ENGINE OVERHAUL KIT (WITH TURBOCHARGER) (ALSO INCLUDES RE501568 ENGINE OVERHAUL GASKET KIT) (ORDER ONE KIT PER ENGINE) (AT86989 NO LONGER AVAILABLE) (SUB RE61612)
	RE61612	ENGINE OVERHAUL KIT	1			X	BASIC ENGINE OVERHAUL KIT (WITH TURBOCHARGER) (ALSO INCLUDES ENGINE OVERHAUL GASKET KIT) (ORDER ONE KIT PER ENGINE) (INCLUDES (8) R54114)
	SE500293	COMPLETE BLOCK ASSEMBLY	1	-457534	X		BASIC REMANUFACTURED ENGINE (WITH TURBO) (FOR ADDITIONAL INFORMATION REFER TO REMAN SELECT MANUALS)(T04045TT010)
	SE500294	COMPLETE BLOCK ASSEMBLY	1	457535--	X		BASIC REMANUFACTURED ENGINE (WITH TURBO) (FOR MORE INFORMATION REFER TO REMAN SELECT MANUALS)(T04045TT018)
	SE500306	DIESEL ENGINE	1	--457534	X		COMPLETE REMANUFACTURED ENGINE(WITH TURBO) (FOR ADDITIONAL INFORMATION REFER TO REMAN SELECT MANUALS)(T04045TT010)
	SE500307	DIESEL ENGINE	1	457535-	X		COMPLETE REMANUFACTURED ENGINE(WITH TURBO) (FOR ADDITIONAL INFORMATION REFER TO REMAN SELECT MANUALS)(T04045TT018)
	SE500292	COMPLETE BLOCK ASSEMBLY	1	-480291	X		BASIC REMANUFACTURED ENGINE(WITHOUT TURBO) (FOR ADDITIONAL INFORMATION REFER TO REMAN SELECT MANUALS)(T04045DT005)
	SE500318	COMPLETE BLOCK ASSEMBLY	1	480292-	X		BASIC REMANUFACTURED ENGINE(WITHOUT TURBO) FOR ADDITIONAL INFORMATION REFER TO REMAN SELECT MANUALS)
	SE500305	DIESEL ENGINE	1	-480291	X		COMPLETE REMANUFACTURED ENGINE(WITHOUT TURBO) (FOR ADDITIONAL INFORMATION SEE REMAN SELECT MANUALS)(T04045DT005)

ENGINE FRONT PLATE

TP1130 -UN-01JAN94

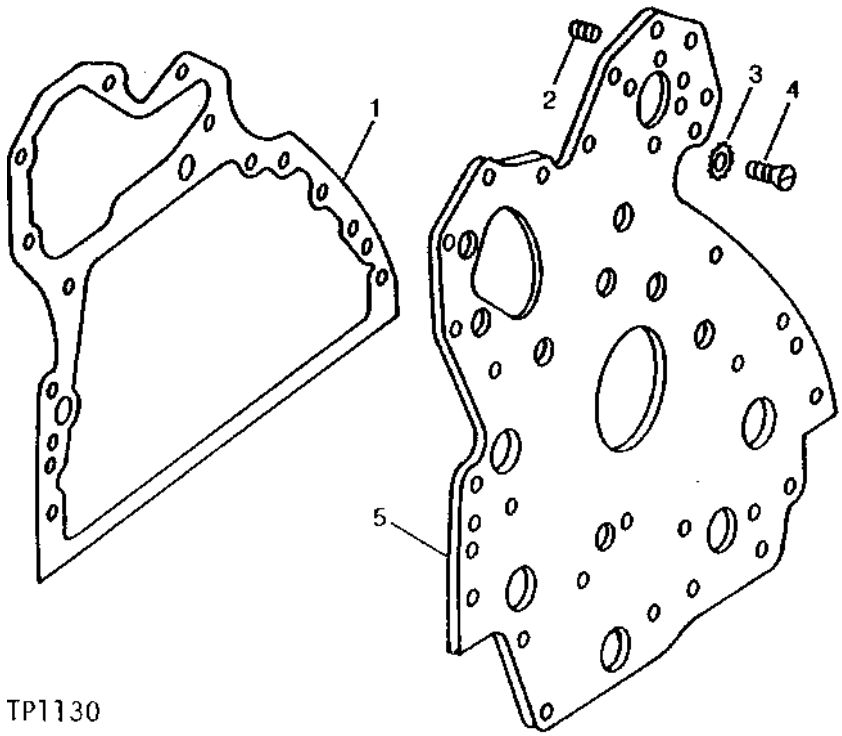

KEY	PART NO.	PART NAME	QTY	ENGINE SERIAL NO.	4 5 1 1 0 0 D D	REMARKS
1	R131794	GASKET	1		X X	(SUB FOR R90648)
2	AT21191	SET SCREW	8		X X	
3	12H324	WASHER	5		X X	3/8", EXTERNAL TOOTH
4	T20166	SCREW	5		X X	
5	RE16149	PLATE	1		X X	(ALSO ORDER (8) AT21191 SET SCREWS AND (2) AT22919 SET SCREWS)

MEMORANDA

ENGINE OIL PAN

TP50797 -UN-25MAR98

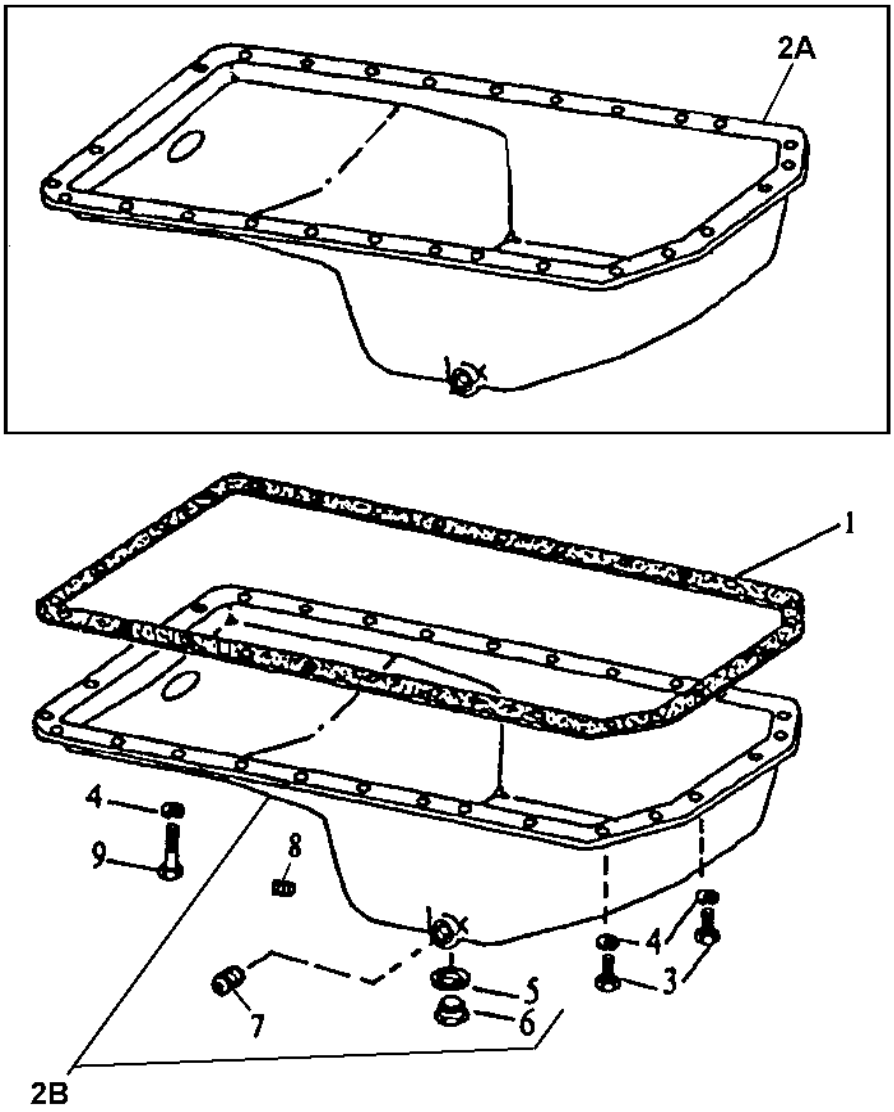

TP50797

ENGINE OIL PAN

KEY	PART NO.	PART NAME	QTY	ENGINE SERIAL NO.	4510 1100 DD	REMARKS
1	R119360	GASKET	1		X X	(SUB FOR R119360)
2A	AR66726	OIL PAN	1		X X	(ALSO ORDER T13213, T20098, 15H624, 15H690) (SUB AT67734)
2B	AT67734	OIL PAN	1		X X	
3	19H1936	CAP SCREW	6		X X	3/8" X 3/4"
4	12H304	LOCK WASHER	28		X X	3/8"
5	T13213	WASHER	1		X X	22.631 X 30.175 X 1.626 MM (57/64" X 1-3/16" X 0.064")
6	T20098	DRAIN PLUG	1		X X	
7	15H690	PIPE PLUG	1		X X	3/4", 3/4"
8	15H624	PIPE PLUG	1		X X	1/2"
9	19H2284	CAP SCREW	22		X X	3/8" X 7/8"

ENGINE OIL FILTER AND OIL FILTER ADAPTER
(ENGINE SERIAL NO. -457534)

TP55120 -UN-02JUN97

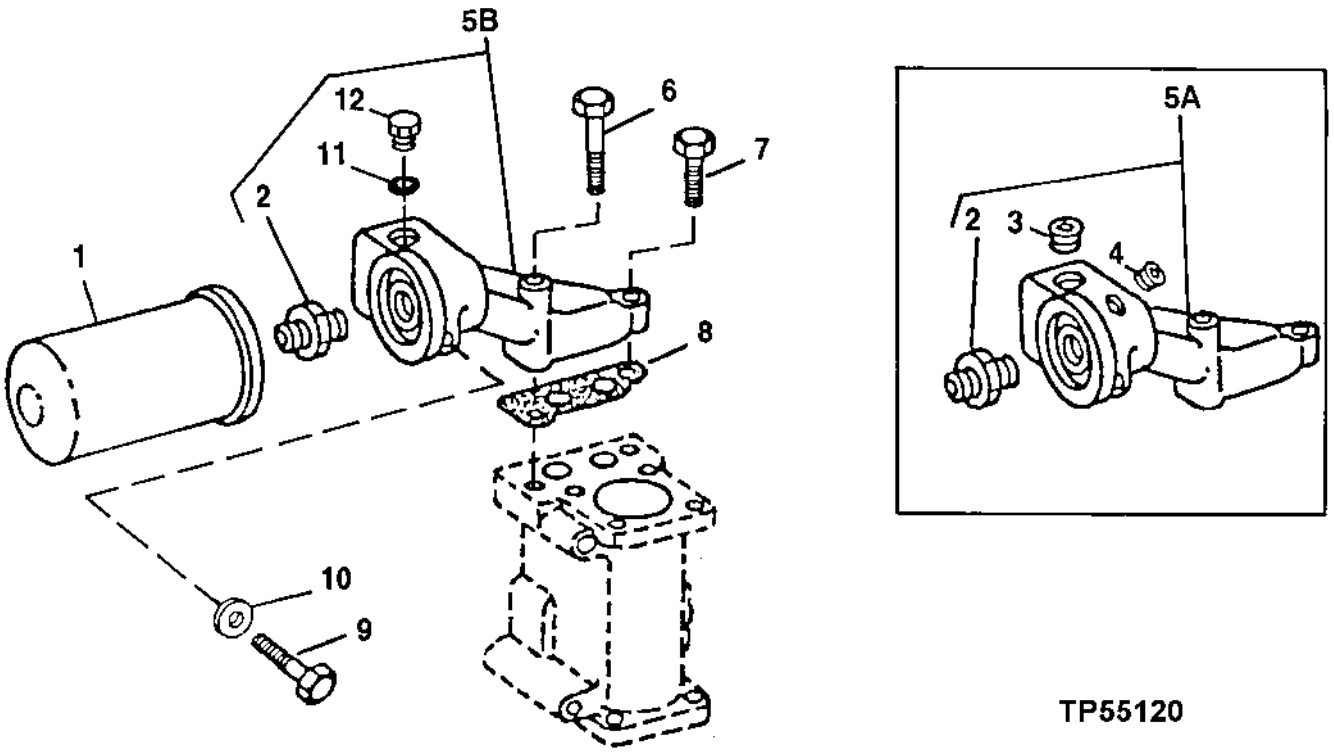

KEY	PART NO.	PART NAME	QTY	ENGINE SERIAL NO.	4 5 1 1 0 0 D D	REMARKS
1	T19044	OIL FILTER	1		X X	
2	R54823	ADAPTER	1		X X	
3	15H666	PIPE PLUG	1		X X	(USE WITH RE31299) 3/8" (WITHOUT TURBOCHARGER)
4	15H275	PIPE PLUG	1		X X	1/4", (USE WITH RE31299)
5A	.....	ADAPTER	1		X X	(RE31299 NO LONGER AVAILABLE) (MARKED R91597) (SUB RE70979) (ALSO ORDER 38H1045, R63548 AND (2) R26448)
5B	RE70979	ADAPTER	1		X X	(MARKED R131238)
6	19H2732	CAP SCREW	1		X X	3/8" X 2-3/4"
7	19H2633	CAP SCREW	1		X X	3/8" X 1-1/2"
8	R54824	GASKET	1		X X	
9	19H1925	CAP SCREW	1		X X	3/8" X 4-1/4"
10	24M7106	WASHER	1		X X	0.394" X 0.709" X 0.098"
11	R26448	O-RING	1		X X	(USE WITH RE70979)
12	R27218	FITTING PLUG	1		X X	(USE WITH RE70979)

ENGINE OIL FILTER AND OIL FILTER ADAPTER
(ENGINE SERIAL NO.457345-)

TP44770 -UN-01JAN94

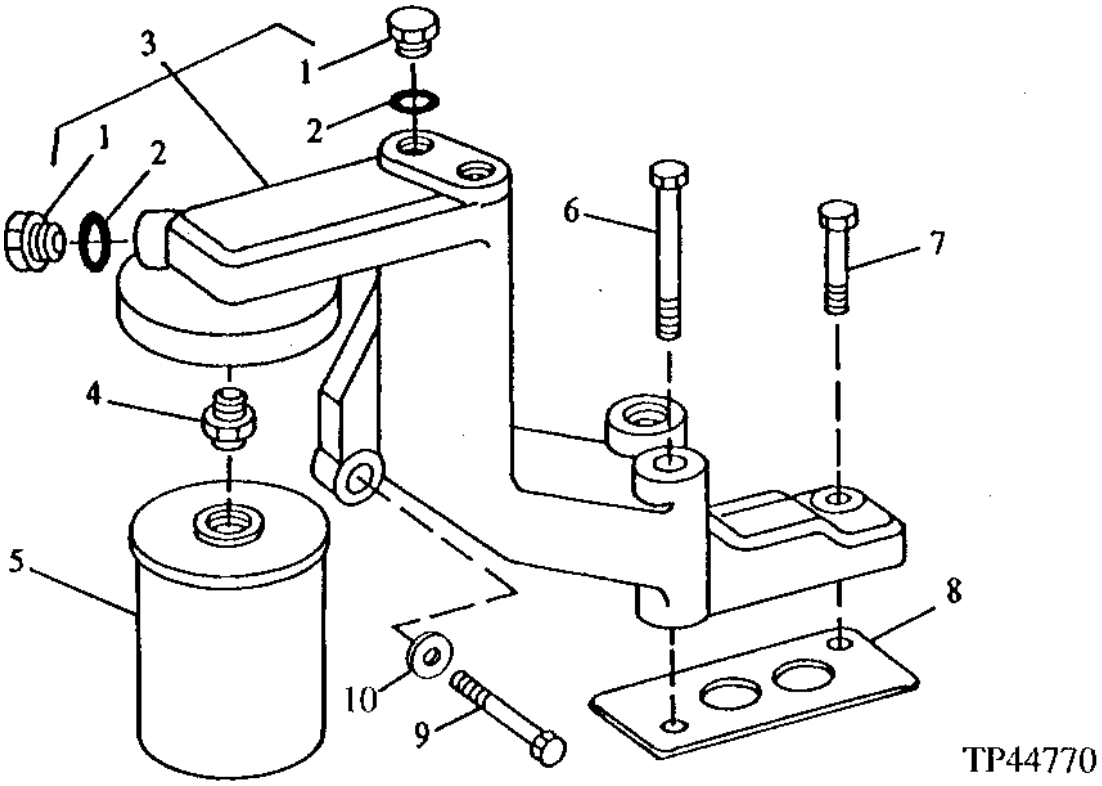

KEY	PART NO.	PART NAME	QTY	SERIAL NO.	4510 DD	REMARKS
1	R27218	FITTING PLUG	3		X X	
2	R26448	O-RING	3		X X	
3	RE56672	ADAPTER	1		X X	(MARKED R120743)
4	R54823	ADAPTER	1		X X	
5	T19044	OIL FILTER	1		X X	
6	19H2732	CAP SCREW	1		X X	3/8" X 2-3/4"
7	19H2633	CAP SCREW	1		X X	3/8" X 1-1/2"
8	R98488	GASKET	1		X X	
9	19H3483	CAP SCREW	1		X X	3/8" X 1-1/8"
10	24M7106	WASHER	1		X X	10 X 18 X 2.500 MM

MEMORANDA

ENGINE OIL DIPSTICK

TP42618 -UN-01JAN94

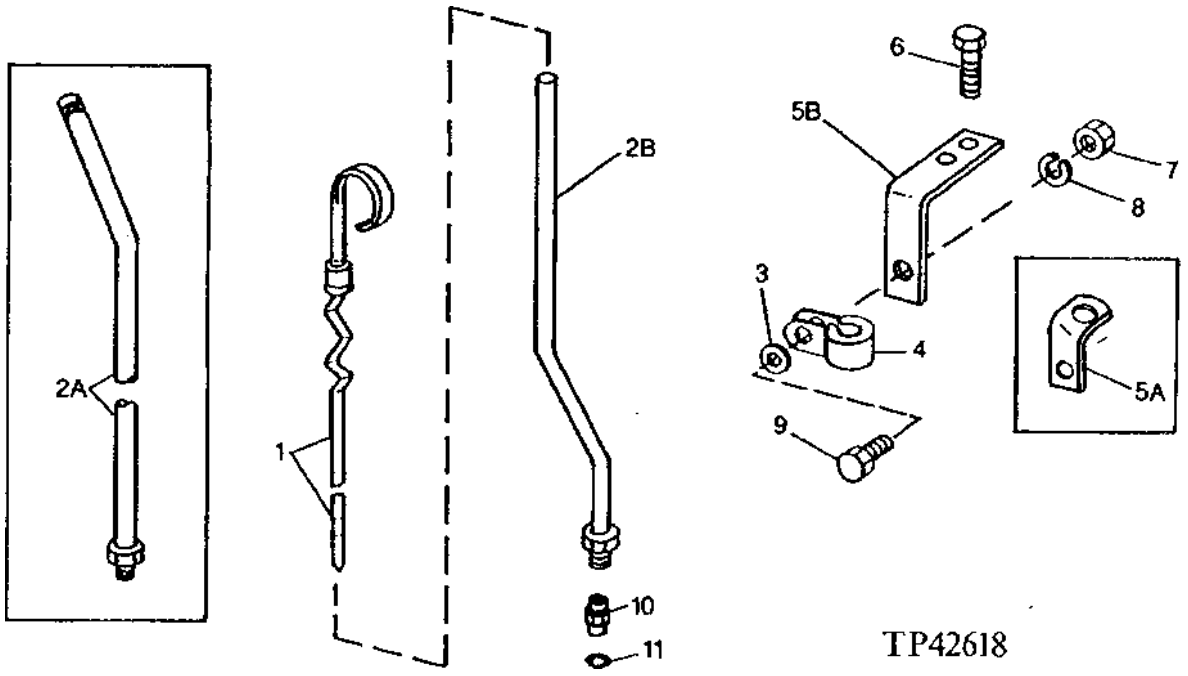

KEY	PART NO.	PART NAME	QTY	ENGINE SERIAL NO.	410D	510D	REMARKS
1	RE10191	DIPSTICK	1		X	X	
2A	RE30695	DIPSTICK TUBE	1	-780199	X	X	
2B	RE49566	DIPSTICK TUBE	1	780200-	X	X	
3	24H1302	WASHER	1		X	X	13/32" X 11/16" X 0.035"
4	T28862	CLAMP	1		X	X	(SUB FOR T29299)
5A	R60357	ANGLE	1	-780199	X	X	
5B	R112706	ANGLE	1	780200-	X	X	
6	19H1895	CAP SCREW	1		X	X	1/2" X 3/4"
7	N10215	LOCK NUT	1		X	X	3/8", (SUB FOR 14H812, THIS APPLICATION)
8	12H304	LOCK WASHER	AR		X	X	3/8"
9	R122618	SCREW	1		X	X	
10	R77016	ADAPTER	1		X	X	
11	R10093	O-RING	1		X	X	

ENGINE OIL FILLER OPENING COVER
(ENGINE SERIAL NO. -426683)

TP26801 -UN-01JAN94

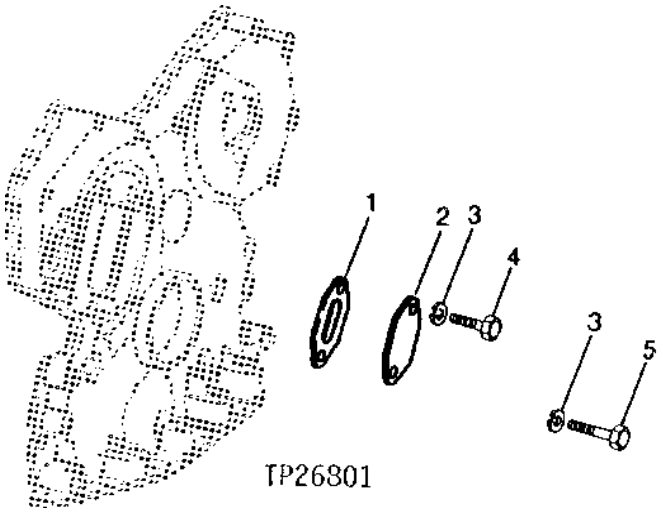

KEY	PART NO.	PART NAME	QTY	ENGINE SERIAL NO.	410D	510D	REMARKS
1	R97352	GASKET	1		X	X	
2	T23260	COVER	1		X	X	
3	24H1304	WASHER	2		X	X	13/32" X 23/32" X 0.120"
4	19H2284	CAP SCREW	1		X	X	3/8" X 7/8"
5	19H1819	CAP SCREW	1		X	X	3/8" X 2-1/8"

ENGINE OIL PUMP
(ENGINE SERIL NO. -427006)

TP12656 -UN-01JAN94

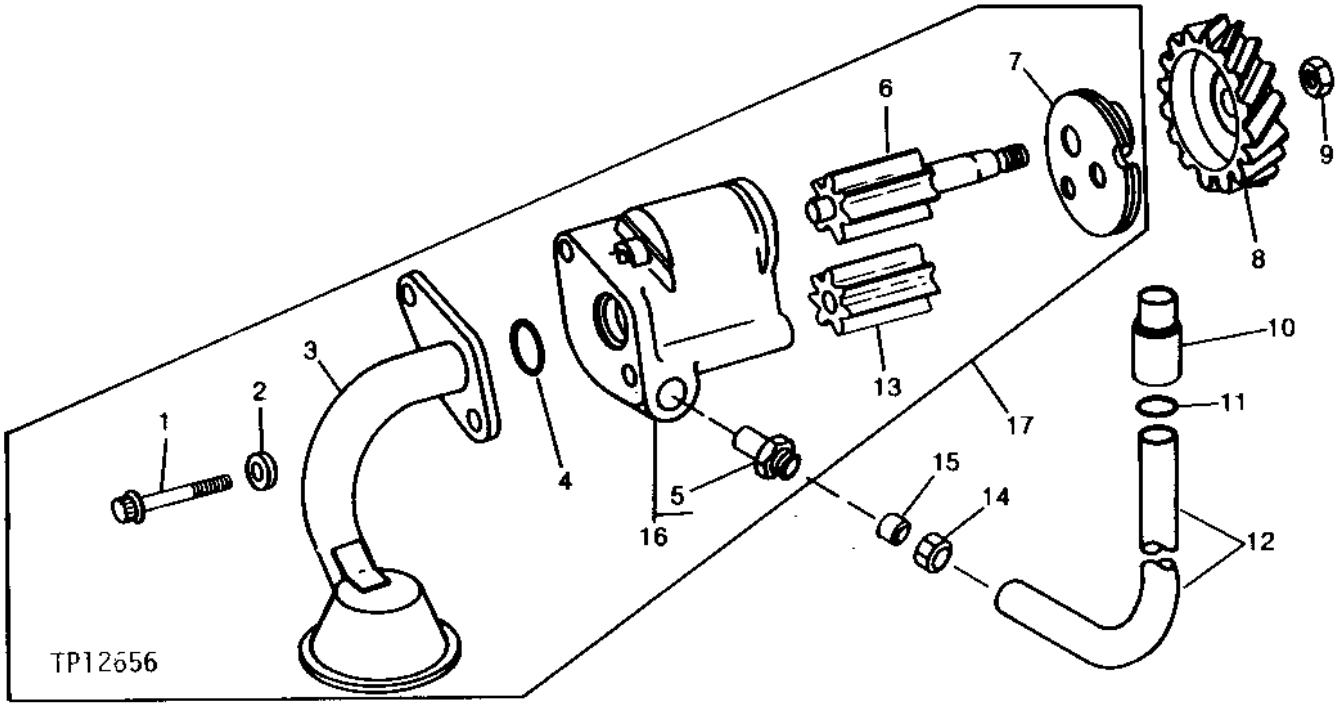

KEY	PART NO.	PART NAME	QTY	ENGINE SERIAL NO.	451 100 DD	REMARKS
1	R116424	SCREW	2		X X	(SUB FOR R74552, THIS APPLICATION) (ALSO ORDER (2) R74553)
2	R74553	WASHER	2		X X	(USE WITH R116424)
3	RE20851	OIL PUMP INTAKE	1		X X	
4	R61871	O-RING	1		X X	
5	R79560	ADAPTER	1		X X	
6	AR85788	SHAFT	1		X X	(7 TEETH)
7	R54632	COVER	1		X X	
8	T20298	GEAR	1		X X	(33 TEETH)
9	14H826	NUT	1		X X	1/2"
10	R54815	FITTING	1		X X	
	R115390	BUSHING	1		X X	(USE WITH CYLINDER BLOCK, MARKED R108755)
11	R80632	O-RING	AR		X X	
	R97185	O-RING	1		X X	(USE WITH CYLINDER BLOCK, MARKED R108755)
12	R79561	OIL TUBE	1		X X	
	R112867	OIL TUBE	1		X X	(USE WITH CYLINDER BLOCK, MARKED R108755)
13	R66177	GEAR	1		X X	(7 TEETH)
14	R79562	FITTING	1		X X	
15	R79563	SLEEVE	1		X X	
16	RE15490	HOUSING	1		X X	(MARKED R54629)
17	AR79464	OIL PUMP	1		X X	

ENGINE OIL PUMP
(ENGINE SERIAL NO.427007-)

TP62296 -UN-16DEC99

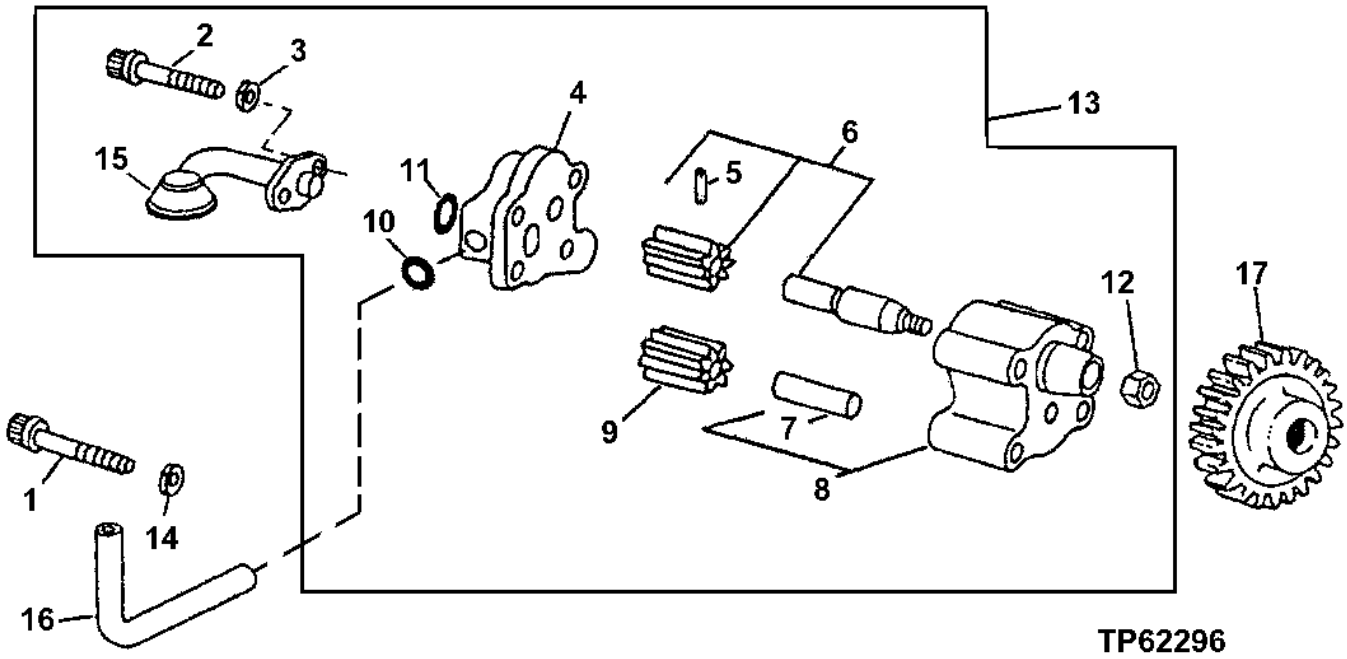

TP62296

KEY	PART NO.	PART NAME	QTY	ENGINE SERIAL NO.	4 5 1 1 0 0 D D	REMARKS
1	R57059	CAP SCREW	2		X X	
2	R74552	SCREW	2		X X	
3	R74553	WASHER	2		X X	0.394" X 0.630" X 0.120"
4	.....	COVER	1		X X	
5	34H280	SPRING PIN	1		X X	3/16" X 7/8", (SUB FOR M3853T, THIS APPLICATION)
6	AR62978	PINION	1		X X	
7	T20091	DOWEL PIN	1		X X	
8	.....	HOUSING	1		X X	(MARKED R54615)
9	R54614	GEAR	1		X X	(7 TEETH)
10	R74354	O-RING	1		X X	
11	R61871	O-RING	1		X X	
12	14H826	NUT	1		X X	1/2"
13	RE55343	KIT	1		X X	
14	R74553	WASHER	2		X X	
15	RE36425	OIL PUMP INTAKE	1		X X	
16	R113752	OIL TUBE	1		X X	
17	T20298	GEAR	1		X X	(33 TEETH)

MEMORANDA

ENGINE VENTILATOR TUBE

TP26702 -UN-01JAN94

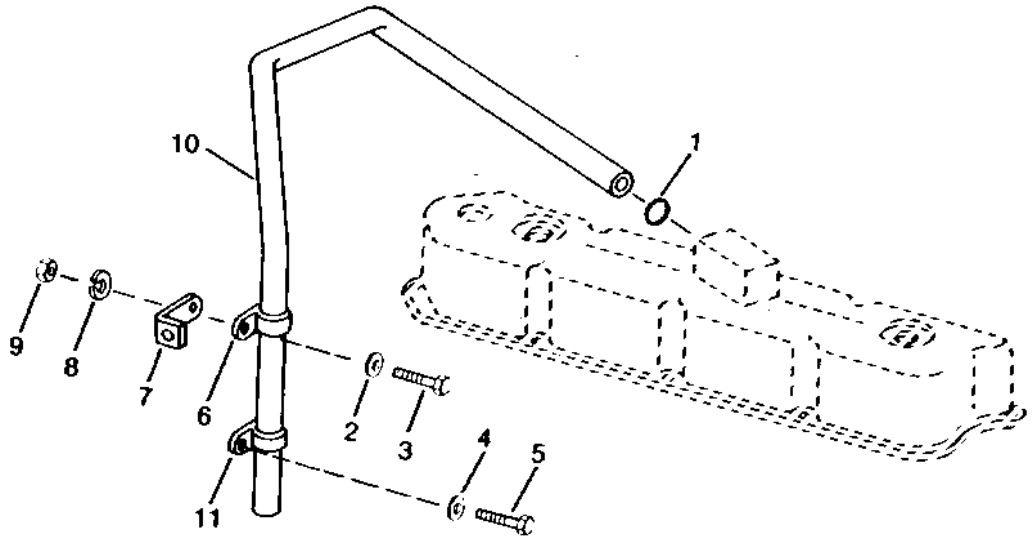

TP26702

KEY	PART NO.	PART NAME	QTY	ENGINE SERIAL NO.	410D	510D	REMARKS
1	R56463	O-RING	1		X	X	
2	12H304	LOCK WASHER	AR		X	X	
3	19H3411	SCREW	1		X	X	3/8" X 1-1/8", (SUB FOR 19H3239, THIS APPLICATION)
4	24H1136	WASHER	1		X	X	11/32" X 11/16" X 0.065"
5	19H2664	CAP SCREW	1		X	X	5/16" X 3/4"
6	R40791	CLAMP	1		X	X	
7	R73975	BRACKET	1		X	X	
8	24M7096	WASHER	AR		X	X	
9	N10215	LOCK NUT	1		X	X	3/8", (SUB FOR 14H812, THIS APPLICATION)
10	R59047	TUBE	1		X	X	
11	R40791	CLAMP	1		X	X	

MEMORANDA

CYLINDER HEAD,HEAD GASKET AND VALVES

TP42711 -UN-01JAN94

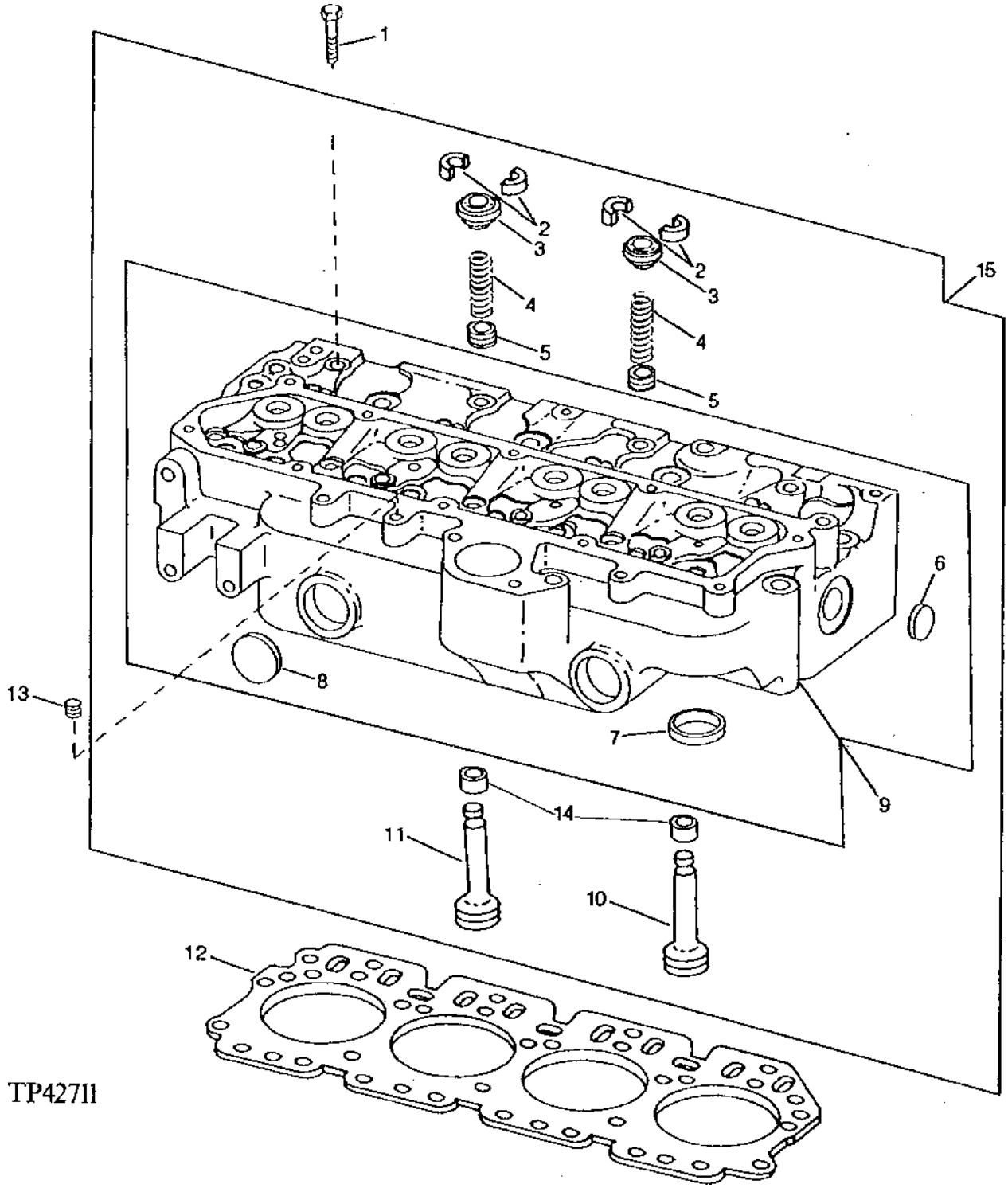

CYLINDER HEAD, HEAD GASKET AND VALVES

KEY	PART NO.	PART NAME	QTY	ENGINE SERIAL NO.	4 5 1 1 0 0 D D	REMARKS
1	R85363	CAP SCREW	18		X X	
2	R91889	RETAINER	16		X X	
3	RE60005	ROTATOR	8		X X	(SUB FOR RE31323)
4	R26125	SPRING	8		X X	
5	RE31617	SEAL	8		X X	STANDARD
	.....	SEAL	8		X X	RE37643 015"OVERSIZE NO LONGER AVAILABLE(SUB RE31617)
	.....	SEAL	8		X X	RE37644 030"OVERSIZE NO LONGER AVAILABLE(SUB RE31617)
6	A3910R	PLUG	2		X X	
7	R85687	VALVE SEAT INSERT	4		X X	STANDARD SIZE (EXHAUST)
	R93910	VALVE SEAT INSERT	4		X X	OVERSIZE EXHAUST VALVE
	R98063	VALVE SEAT INSERT	4		X X	STANDARD SIZE (INTAKE)
	R98335	VALVE SEAT INSERT	4		X X	OVERSIZE EXHAUST VALVE
8	R43409	PLUG	2		X X	
9	RE48616	CYLINDER HEAD	1		X X	(MARKED R111949) (SUB FOR RE36428, MARKED R97628)
10	R90692	EXHAUST VALVE	4		X X	STANDARD
	R97492	EXHAUST VALVE	4		X X	0.38 MM (.015") OVERSIZE
	R97493	EXHAUST VALVE	4		X X	0.76 MM (.030") OVERSIZE
11	R98062	INTAKE VALVE	4		X X	STANDARD
	R97490	INTAKE VALVE	4		X X	0.38 MM (.015") OVERSIZE
	R97491	INTAKE VALVE	4		X X	0.76 MM (.030") OVERSIZE
12	R125863	GASKET	1		X X	(SUB FOR R92425)
13	R104592	PIPE PLUG	1		X X	
14	RE31617	SEAL	8		X X	
15	RE48615	CYLINDER HEAD	1		X X	CONVENIENCE ASSEMBLY (WHEN ETHER AID IS NOT INSTALLED) (ALSO ORDER T58477 AND R26906) (SUB RE48615) (MARKED R111949) (SUB FOR RE37545) (MARKED R97628)

EXHAUST MANIFOLD AND ELBOW
(WITH TURBOCHARGER)

TP4267 -UN-01JAN94

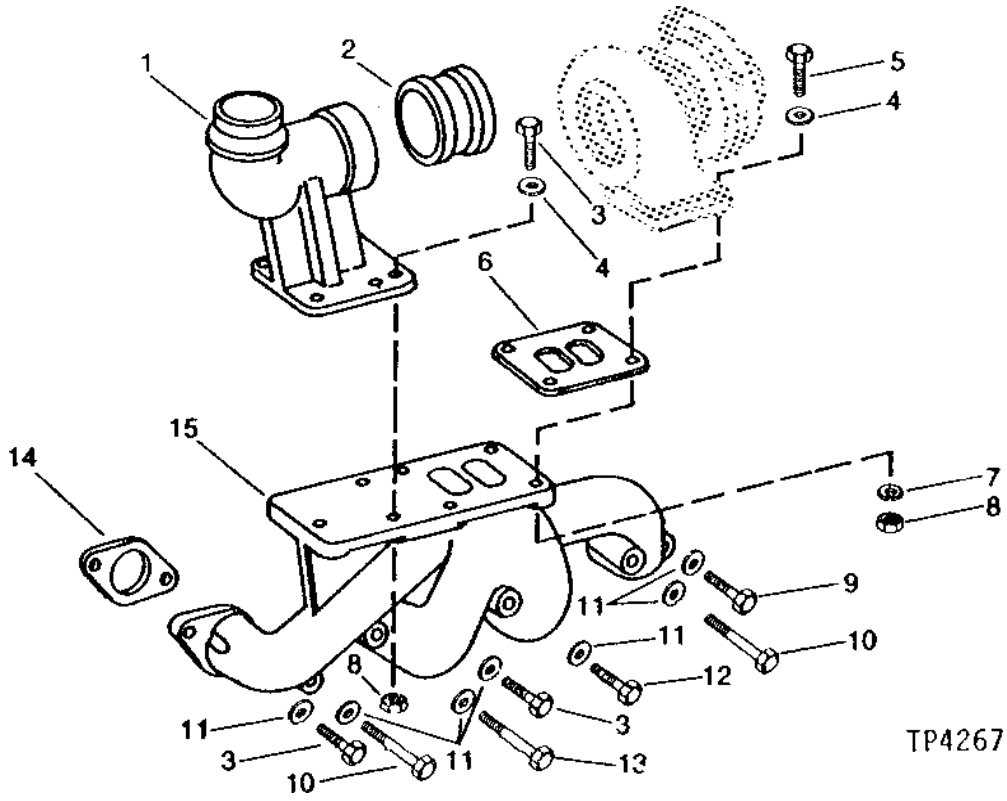

KEY	PART NO.	PART NAME	QTY	ENGINE SERIAL NO.	4 5 1 1 0 0 D D	REMARKS
1	R57270	ELBOW FITTING	1		X X	
2	R43724	ADAPTER	1		X X	
3	19H3751	SCREW	3		X X	3/8" X 1-3/8"
4	24H1305	WASHER	AR		X X	13/32" X 13/16" X 0.065"
5	19H3742	SCREW	3		X X	3/8" X 1-5/8"
	19H3217	CAP SCREW	1		X X	3/8" X 1-3/4"
6	R123572	GASKET	1		X X	(SUB FOR R89879, THIS APPLICATION)
7	12H304	LOCK WASHER	AR		X X	3/8"
8	N10215	LOCK NUT	7		X X	3/8", (SUB FOR 14H812, THIS APPLICATION)
9	19H3411	SCREW	3		X X	3/8" X 1-1/8"
10	19H3737	SCREW	2		X X	3/8" X 4-1/4"
11	24M7106	WASHER	AR		X X	10 X 18 X 2.500 MM
12	19H3746	SCREW	1		X X	3/8" X 3-7/8"
13	19H3738	SCREW	2		X X	3/8" X 5"
14	R90658	GASKET	4		X X	
15	R52819	EXHAUST MANIFOLD	1		X X	

EXHAUST MANIFOLD
(WITHOUT TURBOCHARGER)

TP3033 -UN-01JAN94

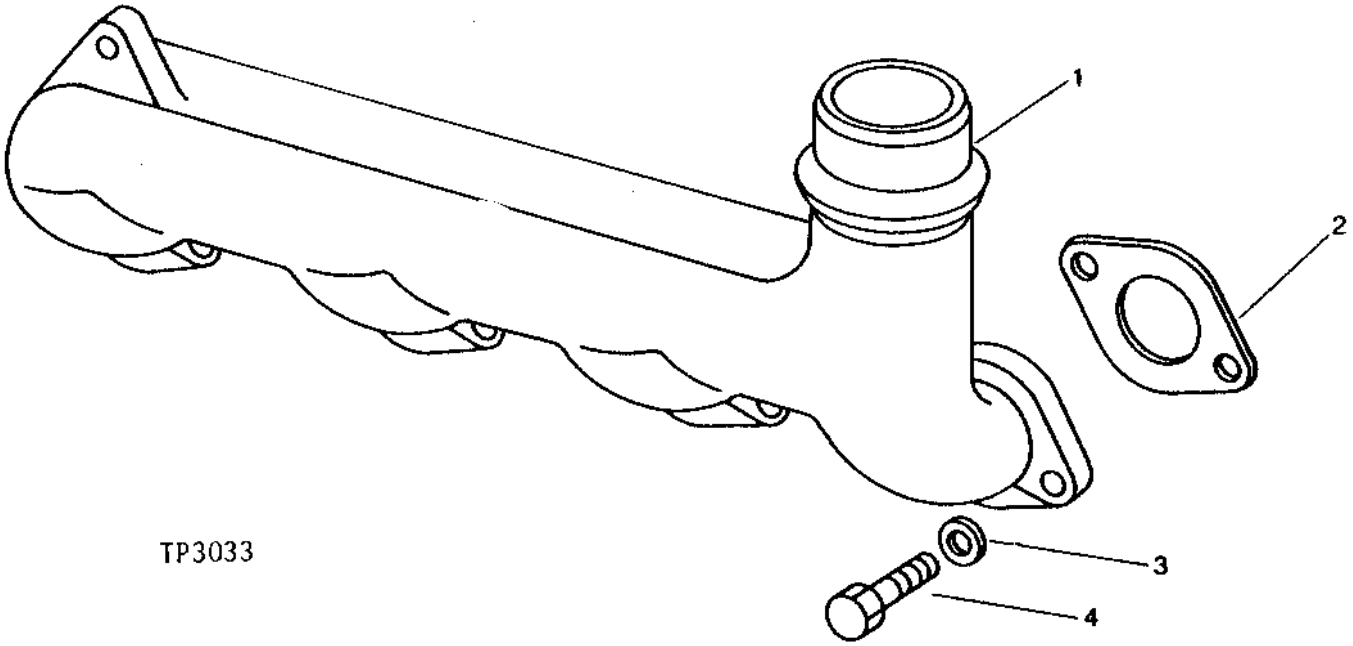

KEY	PART NO.	PART NAME	QTY	ENGINE SERIAL NO.	4 5 1 1 0 0 D D	REMARKS
1	T20200	EXHAUST MANIFOLD	1		X	
2	R90658	GASKET	4		X	
3	24M7106	WASHER	AR		X	10 X 18 X 2.500 MM
4	19H3411	SCREW	8		X	3/8" X 1-1/8"

FUEL INJECTION NOZZLE

TP48976 -UN-26OCT96

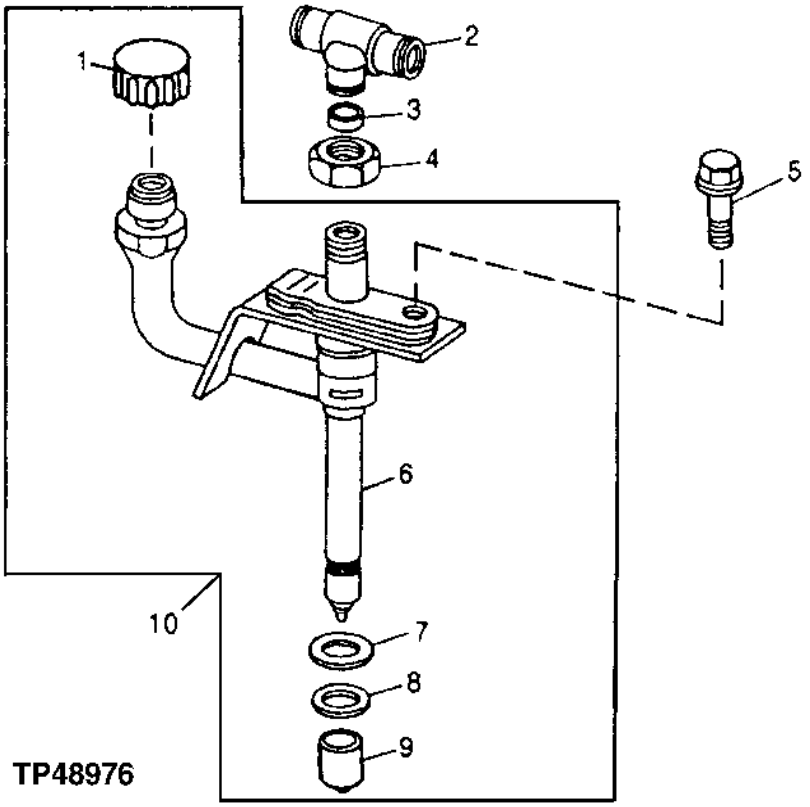

KEY	PART NO.	PART NAME	QTY	ENGINE SERIAL NO.	410D	510D	REMARKS
1	.....	CAP (HAT)	1		X	X	(T31174 NO LONGER AVAILABLE) (USE FOR SERVICING NOZZLE)
2	R79606	TEE FITTING	1		X	X	
3	R79605	WASHER	1		X	X	
4	R79604	TUBE NUT	1		X	X	
5	R101201	CAP SCREW	1		X	X	
6	.....	NOZZLE	1		X	X	(SUB RE38087)
7	R92352	PACKING	1		X	X	
8	R48000	SEAL	1		X	X	
9	T24472	CAP	1		X	X	
10	RE38087	INJECTION NOZZLE	1		X	X	

MEMORANDA

FUEL INJECTION SYSTEM

TP29639 -UN-01JAN94

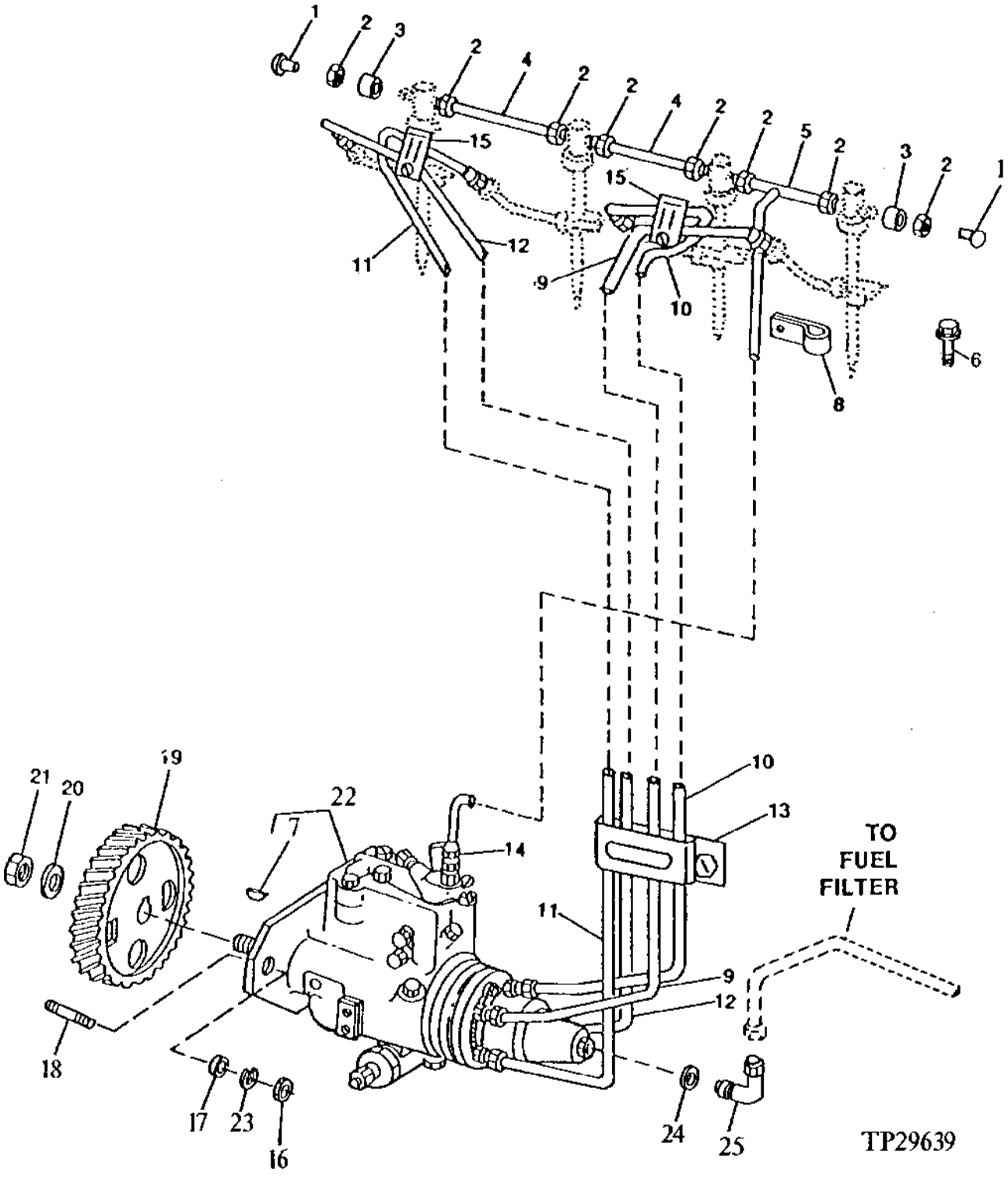

FUEL INJECTION SYSTEM

KEY	PART NO.	PART NAME	QTY	ENGINE SERIAL NO.	410D	510D	REMARKS
1	AR85519	PLUG	2		X	X	(SUB FOR 16H658, THIS APPLICATION)
2	R51937	TUBE NUT	6		X	X	
	R123593	TUBE NUT	2		X	X	(LEAK-OFF)
3	R51936	SEALING WASHER	8		X	X	
4	R66090	TUBE	2		X	X	
5	AR85615	LINE	1		X	X	LEAK-OFF
6	R101201	CAP SCREW	4		X	X	
7	H64373	SHAFT KEY	1		X	X	(SUB FOR R56424 OR M114270) (CUT TO LENGTH)
8	T29969	CLAMP	1		X	X	
9	RE43292	FUEL LINE	1	-383726	X	X	NO. 4
	RE53871	FUEL LINE	1	383727-	X	X	NO.4
10	RE43291	FUEL LINE	1	-383726	X	X	NO. 3
	RE53870	FUEL LINE	1	383727-	X	X	NO.3
11	RE43290	FUEL LINE	1	-383726	X	X	NO. 2
	RE53869	FUEL LINE	2	383727-	X	X	NO.2
12	RE43289	FUEL LINE	1	-383726	X	X	NO. 1
	RE53868	FUEL LINE	1	383727-	X	X	NO.1
13	RE19799	CLAMP	1		X	X	
14	R35352	FITTING	1		X	X	
15	RE19797	CLAMP	2		X	X	
16	14H785	NUT	3		X	X	5/16"
17	T27860	WASHER	3		X	X	
18	T23442	STUD	3		X	X	
19	R104907	GEAR	1		X		(48 TEETH) (WITH TURBOCHARGER)
	R84663	GEAR	1	-480291	X		(48 TEETH) (WITHOUT TURBOCHARGER)
	R116339	GEAR	1	480292-		X	(48 TEETH) (WITHOUT TURBOCHARGER)
	R104907	GEAR	1			X	(48 TEETH) (WITH TURBOCHARGER)
20	R132874	WASHER	1			X	(SUB FOR R48600)
21	R48599	NUT	1		X		(410D)
	R91360	NUT	1			X	(510D)
22	RE46959	FUEL INJECTION PUMP	1		X		(STANADYNE NO.) (WITH TURBOCHARGER)
	RE39997	FUEL INJECTION PUMP	1	-480291	X		(STANADYNE NO.) (WITHOUT TURBOCHARGER) (ALSO ORDER R48599 AND R132874)
	RE57108	FUEL INJECTION PUMP	1	480292-	X		(STANADYNE NO.) (WITHOUT TURBOCHARGER) (ALSO ORDER R48599 AND R48600)
	RE50997	FUEL INJECTION PUMP	1			X	(STANADYNE NO.) (SUB FOR RE40574, THIS APPLICATION)
23	12H303	LOCK WASHER	3		X		5/16"
24	R26286	O-RING	1			X	
25	RE56322	TEE FITTING	1			X	(SUB FOR AT32333)

(A) SEE YOUR AUTHORIZED PUMP REPAIR STATION FOR INTERNAL PARTS

FUEL INJECTION PUMP REPLACEMENT PARTS

TP15140 -UN-01JAN94

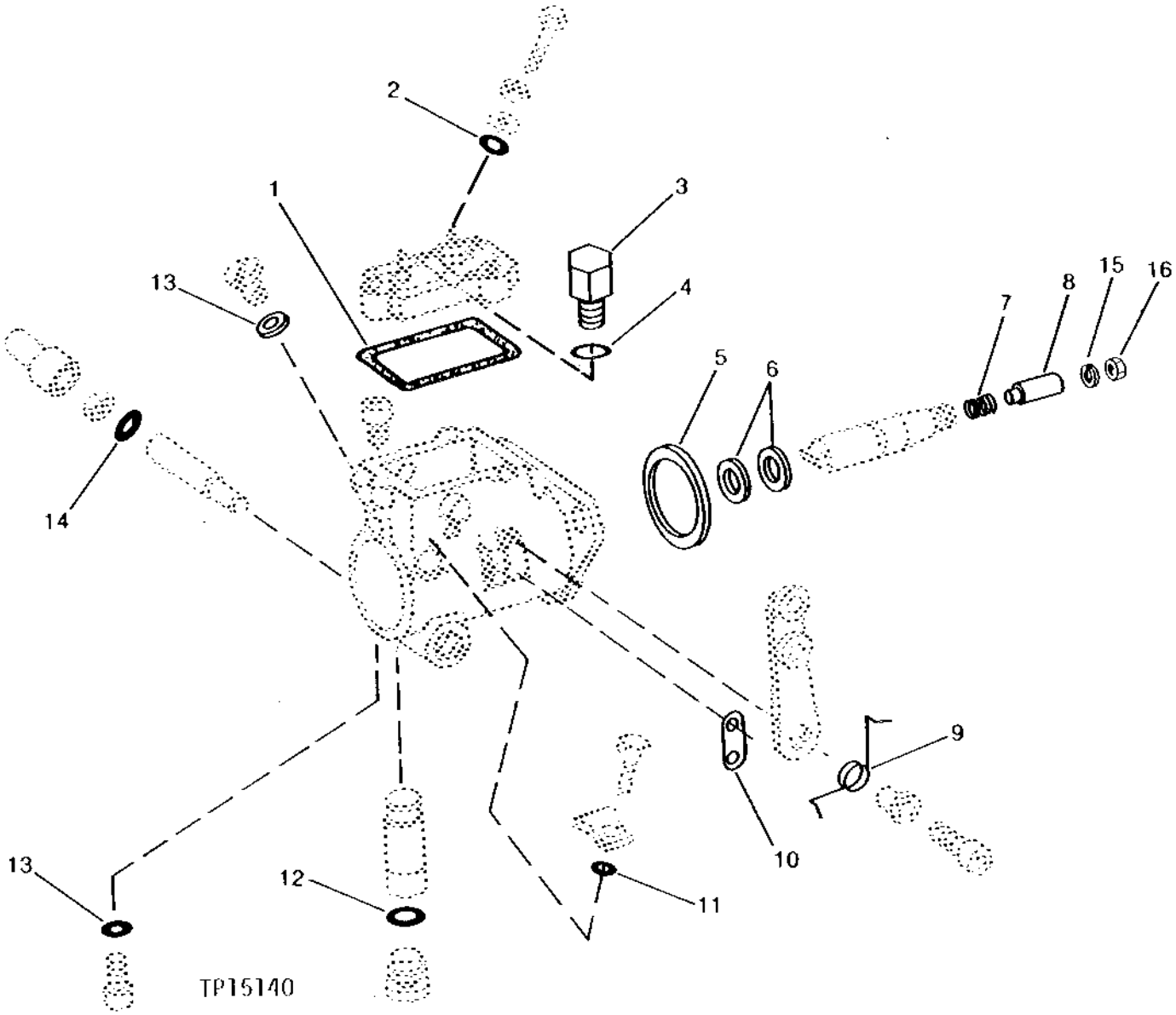

FUEL INJECTION PUMP REPLACEMENT PARTS

KEY	PART NO.	PART NAME	QTY	SERIAL NO.	410D	510D	REMARKS
1	T11918	GASKET	1		X	X	
2	R34812	O-RING	1		X	X	
3	AR104664	FITTING	1		X	X	
4	R76729	O-RING	1		X	X	
5	T16318	O-RING	1		X	X	
6	T11290	SEAL	2		X	X	
7	R36540	SPRING	1		X	X	
8	T19855	PIN	1		X	X	
9	T17949	SPRING	1		X	X	
10	R81929	GASKET	1		X	X	
11	T17951	O-RING	1		X	X	
12	T15712	O-RING	1		X	X	
13	T11899	O-RING	3		X	X	
14	R76578	O-RING	1		X	X	
15	R132874	WASHER	1		X	X	(SUB FOR R48600)
16	R48599	NUT	1		X	X	

FUEL INJECTION PUMP ELECTRIC SHUT-OFF KIT

TP68430 -UN-17NOV99

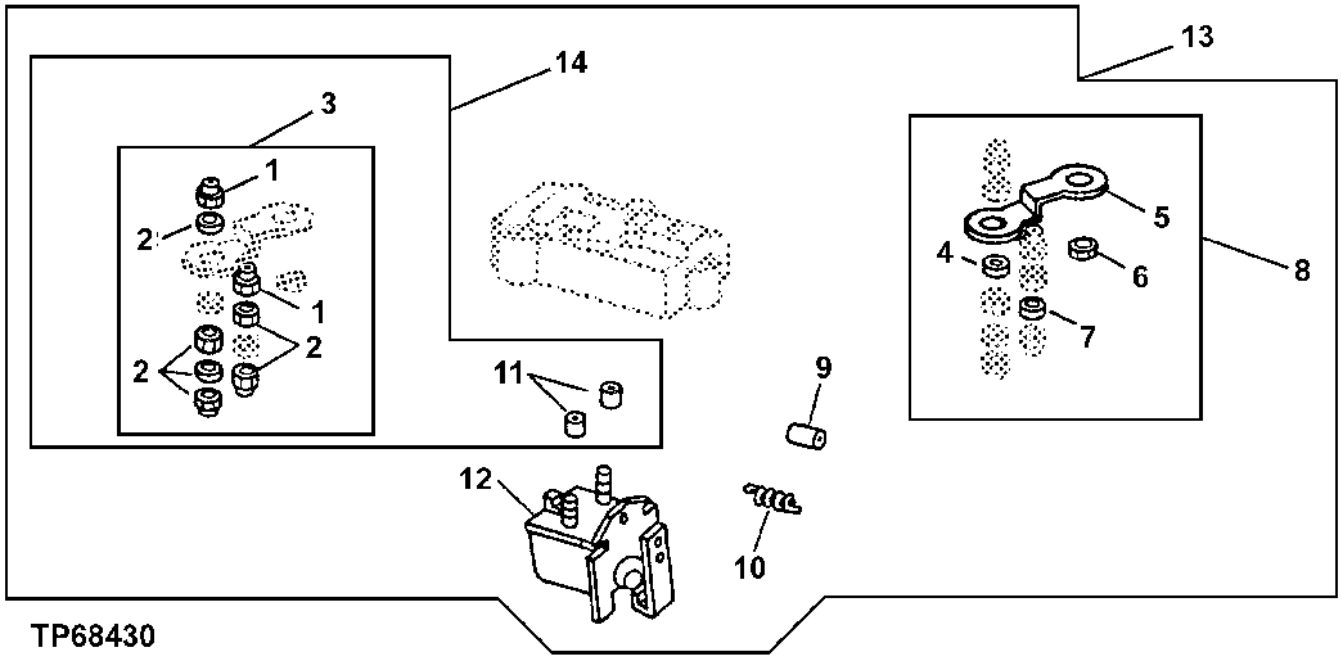

KEY	PART NO.	PART NAME	QTY	SERIAL NO.	410D	510D	REMARKS
1	M63431	LOCK NUT	2		X	X	(SUB FOR T19977)
2	.....	KIT	1		X	X	
3	RE37091	KIT	1		X	X	NUT AND WASHER, (SUB FOR AR90601)
4	12M7084	LOCK WASHER	1		X	X	4.300 MM, (SUB FOR R47077)
5	.....	STRAP	1		X	X	
6	12H295	LOCK WASHER	1		X	X	0.190"
7	.....	WASHER	1		X	X	
8	AR50874	KIT	1		X	X	GROUNDING STRAP
9	R48795	SLEEVE	1		X	X	
10	T11935	SPRING	1		X	X	
11	T11937	INSULATOR	2		X	X	
12	RE37089	SOLENOID	1		X	X	
13	.....	KIT	1		X	X	
14	.....	GASKET KIT	1		X	X	(AR34612 - NO LONGER AVAILABLE)

AIR INTAKE SYSTEM
(WITH TURBOCHARGER)

TP41284 -UN-01JAN94

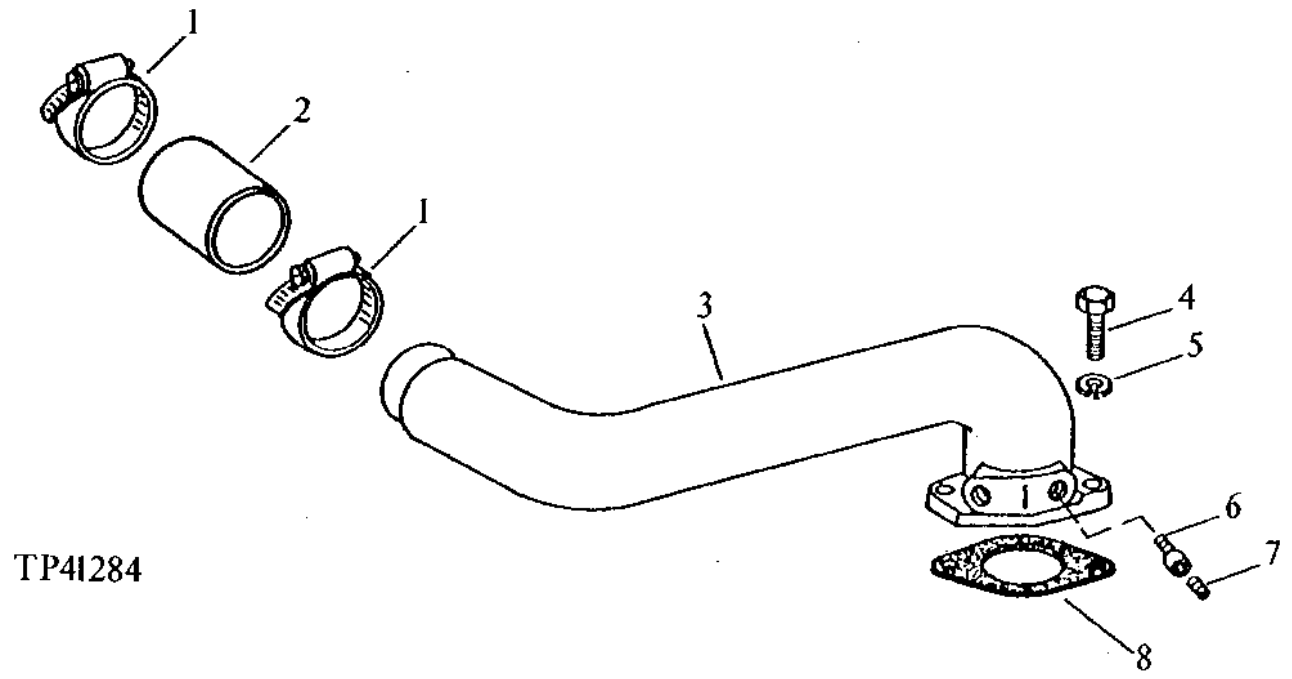

KEY	PART NO.	PART NAME	QTY	SERIAL NO.	4510 DD	REMARKS
1	R110531	CLAMP	2		X X	(SUB FOR R56552)
2	R56551	HOSE	1		X X	
3	RE46784	AIR DUCT	1		X X	(SUB FOR R56549, THIS APPLICATION) (ALSO ORDER T27986)
4	19H3239	CAP SCREW	2		X X	3/8" X 1-1/4"
5	12H304	LOCK WASHER	2		X X	3/8"
6	T27986	FITTING	1		X X	(USE WITH RE46784)
7	15H623	PIPE PLUG	1		X X	3/8"
	15H623	PIPE PLUG	1		X X	3/8", (WITHOUT STARTING AID)
8	R81275	GASKET	1		X X	

AIR INTAKE SYSTEM
(WITHOUT TURBOCHARGER)

TP29103 -UN-01JAN94

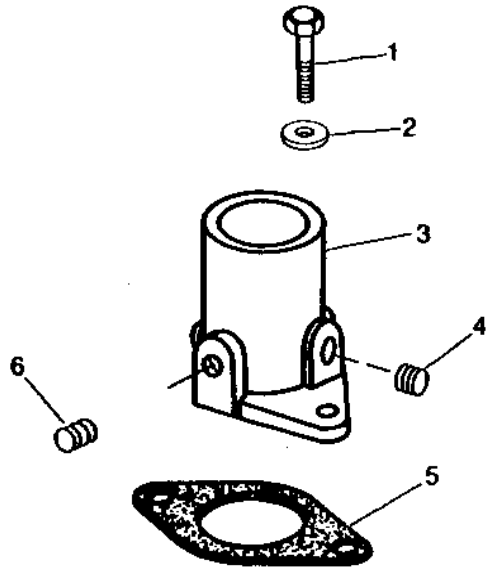

TP29103

KEY	PART NO.	PART NAME	QTY	ENGINE SERIAL NO.	410D	510D	REMARKS
1	19H2633	CAP SCREW	2		X		3/8" X 1-1/2"
2	24M7096	WASHER	2		X		0.413" X 0.709" X 0.063"
3	T31948	AIR INTAKE	1		X		
4	R104592	PIPE PLUG	1		X		
5	R81275	GASKET	1		X		
6	15H623	PIPE PLUG	1		X		3/8"

ENGINE BALANCER SHAFT

TP4295 -UN-01JAN94

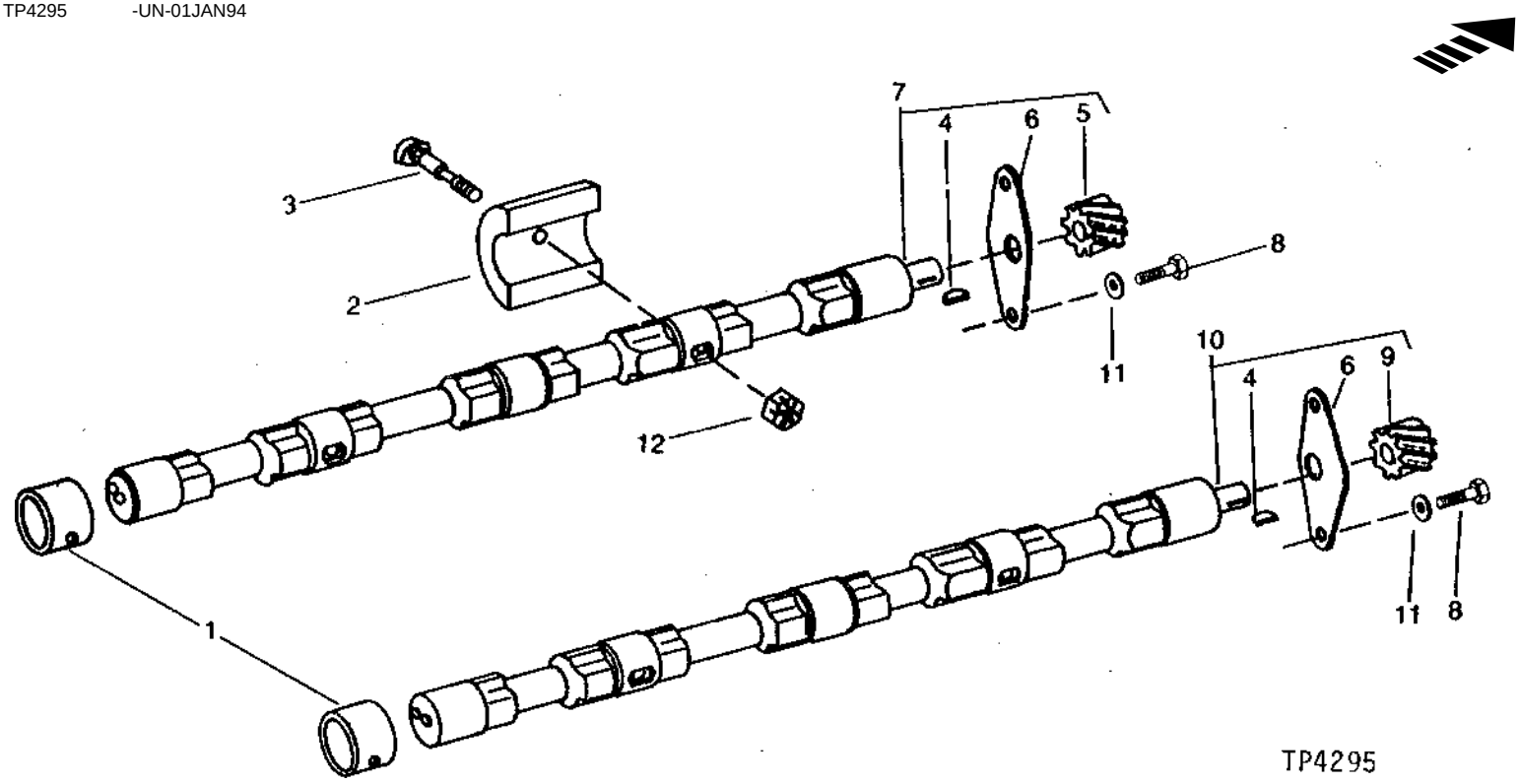

KEY	PART NO.	PART NAME	QTY	ENGINE SERIAL NO.	4511 0 0 D D	REMARKS
1	R57160	BUSHING	6		X X	(STANDARD SIZE)
	R91708	BUSHING	6		X X	.078" (OVERSIZE)
2	R54635	WEIGHT	4		X X	
3	T28745	BOLT	4		X X	
4	T28041	SHAFT KEY	2		X X	
5	T20133	GEAR	1		X X	12 TEETH
6	R58007	STOP	2		X X	
7	AR69711	BALANCER SHAFT	1		X X	(MARKED R54634) L.H.
8	19H2021	CAP SCREW	4		X X	3/8" X 5/8"
9	T20130	GEAR	1		X X	12 TEETH
10	AR69710	BALANCER SHAFT	1		X X	(MARKED R54634) R.H.
11	12H304	LOCK WASHER	4		X X	3/8"
12	T15634	NUT	4		X X	

TURBOCHARGER (AIRESEARCH)

TP53284 -UN-26JUN96

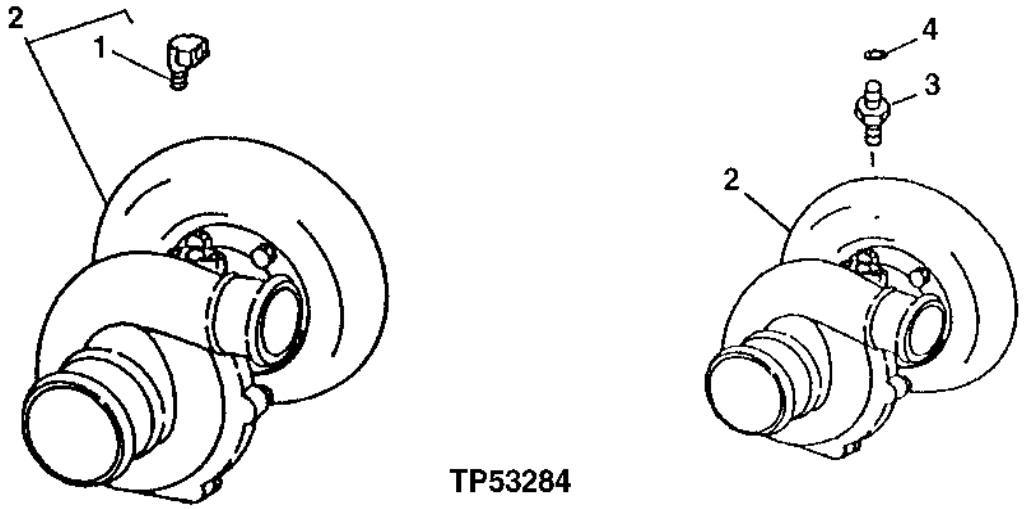

TP53284

KEY	PART NO.	PART NAME	QTY	ENGINE SERIAL NO.	410D	510D	REMARKS
1	T11180	ELBOW FITTING	1	-542303	X	X	
2	RE26342	TURBOCHARGER	1	-542303		X	(K) REMANFACTURED (EXCHANGE CREDIT)
	RE36514	TURBOCHARGER	1	-542303	X		(K) (EXCHANGE CREDIT) (REMANUFACTURED)
	RE58897	TURBOCHARGER	1	542304-	X		(K) REMANUFACTURED, (SUB FOR RE36515)
	RE58898	TURBOCHARGER	1	542304-		X	(SUB FOR RE26343) (K) (CENTER AND ROTATING) (NOT ILLUSTRATED)
3	M87733	ADAPTER	1	542304-	X		
4	R63548	O-RING	1	542304-	X		9.246 X 1.778 MM (0.364" X 0.070")

(K) RE26409 HARDWARE KIT (TURBOCHARGER)

TURBOCHARGER OIL LINES

TP46224 -UN-01JAN94

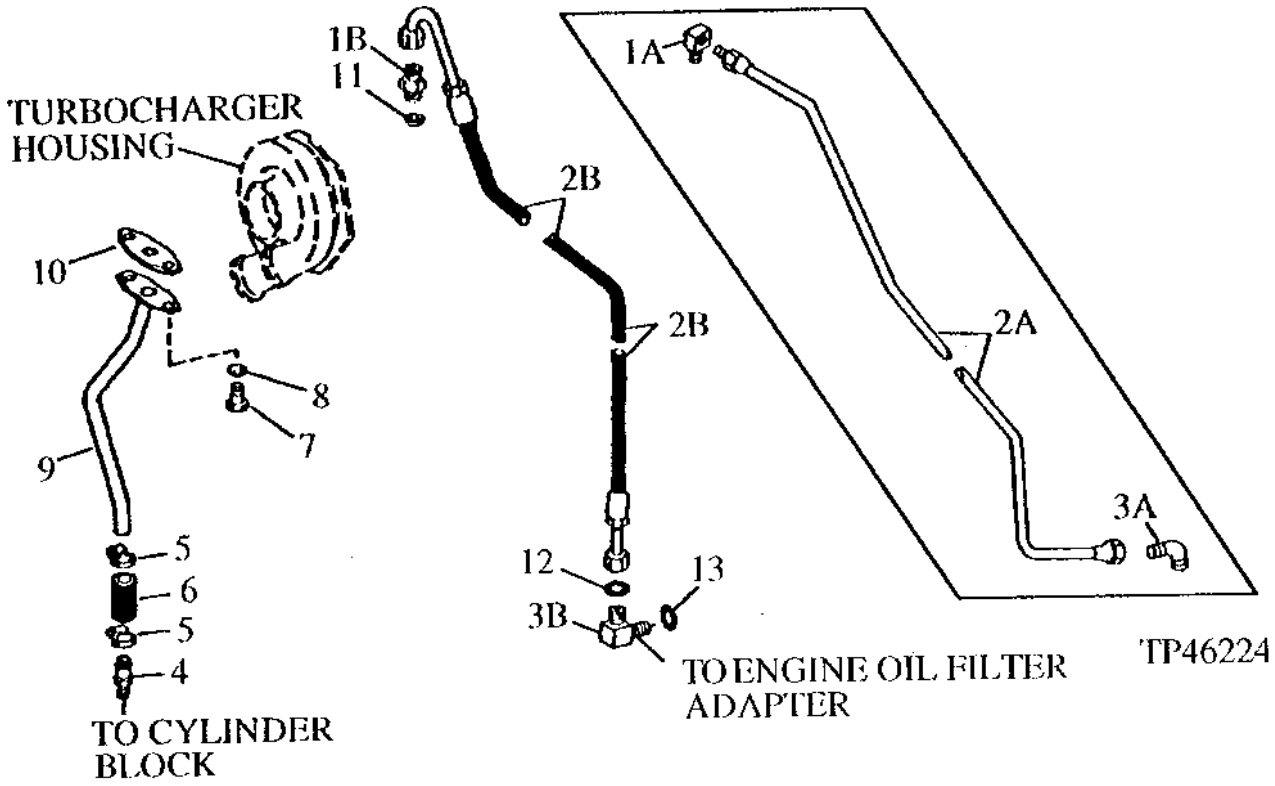

KEY	PART NO.	PART NAME	QTY	ENGINE SERIAL NO.	410D	510D	REMARKS
1A	T11180	ELBOW FITTING	1	-440084	X	X	
1B	M87733	ADAPTER	1	440085-	X	X	
2A	RE29430	OIL LINE	1	-440084	X	X	
2B	RE503219	OIL LINE	1	440085-802199	X	X	(SUB FOR RE57793) INLET
	RE503213	OIL LINE	1	802200-	X	X	(SUB FOR RE62065) INLET
3A	T19898	FITTING	1	-440084	X	X	
3B	R121891	ELBOW FITTING	1	440085-802199	X	X	
	38H1004	ELBOW FITTING	1	802200-	X	X	
4	R39503	FITTING	1		X	X	
5	AR21839	CLAMP	2		X	X	
6	.....	HOSE	1		X	X	(SUB FOR R81210) (MAKE FROM R120013) CUT TO LENGTH)
7	R124277	CAP SCREW	2		X	X	(USE WITH RE62097)
8	12H304	LOCK WASHER	AR		X	X	3/8"
9	RE62097	OIL LINE	1		X	X	(SUB FOR RE19265) (ALSO ORDER (2) R124277) DRAIN
10	R105346	GASKET	1		X	X	
11	R63548	O-RING	1	440085-	X	X	
12	R63548	O-RING	1	802200-	X	X	
13	R26448	O-RING	1	802200-	X	X	

MEMORANDA

WATER PUMP

TP15959 -UN-01JAN94

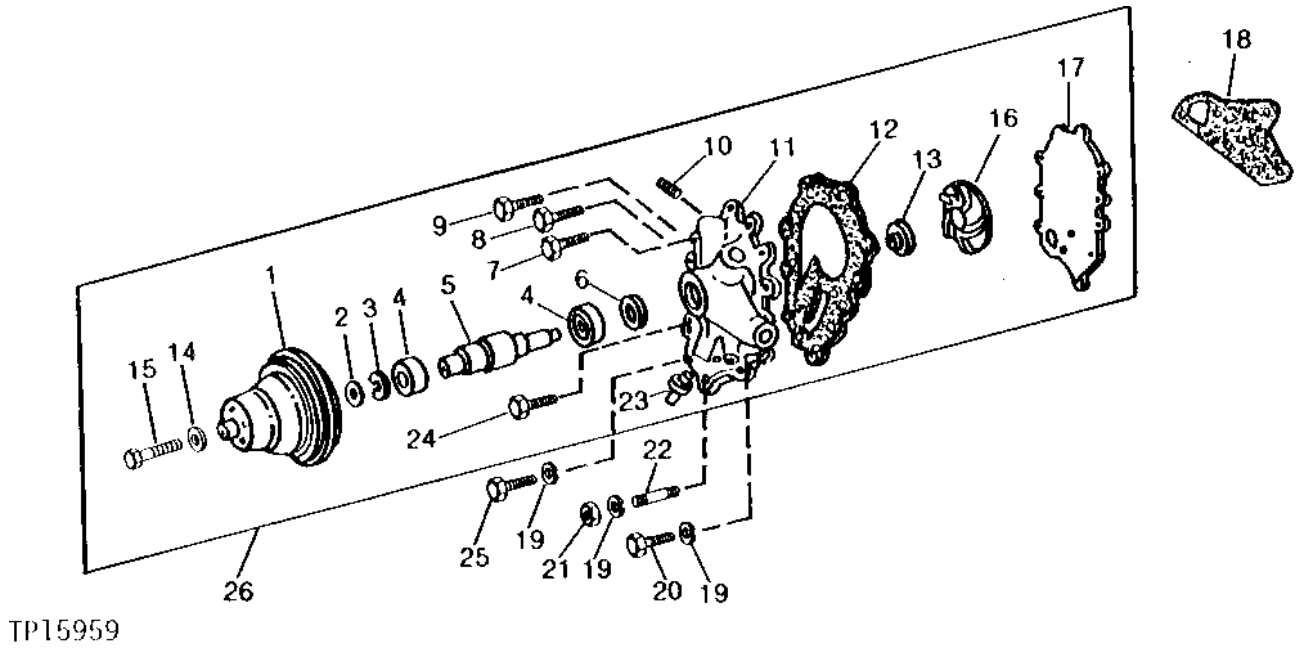

TP15959

KEY	PART NO.	PART NAME	QTY	ENGINE SERIAL NO.	4511 00D D	REMARKS
1	R82945	PULLEY	1		X X	(MARKED R73322)
2	AR90861	SEAL	1		X X	OUTER
3	R62191	SNAP RING	AR		X X	1.7 MM (.067")
	R62192	SNAP RING	AR		X X	2.0 MM (.077")
	R62193	SNAP RING	AR		X X	2.2 MM (.087")
	R62194	SNAP RING	AR		X X	2.5 MM (.097")
4	JD10329	BALL BEARING	2		X X	(SUB FOR JD7686)
5	R82052	SHAFT	1		X X	
6	AR90860	SEAL	1		X X	INNER
7	19H2633	CAP SCREW	5		X X	3/8" X 1-1/2"
8	19H3034	CAP SCREW	2		X X	3/8" X 3"
9	19H2676	CAP SCREW	1		X X	3/8" X 1"
10	15H584	PIPE PLUG	1		X X	1/2"
11	R73322	HOUSING	1		X X	
12	R98472	GASKET	1		X X	
13	AR101549	SEAL KIT	1		X X	
14	T18407	WASHER	1		X X	
15	19H2993	CAP SCREW	1		X X	1/2" X 1-1/2"
16	R56812	IMPELLER	1		X X	
17	R72645	COVER	1		X X	
18	T20243	GASKET	1		X X	
19	12H304	LOCK WASHER	AR		X X	3/8"
20	19H3217	CAP SCREW	1		X X	3/8" X 1-3/4"
	19H3031	CAP SCREW	1		X X	3/8" X 2-1/2"
21	N10215	LOCK NUT	1		X X	3/8", (SUB FOR 14H812, THIS APPLICATION)
22	T25701	STUD	1		X X	
23	R34985	LINE	1		X X	
24	19H1726	CAP SCREW	1		X X	3/8" X 2-1/4"
25	19H3734	SCREW	1		X X	3/8" X 3"
26	AR95506	WATER PUMP	1		X X	(MARKED R73322)

WATER PUMP REPAIR KIT

TP16007 -UN-01JAN94

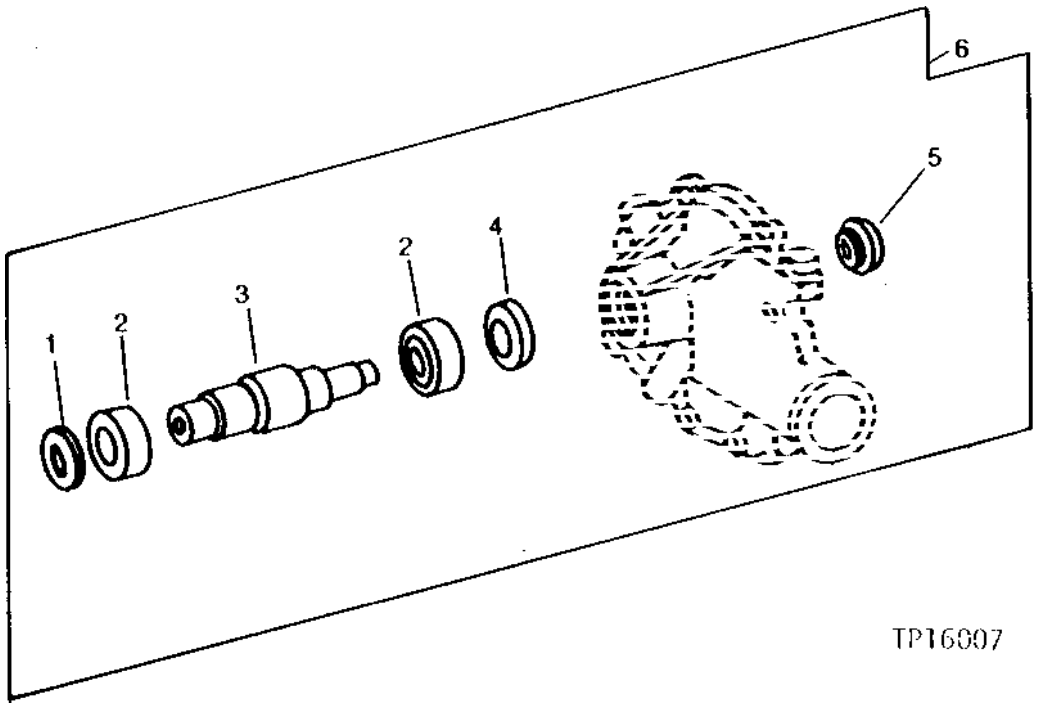

KEY	PART NO.	PART NAME	QTY	SERIAL NO.	4510 DD	REMARKS
1	AR90861	SEAL	1		X X	OUTER
2	JD10329	BALL BEARING	2		X X	(SUB FOR JD7686)
3	R82052	SHAFT	1		X X	
4	AR90860	SEAL	1		X X	INNER
5	AR101549	SEAL KIT	1		X X	
6	AT74543	KIT	1		X X	

MEMORANDA

ENGINE THERMOSTAT AND THERMOSTAT HOUSING

TP29638 -UN-01JAN94

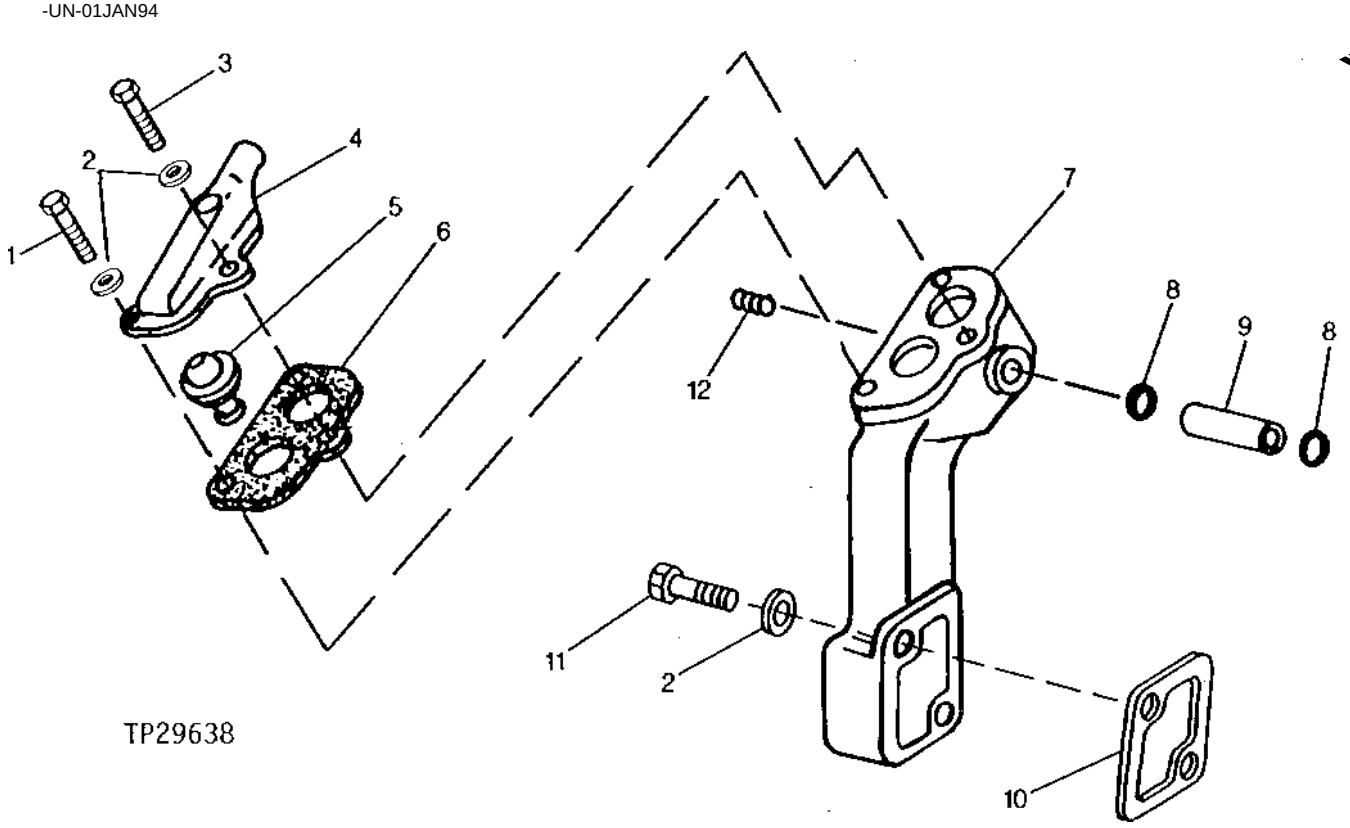

KEY	PART NO.	PART NAME	QTY	ENGINE SERIAL NO.	4 5 1 1 0 0 D D	REMARKS
1	19H3065	CAP SCREW	2		X X	3/8" X 2"
2	12H304	LOCK WASHER	AR		X X	3/8"
3	19H2676	CAP SCREW	1		X X	3/8" X 1"
4	R54639	COVER	1		X X	
5	AR48675	THERMOSTAT	2		X X	83°C (180°F)
6	R501373	GASKET	1		X X	(SUB FOR R54638)
7	R92436	HOUSING	1		X X	
8	R56461	O-RING	2		X X	
9	R55967	TUBE	1		X X	
10	R54641	GASKET	1		X X	
11	19H3746	SCREW	2		X X	3/8" X 3-7/8"
12	15H561	PIPE PLUG	1		X X	1/2", (WITHOUT HEATER)

MEMORANDA

ENGINE OIL COOLER

TP41978 -UN-01JAN94

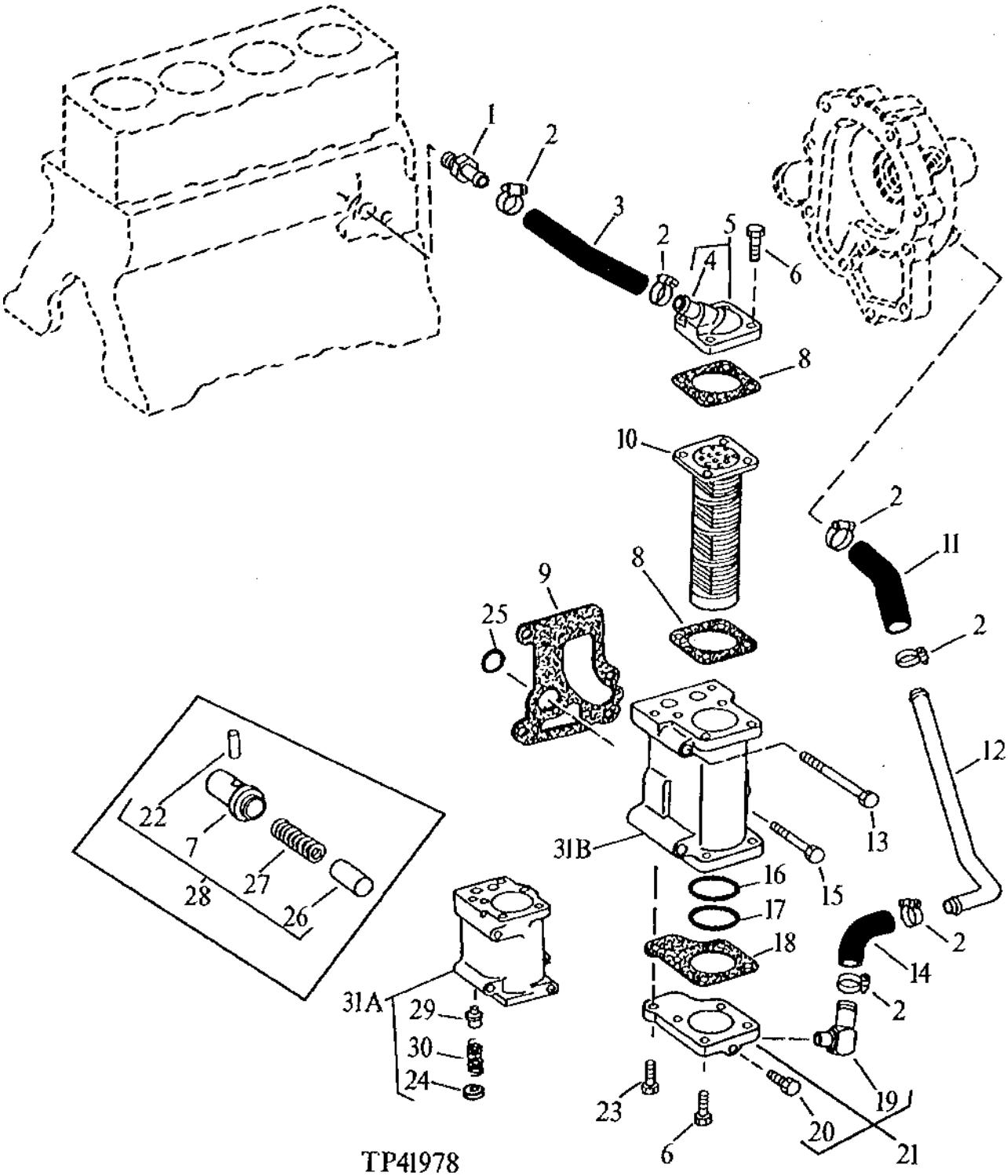

ENGINE OIL COOLER-CONTINUED

KEY	PART NO.	PART NAME	QTY	ENGINE SERIAL NO.	410D	510D	REMARKS
1	R39503	FITTING	1		X	X	
2	AR21839	CLAMP	6		X	X	
3	R54826	HOSE	1		X	X	
4	R34985	LINE	1		X	X	
5	AR70464	COVER	1		X	X	(MARKED R58632)
6	19H1849	CAP SCREW	8		X	X	5/16" X 1-1/4"
7	.....	HOUSING	1	-362468	X	X	(SUB AR63351)
8	R98486	GASKET	2		X	X	
9	R98489	GASKET	1		X	X	
10	RE31089	OIL COOLER	1		X	X	
11	.....	HOSE	1		X	X	(MAKE FROM R57300 CUT TO LENGHT)
12	R54830	TUBE	1		X	X	
13	19H1925	CAP SCREW	2		X	X	3/8" X 4-1/4"
14	R54829	HOSE	1		X	X	
15	19H3065	CAP SCREW	2		X	X	3/8" X 2"
16	R56814	O-RING	1		X	X	INNER
17	R56815	O-RING	1		X	X	OUTER
18	R98487	GASKET	1		X	X	
19	AR26732	ELBOW FITTING	1		X	X	
20	R42852	PIPE PLUG	1		X	X	
21	AR63356	COVER	1		X	X	(MARKED R54828)
22	34H184	SPRING PIN	1		X	X	1/8" X 1-1/8"
23	19H1905	CAP SCREW	1		X	X	5/16" X 1"
24	.....	VALVE	1	-362468	X	X	
25	R61871	O-RING	1	-362468	X	X	
26	.....	VALVE	1	-362468	X	X	(SUB AR63351)
27	R46625	SPRING	1	-362468	X	X	
28	AR63351	VALVE	1	-362468	X	X	
29	.....	RELIEF VALVE	1	-362468	X	X	
30	R46625	SPRING	1	-362468	X	X	
31A	AR103165	HOUSING	1	-362468	X	X	(MARKED R76241)
31B	R110562	HOUSING	1	362469-	X	X	

MEMORANDA

FUEL FILTER AND FUEL LINES
(ENGINE SERIAL NO. -457534)(410D)
(ENGINE SERIAL NO.- -458298)(510D)

TP29640 -UN-01JAN94

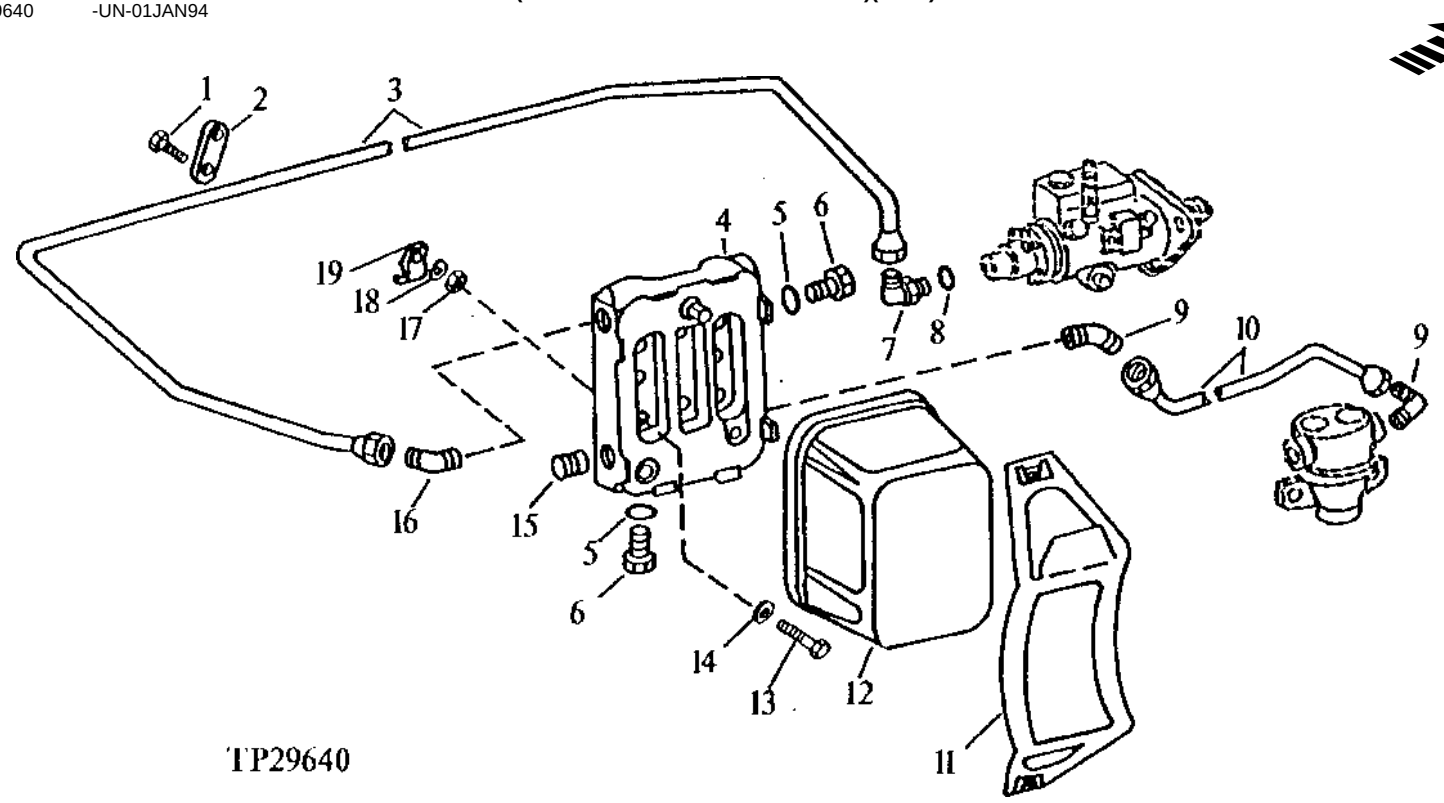

KEY	PART NO.	PART NAME	QTY	ENGINE SERIAL NO.	4 5 1 1 0 0 D D	REMARKS
1	19H2284	CAP SCREW	1		X X	3/8" X 7/8"
2	R56588	STRAP	1		X X	
3	RE42102	FUEL LINE	1		X X	
4	AR50040	HOUSING	1		X X	
5	R34447	WASHER	2		X X	
6	R48071	DRAIN PLUG	2		X X	
7	RE56322	TEE FITTING	1		X X	(SUB FOR AT32333)
8	R26286	O-RING	1		X X	
9	R82131	ELBOW FITTING	2		X X	
10	RE36550	FUEL LINE	1		X X	
11	R66821	CLAMP	1		X X	
12	AR50041	FUEL FILTER	1		X X	
13	19H2284	CAP SCREW	2		X X	3/8" X 7/8"
14	24H1304	WASHER	2		X X	13/32" X 23/32" X 0.120"
15	R104592	PIPE PLUG	1		X X	1/8"
16	T24945	ELBOW FITTING	1		X X	
17	14H812	NUT	1		X X	3/8"
18	12H304	LOCK WASHER	1		X X	3/8"
	24M7096	WASHER	1		X X	0.413" X 0.709" X 0.063"
19	T14050	CLAMP	1		X X	(SUB FOR T29527, THIS APPLICATION)

FUEL FILTER AND FUEL LINES
(ENGINE SERIAL NO.457535-)(410D)
(ENGINE SERIAL NO.458299-)(510D)

T152294 -UN-06MAR02

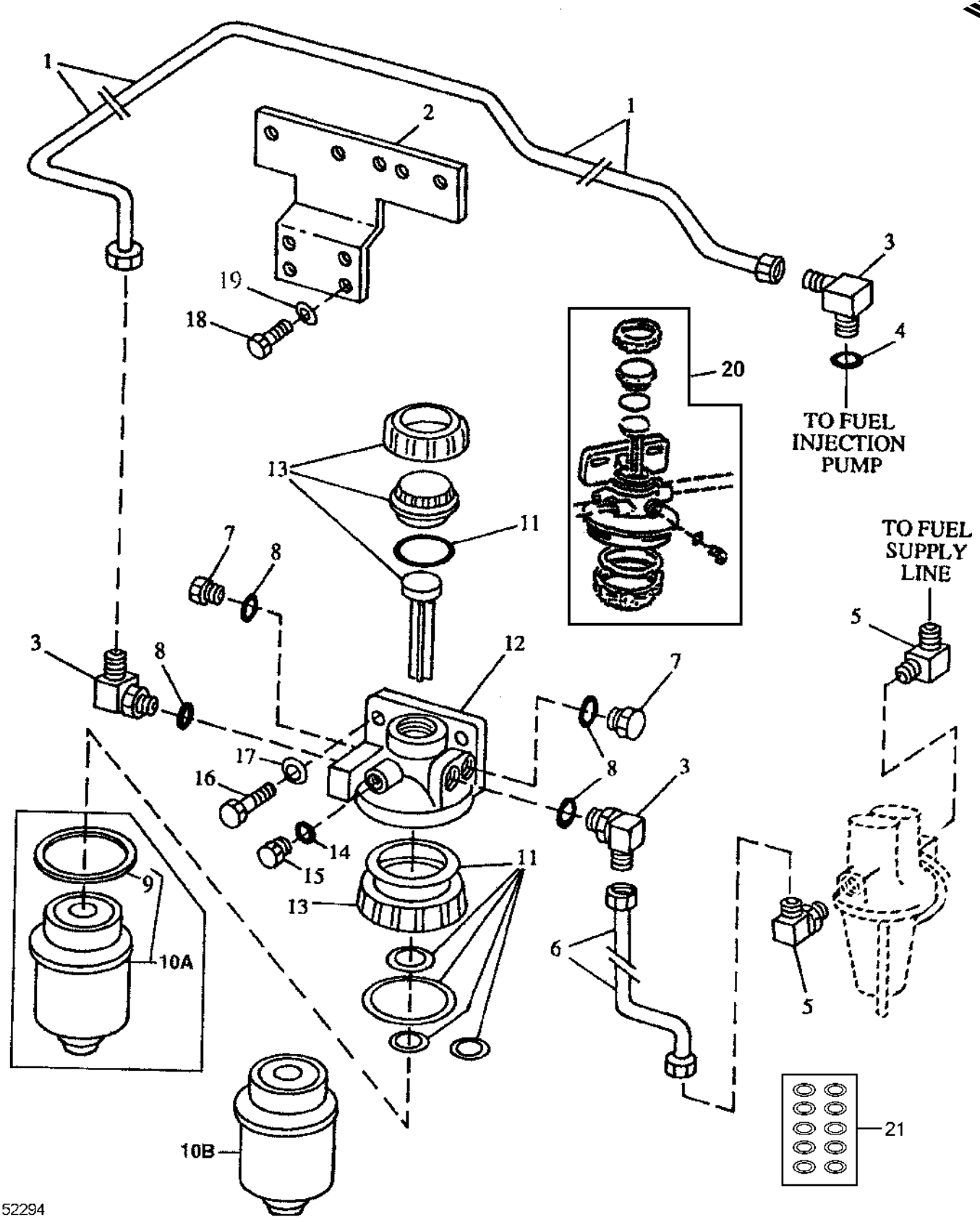

FUEL FILTER AND FUEL LINES
(ENGINE SERIAL NO.457535-) (410D)
(ENGINE SERIAL NO.458299-) (510D)

KEY	PART NO.	PART NAME	QTY	ENGINE SERIAL NO.	410D	510D	REMARKS
1	RE60652	FUEL LINE	1		X	X	
2	R121522	BRACKET	1		X	X	
3	RE56322	TEE FITTING	3		X	X	(SUB FOR AT32333)
4	R26286	O-RING	1		X	X	10.516 X 1.829 MM (0.414" X 0.072")
5	R82131	ELBOW FITTING	2		X	X	
6	RE61405	FUEL LINE	1		X	X	(SUB FOR RE55520)
7	R27094	DRAIN PLUG	2		X	X	
8	R77673	O-RING	4		X	X	10.516 X 1.829 MM (0.414" X 0.072")
9	R113565	SEAL	1	-483408	X	X	
10A	RE53400	FUEL FILTER	1	-483408	X	X	(SUB RE62419 AND RE500160)
10B	RE62419	FUEL FILTER	1	483409-	X	X	
11	RE516553	KIT	1		X	X	(SUB FOR RE50752)
12	RE55762	FILTER HEAD	1	-483408	X	X	(SUB RE62419 AND RE500160)
	RE63181	FILTER HEAD	1	483409-	X	X	(SUB FOR RE500160)
13	RE51649	SEAL KIT	1		X	X	
14	R113562	RING	1		X	X	
15	R113563	DRAIN PLUG	1		X	X	1/8", (ALSO ORDER R113562)
16	19H2676	CAP SCREW	2		X	X	3/8" X 1"
17	24M7239	WASHER	2		X	X	10.700 X 21 X 2.500 MM
18	19H2676	CAP SCREW	2		X	X	3/8" X 1"
19	12H304	LOCK WASHER	AR		X	X	3/8"
20	RE500160	KIT	1		X	X	FILTER HEADER
21	RE516513	KIT	1		X	X	(WITH HAND PRIMER) (CONTAINS 10 O-RINGS)
	RE516512	KIT	1		X	X	(WITHOUT HAND PRIMER) (CONTAINS 10 O-RINGS)

MEMORANDA

FUEL TRANSFER PUMP

TP26808 -UN-01JAN94

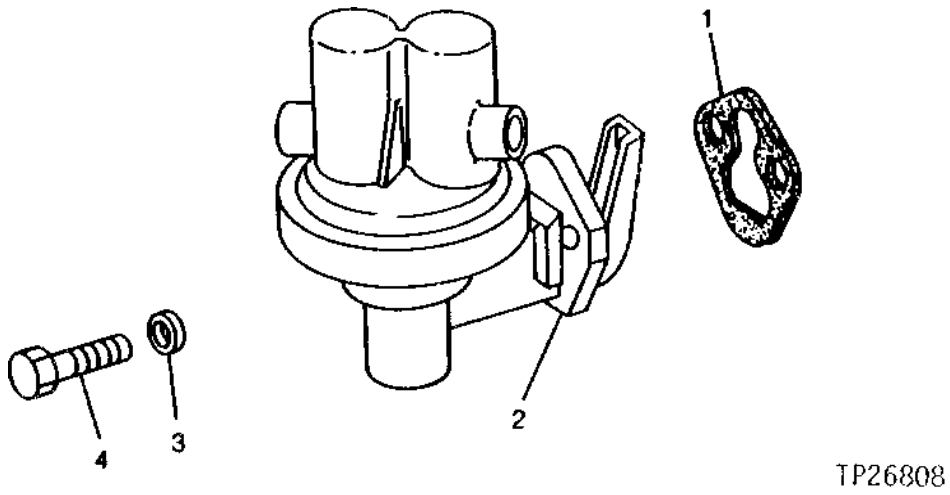

KEY	PART NO.	PART NAME	QTY	ENGINE SERIAL NO.	410D	510D	REMARKS
1	R97350	GASKET	1		X	X	
2	RE42211	FUEL PUMP	1		X	X	
3	T27860	WASHER	2		X	X	
4	19H1849	CAP SCREW	2		X	X	5/16" X 1-1/4"

MEMORANDA

STARTING MOTOR, ATTACHING PARTS AND SOLENOID COVER
(ENGINE SERIAL NO. -417316)

TP43963 -UN-01JAN94

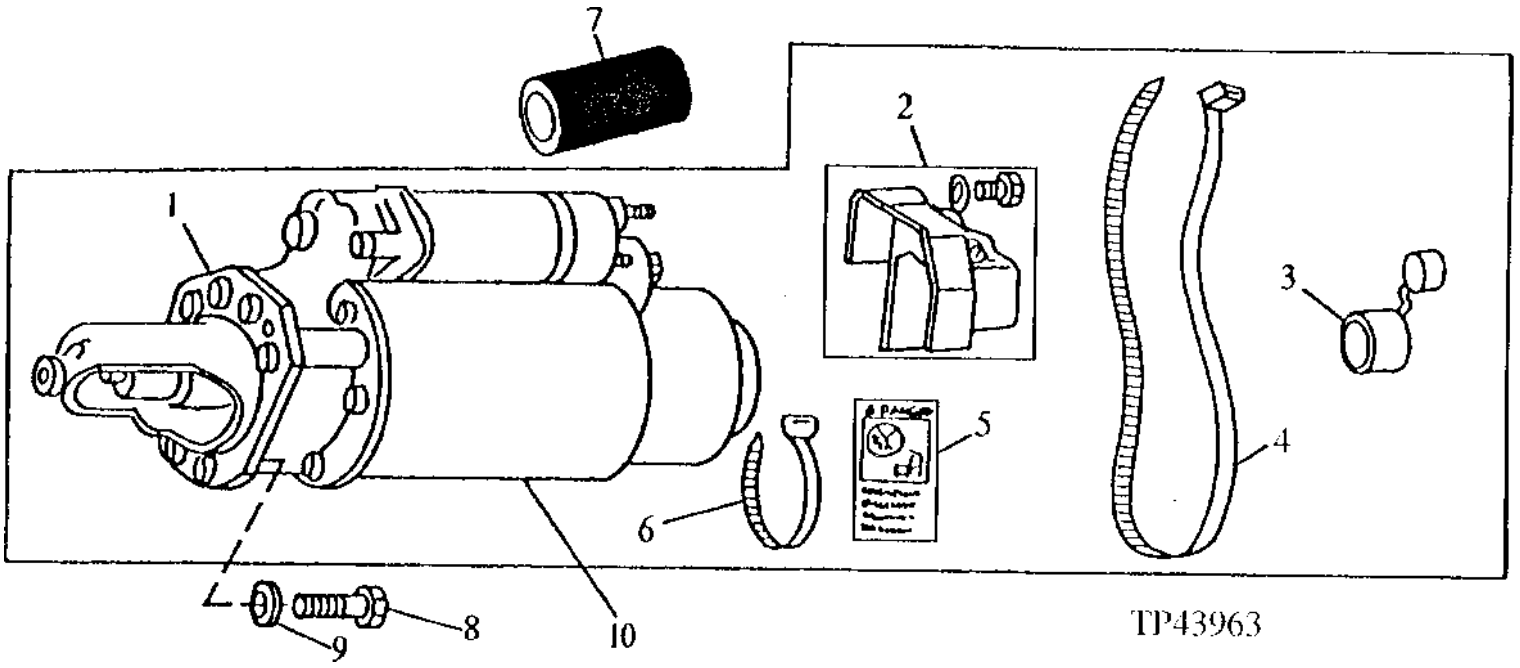

KEY	PART NO.	PART NAME	QTY	ENGINE SERIAL NO.	4 5 1 1 0 0 D D	REMARKS
1	.....	STARTER MOTOR	1		X X	
2	RE45329	COVER	1		X X	
3	R104677	BUSHING	1		X X	
4	R76477	TIE BAND	1		X X	
5	T146102	LABEL	1		X X	(SUB FOR T134459) (SUB FOR T146103, THIS APPLICATION)
6	R44302	TIE BAND	1		X X	
7	.....	HOSE	1		X X	(MAKE FROM T78497 BULK MATERIAL, CUT TO LENGTH)
8	19H3239	CAP SCREW	3		X X	3/8" X 1-1/4"
9	12H304	LOCK WASHER	3		X X	3/8"
10	.....	KIT	1		X X	(SUB FOR RE43421) (SUB RE70960, THIS APPLICATION)

REPLACEMENT STARTING MOTOR
KIT, STARTING MOTOR WITH SOLENOID COVER
(STARTING MOTOR, 12-VOLT)
(ENGINE SERIAL NO. 417317-)

TP46549 -UN-07FEB97

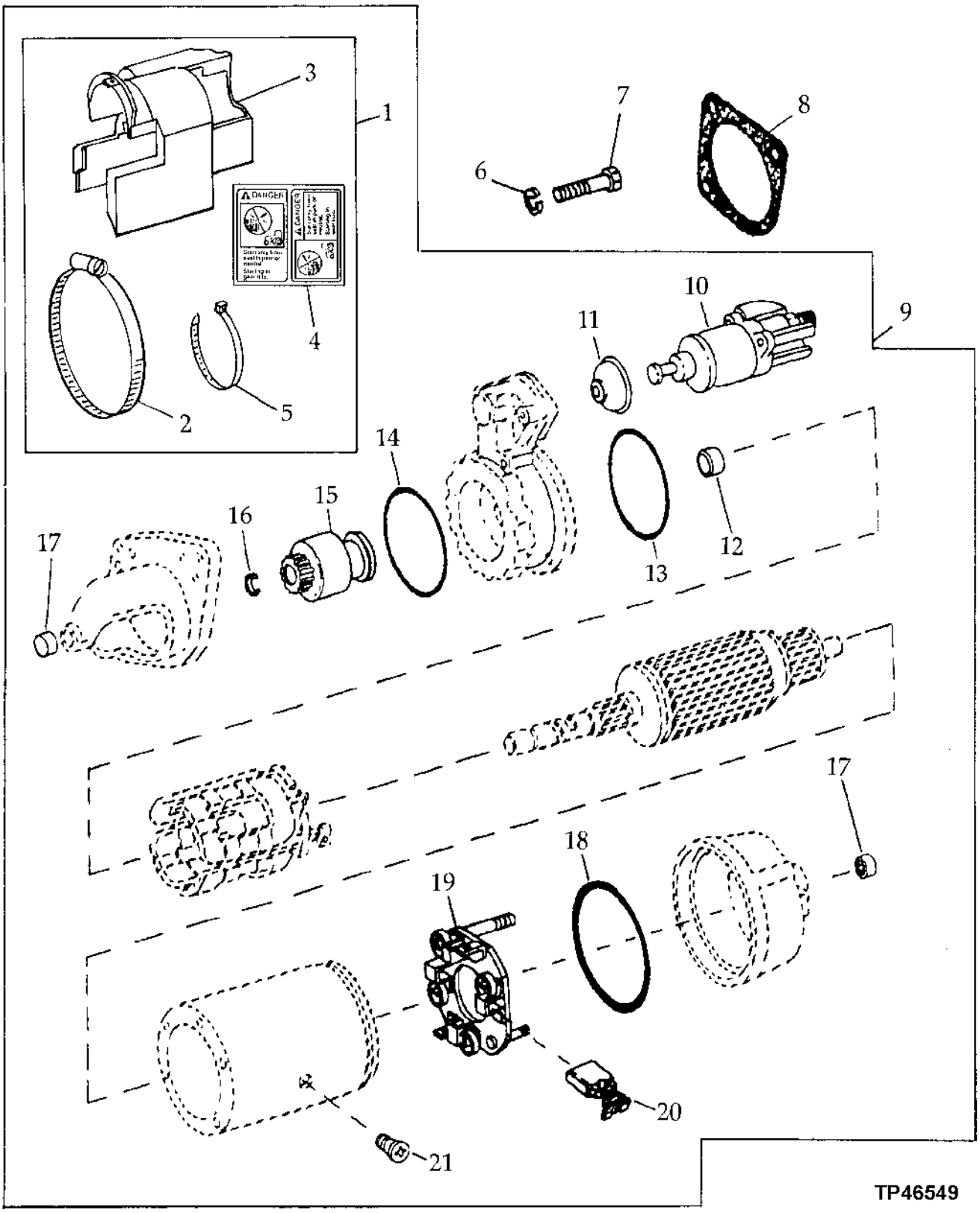

REPLACEMENT STARTING MOTOR - CONTINUED
KIT, STARTING MOTOR WITH SOLENOID
(STARTING MOTOR, 12-VOLT)
(ENGINE SERIAL NO. 417317-)

KEY	PART NO.	PART NAME	QTY	ENGINE SERIAL NO.	410D	510D	REMARKS
1	RE45329	COVER	1		X	X	KIT, STARTER SOLENOID
2	TY22471	CLAMP	1		X	X	
3	.....	COVER	1		X	X	
4	T146102	LABEL	1		X	X	
5	R76477	TIE BAND	1		X	X	
6	12H304	LOCK WASHER	3		X	X	3/8", (USE WITH 19H3239)
7	19H3411	SCREW	3		X	X	3/8" X 1-1/8", (SUB FOR 19H3239, THIS APPLICATION)
8	R53108	GASKET	1		X	X	
9	.....	STARTER MOTOR	1		X	X	(SUB FOR RE55378 OR RE65188) (SUB RE70960, THIS APPLICATION)
10	RE42777	SWITCH	1		X	X	
11	R100513	COVER	1		X	X	
12	R100509	BUSHING	1		X	X	
13	R100511	O-RING	1		X	X	
14	R50901	WASHER	1		X	X	
15	RE39249	CLUTCH	1		X	X	
16	R50902	SNAP RING	1		X	X	
17	RE39251	NEEDLE BEARING	2		X	X	
18	R100512	O-RING	1		X	X	
19	RE39250	CARBON BRUSH HOLDER	1		X	X	
20	RE39247	BRUSH	4		X	X	
21	R100508	SCREW	4		X	X	

STARTING MOTOR DRIVE, HOUSING AND ARMATURE

TP28463 -UN-01JAN94

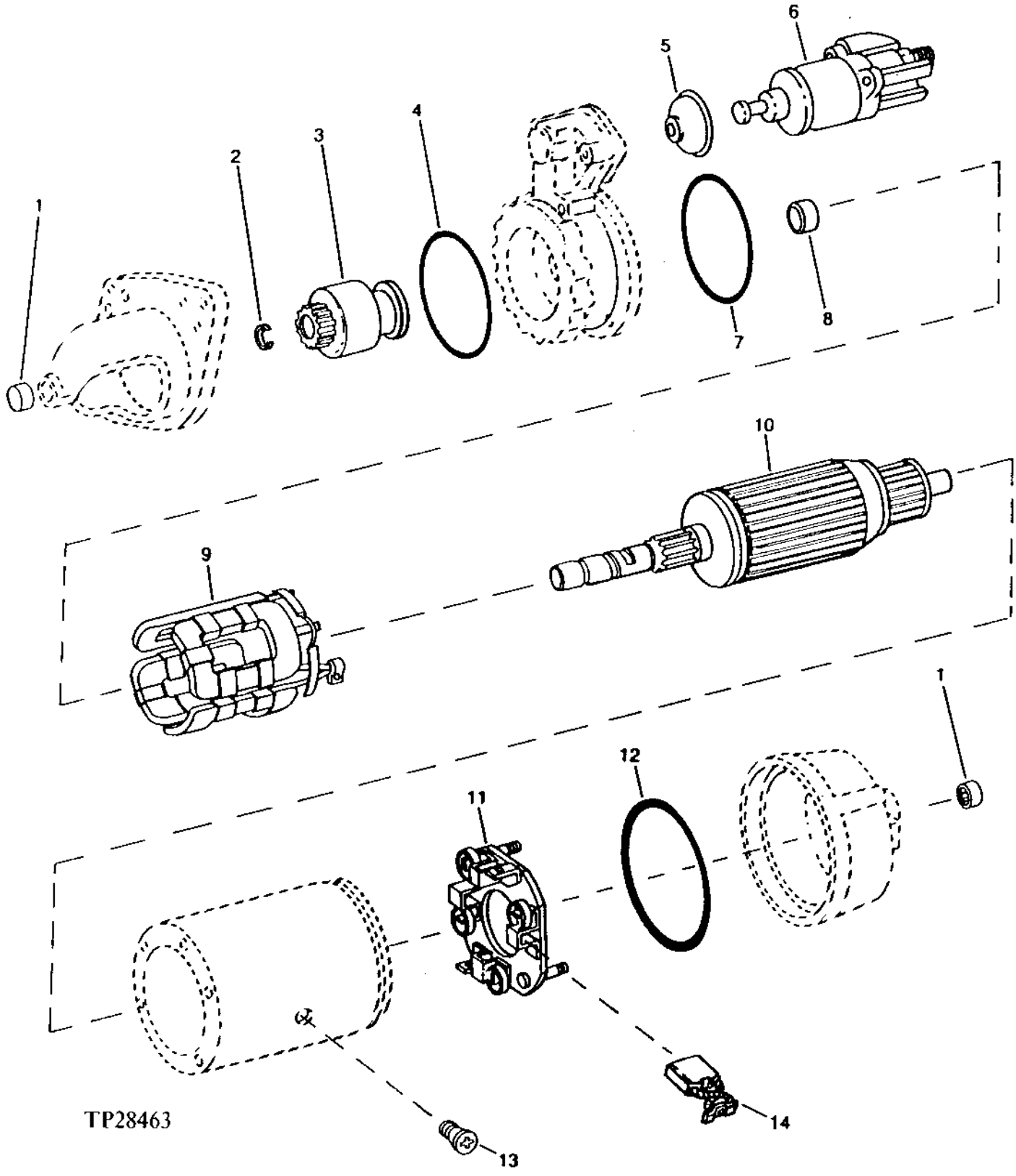

STARTING MOTOR DRIVE, HOUSING AND ARMATURE

KEY	PART NO.	PART NAME	QTY	ENGINE SERIAL NO.	4510 0D D	REMARKS
1	RE39251	NEEDLE BEARING	2		X X	
2	R50902	SNAP RING	1		X X	
3	RE39249	CLUTCH	1		X X	
4	R50901	WASHER	1		X X	
5	R100513	COVER	1		X X	
6	RE42777	SWITCH	1		X X	
7	R100511	O-RING	1		X X	
8	R100509	BUSHING	1		X X	
9	RE39243	FIELD WINDING COIL	1		X X	
10	RE39245	ARMATURE	1		X X	
11	RE39250	CARBON BRUSH HOLDER	1		X X	
12	R100512	O-RING	1		X X	
13	R100508	SCREW	4		X X	
14	RE39247	BRUSH	4		X X	

REPLACEMENT STARTING MOTOR KIT
(STARTING MOTOR, 12-VOLT)
(ENGINE SERIAL NO. 417317-)

RGP10342 -UN-19FEB04

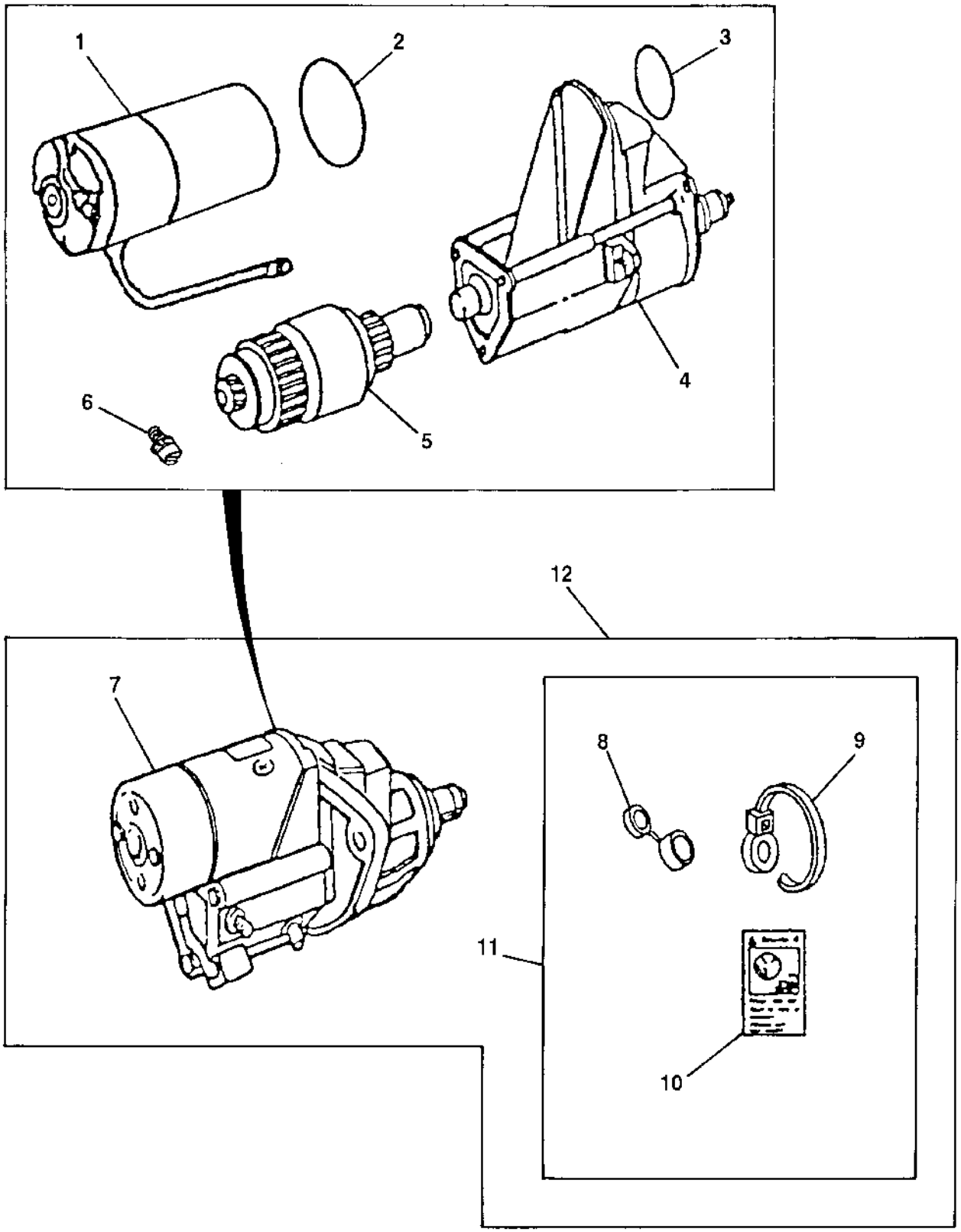

RGP10342

REPLACEMENT STARTING MOTOR KIT - CONTINUED
(STARTING MOTOR, 12-VOLT)
(ENGINE SERIAL NO. 417317-)

KEY	PART NO.	PART NAME	QTY	ENGINE SERIAL NO.	4 5 1 1 0 0 D D	REMARKS
1	.....	MOTOR	1		X X	(SUB RE70960)
2	R135509	SEAL	1		X X	
3	R135510	O-RING	1		X X	
4	RE70680	SOLENOID	1		X X	
5	RE70487	CLUTCH	1		X X	
6	RE71256	SCREW WITH WASHER	1		X X	M5 X .8
7	.....	STARTER MOTOR	1		X X	(MARKED RE70474) (SUB RE70960)
8	.....	COVER	1		X X	(SUB RE70756)
9	R96703	TIE BAND	1		X X	
10	T146102	LABEL	1		X X	
11	RE70756	KIT	1		X X	
12	RE70960	STARTER MOTOR KIT	1		X X	(DENSO)

MEMORANDA

ALTERNATOR MOUNTING BRACKETS

TP29595 -UN-01JAN94

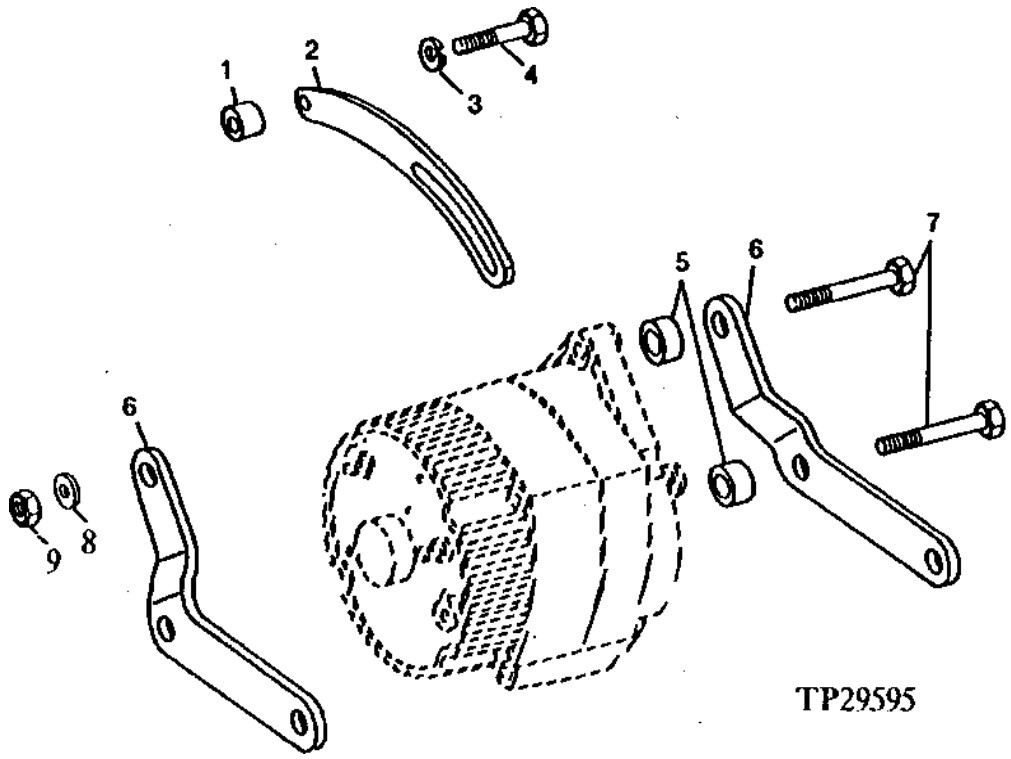

KEY	PART NO.	PART NAME	QTY	ENGINE SERIAL NO.	4 5 1 1 0 0 D D	REMARKS
1	28H860	WASHER	1		X X	0.423" X 0.675" X 3/8", 3/8" X 5/16"
2	R108404	STRAP	1		X X	(SUB FOR R71250, THIS APPLICATION)
3	12H304	LOCK WASHER	AR		X X	3/8"
4	R122618	SCREW	1		X X	
5	28H862	SPACER	2		X X	
6	R57260	BRACKET	2		X X	
7	19H3743	SCREW	2		X X	3/8" X 2-7/8"
8	24M7106	WASHER	AR		X X	10 X 18 X 2.500 MM
9	N10215	LOCK NUT	1		X X	3/8", (SUB FOR 14H812, THIS APPLICATION)
10	24M7106	WASHER	AR		X X	10 X 18 X 2.500 MM

FAN BELTS AND CRANKSHAFT PULLEY

TP3792 -UN-01JAN94

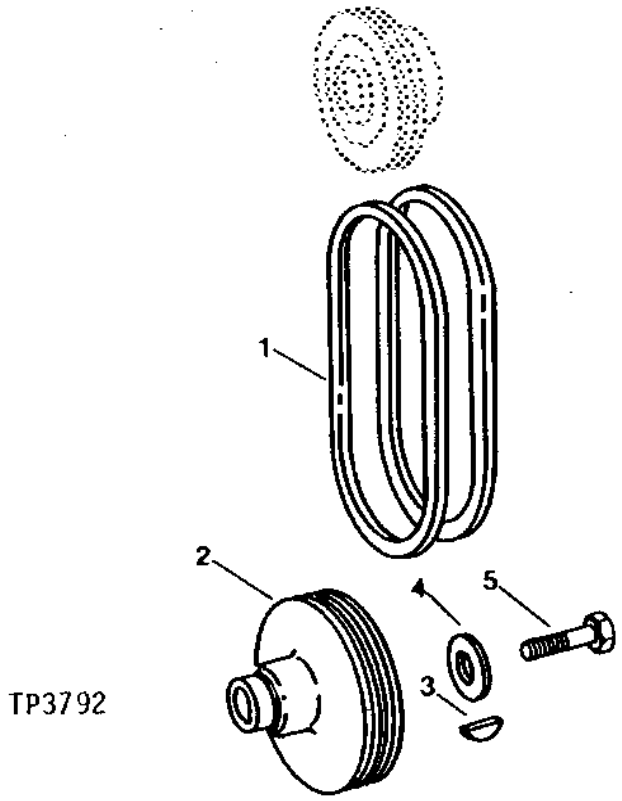

KEY	PART NO.	PART NAME	QTY	ENGINE SERIAL NO.	4 1 0 D	5 1 0 D	REMARKS
1	AR54592	BELT SET	1		X	X	(SET OF TWO)
2	R85391	PULLEY	1		X	X	
3	26H27	SHAFT KEY	1		X	X	
4	CD16045	SPACER	1		X	X	(USE IF AVAILABLE)
5	R84978	CAP SCREW	1		X	X	

ENGINE FLYWHEEL AND FLYWHEEL HOUSING

TP41857 -UN-01JAN94

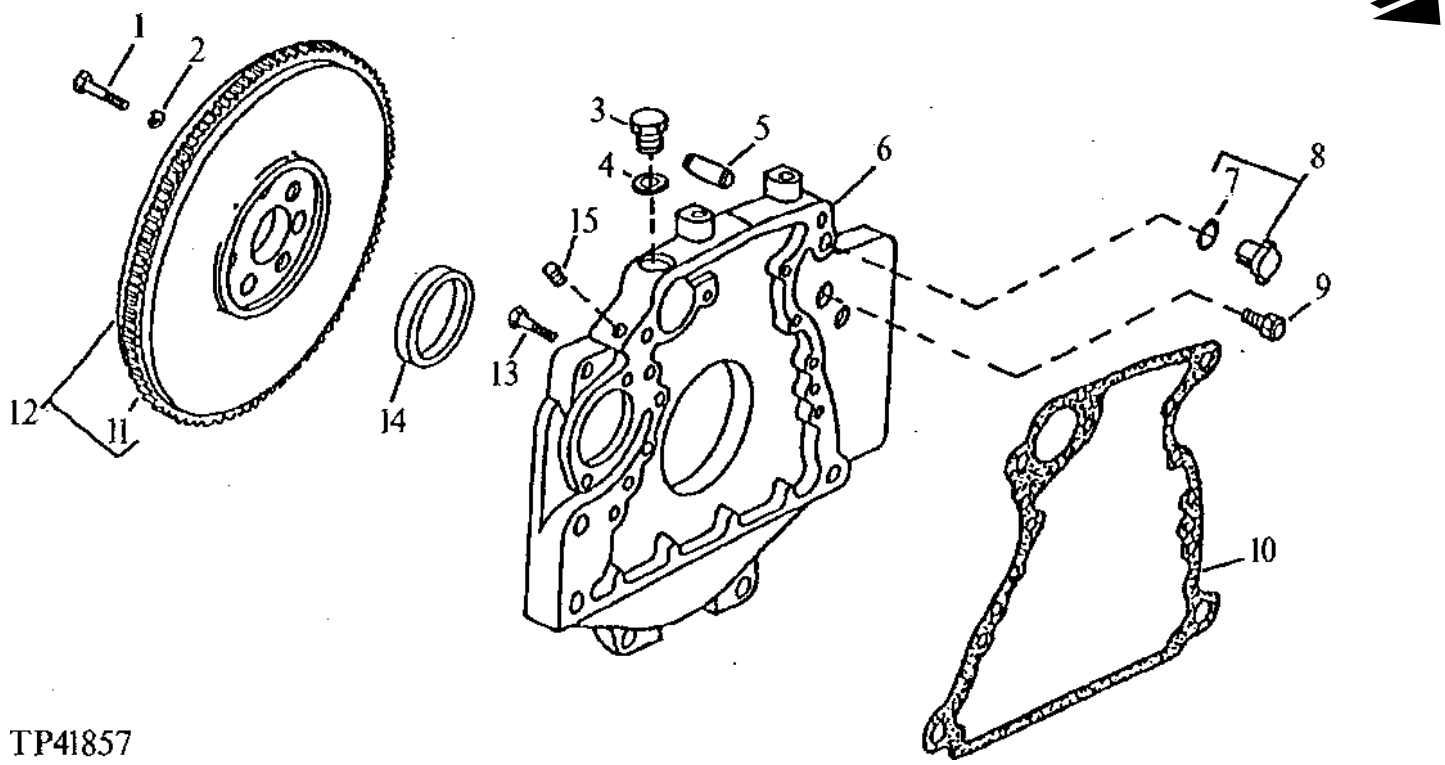

KEY	PART NO.	PART NAME	QTY	ENGINE SERIAL NO.	4 5 1 1 0 0 D D	REMARKS
1	19H2993	CAP SCREW	4		X X	HS, SAE 8, 1/2" X 1-1/2"
2	T23891	WASHER	4		X X	
3	M1746T	DRAIN PLUG	1		X X	
4	T13213	WASHER	1		X X	
5	T26565	DOWEL PIN	2		X X	
6	R54621	HOUSING	1		X X	
7	R27149	O-RING	1		X X	
8	AR61533	PLUG	1		X X	
9	19H2351	CAP SCREW	1		X X	1/2" X 1/2"
10	R97351	GASKET	1		X X	
11	R54503	GEAR	1		X X	(115 TEETH)
12	AR96222	FLYWHEEL	1		X X	(MARKED R72651)
13	19H2545	CAP SCREW	1		X X	3/8" X 1-3/8"
14	RE44574	SEAL	1		X X	REAR OIL SEAL
15	15H638	PIPE PLUG	1		X X	1/8"

MEMORANDA

CYLINDER HEAD REMOVAL GASKET KIT

TP26441 -UN-01JAN94

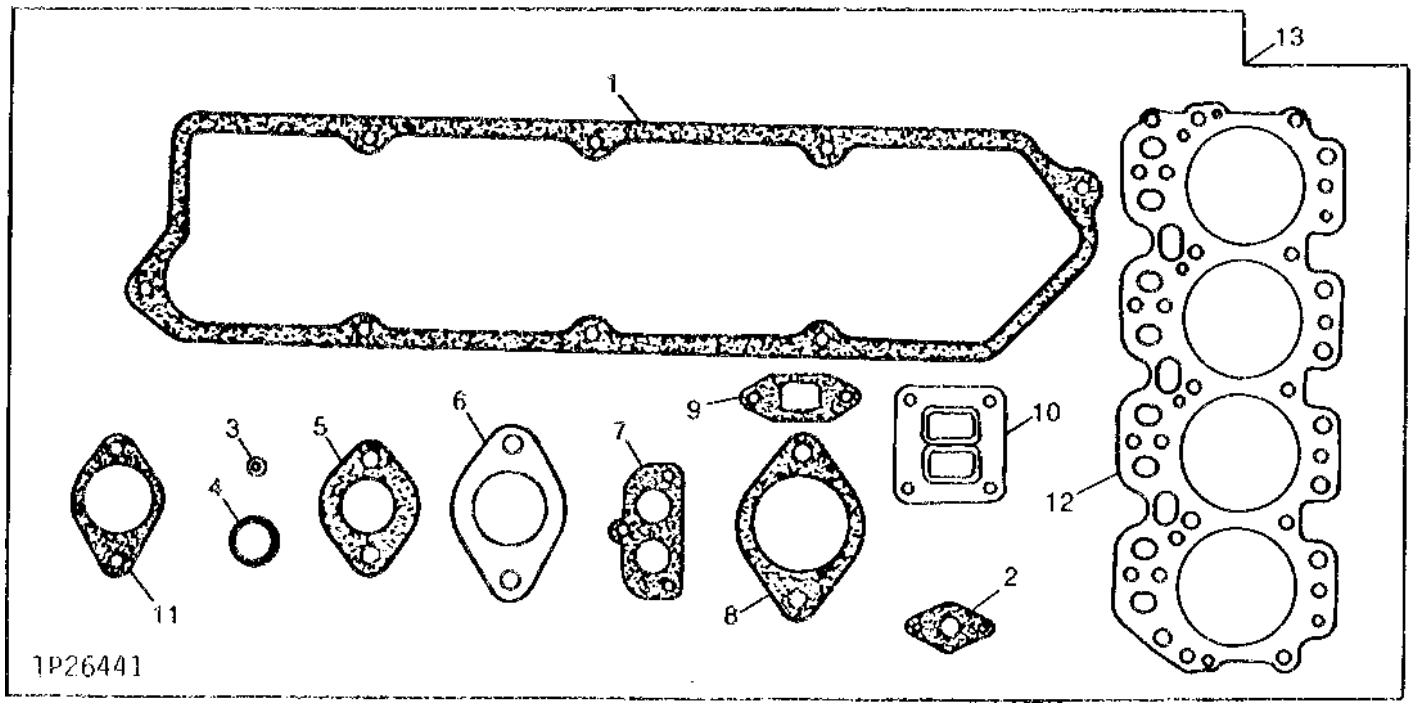

KEY	PART NO.	PART NAME	QTY	ENGINE SERIAL NO.	410D	510D	REMARKS
1	AR100596	GASKET	1		X	X	ROCKER ARM COVER
2	R97348	GASKET	1		X	X	TURBOCHARGER INLET
3	R87627	O-RING	8		X	X	CYLINDER HEAD INTAKE AND EXHAUST VALVES
4	R56463	O-RING	1		X	X	VENT TUBE
5	T20219	GASKET	1		X	X	THERMOSTAT HOUSING
6	R90658	GASKET	4		X	X	EXHAUST MANIFOLD
7	R501373	GASKET	1		X	X	(SUB FOR R54638) THERMOSTAT COVER (WITH DUAL THERMOSTAT)
8	R81275	GASKET	1		X	X	AIR INLET
9	R105346	GASKET	1		X	X	TURBOCHARGER OUTLET
10	R123572	GASKET	1		X	X	TURBOCHARGER, (SUB FOR R89879, THIS APPLICATION)
11	T20215	GASKET	1		X	X	THERMOSTAT COVER (WITH SINGLE THERMOSTAT)
12	R125863	GASKET	1		X	X	CYLINDER HEAD, (SUB FOR R92425)
13	RE38851	GASKET KIT	1		X	X	

ENGINE OVERHAUL GASKET SET

TP26457 -UN-01JAN94

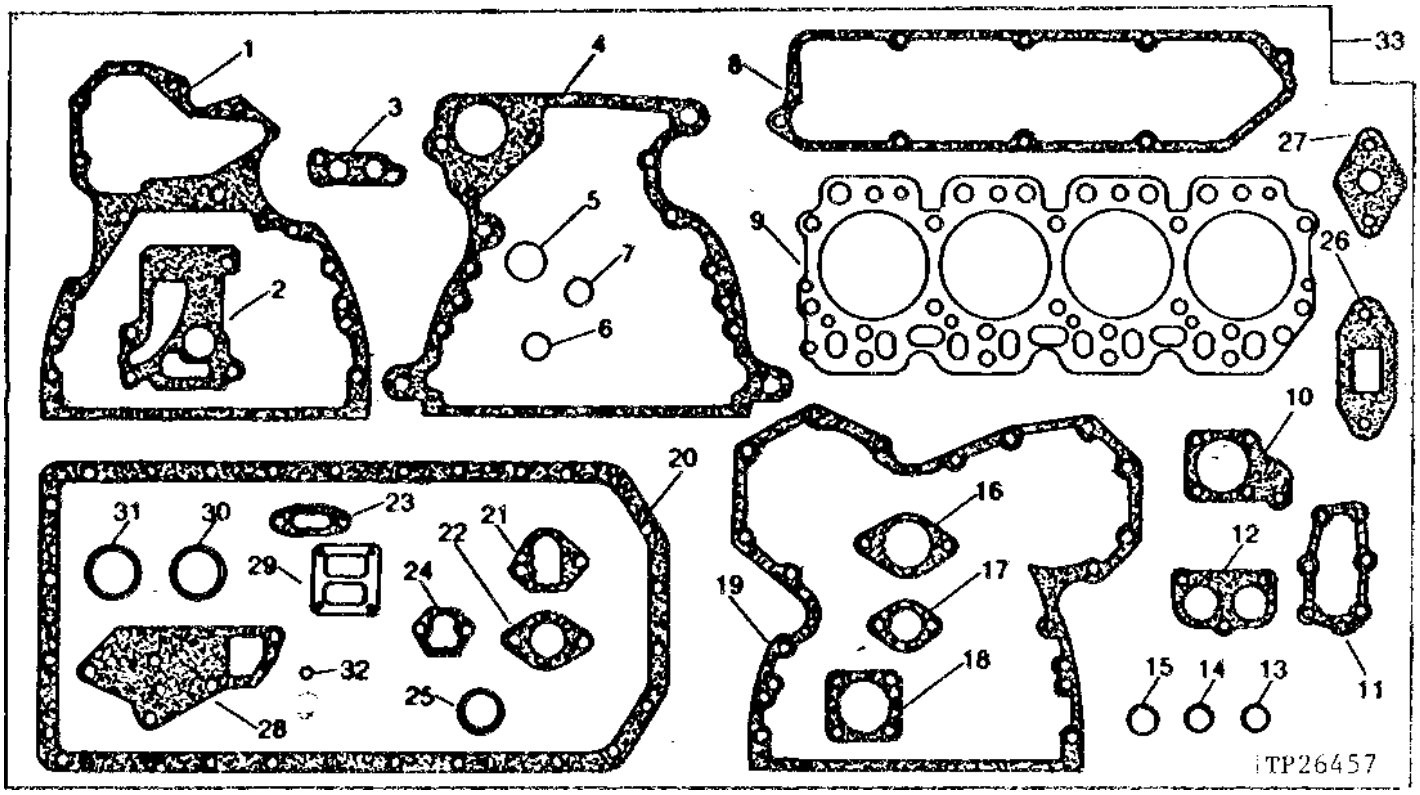

KEY	PART NO.	PART NAME	QTY	ENGINE SERIAL NO.	4511 0 0 D D	REMARKS
1	R131794	GASKET	1		X X	CYLINDER BLOCK PLATE, (SUB FOR R90648)
2	R98489	GASKET	1		X X	OIL COOLER
3	R98488	GASKET	1		X X	OIL FILTER ADAPTER
4	R97351	GASKET	1		X X	FLYWHEEL HOUSING
5	T20328	GASKET	1		X X	OIL FILLER CAP
6	R56463	O-RING	1		X X	VENT TUBE
7	T13213	WASHER	1		X X	OIL DRAIN PLUG
8	R73521	GASKET	1		X X	ROCKER ARM COVER
9	R125863	GASKET	1		X X	CYLINDER HEAD, (SUB FOR R92425)
10	R98487	GASKET	1		X X	LOWER OIL COOLER COVER
11	T20273	GASKET	1		X X	TIMING GEAR COVER OPENING COVER
12	R501373	GASKET	1		X X	(SUB FOR R54638) DUAL THERMOSTAT COVER
13	R56461	O-RING	2		X X	BYPASS
14	R80632	O-RING	2		X X	OIL PUMP TUBE
15	R61871	O-RING	1		X X	OIL PUMP INTAKE

THIS PARTS LISTING IS CONTINUED

ENGINE OVERHAUL GASKET SET

KEY	PART NO.	PART NAME	QTY	ENGINE SERIAL NO.	4510 1D0D	REMARKS
16	R81275	GASKET	1		X X	AIR INLET
17	T20219	GASKET	1		X X	THERMOSTAT HOUSING
18	R98486	GASKET	2		X X	OIL COOLER
19	R121314	GASKET	1		X X	(SUB FOR R97454 OR R119269) TIMING GEAR COVER
20	R119360	GASKET	1		X X	(SUB FOR T24535) OIL PAN
21	R125066	GASKET	1		X X	(SUB FOR R97773) TIMING GEAR COVER OPENING COVER
22	R90658	GASKET	4		X X	EXHAUST MANIFOLD
23	R97352	GASKET	1		X X	OIL FILLER INLET
24	R97350	GASKET	1		X X	FUEL PUMP
25	U13639	O-RING	1		X X	COOLANT HEATER PLUG
26	R105346	GASKET	8		X X	TURBOCHARGER OUTLET
27	R97348	GASKET	1		X X	TURBOCHARGER INLET
28	T20243	GASKET	1		X X	WATER PUMP COVER
29	R123572	GASKET	1		X X	TURBOCHARGER, (SUB FOR R89879, THIS APPLICATION)
30	R56814	O-RING	1		X X	OIL COOLER, INNER
31	R56815	O-RING	1		X X	OIL COOLER, OUTER
32	R87627	O-RING	4		X X	CYLINDER HEAD INTAKE AND EXHAUST VALVE
	R87627	O-RING	4		X X	CYLINDER HEAD EXHAUST VALVE
33	RE501568	GASKET KIT	1		X X	(ALSO ORDER (4) AR65507, (4) R48000 AND (4) R34764) (SUB FOR RE37715)

MEMORANDA

ENGINE COOLANT HEATER

TP27956 -UN-01JAN94

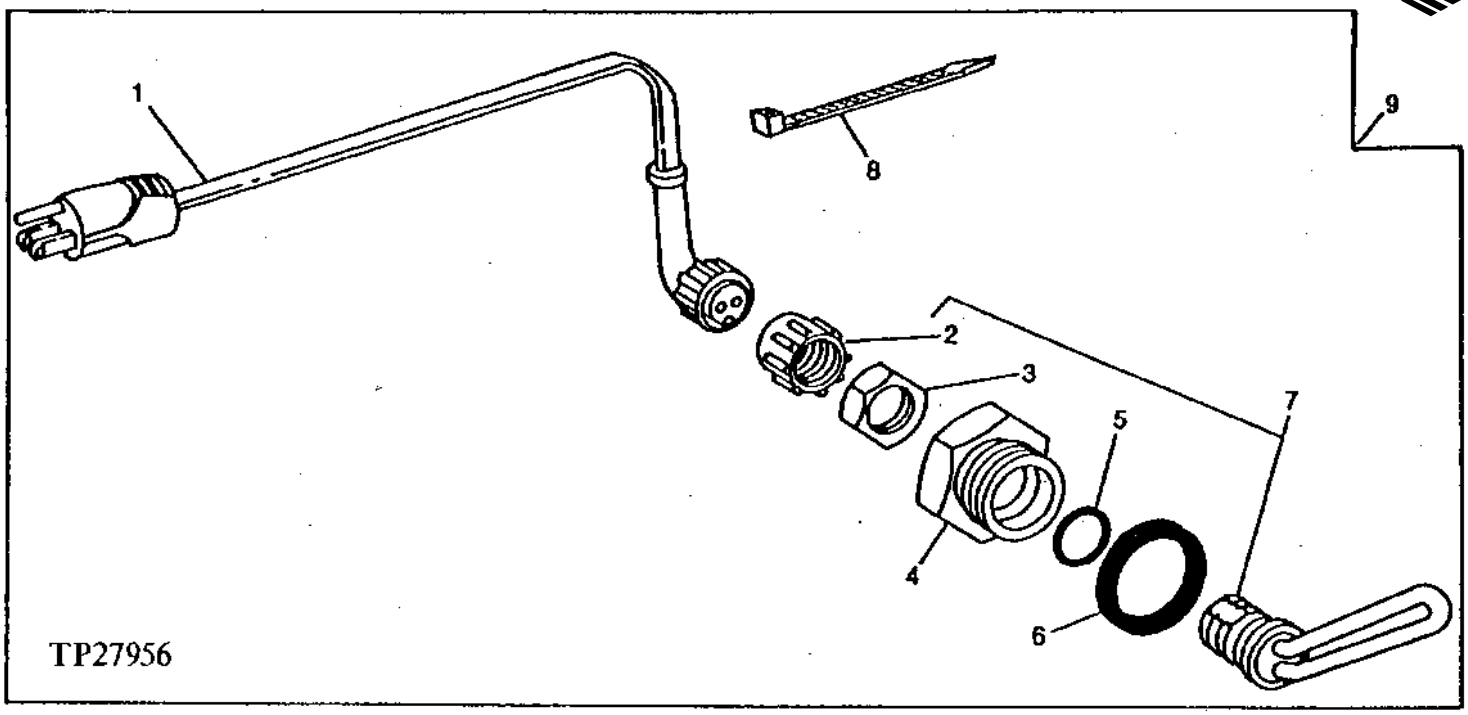

KEY	PART NO.	PART NAME	QTY	SERIAL NO.	410D	510D	REMARKS
1	AT73296	POWER CORD	1		X	X	
2	.....	CAP	1		X	X	
3	.....	NUT	1		X	X	
4	R54123	ADAPTER	1		X	X	
5	R206883	WASHER	1		X	X	(SUB FOR R47693)
6	U13639	O-RING	1		X	X	
7	RE42139	HEATING ELEMENT	1		X	X	(SUB FOR AR62399, THIS APPLICATION)
8	R44302	TIE BAND	1		X	X	
	H77698	TIE BAND	AR		X	X	
9	AT74940	COOLANT HEATER	1		X	X	(SUB FOR AT148233)

COLD WEATHER STARTING AID

TP46943 -UN-15MAR95

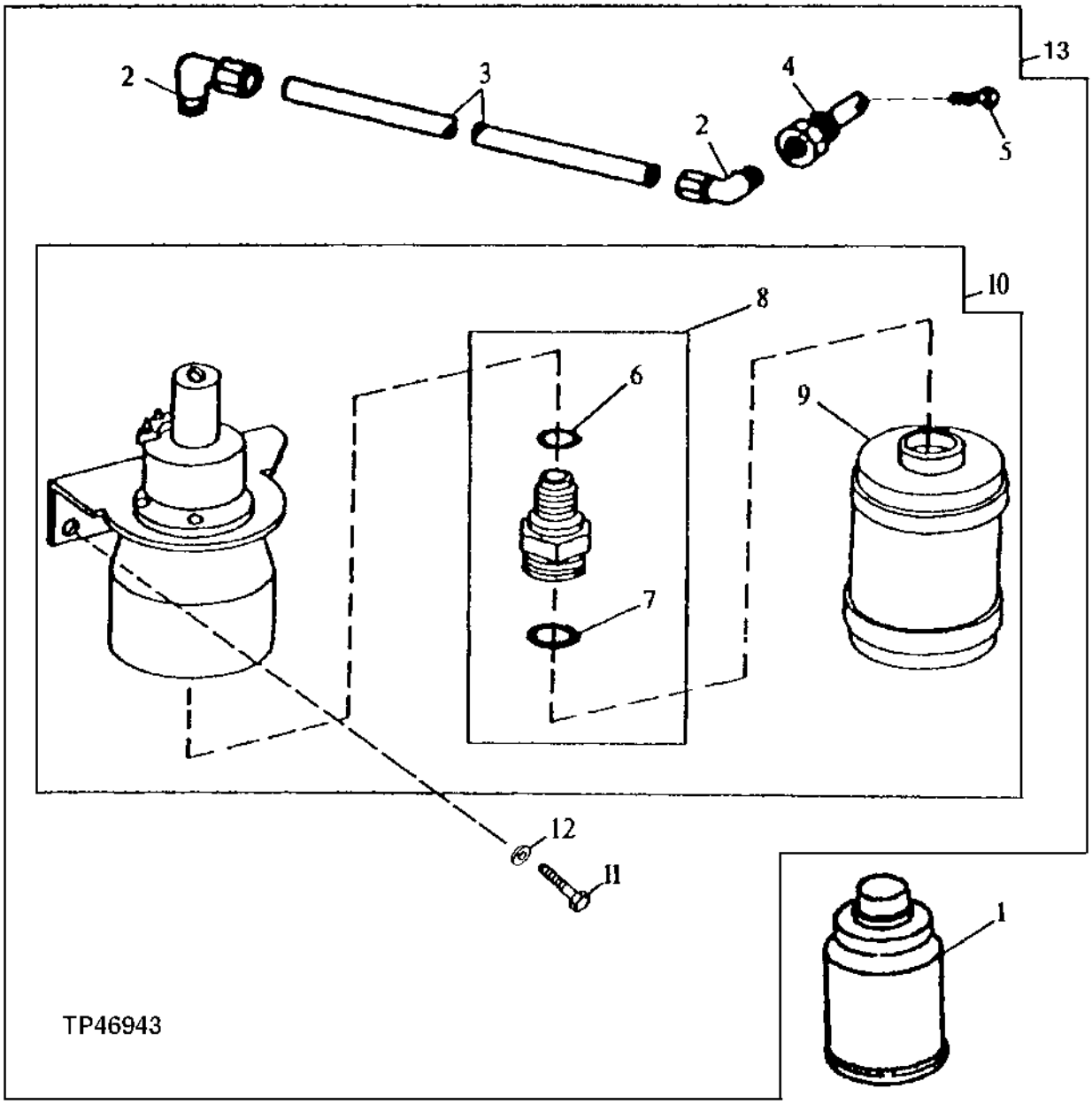

COLD WEATHER STARTING AID

KEY	PART NO.	PART NAME	QTY	SERIAL NO.	410D	510D	REMARKS
1	RE33636	STARTING FLUID	1		X	X	
2	RE21790	ELBOW FITTING	2		X	X	
3	.....	TUBE	1		X	X	(MAKE FROM T78593 BULK MATERIAL, CUT TO LENGTH)
4	R47160	NOZZLE HOLDER	1		X	X	
5	T155858	NOZZLE	1		X	X	SPRAY, (SUB FOR R28583, THIS APPLICATION)
6	T15712	O-RING	1		X	X	
7	T13119	O-RING	1		X	X	
8	RE48321	ADAPTER	1		X	X	
9	R73498	CONTAINER	1		X	X	
10	RE48310	STARTING AID SOLENOID	1		X	X	
11	37H116	SCREW	2		X	X	
	19M7923	CAP SCREW	2		X	X	M6 X 12
12	24H1287	WASHER	2		X	X	9/32" X 5/8" X 0.065"
13	**AT168225**	**STARTING AID**	**1**		**X**	**X**	**(INCLUDES T55585 AND R39554) (SUB FOR AT145603)**

MEMORANDA

RADIATOR SUPPORTS AND BRACKET

TP46256 -UN-01JAN94

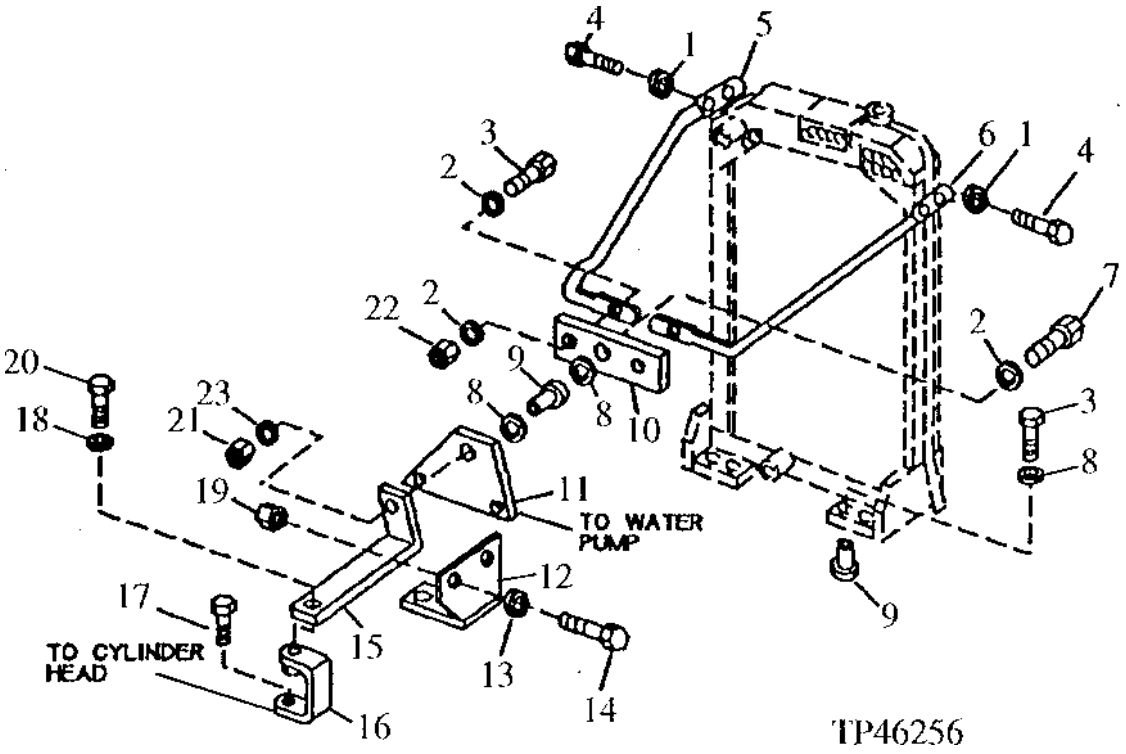

KEY	PART NO.	PART NAME	QTY	SERIAL NO.	4510 DD	REMARKS
1	24M7239	WASHER	6		X X	10.700 X 21 X 2.500 MM
2	24M7028	WASHER	7		X X	10.500 X 20 X 2 MM
3	19M7550	CAP SCREW	4		X X	M10 X 35
4	19M7938	CAP SCREW	4		X X	M10 X 20
5	T149677	SUPPORT	1		X X	L.H. (SUB FOR T113315)
6	T154018	SUPPORT	1		X X	(SUB FOR T126311 AND T148361 AND T149678) R.H.
7	19M7572	CAP SCREW	1		X X	M10 X 45
8	24M7101	WASHER	2		X X	11 X 34 X 3 MM
9	AT76998	ISOLATOR	3		X X	
10	T149556	STRAP	1		X X	(SUB FOR T74477)
11	T74478	PLATE	1		X X	
12	T112995	ANGLE	1		X X	(WITHOUT TURBOCHARGER)
13	24M7296	WASHER	2		X X	10.500 X 30 X 2.500 MM, (WITHOUT TURBOCHARGER)
14	19H2676	CAP SCREW	2		X X	(WITHOUT TURBOCHARGER)
15	T112996	SUPPORT	1		X X	
16	AT107856	BRACKET	1		X X	
17	19H2472	CAP SCREW	1		X X	1/2" X 1"
18	24H1111	WASHER	1		X X	17/32" X 1-1/16" X 0.090"
19	U13184	LOCK NUT	2		X X	(WITHOUT TURBOCHARGER)
20	19H2898	CAP SCREW	1		X X	1/2" X 1-1/4"
21	14M7274	NUT	1		X X	M10
22	14M7274	NUT	2		X X	M10
23	24M7047	WASHER	1		X X	13 X 24 X 2.500 MM

RADIATOR, RADIATOR HOSES, FAN SHROUD AND FAN GUARD
(SERIAL NO. -801199)

TP46459 -UN-25JAN95

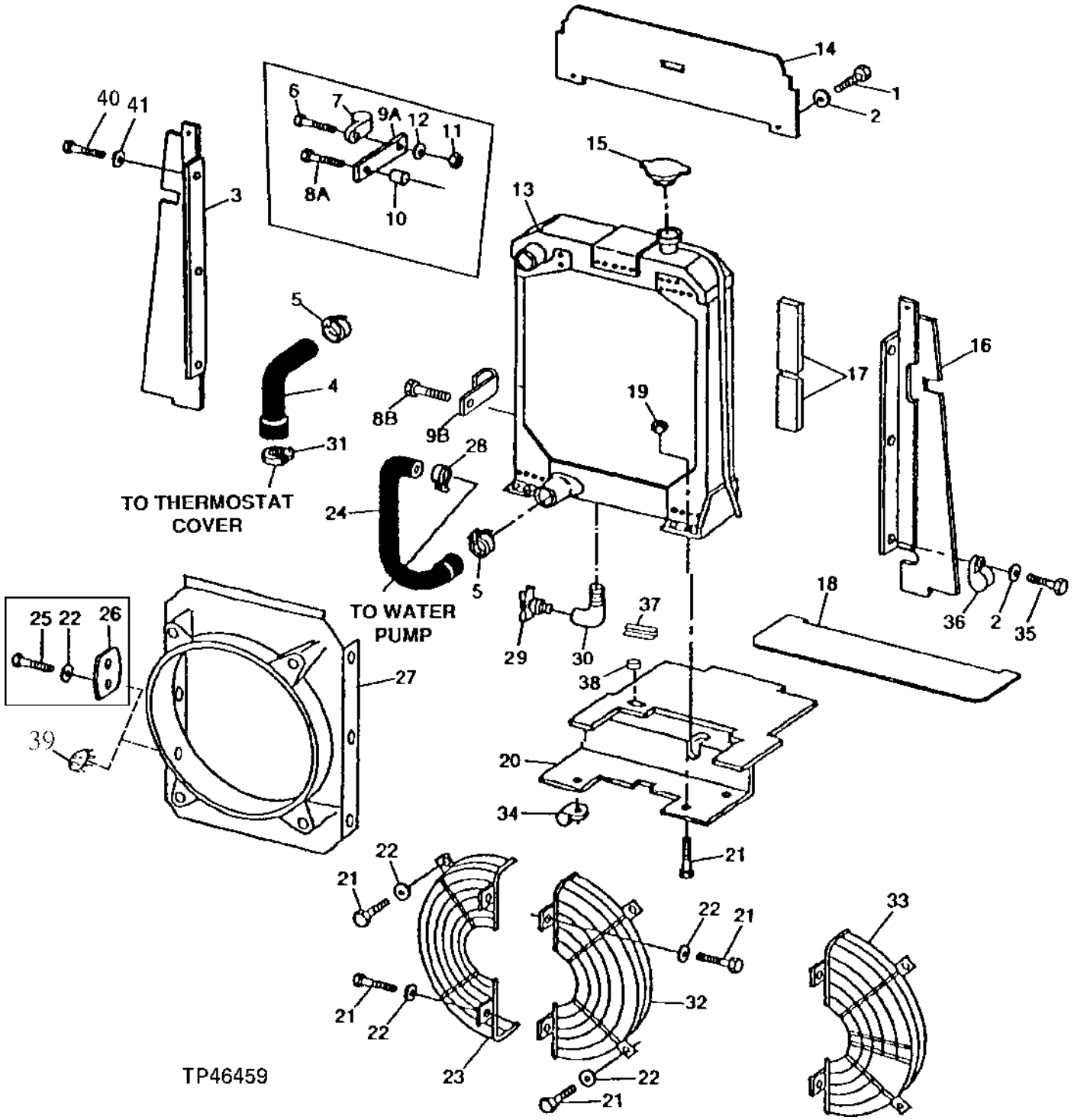

RADIATOR, RADIATOR HOSES, FAN SHROUD AND FAN GUARD
(SERIAL NO. -801199)

KEY	PART NO.	PART NAME	QTY	SERIAL NO.	410D	510D	REMARKS
1	37H116	SCREW	2		X	X	
2	24M7139	WASHER	2		X	X	6.400 X 18 X 1.600 MM
3	AT151143	ISOLATOR	1	-796854	X	X	L.H.
	AT164456	ISOLATOR	1	796855-	X	X	
4	T68579	RADIATOR HOSE	1		X	X	UPPER
5	TY22472	CLAMP	2		X	X	(SUB FOR AT145651 AND AR40418 AND AR21840)
6	19M7166	CAP SCREW	1	-778968	X	X	M10 X 20
7	T28949	CLAMP	1	-778968	X	X	
8A	19M7662	CAP SCREW	1	-778968	X	X	M10 X 30
8B	19M8324	CAP SCREW	6	778969-	X	X	M10 X 16, (SUB FOR 19M7557)
9A	.....	STRAP	1	-778968	X	X	(SUB R73292) (T46842 NO LONGER AVAILABLE)
9B	R73292	CLAMP	1	778969-	X	X	(SUB FOR T46842)
10	28H1884	SPACER	1	-778968	X	X	
11	14M7274	NUT	1	-778968	X	X	M10
12	24M7028	WASHER	1	-778968	X	X	10.500 X 20 X 2 MM
13	AT169770	RADIATOR	1		X	X	(SUB FOR AT146006 AND AT167270) (INCLUDES (6) 19M7866 AND (6) 24H1682) (ALSO ORDER T154018 R.H. SUPPORT WHEN UNIT IS EQUIPED WITH AIR CONDITIONING)
14	T140891	ISOLATOR	1	-796854	X	X	TOP
	AT166620	DEFLECTOR	1	796855-	X	X	
15	AT165587	FILLER CAP	1		X	X	(SUB FOR AT132814, THIS APPLICATION) (SUB FOR AT165587)
16	AT151144	ISOLATOR	1	-796854	X	X	R.H.
	AT164457	ISOLATOR	1	796855-	X	X	
17	.....	ISOLATOR	AR		X	X	(MAKE FROM AT56771 BULK MATERIAL, CUT TO LENGTH)
18	.....	DEFLECTOR	1		X	X	LOWER
19	14M7273	NUT	2		X	X	M8
	24M7238	WASHER	2		X	X	8.700 X 17 X 2 MM
20	AT151145	ISOLATOR	1	-796854	X	X	BOTTOM, (SUB AT167536 AND T51497)
	AT167536	ISOLATOR	1	796855-	X	X	
21	19M7881	SCREW	8		X	X	M8 X 20
22	24M7238	WASHER	8	-805722	X	X	8.700 X 17 X 2 MM
23	AT107917	GUARD	1		X	X	L.H. (WITH AND WITHOUT AIR CONDITIONING)
24	T100294	RADIATOR HOSE	1		X	X	LOWER
25	19M7881	SCREW	2	-805722	X	X	M8 X 20
26	B32585	STRAP	1	-805722	X	X	(WITHOUT CAB)
27	.....	SHROUD	1	-805722	X	X	(T130662 NO LONGER AVAILABLE) (SUB T154695) (ALSO ORDER AT167782 OR M61266)
	T154695	SHROUD	1	805723-	X	X	(SUB FOR T151873)
28	TY22472	CLAMP	1		X	X	(SUB FOR AT145651 OR AR21999)
29	AT13740	DRAIN VALVE	1		X	X	
30	15H220	ELBOW FITTING	1		X	X	
31	TY22472	CLAMP	1		X	X	(SUB FOR AT145651 OR AR40418)
32	AT107917	GUARD	1		X	X	R.H. (WITHOUT AIR CONDITIONING)
33	AT151841	GUARD	1		X	X	R.H. (WITH AIR CONDITIONING) (SUB FOR AT145469, THIS APPLICATION)
34	T19935	CLAMP	1		X	X	
35	19M7938	CAP SCREW	1		X	X	M10 X 20
36	T28949	CLAMP	1		X	X	
37	.....	ISOLATOR	AR		X	X	(MAKE FROM T61798) (CUT TO LENGTH)
38	T51497	GROMMET	1	796855-	X	X	
39	M61266	PLUG	1	805723-	X	X	
40	37H116	SCREW	6		X	X	(USE WITH AT167270)
41	24M7139	WASHER	6		X	X	6.400 X 18 X 1.600 MM, (USE WITH AT167270)

RADIATOR, RADIATOR HOSES, FAN SHROUD AND FAN GUARD
(SERIAL NO.801200-)

TP46460 -UN-25JAN95

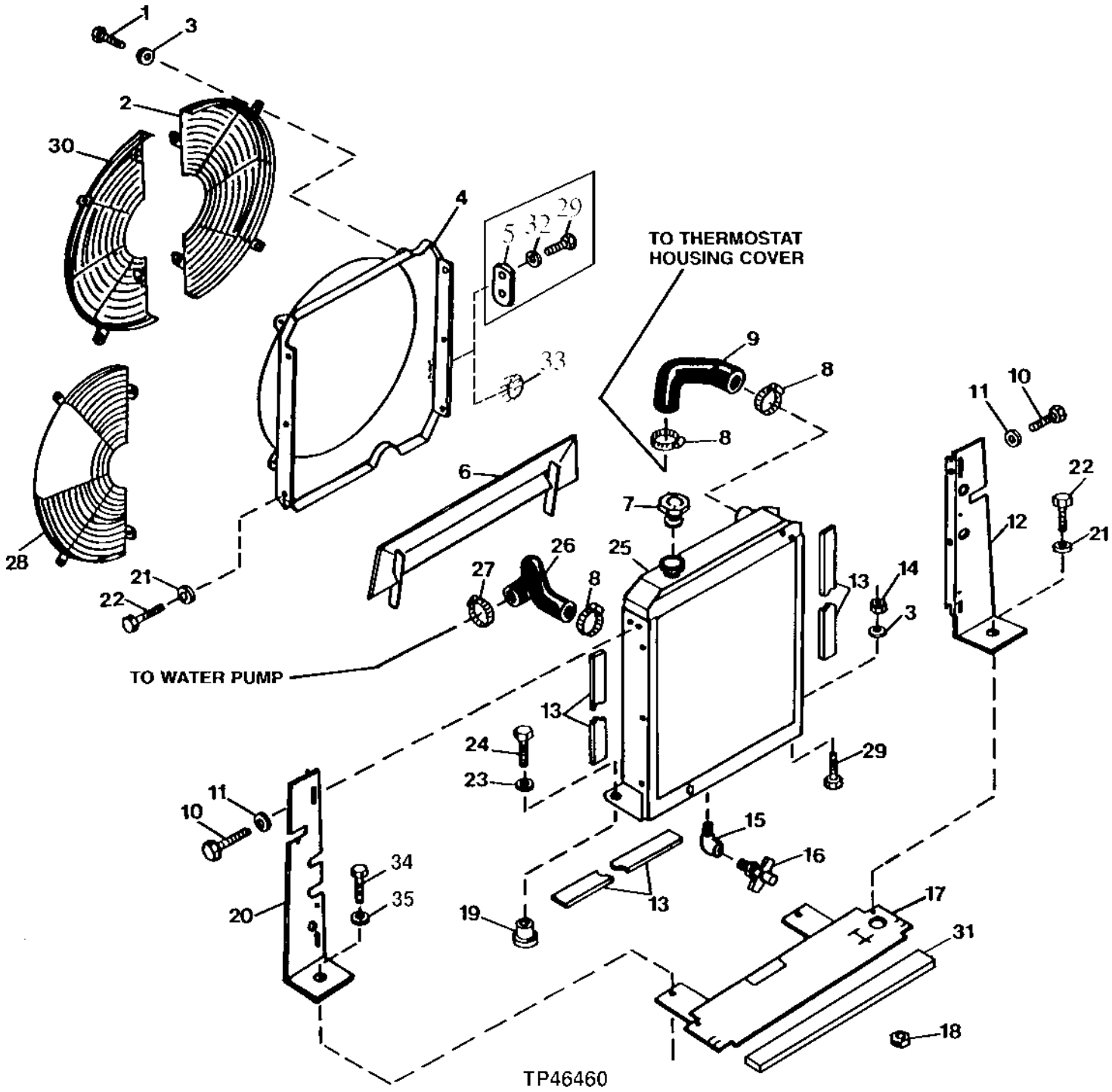

RADIATOR, RADIATOR HOSES, FAN SHROUD AND FAN GUARD
(SERIAL NO.801200-)

KEY	PART NO.	PART NAME	QTY	SERIAL NO.	410D	510D	REMARKS
1	19M7407	CAP SCREW	6		X	X	M8 X 25
2	AT107917	GUARD	1		X	X	L.H (WITH OR WITH OUT AIR CONDITIONING)
3	24M7238	WASHER	8		X	X	8.700 X 17 X 2 MM, L.H.
4	.....	SHROUD	1	-805722	X	X	(T130662 NO LONGER AVAILABLE) (SUB T154695) (ALSO ORDER AT167782 OR M61266)
	T154695	SHROUD	1	805723-	X	X	(SUB FOR T151873)
5	B32585	STRAP	1	-805722	X	X	(USE WITH T130662)
6	AT166620	DEFLECTOR	1		X	X	TOP
7	AT165587	FILLER CAP	1		X	X	
8	TY22472	CLAMP	3		X	X	(SUB FOR AT145651 OR AR40418)
9	T68579	RADIATOR HOSE	1		X	X	UPPER
10	19M8324	CAP SCREW	6		X	X	M10 X 16
11	24M7239	WASHER	6		X	X	10.700 X 21 X 2.500 MM
12	AT166163	ISOLATOR	1		X	X	L.H
13	.....	WEATHERSTRIP	3		X	X	(MAKE FROM AT56771 BULK MATERIAL CUT TO LENGHT)
14	14M7273	NUT	2		X	X	M8
15	15H220	ELBOW FITTING	1		X	X	
16	AT13740	DRAIN VALVE	1		X	X	
17	AT166162	ISOLATOR	1		X	X	BOTTOM
18	T51497	GROMMET	1		X	X	
19	AT76998	ISOLATOR	2		X	X	
20	AT166164	ISOLATOR	1		X	X	R.H
21	24M7139	WASHER	6	-807088	X	X	6.400 X 18 X 1.600 MM
	24H1682	WASHER	6	807089-	X	X	10.312 X 22.225 X 3.048 MM
22	37H116	SCREW	6	-807088	X	X	
	19M7866	SCREW	6	807089-	X	X	M8 X 20
23	24M7296	WASHER	2		X	X	10.500 X 30 X 2.500 MM
24	19M7550	CAP SCREW	2		X	X	
25	AT169770	RADIATOR	1	-807221	X	X	(SUB FOR AT167270) (INCLUDES (6) 19M7866 AND (6) 24H1682) (ALSO ORDER T154018 R.H. SUPPORT WHEN UNIT IS EQUIPED WITH AIR CONDITIONING)
	AT169770	RADIATOR	1	807222-	X	X	
26	T100294	RADIATOR HOSE	1		X	X	LOWER
27	TY22472	CLAMP	1		X	X	(SUB FOR AT145651 OR AR21999)
28	AT151841	GUARD	1		X	X	(WITH AIR CONDITIONING)
29	19M7881	SCREW	4	-805722	X	X	M8 X 20, (USE WITH T130662)
30	AT107917	GUARD	1		X	X	R.H (WITHOUT AIR CONDITIONING)
31	.....	INSULATOR	1		X	X	(MAKE FROM T61798 BULK MATERIAL, CUT TO LENGHT)
32	24M7238	WASHER	2	-805722	X	X	(USE WITH T130662)
33	M61266	PLUG	1	805723-	X	X	(USE WITH T151873 AND T154695)
34	37H116	SCREW	2		X	X	
35	24M7139	WASHER	2		X	X	6.400 X 18 X 1.600 MM

ENGINE COOLANT RECOVERY TANK
(SERIAL NO. -801199)

TP44574 -UN-01JAN94

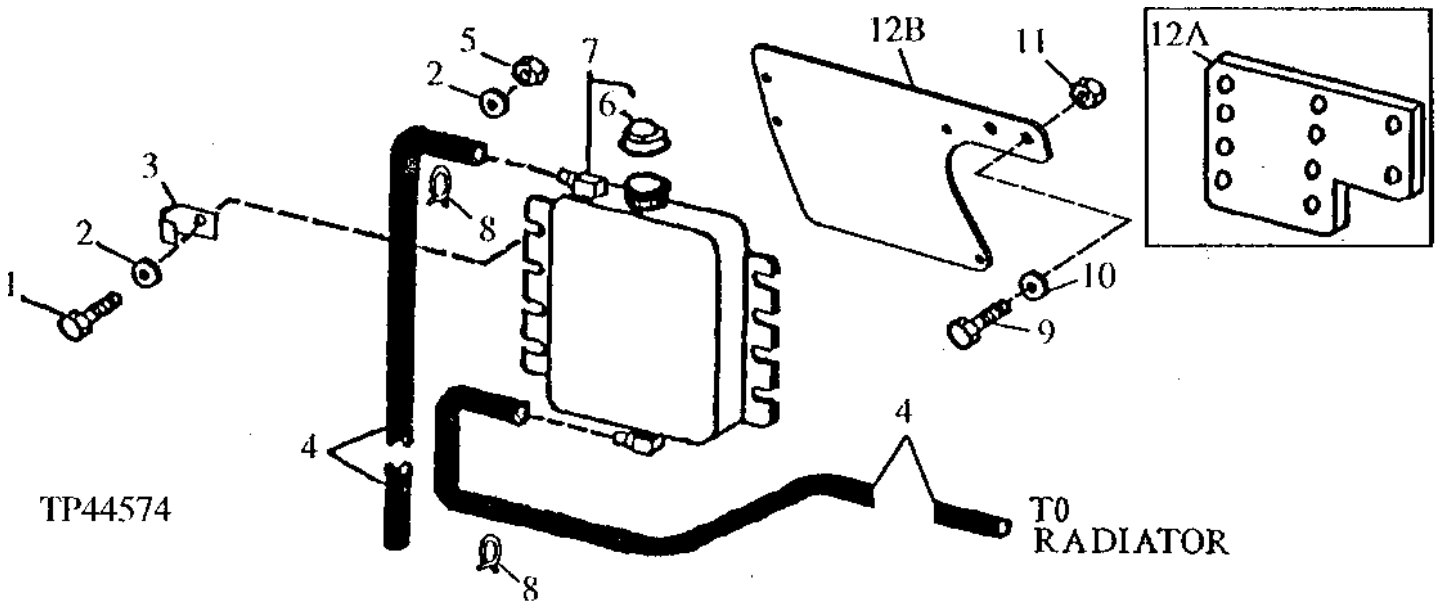

KEY	PART NO.	PART NAME	QTY	SERIAL NO.	410D	510D	REMARKS
1	19M8425	CAP SCREW	4		X	X	M6 X 16
2	24M7100	WASHER	4		X	X	6.600 X 22 X 2 MM
3	AH89557	CLIP	1	796855-	X	X	
4	.....	HOSE	AR		X	X	(MAKE FROM T79477 BULK MATERIAL, CUT TO LENGTH)
5	14M7272	NUT	4		X	X	M6
6	AT106413	CAP	1		X	X	
7	AT166459	TANK	1	-796854	X	X	(SUB FOR AT104021, THIS APPLICATION) (SUB FOR AT162597)
	AT166459	TANK	1	796855-	X	X	
8	R56101	CLIP	3		X	X	
9	19M7402	CAP SCREW	2		X	X	M10 X 25
10	24M7239	WASHER	2	796855-	X	X	
11	14M7274	NUT	2		X	X	M10
12A	T140399	PLATE	1	-796854	X	X	
12B	T148055	BRACKET	1	796855-	X	X	

ENGINE COOLANT RECOVERY TANK
(SERIAL NO.801200-)

TP46250 -UN-01JAN94

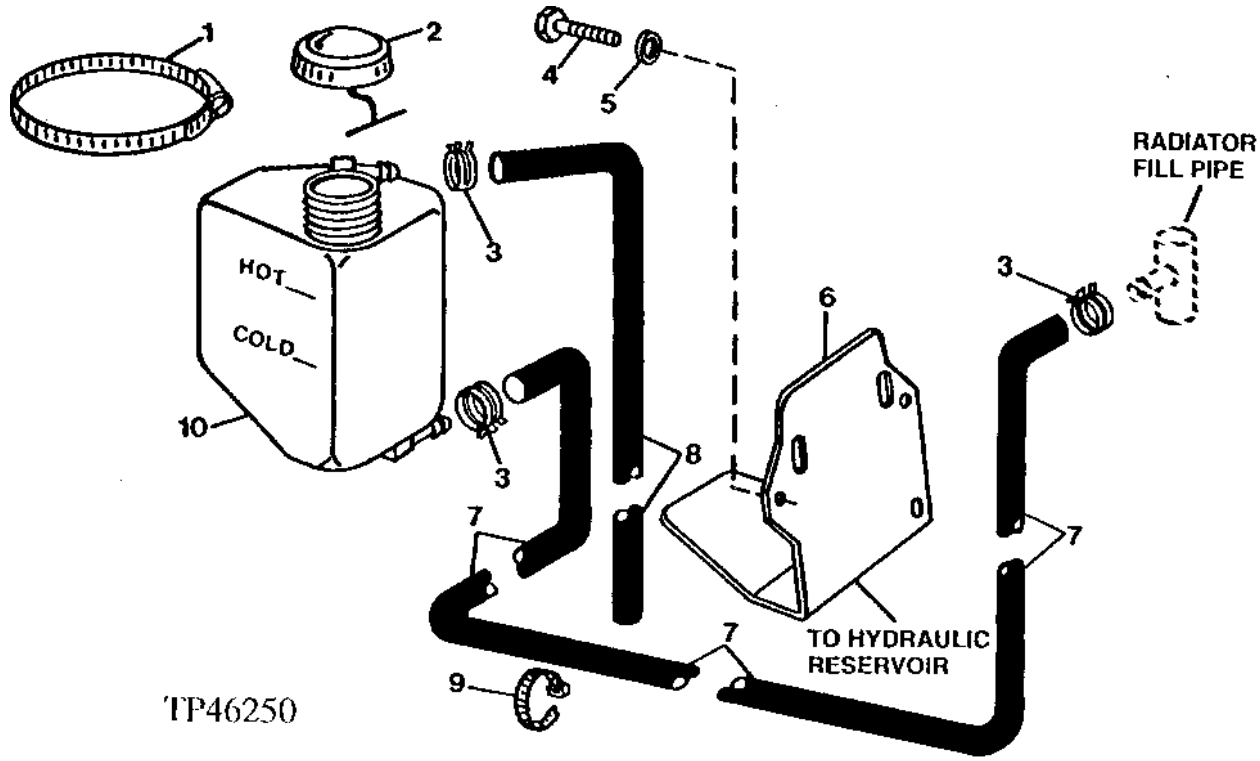

KEY	PART NO.	PART NAME	QTY	SERIAL NO.	451 100 DD	REMARKS
1	AR85327	CLAMP	1		X X	
2	AT106413	CAP	1		X X	
3	R56101	CLIP	3		X X	
4	19M7932	CAP SCREW	3		X X	M8 X 16
5	24M7238	WASHER	3		X X	8.700 X 17 X 2 MM
6	T152698	BRACKET	1		X X	
7	.....	HOSE	1		X X	(MAKE FROM T79477 BULK MATERIAL CUT TO LENGHT)
8	.....	HOSE	1		X X	(MAKE FROM T79477 BULK MATERIAL CUT TO LENGHT)
9	H77698	TIE BAND	2		X X	
10	AT116526	CONTAINER	1		X X	

FAN BLADE

TP41625 -UN-01JAN94

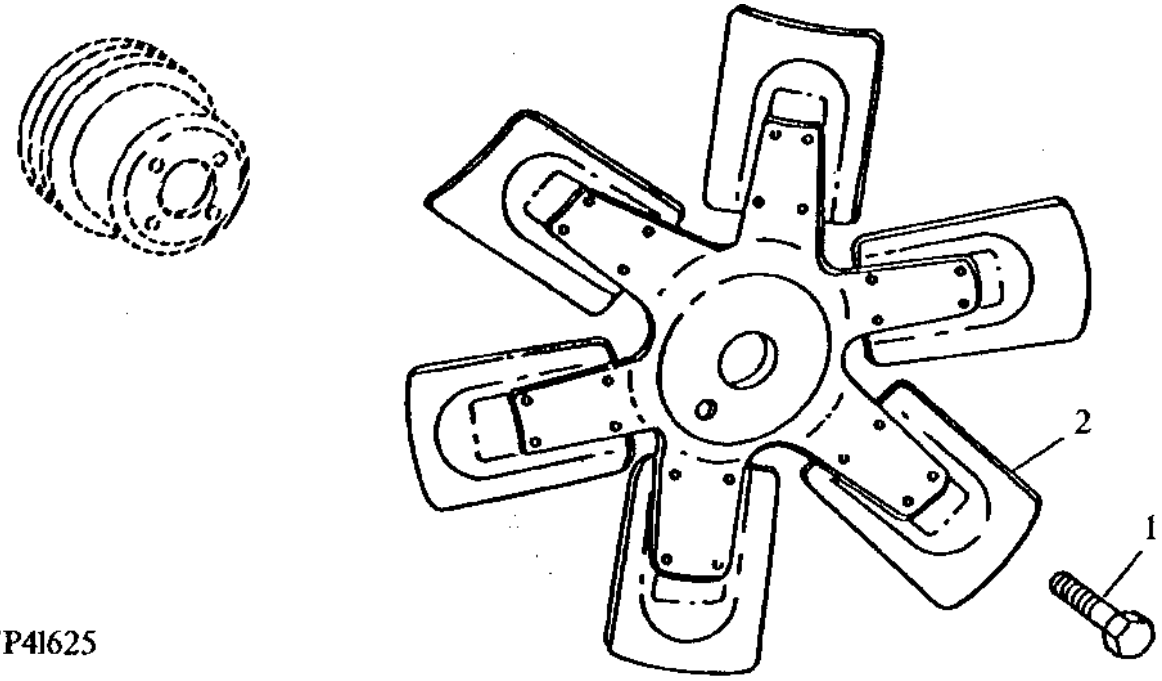

KEY	PART NO.	PART NAME	QTY	SERIAL NO.	410D	510D	REMARKS
1	19H2021	CAP SCREW	4		X	X	
2	AT107512	SUCTION FAN	1		X	X	(6 BLADE)

MEMORANDA

ENGINE SPEED CONTROL LINKAGE

TP44465 -UN-21SEP94

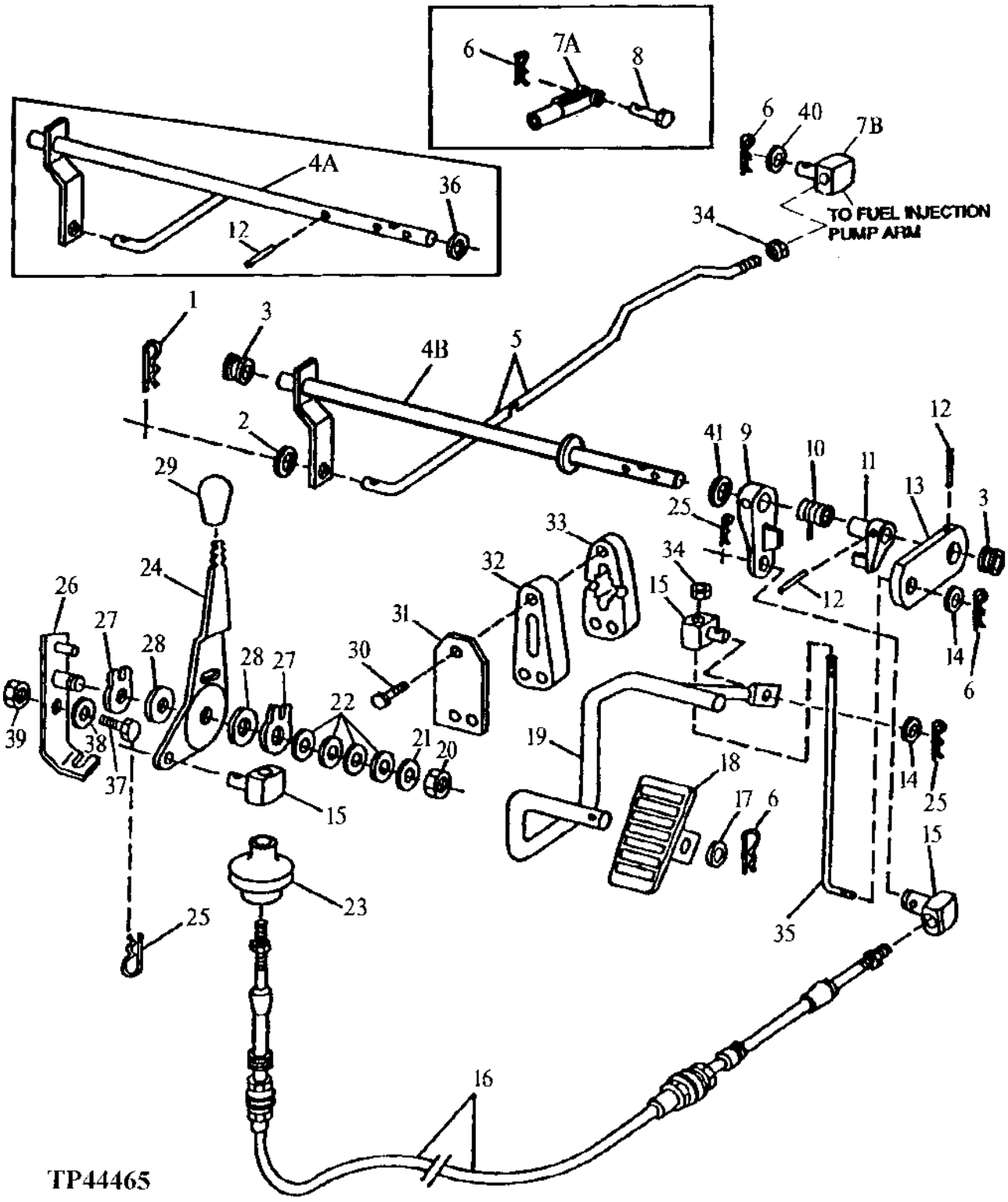

ENGINE SPEED CONTROL LINKAGE

KEY	PART NO.	PART NAME	QTY	SERIAL NO.	410D	510D	REMARKS
1	11M7077	COTTER PIN	1		X	X	1.600 X 25 MM, (SUB FOR 11M7076, THIS APPLICATION)
2	24H1286	WASHER	2		X	X	9/32" X 1/2" X 1/16"
3	T22241	GROMMET	2		X	X	
4	.....	SHAFT	1		X	X	(SUB AT157429) (AT149434 NO LONGER AVAILABLE)
	AT157429	SHAFT	1		X	X	
5	T139821	ROD	1	-781367	X	X	
	T142750	ROD	1	781368-801199	X	X	
	T153614	ROD	1	801200-	X	X	
6	11M7082	COTTER PIN	3	-801199	X	X	2.500 X 25 MM
	11H239	COTTER PIN	3	801200-	X	X	5/32" X 1"
7A	M3742T	YOKE	1	-781367	X	X	
7B	T142748	SWIVEL	1	781368-	X	X	
8	R72660	PIN FASTENER	1	-781367	X	X	(SUB FOR R662R)
9	T22240	ARM	1		X	X	
10	T77165	SPRING	1		X	X	
11	T22150	ARM	1		X	X	
12	34H264	SPRING PIN	3		X	X	5/32" X 7/8"
13	T135342	LEVER	1		X	X	
14	24H1731	WASHER	2		X	X	17/64" X 5/8" X 0.035"
15	T35887	SWIVEL	3		X	X	
16	AT148127	PUSH PULL CABLE	1		X	X	
17	24M7240	WASHER	1		X	X	13 X 25 X 3 MM
18	T137318	PEDAL	1		X	X	
19	AT162005	ROD	1		X	X	(SUB FOR AT148129)
20	U13184	LOCK NUT	1		X	X	
21	24M7028	WASHER	1		X	X	0.413" X 0.787" X 0.079"
22	12M7117	WASHER	4		X	X	10.200 X 20 X 1.100 MM
23	T130086	BOOT	1		X	X	
24	T133065	LEVER	1		X	X	
25	11M7079	COTTER PIN	4		X	X	2.500 X 12 MM
26	AT157422	BRACKET	1		X	X	(SUB FOR AT151433)
27	R33976	PLATE	2		X	X	
28	R39985	WASHER	2		X	X	
29	T133487	KNOB	1		X	X	
30	19M8397	CAP SCREW	3		X	X	M8 X 50
31	T129732	PLATE	1		X	X	
32	T137321	SUPPORT	1		X	X	
33	T137322	SUPPORT	1		X	X	
34	14H649	NUT	2		X	X	1/4"
35	T135343	HOOK BOLT	1		X	X	
36	24H1305	WASHER	2		X	X	13/32" X 13/16" X 0.065"
37	19H2676	CAP SCREW	1		X	X	3/8" X 1"
38	24M7028	WASHER	1		X	X	10.500 X 20 X 2 MM
39	U13184	LOCK NUT	1		X	X	
40	24H1287	WASHER	1	781368-	X	X	9/32" X 5/8" X 0.065"
41	24H1302	WASHER	1		X	X	13/32" X 11/16" X 0.035"

MEMORANDA

AIR CLEANER
(WITH TURBOCHARGER)

TP17911 -UN-01JAN94

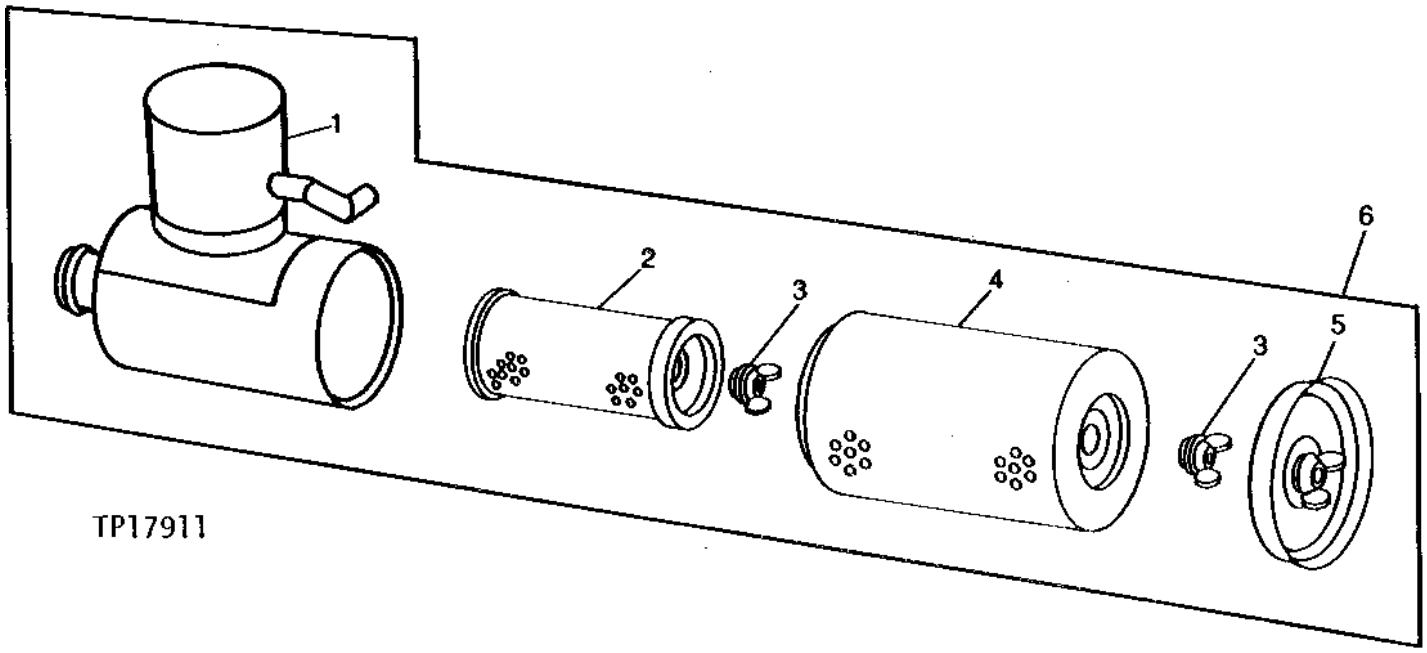

KEY	PART NO.	PART NAME	QTY	SERIAL NO.	410D	510D	REMARKS
1	.....	HOUSING	1		X	X	
2	AT44378	FILTER ELEMENT	1		X	X	SECONDARY
3	AH20849	WING NUT	2		X	X	
4	AT65296	FILTER ELEMENT	1		X	X	PRIMARY
5	AT71474	COVER	1		X	X	
6	AT101154	AIR CLEANER	1		X	X	

AIR CLEANER BRACKET AND HOSE (WITH TURBOCHARGER)

TP46257 -UN-01JAN94

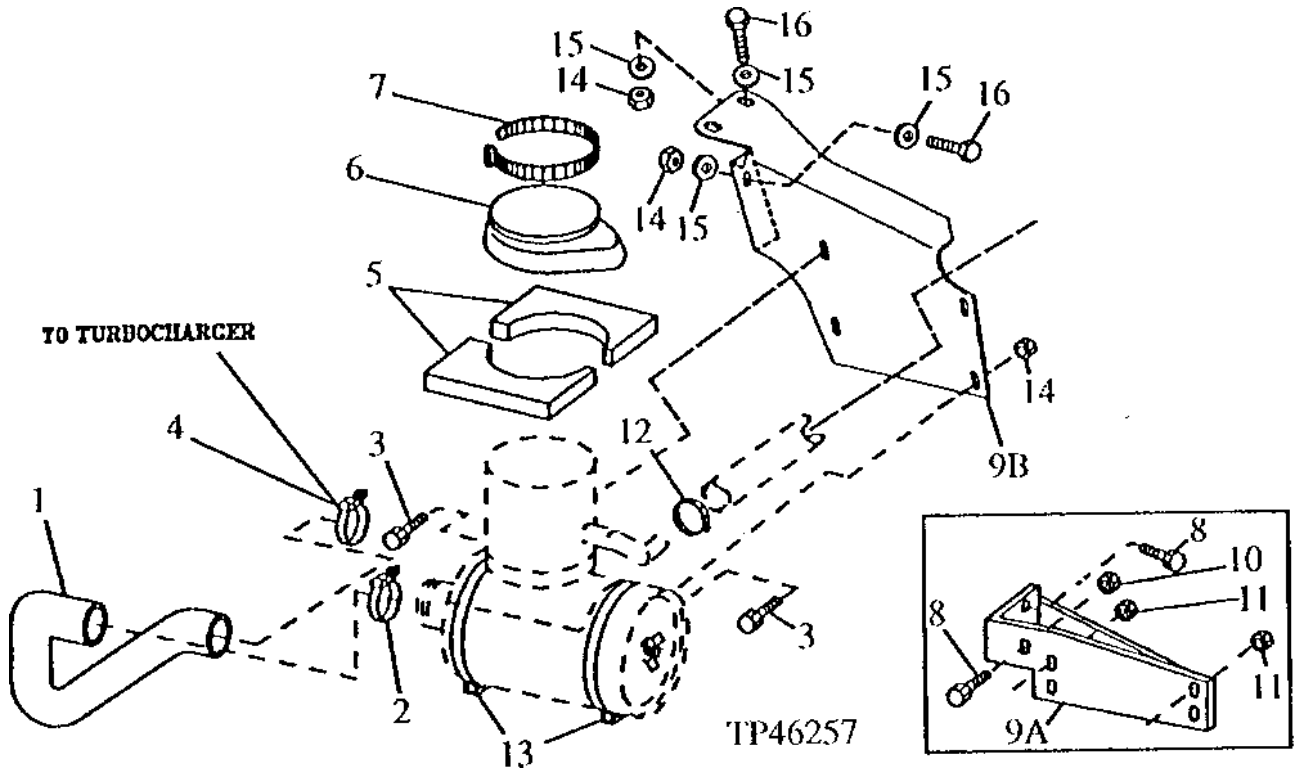

KEY	PART NO.	PART NAME	QTY	SERIAL NO.	4510 DD	REMARKS
1	T118725	HOSE	1		X X	
2	AT56658	HOSE CLAMP	1		X X	
3	19M7881	SCREW	4		X X	M8 X 20
	24M7238	WASHER	4		X X	8.700 X 17 X 2 MM
4	AT50923	HOSE CLAMP	1		X X	
5	T105760	ISOLATOR	2		X X	
6	T100859	SEAL	1		X X	
7	R76477	TIE BAND	1		X X	
8	19M7788	SCREW	2	-801199	X X	M12 X 25
9A	AT100512	BRACKET	1	-801199	X X	(SUB FOR AT106524)
9B	T149510	BRACKET	1	801200-	X X	
10	14M7299	FLANGE NUT	AR	-782720	X X	M12
11	14M7273	NUT	4	-801199	X X	M8
	24M7238	WASHER	4	-801199	X X	8.700 X 17 X 2 MM
12	AR21839	CLAMP	1		X X	
13	AN31656	CLAMP	2		X X	
14	14M7275	NUT	4	801200-	X X	M12
15	24M7240	WASHER	8	801200-	X X	13 X 25 X 3 MM
16	19M7403	CAP SCREW	4	801200-	X X	M12 X 35

AIR CLEANER
(WITHOUT TURBOCHARGER)

TP5688 -UN-01JAN94

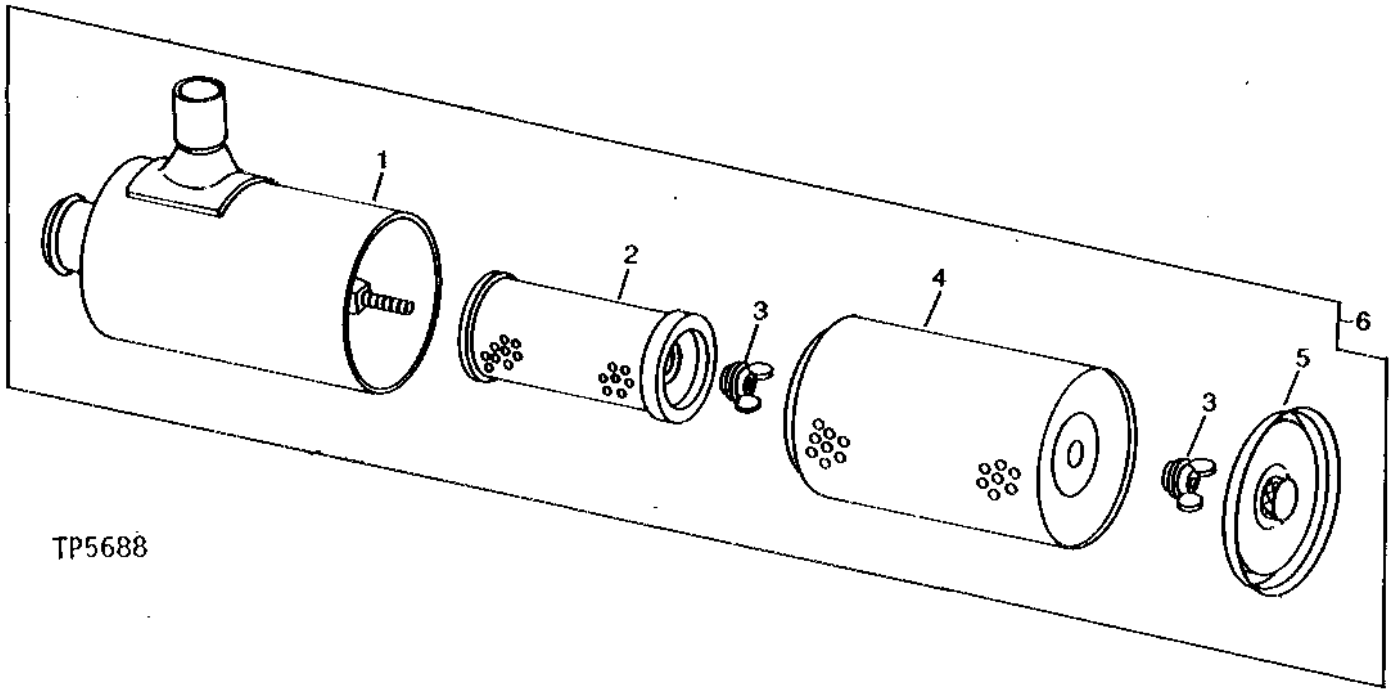

KEY	PART NO.	PART NAME	QTY	SERIAL NO.	410D	510D	REMARKS
1	.....	HOUSING	1		X		
2	AT44378	FILTER ELEMENT	1		X		SECONDARY
3	AH20849	WING NUT	2		X		
4	AT65088	FILTER ELEMENT	1		X		PRIMARY
5	AT159396	COVER	1		X		(SUB FOR AT71473) (DONALDSON) (WITH HAND NUT) (ILLUSTRATED)
6	AT65087	AIR CLEANER	1		X		

AIR CLEANER BRACKET AND HOSE (WITHOUT TURBOCHARGER)

TP5840 -UN-01JAN94

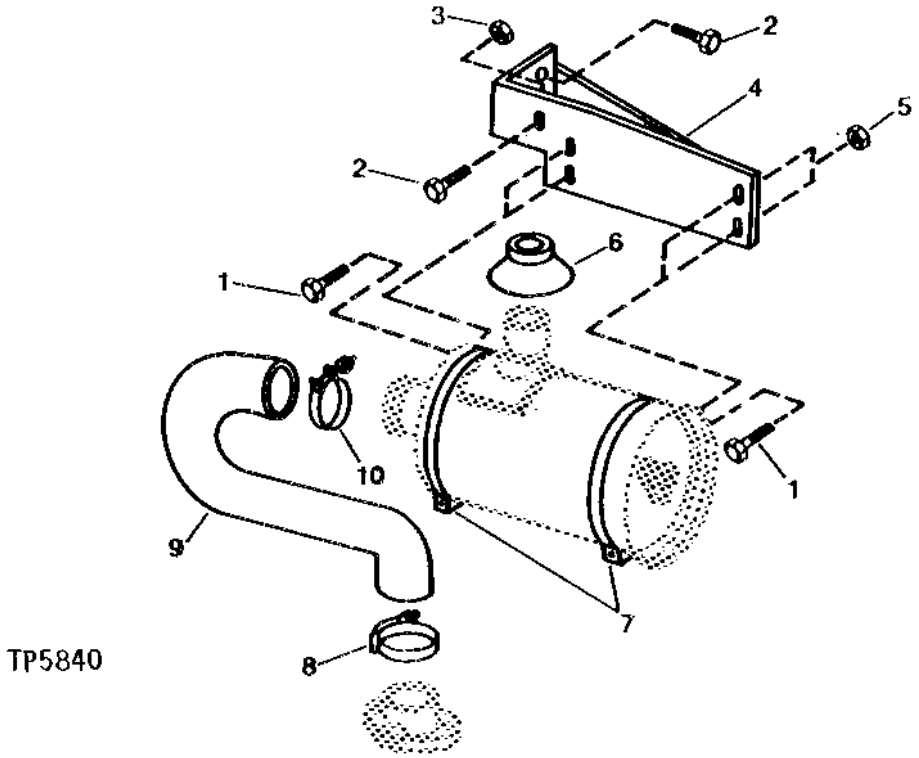

KEY	PART NO.	PART NAME	QTY	SERIAL NO.	4510 DD	REMARKS
1	19M7881	SCREW	4		X	M8 X 20
	24M7238	WASHER	4		X	8.700 X 17 X 2 MM
2	19M7788	SCREW	2		X	M12 X 25
3	14M7299	FLANGE NUT	AR	-782720	X	
4	AT100512	BRACKET	1		X	(SUB FOR AT106524)
5	14M7273	NUT	4		X	M8
	24M7238	WASHER	4		X	8.700 X 17 X 2 MM
6	R57119	SEAL	1		X	
7	AN33226	CLAMP	2		X	
8	AT37478	HOSE CLAMP	1		X	
	AT175744	HOSE CLAMP	1		X	(SUB FOR AT172239) (USE WITH T155632)
9	.....	HOSE	1		X	(T118723 NO LONGER AVAILABLE) (SUB T155632 AND AT175744)
	T155632	SUCTION HOSE	1		X	(ALSO ORDER AT175744) (SUB FOR T118723)
10	AT56658	HOSE CLAMP	1		X	

AIR CLEANER VACUUM SENSOR

TP27894 -UN-01JAN94

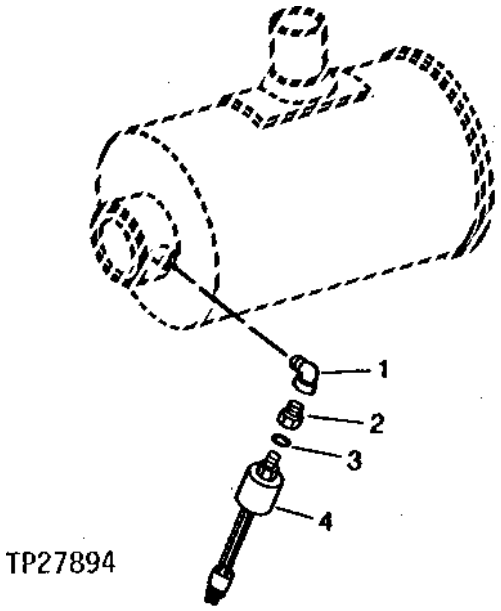

KEY	PART NO.	PART NAME	QTY	SERIAL NO.	410D	510D	REMARKS
1	M45937	ELBOW FITTING	1		X	X	
2	T82907	ADAPTER	1		X	X	
3	R26286	O-RING	1		X	X	
4	RE12176	AIR RESTRICTION SENSOR	1		X	X	

AIR CLEANER AIR STACK CAP
(WITH TURBOCHARGER)

TP15946 -UN-01JAN94

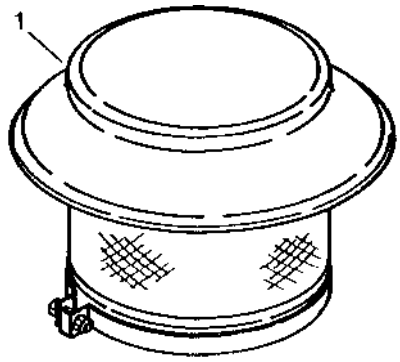

TP15946

KEY	PART NO.	PART NAME	QTY	SERIAL NO.	410D	510D	REMARKS
1	AT101171	CAP	1		X	X	

PRE-CLEANER
(WITHOUT TURBOCHARGER)

TP48879 -UN-19JAN96

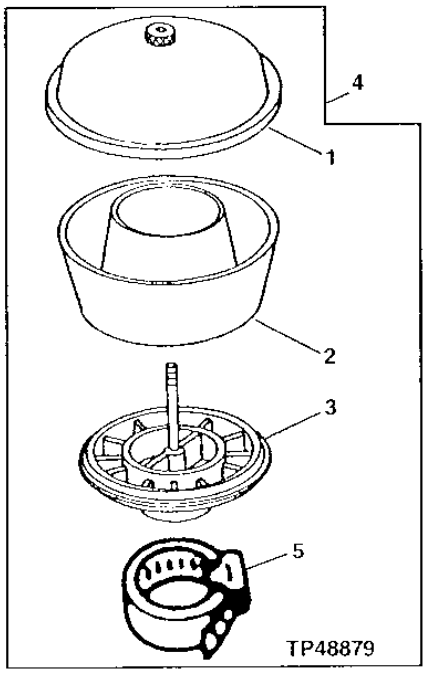

KEY	PART NO.	PART NAME	QTY	SERIAL NO.	410D	510D	REMARKS
1	AL37364	COVER	1		X		(SUB FOR AF3583R)
2	R28794	DUST BOWL	1		X		
3	.....	BASE	1		X		
4	AT170950	PRECLEANER	1		X		(SUB FOR AH79124)
5	AR21841	CLAMP	1		X		

MEMORANDA

**EXHAUST EXTENSION COVER AND MUFFLER
(WITH TURBOCHARGER)**

TP55937 -UN-16DEC98

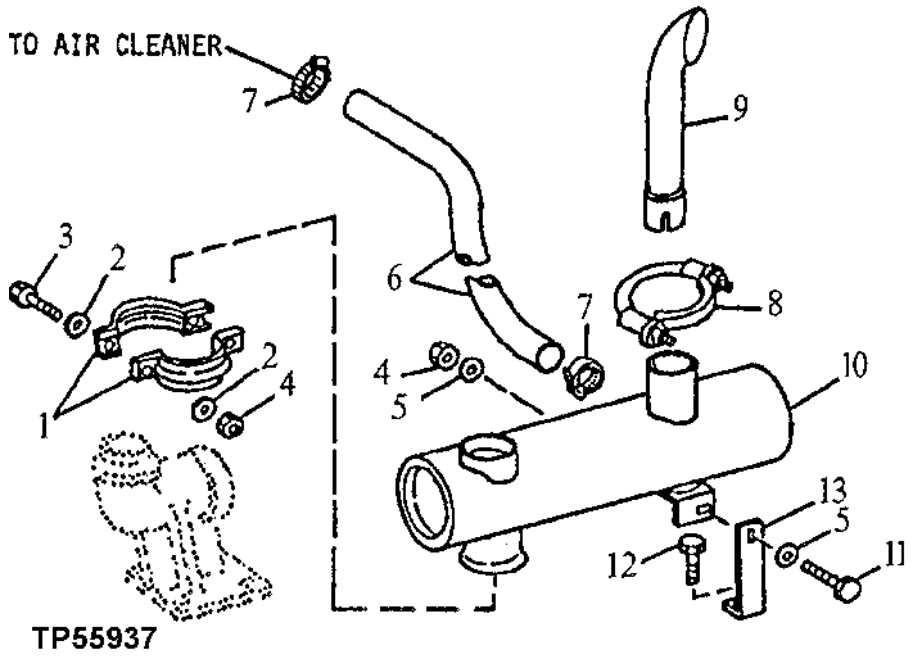

KEY	PART NO.	PART NAME	QTY	SERIAL NO.	4510 DD	REMARKS
1	AR43704	CLAMP	2		X X	(SUB FOR AT27164)
2	24M7239	WASHER	4		X X	10.700 X 21 X 2.500 MM
3	19H3034	CAP SCREW	2		X X	
4	U13184	LOCK NUT	3		X X	
5	24M7239	WASHER	2		X X	10.700 X 21 X 2.500 MM
6	T100858	HOSE	1		X X	
7	AR21839	CLAMP	2		X X	
8	AT167360	CLAMP	1		X X	(SUB FOR AT74173)
9	T139827	EXHAUST PIPE	1		X X	BLACK
	T142955	EXTENSION	1		X X	CHROME
10	AT161294	MUFFLER	1		X X	(SUB FOR AT101179)
11	19H1732	CAP SCREW	1		X X	3/8" X 1-1/4"
12	19H3385	CAP SCREW	1		X X	1/2" X 1-1/8"
13	T68098	ANGLE	1		X X	

EXHAUST EXTENSION, COVER AND MUFFLER
(WITHOUT TURBOCHARGER)

TP55936 -UN-16DEC98

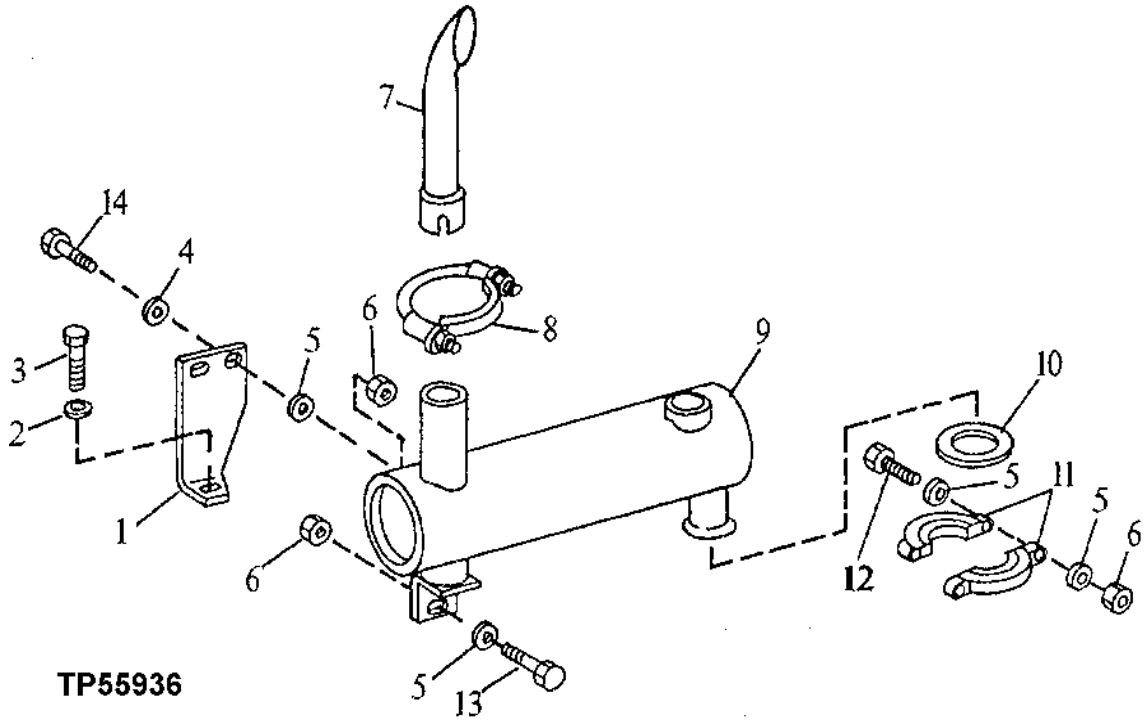

KEY	PART NO.	PART NAME	QTY	SERIAL NO.	410D	510D	REMARKS
1	T112995	ANGLE	1		X		
2	24M7239	WASHER	1		X		10.700 X 21 X 2.500 MM
3	19H2633	CAP SCREW	1		X		3/8" X 1-1/2"
4	24H1311	WASHER	2		X		13/32" X 1-1/4" X 0.220", (SUB FOR N100870, THIS APPLICATION)
5	24M7239	WASHER	7		X		10.700 X 21 X 2.500 MM
6	U13184	LOCK NUT	5		X		
7	T139827	EXHAUST PIPE	1		X		BLACK
	T142955	EXTENSION	1		X		CHROME
8	AT167754	CLAMP	1		X		(SUB FOR AT74173 AND AT167360)
9	AT83613	MUFFLER	1		X		
10	R98844	GASKET	1		X		
11	AT72624	HALF CLAMP	2		X		
12	19H3034	CAP SCREW	2		X		3/8" X 3"
13	19H2633	CAP SCREW	1		X		3/8" X 1-1/2"
14	19H1732	CAP SCREW	1		X		3/8" X 1-1/4"

ENGINE MOUNT

TP5654 -UN-01JAN94

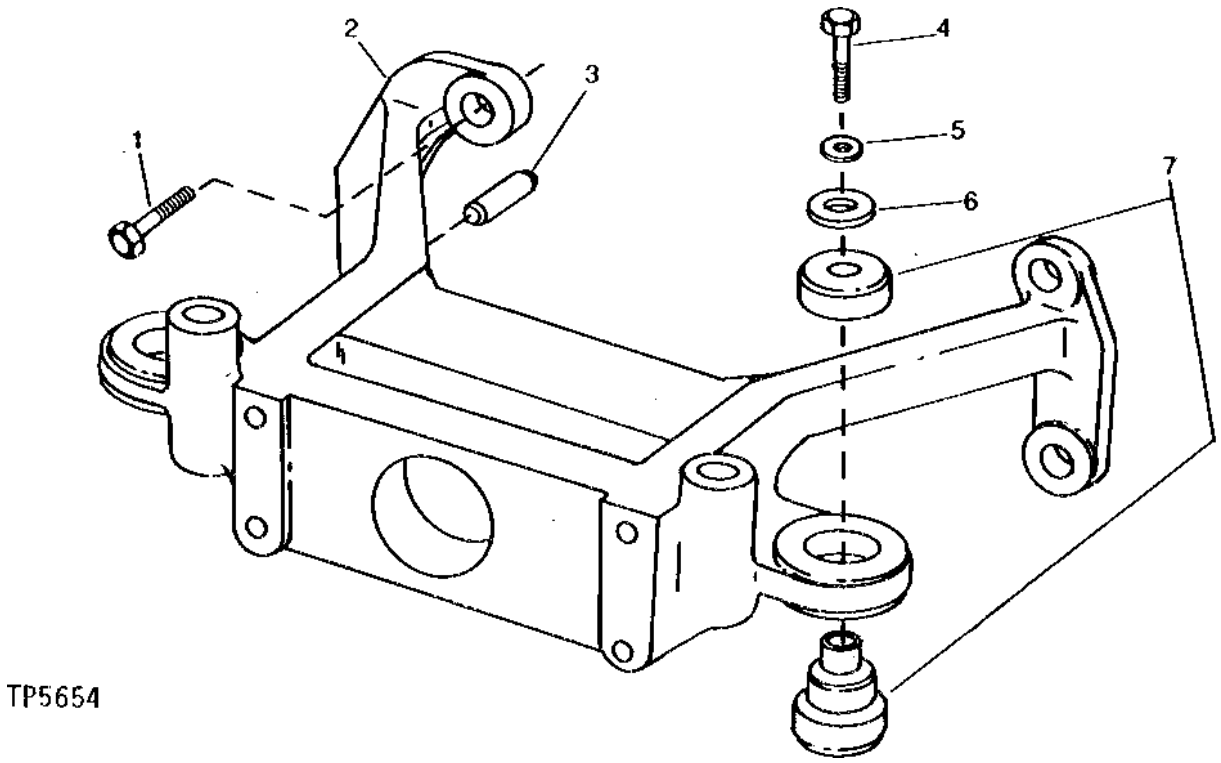

KEY	PART NO.	PART NAME	QTY	SERIAL NO.	4 5 1 1 0 0 D D	REMARKS
1	19H2599	CAP SCREW	4		X X	5/8" X 2-1/2"
2	T145878	SUPPORT	1		X X	(SUB FOR T100629)
3	R54380	DOWEL PIN	2		X X	
4	19M7969	CAP SCREW	2		X X	M20 X 110
5	24M7242	WASHER	4		X X	21.400 X 42 X 5 MM, (SUB FOR T19572, THIS APPLICATION)
6	T42977	WASHER	4		X X	
7	AT102326	ISOLATOR	2		X X	

FUEL TANK, FUEL HOSES AND FUEL GAUGE SENDER
(SERIAL NO. -801199)

TP45458 -UN-01JAN94

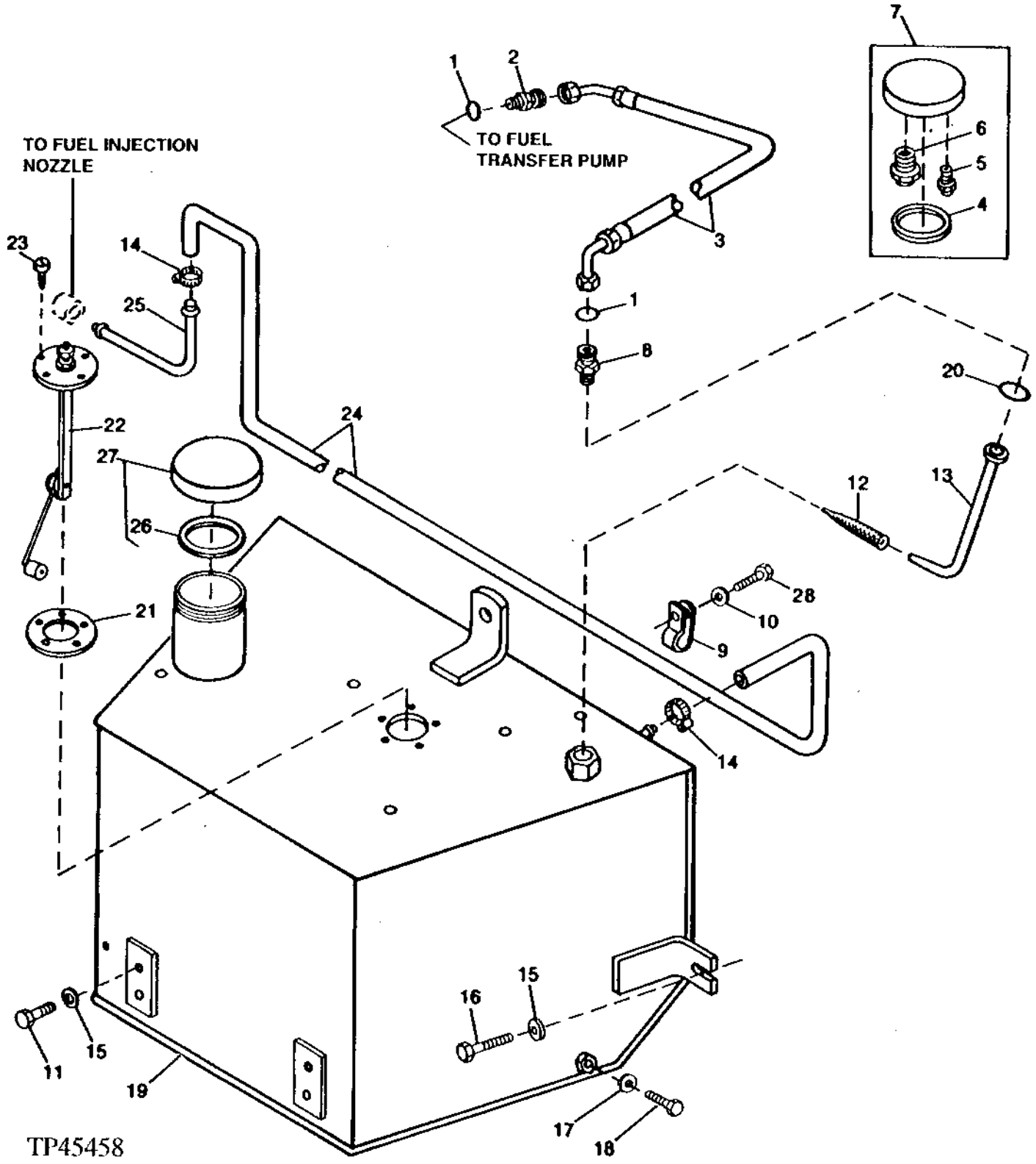

FUEL TANK, FUEL HOSES AND FUEL GAUGE SENDER
(SERIAL NO. -801199)

KEY	PART NO.	PART NAME	QTY	SERIAL NO.	410D	510D	REMARKS
1	T77814	O-RING	2		X	X	
2	T80937	ADAPTER	1		X	X	
3	AT150742	HYDRAULIC HOSE - FABRICATE	1		X	X	
4	T103461	SEALING WASHER	1	-779085	X	X	
5	AE38448	PRESSURE RELIEF VALVE	1	-779085	X	X	
6	E14814	PRESSURE RELIEF FITTING	1	-779085	X	X	
7	AT156445	FILLER CAP	1	-779085	X	X	(SUB FOR AT150836)
8	38H1408	UNION FITTING	1		X	X	
9	T76252	CLAMP	1		X	X	
10	24M7239	WASHER	1		X	X	10.700 X 21 X 2.500 MM
11	19M7938	CAP SCREW	4		X	X	M10 X 20
12	AT65241	STRAINER	1		X	X	
	TY15969	ADHESIVE	1		X	X	
13	AT157111	STRUCTURAL TUBING	1		X	X	
14	TY22462	CLAMP	2		X	X	(SUB FOR AR48236)
15	24M7296	WASHER	7		X	X	10.500 X 30 X 2.500 MM
16	19M7550	CAP SCREW	3		X	X	M10 X 35
17	R463R	WASHER	1		X	X	
18	19H2020	CAP SCREW	1		X	X	5/16" X 1/2"
19	AT150756	FUEL TANK	1	-796854	X	X	
	AT164895	FUEL TANK	1	796855-	X	X	
20	T77858	O-RING	1		X	X	
21	R27181	GASKET	1		X	X	
22	AT160230	SENDER	1		X	X	(SUB FOR AT141234, THIS APPLICATION)
23	37H129	SCREW	5		X	X	
24	.....	HOSE	1		X	X	(MAKE FROM N112006 BULK MATERIAL, CUT TO LENGTH)
25	T66701	LINE	1		X	X	
26	T103461	SEALING WASHER	1	779086-	X	X	
27	AT156445	FILLER CAP	1	779086-	X	X	
28	19M7550	CAP SCREW	1		X	X	

FUEL TANK, FUEL HOSES AND FUEL GAUGE SENDER
(SERIAL NO. 801200-)

TP46374 -UN-21DEC94

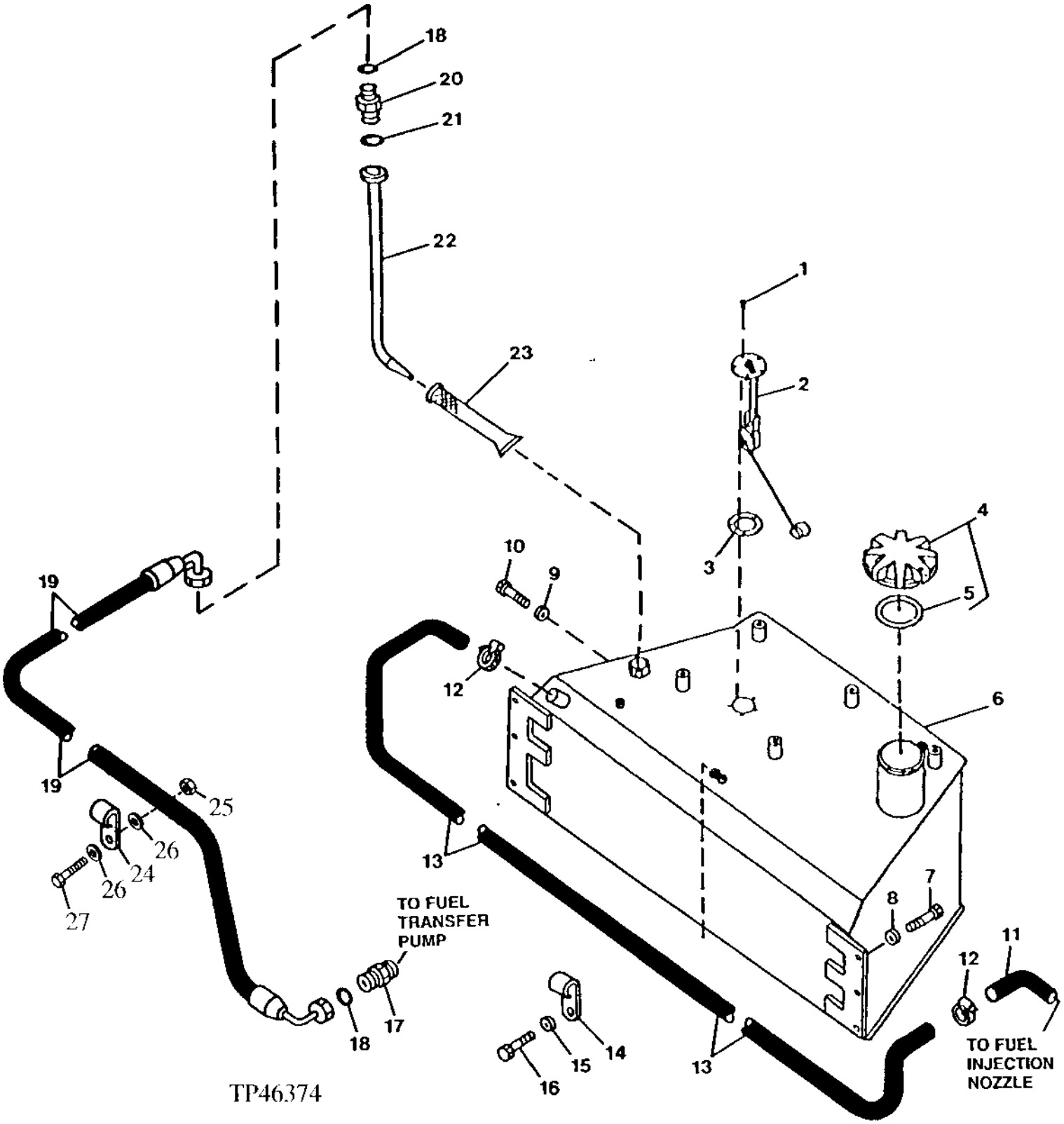

FUEL TANK, FUEL HOSES AND FUEL GAUGE SENDER
(SERIAL NO. 801200-)

KEY	PART NO.	PART NAME	QTY	SERIAL NO.	410D	510D	REMARKS
1	37H129	SCREW	5		X	X	
2	AT160230	SENDER	1		X	X	FUEL TANK
3	R27181	GASKET	1		X	X	
4	AT156445	FILLER CAP	1		X	X	
5	T103461	SEALING WASHER	1		X	X	
6	AT170461	FUEL TANK	1		X	X	(SUB FOR AT169890 AND AT170039)
7	19M7572	CAP SCREW	6		X	X	
8	24M7296	WASHER	6		X	X	
9	R463R	WASHER	1		X	X	FUEL TANK DRAIN
10	19H2020	CAP SCREW	1		X	X	5/16" X 1/2", FUEL TANK DRAIN
11	T66701	LINE	1		X	X	
12	TY22462	CLAMP	2		X	X	(SUB FOR AR48236)
13	.....	HYDRAULIC HOSE	1		X	X	(MAKE FROM N112006 BULK MATERIAL, CUT TO LENGTH)
14	T75197	CLAMP	1		X	X	
15	24M7239	WASHER	1		X	X	10.700 X 21 X 2.500 MM
16	19M7572	CAP SCREW	1		X	X	M10 X 45
17	T80937	ADAPTER	1		X	X	
18	T77814	O-RING	2		X	X	
19	AT169072	HYDRAULIC HOSE - FABRICATE	1		X	X	
20	38H1408	UNION FITTING	1		X	X	
21	T77858	O-RING	1		X	X	
22	AT166189	STRUCTURAL TUBING	1		X	X	
23	AT65241	STRAINER	1		X	X	
	TY15969	ADHESIVE	1		X	X	
24	AH89557	CLIP	2		X	X	
25	14M7274	NUT	2		X	X	
26	24M7239	WASHER	2		X	X	
27	19M7662	CAP SCREW	2		X	X	

FUEL TANK LOCK

TP24035 -UN-01JAN94

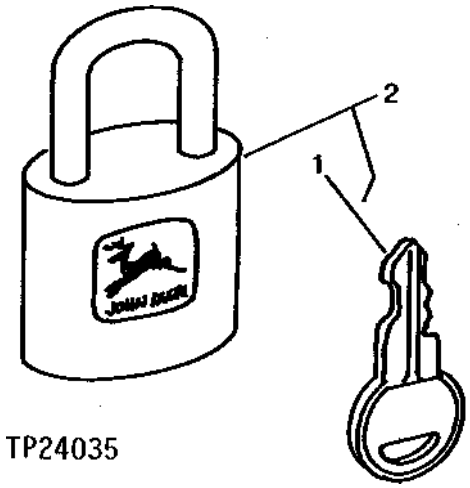

KEY	PART NO.	PART NAME	QTY	SERIAL NO.	410D	510D	REMARKS
1	T108235	KEY	1		X	X	
2	AT116192	LOCK	1		X	X	

TORQUE CONVERTER

TP15176 -UN-01JAN94

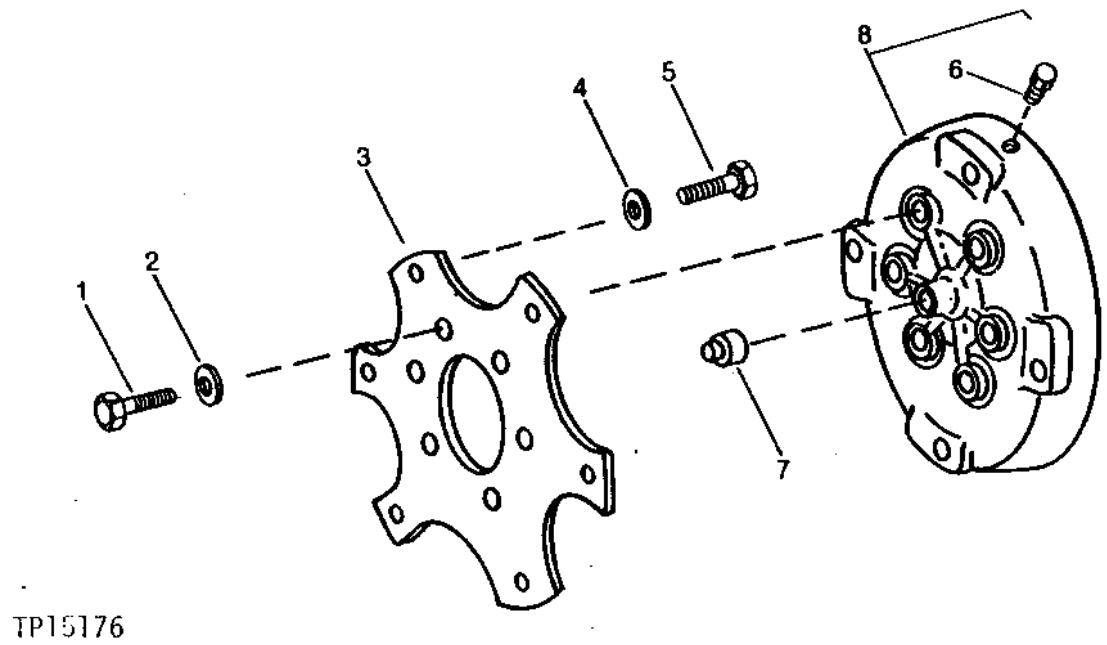

KEY	PART NO.	PART NAME	QTY	SERIAL NO.	410D	510D	REMARKS
1	19H2554	CAP SCREW	6		X	X	3/8" X 5/8"
2	R43696	WASHER	6		X	X	
3	T68891	PLATE	1		X	X	
4	24H1685	WASHER	6		X	X	11/32" X 47/64" X 0.083"
5	19M7139	CAP SCREW	6		X	X	M8 X 20
6	L2646N	PIPE PLUG	1		X	X	
7	T106361	BUSHING	1		X	X	
8	AT196804	TORQUE CONVERTER	1		X	X	(SUB FOR AT101409 AND AT170901) (MARKED ONE GREEN AND ONE PURPLE PAINT DOT)

MEMORANDA

POWER STEERING CYLINDER
(WITHOUT MECHANICAL FRONT WHEEL DRIVE)
(SERIAL NO. -780658)

TP40441 -UN-01JAN94

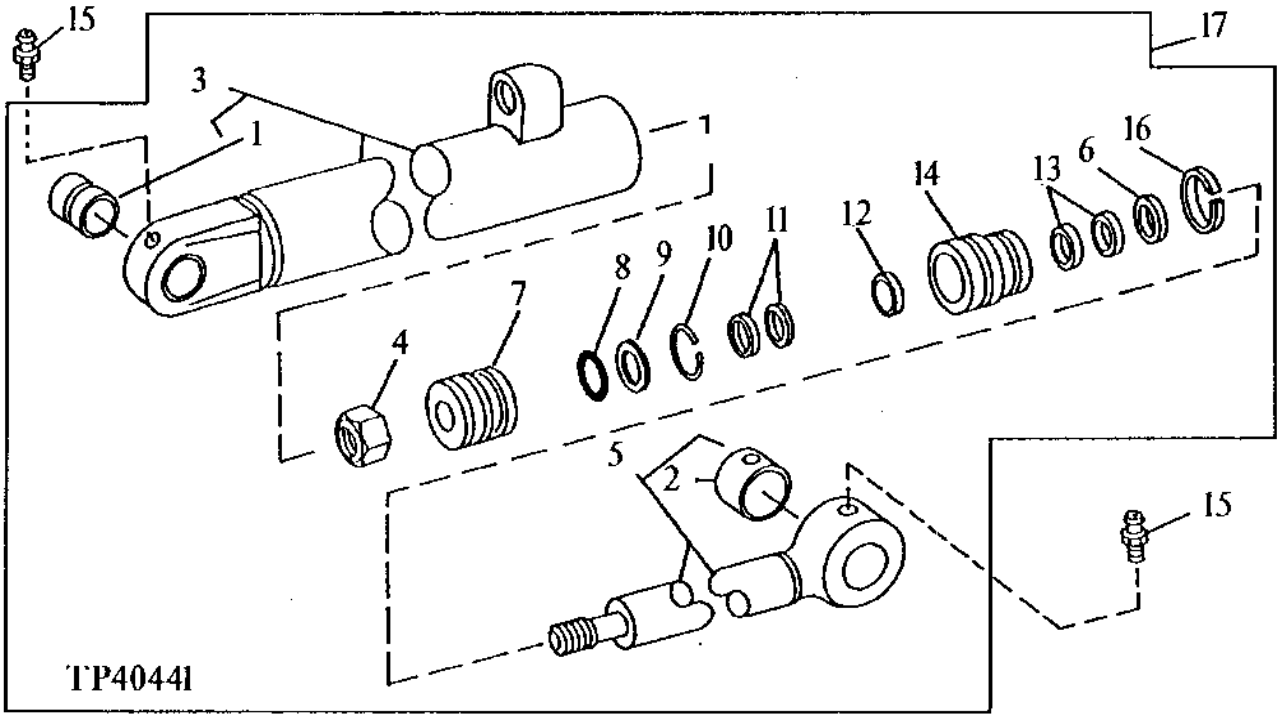

KEY	PART NO.	PART NAME	QTY	SERIAL NO.	410D	510D	REMARKS
1	R81854	BUSHING	1		X	X	
2	R72700	BUSHING	1		X	X	(SUB FOR R82969)
3	RE22413	HYDRAULIC CYLINDER BARREL	1		X	X	
4	R82570	LOCK NUT	1		X	X	
5	RE22415	ROD	1		X	X	
6	H169509	BACK-UP RING	AR		X	X	(BK) (SUB FOR R91726)
7	AH138200	PISTON	1		X	X	
	.....	WEAR RING	2		X	X	
	.....	SEAL	1		X	X	FACE
	.....	SEAL	1		X	X	INTERNAL
8	R94418	O-RING	1		X	X	(BK)
9	R79117	WASHER	1		X	X	(BK)
10	R82571	SNAP RING	1		X	X	
11	RE21846	SEAL	1		X	X	(RK)
12	R82566	SEAL	1		X	X	(RK)
13	RE24532	SEAL	1		X	X	(RK)
14	.....	HYDR. CYLINDER ROD GUIDE	1		X	X	(R94417 NO LONGER USED) (SUB H157662) (ALSO ORDER AH149810)
15	T162396	LUBRICATION FITTING	1		X	X	(SUB FOR JD7798) (ROD END)
	JD7759	LUBRICATION FITTING	1		X	X	(HEAD END)
16	R90565	SNAP RING	1		X	X	
17	.....	HYDRAULIC CYLINDER	1		X	X	(AH139130 NO LONGER AVAILABLE) (SUB AH154780)

(BK) AH167552 CYLINDER BORE REPAIR KIT

(RK) RE21875 CYLINDER ROD REPAIR KIT

POWER STEERING CYLINDER
(WITHOUT MECHANICAL FRONT WHEEL DRIVE)
(REPLACEMENT CYLINDER)

TP40441 -UN-01JAN94

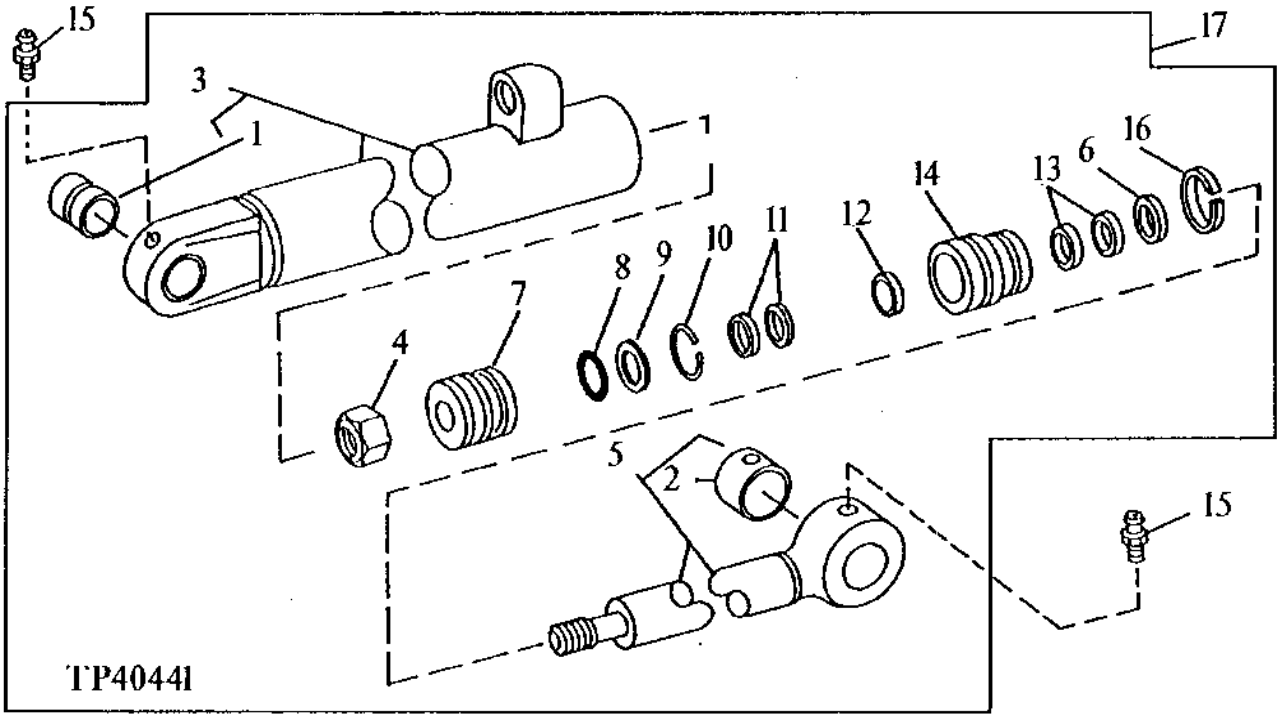

KEY	PART NO.	PART NAME	QTY	SERIAL NO.	4 5 1 1 0 0 D D	REMARKS
1	R81854	BUSHING	1		X X	
2	R72700	BUSHING	1		X X	
3	RE22413	HYDRAULIC CYLINDER BARREL	1		X X	
4	R82570	LOCK NUT	1		X X	
5	RE22415	ROD	1		X X	
6	H169509	BACK-UP RING	AR		X X	(BK) (SUB FOR R91726)
7	AH138200	PISTON	1		X X	
	.....	WEAR RING	2		X X	
	.....	SEAL	1		X X	FACE
	.....	SEAL	1		X X	INTERNAL
8	R94418	O-RING	1		X X	(BK)
9	R79117	WASHER	1		X X	(BK)
10	R82571	SNAP RING	1		X X	
11	AH151381	SEAL	1		X X	(RK)
12	H158676	SEAL	1		X X	(RK)
13	AH151380	SEAL	1		X X	(RK)
14	H157662	HYDR. CYLINDER ROD GUIDE	1		X X	
15	T162396	LUBRICATION FITTING	1		X X	(ROD END)
	JD7759	LUBRICATION FITTING	1		X X	(HEAD END)
16	R90565	SNAP RING	1		X X	
17	AH154780	HYDRAULIC CYLINDER	1		X X	

(BK) AH167552 CYLINDER BORE REPAIR KIT

(RK) AU149810 CYLINDER ROD REPAIR KIT

MEMORANDA

POWER STEERING CYLINDER
(WITHOUT MECHANICAL FRONT WHEEL DRIVE)
(SERIAL NO. 780659-)

TP26637 -UN-01JAN94

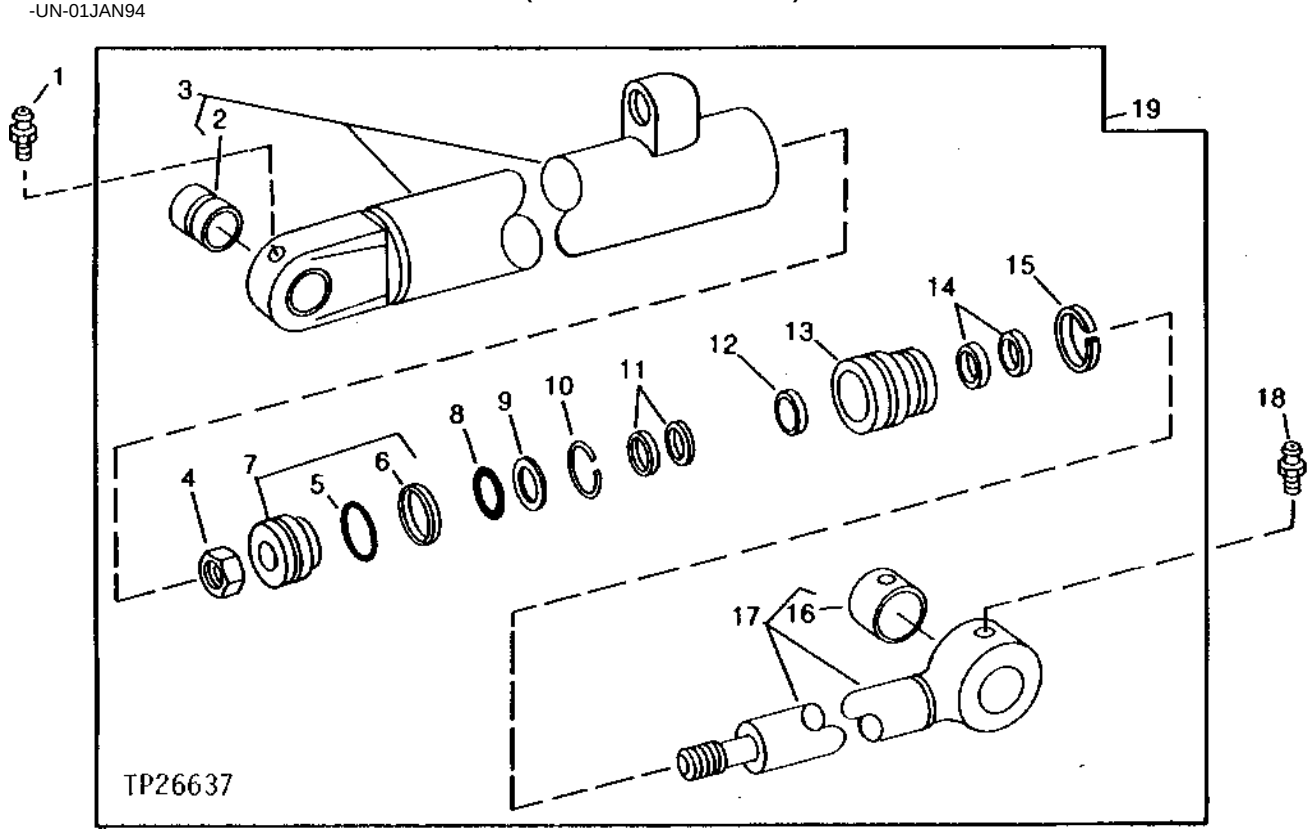

KEY	PART NO.	PART NAME	QTY	SERIAL NO.	451 100 DD	REMARKS
1	JD7759	LUBRICATION FITTING	1		X X	
2	R81854	BUSHING	1		X X	
3	AH134479	HYDRAULIC CYLINDER BARREL	1		X X	
4	R82570	LOCK NUT	1		X X	
5	R30200	O-RING	1		X X	(BK)
6	R92208	PACKING	1		X X	(BK)
7	AH135785	PISTON	1		X X	(INCLUDES WEAR RINGS AND SEALS
	.....	WEAR RING	2		X X	
	.....	SEAL	1		X X	FACE
	.....	SEAL	1		X X	INTERNAL
8	R90267	O-RING	1		X X	(BK)
9	R78393	BACK-UP RING	1		X X	(BK)
10	R88114	SNAP RING	1		X X	
11	RE21846	SEAL	1		X X	(RK)
12	R82566	SEAL	1		X X	(RK)
13	.....	HYDR. CYLINDER ROD GUIDE	1		X X	(H140830 N0 LONGER USED) (SUB H161330) (ALSO ORDER AH149810)
14	RE24532	SEAL	1		X X	(RK)
15	N34349	SNAP RING	1		X X	
16	R72700	BUSHING	1		X X	(SUB FOR R82969)
17	RE22415	ROD	1		X X	
18	T162396	LUBRICATION FITTING	1		X X	(SUB FOR JD7798)
19	.....	HYDRAULIC CYLINDER	1		X X	(AH134478 NO LONGER AVAILABLE) (SUB AH154774)

(BK) RE30100 CYLINDER BORE KIT

(RK) RE21875 CYLINDER ROD KIT

POWER STEERING CYLINDER
(WITHOUT MECHANICAL FRONT WHEEL DRIVE)
(SERIAL NO. 780659-)
(REPLACEMENT CYLINDER)

TP26637 -UN-01JAN94

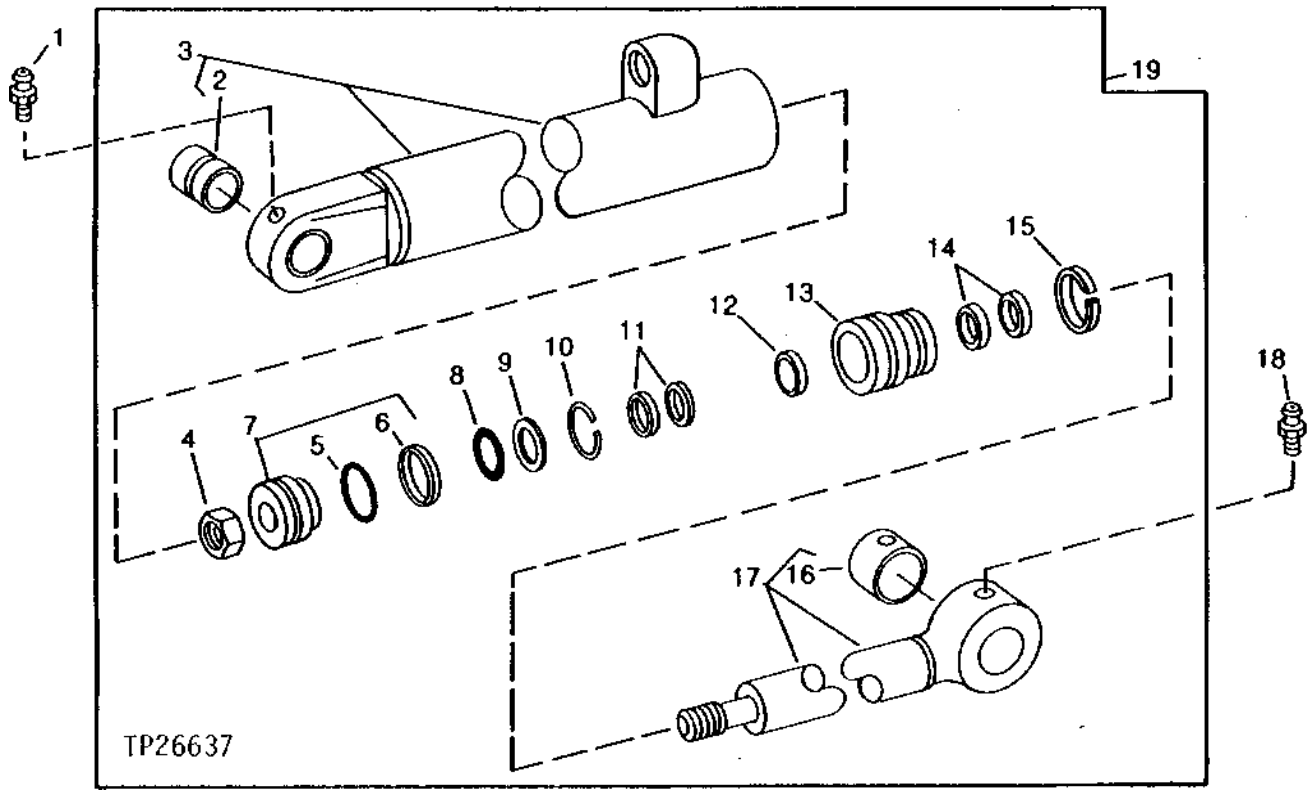

KEY	PART NO.	PART NAME	QTY	SERIAL NO.	4 5 1 1 0 0 D D	REMARKS
1	JD7759	LUBRICATION FITTING	1		X X	
2	R81854	BUSHING	1		X X	
3	AH134479	HYDRAULIC CYLINDER BARREL	1		X X	
4	R82570	LOCK NUT	1		X X	
5	R30200	O-RING	1		X X	(BK)
6	R92208	PACKING	1		X X	(BK)
7	AH135785	PISTON	1		X X	(INCLUDES WEAR RINGS AND SEALS
	.....	WEAR RING	2		X X	
	.....	SEAL	1		X X	FACE
	.....	SEAL	1		X X	INTERNAL
8	R90267	O-RING	1		X X	(BK)
9	R78393	BACK-UP RING	1		X X	(BK)
10	R88114	SNAP RING	1		X X	
11	AH151381	SEAL	1		X X	(RK)
12	H158676	SEAL	1		X X	(RK)
13	H161330	HYDR. CYLINDER ROD GUIDE	1		X X	
14	AH151380	SEAL	1		X X	(RK)
15	N34349	SNAP RING	1		X X	
16	R72700	BUSHING	1		X X	(SUB FOR R82969)
17	RE22415	ROD	1		X X	
18	T162396	LUBRICATION FITTING	1		X X	(SUB FOR JD7798)
19	AH154774	HYDRAULIC CYLINDER	1		X X	

(BK) RE30100 CYLINDER BORE KIT

(RK) AH149810 CYLINDER ROD KIT

STEERING CYLINDER
(MECHANICAL FRONT WHEEL DRIVE)
(SERIAL NO. -796854)

TP21572 -UN-01JAN94

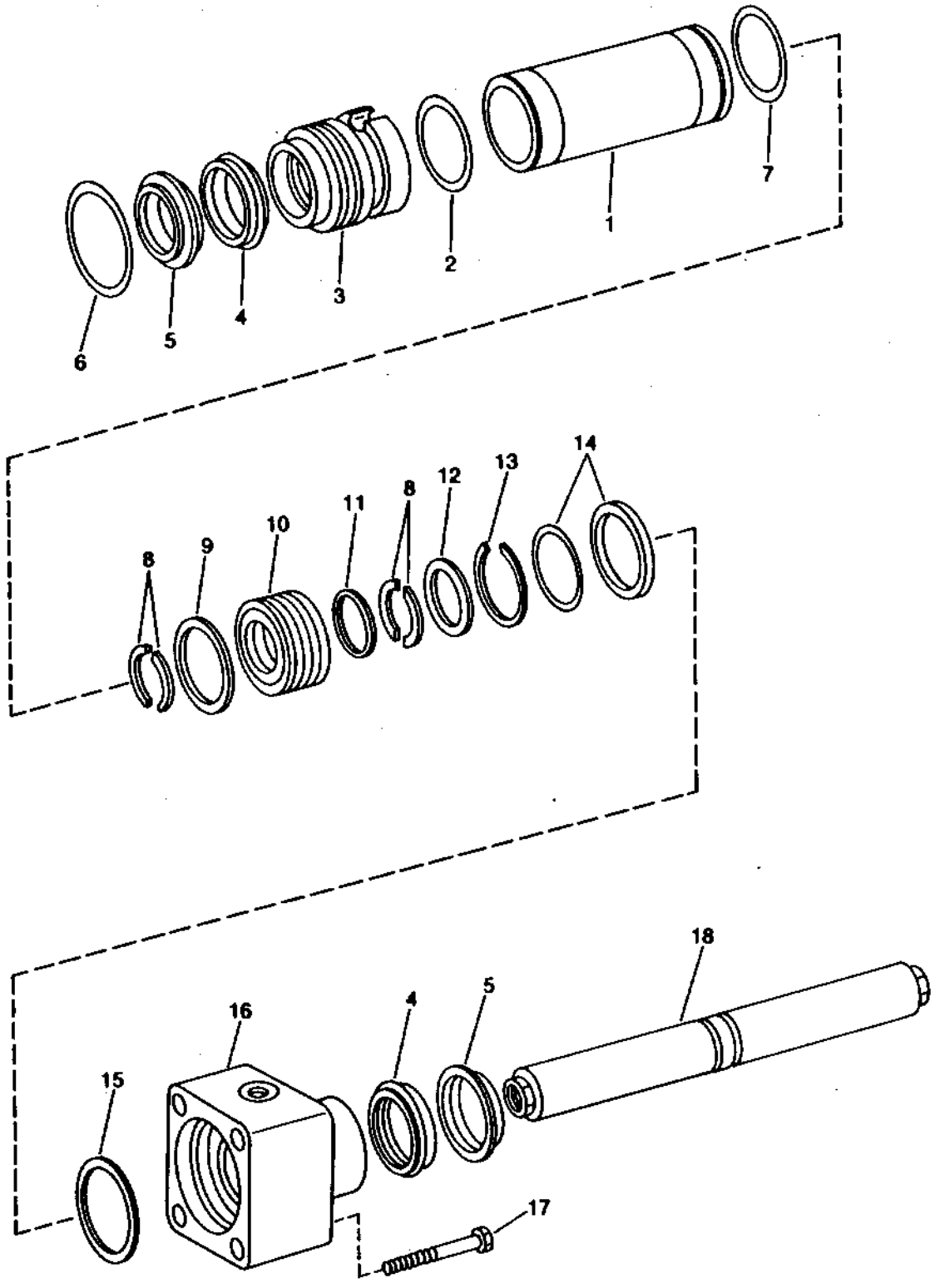

TP21572

STEERING CYLINDER
(MECHANICAL FRONT WHEEL DRIVE)
(SERIAL NO. -796854)

KEY	PART NO.	PART NAME	QTY	SERIAL NO.	410D	510D	REMARKS
1	AT108335	HYDRAULIC CYLINDER BARREL	1		X	X	
2	L40318	O-RING	1		X	X	
3	T116826	GUIDE	1		X	X	
4	L41317	SEAL	2		X	X	
5	L41318	SEAL	2		X	X	
6	L40320	O-RING	1		X	X	
7	L40318	O-RING	1		X	X	(SUB FOR L40319)
8	T116796	WASHER	2		X	X	
9	T116785	RING	1		X	X	
10	T116828	PISTON	1		X	X	
11	T116789	O-RING	1		X	X	
12	T116829	WASHER	1		X	X	
13	40M7127	SNAP RING	1		X	X	
14	T116784	GASKET	1		X	X	
15	L40162	WASHER	AR		X	X	1.0 MM (.039")
	L40161	WASHER	AR		X	X	1.1 MM (.043")
	L40160	WASHER	AR		X	X	1.2 MM (.047")
	L40159	WASHER	AR		X	X	1.3 MM (.051")
	L40158	WASHER	AR		X	X	1.4 MM (.055")
	L40157	WASHER	AR		X	X	1.5 MM (.059")
	L40156	WASHER	AR		X	X	1.6 MM (.063")
	L40155	WASHER	AR		X	X	1.7 MM (.067")
	L39999	WASHER	AR		X	X	1.8 MM (.071")
	L60115	WASHER	AR		X	X	0.9 MM (0.35")
16	T116834	HYDR. CYLINDER ROD GUIDE	1		X	X	
17	T84067	SCREW	4		X	X	
18	T116835	ROD	1		X	X	

STEERING CYLINDER
(MECHANICAL FRONT WHEEL DRIVE)
(SERIAL NO. 796855-)

TP70433 -UN-30AUG00

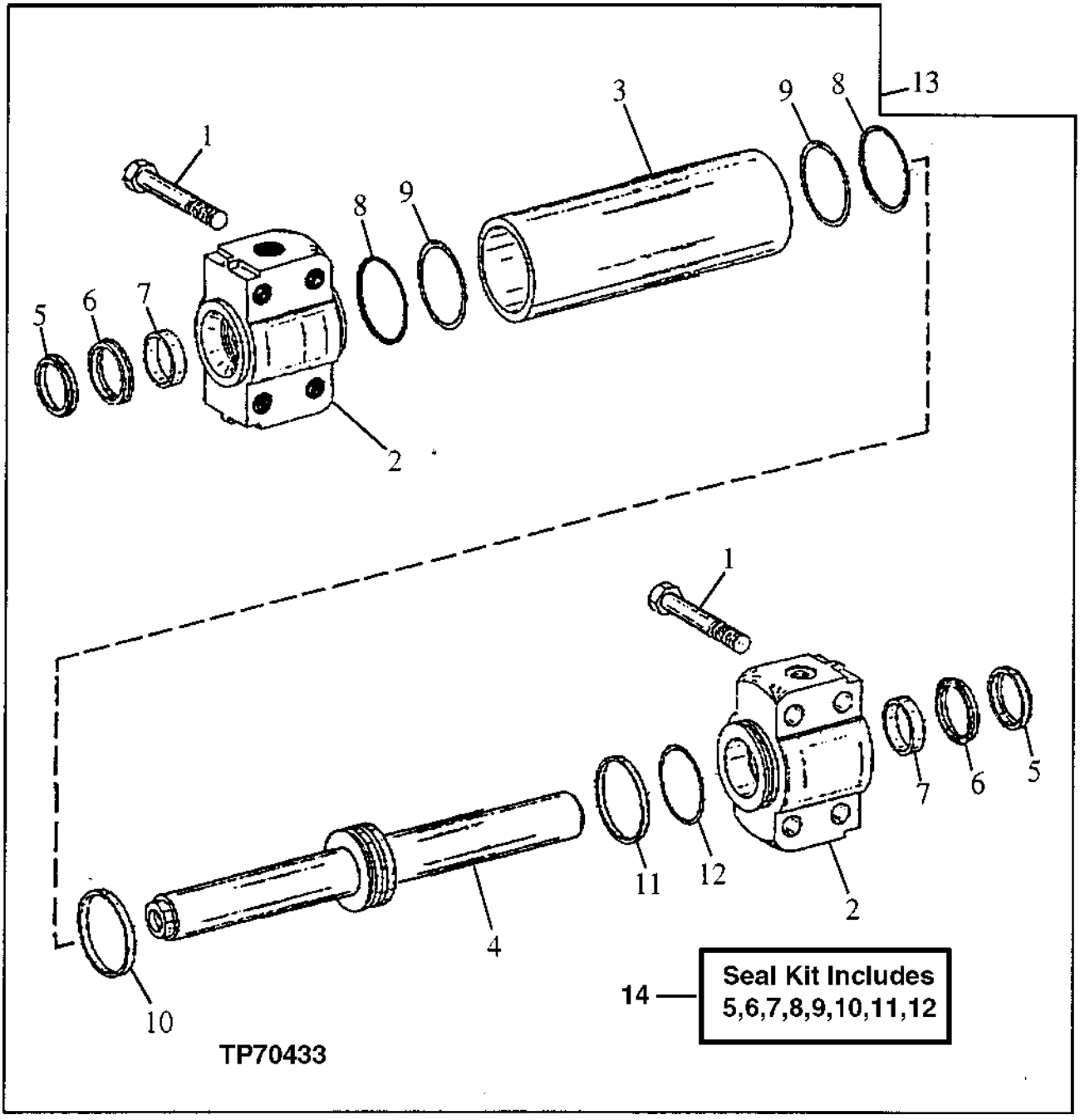

STEERING CYLINDER
(MECHANICAL FRONT WHEEL DRIVE)
(SERIAL NO. 796855-)

KEY	PART NO.	PART NAME	QTY	SERIAL NO.	410D	510D	REMARKS
1	19M8632	CAP SCREW	8		X	X	M16 X 75
2	T153723	HYDRAULIC CYLINDER CAP	2		X	X	
3	T153742	HYDRAULIC CYLINDER BARREL	1		X	X	
4	AT195573	ROD	1		X	X	(SUB FOR T153743)
5	.....	SEAL	2		X	X	(A)
6	.....	SEAL	2		X	X	(A)
7	.....	GUIDE	2		X	X	(A)
8	.....	O-RING	2		X	X	(A)
9	.....	RING	2		X	X	(A)
10	.....	SEAL	1		X	X	(A)
11	.....	GUIDE	1		X	X	(A)
12	.....	O-RING	1		X	X	(A)
13	AT195570	CYLINDER	1		X	X	(SUB FOR AT167332)
14	T153744	HYDRAULIC CYLINDER KIT	1		X	X	(STEERING CYLINDER SEAL KIT) INCLUDES ALL (A) PARTS

STEERING VALVE AND STEERING CYLINDER HYDRAULICS
(SERIAL NO. -801199)

TP44559 -UN-01JAN94

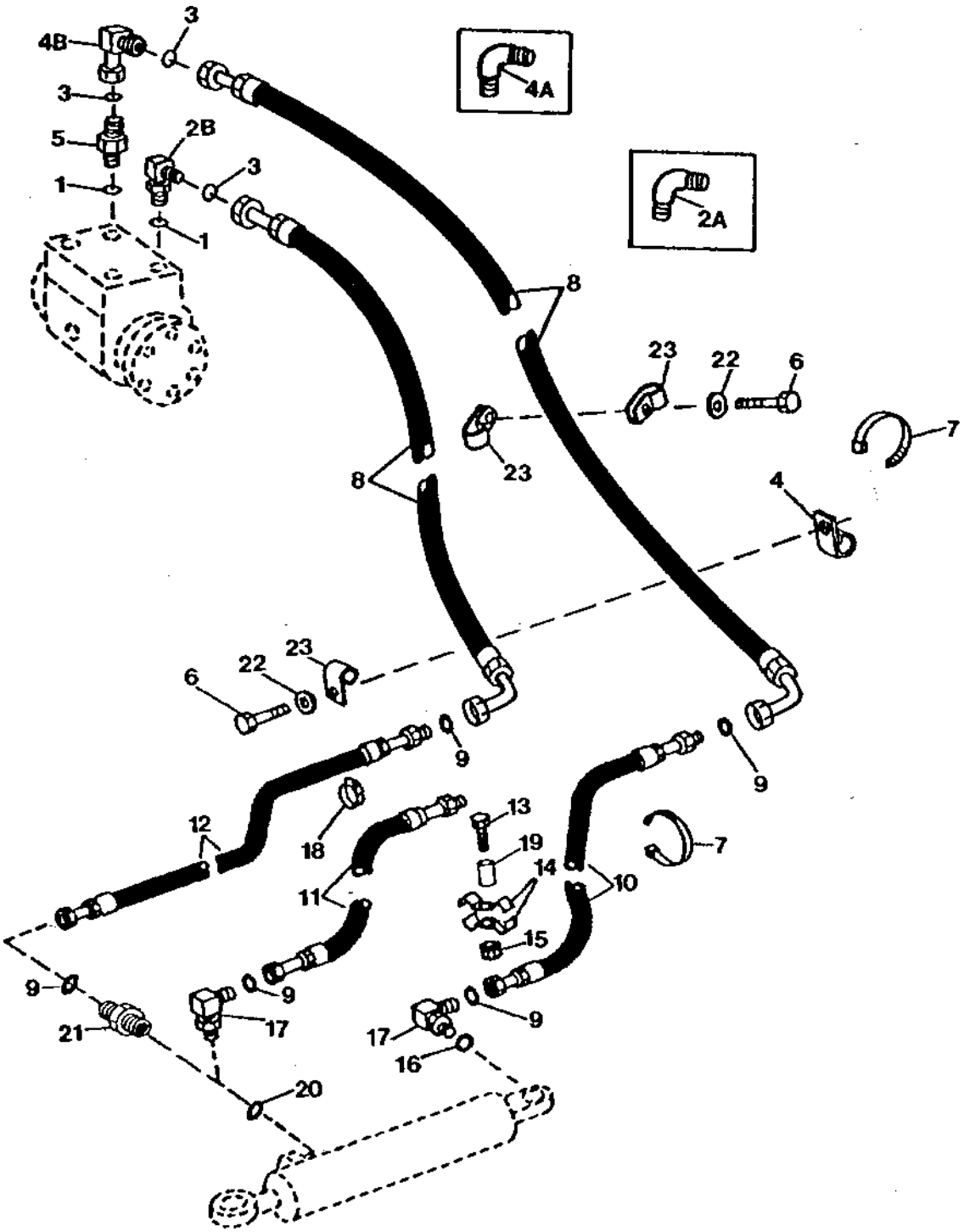

STEERING VALVE AND STEERING CYLINDER HYDRAULICS
(SERIAL NO. -801199)

KEY	PART NO.	PART NAME	QTY	SERIAL NO.	410D	510D	REMARKS
1	R26375	O-RING	2		X	X	
2A	38H1046	ELBOW FITTING	1	-796854	X	X	
2B	38H1005	ELBOW FITTING	1	796855-	X	X	
3	T77857	O-RING	3		X	X	
4A	38H1046	ELBOW FITTING	1	-796854	X	X	
4B	38H1095	ELBOW FITTING	1	796855-	X	X	
5	38H1161	ADAPTER	1	796855-	X	X	
6	19M7938	CAP SCREW	3		X	X	M10 X 20
7	R44302	TIE BAND	1		X	X	
8	AT151344	HYDRAULIC HOSE - FABRICATE	2		X	X	
9	T77613	O-RING	4		X	X	(WITH MFWD)
	T77613	O-RING	2	-780658	X	X	(WITHOUT MFWD)
	T77613	O-RING	3	780659-	X	X	(WITHOUT MFWD)
10	AT151345	HYDRAULIC HOSE - FABRICATE	1		X	X	(WITH MFWD) (LEFT END)
	AT151348	HYDRAULIC HOSE - FABRICATE	1		X	X	(WITHOUT MFWD) (HEAD END)
11	AT151346	HYDRAULIC HOSE - FABRICATE	1	-796854	X	X	11/16" X 1 175 MM (46-1/4") X 11/16", (WITH MFWD) (RIGHT END)
	AT165341	HYDRAULIC HOSE - FABRICATE	1	796855-	X	X	11/16" X 1 276 MM (50-1/4") X 11/16" (WITH MFWD)
12	.....	HYDRAULIC HOSE	1	-780658	X	X	(AT151347 NO LONGER AVAILABLE) (SUB AT157316 AND 38H1160) (WITHOUT MFWD) (ROD END)
	AT157316	HYDRAULIC HOSE - FABRICATE	1	780659-	X	X	(WITHOUT MFWD)
13	19M7550	CAP SCREW	1		X	X	M10 X 35, (WITH MFWD)
14	R46919	HALF CLAMP	2		X	X	(WITH MFWD)
15	14M7274	NUT	1		X	X	M10, (WITH MFWD)
16	R26448	O-RING	2	-780658	X	X	
	R26448	O-RING	1	780659-	X	X	
17	38H1004	ELBOW FITTING	1		X	X	(WITHOUT MFWD)
	38H1004	ELBOW FITTING	2		X	X	(WITH MFWD)
18	AR21839	CLAMP	1		X	X	
19	28H1521	SPACER	1		X	X	
20	R26375	O-RING	1	780659-	X	X	
21	38H1171	ADAPTER	1	780659-	X	X	
22	24M7239	WASHER	7		X	X	10.700 X 21 X 2.500 MM
23	T74416	CLAMP	6		X	X	

STEERING, PRIORITY AND TRANSMISSION HYDRAULICS
(SERIAL NO. (-801199)

TP44558 -UN-01JAN94

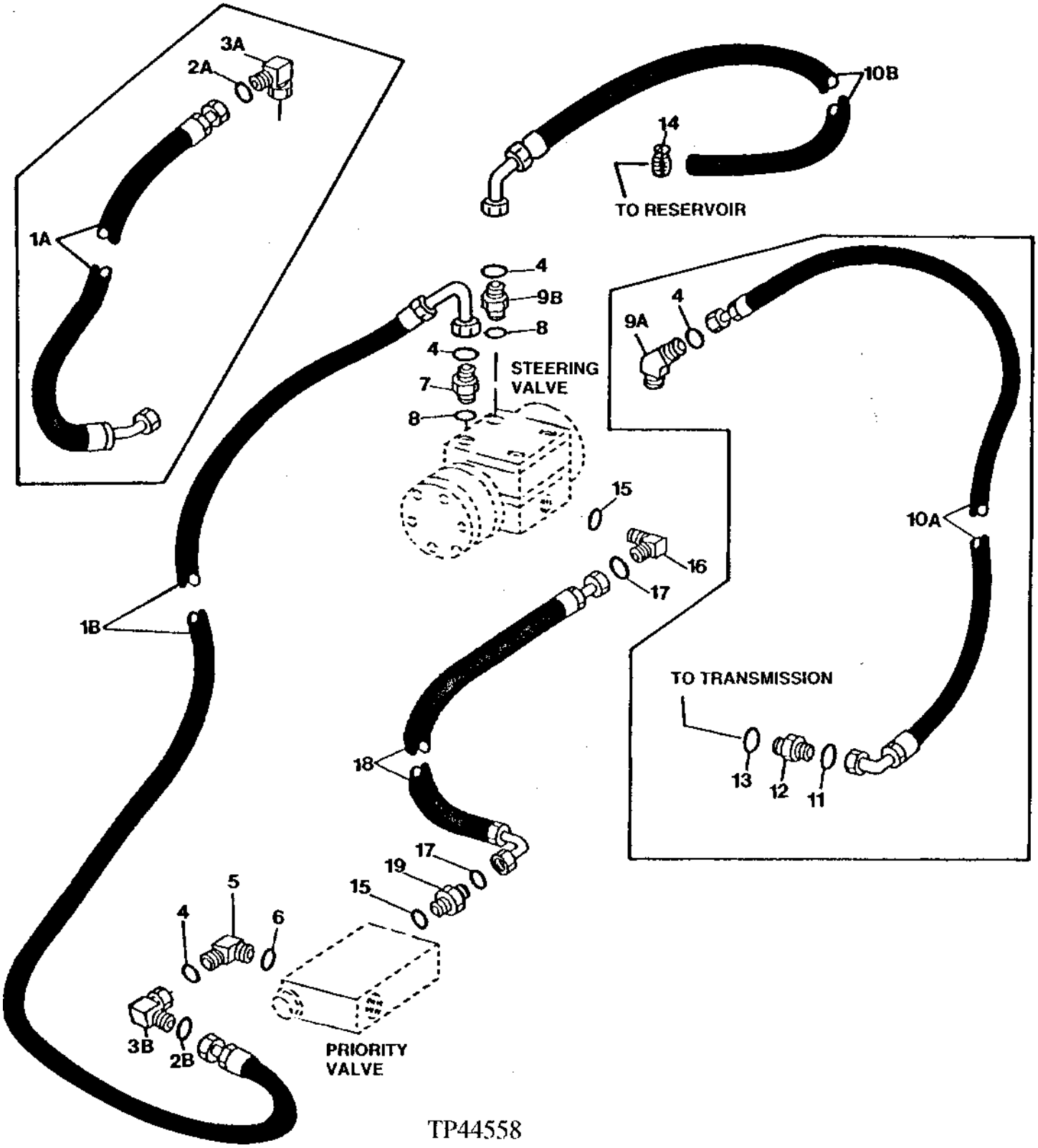

TP44558

STEERING, PRIORITY, AND TRANSMISSION HYDRAULICS
(SERIAL NO. (-801199)

KEY	PART NO.	PART NAME	QTY	SERIAL NO.	410D	510D	REMARKS
1A	AT151826	HYDRAULIC HOSE - FABRICATE	1	-796854	X	X	(SUB FOR AT150548 AND AT100465)
1B	AT151826	HYDRAULIC HOSE - FABRICATE	1	796855-	X	X	
2A	T77857	O-RING	1	-796854	X	X	
2B	T77857	O-RING	1	796855-	X	X	
3A	38H1095	ELBOW FITTING	1	-796854	X	X	
3B	38H1095	ELBOW FITTING	1	796855-	X	X	
4	T77857	O-RING	3		X	X	
5	38H1013	ELBOW FITTING	1		X	X	
6	U12547	O-RING	1		X	X	
7	AT141527	CHECK VALVE	1		X	X	
8	R26375	O-RING	2		X	X	
9A	38H1046	ELBOW FITTING	1	-796854	X	X	
9B	38H1161	ADAPTER	1	796855-	X	X	
10A	AT151854	HYDRAULIC HOSE - FABRICATE	1	-796854	X	X	(SUB FOR AT149779)
10B	AT164459	HYDRAULIC HOSE - FABRICATE	1	796855-	X	X	
11	T77857	O-RING	1	-796854	X	X	
12	38H1173	ADAPTER	1	-796854	X	X	
13	R28782	O-RING	1	-796854	X	X	
14	TY22464	CLAMP	1	796855-	X	X	(SUB FOR AR21836)
15	R28782	O-RING	2	796855-	X	X	
16	38H1003	ELBOW FITTING	1		X	X	
17	T77814	O-RING	2		X	X	
18	AT151853	HYDRAULIC HOSE - FABRICATE	1		X	X	
19	38H1159	ADAPTER	1		X	X	

**STEERING VALVE AND STEERING CYLINDER HYDRAULICS
(WITHOUT MECHANICAL FRONT WHEEL DRIVE)
(SERIAL NO. 801200-)**

TP50436 -UN-12JUL96

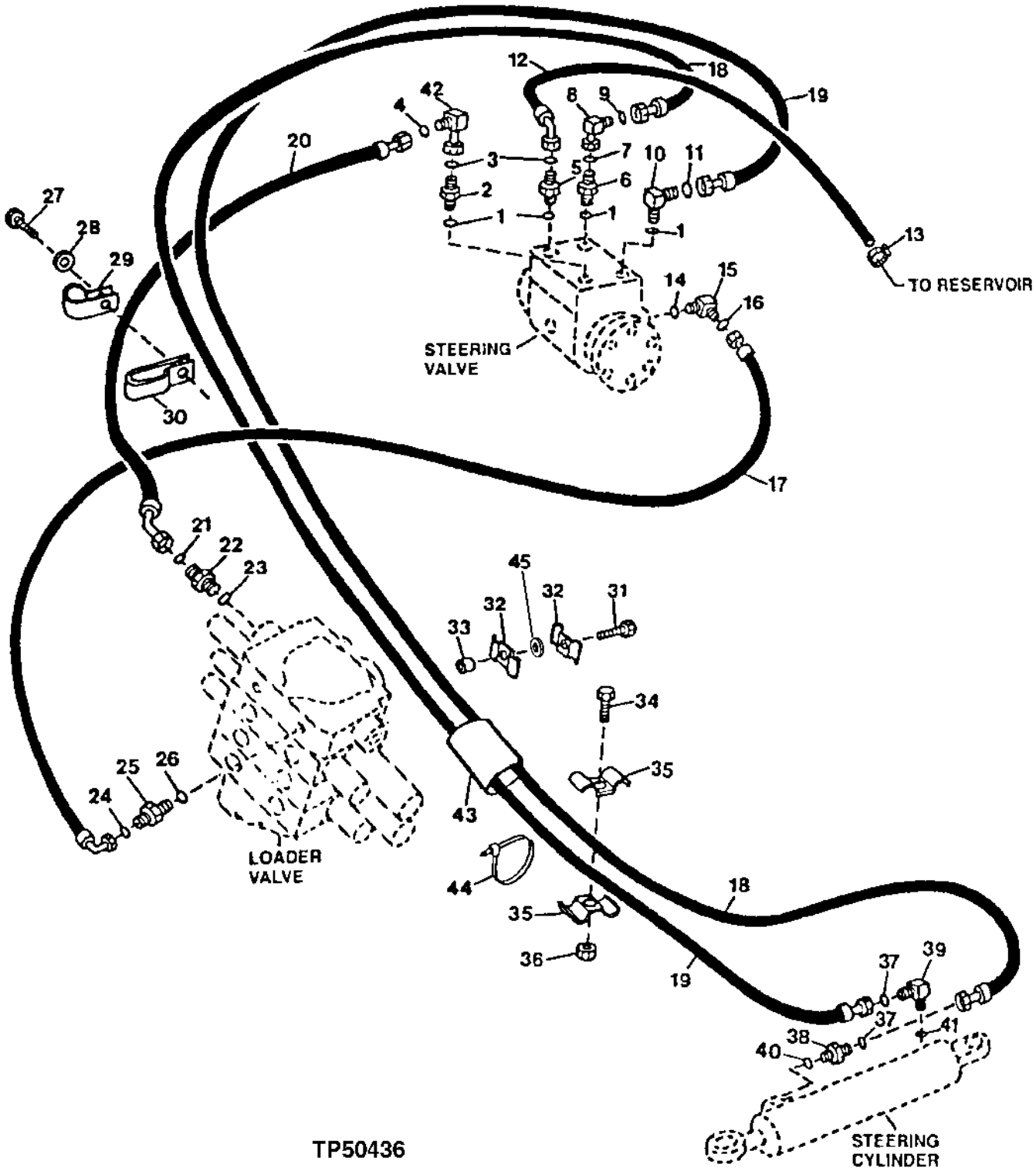

STEERING HYDRAULICS
(WITHOUT MECHANICAL FRONT WHEEL DRIVE)
(SERIAL NO. 801200-)

KEY	PART NO.	PART NAME	QTY	SERIAL NO.	410D	510D	REMARKS
1	R26375	O-RING	4		X	X	
2	AT141527	CHECK VALVE	1		X	X	
3	T77857	O-RING	2		X	X	
4	T77857	O-RING	1		X	X	
5	38H1161	ADAPTER	1		X	X	
6	38H1171	ADAPTER	1		X	X	
7	T77613	O-RING	1		X	X	
8	38H1094	ELBOW FITTING	1		X	X	
9	T77613	O-RING	1		X	X	WITH MFWD
10	38H1010	ELBOW FITTING	1		X	X	
11	T77613	O-RING	1		X	X	
12	AT164459	HYDRAULIC HOSE - FABRICATE	1		X	X	
13	TY22462	CLAMP	1		X	X	(SUB FOR AR48236)
14	R28782	O-RING	1		X	X	
15	38H1003	ELBOW FITTING	1		X	X	
16	T77814	O-RING	1		X	X	
17	AT165138	HYDRAULIC HOSE - FABRICATE	1		X	X	9/16" X 1 664 MM (65-1/2") X 9/16"
18	AT165979	HYDRAULIC HOSE - FABRICATE	1		X	X	11/16" X 2 388 MM (94") X 11/16"
19	AT165979	HYDRAULIC HOSE - FABRICATE	1		X	X	11/16" X 2 388 MM (94") X 11/16"
20	AT165137	HYDRAULIC HOSE - FABRICATE	1		X	X	13/16" X 1 422 MM (56") X 13/16"
21	T77857	O-RING	1		X	X	
22	38H1161	ADAPTER	1		X	X	
23	R26375	O-RING	1		X	X	
24	T77814	O-RING	1		X	X	
25	38H1168	ADAPTER	1		X	X	
26	R26448	O-RING	1		X	X	
27	19M7407	CAP SCREW	1		X	X	M8 X 25
28	24M7238	WASHER	1		X	X	8.700 X 17 X 2 MM (0.343" X 0.669" X 0.079")
29	T24959	CLAMP	1		X	X	
30	T152608	CLAMP	1		X	X	
31	19M8853	SCREW	2		X	X	M10 X 50, (SUB FOR M117904)
32	R27491	CLAMP	4		X	X	
33	28H1521	SPACER	2		X	X	12.522 X 17.145 X 14.275 MM (0.493" X 0.675" X 9/16")
34	19M7881	SCREW	1		X	X	M8 X 20
	24M7239	WASHER	2		X	X	10.700 X 21 X 2.500 MM
35	R27491	CLAMP	2		X	X	
36	14M7273	NUT	1		X	X	M8
37	T77613	O-RING	2		X	X	
38	38H1160	ADAPTER	1		X	X	
39	38H1004	ELBOW FITTING	1		X	X	
40	R26375	O-RING	1		X	X	
41	R26448	O-RING	1		X	X	
42	38H1095	ELBOW FITTING	1		X	X	
43	.....	ISOLATOR	1		X	X	(MAKE FROM T78606 BULK FABRIC CUT TO LENGTH)
44	R44302	TIE BAND	1		X	X	
45	24H1304	WASHER	2		X	X	13/32" X 23/32" X 0.120"

STEERING VALVE AND STEERING CYLINDER HYDRAULICS
(MECHANICAL FRONT WHEEL DRIVE)
(SERIAL NO. 801200-)

T143120 -UN-20JUN01

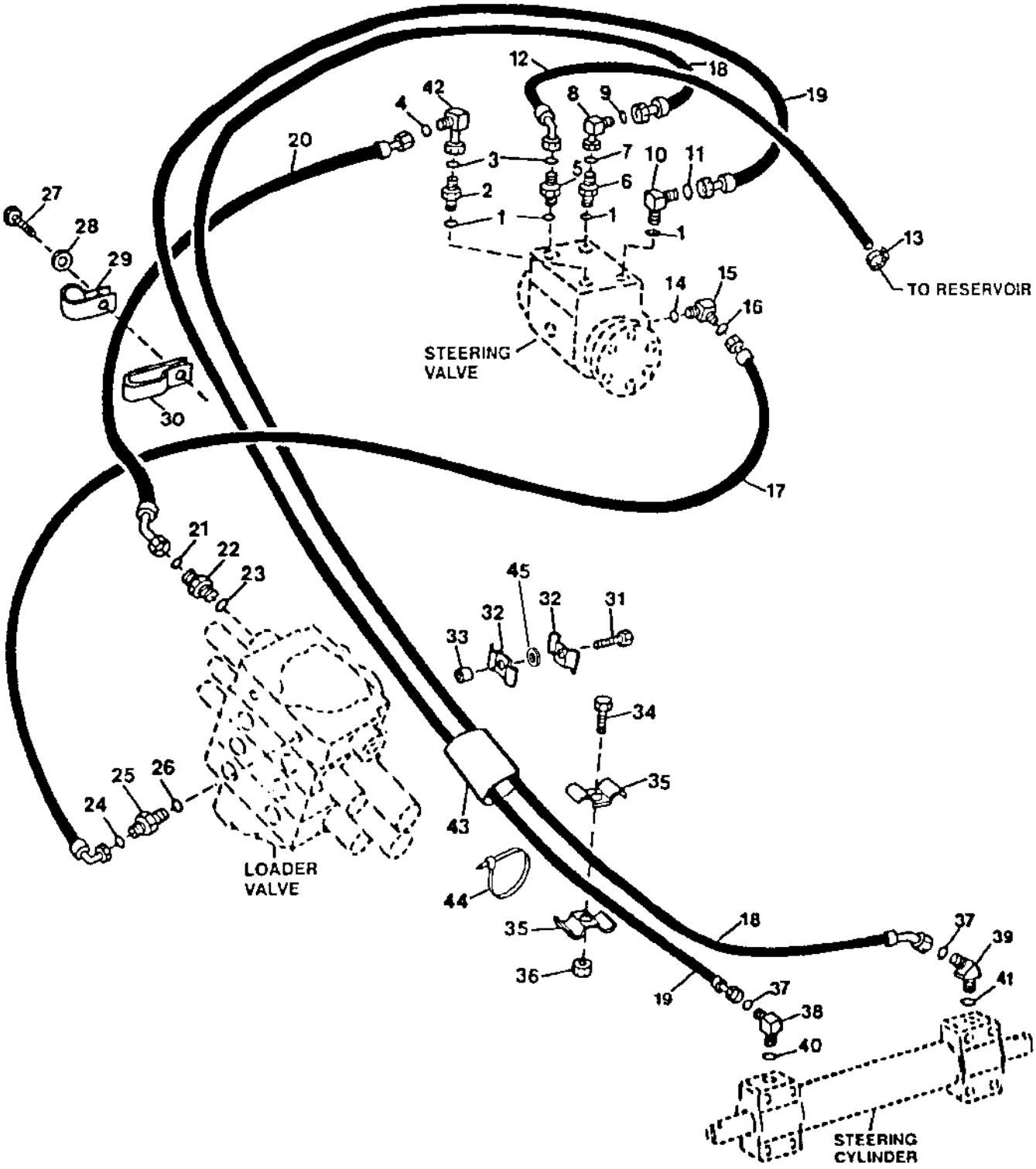

T143120

STEERING VALVE AND STEERING CYLINDER HYDRAULICS
(MECHANICAL FRONT WHEEL DRIVE)
(SERIAL NO. 801200-)

KEY	PART NO.	PART NAME	QTY	SERIAL NO.	410D	510D	REMARKS
1	R26375	O-RING	4		X	X	16.358 X 2.210 MM (0.644" X 0.087")
2	AT141527	CHECK VALVE	1		X	X	
3	T77857	O-RING	2		X	X	12.421 X 1.778 MM (0.489" X 0.070")
4	T77857	O-RING	1		X	X	12.421 X 1.778 MM (0.489" X 0.070")
5	38H1161	ADAPTER	1		X	X	
6	38H1171	ADAPTER	1		X	X	
7	T77613	O-RING	1		X	X	0.364" X 0.070"
8	38H1094	ELBOW FITTING	1		X	X	
9	T77613	O-RING	1		X	X	0.364" X 0.070", WITH MFWD
10	38H1010	ELBOW FITTING	1		X	X	
11	T77613	O-RING	1		X	X	0.364" X 0.070"
12	AT164459	HYDRAULIC HOSE - FABRICATE	1		X	X	
13	TY22462	CLAMP	1		X	X	(SUB FOR AR48236)
14	R28782	O-RING	1		X	X	
15	38H1003	ELBOW FITTING	1		X	X	
16	T77814	O-RING	1		X	X	0.301" X 0.070"
17	AT165138	HYDRAULIC HOSE - FABRICATE	1		X	X	9/16" X 1 664 MM (65-1/2") X 9/16"
18	AT165978	HYDRAULIC HOSE - FABRICATE	1	-803692	X	X	11/16" X 2 921 MM (115") X 11/16", (ALSO ORDER AT171139, 24M7239 AND R44302) (ALSO REQUIRES 10" OF T78606 BULK MATERIAL)
	AT165978	HYDRAULIC HOSE - FABRICATE	1	803693-	X	X	
19	AT170930	HYDRAULIC HOSE - FABRICATE	1	-803692	X	X	11/16" X 2 629 MM (103-1/2") X 11/16", (SUB FOR AT165979, THIS APPLICATION) (ALSO ORDER AT171139, 24M7239 AND R44302) (ALSO REQUIRES 10 " OF T78606 BULK MATERIAL)
	AT170930	HYDRAULIC HOSE - FABRICATE	1	803693-	X	X	11/16" X 2 629 MM (103-1/2") X 11/16", (SUB FOR AT165979, THIS APPLICATION)
20	AT165137	HYDRAULIC HOSE - FABRICATE	1		X	X	13/16" X 1 422 MM (56") X 13/16"
21	T77857	O-RING	1		X	X	
22	38H1161	ADAPTER	1		X	X	
23	R26375	O-RING	1		X	X	16.358 X 2.210 MM (0.644" X 0.087")
24	T77814	O-RING	1		X	X	7.645 X 1.778 MM (0.301" X 0.070")
25	38H1168	ADAPTER	1		X	X	
26	R26448	O-RING	1		X	X	11.887 X 1.981 MM (0.468" X 5/64")
27	19M7407	CAP SCREW	1		X	X	M8 X 25
28	24M7238	WASHER	1		X	X	8.700 X 17 X 2 MM
29	T24959	CLAMP	1		X	X	
30	T152608	CLAMP	1		X	X	
31	19M8853	SCREW	2		X	X	M10 X 50, (SUB FOR M117904)
32	R27491	CLAMP	4		X	X	
33	28H1521	SPACER	2		X	X	0.493" X 0.675" X 9/16"
34	19M7881	SCREW	1		X	X	M8 X 20
	24M7239	WASHER	2		X	X	10.700 X 21 X 2.500 MM
35	R27491	CLAMP	2		X	X	
36	14M7273	NUT	1		X	X	M8
37	T77613	O-RING	2		X	X	9.246 X 1.778 MM (0.364" X 0.070")
38	38H1004	ELBOW FITTING	1		X	X	
39	38H1045	ELBOW FITTING	1		X	X	
40	R26375	O-RING	1		X	X	16.358 X 2.210 MM (0.644" X 0.087")
41	R26448	O-RING	1		X	X	11.887 X 1.981 MM (0.468" X 5/64")
42	38H1095	ELBOW FITTING	1		X	X	
43	.....	ISOLATOR	1		X	X	(MAKE FROM T78606 BULK MATERIAL, CUT TO LENGTH)
44	R44302	TIE BAND	1		X	X	
45	24H1304	WASHER	2		X	X	13/32" X 23/32" X 0.120"

STEERING WHEEL, STEERING VALVE AND STEERING COLUMN

TP58205 -UN-23MAY00

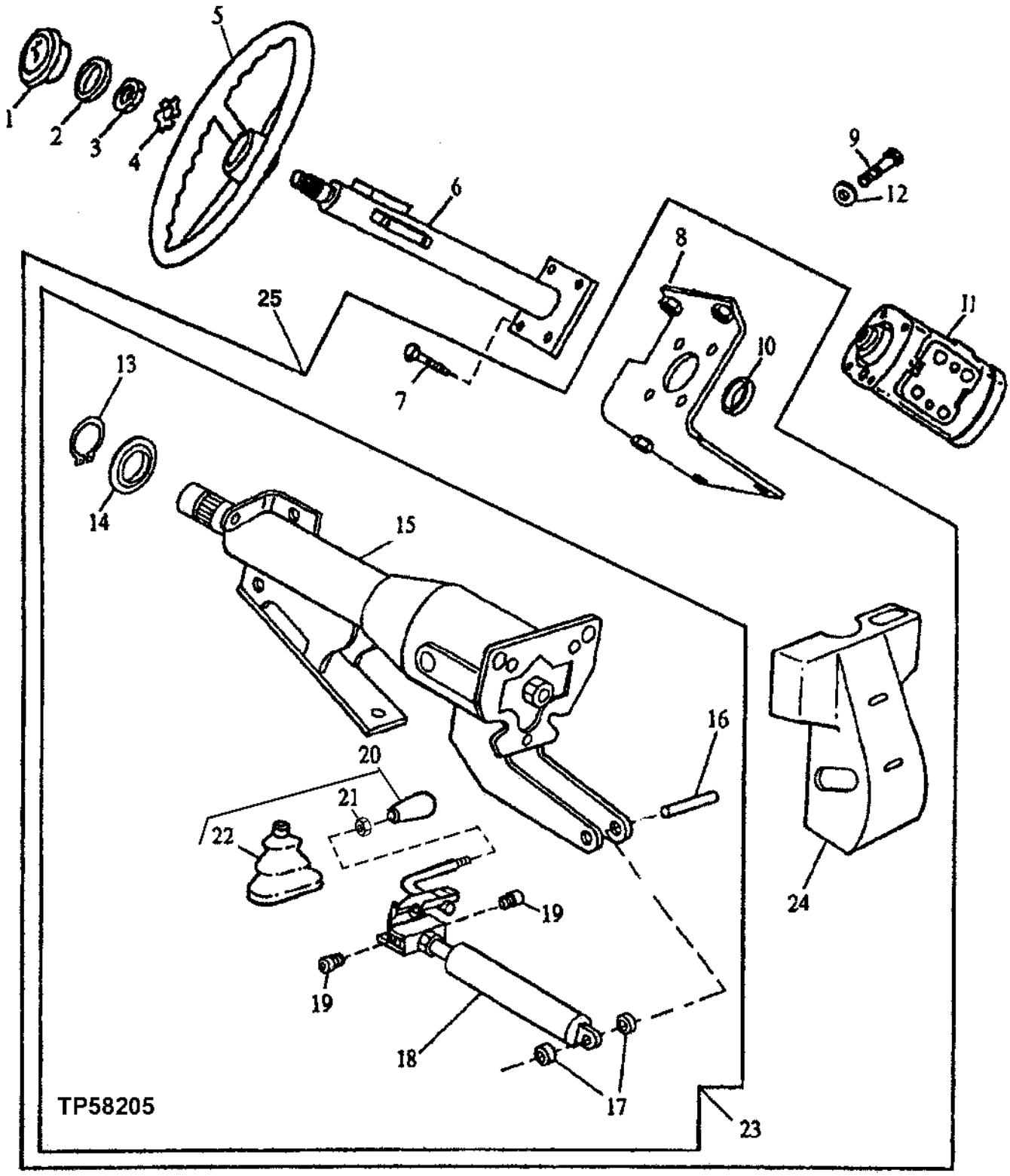

STEERING WHEEL, STEERING VALVE AND STEERING COLUMN

KEY	PART NO.	PART NAME	QTY	SERIAL NO.	410D	510D	REMARKS
1	AL155227	COVER	1		X	X	(SUB FOR AL118173 OR R47998)
2	P50631	O-RING	1		X	X	
3	T13630	NUT	1		X	X	
4	T17148	LOCK WASHER	1		X	X	
5	AT139694	STEERING WHEEL	1		X	X	
6	AT166242	STEERING COLUMN	1		X	X	(SUB FOR AT139699 AND AT160572)
7	19H2676	CAP SCREW	4		X	X	3/8" X 1", WITHOUT TILT STEERING
	19H2272	SCREW	4	787371-	X	X	3/8" X 1", WITH TILT STEERING
8	AT146291	BRACKET	1	-787370	X	X	
	AT159104	BRACKET	1	787371-	X	X	
9	19M7402	CAP SCREW	4		X	X	M10 X 25
10	T134635	WASHER	1		X	X	WITHOUT TILT STEERING
	T142887	WASHER	1		X	X	WITH TILT STEERING
11	AT173411	FLOW CONTROL HYD. VALVE	1		X	X	(SUB FOR AT107576)
12	24M7239	WASHER	4		X	X	10.700 X 21 X 2.500 MM
13	.....	SNAP RING	1	787371-	X	X	(K)
14	.....	SEAL	1	787371-	X	X	(K)
15	.....	STEERING COLUMN	1	787371-			(AT160661 NO LONGER AVAILABLE) (SUB AT140971)
16	.....	DOWEL PIN	1	787371-	X	X	(K)
17	.....	BUSHING	1	787371-	X	X	NO LONGER USED
18	AT160662	KIT	1	787371-	X	X	
19	.....	PIN	1	787371-	X	X	(K)
20	AT191487	KIT	1	787371-	X	X	KNOB
21	.....	NUT	1	787371-	X	X	(ORDER AT191487)
22	.....	BOOT	1	787371-	X	X	(ORDER AT191487)
23	AT140971	STEERING COLUMN	1	787371-	X	X	TILT
24	T132995	COVER	1	787371-	X	X	LOWER COLUMN (TILT STEERING)
25	**AT161014**	**KIT**	**1**	**787371-**	**X**	**X**	**TILT STEERING**

(K) RE56109 KIT, TILT STEERING COLUMN OVERHAUL (SUB FOR RE50306)

POWER STEERING VALVE SEAL REPAIR KIT

TP40543 -UN-01JAN94

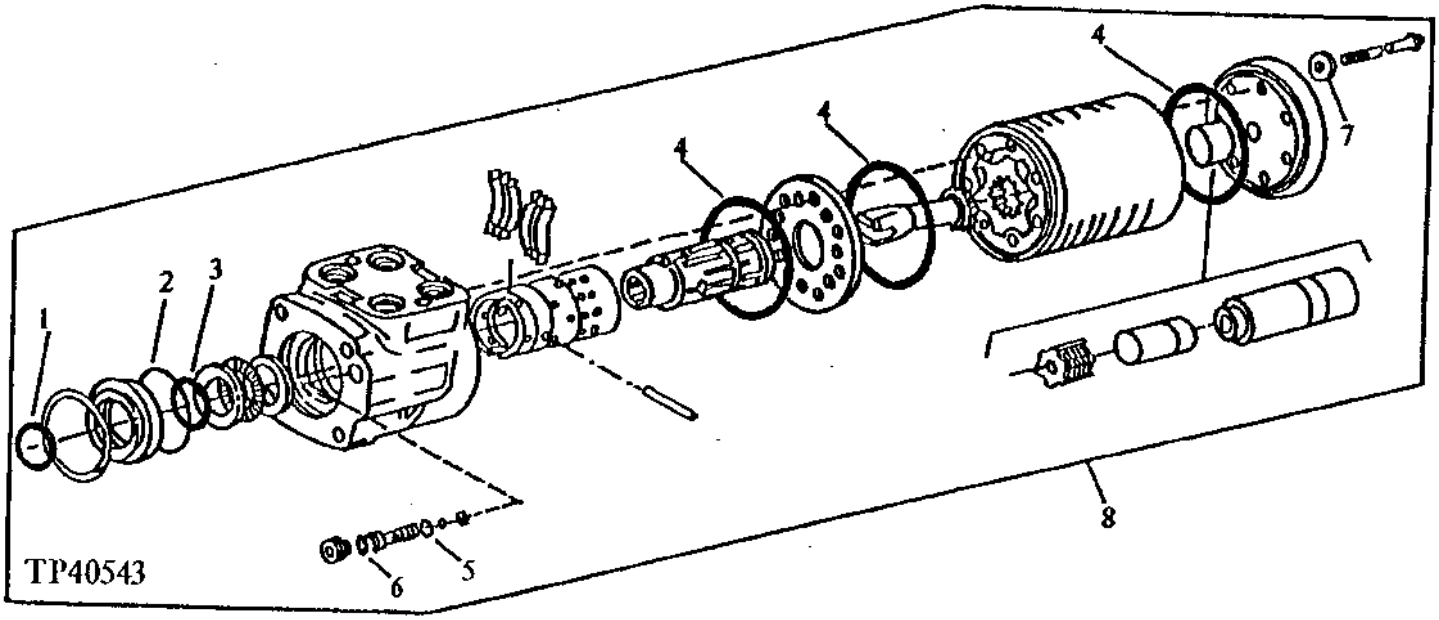

KEY	PART NO.	PART NAME	QTY	SERIAL NO.	410D	510D	REMARKS
1	C15104	SEAL	1		X	X	
2	B3690R	O-RING	1		X	X	
3	C15107	O-RING	1		X	X	
4	T70321	WASHER	3		X	X	
5	R10093	O-RING	1		X	X	
6	A3917R	O-RING	1		X	X	
7	.....	WASHER	7		X	X	(T34972 USE IF AVAILABLE)
8	AT168632	SEAL KIT	1		X	X	(SUB FOR AT69938 OR AT175616)

BRAKE DISK ASSEMBLY

TP44566 -UN-01JAN94

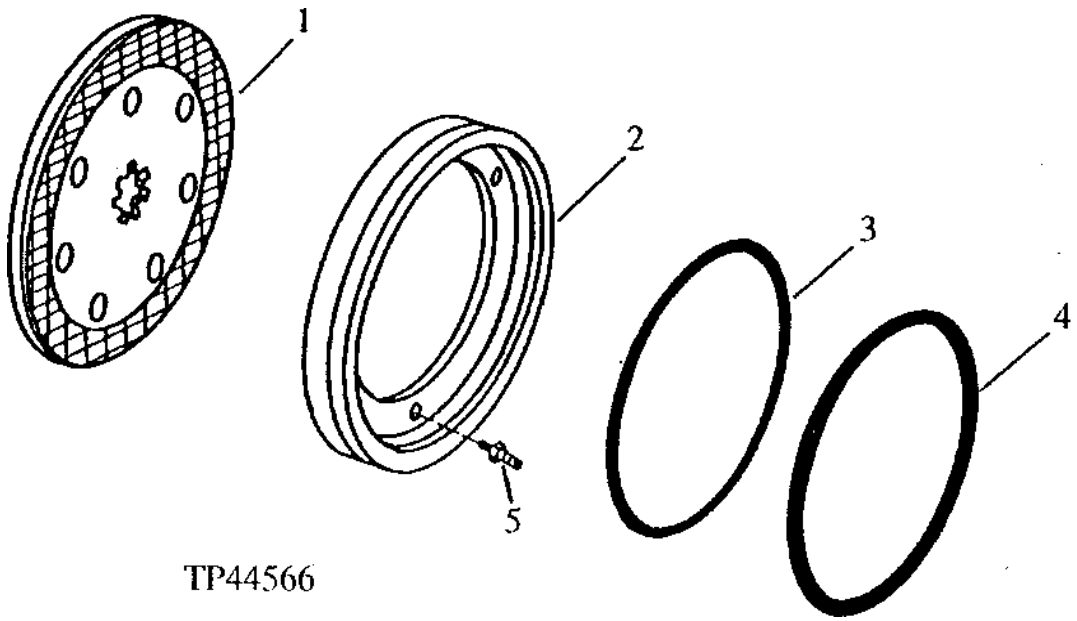

KEY	PART NO.	PART NAME	QTY	SERIAL NO.	410D	510D	REMARKS
1	AT315888	BRAKE DISK	1	-796854	X	X	(SUB FOR AT63106)
	AT167600	BRAKE DISK	1	796855-	X	X	
2	T146759	PLATE	1	-796854	X	X	(SUB FOR T68671)
	T149317	PLATE	1	796855-	X	X	
3	R50704	SEALING WASHER	1	-796854	X	X	INSIDE
	L56244	O-RING	1	796855-	X	X	INSIDE
4	T135749	PACKING	1	-796854	X	X	OUTSIDE
	L56246	O-RING	1	796855-	X	X	OUTSIDE
5	AT163978	ADJUSTER	3	796855-	X	X	

BRAKE VALVE AND PEDALS

TP40485 -UN-01JAN94

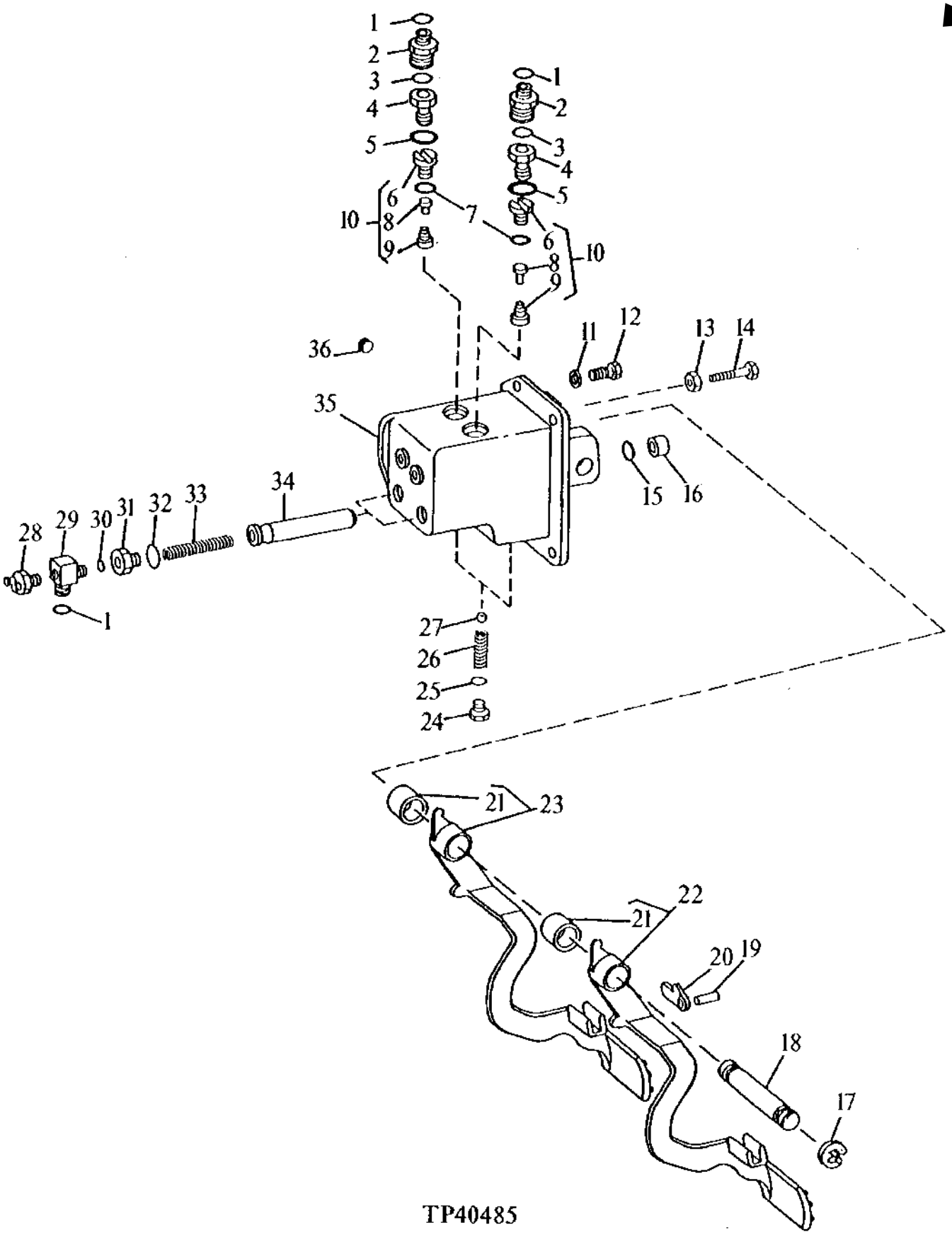

BRAKE VALVE AND PEDALS

KEY	PART NO.	PART NAME	QTY	SERIAL NO.	410D	510D	REMARKS
1	T77814	O-RING	4		X	X	
2	R46856	FITTING	2	-801199	X	X	
	38H1176	ADAPTER	2	801200-	X	X	
3	R26448	O-RING	2	-801199	X	X	
	T77857	O-RING	2	801200-	X	X	
4	L32705	THREADED NIPPLE	2		X	X	
5	R29936	O-RING	2		X	X	
6	.....	SEAT	2		X	X	(A)
7	R26906	O-RING	2		X	X	(A)
8	.....	VALVE	2		X	X	(A)
9	.....	SPRING	2		X	X	(A)
10	.....	CHECK VALVE	2		X	X	(A) AT135655 NO LONGER AVAILABLE, (SUB AT184432)
11	24M7239	WASHER	4		X	X	10.700 X 21 X 2.500 MM
12	19M7550	CAP SCREW	4		X	X	M10 X 35
13	14H732	NUT	2		X	X	3/8"
14	L32504	CAP SCREW	2		X	X	
15	T163092	SEAL	2		X	X	(A) (SUB FOR R495R, THIS APPLICATION)
16	T22101	SEAL	2		X	X	(A)
17	F2863R	SNAP RING	2		X	X	
18	T133078	PIN FASTENER	1		X	X	
19	34H101	SPRING PIN	1		X	X	1/4" X 1"
20	R50879	ARM	1		X	X	
21	B177R	BUSHING	2		X	X	
22	AT151431	PEDAL	1		X	X	LEFT
23	AT151432	PEDAL	1		X	X	RIGHT
24	R39112	FITTING	2		X	X	
25	R26375	O-RING	2		X	X	
26	T21816	SPRING	2		X	X	
27	D2361R	BALL	2		X	X	
28	R32548	PRESSURE SWITCH	2		X	X	(STOP LIGHT SWITCH)
29	T130279	ELBOW FITTING	2		X	X	
30	R26287	O-RING	2		X	X	
31	R50110	FITTING	2		X	X	
32	U12547	O-RING	2		X	X	
33	T124602	SPRING	2		X	X	
34	.....	PISTON	2		X	X	(A) T127125 NO LONGER AVAILABLE, (SUB AT184432)
35	T133398	HOUSING	1		X	X	
36	15H560	PIPE PLUG	1		X	X	1/16"

(A) KIT AT184432 BRAKE VALVE OVERHAUL (REQUIRES 2 KITS FOR 1 VALVE)

SERVICE BRAKE HYDRAULICS
(SERIAL NO. -796854)

TP46953 -UN-25APR95

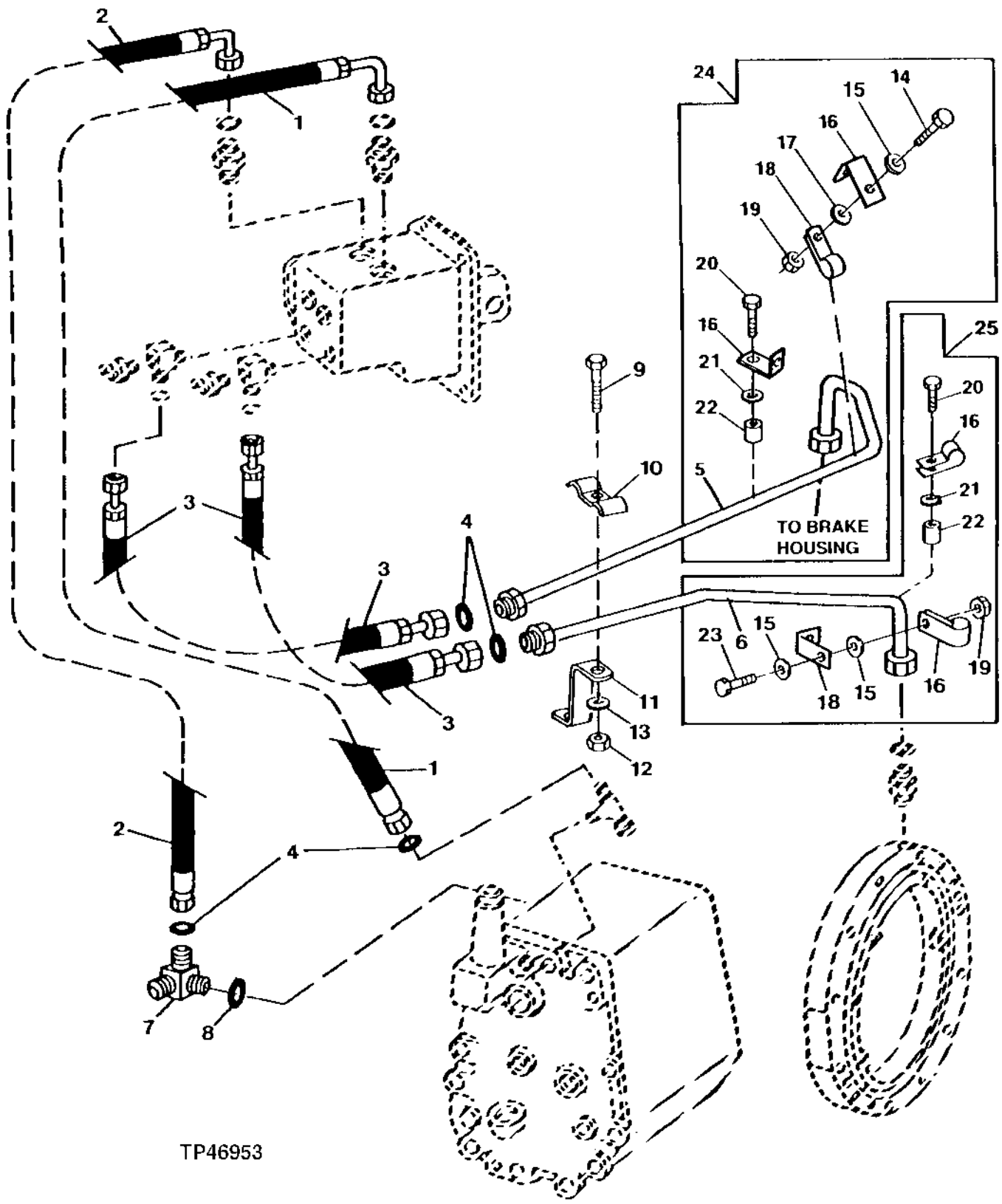

SERVICE BRAKE HYDRAULICS
(SERIAL NO. -796854)

KEY	PART NO.	PART NAME	QTY	SERIAL NO.	410D	510D	REMARKS
1	AT149778	HYDRAULIC HOSE - FABRICATE	1		X	X	1/2" X 1 321 MM (52") X 1/2"
2	AT151012	HYDRAULIC HOSE - FABRICATE	1		X	X	
3	AT168206	HYDRAULIC HOSE - FABRICATE	2		X	X	(SUB FOR AT150290)
4	T77814	O-RING	4		X	X	
5	.....	OIL LINE	1		X	X	(AT150479 NO LONGER AVAILABLE) (SUB AT172102)
6	.....	OIL LINE	1		X	X	(AT149701 NO LONGER AVAILABLE) (SUB AT172103)
7	AT74103	TEE FITTING	1		X	X	
8	R26448	O-RING	1		X	X	
9	19M7932	CAP SCREW	1		X	X	M8 X 16
10	R27491	CLAMP	1		X	X	
11	T128064	BRACKET	1		X	X	
12	14M7273	NUT	1		X	X	M8
13	24M7238	WASHER	1		X	X	8.700 X 17 X 2 MM
14	19H3239	CAP SCREW	AR		X	X	3/8" X 1-1/4"
15	24M7239	WASHER	AR		X	X	10.700 X 21 X 2.500 MM
16	T29969	CLAMP	2		X	X	
17	24H1781	WASHER	AR		X	X	13/32" X 7/8" X 1/4"
18	T47700	ANGLE	1		X	X	
19	14H1076	NUT	1		X	X	3/8"
20	19H3217	CAP SCREW	1		X	X	3/8" X 1-3/4"
21	28H1495	SPACER	1		X	X	0.493" X 0.675" X 1"
22	28H3381	SPACER	AR		X	X	0.493" X 0.675" X 5/8"
23	19H2284	CAP SCREW	1		X	X	3/8" X 7/8"
24	AT172102	KIT	1		X	X	
25	AT172103	KIT	1		X	X	

SERVICE BRAKE HYDRAULICS
(SERIAL NO. 796855-)

TP46424 -UN-23JAN95

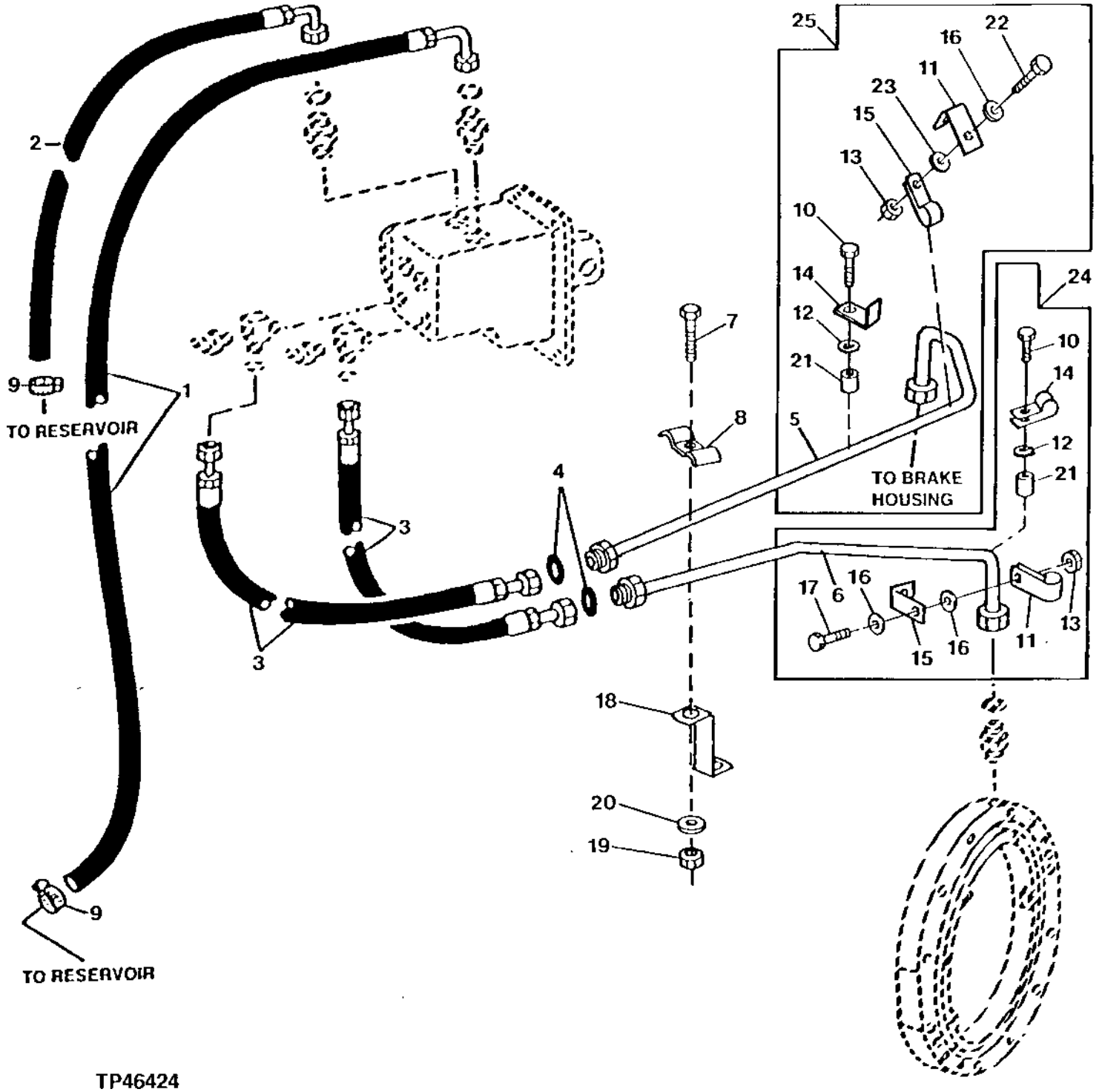

TP46424

SERVICE BRAKE HYDRAULICS
(SERIAL NO. 796855-)

KEY	PART NO.	PART NAME	QTY	SERIAL NO.	410D	510D	REMARKS
1	AT164462	HYDRAULIC HOSE - FABRICATE	1	-801199	X	X	
	AT145272	HYDRAULIC HOSE - FABRICATE	1	801200-	X	X	
2	AT164461	HYDRAULIC HOSE - FABRICATE	1	-801999	X	X	
	AT167890	HYDRAULIC HOSE - FABRICATE	1	801200-	X	X	
3	AT168206	HYDRAULIC HOSE - FABRICATE	2		X	X	(SUB FOR AT150290)
4	T77814	O-RING	4		X	X	
5	.....	OIL LINE	1		X	X	(AT150479 NO LONGER AVAILABLE) (SUB AT172102)
6	.....	OIL LINE	1		X	X	(AT149701 NO LONGER AVAILABLE) (SUB AT172103)
7	19M7932	CAP SCREW	1		X	X	M8 X 16
8	R27491	CLAMP	1		X	X	
9	TY22462	CLAMP	2		X	X	(SUB FOR AR48236)
10	19H3217	CAP SCREW	1	798383-	X	X	3/8" X 1-3/4"
11	T29969	CLAMP	2	798383-	X	X	
12	28H1495	SPACER	1	798383-	X	X	0.493" X 0.675" X 1"
13	14H1076	NUT	1	798951-	X	X	3/8"
14	T29969	CLAMP	1	801200-	X	X	
15	T47700	ANGLE	1	801200-	X	X	
16	24M7239	WASHER	1	801200-	X	X	
17	19H2284	CAP SCREW	1	801200-	X	X	3/8" X 7/8"
18	T152236	SUPPORT	1	801200-	X	X	
19	14M7273	NUT	1	801200-	X	X	M8
20	24M7238	WASHER	1	801200-	X	X	8.700 X 17 X 2 MM
21	28H3381	SPACER	AR		X	X	0.493" X 0.675" X 5/8"
22	19H3239	CAP SCREW	AR		X	X	3/8" X 1-1/4"
23	24H1781	WASHER	AR		X	X	13/32" X 7/8" X 1/4"
24	AT172103	KIT	1		X	X	
25	AT172102	KIT	1		X	X	

MEMORANDA

BRAKE BAND, LINING AND LINKAGE

TP12738 -UN-01JAN94

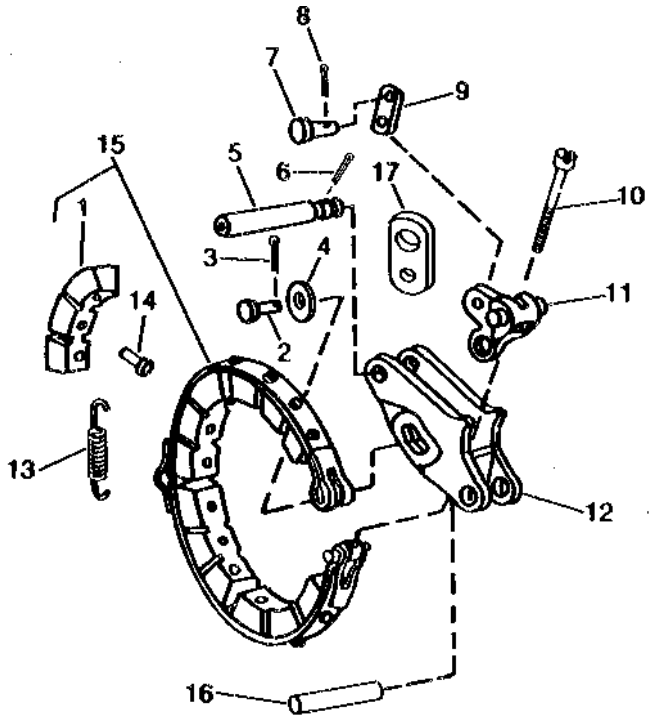

KEY	PART NO.	PART NAME	QTY	SERIAL NO.	410D	510D	REMARKS
1	L40420	LINING	4		X	X	
2	T25285	PIN FASTENER	1		X	X	
3	11M7015	COTTER PIN	1		X	X	3.200 X 25 MM
4	24H1658	WASHER	1	-814810	X	X	21/32" X 1" X 0.060"
	24M7338	WASHER	1	814811-	X	X	17 X 30 X 3 MM
5	T157600	PIN FASTENER	1		X	X	(SUB FOR T100449)
6	11M7087	COTTER PIN	1		X	X	4 X 40 MM
7	F2653R	PIN FASTENER	2		X	X	
8	11M7059	COTTER PIN	2		X	X	3.200 X 20 MM
9	L56128	STRAP	2		X	X	
10	T21579	SET SCREW	1		X	X	
11	T155426	LEVER	1	-814810	X	X	(SUB FOR L29884) (ALSO ORDER T155333, T155750, T157600, 11M7087, 11M7015, 24M7338 AND (2) 11M7059)
	T155426	LEVER	1	814811-	X	X	
12	.....	ANCHOR	1	-814810	X	X	T122082 NO LONGER AVAILABLE, (SUB T155333) (ALSO ORDER T155426, T155750, T157600, 11M7087, 11M7015, 24M7338 AND (2) 11M7059)
	T155333	ANCHOR	1	814811-	X	X	
13	T21577	SPRING	1		X	X	
14	16M7014	RIVET	12		X	X	
15	.....	BRAKE BAND	1	-814810	X	X	(AL38213 NO LONGER AVAILABLE) (SUB AT176621) (ALSO ORDER T155333, T155426, T155750, T157600, 24M7338, 11M7087, 11M7015 AND (2) 11M7059)
	AT176621	BRAKE BAND	1	814811-	X	X	(SUB FOR AL38213)
16	T126186	PIN	1		X	X	
17	.....	STRAP	1	-814810	X	X	T100451 NO LONGER AVAILABLE, (SUB T155750) (ALSO ORDER T155426, T155333, T157600, 11M7087, 11M7015, 24M7338 AND (2) 11M7059)
	T155750	RETAINER	1	814811-	X	X	

PARK BRAKE ACTUATOR AND CONTROLS

TP45550 -UN-11OCT94

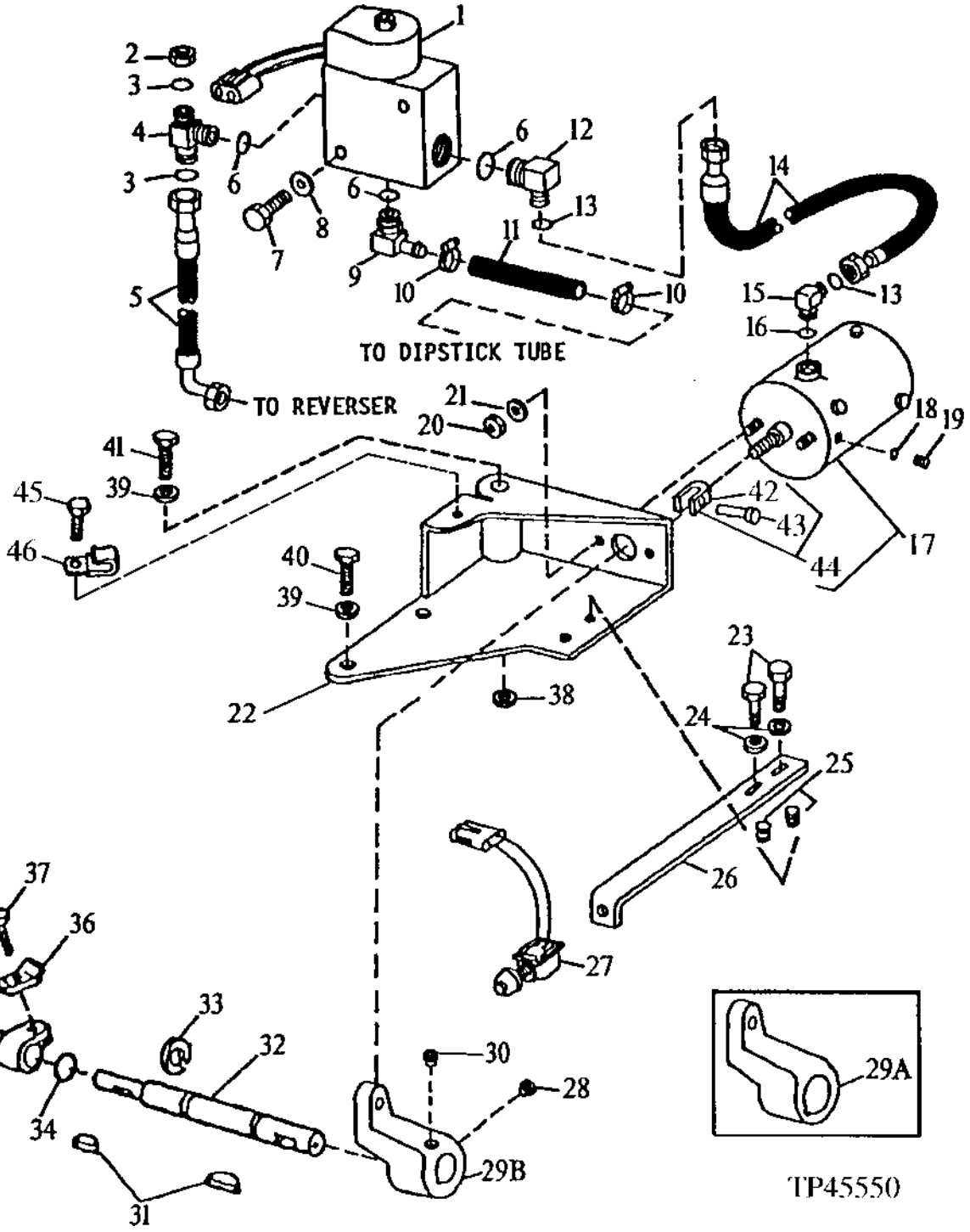

PARK BRAKE ACTUATOR AND CONTROLS

KEY	PART NO.	PART NAME	QTY	SERIAL NO.	410D	510D	REMARKS
1	AT158084	SOLENOID	1		X	X	(SUB FOR AT151673, THIS APPLICATION) (SUB FOR AT148442)
2	T140268	PLUG	1	-778823	X	X	
	38H1416	FITTING	1	778824-	X	X	
3	T77857	O-RING	2		X	X	
4	38H1005	ELBOW FITTING	1	-796854	X	X	
5	AT162774	HYDRAULIC HOSE - FABRICATE	1	-796854	X	X	9/16" X 1 276 MM (50-1/4") X 13/16", (SUB FOR AT150019)
6	R26375	O-RING	3		X	X	
7	19M7981	CAP SCREW	2	-796854	X	X	M8 X 55
	19M8081	CAP SCREW	2	796855-	X	X	M10 X 80
8	24M7238	WASHER	2	-796854	X	X	
	24M7239	WASHER	2	796855-			
9	AR90369	ELBOW FITTING	1	-796854	X	X	
10	TY22464	CLAMP	2		X	X	(SUB FOR AR21836)
11	.....	HOSE	1		X	X	(MAKE FROM TY22562 BULK MATERIAL, CUT TO LENGTH)
12	38H1405	ELBOW FITTING	1	-796854	X	X	
13	T77932	O-RING	2		X	X	
14	AT150857	HYDRAULIC HOSE - FABRICATE	1	-796854	X	X	
15	38H1006	ELBOW FITTING	1		X	X	
16	R26906	O-RING	1		X	X	
17	AT146182	ACTUATOR	1		X	X	
	AT171247	SEAL KIT	1		X	X	SEAL AND BUSHING (NOT ILLUSTRATED)
18	R26287	O-RING	1		X	X	
19	R31631	DRAIN PLUG	1		X	X	
20	14H808	NUT	2		X	X	5/8"
21	24M7241	WASHER	2		X	X	17 X 34 X 4 MM
22	AT160736	BRACKET	1		X	X	(SUB FOR AT148205)
23	19H3239	CAP SCREW	2		X	X	3/8" X 1-1/4"
24	24M7239	WASHER	2		X	X	10.700 X 21 X 2.500 MM
25	28H2497	SPACER	2		X	X	0.423" X 0.675" X 5/8"
26	T135418	STRAP	1		X	X	PARK BRAKE
27	AT157547	SWITCH	1		X	X	(PARK BRAKE) (SUB FOR AH123025 AND AH14065)
28	AN122499	BOLT	1		X	X	
29A	T137349	ARM	1	-783807	X	X	
29B	T142414	ARM	1	783808-	X	X	(SUB FOR T137349) (ALSO ORDER AN122499)
30	AN122499	BOLT	1	783808-	X	X	
31	26H77	SHAFT KEY	2		X	X	
32	T132945	SHAFT	1		X	X	
33	M2353T	SNAP RING	1		X	X	
34	T122075	O-RING	1		X	X	
35	L32144	LEVER	1		X	X	
36	R1888R	STRAP	1		X	X	
37	19H3483	CAP SCREW	1		X	X	3/8" X 1-1/8"
38	T135419	SPACER	1		X	X	
39	24M7240	WASHER	2		X	X	13 X 25 X 3 MM
40	19H2993	CAP SCREW	1		X	X	HS, SAE 8, 1/2" X 1 1/2"
41	T27644	SCREW	1		X	X	
42	.....	YOKE	1		X	X	
43	.....	PIN	1		X	X	
44	AT161025	KIT	1		X	X	
45	19H2038	CAP SCREW	1		X	X	3/8" X 1/2"
46	T19935	CLAMP	1		X	X	

PARK BRAKE SOLENOID VALVE AND FITTINGS
(SERIAL NO. 796855-)

TP44715 -UN-01JAN94

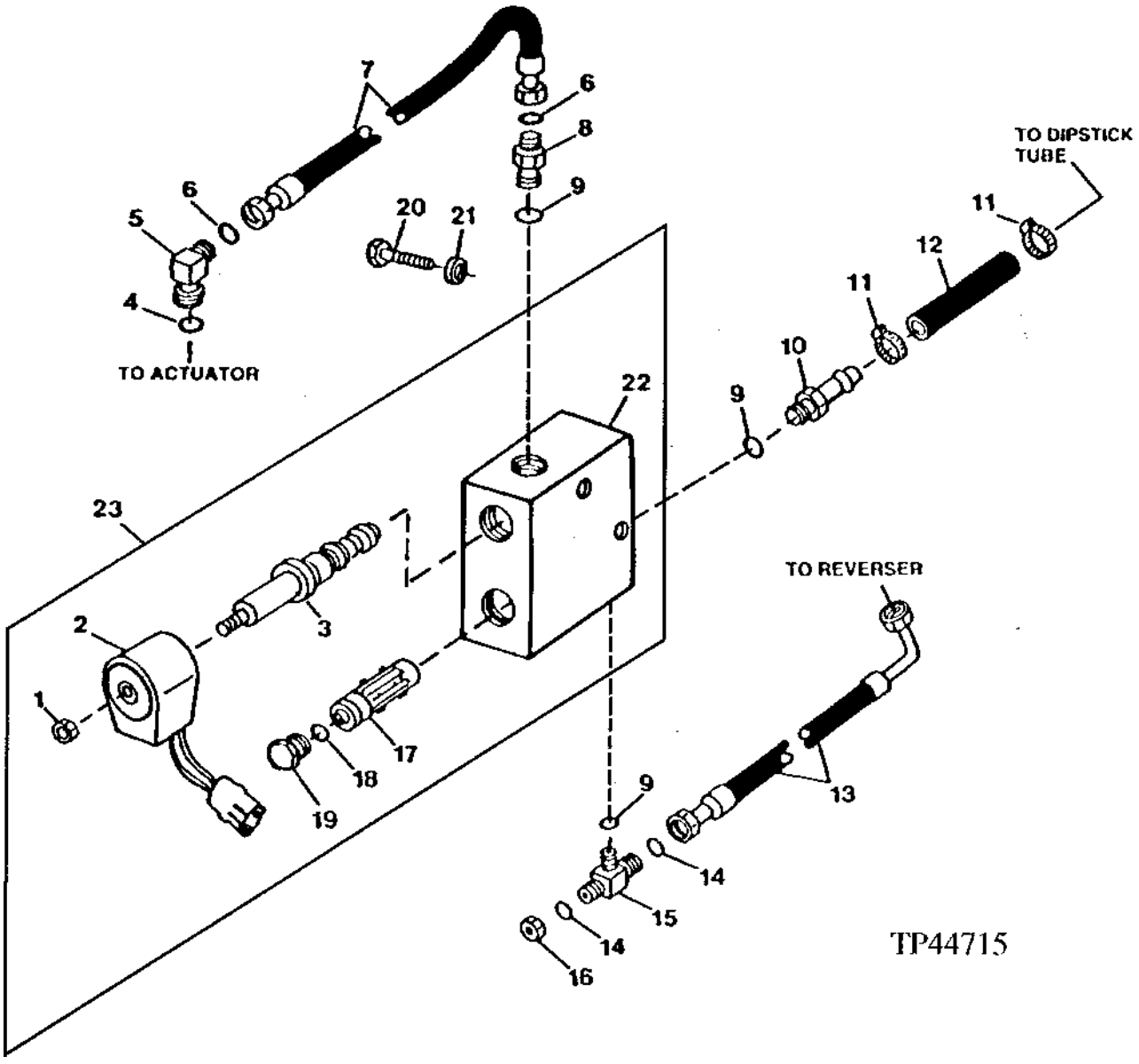

PARK BRAKE SOLENOID VALVE AND FITTINGS
(SERIAL NO. 796855-)

KEY	PART NO.	PART NAME	QTY	SERIAL NO.	410D	510D	REMARKS
1	M63707	LOCK NUT	1		X	X	
2	AH128654	ELECTRICAL COIL	1		X	X	
3	AT151491	PRESSURE RELIEF VALVE	1		X	X	
4	R26906	O-RING	1		X	X	
5	38H1006	ELBOW FITTING	1		X	X	
6	T77932	O-RING	2		X	X	
7	AT163900	HYDRAULIC HOSE - FABRICATE	1	-801199	X	X	
	AT167855	HYDRAULIC HOSE - FABRICATE	1	801200-	X	X	
8	38H1317	FITTING	1		X	X	
9	R26375	O-RING	3		X	X	
10	T38282	HOSE FITTING	1		X	X	
11	TY22464	CLAMP	2		X	X	(SUB FOR AR21836)
12	.....	HOSE	1		X	X	(MAKE FROM TY22562 BULK MATERIAL, CUT TO LENGTH)
13	AT163899	HYDRAULIC HOSE - FABRICATE	1	-801199	X	X	
	AT167854	HYDRAULIC HOSE - FABRICATE	1	801200-	X	X	
14	T77857	O-RING	2		X	X	
15	38H1024	TEE FITTING	1		X	X	
16	38H1416	FITTING	1		X	X	
17	T58474	SCREEN	1		X	X	
18	U12547	O-RING	1		X	X	
19	R27175	DRAIN PLUG	1		X	X	
20	19M7981	CAP SCREW	2	-801199	X	X	M8 X 55
	19M7875	CAP SCREW	2	801200-	X	X	M10 X 70
21	24M7239	WASHER	2		X	X	10.700 X 21 X 2.500 MM
22	.....	JUNCTION BLOCK	1		X	X	
23	AT158084	SOLENOID	1		X	X	

MEMORANDA

LOADER BOOM SERVICE LOCK BAR (SERIAL NO. -803113)

TP50363 -UN-12SEP95

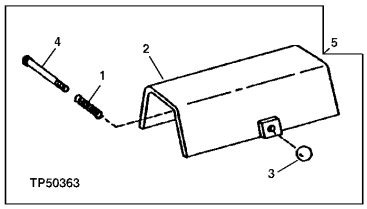

KEY	PART NO.	PART NAME	QTY	SERIAL NO.	410D	510D	REMARKS
1	T41597	SPRING	1		X	X	
2	.....	BAR	1		X	X	(SUB AT40571)
3	M526T	KNOB	1		X	X	
4	T41596	BOLT	1		X	X	
5	AT40571	BAR	1		X	X	

LOADER BOOM SERVICE LOCK

TP46958 -UN-03MAY95

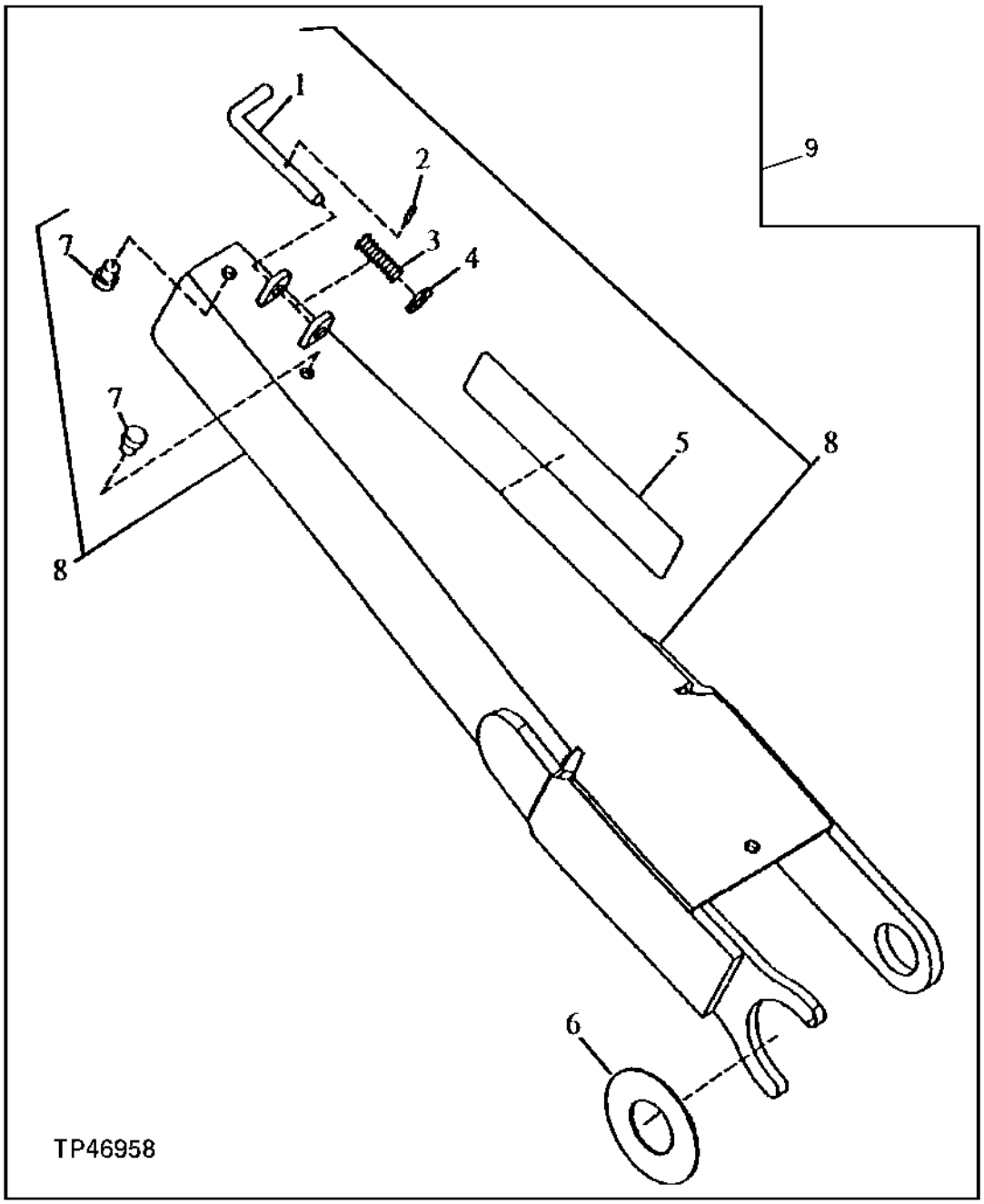

LOADER BOOM SERVCE LOCK

KEY	PART NO.	PART NAME	QTY	SERIAL NO.	410D	510D	REMARKS
1	T152392	PIN	1		X	X	
2	34H264	SPRING PIN	1		X	X	5/32" X 7/8"
3	R26908	SPRING	1		X	X	
4	24M7240	WASHER	1		X	X	13 X 25 X 3 MM
5	T152442	LABEL	1		X	X	
6	T153373	WASHER	1		X	X	
7	T154364	BUMPER	2		X	X	(SUB FOR T14083, THIS APPLICATION)
8	AT171155	LOCK	1	803386-	X	X	(SUB FOR AT169622, THIS APPLICATION)
9	**AT169446**	**KIT**	**1**	**-803387**	**X**	**X**	**(INCLUDES T151953)**

DECALS AND LABELS

TP44691 -UN-01JAN94

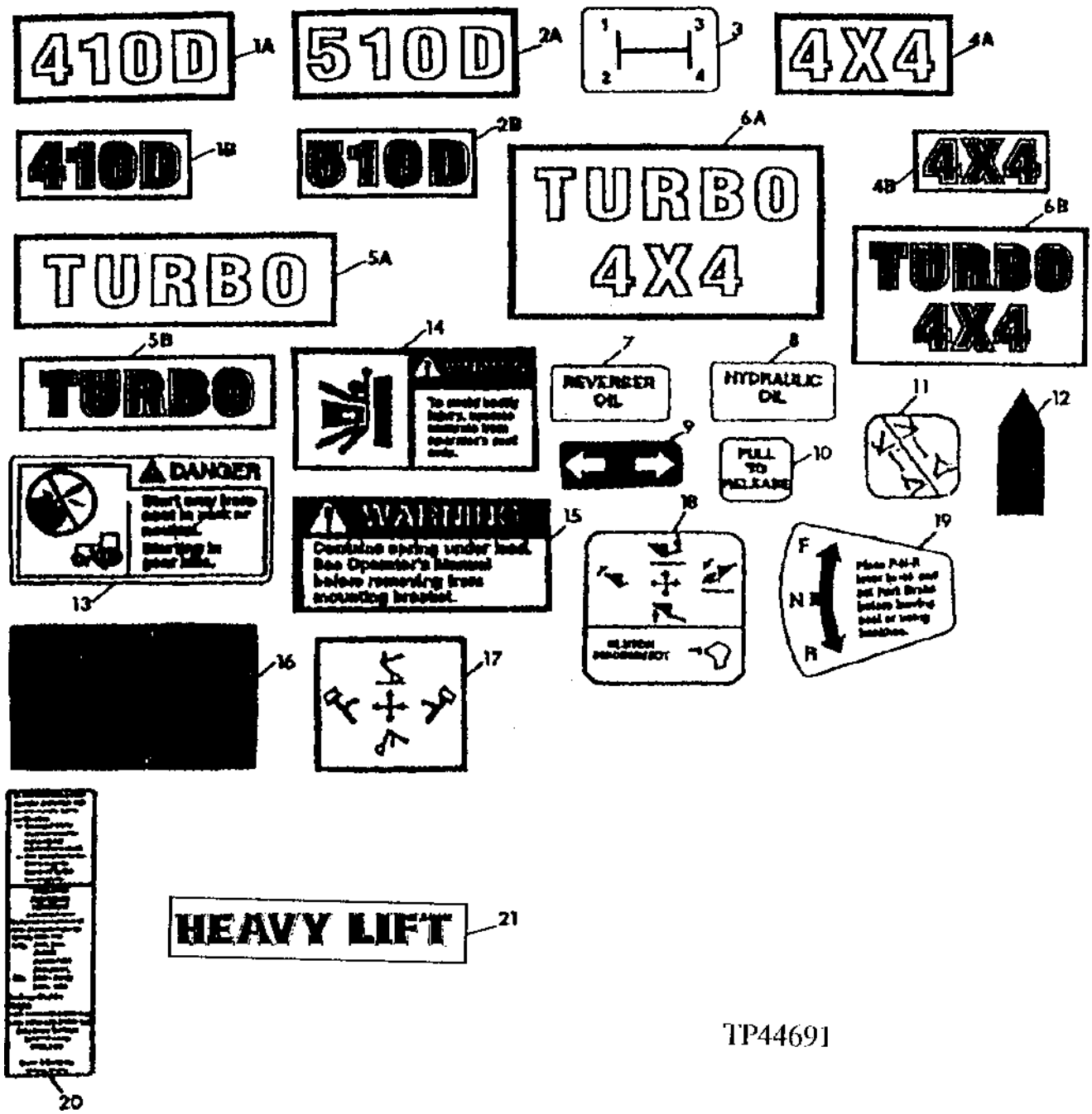

DECALS AND LABELS

KEY	PART NO.	PART NAME	QTY	SERIAL NO.	410D	510D	REMARKS
1A	T135633	LABEL	2	-787296	X		SERIES DESIGNATION FOR BACKHOE DIPPERSTICK
1B	T150332	LABEL	2	787297-	X		SERIES DESIGNATION FOR BACKHOE DIPPERSTICK
2A	T135634	LABEL	2	-787296		X	SERIES DESIGNATION FOR BACKHOE DIPPERSTICK
2B	T146412	LABEL	2	787297-796854		X	SERIES DESIGNATION FOR BACKHOE DIPPERSTICK
	T150336	LABEL	2	796855-		X	SERIES DESIGNATION FOR BACKHOE DIPPERSTICK
3	T126989	LABEL	2	-781056	X	X	SHIFT PATTERN
4A	T135630	LABEL	1	-787296	X		4 X 4
4B	T146413	LABEL	1	787297-	X		4 X 4
5A	T135631	LABEL	2	-787296	X	X	TURBO
5B	T146414	LABEL	2	787297-	X	X	TURBO
6A	T135632	LABEL	2	-787296	X	X	TURBO WITH 4 X 4
6B	T146415	LABEL	2	787297-	X	X	TURBO WITH 4 X 4
7	T140284	LABEL	1		X	X	REVERSER OIL (ENGLISH)
	.....	LABEL	1		X	X	(K1) REVERSER OIL (SPANISH)
	.....	LABEL	1		X	X	(K2) REVERSER OIL (FRENCH)
8	T140283	LABEL	1		X	X	HYDRAULIC OIL (ENGLISH)
	.....	LABEL	1		X	X	(K1) HYDRAULIC OIL (SPANISH)
	.....	LABEL	1		X	X	(K2) HYDRAULIC OIL (FRENCH)
9	T140133	LABEL	1		X	X	TURN SIGNAL
10	T140419	LABEL	2		X	X	LATCH RELEASE (ENGLISH)
	.....	LABEL	2		X	X	(K1) LATCH RELEASE (SPANISH)
	.....	LABEL	2		X	X	(K2) LATCH RELEASE (FRENCH)
11	T134805	LABEL	1		X	X	STABILIZER CONTROL
12	T139806	LABEL	1		X	X	BUCKET LEVEL INDICATOR
13	T146102	LABEL	1		X	X	SAFETY START (ENGLISH) (SUB FOR T146102)
	T146106	SAFETY SIGN	1		X	X	(K1) (SUB FOR T134452) SAFETY START (SPANISH)
	T146104	SAFETY SIGN	1		X	X	(K2) (SUB FOR T134453) SAFETY START (FRENCH)
14	T135571	SAFETY SIGN	1		X	X	WARNING (ENGLISH)
	.....	LABEL	1		X	X	(K1) WARNING (SPANISH)
	.....	LABEL	1		X	X	(K2) WARNING (FRENCH)
15	T139812	SAFETY SIGN	1	-784873	X	X	WARNING (ENGLISH)
	.....	LABEL	1		X	X	(K1) WARNING (SPANISH)
	.....	LABEL	1		X	X	(K2) WARNING (FRENCH)
	T146662	SAFETY SIGN	1	784874-	X	X	WARNING (ENGLISH)
16	R56902	LABEL	AR		X	X	DRY AIR CLEANER (ENGLISH)
	R56903	LABEL	AR		X	X	(K1) DRY AIR CLEANER (SPANISH)
	CD14148	LABEL	AR		X	X	(K2) DRY AIR CLEANER (FRENCH)
17	T100195	LABEL	1		X	X	BACKHOE CONTROL (SWING AND BOOM)
	T100196	LABEL	1		X	X	BACKHOE CONTROL (BUCKET AND DIPPERSTICK)
18	T134785	LABEL	1		X	X	3-FUNCTION LOADER CONTROL AND CLUTCH DISCONNECT (ENGLISH)
	.....	LABEL	1		X	X	(K2) 3-FUNCTION LOADER CONTROL AND CLUTCH DISCONNECT (FRENCH)
	.....	LABEL	1		X	X	(K1) 3-FUNCTION LOADER CONTROL AND CLUTCH DISCONNECT (SPANISH)
	T134782	LABEL	1		X	X	LOADER CONTROL AND CLUTCH DISCONNECT (ENGLISH)
	.....	LABEL	1		X	X	(K2) LOADER CONTROL AND CLUTCH DISCONNECT (FRENCH)
	.....	LABEL	1		X	X	(K1) LOADER CONTROL AND CLUTCH DISCONNECT (SPANISH)
19	T140923	LABEL	1		X	X	DIRECTION CONTROL SWITCH (ENGLISH)
	.....	LABEL	1		X	X	(K1) DIRECTION CONTROL SWITCH (SPANISH)
	.....	LABEL	1		X	X	(K2) DIRECTION CONTROL SWITCH (FRENCH)
20	T141724	LABEL	1		X	X	ROPS (ENGLISH) (SUB FOR T135567 AND T141652)
	.....	LABEL	1		X	X	(K1) ROPS (SPANISH)
	.....	LABEL	1		X	X	(K2) ROPS (FRENCH)
21	T151507	LABEL	1		X		(HEAVY LIFT)

DECALS AND LABELS

TP50394 -UN-07NOV95

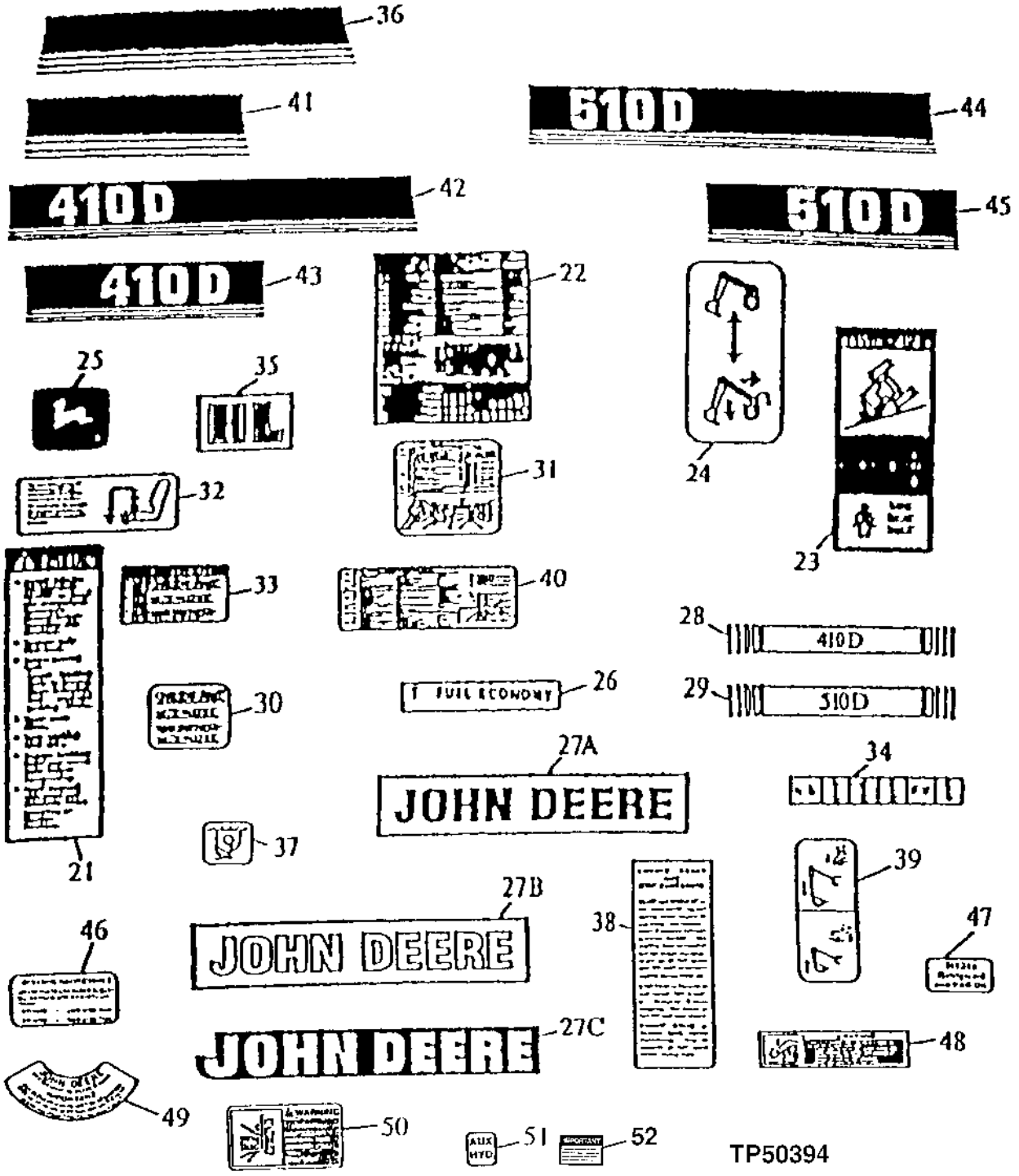

DECALS AND LABELS

KEY	PART NO.	PART NAME	QTY	SERIAL NO.	410D	510D	REMARKS
22	T135565	LABEL	1	-787296	X	X	
23	T146097	LABEL	1		X	X	SEAT BELT (ENGLISH) (SUB FOR T84314)
	T146099	SAFETY SIGN	1		X	X	(K2) SEAT BELT (FRENCH) (SUB FOR T84580, THIS APPLICATION)
	T146098	SAFETY SIGN	1		X	X	(K1) SEAT BELT (SPANISH) (SUB FOR T84582, THIS APPLICATION)
24	T139810	LABEL	1		X	X	BOOM LOCK, (SUB FOR T141051)
25	JD5624	LABEL	1	-787296	X	X	LEAPING DEERE
	JD5625	LABEL	1	787297-	X	X	LEAPING DEERE
26	T120259	LABEL	1		X	X	FUEL ECOMONY (ENGLISH)
	.....	LABEL	1		X	X	(K1) FUEL ECONOMY (SPANISH)
	.....	LABEL	1		X	X	(K2) FUEL ECONOMY (FRENCH)
27A	JD5612	LABEL	2	-787296	X	X	LOADER LIFT ARMS
27B	T146399	LABEL	2	787297-796854	X	X	LOADER LIFT ARMS
	T146388	LABEL	1		X	X	BACK OF ROPS/CAB
27C	T150320	LABEL	1	796855-	X	X	LOADER LIFT ARMS
28	T140176	LABEL	1	-787296	X		LEFT STROBE ON HOOD
	T140174	LABEL	1	-787296	X		RIGHT STROBE ON HOOD
29	T140181	LABEL	1	-787296		X	LEFT STROBE ON HOOD
	T140179	LABEL	1	-787296		X	RIGHT STROBE ON HOOD
30	.....	LABEL	1		X	X	(K1) (K2) PARK BRAKE (NOT ILLUSTRATED)
31	T163576	LABEL	1	787297-	X	X	(PERIODIC GREASING) (SUB FOR T148150)
32	T135642	LABEL	1	-815114	X	X	SEAT ADJUSTING
33	T145560	LABEL	1		X	X	RECEIVER/DRYER, (SUB FOR T138914, THIS APPLICATION)
34	T140411	LABEL	1		X	X	STANDARD DIPPERSTICK
	T145283	LABEL	1		X	X	EXTENDIBLE DIPPERSTICK, (SUB FOR T140412)
35	T151507	LABEL	1	787297-	X	X	HEAVY LIFT, (SUB FOR T146416)
36	T147357	LABEL	2	787297-	X	X	HOOD STRIPE
37	T153680	LABEL	4		X	X	(SUB FOR T32270, THIS APPLICATION) LIFT
38	T131938	LABEL	1		X	X	ENGINE START AND STOP
	.....	LABEL	1		X	X	(K1) ENGINE START AND STOP
	T139165	LABEL	1		X	X	(K2) ENGINE START AND STOP
39	T147012	LABEL	1		X	X	FOOT PEDAL
40	T148151	LABEL	1	787297-796854	X	X	PERIDIOC SERVICE (ENGLISH)
	T151783	LABEL	1	796855-	X	X	PERIDIOC SERVICE (ENGLISH)
	T147139	LABEL	1		X	X	PERIDIOC SERVICE (SPANISH)
	T147135	LABEL	1		X	X	PERIODIC SERVICE (FRENCH)
41	T147357	LABEL	1	796855-801199	X	X	HOOD STRIPE R.H.
	T152694	LABEL	1	801200-	X	X	
42	T150335	LABEL	1	796855-801199	X		HOOD STRIPE L.H.
	T152691	LABEL	1	801200-	X		
43	T150334	LABEL	1	796855-	X		HOOD DOOR
44	T150338	LABEL	1	796855-		X	HOOD STRIPE L.H.

DECALS AND LABELS

TP50394 -UN-07NOV95

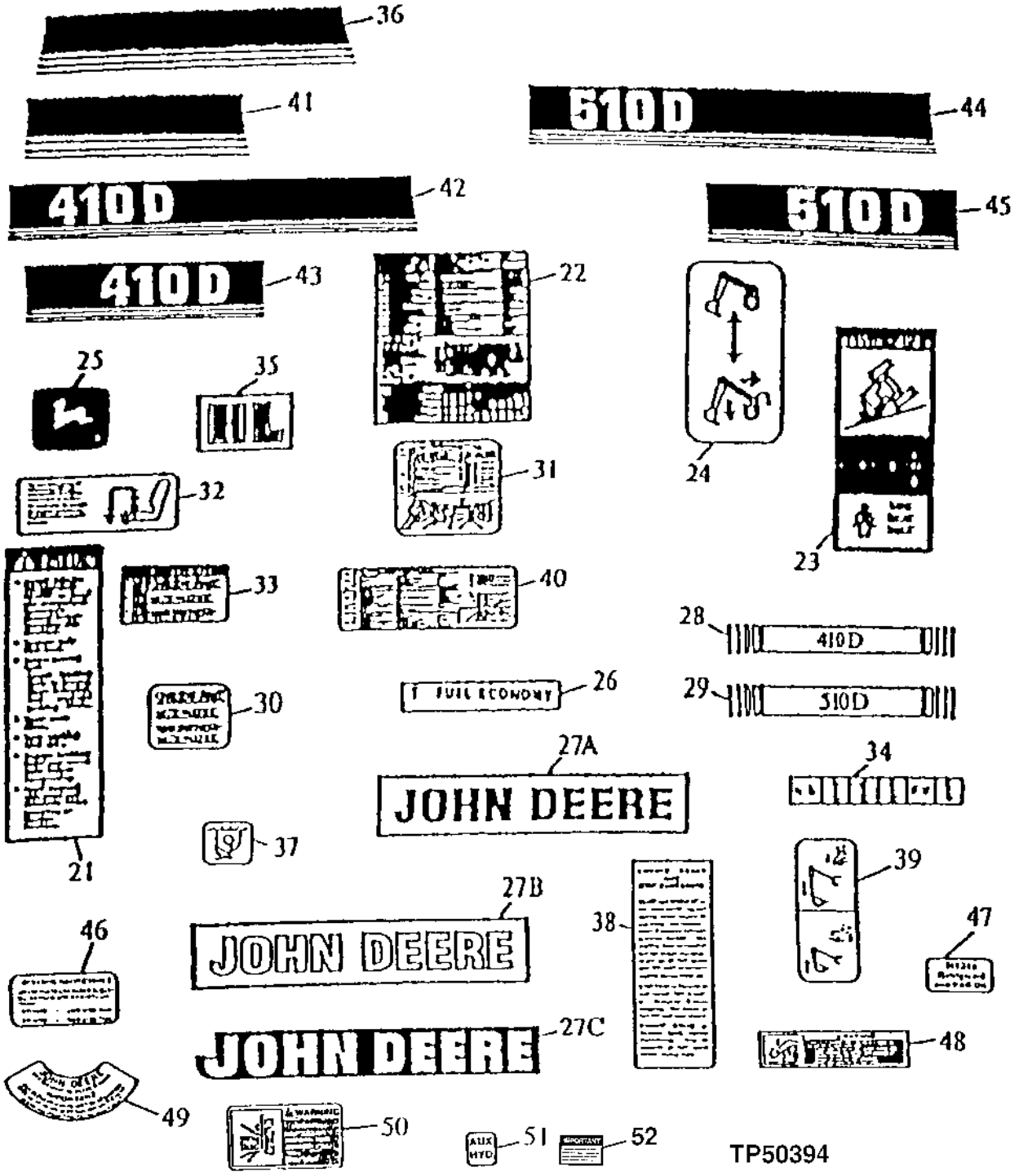

DECALS AND LABELS

KEY	PART NO.	PART NAME	QTY	SERIAL NO.	410D	510D	REMARKS
45	T150337	LABEL	1	796855-		X	HOOD DOOR
46	T152845	LABEL	1	799380-	X	X	
47	T149651	LABEL	1	801200-	X	X	REFRIGERANT
48	T152442	LABEL	1		X	X	BOOM LOCK
49	CD12569	LABEL	1		X	X	OIL FILTER, FRENCH
50	T146081	SERVICE SCHOOL APPVL SEAL	1		X	X	(WARNING, ENGLISH)
51	T152825	LABEL	1		X	X	(AUX HYD)
52	T157549	LABEL	1		X	X	SERVICE VALVE
53	T151507	LABEL	1		X		(HEAVY LIFT)
54	AT191910	KIT	1	-796854	X	X	(K1) NOT ILLUSTRATED, (SUB FOR AT151354, AT165185 AND AT161715) IMPORTANT: TRANSLATED OPERATOR'S MANUAL MUST BE ORDERED THROUGH YOUR AUTHORIZED DEALER
	AT167943	KIT	1	796855-801199	X	X	(K1) NOT ILLUSTRATED, IMPORTANT: TRANSLATED OPERATOR'S MANUAL MUST BE ORDERED THROUGH YOUR AUTHORIZED DEALER
	AT191910	KIT	1	801200-	X	X	(K1) NOT ILLUSTRATED, (SUB FOR AT161715 AND AT169185) IMPORTANT: TRANSLATED OPERATOR'S MANUAL MUST BE ORDERED THROUGH YOUR AUTHORIZED DEALER
	AT165186	KIT	1	-796854	X	X	(K2) NOT ILLUSTRATED, (SUB FOR AT151360 AND AT161710) IMPORTANT: TRANSLATED OPERATOR'S MANUAL MUST BE ORDERED THROUGH YOUR AUTHORIZED DEALER
	AT167941	KIT	1	796855-801199	X	X	(K2) NOT ILLUSTRATED, IMPORTANT: TRANSLATED OPERATOR'S MANUAL MUST BE ORDERED THROUGH YOUR AUTHORIZED DEALER
	AT191911	KIT	1	801200-	X	X	(K2) NOT ILLUSTRATED, (SUB FOR AT169183) IMPORTANT: TRANSLATED OPERATOR'S MANUAL MUST BE ORDERED THROUGH YOUR AUTHORIZED DEALER

DECAL KIT
CONVERTS TWO LEVER (DEERE) CONTROLS TO
TWO LEVER (SAE) CONTROLS
STANTARD OR EXTENDABLE DIPPERSTICK

TP48878 -UN-19DEC95

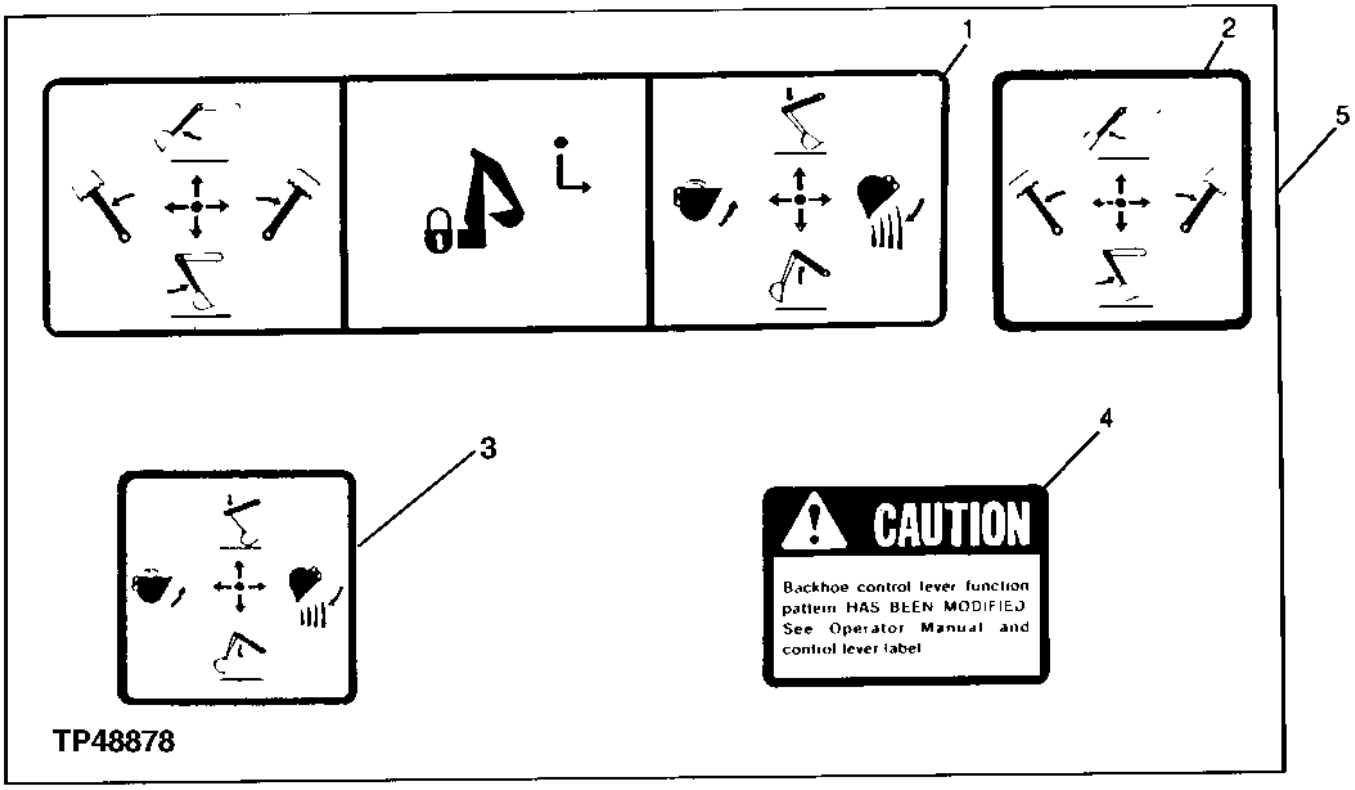

KEY	PART NO.	PART NAME	QTY	SERIAL NO.	4 5 1 1 0 0 D D	REMARKS
1	.....	LABEL	1		X X	(SUB AT176781)
2	.....	LABEL	1		X X	(SUB AT176781)
3	.....	LABEL	1		X X	(SUB AT176781)
4	.....	LABEL	1		X X	(SUB AT176781)
5	AT176781	KIT	1		X X	(SUB FOR AT114016)

AIR CONDITIONER O-RING REPAIR KIT
(PARTS LISTED BELOW ARE NOT ILLUSTRATED)

KEY	PART NO.	PART NAME	QTY	SERIAL NO.	4 5 1 1 0 0 D D	REMARKS
..	32240	O-RING	5		X X	21.895 X 2.616 MM (0.862" X 0.103")
..	B15646	O-RING	10		X X	26.695 X 1.778 MM (1.051" X 0.070")
..	P50883	RING	10		X X	17.170 X 1.778 MM (0.676" X 0.070")
..	P51212	O-RING	10		X X	10.820 X 1.778 MM (0.426" X 0.070")
..	R10093	O-RING	15		X X	7.645 X 1.778 MM (0.301" X 0.070")
..	R33259	O-RING	10		X X	13.995 X 1.778 MM (0.551" X 0.070")
..	R34812	O-RING	10		X X	3.683 X 1.778 MM (0.145" X 0.070")
..	R47235	O-RING	10		X X	20.218 X 3.531 MM (0.796" X 0.139")
..	AT66632	KIT	1		X X	AT66632 NO LONGER AVAILABLE SUB TY15939

REPLACEMENT AIR CONDITIONER O-RING REPAIR KIT
(PART LISTED BELOW IS NOT ILLUSTRATED)

KEY	PART NO.	PART NAME	QTY	SERIAL NO.	4 5 1 1 0 0 D D	REMARKS
..	A3917R	O-RING	20		X X	9.246 X 1.778 MM (0.364" X 0.070")
..	A4365R	O-RING	20		X X	6.071 X 1.778 MM (0.239" X 0.070")
..	R10093	O-RING	30		X X	7.645 X 1.778 MM (0.301" X 0.070")
..	R27166	O-RING	20		X X	15.596 X 1.778 MM (0.614" X 0.070")
..	R28776	O-RING	10		X X	12.421 X 1.778 MM (0.489" X 0.070")
..	R33259	O-RING	20		X X	13.995 X 1.778 MM (0.551" X 0.070")
..	R394R	O-RING	20		X X	12.370 X 2.616 MM (0.487" X 0.103")
..	R74210	O-RING	20		X X	20.218 X 3.531 MM (0.796" X 0.139")
..	R113050	O-RING	20		X X	10.820 X 1.778 MM (0.426" X 0.070")
..	T143166	O-RING	20		X X	26.695 X 1.778 MM (1.051" X 0.070")
..	T143167	O-RING	20		X X	3.683 X 1.778 MM (0.145" X 0.070")
..	T143169	O-RING	20		X X	17.170 X 1.778 MM (0.676" X 0.070")
..	T57247	O-RING	10		X X	21.895 X 2.616 MM (0.862" X 0.103")
..	TY15939	O-RING KIT	1		X X	

SILICONE RUBBER ADHESIVE
(PART LISTED BELOW IS NOT ILLUSTRATED)

KEY	PART NO.	PART NAME	QTY	SERIAL NO.	4 5 1 1 0 0 D D	REMARKS
..	TY15130	SEALANT	1		X X	

LOCTITE SERVICE KIT
(PARTS LISTED BELOW ARE NOT ILLUSTRATED)

KEY	PART NO.	PART NAME	QTY	SERIAL NO.	410D	510D	REMARKS
..	TY16285	PRIMER	1		X	X	(SUB FOR TY6305)
..	T43512	SEALANT	1		X	X	LOCTITE
..	T43513	SEALANT	1		X	X	
..	T43514	GASKET	1		X	X	
..	TY15969	ADHESIVE	1		X	X	(SUB FOR T43515)
..	AT42386	KIT	1		X	X	LOCTITE SERVICE (INCLUDES ALL PARTS ABOVE)

TORQ-GUARD SUPREME ENGINE OIL
(PARTS LISTED BELOW ARE NOT ILLUSTRATED)

KEY	PART NO.	PART NAME	QTY	SERIAL NO.	4 5 1 1 0 0 D D	REMARKS
..	AR63980	OIL	1		X X	237 ML (8 OZ.) CAN (SAE 5W/20)
..	AR63979	OIL	1		X X	237 ML (8 OZ.) CAN (SAE 30)
..	AR63228	OIL	1		X X	946 ML (QT.) CAN (SAE 5W/20)
..	AR63223	OIL	1		X X	946 ML (QT.) CAN (SAE 10W/20)
..	AR63218	OIL	1		X X	946 ML (QT.) CAN (SAE 30)
..	AR63229	OIL	1		X X	18.9 L (5 GAL.) CAN (SAE 5W/20)
..	AR63224	OIL	1		X X	18.9 L (5 GAL.) CAN (SAE 10W/20)
..	AR63219	OIL	1		X X	18.9 L (5 GAL.) CAN (SAE 30)
..	AR63230	OIL	1		X X	208.5 L (55 GAL.) DRUM (SAE 5W/20)
..	AR63227	OIL	1		X X	208.5 L (55 GAL.) DRUM (SAE 10W/20)
..	AR63222	OIL	1		X X	208.5 L (55 GAL.) DRUM (SAE 30)

AIR CONDITIONING COMPRESSOR LUBRICANT
(PART LISTED BELOW IS NOT ILLUSTRATED)

KEY	PART NO.	PART NAME	QTY	SERIAL NO.	4 5 1 1 0 0 D D	REMARKS
..	R49856	OIL	1		X X	

O-RING KIT

TP1406 -UN-09NOV99

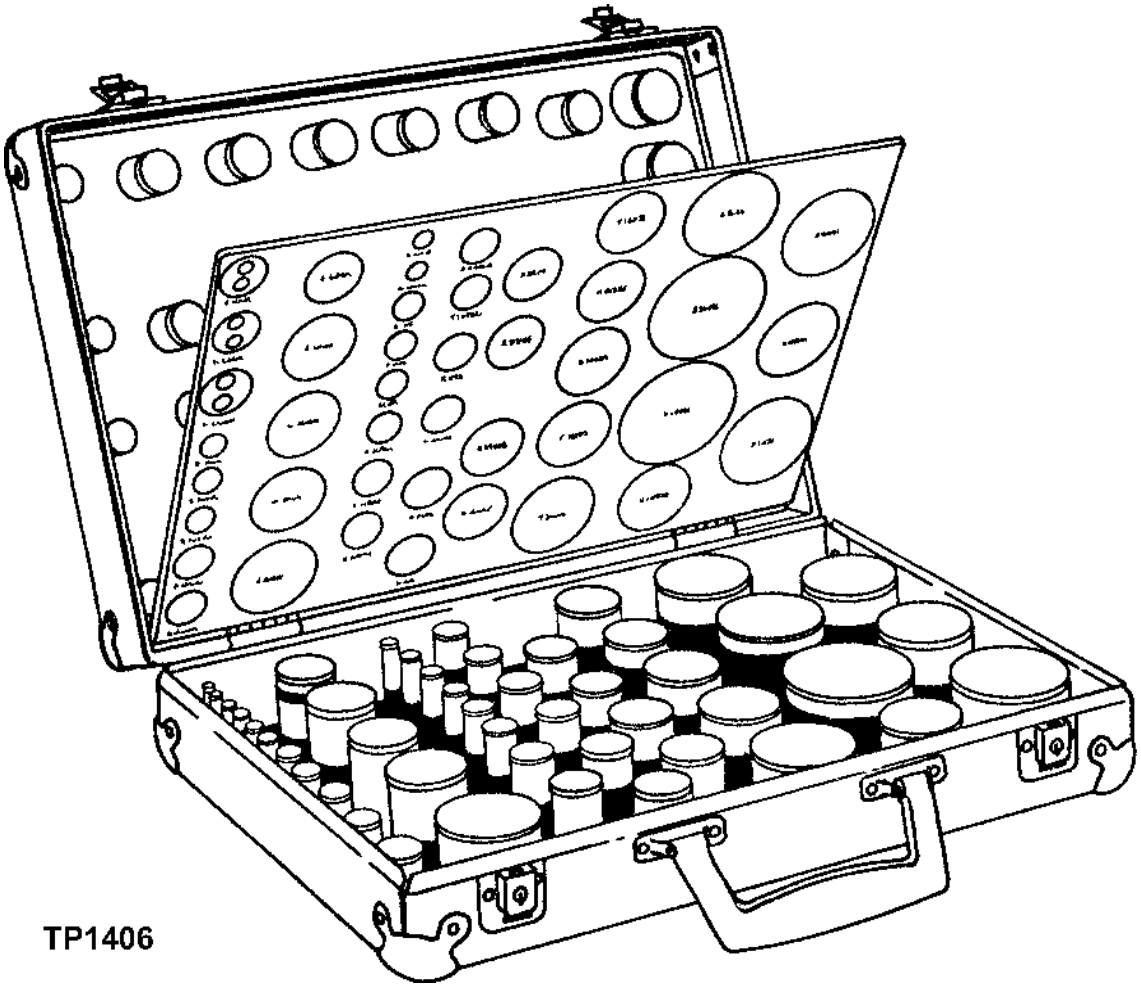

TP1406

O-RING KIT-CONTINUED

KEY	PART NO.	PART NAME	QTY	SERIAL NO.	410D	510D	REMARKS
..	A3606R	O-RING	1		X	X	
..	A3917R	O-RING	1		X	X	
..	A4365R	O-RING	1		X	X	
..	A4730R	O-RING	1		X	X	
..	B2762R	O-RING	1		X	X	
..	B3690R	O-RING	1		X	X	
..	F1056R	O-RING	1		X	X	
..	F1870R	O-RING	1		X	X	
..	U12547	O-RING	1		X	X	(SUB FOR F3171R)
..	F3353R	O-RING	1		X	X	
..	H35244	RING	1		X	X	
..	H61355	O-RING	1		X	X	
..	M4237T	O-RING	1		X	X	
..	N131838	O-RING	1		X	X	
..	P46051	O-RING	1		X	X	
..	P48403	O-RING	1		X	X	
..	P50631	O-RING	1		X	X	
..	R375R	O-RING	1		X	X	
..	R394R	O-RING	1		X	X	
..	R459R	O-RING	1		X	X	
..	R460R	O-RING	1		X	X	
..	R495R	O-RING	1		X	X	
..	R10093	O-RING	1		X	X	
..	R26286	O-RING	1		X	X	
..	R26287	O-RING	1		X	X	
..	R26375	O-RING	1		X	X	
..	R26448	O-RING	1		X	X	
..	R26773	O-RING	1		X	X	
..	R26863	O-RING	1		X	X	
..	R26906	O-RING	1		X	X	
..	R27166	O-RING	1		X	X	
..	R27928	O-RING	1		X	X	
..	R28776	O-RING	1		X	X	
..	R28782	O-RING	1		X	X	
..	R29463	O-RING	1		X	X	
..	R29936	O-RING	1		X	X	
..	R30903	O-RING	1		X	X	
..	R33259	O-RING	1		X	X	
..	R56461	O-RING	1		X	X	
..	R48638	O-RING	1		X	X	
..	R71732	O-RING	1		X	X	(SUB FOR R50378)
..	R53543	O-RING	1		X	X	
..	R56463	O-RING	1		X	X	
..	R56751	O-RING	1		X	X	
..	R60332	O-RING	1		X	X	
..	R77052	O-RING	1		X	X	
..	T12275	O-RING	1		X	X	
..	T13119	O-RING	1		X	X	
..	T16752	O-RING	1		X	X	
..	T19687	O-RING	1		X	X	

O-RING KIT

TP1406 -UN-09NOV99

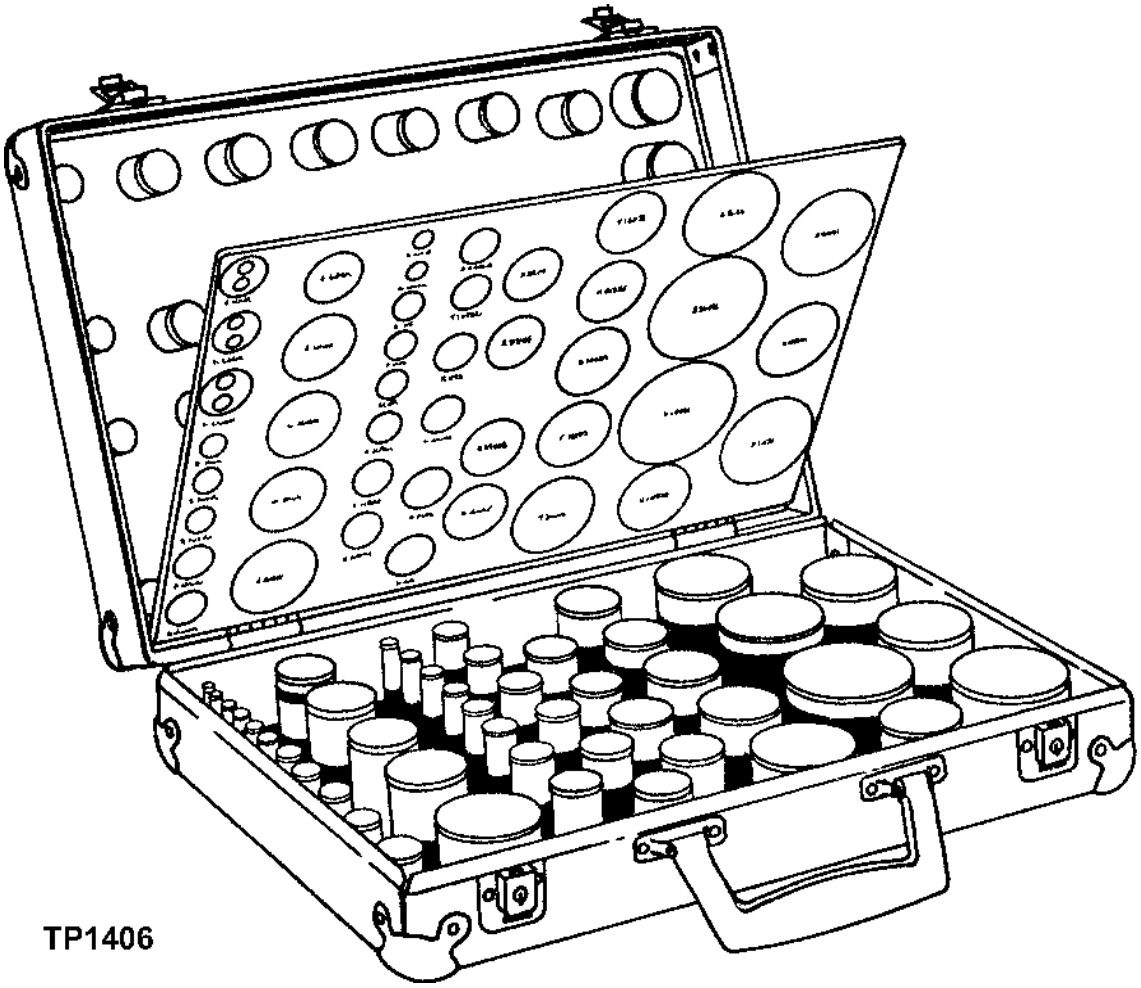

TP1406

O-RING KIT-CONTINUED

KEY	PART NO.	PART NAME	QTY	SERIAL NO.	410D	510D	REMARKS
..	R112857	O-RING	1		X	X	(SUB FOR T19832)
..	T25335	O-RING	1		X	X	
..	T34248	O-RING	1		X	X	
..	U10289	O-RING	1		X	X	
..	U10746	O-RING	1		X	X	
..	U10776	O-RING	1		X	X	
..	U11326	O-RING	1		X	X	
..	U11343	O-RING	1		X	X	
..	U12037	O-RING	1		X	X	
..	U12198	O-RING	1		X	X	
..	U12331	O-RING	1		X	X	
..	U12547	O-RING	1		X	X	
..	U13639	O-RING	1		X	X	
..	U15415	O-RING	1		X	X	
..	U15973	O-RING	1		X	X	
..	U17409	O-RING	1		X	X	
..	U42111	O-RING	1		X	X	
..	AT130208	O-RING KIT	1		X	X	(SUB FOR AT65004) (CONTAINS CARRYING CASE AND FIVE OF EACH O-RING LISTED ABOVE)

FLAT FACE O-RING SEAL CAP AND PLUG FITTINGS
(NOT ILLUSTRATED)

KEY	PART NO.	PART NAME	QTY	SERIAL NO.	410D	510D	REMARKS
1	38H1414	FITTING	1		X	X	(F) (SIZE -4) O-RING REQUIRED T77814
2	38H1145	FITTING PLUG	1		X	X	(M) (SIZE -4) O-RING REQUIRED T77814
3	38H1415	FITTING	1		X	X	(F) (SIZE -6) O-RING REQUIRED T77613
4	38H1146	FITTING PLUG	1		X	X	(M) (SIZE -6) O-RING REQUIRED T77613
5	38H1416	FITTING	1		X	X	(F) (SIZE -8) O-RING REQUIRED T77857
6	38H1147	FITTING PLUG	1		X	X	(M) (SIZE -8) O-RING REQUIRED T77857
7	38H1417	FITTING	1		X	X	(F) (SIZE -10) O-RING REQUIRED T77932
8	38H1148	FITTING PLUG	1		X	X	(M) (SIZE -10) O-RING REQUIRED T77932
9	38H1418	FITTING	1		X	X	(F) (SIZE -12) O-RING REQUIRED T77858
10	38H1149	FITTING PLUG	1		X	X	(M) (SIZE -12) O-RING REQUIRED T77858
11	38H1419	FITTING	1		X	X	(F) (SIZE -16) O-RING REQUIRED T76938
12	38H1150	FITTING PLUG	1		X	X	(M) (SIZE -16) O-RING REQUIRED T76938
13	38H1420	FITTING	1		X	X	(F) (SIZE -20) O-RING REQUIRED T78612
14	38H1151	FITTING PLUG	1		X	X	(M) (SIZE -20) O-RING REQUIRED T78612
15	38H1421	FITTING	1		X	X	(F) (SIZE -24) O-RING REQUIRED T78784
16	38H1186	FITTING PLUG	1		X	X	(M) (SIZE -24) O-RING REQUIRED T78784

(F) - FEMALE

(M) - MALE

FLAT FACE O-RING SEAL KIT
(NOT ILLUSTRATED)

KEY	PART NO.	PART NAME	QTY	SERIAL NO.	410D	510D	REMARKS
1	T77814	O-RING	1		X	X	(SIZE -4) KIT O-RING QUANTITY 10
2	T77613	O-RING	1		X	X	(SIZE -6) KIT O-RING QUANTITY 12
3	T77857	O-RING	1		X	X	(SIZE -8) KIT O-RING QUANTITY 12
4	T77932	O-RING	1		X	X	(SIZE -10) KIT O-RING QUANTITY 12
5	T77858	O-RING	1		X	X	(SIZE -12) KIT O-RING QUANTITY 12
6	T76938	O-RING	1		X	X	(SIZE -16) KIT O-RING QUANTITY 12
7	T78612	O-RING	1		X	X	(SIZE -20) KIT O-RING QUANTITY 5
8	T78784	O-RING	1		X	X	(SIZE -24) KIT O-RING QUANTITY 5
9	AT85197	O-RING KIT	1				INCLUDES ALL O-RINGS LISTED 1-8

ENGINE VALVE STEM LUBRICANT
(NOT ILLUSTRATED)

KEY	PART NO.	PART NAME	QTY	SERIAL NO.	4 5 1 1 0 0 D D	REMARKS
..	AR44402	OIL	1		X X	ENGINE VALVE STEM 0.95 L (1 QT.) CAN

KIT FOR OFF-SEASON STORAGE
(NOT ILLUSTRATED)

KEY	PART NO.	PART NAME	QTY	SERIAL NO.	4 5 1 1 0 0 D D	REMARKS

STOP LEAK AND COOLANT CONDITIONER
(NOT ILLUSTRATED)

KEY	PART NO.	PART NAME	QTY	SERIAL NO.	4 5 1 1 0 0 D D	REMARKS
..	RE12842	COOLANT	1		X X	.91 KG (32 OZ.)
..	TY16004	ENGINE COOLANT CONDITIONER	1		X X	16 OZ.
..	TY16005	ENGINE COOLANT CONDITIONER	1		X X	1/2 GAL.

CYLINDER LINER PACKING LUBRICANT
(NOT ILLUSTRATED)

KEY	PART NO.	PART NAME	QTY	SERIAL NO.	4 5 1 1 0 0 D D	REMARKS
..	AR54749	LUBRICANT	1		X X	0.95 L (1 QT.) CAN

SPECIAL DIGMOR DIPPERSTICK LUBE
(NOT ILLUSTRATED)

KEY	PART NO.	PART NAME	QTY	SERIAL NO.	4 5 1 1 0 0 D D	REMARKS
..	AT56125	LUBRICANT	1		X X	.454 KG (1 LB.) SPRAY CAN
..	AT56125	LUBRICANT	1		X X	.946 ML (1 QT.) CAN (BRUSH ON) (AT79697 USE IF AVAILABLE)

MEMORANDA

MEMORANDA

FLUID ANALYSIS PRODUCTS (OILSCAN PLUS TEST KIT)

T135474 -UN-15NOV00



T135474

FLUID ANALYSIS PRODUCTS (OILSCAN PLUS TEST KIT)

KEY	PART NO.	PART NAME	QTY	SERIAL NO.	REMARKS
1	.....	KIT	1		STANDARD ENGINE, SELF EXTRACTION (12 PER PACKAGE)(INCLUDES SPECTROCHEMICAL ANALYSIS, VISCOSITY, ° WATER, FUEL DILUTION, GLYCOL, FUEL SOOT) (SUB FOR AT178843) (AT178840 NO LONGER AVAILABLE FOR SERVICE - SUB AT180333)
	AT180333	KIT	1		STANDARD ENGINE, 4 OZ BOTTLE (10 PER PACKAGE) (SAME AS AT178840) (SUB FOR AT180335)
	.....	KIT	1		COMPREHENSIVE ENGINE W/TBN (EXTENDED DRAIN) (12 PER PACKAGE)(SAME AS AT178840 PLUS TBN) (AT178842 NO LONGER AVAILABLE FOR SERVICE - SUB AT180334)
	AT180334	KIT	1		COMPREHENSIVE ENGINE W/TBN (EXTENDED DRAIN) 4 OZ BOTTLE (10 PRT PACKAGE) (SAME AS AT178842)
	AT303189	KIT	1		COMPREHENSIVE HYDRAULIC & HYDROSTATIC SYSTEMS, 4 OZ BOTTLE (10 PER PACKAGE) (REQUIRES USE OF A SAMPLING VALVE FOR ACCURATE RESULTS) (SUB FOR AT178844)
	IPSKIT3	PUMP	1		OIL EXTRACTION (1 PER PACKAGE)(CAN BE USED WITH AT180333, AT180334, AND AT180335 KITS TO EXTRACT OIL SAMPLE)
	DSO345	TUBE	1		500'ROLL (USED WITH IPSKIT3 PUMP TO EXTRACT SAMPLE)
	DSO346	TUBE	1		100' ROLL (USED WITH IPSKIT3 PUMP TO EXTRACT SAMPLE)

FLUID ANALYSIS PRODUCTS (COOLSCAN PLUS TEST KIT)

T135475 -UN-15NOV00

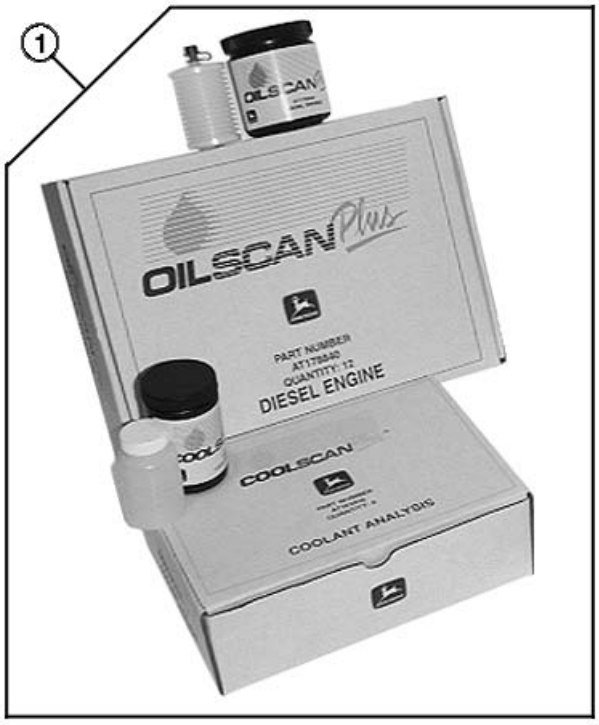

T135475

KEY	PART NO.	PART NAME	QTY	SERIAL NO.	REMARKS
1	AT183016	KIT	1		COOLANT ANALYSIS (6 PER PACKAGE)(TESTS FREEZE POINT, ° ANTIFREEZE, PH, RESERVE ALKALINITY, NITRITE, MOLYBDATE, SILICATE, VISUAL ASSESSMENT & CORROSION METALS (IRON, COPPER, ALUMINUM & LEAD))

FLUID ANALYSIS PRODUCTS (DIESELSCAN TEST KIT)

T135476 -UN-15NOV00



T135476

KEY	PART NO.	PART NAME	QTY	SERIAL NO.	REMARKS
1	AT180344	KIT	1		DIESEL ANALYSIS (6 PER PACKAGE)(USED TO VERIFY TYPE, SUITABILITY FOR COLD TEMPERATURE OPERATIONS, CLEANLINESS, WATER CONTENT AND IF FUEL IS WITHIN ASTM SPECIFICATIONS. CHECKS API GRAVITY, VISCOSITY AT 40C, SULFUR, CETANE INDEX, DISTILLATION, CLOUD POINT, POUR POINT AND COLD FILTER PLUGGING POINT.

FLUID ANALYSIS PRODUCTS (CUSTOMER CONVENIENCE PACKS)

TP49951 -UN-17FEB98



FRONT AXLE AND STEERING CYLINDER LUBRICATION SYSTEM

TP50354 -UN-21JUN95

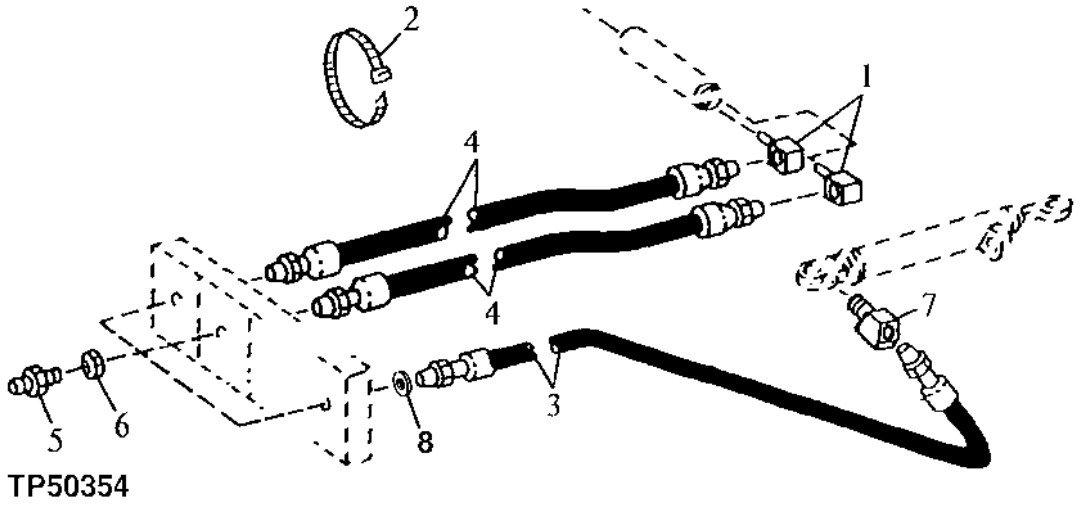

TP50354

KEY	PART NO.	PART NAME	QTY	SERIAL NO.	410D	510D	REMARKS
1	JD7838	ADAPTER	2		X	X	
2	AR21839	CLAMP	AR		X	X	
	R27491	CLAMP	AR		X	X	WITH MFWD
3	AT114019	HYDRAULIC HOSE	1	801200-	X	X	WITHOUT MFWD, (SUB FOR AT168485) (ALSO ORDER 24H1302)
4	AT173254	HYDRAULIC HOSE	2	801200-	X	X	(SUB FOR AT165022) (ALSO ORDER 24H1302)
5	JD7797	LUBRICATION FITTING	3		X	X	
	T162396	LUBRICATION FITTING	2	-801199	X	X	WITH MFWD, (SUB FOR JD7798)
6	14M7275	NUT	3	801200-810971	X	X	M12, WITH MFWD
	E12379	NUT	AR	810972-	X	X	3.175 MM (1/8")
7	JD7801	LUBRICATION FITTING	1		X	X	WITHOUT MFWD
8	24H1302	WASHER	AR	810972-	X	X	13/32" X 11/16" X 0.035"

MEMORANDA

MACHINE FILTERS

TP48859 -UN-31OCT95

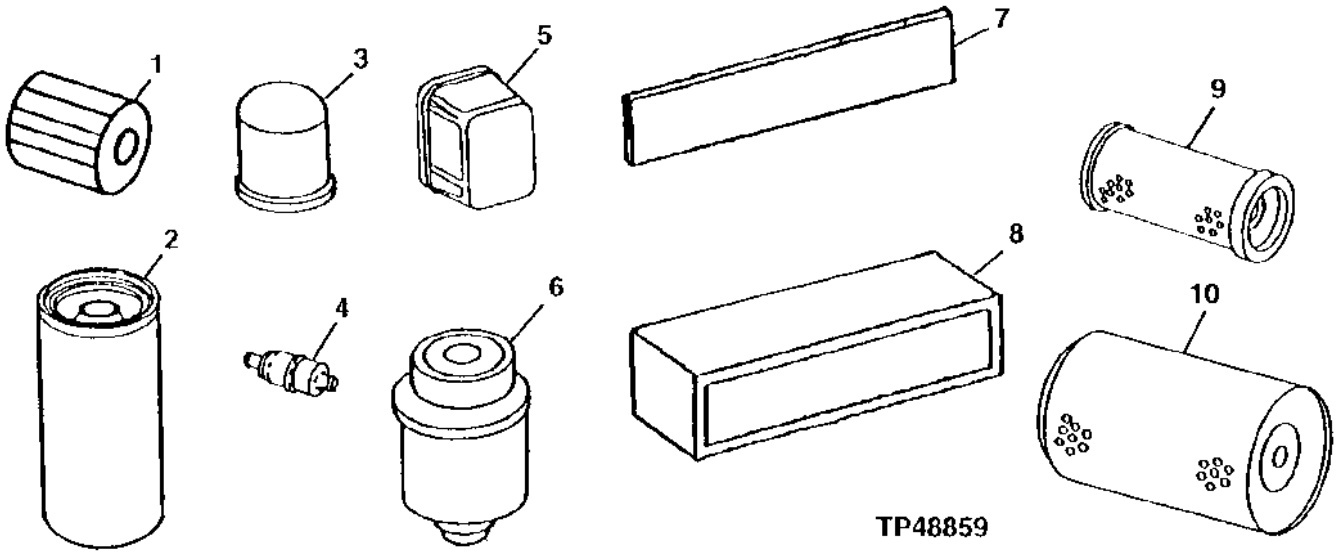

KEY	PART NO.	PART NAME	QTY	SERIAL NO.	410D	510D	REMARKS
1	AT67957	FILTER ELEMENT	1	-796854	X	X	HYDRAULIC OIL
2	AT184206	FILTER ELEMENT	1	796855-	X	X	(SUB FOR AT120444 AND AT144879, THIS APPLICATION)
3	T19044	OIL FILTER	1		X	X	ENGINE
4	AT101565	AIR FILTER	1		X	X	HYDRAULIC OIL BREATHER
5	AR50041	FUEL FILTER	1	-458298	X	X	FUEL FILTER
6	RE62419	FUEL FILTER	1	458299-	X	X	FUEL FILTER
7	T133239	AIR FILTER	1	-801199	X	X	RECIRCULATION
	T153177	AIR FILTER	1	801200-	X	X	RECIRCULATION
8	AT141209	AIR FILTER	1		X	X	FRESH AIR
9	AT44378	FILTER ELEMENT	1		X	X	AIR CLEANER
10	AT65296	FILTER ELEMENT	1		X	X	AIR CLEANER, WITH TURBOCHARGER
	AT65088	FILTER ELEMENT	1		X	X	AIR CLEANER, WITHOUT TURBOCHARGER

SINGLE BATTERY INSTALLATION

TP46363 -UN-21OCT94

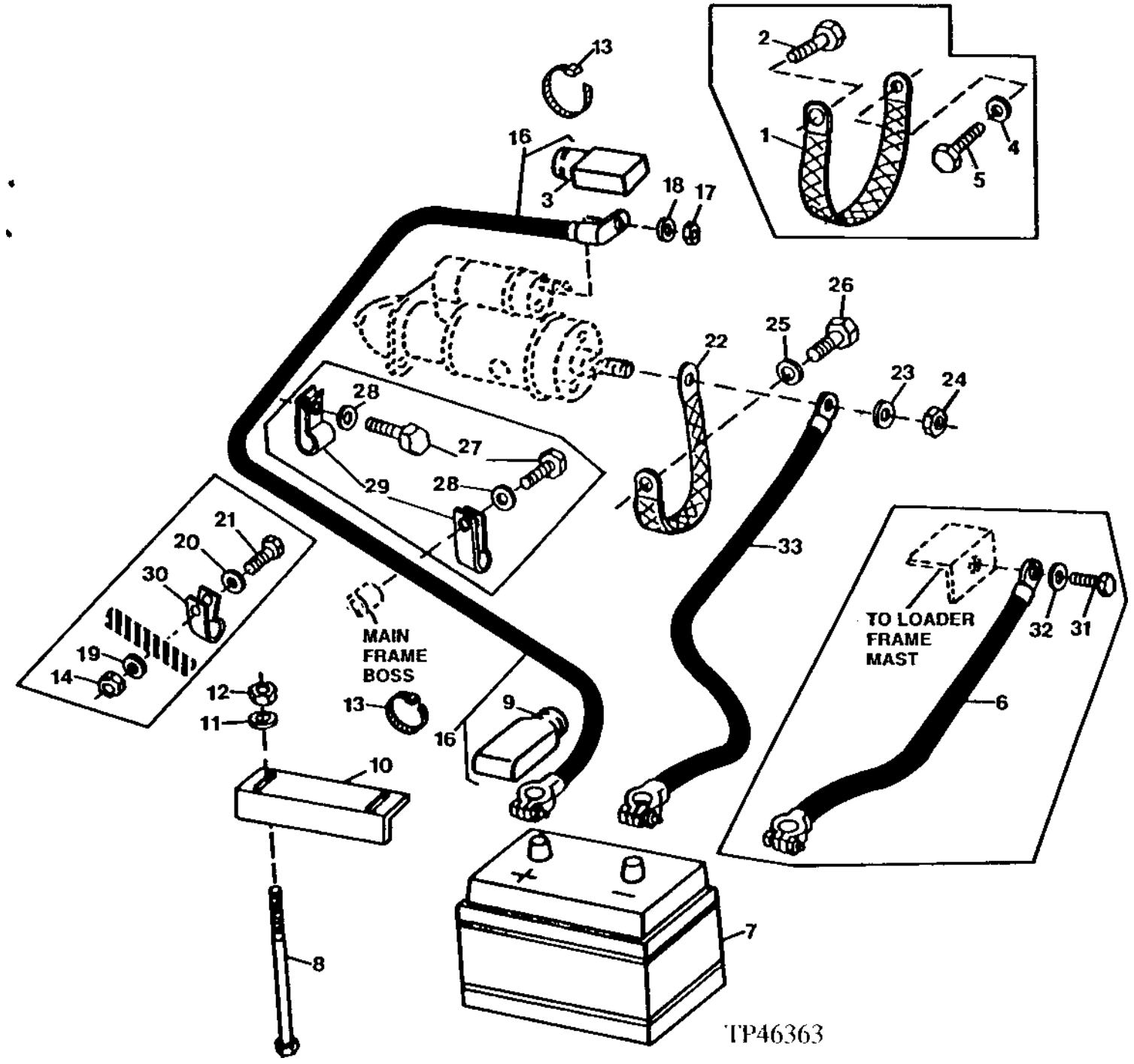

SINGLE BATTERY INSTALLATION

KEY	PART NO.	PART NAME	QTY	SERIAL NO.	410D	510D	REMARKS
1	AT167399	GROUND CABLE	1	-792941	X	X	(SUB FOR AT100506)
2	19M8784	SCREW	1	-792941	X	X	M10 X 20, (SUB FOR 19M8356)
3	T129165	BOOT	1		X	X	
4	24M7239	WASHER	1	-792941	X	X	10.700 X 21 X 2.500 MM
5	19M7938	CAP SCREW	1	-792941	X	X	M10 X 20
6	AT150155	BATTERY CABLE	1	-801199	X	X	NEGATIVE
7	TY6127	DRY CHARGED BATTERY	1	-813880	X	X	160-MINUTE
	TY25803	DRY CHARGED BATTERY	1	813881-	X	X	150-MINUTE, (SUB FOR TY6127, THIS APPLICATION) (SUB FOR TY21766)
8	03H2208	BOLT	2		X	X	1/4" X 9-1/4", (SUB FOR 03H2173, THIS APPLICATION)
9	T107117	COVER	1		X	X	
10	T121288	ANGLE	1		X	X	(BATTERY CLAMP)
11	24H1288	WASHER	2		X	X	9/32" X 1" X 1/16"
12	M40333	LOCK NUT	2		X	X	
13	R44302	TIE BAND	2		X	X	
14	14M7274	NUT	1	-786381	X	X	M10
15	T102934	CLAMP	1	-786381	X	X	
16	AT150376	CABLE	1		X	X	POSITIVE, (USE IF AVAILABLE)
	AT156575	CABLE	1	-788717	X	X	POSITIVE, (SUB FOR AT150376) (SUB AT159429 AND 14H1076)
	AT159429	BATTERY CABLE	1	788718-801199	X	X	POSITIVE
	AT166102	BATTERY CABLE	1	801200-	X	X	POSTIVE
17	14H1040	NUT	1		X	X	1/2"
18	24M7047	WASHER	1		X	X	13 X 24 X 2.500 MM
19	24M7296	WASHER	1	-786381	X	X	10.500 X 30 X 2.500 MM
20	19M7938	CAP SCREW	1	-786381	X	X	M10 X 20
21	24M7239	WASHER	1	788718-	X	X	10.700 X 21 X 2.500 MM
22	AT167399	GROUND CABLE	1	792942-	X	X	
23	24M7047	WASHER	1	792942-	X	X	
24	14H1040	NUT	1	792942-	X	X	
25	24M7239	WASHER	1	792942-	X	X	
26	19M7938	CAP SCREW	1	792942-801199	X	X	M10 X 20
	19M7557	CAP SCREW	1	801200-	X	X	M10 X 16
27	19M7938	CAP SCREW	2	786382-801199	X	X	
28	24M7239	WASHER	2	786382-801199	X	X	10.700 X 21 X 2.500 MM
29	T102934	CLAMP	2	786382-801199	X	X	
30	24M7239	WASHER	1	-786381	X	X	10.700 X 21 X 2.500 MM (0.421" X 0.827" X 0.098")
31	19M7938	CAP SCREW	1	-801199	X	X	M10 X 20
32	24M7239	WASHER	1	-801199	X	X	10.700 X 21 X 2.500 MM (0.421" X 0.827" X 0.098")
33	AT166103	BATTERY CABLE	1	801200-	X	X	NEGATIVE

DUAL BATTERY INSTALLATION

TP46217 -UN-01JAN94

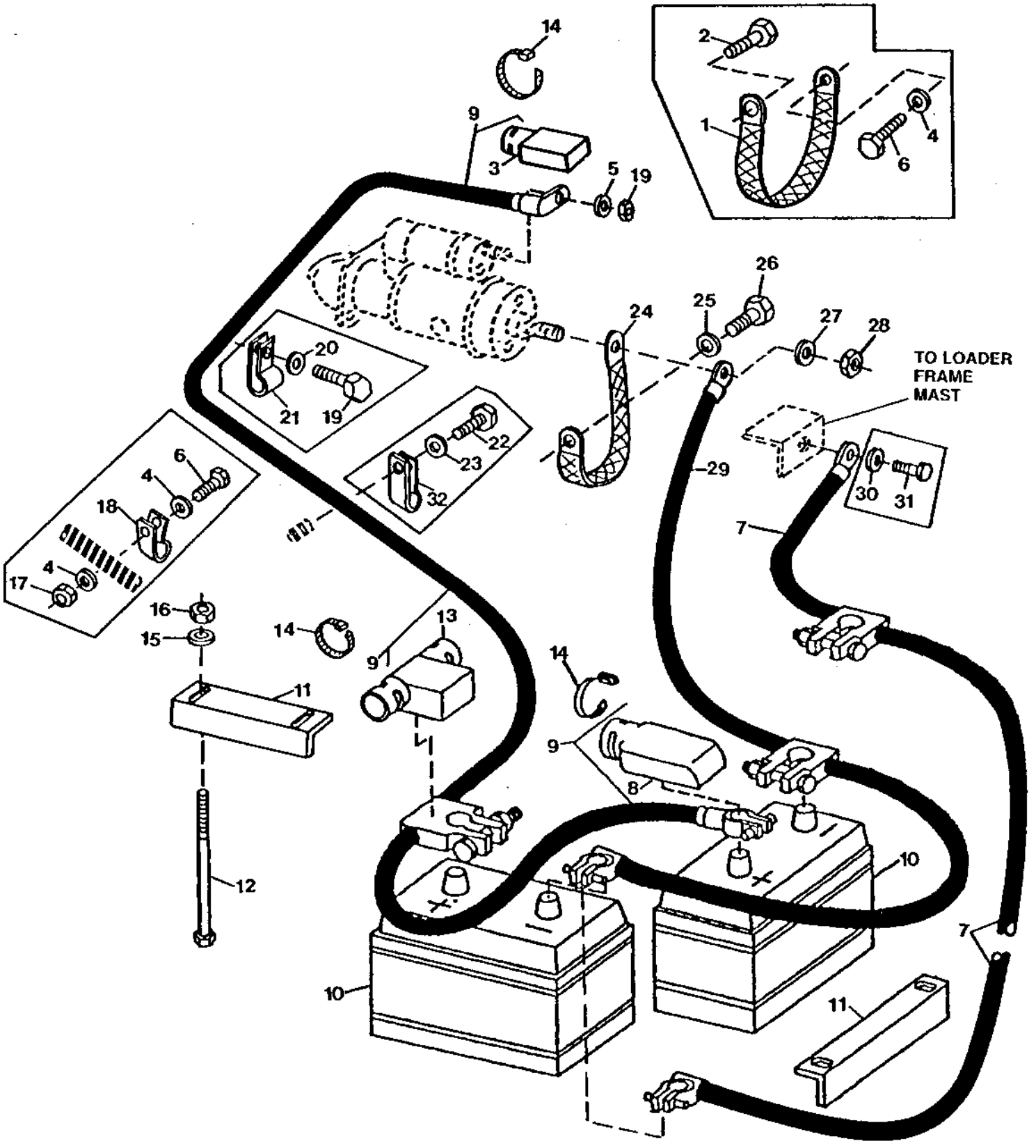

DUAL BATTERY INSTALLATION

KEY	PART NO.	PART NAME	QTY	SERIAL NO.	410D	510D	REMARKS
1	AT167399	GROUND CABLE	1	-792941	X	X	(ENGINE TO FRAME) (SUB FOR AT100506)
2	19M8784	SCREW	1	-792941	X	X	M10 X 20, (SUB FOR 19M8356)
3	T129165	BOOT	1		X	X	
4	24M7239	WASHER	1	-792941	X	X	10.700 X 21 X 2.500 MM
5	24M7047	WASHER	1		X	X	13 X 24 X 2.500 MM
6	19M7938	CAP SCREW	1	-792941	X	X	M10 X 20
7	AT149890	CABLE	1	-786381	X	X	NEGATIVE
	AT159431	BATTERY CABLE	1	786382-801199	X	X	NEGATIVE
8	T107117	COVER	1		X	X	
9	AT150373	CABLE	1	-788804	X	X	POSITIVE (USE IF AVAILABLE)
	AT156576	CABLE	1	-788804	X	X	POSITIVE, (SUB FOR AT150373) (SUB AT159430 AND 14H1076)
	AT159430	BATTERY CABLE	1	788805-801199	X	X	POSITIVE
	AT165248	BATTERY BOOSTER CABLES	1	801200-	X	X	POSITIVE
10	TY6127	DRY CHARGED BATTERY	2	-813880	X	X	320-MINUTE
	TY25803	DRY CHARGED BATTERY	2	813881-	X	X	300-MINUTE, (SUB FOR TY6127, THIS APPLICATION) (SUB FOR TY21766)
11	T121288	ANGLE	2		X	X	
12	03H2208	BOLT	4		X	X	1/4" X 9-1/4", (SUB FOR 03H2173, THIS APPLICATION)
13	T107116	COVER	1		X	X	
14	R44302	TIE BAND	3		X	X	
15	24H1288	WASHER	4		X	X	9/32" X 1" X 1/16"
16	M40333	LOCK NUT	4		X	X	1/4"
17	14M7274	NUT	1	-786381	X	X	M10
18	T102934	CLAMP	1	-786381	X	X	
19	19M7938	CAP SCREW	1	-801199	X	X	M10 X 20
20	24M7239	WASHER	1	-801199	X	X	10.700 X 21 X 2.500 MM
21	T102934	CLAMP	1	-801199	X	X	
22	19M7938	CAP SCREW	1	-801199	X	X	M10 X 20
23	24M7239	WASHER	1	-801199	X	X	10.700 X 21 X 2.500 MM
24	AT167399	GROUND CABLE	1	792942-	X	X	GROUND CABLE TO MAIN FRAME
25	24M7239	WASHER	1	792942-	X	X	10.700 X 21 X 2.500 MM
26	19M7938	CAP SCREW	1	792942-801199	X	X	M10 X 20
	19M7557	CAP SCREW	1	801200-	X	X	M10 X 16
27	24M7047	WASHER	1	792942-	X	X	13 X 24 X 2.500 MM
28	14H1040	NUT	1	792942-	X	X	1/2"
29	AT174830	CABLE	1		X	X	NEGATIVE, (SUB FOR AT165249 AND AT172623)
30	24M7239	WASHER	1	-801199	X	X	10.700 X 21 X 2.500 MM
31	19M7938	CAP SCREW	1	-801199	X	X	M10 X 20
32	T102934	CLAMP	1	-801199	X	X	

ALTERNATOR AND ATTACHING PARTS
(SERIAL NO. -817881)

T165919 -UN-05MAR03

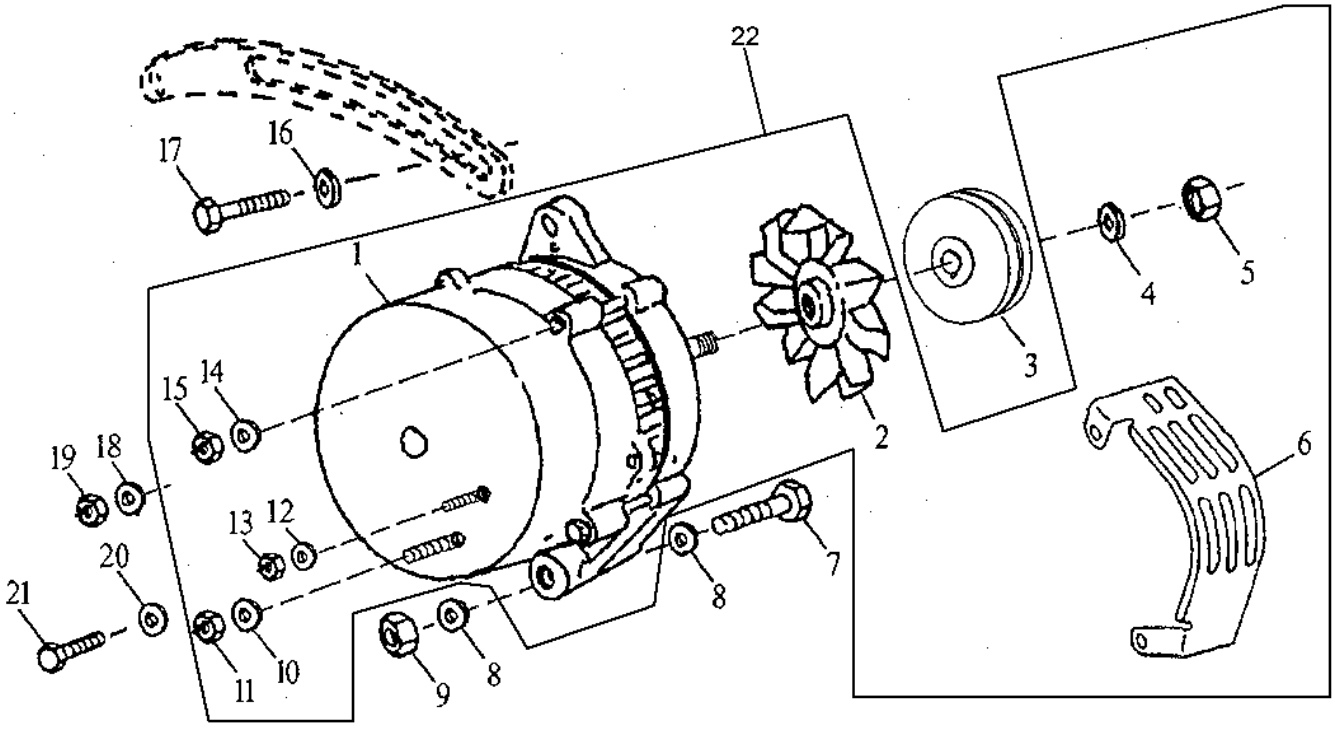

T165919

KEY	PART NO.	PART NAME	QTY	SERIAL NO.	410D	510D	REMARKS
1	.....	ALTERNATOR	1	-778740	X	X	12V-78AMP, NEW (DELCO) (AT142267 NO LONGER AVAILABLE) (SUB AT317673)
	.....	ALTERNATOR	1	778741-787551	X	X	12V-78AMP, NEW (AT157177 NO LONGER AVAILABLE) (SUB AT317673)
	.....	ALTERNATOR	1	787552-	X	X	14V-100AMP, REMANUFACTURED (BOSCH) (TY6750 NO LONGER AVAILABLE) (INCLUDES T10745 AND 14M7158) (SUB TY24485)
	TY24485	ALTERNATOR	1		X	X	(K) 12V-95AMP, REMANUFACTURED (BOSCH)
2	R87764	FAN	1	-787551	X	X	
	L33993	FAN	1	787552-	X	X	(K)
3	T123088	PULLEY	1		X	X	
4	T10745	WASHER	1	787552-	X	X	(K)
5	R11049	NUT	1	-787551	X	X	0.669"
	14M7158	NUT	1	787552-	X	X	(K) M16
6	R122848	SHIELD	1	787552-	X	X	(K) (SUB FOR R122848, THIS APPLICATION)
7	19M8081	CAP SCREW	1		X	X	M10 X 80
8	24M7239	WASHER	2		X	X	10.700 X 21 X 2.500 MM
9	14M7274	NUT	1		X	X	M10
10	24M7036	WASHER	2	787552-	X	X	(K) 9 X 16 X 1.600 MM
11	14M7273	NUT	1	787552-	X	X	(K) M8
12	12H246	LOCK WASHER	1	787552-	X	X	(K) 0.190"
13	14M7297	NUT	1	787552-	X	X	(K) M5
14	24H1283	WASHER	2	787552-	X	X	(K) 7/32" X 1/2" X 0.049"
15	14M7297	NUT	1	787552-	X	X	(K) M5
16	24H1621	WASHER	1		X	X	11/32" X 1" X 0.220"
17	19M7513	CAP SCREW	1		X	X	M8 X 30, (SUB FOR 19M7867 AND 19M7868, THIS APPLICATION)
18	12H297	LOCK WASHER	1	-787551	X	X	1/4"
19	14M7272	NUT	1	-787551	X	X	M6
20	12H291	LOCK WASHER	1	-787551	X	X	5/16"
21	19M7297	CAP SCREW	1	-787551	X	X	M8 X 12
22	AT317673	KIT	1	-787551			(BOSCH) (SUB FOR AT161480)

ALTERNATOR
(78AMP)
(SERIAL NO. -778740)

TP40238 -UN-01JAN94

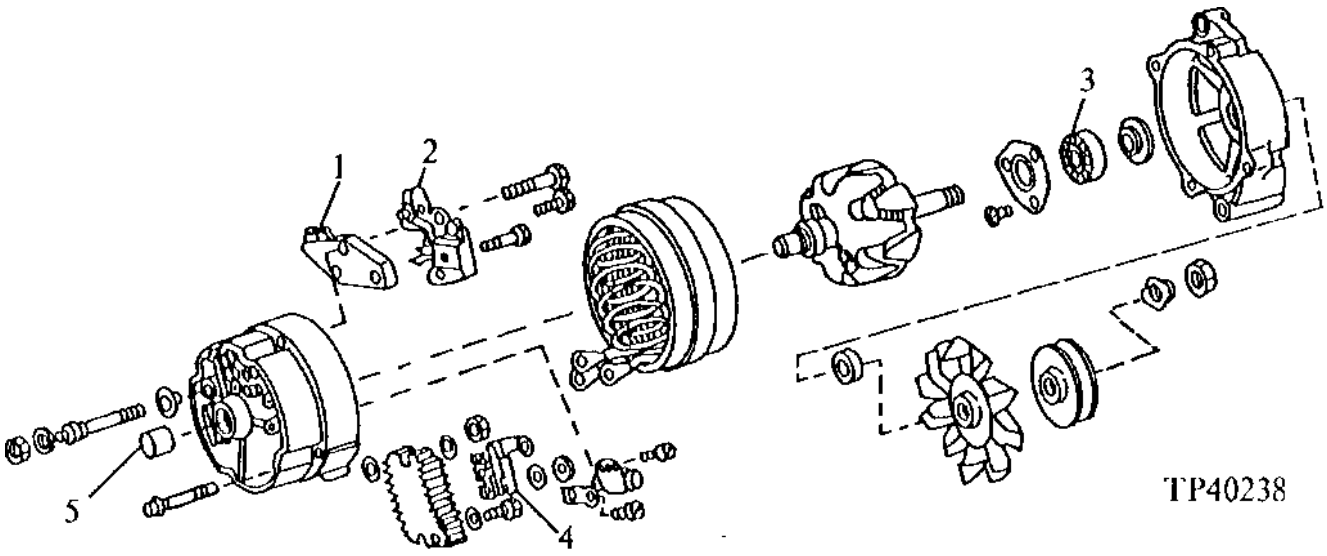

KEY	PART NO.	PART NAME	QTY	SERIAL NO.	410D	510D	REMARKS
1	AR55827	VOLTAGE REGULATOR	1		X	X	
2	.....	HOLDER	1		X	X	AT129533, NO LONGER AVAILABLE
3	.....	ROLLER BEARING	1		X	X	T123729, NO LONGER AVAILABLE
4	.....	DIODE	1		X	X	AT129531, NO LONGER AVAILABLE
5	AR77851	CYLINDRICAL ROLLER BEARING	1		X	X	

ALTERNATOR
(78 AMP,DELCO-REMY NO.10480058)
(SERIAL NO. 778741-787551)

TP44018 -UN-01JAN94

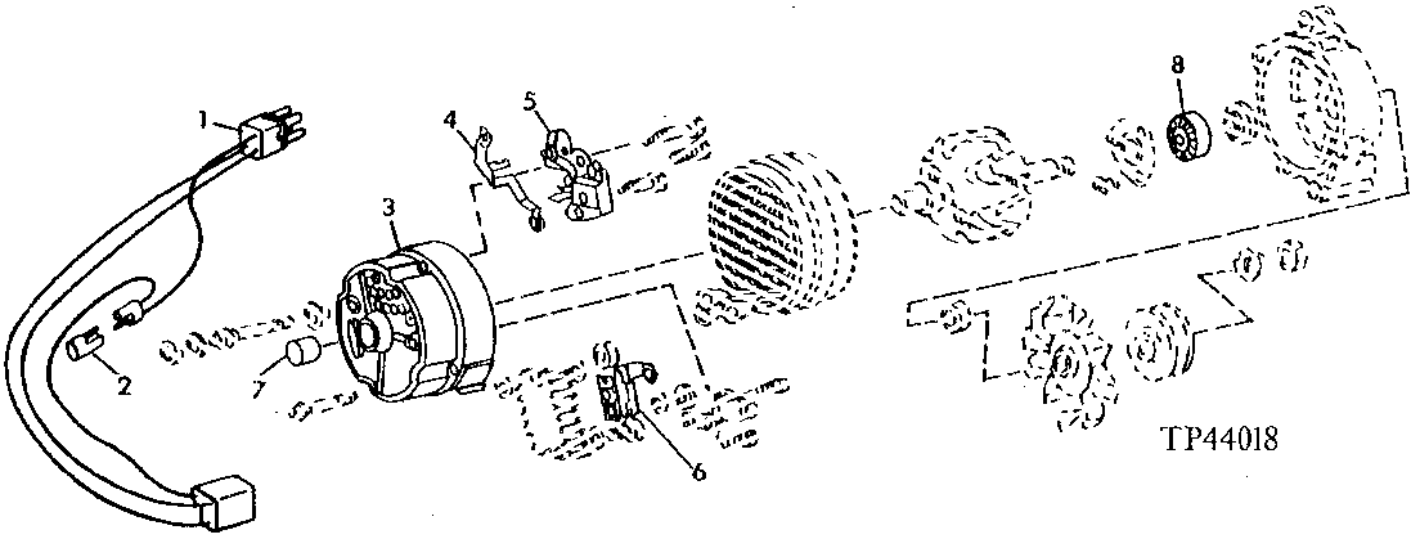

KEY	PART NO.	PART NAME	QTY	SERIAL NO.	4 5 1 1 0 0 D D	REMARKS
1	AT142395	WIRING HARNESS	1		X X	
2	AT103399	DIODE	1		X X	
3	R71400	HOUSING	1		X X	
4	R81597	ELEC. CONNECTOR TERMINAL	1		X X	(RELAY)
5	AR85941	CARBON BRUSH HOLDER	1		X X	
6	RE13798	DIODE	1		X X	
7	AR77851	CYLINDRICAL ROLLER BEARING	1		X X	
8	JD9449	BALL BEARING	1		X X	

ALTERNATOR AND ATTACHING PARTS
(SERIAL NO. 817882-)

TP52751 -UN-06MAR96

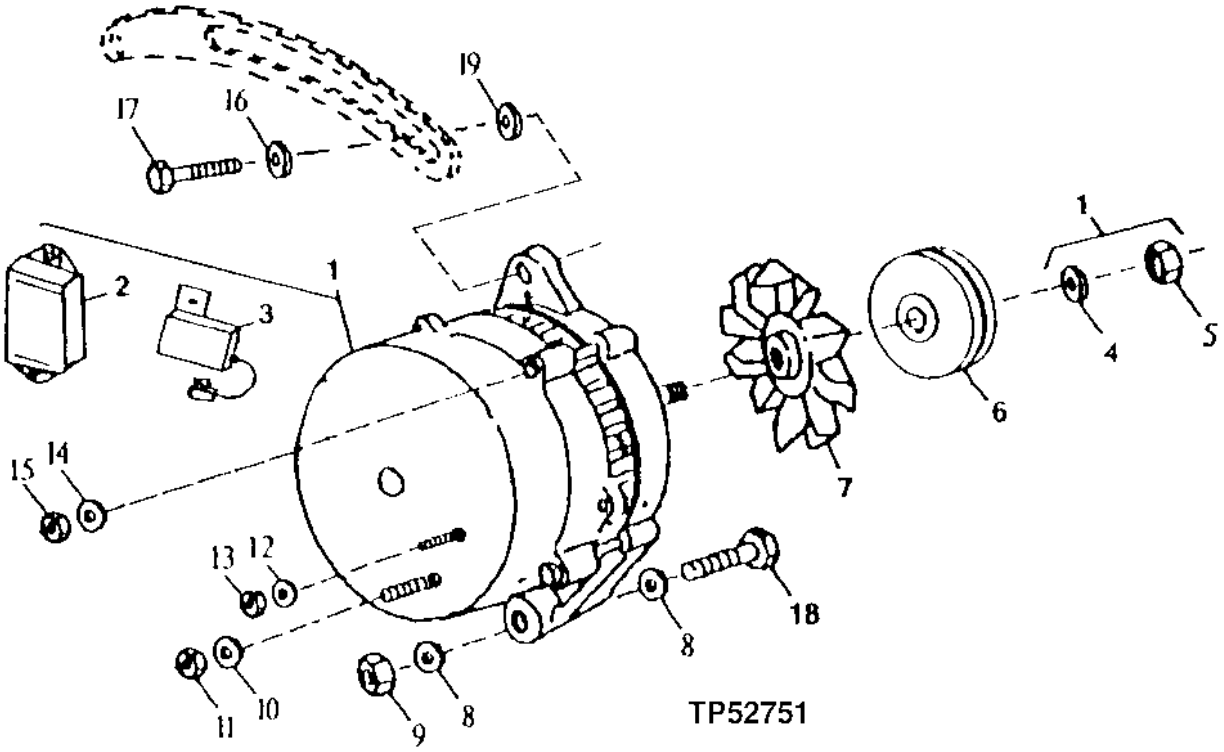

KEY	PART NO.	PART NAME	QTY	SERIAL NO.	4 5 1 1 0 0 D D	REMARKS
1	.....	ALTERNATOR	1		X X	65 AMP, NEW (CONVENIENCE ASSEMBLY) (SUB FOR AT220393) (SUB TY6799)
	AT220394	ALTERNATOR	1		X X	95 AMP, NEW (CONVENIENCE ASSEMBLY) (SUB FOR AT175194) (SUB TY6750 OR TY24485)
	TY6799	ALTERNATOR	1		X X	65 AMP, REMANUFACTURED, (SUB FOR AT220393)
	TY24485	ALTERNATOR	1		X X	95 AMP, REMANUFACTURED, (SUB FOR AT220394 OR TY6750)
2	H144094	VOLTAGE REGULATOR	1		X X	
	TY6799	ALTERNATOR	1		X X	
3	H144095	CAPACITOR	1		X X	
4	T10745	WASHER	1		X X	
5	14M7158	NUT	1		X X	M16
6	T123088	PULLEY	1		X X	
7	T158584	FAN	1		X X	
8	24M7239	WASHER	2		X X	10.700 X 21 X 2.500 MM
9	14M7274	NUT	1		X X	M10
10	24M7036	WASHER	2		X X	9 X 16 X 1.600 MM
11	14M7273	NUT	1		X X	M8
12	12M7060	WASHER	1		X X	5.300 MM
13	14M7297	NUT	1		X X	M5
14	24H1283	WASHER	2		X X	7/32" X 1/2" X 0.049"
15	14M7297	NUT	1		X X	M5
16	24H1621	WASHER	1		X X	11/32" X 1" X 0.220"
17	19M7513	CAP SCREW	1		X X	M8 X 30
18	19M8081	CAP SCREW	1		X X	M10 X 80
19	24M7296	WASHER	1		X X	

MEMORANDA

ROTATING BEACON

TP48890 -UN-05MAR96

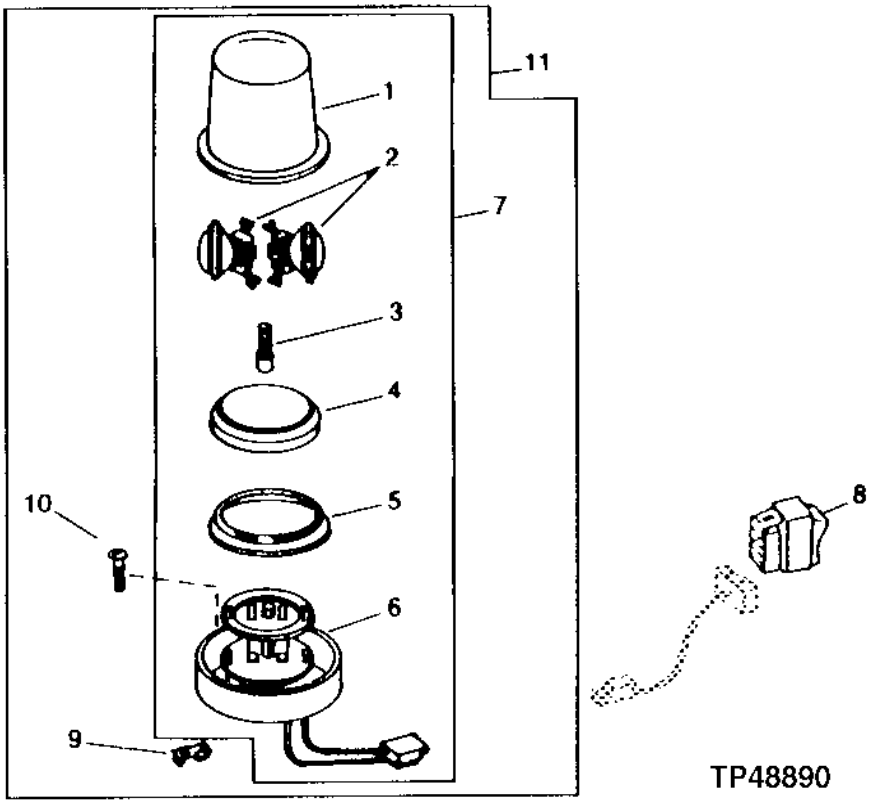

KEY	PART NO.	PART NAME	QTY	SERIAL NO.	4510 DD	REMARKS
1	T76607	LENS	1		X X	
2	AH91124	LAMP	2		X X	
3	T76609	BRUSH	1		X X	
4	AT74938	RETAINER	1		X X	
5	T76608	GASKET	1		X X	
6	.....	MOTOR	1		X X	
	.....	ISOLATOR	AR		X X	(MAKE FROM T59937 BULK MATERIAL, CUT TO LENGTH)
7	AT74936	LAMP	1		X X	
8	AT175603	TOGGLE/ROCKER SWITCH	1		X X	
	57M7102	BULB	1		X X	
9	T76610	NUT	3		X X	
10	19H1914	CAP SCREW	3		X X	1/4" X 1"
11	**AT176827**	**LAMP**	**1**		**X X**	**(SUB FOR AT141489) (ALSO ORDER AT140957) (USE WITH CAB OR ROPS)**

FRONT AND REAR LIGHTS
(WITH CAB)

TP44467 -UN-01JAN94

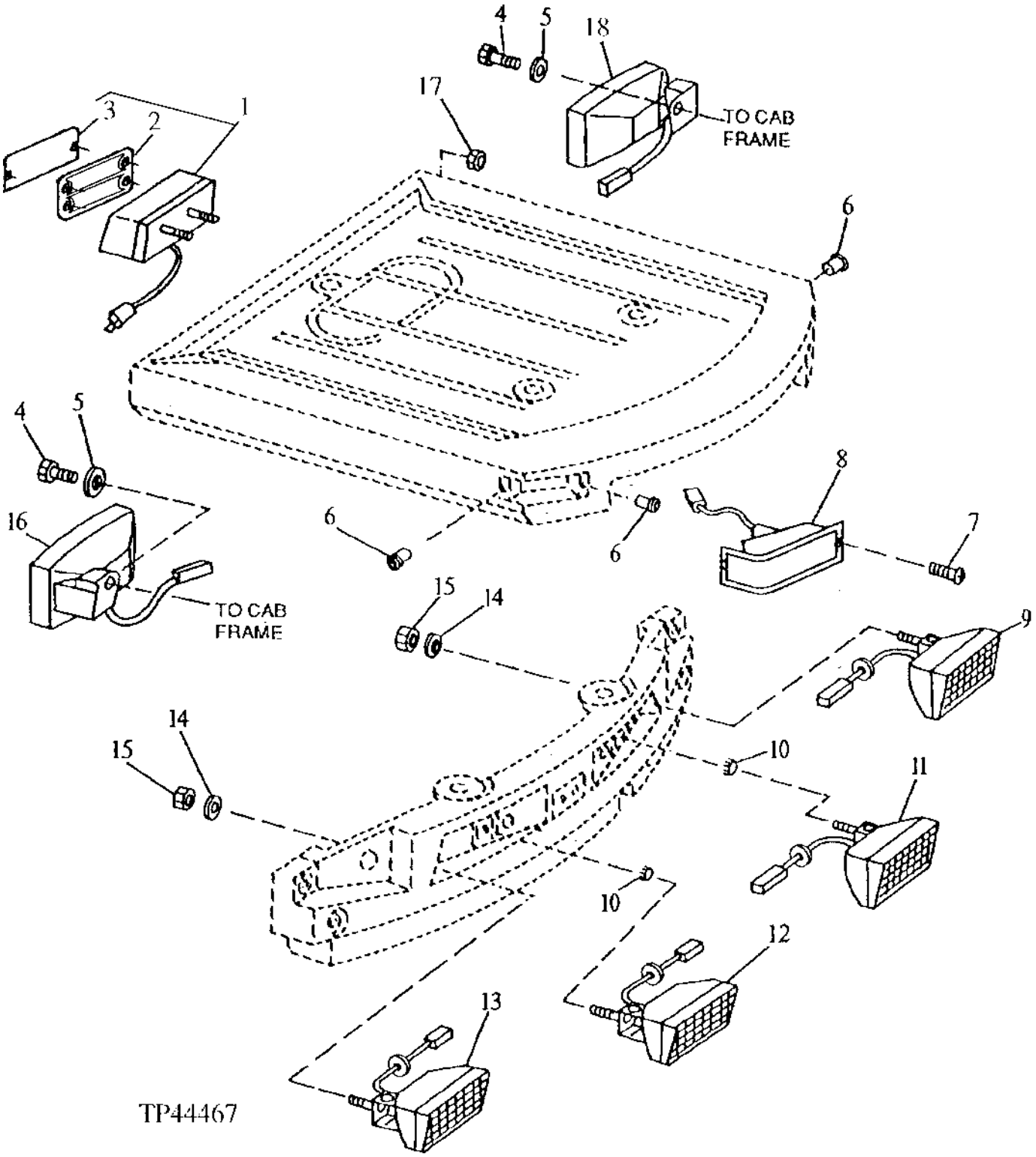

FRONT AND REAR LIGHTS
(WITH CAB)

KEY	PART NO.	PART NAME	QTY	SERIAL NO.	410D	510D	REMARKS
1	.....	LAMP	2	-795311	X	X	TURN SIGNAL, BRAKE AND TAIL LIGHT (AT140914 USE IF AVAILABLE)
	AT159359	STOP LIGHT	2	795312-	X	X	
	AD2062R	BULB	2		X	X	(TURN SIGNAL)
	AR48041	BULB	2		X	X	(BRAKE AND TAIL LIGHT)
2	T150355	GASKET	1		X	X	
3	T145896	LENS	1	795312-	X	X	(RED)
	T145897	LENS	1	795312-	X	X	(AMBER)
4	19M7938	CAP SCREW	2		X	X	(SUB FOR 19M8324, THIS APPLICATION) (SUB FOR T134887)
5	24H1305	WASHER	2		X	X	13/32" X 13/16" X 0.065"
6	T82792	NUT	4		X	X	
7	T82791	SCREW	4		X	X	
8	AT87556	TAIL LAMP	2		X	X	
	AD2062R	BULB	2		X	X	WARNING
9	AT163950	FLOODLAMP	1		X	X	(SUB FOR AT141070) L.H. STANDARD LIGHTING
	AT130104	BULB	1		X	X	HALOGEN
10	H91792	PLUG	2		X	X	WITHOUT ADDITIONAL LIGHTING
	T152230	PLUG	2		X	X	WITHOUT ADDITIONAL LIGHTING
11	AT163950	FLOODLAMP	1		X	X	(SUB FOR AT141070) L.H. ADDITIONAL LIGHTING
	AT130104	BULB	1		X	X	HALOGEN
	T140780	ANGLE	1		X	X	(NOT ILLUSTRATED)
12	AT163948	FLOODLAMP	1		X	X	(SUB FOR AT141069) R.H. ADDITIONAL LIGHTING
	AT130104	BULB	1		X	X	HALOGEN
	T140780	ANGLE	1		X	X	(NOT ILLUSTRATED)
13	AT163948	FLOODLAMP	1		X	X	(SUB FOR AT141069) R.H. ADDITIONAL LIGHTING
	AT130104	BULB	1		X	X	HALOGEN
14	24H1219	WASHER	2		X	X	7/16" X 1" X 0.083", WITH STANDARD LIGHTING
	24H1219	WASHER	4		X	X	7/16" X 1" X 0.083", WITH ADDITIONAL LIGHTING
15	14M7167	LOCK NUT	2		X	X	M10, WITH STANDARD LIGHTING
	14M7167	LOCK NUT	4		X	X	M10, WITH ADDITIONAL LIGHTING
16	AT145797	FLOODLAMP	1		X	X	R.H. REAR WORK LIGHT
	AT130104	BULB	1		X	X	HALOGEN
17	14M7375	FLANGE NUT	4		X	X	M5
18	AT145798	FLOODLAMP	1		X	X	L.H. REAR WORK LAMP0
	AT130104	BULB	1		X	X	HALOGEN

DELUXE FRONT LIGHTS, REAR LIGHTS AND TURN SIGNAL LIGHTS (WITH ROPS)

TP44472 -UN-01JAN94

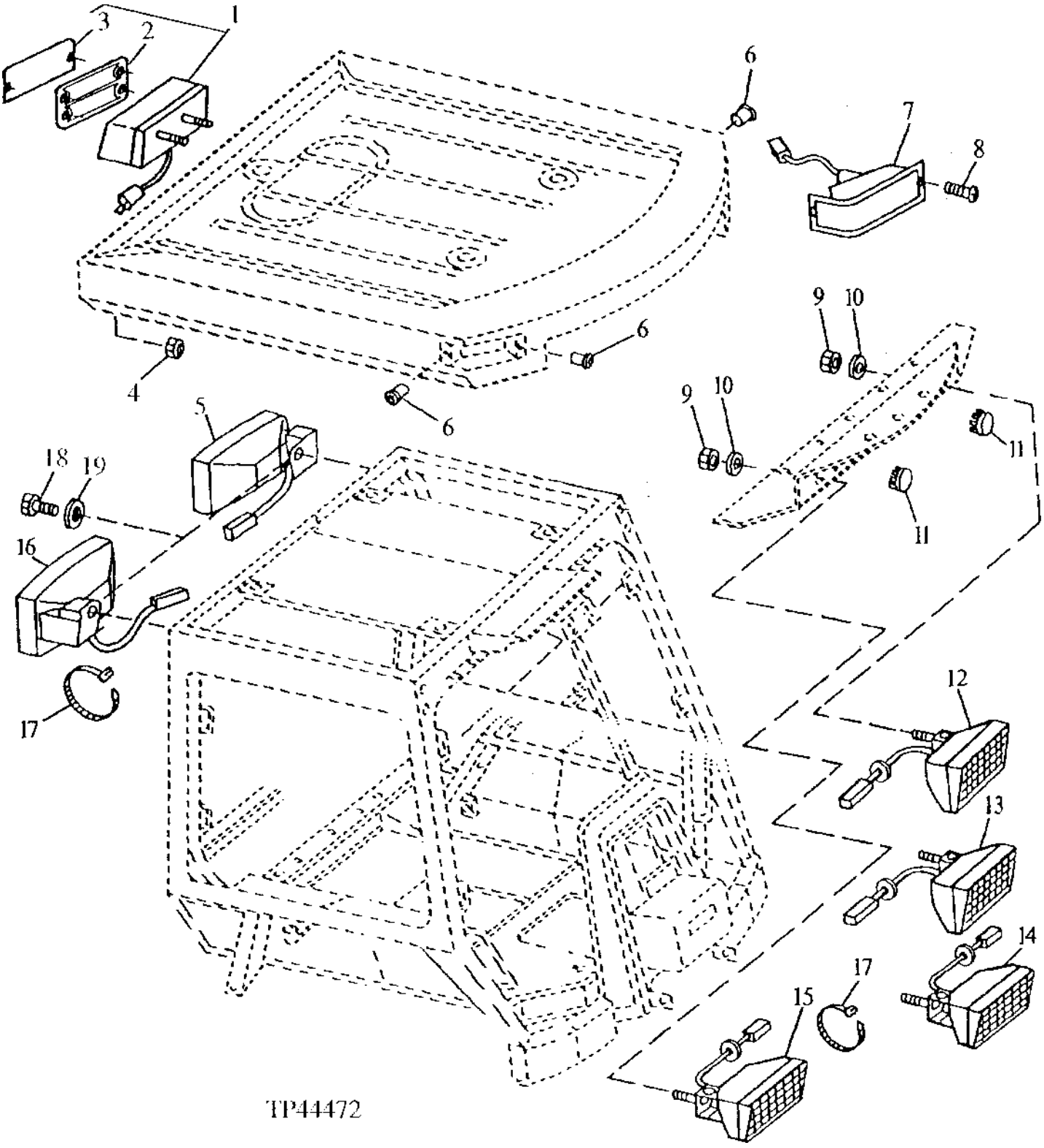

DELUXE FRONT LIGHTS, REAR LIGHTS AND TURN SIGNAL LIGHTS (WITH ROPS)

KEY	PART NO.	PART NAME	QTY	SERIAL NO.	410D	510D	REMARKS
1	.....	LAMP	2	-795311	X	X	TURN SIGNAL, BRAKE AND TAIL LIGHT (AT140914 USE IF AVAILABLE)
	AT159359	STOP LIGHT	2	795312-	X	X	
	AD2062R	BULB	1		X	X	TURN SIGNAL
	AR48041	BULB	1		X	X	BRAKE AND TAIL LIGHT
2	T150355	GASKET	1		X	X	
3	T145896	LENS	1		X	X	RED
	T145897	LENS	1		X	X	AMBER
4	14M7375	FLANGE NUT	4		X	X	M5
5	AT145798	FLOODLAMP	1		X	X	WORK LAMP (LEFT REAR)
	AT130104	BULB	1		X	X	HALOGEN
6	T82792	NUT	4		X	X	
7	AT87556	TAIL LAMP	2		X	X	TURN SIGNAL AND WARNING
8	T82791	SCREW	4		X	X	
	AD2062R	BULB	1		X	X	
9	14M7167	LOCK NUT	2		X	X	M10, (WITH STANDARD LIGHTING)
	14M7167	LOCK NUT	4		X	X	M10, (WITH ADDITIONAL LIGHTING)
10	24H1219	WASHER	2		X	X	7/16" X 1" X 0.083", (WITH STANDARD LIGHTING)
	24H1219	WASHER	4		X	X	7/16" X 1" X 0.083", (WITH ADDITIONAL LIGHTING)
11	H91792	PLUG	2		X	X	(WITH ADDITIONAL LIGHTING)
12	AT163950	FLOODLAMP	1		X	X	L.H. STANDARD LIGHTING, (SUB FOR AT141070)
	AT130104	BULB	1		X	X	HALOGEN
13	AT163950	FLOODLAMP	1		X	X	L.H. ADDITIONAL LIGHTING, (SUB FOR AT163950)
	AT130104	BULB	1		X	X	HALOGEN
14	AT163948	FLOODLAMP	1		X	X	R.H. ADDITIONAL LIGHTING, (SUB FOR AT163948)
	AT130104	BULB	1		X	X	HALOGEN
15	AT163948	FLOODLAMP	1		X	X	R.H. STANDARD LIGHTING, (SUB FOR AT163948)
	AT130104	BULB	1		X	X	HALOGEN
16	AT145797	FLOODLAMP	1		X	X	R.H. REAR WORK LIGHT
	AT130104	BULB	1		X	X	HALOGEN
17	R44302	TIE BAND	AR		X	X	
18	19M7938	CAP SCREW	2		X	X	M10 X 20, (SUB FOR 19M8324, THIS APPLICATION) (SUB FOR T134887)
19	24H1305	WASHER	2		X	X	13/32" X 13/16" X 0.065"

LOADER CONTROL VALVE RETURN-TO-DIG WIRE HARNESS AND SWITCH

TP44653 -UN-01JAN94

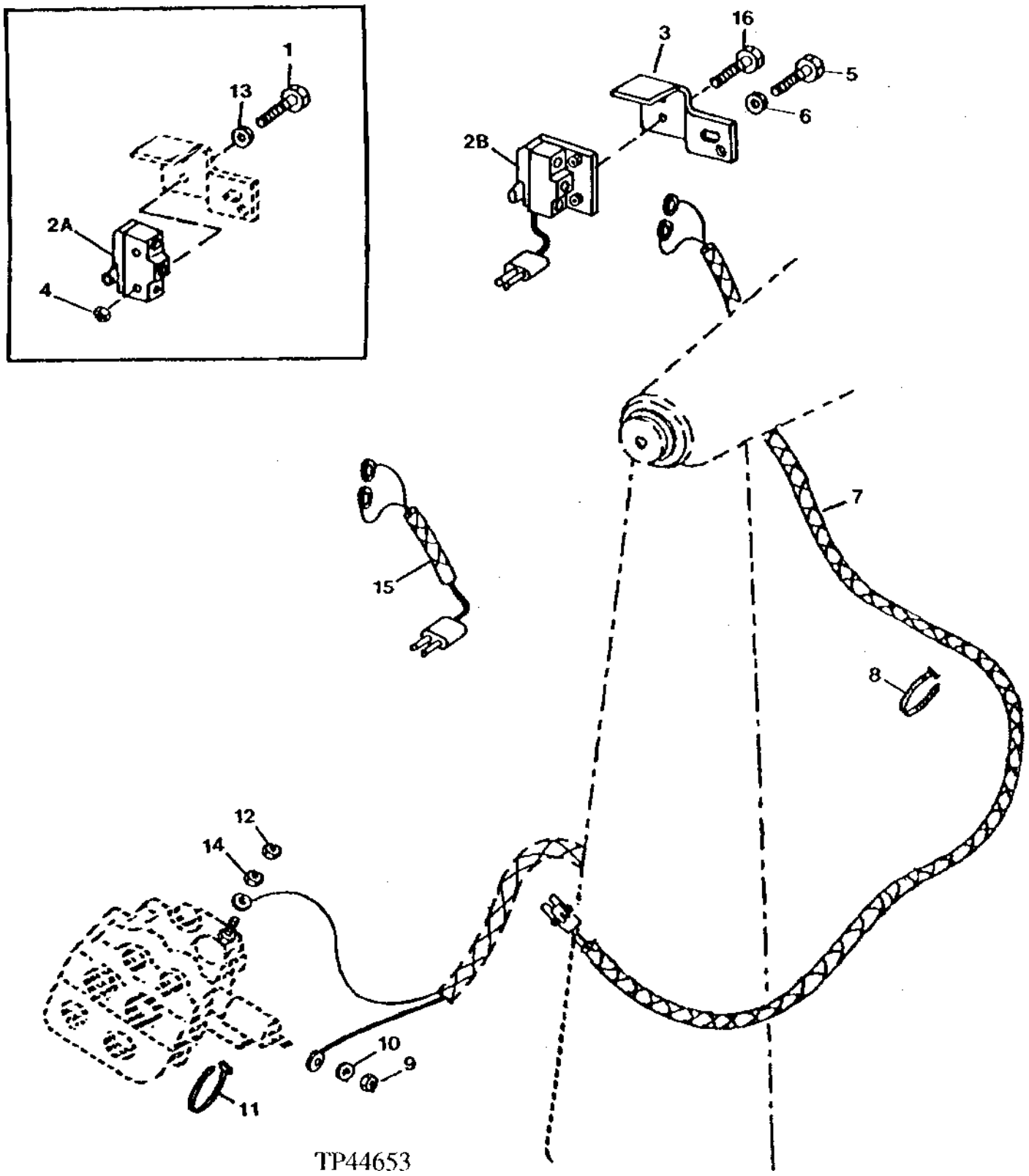

LOADER CONTROL VALVE RETURN-TO-DIG WIRE HARNESS AND SWITCH-CONTINUED

KEY	PART NO.	PART NAME	QTY	SERIAL NO.	410D	510D	REMARKS
1	19M8072	CAP SCREW	2	-792531	X	X	M3 X 25
2A	AT182389	SWITCH	1	-792531	X	X	(SUB FOR AT69969, THIS APPLICATION) (ALSO ORDER R78053, (2) R78061, (2) R78063 AND (2) 21H1290) RETURN-TO-DIG
2B	AT182389	SWITCH	1	792532-	X	X	(SUB FOR AT158604) RETURN-TO-DIG
3	T134340	BRACKET	1		X	X	(SUB FOR T75500)
4	14M7030	NUT	2	-792531	X	X	M3
5	19M8017	CAP SCREW	1		X	X	M12 X 20
6	24M7047	WASHER	1		X	X	13 X 24 X 2.500 MM
7	AT150657	WIRING HARNESS	1	-778823	X	X	
	.....	WIRING HARNESS	1	778824-	X	X	(SUB AT167252)
8	R44302	TIE BAND	5		X	X	
9	14H631	NUT	1	-801199	X	X	0.190"
10	12H295	LOCK WASHER	1	-801199	X	X	0.190"
11	H77698	TIE BAND	AR		X	X	
12	14H1076	NUT	1		X	X	3/8"
13	R52119	WASHER	2	-792531	X	X	3.353 X 9.652 X 1.524 MM (0.132" X 0.380" X 0.060")
14	14H1076	NUT	1	-801199	X	X	3/8"
15	AT156689	WIRING HARNESS	1	787552-792531	X	X	
16	21H1290	SCREW	2	792532-	X	X	0.138" X 1/2"

FRONT CONSOLE HARNESS

TP48864 -UN-02NOV95

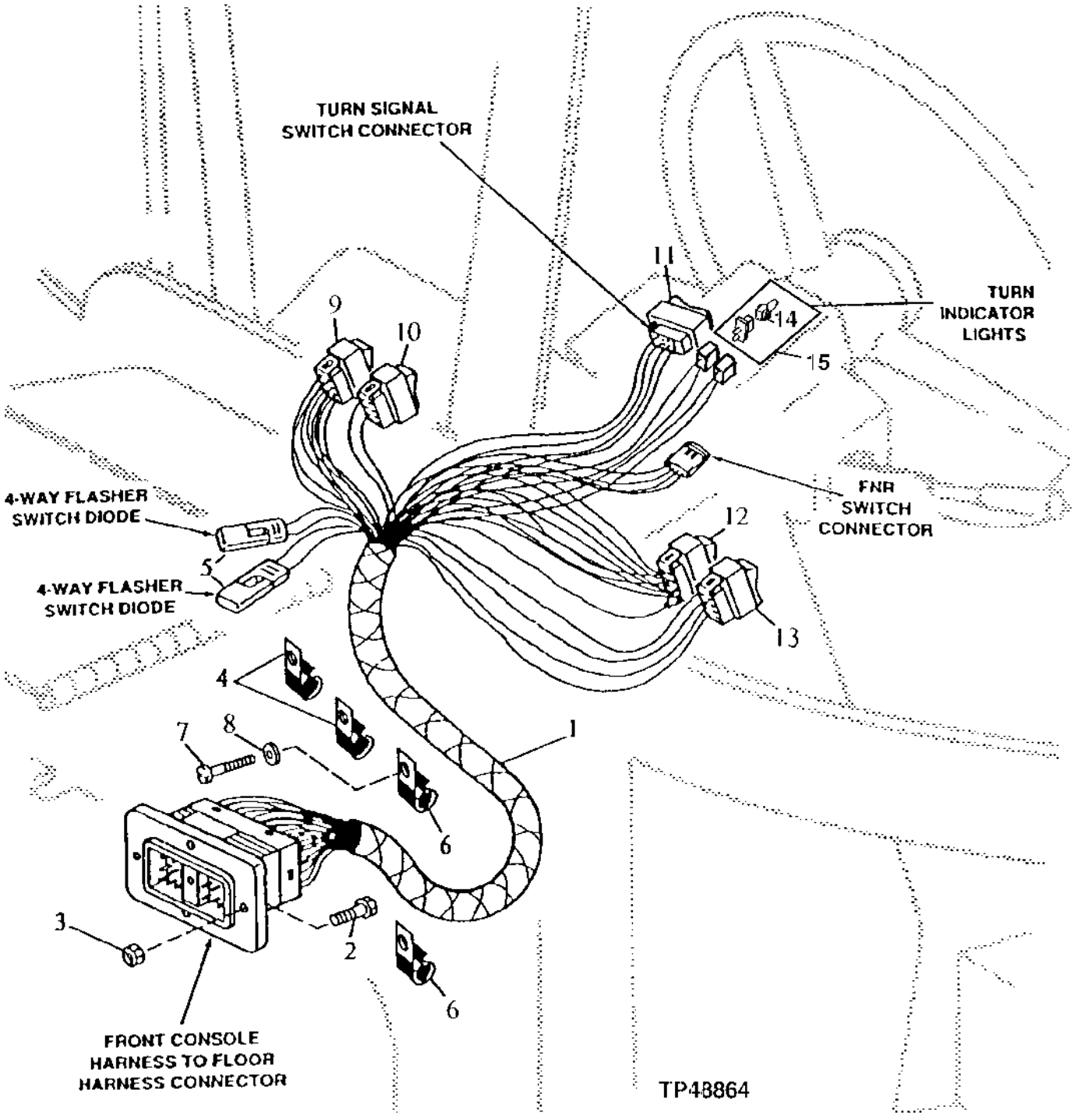

FRONT CONSOLE HARNESS

KEY	PART NO.	PART NAME	QTY	SERIAL NO.	410D	510D	REMARKS
1	AT156335	WIRING HARNESS	1		X	X	(SUB FOR AT149548, THIS APPLICATION)
2	R54388	SCREW	2		X	X	
3	14H1026	NUT	2		X	X	0.138"
4	AH89557	CLIP	2		X	X	
5	AT103399	DIODE	2		X	X	
6	T74416	CLAMP	2		X	X	(SUB FOR T75197, THIS APPLICATION)
7	19M7557	CAP SCREW	1		X	X	M10 X 16
8	24H1305	WASHER	1		X	X	13/32" X 13/16" X 0.065"
9	AT140962	SWITCH	1		X	X	FRONT WIPER
10	AT140963	SWITCH	1		X	X	WINDSHIED WASHER
11	AT150089	SWITCH	1		X	X	TURN SIGNAL
12	AT140966	SWITCH	1		X	X	4-WAY FLASHER
13	AT149830	SWITCH	1		X	X	FRONT LIGHT
14	57M7102	BULB	1		X	X	
15	AL36535	SOCKET	1		X	X	

FLOOR WIRING HARNESS
(SERIAL NO. -778668)

TP42814 -UN-01JAN94

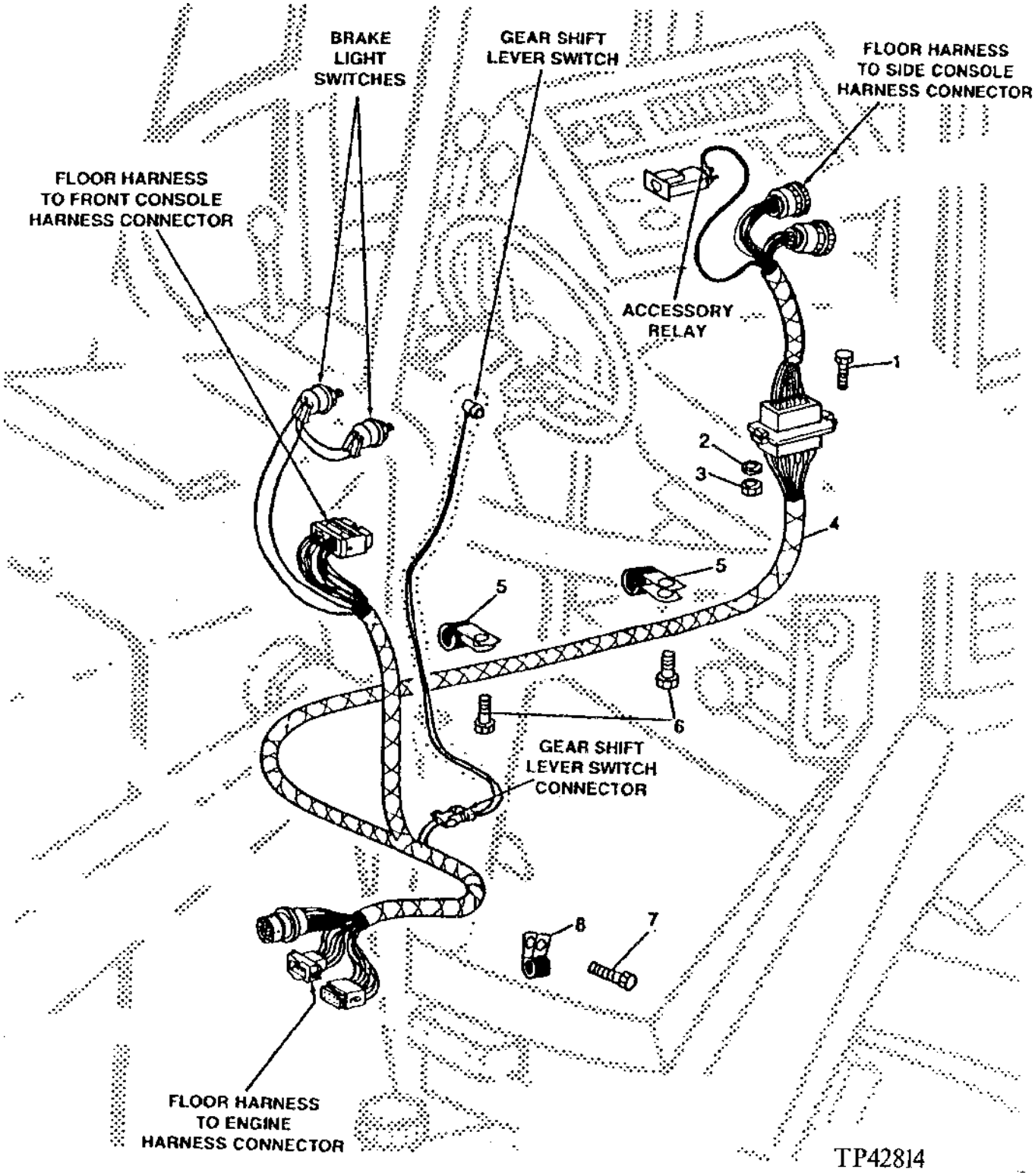

FLOOR WIRING HARNESS
(SERIAL NO. -778668)

KEY	PART NO.	PART NAME	QTY	SERIAL NO.	410D	510D	REMARKS
1	37H142	SCREW	1		X	X	
2	24M7138	WASHER	2		X	X	5.300 X 15 X 1.200 MM
3	14M7100	NUT	1		X	X	M4
4	.....	WIRING HARNESS	1		X	X	(AT150473 NO LONGER AVAILABLE) (SUB AT171218 FOR CAB MACHINES OR AT171217 FOR ROPS MACHINES)
5	T102934	CLAMP	3		X	X	
6	19M7932	CAP SCREW	2		X	X	M8 X 16
	24M7238	WASHER	2		X	X	8.700 X 17 X 2 MM
7	19M7881	SCREW	1		X	X	M8 X 20
	24M7238	WASHER	1		X	X	8.700 X 17 X 2 MM
8	T74416	CLAMP	1		X	X	

SIDE CONSOLE HARNESS AND ELECTRICAL COMPONENTS FOR CAB (SERIAL NO. -778668)

TP45425 -UN-01JAN94

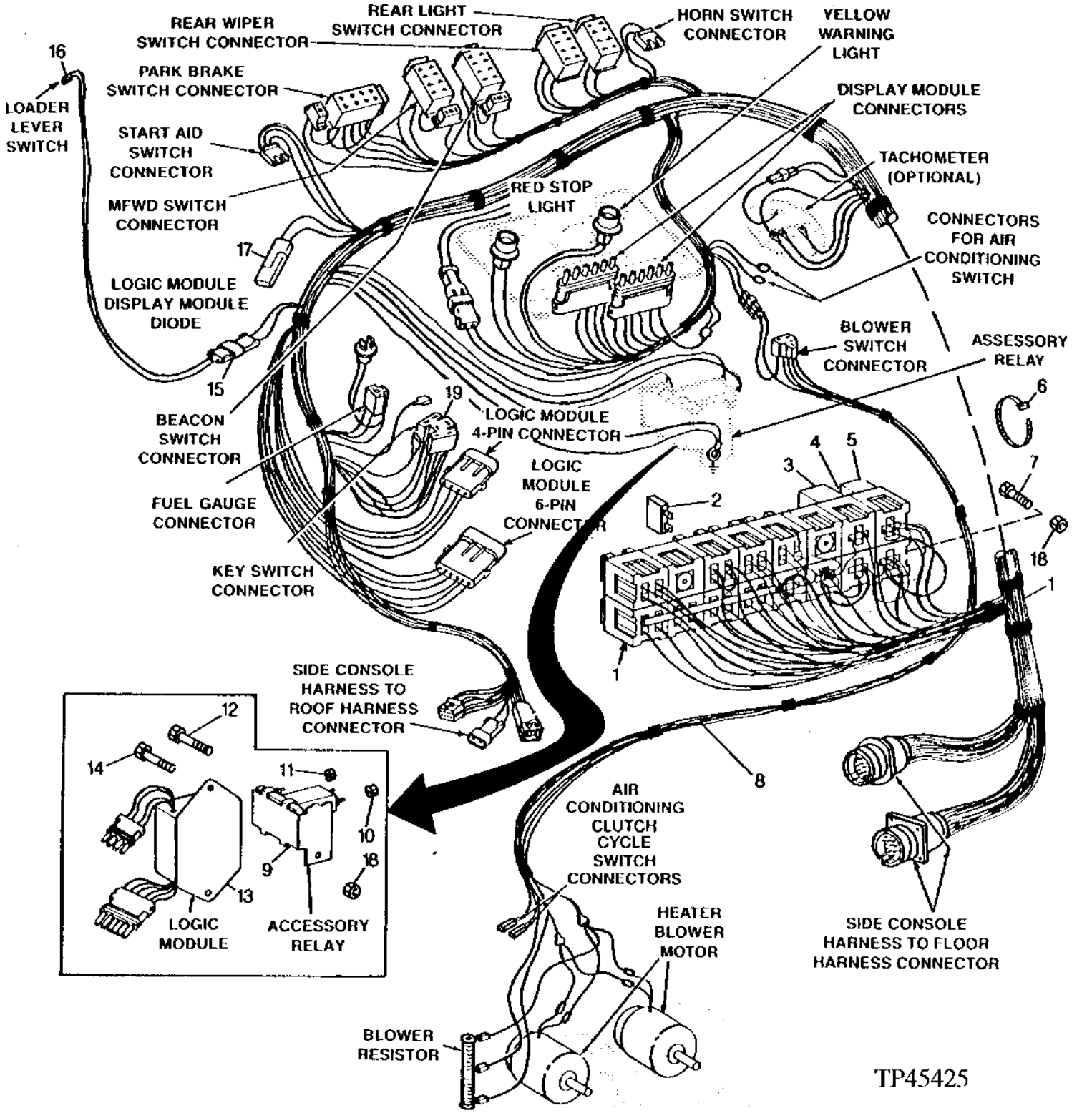

SIDE CONSOLE HARNESS AND ELECTRICAL COMPONENTS FOR CAB (SERIAL NO. -778668)

KEY	PART NO.	PART NAME	QTY	SERIAL NO.	410D	510D	REMARKS
1	.....	WIRING HARNESS	1		X	X	CAB (AT151500 NO LONGER AVAILABLE) (SUB FOR AT149669) (SUB AT156309)
2	57M7125	FUSE	3		X	X	5 AMP
	99M7064	FUSE	3		X	X	7.5 AMP
	57M7121	FUSE	2		X	X	10 AMP
	99M7065	FUSE	4		X	X	15 AMP
	57M7120	FUSE	1		X	X	20 AMP
	99M7069	FUSE	2		X	X	25 AMP
	T102781	CIRCUIT BREAKER	1		X	X	
3	AT163088	FLASHER	1		X	X	(SUB FOR AT163088)
4	RE48876	RELAY	4		X	X	(SUB FOR AL77324)
5	AR91168	RELAY	1		X	X	6 VOLT
6	R44302	TIE BAND	4		X	X	
7	T83060	SCREW	3		X	X	
8	AT141449	WIRING HARNESS	1		X	X	HEATER
9	AR73144	RELAY	1		X	X	(SUB FOR AT142305, ALSO ORDER (2) 14H785 AND (2) 12M7065)
	12M7065	LOCK WASHER	2		X	X	8 MM
10	14H650	NUT	2		X	X	5/16", (USE WITH AT142305) (SUB FOR R11151, THIS APPLICATION)
	14H785	NUT	2		X	X	5/16", (USE WITH AR73144)
11	14H631	NUT	1		X	X	0.190"
12	T83060	SCREW	1		X	X	
13	AT107670	MODULE	1		X	X	
14	T83060	SCREW	2		X	X	
15	RE12363	ELECTRICAL CONNECTOR ASSY	1		X	X	
16	AT162180	SWITCH	1		X	X	LOADER LEVER, (SUB FOR AT150623 AND AT151784)
17	AR94101	DIODE	1		X	X	
18	M40333	LOCK NUT	6		X	X	
19	L38138	ELEC. CONNECTOR HOUSING	1		X	X	

SIDE CONSOLE HARNESS AND ELECTRICAL COMPONENTS FOR ROPS
(SERIAL NO. -778668)

TP45426 -UN-01JAN94

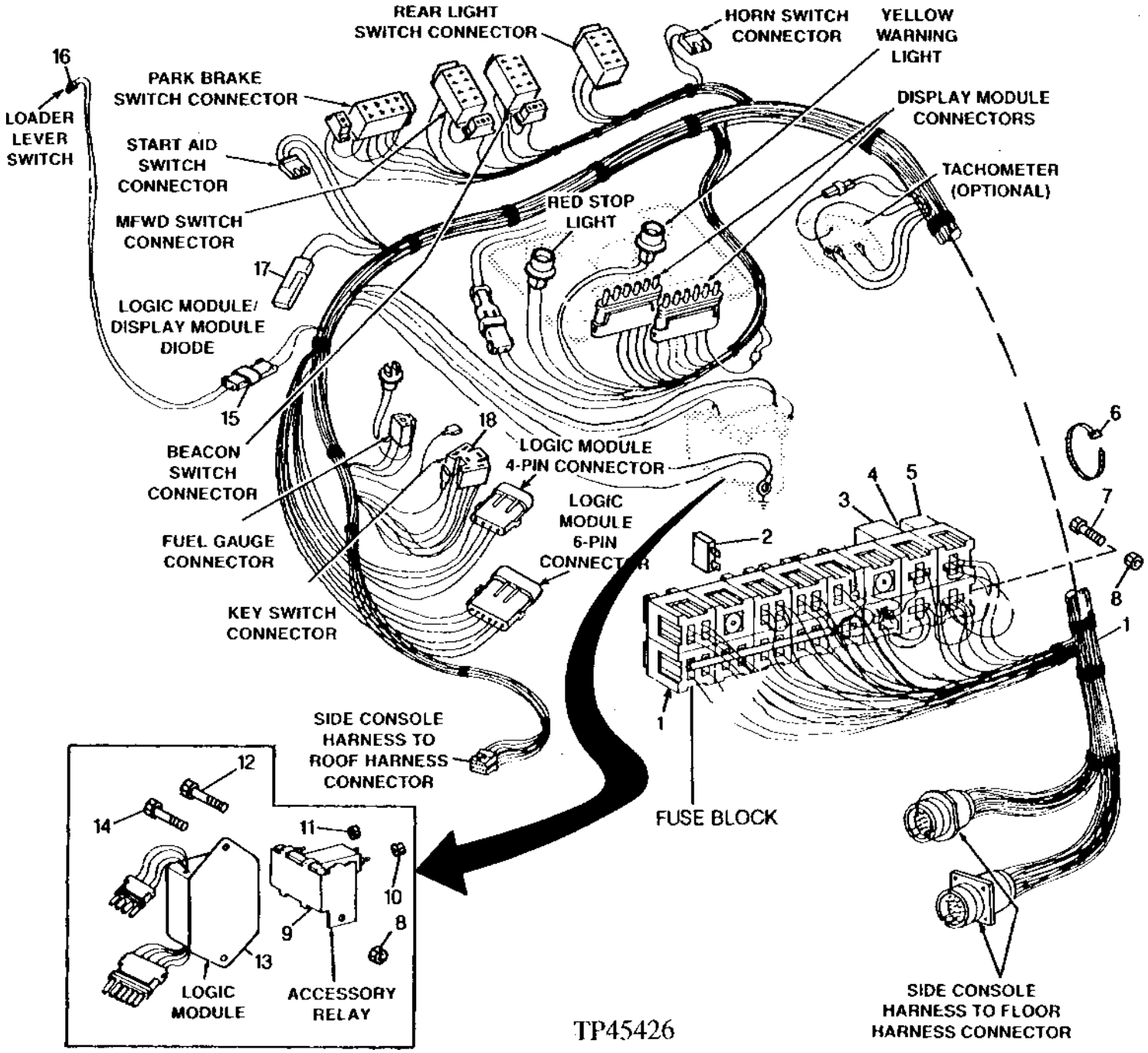

SIDE CONSOLE HARNESS AND ELECTRICAL COMPONENTS FOR ROPS (SERIAL NO. -778668)

KEY	PART NO.	PART NAME	QTY	SERIAL NO.	410D	510D	REMARKS
1	.....	WIRING HARNESS	1		X	X	ROPS, (SUB AT156310) (AT149670 NO LONGER AVAILABLE)
2	57M7125	FUSE	3		X	X	5-AMP
	99M7064	FUSE	3		X	X	7.5-AMP
	57M7121	FUSE	2		X	X	10-AMP
	99M7065	FUSE	3		X	X	15-AMP
	57M7120	FUSE	1		X	X	20-AMP
	99M7069	FUSE	1		X	X	25-AMP
	T102781	CIRCUIT BREAKER	1		X	X	
3	AT163088	FLASHER	1		X	X	(SUB FOR AT163088)
4	RE48876	RELAY	4		X	X	(SUB FOR AL77324)
5	AR91168	RELAY	1		X	X	6 VOLT
6	R44302	TIE BAND	4		X	X	
7	T83060	SCREW	3		X	X	
8	M40333	LOCK NUT	6		X	X	
9	AR73144	RELAY	1		X	X	(SUB FOR AT142305)
	12M7065	LOCK WASHER	2		X	X	8 MM
10	14H650	NUT	2		X	X	5/16", (USE WITH AT142305) (SUB FOR R11151, THIS APPLICATION)
	14H785	NUT	2		X	X	5/16", (USE WITH AR73144)
11	14H631	NUT	1		X	X	0.190"
12	T83060	SCREW	1		X	X	
13	AT107670	MODULE	1		X	X	12-VOLT
14	T83060	SCREW	2		X	X	
15	RE12363	ELECTRICAL CONNECTOR ASSY	1		X	X	
16	AT162180	SWITCH	1		X	X	LOADER LEVER, (SUB FOR AT150623 AND AT151784)
17	AR94101	DIODE	1		X	X	
18	L38138	ELEC. CONNECTOR HOUSING	1		X	X	

FLOOR AND SIDE CONSOLE WIRING HARNESSES AND COMPONENTS
(WITH CAB)
(SERIAL NO.778669-)

TP50387 -UN-02NOV95

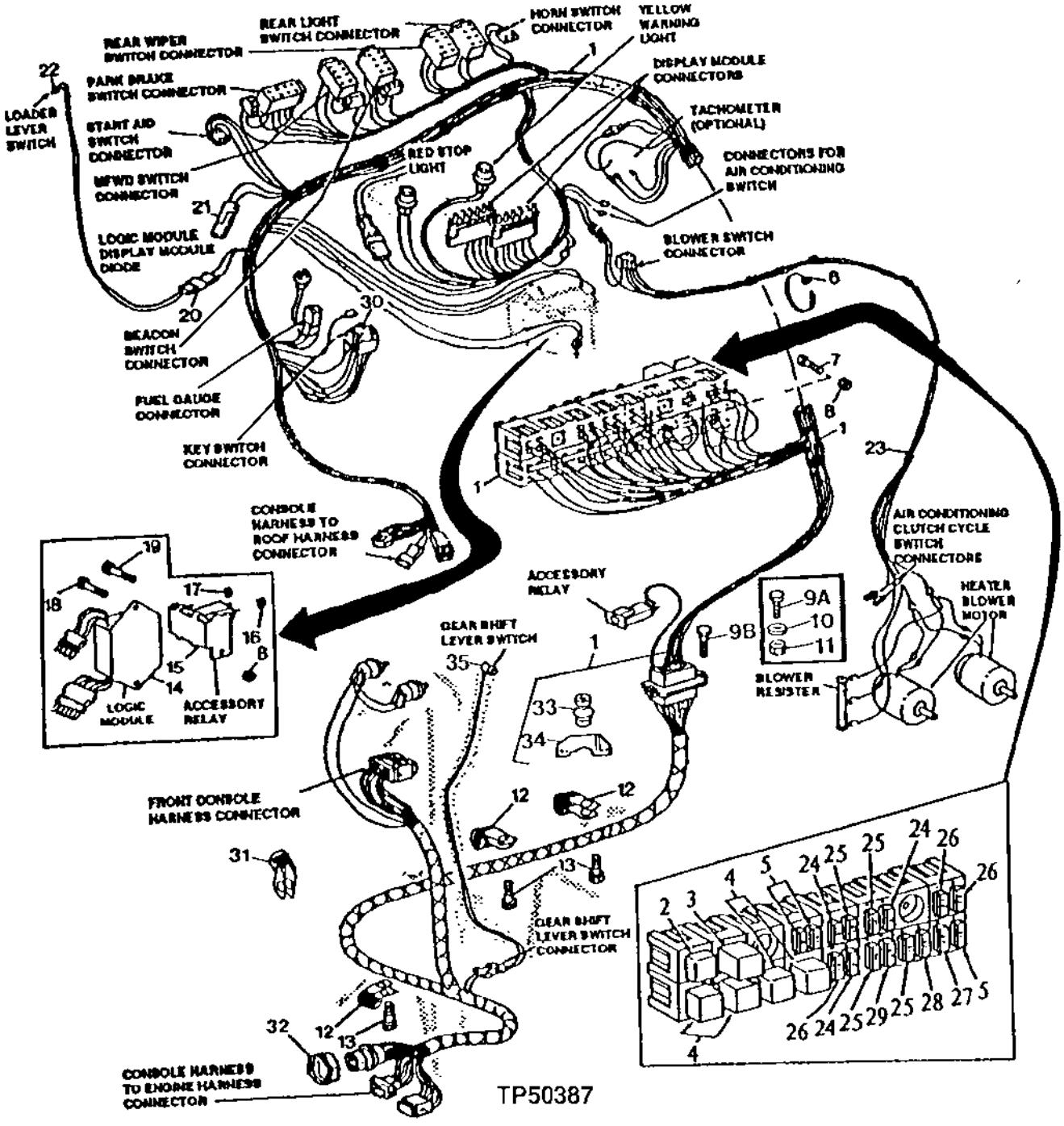

FLOOR AND SIDE CONSOLE WIRING HARNESSES AND COMPONENTS
(WITH CAB)
(SERIAL NO.778669-)

KEY	PART NO.	PART NAME	QTY	SERIAL NO.	410D	510D	REMARKS
1	.....	WIRING HARNESS	1	-806594	X	X	CAB AND CONSOLE (AT165931- USE IF AVAILABLE) (SUB AT171218) (SUB FOR AT156309 AND AT162188)
	AT171218	WIRING HARNESS	1	806595-815397	X	X	(SUB FOR AT165931) (ALSO ORDER (2) 37H132)
	AT179621	WIRING HARNESS	1	815398-	X	X	(SUB FOR AT173862)
2	AR91168	RELAY	1		X	X	6-VOLT (ALTERNATOR)
3	AT163088	FLASHER	1		X	X	12 VOLT, (SUB FOR AT163088)
4	RE68327	RELAY	4		X	X	MINI WITH RESISTOR (PARK LIGHT, ETHER AID, NEUTRAL, PARK BRAKE) (SUB FOR AL77324 AND RE48876, THIS APPLICATION)
5	57M7121	FUSE	3		X	X	10-AMP (START, FNR/PARK, RTD/BEACON)
6	R44302	TIE BAND	4		X	X	
7	T83060	SCREW	2		X	X	
8	M40333	LOCK NUT	6	-815397	X	X	
	M40333	LOCK NUT	4	815398-	X	X	
9A	37H142	SCREW	1	-806594	X	X	
9B	37H132	SCREW	2	806595-	X	X	
10	24M7138	WASHER	2	-806594	X	X	5.300 X 15 X 1.200 MM
11	14M7100	NUT	1	-806594	X	X	M4
12	T102934	CLAMP	3		X	X	
13	19M7932	CAP SCREW	AR		X	X	M8 X 16
	24M7238	WASHER	AR		X	X	8.700 X 17 X 2 MM
14	AT107670	MODULE	1	-815397	X	X	
15	AR73144	RELAY	1		X	X	(SUB FOR AT142305, ALSO ORDER (2) 14H785 AND (2) 12M7065)
	12M7065	LOCK WASHER	2		X	X	8 MM
16	14H650	NUT	2		X	X	5/16", (USE WITH AT142305) (SUB FOR R11151, THIS APPLICATION)
	14H785	NUT	2		X	X	5/16", (USE WITH AR73144)
17	14H631	NUT	1		X	X	0.190"
18	T83060	SCREW	2	-815397	X	X	
19	T83060	SCREW	2		X	X	
20	RE12363	ELECTRICAL CONNECTOR ASSY	1		X	X	
21	AR94101	DIODE	1		X	X	
22	AT162180	SWITCH	1		X	X	(SUB FOR AT150623 AND AT151784)
23	AT141449	WIRING HARNESS	1	-801199	X	X	HEATER AND AIR CONDITIONER MOTOR
	AT169618	WIRING HARNESS	1	801200-	X	X	HEATER AND AIR CONDITONER BLOWER MOTOR
24	57M7125	FUSE	3		X	X	5-AMP (MONITOR/GAUGES, RADIO, DOME/RADIO)
25	99M7065	FUSE	4		X	X	15-AMP (FUEL/ETHER/BACKUP ALARM, HAZARD/ MONITOR, WIPER, REAR LIGHTS)
26	99M7064	FUSE	3		X	X	7.5-AMP (RIGHT AND LEFT TURN, MFWD/ALTERNTOR)
27	57M7120	FUSE	1		X	X	20-AMP (TURN/STOP/HORN)
28	99M7069	FUSE	1		X	X	25-AMP (FRONT LIGHTS/TAIL LIGHTS)
29	T102781	CIRCUIT BREAKER	1	-815397	X	X	30-AMP (HEATER/AIR CONDITIONER)
	57M7146	FUSE	1	815398-	X	X	
30	L38138	ELEC. CONNECTOR HOUSING	1		X	X	
31	T120536	CLAMP	1		X	X	
32	E73240	NUT	1		X	X	
33	.....	GROMMET	1	806595-	X	X	
34	.....	PLATE	1	806595-	X	X	
35	AT162180	SWITCH	1		X	X	CLUTCH DISCONNECT

FLOOR AND SIDE CONSOLE WIRE HARNESSES AND COMPONENTS
(WITH ROPS)
(SERIAL NO.788669-)

TP50388 -UN-02NOV95

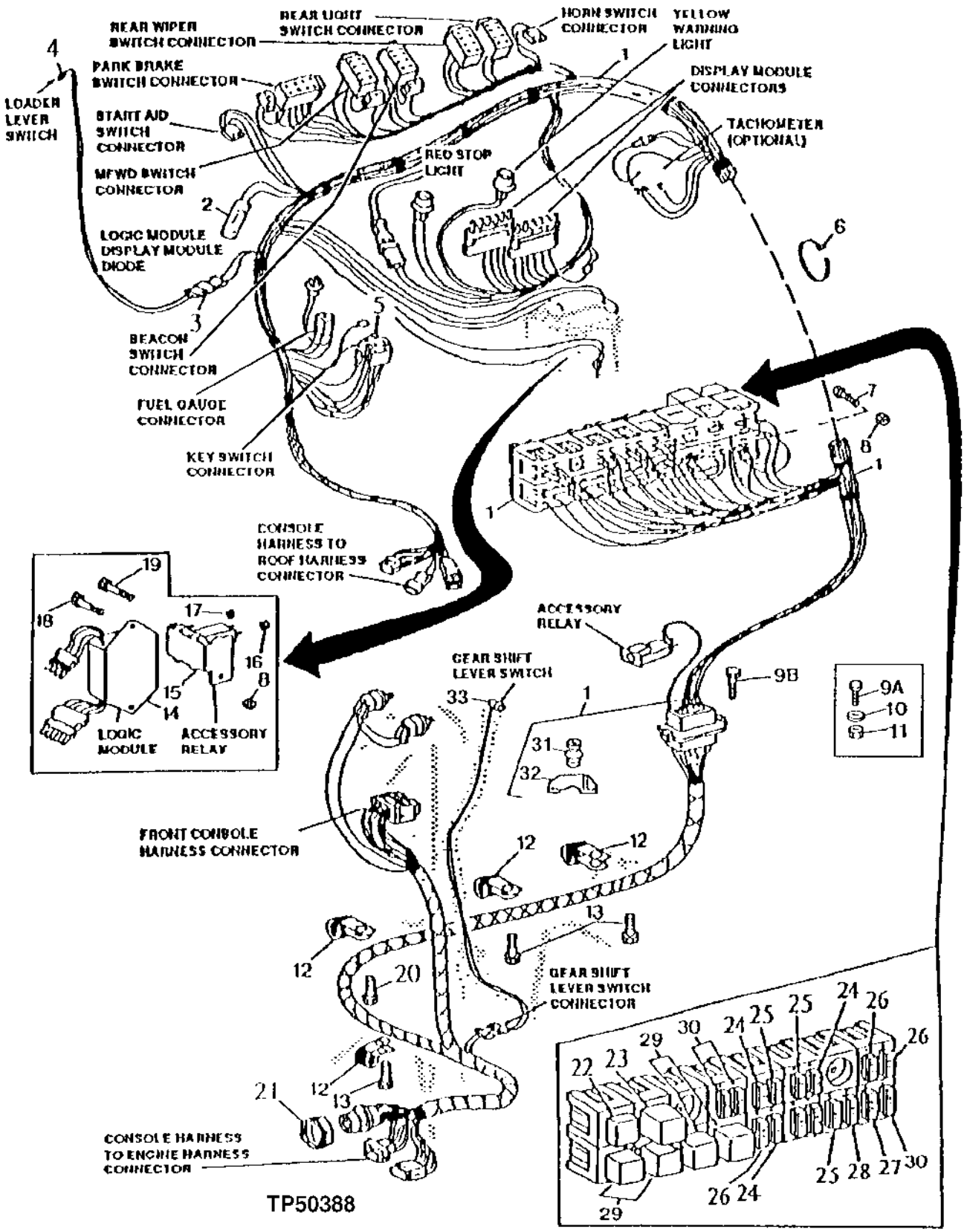

FLOOR AND SIDE CONSOLE WIRE HARNESSES AND COMPONENTS
(WITH ROPS)
(SERIAL NO.788669-)

KEY	PART NO.	PART NAME	QTY	SERIAL NO.	410D	510D	REMARKS
1	.....	WIRING HARNESS	1	-806514	X	X	ROPS (AT165932 - USE IF AVAILABLE) (SUB AT171217) (SUB FOR AT156310 AND AT162189)
	AT171217	WIRING HARNESS	1	806515-815397	X	X	(SUB FOR AT165932) (ALSO ORDER (2) 37H132
	AT179620	WIRING HARNESS	1	815398-	X	X	(SUB FOR AT173861)
2	AR94101	DIODE	1		X	X	
3	RE12363	ELECTRICAL CONNECTOR ASSY	1		X	X	
4	AT162180	SWITCH	1		X	X	(SUB FOR AT150623 AND AT151784)
5	L38138	ELEC. CONNECTOR HOUSING	1		X	X	
6	R44302	TIE BAND	4		X	X	
7	T83060	SCREW	2		X	X	
8	M40333	LOCK NUT	6	-815397	X	X	
	M40333	LOCK NUT	4	815398-	X	X	
9A	37H142	SCREW	1	-806514	X	X	
9B	37H132	SCREW	2	806515-	X	X	
10	24M7138	WASHER	2	-806514	X	X	5.300 X 15 X 1.200 MM
11	14M7100	NUT	1	-806514	X	X	M4
12	T102934	CLAMP	4		X	X	
13	19M7932	CAP SCREW	3		X	X	M8 X 16
14	AT107670	MODULE	1	-815397	X	X	12-VOLT
15	AR73144	RELAY	1		X	X	(SUB FOR AT142305)
	12M7065	LOCK WASHER	2		X	X	8 MM
16	14H650	NUT	2		X	X	5/16", (USE WITH AT142305) (SUB FOR R11151, THIS APPLICATION)
	14H785	NUT	2		X	X	5/16", (USE WITH AR73144)
17	14H631	NUT	1		X	X	0.190"
18	T83060	SCREW	2	-815397	X	X	
19	T83060	SCREW	2		X	X	
20	19M7932	CAP SCREW	1		X	X	M8 X 16
	24M7238	WASHER	1		X	X	8.700 X 17 X 2 MM
21	E73240	NUT	1		X	X	1-11/16"
22	AR91168	RELAY	1		X	X	6-VOLT (ALTERNATOR)
23	AT163088	FLASHER	1		X	X	12-VOLT, (SUB FOR AT163088)
24	57M7125	FUSE	3		X	X	5-AMP (MONITOR GAUGES, RADIO, DOME/RADIO)
25	99M7065	FUSE	3		X	X	15-AMP (FUEL/ETHER/BACKUP ALARM, HAZARD/ MONITOR, REAR LIGHTS)
26	99M7064	FUSE	3		X	X	7.5-AMP (RIGHT AND LEFT TURN, MFWD/ALTERNATOR)
27	57M7120	FUSE	1		X	X	20-AMP (TURN/STOP/HORN)
28	99M7069	FUSE	1		X	X	25-AMP (FRONT LIGHTS/TAIL LIGHTS)
29	RE68327	RELAY	4		X	X	MINI WITH RESISTOR (PARK LIGHT, ETHER AID, NEUTRAL, PARK BRAKE) (SUB FOR AL77324 AND RE48876, THIS APPLICATION)
30	57M7121	FUSE	3		X	X	10-AMP (START, FNR/PARK, RTD/BEACON)
31	.....	GROMMET	1	806515-	X	X	
32	.....	PLATE	1	806515-	X	X	

ENGINE WIRING HARNESS
(SERIAL NO -796854)

TP44655 -UN-01JAN94

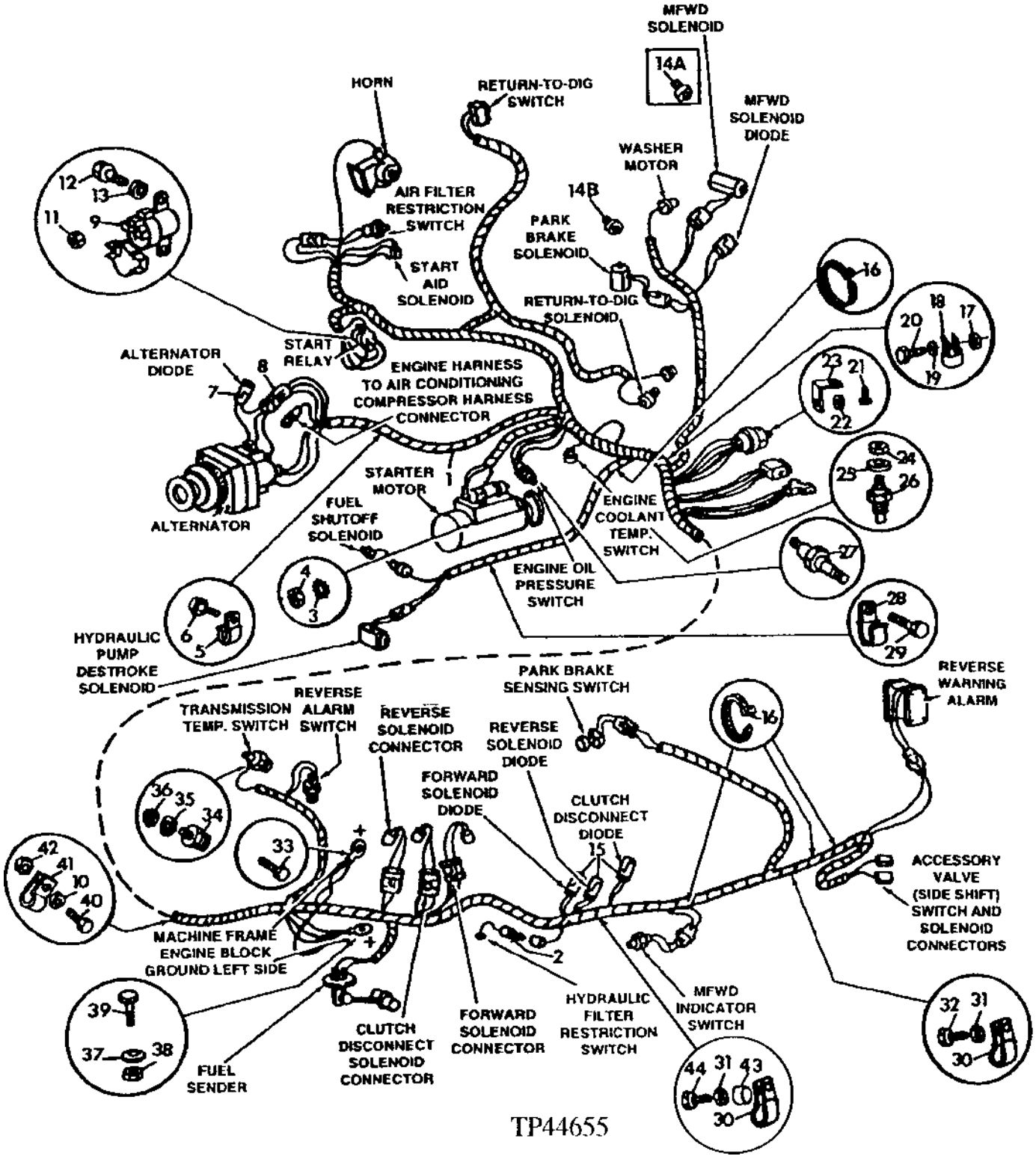

ENGINE WIRING HARNESS
(SERIAL NO. -796854)

KEY	PART NO.	PART NAME	QTY	SERIAL NO.	410D	510D	REMARKS
1	.....	WIRING HARNESS	1	-778823	X	X	ENGINE, (SUB AT156487 AND AT156689)
	.....	WIRING HARNESS	1	778824-787551	X	X	ENGINE, INCLUDES RETURN TO DIG LEAD (AT156487 NO LONGER AVAILABLE) (SUB FOR AT150267 AND AT161477) (SUB AT167252)
	AT167252	WIRING HARNESS	1	787552-	X	X	ENGINE, (SUB FOR AT161477)
2	AT113759	WIRING HARNESS	2		X	X	FUEL INJECTION PUMP AND FILTER RESTRICTION SWITCH
3	12H295	LOCK WASHER	1		X	X	0.190"
4	14M7297	NUT	1		X	X	M5
5	AH89557	CLIP	1		X	X	
6	19M7932	CAP SCREW	1		X	X	M8 X 16
7	AT103399	DIODE	1		X	X	
8	AT142390	WIRING HARNESS	1		X	X	ALTERNATOR (USE WITH AT142267)
	AT142395	WIRING HARNESS	1	-787551	X	X	ALTERNATOR, (USE WITH AT157177)
	AT160820	WIRING HARNESS	1	787552-	X	X	ALTERNATOR, (USE WITH TY6750 OR TY24485)
9	AT141011	RELAY	1		X	X	
10	24H1305	WASHER	1		X	X	13/32" X 13/16" X 0.065"
11	14M7272	NUT	2		X	X	M6
12	37H116	SCREW	2		X	X	
13	24H1287	WASHER	2		X	X	9/32" X 5/8" X 0.065"
14A	AT151507	SWITCH	1	-778823	X	X	REVERSER PRESSURE SWITCH, (SUB FOR AT150096)
14B	38H1416	FITTING	1	778824-	X	X	
	T77857	O-RING	1	778824-	X	X	
15	AR94101	DIODE	4		X	X	
16	R44302	TIE BAND	4		X	X	
17	14M7274	NUT	1		X	X	M10
18	T102934	CLAMP	1		X	X	
19	24H1305	WASHER	1		X	X	13/32" X 13/16" X 0.065"
20	19M7402	CAP SCREW	1		X	X	M10 X 25
21	19H1648	CAP SCREW	1		X	X	3/8" X 3/4"
22	E73240	NUT	1		X	X	
23	T140260	BRACKET	1		X	X	
24	14H631	NUT	1		X	X	0.190"
25	12H295	LOCK WASHER	1		X	X	0.190"
26	AT135260	SWITCH	1		X	X	ENGINE COOLANT TEMPERATURE
27	AT85174	SWITCH	1		X	X	ENGINE OIL PRESSURE
28	T13744	CLAMP	1		X	X	
29	19H3649	CAP SCREW	1		X	X	9/16" X 1"
30	R49921	CLAMP	2		X	X	
31	24M7239	WASHER	2		X	X	10.700 X 21 X 2.500 MM
32	19M7938	CAP SCREW	1		X	X	M10 X 20
33	19M7923	CAP SCREW	1		X	X	M6 X 12
	24M7293	WASHER	1		X	X	6.500 X 13 X 1.600 MM
34	AT100083	SWITCH	1		X	X	
35	12H295	LOCK WASHER	1		X	X	0.190"
36	14H631	NUT	1		X	X	0.190"
37	24M7240	WASHER	1		X	X	13 X 25 X 3 MM
38	14M7299	FLANGE NUT	1		X	X	M12
39	19M7788	SCREW	1		X	X	M12 X 25
40	19M7402	CAP SCREW	1		X	X	M10 X 25
41	T74416	CLAMP	1		X	X	
42	14M7274	NUT	1		X	X	M10
43	28H1521	SPACER	1		X	X	0.493" X 0.675" X 9/16"
44	19M7550	CAP SCREW	1		X	X	M10 X 35

ENGINE WIRING HARNESS
(SERIAL NO. 796855-801199)

TP46213 -UN-01JAN94

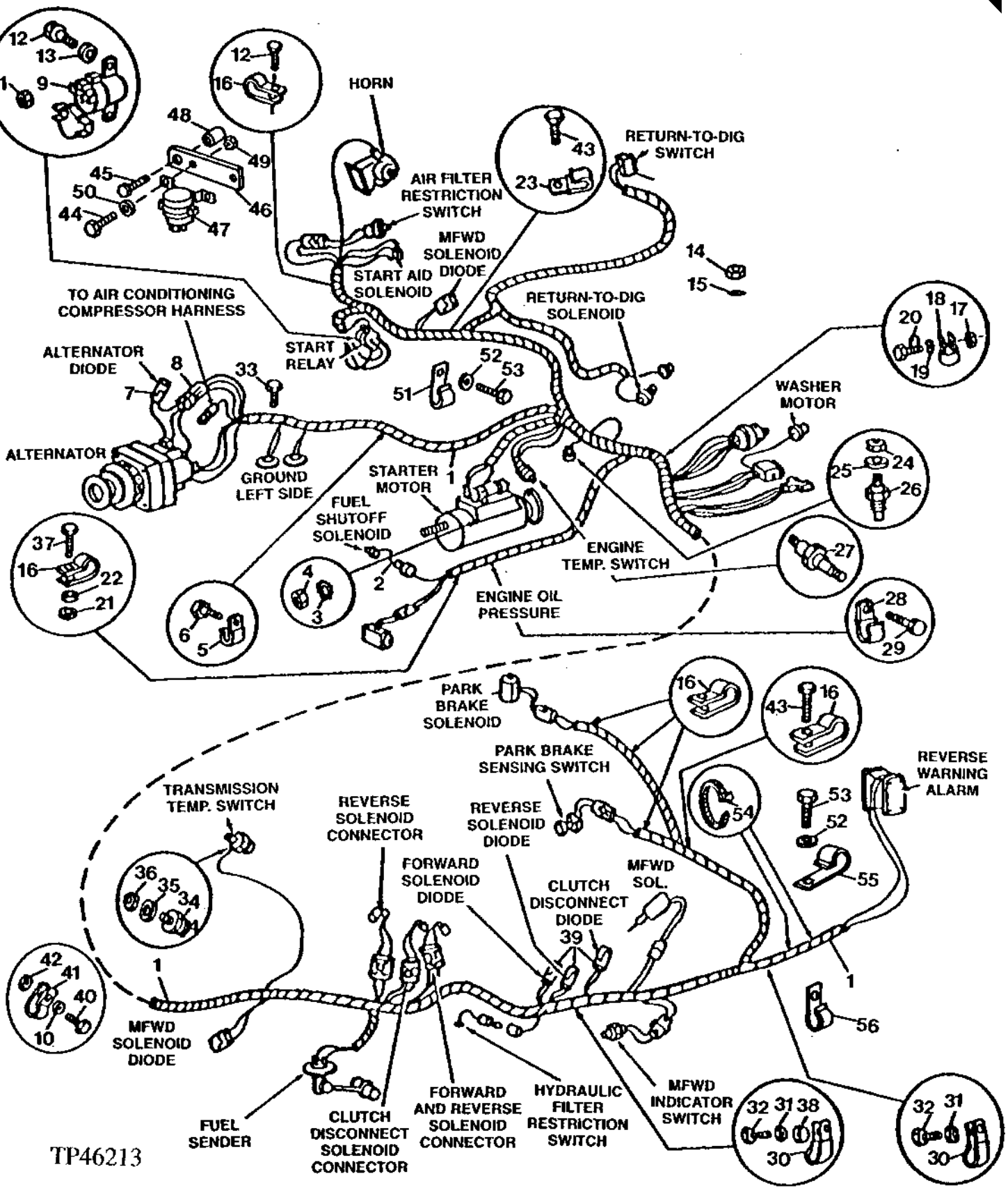

ENGINE WIRING HARNESS
(SERIAL NO. 796855-801199)

KEY	PART NO.	PART NAME	QTY	SERIAL NO.	410D	510D	REMARKS
1	AT168363	WIRING HARNESS	1		X	X	ENGINE, (SUB FOR AT165290)
2	AT113759	WIRING HARNESS	2		X	X	FUEL INJECTION PUMP
3	12H295	LOCK WASHER	1		X	X	0.190"
4	14M7297	NUT	1		X	X	M5
5	AH89557	CLIP	1	-801199	X	X	
	AH89557	CLIP	3	801200-	X	X	
6	19H2038	CAP SCREW	1		X	X	3/8" X 1/2"
7	AT103399	DIODE	1		X	X	STARTING MOTOR
8	AT160820	WIRING HARNESS	1		X	X	ALTERNATOR, (USE WITH TY6750)
9	AT141011	RELAY	1	-801199	X	X	STARTER
10	24H1305	WASHER	1		X	X	13/32" X 13/16" X 0.065"
11	14M7272	NUT	2	-801199	X	X	M6
12	37H116	SCREW	2	-801199	X	X	
13	24H1287	WASHER	2	-801199	X	X	9/32" X 5/8" X 0.065"
14	38H1416	FITTING	1		X	X	
15	T77857	O-RING	1		X	X	
16	T19935	CLAMP	4		X	X	
17	14M7274	NUT	1		X	X	M10
18	T102934	CLAMP	1		X	X	
19	24H1305	WASHER	1		X	X	13/32" X 13/16" X 0.065"
20	19H1936	CAP SCREW	1		X	X	9.525 X 19.050 MM
21	14M7273	NUT	1		X	X	M8
22	24M7238	WASHER	1		X	X	8.700 X 17 X 2 MM
23	AH89557	CLIP	1		X	X	
24	14H631	NUT	1		X	X	0.190"
25	12H295	LOCK WASHER	1		X	X	0.190"
26	AT135260	SWITCH	1		X	X	ENGINE COOLANT TEMPERATURE
27	AT85174	SWITCH	1		X	X	ENGINE OIL PRESSURE
28	T13744	CLAMP	1		X	X	
29	19H3649	CAP SCREW	1		X	X	9/16" X 1"
30	R49921	CLAMP	2		X	X	
31	24M7239	WASHER	3		X	X	10.700 X 21 X 2.500 MM
32	19M7938	CAP SCREW	3		X	X	M10 X 20
33	19M7923	CAP SCREW	1		X	X	M6 X 12
	24M7293	WASHER	1		X	X	6.500 X 13 X 1.600 MM
34	AT100083	SWITCH	1		X	X	TRANSMISSION TEMPERATURE
35	24H1283	WASHER	1		X	X	7/32" X 1/2" X 0.049"
36	14H631	NUT	1		X	X	0.190"
37	19M7881	SCREW	1		X	X	M8 X 20
38	28H1521	SPACER	1		X	X	
39	AR94101	DIODE	4		X	X	
40	19M7402	CAP SCREW	1	-797886	X	X	M10 X 25
	19M7938	CAP SCREW	1	797887-801199	X	X	M10 X 20
	19M7557	CAP SCREW	1	801200-	X	X	M10 X 16
41	T74416	CLAMP	1		X	X	
42	14M7274	NUT	1		X	X	M10
43	19H2038	CAP SCREW	3		X	X	3/8" X 1/2"
44	37H116	SCREW	2	801200-	X	X	
45	19M7572	CAP SCREW	1	801200-	X	X	M10 X 45
46	T184676	STRAP	1	801200-	X	X	(SUB FOR T149269)
47	AT141011	RELAY	1	801200-	X	X	STARTER
48	28H3381	SPACER	1	801200-	X	X	0.493" X 0.675" X 5/8"
49	14M7272	NUT	2	801200-	X	X	M6
50	24H1287	WASHER	2	801200-	X	X	7.137 X 15.875 X 1.651 MM
51	AH89557	CLIP	1	801200-	X	X	
52	24H1305	WASHER	1	801200-	X	X	
53	19H2038	CAP SCREW	2	801200-	X	X	3/8" X 1/2"
54	R44302	TIE BAND	AR		X	X	
55	T19935	CLAMP	1	801200-	X	X	
56	T19935	CLAMP	1	801200-	X	X	

ENGINE WIRING HARNESS
(SERIAL NO. 801200-)

TP46523 -UN-15MAY95

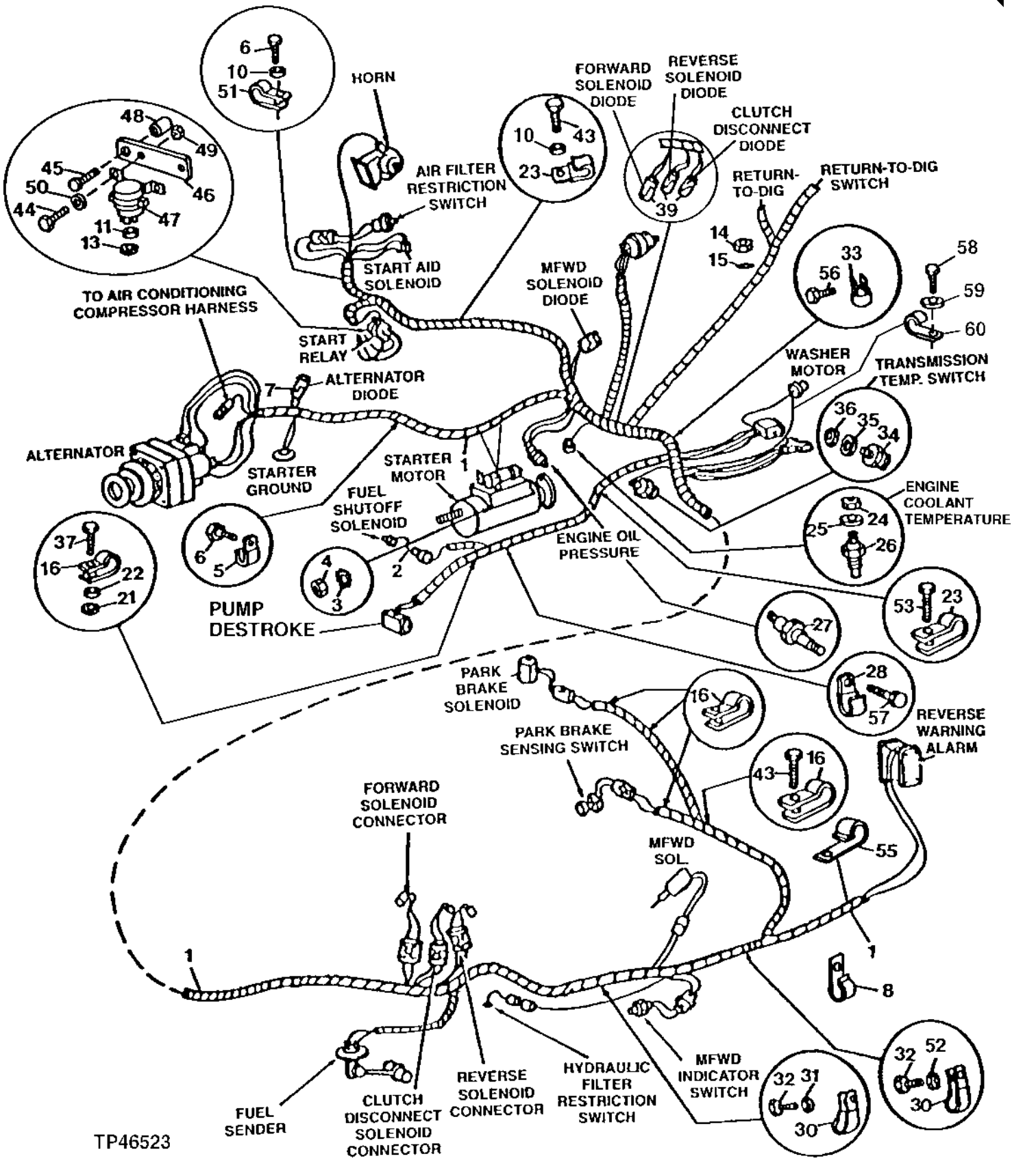

ENGINE WIRING HARNESS
(SERIAL NO. 801200-)

KEY	PART NO.	PART NAME	QTY	SERIAL NO.	410D	510D	REMARKS
1	AT168363	WIRING HARNESS	1		X	X	ENGINE, (SUB FOR AT165290)
2	AT113759	WIRING HARNESS	2		X	X	FUEL INJECTION PUMP
3	12H295	LOCK WASHER	1		X	X	0.190"
4	14M7297	NUT	1		X	X	M5
5	AH89557	CLIP	1		X	X	
6	19H2038	CAP SCREW	1		X	X	3/8" X 1/2"
7	AT103399	DIODE	1		X	X	STARTING MOTOR
8	T19935	CLAMP	1		X	X	
9	AT141011	RELAY	1		X	X	STARTER
10	24H1305	WASHER	1		X	X	13/32" X 13/16" X 0.065"
11	14M7272	NUT	2		X	X	M6
12	37H116	SCREW	2		X	X	
13	24H1287	WASHER	2		X	X	9/32" X 5/8" X 0.065"
14	38H1416	FITTING	1		X	X	
15	T77857	O-RING	1		X	X	
16	T19935	CLAMP	4		X	X	
17	14M7274	NUT	1		X	X	M10
18	T102934	CLAMP	1		X	X	
19	24H1305	WASHER	1		X	X	13/32" X 13/16" X 0.065"
20	19H1936	CAP SCREW	1		X	X	9.525 X 19.050 MM
21	14M7273	NUT	1		X	X	M8
22	24M7238	WASHER	1		X	X	8.700 X 17 X 2 MM
23	AH89557	CLIP	1		X	X	
24	14H631	NUT	1		X	X	0.190"
25	12H295	LOCK WASHER	1		X	X	0.190"
26	AT135260	SWITCH	1		X	X	ENGINE COOLANT TEMPERATURE
27	AT85174	SWITCH	1		X	X	ENGINE OIL PRESSURE
28	T13744	CLAMP	1		X	X	
29	19H3649	CAP SCREW	1		X	X	9/16" X 1"
30	R49921	CLAMP	2		X	X	
31	24M7239	WASHER	3		X	X	10.700 X 21 X 2.500 MM
32	19M7938	CAP SCREW	3		X	X	M10 X 20
33	T74416	CLAMP	1		X	X	
34	AT100083	SWITCH	1		X	X	TRANSMISSION TEMPERATURE
35	24H1283	WASHER	1		X	X	7/32" X 1/2" X 0.049"
36	14H631	NUT	1		X	X	0.190"
37	19M7881	SCREW	1		X	X	M8 X 20
38	28H1521	SPACER	1		X	X	
39	AR94101	DIODE	4		X	X	
40	19M7557	CAP SCREW	1		X	X	M10 X 16
41	T74416	CLAMP	1		X	X	
42	14M7274	NUT	1		X	X	M10
43	19H2038	CAP SCREW	3		X	X	3/8" X 1/2"
44	37H116	SCREW	2		X	X	
45	19M7572	CAP SCREW	1		X	X	M10 X 45
46	T184676	STRAP	1		X	X	(SUB FOR T149269)
47	AT141011	RELAY	1		X	X	STARTER
48	28H3381	SPACER	1		X	X	0.493" X 0.675" X 5/8"
49	14M7272	NUT	2		X	X	M6
50	24H1287	WASHER	2		X	X	7.137 X 15.875 X 1.651 MM
51	AH89557	CLIP	1		X	X	
52	24H1305	WASHER	1		X	X	
53	19H2038	CAP SCREW	2		X	X	3/8" X 1/2"
54	R44302	TIE BAND	AR		X	X	
55	T19935	CLAMP	1		X	X	
56	19M7557	CAP SCREW	1		X	X	
57	19H2353	CAP SCREW	1		X	X	9/16" X 1"
58	19M7923	CAP SCREW	1		X	X	M6 X 12
59	24H1287	WASHER	1		X	X	9/32" X 5/8" X 0.065"
60	AH89557	CLIP	1		X	X	

CAB WIRING HARNESS

TP44686 -UN-01JAN94

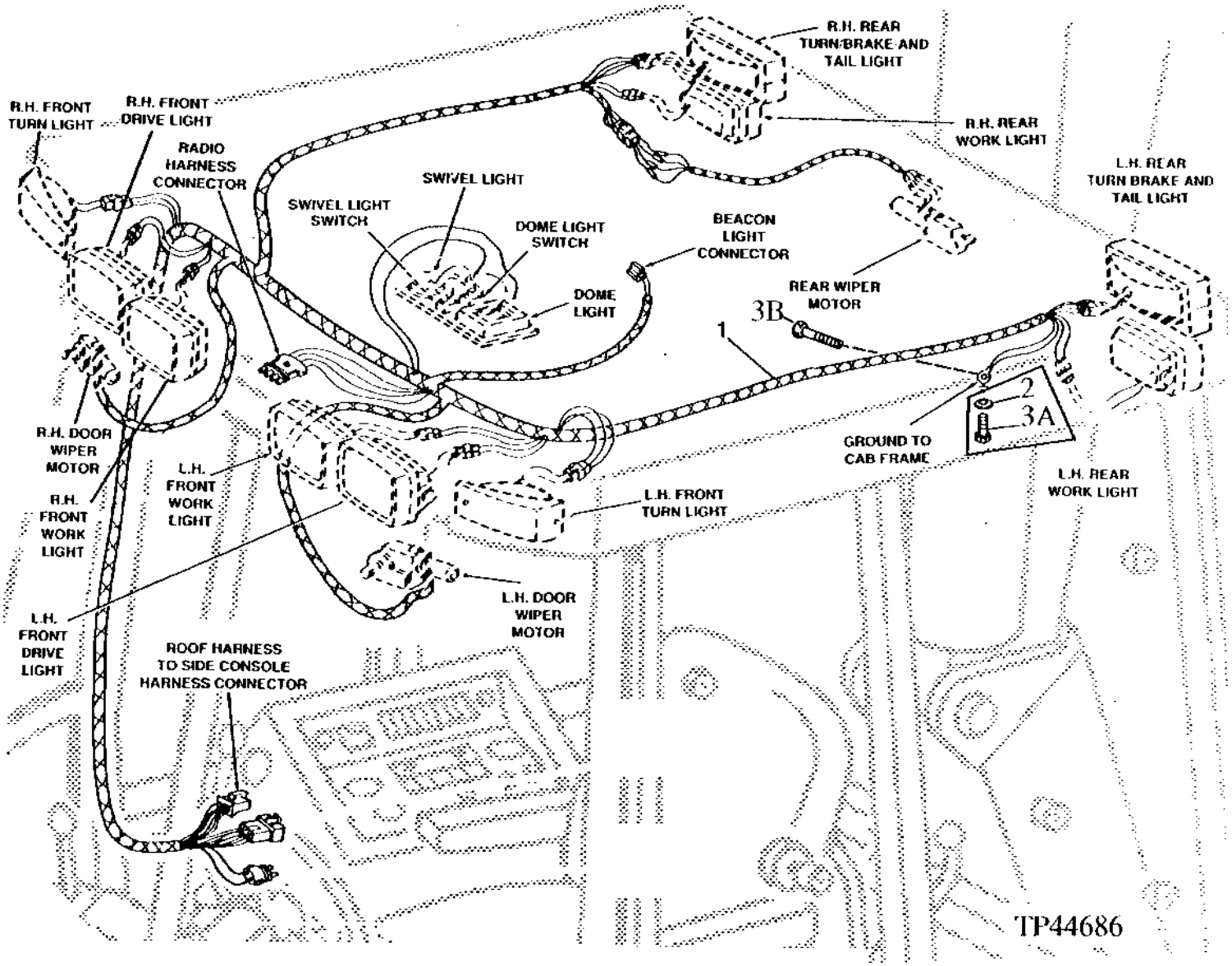

CAB WIRING HARNESS

KEY	PART NO.	PART NAME	QTY	SERIAL NO.	410D	510D	REMARKS
1	AT157311	WIRING HARNESS	1	-801199	X	X	(SUB FOR AT150161)
	AT176553	CAB WIRING HARNESS	1	801200-	X	X	(SUB FOR AT157311)
2	12H310	LOCK WASHER	1		X	X	3/8"
3A	T80176	SELF-LOCKING SCREW	1	-797640	X	X	
3B	37H29	SCREW	1	797641-	X	X	

ROPS WIRING HARNESS

TP41701 -UN-01JAN94

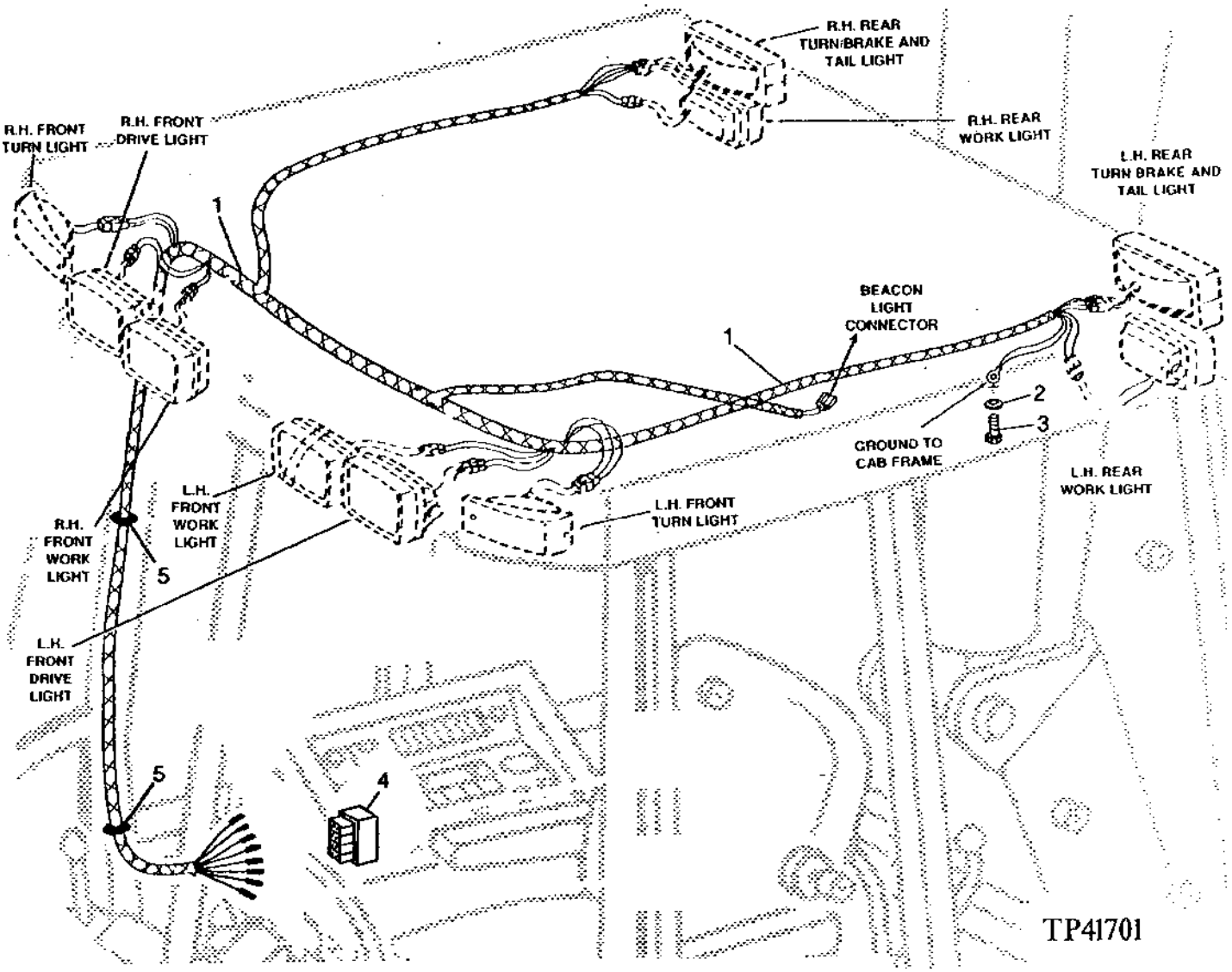

ROPS WIRING HARNESS

KEY	PART NO.	PART NAME	QTY	SERIAL NO.	410D	510D	REMARKS
1	AT157312	WIRING HARNESS	1		X	X	(SUB FOR AT145149)
2	12H310	LOCK WASHER	1		X	X	3/8"
3	T80176	SELF-LOCKING SCREW	1		X	X	
4	T23851	HOUSING	1		X	X	
5	T70502	GROMMET	2		X	X	

AIR CONDITIONING WIRING HARNESS

TP52758 -UN-14MAR96

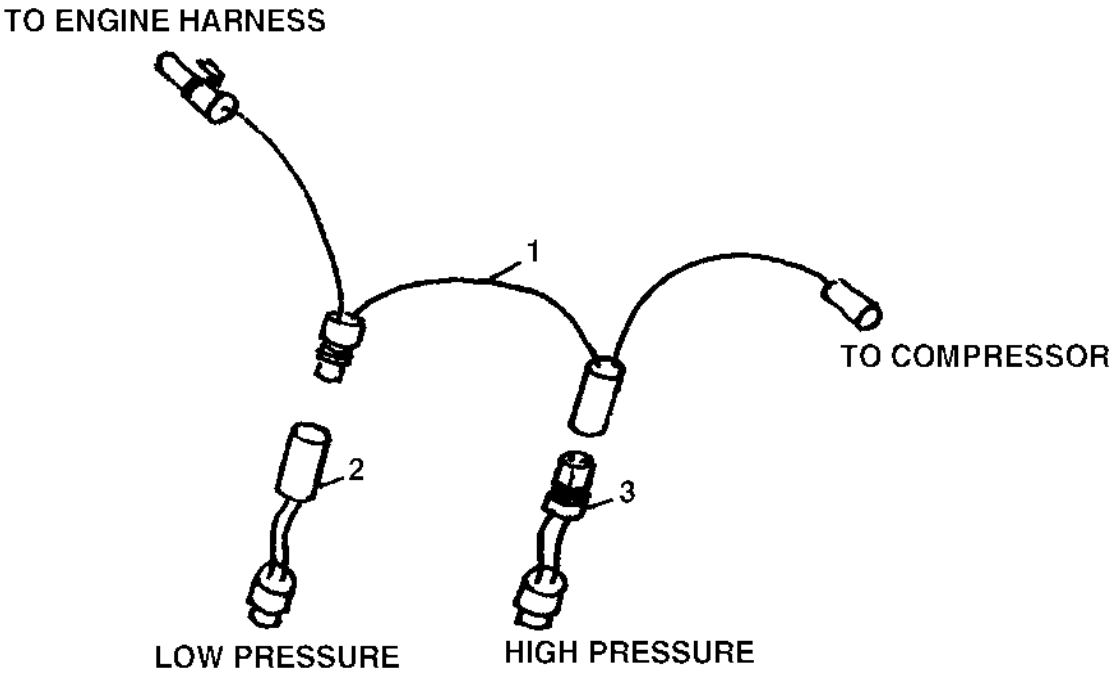

TP52758

AIR CONDITIONING WIRING HARNESS

KEY	PART NO.	PART NAME	QTY	SERIAL NO.	410D	510D	REMARKS
1	AT141446	WIRING HARNESS	1	-801199	X	X	
	AT161863	WIRING HARNESS	1	801200-816286	X	X	
	AT174783	WIRING HARNESS	1	816287-	X	X	
2	AT63266	SWITCH	1	-816286	X	X	LOW PRESSURE
	RE155938	PRESSURE SWITCH	1	816287-	X	X	(SUB FOR RE60887)
3	AT63265	SWITCH	1	-816286	X	X	HIGH PRESSURE
	RE60888	PRESSURE SWITCH	1	816287-	X	X	

WIRE LEAD KIT

TP24072 -UN-01JAN94

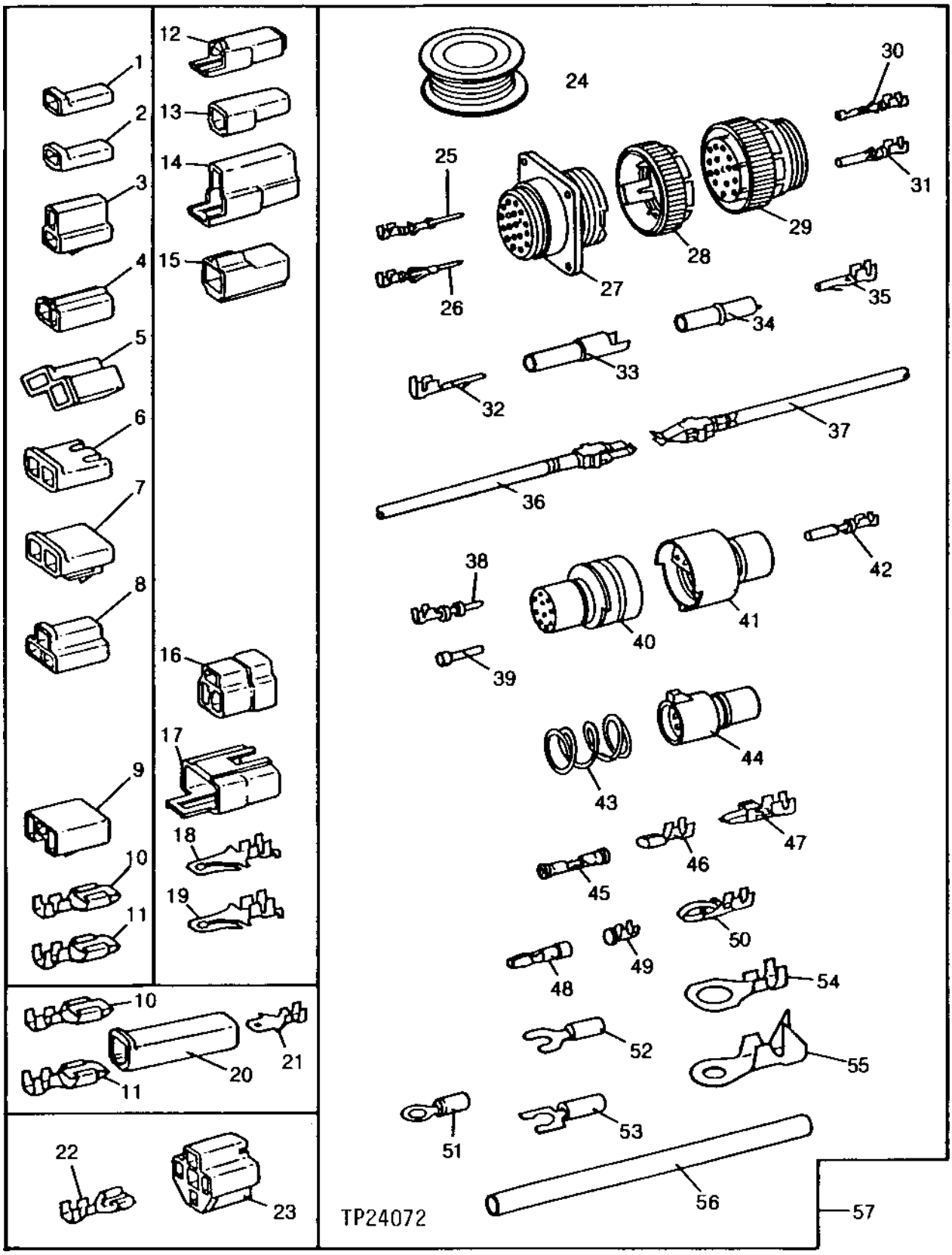

WIRE LEAD KIT

KEY	PART NO.	PART NAME	QTY	SERIAL NO.	410D	510D	REMARKS
1	T28583	ELEC. CONNECTOR HOUSING	1		X	X	(B)
2	M43835	ELECTRICAL CONNECTOR ASSY	1		X	X	(B)
3	R77476	ELECTRICAL CONNECTOR ASSY	1		X	X	(A)
4	R77477	ELEC. CONNECTOR HOUSING	1		X	X	(A)
5	R77479	ELECTRICAL CONNECTOR ASSY	1		X	X	(A)
6	R77480	ELECTRICAL CONNECTOR ASSY	1		X	X	(A)
7	R77481	ELECTRICAL CONNECTOR ASSY	1		X	X	(A)
8	R77482	ELECTRICAL CONNECTOR ASSY	1		X	X	
9	H104855	ELECTRICAL CONNECTOR ASSY	1		X	X	
10	U46662	ELEC. CONNECTOR TERMINAL	1		X	X	(E) (F)
11	N115096	TERMINAL	1		X	X	(G) (PKG. OF 15)
12	T28585	ELECTRICAL CONNECTOR ASSY	1		X	X	(B)
13	R77475	ELECTRICAL CONNECTOR ASSY	1		X	X	(B)
14	T28586	ELECTRICAL CONNECTOR ASSY	1		X	X	(A)
15	R77478	ELECTRICAL CONNECTOR ASSY	1		X	X	(A)
16	R77483	ELECTRICAL CONNECTOR ASSY	1		X	X	
17	R48887	ELECTRICAL CONNECTOR ASSY	1		X	X	
18	T34067	ELEC. CONNECTOR TERMINAL	1		X	X	(E) (F)
19	R77484	ELEC. CONNECTOR TERMINAL	1		X	X	(G) (PKG. OF 15)
20	U46370	ELECTRICAL CONNECTOR ASSY	1		X	X	(B)
21	R77485	ELEC. CONNECTOR TERMINAL	1		X	X	(C) (F)
22	R77486	ELEC. CONNECTOR TERMINAL	1		X	X	(E) (F)
23	R77487	ELECTRICAL CONNECTOR ASSY	1		X	X	(B)
24	R66321	WIRING LEAD	1		X	X	15M (50 FT.) 10 GA.
	R66320	WIRING LEAD	1		X	X	30.5M (100 FT.) 12 GA.
	R77501	WIRE	1		X	X	30.5M (100 FT.) 14 GA.
	R77500	WIRE	1		X	X	30.5M (100 FT.) 16 GA.
	R77499	WIRE	1		X	X	30.5M (100 FT.) 18 GA.
	R77498	WIRE	1		X	X	30.5M (100 FT.) 20 GA.
25	R77462	ELEC. CONNECTOR TERMINAL	1		X	X	(PKG. OF 40) (20-22 OR 24 GA. WIRE)
26	R77464	ELEC. CONNECTOR TERMINAL	1		X	X	(H) (PKG. OF 50)
27	R77456	ELEC. CONNECTOR TERMINAL	1		X	X	(37 WAY)
28	R77458	ELEC.CONNECT LOCKING DEVICE	1		X	X	(A) (SIZE 23)
	.....	CONNECTOR	1		X	X	(A) (SIZE 17)
	.....	CONNECTOR	1		X	X	(A) (SIZE 13)
	.....	CONNECTOR	1		X	X	(A) (SIZE 11)
29	R77457	ELEC. CONNECTOR TERMINAL	1		X	X	(37 WAY)
30	R77463	ELEC. CONNECTOR TERMINAL	1		X	X	(PKG. OF 40) (20-22 OR 24 GA. WIRE)
31	R77465	ELEC. CONNECTOR TERMINAL	1		X	X	(H) (PKG. OF 50)
32	R77468	ELEC. CONNECTOR TERMINAL	1		X	X	(PKG. OF 5)
33	R77466	ELECTRICAL CONNECTOR ASSY	1		X	X	(A)
34	R77467	ELECTRICAL CONNECTOR ASSY	1		X	X	(A)

(A) PKG. OF 2
(B) PKG. OF 3
(C) PKG. OF 10
(D) PKG. OF 20
(E) PKG. OF 25
(F) 14 OR 16 GA. WIRE
(G) 10 OR 12 GA. WIRE
(H) 14-16 OR 18 GA. WIRE

WIRE LEAD KIT

TP24072 -UN-01JAN94

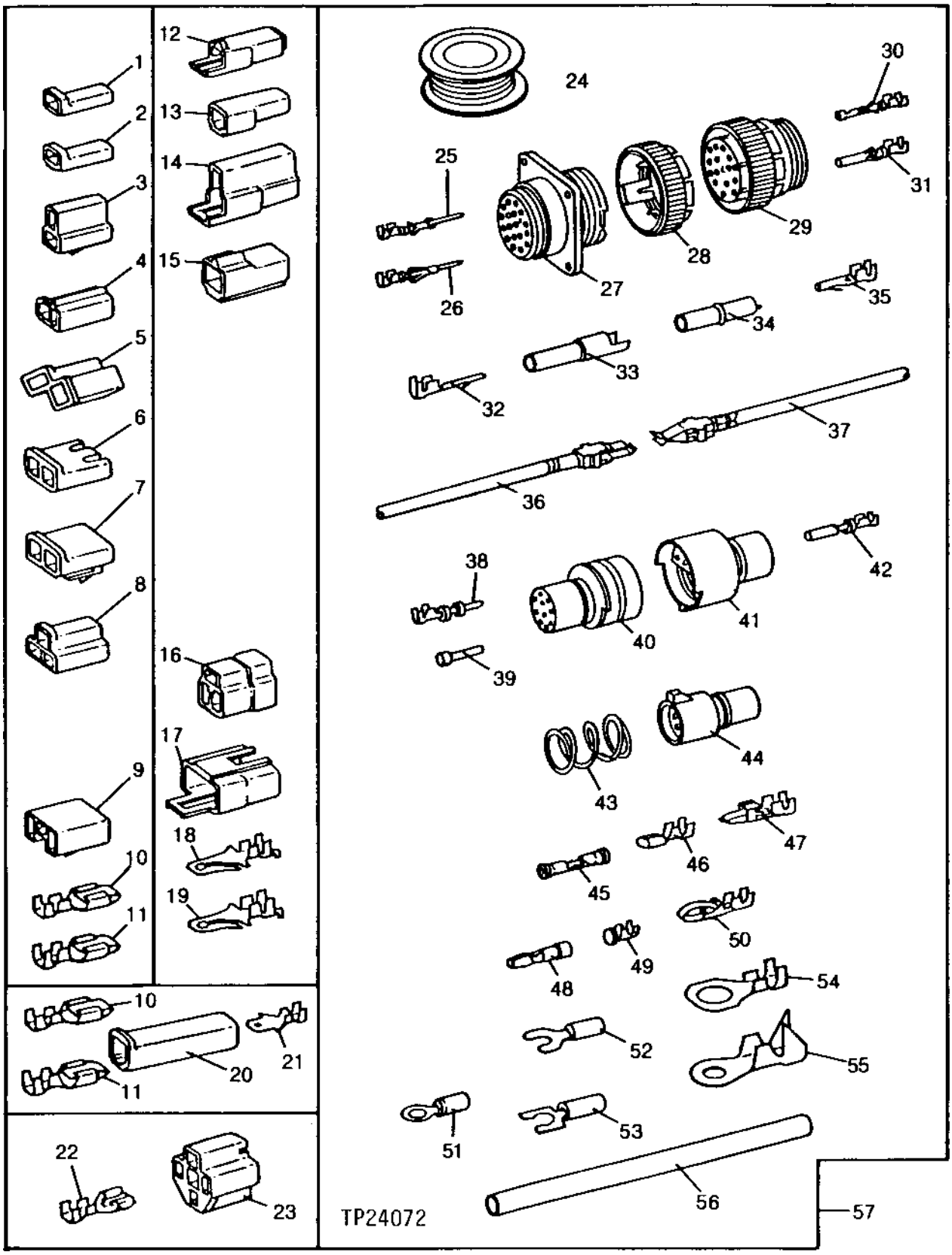

WIRE LEAD KIT

KEY	PART NO.	PART NAME	QTY	SERIAL NO.	410D	510D	REMARKS
35	R77469	ELEC. CONNECTOR TERMINAL	1		X	X	(PKG. OF 5)
36	RE11156	ELEC. CONNECTOR TERMINAL	1		X	X	(B) (MALE)
37	RE11157	ELEC. CONNECTOR TERMINAL	1		X	X	(B) (FEMALE)
38	R70222	ELEC. CONNECTOR TERMINAL	1		X	X	(D) (H)
39	R70221	ELEC. CONNECTOR TERMINAL	1		X	X	(E)
40	R70219	PLUG	1		X	X	(A) (10 WAY)
	R70217	PLUG	1		X	X	(A) (7 WAY)
	R70215	PLUG	1		X	X	(A) (4 WAY)
	R70213	ELEC. CONNECTOR HOUSING	1		X	X	(A) (3 WAY)
	R70211	ELECTRICAL CONNECTOR ASSY	1		X	X	(A) (2 WAY)
41	R70218	ELEC. CONNECTOR TERMINAL	1		X	X	(A) (10 WAY)
	R70216	ELEC. CONNECTOR TERMINAL	1		X	X	(A) (7 WAY)
	R70214	ELEC. CONNECTOR TERMINAL	1		X	X	(A) (4 WAY)
	R70212	ELEC. CONNECTOR TERMINAL	1		X	X	(A) (3 WAY)
	R70210	ELEC. CONNECTOR TERMINAL	1		X	X	(A) (2 WAY)
42	AR91793	ELEC. CONNECTOR TERMINAL	1		X	X	(D)
43	R30378	SPRING	1		X	X	(C)
44	R77474	ELECTRICAL CONNECTOR ASSY	1		X	X	(A) (6 WAY)
45	R77470	ELEC. CONNECTOR TERMINAL	1		X	X	SPLICE (PKG. OF 15) (16-18-20 OR 22 GA. WIRE)
	R77471	ELEC. CONNECTOR TERMINAL	1		X	X	(C) (G) SPLICE
	R77472	ELEC. CONNECTOR TERMINAL	1		X	X	(A) SPLICE (8 GA. WIRE)
	R77473	ELEC. CONNECTOR TERMINAL	1		X	X	(A) SPLICE (6 GA. WIRE)
46	R65607	ELEC. CONNECTOR TERMINAL	1		X	X	(C) (18 OR 20 GA. WIRE)
47	U46664	ELEC. CONNECTOR TERMINAL	1		X	X	(C) (F)
48	R32026	ELEC. CONNECTOR TERMINAL	1		X	X	(D) (F)
49	R65602	ELEC. CONNECTOR TERMINAL	1		X	X	(C) (16 OR 18 GA. WIRE)
50	R70220	ELEC. CONNECTOR TERMINAL	1		X	X	(C) (18 OR 20 GA. WIRE)
51	R77489	ELEC. CONNECTOR TERMINAL	1		X	X	(D) (14-16-18 OR 20 GA. WIRE) (NO. 10 EYELET)
	R77493	ELEC. CONNECTOR TERMINAL	1		X	X	(D) (G) (NO. 10 EYELET)
	R77488	ELEC. CONNECTOR TERMINAL	1		X	X	(D) (14-16-18 OR 20 GA. WIRE) (3/8" EYELET)
	R77490	ELEC. CONNECTOR TERMINAL	1		X	X	(D) (G) (1/2" EYELET)
52	R77496	ELEC. CONNECTOR TERMINAL	1		X	X	(D) (F) (NO. 8 SPADE)
	R77495	ELEC. CONNECTOR TERMINAL	1		X	X	(D) (18 GA. WIRE) (NO. 10 SPADE)
53	R77497	ELEC. CONNECTOR TERMINAL	1		X	X	(D) (F) (NO. 6 SPADE)
54	R77491	ELEC. CONNECTOR TERMINAL	1		X	X	(D) (G) (3/8" EYELET)
	R77492	ELEC. CONNECTOR TERMINAL	1		X	X	(D) (G) (1/4" EYELET)
55	R77494	ELEC. CONNECTOR TERMINAL	1		X	X	(D) (6 OR 8 GA. WIRE) (1/4" EYELET)
56	R77502	TUBE	1		X	X	(PKG. OF 8) 3/8" (HEAT SHRINK)
	R77503	TUBE	1		X	X	(PKG. OF 8) 3/16" (HEAT SHRINK)
57	PM797NA	KIT	1		X	X	(SUB FOR RE11154)

(A) PKG. OF 2
(B) PKG. OF 3
(C) PKG. OF 10
(D) PKG. OF 20
(E) PKG. OF 25
(F) 14 OR 16 GA. WIRE
(G) 10 OR 12 GA. WIRE
(H) 14-16 OR 18 GA. WIRE

WEATHERPACK TERMINALS AND CONNECTORS

TP17921 -UN-01JAN94

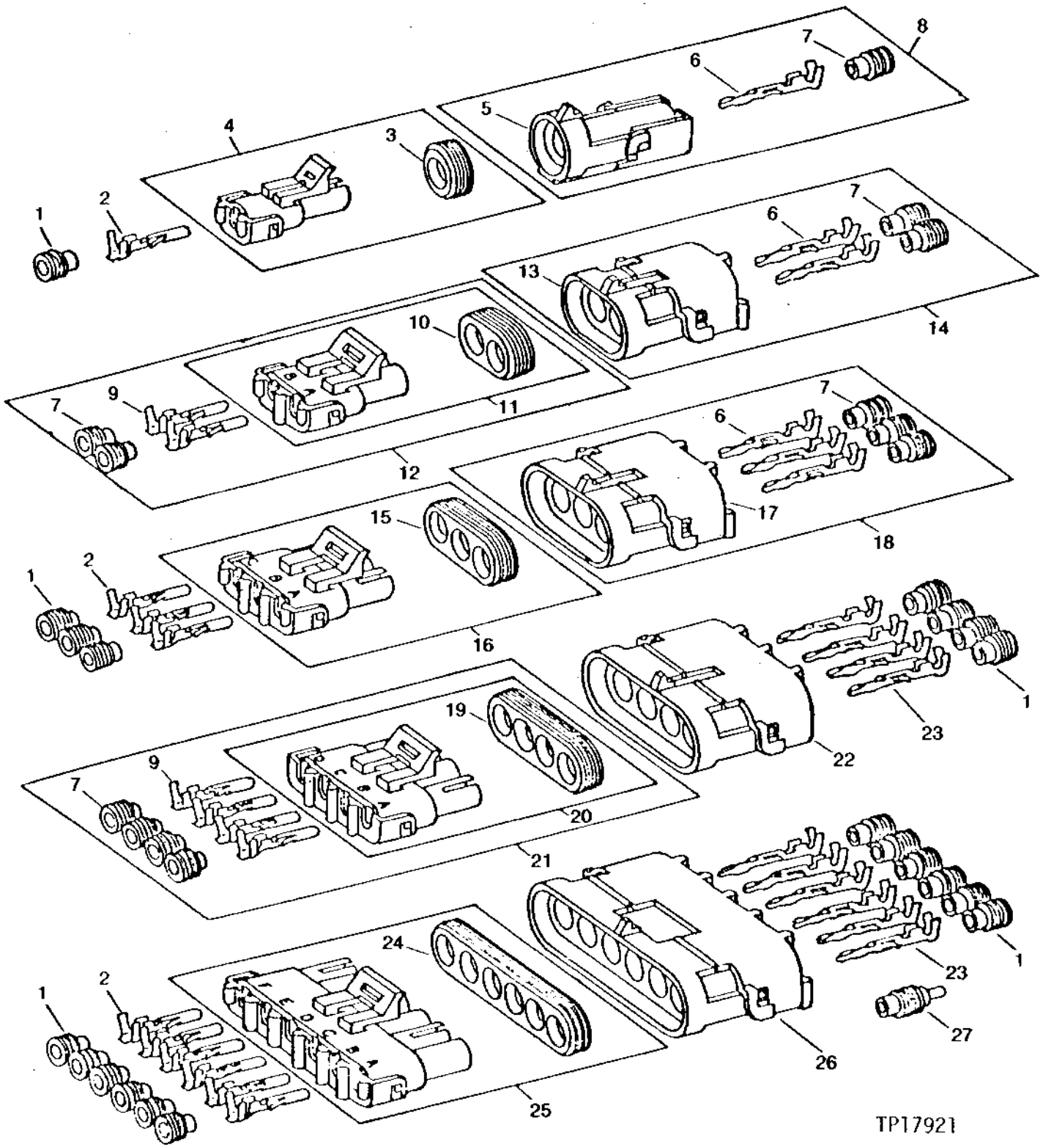

WEATHERPACK TERMINALS AND CONNECTORS - CONTINUED

KEY	PART NO.	PART NAME	QTY	TRACTOR SERIAL NO.	410D	510D	REMARKS
1	R78063	ELEC. CONNECTOR SEAL	1		X	X	(PKG. OF 40) (16 GA. WIRE) (GRAY)
	R78059	ELECTRICAL CONNECTOR ASSY	1		X	X	(PKG. OF 40) (18 OR 20 GA. WIRE) (GREEN)
	R78062	ELEC. CONNECTOR ACCESSORY	1		X	X	(PKG. OF 40) (14 GA. WIRE) (BLUE)
2	R78057	ELEC. CONNECTOR TERMINAL	1		X	X	(PKG. OF 40) (18 OR 20 GA. WIRE) (NO. 19)
	R78060	ELEC. CONNECTOR TERMINAL	1		X	X	(PKG. OF 40) (14 OR 16 GA. WIRE) (NO. 15)
3	R78047	SEAL	1		X	X	(PKG. OF 5)
4	RE12362	ELECTRICAL CONNECTOR ASSY	1		X	X	(PKG. OF 3)
5	R78052	ELECTRICAL CONNECTOR ASSY	1		X	X	(PKG. OF 3)
6	R78061	ELEC. CONNECTOR TERMINAL	1		X	X	(PKG. OF 40) (14 OR 16 GA. WIRE) (NO. 15)
7	R78063	ELEC. CONNECTOR SEAL	1		X	X	(PKG. OF 40) (16 GA. WIRE) (GRAY)
8	RE12334	ELECTRICAL CONNECTOR ASSY	1		X	X	
9	R78060	ELEC. CONNECTOR TERMINAL	1		X	X	(PKG. OF 40) (14 OR 16 GA. WIRE) (NO. 15)
10	R78048	ELEC. CONNECTOR ACCESSORY	1		X	X	(PKG. OF 5)
11	RE12363	ELECTRICAL CONNECTOR ASSY	1		X	X	(PKG. OF 3)
12	RE12331	ELECTRICAL CONNECTOR ASSY	1		X	X	
13	R78053	ELECTRICAL CONNECTOR ASSY	1		X	X	(PKG. OF 3)
14	RE12330	ELECTRICAL CONNECTOR ASSY	1		X	X	
15	R78049	SEAL	1		X	X	(PKG. OF 5)
16	RE12364	ELECTRICAL CONNECTOR ASSY	1		X	X	(PKG. OF 3)
17	R78054	ELECTRICAL CONNECTOR ASSY	1		X	X	(PKG. OF 3)
18	RE12332	ELECTRICAL CONNECTOR ASSY	1		X	X	
19	R78050	SEAL	1		X	X	(PKG. OF 5)
20	RE12365	ELECTRICAL CONNECTOR ASSY	1		X	X	(PKG. OF 2)
21	RE12333	ELECTRICAL CONNECTOR ASSY	1		X	X	
22	R78055	ELECTRICAL CONNECTOR ASSY	1		X	X	(PKG. OF 2)
23	R78061	ELEC. CONNECTOR TERMINAL	1		X	X	(PKG. OF 40) (14 OR 16 GA. WIRE) (NO. 15)
	R78058	ELEC. CONNECTOR TERMINAL	1		X	X	(PKG. OF 40) (18 OR 20 GA. WIRE) (NO. 19)
24	R78051	SEAL	1		X	X	(PKG. OF 5)
25	RE12366	ELECTRICAL CONNECTOR ASSY	1		X	X	(PKG. OF 2)
26	R78056	ELECTRICAL CONNECTOR ASSY	1		X	X	(PKG. OF 2)
27	R78064	ELEC. CONNECTOR CAVITY PLUG	1		X	X	(PKG. OF 40)

SUPPLEMENTARY TERMINALS, CONNECTORS AND REPAIR CONDUIT

TP24539 -UN-01JAN94

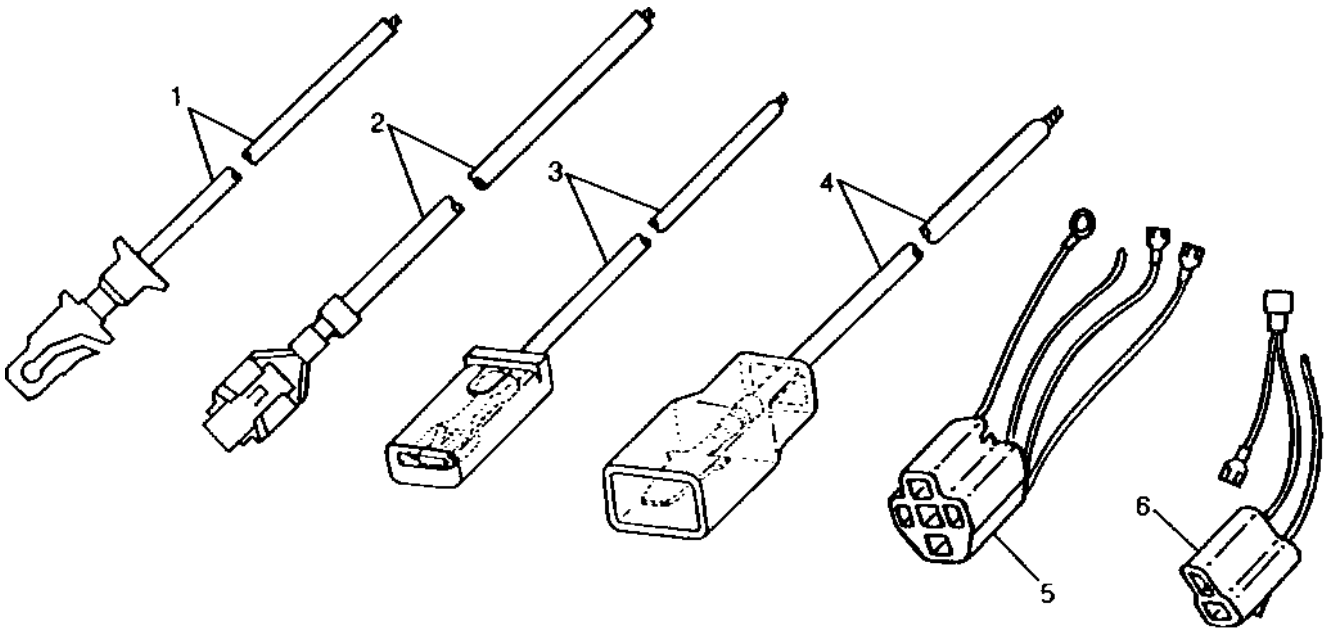

TP24539

KEY	PART NO.	PART NAME	QTY	SERIAL NO.	4 5 1 1 0 0 D D	REMARKS
1	AR65005	ELEC. CONNECTOR TERMINAL	1		X X	
2	AR65006	ELEC. CONNECTOR TERMINAL	1		X X	
3	R32024	WIRING LEAD	1		X X	
4	R32025	WIRING LEAD	1		X X	
5	RE21730	ELECTRICAL CONNECTOR ASSY	1		X X	(ILLUSTRATED)
	RE21731	ELECTRICAL CONNECTOR ASSY	1		X X	
6	RE21732	ELECTRICAL CONNECTOR ASSY	1		X X	
	R93219	CONDUIT	1		X X	0.3 X 3048 MM (1/4" X 120")
	R93220	CONDUIT	1		X X	10.4 X 2048 MM (13/32" X 120")
	R93221	CONDUIT	1		X X	15.9 X 3048 MM (5/8" X 120")
	R93222	CONDUIT	1		X X	25.4 X 3048 MM (1" X 120")

DEUTSCH TERMINALS

TP24540 -UN-01JAN94

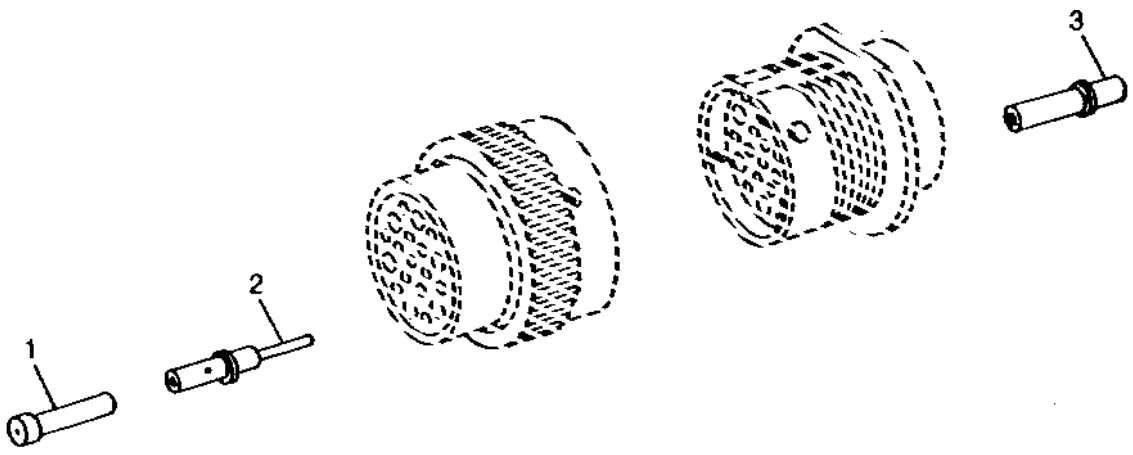

TP24540

KEY	PART NO.	PART NAME	QTY	SERIAL NO.	410D	510D	REMARKS
1	R78069	ELEC. CONNECTOR TERMINAL	3		X	X	(PKG OF 40)
2	R78066	ELEC. CONNECTOR TERMINAL	14		X	X	(PKG OF 40) (16 OR 18 GA WIRE)
	R78068	ELEC. CONNECTOR TERMINAL	4		X	X	(PKG OF 40) (12 OR 14 GA WIRE)
3	R78065	ELEC. CONNECTOR TERMINAL	14		X	X	(PKG OF 40) (16 OR 18 GA WIRE)
	R78067	ELEC. CONNECTOR TERMINAL	4		X	X	(PKG OF 40) (12 OR 14 GA WIRE)

SIDE INSTRUMENT PANEL WITH GAUGES AND SWITCHES

TP58014 -UN-09MAR99

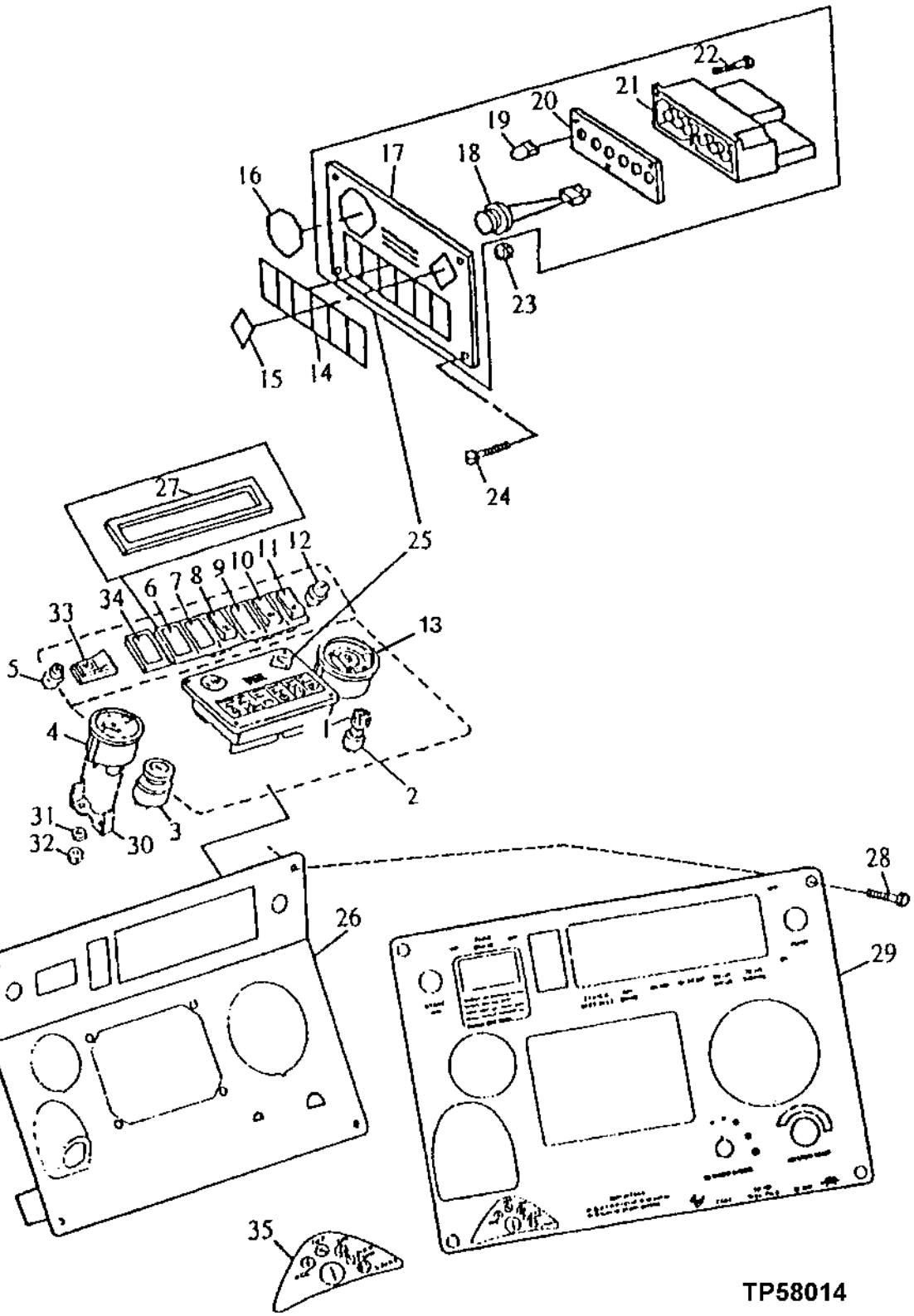

SIDE INSTRUMENT PANEL WITH GAUGES AND SWITCHES

KEY	PART NO.	PART NAME	QTY	SERIAL NO.	410D	510D	REMARKS
1	AT145907	KNOB	1	-816286	X	X	HEATER BLOWER (WITH CAB)
	R111632	KNOB	1	816287-	X	X	(WITH CAB)
2	AL36529	SWITCH	1	-816286	X	X	HEATER BLOWER (WITH CAB)
	E46066	NUT	2		X	X	(WITH CAB)
	RE43497	ROTARY SWITCH	1	816287-	X	X	(WITH CAB)
3	AT145929	KEY	1		X	X	(SET OF 2) (SUB FOR AR51481)
	AT195301	SWITCH	1		X	X	KEY, (SUB FOR AT101484 AND AT145931)
	R52725	ELECTRICAL CONNECTOR ASSY	2		X	X	GROUND
	R44342	NUT	1		X	X	
4	AT104809	GAUGE	1		X	X	FUEL
	AR62407	BULB	1		X	X	(SUB FOR T40990, THIS APPLICATION)
5	R39554	SWITCH	1		X	X	START AID
	T55585	CAP	1		X	X	(WITH STARTING AID)
	T154361	PLUG	1		X	X	(WITHOUT STARTING AID) (SUB FOR R56264)
6	AT163734	INDICATOR LAMP	1		X	X	(SEAT BELT WARNING) (SUB FOR AT160717)
7	AT151499	TOGGLE/ROCKER SWITCH	1		X	X	AIR CONDITIONING
8	AT165473	SWITCH	1		X	X	(SUB FOR AT150134) (MFWD)
	AT167215	TAIL LAMP	1		X	X	(SUB FOR 57M7102, THIS APPLICATION) (BEHIND COVER IN SWITCH)
9	AT140957	SWITCH	1		X	X	(ROTATING BEACON)
	57M7102	BULB	1		X	X	
10	AT140956	SWITCH	1		X	X	(REAR WINDOW WIPER)
11	AT149829	SWITCH	1		X	X	(REAR LIGHTS)
12	R39554	SWITCH	1		X	X	HORN
	T55501	CAP	1		X	X	HORN
13	AT302762	KIT	1		X	X	(SUB FOR AT142304 OR AT162517)
	AR56675	BULB	1		X	X	
14	T129938	LABEL	1		X	X	FAULT LAMP
15	T100475	LABEL	1		X	X	AMBER WARNING
16	T100474	SAFETY SIGN	1		X	X	RED WARNING
17	AT100484	MONITOR CONSOLE	1		X	X	FACE PLATE
18	AT101132	AUDIBLE WARNING ALARM	1		X	X	
19	AR62407	BULB	6		X	X	
20	T100812	GASKET	1		X	X	
21	AT101131	MODULE	1		X	X	
22	21H1308	SCREW	3		X	X	0.138" X 3/8"
23	T82792	NUT	4		X	X	
24	T82791	SCREW	4		X	X	
25	AT100073	MONITOR CONSOLE	1		X	X	
	AR62407	BULB	2		X	X	
26	.....	INSTRUMENT PANEL	1	-794465	X	X	CAB (AT162074 NO LONGER AVAILABLE) (SUB FOR AT150895 AND AT151495) (SUB AT165469 AND T153055)
	AT165469	INSTRUMENT PANEL	1	794466-816286	X	X	CAB
	.....	INSTRUMENT PANEL	1	-794521	X	X	ROPS (AT162073 NO LONGER AVAILABLE) (SUB FOR AT150896 AND AT151498) (SUB AT165397 AND T153056)
	AT165397	INSTRUMENT PANEL	1	794522-816286	X	X	ROPS
	AT175380	INSTRUMENT PANEL	1	816287-	X	X	(WITH CAB)
	AT175381	INSTRUMENT PANEL	1	816287-	X	X	(WITH ROPS)
27	Z45961	FRAME	1		X	X	SIX SWITCH MOUNTING
28	21H1406	SCREW	4		X	X	0.190" X 3/4"

THIS PARTS LISTING IS CONTINUED

SIDE INSTRUMENT PANEL WITH GAUGES AND SWITCHES

TP58014 -UN-09MAR99

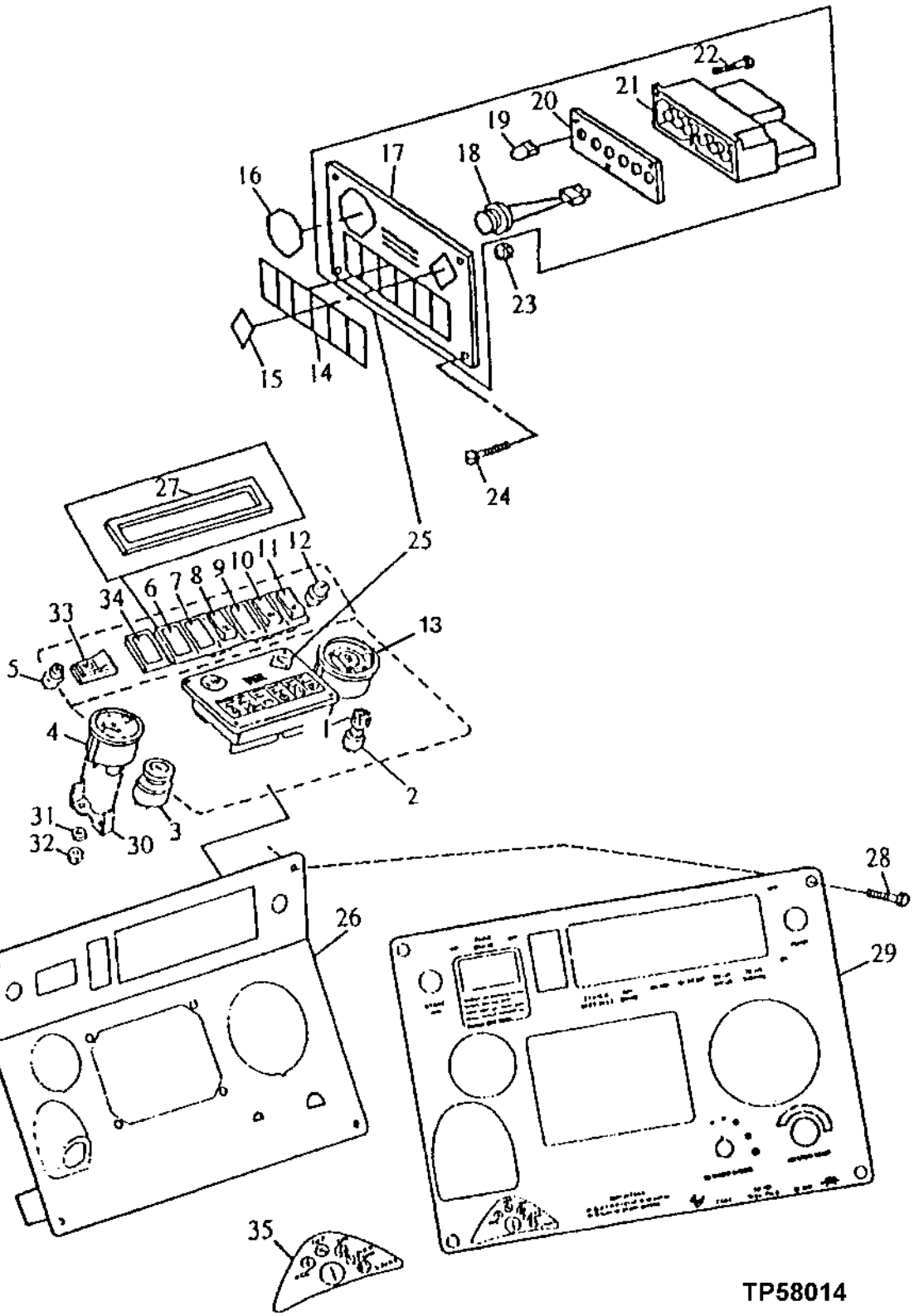

SIDE INSTRUMENT PANEL WITH GAUGES AND SWITCHES

KEY	PART NO.	PART NAME	QTY	SERIAL NO.	410D	510D	REMARKS
29	T141265	LABEL	1	-789400	X	X	(CAB) (SUB FOR T130526)
	T147119	LABEL	1	789401-794465	X	X	(CAB) INSTRUMENT PANEL (ENGLISH) (ALSO ORDER AT161710 FOR FRENCH APPLICATION) (ALSO ORDER AT161715 FOR SPANISH APPLICATION)
	T153055	LABEL	1	794466-816286	X	X	(CAB) (SUB FOR T149516)
	T141266	LABEL	1	-789429	X	X	(ROPS) (SUB FOR T130525)
	T147113	LABEL	1	789430-794521	X	X	(ROPS) INSTRUMENT PANEL (ENGLISH) (ALSO ORDER AT161710 FOR FRENCH APPLICATION) (ALSO ORDER AT191910 FOR SPANISH APPLICATION)
	T153056	LABEL	1	794522-	X	X	(ROPS) (SUB FOR T149517)
	T158507	LABEL	1	816287-	X	X	(CAB)
30	T118593	BRACKET	1		X	X	
31	12M7084	LOCK WASHER	2		X	X	4.300 MM
32	14M7100	NUT	2		X	X	M4
33	AT165472	SWITCH	1		X	X	(SUB FOR AT141152) PARK BRAKE
	AT167214	TAIL LAMP	1		X	X	(BEHIND COVER IN SWITCH) (SUB FOR 57M7102, THIS APPLICATION)
	T151169	LENS	1	-798297	X	X	(USE WITH AT167214)
34	Z45833	COVER	AR		X	X	
35	.....	LABEL	1	794466-802708	X	X	SWITCH POSITION (T149829 NO LONGER AVAILABLE) (SUB T153055 WITH CAB OR T153056 WITH ROPS)

MAIN FRAME
(SERIAL NO. -801199)

TP44726 -UN-01JAN94

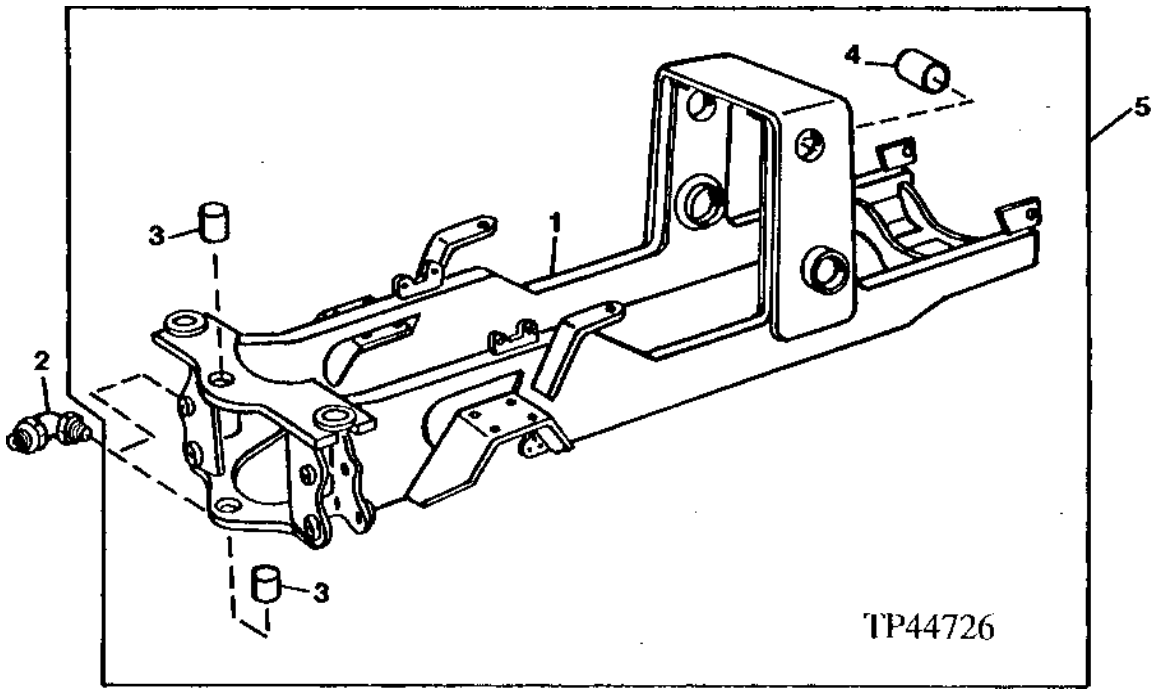

KEY	PART NO.	PART NAME	QTY	SERIAL NO.	410D	510D	REMARKS
1	.....	MAIN FRAME	1		X	X	
2	JD7799	LUBRICATION FITTING	2		X	X	
3	T69146	BUSHING	2		X	X	
4	T76308	BUSHING	2		X	X	
5	.....	MAIN FRAME	1	-796854	X	X	
	.....	MAIN FRAME	1	796855-	X	X	

MEMORANDA

MAIN FRAME
(SERIAL NO. 801200-XXXXXX)

TP50409 -UN-24APR96

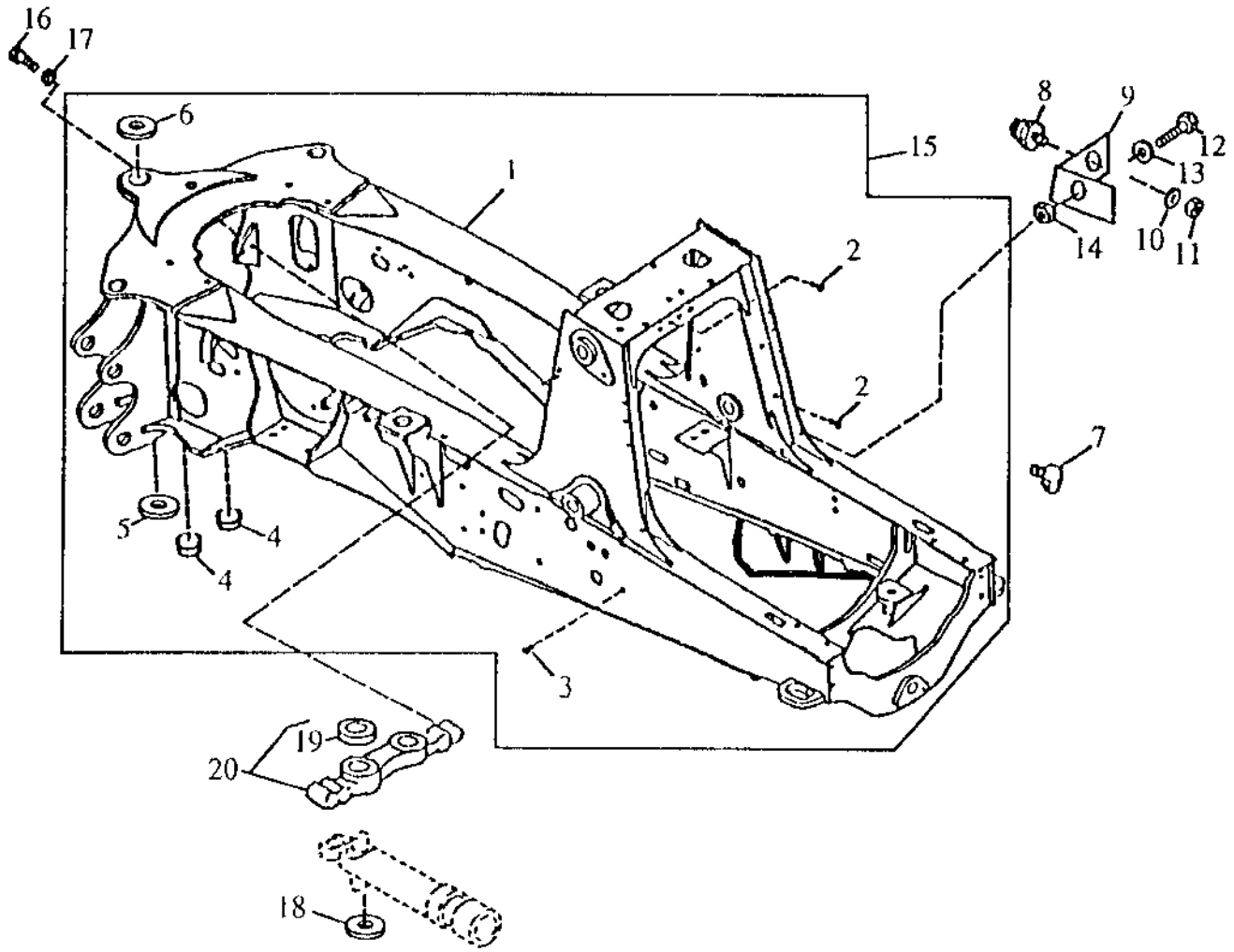

TI 109

MAIN FRAME
(SERIAL NO. 801200-XXXXXX)

KEY	PART NO.	PART NAME	QTY	SERIAL NO.	410D	510D	REMARKS
1	.....	FRAME	1		X	X	
2	T148410	NUT	27		X	X	M10, (KREMNUT)(RED NO.8 FOR 8 MM PLATE)
3	T148409	NUT	25		X	X	M10, (KREMNUT)(GOLD NO.6 FOR 6 MM PLATE)
	24H1211	WASHER	2		X	X	
4	T147070	BUSHING	2		X	X	
5	T149834	BUSHING	1		X	X	
6	T148313	BUSHING	1		X	X	
7	JD7799	LUBRICATION FITTING	1		X	X	
8	AT36635	BUMPER	1		X	X	
9	T152598	SUPPORT	1		X	X	
10	24H1136	WASHER	1		X	X	
11	14H650	NUT	1		X	X	5/16"
12	19M7662	CAP SCREW	1		X	X	M10 X 30
13	24M7239	WASHER	1		X	X	
14	14M7517	LOCK NUT	1		X	X	M10
15	.....	FRAME	1		X	X	(AT162656 AND AT176497 NO LONGER AVAILABLE)
16	19M8224	CAP SCREW	4		X	X	M20 X 60
17	T83426	WASHER	1		X	X	
18	T148387	WASHER	2		X	X	
19	T153303	BUSHING	2		X	X	
20	AT169804	TRUNNION	1		X	X	(MARKED T153304)

MECHANICAL FRONT WHEEL DRIVE SHAFT GUARD
(SERIAL NO. -801199)

TP25655 -UN-01JAN94

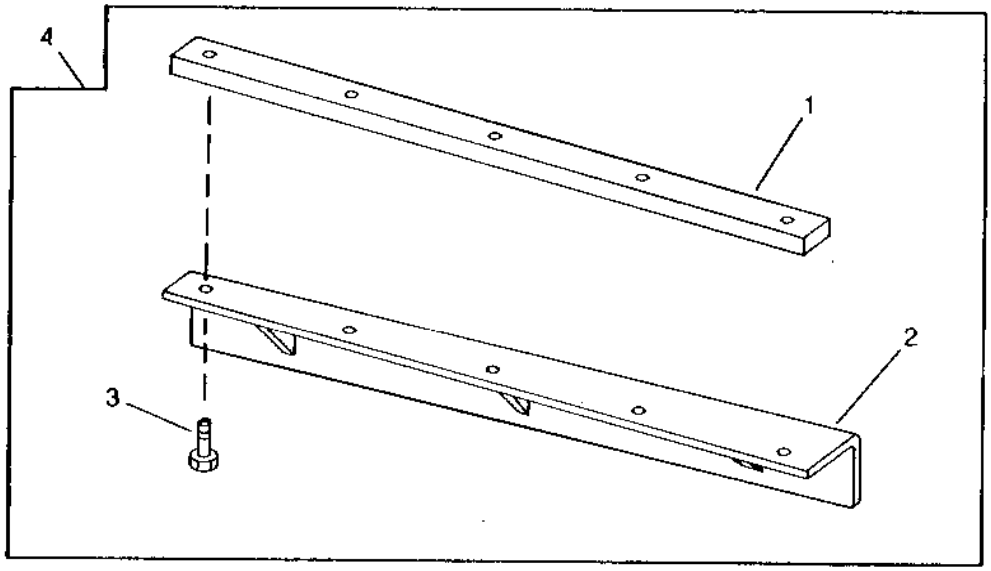

TP25655

KEY	PART NO.	PART NAME	QTY	SERIAL NO.	410D 510D	REMARKS
1	T105767	STRAP	1		X X	(WELD ON)
2	AT101687	GUARD	1		X X	
3	19M8029	CAP SCREW	5		X X	M16 X 30
	24M7053	WASHER	5		X X	17 X 30 X 3 MM
4	.....	GUARD	1		X X	(AT132965 - NO LONGER AVAILABLE)

MECHANICAL FRONT WHEEL DRIVE SHAFT GUARD
(SERIAL NO. 801200-)

TP44766 -UN-01JAN94

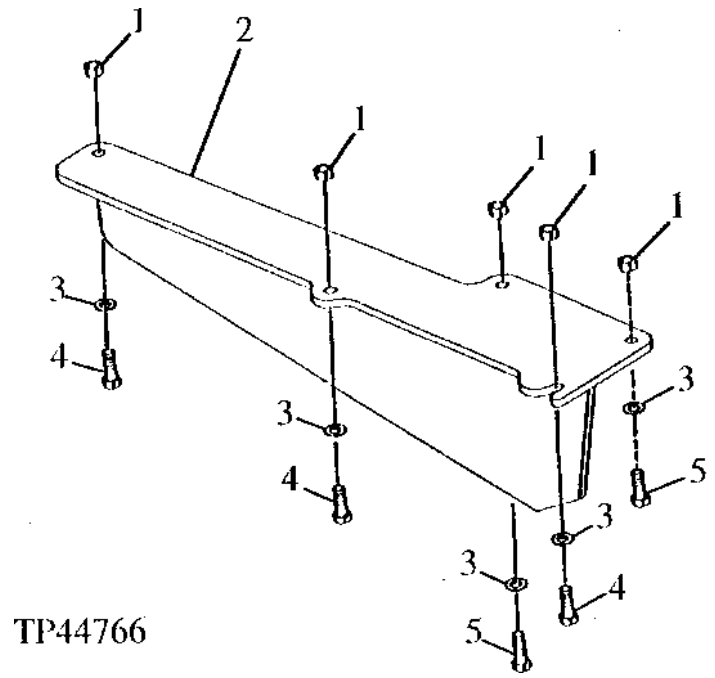

KEY	PART NO.	PART NAME	QTY	SERIAL NO.	410D	510D	REMARKS
1	14M7275	NUT	5		X	X	M12
2	AT164565	GUARD	1		X	X	
3	T29342	WASHER	5		X	X	13.487 X 31.750 X 4.572 MM
4	03M7083	BOLT	3		X	X	
5	19M7403	CAP SCREW	2		X	X	M12 X 35

STABILIZER CYLINDER GUARD KIT

TP48877 -UN-04MAR96

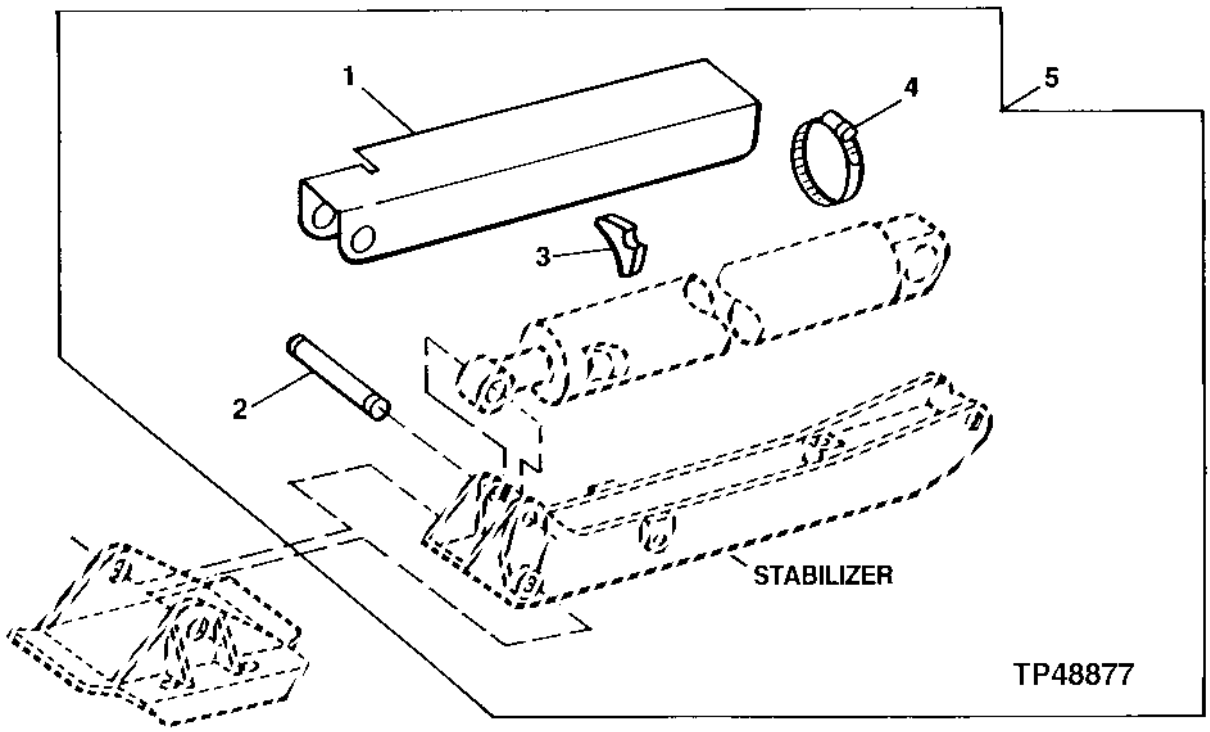

KEY	PART NO.	PART NAME	QTY	SERIAL NO.	410D	510D	REMARKS
1	T154034	GUARD	2		X	X	
2	T157536	PIN FASTENER	2		X	X	
3	T101624	SUPPORT	2		X	X	
4	C16054	CLAMP	2		X	X	
5	.....	KIT	1		X	X	(AT174352 NO LONGER AVAILABLE)

COUNTERWEIGHT
(SERIAL NO. -801199)

TP41213 -UN-01JAN94

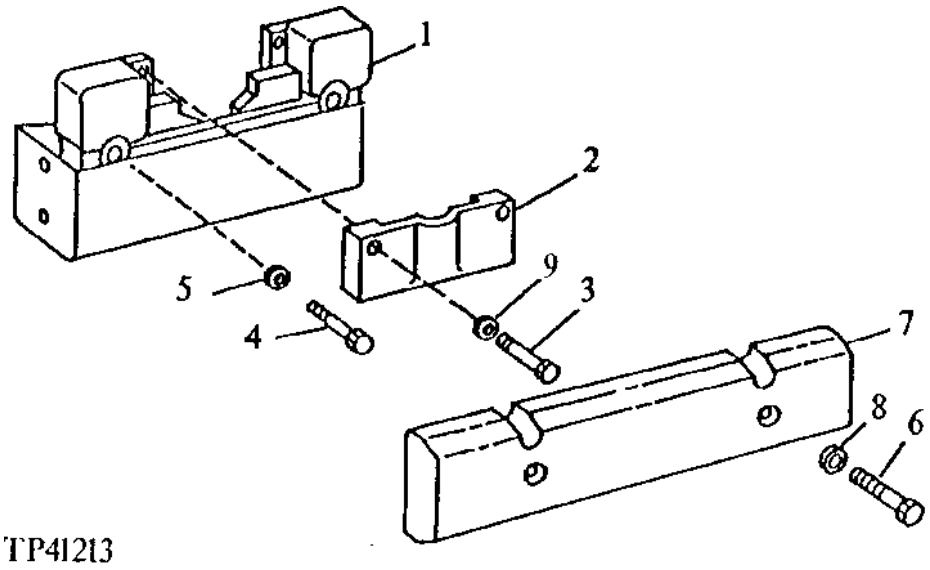

KEY	PART NO.	PART NAME	QTY	SERIAL NO.	410D	510D	REMARKS
1	.....	COUNTERWEIGHT	1		X	X	(T119198 NO LONGER AVAILABLE) MAIN
2	T100705	COVER	1		X	X	
3	19M7493	CAP SCREW	2		X	X	M12 X 40
4	19M7936	CAP SCREW	2		X	X	M24 X 130
5	24M7243	WASHER	2		X	X	25.400 X 50 X 6 MM
6	19M7719	CAP SCREW	2		X	X	M16 X 70
7	.....	COUNTERWEIGHT	1		X	X	FRONT (T121903 NO LONGER AVAILABLE)
8	24M7053	WASHER	2		X	X	17 X 30 X 3 MM
9	24M7240	WASHER	2		X	X	13 X 25 X 3 MM

FRONT COUNTERWEIGHT

TP7526 -UN-01JAN94

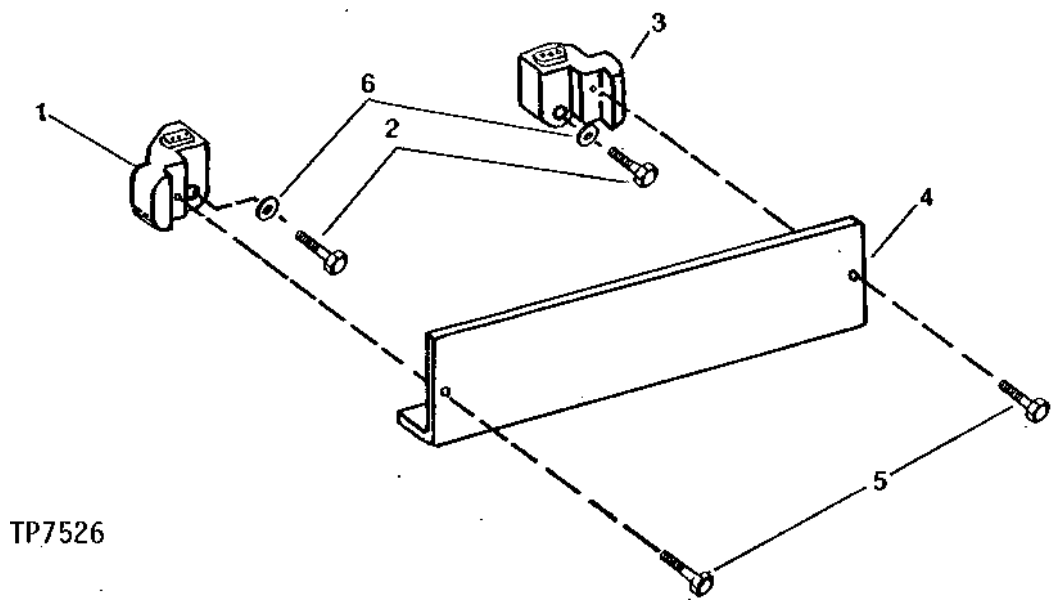

KEY	PART NO.	PART NAME	QTY	SERIAL NO.	410D	510D	REMARKS
1	T128204	FRAME	1		X	X	RIGHT
2	19M7683	CAP SCREW	2		X	X	M24 X 110
3	T128205	FRAME	1		X	X	LEFT
4	T70456	ANGLE	1		X	X	
5	19M7402	CAP SCREW	2		X	X	M10 X 25
	24M7239	WASHER	2		X	X	10.700 X 21 X 2.500 MM
6	24M7243	WASHER	2		X	X	25.400 X 50 X 6 MM

FRONT COUNTERWEIGHT
(SERIAL NO. 801200-)

TP45485 -UN-01JAN94

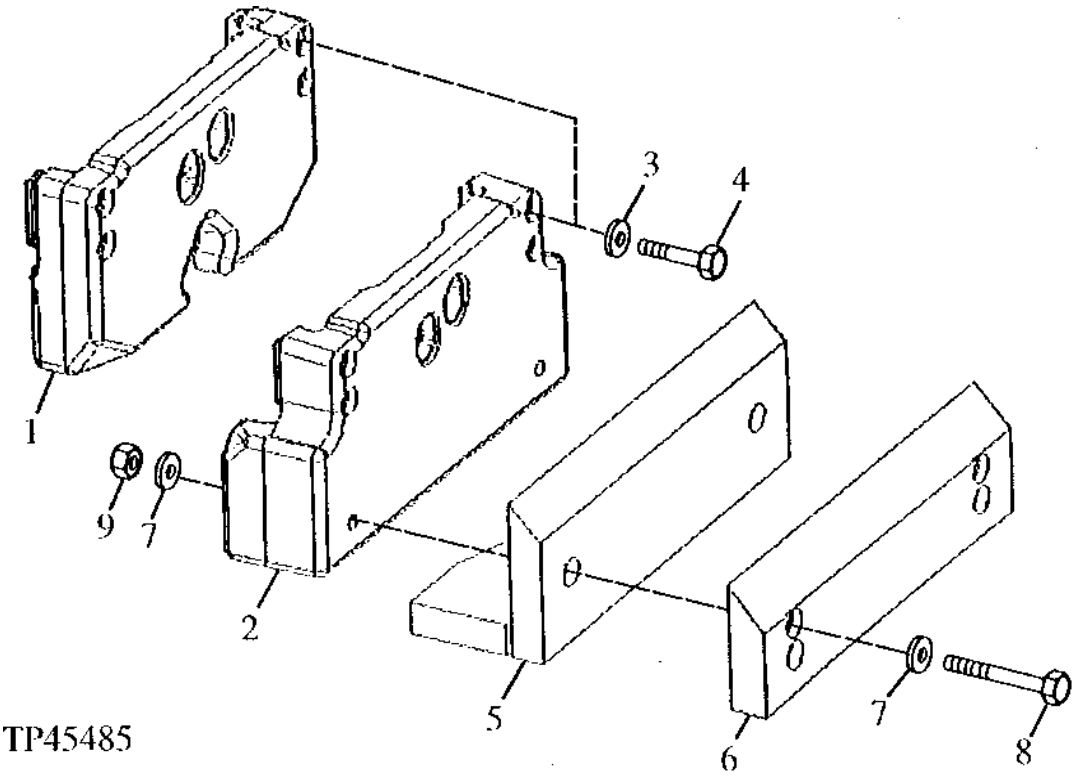

KEY	PART NO.	PART NAME	QTY	SERIAL NO.	410D	510D	REMARKS
1	**T148381**	**COUNTERWEIGHT**	**1**		**X**	**X**	**CONVENIENCE ASSEMBLY (400 LB)**
2	.....	COUNTERWEIGHT	1		X	X	(750 LB) (T148382 NO LONGER AVAILABLE) (USE WITH AT169181 AND T152677)
3	T119912	WASHER	4		X	X	16.662 X 41.148 X 6.350 MM (21/32" X 1.620" X 1/4")
4	19M7882	SCREW	4		X	X	M16 X 170
5	.....	COUNTERWEIGHT	1		X	X	(AT169181 NO LONGER AVAILABLE (450 LB) (USE WITH T148382) (ALSO ORDER (2) 19M8415, (4) 24M7242 AND (2) 14M7277)
6	**T152677**	**COUNTERWEIGHT**	**1**		**X**	**X**	**CONVENIENCE ASSEMBLY (250 LB) (USE WITH T148382) (ALSO ORDER (2) 19M8415 OR (2) 19M8411, (4) 24M7242 AND (2) 14M7277)**
7	24M7242	WASHER	4		X	X	21.400 X 42 X 5 MM
8	19M8415	CAP SCREW	2		X	X	M20 X 260, (USE WITH AT169181 OR T152677)
	19M8411	SCREW	2		X	X	M20 X 340, (USE WITH AT169181 AND T152677)
9	14M7277	NUT	2		X	X	M20

FRONT INSTRUMENT PANEL HOUSING AND STEERING COLUMN COVERS

TP50405 -UN-18JAN96

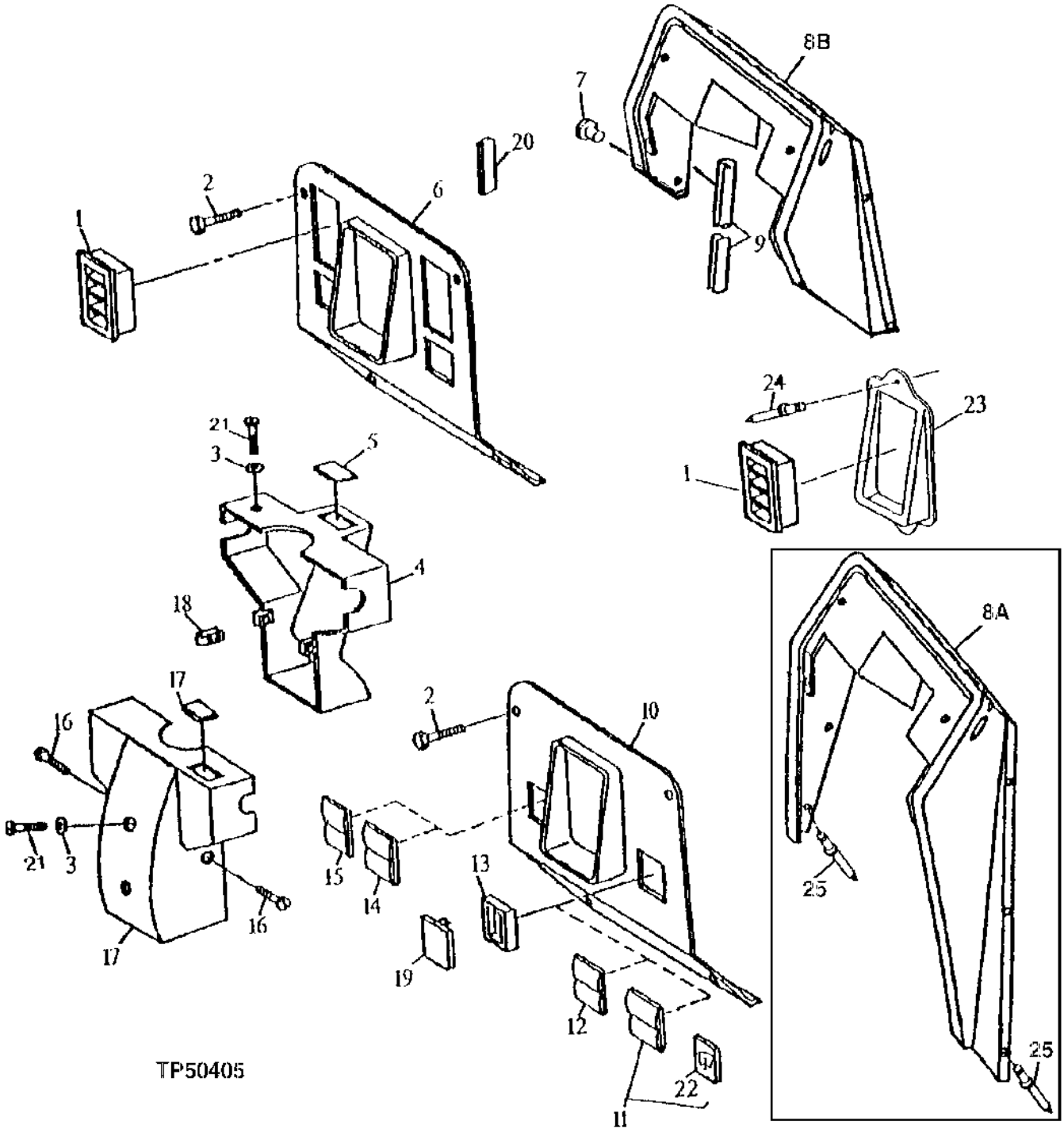

FRONT INSTRUMENT PANEL HOUSING AND STEERING COLUMN COVERS

KEY	PART NO.	PART NAME	QTY	SERIAL NO.	410D	510D	REMARKS
1	AT140978	LOUVER	2	-816286	X	X	(WITH CAB)
2	21H1406	SCREW	4		X	X	0.190" X 3/4"
3	24M7087	WASHER	3		X	X	5.500 X 10 X 1 MM
4	T132994	COVER	1		X	X	FRONT
5	AT140968	INDICATOR LAMP	1		X	X	(WITH TURN SIGNALS)
	57M7102	BULB	2		X	X	(TURN SIGNALS)
	Z45833	COVER	1		X	X	(WITHOUT TURN SIGNALS)
6	T132993	PANEL	1	-816286	X	X	(WITH CAB)
	T133010	PANEL	1	816287-	X	X	(WITH CAB)
7	T133009	PLUG	8	-798426	X	X	
	T133009	PLUG	4	798427-	X	X	
8A	.....	HOUSING	1	-816286	X	X	AT167625 NO LONGER AVAILABLE, (SUB AT175938) (SUB FOR AT139722 AND AT160489) (WITH CAB)
	.....	HOUSING	1	-816286	X	X	AT167783 NO LONGER AVAILABLE, (SUB AT175934) (SUB FOR AT139720 AND AT160488) (WITHOUT CAB)
8B	AT175938	HOUSING	1	816287-	X	X	(WITH CAB)
	AT175934	HOUSING	1	816287-	X	X	(WITHOUT CAB)
9	T63019	WEATHERSTRIP	AR		X	X	(SUB FOR T59938)
10	T133010	PANEL	1		X	X	(WITHOUT CAB)
11	AT140962	SWITCH	1		X	X	(FRONT WIPER)
12	AT140963	SWITCH	1		X	X	(FRONT WASHER)
13	Z46941	FRAME	AR		X	X	
14	AT140966	SWITCH	1		X	X	(WARNING FLASHER)
	57M7102	BULB	1		X	X	
15	AT149830	SWITCH	1		X	X	(FRONT LIGHTS)
16	37M7072	SCREW	2		X	X	
17	T133108	COVER	1		X	X	REAR
	AT150089	SWITCH	1		X	X	(WITH TURN SIGNALS)
	Z45833	COVER	1		X	X	(WITHOUT TURN SIGNALS)
18	R50279	NUT	2		X	X	
19	Z45833	COVER	AR		X	X	
20	.....	ISOLATOR	AR		X	X	MAKE FROM T71733 - CUT TO LENGTH
21	21H1316	SCREW	3		X	X	0.190" X 1/2"
22	L39638	INSERT	1		X	X	
23	T147894	ADAPTER	1	-816286	X	X	
	R55326	RIVET	2	-816286	X	X	
24	R55326	RIVET	2	-816286	X	X	
25	R55326	RIVET	2	798427-816286	X	X	

SIDE INSTRUMENT PANEL HOUSING, LOADER LINKAGE COVER AND STABILIZER LINKAGE COVER

TP44096 -UN-01JAN94

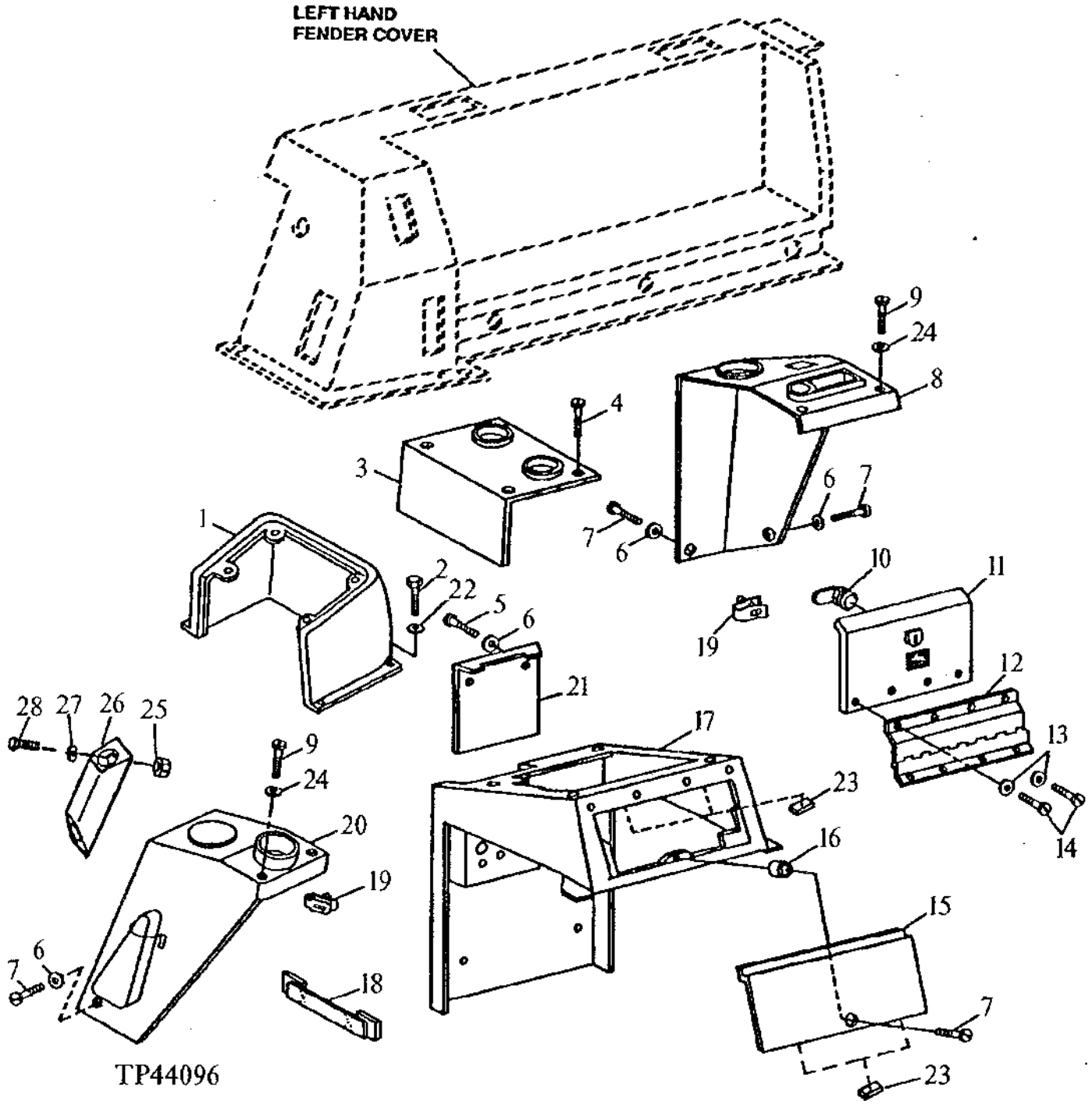

SIDE INSTRUMENT PANEL HOUSING, LOADER LINKAGE COVER AND STABILIZER LINKAGE COVER

KEY	PART NO.	PART NAME	QTY	SERIAL NO.	410D	510D	REMARKS
1	T133357	COVER	1		X	X	(WITH TWO CONTROL LEVER REGULAR DIPPERSTICK)
	T134876	COVER	1		X	X	(WITH THREE CONTROL LEVER REGULAR DIPPERSTICK) CASE CONTROLS
	T134850	COVER	1		X	X	(WITH TWO CONTROL LEVER EXTENDIBLE DIPPERSTICK)
	T134876	COVER	1		X	X	(WITH THREE CONTROL LEVER EXTENDIBLE DIPPERSTICK) CASE CONTROLS
2	19M8425	CAP SCREW	5		X	X	M6 X 16
3	T134383	PANEL	1		X	X	(WITH TWO CONTROL LEVERS)
4	T151178	SELF-LOCKING SCREW	4		X	X	0.190" X 3/4", (SUB FOR 21H1406)
5	T133674	SELF-LOCKING SCREW	2		X	X	
6	24M7293	WASHER	3		X	X	6.500 X 13 X 1.600 MM
7	T134895	SELF-LOCKING SCREW	4		X	X	
8	T132978	COVER	1		X	X	LOADER LINKAGE
9	T134874	SELF-LOCKING SCREW	4		X	X	
10	AT141724	LOCK	1		X	X	
11	T134594	COVER	1		X	X	VANDAL PROTECTION
12	AT181562	HINGE	1		X	X	VANDAL PROTECTION, (SUB FOR AT141319)
13	.....	WASHER	8		X	X	
14	H111706	SCREW	8		X	X	
15	T133328	PANEL	1		X	X	FUSE ACCESS
16	T134896	BUMPER	1		X	X	
17	T141242	HOUSING	1		X	X	(WITHOUT CAB) (SUB FOR T134603)
	T141244	HOUSING	1	-816286	X	X	(WITH CAB) (SUB FOR T132977)
	T158639	HOUSING	1	816287-	X	X	(WITH CAB)
18	AT145938	STRAP	1		X	X	
19	M84972	NUT	4		X	X	
20	T148875	COVER	1		X	X	STABILIZER LINKAGE (BOTTOM HOLE REMOVED NOV92 - NO LONGER REQUIRED) (SUB FOR T132979)
	T148903	COVER	1		X	X	STABILIZER LINKAGE (USE WITH EXTENDIBLE DIPPERSTICK) (SUB FOR T147015)
21	T133327	PANEL	1		X	X	SPEED CONTROL
22	24H1287	WASHER	5		X	X	9/32" X 5/8" X 0.065"
23	.....	FOAM PAD	AR		X	X	(MAKE FROM T141322 BULK MATERIAL, CUT TO LENGTH)
24	24H1646	WASHER	3		X	X	17/64" X 3/4" X 0.060"
25	14M7165	LOCK NUT	2		X	X	M6
26	T141235	HOLDER	1	-801199	X	X	
	T141234	HOLDER	1	801200-	X	X	
27	24H1287	WASHER	2		X	X	9/32" X 5/8" X 0.065"
28	19M7874	CAP SCREW	2		X	X	M6 X 30

MEMORANDA

CAB

TP46353 -UN-25OCT94

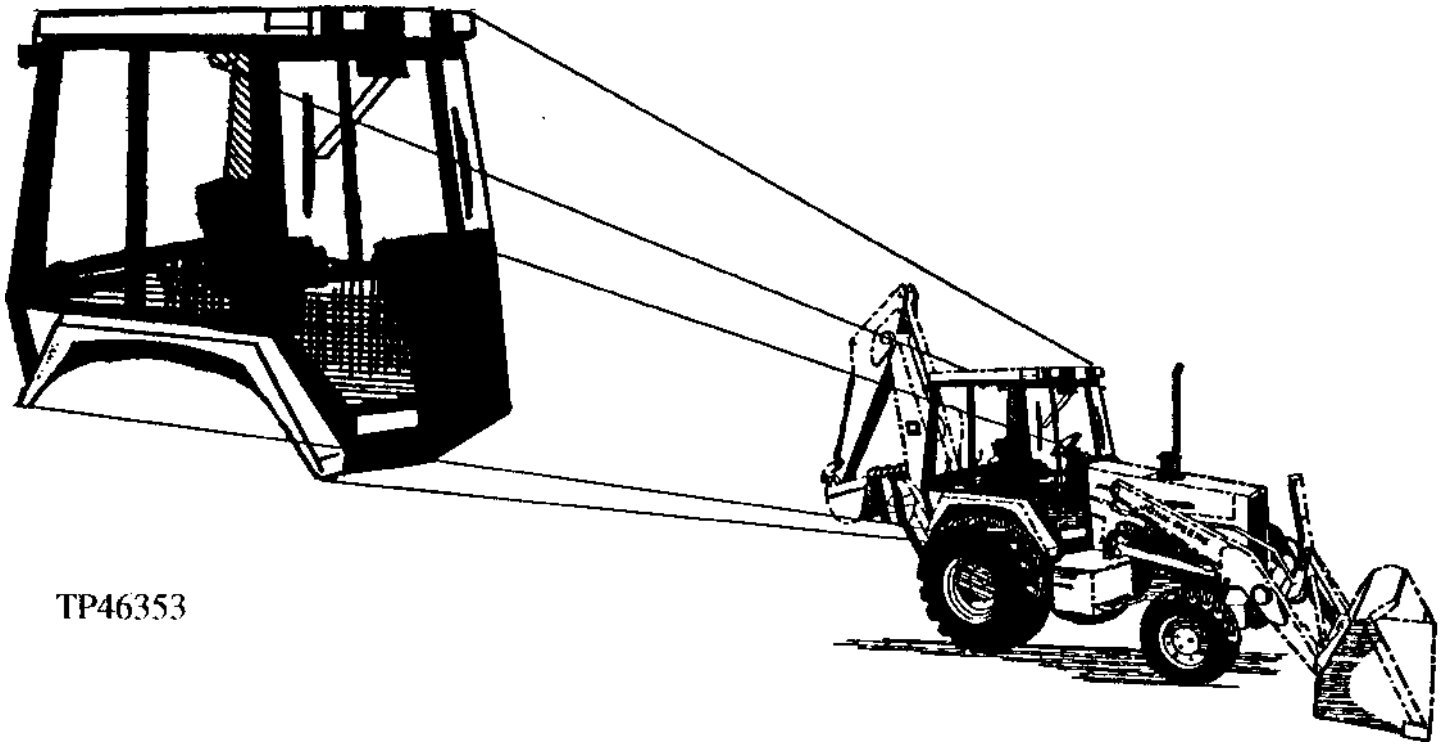

KEY	PART NO.	PART NAME	QTY	SERIAL NO.	410D	510D	REMARKS
1	.....	CAB	1	-801199	X	X	(AT156817 NO LONGER AVAILABLE)
	.....	CAB	1	801200-	X	X	

CAB FRAME AND CAB MOUNTING ISOLATORS

TP44170 -UN-01JAN94

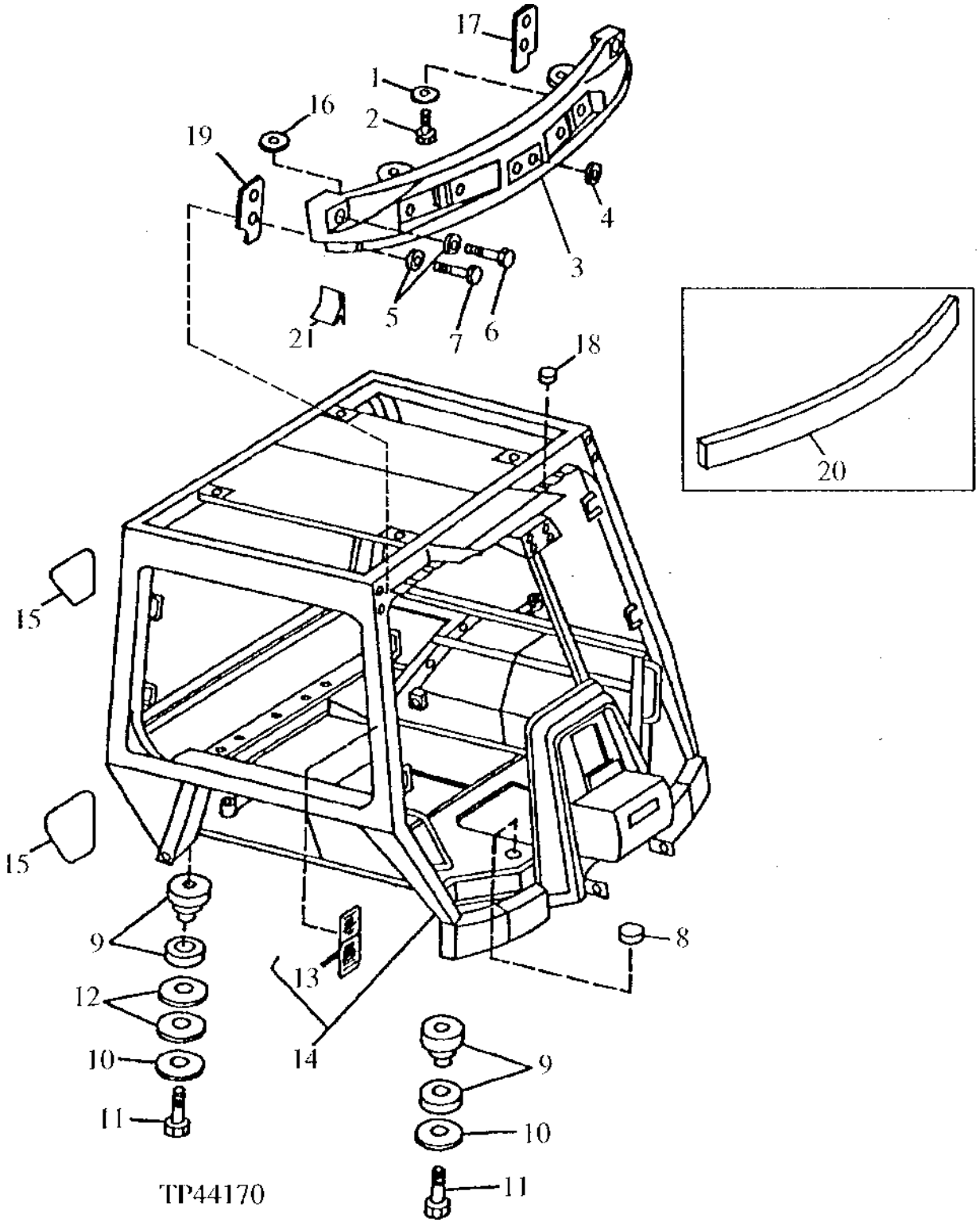

CAB FRAME AND CAB MOUNTING ISOLATORS

KEY	PART NO.	PART NAME	QTY	SERIAL NO.	410D	510D	REMARKS
1	24M7207	WASHER	3		X	X	8.400 X 24 X 2 MM
2	T80176	SELF-LOCKING SCREW	2		X	X	
3	T141500	SUPPORT	1		X	X	ROOF AND FRONT WORK LIGHTS, (SUB FOR T132847) (REQUIRES T142464 AND T142465)
4	T130425	GROMMET	AR		X	X	
5	24H1685	WASHER	4		X	X	11/32" X 47/64" X 0.083"
6	19M8008	CAP SCREW	2		X	X	M8 X 35
7	19M7325	CAP SCREW	2		X	X	M8 X 80
8	N30256	GROMMET	1		X	X	(WITH WINDSHIELD WIPER)
	T154361	PLUG	1		X	X	(SUB FOR R56264) (WITHOUT WINDSHIELD WASHER)
9	AT164785	ISOLATOR	4	-801199	X	X	(SUB FOR AT102326, THIS APPLICATION)
	AT165288	ISOLATOR	4	801200-	X	X	
10	T101807	WASHER	4		X	X	
11	19M7968	CAP SCREW	4		X	X	M20 X 130
12	T80883	WASHER	4	-801199	X	X	
13	T141724	LABEL	1		X	X	(SUB FOR T140432) (CAB FRAME)
14	AT150641	CAB FRAME	1	-801199	X	X	(WITH LABEL)
	AT151503	CAB FRAME	1	-801199	X	X	(NOT ILLUSTRATED) 1/4 CAB CONVENIENCE ASSEMBLY, (WITH LABEL)
	AT169013	CAB FRAME	1	801200-816286	X	X	(WITH LABEL)
	AT175329	CAB FRAME	1	816287-	X	X	(WITH LABEL)
15	T148168	REFLECTOR	1		X	X	RIGHT, (SUB FOR T133610, T133611 AND T142094)
	T148167	REFLECTOR	1		X	X	LEFT, (SUB FOR T133610, T133611 AND T142094)
16	R36235	GROMMET	1		X	X	
17	T142464	GASKET	1		X	X	LEFT
18	BP13712	NUT	6		X	X	WITHOUT RADIO
	M84972	NUT	7		X	X	WITH RADIO
19	T142465	GASKET	1		X	X	RIGHT
20	T63019	WEATHERSTRIP	AR	-793402	X	X	(SUB FOR T66419)
21	T148469	SEAL	AR		X	X	(150 MM) (ALSO ORDER T145402)

UPPER REAR CAB WINDOW AND REAR WINDOW WIPER MOTOR

TP57968 -UN-11NOV98

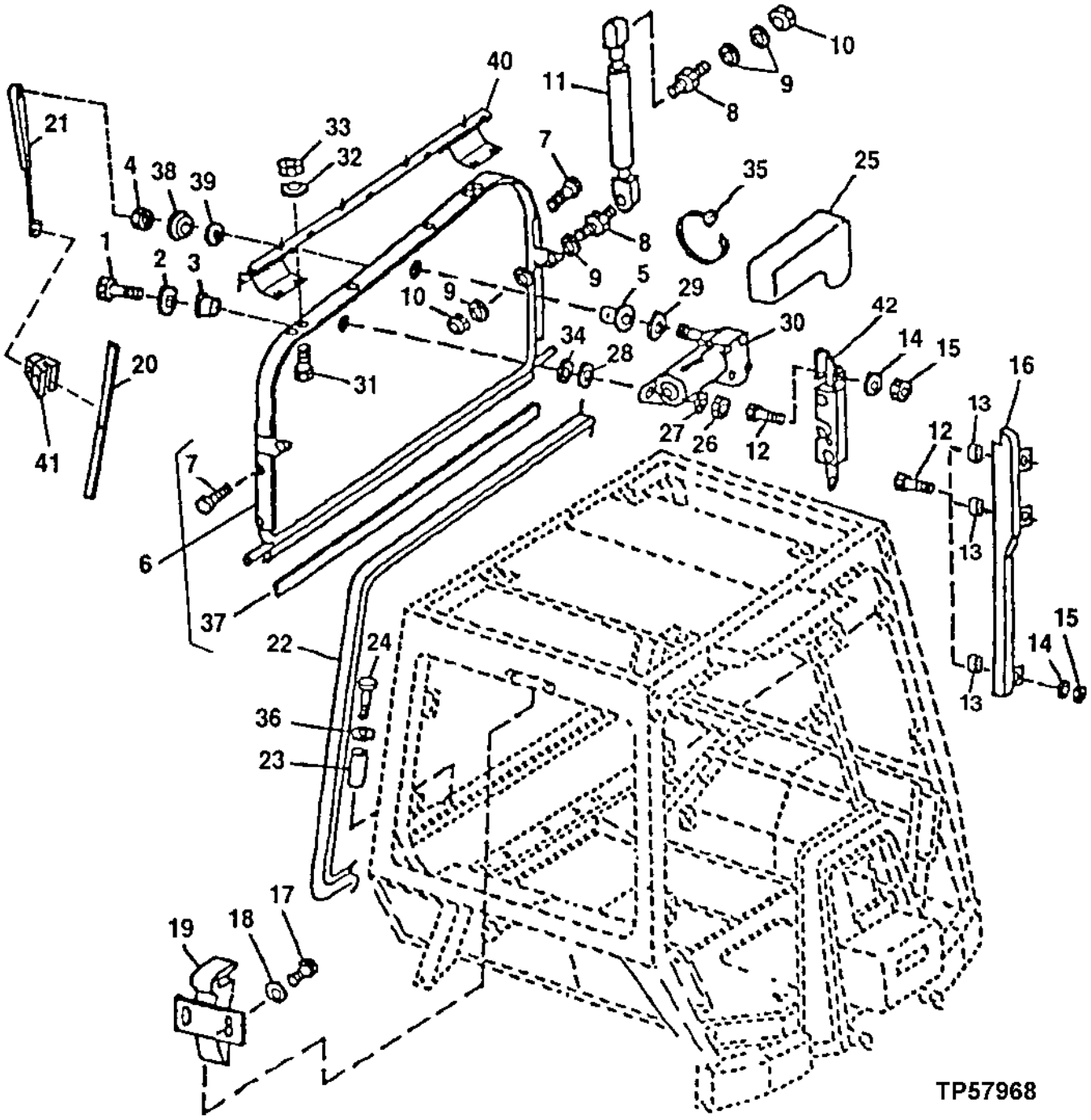

UPPER REAR CAB WINDOW AND REAR WINDOW WIPER MOTOR

KEY	PART NO.	PART NAME	QTY	SERIAL NO.	410D	510D	REMARKS
1	21M7251	SCREW	1		X	X	M5 X 25
2	24H1287	WASHER	1		X	X	9/32" X 5/8" X 0.065"
3	R50642	WASHER	1		X	X	
4	U46519	NUT	1		X	X	
5	T78315	WASHER	1		X	X	
6	AT151104	WINDOW	1		X	X	(WITH WINDOW PANE)
7	37M7024	SCREW	13		X	X	
8	T142651	BALL STUD	4		X	X	(SUB FOR (4) T73834)
9	24M7238	WASHER	8		X	X	8.700 X 17 X 2 MM
10	14H785	NUT	4		X	X	5/16"
11	AT164828	CYLINDER	2		X	X	(SUB FOR AT145132, THIS APPLICATION)
12	T145057	CAP SCREW	10		X	X	1/4" X 1-1/8", (SUB FOR T133567)
13	T165567	BUSHING	3		X	X	
14	24M7100	WASHER	10		X	X	6.600 X 22 X 2 MM
15	M40333	LOCK NUT	10		X	X	
16	T165760	GUIDE	1		X	X	(R.H.) (SUB FOR T84944)
	T165761	GUIDE	1		X	X	(L.H.) (SUB FOR T133463)
17	T142992	SCREW	4		X	X	M8 X 16
18	24M7238	WASHER	4		X	X	0.343" X 0.669" X 0.079"
19	AT151705	LATCH	2		X	X	(SUB FOR AT141467)
20	TY16302	WIPER BLADE	1		X	X	(ALSO ORDER TY16312) (SUB FOR TY16302) (FOR FIRST TIME INSTALLATION)
21	AT145249	WIPER ARM	1		X	X	
22	AT140912	ISOLATOR	1		X	X	
23	T129928	BUMPER	2		X	X	
24	19M8439	SCREW	2		X	X	
25	T133446	COVER	1		X	X	
26	14M7297	NUT	1		X	X	M5
27	24H1283	WASHER	1		X	X	7/32" X 1/2" X 0.049"
28	24H1284	WASHER	1		X	X	7/32" X 7/8" X 0.065"
29	24H1375	WASHER	1		X	X	11/16" X 1-1/8" X 0.060"
30	AT149518	WIPER MOTOR	1		X	X	WIRING HARNESS IS INCLUDED WITH MOTOR, (INCLUDES U46518, U46519 AND U46520) (SUB FOR AT66766, THIS APPLICATION)
31	19M7833	SCREW	4		X	X	M6 X 35
32	24M7293	WASHER	4		X	X	6.500 X 13 X 1.600 MM
33	14M7272	NUT	4		X	X	M6
34	R52921	WASHER	1		X	X	
35	H77698	TIE BAND	AR		X	X	
36	24M7238	WASHER	2		X	X	8.700 X 17 X 2 MM
37	T132816	SEAL	1		X	X	
38	U46518	SPACER	1		X	X	
39	U46520	GASKET	1		X	X	
40	.....	HINGE	1		X	X	(AT139631 NO LONGER AVAILABLE)
41	TY16312	KIT	1		X	X	
42	AT151752	LATCH	1		X	X	R.H. (SUB FOR AT141153)
	AT151753	LATCH	1		X	X	L.H. (SUB FOR AT141154)

DOORS, WINDOWS, LOWER SIDE WINDOWS AND REAR WINDOWS
CAB LOWER REAR WINDOWS AND LOWER SIDE WINDOWS

TP45579 -UN-01DEC94

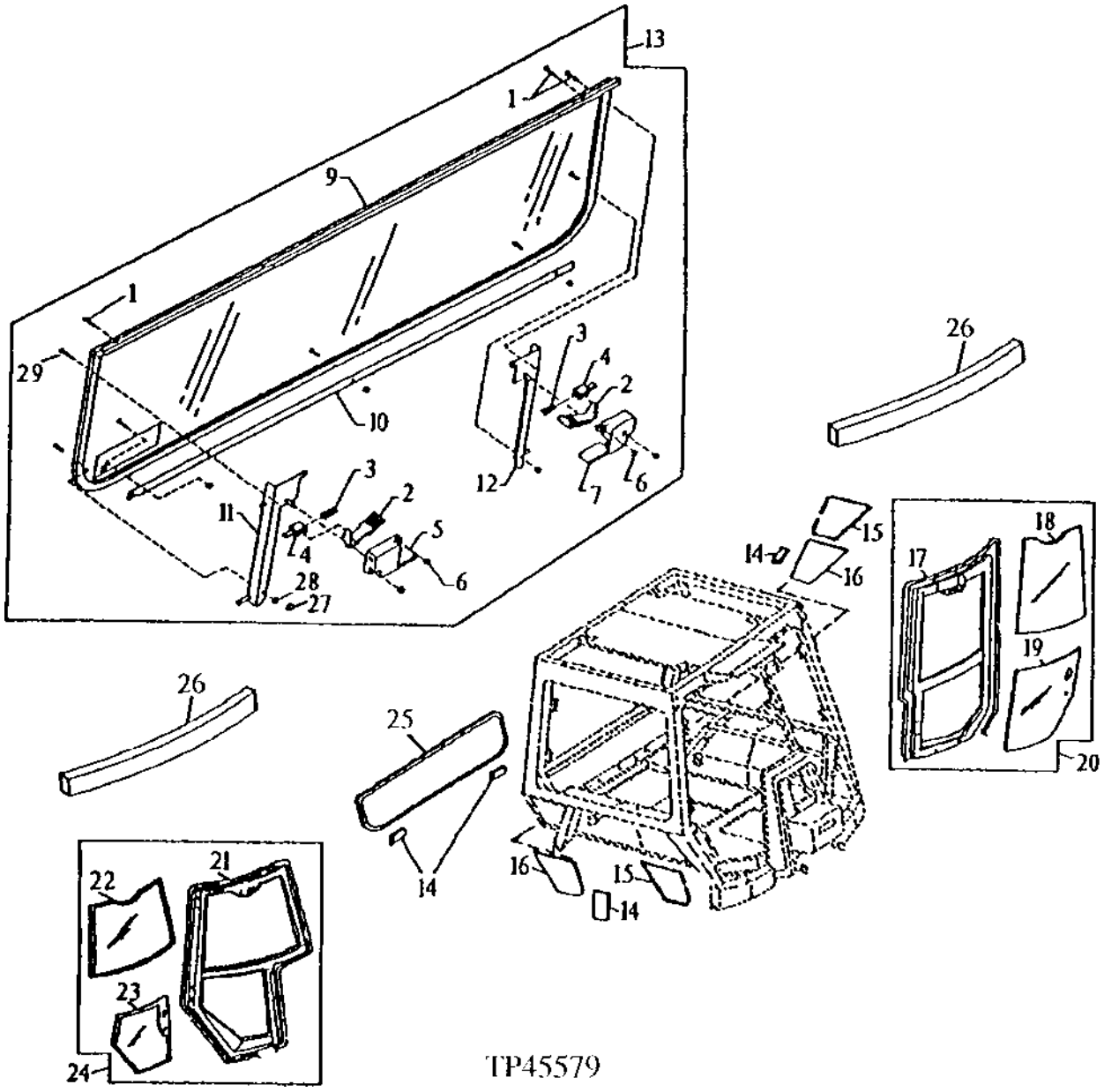

DOORS, WINDOWS, LOWER SIDE WINDOWS AND REAR WINDOWS

KEY	PART NO.	PART NAME	QTY	SERIAL NO.	410D	510D	REMARKS
1	21H1478	SCREW	4		X	X	
2	T133493	LEVER	2		X	X	
3	R28009	SPRING	2		X	X	
4	T133495	PIN	2		X	X	
5	T133491	LATCH	1		X	X	(R.H.)
6	M63431	LOCK NUT	9		X	X	
7	T133492	LATCH	1		X	X	(L.H.)
8	21H1470	SCREW	5		X	X	0.164" X 3/4"
9	AT87527	WINDOW	1		X	X	
10	T132889	SUPPORT	1		X	X	
11	AT87558	GUIDE	1		X	X	
12	AT87559	GUIDE	1		X	X	
13	AT140907	WINDOW	1		X	X	
14	T135675	STAND-OFF	6	-790867	X	X	
	T135675	STAND-OFF	12	790868-	X	X	
15	.....	SEALANT	AR		X	X	FOR ADHESIVE REPAIR USE COMMERCIAL AUTO GLASS URETHANE.
16	T133007	WINDOWPANE	2	-790867	X	X	
	T147876	WINDOWPANE	1	790868-	X	X	RIGHT
	T147877	WINDOWPANE	1	790868-	X	X	LEFT
17	AT145688	SEAL	1		X	X	L.H. DOOR SURROUND (USE WITH TY24446 JD MULTI-SEALANT ADHESIVE)
18	T133335	WINDOWPANE	1		X	X	L. H. UPPER CAB DOOR
19	T133336	WINDOWPANE	1		X	X	L. H. LOWER CAB DOOR
20	.....	DOOR	1		X	X	L.H. (AT173690 NO LONGER AVAILABLE) (SUB AT178078) (SUB FOR AT156894)
21	AT169385	SEAL	1		X	X	R.H. UPPER DOOR (USE WITH TY24446 JD MULTI-SEALANT ADHESIVE) (SUB FOR AT145692, AT151319 AND AT164124)
22	T133333	WINDOWPANE	1		X	X	R.H. UPPER
23	T133334	WINDOWPANE	1		X	X	R.H. LOWER DOOR
24	.....	DOOR	1		X	X	R.H. (AT173689 NO LONGER AVAILABLE) (SUB AT178080) (SUB FOR AT156893)
25	T132952	WINDOWPANE	1		X	X	(BOTTOM LOWER) FOR ADHESIVE REPAIR USE COMMERCIAL AUTO GLASS URETHANE.
26	T145402	SEAL	1		X	X	UPPER DOOR (1676 MM) (ALSO ORDER T148469)
27	24M7100	WASHER	6		X	X	6.600 X 22 X 2 MM
28	M40333	LOCK NUT	6		X	X	6.350 MM
29	T145057	CAP SCREW	6		X	X	6.350 X 28.575 MM
..	TY24446	ADHESIVE	1		X	X	

CAB HEADLINERS, CAB DOME LIGHT AND FENDER COVER

TP50584 -UN-22FEB97

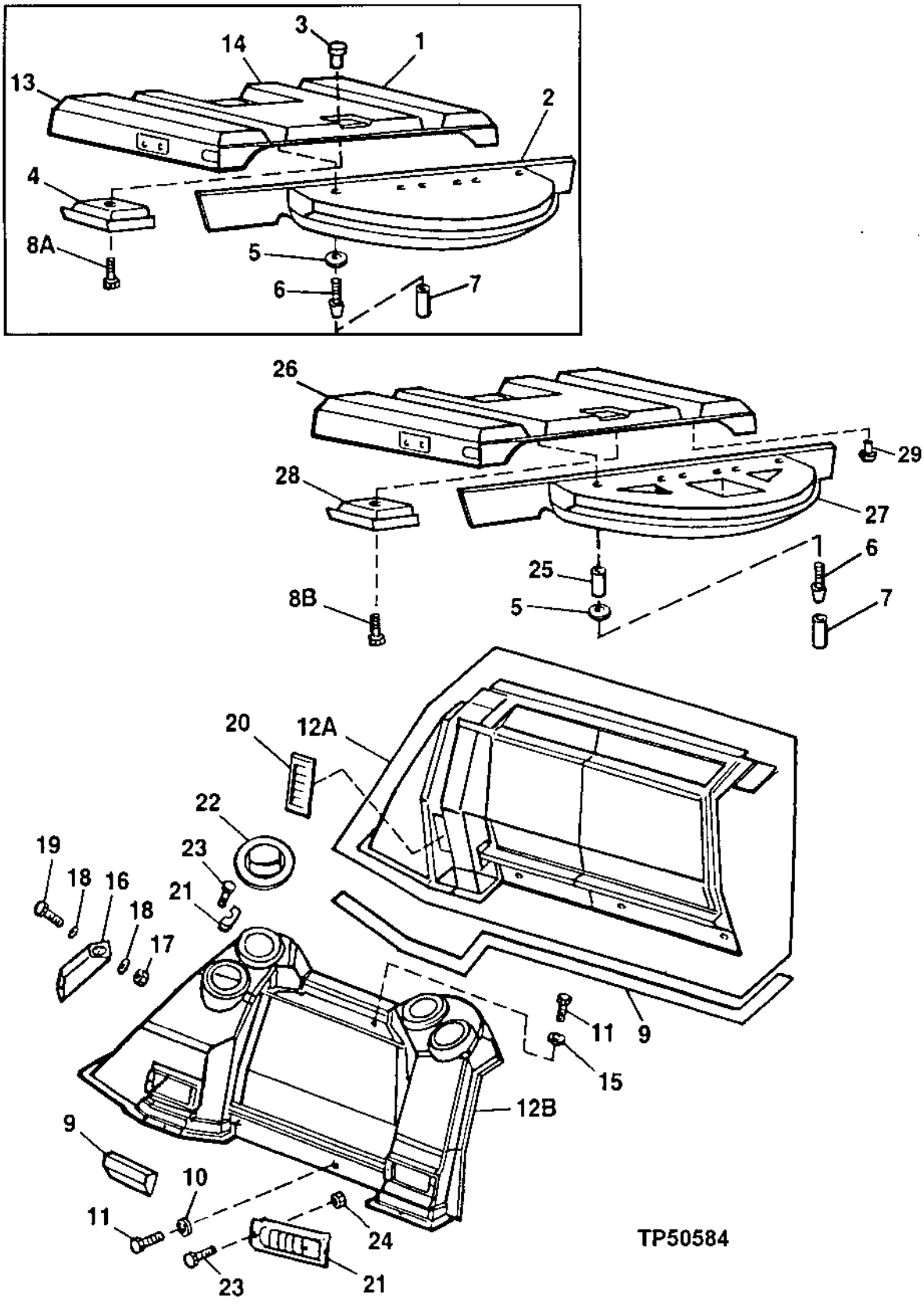

CAB HEADLINERS, CAB DOME LIGHT AND FENDER COVER

KEY	PART NO.	PART NAME	QTY	SERIAL NO.	410D	510D	REMARKS
1	T133353	HEADLINER	1	-823355	X	X	L.H. (SUB T161427) (ALSO ORDER AT173908, T135736, T157811 AND (2) T161294)
2	T133350	HEADLINER	1	-823355	X	X	FRONT (USE WITHOUT RADIO) (SUB T157811) (ALSO ORDER AT173908, T135736, T161427 AND (2) T161294)
	T140363	HEADLINER	1	-823355	X	X	FRONT (USE WITH RADIO) (NOT ILLUSTRATED) (SUB T158351) (ALSO ORDER AT173908, T161427 AND (2) T161294)
	T158351	HEADLINER	1	823356-	X	X	(FRONT) USE WITH RADIO (NOT ILLUSTRATED) (SUB FOR T140363)
3	T82792	NUT	2	-823355	X	X	
4	AT151231	LAMP	1	-823355	X	X	(WITH LIGHT BULBS)
	AR48015	BULB	1		X	X	(DOME LIGHT EYE BALL) (SUB FOR AT150228)
	L41333	BULB	1		X	X	(DOME LIGHT) (SUB FOR AT151255, THIS APPLICATION)
5	T134962	RETAINER	4		X	X	(USE WIHTOUT RADIO)
6	T83060	SCREW	6	-823355	X	X	WITHOUT RADIO
	T134895	SELF-LOCKING SCREW	7		X	X	(USE WITH RADIO)
7	T134961	CAP	4		X	X	(USE WITHOUT RADIO)
8A	T82791	SCREW	2	-823355	X	X	
8B	T83060	SCREW	2	823356-	X	X	
9	T63019	WEATHERSTRIP	1	-816286	X	X	(SUB FOR T59938)
	T158840	SEAL	2	816287-	X	X	
10	24H1646	WASHER	4		X	X	6.756 X 19.050 X 1.524 MM, (LEFT FENDER COVER TO FENDER AND FLOOR SCREWS 3-LOWER SIDE 1-FLOOR) (SUB FOR 24M7139, THIS APPLICATION)
11	T133674	SELF-LOCKING SCREW	6	-823355	X	X	
	T134874	SELF-LOCKING SCREW	6	823356-	X	X	
12A	T141257	COVER	1	-816286	X	X	(SUB FOR T133354) L.H.
12B	AT174337	COVER	1	816287-823355	X	X	
	AT177064	COVER	1	823356-	X	X	
13	T133352	HEADLINER	1	-823355	X	X	R.H. (SUB T161427) (ALSO ORDER AT173908, T135736, T157811 AND (2) T161294)
14	T141043	HEADLINER	1	-823355	X	X	CENTER (SUB T161427) (ALSO ORDER AT173908, T135736, T157811 AND (2) T161294) (SUB FOR T133351)
15	24M7100	WASHER	2		X	X	6.600 X 22 X 2 MM, (FENDER COVER TO FENDER AND FLOOR SCREWS TOP HOLES UNDER LOUVERS)
16	T141235	HOLDER	1	-801199	X	X	SWING LOCK PIN
	T141234	HOLDER	1	801200-	X	X	
17	14M7165	LOCK NUT	2		X	X	M6
18	24H1287	WASHER	4		X	X	7.137 X 15.875 X 1.651 MM
19	19M7874	CAP SCREW	2		X	X	M6 X 30
20	AT140978	LOUVER	4	-816286	X	X	
21	AT177227	LOUVER	2	816287-	X	X	
22	AT227669	LOUVER	4	816287-	X	X	(SUB FOR AT151036)
23	T159945	SCREW	20	816287-	X	X	
24	T159946	NUT	20	816287-	X	X	
25	28H1611	WASHER	2	-823355	X	X	0.269" X 0.405" X 5/16", (HEADLINER)
	28H1611	WASHER	4	823356-	X	X	(HEADLINER)
26	T161427	HEADLINER	1	823356-	X	X	(REAR) (SUB FOR T155431) (ALSO ORDER (2) T161294)
27	T157811	HEADLINER	1	823356-	X	X	(FRONT) (WITHOUT RADIO)
28	AT173908	LAMP	1	823356-	X	X	(INCLUDES SWITCH AND BULB)
	L41333	BULB	1	823356-	X	X	(DOME LIGHT)
29	T161294	PLUG	1	823356-	X	X	REAR HEADLINER

CAB SIDE WINDOWS

T145859 -UN-22SEP01

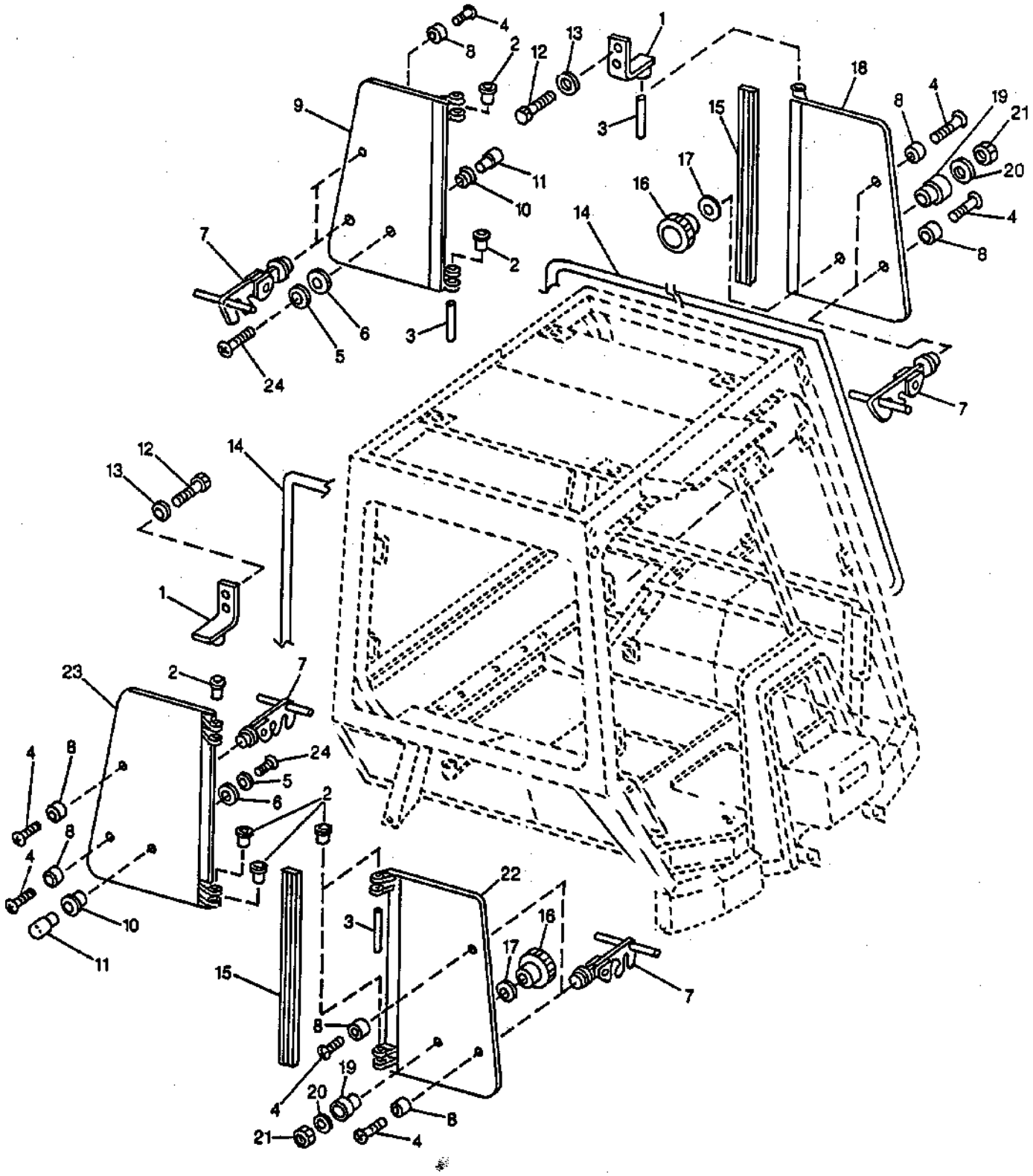

T145859

CAB SIDE WINDOWS

KEY	PART NO.	PART NAME	QTY	SERIAL NO.	410D	510D	REMARKS
1	AT139782	BRACKET	2		X	X	
2	R65570	BUSHING	8		X	X	
3	T131564	PIN	4		X	X	
4	T133674	SELF-LOCKING SCREW	8		X	X	M6 X 16, (USE WITH AT118766)
	T188806	SCREW	8		X	X	(USE WITH AT196522)
5	24H1288	WASHER	2		X	X	9/32" X 1" X 1/16"
6	T76833	WASHER	2		X	X	
7	AT196522	LATCH	8		X	X	(SUB FOR AT118766)
	A48970	DUAL LOCK FASTENER	16		X	X	
8	T184135	BUMPER	8		X	X	(SUB FOR T101090)
9	AT171898	WINDOWPANE	1		X	X	L. H. REAR, (SUB FOR AT139793 AND AT151482)
10	T76832	WASHER	2		X	X	
11	T76831	BUSHING	2		X	X	
12	19M7932	CAP SCREW	4		X	X	M8 X 16
13	24M7238	WASHER	4		X	X	8.700 X 17 X 2 MM
14	T132817	ISOLATOR	2		X	X	
15	T132984	ISOLATOR	2		X	X	
16	AT75311	KNOB	2		X	X	
17	R52921	WASHER	2		X	X	
18	AT171897	WINDOWPANE	1		X	X	L. H. FRONT, (SUB FOR AT139792 AND AT151481)
19	T76830	GUARD	2		X	X	
20	24M7293	WASHER	2		X	X	6.500 X 13 X 1.600 MM
21	14M7167	LOCK NUT	2		X	X	M10
22	AT171898	WINDOWPANE	1		X	X	R. H. FRONT, (SUB FOR AT139793 AND AT151482)
23	AT171897	WINDOWPANE	1		X	X	R. H. REAR, (SUB FOR AT139792 AND AT151481)
24	T133674	SELF-LOCKING SCREW	2		X	X	

LEFT-HAND CAB DOOR AND WIPER MOTOR

T144897 -UN-21AUG01

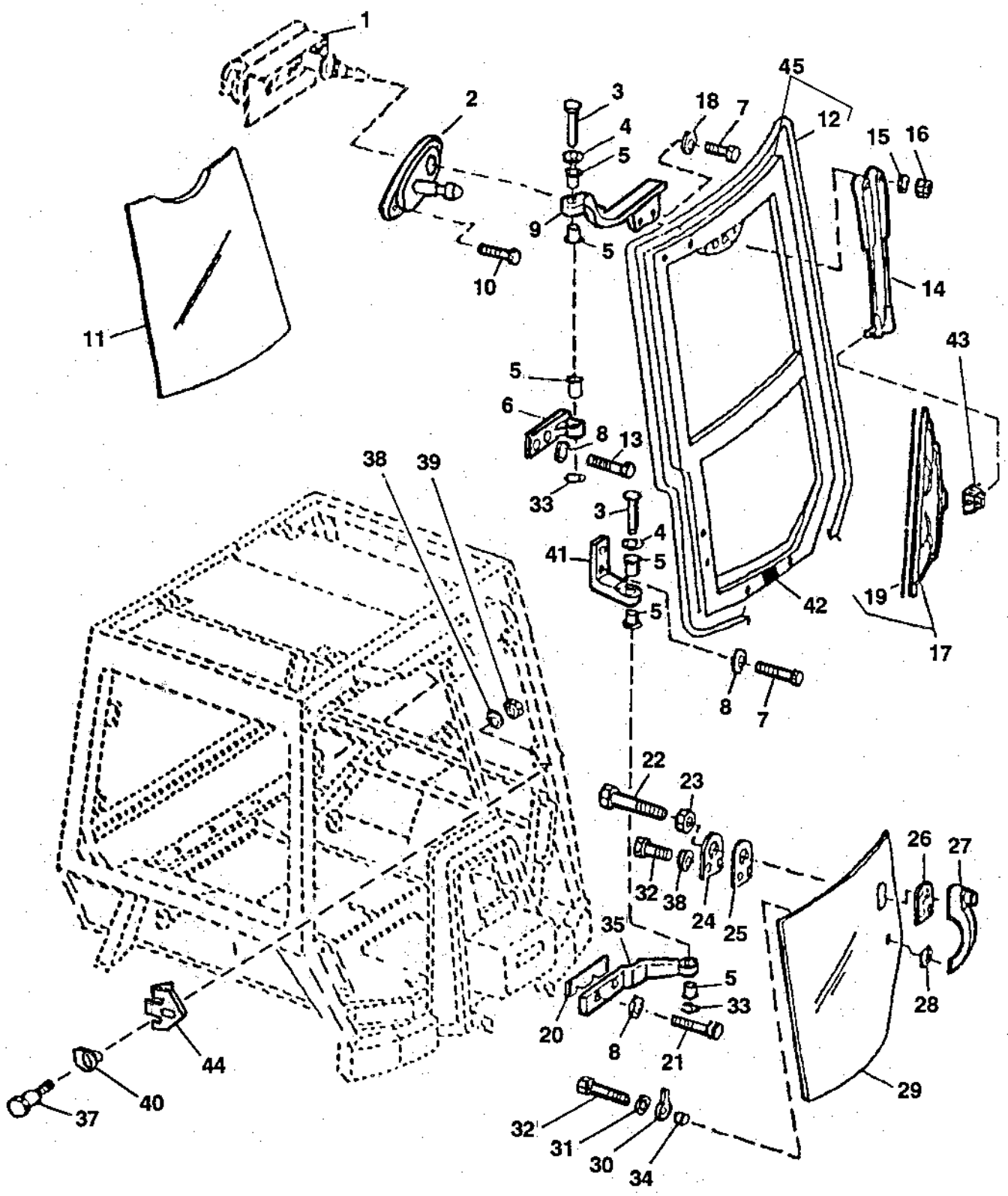

T144897

LEFT-HAND CAB DOOR AND WIPER MOTOR

KEY	PART NO.	PART NAME	QTY	SERIAL NO.	410D	510D	REMARKS
1	.....	MOTOR	1		X	X	
2	RE36215	PLATE	1		X	X	(INCLUDES (1) WASHER AND (1) CAP NUT) (SUB FOR AT115596)
3	T135625	PIN FASTENER	2		X	X	
4	24H1111	WASHER	2		X	X	17/32" X 1-1/16" X 0.090"
5	T141285	BUSHING	4		X	X	(SUB FOR T57177)
6	T135405	HINGE	1		X	X	L. H. UPPER CAB FRAME
7	19M7402	CAP SCREW	4		X	X	M10 X 25, (SUB FOR T135586)
8	24M7239	WASHER	6		X	X	10.700 X 21 X 2.500 MM, (SUB FOR T135423)
9	T147945	HINGE	1		X	X	L. H. UPPER CAB DOOR, (SUB FOR T135406)
10	T141151	BOLT	2		X	X	
11	T133335	WINDOWPANE	1		X	X	L. H. UPPER CAB DOOR
12	AT145688	SEAL	1		X	X	L.H. DOOR SURROUND (USE WITH TY24446 JD MULTI-SEALANT ADHESIVE)
13	19M7658	CAP SCREW	2		X	X	M10 X 50, (SUB FOR T140882)
14	AT151124	WIPER ARM	1		X	X	
15	R63667	WASHER	2		X	X	
16	R63671	NUT	2		X	X	
17	TY16304	WIPER BLADE	1		X	X	(STANDARD DUTY) (ALSO ORDER TY16312) (FOR FIRST TIME INSTALLATION)
	AT117254	WIPER BLADE	1		X	X	(HEAVY DUTY)
18	24M7296	WASHER	2		X	X	10.500 X 30 X 2.500 MM
19	T122979	WIPER BLADE	1		X	X	(SUB FOR T141529)
20	T140911	SHIM	1		X	X	(2 MM)
21	19M7662	CAP SCREW	2		X	X	M10 X 30
22	T140751	SCREW	1		X	X	
23	14H786	NUT	1		X	X	1/4", (SUB FOR T135427)
24	T134584	PLATE	1		X	X	
25	T134582	GROMMET	1		X	X	
26	T134755	GROMMET	1		X	X	
27	AT148303	HANDLE	1		X	X	
28	T134754	GROMMET	1		X	X	
29	T133336	WINDOWPANE	1		X	X	L. H. LOWER CAB DOOR
30	T134583	GROMMET	1		X	X	
31	24H1821	WASHER	1		X	X	9/32" X 47/64" X 1/16", (SUB FOR T135425)
32	19M7286	CAP SCREW	3		X	X	M6 X 25, (SUB FOR T135421)
33	R26871	SNAP RING	2		X	X	
34	T134586	SPACER	3		X	X	
35	T135404	HINGE	1		X	X	L. H. LOWER CAB FRAME
36	24H1287	WASHER	2		X	X	9/32" X 5/8" X 0.065"
37	AR91896	STRIKER	1		X	X	
38	T105740	WASHER	1		X	X	(SUB FOR T135423)
39	14H1047	NUT	1		X	X	7/16", (SUB FOR T135682)
40	T135583	GUARD	1		X	X	
41	T135403	HINGE	1		X	X	L. H. LOWER CAB DOOR
42	T148728	PAD	1		X	X	
43	TY16312	KIT	1		X	X	WIPER BLADE
44	AT188465	KIT	1		X	X	STRIKER BRACKET
45	AT178078	DOOR	1		X	X	WITH GLASS, WIPER MOTOR, DOOR PULL AND LATCH
..	TY24446	ADHESIVE	1		X	X	

RIGHT-HAND CAB DOOR AND WIPER MOTOR

T144971 -UN-24AUG01

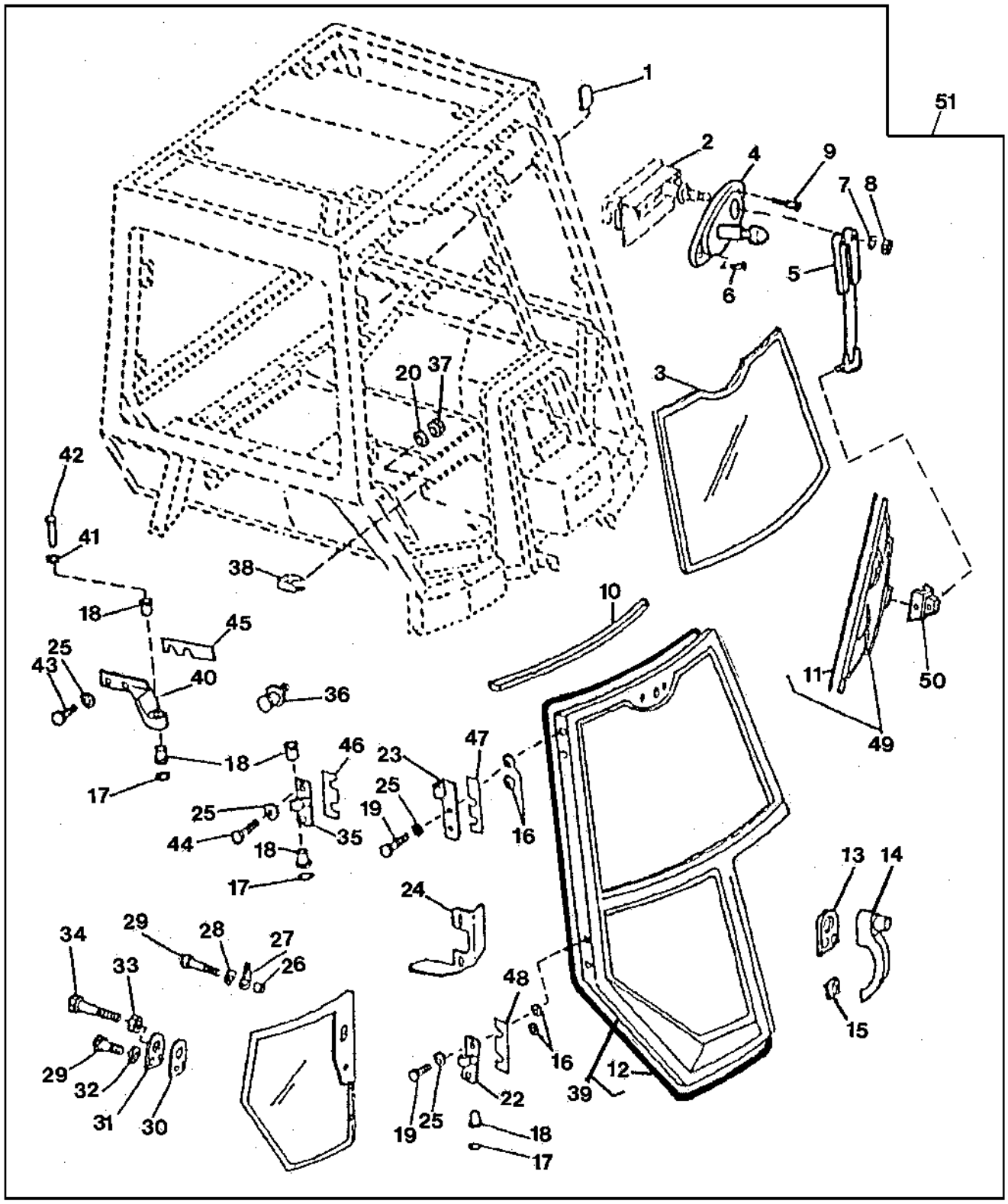

T144971

RIGHT-HAND CAB DOOR AND WIPER MOTOR

KEY	PART NO.	PART NAME	QTY	SERIAL NO.	410D	510D	REMARKS
1	T135748	COVER	1		X	X	COAT HOOK
2	.....	MOTOR	1		X	X	(AT66481)
3	T133333	WINDOWPANE	1		X	X	(R.H. UPPER)
4	RE36215	PLATE	1		X	X	(INCLUDES (1) WASHER AND (1) CAP NUT) (SUB FOR AT115596)
5	AT151124	WIPER ARM	1		X	X	
6	T141151	BOLT	1		X	X	
7	R63667	WASHER	1		X	X	
8	R63671	NUT	1		X	X	
9	19M7662	CAP SCREW	2		X	X	M10 X 30
10	T145402	SEAL	1		X	X	UPPER DOOR (1676 MM) (ALSO ORDER T148469)
11	T122979	WIPER BLADE	1		X	X	(SUB FOR T141529)
12	AT169385	SEAL	1		X	X	R.H. UPPER DOOR (USE WITH TY24446 JD MULTI-SEALANT AHDESIVE) (SUB FOR AT145692, AT151319 AND AT164124)
13	T134755	GROMMET	1		X	X	UPPER
14	AT148303	HANDLE	1		X	X	
15	T134754	GROMMET	1		X	X	LOWER
16	.....	WASHER	AR		X	X	
17	R26871	SNAP RING	2		X	X	
18	T141285	BUSHING	4		X	X	(SUB FOR T57177)
19	19M7358	CAP SCREW	4		X	X	M10 X 40, (SUB FOR T135586)
20	T105740	WASHER	1		X	X	(SUB FOR T135423)
21	T133334	WINDOWPANE	1		X	X	(R.H. LOWER DOOR)
22	.....	HINGE	1	-779223	X	X	(R.H. CAB DOOR LOWER) (SUB T141379 AND T141380)
	T141380	HINGE	1	779224-	X	X	
23	T135387	HINGE	1		X	X	(R.H. CAB DOOR,UPPER)
24	T140899	PLATE	1	-779223	X	X	DOOR STOP (LOWER R.H. DOOR HINGE) (SUB T141379 AND T141380)
25	24M7239	WASHER	8		X	X	(SUB FOR T140882)
26	T134586	SPACER	3		X	X	
27	T134583	GROMMET	1		X	X	
28	24H1821	WASHER	1		X	X	(SUB FOR T135425)
29	19M7286	CAP SCREW	3		X	X	M6 X 25, (SUB FOR T135421)
30	T134582	GROMMET	1		X	X	
31	T134584	PLATE	1		X	X	
32	24H1287	WASHER	2		X	X	
33	14H786	NUT	1		X	X	1/4", (SUB FOR T135427)
34	T141152	SCREW	1		X	X	(SUB FOR T140751, THIS APPLICATION)
35	.....	HINGE	1	-779223	X	X	(R.H. LOWER CAB FRAME) (SUB T141379 AND T141380)
	T141379	HINGE	1	779224-	X	X	
36	AR91896	STRIKER	1		X	X	
37	14H1047	NUT	1		X	X	7/16", (SUB FOR T135682)
38	T135583	GUARD	1		X	X	
39	AT178080	DOOR	1		X	X	WITH GLASS, WIPER MOTOR, DOOR PULL AND LATCH
40	T135386	HINGE	1		X	X	(R.H. UPPER CAB FRAME)
41	24M7036	WASHER	2		X	X	
42	T135625	PIN FASTENER	2		X	X	
43	19M7402	CAP SCREW	2		X	X	M10 X 25, (SUB FOR T135680)
44	T141151	BOLT	1		X	X	
45	T140911	SHIM	AR		X	X	(2 MM)
46	T140912	SHIM	AR		X	X	(2 MM)
47	T140791	SOLID SHIM	AR		X	X	(2 MM)
48	T140790	SOLID SHIM	AR		X	X	(2 MM)
49	TY16304	WIPER BLADE	1		X	X	(STANDARD DUTY) (ALSO ORDER TY16312) (FOR FIRST TIME INSTALLATION)
	AT117254	WIPER BLADE	1		X	X	(HEAVY DUTY)
50	TY16312	KIT	1		X	X	
51	.....	DOOR	1		X	X	(AT178734 NO LONGER AVAILABLE) ORDER COMPONENTS, (CONVERSION) SINGLE DOOR TO 2-DOOR CAB.
..	TY24446	ADHESIVE	1		X	X	

CAB ONE PIECE FRONT WINDSHIELD GLASS AND WIPER MOTOR (WITHOUT RIGHT CAB DOOR)

TP57845 -UN-17MAR98

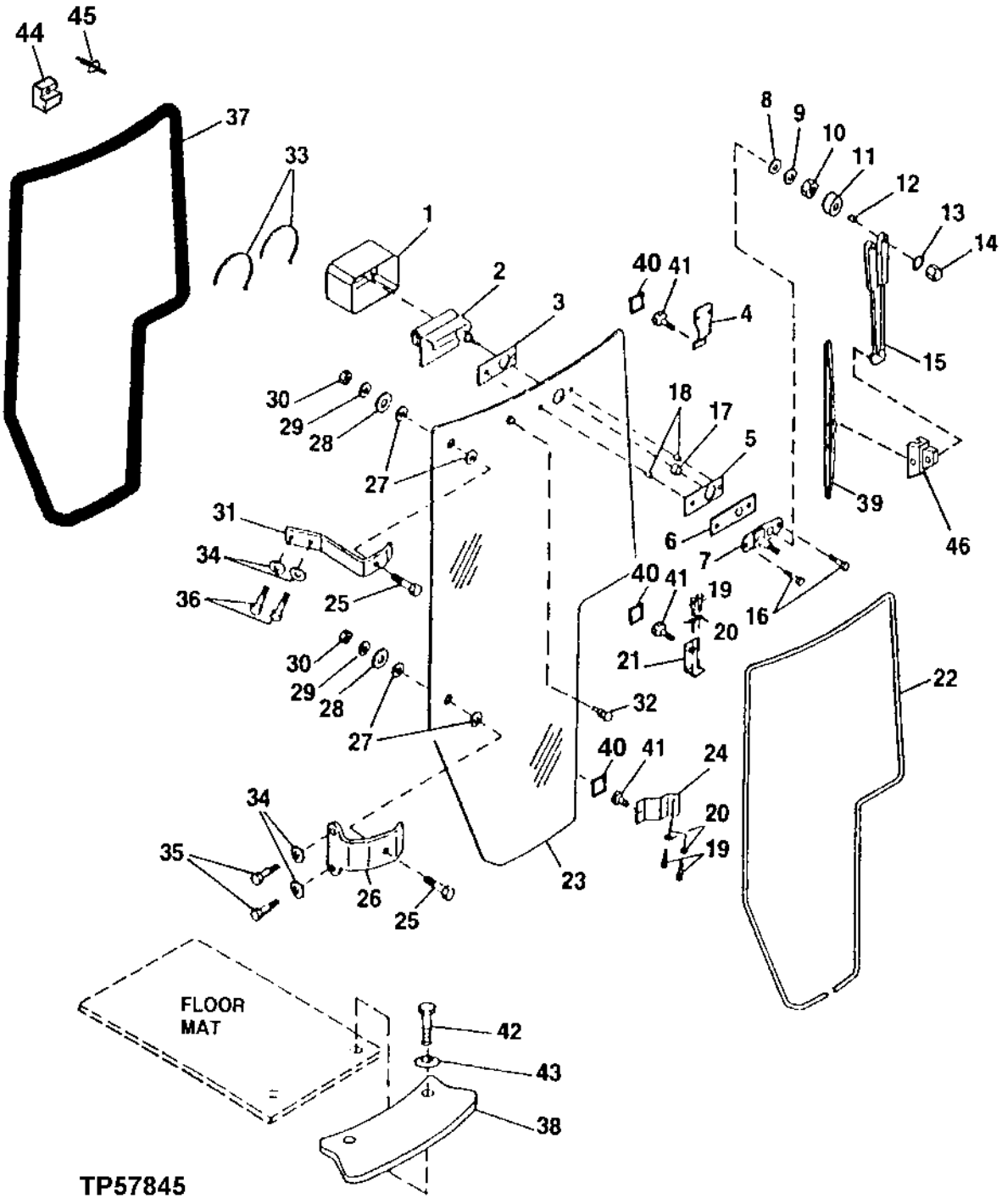

CAB, ONE PIECE FRONT WINDSHIELD GLASS AND WIPER (WITHOUT RIGHT CAB DOOR)

KEY	PART NO.	PART NAME	QTY	SERIAL NO.	410D	510D	REMARKS
1	T151513	COVER	1		X	X	
2	.....	MOTOR	1		X	X	
3	T148472	ISOLATOR	1		X	X	
4	T148478	PLATE	1		X	X	
5	T148471	ISOLATOR	1		X	X	
6	T148470	PLATE	1		X	X	
7	RE36215	PLATE	1		X	X	(INCLUDES (1) WASHER AND (1) CAP NUT)
8	R63666	WASHER	1		X	X	
9	R63667	WASHER	1		X	X	
10	R63668	NUT	1		X	X	
11	R63669	CAP	1		X	X	
12	R63670	WELD NUT	1		X	X	
13	T142520	LOCK WASHER	1		X	X	
14	T142519	NUT	1		X	X	
15	AT151124	WIPER ARM	1		X	X	
16	T135584	SCREW	1		X	X	
17	T148473	BUSHING	1		X	X	
18	T148474	BUSHING	1		X	X	
19	19M7881	SCREW	1		X	X	
20	24M7238	WASHER	4		X	X	
21	T148482	PLATE	1		X	X	
22	T152648	ISOLATOR	1		X	X	
23	T149843	WINDOWPANE	1		X	X	
24	T148485	PLATE	1		X	X	
25	19M7922	CAP SCREW	2		X	X	
26	T148454	HINGE	1		X	X	
27	T158081	WASHER	4		X	X	0.945" X 1.575" X 0.276", (SUB FOR L77652, THIS APPLICATION)
28	T185678	WASHER	2		X	X	(SUB FOR L77651 AND T158080)
29	24M7024	WASHER	1		X	X	
30	14M7273	NUT	2		X	X	
31	T148453	HINGE	1		X	X	
32	T153138	PLUG	1		X	X	(USE WITH NO WINDSHIELD WASHER)
	T153734	GROMMET	1		X	X	(USE WITH WINDSHIELD WASHER OPTION)
33	M86436	TIE BAND	2		X	X	
34	24M7239	WASHER	1		X	X	
35	19M7358	CAP SCREW	2		X	X	
36	19M7662	CAP SCREW	2		X	X	
37	AT164148	ISOLATOR	1		X	X	
38	T153271	GUARD	1		X	X	
39	TY16304	WIPER BLADE	1		X	X	(STANDARD DUTY) (ALSO ORDER TY16312) (FOR FIRST TIME INSTALLATION)
	AT117254	WIPER BLADE	1		X	X	(HEAVY DUTY)
40	T157709	PAD	3		X	X	
41	T153733	BUMPER	3		X	X	
42	T134895	SELF-LOCKING SCREW	2		X	X	
43	24M7100	WASHER	2		X	X	
44	T161902	SUPPORT	1		X	X	(SUB FOR T153981) (ALSO ORDER T163002)
45	T163002	RIVET	1		X	X	
46	TY16312	KIT	1		X	X	WIPER BLADE ADAPTER

FRONT WINDOW WIPER MOTOR

TP46956 -UN-23JAN97

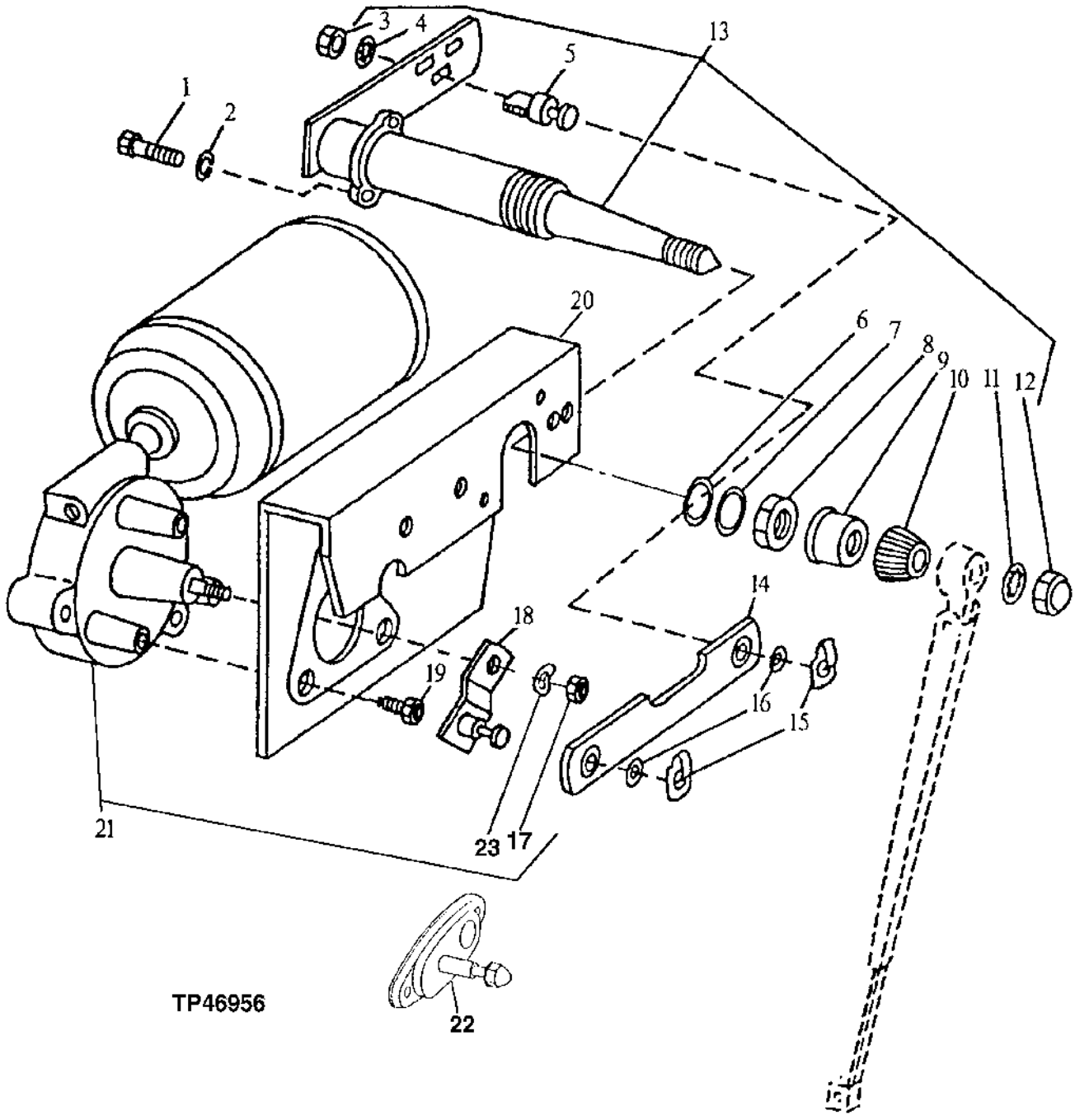

FRONT WINDOW WIPER MOTOR

KEY	PART NO.	PART NAME	QTY	SERIAL NO.	410D	510D	REMARKS
1	21H1127	SCREW	2		X	X	0.190" X 7/16"
2	12H295	LOCK WASHER	2		X	X	0.190"
3	14H649	NUT	1		X	X	1/4"
4	T142520	LOCK WASHER	1		X	X	
5	U46507	PIN	1		X	X	
6	R63666	WASHER	1		X	X	
7	R63667	WASHER	1		X	X	
8	R63668	NUT	1		X	X	
9	R63669	CAP	1		X	X	
10	R63670	WELD NUT	1		X	X	
11	12H297	LOCK WASHER	1		X	X	1/4"
12	T142519	NUT	1		X	X	
13	AT58147	SHAFT	1		X	X	
14	AU43853	LINK	1		X	X	
15	U46506	CLIP	2		X	X	
16	T32255	SHIM	2		X	X	
17	T142517	LOCK NUT	1		X	X	
18	AT157435	ARM	1		X	X	(SUB FOR AT156892) L.H.
	AT141987	ARM	1		X	X	(SUB FOR AT156885) R.H.
19	AT156886	CAP SCREW	3		X	X	
20	R112049	BRACKET	1		X	X	(SUB FOR T142518)
21	.....	MOTOR	1		X	X	L.H. (AT146063 USE IF AVAILABLE) (ALSO ORDER AT314060, U46508, 14M7426, (3) 19M8425, IF USING AT312452 MOTOR) (SUB AT312452)
	AT312452	WIPER MOTOR	1		X	X	L.H. (SUB FOR AT157434, THIS APPLICATION) (SUB FOR AT66481) (ALSO ORDER AT314060, U46508, 14M7426, (3) 19M8425) ALSO ORDER AT135811 IF MOTOR IS MARKED "WC" (3-TERMINAL)
	AT312452	WIPER MOTOR	1		X	X	R.H. (SUB FOR AT146064, THIS APPLICATION) (SUB FOR AT66481) (ALSO ORDER AT314060, U46508, 14M7426, (3) 19M8425) ALSO ORDER AT135811 IF MOTOR IS MARKED "WC" (3 TERMINAL)
22	RE36215	PLATE	1		X	X	(SUB FOR AT115596)
23	U46508	WASHER	1		X	X	

CAB DOOR LATCHES AND PULL HANDLES

TP55035 -UN-20MAR97

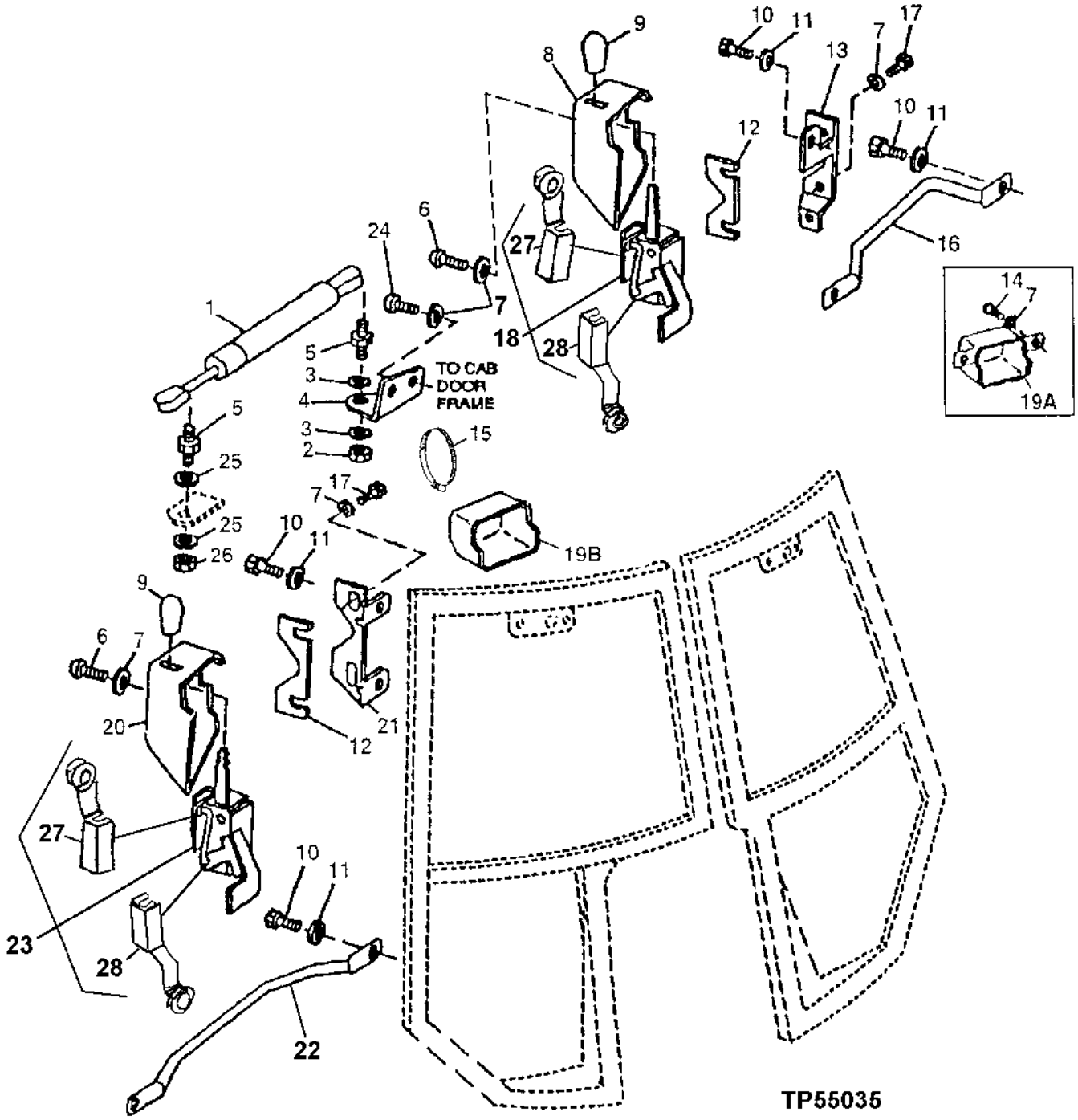

CAB DOOR LATCHES AND PULL HANDLES

KEY	PART NO.	PART NAME	QTY	SERIAL NO.	410D	510D	REMARKS
1	AT146294	CYLINDER	1		X	X	
2	14H785	NUT	1		X	X	5/16"
3	24H1136	WASHER	2		X	X	11/32" X 11/16" X 0.065"
4	T134592	ANGLE	1		X	X	
5	T142651	BALL STUD	2		X	X	(SUB FOR (2) T73834)
6	T133674	SELF-LOCKING SCREW	8		X	X	
7	24H1287	WASHER	AR		X	X	9/32" X 5/8" X 0.065"
8	T133345	COVER	1		X	X	L.H. DOOR LATCH
9	T133487	KNOB	2		X	X	
10	19M7557	CAP SCREW	8		X	X	(SUB FOR T135420, THIS APPLICATION)
11	24M7044	WASHER	4		X	X	13 X 20 X 2 MM, (SUB FOR T135423)
12	T134580	STRAP	4		X	X	
13	T134579	BRACKET	1		X	X	L.H. DOOR
14	T134895	SELF-LOCKING SCREW	2		X	X	
15	M86436	TIE BAND	1		X	X	
16	T133347	HANDLE	1		X	X	L.H. DOOR
17	19H1914	CAP SCREW	4		X	X	1/4" X 1", (SUB FOR T135479)
18	AT145792	LATCH	1		X	X	L.H. DOOR
19A	.....	COVER	2		X	X	T134430 NO LONGER AVAILABLE, (SUB T142875 AND M86436)
19B	T142875	COVER	2		X	X	(ALSO ORDER (2) M86436)
20	T133344	COVER	1		X	X	R.H. DOOR
21	T134590	BRACKET	1		X	X	R.H. DOOR
22	T134591	HANDLE	1		X	X	R.H. DOOR
23	AT145792	LATCH	1		X	X	R.H. DOOR
24	19M8425	CAP SCREW	2		X	X	M6 X 16
25	24M7238	WASHER	2		X	X	8.700 X 17 X 2 MM
26	14H785	NUT	1		X	X	5/16"
27	T161373	CLIP	2		X	X	
28	R26491	CLIP	2		X	X	

FLOOR RAMPS AND FLOOR MATS

TP44740 -UN-01JAN94

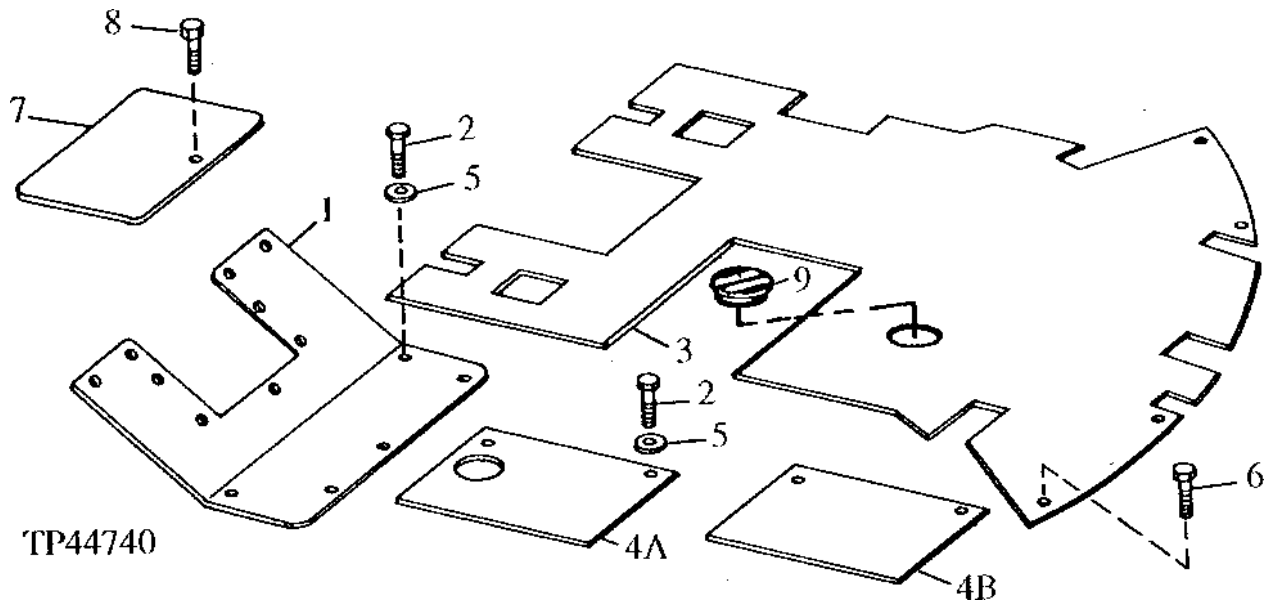

KEY	PART NO.	PART NAME	QTY	SERIAL NO.	4 5 1 1 0 0 D D	REMARKS
1	AT151428	RAMP	1		X X	(WITH CAB)
	AT151429	RAMP	1		X X	(WITH ROPS)
2	19M7932	CAP SCREW	11		X X	M8 X 16
3	T158187	MAT	1		X X	WITH CAB OR ROPS, (SUB FOR T149325, T148228 AND T140083)
4A	T155064	COVER	1	-816286	X X	(SUB FOR AT150248)
	T158031	COVER	1	816287-	X X	
4B	T155065	COVER	1	-816286	X X	(SUB FOR AT150249)
	T158068	COVER	1	816287-	X X	
5	24M7238	WASHER	11		X X	8.700 X 17 X 2 MM
6	T133674	SELF-LOCKING SCREW	4		X X	(WITH CAB)
7	T140887	COVER	1		X X	HEATER HOLE
8	19M8425	CAP SCREW	1		X X	M6 X 16
9	T149324	PLUG	1		X X	

MEMORANDA

ROPS FRAME ROPS MOUNTING ISOLATORS AND ROPS ROOF

TP50628 -UN-08APR97

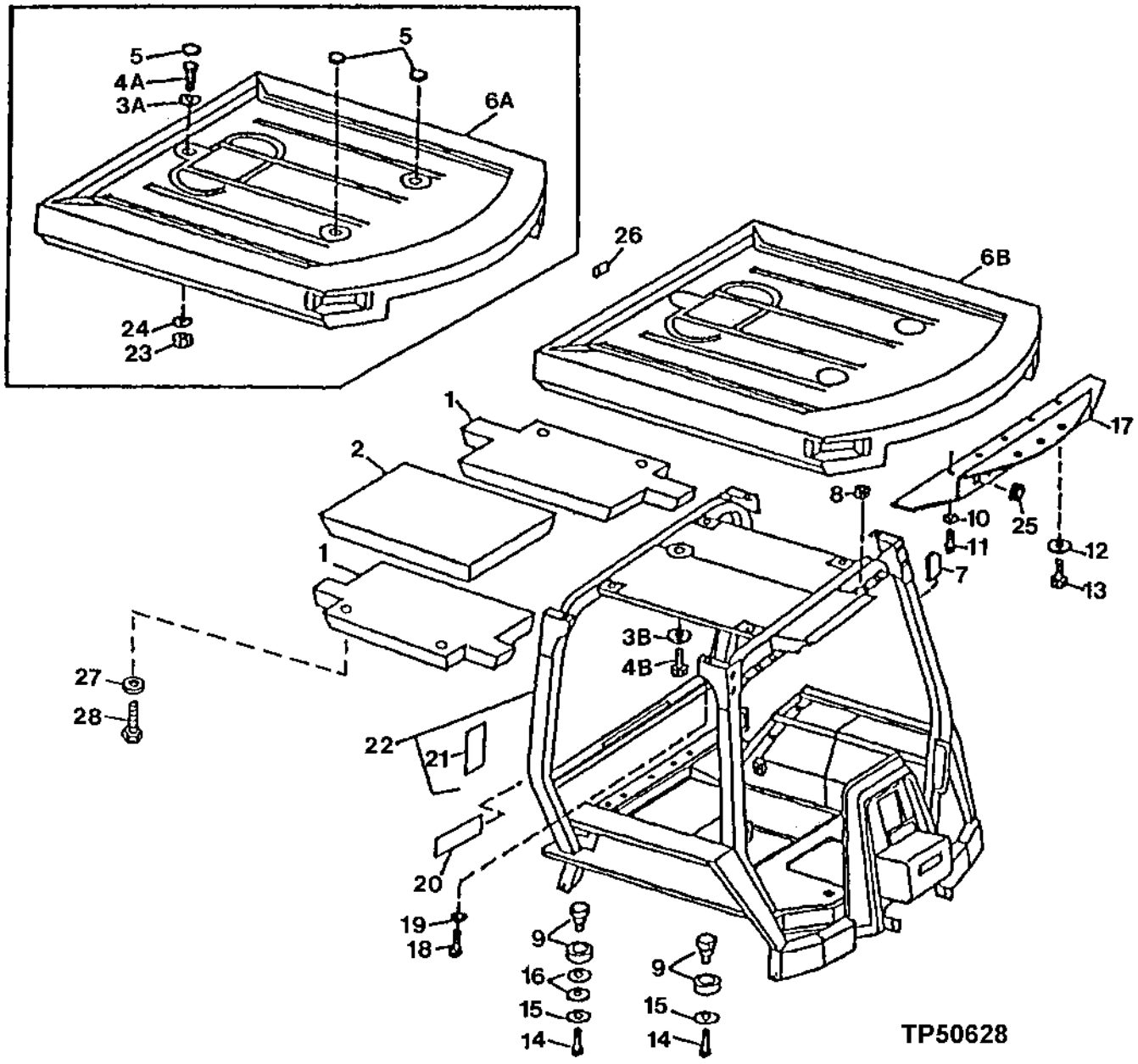

ROPS FRAME ROPS MOUNTING ISOLATORS AND ROPS ROOF

KEY	PART NO.	PART NAME	QTY	SERIAL NO.	410D	510D	REMARKS
1	T161720	PAD	2		X	X	HEADLINER, (SUB FOR T133116) (ALSO ORDER (4) 24M7293 AND (4) 37M7183)
2	T161721	PAD	1		X	X	CENTER HEADLINER, (SUB FOR T133594)
3A	24H1191	WASHER	1	-779593	X	X	1/2" X 1-1/2" X 0.105"
3B	24H1136	WASHER	1	779594-	X	X	11/32" X 11/16" X 0.065"
4A	19M8488	CAP SCREW	1	-779593	X	X	M10 X 45
4B	19H3552	CAP SCREW	1	779594-	X	X	
5	T78888	PLUG	3	-779593	X	X	
6A	T131327	ROOF	1	-779593	X	X	(SUB T141859)
6B	T141859	ROOF	1	779594-787373	X	X	(SUB FOR T131327)
	T160728	ROOF	1	787374-	X	X	(SUB FOR T145993)
7	T135748	COVER	1	-779593	X	X	COAT HOOK
8	BP13712	NUT	6		X	X	
9	AT164785	ISOLATOR	4	-801199	X	X	(SUB FOR AT102326, THIS APPLICATION)
	AT165288	ISOLATOR	4	801200-	X	X	
10	24H1136	WASHER	4		X	X	
11	T83060	SCREW	6		X	X	6.350 X 19.050 MM (1/4" X 3/4")
12	24M7207	WASHER	4		X	X	8.400 X 24 X 2 MM
13	T80176	SELF-LOCKING SCREW	2		X	X	7.925 X 31.750 MM (5/16" X 1-1/4")
14	19M7968	CAP SCREW	4		X	X	M20 X 130
15	T101807	WASHER	4		X	X	22 X 88.900 X 7.925 MM (0.866" X 3-1/2" X 5/16")
16	T80883	WASHER	4		X	X	23.012 X 76.200 X 4.928 MM (29/32" X 3" X 0.194")
17	AT151889	PANEL	1		X	X	(SUB FOR AT140977)
18	T80176	SELF-LOCKING SCREW	4		X	X	7.925 X 31.750 MM (5/16" X 1-1/4")
19	24H1136	WASHER	5		X	X	11/32" X 11/16" X 0.065"
20	T148168	REFLECTOR	1		X	X	RIGHT, (SUB FOR T142094) (SUB FOR JD5901, THIS APPLICATION) REAR MARKER
	T148167	REFLECTOR	1		X	X	LEFT, REAR MARKER
21	T141724	LABEL	1		X	X	(SUB FOR T140432) ROPS
22	AT150642	FRAME	1	-801199	X	X	WITH LABEL
	AT175330	FRAME	1	801200-	X	X	(WITH LABEL) (SUB FOR AT169914)
23	14M7167	LOCK NUT	1	-779593	X	X	M10
24	24M7296	WASHER	1	-779593	X	X	10.500 X 30 X 2.500 MM
25	T130426	GROMMET	2		X	X	
26	T142447	PLUG	1	779594-	X	X	
27	24M7293	WASHER	4		X	X	6.500 X 13 X 1.600 MM, (HEADLINER)
28	37M7183	SCREW	4		X	X	HEADLINER

CAB ROOF

TP41838 -UN-01JAN94

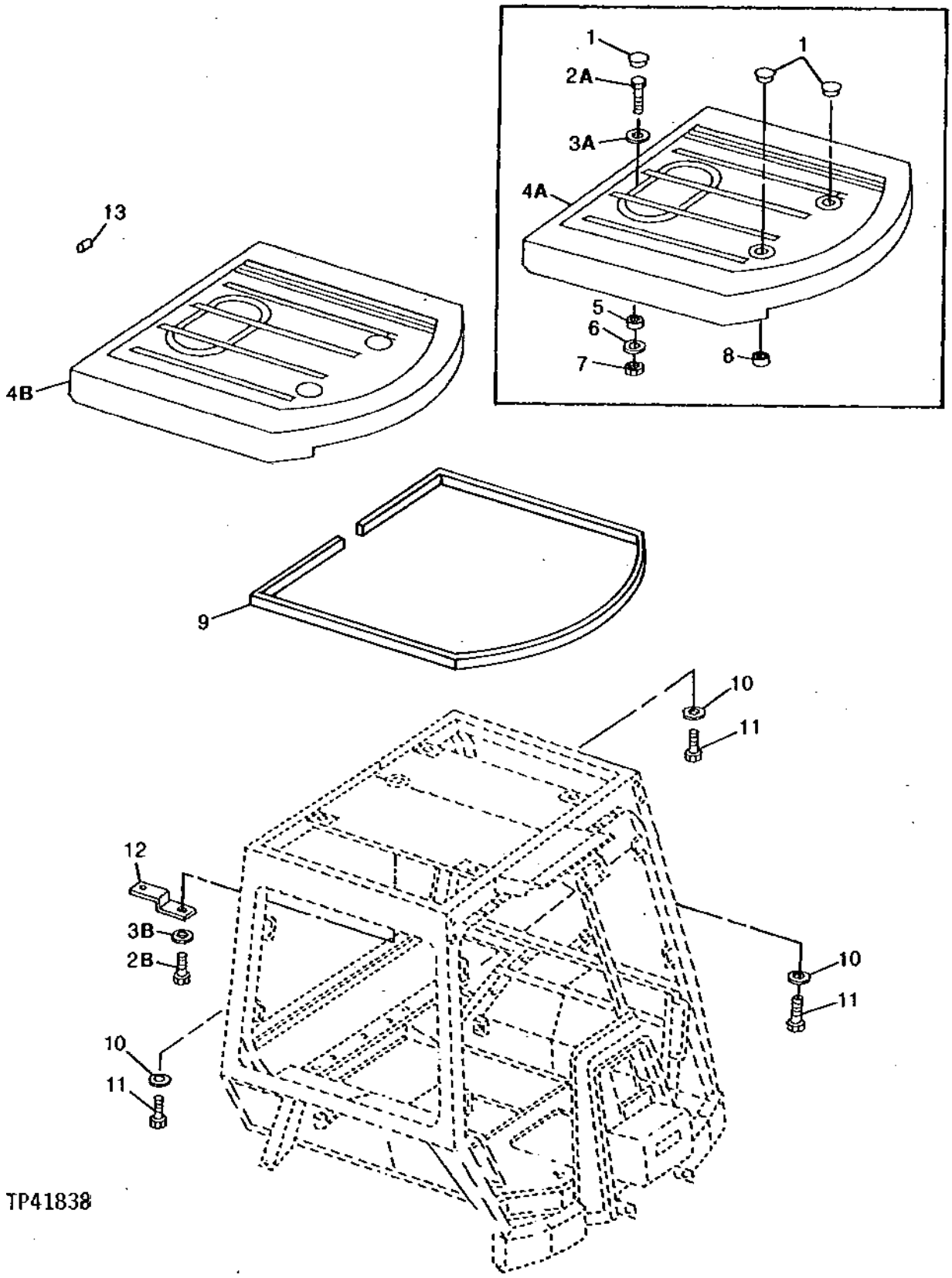

CAB ROOF

KEY	PART NO.	PART NAME	QTY	SERIAL NO.	410D	510D	REMARKS
1	T78888	PLUG	3	-779593	X	X	
2A	19M8488	CAP SCREW	1	-779593	X	X	M10 X 45
2B	T133674	SELF-LOCKING SCREW	1	779594-	X	X	M6 X 16
3A	24H1191	WASHER	1	-779593	X	X	1/2" X 1-1/2" X 0.105"
3B	24H1287	WASHER	1	779594-	X	X	9/32" X 5/8" X 0.065"
4A	T131327	ROOF	1	-779593	X	X	(SUB T141859 AND AT151970)
4B	T141859	ROOF	1	779594-787373	X	X	(SUB FOR T131327)
	T160728	ROOF	1	787374-	X	X	(SUB FOR T145993)
5	T135247	GASKET	1	-779593	X	X	
6	24M7296	WASHER	1	-779593	X	X	10.500 X 30 X 2.500 MM
7	14M7167	LOCK NUT	1	-779593	X	X	M10
8	T135246	GASKET	2	-779593	X	X	
9	T144073	ISOLATOR	1		X	X	(SUB FOR AT56771, THIS APPLICATION)
10	24H1136	WASHER	14		X	X	11/32" X 11/16" X 0.065"
11	T80176	SELF-LOCKING SCREW	12		X	X	5/16" X 1-1/4"
	19H3552	CAP SCREW	2		X	X	5/16" X 1-1/2"
12	AT151970	BRACKET	1	779594-	X	X	
13	T142447	PLUG	1	779594-	X	X	

CAB WINDSHIELD WASHER PUMP AND HOSES

TP58186 -UN-20MAR00

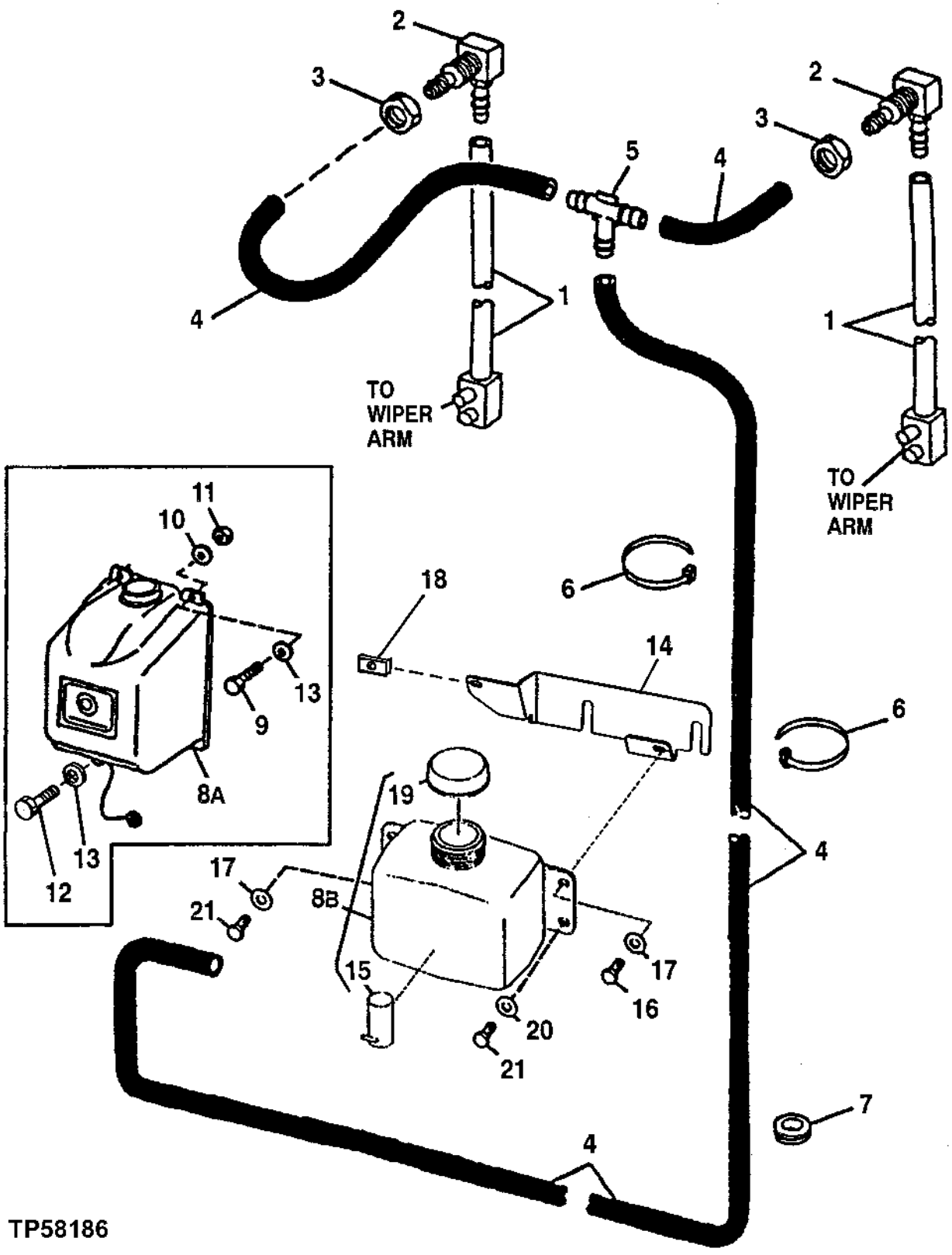

CAB WINDSHIELD WASHER PUMP AND HOSES

KEY	PART NO.	PART NAME	QTY	SERIAL NO.	410D	510D	REMARKS
1	AT151147	KIT	2		X	X	WIPER ARM HOSE
2	AT116970	ELBOW FITTING	2		X	X	
3	.....	NUT	2		X	X	
4	.....	HOSE	AR		X	X	(MAKE FROM R120653 BULK MATERIAL, CUT TO LENGTH) (SUB FOR R54445 AND R104595)
5	T135764	TEE FITTING	1		X	X	
6	R44302	TIE BAND	AR		X	X	
7	N30256	GROMMET	1		X	X	
8A	AT48387	WINDSHIELD WASHER	1	-801199	X	X	
8B	AT169058	RESERVOIR	1	801200-	X	X	
9	19M7933	CAP SCREW	1	-801199	X	X	M6 X 25
10	24H1287	WASHER	2	-801199	X	X	9/32" X 5/8" X 0.065"
11	14M7272	NUT	AR	-801199	X	X	M6
12	19M7923	CAP SCREW	1	-801199	X	X	M6 X 12
13	24H1287	WASHER	1	-801199	X	X	9/32" X 5/8" X 0.065"
14	T166443	BRACKET	1	801200-	X	X	(SUB FOR AT169094)
15	AT103577	PUMP	1	801200-	X	X	(USE IF AVAILABLE) (SUB AT174348)
	AT174348	PUMP	1	801200-	X	X	
16	19M7077	CAP SCREW	2	801200-	X	X	M6 X 20
17	24H1287	WASHER	2	801200-	X	X	9/32" X 5/8" X 0.065"
18	M84972	NUT	4	801200-	X	X	
19	AT173193	CAP	1	801200-	X	X	(SUB FOR AT106413, THIS APPLICATION)
20	24M7293	WASHER	2	801200-	X	X	6.500 X 13 X 1.600 MM
21	19M7077	CAP SCREW	2	801200-	X	X	M6 X 20

MEMORANDA

MEMORANDA

SEAT ADJUSTER
(WITH SUSPENDED SEAT)
(SERIAL NO. -815114)

TP44700 -UN-01JAN94

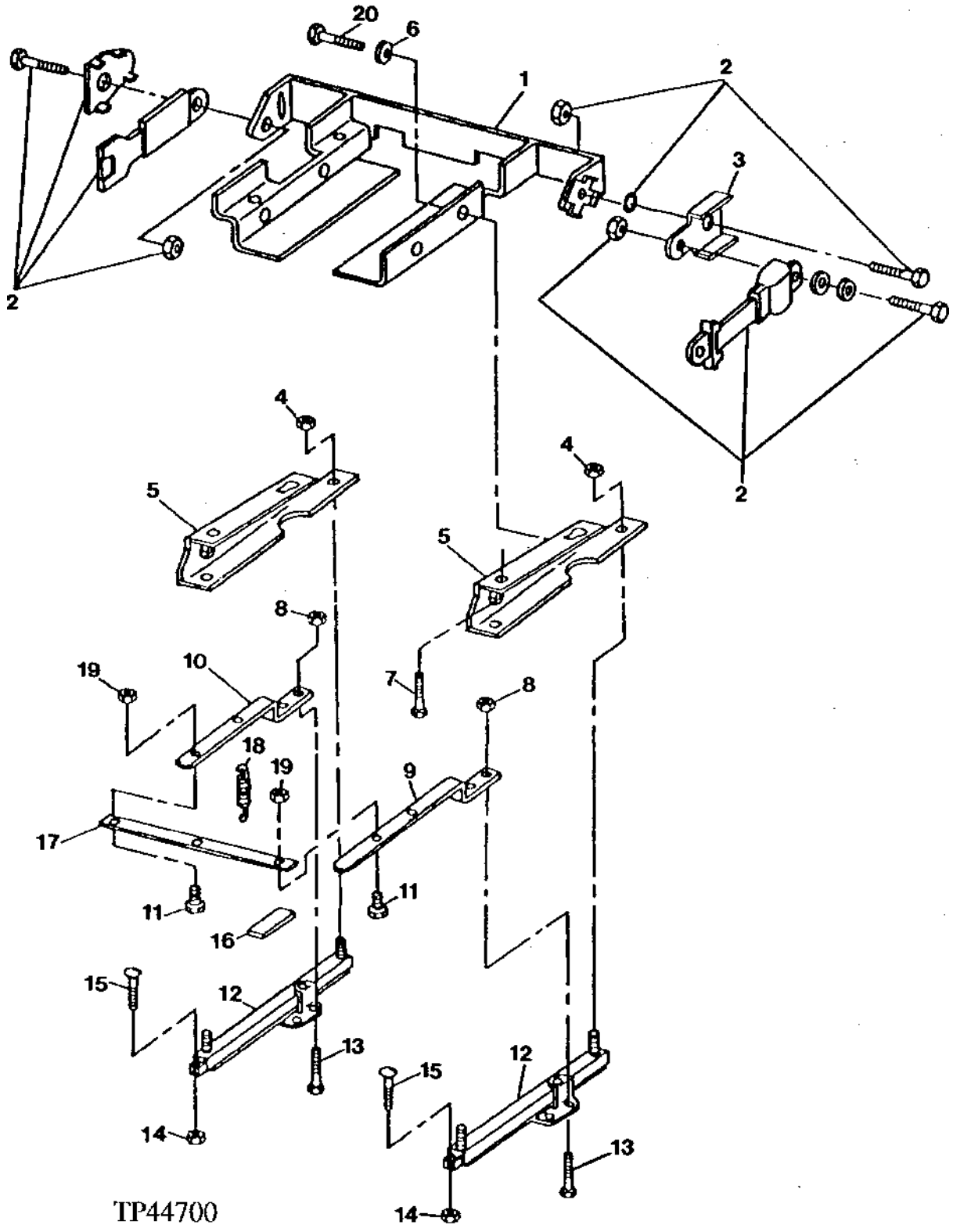

SEAT ADJUSTER
(WITH SUSPENDED SEAT)
(SERIAL NO. -815114)

KEY	PART NO.	PART NAME	QTY	SERIAL NO.	410D	510D	REMARKS
1	AT146301	SUPPORT	1		X	X	
2	AT172910	SEAT BELT	1		X	X	(2 INCH) (ALSO ORDER AT172779) (SUB FOR AT145740)
	AT172903	SEAT BELT	1		X	X	(SUB FOR AT148422) (3 INCH)
3	T140401	BRACKET	1		X	X	(USE WITH 3 INCH SEAT BELT)
4	14H785	NUT	4		X	X	5/16"
5	AT151136	BRACKET	2		X	X	
6	24H1305	WASHER	2		X	X	
7	T77833	SELF-LOCKING SCREW	4		X	X	
8	E45229	LOCK NUT	4		X	X	(SUB K40001)
	K40001	LOCK NUT	4		X	X	
9	T137302	LEVER	1		X	X	LEFT
10	T140858	LEVER	1		X	X	RIGHT
11	T25803	CAP SCREW	2		X	X	
12	AT75874	ADJUSTER	2		X	X	
13	19H1919	CAP SCREW	4		X	X	1/4" X 5/8"
14	14M7273	NUT	4		X	X	M8
15	19M7513	CAP SCREW	4		X	X	M8 X 30
16	T135211	GRIP	1		X	X	
17	T140857	STRAP	1		X	X	
18	R43538	SPRING	1		X	X	
19	H143332	LOCK NUT	2		X	X	(SUB FOR T32688)
20	19H2676	CAP SCREW	2		X	X	3/8" X 1"

**SEAT BASE WITH TURNTABLE
(WITH SUSPENDED SEAT)
(SERIAL NO. -815114)**

TP44154 -UN-01JAN94

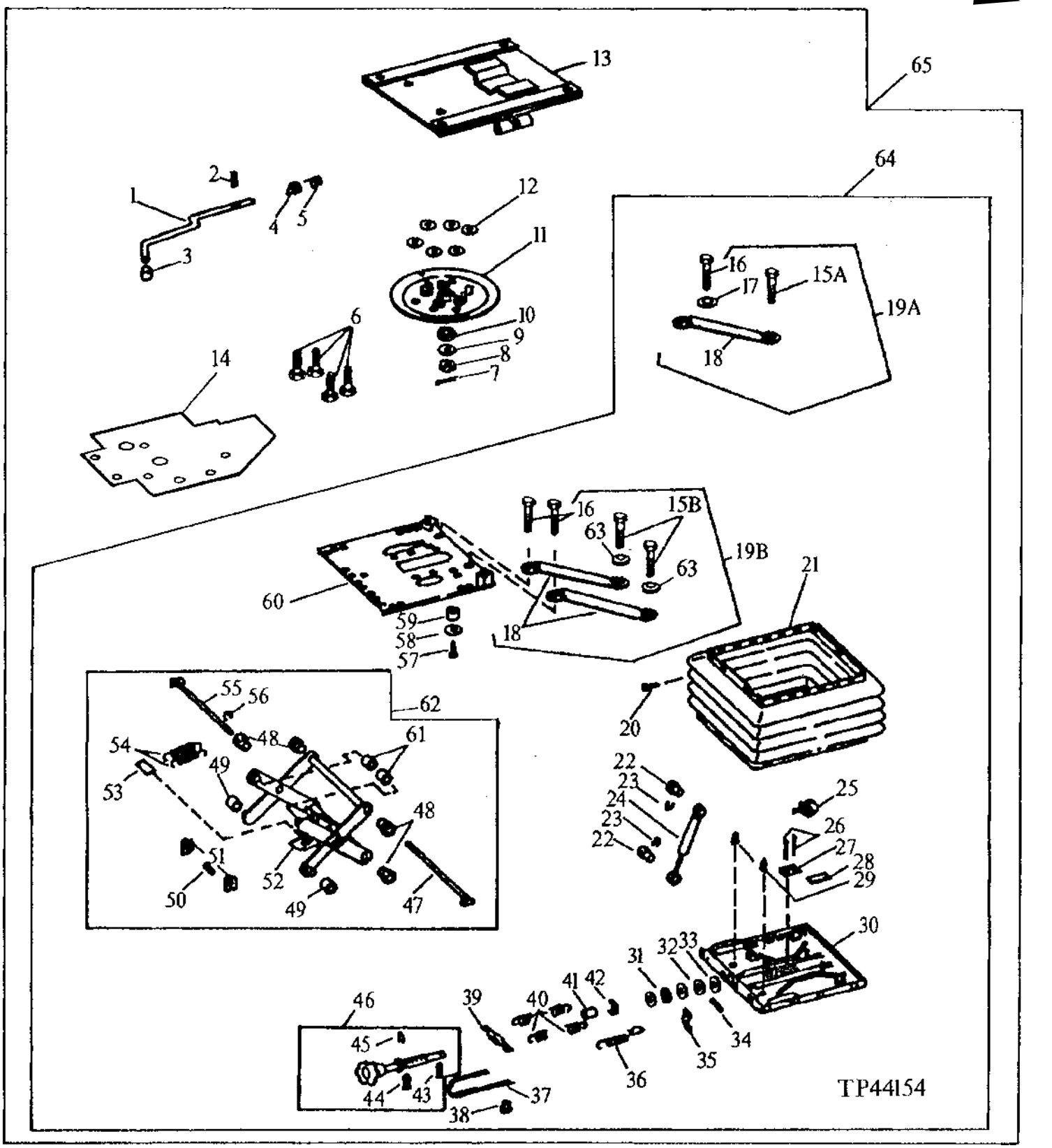

SEAT BASE WITH TURNTABLE
(WITH SUSPENDED SEAT)
(SERIAL NO. -815114)

KEY	PART NO.	PART NAME	QTY	SERIAL NO.	410D	510D	REMARKS
1	T141397	ROD	1		X	X	(SUB FOR T82216, THIS APPLICATION)
2	34M7094	SPRING PIN	1		X	X	4 X 16 MM
3	T82217	KNOB	1		X	X	
4	T82218	PAWL	1		X	X	
5	T82219	EXTENSION SPRING	1		X	X	
6	19M8163	CAP SCREW	4	-787008	X	X	M8 X 16
	T146652	SCREW	4	787009-	X	X	
7	11M7083	COTTER PIN	1		X	X	3.200 X 50 MM
8	14M7179	NUT	1		X	X	M16
9	R39129	THRUST WASHER	1		X	X	
10	T82221	WASHER	1		X	X	
11	AT84216	PLATE	1		X	X	
12	AT107543	BUSHING	6		X	X	
13	.....	PLATE	1	-787008	X	X	(UPPER TURNTABLE) (SUB AT161481) (ALSO ORDER AT161675, T146639 AND (4) T146652) (AT145233 NO LONGER AVAILABLE)
	AT161481	PLATE	1	787009-	X	X	(UPPER TURNTABLE)
14	T146639	PLATE	1	787009-	X	X	
15A	.....	CAP SCREW	1		X	X	
15B	19M7402	CAP SCREW	2		X	X	M10 X 25
16	19H3150	CAP SCREW	2		X	X	7/16" X 3/4"
17	L36255	WASHER	1		X	X	
18	.....	STRAP	1		X	X	TETHER BELT
19A	.....	SEAT BELT	2		X	X	(AT84231 NO LONGER AVAILABLE) (SUB AT160627)
19B	AT160627	KIT	1		X	X	
20	L38892	PLUG	36		X	X	
21	AL36686	BOOT	1		X	X	
22	L63562	PIN FASTENER	2		X	X	(SUB FOR L38889)
23	40M7041	SNAP RING	2		X	X	
24	AT84224	SHOCK ABSORBER	1		X	X	
25	AL38526	FORK	1		X	X	
26	AT44188	RIVET	2		X	X	
27	L38891	RAIL	1		X	X	
28	L38890	PLATE	1		X	X	
29	L25678	BUMPER	2		X	X	
30	AT145191	PLATE	1		X	X	(LOWER)

**SEAT BASE WITH TURNTABLE
(WITH SUSPENDED SEAT)
(SERIAL NO. -815114)**

TP44154 -UN-01JAN94

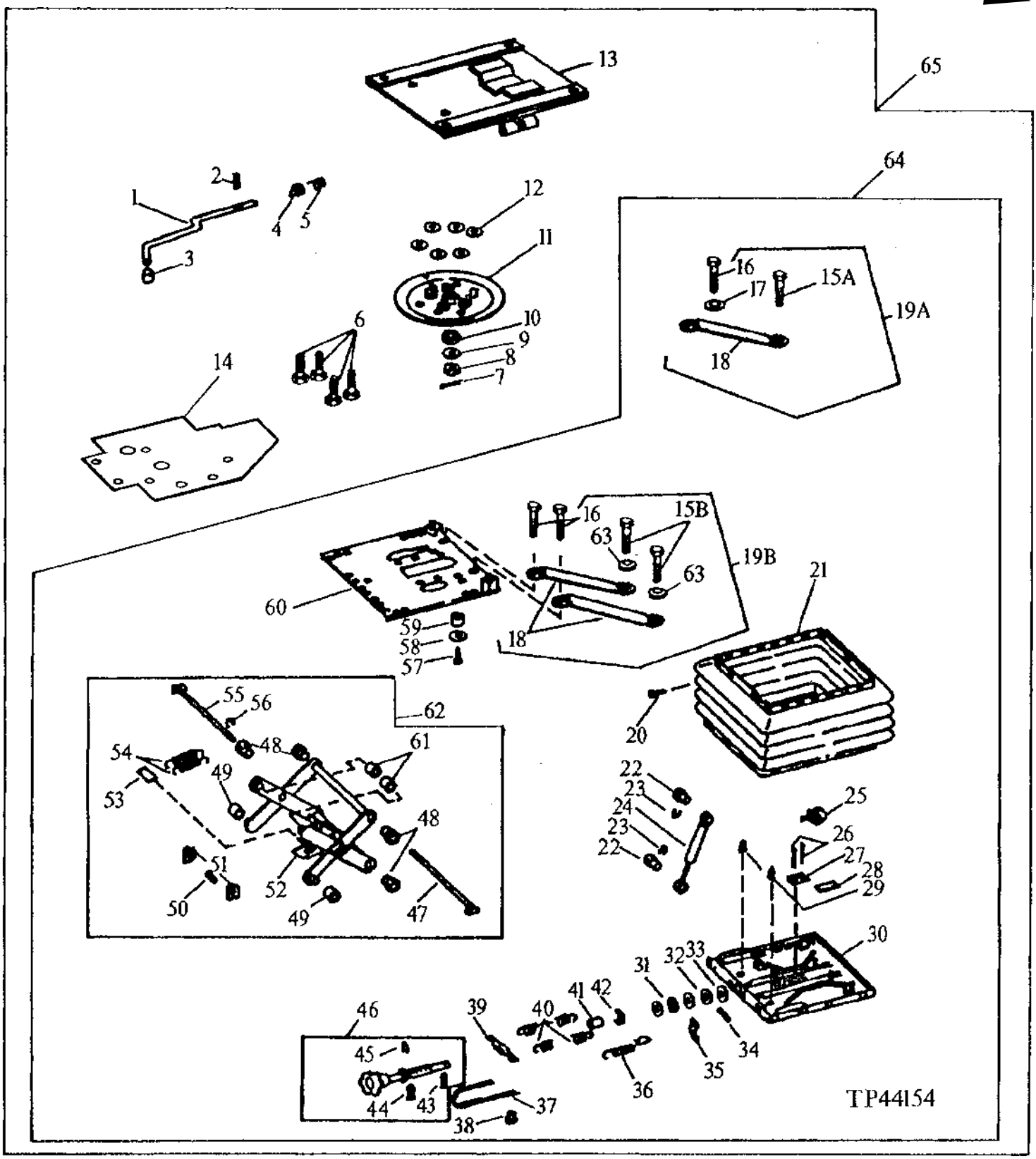

SEAT BASE WITH TURNTABLE
(WITH SUSPENDED SEAT)
(SERIAL NO. -815114)

KEY	PART NO.	PART NAME	QTY	SERIAL NO.	410D	510D	REMARKS
31	JD10212	BALL BEARING	2		X	X	
32	24H1657	WASHER	1		X	X	21/64" X 1-1/4" X 7/64"
33	B28163	WASHER	1		X	X	
34	L38851	ROLLER	1		X	X	
35	L38847	GUIDE	1		X	X	
36	L38866	EXTENSION SPRING	1		X	X	
37	T82231	TIE BAND	1		X	X	
38	L38857	PLUG	2		X	X	
39	AL36643	RETAINER	1		X	X	
40	T82227	EXTENSION SPRING	2		X	X	
41	L42038	BUSHING	1		X	X	
42	L38861	NUT	1		X	X	
43	34M7129	SPRING PIN	1		X	X	3 X 16 MM
44	34M7130	SPRING PIN	1		X	X	4 X 20 MM
45	40M7051	SNAP RING	1		X	X	
46	AL38524	ADJUSTER	1		X	X	
47	AT84228	PIN FASTENER	1		X	X	
48	L42041	BEARING	4		X	X	(A)
49	L42042	ROLLER	2		X	X	(A)
50	L38862	BAR	1		X	X	(A)
51	L38852	PLATE	2		X	X	(A)
52	.....	ARM	1		X	X	(A) (SUB AL64581) (SUB FOR AL64580)
53	L38853	PLATE	1		X	X	(A)
54	L38854	SPRING	2		X	X	(A)
55	AT84226	PIN FASTENER	1		X	X	
56	40M7030	SNAP RING	1		X	X	
57	L42039	RIVET	1		X	X	
58	24M7146	WASHER	1		X	X	4.300 X 12 X 1 MM
59	L42040	BUMPER	1		X	X	
60	.....	PLATE	1	-787008	X	X	(UPPER BASE) (AT84229 NO LONGER AVAILABLE) (SUB AT161675) (ALSO ORDER AT161481, T146639 AND (4) T146652)
	AT161675	PLATE	1	787009-	X	X	(UPPER BASE)
61	L38855	ROLLER	2		X	X	
62	AT84225	ROCKER	1		X	X	
	AL64581	ARM	1		X	X	(NOT ILLUSTRATED) (INCLUDES PARTS MARKED A)
63	24M7239	WASHER	2		X	X	10.700 X 21 X 2.500 MM
64	.....	BASE	1		X	X	(AT145199 NO LONGER AVAILABLE) (SUB AT161479)
65	AT161479	BASE	1		X	X	(SUB FOR AT141039)

SEAT CUSHIONS AND ARM RESTS

TP50433 -UN-10JUL96

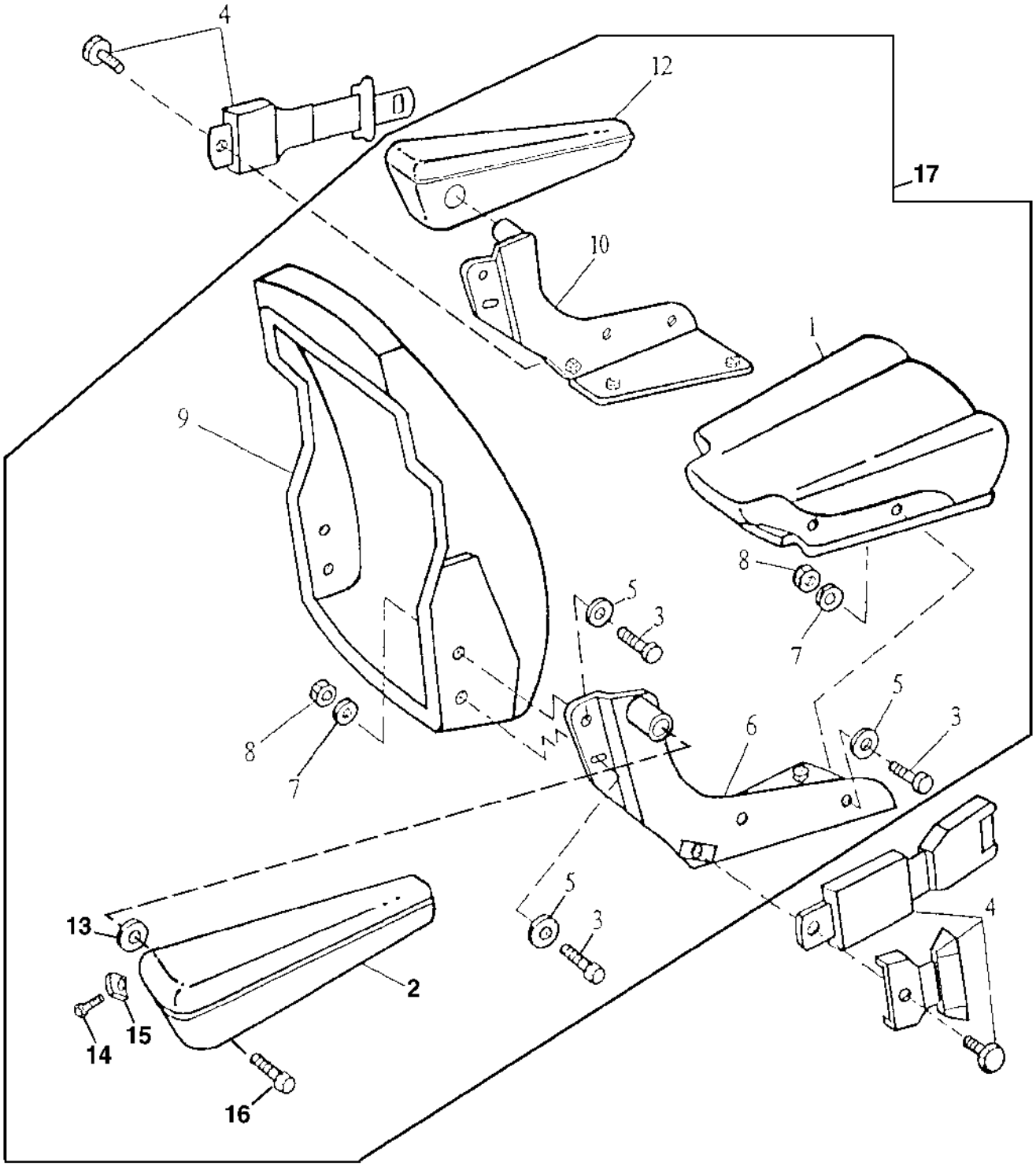

TP50433

SEAT CUSHIONS AND ARM RESTS

KEY	PART NO.	PART NAME	QTY	SERIAL NO.	410D	510D	REMARKS
1	AT139858	CUSHION	1		X	X	(CLOTH)
	AT141286	CUSHION	1		X	X	(VINYL)
2	AT146058	ARMREST	1		X	X	(RH) (BLACK)
	AT186152	ARMREST KIT	1		X	X	(RH) (BLACK) INCLUDES ATTACHING HARDWARE, (SUB FOR AT183637)
3	19H2676	CAP SCREW	8		X	X	HS, SAE 8, 3/8" X 1"
4	AT172910	SEAT BELT	1		X	X	(2 INCH) (ALSO ORDER AT172779) (SUB FOR AT145740)
	AT172903	SEAT BELT	1		X	X	(SUB FOR AT148422) (3 INCH)
5	24H1305	WASHER	8		X	X	13/32" X 13/16" X 0.065"
6	AT175955	BRACKET	1	-815114	X	X	RH. SUSPENSION SEAT, (SUB FOR AT146060)
	AT175349	BRACKET	1	815115-	X	X	RH. SUSPENSION SEAT,
	AT175349	BRACKET	1		X	X	RH. NON-SUSPENSION, (SUB FOR AT146056 AND AT151939)
7	12H304	LOCK WASHER	8	-815114	X	X	3/8"
8	14H812	NUT	8	-815114	X	X	3/8"
	N10215	LOCK NUT	8	815115-	X	X	3/8"
9	AT141283	SEAT BACK	1		X	X	(VINYL) NON-SUSPENSION AND SUSPENSION, WITHOUT ADJUSTING LUMBAR
	AT158425	SEAT BACK	1		X	X	(CLOTH) (WITH ADJUSTING LUMBAR) (SUB FOR AT141276)
	AT175443	SEAT BACK	1		X	X	(VINYL) SUSPENSION, (WITH ADJUSTING LUMBAR)
10	AT175954	BRACKET	1	-815114	X	X	LH. SUSPENSION SEAT, (SUB FOR AT146059)
	AT175348	BRACKET	1	815115-	X	X	LH. SUSPENSION SEAT,
	AT175348	BRACKET	1		X	X	LH. NON-SUSPENSION, (SUB FOR AT146055 AND AT151940)
11	T140401	BRACKET	AR		X	X	(USE WITH 3 INCH SEAT BELT) (NOT ILLUSTRATED)
12	AT146057	ARMREST	1		X	X	(LH) (BLACK)
	AT186156	ARMREST KIT	1		X	X	(LH) (BLACK) INCLUDES ATTACHING HARDWARE, (SUB FOR AT183638)
13	T120545	WASHER	2		X	X	
14	T120543	SCREW	2		X	X	
15	T120540	COVER	1		X	X	(RIGHT SEAT)
	T120541	COVER	1		X	X	(LEFT SEAT)
16	T120544	SCREW	2		X	X	
17	AT173704	SEAT	1		X	X	(VINYL NON-SUSPENSION) (BROWN) INCLUDES SEAT BASE, SWIVEL AND SLIDE
	AT173705	SEAT SUSPENSION	1		X	X	(VINYL) (BROWN) INCLUDES SEAT SUSPENSION, SWIVEL AND SLIDE
	AT173706	SEAT SUSPENSION	1		X	X	(CLOTH) (BROWN) INCLUDES SEAT SUSPENSION, SWIVEL AND SLIDE

SEAT BASE AND SEAT SUPPORT
(WITH NON-SUSPENDED SEAT)

TP57808 -UN-10DEC97

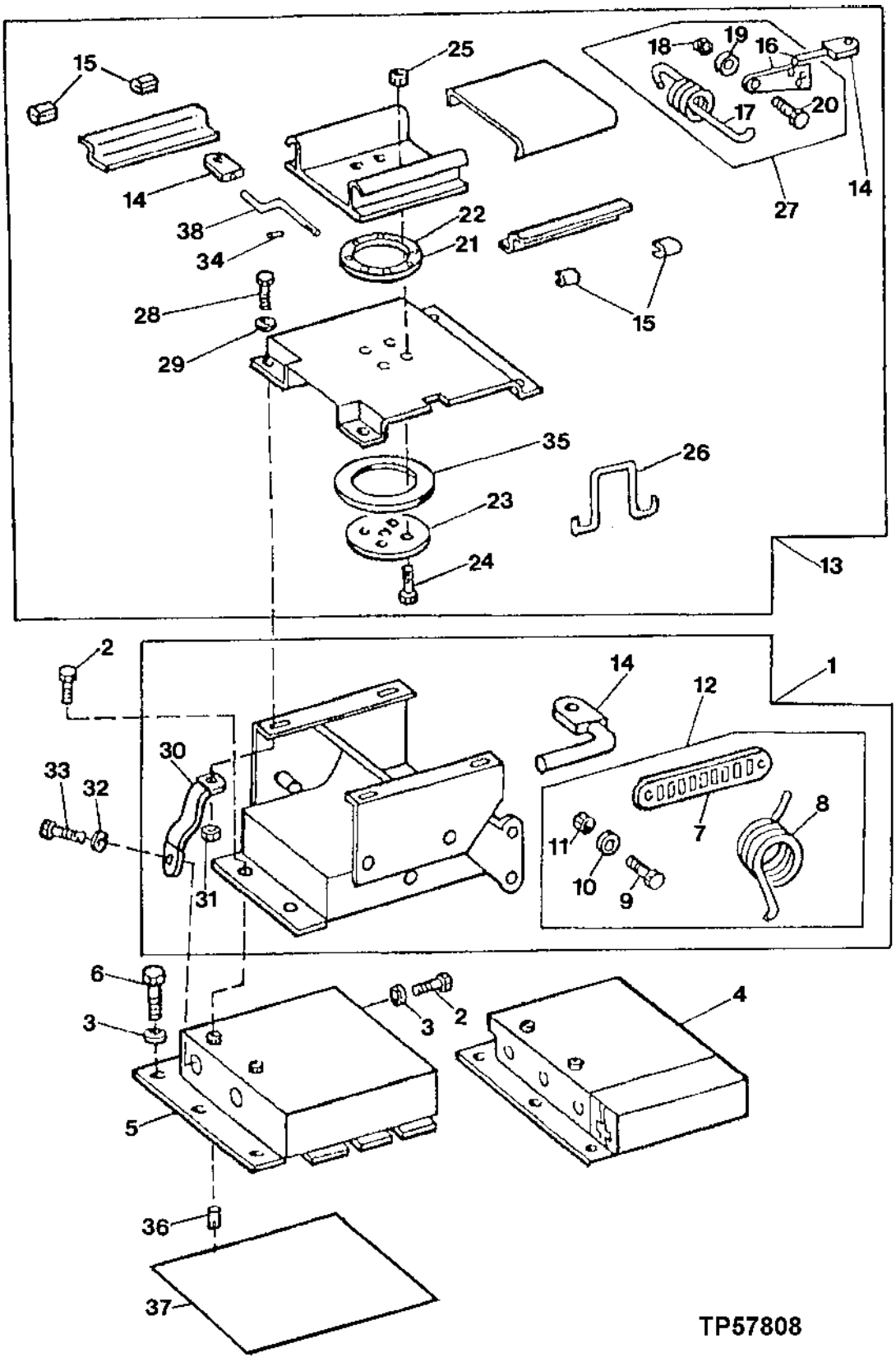

SEAT BASE AND SEAT SUPPORT
(WITH NON-SUSPENDED SEAT)

KEY	PART NO.	PART NAME	QTY	SERIAL NO.	410D	510D	REMARKS
1	AT141500	BASE	1		X	X	(ASSEMBLED)
2	19M7402	CAP SCREW	4		X	X	M10 X 25
3	24M7239	WASHER	11		X	X	10.700 X 21 X 2.500 MM
4	AT141214	COVER	1		X	X	(WITH CAB HEATER OR AIR CONDITIONING)
5	.....	BASE	1		X	X	(W/O CAB HEATER OR AIR CONDITIONING) (AT145508 NO LONGER AVAILABLE) (SUB AT174711) (ALSO ORDER R26936 AND T157803)
	AT174711	BASE	1		X	X	(W/O CAB HEATER OR AIR CONDITIONING) (ALSO ORDER T157803 AND R26936)
6	19M7938	CAP SCREW	9		X	X	M10 X 20
7	.....	LINK	2		X	X	
8	.....	SPRING	2		X	X	HEIGHT ADJUST
	.....	SPRING	1		X	X	LATCH RETURN
9	.....	BOLT	4		X	X	
10	.....	WASHER	4		X	X	
11	.....	NUT	4		X	X	
12	AT156921	KIT	1		X	X	HEIGHT ADJUSTER
13	.....	KIT	1	-815114	X	X	SWIVEL AND ADJUSTER (AT156936 NO LONGER AVAILABLE) (SUB AT175350)
14	.....	KNOB	1		X	X	(K1) SWIVEL ADJUST
	.....	KNOB	1		X	X	(K1) SLIDE ADJUST
	.....	KNOB	1		X	X	(K1) HEIGHT ADJUST
15	.....	STOP	4		X	X	(K2) SLIDER BLOCK
16	.....	LATCH	1		X	X	SLIDE RELEASE WELDMENT
17	.....	SPRING	1		X	X	EXTENSION
18	.....	NUT	2		X	X	
19	.....	WASHER	2		X	X	
20	.....	BOLT	2		X	X	
21	.....	RETAINER	1		X	X	(K3)
22	.....	BALL BEARING	8		X	X	(K3)
23	.....	PLATE	1		X	X	(K3) SWIVEL BEARING
24	.....	BOLT	4		X	X	(K3)
25	.....	NUT	4		X	X	(K3)
26	.....	SPRING	1		X	X	(K3)
27	AT156929	KIT	1		X	X	ADJUSTER LATCH
28	19H2676	CAP SCREW	2		X	X	3/8" X 1"
29	24M7239	WASHER	2		X	X	10.700 X 21 X 2.500 MM
30	AT173022	KIT	2		X	X	(INCLUDES (2) H99923, (2) 19H2676, (2) 19M7402, (2) 24M7239, (2) 24M7346)
31	H99923	LOCK NUT	2		X	X	3/8"
32	24M7239	WASHER	2		X	X	10.700 X 21 X 2.500 MM
33	19M7402	CAP SCREW	2		X	X	M10 X 25
34	34H266	SPRING PIN	1		X	X	5/32" X 1" (K3)
35	.....	PLATE	1		X	X	(K3)
36	R26936	GROMMET	1		X	X	
37	T157803	PLATE	1		X	X	(UNDER SEATBASE)
38	.....	ROD	1		X	X	(K3) SWIVEL

(K1) AT151697 KIT, KNOB

(K2) AT156920 KIT, ADJUSTER PUCK

(K3) AT156928 KIT, SWIVEL

SEAT SUSPENSION
(SERIAL NO. 815115-)

TP48867 -UN-16NOV95

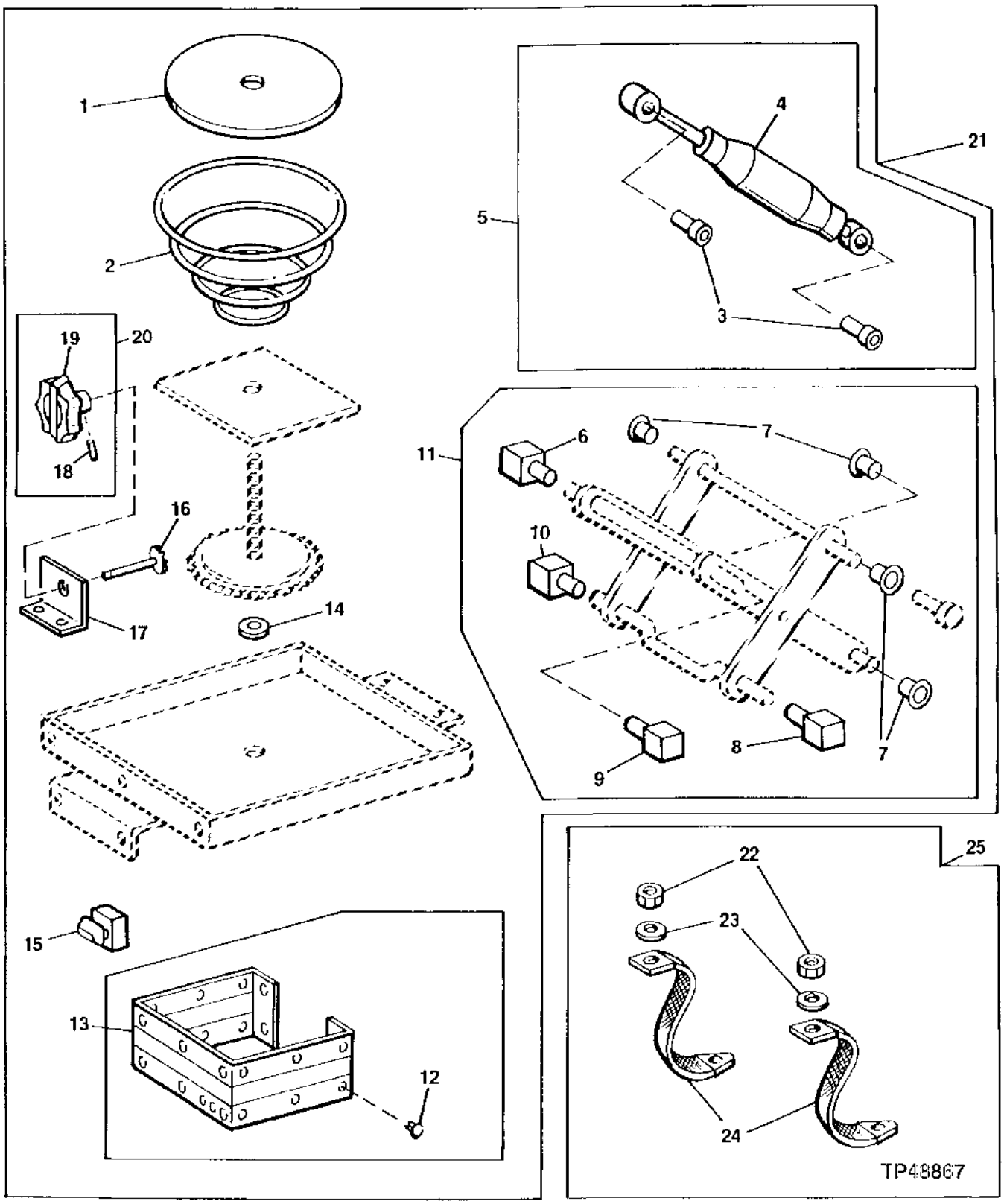

SEAT SUSPENSION
(SERIAL NO. 815115-)

KEY	PART NO.	PART NAME	QTY	SERIAL NO.	410D	510D	REMARKS
1	T55208	PAD	1		X	X	
2	T55210	SPRING	1		X	X	
3	.....	BUSHING	2		X	X	
4	.....	ABSORBER	1		X	X	
5	AT175436	KIT	1		X	X	
6	.....	BAR	1		X	X	
7	.....	BUSHING	4		X	X	
8	.....	BAR	1		X	X	
9	.....	END	1		X	X	
10	.....	BAR	1		X	X	
11	AT106397	BEARING KIT	1		X	X	BUSHING
12	T63798	PLUG	25		X	X	
13	AT175438	KIT	1		X	X	
14	T158481	WASHER	1		X	X	16.130 X 51 X 0.760 MM (0.635" X 2.008" X 0.030")
15	T55224	BUMPER	2		X	X	
16	AT175353	GEAR	1		X	X	
17	T55214	ANGLE	1		X	X	
18	34H266	SPRING PIN	1		X	X	
19	AT125829	KNOB	1		X	X	
20	AT125805	KIT	1		X	X	
21	AT175352	SEAT SUSPENSION	1		X	X	
22	H99923	LOCK NUT	2		X	X	
23	.....	WASHER	2		X	X	
24	.....	BELT	2		X	X	
25	.....	BELT SET	1		X	X	

SEAT SWIVEL AND SLIDE
(SERIAL NO. 815115-)

TP57809 -UN-10DEC97

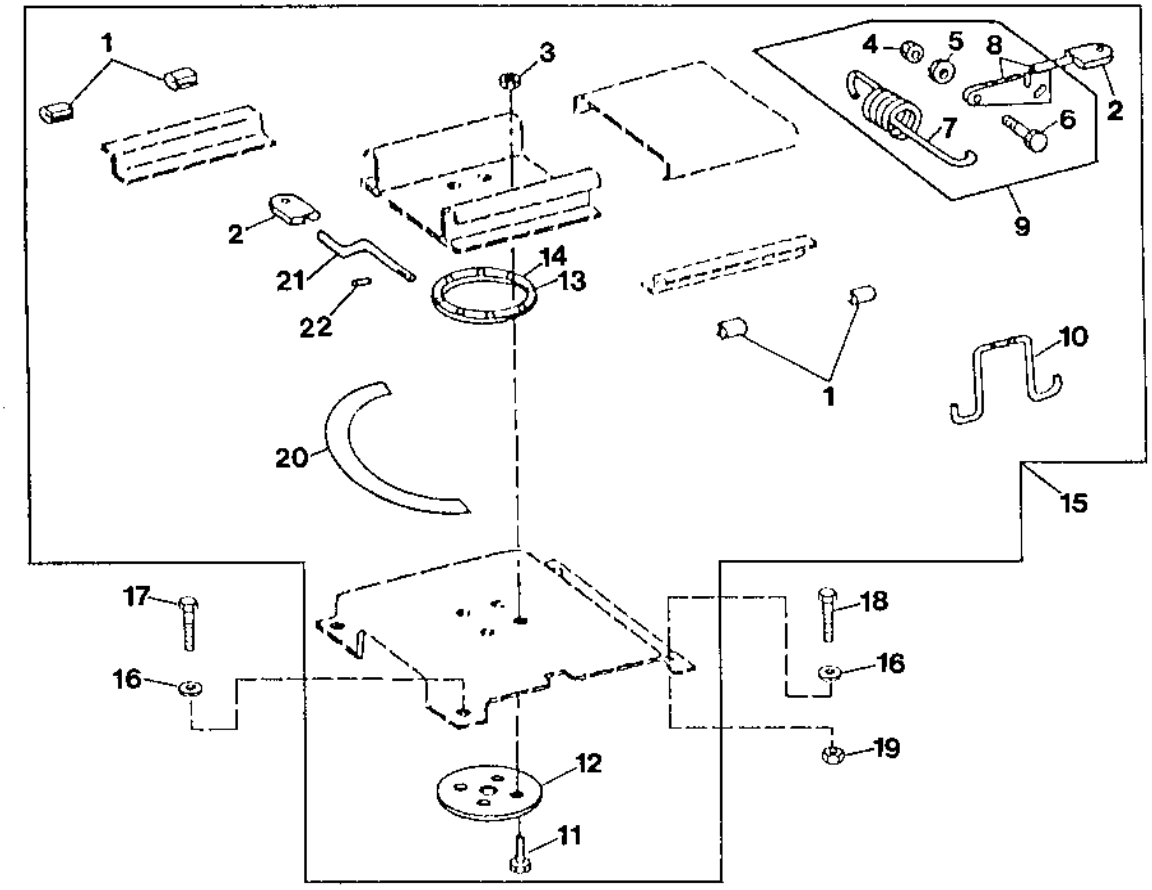

TP57809

SEAT SWIVEL AND SLIDE
(SERIAL NO. 815115-)

KEY	PART NO.	PART NAME	QTY	SERIAL NO.	410D	510D	REMARKS
1	.....	STOP	4		X	X	(K2) SLIDER BLOCK
2	.....	KNOB	1		X	X	(K1) SWIVEL ADJUST
3	.....	NUT	4		X	X	(K3)
4	.....	NUT	2		X	X	
5	.....	WASHER	2		X	X	
6	.....	BOLT	2		X	X	
7	.....	SPRING	1		X	X	EXTENSION
8	.....	LATCH	1		X	X	SLIDE RELEASE WELDMENT
9	AT156929	KIT	1		X	X	ADJUSTER LATCH
10	.....	SPRING	1		X	X	(K3)
11	.....	BOLT	4		X	X	(K3)
12	.....	PLATE	1		X	X	(K3) SWIVEL BEARING
13	.....	RETAINER	1		X	X	(K3)
14	.....	BALL BEARING	8		X	X	(K3)
15	AT175350	SWIVEL	1		X	X	SWIVEL AND ADJUSTER (ASSEMBLED)
16	24H1305	WASHER	4		X	X	13/32" X 13/16" X 0.065"
17	19H2676	CAP SCREW	2		X	X	3/8" X 1"
18	19H2284	CAP SCREW	2		X	X	3/8" X 7/8"
19	N10215	LOCK NUT	2		X	X	3/8"
20	T159158	STRIP	1		X	X	
21	.....	LEVER	1		X	X	(K3)
22	.....	SPRING PIN	1		X	X	(K3)

(K1) AT151697 KIT,KNOB

(K2) AT156920 KIT, ADJUSTER PUCK

(K3) AT156928 KIT,SWIVEL

STEPS AND SAFETY MATTING

TP45418 -UN-01JAN94

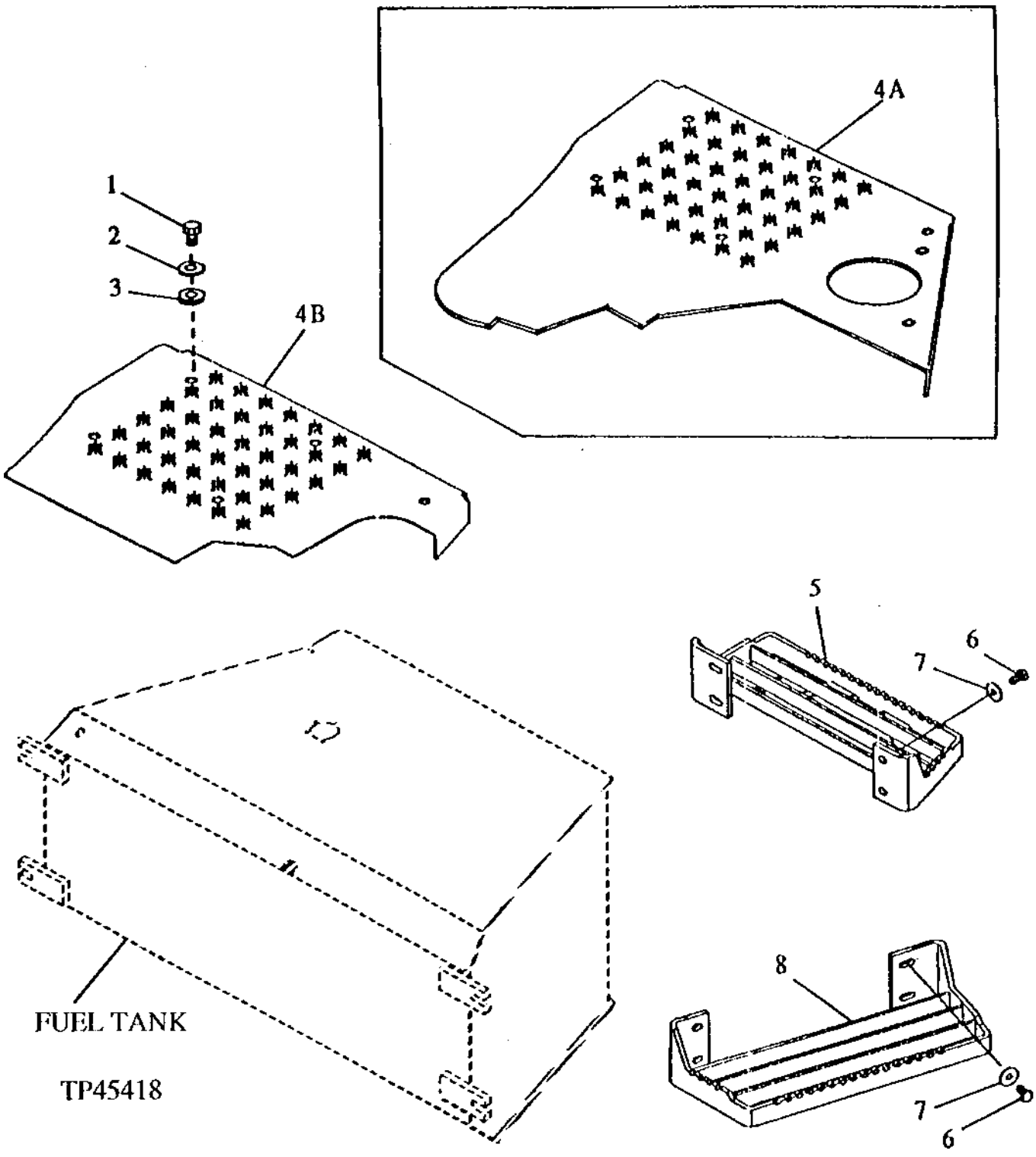

STEPS AND SAFETY MATTING

KEY	PART NO.	PART NAME	QTY	SERIAL NO.	410D	510D	REMARKS
1	19M7938	CAP SCREW	AR		X	X	M10 X 20
2	24M7296	WASHER	AR		X	X	STEEL
3	T145936	WASHER	1		X	X	
4A	T144360	MAT	1	-801199	X	X	(SUB FOR T140271)
4B	T148422	MAT	1	801200-	X	X	
5	AT173387	STEP	1		X	X	(SUB FOR AT151176, AT162205 AND AT165642) (LEFT-HAND)
6	19M7402	CAP SCREW	AR		X	X	M10 X 25
7	24M7296	WASHER	AR		X	X	10.500 X 30 X 2.500 MM
8	AT173387	STEP	1		X	X	(SUB FOR AT162205 AND AT165642) (RIGHT-HAND)

CAB HEATER HOSES AND SHUT-OFF VALVE

TP55006 -UN-13MAR97

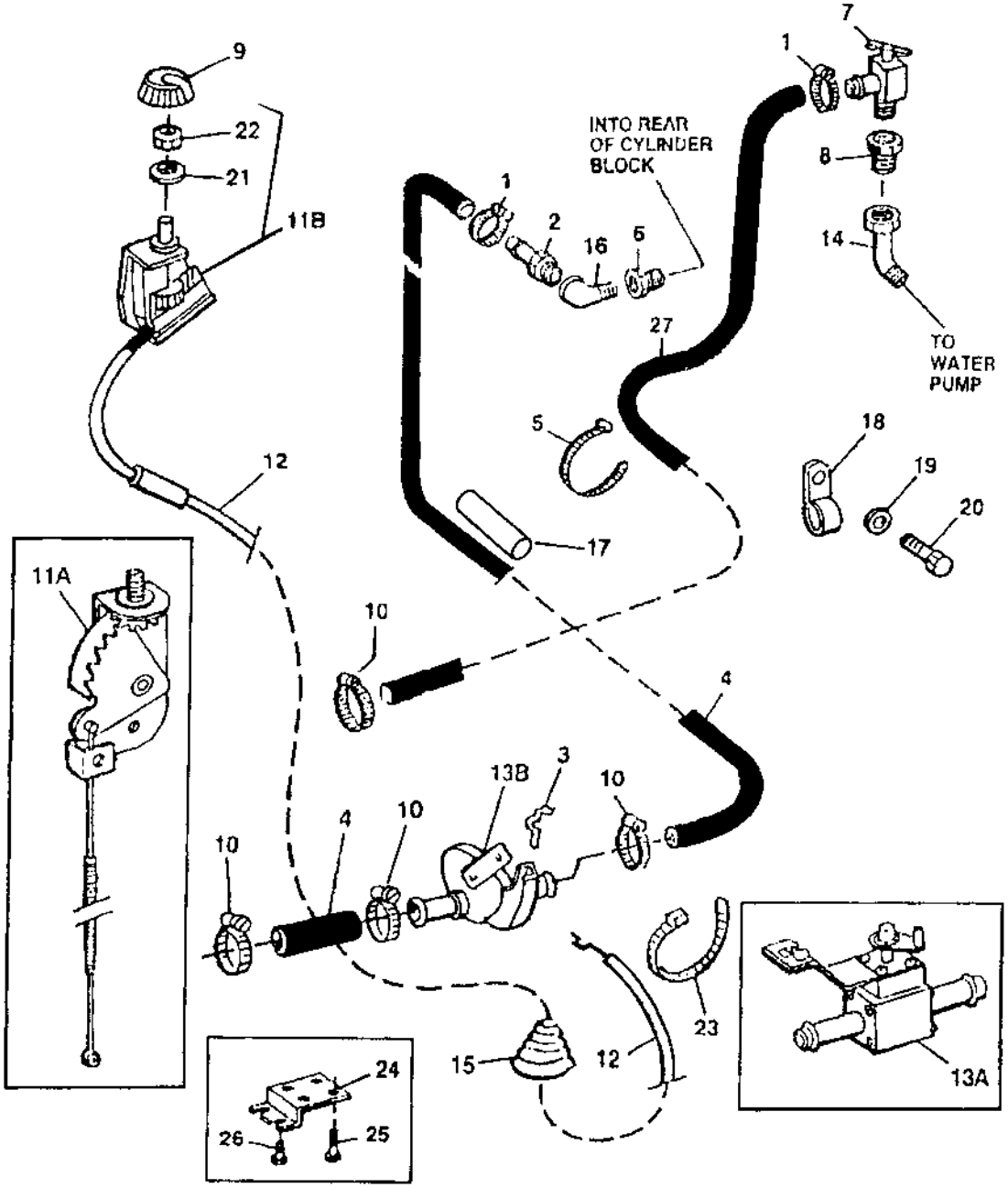

TP55006

CAB HEATER HOSES AND SHUT-OFF VALVE

KEY	PART NO.	PART NAME	QTY	SERIAL NO.	410D	510D	REMARKS
1	AR21837	CLAMP	6	-816286	X	X	
	AR21837	CLAMP	2	816287-	X	X	
2	R41985	FITTING	1		X	X	
3	L57881	CLIP	1		X	X	
4	.....	HOSE	2		X	X	(MAKE FROM T60811 BULK MATERIAL, CUT TO 5.10 INCHES)
5	R44302	TIE BAND	4		X	X	
6	15H590	PIPE BUSHING	1		X	X	1/2"
7	AT35831	DRAIN VALVE	1	-801199	X	X	
	AT169553	DRAIN VALVE	1	801200-818708	X	X	(SUB FOR AH12614)
	T27077	HOSE FITTING	1	818709-	X	X	
8	15H586	ADAPTER	1	-818708	X	X	3/8"
9	AT145907	KNOB	1	-816286	X	X	
	R111632	KNOB	1	816287-			
10	E46066	NUT	1	-816286	X	X	
	R117721	CLAMP	4	816287-	X	X	
11A	AT145596	CABLE	1	-816286	X	X	
11B	RE46742	TEMPERATURE SWITCH	1	816287-	X	X	(TEMP)
12	AT174777	CABLE	1	816287-	X	X	(TEMP)
13A	AT141210	HAND OPERATED VALVE	1	-816286	X	X	
13B	AT193500	HAND OPERATED VALVE	1	816287-	X	X	(SUB FOR RE47070) (WATER)
14	15H627	ELBOW FITTING	1		X	X	
15	T66413	GROMMET	1	816287-	X	X	
16	T37041	ELBOW FITTING	1	816287-	X	X	12.700 MM
17	.....	HOSE	1	801200-	X	X	HEATER HOSE PROTECTION(MAKE FROM T145959)
18	T102934	CLAMP	1	816287-	X	X	
19	24M7239	WASHER	1	801200-	X	X	WITH OUT AIR CONDITIONING
20	19H3239	CAP SCREW	1	801200-816286	X	X	9.525 X 31.750 MM, WITH OUT AIR CONDITIONING
	19H1732	CAP SCREW	1	816287-	X	X	
21	12H292	LOCK WASHER	1	816287-	X	X	1/2", WITH OUT AIR CONDITIONING
22	14H934	NUT	1	816287-	X	X	
23	H77698	TIE BAND	1	816287-	X	X	
24	T134492	BRACKET	1	-816286	X	X	
25	19M7775	SCREW	1	-816286	X	X	
26	37M7110	SCREW	1	-816286	X	X	
27	.....	HOSE	1	816286-	X	X	(MAKE FROM T60811 BULK MATERIAL, CUT TO 9.25 INCHES)

CAB HEATER AND AIR CONDITIONING FRESH AIR INTAKE AND DUCTING
(SERIAL NO. -801199)

TP45456 -UN-01JAN94

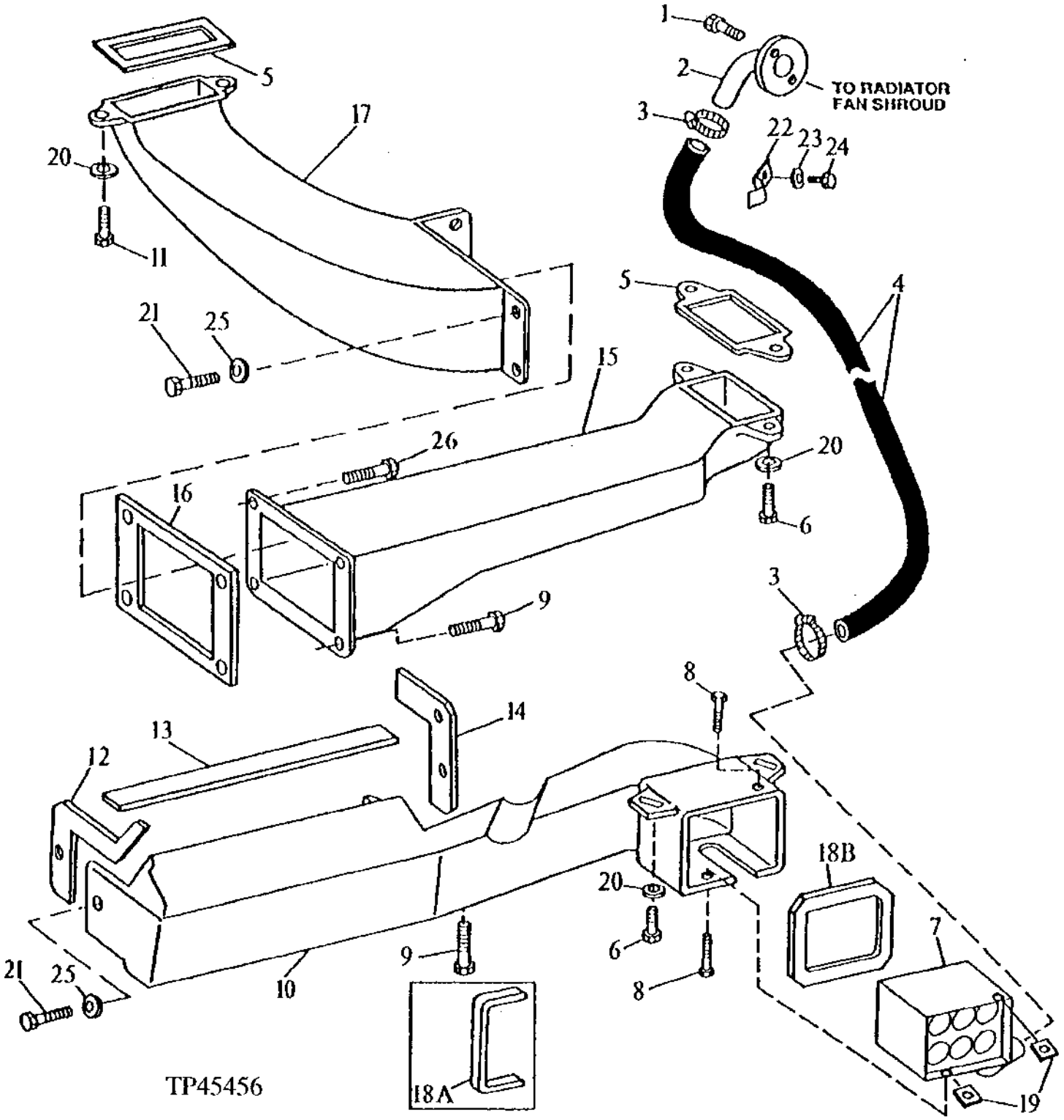

CAB HEATER AND AIR CONDITIONING FRESH AIR INTAKE AND DUCTING
(SERIAL NO. -801199)

KEY	PART NO.	PART NAME	QTY	SERIAL NO.	410D	510D	REMARKS
1	19M7881	SCREW	2		X	X	M8 X 20
2	AT142995	FLANGE	1		X	X	
3	AR21839	CLAMP	2		X	X	
4	T145959	HOSE	1		X	X	(CUT TO LENGTH) (SUB FOR T133405)
5	.....	SEAL	1		X	X	(MAKE FROM T70307 BULK MATERIAL, CUT TO LENGTH)
6	19M7077	CAP SCREW	4		X	X	M6 X 20
	24M7238	WASHER	4		X	X	
7	AT163390	PRECLEANER	1		X	X	
8	21H1301	SCREW	2		X	X	0.190" X 1/2"
9	19M7077	CAP SCREW	9		X	X	M6 X 20
	24M7239	WASHER	9		X	X	10.700 X 21 X 2.500 MM, (SUB FOR 24M7293)
10	T133192	AIR DUCT	1	-788801	X	X	R.H.
	T145547	AIR DUCT	1	788802-	X	X	
11	19M7077	CAP SCREW	2		X	X	M6 X 20
	24M7238	WASHER	2		X	X	8.700 X 17 X 2 MM
12	T130112	GASKET	1		X	X	
13	.....	STRIP	1		X	X	(MAKE FROM T59938 OR T63019 BULK MATERIAL, CUT TO LENGTH)
14	T130111	GASKET	1		X	X	
15	T133191	AIR DUCT	1		X	X	L.H. FRONT
16	T130110	GASKET	1		X	X	
17	T133190	AIR DUCT	1		X	X	L.H. REAR
18A	AT56771	ISOLATOR	1	-788801	X	X	7 620 MM (300") CUT TO LENGTH
18B	T145143	GASKET	1	788802-	X	X	
19	R52130	LOCK NUT	2		X	X	
20	24H1821	WASHER	1		X	X	9/32" X 47/64" X 1/16"
21	19M7077	CAP SCREW	4		X	X	M6 X 20
22	AH77714	CLIP	1		X	X	
23	24M7239	WASHER	1		X	X	10.700 X 21 X 2.500 MM
24	19M7938	CAP SCREW	1		X	X	M10 X 20
25	24M7293	WASHER	4		X	X	6.500 X 13 X 1.600 MM
26	19M7077	CAP SCREW	2		X	X	M6 X 20

CAB HEATER AND AIR CONDITIONING FRESH AIR INTAKE AND DUCTING
(SERIAL NO.801200-816286)

TP46291 -UN-12SEP94

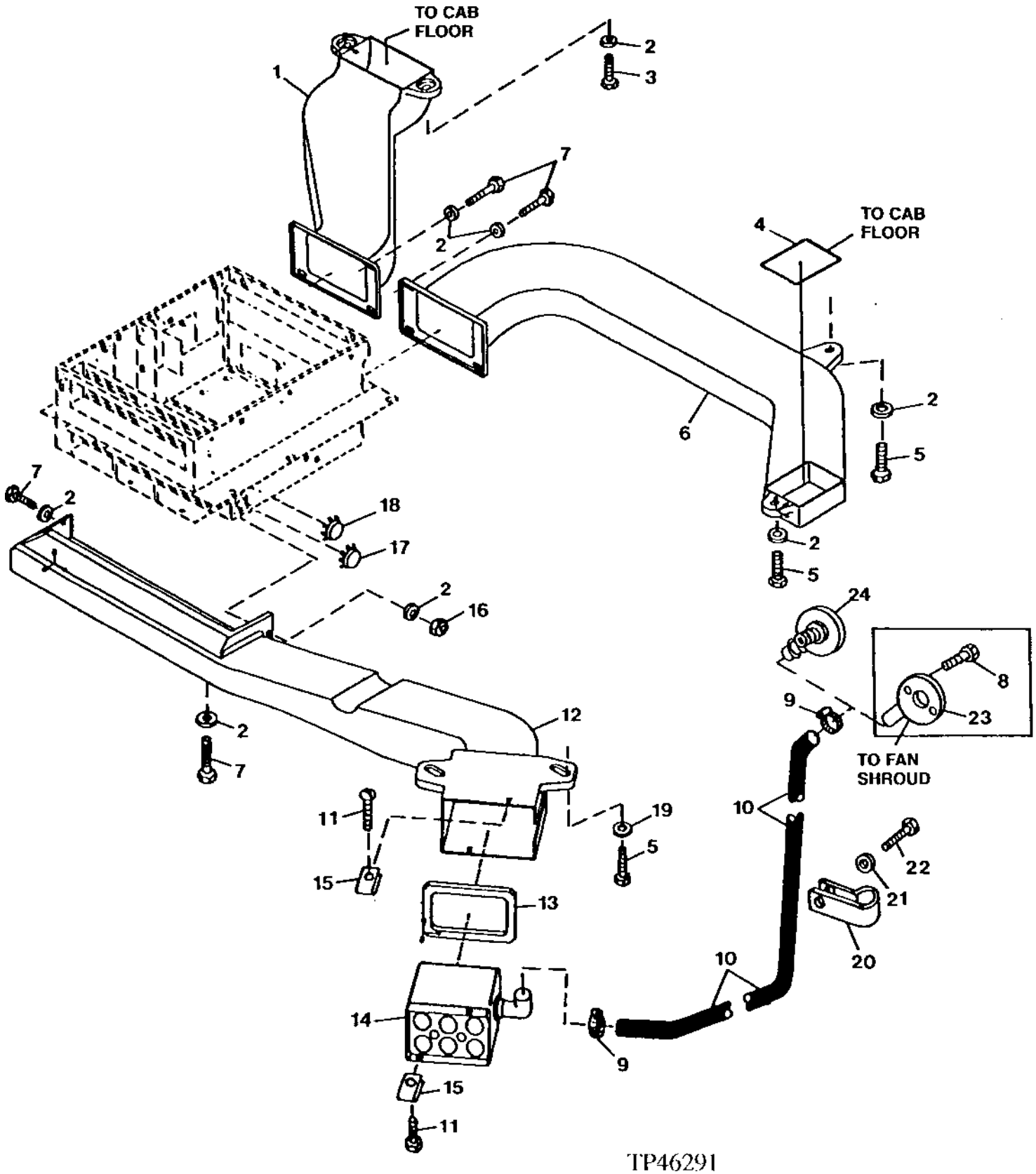

CAB HEATER AND AIR CONDITIONING FRESH AIR INTAKE AND DUCTING
(SERIAL NO.801200-816286)

KEY	PART NO.	PART NAME	QTY	SERIAL NO.	410D	510D	REMARKS
1	T148431	AIR DUCT	1		X	X	REAR
2	24M7139	WASHER	15		X	X	6.400 X 18 X 1.600 MM
3	19M7077	CAP SCREW	2		X	X	M6 X 20
4	.....	SEAL	1		X	X	(MAKE FROM AT56771 BULK MATERIAL, CUT TO LENGTH)
5	19M7077	CAP SCREW	4		X	X	M6 X 20
6	T148633	AIR DUCT	1		X	X	FRONT
7	19M7077	CAP SCREW	10		X	X	M6 X 20
8	19M7881	SCREW	2	-805722	X	X	M8 X 20
9	AR21839	CLAMP	2		X	X	
10	T145959	HOSE	1		X	X	(CUT TO LENGTH)
11	21H1301	SCREW	2		X	X	
12	T152207	AIR DUCT	1		X	X	FRESH AIR
13	T145143	GASKET	1		X	X	
14	AT168604	PRECLEANER	1		X	X	
15	R52130	LOCK NUT	2		X	X	
16	14M7272	NUT	1		X	X	M6
17	.....	PLUG	1		X	X	
18	.....	PLUG	1		X	X	
19	24M7238	WASHER	2		X	X	8.700 X 17 X 2 MM
20	AH77714	CLIP	1		X	X	
21	24M7239	WASHER	1		X	X	10.700 X 21 X 2.500 MM
22	19M7550	CAP SCREW	1		X	X	M10 X 35
23	AT142995	FLANGE	1	-805722	X	X	
24	AT167782	FLANGE	1	805723-	X	X	

CAB HEATER AND AIR CONDITIONING FRESH AIR INTAKE AND DUCTING
(SERIAL NO.816287) (410D AND 510D)

TP50421 -UN-19OCT96

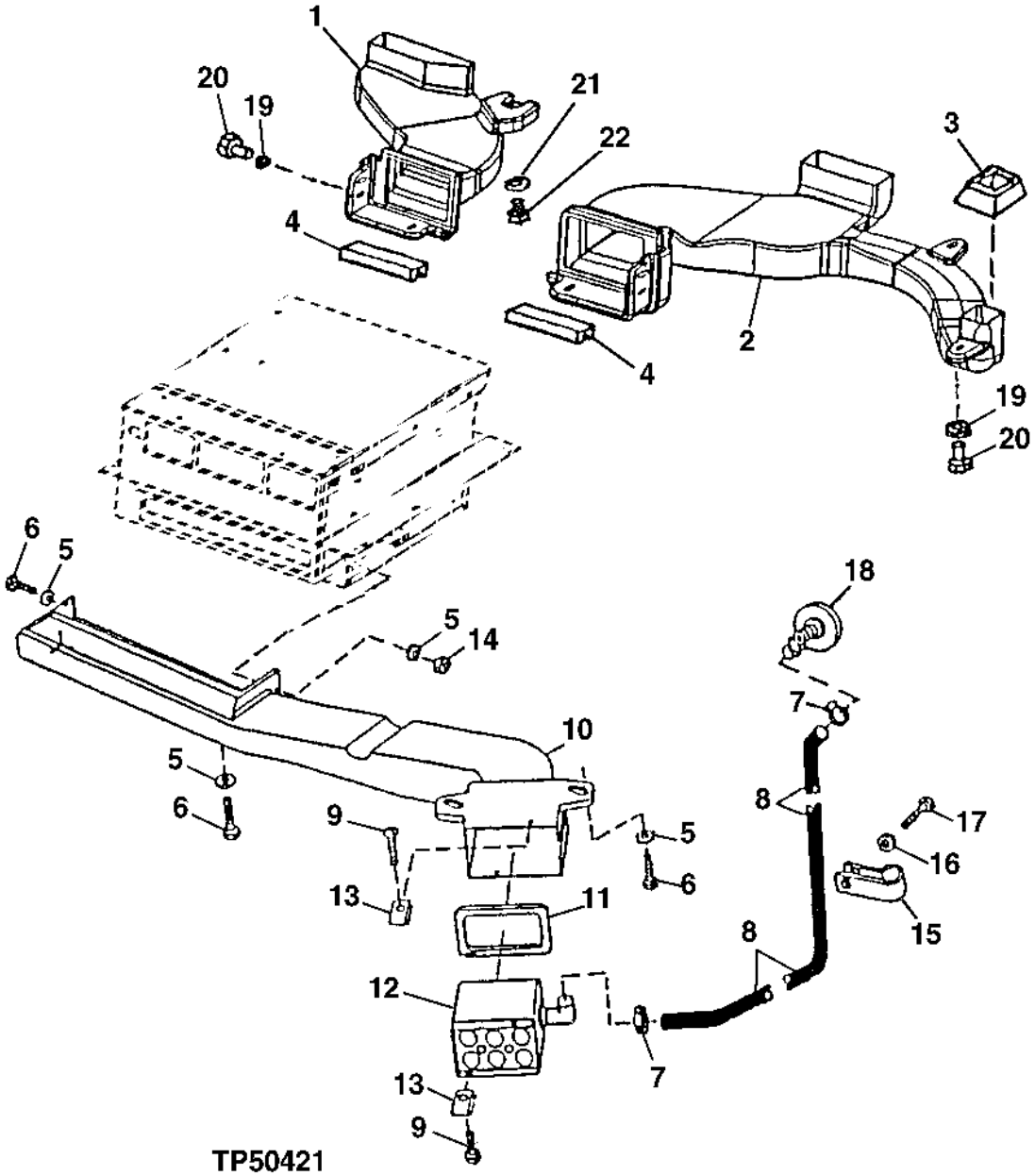

CAB HEATER AND AIR CONDITIONING FRESH AIR INTAKE AND DUCTING
(SERIAL NO.816287-)(410D AND 510D)

KEY	PART NO.	PART NAME	QTY	SERIAL NO.	410D	510D	REMARKS
1	AT174632	AIR DUCT	1		X	X	(LEFT REAR)
2	AT173978	AIR DUCT	1		X	X	(LEFT FRONT/DEFROST)
3	T165521	SEAL	1		X	X	(SUB FOR T158825)
4	T165520	SEAL	2		X	X	(SUB FOR T157836)
5	24M7139	WASHER	14		X	X	6.400 X 18 X 1.600 MM
6	19M7933	CAP SCREW	6		X	X	M6 X 25
7	AR21839	CLAMP	20		X	X	(SUB FOR AR54815)
8	T145959	HOSE	1		X	X	
9	37M7072	SCREW	2		X	X	
10	T152207	AIR DUCT	1		X	X	(FRESH AIR)
11	T145143	GASKET	1		X	X	
12	AT168604	PRECLEANER	1		X	X	
13	R52130	LOCK NUT	2		X	X	
14	14M7297	NUT	1		X	X	M5
15	AH77714	CLIP	1		X	X	
16	24M7239	WASHER	1		X	X	10.700 X 21 X 2.500 MM
17	19M7550	CAP SCREW	1		X	X	M10 X 35
18	AT167782	FLANGE	1		X	X	
19	24M7139	WASHER	6		X	X	6.400 X 18 X 1.600 MM
20	19M7874	CAP SCREW	6		X	X	M6 X 30
21	19M7933	CAP SCREW	1		X	X	M6 X 25
22	19M7833	SCREW	1		X	X	M6 X 35

CAB HEATER HOUSING,HEATER CORE,FILTER AND EVAPORATOR
(SERIAL NO. -801199)

TP46316 -UN-07SEP94

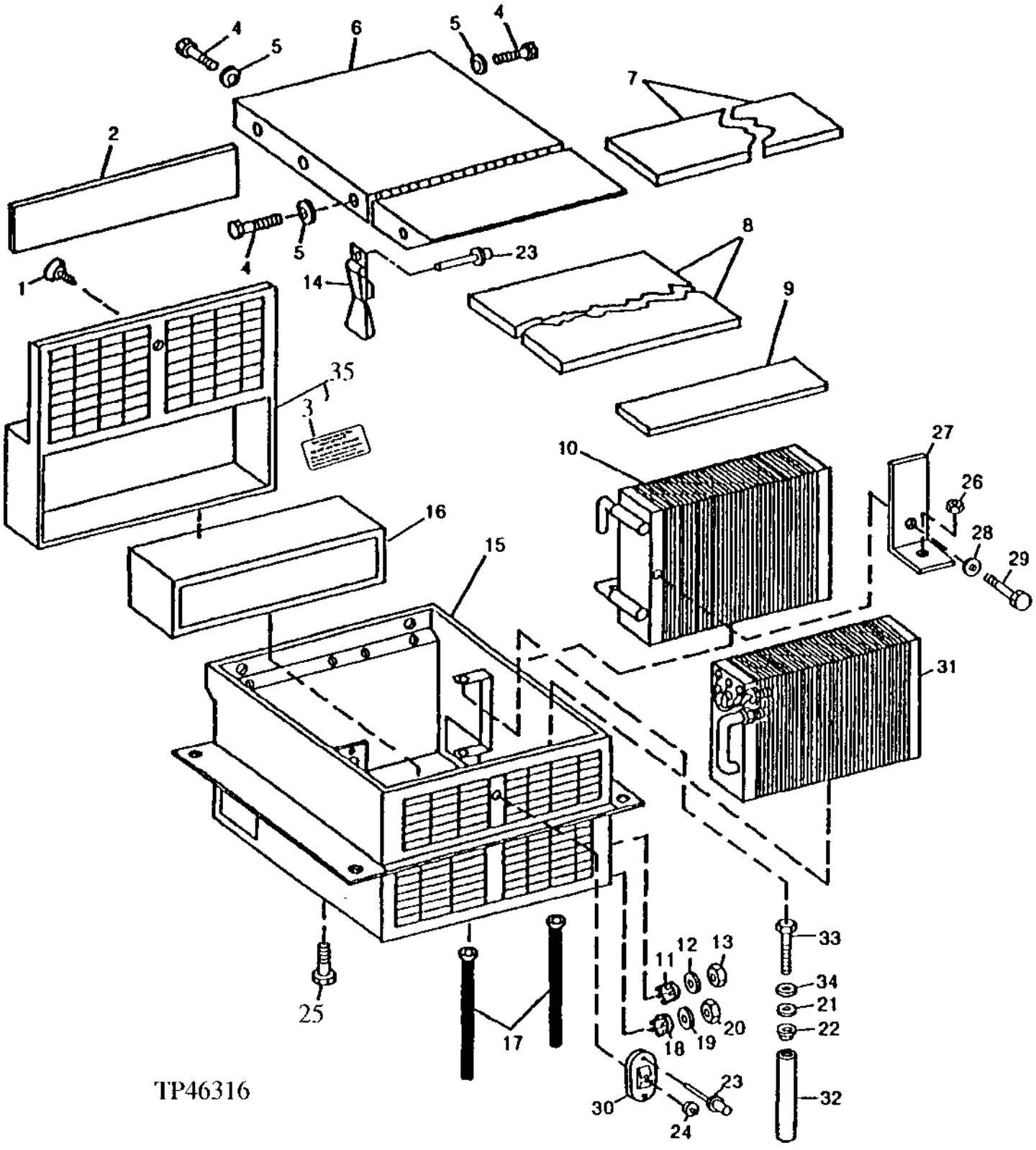

CAB HEATER HOUSING,HEATER CORE,FILTER AND EVAPORATOR
(SERIAL NO. -801199)

KEY	PART NO.	PART NAME	QTY	SERIAL NO.	410D	510D	REMARKS
1	T133399	WING SCREW	1		X	X	
2	T133239	AIR FILTER	1		X	X	
3	T141484	LABEL	1		X	X	FRESH AIR FILTER
4	19M7938	CAP SCREW	7		X	X	M10 X 20
5	24M7239	WASHER	7		X	X	10.700 X 21 X 2.500 MM
6	AT141214	COVER	1		X	X	
7	T134495	SEAL	1		X	X	SMALL
8	T134494	SEAL	1		X	X	LARGE
9	T134490	SEAL	1		X	X	
10	AT141207	CORE	1		X	X	
11	.....	PLUG	1		X	X	WITHOUT AIR CONDITIONING (U45113 - NO LONGER AVAILABLE)
12	12H247	LOCK WASHER	1		X	X	5/8", (WITH AIR CONDITIONING)
13	14H866	NUT	1		X	X	5/8", (WITH AIR CONDITIONING)
14	AT145602	RETAINER	2		X	X	
15	AT145590	HOUSING	1		X	X	
16	AT141209	AIR FILTER	1		X	X	
17	AT168138	TUBE	2		X	X	DRAIN (WITH AIR CONDITIONING) (SUB FOR AT145600)
	T122374	PLUG	2		X	X	WITHOUT AIR CONDITIONING
18	A4270R	PLUG	1		X	X	WITHOUT AIR CONDITIONING, (SUB FOR M42230)
19	12H328	LOCK WASHER	1		X	X	7/8", (WITH AIR CONDITIONING)
20	C985R	NUT	1		X	X	7/8", (WITH AIR CONDITIONING)
21	M74794	WASHER	2		X	X	0.283" X 0.949" X 0.126"
22	T142704	ROUND RETAINER	2		X	X	
23	AT44195	RIVET	6		X	X	(SUB FOR M86758)
24	T142718	WASHER	1		X	X	
25	19M7865	SCREW	8		X	X	M8 X 16
26	14M7272	NUT	1		X	X	M6
27	T142703	ANGLE	1		X	X	
28	24H1287	WASHER	1		X	X	9/32" X 5/8" X 0.065"
29	19M8332	CAP SCREW	1		X	X	M6 X 90
30	T142706	NUT	1		X	X	
31	AT164840	EVAPORATOR	1		X	X	(WITH AIR CONDITIONING) (SUB FOR AT141206)
32	AT145601	RESISTOR	2		X	X	
33	T142714	CAP SCREW	1		X	X	
34	24H1287	WASHER	2		X	X	9/32" X 5/8" X 0.065"
35	AT145599	FRAME	1		X	X	(FRESH AIR FILTER)

CAB HEATER HOUSING,HEATER CORE,FILTER AND EVAPORATOR
(SERIAL NO.801200-816286)

TP46231 -UN-01JAN94

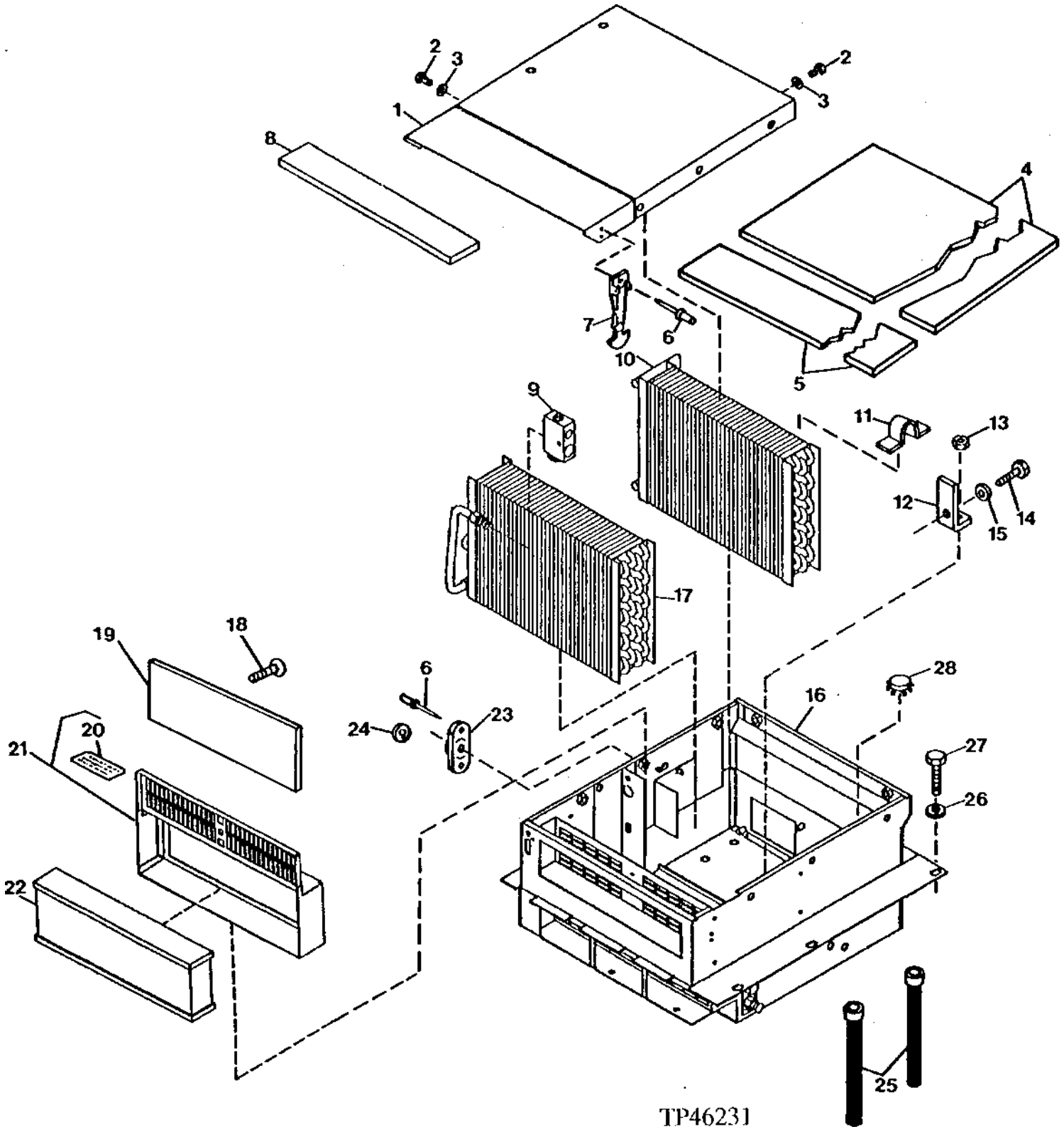

CAB HEATER HOUSING,HEATER CORE,FILTER AND EVAPORATOR
(SERIAL NO.801200-816286)

KEY	PART NO.	PART NAME	QTY	SERIAL NO.	410D	510D	REMARKS
1	AT141214	COVER	1		X	X	
2	19M7938	CAP SCREW	4		X	X	M10 X 20
3	24M7028	WASHER	4		X	X	
4	T134494	SEAL	1		X	X	
5	T134495	SEAL	1		X	X	
6	AT44195	RIVET	4		X	X	(SUB FOR M86758)
7	AT145602	RETAINER	2		X	X	
8	T134490	SEAL	1		X	X	
9	AH203871	FLOW CONTROL HYD. VALVE	1		X	X	(SUB FOR AH137702)
10	AT141207	CORE	1		X	X	HEATER
11	T153178	CLIP	1		X	X	
12	T142703	SUPPORT	1		X	X	
13	14M7272	NUT	1		X	X	M6
14	19M8332	CAP SCREW	1		X	X	M6 X 90
15	24H1287	WASHER	1		X	X	9/32" X 5/8" X 0.065"
16	.....	CASE	1		X	X	
17	AT164840	EVAPORATOR	1		X	X	AIR CONDITIONER
18	T133399	WING SCREW	1		X	X	
19	T153177	FILTER	1		X	X	WITH AIR CONDITIONING
20	T141484	LABEL	1		X	X	AIR FILTER
21	AT169624	FRAME	1		X	X	WITH AIR CONDITIONING
22	AT141209	AIR FILTER	1		X	X	
23	T142706	NUT	1		X	X	
24	T142718	WASHER	1		X	X	
25	AT168138	DRAIN VALVE	2		X	X	WITH AIR CONDITIONING
26	24M7239	WASHER	7		X	X	10.700 X 21 X 2.500 MM
27	19M7402	CAP SCREW	7		X	X	M10 X 25
28	H99452	PLUG	2		X	X	WITHOUT AIR CONDITIONING

HEATER MODULE
(SERIAL NO.816287-)(410D AND 510D)

TP50427 -UN-08MAY96

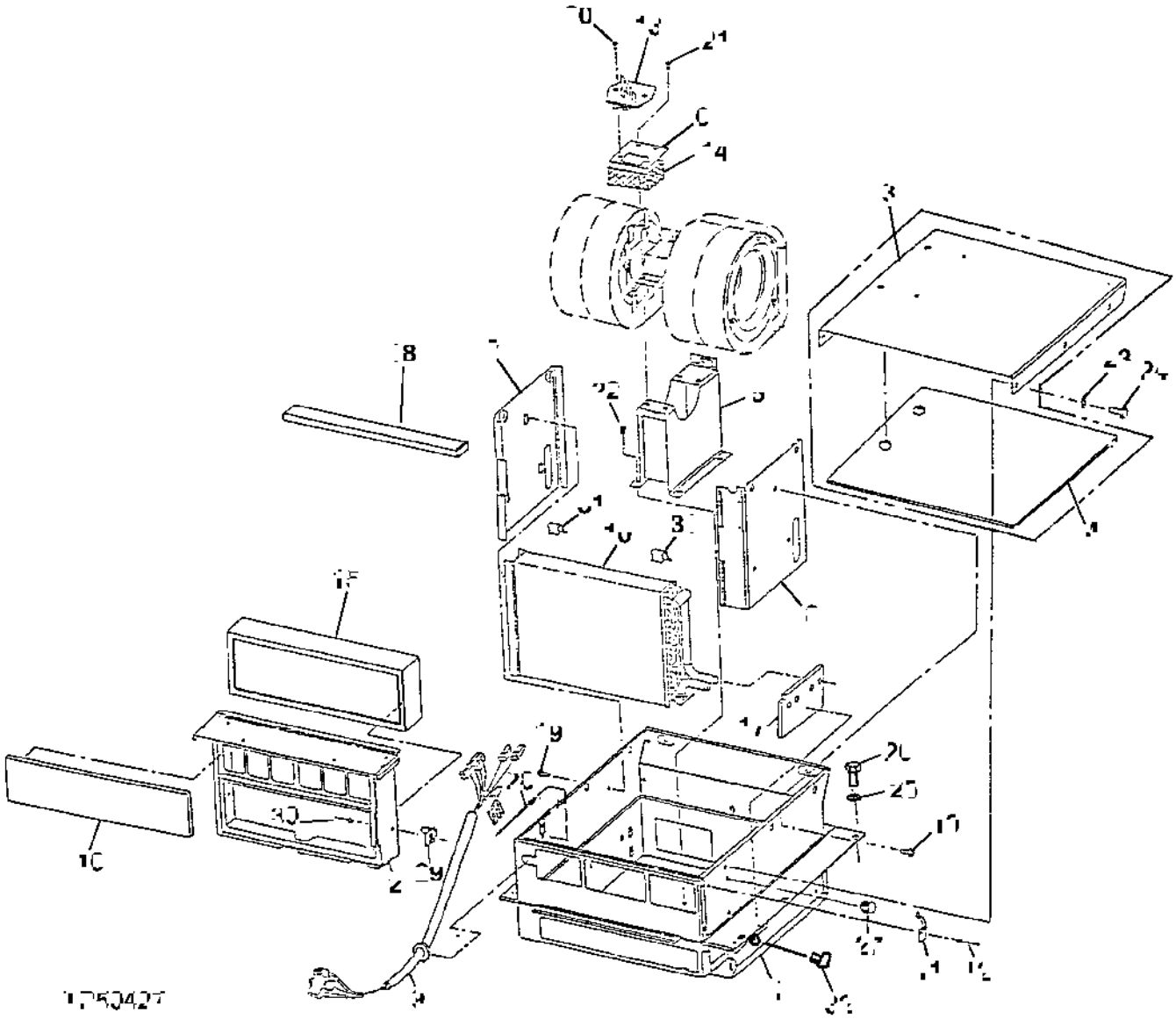

HEATER MODULE
(SERIAL NO.816287-)(410D AND 510D)

KEY	PART NO.	PART NAME	QTY	SERIAL NO.	410D	510D	REMARKS
1	AT175759	CASE	1		X	X	
2	AT174772	FRAME	1	-817418	X	X	
	AT177786	FILTER	1	817419-	X	X	
3	AT175760	COVER	1		X	X	
4	T158842	GASKET	1		X	X	
5	AT175770	SUPPORT	1		X	X	(MOUNT)
6	AT178892	BRACKET	1		X	X	(SUB FOR AT175773)
7	AT175782	PLATE	1		X	X	(FRONT)
8	AT175783	PLATE	1		X	X	(REAR)
9	AT174775	AC TIMER WIRING HARNESS	1		X	X	(MODULE)
10	AT174774	HEATER	1		X	X	
11	AT175769	LATCH	2		X	X	
12	H85233	RIVET	2		X	X	
13	AT182200	RESISTOR	1		X	X	(SUB FOR RE49636)
14	.....	GUARD	1		X	X	NO LONGER AVAILABLE, (SUB AT178892)
15	AT141209	AIR FILTER	1		X	X	
16	T158848	AIR FILTER	1		X	X	(RECIRCULATION)
17	T158862	SEAL	1		X	X	
18	T158871	SEAL	1		X	X	
19	19M7774	SCREW	6		X	X	M6 X 12
20	19M7640	CAP SCREW	2		X	X	M5 X 12
21	19M7774	SCREW	4		X	X	M6 X 12
22	19M7774	SCREW	6		X	X	M6 X 12
23	24M7239	WASHER	4		X	X	10.700 X 21 X 2.500 MM
24	19M7402	CAP SCREW	4		X	X	M10 X 25
25	24M7239	WASHER	7		X	X	10.700 X 21 X 2.500 MM
26	19M7402	CAP SCREW	7		X	X	M10 X 25
27	T155525	CLIP	4		X	X	
28	Z57041	TIE BAND	2		X	X	(SUB R44302)
	R44302	TIE BAND	2		X	X	
29	AT177787	BOLT	2		X	X	
30	H85233	RIVET	2		X	X	
31	T160275	CLIP	2		X	X	
32	19M7775	SCREW	3		X	X	M6 X 16

HEATING,VENTILATION,AIR CONDITIONING (HVAC MODULE)
(SERIAL NO.816287-)(410D AND 510D)

T161674 -UN-13NOV02

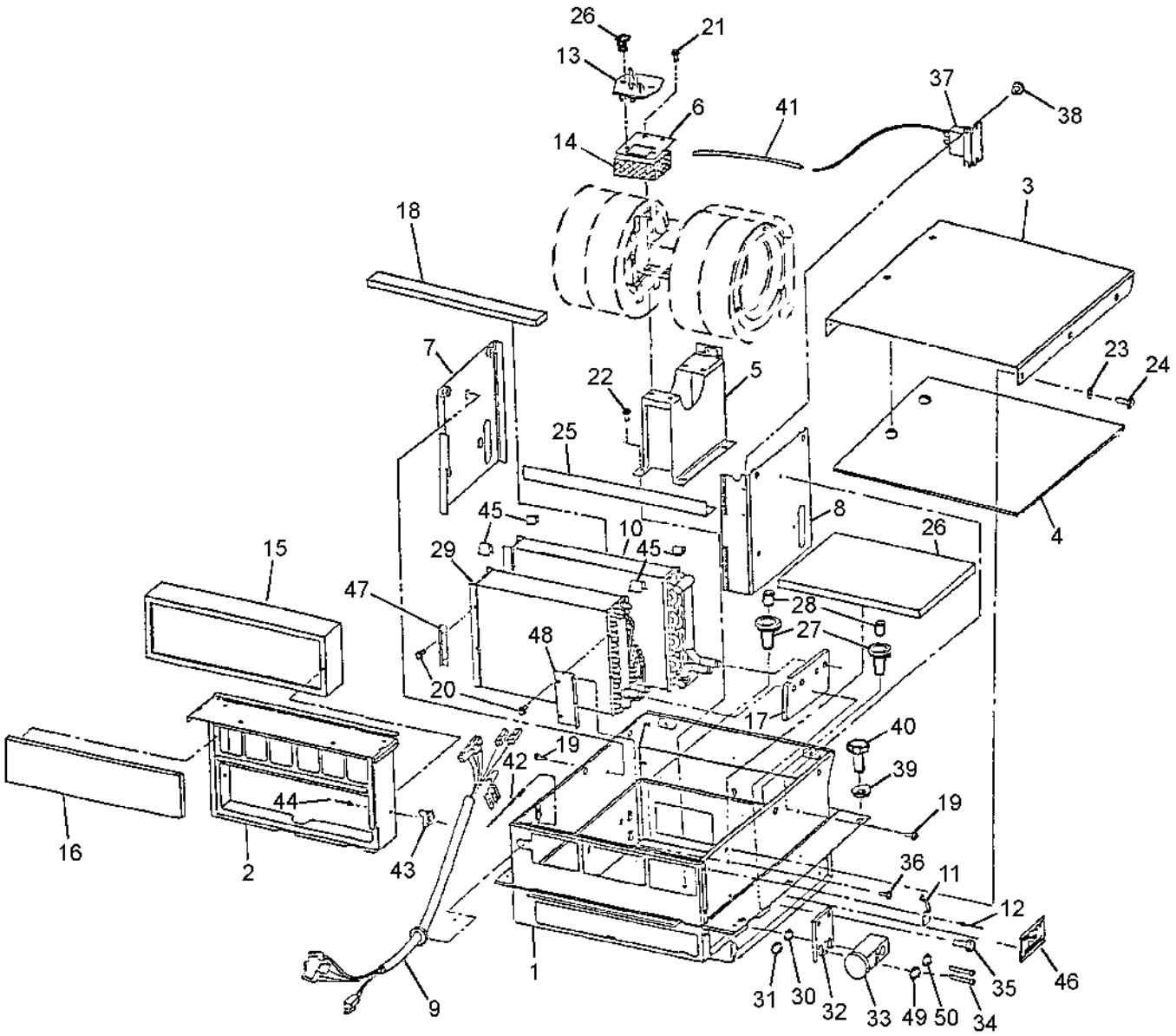

T161674

HEATING,VENTILATION,AIR CONDITIONING (HVAC MODULE)
(SERIAL NO.816287-)(410D AND 510D)

KEY	PART NO.	PART NAME	QTY	SERIAL NO.	410D	510D	REMARKS
1	AT175759	CASE	1		X	X	
2	AT174772	FRAME	1	-817143	X	X	(FILTER)
	AT177786	FRAME	1	817144-	X	X	(FILTER)
3	AT175760	COVER	1		X	X	
4	T158842	GASKET	1		X	X	
5	AT175770	SUPPORT	1		X	X	(MOUNT)
6	AT178892	BRACKET	1		X	X	(SUB FOR AT175773)
7	AT175782	PLATE	1		X	X	(FRONT)
8	AT175783	PLATE	1		X	X	(REAR)
9	AT174775	AC TIMER WIRING HARNESS	1		X	X	(MODULE)
10	AT174774	HEATER	1		X	X	
11	AT175769	LATCH	2		X	X	
12	H85233	RIVET	2		X	X	
13	AT182200	RESISTOR	1		X	X	(SUB FOR RE49636)
14	.....	GUARD	1		X	X	NO LONGER AVAILABLE, (SUB AT178892)
15	AT141209	AIR FILTER	1		X	X	
16	T158848	AIR FILTER	1		X	X	(RECIRCULATION)
17	T158862	SEAL	1		X	X	
18	T158871	SEAL	1		X	X	
19	19M7774	SCREW	6		X	X	M6 X 12
20	19M7640	CAP SCREW	6		X	X	M5 X 12
21	19M7774	SCREW	4		X	X	M6 X 12
22	19M7774	SCREW	5		X	X	M6 X 12
23	24M7239	WASHER	4		X	X	10.700 X 21 X 2.500 MM
24	19M7402	CAP SCREW	4		X	X	M10 X 25
25	T158873	ANGLE	1		X	X	
26	T158866	GASKET	1		X	X	
27	T164738	FITTING	2		X	X	(SUB FOR T158865)
28	.....	VALVE	2		X	X	(AT175768 NO LONGER AVAILABLE) (SUB T164738)
29	AT174773	EVAPORATOR	1		X	X	
30	R113050	O-RING	1		X	X	
31	R33259	O-RING	1		X	X	
32	T158127	PLATE	1		X	X	
33	RE57575	VALVE	1		X	X	
34	19M8669	SCREW	2		X	X	M5 X 35
35	19M7775	SCREW	3		X	X	M6 X 16
36	19M7774	SCREW	4		X	X	M6 X 12
37	RE198074	TEMPERATURE SWITCH	1		X	X	(SUB FOR AH144020)
38	37H147	SCREW	1		X	X	
39	24M7239	WASHER	7		X	X	10.700 X 21 X 2.500 MM
40	19M7402	CAP SCREW	7		X	X	M10 X 25
41	T160136	TUBE	1		X	X	
42	Z57041	TIE BAND	2		X	X	(SUB R44302)
	R44302	TIE BAND	2		X	X	
43	AT177787	BOLT	2		X	X	
44	H85233	RIVET	2		X	X	
45	T160275	CLIP	4		X	X	
46	T160276	LABEL	1		X	X	
47	AT175789	RETAINER	1		X	X	
48	AT175790	RETAINER	1		X	X	
49	T143169	O-RING	1		X	X	
50	R10093	O-RING	1		X	X	

HEATER AND HVAC MODULE
(SERIAL NO.816287-)(410D AND 510D)

TP50429 -UN-06MAY96

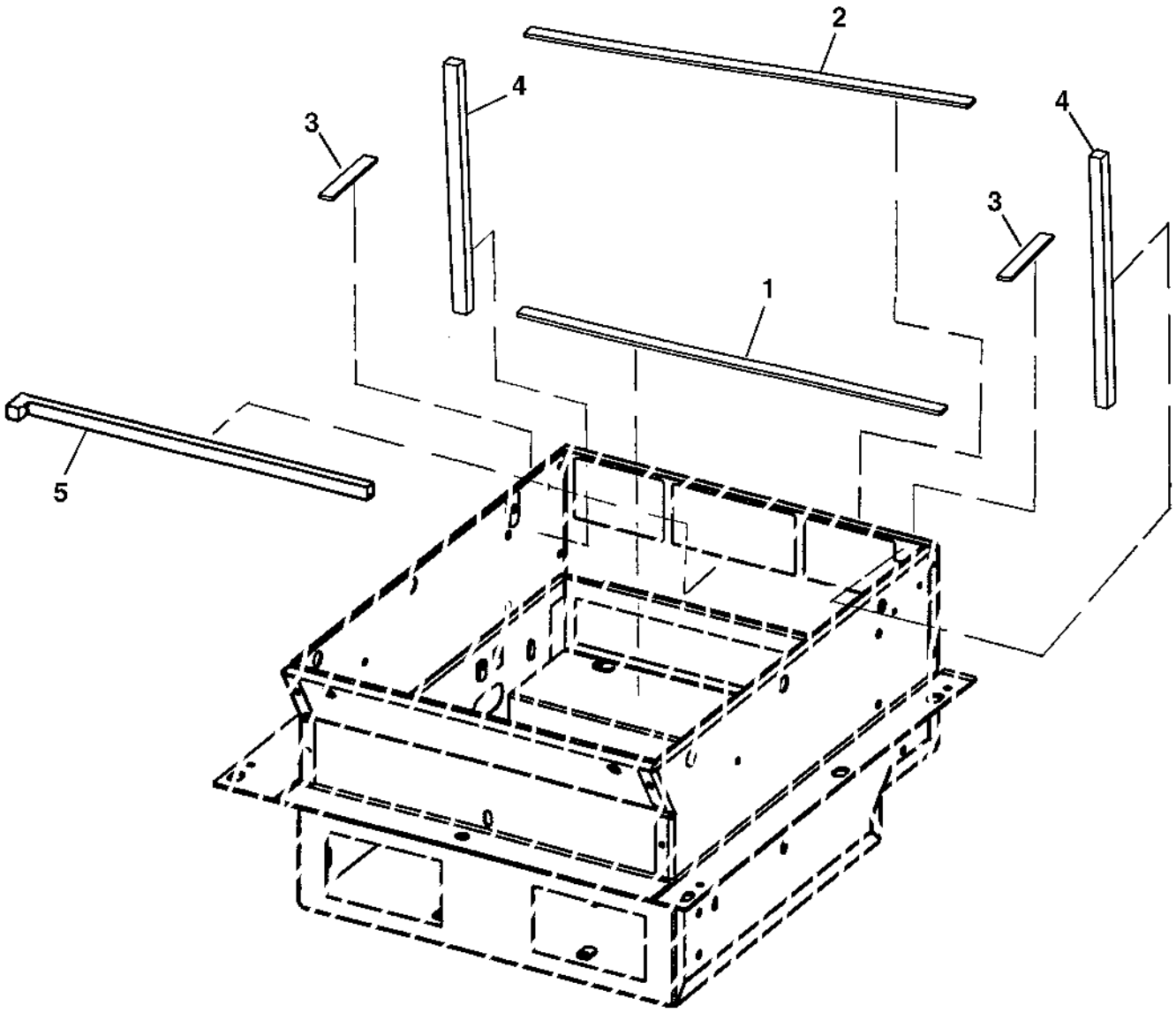

HEATER AND HVAC MODULE
(SERIAL NO.816287-)(410D AND 510D)

KEY	PART NO.	PART NAME	QTY	SERIAL NO.	410D	510D	REMARKS
1	.....	ISOLATOR	1		X	X	MAKE FROM T59938 BULK MATERIAL CUT TO 15.0 INCHES
2	.....	ISOLATOR	1		X	X	MAKE FROM T59938 BULK MATERIAL CUT TO 16.5 INCHES
3	.....	ISOLATOR	1		X	X	MAKE FROM T59938 BULK MATERIAL CUT TO 3.1 INCHES
4	.....	ISOLATOR	1		X	X	MAKE FROM T71733 BULK MATERIAL CUT TO 8.6 INCHES
5	.....	ISOLATOR	1		X	X	MAKE FROM T71733 BULK MATERIAL CUT TO 15.5 INCHES

CAB HEATER AND AIR CONDITIONING MOTORS AND MOUNTING BRACKETS
(SERIAL NO. -801199)

TP41685 -UN-01JAN94

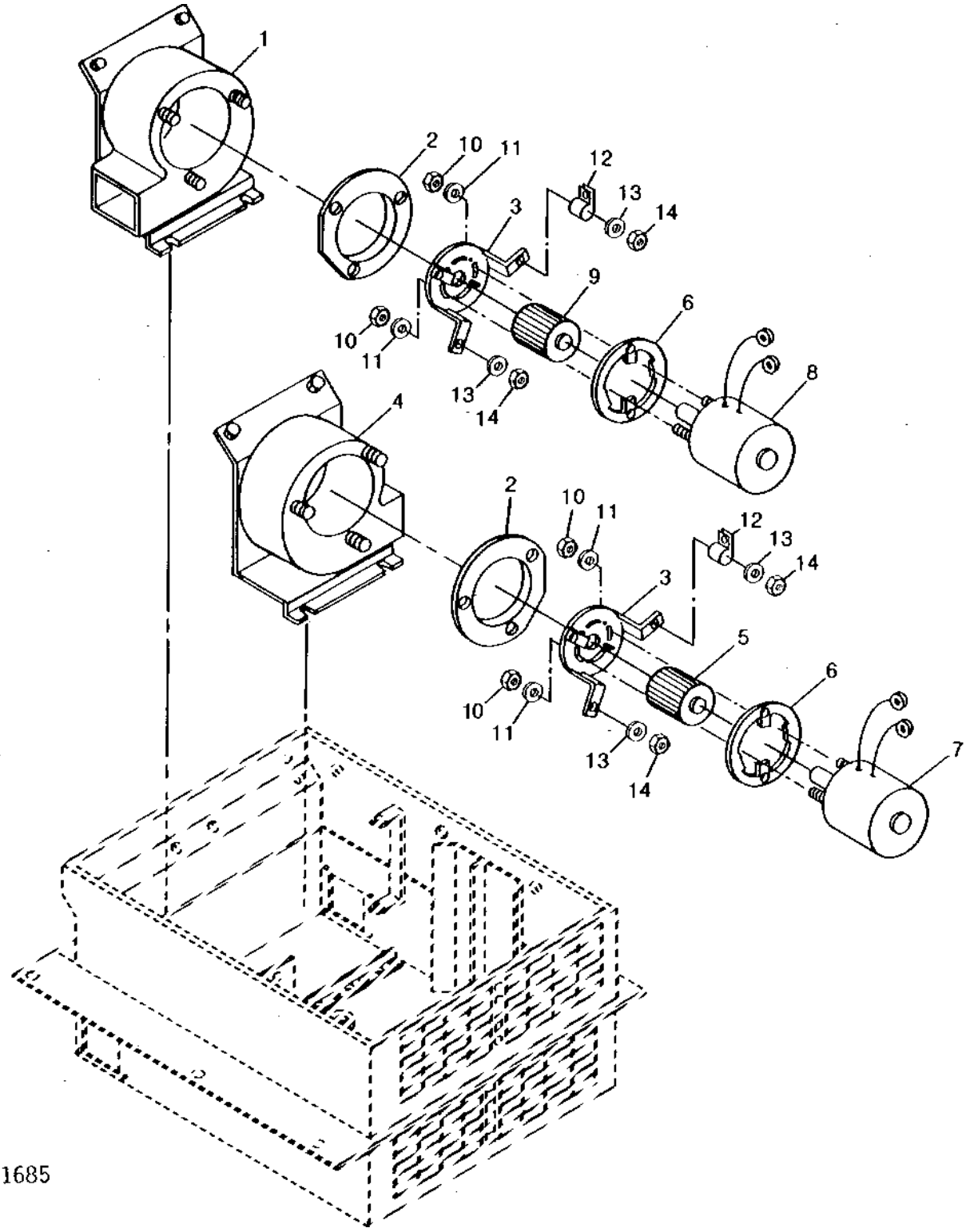

CAB HEATER AND AIR CONDITIONING MOTORS AND MOUNTING BRACKETS
(SERIAL NO. -801199)

KEY	PART NO.	PART NAME	QTY	SERIAL NO.	410D	510D	REMARKS
1	AT145591	HOUSING	1		X	X	
2	.....	RING	2		X	X	(T134493 NO LONGER NEEDED)
3	AT145595	BRACKET	2		X	X	
4	AT141372	HOUSING	1		X	X	
5	AT171808	FAN	1		X	X	(SUB FOR AT145592)
6	T134489	GASKET	2		X	X	
7	AT141208	ELECTRIC MOTOR	1		X	X	(CCW ROTATION - OPPOSITE SHAFT END) (FRONT)
	19M8425	CAP SCREW	1		X	X	M6 X 16, (HEATER GROUND WIRE TO CAB FLOOR)
	24M7293	WASHER	1		X	X	6.500 X 13 X 1.600 MM
8	AT145593	ELECTRIC MOTOR	1		X	X	(CW ROTATION - OPPOSITE SHAFT END) (REAR)
9	AT171807	FAN	1		X	X	(SUB FOR AT141371)
10	N125411	LOCK NUT	4		X	X	0.190"
11	24H1283	WASHER	4		X	X	7/32" X 1/2" X 0.049"
12	TH104034	CLAMP	2		X	X	
13	24H1287	WASHER	6		X	X	9/32" X 5/8" X 0.065"
14	14M7165	LOCK NUT	6		X	X	M6

CAB HEATER AND AIR CONDITIONING BLOWER MOTOR
(SERIAL NO.801200-816286)

TP46233 -UN-01JAN94

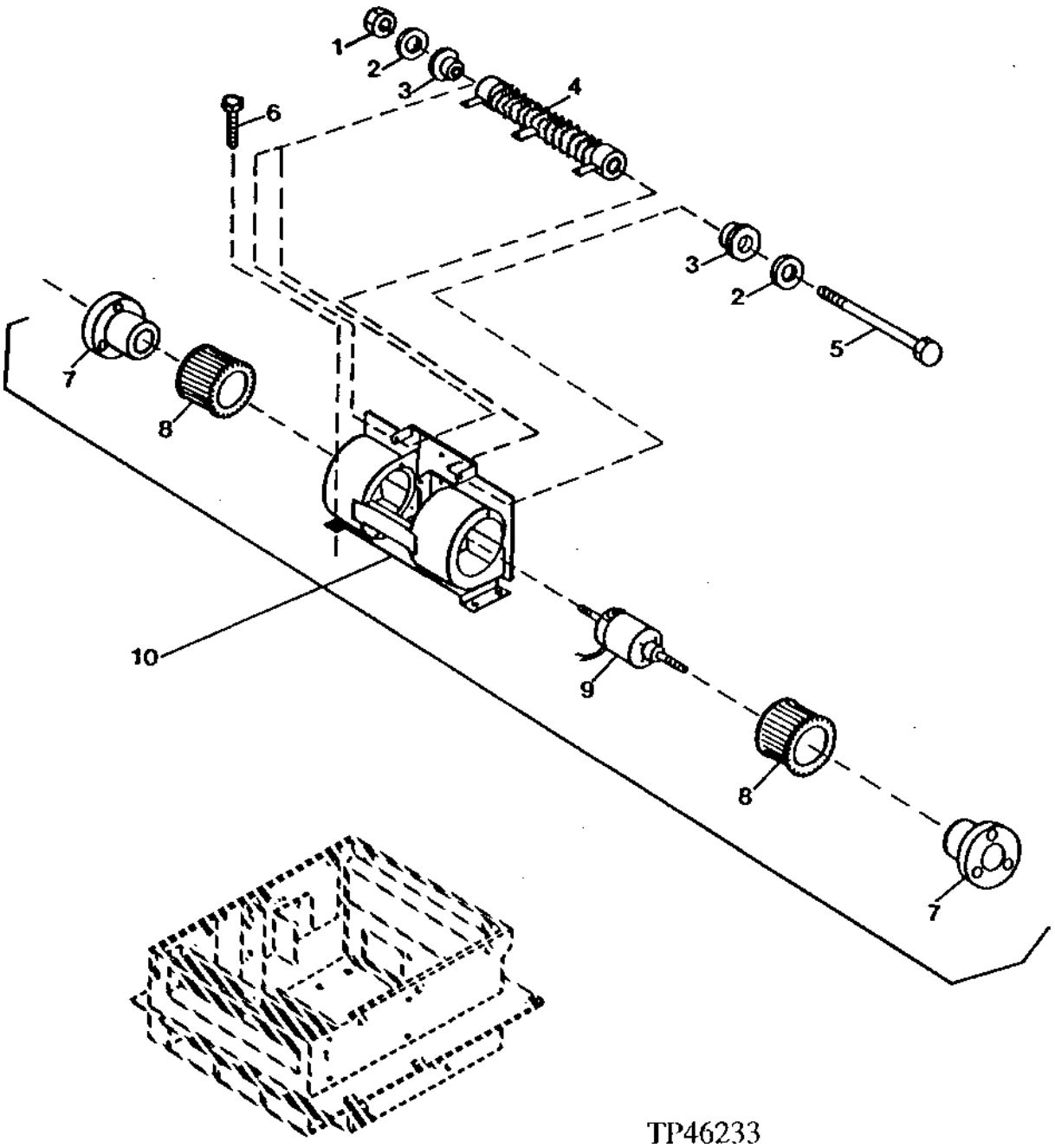

CAB HEATER AND AIR CONDITIONING BLOWER MOTOR
(SERIAL NO.801200-816286)

KEY	PART NO.	PART NAME	QTY	SERIAL NO.	410D	510D	REMARKS
1	14M7272	NUT	1		X	X	M6
2	M74794	WASHER	2		X	X	
3	T142704	ROUND RETAINER	2		X	X	
4	AT145601	RESISTOR	1		X	X	
5	T142714	CAP SCREW	1		X	X	
6	.....	SCREW	4		X	X	
7	.....	RETAINER	2		X	X	
8	T139101	WHEEL	2		X	X	
9	.....	MOTOR	1		X	X	
10	AT169619	BLOWER	1		X	X	

BLOWER ASSEMBLY
(SERIAL NO.816287-)

TP50426 -UN-31OCT96

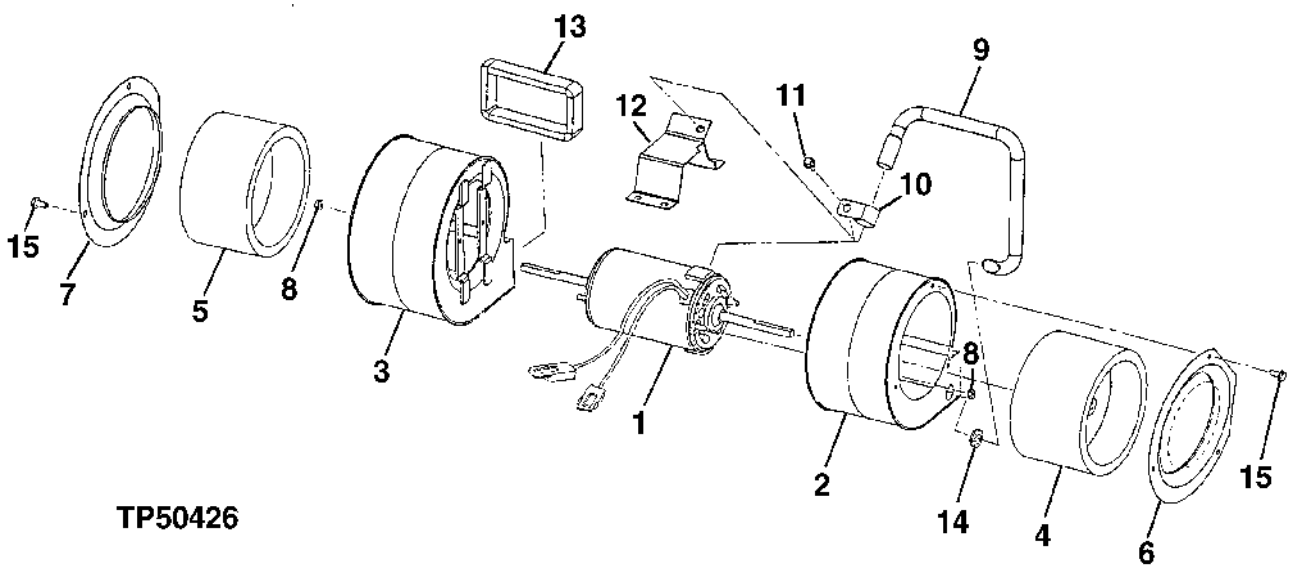

BLOWER ASSEMBLY
(SERIAL NO.816287-)

KEY	PART NO.	PART NAME	QTY	SERIAL NO.	410D	510D	REMARKS
1	AT173906	ELECTRIC MOTOR	1		X	X	
2	AT175766	HOUSING	1		X	X	(FRONT)
3	AT175765	HOUSING	1		X	X	(REAR)
4	AT175764	BLOWER	1		X	X	(FRONT)
5	AT175763	BLOWER	1		X	X	(REAR)
6	T158846	RING	1		X	X	(FRONT)
7	T158845	RING	1		X	X	(REAR)
8	N125411	LOCK NUT	4		X	X	0.190"
9	T158867	TUBE	1		X	X	
10	T158875	CLAMP	1		X	X	
11	19M7774	SCREW	1		X	X	M6 X 12
12	AT175771	RETAINER	1		X	X	
13	T158856	GASKET	2		X	X	
14	P41858	GROMMET	1		X	X	
15	M83123	CAP SCREW	6		X	X	4.826 X 9.525 MM

AIR CONDITIONING COMPRESSOR SEAL KIT
(SERIAL NO -790701)

TP11056 -UN-01JAN94

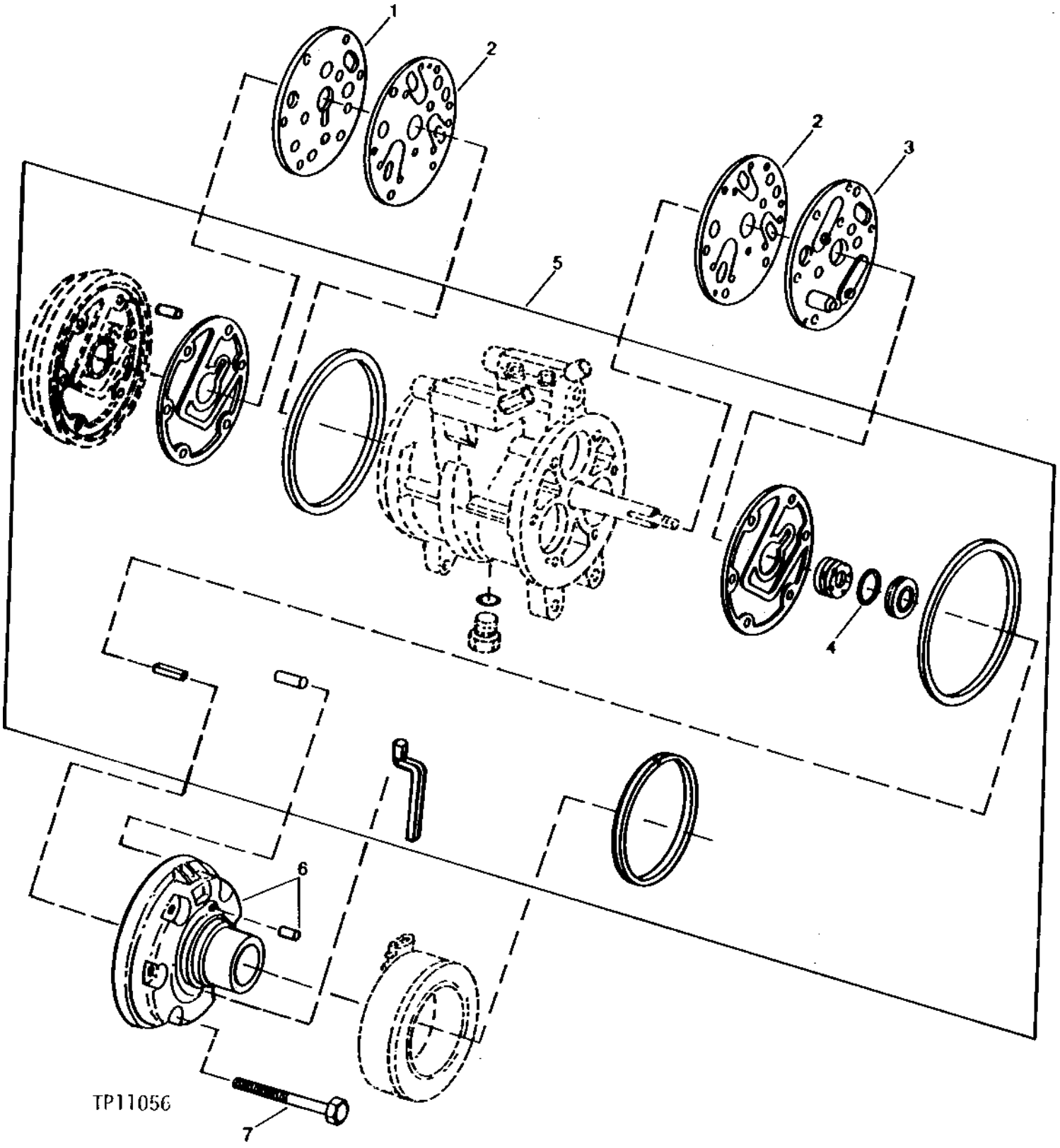

AIR CONDITIONING COMPRESSOR SEAL KIT
(SERIAL NO -790701)

KEY	PART NO.	PART NAME	QTY	SERIAL NO.	410D	510D	REMARKS
1	RE10979	PLATE	1		X	X	
2	R77397	VALVE	2		X	X	
3	RE10978	PLATE	1		X	X	
4	R77399	PACKING	1		X	X	
5	RE10973	KIT	1		X	X	SEAL
6	RE10977	CYLINDER HEAD	1		X	X	
7	R77396	SOCKET HEAD SCREW	6		X	X	

AIR CONDITIONING COMPRESSOR SEAL KIT
(SERIAL NO 790702-)
(R134A REFRIGERANT)

TP34246 -UN-01JAN94

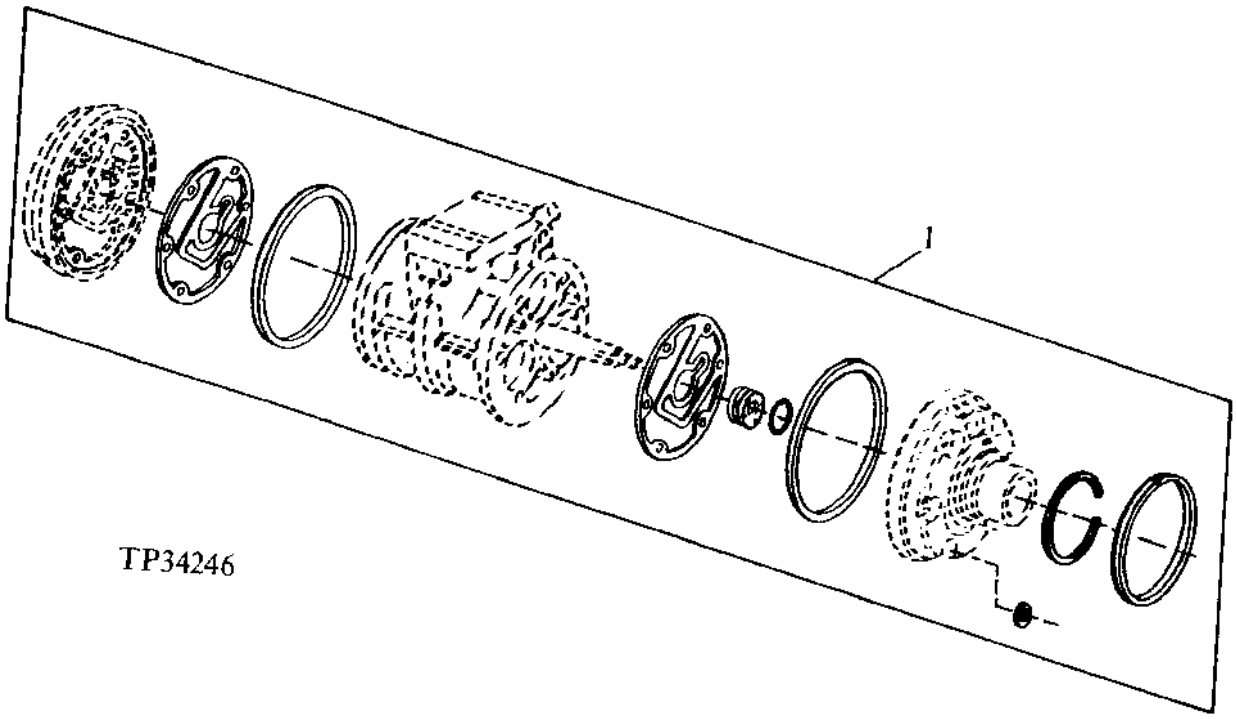

KEY	PART NO.	PART NAME	QTY	SERIAL NO.	410D	510D	REMARKS
1	RE52509	SEAL KIT	1		X	X	

AIR CONDITIONING COMPRESSOR CLUTCH AND SERVICE VALVES
(SERIAL NO. -790701)

TP11057 -UN-01JAN94

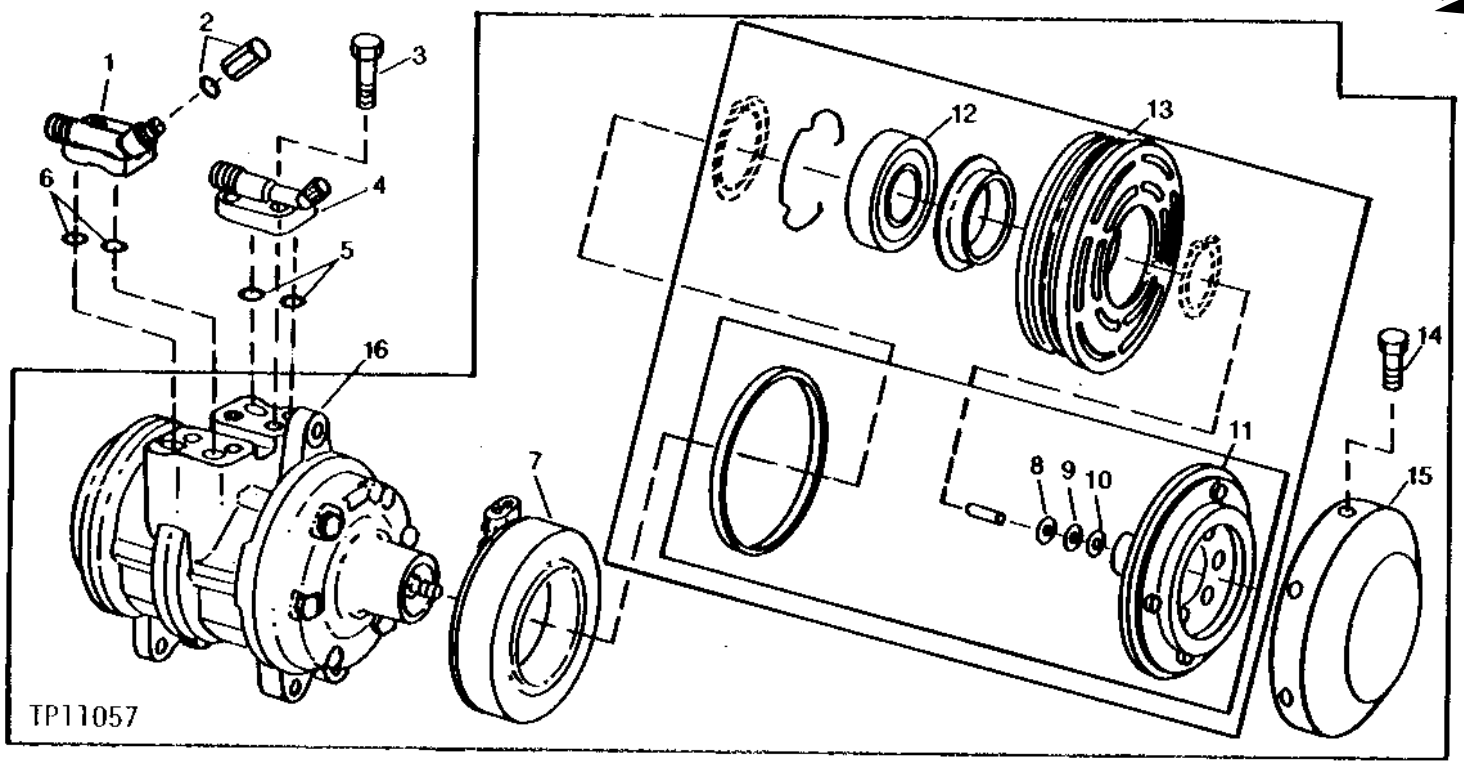

KEY	PART NO.	PART NAME	QTY	SERIAL NO.	410D 510D	REMARKS
1	RE10981	MANIFOLD	1		X X	
2	RE10982	VALVE	1		X X	
3	19M8446	SCREW	4		X X	
4	RE10980	MANIFOLD	1		X X	
5	R77401	O-RING	2		X X	
6	R77400	PACKING	2		X X	
7	R85688	STATOR	1		X X	
8	R77391	WASHER	AR		X X	
9	R77392	SHIM	AR		X X	
10	R77393	SHIM	AR		X X	
11	RE10974	KIT	1		X X	
12	R77394	BALL BEARING	1		X X	
13	RE10975	KIT	1		X X	
14	R77390	SCREW	6		X X	
15	R77389	COVER	1		X X	
16	TY6626	COMPRESSOR	1		X X	

AIR CONDITIONING COMPRESSOR AND MAINFOLD
(SERIAL NO. 790702-)
(R134A REFRIGERANT)

TP45951 -UN-20SEP94

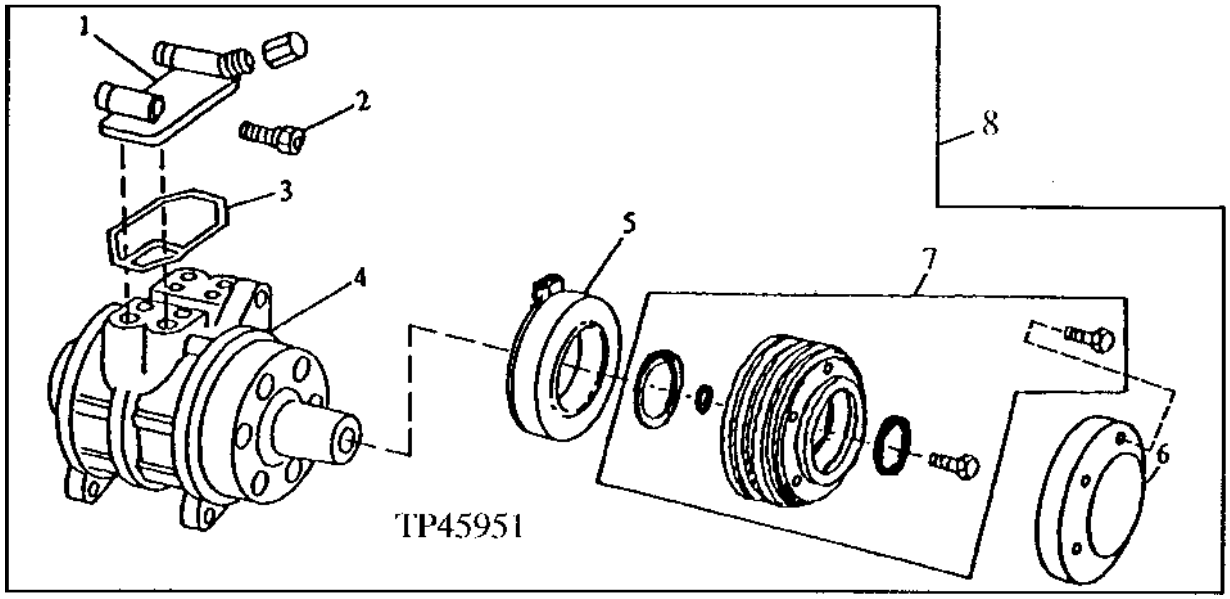

KEY	PART NO.	PART NAME	QTY	SERIAL NO.	410D	510D	REMARKS
1	RE51052	MANIFOLD	1		X	X	
2	RE52506	FLOW CONTROL HYD. VALVE	1		X	X	
3	R115742	SEAL	1		X	X	
4	RE52454	COMPRESSOR	1	-816286	X	X	
5	RE52510	STATOR	1		X	X	
6	R115743	COVER	1		X	X	(USE WITH RE53408)
	R122351	COVER	1		X	X	(USE WITH RE58348)
7	.....	KIT	1		X	X	COMPRESSOR CLUTCH AND PULLEY (RE53408 NO LONGER AVAILABLE) (SUB RE58348 AND R122351)
	RE58348	KIT	1		X	X	(SUB FOR RE53408) (ALSO ORDER R122351) COMPRESSOR CLUTCH AND PULLEY
8	TY6784	COMPRESSOR	1	-816286	X	X	REMANUFACTURED
	TY6765	COMPRESSOR	1	816287-	X	X	(REMANUFACTURED)

AIR CONDITIONING COMPRESSOR HARDWARE KIT
(SERIAL NO -790701)

TP11058 -UN-01JAN94

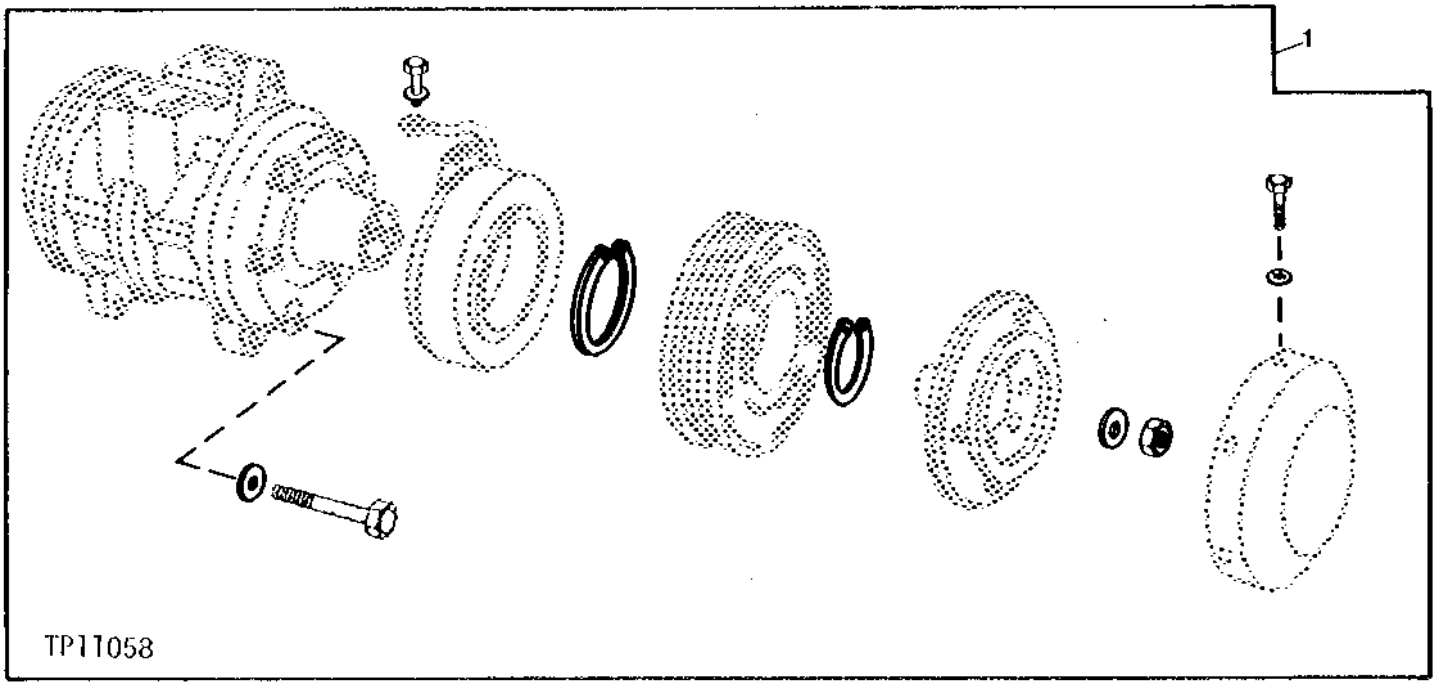

KEY	PART NO.	PART NAME	QTY	SERIAL NO.	410D	510D	REMARKS
1	RE10976	KIT	1		X	X	

AIR CONDITIOING COMPRESSOR HARDWARE KIT
(SERIAL NO. 790702-)
(R134A REFRIGERANT)

TP34247 -UN-01JAN94

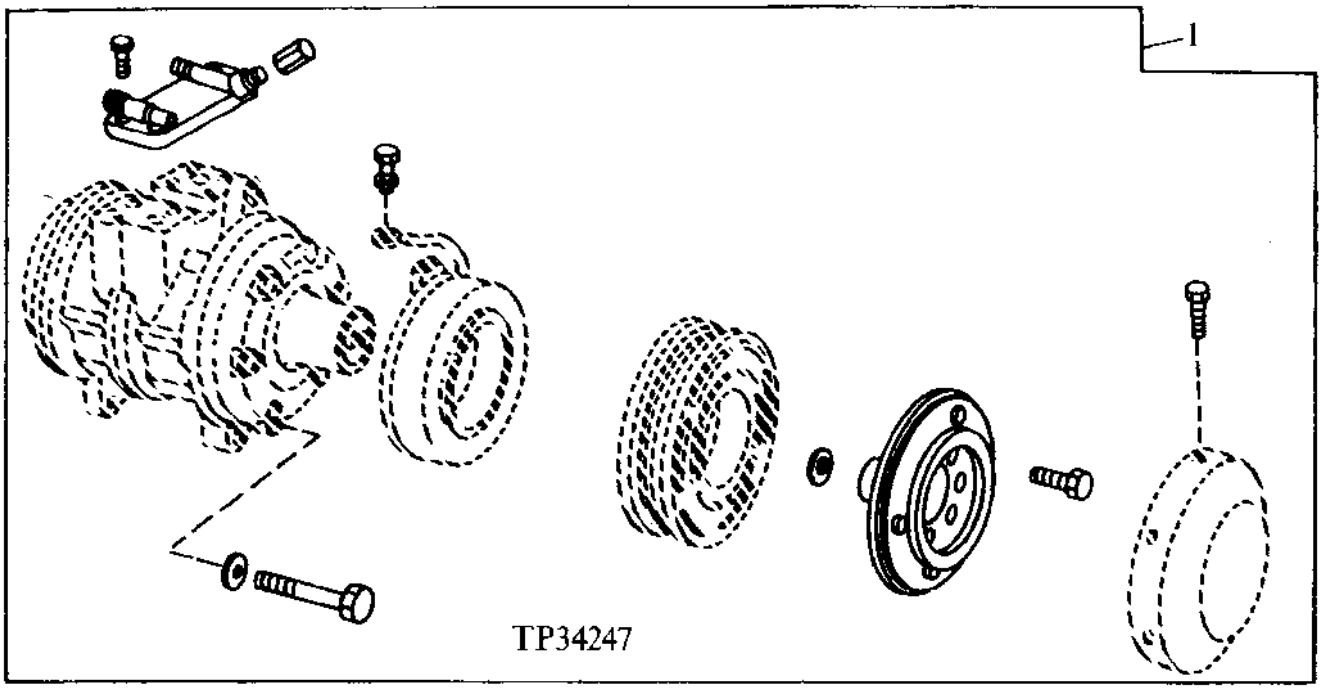

KEY	PART NO.	PART NAME	QTY	SERIAL NO.	410D	510D	REMARKS
1	RE52507	KIT	1		X	X	

AIR CONDITIONING REFRIGERANT COMPRESSOR MOUNT
(SERIAL NO. -790701)

TP44031 -UN-01JAN94

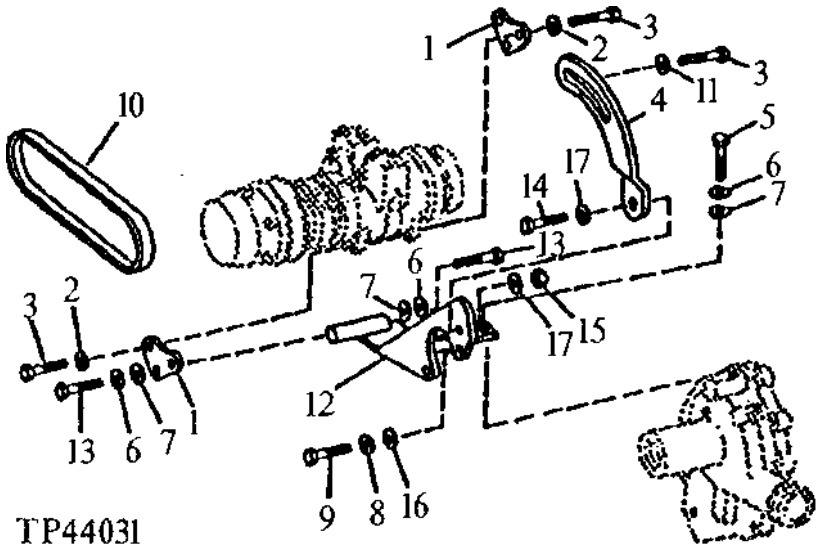

KEY	PART NO.	PART NAME	QTY	SERIAL NO.	410D	510D	REMARKS
1	R71197	BRACKET	2		X	X	
2	24H1781	WASHER	AR		X	X	13/32" X 7/8" X 1/4"
3	19M8007	CAP SCREW	5		X	X	M10 X 25
4	T141626	STRAP	1		X	X	(SUB FOR T82265, THIS APPLICATION)
5	19H1990	CAP SCREW	1		X	X	1/2" X 2-1/4", (SUB FOR 19H3550, THIS APPLICATION)
6	12H301	LOCK WASHER	3		X	X	1/2"
7	24H1254	WASHER	3		X	X	17/32" X 1-1/8" X 0.105"
8	12H304	LOCK WASHER	2		X	X	3/8"
9	19H3065	CAP SCREW	2		X	X	3/8" X 2"
10	R82437	V-BELT	1		X	X	(SUB FOR T60985, THIS APPLICATION)
11	24H1781	WASHER	1		X	X	13/32" X 7/8" X 1/4"
12	AT151840	SUPPORT	1	-790708	X	X	(SUB FOR AT84266)
	AT167956	SUPPORT	1	790709-	X	X	(SUB FOR AT164970)
13	19H2898	CAP SCREW	2		X	X	1/2" X 1-1/4"
14	19M7662	CAP SCREW	1		X	X	M10 X 30
15	14M7167	LOCK NUT	1		X	X	M10
16	24H1864	WASHER	2		X	X	13/32" X 3/4" X 7/64"
17	24M7239	WASHER	2		X	X	10.700 X 21 X 2.500 MM

AIR CONDITIONING COMPRESSOR DRIVE BELT,BRACKETS AND SUPPORT
(SERIAL NO 790702-)
(R134A REFRIGERANT)

TP50359 -UN-26JUN95

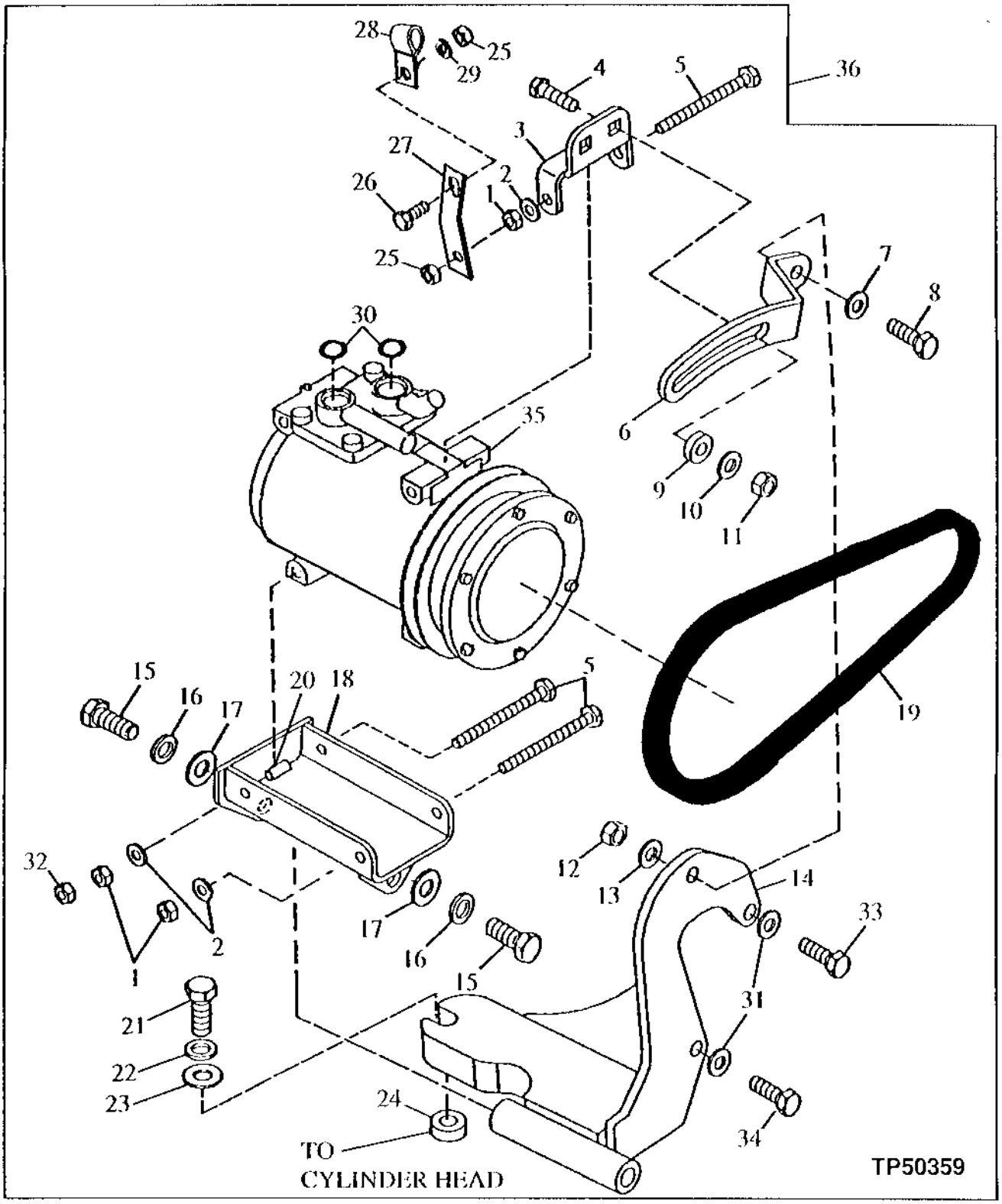

AIR CONDITIONING COMPRESSOR DRIVE BELT,BRACKETS AND SUPPORT
(SERIAL NO 790702-)

KEY	PART NO.	PART NAME	QTY	SERIAL NO.	410D	510D	REMARKS
1	14M7273	NUT	3		X	X	M8
2	12M7065	LOCK WASHER	3		X	X	8 MM
3	T151638	BRACKET	1		X	X	(SUB FOR R115397 AND R121294)
4	03M7192	BOLT	1		X	X	M10 X 30
5	19M8456	CAP SCREW	3		X	X	M8 X 100
6	T155126	STRAP	1		X	X	(SUB FOR T145907)
7	24M7239	WASHER	1		X	X	10.700 X 21 X 2.500 MM
8	19M7662	CAP SCREW	1		X	X	M10 X 30
9	24H1781	WASHER	1		X	X	
10	12M7066	LOCK WASHER	1		X	X	10 MM
11	14M7274	NUT	1		X	X	M10
12	14M7167	LOCK NUT	1		X	X	M10
13	24M7239	WASHER	1		X	X	10.700 X 21 X 2.500 MM
14	AT167956	SUPPORT	1		X	X	(SUB FOR AT164970)
15	19H2898	CAP SCREW	2	-801199	X	X	1/2" X 1-1/4"
	19H1815	CAP SCREW	2	801200-	X	X	1/2" X 1-1/4"
16	12H301	LOCK WASHER	2	-801199	X	X	1/2"
	24H1254	WASHER	2	801200-	X	X	17/32" X 1-1/8" X 0.105"
17	24H1111	WASHER	2		X	X	17/32" X 1-1/16" X 0.090"
18	AT167747	BRACKET	1	-796852	X	X	(ALSO ORDER M78771) (SUB FOR AT167747)
	AT168278	BRACKET	1	796853-	X	X	
19	R82437	V-BELT	1		X	X	COMPRESSOR DRIVE
20	M78771	WASHER	1	-796852	X	X	(USE WITH AT168278)
21	19H1990	CAP SCREW	1		X	X	1/2" X 2-1/4"
22	12H301	LOCK WASHER	1		X	X	1/2"
23	24H1254	WASHER	1		X	X	17/32" X 1-1/8" X 0.105"
24	T151858	WASHER	1		X	X	
25	14M7273	NUT	2	801200-	X	X	M8
26	19M7881	SCREW	1	801200-	X	X	M8 X 20
27	T152886	STRAP	1	801200-	X	X	(SUB FOR T150605)
28	H75541	CLAMP	1	801200-	X	X	
29	24H1243	WASHER	1	801200-	X	X	11/32" X 5/8" X 1/16"
30	R113050	O-RING	2		X	X	
31	12H304	LOCK WASHER	2		X	X	3/8"
32	14M7273	NUT	1	801200-	X	X	
33	19H1801	CAP SCREW	1		X	X	3/8" X 2"
34	19H1801	CAP SCREW	1		X	X	3/8" X 2"
35	RE52454	COMPRESSOR	1	-816286	X	X	(WITHOUT CLUTCH OR MANIFOLD)
	TY6765	COMPRESSOR	1	816287-	X	X	(REMANUFACTURED)
36	.....	AIR CONDITIONER	1	-801199	X	X	(AT163891 NO LONGER AVAILABLE) (SUB AT167584) (ALSO INCLUDES EVAPORATOR,SWITCHES,WIRE HARNESS,RECEIVER DRYER,FAN GUARD,LABELS, HOSES,LINES,THERMOSTAT,RADIATOR SUPPORTS, LOUVER,AND MISCELLANEOUS HARDWARE)
	AT167584	**AIR CONDITIONER**	**1**	**801200-816286**	**X**	**X**	**(ALSO INCLUDES EVAPORATOR,SWITCHES,WIRE HARNESS,RECEIVER DRYER,FAN GUARD,LABELS, HOSES,LINES,THERMOSTAT AND MISCELLANEOUS HARDWARE)**
	.....	AIR CONDITIONER	1	816287-	X	X	(AT177481 NO LONGER AVAILABLE) (ALSO INCLUDES EVAPORATOR KIT,SWITCHES, WIRE HARNESS,LINES,HOSES, RECEIVER DRYER,LABELS,THERMOSTAT, FAN GUARD,AND MISCELLANEOUS HARDWARE)

AIR CONDITIONING CONDENSER,RECEIVER DRYER,HOSES AND LINES
(SERIAL NO. -816286)

TP50358 -UN-26JUN95

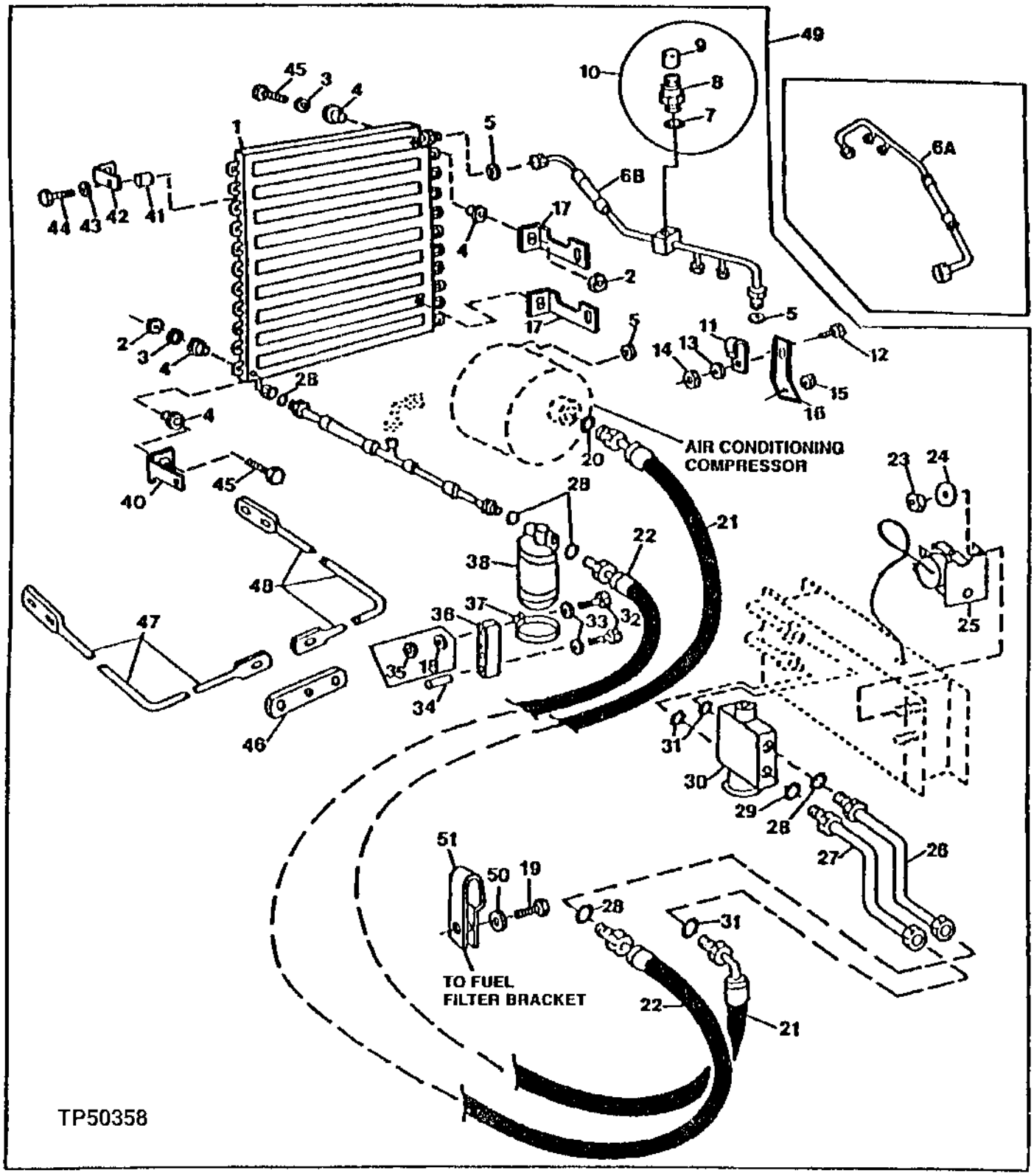

AIR CONDITIONING CONDENSER,RECEIVER DRYER,HOSES AND LINES
(SERIAL NO. -816286)

KEY	PART NO.	PART NAME	QTY	SERIAL NO.	410D	510D	REMARKS
1	AT78603	VAPOR CONDENSER	1		X	X	
2	14M7166	LOCK NUT	4		X	X	M8
3	24M7239	WASHER	4		X	X	10.700 X 21 X 2.500 MM
4	U42208	ISOLATOR	8		X	X	
5	R113050	O-RING	2		X	X	
6A	AT165971	REFRIGERANT HOSE	1	-792965	X	X	(SUB FOR AT148539 AND AT156968)
6B	AT172571	REFRIGERANT HOSE	1	792966-	X	X	(SUB FOR AT165859 AND AT161577)
7	R28776	O-RING	1		X	X	
8	.....	HYDRAULIC CYLINDER PORT	1		X	X	
9	T148917	CAP	1		X	X	
10	AT164892	HYDRAULIC CYLINDER PORT	1		X	X	
11	H75541	CLAMP	1		X	X	
12	19M7881	SCREW	1		X	X	M8 X 20
13	24H1243	WASHER	1		X	X	(SUB FOR 12M7065)
14	14M7273	NUT	1		X	X	M8
15	14M7273	NUT	1		X	X	M8
16	T152886	STRAP	1		X	X	(SUB FOR T150605)
17	T106428	BRACKET	2		X	X	
18	24M7239	WASHER	2	-801199	X	X	10.700 X 21 X 2.500 MM
19	19H1732	CAP SCREW	2	801200-	X	X	3/8" X 1-1/4"
20	A4365R	O-RING	1		X	X	
21	AT156966	HOSE	1	-790701	X	X	7/8" X 2 175 MM (85-3/4") X 7/8"
	AT161576	REFRIGERANT HOSE	1	790702-801199	X	X	7/8" X 2 229 MM (87-3/4") X 7/8"
	AT168125	REFRIGERANT HOSE	1	801200-	X	X	
22	AT156965	REFRIGERANT HOSE	1		X	X	(SUB FOR AT148549)
23	14M7229	NUT	2		X	X	M5
24	24H1283	WASHER	2		X	X	7/32" X 1/2" X 0.049"
25	RE198074	TEMPERATURE SWITCH	1		X	X	(SUB FOR AT145598, THIS APPLICATION) (SUB FOR AH144020) FREEZE CONTROL
26	AT151555	LINE	1		X	X	
27	AT151556	ADAPTER	1		X	X	
	.....	TAPE	AR		X	X	INSULATING TAPE (MAKE FROM R57003 BULK MATERIAL)
28	R10093	O-RING	5		X	X	
29	P51212	O-RING	1		X	X	(SUB FOR R28776, THIS APPLICATION)
30	AH203871	FLOW CONTROL HYD. VALVE	1		X	X	(SUB FOR AH122867, AH137702) EXPANSION
31	R33259	O-RING	3		X	X	(SUB FOR A4365R, THIS APPLICATION)
32	19M7935	CAP SCREW	2	-801199	X	X	M10 X 55
	19M8166	CAP SCREW	2	801200-	X	X	
33	24H1781	WASHER	2		X	X	
34	28H1521	SPACER	2	-801199	X	X	0.493" X 0.675" X 9/16"
	28H3402	SPACER	2	801200-	X	X	
35	14M7274	NUT	2	-801199	X	X	M10
36	T79844	STRAP	1		X	X	
37	R53422	CLAMP	2		X	X	
38	AT162848	RECEIVER-DRYER	1		X	X	(SUB FOR AT125596, THIS APPLICATION) (SUB FOR AT151981)
39	AT156967	REFRIGERANT HOSE	1		X	X	(SUB FOR AT106503, AT79961 AND AT151967)
40	T106430	BRACKET	1		X	X	
41	28H1521	SPACER	4		X	X	0.493" X 0.675" X 9/16"
42	T146262	ANGLE	1		X	X	(SUB FOR T106429)
43	24H1657	WASHER	4		X	X	21/64" X 1-1/4" X 7/64"
44	19M7981	CAP SCREW	4		X	X	M8 X 55
45	19M7550	CAP SCREW	4		X	X	M10 X 35
46	T149556	STRAP	1		X	X	
47	T154018	SUPPORT	1		X	X	(SUB FOR T149678) RH
48	T149677	SUPPORT	1		X	X	LH
49	.....	AIR CONDITIONER	1	-801199	X	X	(AT163891 NO LONGER AVAILABLE) (SUB AT167584) (SUB FOR AT148434) (ALSO INCLUDES CONDENSOR,EVAPORATOR,FAN GUARD COMPRESSOR BRACKETS AND SUPPORT,DRIVE BELT, SWITCHES AND MISCELLANEOUS)
	AT167584	**AIR CONDITIONER**	**1**	**801200-**	**X**	**X**	**(INCLUDES COMPRESSOR,EVAPORATOR,SWITCHES, DRIVE BELT AND MISCELLANEOUS)**
50	24M7296	WASHER	1	801200-	X	X	10.500 X 30 X 2.500 MM
51	T126299	CLAMP	1	801200-	X	X	

AIR CONDITIONING CONDENSER AND HOSES
(SERIAL NO.816287-)

TP50425 -UN-09MAY96

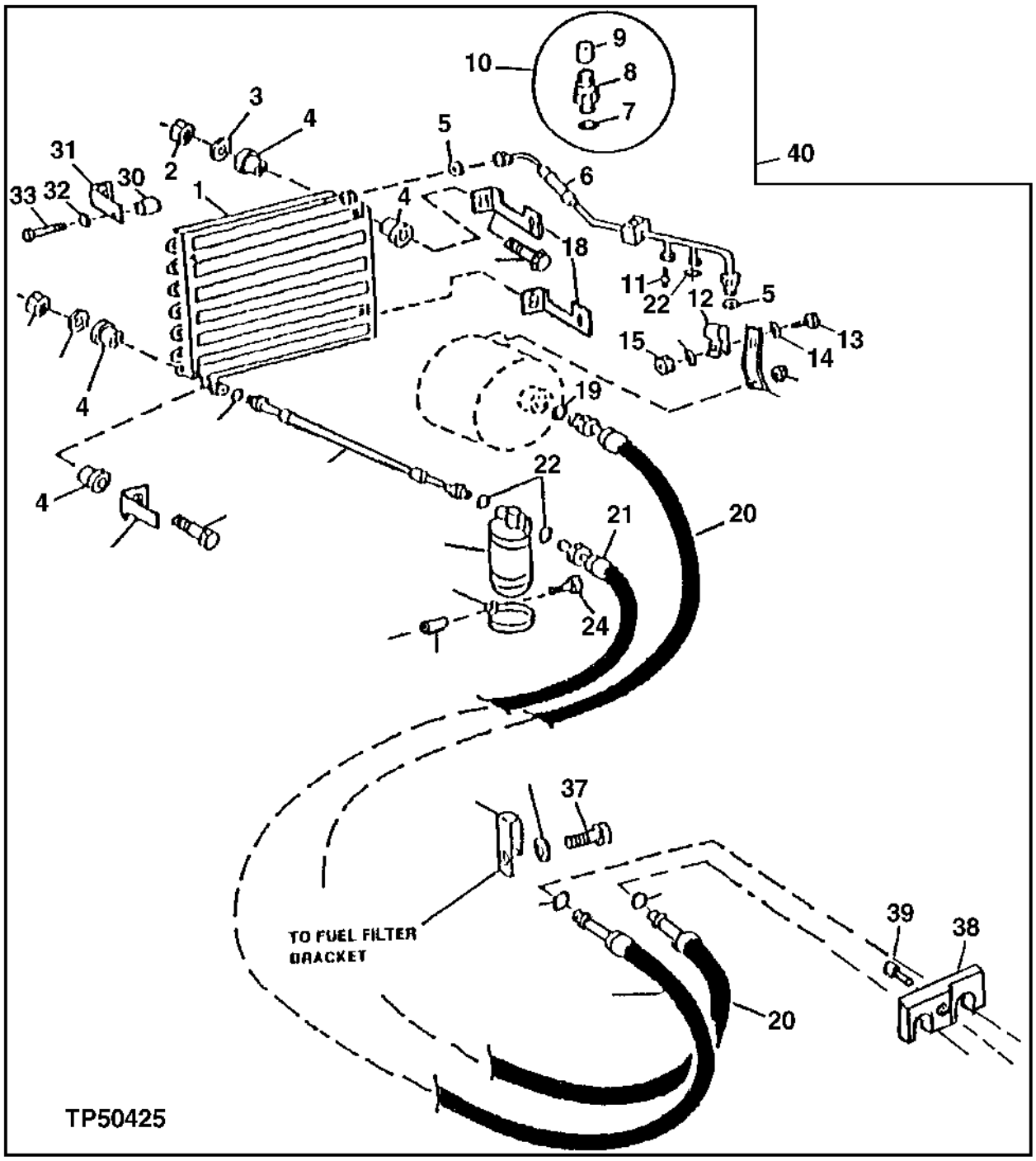

AIR CONDITIONING CONDENSER AND HOSES
(SERIAL NO.816287-)

KEY	PART NO.	PART NAME	QTY	SERIAL NO.	410D	510D	REMARKS
1	AT78603	VAPOR CONDENSER	1		X	X	
2	14M7166	LOCK NUT	4		X	X	M8
3	24M7239	WASHER	4		X	X	10.700 X 21 X 2.500 MM
4	U42208	ISOLATOR	8		X	X	
5	R113050	O-RING	2		X	X	
6	AT174791	REFRIGERANT HOSE	1		X	X	
7	R28776	O-RING	1		X	X	
8	.....	HYDRAULIC CYLINDER PORT	1		X	X	
9	T148917	CAP	1		X	X	
10	AT164892	HYDRAULIC CYLINDER PORT	1		X	X	
11	R60170	VALVE	2		X	X	
12	H75541	CLAMP	1		X	X	
13	19M7881	SCREW	2		X	X	M8 X 20
14	24H1243	WASHER	2		X	X	8.738 X 15.875 X 1.600 MM
15	14M7273	NUT	1		X	X	M8
16	14M7273	NUT	1		X	X	M8
17	T152886	STRAP	1		X	X	
18	T106428	BRACKET	2		X	X	
19	R33259	O-RING	1		X	X	
20	AT174786	REFRIGERANT HOSE	1		X	X	
21	AT174785	REFRIGERANT HOSE	1		X	X	
22	R10093	O-RING	6		X	X	
23	T143169	O-RING	1		X	X	
24	19M8166	CAP SCREW	2		X	X	
25	28H3402	SPACER	2		X	X	
26	R53422	CLAMP	2		X	X	
27	AT162848	RECEIVER-DRYER	1		X	X	
28	AT156967	REFRIGERANT HOSE	1		X	X	
29	T106430	BRACKET	1		X	X	
30	T126052	SPACER	4		X	X	
31	T146262	ANGLE	1		X	X	
32	24H1657	WASHER	4		X	X	21/64" X 1-1/4" X 7/64"
33	19M7981	CAP SCREW	4		X	X	M8 X 55
34	19M7550	CAP SCREW	4		X	X	M10 X 35
35	T126299	CLAMP	1		X	X	
36	24M7296	WASHER	2		X	X	10.500 X 30 X 2.500 MM
37	19H1732	CAP SCREW	1		X	X	3/8" X 1-1/4"
38	R125223	PLATE	1		X	X	
39	19M8553	SCREW	1		X	X	M6 X 16
40	.....	AIR CONDITIONER	1		X	X	(AT177481 NO LONGER AVAILABLE) (ALSO INCLUDES EVAPORATOR KIT,SWITCHES, FAN GUARD,COMPRESS0R,BRACKETS,V-BELT, WIRE HARNESS,STRAP,LABEL AND MISCELLANEOUS HARDWARE)

HOOD AND ENGINE SIDE SHIELDS
(SERIAL NO. -801199)

TP44734 -UN-01JAN94

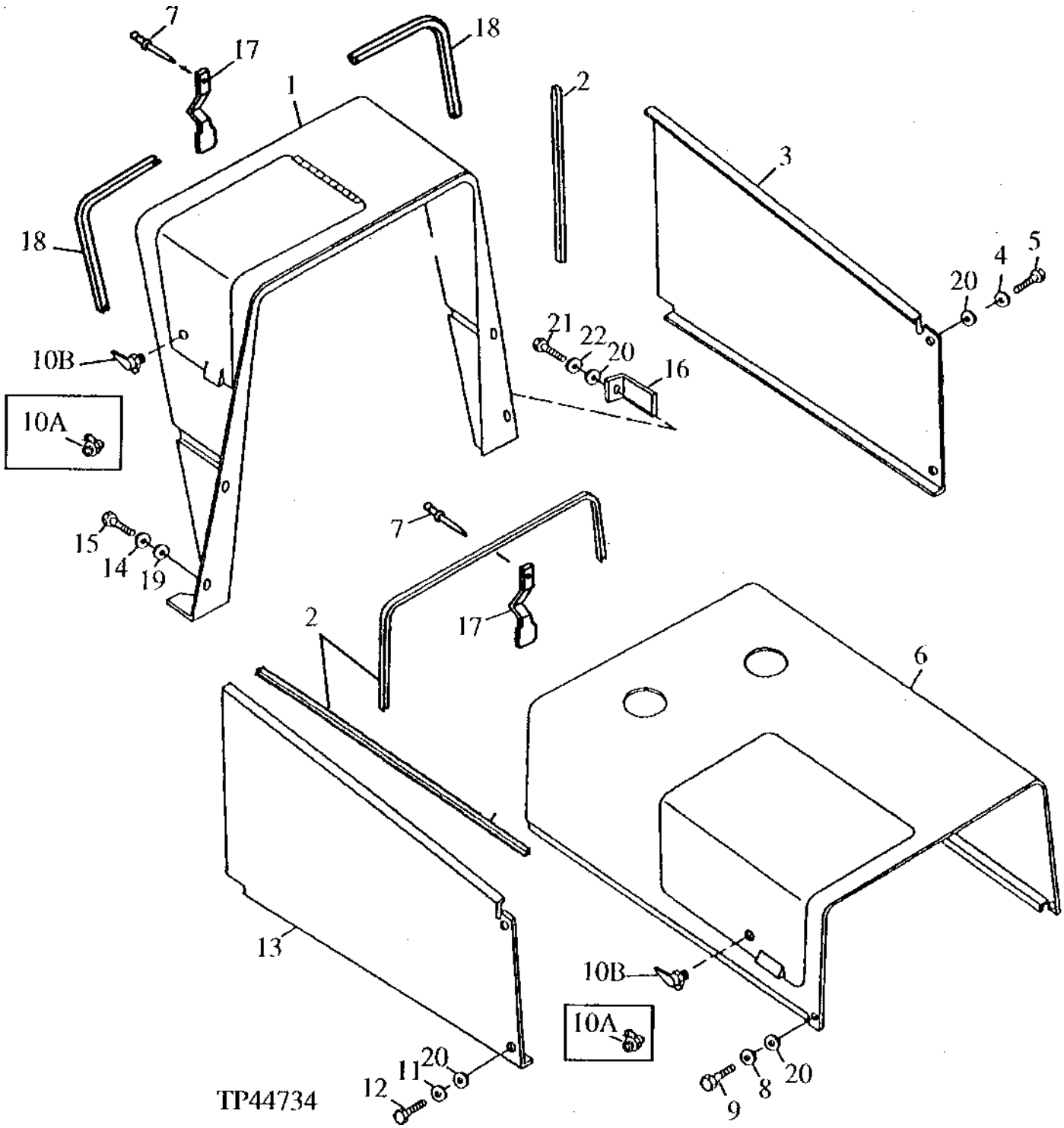

HOOD AND ENGINE SIDE SHIELDS
(SERIAL NO. -801199)

KEY	PART NO.	PART NAME	QTY	SERIAL NO.	410D	510D	REMARKS
1	AT150902	COVER	1	-796896	X	X	COWL, (SUB AT167032 AND AT171397)
	AT167032	COWL	1	796897-	X	X	COWL
2	T61798	ISOLATOR	AR		X	X	
3	T137308	SHIELD	1		X	X	
4	24M7296	WASHER	2		X	X	10.500 X 30 X 2.500 MM
5	19M7938	CAP SCREW	2		X	X	M10 X 20
6	AT151100	HOOD	1	-796896	X		(SUB AT167081 AND AT171397) (WITHOUT TURBOCHARGER)
	AT167081	HOOD	1	796897-	X	X	(WITHOUT TURBOCHARGER)
	AT151105	HOOD	1	-796896	X	X	(SUB AT167090 AND AT171397) (WITH TURBOCHARGER)
	AT167090	HOOD	1	796897-	X	X	(WITH TURBOCHARGER)
7	M82259	RIVET	4		X	X	(SUB FOR AT139608 AND AT151755)
8	24M7296	WASHER	2		X	X	10.500 X 30 X 2.500 MM
9	19M7938	CAP SCREW	2		X	X	M10 X 20
10A	AT151812	LOCK	2	-796896	X	X	(SUB FOR AT53010, THIS APPLICATION)
	AT145929	KEY	1		X	X	(SUB FOR AR51481) (SET OF TWO KEYS)
10B	AT171397	LATCH	1	796897-	X	X	(SUB FOR AT166408)
	AT145929	KEY	1		X	X	(SET OF TWO KEYS)
11	24M7296	WASHER	2		X	X	10.500 X 30 X 2.500 MM
12	19M7938	CAP SCREW	2		X	X	M10 X 20
13	T137307	SHIELD	1		X	X	
14	24M7239	WASHER	2		X	X	10.700 X 21 X 2.500 MM, RIGHT SIDE (STEEL)
15	19M7938	CAP SCREW	4		X	X	M10 X 20, (WITH ROPS)
	19M7938	CAP SCREW	3		X	X	M10 X 20, (WITH CAB)
16	T141904	BUMPER	1		X	X	(SUB FOR T135282) (WITH CAB)
17	T141506	SPRING	2		X	X	DOOR LOCK
18	.....	ISOLATOR	1		X	X	(MAKE FROM T68144 BULK MATERIAL, CUT TO LENGTH)
19	H110232	WASHER	2		X	X	0.406" X 0.890" X 0.059", RIGHT SIDE (NYLON)
20	T145936	WASHER	8		X	X	(NYLON)
21	19M7662	CAP SCREW	1		X	X	M10 X 30, (WITH CAB)
22	24M7296	WASHER	2		X	X	10.500 X 30 X 2.500 MM, LEFT SIDE (STEEL)

HOOD,COWL AND SIDE SHIELDS
(SERIAL NO. 801200-)

TP46289 -UN-27SEP94

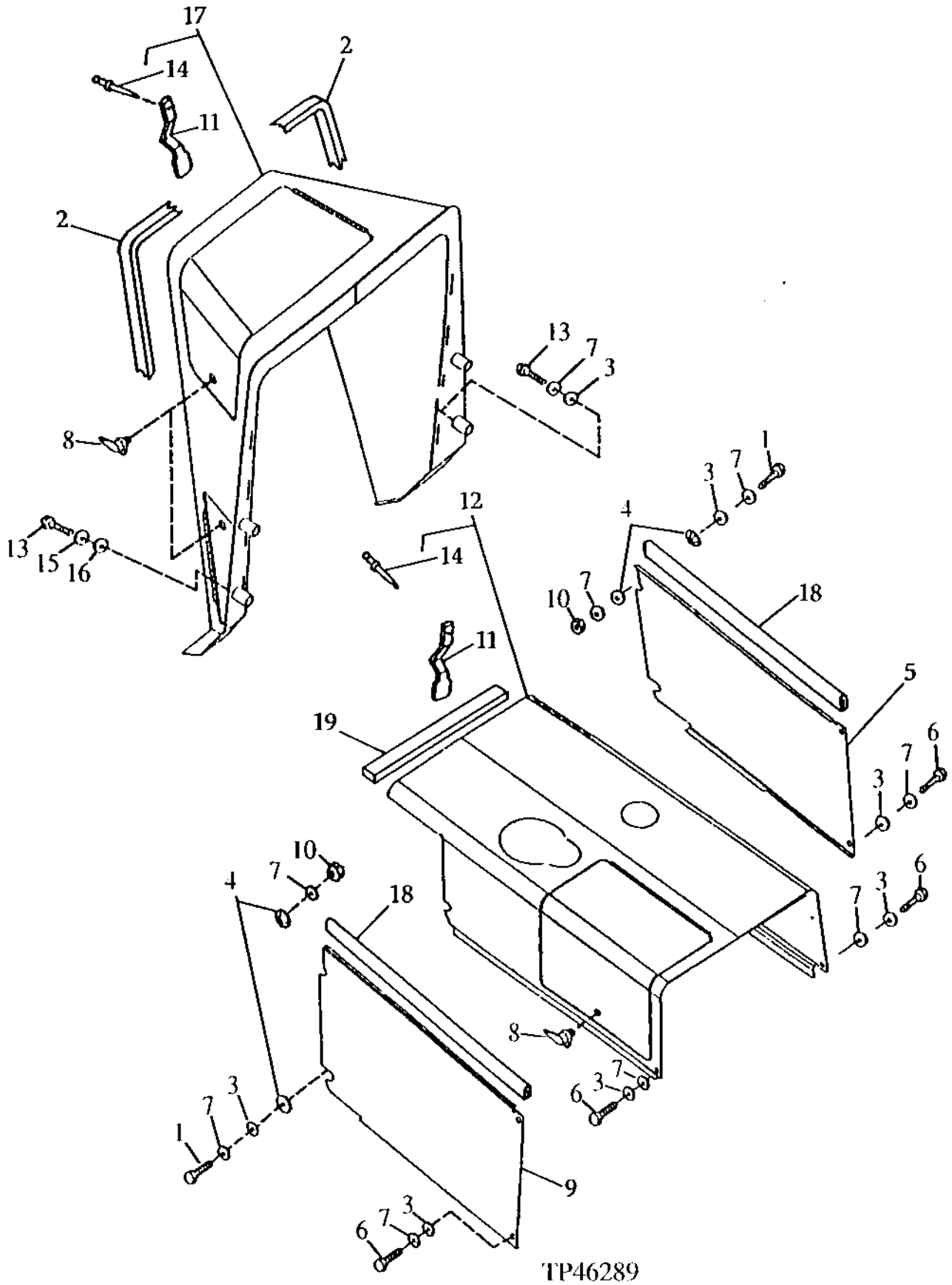

HOOD,COWL AND SIDE SHIELDS
(SERIAL NO. 801200-)

KEY	PART NO.	PART NAME	QTY	SERIAL NO.	410D	510D	REMARKS
1	19M7572	CAP SCREW	6		X	X	M10 X 45
2	T142819	ISOLATOR	1		X	X	
3	T145936	WASHER	8		X	X	
4	T148643	GUIDE	12		X	X	L.H.
5	T148722	SHIELD	1		X	X	
	T154240	WASHER	4		X	X	(ON GRILLE FRAME AT ATTACHING HOLES FOR ENGINE SIDE SHIELDS)
6	19M7938	CAP SCREW	6		X	X	M10 X 20
7	24M7296	WASHER	6		X	X	10.500 X 30 X 2.500 MM
8	AT171397	LATCH	1		X	X	(SUB FOR AT166408)
9	T148721	SHIELD	1		X	X	R.H.
10	14M7167	LOCK NUT	6		X	X	M10
11	T141506	SPRING	1		X	X	
12	AT168723	HOOD	1		X	X	
13	19M7875	CAP SCREW	4		X	X	M10 X 70
14	M82259	RIVET	2		X	X	
15	H110232	WASHER	1		X	X	
16	24M7239	WASHER	1		X	X	10.700 X 21 X 2.500 MM
17	AT168783	COVER	1		X	X	
18	.....	ISOLATOR	1		X	X	(MAKE FROM T61798 BULK MATERIAL, CUT TO LENGTH)
19	T142819	ISOLATOR	1		X	X	

BATTERY BOX
(SERIAL NO. -801199)

TP42685 -UN-01JAN94

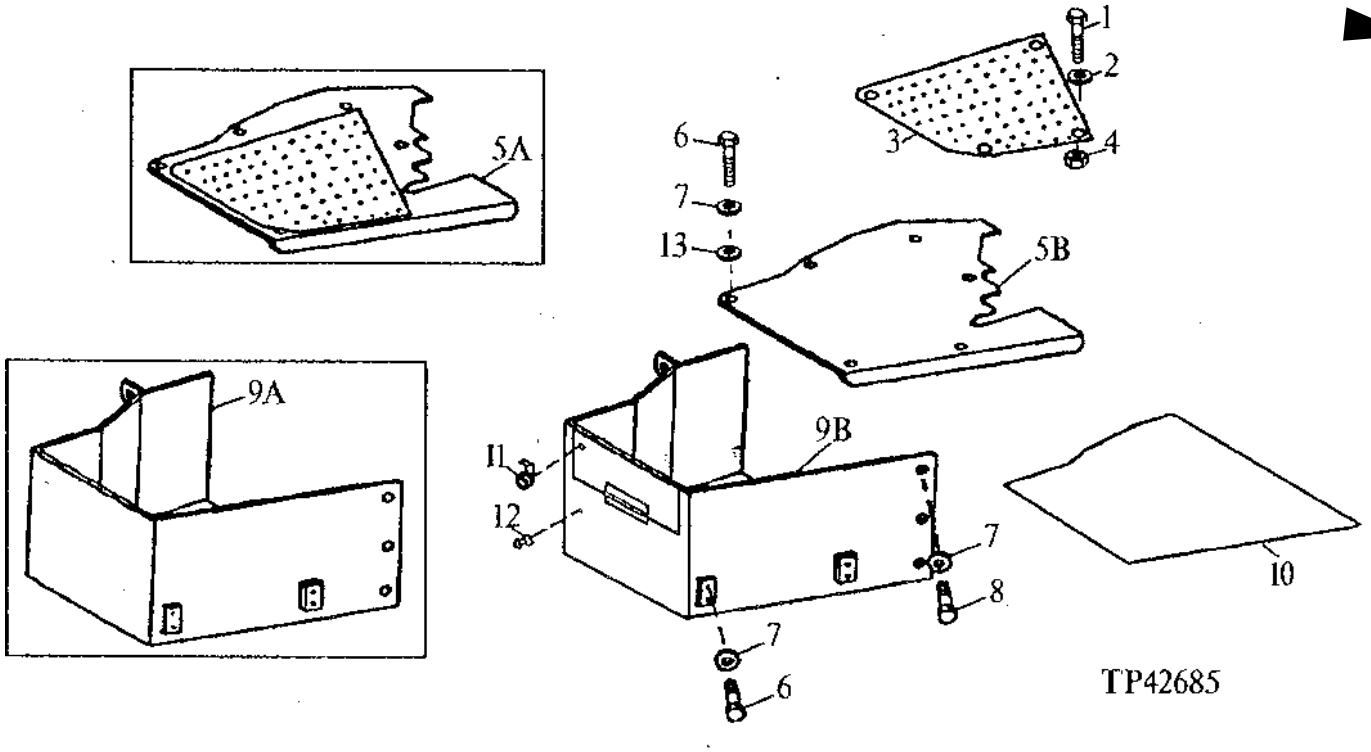

KEY	PART NO.	PART NAME	QTY	SERIAL NO.	4 5 1 1 0 0 D D	REMARKS
1	03M7183	BOLT	2		X X	M8 X 16
2	24M7207	WASHER	2		X X	8.400 X 24 X 2 MM
3	T143213	MAT	1		X X	
4	14M7273	NUT	2		X X	M8
5A	.....	COVER	1		X X	(AT150899 USE IF AVAILABLE)
5B	T143214	COVER	1		X X	(SUB FOR AT150899) (ALSO ORDER (2) 03M7183, (2) 24M7207, T143213 AND (2) 14M7273)
6	19M7938	CAP SCREW	8		X X	M10 X 20, GROUND STRAP
7	24M7296	WASHER	12		X X	10.500 X 30 X 2.500 MM
8	19M7402	CAP SCREW	4		X X	M10 X 25
9A	.....	BATTERY BOX	1		X X	(AT150714 NO LONGER AVAILABLE) (SUB AT160294)
9B	.....	BATTERY BOX	1		X X	(AT160294 NO LONGER AVAILABLE) (SUB AT162712 AND T147687)
	AT162712	BATTERY BOX	1		X X	
10	.....	TRAY	1		X X	(T145608 NO LONGER AVAILABLE) (SUB T147687)
	T147687	TRAY	1		X X	
11	AT151812	LOCK	1		X X	
12	M68997	BUMPER	1		X X	
13	T145936	WASHER	4		X X	0.390" X 1.260" X 0.062", NYLON

BATTERY BOX
(SERIAL NO. 801200-)

TP46220 -UN-01JAN94

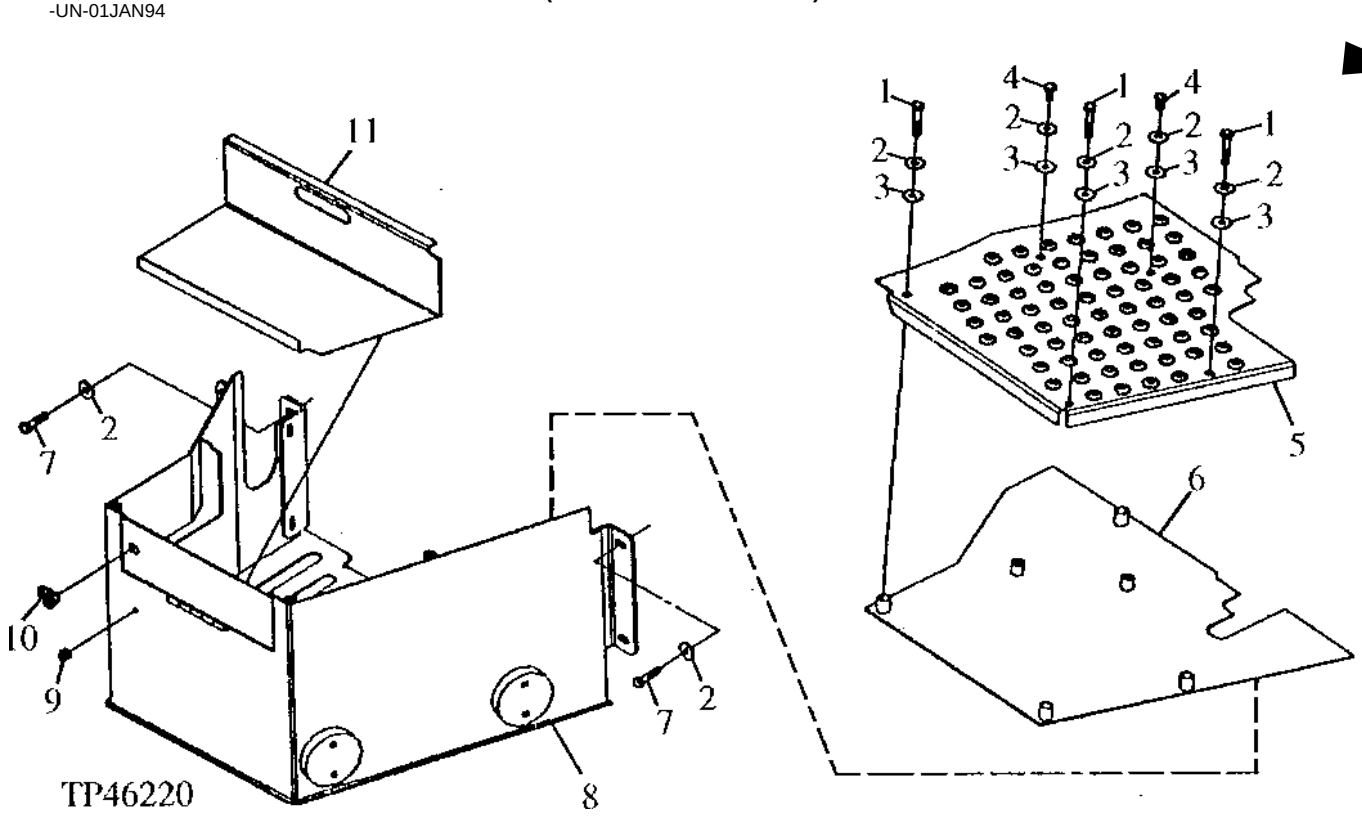

KEY	PART NO.	PART NAME	QTY	SERIAL NO.	410D	510D	REMARKS
1	19M7935	CAP SCREW	1		X	X	M10 X 55
2	24M7296	WASHER	7		X	X	10.500 X 30 X 2.500 MM
3	T145936	WASHER	3		X	X	
4	19M7402	CAP SCREW	4		X	X	M10 X 25, (SUB FOR 19M7938, THIS APPLICATION)
5	T148512	MAT	1	-807613	X	X	
	T155276	MAT	1	807614-	X	X	
6	AT164198	COVER	1	-807613	X	X	
	AT172708	COVER	1	807614-	X	X	
7	19M7358	CAP SCREW	4		X	X	M10 X 40, (SUB FOR 19M7572, THIS APPLICATION)
8	AT164194	BATTERY BOX	1		X	X	
9	M68997	BUMPER	1		X	X	
10	AT151812	LOCK	1		X	X	
11	T151488	TRAY	1		X	X	

MEMORANDA

GRILLE AND GRILLE HOUSING
(SERIAL NO. -801199)

TP42818 -UN-01JAN94

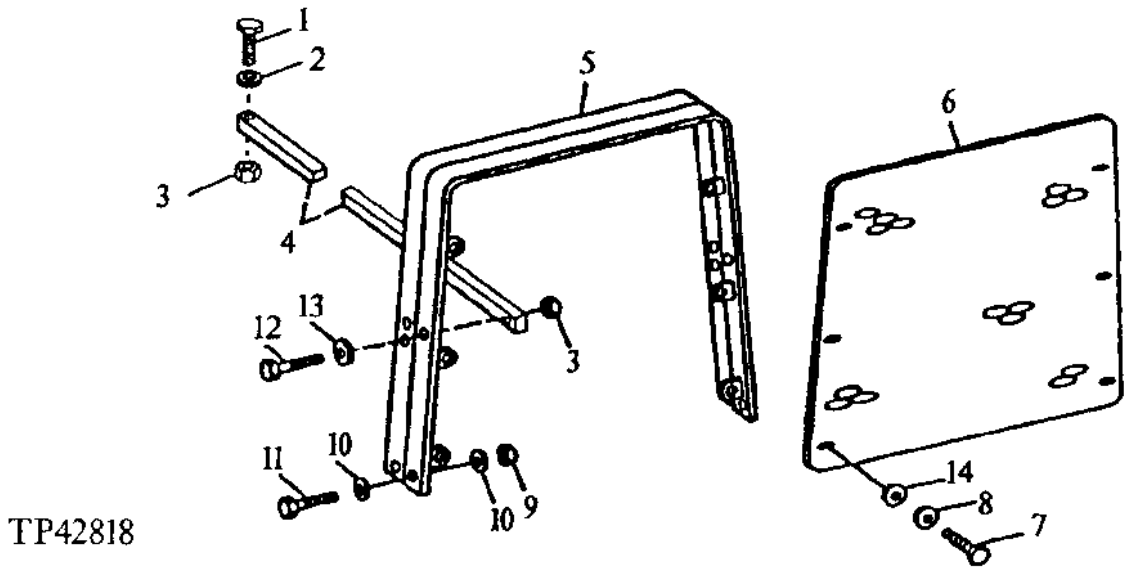

KEY	PART NO.	PART NAME	QTY	SERIAL NO.	410D	510D	REMARKS
1	19M7361	CAP SCREW	2		X	X	M12 X 50
2	24M7240	WASHER	2		X	X	13 X 25 X 3 MM
3	14M7275	NUT	4		X	X	M12
4	T135590	BAR	2		X	X	
5	AT165548	FRAME	1		X	X	(SUB FOR AT146306)
6	T149398	GRILLE	1		X	X	(SUB FOR T135582)
7	19M7402	CAP SCREW	6		X	X	M10 X 25
8	24M7296	WASHER	6		X	X	10.500 X 30 X 2.500 MM, STEEL
9	14M7276	NUT	2		X	X	M16
10	24M7241	WASHER	4		X	X	17 X 34 X 4 MM
11	19M8295	CAP SCREW	2		X	X	M16 X 55, (SUB FOR 19M7480)
12	19M7363	CAP SCREW	2		X	X	M12 X 60
13	T29342	WASHER	2		X	X	
14	T145936	WASHER	6		X	X	0.390" X 1.260" X 0.062", NYLON

GRILLE AND GRILLE HOUSING
(SERIAL NO. 801200-)

TP46222 -UN-01JAN94

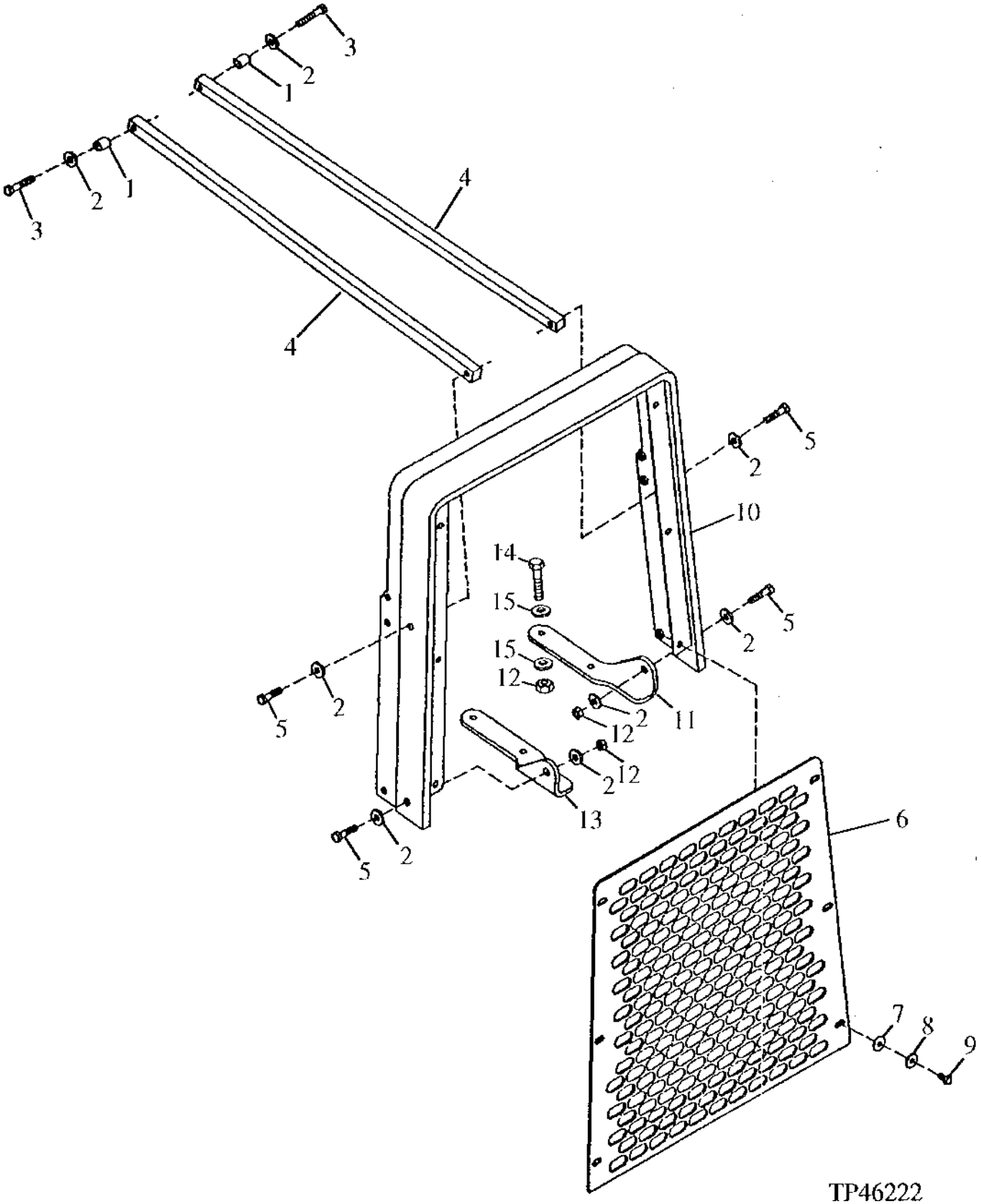

GRILL AND GRILL HOUSING
(SERIAL NO. 801200-)

KEY	PART NO.	PART NAME	QTY	SERIAL NO.	410D	510D	REMARKS
1	T139939	SPACER	2		X	X	
2	T29342	WASHER	8		X	X	
3	19M7363	CAP SCREW	2		X	X	M12 X 60
4	T148304	SUPPORT	2		X	X	
5	19M7361	CAP SCREW	4		X	X	M12 X 50
6	T148331	SCREEN	1		X	X	
7	T145936	WASHER	6		X	X	
8	24M7296	WASHER	6		X	X	10.500 X 30 X 2.500 MM
9	19M7938	CAP SCREW	6		X	X	M10 X 20
10	AT171031	FRAME	1		X	X	(SUB FOR AT166753)
11	T152763	BRACKET	1		X	X	L.H.
12	14M7275	NUT	4		X	X	M12
13	T152764	BRACKET	1		X	X	R.H.
14	19M7493	CAP SCREW	4		X	X	M12 X 40
15	24M7240	WASHER	8		X	X	13 X 25 X 3 MM

FENDERS

TP44095 -UN-01JAN94

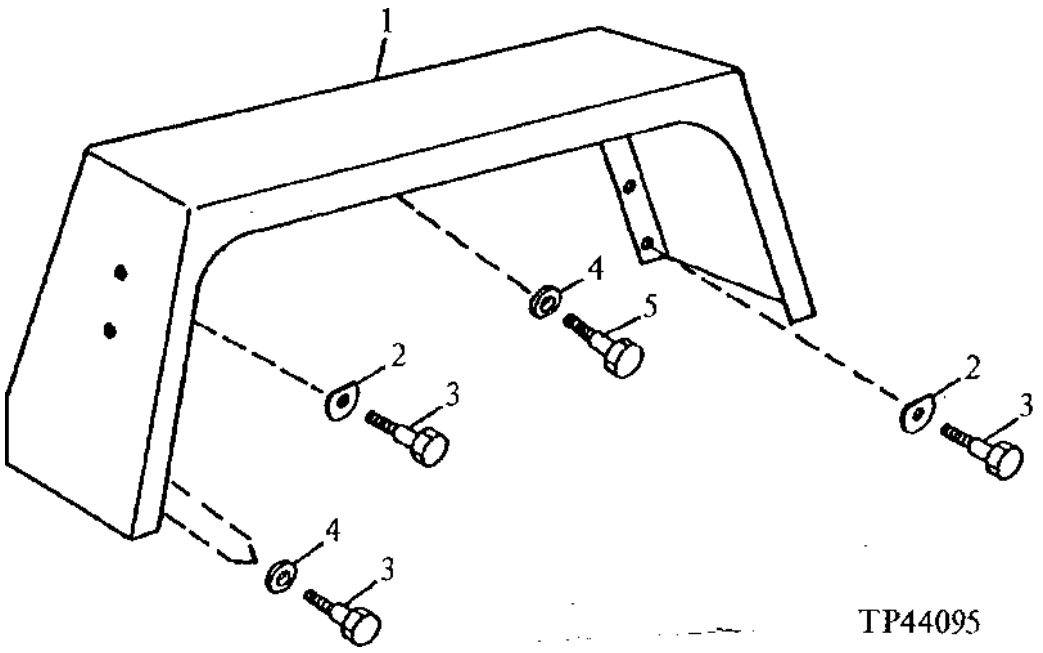

KEY	PART NO.	PART NAME	QTY	SERIAL NO.	4 5 1 1 0 0 D D	REMARKS
1	.....	FENDER	1		X X	RIGHT OUTER T146009 NO LONGER AVAILABLE, (SUB FOR T85312) (SUB T158623, T158624, (24) 24M7100 AND (24) 19M7933)
	.....	FENDER	1		X X	LEFT OUTER T146010 NO LONGER AVAILABLE, (SUB FOR T85313) (SUB T158623, T158624, (24) 24M7100 AND (24) 19M7933)
2	24M7118	WASHER	6		X X	18 X 25 X 1 MM, (SUB FOR T134611) (SUB FOR T141798, THIS APPLICATION)
3	T151864	SCREW	8		X X	M6 X 20, (SUB FOR T133289)
4	24H1122	WASHER	6		X X	3/8" X 7/8" X 0.083"
5	T151863	BOLT	4		X X	M6 X 24, (SUB FOR T133288)

REPLACEMENT FENDERS

TP50487 -UN-21SEP96

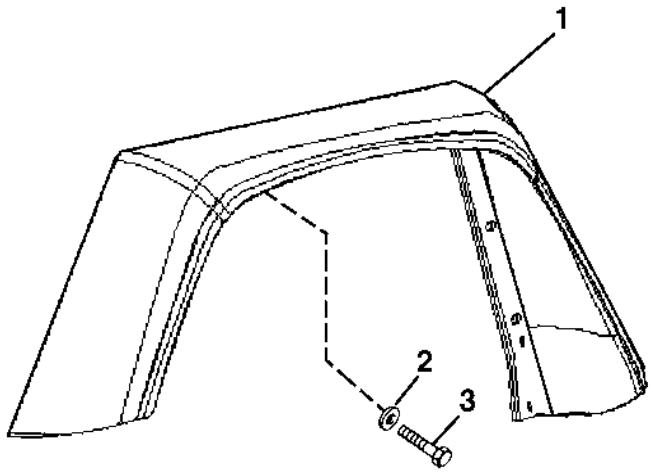

TP50487

KEY	PART NO.	PART NAME	QTY	SERIAL NO.	410D	510D	REMARKS
1	T158623	FENDER	1		X	X	RIGHT OUTER
	T158624	FENDER	1		X	X	LEFT OUTER
2	24M7100	WASHER	24		X	X	6.600 X 22 X 2 MM
3	19M7933	CAP SCREW	24		X	X	M6 X 25

FENDERS EXTENSION

TP46362 -UN-25OCT94

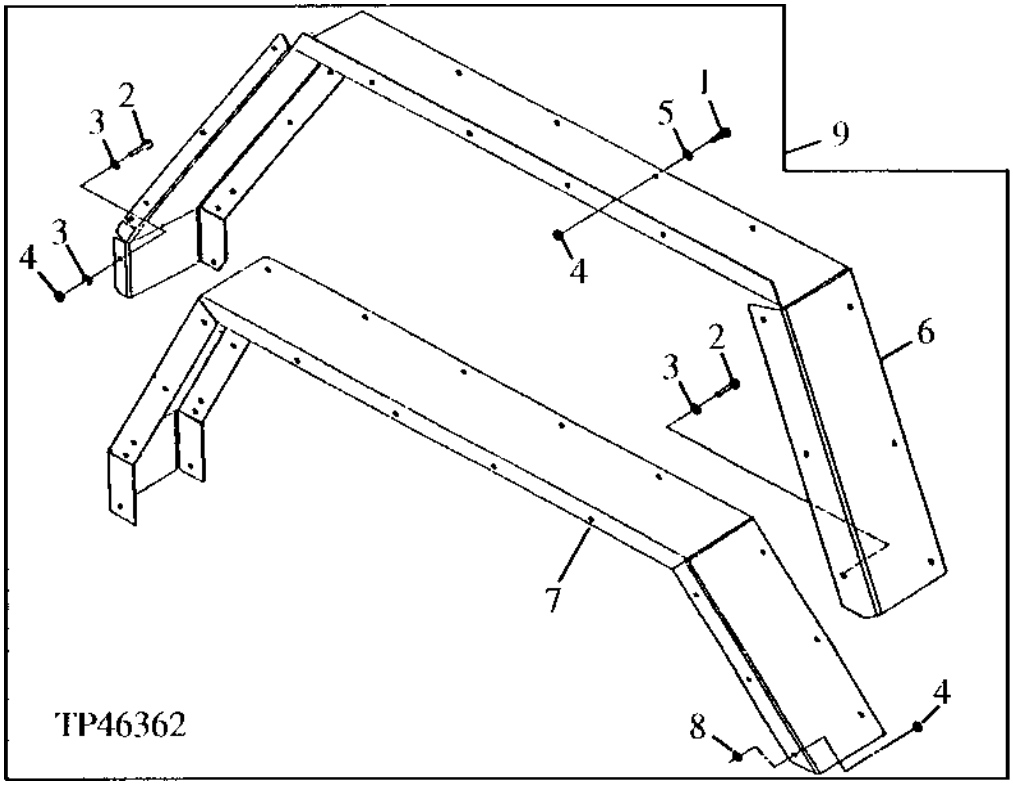

KEY	PART NO.	PART NAME	QTY	SERIAL NO.	4 5 1 1 0 0 D D	REMARKS
1	T151864	SCREW	AR		X X	(SUB FOR T133289)
	24H1682	WASHER	AR		X X	13/32" X 7/8" X 0.120"
2	19M7933	CAP SCREW	24		X X	
3	24H1287	WASHER	25		X X	
4	14M7165	LOCK NUT	25		X X	
5	24H1305	WASHER	8		X X	
6	.....	EXTENSION	1		X X	
7	.....	EXTENSION	1		X X	
8	24H1305	WASHER	16	803549-	X X	
9	**AT161376**	**FENDER**	**1**		**X X**	**EXTENSIONS**

MEMORANDA

RADIO, HARNESS, AND SPEAKERS
(FOR USE WITH CAB ONLY)

TP58176 -UN-25FEB00

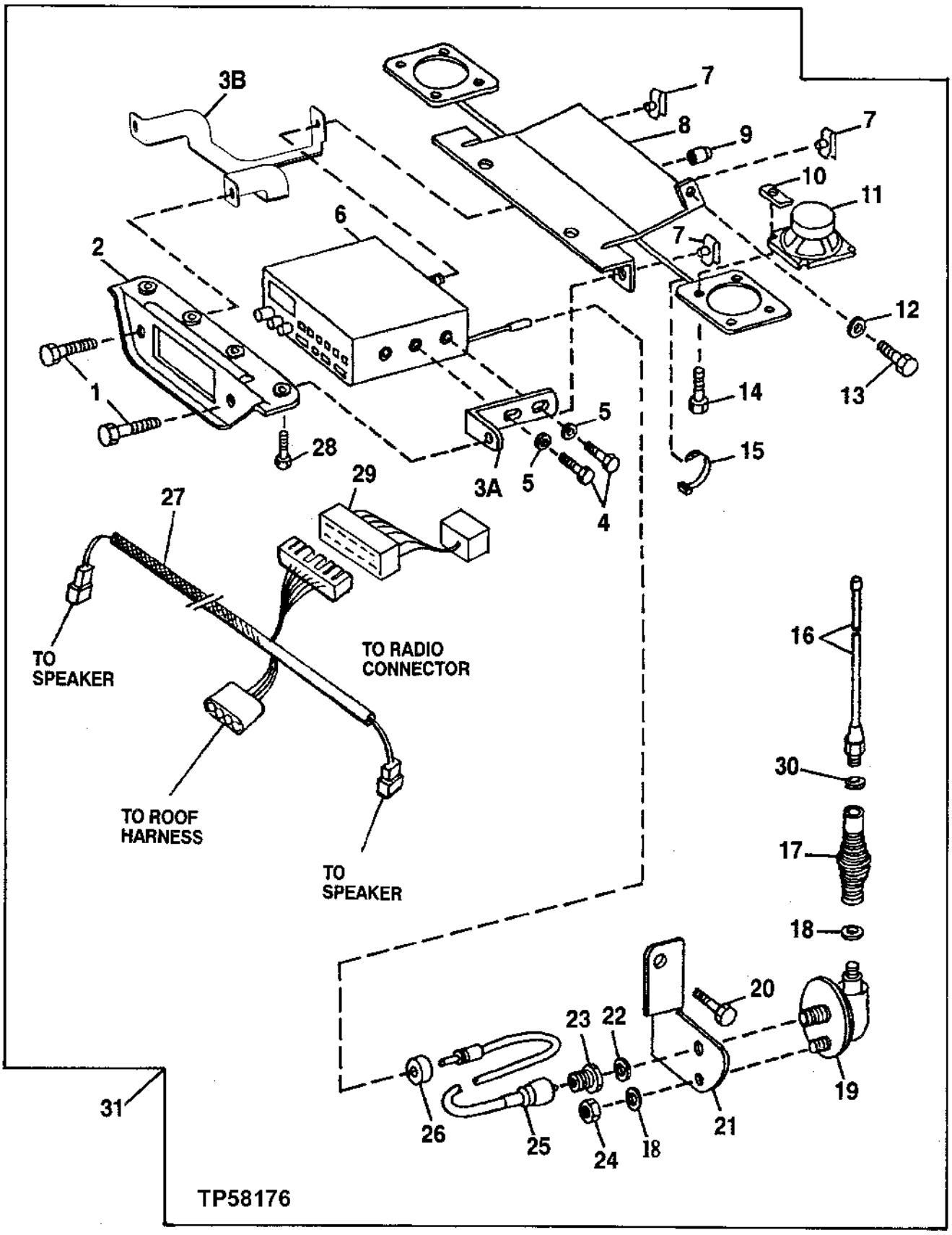

RADIO, HARNESS, AND SPEAKERS
(FOR USE WITH CAB ONLY)

KEY	PART NO.	PART NAME	QTY	SERIAL NO.	410D	510D	REMARKS
1	T133674	SELF-LOCKING SCREW	2		X	X	
2	T142250	PANEL	1		X	X	
3A	T142249	ANGLE	2		X	X	
3B	T184860	BRACKET	1		X	X	
4	21M7265	SCREW	4		X	X	M5 X 12, (USE WITH T142249)
5	24H1283	WASHER	4		X	X	(USE WITH T142249)
6	.....	RADIO	1		X	X	(AT148348 NO LONGER AVAILABLE) (SUB RE190139) (ALSO ORDER T184860 AND AT191243)
7	M84972	NUT	3		X	X	
8	AT151112	PLATE	1		X	X	RADIO/SPEAKER MOUNTING
9	T142434	BUSHING	1		X	X	
10	BP13712	NUT	8		X	X	
11	R99016	SPEAKER	2		X	X	
12	24M7100	WASHER	1		X	X	6.600 X 22 X 2 MM
13	19M7933	CAP SCREW	1		X	X	M6 X 25
14	19H1227	CAP SCREW	8		X	X	1/4" X 1/2"
15	R44302	TIE BAND	4		X	X	
16	AR104516	ANTENNA	1		X	X	
17	AR104518	SPRING	1		X	X	
18	12H302	LOCK WASHER	2		X	X	1/4"
19	RE61648	BASE	1		X	X	(SUB FOR AR104517)
20	19M7938	CAP SCREW	1		X	X	M10 X 20
21	T140598	BRACKET	1		X	X	
22	12H292	LOCK WASHER	1		X	X	1/2"
23	R76695	NUT	1		X	X	
24	14H786	NUT	1		X	X	1/4"
25	AT151111	ANTENNA CABLE	1		X	X	
26	T74952	GROMMET	1		X	X	
27	AT150707	WIRING HARNESS	1		X	X	
28	T134895	SELF-LOCKING SCREW	7		X	X	
29	AT191243	RADIO SPEAKER WRG HARNESS	1		X	X	
30	12H310	LOCK WASHER	1		X	X	
31	**AT178643**	**RADIO**	**1**		**X**	**X**	**FOR USE WITH CAB ONLY, (SUB FOR AT157285)**

MEMORANDA

INTERIOR REAR VIEW MIRROR

TP57824 -UN-08JAN98

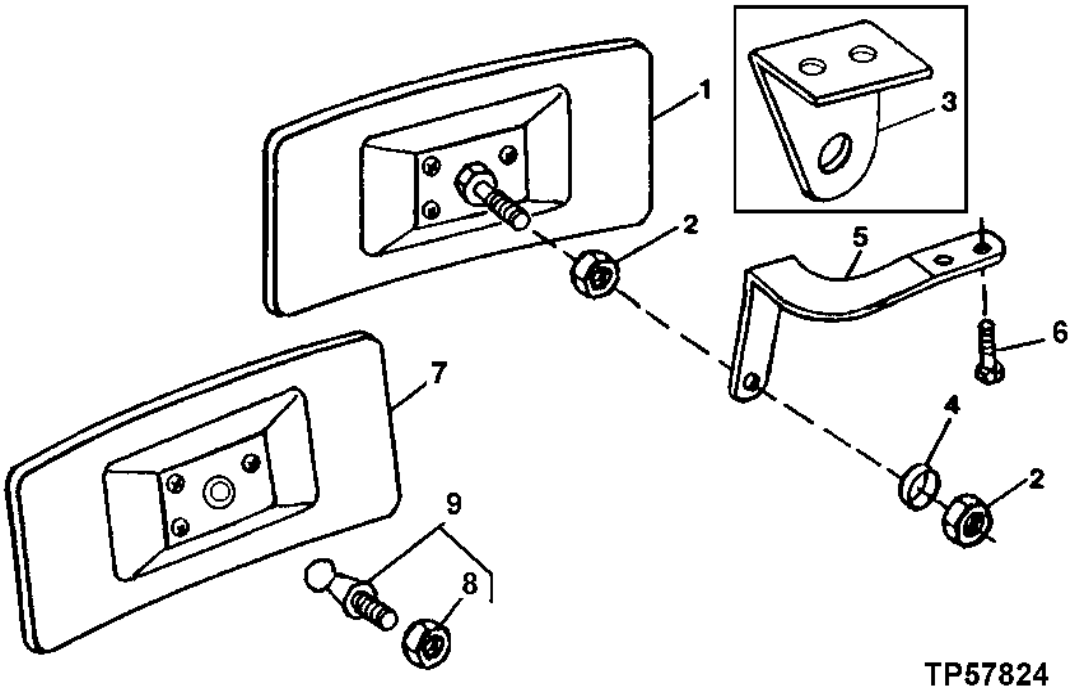

KEY	PART NO.	PART NAME	QTY	SERIAL NO.	4 5 1 1 0 0 D D	REMARKS
1	AT186760	REAR VIEW MIRROR	1		X X	(SUB FOR RE20254 OR RE52660)
2	14H785	NUT	2		X X	5/16"
3	T135000	BRACKET	1	-823474	X X	CAB
	T135000	BRACKET	1	-826425	X X	ROPS
4	24M7238	WASHER	2		X X	8.700 X 17 X 2 MM
5	T135736	BRACKET	1		X X	
6	T134895	SELF-LOCKING SCREW	2		X X	M6 X 25, WITH RADIO
7	AT137925	REAR VIEW MIRROR	1		X X	CORROSION RESISTANT
8	AT137926	BALL STUD	1		X X	
9	.....	NUT	1		X X	M8

OUTSIDE MIRROR FOR CAB OR CANOPY

TP44738 -UN-01JAN94

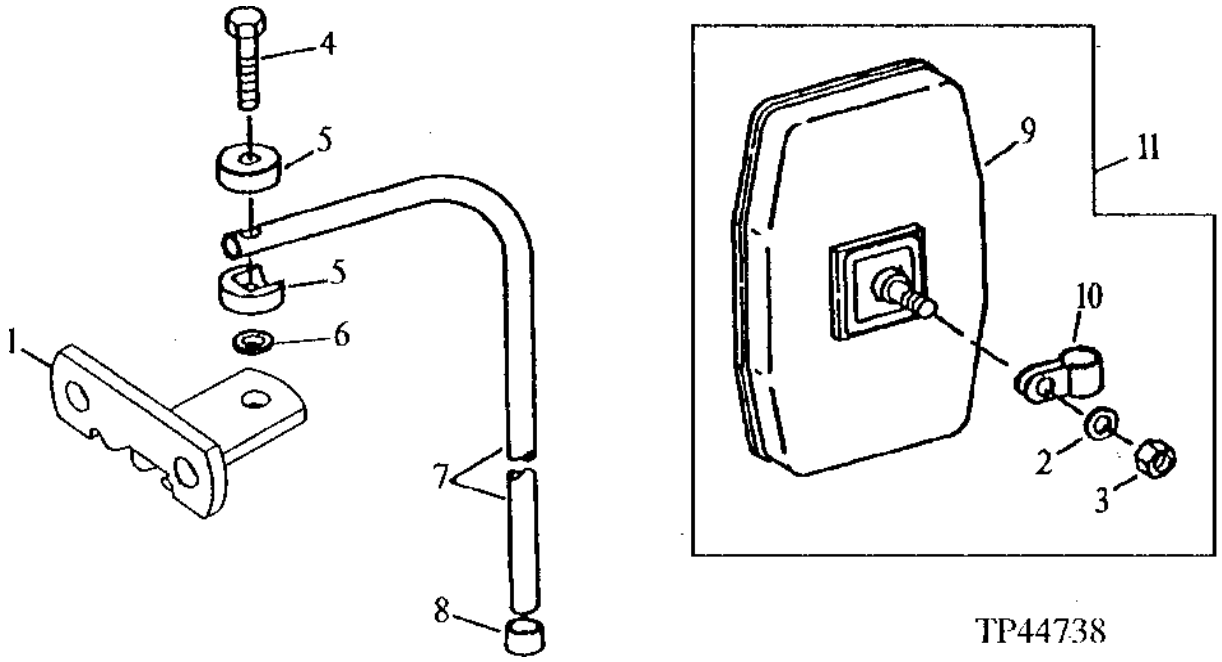

KEY	PART NO.	PART NAME	QTY	SERIAL NO.	410D	510D	REMARKS
1	T148818	BRACKET	2		X	X	
2	24M7243	WASHER	2		X	X	25.400 X 50 X 6 MM
3	T11234	LOCK NUT	1		X	X	
4	T125724	CAP SCREW	2		X	X	
5	T115030	HALF CLAMP	4		X	X	
6	T60920	WASHER	2		X	X	
7	T148817	TUBE	2		X	X	
8	T128437	CAP	2		X	X	
9	AT157226	REAR VIEW MIRROR	1		X	X	
10	T119564	CLAMP	1		X	X	
11	AT103919	REAR VIEW MIRROR	1		X	X	

HORN

TP44784 -UN-01JAN94

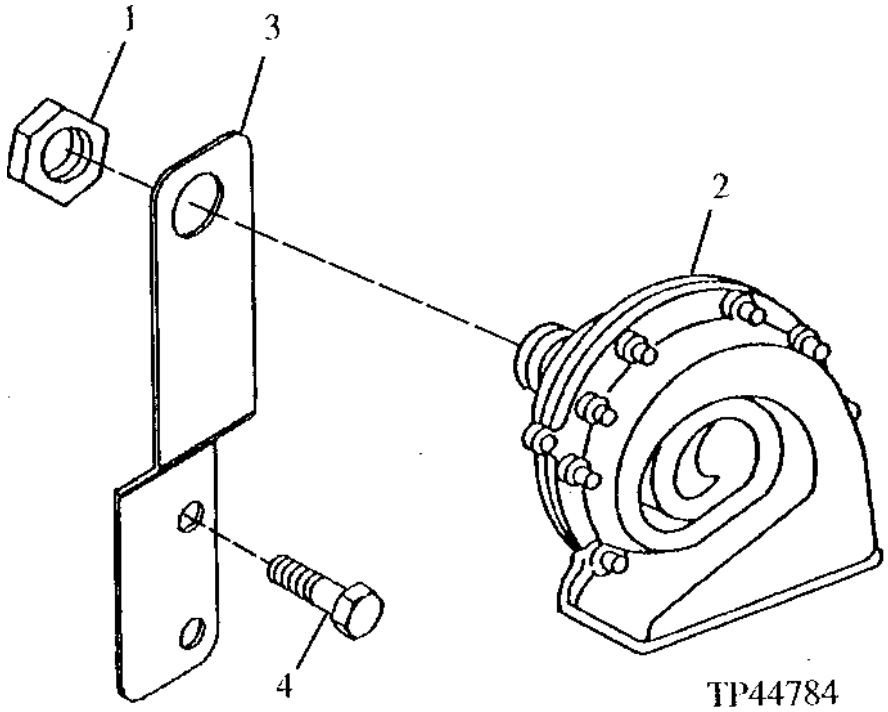

KEY	PART NO.	PART NAME	QTY	SERIAL NO.	410D	510D	REMARKS
1	14M7272	NUT	1		X	X	(SUB FOR R11278, THIS APPLICATION)
2	AT180293	KIT	1		X	X	INCLUDES HORN, BRACKET AND HARDWARE, (SUB FOR R64700, THIS APPLICATION)
3	T149268	PLATE	1	801200-	X	X	
4	19M7550	CAP SCREW	2	801200-	X	X	

BACK-UP ALARM SYSTEM
(SERIAL NO. -801199)

TP52760 -UN-10APR96

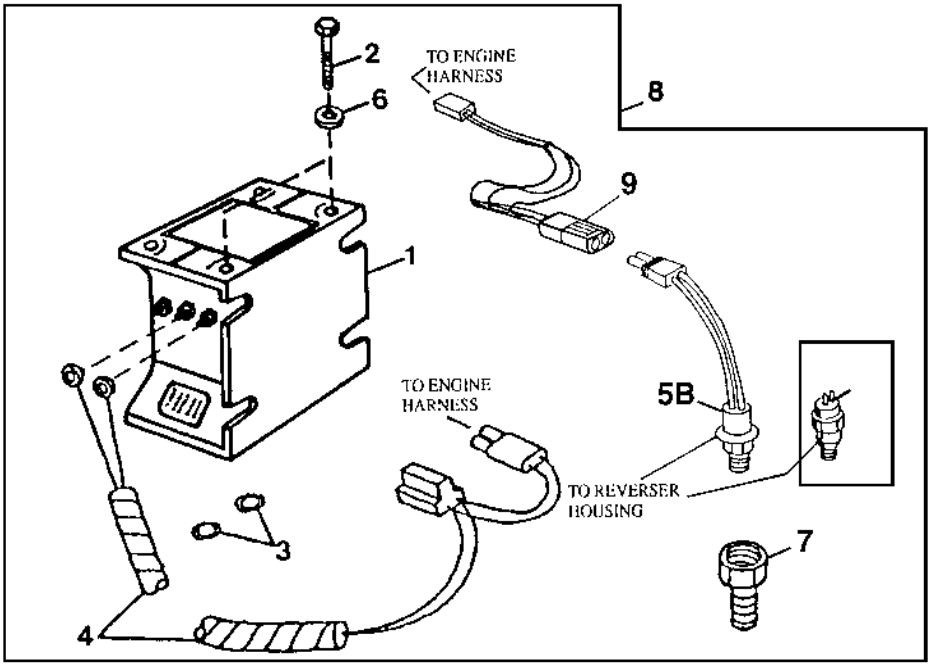

KEY	PART NO.	PART NAME	QTY	SERIAL NO.	410D	510D	REMARKS
1	AT120461	TRAVEL WARNING ALARM	1		X	X	
2	37H116	SCREW	2		X	X	
3	12M7084	LOCK WASHER	2		X	X	4.300 MM
4	AT156689	WIRING HARNESS	1	-778824	X	X	(SUB FOR AT68613)
	AT157012	WIRING HARNESS	1	778825-794259	X	X	
5A	AL67715	SWITCH	1	-798322	X	X	BACK UP ALARM
5B	AT151507	SWITCH	1	798323-	X	X	
6	24H1287	WASHER	2		X	X	9/32" X 5/8" X 0.065"
7	15H639	PIPE BUSHING	1	-794259	X	X	
8	.....	TRAVEL WARNING ALARM	1		X	X	(AT145726 NO LONGER AVAILABLE)
9	AT167115	WIRING HARNESS	1	798323-	X	X	

BACK-UP ALARM SYSTEM
(SERIAL NO. 801200-)

TP46218 -UN-01JAN94

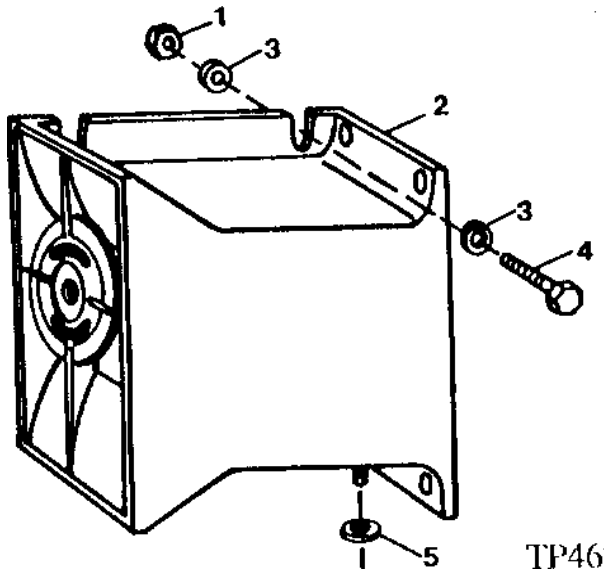

KEY	PART NO.	PART NAME	QTY	SERIAL NO.	410D	510D	REMARKS
1	14M7426	LOCK NUT	2		X	X	M8
2	AT120461	TRAVEL WARNING ALARM	1		X	X	
3	24M7238	WASHER	4		X	X	8.700 X 17 X 2 MM
4	19M7407	CAP SCREW	2		X	X	M8 X 25
5	12M7084	LOCK WASHER	2		X	X	4.300 MM

TOOLBOX WITH TRAY AND BRACKET

TP29707 -UN-01JAN94

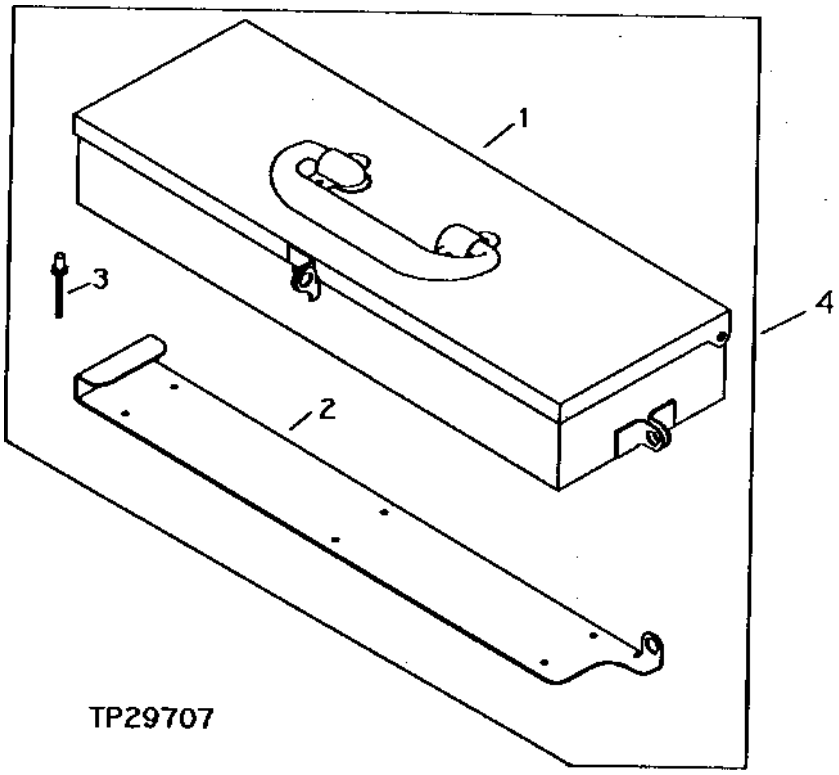

KEY	PART NO.	PART NAME	QTY	SERIAL NO.	410D	510D	REMARKS
1	AT145589	TOOLBOX	1		X	X	
2	AT145554	BRACKET	1		X	X	
3	AT44195	RIVET	6		X	X	(SUB FOR M86758)
4	**AT141401**	**TOOLBOX**	**1**		**X**	**X**	

REPLACEMENT HYDRAULIC PUMP ASSEMBLY

TP40234 -UN-01JAN94

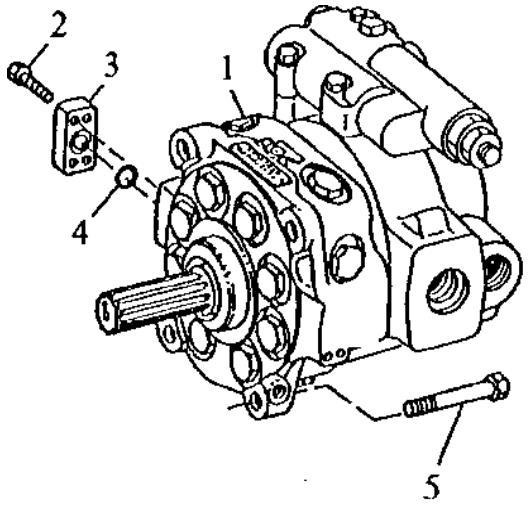

TP40234

KEY	PART NO.	PART NAME	QTY	SERIAL NO.	410D	510D	REMARKS
1	RE33603	HYDRAULIC PUMP	1		X	X	65 CM3
2	19H3483	CAP SCREW	4		X	X	3/8" X 1-1/8"
3	R82192	COVER	1		X	X	
4	U12037	O-RING	1		X	X	
5	19M7363	CAP SCREW	4		X	X	

HYDRAULIC PUMP

RXP6596 -UN-01JAN94

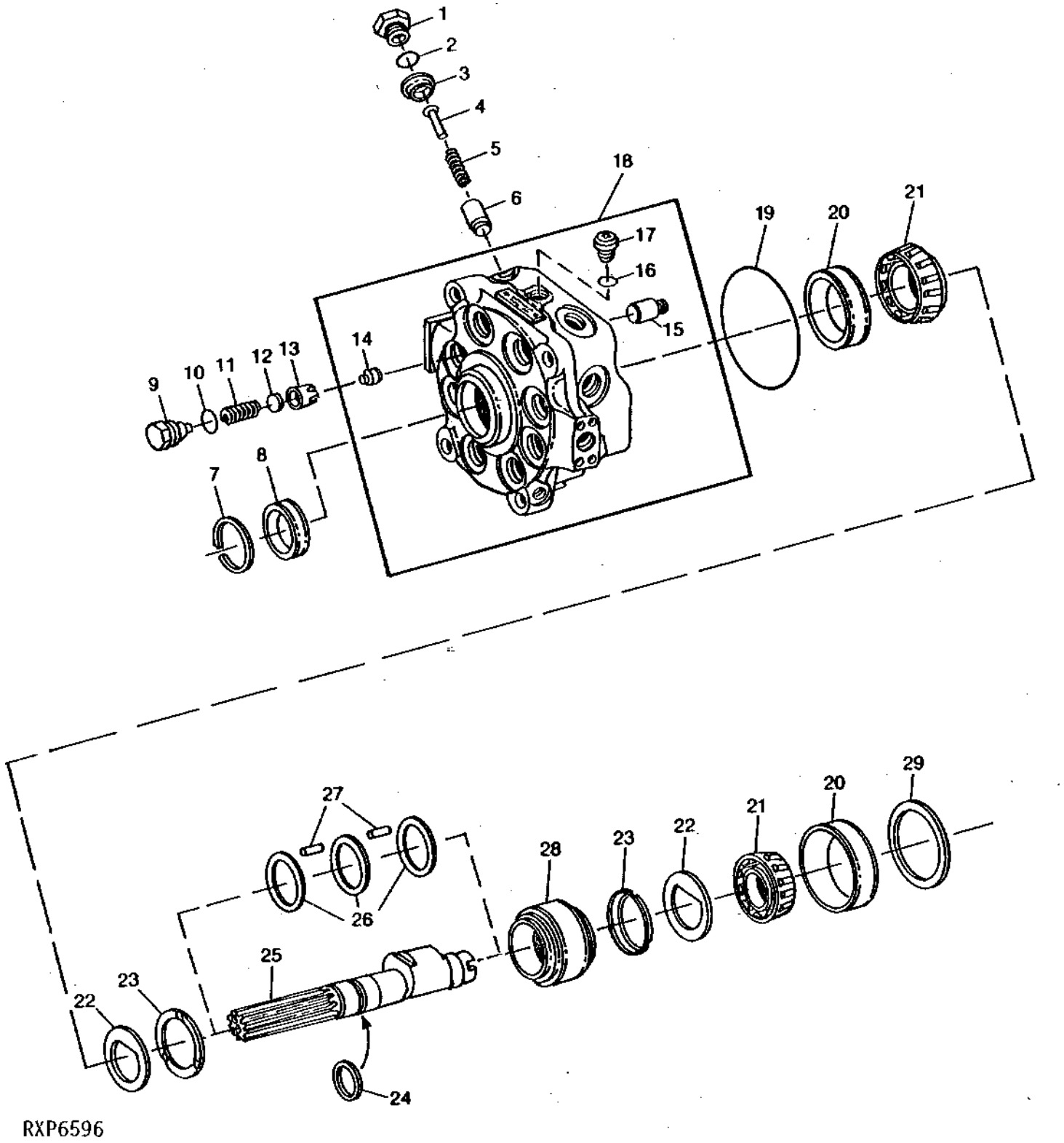

HYDRAULIC PUMP - CONTINUED

KEY	PART NO.	PART NAME	QTY	PUMP SERIAL NO.	410D	510D	REMARKS
1	R89562	DRAIN PLUG	8		X	X	
2	R47154	O-RING	8		X	X	
3	RE17525	RETAINER	1		X	X	(SET OF 8)
4	R81804	PIN FASTENER	8		X	X	
5	R81578	SPRING	8		X	X	(SUB FOR RE17524)
6	R80661	PISTON	8		X	X	
7	R26137	SNAP RING	1		X	X	
8	RE28790	SEAL	1		X	X	
9	R75683	FITTING	8		X	X	
10	R56751	O-RING	8		X	X	
11	R81811	SPRING	8		X	X	
12	R49297	DISK	8		X	X	
13	R48738	GUIDE	8		X	X	
14	R105584	SEAT	8		X	X	
15	RE16600	VALVE	8		X	X	(INLET) (3 WEB)
16	R26375	O-RING	1		X	X	
17	R33138	FITTING	1		X	X	
18	RE14740	HOUSING	1		X	X	(MARKED R75645)
19	U10746	O-RING	1		X	X	
20	JD8223	BEARING CUP	2		X	X	
21	JD8192	BEARING CONE	2		X	X	
22	R79151	LOCK WASHER	2		X	X	
23	R72507	THRUST WASHER	2		X	X	
24	R77611	SEALING WASHER	1		X	X	(SEALING)
25	R83513	SHAFT	1		X	X	
26	R85557	WASHER	3		X	X	
27	R116713	NEEDLE ROLLER	50		X	X	(SUB FOR R85558)
28	R80558	BEARING RACE	1		X	X	
29	R27478	SHIM	AR		X	X	0.15MM (.006")
	R27479	SHIM	AR		X	X	0.25MM (.010")

HYDRAULIC PUMP STROKE CONTROL VALVE

TP40233 -UN-01JAN94

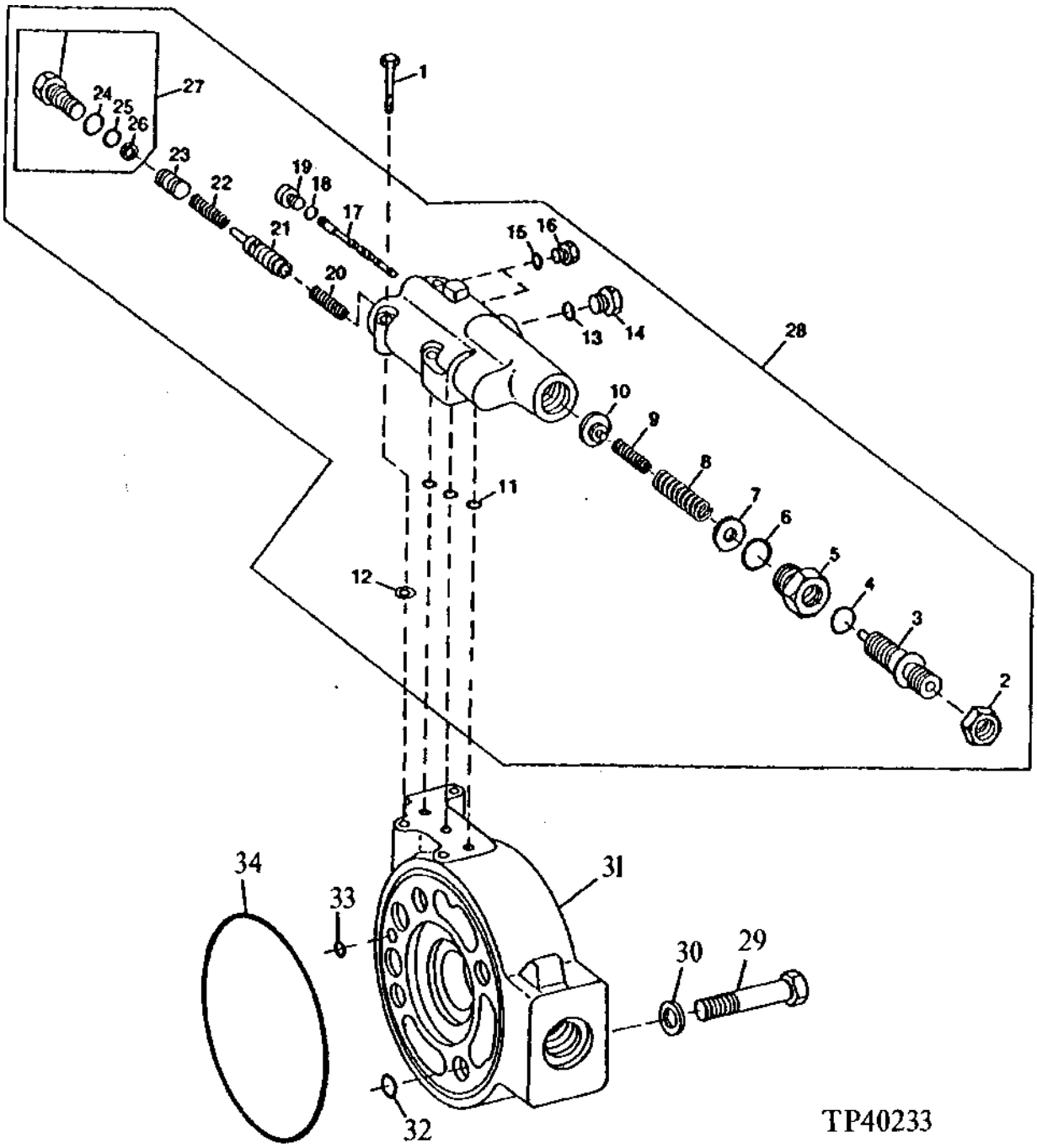

HYDRAULIC PUMP STROKE CONTROL VALVE - CONTINUED

KEY	PART NO.	PART NAME	QTY	PUMP SERIAL NO.	4 5 1 1 0 0 D D	REMARKS
1	19M8477	CAP SCREW	3		X X	
2	14H888	NUT	1		X X	
3	RE27711	SCREW	1		X X	
4	R26448	O-RING	1		X X	
5	R105547	ADAPTER	1		X X	
6	R56751	O-RING	1		X X	
7	24M7100	WASHER	1		X X	6.600 X 22 X 2 MM
8	R90548	SPRING	1		X X	
9	R92898	SPRING	1		X X	
10	R90591	GUIDE	1		X X	
11	32246	O-RING	3		X X	
12	R1115R	SHIM	3		X X	0.05MM (0.002")
13	R26375	O-RING	1		X X	
14	R39112	FITTING	1		X X	
15	R26448	O-RING	2		X X	
16	R75376	DRAIN PLUG	2		X X	
17	.....	VALVE	1		X X	(SUB RE33524)
18	R26448	O-RING	1		X X	
19	R90584	FITTING PLUG	1		X X	
20	R57374	SPRING	1		X X	
21	R109114	VALVE	1		X X	
22	R65694	SPRING	1		X X	
23	R106697	VALVE	1		X X	
24	R26375	O-RING	1		X X	
25	T40308	O-RING	1		X X	
26	T57374	BACK-UP RING	1		X X	
27	AR90378	PLUG	1		X X	(LESS DESTROKE)
28	RE33524	CONTROL VALVE	1		X X	
29	19M8311	CAP SCREW	2		X X	M14 X 110
30	U41353	WASHER	4		X X	21/32" X 1" X 0.060"
31	RE30717	MANIFOLD	1		X X	
32	A3190R	O-RING	4		X X	
33	32246	O-RING	1		X X	
34	R89332	O-RING	1		X X	

HYDRAULIC PUMP AUXILIARY CHARGE PUMP

RP3797 -UN-01JAN94

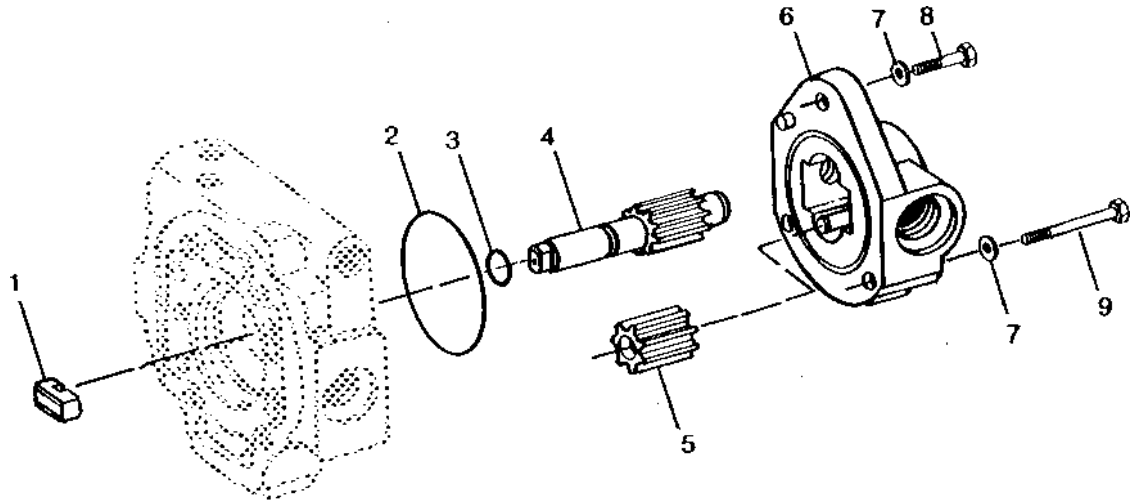

RP3797

KEY	PART NO.	PART NAME	QTY	PUMP SERIAL NO.	410D	510D	REMARKS
1	R76723	KEY	1		X	X	
2	U10746	O-RING	1		X	X	
3	R76721	WASHER	1		X	X	
4	RE17287	SHAFT	1		X	X	
5	RE13965	GEAR	1		X	X	
6	RE19455	HOUSING	1		X	X	(MARKED R81313)
7	R76126	WASHER	3		X	X	
8	19M7490	CAP SCREW	1		X	X	M14 X 40
9	19M8303	CAP SCREW	2		X	X	M14 X 160

HYDRAULIC PUMP DESTROKE SOLENOID

RXP6589 -UN-01JAN94

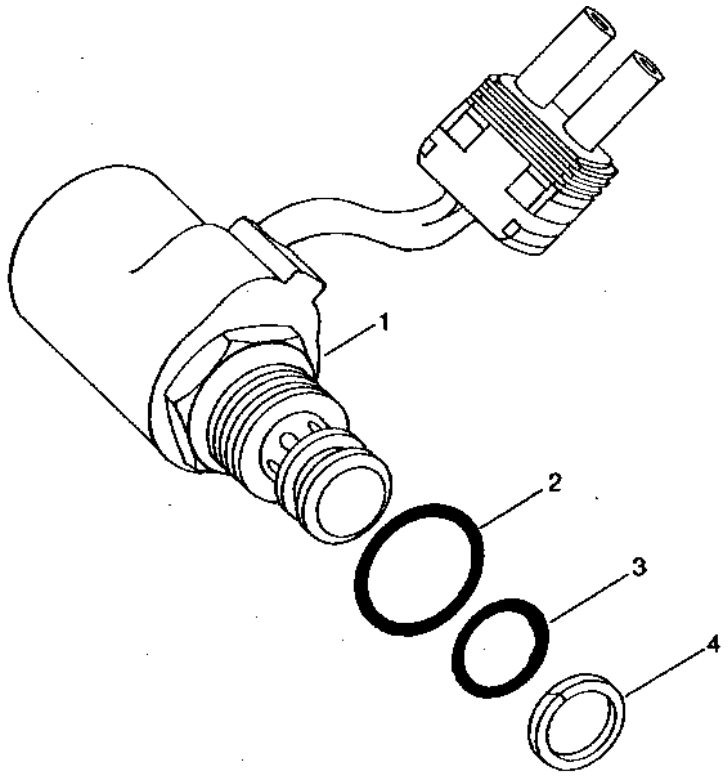

KEY	PART NO.	PART NAME	QTY	PUMP SERIAL NO.	410D	510D	REMARKS
1	RE32529	SOLENOID VALVE	1		X	X	
2	R26375	O-RING	1		X	X	
3	T40308	O-RING	1		X	X	
4	T57374	BACK-UP RING	1		X	X	

HYDRAULIC PUMP AND CHARGE PUMP OVERHAUL KITS

TP44512 -UN-01JAN94

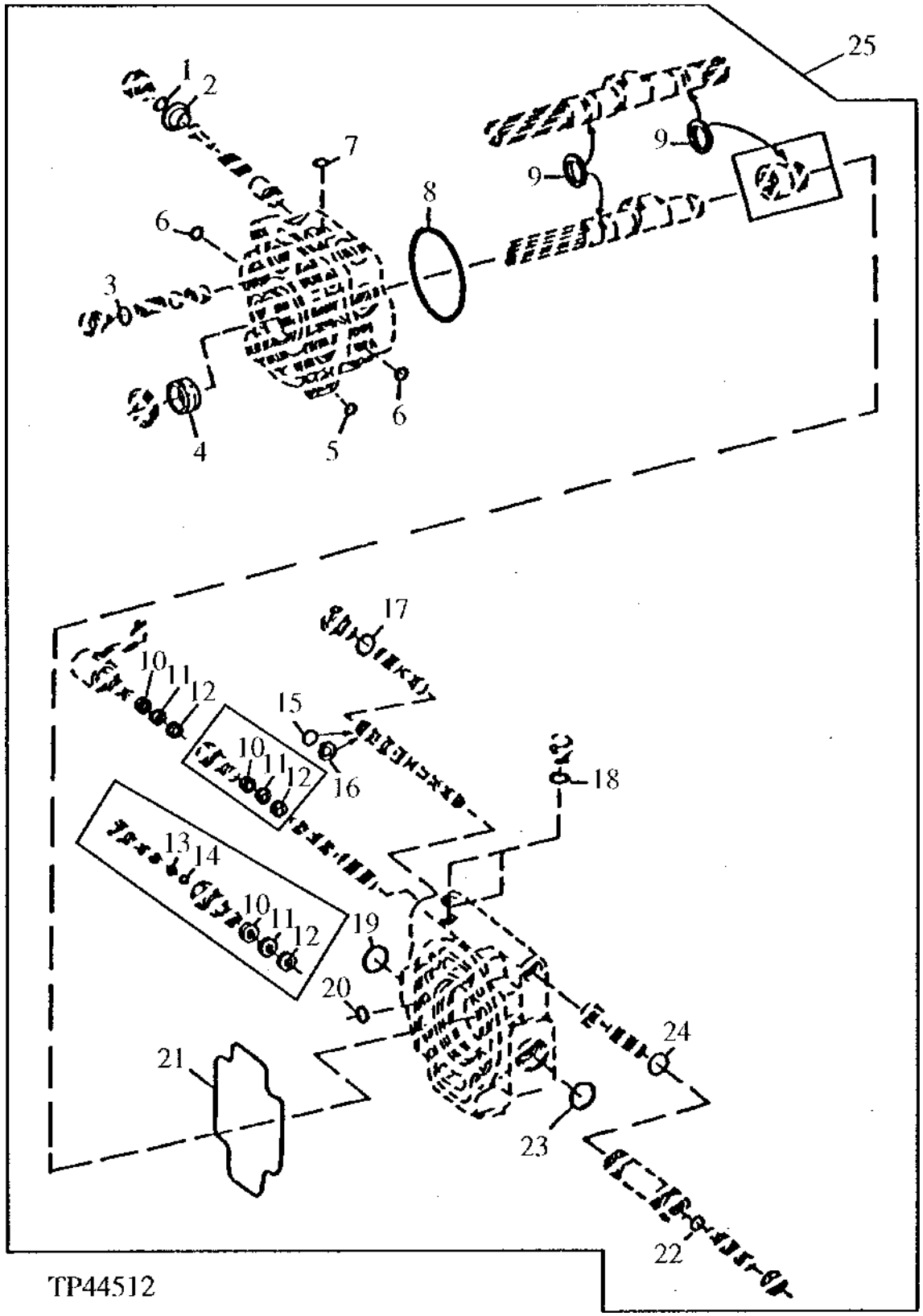

HYDRAULIC PUMP AND CHARGE PUMP OVERHAUL KITS-CONTINUED

KEY	PART NO.	PART NAME	QTY	PUMP SERIAL NO.	410D	510D	REMARKS
1	R47154	O-RING	8		X	X	
2	RE17525	RETAINER	1		X	X	(SET OF 8)
3	R56751	O-RING	8		X	X	
4	RE28790	SEAL	1		X	X	
5	R28782	O-RING	1		X	X	
6	U12037	O-RING	2		X	X	
7	R26375	O-RING	1		X	X	
8	U10746	O-RING	1		X	X	
9	R77611	SEALING WASHER	2		X	X	(SEALING)
10	R26375	O-RING	1		X	X	
11	T40308	O-RING	1		X	X	
12	T57374	BACK-UP RING	1		X	X	
13	R36358	BACK-UP RING	1		X	X	
14	R27490	O-RING	1		X	X	
15	R80632	O-RING	1		X	X	
16	R45925	BACK-UP RING	1		X	X	
17	R56751	O-RING	1		X	X	
18	R26448	O-RING	2		X	X	
19	R29936	O-RING	1		X	X	
20	R80615	RING	1		X	X	
21	R80637	PACKING	1		X	X	
22	R26448	O-RING	1		X	X	
23	F1870R	O-RING	1		X	X	(FOUR BOLT FLAT-FACE PORT)
24	R29936	O-RING	1		X	X	
25	RE29110	SEAL KIT	1		X	X	

HYDRAULIC PUMP OVERHAUL KIT

RXP6591 -UN-01JAN94

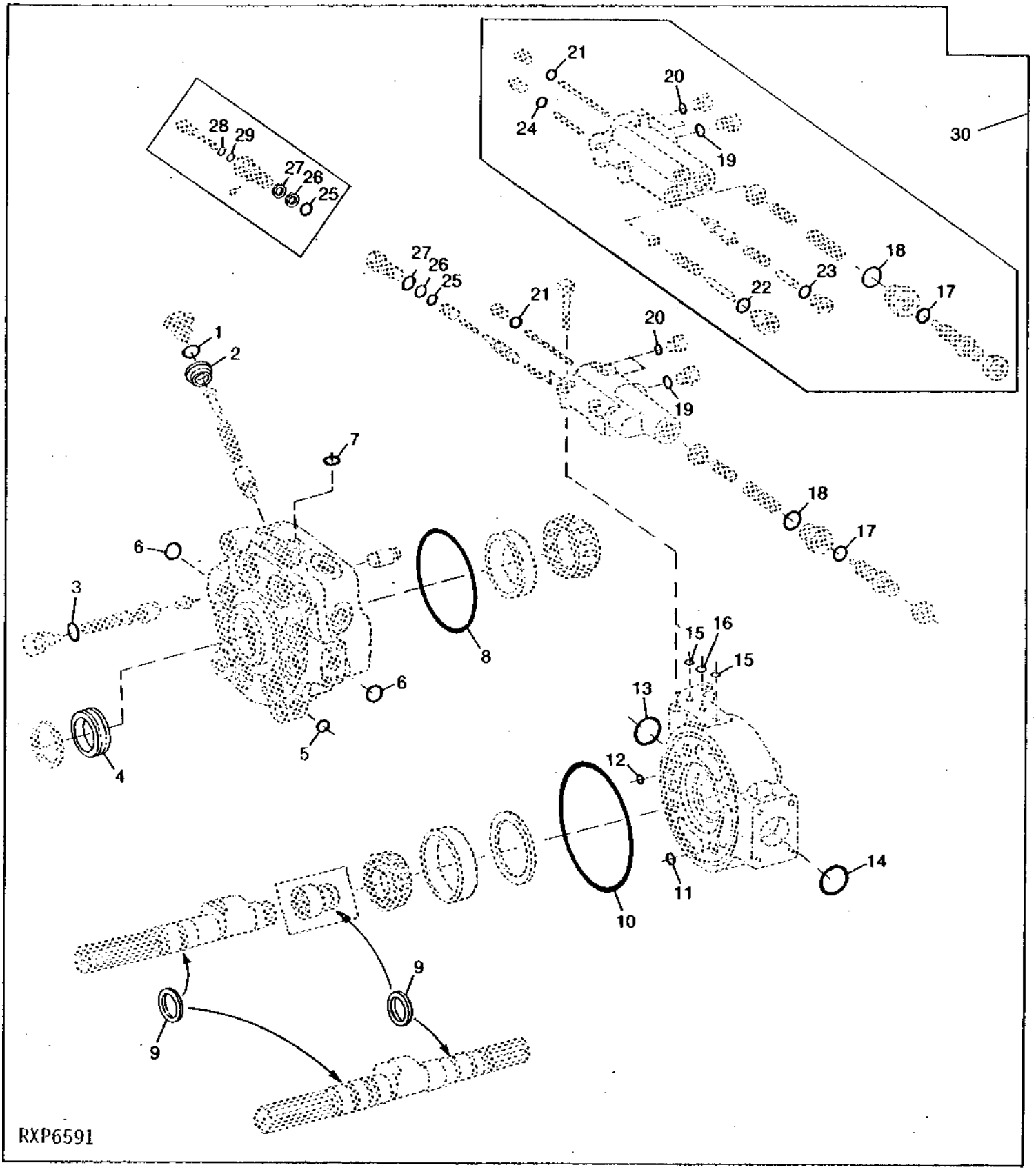

HYDRAULIC PUMP OVERHAUL KIT - CONTINUED

KEY	PART NO.	PART NAME	QTY	PUMP SERIAL NO.	4 5 1 1 0 0 D D	REMARKS
1	R47154	O-RING	1		X X	
2	RE17525	RETAINER	1		X X	(SET OF 8)
3	R56751	O-RING	8		X X	
4	RE28790	SEAL	1		X X	
5	R28782	O-RING	1		X X	
6	U12037	O-RING	2		X X	(OUTLET PORTS)
7	R26375	O-RING	1		X X	
8	U10746	O-RING	1		X X	
9	R77611	SEALING WASHER	2		X X	(A) (SEALING)
10	R89332	O-RING	1		X X	
11	A3190R	O-RING	4		X X	
12	32246	O-RING	1		X X	
13	R29936	O-RING	1		X X	
14	R29936	O-RING	1		X X	(A) (THREADED O-RING PORT)
	F1870R	O-RING	1		X X	(A) (FOUR BOLT FLAT-FACE PORT)
15	32246	O-RING	2		X X	
16	32246	O-RING	1		X X	(A) (PRESSURE COMPENSATED)
	T57247	O-RING	1		X X	(A) (LOAD SENSE)
17	R26448	O-RING	1		X X	
18	R56751	O-RING	1		X X	
19	R26375	O-RING	1		X X	
20	R26448	O-RING	2		X X	
21	R26448	O-RING	1		X X	
22	R26375	O-RING	1		X X	(A) (LOAD SENSE)
23	R26448	O-RING	1		X X	(A) (LOAD SENSE)
24	R26448	O-RING	1		X X	(A) (LOAD SENSE)
25	T57374	BACK-UP RING	1		X X	(A) (PRESSURE COMPENSATED)
26	T40308	O-RING	1		X X	(A) (PRESSURE COMPENSATED)
27	R26375	O-RING	1		X X	(A) (PRESSURE COMPENSATED)
28	R36358	BACK-UP RING	1		X X	(A) (PRESSURE COMPENSATED)
29	R27490	O-RING	1		X X	(A) (PRESSURE COMPENSATED)
30	RE33539	KIT	1		X X	(ALSO ORDER R76721)

(A) UNIVERSAL KIT - APPLICATIONS WILL VARY

HYDRAULIC PUMP DRIVE

TP4158 -UN-01JAN94

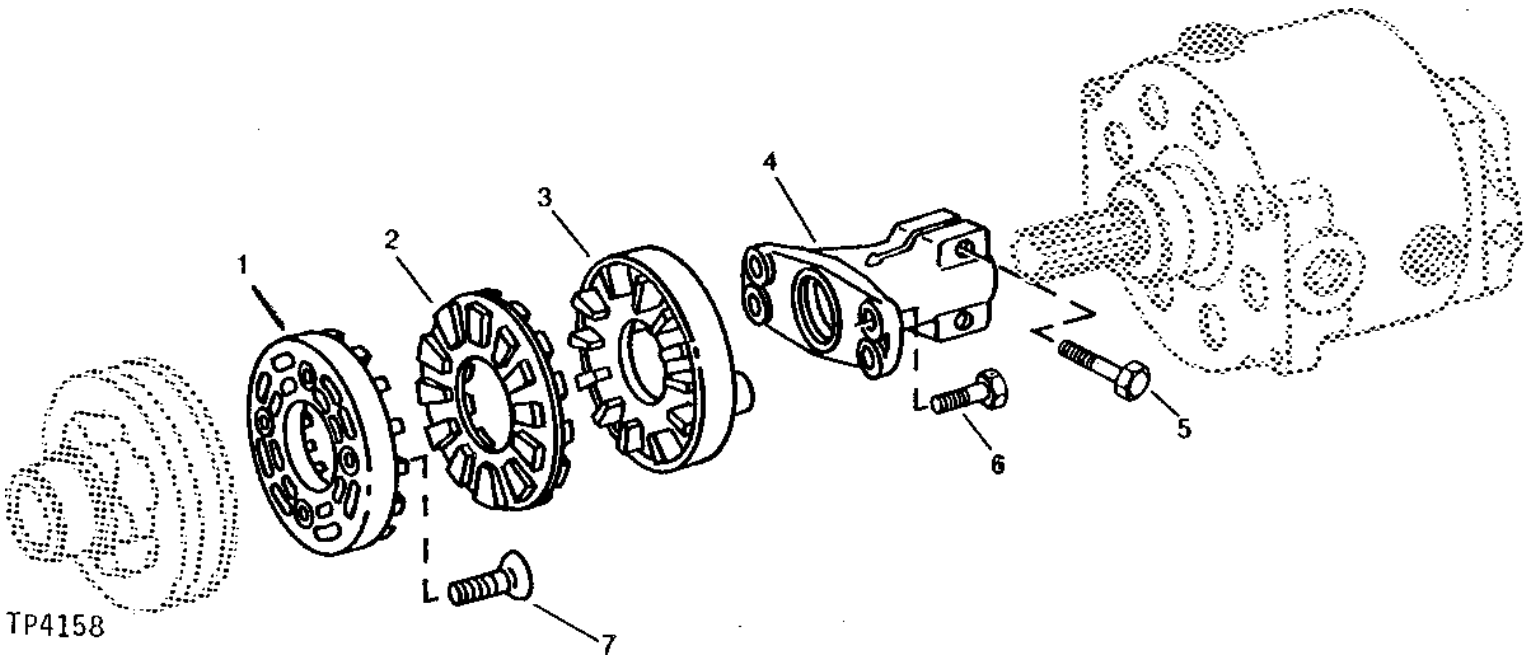

KEY	PART NO.	PART NAME	QTY	SERIAL NO.	410D	510D	REMARKS
1	L34569	COUPLING	1		X	X	
2	R78202	CUSHION	1		X	X	
3	L34432	COUPLING	1		X	X	
4	T69408	DRIVE SHAFT	1		X	X	
5	19M7493	CAP SCREW	2		X	X	M12 X 40
6	19H3239	CAP SCREW	4		X	X	3/8" X 1-1/4"
7	L34575	SCREW	4		X	X	

HYDRAULIC OIL FILTER
(SERIAL NO. -801199)

TP45410 -UN-01JAN94

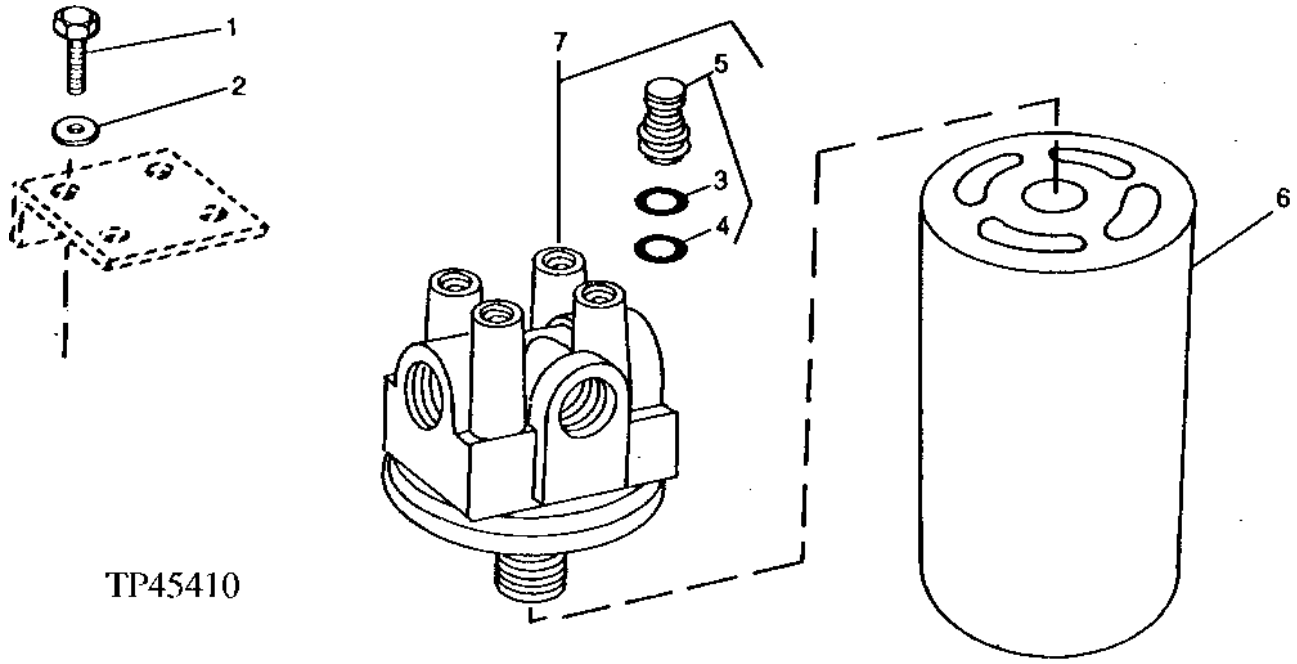

KEY	PART NO.	PART NAME	QTY	SERIAL NO.	410D	510D	REMARKS
1	19M7402	CAP SCREW	4		X	X	M10 X 25
2	24M7239	WASHER	4		X	X	10.700 X 21 X 2.500 MM
3	P46051	O-RING	1		X	X	
4	R26375	O-RING	1		X	X	
5	AT129419	KIT	1		X	X	HYDRAULIC FILTER RESTRICTION SWITCH
6	AT144879	FILTER ELEMENT	1		X	X	(SUB FOR AT140315, THIS APPLICATION)
7	AT144994	FILTER HEAD	1		X	X	

HYDRAULIC OIL FILTER
(SERIAL NO. 801200-)

TP45408 -UN-01JAN94

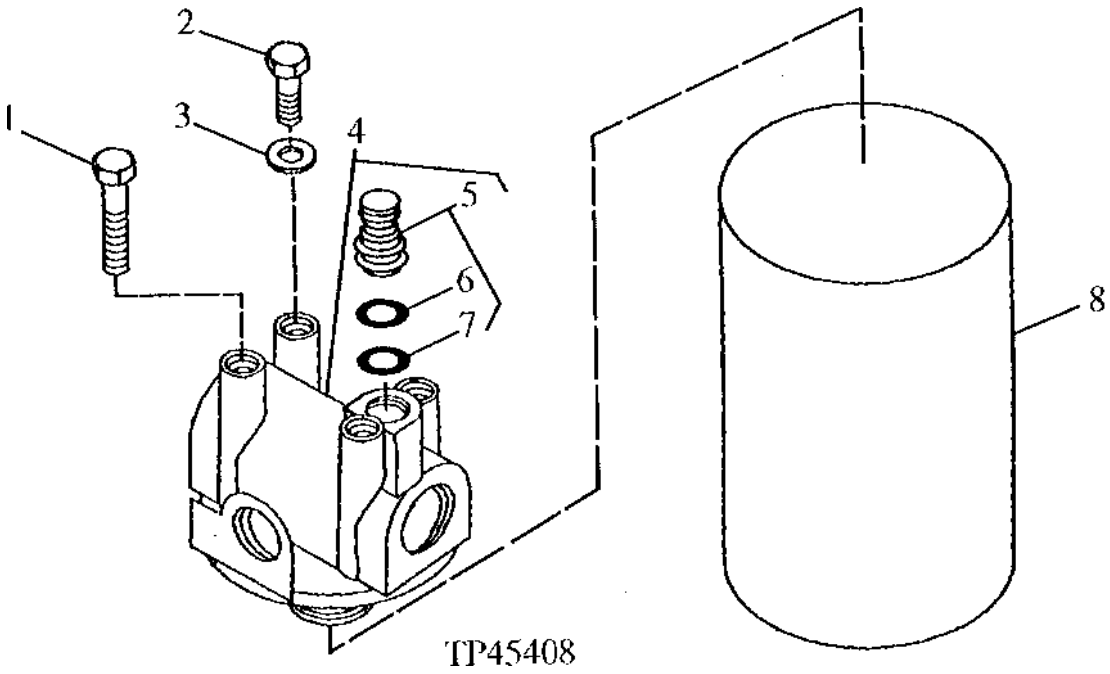

KEY	PART NO.	PART NAME	QTY	SERIAL NO.	410D	510D	REMARKS
1	19M7935	CAP SCREW	1		X	X	M10 X 55
2	19M7662	CAP SCREW	3		X	X	M10 X 30
3	24M7239	WASHER	3		X	X	10.700 X 21 X 2.500 MM
4	AT179364	FILTER HEAD	1		X	X	(SUB FOR AT144993, THIS APPLICATION)
5	AT129419	KIT	1		X	X	HYDRAULIC FILTER RESTRICTION SWITCH
6	P46051	O-RING	1		X	X	
7	R26375	O-RING	1		X	X	
8	AT184206	FILTER ELEMENT	1		X	X	(SUB FOR AT144879, THIS APPLICATION)

MEMORANDA

PRIORITY VALVE
(SERIAL NO. -801199)

TP40235 -UN-01JAN94

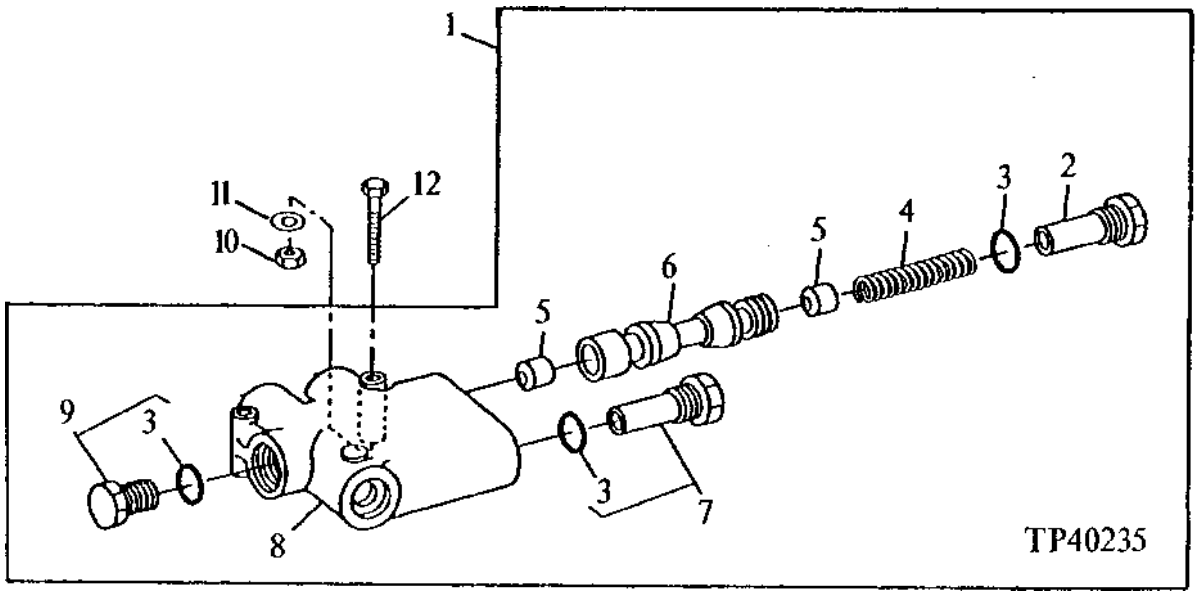

KEY	PART NO.	PART NAME	QTY	SERIAL NO.	410D	510D	REMARKS
1	AT158649	FLOW CONTROL HYD. VALVE	1		X	X	(SUB FOR AT146183)
2	.....	FITTING	1		X	X	
3	R26906	O-RING	3		X	X	
4	T114738	COMPRESSION SPRING	1		X	X	
5	T101571	ORIFICE	3		X	X	
6	.....	SPOOL	1		X	X	
7	AT107493	PRESSURE RELIEF VALVE	1		X	X	
8	.....	HOUSING	1		X	X	
9	T101569	FITTING PLUG	1		X	X	
10	14M7273	NUT	1		X	X	
11	24M7238	WASHER	2		X	X	
12	19M8539	CAP SCREW	1		X	X	
	19M8456	CAP SCREW	1		X	X	M8 X 100

MEMORANDA

MAIN HYDRAULIC SYSTEM
(SERIAL NO. -796854)

TP45419 -UN-01JAN94

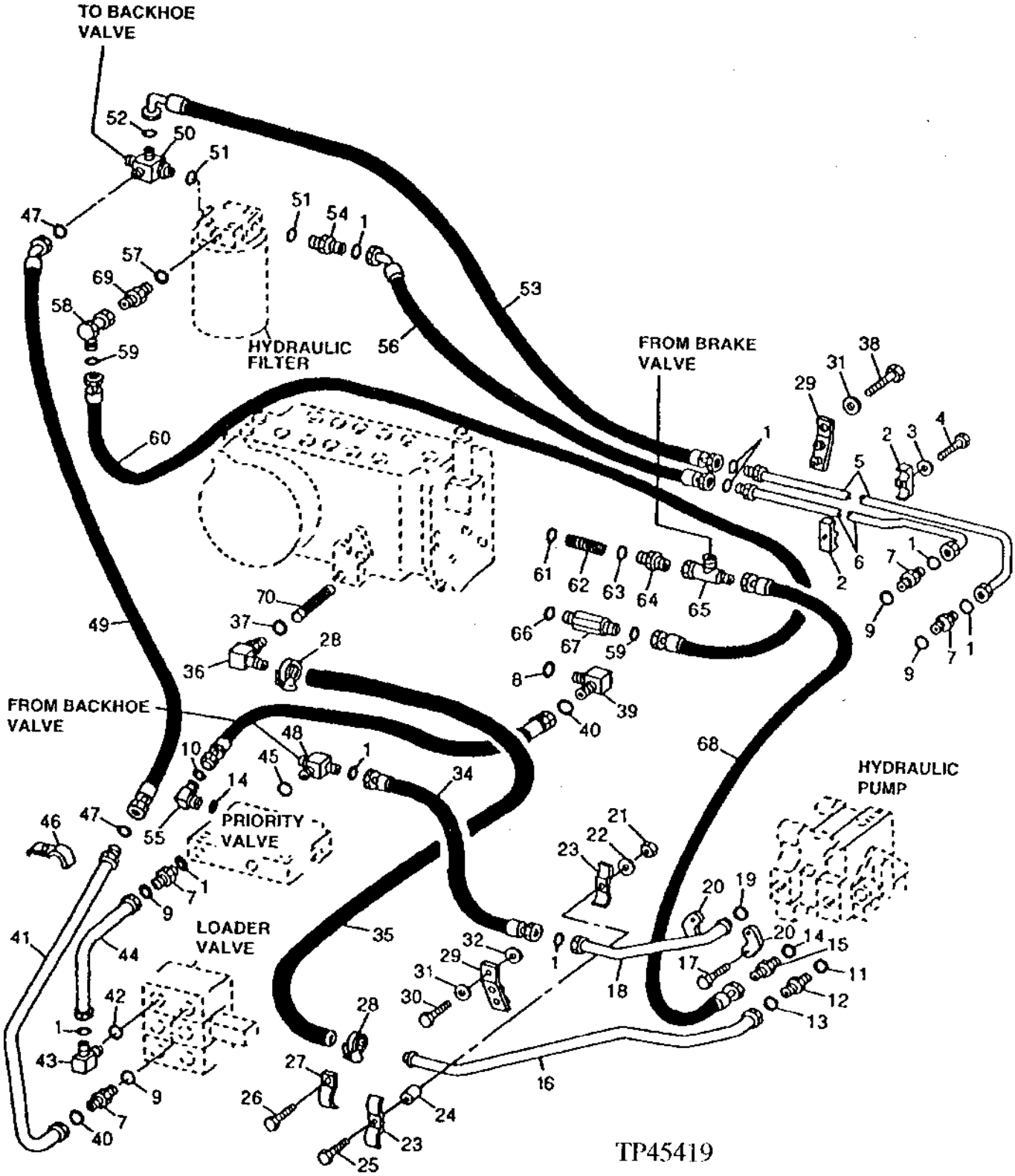

MAIN HYDRAULIC SYSTEM
SERIAL NO. -796854)

KEY	PART NO.	PART NAME	QTY	SERIAL NO.	410D	510D	REMARKS
1	T76938	O-RING	9		X	X	
2	T44200	CLAMP	2		X	X	
3	24M7240	WASHER	1		X	X	13 X 25 X 3 MM, (SUB FOR T21242, THIS APPLICATION)
4	19M7753	CAP SCREW	1		X	X	M12 X 70
5	AT150524	OIL LINE	1		X	X	
6	AT82866	OIL LINE	1		X	X	
7	38H1164	ADAPTER	4		X	X	
8	R26906	O-RING	1		X	X	
9	R29936	O-RING	4		X	X	
10	T77814	O-RING	1		X	X	
11	U13639	O-RING	1		X	X	
12	38H1165	ADAPTER	1		X	X	
13	T78612	O-RING	1		X	X	
14	R28782	O-RING	2		X	X	
15	T106175	ADAPTER	1		X	X	37° FLARE
16	AT101759	OIL LINE	1		X	X	
17	19H3239	CAP SCREW	4		X	X	3/8" X 1-1/4"
18	AT101734	OIL LINE	1		X	X	
19	T78313	O-RING	1		X	X	
20	H61354	FLANGE FITTING	2		X	X	
21	14H1076	NUT	1		X	X	3/8"
22	12H304	LOCK WASHER	1		X	X	3/8"
23	K40457	HOSE CLAMP	2		X	X	
24	28H856	WASHER	1		X	X	0.423" X 0.675" X 3/16"
25	19H1801	CAP SCREW	1		X	X	3/8" X 2"
26	19M8011	CAP SCREW	1		X	X	M12 X 30
27	U15977	HOSE CLAMP	1		X	X	
28	AH105968	HOSE CLAMP	2		X	X	(SUB FOR (4) AR44217, THIS APPLICATION)
29	AT75557	BRACKET	2		X	X	
30	19H2994	CAP SCREW	1		X	X	5/8" X 1-1/2"
31	24M7053	WASHER	2		X	X	
32	24H1367	WASHER	1		X	X	21/32" X 1-1/4" X 1/4"
33	AT149772	HYDRAULIC HOSE - FABRICATE	1		X	X	9/16" X 420 MM (16-1/2") X 11/16"
34	AT149706	HYDRAULIC HOSE - FABRICATE	1		X	X	1-7/16" X 1 240 MM (48-3/4") X 1-7/16", (REPLACES AT149447)

THIS PARTS LISTING IS CONTINUED

MAIN HYDRAULIC SYSTEM
(SERIAL NO. -796854)

TP45419 -UN-01JAN94

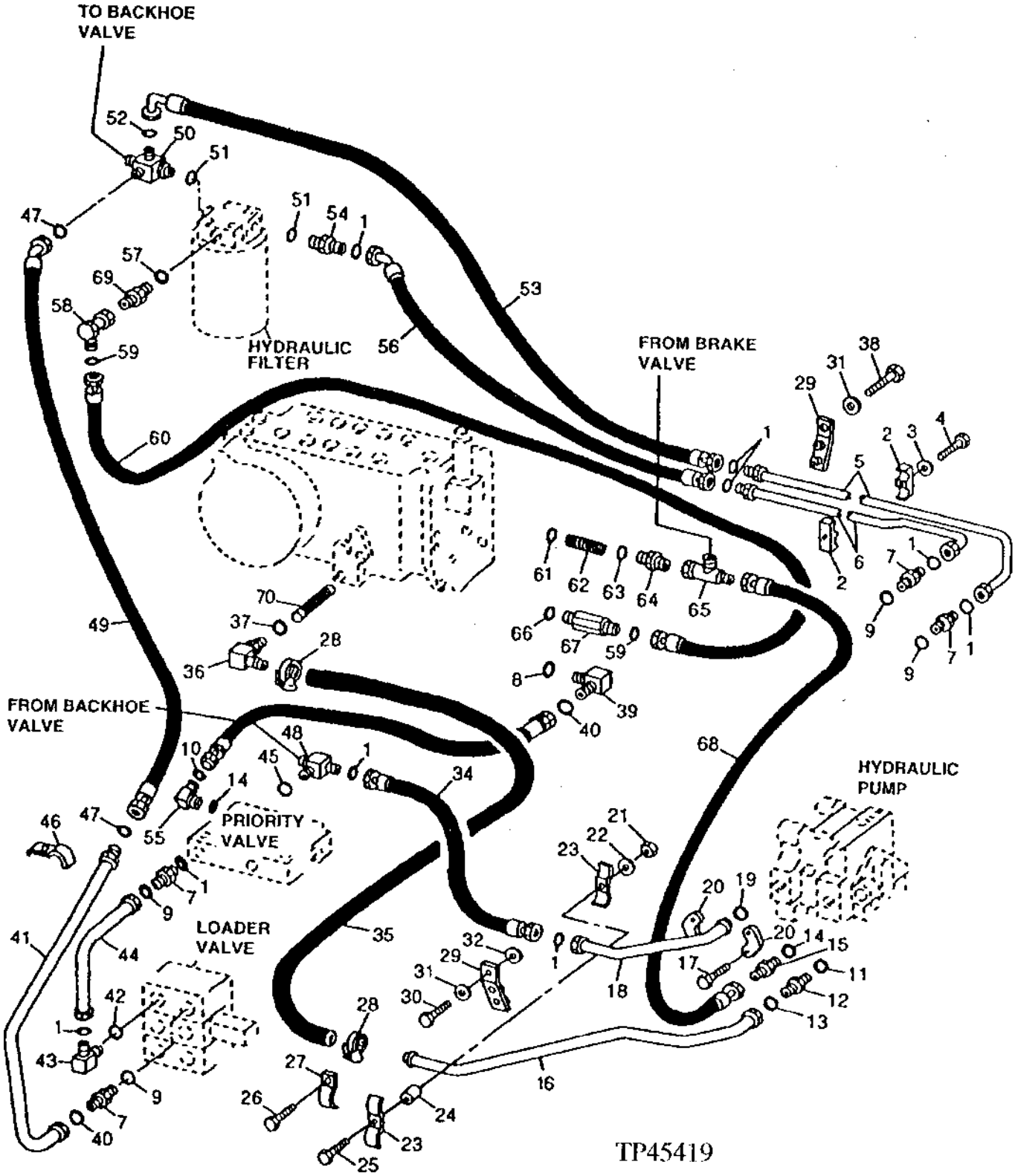

MAIN HYDRAULIC SYSTEM
(SERIAL NO. -796854)

KEY	PART NO.	PART NAME	QTY	SERIAL NO.	410D	510D	REMARKS
35	T81007	HOSE	1		X	X	
36	AT69845	ELBOW FITTING	1		X	X	
37	U13639	O-RING	1		X	X	
38	19H1833	CAP SCREW	1		X	X	5/8" X 1-1/4"
39	38H1011	ELBOW FITTING	1		X	X	
40	T77613	O-RING	1		X	X	
41	AT148198	OIL LINE	1		X	X	
42	R29936	O-RING	1		X	X	(SUB FOR U17409, THIS APPLICATION)
43	38H1037	ELBOW FITTING	1		X	X	
44	AT146155	OIL LINE	1		X	X	
45	R29936	O-RING	2		X	X	
46	U43641	CLAMP	1		X	X	
47	T77858	O-RING	2		X	X	
48	38H1020	TEE FITTING	1		X	X	
49	AT149838	HYDRAULIC HOSE - FABRICATE	1		X	X	
50	AT132701	ADAPTER	1		X	X	
51	U13639	O-RING	2		X	X	
52	T77858	O-RING	1		X	X	
53	AT151156	HYDRAULIC HOSE - FABRICATE	1		X	X	
54	38H1180	ADAPTER	1		X	X	
55	38H1003	ELBOW FITTING	1		X	X	
56	AT150854	HYDRAULIC HOSE - FABRICATE	1		X	X	
57	U12547	O-RING	1		X	X	
58	38H1097	ELBOW FITTING	1		X	X	
59	T77858	O-RING	2		X	X	
60	AT149449	HYDRAULIC HOSE - FABRICATE	1		X	X	1-3/16" X 462 MM (18-1/4") X 1-3/16"
61	R26552	BALL	1		X	X	
62	T27716	SPRING	1		X	X	
63	R26287	O-RING	1		X	X	
64	R46704	FITTING	1		X	X	
65	U45760	FITTING	1		X	X	
66	U13639	O-RING	1		X	X	
67	AT148125	PRESSURE RELIEF VALVE	1		X	X	
68	AT114025	HYDRAULIC HOSE - FABRICATE	1		X	X	1/2" X 2 142 MM (84-1/4") X 1/2"
69	38H1163	ADAPTER	1		X	X	
70	R53169	SCREEN	1		X	X	

MAIN HYDRAULIC SYSTEM
(SERIAL NO. 796855-801199)

TP44548 -UN-01JAN94

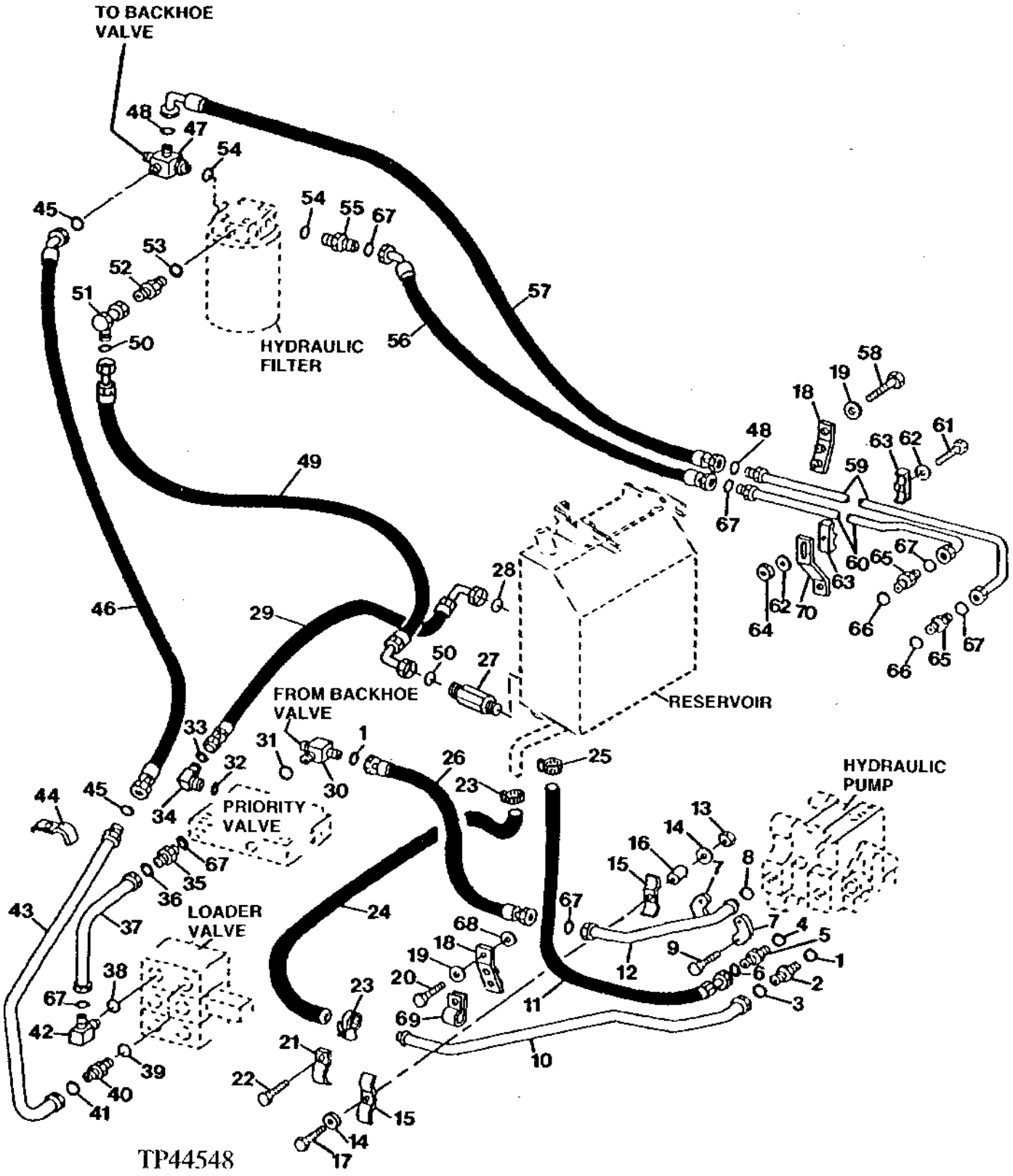

MAIN HYDRAULIC SYSTEM
(SERIAL NO. 796855-801199)

KEY	PART NO.	PART NAME	QTY	SERIAL NO.	410D	510D	REMARKS
1	U13639	O-RING	1		X	X	
2	38H1165	ADAPTER	1		X	X	
3	T78612	O-RING	1		X	X	29.870 X 1.778 MM
4	R28782	O-RING	1		X	X	8.915 X 1.829 MM
5	T106175	ADAPTER	1		X	X	
6	R28782	O-RING	1		X	X	
7	H61354	FLANGE FITTING	2		X	X	
8	T78313	O-RING	1		X	X	
9	19H3239	CAP SCREW	4		X	X	
10	AT101759	OIL LINE	1		X	X	
11	AT166476	HYDRAULIC HOSE - FABRICATE	1		X	X	
12	AT101734	OIL LINE	1		X	X	
13	14M7274	NUT	1		X	X	M10
14	24M7296	WASHER	2		X	X	10.500 X 30 X 2.500 MM
15	K40457	HOSE CLAMP	2		X	X	37° FLARE
16	28H856	WASHER	1		X	X	0.423" X 0.675" X 3/16"
	28H1521	SPACER	1		X	X	0.493" X 0.675" X 9/16"
17	19M7658	CAP SCREW	1	-820207	X	X	M10 X 50
	19M7935	CAP SCREW	1	820208-	X	X	M10 X 55
18	AT166919	BRACKET	1		X	X	
19	U41353	WASHER	2		X	X	
20	19M7493	CAP SCREW	1		X	X	M12 X 40
21	U15977	HOSE CLAMP	1		X	X	
22	19M8011	CAP SCREW	1		X	X	M12 X 30
23	AT145650	HOSE CLAMP	2		X	X	
24	T148657	HOSE	1		X	X	
25	AR21837	CLAMP	1		X	X	
26	AT149706	HYDRAULIC HOSE - FABRICATE	1		X	X	
27	AT148125	PRESSURE RELIEF VALVE	1		X	X	
28	T77613	O-RING	1		X	X	
29	AT166838	HYDRAULIC HOSE - FABRICATE	1		X	X	
30	38H1020	TEE FITTING	1		X	X	
31	R29936	O-RING	1		X	X	
32	R28782	O-RING	1		X	X	0.351" X 0.072"
33	T77814	O-RING	1		X	X	
34	38H1003	ELBOW FITTING	1		X	X	

THIS PARTS LISTING IS CONTINUED

MAIN HYDRAULIC SYSTEM
(SERIAL NO. 796855-801199)

TP44548 -UN-01JAN94

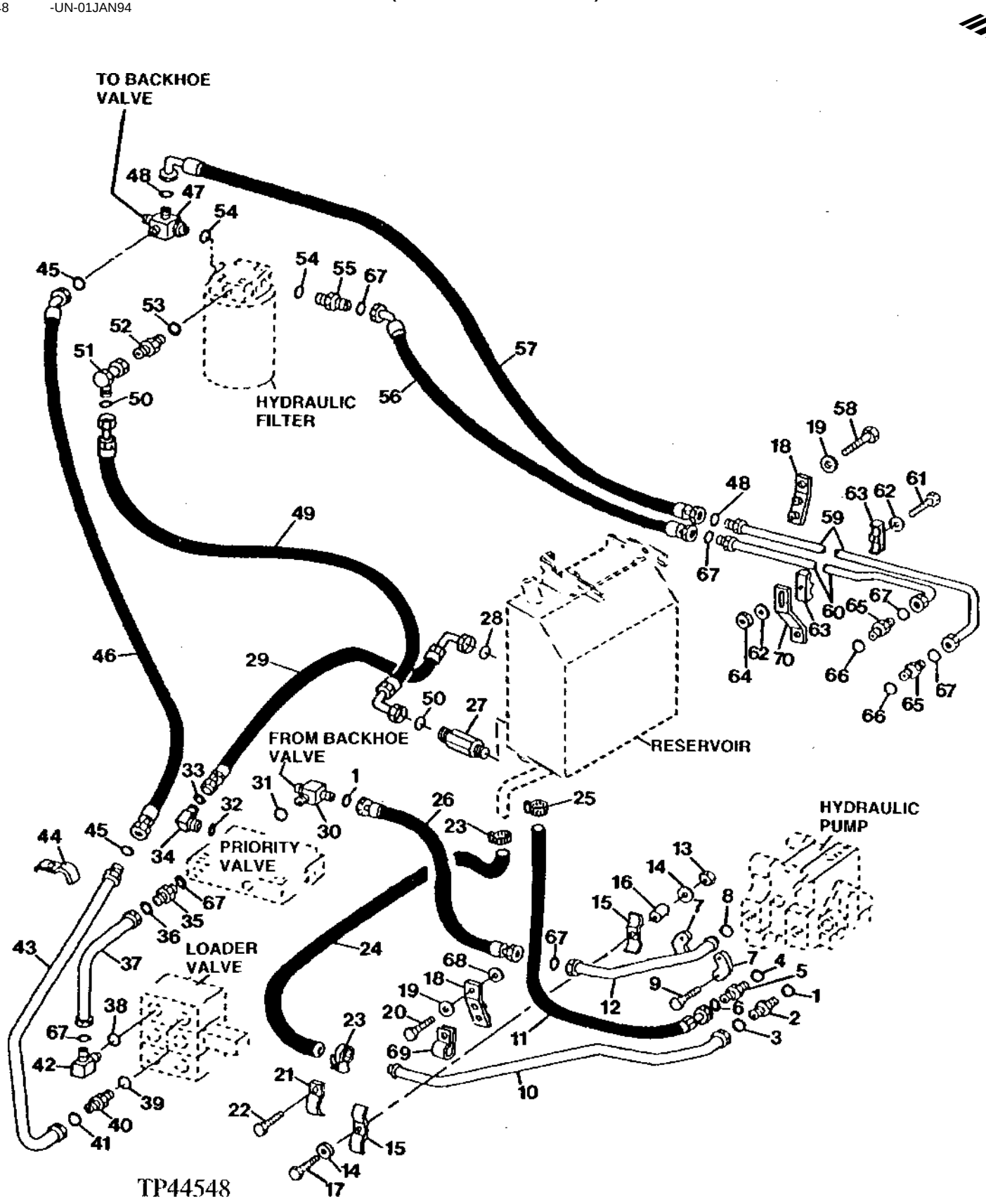

MAIN HYDRAULIC SYSTEM
(SERIAL NO.796855-801199)

KEY	PART NO.	PART NAME	QTY	SERIAL NO.	410D	510D	REMARKS
35	38H1164	ADAPTER	1		X	X	
36	R29936	O-RING	1		X	X	
37	AT146155	OIL LINE	1		X	X	
38	R29936	O-RING	1		X	X	
39	R29936	O-RING	1		X	X	
40	38H1164	ADAPTER	1		X	X	
41	T76938	O-RING	1		X	X	
42	38H1037	ELBOW FITTING	1		X	X	(SUB FOR U17409, THIS APPLICATION)
43	AT148198	OIL LINE	1		X	X	
44	U43641	CLAMP	1		X	X	
45	T77858	O-RING	2		X	X	
46	AT167803	HYDRAULIC HOSE	1		X	X	
47	AT132701	ADAPTER	1		X	X	
48	T77858	O-RING	2		X	X	
49	AT164510	HYDRAULIC HOSE - FABRICATE	1		X	X	1-3/16" X 546 MM (21-1/2") X 1-3/16"
50	T77858	O-RING	2		X	X	
51	38H1097	ELBOW FITTING	1		X	X	
52	38H1163	ADAPTER	1		X	X	
53	U12547	O-RING	1		X	X	
54	U13639	O-RING	2		X	X	
55	38H1180	ADAPTER	1		X	X	
56	AT166952	HYDRAULIC HOSE - FABRICATE	1		X	X	1-7/16" X 1 080 MM (42-1/2") X 1-7/16"
57	AT166951	HYDRAULIC HOSE - FABRICATE	1		X	X	1-3/16" X 1 238 MM (48-3/4") X 1-3/16"
58	19H1833	CAP SCREW	1		X	X	
59	AT166560	OIL LINE	1		X	X	
60	AT166561	OIL LINE	1		X	X	
61	19M7753	CAP SCREW	1		X	X	M12 X 70
62	24M7240	WASHER	1		X	X	13 X 25 X 3 MM
63	T44200	CLAMP	2		X	X	
64	14M7275	NUT	1		X	X	M12
65	38H1164	ADAPTER	2		X	X	
66	R29936	O-RING	2		X	X	
67	T76938	O-RING	8		X	X	
68	24M7240	WASHER	1		X	X	13 X 25 X 3 MM
69	T150753	CLAMP	4		X	X	
70	T150851	BRACKET	1		X	X	

MAIN HYDRAULIC SYSTEM
(SERIAL NO. 801200-)

TP46972 -UN-22JUN95

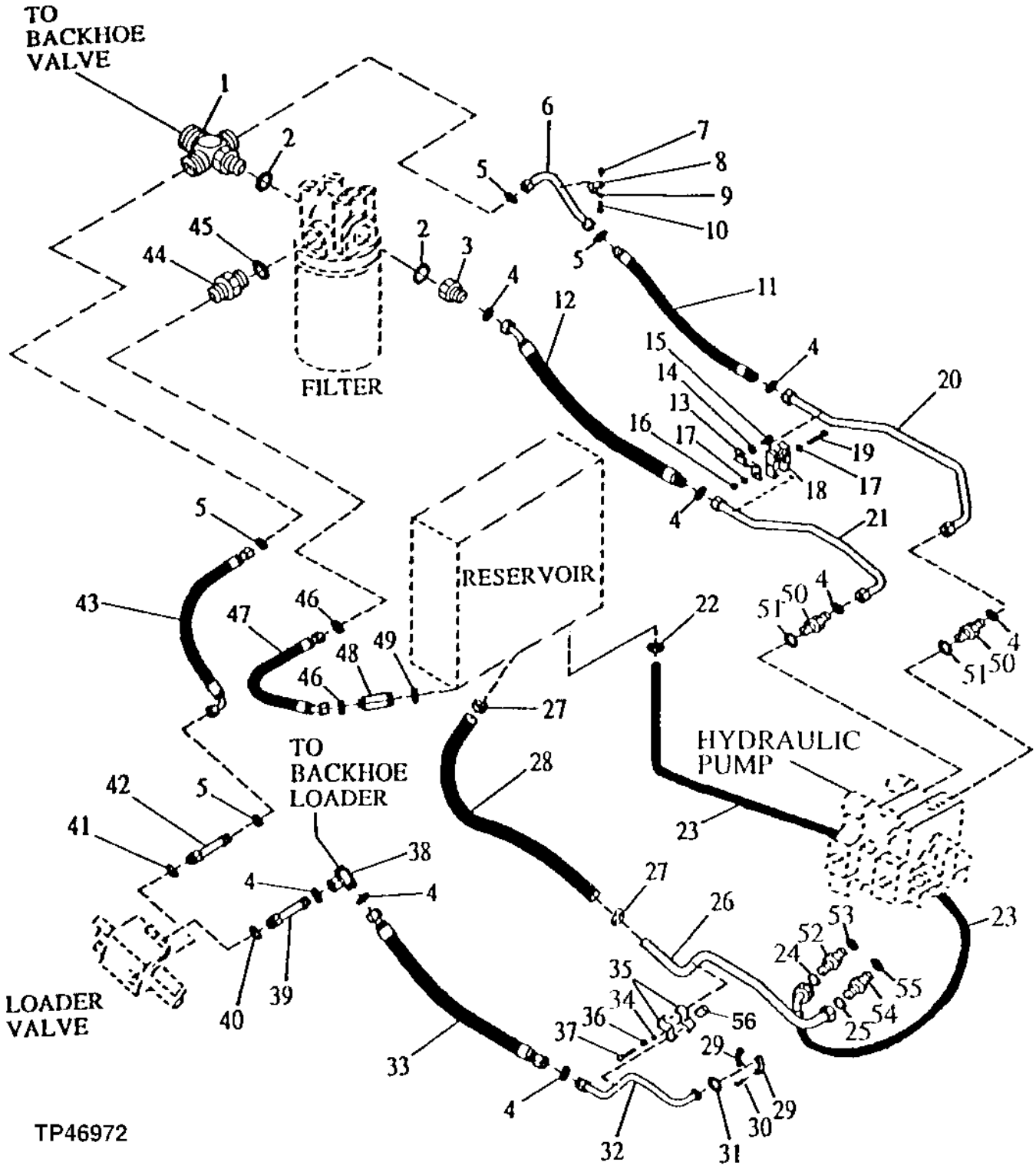

MAIN HYDRAULIC SYSTEM
(SERIAL NO. 801200-)

KEY	PART NO.	PART NAME	QTY	SERIAL NO.	410D	510D	REMARKS
1	AT167063	FITTING	1		X	X	
2	R29936	O-RING	1		X	X	
3	38H1164	ADAPTER	1		X	X	
4	T76938	O-RING	8		X	X	
5	T77858	O-RING	4		X	X	
6	AT168096	OIL LINE	1		X	X	
7	14M7274	NUT	1		X	X	
8	T28949	CLAMP	1		X	X	
9	24M7239	WASHER	1	-803691	X	X	10.700 X 21 X 2.500 MM
	24M7239	WASHER	2	803692-	X	X	
10	19M7662	CAP SCREW	1		X	X	M10 X 30
11	AT168097	HYDRAULIC HOSE - FABRICATE	1		X	X	1-3/16" X 718 MM (28-1/4") X 1-7/16"
12	AT168320	HYDRAULIC HOSE - FABRICATE	1		X	X	1-7/16" X 889 MM (35") X 1-7/16"
13	T152082	STRAP	1		X	X	
14	24M7241	WASHER	1		X	X	17 X 34 X 4 MM
15	19H2354	CAP SCREW	1		X	X	9/16" X 1-1/4", 37° FLARE
16	14M7275	NUT	1		X	X	M12
17	24M7240	WASHER	2		X	X	13 X 25 X 3 MM
18	T44200	CLAMP	2		X	X	
19	19M7753	CAP SCREW	1		X	X	M12 X 70
20	AT168322	OIL LINE	1		X	X	
21	AT168323	OIL LINE	1		X	X	
22	TY22464	CLAMP	1		X	X	(SUB FOR AR21836)
23	AT170785	HYDRAULIC HOSE - FABRICATE	1		X	X	
24	T77613	O-RING	1		X	X	
25	T78612	O-RING	1		X	X	
26	AT166559	OIL LINE	1		X	X	
27	AH105968	HOSE CLAMP	2		X	X	
28	T151374	HYDRAULIC HOSE - FABRICATE	1		X	X	
29	H61354	FLANGE FITTING	2		X	X	
30	19H3239	CAP SCREW	4		X	X	
31	T78313	O-RING	1		X	X	
32	AT171139	OIL LINE	1		X	X	(SUB FOR AT166558)
33	AT173679	HYDRAULIC HOSE - FABRICATE	1		X	X	1-7/16" X 910 MM (35-3/4") X 1-7/16", (SUB FOR AT167481)
34	24M7239	WASHER	2		X	X	10.700 X 21 X 2.500 MM
35	T153803	HOSE CLAMP	1		X	X	
36	24M7239	WASHER	1		X	X	0.421" X 0.827" X 0.098"
37	19M7875	CAP SCREW	1		X	X	
38	AT172877	TEE FITTING	1		X	X	(SUB FOR 38H1042, THIS APPLICATION)
39	AT164694	OIL LINE	1		X	X	
40	R29936	O-RING	1		X	X	
41	U17409	O-RING	1		X	X	
42	AT164802	OIL LINE	1	-803059	X	X	
	AT170444	OIL LINE	1	803060-	X	X	
43	AT167495	HYDRAULIC HOSE - FABRICATE	1		X	X	1-3/16" X 673 MM (26-1/2") X 1-3/16", (SUB FOR AT79491)
44	38H1163	ADAPTER	1		X	X	
45	U12547	O-RING	1		X	X	
46	T77858	O-RING	2		X	X	
47	AT167495	HYDRAULIC HOSE - FABRICATE	1		X	X	1-3/16" X 673 MM (26-1/2") X 1-3/16"
48	AT148125	PRESSURE RELIEF VALVE	1		X	X	RELIEF
49	U13639	O-RING	1		X	X	
50	38H1164	ADAPTER	2		X	X	
51	R29936	O-RING	2		X	X	
52	38H1309	ADAPTER	1		X	X	
53	R28782	O-RING	1		X	X	
54	38H1165	ADAPTER	1		X	X	
55	U13639	O-RING	1		X	X	
56	T153802	SPACER	1		X	X	0.464" X 0.840" X 1.437"

MAIN HYDRAULIC SYSTEM RESERVOIR
(SERIAL NO. 796855-801199)

TP44551 -UN-01JAN94

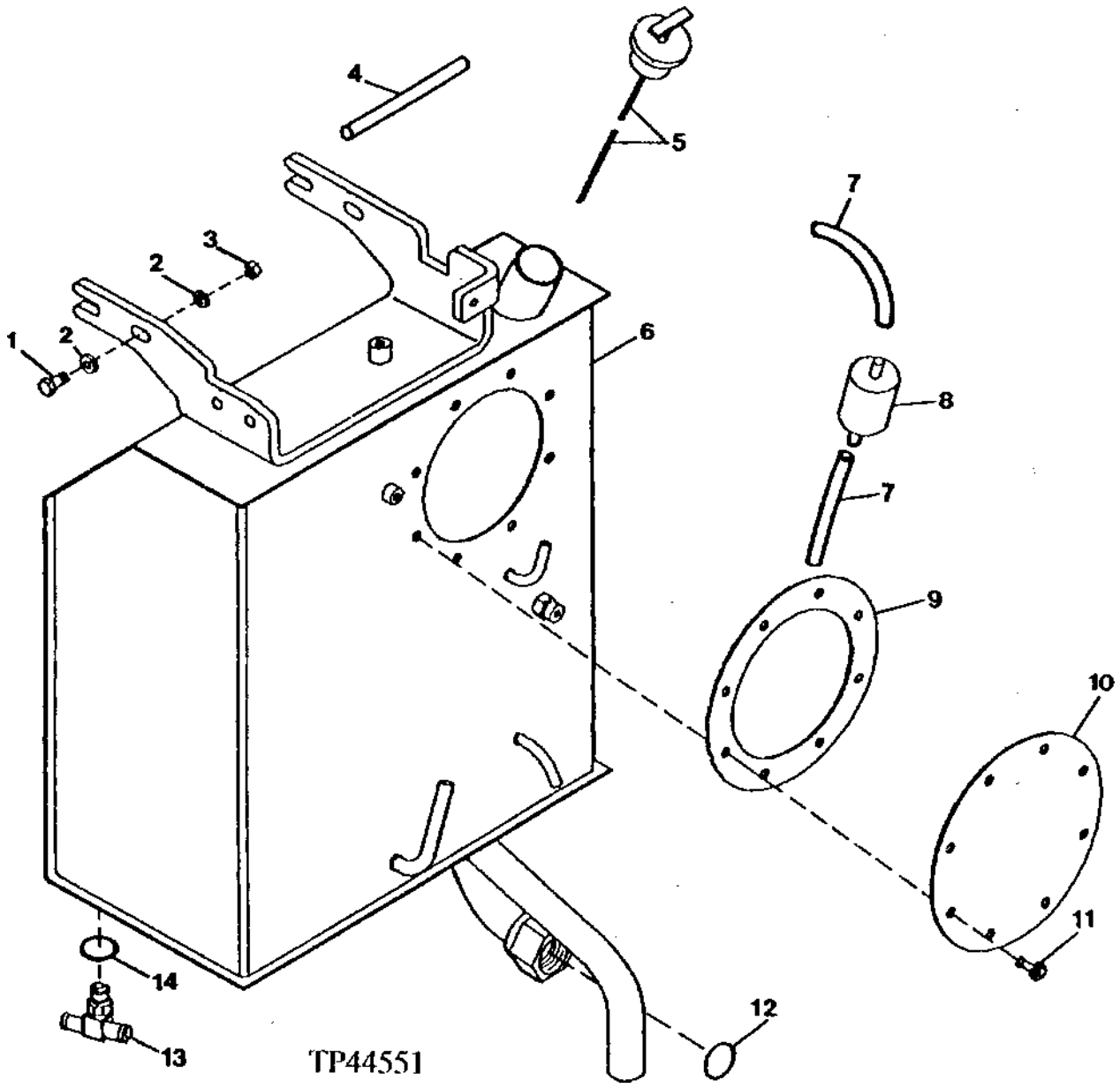

MAIN HYDRAULIC SYSTEM RESERVOIR
(SERIAL NO. 796855-801199)

KEY	PART NO.	PART NAME	QTY	SERIAL NO.	410D	510D	REMARKS
1	19M7550	CAP SCREW	4		X	X	M10 X 35
2	24M7296	WASHER	8		X	X	10.500 X 30 X 2.500 MM
3	14M7274	NUT	4		X	X	M10
4	.....	ISOLATOR	1		X	X	(MAKE FROM T71733 BULK MATERIAL, CUT TO LENGTH)
5	AT145932	DIPSTICK	1		X	X	
6	AT164652	RESERVOIR	1		X	X	
7	.....	HOSE	1		X	X	(MAKE FROM M87571 BULK MATERIAL, CUT TO LENGTH)
8	AT101565	AIR FILTER	1		X	X	BREATHER, (INSTALL WITH FLOW ARROW POINTING TOWARD RESERVOIR)
9	T106595	GASKET	1		X	X	
10	T106594	COVER	1		X	X	
11	19M7865	SCREW	8		X	X	M8 X 16, (SELF-LOCK HEX FLANGE)
12	U13639	O-RING	1		X	X	
13	AT165402	TEE FITTING	1		X	X	
14	R26375	O-RING	1		X	X	

MAIN HYDRAULIC SYSTEM RESERVOIR
(SERIAL NO. 801200-)

TP46384 -UN-10NOV94

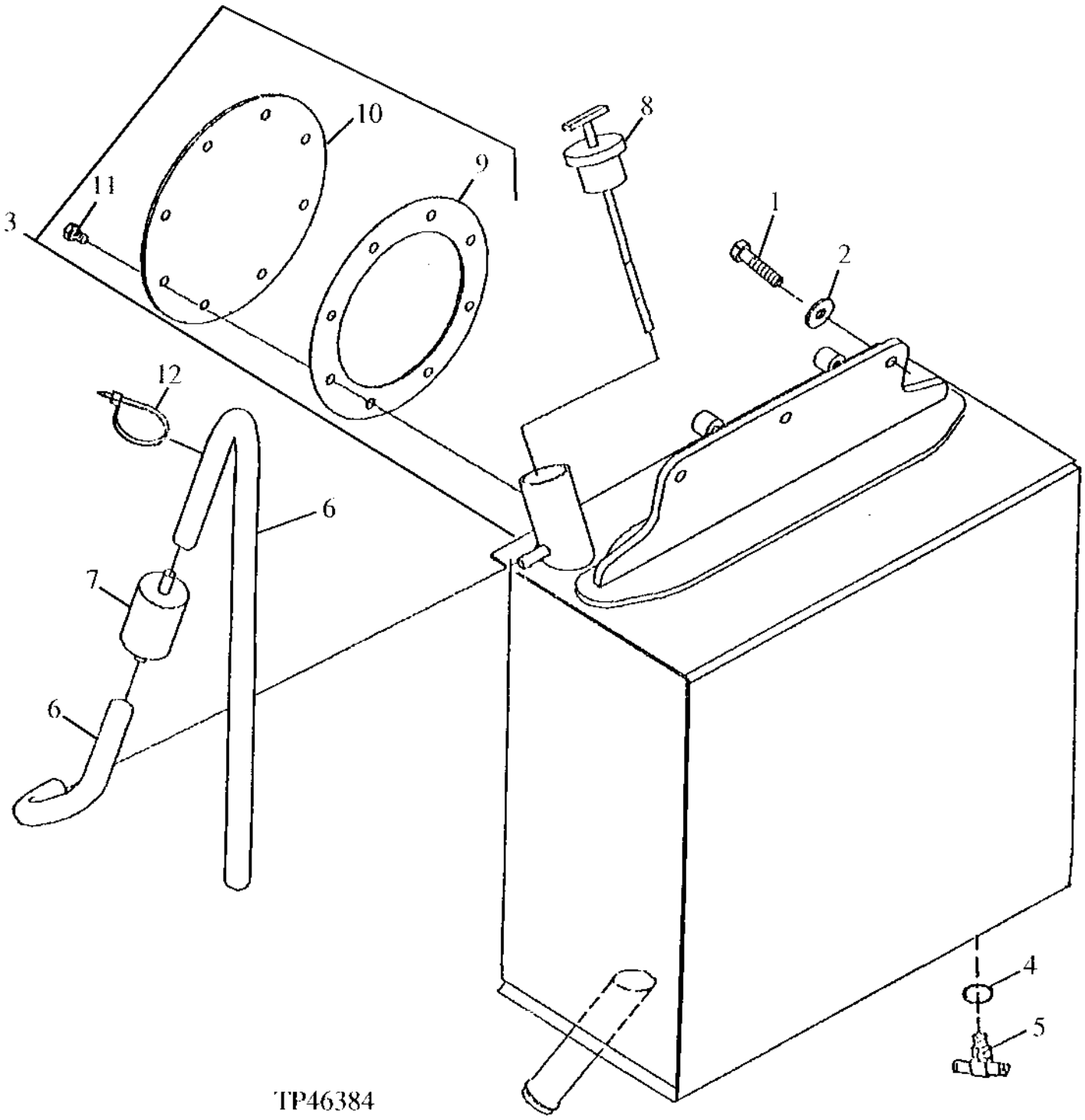

MAIN HYDRAULIC SYSTEM RESERVOIR
(SERIAL NO. 801200-)

KEY	PART NO.	PART NAME	QTY	SERIAL NO.	410D	510D	REMARKS
1	19M7572	CAP SCREW	3		X	X	M10 X 45
2	24M7296	WASHER	3		X	X	10.500 X 30 X 2.500 MM
3	AT166184	HYDRAULIC RESERVOIR	1		X	X	
4	R26375	O-RING	1		X	X	
5	AT165402	TEE FITTING	1		X	X	
6	.....	HOSE	AR		X	X	(MAKE FROM M87571 BULK MATERIAL, CUT TO LENGTH)
7	AT101565	AIR FILTER	1		X	X	BREATHER (INSTALL WITH FLOW ARROW POINTING TOWARD RESERVOIR)
8	AT145932	DIPSTICK	1		X	X	
9	T106595	GASKET	1		X	X	
10	T106594	COVER	1		X	X	
11	19M7865	SCREW	8		X	X	M8 X 16, (SELF-LOCK HEX FLANGE)
12	H77698	TIE BAND	1		X	X	

HYDRAULIC OIL COOLER TO REVERSER HOUSING OIL LINE
(SERIAL NO. -796854)

TP40517 -UN-01JAN94

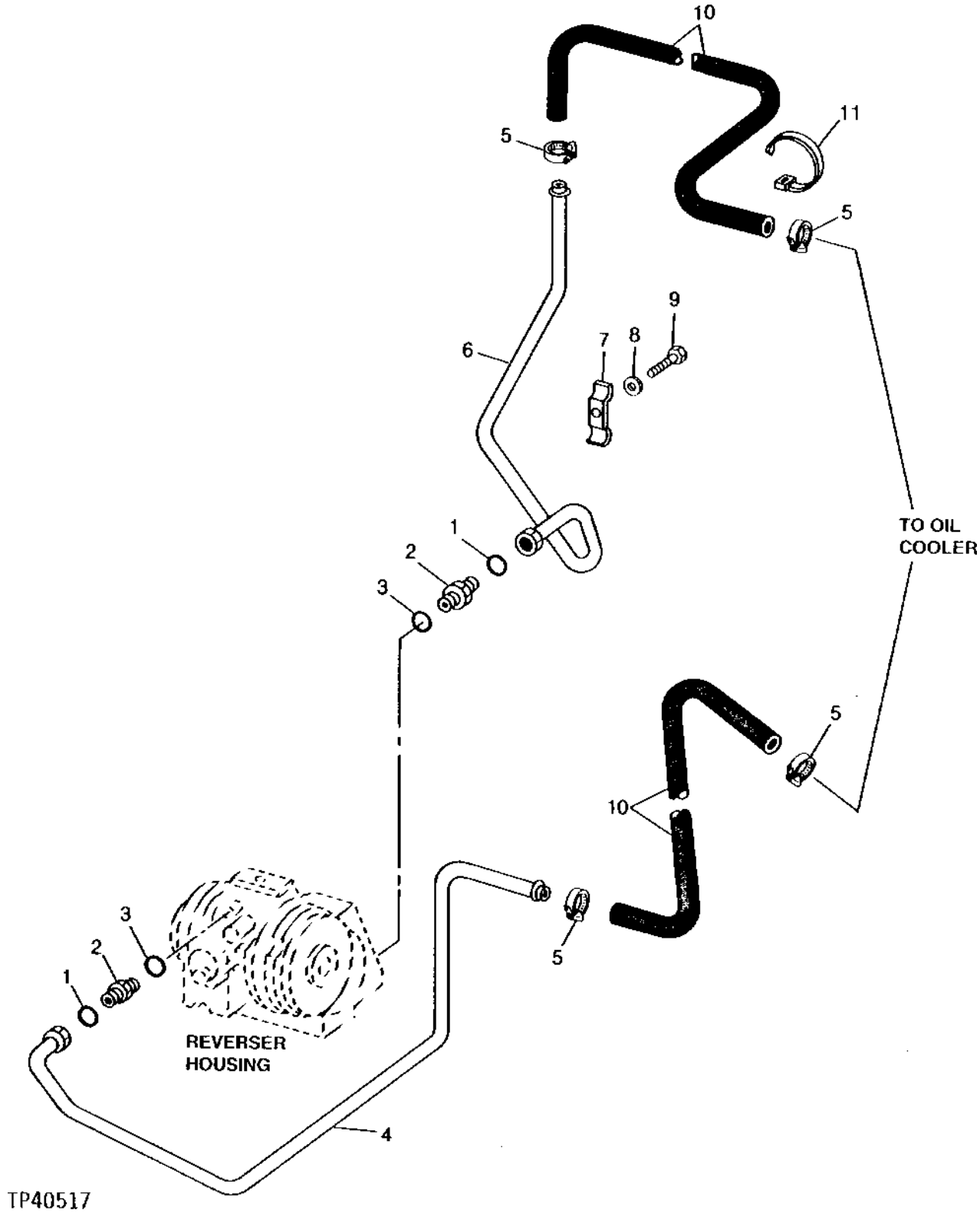

HYDRAULIC OIL COOLER TO REVERSER HOUSING OIL LINES
(SERIAL NO. -796854)

KEY	PART NO.	PART NAME	QTY	SERIAL NO.	410D	510D	REMARKS
1	T77857	O-RING	2		X	X	
2	38H1175	ADAPTER	2		X	X	
3	U12547	O-RING	2		X	X	
4	AT101214	OIL LINE	1		X	X	
5	TY22464	CLAMP	4		X	X	(SUB FOR AR21836)
6	AT134887	OIL LINE	1		X	X	
7	T68589	CLAMP	1		X	X	
8	24M7053	WASHER	2		X	X	17 X 30 X 3 MM, (SUB FOR U41353, THIS APPLICATION)
9	19H1833	CAP SCREW	1		X	X	5/8" X 1-1/4"
10	.....	HYDRAULIC HOSE	2		X	X	(MAKE FROM TY22562 BULK MATERIAL, CUT TO LENGTH)
11	H77698	TIE BAND	AR		X	X	

MEMORANDA

HYDRAULIC OIL COOLER BYPASS VALVE
(SERIAL NO. -796854)

TP4155 -UN-01JAN94

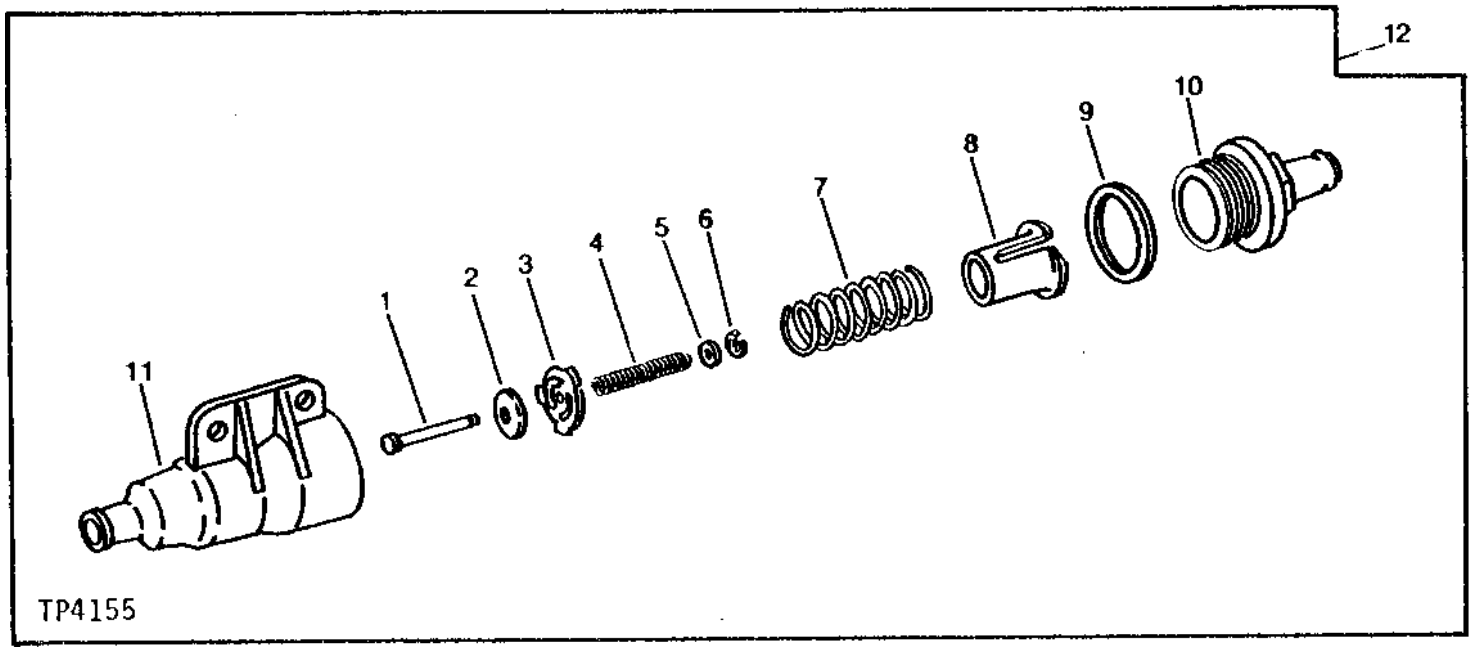

KEY	PART NO.	PART NAME	QTY	SERIAL NO.	410D	510D	REMARKS
1	.....	PIN FASTENER	1		X	X	
2	R31933	WASHER	1		X	X	
3	.....	VALVE	1		X	X	
4	.....	SPRING	1		X	X	
5	24H1283	WASHER	1		X	X	7/32" X 1/2" X 0.049"
6	R31935	SNAP RING	1		X	X	
7	.....	SPRING	1		X	X	
8	.....	GUIDE	1		X	X	
9	R31378	O-RING	1		X	X	
10	.....	FITTING	1		X	X	
11	.....	VALVE	1		X	X	
12	AR31547	VALVE	1		X	X	

HYDRAULIC OIL COOLER TO HYDRAULIC PUMP AND TRANSMISSION OIL LINES
(SERIAL NO. -796854

TP45449 -UN-01JAN94

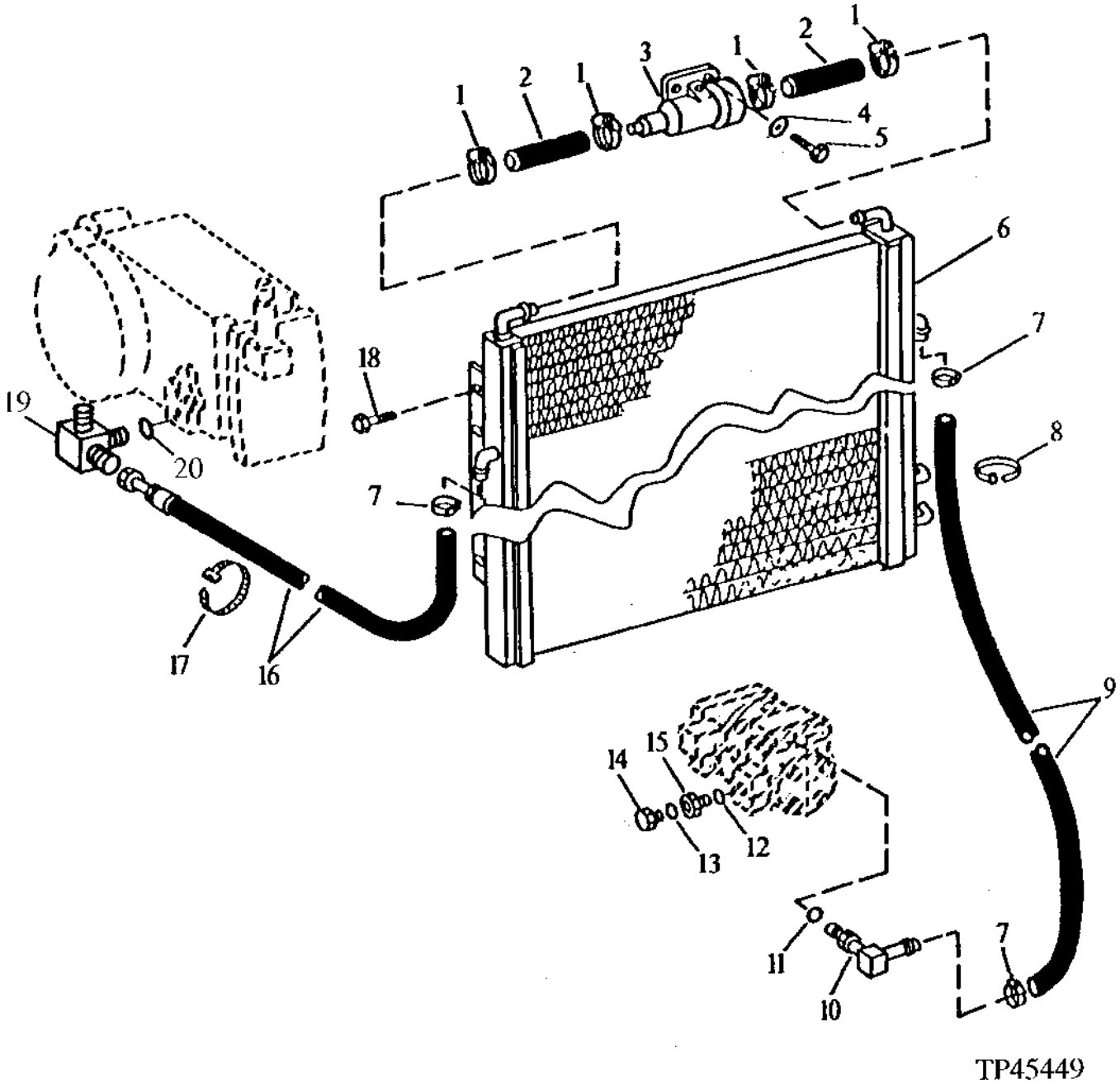

HYDRAULIC OIL COOLER TO HYDRAULIC PUMP AND TRANSMISSION OIL LINES-CONTINUED
(SERIAL NO. -796854)

KEY	PART NO.	PART NAME	QTY	SERIAL NO.	410D	510D	REMARKS
1	AR21839	CLAMP	4		X	X	
2	.....	HOSE	2		X	X	(MAKE FROM T78497 BULK MATERIAL, CUT TO LENGTH)
3	AR31547	VALVE	1		X	X	
4	24H1685	WASHER	2		X	X	11/32" X 47/64" X 0.083"
5	19M7881	SCREW	2		X	X	M8 X 20
6	AT149850	OIL COOLER	1		X	X	
7	TY22464	CLAMP	3		X	X	(SUB FOR AR21836)
8	H77698	TIE BAND	AR		X	X	
9	.....	HOSE	1		X	X	(MAKE FROM TY22562 BULK MATERIAL, CUT TO LENGTH)
10	AT124317	ELBOW FITTING	1		X	X	
11	R26375	O-RING	1		X	X	
12	R29936	O-RING	1		X	X	
13	R26287	O-RING	1		X	X	
14	R31631	DRAIN PLUG	1	747672-	X	X	
15	T30929	PIPE PLUG	1		X	X	
16	AT151676	HYDRAULIC HOSE - FABRICATE	1		X	X	(SUB FOR AT69017, THIS APPLICATION)
17	R76477	TIE BAND	1		X	X	
18	19M7557	CAP SCREW	4		X	X	M10 X 16
19	AT74103	TEE FITTING	1		X	X	
20	R26448	O-RING	1		X	X	

HYDRAULIC OIL COOLER AND HOSES
(SERIAL NO. 796855-801199)

TP45414 -UN-01JAN94

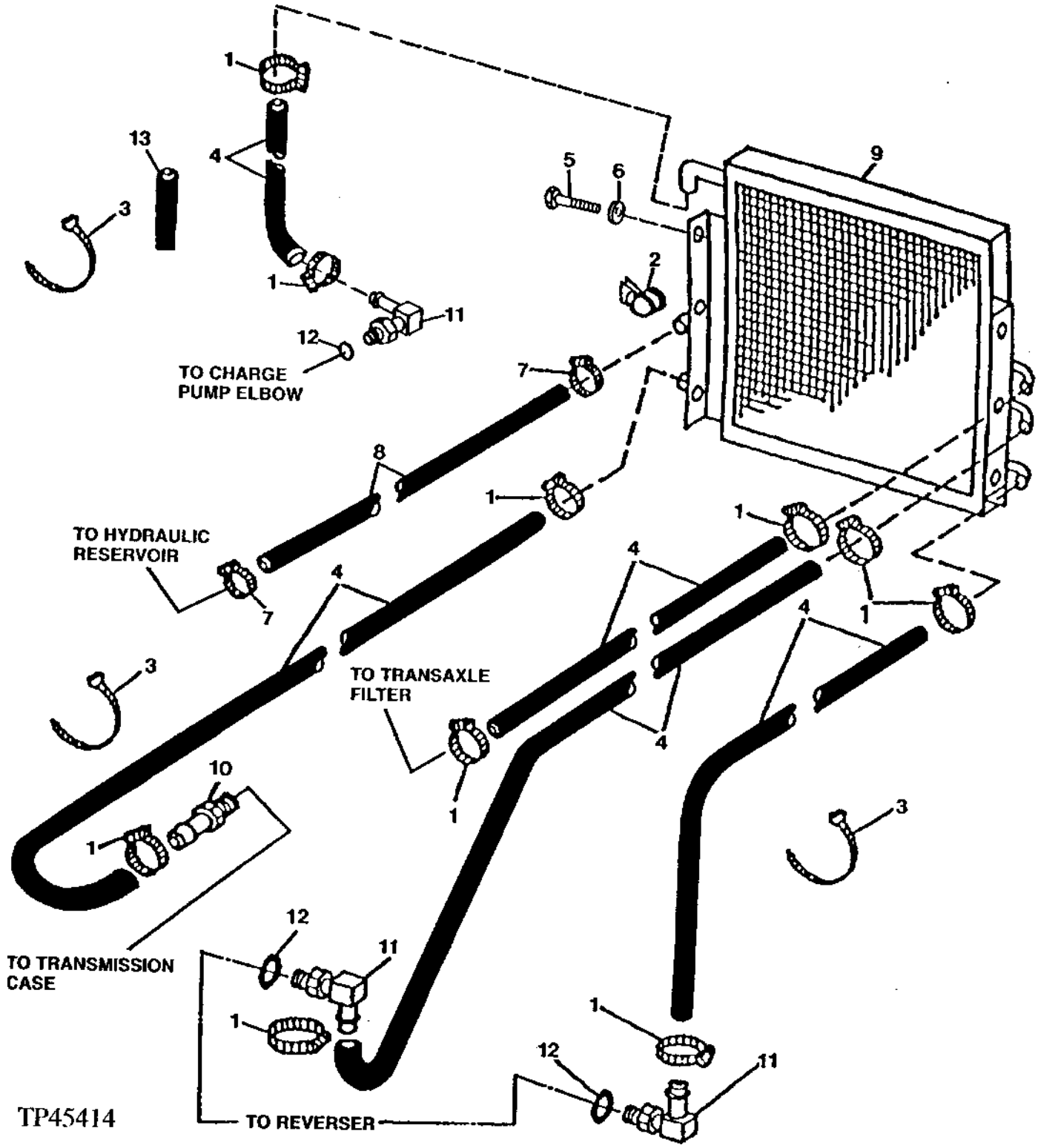

HYDRAULIC OIL COOLER AND HOSES
(SERIAL NO. 796855-801199)

KEY	PART NO.	PART NAME	QTY	SERIAL NO.	410D	510D	REMARKS
1	TY22464	CLAMP	10		X	X	(SUB FOR AR21836)
2	T151273	CLAMP	1		X	X	(SUB FOR T78787, THIS APPLICATION)
3	H77698	TIE BAND	AR		X	X	
4	.....	HOSE	AR		X	X	(MAKE FROM TY22562 BULK MATERIAL, CUT TO LENGTH)
5	19M8324	CAP SCREW	6		X	X	M10 X 16
6	24M7139	WASHER	6		X	X	6.400 X 18 X 1.600 MM
7	AR21837	CLAMP	2		X	X	
8	.....	HOSE	AR		X	X	(MAKE FROM T100526 BULK MATERIAL, CUT TO LENGTH)
9	AT162591	OIL COOLER	1		X	X	
10	T126833	THREADED NIPPLE	1		X	X	
11	AT124317	ELBOW FITTING	3		X	X	
12	R26375	O-RING	3		X	X	
13	.....	HOSE	AR		X	X	(MAKE FROM T100484 BULK MATERIAL, CUT TO LENGTH) (USE TO PROTECT CHARGE PUMP HOSE)

HYDRAULIC OIL COOLER AND HOSES
(SERIAL NO. 801200-)

TP46255 -UN-01JAN94

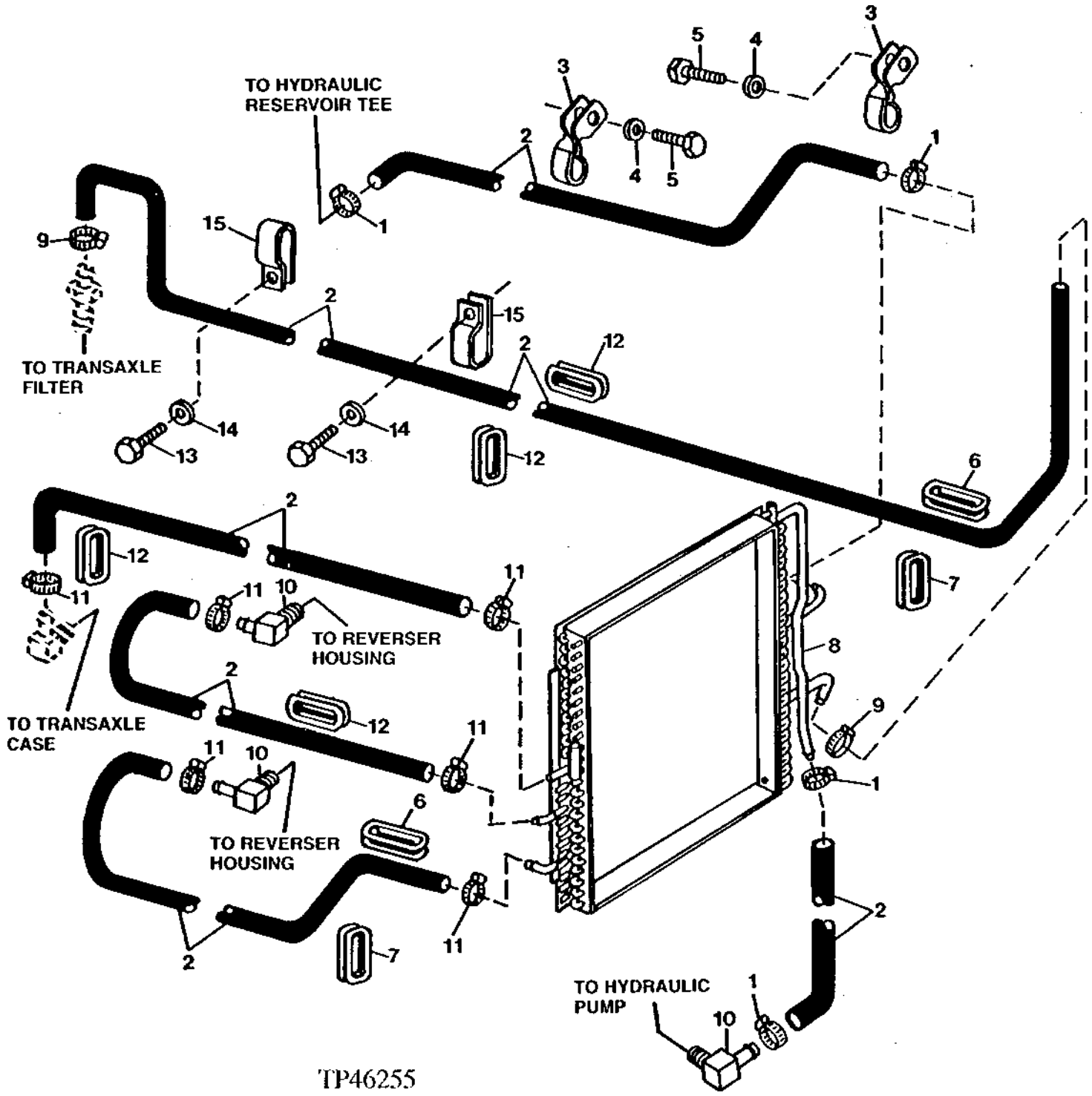

HYDRAULIC OIL COOLER AND HOSES
(SERIAL NO. 801200-)

KEY	PART NO.	PART NAME	QTY	SERIAL NO.	410D	510D	REMARKS
1	TY22464	CLAMP	4		X	X	(SUB FOR AR21836)
2	.....	HOSE	5		X	X	(MAKE FROM T100484 BULK MATERIAL,CUT TO LENGTH)
3	T152828	HOSE CLAMP	2		X	X	
4	24M7239	WASHER	2		X	X	10.700 X 21 X 2.500 MM
5	19M7550	CAP SCREW	2		X	X	
6	T149657	GROMMET	2		X	X	
7	T149658	GROMMET	2		X	X	
8	AT169357	OIL COOLER	1		X	X	
9	AR21837	CLAMP	2		X	X	
10	AT124317	ELBOW FITTING	3		X	X	
11	TY22464	CLAMP	6		X	X	(SUB FOR AR21836)
12	T149680	GROMMET	4		X	X	
13	19M7550	CAP SCREW	2		X	X	M10 X 35
14	24M7239	WASHER	2		X	X	10.700 X 21 X 2.500 MM
15	R49921	CLAMP	2		X	X	

AUXILIARY HYDRAULIC LINES FOR MOUNTED EQUIPMENT
(SERIAL NO. -801199)

TP41715 -UN-01JAN94

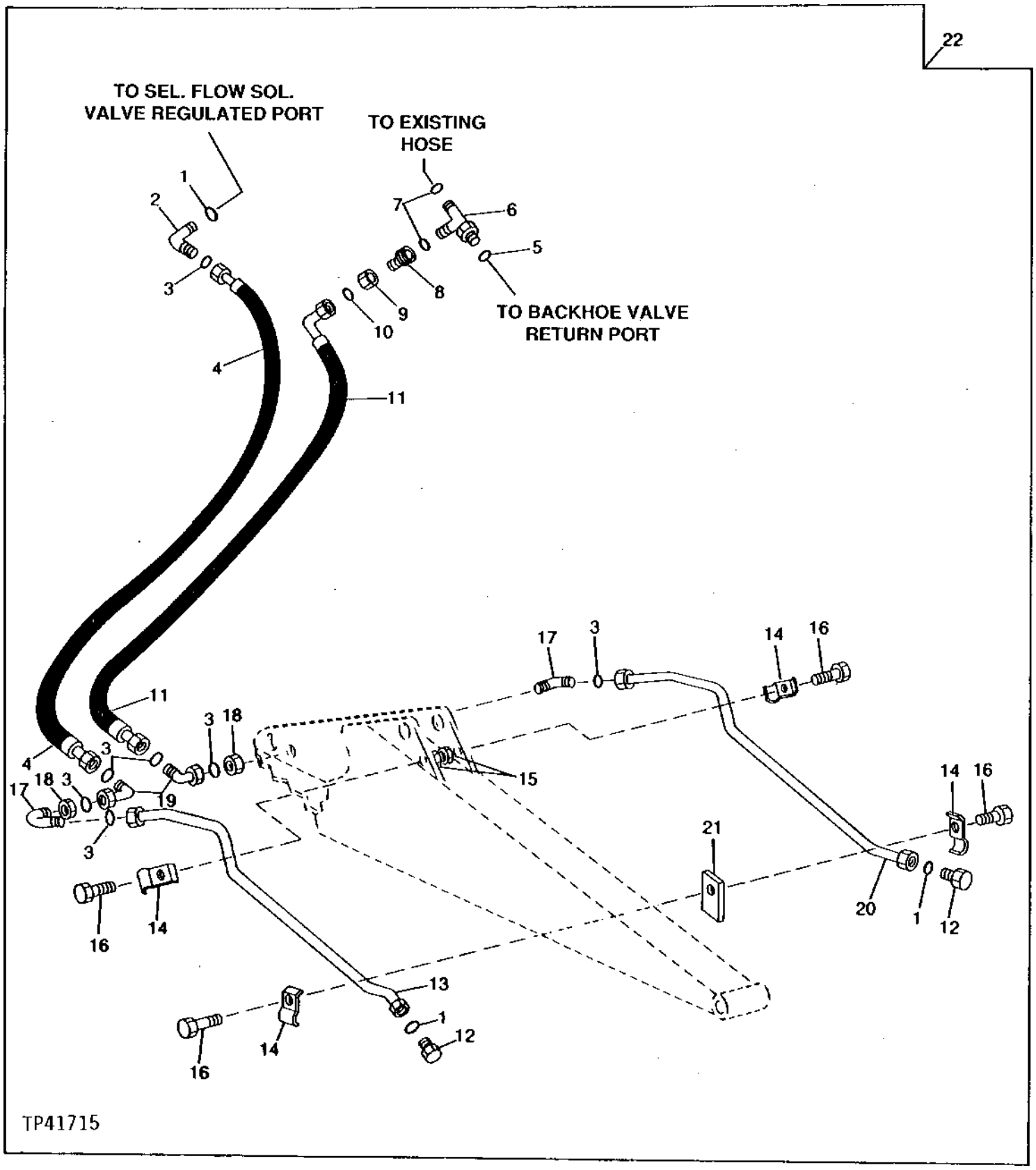

AUXILIARY HYDRAULIC LINES FOR REAR MOUNTED EQUIPMENT
(SERIAL NO. -801199)

KEY	PART NO.	PART NAME	QTY	SERIAL NO.	410D	510D	REMARKS
1	U12547	O-RING	3		X	X	
2	38H1305	ELBOW FITTING	1		X	X	
3	T76938	O-RING	7		X	X	
4	AT157157	HYDRAULIC HOSE - FABRICATE	1		X	X	1-7/16" X 1 800 MM (70-3/4") X 1-7/16"
5	U13639	O-RING	1		X	X	
6	38H1028	TEE FITTING	1	-796890	X	X	
	38H1410	TEE FITTING	1	796891-	X	X	
7	T78612	O-RING	2	-796890	X	X	
8	38H1477	REDUCER	1	-796890	X	X	
9	38H1122	TUBE NUT	1	-796890	X	X	
10	T77858	O-RING	1		X	X	
11	AT157158	HYDRAULIC HOSE - FABRICATE	1		X	X	1-7/16" X 1 500 MM (59") X 1-3/16"
12	R27175	DRAIN PLUG	2		X	X	
13	AT156760	OIL LINE	1		X		
	AT157159	OIL LINE	1			X	
14	U43641	CLAMP	4		X	X	
15	14M7166	LOCK NUT	3		X	X	M8
16	19M7269	CAP SCREW	3		X	X	M8 X 50
17	38H1456	ELBOW FITTING	2		X	X	
18	T78715	NUT	2		X	X	1-7/16"
19	38H1098	ELBOW FITTING	2		X	X	
20	AT156761	OIL LINE	1		X		
	AT157160	OIL LINE	1			X	
21	.....	STRAP	1		X	X	
22	**AT156913**	**KIT**	**1**		**X**		**(STANDARD) (ALSO REQUIRES AT117687 HYDRAULIC HOSE (2) FOR USE WITH 410D STANDARD DIPPERSTICK, 410D HEAVY LIFT, STANDARD OR EXTENDABLE DIPPERSTICK)(ALSO REQUIRES AT167912 FIELD KIT FOR USE WITH THE AUXILIARY SELECTIVE FLOW SOLENOID VALVE OR AT167907 BOOM TO MANUAL VALVE AUXILIARY PLUMBING FOR USE WITH A 5 OR 6 FUNCTION VALVE) (SUB AT166860)**
	AT156914	**KIT**	**1**		**X**	**X**	**(HEAVY LIFT) (SUB AT170233) (ALSO REQUIRES AT124153 (2) FOR USE WITH 510D STANDARD DIPPER) (REQUIRES AT166920 (2) FOR USE WITH 510D EXTENDABLE DIPPER OR 410D HEAVY LIFT, STANDARD OR EXTENDABLE DIPPER) (AT167912 FOR USE WITH THE AUXILIARY SELECTIVE FLOW SOLENOID VALVE OR AT167907 FOR USE WITH A 5 OR 6 FUNCTION AUXILIARY MANUAL VALVE) (SUB AT167009)**

REAR EQUIPMENT OIL LINES AND HOSES
(SERIAL NO. 801200-)

TP50407 -UN-10APR96

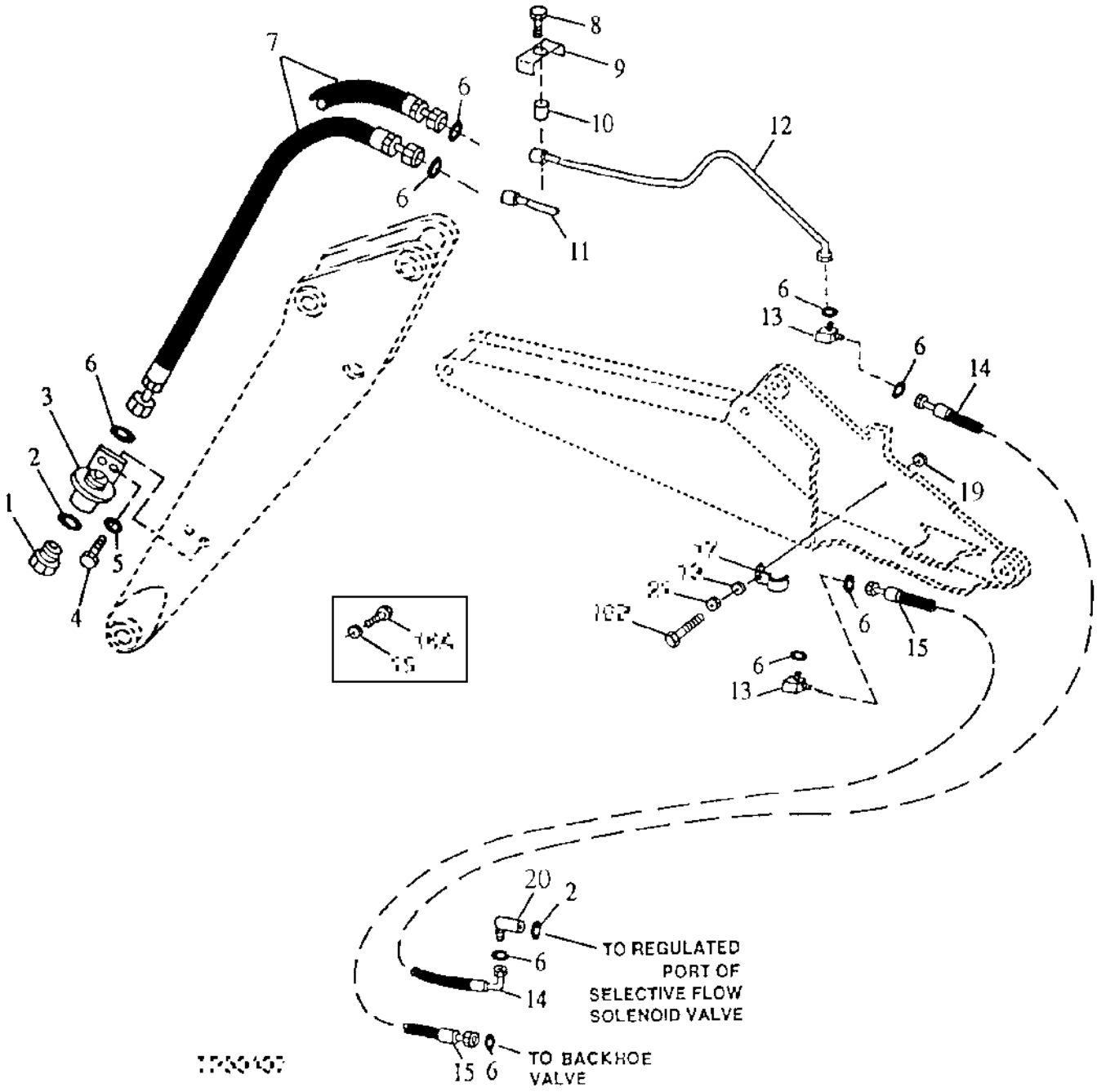

REAR EQUIPMENT OIL LINES AND HOSES
(SERIAL NO. 801200-)

KEY	PART NO.	PART NAME	QTY	SERIAL NO.	410D	510D	REMARKS
1	R27175	DRAIN PLUG	2		X		
2	U12547	O-RING	2		X		
3	AT164922	ADAPTER	2		X		
4	19M7662	CAP SCREW	4		X		M10 X 30
5	24M7040	WASHER	4	-817361	X		11 X 20 X 2 MM
	24M7239	WASHER	4	817362-	X		10.700 X 21 X 2.500 MM
6	T77858	O-RING	9		X		
7	AT124152	HYDRAULIC HOSE - FABRICATE	2		X		1-3/16" X 1 998 MM (78-3/4") X 1-3/16"
8	19M7658	CAP SCREW	1	-820207	X		M10 X 50
	19M7935	CAP SCREW	1	820208-	X		M10 X 55
9	T27022	CLAMP	1		X		
10	M92064	SPACER	1		X		0.510" X 3/4" X 0.920"
11	AT164931	OIL LINE	1		X		LEFT
12	AT164932	OIL LINE	1		X		RIGHT
13	38H1097	ELBOW FITTING	2		X		90 DEGREE
14	AT117363	HYDRAULIC HOSE - FABRICATE	1		X		1-3/16" X 1 600 MM (63") X 1-3/16"
15	AT170567	HYDRAULIC HOSE - FABRICATE	1		X		1-3/16" X 1 400 MM (55") X 1-3/16"
16A	19M8504	CAP SCREW	2	-817361	X		M8 X 80
16B	19M8324	CAP SCREW	2	817362-	X		M10 X 16
17	U43641	CLAMP	2		X		
18	14M7166	LOCK NUT	2	-817361	X		M8
19	24M7238	WASHER	4		X		8.700 X 17 X 2 MM
20	38H1007	ELBOW FITTING	1		X		90 DEGREE
21	24M7239	WASHER	2	817362-	X		10.700 X 21 X 2.500 MM

HYDRAULIC LINES FOR REAR MOUNTED EQUIPMENT
(SERIAL NO. 801200-)

TP45590 -UN-16DEC94

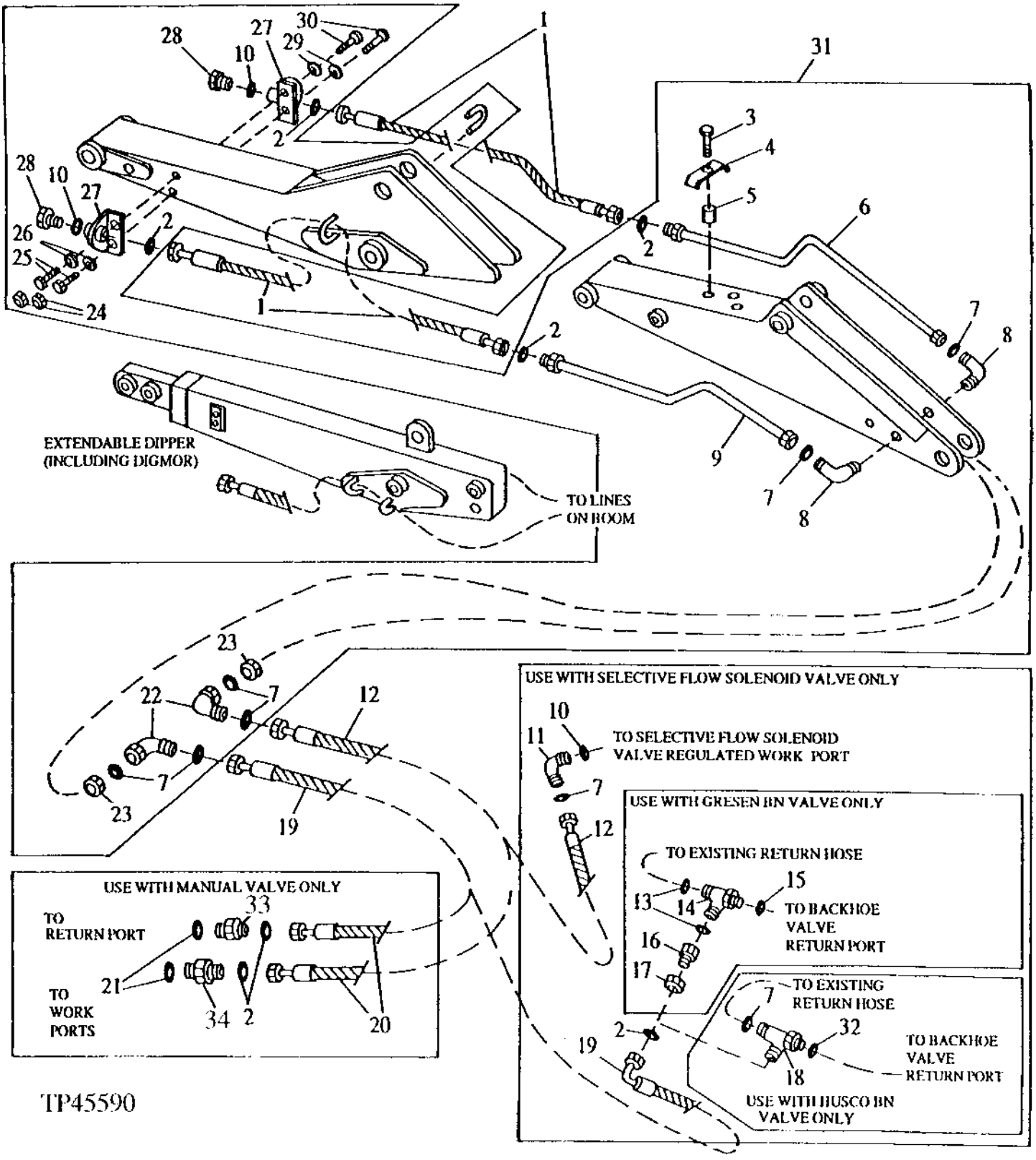

HYDRAULIC LINES FOR REAR MOUNTED EQUIPMENT
(SERIAL NO. 801200-)

KEY	PART NO.	PART NAME	QTY	SERIAL NO.	410D	510D	REMARKS
1	AT117687	HYDRAULIC HOSE - FABRICATE	1		X		(WITH STANDARD DIPPERSTICK)
	AT170233	HYDRAULIC HOSE - FABRICATE	1			X	(WITH STANDARD DIPPERSTICK)
	AT166920	HYDRAULIC HOSE - FABRICATE	1		X	X	(WITH EXTENDABLE DIPPERSTICK 410D AND 510D) (WITH STANDARD OR EXTENDABLE DIPPERSTICK 410D HEAVY LIFT)
2	T77858	O-RING	6		X	X	
3	19M7658	CAP SCREW	1	-820207	X	X	M10 X 50
4	T27022	CLAMP	1		X	X	
5	M92064	SPACER	1		X	X	(SUB FOR 28H187)
6	AT165871	OIL LINE	1		X		
	AT165980	LINE	1		X	X	(410D HEAVY LIFT)
7	T76938	O-RING	6		X	X	
8	38H1456	ELBOW FITTING	2		X	X	
9	AT165872	OIL LINE	1		X		
	AT165981	LINE	1		X	X	(410D HEAVY LIFT)
10	U12547	O-RING	2		X	X	
11	38H1305	ELBOW FITTING	1		X	X	
12	AT167903	HYDRAULIC HOSE - FABRICATE	1		X	X	
13	T78612	O-RING	2		X	X	
14	38H1028	TEE FITTING	1		X	X	
15	U13639	O-RING	1		X	X	37.465 X 2.997 MM
16	38H1477	REDUCER	1		X	X	
17	38H1122	TUBE NUT	1		X	X	
18	38H1410	TEE FITTING	1		X	X	
19	AT157158	HYDRAULIC HOSE - FABRICATE	1		X	X	
20	AT167903	HYDRAULIC HOSE - FABRICATE	2		X	X	
21	U17409	O-RING	2		X	X	(GRESEN)
	U12547	O-RING	2		X	X	(HUSCO)
22	38H1098	ELBOW FITTING	2		X	X	(STANDARD)
23	T78715	NUT	2		X	X	
24	14M7167	LOCK NUT	2		X	X	M10, (USE WITH 19M8161)
25	19M8161	CAP SCREW	2		X	X	M10 X 230, (USE WITH STANDARD DIPPER)
	19M7662	CAP SCREW	4		X	X	M10 X 30, (USE WITH EXTENDABLE DIPPER)

THIS PARTS LISTING IS CONTINUED

HYDRAULIC LINES FOR REAR MOUNTED EQUIPMENT
(SERIAL NO. 801200-)

TP45590 -UN-16DEC94

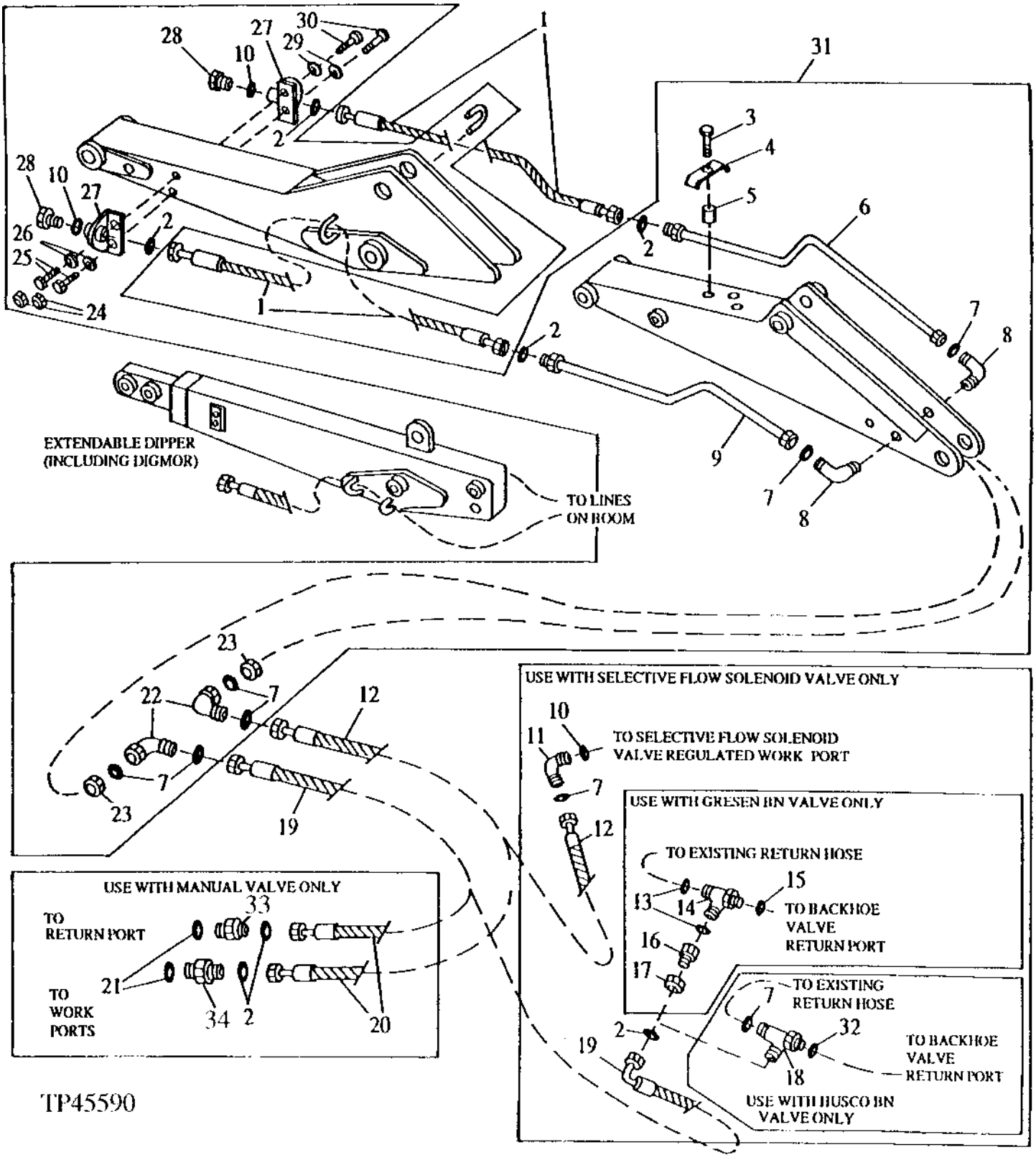

HYDRAULIC LINES FOR REAR MOUNTED EQUIPMENT
(SERIAL NO. 801200-)

KEY	PART NO.	PART NAME	QTY	SERIAL NO.	410D	510D	REMARKS
26	24M7040	WASHER	4		X	X	11 X 20 X 2 MM
27	AT164922	ADAPTER	2		X	X	
28	R27175	DRAIN PLUG	2		X	X	
29	24M7040	WASHER	4		X	X	11 X 20 X 2 MM
30	19M7662	CAP SCREW	4		X	X	M10 X 30, (USE WITH STANDARD DIPPERSTICK FACTORY THREADED)
	19M7402	CAP SCREW	4		X	X	M10 X 25, (USE WITH EXTENDABLE DIPPERSTICK)
	19M8161	CAP SCREW	4		X	X	M10 X 230, (USE WITH STANDARD DIPPERSTICK NOT FACTORY THREADED)
31	.....	KIT	1		X		(AT166860 NO LONGER AVAILABLE) (STANDARD) (ALSO REQUIRES AT117687 HYDRAULIC HOSE (2) FOR USE WITH 410D STANDARD DIPPERSTICK, 410D HEAVY LIFT, STANDARD OR EXTENDABLE DIPPERSTICK)(ALSO REQUIRES AT167912 FIELD KIT FOR USE WITH THE AUXILIARY SELECTIVE FLOW SOLENOID VALVE OR AT167907 BOOM TO MANUAL VALVE AUXILIARY PLUMBING FOR USE WITH 5 OR 6 FUNCTION VALVE)
	AT167009	**KIT**	**1**		**X**	**X**	**(HEAVY LIFT) (ALSO REQUIRES AT170233 (2) FOR USE WITH 510D STANDARD DIPPER) (REQUIRES AT166920 (2) FOR USE WITH 510D EXTENDABLE DIPPER OR 410D HEAVY LIFT, STANDARD OR EXTENDABLE DIPPER (AT167912 FOR USE WITH THE AUXILIARY SELECTIVE FLOW SOLENOID VALVE OR AT167907 FOR USE WITH A 5 OR 6 FUNCTION AUXILIARY MANUAL VALVE)**
32	R29936	O-RING	1		X	X	
33	38H1194	ADAPTER	1		X	X	(HUSCO)
	38H1343	ADAPTER	1		X	X	(GRESEN)
34	38H1163	ADAPTER	1		X	X	(HUSCO)
	38H1343	ADAPTER	1		X	X	(GRESEN)

SELECTIVE FLOW SOLENOID VALVE KIT
(SERIAL NO. -801199)

TP52756 -UN-19MAR96

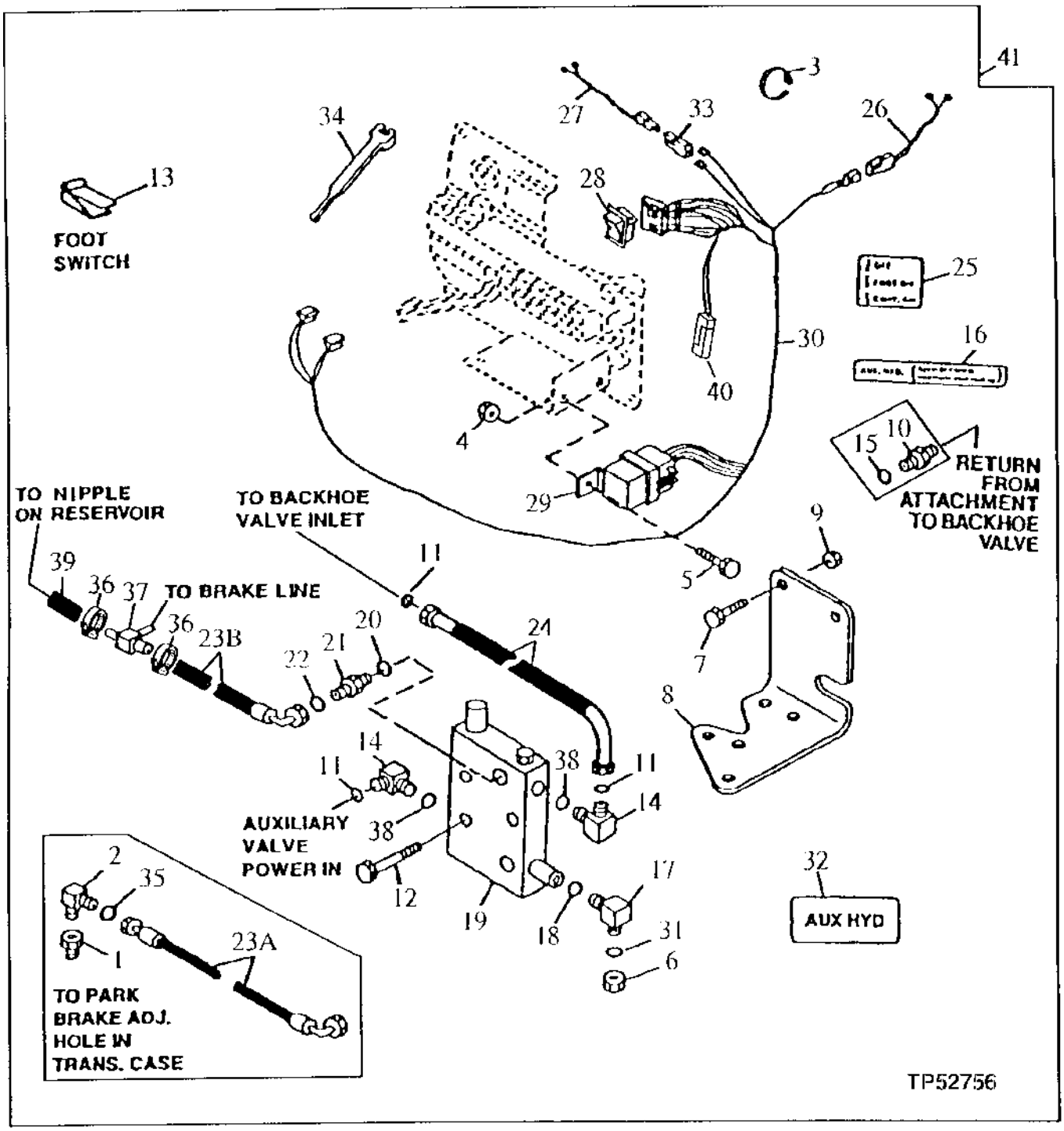

SELECTIVE FLOW SOLENOID VALVE KIT
(SERIAL NO. -801199)

KEY	PART NO.	PART NAME	QTY	SERIAL NO.	410D	510D	REMARKS
1	15H576	PIPE BUSHING	1	-796890	X	X	
2	R87907	ELBOW FITTING	1	-796890	X	X	
3	R44302	TIE BAND	1		X	X	
4	14M7272	NUT	1		X	X	M6
5	19M8425	CAP SCREW	1		X	X	M6 X 16
6	38H1417	FITTING	1	-796890	X	X	
	38H1419	FITTING	1	796891-	X	X	
7	19M8011	CAP SCREW	2		X	X	M12 X 30
8	AT167606	BRACKET	1		X	X	VALVE MOUNTING, (SUB FOR AT156404 AND AT156935)
9	14M7275	NUT	2		X	X	M12
10	38H1164	ADAPTER	1	-796890	X	X	
11	T76938	O-RING	3		X	X	
12	19M7663	CAP SCREW	3		X	X	M8 X 70
13	AT82210	SWITCH	1		X	X	FOOT CONTROL
14	38H1037	ELBOW FITTING	2		X	X	
15	R29936	O-RING	1	-796890	X	X	
16	T142096	LABEL	1		X	X	
17	38H1404	ELBOW FITTING	1	-796890	X	X	
	38H1305	ELBOW FITTING	1	796891-	X	X	
18	U12547	O-RING	1		X	X	
19	AT101899	ELEC-HYD PROPORTIONAL VALVE	1		X	X	AUXILIARY
20	R28782	O-RING	1		X	X	
21	38H1309	ADAPTER	1		X	X	
22	T77613	O-RING	2		X	X	
23A	AT103379	HYDRAULIC HOSE - FABRICATE	1	-796801	X	X	
23B	AT167884	HYDRAULIC HOSE - FABRICATE	1	796891-			
24	AT156399	HYDRAULIC HOSE - FABRICATE	1		X	X	
25	T142093	LABEL	1		X	X	(AUXILIARY HYDRAULIC VALVE)
26	AT156431	WIRING HARNESS	1		X	X	
27	AT156432	WIRING HARNESS	1		X	X	
28	T142081	SWITCH	1		X	X	(AUXILIARY HYDRAULIC)
29	AT75769	RELAY	1		X	X	
30	AT156430	WIRING HARNESS	1		X	X	(ALSO ORDER R78053)
31	T77932	O-RING	1	-796890	X	X	
32	T149199	LABEL	1		X	X	AUXILIARY HYDRAULICS
33	R78053	ELECTRICAL CONNECTOR ASSY	1		X	X	
34	R44302	TIE BAND	1		X	X	
35	T77613	O-RING	1	796891-	X	X	
36	TY22462	CLAMP	2	796891-	X	X	(SUB FOR AR48236)
37	M86863	TEE FITTING	1	796891-	X	X	
38	R29936	O-RING	1	796891-	X	X	
39	.....	HOSE	1	796891-	X	X	(MAKE FROM M87571 BULK MATERIAL)
40	AR94101	DIODE	1		X	X	
41	**AT156400**	**SOLENOID VALVE**	**1**		**X**	**X**	**(SELECTIVE FLOW KIT) (ALSO INCLUDES MISCELLANEOUS O-RINGS AND FITTINGS)**

SELECTIVE FLOW SOLENOID VALVE KIT
(SERIAL NO. 801200-)

TP52753 -UN-19MAR96

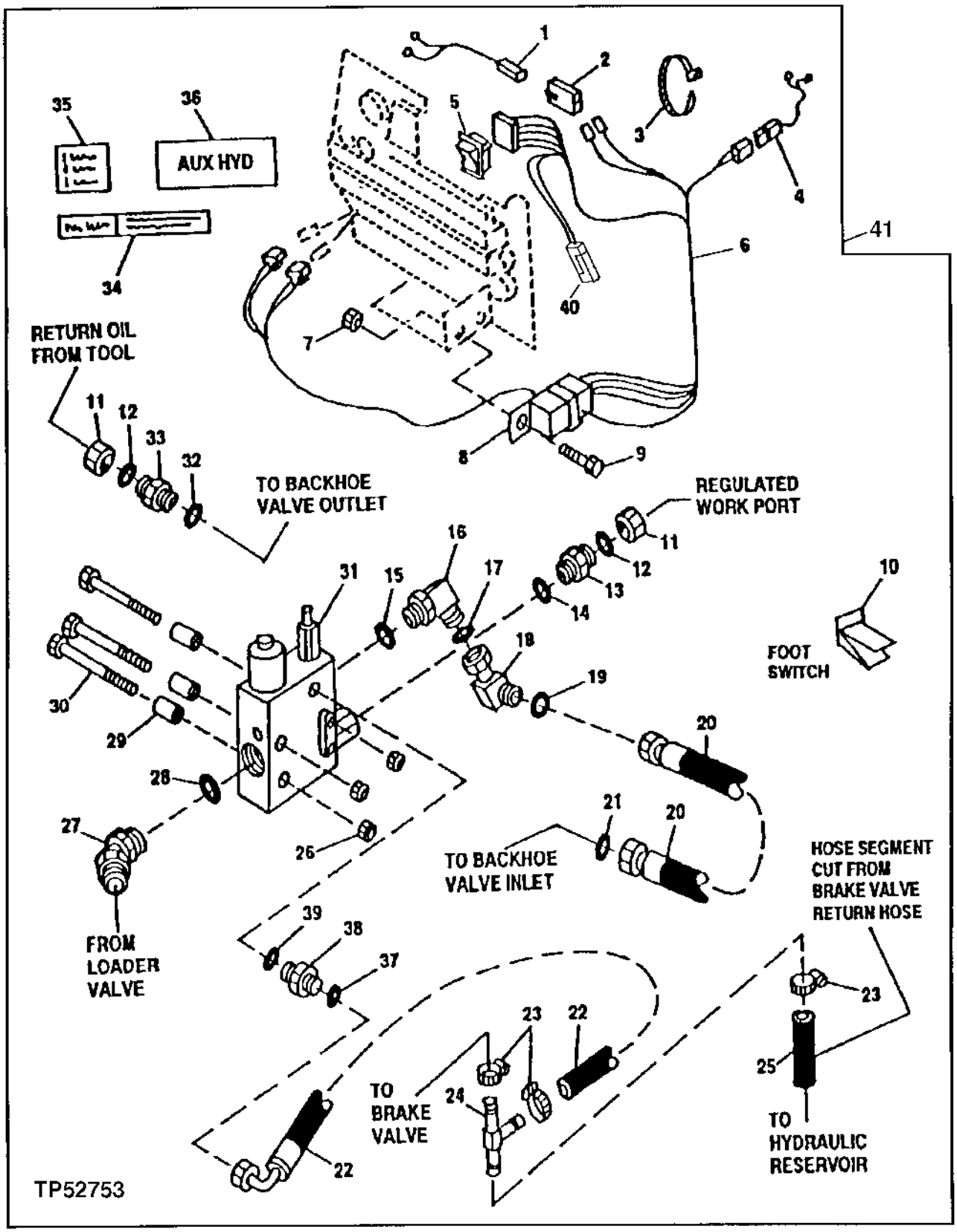

SELECTIVE FLOW SOLENOID VALVE KIT
(SERIAL NO. 801200-)

KEY	PART NO.	PART NAME	QTY	SERIAL NO.	410D	510D	REMARKS
1	AT156432	WIRING HARNESS	1		X	X	
2	R78053	ELECTRICAL CONNECTOR ASSY	1		X	X	
3	R44302	TIE BAND	AR		X	X	
4	AT156431	WIRING HARNESS	1		X	X	
5	T142081	SWITCH	1		X	X	
6	AT156430	WIRING HARNESS	1		X	X	
7	14M7272	NUT	1		X	X	M6
8	AT75769	RELAY	1		X	X	
9	19M8425	CAP SCREW	1		X	X	
10	AT82210	SWITCH	1		X	X	FOOT CONTROL
11	38H1418	FITTING	2		X	X	
12	T77858	O-RING	2		X	X	
13	38H1163	ADAPTER	1		X	X	
14	U12547	O-RING	1		X	X	
15	R29936	O-RING	1		X	X	
16	38H1037	ELBOW FITTING	1		X	X	
17	T76938	O-RING	1		X	X	
18	38H1098	ELBOW FITTING	1		X	X	
19	T76938	O-RING	1		X	X	
20	AT173679	HYDRAULIC HOSE - FABRICATE	1		X	X	(SUB FOR AT167481)
21	T76938	O-RING	1		X	X	
22	AT167884	HYDRAULIC HOSE - FABRICATE	2		X	X	
23	TY22464	CLAMP	3		X	X	(SUB FOR AR21836)
24	M86863	TEE FITTING	1		X	X	
25	.....	HOSE	1		X	X	
26	14H785	NUT	3		X	X	5/16"
27	38H1049	ELBOW FITTING	1		X	X	
28	R29936	O-RING	1		X	X	
29	N188273	SPACER	3		X	X	
30	03H1828	BOLT	3		X	X	5/16" X 4"
31	AT101899	ELEC-HYD PROPORTIONAL VALVE	1		X	X	AUXILIARY
32	R29936	O-RING	1		X	X	
33	38H1194	ADAPTER	1		X	X	
34	T142096	LABEL	1		X	X	AUXILIARY HYDRAULIC VALVE
35	T142093	LABEL	1		X	X	AUXILIARY HYDRAULIC VALVE
36	T149199	LABEL	1		X	X	AUXILIARY HYDRAULICS
37	T77613	O-RING	1		X	X	
38	38H1309	ADAPTER	1		X	X	
39	R28782	O-RING	1		X	X	
40	AR94101	DIODE	1		X	X	
41	**AT169724**	**SOLENOID VALVE**	**1**		**X**	**X**	

SELECTIVE FLOW SOLENOID VALVE

TP24016 -UN-01JAN94

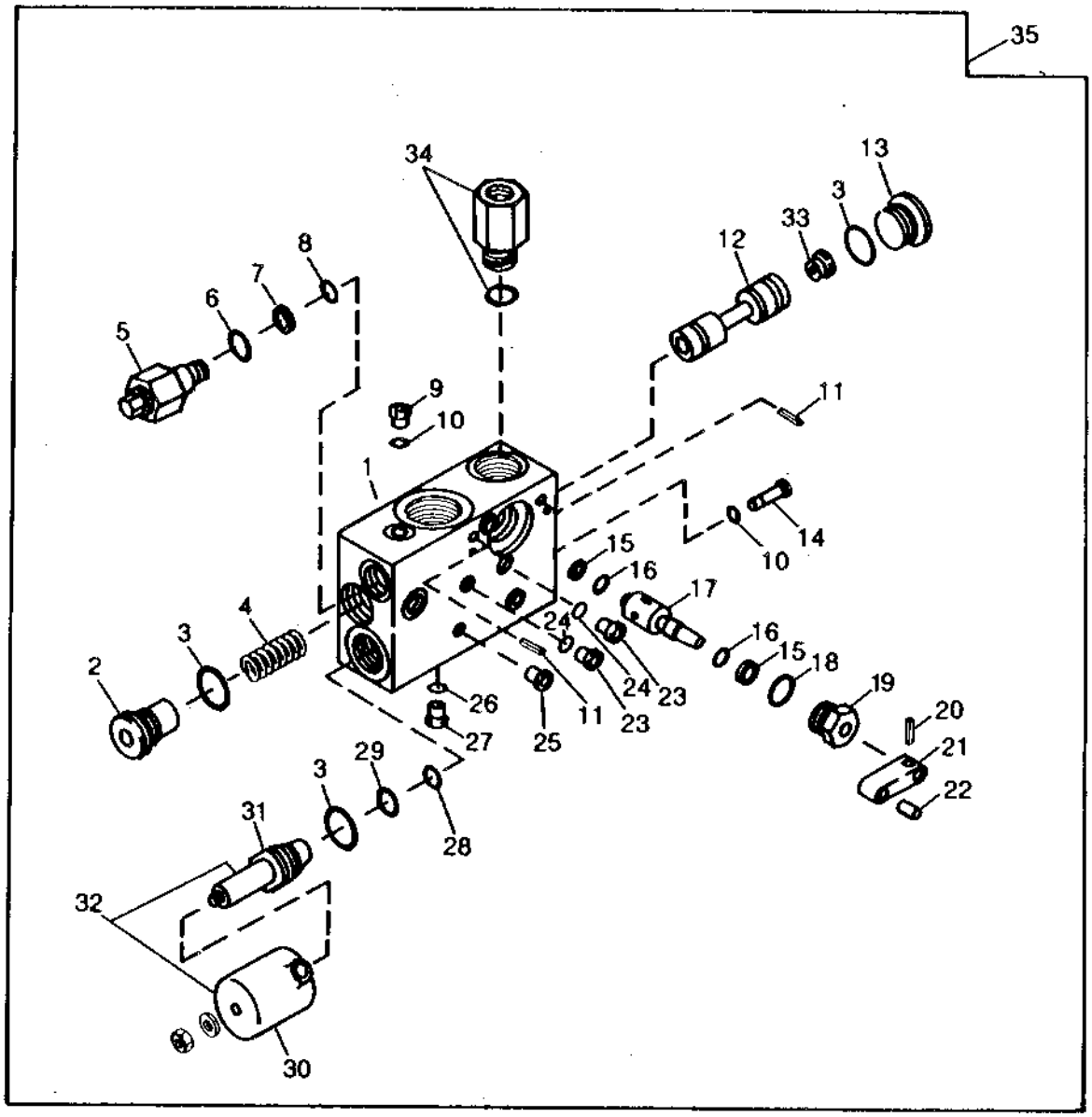

TP24016

SELECTIVE FLOW SOLENOID VALVE

KEY	PART NO.	PART NAME	QTY	SERIAL NO.	410D	510D	REMARKS
1	.....	HOUSING	1		X	X	
2	.....	CAP	1		X	X	
3	U12547	O-RING	3		X	X	
4	.....	SPRING	1		X	X	
5	AT106655	PRESSURE RELIEF VALVE	1		X	X	
6	R26375	O-RING	1		X	X	
7	T106208	BACK-UP RING	1		X	X	
8	T77613	O-RING	1		X	X	
9	.....	PLUG	1		X	X	
10	R30903	O-RING	2		X	X	
11	34H69	SPRING PIN	2		X	X	3/16" X 1/2"
12	.....	SPOOL VALVE	1		X	X	
13	.....	PLUG	1		X	X	
14	.....	ORIFICE	1		X	X	
15	W37172	BACK-UP RING	2		X	X	
16	T77814	O-RING	2		X	X	
17	.....	CONTROL VALVE	1		X	X	
18	R26906	O-RING	1		X	X	
19	T106206	NUT	1		X	X	
20	34H227	SPRING PIN	1		X	X	3/32" X 1/2"
21	T106207	HANDLE	1		X	X	
22	AT106657	SCREW	1		X	X	
23	.....	PLUG	2		X	X	
24	R26287	O-RING	2		X	X	
25	.....	BUSHING	6		X	X	
26	R28782	O-RING	1		X	X	
27	.....	PLUG	1		X	X	
28	H81608	O-RING	1		X	X	
29	Z29304	O-RING	1		X	X	
30	.....	ELECTRICAL COIL	1		X	X	
31	.....	CORE	1		X	X	
32	AT106656	SOLENOID VALVE	1		X	X	
33	.....	ORIFICE	1		X	X	
34	AT117631	CHECK VALVE	1		X	X	CHECK VALVE WITH O-RING
35	AT101899	ELEC-HYD PROPORTIONAL VALVE	1		X	X	

LOW FLOW AUXILIARY SOLENOID VALVE

TP27832 -UN-01JAN94

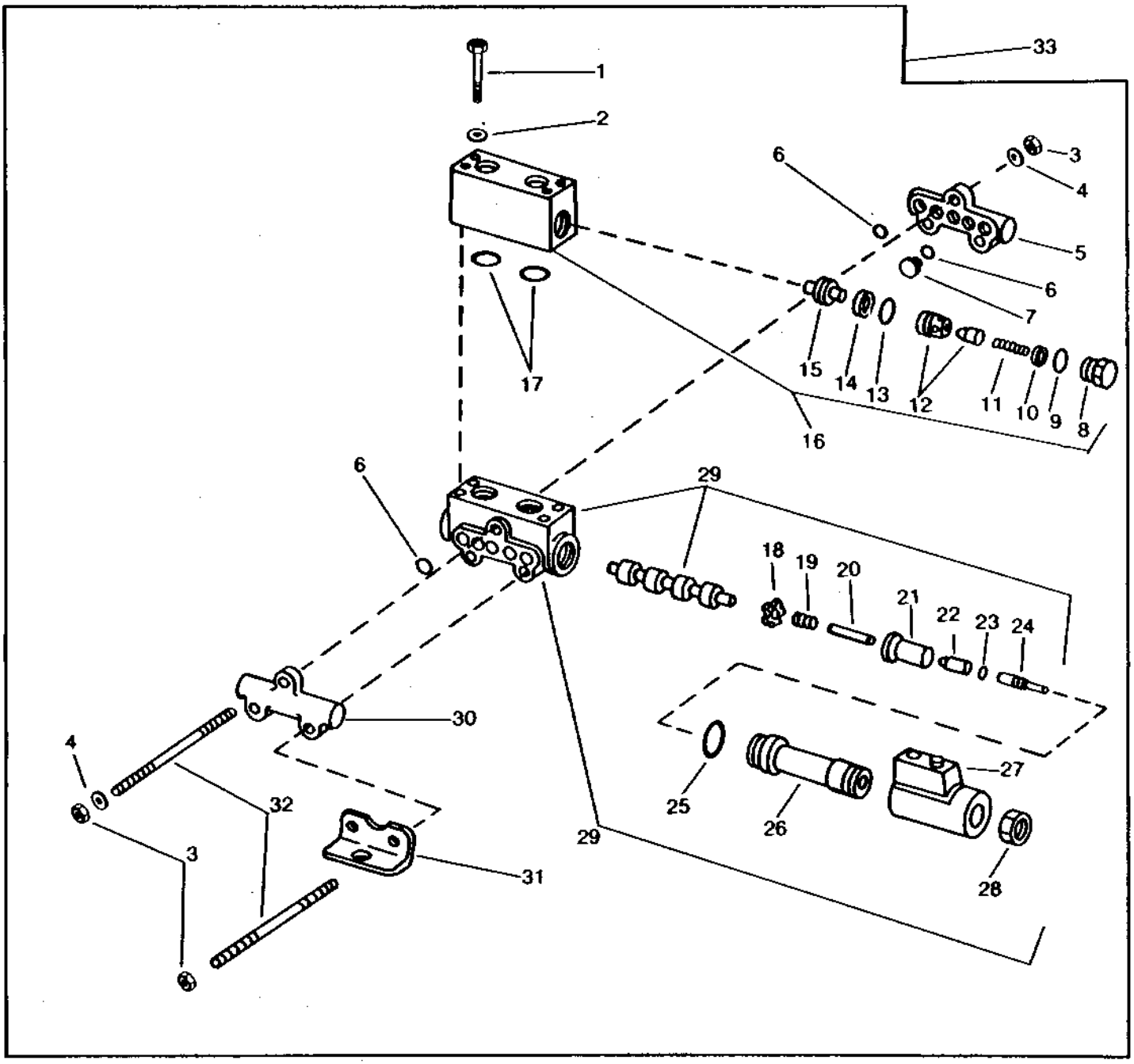

TP27832

LOW FLOW AUXILIARY SOLENOID VALVE

KEY	PART NO.	PART NAME	QTY	SERIAL NO.	410D	510D	REMARKS
1	19H3365	SCREW	4		X	X	1/4" X 2-1/2"
2	12H302	LOCK WASHER	4		X	X	1/4"
3	14H785	NUT	6		X	X	5/16"
4	24H1136	WASHER	2		X	X	11/32" X 11/16" X 0.065"
5	T55278	SECTION	1		X	X	OUTLET
6	A3917R	O-RING	10		X	X	
7	T55277	PLUG	1		X	X	CLOSED CENTER
8	T55273	PLUG	2		X	X	
9	R26906	O-RING	2		X	X	
10	T55275	WASHER	2		X	X	
11	T55274	SPRING	2		X	X	
12	AT53142	MOUNTING PARTS	2		X	X	AND CAGE (MATCHED SET)
13	R27166	O-RING	2		X	X	
14	R41057	BACK-UP RING	2		X	X	
15	AT53143	PISTON	1		X	X	
16	AT53141	HYD ACTUATED CONTROL VALVE	1		X	X	
17	P47889	O-RING	2		X	X	
18	T55287	RETAINER	2		X	X	
19	T55286	SPRING	2		X	X	
20	T55285	PIN	2		X	X	
21	ET14808	TUBE	2		X	X	(SUB FOR T55284)
22	T55283	PLUNGER	2		X	X	
23	R27490	O-RING	2		X	X	
24	T55282	PUSH BUTTON	2		X	X	FLUSH STANDARD
25	U12547	O-RING	2		X	X	
26	.....	LINE	2		X	X	(SUB AT53145 OR AT59593) (AT53146 NO LONGER AVAILABLE)
27	AT61613	ELECTRICAL COIL	2		X	X	
28	T55281	NUT	2		X	X	
29	AT53145	SPOOL VALVE	1		X	X	
30	.....	SECTION	1		X	X	INLET
31	T55280	BRACKET	2		X	X	
32	T55279	STUD	3		X	X	
33	AT59593	HYD ACTUATED CONTROL VALVE	1		X	X	

LOW FLOW AUXILIARY SOLENOID VALVE KIT

TP46379 -UN-19NOV94

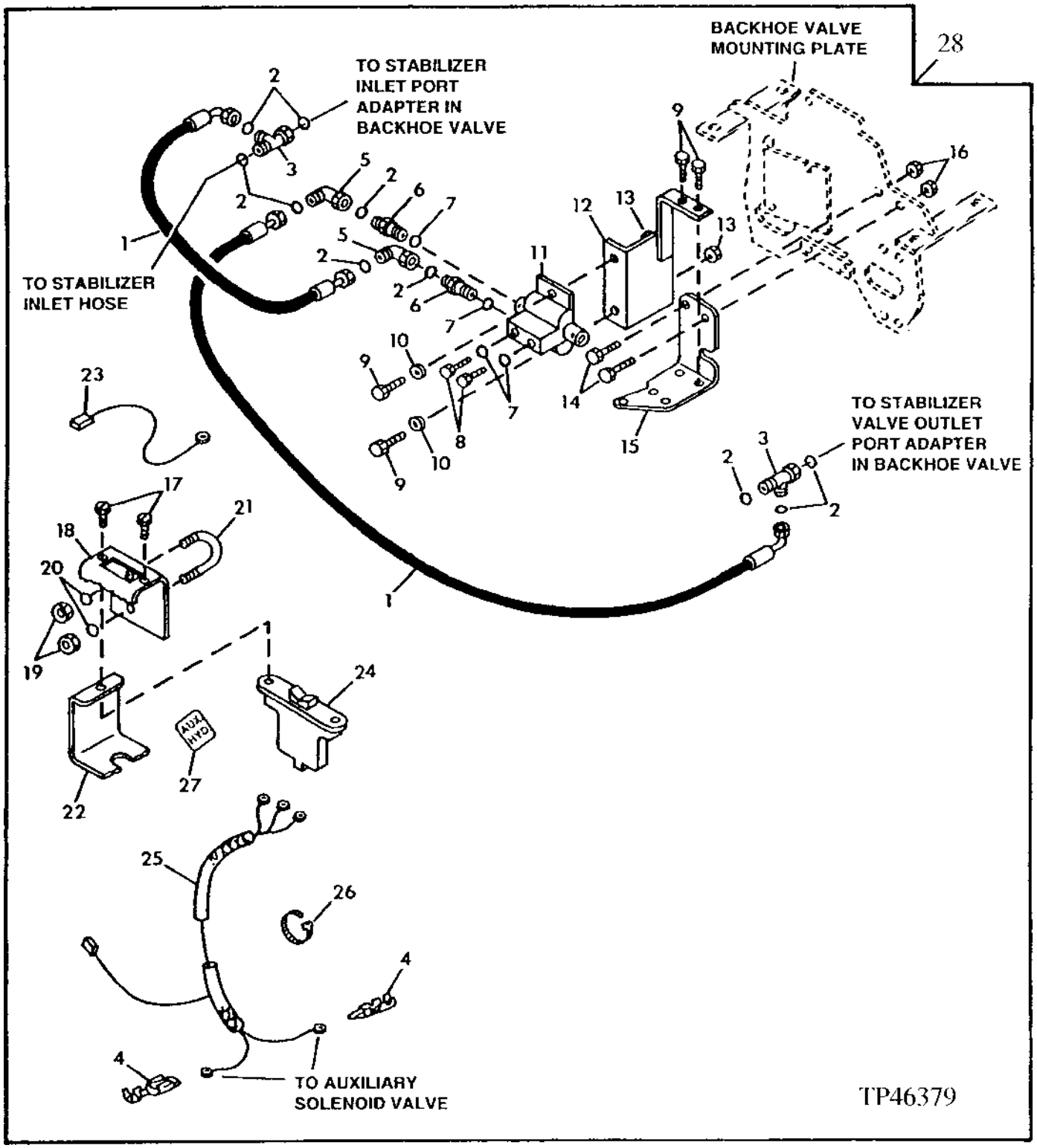

LOW FLOW AUXILIARY SOLENOID VALVE KIT

KEY	PART NO.	PART NAME	QTY	SERIAL NO.	410D	510D	REMARKS
1	AT157224	HYDRAULIC HOSE - FABRICATE	1		X	X	13/16" X 600 MM (23-1/2") X 13/16"
2	T77857	O-RING	10		X	X	
3	38H1031	TEE FITTING	2		X	X	
4	U46662	ELEC. CONNECTOR TERMINAL	2		X	X	
5	38H1095	ELBOW FITTING	1		X	X	
6	38H1173	ADAPTER	1		X	X	
7	R26448	O-RING	4		X	X	
8	R27218	FITTING PLUG	2		X	X	
9	19M7139	CAP SCREW	4		X	X	M8 X 20
10	24M7207	WASHER	2		X	X	8.400 X 24 X 2 MM
11	AT59593	HYD ACTUATED CONTROL VALVE	1		X	X	
12	AT156934	BRACKET	1		X	X	
13	14M7273	NUT	2		X	X	M8
14	19M8011	CAP SCREW	2		X	X	M12 X 30
15	AT167606	BRACKET	1		X	X	(SUB FOR AT156935)
16	14M7275	NUT	2		X	X	M12
17	21H1353	SCREW	2		X	X	0.138" X 3/4"
18	T128180	BRACKET	1		X	X	
19	14H786	NUT	2		X	X	1/4"
20	24H1731	WASHER	2		X	X	17/64" X 5/8" X 0.035"
21	B10937	U-BOLT	1		X	X	
22	T128181	COVER	1		X	X	
23	.....	WIRING LEAD	1		X	X	
24	AT42676	TOGGLE/ROCKER SWITCH	1		X	X	
25	AT75445	WIRING HARNESS	1		X	X	
26	R44302	TIE BAND	1		X	X	
27	T152825	LABEL	1		X	X	(AUX HYD)
28	**AT157102**	**VALVE**	**1**		**X**	**X**	

QUICKIE TUBE KIT

TP50369 -UN-18SEP95

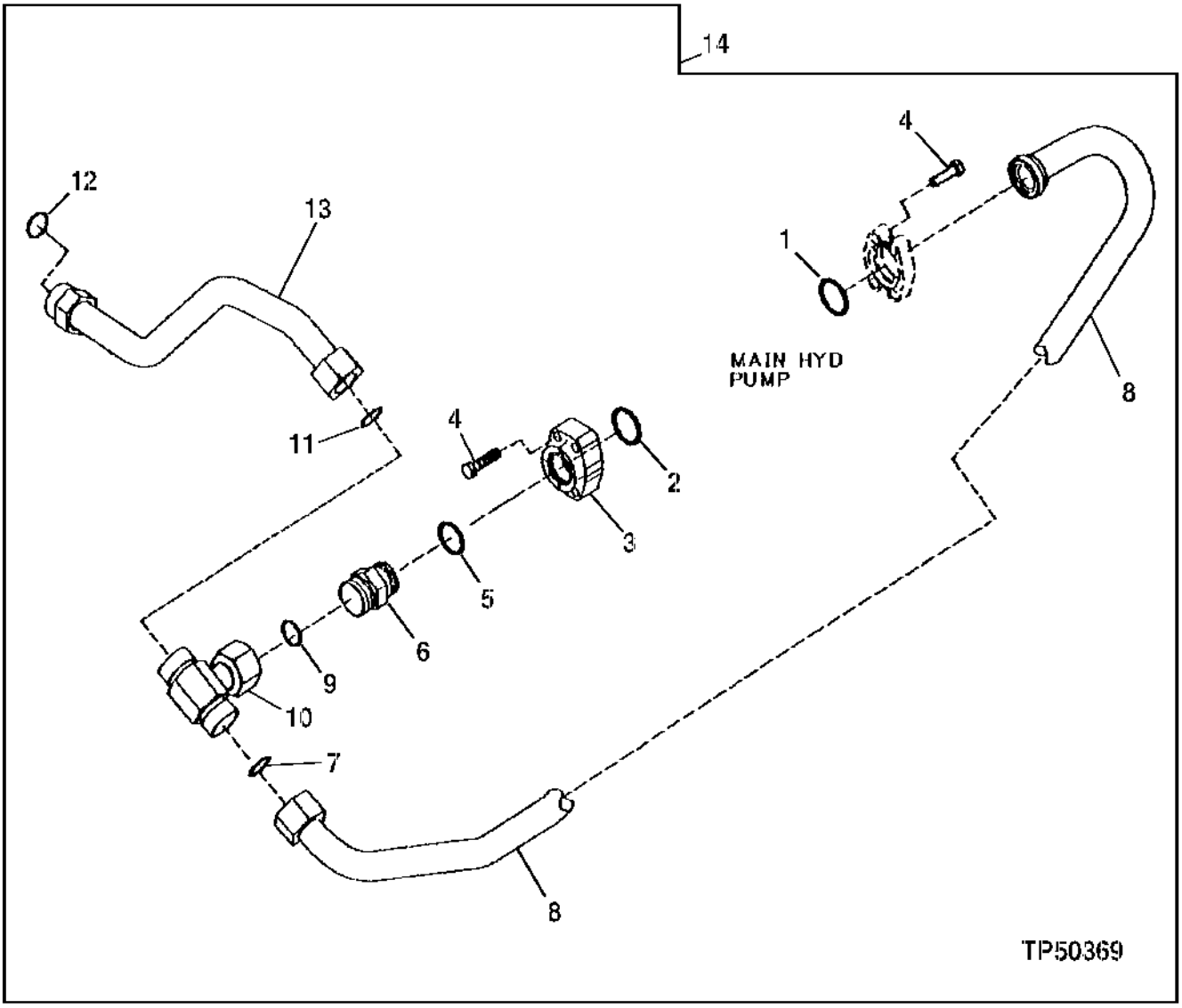

QUICKIE TUBE KIT

KEY	PART NO.	PART NAME	QTY	SERIAL NO.	410D	510D	REMARKS
1	T78313	O-RING	1		X	X	
2	T78313	O-RING	1		X	X	
3	T60983	FLANGE FITTING	1		X	X	
4	19H3124	SCREW	1		X	X	3/8" X 1-1/2"
5	R29936	O-RING	1		X	X	
6	38H1164	ADAPTER	1		X	X	
7	T76938	O-RING	1		X	X	
8	AT172679	OIL LINE	1		X	X	
9	T76938	O-RING	1		X	X	
10	AT172877	TEE FITTING	1		X	X	
11	T76938	O-RING	1		X	X	
12	T76938	O-RING	1		X	X	
13	AT172678	OIL LINE	1		X	X	
14	.....	KIT	1		X	X	(AT172677 NO LONGER AVAILABLE)
15	.....	CLAMP	2		X	X	RE USE FROM RIGHT SIDE OF MAIN PUMP
16	.....	CAP SCREW	4		X	X	RE USE FROM RIGHT SIDE OF MAIN PUMP

LOADER BUCKET
.76 CUBIC METER (1.00 CUBIC YARD)

TP44153 -UN-01JAN94

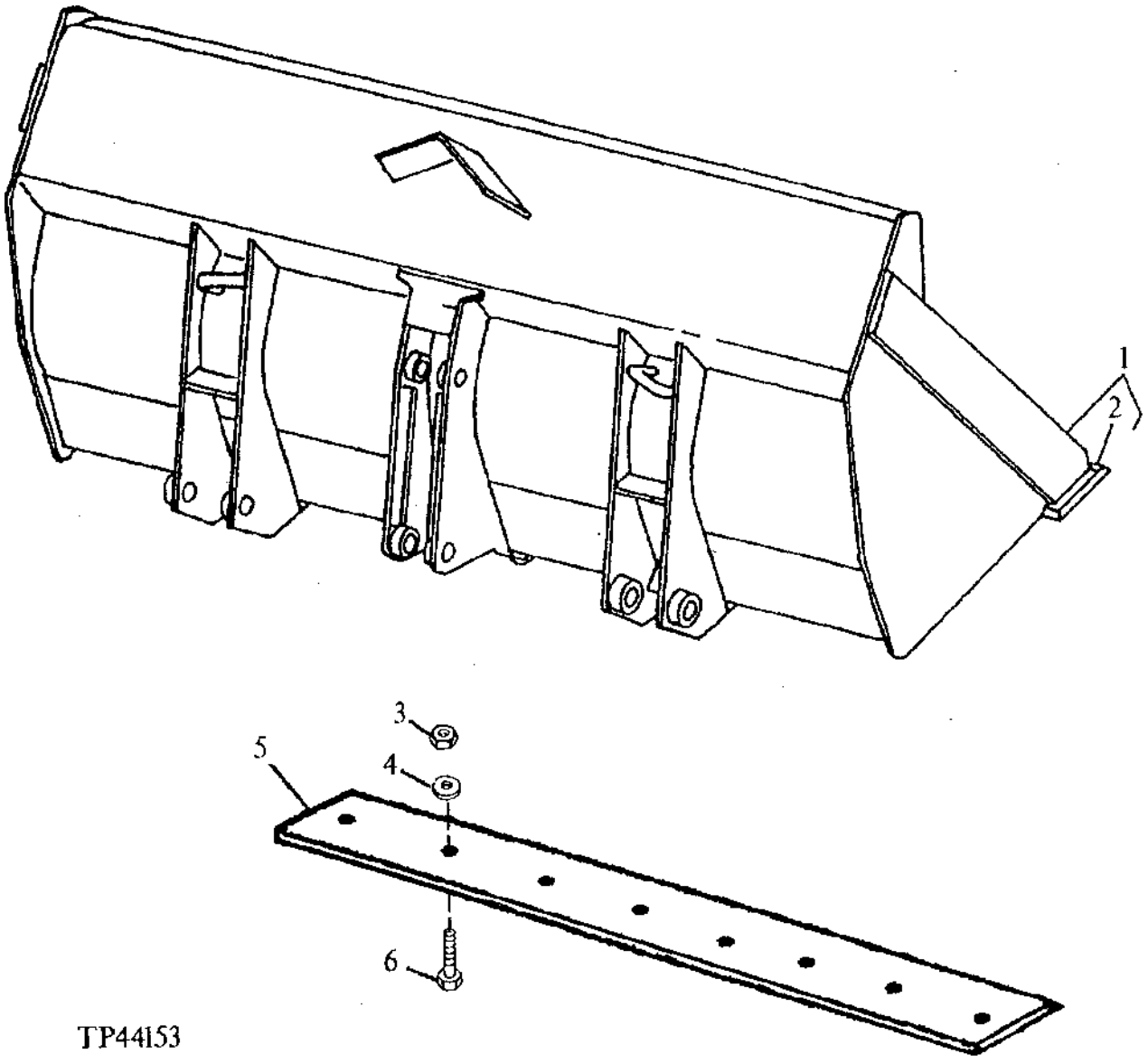

LOADER BUCKET
.76 CUBIC METER (1.00 CUBIC YARD)

KEY	PART NO.	PART NAME	QTY	SERIAL NO.	410D	510D	REMARKS
1	.....	LOADER BUCKET	1		X	X	1.00 CUBIC METER(1.25 CUBIC YARD) LONG LIP (AT159220 NO LONGER AVAILABLE) (SUB FOR AT162198)
	.....	LOADER BUCKET	1			X	1.15 CUBIC METER (1.50 CUBIC YARD) (AT170889 NO LONGER AVAILABLE) (SUB FOR AT159219)
2	T118977	CUTTING EDGE	1		X	X	(1.25 CUBIC YARD)
	T142888	CUTTING EDGE	1		X	X	(1.50 CUBIC YARD)
3	14H1039	NUT	8		X	X	5/8"
4	24M7241	WASHER	8		X	X	17 X 34 X 4 MM
5	T84194	CUTTING EDGE	1		X	X	(AUXILIARY) (1.25 CUBIC YARD) 3/4 THICK X 8 INCH DBF X 92 3/8 INCH
	T126774	"DURA-MAX" CUTTING EDGE	1		X	X	(AUXILIARY) (1.50 CUBIC YARDS) 5/8 THICK X 8 INCH DBF X 97 INCH
6	09H1764	BOLT	8		X	X	5/8" X 2-1/2"

LOADER BUCKET
.76 CUBIC METER (1.00 CUBIC YARD)
1.00 CUBIC METER (1.25 CUBIC YARD) LONG LIP
1.09 CUBIC METER (1.42 CUBIC YARD)
1.15 CUBIC METER (1.50 CUBIC YARD)

TP42258 -UN-01JAN94

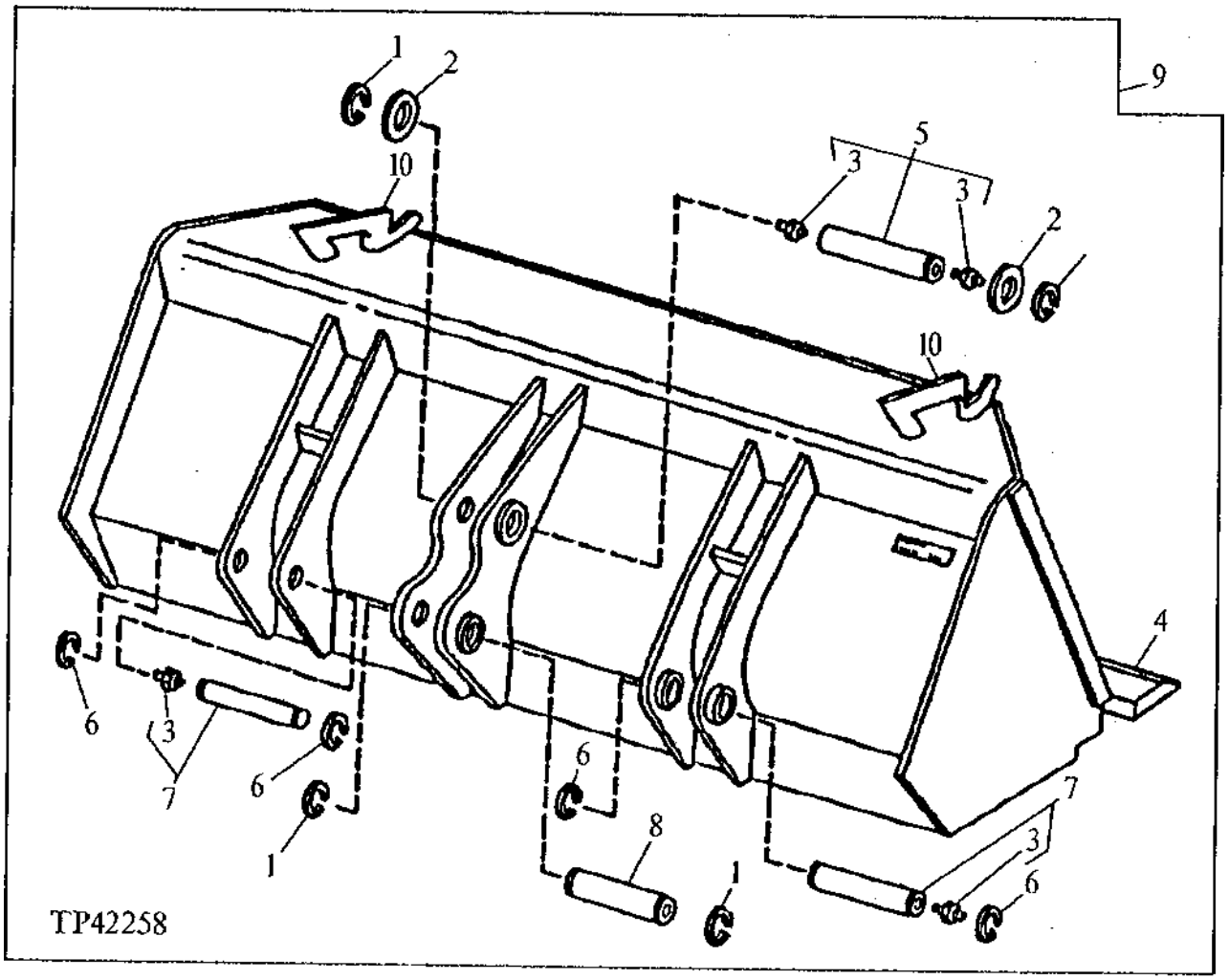

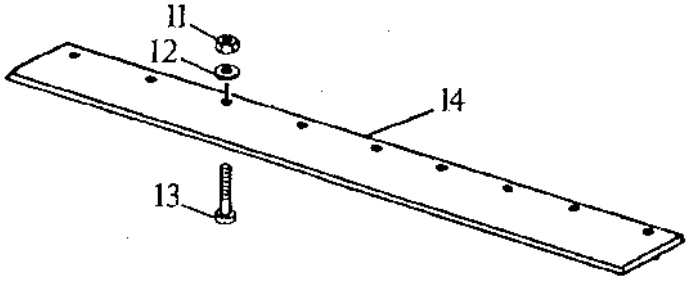

LOADER BUCKET
.76 CUBIC METER (1.00 CUBIC YARD)
1.00 CUBIC METER (1.25 CUBIC YARD) LONG LIP
1.09 CUBIC METER (1.42 CUBIC YARD)
1.15 CUBIC METER (1.50 CUBIC YARD)

KEY	PART NO.	PART NAME	QTY	SERIAL NO.	410D	510D	REMARKS
1	40M7180	SNAP RING	4		X	X	45 X 2.5 MM
2	24H1571	WASHER	2		X	X	1-25/32" X 2-7/8" X 0.120"
3	T162396	LUBRICATION FITTING	4		X	X	1/8", (SUB FOR JD7798)
4	T118768	CUTTING EDGE	1		X	X	(1.09 CUBIC YARD) AND (1.42 CUBIC YARD)
	T118977	CUTTING EDGE	1		X	X	(1.25 CUBIC YARD)
	PBT69309	"DURA-MAX" CUTTING EDGE	1			X	(1.50 CUBIC YARD)
	T142888	CUTTING EDGE	1			X	
5	AT86422	PIN FASTENER	1		X	X	
6	40M7179	SNAP RING	4		X	X	40 X 2.5 MM
7	AT86427	PIN FASTENER	2		X	X	(SUB FOR AT150666)
8	T100188	PIN FASTENER	1		X	X	
9	.....	LOADER BUCKET	1		X		(AT163318 NO LONGER AVAILABLE) .76 CUBIC METER (1.00 CUBIC YARD) (MARKED AT159221) (SUB FOR AT101138) (SUB AT166494)
	.....	LOADER BUCKET	1		X	X	(AT163316 NO LONGER AVAILABLE) 1.00 CUBIC METER (1.25 CUBIC YARD) LONG LIP (INCLUDES (2) U11773) (SUB FOR AT101137) (SUB AT159220)
	.....	LOADER BUCKET	1		X	X	(AT163320 NO LONGER AVAILABLE) 1 CUBIC METER (1.3 CUBIC YARD) (SUB FOR AT101136)
	.....	LOADER BUCKET	1	-787390		X	(AT148392 NO LONGER AVAILABLE) 1.15 CUBIC METER (1.50 CUBIC YARD) (SUB FOR AT148501) (SUB AT170889)
	.....	LOADER BUCKET	1	787391-		X	(AT163315 NO LONGER AVAILABLE) 1.15 CUBIC METER (1.50 CUBIC YARD) (MARKED AT170889) (SUB FOR AT162446) (SUB AT170889)
10	U11773	HOOK	2		X	X	1.00 CUBIC METER (1.25 CUBIC YARD) LONG LIP
11	14H1039	NUT	8		X	X	5/8"
12	24M7241	WASHER	8		X	X	
13	09H1759	BOLT	8		X	X	5/8" X 2-1/4"
	09H1764	BOLT	8		X	X	5/8" X 2-1/2"
	09H1757	BOLT	8		X	X	5/8" X 2-3/4"
14	T126774	"DURA-MAX" CUTTING EDGE	1		X	X	(AUXILIARY) 5/8 THICK X 8 INCH DBF X 97 INCH, (ALSO ORDER (8) 14H1039, (8) 24M7241 AND (8) 09H1759 OR (8) 09H1764)
	T84194	CUTTING EDGE	1		X	X	(AUXILIARY) 3/4 THICK X 8 INCH DBF X 92 3/8 INCH, (ALSO ORDER (8) 14H1039, (8) 24M7241 AND (8) 09H1759 OR (8) 09H1764 OR (8) 09H1757)

LOADER BUCKET
.76 CUBIC METER (1.00 CUBIC YARD)
1.09 CUBIC METER (1.43 CUBIC YARD)

TP45482 -UN-01JAN94

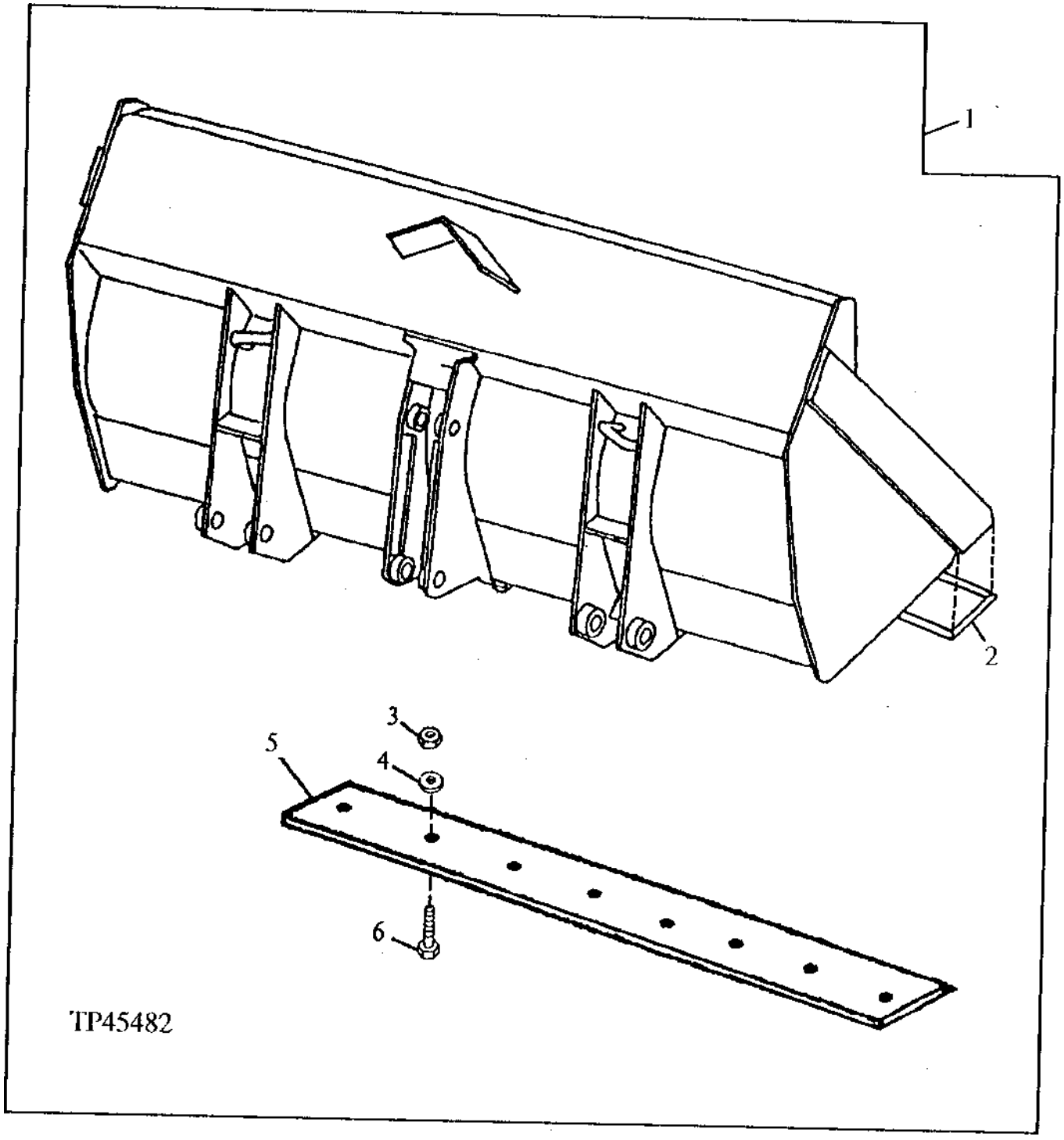

LOADER BUCKET
.76 CUBIC METER (1.00 CUBIC YARD)
1.09 CUBIC METER (1.43 CUBIC YARD)

KEY	PART NO.	PART NAME	QTY	SERIAL NO.	410D	510D	REMARKS
1	**AT166494**	**LOADER BUCKET**	**1**		**X**	**X**	**(SUB FOR AT163314 AND AT163318)**
	.....	LOADER BUCKET	1		X	X	(AT168637 NO LONGER AVAILABLE) (SUB FOR AT163320)
2	T150487	CUTTING EDGE	1		X	X	(USE WITH AT166494)
	T118768	CUTTING EDGE	1		X	X	(USE WITH AT168637)
3	14H1039	NUT	AR		X	X	5/8"
4	24M7241	WASHER	AR		X	X	17 X 34 X 4 MM
5	T150517	CUTTING EDGE	1		X	X	(AUXILIARY) 3/4 THICK X 8 INCH DBF X 86 INCH, (USE WITH AT166494) (ALSO ORDER (7) 14H1039, (7) 24M7241 AND (7) 09H1764)
	T84194	CUTTING EDGE	1		X	X	(AUXILIARY) 3/4 THICK X 8 INCH DBF X 92 38 INCH, (USE WITH AT168637) (ALSO ORDER (8) 14H1039, (8) 24M7241 AND (8) 09H1764)
6	09H1764	BOLT	AR		X	X	5/8" X 2-1/2"

LOADER BUCKET PINS

TP9940 -UN-01JAN94

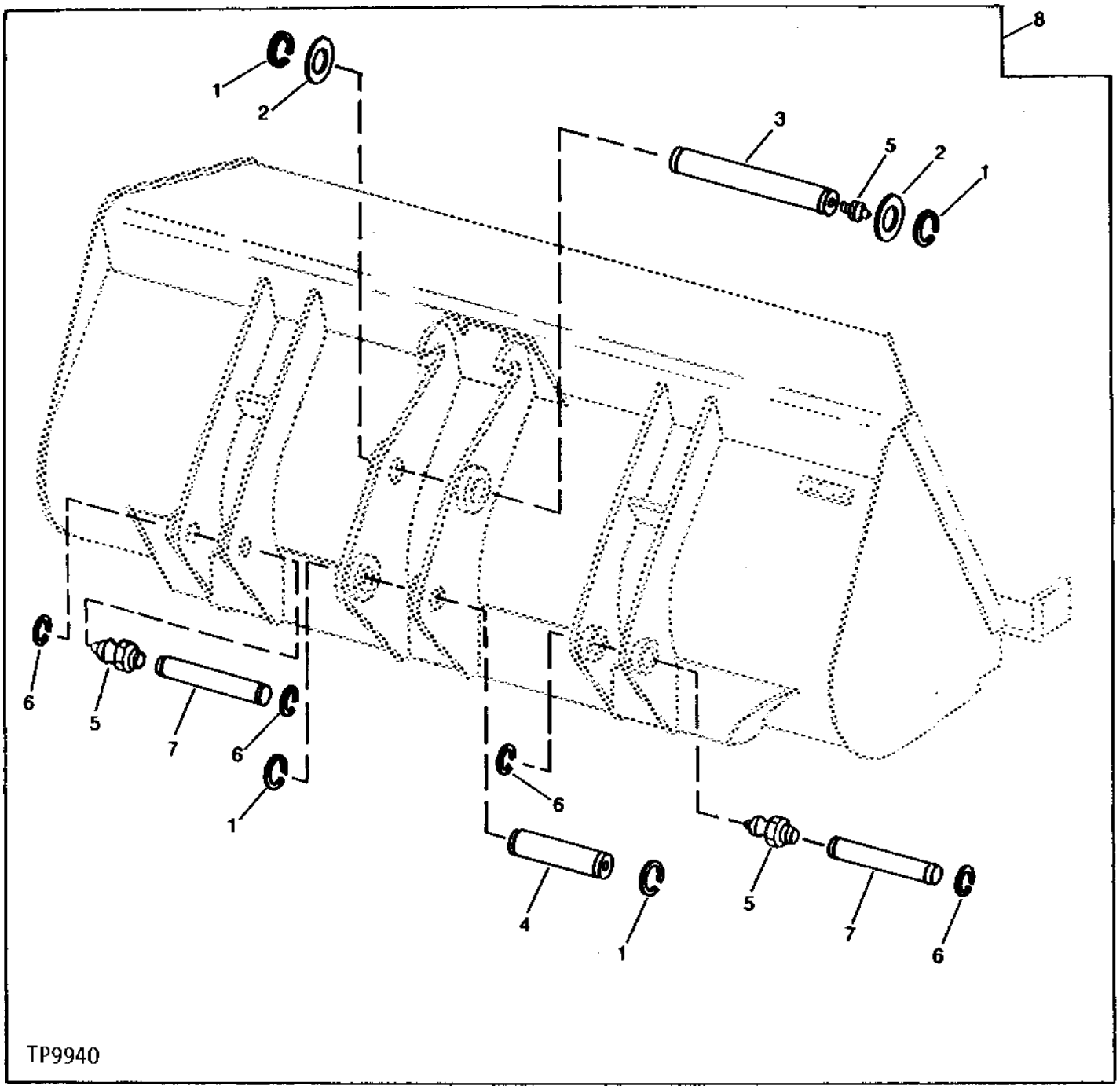

LOADER BUCKET PINS

KEY	PART NO.	PART NAME	QTY	SERIAL NO.	410D	510D	REMARKS
1	40M7180	SNAP RING	4		X	X	45 X 2.5 MM
2	24H1571	WASHER	2		X	X	1-25/32" X 2-7/8" X 0.120", 1-25/32" X 2-7/8" X 0.120"
3	AT86422	PIN FASTENER	1		X	X	(WITH GREASE FITTING)
4	T100188	PIN FASTENER	1		X	X	
5	T162396	LUBRICATION FITTING	4		X	X	1/8", (SUB FOR JD7798)
6	40M7179	SNAP RING	4		X	X	40 X 2.5 MM
7	AT86427	PIN FASTENER	2		X	X	(WITH GREASE FITTING) (SUB FOR AT150666)
8	.....	MOUNTING PARTS	1		X	X	(AT106673 NO LONGER AVAILABLE)

MULTI-PURPOSE BUCKET,92 INCH
410D,510D

TP57831 -UN-29JAN98

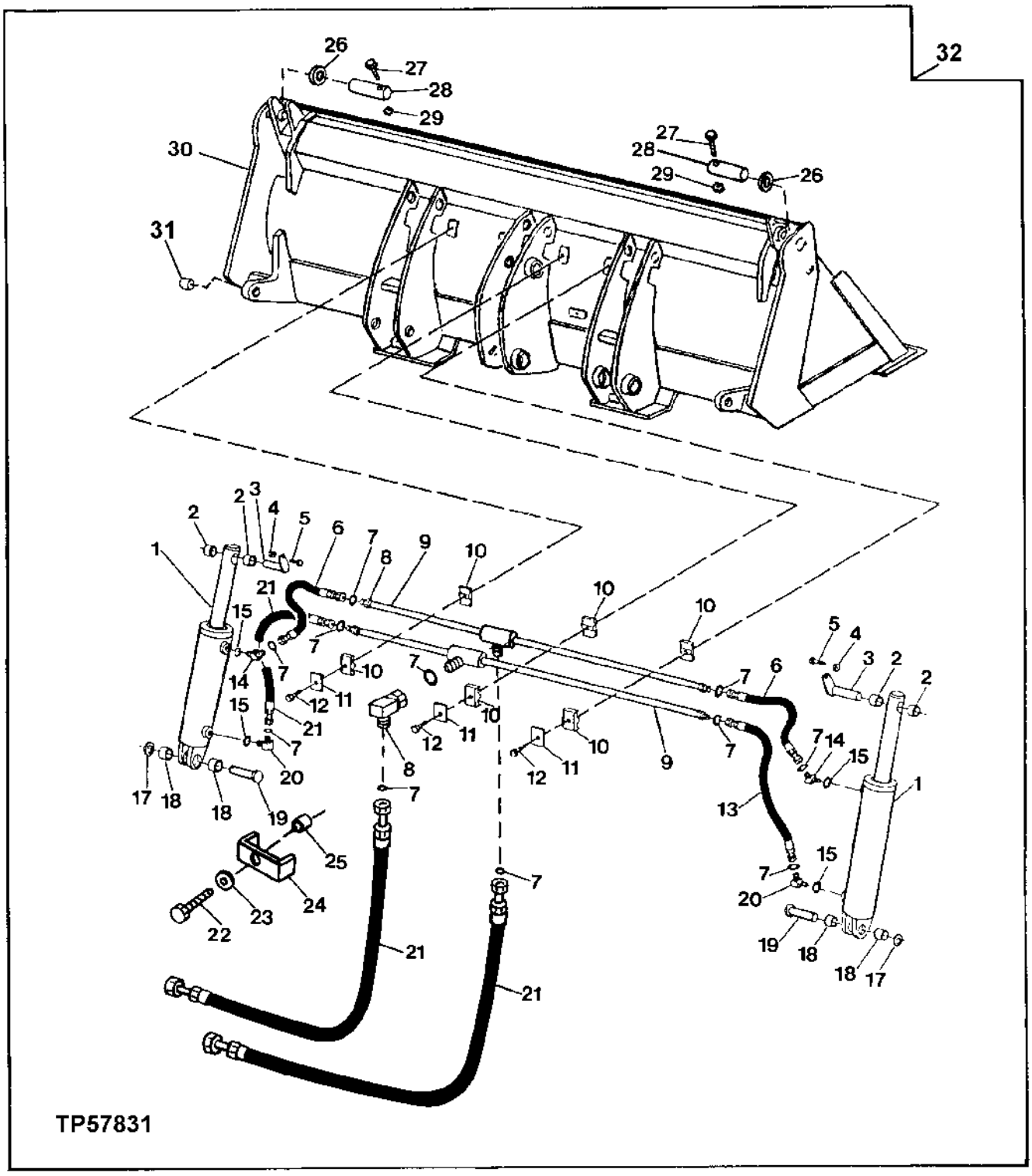

MULTI-PURPOSE BUCKET,92 INCH
410D,510D

KEY	PART NO.	PART NAME	QTY	SERIAL NO.	410D	510D	REMARKS
1	.....	CYLINDER	2		X	X	(AT190880 NO LONGER AVAILABLE) (SUB FOR AT142578) (SUB AH210737, T191318 AND (3) 24H1138)
2	T128532	BUSHING	4		X	X	1.035" X 1.370" X 3/4", (USE WITH AT142578)
	A24073	BUSHING	4		X	X	1" X 1-1/4" X 0.780", (USE WITH AT190880)
3	AT190900	U-JOINT LOCK PIN	2		X	X	(SUB FOR AT142584)
4	T54568	LOCK NUT	2		X	X	3/8"
5	19H2676	CAP SCREW	2		X	X	3/8" X 1"
6	AT142604	HYDRAULIC HOSE - FABRICATE	1		X	X	13/16" X 19" X 13/16", RIGHT
	AT156437	HYDRAULIC HOSE - FABRICATE	1		X	X	13/16" X 17" X 13/16", LEFT
7	T77857	O-RING	13		X	X	0.489" X 0.070"
8	38H1095	ELBOW FITTING	2		X	X	
9	AT150755	OIL LINE	2		X	X	
10	H135156	CLAMP	6		X	X	
11	H121168	PLATE	3		X	X	
12	19H2661	CAP SCREW	3		X	X	5/16" X 1-3/8"
13	AT150828	HYDRAULIC HOSE - FABRICATE	1		X	X	RIGHT, (SUB FOR AT142605, THIS APPLICATION)
14	38H1521	ELBOW FITTING	2		X	X	
15	R26448	O-RING	4		X	X	0.468" X 5/64"
16	AT142605	HYDRAULIC HOSE - FABRICATE	1		X	X	13/16" X 26" X 13/16"
17	24H1138	WASHER	2		X	X	1-1/16" X 2" X 0.134"
18	T128531	BUSHING	4		X	X	1.035" X 1.370" X 1/2", (USE WITH AT142578)
	A24073	BUSHING	4		X	X	1" X 1-1/4" X 0.780", (USE WITH AT190880)
19	.....	PIN	2		X	X	(T185041 NO LONGER AVAILBLE) (SUB FOR T128536) (SUB (2) T191318 AND (6) 24H1138)
20	38H1314	ELBOW FITTING	2		X	X	
21	AT142105	HYDRAULIC HOSE - FABRICATE	2		X	X	13/16" X 46" X 13/16"
22	19H1800	CAP SCREW	1		X	X	3/8" X 1-1/2"
23	24H1304	WASHER	1		X	X	13/32" X 23/32" X 0.120"
24	U40398	CLAMP	1		X	X	
25	28H1697	SPACER	1		X	X	0.493" X 0.675" X 3/4"
26	24H1554	WASHER	2		X	X	1-5/8" X 3-1/2" X 0.180"
27	19H2106	CAP SCREW	2		X	X	7/16" X 2-3/4"
28	T167059	PIN	2		X	X	(SUB FOR T128535)
29	K40006	LOCK NUT	2		X	X	7/16"
30	.....	MOLDBOARD	1		X	X	(AT150827 NO LONGER AVAILABLE)
31	T128534	BUSHING	1		X	X	
32	**AT173734**	**MULTI-PURPOSE BUCKET**	**1**		**X**	**X**	**INCLUDES T139806 LABEL AND R44302 BAND, (MARKED AT150454)**

THIRD FUNCTION HYDRAULICS
(MULTI-PURPOSE BUCKET)
(GANNON)

TP40313 -UN-01JAN94

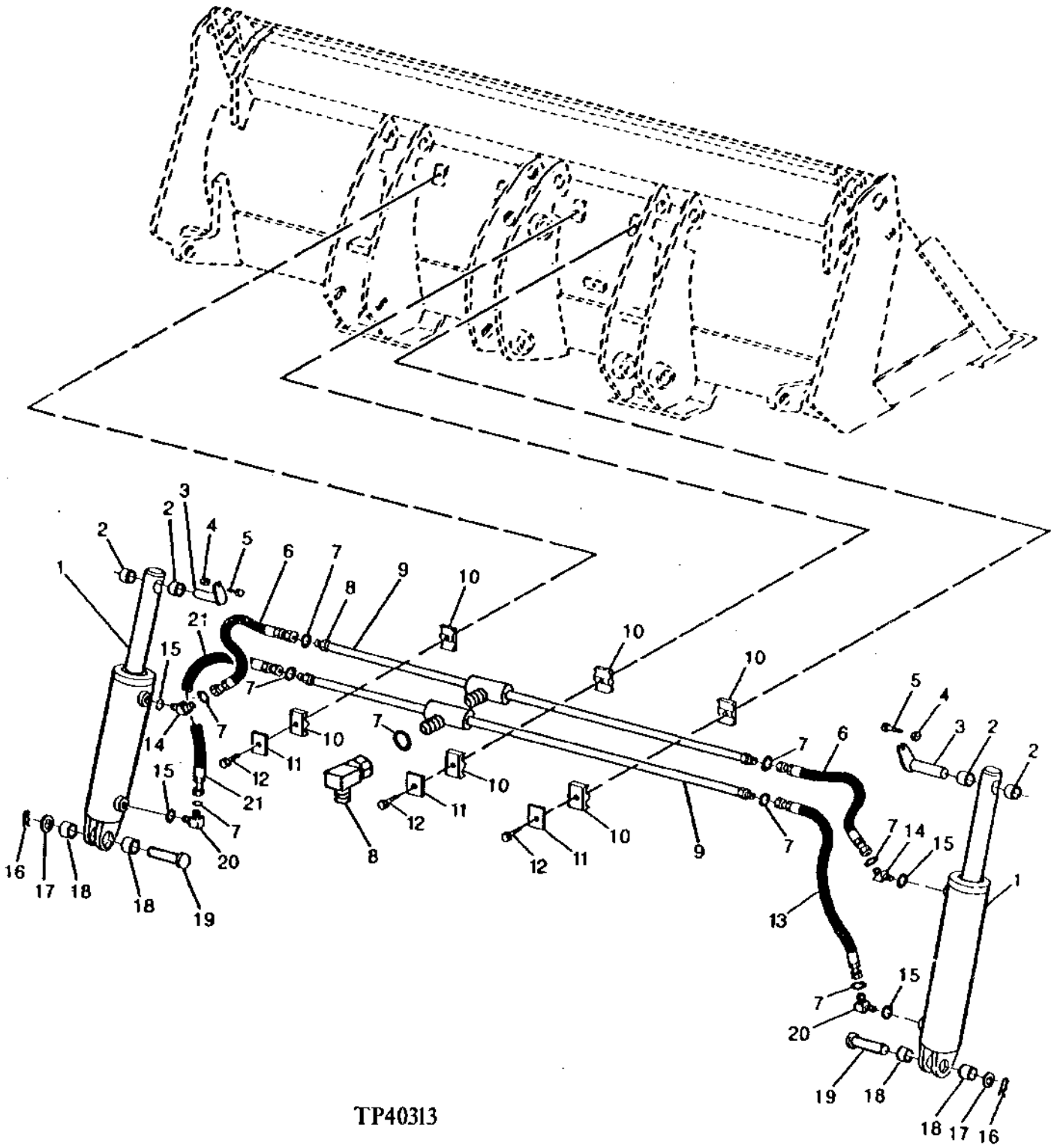

THIRD FUNCTION HYDRAULICS
(MULTI-PURPOSE BUCKET)
(GANNON)

KEY	PART NO.	PART NAME	QTY	SERIAL NO.	410D	510D	REMARKS
1	.....	CYLINDER	2		X	X	(AT190880 NO LONGER AVAILABLE) (SUB FOR AT142578) (SUB AH210737, T191318 AND (3) 24H1138)
	A24073	BUSHING	8		X	X	(USE WITH AT190880)
2	T128532	BUSHING	4		X	X	
3	AT190900	U-JOINT LOCK PIN	2		X	X	(SUB FOR AT142584)
4	T54568	LOCK NUT	2		X	X	
5	19H2676	CAP SCREW	2		X	X	3/8" X 1"
6	AT142604	HYDRAULIC HOSE - FABRICATE	1		X	X	RIGHT, (SUB FOR AT142605, THIS APPLICATION)
	AT156437	HYDRAULIC HOSE - FABRICATE	1		X	X	LEFT
7	T77857	O-RING	9		X	X	
8	38H1095	ELBOW FITTING	2		X	X	
9	AT150755	OIL LINE	2		X	X	
10	H135156	CLAMP	6		X	X	
11	H121168	PLATE	3		X	X	
12	19H2661	CAP SCREW	3		X	X	5/16" X 1-3/8"
13	AT150828	HYDRAULIC HOSE - FABRICATE	1		X	X	(RIGHT)
14	38H1521	ELBOW FITTING	2		X	X	
15	R26448	O-RING	4		X	X	
16	11M7030	COTTER PIN	2		X	X	5 X 40 MM
17	24H1138	WASHER	2		X	X	1-1/16" X 2" X 0.134"
18	T128531	BUSHING	4		X	X	
19	.....	PIN	2		X	X	(T185041 NO LONGER AVAILBLE) (SUB FOR T128536) (SUB (2) T191318 AND (6) 24H1138)
20	38H1314	ELBOW FITTING	2		X	X	
21	AT142605	HYDRAULIC HOSE - FABRICATE	1		X	X	(LEFT) (SUB FOR AT142604, THIS APPLICATION)

MULTI-PURPOSE BUCKET
(GANNON)
2337 MM (92")

TP41278 -UN-16AUG96

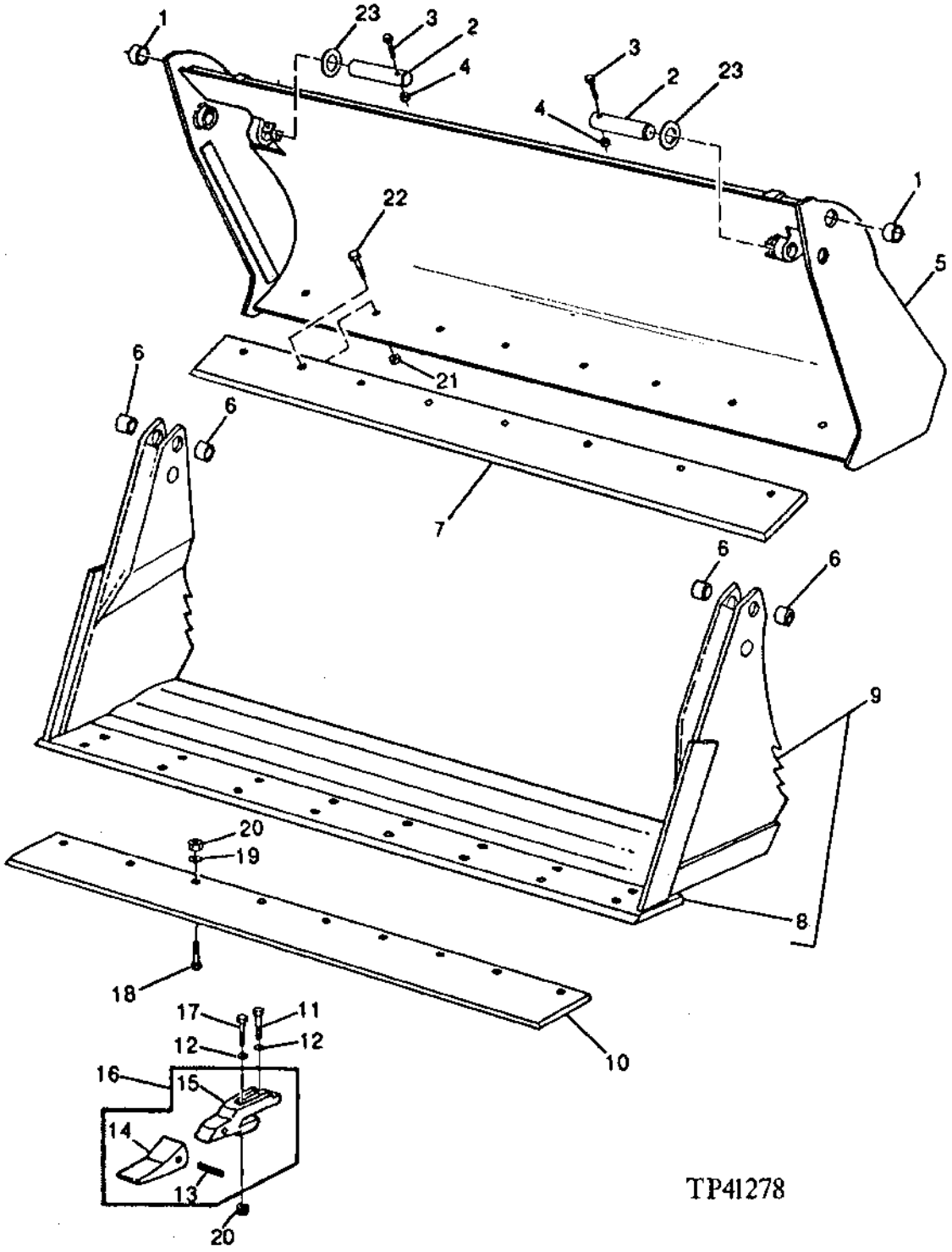

MULTI-PURPOSE BUCKET
(GANNON)
2337 MM (92")

KEY	PART NO.	PART NAME	QTY	SERIAL NO.	410D	510D	REMARKS
1	T128534	BUSHING	2		X	X	
2	T167059	PIN	2		X	X	(SUB FOR T128535)
3	19H2106	CAP SCREW	2		X	X	7/16" X 2-3/4"
4	K40006	LOCK NUT	2		X	X	
5	.....	MOLDBOARD	1		X	X	(AT150827 NO LONGER AVAILABLE) (INCLUDES T143802)
6	T128533	BUSHING	4		X	X	
7	T143802	CUTTING EDGE	1		X	X	
	T126774	"DURA-MAX" CUTTING EDGE	1		X	X	
8	T128538	CUTTING EDGE	1		X	X	
	T143679	CUTTING EDGE	1		X	X	
9	.....	HINGE	1		X	X	(AT142603 NO LONGER AVAILABLE) (INCLUDES T143679)
10	T126774	"DURA-MAX" CUTTING EDGE	1		X	X	(AUXILIARY) 5/8 THICK X 8 INCH DBF X 97 INCH, (ALSO ORDER (8) 14H1039, (8) 24M7241 AND (8) 09H1759)
	T84194	CUTTING EDGE	1		X	X	(AUXILIARY) 3/4 THICK X 8 INCH DBF X 92 3/8 INCH, (ALSO ORDER (8) 14H1039, (8) 24M7241 AND (8) 09H1764)
11	19H2599	CAP SCREW	AR		X	X	5/8" X 2-1/2"
12	24H1367	WASHER	AR		X	X	21/32" X 1-1/4" X 1/4"
13	T40910	PIN	AR		X	X	
14	T230SP	TOOTH	AR		X	X	(SUB FOR T54317)
15	T128889	SHANK	AR		X	X	
16	.....	TOOTH	8		X	X	(AT142895 NO LONGER AVAILABLE) (SUB T40910, T230SP, T12889) (ALSO ORDER 19H2599, 19H2641, (3) 24H1367 AND (2) K40015)
17	19H2641	CAP SCREW	AR		X	X	5/8" X 3-1/4"
18	09H1759	BOLT	AR		X	X	5/8" X 2-1/4"
	09H1764	BOLT	AR		X	X	5/8" X 2-1/2"
19	24M7241	WASHER	AR		X	X	17 X 34 X 4 MM
20	14H1039	NUT	AR		X	X	
21	K40015	LOCK NUT	8		X	X	
22	10H1039	BOLT	8		X	X	5/8" X 1-3/4"
23	24H1554	WASHER	2		X	X	1-5/8" X 3-1/2" X 0.180"

BUCKET LEVELING AND RETURN-TO-DIG LINKAGE
(SERIAL NO. -801199)

TP45443 -UN-01JAN94

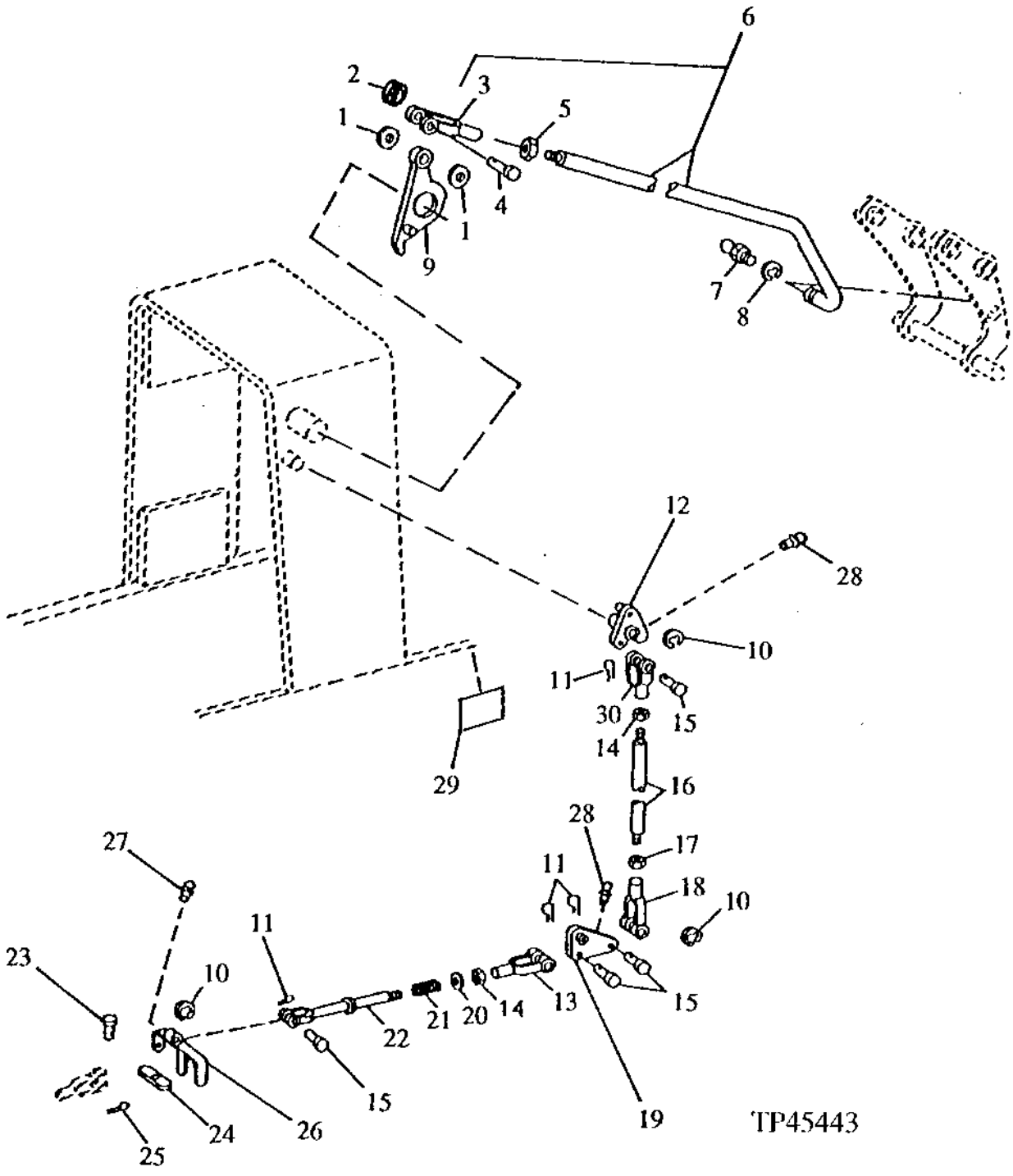

BUCKET LEVELING AND RETURN-TO-DIG LINKAGE
(SERIAL NO. -801199)

KEY	PART NO.	PART NAME	QTY	SERIAL NO.	410D	510D	REMARKS
1	T146757	WASHER	2		X	X	(SUB FOR (2) M46935)
2	T148182	RING	1		X	X	
3	T21158	YOKE	1		X	X	
4	R72855	PIN FASTENER	1		X	X	
5	14H856	NUT	2		X	X	1/2"
6	AT151479	TUBE	1		X	X	(INCLUDES T162396)
7	T162396	LUBRICATION FITTING	1		X	X	(SUB FOR JD7798)
8	R73380	SNAP RING	1		X	X	
9	AT156332	ACTUATOR	1		X	X	ON MAST PIN, (SUB FOR AT141451)
10	F2863R	SNAP RING	3		X	X	
11	R46528	SPRING LOCKING PIN	4		X	X	
12	.....	BELLCRANK	1	-799379	X	X	(AT156333 NO LONGER AVAILABLE) (SUB AT169344) (ALSO ORDER JD7844 AND T152845) (SUB FOR AT149813)
	AT169344	BELLCRANK	1	799380-	X	X	
	U12857	BUSHING	1		X	X	
13	M80373	YOKE	1		X	X	(USE WITH AT150353)
	T141964	YOKE	1		X	X	(USE WITH AT151906)
14	14H774	NUT	1		X	X	3/8"
15	R65563	PIN FASTENER	4		X	X	
16	T140357	STUD	1		X	X	
17	14H913	NUT	1		X	X	3/8", (L.H.)
18	T140328	YOKE	1		X	X	(L.H.)
19	.....	BELLCRANK	1	-799379	X	X	(AT141108 NO LONGER AVAILABLE) (SUB AT169343) (ALSO ORDER JD7844, JD7846 AND T152845)
	AT169343	BELLCRANK	1	799380-	X	X	
	U12857	BUSHING	1		X	X	
20	24H1308	WASHER	1		X	X	13/32" X 1" X 0.134"
21	U12595	SPRING	1		X	X	
22	.....	ROD	1		X	X	(AT150353 - NO LONGER AVAILABLE) (SUB AT151906 AND T141964)
	AT151906	YOKE	1		X	X	(SUB FOR AT150353, ALSO ORDER T141964)
23	45M7036	PIN FASTENER	1		X	X	6 X 30 MM
24	T132842	STRAP	1		X	X	(SUB FOR T76771, THIS APPLICATION)
25	11M7077	COTTER PIN	1		X	X	1.600 X 25 MM
26	.....	BELLCRANK	1	-799379	X	X	(AT145784 NO LONGER AVAILABLE) (SUB AT169345) (ALSO ORDER JD7846 AND T152845)
	AT169345	BELLCRANK	1	799380-	X	X	
	U12857	BUSHING	1		X	X	
27	JD7844	LUBRICATION FITTING	2	799380-	X	X	
28	JD7846	LUBRICATION FITTING	1	799380-	X	X	
29	T152845	LABEL	1	799380-	X	X	
30	M80373	YOKE	1		X	X	

BUCKET LEVELING AND RETURN-TO-DIG LINKAGE
(SERIAL NO. 801200-)

TP48896 -UN-21MAR96

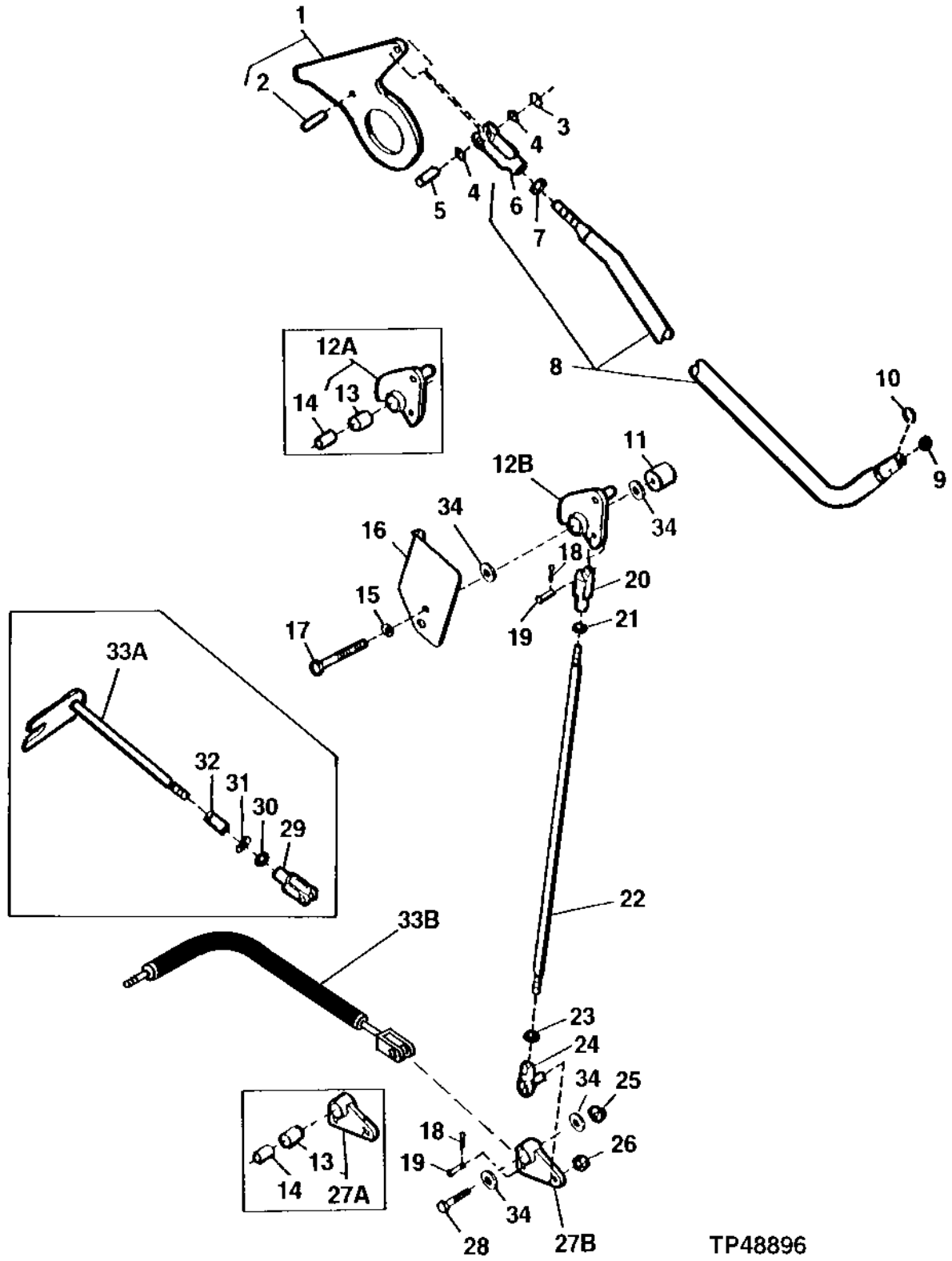

BUCKET LEVELING AND RETURN-TO-DIG LINKAGE
(SERIAL NO. 801200-)

KEY	PART NO.	PART NAME	QTY	SERIAL NO.	410D	510D	REMARKS
1	AT156332	ACTUATOR	1		X	X	
2	25H153	GROOVE PIN	1		X	X	3/8" X 1-3/4"
3	T148182	RING	1		X	X	
4	T146757	WASHER	2		X	X	13.150 X 22.080 X 0.635 MM (0.518" X 0.869" X 0.025")
5	R72855	PIN FASTENER	1		X	X	12.499 X 36.068 MM (0.492" X 1.420")
6	T21158	YOKE	1		X	X	
7	14H856	NUT	1		X	X	1/2"
8	AT151479	TUBE	1		X	X	(INCLUDES T162396)
9	T162396	LUBRICATION FITTING	1		X	X	(SUB FOR JD7798)
10	R73380	SNAP RING	1		X	X	
11	T148640	BUSHING	1		X	X	
12A	.....	BELLCRANK	1	-817146	X	X	AT164455 NO LONGER AVAILABLE, (SUB AT169870)
12B	AT169870	BELLCRANK	1	817147-	X	X	(INCLUDES AA34134)
	AA34134	BALL BEARING	1		X	X	(NOT ILLUSTRATED)
13	T13742	BUSHING	2	-817146	X	X	
14	T148641	BUSHING	2	-817146	X	X	
15	24M7239	WASHER	3	-817146	X	X	10.700 X 21 X 2.500 MM
	24M7239	WASHER	1	817147-	X	X	
16	T148642	PLATE	1		X	X	
17	19M8093	CAP SCREW	1		X	X	M10 X 100
18	R46528	SPRING LOCKING PIN	2		X	X	
19	R65563	PIN FASTENER	2		X	X	9.398 X 28.499 MM (0.370" X 1.122")
20	T140328	YOKE	1		X	X	(L.H.)
21	14H913	NUT	1		X	X	3/8"
22	T148636	ROD	1		X	X	
23	14H774	NUT	1		X	X	3/8"
24	AT169087	BALL JOINT	1		X	X	
25	14M7296	FLANGE NUT	1		X	X	M10
26	M68954	LOCK NUT	1		X	X	9.525 MM
27A	.....	BELLCRANK	1	-817146	X	X	AT164452 NO LONGER AVAILABLE, (SUB AT169869)
27B	AT169869	BELLCRANK	1	817147-	X	X	(INCLUDES AA34134)
	AA34134	BALL BEARING	1				(NOT ILLUSTRATED)
28	19M7658	CAP SCREW	1		X	X	M10 X 50
29	M80373	YOKE	1	-817429	X	X	
30	14H774	NUT	1	-817429	X	X	3/8"
31	24M7085	WASHER	1	-817429	X	X	15 X 28 X 2.500 MM
32	U12595	SPRING	1	-817429	X	X	
33A	AT164450	ROD	1	-817429	X	X	
33B	AT175428	ROD	1	817430-	X	X	
34	24M7096	WASHER	4	817147-	X	X	

LOADER CONTROL VALVE LINKAGE

TP48897 -UN-21MAR96

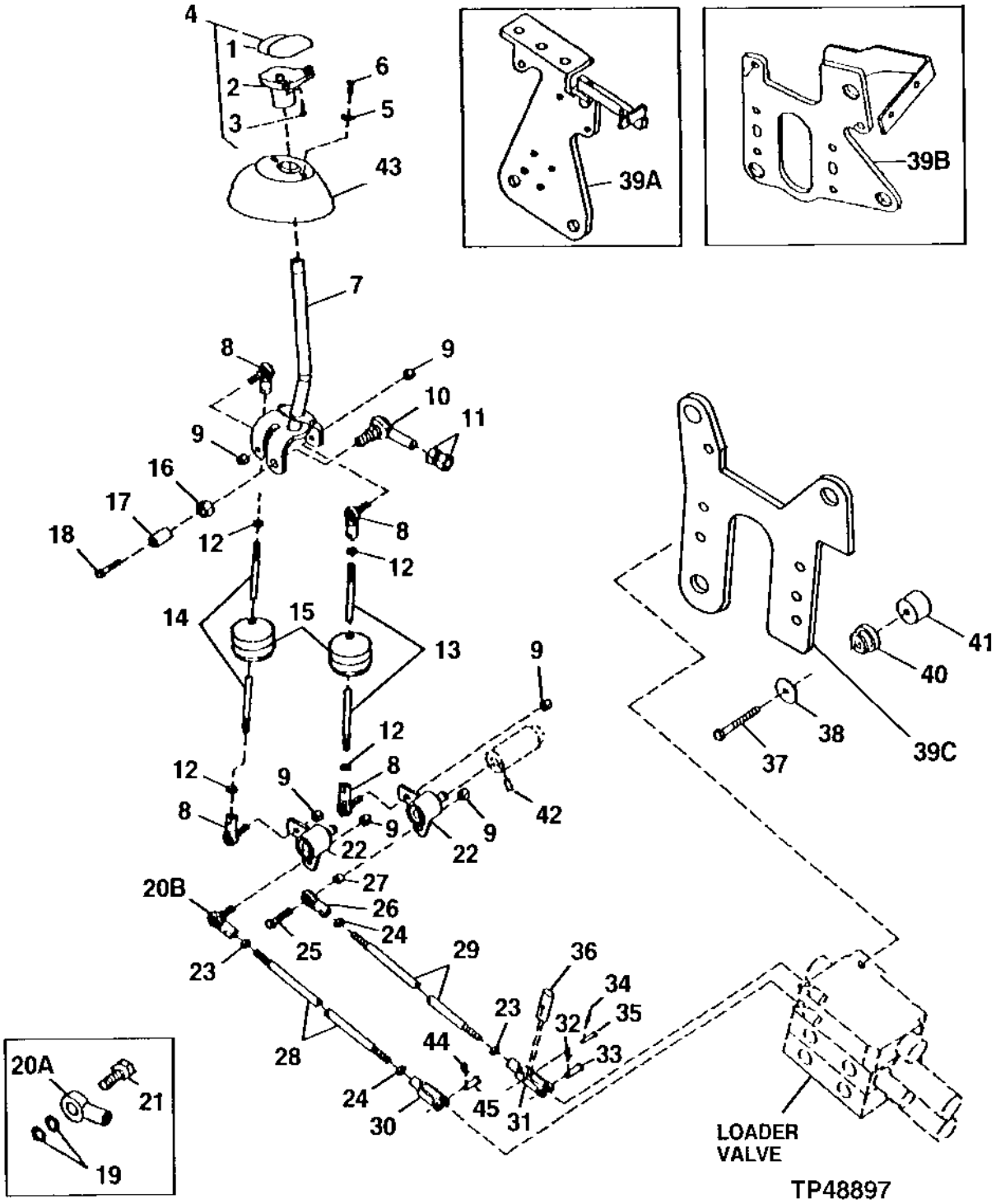

LOADER CONTROL VALVE LINKAGE

KEY	PART NO.	PART NAME	QTY	SERIAL NO.	410D	510D	REMARKS
1	.....	HANDLE	1		X	X	
2	.....	HANDLE	1		X	X	
3	37H95	SCREW	2		X	X	
4	AT171550	KNOB	1		X	X	(SUB FOR T126974 AND T126975) (INCLUDES (2) 37H95)
5	24H1646	WASHER	2		X	X	17/64" X 3/4" X 0.060"
6	21H1406	SCREW	2		X	X	0.190" X 3/4"
7	AT139741	LEVER	1		X	X	
8	AT169087	BALL JOINT	4	-801199	X	X	(SUB FOR AT49300)
	AT169087	BALL JOINT	4	801200-	X	X	
9	M68954	LOCK NUT	6		X	X	
10	AT75688	BALL JOINT	1		X	X	
11	14H1083	NUT	2		X	X	5/8"
12	14H774	NUT	4		X	X	3/8"
13	T140321	STUD	1	-801199	X	X	
	T162933	STUD	1	801200-	X	X	(SUB FOR T148281, THIS APPLICATION)
14	T140323	STUD	1	-801199	X	X	
	T148436	STUD	1	801200-	X	X	(SUB FOR T148282)
15	AT145629	BOOT	2		X	X	(WITH CAB)
16	14H1083	NUT	1		X	X	5/8"
17	T141171	BUSHING	1		X	X	(SUB FOR T133113)
18	19H2527	CAP SCREW	1		X	X	5/16" X 1-3/4"
19	24H1304	WASHER	2		X	X	13/32" X 23/32" X 0.120"
20A	AE37072	LINK END	1	-801199	X	X	
20B	AT169087	BALL JOINT	1	801200-	X	X	
21	19H3663	CAP SCREW	1		X	X	3/8" X 1-1/2"
22	AT141346	BELLCRANK	2		X	X	
23	14H774	NUT	2		X	X	3/8"
24	14H913	NUT	2		X	X	3/8", (L.H.)
25	19H3663	CAP SCREW	1	-801199	X	X	3/8" X 1-1/2"
	19H2960	CAP SCREW	1	801200-	X	X	3/8" X 1-3/4"
26	AT169087	BALL JOINT	1		X	X	(L.H.) (SUB FOR AE37859, THIS APPLICATION)
27	24H1304	WASHER	2	-801199	X	X	13/32" X 23/32" X 0.120"
	M72076	WASHER	1	801200-	X	X	10.450 X 13.700 X 9.500 MM
28	T140356	STUD	1	-801199	X	X	
	T148260	ROD	1	801200-	X	X	
29	T140355	STUD	1	-801199	X	X	
	T148259	ROD	1	801200-	X	X	
30	T140328	YOKE	1		X	X	(L.H.)
31	.....	YOKE	1	-817429	X	X	T152826 NO LONGER AVAILABLE, SUB T140328, (SUB FOR T76772, THIS APPLICATION)
	T140328	YOKE	1	817429-	X	X	
32	11M7012	COTTER PIN	1	-817429	X	X	3.200 X 16 MM
33	R65563	PIN FASTENER	1	-817429	X	X	
34	11M7077	COTTER PIN	1	801200-817429	X	X	1.600 X 25 MM
35	45M7036	PIN FASTENER	1	801200-817429	X	X	6 X 30 MM
36	T132842	STRAP	1	801200-817429	X	X	
37	19M7572	CAP SCREW	3	-801199	X	X	M10 X 45
	19M8183	CAP SCREW	3	801200-	X	X	M10 X 90
38	MT2491	WASHER	3		X	X	(SUB FOR 24H1314, THIS APPLICATION)
39A	AT145782	SUPPORT	1	-801199	X	X	
39B	AT163755	SUPPORT	1	801200-817429	X	X	
39C	T160010	SUPPORT	1	817430-	X	X	(SUB FOR T158272)
40	AT139776	ISOLATOR	3		X	X	
41	T148269	SPACER	3	801200-	X	X	
42	22M7070	SET SCREW	2		X	X	M8 X 20
43	T133022	BASE	1		X	X	
44	11M7012	COTTER PIN	1		X	X	
45	R65563	PIN FASTENER	1		X	X	

THIRD FUNCTION LOADER CONTROL VALVE LINKAGE

TP45447 -UN-01JAN94

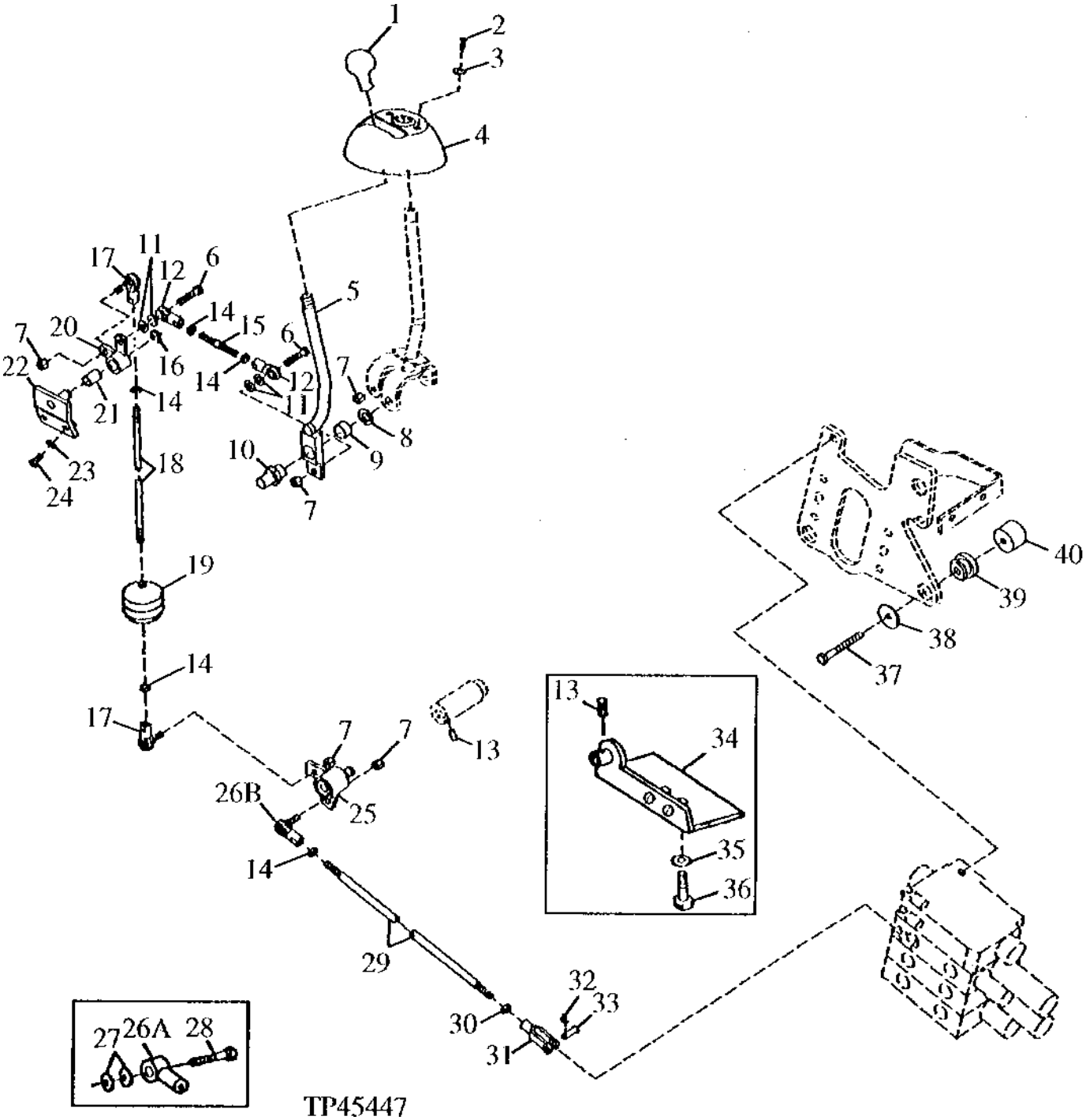

THIRD FUNCTION LOADER CONTROL VALVE LINKAGE

KEY	PART NO.	PART NAME	QTY	SERIAL NO.	410D	510D	REMARKS
1	T133291	KNOB	1		X	X	
2	21H1406	SCREW	2		X	X	0.190" X 3/4"
3	24H1646	WASHER	2		X	X	17/64" X 3/4" X 0.060"
4	T134363	BASE	1		X	X	
5	AT164534	LEVER	1		X	X	(SUB FOR AT150758)
6	19H3663	CAP SCREW	2		X	X	3/8" X 1-1/2"
7	M68954	LOCK NUT	5		X	X	
8	24M7053	WASHER	1		X	X	17 X 30 X 3 MM
9	L4694T	BUSHING	1		X	X	
10	T141170	SPACER	1		X	X	(SUB FOR T132983)
11	24H1304	WASHER	4		X	X	13/32" X 23/32" X 0.120"
12	AE37072	LINK END	2		X	X	
13	22M7070	SET SCREW	1		X	X	M8 X 20
14	14H774	NUT	5		X	X	3/8"
15	T140325	STUD	1		X	X	
16	F2863R	SNAP RING	1		X	X	
17	AT169087	BALL JOINT	2	-801199	X	X	(SUB FOR AT49300)
	AT169087	BALL JOINT	2	801200-	X	X	
18	T140324	STUD	1	-801199	X	X	
	T148825	STUD	1	801200-	X	X	
19	AT145629	BOOT	1		X	X	(WITH CAB)
20	AT140964	BELLCRANK	1		X	X	
21	U12857	BUSHING	1		X	X	
22	AT143426	SUPPORT	1		X	X	
23	24M7238	WASHER	2		X	X	8.700 X 17 X 2 MM
24	19M7881	SCREW	2		X	X	M8 X 20
25	AT141346	BELLCRANK	1		X	X	
26A	AE37072	LINK END	1	-801199	X	X	
26B	AT169087	BALL JOINT	1	801200-	X	X	
27	24H1304	WASHER	2	-801199	X	X	13/32" X 23/32" X 0.120"
28	19H3663	CAP SCREW	1	-801199	X	X	3/8" X 1-1/2"
29	T140357	STUD	1	-801199	X	X	
	T148823	CONNECTING ROD	1	801200-	X	X	
30	14H913	NUT	1		X	X	3/8", (L.H.)
31	T140328	YOKE	1		X	X	(L.H.)
32	11M7012	COTTER PIN	1		X	X	3.200 X 16 MM
33	R65563	PIN FASTENER	1		X	X	
34	AT156389	SUPPORT	1	-801199	X	X	(SUB FOR AT150861)
35	24M7239	WASHER	2	-801199	X	X	10.700 X 21 X 2.500 MM
36	19M7402	CAP SCREW	2	-801199	X	X	M10 X 25
37	19M7572	CAP SCREW	3	-801199	X	X	M10 X 45
	19M8183	CAP SCREW	3	801200-	X	X	M10 X 90
38	MT2491	WASHER	3		X	X	(SUB FOR 24H1314, THIS APPLICATION)
39	AT139776	ISOLATOR	3		X	X	
40	T148269	SPACER	3	801200-	X	X	
..	**AT148441**	**MOUNTING PARTS**	**1**	**-801199**	**X**	**X**	**(THIRD FUNCTION LOADER HYDRAULICS, LINKAGE & PLUMBING) (NOT ILLUSTRATED)**
..	.....	MOUNTING PARTS	1	801200-	X	X	(THIRD FUNCTION LOADER HYDRAULICS, LINKAGE & PLUMBING) (NOT ILLUSTRATED) (AT169591 NO LONGER AVAILABLE)

LOADER LIFT ARMS

TP46940 -UN-24AUG96

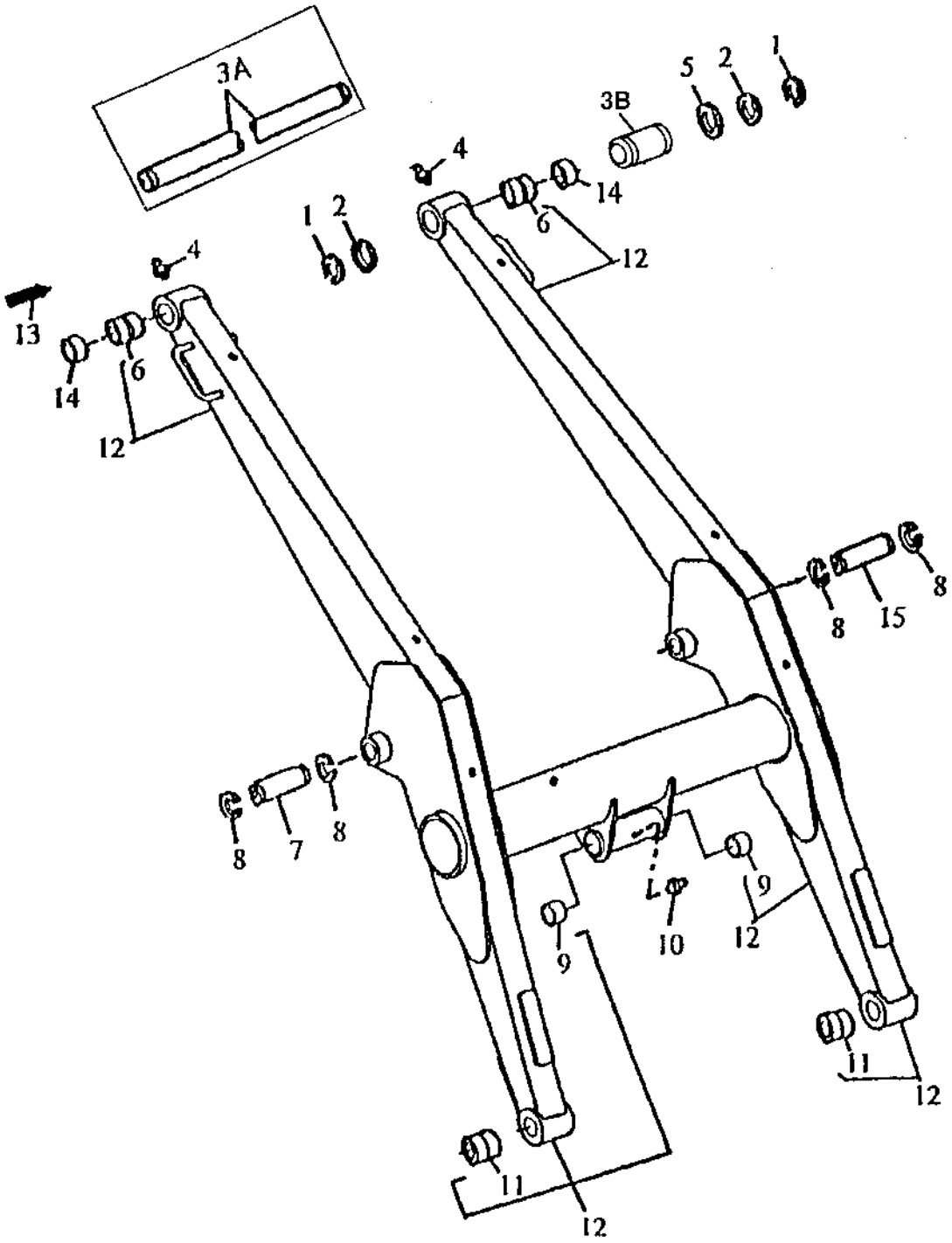

LOADER LIFT ARMS

KEY	PART NO.	PART NAME	QTY	SERIAL NO.	410D	510D	REMARKS
1	T61226	SNAP RING	4		X	X	50 X 2 MM, (SUB FOR T158072) (SUB FOR 40M7166, THIS APPLICATION)
2	T75815	WASHER	AR		X	X	50.500 X 75 X 5 MM
3A	T79092	PIN FASTENER	1	-814651	X	X	1.969" X 40.906"
3B	T158906	PIN	2	814652-	X	X	(SUB FOR T79092)
4	T162396	LUBRICATION FITTING	3		X	X	(SUB FOR JD7798) 1/8"
5	24H1589	WASHER	AR		X	X	2" X 3-3/16" X 0.036"
6	T128309	BUSHING	2		X	X	
7	T140086	PIN FASTENER	1		X	X	1.772" X 6.783"
8	40M7180	SNAP RING	4		X	X	
9	T76639	BUSHING	2		X	X	
10	T162396	LUBRICATION FITTING	2		X	X	(SUB FOR JD7798)
11	T76638	BUSHING	2		X	X	
12	AT169675	ARM	1		X	X	(SUB FOR AT124378 AND T145219)
13	T139806	LABEL	1		X	X	BUCKET LEVEL INDICATOR, (USE WITH AT156366)
14	T68818	SEAL	2		X	X	
15	T140086	PIN FASTENER	1	-803113	X	X	1.772" X 6.783"
	T151953	PIN	1	803114-	X	X	1.772" X 7.461"

BUCKET LINKAGE

TP27949 -UN-24AUG96

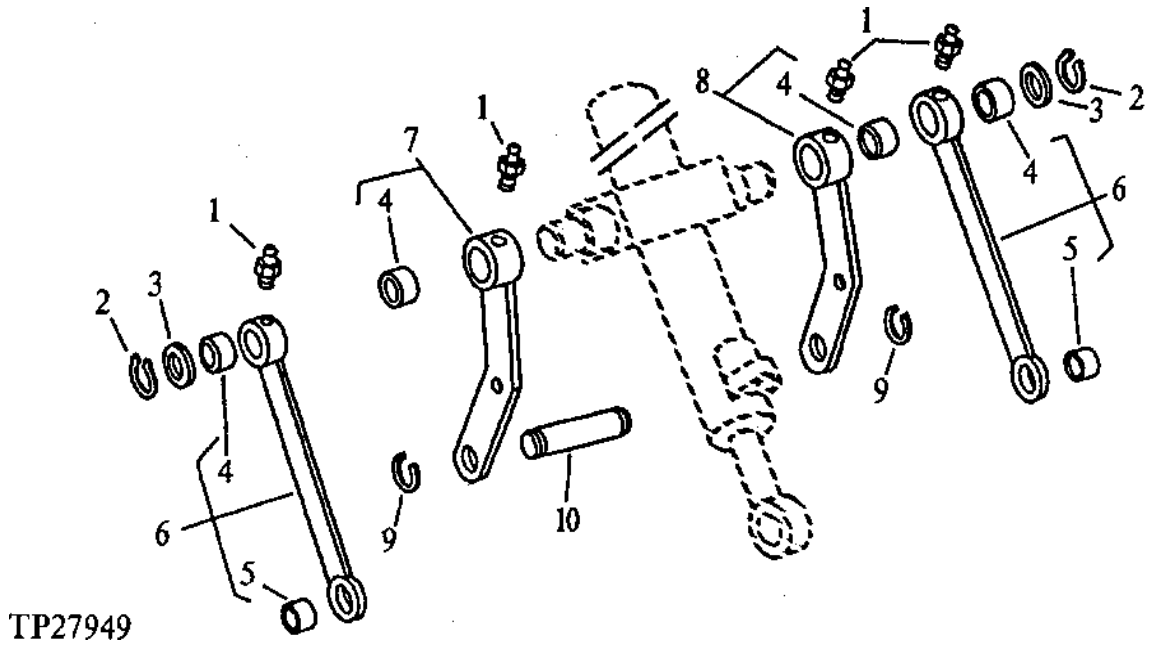

KEY	PART NO.	PART NAME	QTY	SERIAL NO.	410D	510D	REMARKS
1	T162396	LUBRICATION FITTING	4		X	X	(SUB FOR JD7759, THIS APPLICATION) (SUB FOR JD7798)
2	40M7138	SNAP RING	2		X	X	
3	24H1635	WASHER	2		X	X	2-5/8" X 3-3/8" X 0.120"
4	T76637	BUSHING	4		X	X	
5	T76639	BUSHING	2		X	X	
6	AT100399	LINK	2		X	X	
7	AT107949	LINK	1		X	X	
8	AT107950	LINK	1		X	X	
9	40M7180	SNAP RING	2		X	X	
10	T113057	PIN FASTENER	1		X	X	

LOADER CONTROL VALVE
(WITH RETURN-TO-DIG)
(GRESEN)
(SERIAL NO. -801199)

TP18893 -UN-01JAN94

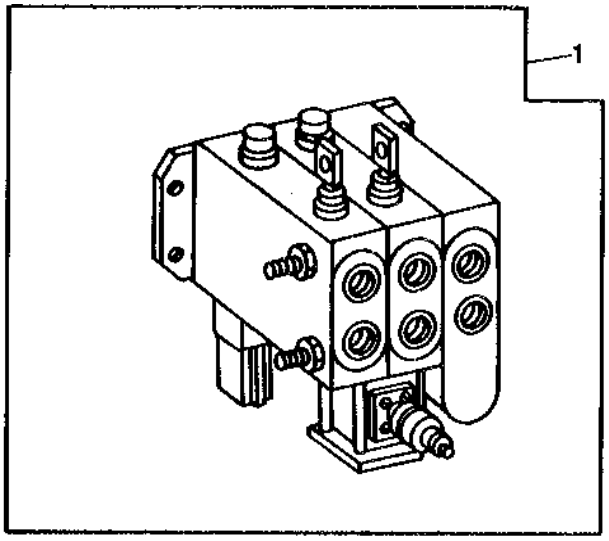

TP18893

KEY	PART NO.	PART NAME	QTY	SERIAL NO.	410D	510D	REMARKS
1	AT150408	VALVE	1	-785107	X	X	GRESEN V30 (3-FUNCTION) (SUB FOR AT145743)
	AT159004	SPOOL VALVE	1	785108-	X	X	GRESEN V30 (3-FUNCTION)
	AT150407	VALVE	1	-784895	X	X	GRESEN V30 (2-FUNCTION)
	AT159001	SPOOL VALVE	1	784896-	X	X	GRESEN V30 (2-FUNCTION)

INLET SECTION, VALVE SECTION SEALS AND TIE BOLTS
(GRESEN)
(SERIAL NO. -801199)

TP41723 -UN-01JAN94

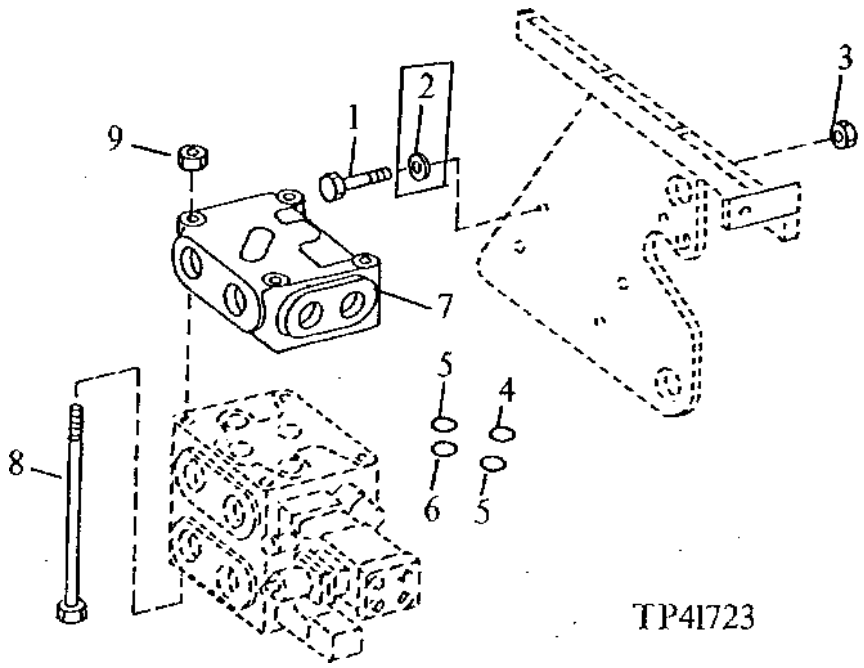

KEY	PART NO.	PART NAME	QTY	SERIAL NO.	410D	510D	REMARKS
1	19M8011	CAP SCREW	3		X	X	M12 X 30
2	24M7240	WASHER	3		X	X	13 X 25 X 3 MM
3	14M7275	NUT	3		X	X	M12
4	T143166	O-RING	2		X	X	(K) (SUB FOR (2) T106369)
	T143166	O-RING	3		X	X	(K) (SUB FOR (3) T106369) (THIRD FUNCTION)
5	T106370	O-RING	2		X	X	(K)
	T106370	O-RING	3		X	X	(K) (THIRD FUNCTION)
6	T49819	O-RING	4		X	X	(K) (SUB FOR T106368)
	T49819	O-RING	6		X	X	(K) (THIRD FUNCTION) (SUB FOR T106368)
7	.....	VALVE	1	-784895	X	X	(T126095 NO LONGER AVAILABLE) (SUB T145253) (ALSO ORDER 38H1037 AND R29936)
	T145253	HYD ACTUATED CONTROL VALVE	1	784896-	X	X	
8	19H3274	CAP SCREW	4		X	X	3/8" X 7", (TWO FUNCTION)
	T135377	STUD	4		X	X	(THIRD FUNCTION)
9	14H1076	NUT	4		X	X	3/8"

(K) AT159848 KIT, SECTION SEAL

BETWEEN SECTION SEAL KIT
(GRESEN)
(SERIAL NO. -801199)

TP44012 -UN-01JAN94

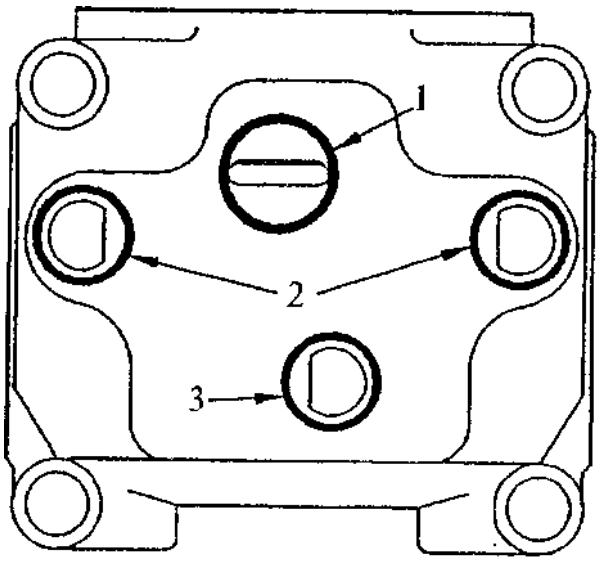

TP44012

KEY	PART NO.	PART NAME	QTY	SERIAL NO.	410D	510D	REMARKS
1	.....	O-RING	1		X	X	(K) 1.11"
2	.....	O-RING	2		X	X	(K) .924"
3	.....	O-RING	1		X	X	(K) .987"

(K) AT159848 KIT, SECTION SEAL

BUCKET SECTION
(SERIAL NO. -801199)

TP42916 -UN-01JAN94

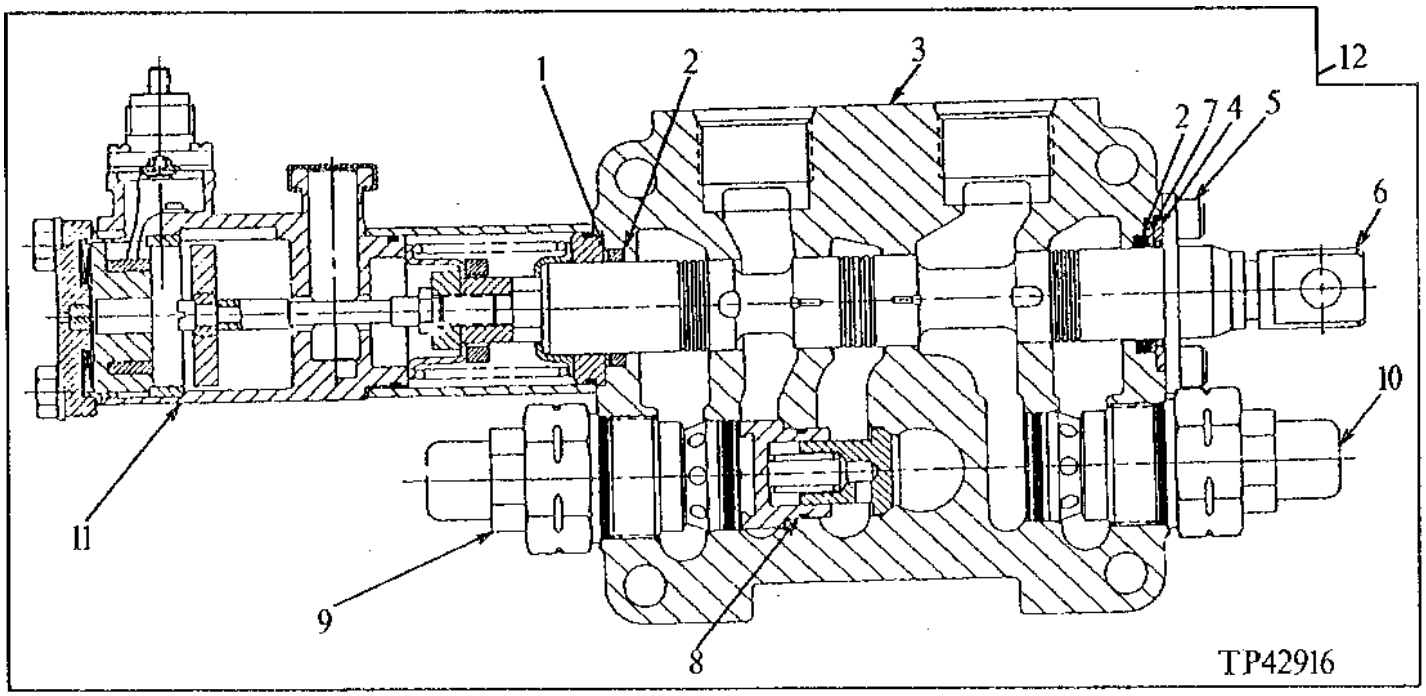

KEY	PART NO.	PART NAME	QTY	SERIAL NO.	410D	510D	REMARKS
1	T75982	BACK-UP RING	1		X	X	(K)
2	T122063	O-RING	2		X	X	(K)
3	.....	HOUSING	1		X	X	
4	T118737	THRUST WASHER	1		X	X	
5	19H2701	SCREW	2		X	X	1/4" X 5/8"
	T106147	PLATE	1		X	X	
6	.....	SPOOL	1		X	X	
7	T118736	SEAL	1		X	X	(K)
8	AT106602	PLUG	1		X	X	
9	AT106600	PRESSURE RELIEF VALVE	1		X	X	
10	AT106601	PRESSURE RELIEF VALVE	1		X	X	
11	AT168948	HYDR./PILOT CONTROL VALVE	1		X	X	SOLENOID, (SUB FOR AT106607)
12	.....	VALVE	1	-795661	X	X	(AT159002 NO LONGER AVAILABLE) (SUB FOR AT118795 AND AT156401) (ALSO ORDER AT159848) (SUB AT168947)
	AT168947	HYD ACTUATED CONTROL VALVE	1	795662-	X	X	

(K) KIT AT159849 KIT, SPOOL SEAL

RELIEF VALVE
(GRESEN V30)
(BUCKET SECTION)
(SERIAL NO. -801199)

TP44088 -UN-01JAN94

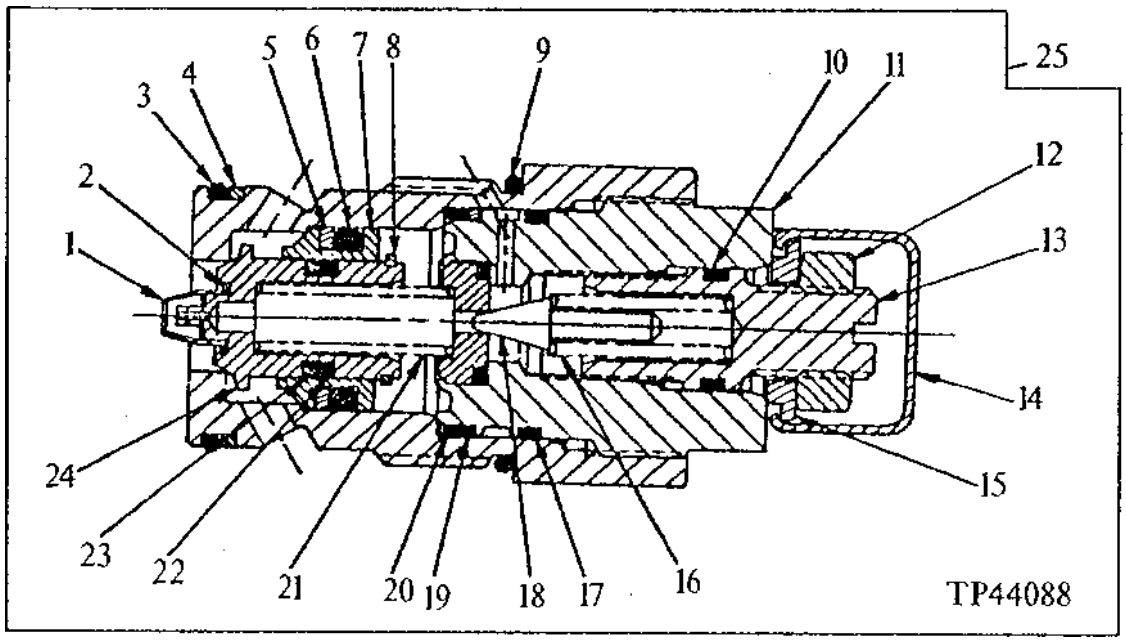

KEY	PART NO.	PART NAME	QTY	SERIAL NO.	410D	510D	REMARKS
1	.....	FILTER	1		X	X	
2	.....	SNAP RING	1		X	X	
3	T106368	O-RING	1		X	X	(K)
4	T106298	BACK-UP RING	1		X	X	(K)
5	T121258	BACK-UP RING	1		X	X	(K)
6	R28782	O-RING	1		X	X	(K)
7	.....	PISTON	1		X	X	
8	.....	SNAP RING	1		X	X	
9	R56464	O-RING	1		X	X	(K) (SUB FOR U15242, THIS APPLICATION)
10	A3917R	O-RING	1		X	X	(K)
11	.....	HOUSING	1		X	X	
12	.....	NUT	1		X	X	
13	.....	SCREW	1		X	X	
14	.....	COVER	1		X	X	
15	.....	WASHER	1		X	X	
16	.....	SPRING	1		X	X	
17	T113021	PACKING	1		X	X	
18	.....	POPPET	1		X	X	
19	U15981	BACK-UP RING	1		X	X	(K)
20	T75984	O-RING	1		X	X	(K)
21	.....	SPRING	1		X	X	
22	R56464	O-RING	1		X	X	(K)
23	.....	BACK-UP RING	1		X	X	(K)
24	.....	POPPET	1		X	X	
25	AT106600	PRESSURE RELIEF VALVE	1		X	X	RP30-NAC
	AT106601	PRESSURE RELIEF VALVE	1		X	X	RP30-N

(K) AT160465 KIT, RELIEF VALVE SEAL

LOAD CHECK PLUG
(BUCKET SECTION)
(SERIAL NO. -801199)

TP44089 -UN-01JAN94

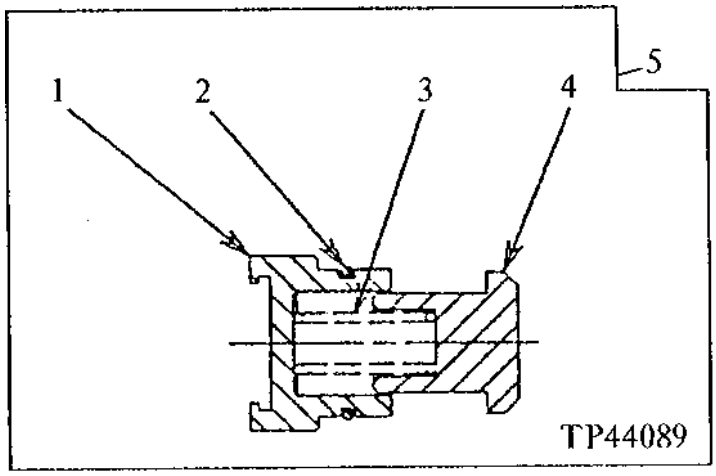

KEY	PART NO.	PART NAME	QTY	SERIAL NO.	410D	510D	REMARKS
1	.....	PLUG	1		X	X	
2	N31772	O-RING	1		X	X	
3	.....	SPRING	1		X	X	
4	.....	POPPET	1		X	X	
5	AT106602	PLUG	1		X	X	

MEMORANDA

SOLENOID VALVE
(GRESEN)
(SERIAL NO. -801199)

TP45421 -UN-01JAN94

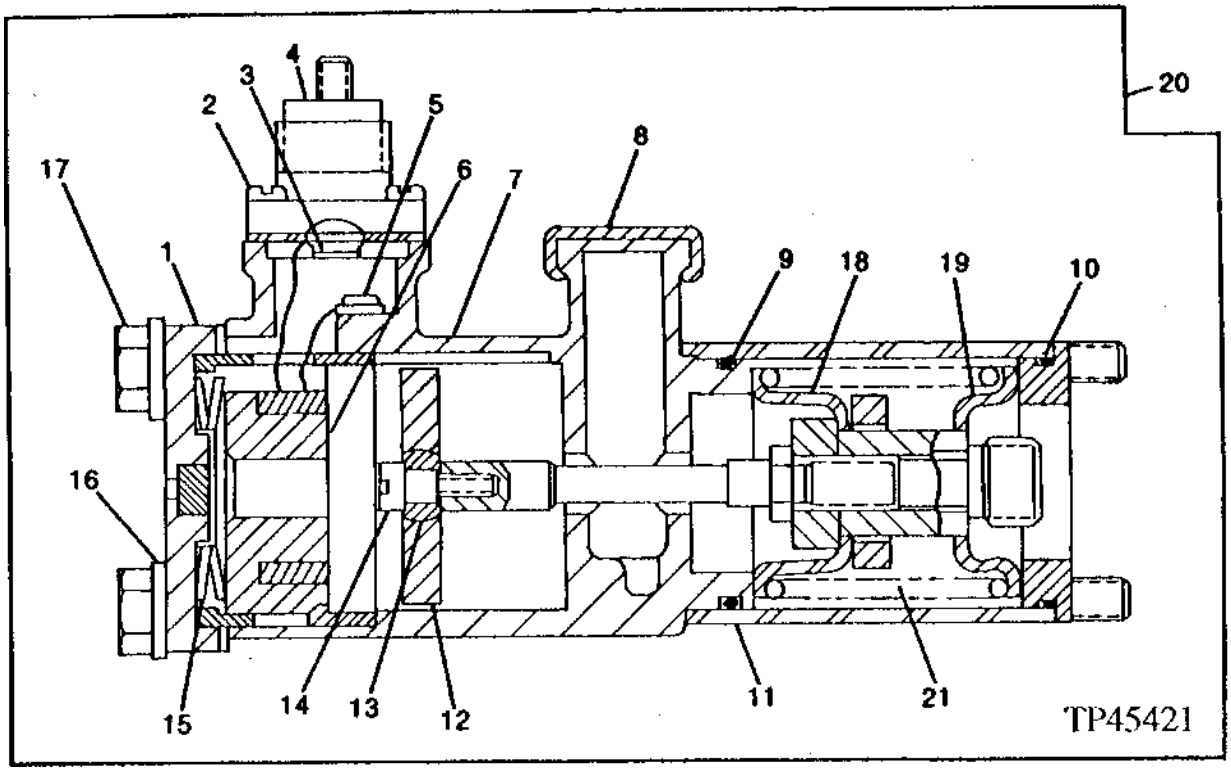

KEY	PART NO.	PART NAME	QTY	SERIAL NO.	451 100 DD	REMARKS
1	.....	CAP	1		X X	
2	T78192	SCREW	4		X X	
3	T61157	GASKET	1		X X	
4	AT78371	ELECTRICAL CONNECTOR ASSY	1		X X	
5	21H1284	SCREW	1		X X	0.112" X 3/16"
6	AT168950	MAGNET	1		X X	(SUB FOR AT58741, THIS APPLICATION)
7	.....	COVER	1		X X	(SUB AT106607)
8	T61158	COVER	1		X X	
9	T22827	O-RING	1		X X	(K)
10	T22827	O-RING	1		X X	(K)
11	.....	SLEEVE	1		X X	
12	T151328	ARMATURE	1		X X	(SUB FOR T61148)
13	T61149	WASHER	1		X X	
14	T61150	SCREW	1		X X	
15	T61152	WASHER	2		X X	
16	24H1287	WASHER	4		X X	9/32" X 5/8" X 0.065"
17	19H2340	CAP SCREW	4		X X	1/4" X 5-1/2"
18	T106183	ROUND RETAINER	1		X X	
19	T106184	ROUND RETAINER	1		X X	
20	AT168948	HYDR./PILOT CONTROL VALVE	1		X X	(SUB FOR AT106607)
21	T118853	SPRING	1		X X	

(K) AT159849 KIT, SPOOL SEAL

BOOM SECTION
(GRESEN)
(SERIAL NO. -801199)

TP50368 -UN-14SEP95

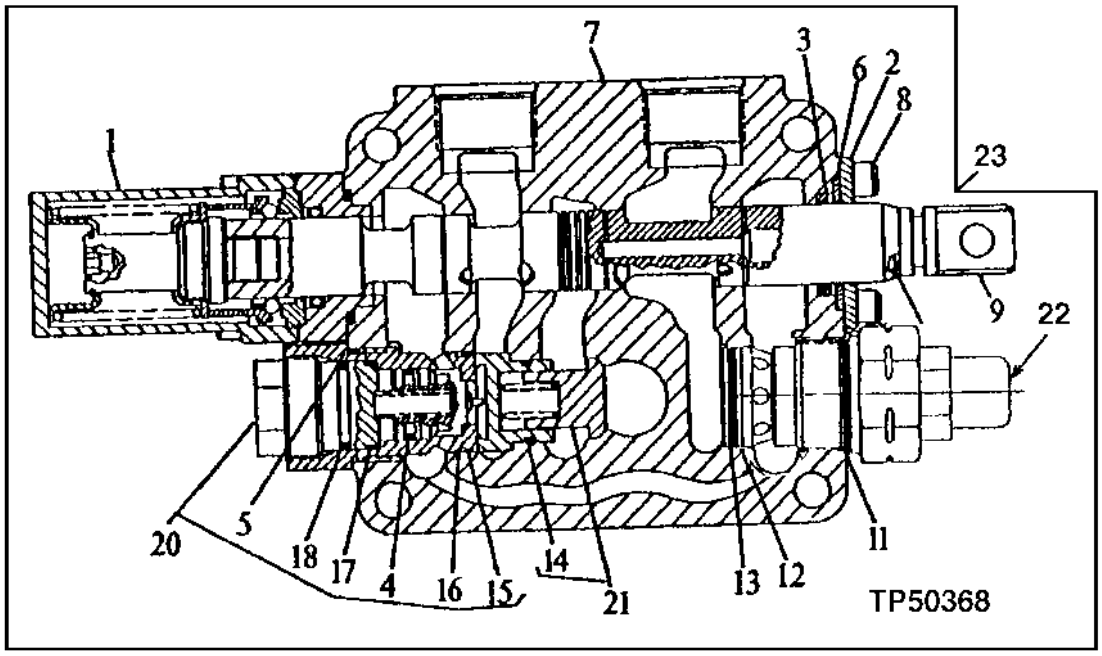

KEY	PART NO.	PART NAME	QTY	SERIAL NO.	4510 DD	REMARKS
1	AT114566	RETAINER	1		X X	
2	T106147	PLATE	1		X X	
3	T118736	SEAL	1		X X	(K)
4	R56464	O-RING	1		X X	
5	U15242	O-RING	1		X X	
6	T118737	THRUST WASHER	1		X X	
7	.....	HOUSING	1		X X	
8	19H2701	SCREW	2		X X	1/4" X 5/8"
9	.....	SPOOL	1		X X	
10	L34378	O-RING	1		X X	(SUB FOR T36492)
11	U15242	O-RING	1		X X	
12	T75996	BACK-UP RING	1		X X	
13	T106298	BACK-UP RING	1		X X	(K1) (SUB FOR R27928, THIS APPLICATION)
14	N31772	O-RING	1		X X	
15	T106298	BACK-UP RING	1		X X	(K1) (SUB FOR R27928, THIS APPLICATION)
16	T49819	O-RING	1		X X	(SUB FOR T75996, THIS APPLICATION)
17	T75984	O-RING	1		X X	
18	U15980	O-RING	1		X X	
20	AT106609	CHECK VALVE	1		X X	
21	AT106602	PLUG	1		X X	
22	AT106601	PRESSURE RELIEF VALVE	1		X X	(SUB FOR AT107969) (ALSO ORDER AT159848) (WITH TWO FUNCTION)
23	AT156429	VALVE	1	-784895	X X	
	AT156405	VALVE	1	-785107	X X	
	AT160512	SPOOL VALVE	1	784896-	X X	(2 SECTION VALVE)
	AT160515	SPOOL VALVE	1	785108-	X X	(3 SECTION VALVE)

(K) AT159849 KIT, SPOOL SEAL

(K1) AT160465 KIT, RELIEF VALVE SEAL

BOOM SECTION FLOAT POSITIONER
(GRESEN)
(SERIAL NO. -801199)

TP21291 -UN-01JAN94

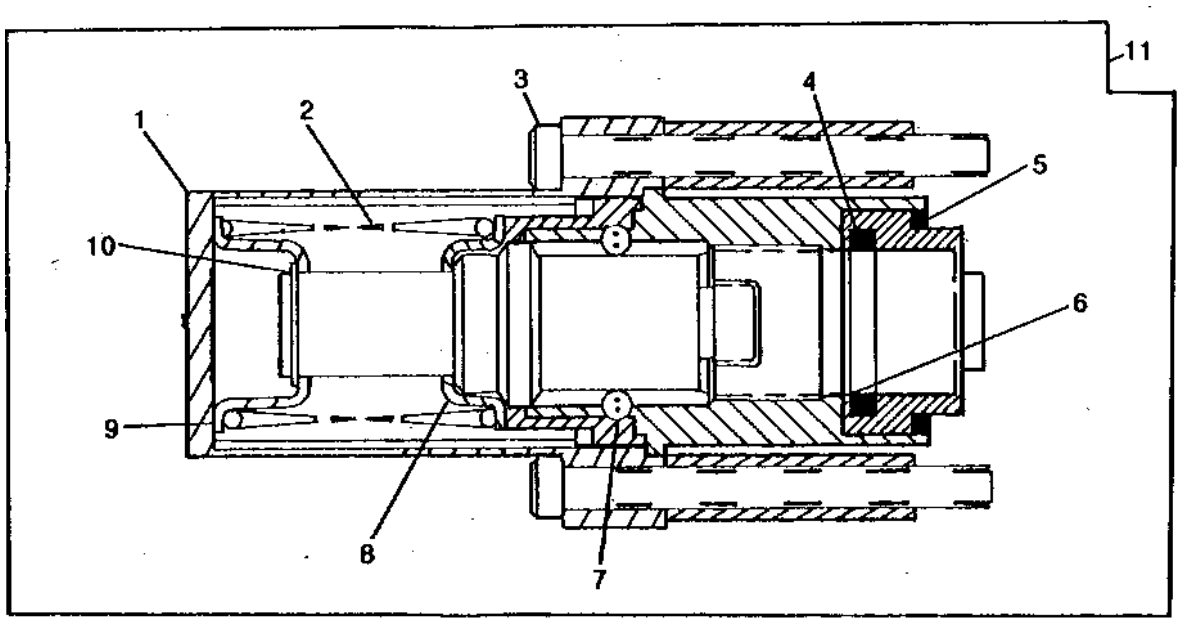

TP21291

KEY	PART NO.	PART NAME	QTY	SERIAL NO.	410D	510D	REMARKS
1	AT117657	CAP	1		X	X	
2	T118853	SPRING	1		X	X	
3	19H3220	CAP SCREW	2		X	X	1/4" X 2-1/2"
4	T122063	O-RING	1		X	X	(K)
5	R69670	O-RING	1		X	X	(K) (SUB FOR H35238, THIS APPLICATION)
6	T75982	BACK-UP RING	1		X	X	(K)
7	H60816	BALL	4		X	X	
8	T106184	ROUND RETAINER	1		X	X	
9	T106183	ROUND RETAINER	1		X	X	
10	T106194	SNAP RING	1		X	X	
11	AT114566	RETAINER	1		X	X	

(K) AT159849 KIT, SPOOL SEAL

AUXILIARY SECTION
(THIRD FUNCTION)
(GRESEN)
(SERIAL NO. -801199)

TP42918 -UN-01JAN94

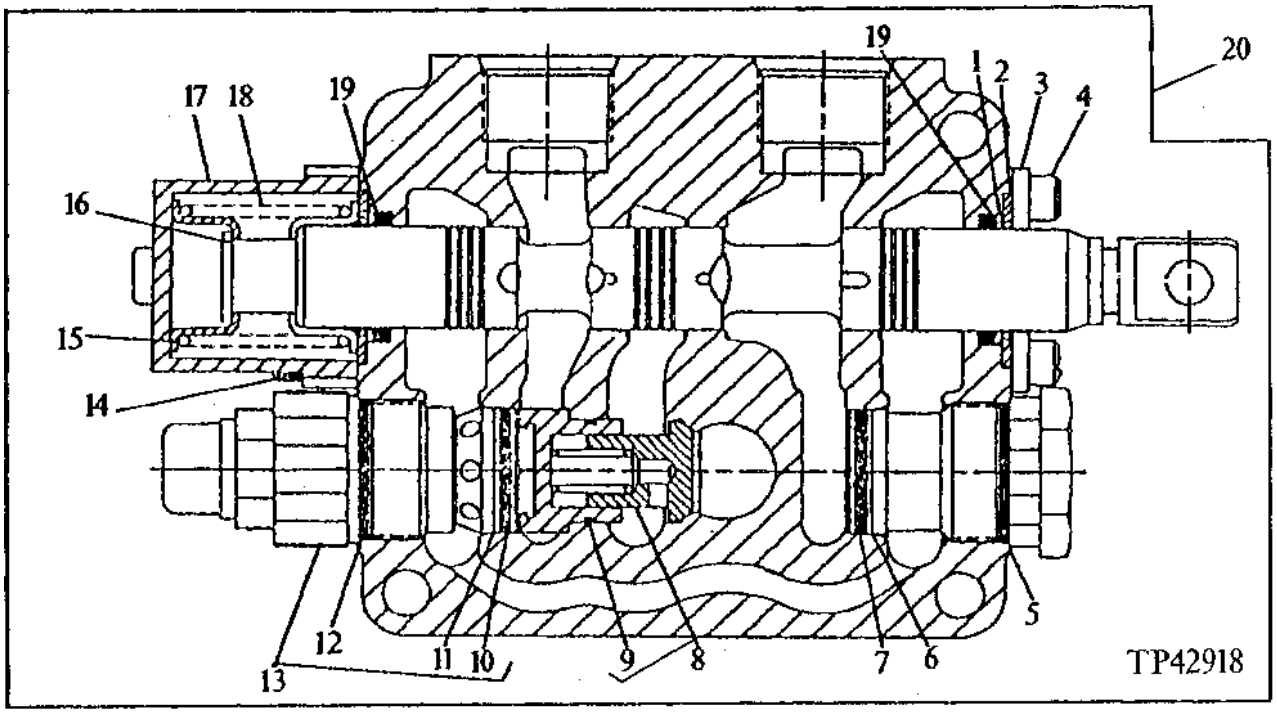

KEY	PART NO.	PART NAME	QTY	SERIAL NO.	410D	510D	REMARKS
1	T118736	SEAL	1		X	X	(K)
2	T118737	THRUST WASHER	1		X	X	
3	T106147	PLATE	1		X	X	
4	19H2701	SCREW	2		X	X	1/4" X 5/8"
5	U15242	O-RING	1		X	X	
6	T75996	BACK-UP RING	1		X	X	
7	R27928	O-RING	1		X	X	
8	AT106602	PLUG	1		X	X	
9	N31772	O-RING	1		X	X	
10	R27928	O-RING	1		X	X	
11	T75996	BACK-UP RING	1		X	X	
12	U15242	O-RING	1		X	X	
13	AT148194	PRESSURE RELIEF VALVE	1		X	X	
14	T106306	SCREW	2		X	X	
15	T106183	ROUND RETAINER	2		X	X	
16	T135398	BUSHING	1		X	X	
17	AT148195	CAP	1		X	X	
18	.....	SPRING	1		X	X	
19	T122063	O-RING	2		X	X	(K)
20	AT156406	VALVE	1	-785107	X	X	(SUB FOR AT148155) (ALSO ORDER AT159848)
	AT160516	SPOOL VALVE	1	785108-	X	X	(ALSO ORDER AT159848)

(K) KIT AT159849 KIT, SPOOL SEAL

LOADER CONTROL VALVE
(HUSCO)
(SERIAL NO. 801200-807613)

TP45473 -UN-01JAN94

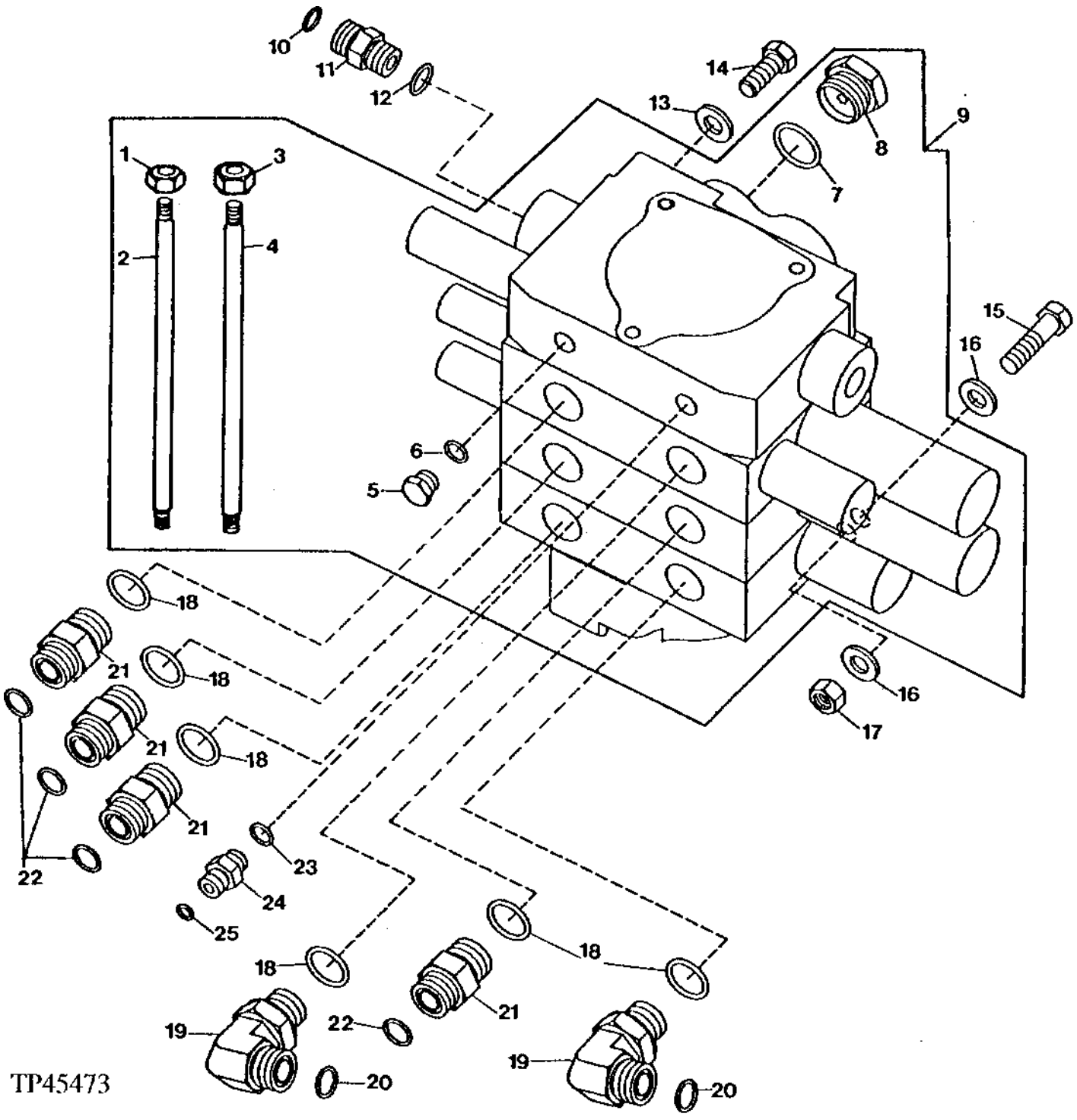

LOADER CONTROL VALVE
(HUSCO)
(SERIAL NO. 801200-807613)

KEY	PART NO.	PART NAME	QTY	SERIAL NO.	4510 1100 DD	REMARKS
1	14H865	NUT	2		X X	1/2"
2	T80563	STUD	1		X X	12.700 X 225.425 MM (1/2" X 8-7/8") (TWO FUNCTION)
	T152873	TIE ROD	1		X X	(THREE FUNCTION)
3	14H807	NUT	4		X X	7/16"
4	T80561	STUD	2		X X	11.125 X 225.425 MM (7/16" X 8-7/8") (TWO FUNCTION)
	T152871	TIE ROD	2		X X	(THREE FUNCTION)
5	R27218	FITTING PLUG	1		X X	
6	R26448	O-RING	1		X X	
7	U17409	O-RING	1		X X	
8	R49465	DRAIN PLUG	1		X X	
9	AT165196	VALVE	1		X X	(TWO FUNCTION) CONVENIENCE ASSEMBLY
	AT165210	VALVE	1		X X	(THREE FUNCTION) CONVENIENCE ASSEMBLY
10	T77857	O-RING	1		X X	
11	38H1161	ADAPTER	1		X X	
12	R26375	O-RING	1		X X	
13	24M7240	WASHER	1		X X	13 X 25 X 3 MM
14	19M8011	CAP SCREW	1		X X	M12 X 30
15	19M7496	CAP SCREW	2		X X	M12 X 45
16	24M7240	WASHER	4		X X	13 X 25 X 3 MM
17	14M7275	NUT	2		X X	M12
18	U12547	O-RING	6		X X	
19	38H1404	ELBOW FITTING	2		X X	
20	T77932	O-RING	2		X X	
21	38H1329	ADAPTER	4		X X	
22	T77932	O-RING	4		X X	
23	R26448	O-RING	1		X X	
24	38H1168	ADAPTER	1		X X	
25	T77814	O-RING	1		X X	

LOADER CONTROL VALVE
(HUSCO)
(SERIAL NO. 807614-)

TP46952 -UN-04MAY95

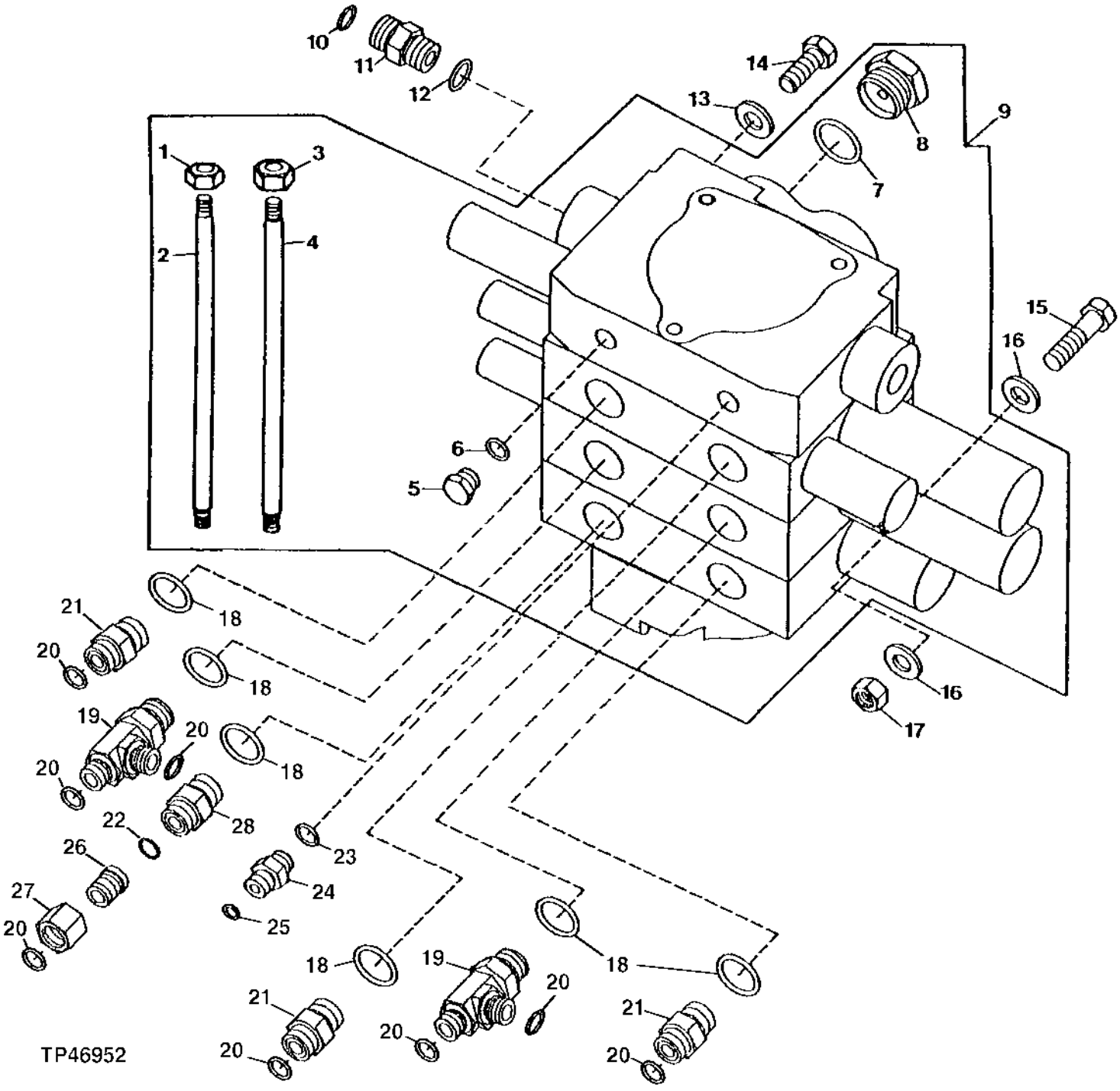

LOADER CONTROL VALVE
(HUSCO)
(SERIAL NO. 807614-)

KEY	PART NO.	PART NAME	QTY	SERIAL NO.	410D	510D	REMARKS
1	14H865	NUT	2		X	X	1/2"
2	T80563	STUD	1		X	X	12.700 X 225.425 MM (1/2" X 8-7/8") (TWO FUNCTION)
	T152873	TIE ROD	1		X	X	(THREE FUNCTION)
3	14H807	NUT	4		X	X	7/16"
4	T80561	STUD	2		X	X	11.125 X 225.425 MM (7/16" X 8-7/8") (TWO FUNCTION)
	T152871	TIE ROD	2		X	X	(THREE FUNCTION)
5	R27218	FITTING PLUG	1		X	X	
6	R26448	O-RING	1		X	X	
7	U17409	O-RING	1		X	X	
8	R49465	DRAIN PLUG	1		X	X	
9	AT165196	VALVE	1		X	X	(TWO FUNCTION) CONVENIENCE ASSEMBLY
	AT165210	VALVE	1		X	X	(THREE FUNCTION) CONVENIENCE ASSEMBLY
10	T77857	O-RING	1		X	X	
11	38H1161	ADAPTER	1		X	X	
12	R26375	O-RING	1		X	X	
13	24M7240	WASHER	1		X	X	13 X 25 X 3 MM
14	19M8011	CAP SCREW	1		X	X	M12 X 30
15	19M7496	CAP SCREW	2		X	X	M12 X 45
16	24M7240	WASHER	4		X	X	13 X 25 X 3 MM
17	14M7275	NUT	2		X	X	M12
18	U12547	O-RING	6		X	X	
19	38H1374	TEE FITTING	2		X	X	
20	T77857	O-RING	8		X	X	
21	38H1175	ADAPTER	3		X	X	
22	T77932	O-RING	1		X	X	
23	R26448	O-RING	1		X	X	
24	38H1168	ADAPTER	1		X	X	
25	T77814	O-RING	1		X	X	
26	38H1471	REDUCER	1		X	X	
27	38H1355	TUBE NUT	1		X	X	
28	38H1329	ADAPTER	1		X	X	

LOADER CONTROL VALVE
(BUCKET SECTION WITH RETURN-TO-DIG)
(HUSCO)
(SERIAL NO. 801200-)

TP45477 -UN-01JAN94

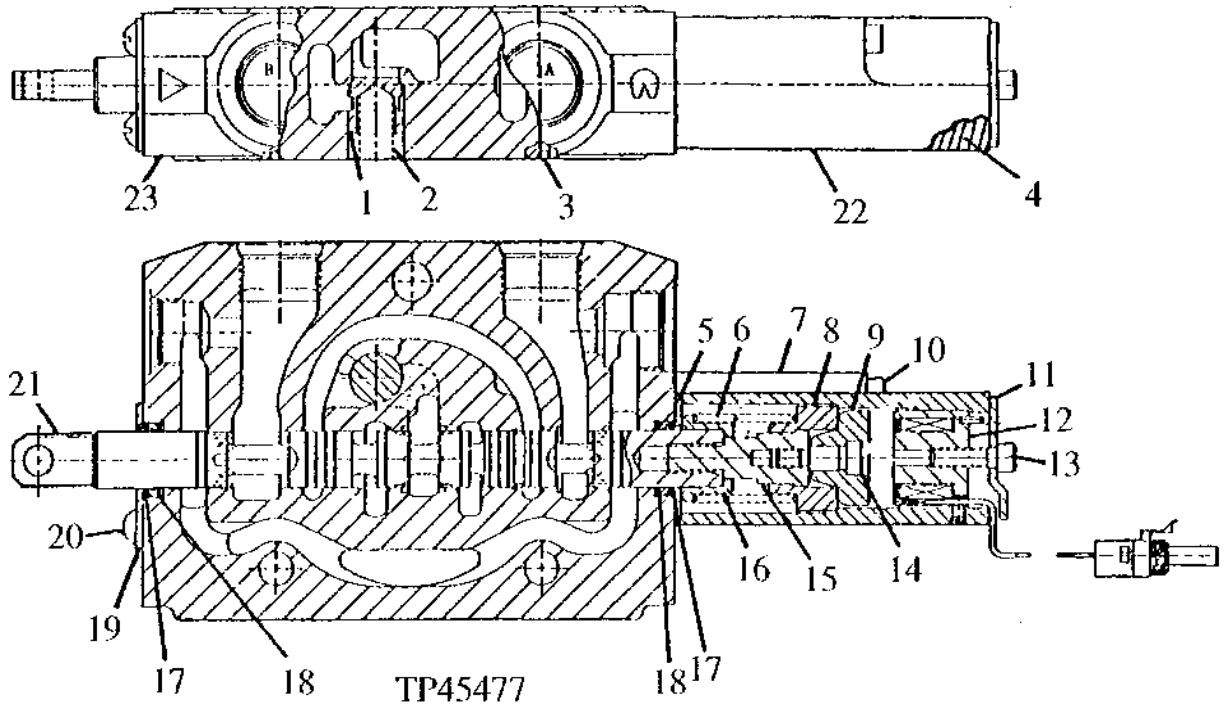

KEY	PART NO.	PART NAME	QTY	SERIAL NO.	410D	510D	REMARKS
1	T81538	POPPET	1		X	X	
2	T81539	SPRING	1		X	X	
3	T118685	O-RING	1		X	X	(BETWEEN SECTION)
4	T118799	FILTER	1		X	X	
5	T152377	RETAINER	1		X	X	
6	T118683	SPRING	1		X	X	
7	T118699	CAP	1		X	X	
8	T118700	PLATE	1		X	X	
9	T105564	PISTON	1		X	X	
10	T118703	SCREW	1		X	X	
11	T118705	CAP	1		X	X	
12	AT169555	MAGNETIC PICKUP TOOL	1		X	X	(12 VOLT)
13	19H3554	SCREW	1		X	X	1/4" X 0.880"
14	T118704	SCREW	1		X	X	
15	T118702	END	1		X	X	
16	T81540	RETAINER	1		X	X	
17	.....	SEAL	1		X	X	(K)
18	.....	SEAL	2		X	X	(K)
19	T81524	PLATE	1		X	X	
20	21H1018	SCREW	2		X	X	1/4" X 3/8"
21	.....	SPOOL VALVE	1				
22	AT168731	CAP	1		X	X	POSITIONER
23	AT165506	SPOOL VALVE	1		X	X	

(K) AT168675 KIT, SPOOL SEAL (HUSCO)

LOADER CONTROL VALVE
(BOOM SECTION)
(HUSCO)
(SERIAL NO. 801200-)

TP45475 -UN-01JAN94

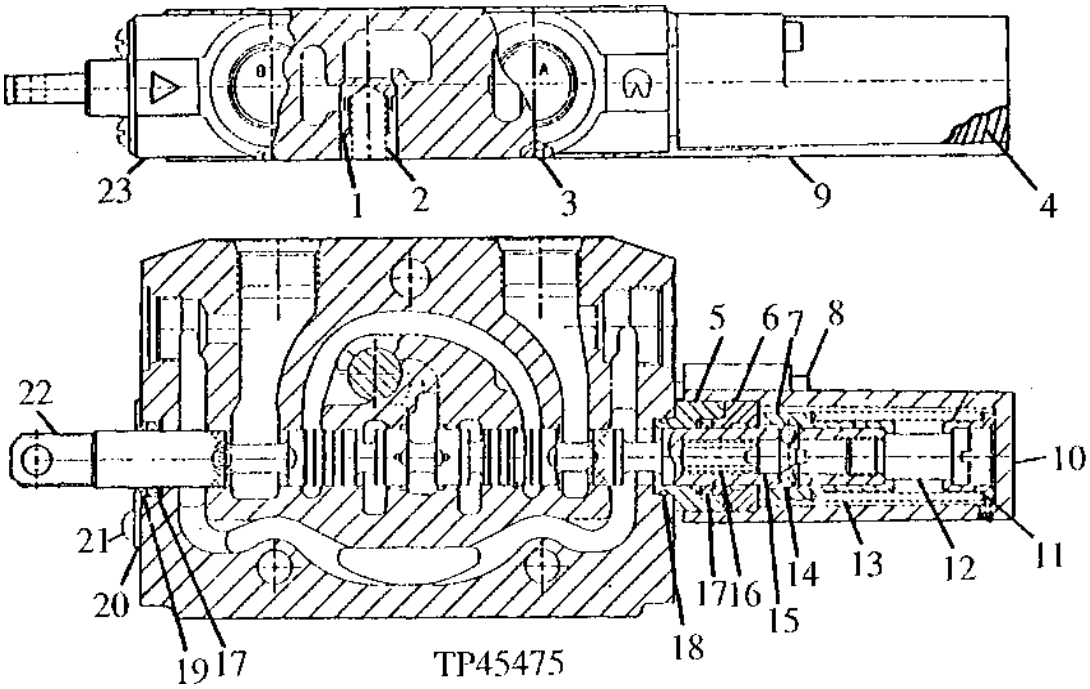

KEY	PART NO.	PART NAME	QTY	SERIAL NO.	410D	510D	REMARKS
1	T81538	POPPET	1		X	X	
2	T81539	SPRING	1		X	X	
3	T118685	O-RING	1		X	X	(BETWEEN SECTION)
4	T118799	FILTER	1		X	X	
5	T152404	SLEEVE	1		X	X	
6	T157698	SLEEVE	1		X	X	(ALSO ORDER (4) T157697)
7	T118708	VALVE SEAT INSERT	1		X	X	
8	T118712	SCREW	2		X	X	
9	AT173769	CAP	1		X	X	POSITIONER
10	T152398	CAP	1		X	X	
11	T118709	VALVE SEAT INSERT	1		X	X	
12	T118711	END	1		X	X	
13	T118710	SPRING	1		X	X	
14	T157697	BALL	4		X	X	(ALSO ORDER T157698)
15	T118715	CAM	1		X	X	
16	T118714	SPRING	1		X	X	
17	.....	SEAL	2		X	X	(K)
18	.....	SEAL	1		X	X	(K)
19	.....	SEAL	1		X	X	(K)
20	T81524	PLATE	1		X	X	
21	21H1018	SCREW	2		X	X	
22	.....	SPOOL VALVE	1		X	X	
23	AT165507	SPOOL VALVE	1		X	X	

(K) AT168675 KIT, SPOOL SEAL (HUSCO)

LOADER CONTROL VALVE
(INLET / PRIORITY VALVE)
(HUSCO)
(SERIAL NO. 801200-)

TP45469 -UN-01JAN94

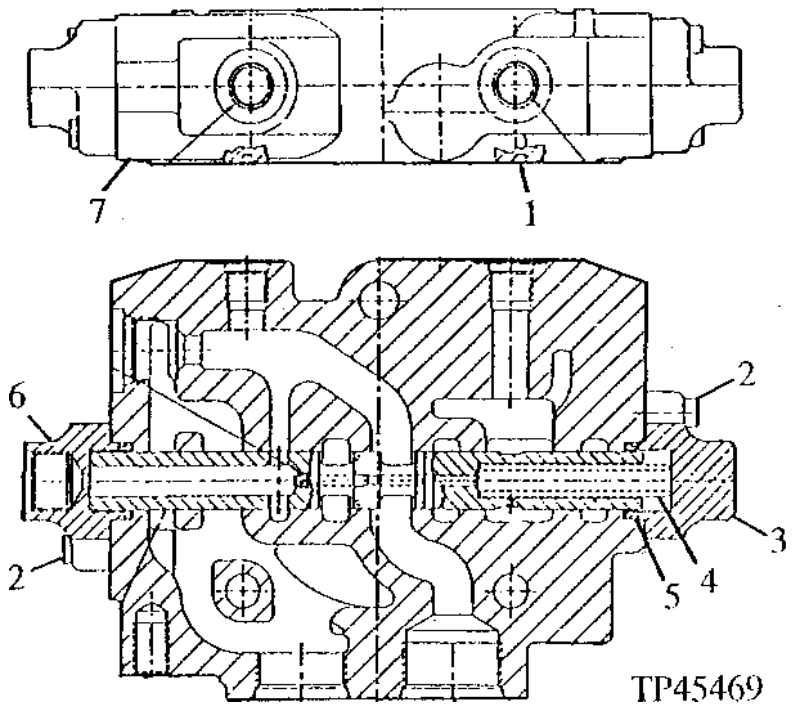

KEY	PART NO.	PART NAME	QTY	SERIAL NO.	410D	510D	REMARKS
1	T118685	O-RING	1		X	X	(BETWEEN END PLATE)
2	19H3554	SCREW	4		X	X	1/4" X 0.880"
3	T160517	CAP	1		X	X	(SUB FOR T152361) (ALSO ORDER (2) 19H2935)
4	T152374	SPRING	1		X	X	
5	U15192	O-RING	2		X	X	(K)
6	T160516	CAP	1		X	X	(SUB FOR T151682) (ALSO ORDER (2) 19H2935)
7	AT165505	FLOW CONTROL HYD. VALVE	1		X	X	

(K) AT168675 KIT, SPOOL SEAL (HUSCO)

AUXILIARY SECTION
(THIRD FUNCTION)
(HUSCO)
(SERIAL NO. 801200-)

TP45474 -UN-01JAN94

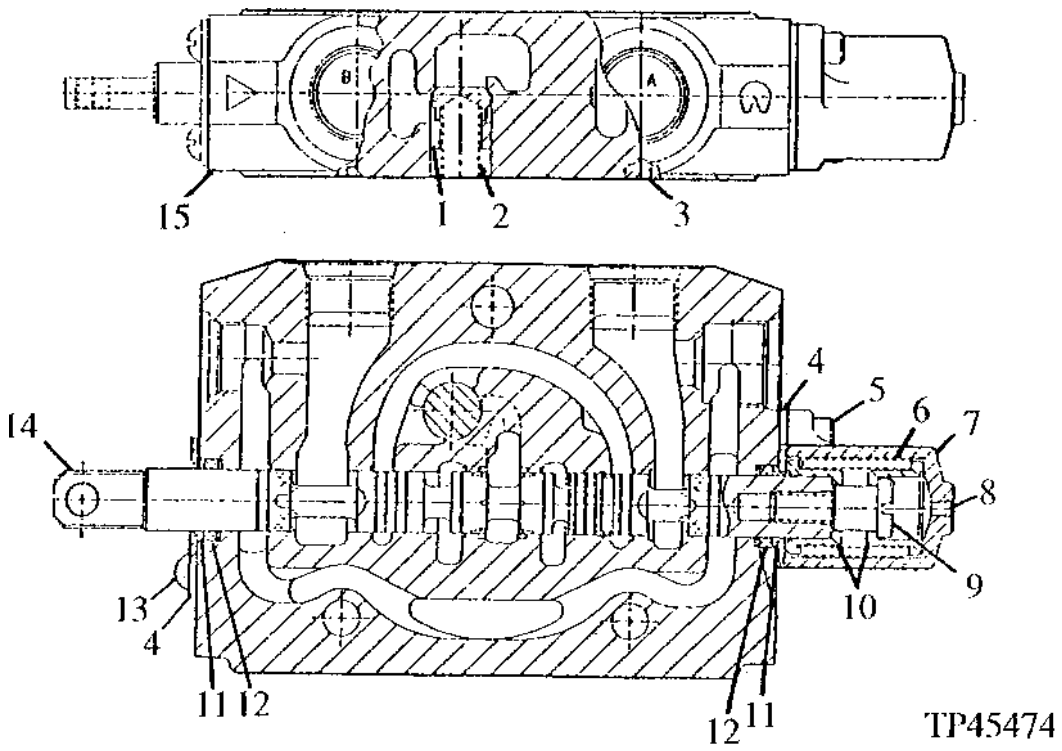

KEY	PART NO.	PART NAME	QTY	SERIAL NO.	451 100 DD	REMARKS
1	T81538	POPPET	1		X X	
2	T81539	SPRING	1		X X	
3	T118685	O-RING	1		X X	(BETWEEN SECTION)
4	T81524	PLATE	2		X X	
5	19H3554	SCREW	2		X X	1/4" X 0.880"
6	T153105	SPRING	1		X X	
7	T118808	CAP	1		X X	
8	T118799	FILTER	1		X X	
9	T81541	SCREW	1		X X	
10	T81540	RETAINER	2		X X	
11	.....	SEAL	2		X X	(K)
12	.....	SEAL	2		X X	(K)
13	21H1018	SCREW	2		X X	
14	.....	SPOOL VALVE	1		X X	
15	AT165508	SPOOL VALVE	1		X X	

(K) KIT AT168675 KIT, SPOOL SEAL

LOADER CONTROL VALVE
(OUTLET SECTION)
(HUSCO)
(SERIAL NO. 801200-)

TP45479 -UN-01JAN94

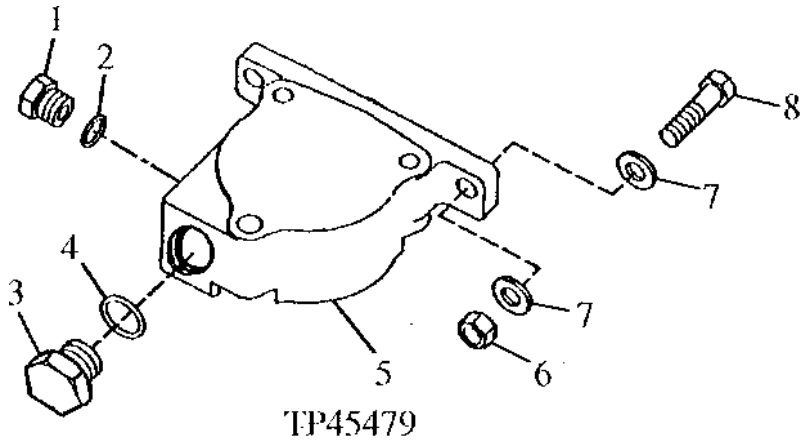

TP45479

KEY	PART NO.	PART NAME	QTY	SERIAL NO.	410D	510D	REMARKS
1	R27474	DRAIN PLUG	1		X	X	
2	R26906	O-RING	1		X	X	19.177 X 2.464 MM (0.755" X 0.097")
3	R36636	FITTING PLUG	1		X	X	
4	R29936	O-RING	1		X	X	29.743 X 2.946 MM (1.171" X 0.116")
5	T151365	SECTION	1		X	X	
6	14M7275	NUT	2		X	X	M12
7	24M7240	WASHER	4		X	X	13 X 25 X 3 MM
8	19M7496	CAP SCREW	2		X	X	M12 X 45

LOADER RELIEF VALVE AND KIT
(SERIAL NO. 801200-) (410D, 510D)

TP45595 -UN-06JAN95

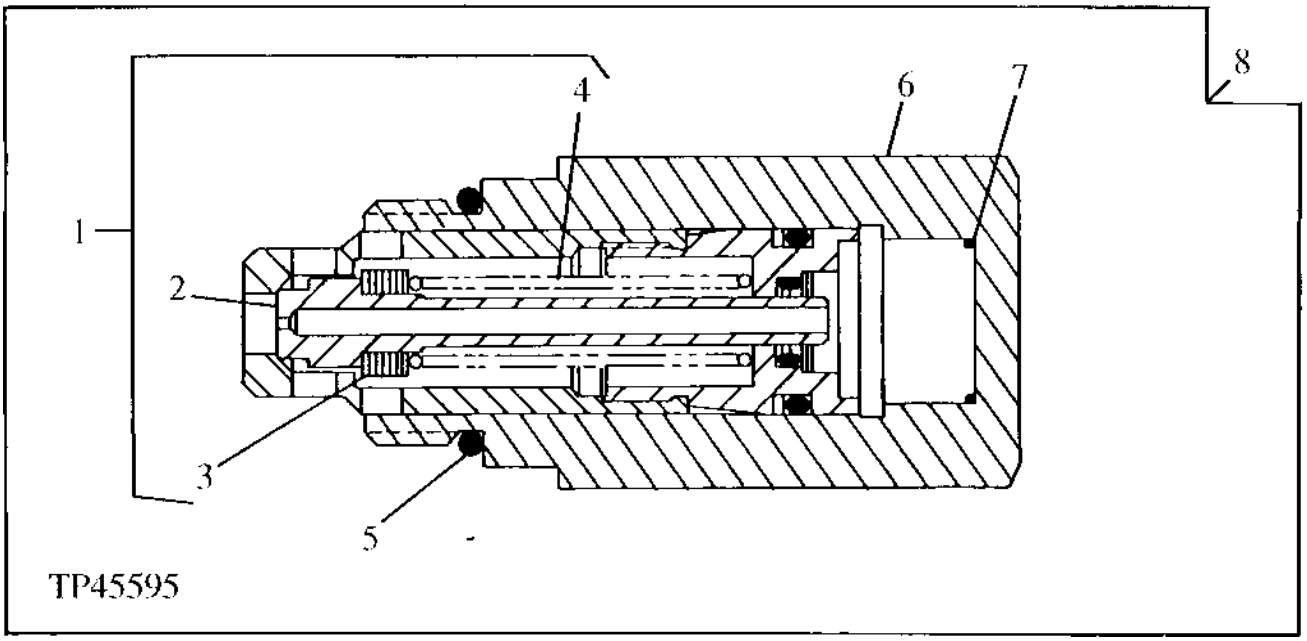

KEY	PART NO.	PART NAME	QTY	SERIAL NO.	410D	510D	REMARKS
1	AT135715	KIT	1		X	X	3000 PSI (20,684 KPA)
2	.....	POPPET	1		X	X	
3	.....	SHIM	AR		X	X	(K)
4	.....	COMPRESSION SPRING	1		X	X	
5	T118681	O-RING	1		X	X	
6	T118866	HOUSING	1		X	X	
7	T118867	SPRING	1		X	X	
8	AT135714	PRESSURE RELIEF VALVE	1		X	X	(AUXILIARY VALVE) (TOP PORT)

(A) AT189413 KIT, RELIEF VALVE SEAL (CONTAINS (2) T118681)

LOADER RELIEF VALVES AND KITS
(HUSCO)
(SERIAL NO. 801200-)

TP48801 -UN-09MAY95

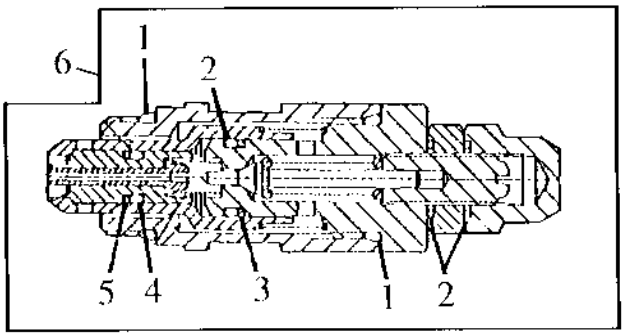

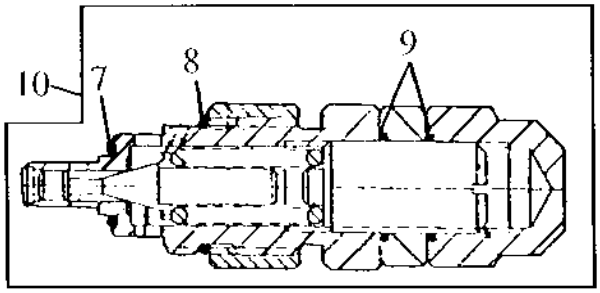

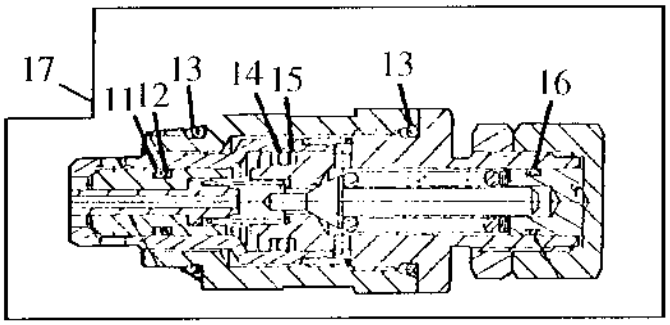

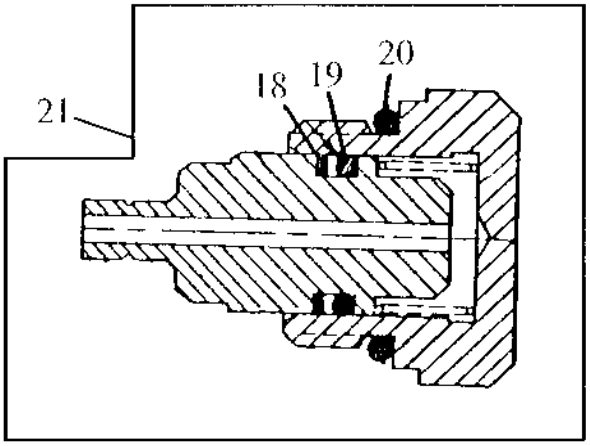

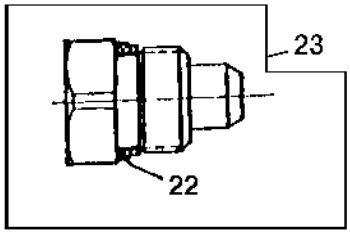

TP48801

LOADER RELIEF VALVES AND KITS
(HUSCO)
(SERIAL NO. 801200-)

KEY	PART NO.	PART NAME	QTY	SERIAL NO.	410D	510D	REMARKS
1	.....	O-RING	2		X	X	(K)
2	.....	O-RING	3		X	X	(K)
3	.....	BACK-UP RING	1		X	X	(K)
4	.....	O-RING	1		X	X	(K)
5	.....	O-RING	1		X	X	(K)
6	AT169268	PRESSURE RELIEF VALVE	1		X	X	(3150 PSI) (INLET SECTION) (PUMP CLIPPER RELIEF)
7	.....	O-RING	1		X	X	(K)
8	.....	O-RING	1		X	X	(K)
9	.....	O-RING	1		X	X	(K)
10	AT169269	PRESSURE RELIEF VALVE	1		X	X	(4500 PSI) (BUCKET SECTION) (TOP PORT)
	AT118501	PRESSURE RELIEF VALVE	1		X	X	(3500 PSI) (BOOM SECTION) (TOP PORT) (SUB FOR AT114681, THIS APPLICATION)
11	.....	BACK-UP RING	1		X	X	(K)
12	.....	O-RING	1		X	X	(K)
13	U12547	O-RING	2		X	X	(K)
14	.....	O-RING	1		X	X	(K)
15	.....	BACK-UP RING	2		X	X	(K)
16	.....	O-RING	1		X	X	(K)
17	AT169272	PRESSURE RELIEF VALVE	1		X	X	(4500 PSI) (BUCKET SECTION) (BOTTOM PORT)
18	.....	BACK-UP RING	1		X	X	(K)
19	.....	O-RING	1		X	X	(K)
20	U12547	O-RING	1		X	X	(K)
21	AT169373	CHECK VALVE	1		X	X	(BOOM SECTION) (BOTTOM PORT)
22	T183756	SEAL	1		X	X	(SUB FOR T126301)
23	AT78527	PLUG	1		X	X	(AUXILIARY SECTION) (BOTTOM PORT)

(K) AT189413 KIT, RELIEF VALVE SEAL (ORDER ONE KIT PER RELIEF VALVE)

LOADER BOOM LIFT CYLINDER HYDRAULICS
(SERIAL NO. -801199)

TP44546 -UN-01JAN94

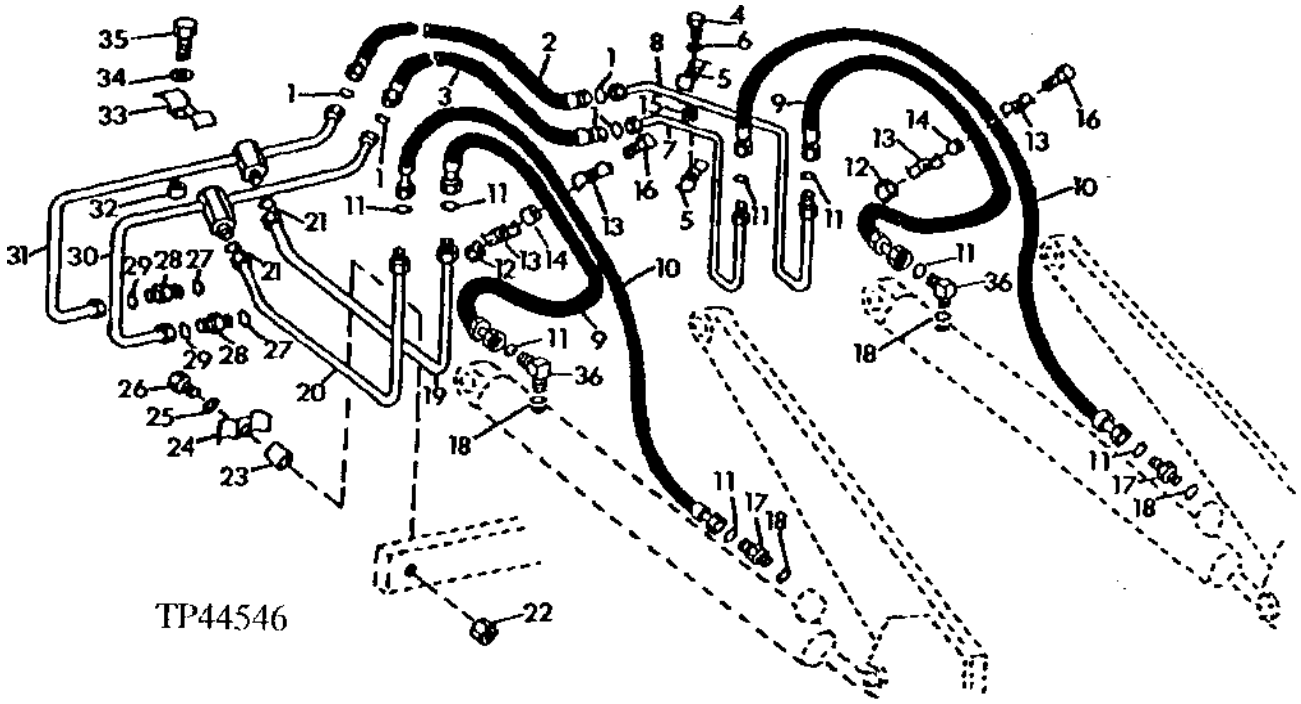

LOADER BOOM LIFT CYLINDER HYDRAULICS
(SERIAL NO. -801199)

KEY	PART NO.	PART NAME	QTY	SERIAL NO.	410D	510D	REMARKS
1	T77857	O-RING	4		X	X	
2	AT150870	HYDRAULIC HOSE - FABRICATE	1	-796854	X	X	
	AT165363	HYDRAULIC HOSE - FABRICATE	1	796855-	X	X	
3	AT150870	HYDRAULIC HOSE - FABRICATE	1	-796854	X	X	
	AT165363	HYDRAULIC HOSE - FABRICATE	1	796855-	X	X	
4	19M7407	CAP SCREW	2		X	X	M8 X 25
5	R46919	HALF CLAMP	4		X	X	
6	24M7238	WASHER	AR		X	X	8.700 X 17 X 2 MM
7	AT150869	OIL LINE	1	-796854	X	X	
	AT165116	OIL LINE	1	796855-	X	X	
8	AT150868	OIL LINE	1	-796854	X	X	
	AT165115	OIL LINE	1	796855-	X	X	
9	.....	HYDRAULIC HOSE	2	-790926	X	X	(AT145152 NO LONGER AVAILABLE) (SUB AT164059 AND (2) 38H1013)
	AT164059	HYDRAULIC HOSE - FABRICATE	2	790927-	X	X	
10	AT145154	HYDRAULIC HOSE - FABRICATE	2		X	X	13/16" X 1 270 MM (50") X 13/16"
11	T77857	O-RING	8		X	X	
12	14M7274	NUT	2		X	X	M10
13	R46919	HALF CLAMP	4		X	X	
14	28H3381	SPACER	2		X	X	
15	28H1519	WASHER	2		X	X	0.493" X 0.675" X 3/8", HEX FLANGE
16	19M7550	CAP SCREW	2		X	X	M10 X 35
17	38H1175	ADAPTER	2		X	X	(SUB FOR 38H1174, THIS APPLICATION)
18	U12547	O-RING	4		X	X	(SUB FOR R26906, THIS APPLICATION)
19	AT150884	OIL LINE	1		X	X	
20	AT150885	OIL LINE	1		X	X	
21	T77858	O-RING	2		X	X	
22	14M7273	NUT	2		X	X	M8
	14M7274	NUT	1		X	X	M10, (THIRD FUNCTION)
23	28H3381	SPACER	1		X	X	0.493" X 0.675" X 5/8"
24	R46919	HALF CLAMP	1		X	X	(SUB FOR T32707, THIS APPLICATION)
25	24M7238	WASHER	AR		X	X	8.700 X 17 X 2 MM
26	19M7322	CAP SCREW	1		X	X	M8 X 35
	19M8081	CAP SCREW	1		X	X	M10 X 80, (THIRD FUNCTION)
27	U12547	O-RING	2		X	X	
28	38H1163	ADAPTER	2		X	X	
29	T77858	O-RING	2		X	X	
30	AT150622	OIL LINE	1		X	X	
31	AT150621	OIL LINE	1		X	X	
32	28H3381	SPACER	1		X	X	0.493" X 0.675" X 5/8"
33	R46919	HALF CLAMP	1		X	X	
34	24M7238	WASHER	AR		X	X	8.700 X 17 X 2 MM
35	19M7322	CAP SCREW	1		X	X	M8 X 35
36	38H1175	ADAPTER	2	-790926	X	X	
	38H1013	ELBOW FITTING	2	790927-	X	X	

LOADER BOOM LIFT CYLINDER HYDRAULICS
(SERIAL NO. 801200-807613)

TP45459 -UN-01JAN94

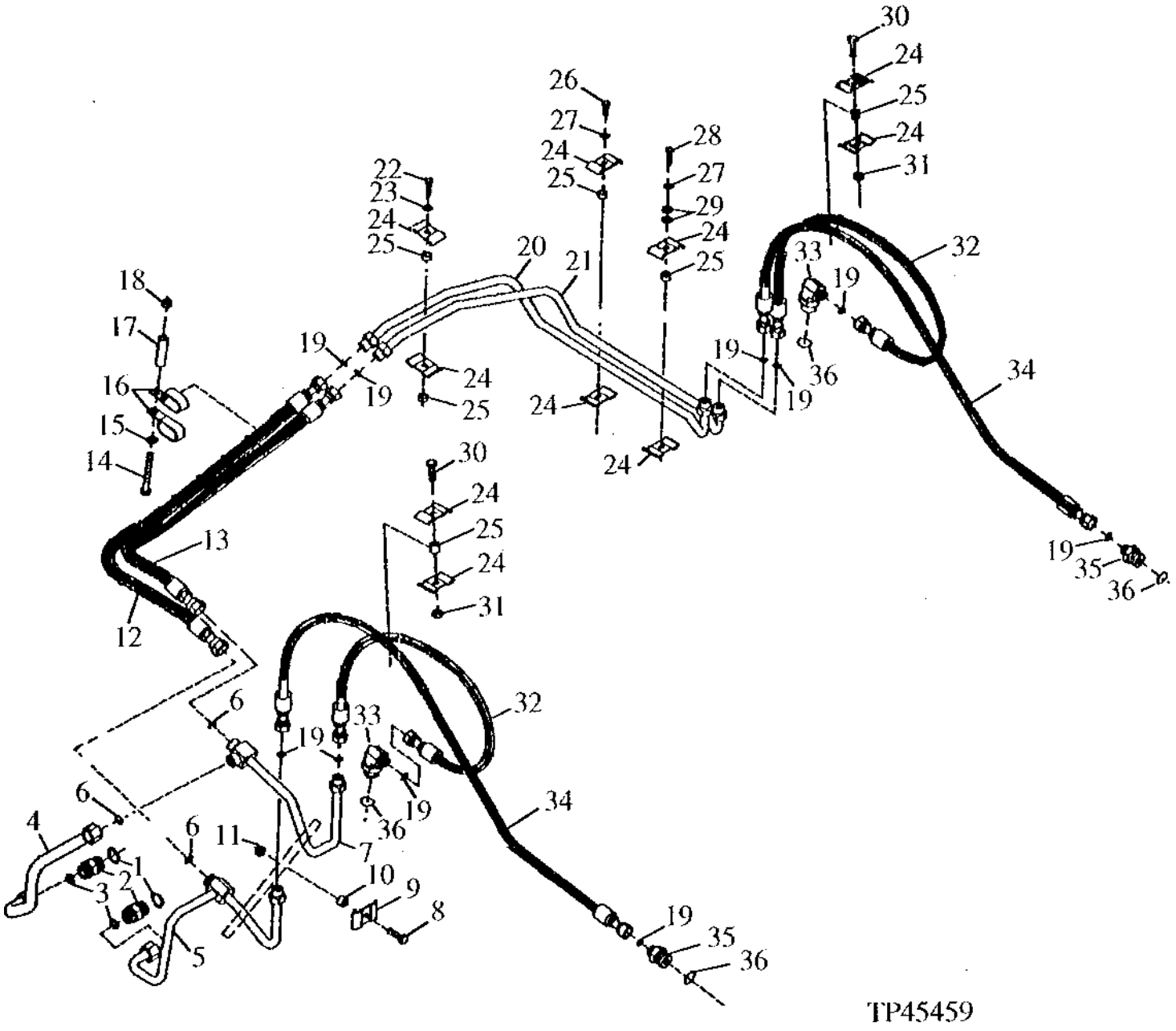

LOADER BOOM LIFT CYLINDER HYDRAULICS
(SERIAL NO. 801200-807613)

KEY	PART NO.	PART NAME	QTY	SERIAL NO.	410D	510D	REMARKS
1	U12547	O-RING	2		X	X	
2	38H1329	ADAPTER	2		X	X	
3	T77932	O-RING	2		X	X	
4	AT164186	OIL LINE	1		X	X	
5	AT166645	OIL LINE	1		X	X	
6	T77932	O-RING	3		X	X	
7	AT164189	OIL LINE	1		X	X	
8	19M7550	CAP SCREW	1		X	X	M10 X 35
9	R46919	HALF CLAMP	1		X	X	
10	28H3394	BUSHING	1		X	X	0.493" X 0.675" X 1/2"
11	14M7274	NUT	1		X	X	M10
12	AT164183	HYDRAULIC HOSE - FABRICATE	1		X	X	13/16" X 940 MM (37") X 1"
13	AT165038	HYDRAULIC HOSE - FABRICATE	1		X	X	13/16" X 780 MM (30-3/4") X 1"
14	19M8093	CAP SCREW	1		X	X	M10 X 100
15	24M7239	WASHER	1		X	X	10.700 X 21 X 2.500 MM
16	AH77869	CLIP	2		X	X	
17	28H3413	BUSHING	1		X	X	
18	14M7274	NUT	1		X	X	M10
19	T77857	O-RING	10		X	X	
20	AT166513	OIL LINE	1		X	X	
21	AT166514	OIL LINE	1		X	X	
22	19M7935	CAP SCREW	1		X	X	M10 X 55
23	24M7239	WASHER	1		X	X	10.700 X 21 X 2.500 MM
24	R46919	HALF CLAMP	10		X	X	
25	28H3412	WASHER	4		X	X	0.493" X 0.675" X 3/8"
26	19M7407	CAP SCREW	1		X	X	M8 X 25
27	24M7238	WASHER	2		X	X	8.700 X 17 X 2 MM
28	19M7513	CAP SCREW	1		X	X	M8 X 30
29	24H1292	WASHER	2		X	X	11/32" X 3/4" X 0.120"
30	19M7550	CAP SCREW	2		X	X	M10 X 35
31	14M7274	NUT	2		X	X	M10
32	AT164059	HYDRAULIC HOSE - FABRICATE	2		X	X	
33	38H1013	ELBOW FITTING	2		X	X	
34	AT145154	HYDRAULIC HOSE - FABRICATE	2		X	X	13/16" X 1 270 MM (50") X 13/16"
35	38H1175	ADAPTER	2		X	X	
36	U12547	O-RING	4		X	X	

LOADER BOOM LIFT CYLINDER HYDRAULICS
(SERIAL NO. 807614-)

TP46949 -UN-01JUN95

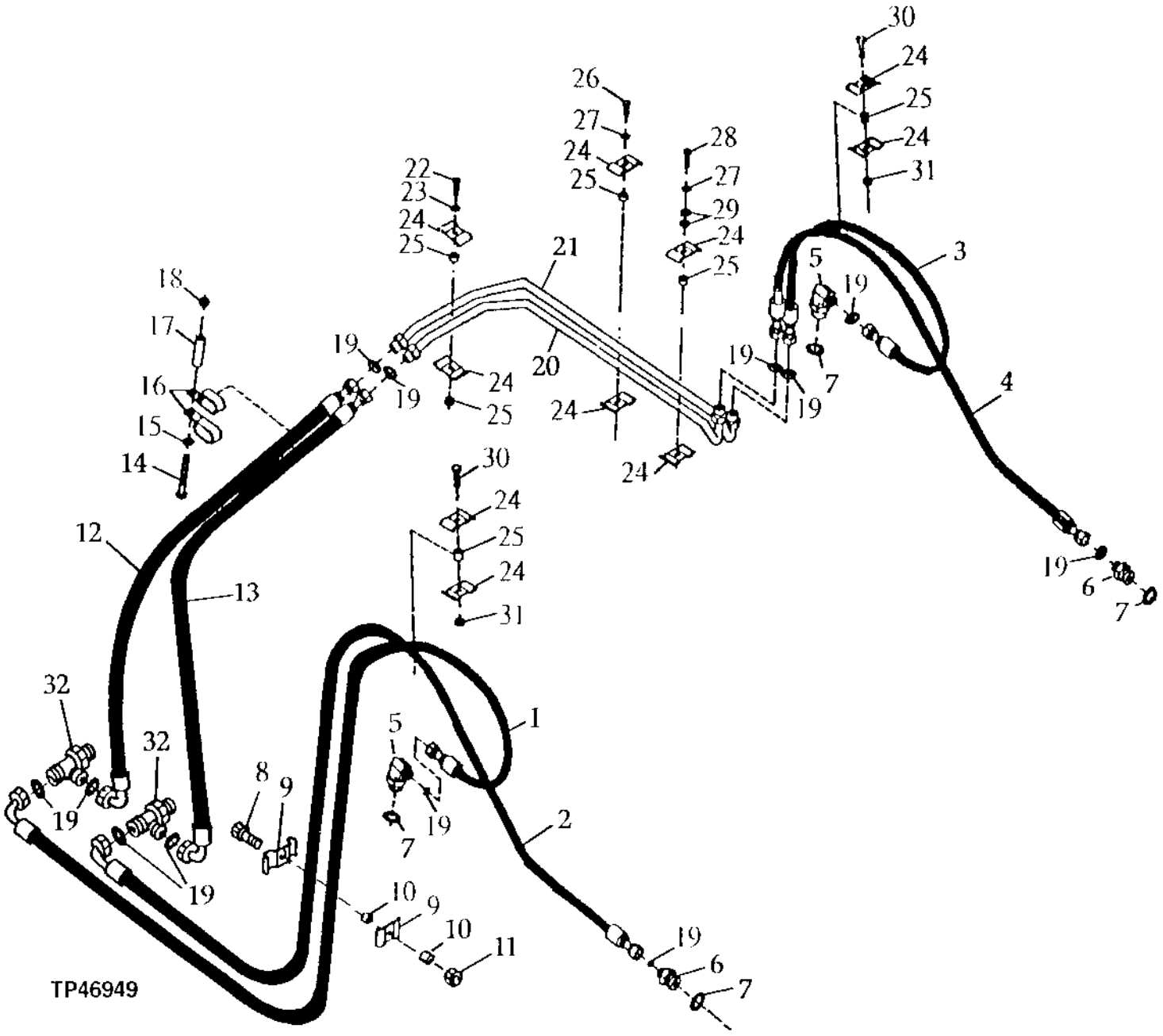

LOADER BOOM LIFT CYLINDER HYDRAULICS
(SERIAL NO. 807614-)

KEY	PART NO.	PART NAME	QTY	SERIAL NO.	410D	510D	REMARKS
1	AT172615	HYDRAULIC HOSE - FABRICATE	1		X	X	13/16" X 1 430 MM (56-1/4") X 13/16"
2	AT172612	HYDRAULIC HOSE - FABRICATE	1		X	X	13/16" X 1 760 MM (69-1/4") X 13/16"
3	AT164059	HYDRAULIC HOSE - FABRICATE	1		X	X	
4	AT145154	HYDRAULIC HOSE - FABRICATE	1		X	X	13/16" X 1 270 MM (50") X 13/16"
5	38H1012	ELBOW FITTING	2		X	X	
6	38H1174	ADAPTER	2		X	X	
7	R26906	O-RING	4		X	X	
8	19M8499	CAP SCREW	1		X	X	M10 X 60
9	R46919	HALF CLAMP	2		X	X	
10	28H3381	SPACER	2		X	X	0.493" X 0.675" X 5/8"
11	14M7274	NUT	1		X	X	M10
12	AT135719	HYDRAULIC HOSE - FABRICATE	1		X	X	13/16" X 1 015 MM (40") X 13/16"
13	AT135719	HYDRAULIC HOSE - FABRICATE	1		X	X	13/16" X 1 015 MM (40") X 13/16"
14	19M8093	CAP SCREW	1	-817429	X	X	M10 X 100
	19M8166	CAP SCREW	1	817430-	X	X	M10 X 110
15	24M7239	WASHER	1		X	X	10.700 X 21 X 2.500 MM
16	AH77869	CLIP	2		X	X	
17	28H3413	BUSHING	1		X	X	
18	14M7274	NUT	1		X	X	M10
19	T77857	O-RING	10		X	X	
20	AT171092	OIL LINE	1		X	X	
21	AT171091	OIL LINE	1		X	X	
22	19M7935	CAP SCREW	1		X	X	M10 X 55
23	24M7239	WASHER	1		X	X	10.700 X 21 X 2.500 MM
24	R46919	HALF CLAMP	10		X	X	
25	28H3412	WASHER	4		X	X	0.493" X 0.675" X 3/8"
26	19M7407	CAP SCREW	1		X	X	M8 X 25
27	24M7238	WASHER	2		X	X	8.700 X 17 X 2 MM
28	19M7513	CAP SCREW	1		X	X	M8 X 30
29	24H1292	WASHER	2		X	X	11/32" X 3/4" X 0.120"
30	19M7550	CAP SCREW	2		X	X	M10 X 35
31	14M7274	NUT	2		X	X	M10
32	38H1374	TEE FITTING	2		X	X	

LOADER BUCKET CYLINDER HYDRAULICS
(SERIAL NO. -801199)

TP46319 -UN-27SEP94

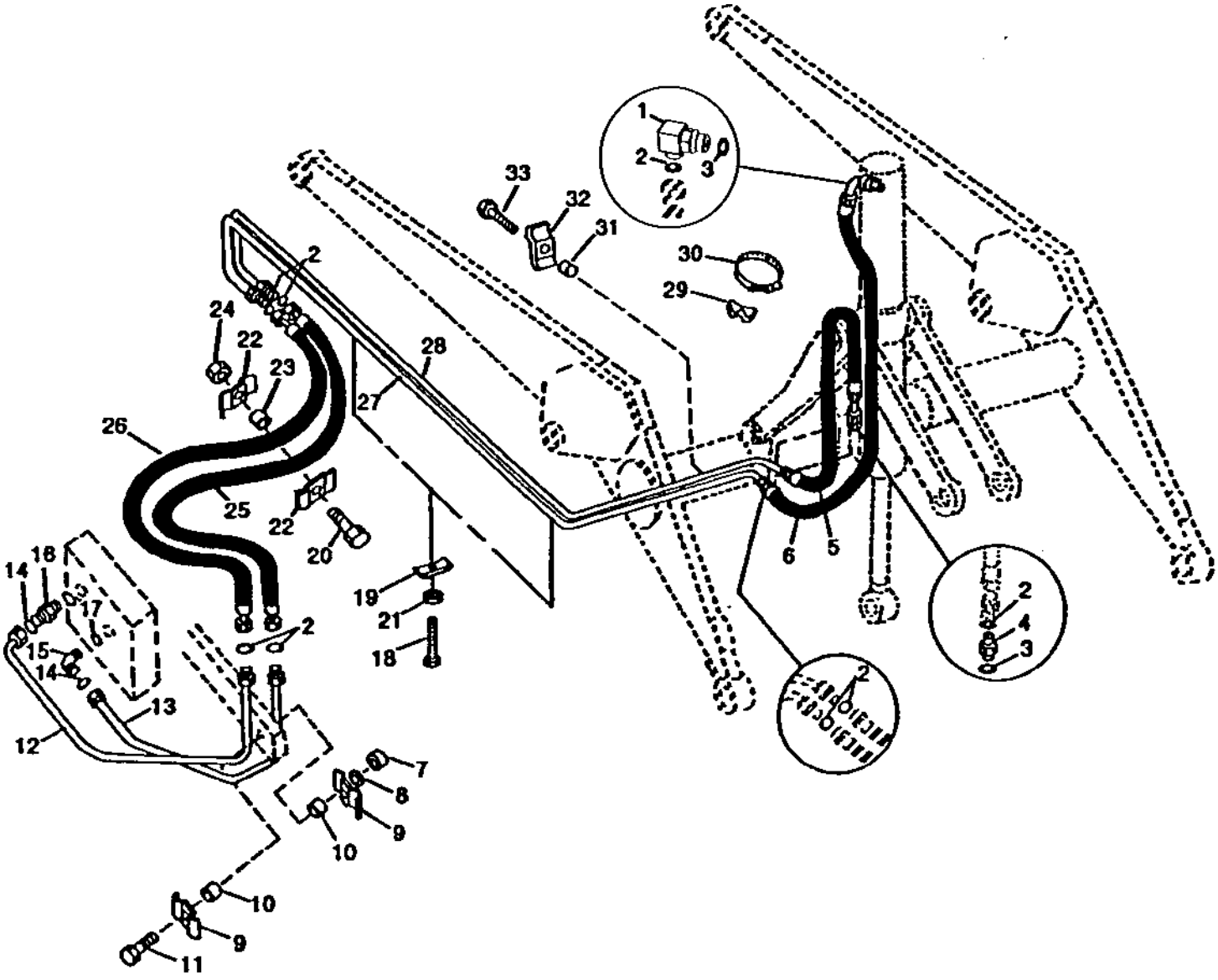

TP46319

LOADER BUCKET CYLINDER HYDRAULICS
(SERIAL NO. -801199)

KEY	PART NO.	PART NAME	QTY	SERIAL NO.	410D	510D	REMARKS
1	38H1404	ELBOW FITTING	1		X		
	38H1014	ELBOW FITTING	1			X	
2	T77932	O-RING	8		X	X	
3	U12547	O-RING	2		X	X	
4	38H1329	ADAPTER	1		X		
	38H1175	ADAPTER	1			X	
5	AT124390	HYDRAULIC HOSE - FABRICATE	1		X	X	1" X 1 412 MM (55-1/2") X 1"
6	AT124390	HYDRAULIC HOSE - FABRICATE	1		X	X	1" X 1 412 MM (55-1/2") X 1"
7	14M7273	NUT	1		X	X	M8
8	24M7238	WASHER	AR		X	X	8.700 X 17 X 2 MM
9	R46919	HALF CLAMP	2		X	X	(SUB FOR T32707, THIS APPLICATION)
10	28H3381	SPACER	2		X	X	0.493" X 0.675" X 5/8"
11	19M7875	CAP SCREW	1		X	X	M10 X 70
12	AT170940	OIL LINE	1		X	X	(SUB FOR AT150882 AND AT168156)
13	AT150883	OIL LINE	1		X	X	
14	T77858	O-RING	2		X	X	
15	38H1007	ELBOW FITTING	1		X	X	
16	38H1163	ADAPTER	1		X	X	
17	U12547	O-RING	2		X	X	
18	19M8324	CAP SCREW	2		X	X	M10 X 16
19	U40398	CLAMP	2		X	X	
20	19M7358	CAP SCREW	1		X	X	M10 X 40
21	24H1304	WASHER	2		X	X	13/32" X 23/32" X 0.120"
22	R46919	HALF CLAMP	2		X	X	
23	28H1697	SPACER	1		X	X	0.493" X 0.675" X 3/4"
24	14M7274	NUT	1		X	X	M10
25	AT148131	HYDRAULIC HOSE - FABRICATE	1		X	X	1" X 1 380 MM (54-1/4") X 1"
26	AT148131	HYDRAULIC HOSE - FABRICATE	1		X	X	1" X 1 380 MM (54-1/4") X 1"
27	AT170939	OIL LINE	1		X	X	(SUB FOR AT151194 AND AT168155)
28	AT151195	OIL LINE	1		X	X	
29	T105773	GUIDE	1		X	X	
30	C16054	CLAMP	1		X	X	(SUB FOR AC15595, THIS APPLICATION)
31	28H1522	SPACER	1		X	X	
32	T105720	CLAMP	1		X	X	
33	19M7662	CAP SCREW	1		X	X	M10 X 30

THIRD FUNCTION HYDRAULICS
(SERIAL NO. -801199)

TP42858 -UN-01JAN94

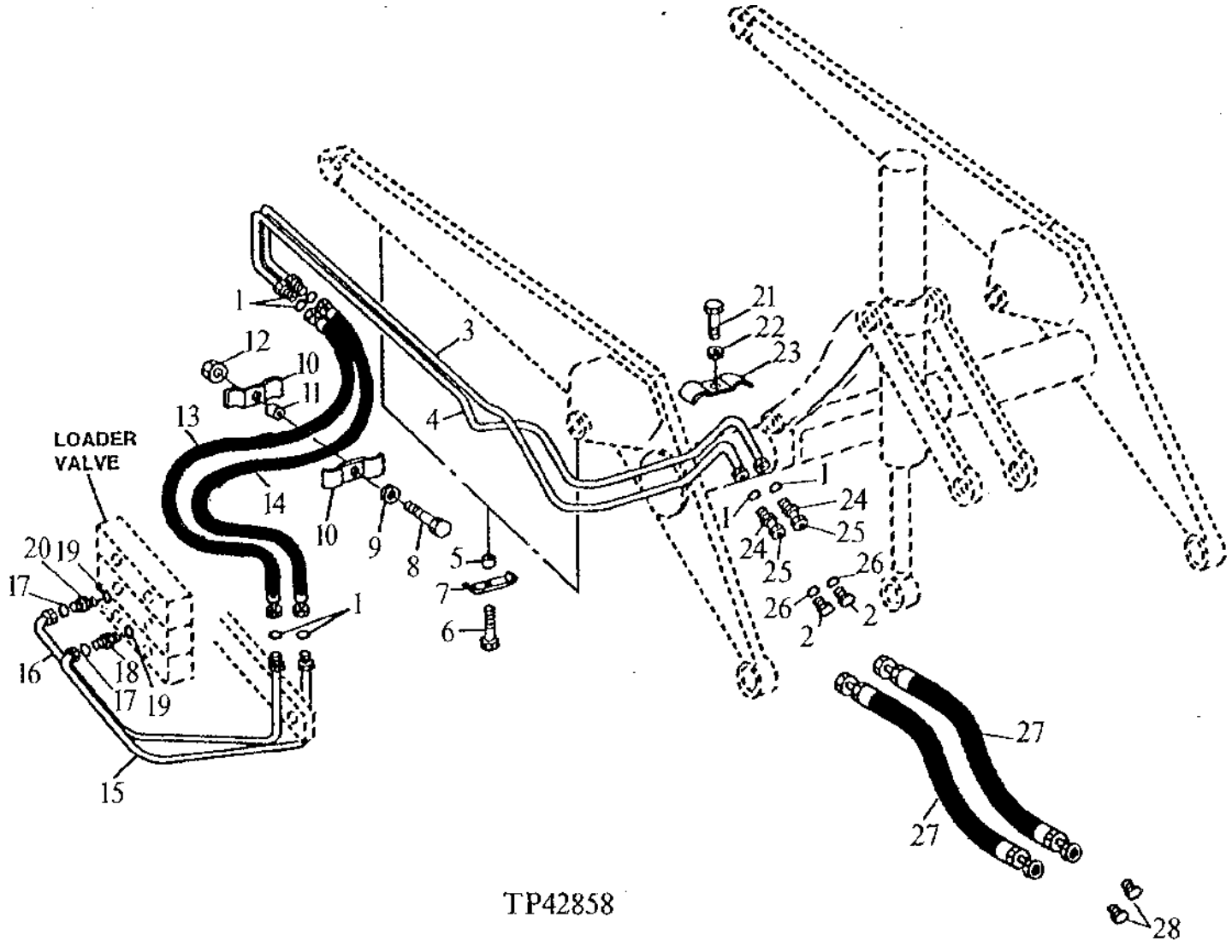

THIRD FUNCTION HYDRAULICS
(SERIAL NO. -801199)

KEY	PART NO.	PART NAME	QTY	SERIAL NO.	410D	510D	REMARKS
1	T77932	O-RING	6		X	X	
2	38H1416	FITTING	2		X	X	
3	AT151714	OIL LINE	1		X	X	(SUB FOR AT151191)
4	AT151715	OIL LINE	1		X	X	(SUB FOR AT151193)
5	28H1522	SPACER	2		X	X	
6	19M7358	CAP SCREW	2		X	X	M10 X 40
7	U40398	CLAMP	2		X	X	
8	19M7358	CAP SCREW	1		X	X	M10 X 40
9	24M7239	WASHER	1		X	X	10.700 X 21 X 2.500 MM
10	R46919	HALF CLAMP	2		X	X	
11	28H1697	SPACER	1		X	X	
11A	19M7358	CAP SCREW	1		X	X	M10 X 40
11B	24M7239	WASHER	1		X	X	10.700 X 21 X 2.500 MM
12	14M7274	NUT	1		X	X	M10
13	AT148131	HYDRAULIC HOSE - FABRICATE	1		X	X	1" X 1 380 MM (54-1/4") X 1"
13A	19M7358	CAP SCREW	1		X	X	M10 X 40
13B	24M7239	WASHER	1		X	X	10.700 X 21 X 2.500 MM
14	AT148131	HYDRAULIC HOSE - FABRICATE	1		X	X	1" X 1 380 MM (54-1/4") X 1"
15	AT150887	OIL LINE	1		X	X	
16	AT150886	OIL LINE	1		X	X	
17	T77858	O-RING	2		X	X	
18	38H1163	ADAPTER	1		X	X	
19	U12547	O-RING	2		X	X	
20	38H1163	ADAPTER	1		X	X	
21	19M8324	CAP SCREW	1		X	X	M10 X 16
22	24H1304	WASHER	1		X	X	13/32" X 23/32" X 0.120"
23	U40398	CLAMP	1		X	X	
24	38H1471	REDUCER	2		X	X	
25	38H1355	TUBE NUT	2		X	X	
26	T77857	O-RING	2		X	X	
27	AT142105	HYDRAULIC HOSE - FABRICATE	2		X	X	
28	38H1147	FITTING PLUG	2		X	X	
50	R46919	HALF CLAMP	2		X	X	
51	28H1697	SPACER	1		X	X	
..	**AT148441**	**MOUNTING PARTS**	**1**		**X**	**X**	**(THIRD FUNCTION LOADER HYDRAULICS, LINKAGE & PUUMBING) (NOT ILLUSTRATED)**

LOADER BUCKET CYLINDER AND THIRD FUNCTION HYDRAULICS
(SERIAL NO. 801200-807613)

TP45460 -UN-01JAN94

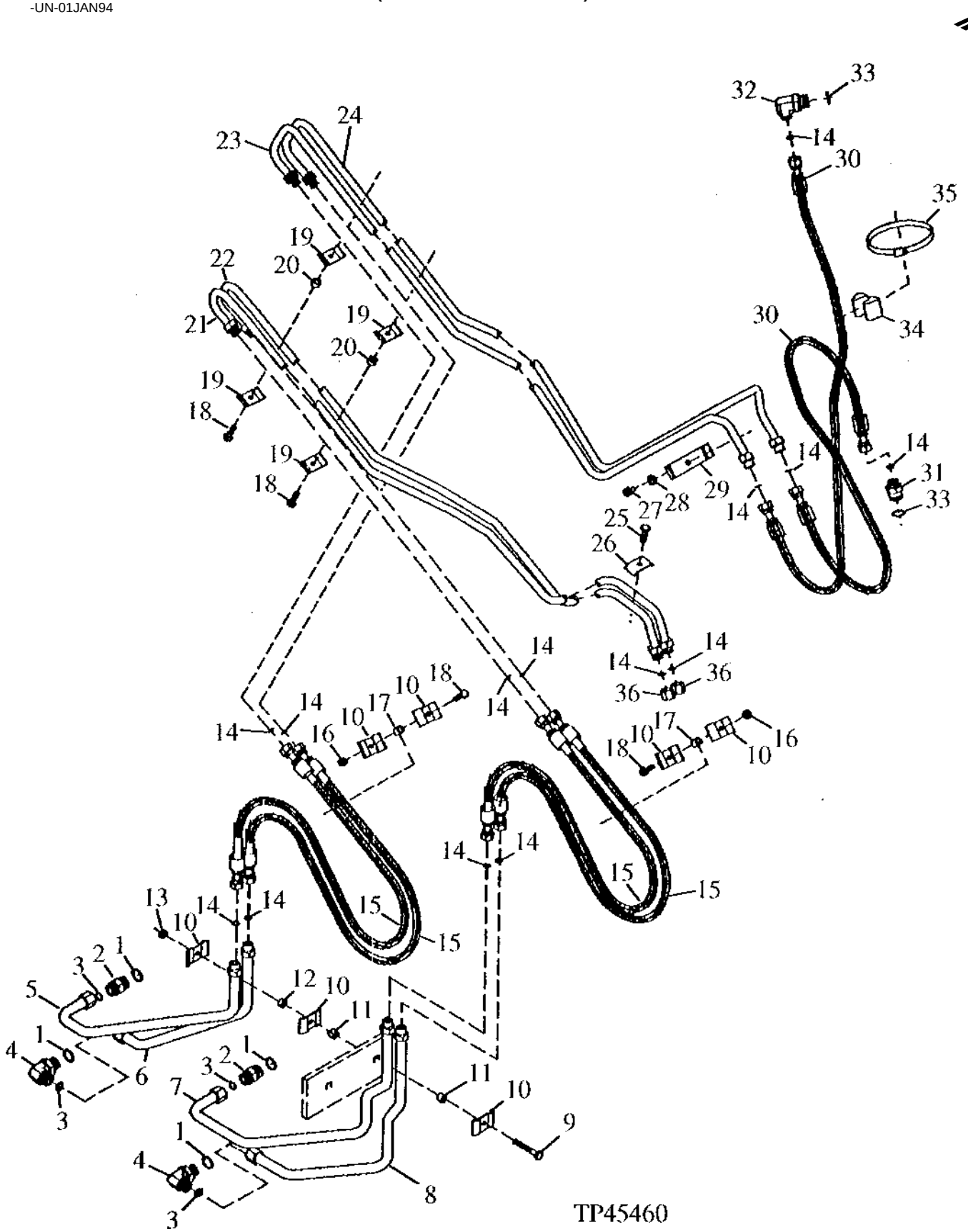

LOADER BUCKET CYLINDER AND THIRD FUNCTION HYDRAULICS
(SERIAL NO. 801200-807613)

KEY	PART NO.	PART NAME	QTY	SERIAL NO.	410D	510D	REMARKS
1	U12547	O-RING	4		X	X	
2	38H1329	ADAPTER	2		X	X	
3	T77932	O-RING	4		X	X	
4	38H1404	ELBOW FITTING	2		X	X	
5	AT164185	OIL LINE	1		X	X	
6	AT164184	OIL LINE	1		X	X	
7	AT166646	OIL LINE	1		X	X	
8	AT164191	OIL LINE	1		X	X	
9	19M7935	CAP SCREW	1		X	X	M10 X 55 (TWO FUNCTION)
	19M7875	CAP SCREW	1		X	X	M10 X 70 (THREE FUNCTION)
10	R46919	HALF CLAMP	7		X	X	
11	28H3394	BUSHING	2		X	X	0.493" X 0.675" X 1/2"
12	28H3412	WASHER	1		X	X	0.493" X 0.675" X 3/8"
13	14M7274	NUT	1		X	X	M10
14	T77857	O-RING	14		X	X	
15	AT145154	HYDRAULIC HOSE - FABRICATE	4		X	X	13/16" X 1 270 MM (50") X 13/16"
16	14M7274	NUT	2		X	X	M10
17	28H3381	SPACER	2		X	X	0.493" X 0.675" X 5/8"
18	19M7932	CAP SCREW	4		X	X	M8 X 16 (TWO FUNCTION)
	19M7550	CAP SCREW	4		X	X	M10 X 35 (THREE FUNCTION)
19	U10516	HOSE CLAMP	4		X	X	
20	28H3394	BUSHING	2		X	X	0.493" X 0.675" X 1/2"
21	AT151323	OIL LINE	1		X	X	
22	AT151322	OIL LINE	1		X	X	
23	AT166984	OIL LINE	1		X	X	
24	AT166985	OIL LINE	1		X	X	
25	19M7550	CAP SCREW	1		X	X	M10 X 35
26	U10516	HOSE CLAMP	1		X	X	
27	19M7938	CAP SCREW	1		X	X	M10 X 20
28	24M7239	WASHER	1		X	X	10.700 X 21 X 2.500 MM
29	T105720	CLAMP	1		X	X	
30	AT145676	HYDRAULIC HOSE - FABRICATE	2		X	X	13/16" X 1 326 MM (52-1/4") X 13/16"
31	38H1175	ADAPTER	1		X	X	
32	38H1013	ELBOW FITTING	1		X	X	
33	U12547	O-RING	2		X	X	
34	T105773	GUIDE	1		X	X	
35	AH104837	HOSE CLAMP	1		X	X	
36	38H1416	FITTING	2		X	X	

LOADER BUCKET CYLINDER AND THIRD FUNCTION HYDRAULICS
(SERIAL NO. 807614-)

TP46950 -UN-07APR95

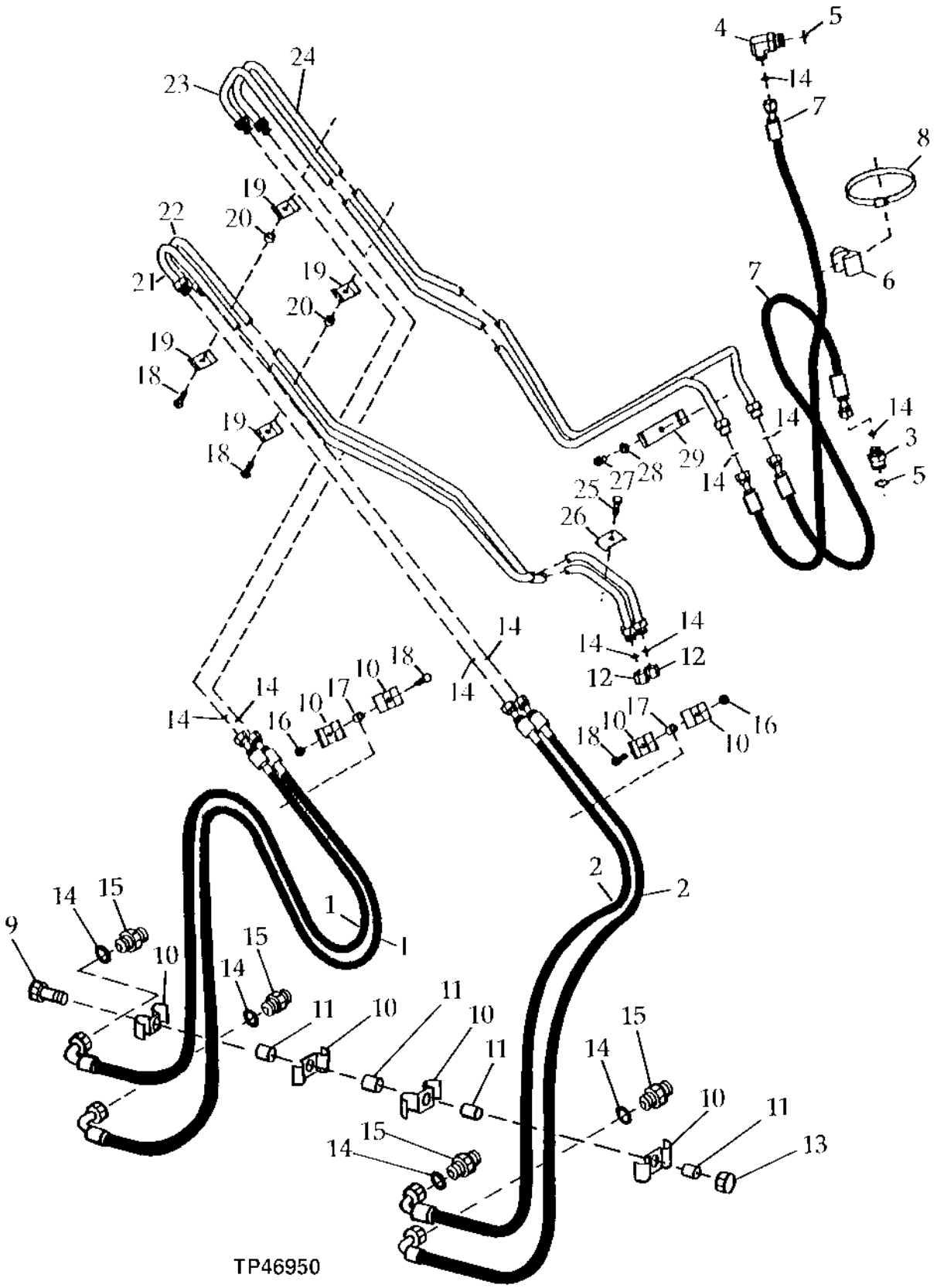

LOADER BUCKET CYLINDER AND THIRD FUNCTION HYDRAULICS
(SERIAL NO. 807614-)

KEY	PART NO.	PART NAME	QTY	SERIAL NO.	410D	510D	REMARKS
1	AT172612	HYDRAULIC HOSE - FABRICATE	2		X	X	13/16" X 1 760 MM (69-1/4") X 13/16"
2	AT172721	HYDRAULIC HOSE - FABRICATE	2		X	X	13/16" X 2 101 MM (82-3/4") X 13/16"
3	38H1175	ADAPTER	1		X	X	
4	38H1013	ELBOW FITTING	1		X	X	
5	U12547	O-RING	2		X	X	
6	T105773	GUIDE	1		X	X	
7	AT145676	HYDRAULIC HOSE	2		X	X	(SUB FOR AT172614)
8	AH104837	HOSE CLAMP	1		X	X	
9	19M8093	CAP SCREW	1		X	X	M10 X 100 (TWO FUNCTION)
10	R46919	HALF CLAMP	8		X	X	
11	28H3381	SPACER	4		X	X	0.493" X 0.675" X 5/8"
12	38H1216	ADAPTER	2		X	X	
13	14M7274	NUT	1		X	X	M10
14	T77857	O-RING	14		X	X	
15	38H1175	ADAPTER	4		X	X	
16	14M7274	NUT	2		X	X	M10
17	28H3381	SPACER	2		X	X	0.493" X 0.675" X 5/8"
18	19M7932	CAP SCREW	4		X	X	M8 X 16 (TWO FUNCTION)
	19M7550	CAP SCREW	4		X	X	M10 X 35 (THREE FUNCTION)
19	U10516	HOSE CLAMP	4		X	X	
20	28H3394	BUSHING	2		X	X	0.493" X 0.675" X 1/2"
21	AT151323	OIL LINE	1		X	X	
22	AT151322	OIL LINE	1		X	X	
23	AT166984	OIL LINE	1		X	X	
24	AT166985	OIL LINE	1		X	X	
25	19M7550	CAP SCREW	1		X	X	M10 X 35
26	U10516	HOSE CLAMP	1		X	X	
27	19M7938	CAP SCREW	1		X	X	M10 X 20
28	24M7239	WASHER	1		X	X	10.700 X 21 X 2.500 MM
29	T105720	CLAMP	1		X	X	

MULTI-PURPOSE BUCKET CYLINDER (GANNON)

TP27926 -UN-01JAN94

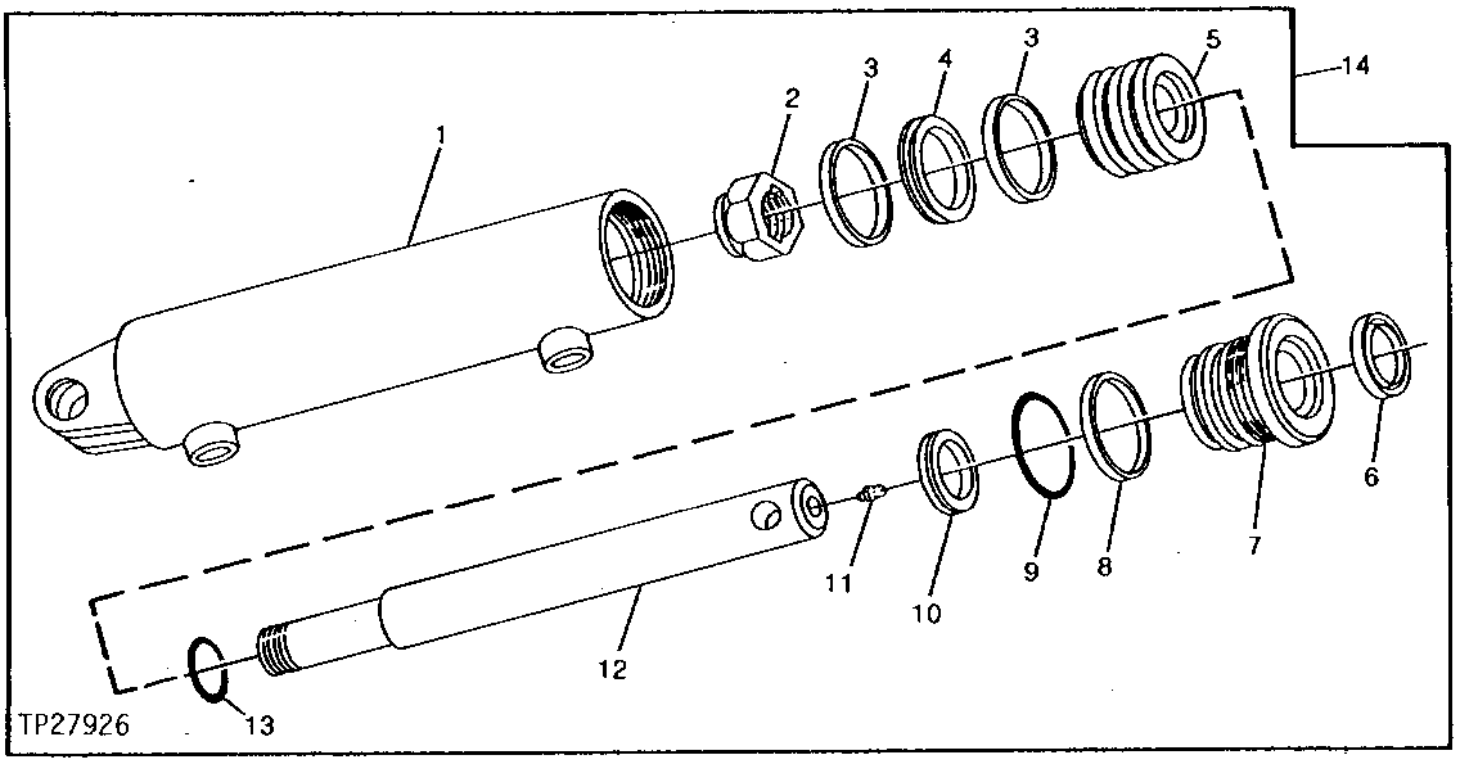

KEY	PART NO.	PART NAME	QTY	SERIAL NO.	4510 DD	REMARKS
1	.....	BARREL	1		X X	(SUB AT190880) (AT142583 NO LONGER AVAILABLE)
2	.....	NUT	1		X X	(SUB AT190880) (T24715 NO LONGER AVAILABLE)
3	.....	WEAR RING	2		X X	(K)
4	.....	SEAL	1		X X	(K)
5	.....	PISTON	1		X X	(SUB AT190880) (T128529 NO LONGER AVAILABLE)
6	.....	SEAL	1		X X	(K)
7	.....	HYDR. CYLINDER ROD GUIDE	1		X X	(SUB AT190880) (T128528 NO LONGER AVAILABLE)
8	.....	BACK-UP RING	1		X X	(K)
9	.....	O-RING	1		X X	(K)
10	.....	SEAL	1		X X	(K)
11	JD7797	LUBRICATION FITTING	1		X X	(SUB FOR JD7803, THIS APPLICATION)
12	.....	ROD	1		X X	(SUB AT190880) (T128530 NO LONGER AVAILABLE)
13	.....	O-RING	1		X X	(K)
14	.....	CYLINDER	1		X X	(SUB AT190880) (AT142578 NO LONGER AVAILABLE)
..	AT142582	KIT	1		X X	INCLUDES ALL (K) PARTS (MULTI-PURPOSE BUCKET CYLINDER REPAIR)

MULTI-PURPOSE BUCKET CYLINDER

TP62438 -UN-06JUL00

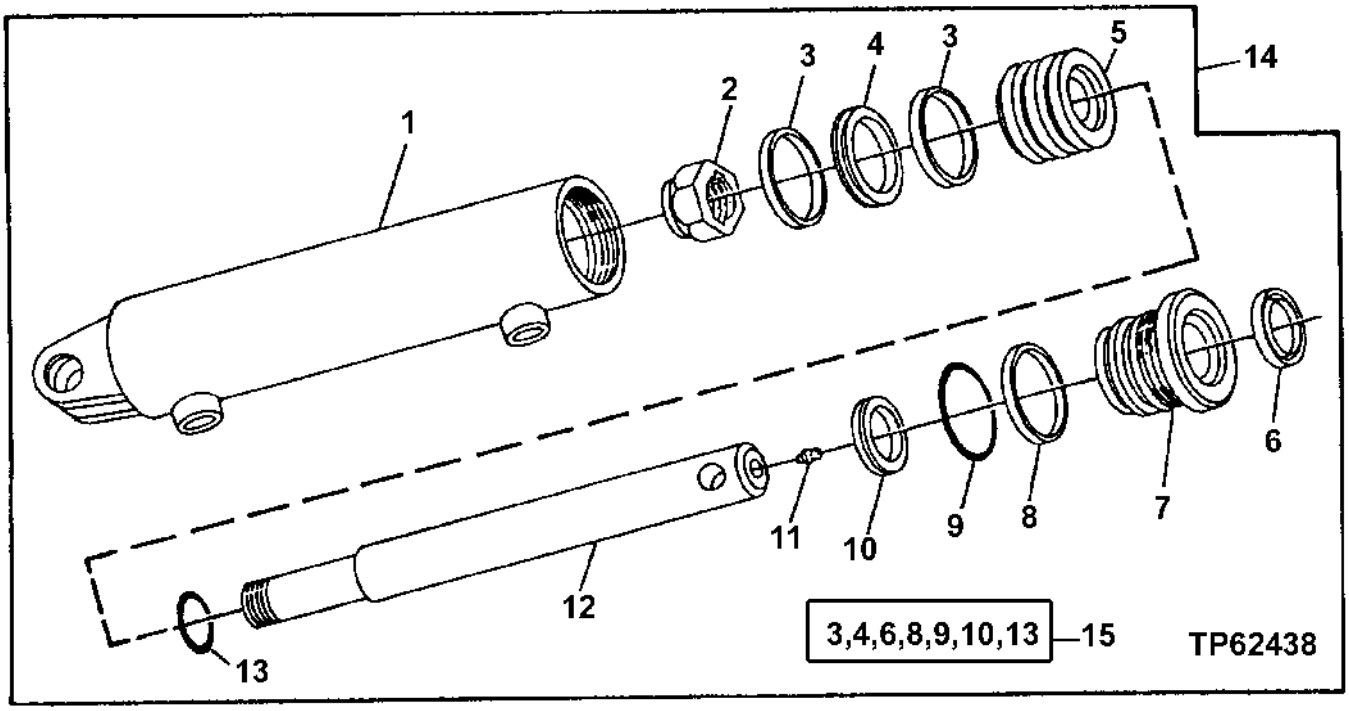

KEY	PART NO.	PART NAME	QTY	SERIAL NO.	410D	510D	REMARKS
1	AT190881	BARREL	1		X	X	
2	H29619	LOCK NUT	1		X	X	
3	.....	WEAR RING	2		X	X	
4	.....	SEAL	1		X	X	
5	T163117	PISTON	1		X	X	
6	.....	SEAL	1		X	X	
7	T163116	HYDR. CYLINDER ROD GUIDE	1		X	X	
8	.....	BACK-UP RING	1		X	X	
9	.....	O-RING	1		X	X	
10	.....	SEAL	1		X	X	
11	JD7797	LUBRICATION FITTING	1		X	X	
12	T163118	ROD	1		X	X	
13	.....	O-RING	1		X	X	
14	.....	CYLINDER	1		X	X	(AT190880 NO LONGER AVAILABLE) (SUB AH210737, T191318 AND (3) 24H1138)
15	AT190898	KIT	1		X	X	

MULTI-PURPOSE BUCKET CYLINDER AND REPAIR KIT
(REPLACEMENT CYLINDER)

T197121 -UN-08JAN04

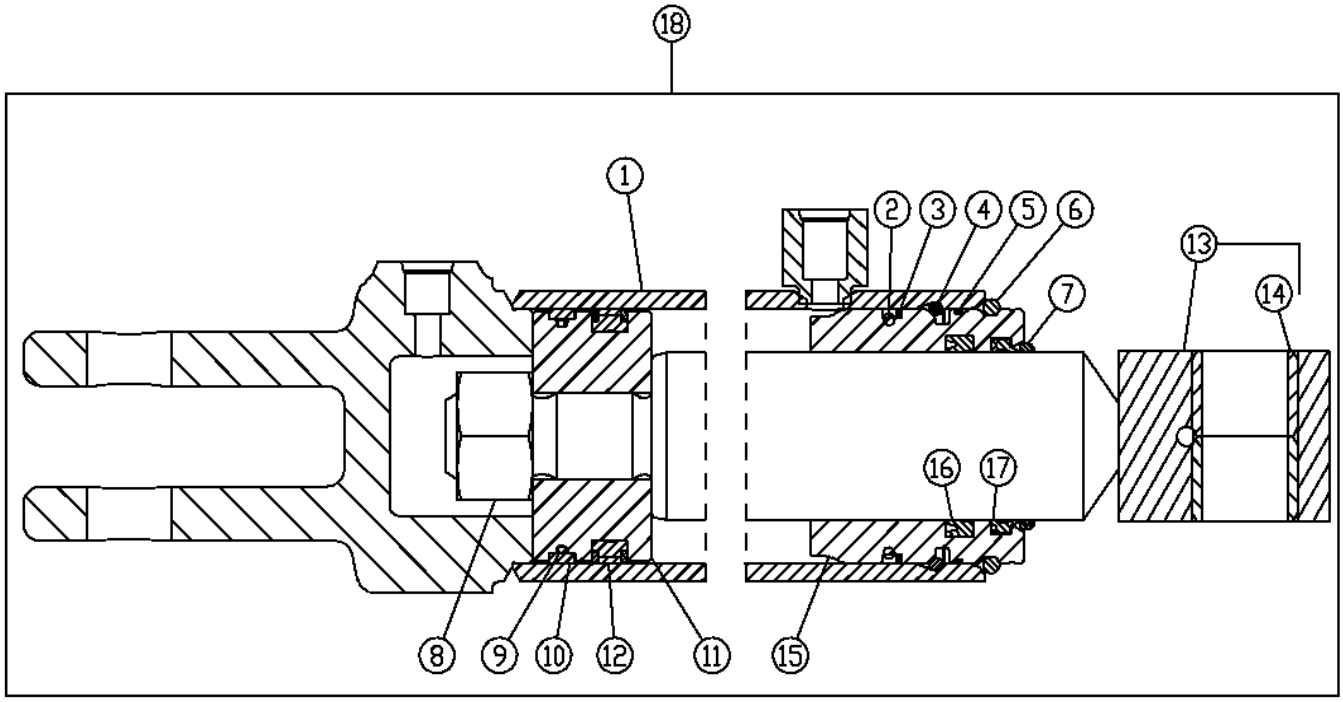

T197121

KEY	PART NO.	PART NAME	QTY	SERIAL NO.	REMARKS
1	.....	HYDRAULIC CYLINDER BARREL	1		
2	T14065	O-RING	1		
3	.....	RING	2		
4	H177854	SNAP RING	1		
5	.....	O-RING	1		
6	H180927	SNAP RING	1		
7	.....	O-RING	1		
8	H179692	NUT	1		
9	.....	WEAR RING	1		
10	.....	O-RING	1		
11	.....	PISTON	1		
12	.....	SEAL	1		
13	.....	ROD	1		
14	.....	BUSHING	1		
15	.....	HYDR. CYLINDER ROD GUIDE	1		
16	H152203	SEAL	1		
17	.....	SEAL	1		
18	AH210737	HYDRAULIC CYLINDER	1		
19	AH209022	HYDRAULIC CYLINDER KIT	1		KIT

BOOM LIFT CYLINDER

TP50365 -UN-15SEP95

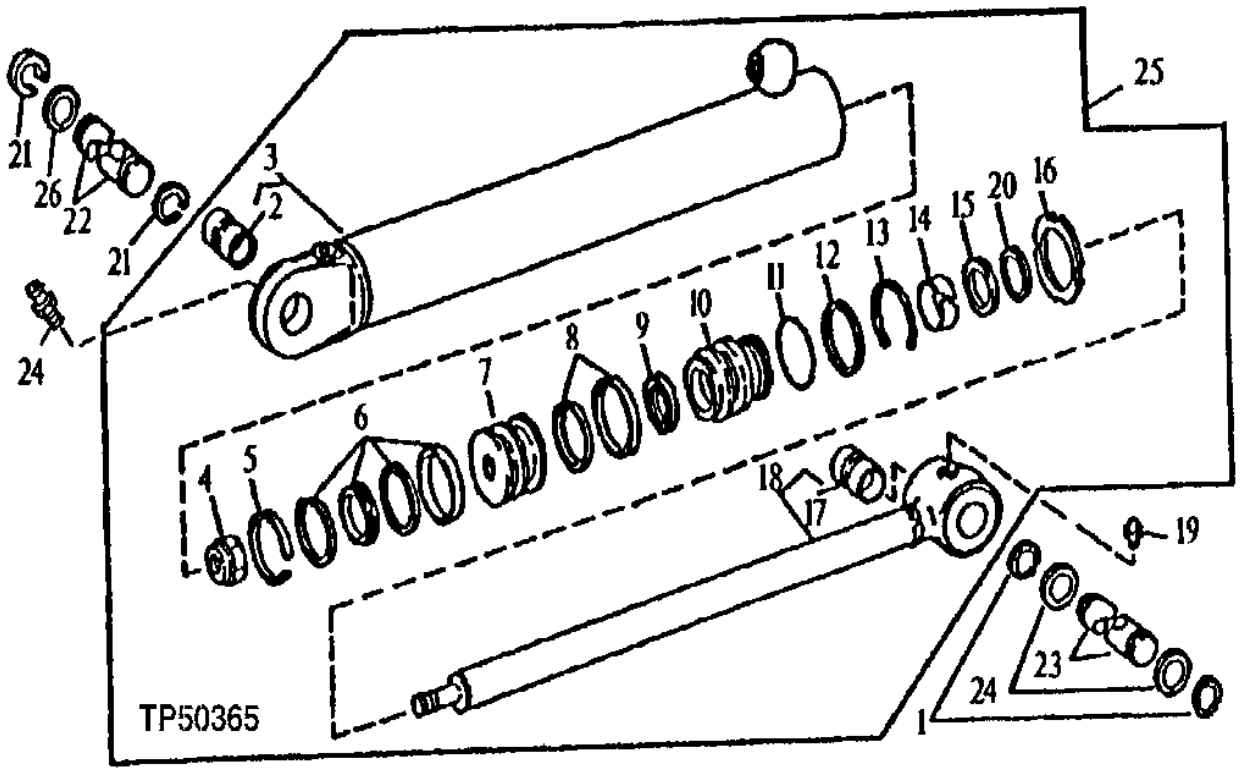

KEY	PART NO.	PART NAME	QTY	SERIAL NO.	4 5 1 1 0 0 D D	REMARKS
1	40M7180	SNAP RING	2		X X	
2	R82954	BUSHING	1		X X	
3	AH139093	HYDRAULIC CYLINDER BARREL	1		X X	
4	R81866	NUT	1		X X	
5	R81776	WEAR RING	1		X X	(BK)
6	RE20344	SEAL	1		X X	(BK)
7	R81771	PISTON	1		X X	
8	RE20491	SEAL	1		X X	(RK)
9	R81856	SEAL	1		X X	(RK)
10	.....	HYDR. CYLINDER ROD GUIDE	1		X X	(R81766 NO LONGER USED) (SUB H157642) (ALSO ORDER AH149813)
11	F1430R	O-RING	1		X X	
12	R79101	BACK-UP RING	1		X X	(BK)
13	R81788	RING	1		X X	
14	R81779	WEAR RING	1		X X	(RK)
15	RE24535	SEAL	1		X X	(RK)
16	R81794	NUT	1		X X	
17	R81850	BUSHING	1		X X	
18	AH139111	ROD	1		X X	
19	T162396	LUBRICATION FITTING	1		X X	
20	R91730	RING	AR		X X	(BK) (DISASSEMBLY AID TOOL)
21	T61226	SNAP RING	4		X X	(SUB FOR T158072) (SUB FOR 40M7166, THIS APPLICATION)
22	T100317	PIN	1	-801199	X X	49.950 X 299 MM (1.967" X 11.772")
	T158906	PIN	1	801200-	X X	(SUB FOR T158071, T106389 AND T148743)
23	T140086	PIN FASTENER	1		X X	
24	T162396	LUBRICATION FITTING	1		X X	STRAIGHT, (SUB FOR JD7799, THIS APPLICATION) (SUB FOR JD7798)
25	AH154779	HYDRAULIC CYLINDER	1		X X	(SUB FOR AH138931) (USE IF AVAILABLE)
26	24H1594	WASHER	2	-801199	X X	2-1/16" X 2-3/4" X 0.134"
	T75815	WASHER	2	801200-	X X	50.500 X 75 X 5 MM (1.988" X 2.953" X 0.197")

(BK) AH212096 CYLINDER BORE REPAIR KIT (SUB FOR AH149843 REPAIR KIT)

(RK) RE20434 CYLINDER ROD REPAIR KIT

BOOM LIFT CYLINDER
(REPLACEMENT CYLINDER)

TP50365 -UN-15SEP95

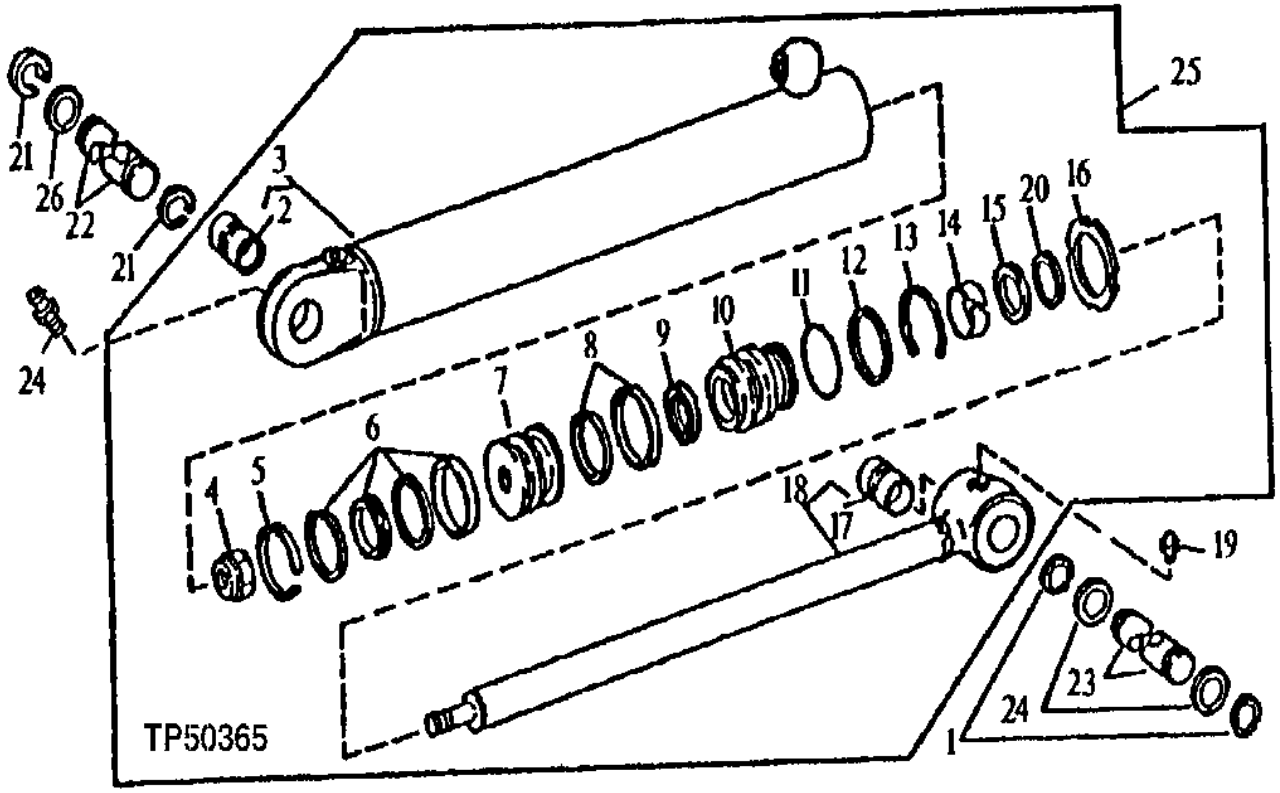

KEY	PART NO.	PART NAME	QTY	SERIAL NO.	410D	510D	REMARKS
1	40M7180	SNAP RING	2		X	X	
2	R82954	BUSHING	1		X	X	
3	AH139093	HYDRAULIC CYLINDER BARREL	1		X	X	
4	R81866	NUT	1		X	X	
5	R81776	WEAR RING	1		X	X	(BK)
6	RE20344	SEAL	1		X	X	(BK)
7	R81771	PISTON	1		X	X	
8	AH146560	SEAL	1		X	X	(RK)
9	H152202	SEAL	1		X	X	(RK)
10	H157642	HYDR. CYLINDER ROD GUIDE	1		X	X	
11	F1430R	O-RING	1		X	X	
12	R79101	BACK-UP RING	1		X	X	(BK)
13	R81788	RING	1		X	X	
14	H152793	BACK-UP RING	1		X	X	(RK)
15	AH146556	SEAL	1		X	X	(RK)
16	R81794	NUT	1		X	X	
17	R81850	BUSHING	1		X	X	
18	AH139111	ROD	1		X	X	
19	T162396	LUBRICATION FITTING	1		X	X	(SUB FOR JD7798)
20	R91730	RING	AR		X	X	(BK) (DISASSEMBLY AID TOOL)
21	T61226	SNAP RING	4		X	X	(SUB FOR T158072) (SUB FOR 40M7166, THIS APPLICATION)
22	T158906	PIN	1		X	X	49.950 X 292 MM (1.967" X 11.496")
23	T140086	PIN FASTENER	1		X	X	
24	T162396	LUBRICATION FITTING	1		X	X	STRAIGHT, (SUB FOR JD7799, THIS APPLICATION) (SUB FOR JD7798)
25	AH154779	HYDRAULIC CYLINDER	1		X	X	
26	T75815	WASHER	2		X	X	1.988" X 2.953" X 0.197"

(BK) AH212096 CYLINDER BORE REPAIR KIT (SUB FOR AH149843 REPAIR KIT)

(RK) AH149813 CYLINDER ROD REPAIR KIT

LOADER BUCKET CYLINDER
(410D)

TP42321 -UN-01JAN94

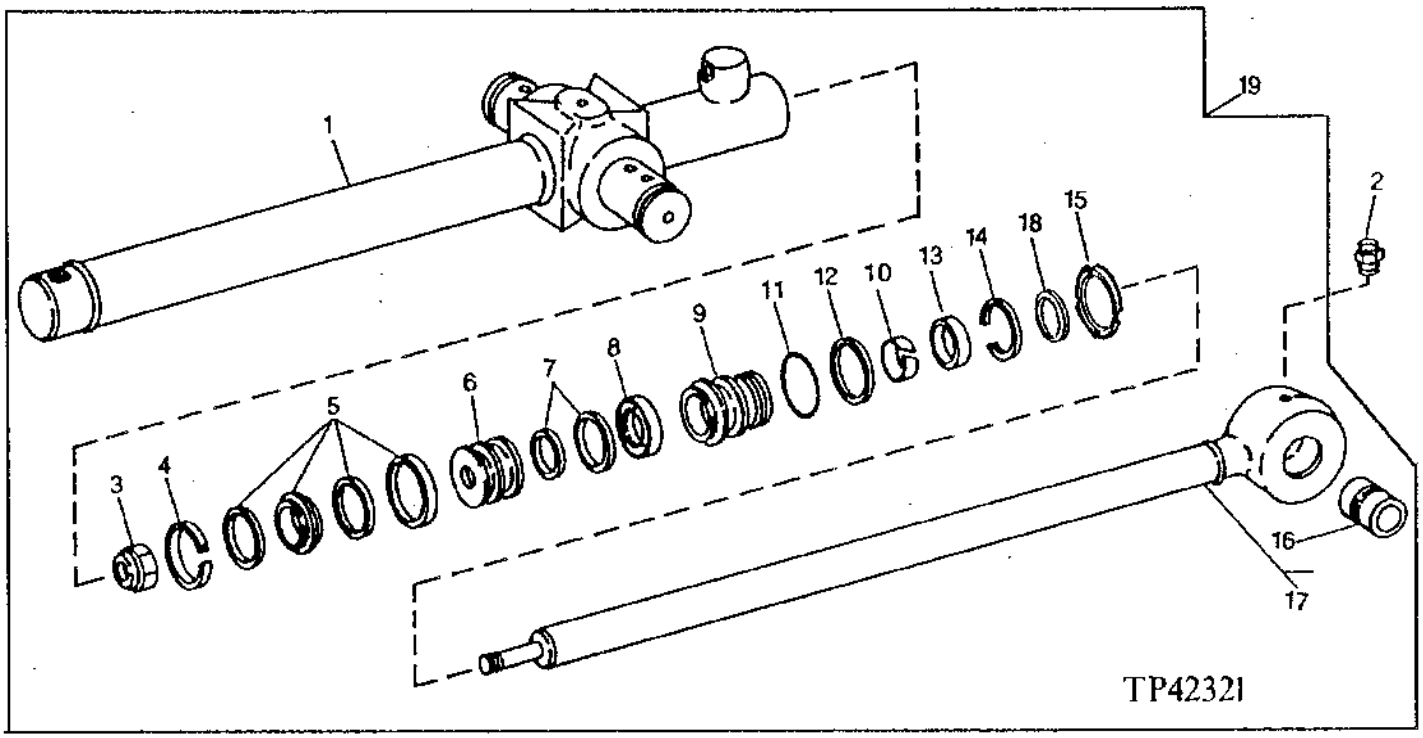

KEY	PART NO.	PART NAME	QTY	SERIAL NO.	410D	510D	REMARKS
1	RE38228	HYDRAULIC CYLINDER BARREL	1		X		
2	JD7844	LUBRICATION FITTING	1		X		(SUB FOR JD7799 AND T162396, THIS APPLICATION)
3	R81866	NUT	1		X		
4	R81776	WEAR RING	1		X		(BK)
5	RE20344	SEAL	1		X		(BK)
6	R81771	PISTON	1		X		
7	RE20491	SEAL	1		X		(RK)
8	R81856	SEAL	1		X		(RK)
9	.....	HYDR. CYLINDER ROD GUIDE	1		X		(R81766 NO LONGER AVAILABLE) (SUB H157642) (ALSO ORDER AH149813)
10	R81779	WEAR RING	1		X		(RK)
11	F1430R	O-RING	1		X		
12	R79101	BACK-UP RING	1		X		(BK)
13	RE24535	SEAL	1		X		(RK)
14	R81788	RING	1		X		
15	R81794	NUT	1		X		
16	R81850	BUSHING	1		X		
17	RE22493	ROD	1		X		
18	R91730	RING	AR		X		(BK) (DISASSEMBLY AID TOOL)
19	RE38227	HYDRAULIC CYLINDER	1		X		(USE IF AVAILABLE)

(BK) AH212096 CYLINDER BORE REPAIR KIT (SUB FOR AH149843 REPAIR KIT)

(RK) RE20434 CYLINDER ROD REPAIR KIT

LOADER BUCKET CYLINDER
(410D)
(REPLACEMENT CYLINDER)

TP42321 -UN-01JAN94

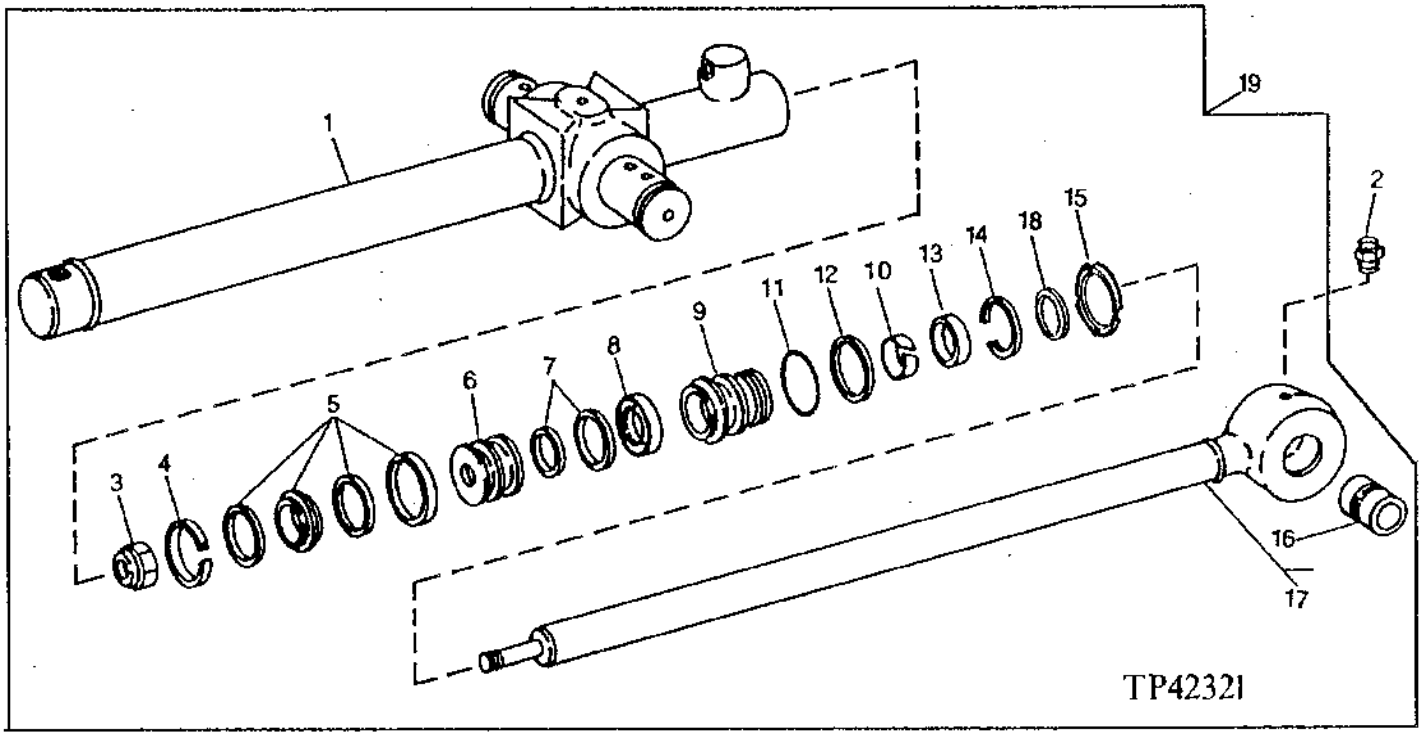

KEY	PART NO.	PART NAME	QTY	SERIAL NO.	410D	510D	REMARKS
1	RE38228	HYDRAULIC CYLINDER BARREL	1		X		
2	JD7844	LUBRICATION FITTING	1		X		(SUB FOR JD7799 AND T162396, THIS APPLICATION)
3	R81866	NUT	1		X		
4	R81776	WEAR RING	1		X		(BK)
5	RE20344	SEAL	1		X		(BK)
6	R81771	PISTON	1		X		
7	AH146560	SEAL	1		X		(RK)
8	H152202	SEAL	1		X		(RK)
9	H157642	HYDR. CYLINDER ROD GUIDE	1		X		
10	H152793	BACK-UP RING	1		X		(RK)
11	F1430R	O-RING	1		X		
12	R79101	BACK-UP RING	1		X		(BK)
13	AH146556	SEAL	1		X		(RK)
14	R81788	RING	1		X		
15	R81794	NUT	1		X		
16	R81850	BUSHING	1		X		
17	RE22493	ROD	1		X		
18	R91730	RING	AR		X		(BK) (DISASSEMBLY AID TOOL)
19	AH154793	HYDRAULIC CYLINDER	1		X		

(BK) AH212096 CYLINDER BORE REPAIR KIT (SUB FOR AH149843 REPAIR KIT)

(RK) AH149813 CYLINDER ROD REPAIR KIT

LOADER BUCKET CYLINDER
(510D)
(SERIAL NO. - 817458)

TP52875 -UN-11DEC96

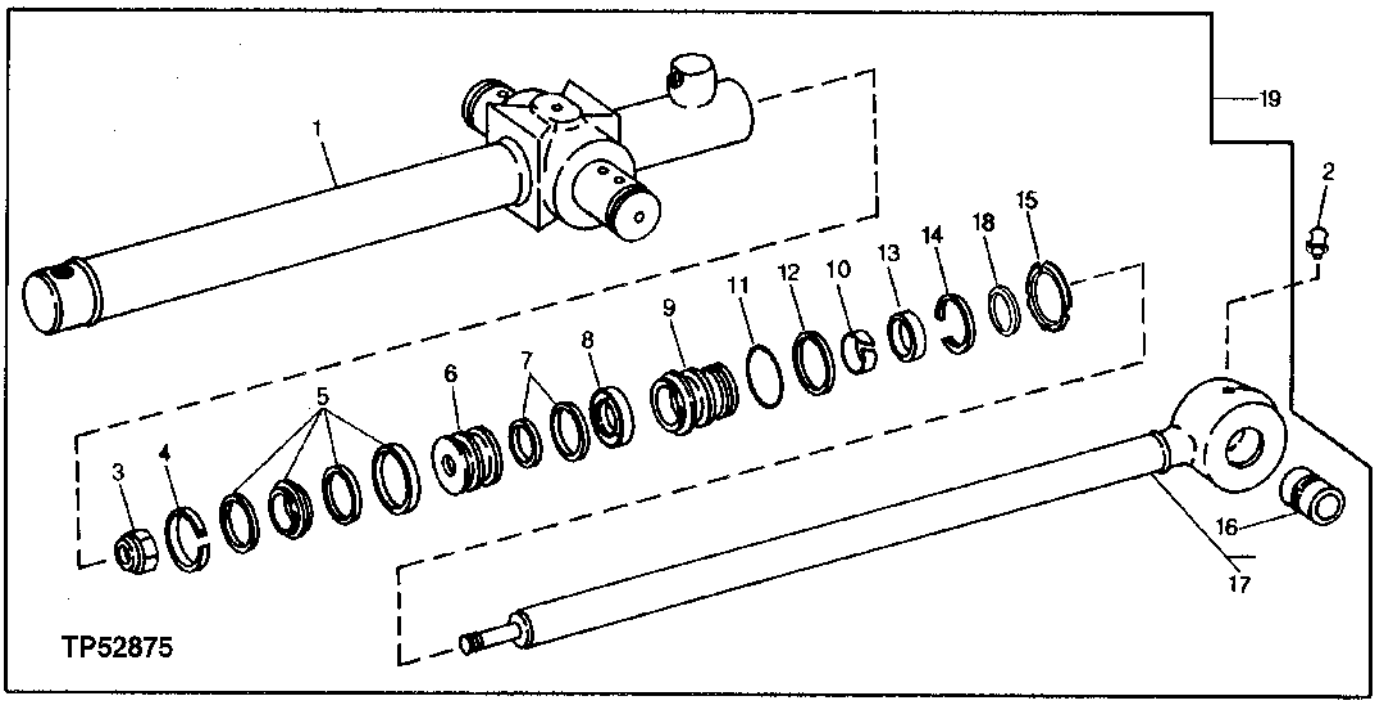

KEY	PART NO.	PART NAME	QTY	SERIAL NO.	410D	510D	REMARKS
1	RE38231	HYDRAULIC CYLINDER BARREL	1			X	
2	JD7844	LUBRICATION FITTING	1	-823016		X	(SUB FOR JD7799 AND T162396, THIS APPLICATION) 1/8", 90°
	T162396	LUBRICATION FITTING	1	823017-		X	(SUB FOR JD7798)
3	H170539	NUT	1			X	
4	R81775	WEAR RING	1			X	(BK)
5	RE20343	SEAL	1			X	(BK)
6	H145456	PISTON	1			X	
7	RE20757	SEAL	1			X	(RK)
8	R81973	SEAL	1			X	(RK)
9	.....	HYDR. CYLINDER ROD GUIDE	1			X	(RK) (R81972 NO LONGER USED) (SUB H157978) (ALSO ORDER AH210484)
10	R81975	WEAR RING	1			X	(RK)
11	F950R	O-RING	1			X	(BK)
12	R81862	BACK-UP RING	1			X	(BK)
13	RE24536	SEAL	1			X	(RK)
14	R81787	RING	1			X	
15	R81793	NUT	1			X	
16	R82960	BUSHING	1			X	
17	RE22410	ROD	1			X	
18	R91731	RING	AR			X	(BK) (DISASSEMBLY AID TOOL)
19	.....	HYDRAULIC CYLINDER	1	-817458		X	RE38230 NO LONGER AVAILABLE, (SUB AH148272)

(BK) AH212101 CYLINDER BORE REPAIR KIT (SUB FOR AH149844 REPAIR KIT)

(RK) RE20595 CYLINDER ROD REPAIR KIT (USE WITH RE38230)

LOADER BUCKET CYLINDER
(510D)
(REPLACEMENT CYLINDER)
(SERIAL NO.818300 -)

TP52875 -UN-11DEC96

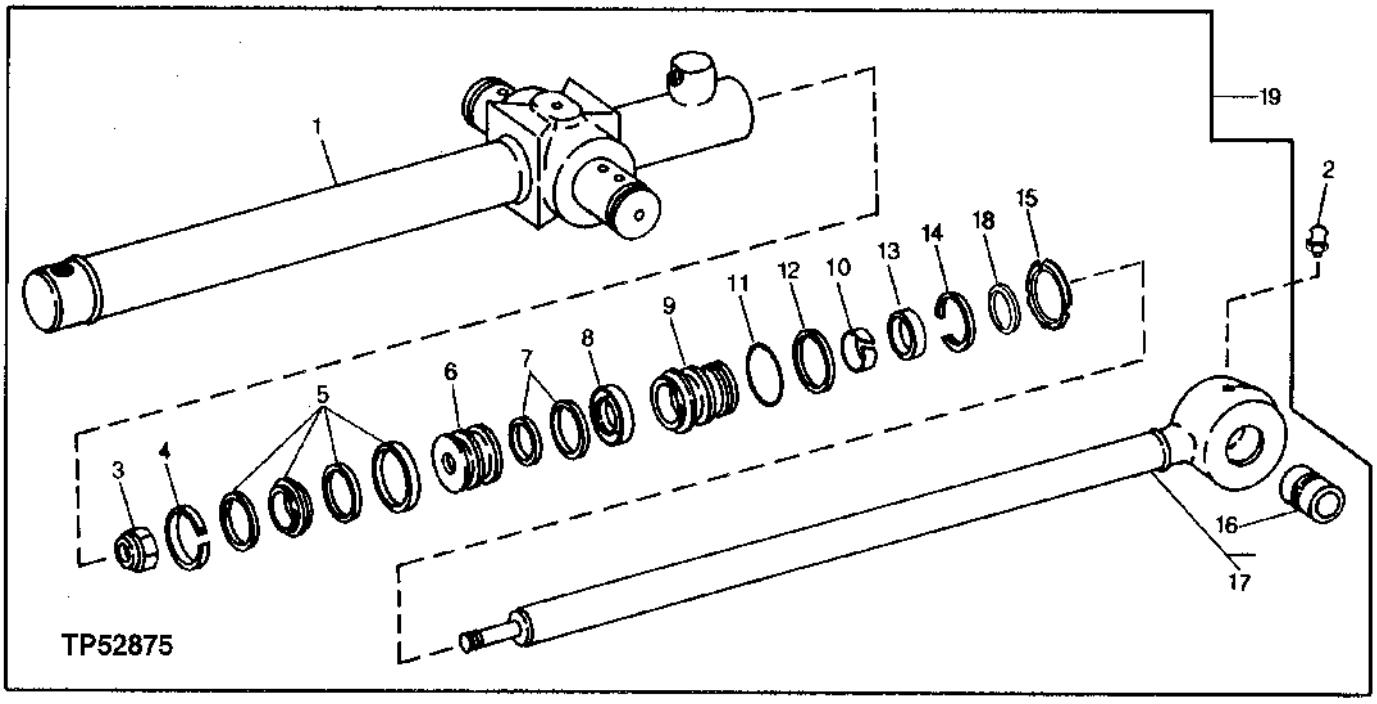

KEY	PART NO.	PART NAME	QTY	SERIAL NO.	410D	510D	REMARKS
1	RE38231	HYDRAULIC CYLINDER BARREL	1			X	
2	T162396	LUBRICATION FITTING	1			X	(SUB FOR JD7799 AND T162396, THIS APPLICATION) 1/8", 90°
3	H170539	NUT	1			X	
4	R81775	WEAR RING	1			X	(BK)
5	RE20343	SEAL	1			X	(BK)
6	H145456	PISTON	1			X	
7	AH146561	SEAL	1			X	(RK)
8	H152203	SEAL	1			X	(RK)
9	H157978	HYDR. CYLINDER ROD GUIDE	1			X	(RK)
10	H152794	WEAR RING	1			X	(RK)
11	F950R	O-RING	1			X	(BK)
12	R81862	BACK-UP RING	1			X	(BK)
13	AH146557	SEAL	1			X	(RK)
14	R81787	RING	1			X	
15	R81793	NUT	1			X	
16	R82960	BUSHING	1			X	
17	RE22410	ROD	1			X	
18	R91731	RING	AR			X	(BK) (DISASSEMBLY AID TOOL)
19	AH148272	HYDRAULIC CYLINDER	1			X	

(BK) AH212101 CYLINDER BORE REPAIR KIT (SUB FOR AH149844 REPAIR KIT)
(RK) AH210484 ROD SEAL REPAIR KIT

RIPPER TOOTH

TP29752 -UN-01JAN94

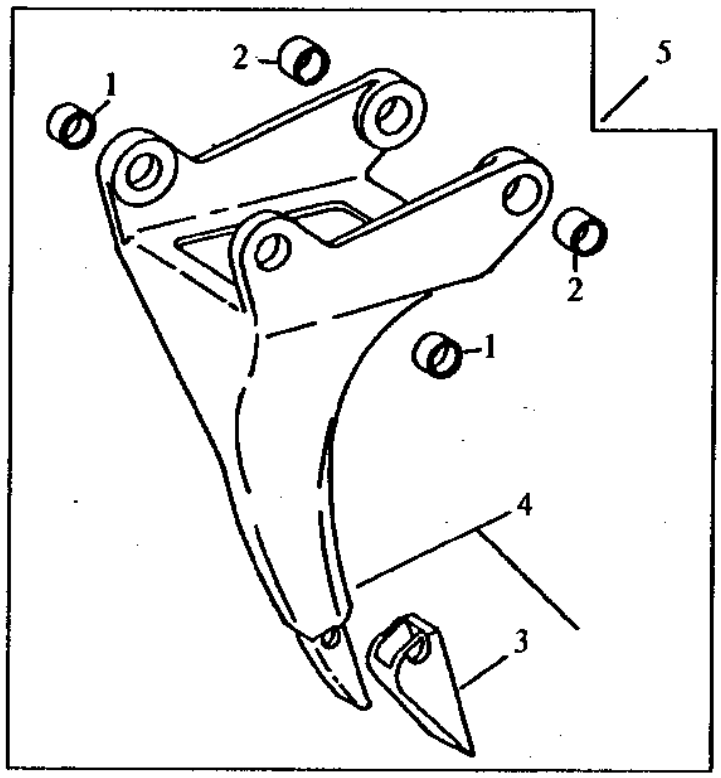

TP29752

KEY	PART NO.	PART NAME	QTY	SERIAL NO.	410D	510D	REMARKS
1	U11121	BUSHING	2		X	X	
2	U16017	BUSHING	2		X	X	
3	T240	TOOTH	1		X	X	(SUB FOR U16541)
4	AU13769	KIT	1		X	X	(NOT FOR USE IN CONJUNCTION WITH BUCKET COUPLER)
5	.....	TOOTH	1		X	X	(BU10758 NO LONGER AVAILABLE)

BACKHOE BUCKET COUPLER

TP40327 -UN-01JAN94

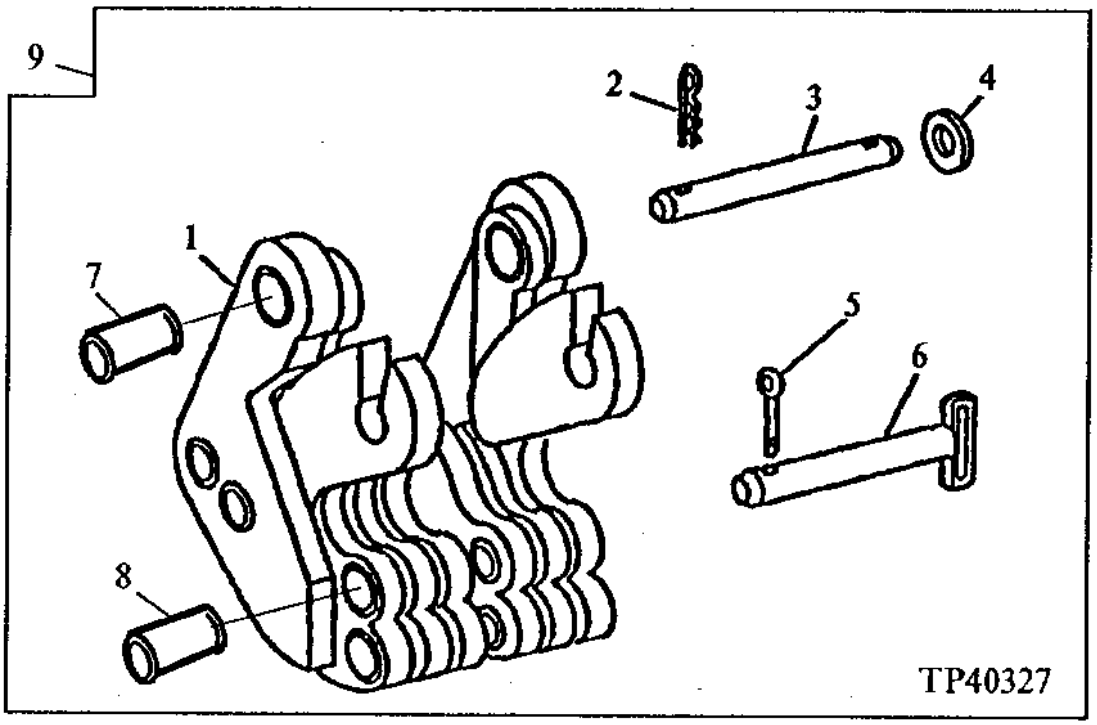

KEY	PART NO.	PART NAME	QTY	SERIAL NO.	410D	510D	REMARKS
1	.....	QUICK COUPLER	1		X	X	
2	11H227	COTTER PIN	2		X	X	3/8" X 3"
3	T125926	PIN FASTENER	1		X	X	
4	24H1574	WASHER	AR		X	X	1-13/16" X 2-3/4" X 0.060"
	24H1576	WASHER	AR		X	X	1-13/16" X 2-15/16" X 0.075", (SUB FOR U11650, THIS APPLICATION)
5	AT141691	SPRING LOCKING PIN	1		X	X	
6	AT141689	PIN FASTENER	1		X	X	(11.38 INCHES LONG)
7	T113755	BUSHING	2		X	X	
8	T113756	BUSHING	4		X	X	
9	.....	QUICK COUPLER	1		X	X	(AT141669 NO LONGER AVAILABLE) USE WITH 18" OR LARGER BUCKETS

BACKHOE BUCKET COUPLER

TP48806 -UN-26MAY95

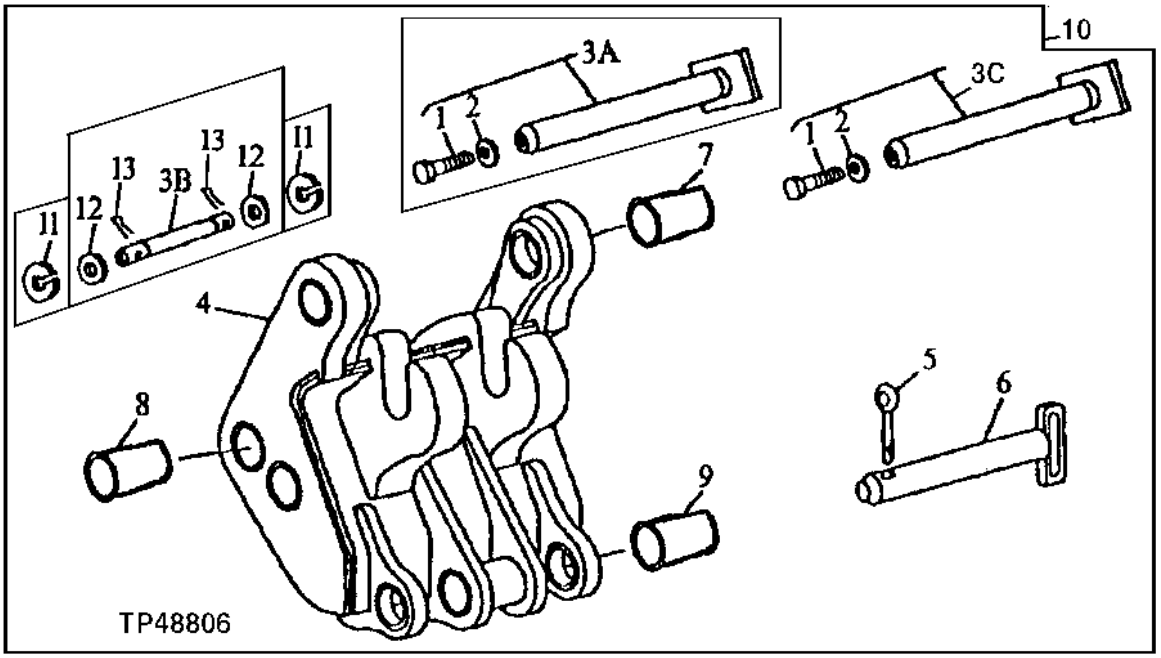

KEY	PART NO.	PART NAME	QTY	SERIAL NO.	410D	510D	REMARKS
1	19H2716	CAP SCREW	1	-783627	X	X	3/4" X 1-1/2"
	19H2716	CAP SCREW	1	804487-	X	X	3/4" X 1-1/2"
2	F3607R	WASHER	1	-783627	X	X	25/32" X 2-3/4" X 3/8"
	F3607R	WASHER	1	804487-	X	X	25/32" X 2-3/4" X 3/8"
3A	AT143533	PIN FASTENER	1	-783627	X	X	
3B	T140880	PIN FASTENER	1	783628-796855	X	X	
	T125926	PIN FASTENER	1	796855-804486	X	X	
3C	AT143533	PIN FASTENER	1	804487-	X	X	
4	.....	ADAPTER	1		X	X	
5	AT141691	SPRING LOCKING PIN	2		X	X	
6	AT179130	PIN	1		X	X	(13.88 INCHES LONG) (SUB FOR AT141690)
	AT141689	PIN FASTENER	1		X	X	(11.38 INCHES LONG)
7	T113755	BUSHING	2		X	X	
8	T113756	BUSHING	4		X	X	
9	T142072	BUSHING	2		X	X	
10	.....	QUICK COUPLER	1		X	X	(AT149463 NO LONGER AVAILABLE) USE WITH 12" BUCKETS
11	U11031	SNAP RING	2	783628-796854	X	X	
12	24H1574	WASHER	AR	783628-804486	X	X	1-13/16" X 2-3/4" X 0.060"
	24H1576	WASHER	AR	783628-804486	X	X	1-13/16" X 2-15/16" X 0.075"
13	11H221	COTTER PIN	2	796855-804486	X	X	3/8" X 2-1/2"

MEMORANDA

BACKHOE BUCKETS
304 MM (12") STANDARD AND HEAVY DUTY 2.5 CUBIC FEET

TP44161 -UN-01JAN94

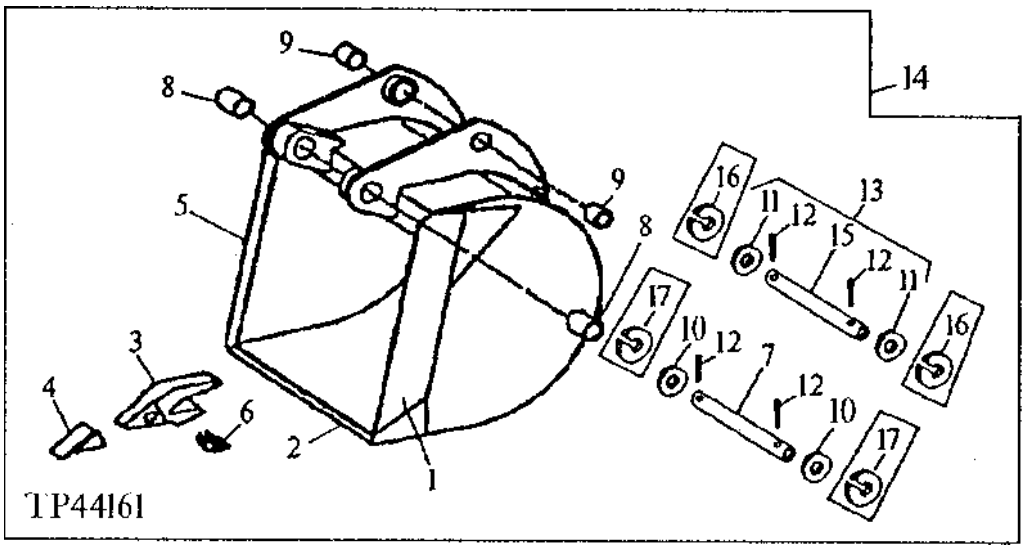

KEY	PART NO.	PART NAME	QTY	SERIAL NO.	410D	510D	REMARKS
1	T140521	CUTTING EDGE	1		X	X	RIGHT
2	T161279	CUTTING EDGE	1		X	X	FRONT, (SUB FOR T140092, THIS APPLICATION)
3	U43792	BUCKET TOOTH ADAPTER	3		X	X	
4	TF23	TOOTH	3		X	X	
5	T140522	CUTTING EDGE	1		X	X	LEFT
6	TF23P	PIN	3		X	X	
7	AU13551	PIN FASTENER	1	-783627	X	X	
	T140907	PIN	1	783628-815397	X	X	
	AU13551	PIN FASTENER	1	815398-	X	X	
8	T140669	BUSHING	2		X	X	
9	T113756	BUSHING	4		X	X	
10	24H1574	WASHER	AR		X	X	1-13/16" X 2-3/4" X 0.060"
	24H1576	WASHER	AR		X	X	1-13/16" X 2-15/16" X 0.075", (SUB FOR U11650, THIS APPLICATION)
	24H1561	WASHER	2		X	X	1-3/4" X 2-3/4" X 0.060"
11	U11649	WASHER	2		X	X	
12	11H221	COTTER PIN	4		X	X	3/8" X 2-1/2"
13	.....	PIN FASTENER	1	-783627	X	X	(AT107515 - NO LONGER AVAILABLE)
14	.....	BACKHOE BUCKET	1		X	X	(12") HEAVY DUTY 3.3 CUBIC FEET (AT101635 USE IF AVAILABLE) (SUB AT181719, AT180471, AT180472, (2) T29342 AND (2) 19M8935)
	.....	BACKHOE BUCKET	1		X	X	(12") HEAVY DUTY (AT158952 USE IF AVAILABLE) (SUB AT181719, AT180471, AT180472, (2) T29342 AND (2) 19M8935)
15	T140908	PIN	1	783628-815397	X	X	
	T105710	PIN FASTENER	1	815398-	X	X	
16	U11030	SNAP RING	2	783628-815397	X	X	
17	U11031	SNAP RING	2	783628-815397	X	X	

BACKHOE BUCKETS
(457 MM (18") STANDARD AND HEAVY DUTY 5.1 CUBIC FEET)

TP44022 -UN-01JAN94

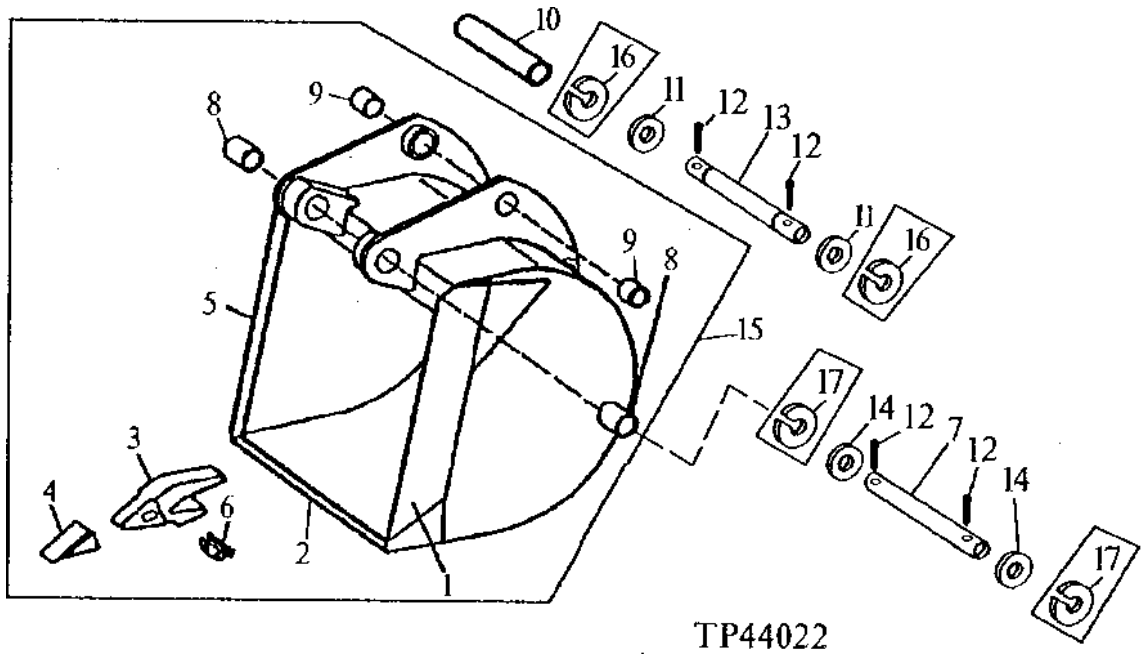

KEY	PART NO.	PART NAME	QTY	SERIAL NO.	410D 510D	REMARKS
1	T139706	CUTTING EDGE	1		X X	RIGHT
2	T161279	CUTTING EDGE	1		X X	FRONT, (SUB FOR T140092, THIS APPLICATION)
3	U43792	BUCKET TOOTH ADAPTER	3		X X	(STANDARD)
	U43792	BUCKET TOOTH ADAPTER	4		X X	(HEAVY DUTY)
4	TF23	TOOTH	3		X X	(STANDARD)
	TF23	TOOTH	4		X X	(HEAVY DUTY)
5	T139707	CUTTING EDGE	1		X X	LEFT

BACKHOE BUCKETS
(457 MM (18") STANDARD AND HEAVY-DUTY 5.1 CUBIC FEET)

KEY	PART NO.	PART NAME	QTY	SERIAL NO.	410D	510D	REMARKS
6	TF23P	PIN	3		X	X	(SUB FOR T40910, THIS APPLICATION) (STANDARD)
	TF23P	PIN	4		X	X	HEAVY DUTY AND EXTRA HEAVY DUTY, (SUB FOR T40910, THIS APPLICATION)
7	T125926	PIN FASTENER	1	-783627	X	X	
	T140880	PIN FASTENER	1	783628-815397	X	X	
	T125926	PIN FASTENER	1	815398-	X	X	
8	T113755	BUSHING	2		X	X	
9	T113756	BUSHING	4		X	X	
10	T140362	SPACER	1		X	X	
11	U11649	WASHER	2	-783627	X	X	
	24H1536	WASHER	2	783628-	X	X	1-17/32" X 2-1/4" X 0.060"
12	11H221	COTTER PIN	4		X	X	3/8" X 2-1/2"
13	T125931	PIN FASTENER	1	-783627	X	X	
	T140881	PIN FASTENER	1	783628-815397	X	X	
	T125931	PIN FASTENER	1	815398-	X	X	
14	24H1574	WASHER	AR		X	X	1-13/16" X 2-3/4" X 0.060"
	24H1576	WASHER	AR		X	X	1-13/16" X 2-15/16" X 0.075"
	24H1561	WASHER	AR		X	X	1-3/4" X 2-3/4" X 0.060"
15	.....	BACKHOE BUCKET	1		X	X	457 MM (18") HEAVY DUTY 5.1 CUBIC FEET (AT158374 NO LONGER AVAILABLE) (SUB FOR AT149957) (SUB AT181720, AT180471, AT180472, (2) T28342 AND (2) 19M8935)
	.....	BACKHOE BUCKET	1		X	X	(18") STANDARD 5.1 CUBIC FEET (AT158369 USE IF AVAILABLE) (SUB FOR AT149956) (SUB AT181720, AT180471, AT180472, (2) T29342 AND (2) 19M8935)
	.....	BACKHOE BUCKET	1		X	X	(18") HEAVY DUTY 5.1 CUBIC FEET (AT149983 USE IF AVAILABLE) (SUB AT181720, AT180471, AT180472, (2) T29342 AND (2) 19M8935)
16	U11030	SNAP RING	2	783629-815397	X	X	
17	U11031	SNAP RING	2	783629-815397	X	X	

BACKHOE BUCKETS
(610 MM (24") STANDARD AND HEAVY DUTY 7.5 CUBIC FEET)
(610 MM (24") HEAVY DUTY AND EXTRA HEAVY DUTY 8.8 CUBIC FEET)

TP44022 -UN-01JAN94

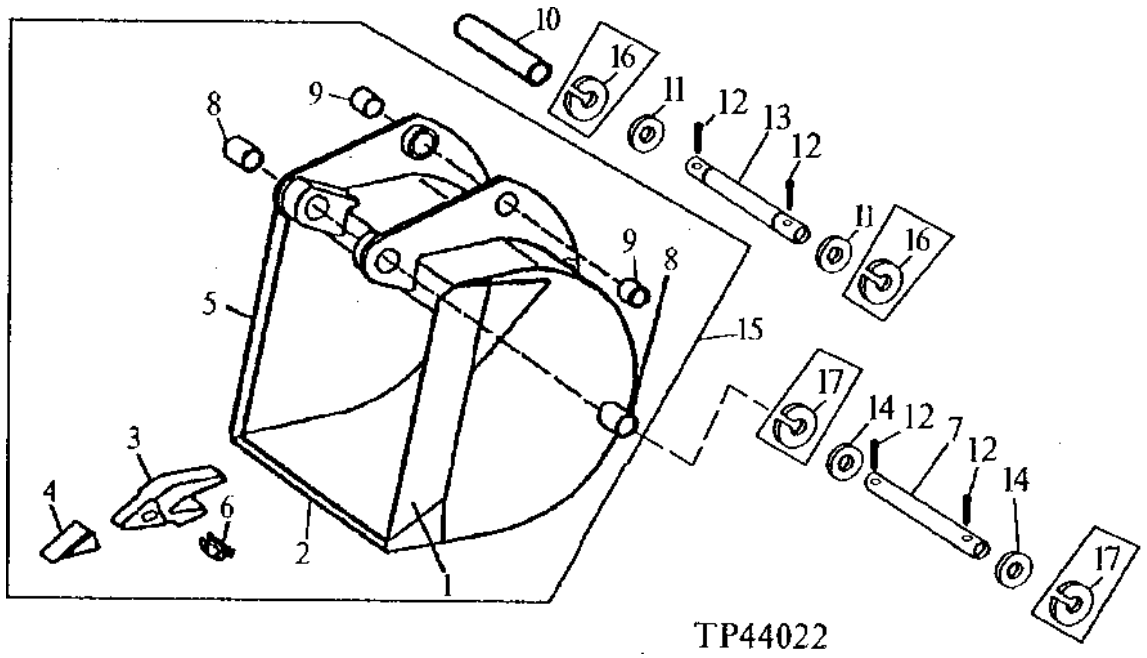

KEY	PART NO.	PART NAME	QTY	SERIAL NO.	4511 00 DD	REMARKS
1	T140110	"DURA-MAX" CUTTING EDGE	1		X X	RIGHT (HEAVY DUTY 8.8 CUBIC FEET)
	T139706	CUTTING EDGE	1		X X	RIGHT (STANDARD AND HEAVY DUTY 7.5 CUBIC FEET)
	T140673	CUTTING EDGE	1		X X	RIGHT (EXTRA HEAVY DUTY 8.8 CUBIC FEET)
	T140128	CUTTING EDGE	1		X X	RIGHT (EXTRA HEAVY DUTY 7.5 CUBIC FEET)
2	T161279	CUTTING EDGE	1		X X	FRONT, (SUB FOR T140092, THIS APPLICATION)
3	U43792	BUCKET TOOTH ADAPTER	4		X X	(STANDARD)
	U43792	BUCKET TOOTH ADAPTER	5		X X	(HEAVY DUTY AND EXTRA HEAVY DUTY)
4	TF23	TOOTH	4		X X	(STANDARD)
	TF23	TOOTH	5		X X	(HEAVY DUTY AND EXTRA HEAVY DUTY)
5	T139707	CUTTING EDGE	1		X X	LEFT (STANDARD AND HEAVY DUTY 7.5 CUBIC FEET)
	T140111	"DURA-MAX" CUTTING EDGE	1		X X	LEFT (HEAVY DUTY 8.8 CUBIC FEET)
	T140674	CUTTING EDGE	1		X X	LEFT (EXTRA HEAVY DUTY 8.8 CUBIC FEET)
	T140129	CUTTING EDGE	1		X X	LEFT (EXTRA HEAVY DUTY 7.5 CUBIC FEET)

THIS PARTS LISTING IS CONTINUED

BUCKET WITH TEETH
(610 MM (24") STANDARD AND HEAVY-DUTY 7.5 CUBIC FEET)
(610 MM (24") HEAVY-DUTY AND EXTRA HEAVY-DUTY 8.8 CUBIC FEET)

KEY	PART NO.	PART NAME	QTY	SERIAL NO.	410D	510D	REMARKS
6	TF23P	PIN	4		X	X	(SUB FOR T40910, THIS APPLICATION) (STANDARD)
	TF23P	PIN	5		X	X	(SUB FOR T40910, THIS APPLICATION) (HEAVY DUTY AND EXTRA HEAVY DUTY)
7	T125926	PIN FASTENER	1	-783628	X	X	
	T140880	PIN FASTENER	1	783629-788307	X	X	
	T125926	PIN FASTENER	1	788308-	X	X	
8	T113755	BUSHING	2		X	X	(7.5 CUBIC FEET)
	T113755	BUSHING	6		X	X	(8.8 CUBIC FEET)
9	T113756	BUSHING	4		X	X	
10	T140362	SPACER	1		X	X	
11	U11649	WASHER	2	-783628	X	X	
	24H1536	WASHER	1	783629-	X	X	1-17/32" X 2-1/4" X 0.060"
12	11H221	COTTER PIN	4	-783628	X	X	3/8" X 2-1/2"
	11H221	COTTER PIN	2	788308-	X	X	
13	T125931	PIN FASTENER	1	-783628	X	X	
	T140881	PIN FASTENER	1	783629-788307	X	X	
	T125931	PIN FASTENER	1	788308-	X	X	
14	24H1574	WASHER	AR		X	X	1-13/16" X 2-3/4" X 0.060"
	24H1576	WASHER	AR		X	X	1-13/16" X 2-15/16" X 0.075"
	24H1561	WASHER	2		X	X	1-3/4" X 2-3/4" X 0.060"
15	.....	BACKHOE BUCKET	1		X	X	610 MM (24") STANDARD 7.5 CUBIC FEET (AT163744 USE IF AVAILABLE) (SUB FOR AT149954 AND AT156374) (SUB AT181721, AT180471, AT180472, (2) T29342 AND (2) 19M8935)
	.....	BACKHOE BUCKET	1		X	X	(24") HEAVY DUTY (AT162621 USE IF AVAILABLE) (SUB FOR AT149955 AND AT156376) (SUB AT181721, AT180471, AT180472, (2) T29342 AND (2) 19M8935)
	.....	BACKHOE BUCKET	1		X	X	610 MM (24") HEAVY DUTY 8.8 CUBIC FEET (AT150139 USE IF AVAILABLE) (SUB AT181722, AT180471, AT180472, (2) T29342 AND (2) 19M8935)
	.....	BACKHOE BUCKET	1		X	X	610 MM (24") EXTRA HEAVY DUTY 8.8 CUBIC FEET (AT150148 NO LONGER AVAILABLE)
	.....	BACKHOE BUCKET	1		X	X	610 MM (24") EXTRA HEAVY DUTY 7.5 CUBIC FEET (AT149984 USE IF AVAILABLE) (SUB AT181721, AT180471, AT180472, (2) T29342 AND (2) 19M8935)
16	U11030	SNAP RING	2	783629-788307	X	X	
17	U11031	SNAP RING	2	783629-788307	X	X	

BACKHOE BUCKET
(762 MM (30") STANDARD AND HEAVY-DUTY)

TP44022 -UN-01JAN94

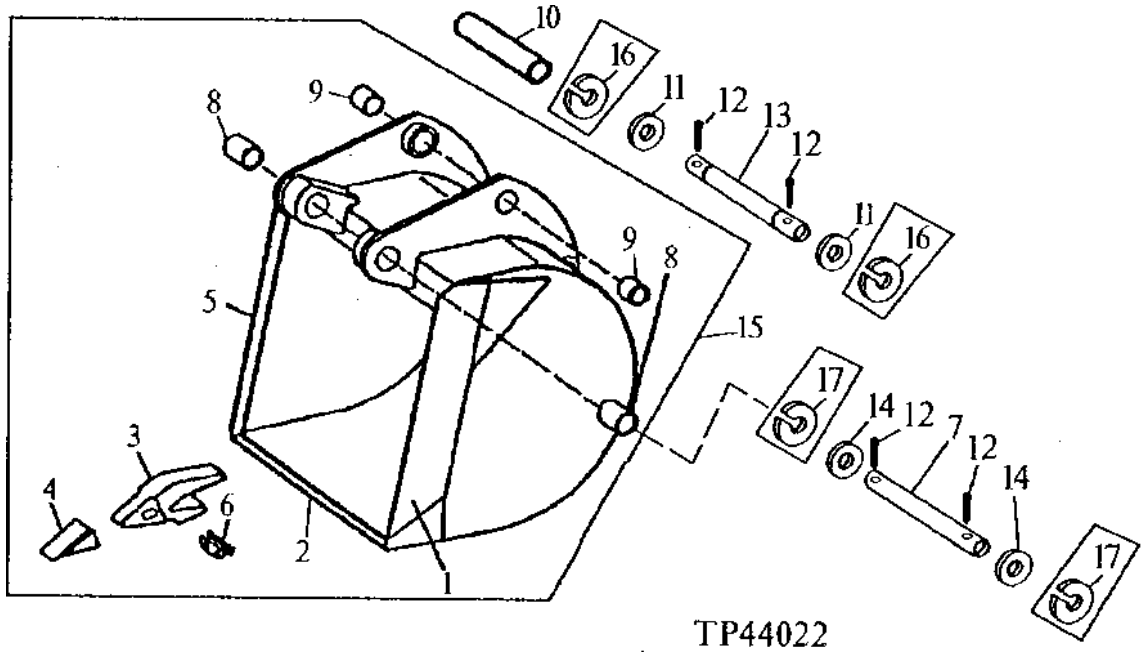

KEY	PART NO.	PART NAME	QTY	SERIAL NO.	410D	510D	REMARKS
1	T139706	CUTTING EDGE	1		X	X	RIGHT (STANDARD AND HEAVY DUTY)
	T140128	CUTTING EDGE	1		X	X	RIGHT (EXTRA HEAVY DUTY)
2	T161319	CUTTING EDGE	1		X	X	FRONT, (SUB FOR T140092, THIS APPLICATION) (30 & 36 INCH BUCKET)
	T161279	CUTTING EDGE	1		X	X	(12, 18 & 24 INCH BUCKET)
3	U43792	BUCKET TOOTH ADAPTER	5		X	X	
4	TF23	TOOTH	5		X	X	
5	T139707	CUTTING EDGE	1		X	X	LEFT (STANDARD AND HEAVY DUTY)
	T140129	CUTTING EDGE	1		X	X	LEFT (EXTRA HEAVY DUTY)
6	TF23P	PIN	5		X	X	(SUB FOR T40910, THIS APPLICATION)
7	T125926	PIN FASTENER	1	-783628	X	X	
	T140880	PIN FASTENER	1	783629-815397	X	X	
	T125926	PIN FASTENER	1	815398-	X	X	
8	T113755	BUSHING	2		X	X	
9	T113756	BUSHING	4		X	X	

BACKHOE BUCKET
(762 MM (30") STANDARD AND HEAVY-DUTY)

TP44022 -UN-01JAN94

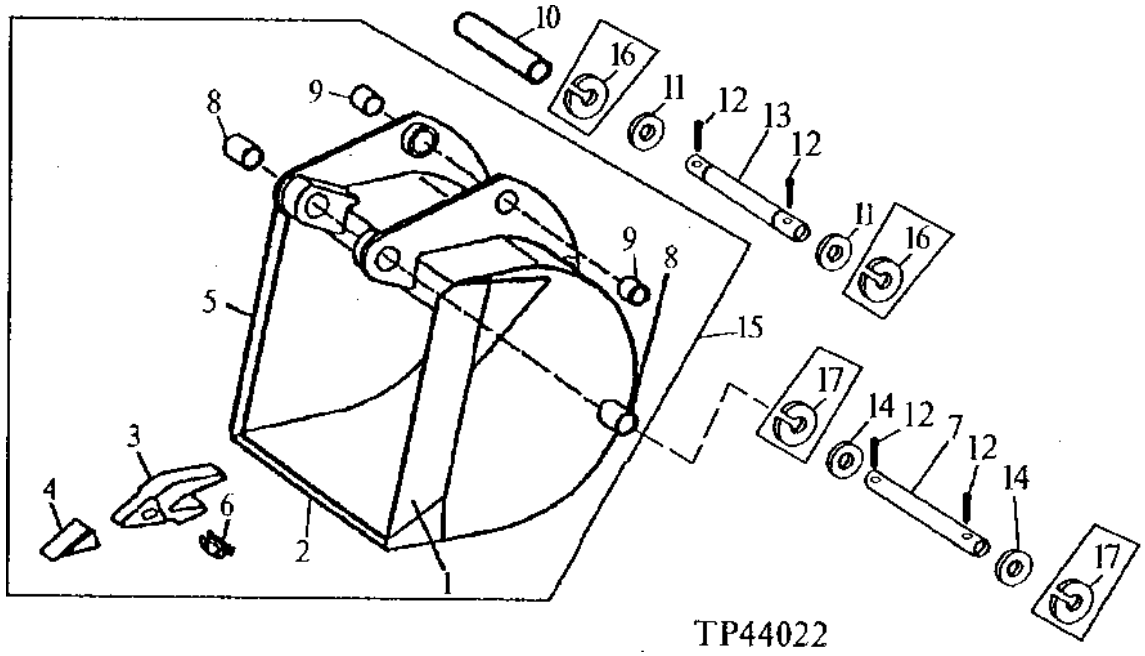

KEY	PART NO.	PART NAME	QTY	SERIAL NO.	410D	510D	REMARKS
10	T140362	SPACER	1		X	X	
11	U11649	WASHER	2	-783628	X	X	
	24H1536	WASHER	2	783629-	X	X	
12	11H221	COTTER PIN	4		X	X	3/8" X 2-1/2"
13	T125931	PIN FASTENER	1	-783628	X	X	
	T140881	PIN FASTENER	1	783629-815397	X	X	
	T125931	PIN FASTENER	1	815398-	X	X	
14	24H1574	WASHER	AR		X	X	1-13/16" X 2-3/4" X 0.060"
	24H1576	WASHER	AR		X	X	1-13/16" X 2-15/16" X 0.075"
15	.....	BACKHOE BUCKET	1		X	X	(SUB FOR AT149958) 762 MM (30INCH) (STANDARD) AT158376 NO LONGER AVAILABLE
	.....	BACKHOE BUCKET	1		X	X	(30") HEAVY DUTY (AT158375 USE IF AVAILABLE) (SUB FOR AT149959) (SUB AT181723, AT180471, AT180472, (2) T29342 AND (2) 19M8935)
	.....	BACKHOE BUCKET	1		X	X	(30") HEAVY DUTY 10 CUBIC FEET (AT149985 USE IF AVAILABLE) (SUB AT181723, AT180471, AT180472, (2) T29342 AND (2) 19M8935)
16	U11030	SNAP RING	2	783629-815397	X	X	
17	U11031	SNAP RING	2	783629-815397	X	X	

MEMORANDA

BACKHOE BUCKET
914 MM (36") 10 CUBIC FEET AND 14.5 CUBIC FEET

TP44022 -UN-01JAN94

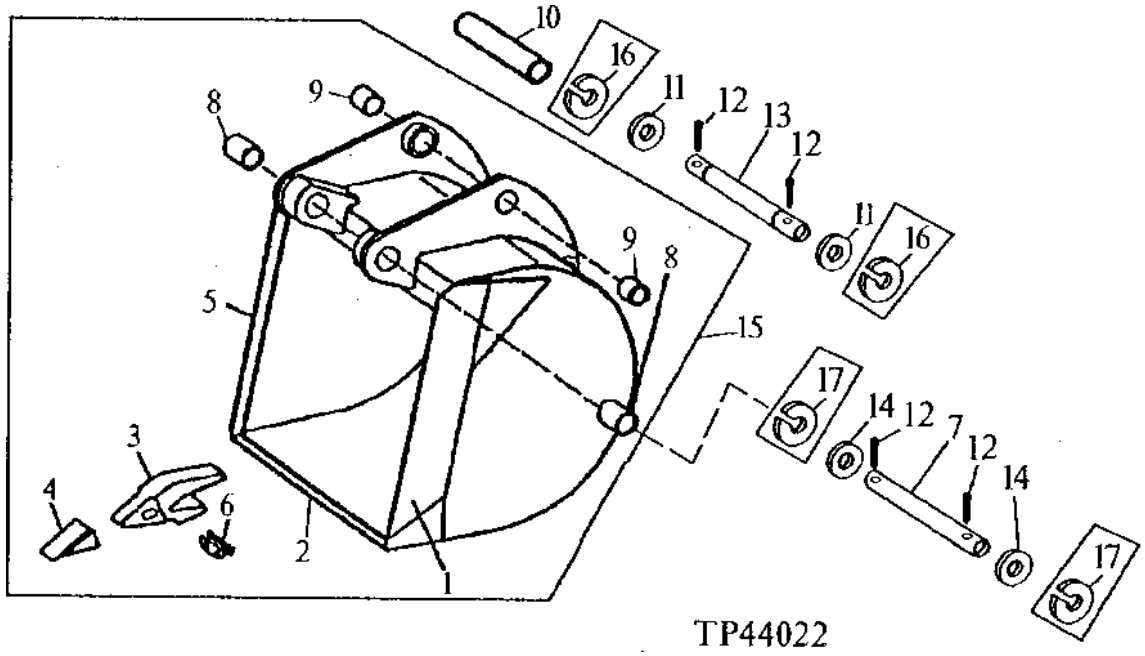

TP44022

KEY	PART NO.	PART NAME	QTY	SERIAL NO.	410D	510D	REMARKS
1	T140019	"DURA-MAX" CUTTING EDGE	1		X	X	RIGHT (10 CUBIC FEET)
	T140110	"DURA-MAX" CUTTING EDGE	1		X	X	RIGHT (14.5 CUBIC FEET)
2	T161319	CUTTING EDGE	1		X	X	FRONT, (SUB FOR T140092, THIS APPLICATION)
3	U43792	BUCKET TOOTH ADAPTER	6		X	X	
4	TF23	TOOTH	6		X	X	
5	T140020	"DURA-MAX" CUTTING EDGE	1		X	X	LEFT (10 CUBIC FEET)
	T140111	"DURA-MAX" CUTTING EDGE	1		X	X	LEFT (14.5 CUBIC FEET)
6	TF23P	PIN	6		X	X	(SUB FOR T40910, THIS APPLICATION)
7	T125926	PIN FASTENER	1	-783628	X	X	
	T140880	PIN FASTENER	1	783629-815397	X	X	
	T125926	PIN FASTENER	1	815398-	X	X	
8	T113755	BUSHING	2		X	X	(10 CUBIC FEET)
	T113755	BUSHING	6		X	X	(14.5 CUBIC FEET)
9	T113756	BUSHING	4		X	X	
10	T140362	SPACER	1		X	X	
11	U11649	WASHER	2	-783628	X	X	
	24H1536	WASHER	2	783629-	X	X	1-17/32" X 2-1/4" X 0.060"
12	11H221	COTTER PIN	4		X	X	3/8" X 2-1/2"
13	T125931	PIN FASTENER	1	-783628	X	X	
	T140881	PIN FASTENER	1	783629-815397	X	X	
	T125931	PIN FASTENER	1	815398-	X	X	
14	24H1574	WASHER	AR		X	X	1-13/16" X 2-3/4" X 0.060"
	24H1576	WASHER	AR		X	X	1-13/16" X 2-15/16" X 0.075"
	24H1561	WASHER	AR		X	X	1-3/4" X 2-3/4" X 0.060"
15	.....	BACKHOE BUCKET	1		X	X	914 MM (36") STANDARD 10 CUBIC FEET (AT150140 USE IF AVAILABLE)
	.....	BACKHOE BUCKET	1		X	X	914 MM (36") STANDARD 14.5 CUBIC FEET (AT150141 USE IF AVAILABLE)
	AT156925	**BACKHOE BUCKET**	**1**		**X**	**X**	**914 MM (36") HEAVY DUTY 10 CUBIC FEET**
16	U11030	SNAP RING	2	783629-815397	X	X	
17	U11031	SNAP RING	2	783629-815397	X	X	

BACKHOE BUCKET
914 MM (36") DITCHING 10 CUBIC FEET AND 14.5 CUBIC FEET

TP44023 -UN-01JAN94

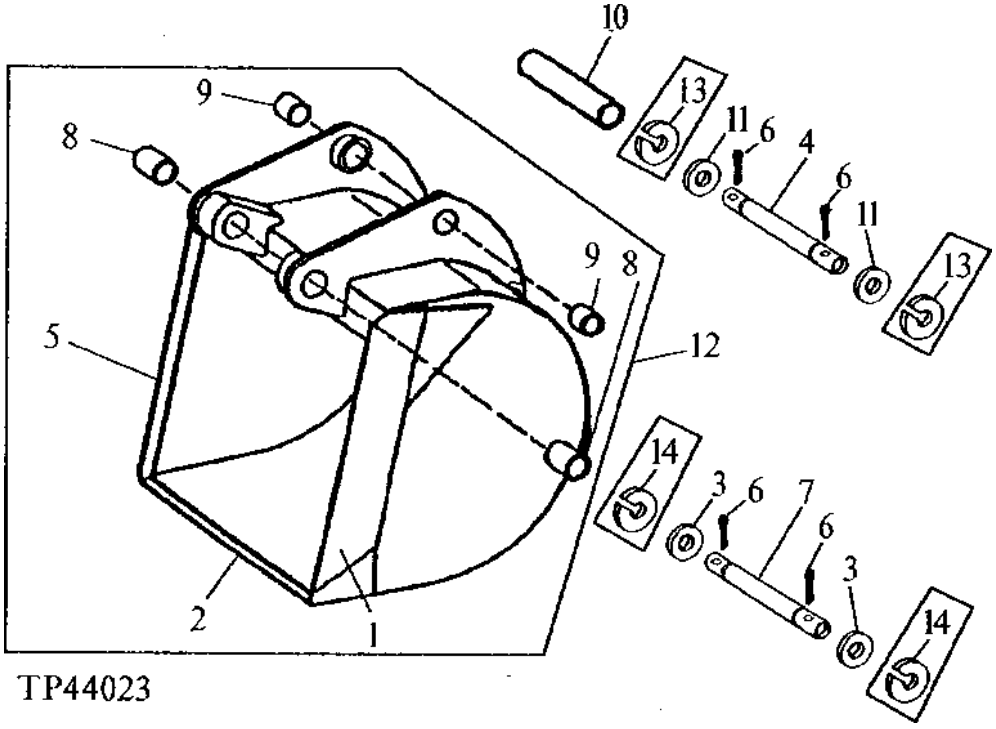

KEY	PART NO.	PART NAME	QTY	SERIAL NO.	410D	510D	REMARKS
1	T140019	"DURA-MAX" CUTTING EDGE	1		X	X	RIGHT (10 CUBIC FEET)
	T140110	"DURA-MAX" CUTTING EDGE	1			X	RIGHT (14.5 CUBIC FEET)
2	T161319	CUTTING EDGE	1		X	X	FRONT, (SUB FOR T147440, THIS APPLICATION)
3	24H1574	WASHER	AR		X	X	1-13/16" X 2-3/4" X 0.060"
	24H1576	WASHER	AR		X	X	1-13/16" X 2-15/16" X 0.075"
	24H1561	WASHER	AR		X	X	1-3/4" X 2-3/4" X 0.060"
4	T125931	PIN FASTENER	1	-783628	X	X	
	T140881	PIN FASTENER	1	783629-815397	X	X	
	T125931	PIN FASTENER	1	815398-	X	X	
5	T140020	"DURA-MAX" CUTTING EDGE	1		X	X	LEFT (10 CUBIC FEET)
	T140111	"DURA-MAX" CUTTING EDGE	1			X	LEFT (14.5 CUBIC FEET)
6	11H221	COTTER PIN	4		X	X	3/8" X 2-1/2"
7	T125926	PIN FASTENER	1	-783628	X	X	
	.....	PIN FASTENER	1	783629-815397	X	X	(SUB T125926) (ALSO ORDER (2) 11H221, (2) 24H1561 OR (2) 24H1574 OR (2) 24H1576)
	T125926	PIN FASTENER	1	815398-	X	X	
8	T113755	BUSHING	2		X	X	(10 CUBIC FEET)
	T113755	BUSHING	6		X	X	(14.5 CUBIC FEET)
9	T113756	BUSHING	4		X	X	
10	T140362	SPACER	1		X	X	
11	U11649	WASHER	2	-783628	X	X	
	24H1536	WASHER	2	783629-	X	X	
12	.....	BACKHOE BUCKET	1		X	X	914 MM (36") DITCHING 10 CUBIC FEET (AT156931 USE IF AVAILABLE)
	.....	BACKHOE BUCKET	1		X	X	914 MM (36") DITCHING 14.5 CUBIC FEET (AT156932 USE IF AVAILABLE)
13	U11030	SNAP RING	2	783629-815397	X	X	
14	U11031	SNAP RING	2	783629-815397	X	X	

MEMORANDA

REPLACEMENT BACKHOE BUCKETS AND PINS

TP57887 -UN-29JUN98

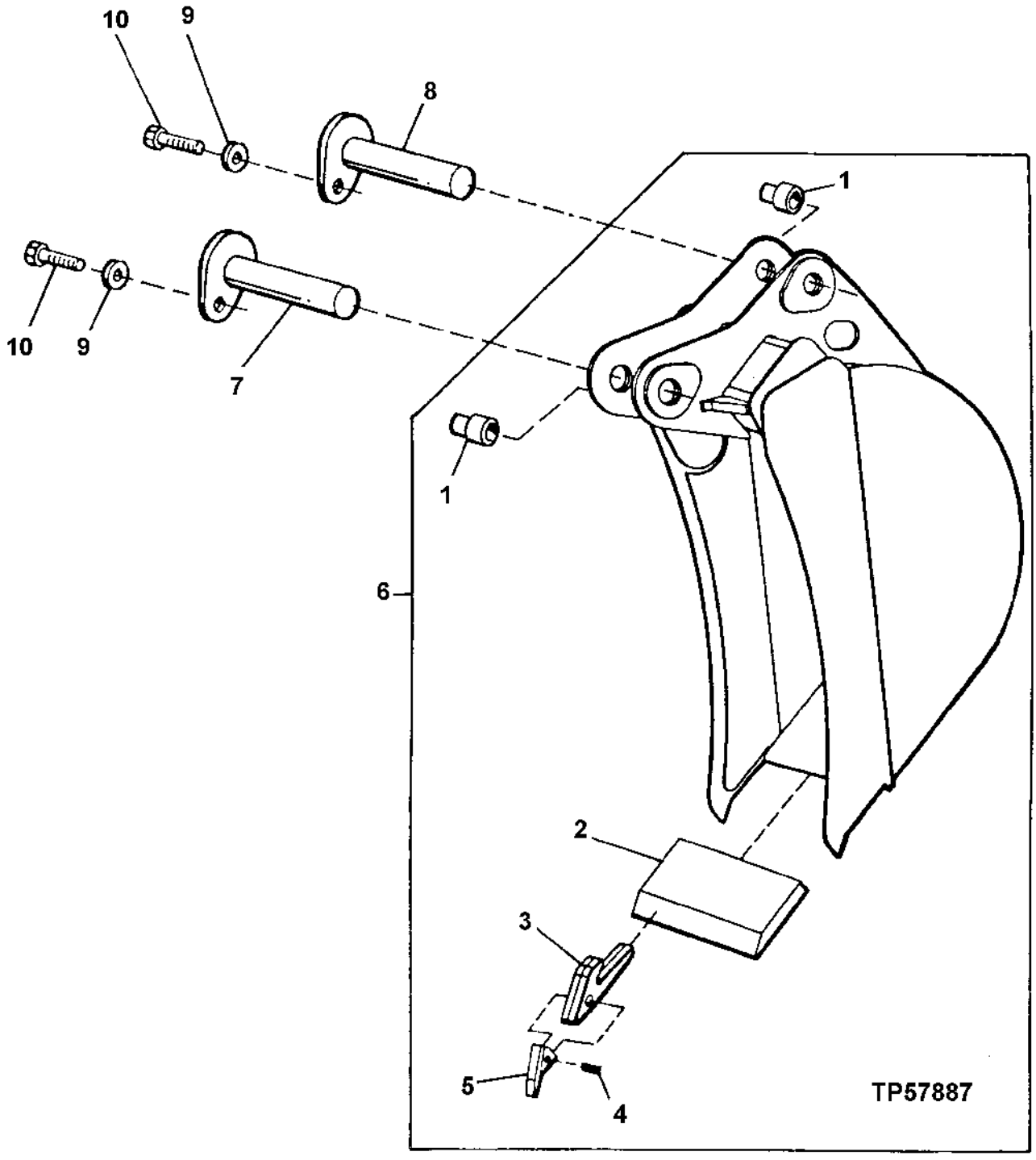

REPLACEMENT BACKHOE BUCKETS AND PINS

KEY	PART NO.	PART NAME	QTY	SERIAL NO.	410D	510D	REMARKS
1	T162108	BUSHING	2		X	X	(REQUIRES WELDING)
2	T161279	CUTTING EDGE	1		X	X	25" (CUT TO LENGTH)
	T161319	CUTTING EDGE	1		X	X	37" (CUT TO LENGTH)
3	U43792	BUCKET TOOTH ADAPTER	AR		X	X	
4	TF23P	PIN	AR		X	X	
5	TF23D	TOOTH	AR		X	X	
6	AT181719	BACKHOE BUCKET	1		X	X	304 MM (12") HEAVY-DUTY 3.3 CUBIC FEET, (SUB AT192004) (ALSO ORDER AT192262)
	AT181720	BACKHOE BUCKET	1		X	X	457 MM (18") HEAVY-DUTY 5.1 CUBIC FEET, (SUB AT192006) (ALSO ORDER AT192262)
	AT181721	BACKHOE BUCKET	1		X	X	610 MM (24") HEAVY-DUTY 7.5 CUBIC FEET, (SUB AT192008) (ALSO ORDER AT192262)
	AT181722	BACKHOE BUCKET	1		X	X	610 MM (24") HEAVY-DUTY 8.8 CUBIC FEET, (SUB AT192009) (ALSO ORDER AT192262)
	AT181723	BACKHOE BUCKET	1		X	X	762 MM (30") HEAVY-DUTY 10.0 CUBIC FEET, (SUB AT192010) (ALSO ORDER AT192262)
7	AT180471	PIN	1		X	X	
8	AT180472	PIN	1		X	X	
9	T29342	WASHER	2		X	X	13.487 X 31.750 X 4.572 MM
10	19M8935	CAP SCREW	2		X	X	M12 X 16

REPLACEMENT BACKHOE BUCKETS AND PINS

T138728 -UN-05MAR01

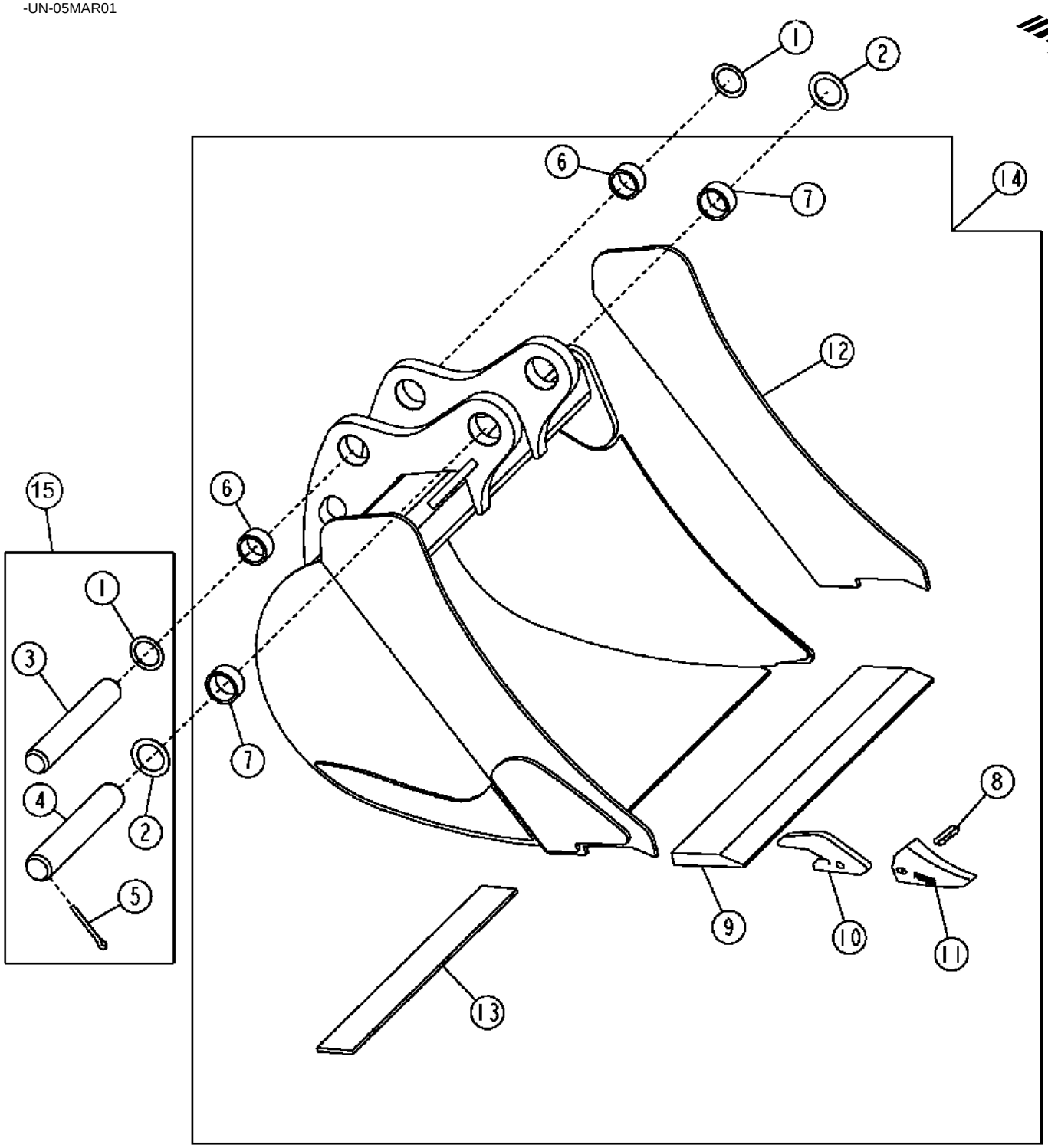

T138728

REPLACEMENT BACKHOE BUCKETS AND PINS

KEY	PART NO.	PART NAME	QTY	SERIAL NO.	REMARKS
1	24H1536	WASHER	2		
2	24H1574	WASHER	2		
3	T185829	PIN FASTENER	1		38.100 X 320 MM
4	T185830	PIN FASTENER	1		44.475 X 320 MM
5	11H221	COTTER PIN	4		
6	T187114	BUSHING	2		(SUB FOR T185793)
7	T187115	BUSHING	2		(SUB FOR T185792)
8	TF23P	PIN	AR		(FLEX)
9	T161279	CUTTING EDGE	1		(A)(CUT TO LENGTH)
	T161319	CUTTING EDGE	1		(B)(CUT TO LENGTH)
10	U43792	BUCKET TOOTH ADAPTER	AR		
11	TF23D	TOOTH	AR		(TIP)
12	T162535	PLATE	2		
	T162569	PLATE	2		
13	T166182	WEAR PLATE	AR		(USE WITH SEVERE DUTY BUCKETS)
14	AT192004	BACKHOE BUCKET	1		(WHOLE GOODS) (A) 304MM (12") HEAVY DUTY 3.3 CUBIC FEET, (CONTAINS (2) T162535) (ALSO ORDER AT192262)
	AT192006	BACKHOE BUCKET	1		(WHOLE GOODS) (A) 457MM (18") HEAVY DUTY 5.1 CUBIC FEET, (CONTAINS (2) T162535) (ALSO ORDER AT192262)
	AT192008	BACKHOE BUCKET	1		(WHOLE GOODS) (A) 610MM (24") HEAVY DUTY 7.5 CUBIC FEET, (CONTAINS (2) T162535) (ALSO ORDER AT192262)
	AT192009	BACKHOE BUCKET	1		(WHOLE GOODS) (A) 610MM (24") HEAVY DUTY 8.8 CUBIC FEET, (CONTAINS (2) T162569) (ALSO ORDER AT192262)
	AT192010	BACKHOE BUCKET	1		(WHOLE GOODS) (B) 762MM (30") HEAVY DUTY 10.0 CUBIC FEET, (CONTAINS (2) T162535) (ALSO ORDER AT192262)
15	AT192262	KIT	1		

BACKHOE BUCKET DATA 12 INCH (305)

TP45591 -UN-16DEC94

12 INCH [305] BACKHOE BUCKET DATA

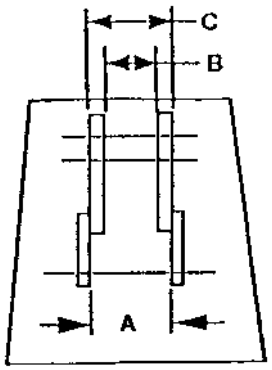

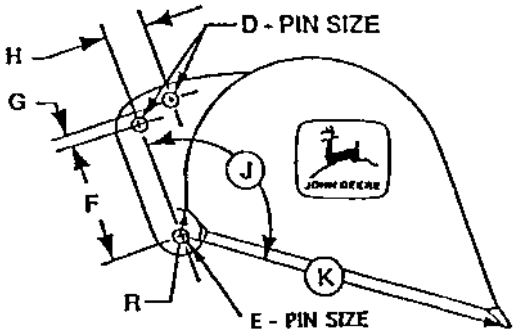

	210C, 300D, 310C, 310D, 410C, 410D, 510C, 510D, 610C, 9300G, 9310G
A	[207 ± 1.5] 8.15 ± .06
B	[134 ± 1.5] 5.28 ± .06
C	[197.6] 7.78
D	[38.1 + 0.025 - 0.1] 1.500 + .001 - .004
E	[44.45 + 0.025 - 0.13] 1.750 + .001 - .005
F	[356 ± 2] 14.02 ± .08
G	[36 ± 2] 1.42 ± .08
H	[94 ± 2] 3.70 ± .08
J	113°
K	[978] 38.50
R	[101.6] 4.00

Company policy limits the use of the enclosed drawings and information to your company and any other usage is expressly prohibited without the written consent of Deere & Company. We regret we cannot keep you informed of subsequent changes in the specifications furnished. You are, therefore, responsible for the risks involved in their use.

It is to be understood that furnishing you with the requested material does not automatically constitute a Deere & Company endorsement of your products on or with any John Deere product.

TP45591 Rev. 02DEC94

MEMORANDA

TP45592 -UN-16DEC94

18 - 48 INCH [457 - 1219] BACKHOE BUCKET DATA

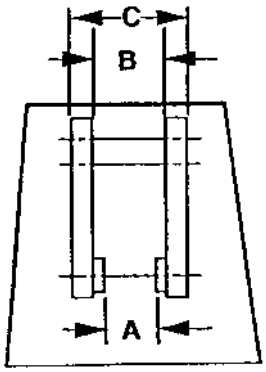

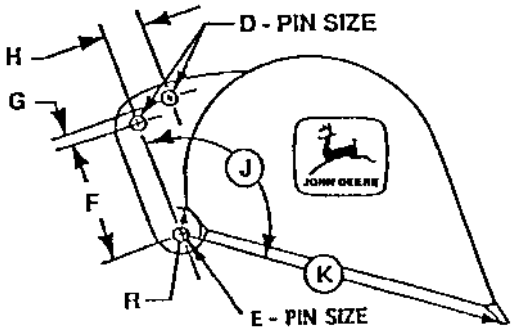

	210C, 300D, 310C, 310D, 410C, 410D, 510C, 510D, 610C, 9300G, 9310G
A	[207 ± 1.5] 8.15 ± .06
B	[257.8 ± 2] 10.15 ± .08
C	[322.6 ± 2.8] 12.70 ± .11
D	[38.1 + 0.025 - 0.1] 1.500 + .001 - .004
E	[44.45 + 0.025 - 0.13] 1.750 + .001 - .005
F	[356 ± 2] 14.02 ± .08
G	[36 ± 2] 1.42 ± .08
H	[94 ± 2] 3.70 ± .08
J	117.0°
K	[938.5] 36.95
R	[101.6] 4.00

Company policy limits the use of the enclosed drawings and information to your company and any other usage is expressly prohibited without the written consent of Deere & Company. We regret we cannot keep you informed of subsequent changes in the specifications furnished. You are, therefore, responsible for the risks involved in their use.

It is to be understood that furnishing you with the requested material does not automatically constitute a Deere & Company endorsement of your products on or with any John Deere product.

TP45592 Rev.02DEC94

MEMORANDA

BOOM LOCK LEVER
(410D STANDARD)

TP41223 -UN-01JAN94

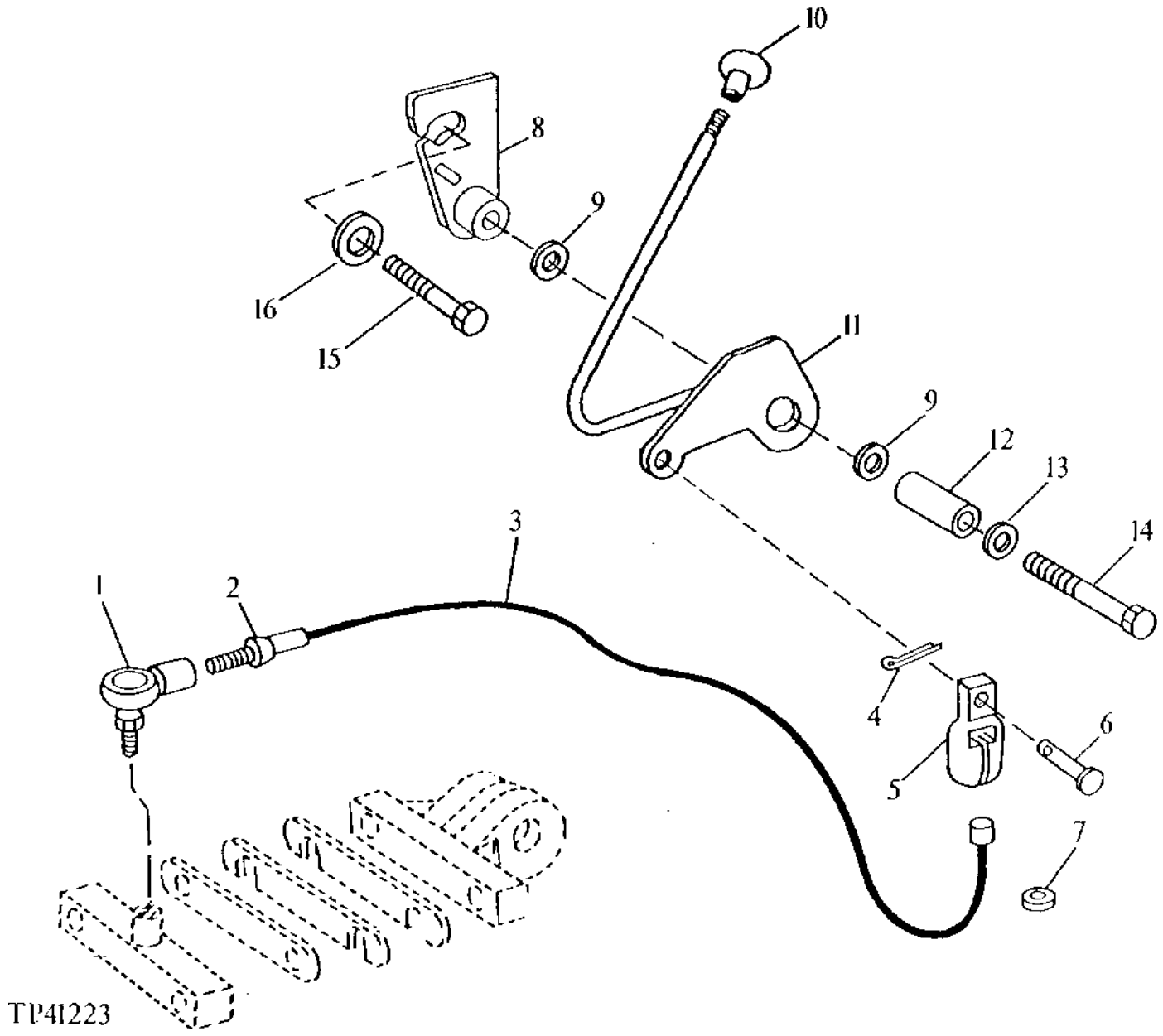

BOOM LOCK LEVER
(410D STANDARD)

KEY	PART NO.	PART NAME	QTY	SERIAL NO.	410D	510D	REMARKS
1	AT169087	BALL JOINT	1		X		
2	14H774	NUT	1		X		3/8"
3	AT160211	CABLE	1		X		FOR USE WITH STANDARD BOOM, (SUB FOR AT148249)
	AT160212	CABLE	1	-801199	X		FOR USE WITH HEAVY LIFT BOOM, (SUB FOR AT151909)
	AT165936	CABLE	1	801200-	X		FOR USE WITH HEAVY LIFT BOOM
4	11M7009	COTTER PIN	1		X		2 X 16 MM
5	T133666	GRIP	1		X		
6	45M7044	PIN FASTENER	1		X		8 X 16 MM
7	T133665	GROMMET	1		X		
8	AT150562	BRACKET	1		X		
9	24M7047	WASHER	2		X		13 X 24 X 2.500 MM
10	T133292	KNOB	1		X		
11	.....	LEVER	1	-816286	X		AT151994 NO LONGER AVAILABLE, (SUB AT176686) (SUB FOR AT150577)
	AT176686	LEVER	1	816287-	X		
12	T44730	BUSHING	1		X		
13	T18786	WASHER	1		X		
14	19M7364	CAP SCREW	1		X		M12 X 80
15	19M8011	CAP SCREW	1		X		M12 X 30
16	T29342	WASHER	1		X		17/32" X 1-1/4" X 0.180"

BOOM LOCK LEVER
(WITH LINKAGE AND ROD CONTROL)
(410D STANDARD)

TP54990 -UN-04MAR97

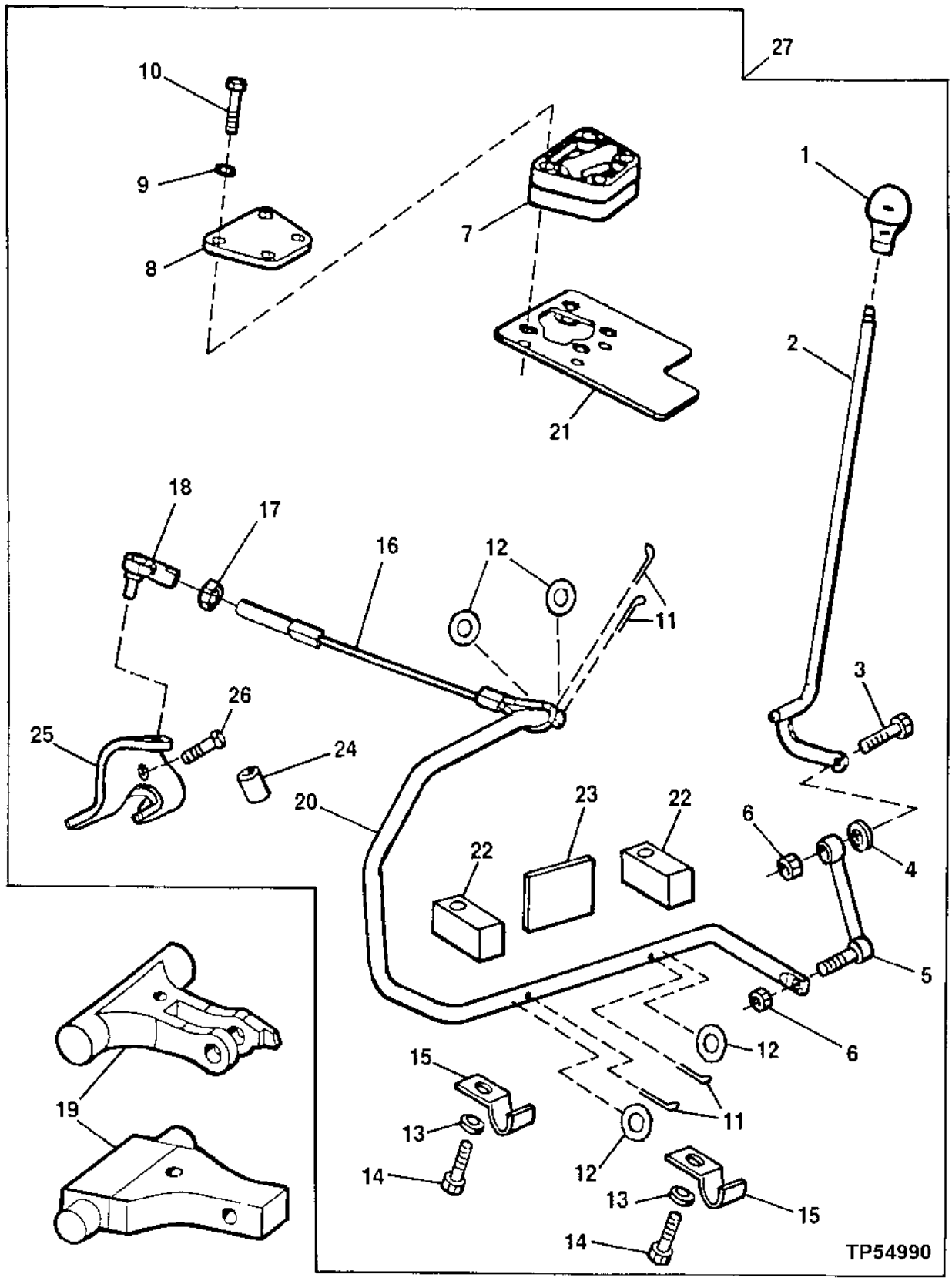

BOOM LOCK LEVER
(WITH LINKAGE AND ROD CONTROL)
(410D STANDARD)

KEY	PART NO.	PART NAME	QTY	SERIAL NO.	410D	510D	REMARKS
1	T133292	KNOB	1		X		
2	AT178240	LEVER	1		X		
3	19H2544	CAP SCREW	1		X		
4	24H1301	WASHER	1		X		
5	AT158198	LINK	1		X		
6	M68954	LOCK NUT	2		X		
7	AT178820	PIVOT	1		X		
8	T160449	PLATE	1		X		
9	24M7055	WASHER	4		X		
10	19M7922	CAP SCREW	4		X		
11	11M7082	COTTER PIN	4		X		
12	24H1362	WASHER	4		X		
13	24M7239	WASHER	2		X		
14	19M7938	CAP SCREW	2		X		
15	T160905	CLAMP	2		X		
16	AT179533	CABLE	1		X		
17	14H774	NUT	1		X		
18	AT169087	BALL JOINT	1		X		
19	AT179424	LOCK	1	-801199	X		
	T161431	LOCK	1	801200-	X		
20	T160891	ROD	1		X		
21	AT179572	PLATE	1		X		
22	T157694	STRAP	2		X		
23	T27293	REINFORCEMENT	1		X		
24	T161172	BUSHING	1	-801199	X		
25	T161327	BRACKET	1	801200-	X		
26	19H2309	CAP SCREW	1	801200-	X		
27	**AT180071**	**KIT**	**1**		**X**		

BOOM LOCK LEVER
(510D)
(WITH CABLE CONTROL)

TP41227 -UN-01JAN94

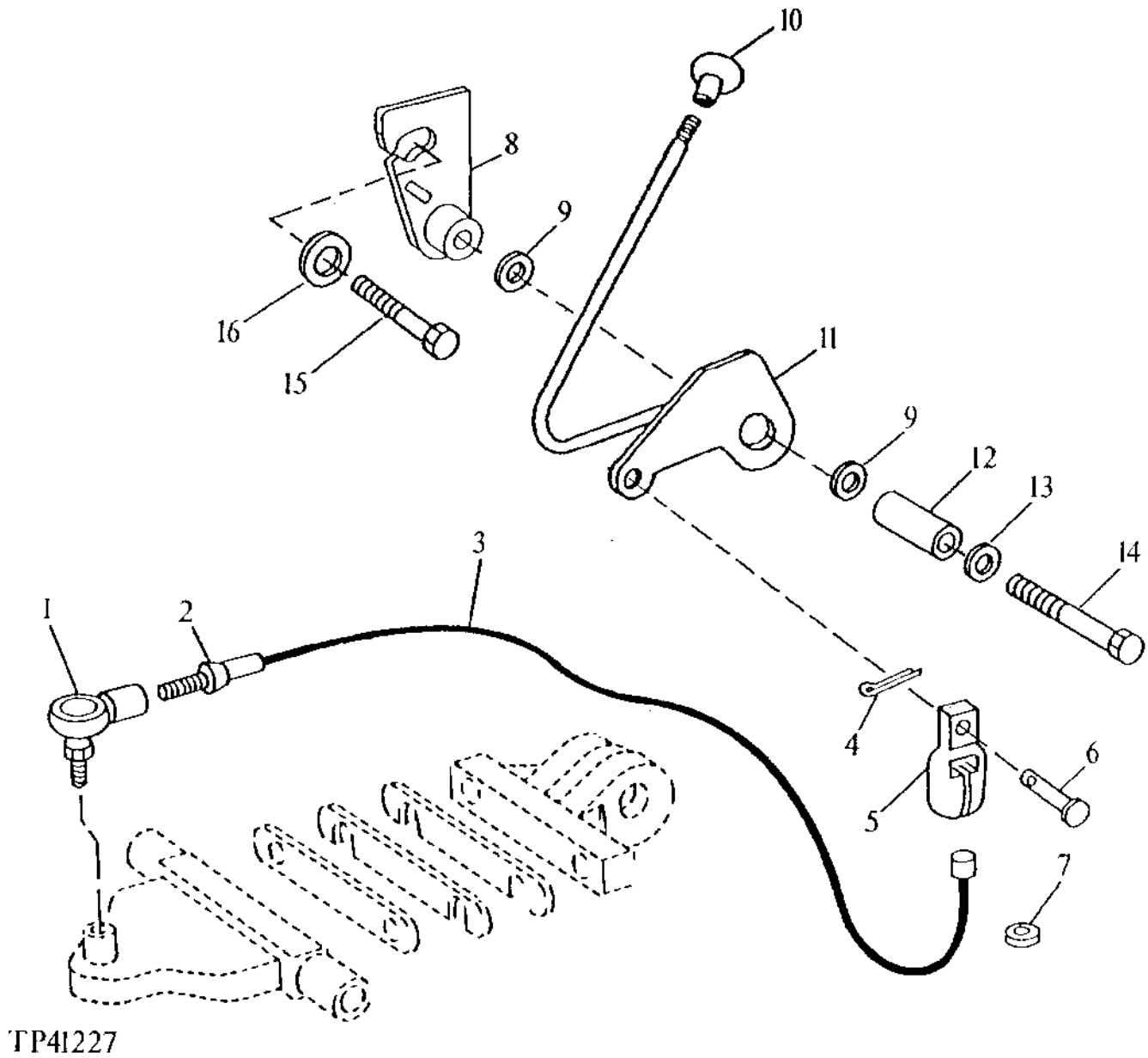

BOOM LOCK LEVER
(510D)
(WITH CABLE CONTROL)

KEY	PART NO.	PART NAME	QTY	SERIAL NO.	410D	510D	REMARKS
1	AT169087	BALL JOINT	1		X	X	(SUB FOR AT49300)
2	14H774	NUT	1		X	X	3/8"
3	AT160212	CABLE	1	-801199	X	X	(SUB FOR AT148249, THIS APPLICATION) (SUB FOR AT151575 AND AT151909)
	AT165936	CABLE	1	801200-	X	X	
4	11M7009	COTTER PIN	1		X	X	2 X 16 MM
5	T133666	GRIP	1		X	X	
6	45M7044	PIN FASTENER	1		X	X	8 X 16 MM
7	T133665	GROMMET	1		X	X	
8	AT150562	BRACKET	1		X	X	(SUB FOR AT151494)
9	24M7047	WASHER	2		X	X	13 X 24 X 2.500 MM
10	T133292	KNOB	1		X	X	
11	AT150577	LEVER	1	-781178	X	X	(SUB FOR AT151172) (SUB AT151994)
	.....	LEVER	1	781179-816286	X	X	AT151994 NO LONGER AVAILABLE, (SUB AT176686) (SUB FOR AT150577)
	AT176686	LEVER	1	816287-	X	X	
12	T44730	BUSHING	1		X	X	
13	T18786	WASHER	2		X	X	
14	19M7364	CAP SCREW	1		X	X	M12 X 80
15	19M8011	CAP SCREW	1		X	X	M12 X 30
16	T29342	WASHER	1		X	X	

BOOM LOCK LEVER
(WITH LINKAGE AND ROD CONTROL)
(410D HEAVY LIFT)
(510D STANDARD)

TP54991 -UN-04MAR97

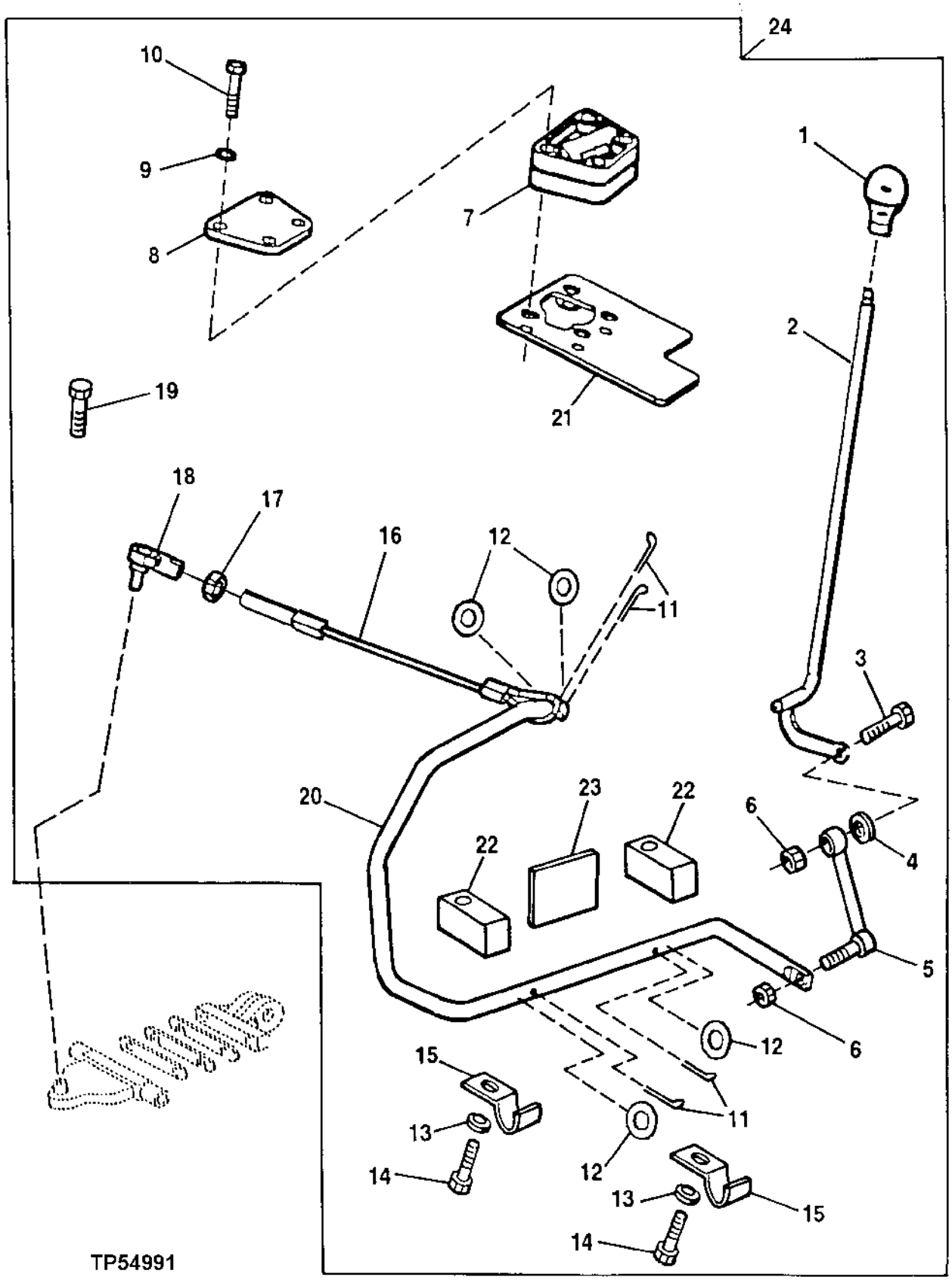

BOOM LOCK LEVER
(WITH LINKAGE AND ROD CONTROL)
(410D HEAVY LIFT)
(510D STANDARD)

KEY	PART NO.	PART NAME	QTY	SERIAL NO.	410D	510D	REMARKS
1	T133292	KNOB	1		X	X	
2	AT178240	LEVER	1		X	X	
3	19H2544	CAP SCREW	1		X	X	
4	24H1301	WASHER	1		X	X	
5	AT158198	LINK	1		X	X	
6	M68954	LOCK NUT	2		X	X	
7	AT178820	PIVOT	1		X	X	
8	T160449	PLATE	1		X	X	
9	24M7055	WASHER	4		X	X	
10	19M7922	CAP SCREW	4		X	X	
	19M7323	CAP SCREW	4		X	X	
11	11M7082	COTTER PIN	4		X	X	
12	24H1362	WASHER	4		X	X	
13	24M7239	WASHER	2		X	X	
14	19M7938	CAP SCREW	2		X	X	
15	T160905	CLAMP	2		X	X	
16	AT179533	CABLE	1		X	X	
17	14H774	NUT	1		X	X	
18	AT169087	BALL JOINT	1		X	X	
19	19H2309	CAP SCREW	1		X	X	
20	T161255	ROD	1		X	X	
21	AT179572	PLATE	1		X	X	
22	T157694	STRAP	2		X	X	
23	T27293	REINFORCEMENT	1		X	X	
24	.....	KIT	1		X	X	(AT180073 NO LONGER AVAILABLE)

STABILIZER VALVE LINKAGE
(SERIAL NO. -801199)

TP58048 -UN-17AUG99

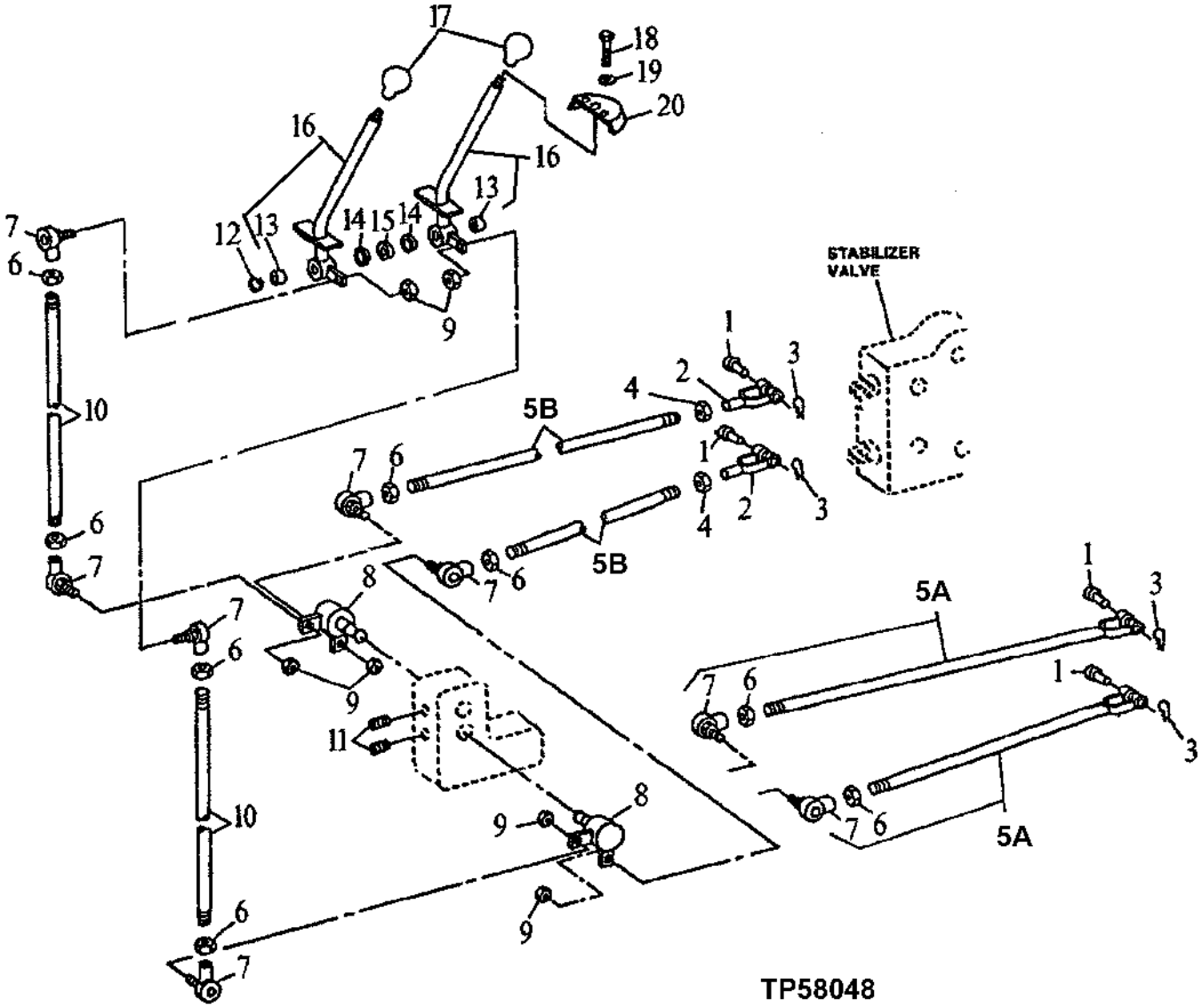

STABILIZER VALVE LINAKGE
(SERIAL NO. -801199)

KEY	PART NO.	PART NAME	QTY	SERIAL NO.	410D	510D	REMARKS
1	R52107	PIN FASTENER	2		X	X	7.836 X 34.036 MM (0.309" X 1.340")
2	T165920	YOKE	2	-784539	X	X	(SUB AT156895)
3	11M7078	COTTER PIN	2		X	X	2 X 20 MM
4	14H1080	NUT	2	-784539	X	X	3/8"
5A	.....	ROD	2	-784539	X	X	(AT157618 NO LONGER AVAILABLE) (SUB AT169087, T165920, T165222, 14H1063, 14H1080)
5B	T165222	STUD	2	784540-	X	X	
6	14H1063	NUT	6		X	X	3/8"
7	AT169087	BALL JOINT	6		X	X	(SUB FOR AT49300)
8	AT141464	BELLCRANK	2		X	X	
9	M68954	LOCK NUT	6		X	X	9.525 MM (3/8")
10	T140331	STUD	2		X	X	9.525 X 370 MM (3/8" X 14.567")
11	22M7070	SET SCREW	2		X	X	M8 X 20
12	R27434	SNAP RING	1		X	X	
13	B28042	BUSHING	2	784540-	X	X	
14	R26081	WASHER	2		X	X	19.837 X 26.975 X 0.406 MM (25/32" X 1-1/16" X 1/64")
15	J20570	BUSHING	1		X	X	20.930 X 26.670 X 34.925 MM (0.824" X 1.050" X 1-3/8") (SUB FOR 28H1948)
16	AT185250	LEVER	2		X	X	(AT139843, B28042 AND AT156818 NO LONGER AVAILABLE)
17	T133292	KNOB	2		X	X	
18	21H1406	SCREW	4		X	X	0.190" X 3/4"
19	24H1821	WASHER	4		X	X	9/32" X 47/64" X 1/16"
20	T133023	COVER	2		X	X	

STABILIZER VALVE LINKAGE
(SERIAL NO. 801200-)

TP58023 -UN-21APR99

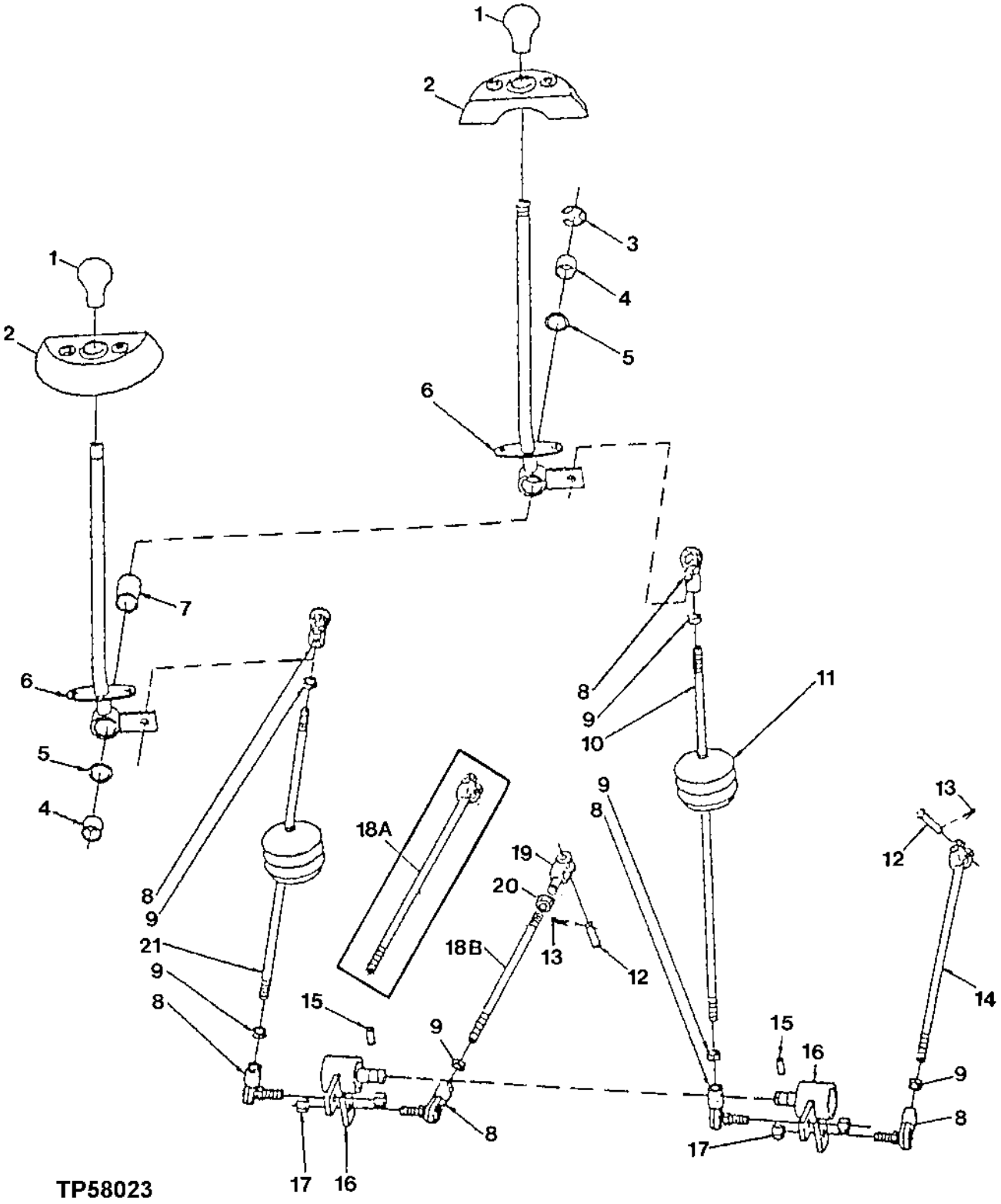

STABILIZER VALVE LINAKGE
(SERIAL NO. 801200-)

KEY	PART NO.	PART NAME	QTY	SERIAL NO.	410D	510D	REMARKS
1	T133292	KNOB	2		X	X	
2	T133023	COVER	2		X	X	
3	R27434	SNAP RING	1		X	X	
4	B28042	BUSHING	2		X	X	
5	R26081	WASHER	2		X	X	
6	AT185250	LEVER	2		X	X	(SUB FOR AT156818)
7	J20570	BUSHING	1		X	X	
8	AT169087	BALL JOINT	6		X	X	
9	14H774	NUT	6		X	X	3/8"
10	T148435	STUD	1		X	X	
11	AT145629	BOOT	2		X	X	
12	R52107	PIN FASTENER	2		X	X	
13	11M7078	COTTER PIN	2		X	X	2 X 20 MM
14	T148434	YOKE	1		X	X	
15	22M7070	SET SCREW	2		X	X	M8 X 20
16	AT141464	BELLCRANK	2		X	X	
17	M68954	LOCK NUT	2		X	X	
18A	.....	YOKE	1		X	X	(T148433 NO LONGER AVAILABLE) (SUB T158810, T165920 AND 14H1063)
18B	T158810	STUD	1		X	X	
19	T165920	YOKE	1		X	X	(L.H.)
20	14H1063	NUT	1		X	X	(L.H.)
21	T148436	STUD	1		X	X	

FIFTH FUNCTION FOOT CONTROL LINKAGE
(TWO-LEVER)
(SERIAL NUMBER -796890)

TP57913 -UN-10SEP98

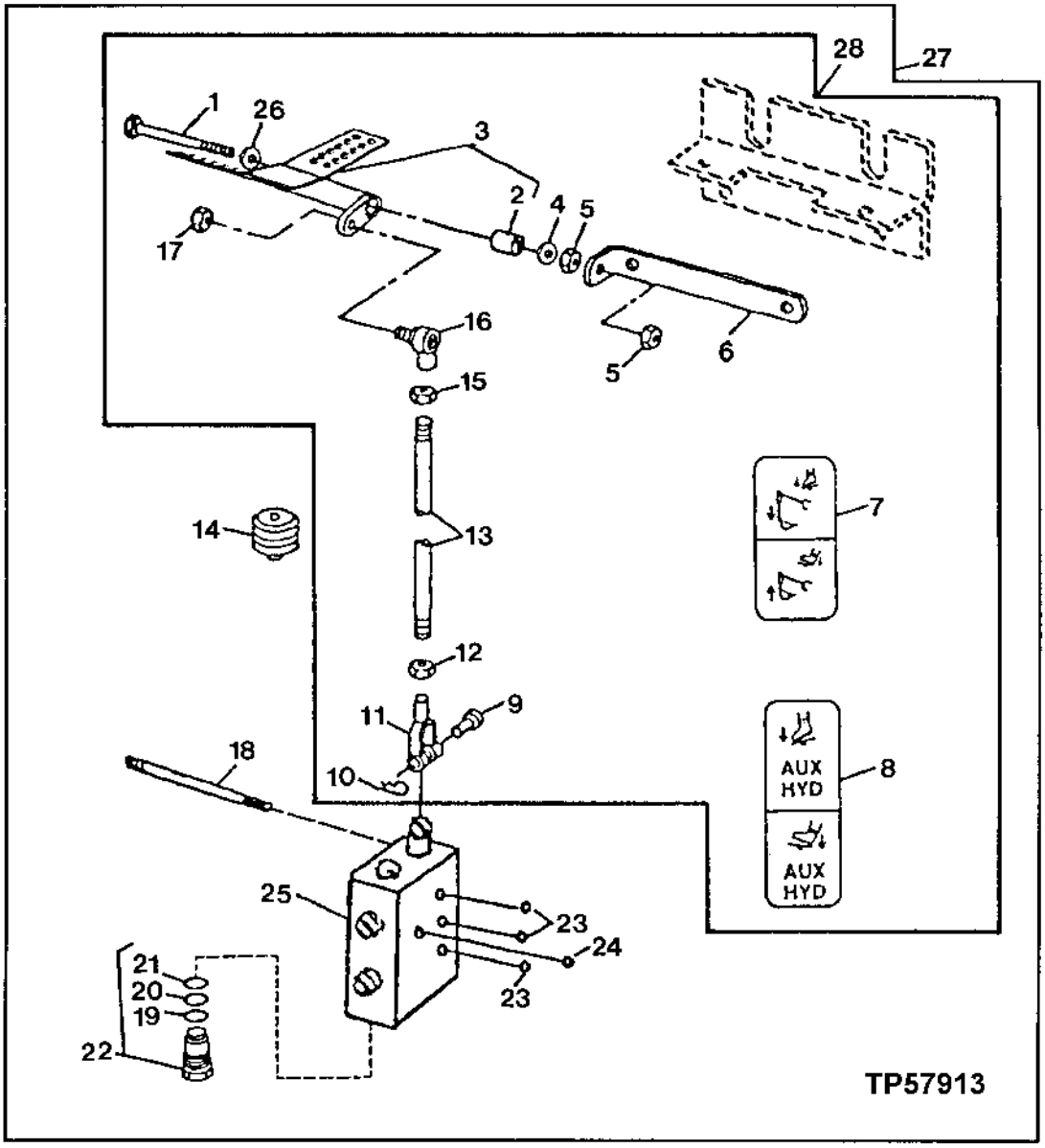

FIFTH FUNCTION FOOT CONTROL LINKAGE
(TWO-LEVER)
(SERIAL NUMBER -796890)

KEY	PART NO.	PART NAME	QTY	SERIAL NO.	410D	510D	REMARKS
1	19H3450	CAP SCREW	1		X	X	5/8" X 6-3/4"
2	T58109	BUSHING	2		X	X	
3	AT161682	CONTROL	1		X	X	(SUB FOR AT141229)
4	M87534	SPRING WASHER	2		X	X	
5	14H1039	NUT	2		X	X	5/8"
6	T134907	ANGLE	1		X	X	
7	T147012	LABEL	1		X	X	FOOT PEDAL
8	T149173	LABEL	1		X	X	FOOT PEDAL, AUXILIARY
9	R65563	PIN FASTENER	1		X	X	
10	R46528	SPRING LOCKING PIN	1		X	X	
11	T140328	YOKE	1		X	X	
12	14H913	NUT	1		X	X	3/8"
13	T140299	STUD	1		X	X	
14	AT145629	BOOT	1		X	X	(FOR USE WITH CAB)
15	14H774	NUT	1		X	X	3/8"
16	AT169087	BALL JOINT	1		X	X	(SUB FOR AT49300)
17	M68954	LOCK NUT	1		X	X	
18	T135395	STUD	4		X	X	
19	U17409	O-RING	1		X	X	(K)
20	T106298	BACK-UP RING	1		X	X	(K)
21	T49819	O-RING	1		X	X	(K)
22	AT160482	PLUG	1		X	X	
23	.....	O-RING	3		X	X	(SUB AT159816)
24	.....	O-RING	1		X	X	(SUB AT159816)
25	AT163865	SPOOL VALVE	1		X	X	BUCKET/AUXILIARY SECTION, (ALSO ORDER AT159816) (SUB FOR AT148192 AND AT151899)
26	N119479	WASHER	1		X	X	(SUB FOR R64059)
27	.....	VALVE	1		X	X	(AT151135 NO LONGER AVAILABLE) (SUB AT183939) (ALSO ORDER AT159816, AT163865, AT160482, AT145629 AND (4) T135395)
28	**AT183939**	**KIT**	**1**		**X**	**X**	

(K) AT160390 KIT, SEAL RELIEF VALVE

FIFTH FUNCTION FOOT CONTROL LINKAGE AND VALVE
(TWO-LEVER)
(SERIAL NO. 796891-802199)

TP44589 -UN-01JAN94

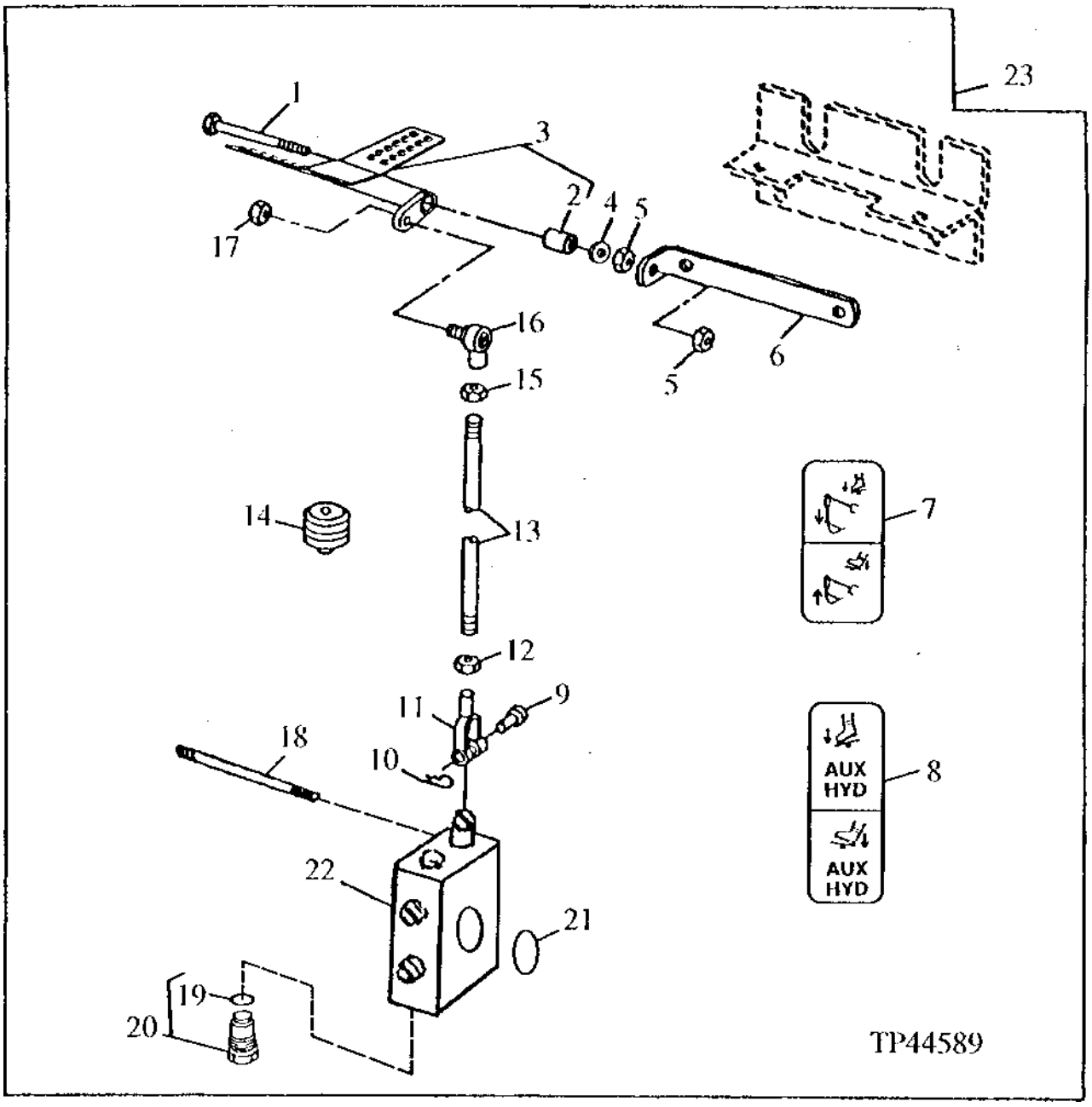

FIFTH FUNCTION FOOT CONTROL LINKAGE AND VALVE
(TWO-LEVER)
(SERIAL NO. 796891-801199)

KEY	PART NO.	PART NAME	QTY	SERIAL NO.	410D	510D	REMARKS
1	19H3450	CAP SCREW	1		X	X	5/8" X 6-3/4"
2	T58109	BUSHING	2		X	X	
3	AT161682	CONTROL	1		X	X	
4	M87534	SPRING WASHER	2		X	X	
5	14H1039	NUT	2		X	X	5/8"
6	T134907	ANGLE	1		X	X	
7	T147012	LABEL	1		X	X	FOOT PEDAL
8	T149173	LABEL	1		X	X	FOOT PEDAL, AUXILIARY
9	R65563	PIN FASTENER	1		X	X	
10	R46528	SPRING LOCKING PIN	1		X	X	
11	T140328	YOKE	1		X	X	
12	14H913	NUT	1		X	X	3/8"
13	T140299	STUD	1		X	X	
14	AT145629	BOOT	1		X	X	(FOR USE WITH CAB)
15	14H774	NUT	1		X	X	3/8"
16	AT169087	BALL JOINT	1		X	X	(SUB FOR AT49300)
17	M68954	LOCK NUT	1		X	X	
18	T149575	STUD	1		X	X	
	T149576	STUD	1		X	X	
19	T183757	SEAL	1		X	X	(SUB FOR T141872)
20	AT83174	PLUG	1		X	X	
21	T118685	O-RING	1		X	X	
22	AT165730	SECTION	1		X	X	
23	**AT166634**	**VALVE**	**1**		**X**	**X**	

SIXTH FUNCTION FOOT CONTROL LINKAGE AND VALVE
(TWO-LEVER)
(SERIAL NO. 796891-801199)

TP44588 -UN-01JAN94

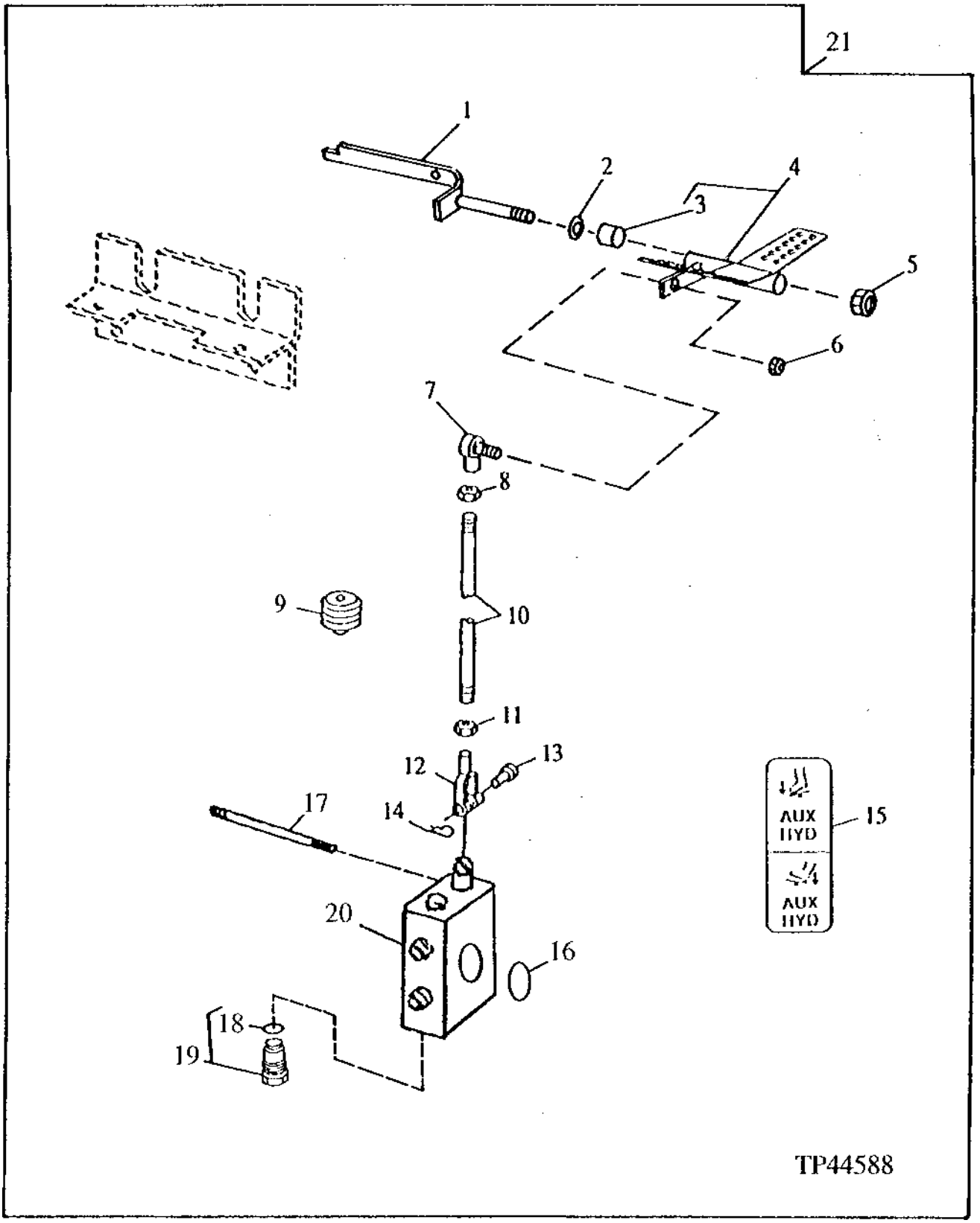

SIXTH FUNCTION FOOT CONTROL LINKAGE AND VALVE
(TWO-LEVER)
(SERIAL NO. 796891-801199)

KEY	PART NO.	PART NAME	QTY	SERIAL NO.	410D	510D	REMARKS
1	AT163685	SUPPORT	1		X	X	
2	M87534	SPRING WASHER	2		X	X	
3	T58109	BUSHING	2		X	X	
4	AT161973	CONTROL	1		X	X	
5	U14555	LOCK NUT	1		X	X	15.875 MM (5/8")
6	M68954	LOCK NUT	1		X	X	
7	AT169087	BALL JOINT	1		X	X	(SUB FOR AT49300)
8	14H774	NUT	1		X	X	3/8"
9	AT145629	BOOT	1		X	X	(FOR USE WITH CAB)
10	T140299	STUD	1		X	X	
11	14H913	NUT	1		X	X	3/8"
12	T140328	YOKE	1		X	X	
13	R65563	PIN FASTENER	1		X	X	
14	R46528	SPRING LOCKING PIN	1		X	X	
15	T149173	LABEL	1		X	X	FOOT PEDAL, AUXILIARY
16	T118685	O-RING	1		X	X	
17	T149577	STUD	1		X	X	
	T149578	STUD	2		X	X	
18	T183757	SEAL	1		X	X	(SUB FOR T141872)
19	AT83174	PLUG	2		X	X	
20	AT165730	SECTION	1		X	X	
21	.....	VALVE	1		X	X	(AT167144 NO LONGER AVAILABLE)

TWO LEVER BACKHOE CONTROL LEVER LINKAGE FOR EXTENDIBLE DIPPERSTICK

TP50411 -UN-28OCT96

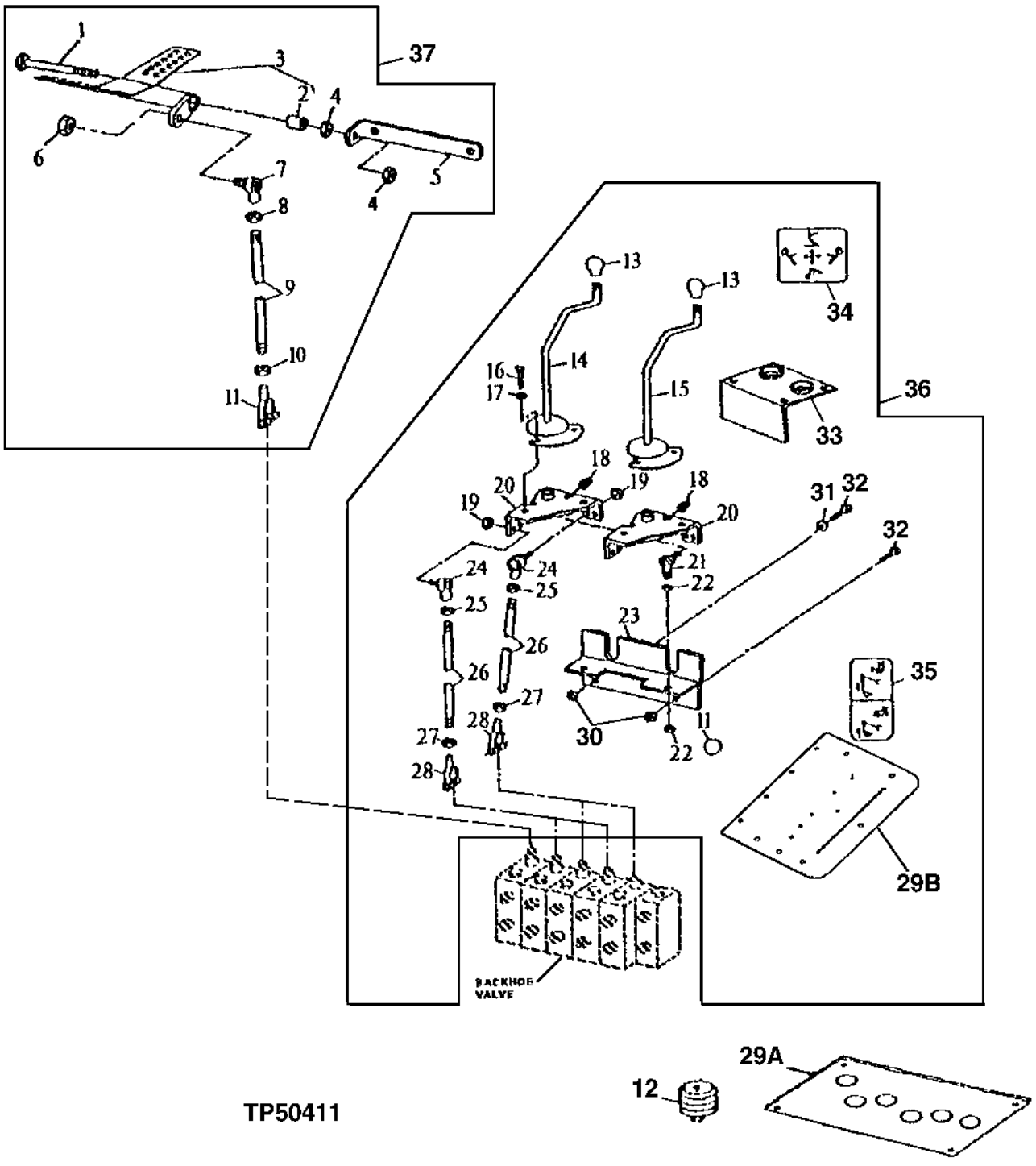

TP50411

TWO LEVER BACKHOE CONTROL LEVEL LINKAGE FOR EXTENDIBLE DIPPERSTICK

KEY	PART NO.	PART NAME	QTY	SERIAL NO.	410D	510D	REMARKS
1	19H3450	CAP SCREW	1		X	X	5/8" X 6-3/4"
2	T58109	BUSHING	2		X	X	
3	AT161682	CONTROL	1		X	X	
4	14H1039	NUT	2		X	X	5/8"
	M87534	SPRING WASHER	2		X	X	
5	T134907	ANGLE	1		X	X	
6	M68954	LOCK NUT	1		X	X	
7	AT169087	BALL JOINT	1		X	X	(SUB FOR AT49300)
8	14H774	NUT	1		X	X	3/8"
9	T148848	STUD	1		X	X	(USE WITH AT168919)
	T158812	STUD	1		X	X	(USE WITH AT178776)
	T165214	STUD	1		X	X	(USE WITH AT183939)
10	14H913	NUT	1		X	X	3/8"
11	T140328	YOKE	1		X	X	
12	AT145629	BOOT	5		X	X	
13	T133291	KNOB	2		X	X	
14	AT148213	LEVER	1		X	X	RIGHT
15	AT148214	LEVER	1		X	X	LEFT
16	19M7881	SCREW	4		X	X	M8 X 20
17	24M7238	WASHER	4		X	X	8.700 X 17 X 2 MM
18	T161379	SPACER	2		X	X	(ALSO ORDER 14H865) (SUB FOR T141126, THIS APPLICATION)
	14H865	NUT	2		X	X	1/2"
19	M68954	LOCK NUT	4		X	X	
20	AT178686	BASE	2		X	X	REPLACE IN PAIRS, (SUB FOR AT151699)
21	AT124107	BALL JOINT	2		X	X	
22	14H865	NUT	4		X	X	1/2"
23	AT164934	SUPPORT	1		X	X	(SUB FOR AT149549)
24	AT169087	BALL JOINT	4		X	X	(SUB FOR AT49300)
25	14H774	NUT	4		X	X	3/8"
26	T158810	STUD	4		X	X	
27	14H913	NUT	4		X	X	3/8"
28	T140328	YOKE	4		X	X	
29A	T133509	SUPPORT	1		X	X	(USE WITH AT156392) (WITH CAB)
29B	T151794	GASKET	1		X	X	(USE WITH AT168918) (WITH CAB)
30	14M7274	NUT	2		X	X	M10
31	24M7239	WASHER	1		X	X	10.700 X 21 X 2.500 MM
32	19M7550	CAP SCREW	2		X	X	M10 X 35
33	T134383	PANEL	1		X	X	
34	T100195	LABEL	1		X	X	SWING AND BOOM
	T100196	LABEL	1		X	X	BUCKET AND DIPPERSTICK
35	T147012	LABEL	1		X	X	FOOT PEDAL
36	**AT183938**	**KIT**	**1**		**X**	**X**	**(ALSO ORDER AT183939 AND AT184192) (SUB FOR AT156392 AND AT178770)**
37	**AT183939**	**LINKAGE**	**1**		**X**	**X**	**(SUB FOR AT168919 AND AT178776)**

SIXTH FUNCTION FOOT CONTROL BACKHOE LINKAGE
(TWO-LEVER)
(SERIAL NO. 801200-)

TP54907 -UN-07DEC96

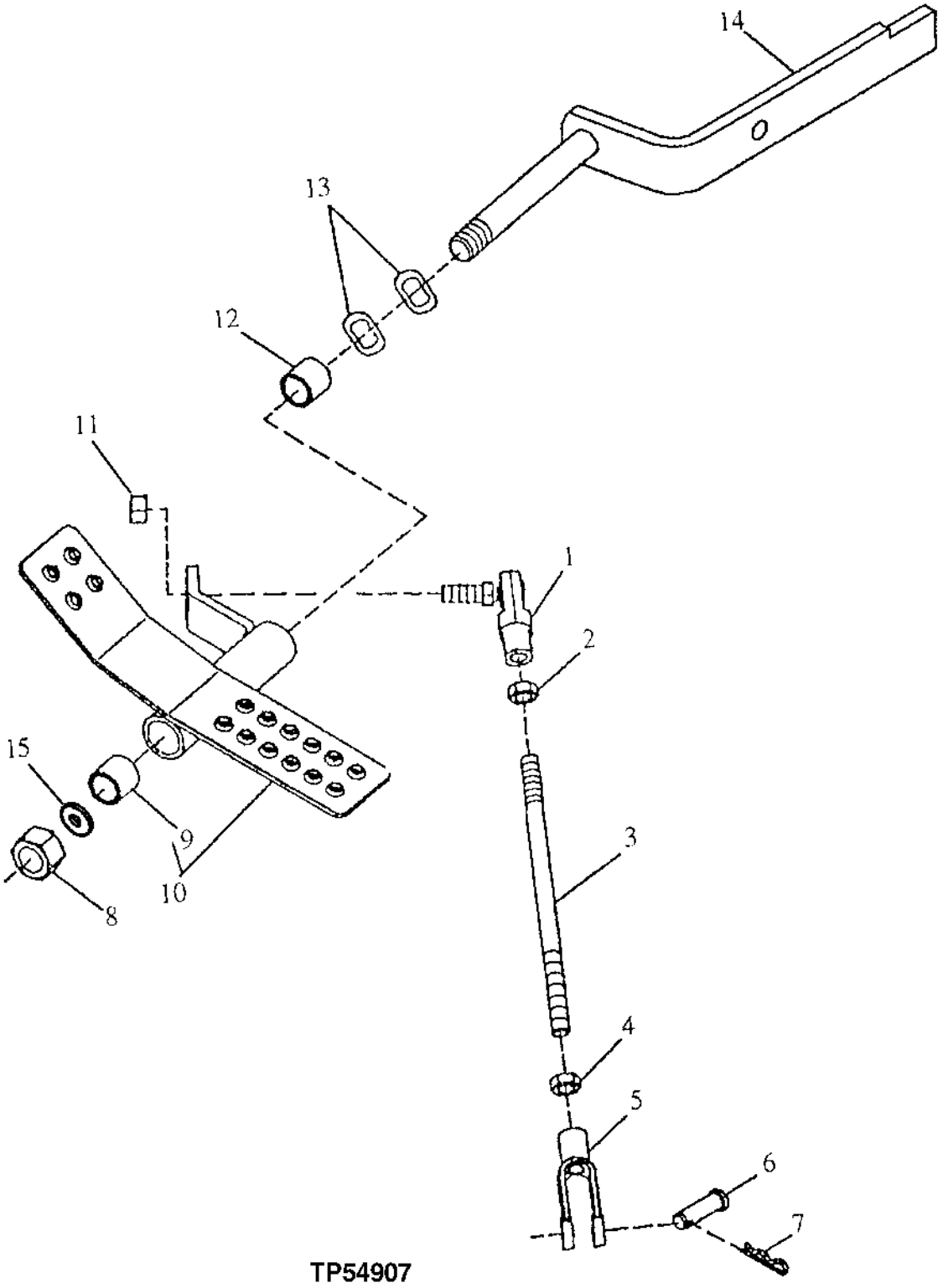

TP54907

SIXTH FUNCTION FOOT CONTROL BACKHOE LINKAGE
(TWO-LEVER)
(SERIAL NO. 801200-)

KEY	PART NO.	PART NAME	QTY	SERIAL NO.	410D	510D	REMARKS
1	AT169087	BALL JOINT	1		X	X	
2	14H774	NUT	1		X	X	3/8"
3	T148848	STUD	1		X	X	
4	14H913	NUT	1		X	X	3/8"
5	T140328	YOKE	1		X	X	
6	R65563	PIN FASTENER	1		X	X	
7	R46528	SPRING LOCKING PIN	1		X	X	
8	U14555	LOCK NUT	1		X	X	
9	T58109	BUSHING	1		X	X	
10	AT161973	CONTROL	1		X	X	
11	M68954	LOCK NUT	1		X	X	
12	T58109	BUSHING	1		X	X	
13	M87534	SPRING WASHER	2		X	X	
14	AT163685	SUPPORT	1		X	X	
15	N119479	WASHER	1		X	X	(SUB FOR R64059)

FIFTH FUNCTION PEDAL FOR TWO LEVER CONTROLS KIT
(SERIAL NO. 801200-)

TP54909 -UN-09DEC96

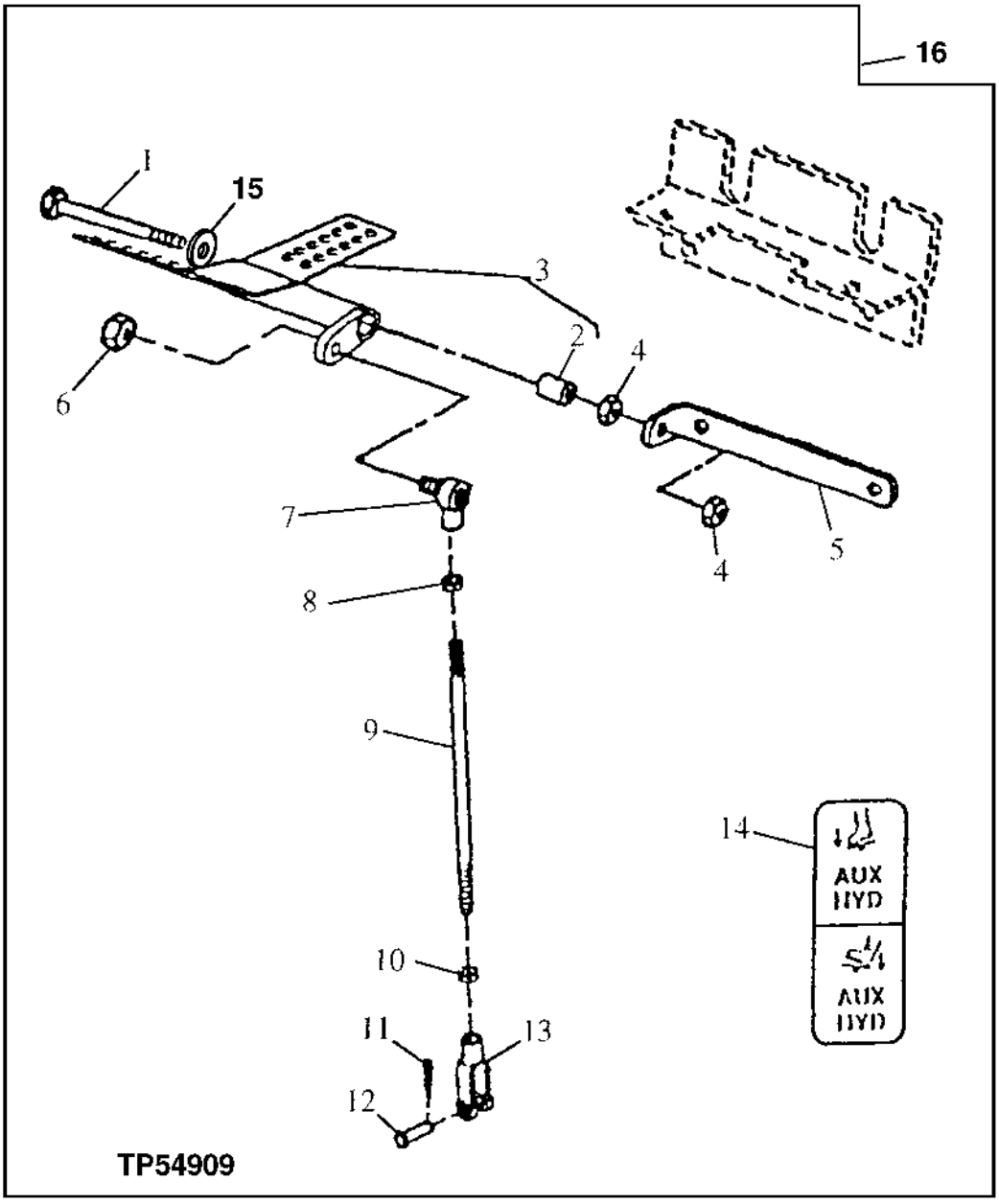

FIFTH FUNCTION PEDAL FOR TWO LEVER CONTROLS KIT
(SERIAL NO. 801200-)

KEY	PART NO.	PART NAME	QTY	SERIAL NO.	410D	510D	REMARKS
1	19H3450	CAP SCREW	1		X	X	5/8" X 6-3/4"
2	T58109	BUSHING	2		X	X	
3	AT161682	CONTROL	1		X	X	
4	14H1039	NUT	2		X	X	5/8"
	M87534	SPRING WASHER	2		X	X	
5	T134907	ANGLE	1		X	X	
6	M68954	LOCK NUT	2		X	X	
7	AT169087	BALL JOINT	1		X	X	
8	14H774	NUT	1		X	X	3/8"
9	T148848	STUD	1		X	X	
10	14H913	NUT	1		X	X	3/8"
11	R46528	SPRING LOCKING PIN	1		X	X	
12	R65563	PIN FASTENER	1		X	X	
13	T140328	YOKE	1		X	X	
14	T149173	LABEL	1		X	X	RIGHT
15	N119479	WASHER	1		X	X	(SUB FOR R64059)
16	**AT168919**	**LINKAGE**	**1**		**X**	**X**	**LEFT**

SIXTH FUNTION PEDAL
(SERIAL NO. 801200-)

TP54908 -UN-07DEC96

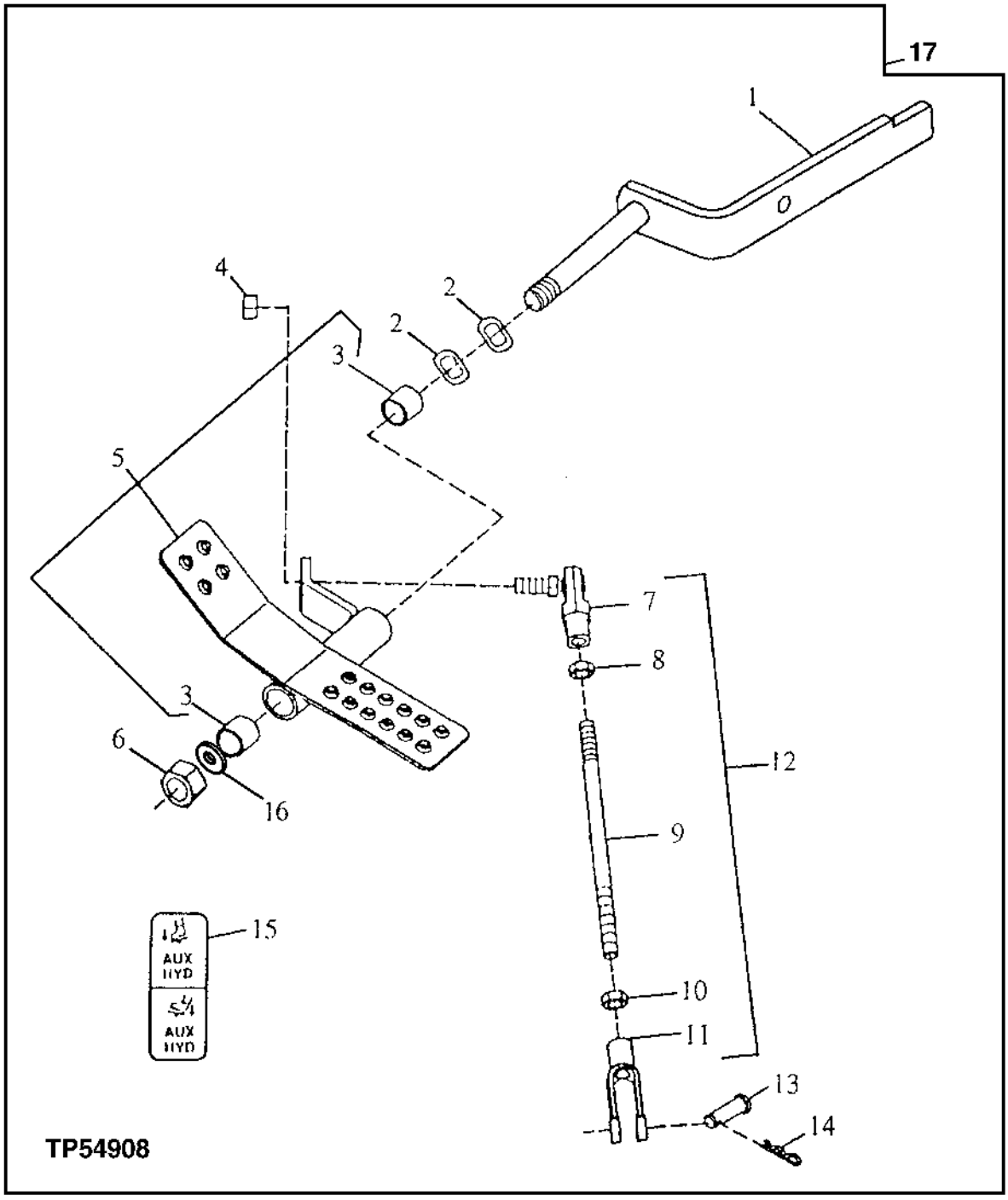

SIXTH FUNTION PEDAL
(SERIAL NO. 801200-)

KEY	PART NO.	PART NAME	QTY	SERIAL NO.	410D	510D	REMARKS
1	AT163685	SUPPORT	1		X	X	
2	M87534	SPRING WASHER	2		X	X	
3	T58109	BUSHING	2		X	X	
4	M68954	LOCK NUT	1		X	X	
5	AT161973	CONTROL	1		X	X	
6	U14555	LOCK NUT	1		X	X	
7	AT169087	BALL JOINT	1		X	X	
8	14H774	NUT	1		X	X	3/8"
9	T148848	STUD	1		X	X	(USE WITH AT168917)
	T165214	STUD	1		X	X	(USE WITH AT183952)
10	14H913	NUT	1		X	X	3/8"
11	T140328	YOKE	1		X	X	
12	.....	BALL JOINT	1		X	X	
13	R65563	PIN FASTENER	1		X	X	
14	R46528	SPRING LOCKING PIN	1		X	X	
15	T149173	LABEL	1		X	X	
16	N119479	WASHER	1		X	X	(SUB FOR R64059)
17	**AT183952**	**MOUNTING PARTS**	**1**		**X**	**X**	**(SUB FOR AT168917) (SIXTH FUNCTION FOOT PEDAL CONTROL FIELD KIT)**

TWO LEVER BACKHOE CONTROL LEVER LINKAGE
(SERIAL NO. -801199)

TP45031 -UN-01JAN94

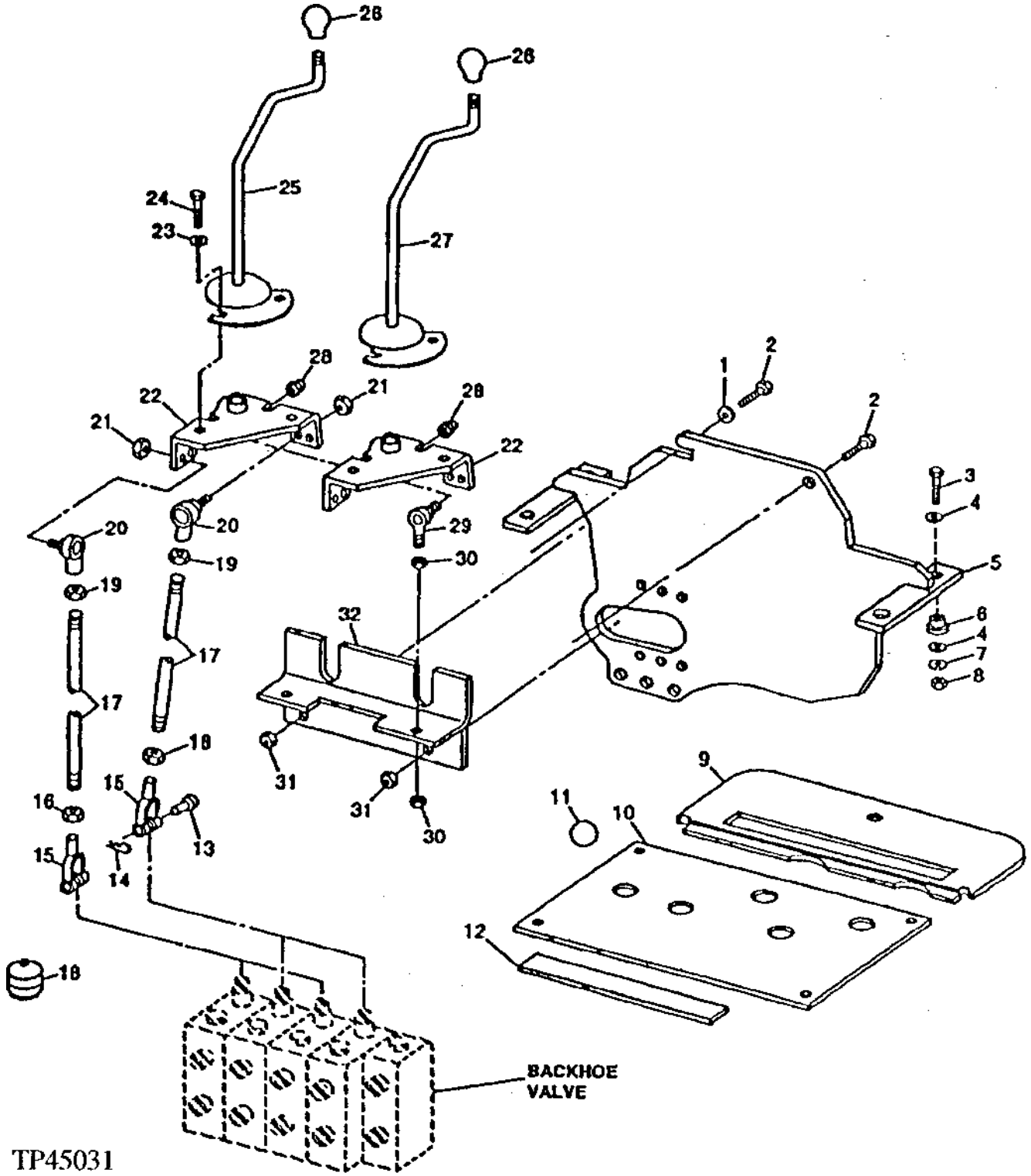

TWO-LEVER BACKHOE CONTROL VALVE LINKAGE
(SERIAL NO. -801199)

KEY	PART NO.	PART NAME	QTY	SERIAL NO.	410D	510D	REMARKS
1	24M7239	WASHER	1		X	X	10.700 X 21 X 2.500 MM, (SUB FOR AT151567)
2	19M7572	CAP SCREW	2		X	X	M10 X 45, (SUB FOR 19M7550)
3	19M7935	CAP SCREW	4		X	X	M10 X 55
4	24H1314	WASHER	8		X	X	13/32" X 1-3/4" X 7/64"
5	AT146221	SUPPORT	1	-774985	X	X	(SUB AT165783 AND T141316)
	AT165783	SUPPORT	1	774986-	X	X	(SUB FOR AT151567)
6	AT139776	ISOLATOR	4		X	X	
7	24M7296	WASHER	4		X	X	10.500 X 30 X 2.500 MM
8	14M7274	NUT	4		X	X	M10
9	T133386	GROMMET	1	-774985	X	X	(USE WITH AT146221)
	T141316	GROMMET	1	774986-	X	X	(USE WITH AT165783)
10	T133509	SUPPORT	1	-798064	X	X	
	T148844	SUPPORT	1	798065-	X	X	
11	T135241	PLUG	1		X	X	
12	.....	STRIP	1		X	X	(MAKE FROM T59938 BULK MATERIAL,CUT TO LENGTH
13	R65563	PIN FASTENER	4		X	X	
14	R46528	SPRING LOCKING PIN	4		X	X	
15	T140328	YOKE	4		X	X	(L.H.)
16	14H913	NUT	4		X	X	3/8", (L.H.)
17	T140300	STUD	4		X	X	
18	AT145629	BOOT	4		X	X	
19	14H774	NUT	4		X	X	3/8"
20	AT169087	BALL JOINT	4		X	X	(SUB FOR AT49300)
21	M68954	LOCK NUT	4		X	X	
22	AT178686	BASE	2		X	X	REPLACE IN PAIRS, (SUB FOR AT148212 AND AT151699)
23	24M7238	WASHER	4		X	X	8.700 X 17 X 2 MM
24	19M7881	SCREW	4		X	X	M8 X 20
25	AT148213	LEVER	1		X	X	
26	T133291	KNOB	2		X	X	
27	AT148214	LEVER	1		X	X	
28	T161379	SPACER	2		X	X	(ALSO ORDER 14H865) (SUB FOR T133466) (SUB FOR T141126, THIS APPLICATION)
	14H865	NUT	2		X	X	1/2"
29	AT124107	BALL JOINT	2		X	X	
30	14H865	NUT	4		X	X	1/2"
31	14M7274	NUT	2		X	X	M10
32	AT164934	SUPPORT	1		X	X	(SUB FOR AT149549)

TWO LEVER BACKHOE CONTROL LEVER LINKAGE
(SERIAL NO. 801200-)

TP46240 -UN-01JAN94

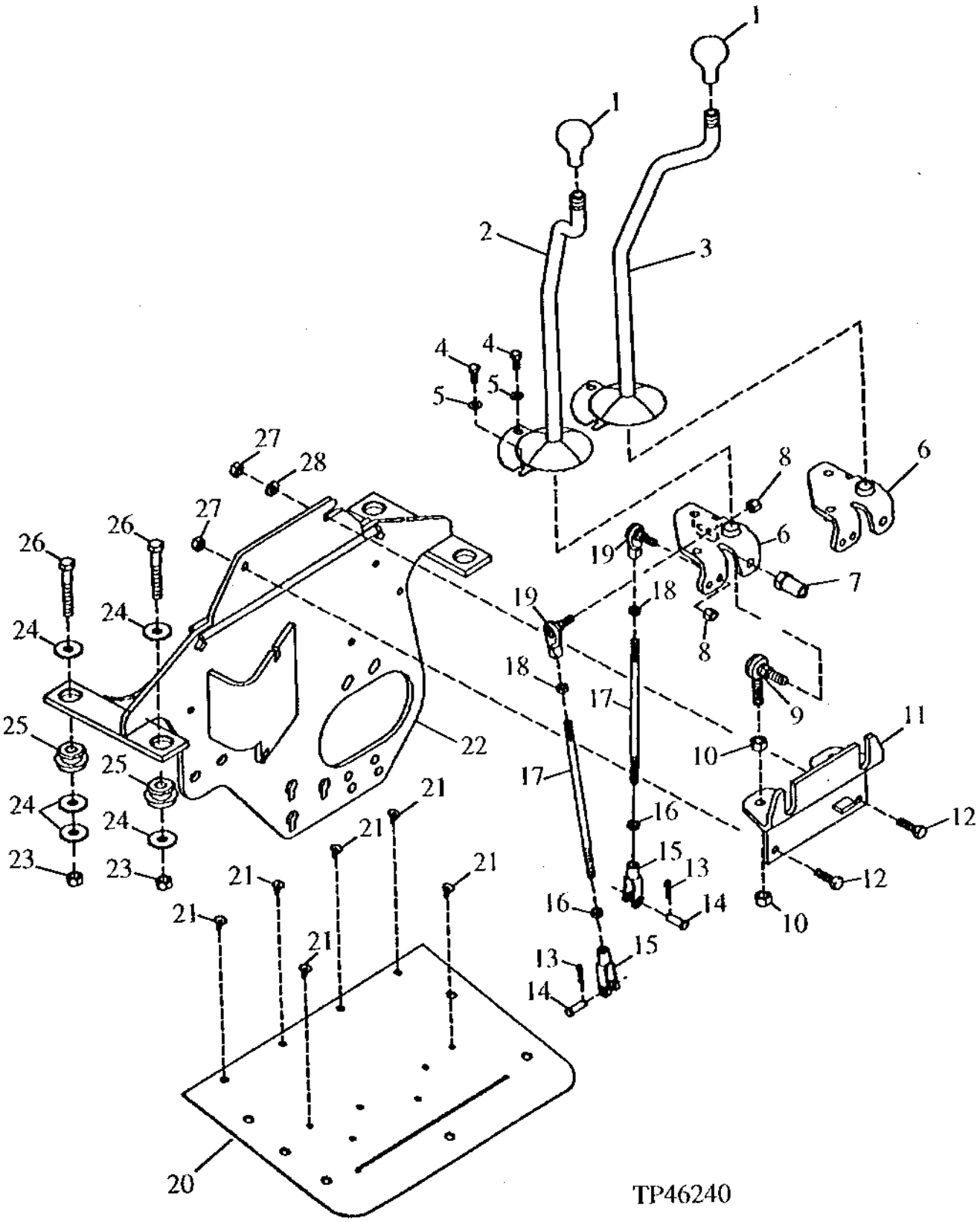

TWO-LEVER BACKHOE CONTROL VALVE LINKAGE
(SERIAL NO. 801200-)

KEY	PART NO.	PART NAME	QTY	SERIAL NO.	410D	510D	REMARKS
1	T133291	KNOB	2		X	X	
2	AT148214	LEVER	1		X	X	
3	AT148213	LEVER	1		X	X	
4	19M7881	SCREW	4		X	X	M8 X 20
5	24M7238	WASHER	4		X	X	8.700 X 17 X 2 MM
6	AT178686	BASE	2		X	X	REPLACE IN PAIRS, (SUB FOR AT151699)
7	T161379	SPACER	2		X	X	(ALSO ORDER 14H865) (SUB FOR T141126, THIS APPLICATION)
	14H865	NUT	2		X	X	1/2"
8	M68954	LOCK NUT	4		X	X	9.525 MM
9	AT124107	BALL JOINT	2		X	X	
10	14H865	NUT	4		X	X	1/2"
11	AT164934	SUPPORT	1		X	X	
12	19M7550	CAP SCREW	2		X	X	M10 X 35
13	R46528	SPRING LOCKING PIN	4		X	X	
14	R65563	PIN FASTENER	4		X	X	
15	T140328	YOKE	1		X	X	
16	14H913	NUT	1		X	X	3/8"
17	T148741	STUD	1		X	X	
18	14H774	NUT	1		X	X	
19	AT169087	BALL JOINT	1		X	X	
20	T151794	GASKET	1		X	X	
21	T133009	PLUG	6		X	X	
22	AT164513	PLATE	1		X	X	
23	14M7275	NUT	4		X	X	M12
24	24M7180	WASHER	10		X	X	13 X 37 X 3 MM
25	AT139776	ISOLATOR	4		X	X	
26	19M7753	CAP SCREW	2		X	X	M12 X 70, (VALVE SUPPORT TO FRAME THROUGH ISOLATORS- TWO HOLES TO REAR OF TRACTOR)
	19M7943	CAP SCREW	2		X	X	M12 X 90, (VALVE SUPPORT TO FRAME THROUGH ISOLATORS- TWO HOLES TO FRONT OF TRACTOR)
	24M7180	WASHER	4		X	X	13 X 37 X 3 MM, (REAR (TOWARDS BACKHOE) SCREWS TO BACKHOE VALVE MOUNTING PLATE THROUGH ISOLATORS-ONE EACH UNDER HEAD OF CAPSCREW AND NUT)
27	14M7274	NUT	2		X	X	M10
28	24M7239	WASHER	1		X	X	10.700 X 21 X 2.500 MM

TWO LEVER BACKHOE CONTROL LEVER LINKAGE KIT
(SERIAL NO. 801200-)

TP45551 -UN-11OCT94

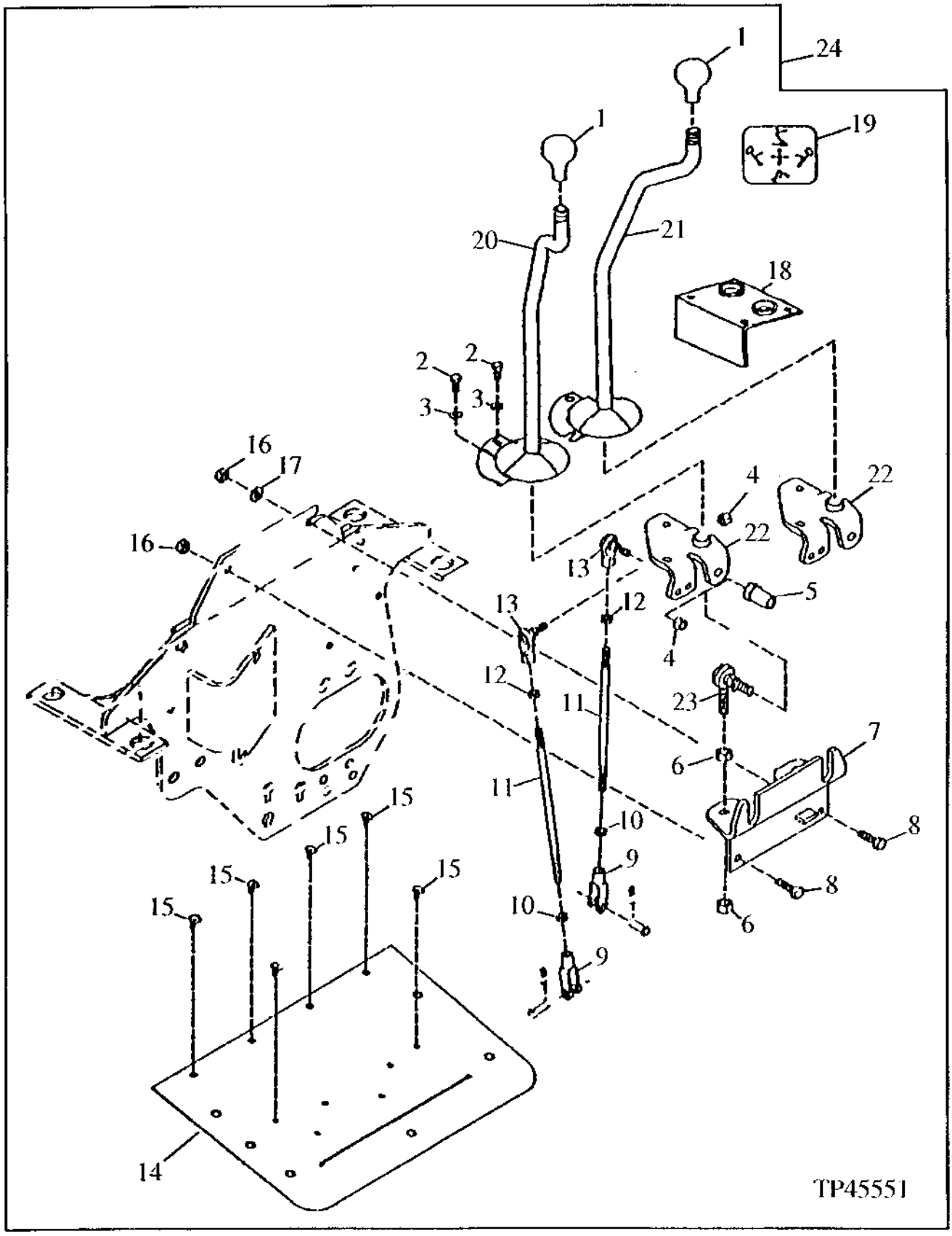

TWO-LEVER BACKHOE CONTROL VALVE LINKAGE KIT
(SERIAL NO. 801200-)

KEY	PART NO.	PART NAME	QTY	SERIAL NO.	410D	510D	REMARKS
1	T133291	KNOB	2		X	X	
2	19M7881	SCREW	4		X	X	M8 X 20
3	24M7238	WASHER	4		X	X	8.700 X 17 X 2 MM
4	M68954	LOCK NUT	4		X	X	
5	T161379	SPACER	2		X	X	(ALSO ORDER 14H865) (SUB FOR T141126, THIS APPLICATION)
	14H865	NUT	2		X	X	1/2"
6	14H865	NUT	4		X	X	1/2"
7	AT164934	SUPPORT	1		X	X	
8	19M7550	CAP SCREW	4		X	X	M10 X 35
9	T140328	YOKE	4		X	X	
10	14H913	NUT	4		X	X	3/8"
11	T158810	STUD	4		X	X	
12	14H774	NUT	4		X	X	3/8"
13	AT169087	BALL JOINT	4		X	X	
14	T151794	GASKET	1		X	X	
15	T133009	PLUG	6		X	X	
16	14M7274	NUT	2		X	X	M10
17	24M7239	WASHER	1		X	X	10.700 X 21 X 2.500 MM
18	T134383	PANEL	1		X	X	
19	T100195	LABEL	1		X	X	(SWING AND BOOM)
	T100196	LABEL	1		X	X	(BUCKET AND DIPPERSTICK)
20	AT148214	LEVER	1		X	X	LEFT
21	AT148213	LEVER	1		X	X	RIGHT
22	AT178686	BASE	2		X	X	REPLACE IN PAIRS, (SUB FOR AT151699)
23	AT124107	BALL JOINT	2		X	X	
24	**AT183938**	**LINKAGE**	**1**		**X**	**X**	**(SUB FOR AT168918 AND AT178770) (ALSO ORDER AT184192)**

THREE LEVER CONTROL VALVE LINKAGE
(STANDARD BACKHOE)
(SERIAL NO. -801199)

TP58063 -UN-16AUG99

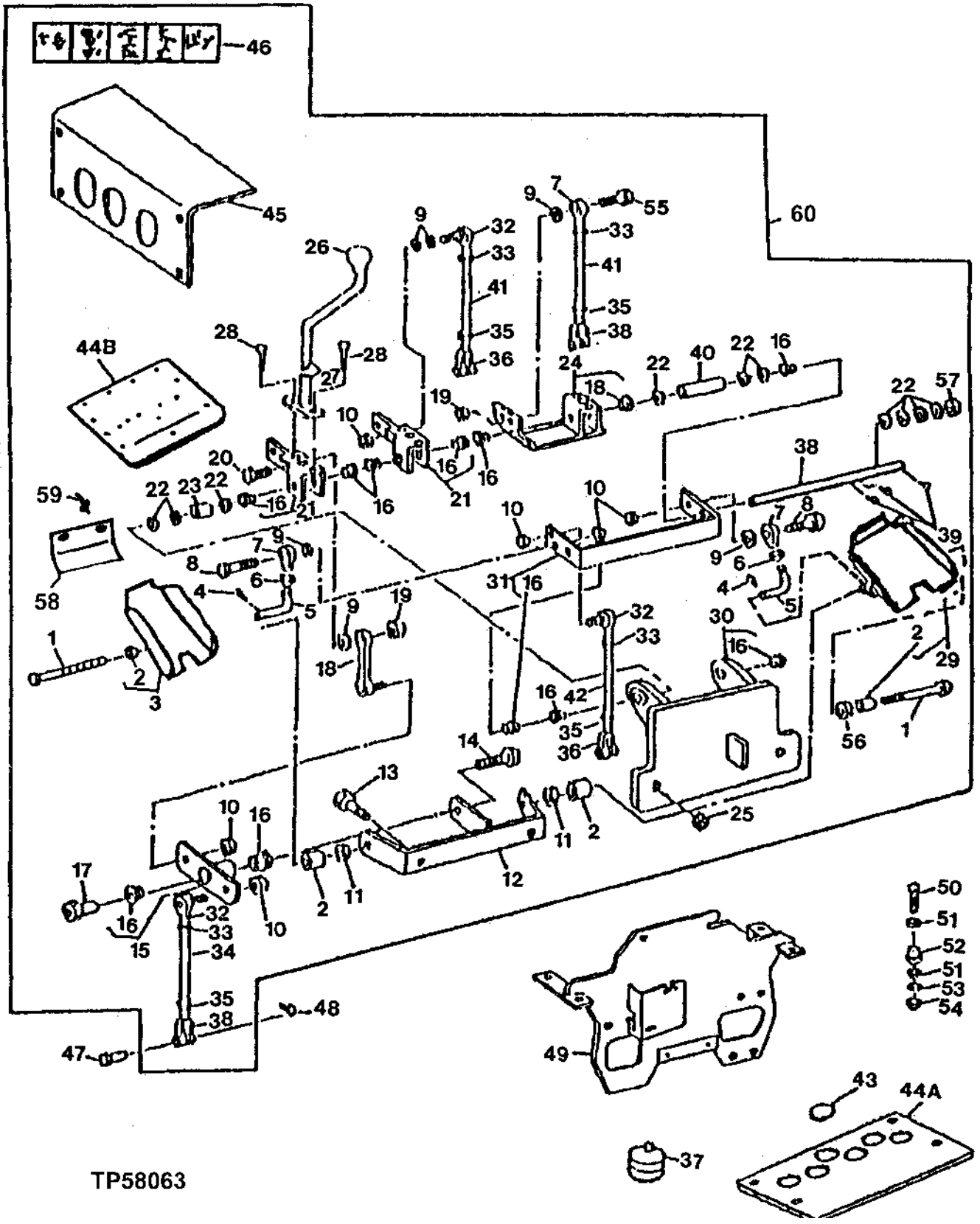

THREE-LEVER CONTROL VALVE LINKAGE (STANDARD BUCKET)
(SERIAL NO. -801199)

KEY	PART NO.	PART NAME	QTY	SERIAL NO.	410D	510D	REMARKS
1	19H3323	CAP SCREW	2		X	X	5/8" X 8"
2	T58109	BUSHING	4		X	X	
3	AT186908	PEDAL	1		X	X	(SUB FOR AT151371 AND AT174416)
	T162396	LUBRICATION FITTING	1		X	X	
4	R46528	SPRING LOCKING PIN	2		X	X	
5	T141108	HOOK BOLT	2		X	X	
6	14H1080	NUT	2		X	X	3/8"
7	AE37072	LINK END	3		X	X	
8	19H3663	CAP SCREW	2		X	X	3/8" X 1-1/2"
9	M359T	WASHER	AR		X	X	
10	M68954	LOCK NUT	6		X	X	9.525 MM (3/8")
11	14H1039	NUT	2		X	X	5/8"
	M87534	SPRING WASHER	4		X	X	16.385 X 25.905 X 0.150 MM (0.645" X 1.020" X 0.006")
12	AT179513	SUPPORT	1		X	X	(SUB FOR AT175356 AND AT151368)
13	19M7358	CAP SCREW	2		X	X	M10 X 40
14	19H3030	CAP SCREW	1		X	X	1/2" X 1-1/4"
15	AT151369	BELLCRANK	1	-788543	X	X	
	AT158197	BELLCRANK	1	788544-	X	X	
16	T125808	BUSHING	12		X	X	
17	T141126	SPACER	1		X	X	
18	AT150413	LINK	1	-788543	X	X	
	AT158198	LINK	1	788544-	X	X	
19	H129201	LOCK NUT	2		X	X	9.525 MM (3/8") (SUB FOR T32552)
20	19H3239	CAP SCREW	2		X	X	3/8" X 1-1/4"
21	AT151364	BASE	2		X	X	
22	24H1746	WASHER	AR		X	X	25/32" X 1-1/8" X 0.120"
23	28H1576	BUSHING	1		X	X	0.824" X 1.050" X 7/8"
24	AT151365	BASE	1		X	X	
25	14M7274	NUT	2		X	X	M10
26	39M1709	KNOB	3		X	X	(SUB FOR T35233, THIS APPLICATION)
27	AT169512	LEVER	3		X	X	
28	19M7402	CAP SCREW	6		X	X	M10 X 25
29	AT186909	PEDAL	1		X	X	(SUB FOR AT151370 AND AT174417)
	T162396	LUBRICATION FITTING	1		X	X	(NOT ILLUSTRATED)

THIS PARTS LISTING IS CONTINUED

THREE LEVER CONTROL VALVE LINKAGE
(STANDARD BACKHOE)
(SERIAL NO. -801199)

TP58063 -UN-16AUG99

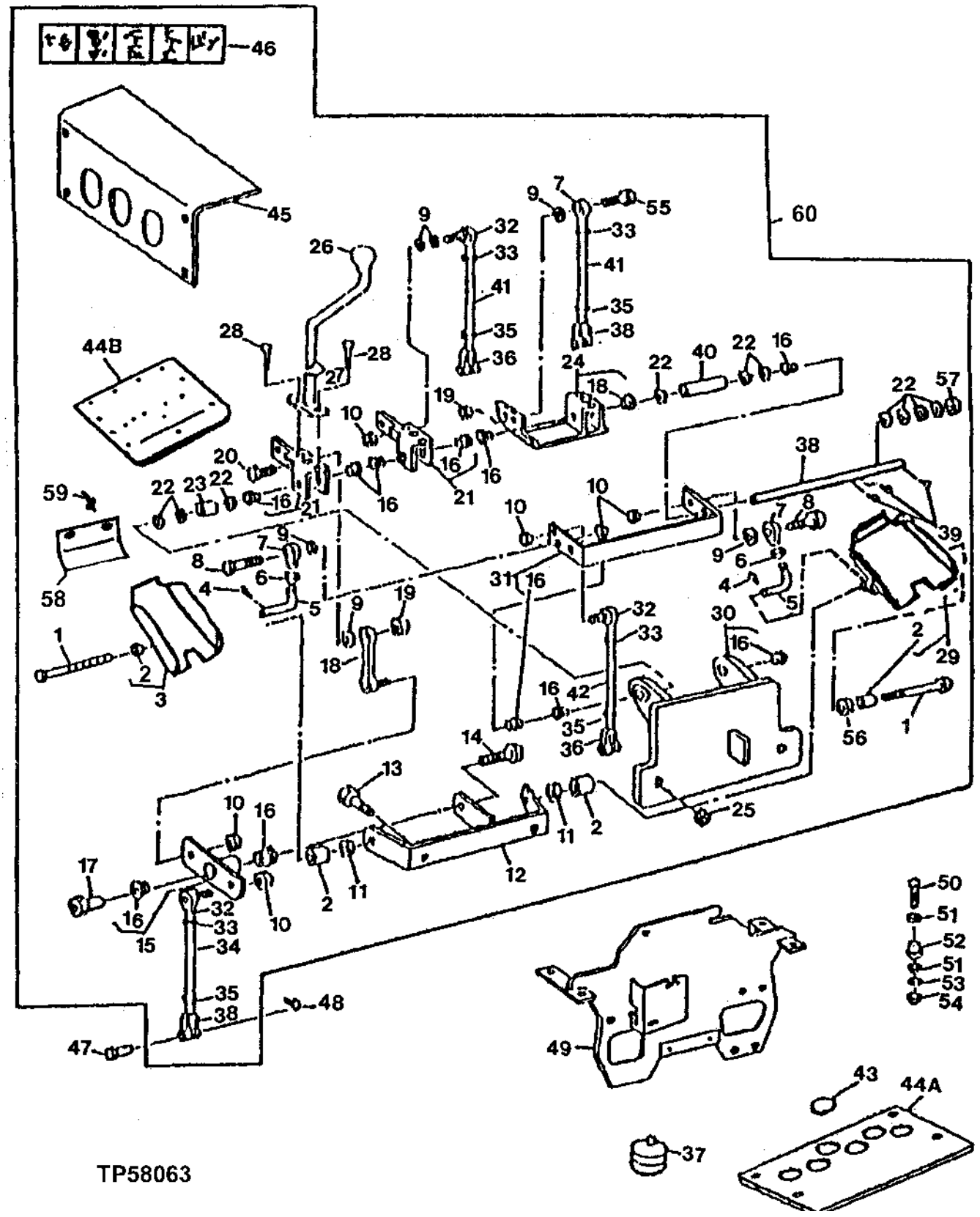

THREE-LEVER CONTROL VALVE LINKAGE (STANDARD BUCKET)
(SERIAL NO. -801199)

KEY	PART NO.	PART NAME	QTY	SERIAL NO.	410D	510D	REMARKS
30	AT151366	SUPPORT	1		X	X	
31	AT151367	STRAP	1		X	X	
32	AT169087	BALL JOINT	3		X	X	(SUB FOR AT49300)
33	14H774	NUT	4		X	X	3/8"
34	T158812	STUD	1		X	X	
35	14H913	NUT	4		X	X	3/8"
36	T140328	YOKE	4		X	X	
37	AT145629	BOOT	4		X	X	WITH CAB
38	T158026	SHAFT	1		X	X	
39	11M7087	COTTER PIN	4		X	X	4 X 40 MM
40	28H1669	BUSHING	1		X	X	0.824" X 1.050" X 1-1/2"
41	T158810	STUD	2		X	X	
42	T161213	ROD	1		X	X	
43	T135241	PLUG	1		X	X	WITH CAB
44A	T140261	SUPPORT	1		X	X	(USE WITH AT156473) (WITH CAB)
44B	T152399	GASKET	1		X	X	(USE WITH AT175958) (WITH CAB)
	T164602	GASKET	1		X	X	(USE WITH AT183941) (WITH CAB)
45	T134877	PANEL	1		X	X	
46	T140411	LABEL	1		X	X	
47	R65563	PIN FASTENER	4		X	X	9.398 X 28.499 MM (0.370" X 1.122")
48	R46528	SPRING LOCKING PIN	4		X	X	
49	AT165783	SUPPORT	1		X	X	(SUB FOR AT151567)
50	19M7935	CAP SCREW	4		X	X	M10 X 55
51	24H1314	WASHER	8		X	X	13/32" X 1-3/4" X 7/64"
52	AT139776	ISOLATOR	4		X	X	
53	24M7296	WASHER	4		X	X	10.500 X 30 X 2.500 MM
54	14M7274	NUT	4		X	X	M10
55	19H3239	CAP SCREW	1		X	X	3/8" X 1-1/4"
56	24M7053	WASHER	AR		X	X	17 X 30 X 3 MM
57	24H1391	WASHER	1		X	X	25/32" X 1-5/16" X 0.060"
58	T167259	GUARD	2		X	X	ROPS APPLICATION ONLY, (SUB FOR (2) AT177780)
59	T69627	RIVET	4		X	X	
60	**AT183941**	**CONTROL LEVER**	**1**		**X**	**X**	**(ALSO ORDER AT184192) (SUB FOR AT156469, AT175958 AND AT178773)**

THREE LEVER CONTROL VALVE LINKAGE
(EXTENDIBLE BACKHOE)
(SERIAL NO. -801199)

TP58064 -UN-16AUG99

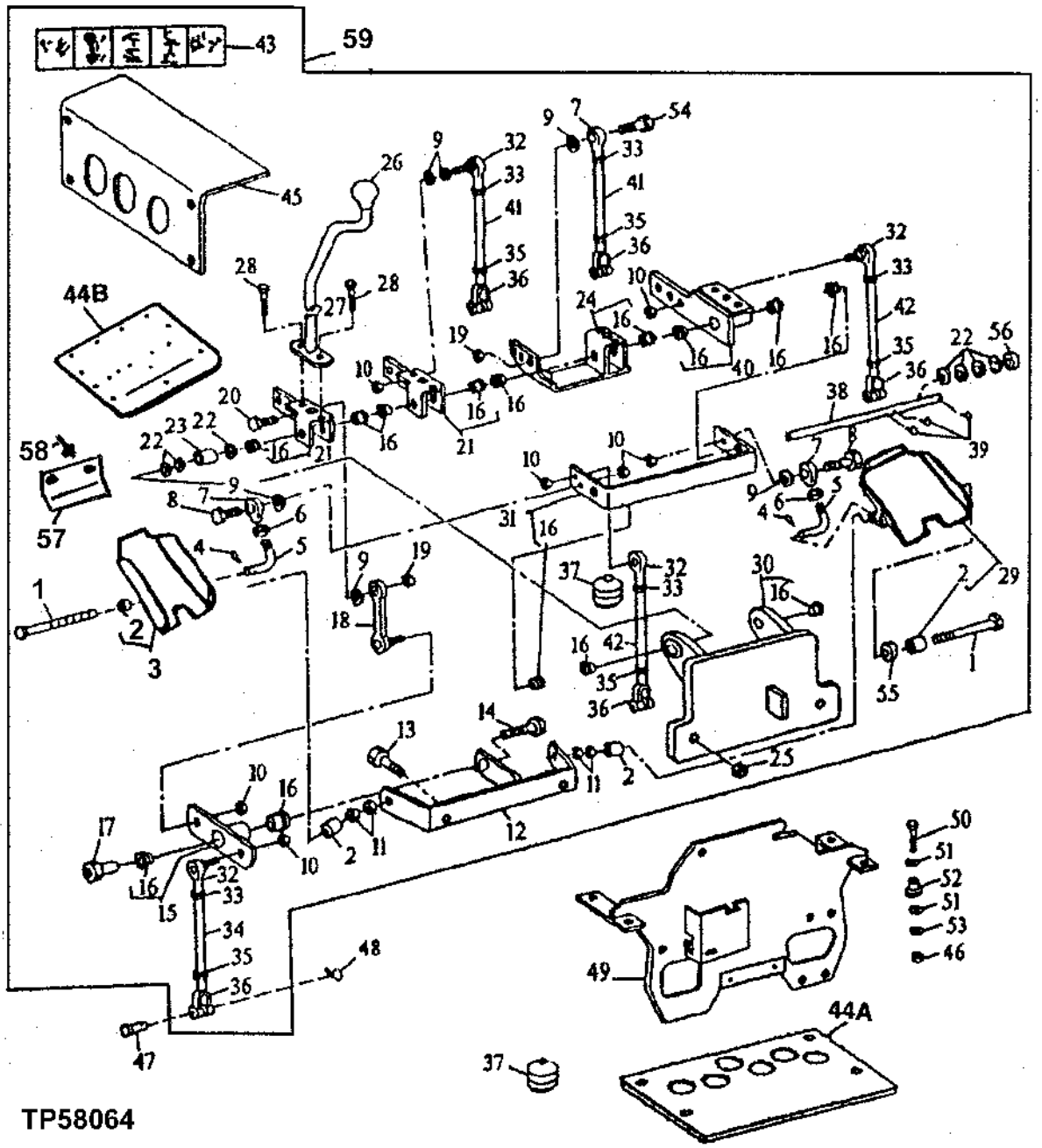

THREE-LEVER CONTROL VALVE LINKAGE
(EXTENDIBLE BACKHOE)
(SERIAL NO. -801199)

KEY	PART NO.	PART NAME	QTY	SERIAL NO.	410D	510D	REMARKS
1	19H3323	CAP SCREW	2		X	X	5/8" X 8"
2	T58109	BUSHING	4		X	X	
3	AT186908	PEDAL	1		X	X	(SUB FOR AT151371 AND AT174416)
	T162396	LUBRICATION FITTING	1		X	X	
4	R46528	SPRING LOCKING PIN	2		X	X	
5	T141108	HOOK BOLT	2		X	X	
6	14H1080	NUT	2		X	X	3/8", (SUB FOR 14H774, THIS APPLICATION)
7	AE37072	LINK END	3		X	X	
8	19H3663	CAP SCREW	2		X	X	3/8" X 1-1/2"
9	M359T	WASHER	AR		X	X	
10	M68954	LOCK NUT	7		X	X	
11	14H1039	NUT	2		X	X	5/8"
	M87534	SPRING WASHER	2		X	X	
12	AT179513	SUPPORT	1		X	X	(SUB FOR AT175356 AND AT151368)
13	19M7358	CAP SCREW	2		X	X	M10 X 40
14	19H3030	CAP SCREW	1		X	X	1/2" X 1-1/4"
15	AT151369	BELLCRANK	1	-788543	X	X	
	AT158197	BELLCRANK	1	788544-	X	X	
16	T125808	BUSHING	14		X	X	
17	T141126	SPACER	1		X	X	
18	AT150413	LINK	1	-788543	X	X	
	AT158198	LINK	1	788544-	X	X	
19	H129201	LOCK NUT	2		X	X	9.525 MM (3/8") (SUB FOR T32552)
20	19H3239	CAP SCREW	1		X	X	3/8" X 1-1/4"
21	AT151364	BASE	2		X	X	
22	24H1746	WASHER	AR		X	X	25/32" X 1-1/8" X 0.120"
23	28H1576	BUSHING	1		X	X	0.824" X 1.050" X 7/8"
24	AT151365	BASE	1		X	X	
25	14M7274	NUT	2		X	X	M10
26	39M1709	KNOB	4		X	X	(SUB FOR T35233, THIS APPLICATION)
27	AT169512	LEVER	4		X	X	
28	19M7402	CAP SCREW	8		X	X	M10 X 25
29	AT186909	PEDAL	1		X	X	(SUB FOR AT151370 AND AT174417)
	T162396	LUBRICATION FITTING	1		X	X	

THIS PARTS LISTING IS CONTINUED

THREE LEVER CONTROL VALVE LINKAGE
(EXTENDIBLE BACKHOE)
(SERIAL NO. -801199)

TP58064 -UN-16AUG99

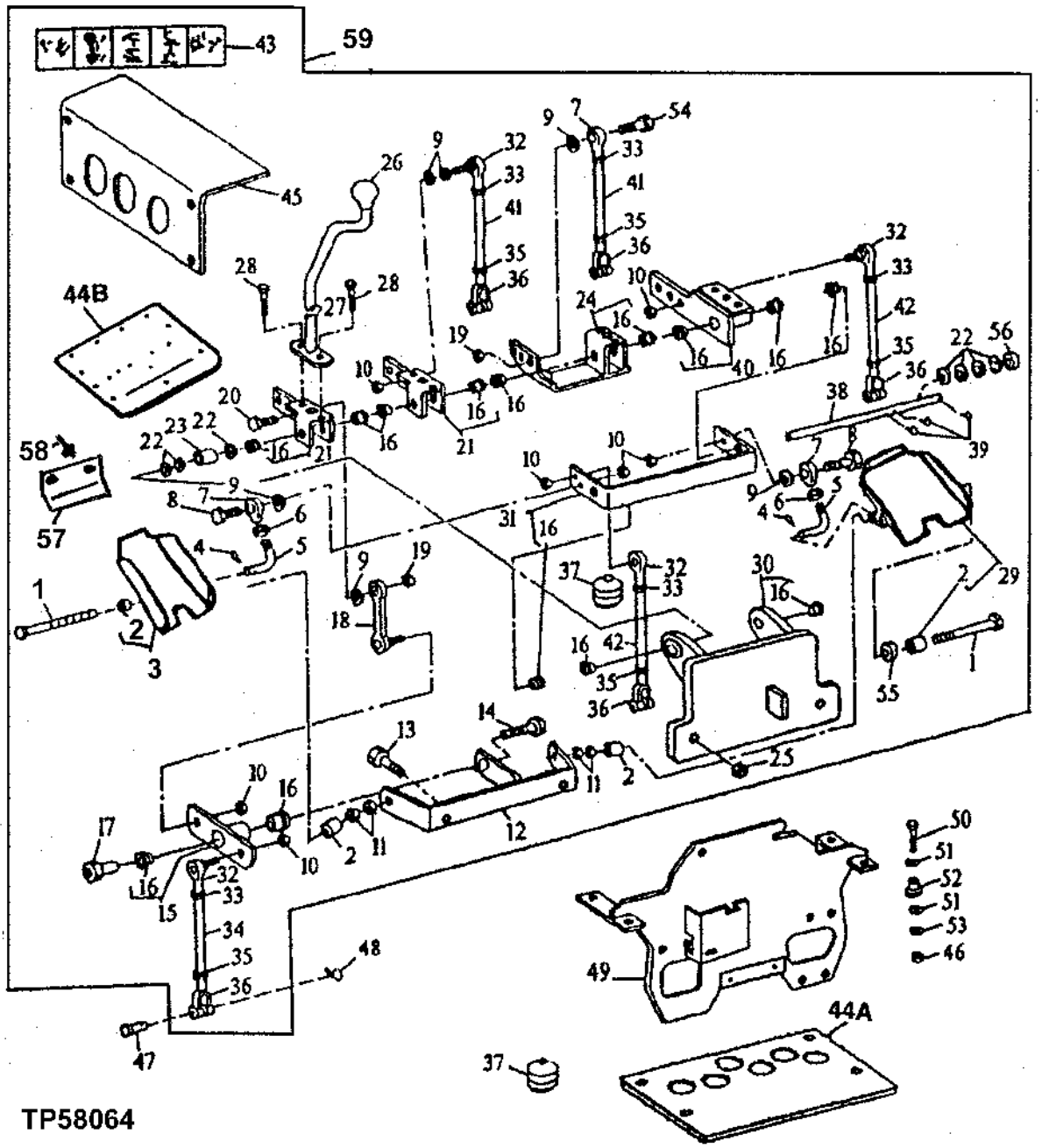

THREE-LEVER CONTROL VALVE LINKAGE
(EXTENDIBLE BACKHOE)
(SERIAL NO. -801199)

KEY	PART NO.	PART NAME	QTY	SERIAL NO.	410D	510D	REMARKS
30	AT151366	SUPPORT	1		X	X	
31	AT151367	STRAP	1		X	X	
32	AT169087	BALL JOINT	4		X	X	(SUB FOR AT49300)
33	14H774	NUT	5		X	X	3/8"
34	T158812	STUD	1		X	X	
35	14H913	NUT	5		X	X	3/8"
36	T140328	YOKE	5		X	X	
37	AT145629	BOOT	5		X	X	WITH CAB
38	T158026	SHAFT	1		X	X	(SUB FOR T141109)
39	11M7087	COTTER PIN	4		X	X	4 X 40 MM
40	AT151372	BASE	1		X	X	
41	T158810	STUD	2		X	X	
42	T161213	ROD	2		X	X	
43	T145283	LABEL	1		X	X	WITH CAB, (SUB FOR T140412)
44A	T140261	SUPPORT	1		X	X	(USE WITH AT156473) (WITH CAB)
44B	T152399	GASKET	1		X	X	(USE WITH AT175958) (WITH CAB)
	T164602	GASKET	1		X	X	(USE WITH AT183941) (WITH CAB)
45	T134878	PANEL	1		X	X	
46	14M7274	NUT	4		X	X	M10
47	R65563	PIN FASTENER	5		X	X	9.398 X 28.499 MM (0.370" X 1.122")
48	R46528	SPRING LOCKING PIN	5		X	X	
49	AT165783	SUPPORT	1		X	X	(SUB FOR AT151567)
50	19M7935	CAP SCREW	4		X	X	M10 X 55
51	24H1314	WASHER	8		X	X	13/32" X 1-3/4" X 7/64"
52	AT139776	ISOLATOR	4		X	X	
53	24M7296	WASHER	4		X	X	10.500 X 30 X 2.500 MM
54	19H3239	CAP SCREW	1		X	X	3/8" X 1-1/4"
55	24M7053	WASHER	AR		X	X	17 X 30 X 3 MM
56	24H1391	WASHER	1		X	X	25/32" X 1-5/16" X 0.060"
57	T167259	GUARD	2		X	X	ROPS APPLICATION ONLY, (SUB FOR (2) AT177780)
58	T69627	RIVET	4		X	X	
59	**AT183941**	**CONTROL LEVER**	**1**		**X**	**X**	**(ALSO ORDER AT183942 AND AT184192) (SUB FOR AT156473, AT175958 AND AT178773)**

THREE LEVER CONTROL VALVE LINKAGE
(SERIAL NO. 801200-)

TP58065 -UN-16AUG99

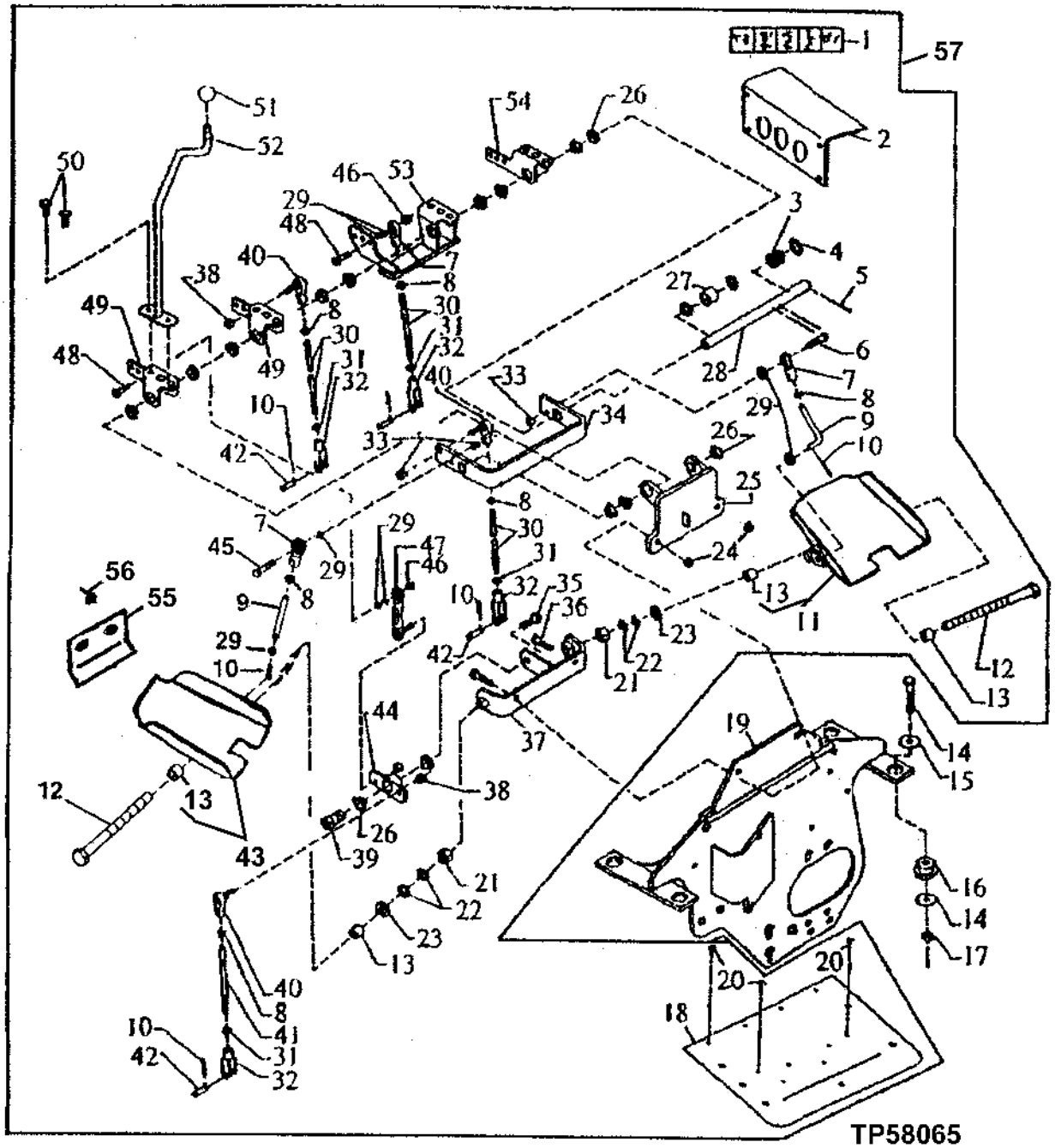

THREE-LEVER CONTROL VALVE LINKAGE
(SERIAL NO. 801200-)

KEY	PART NO.	PART NAME	QTY	SERIAL NO.	410D	510D	REMARKS
1	T140411	LABEL	1		X	X	
2	T134877	PANEL	1		X	X	
3	24H1746	WASHER	7		X	X	25/32" X 1-1/8" X 0.120"
4	24H1391	WASHER	1		X	X	25/32" X 1-5/16" X 0.060"
5	11M7087	COTTER PIN	4		X	X	4 X 40 MM
6	19H3663	CAP SCREW	2		X	X	3/8" X 1-1/2"
7	AE37072	LINK END	3		X	X	
8	14H774	NUT	5		X	X	3/8"
9	T141108	HOOK BOLT	2		X	X	
10	R46528	SPRING LOCKING PIN	6		X	X	
11	AT186909	PEDAL	1		X	X	(SUB FOR AT151370 AND AT174417)
	T162396	LUBRICATION FITTING	1		X	X	
12	19H3323	CAP SCREW	2		X	X	5/8" X 8"
13	T58109	BUSHING	4		X	X	
14	19M7753	CAP SCREW	2		X	X	M12 X 70, ((VALVE SUPPORT TO FRAME THROUGH ISOLATORS- TWO HOLES TO REAR OF TRACTOR)
	19M7943	CAP SCREW	2		X	X	M12 X 90, (VALVE SUPPORT TO FRAME THROUGH ISOLATORS- TWO HOLES TO FRONT OF TRACTOR)
	24M7180	WASHER	4		X	X	13 X 37 X 3 MM, (REAR (TOWARDS BACKHOE) SCREWS TO BACKHOE VALVE MOUNTING PLATE THROUGH ISOLATORS-ONE EACH UNDER HEAD OF CAPSCREW AND NUT)
15	24M7180	WASHER	4		X	X	13 X 37 X 3 MM
16	AT139776	ISOLATOR	4		X	X	
17	14M7275	NUT	4		X	X	M12
18	T152399	GASKET	1		X	X	(USE WITH AT168912 AND AT175958)
	T160999	GASKET	1		X	X	(USE WITH AT178773) (WITH CAB)
	T164602	GASKET	1		X	X	(USE WITH AT183941) (WITH CAB)
19	AT164513	PLATE	1		X	X	
20	T133009	PLUG	5		X	X	
21	14H1039	NUT	2		X	X	5/8"
22	M87534	SPRING WASHER	6		X	X	
23	24M7053	WASHER	12		X	X	17 X 30 X 3 MM
24	14M7274	NUT	2		X	X	M10
25	AT151366	SUPPORT	1		X	X	
26	T125808	BUSHING	12		X	X	
27	28H1576	BUSHING	1		X	X	0.824" X 1.050" X 7/8"
28	T158026	SHAFT	1		X	X	(SUB FOR T141109)
29	M359T	WASHER	4		X	X	
30	T158810	STUD	2		X	X	

THIS PARTS LISTING IS CONTINUED

THREE LEVER CONTROL VALVE LINKAGE
(SERIAL NO. 801200-)

TP58065 -UN-16AUG99

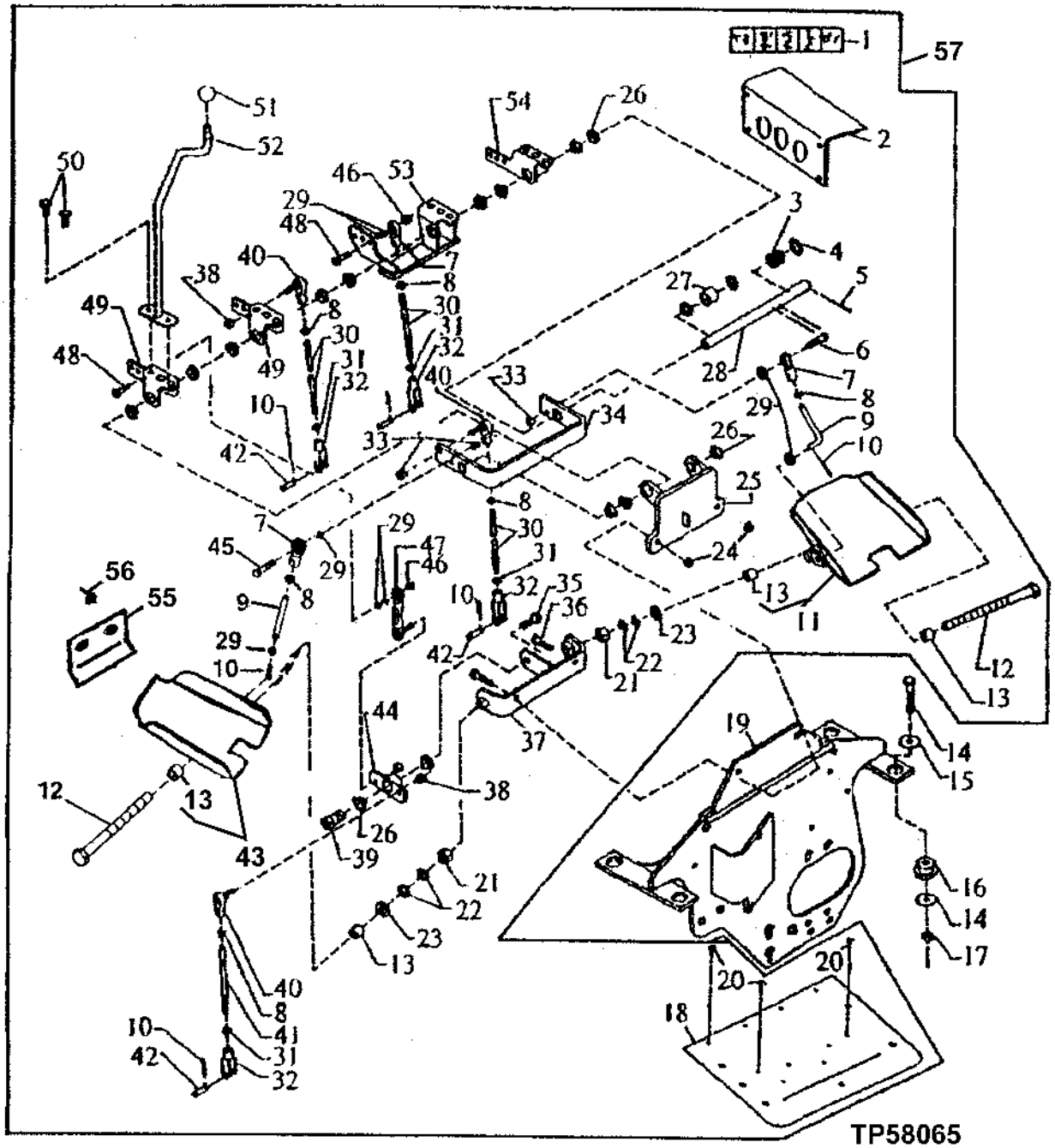

THREE-LEVER CONTROL VALVE LINKAGE
(SERIAL NO. 801200-)

KEY	PART NO.	PART NAME	QTY	SERIAL NO.	410D	510D	REMARKS
31	14H913	NUT	3		X	X	3/8"
32	T140328	YOKE	3		X	X	
33	M68954	LOCK NUT	3		X	X	
34	AT151367	STRAP	1		X	X	
35	19H3030	CAP SCREW	1		X	X	1/2" X 1-1/4"
36	19M8637	CAP SCREW	2		X	X	M10 X 40
37	AT179513	SUPPORT	1		X	X	WITH CAB, (SUB FOR AT175356 AND AT151368)
38	M68954	LOCK NUT	6		X	X	
39	T141126	SPACER	1		X	X	
40	AT169087	BALL JOINT	3		X	X	
41	T158812	STUD	1		X	X	
42	R65563	PIN FASTENER	4		X	X	
43	AT186908	PEDAL	1		X	X	WITH CAB, (SUB FOR AT151371) (SUB FOR T140412 AND AT174416)
	T162396	LUBRICATION FITTING	1		X	X	
44	AT158197	BELLCRANK	1		X	X	WITH CAB
45	19H3663	CAP SCREW	2		X	X	3/8" X 1-1/2"
46	H129201	LOCK NUT	2		X	X	(SUB FOR T32552)
47	AT158198	LINK	1		X	X	
48	19H3239	CAP SCREW	2		X	X	3/8" X 1-1/4"
49	AT151364	BASE	2		X	X	(SUB FOR AT151567)
50	19M7402	CAP SCREW	6		X	X	M10 X 25
51	39M1709	KNOB	3		X	X	(SUB FOR T35233, THIS APPLICATION)
52	AT169512	LEVER	3		X	X	
53	AT151365	BASE	1		X	X	
54	AT151372	BASE	1		X	X	
55	T167259	GUARD	2		X	X	ROPS APPLICATION ONLY, (SUB FOR AT177780)
56	T69627	RIVET	4		X	X	
57	**AT183941**	**CONTROL LEVER**	**1**		**X**	**X**	**(ALSO ORDER AT184192) (SUB FOR AT168912, AT175958 AND AT178773)**

FIFTH FN LEVER FOR THREE LEVER CONTROLS
(SERIAL NO. 801200-)

TP45072 -UN-01JAN94

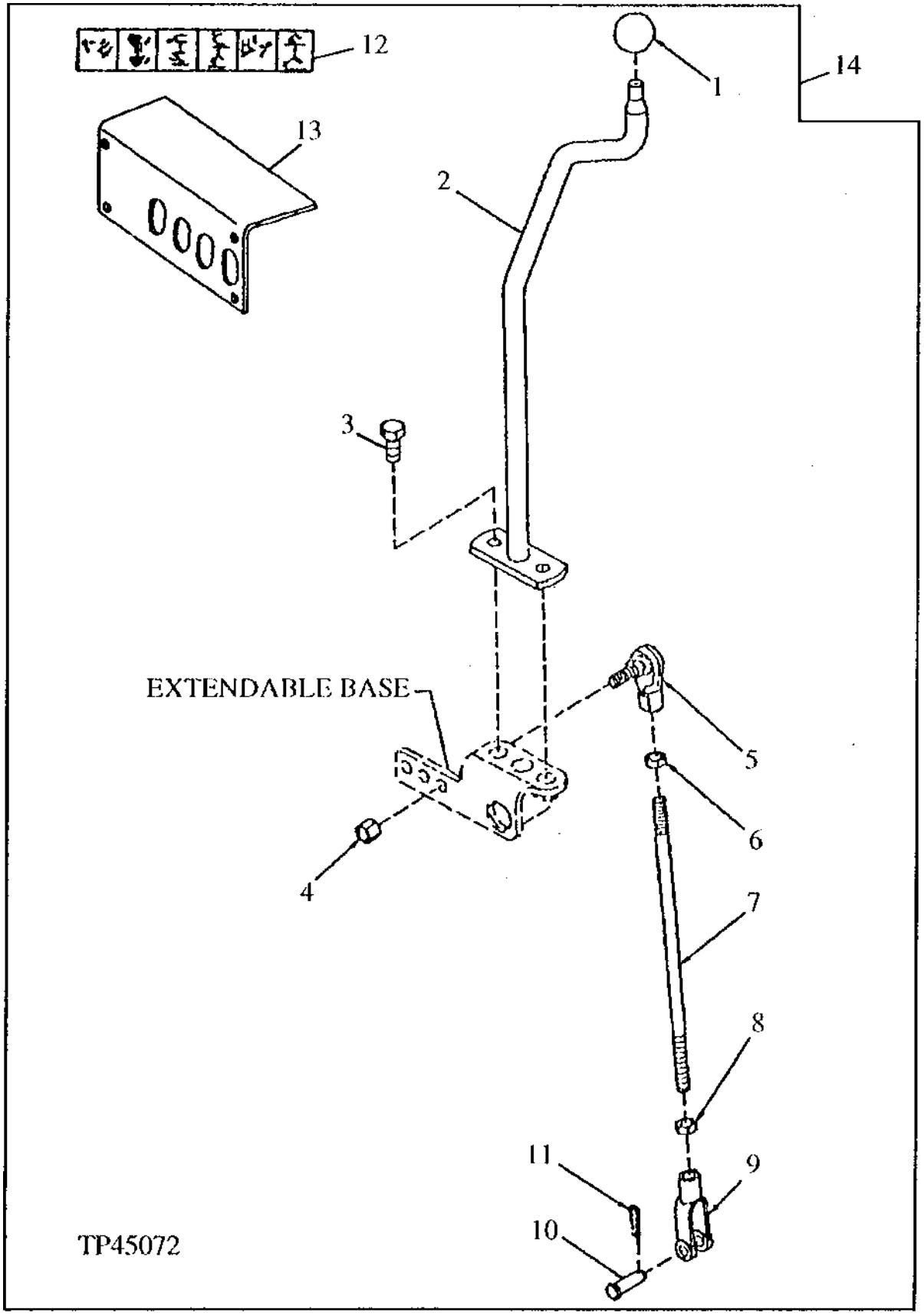

FIFTH FN LEVER FOR THREE LEVER CONTROLS
(SERIAL NO.801200-)

KEY	PART NO.	PART NAME	QTY	SERIAL NO.	410D	510D	REMARKS
1	39M1709	KNOB	1		X	X	(SUB FOR T35233, THIS APPLICATION)
2	AT169512	LEVER	1		X	X	
3	19M7402	CAP SCREW	2		X	X	M10 X 25
4	M68954	LOCK NUT	1		X	X	
5	AT169087	BALL JOINT	1		X	X	
6	14H774	NUT	1		X	X	3/8"
7	T148741	STUD	1		X	X	(USE WITH AT168913)
	T158810	STUD	1		X	X	(USE WITH AT178774)
	T165222	STUD	1		X	X	(USE WITH AT183942)
8	14H913	NUT	1		X	X	3/8"
9	T140328	YOKE	1		X	X	
10	R65563	PIN FASTENER	1		X	X	(VALVE SPOOLS TO LINKAGE YOKES)
11	R46528	SPRING LOCKING PIN	1		X	X	
12	T145283	LABEL	1		X	X	
13	T134878	PANEL	1		X	X	
14	**AT183942**	**CONTROL LEVER**	**1**		**X**	**X**	**(SUB FOR AT168913 AND AT178774)**

**TWO LEVER BACKHOE CONTROLS KIT
FOR STANDARD DIPPERSTICK
(SERIAL NO. -801199)**

TP50410 -UN-28OCT96

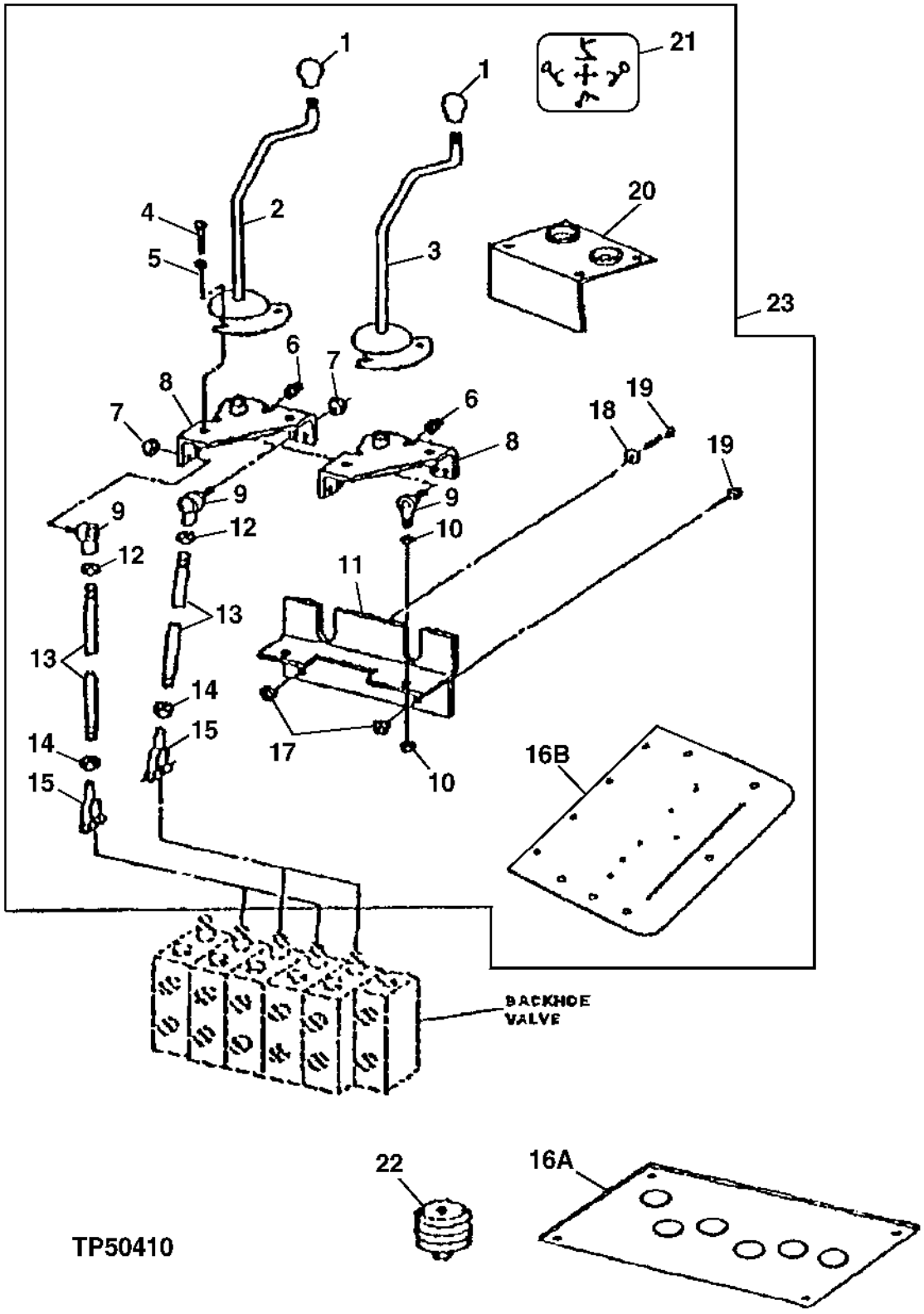

**TWO LEVER BACKHOE CONTROLS KIT
WITH STANDARD DIPPERSTICK
(SERIAL NO. -801199)**

KEY	PART NO.	PART NAME	QTY	SERIAL NO.	410D	510D	REMARKS
1	T133291	KNOB	2		X	X	
2	AT148213	LEVER	1		X	X	
3	AT148214	LEVER	1		X	X	
4	19M7881	SCREW	4		X	X	M8 X 20
5	24M7238	WASHER	4		X	X	8.700 X 17 X 2 MM
6	T141126	SPACER	2		X	X	
7	M68954	LOCK NUT	4		X	X	
8	AT178686	BASE	2		X	X	REPLACE IN PAIRS, (SUB FOR AT151699)
9	AT124107	BALL JOINT	2		X	X	
10	14H865	NUT	4		X	X	1/2"
11	AT164934	SUPPORT	1		X	X	
12	14H774	NUT	4		X	X	3/8"
13	T140300	STUD	4		X	X	
14	14H913	NUT	4		X	X	3/8"
15	T140328	YOKE	4		X	X	
16A	T133509	SUPPORT	1		X	X	(USE WITH AT156391) (WITH CAB)
16B	T151794	GASKET	1		X	X	(USE WITH AT168918) (WITH CAB)
17	14M7274	NUT	2		X	X	M10
18	24M7239	WASHER	1		X	X	10.700 X 21 X 2.500 MM
19	19M7550	CAP SCREW	2		X	X	M10 X 35
20	T134383	PANEL	1		X	X	
21	T100195	LABEL	1		X	X	(SWING AND BOOM)
	T100196	LABEL	1		X	X	(BUCKET AND DIPPERSTICK)
22	AT145629	BOOT	4		X	X	(SUB FOR AT149549) (USE WITH CAB)
23	.....	LINKAGE	1		X	X	AT156391, AND AT178770 NO LONGER AVAILABLE, (SUB AT183938) (ALSO ORDER AT184192)

FOUR-LEVER CONTROL VALVE LINKAGE
(STANDARD BACKHOE)
(SERIAL NO. -801199)

TP50413 -UN-28OCT96

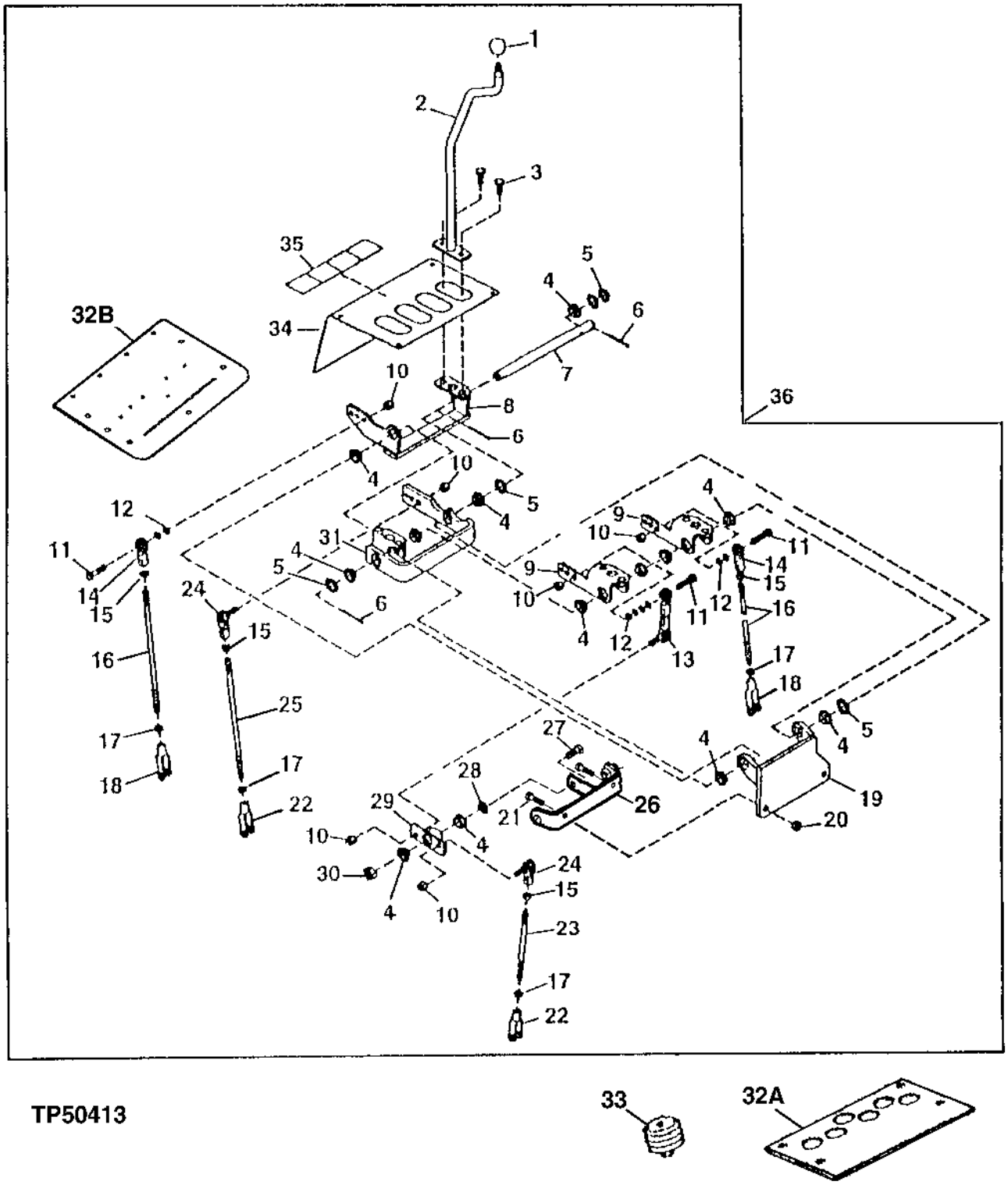

TP50413

FOUR-LEVER CONTROL VALVE LINKAGE
(STANDARD BACKHOE)
(SERIAL NO. -801199)

KEY	PART NO.	PART NAME	QTY	SERIAL NO.	410D	510D	REMARKS
1	T35233	GRIP	1		X	X	
2	AT169512	LEVER	1		X	X	
3	19M7402	CAP SCREW	2		X	X	M10 X 25
4	T125808	BUSHING	11		X	X	
5	24H1746	WASHER	5		X	X	
6	11M7087	COTTER PIN	3		X	X	4 X 40 MM
7	T140650	SHAFT	1		X	X	
8	AT150763	BASE	1		X	X	
9	AT150762	BASE	2		X	X	
10	M68954	LOCK NUT	6		X	X	3/8"
11	19H3663	CAP SCREW	3		X	X	3/8" X 1-1/2"
12	M359T	WASHER	7		X	X	9.703 X 14.275 X 1.600 MM
13	AT158198	LINK	1		X	X	
14	AE37072	LINK END	2		X	X	
15	14H1080	NUT	4		X	X	3/8", (SUB FOR 14H774, THIS APPLICATION)
16	T140300	STUD	2		X	X	(USE WITH AT156573)
	T161213	ROD	2		X	X	(USE WITH AT178775)
	T161213	ROD	2		X	X	(USE WITH AT183943)
17	14H913	NUT	4		X	X	3/8"
18	T140328	YOKE	2		X	X	
19	AT169557	SUPPORT	1		X	X	
20	14M7274	NUT	2		X	X	M10
21	19M7550	CAP SCREW	2		X	X	M10 X 35
22	T140328	YOKE	2		X	X	
23	T140289	STUD	1		X	X	(USE WITH AT156573)
	T158812	STUD	1		X	X	(USE WITH AT178775)
	T165214	STUD	1		X	X	(USE WITH AT183943)
24	AT169087	BALL JOINT	2		X	X	
25	T140300	STUD	1		X	X	(USE WITH AT156573)
	T158810	STUD	1		X	X	(USE WITH AT178775)
	T165222	STUD	1		X	X	(USE WITH AT183943)
26	AT179513	SUPPORT	1		X	X	(SUB FOR AT175356 AND AT151368)
27	19H3030	CAP SCREW	1		X	X	1/2" X 1-1/4"
28	24M7047	WASHER	1		X	X	13 X 24 X 2.500 MM
29	AT158197	BELLCRANK	1		X	X	
30	T141126	SPACER	1		X	X	
31	AT150764	BASE	1		X	X	
32A	T140571	SUPPORT	1		X	X	(USE WITH AT156573) (WITH CAB)
32B	T151794	GASKET	1		X	X	(USE WITH AT168916) (WITH CAB)
33	AT145629	BOOT	4		X	X	
34	T140229	PANEL	1		X	X	
35	T140649	LABEL	1		X	X	
36	**AT183943**	**MOUNTING PARTS**	**1**		**X**	**X**	**(ALSO ORDER AT184192) (SUB FOR AT156573 AND AT178775)**

FOUR-LEVER CONTROL VALVE LINKAGE
(STANDARD BACKHOE)
(SERIAL NO. 801200-) (410D/510D)

TP48815 -UN-28OCT96

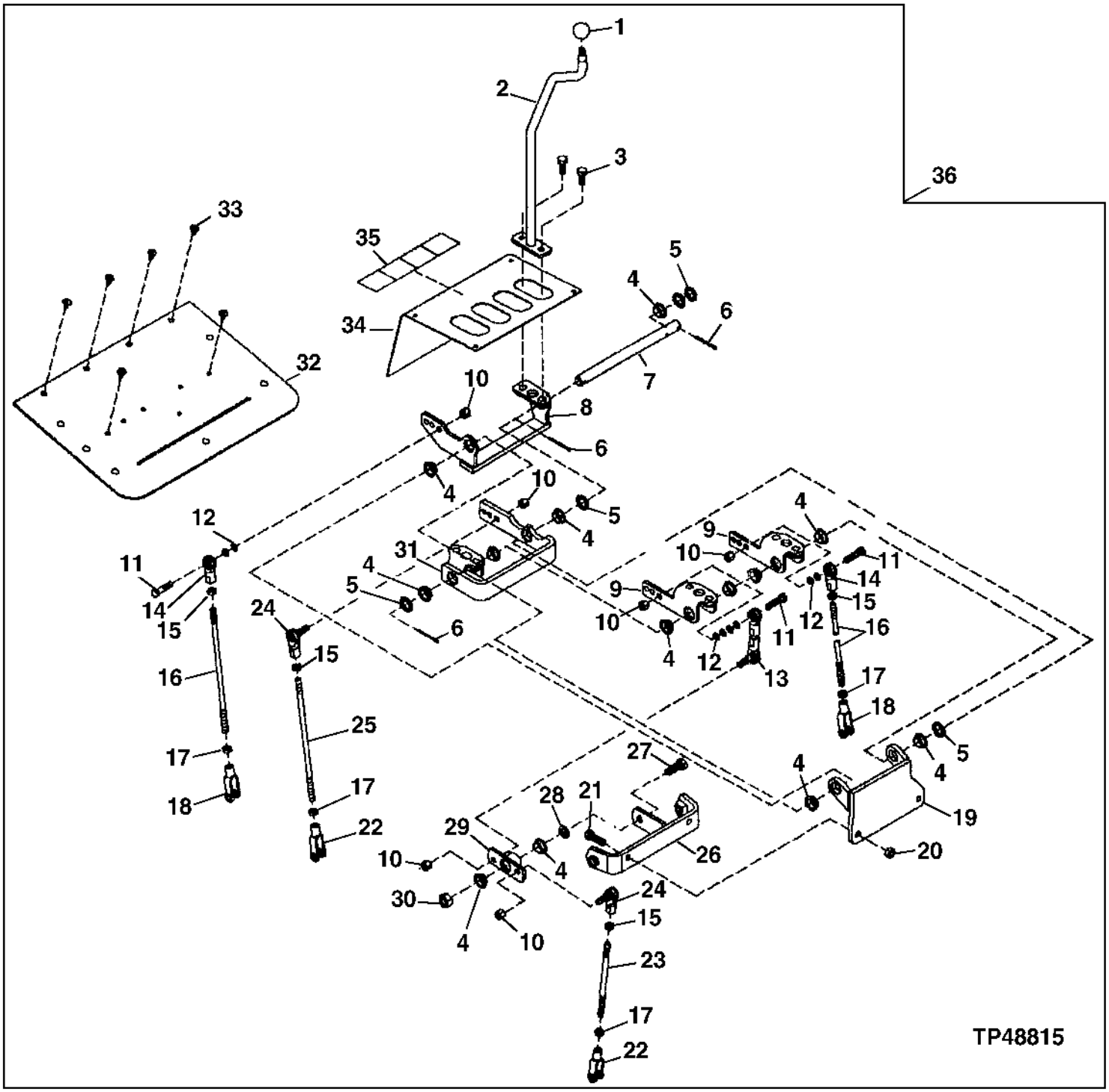

FOUR-LEVER CONTROL VALVE LINKAGE
(STANDARD BACKHOE)
(SERIAL NO. 801200-) (410D/510D)

KEY	PART NO.	PART NAME	QTY	SERIAL NO.	410D	510D	REMARKS
1	T35233	GRIP	1		X	X	
2	AT169512	LEVER	1		X	X	
3	19M7402	CAP SCREW	2		X	X	M10 X 25
4	T125808	BUSHING	13		X	X	
5	24H1746	WASHER	5		X	X	
6	11M7087	COTTER PIN	3		X	X	4 X 40 MM
7	T140650	SHAFT	1		X	X	
8	AT150763	BASE	1		X	X	
9	AT150762	BASE	2		X	X	
10	M68954	LOCK NUT	6		X	X	3/8"
11	19H3663	CAP SCREW	3		X	X	3/8" X 1-1/2"
12	M359T	WASHER	8		X	X	9.703 X 14.275 X 1.600 MM
13	AT158198	LINK	1		X	X	
14	AE37072	LINK END	2		X	X	
15	14H1080	NUT	2		X	X	3/8", (SUB FOR 14H774, THIS APPLICATION)
16	T148741	STUD	2		X	X	(USE WITH AT168916)
	T161213	ROD	2		X	X	(USE WITH AT178775)
	T165222	STUD	2		X	X	(USE WITH AT183943)
17	14H913	NUT	4		X	X	3/8"
18	T140328	YOKE	2		X	X	
19	AT169557	SUPPORT	1		X	X	
20	14M7274	NUT	2		X	X	M10
21	19M7358	CAP SCREW	2		X	X	M10 X 40
22	T140328	YOKE	2		X	X	
23	T148848	STUD	1		X	X	(USE WITH AT168916)
	T158812	STUD	1		X	X	(USE WITH AT178775)
	T165214	STUD	1		X	X	(USE WITH AT183943)
24	AT169087	BALL JOINT	2		X	X	
25	T148741	STUD	1		X	X	(USE WITH AT168916)
	T158810	STUD	1		X	X	(USE WITH AT178775)
	T165222	STUD	1		X	X	(USE WITH AT183943)
26	AT179513	SUPPORT	1		X	X	(SUB FOR AT175356 AND AT151368)
27	19H3030	CAP SCREW	1		X	X	1/2" X 1-1/4"
28	24M7047	WASHER	1		X	X	13 X 24 X 2.500 MM
29	AT158197	BELLCRANK	1		X	X	
30	T141126	SPACER	1		X	X	
31	AT150764	BASE	1		X	X	
32	T153058	GASKET	1		X	X	
33	T133009	PLUG	6		X	X	
34	T140229	PANEL	1		X	X	
35	T140649	LABEL	1		X	X	
36	**AT183943**	**MOUNTING PARTS**	**1**		**X**	**X**	**(ALSO ORDER AT184192) (SUB FOR AT168916 AND AT178775)**

LINK ADAPTER KIT

TP50417 -UN-28OCT96

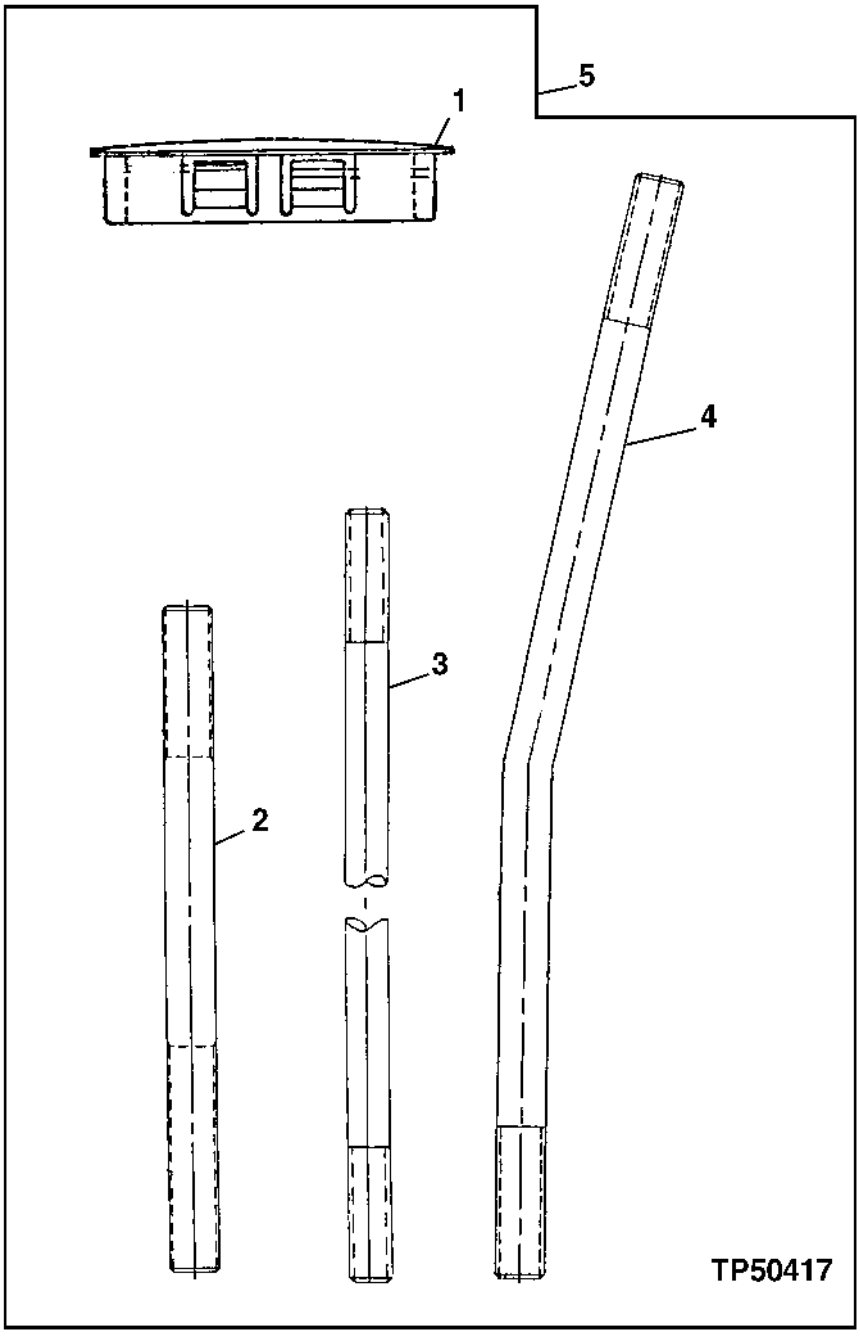

LINK ADAPTER KIT
(SERIAL NO. -801199)

KEY	PART NO.	PART NAME	QTY	SERIAL NO.	410D	510D	REMARKS
1	T135241	PLUG	2		X	X	
2	T140299	STUD	2		X	X	113 MM
	T140289	STUD	2		X	X	130 MM
	T148848	STUD	2		X	X	177 MM
3	T140288	STUD	4		X	X	216 MM
	T148741	STUD	4		X	X	266 MM
4	T141298	LEVER	2		X	X	220 MM
5	AT184192	ADAPTER	1		X	X	(KIT) (SUB FOR AT175965 AND AT182127)

MEMORANDA

BUCKET PINS
(CASE BUCKET)

TP20301 -UN-01JAN94

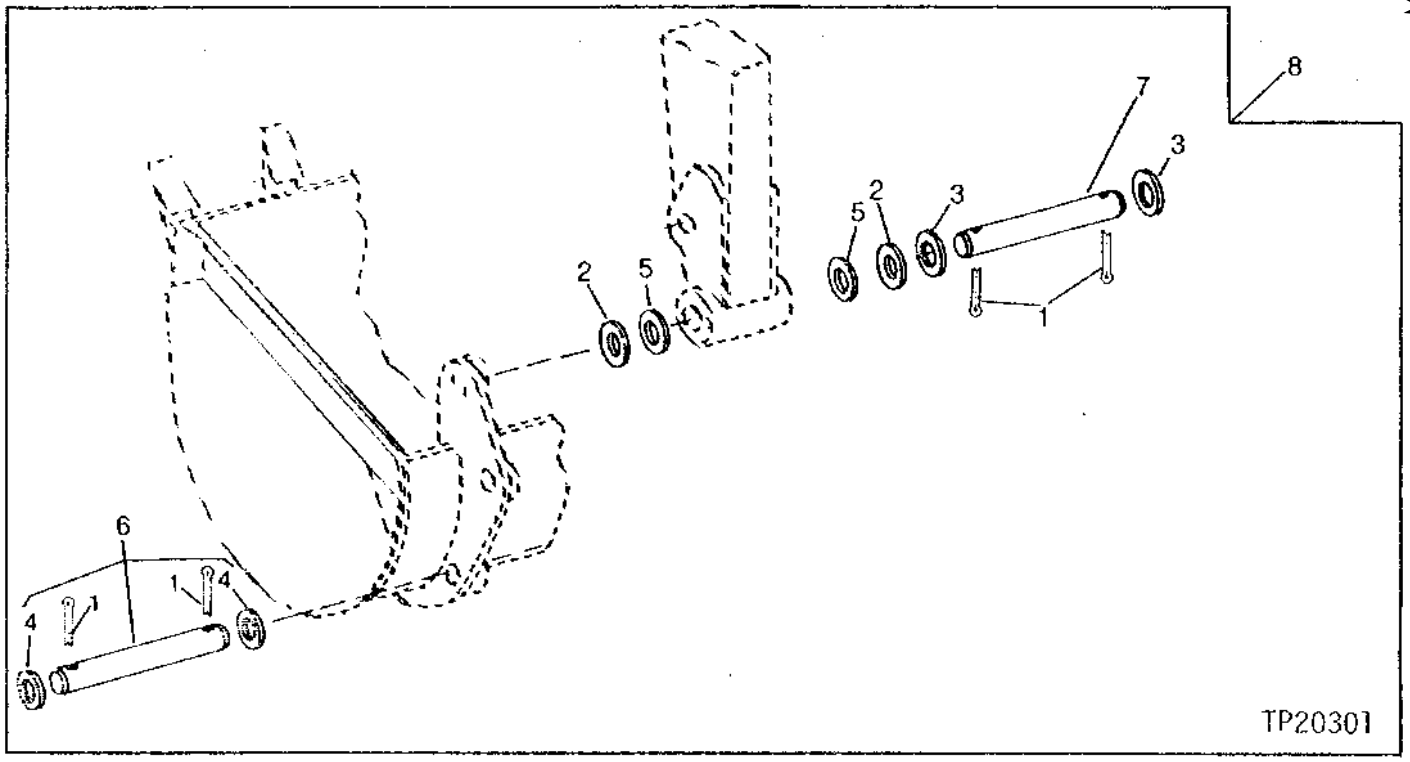

KEY	PART NO.	PART NAME	QTY	SERIAL NO.	410D	510D	REMARKS
1	11H221	COTTER PIN	4		X	X	3/8" X 2-1/2"
2	U40876	WASHER	2		X	X	
3	H89524	WASHER	AR		X	X	
4	24H1228	WASHER	AR		X	X	1-17/32" X 2-1/2" X 0.120"
5	R36158	BUSHING	2		X	X	
6	AU13558	PIN FASTENER	1		X	X	
7	T106493	PIN FASTENER	1		X	X	
8	AT107514	KIT	1		X	X	

STABILIZER AND STABILIZER FEET

TP46518 -UN-03MAY95

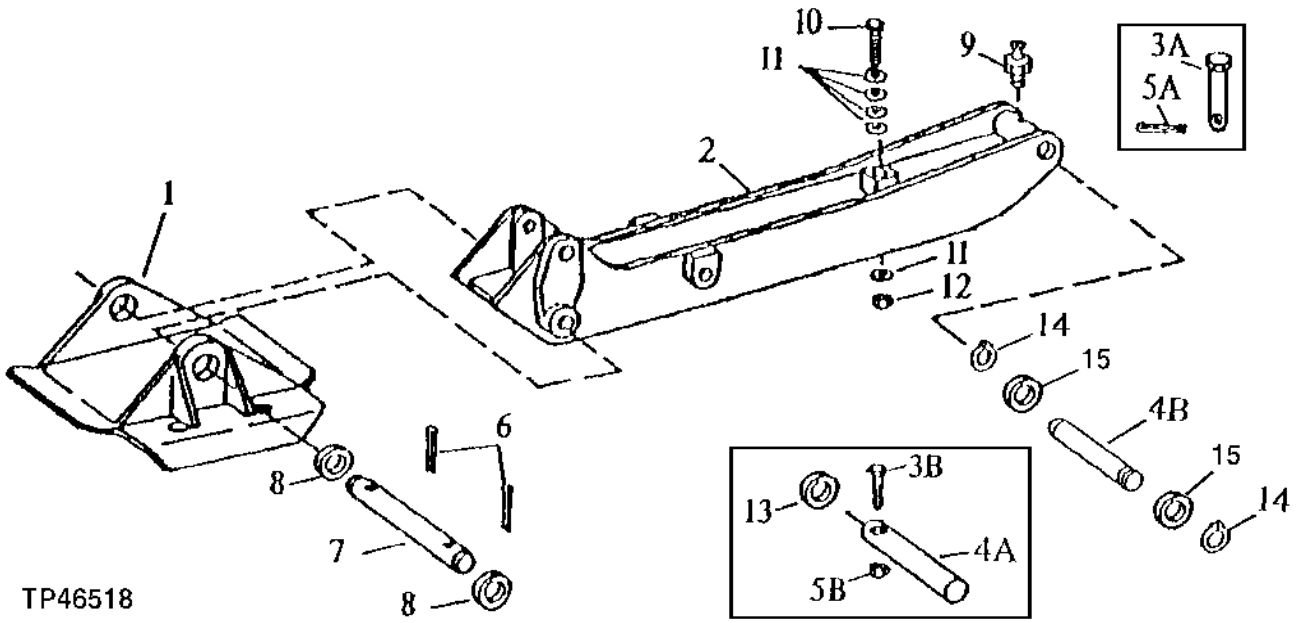

KEY	PART NO.	PART NAME	QTY	SERIAL NO.	410D 510D	REMARKS
1	.....	STABILIZER FOOT	1		X X	(T126867 NO LONGER AVAILABLE) (SUB AT166258)
2	.....	STABILIZER	1		X X	(T157831 NO LONGER AVAILABLE) (SUB AT193495) (SUB FOR T130336)
	AT193495	STABILIZER	1		X X	KIT, (INCLUDES 19H2261 AND (7) 24M7241)
3A	19M8043	CAP SCREW	1	-788913	X X	M16 X 140
3B	19M8043	CAP SCREW	1	788914-801199	X X	M16 X 140
4A	T135589	PIN FASTENER	1	-801199	X X	
4B	T158112	PIN	1	801200-	X X	(SUB FOR T148346, THIS APPLICATION) (ALSO ORDER (2) L78069)
5A	11M7038	COTTER PIN	1	-788913	X X	6.300 X 40 MM
5B	14M7328	LOCK NUT	1	788914-801199	X X	M16
6	11H270	COTTER PIN	2		X X	1/2" X 3"
7	T69472	PIN FASTENER	1		X X	
8	24H1595	WASHER	AR		X X	2-1/16" X 3" X 0.075"
9	T162396	LUBRICATION FITTING	1		X X	(SUB FOR JD7798)
10	19M7417	CAP SCREW	1		X X	M16 X 65
11	24M7241	WASHER	2		X X	17 X 34 X 4 MM, (1 UNDER HEAD AND 1 UNDER NUT) (ALSO ORDER 24M7241 (3) WITH CAB OR 1/4 CAB)
12	14M7276	NUT	1		X X	M16
13	T125956	WASHER	AR	-801199	X X	2.560" X 4.530" X 0.098", (SUB FOR T67205, THIS APPLICATION)
14	L78069	RING	2	801200-	X X	
15	T161036	WASHER	4		X X	(SUB FOR T148178)

BACKHOE STREET PADS

TP42956 -UN-01JAN94

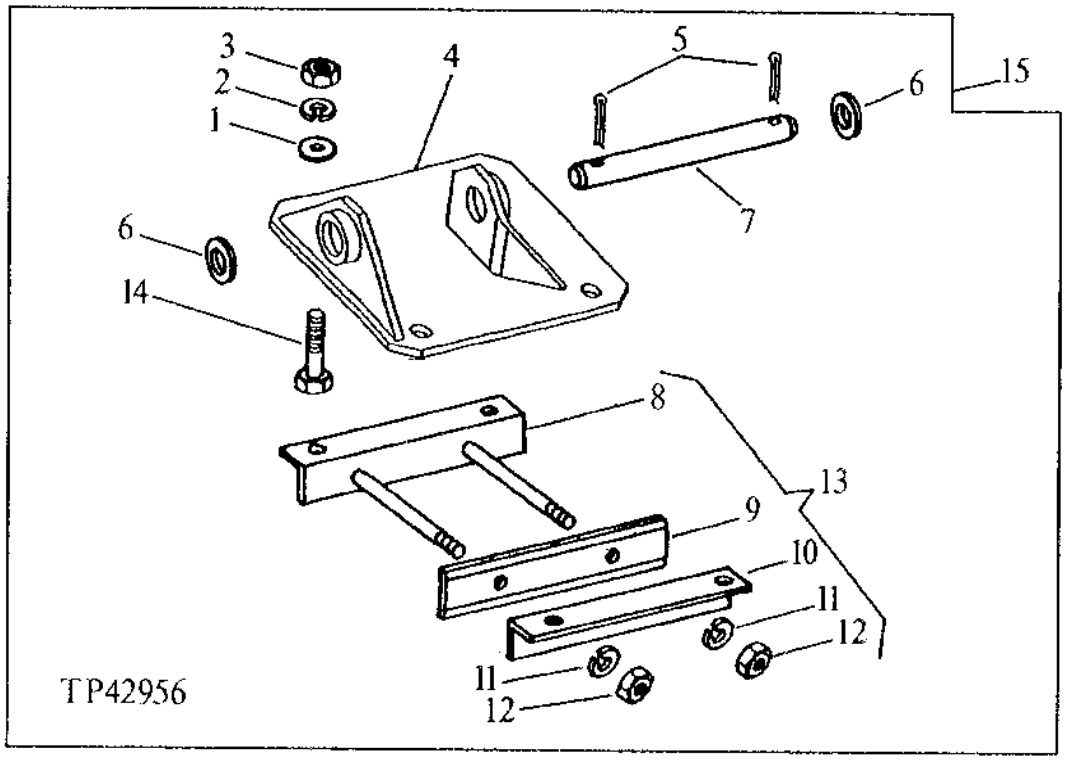

KEY	PART NO.	PART NAME	QTY	SERIAL NO.	4 5 1 1 0 0 D D	REMARKS
1	24H1391	WASHER	4		X X	25/32" X 1-5/16" X 0.060"
2	12H236	LOCK WASHER	4		X X	3/4"
3	14H1058	NUT	4		X X	3/4"
4	AT160434	STABILIZER FOOT	1		X X	(SUB FOR AT66518)
5	11H270	COTTER PIN	2		X X	1/2" X 3"
6	24H1595	WASHER	AR		X X	2-1/16" X 3" X 0.075"
7	T69472	PIN FASTENER	1		X X	
8	.....	ANGLE	1		X X	
9	T33644	STREET PAD	14		X X	
10	.....	ANGLE	1		X X	
11	12H245	LOCK WASHER	2		X X	7/8"
12	14H1077	NUT	2		X X	7/8", (SUB FOR 14H836)
13	AT32757	ABSORBER	1		X X	
14	19H1768	CAP SCREW	4		X X	3/4" X 2"
15	.....	PAD	1		X X	(AT66517 IS NO LONGER AVAILABLE)

REVERSIBLE STABILIZER FOOT

TP40447 -UN-01JAN94

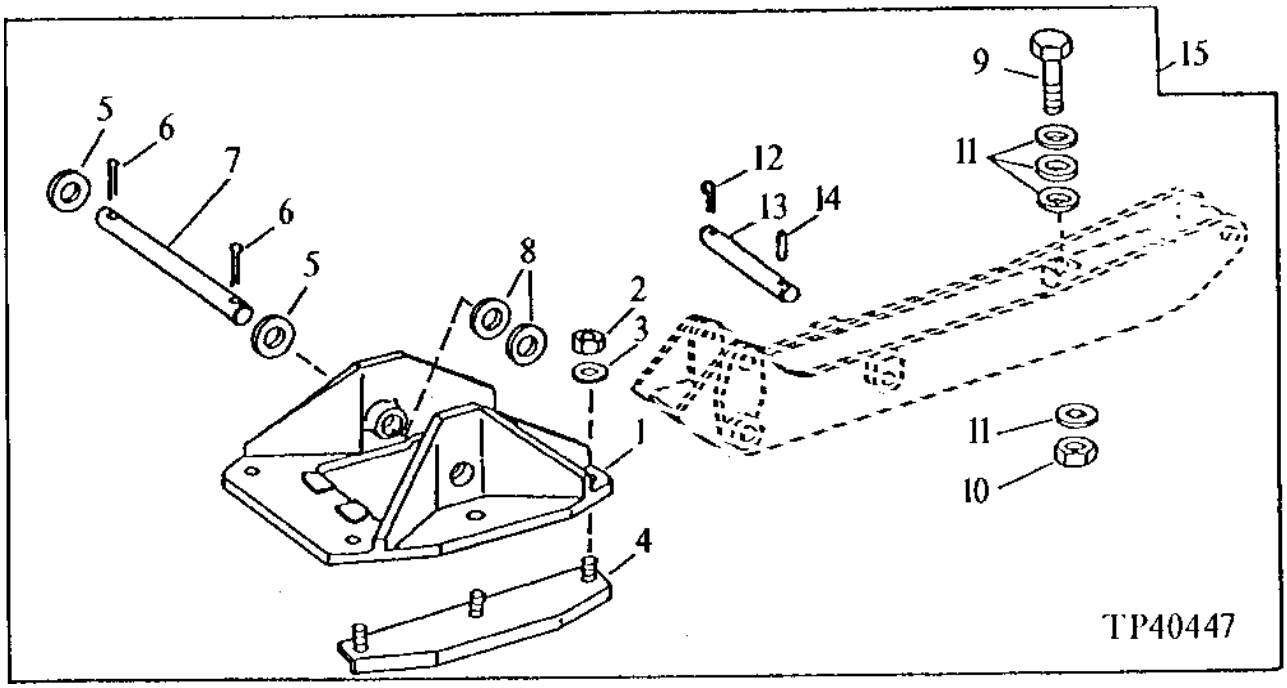

KEY	PART NO.	PART NAME	QTY	SERIAL NO.	4 5 1 1 0 0 D D	REMARKS
1	T206569	STABILIZER FOOT	2		X X	(SUB FOR T166258) (SUB FOR T77506, T126868 AND T128658)
2	14H1040	NUT	12		X X	1/2", (SUB FOR 14H826, THIS APPLICATION)
3	T29342	WASHER	24		X X	17/32" X 1-1/4" X 0.180"
4	AT195669	STREET PAD	4		X X	(SUB FOR AT114691 AND AT192120)
5	24H1679	WASHER	4		X X	2-17/64" X 3-1/4" X 0.060"
6	11H270	COTTER PIN	4		X X	1/2" X 3"
7	T69472	PIN FASTENER	2		X X	
8	24H1679	WASHER	AR		X X	2-17/64" X 3-1/4" X 0.060", (BETWEEN LEG AND FOOT TO FILL GAP)
9	19M7417	CAP SCREW	2		X X	M16 X 65
10	14M7276	NUT	2		X X	M16
11	24M7053	WASHER	8		X X	17 X 30 X 3 MM, (5 UNDER SCREW AND 1 UNDER NUT)
12	A3581R	SPRING LOCKING PIN	2		X X	
13	T184988	PIN FASTENER	2		X X	(SUB FOR T130369)
14	A3581R	SPRING LOCKING PIN	2		X X	(SUB FOR 34H321)
15	**AT157327**	**STABILIZER**	**1**		**X X**	**(SUB FOR AT145744 AND AT149742) (CONTAINS SET OF TWO)**

MEMORANDA

SWING FRAME AND PINS
(FOR USE WITH STANDARD BOOM)
(SERIAL NO. -801199)

TP41207 -UN-01JAN94

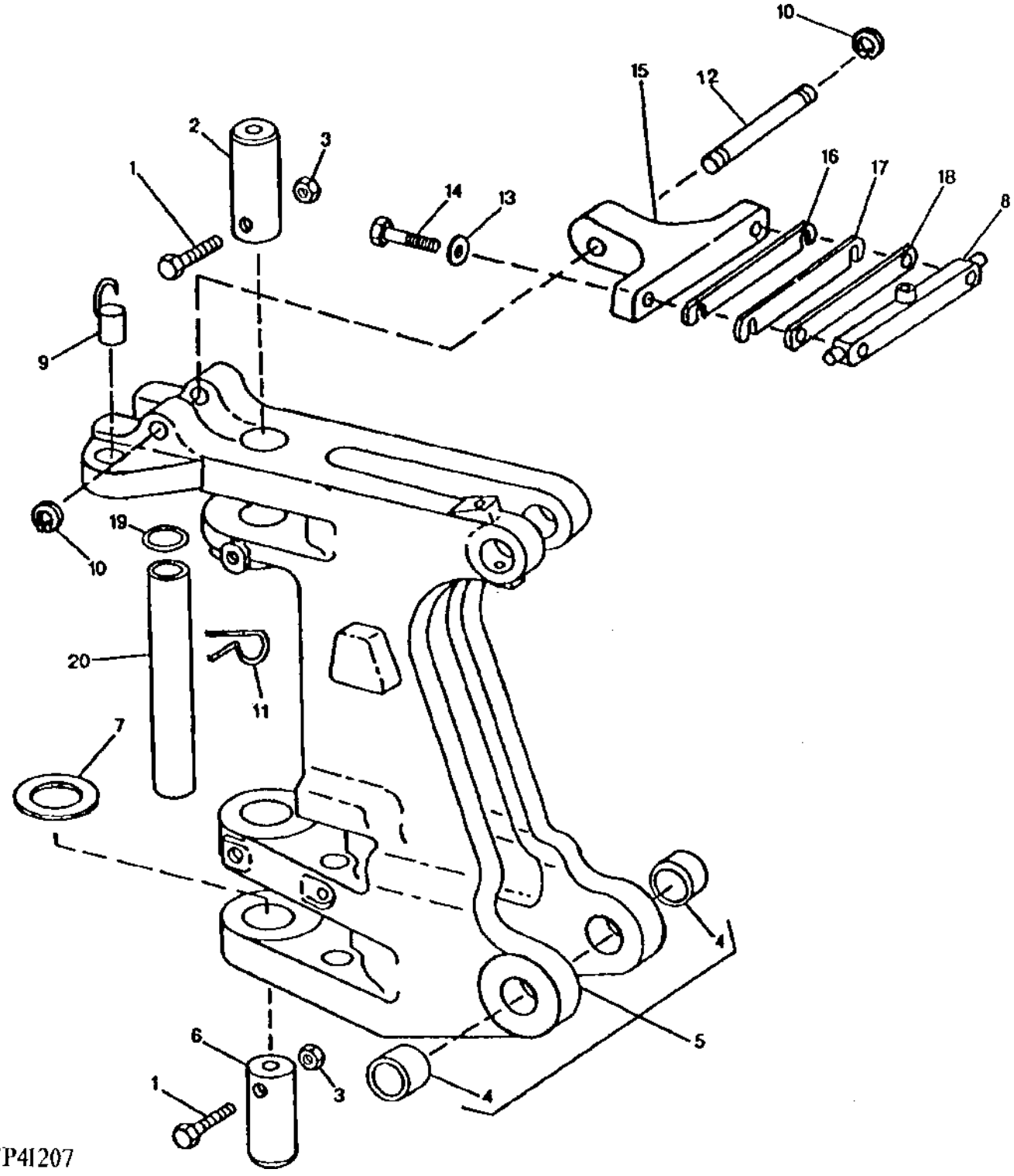

SWING FRAME AND PINS
(FOR USE WITH STANDARD BOOM)
(SERIAL NO. -801199)

KEY	PART NO.	PART NAME	QTY	SERIAL NO.	410D	510D	REMARKS
1	19M7882	SCREW	2		X		M16 X 170
2	T78795	PIN	1		X		
3	14M7328	LOCK NUT	2		X		M16
4	T77348	BUSHING	2		X		
5	AT148285	FRAME	1		X		(MARKED T135151)
6	T118680	PIN	1		X		
7	T67205	THRUST WASHER	1		X		
8	AT151236	LOCK	1		X		
9	AT150726	PIN	1		X		SWING LOCK
10	W23122	SNAP RING	2		X		
11	24M7091	WASHER	2		X		26 X 44 X 4 MM
12	T140860	PIN FASTENER	1		X		
13	.....	WASHER	2		X		(N52020 - USE IF AVAILABLE)
	24M7241	WASHER	2				17 X 34 X 4 MM, (SUB FOR N52020)
14	19M7720	CAP SCREW	2		X		M16 X 80
15	T145559	PIVOT	1		X		(SUB FOR T135339 AND T141659)
16	T135303	STRAP	6		X		(SUB FOR T70655)
17	T135304	STRAP	1		X		(SUB FOR T106161)
18	T70654	STRAP	AR		X		
19	24H1304	WASHER	1		X		13/32" X 23/32" X 0.120"
20	T77497	ROD	1		X		GUIDE

SWING FRAME AND PINS
(410D HEAVY LIFT)
(510D STANDARD)
(SERIAL NO. -801199)

TP48839 -UN-16AUG95

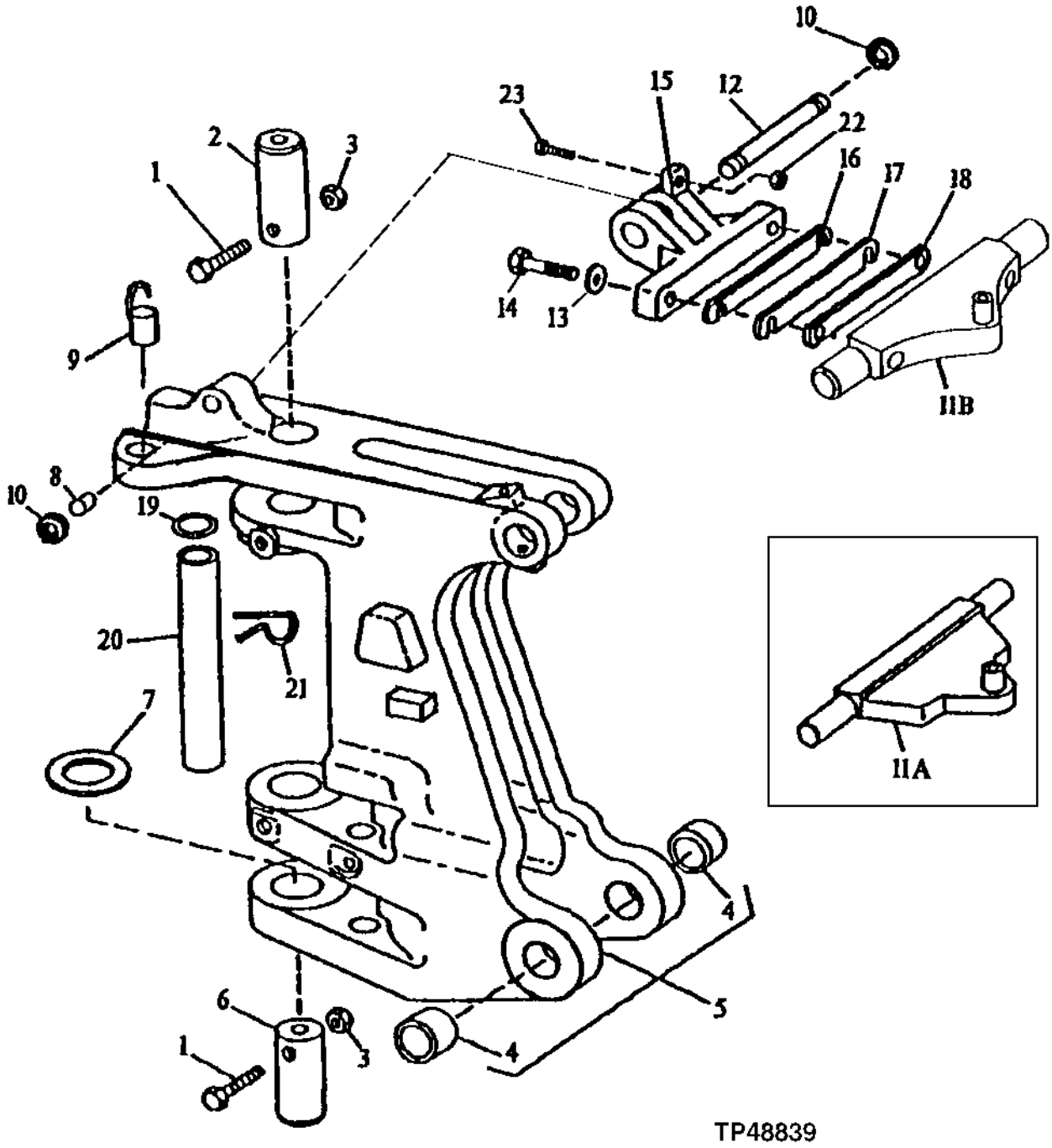

SWING FRAME AND PINS
(410D HEAVY LIFT)
(510D STANDARD)
(SERIAL NO. -801199)

KEY	PART NO.	PART NAME	QTY	SERIAL NO.	410D	510D	REMARKS
1	19M7882	SCREW	2		X	X	M16 X 170
2	T78795	PIN FASTENER	1		X	X	
3	14M7328	LOCK NUT	2		X	X	M16
4	T77348	BUSHING	2		X	X	
5	AT176557	FRAME	1		X	X	(SUB FOR AT146288 AND AT168091)
6	T118680	PIN FASTENER	1		X	X	
7	T67205	THRUST WASHER	1		X	X	
8	T158902	BUSHING	1		X	X	(SUB FOR AT40976, THIS APPLICATION)
9	AT150726	PIN	1		X	X	SWING LOCK
10	T140425	SNAP RING	2		X	X	
11A	AT151201	LOCK	1	-787875	X	X	
11B	AT176761	LOCK	1	787876-	X	X	(SUB FOR AT170200 AND AT168136)
12	T140740	PIN FASTENER	1		X	X	
13	T83426	WASHER	2		X	X	
14	19M7892	CAP SCREW	2		X	X	M20 X 80
15	T141727	PIVOT	1		X	X	(SUB FOR T140620)
16	T135304	STRAP	AR		X	X	
17	T135303	STRAP	AR		X	X	
18	T135305	STRAP	AR		X	X	
19	24H1304	WASHER	2		X	X	13/32" X 23/32" X 0.120"
20	T77497	ROD	1		X	X	GUIDE
21	11M7081	COTTER PIN	1		X	X	2.500 X 20 MM
22	14M7273	NUT	1		X	X	M8
23	19M7164	CAP SCREW	1		X	X	M8 X 50

SWING FRAME AND PINS
(FOR USE WITH STANDARD BOOM)
(SERIAL NO. 801200-)

TP45537 -UN-22SEP94

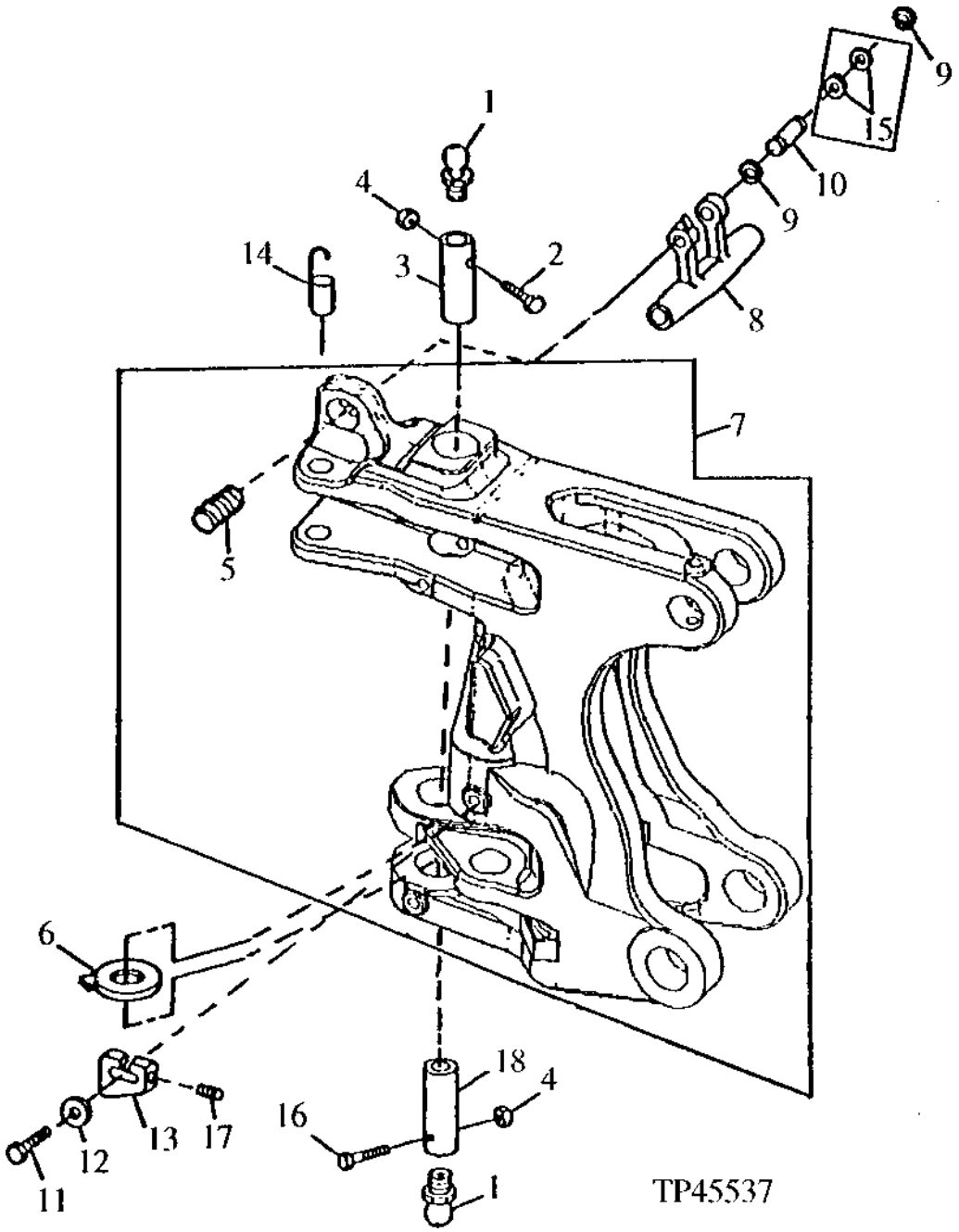

SWING FRAME AND PINS
(FOR USE WITH STANDARD BOOM)
(SERIAL NO. 801200-)

KEY	PART NO.	PART NAME	QTY	SERIAL NO.	410D	510D	REMARKS
1	T162396	LUBRICATION FITTING	2		X		(SUB FOR JD7798)
2	19M8486	CAP SCREW	1		X		
3	T160493	PIN	1		X		UPPER SWINGFRAME, (SUB FOR T145220 AND T158613)
4	14M7328	LOCK NUT	2		X		M16
5	T158419	BUSHING	1		X		(SUB FOR AZ23708)
6	T148187	THRUST WASHER	2		X		
7	AT176085	FRAME	1		X		(SUB FOR AT165610)
8	T159694	LOCK	1		X		(SUB FOR T145353)
9	W23122	SNAP RING	2		X		
10	T133618	PIN FASTENER	1		X		
11	19M7892	CAP SCREW	1		X		M20 X 80
12	T29049	WASHER	2		X		20.625 X 56.896 X 6.350 MM
13	T152759	STOP	1		X		
14	AT150725	PIN FASTENER	1		X		
15	24H1452	WASHER	1		X		1-1/32" X 1-3/4" X 0.105"
16	19M7954	CAP SCREW	1		X		
17	22H993	SET SCREW	1		X		
18	T158612	PIN FASTENER	1		X		LOWER SWINGFRAME, (SUB FOR T133561)

SWING FRAME AND PINS
(410D HEAVY LIFT)
(510D STANDARD)
(SERIAL NO. 801200-)

TP45084 -UN-01JAN94

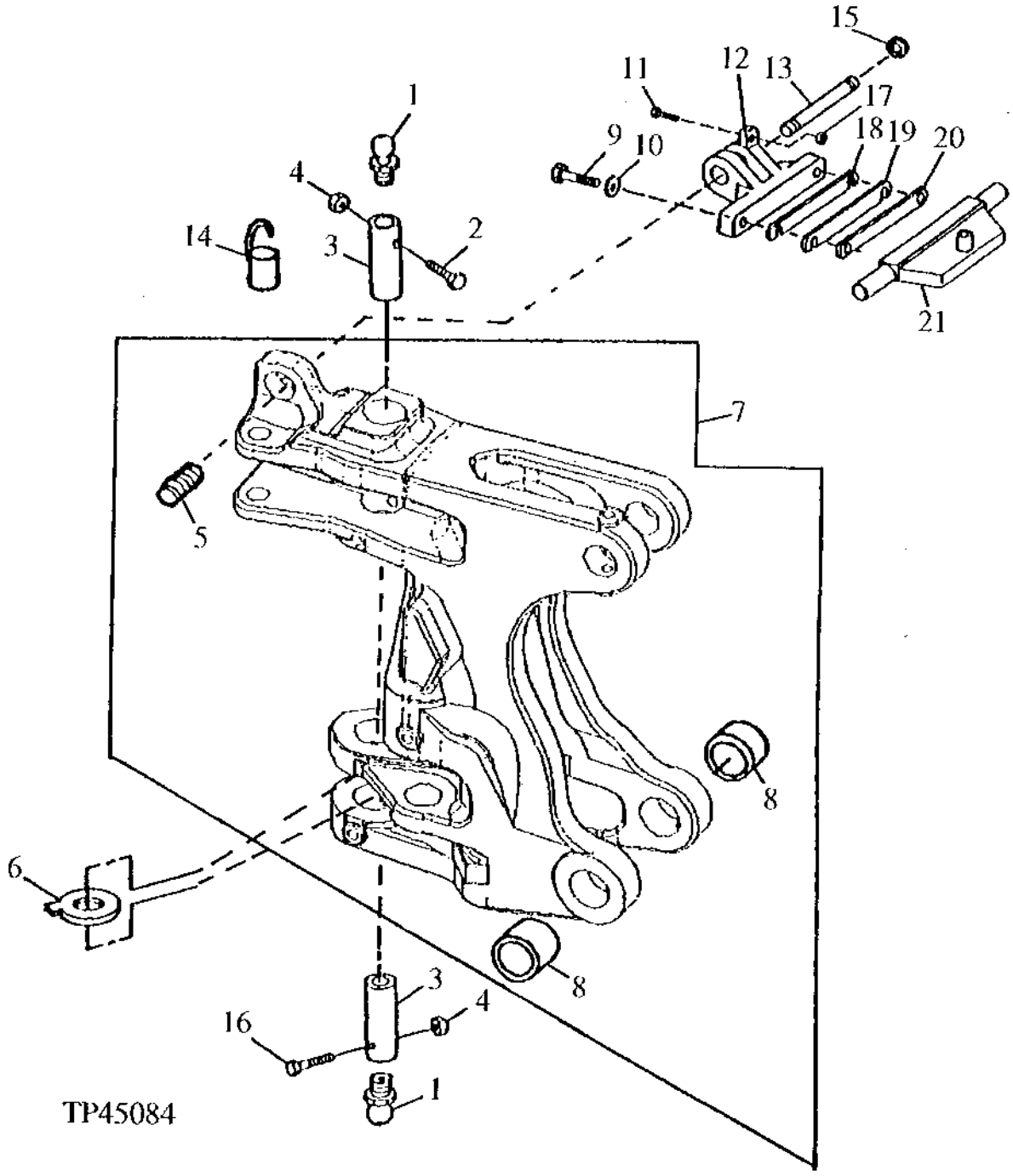

SWING FRAME AND PINS
(410D HEAVY LIFT)
(510D STANDARD)
(SERIAL NO. 801200-)

KEY	PART NO.	PART NAME	QTY	SERIAL NO.	410D	510D	REMARKS
1	JD7808	LUBRICATION FITTING	1	786688-	X	X	(30 DEGREE)
	T162396	LUBRICATION FITTING	2	-786687	X	X	(SUB FOR JD7798) (STRAIGHT)
	T162396	LUBRICATION FITTING	1	786688-	X	X	(SUB FOR JD7798) (STRAIGHT)
2	19M8486	CAP SCREW	1		X	X	
3	T161053	PIN	1		X	X	LOWER SWINGFRAME, (SUB FOR T149633)
	T161054	PIN	1		X	X	UPPER SWINGFRAME, (SUB FOR T149634) (SUB FOR T158182)
4	14M7328	LOCK NUT	2		X	X	M16
5	T158902	BUSHING	1		X	X	(SUB FOR AT40976, THIS APPLICATION)
6	T148187	THRUST WASHER	2		X	X	
7	AT176490	FRAME	1		X	X	(SUB FOR AT164965)
8	T77348	BUSHING	1		X	X	
9	19M7892	CAP SCREW	2		X	X	M20 X 80
10	T83426	WASHER	2		X	X	
11	19M7164	CAP SCREW	1		X	X	M8 X 50
12	T141727	PIVOT	1		X	X	
13	T140740	PIN FASTENER	1		X	X	
14	AT150725	PIN FASTENER	1		X	X	
15	T140425	SNAP RING	2		X	X	
16	19M8019	CAP SCREW	1		X	X	M16 X 160
17	14M7273	NUT	1		X	X	M8
18	T135304	STRAP	AR		X	X	
19	T135303	STRAP	AR		X	X	
20	T135305	MAT	AR		X	X	
21	AT176761	LOCK	1		X	X	(SUB FOR AT170200 AND AT168136)

BACKHOE BOOM
(STANDARD BOOM)
(SERIAL NO. 801200-)

TP46404 -UN-29NOV94

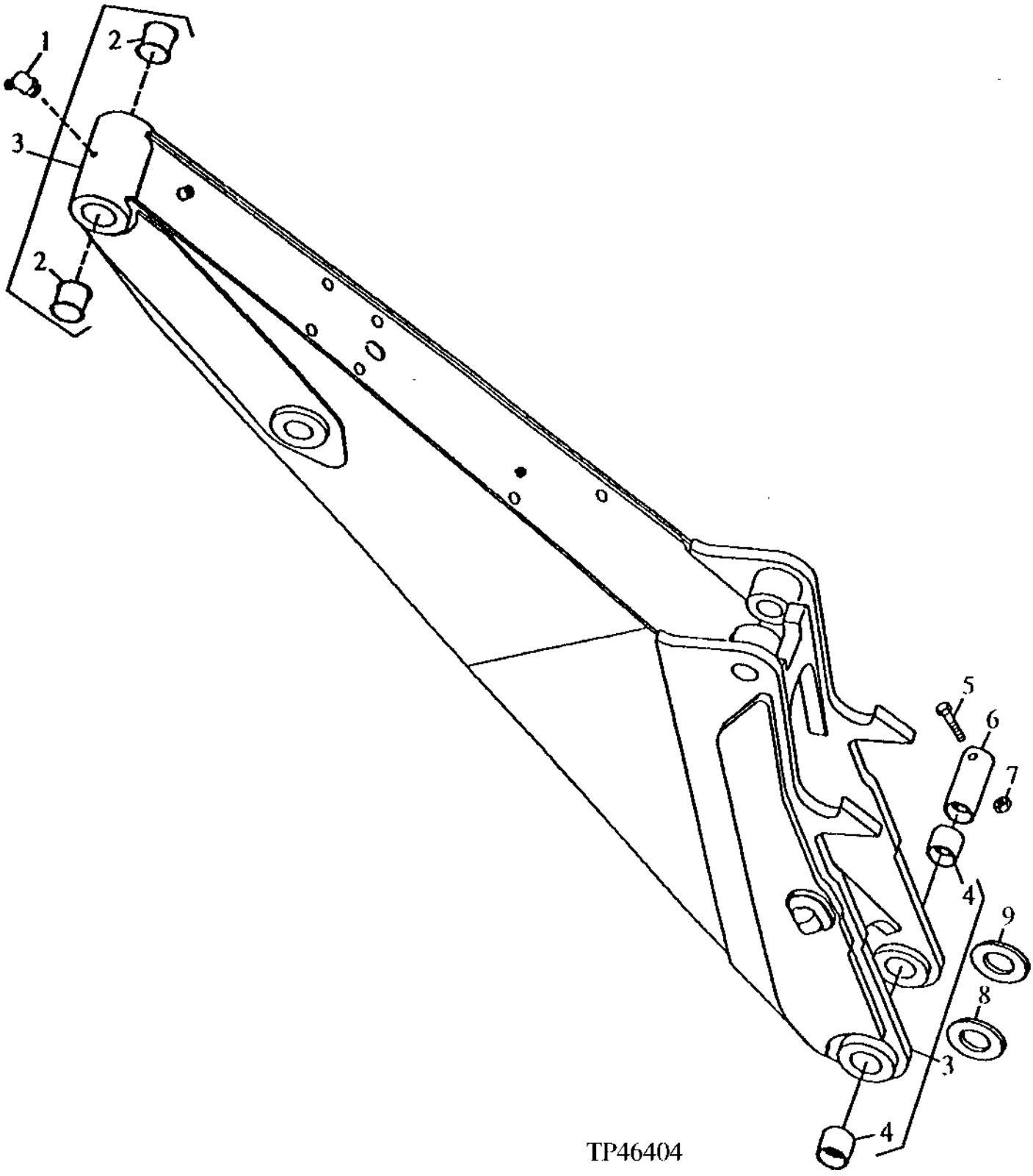

BACKHOE BOOM
(STANDARD BOOM)
(SERIAL NO. 801200-)

KEY	PART NO.	PART NAME	QTY	SERIAL NO.	410D	510D	REMARKS
1	JD7799	LUBRICATION FITTING	1		X		
2	T162582	BUSHING	2		X		(SUB FOR T67855)
3	AT169391	BACKHOE BOOM	1		X		
4	T127644	BUSHING	2		X		
5	19M7758	CAP SCREW	2		X		M12 X 130
6	T127673	PIN FASTENER	2		X		
7	14M7168	LOCK NUT	2		X		M12
8	24H1679	WASHER	AR		X		
9	24H1589	WASHER	AR		X		

BACKHOE BOOM

TP46230 -UN-01JAN94

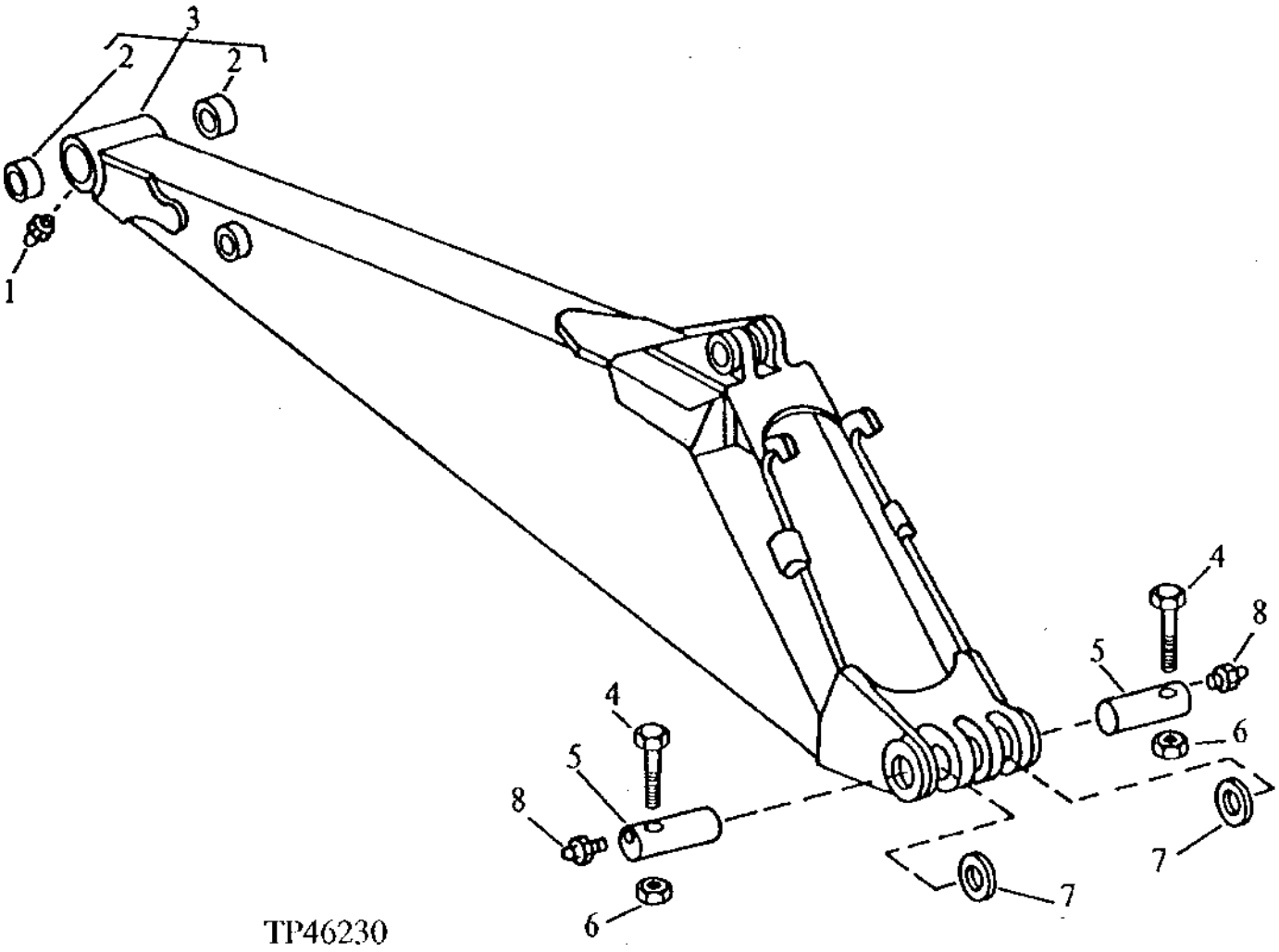

BACKHOE BOOM

KEY	PART NO.	PART NAME	QTY	SERIAL NO.	410D	510D	REMARKS
1	JD7771	LUBRICATION FITTING	1		X	X	
2	T162582	BUSHING	2		X	X	(SUB FOR T67855)
3	.....	BACKHOE BOOM	1	-780969	X		AT148318 AND AT148319 NO LONGER AVAILABLE, (SUB AT169603, AT173548, 40M7066, T142484 AND (2) 40M7166)
	AT169603	BACKHOE BOOM	1	780970-801199	X		STANDARD BOOM, (SUB FOR AT156655 AND AT166798) (ALSO ORDER AT173548 AND 40M7066)
	.....	BACKHOE BOOM	1	-780969		X	AT148309 NO LONGER AVAILABLE, (SUB FOR AT146289) (SUB AT169608, AT173548 AND 40M7066)
	AT174234	BACKHOE BOOM	1	780970-804230	X		HEAVY LIFT, (ALSO ORDER AT173548 AND 40M7066) (SUB FOR AT169608 AND AT166624) (FOR UNITS WITH EXTENDIBLE DIPPERSTICK ALSO ORDER AT175073 AND (2) 24H1424)
	AT174234	BACKHOE BOOM	1	780970-804230		X	STANDARD BOOM, (ALSO ORDER AT173548 AND 40M7066) (SUB FOR AT169608 AND AT166624) (FOR UNITS WITH EXTENDIBLE DIPPERSTICK ALSO ORDER AT175073 AND (2) 24H1424)
	AT174234	BACKHOE BOOM	1	804231-814306	X		HEAVY LIFT, (SUB FOR AT169608 AND AT166624) (FOR UNITS WITH EXTENDIBLE DIPPERSTICK ALSO ORDER AT175073 AND (2) 24H1424)
	AT174234	BACKHOE BOOM	1	804231-814306		X	STANDARD BOOM, (SUB FOR AT169608 AND AT166624) (FOR UNITS WITH EXTENDIBLE DIPPERSTICK ALSO ORDER AT175073 AND (2) 24H1424)
	AT174234	BACKHOE BOOM	1	814307-	X		
	AT174234	BACKHOE BOOM	1	814307-		X	
4	19M7884	CAP SCREW	2		X	X	M16 X 110
5	AT86425	PIN FASTENER	2		X	X	
6	14M7328	LOCK NUT	2		X	X	M16
7	T126034	WASHER	1		X	X	
8	T162396	LUBRICATION FITTING	2		X	X	(SUB FOR JD7798)

EXTENDIBLE DIPPERSTICK HOUSING
(SERIAL NO. -787384)

TP41699 -UN-01JAN94

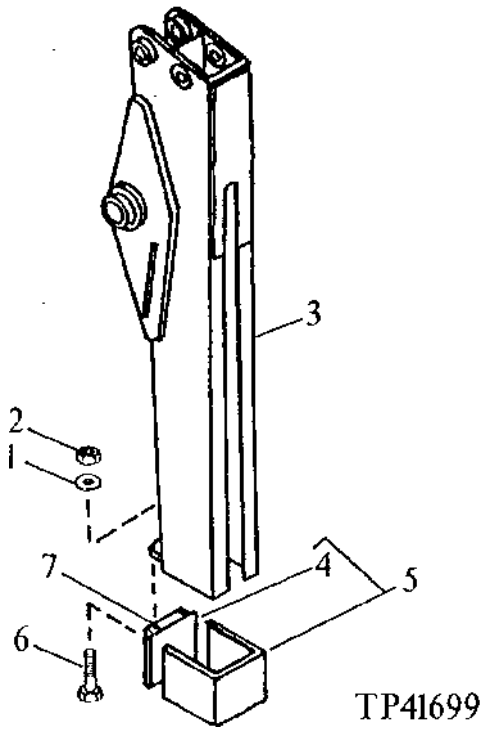

KEY	PART NO.	PART NAME	QTY	SERIAL NO.	410D	510D	REMARKS
1	12H301	LOCK WASHER	2		X	X	1/2"
	24H1226	WASHER	AR		X	X	1/2" X 1-1/4" X 0.083"
2	14H1040	NUT	2		X	X	1/2"
3	AT101060	HOUSING	1		X		1.2M EXTENDIBLE DIPPERSTICK, (ALSO ORDER T143070)
	AT106709	HOUSING	1		X	X	1.5M EXTENDIBLE DIPPERSTICK, (ALSO ORDER T143070)
4	.....	PLATE	1		X	X	(SUB AT82797)
5	AT82797	KIT	1		X	X	COLLAR
6	19H1820	CAP SCREW	2		X	X	1/2" X 3"
7	T143070	STRAP	1		X	X	

1.2M EXTENDIBLE DIPPERSTICK HOUSING
(410D)
(SERIAL NO. 787385-)

TP45463 -UN-01JAN94

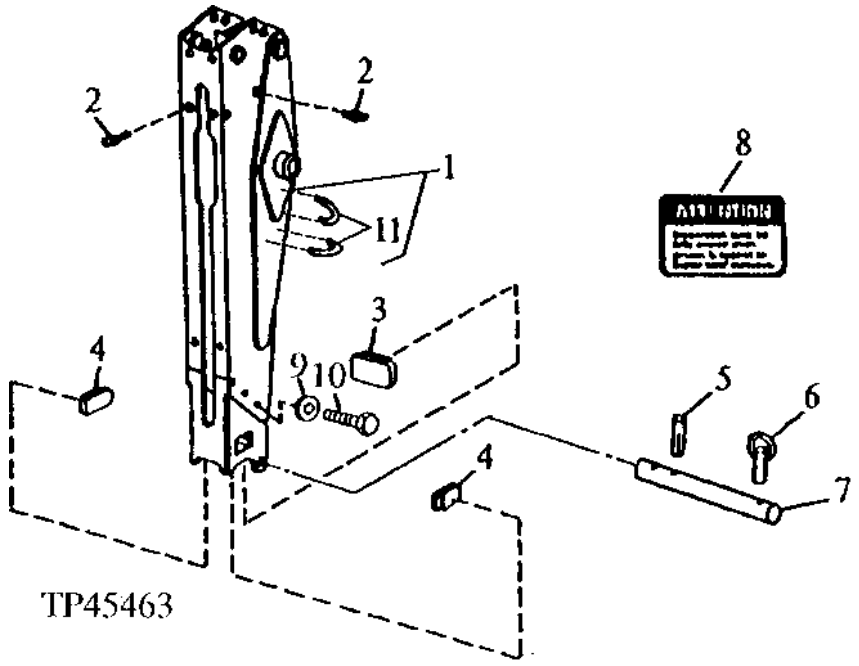

KEY	PART NO.	PART NAME	QTY	SERIAL NO.	410D	510D	REMARKS
1	AT114206	HOUSING	1		X		
2	T162396	LUBRICATION FITTING	2		X		(SUB FOR JD7798)
3	AT158583	PAD	1		X		
4	AT162921	PAD	2		X		(SUB FOR AT158580, THIS APPLICATION)
5	34M7054	SPRING PIN	1		X		10 X 50 MM
6	AR83396	QUICK LOCK PIN	1		X		
7	T147005	PIN	1		X		
8	T146687	LABEL	1		X		
9	24M7239	WASHER	4		X		
10	19M8324	CAP SCREW	4		X		
11	T113400	PIN	4		X		

1.5M EXTENDIBLE DIPPERSTICK HOUSING
(SERIAL NO. 787385-)

TP45462 -UN-01JAN94

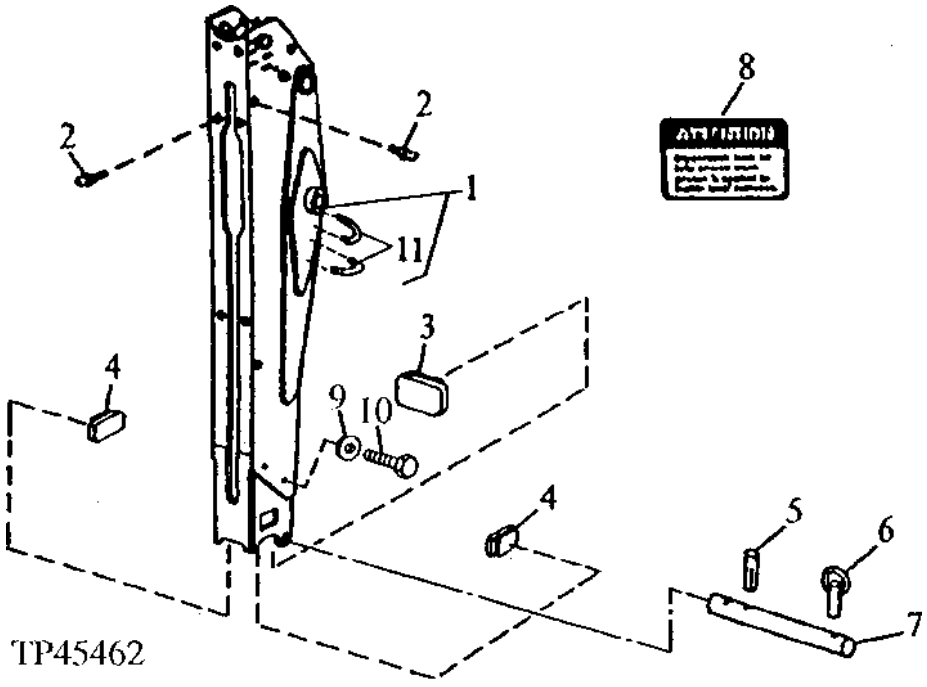

KEY	PART NO.	PART NAME	QTY	SERIAL NO.	410D	510D	REMARKS
1	AT159237	HOUSING	1		X	X	
2	T162396	LUBRICATION FITTING	4		X	X	(SUB FOR JD7798)
3	AT158583	PAD	1		X	X	
4	AT162921	PAD	2		X	X	(SUB FOR AT158580, THIS APPLICATION)
5	34M7054	SPRING PIN	1		X	X	10 X 50 MM
6	AR83396	QUICK LOCK PIN	1		X	X	
7	T147005	PIN	1		X	X	
8	T146687	LABEL	1		X	X	ATTENTION
9	24M7239	WASHER	4		X	X	10.700 X 21 X 2.500 MM
10	19M8324	CAP SCREW	4		X	X	M10 X 16
11	T113400	PIN	4		X	X	

EXTENDIBLE DIPPERSTICK EXTENSION
(SERIAL NO. -787384)

TP17067 -UN-01JAN94

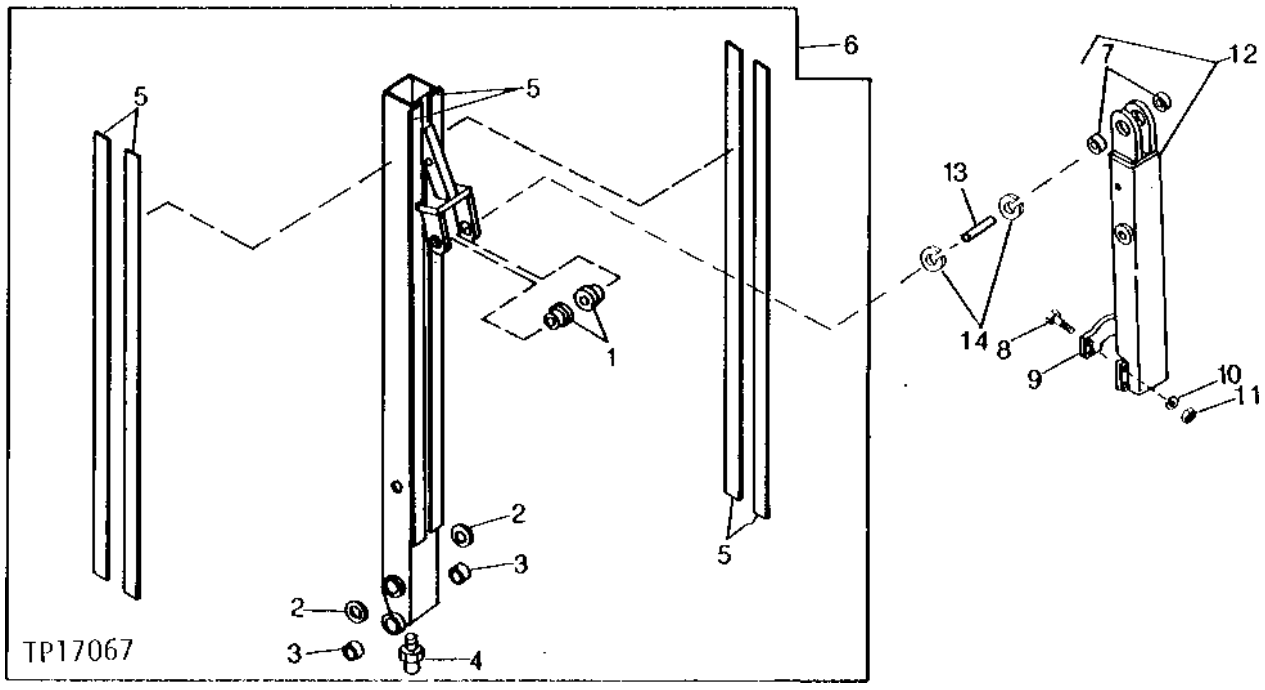

KEY	PART NO.	PART NAME	QTY	SERIAL NO.	410D	510D	REMARKS
1	T100762	BUSHING	2		X		1.2M
	T106261	BUSHING	1		X	X	1.5M
2	T100763	BUSHING	2		X	X	
3	T51859	BUSHING	2		X	X	
4	JD7759	LUBRICATION FITTING	1		X	X	
5	T100755	REINFORCEMENT	8		X		1.2M, (1.25" WIDE)
	T106262	REINFORCEMENT	8		X	X	1.5M
6	AT117615	EXTENSION	1		X		1.2M
	AT117617	EXTENSION	1		X	X	1.5M
7	T106260	BUSHING	2		X	X	1.5M
8	19H2735	CAP SCREW	4		X	X	1/2" X 2", 1.5M
9	T106259	BRACKET	1		X	X	1.5M
10	12H301	LOCK WASHER	4		X	X	1/2", 1.5M
11	14H1040	NUT	4		X	X	1/2", 1.5M, (SUB FOR 14H809)
12	AT106708	EXTENSION	1		X	X	1.5M
13	T106258	PIN	1		X	X	1.5M
14	U15411	SNAP RING	2		X	X	1.5M

1.2M EXTENDIBLE DIPPERSTICK EXTENSION
(SERIAL NO. 787385-)

TP48807 -UN-28OCT96

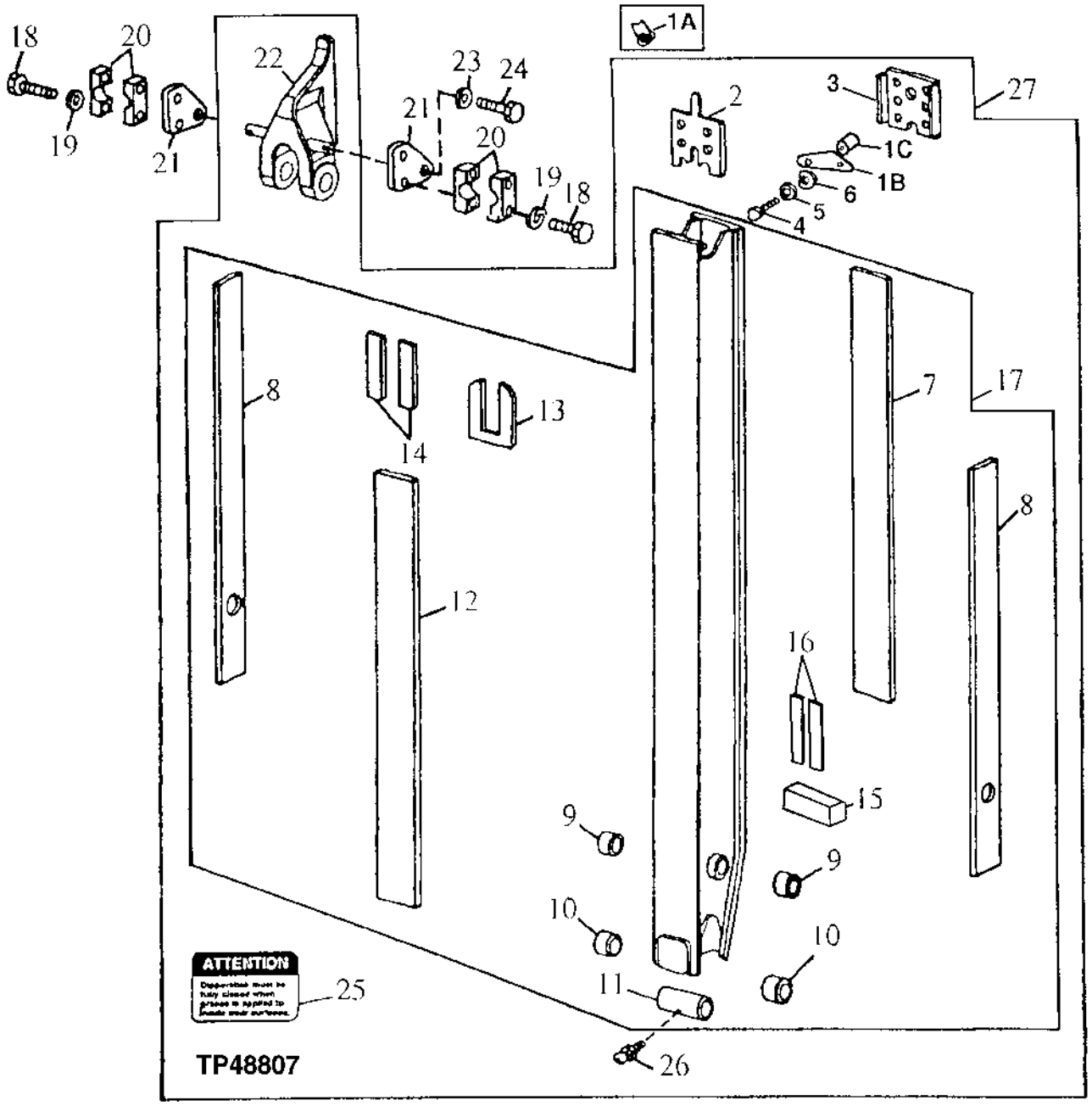

1.2M EXTENDIBLE DIPPERSTICK EXTENSION
(SERIAL NO. 787385-)

KEY	PART NO.	PART NAME	QTY	SERIAL NO.	410D	510D	REMARKS
1A	.....	RETAINER	2	-806265	X		(AT161328 NO LONGER AVAILABLE) (SUB (2) T154092 AND (2) T154271)
1B	T154271	RETAINER	2	806266-	X		
1C	T154092	PLATE	2	806266-	X		
2	T143209	SHIM	AR		X		
3	AT162050	PAD	1		X		
4	19M7403	CAP SCREW	6		X		
5	24M7240	WASHER	AR		X		
6	T146635	WASHER	2	-806265	X		
7	T144184	STRIP	1		X		(ALSO ORDER (2) T148940, (2) T148941 AND (2) T148942)
8	T143249	STRIP	2		X		
9	R72579	BUSHING	2		X		
10	T34301	BUSHING	2		X		
11	T157646	BUSHING	1		X		(SUB FOR T113279)
12	T113436	STRIP	1		X		
13	T144130	PLATE	1		X		
14	T143208	PAD	2		X		
15	T144129	STOP	1		X		
16	T148940	REINFORCEMENT	2		X		.005
	T148941	REINFORCEMENT	2		X		.010
	T148942	REINFORCEMENT	2		X		.030
17	AT114101	EXTENSION	1		X		(ALSO ORDER (2) T148940, (2) T148941, (2) T148942 AND T144129)
18	19M7981	CAP SCREW	4		X		M8 X 55
19	24M7238	WASHER	4		X		8.700 X 17 X 2 MM
20	T162004	CLAMP	4	-806265	X		(USE WITH AT162076 OR AT173677) (SUB FOR T147187)
	T162003	CLAMP	4	806266-	X		(USE WITH AT173675 OR AT173677) (SUB FOR T147186)
21	T147142	PLATE	2		X		
22	T144441	CLEVIS	1		X		
23	24M7239	WASHER	2		X		10.700 X 21 X 2.500 MM
24	19M7402	CAP SCREW	2		X		M10 X 25
25	T146687	LABEL	1		X		ATTENTION
26	T162396	LUBRICATION FITTING	1		X		(SUB FOR JD7798)
27	.....	DIPPERSTICK	1		X		(AT159927 NO LONGER AVAILABLE)

1.5M EXTENDIBLE DIPPERSTICK EXTENSION
(SERIAL NO. 787385-)

TP45575 -UN-20FEB95

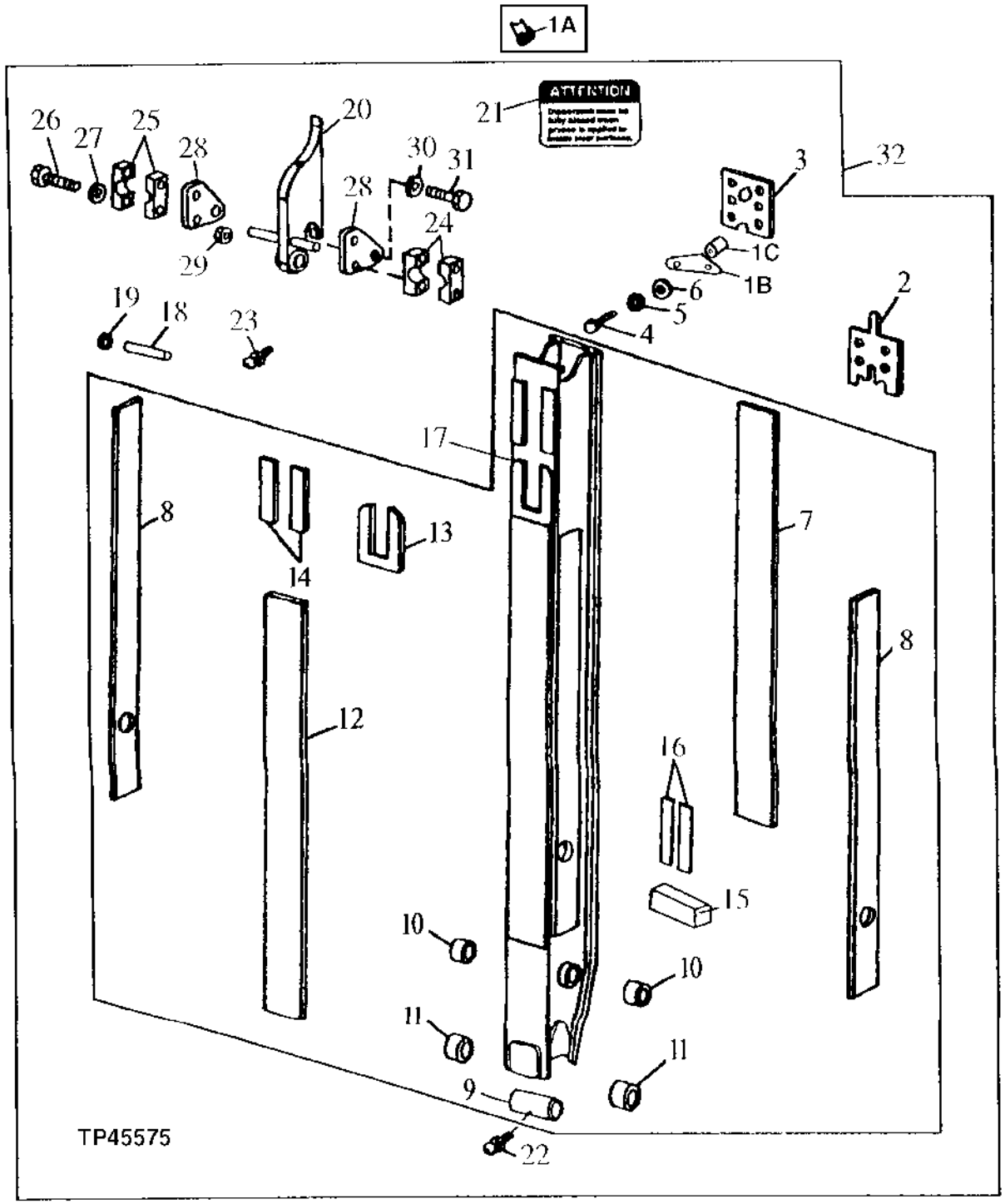

1.5M EXTENDIBLE DIPPERSTICK EXTENSION
(SERIAL NO. 787385-)

KEY	PART NO.	PART NAME	QTY	SERIAL NO.	410D	510D	REMARKS
1A	.....	RETAINER	2	-806265	X	X	(AT161328 NO LONGER AVAILABLE) (SUB (2) T154092 AND (2) T154271)
1B	T154271	RETAINER	2	806266-	X	X	
1C	T154092	PLATE	2	806266-	X	X	
2	T143209	SHIM	AR		X	X	
3	AT162050	PAD	1		X	X	(SUB FOR T143207)
4	19M7403	CAP SCREW	6		X	X	M12 X 35
5	24M7240	WASHER	AR		X	X	13 X 25 X 3 MM
6	T146635	WASHER	1	-806265	X	X	
7	T144537	STRIP	1		X	X	(ALSO ORDER (2) T148940, (2) T148941 AND (2) T148942)
8	T144536	STRIP	2		X	X	
9	T157646	BUSHING	1		X	X	(SUB FOR T113279)
10	R72579	BUSHING	2		X	X	
11	T34301	BUSHING	2		X	X	
12	T144532	STRIP	1		X	X	
13	T144130	PLATE	1		X	X	
14	T143937	PAD	2		X	X	
15	T144129	STOP	1		X	X	
16	T148940	REINFORCEMENT	2		X	X	.005
	T148941	REINFORCEMENT	2		X	X	.010
	T148942	REINFORCEMENT	2		X	X	.030
17	AT159236	EXTENSION	1		X	X	(ALSO ORDER (2) T148940, (2) T148941, (2) T148942 AND T144129)
18	T100188	PIN FASTENER	1		X	X	(SUB FOR T125937)
19	40M7180	SNAP RING	2		X	X	
20	AT160987	CLEVIS	1		X	X	
21	T146687	LABEL	1		X	X	ATTENTION
22	JD7799	LUBRICATION FITTING	1		X	X	
23	T162396	LUBRICATION FITTING	1		X	X	(SUB FOR JD7798)
24	T162004	CLAMP	2		X	X	ROD END, BUCKET CYLINDER, (SUB FOR T147187)
25	T163636	CLAMP	2		X	X	HEAD END, BUCKET CYLINDER, (SUB FOR T147188)
26	19M7981	CAP SCREW	4		X	X	M8 X 55
27	24M7238	WASHER	4		X	X	8.700 X 17 X 2 MM
28	T147142	PLATE	2		X	X	
29	14M7273	NUT	4		X	X	M8
30	24M7028	WASHER	2		X	X	10.500 X 20 X 2 MM
31	19M7402	CAP SCREW	2		X	X	M10 X 25
32	.....	DIPPERSTICK	1		X	X	(AT159933 NO LONGER AVAILABLE)

EXTENDIBLE DIPPERSTICK CROWD, EXTENSION AND BUCKET CYLINDER PINS
(SERIAL NO. -787384)

TP16317 -UN-01JAN94

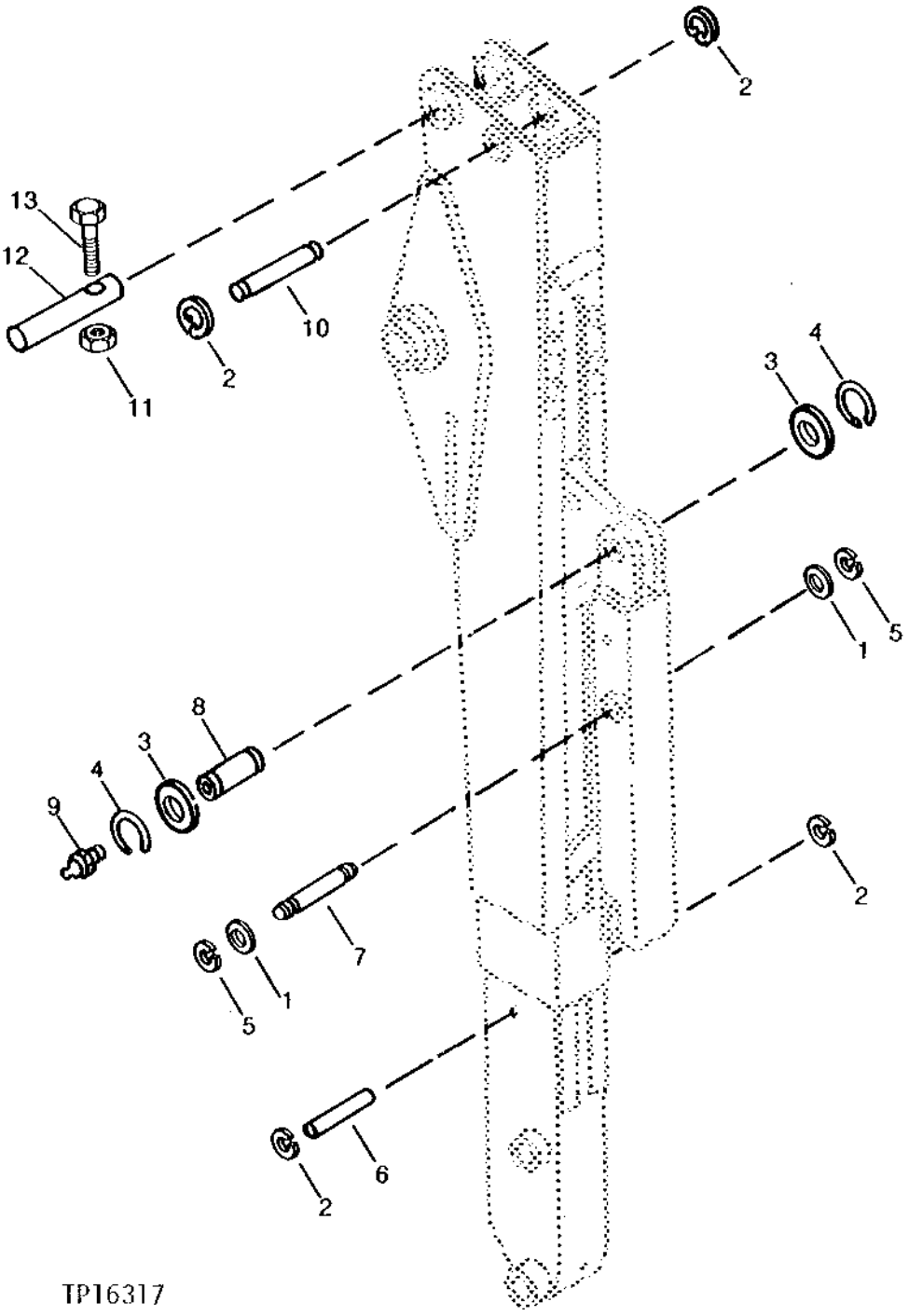

EXTENDIBLE DIPPERSTICK CROWD, EXTENSION AND BUCKET CYLINDER PINS
(SERIAL NO. -787384)

KEY	PART NO.	PART NAME	QTY	SERIAL NO.	410D	510D	REMARKS
1	24H1574	WASHER	AR		X	X	1-13/16" X 2-3/4" X 0.060"
	24H1576	WASHER	AR		X	X	1-13/16" X 2-15/16" X 0.075"
2	H35226	SNAP RING	4		X	X	
3	U11649	WASHER	2		X	X	1.5M EXTENDIBLE DIPPERSTICK
4	U15411	SNAP RING	2		X	X	1.5M EXTENDIBLE DIPPERSTICK
5	40M7180	SNAP RING	2		X	X	
6	B28568	DOWEL PIN	1		X	X	
7	T100188	PIN FASTENER	1		X		1.2M EXTENDIBLE DIPPERSTICK, (SUB FOR T125937)
	T125946	PIN FASTENER	1		X	X	1.5M EXTENDIBLE DIPPERSTICK
8	T106258	PIN	1		X	X	1.5M EXTENDIBLE DIPPERSTICK
9	JD7759	LUBRICATION FITTING	1			X	1/8"
10	T113347	PIN	1		X	X	
11	14M7319	LOCK NUT	1		X	X	M12
12	T126033	PIN FASTENER	1		X	X	
13	19M7949	CAP SCREW	1		X	X	M12 X 100

BUCKET LINKS AND PINS
(SERIAL NO. -783627)

TP40405 -UN-01JAN94

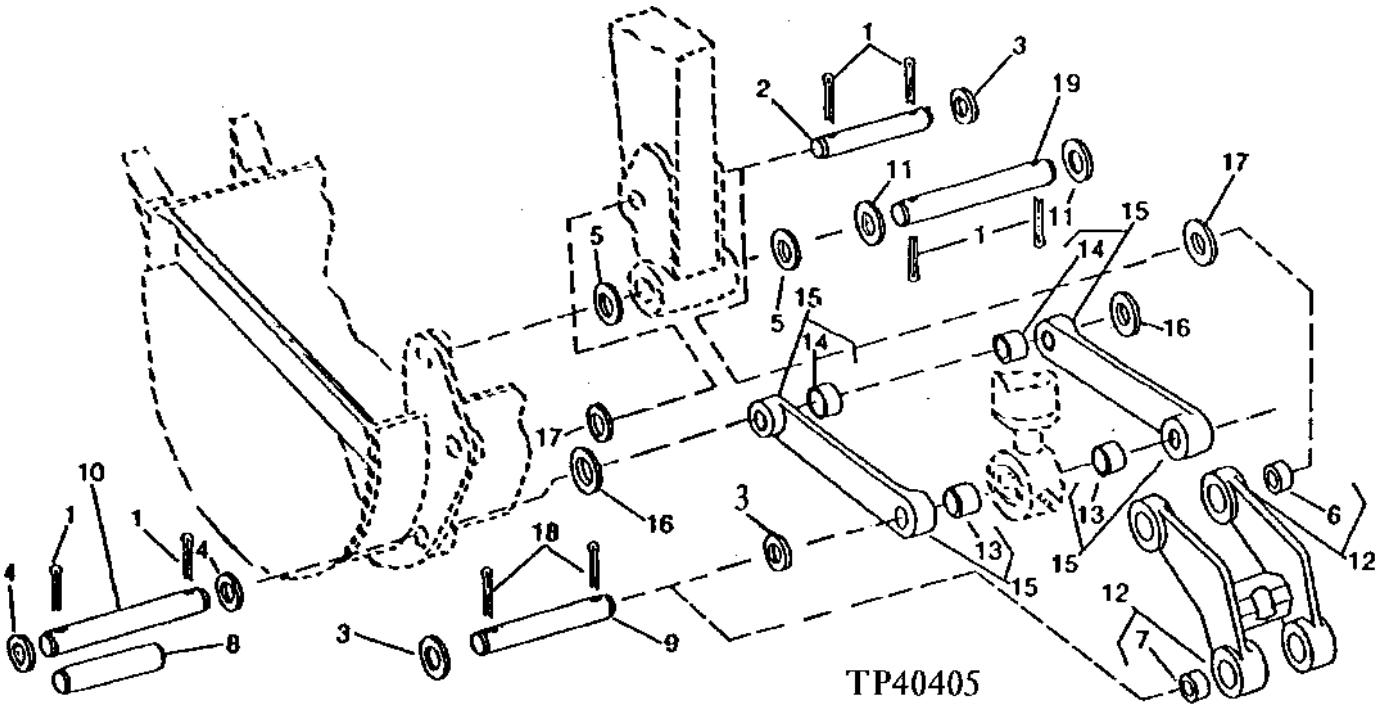

KEY	PART NO.	PART NAME	QTY	SERIAL NO.	410D	510D	REMARKS
1	11H221	COTTER PIN	6		X	X	3/8" X 2-1/2"
2	T125929	PIN FASTENER	1		X	X	
	T100188	PIN FASTENER	AR	-781178	X		(SUB FOR (AR) T125937) (WITH EXTENDIBLE DIPPERSTICK)
	T125946	PIN FASTENER	AR	-781178		X	(WITH EXTENDIBLE DIPPERSTICK)
	40M7180	SNAP RING	AR	-781178	X	X	(WITH EXTENDIBLE DIPPERSTICK)
3	T161036	WASHER	3		X	X	(SUB FOR (3) T125955) (SUB FOR T148178)
4	U11649	WASHER	2		X	X	
5	24H1574	WASHER	AR		X	X	1-13/16" X 2-3/4" X 0.060"
	24H1576	WASHER	AR		X	X	1-13/16" X 2-15/16" X 0.075"
	24H1679	WASHER	AR		X	X	2-17/64" X 3-1/4" X 0.060", 1.2M AND 1.5M EXTENDIBLE DIPPERSTICK (USE ON EXTENDIBLE DIPPERSTICK TO MINIMIZE GAP)
6	R72579	BUSHING	2		X	X	
7	T101084	BUSHING	2		X	X	
8	T140362	SPACER	1		X	X	
9	T125939	PIN FASTENER	1		X	X	
10	T125931	PIN FASTENER	1		X	X	
11	24H1574	WASHER	AR		X	X	1-13/16" X 2-3/4" X 0.060"
	24H1576	WASHER	AR		X	X	1-13/16" X 2-15/16" X 0.075"
12	AT158567	LINK	1		X	X	(INCLUDES BUSHINGS) (MARKED T143994) (SUB FOR AT107527)
	T143994	LINK	1		X	X	(WITHOUT BUSHINGS)
13	T101084	BUSHING	2		X	X	
14	T101148	BUSHING	2		X	X	
15	AT146005	LINK	2		X	X	
16	24H1536	WASHER	AR		X	X	1-17/32" X 2-1/4" X 0.060"
17	24H1558	WASHER	2		X	X	1-41/64" X 2-3/8" X 0.075"
18	11H227	COTTER PIN	2		X	X	3/8" X 3"
19	T125926	PIN FASTENER	1		X	X	

BUCKET LINKS AND PINS
(SERIAL NO. 783628-)

TP44024 -UN-04SEP96

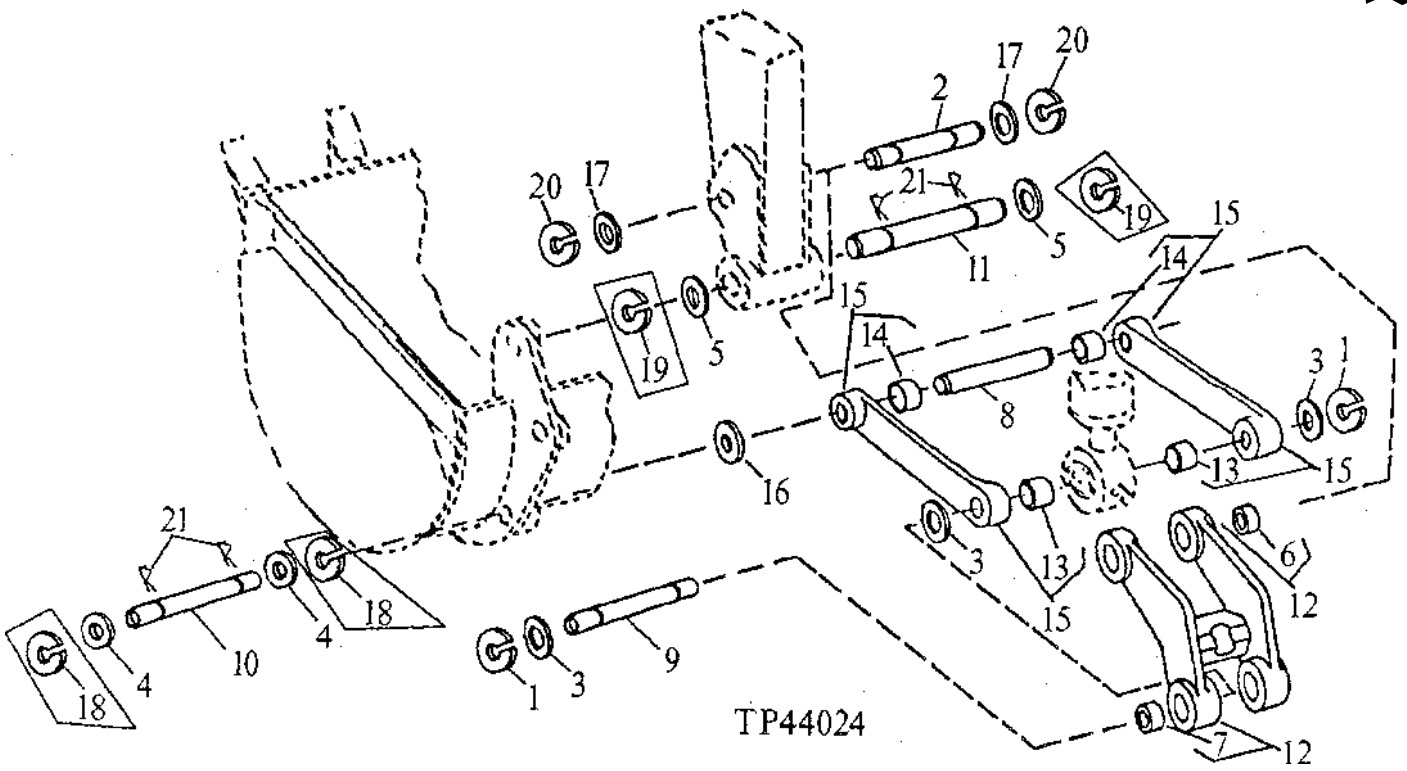

KEY	PART NO.	PART NAME	QTY	SERIAL NO.	410D	510D	REMARKS
1	40M7066	SNAP RING	2		X	X	
2	T140906	PIN	1		X	X	
3	T161036	WASHER	2		X	X	(SUB FOR (2) T125955 AND T148178)
4	24H1536	WASHER	2		X	X	1-17/32" X 2-1/4" X 0.060"
5	24H1574	WASHER	AR		X	X	1-13/16" X 2-3/4" X 0.060"
	24H1576	WASHER	AR		X	X	1-13/16" X 2-15/16" X 0.075"
6	R72579	BUSHING	2		X	X	
7	T101084	BUSHING	2		X	X	
8	T140362	SPACER	1		X	X	
9	T140905	PIN FASTENER	1		X	X	
10	T140881	PIN FASTENER	1	-788307	X	X	
	T125931	PIN FASTENER	1	788308-	X	X	
11	T125926	PIN FASTENER	1		X	X	(SUB FOR T140880)
12	AT158567	LINK	1		X	X	(INCLUDES BUSHINGS) (MARKED T143994) (SUB FOR AT107527)
	T143994	LINK	1		X	X	(WITHOUT BUSHINGS)
13	T101084	BUSHING	2		X	X	
14	T101148	BUSHING	2		X	X	
15	AT146005	LINK	2		X	X	
16	24H1536	WASHER	AR		X	X	1-17/32" X 2-1/4" X 0.060"
17	24H1558	WASHER	AR		X	X	1-41/64" X 2-3/8" X 0.075"
18	U11030	SNAP RING	2	-788307	X	X	
19	U11031	SNAP RING	2	-788307	X	X	
20	40M7179	SNAP RING	2		X	X	
21	11H221	COTTER PIN	4	788308-	X	X	

DIPPERSTICK

TP45465 -UN-01JAN94

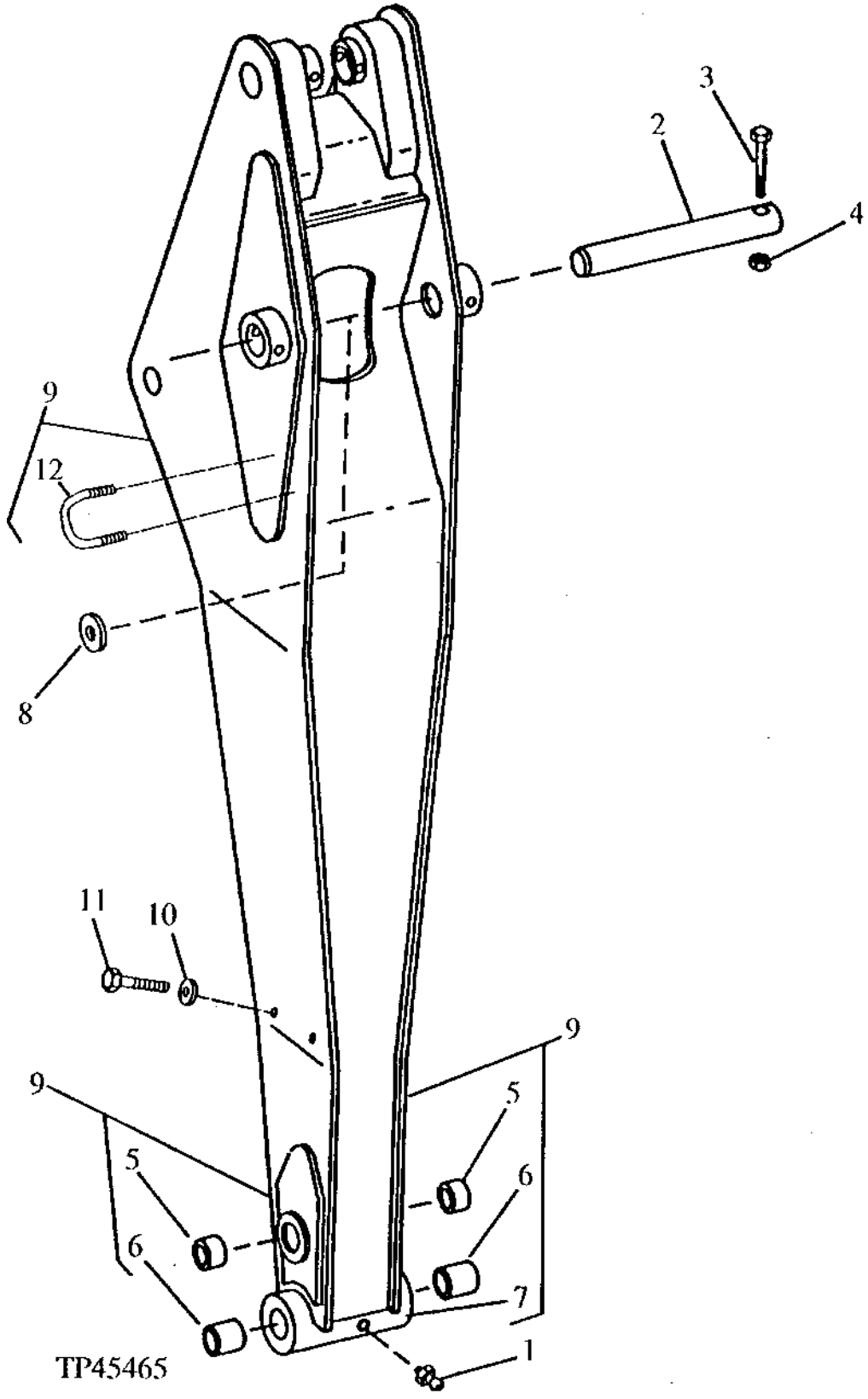

DIPPERSTICK

KEY	PART NO.	PART NAME	QTY	SERIAL NO.	410D	510D	REMARKS
1	T162396	LUBRICATION FITTING	1		X	X	(USE WITH 1.9M DIPPERSTICK) (SUB FOR JD7759, THIS APPLICATION) (SUB FOR JD7798)
	T162396	LUBRICATION FITTING	1	-781178	X		(USE WITH 1.7M DIPPERSTICK) (SUB FOR JD7798)
	T162396	LUBRICATION FITTING	1			X	(USE WITH 2.1M DIPPERSTICK) (SUB FOR JD7759, THIS APPLICATION) (SUB FOR JD7798)
2	T125922	PIN FASTENER	1		X	X	STANDARD AND EXTENDIBLE
3	19M8043	CAP SCREW	1		X	X	M16 X 140
4	14M7328	LOCK NUT	1		X	X	M16
5	R72579	BUSHING	2		X	X	
6	T34301	BUSHING	2		X	X	
7	T41314	PIVOT	1		X	X	
8	24H1679	WASHER	AR		X	X	2-17/64" X 3-1/4" X 0.060"
9	AT151271	DIPPERSTICK	1	-781178	X		1.7M
	AT101188	DIPPERSTICK	1	-781178	X		(SUB AT166829, (2) 40M7180 AND T142482) 1.9M
	AT101202	DIPPERSTICK	1	-780904		X	(SUB AT166831, (2) 40M7180 AND T142482) 2.1M
	AT166829	DIPPERSTICK	1	780905-	X		1.9 M, (SUB FOR AT101188 AND AT156503) (STANDARD AND HEAVY LIFT)
	AT166831	DIPPERSTICK	1	780905-		X	2.1 M, (SUB FOR AT101202 AND AT156504)
	AT101188	DIPPERSTICK	1	-781178		X	1.7M, (SUB FOR AT151271)
10	24M7239	WASHER	4			X	10.700 X 21 X 2.500 MM
11	19M8324	CAP SCREW	4			X	M10 X 16
12	T113400	PIN	2			X	

BACKHOE AND LOADER LINKAGE SHIELDS
(SERIAL NO. -801199)

TP40415 -UN-01JAN94

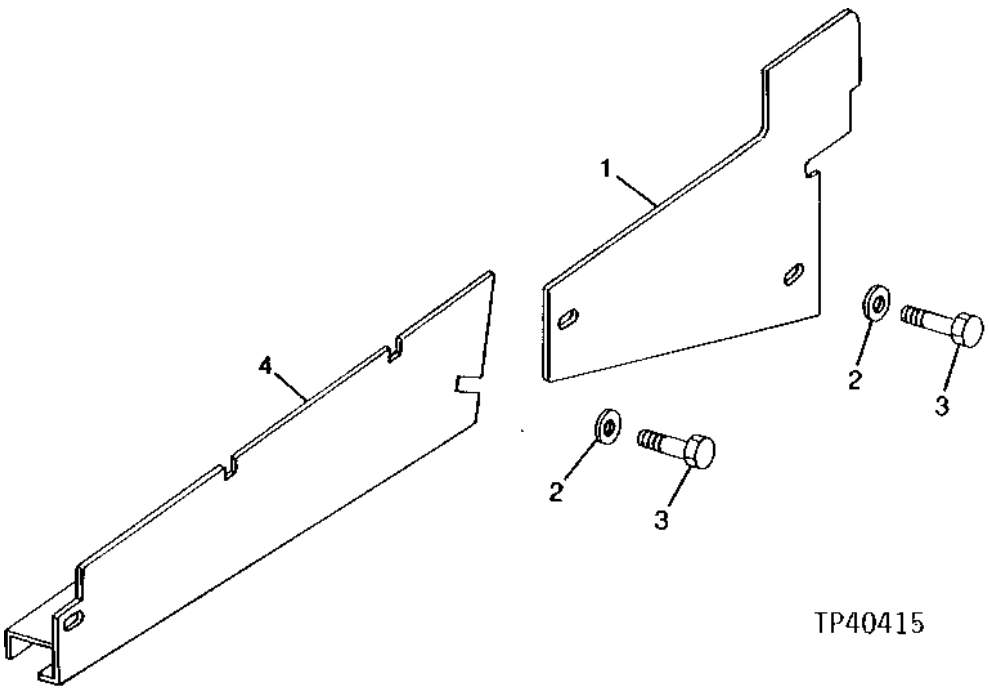

KEY	PART NO.	PART NAME	QTY	SERIAL NO.	4 5 1 1 0 0 D D	REMARKS
1	T140588	SHIELD	1		X X	FRONT
2	24M7296	WASHER	5		X X	10.500 X 30 X 2.500 MM
3	19M7402	CAP SCREW	5		X X	M10 X 25
4	T140580	SHIELD	1		X X	REAR

BACKHOE AND LOADER LINKAGE SHIELDS (2 LEVER-6TH FUNCTION)
(SERIAL NO. 801200-)

TP50367 -UN-29OCT96

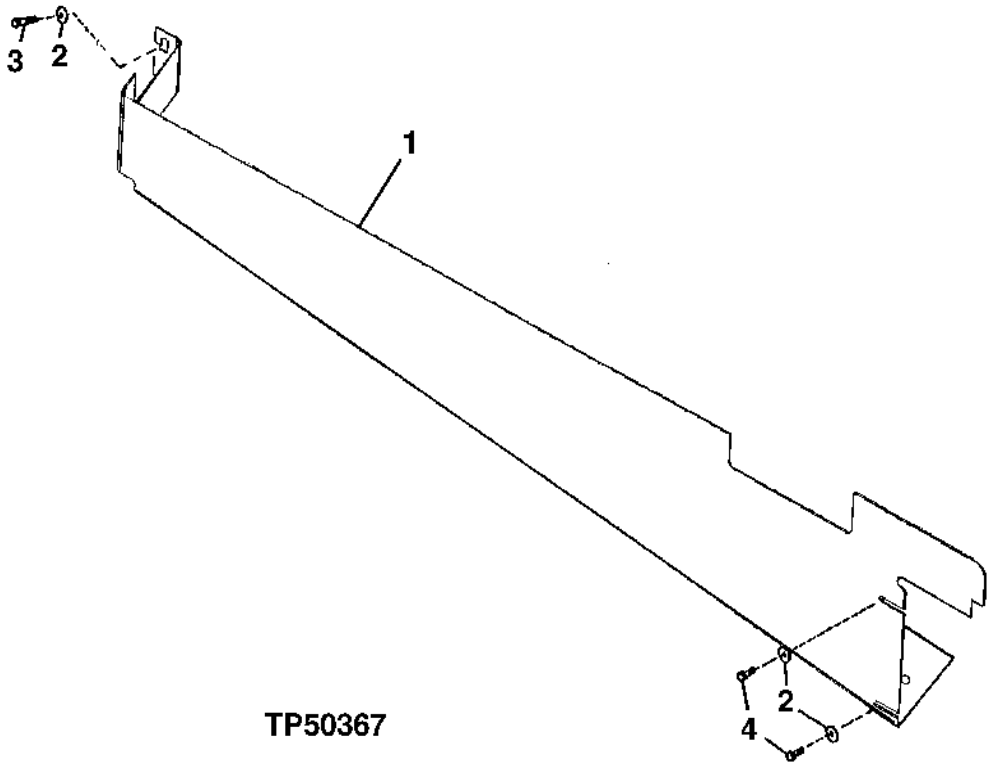

KEY	PART NO.	PART NAME	QTY	SERIAL NO.	4 5 1 1 0 0 D D	REMARKS
1	.....	SHIELD	1		X X	AT164032 NO LONGER AVAILABLE, (SUB T155374)
	T160230	SHIELD	1		X X	(SUB FOR T155374, AT164032 AND T148374)
2	24M7296	WASHER	AR		X X	10.500 X 30 X 2.500 MM
3	19M8637	CAP SCREW	10	-813385	X X	M10 X 40
	19M7550	CAP SCREW	1	813386-	X X	M10 X 35
4	19M7402	CAP SCREW	AR		X X	M10 X 25, REAR

BACKHOE CONTROL VALVE
(SERIAL NO. -796890) (5-FUNCTION)
(SERIAL NO. -798064) (4-FUNCTION)
(GRESEN)

TP45036 -UN-01JAN94

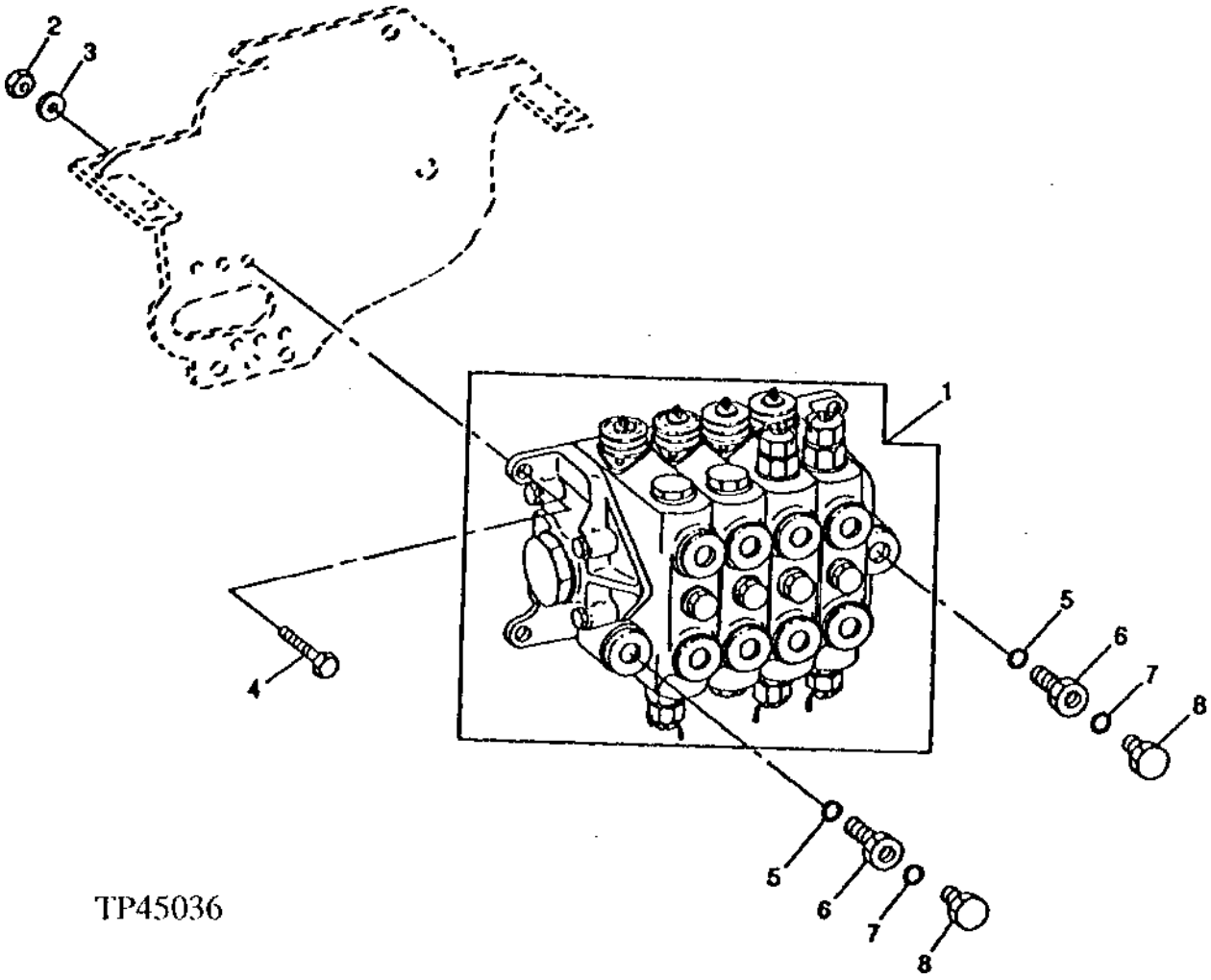

BACKHOE CONTROL VALVE
(SERIAL NO. -796890) (5-FUNCTION)
(SERIAL NO. -798064) (4-FUNCTION)
(GRESEN)

KEY	PART NO.	PART NAME	QTY	SERIAL NO.	410D	510D	REMARKS
1	.....	VALVE	1		X	X	4-FUNCTION (AT165785 NO LONGER AVAILABLE) (SUB COMPONENTS) (ALSO ORDER AT165739 AND AT168107) (SUB FOR AT145736, AT150391 AND AT163861) (ALSO ORDER AT169987 FOR THE 410D STANDARD OR AT165735 FOR THE 410D HEAVY LIFT AND 510D) (SEE SOL. 30690)
	.....	VALVE	1		X	X	5-FUNCTION (NOT ILLUSTRATED) (NO LONGER AVAILABLE) (SUB AT165786, AT165739 AND AT168107) (SUB FOR AT145738, AT150392 AND AT163862) (ALSO ORDER AT169987 FOR THE 410D STANDARD OR AT165735 FOR THE 410D HEAVY LIFT AND 510D) (SEE SOL. 30690)
2	14M7275	NUT	3		X	X	M12
3	T29342	WASHER	3		X	X	
4	19M7361	CAP SCREW	3		X	X	M12 X 50
5	R29936	O-RING	2		X	X	
6	T30929	PIPE PLUG	2		X	X	
7	R26287	O-RING	2		X	X	
8	R31631	DRAIN PLUG	2		X	X	

MEMORANDA

MEMORANDA

BACKHOE CONTROL VALVE SWING SECTION
(SERIAL NO. -796890) (5-FUNCTION)
(SERIAL NO. -798064) (4-FUNCTION)

TP54976 -UN-13MAR97

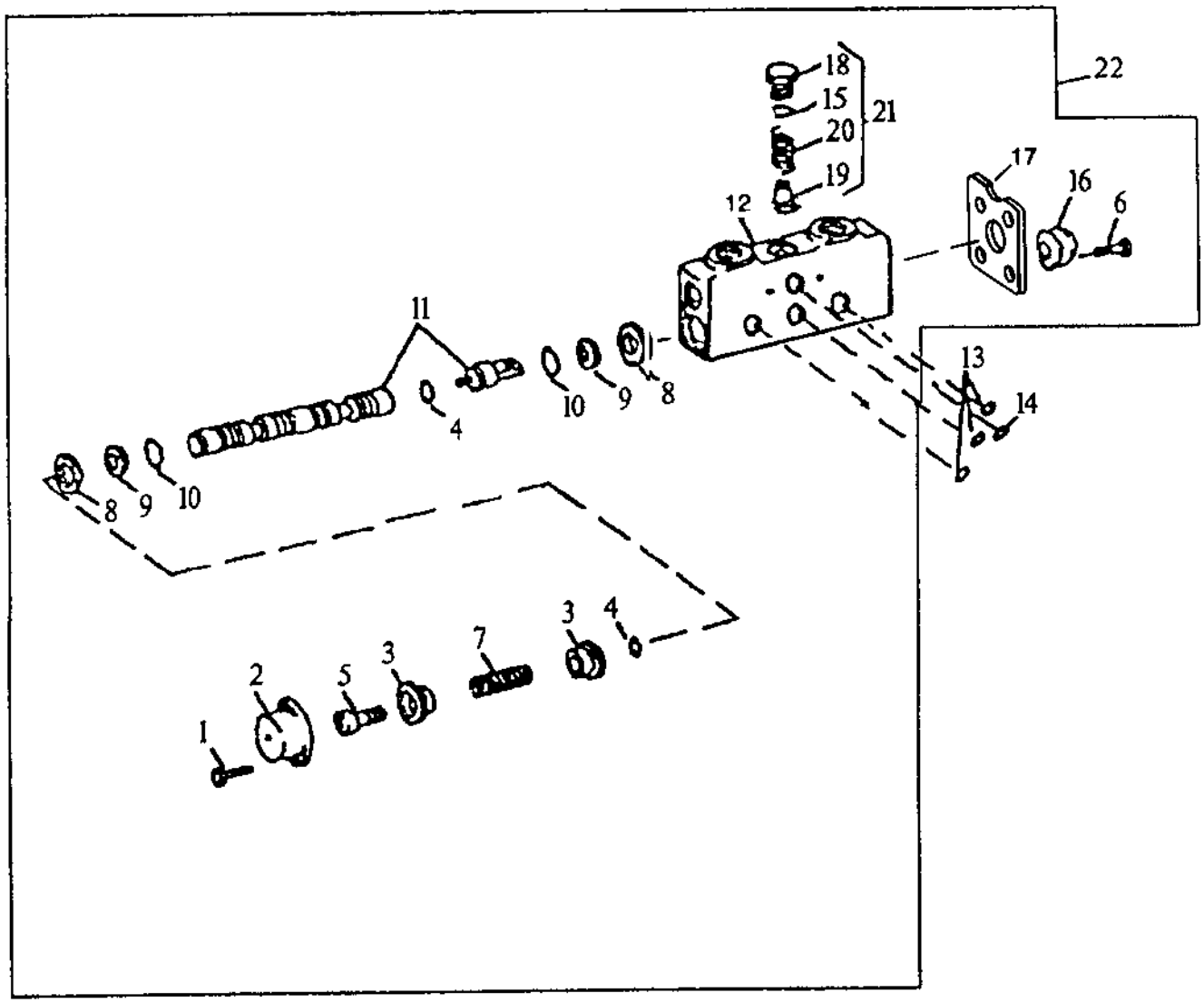

TP54976

BACKHOE CONTROL VALVE SWING SECTION
(SERIAL NO. -796890) (5-FUNCTION)
(SERIAL NO. -798064) (4-FUNCTION)

KEY	PART NO.	PART NAME	QTY	SERIAL NO.	410D	510D	REMARKS
1	T106306	SCREW	2		X	X	
2	AT117656	CAP	1		X	X	
3	T75991	ROUND RETAINER	2		X	X	
4	R26287	O-RING	2		X	X	
5	T106305	BUSHING	1		X	X	
6	T104773	CAP SCREW	2		X	X	
7	T75992	SPRING	1		X	X	
8	T75997	RING	2		X	X	
9	T76002	BACK-UP RING	2		X	X	
10	T122034	O-RING	2		X	X	
11	.....	SPOOL	1		X	X	
12	.....	HOUSING	1		X	X	
13	.....	O-RING	3		X	X	(SUB AT159816)
14	.....	O-RING	1		X	X	(SUB AT159816)
15	U17409	O-RING	1		X	X	
16	T149740	BOOT	1		X	X	(SUB FOR T113029)
17	T160996	FLANGE	1		X	X	(SUB FOR T75998) (ALSO ORDER (2) T104773)
18	.....	FITTING PLUG	1		X	X	(SUB FOR T54922, THIS APPLICATION)
19	.....	POPPET	1		X	X	(T75990 - NO LONGER AVAILABLE)
20	.....	SPRING	1		X	X	
21	AT74127	FITTING PLUG	1		X	X	
22	AT163863	SPOOL VALVE	1		X	X	SWING SECTION (CONVENIENCE ASSEMBLY) (USE WITH (2) AT163868) (ALSO ORDER AT159816) (SUB FOR AT118792 AND AT150396)

RELIEF VALVE AND INLET COVER
SEE REPLACEMENT RELIEF VALVE AND INLET COVER
(SERIAL NO. -796890) (5-FUNCTION)
(SERIAL NO. -798064) (4-FUNCTION)

TP40475 -UN-01JAN94

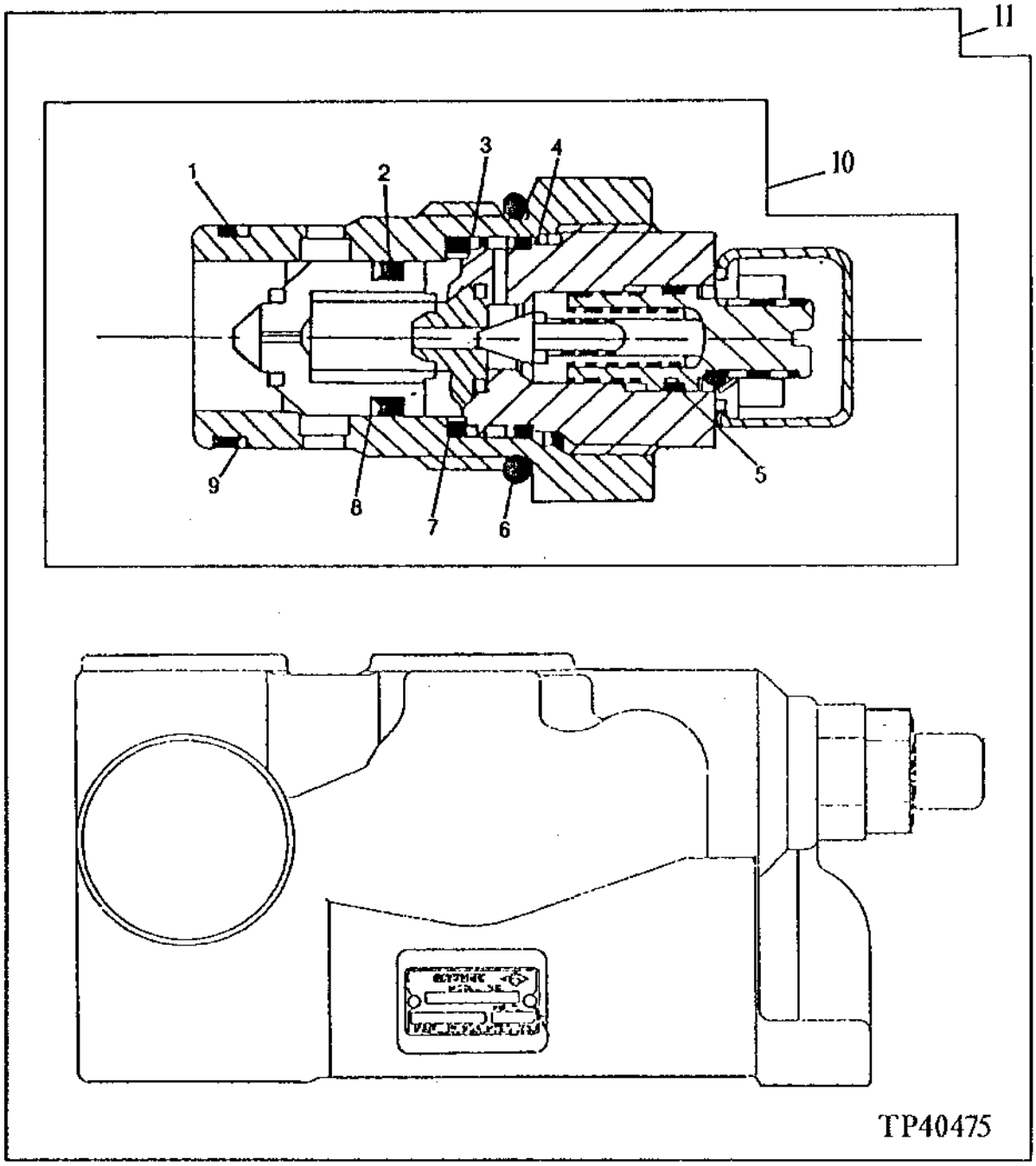

RELIEF VALVE AND INLET COVER
SEE REPLACEMENT RELIEF VALVE AND INLET COVER
(SERIAL NO. -796890) (5-FUNCTION)
(SERIAL NO. -798064) (4-FUNCTION)

KEY	PART NO.	PART NAME	QTY	SERIAL NO.	410D	510D	REMARKS
1	T49819	O-RING	1		X	X	(K)
2	R56464	O-RING	1		X	X	(K)
3	U15981	BACK-UP RING	1		X	X	(K)
4	U15980	O-RING	1		X	X	(K)
5	A3917R	O-RING	1		X	X	(K)
6	U17409	O-RING	1		X	X	(K)
7	T75984	O-RING	1		X	X	(K)
8	.....	O-RING	1		X	X	(K)
9	T106298	BACK-UP RING	1		X	X	(K)
10	AT151150	PRESSURE RELIEF VALVE	1		X	X	
11	.....	VALVE	1		X	X	(AT151901 NO LONGER AVAILABLE) (SUB T147004, AT159816 AND AT151150) (SUB FOR AT145810)

(K) AT160390 KIT, SEAL, RELIEF VALVE

REPLACEMENT RELIEF VALVE AND INLET COVER
(SERIAL NO. -796890) (5-FUNCTION)
(SERIAL NO. -798064) (4-FUNCTION)

TP42905 -UN-01JAN94

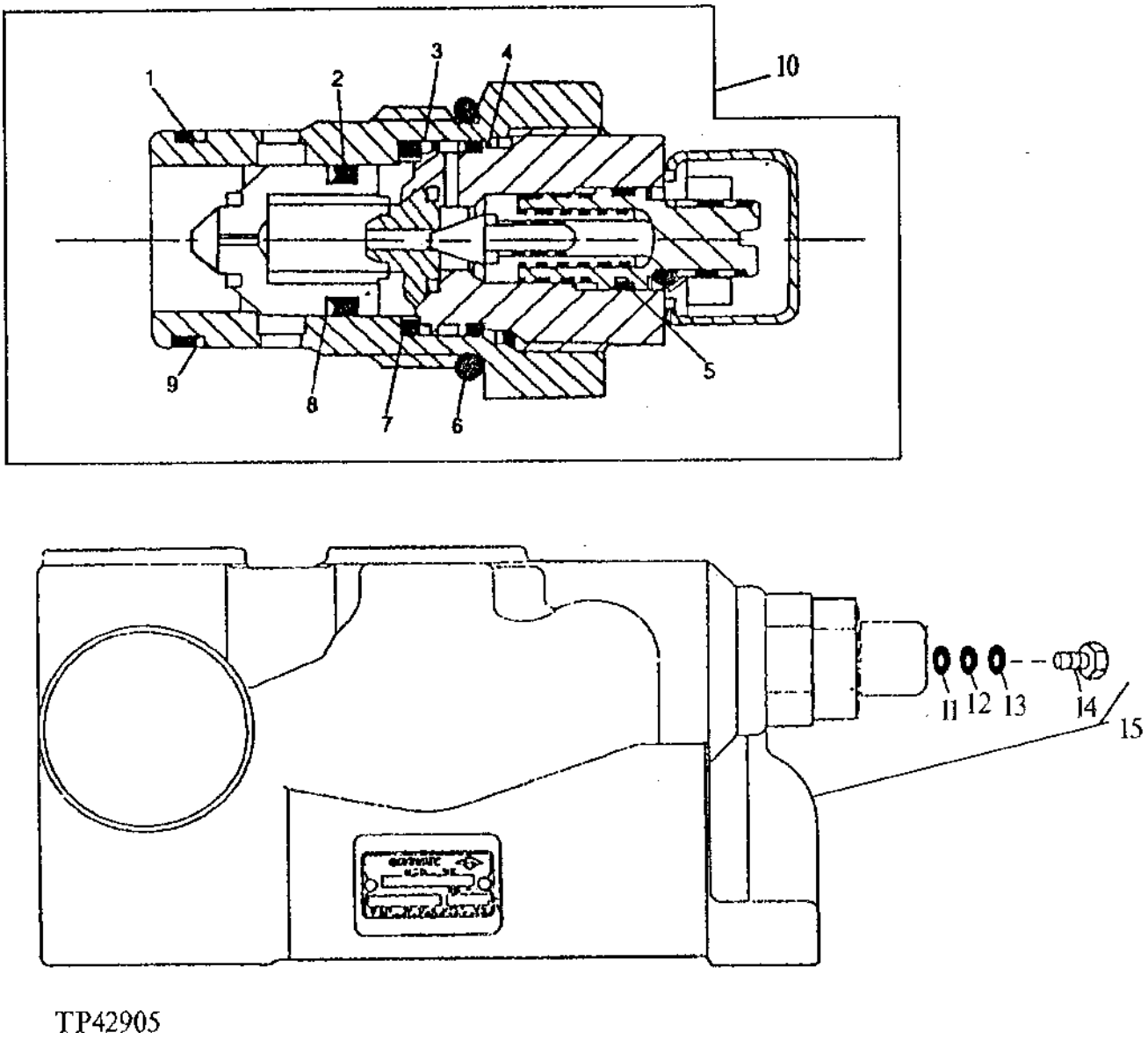

TP42905

REPLACEMENT RELIEF VALVE AND INLET COVER
(SERIAL NO. -796890) (5-FUNCTION)
(SERIAL NO. -798064) (4-FUNCTION)

KEY	PART NO.	PART NAME	QTY	SERIAL NO.	410D	510D	REMARKS
1	T49819	O-RING	1		X	X	(K)
2	R56464	O-RING	1		X	X	(K)
3	U15981	BACK-UP RING	1		X	X	(K)
4	U15980	O-RING	1		X	X	(K)
5	A3917R	O-RING	1		X	X	(K)
6	U17409	O-RING	1		X	X	(K)
7	T75984	O-RING	1		X	X	(K)
8	.....	O-RING	1		X	X	(K)
9	T106298	BACK-UP RING	1		X	X	(K)
10	AT151150	PRESSURE RELIEF VALVE	1		X	X	
11	R27928	O-RING	1		X	X	(ALSO ORDER AT159816)
12	T106298	BACK-UP RING	1		X	X	
13	U17409	O-RING	1		X	X	
14	.....	PLUG	1		X	X	
15	T147004	COVER	1		X	X	(SUB FOR AT143027)

(K) AT160390 KIT, SEAL, RELIEF VALVE

BACKHOE CONTROL VALVE BOOM SECTION
(SERIAL NO. -796890) (5-FUNCTION)
(SERIAL NO. -798064) (4-FUNCTION)

TP54979 -UN-20FEB97

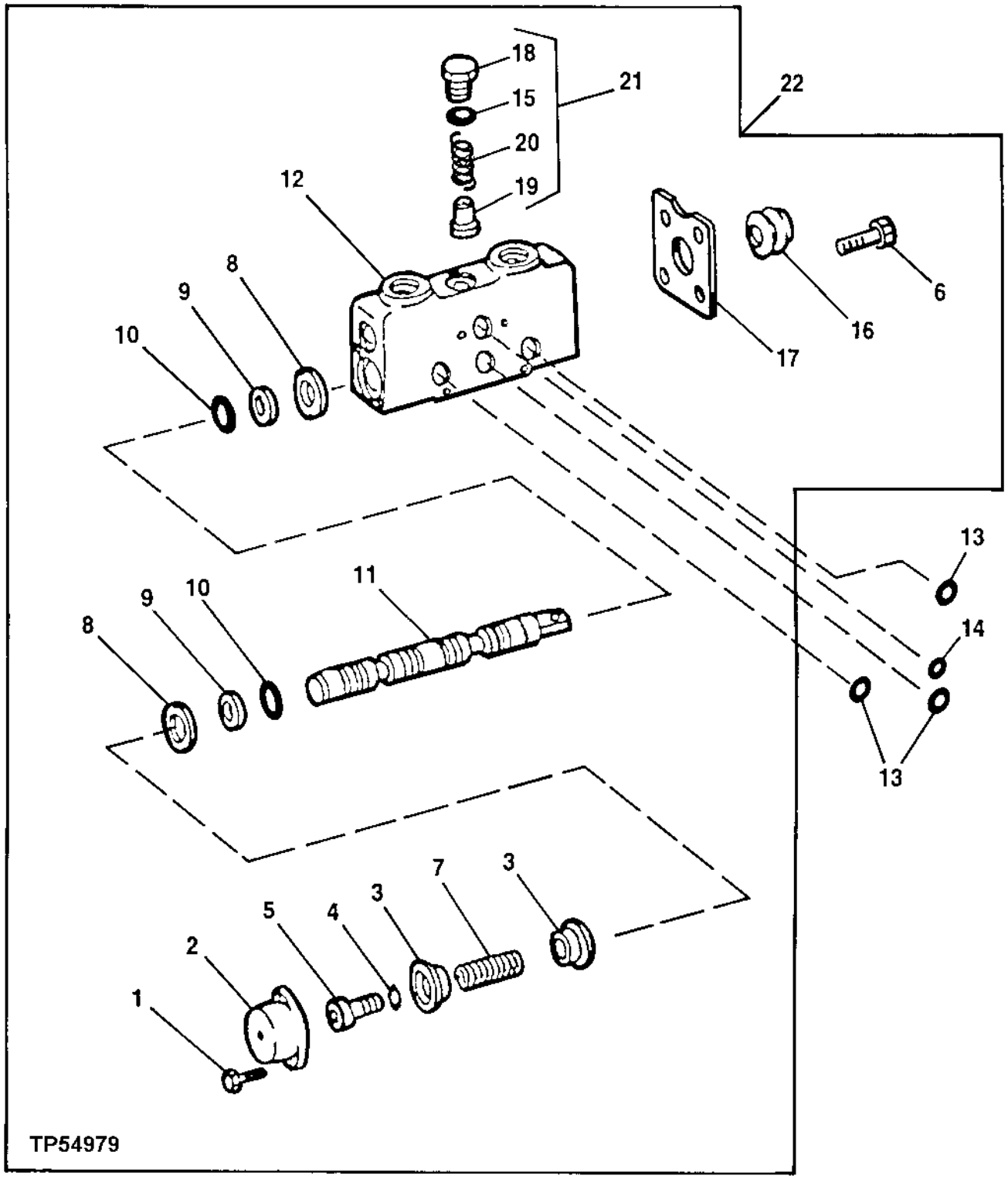

BACKHOE CONTROL VALVE BOOM SECTION-CONTINUED
(SERIAL NO. -796890) (5-FUNCTION)
(SERIAL NO. -798064) (4-FUNCTION)

KEY	PART NO.	PART NAME	QTY	SERIAL NO.	410D	510D	REMARKS
1	T106306	SCREW	2		X	X	
2	AT117656	CAP	1		X	X	
3	T75991	ROUND RETAINER	2		X	X	
4	R26287	O-RING	1		X	X	
5	T106305	BUSHING	1		X	X	
6	T104773	CAP SCREW	2		X	X	
7	T75992	SPRING	1		X	X	
8	T75997	RING	2		X	X	
9	T76002	BACK-UP RING	2		X	X	
10	T122034	O-RING	2		X	X	
11	.....	SPOOL	1		X	X	
12	.....	HOUSING	1		X	X	
13	.....	O-RING	3		X	X	(SUB AT159816)
14	.....	O-RING	1		X	X	(SUB AT159816)
15	U17409	O-RING	1		X	X	
16	T149740	BOOT	1		X	X	(SUB FOR T113029)
17	T160996	FLANGE	1		X	X	(SUB FOR T75998) (ALSO ORDER (2) T104773)
18	.....	FITTING PLUG	1		X	X	
19	.....	POPPET	1		X	X	(T75990 - NO LONGER AVAILABLE)
20	.....	SPRING	1		X	X	(U17406 - NO LONGER AVAILABLE)
21	AT74127	FITTING PLUG	1		X	X	
22	AT163866	SPOOL VALVE	1		X	X	BOOM SECTION, (ALSO ORDER AT159816, 38H1163 AND 38H1175) (USE WITH AT151814 AND AT141644) (SUB FOR AT117653, AT151900 AND AT163158)

BACKHOE CONTROL VALVE BUCKET SECTION
(SERIAL NO. -796890) (5-FUNCTION)
(SERIAL NO. -798064) (4-FUNCTION)

TP54979 -UN-20FEB97

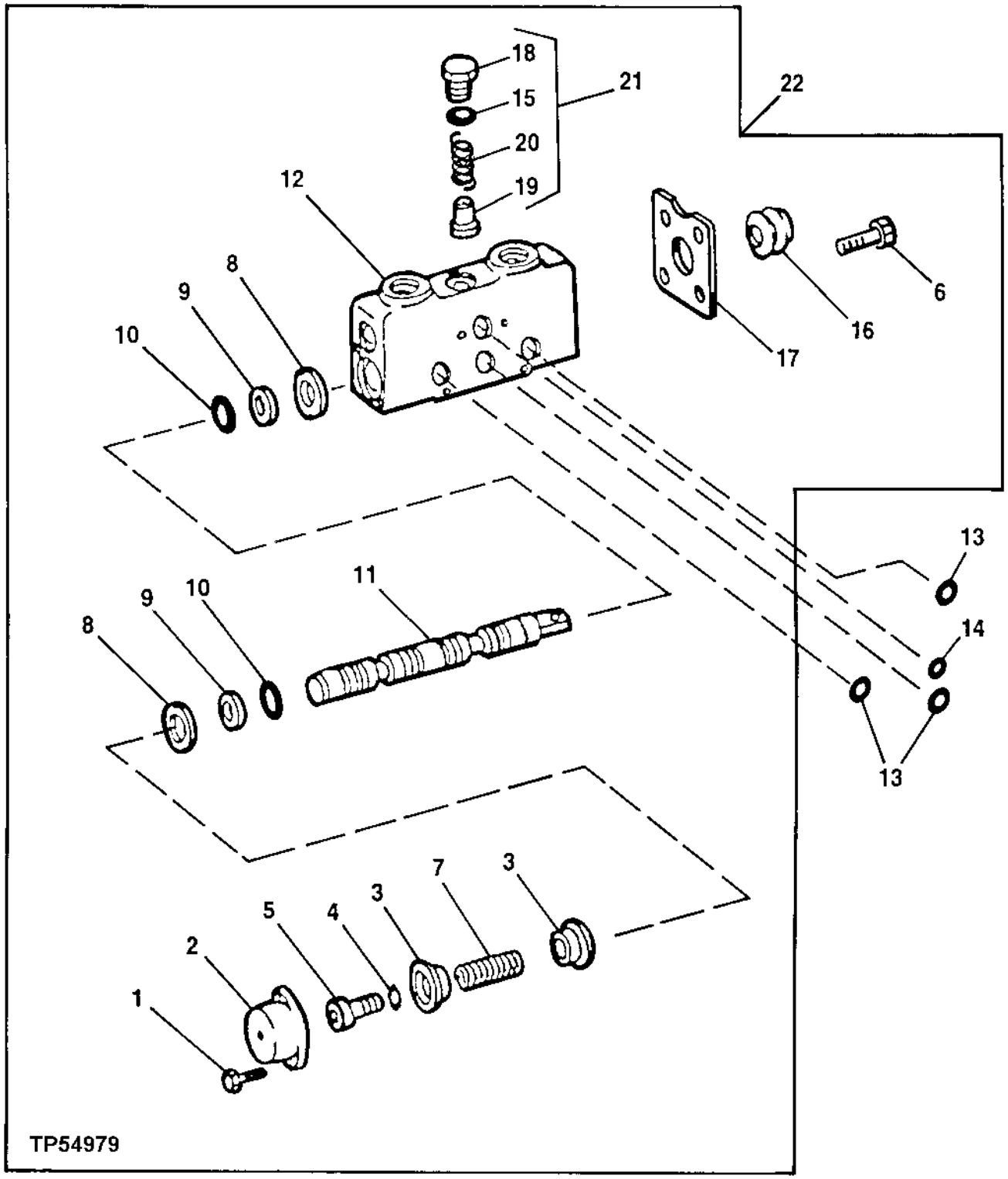

BACKHOE CONTROL VALVE BUCKET SECTION
(SERIAL NO. -796890) (5-FUNCTION)
(SERIAL NO. -798064) (4-FUNCTION)

KEY	PART NO.	PART NAME	QTY	SERIAL NO.	410D	510D	REMARKS
1	T106306	SCREW	2		X	X	
2	AT117656	CAP	1		X	X	
3	T75991	ROUND RETAINER	2		X	X	
4	R26287	O-RING	1		X	X	
5	T106305	BUSHING	1		X	X	
6	T104773	CAP SCREW	2		X	X	
7	T75992	SPRING	1		X	X	
8	T75997	RING	2		X	X	
9	T76002	BACK-UP RING	2		X	X	
10	T122034	O-RING	2		X	X	
11	.....	SPOOL	1		X	X	
12	.....	HOUSING	1		X	X	
13	.....	O-RING	3		X	X	(SUB AT159816)
14	.....	O-RING	1		X	X	(SUB AT159816)
15	U17409	O-RING	1		X	X	
16	T149740	BOOT	1		X	X	(SUB FOR T113029)
17	T160996	FLANGE	1		X	X	(SUB FOR T75998) (ALSO ORDER (2) T104773)
18	AT74127	FITTING PLUG	1		X	X	(SUB FOR T54922, THIS APPLICATION)
19	.....	POPPET	1		X	X	(T75990 - NO LONGER AVAILABLE)
20	.....	SPRING	1		X	X	(U17406 - NO LONGER AVAILABLE)
21	AT74127	FITTING PLUG	1		X	X	
22	AT151899	VALVE	1		X	X	BUCKET SECTION, (ALSO ORDER AT159816) (USE WITH AT159226 AND AT141647) (SUB FOR AT141645)

BACKHOE CONTROL VALVE CROWD SECTION WITH END PLATE
(SERIAL NO. -796890) (5-FUNCTION)
(SERIAL NO. -798064) (4-FUNCTION)

TP42883 -UN-01JAN94

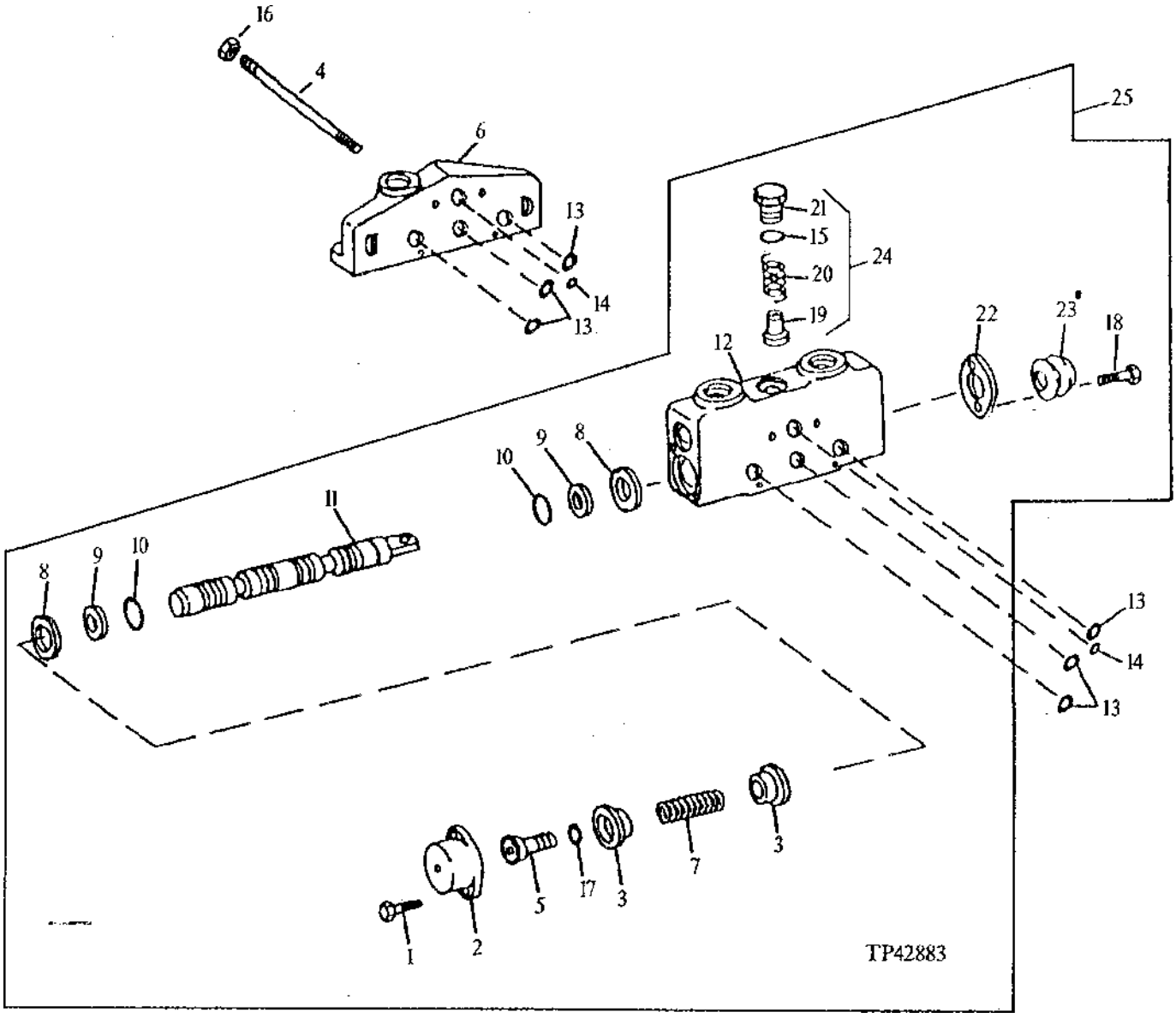

BACKHOE CONTROL VALVE CROWD SECTION WITH END PLATE
(SERIAL NO. -796890) (5-FUNCTION)
(SERIAL NO. -798064) (4-FUNCTION)

KEY	PART NO.	PART NAME	QTY	SERIAL NO.	410D	510D	REMARKS
1	T106306	SCREW	2		X	X	
2	AT117656	CAP	1		X	X	
3	T75991	ROUND RETAINER	2		X	X	
4	T147000	STUD	4		X	X	4-FUNCTION VALVE, (SUB FOR T128826)
	T135395	STUD	4		X	X	5-FUNCTION VALVE
5	T106305	BUSHING	1		X	X	
6	T146906	COVER	1		X	X	RIGHT END (IF ORDERED FOR 4-SPOOL VALVE, (SUB FOR T77828) (ALSO ORDER AT159816) PROVIDE (4) T147000 TIE BOLTS) (IF ORDERED FOR 5-SPOOL VALVE, PROVIDE (4) T147001 TIE BOLTS)
7	T75992	SPRING	1		X	X	
8	T75997	RING	2		X	X	
9	T76002	BACK-UP RING	2		X	X	
10	T122034	O-RING	2		X	X	
11	.....	SPOOL	1		X	X	
12	.....	HOUSING	1		X	X	
13	.....	O-RING	6		X	X	(SUB AT159816)
14	.....	O-RING	2		X	X	(SUB AT159816)
15	U17409	O-RING	1		X	X	
16	14H1047	NUT	4		X	X	
17	R26287	O-RING	1		X	X	
18	T104773	CAP SCREW	2		X	X	
19	.....	POPPET	1		X	X	(T75990 - NO LONGER AVAILABLE)
20	.....	SPRING	1		X	X	(U17406 - NO LONGER AVAILABLE)
21	.....	FITTING PLUG	1		X	X	(SUB FOR T54922, THIS APPLICATION)
22	T160996	FLANGE	1		X	X	(SUB FOR T75998) (ALSO ORDER (2) T104773)
23	T149740	BOOT	1		X	X	(SUB FOR T113029)
24	AT74127	FITTING PLUG	1		X	X	
25	AT163864	SPOOL VALVE	1		X	X	CROWD SECTION, (ALSO ORDER AT159816) (USE WITH AT141643 AND AT159226) (SUB FOR AT141642 AND AT151898)

RELIEF VALVE
(WITH CAVITATION)
(SERIAL NO. -796890) (5-FUNCTION)
(SERIAL NO. -798064) (4-FUNCTION)

TP42881 -UN-01JAN94

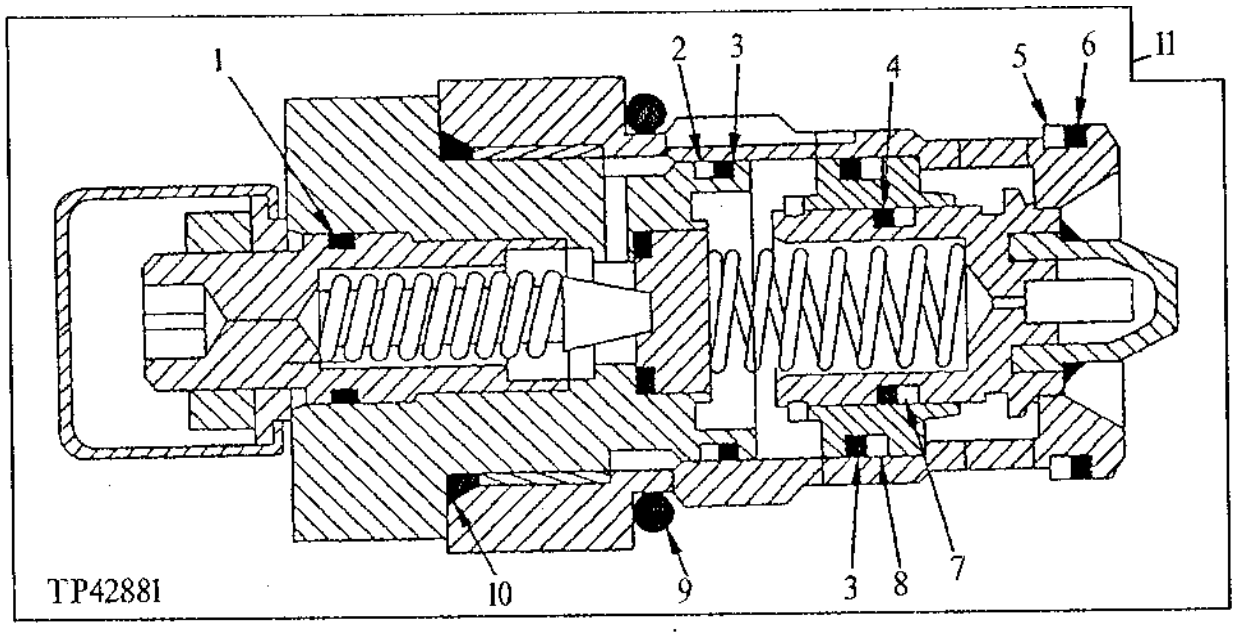

KEY	PART NO.	PART NAME	QTY	SERIAL NO.	410D	510D	REMARKS
1	A3917R	O-RING	1		X	X	(K)
2	.....	WASHER	1		X	X	(K) BACKUP
3	U15980	O-RING	2		X	X	(K)
4	T49819	O-RING	1		X	X	(K)
5	.....	WASHER	1		X	X	(K) BACKUP
6	H81608	O-RING	1		X	X	(K)
7	T106298	BACK-UP RING	1		X	X	(K)
8	.....	WASHER	1		X	X	(K) BACKUP
9	U17409	O-RING	1		X	X	(K)
10	U12547	O-RING	1		X	X	(K)
11	AT163868	PRESSURE RELIEF VALVE	1		X	X	19,500 KPA (SWING SECTION)
	AT141643	RELIEF VALVE	1		X	X	20,500 KPA (CROWD SECTION)
	AT141644	RELIEF VALVE	1		X	X	14,000 KPA (BOOM SECTION)
	AT141647	RELIEF VALVE	1		X	X	24,000 KPA (BUCKET SECTION)

(K) AT160390 KIT, SEAL, RELIEF VALVE

RELIEF VALVE
(WITHOUT CAVITATION)
(SERIAL NO. -796890) (5-FUNCTION)
(SERIAL NO. -798064) (4-FUNCTION)

TP20171 -UN-01JAN94

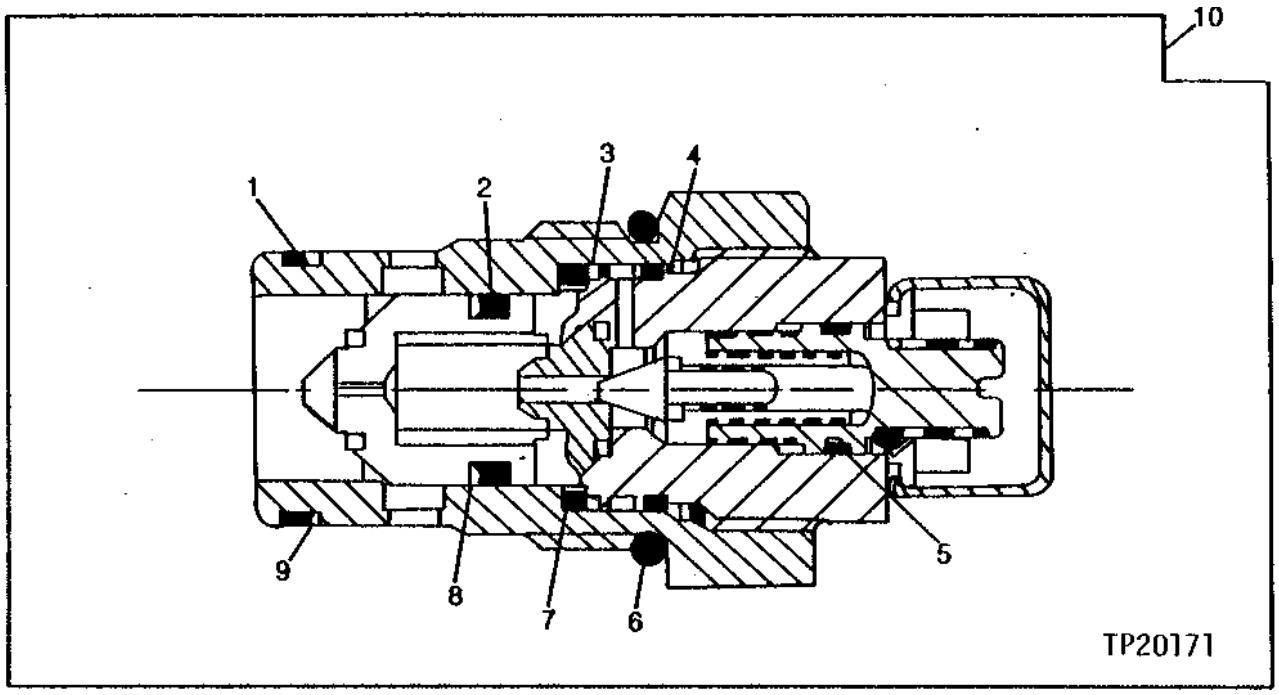

KEY	PART NO.	PART NAME	QTY	SERIAL NO.	410D	510D	REMARKS
1	T49819	O-RING	1		X	X	(K)
2	R56464	O-RING	1		X	X	(K)
3	U15981	BACK-UP RING	1		X	X	(K)
4	U15980	O-RING	1		X	X	(K)
5	A3917R	O-RING	1		X	X	(K)
6	U17409	O-RING	1		X	X	(K)
7	T75984	O-RING	1		X	X	(K)
8	.....	O-RING	1		X	X	(K)
9	T106298	BACK-UP RING	1		X	X	(K)
10	.....	RELIEF VALVE	1		X	X	20,500 KPA (BUCKET AND CROWD SECTION) (AT101313 - USE IF AVAILABLE)
	AT159226	PRESSURE RELIEF VALVE	1		X	X	24,000 KPA (BUCKET AND CROWD SECTION) (SUB FOR AT101313)
	AT151814	PRESSURE RELIEF VALVE	1		X	X	31,034 KPA (BOOM SECTION) (SUB FOR AT74133, THIS APPLICATION)

(K) AT160390 KIT, SEAL, RELIEF VALVE

BACKHOE CONTROL VALVE AUXILIARY SECTION
(WITH 5-FUNCTION VALVE)
(SERIAL NO. -796890) (5-FUNCTION)
(SERIAL NO. -798064) (4-FUNCTION)

TP54980 -UN-20FEB97

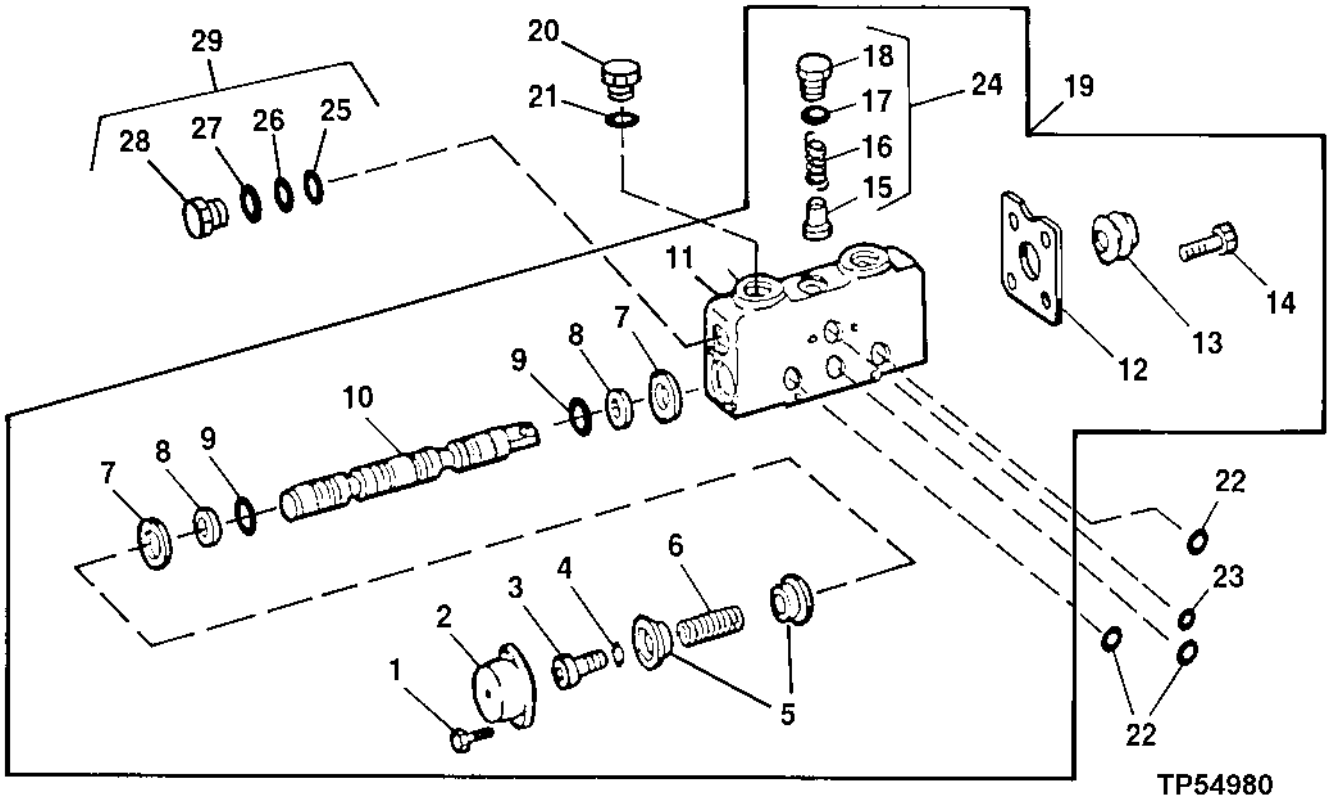

KEY	PART NO.	PART NAME	QTY	SERIAL NO.	410D	510D	REMARKS
1	T106306	SCREW	2		X	X	
2	AT117656	CAP	1		X	X	
3	T106305	BUSHING	1		X	X	
4	R26287	O-RING	1		X	X	
5	T75991	ROUND RETAINER	2		X	X	
6	T75992	SPRING	1		X	X	
7	T75997	RING	2		X	X	
8	T76002	BACK-UP RING	2		X	X	
9	T122034	O-RING	2		X	X	
10	.....	SPOOL	1		X	X	
11	.....	HOUSING	1		X	X	
12	T160996	FLANGE	1		X	X	(SUB FOR T75998) (ALSO ORDER (2) T104773)
13	T149740	BOOT	1		X	X	(SUB FOR T113029)
14	T104773	CAP SCREW	2		X	X	
15	.....	POPPET	1		X	X	(T75990 - NO LONGER AVAILABLE)
16	.....	SPRING	1		X	X	(U17406 - NO LONGER AVAILABLE)
17	U17409	O-RING	1		X	X	
18	.....	FITTING PLUG	1		X	X	(T54922 - NO LONGER AVAILABLE)
19	AT163865	SPOOL VALVE	1		X	X	(ALSO ORDER AT159816) (SUB FOR AT148192 AND AT151899) (SUB FOR AT151936, THIS APPLICATION)
20	R49465	DRAIN PLUG	1		X	X	WITHOUT EXTENDIBLE DIPPERSTICK
21	U17409	O-RING	1		X	X	WITHOUT EXTENDIBLE DIPPERSTICK
22	.....	O-RING	3		X	X	(SUB AT159816)
23	.....	O-RING	1		X	X	(SUB AT159816)
24	AT74127	FITTING PLUG	1		X	X	
25	T49819	O-RING	1		X	X	
26	T106298	BACK-UP RING	1		X	X	
27	U17409	O-RING	1		X	X	
28	.....	PLUG	1		X	X	
29	AT160482	PLUG	2		X	X	

BACKHOE CONTROL VALVE SEAL KIT
(BOOM, BUCKET, CROWD, SWING, AND AUXILIARY SECTIONS)
(SERIAL NO. -796890) (5-FUNCTION)
(SERIAL NO. -798064) (4-FUNCTION)

TP54974 -UN-20FEB97

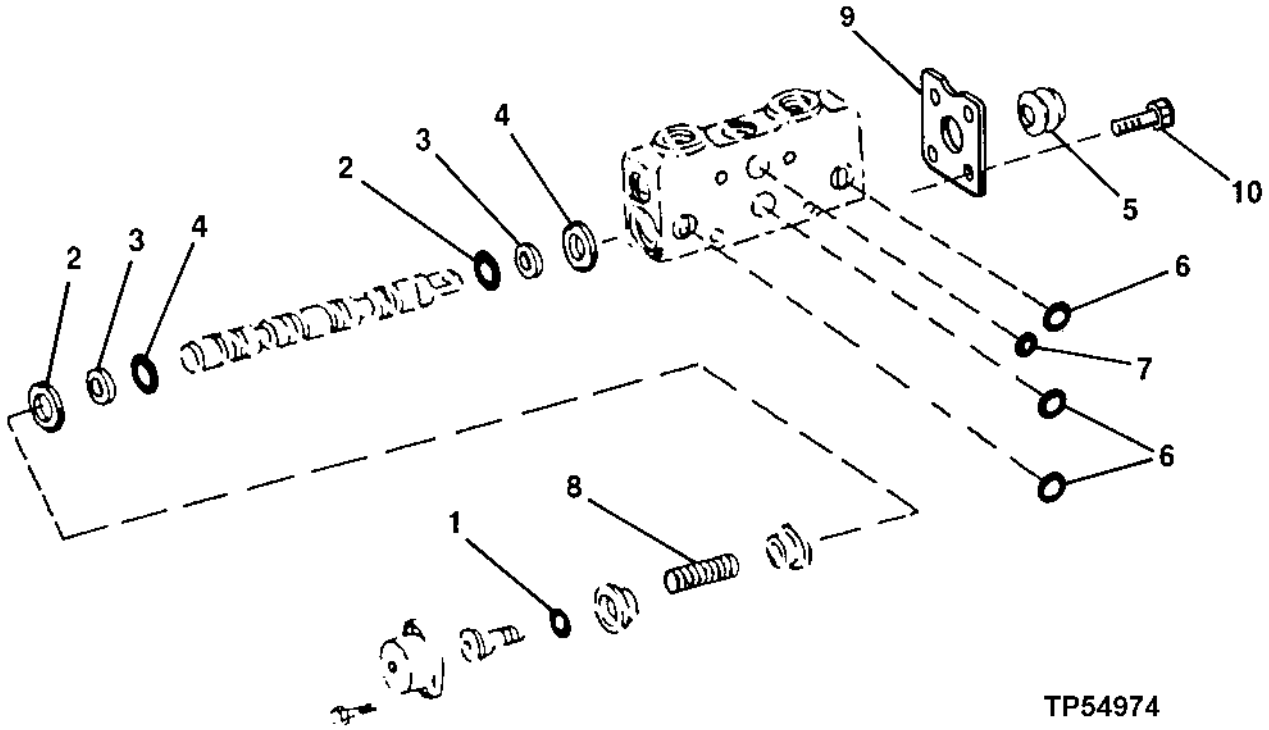

KEY	PART NO.	PART NAME	QTY	SERIAL NO.	410D	510D	REMARKS
1	R26287	O-RING	2		X	X	(B)
2	T75997	RING	2		X	X	(B)
3	T76002	BACK-UP RING	2		X	X	(B)
4	T122034	O-RING	2		X	X	(B)
5	T149740	BOOT	1		X	X	(B) (SUB FOR T113029)
6	.....	O-RING	6		X	X	(A)
7	.....	O-RING	2		X	X	(A)
8	T75992	SPRING	1		X	X	(B)
9	T160996	FLANGE	1		X	X	(B)
10	T104773	CAP SCREW	4		X	X	(B)

(A) AT159816 KIT, SEAL (REPLACES AT151896)

(B) AT165991 KIT, SPOOL SEAL (REPLACES AT151896 AND AT159817)

BACKHOE CONTROL VALVE
(SERIAL NO. 798065-801199) (4 FUNCTION)
(SERIAL N0. 796891-801199) (5 FUNCTION)
(SERIAL NO. 799622-801199) (6 FUNCTION)
(HUSCO)

TP44596 -UN-01JAN94

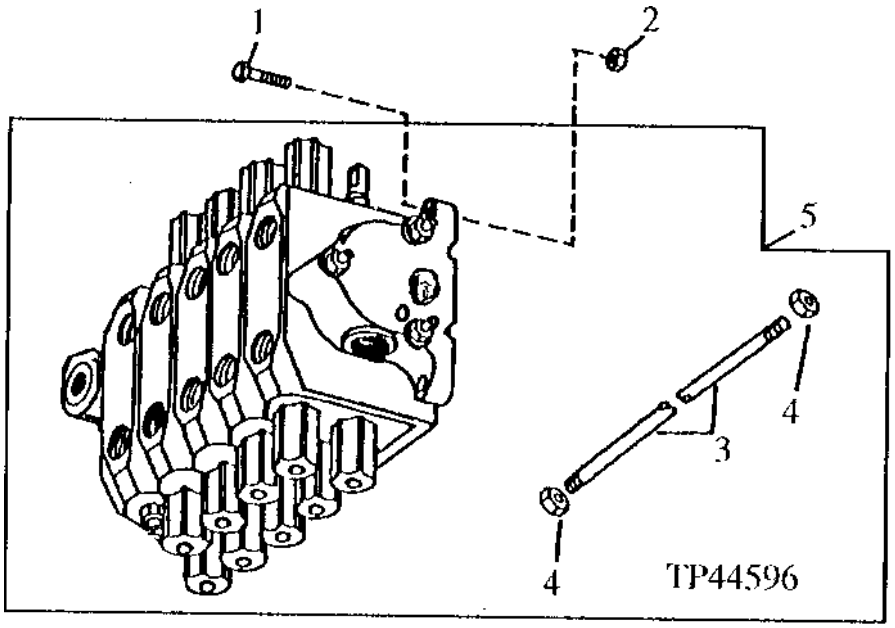

KEY	PART NO.	PART NAME	QTY	SERIAL NO.	4510DD	REMARKS
1	19M7496	CAP SCREW	2		X X	M12 X 45
	19M8348	CAP SCREW	1		X X	M12 X 65
	T29342	WASHER	3		X X	
	24M7345	WASHER	AR		X X	13.500 X 24 X 2.500 MM (5-FUNCTION AND 6-FUNCTION)
2	14M7275	NUT	3		X X	M12
3	T149571	STUD	2		X X	(SMALLER FRONT) (WITH 4-FUNCTION)
	T149570	STUD	1		X X	(LARGER REAR) (WITH 4-FUNCTION)
	T149576	STUD	2		X X	(SMALLER FRONT) (WITH 5-FUNCTION)
	T149575	STUD	1		X X	(LARGER REAR) (WITH 5-FUNCTION)
	T149578	STUD	2		X X	(SMALLER FRONT) (WITH 6-FUNCTION)
	T149577	STUD	1		X X	(LARGER REAR) (WITH 6-FUNCTION)
4	14H807	NUT	4		X X	7/16", (SMALLER TIE RODS)
	14H865	NUT	2		X X	1/2", (LARGER TIE ROD)
5	.....	VALVE	1		X X	(AT165436 NO LONGER AVAILABLE) CONVENIENCE ASSEMBLY (4-FUNCTION) (NOT ILLUSTRATED) (SUB AT165785 AND AT165739) (ALSO ORDER AT169987 FOR THE 410D STANDARD OR AT165735 FOR THE 410D HEAVY LIFT AND 510D)
	.....	VALVE	1		X X	(AT165437 NO LONGER AVAILABLE) CONVENIENCE ASSEMBLY (5-FUNCTION) (SUB AT165786 AND AT165739) (ALSO ORDER AT169987 FOR THE 410D STANDARD OR AT165735 FOR 410D HEAVY LIFT AND 510D)
	.....	VALVE	1		X X	(AT165438 NO LONGER AVAILABLE) CONVENIENCE ASSEMBLY (6-FUNCTION) (NOT ILLUSTRATED) (SUB AT165787 AND AT165739) (ALSO ORDER AT169987 FOR THE 410D STANDARD OR AT165735 FOR THE 410D HEAVY LIFT AND 510D)

BACKHOE CONTROL VALVE
(SERIAL N0. 801200-)
(HUSCO)

TP45488 -UN-01JAN94

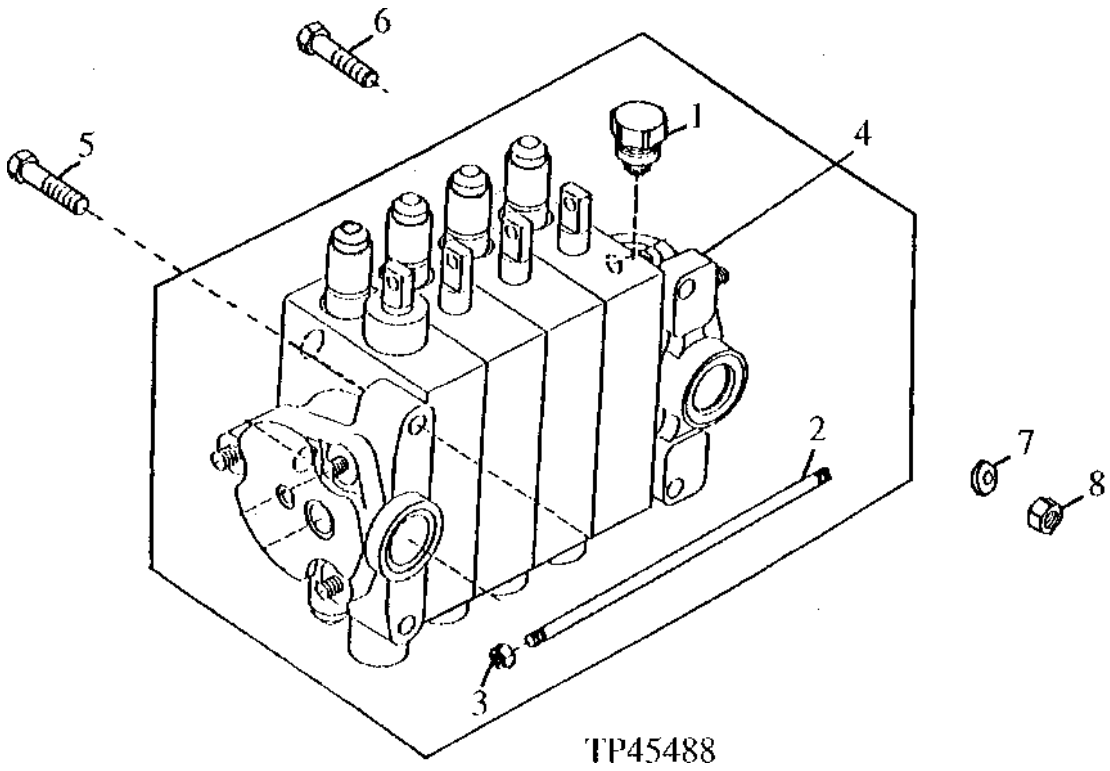

KEY	PART NO.	PART NAME	QTY	SERIAL NO.	410D	510D	REMARKS
1	AT83174	PLUG	1		X	X	
2	T149571	STUD	2		X	X	(SMALLER FRONT) (WITH 4-FUNCTION)
	T149570	STUD	1		X	X	(LARGER REAR) (WITH 4-FUNCTION)
	T149576	STUD	2		X	X	(SMALLER FRONT) (WITH 5-FUNCTION)
	T149575	STUD	1		X	X	(LARGER REAR) (WITH 5-FUNCTION)
	T149578	STUD	2		X	X	(SMALLER FRONT) (WITH 6-FUNCTION)
	T149577	STUD	1		X	X	(LARGER REAR) (WITH 6-FUNCTION)
3	14H807	NUT	4		X	X	7/16", (SMALLER TIE RODS)
	14H865	NUT	2		X	X	1/2", (LARGER TIE ROD)
4	AT165785	VALVE	1		X	X	CONVENIENCE ASSEMBLY (4-FUNCTION) (ALSO ORDER AT169987 FOR 410D STANDARD OR AT165735 FOR 410D HEAVY LIFT AND 510D)
	AT165786	VALVE	1		X	X	CONVENIENCE ASSEMBLY (5-FUNCTION) (NOT ILLUSTRATED) (ALSO ORDER AT169987 FOR THE 410D STANDARD OR AT165735 FOR THE 410D HEAVY LIFT AND 510D)
	AT165787	VALVE	1		X	X	CONVENIENCE ASSEMBLY (6-FUNCTION) (NOT ILLUSTRATED) (ALSO ORDER AT169987 FOR THE 410D STANDARD OR AT165735 FOR THE 410D HEAVY LIFT AND 510D)
5	19M7753	CAP SCREW	1		X	X	M12 X 70
6	19M7361	CAP SCREW	2		X	X	M12 X 50
7	T29342	WASHER	3		X	X	
8	14M7275	NUT	3		X	X	M12

MEMORANDA

SWING SECTION
(SERIAL NUMBER 798065-) (4 FUNCTION)
(SERIAL NUMBER 796891-) (5 FUNCTION)
(SERIAL NUMBER 799622-) (6 FUNCTION)

TP45037 -UN-01JAN94

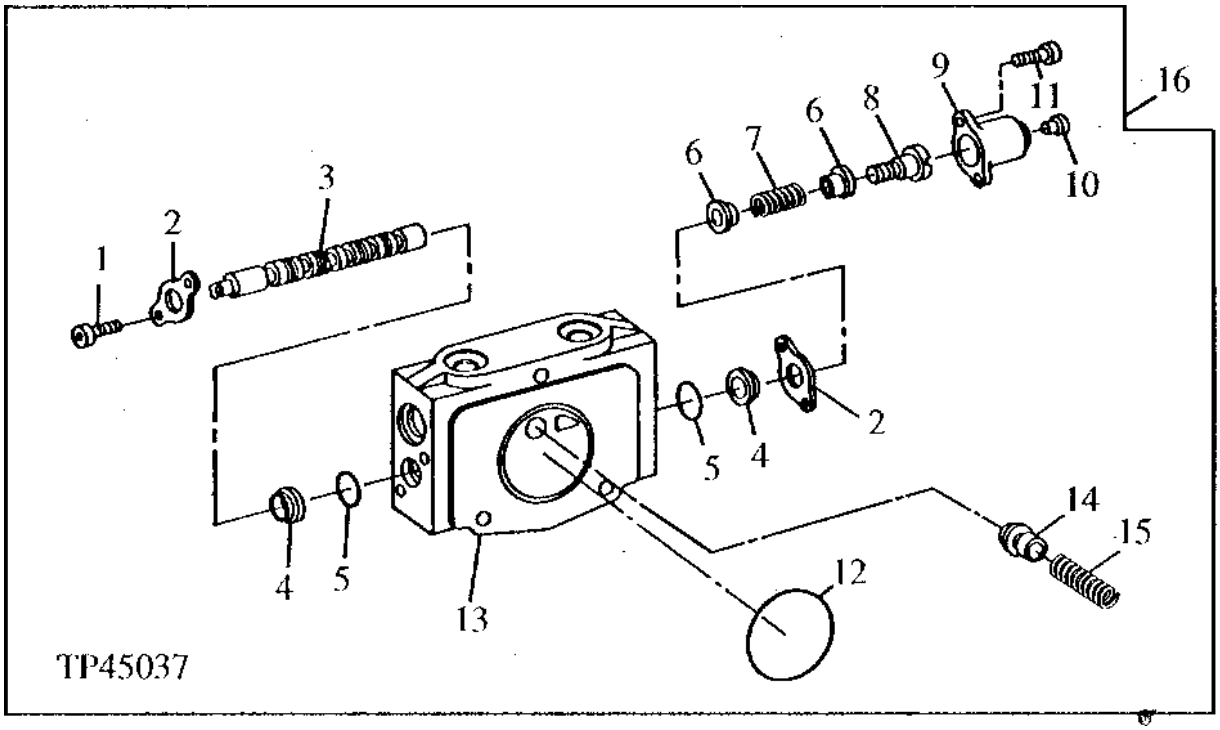

KEY	PART NO.	PART NAME	QTY	SERIAL NO.	410D	510D	REMARKS
1	21H1352	SCREW	2		X	X	1/4" X 3/8", (BETWEEN VALVE SECTIONS)
2	T81524	PLATE	2		X	X	
3	.....	SPOOL VALVE	1		X	X	
4	.....	SEAL	2		X	X	(K)
5	.....	SEAL	2		X	X	(K)
6	T81540	RETAINER	2		X	X	
7	T134881	SPRING	1		X	X	
8	T81541	SCREW	1		X	X	
9	T118808	CAP	1		X	X	
10	T118799	FILTER	1		X	X	
11	19H3554	SCREW	2		X	X	1/4" X 0.880"
12	T118685	O-RING	1		X	X	(BETWEEN VALVE SECTIONS)
13	.....	HOUSING	1		X	X	
14	T81538	POPPET	1		X	X	
15	T81539	SPRING	1		X	X	
16	AT165728	SPOOL VALVE	1	-801199	X	X	
	AT169659	SPOOL VALVE	1	801200-	X	X	

(K) AT157453 KIT, SPOOL SEAL (HUSCO)

BOOM, BUCKET, CROWD AND AUXILIARY SECTION
(SERIAL NUMBER 798065-) (4 FUNCTION)
(SERIAL NUMBER 796891-) (5 FUNCTION)
(SERIAL NUMBER 799622-) (6 FUNCTION)

TP40537 -UN-01JAN94

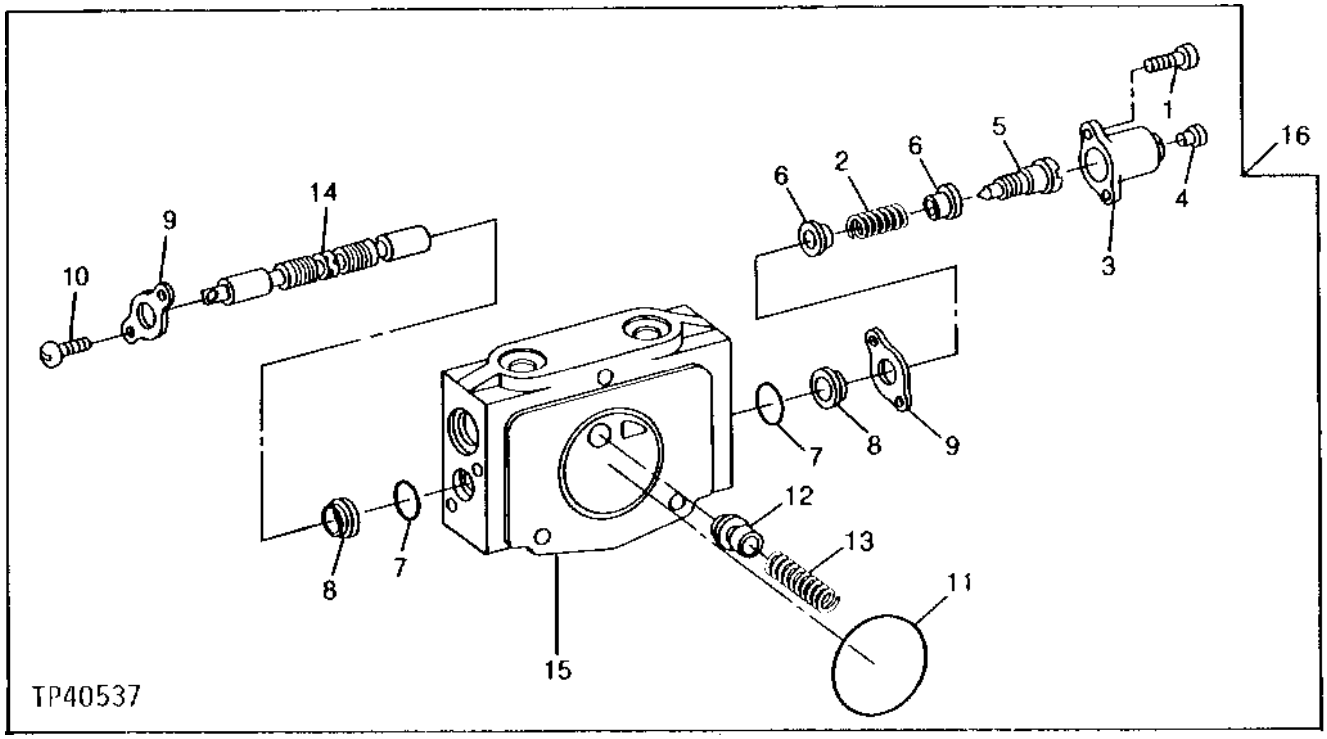

KEY	PART NO.	PART NAME	QTY	SERIAL NO.	4 5 1 1 0 0 D D	REMARKS
1	19H3554	SCREW	2		X X	1/4" X 0.880"
2	T134881	SPRING	1		X X	
3	T118808	CAP	1		X X	
4	T118799	FILTER	1		X X	
5	T81541	SCREW	1		X X	
6	T81540	RETAINER	2		X X	
7	.....	SEAL	2		X X	(K)
8	.....	SEAL	2		X X	(K)
9	T81524	PLATE	2		X X	
10	21H1018	SCREW	2		X X	1/4" X 3/8"
11	T118685	O-RING	1		X X	(BETWEEN VALVE SECTIONS)
12	T81538	POPPET	1		X X	
13	T81539	SPRING	1		X X	
14	.....	SPOOL VALVE	1		X X	
15	.....	HOUSING	1		X X	
16	AT165729	SECTION	1		X X	BOOM SECTION
	AT165730	SECTION	1		X X	BUCKET AND AUXILIARY SECTION
	AT165731	SECTION	1		X X	CROWD SECTION

(K) AT157453 KIT, SPOOL SEAL (HUSCO)

OUTLET SECTION
(SERIAL NUMBER 798065-) (4 FUNCTION)
(SERIAL NUMBER 796891-) (5 FUNCTION)
(SERIAL NUMBER 799622-) (6 FUNCTION)

TP44597 -UN-01JAN94

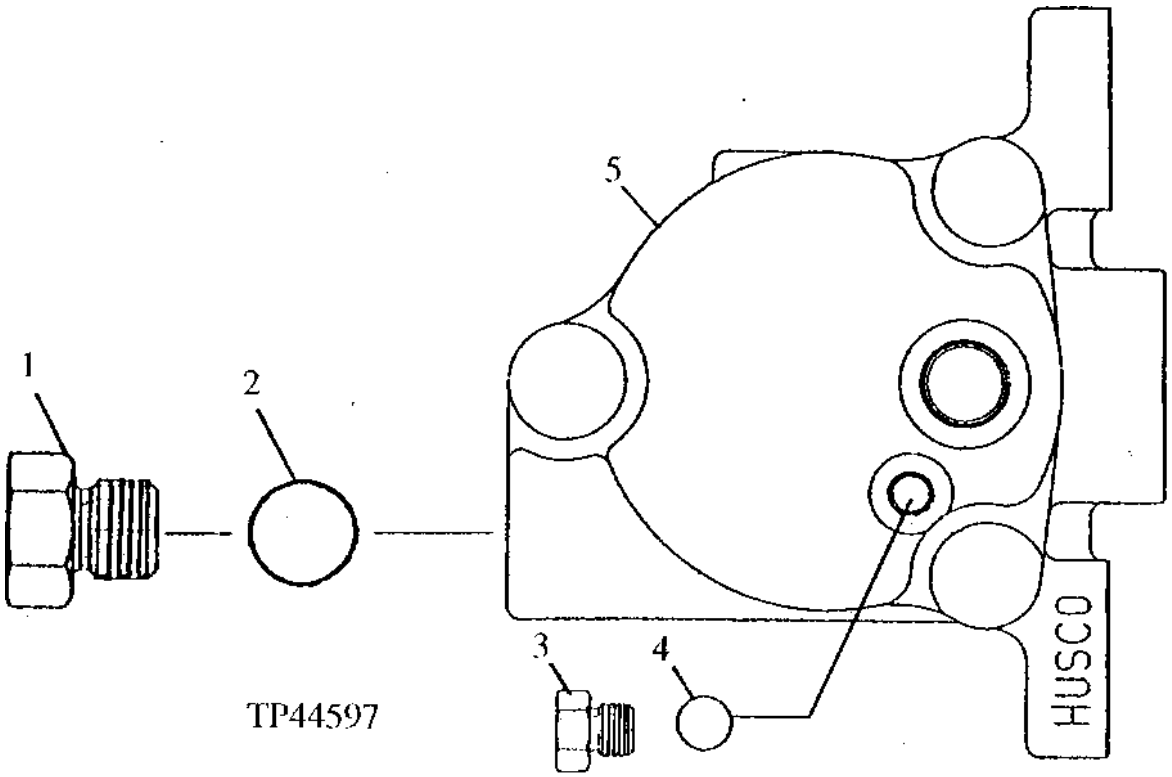

KEY	PART NO.	PART NAME	QTY	SERIAL NO.	410D	510D	REMARKS
1	R36636	FITTING PLUG	1		X	X	
2	R29936	O-RING	1		X	X	
3	R31631	DRAIN PLUG	1		X	X	
4	R26287	O-RING	1		X	X	
5	T149560	COVER	1		X	X	

INLET SECTION
(SERIAL NUMBER 798065-) (4 FUNCTION)
(SERIAL NUMBER 796891-) (5 FUNCTION)
(SERIAL NUMBER 799622-) (6 FUNCTION)

TP44598 -UN-01JAN94

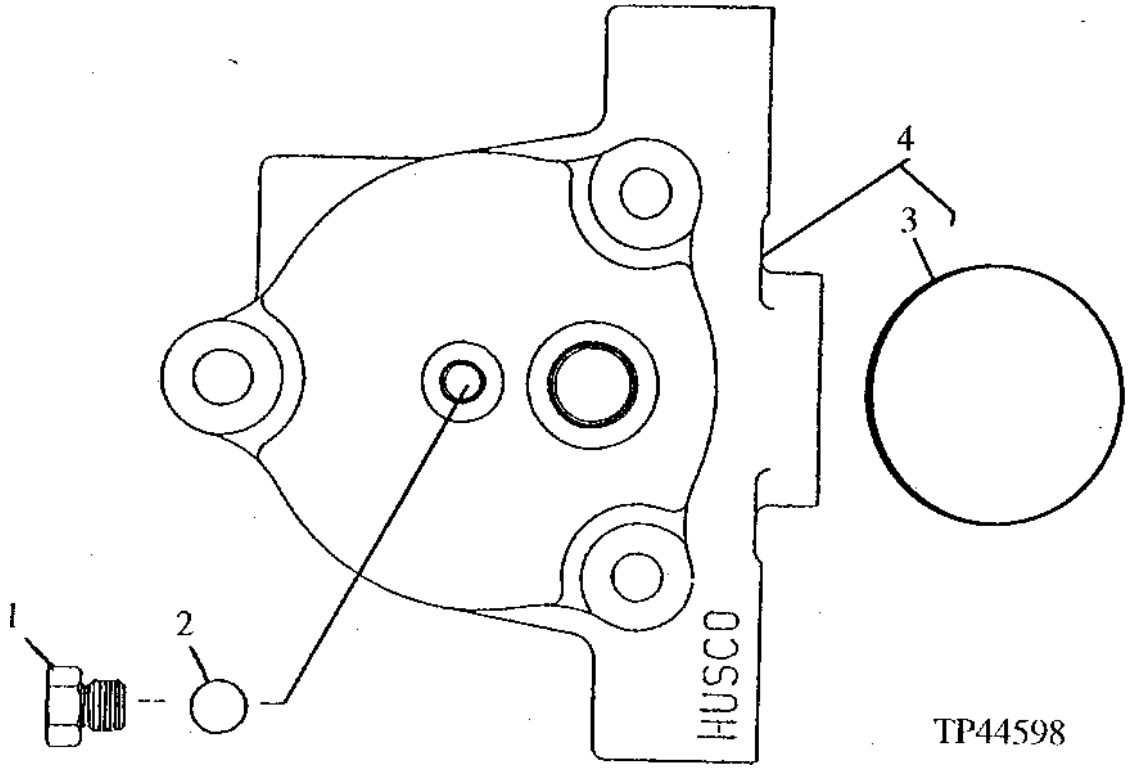

KEY	PART NO.	PART NAME	QTY	SERIAL NO.	410D	510D	REMARKS
1	R31631	DRAIN PLUG	1		X	X	
2	R26287	O-RING	1		X	X	
3	T118685	O-RING	1		X	X	
4	AT165839	COVER	1		X	X	

BACKHOE RELIEF VALVES AND KITS
(SERIAL NUMBER 798065-) (4 FUNCTION)
(SERIAL NUMBER 796891-) (5 FUNCTION)
(SERIAL NUMBER 799622-) (6 FUNCTION)

TP44584 -UN-01JAN94

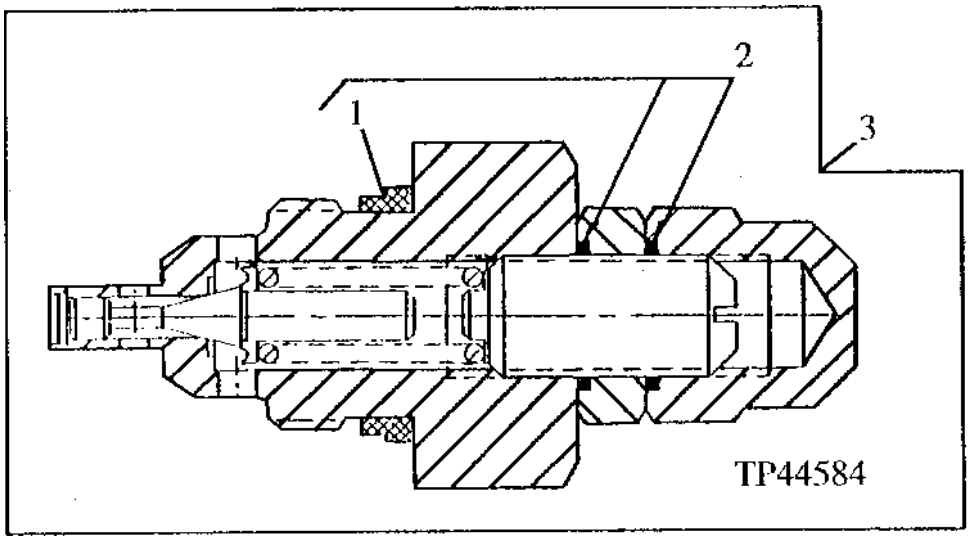

KEY	PART NO.	PART NAME	QTY	SERIAL NO.	410D	510D	REMARKS
1	T183757	SEAL	1		X	X	(SUB FOR T141872)
2	AT189413	KIT	1		X	X	(SUB FOR AT165834, AT168676 AND AT178359) (SEAL REPAIR, RELIEF VALVE)
3	AT165735	PRESSURE RELIEF VALVE	1	-801199	X	X	(31030 KPA) (BOOM SECTION BOTTOM PORT)
	AT169987	PRESSURE RELIEF VALVE	1	801200-	X		(28270 KPA) (BOOM SECTION BOTTOM PORT) USE WITH STANDARD BOOM
	AT165735	PRESSURE RELIEF VALVE	1	801200-	X	X	(31030 KPA) (BOOM SECTION BOTTOM PORT) USE WITH 410D HEAVY LIFT BOOM
	AT165737	PRESSURE RELIEF VALVE	1		X	X	(24140 KPA) (BUCKET SECTION BOTTOM PORT AND CROWD SECTION TOP PORT)
	AT165739	PRESSURE RELIEF VALVE	1	-801199	X	X	(21720 KPA) (OUTLET COVER)

BACKHOE RELIEF VALVES AND KITS
(SERIAL NO. 798065-) (4 FUNCTION)
(SERIAL NO. 796891-) (5 FUNCTION)
(SERIAL NO. 799622-) (6 FUNCTION)

TP44599 -UN-01JAN94

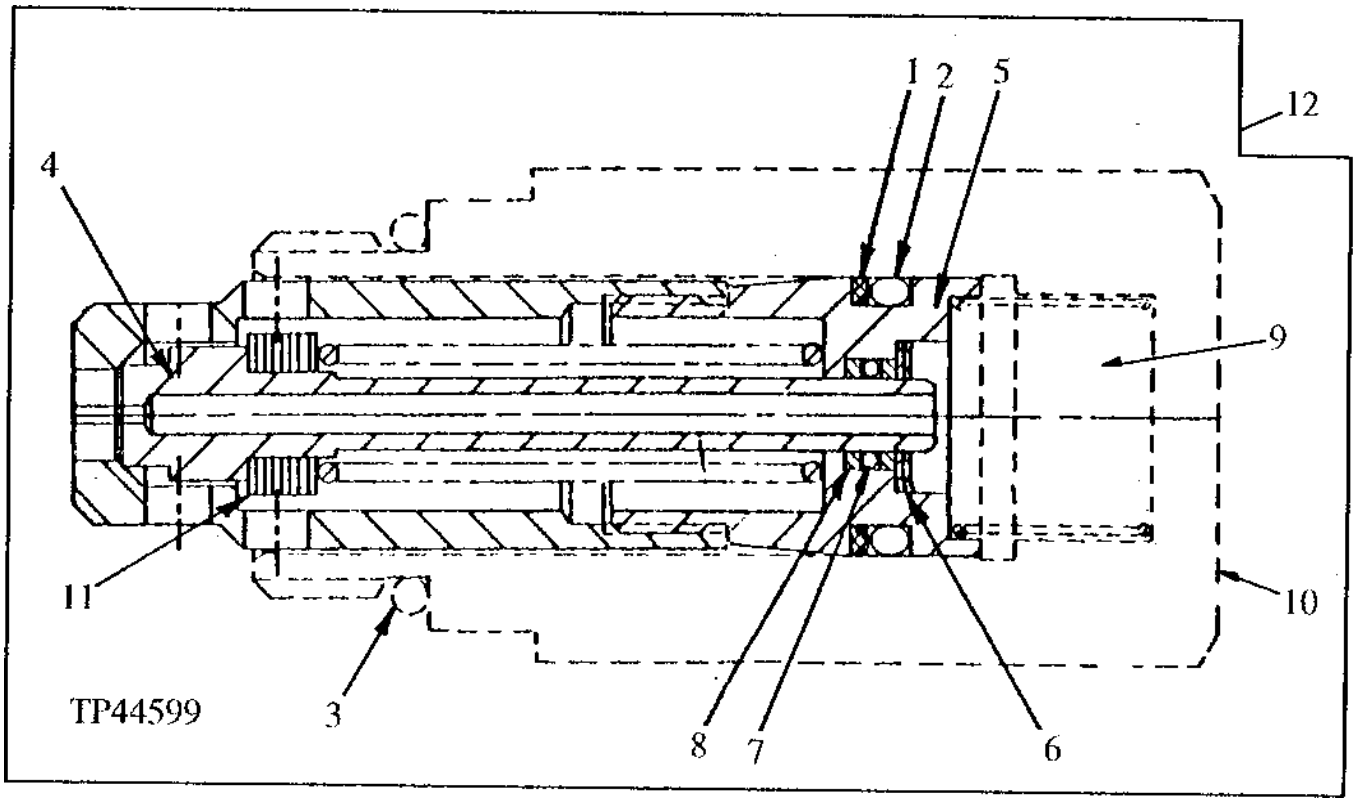

KEY	PART NO.	PART NAME	QTY	SERIAL NO.	410D	510D	REMARKS
1	.....	BACK-UP RING	1		X	X	(A) (B)
2	.....	O-RING	1		X	X	(A) (B)
3	T118681	O-RING	1		X	X	(A)
4	.....	POPPET	1		X	X	(B)
5	.....	RETAINER	1		X	X	(B)
6	.....	WASHER	1		X	X	(B)
7	.....	O-RING	1		X	X	(B)
8	.....	BACK-UP RING	2		X	X	(B)
9	T118867	SPRING	1		X	X	
10	T118866	HOUSING	1		X	X	
11	.....	SHIM	AR		X	X	(B)
12	.....	RELIEF VALVE	2	-801199	X	X	(19480 KPA) (SWING SECTION TOP & BOTTOM PORTS) (USE WITH AT165835)
	.....	RELIEF VALVE	2	801200-	X	X	(18970 KPA) (SWING SECTION TOP & BOTTOM PORTS) (USE WITH AT114682)
	.....	RELIEF VALVE	1		X	X	(16550 KPA) (BOOM SECTION TOP PORT)
	.....	RELIEF VALVE	1		X	X	(24140 KPA) (BUCKET SECTION TOP PORT)
	.....	RELIEF VALVE	1		X	X	(20520 KPA) (CROWD SECTION BOTTOM PORT)

(A) AT189413 SEAL KIT

(B) AT165835 RELIEF KIT (SWING)

(B) AT114682 RELIEF VALVE (SWING

(B) AT165836 RELIEF VALVE (BOOM)

(B) AT165837 RELIEF VALVE (BUCKET)

(B) AT135715 RELIEF VALVE (CROWD)

BACKHOE RELIEF VALVES AND KITS
(SERIAL NO. 801200-)

TP45487 -UN-01JAN94

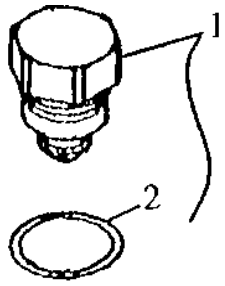

TP45487

KEY	PART NO.	PART NAME	QTY	SERIAL NO.	410D	510D	REMARKS
1	AT83174	PLUG	1		X	X	
2	T183757	SEAL	1		X	X	(K) (SUB FOR T141872)

(K) AT168676 SEAL KIT

STABILIZER VALVE
(EATON)

TP57886 -UN-09JUL98

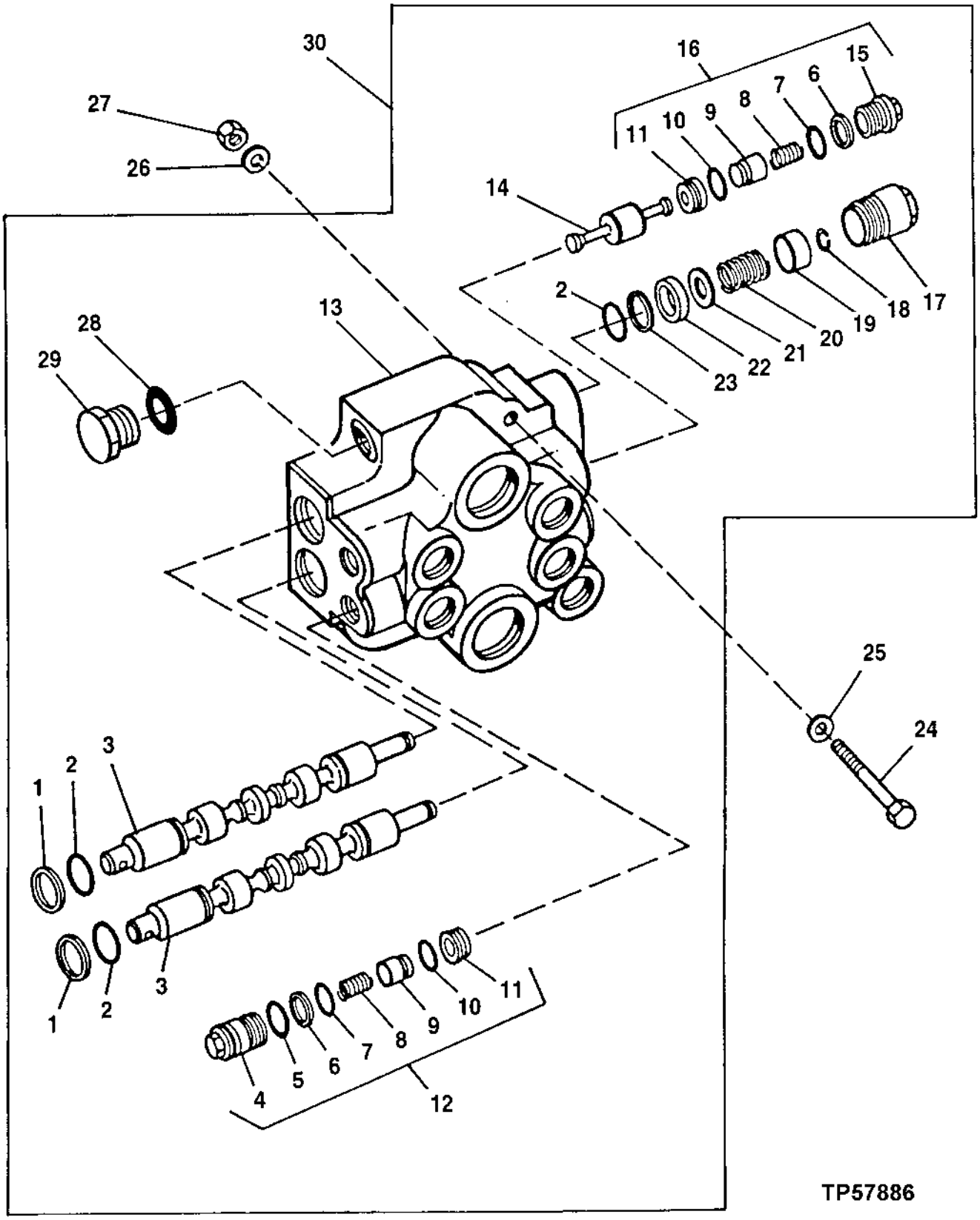

STABILIZER VALVE
(EATON)

KEY	PART NO.	PART NAME	QTY	SERIAL NO.	410D	510D	REMARKS
1	T127265	SEAL	2		X	X	(A)
2	T127268	O-RING	4		X	X	(A)
3	.....	VALVE SPOOL	2		X	X	(SUB AT190330)
4	.....	RETAINER	2		X	X	(SUB AT190334)
5	R116031	O-RING	2		X	X	(A) (SUB FOR U15192, THIS APPLICATION)
6	T154187	BACK-UP RING	4		X	X	(A) (SUB FOR T127258, THIS APPLICATION)
7	R72328	O-RING	4		X	X	(A) (SUB FOR U46731, THIS APPLICATION) (SUB FOR T127269)
8	.....	SPRING	4		X	X	(SUB AT190333 AND AT190334)
9	.....	POPPET	4		X	X	(SUB AT190333 AND AT190334)
10	R56464	O-RING	4		X	X	(A) (SUB FOR 32246, THIS APPLICATION)
11	.....	SEAT	4		X	X	(SUB AT190333 AND AT190334)
12	AT190334	KIT	2		X	X	(THERMAL RELIEF) (SUB FOR AT135769)
13	.....	HOUSING	1		X	X	(SUB AT190330)
14	T127257	PLUNGER	2		X	X	
15	.....	RETAINER	2		X	X	(SUB AT190333)
16	AT190333	KIT	2		X	X	(STANDARD) (SUB FOR AT135768)
17	AT135767	CAP	2		X	X	
18	T127263	SNAP RING	2		X	X	(A)
19	T127261	RETAINER	2		X	X	
20	MG272321	SPRING	2		X	X	
21	T127264	WASHER	2		X	X	
22	T127260	SPACER	2		X	X	
23	R73530	BACK-UP RING	2		X	X	(A)
24	19M8504	CAP SCREW	2		X	X	M8 X 80, HS, 10.9, M8 X 70
25	24M7298	WASHER	2		X	X	8.400 X 25 X 2 MM
26	24M7298	WASHER	2		X	X	8.400 X 25 X 2 MM
27	14M7273	NUT	2		X	X	M8
28	R26448	O-RING	1		X	X	(A)
29	T54967	FITTING PLUG	1		X	X	
30	AT190330	SPOOL VALVE	1		X	X	(SUB FOR AT149981, AT178272, AT186400 AND AT188549) (ALSO ORDER (2) M137181) (WITH TWO WAY LOCK OUTS)
..	AT190741	SEAL KIT	1		X	X	INCLUDES ALL (A) PARTS

BACKHOE AND STABILIZER VALVE PRESSURE AND RETURN HYDRAULICS
(SERIAL NO. -796890) (5-FUNCTION)
(SERIAL NO.- -798064) (4-FUNCTION)

TP44578 -UN-01JAN94

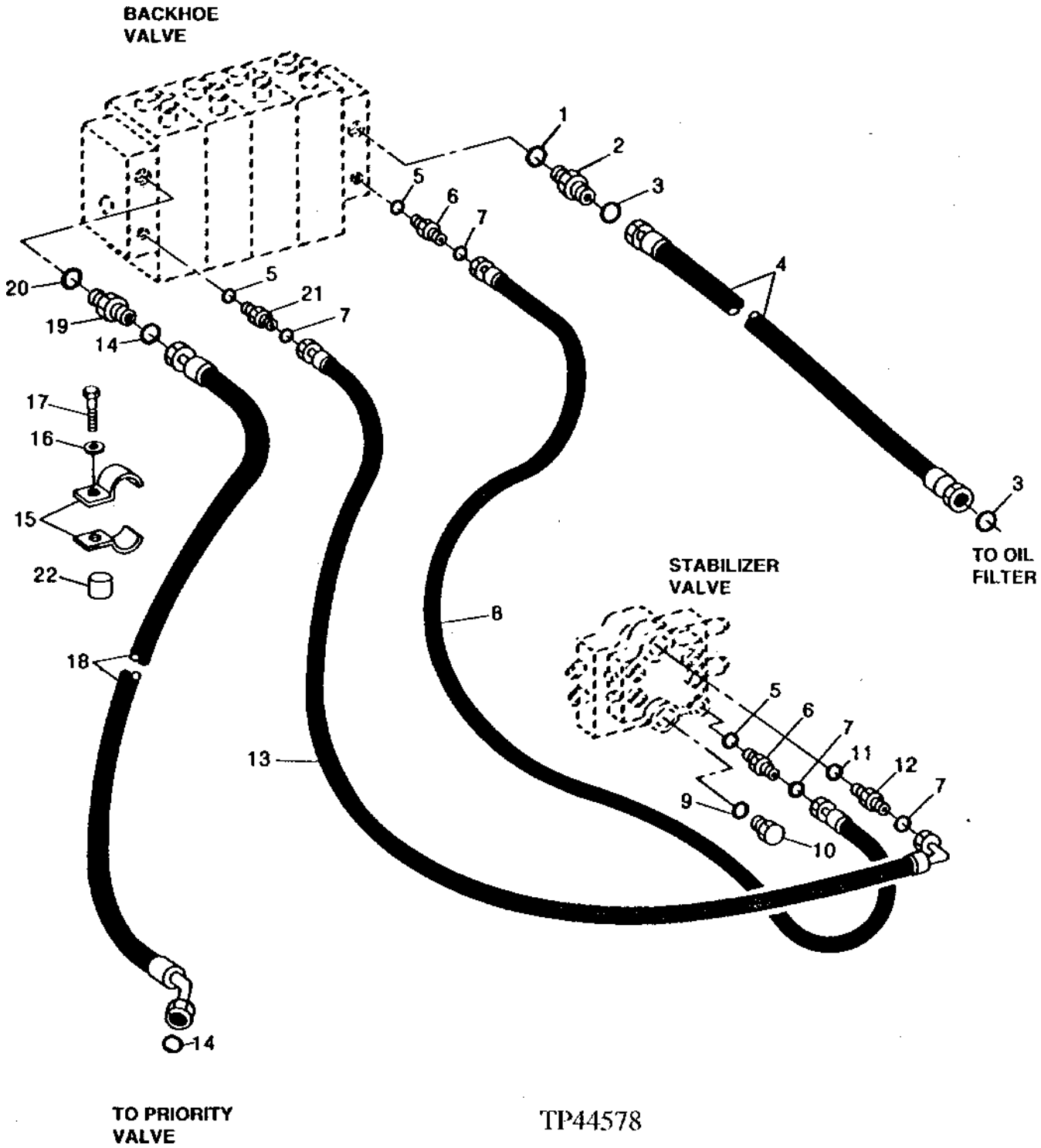

BACKHOE AND STABILIZER VALVE PRESSURE AND RETURN HYDRAULICS
(SERIAL NO. -796890) (5-FUNCTION)
(SERIAL NO. -798064) (4-FUNCTION)

KEY	PART NO.	PART NAME	QTY	SERIAL NO.	410D	510D	REMARKS
1	R29936	O-RING	1		X	X	
2	38H1165	ADAPTER	1		X	X	
3	T78612	O-RING	1		X	X	
4	AT151855	HYDRAULIC HOSE - FABRICATE	1		X	X	(SUB FOR AT149424)
5	R26375	O-RING	3		X	X	
6	38H1161	ADAPTER	2		X	X	
7	T77857	O-RING	4		X	X	
8	AT149428	HYDRAULIC HOSE - FABRICATE	1		X	X	
9	R29936	O-RING	1		X	X	
10	R36636	FITTING PLUG	1		X	X	
11	R29936	O-RING	1		X	X	
12	38H1176	ADAPTER	1		X	X	
13	AH136277	HYDRAULIC HOSE	1		X	X	(SUB FOR AT149427)
14	T76938	O-RING	2		X	X	
15	T112958	CLAMP	2		X	X	
16	24M7239	WASHER	1		X	X	10.700 X 21 X 2.500 MM
17	19H3065	CAP SCREW	1		X	X	3/8" X 2"
18	AT149448	HYDRAULIC HOSE - FABRICATE	1		X	X	1-7/16" X 1 465 MM (57-3/4") X 1-7/16"
19	38H1164	ADAPTER	1		X	X	
20	R29936	O-RING	1		X	X	
21	38H1005	ELBOW FITTING	1		X	X	(FOUR FUNCTION)
	38H1046	ELBOW FITTING	1		X	X	(FIVE FUNCTION)
22	28H1697	SPACER	1		X	X	

BACKHOE AND STABILIZER VALVE PRESSURE AND RETURN HYDRAULICS
(SERIAL NO. 796891-) (5-FUNCTION)
(SERIAL NO. 798065-) (4-FUNCTION)

TP46371 -UN-23NOV94

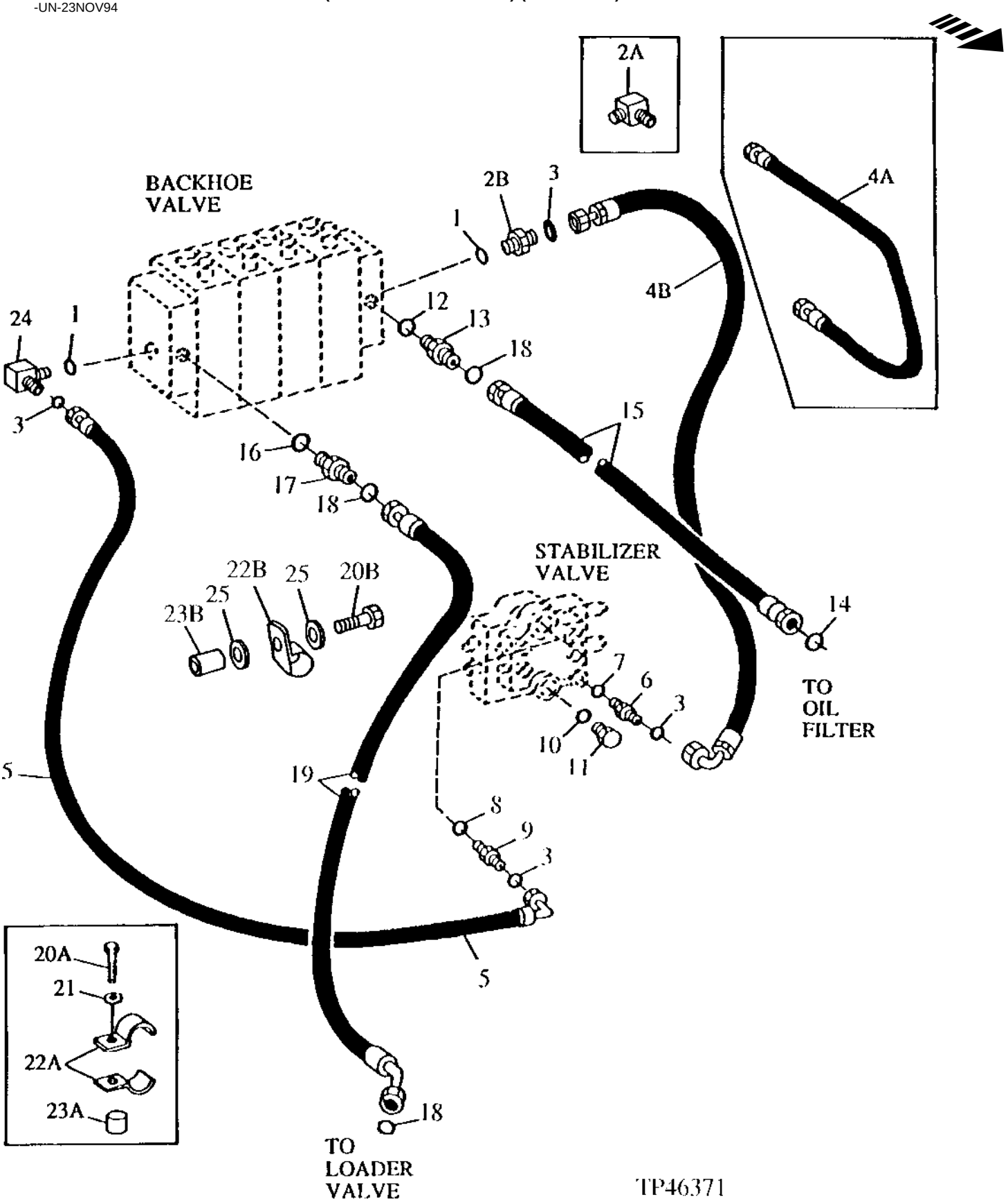

BACKHOE AND STABILIZER VALVE PRESSURE AND RETURN HYDRAULICS
(SERIAL NO. 796891-) (5-FUNCTION)
(SERIAL NO. 798065-) (4-FUNCTION)

KEY	PART NO.	PART NAME	QTY	SERIAL NO.	410D	510D	REMARKS
1	R26375	O-RING	2		X	X	
2A	38H1005	ELBOW FITTING	1	-801199	X	X	
2B	38H1161	ADAPTER	1	801200-	X	X	
3	T77857	O-RING	4		X	X	
4A	AT167827	HYDRAULIC HOSE - FABRICATE	1	-801199	X	X	13/16" X 725 MM (28-1/2") X 13/16"
4B	AT167904	HYDRAULIC HOSE - FABRICATE	1	801200-	X	X	13/16" X 530 MM (20-3/4") X 13/16"
5	AT167044	HYDRAULIC HOSE - FABRICATE	1	-801199	X	X	13/16" X 600 MM (23-1/2") X 13/16"
	AT167904	HYDRAULIC HOSE - FABRICATE	1	801200-	X	X	
6	38H1161	ADAPTER	1		X	X	
7	R26375	O-RING	1		X	X	
8	R29936	O-RING	1		X	X	
9	38H1176	ADAPTER	1		X	X	
10	R29936	O-RING	1		X	X	
11	R36636	FITTING PLUG	1		X	X	
12	R29936	O-RING	1		X	X	
13	38H1164	ADAPTER	1		X	X	
14	T78612	O-RING	1	-801199	X	X	
	T76938	O-RING	1	801200-	X	X	
15	AT167828	HYDRAULIC HOSE - FABRICATE	1	-801999	X	X	1-7/16" X 910 MM (35-3/4") X 1-11/16"
	AT168457	HYDRAULIC HOSE - FABRICATE	1	801200-	X	X	1-7/16" X 1 100 MM (43-1/4") X 1-7/16"
16	R29936	O-RING	1		X	X	
17	38H1164	ADAPTER	1		X	X	
18	T76938	O-RING	3		X	X	
19	AT165361	HYDRAULIC HOSE - FABRICATE	1	-801199	X	X	1-7/16" X 1 440 MM (56-3/4") X 1-7/16"
	AT166516	HYDRAULIC HOSE - FABRICATE	1	801200-	X	X	1-7/16" X 1 525 MM (60") X 1-7/16"
20A	19H3065	CAP SCREW	1	-801199	X	X	3/8" X 2"
20B	19M8183	CAP SCREW	1	801200-	X	X	M10 X 90
21	24M7239	WASHER	1	-801199	X	X	10.700 X 21 X 2.500 MM
22A	T112958	CLAMP	2	-801199	X	X	
22B	T150753	CLAMP	1	801200-	X	X	
23A	28H1697	SPACER	1	-801199	X	X	0.493" X 0.675" X 3/4"
23B	28H3402	SPACER	1	801200-	X	X	0.493" X 0.675" X 2"
24	38H1005	ELBOW FITTING	1		X	X	
25	24M7296	WASHER	1	801200-	X	X	

STABILIZER CYLINDER HYDRAULICS

TP48828 -UN-29JUN95

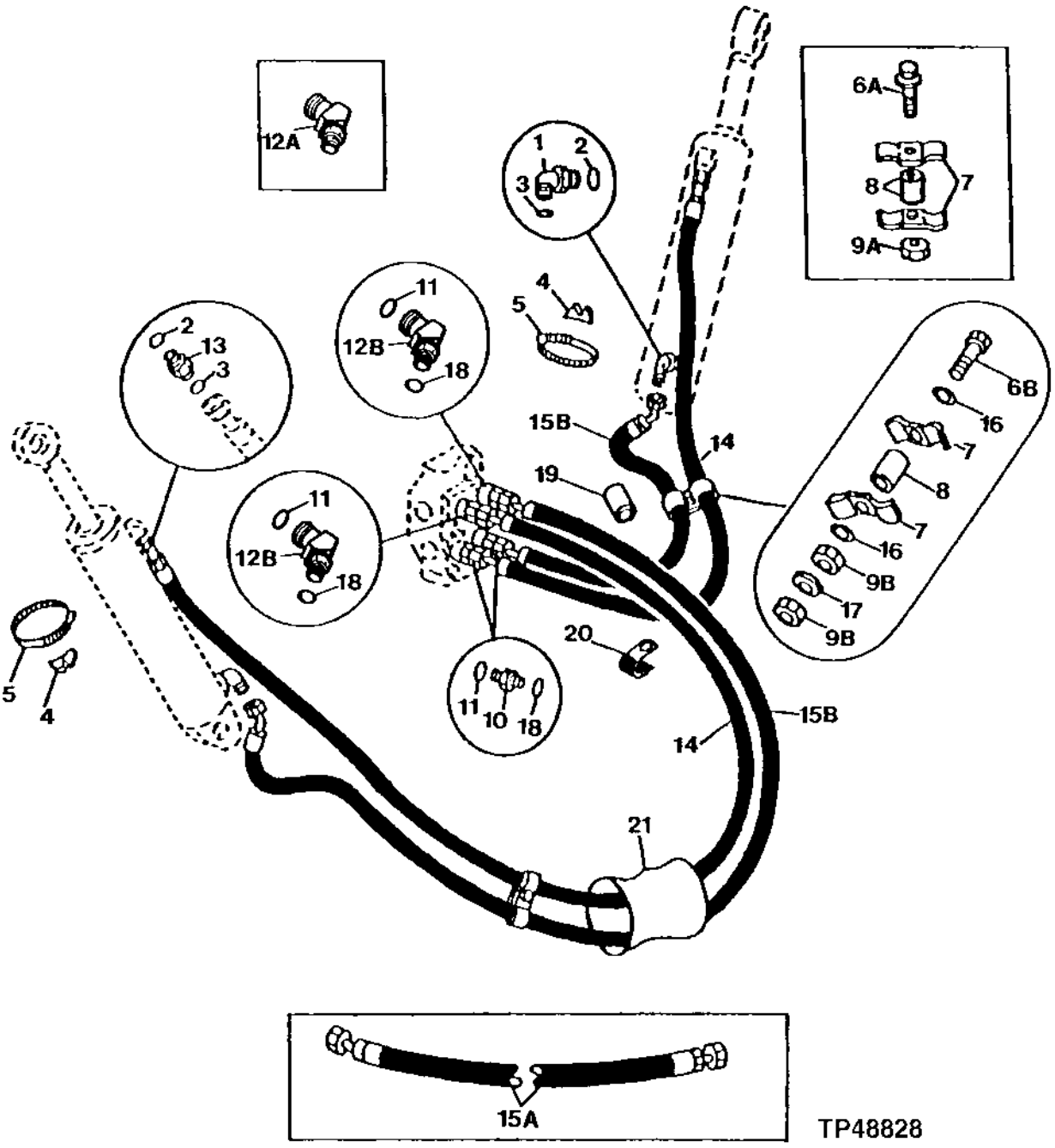

STABILIZER CYLINDER HYDRAULICS

KEY	PART NO.	PART NAME	QTY	SERIAL NO.	410D	510D	REMARKS
1	38H1013	ELBOW FITTING	2	-801199	X	X	90 DEGREE
	38H1413	ELBOW FITTING	2	801200-	X	X	
2	U12547	O-RING	4		X	X	
3	T77857	O-RING	4	-801199	X	X	
	T77613	O-RING	4	801200-	X	X	
4	T105774	GUIDE	2		X	X	
5	C16054	CLAMP	2		X	X	
6A	19M7550	CAP SCREW	2	-801199	X	X	M10 X 35
6B	19M7165	CAP SCREW	2	801200-	X	X	M8 X 55
7	R46919	HALF CLAMP	4		X	X	
8	28H1521	SPACER	2		X	X	(SUB FOR 28H3381 AND 28H3381, THIS APPLICATION)
9A	14M7274	NUT	2	-801199	X	X	M10
9B	14M7273	NUT	4	801200-	X	X	M8
10	38H1161	ADAPTER	2	-801199	X	X	STRAIGHT
	38H1171	ADAPTER	2	801200-	X	X	
11	R26375	O-RING	4		X	X	
12A	38H1046	ELBOW FITTING	2	-801199	X	X	45 DEGREE
12B	38H1522	ELBOW FITTING	2	801200-	X	X	45 DEGREE, (SUB FOR 38H1010, THIS APPLICATION)
13	38H1175	ADAPTER	2	-801199	X	X	STRAIGHT
	38H1338	ADAPTER	2	801200-	X	X	
14	AT146136	HYDRAULIC HOSE - FABRICATE	2	-801199	X	X	13/16" X 1 790 MM (70-1/2") X 13/16"
	AT145542	HYDRAULIC HOSE - FABRICATE	2	801200-	X	X	11/16" X 1 854 MM (73") X 11/16"
15A	AT146137	HYDRAULIC HOSE - FABRICATE	2	-801199	X	X	13/16" X 1 300 MM (51-1/4") X 13/16"
15B	AT169301	HYDRAULIC HOSE - FABRICATE	2	801200-	X	X	11/16" X 1 357 MM (53-1/2") X 11/16"
16	24M7238	WASHER	4	801200-	X	X	8.700 X 17 X 2 MM
17	24H1657	WASHER	2	801200-	X	X	21/64" X 1-1/4" X 7/64" LEFT SIDE
18	T77857	O-RING	4	-801199	X	X	
	T77613	O-RING	4	801200-	X	X	
19	.....	HOSE	2	801200-	X	X	
20	AH96317	CLIP	AR	801200-	X	X	
21	.....	SLEEVE	1	801200-	X	X	

SWING CYLINDER HYDRAULICS
(SERIAL NO. -801199)

TP45476 -UN-01JAN94

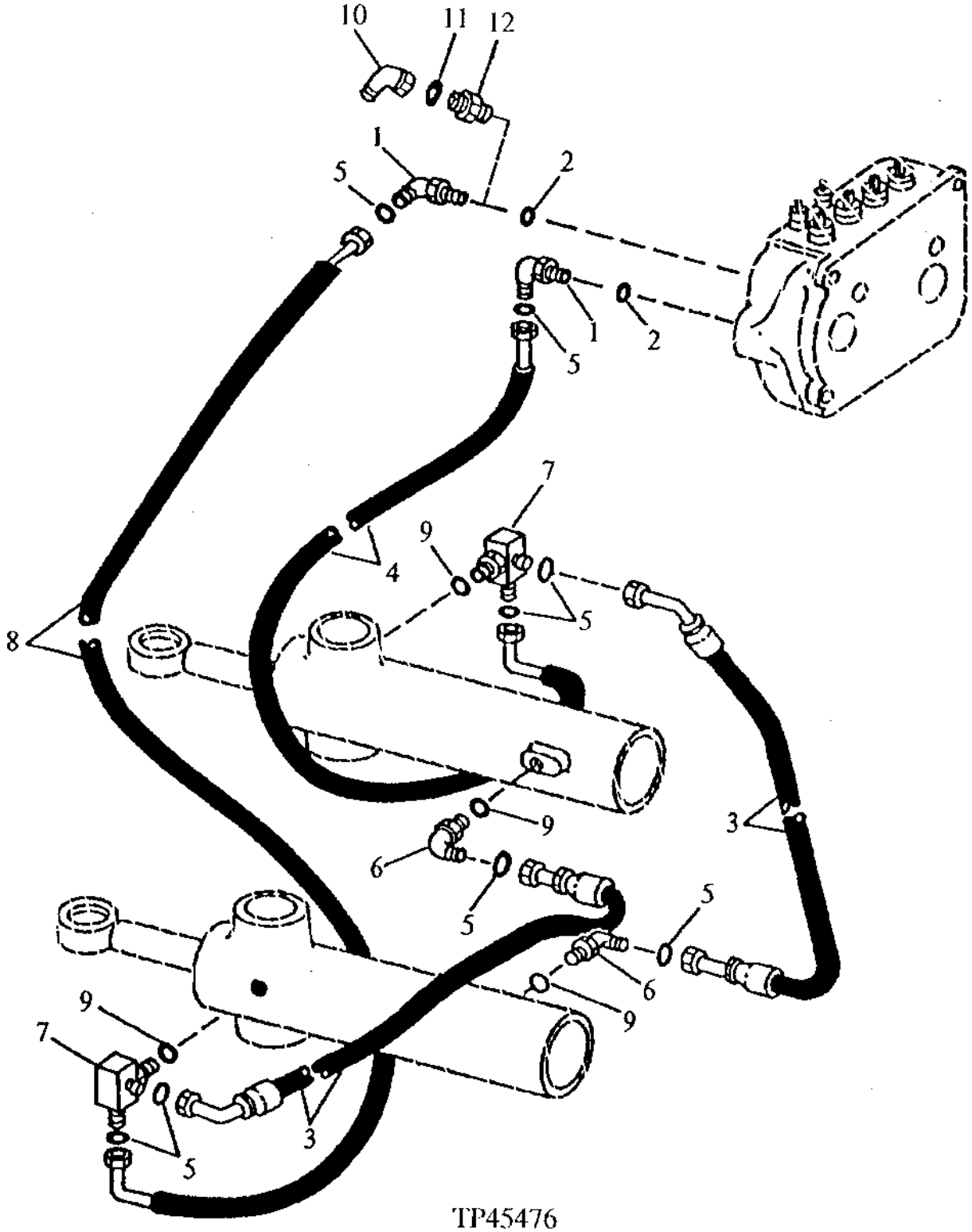

SWING CYLINDER HYDRAULICS
(SERIAL NO. -801199)

KEY	PART NO.	PART NAME	QTY	SERIAL NO.	410D	510D	REMARKS
1	38H1013	ELBOW FITTING	2	-799621	X	X	90 DEGREE
	38H1005	ELBOW FITTING	2	799622-	X	X	
2	U12547	O-RING	2	-799621	X	X	
	R26375	O-RING	2	799622-	X	X	
3	AT142220	HYDRAULIC HOSE - FABRICATE	2		X	X	13/16" X 1 000 MM (39-1/4") X 13/16"
4	AT142219	HYDRAULIC HOSE - FABRICATE	1		X	X	13/16" X 560 MM (22") X 13/16"
5	T77857	O-RING	8		X	X	
6	38H1005	ELBOW FITTING	2		X	X	90 DEGREE
7	AT106759	TEE FITTING	2		X	X	
8	AT161708	HYDRAULIC HOSE - FABRICATE	1		X	X	(SUB FOR AT142218 AND AT158245)
9	R26375	O-RING	4		X	X	
10	38H1095	ELBOW FITTING	1	799622-	X	X	(USED WITH 6 FUNCTION ONLY)
11	T77857	O-RING	1	799622-	X	X	(USED WITH 6 FUNCTION ONLY)
12	38H1161	ADAPTER	1	799622-	X	X	(USED WITH 6 FUNCTION ONLY)

SWING CYLINDER HYDRAULICS
(SERIAL NO. 801200-)

TP45489 -UN-01JAN94

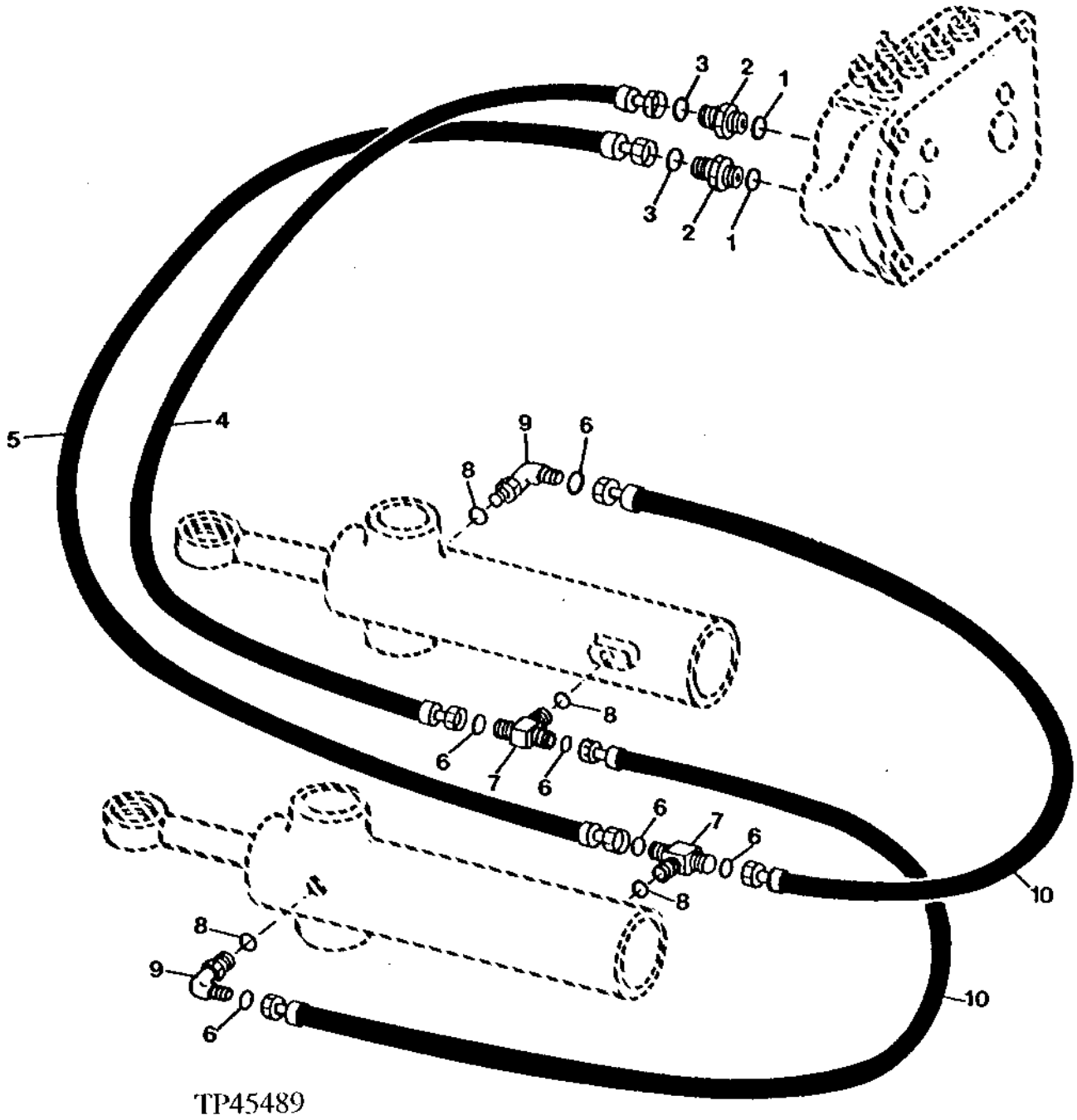

SWING CYLINDER HYDRAULICS
(SERIAL NO. 801200-)

KEY	PART NO.	PART NAME	QTY	SERIAL NO.	410D	510D	REMARKS
1	R26375	O-RING	2		X	X	16.358 X 2.210 MM (0.644" X 0.087")
2	38H1171	ADAPTER	2		X	X	
3	T77613	O-RING	2		X	X	9.246 X 1.778 MM (0.364" X 0.070")
4	AT174019	HYDRAULIC HOSE	1		X	X	(SUB FOR AT168678)
5	AT174018	HYDRAULIC HOSE	1		X	X	11/16" X 790 MM (31") X 11/16", (SUB FOR AT168677)
6	T77613	O-RING	6		X	X	9.246 X 1.778 MM (0.364" X 0.070")
7	38H1016	TEE FITTING	2		X	X	
8	R26448	O-RING	4		X	X	11.887 X 1.981 MM (0.468" X 5/64")
9	38H1004	ELBOW FITTING	2		X	X	
10	AT174019	HYDRAULIC HOSE	2		X	X	(SUB FOR AT168678)

BOOM CYLINDER HYDRAULICS
(FOR USE WITH STANDARD BOOM)
(410D)
(SERIAL NO. -801199)

TP40467 -UN-01JAN94

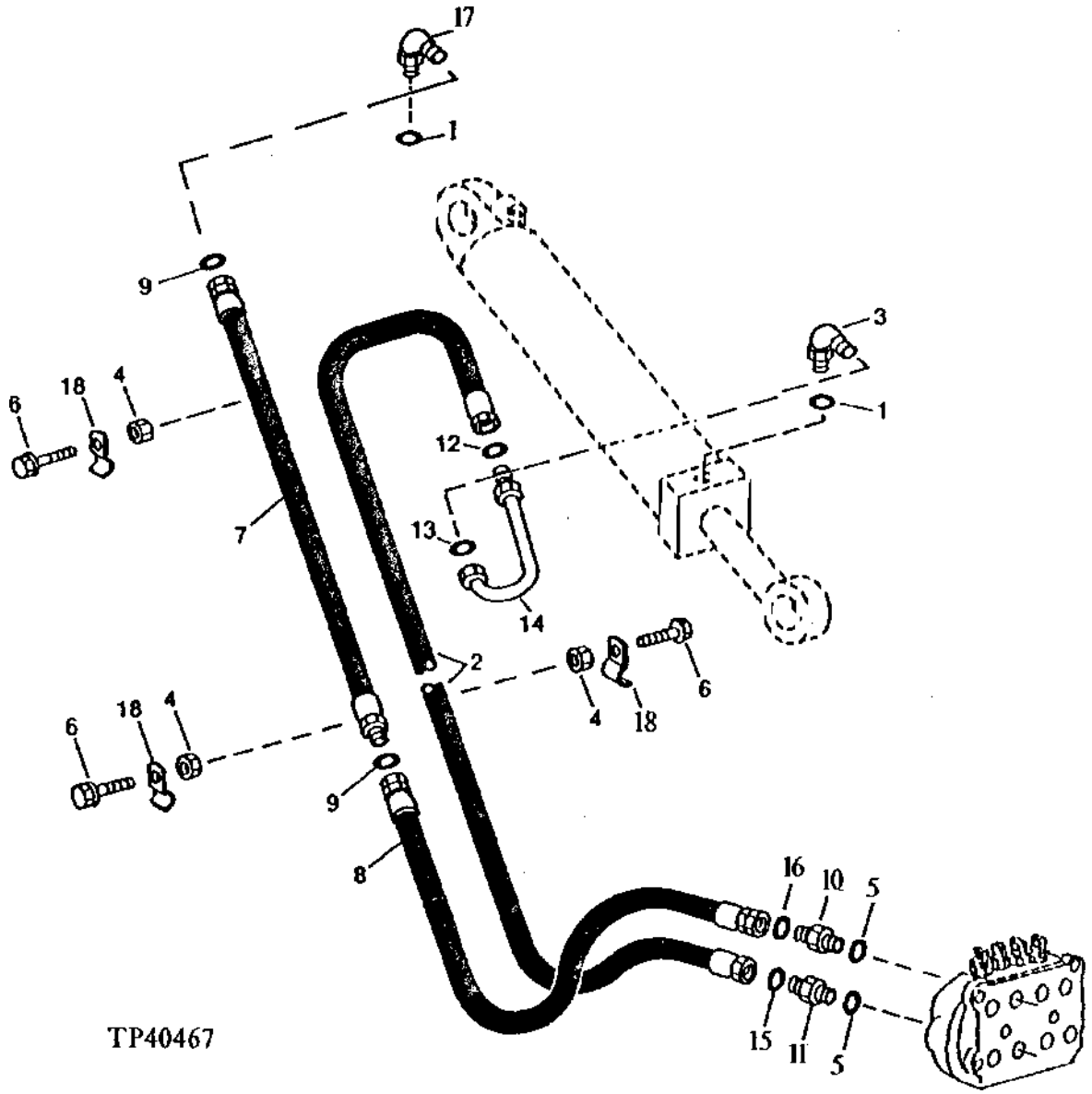

BOOM CYLINDER HYDRAULICS
(FOR USE WITH STANDARD BOOM)
(410D)
(SERIAL NO. -801199)

KEY	PART NO.	PART NAME	QTY	SERIAL NO.	410D	510D	REMARKS
1	U12547	O-RING	2		X		
2	AT133153	HYDRAULIC HOSE - FABRICATE	1		X		
3	38H1404	ELBOW FITTING	1		X		
4	14M7274	NUT	3		X		M10
5	U17409	O-RING	2	-796890	X		
	U12547	O-RING	2	796891-	X		
6	19M7662	CAP SCREW	3		X		M10 X 30
	24M7239	WASHER	3		X		10.700 X 21 X 2.500 MM
7	AT133148	HYDRAULIC HOSE - FABRICATE	1		X		1-7/16" X 1 275 MM (50-1/4") X 1-7/16"
8	AT133149	HYDRAULIC HOSE - FABRICATE	1		X		
9	T76938	O-RING	2		X		
10	38H1346	ADAPTER	1	-796890	X		
	T151255	ADAPTER	1	796891-	X		
11	38H1350	ADAPTER	1	-796890	X		
	38H1175	ADAPTER	1	796891-	X		
12	T77857	O-RING	1		X		
13	T77932	O-RING	1		X		
14	AT101473	OIL LINE	1	-798705	X		
	AT169086	OIL LINE	1	798706-	X		
15	T77857	O-RING	1		X		
16	T76938	O-RING	1		X		
17	38H1305	ELBOW FITTING	1		X		
18	U15939	CLAMP	3		X		

BOOM CYLINDER HYDRAULICS
(410D HEAVY LIFT)
(510D STANDARD)
(SERIAL NO. -801199)

TP44515 -UN-01JAN94

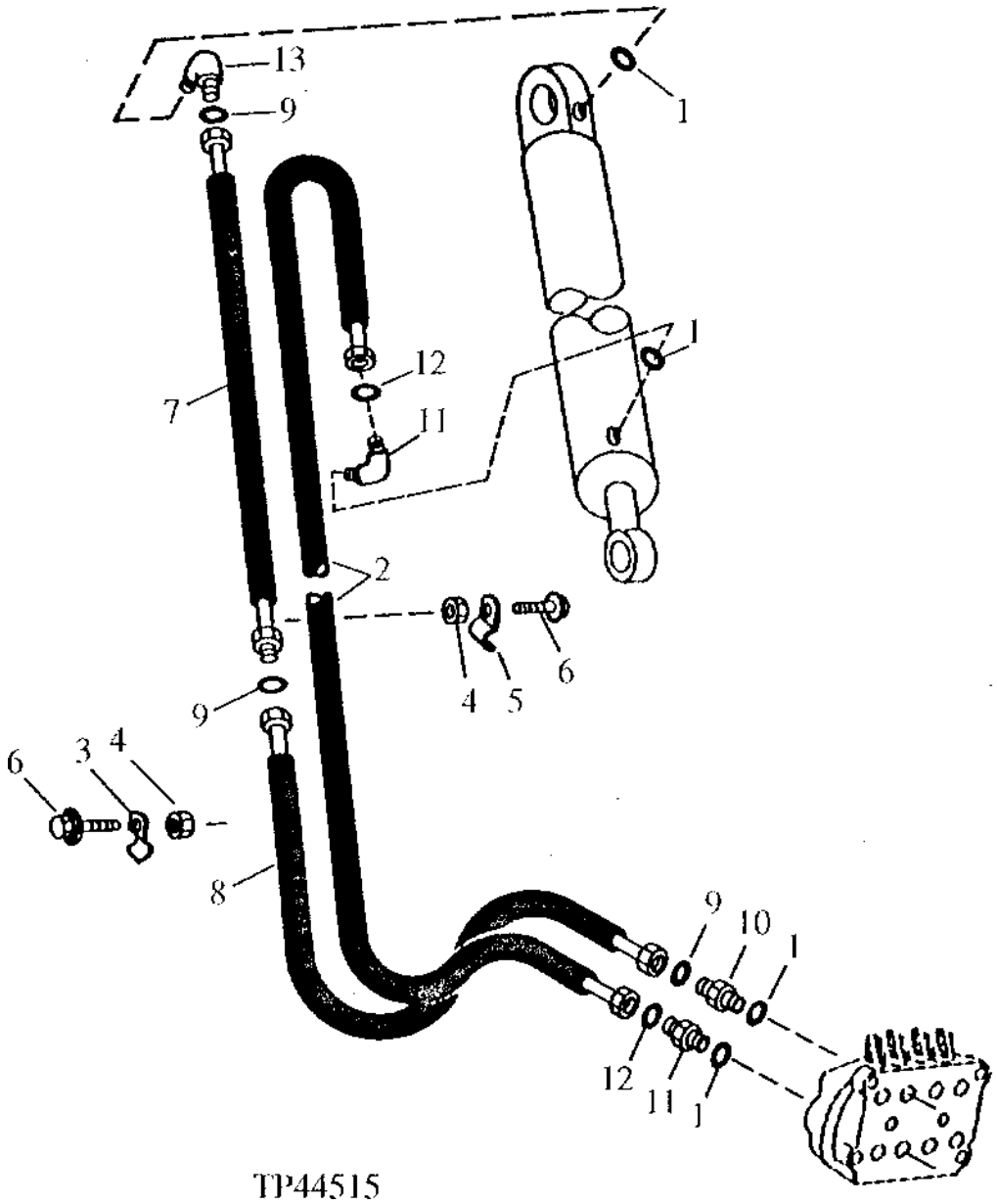

TP44515

BOOM CYLINDER HYDRAULICS
(410D HEAVY LIFT)
(510D STANDARD)
(SERIAL NO. -801199)

KEY	PART NO.	PART NAME	QTY	SERIAL NO.	410D	510D	REMARKS
1	U17409	O-RING	4	-796890	X	X	
	U12547	O-RING	4	796891-	X	X	
2	AT133153	HYDRAULIC HOSE - FABRICATE	1		X	X	
3	U15939	CLAMP	1		X	X	
4	14M7274	NUT	2		X	X	M10
5	U15939	CLAMP	1		X	X	
6	19M7662	CAP SCREW	2		X	X	M10 X 30
	24M7239	WASHER	2		X	X	10.700 X 21 X 2.500 MM
7	AT133155	HYDRAULIC HOSE	1		X	X	1-7/16" X 1 465 MM (57-3/4") X 1-7/16"
8	AT133149	HYDRAULIC HOSE - FABRICATE	1		X	X	
9	T76938	O-RING	3		X	X	
10	38H1346	ADAPTER	1	-796890	X	X	
	T151255	ADAPTER	1	796891-	X	X	
11	38H1350	ADAPTER	1	-796890	X	X	STRAIGHT
	38H1175	ADAPTER	1	796891-	X	X	
12	T77857	O-RING	2		X	X	
13	38H1347	ELBOW FITTING	1		X	X	90 DEGREE

BUCKET CYLINDER HYDRAULICS
(SERIAL NO. -801199 410D STANDARD BOOM)
(SERIAL NO. - 410D/510 HEAVY LIFT BOOM)

TP40469 -UN-01JAN94

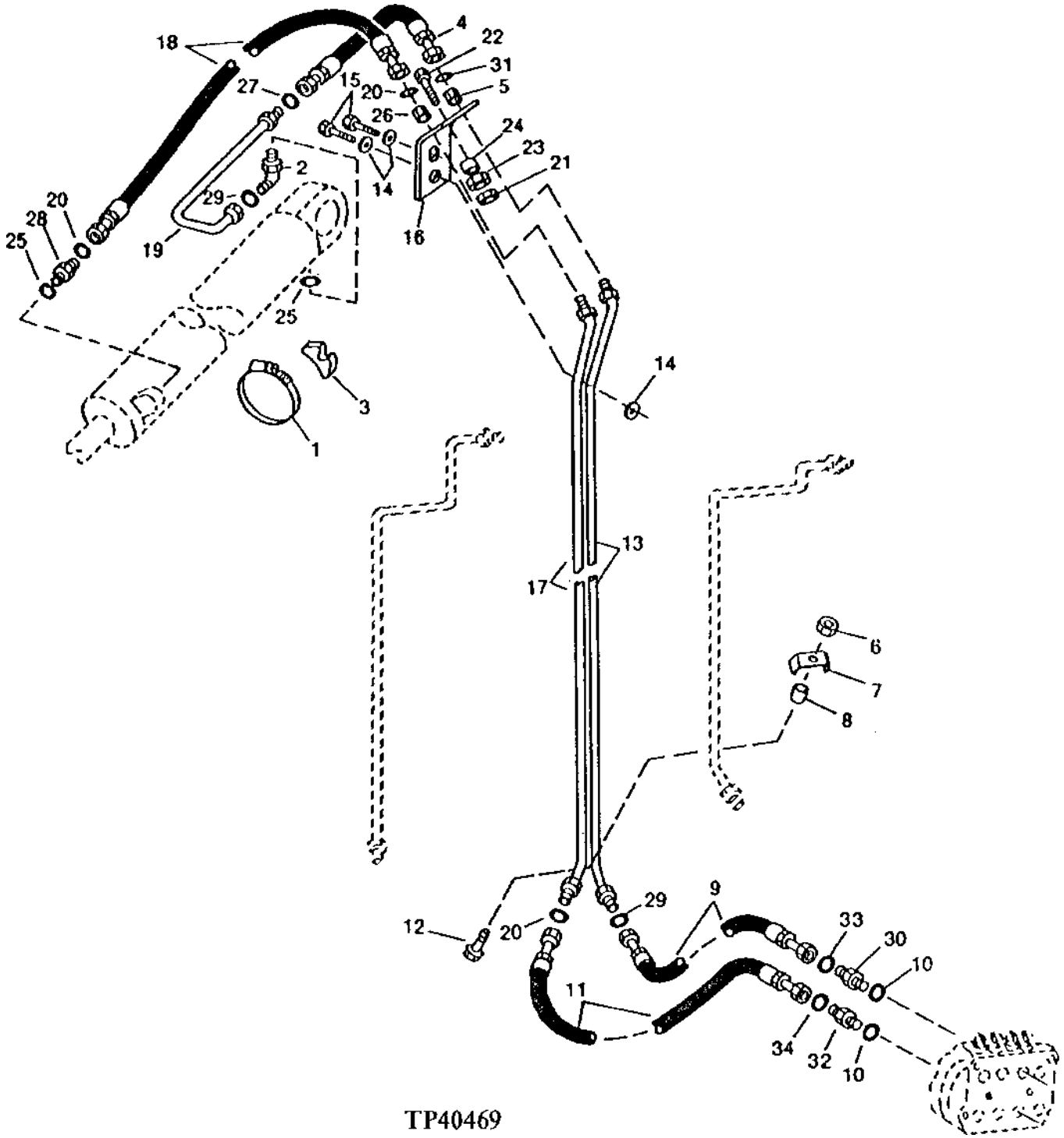

TP40469

BUCKET CYLINDER HYDRAULICS
(SERIAL NO. -801199 410D STANDARD BOOM)
(SERIAL NO. - 410D/510D HEAVY LIFT BOOM)

KEY	PART NO.	PART NAME	QTY	SERIAL NO.	410D	510D	REMARKS
1	C16054	CLAMP	1		X	X	(SUB FOR AC15595, THIS APPLICATION)
2	38H1007	ELBOW FITTING	1		X	X	90 DEGREE
3	T105773	GUIDE	1		X	X	
4	AT101765	HYDRAULIC HOSE - FABRICATE	1		X	X	1" X 925 MM (36-1/2") X 1"
5	T80306	NUT	1		X	X	
6	14M7337	NUT	2		X	X	M10
7	U40398	CLAMP	2		X	X	
8	28H1522	SPACER	1		X		RIGHT LINES 1.9M DIPPERSTICK WITH STANDARD BOOM
	28H1521	SPACER	1		X		LEFT LINES 1.9M DIPPERSTICK WITH STANDARD BOOM
	28H1521	SPACER	2		X	X	1.2M AND 1.9M DIPPERSTICK WITH HEAVY LIFT BOOM
9	AT133150	HYDRAULIC HOSE - FABRICATE	1	-801199	X	X	1-3/16" X 1 330 MM (52-1/4") X 1-3/16"
	AT165947	HYDRAULIC HOSE - FABRICATE	1	801200-	X	X	1-3/16" X 1 370 MM (54") X 1-3/16" (WITH HEAVY LIFT BOOM)
10	U17409	O-RING	2	-796890	X	X	
	U12547	O-RING	2	796891-	X	X	
11	AT133151	HYDRAULIC HOSE - FABRICATE	1	-801199	X	X	13/16" X 1 390 MM (54-3/4") X 13/16"
	AT165948	HYDRAULIC HOSE - FABRICATE	1	801200-	X	X	13/16" X 1 430 MM (56-1/4") X 13/16" (WITH HEAVY LIFT BOOM)
12	19M7658	CAP SCREW	2		X	X	M10 X 50
	24M7239	WASHER	2		X	X	10.700 X 21 X 2.500 MM
13	AT101466	OIL LINE	1		X		1.9M DIPPERSTICK WITH STANDARD BOOM
	AT101418	OIL LINE	1		X	X	1.9M AND 2.1M DIPPERSTICK WITH HEAVY LIFT BOOM
14	24M7241	WASHER	3		X	X	17 X 34 X 4 MM
15	19M7409	CAP SCREW	2		X	X	M16 X 50
16	T100981	BRACKET	1		X	X	
17	AT101465	OIL LINE	1		X		1.9M DIPPERSTICK WITH STANDARD BOOM
	AT101419	OIL LINE	1		X	X	1.9M AND 2.1M DIPPERSTICK WITH HEAVY LIFT BOOM
18	AT101435	HYDRAULIC HOSE - FABRICATE	1		X	X	13/16" X 1 500 MM (59") X 13/16"
19	AT101914	OIL LINE	1		X	X	
20	T77857	O-RING	3		X	X	
21	14M7166	LOCK NUT	1		X	X	M8
	24M7238	WASHER	1		X	X	8.700 X 17 X 2 MM
22	19M7513	CAP SCREW	1		X	X	M8 X 30
	24M7238	WASHER	1		X	X	8.700 X 17 X 2 MM
23	14H1039	NUT	1		X	X	5/8"
24	28H90	BUSHING	1		X	X	
25	U12547	O-RING	2		X	X	
26	T78716	NUT	1		X	X	
27	T76938	O-RING	1		X	X	
28	38H1175	ADAPTER	2		X	X	90 DEGREE
29	T77858	O-RING	2		X	X	
30	38H1343	ADAPTER	1	-796890	X	X	
	38H1163	ADAPTER	1	796891-	X	X	
31	T77932	O-RING	1		X	X	
32	38H1350	ADAPTER	1	-796890	X	X	
	38H1175	ADAPTER	1	796891-	X	X	
33	T77858	O-RING	1		X	X	
34	T77857	O-RING	1		X	X	

CROWD CYLINDER HYDRAULICS
(SERIAL NO. -801199)

TP45503 -UN-17OCT94

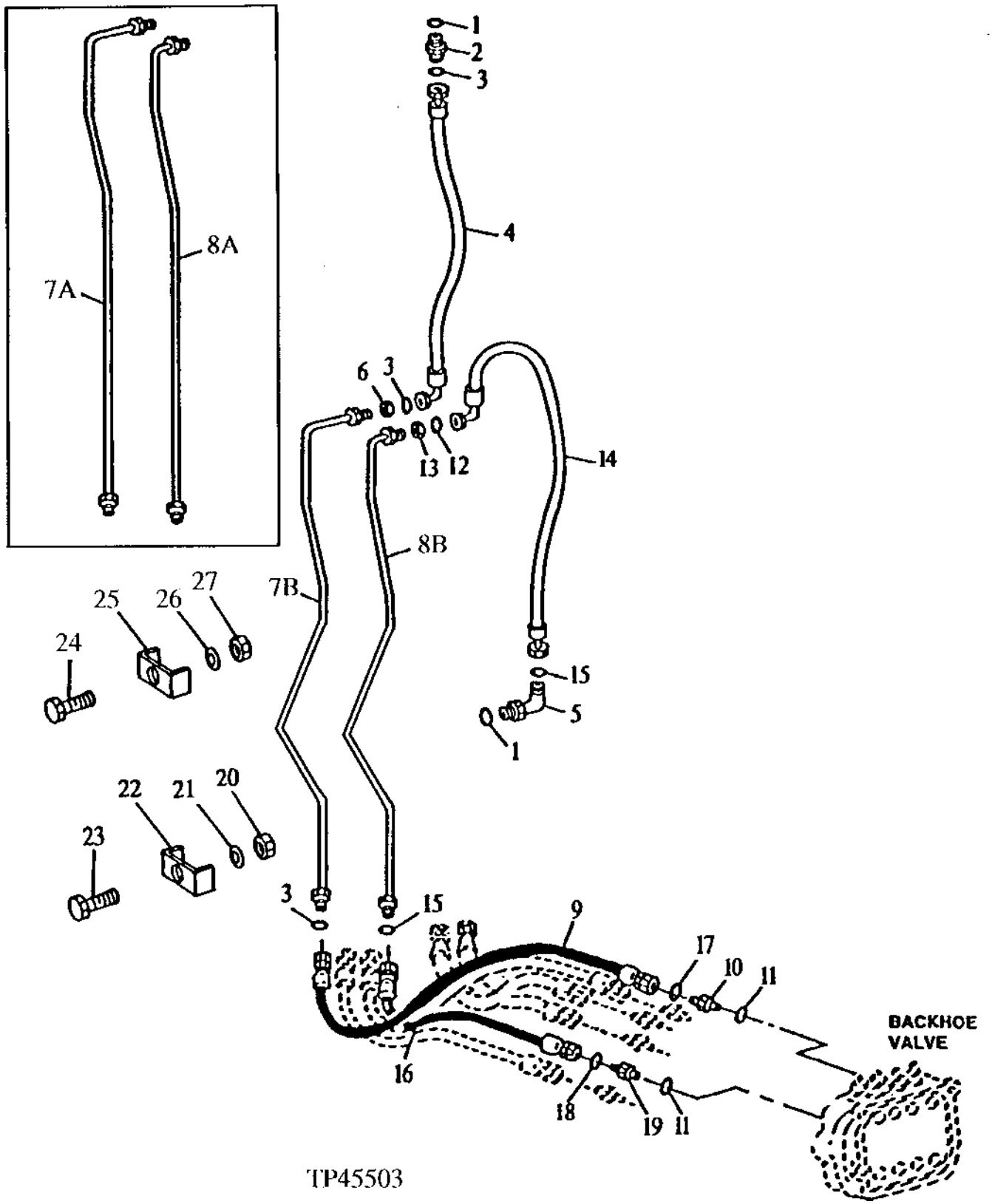

CROWD CYLINDER HYDRAULICS
(SERIAL NO. -801199)

KEY	PART NO.	PART NAME	QTY	SERIAL NO.	410D	510D	REMARKS
1	U12547	O-RING	2		X	X	
2	38H1175	ADAPTER	2		X		STRAIGHT (WITH STANDARD BOOM)
	38H1013	ELBOW FITTING	1		X	X	90 DEGREE (NOT ILLUSTRATED) (WITH HEAVY LIFT BOOM)
3	T77857	O-RING	3		X	X	
4	AT163115	HYDRAULIC HOSE - FABRICATE	1		X	X	(SUB FOR AT100618)
5	38H1007	ELBOW FITTING	1		X	X	90 DEGREE
6	T78716	NUT	1		X	X	
7	AT101467	OIL LINE	1		X		(NOT ILLUSTRATED) (WITH STANDARD BOOM)
7A	AT101421	OIL LINE	1	-797021	X	X	(WITH HEAVY LIFT BOOM)
7B	AT166900	OIL LINE	1	797022-	X	X	(WITH HEAVY LIFT BOOM)
8	AT101468	OIL LINE	1		X		(NOT ILLUSTRATED) (WITH STANDARD BOOM)
8A	AT101420	OIL LINE	1	-797021	X	X	(WITH HEAVY LIFT BOOM)
8B	AT166899	OIL LINE	1	797022-	X	X	(WITH HEAVY LIFT BOOM)
9	AT133151	HYDRAULIC HOSE - FABRICATE	1		X	X	13/16" X 1 390 MM (54-3/4") X 13/16"
10	38H1350	ADAPTER	1	-796890	X	X	STRAIGHT
	38H1175	ADAPTER	1	796891-	X	X	
11	U17409	O-RING	2	-796890	X	X	
	U12547	O-RING	2	796891-	X	X	
12	T77932	O-RING	1		X	X	
13	T80306	NUT	1		X	X	
14	AT118697	HYDRAULIC HOSE	1		X	X	1-3/16" X 1 245 MM (49") X 1"
15	T77858	O-RING	2		X	X	
16	AT133150	HYDRAULIC HOSE - FABRICATE	1		X	X	1-3/16" X 1 330 MM (52-1/4") X 1-3/16"
17	T77857	O-RING	1		X	X	
18	T77858	O-RING	1		X	X	
19	38H1343	ADAPTER	1	-796890	X	X	STRAIGHT
	38H1163	ADAPTER	1	796891-	X	X	
20	14M7337	NUT	1		X	X	M10
21	24M7239	WASHER	1		X	X	10.700 X 21 X 2.500 MM
22	U40398	CLAMP	1		X	X	
23	19M7658	CAP SCREW	1		X	X	M10 X 50
24	19M7550	CAP SCREW	1	800662-	X	X	M10 X 35, (HEAVY LIFT)
25	U46219	HOSE CLAMP	1	800662-	X	X	(HEAVY LIFT)
26	24M7239	WASHER	3	800662-	X	X	10.700 X 21 X 2.500 MM, (HEAVY LIFT)
27	14M7517	LOCK NUT	1	800662-	X	X	M10, (HEAVY LIFT)

EXTENDIBLE DIPPERSTICK AND BUCKET CYLINDER HYDRAULICS
(SERIAL NO. -801199)

T159365 -UN-23SEP02

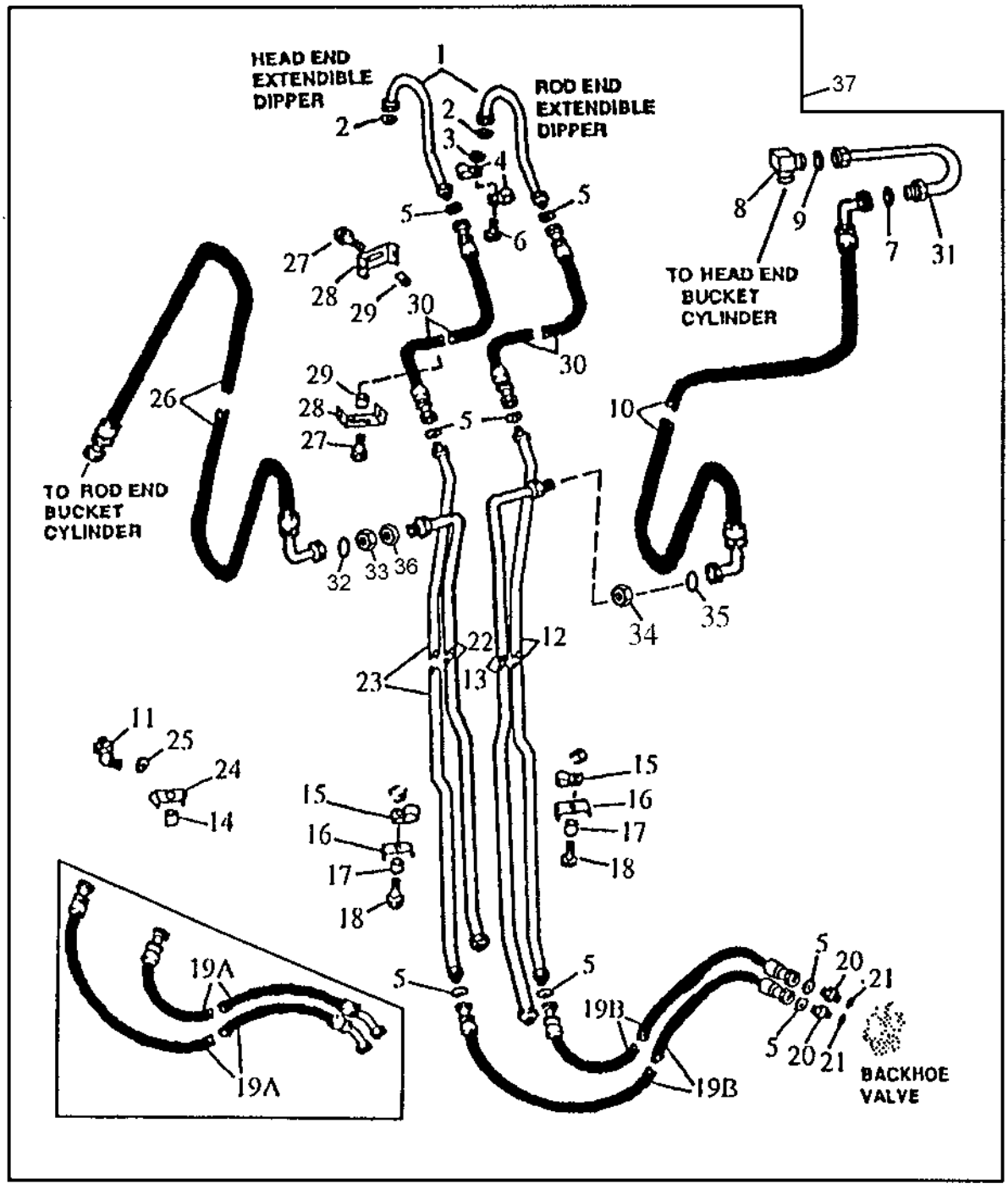

T159365

EXTENDIBLE DIPPERSTICK AND BUCKET CYLINDER HYDRAULICS
(SERIAL NO. -801199)

KEY	PART NO.	PART NAME	QTY	SERIAL NO.	410D	510D	REMARKS
1	AT101494	OIL LINE	2	-787384	X		1.2M
	AT160360	OIL LINE	2	787385-	X		1.2M
	AT101778	OIL LINE	2	-787384	X	X	1.5M
	AT161753	TUBE	2	787385-	X	X	1.5M
2	T77857	O-RING	2	-787384	X	X	12.421 X 1.778 MM (0.489" X 0.070")
	T77932	O-RING	2	787385-	X	X	15.596 X 1.778 MM (0.614" X 0.070")
3	24M7028	WASHER	2		X	X	10.500 X 20 X 2 MM
	28H1697	SPACER	1		X	X	0.493" X 0.675" X 3/4"
4	T24958	CLIP	2		X	X	
5	T77857	O-RING	8		X	X	12.421 X 1.778 MM (0.489" X 0.070")
6	19M7662	CAP SCREW	1	-787384	X	X	M10 X 30
	19M7932	CAP SCREW	2	787385-	X	X	M8 X 16
7	T76938	O-RING	1		X	X	23.520 X 1.778 MM (0.926" X 0.070")
8	38H1007	ELBOW FITTING	1	-787384	X		90 DEGREE - 1.2M
9	T77932	O-RING	1		X		15.596 X 1.778 MM (0.614" X 0.070") 1.2M
	T76938	O-RING	1		X	X	23.520 X 1.778 MM (0.926" X 0.070") 1.5M
10	AT133154	HYDRAULIC HOSE	1	-787384	X		1" X 1 875 MM (73-3/4") X 1"
	AT162077	HYDRAULIC HOSE - FABRICATE	1	787385-	X		1" X 2 286 MM (90") X 1"
	AT162077	HYDRAULIC HOSE - FABRICATE	1		X	X	1" X 2 286 MM (90") X 1", 1.5M
11	38H1007	ELBOW FITTING	1		X	X	1.5M (TO HEAD END CROWD CYLINDER)
12	AT101469	OIL LINE	1		X		1.2M
	AT101425	OIL LINE	1		X	X	1.5M
13	AT101472	OIL LINE	1		X		1.2M
	AT101423	OIL LINE	1		X	X	1.5M
14	28H1521	SPACER	1		X	X	0.493" X 0.675" X 9/16", 1.5M (CROWD LINE CLAMP)
15	R46414	CLAMP	2		X		1.2M
16	U40398	CLAMP	3		X	X	
17	28H1521	SPACER	3		X	X	0.493" X 0.675" X 9/16"
18	19M7658	CAP SCREW	2		X	X	M10 X 50, 1.2M
19A	AT133152	HYDRAULIC HOSE - FABRICATE	2	-797469	X	X	13/16" X 1 460 MM (57-1/2") X 13/16"
19B	AT133151	HYDRAULIC HOSE - FABRICATE	2	797470-	X	X	
20	38H1350	ADAPTER	2	-796890	X	X	STRAIGHT
	38H1175	ADAPTER	2	796891-	X	X	
21	U17409	O-RING	2	-796890	X	X	26.619 X 2.946 MM (1.048" X 0.116")
	U12547	O-RING	2	796891-	X	X	
22	AT101471	OIL LINE	1		X	X	1.2M
	AT101422	OIL LINE	1	-814306	X	X	1.5M, (SUB AT175073 AND (2) 24H1424)
	AT175073	OIL LINE	1	814307-	X	X	
23	AT101470	OIL LINE	1		X		1.2M
	AT101424	OIL LINE	1		X	X	1.5M
24	U40398	CLAMP	1		X	X	1.5M (CROWD LINE TO BOOM)
25	T77858	O-RING	1		X	X	18.771 X 1.778 MM (0.739" X 0.070")
26	AT135293	HYDRAULIC HOSE - FABRICATE	1	-787384	X		13/16" X 2 670 MM (105") X 13/16" 1.2M
	AT133157	HYDRAULIC HOSE - FABRICATE	1	787385-	X		13/16" X 3 075 MM (121") X 13/16" 1.2M
	AT133157	HYDRAULIC HOSE - FABRICATE	1		X	X	13/16" X 3 075 MM (121") X 13/16"
27	19M7550	CAP SCREW	2		X	X	M10 X 35
28	U40398	CLAMP	2		X	X	
29	28H1697	SPACER	1		X	X	0.493" X 0.675" X 3/4", (SUB FOR M74635)
30	AT101444	HYDRAULIC HOSE - FABRICATE	2		X	X	13/16" X 780 MM (30-3/4") X 13/16"
31	AT162888	OIL LINE	1		X		
32	T77857	O-RING	1		X	X	
33	T78716	NUT	1		X	X	
34	T80306	NUT	1		X	X	
35	T77932	O-RING	1		X	X	
36	24H1424	WASHER	2	814307-	X	X	29/32" X 1-1/2" X 0.060"
37	**AT163134**	**DIPPERSTICK**	**1**		**X**		**HYDRAULICS 1.2M**
	AT166200	**DIPPERSTICK**	**1**		**X**	**X**	**HYDRAULICS 1.5M, (SUB FOR AT163140)**

BOOM CYLINDER HYDRAULICS
(FOR USE WITH STANDARD BOOM)
(SERIAL NO. 801200-)

TP45490 -UN-01JAN94

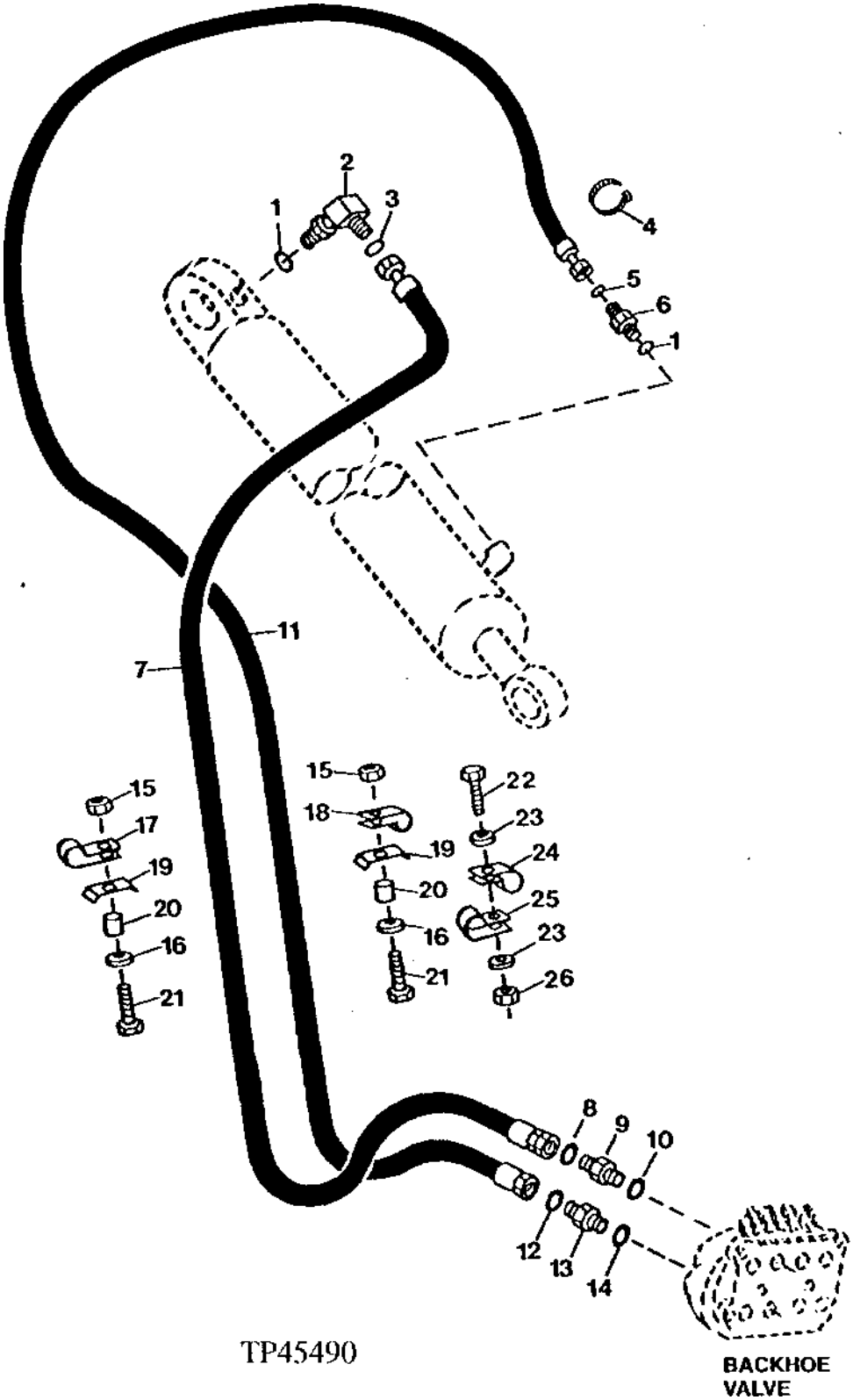

BOOM CYLINDER HYDRAULICS
(FOR USE WITH STANDARD BOOM)
(SERIAL NO. 801200-)

KEY	PART NO.	PART NAME	QTY	SERIAL NO.	410D	510D	REMARKS
1	U12547	O-RING	2		X		23.470 X 2.946 MM (0.924" X 0.116")
2	38H1007	ELBOW FITTING	1		X		
3	T77858	O-RING	2		X		18.771 X 1.778 MM (0.739" X 0.070")
4	R76477	TIE BAND	1		X		(SUB FOR A49232)
5	T77857	O-RING	1		X		12.421 X 1.778 MM (0.489" X 0.070")
6	38H1175	ADAPTER	1		X		
7	AT169216	HYDRAULIC HOSE - FABRICATE	1		X		1-3/16" X 2 768 MM (109") X 1-3/16"
8	T77858	O-RING	1		X		18.771 X 1.778 MM (0.739" X 0.070")
9	38H1163	ADAPTER	1		X		
10	U12547	O-RING	1		X		23.470 X 2.946 MM (0.924" X 0.116")
11	AT172128	HYDRAULIC HOSE	1		X		13/16" X 2 641 MM (104") X 13/16", (SUB FOR AT166161) (ALSO ORDER T102934)
12	T77857	O-RING	1		X		12.421 X 1.778 MM (0.489" X 0.070")
13	AT135932	CHECK VALVE	1		X		
14	U12547	O-RING	1		X		23.470 X 2.946 MM (0.924" X 0.116")
15	14M7517	LOCK NUT	2		X		M10
16	24M7239	WASHER	2		X		10.700 X 21 X 2.500 MM
17	T120536	CLAMP	1		X		
18	T151192	CLAMP	1		X		
19	U40398	CLAMP	2		X		
20	28H1521	SPACER	2		X		0.493" X 0.675" X 9/16"
21	19M8499	CAP SCREW	2		X		M10 X 60
22	19M7407	CAP SCREW	1		X		M8 X 25
23	24M7238	WASHER	2		X		8.700 X 17 X 2 MM
24	T78787	CLAMP	1		X		(USE WITH AT166161)
	T102934	CLAMP	1		X		(USE WITH AT172128)
25	R46414	CLAMP	1		X		
26	14M7166	LOCK NUT	1		X		M8

BOOM CYLINDER HYDRAULICS
(410D HEAVY LIFT)
(510D STANDARD)
(SERIAL NO. 801200-)

TP45493 -UN-01JAN94

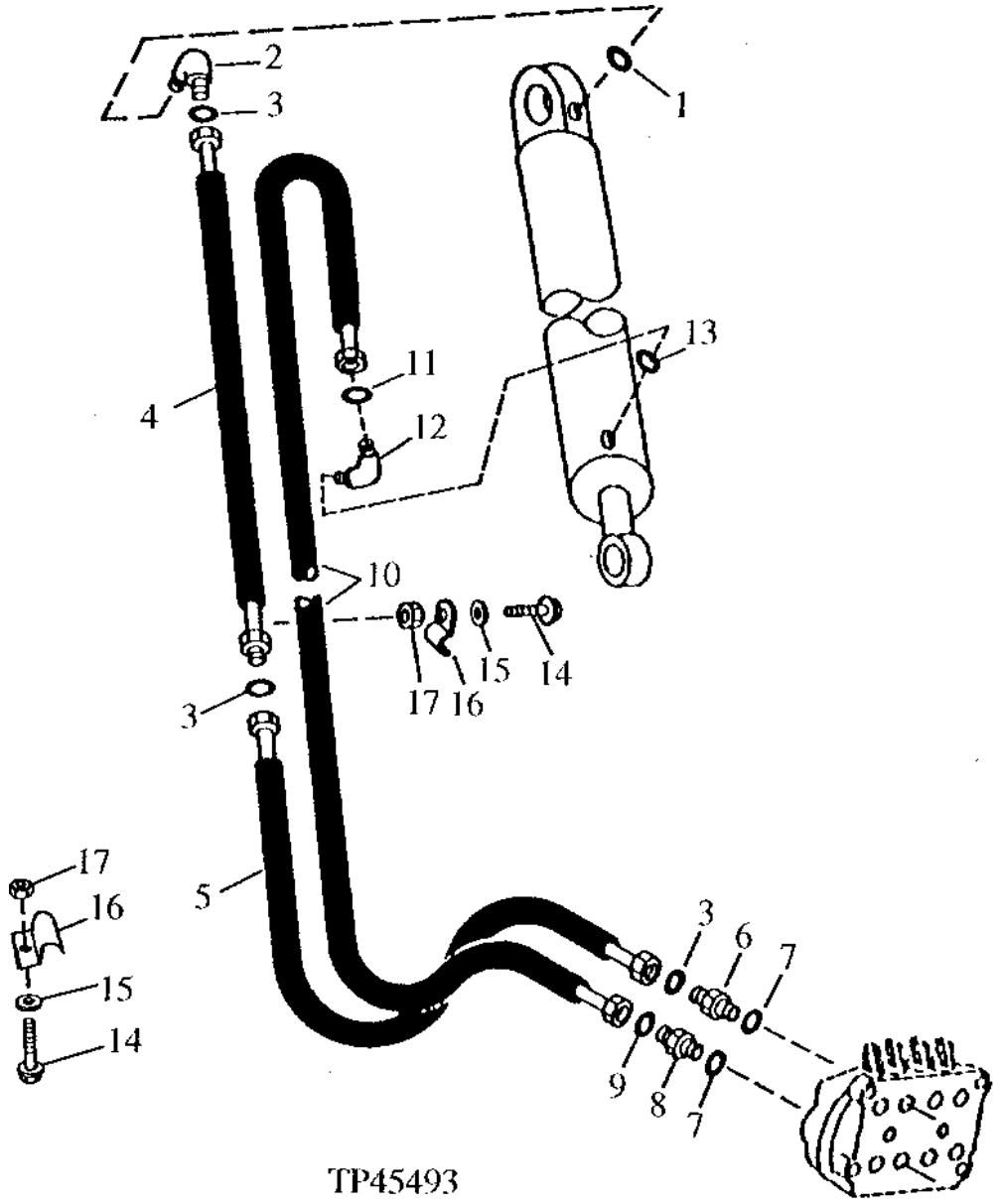

TP45493

BOOM CYLINDER HYDRAULICS
(FOR USE WITH HEAVY LIFT BOOM)
(SERIAL NO. 801200-)

KEY	PART NO.	PART NAME	QTY	SERIAL NO.	410D	510D	REMARKS
1	R29936	O-RING	1		X	X	29.743 X 2.946 MM (1.171" X 0.116")
2	38H1037	ELBOW FITTING	1		X	X	
3	T76938	O-RING	3		X	X	23.520 X 1.778 MM (0.926" X 0.070")
4	AT133155	HYDRAULIC HOSE	1		X	X	1-7/16" X 1 465 MM (57-3/4") X 1-7/16"
5	AT165946	HYDRAULIC HOSE - FABRICATE	1		X	X	1-7/16" X 1 630 MM (64-1/4") X 1-7/16"
6	T151255	ADAPTER	1		X	X	
7	U12547	O-RING	2		X	X	23.470 X 2.946 MM (0.924" X 0.116")
8	38H1175	ADAPTER	1		X	X	
9	T77857	O-RING	1		X	X	12.421 X 1.778 MM (0.489" X 0.070")
10	AT165949	HYDRAULIC HOSE - FABRICATE	1		X	X	13/16" X 2 815 MM (110-3/4") X 13/16"
11	T77857	O-RING	1		X	X	12.421 X 1.778 MM (0.489" X 0.070")
12	38H1013	ELBOW FITTING	1		X	X	
13	U12547	O-RING	1		X	X	23.470 X 2.946 MM (0.924" X 0.116")
14	19M7662	CAP SCREW	2		X	X	M10 X 30
15	24M7239	WASHER	2		X	X	10.700 X 21 X 2.500 MM
16	U15939	CLAMP	2		X	X	
17	14M7274	NUT	2		X	X	M10

BUCKET CYLINDER HYDRAULICS (STANDARD BOOM)
(SERIAL NO. 801200-)

TP45491 -UN-01JAN94

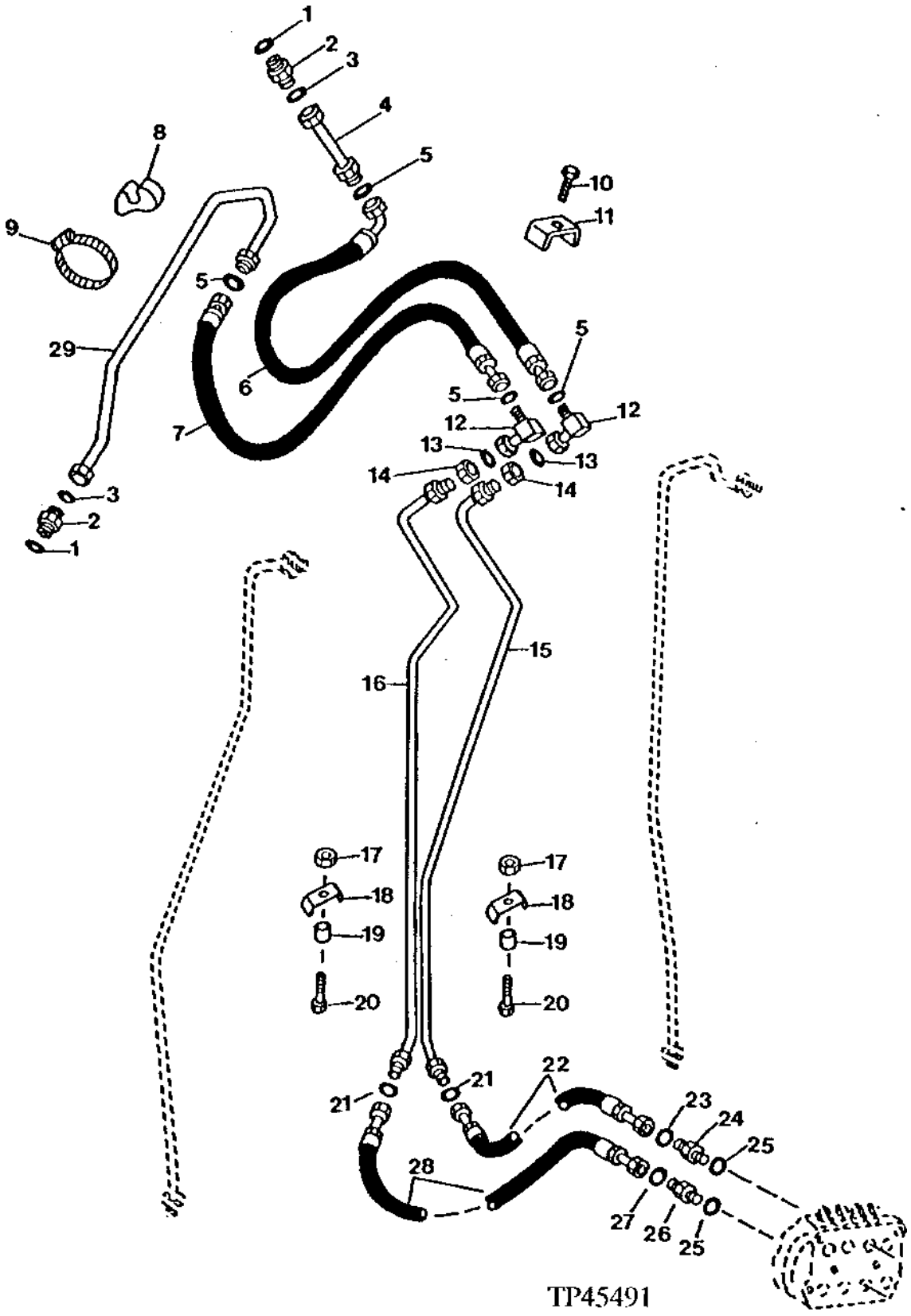

BUCKET CYLINDER HYDRAULICS (STANDARD BOOM)
(SERIAL NO. 801200-)

KEY	PART NO.	PART NAME	QTY	SERIAL NO.	410D	510D	REMARKS
1	U12547	O-RING	2		X		23.470 X 2.946 MM (0.924" X 0.116")
2	38H1329	ADAPTER	2		X		
3	T77932	O-RING	2		X		15.596 X 1.778 MM (0.614" X 0.070")
4	AT145319	OIL LINE	1		X		
5	T77857	O-RING	4		X		12.421 X 1.778 MM (0.489" X 0.070")
6	AT170846	HYDRAULIC HOSE - FABRICATE	1		X		
7	AT145676	HYDRAULIC HOSE - FABRICATE	1		X		
8	T105774	GUIDE	1		X		
9	AR21842	CLAMP	1		X		
10	19M8324	CAP SCREW	1		X		M10 X 16
11	T135078	CHANNEL	1		X		
12	38H1095	ELBOW FITTING	2		X		
13	T77857	O-RING	2		X		12.421 X 1.778 MM (0.489" X 0.070")
14	T78716	NUT	2		X		13/16"
15	AT157223	OIL LINE	1		X		
16	AT149714	OIL LINE	1		X		
17	14M7517	LOCK NUT	2		X		M10
18	U40398	CLAMP	2		X		
19	28H1521	SPACER	2		X		0.493" X 0.675" X 9/16"
20	19M8499	CAP SCREW	2		X		M10 X 60
21	T77857	O-RING	2		X		12.421 X 1.778 MM (0.489" X 0.070")
22	AT169215	HYDRAULIC HOSE - FABRICATE	1		X		13/16" X 1 295 MM (51") X 1-3/16"
23	T77858	O-RING	1		X		18.771 X 1.778 MM (0.739" X 0.070")
24	38H1163	ADAPTER	1		X		
25	U12547	O-RING	2		X		23.470 X 2.946 MM (0.924" X 0.116")
26	38H1175	ADAPTER	1		X		
27	T77857	O-RING	1		X		12.421 X 1.778 MM (0.489" X 0.070")
28	AT166159	HYDRAULIC HOSE - FABRICATE	1		X		13/16" X 1 295 MM (51") X 13/16"
29	AT161730	HYDRAULIC LINE	1		X		

CROWD CYLINDER HYDRAULICS
(SERIAL NO. 801200-)

TP45502 -UN-23SEP94

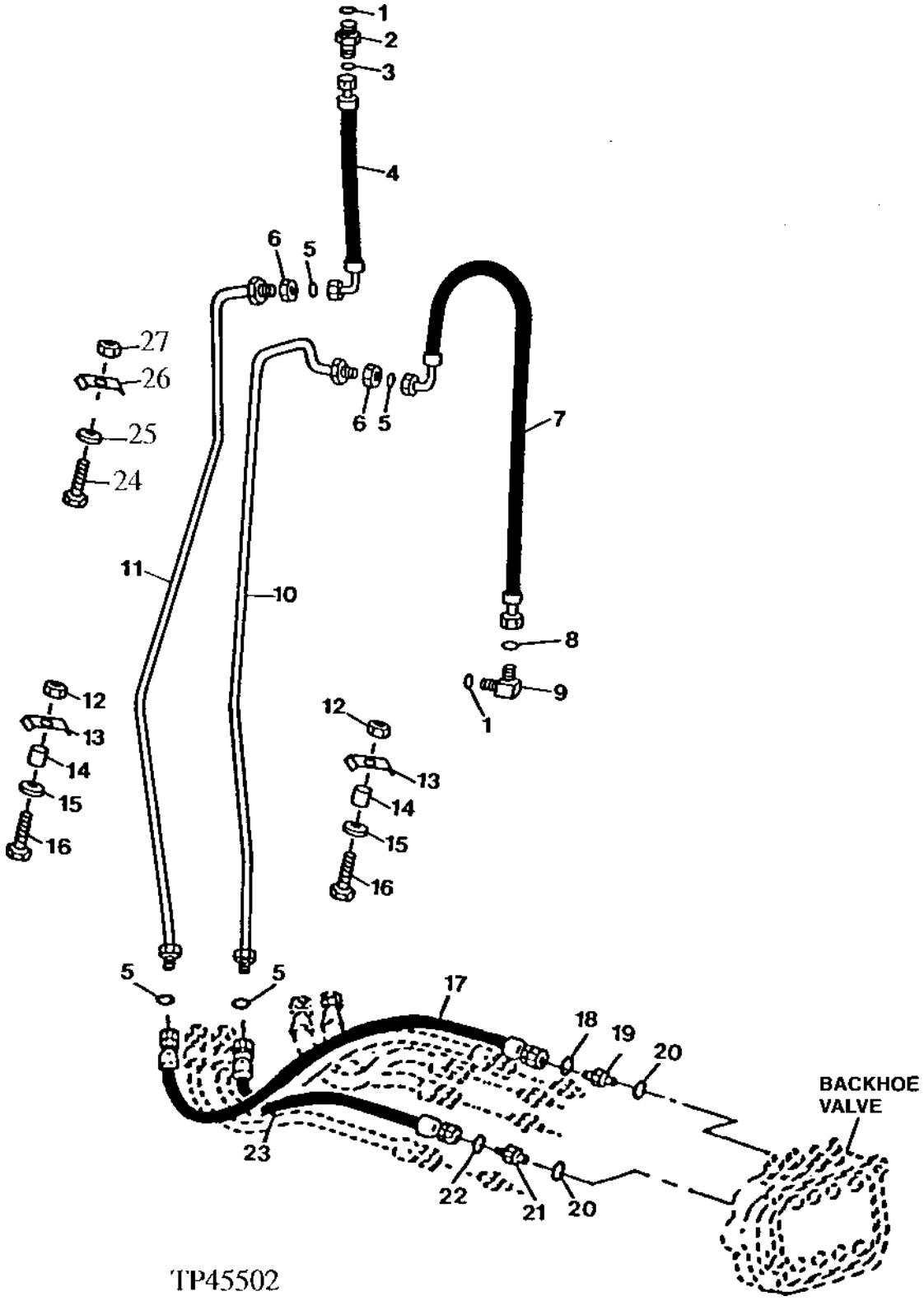

CROWD CYLINDER HYDRAULICS
(SERIAL NO. 801200-)

KEY	PART NO.	PART NAME	QTY	SERIAL NO.	410D	510D	REMARKS
1	U12547	O-RING	2		X	X	
2	38H1175	ADAPTER	1		X	X	
3	T77857	O-RING	1		X	X	
4	AT163115	HYDRAULIC HOSE - FABRICATE	1		X	X	
5	T77857	O-RING	4		X	X	
6	T78716	NUT	2		X	X	20.625 MM (13/16")
7	AT169610	HYDRAULIC HOSE - FABRICATE	1		X	X	1-3/16" X 900 MM (35-1/2") X 13/16"
8	T77858	O-RING	1		X	X	18.771 X 1.778 MM (0.739" X 0.070")
9	38H1007	ELBOW FITTING	1		X	X	
10	AT157222	OIL LINE	1		X	X	
11	AT149715	OIL LINE	1		X	X	
12	14M7517	LOCK NUT	2		X	X	M10
13	U40398	CLAMP	2		X	X	
14	28H1521	SPACER	2		X	X	0.493" X 0.675" X 9/16"
15	24M7239	WASHER	2		X	X	10.700 X 21 X 2.500 MM
16	19M8499	CAP SCREW	2		X	X	M10 X 60
17	AT166159	HYDRAULIC HOSE - FABRICATE	1		X	X	13/16" X 1 295 MM (51") X 13/16"
	AT165948	HYDRAULIC HOSE - FABRICATE	1		X	X	13/16" X 1 430 MM (56-1/4") X 13/16" (HEAVY LIFT)
18	T77857	O-RING	1		X	X	12.421 X 1.778 MM (0.489" X 0.070")
19	38H1175	ADAPTER	1		X	X	
20	U12547	O-RING	2		X	X	23.470 X 2.946 MM (0.924" X 0.116")
21	38H1163	ADAPTER	1		X	X	
22	T77858	O-RING	1		X	X	18.771 X 1.778 MM (0.739" X 0.070")
23	AT169215	HYDRAULIC HOSE - FABRICATE	1		X	X	13/16" X 1 295 MM (51") X 1-3/16"
	AT165947	HYDRAULIC HOSE - FABRICATE	1		X	X	1-3/16" X 1 370 MM (54") X 1-3/16" (HEAVY LIFT)
24	19M7550	CAP SCREW	1		X	X	(HEAVY LIFT)
25	24M7239	WASHER	3		X	X	(HEAVY LIFT)
26	U46219	HOSE CLAMP	1		X	X	(HEAVY LIFT)
27	14M7517	LOCK NUT	1		X	X	(HEAVY LIFT)

STANDARD BACKHOE HYDRAULICS
(EXTENDIBLE DIPPERSTICK)
(SERIAL NO. 801200-)

TP45534 -UN-17OCT94

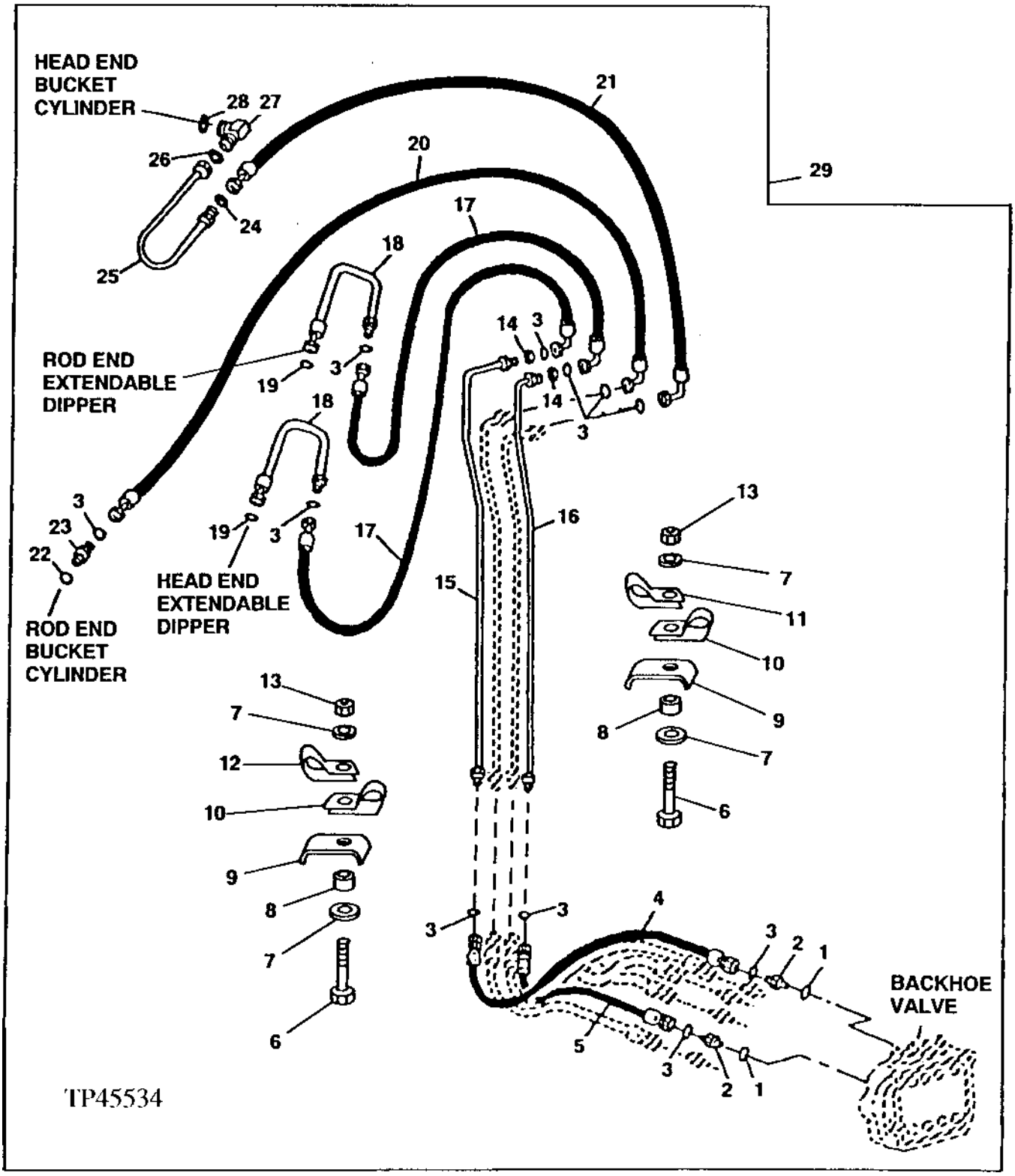

STANDARD BACKHOE HYDRAULICS
(EXTENDIBLE DIPPERSTICK)
(SERIAL NO. 801200-)

KEY	PART NO.	PART NAME	QTY	SERIAL NO.	410D	510D	REMARKS
1	U12547	O-RING	2		X		
2	38H1175	ADAPTER	2		X		
3	T77857	O-RING	8		X		
4	AT166165	HYDRAULIC HOSE - FABRICATE	1		X		13/16" X 1 399 MM (55") X 13/16"
5	AT166159	HYDRAULIC HOSE - FABRICATE	1		X		13/16" X 1 295 MM (51") X 13/16"
6	19M8499	CAP SCREW	2		X		M10 X 60
7	24M7238	WASHER	4		X		
8	28H1521	SPACER	2		X		
9	U40398	CLAMP	2		X		
10	R46414	CLAMP	2		X		
11	T151192	CLAMP	1		X		
12	T120536	CLAMP	1		X		
13	14M7517	LOCK NUT	2		X		M10
14	T78716	NUT	2		X		
15	AT151551	OIL LINE	1		X		
16	AT151552	OIL LINE	1		X		
17	AT173676	HOSE	2		X		11/16" X 1 467 MM (57-3/4") X 13/16", (SUB FOR AT162082)
18	AT159295	OIL LINE	2		X		
19	T77613	O-RING	2		X		
20	AT173675	HYDRAULIC HOSE	1		X		13/16" X 2 845 MM (112") X 13/16", (SUB FOR AT162076)
21	AT173677	HYDRAULIC HOSE - FABRICATE	1		X		1" X 2 245 MM (88-1/2") X 13/16", (SUB FOR AT162874)
22	U12547	O-RING	1		X		
23	38H1175	ADAPTER	1		X		
24	T76938	O-RING	1		X		
25	AT162888	OIL LINE	1		X		
26	T77858	O-RING	1		X		
27	38H1007	ELBOW FITTING	1		X		
28	U12547	O-RING	1		X		
29	.....	DIPPERSTICK	1		X		(AT166204 NO LONGER AVAILABLE)

HEAVY LIFT BACKHOE HYDRAULICS
(EXTENDIBLE DIPPERSTICK)
(410D HEAVY LIFT,510D STANDARD)
(SERIAL NO. 801200-)

TP45589 -UN-16DEC94

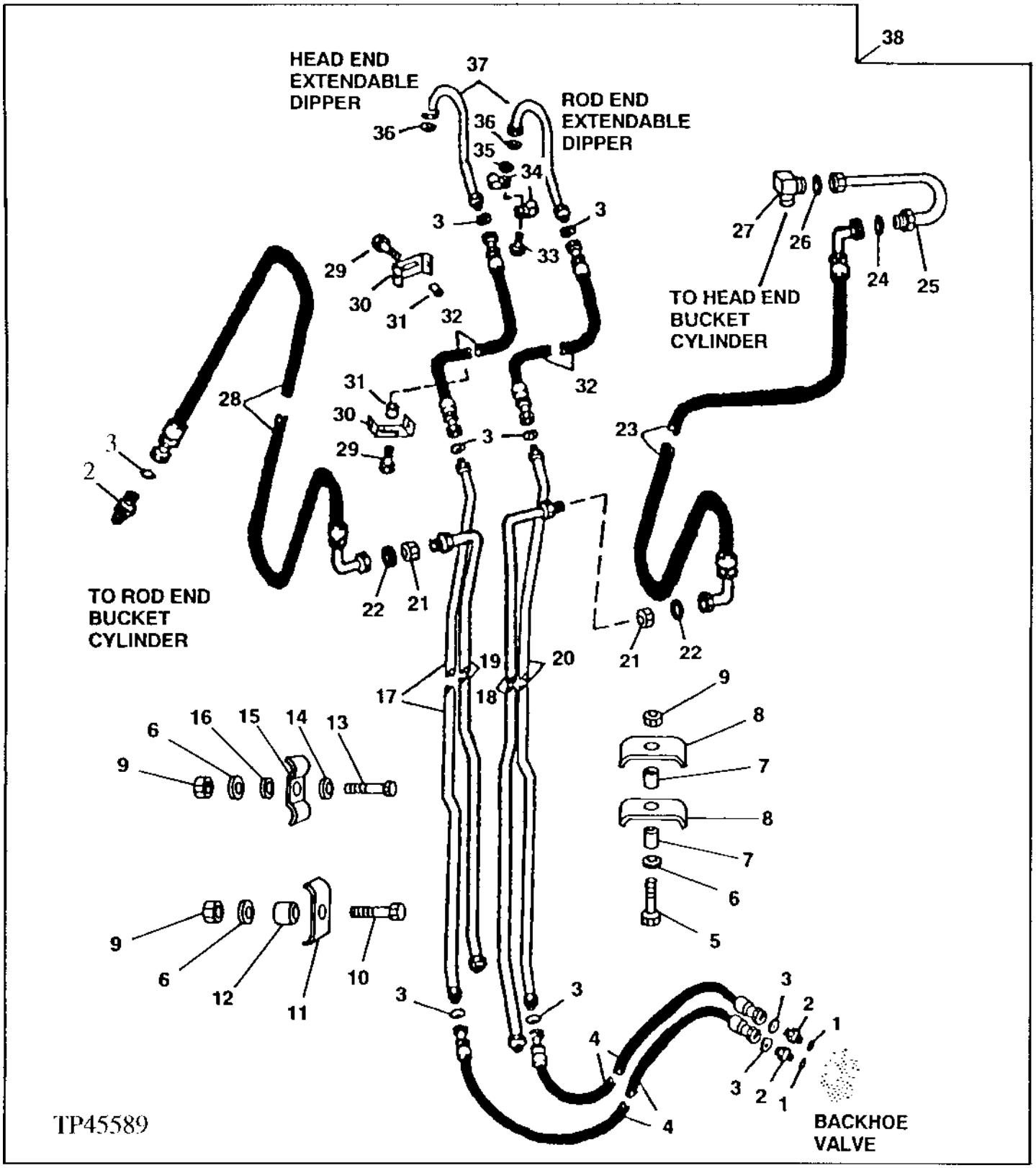

HEAVY LIFT BACKHOE HYDRAULICS)
(EXTENDIBLE DIPPERSTICK)
(410D HEAVY LIFT, 510D STANDARD)
(SERIAL NO. 801200-)

KEY	PART NO.	PART NAME	QTY	SERIAL NO.	410D	510D	REMARKS
1	U17409	O-RING	2		X	X	
2	38H1175	ADAPTER	3		X	X	STRAIGHT
3	T77857	O-RING	9		X	X	
4	AT165948	HYDRAULIC HOSE - FABRICATE	2		X	X	13/16" X 1 430 MM (56-1/4") X 13/16"
5	19M7875	CAP SCREW	2		X	X	M10 X 70, 1.2M
6	24M7239	WASHER	3		X	X	10.700 X 21 X 2.500 MM
7	28H1521	SPACER	2		X	X	0.493" X 0.675" X 9/16"
8	U40398	CLAMP	3		X	X	
9	14M7517	LOCK NUT	3		X	X	M10
10	19M7658	CAP SCREW	1		X	X	M10 X 50
11	U40398	CLAMP	1		X	X	
12	28H1521	SPACER	1		X	X	0.493" X 0.675" X 9/16"
13	19M7550	CAP SCREW	1		X	X	
14	24M7239	WASHER	1		X	X	10.700 X 21 X 2.500 MM
15	U46219	HOSE CLAMP	1		X	X	
16	24M7028	WASHER	1		X	X	10.500 X 20 X 2 MM
17	AT101424	OIL LINE	1		X	X	
18	AT101423	OIL LINE	1		X	X	
19	AT101422	OIL LINE	1	-814306	X	X	(SUB AT175073 AND (2) 24H1424)
	AT175073	OIL LINE	1	814307-	X	X	
20	AT101425	OIL LINE	1		X	X	
21	T78716	NUT	2		X	X	20.625 MM
	T80306	NUT	2		X	X	25.400 MM
22	T77857	O-RING	2		X	X	
23	AT162077	HYDRAULIC HOSE - FABRICATE	1		X	X	1" X 2 286 MM (90") X 1"
24	T76938	O-RING	1		X	X	
25	AT162888	OIL LINE	1		X	X	
26	T76938	O-RING	1		X	X	
27	38H1404	ELBOW FITTING	1		X	X	90 DEGREE
28	AT133157	HYDRAULIC HOSE - FABRICATE	1		X	X	13/16" X 3 075 MM (121") X 13/16" 1.2M
29	19M7550	CAP SCREW	2		X	X	M10 X 35
30	U40398	CLAMP	2		X	X	
31	28H1697	SPACER	1		X	X	0.493" X 0.675" X 3/4"
32	AT101444	HYDRAULIC HOSE - FABRICATE	2		X	X	13/16" X 780 MM (30-3/4") X 13/16"
33	19M7932	CAP SCREW	1		X	X	M8 X 16
34	T24958	CLIP	2		X	X	
35	24M7028	WASHER	2		X	X	10.500 X 20 X 2 MM
	28H1697	SPACER	1		X	X	0.493" X 0.675" X 3/4"
36	T77857	O-RING	2		X	X	
37	AT161753	TUBE	2		X	X	
38	24H1424	WASHER	2	814307-	X	X	29/32" X 1-1/2" X 0.060", HYDRAULICS 1.5M
39	**AT166200**	**DIPPERSTICK**	**1**		**X**	**X**	

SWING CYLINDER
(SERIAL NO. -801199)

TP19320 -UN-01JAN94

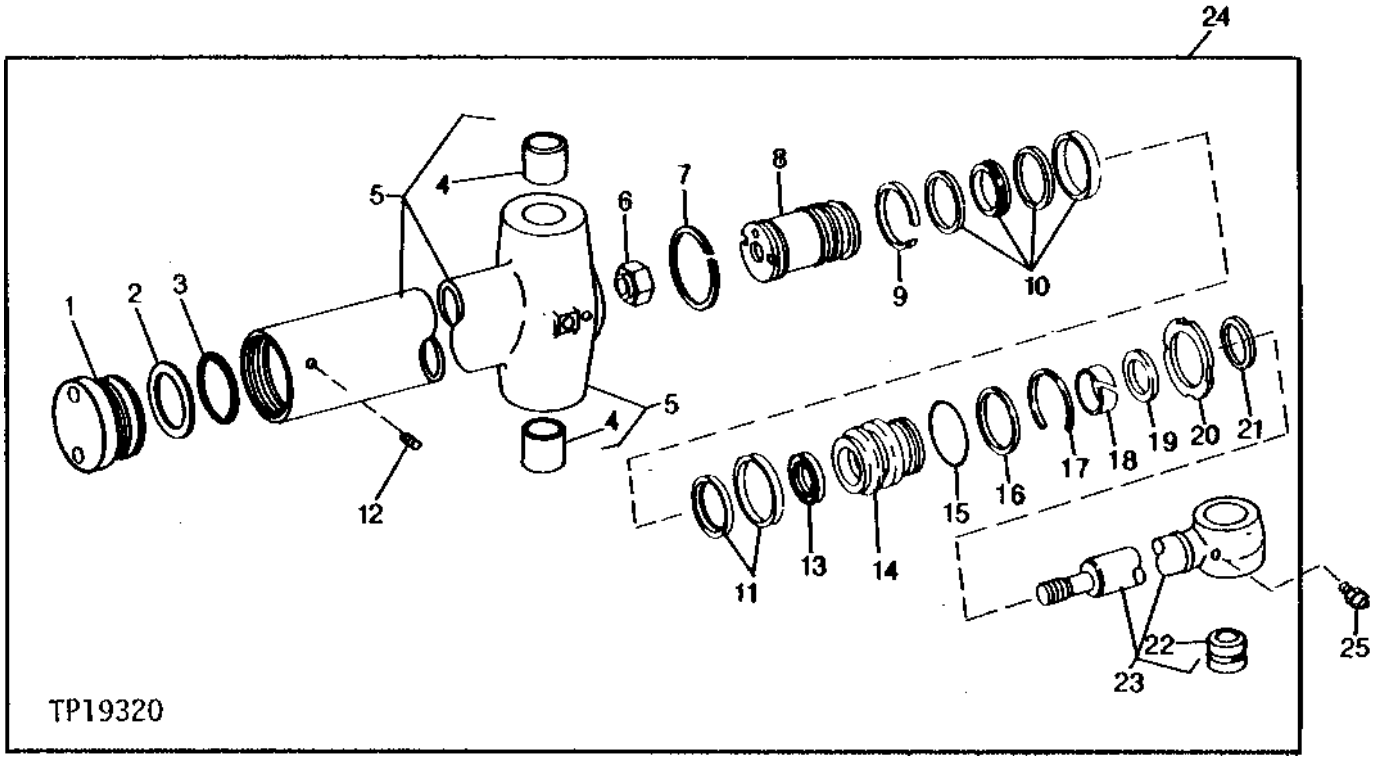

KEY	PART NO.	PART NAME	QTY	SERIAL NO.	410D	510D	REMARKS
1	R93755	HYDRAULIC CYLINDER CAP	1		X	X	
2	R78994	BACK-UP RING	1		X	X	
3	L2301CU	O-RING	1		X	X	
4	R81487	BUSHING	2		X	X	
5	RE28848	HYDRAULIC CYLINDER BARREL	1		X	X	
6	H170539	NUT	1		X	X	
7	R81796	RING	1		X	X	SPLIT, BRAKE SEAL
8	R89480	PISTON	1		X	X	
9	R81775	WEAR RING	1		X	X	(BK)
10	RE20343	SEAL	1		X	X	(BK)
11	RE20757	SEAL	1		X	X	(RK)
12	22H1077	SET SCREW	1		X	X	1/4" X 5/16"
13	R81973	SEAL	1		X	X	(RK)
14	.....	HYDR. CYLINDER ROD GUIDE	1		X	X	(R81972 NO LONGER USED) (SUB H157978) (ALSO ORDER AH210484)
15	F950R	O-RING	1		X	X	(SUB FOR F950R, THIS APPLICATION)
16	R81862	BACK-UP RING	1		X	X	(BK)
17	R81787	RING	1		X	X	
18	R81975	WEAR RING	1		X	X	(RK)
19	R91731	RING	AR		X	X	(BK)
20	R81793	NUT	1		X	X	
21	RE24536	SEAL	1		X	X	(RK)
22	R81488	BUSHING	1		X	X	
23	RE28849	ROD	1		X	X	
24	.....	HYDRAULIC CYLINDER	1		X	X	(RE33472 NO LONGER AVAILABLE) (SUB AH148720)
25	T162396	LUBRICATION FITTING	1		X	X	(SUB FOR JD7798) 1/8", STRIAGHT

(BK) AH212101 CYLINDER BORE REPAIR KIT (SUB FOR AH149844 REPAIR KIT)

(RK) RE20595 CYLINDER ROD REPAIR KIT

SWING CYLINDER
(REPLACEMENT CYLINDER)
(SERIAL NO. -801199)

TP19320 -UN-01JAN94

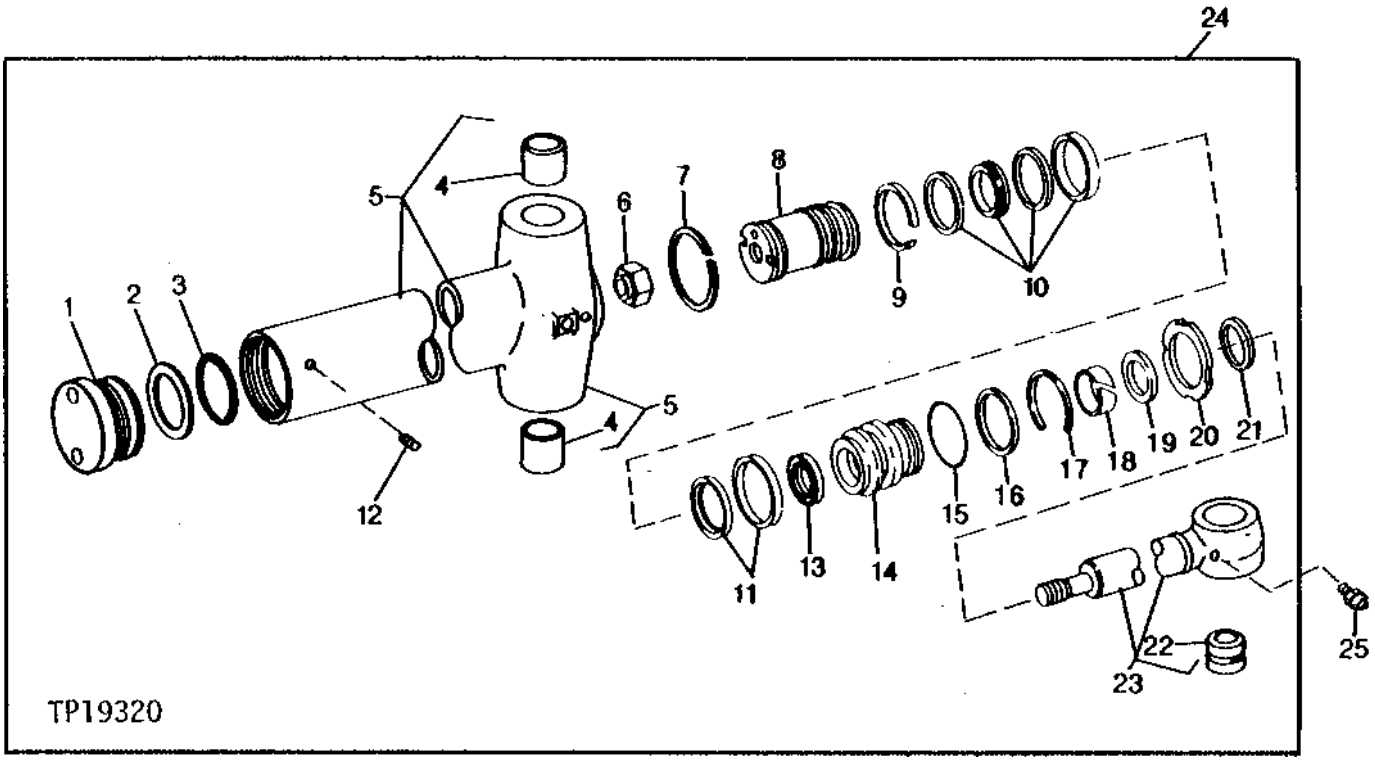

KEY	PART NO.	PART NAME	QTY	SERIAL NO.	4510DD	REMARKS
1	R93755	HYDRAULIC CYLINDER CAP	1		X X	
2	R78994	BACK-UP RING	1		X X	
3	L2301CU	O-RING	1		X X	
4	R81487	BUSHING	2		X X	
5	RE28848	HYDRAULIC CYLINDER BARREL	1		X X	
6	H170539	NUT	1		X X	
7	R81796	RING	1		X X	SPLIT, BRAKE SEAL
8	R89480	PISTON	1		X X	
9	R81775	WEAR RING	1		X X	(BK)
10	RE20343	SEAL	1		X X	(BK)
11	AH146561	SEAL	1		X X	(RK)
12	22H1077	SET SCREW	1		X X	1/4" X 5/16"
13	H152203	SEAL	1		X X	(RK)
14	H157978	HYDR. CYLINDER ROD GUIDE	1		X X	
15	F950R	O-RING	1		X X	
16	R81862	BACK-UP RING	1		X X	(BK)
17	R81787	RING	1		X X	
18	H152794	WEAR RING	1		X X	(RK)
19	R91731	RING	AR		X X	(BK)
20	R81793	NUT	1		X X	
21	AH146557	SEAL	1		X X	(RK)
22	R81488	BUSHING	1		X X	
23	RE28849	ROD	1		X X	
24	AH148720	HYDRAULIC CYLINDER	1		X X	
25	T162396	LUBRICATION FITTING	1		X X	(SUB FOR JD7798) 1/8", STRIAGHT

(BK) AH212101 CYLINDER BORE REPAIR KIT (SUB FOR AH149844 REPAIR KIT)

(RK) AH210484 CYLINDER ROD REPAIR KIT

SWING CYLINDER
(SERIAL NO.801200-)

TP41252 -UN-01JAN94

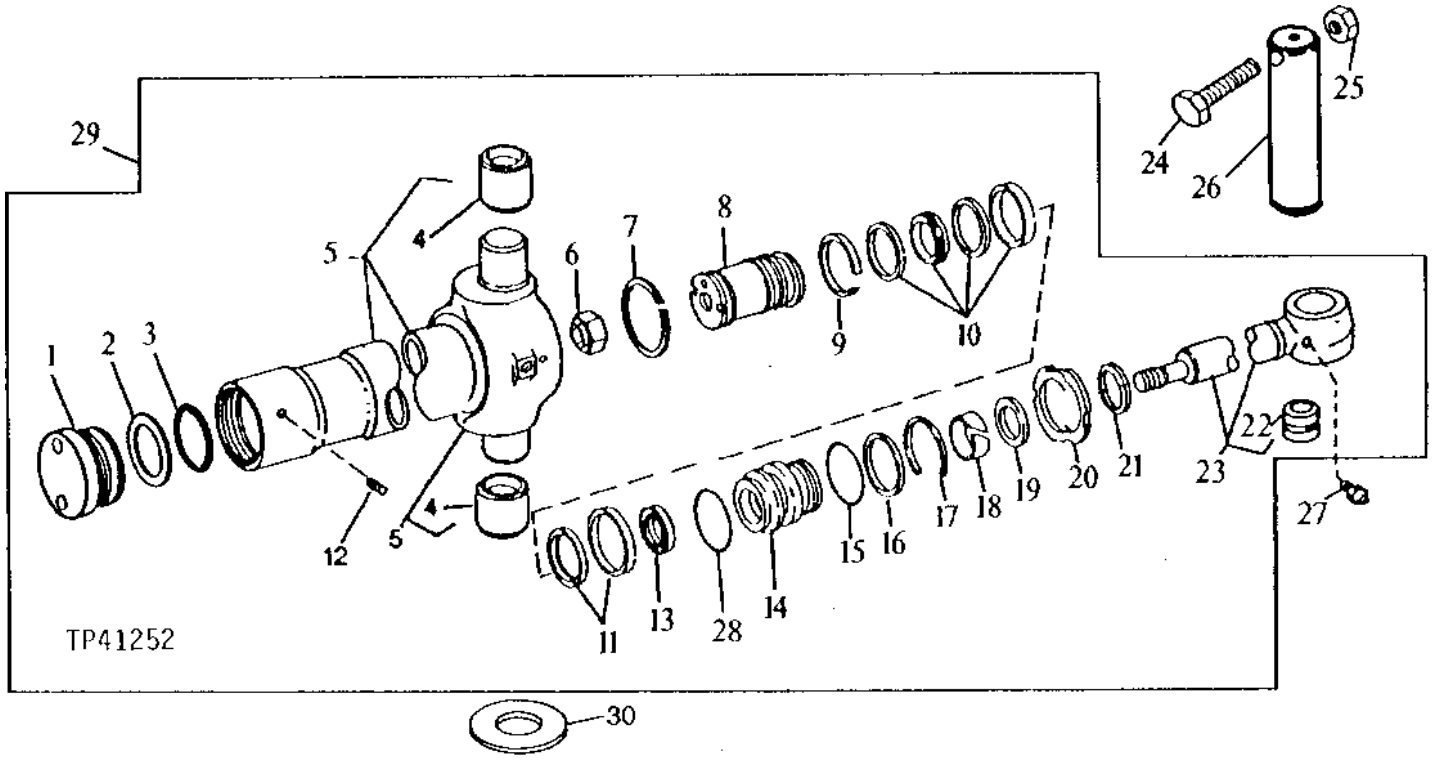

SWING CYLINDER
(SERIAL NO.801200-)

KEY	PART NO.	PART NAME	QTY	SERIAL NO.	410D	510D	REMARKS
1	R93755	HYDRAULIC CYLINDER CAP	1		X	X	
2	R78994	BACK-UP RING	1		X	X	
3	L2301CU	O-RING	1		X	X	
4	H151328	BUSHING	2		X	X	
5	AH145620	HYDRAULIC CYLINDER BARREL	1		X	X	
6	H170539	NUT	1		X	X	
7	R81796	RING	1		X	X	SPLIT, BRAKE SEAL
8	H151330	PISTON	1		X	X	
9	R81775	WEAR RING	1		X	X	(BK)
10	RE20343	SEAL	1		X	X	(BK)
11	RE20757	SEAL	1		X	X	(RK)
12	22H1077	SET SCREW	1		X	X	
13	R81973	SEAL	1		X	X	(RK)
14	.....	HYDR. CYLINDER ROD GUIDE	1		X	X	(RK) (R81972 NO LONGER USED) (SUB H157978) (ALSO ORDER AH210484)
15	R83577	O-RING	1		X	X	(BK)
16	R81862	BACK-UP RING	1		X	X	(BK)
17	R81787	RING	1		X	X	
18	R81975	WEAR RING	1		X	X	(RK)
19	R91731	RING	AR		X	X	(BK)
20	R81793	NUT	1		X	X	
21	RE24536	SEAL	1		X	X	(RK)
22	H180402	BUSHING	1		X	X	(SUB FOR H142209)
23	AH145618	ROD	1		X	X	
24	19M7941	CAP SCREW	1		X	X	M16 X 120
25	14M7328	LOCK NUT	1		X	X	
26	T133570	PIN FASTENER	1		X	X	
27	T162396	LUBRICATION FITTING	1		X	X	1/8", (SUB FOR JD7798)
28	F950R	O-RING	1		X	X	
29	.....	HYDRAULIC CYLINDER	1		X	X	AH145619 NO LONGER AVAILABLE, (SUB AH148152)
30	T148387	WASHER	1		X	X	

(BK) AH212101 CYLINDER BORE REPAIR KIT (SUB FOR AH149844 REPAIR KIT)

(RK) RE20595 CYLINDER ROD REPAIR KIT

REPLACEMENT SWING CYLINDER
(SERIAL NO. 801200-)

TP41252 -UN-01JAN94

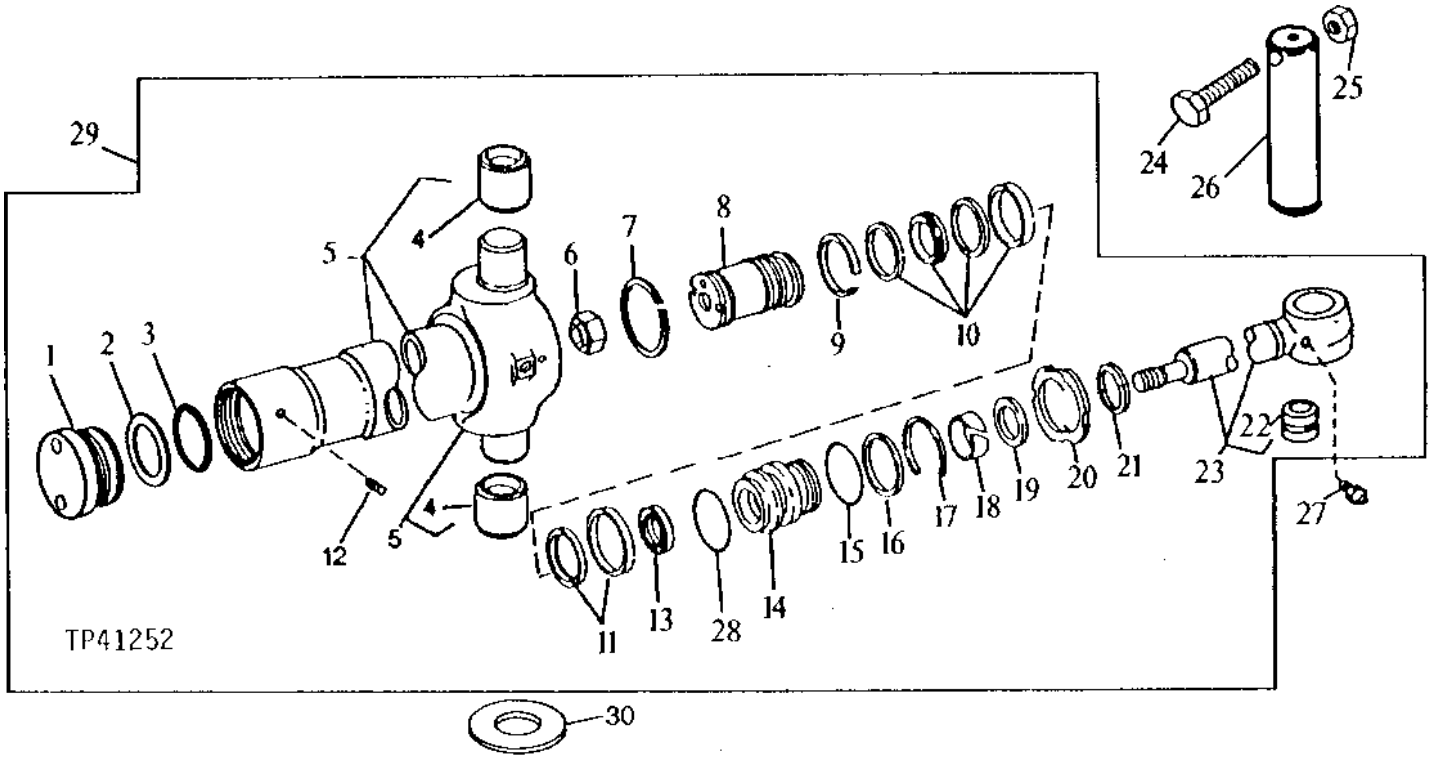

REPLACEMENT SWING CYLINDER
(SERIAL NO. 801200 -)

KEY	PART NO.	PART NAME	QTY	SERIAL NO.	410D	510D	REMARKS
1	R93755	HYDRAULIC CYLINDER CAP	1		X	X	
2	R78994	BACK-UP RING	1		X	X	
3	L2301CU	O-RING	1		X	X	
4	H151328	BUSHING	2		X	X	
5	AH145620	HYDRAULIC CYLINDER BARREL	1		X	X	
6	H170539	NUT	1		X	X	
7	R81796	RING	1		X	X	SPLIT, BRAKE SEAL
8	H151330	PISTON	1		X	X	
9	R81775	WEAR RING	1		X	X	(BK)
10	RE20343	SEAL	1		X	X	(BK)
11	AH146561	SEAL	1		X	X	(RK)
12	22H1077	SET SCREW	1		X	X	
13	H152203	SEAL	1		X	X	(RK)
14	H157978	HYDR. CYLINDER ROD GUIDE	1		X	X	(RK)
15	R83577	O-RING	1		X	X	(BK)
16	R81862	BACK-UP RING	1		X	X	(BK)
17	R81787	RING	1		X	X	
18	H152794	WEAR RING	1		X	X	(RK)
19	R91731	RING	AR		X	X	(BK)
20	R81793	NUT	1		X	X	
21	AH146557	SEAL	1		X	X	(RK)
22	H180402	BUSHING	1			X	(SUB FOR H142209)
23	AH145618	ROD	1		X	X	
24	19M7941	CAP SCREW	1		X	X	M16 X 120
25	14M7328	LOCK NUT	1		X	X	
26	T133570	PIN FASTENER	1		X	X	
27	T162396	LUBRICATION FITTING	1		X	X	1/8", (SUB FOR JD7798)
28	F950R	O-RING	1		X	X	
29	AH148152	HYDRAULIC CYLINDER	1		X	X	
30	T148387	WASHER	1		X	X	

(BK) AH212101 CYLINDER BORE REPAIR KIT (SUB FOR AH149844 REPAIR KIT)

(RK) AH210484 ROD SEAL REPAIR KIT (USE WITH AH148152)

SWING CYLINDER PINS
(SERIAL NO. -801199)

TP40435 -UN-01JAN94

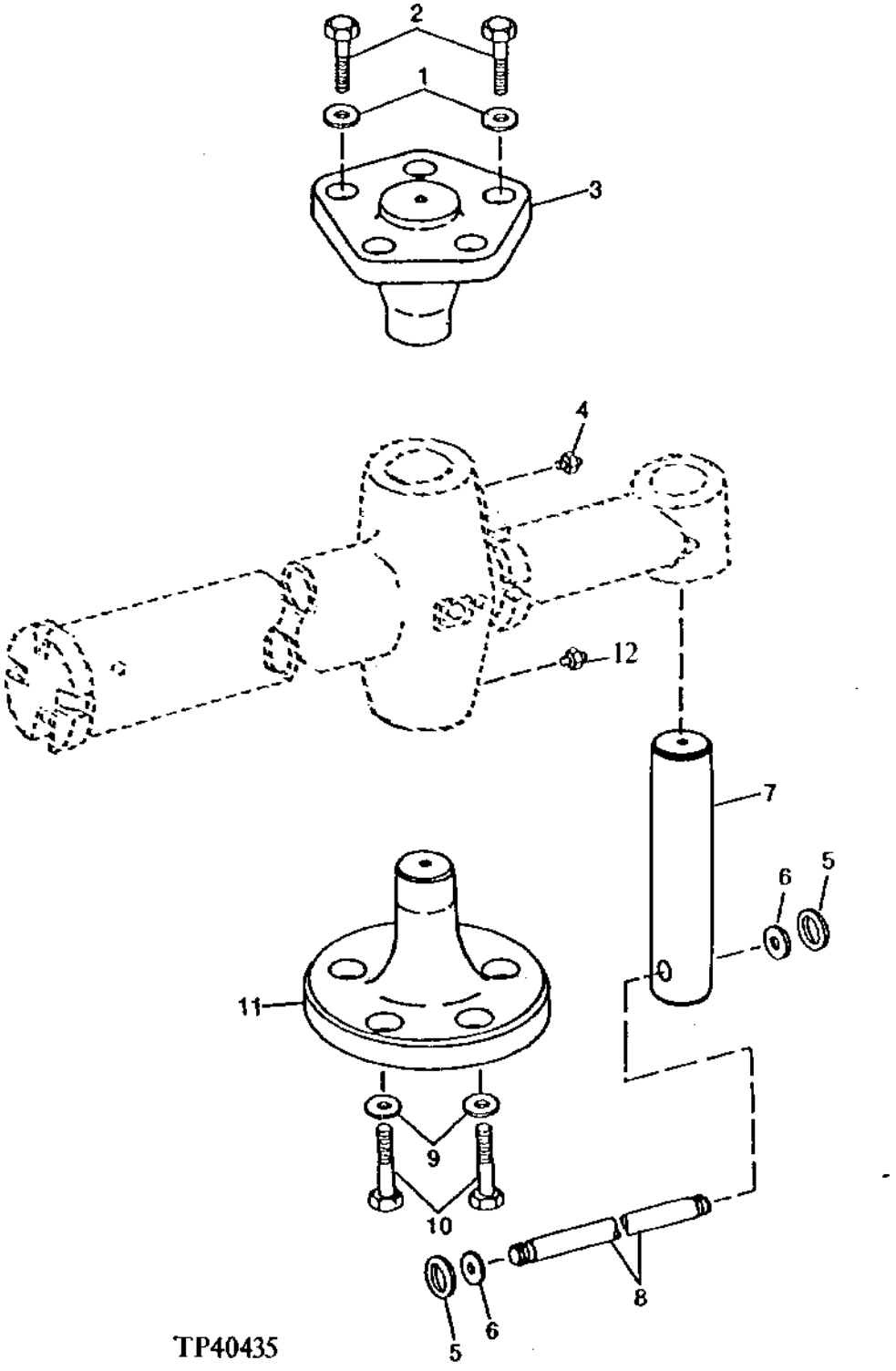

SWING CYLINDER PINS
(SERIAL NO. -801199)

KEY	PART NO.	PART NAME	QTY	SERIAL NO.	410D	510D	REMARKS
1	24M7243	WASHER	5		X	X	25.400 X 50 X 6 MM
2	19M7993	CAP SCREW	5		X	X	M24 X 50
3	T83428	PIN FASTENER	1		X	X	
4	JD7759	LUBRICATION FITTING	1	-790672	X	X	1/8"
	T162396	LUBRICATION FITTING	1	790673-	X	X	(SUB FOR JD7798)
5	N105572	SNAP RING	2		X	X	
6	24H1364	WASHER	2		X	X	21/32" X 15/16" X 0.036", (SUB FOR 24M5783)
7	T69030	PIN	1		X	X	39.870 X 165 MM (1.570" X 6.496")
8	T76230	PIN FASTENER	1		X	X	16 X 206 MM (0.630" X 8.110")
9	T76090	WASHER	5		X	X	32.200 X 55 X 8 MM (1.268" X 2.165" X 0.315")
10	19M7994	CAP SCREW	5		X	X	M30 X 55
11	T83429	PIN FASTENER	1		X	X	
12	JD7763	LUBRICATION FITTING	1	-790672	X	X	45° X 0.890" LONG
	JD7847	LUBRICATION FITTING	1	790673-	X	X	45° X 1" LONG

BOOM CYLINDER
(FOR USE WITH STANDARD BOOM)
(SERIAL NO. -798466)

TP45557 -UN-25OCT94

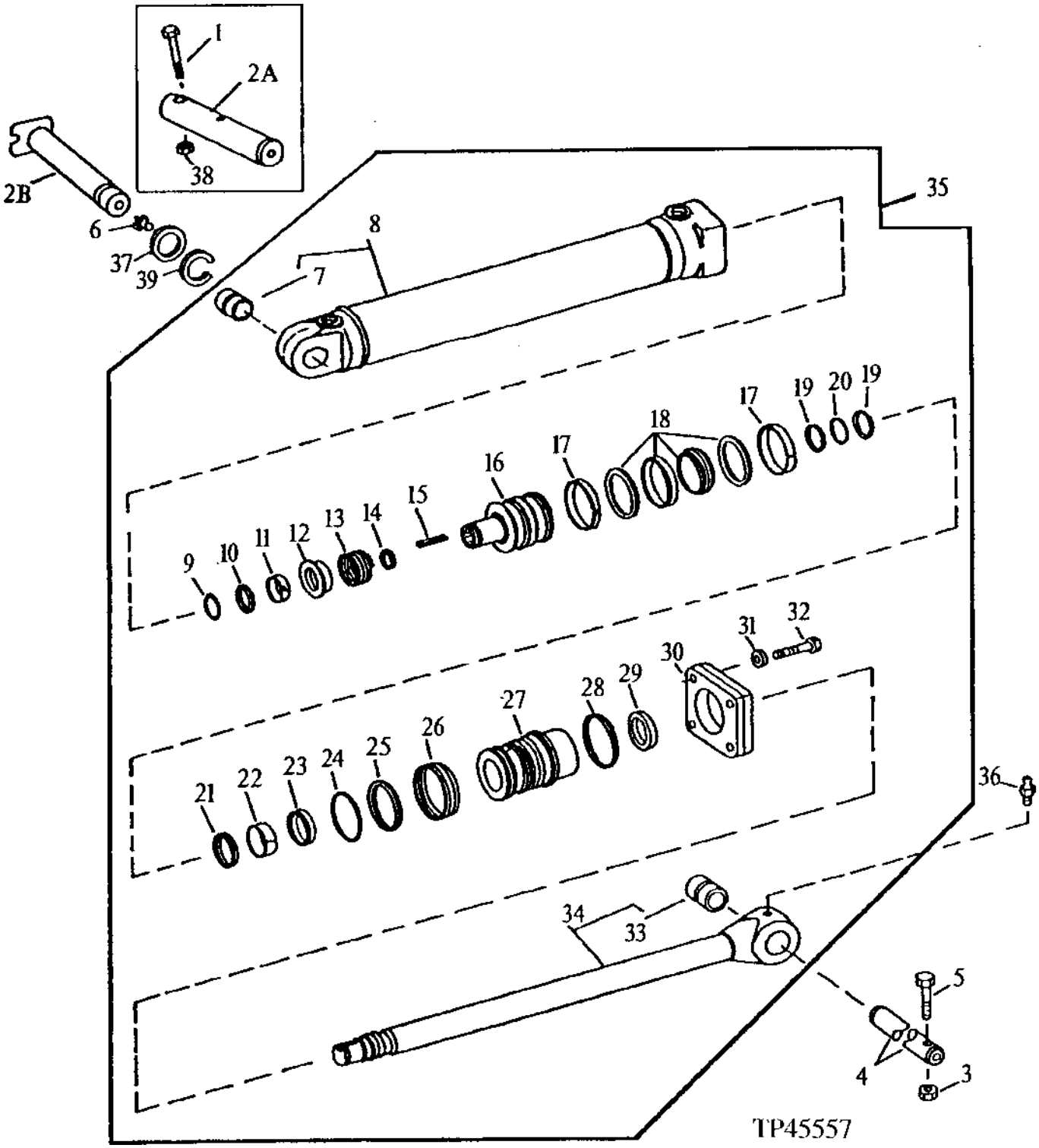

BOOM CYLINDER
(FOR USE WITH STANDARD BOOM)
(SERIAL NO. -798466)

KEY	PART NO.	PART NAME	QTY	SERIAL NO.	410D	510D	REMARKS
1	19M7914	CAP SCREW	1	-780969	X		M12 X 120
2A	T125942	PIN FASTENER	1	-780969	X		
2B	AT173548	PIN	1	780970-	X		(SUB FOR T142483) (ALSO ORDER T153180)
3	14M7328	LOCK NUT	2	-780969	X		M16
	14M7328	LOCK NUT	1	780970-	X		M16
4	T125941	PIN FASTENER	1		X		
5	19M8019	CAP SCREW	1		X		M16 X 160
6	T162396	LUBRICATION FITTING	1		X		(SUB FOR JD7759, THIS APPLICATION) (SUB FOR JD7798)
7	R82075	BUSHING	1		X		
8	.....	HYDRAULIC CYLINDER BARREL	1		X		(AH135267 NO LONGER AVAILABLE) (SUB AH142950, H149342 AND (8) 19M6619) (ALSO ORDER H150617 AND RE24537)
9	R86103	SNAP RING	1		X		
10	H140824	SPRING	1		X		
11	H140820	BACK-UP RING	1		X		
12	H140816	PISTON	1		X		
13	H140818	SPRING	1		X		
14	H140823	SNAP RING	1		X		
15	H140826	SHAFT KEY	1		X		
16	R96784	PISTON	1		X		
17	R82095	WEAR RING	2		X		(BK)
18	RE20809	SEAL	1		X		(BK)
19	R86290	BACK-UP RING	2		X		(RK)
20	R26282	O-RING	1		X		(RK)
21	RE22776	SEAL	1		X		(RK)
22	R83213	WEAR RING	1		X		(BK1)
23	RE30121	SEAL	1		X		(BK1)
24	P46765	O-RING	1		X		
25	R79001	BACK-UP RING	1		X		(BK) (DISASSEMBLY AID TOOL)
26	H141511	SPACER	1		X		
27	H140812	HYDR. CYLINDER ROD GUIDE	1		X		
28	H141980	SEALING WASHER	1		X		(BK)
29	RE22777	SEAL	1		X		(RK)
30	H140827	HYDR. CYLINDER ROD GUIDE	1		X		
31	H140825	WASHER	4		X		
32	19M7892	CAP SCREW	4		X		
33	R83211	BUSHING	1		X		
34	RE22781	ROD	1		X		
35	.....	HYDRAULIC CYLINDER	1		X		(AH135265 NO LONGER AVAILABLE) (SUB AH142935)
36	T162396	LUBRICATION FITTING	1		X		(SUB FOR JD7798)
37	24H1589	WASHER	AR		X		2" X 3-3/16" X 0.036"
38	14M7319	LOCK NUT	1	-780969	X		M12
39	40M7066	SNAP RING	AR	780970-	X		

(BK) AH212103 CYLINDER BORE REPAIR KIT (SUB FOR AH149846 REPAIR KIT)

(RK) RE25151 CYLINDER ROD REPAIR KIT

BOOM CYLINDER
(FOR USE WITH STANDARD BOOM)
(SERIAL NO.798467-801199)

TP46959 -UN-03MAY95

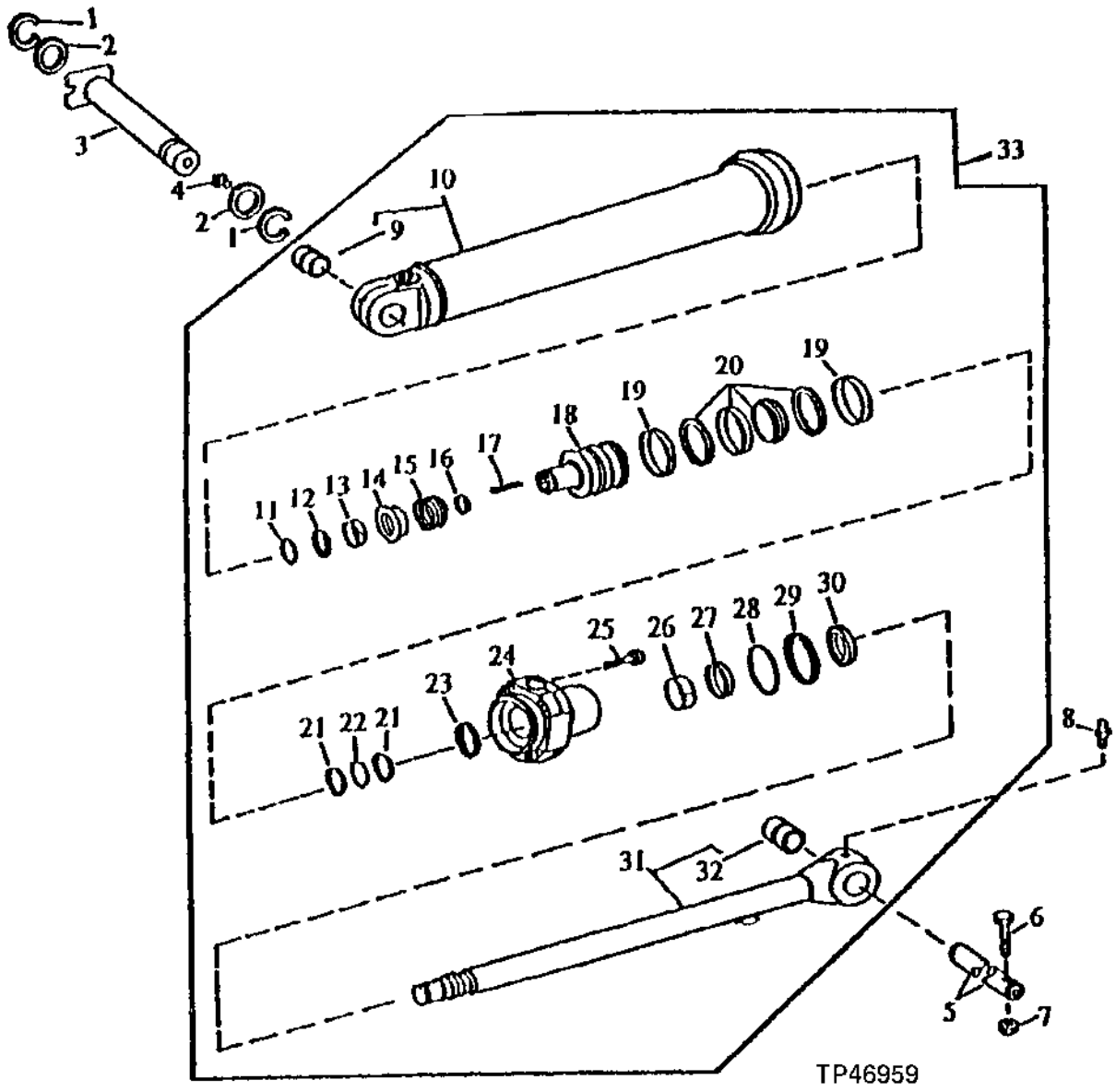

BOOM CYLINDER
(FOR USE WITH STANDARD BOOM)
(SERIAL NO. 798467-801199)

KEY	PART NO.	PART NAME	QTY	SERIAL NO.	410D	510D	REMARKS
1	40M7066	SNAP RING	AR		X		
2	24H1589	WASHER	AR		X		
3	AT173548	PIN	1		X		(SUB FOR T142483) (ALSO ORDER T153180)
4	T162396	LUBRICATION FITTING	1		X		(SUB FOR JD7798)
5	T125941	PIN FASTENER	1		X		
6	19M8019	CAP SCREW	1		X		
7	14M7238	FLANGE NUT	1		X		
8	T162396	LUBRICATION FITTING	1		X		(SUB FOR JD7798)
9	R82075	BUSHING	1		X		
10	AH142950	HYDRAULIC CYLINDER BARREL	1		X		
11	R86103	SNAP RING	1		X		
12	H140824	SPRING	1		X		
13	H140820	BACK-UP RING	1		X		
14	H140816	PISTON	1		X		
15	H140818	SPRING	1		X		
16	H140823	SNAP RING	1		X		
17	H140826	SHAFT KEY	1		X		
18	R96784	PISTON	1		X		
19	R82095	WEAR RING	2		X		(BK)
20	RE20809	SEAL	1		X		(BK)
21	R86290	BACK-UP RING	2		X		(RK)
22	R26282	O-RING	1		X		(RK)
23	RE22776	SEAL	1		X		(RK)
24	H149342	HYDR. CYLINDER ROD GUIDE	1		X		
25	19M6619	SCREW	8		X		
26	H150617	WEAR RING	1		X		
27	RE30121	SEAL	1		X		(DISASSEMBLY AID TOOL) (RK)
28	P46765	O-RING	1		X		
29	R79001	BACK-UP RING	1		X		(BK)
30	RE24537	SEAL	1		X		
31	RE22781	ROD	1		X		
32	R83211	BUSHING	1		X		
33	AH142935	HYDRAULIC CYLINDER	1		X		

(BK) AH212103 CYLINDER BORE REPAIR KIT (SUB FOR AH149846 REPAIR KIT)

(RK) RE25151 CYLINDER ROD REPAIR KIT

BOOM CYLINDER
(FOR USE WITH STANDARD BOOM)
(SERIAL NO. 801200-)

TP41796 -UN-01JAN94

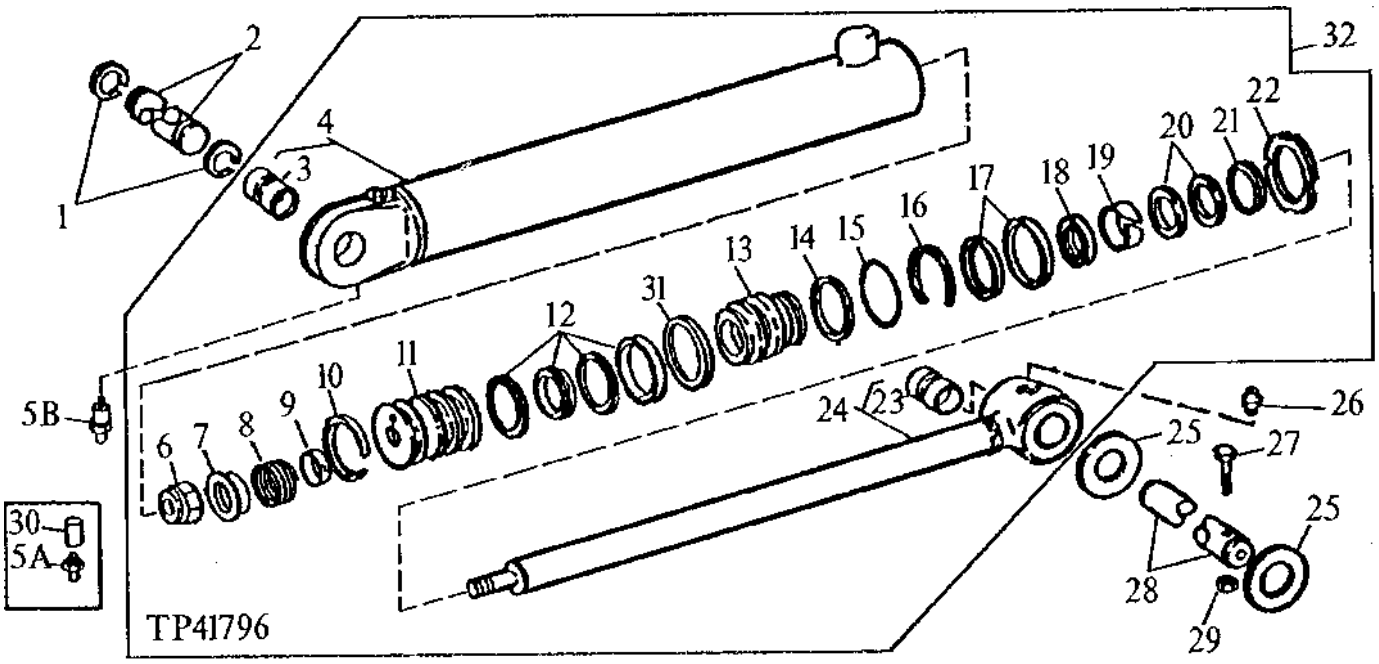

KEY	PART NO.	PART NAME	QTY	SERIAL NO.	410D	510D	REMARKS
1	40M7066	SNAP RING	2		X		
2	T142698	PIN	1		X		
3	H144296	BUSHING	1		X		
4	AH136381	HYDRAULIC CYLINDER BARREL	1		X		
5A	JD7782	LUBRICATION FITTING	1		X		
5B	JD7779	LUBRICATION FITTING	1		X		

THIS PARTS LISTING IS CONTINUED

BOOM CYLINDER
(FOR USE WITH STANDARD BOOM)
(SERIAL NO. 801200-)

KEY	PART NO.	PART NAME	QTY	SERIAL NO.	410D	510D	REMARKS
6	H142024	LOCK NUT	1		X		
7	H142025	VALVE SEAT INSERT	1		X		
8	H140818	SPRING	1		X		
9	H142026	BACK-UP RING	1		X		
10	R82095	WEAR RING	1		X		(BK)
11	H142020	PISTON	1		X		
12	RE20809	SEAL	1		X		(BK)
13	.....	HYDR. CYLINDER ROD GUIDE	1		X		(R92321 NO LONGER USED) (SUB H157428) (ALSO ORDER AH149814)
14	P46765	O-RING	1		X		
15	R79001	BACK-UP RING	1		X		(BK)
16	R82093	SNAP RING	1		X		
17	RE31717	SEAL	1		X		(RK)
18	R92309	SEAL	1		X		(RK)
19	R92310	WEAR RING	1		X		(RK)
20	RE31718	SEAL	1		X		(RK)
21	R91624	BACK-UP RING	1		X		(BK)
22	R82086	NUT	1		X		
23	R97726	BUSHING	1		X		
24	AH136380	ROD	1		X		
25	24H1679	WASHER	2		X		2-17/64" X 3-1/4" X 0.060"
26	T162396	LUBRICATION FITTING	1		X		(SUB FOR JD7798)
27	19M7758	CAP SCREW	1		X		M12 X 130
28	T133689	PIN FASTENER	1		X		2.145" X 6.142"
29	14M7319	LOCK NUT	1		X		M12
30	JD5811	FITTING	1		X		
31	R82092	PISTON RING	1		X		
32	AH136176	HYDRAULIC CYLINDER	1		X		(USE IF AVAILABLE)

(BK) AH212103 CYLINDER BORE REPAIR KIT (SUB FOR AH149846 REPAIR KIT)

(RK) RE31716 CYLINDER ROD REPAIR KIT (ALSO ORDER H142026)

BOOM CYLINDER
(FOR USE WITH STANDARD BOOM)
(REPLACEMENT CYLINDER)
(SERIAL NO. 801200-)

TP41796 -UN-01JAN94

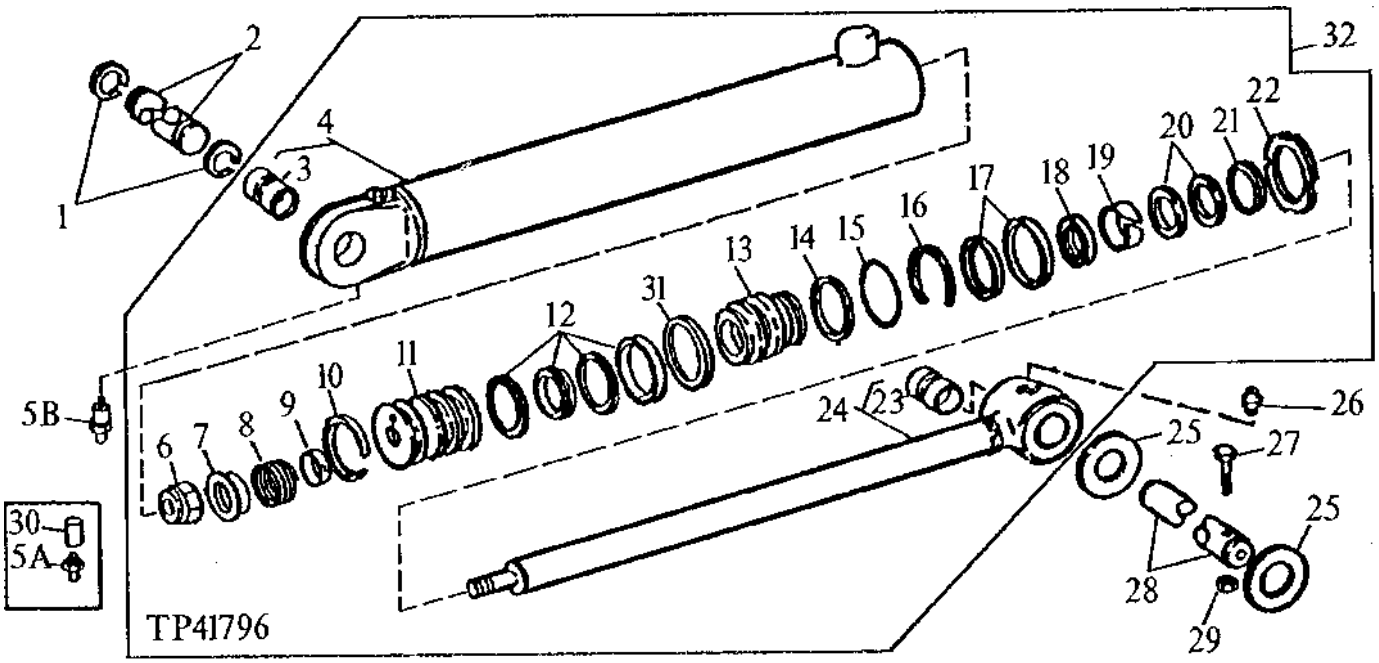

KEY	PART NO.	PART NAME	QTY	SERIAL NO.	410D	510D	REMARKS
1	40M7066	SNAP RING	2		X		
2	T142698	PIN	1		X		
3	H144296	BUSHING	1		X		
4	AH136381	HYDRAULIC CYLINDER BARREL	1		X		
5A	JD7782	LUBRICATION FITTING	1		X		
5B	JD7779	LUBRICATION FITTING	1		X		

THIS PARTS LISTING IS CONTINUED

BOOM CYLINDER
(FOR USE WITH STANDARD BOOM)
(REPLACEMENT CYLINDER)
(SERIAL NO. 801200-)

KEY	PART NO.	PART NAME	QTY	SERIAL NO.	410D	510D	REMARKS
6	H142024	LOCK NUT	1		X		
7	H142025	VALVE SEAT INSERT	1		X		
8	H140818	SPRING	1		X		
9	H142026	BACK-UP RING	1		X		
10	R82095	WEAR RING	1		X		(BK)
11	H142020	PISTON	1		X		
12	RE20809	SEAL	1		X		(BK)
13	H157428	HYDR. CYLINDER ROD GUIDE	1		X		
14	R83578	O-RING	1		X		
15	R79001	BACK-UP RING	1		X		(BK)
16	R82093	SNAP RING	1		X		
17	AH146562	SEAL	1		X		(RK)
18	R92309	SEAL	1		X		(RK)
19	H152795	WEAR RING	1		X		(RK)
20	AH146558	SEAL	1		X		(RK)
21	R91624	BACK-UP RING	1		X		(BK)
22	R82086	NUT	1		X		
23	R97726	BUSHING	1		X		
24	AH136380	ROD	1		X		
25	24H1679	WASHER	2		X		2-17/64" X 3-1/4" X 0.060"
26	T162396	LUBRICATION FITTING	1		X		(SUB FOR JD7798)
27	19M7758	CAP SCREW	1		X		M12 X 130
28	T133689	PIN FASTENER	1		X		2.145" X 6.142"
29	14M7319	LOCK NUT	1		X		M12
30	JD5811	FITTING	1		X		
31	R82092	PISTON RING	1		X		
32	AH154775	HYDRAULIC CYLINDER	1		X		

(BK) AH212103 CYLINDER BORE REPAIR KIT (SUB FOR AH149846 REPAIR KIT)

(RK) AH149814 CYLINDER ROD REPAIR KIT

BOOM CYLINDER
(410D HEAVY LIFT)
(510D STANDARD)
(SERIAL NO. -797021)

TP45559 -UN-25OCT94

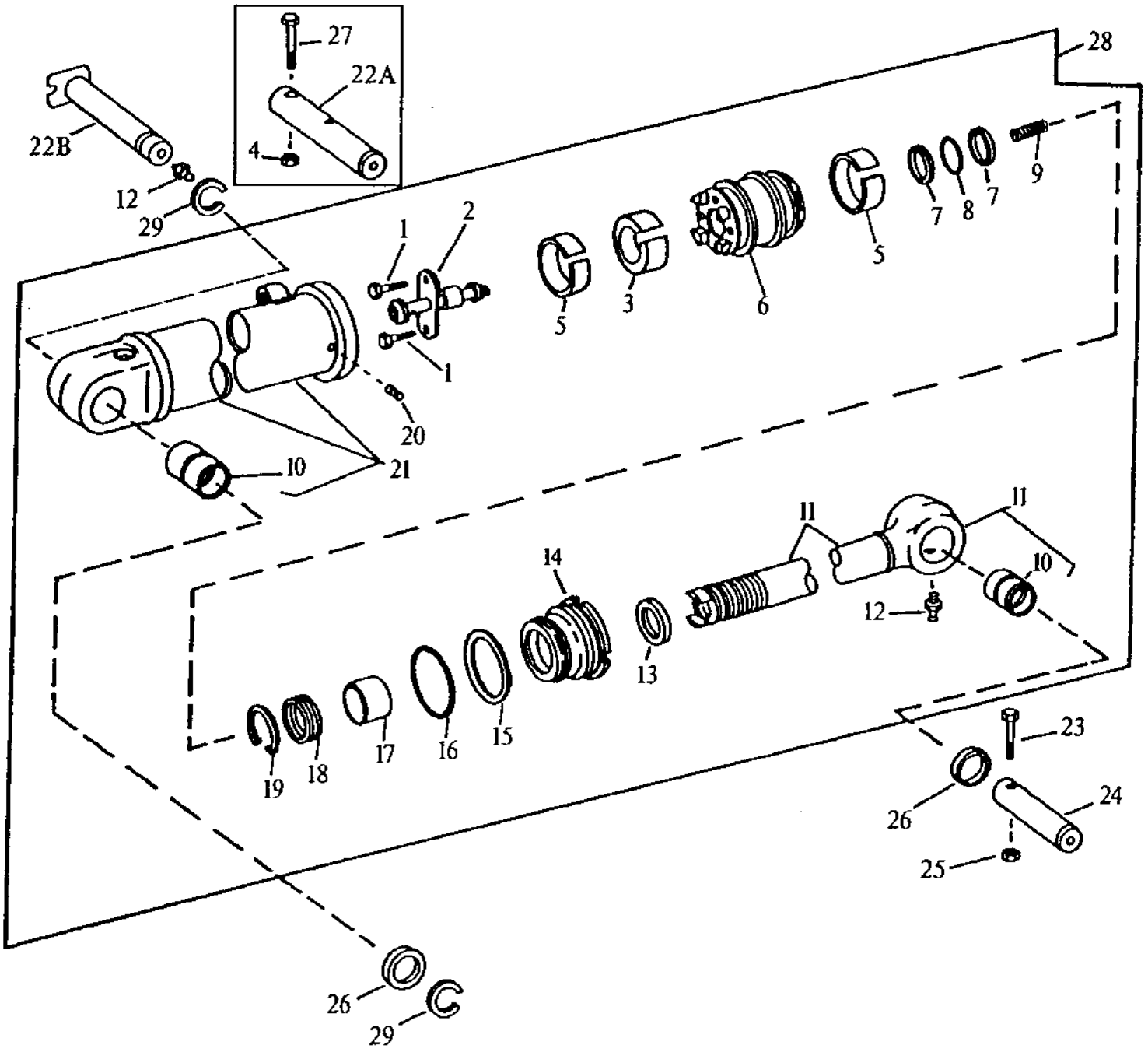

TP45559

BOOM CYLINDER
(410D HEAVY LIFT)
(510D STANDARD)
(SERIAL NO. -797021)

KEY	PART NO.	PART NAME	QTY	SERIAL NO.	410D	510D	REMARKS
1	19H3111	SCREW	2		X	X	3/8" X 1.380"
2	RE15648	POPPET	1		X	X	
3	RE11910	SEAL	1		X	X	(BK)
4	14M7319	LOCK NUT	1	-780969		X	M12
5	U44508	WEAR RING	2		X	X	(BK)
6	R79661	PISTON	1		X	X	
7	R79170	BACK-UP RING	2		X	X	(RK)
8	F3450R	O-RING	1		X	X	(RK)
9	R76350	SPRING	1		X	X	
10	R72385	BUSHING	2		X	X	
11	RE12373	ROD	1		X	X	
12	T162396	LUBRICATION FITTING	2		X	X	(SUB FOR JD7759, THIS APPLICATION) (SUB FOR JD7798) 1/8"
13	U45230	SEAL	1		X	X	(RK)
14	R66862	GUIDE	1		X	X	
15	R79177	BACK-UP RING	1		X	X	(BK)
16	T38489	O-RING	1		X	X	(BK)
17	U43999	WEAR RING	2		X	X	(RK)
18	R73998	SEAL	1		X	X	(RK)
19	U44000	SNAP RING	1		X	X	
20	22H1077	SET SCREW	1		X	X	1/4" X 5/16"
21	RE15883	HYDRAULIC CYLINDER BARREL	1		X	X	
22A	T125942	PIN FASTENER	1	-780969		X	
22B	AT173548	PIN	1	780970-	X	X	(SUB FOR T142483) (ALSO ORDER T153180)
23	19M8019	CAP SCREW	1		X	X	M16 X 160
24	T125944	PIN FASTENER	1		X	X	
25	14M7328	LOCK NUT	1		X	X	M16
26	24H1679	WASHER	AR		X	X	2-17/64" X 3-1/4" X 0.060"
27	19M7914	CAP SCREW	1	-780969	X	X	M12 X 120
28	RE15647	HYDRAULIC CYLINDER	1		X	X	
29	40M7066	SNAP RING	1	780970-	X	X	

(BK) RE14744 CYLINDER BORE REPAIR KIT

(RK) RE14745 CYLINDER ROD REPAIR KIT

BOOM CYLINDER
(410D HEAVY LIFT)
(510D STANDARD)
(SERIAL NO. 797022-)

TP46960 -UN-21JUN95

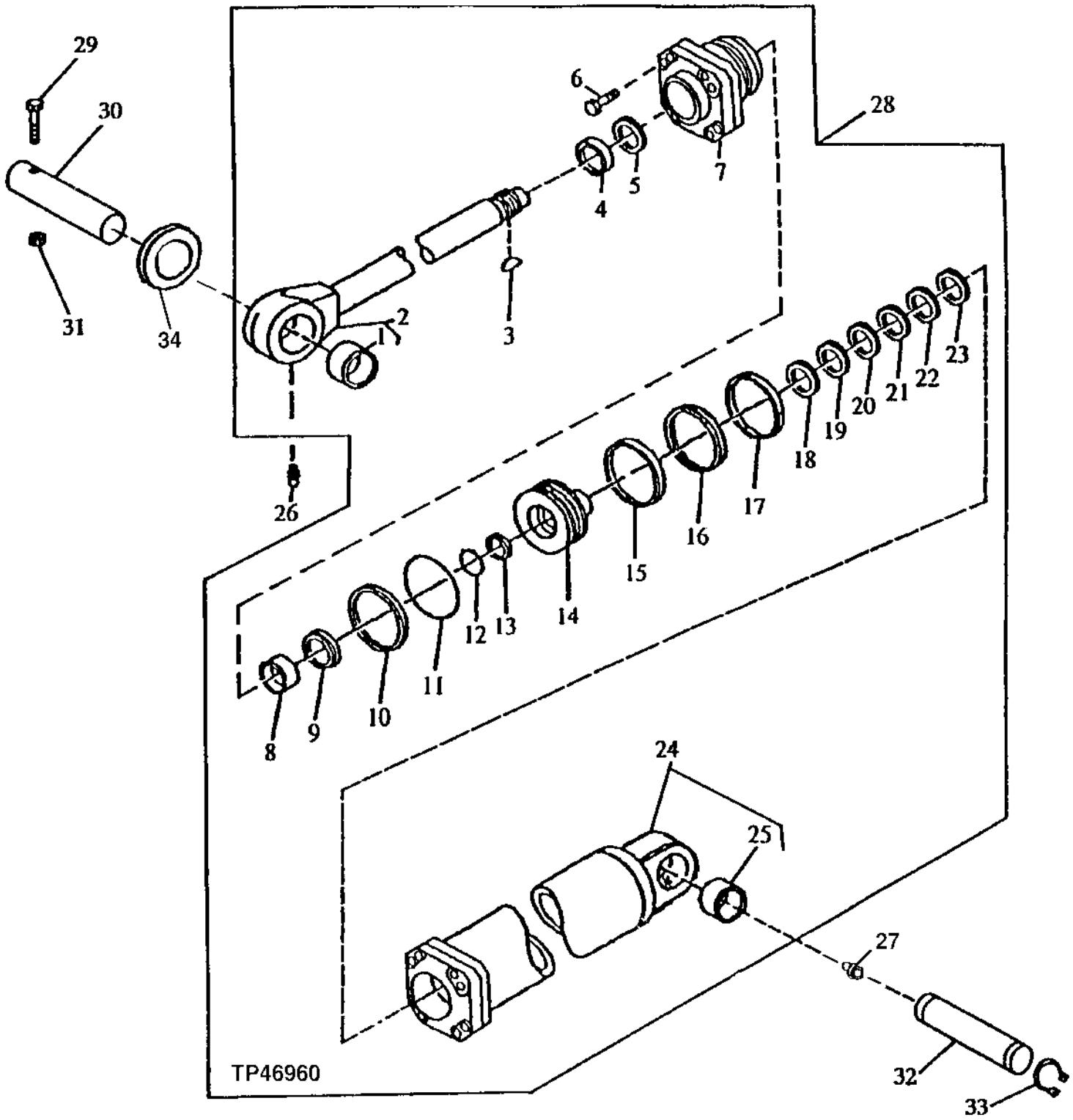

BOOM CYLINDER
(410D HEAVY LIFT)
(510D STANDARD)
(SERIAL NO. 797022-)

KEY	PART NO.	PART NAME	QTY	SERIAL NO.	410D	510D	REMARKS
1	R72385	BUSHING	1		X	X	
2	AH144379	ROD	1		X	X	
3	H140826	SHAFT KEY	1		X	X	11.880 X 7.950 X 60 MM
4	RE22777	SEAL	1		X	X	
5	RE30121	SEAL	1		X	X	
6	19M8656	SCREW	8		X	X	
7	H145437	HYDR. CYLINDER ROD GUIDE	1		X	X	
8	R83213	WEAR RING	1		X	X	
9	RE22776	SEAL	1		X	X	
10	R98667	BACK-UP RING	1		X	X	
11	E49244	O-RING	1		X	X	
12	R26282	O-RING	1		X	X	
13	R86290	BACK-UP RING	2		X	X	
14	H150217	PISTON	1		X	X	
15	R90653	WEAR RING	2		X	X	
16	RE30162	SEAL	1		X	X	
17	R90653	WEAR RING	1		X	X	
18	H140820	BACK-UP RING	1		X	X	
19	H140818	SPRING	1		X	X	
20	H140816	PISTON	1		X	X	(CUSHION)
21	H140824	SPRING	1		X	X	
22	R86103	SNAP RING	1		X	X	
23	H140823	SNAP RING	1		X	X	
24	AH144378	HYDRAULIC CYLINDER BARREL	1		X	X	
25	H150344	BUSHING	1		X	X	
26	JD7844	LUBRICATION FITTING	1		X	X	
27	T162396	LUBRICATION FITTING	1		X	X	(SUB FOR JD7798)
28	AH144377	HYDRAULIC CYLINDER	1		X	X	
29	19M8019	CAP SCREW	1		X	X	M16 X 160
30	T125944	PIN FASTENER	1		X	X	
31	14M7328	LOCK NUT	1		X	X	M16
32	.....	PIN FASTENER	1	-804230	X	X	(T142483 NO LONGER AVAILABLE) (SUB AT173548) (ALSO ORDER T153180 AND 40M7066)
	AT173548	PIN	1	804231-	X	X	
33	40M7066	SNAP RING	2		X	X	
34	24H1679	WASHER	AR		X	X	

(BK) AH137208 BORE REPAIR KIT

(RK) RE25151 ROD REPAIR KIT

BUCKET CYLINDER
(FOR USE WITH STANDARD DIPPERSTICK)
(FOR USE WITH 1.2M EXTENDIBLE DIPPERSTICK)
(SERIAL NO. - 817497)

TP42944 -UN-01JAN94

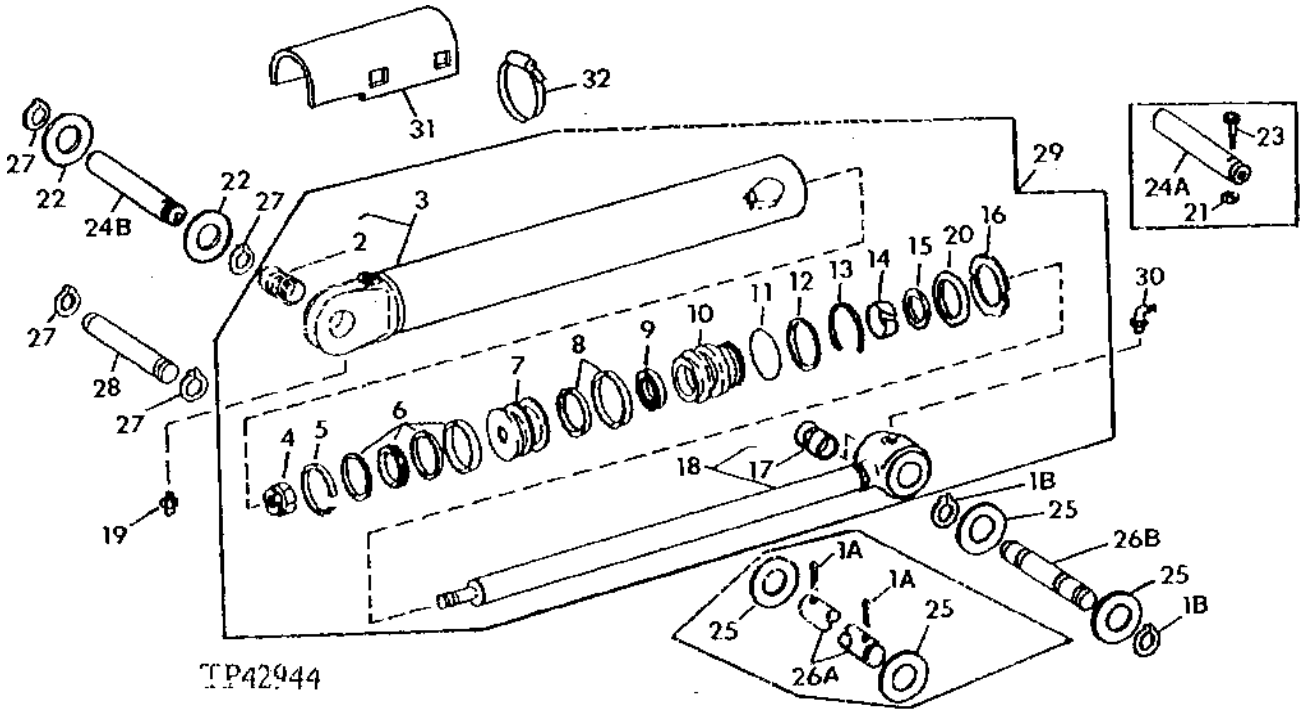

KEY	PART NO.	PART NAME	QTY	SERIAL NO.	410D	510D	REMARKS
1A	11H227	COTTER PIN	2		X	X	3/8" X 3", (USE WITH T125939)
1B	40M7066	SNAP RING	2		X	X	(USE WITH T140905)
2	R81850	BUSHING	1		X	X	
3	RE25623	HYDRAULIC CYLINDER BARREL	1		X	X	
4	R81866	NUT	1		X	X	
5	R81776	WEAR RING	1		X	X	(BK)

BUCKET CYLINDER
(FOR USE WITH STANDARD DIPPERSTICK)
(FOR USE WITH 1.2M EXTENDIBLE DIPPERSTICK)
(SERIAL NO. - 817497)

KEY	PART NO.	PART NAME	QTY	SERIAL NO.	410D	510D	REMARKS
6	RE20344	SEAL	1		X	X	(BK)
7	R82090	PISTON	1		X	X	
8	RE20757	SEAL	1	-817458	X	X	(RK)
	AH146561	SEAL	1	817459-	X	X	(RK)
9	R81973	SEAL	1	-817458	X	X	(RK)
	H152203	SEAL	1	817459-	X	X	(RK)
10	.....	HYDR. CYLINDER ROD GUIDE	1		X	X	(RK) (R82088 NO LONGER USED) (SUB H154352) (ALSO ORDER AH210484)
11	F1430R	O-RING	1		X	X	
12	R79101	BACK-UP RING	1		X	X	(BK)
13	R81788	RING	1		X	X	
14	R81975	WEAR RING	1		X	X	(RK)
15	RE24536	SEAL	1		X	X	(RK)
16	R81794	NUT	1		X	X	
17	R82077	BUSHING	1		X	X	
18	RE22501	ROD	1		X	X	
19	T162396	LUBRICATION FITTING	1		X	X	(SUB FOR JD7798) 1/8", STRAIGHT
20	R91730	RING	AR		X	X	(BK)
21	14M7319	LOCK NUT	1	-783627	X	X	M12
22	24H1575	WASHER	AR		X	X	1-13/16" X 2-3/4" X 0.180", (WITH STANDARD DIPPERSTICK)
	24H1576	WASHER	AR		X	X	1-13/16" X 2-15/16" X 0.075", (K1)
	24H1572	WASHER	AR		X	X	1-13/16" X 2-3/8" X 0.060"
23	19M7949	CAP SCREW	1		X	X	M12 X 100
24A	.....	PIN FASTENER	1	-783627	X	X	(T125938 NO LONGER AVAILABLE) (SUB T142482 AND (2) 40M7180)
24B	T142482	PIN	1	783628-	X	X	(WITH STANDARD DIPPERSTICK) (SUB FOR T125938)
25	T161036	WASHER	3		X	X	(SUB FOR (3) T125955 AND T148178)
26A	T125939	PIN FASTENER	1		X	X	(SUB T140905, (2) 40M7066 AND (2) T148178)
26B	T140905	PIN FASTENER	1		X	X	
27	40M7180	SNAP RING	2	783628-	X	X	(K1)
28	T100188	PIN FASTENER	1			X	
	T100188	PIN FASTENER	1	-787395	X		(WITH 1.2M EXTENDIBLE DIPPERSTICK) (SUB FOR T125937)
	T145346	PIN FASTENER	1	787396-	X		(K1) (WITH 1.2M EXTENDIBLE DIPPERSTICK)
29	.....	HYDRAULIC CYLINDER	1	-817458	X	X	RE25622 NO LONGER AVAILABLE, (SUB AH147722)
	.....	HYDRAULIC CYLINDER	1	-787384	X	X	RE25622 NO LONGER AVAILABLE, (SUB AH147722) (1.5M EXTENDIBLE DIPPERSTICK)
30	JD7799	LUBRICATION FITTING	1		X	X	1/8", 90°
31	T147178	GUARD	1		X	X	
32	AT125191	HOSE CLAMP	2		X	X	

(BK) AH212096 BORE REPAIR KIT (SUB FOR AH149843 REPAIR KIT)

(RK) RE20595 ROD REPAIR KIT (USE WITH RE25622)

(K1) AT162064 1.2M EXTENDIBLE DIPPER KIT (INCLUDES T143647 AND EXTENDIBLE DIPPERSTICK)

BUCKET CYLINDER
(REPLACEMENT CYLINDER)
(FOR USE WITH STANDARD DIPPERSTICK)
(FOR USE WITH 1.2M EXTENDIBLE DIPPERSTICK)
(SERIAL NO. 817498 -)

TP42944 -UN-01JAN94

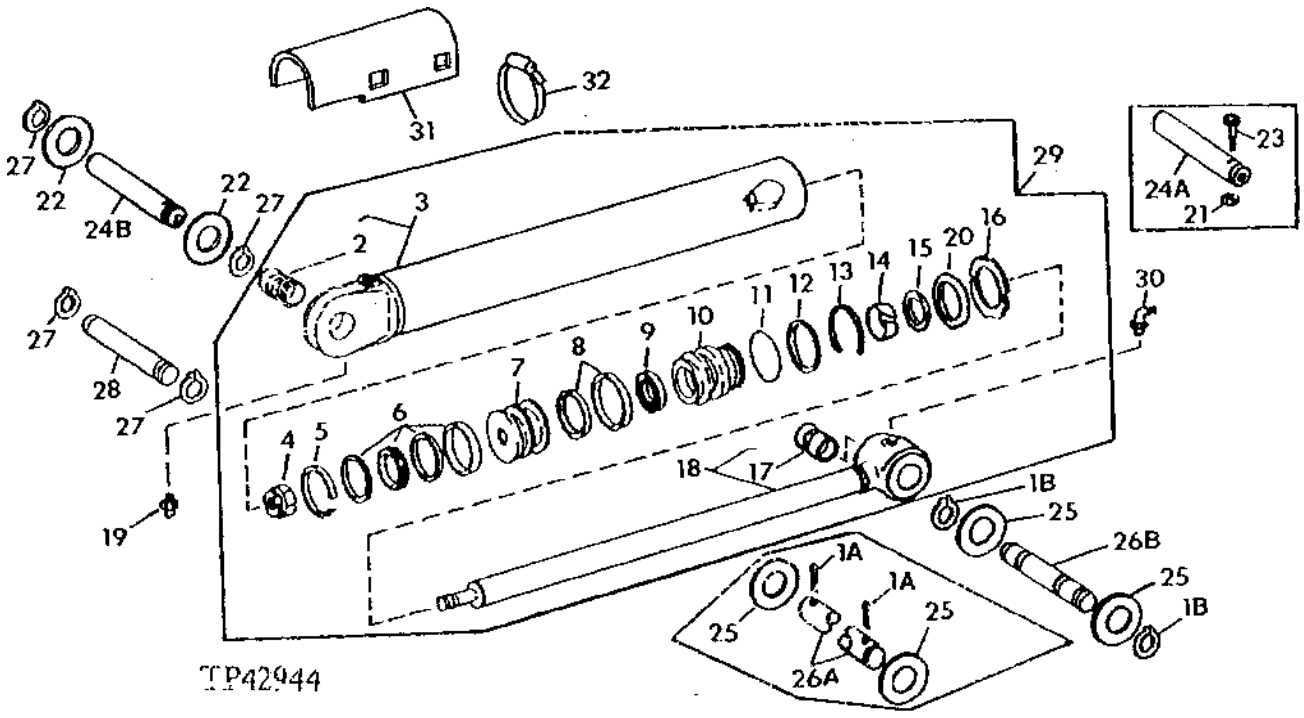

KEY	PART NO.	PART NAME	QTY	SERIAL NO.	4 5 1 1 0 0 D D	REMARKS
1A	11H227	COTTER PIN	2		X X	3/8" X 3", (USE WITH T125939)
1B	40M7066	SNAP RING	2		X X	(USE WITH T140905)
2	R81850	BUSHING	1		X X	
3	RE25623	HYDRAULIC CYLINDER BARREL	1		X X	
4	R81866	NUT	1		X X	
5	R81776	WEAR RING	1		X X	(BK)

BUCKET CYLINDER
(REPLACEMENT CYLINDER)
(FOR USE WITH STANDARD DIPPERSTICK)
(FOR USE WITH 1.2M EXTENDIBLE DIPPERSTICK)
(SERIAL NO. 817498 -)

KEY	PART NO.	PART NAME	QTY	SERIAL NO.	410D	510D	REMARKS
6	RE20344	SEAL	1		X	X	(BK)
7	R82090	PISTON	1		X	X	
8	AH146561	SEAL	1		X	X	(RK)
9	H152203	SEAL	1		X	X	(RK)
10	H154352	HYDR. CYLINDER ROD GUIDE	1		X	X	(RK)
11	F1430R	O-RING	1		X	X	
12	R79101	BACK-UP RING	1		X	X	(BK)
13	R81788	RING	1		X	X	
14	H152794	WEAR RING	1		X	X	(RK)
15	AH146557	SEAL	1		X	X	(RK)
16	R81794	NUT	1		X	X	
17	R82077	BUSHING	1		X	X	
18	RE22501	ROD	1		X	X	
19	T162396	LUBRICATION FITTING	1		X	X	(SUB FOR JD7798) 1/8", STRAIGHT
20	R91730	RING	AR		X	X	(BK)
21	14M7319	LOCK NUT	1	-783627	X	X	M12
22	24H1575	WASHER	AR		X	X	1-13/16" X 2-3/4" X 0.180", (WITH STANDARD DIPPERSTICK)
	24H1576	WASHER	AR		X	X	1-13/16" X 2-15/16" X 0.075", (K1)
	24H1572	WASHER	AR		X	X	1-13/16" X 2-3/8" X 0.060"
23	19M7949	CAP SCREW	1		X	X	M12 X 100
24A	.....	PIN FASTENER	1	-783627	X	X	(T125938 NO LONGER AVAILABLE) (SUB T142482 AND (2) 40M7180)
24B	T142482	PIN	1	783628-	X	X	(WITH STANDARD DIPPERSTICK) (SUB FOR T125938)
25	T161036	WASHER	3		X	X	(SUB FOR (3) T125955 AND T148178)
26A	T125939	PIN FASTENER	1		X	X	(SUB T140905, (2) 40M7066 AND (2) T148178)
26B	T140905	PIN FASTENER	1		X	X	
27	40M7180	SNAP RING	2	783628-	X	X	(K1)
28	T100188	PIN FASTENER	1			X	
	T100188	PIN FASTENER	1	-787395	X		(WITH 1.2M EXTENDIBLE DIPPERSTICK) (SUB FOR T125937)
	T145346	PIN FASTENER	1	787396-	X		(K1) (WITH 1.2M EXTENDIBLE DIPPERSTICK)
29	AH147722	HYDRAULIC CYLINDER	1		X	X	
30	JD7799	LUBRICATION FITTING	1		X	X	1/8", 90°
31	T147178	GUARD	1		X	X	
32	AT125191	HOSE CLAMP	2		X	X	

(BK) AH212096 BORE REPAIR KIT (SUB FOR AH149843 REPAIR KIT)

(RK) AH210484 ROD REPAIR KIT

(K1) AT162064 1.2M EXTENDIBLE DIPPER KIT (INCLUDES T143647 AND EXTENDIBLE DIPPERSTICK)

BUCKET CYLINDER
(FOR USE WITH 1.5M EXTENDIBLE DIPPERSTICK)
(SERIAL NO. 787385-)

TP48870 -UN-14NOV95

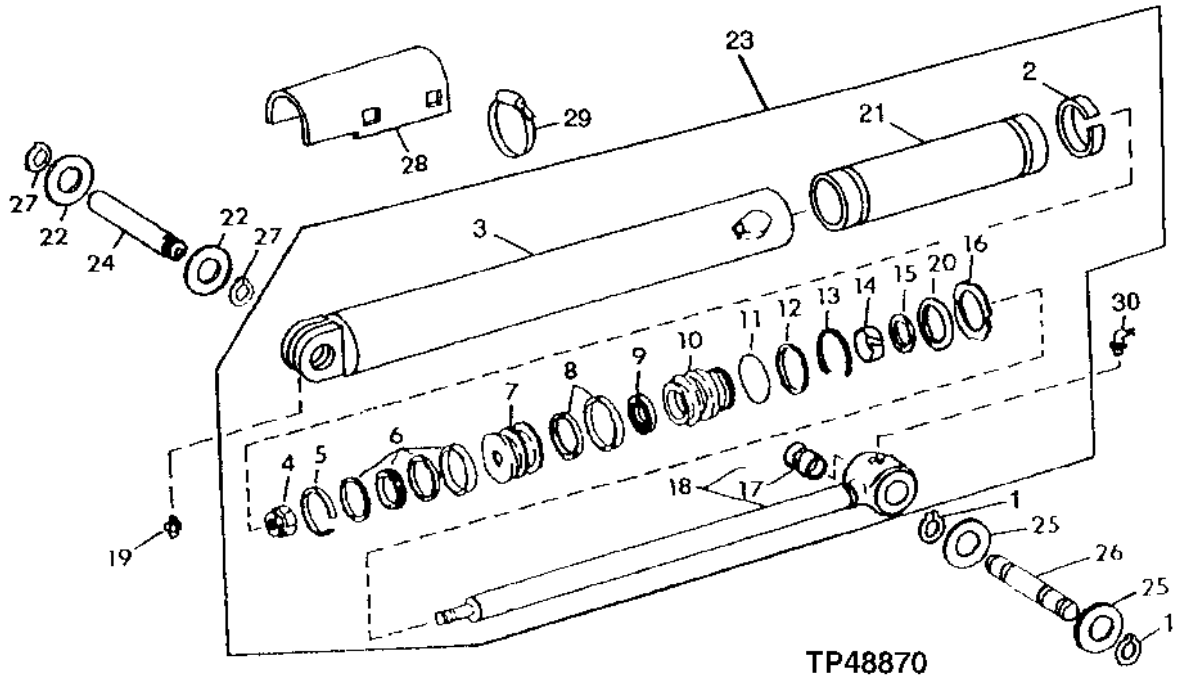

KEY	PART NO.	PART NAME	QTY	SERIAL NO.	410D	510D	REMARKS
1	40M7066	SNAP RING	2		X	X	
2	R97848	WEAR RING	2		X	X	
3	AH143311	HYDRAULIC CYLINDER BARREL	1		X	X	
4	R81866	NUT	1		X	X	
5	R81776	WEAR RING	1		X	X	(BK)

BUCKET CYLINDER
(FOR USE WITH 1.5M EXTENDIBLE DIPPERSTICK)
(SERIAL NO.787385-818843)

KEY	PART NO.	PART NAME	QTY	SERIAL NO.	410D	510D	REMARKS
6	RE20344	SEAL	1		X	X	(BK)
7	R82090	PISTON	1		X	X	
8	RE20757	SEAL	1		X	X	(RK)
9	R81973	SEAL	1		X	X	(RK)
10	.....	HYDR. CYLINDER ROD GUIDE	1		X	X	(RK) (R82088 NO LONGER USED) (SUB H154352) (ALSO ORDER AH210484)
11	R83576	O-RING	1		X	X	(BK) (SUB FOR F1430R, THIS APPLICATION)
12	R79101	BACK-UP RING	1		X	X	(BK)
13	R81788	RING	1		X	X	
14	R81975	WEAR RING	1		X	X	(RK)
15	RE24536	SEAL	1		X	X	(RK)
16	R81794	NUT	1		X	X	
17	R82077	BUSHING	1		X	X	
18	RE22501	ROD	1		X	X	
19	T162396	LUBRICATION FITTING	1		X	X	(SUB FOR JD7798) 1/8", STRAIGHT
20	R91730	RING	AR		X	X	(BK)
21	H149421	SPACER	1		X	X	
22	24H1576	WASHER	AR		X	X	1-13/16" X 2-15/16" X 0.075", (K)
	24H1572	WASHER	AR		X	X	1-13/16" X 2-3/8" X 0.060"
23	AH143312	HYDRAULIC CYLINDER	1	-818843	X	X	
24	T100188	PIN FASTENER	1		X	X	(K) (SUB FOR T125937)
25	T125955	WASHER	3		X	X	
26	T140905	PIN FASTENER	1		X	X	
27	40M7180	SNAP RING	2		X	X	(K)
28	T147178	GUARD	1		X	X	
29	AT125191	HOSE CLAMP	1		X	X	
30	JD7799	LUBRICATION FITTING	1		X	X	1/8", 90°

(BK) AH212096 BORE REPAIR KIT (SUB FOR AH149843 REPAIR KIT)

(RK) RE20595 ROD REPAIR KIT - (USE WITH AH143312)

(K)..... 1.5M EXTENDIBLE DIPPER KIT (INCLUDES T147002, T141234, AND EXTENDIBLE DIPPERSTICK)
(ALSO ORDER AT158567 LINK IF SERIAL NUMBER IS BELOW 787396)
(AT162066 NO LONGER AVAILABLE)

(RK) AH210484 ROD SEAL REPAIR KIT (USE WITH AH148738)

REPLACEMENT BUCKET CYLINDER
(FOR USE WITH 1.5M EXTENDIBLE DIPPERSTICK)

TP48870 -UN-14NOV95

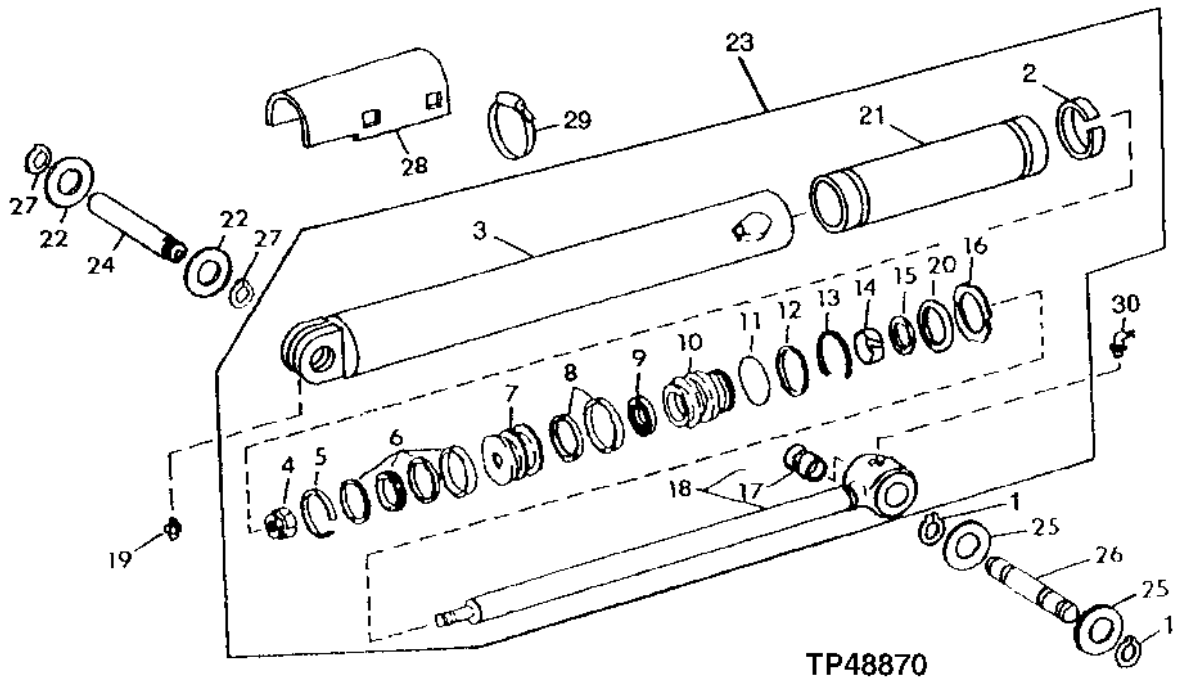

TP48870

KEY	PART NO.	PART NAME	QTY	SERIAL NO.	410D	510D	REMARKS
1	40M7066	SNAP RING	2		X	X	
2	R97848	WEAR RING	2		X	X	
3	AH143311	HYDRAULIC CYLINDER BARREL	1		X	X	
4	R81866	NUT	1		X	X	
5	R81776	WEAR RING	1		X	X	(BK)

REPLACEMENT BUCKET CYLINDER
(FOR USE WITH 1.5M EXTENDIBLE DIPPERSTICK)

KEY	PART NO.	PART NAME	QTY	SERIAL NO.	410D	510D	REMARKS
6	RE20344	SEAL	1		X	X	(BK)
7	R82090	PISTON	1		X	X	
8	AH146561	SEAL	1		X	X	(RK)
9	H152203	SEAL	1		X	X	(RK)
10	H154352	HYDR. CYLINDER ROD GUIDE	1		X	X	(RK)
11	F1430R	O-RING	1		X	X	
12	R79101	BACK-UP RING	1		X	X	(BK)
13	R81788	RING	1		X	X	
14	H152794	WEAR RING	1		X	X	(RK)
15	AH146557	SEAL	1		X	X	(RK)
16	R81794	NUT	1		X	X	
17	R82077	BUSHING	1		X	X	
18	RE22501	ROD	1		X	X	
19	T162396	LUBRICATION FITTING	1		X	X	(SUB FOR JD7798) 1/8", STRAIGHT
20	R91730	RING	1		X	X	(BK)
21	H149421	SPACER	1		X	X	
22	24H1576	WASHER	AR		X	X	1-13/16" X 2-15/16" X 0.075", (K)
	24H1572	WASHER	AR		X	X	1-13/16" X 2-3/8" X 0.060"
23	AH148738	HYDRAULIC CYLINDER	1		X	X	
24	T100188	PIN FASTENER	1		X	X	(K) (SUB FOR T125937)
25	T125955	WASHER	3		X	X	
26	T140905	PIN FASTENER	1		X	X	
27	40M7180	SNAP RING	2		X	X	(K)
28	T147178	GUARD	1		X	X	
29	AT125191	HOSE CLAMP	1		X	X	
30	JD7799	LUBRICATION FITTING	1		X	X	1/8", 90°

(BK) AH212096 BORE REPAIR KIT (SUB FOR AH149843 REPAIR KIT)

(K) AT162066 1.5M EXTENDIBLE DIPPER KIT (INCLUDES T147002, T141234, AND EXTENDIBLE DIPPERSTICK)
(ALSO ORDER AT158567 LINK IF SERIAL NUMBER IS BELOW 787396)

(AT162066 NO LONGER AVAILABLE)

(RK) AH210484 ROD SEAL REPAIR KIT (USE WITH AH148738)

CROWD CYLINDER
(FOR USE WITH STANDARD BOOM)

TP41675 -UN-01JAN94

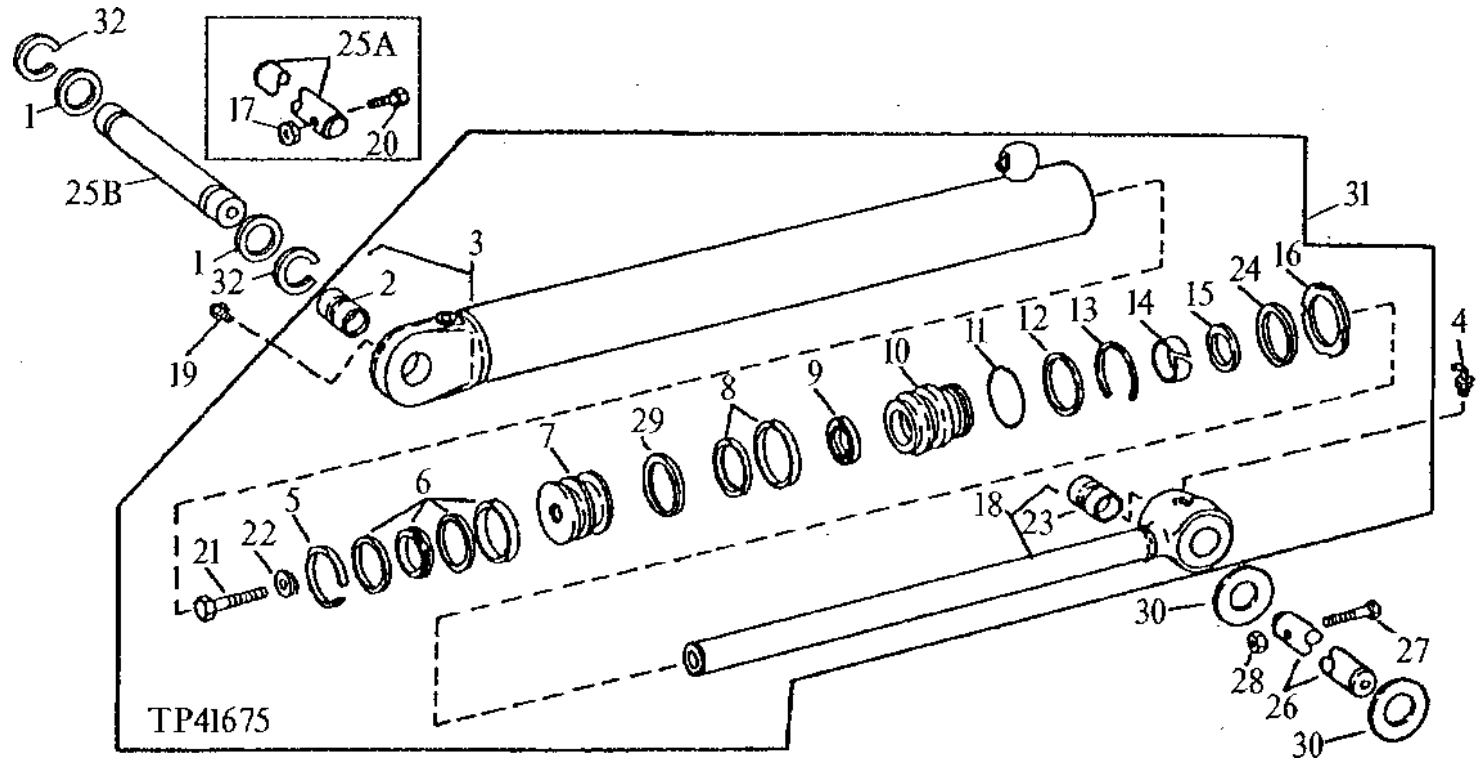

KEY	PART NO.	PART NAME	QTY	SERIAL NO.	410D	510D	REMARKS
1	24H1589	WASHER	AR		X		2" X 3-3/16" X 0.036", FOR STANDARD BOOM
2	R81968	BUSHING	1	-801199	X		
	R97724	BUSHING	1	801200-	X		
3	RE22686	HYDRAULIC CYLINDER BARREL	1	-801199	X		
	AH138197	HYDRAULIC CYLINDER BARREL	1	801200-	X		
4	JD7799	LUBRICATION FITTING	1		X		90° X 0.770" LONG
5	R81775	WEAR RING	1		X		(BK)
6	RE20343	SEAL	1		X		(BK)
7	H144765	PISTON	1		X		
8	RE31717	SEAL	1		X		(RK)
9	R92309	SEAL	1		X		
10	.....	HYDR. CYLINDER ROD GUIDE	1		X		(R92314 NO LONGER USED) (SUB H157427) (ALSO ORDER AH149814)
11	F950R	O-RING	1		X		(BK)
12	R81862	BACK-UP RING	1		X		(BK)
13	R81787	RING	1		X		
14	R92310	WEAR RING	1		X		(RK)
15	RE31718	SEAL	1		X		(RK)

THIS PARTS LISTING IS CONTINUED

CROWD CYLINDER
(FOR USE WITH STANDARD BOOM)

KEY	PART NO.	PART NAME	QTY	SERIAL NO.	410D	510D	REMARKS
16	R81793	NUT	1		X		M90
17	14M7319	LOCK NUT	1	-780969	X		M12
18	AH138663	ROD	1		X		
19	T162396	LUBRICATION FITTING	1		X		1/8", STRAIGHT, (SUB FOR JD7798)
20	19M7908	CAP SCREW	1	-780969	X		M12 X 110
21	H145161	CAP SCREW	1		X		M33 X 80
22	H145139	WASHER	1		X		34.700 X 54 X 6.200 MM (1.366" X 2.126" X 0.244")
23	R82077	BUSHING	1		X		
24	R91731	RING	AR		X		(BK) (DISASSEMBLY AID TOOL)
25A	T125943	PIN FASTENER	1	-780969	X		50 X 216 MM (1.969" X 8.504")
25B	T142484	PIN FASTENER	1	780970-801199	X		50 X 250 MM (1.969" X 9.843")
	T142699	PIN	1	801200-	X		
26	T125936	PIN FASTENER	1		X		55 X 263 MM (2.165" X 10.354") USE WITH 1.9M DIPPERSTICK
	T142121	PIN FASTENER	1	-780877	X		55 X 230 MM (2.165" X 9.055") USE WITH 1.7M DIPPERSTICK
	T126033	PIN FASTENER	1	-787384	X		(K) 55 X 237 MM (2.165" X 9.331") (USE WITH EXTENDIBLE DIPPERSTICK)
	T143647	PIN FASTENER	1	787385-	X		55 X 263 MM (2.165" X 10.354")
27	19M7949	CAP SCREW	1	-780877	X		M12 X 100, USE WITH 1.7M DIPPERSTICK
	19M7949	CAP SCREW	1	-787384	X		M12 X 100, USE WITH 1.9M AND 1.2M DIPPERSTICK
	19M7914	CAP SCREW	1	787385-	X		M12 X 120
28	14M7319	LOCK NUT	1		X		M12, USE WITH 1.9M AND 1.2M DIPPERSTICK
	14M7319	LOCK NUT	1	-780877	X		M12, USE WITH 1.7M DIPPERSTICK
29	R81796	RING	1		X		SPLIT, BRAKE SEAL
30	24H1679	WASHER	AR		X		2-17/64" X 3-1/4" X 0.060"
31	.....	HYDRAULIC CYLINDER	1	-801199	X		(AH138661 NO LONGER AVAILABLE) (SUB AH150119)
	.....	HYDRAULIC CYLINDER	1	801200-	X		(AH138169 NO LONGER AVAILABLE) (SUB AH154776)
32	40M7166	SNAP RING	2	780970-	X		

(BK) AH212101 CYLINDER BORE REPAIR KIT (SUB FOR AH149844 REPAIR KIT)

(RK) RE31716 CYLINDER ROD REPAIR KIT

(K) KIT AT162064 EXTENDIBLE DIPPER KIT (INCLUDES T145346, 24H1576, 40M7180 AND EXTENDIBLE DIPPER)

CROWD CYLINDER
(FOR USE WITH STANDARD BOOM)
(REPLACEMENT CYLINDER)

TP41675 -UN-01JAN94

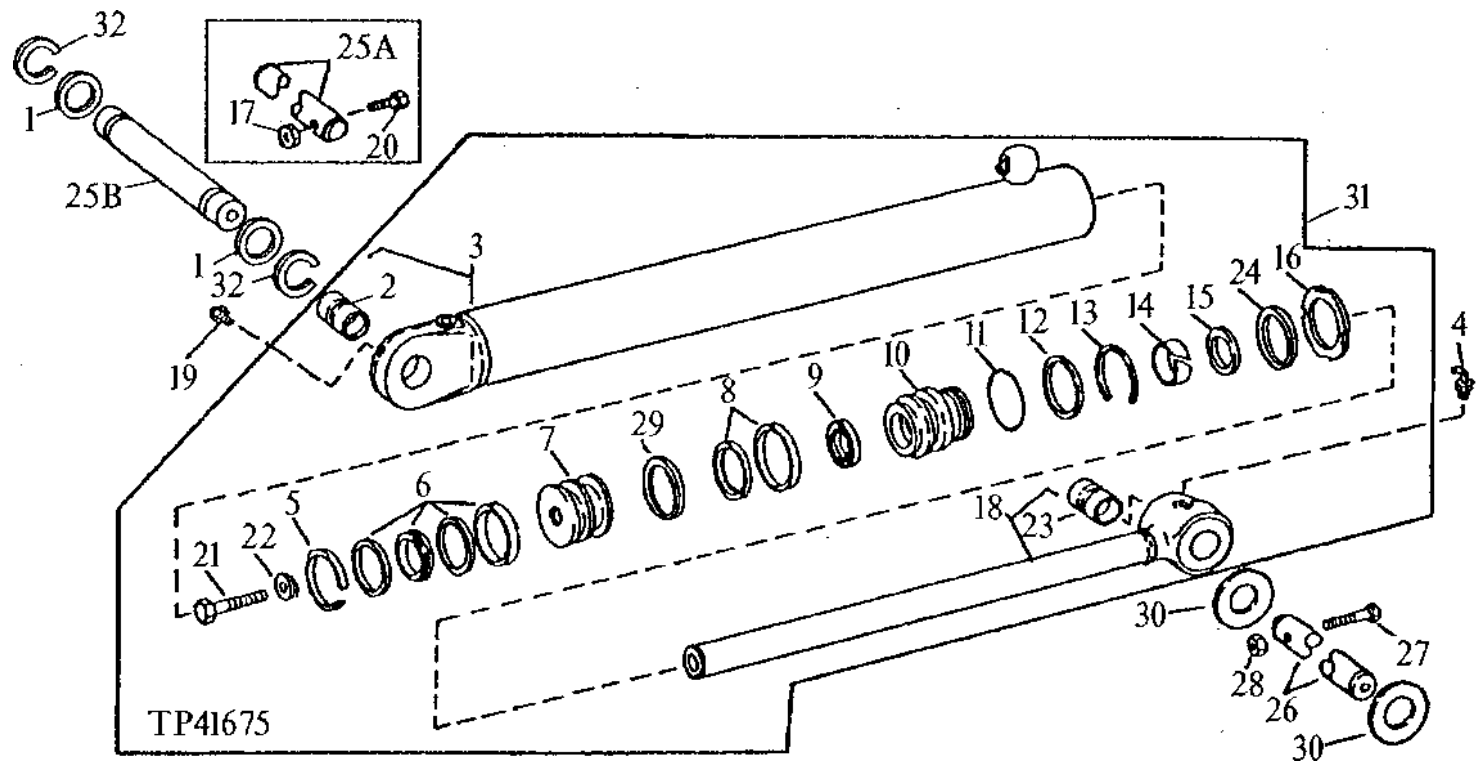

KEY	PART NO.	PART NAME	QTY	SERIAL NO.	410D	510D	REMARKS
1	24H1589	WASHER	AR		X		2" X 3-3/16" X 0.036", FOR STANDARD BOOM
2	R81968	BUSHING	1	-801199	X		
	R97724	BUSHING	1	801200-	X		
3	RE22686	HYDRAULIC CYLINDER BARREL	1	-801199	X		
	AH138197	HYDRAULIC CYLINDER BARREL	1	801200-	X		
4	JD7799	LUBRICATION FITTING	1		X		90° X 0.770" LONG
5	R81775	WEAR RING	1		X		(BK)
6	RE20343	SEAL	1		X		(BK)
7	H144765	PISTON	1		X		
8	AH146562	SEAL	1		X		(RK)
9	H152204	SEAL	1		X		
10	H157427	HYDR. CYLINDER ROD GUIDE	1		X		
11	F950R	O-RING	1		X		(BK)
12	R81862	BACK-UP RING	1		X		(BK)
13	R81787	RING	1		X		
14	H152795	WEAR RING	1		X		(RK)
15	AH146558	SEAL	1		X		(RK)

THIS PARTS LISTING IS CONTINUED

CROWD CYLINDER
(FOR USE WITH STANDARD BOOM)
(REPLACEMENT CYLINDER)

KEY	PART NO.	PART NAME	QTY	SERIAL NO.	410D	510D	REMARKS
16	R81793	NUT	1		X		M90
17	14M7319	LOCK NUT	1	-780969	X		M12
18	AH138663	ROD	1		X		
19	T162396	LUBRICATION FITTING	1		X		1/8", STRAIGHT, (SUB FOR JD7798)
20	19M7908	CAP SCREW	1	-780969	X		M12 X 110
21	H145161	CAP SCREW	1		X		M33 X 80
22	H145139	WASHER	1		X		34.700 X 54 X 6.200 MM (1.366" X 2.126" X 0.244")
23	R82077	BUSHING	1		X		
24	R91731	RING	AR		X		(BK) (DISASSEMBLY AID TOOL)
25A	T125943	PIN FASTENER	1	-780969	X		50 X 216 MM (1.969" X 8.504")
25B	T142484	PIN FASTENER	1	780970-801199	X		50 X 250 MM (1.969" X 9.843")
	T142699	PIN	1	801200-	X		
26	T125936	PIN FASTENER	1		X		55 X 263 MM (2.165" X 10.354") USE WITH 1.9M DIPPERSTICK
	T142121	PIN FASTENER	1	-780877	X		55 X 230 MM (2.165" X 9.055") USE WITH 1.7M DIPPERSTICK
	T126033	PIN FASTENER	1	-787384	X		(K) 55 X 237 MM (2.165" X 9.331") (USE WITH EXTENDIBLE DIPPERSTICK)
	T143647	PIN FASTENER	1	787385-	X		55 X 263 MM (2.165" X 10.354")
27	19M7949	CAP SCREW	1	-780877	X		M12 X 100, USE WITH 1.7M DIPPERSTICK
	19M7949	CAP SCREW	1	-787384	X		M12 X 100, USE WITH 1.9M AND 1.2M DIPPERSTICK
	19M7914	CAP SCREW	1	787385-	X		M12 X 120
28	14M7319	LOCK NUT	1		X		M12, USE WITH 1.9M AND 1.2M DIPPERSTICK
	14M7319	LOCK NUT	1	-780877	X		M12, USE WITH 1.7M DIPPERSTICK
29	R81796	RING	1		X		SPLIT, BRAKE SEAL
30	24H1679	WASHER	AR		X		2-17/64" X 3-1/4" X 0.060"
31	AH150119	HYDRAULIC CYLINDER	1	-801199	X		
	AH154776	HYDRAULIC CYLINDER	1	801200-	X		
32	40M7166	SNAP RING	2	780970-	X		

(BK) AH212101 CYLINDER BORE REPAIR KIT (SUB FOR AH149844 REPAIR KIT)

(RK) AH149814 CYLINDER ROD REPAIR KIT

(K) KIT AT162064 EXTENDIBLE DIPPER KIT (INCLUDES T145346, 24H1576, 40M7180 AND EXTENDIBLE DIPPER)

CROWD CYLINDER
(410D HEAVY LIFT)
(510D STANDARD)
(SERIAL NO. -798466)

TP41663 -UN-01JAN94

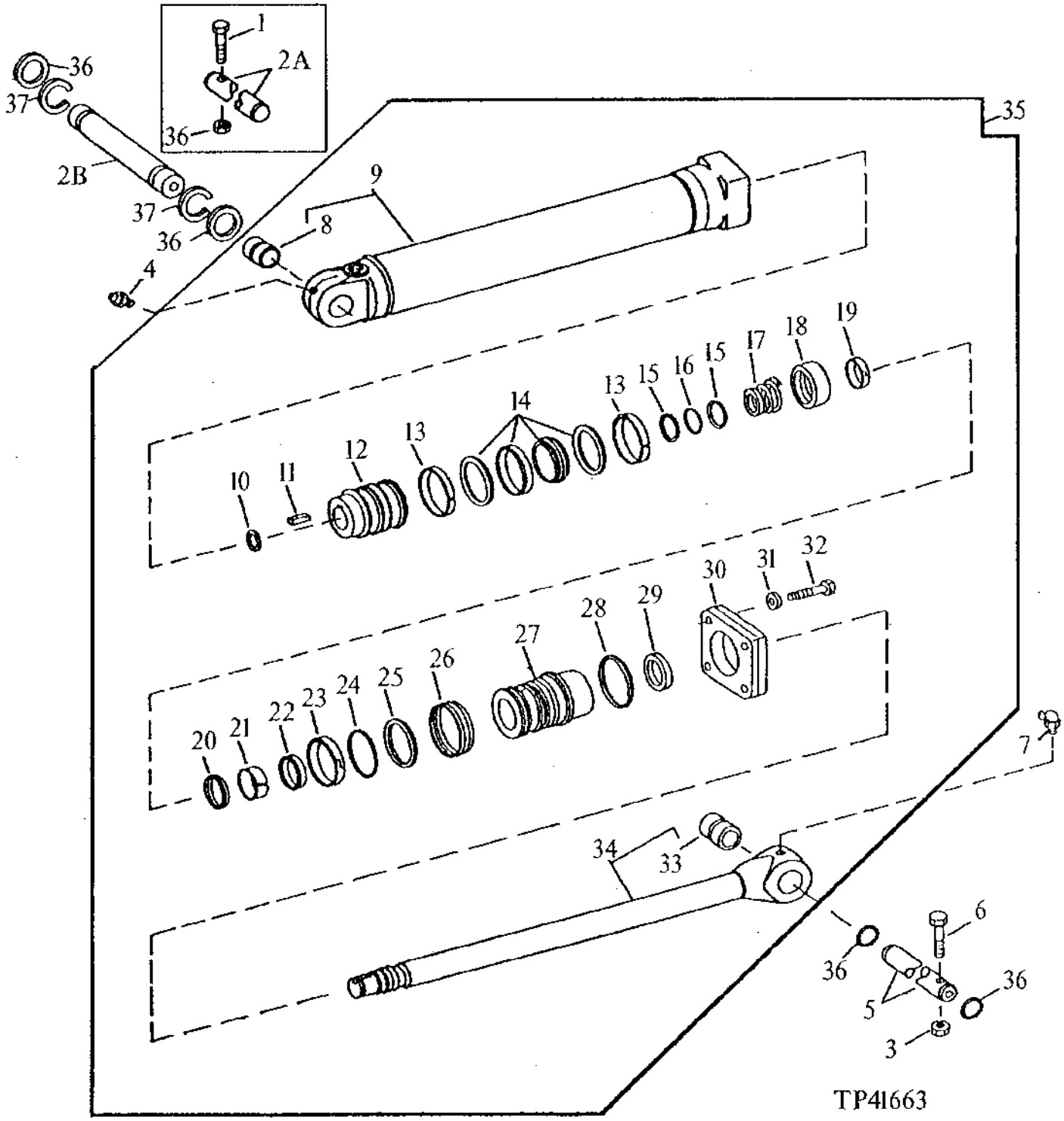

CROWD CYLINDER
(410D HEAVY LIFT)
(510D STANDARD)
(SERIAL NO. -798466)

KEY	PART NO.	PART NAME	QTY	SERIAL NO.	410D	510D	REMARKS
1	19M7914	CAP SCREW	1	-780969		X	M12 X 120
2A	T125945	PIN FASTENER	1	-780969		X	
2B	T142485	PIN	1	780970-	X	X	
3	14M7319	LOCK NUT	1		X	X	M12
4	T162396	LUBRICATION FITTING	1		X	X	(SUB FOR JD7798)
5	T125936	PIN FASTENER	1		X	X	USE WITH 1.9M AND 2.1M DIPPERSTICK
	T147002	PIN	1		X	X	(WITH 1.2M AND 1.5M EXTENDIBLE DIPPERSTICK)
6	19M7949	CAP SCREW	1		X	X	M12 X 100
7	JD7799	LUBRICATION FITTING	1		X	X	
8	R82075	BUSHING	1		X	X	
9	.....	HYDRAULIC CYLINDER BARREL	1		X	X	(AH135268 NO LONGER AVAILABLE) (SUB AH143715)
10	R83216	SNAP RING	1		X	X	
11	R83215	SHAFT KEY	1		X	X	
12	H141559	PISTON	1		X	X	
13	R82095	WEAR RING	2		X	X	(BK)
14	RE20809	SEAL	1		X	X	(BK)
15	R86290	BACK-UP RING	2		X	X	(RK)
16	R26282	O-RING	1		X	X	(RK)
17	H140819	SPRING	1		X	X	
18	H140817	CUSHION	1		X	X	
19	H140822	BACK-UP RING	1		X	X	
20	RE22776	SEAL	1		X	X	(RK)
21	R83213	WEAR RING	1		X	X	(RK)
22	RE30121	SEAL	1		X	X	(RK)
23	H140821	BACK-UP RING	1		X	X	
24	P46765	O-RING	1		X	X	
25	R79001	BACK-UP RING	1		X	X	(BK) (DISASSEMBLY AID TOOL)
26	H141511	SPACER	1		X	X	
27	H140812	HYDR. CYLINDER ROD GUIDE	1		X	X	
28	H141980	SEALING WASHER	1		X	X	(BK)
29	RE22777	SEAL	1		X	X	(RK)
30	H140827	HYDR. CYLINDER ROD GUIDE	1		X	X	
31	H140825	WASHER	4		X	X	
32	19M7892	CAP SCREW	4		X	X	
33	R83221	BUSHING	1		X	X	
34	AH135272	ROD	1		X	X	
35	.....	HYDRAULIC CYLINDER	1		X	X	(AH135266 NO LONGER AVAILABLE) (SUB AH142934)
36	14M7319	LOCK NUT	1	-780969		X	M12
	24H1679	WASHER	AR	780970-		X	2-17/64" X 3-1/4" X 0.060"
37	40M7066	SNAP RING	2	780970-	X	X	

(BK) RE31140 CYLINDER BORE REPAIR KIT

(RK) RE25151 CYLINDER ROD REPAIR KIT

CROWD CYLINDER
(410D HEAVY LIFT)
(510D STANDARD)
(SERIAL NO. 798467-)

TP44564 -UN-01JAN94

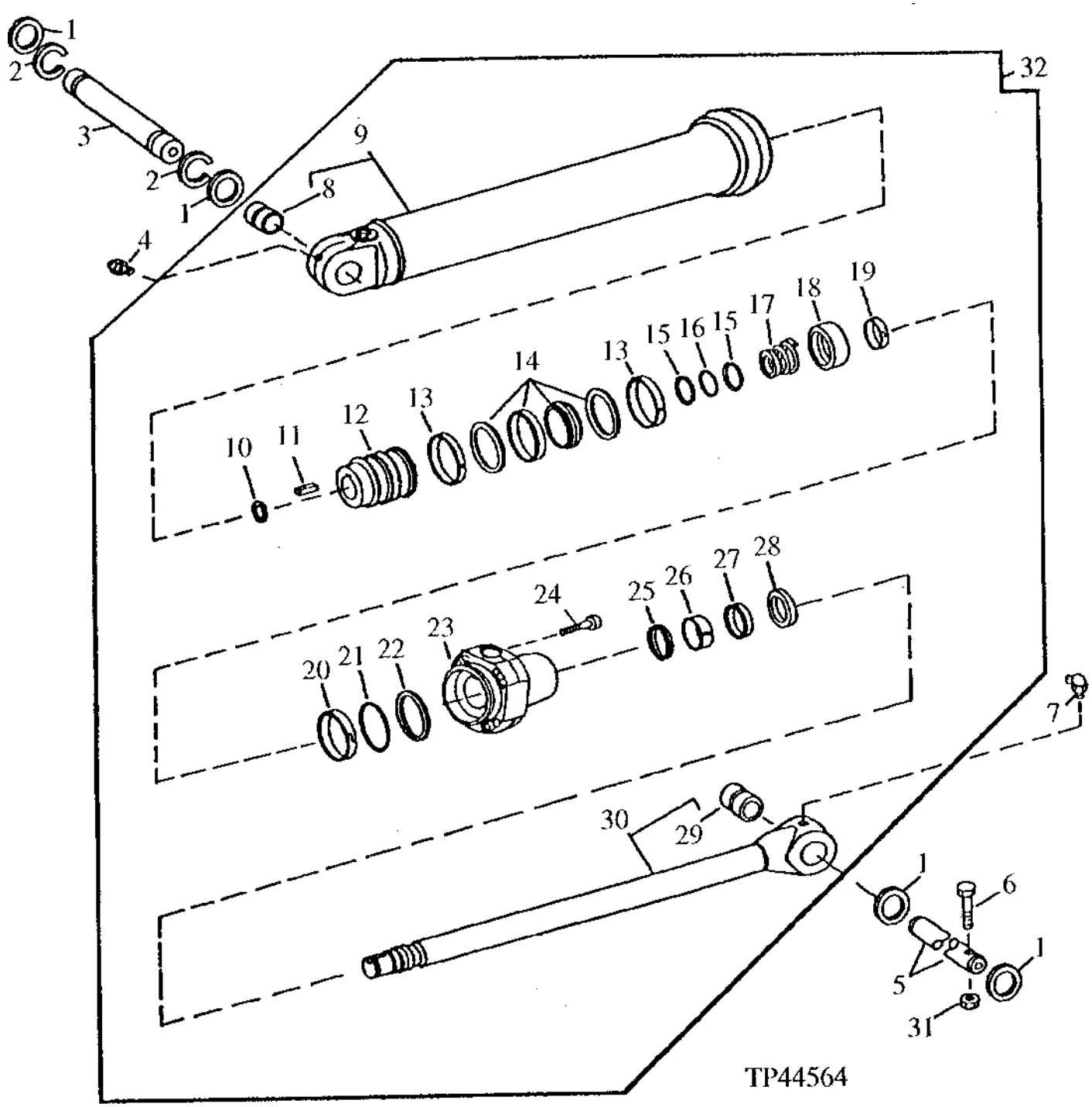

CROWD CYLINDER
(410D HEAVY LIFT)
(510D STANDARD)
(SERIAL NO. 798467-)

KEY	PART NO.	PART NAME	QTY	SERIAL NO.	410D	510D	REMARKS
1	24H1679	WASHER	AR		X	X	57.556 X 82.550 X 1.524 MM
2	40M7066	SNAP RING	2		X	X	
3	T142485	PIN	1		X	X	55 X 222 MM
4	T162396	LUBRICATION FITTING	1		X	X	(SUB FOR JD7798)
5	T125936	PIN FASTENER	1		X	X	USE WITH 1.9M AND 2.1M DIPPERSTICK
	T147002	PIN	1		X	X	(WITH 1.2M AND 1.5M EXTENDIBLE DIPPERSTICK)
6	19M7949	CAP SCREW	1		X	X	M12 X 100
7	JD7799	LUBRICATION FITTING	1		X	X	
8	R82075	BUSHING	1		X	X	
9	AH142949	HYDRAULIC CYLINDER BARREL	1		X	X	(BK1)
10	R83216	SNAP RING	1		X	X	
11	R83215	SHAFT KEY	1		X	X	
12	H141559	PISTON	1		X	X	
13	R82095	WEAR RING	2		X	X	(BK)
14	RE20809	SEAL	1		X	X	(BK)
15	R86290	BACK-UP RING	2		X	X	(RK)
16	R26282	O-RING	1		X	X	(RK)
17	H140819	SPRING	1		X	X	
18	H140817	CUSHION	1		X	X	
19	H140822	BACK-UP RING	1		X	X	
20	RE22776	SEAL	1		X	X	(RK)
21	P46765	O-RING	1		X	X	(RK)
22	R79001	BACK-UP RING	1		X	X	(BK)
23	H149342	HYDR. CYLINDER ROD GUIDE	1		X	X	(BK1)
24	19M6619	SCREW	8		X	X	(BK1)
25	RE22776	SEAL	1		X	X	(RK) (DISASSEMBLY AID TOOL)
26	H150617	WEAR RING	1		X	X	(RK)
27	RE30121	SEAL	1		X	X	(RK)
28	RE24537	SEAL	1		X	X	(RK)
29	R83221	BUSHING	1		X	X	
30	AH135272	ROD	1		X	X	
31	14M7319	LOCK NUT	1		X	X	
32	AH142934	HYDRAULIC CYLINDER	1		X	X	

(BK) AH212103 CYLINDER BORE REPAIR KIT (SUB FOR AH149846 REPAIR KIT)

(RK) AH146415 CYLINDER ROD REPAIR KIT

(BK1) AH143715 KIT, SERVICE BARREL

EXTENDIBLE DIPPERSTICK CYLINDER
(FOR USE WITH 1.2M EXTENDIBLE DIPPERSTICK)
(410D)
(SERIAL NO. -787395)

TP27864 -UN-01JAN94

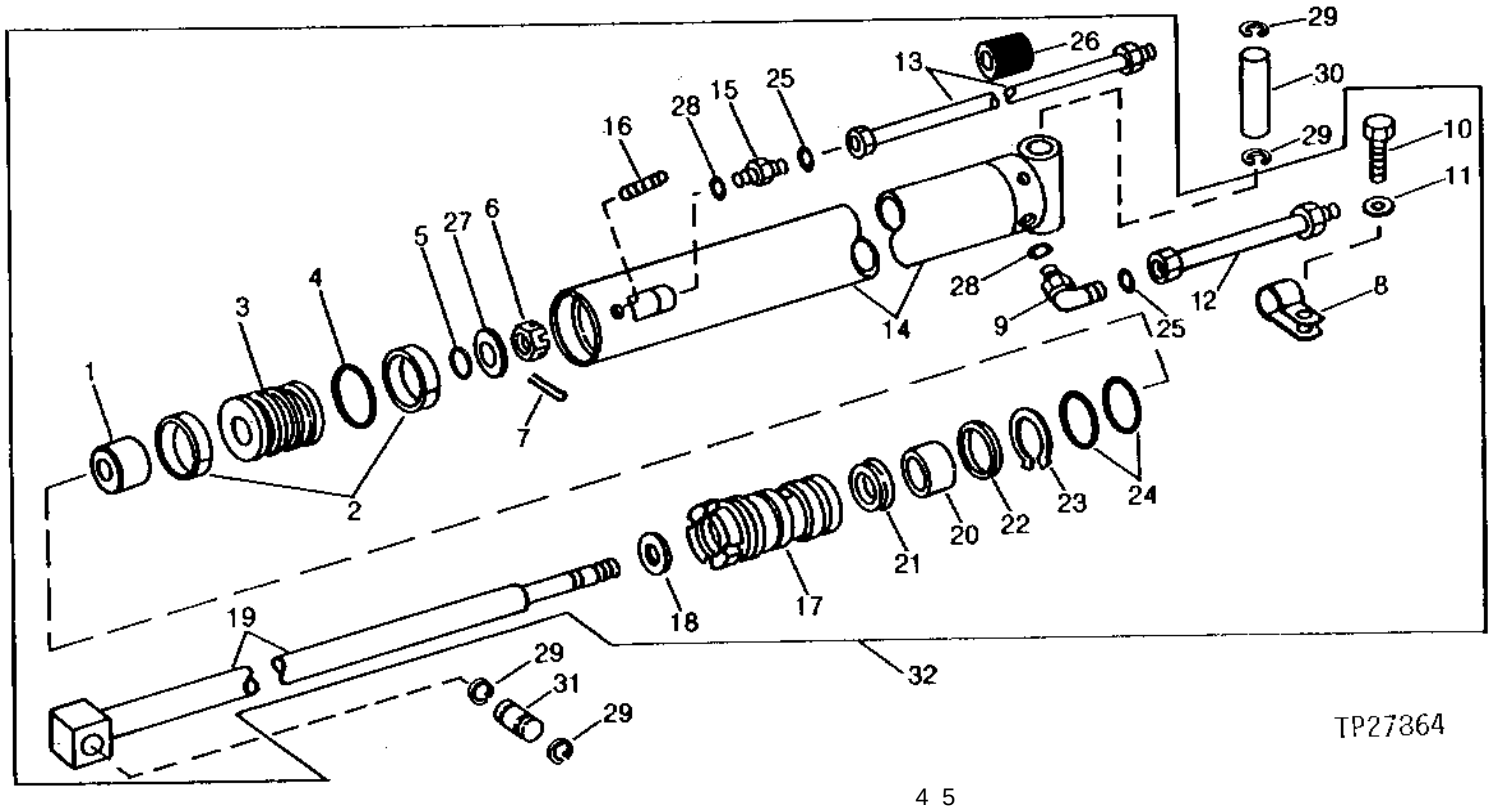

KEY	PART NO.	PART NAME	QTY	SERIAL NO.	410D	510D	REMARKS
1	T79781	BUSHING	1		X		
2	.....	WEAR RING	2		X		(K)
3	T79782	PISTON	1		X		
4	.....	SEAL	1		X		(K)
5	A3190R	O-RING	1		X		(K)

EXTENDIBLE DIPPERSTICK CYLINDER
(FOR USE WITH 1.2M EXTENDIBLE DIPPERSTICK)
(410D)
(SERIAL NO. -787395)

KEY	PART NO.	PART NAME	QTY	SERIAL NO.	410D	510D	REMARKS
6	14H875	NUT	1		X		7/8"
7	34H284	SPRING PIN	1		X		3/16" X 1-1/4"
8	T14787	CLAMP	1		X		
9	38H1405	ELBOW FITTING	1		X		
10	19H2038	CAP SCREW	1		X		3/8" X 1/2"
	28H1884	SPACER	1		X		0.493" X 0.675" X 1/2"
11	12H304	LOCK WASHER	1		X		3/8"
	24H1308	WASHER	1		X		13/32" X 1" X 0.134"
12	AT84175	ADAPTER	1		X		
13	AT101064	OIL LINE	1		X		
14	AT80098	HYDRAULIC CYLINDER BARREL	1		X		
15	38H1317	FITTING	1		X		
16	22H897	SET SCREW	1		X		1/4" X 1/4"
17	T79719	HYDR. CYLINDER ROD GUIDE	1		X		
18	.....	SEAL	1		X		(K)
19	AT79723	ROD	1		X		
20	T79720	BUSHING	1		X		
21	.....	SEAL	1		X		(K)
22	R35684	BACK-UP RING	1		X		(K)
23	T41471	SNAP RING	1		X		(K)
24	U12331	O-RING	2		X		(K)
25	T77932	O-RING	2		X		
26	T100974	GROMMET	1		X		
27	T19572	WASHER	1		X		
28	R26375	O-RING	2		X		
29	H35226	SNAP RING	4		X		
30	T113347	PIN	1		X		
31	B28568	DOWEL PIN	1		X		
32	.....	HYDRAULIC CYLINDER	1		X		(AT101063 NO LONGER AVAILABLE) (SUB AH154784, AT167718, (2) AT164789 AND AT114218)

(K) AT79722 REPAIR KIT

EXTENDIBLE DIPPERSTICK CYLINDER
(FOR USE WITH 1.2M EXTENDIBLE DIPPERSTICK)
(410D)
(SERIAL NO. 787396-)

TP44500 -UN-01JAN94

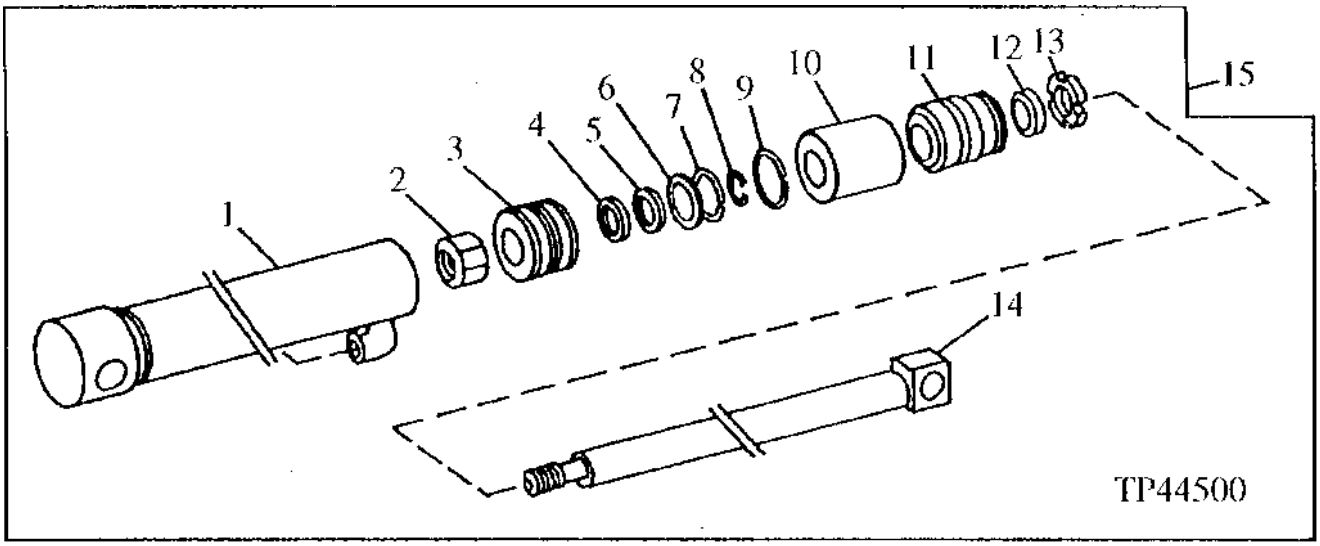

KEY	PART NO.	PART NAME	QTY	SERIAL NO.	410D	510D	REMARKS
1	.....	HYDRAULIC CYLINDER BARREL	1	-795234	X		(AH142916 NO LONGER AVAILABLE) (SUB AH144119 AND H150292)
	AH144119	HYDRAULIC CYLINDER BARREL	1	795235-	X		
2	R81866	NUT	1		X		
3	RE33968	PISTON	1		X		UNITIZED (INCLUDES WEAR RINGS AND SEALS) (ALSO ORDER AH212092)
	R98322	SEAL	1		X		FACE
	R98323	SEAL	1		X		INTERNAL
4	RE20491	SEAL	1		X		(RK)
5	R81856	SEAL	1		X		(RK)
6	R81864	BACK-UP RING	1		X		(BK)
	T12582	O-RING	1		X		
7	R81779	WEAR RING	1		X		(RK)
8	R81789	RING	1		X		
9	R91729	RING	AR		X		(BK)
10	.....	SPACER	1	-795234	X		(H148844 NO LONGER AVAILABLE) (SUB H150292 AND AH144119)
	H150292	BUSHING	1	795235-	X		
11	.....	HYDR. CYLINDER ROD GUIDE	1		X		(R81767 NO LONGER AVAILABLE) (SUB H157510) (ALSO ORDER AH212091)
12	RE24535	SEAL	1		X		(RK)
13	R81795	NUT	1		X		
14	AH141549	ROD	1		X		
15	.....	HYDRAULIC CYLINDER	1	-795234	X		(AH141377 NO LONGER AVAILABLE) (SUB AH154784)
	.....	HYDRAULIC CYLINDER	1	795235-	X		(AH144391 NO LONGER AVAILABLE) (SUB AH154784)

(BK) AH212092 CYLINDER BORE SEAL KIT (SUB FOR AH202080 SEAL KIT)

(RK) RE20434 CYLINDER ROD SEAL KIT

EXTENDIBLE DIPPERSTICK CYLINDER
(REPLACEMENT CYLINDER)

TP44500 -UN-01JAN94

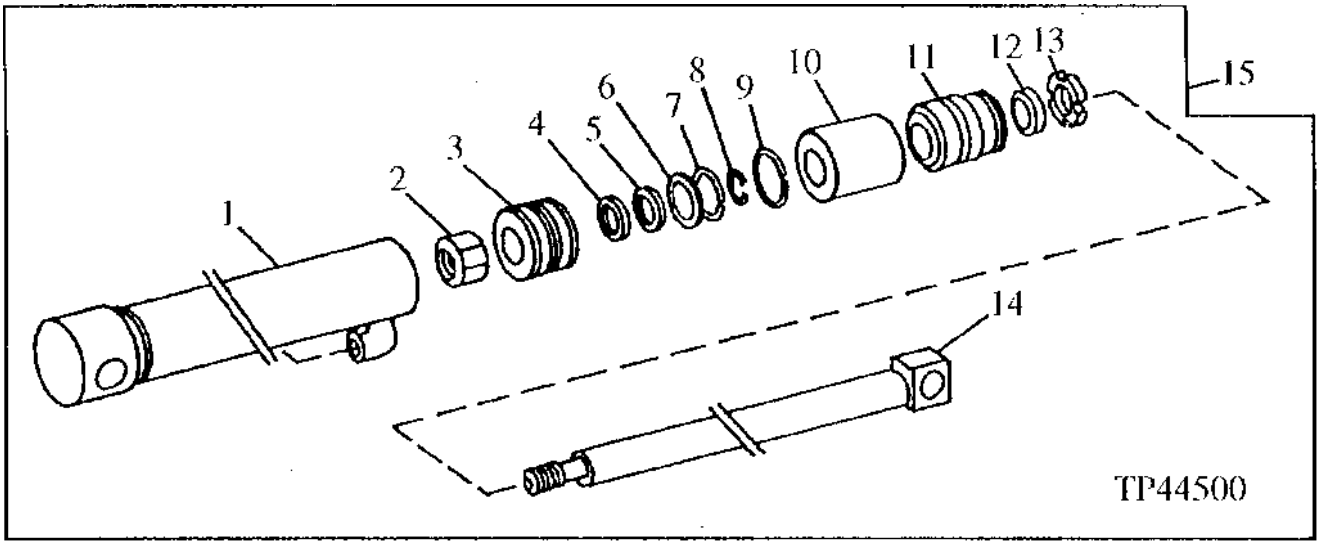

KEY	PART NO.	PART NAME	QTY	SERIAL NO.	410D	510D	REMARKS
1	AH144119	HYDRAULIC CYLINDER BARREL	1		X		
2	R81866	NUT	1		X		
3	RE33968	PISTON	1		X		UNITIZED (INCLUDES WEAR RINGS AND SEALS) (ALSO ORDER AH212092)
	R98322	SEAL	1		X		FACE
	R98323	SEAL	1		X		INTERNAL
4	AH146560	SEAL	1		X		(RK)
5	H152202	SEAL	1		X		(RK)
6	R81864	BACK-UP RING	1		X		(BK)
	T12582	O-RING	1		X		
7	H152793	BACK-UP RING	1		X		(RK)
8	R81789	RING	1		X		
9	R91729	RING	AR		X		(BK)
10	H150292	BUSHING	1		X		
11	H157510	HYDR. CYLINDER ROD GUIDE	1		X		(SUB FOR H152347)
12	AH146556	SEAL	1		X		(RK)
13	R81795	NUT	1		X		
14	AH141549	ROD	1		X		
15	AH154784	HYDRAULIC CYLINDER	1		X		

(BK) AH212092 CYLINDER BORE SEAL KIT (SUB FOR AH202080 SEAL KIT)

(RK) AH149813 CYLINDER ROD SEAL KIT

MEMORANDA

EXTENDIBLE DIPPERSTICK CYLINDER HYDRAULIC LINE, PINS, AND STOP
(FOR USE WITH 1.2M EXTENDIBLE DIPPERSTICK)
(410D)
(SERIAL NO 787396-)

TP44404 -UN-01JAN94

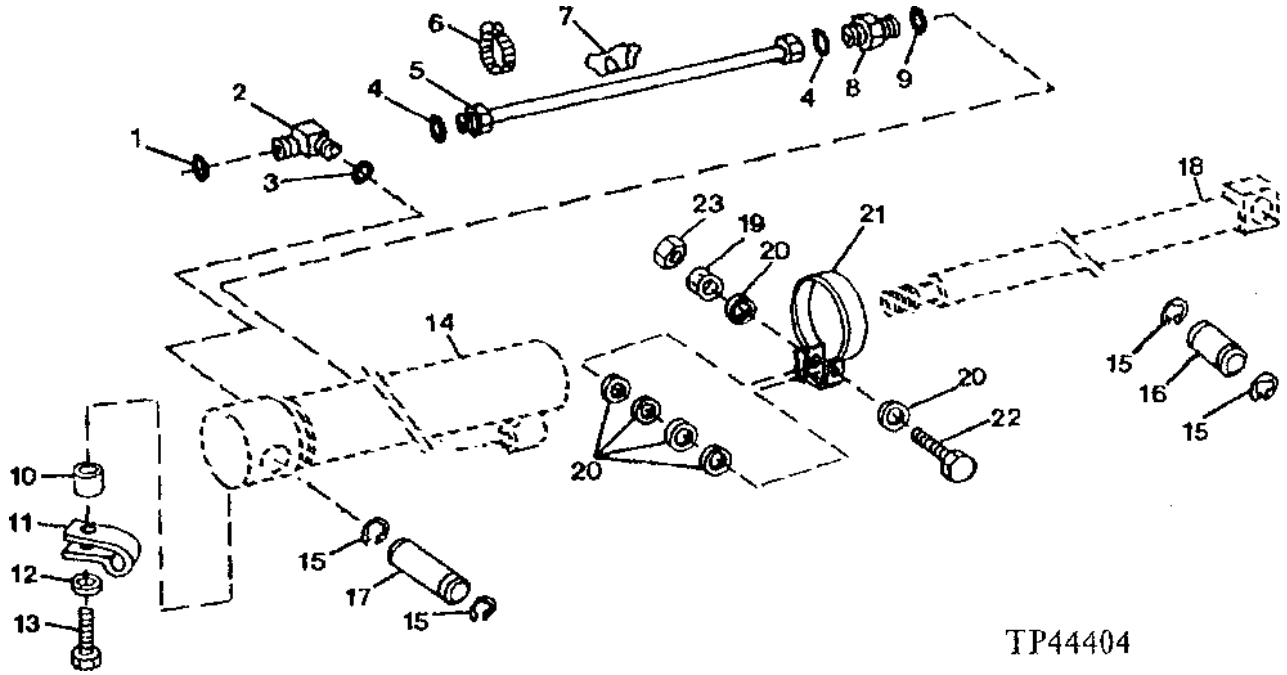

KEY	PART NO.	PART NAME	QTY	SERIAL NO.	410D	510D	REMARKS
1	T77857	O-RING	1		X		
2	AT161678	ELBOW FITTING	1		X		
3	R26375	O-RING	1		X		
4	T77857	O-RING	2		X		
5	AT114218	OIL LINE	1		X		
6	AR21842	CLAMP	1		X		
7	T101624	SUPPORT	1		X		
8	38H1173	ADAPTER	1		X		
9	R26448	O-RING	1		X		
10	28H1883	SPACER	1		X		
11	T24958	CLIP	1		X		
12	24M7238	WASHER	1	-795234	X		8.700 X 17 X 2 MM
13	19M7513	CAP SCREW	1		X		M8 X 30, (SUB FOR 19M7932)
14	.....	HYDRAULIC CYLINDER BARREL	1		X		
15	L1610N	SNAP RING	4		X		
16	T143262	PIN	1		X		
17	T145377	PIN	1		X		
18	AH141549	ROD	1		X		
19	14M7273	NUT	1	-795234	X		M8
20	24M7238	WASHER	6	-795234	X		8.700 X 17 X 2 MM
21	T151248	STOP	1	-795234	X		(SUB FOR AT161938)
22	19M7922	CAP SCREW	1	-795234	X		M8 X 40
23	14M7166	LOCK NUT	1	-795234	X		M8

EXTENDIBLE DIPPERSTICK CYLINDER
(FOR USE WITH 1.5M EXTENDIBLE DIPPERSTICK)
(SERIAL NO. -787395)

TP12881 -UN-01JAN94

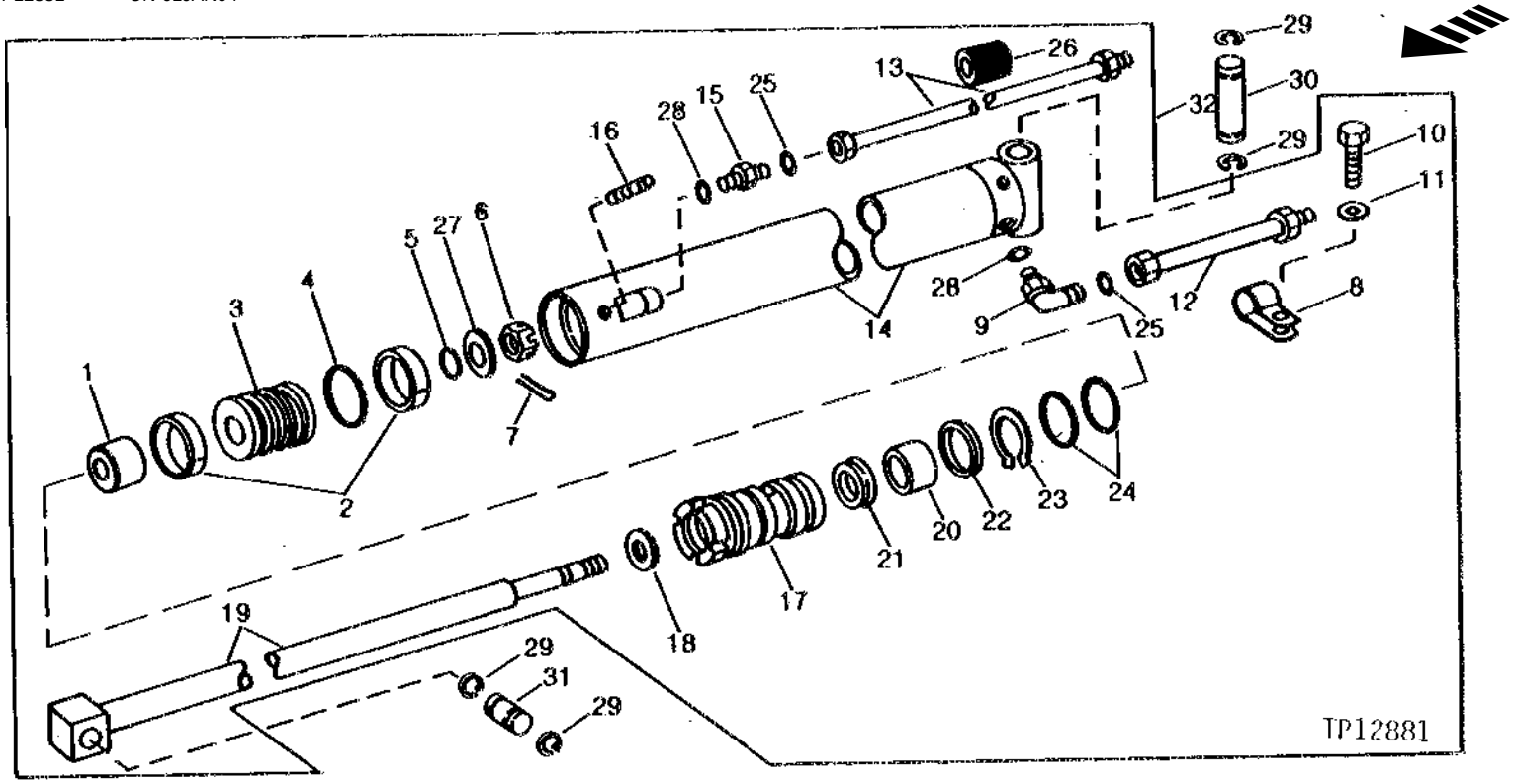

KEY	PART NO.	PART NAME	QTY	SERIAL NO.	410D	510D	REMARKS
1	T79781	BUSHING	1		X	X	
2	.....	WEAR RING	2		X	X	(K)
3	T79782	PISTON	1		X	X	
4	.....	SEAL	1		X	X	(K)
5	A3190R	O-RING	1		X	X	(K)

EXTENDIBLE DIPPERSTICK CYLINDER
(FOR USE WITH 1.5M EXTENDIBLE DIPPERSTICK)
(SERIAL NO. -787395)

KEY	PART NO.	PART NAME	QTY	SERIAL NO.	410D	510D	REMARKS
6	14H875	NUT	1		X	X	7/8"
7	34H284	SPRING PIN	1		X	X	3/16" X 1-1/4"
8	T14787	CLAMP	1		X	X	
9	38H1405	ELBOW FITTING	1		X	X	
10	19H2038	CAP SCREW	1		X	X	3/8" X 1/2"
	28H1884	SPACER	1		X	X	
11	12H304	LOCK WASHER	1		X	X	3/8"
	24H1308	WASHER	1		X	X	
12	AT84175	ADAPTER	1		X	X	
13	AT84176	OIL LINE	1		X	X	
14	AT80099	HYDRAULIC CYLINDER BARREL	1		X	X	
15	38H1317	FITTING	1		X	X	
16	22H897	SET SCREW	1		X	X	1/4" X 1/4"
17	.....	HYDR. CYLINDER ROD GUIDE	1		X	X	(R96445 & R81767 NO LONGER AVAILABLE) (SUB H157510) (ALSO ORDER AH212091)
18	.....	SEAL	1		X	X	(K)
19	AT79728	ROD	1		X	X	
20	T79720	BUSHING	1		X	X	
21	.....	SEAL	1		X	X	(K)
22	R35684	BACK-UP RING	1		X	X	(K)
23	T41471	SNAP RING	1		X	X	(K)
24	U12331	O-RING	2		X	X	(K)
25	T77932	O-RING	2		X	X	
26	T100974	GROMMET	1		X	X	
27	T19572	WASHER	1		X	X	
28	R26375	O-RING	2		X	X	
29	H35226	SNAP RING	4		X	X	
30	T113347	PIN	1		X	X	
31	B28568	DOWEL PIN	1		X	X	
32	.....	HYDRAULIC CYLINDER	1		X	X	(AT84174 NO LONGER AVAILABLE) (SUB AH155668, AT167718, (2) AT164788 AND AT159058)

(K) AT79722 REPAIR KIT

REPLACEMENT EXTENDIBLE DIPPERSTICK CYLINDER KIT

TP58037 -UN-24MAY99

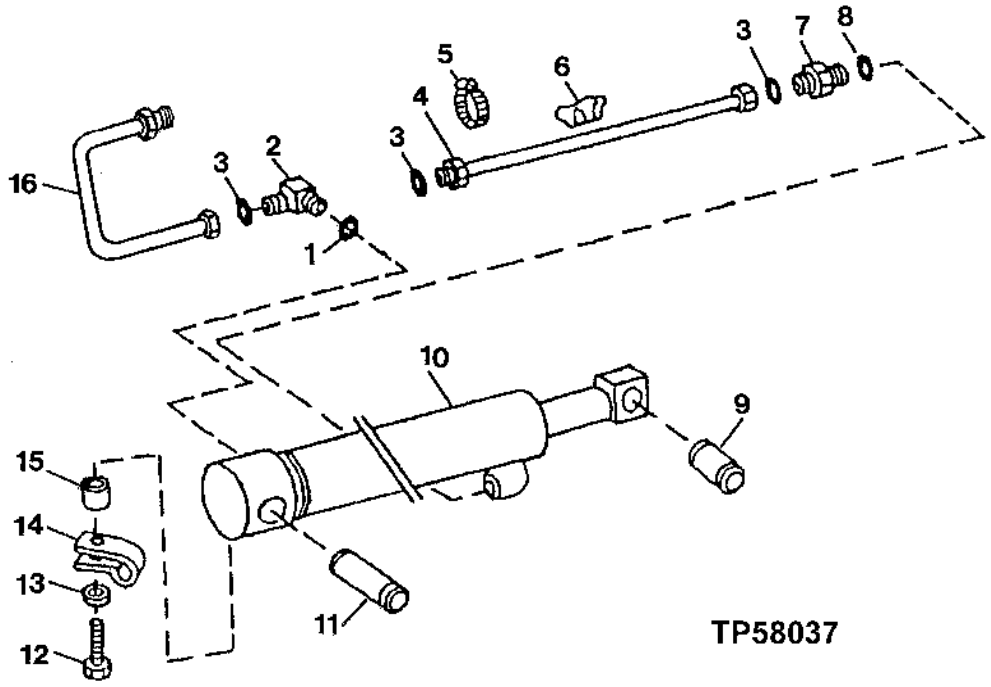

KEY	PART NO.	PART NAME	QTY	SERIAL NO.	410D	510D	REMARKS
1	R26375	O-RING	2		X	X	(K)
2	AT161678	ELBOW FITTING	1		X	X	(K)
3	T77857	O-RING	3		X	X	(K)
4	AT114218	OIL LINE	1		X		(STANDARD) (USE WITH AH144391 AND AH154784)
	AT159058	TUBE	1		X	X	(HEAVY LIFT) (USE WITH AH146325)
5	AR21842	CLAMP	1		X	X	(K)
6	T101624	SUPPORT	1		X	X	(K)
7	38H1173	ADAPTER	1		X	X	(K)
8	R26448	O-RING	1		X	X	(K)
9	T146688	BUSHING	1		X	X	(K)
10	AH154784	HYDRAULIC CYLINDER	1		X		(STANDARD) (SUB FOR AT101063 AND AH144391)
	AH155668	HYDRAULIC CYLINDER	1		X	X	(HEAVY LIFT) (SUB FOR AT84174 AND AH144392)
11	T146689	BUSHING	1		X	X	(K)
12	19M7513	CAP SCREW	1		X	X	(K)
13	24M7238	WASHER	1		X	X	(K)
14	T24958	CLIP	1		X	X	(K)
15	28H1883	SPACER	1		X	X	(K)
16	AT164788	OIL LINE	2		X	X	(USE WITH AH144392)
	AT164789	OIL LINE	2		X		(USE WITH AH144391 AND AH154784)

(K) AT167718 REPLACEMENT CYLINDER KIT

MEMORANDA

EXTENDIBLE DIPPERSTICK CYLINDER
(FOR USE WITH 1.5M EXTENDIBLE DIPPERSTICK)
(SERIAL NO. 787396-)

TP44500 -UN-01JAN94

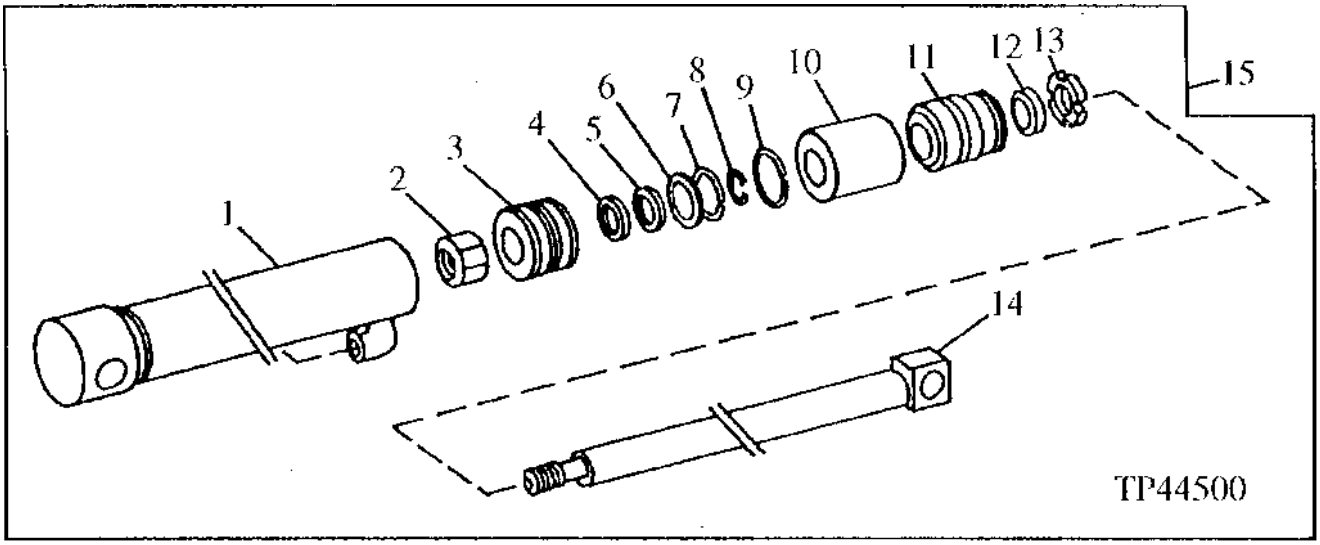

KEY	PART NO.	PART NAME	QTY	SERIAL NO.	410D	510D	REMARKS
1	.....	HYDRAULIC CYLINDER BARREL	1	-795234	X	X	(AH142917 NO LONGER AVAILABLE) (SUB AH144120 AND H150292)
	AH144120	HYDRAULIC CYLINDER BARREL	1	795235-	X	X	
2	R81866	NUT	1		X	X	
3	RE33968	PISTON	1		X	X	UNITIZED (INCLUDES WEAR RINGS AND SEALS) (ALSO ORDER AH212092)
	R98322	SEAL	1		X	X	FACE
	R98323	SEAL	1		X	X	INTERNAL
4	RE20491	SEAL	1		X	X	(RK)
5	R81856	SEAL	1		X	X	(RK)
6	R81864	BACK-UP RING	1		X	X	(BK)
7	R81779	WEAR RING	1		X	X	(RK)
8	R81789	RING	1		X	X	
9	R91729	RING	AR		X	X	(BK)
10	.....	SPACER	1	-795234	X	X	(H148844 NO LONGER AVAILABLE) (SUB H150292 AND AH144120)
	H150292	BUSHING	1	795235-	X	X	
11	.....	HYDR. CYLINDER ROD GUIDE	1		X	X	(R96445 & R81767 NO LONGER AVAILABLE) (SUB H157510) (ALSO ORDER AH149813)
12	RE24535	SEAL	1		X	X	(RK)
13	R81795	NUT	1		X	X	
14	AH141803	ROD	1		X	X	
15	.....	HYDRAULIC CYLINDER	1		X	X	(AH146325 NO LONGER AVAILABLE) (SUB AH155668) (SUB FOR AH141378 AND AH144392)

(BK) AH212092 CYLINDER BORE SEAL KIT (SUB FOR AH202080 SEAL KIT)

(RK) RE20434 CYLINDER ROD SEAL KIT

THIS PARTS LISTING IS CONTINUED

EXTENDIBLE DIPPERSTICK CYLINDER
(FOR USE WITH 1.5M EXTENDIBLE DIPPERSTICK)
(REPLACEMENT CYLINDER)

TP44500 -UN-01JAN94

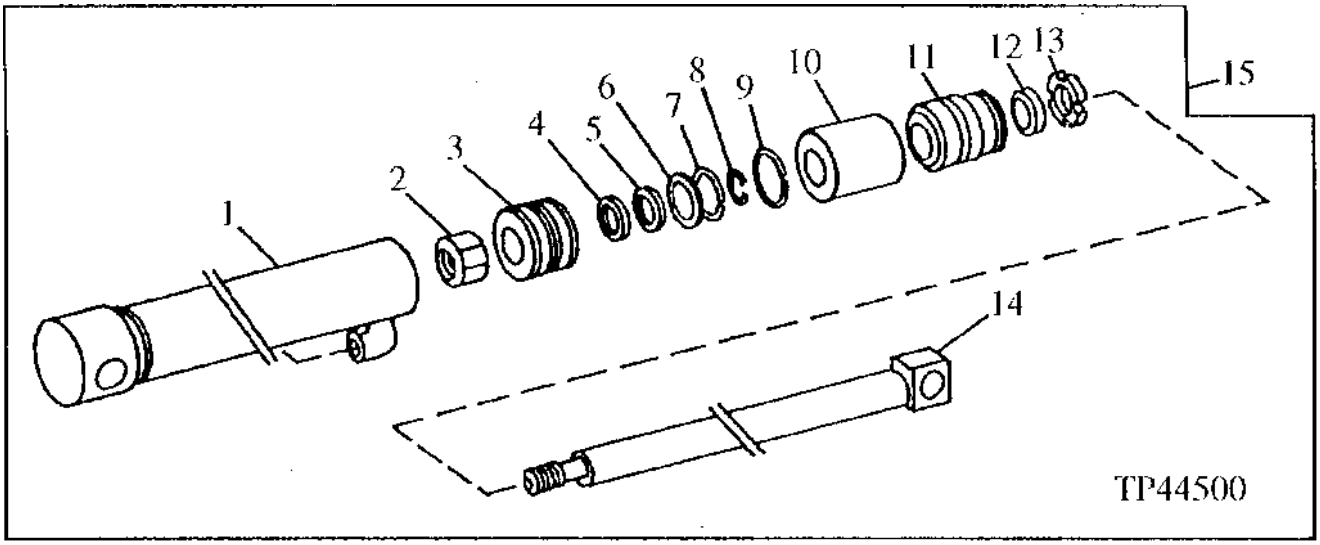

KEY	PART NO.	PART NAME	QTY	SERIAL NO.	4510 D	5110 D	REMARKS
1	AH144120	HYDRAULIC CYLINDER BARREL	1		X	X	
2	R81866	NUT	1		X	X	
3	RE33968	PISTON	1		X	X	UNITIZED (INCLUDES WEAR RINGS AND SEALS) (ALSO ORDER AH212092)
	R98322	SEAL	1		X	X	FACE
	R98323	SEAL	1		X	X	INTERNAL
4	AH146560	SEAL	1		X	X	(RK)
5	H152202	SEAL	1		X	X	(RK)
6	R81864	BACK-UP RING	1		X	X	(BK)
7	H152793	BACK-UP RING	1		X	X	(RK)
8	R81789	RING	1		X	X	
9	R91729	RING	AR		X	X	(BK)
10	H150292	BUSHING	1		X	X	
11	H157510	HYDR. CYLINDER ROD GUIDE	1		X	X	
12	RE24535	SEAL	1		X	X	(RK)
13	R81795	NUT	1		X	X	
14	AH141803	ROD	1		X	X	
15	AH155668	HYDRAULIC CYLINDER	1		X	X	

(BK) AH212092 CYLINDER BORE SEAL KIT (SUB FOR AH202080 SEAL KIT)

(RK) AH149813 CYLINDER ROD SEAL KIT

MEMORANDA

EXTENDIBLE DIPPERSTICK CYLINDER HYDRAULIC LINE, PINS, AND STOP
(FOR USE WITH 1.5M EXTENDIBLE DIPPERSTICK)
(SERIAL NO 787396-)

TP44404 -UN-01JAN94

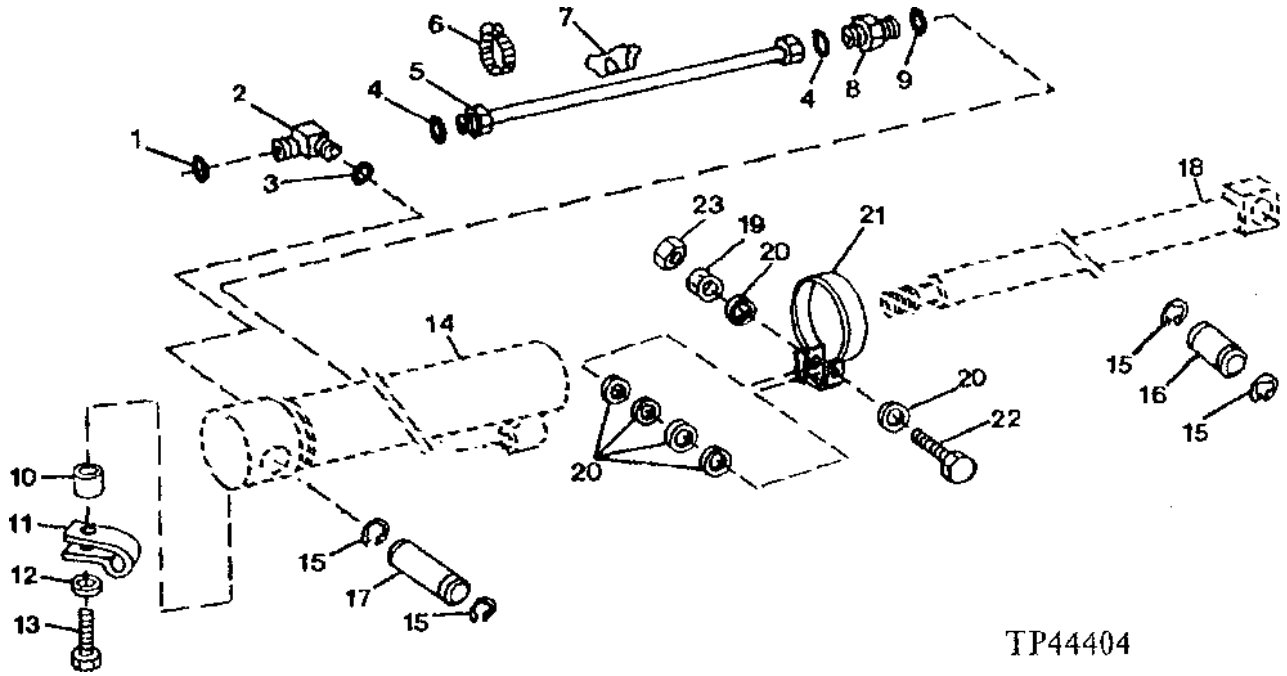

KEY	PART NO.	PART NAME	QTY	SERIAL NO.	410D	510D	REMARKS
1	T77857	O-RING	1		X	X	
2	AT161678	ELBOW FITTING	1		X	X	
3	R26375	O-RING	1		X	X	
4	T77857	O-RING	2		X	X	
5	AT159058	TUBE	1		X	X	
6	AR21842	CLAMP	1		X	X	
7	T101624	SUPPORT	1		X	X	
8	38H1173	ADAPTER	1		X	X	
9	R26448	O-RING	1		X	X	
10	28H1883	SPACER	1		X	X	
11	T24958	CLIP	1		X	X	
12	24M7238	WASHER	1	-795234	X	X	8.700 X 17 X 2 MM
13	19M7932	CAP SCREW	1		X	X	M8 X 16
14	.....	HYDRAULIC CYLINDER BARREL	1		X	X	
15	L1610N	SNAP RING	4		X	X	
16	T143262	PIN	1		X	X	
17	T145377	PIN	1		X	X	
18	AH141803	ROD	1		X	X	
19	14M7273	NUT	1	-795234	X	X	M8
20	24M7238	WASHER	6	-795234	X	X	8.700 X 17 X 2 MM
21	AT161938	STOP	1	-795234	X	X	
22	19M7922	CAP SCREW	1	-795234	X	X	M8 X 40
23	14M7166	LOCK NUT	1	-795234	X	X	M8

STABILIZER CYLINDER
(SERIAL NO. -817458)
(AH135635, AH135636, AH143513, AH143514 CYLINDERS)

TP45536 -UN-12OCT94

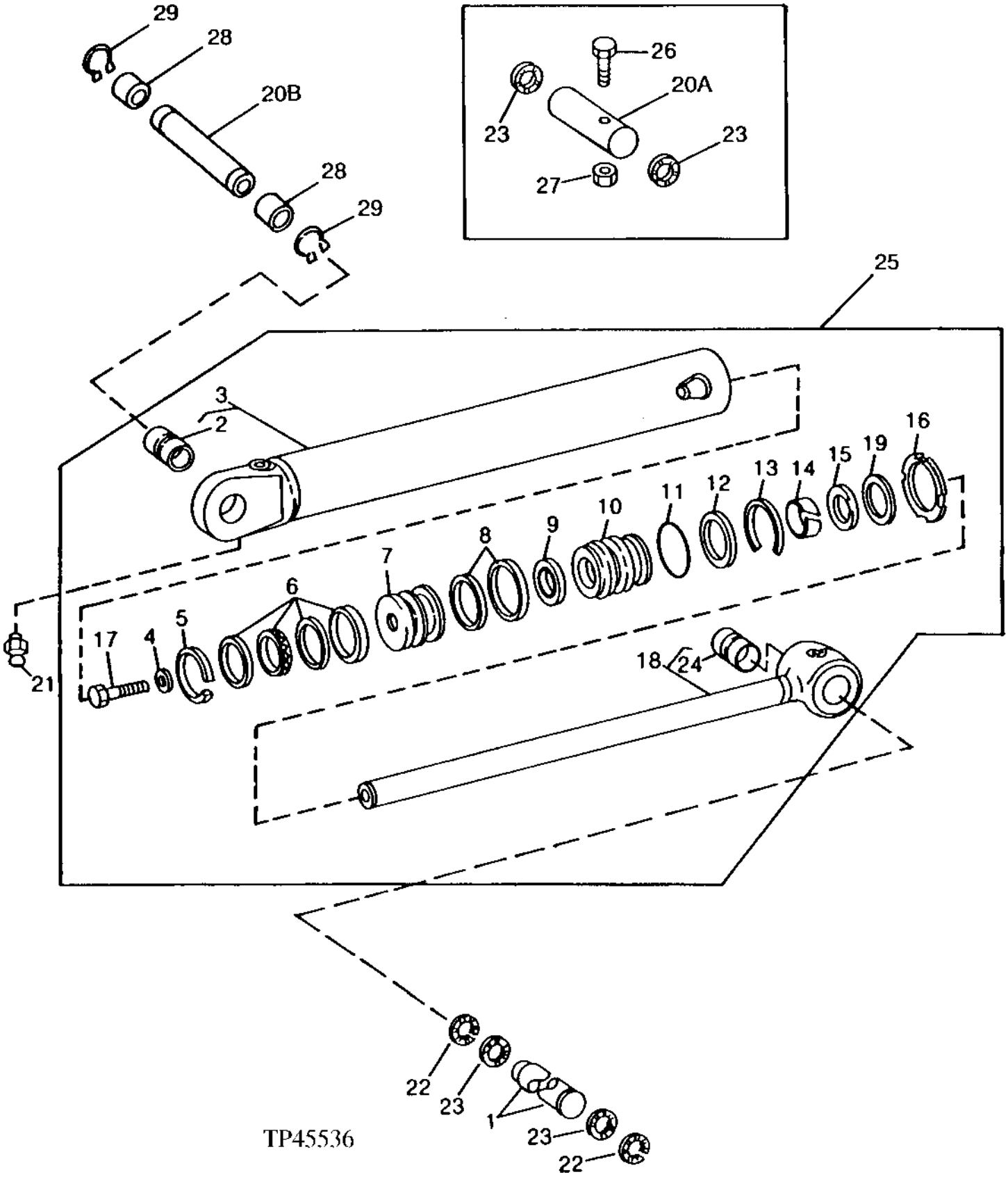

STABILIZER CYLINDER
(SERIAL NO. -817458)
(AH135635, AH135636, AH143513, AH143514 CYLINDERS)

KEY	PART NO.	PART NAME	QTY	SERIAL NO.	410D	510D	REMARKS
1	T127437	PIN FASTENER	1		X	X	
2	R81968	BUSHING	1	-801199	X	X	
	H144296	BUSHING	1	801200-	X	X	
3	AH135638	HYDRAULIC CYLINDER BARREL	1	-801199	X	X	LEFT SIDE
	AH143533	HYDRAULIC CYLINDER BARREL	1	801200-	X	X	LEFT SIDE
	AH135639	HYDRAULIC CYLINDER BARREL	1	-801199	X	X	RIGHT SIDE
	AH143534	HYDRAULIC CYLINDER BARREL	1	801200-	X	X	RIGHT SIDE
4	H145175	WASHER	1		X	X	
5	R81775	WEAR RING	1		X	X	(BK)
6	RE20343	SEAL	1		X	X	(BK)
7	H145456	PISTON	1		X	X	
8	RE20757	SEAL	1		X	X	(RK)
9	R81973	SEAL	1		X	X	(RK)
10	.....	HYDR. CYLINDER ROD GUIDE	1		X	X	(R81972 NO LONGER USED) (SUB H157978) (ALSO ORDER AH210484)
11	F950R	O-RING	1		X	X	
12	R81862	BACK-UP RING	1		X	X	(BK)
13	R81787	RING	1		X	X	
14	R81975	WEAR RING	1		X	X	(RK)
15	RE24536	SEAL	1		X	X	(RK)
16	R81793	NUT	1		X	X	
17	19M8353	CAP SCREW	1		X	X	
18	RE26577	ROD	1		X	X	
19	R91731	RING	AR		X	X	(BK)
20A	T68296	PIN FASTENER	1	-801199	X	X	
20B	T148346	PIN FASTENER	1	801200-	X	X	
21	T162396	LUBRICATION FITTING	2		X	X	(SUB FOR JD7798)
22	40M7166	SNAP RING	4		X	X	
23	24H1595	WASHER	AR		X	X	
24	R81971	BUSHING	1		X	X	
25	.....	HYDRAULIC CYLINDER	1		X	X	LEFT SIDE (AH135635, AH143513 NO LONGER AVAILABLE) (ORDER COMPONENTS)
	.....	HYDRAULIC CYLINDER	1		X	X	RIGHT SIDE (AH135636, AH143514 NO LONGER AVAILABLE) (ORDER COMPONENTS)
26	19M7949	CAP SCREW	1		X	X	M12 X 100
27	14M7319	LOCK NUT	1		X	X	M12
28	T150417	SPACER	2	801200-	X	X	
29	40M7066	SNAP RING	2	801200-	X	X	

(BK) AH212101 CYLINDER BORE REPAIR KIT (SUB FOR AH149844 REPAIR KIT)

(RK) RE20595 CYLINDER ROD REPAIR KIT

REPLACEMENT STABILIZER CYLINDER
(SERIAL NO. 817459 -)

TP49916 -UN-11NOV96

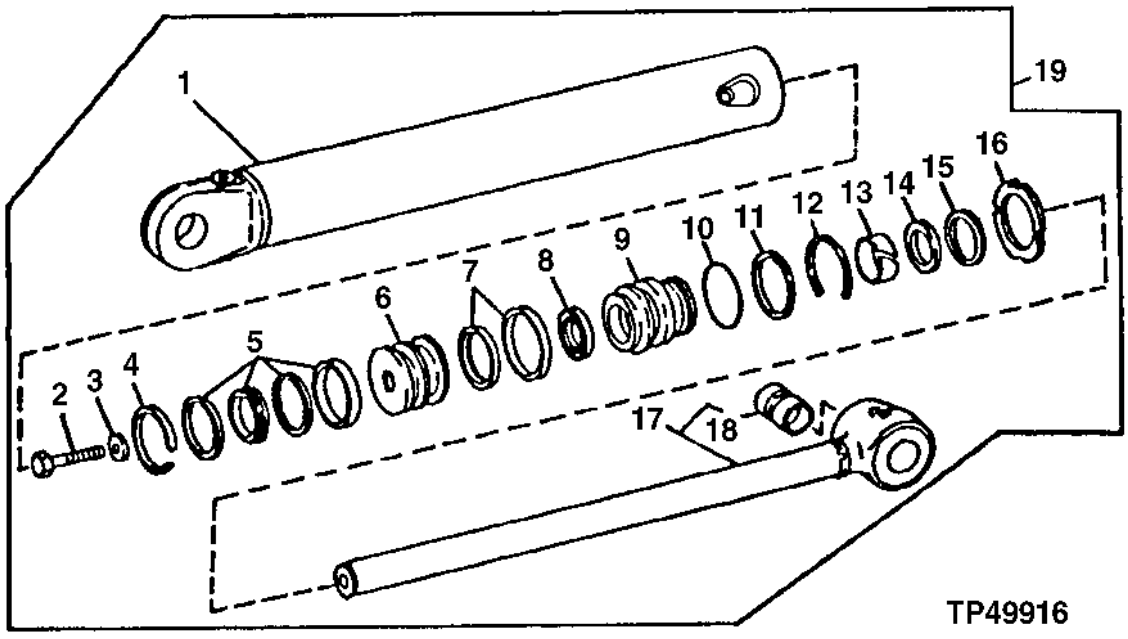

REPLACEMENT STABILIZER CYLINDER
(SERIAL NO. 817459 -)

KEY	PART NO.	PART NAME	QTY	SERIAL NO.	410D	510D	REMARKS
1	AH143533	HYDRAULIC CYLINDER BARREL	1		X	X	LEFT
	AH143534	HYDRAULIC CYLINDER BARREL	1		X	X	RIGHT
2	19M8353	CAP SCREW	1		X	X	
3	H145175	WASHER	1		X	X	
4	R81775	WEAR RING	1		X	X	(BK)
5	RE20343	SEAL	1		X	X	(BK)
6	H145456	PISTON	1		X	X	
7	AH146561	SEAL	1		X	X	(RK)
8	H152203	SEAL	1		X	X	(RK)
9	H157978	HYDR. CYLINDER ROD GUIDE	1		X	X	
10	F950R	O-RING	1		X	X	
11	R81862	BACK-UP RING	1		X	X	(BK)
12	R81787	RING	1		X	X	
13	H152794	WEAR RING	1		X	X	(RK)
14	RE24536	SEAL	1		X	X	
15	AH146557	SEAL	1		X	X	(RK)
16	R81793	NUT	1		X	X	
17	RE26577	ROD	1		X	X	
18	R81971	BUSHING	1		X	X	
19	AH147720	HYDRAULIC CYLINDER	1		X	X	LEFT
	AH147721	HYDRAULIC CYLINDER	1		X	X	RIGHT

(BK) AH212101 CYLINDER BORE REPAIR KIT (SUB FOR AH149844 REPAIR KIT)

(RK) AH210484 CYLINDER ROD REPAIR KIT (SUB FOR AH148164)

CONTROLLED LOWERING DEVISE, BOOM CYLINDER KIT
STANDARD BOOM

TP50390 -UN-07NOV95

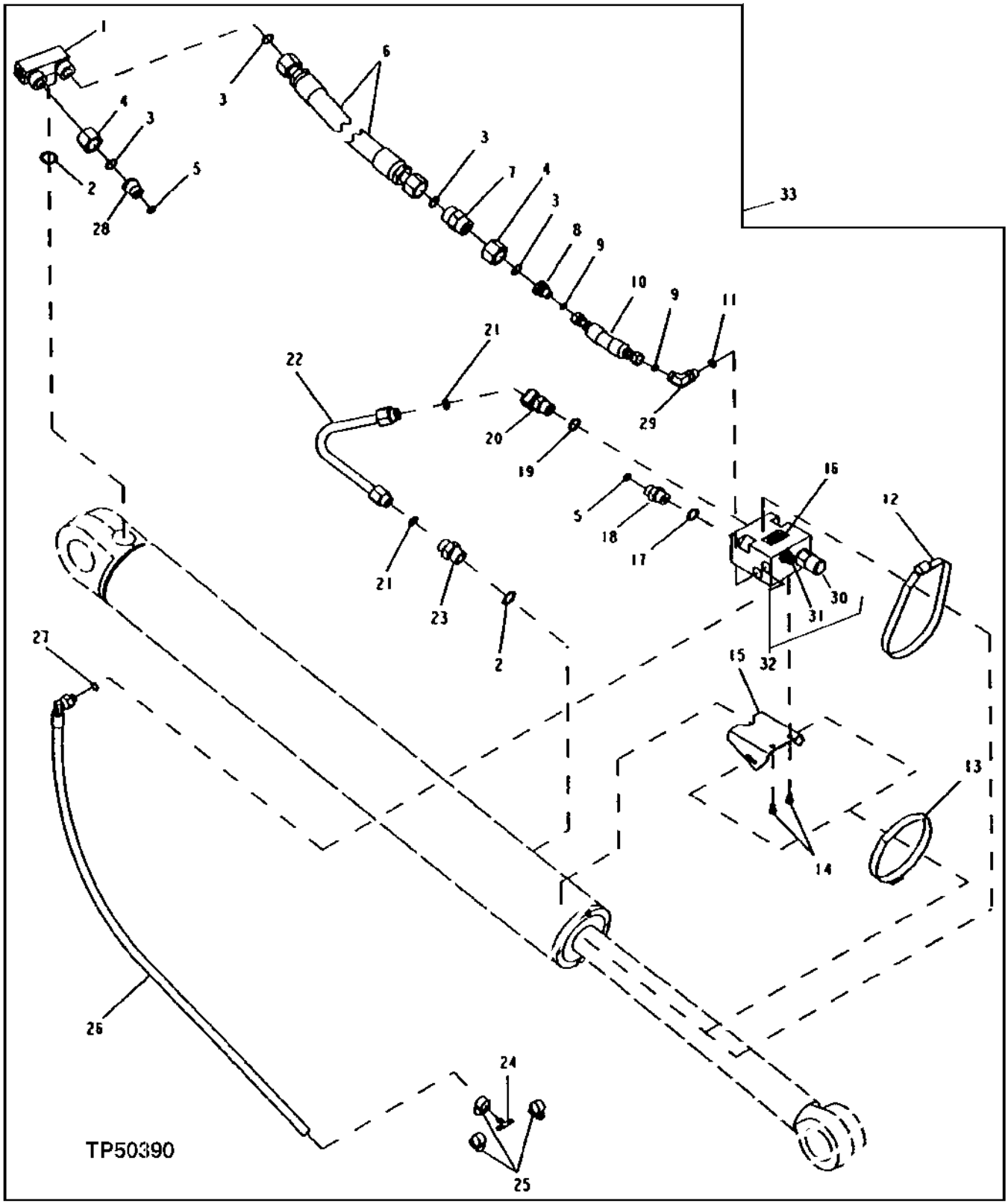

CONTROLLED LOWERING DEVICE, BOOM CYLINDER KIT
STANDARD BOOM

KEY	PART NO.	PART NAME	QTY	SERIAL NO.	410D	510D	REMARKS
1	AT173160	TEE FITTING	1		X		
2	U12547	O-RING	2		X		
3	T77858	O-RING	4		X		
4	38H1356	TUBE NUT	2		X		
5	T77857	O-RING	2		X		
6	AT173229	HOSE	1		X		
7	38H1272	UNION FITTING	1		X		
8	38H1473	REDUCER	1		X		
	38H1356	TUBE NUT	1		X		
9	T77613	O-RING	2		X		
10	AT173565	HYDRAULIC HOSE - FABRICATE	1		X		
11	R26448	O-RING	1		X		
12	TY22495	HOSE CLAMP	1		X		
13	TY22492	HOSE CLAMP	1		X		
14	19M7923	CAP SCREW	2		X		M6 X 12
15	T157513	PLATE	1		X		
16	T157549	LABEL	1		X		
17	R26906	O-RING	1		X		
18	38H1174	ADAPTER	1		X		
19	R26906	O-RING	1		X		
20	38H1047	ELBOW FITTING	1		X		
21	T77932	O-RING	2		X		
22	AT171249	TUBE	1		X		
23	38H1329	ADAPTER	1		X		
24	M87795	TEE FITTING	1		X		
25	TY22462	CLAMP	3		X		(SUB FOR AR21836, THIS APPLICATION) (SUB FOR AR48236)
26	AT173909	HOSE	1		X		
27	R26448	O-RING	1		X		
28	38H1474	REDUCER	1		X		
29	38H1004	ELBOW FITTING	1		X		
30	AT173883	HYD ACTUATED CONTROL VALVE	1		X		(A) COUNTERBALANCE
31	AT173884	MANUAL HYDRAULIC VALVE	1		X		(B) NEEDLE
32	AT171833	HYD ACTUATED CONTROL VALVE	1		X		CONTROLLED LOWERING DEVICE
33	.....	KIT	1		X		(AT170487 NO LONGER AVAILABLE) BOOM CONTROLLED LOWERING DEVICE

(A)AT173887 KIT,COUNTERBALANCE SEAL

(B)AT173888 KIT,NEEDLE SEAL

CONTROLLED LOWERING DEVISE, CROWD CYLINDER KIT

TP50392 -UN-07NOV95

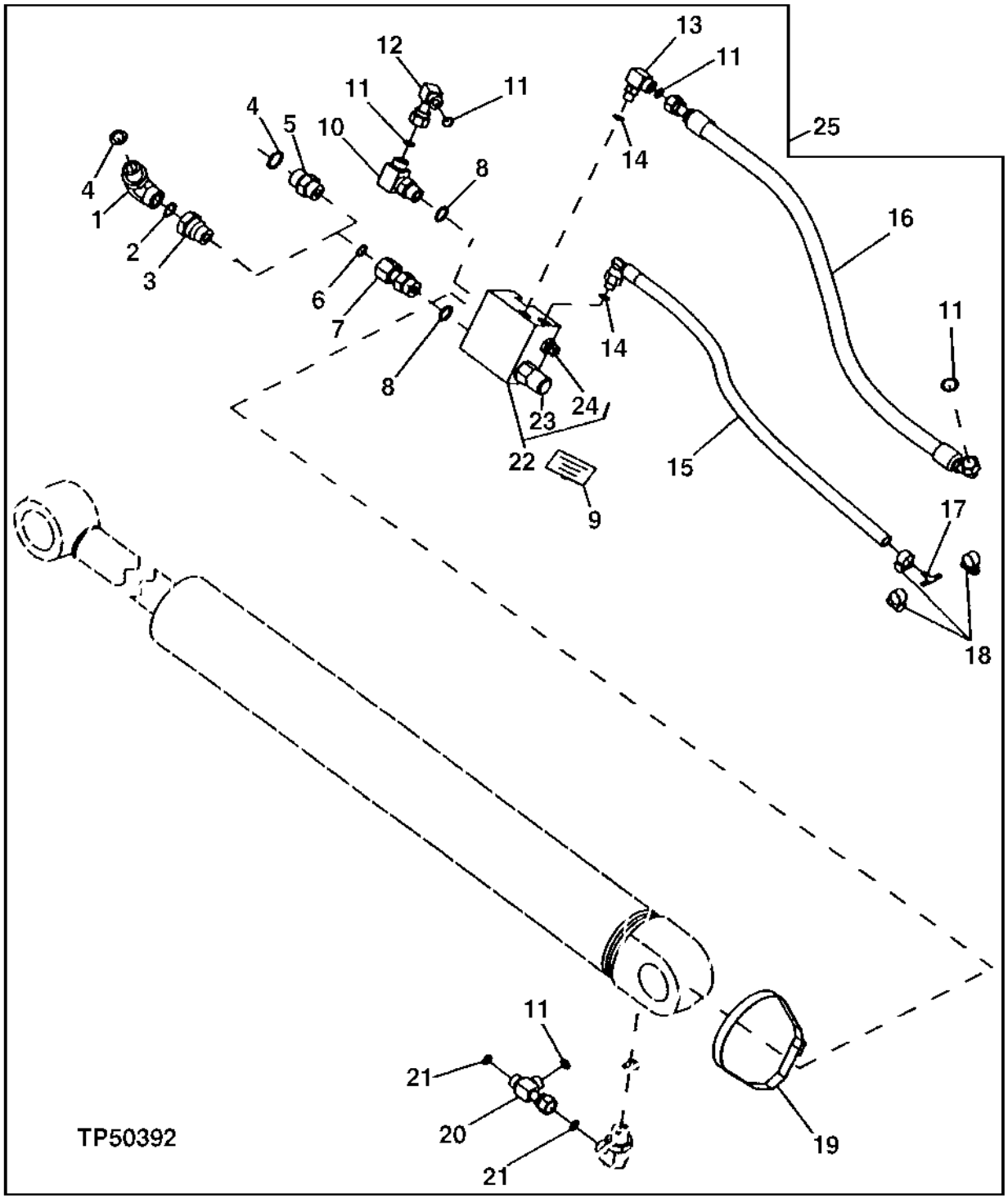

CONTROLLED LOWERING DEVICE, CROWD CYLINDER KIT

KEY	PART NO.	PART NAME	QTY	SERIAL NO.	410D	510D	REMARKS
1	38H1007	ELBOW FITTING	1		X	X	(HEAVY LIFT)
2	T77858	O-RING	1		X	X	
3	38H1482	REDUCER	1		X	X	(HEAVY LIFT)
4	U12547	O-RING	2		X	X	
5	38H1329	ADAPTER	1		X		(STANDARD)
6	T77932	O-RING	1		X	X	
7	38H1069	FITTING	1		X	X	
8	R26906	O-RING	2		X	X	
9	T157549	LABEL	1		X	X	
10	38H1012	ELBOW FITTING	1		X	X	
11	T77857	O-RING	4		X	X	
12	38H1095	ELBOW FITTING	1		X	X	
13	38H1314	ELBOW FITTING	1		X	X	
14	R26448	O-RING	2		X	X	11.887 X 1.981 MM
15	AT173909	HOSE	1		X	X	
16	AT101236	HYDRAULIC HOSE - FABRICATE	1		X	X	(HEAVY LIFT)
	AT159307	HYDRAULIC HOSE - FABRICATE	1		X		(STANDARD)
17	M87795	TEE FITTING	1		X	X	
18	TY22462	CLAMP	3		X	X	(SUB FOR AR21836, THIS APPLICATION) (SUB FOR AR48236)
19	TY22495	HOSE CLAMP	1		X	X	(HEAVY LIFT)
	TY22494	HOSE CLAMP	1		X		(STANDARD)
20	38H1532	TEE FITTING	1		X	X	
21	T77858	O-RING	2		X	X	
22	AT171833	HYD ACTUATED CONTROL VALVE	1		X	X	CONTROLLED LOWERING DEVICE
23	AT173883	HYD ACTUATED CONTROL VALVE	1		X	X	(A) COUNTERBALANCE
24	AT173884	MANUAL HYDRAULIC VALVE	1		X	X	(B) NEEDLE
25	.....	KIT	1		X	X	(AT170532 NO LONGER AVAILABLE CROWD CONTROLLED LOWERING DEVICE

(A)AT173887 KIT,COUNTERBALANCE SEAL

(B)AT173888 KIT,NEEDLE SEAL

CONTROLLED LOWERING DEVISE, BOOM CYLINDER KIT
(410D HEAVY LIFT)
(510D STANDARD)

TP52769 -UN-03JUN96

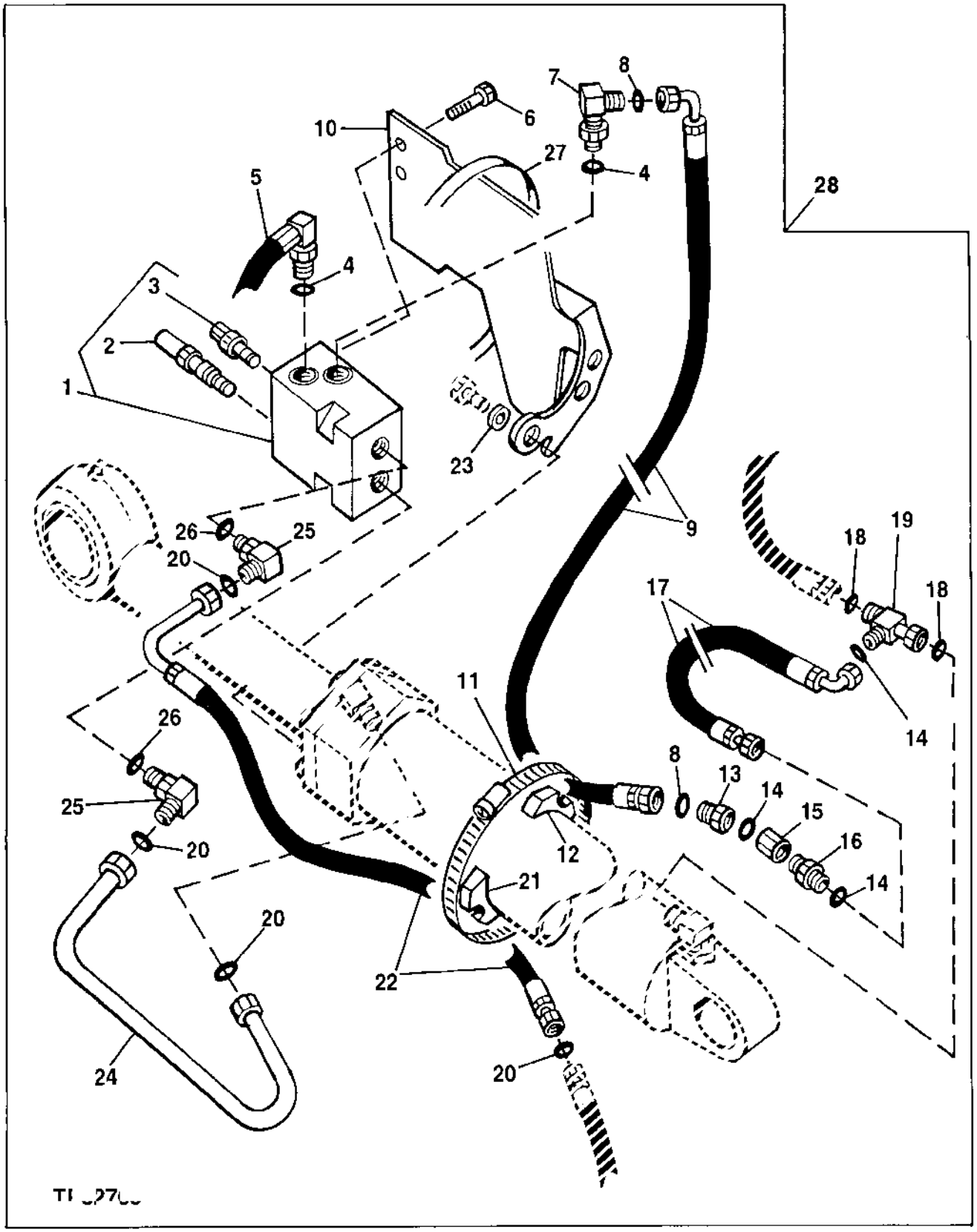

CONTROLLED LOWERING DEVICE, BOOM CYLINDER KIT
(410D HEAVY LIFT)
(510D STANDARD)

KEY	PART NO.	PART NAME	QTY	SERIAL NO.	410D	510D	REMARKS
1	AT171833	HYD ACTUATED CONTROL VALVE	1		X	X	
2	AT173883	HYD ACTUATED CONTROL VALVE	1		X	X	(A) COUNTERBALANCE
3	AT173884	MANUAL HYDRAULIC VALVE	1		X	X	(B) NEEDLE
4	R26448	O-RING	2		X	X	
5	AT173909	HOSE	1		X	X	
6	H165693	SCREW	2		X	X	M6 X 12, (SUB FOR H130192)
7	38H1004	ELBOW FITTING	1		X	X	
8	T77613	O-RING	2		X	X	
9	AT167148	HYDRAULIC HOSE	1		X	X	11/16" X 362 MM (14-1/4") X 11/16"
10	AT176162	BRACKET	1		X	X	
11	TY22495	HOSE CLAMP	1		X	X	
12	T105773	GUIDE	1		X	X	
13	38H1473	REDUCER	1		X	X	
14	T77858	O-RING	3		X	X	
15	38H1356	TUBE NUT	1		X	X	
16	38H1272	UNION FITTING	1		X	X	
17	AT80224	HYDRAULIC HOSE	1		X	X	1-3/16" X 1 076 MM (42-1/4") X 1-3/16"
18	T76938	O-RING	2		X	X	
19	AT176228	TEE FITTING	1		X	X	
20	T77857	O-RING	4		X	X	
21	T102005	GUIDE	1		X	X	
22	AT176530	HOSE	1		X	X	13/16" X 300 MM (11-3/4") X 13/16"
23	24M7241	WASHER	3		X	X	17 X 34 X 4 MM
24	AT171200	OIL LINE	1		X	X	
25	38H1012	ELBOW FITTING	2		X	X	
26	R26906	O-RING	2		X	X	
27	TY22489	HOSE CLAMP	1		X	X	(SUB FOR AR85329)
28	.....	KIT	1		X	X	(AT170493 NO LONGER AVAILABLE)

(A) AT173887 KIT,COUNTERBALANCE SEAL

(B) AT173888 KIT,NEEDLE SEAL

MEMORANDA

NUMERICAL INDEX

PART NO.	GRID	KEY	PAGE
AA34134	4C8	12B	3115 - 5
AA34134	4C8	27B	3115 - 5
AC15595	4D20	30	3160 - 31
AC15595	5H24	1	3360 - 49
AD2062R	2E18	1	1673 - 3
AD2062R	2E18	8	1673 - 3
AD2062R	2E20	1	1673 - 5
AD2062R	2E20	8	1673 - 5
AE37072	4C10	20A	3115 - 7
AE37072	4C12	12	3115 - 9
AE37072	4C12	26A	3115 - 9
AE37072	5E2	7	3315 - 31
AE37072	5E6	7	3315 - 33
AE37072	5E10	7	3315 - 35
AE37072	5E18	14	3315 - 41
AE37072	5E20	14	3315 - 43
AE37859	4C10	26	3115 - 7
AE38448	1J5	5	0560 - 3
AF3583R	1I25	1	0520 - 7
AH104837	4D24	35	3160 - 35
AH104837	4E2	8	3160 - 37
AH105968	3G21	28	2160 - 17
AH105968	3H6	27	2160 - 23B
AH122867	3F2	30	1830 - 37
AH123025	2C19	27	1115 - 3
AH12614	3D16	7	1830 - 3
AH128654	2C21	2	1115 - 5
AH134478	2B16	19	0960 - 2
AH134479	2B16	3	0960 - 2
AH134479	2B17	3	0960 - 3
AH135265	5J2	35	3360 - 75
AH135266	6B23	35	3360A - 11
AH135267	5J2	8	3360 - 75
AH135268	6B23	9	3360A - 11
AH135272	6B23	34	3360A - 11
AH135272	6B25	30	3360A - 13
AH135635	6C13	25	3360A - 29
AH135636	6C13	25	3360A - 29
AH135638	6C13	3	3360A - 29
AH135639	6C13	3	3360A - 29
AH135785	2B16	7	0960 - 2
AH135785	2B17	7	0960 - 3
AH136176	5J6	32	3360 - 79
AH136277	5H10	13	3360 - 35
AH136380	5J6	24	3360 - 79
AH136380	5J8	24	3360 - 81
AH136381	5J5	4	3360 - 78
AH136381	5J7	4	3360 - 80
AH137208	5J12	..	3360 - 85
AH137702	3E2	9	1830 - 13
AH137702	3F2	30	1830 - 37
AH138169	6B19	31	3360A - 7
AH138197	6B18	3	3360A - 6
AH138197	6B20	3	3360A - 8
AH138200	2B14	7	0960 - 1
AH138200	2B15	7	0960 - 1A
AH138661	6B19	31	3360A - 7
AH138663	6B19	18	3360A - 7
AH138663	6B21	18	3360A - 9
AH138931	4E6	25	3160 - 39
AH139093	4E6	3	3160 - 39
AH139093	4E7	3	3160 - 40
AH139111	4E6	18	3160 - 39
AH139111	4E7	18	3160 - 40
AH139130	2B14	17	0960 - 1
AH14065	2C19	27	1115 - 3
AH141377	6C3	15	3360A - 16
AH141378	6C9	15	3360A - 24
AH141549	6C3	14	3360A - 16
AH141549	6C4	14	3360A - 17
AH141549	6C5	18	3360A - 19
AH141803	6C9	14	3360A - 24
AH141803	6C10	14	3360A - 25
AH141803	6C11	18	3360A - 27
AH142916	6C3	1	3360A - 16
AH142917	6C9	1	3360A - 24
AH142934	6B23	35	3360A - 11
AH142934	6B25	32	3360A - 13
AH142935	5J2	35	3360 - 75
AH142935	5J4	33	3360 - 77
AH142949	6B25	9	3360A - 13
AH142950	5J2	8	3360 - 75
AH142950	5J4	10	3360 - 77
AH143311	6B14	3	3360A - 2
AH143311	6B16	3	3360A - 4
AH143312	6B15	23	3360A - 3
AH143533	6C13	3	3360A - 29
AH143533	6C15	1	3360A - 31
AH143534	6C13	3	3360A - 29
AH143534	6C15	1	3360A - 31
AH143715	6B23	9	3360A - 11
AH143715	6B25	..	3360A - 13
AH144020	3E6	37	1830 - 17
AH144020	3F2	25	1830 - 37
AH144119	6C3	1	3360A - 16
AH144119	6C3	10	3360A - 16
AH144119	6C4	1	3360A - 17
AH144120	6C9	1	3360A - 24
AH144120	6C9	10	3360A - 24
AH144120	6C10	1	3360A - 25
AH144377	5J12	28	3360 - 85
AH144378	5J12	24	3360 - 85
AH144379	5J12	2	3360 - 85
AH144391	6C3	15	3360A - 16
AH144391	6C8	4	3360A - 22
AH144391	6C8	10	3360A - 22
AH144391	6C8	16	3360A - 22
AH144392	6C8	10	3360A - 22
AH144392	6C8	16	3360A - 22
AH144392	6C9	15	3360A - 24
AH145618	5I20	23	3360 - 69
AH145618	5I22	23	3360 - 71
AH145619	5I20	29	3360 - 69
AH145620	5I20	5	3360 - 69
AH145620	5I22	5	3360 - 71
AH146325	6C8	4	3360A - 22
AH146325	6C9	15	3360A - 24
AH146415	6B25	..	3360A - 13
AH146556	4E7	15	3160 - 40
AH146556	4E9	13	3160 - 42
AH146556	6C4	12	3360A - 17
AH146557	4E11	13	3160 - 44
AH146557	5I18	21	3360 - 67
AH146557	5I22	21	3360 - 71
AH146557	5J16	15	3360 - 89
AH146557	6B17	15	3360A - 5
AH146557	6C15	15	3360A - 31
AH146558	5J8	20	3360 - 81
AH146558	6B20	15	3360A - 8
AH146560	4E7	8	3160 - 40
AH146560	4E9	7	3160 - 42
AH146560	6C4	4	3360A - 17
AH146560	6C10	4	3360A - 25
AH146561	4E11	7	3160 - 44
AH146561	5I18	11	3360 - 67
AH146561	5I22	11	3360 - 71
AH146561	5J14	8	3360 - 87
AH146561	5J16	8	3360 - 89
AH146561	6B17	8	3360A - 5
AH146561	6C15	7	3360A - 31
AH146562	5J8	17	3360 - 81
AH146562	6B20	8	3360A - 8
AH147720	6C15	19	3360A - 31
AH147721	6C15	19	3360A - 31
AH147722	5J14	29	3360 - 87
AH147722	5J16	29	3360 - 89
AH148152	5I20	29	3360 - 69
AH148152	5I22	29	3360 - 71
AH148152	5I22	..	3360 - 71
AH148164	6C15	..	3360A - 31
AH148272	4E10	19	3160 - 43
AH148272	4E11	19	3160 - 44
AH148720	5I17	24	3360 - 66
AH148720	5I18	24	3360 - 67
AH148738	6B17	23	3360A - 5
AH149810	2B14	14	0960 - 1
AH149810	2B16	13	0960 - 2
AH149810	2B17	..	0960 - 3
AH149813	4E6	10	3160 - 39
AH149813	4E7	..	3160 - 40
AH149813	4E8	9	3160 - 41
AH149813	4E9	..	3160 - 42
AH149813	6C4	..	3360A - 17
AH149813	6C9	11	3360A - 24
AH149813	6C10	..	3360A - 25
AH149814	5J6	13	3360 - 79
AH149814	5J8	..	3360 - 81
AH149814	6B18	10	3360A - 6
AH149814	6B21	..	3360A - 9
AH149843	4E6	..	3160 - 39
AH149843	4E7	..	3160 - 40
AH149843	4E8	..	3160 - 41
AH149843	4E9	..	3160 - 42
AH149843	5J14	..	3360 - 87
AH149843	5J16	..	3360 - 89
AH149843	6B15	..	3360A - 3
AH149843	6B17	..	3360A - 5
AH149844	4E10	..	3160 - 43
AH149844	4E11	..	3160 - 44
AH149844	5I17	..	3360 - 66
AH149844	5I18	..	3360 - 67
AH149844	5I20	..	3360 - 69
AH149844	5I22	..	3360 - 71
AH149844	6B19	..	3360A - 7
AH149844	6B21	..	3360A - 9
AH149844	6C13	..	3360A - 29
AH149844	6C15	..	3360A - 31
AH149846	5J2	..	3360 - 75
AH149846	5J4	..	3360 - 77
AH149846	5J6	..	3360 - 79
AH149846	5J8	..	3360 - 81
AH149846	6B25	..	3360A - 13
AH150119	6B19	31	3360A - 7
AH150119	6B21	31	3360A - 9
AH151380	2B15	13	0960 - 1A
AH151380	2B17	14	0960 - 3
AH151381	2B15	11	0960 - 1A
AH151381	2B17	11	0960 - 3
AH154774	2B16	19	0960 - 2
AH154774	2B17	19	0960 - 3
AH154775	5J8	32	3360 - 81

NUMERICAL INDEX - CONTINUED

PART NO.	GRID	KEY	PAGE
AH154776	6B19	31	3360A - 7
AH154776	6B21	31	3360A - 9
AH154779	4E6	25	3160 - 39
AH154779	4E7	25	3160 - 40
AH154780	2B14	17	0960 - 1
AH154780	2B15	17	0960 - 1A
AH154784	6C2	32	3360A - 15
AH154784	6C3	15	3360A - 16
AH154784	6C4	15	3360A - 17
AH154784	6C8	4	3360A - 22
AH154784	6C8	10	3360A - 22
AH154784	6C8	16	3360A - 22
AH154793	4E9	19	3160 - 42
AH155668	6C7	32	3360A - 21
AH155668	6C8	10	3360A - 22
AH155668	6C9	15	3360A - 24
AH155668	6C10	15	3360A - 25
AH167552	2B14	..	0960 - 1
AH167552	2B15	..	0960 - 1A
AH202080	6C3	..	3360A - 16
AH202080	6C4	..	3360A - 17
AH202080	6C9	..	3360A - 24
AH202080	6C10	..	3360A - 25
AH203871	3E2	9	1830 - 13
AH203871	3F2	30	1830 - 37
AH20849	1I19	3	0520 - 1
AH20849	1I21	3	0520 - 3
AH209022	4E5	19	3160 - 38B
AH210484	4E10	9	3160 - 43
AH210484	4E11	..	3160 - 44
AH210484	5I17	14	3360 - 66
AH210484	5I18	..	3360 - 67
AH210484	5I20	14	3360 - 69
AH210484	5I22	..	3360 - 71
AH210484	5J14	10	3360 - 87
AH210484	5J16	..	3360 - 89
AH210484	6B15	10	3360A - 3
AH210484	6B15	..	3360A - 3
AH210484	6B17	..	3360A - 5
AH210484	6C13	10	3360A - 29
AH210484	6C15	..	3360A - 31
AH210737	4B24	1	3102 - 11
AH210737	4C2	1	3102 - 13
AH210737	4E4	14	3160 - 38A
AH210737	4E5	18	3160 - 38B
AH212091	6C3	11	3360A - 16
AH212091	6C7	17	3360A - 21
AH212092	6C3	3	3360A - 16
AH212092	6C3	..	3360A - 16
AH212092	6C4	3	3360A - 17
AH212092	6C4	..	3360A - 17
AH212092	6C9	3	3360A - 24
AH212092	6C9	..	3360A - 24
AH212092	6C10	3	3360A - 25
AH212092	6C10	..	3360A - 25
AH212096	4E6	..	3160 - 39
AH212096	4E7	..	3160 - 40
AH212096	4E8	..	3160 - 41
AH212096	4E9	..	3160 - 42
AH212096	5J14	..	3360 - 87
AH212096	5J16	..	3360 - 89
AH212096	6B15	..	3360A - 3
AH212096	6B17	..	3360A - 5
AH212101	4E10	..	3160 - 43
AH212101	4E11	..	3160 - 44
AH212101	5I17	..	3360 - 66
AH212101	5I18	..	3360 - 67
AH212101	5I20	..	3360 - 69
AH212101	5I22	..	3360 - 71
AH212101	6B19	..	3360A - 7
AH212101	6B21	..	3360A - 9
AH212101	6C13	..	3360A - 29
AH212101	6C15	..	3360A - 31
AH212103	5J2	..	3360 - 75
AH212103	5J4	..	3360 - 77
AH212103	5J6	..	3360 - 79
AH212103	5J8	..	3360 - 81
AH212103	6B25	..	3360A - 13
AH76883	1F5	3	0360 - 13
AH76883	1F7	2	0360 - 15
AH77714	3D18	22	1830 - 5
AH77714	3D20	20	1830 - 7
AH77714	3D22	15	1830 - 9
AH77869	4D16	16	3160 - 27
AH77869	4D18	16	3160 - 29
AH79124	1I25	4	0520 - 7
AH86866	1B13	3	0110 - 1
AH89557	1I14	3	0510 - 4
AH89557	1J7	24	0560 - 5
AH89557	2E24	4	1674 - 5
AH89557	2F12	5	1674 - 17
AH89557	2F14	5	1674 - 19
AH89557	2F14	23	1674 - 19
AH89557	2F14	51	1674 - 19
AH89557	2F16	5	1674 - 19B
AH89557	2F16	23	1674 - 19B
AH89557	2F16	51	1674 - 19B
AH89557	2F16	60	1674 - 19B
AH91124	2E16	2	1673 - 1
AH96317	5H14	20	3360 - 39
AL111096	1C21	5	0250 - 21
AL113451	1C9	3	0250 - 9
AL113460	1C9	5	0250 - 9
AL113460	1C9	6	0250 - 9
AL118173	2C6	1	0960 - 17
AL155227	2C6	1	0960 - 17
AL34261	1C7	7	0250 - 7
AL36529	2G8	2	1676 - 3
AL36535	2E24	15	1674 - 5
AL36643	3D4	39	1821 - 7
AL36686	3D2	21	1821 - 5
AL37364	1I25	1	0520 - 7
AL38213	2C17	15	1115 - 1
AL38524	3D4	46	1821 - 7
AL38526	3D2	25	1821 - 5
AL56820	1E2	14	0341 - 11
AL60161	1C7	8	0250 - 7
AL64127	1C22	3	0250 - 22
AL64252	1C22	5	0250 - 22
AL64580	3D4	52	1821 - 7
AL64581	3D4	52	1821 - 7
AL64581	3D4	62	1821 - 7
AL67715	1E11	33	0341 - 19
AL67715	3F24	5A	2004 - 2
AL68616	1C11	11	0250 - 11
AL77324	2F4	4	1674 - 9
AL77324	2F6	4	1674 - 11
AL77324	2F8	4	1674 - 13
AL77324	2F10	29	1674 - 15
AL79794	1C21	2	0250 - 21
AL79797	1C19	12	0250 - 19
AL79797	1C21	6	0250 - 21
AL79808	1C9	12	0250 - 9
AL79843	1C5	4	0250 - 5
AL79901	1C13	2	0250 - 13
AL79902	1C13	1	0250 - 13
AL79904	1C5	6	0250 - 5
AL79950	1C13	21	0250 - 13
AL79951	1C13	11	0250 - 13
AL80542	1C9	2	0250 - 9
AL81904	1C9	2	0250 - 9
AM115376	1D10	7	0315 - 7
AM115376	1D12	12	0315 - 9
AND	6B15	..	3360A - 3
AND	6B17	..	3360A - 5
AN122499	1D5	10	0315 - 2
AN122499	2C19	28	1115 - 3
AN122499	2C19	29B	1115 - 3
AN122499	2C19	30	1115 - 3
AN132749	1B13	2	0110 - 1
AN132749	1B14	2	0120 - 2
AN192734	1D16	3	0325 - 2
AN31656	1I20	13	0520 - 2
AN33226	1I22	7	0520 - 4
AR100124	1F20	1	0402 - 4
AR100596	1I1	1	0452 - 1
AR101549	1H7	13	0417 - 1
AR101549	1H8	5	0417 - 2
AR103165	1H11	31A	0419 - 3
AR103339	1E18	23	0350 - 5
AR103811	1F20	1	0402 - 4
AR104516	3F20	16	2001 - 3
AR104517	3F20	19	2001 - 3
AR104518	3F20	17	2001 - 3
AR104664	1G25	3	0413 - 7
AR21836	1F10	5	0360 - 18
AR21836	1F11	1	0360 - 19
AR21836	2B25	14	0960 - 11
AR21836	2C19	10	1115 - 3
AR21836	2C21	11	1115 - 5
AR21836	3H6	22	2160 - 23B
AR21836	3H12	5	2160 - 27
AR21836	3H15	7	2160 - 31
AR21836	3H17	1	2160 - 33
AR21836	3H19	1	2160 - 33B
AR21836	3H19	11	2160 - 33B
AR21836	3I8	23	2160 - 41
AR21836	6C17	25	3360A - 33
AR21836	6C19	18	3360A - 35
AR21837	3D16	1	1830 - 3
AR21837	3H2	25	2160 - 21
AR21837	3H17	7	2160 - 33
AR21837	3H19	9	2160 - 33B
AR21839	1H6	5	0416 - 3
AR21839	1H11	2	0419 - 3
AR21839	1I20	12	0520 - 2
AR21839	1J1	7	0530 - 1
AR21839	2B23	18	0960 - 9
AR21839	2E2	2	1370 - 1
AR21839	3D18	3	1830 - 5
AR21839	3D20	9	1830 - 7
AR21839	3D22	7	1830 - 9
AR21839	3H15	1	2160 - 31
AR21840	1D8	9	0315 - 5
AR21840	1D10	17	0315 - 7
AR21840	1D12	24	0315 - 9
AR21840	1E6	4	0341 - 15
AR21840	1I11	5	0510 - 3
AR21841	1I25	5	0520 - 7
AR21842	5I10	9	3360 - 59
AR21842	6C5	6	3360A - 19

NUMERICAL INDEX - CONTINUED

PART NO.	GRID	KEY	PAGE
AR21842	6C8	5	3360A - 22
AR21842	6C11	6	3360A - 27
AR21999	1I11	28	0510 - 3
AR21999	1I13	27	0510 - 3B
AR26732	1H11	19	0419 - 3
AR27806	1B22	1	0230 - 1
AR31547	3H13	12	2160 - 29
AR31547	3H15	3	2160 - 31
AR34612	1H1	14	0413 - 8
AR40418	1I11	5	0510 - 3
AR40418	1I11	31	0510 - 3
AR40418	1I13	8	0510 - 3B
AR43704	1J1	1	0530 - 1
AR44217	3G21	28	2160 - 17
AR44402	2D21	..	1369 - 7
AR48015	3C4	4	1810 - 11
AR48041	2E18	1	1673 - 3
AR48041	2E20	1	1673 - 5
AR48236	1E9	11	0341 - 17
AR48236	1J5	14	0560 - 3
AR48236	1J7	12	0560 - 5
AR48236	2C2	13	0960 - 13
AR48236	2C4	13	0960 - 15
AR48236	2C15	9	1060 - 7
AR48236	3I6	36	2160 - 39
AR48236	6C17	25	3360A - 33
AR48236	6C19	18	3360A - 35
AR48675	1H9	5	0418 - 2
AR50040	1H12	4	0420 - 1
AR50041	1H12	12	0420 - 1
AR50041	2E3	5	1399 - 3
AR50874	1H1	8	0413 - 8
AR51481	2G8	3	1676 - 3
AR51481	3F7	10A	1910 - 3
AR54592	1H24	1	0429 - 2
AR54749	2D21	..	1369 - 7
AR54815	3D22	7	1830 - 9
AR55827	2E13	1	1672 - 3
AR55966	1D21	34	0341 - 5
AR56675	2G8	13	1676 - 3
AR61533	1H25	8	0433 - 1
AR62399	1I6	7	0505 - 1
AR62407	2G8	4	1676 - 3
AR62407	2G8	19	1676 - 3
AR62407	2G8	25	1676 - 3
AR62978	1G15	6	0407 - 6
AR63218	2D15	..	1369 - 1
AR63219	2D15	..	1369 - 1
AR63222	2D15	..	1369 - 1
AR63223	2D15	..	1369 - 1
AR63224	2D15	..	1369 - 1
AR63227	2D15	..	1369 - 1
AR63228	2D15	..	1369 - 1
AR63229	2D15	..	1369 - 1
AR63230	2D15	..	1369 - 1
AR63351	1H11	7	0419 - 3
AR63351	1H11	26	0419 - 3
AR63351	1H11	28	0419 - 3
AR63356	1H11	21	0419 - 3
AR63979	2D15	..	1369 - 1
AR63980	2D15	..	1369 - 1
AR65005	2G5	1	1674 - 32
AR65006	2G5	2	1674 - 32
AR65507	1F22	9	0403 - 2
AR65507	1I3	33	0452 - 3
AR65864	1F20	2	0402 - 4
AR66400	1F22	3	0403 - 2
AR66726	1G9	2A	0407 - 1B
AR67942	1F15	14	0401 - 2
AR67942	1F17	2	0401 - 3A
AR69710	1H4	10	0415 - 1
AR69711	1H4	7	0415 - 1
AR70464	1H11	5	0419 - 3
AR71130	1F20	3	0402 - 4
AR73144	2F4	9	1674 - 9
AR73144	2F4	10	1674 - 9
AR73144	2F6	9	1674 - 11
AR73144	2F6	10	1674 - 11
AR73144	2F8	15	1674 - 13
AR73144	2F8	16	1674 - 13
AR73144	2F10	15	1674 - 15
AR73144	2F10	16	1674 - 15
AR77851	2E13	5	1672 - 3
AR77851	2E14	7	1672 - 4
AR79464	1G14	17	0407 - 5
AR81786	1F17	10	0401 - 3A
AR83396	5F15	6	3340 - 19
AR83396	5F16	6	3340 - 20
AR85327	1I15	1	0510 - 5
AR85329	6C21	27	3360A - 37
AR85519	1G23	1	0413 - 5
AR85615	1G23	5	0413 - 5
AR85788	1G14	6	0407 - 5
AR85941	2E14	5	1672 - 4
AR90369	1D18	13	0341 - 2
AR90369	1D19	17	0341 - 3
AR90369	2C19	9	1115 - 3
AR90378	3G9	27	2160 - 5
AR90601	1H1	3	0413 - 8
AR90860	1H7	6	0417 - 1
AR90860	1H8	4	0417 - 2
AR90861	1H7	2	0417 - 1
AR90861	1H8	1	0417 - 2
AR90898	1B14	1	0120 - 2
AR91168	2F4	5	1674 - 9
AR91168	2F6	5	1674 - 11
AR91168	2F8	2	1674 - 13
AR91168	2F10	22	1674 - 15
AR91660	1F15	10	0401 - 2
AR91793	2G2	42	1674 - 29
AR91896	3C8	37	1810 - 15
AR91896	3C10	36	1810 - 17
AR94101	2F4	17	1674 - 9
AR94101	2F6	17	1674 - 11
AR94101	2F8	21	1674 - 13
AR94101	2F10	2	1674 - 15
AR94101	2F12	15	1674 - 17
AR94101	2F14	39	1674 - 19
AR94101	2F16	39	1674 - 19B
AR94101	3I6	40	2160 - 39
AR94101	3I8	40	2160 - 41
AR94516	1E18	26	0350 - 5
AR94761	1C19	14	0250 - 19
AR94761	1E15	9	0350 - 2
AR95506	1H7	26	0417 - 1
AR96222	1H25	12	0433 - 1
AR97517	1F22	11	0403 - 2
AR97652	1F22	11	0403 - 2
AR97653	1F22	11	0403 - 2
AR97654	1F22	11	0403 - 2
AR97655	1F22	11	0403 - 2
AR98338	1E18	16	0350 - 5
AT100073	2G8	25	1676 - 3
AT100083	1E9	8	0341 - 17
AT100083	2F12	34	1674 - 17
AT100083	2F14	34	1674 - 19
AT100083	2F16	34	1674 - 19B
AT100399	4C15	6	3140 - 4
AT100465	2B25	1A	0960 - 11
AT100484	2G8	17	1676 - 3
AT100506	2E9	1	1671 - 3
AT100506	2E11	1	1671 - 5
AT100512	1I20	9A	0520 - 2
AT100512	1I22	4	0520 - 4
AT100618	5I2	4	3360 - 51
AT101060	5F14	3	3340 - 18
AT101063	6C2	32	3360A - 15
AT101063	6C8	10	3360A - 22
AT101064	6C2	13	3360A - 15
AT101131	2G8	21	1676 - 3
AT101132	2G8	18	1676 - 3
AT101136	4B18	9	3102 - 5
AT101137	4B18	9	3102 - 5
AT101138	4B18	9	3102 - 5
AT101154	1I19	6	0520 - 1
AT101171	1I24	1	0520 - 6
AT101179	1J1	10	0530 - 1
AT101188	5G2	9	3340 - 31
AT101202	5G2	9	3340 - 31
AT101214	3H12	4	2160 - 27
AT101236	6C19	16	3360A - 35
AT101313	5G20	10	3360 - 19
AT101409	1J10	8	0641 - 1
AT101418	5H24	13	3360 - 49
AT101419	5H24	17	3360 - 49
AT101420	5I2	8A	3360 - 51
AT101421	5I2	7A	3360 - 51
AT101422	5I4	22	3360 - 53
AT101422	5I16	19	3360 - 65
AT101423	5I4	13	3360 - 53
AT101423	5I16	18	3360 - 65
AT101424	5I4	23	3360 - 53
AT101424	5I16	17	3360 - 65
AT101425	5I4	12	3360 - 53
AT101425	5I16	20	3360 - 65
AT101435	5H24	18	3360 - 49
AT101444	5I4	30	3360 - 53
AT101444	5I16	32	3360 - 65
AT101465	5H24	17	3360 - 49
AT101466	5H24	13	3360 - 49
AT101467	5I2	7	3360 - 51
AT101468	5I2	8	3360 - 51
AT101469	5I4	12	3360 - 53
AT101470	5I4	23	3360 - 53
AT101471	5I4	22	3360 - 53
AT101472	5I4	13	3360 - 53
AT101473	5H20	14	3360 - 45
AT101484	2G8	3	1676 - 3
AT101494	5I4	1	3360 - 53
AT101565	1E9	13	0341 - 17
AT101565	2E3	4	1399 - 3
AT101565	3H8	8	2160 - 25
AT101565	3H10	7	2160 - 25B
AT101635	5B24	14	3302 - 3
AT101687	2G15	2	1746 - 2
AT101734	3G21	18	2160 - 17
AT101734	3H2	12	2160 - 21
AT101759	3G21	16	2160 - 17
AT101759	3H2	10	2160 - 21
AT101765	5H24	4	3360 - 49
AT101778	5I4	1	3360 - 53

NUMERICAL INDEX - CONTINUED

PART NO.	GRID	KEY	PAGE
AT101899	3I6	19	2160 - 39
AT101899	3I8	31	2160 - 41
AT101899	3I10	35	2160 - 43
AT101914	5H24	19	3360 - 49
AT102326	1E13	4	0342 - 1
AT102326	1J3	7	0540 - 1
AT102326	3B23	9	1810 - 7
AT102326	3C19	9	1810 - 27
AT103379	3I6	23A	2160 - 39
AT103399	2E14	2	1672 - 4
AT103399	2E24	5	1674 - 5
AT103399	2F12	7	1674 - 17
AT103399	2F14	7	1674 - 19
AT103399	2F16	7	1674 - 19B
AT103577	3C23	15	1810 - 31
AT103919	3F22	11	2002 - 2
AT104021	1I14	7	0510 - 4
AT104809	2G8	4	1676 - 3
AT106397	3D10	11	1821 - 13
AT106413	1I14	6	0510 - 4
AT106413	1I15	2	0510 - 5
AT106413	3C23	19	1810 - 31
AT106503	3F2	39	1830 - 37
AT106524	1I20	9A	0520 - 2
AT106524	1I22	4	0520 - 4
AT106559	1B24	10	0230 - 3
AT106600	4C19	9	3160 - 4
AT106600	4C20	25	3160 - 5
AT106601	4C19	10	3160 - 4
AT106601	4C20	25	3160 - 5
AT106601	4C23	22	3160 - 9
AT106602	4C19	8	3160 - 4
AT106602	4C21	5	3160 - 6
AT106602	4C23	21	3160 - 9
AT106602	4C25	8	3160 - 11
AT106607	4C19	11	3160 - 4
AT106607	4C22	7	3160 - 8
AT106607	4C22	20	3160 - 8
AT106609	4C23	20	3160 - 9
AT106655	3I10	5	2160 - 43
AT106656	3I10	32	2160 - 43
AT106657	3I10	22	2160 - 43
AT106673	4B22	8	3102 - 9
AT106708	5F17	12	3340 - 21
AT106709	5F14	3	3340 - 18
AT106759	5H16	7	3360 - 41
AT107493	3G19	7	2160 - 14
AT107510	1E16	9	0350 - 3
AT107511	1E16	9	0350 - 3
AT107512	1I16	2	0510 - 6
AT107514	5E23	8	3340 - 1
AT107515	5B24	13	3302 - 3
AT107527	5F24	12	3340 - 28
AT107527	5F25	12	3340 - 29
AT107543	3D2	12	1821 - 5
AT107576	2C6	11	0960 - 17
AT107670	2F4	13	1674 - 9
AT107670	2F6	13	1674 - 11
AT107670	2F8	14	1674 - 13
AT107670	2F10	14	1674 - 15
AT107856	1I9	16	0510 - 1
AT107917	1I11	23	0510 - 3
AT107917	1I11	32	0510 - 3
AT107917	1I13	2	0510 - 3B
AT107917	1I13	30	0510 - 3B
AT107949	4C15	7	3140 - 4
AT107950	4C15	8	3140 - 4
AT107969	4C23	22	3160 - 9
AT108330	1C7	1	0250 - 7
AT108331	1C11	1	0250 - 11
AT108332	1C11	1	0250 - 11
AT108334	1C11	16	0250 - 11
AT108335	2B19	1	0960 - 5
AT113759	2F12	2	1674 - 17
AT113759	2F14	2	1674 - 19
AT113759	2F16	2	1674 - 19B
AT113921	1C19	12	0250 - 19
AT114016	2D12	5	1320 - 6
AT114019	2E2	3	1370 - 1
AT114025	3G23	68	2160 - 19
AT114093	1B14	1	0120 - 2
AT114101	5F19	17	3340 - 23
AT114153	1C1	1	0250 - 1
AT114206	5F15	1	3340 - 19
AT114218	6C2	32	3360A - 15
AT114218	6C5	5	3360A - 19
AT114218	6C8	4	3360A - 22
AT114566	4C23	1	3160 - 9
AT114566	4C24	11	3160 - 10
AT114681	4D12	10	3160 - 23
AT114682	5H5	12	3360 - 30
AT114682	5H5	..	3360 - 30
AT114691	5F1	4	3340 - 4
AT115596	3C8	2	1810 - 15
AT115596	3C10	4	1810 - 17
AT115596	3C14	22	1810 - 21
AT116192	1J8	2	0560 - 6
AT116526	1I15	10	0510 - 5
AT116970	3C23	2	1810 - 31
AT117254	3C8	17	1810 - 15
AT117254	3C10	49	1810 - 17
AT117254	3C12	39	1810 - 19
AT117344	1C19	1	0250 - 19
AT117345	1C15	13	0250 - 15
AT117346	1C22	1	0250 - 22
AT117346	1C22	6	0250 - 22
AT117347	1C4	14	0250 - 4
AT117348	1C21	5	0250 - 21
AT117363	3H23	14	2160 - 35B
AT117615	5F17	6	3340 - 21
AT117617	5F17	6	3340 - 21
AT117631	3I10	34	2160 - 43
AT117653	5G14	22	3360 - 13
AT117656	5G8	2	3360 - 7
AT117656	5G14	2	3360 - 13
AT117656	5G16	2	3360 - 15
AT117656	5G18	2	3360 - 17
AT117656	5G21	2	3360 - 20
AT117657	4C24	1	3160 - 10
AT117687	3H21	22	2160 - 35
AT117687	3I2	1	2160 - 37
AT117687	3I4	31	2160 - 37B
AT118501	4D12	10	3160 - 23
AT118589	1D16	4	0325 - 2
AT118590	1D16	4	0325 - 2
AT118697	5I2	14	3360 - 51
AT118766	3C6	4	1810 - 13
AT118766	3C6	7	1810 - 13
AT118792	5G8	22	3360 - 7
AT118795	4C19	12	3160 - 4
AT120444	1E9	32	0341 - 17
AT120444	1E24	10	0360 - 7
AT120444	2E3	2	1399 - 3
AT120461	3F24	1	2004 - 2
AT120461	3F25	2	2004 - 3
AT124107	5D10	21	3315 - 17
AT124107	5D18	29	3315 - 25
AT124107	5D20	9	3315 - 27
AT124107	5D22	23	3315 - 29
AT124107	5E16	9	3315 - 39
AT124152	3H23	7	2160 - 35B
AT124153	3H21	22	2160 - 35
AT124317	1E9	7	0341 - 17
AT124317	3H15	10	2160 - 31
AT124317	3H17	11	2160 - 33
AT124317	3H19	10	2160 - 33B
AT124378	4C14	12	3140 - 3
AT124390	4D20	5	3160 - 31
AT124390	4D20	6	3160 - 31
AT124394	1D25	10	0341 - 9
AT124395	1E14	17	0350 - 1
AT124414	1D21	20	0341 - 5
AT125191	5J14	32	3360 - 87
AT125191	5J16	32	3360 - 89
AT125191	6B15	29	3360A - 3
AT125191	6B17	29	3360A - 5
AT125596	3F2	38	1830 - 37
AT125805	3D10	20	1821 - 13
AT125829	3D10	19	1821 - 13
AT129419	1E24	6	0360 - 7
AT129419	3G17	5	2160 - 13
AT129419	3G18	5	2160 - 13A
AT129531	2E13	4	1672 - 3
AT129533	2E13	2	1672 - 3
AT130104	2E18	9	1673 - 3
AT130104	2E18	11	1673 - 3
AT130104	2E18	12	1673 - 3
AT130104	2E18	13	1673 - 3
AT130104	2E18	16	1673 - 3
AT130104	2E18	18	1673 - 3
AT130104	2E20	5	1673 - 5
AT130104	2E20	12	1673 - 5
AT130104	2E20	13	1673 - 5
AT130104	2E20	14	1673 - 5
AT130104	2E20	15	1673 - 5
AT130104	2E20	16	1673 - 5
AT130208	2D19	..	1369 - 5
AT132701	3G23	50	2160 - 19
AT132701	3H4	47	2160 - 23
AT132814	1I11	15	0510 - 3
AT132842	1D10	20	0315 - 7
AT132842	1D12	18	0315 - 9
AT132965	2G15	4	1746 - 2
AT133033	1B17	6	0201 - 1
AT133148	5H20	7	3360 - 45
AT133149	5H20	8	3360 - 45
AT133149	5H22	8	3360 - 47
AT133150	5H24	9	3360 - 49
AT133150	5I2	16	3360 - 51
AT133151	5H24	11	3360 - 49
AT133151	5I2	9	3360 - 51
AT133151	5I4	19B	3360 - 53
AT133152	5I4	19A	3360 - 53
AT133153	5H20	2	3360 - 45
AT133153	5H22	2	3360 - 47
AT133154	5I4	10	3360 - 53
AT133155	5H22	7	3360 - 47
AT133155	5I8	4	3360 - 57
AT133157	5I4	26	3360 - 53
AT133157	5I16	28	3360 - 65
AT133216	1B14	1	0120 - 2

NUMERICAL INDEX - CONTINUED

PART NO.	GRID	KEY	PAGE
AT134839	1F9	11	0360 - 17
AT134887	3H12	6	2160 - 27
AT135260	2F12	26	1674 - 17
AT135260	2F14	26	1674 - 19
AT135260	2F16	26	1674 - 19B
AT135293	5I4	26	3360 - 53
AT135460	1C3	8	0250 - 3
AT135655	2C11	10	1060 - 3
AT135679	1F7	10	0360 - 15
AT135714	4D10	8	3160 - 21
AT135715	4D10	1	3160 - 21
AT135715	5H5	..	3360 - 30
AT135719	4D18	12	3160 - 29
AT135719	4D18	13	3160 - 29
AT135767	5H8	17	3360 - 33
AT135768	5H8	16	3360 - 33
AT135769	5H8	12	3360 - 33
AT135811	3C14	21	1810 - 21
AT135932	5I6	13	3360 - 55
AT13740	1I11	29	0510 - 3
AT13740	1I13	16	0510 - 3B
AT137925	3F21	7	2002 - 1
AT137926	3F21	8	2002 - 1
AT139432	1D14	21	0315 - 11
AT139434	1D14	22	0315 - 11
AT139608	3F7	7	1910 - 3
AT139631	3B25	40	1810 - 9
AT139694	2C6	5	0960 - 17
AT139699	2C6	6	0960 - 17
AT139720	3B18	8A	1810 - 3
AT139722	3B18	8A	1810 - 3
AT139723	1B21	21A	0210 - 3
AT139737	1B21	28	0210 - 3
AT139741	4C10	7	3115 - 7
AT139776	4C10	40	3115 - 7
AT139776	4C12	39	3115 - 9
AT139776	5D18	6	3315 - 25
AT139776	5D20	25	3315 - 27
AT139776	5E4	52	3315 - 31B
AT139776	5E8	52	3315 - 33B
AT139776	5E10	16	3315 - 35
AT139782	3C6	1	1810 - 13
AT139792	3C6	18	1810 - 13
AT139792	3C6	23	1810 - 13
AT139793	3C6	9	1810 - 13
AT139793	3C6	22	1810 - 13
AT139843	5C24	16	3315 - 7
AT139858	3D6	1	1821 - 9
AT140315	3G17	6	2160 - 13
AT140907	3C2	13	1810 - 9B
AT140912	3B25	22	1810 - 9
AT140914	2E18	1	1673 - 3
AT140914	2E20	1	1673 - 5
AT140956	2G8	10	1676 - 3
AT140957	2E16	11	1673 - 1
AT140957	2G8	9	1676 - 3
AT140962	2E24	9	1674 - 5
AT140962	3B18	11	1810 - 3
AT140963	2E24	10	1674 - 5
AT140963	3B18	12	1810 - 3
AT140964	4C12	20	3115 - 9
AT140966	2E24	12	1674 - 5
AT140966	3B18	14	1810 - 3
AT140968	3B18	5	1810 - 3
AT140971	2C6	15	0960 - 17
AT140971	2C6	23	0960 - 17
AT140977	3C19	17	1810 - 27
AT140978	3B18	1	1810 - 3
AT140978	3C4	20	1810 - 11
AT141011	2F12	9	1674 - 17
AT141011	2F14	9	1674 - 19
AT141011	2F14	47	1674 - 19
AT141011	2F16	9	1674 - 19B
AT141011	2F16	47	1674 - 19B
AT141039	3D4	65	1821 - 7
AT141069	2E18	12	1673 - 3
AT141069	2E18	13	1673 - 3
AT141070	2E18	9	1673 - 3
AT141070	2E18	11	1673 - 3
AT141070	2E20	12	1673 - 5
AT141108	4C6	19	3115 - 3
AT141152	2G10	33	1676 - 5
AT141153	3B25	42	1810 - 9
AT141154	3B25	42	1810 - 9
AT141162	1E6	13	0341 - 15
AT141176	1E6	14	0341 - 15
AT141206	3D24	31	1830 - 11
AT141207	3D24	10	1830 - 11
AT141207	3E2	10	1830 - 13
AT141208	3E10	7	1830 - 21
AT141209	2E3	8	1399 - 3
AT141209	3D24	16	1830 - 11
AT141209	3E2	22	1830 - 13
AT141209	3E4	15	1830 - 15
AT141209	3E6	15	1830 - 17
AT141210	3D16	13A	1830 - 3
AT141214	3D8	4	1821 - 11
AT141214	3D24	6	1830 - 11
AT141214	3E2	1	1830 - 13
AT141227	1B21	1	0210 - 3
AT141229	5D4	3	3315 - 11
AT141234	1J5	22	0560 - 3
AT141235	1D8	15	0315 - 5
AT141235	1D10	10	0315 - 7
AT141235	1D12	7	0315 - 9
AT141276	3D6	9	1821 - 9
AT141283	3D6	9	1821 - 9
AT141286	3D6	1	1821 - 9
AT141319	3B20	12	1810 - 5
AT141346	4C10	22	3115 - 7
AT141346	4C12	25	3115 - 9
AT141371	3E10	9	1830 - 21
AT141372	3E10	4	1830 - 21
AT141401	3G1	4	2005 - 2
AT141444	1B13	1	0110 - 1
AT141446	2F22	1	1674 - 25
AT141449	2F4	8	1674 - 9
AT141449	2F8	23	1674 - 13
AT141451	4C6	9	3115 - 3
AT141464	5C24	8	3315 - 7
AT141464	5D2	16	3315 - 9
AT141467	3B25	19	1810 - 9
AT141489	2E16	11	1673 - 1
AT141500	3D8	1	1821 - 11
AT141527	2B25	7	0960 - 11
AT141527	2C2	2	0960 - 13
AT141527	2C4	2	0960 - 15
AT141576	1E9	29	0341 - 17
AT141642	5G18	25	3360 - 17
AT141643	5G18	25	3360 - 17
AT141643	5G19	11	3360 - 18
AT141644	5G14	22	3360 - 13
AT141644	5G19	11	3360 - 18
AT141645	5G16	22	3360 - 15
AT141647	5G16	22	3360 - 15
AT141647	5G19	11	3360 - 18
AT141669	5B22	9	3302 - 2
AT141689	5B22	6	3302 - 2
AT141689	5B23	6	3302 - 2A
AT141690	5B23	6	3302 - 2A
AT141691	5B22	5	3302 - 2
AT141691	5B23	5	3302 - 2A
AT141724	3B20	10	1810 - 5
AT141987	3C14	18	1810 - 21
AT142105	4B24	21	3102 - 11
AT142105	4D22	27	3160 - 33
AT142218	5H16	8	3360 - 41
AT142219	5H16	4	3360 - 41
AT142220	5H16	3	3360 - 41
AT142267	2E12	1	1672 - 2
AT142267	2F12	8	1674 - 17
AT142304	2G8	13	1676 - 3
AT142305	2F4	9	1674 - 9
AT142305	2F4	10	1674 - 9
AT142305	2F6	9	1674 - 11
AT142305	2F6	10	1674 - 11
AT142305	2F8	15	1674 - 13
AT142305	2F8	16	1674 - 13
AT142305	2F10	15	1674 - 15
AT142305	2F10	16	1674 - 15
AT142390	2F12	8	1674 - 17
AT142395	2E14	1	1672 - 4
AT142395	2F12	8	1674 - 17
AT142578	4B24	1	3102 - 11
AT142578	4B24	2	3102 - 11
AT142578	4B24	18	3102 - 11
AT142578	4C2	1	3102 - 13
AT142578	4E3	14	3160 - 38
AT142582	4E3	..	3160 - 38
AT142583	4E3	1	3160 - 38
AT142584	4B24	3	3102 - 11
AT142584	4C2	3	3102 - 13
AT142603	4C4	9	3102 - 15
AT142604	4B24	6	3102 - 11
AT142604	4C2	6	3102 - 13
AT142604	4C2	21	3102 - 13
AT142605	4B24	13	3102 - 11
AT142605	4B24	16	3102 - 11
AT142605	4C2	6	3102 - 13
AT142605	4C2	21	3102 - 13
AT142895	4C4	16	3102 - 15
AT142995	3D18	2	1830 - 5
AT142995	3D20	23	1830 - 7
AT143027	5G12	15	3360 - 11
AT143426	4C12	22	3115 - 9
AT143533	5B23	3A	3302 - 2A
AT143533	5B23	3C	3302 - 2A
AT144879	2E3	2	1399 - 3
AT144879	3G17	6	2160 - 13
AT144879	3G18	8	2160 - 13A
AT144993	3G18	4	2160 - 13A
AT144994	3G17	7	2160 - 13
AT144995	1E9	32	0341 - 17
AT144995	1E24	5	0360 - 7
AT145132	3B25	11	1810 - 9
AT145149	2F20	1	1674 - 23
AT145152	4D14	9	3160 - 25
AT145154	4D14	10	3160 - 25
AT145154	4D16	34	3160 - 27
AT145154	4D18	4	3160 - 29
AT145154	4D24	15	3160 - 35

NUMERICAL INDEX - CONTINUED

PART NO.	GRID	KEY	PAGE
AT145191	3D2	30	1821 - 5
AT145199	3D4	64	1821 - 7
AT145233	3D2	13	1821 - 5
AT145249	3B25	21	1810 - 9
AT145272	2C15	1	1060 - 7
AT145319	5I10	4	3360 - 59
AT145469	1I11	33	0510 - 3
AT145508	3D8	5	1821 - 11
AT145542	5H14	14	3360 - 39
AT145554	3G1	2	2005 - 2
AT145589	3G1	1	2005 - 2
AT145590	3D24	15	1830 - 11
AT145591	3E10	1	1830 - 21
AT145592	3E10	5	1830 - 21
AT145593	3E10	8	1830 - 21
AT145595	3E10	3	1830 - 21
AT145596	3D16	11A	1830 - 3
AT145598	3F2	25	1830 - 37
AT145599	3D24	35	1830 - 11
AT145600	3D24	17	1830 - 11
AT145601	3D24	32	1830 - 11
AT145601	3E12	4	1830 - 23
AT145602	3D24	14	1830 - 11
AT145602	3E2	7	1830 - 13
AT145603	1I8	13	0505 - 3
AT145629	4C10	15	3115 - 7
AT145629	4C12	19	3115 - 9
AT145629	5D2	11	3315 - 9
AT145629	5D4	14	3315 - 11
AT145629	5D4	27	3315 - 11
AT145629	5D6	14	3315 - 13
AT145629	5D8	9	3315 - 15
AT145629	5D10	12	3315 - 17
AT145629	5D18	18	3315 - 25
AT145629	5E4	37	3315 - 31B
AT145629	5E8	37	3315 - 33B
AT145629	5E16	22	3315 - 39
AT145629	5E18	33	3315 - 41
AT145650	3H2	23	2160 - 21
AT145651	1I11	5	0510 - 3
AT145651	1I11	28	0510 - 3
AT145651	1I11	31	0510 - 3
AT145651	1I13	8	0510 - 3B
AT145651	1I13	27	0510 - 3B
AT145676	4D24	30	3160 - 35
AT145676	4E2	7	3160 - 37
AT145676	5I10	7	3360 - 59
AT145688	3C2	17	1810 - 9B
AT145688	3C8	12	1810 - 15
AT145692	3C2	21	1810 - 9B
AT145692	3C10	12	1810 - 17
AT145726	3F24	8	2004 - 2
AT145736	5G6	1	3360 - 3
AT145738	5G6	1	3360 - 3
AT145740	3C25	2	1821 - 3
AT145740	3D6	4	1821 - 9
AT145743	4C16	1	3160 - 1
AT145744	5F1	15	3340 - 4
AT145782	4C10	39A	3115 - 7
AT145784	4C6	26	3115 - 3
AT145792	3C16	18	1810 - 23
AT145792	3C16	23	1810 - 23
AT145797	2E18	16	1673 - 3
AT145797	2E20	16	1673 - 5
AT145798	2E18	18	1673 - 3
AT145798	2E20	5	1673 - 5
AT145799	1E15	12	0350 - 2
AT145810	5G10	11	3360 - 9
AT145907	2G8	1	1676 - 3
AT145907	3D16	9	1830 - 3
AT145929	2G8	3	1676 - 3
AT145929	3F7	10A	1910 - 3
AT145929	3F7	10B	1910 - 3
AT145931	2G8	3	1676 - 3
AT145932	3H8	5	2160 - 25
AT145932	3H10	8	2160 - 25B
AT145938	3B20	18	1810 - 5
AT146005	5F24	15	3340 - 28
AT146005	5F25	15	3340 - 29
AT146006	1I11	13	0510 - 3
AT146046	1B19	14	0210 - 1
AT146055	3D6	10	1821 - 9
AT146056	3D6	6	1821 - 9
AT146057	3D6	12	1821 - 9
AT146058	3D6	2	1821 - 9
AT146059	3D6	10	1821 - 9
AT146060	3D6	6	1821 - 9
AT146063	3C14	21	1810 - 21
AT146064	3C14	21	1810 - 21
AT146136	5H14	14	3360 - 39
AT146137	5H14	15A	3360 - 39
AT146155	3G23	44	2160 - 19
AT146155	3H4	37	2160 - 23
AT146182	2C19	17	1115 - 3
AT146183	3G19	1	2160 - 14
AT146221	5D18	5	3315 - 25
AT146221	5D18	9	3315 - 25
AT146274	1C24	4	0250 - 24
AT146285	1D14	2	0315 - 11
AT146288	5F5	5	3340 - 9
AT146289	5F13	3	3340 - 17
AT146291	2C6	8	0960 - 17
AT146294	3C16	1	1810 - 23
AT146301	3C25	1	1821 - 3
AT146306	3F12	5	1921 - 1
AT147011	1D14	23	0315 - 11
AT148125	1D23	14	0341 - 7
AT148125	1E12	14	0341 - 21
AT148125	3G23	67	2160 - 19
AT148125	3H2	27	2160 - 21
AT148125	3H6	48	2160 - 23B
AT148127	1I18	16	0515 - 3
AT148129	1I18	19	0515 - 3
AT148131	4D20	25	3160 - 31
AT148131	4D20	26	3160 - 31
AT148131	4D22	13	3160 - 33
AT148131	4D22	14	3160 - 33
AT148146	1B21	5A	0210 - 3
AT148155	4C25	20	3160 - 11
AT148192	5D4	25	3315 - 11
AT148192	5G21	19	3360 - 20
AT148194	4C25	13	3160 - 11
AT148195	4C25	17	3160 - 11
AT148198	3G23	41	2160 - 19
AT148198	3H4	43	2160 - 23
AT148205	2C19	22	1115 - 3
AT148207	1E9	32	0341 - 17
AT148212	5D18	22	3315 - 25
AT148213	5D10	14	3315 - 17
AT148213	5D18	25	3315 - 25
AT148213	5D20	3	3315 - 27
AT148213	5D22	21	3315 - 29
AT148213	5E16	2	3315 - 39
AT148214	5D10	15	3315 - 17
AT148214	5D18	27	3315 - 25
AT148214	5D20	2	3315 - 27
AT148214	5D22	20	3315 - 29
AT148214	5E16	3	3315 - 39
AT148233	1I6	9	0505 - 1
AT148249	5C16	3	3315 - 3
AT148249	5C20	3	3315 - 5
AT148262	1D17	13	0341 - 1
AT148285	5F3	5	3340 - 7
AT148303	3C8	27	1810 - 15
AT148303	3C10	14	1810 - 17
AT148309	5F13	3	3340 - 17
AT148318	5F13	3	3340 - 17
AT148319	5F13	3	3340 - 17
AT148392	4B18	9	3102 - 5
AT148406	1E9	16A	0341 - 17
AT148409	1E9	17	0341 - 17
AT148414	1E2	2	0341 - 11
AT148415	1E2	1	0341 - 11
AT148416	1D23	2	0341 - 7
AT148416	1E12	2	0341 - 21
AT148417	1D23	1	0341 - 7
AT148417	1E12	1	0341 - 21
AT148422	3C25	2	1821 - 3
AT148422	3D6	4	1821 - 9
AT148434	3F2	49	1830 - 37
AT148441	4C12	..	3115 - 9
AT148441	4D22	..	3160 - 33
AT148442	2C19	1	1115 - 3
AT148501	4B18	9	3102 - 5
AT148524	1F3	19	0360 - 10
AT148525	1F3	1	0360 - 10
AT148534	1D5	6	0315 - 2
AT148535	1D5	12	0315 - 2
AT148539	3F2	6A	1830 - 37
AT148549	3F2	22	1830 - 37
AT149424	5H10	4	3360 - 35
AT149427	5H10	13	3360 - 35
AT149428	5H10	8	3360 - 35
AT149434	1I18	4	0515 - 3
AT149448	5H10	18	3360 - 35
AT149449	3G23	60	2160 - 19
AT149463	5B23	10	3302 - 2A
AT149518	3B25	30	1810 - 9
AT149548	2E24	1	1674 - 5
AT149549	5D10	23	3315 - 17
AT149549	5D18	32	3315 - 25
AT149549	5E16	22	3315 - 39
AT149669	2F4	1	1674 - 9
AT149670	2F6	1	1674 - 11
AT149701	2C13	6	1060 - 5
AT149701	2C15	6	1060 - 7
AT149706	3G21	34	2160 - 17
AT149706	3H2	26	2160 - 21
AT149714	5I10	16	3360 - 59
AT149715	5I12	11	3360 - 61
AT149742	5F1	15	3340 - 4
AT149770	1D15	9	0315 - 12
AT149772	3G21	33	2160 - 17
AT149778	2C13	1	1060 - 5
AT149779	2B25	10A	0960 - 11
AT149813	4C6	12	3115 - 3
AT149829	2G8	11	1676 - 3
AT149830	2E24	13	1674 - 5
AT149830	3B18	15	1810 - 3
AT149838	3G23	49	2160 - 19
AT149850	3H15	6	2160 - 31

NUMERICAL INDEX - CONTINUED

PART NO.	GRID	KEY	PAGE
AT149890	2E11	7	1671 - 5
AT149954	5C4	15	3302 - 7
AT149955	5C4	15	3302 - 7
AT149956	5C2	15	3302 - 5
AT149957	5C2	15	3302 - 5
AT149958	5C6	15	3302 - 8A
AT149959	5C6	15	3302 - 8A
AT149981	5H8	30	3360 - 33
AT149983	5C2	15	3302 - 5
AT149984	5C4	15	3302 - 7
AT149985	5C6	15	3302 - 8A
AT150019	2C19	5	1115 - 3
AT150087	1E14	19	0350 - 1
AT150089	2E24	11	1674 - 5
AT150089	3B18	17	1810 - 3
AT150096	2F12	14A	1674 - 17
AT150120	1D14	1	0315 - 11
AT150121	1D14	8	0315 - 11
AT150123	1D14	13	0315 - 11
AT150134	2G8	8	1676 - 3
AT150139	5C4	15	3302 - 7
AT150140	5C7	15	3302 - 9
AT150141	5C7	15	3302 - 9
AT150148	5C4	15	3302 - 7
AT150155	2E9	6	1671 - 3
AT150161	2F18	1	1674 - 21
AT150228	3C4	4	1810 - 11
AT150248	3C17	4A	1810 - 24
AT150249	3C17	4B	1810 - 24
AT150267	2F12	1	1674 - 17
AT150290	2C13	3	1060 - 5
AT150290	2C15	3	1060 - 7
AT150353	4C6	13	3115 - 3
AT150353	4C6	22	3115 - 3
AT150373	2E11	9	1671 - 5
AT150376	2E9	16	1671 - 3
AT150391	5G6	1	3360 - 3
AT150392	5G6	1	3360 - 3
AT150396	5G8	22	3360 - 7
AT150407	4C16	1	3160 - 1
AT150408	4C16	1	3160 - 1
AT150413	5E2	18	3315 - 31
AT150413	5E6	18	3315 - 33
AT150454	4B24	32	3102 - 11
AT150473	2F2	4	1674 - 7
AT150479	2C13	5	1060 - 5
AT150479	2C15	5	1060 - 7
AT150524	3G21	5	2160 - 17
AT150548	2B25	1A	0960 - 11
AT150562	5C16	8	3315 - 3
AT150562	5C20	8	3315 - 5
AT150577	5C16	11	3315 - 3
AT150577	5C20	11	3315 - 5
AT150621	4D14	31	3160 - 25
AT150622	4D14	30	3160 - 25
AT150623	1D8	1	0315 - 5
AT150623	2F4	16	1674 - 9
AT150623	2F6	16	1674 - 11
AT150623	2F8	22	1674 - 13
AT150623	2F10	4	1674 - 15
AT150641	3B23	14	1810 - 7
AT150642	3C19	22	1810 - 27
AT150657	2E22	7	1674 - 3
AT150666	4B18	7	3102 - 5
AT150666	4B22	7	3102 - 9
AT150682	1B17	11A	0201 - 1
AT150707	3F20	27	2001 - 3
AT150714	3F10	9A	1913 - 2
AT150725	5F7	14	3340 - 11
AT150725	5F9	14	3340 - 13
AT150726	5F3	9	3340 - 7
AT150726	5F5	9	3340 - 9
AT150742	1J5	3	0560 - 3
AT150755	4B24	9	3102 - 11
AT150755	4C2	9	3102 - 13
AT150756	1J5	19	0560 - 3
AT150758	4C12	5	3115 - 9
AT150762	5E18	9	3315 - 41
AT150762	5E20	9	3315 - 43
AT150763	5E18	8	3315 - 41
AT150763	5E20	8	3315 - 43
AT150764	5E18	31	3315 - 41
AT150764	5E20	31	3315 - 43
AT150827	4B24	30	3102 - 11
AT150827	4C4	5	3102 - 15
AT150828	4B24	13	3102 - 11
AT150828	4C2	13	3102 - 13
AT150836	1J5	7	0560 - 3
AT150854	3G23	56	2160 - 19
AT150857	2C19	14	1115 - 3
AT150861	4C12	34	3115 - 9
AT150868	4D14	8	3160 - 25
AT150869	4D14	7	3160 - 25
AT150870	4D14	2	3160 - 25
AT150870	4D14	3	3160 - 25
AT150882	4D20	12	3160 - 31
AT150883	4D20	13	3160 - 31
AT150884	4D14	19	3160 - 25
AT150885	4D14	20	3160 - 25
AT150886	4D22	16	3160 - 33
AT150887	4D22	15	3160 - 33
AT150895	2G8	26	1676 - 3
AT150896	2G8	26	1676 - 3
AT150899	3F10	5A	1913 - 2
AT150899	3F10	5B	1913 - 2
AT150902	3F7	1	1910 - 3
AT151012	2C13	2	1060 - 5
AT151023	1D8	16	0315 - 5
AT151036	3C4	22	1810 - 11
AT151100	3F7	6	1910 - 3
AT151104	3B25	6	1810 - 9
AT151105	3F7	6	1910 - 3
AT151111	3F20	25	2001 - 3
AT151112	3F20	8	2001 - 3
AT151124	3C8	14	1810 - 15
AT151124	3C10	5	1810 - 17
AT151124	3C12	15	1810 - 19
AT151129	1D4	10	0315 - 1
AT151135	5D4	27	3315 - 11
AT151136	3C25	5	1821 - 3
AT151143	1I11	3	0510 - 3
AT151144	1I11	16	0510 - 3
AT151145	1I11	20	0510 - 3
AT151147	3C23	1	1810 - 31
AT151150	5G10	10	3360 - 9
AT151150	5G10	11	3360 - 9
AT151150	5G12	10	3360 - 11
AT151156	3G23	53	2160 - 19
AT151172	5C20	11	3315 - 5
AT151176	3D14	5	1822 - 3
AT151191	4D22	3	3160 - 33
AT151193	4D22	4	3160 - 33
AT151194	4D20	27	3160 - 31
AT151195	4D20	28	3160 - 31
AT151201	5F5	11A	3340 - 9
AT151231	3C4	4	1810 - 11
AT151236	5F3	8	3340 - 7
AT151255	3C4	4	1810 - 11
AT151271	5G2	9	3340 - 31
AT151319	3C2	21	1810 - 9B
AT151319	3C10	12	1810 - 17
AT151322	4D24	22	3160 - 35
AT151322	4E2	22	3160 - 37
AT151323	4D24	21	3160 - 35
AT151323	4E2	21	3160 - 37
AT151344	2B23	8	0960 - 9
AT151345	2B23	10	0960 - 9
AT151346	2B23	11	0960 - 9
AT151347	2B23	12	0960 - 9
AT151348	2B23	10	0960 - 9
AT151354	2D11	54	1320 - 5B
AT151360	2D11	54	1320 - 5B
AT151364	5E2	21	3315 - 31
AT151364	5E6	21	3315 - 33
AT151364	5E12	49	3315 - 35B
AT151365	5E2	24	3315 - 31
AT151365	5E6	24	3315 - 33
AT151365	5E12	53	3315 - 35B
AT151366	5E4	30	3315 - 31B
AT151366	5E8	30	3315 - 33B
AT151366	5E10	25	3315 - 35
AT151367	5E4	31	3315 - 31B
AT151367	5E8	31	3315 - 33B
AT151367	5E12	34	3315 - 35B
AT151368	5E2	12	3315 - 31
AT151368	5E6	12	3315 - 33
AT151368	5E12	37	3315 - 35B
AT151368	5E18	26	3315 - 41
AT151368	5E20	26	3315 - 43
AT151369	5E2	15	3315 - 31
AT151369	5E6	15	3315 - 33
AT151370	5E2	29	3315 - 31
AT151370	5E6	29	3315 - 33
AT151370	5E10	11	3315 - 35
AT151371	5E2	3	3315 - 31
AT151371	5E6	3	3315 - 33
AT151371	5E12	43	3315 - 35B
AT151372	5E8	40	3315 - 33B
AT151372	5E12	54	3315 - 35B
AT151428	3C17	1	1810 - 24
AT151429	3C17	1	1810 - 24
AT151431	2C11	22	1060 - 3
AT151432	2C11	23	1060 - 3
AT151433	1I18	26	0515 - 3
AT151479	4C6	6	3115 - 3
AT151479	4C8	8	3115 - 5
AT151481	3C6	18	1810 - 13
AT151481	3C6	23	1810 - 13
AT151482	3C6	9	1810 - 13
AT151482	3C6	22	1810 - 13
AT151491	2C21	3	1115 - 5
AT151494	5C20	8	3315 - 5
AT151495	2G8	26	1676 - 3
AT151498	2G8	26	1676 - 3
AT151499	2G8	7	1676 - 3
AT151500	2F4	1	1674 - 9
AT151503	3B23	14	1810 - 7
AT151507	2F12	14A	1674 - 17
AT151507	3F24	5B	2004 - 2
AT151551	5I14	15	3360 - 63
AT151552	5I14	16	3360 - 63

NUMERICAL INDEX - CONTINUED

PART NO.	GRID	KEY	PAGE
AT151555	3F2	26	1830 - 37
AT151556	3F2	27	1830 - 37
AT151567	5D18	1	3315 - 25
AT151567	5D18	5	3315 - 25
AT151567	5E4	49	3315 - 31B
AT151567	5E8	49	3315 - 33B
AT151567	5E12	49	3315 - 35B
AT151575	5C20	3	3315 - 5
AT151673	2C19	1	1115 - 3
AT151676	3H15	16	2160 - 31
AT151697	3D8	..	1821 - 11
AT151697	3D12	..	1821 - 15
AT151699	5D10	20	3315 - 17
AT151699	5D18	22	3315 - 25
AT151699	5D20	6	3315 - 27
AT151699	5D22	22	3315 - 29
AT151699	5E16	8	3315 - 39
AT151705	3B25	19	1810 - 9
AT151714	4D22	3	3160 - 33
AT151715	4D22	4	3160 - 33
AT151719	1F3	24	0360 - 10
AT151750	1D8	16	0315 - 5
AT151752	3B25	42	1810 - 9
AT151753	3B25	42	1810 - 9
AT151755	3F7	7	1910 - 3
AT151784	1D8	1	0315 - 5
AT151784	2F4	16	1674 - 9
AT151784	2F6	16	1674 - 11
AT151784	2F8	22	1674 - 13
AT151784	2F10	4	1674 - 15
AT151812	3F7	10A	1910 - 3
AT151812	3F10	11	1913 - 2
AT151812	3F11	10	1913 - 3
AT151814	5G14	22	3360 - 13
AT151814	5G20	10	3360 - 19
AT151826	2B25	1A	0960 - 11
AT151826	2B25	1B	0960 - 11
AT151840	3E22	12	1830 - 33
AT151841	1I11	33	0510 - 3
AT151841	1I13	28	0510 - 3B
AT151853	2B25	18	0960 - 11
AT151854	2B25	10A	0960 - 11
AT151855	5H10	4	3360 - 35
AT151889	3C19	17	1810 - 27
AT151896	5G22	..	3360 - 21
AT151898	5G18	25	3360 - 17
AT151899	5D4	25	3315 - 11
AT151899	5G16	22	3360 - 15
AT151899	5G21	19	3360 - 20
AT151900	5G14	22	3360 - 13
AT151901	5G10	11	3360 - 9
AT151906	4C6	13	3115 - 3
AT151906	4C6	22	3115 - 3
AT151909	5C16	3	3315 - 3
AT151909	5C20	3	3315 - 5
AT151915	1D14	2	0315 - 11
AT151916	1D14	25	0315 - 11
AT151936	5G21	19	3360 - 20
AT151939	3D6	6	1821 - 9
AT151940	3D6	10	1821 - 9
AT151967	3F2	39	1830 - 37
AT151970	3C21	4A	1810 - 29
AT151970	3C21	12	1810 - 29
AT151981	3F2	38	1830 - 37
AT151994	5C16	11	3315 - 3
AT151994	5C20	11	3315 - 5
AT156309	2F4	1	1674 - 9
AT156309	2F8	1	1674 - 13
AT156310	2F6	1	1674 - 11
AT156310	2F10	1	1674 - 15
AT156332	4C6	9	3115 - 3
AT156332	4C8	1	3115 - 5
AT156333	4C6	12	3115 - 3
AT156335	2E24	1	1674 - 5
AT156366	4C14	13	3140 - 3
AT156374	5C4	15	3302 - 7
AT156376	5C4	15	3302 - 7
AT156389	4C12	34	3115 - 9
AT156391	5E16	16A	3315 - 39
AT156391	5E16	23	3315 - 39
AT156392	5D10	29A	3315 - 17
AT156392	5D10	36	3315 - 17
AT156399	3I6	24	2160 - 39
AT156400	3I6	41	2160 - 39
AT156401	4C19	12	3160 - 4
AT156404	3I6	8	2160 - 39
AT156405	4C23	23	3160 - 9
AT156406	4C25	20	3160 - 11
AT156429	4C23	23	3160 - 9
AT156430	3I6	30	2160 - 39
AT156430	3I8	6	2160 - 41
AT156431	3I6	26	2160 - 39
AT156431	3I8	4	2160 - 41
AT156432	3I6	27	2160 - 39
AT156432	3I8	1	2160 - 41
AT156437	4B24	6	3102 - 11
AT156437	4C2	6	3102 - 13
AT156443	1F3	8	0360 - 10
AT156445	1J5	7	0560 - 3
AT156445	1J5	27	0560 - 3
AT156445	1J7	4	0560 - 5
AT156469	5E4	60	3315 - 31B
AT156473	5E4	44A	3315 - 31B
AT156473	5E8	44A	3315 - 33B
AT156473	5E8	59	3315 - 33B
AT156487	2F12	1	1674 - 17
AT156503	5G2	9	3340 - 31
AT156504	5G2	9	3340 - 31
AT156573	5E18	16	3315 - 41
AT156573	5E18	23	3315 - 41
AT156573	5E18	25	3315 - 41
AT156573	5E18	32A	3315 - 41
AT156573	5E18	36	3315 - 41
AT156575	2E9	16	1671 - 3
AT156576	2E11	9	1671 - 5
AT156655	5F13	3	3340 - 17
AT156689	1D15	13	0315 - 12
AT156689	2E22	15	1674 - 3
AT156689	2F12	1	1674 - 17
AT156689	3F24	4	2004 - 2
AT156760	3H21	13	2160 - 35
AT156761	3H21	20	2160 - 35
AT156817	3B21	1	1810 - 5B
AT156818	5D2	6	3315 - 9
AT156885	3C14	18	1810 - 21
AT156886	3C14	19	1810 - 21
AT156892	3C14	18	1810 - 21
AT156893	3C2	24	1810 - 9B
AT156894	3C2	20	1810 - 9B
AT156895	5C24	2	3315 - 7
AT156913	3H21	22	2160 - 35
AT156914	3H21	22	2160 - 35
AT156920	3D8	..	1821 - 11
AT156920	3D12	..	1821 - 15
AT156921	3D8	12	1821 - 11
AT156925	5C7	15	3302 - 9
AT156928	3D8	..	1821 - 11
AT156928	3D12	..	1821 - 15
AT156929	3D8	27	1821 - 11
AT156929	3D12	9	1821 - 15
AT156931	5C8	12	3302 - 10
AT156932	5C8	12	3302 - 10
AT156934	3I14	12	2160 - 47
AT156935	3I6	8	2160 - 39
AT156935	3I14	15	2160 - 47
AT156936	3D8	13	1821 - 11
AT156965	3F2	22	1830 - 37
AT156966	3F2	21	1830 - 37
AT156967	3F2	39	1830 - 37
AT156967	3F4	28	1830 - 39
AT156968	3F2	6A	1830 - 37
AT156969	1F3	1	0360 - 10
AT156969	1F3	23	0360 - 10
AT157012	3F24	4	2004 - 2
AT157018	1F3	1	0360 - 10
AT157102	3I14	28	2160 - 47
AT157111	1J5	13	0560 - 3
AT157157	3H21	4	2160 - 35
AT157158	3H21	11	2160 - 35
AT157158	3I2	19	2160 - 37
AT157159	3H21	13	2160 - 35
AT157160	3H21	20	2160 - 35
AT157177	2E12	1	1672 - 2
AT157177	2F12	8	1674 - 17
AT157222	5I12	10	3360 - 61
AT157223	5I10	15	3360 - 59
AT157224	3I14	1	2160 - 47
AT157226	3F22	9	2002 - 2
AT157285	3F20	31	2001 - 3
AT157311	2F18	1	1674 - 21
AT157312	2F20	1	1674 - 23
AT157316	2B23	12	0960 - 9
AT157327	5F1	15	3340 - 4
AT157354	1D21	20	0341 - 5
AT157354	1D25	21	0341 - 9
AT157422	1I18	26	0515 - 3
AT157429	1I18	4	0515 - 3
AT157434	3C14	21	1810 - 21
AT157435	3C14	18	1810 - 21
AT157453	5G25	..	3360 - 25
AT157453	5H1	..	3360 - 26
AT157471	1D4	10	0315 - 1
AT157547	2C19	27	1115 - 3
AT157618	5C24	5A	3315 - 7
AT157672	1C3	8	0250 - 3
AT158084	2C19	1	1115 - 3
AT158084	2C21	23	1115 - 5
AT158197	5E2	15	3315 - 31
AT158197	5E6	15	3315 - 33
AT158197	5E12	44	3315 - 35B
AT158197	5E18	29	3315 - 41
AT158197	5E20	29	3315 - 43
AT158198	5C18	5	3315 - 3B
AT158198	5C22	5	3315 - 5B
AT158198	5E2	18	3315 - 31
AT158198	5E6	18	3315 - 33
AT158198	5E12	47	3315 - 35B
AT158198	5E18	13	3315 - 41
AT158198	5E20	13	3315 - 43
AT158245	5H16	8	3360 - 41
AT158369	5C2	15	3302 - 5

NUMERICAL INDEX - CONTINUED

PART NO.	GRID	KEY	PAGE
AT158374	5C2	15	3302 - 5
AT158375	5C6	15	3302 - 8A
AT158376	5C6	15	3302 - 8A
AT158425	3D6	9	1821 - 9
AT158567	5F24	12	3340 - 28
AT158567	5F25	12	3340 - 29
AT158567	6B15	..	3360A - 3
AT158567	6B17	..	3360A - 5
AT158580	5F15	4	3340 - 19
AT158580	5F16	4	3340 - 20
AT158583	5F15	3	3340 - 19
AT158583	5F16	3	3340 - 20
AT158604	2E22	2B	1674 - 3
AT158649	3G19	1	2160 - 14
AT158952	5B24	14	3302 - 3
AT159001	4C16	1	3160 - 1
AT159002	4C19	12	3160 - 4
AT159004	4C16	1	3160 - 1
AT159058	6C7	32	3360A - 21
AT159058	6C8	4	3360A - 22
AT159058	6C11	5	3360A - 27
AT159104	2C6	8	0960 - 17
AT159219	4B16	1	3102 - 3
AT159220	4B16	1	3102 - 3
AT159220	4B18	9	3102 - 5
AT159226	5G16	22	3360 - 15
AT159226	5G18	25	3360 - 17
AT159226	5G20	10	3360 - 19
AT159236	5F21	17	3340 - 25
AT159237	5F16	1	3340 - 20
AT159295	5I14	18	3360 - 63
AT159307	6C19	16	3360A - 35
AT159359	2E18	1	1673 - 3
AT159359	2E20	1	1673 - 5
AT159396	1I21	5	0520 - 3
AT159429	2E9	16	1671 - 3
AT159430	2E11	9	1671 - 5
AT159431	2E11	7	1671 - 5
AT159816	5D4	23	3315 - 11
AT159816	5D4	24	3315 - 11
AT159816	5D4	25	3315 - 11
AT159816	5D4	27	3315 - 11
AT159816	5G8	13	3360 - 7
AT159816	5G8	14	3360 - 7
AT159816	5G8	22	3360 - 7
AT159816	5G10	11	3360 - 9
AT159816	5G12	11	3360 - 11
AT159816	5G14	13	3360 - 13
AT159816	5G14	14	3360 - 13
AT159816	5G14	22	3360 - 13
AT159816	5G16	13	3360 - 15
AT159816	5G16	14	3360 - 15
AT159816	5G16	22	3360 - 15
AT159816	5G18	6	3360 - 17
AT159816	5G18	13	3360 - 17
AT159816	5G18	14	3360 - 17
AT159816	5G18	25	3360 - 17
AT159816	5G21	19	3360 - 20
AT159816	5G21	22	3360 - 20
AT159816	5G21	23	3360 - 20
AT159816	5G22	..	3360 - 21
AT159817	5G22	..	3360 - 21
AT159829	1D21	21	0341 - 5
AT159829	1D25	25	0341 - 9
AT159830	1D21	42	0341 - 5
AT159830	1D25	33	0341 - 9
AT159848	4C17	..	3160 - 2
AT159848	4C18	..	3160 - 3
AT159848	4C19	12	3160 - 4
AT159848	4C23	22	3160 - 9
AT159848	4C25	20	3160 - 11
AT159849	4C19	..	3160 - 4
AT159849	4C22	..	3160 - 8
AT159849	4C23	..	3160 - 9
AT159849	4C24	..	3160 - 10
AT159849	4C25	..	3160 - 11
AT159927	5F19	27	3340 - 23
AT159933	5F21	32	3340 - 25
AT160211	5C16	3	3315 - 3
AT160212	5C16	3	3315 - 3
AT160212	5C20	3	3315 - 5
AT160230	1J5	22	0560 - 3
AT160230	1J7	2	0560 - 5
AT160294	3F10	9A	1913 - 2
AT160294	3F10	9B	1913 - 2
AT160360	5I4	1	3360 - 53
AT160390	5D4	..	3315 - 11
AT160390	5G10	..	3360 - 9
AT160390	5G12	..	3360 - 11
AT160390	5G19	..	3360 - 18
AT160390	5G20	..	3360 - 19
AT160434	5E25	4	3340 - 3
AT160465	4C20	..	3160 - 5
AT160465	4C23	..	3160 - 9
AT160482	5D4	22	3315 - 11
AT160482	5D4	27	3315 - 11
AT160482	5G21	29	3360 - 20
AT160488	3B18	8A	1810 - 3
AT160489	3B18	8A	1810 - 3
AT160512	4C23	23	3160 - 9
AT160515	4C23	23	3160 - 9
AT160516	4C25	20	3160 - 11
AT160572	2C6	6	0960 - 17
AT160627	3D2	19A	1821 - 5
AT160627	3D2	19B	1821 - 5
AT160661	2C6	15	0960 - 17
AT160662	2C6	18	0960 - 17
AT160717	2G8	6	1676 - 3
AT160736	2C19	22	1115 - 3
AT160820	2F12	8	1674 - 17
AT160820	2F14	8	1674 - 19
AT160987	5F21	20	3340 - 25
AT161014	2C6	25	0960 - 17
AT161025	2C19	44	1115 - 3
AT161294	1J1	10	0530 - 1
AT161328	5F19	1A	3340 - 23
AT161328	5F21	1A	3340 - 25
AT161376	3F17	9	1927 - 4
AT161477	2F12	1	1674 - 17
AT161479	3D4	64	1821 - 7
AT161479	3D4	65	1821 - 7
AT161480	2E12	22	1672 - 2
AT161481	3D2	13	1821 - 5
AT161481	3D4	60	1821 - 7
AT161576	3F2	21	1830 - 37
AT161577	3F2	6B	1830 - 37
AT161675	3D2	13	1821 - 5
AT161675	3D4	60	1821 - 7
AT161678	6C5	2	3360A - 19
AT161678	6C8	2	3360A - 22
AT161678	6C11	2	3360A - 27
AT161682	5D4	3	3315 - 11
AT161682	5D6	3	3315 - 13
AT161682	5D10	3	3315 - 17
AT161682	5D14	3	3315 - 21
AT161708	5H16	8	3360 - 41
AT161710	2D11	54	1320 - 5B
AT161710	2G10	29	1676 - 5
AT161715	2D11	54	1320 - 5B
AT161715	2G10	29	1676 - 5
AT161730	5I10	29	3360 - 59
AT161753	5I4	1	3360 - 53
AT161753	5I16	37	3360 - 65
AT161863	2F22	1	1674 - 25
AT161938	6C5	21	3360A - 19
AT161938	6C11	21	3360A - 27
AT161973	5D8	4	3315 - 15
AT161973	5D12	10	3315 - 19
AT161973	5D16	5	3315 - 23
AT162003	1D10	6	0315 - 7
AT162005	1I18	19	0515 - 3
AT162050	5F19	3	3340 - 23
AT162050	5F21	3	3340 - 25
AT162064	5J14	..	3360 - 87
AT162064	5J16	..	3360 - 89
AT162064	6B19	..	3360A - 7
AT162064	6B21	..	3360A - 9
AT162066	6B15	..	3360A - 3
AT162066	6B17	..	3360A - 5
AT162073	2G8	26	1676 - 3
AT162074	2G8	26	1676 - 3
AT162076	5F19	20	3340 - 23
AT162076	5I14	20	3360 - 63
AT162077	5I4	10	3360 - 53
AT162077	5I16	23	3360 - 65
AT162082	5I14	17	3360 - 63
AT162180	1D8	1	0315 - 5
AT162180	1D10	1	0315 - 7
AT162180	1D12	23	0315 - 9
AT162180	2F4	16	1674 - 9
AT162180	2F6	16	1674 - 11
AT162180	2F8	22	1674 - 13
AT162180	2F8	35	1674 - 13
AT162180	2F10	4	1674 - 15
AT162188	2F8	1	1674 - 13
AT162189	2F10	1	1674 - 15
AT162198	4B16	1	3102 - 3
AT162205	3D14	5	1822 - 3
AT162205	3D14	8	1822 - 3
AT162446	4B18	9	3102 - 5
AT162517	2G8	13	1676 - 3
AT162591	3H17	9	2160 - 33
AT162597	1I14	7	0510 - 4
AT162621	5C4	15	3302 - 7
AT162656	2G14	15	1740 - 5
AT162712	3F10	9B	1913 - 2
AT162774	2C19	5	1115 - 3
AT162848	3F2	38	1830 - 37
AT162848	3F4	27	1830 - 39
AT162874	5I14	21	3360 - 63
AT162888	5I4	31	3360 - 53
AT162888	5I14	25	3360 - 63
AT162888	5I16	25	3360 - 65
AT162921	5F15	4	3340 - 19
AT162921	5F16	4	3340 - 20
AT162994	1C2	1	0250 - 2
AT163088	2F4	3	1674 - 9
AT163088	2F6	3	1674 - 11
AT163088	2F8	3	1674 - 13
AT163088	2F10	23	1674 - 15
AT163115	5I2	4	3360 - 51

NUMERICAL INDEX - CONTINUED

PART NO.	GRID	KEY	PAGE
AT163115	5I12	4	3360 - 61
AT163134	5I4	37	3360 - 53
AT163140	5I4	37	3360 - 53
AT163158	5G14	22	3360 - 13
AT163314	4B20	1	3102 - 7
AT163315	4B18	9	3102 - 5
AT163316	4B18	9	3102 - 5
AT163318	4B18	9	3102 - 5
AT163318	4B20	1	3102 - 7
AT163320	4B18	9	3102 - 5
AT163320	4B20	1	3102 - 7
AT163390	3D18	7	1830 - 5
AT163685	5D8	1	3315 - 15
AT163685	5D12	14	3315 - 19
AT163685	5D16	1	3315 - 23
AT163734	2G8	6	1676 - 3
AT163744	5C4	15	3302 - 7
AT163747	1E6	15A	0341 - 15
AT163755	4C10	39B	3115 - 7
AT163861	5G6	1	3360 - 3
AT163862	5G6	1	3360 - 3
AT163863	5G8	22	3360 - 7
AT163864	5G18	25	3360 - 17
AT163865	5D4	25	3315 - 11
AT163865	5D4	27	3315 - 11
AT163865	5G21	19	3360 - 20
AT163866	5G14	22	3360 - 13
AT163868	5G8	22	3360 - 7
AT163868	5G19	11	3360 - 18
AT163891	3E24	36	1830 - 35
AT163891	3F2	49	1830 - 37
AT163895	1F9	5	0360 - 17
AT163895	1F9	8	0360 - 17
AT163899	2C21	13	1115 - 5
AT163900	2C21	7	1115 - 5
AT163948	2E18	12	1673 - 3
AT163948	2E18	13	1673 - 3
AT163948	2E20	14	1673 - 5
AT163948	2E20	15	1673 - 5
AT163950	2E18	9	1673 - 3
AT163950	2E18	11	1673 - 3
AT163950	2E20	12	1673 - 5
AT163950	2E20	13	1673 - 5
AT163978	2C9	5	1011 - 1
AT164032	5G4	1	3340 - 33
AT164059	4D14	9	3160 - 25
AT164059	4D16	32	3160 - 27
AT164059	4D18	3	3160 - 29
AT164077	1F7	4	0360 - 15
AT164078	1F7	6	0360 - 15
AT164124	3C2	21	1810 - 9B
AT164124	3C10	12	1810 - 17
AT164148	3C12	37	1810 - 19
AT164183	4D16	12	3160 - 27
AT164184	4D24	6	3160 - 35
AT164185	4D24	5	3160 - 35
AT164186	4D16	4	3160 - 27
AT164189	4D16	7	3160 - 27
AT164191	4D24	8	3160 - 35
AT164194	3F11	8	1913 - 3
AT164198	3F11	6	1913 - 3
AT164294	1B19	14	0210 - 1
AT164296	1E9	32	0341 - 17
AT16431	1C25	6	0250 - 25
AT164442	1B24	2B	0230 - 3
AT164442	1C23	2B	0250 - 23
AT164450	4C8	33A	3115 - 5
AT164452	4C8	27A	3115 - 5
AT164455	4C8	12A	3115 - 5
AT164456	1I11	3	0510 - 3
AT164457	1I11	16	0510 - 3
AT164459	2B25	10B	0960 - 11
AT164459	2C2	12	0960 - 13
AT164459	2C4	12	0960 - 15
AT164461	2C15	2	1060 - 7
AT164462	2C15	1	1060 - 7
AT164510	3H4	49	2160 - 23
AT164513	5D20	22	3315 - 27
AT164513	5E10	19	3315 - 35
AT164534	4C12	5	3115 - 9
AT164565	2G16	2	1746 - 3
AT164599	1F9	2	0360 - 17
AT164599	1F9	4	0360 - 17
AT164629	1E9	32	0341 - 17
AT164629	1E24	1	0360 - 7
AT164652	3H8	6	2160 - 25
AT164694	3H6	39	2160 - 23B
AT164785	3B23	9	1810 - 7
AT164785	3C19	9	1810 - 27
AT164788	6C7	32	3360A - 21
AT164788	6C8	16	3360A - 22
AT164789	6C2	32	3360A - 15
AT164789	6C8	16	3360A - 22
AT164802	3H6	42	2160 - 23B
AT164828	3B25	11	1810 - 9
AT164840	3D24	31	1830 - 11
AT164840	3E2	17	1830 - 13
AT164892	3F2	10	1830 - 37
AT164892	3F4	10	1830 - 39
AT164895	1J5	19	0560 - 3
AT164922	3H23	3	2160 - 35B
AT164922	3I4	27	2160 - 37B
AT164931	3H23	11	2160 - 35B
AT164932	3H23	12	2160 - 35B
AT164934	5D10	23	3315 - 17
AT164934	5D18	32	3315 - 25
AT164934	5D20	11	3315 - 27
AT164934	5D22	7	3315 - 29
AT164934	5E16	11	3315 - 39
AT164952	1D25	8	0341 - 9
AT164965	5F9	7	3340 - 13
AT164970	3E22	12	1830 - 33
AT164970	3E24	14	1830 - 35
AT165022	2E2	4	1370 - 1
AT165038	4D16	13	3160 - 27
AT165115	4D14	8	3160 - 25
AT165116	4D14	7	3160 - 25
AT165124	1B21	5B	0210 - 3
AT165137	2C2	20	0960 - 13
AT165137	2C4	20	0960 - 15
AT165138	2C2	17	0960 - 13
AT165138	2C4	17	0960 - 15
AT165185	2D11	54	1320 - 5B
AT165186	2D11	54	1320 - 5B
AT165196	4D2	9	3160 - 13
AT165196	4D4	9	3160 - 15
AT165210	4D2	9	3160 - 13
AT165210	4D4	9	3160 - 15
AT165248	2E11	9	1671 - 5
AT165249	2E11	29	1671 - 5
AT165288	3B23	9	1810 - 7
AT165288	3C19	9	1810 - 27
AT165290	2F14	1	1674 - 19
AT165290	2F16	1	1674 - 19B
AT165341	2B23	11	0960 - 9
AT165357	1E9	16A	0341 - 17
AT165361	5H12	19	3360 - 37
AT165363	4D14	2	3160 - 25
AT165363	4D14	3	3160 - 25
AT165397	2G8	26	1676 - 3
AT165402	3H8	13	2160 - 25
AT165402	3H10	5	2160 - 25B
AT165409	1B17	6	0201 - 1
AT165436	5G23	5	3360 - 22
AT165437	5G23	5	3360 - 22
AT165438	5G23	5	3360 - 22
AT165469	2G8	26	1676 - 3
AT165472	2G10	33	1676 - 5
AT165473	2G8	8	1676 - 3
AT165505	4D7	7	3160 - 18
AT165506	4D5	23	3160 - 16
AT165507	4D6	23	3160 - 17
AT165508	4D8	15	3160 - 19
AT165548	3F12	5	1921 - 1
AT165587	1I11	15	0510 - 3
AT165587	1I13	7	0510 - 3B
AT165610	5F7	7	3340 - 11
AT165642	3D14	5	1822 - 3
AT165642	3D14	8	1822 - 3
AT165695	1B21	21B	0210 - 3
AT165728	5G25	16	3360 - 25
AT165729	5H1	16	3360 - 26
AT165730	5D6	22	3315 - 13
AT165730	5D8	20	3315 - 15
AT165730	5H1	16	3360 - 26
AT165731	5H1	16	3360 - 26
AT165735	5G6	1	3360 - 3
AT165735	5G23	5	3360 - 22
AT165735	5G24	4	3360 - 23
AT165735	5H4	3	3360 - 29
AT165737	5H4	3	3360 - 29
AT165739	5G6	1	3360 - 3
AT165739	5G23	5	3360 - 22
AT165739	5H4	3	3360 - 29
AT165783	5D18	5	3315 - 25
AT165783	5D18	9	3315 - 25
AT165783	5E4	49	3315 - 31B
AT165783	5E8	49	3315 - 33B
AT165785	5G6	1	3360 - 3
AT165785	5G23	5	3360 - 22
AT165785	5G24	4	3360 - 23
AT165786	5G6	1	3360 - 3
AT165786	5G23	5	3360 - 22
AT165786	5G24	4	3360 - 23
AT165787	5G23	5	3360 - 22
AT165787	5G24	4	3360 - 23
AT165834	5H4	2	3360 - 29
AT165835	5H5	12	3360 - 30
AT165835	5H5	..	3360 - 30
AT165836	5H5	..	3360 - 30
AT165837	5H5	..	3360 - 30
AT165839	5H3	4	3360 - 28
AT165859	3F2	6B	1830 - 37
AT165871	3I2	6	2160 - 37
AT165872	3I2	9	2160 - 37
AT165931	2F8	1	1674 - 13
AT165931-	2F8	1	1674 - 13
AT165932	2F10	1	1674 - 15
AT165936	5C16	3	3315 - 3
AT165936	5C20	3	3315 - 5
AT165946	5I8	5	3360 - 57

NUMERICAL INDEX - CONTINUED

PART NO.	GRID	KEY	PAGE
AT165947	5H24	9	3360 - 49
AT165947	5I12	23	3360 - 61
AT165948	5H24	11	3360 - 49
AT165948	5I12	17	3360 - 61
AT165948	5I16	4	3360 - 65
AT165949	5I8	10	3360 - 57
AT165971	3F2	6A	1830 - 37
AT165978	2C4	18	0960 - 15
AT165979	2C2	18	0960 - 13
AT165979	2C2	19	0960 - 13
AT165979	2C4	19	0960 - 15
AT165980	3I2	6	2160 - 37
AT165981	3I2	9	2160 - 37
AT165991	5G22	..	3360 - 21
AT166010	1B24	10	0230 - 3
AT166102	2E9	16	1671 - 3
AT166103	2E9	33	1671 - 3
AT166159	5I10	28	3360 - 59
AT166159	5I12	17	3360 - 61
AT166159	5I14	5	3360 - 63
AT166161	5I6	11	3360 - 55
AT166161	5I6	24	3360 - 55
AT166162	1I13	17	0510 - 3B
AT166163	1I13	12	0510 - 3B
AT166164	1I13	20	0510 - 3B
AT166165	5I14	4	3360 - 63
AT166184	3H10	3	2160 - 25B
AT166189	1J7	22	0560 - 5
AT166200	5I4	37	3360 - 53
AT166200	5I16	39	3360 - 65
AT166204	5I14	29	3360 - 63
AT166242	2C6	6	0960 - 17
AT166258	5E24	1	3340 - 2
AT166408	3F7	10B	1910 - 3
AT166408	3F9	8	1910 - 5
AT166459	1I14	7	0510 - 4
AT166476	3H2	11	2160 - 21
AT166494	4B18	9	3102 - 5
AT166494	4B20	1	3102 - 7
AT166494	4B20	2	3102 - 7
AT166494	4B20	5	3102 - 7
AT166513	4D16	20	3160 - 27
AT166514	4D16	21	3160 - 27
AT166516	5H12	19	3360 - 37
AT166558	3H6	32	2160 - 23B
AT166559	3H6	26	2160 - 23B
AT166560	3H4	59	2160 - 23
AT166561	3H4	60	2160 - 23
AT166581	1D18	15	0341 - 2
AT166585	1D19	16	0341 - 3
AT166609	1B17	11B	0201 - 1
AT166620	1I11	14	0510 - 3
AT166620	1I13	6	0510 - 3B
AT166624	5F13	3	3340 - 17
AT166634	5D6	23	3315 - 13
AT166645	4D16	5	3160 - 27
AT166646	4D24	7	3160 - 35
AT166680	1E9	32	0341 - 17
AT166680	1E24	11	0360 - 7
AT166681	1E9	32	0341 - 17
AT166681	1E24	9	0360 - 7
AT166683	1E9	32	0341 - 17
AT166683	1E24	13	0360 - 7
AT166753	3F14	10	1921 - 3
AT166798	5F13	3	3340 - 17
AT166802	1F7	8	0360 - 15
AT166829	5G2	9	3340 - 31
AT166831	5G2	9	3340 - 31
AT166838	3H2	29	2160 - 21
AT166860	3H21	22	2160 - 35
AT166860	3I4	31	2160 - 37B
AT166889	1B19	14	0210 - 1
AT166899	5I2	8B	3360 - 51
AT166900	5I2	7B	3360 - 51
AT166919	3H2	18	2160 - 21
AT166920	3H21	22	2160 - 35
AT166920	3I2	1	2160 - 37
AT166920	3I4	31	2160 - 37B
AT166951	3H4	57	2160 - 23
AT166952	3H4	56	2160 - 23
AT166984	4D24	23	3160 - 35
AT166984	4E2	23	3160 - 37
AT166985	4D24	24	3160 - 35
AT166985	4E2	24	3160 - 37
AT167009	3H21	22	2160 - 35
AT167009	3I4	31	2160 - 37B
AT167032	3F7	1	1910 - 3
AT167044	5H12	5	3360 - 37
AT167057	1D10	14	0315 - 7
AT167063	3H6	1	2160 - 23B
AT167081	3F7	6	1910 - 3
AT167090	3F7	6	1910 - 3
AT167115	3F24	9	2004 - 2
AT167118	1C13	3	0250 - 13
AT167119	1C13	3	0250 - 13
AT167126	1C21	1	0250 - 21
AT167144	5D8	21	3315 - 15
AT167148	6C21	9	3360A - 37
AT167214	2G10	33	1676 - 5
AT167215	2G8	8	1676 - 3
AT167252	2E22	7	1674 - 3
AT167252	2F12	1	1674 - 17
AT167270	1I11	13	0510 - 3
AT167270	1I11	40	0510 - 3
AT167270	1I11	41	0510 - 3
AT167270	1I13	25	0510 - 3B
AT167273	1D10	6	0315 - 7
AT167325	1C9	1	0250 - 9
AT167332	2B21	13	0960 - 7
AT167333	1C13	22	0250 - 13
AT167360	1J1	8	0530 - 1
AT167360	1J2	8	0530 - 2
AT167399	2E9	1	1671 - 3
AT167399	2E9	22	1671 - 3
AT167399	2E11	1	1671 - 5
AT167399	2E11	24	1671 - 5
AT167481	3H6	33	2160 - 23B
AT167481	3I8	20	2160 - 41
AT167495	3H6	43	2160 - 23B
AT167495	3H6	47	2160 - 23B
AT167536	1I11	20	0510 - 3
AT167550	1B17	6	0201 - 1
AT167584	3E24	36	1830 - 35
AT167584	3F2	49	1830 - 37
AT167600	2C9	1	1011 - 1
AT167606	3I6	8	2160 - 39
AT167606	3I14	15	2160 - 47
AT167625	3B18	8A	1810 - 3
AT167718	6C2	32	3360A - 15
AT167718	6C7	32	3360A - 21
AT167718	6C8	..	3360A - 22
AT167747	3E24	18	1830 - 35
AT167754	1J2	8	0530 - 2
AT167782	1I11	27	0510 - 3
AT167782	1I13	4	0510 - 3B
AT167782	3D20	24	1830 - 7
AT167782	3D22	18	1830 - 9
AT167783	3B18	8A	1810 - 3
AT167803	3H4	46	2160 - 23
AT167827	5H12	4A	3360 - 37
AT167828	5H12	15	3360 - 37
AT167854	2C21	13	1115 - 5
AT167855	2C21	7	1115 - 5
AT167884	3I6	23B	2160 - 39
AT167884	3I8	22	2160 - 41
AT167890	2C15	2	1060 - 7
AT167903	3I2	12	2160 - 37
AT167903	3I2	20	2160 - 37
AT167904	5H12	4B	3360 - 37
AT167904	5H12	5	3360 - 37
AT167907	3H21	22	2160 - 35
AT167907	3I4	31	2160 - 37B
AT167912	3H21	22	2160 - 35
AT167912	3I4	31	2160 - 37B
AT167936	1C25	6	0250 - 25
AT167941	2D11	54	1320 - 5B
AT167943	2D11	54	1320 - 5B
AT167956	3E22	12	1830 - 33
AT167956	3E24	14	1830 - 35
AT168091	5F5	5	3340 - 9
AT168096	3H6	6	2160 - 23B
AT168097	3H6	11	2160 - 23B
AT168107	5G6	1	3360 - 3
AT168125	3F2	21	1830 - 37
AT168136	5F5	11B	3340 - 9
AT168136	5F9	21	3340 - 13
AT168138	3D24	17	1830 - 11
AT168138	3E2	25	1830 - 13
AT168155	4D20	27	3160 - 31
AT168156	4D20	12	3160 - 31
AT168206	2C13	3	1060 - 5
AT168206	2C15	3	1060 - 7
AT168225	1I8	13	0505 - 3
AT168263	1F9	5	0360 - 17
AT168278	3E24	18	1830 - 35
AT168278	3E24	20	1830 - 35
AT168320	3H6	12	2160 - 23B
AT168322	3H6	20	2160 - 23B
AT168323	3H6	21	2160 - 23B
AT168363	2F14	1	1674 - 19
AT168363	2F16	1	1674 - 19B
AT168435	1B17	6	0201 - 1
AT168457	5H12	15	3360 - 37
AT168485	2E2	3	1370 - 1
AT168536	1D12	26	0315 - 9
AT168537	1D12	9	0315 - 9
AT168539	1D12	13	0315 - 9
AT168540	1E6	15B	0341 - 15
AT168604	3D20	14	1830 - 7
AT168604	3D22	12	1830 - 9
AT168632	2C7	8	0960 - 18
AT168637	4B20	1	3102 - 7
AT168637	4B20	2	3102 - 7
AT168637	4B20	5	3102 - 7
AT168675	4D5	..	3160 - 16
AT168675	4D6	..	3160 - 17
AT168675	4D7	..	3160 - 18
AT168675	4D8	..	3160 - 19
AT168676	5H4	2	3360 - 29
AT168677	5H18	5	3360 - 43
AT168678	5H18	4	3360 - 43

NUMERICAL INDEX - CONTINUED

PART NO.	GRID	KEY	PAGE
AT168678	5H18	10	3360 - 43
AT168723	3F9	12	1910 - 5
AT168731	4D5	22	3160 - 16
AT168783	3F9	17	1910 - 5
AT168826	1E14	19	0350 - 1
AT168912	5E10	18	3315 - 35
AT168912	5E12	57	3315 - 35B
AT168913	5E14	7	3315 - 37
AT168913	5E14	14	3315 - 37
AT168916	5E18	32B	3315 - 41
AT168916	5E20	16	3315 - 43
AT168916	5E20	23	3315 - 43
AT168916	5E20	25	3315 - 43
AT168916	5E20	36	3315 - 43
AT168917	5D16	9	3315 - 23
AT168917	5D16	17	3315 - 23
AT168918	5D10	29B	3315 - 17
AT168918	5D22	24	3315 - 29
AT168918	5E16	16B	3315 - 39
AT168919	5D10	9	3315 - 17
AT168919	5D10	37	3315 - 17
AT168919	5D14	16	3315 - 21
AT168947	4C19	12	3160 - 4
AT168948	4C19	11	3160 - 4
AT168948	4C22	20	3160 - 8
AT168950	4C22	6	3160 - 8
AT169013	3B23	14	1810 - 7
AT169058	3C23	8B	1810 - 31
AT169072	1J7	19	0560 - 5
AT169086	5H20	14	3360 - 45
AT169087	4C8	24	3115 - 5
AT169087	4C10	8	3115 - 7
AT169087	4C10	20B	3115 - 7
AT169087	4C10	26	3115 - 7
AT169087	4C12	17	3115 - 9
AT169087	4C12	26B	3115 - 9
AT169087	5C16	1	3315 - 3
AT169087	5C18	18	3315 - 3B
AT169087	5C20	1	3315 - 5
AT169087	5C22	18	3315 - 5B
AT169087	5C24	5A	3315 - 7
AT169087	5C24	7	3315 - 7
AT169087	5D2	8	3315 - 9
AT169087	5D4	16	3315 - 11
AT169087	5D6	16	3315 - 13
AT169087	5D8	7	3315 - 15
AT169087	5D10	7	3315 - 17
AT169087	5D10	24	3315 - 17
AT169087	5D12	1	3315 - 19
AT169087	5D14	7	3315 - 21
AT169087	5D16	7	3315 - 23
AT169087	5D18	20	3315 - 25
AT169087	5D20	19	3315 - 27
AT169087	5D22	13	3315 - 29
AT169087	5E4	32	3315 - 31B
AT169087	5E8	32	3315 - 33B
AT169087	5E12	40	3315 - 35B
AT169087	5E14	5	3315 - 37
AT169087	5E18	24	3315 - 41
AT169087	5E20	24	3315 - 43
AT169094	3C23	14	1810 - 31
AT169178	1E9	32	0341 - 17
AT169181	2G20	2	1749 - 3
AT169181	2G20	5	1749 - 3
AT169181	2G20	8	1749 - 3
AT169183	2D11	54	1320 - 5B
AT169185	2D11	54	1320 - 5B
AT169215	5I10	22	3360 - 59
AT169215	5I12	23	3360 - 61
AT169216	5I6	7	3360 - 55
AT169268	4D12	6	3160 - 23
AT169269	4D12	10	3160 - 23
AT169272	4D12	17	3160 - 23
AT169301	5H14	15B	3360 - 39
AT169304	1D12	1	0315 - 9
AT169343	4C6	19	3115 - 3
AT169344	4C6	12	3115 - 3
AT169345	4C6	26	3115 - 3
AT169357	3H19	8	2160 - 33B
AT169373	4D12	21	3160 - 23
AT169385	3C2	21	1810 - 9B
AT169385	3C10	12	1810 - 17
AT169391	5F11	3	3340 - 15
AT169446	2D5	9	1313 - 3
AT169512	5E2	27	3315 - 31
AT169512	5E6	27	3315 - 33
AT169512	5E12	52	3315 - 35B
AT169512	5E14	2	3315 - 37
AT169512	5E18	2	3315 - 41
AT169512	5E20	2	3315 - 43
AT169553	3D16	7	1830 - 3
AT169555	4D5	12	3160 - 16
AT169557	5E18	19	3315 - 41
AT169557	5E20	19	3315 - 43
AT169591	4C12	..	3115 - 9
AT169603	5F13	3	3340 - 17
AT169608	5F13	3	3340 - 17
AT169610	5I12	7	3360 - 61
AT169618	2F8	23	1674 - 13
AT169619	3E12	10	1830 - 23
AT169622	2D5	8	1313 - 3
AT169624	3E2	21	1830 - 13
AT169659	5G25	16	3360 - 25
AT169675	4C14	12	3140 - 3
AT169724	3I8	41	2160 - 41
AT169770	1I11	13	0510 - 3
AT169770	1I13	25	0510 - 3B
AT169804	2G14	20	1740 - 5
AT169869	4C8	27A	3115 - 5
AT169869	4C8	27B	3115 - 5
AT169870	4C8	12A	3115 - 5
AT169870	4C8	12B	3115 - 5
AT169890	1J7	6	0560 - 5
AT169896	1C2	1	0250 - 2
AT169914	3C19	22	1810 - 27
AT169987	5G6	1	3360 - 3
AT169987	5G23	5	3360 - 22
AT169987	5G24	4	3360 - 23
AT169987	5H4	3	3360 - 29
AT170039	1J7	6	0560 - 5
AT170200	5F5	11B	3340 - 9
AT170200	5F9	21	3340 - 13
AT170204	1C9	1	0250 - 9
AT170205	1C9	1	0250 - 9
AT170206	1C9	6	0250 - 9
AT170208	1C9	6	0250 - 9
AT170209	1C9	4	0250 - 9
AT170226	1E9	16B	0341 - 17
AT170233	3H21	22	2160 - 35
AT170233	3I2	1	2160 - 37
AT170233	3I4	31	2160 - 37B
AT170444	3H6	42	2160 - 23B
AT170461	1J7	6	0560 - 5
AT170487	6C17	33	3360A - 33
AT170493	6C21	28	3360A - 37
AT170532	6C19	25	3360A - 35
AT170567	3H23	15	2160 - 35B
AT170785	3H6	23	2160 - 23B
AT170846	5I10	6	3360 - 59
AT170889	4B16	1	3102 - 3
AT170889	4B18	9	3102 - 5
AT170901	1J10	8	0641 - 1
AT170930	2C4	19	0960 - 15
AT170939	4D20	27	3160 - 31
AT170940	4D20	12	3160 - 31
AT170950	1I25	4	0520 - 7
AT171031	3F14	10	1921 - 3
AT171091	4D18	21	3160 - 29
AT171092	4D18	20	3160 - 29
AT171109	1B21	21B	0210 - 3
AT171139	2C4	18	0960 - 15
AT171139	2C4	19	0960 - 15
AT171139	3H6	32	2160 - 23B
AT171155	2D5	8	1313 - 3
AT171183	1B21	5B	0210 - 3
AT171200	6C21	24	3360A - 37
AT171217	2F2	4	1674 - 7
AT171217	2F10	1	1674 - 15
AT171218	2F2	4	1674 - 7
AT171218	2F8	1	1674 - 13
AT171247	2C19	17	1115 - 3
AT171249	6C17	22	3360A - 33
AT171397	3F7	1	1910 - 3
AT171397	3F7	6	1910 - 3
AT171397	3F7	10B	1910 - 3
AT171397	3F9	8	1910 - 5
AT171549	1D8	5	0315 - 5
AT171549	1D10	5	0315 - 7
AT171550	4C10	4	3115 - 7
AT171807	3E10	9	1830 - 21
AT171808	3E10	5	1830 - 21
AT171833	6C17	32	3360A - 33
AT171833	6C19	22	3360A - 35
AT171833	6C21	1	3360A - 37
AT171897	3C6	18	1810 - 13
AT171897	3C6	23	1810 - 13
AT171898	3C6	9	1810 - 13
AT171898	3C6	22	1810 - 13
AT172102	2C13	5	1060 - 5
AT172102	2C13	24	1060 - 5
AT172102	2C15	5	1060 - 7
AT172102	2C15	25	1060 - 7
AT172103	2C13	6	1060 - 5
AT172103	2C13	25	1060 - 5
AT172103	2C15	6	1060 - 7
AT172103	2C15	24	1060 - 7
AT172128	5I6	11	3360 - 55
AT172128	5I6	24	3360 - 55
AT172239	1I22	8	0520 - 4
AT172571	3F2	6B	1830 - 37
AT172612	4D18	2	3160 - 29
AT172612	4E2	1	3160 - 37
AT172614	4E2	7	3160 - 37
AT172615	4D18	1	3160 - 29
AT172623	2E11	29	1671 - 5
AT172677	3I16	14	2160 - 49
AT172678	3I16	13	2160 - 49
AT172679	3I16	8	2160 - 49
AT172708	3F11	6	1913 - 3
AT172721	4E2	2	3160 - 37
AT172779	3C25	2	1821 - 3

NUMERICAL INDEX - CONTINUED

PART NO.	GRID	KEY	PAGE
AT172779	3D6	4	1821 - 9
AT172877	3H6	38	2160 - 23B
AT172877	3I16	10	2160 - 49
AT172903	3C25	2	1821 - 3
AT172903	3D6	4	1821 - 9
AT172910	3C25	2	1821 - 3
AT172910	3D6	4	1821 - 9
AT173022	3D8	30	1821 - 11
AT173160	6C17	1	3360A - 33
AT173193	3C23	19	1810 - 31
AT173229	6C17	6	3360A - 33
AT173254	2E2	4	1370 - 1
AT173387	3D14	5	1822 - 3
AT173387	3D14	8	1822 - 3
AT173411	2C6	11	0960 - 17
AT173548	5F13	3	3340 - 17
AT173548	5J2	2B	3360 - 75
AT173548	5J4	3	3360 - 77
AT173548	5J10	22B	3360 - 83
AT173548	5J12	32	3360 - 85
AT173565	6C17	10	3360A - 33
AT173675	5F19	20	3340 - 23
AT173675	5I14	20	3360 - 63
AT173676	5I14	17	3360 - 63
AT173677	5F19	20	3340 - 23
AT173677	5I14	21	3360 - 63
AT173679	3H6	33	2160 - 23B
AT173679	3I8	20	2160 - 41
AT173689	3C2	24	1810 - 9B
AT173690	3C2	20	1810 - 9B
AT173704	3D6	17	1821 - 9
AT173705	3D6	17	1821 - 9
AT173706	3D6	17	1821 - 9
AT173734	4B24	32	3102 - 11
AT173769	4D6	9	3160 - 17
AT173861	2F10	1	1674 - 15
AT173862	2F8	1	1674 - 13
AT173883	6C17	30	3360A - 33
AT173883	6C19	23	3360A - 35
AT173883	6C21	2	3360A - 37
AT173884	6C17	31	3360A - 33
AT173884	6C19	24	3360A - 35
AT173884	6C21	3	3360A - 37
AT173906	3E14	1	1830 - 25
AT173908	3C4	1	1810 - 11
AT173908	3C4	2	1810 - 11
AT173908	3C4	13	1810 - 11
AT173908	3C4	14	1810 - 11
AT173908	3C4	28	1810 - 11
AT173909	6C17	26	3360A - 33
AT173909	6C19	15	3360A - 35
AT173909	6C21	5	3360A - 37
AT173978	3D22	2	1830 - 9
AT174018	5H18	5	3360 - 43
AT174019	5H18	4	3360 - 43
AT174019	5H18	10	3360 - 43
AT174234	5F13	3	3340 - 17
AT174337	3C4	12B	1810 - 11
AT174348	3C23	15	1810 - 31
AT174352	2G17	5	1746 - 4
AT174416	5E2	3	3315 - 31
AT174416	5E6	3	3315 - 33
AT174416	5E12	43	3315 - 35B
AT174417	5E2	29	3315 - 31
AT174417	5E6	29	3315 - 33
AT174417	5E10	11	3315 - 35
AT174632	3D22	1	1830 - 9
AT174711	3D8	5	1821 - 11
AT174772	3E4	2	1830 - 15
AT174772	3E6	2	1830 - 17
AT174773	3E6	29	1830 - 17
AT174774	3E4	10	1830 - 15
AT174774	3E6	10	1830 - 17
AT174775	3E4	9	1830 - 15
AT174775	3E6	9	1830 - 17
AT174777	3D16	12	1830 - 3
AT174783	2F22	1	1674 - 25
AT174785	3F4	21	1830 - 39
AT174786	3F4	20	1830 - 39
AT174791	3F4	6	1830 - 39
AT174830	2E11	29	1671 - 5
AT175073	5F13	3	3340 - 17
AT175073	5I4	22	3360 - 53
AT175073	5I16	19	3360 - 65
AT175194	2E15	1	1672 - 5
AT175329	3B23	14	1810 - 7
AT175330	3C19	22	1810 - 27
AT175348	3D6	10	1821 - 9
AT175349	3D6	6	1821 - 9
AT175350	3D8	13	1821 - 11
AT175350	3D12	15	1821 - 15
AT175352	3D10	21	1821 - 13
AT175353	3D10	16	1821 - 13
AT175356	5E2	12	3315 - 31
AT175356	5E6	12	3315 - 33
AT175356	5E12	37	3315 - 35B
AT175356	5E18	26	3315 - 41
AT175356	5E20	26	3315 - 43
AT175380	2G8	26	1676 - 3
AT175381	2G8	26	1676 - 3
AT175428	4C8	33B	3115 - 5
AT175436	3D10	5	1821 - 13
AT175438	3D10	13	1821 - 13
AT175443	3D6	9	1821 - 9
AT175603	2E16	8	1673 - 1
AT175616	2C7	8	0960 - 18
AT175744	1I22	8	0520 - 4
AT175744	1I22	9	0520 - 4
AT175759	3E4	1	1830 - 15
AT175759	3E6	1	1830 - 17
AT175760	3E4	3	1830 - 15
AT175760	3E6	3	1830 - 17
AT175763	3E14	5	1830 - 25
AT175764	3E14	4	1830 - 25
AT175765	3E14	3	1830 - 25
AT175766	3E14	2	1830 - 25
AT175768	3E6	28	1830 - 17
AT175769	3E4	11	1830 - 15
AT175769	3E6	11	1830 - 17
AT175770	3E4	5	1830 - 15
AT175770	3E6	5	1830 - 17
AT175771	3E14	12	1830 - 25
AT175773	3E4	6	1830 - 15
AT175773	3E6	6	1830 - 17
AT175782	3E4	7	1830 - 15
AT175782	3E6	7	1830 - 17
AT175783	3E4	8	1830 - 15
AT175783	3E6	8	1830 - 17
AT175789	3E6	47	1830 - 17
AT175790	3E6	48	1830 - 17
AT175934	3B18	8A	1810 - 3
AT175934	3B18	8B	1810 - 3
AT175938	3B18	8A	1810 - 3
AT175938	3B18	8B	1810 - 3
AT175954	3D6	10	1821 - 9
AT175955	3D6	6	1821 - 9
AT175958	5E4	44B	3315 - 31B
AT175958	5E4	60	3315 - 31B
AT175958	5E8	44B	3315 - 33B
AT175958	5E8	59	3315 - 33B
AT175958	5E10	18	3315 - 35
AT175958	5E12	57	3315 - 35B
AT175965	5E22	5	3315 - 45
AT176085	5F7	7	3340 - 11
AT176162	6C21	10	3360A - 37
AT176228	6C21	19	3360A - 37
AT176490	5F9	7	3340 - 13
AT176497	2G14	15	1740 - 5
AT176530	6C21	22	3360A - 37
AT176553	2F18	1	1674 - 21
AT176557	5F5	5	3340 - 9
AT176621	2C17	15	1115 - 1
AT176686	5C16	11	3315 - 3
AT176686	5C20	11	3315 - 5
AT176761	5F5	11B	3340 - 9
AT176761	5F9	21	3340 - 13
AT176781	2D12	1	1320 - 6
AT176781	2D12	2	1320 - 6
AT176781	2D12	3	1320 - 6
AT176781	2D12	4	1320 - 6
AT176781	2D12	5	1320 - 6
AT176827	2E16	11	1673 - 1
AT177064	3C4	12B	1810 - 11
AT177227	3C4	21	1810 - 11
AT177481	3E24	36	1830 - 35
AT177481	3F4	40	1830 - 39
AT177780	5E4	58	3315 - 31B
AT177780	5E8	57	3315 - 33B
AT177780	5E12	55	3315 - 35B
AT177786	3E4	2	1830 - 15
AT177786	3E6	2	1830 - 17
AT177787	3E4	29	1830 - 15
AT177787	3E6	43	1830 - 17
AT177879	1F7	4	0360 - 15
AT178078	3C2	20	1810 - 9B
AT178078	3C8	45	1810 - 15
AT178080	3C2	24	1810 - 9B
AT178080	3C10	39	1810 - 17
AT178240	5C18	2	3315 - 3B
AT178240	5C22	2	3315 - 5B
AT178272	5H8	30	3360 - 33
AT178359	5H4	2	3360 - 29
AT178499	1B14	1	0120 - 2
AT178643	3F20	31	2001 - 3
AT178686	5D10	20	3315 - 17
AT178686	5D18	22	3315 - 25
AT178686	5D20	6	3315 - 27
AT178686	5D22	22	3315 - 29
AT178686	5E16	8	3315 - 39
AT178734	3C10	51	1810 - 17
AT178770	5D10	36	3315 - 17
AT178770	5D22	24	3315 - 29
AT178770	5E16	23	3315 - 39
AT178773	5E4	60	3315 - 31B
AT178773	5E8	59	3315 - 33B
AT178773	5E10	18	3315 - 35
AT178773	5E12	57	3315 - 35B
AT178774	5E14	7	3315 - 37
AT178774	5E14	14	3315 - 37
AT178775	5E18	16	3315 - 41
AT178775	5E18	23	3315 - 41

NUMERICAL INDEX - CONTINUED

PART NO.	GRID	KEY	PAGE
AT178775	5E18	25	3315 - 41
AT178775	5E18	36	3315 - 41
AT178775	5E20	16	3315 - 43
AT178775	5E20	23	3315 - 43
AT178775	5E20	25	3315 - 43
AT178775	5E20	36	3315 - 43
AT178776	5D10	9	3315 - 17
AT178776	5D10	37	3315 - 17
AT178820	5C18	7	3315 - 3B
AT178820	5C22	7	3315 - 5B
AT178840	2D23	1	1369 - 11
AT178842	2D23	1	1369 - 11
AT178843	2D23	1	1369 - 11
AT178844	2D23	1	1369 - 11
AT178892	3E4	6	1830 - 15
AT178892	3E4	14	1830 - 15
AT178892	3E6	6	1830 - 17
AT178892	3E6	14	1830 - 17
AT179130	5B23	6	3302 - 2A
AT179364	3G18	4	2160 - 13A
AT179424	5C18	19	3315 - 3B
AT179513	5E2	12	3315 - 31
AT179513	5E6	12	3315 - 33
AT179513	5E12	37	3315 - 35B
AT179513	5E18	26	3315 - 41
AT179513	5E20	26	3315 - 43
AT179533	5C18	16	3315 - 3B
AT179533	5C22	16	3315 - 5B
AT179572	5C18	21	3315 - 3B
AT179572	5C22	21	3315 - 5B
AT179620	2F10	1	1674 - 15
AT179621	2F8	1	1674 - 13
AT180071	5C18	27	3315 - 3B
AT180073	5C22	24	3315 - 5B
AT180293	3F23	2	2004 - 1
AT180333	2D23	1	1369 - 11
AT180334	2D23	1	1369 - 11
AT180335	2D23	1	1369 - 11
AT180344	2D25	1	1369 - 13
AT180471	5B24	14	3302 - 3
AT180471	5C2	15	3302 - 5
AT180471	5C4	15	3302 - 7
AT180471	5C6	15	3302 - 8A
AT180471	5C10	7	3302 - 11B
AT180472	5B24	14	3302 - 3
AT180472	5C2	15	3302 - 5
AT180472	5C4	15	3302 - 7
AT180472	5C6	15	3302 - 8A
AT180472	5C10	8	3302 - 11B
AT180833	1E7	1	0341 - 15A
AT180834	1E7	1	0341 - 15A
AT180884	1E4	3	0341 - 13
AT180884	1E14	3	0350 - 1
AT180884	1F7	12	0360 - 15
AT180916	1D4	10	0315 - 1
AT181562	3B20	12	1810 - 5
AT181719	5B24	14	3302 - 3
AT181719	5C10	6	3302 - 11B
AT181720	5C2	15	3302 - 5
AT181720	5C10	6	3302 - 11B
AT181721	5C4	15	3302 - 7
AT181721	5C10	6	3302 - 11B
AT181722	5C4	15	3302 - 7
AT181722	5C10	6	3302 - 11B
AT181723	5C6	15	3302 - 8A
AT181723	5C10	6	3302 - 11B
AT182127	5E22	5	3315 - 45
AT182200	3E4	13	1830 - 15
AT182200	3E6	13	1830 - 17
AT182387	1B24	17	0230 - 3
AT182388	1B24	22	0230 - 3
AT182389	2E22	2A	1674 - 3
AT182389	2E22	2B	1674 - 3
AT183016	2D24	1	1369 - 12
AT183637	3D6	2	1821 - 9
AT183638	3D6	12	1821 - 9
AT183938	5D10	36	3315 - 17
AT183938	5D22	24	3315 - 29
AT183938	5E16	23	3315 - 39
AT183939	5D4	27	3315 - 11
AT183939	5D4	28	3315 - 11
AT183939	5D10	9	3315 - 17
AT183939	5D10	36	3315 - 17
AT183939	5D10	37	3315 - 17
AT183941	5E4	44B	3315 - 31B
AT183941	5E4	60	3315 - 31B
AT183941	5E8	44B	3315 - 33B
AT183941	5E8	59	3315 - 33B
AT183941	5E10	18	3315 - 35
AT183941	5E12	57	3315 - 35B
AT183942	5E8	59	3315 - 33B
AT183942	5E14	7	3315 - 37
AT183942	5E14	14	3315 - 37
AT183943	5E18	16	3315 - 41
AT183943	5E18	23	3315 - 41
AT183943	5E18	25	3315 - 41
AT183943	5E18	36	3315 - 41
AT183943	5E20	16	3315 - 43
AT183943	5E20	23	3315 - 43
AT183943	5E20	25	3315 - 43
AT183943	5E20	36	3315 - 43
AT183952	5D16	9	3315 - 23
AT183952	5D16	17	3315 - 23
AT184192	5D10	36	3315 - 17
AT184192	5D22	24	3315 - 29
AT184192	5E4	60	3315 - 31B
AT184192	5E8	59	3315 - 33B
AT184192	5E12	57	3315 - 35B
AT184192	5E16	23	3315 - 39
AT184192	5E18	36	3315 - 41
AT184192	5E20	36	3315 - 43
AT184192	5E22	5	3315 - 45
AT184206	2E3	2	1399 - 3
AT184206	3G18	8	2160 - 13A
AT184432	2C11	10	1060 - 3
AT184432	2C11	34	1060 - 3
AT184432	2C11	..	1060 - 3
AT184869	1F3	..	0360 - 10
AT185250	5C24	16	3315 - 7
AT185250	5D2	6	3315 - 9
AT186152	3D6	2	1821 - 9
AT186156	3D6	12	1821 - 9
AT186400	5H8	30	3360 - 33
AT186760	3F21	1	2002 - 1
AT186908	5E2	3	3315 - 31
AT186908	5E6	3	3315 - 33
AT186908	5E12	43	3315 - 35B
AT186909	5E2	29	3315 - 31
AT186909	5E6	29	3315 - 33
AT186909	5E10	11	3315 - 35
AT187347	1B14	1	0120 - 2
AT188465	3C8	44	1810 - 15
AT188549	5H8	30	3360 - 33
AT189413	4D10	..	3160 - 21
AT189413	4D12	..	3160 - 23
AT189413	5H4	2	3360 - 29
AT189413	5H5	..	3360 - 30
AT190330	5H8	3	3360 - 33
AT190330	5H8	13	3360 - 33
AT190330	5H8	30	3360 - 33
AT190333	5H8	8	3360 - 33
AT190333	5H8	9	3360 - 33
AT190333	5H8	11	3360 - 33
AT190333	5H8	15	3360 - 33
AT190333	5H8	16	3360 - 33
AT190334	5H8	4	3360 - 33
AT190334	5H8	8	3360 - 33
AT190334	5H8	9	3360 - 33
AT190334	5H8	11	3360 - 33
AT190334	5H8	12	3360 - 33
AT190741	5H8	..	3360 - 33
AT190880	4B24	1	3102 - 11
AT190880	4B24	2	3102 - 11
AT190880	4B24	18	3102 - 11
AT190880	4C2	1	3102 - 13
AT190880	4E3	1	3160 - 38
AT190880	4E3	2	3160 - 38
AT190880	4E3	5	3160 - 38
AT190880	4E3	7	3160 - 38
AT190880	4E3	12	3160 - 38
AT190880	4E3	14	3160 - 38
AT190880	4E4	14	3160 - 38A
AT190881	4E4	1	3160 - 38A
AT190898	4E4	15	3160 - 38A
AT190900	4B24	3	3102 - 11
AT190900	4C2	3	3102 - 13
AT191243	3F20	6	2001 - 3
AT191243	3F20	29	2001 - 3
AT191487	2C6	20	0960 - 17
AT191487	2C6	21	0960 - 17
AT191487	2C6	22	0960 - 17
AT191910	2D11	54	1320 - 5B
AT191910	2G10	29	1676 - 5
AT191911	2D11	54	1320 - 5B
AT192004	5C10	6	3302 - 11B
AT192004	5C12	14	3302 - 11D
AT192006	5C10	6	3302 - 11B
AT192006	5C12	14	3302 - 11D
AT192008	5C10	6	3302 - 11B
AT192008	5C12	14	3302 - 11D
AT192009	5C10	6	3302 - 11B
AT192009	5C12	14	3302 - 11D
AT192010	5C10	6	3302 - 11B
AT192010	5C12	14	3302 - 11D
AT192120	5F1	4	3340 - 4
AT192262	5C10	6	3302 - 11B
AT192262	5C12	14	3302 - 11D
AT192262	5C12	15	3302 - 11D
AT193495	5E24	2	3340 - 2
AT193500	3D16	13B	1830 - 3
AT195301	2G8	3	1676 - 3
AT195570	2B21	13	0960 - 7
AT195573	2B21	4	0960 - 7
AT195669	5F1	4	3340 - 4
AT196522	3C6	4	1810 - 13
AT196522	3C6	7	1810 - 13
AT196804	1J10	8	0641 - 1
AT197026	1B13	3	0110 - 1
AT21108	1F16	20	0401 - 3
AT21110	1F16	20	0401 - 3
AT21112	1F16	20	0401 - 3

NUMERICAL INDEX - CONTINUED

PART NO.	GRID	KEY	PAGE
AT21114	1F16	20	0401 - 3
AT21130	1F16	21	0401 - 3
AT21132	1F16	21	0401 - 3
AT21134	1F16	21	0401 - 3
AT21136	1F16	21	0401 - 3
AT21139	1F16	21	0401 - 3
AT21140	1F16	20	0401 - 3
AT21140	1F17	8	0401 - 3A
AT21191	1G7	2	0404 - 10
AT21191	1G7	5	0404 - 10
AT216349	1D14	25	0315 - 11
AT220393	2E15	1	1672 - 5
AT220394	2E15	1	1672 - 5
AT227669	3C4	22	1810 - 11
AT22919	1G7	5	0404 - 10
AT24252	1F15	18	0401 - 2
AT25226	1B13	2	0110 - 1
AT25226	1B14	2	0120 - 2
AT27164	1J1	1	0530 - 1
AT302762	2G8	13	1676 - 3
AT303189	2D23	1	1369 - 11
AT309102	1B13	1	0110 - 1
AT309105	1B14	1	0120 - 2
AT309106	1B14	1	0120 - 2
AT309111	1B14	1	0120 - 2
AT309112	1B13	1	0110 - 1
AT309303	1C9	1	0250 - 9
AT309306	1C9	6	0250 - 9
AT309307	1C9	4	0250 - 9
AT310291	1B14	1	0120 - 2
AT312452	3C14	21	1810 - 21
AT314060	3C14	21	1810 - 21
AT315888	2C9	1	1011 - 1
AT317673	2E12	1	1672 - 2
AT317673	2E12	22	1672 - 2
AT32333	1G23	25	0413 - 5
AT32333	1H12	7	0420 - 1
AT32333	1H14	3	0420 - 3
AT32757	5E25	13	3340 - 3
AT34816	1E11	53	0341 - 19
AT35831	3D16	7	1830 - 3
AT36635	2G14	8	1740 - 5
AT37037	1B13	2	0110 - 1
AT37037	1B14	2	0120 - 2
AT37478	1I22	8	0520 - 4
AT40571	2D3	2	1313 - 1
AT40571	2D3	5	1313 - 1
AT40976	5F5	8	3340 - 9
AT40976	5F9	5	3340 - 13
AT42386	2D14	..	1330 - 2
AT42676	3I14	24	2160 - 47
AT44188	3D2	26	1821 - 5
AT44195	3D24	23	1830 - 11
AT44195	3E2	6	1830 - 13
AT44195	3G1	3	2005 - 2
AT44378	1I19	2	0520 - 1
AT44378	1I21	2	0520 - 3
AT44378	2E3	9	1399 - 3
AT48387	3C23	8A	1810 - 31
AT49300	4C10	8	3115 - 7
AT49300	4C12	17	3115 - 9
AT49300	5C20	1	3315 - 5
AT49300	5C24	7	3315 - 7
AT49300	5D4	16	3315 - 11
AT49300	5D6	16	3315 - 13
AT49300	5D8	7	3315 - 15
AT49300	5D10	7	3315 - 17
AT49300	5D10	24	3315 - 17
AT49300	5D18	20	3315 - 25
AT49300	5E4	32	3315 - 31B
AT49300	5E8	32	3315 - 33B
AT50923	1I20	4	0520 - 2
AT51878	1B14	1	0120 - 2
AT53010	3F7	10A	1910 - 3
AT53141	3I12	16	2160 - 45
AT53142	3I12	12	2160 - 45
AT53143	3I12	15	2160 - 45
AT53145	3I12	26	2160 - 45
AT53145	3I12	29	2160 - 45
AT53146	3I12	26	2160 - 45
AT56125	2D21	..	1369 - 7
AT56658	1I20	2	0520 - 2
AT56658	1I22	10	0520 - 4
AT56771	1I11	17	0510 - 3
AT56771	3C21	9	1810 - 29
AT56771	3D18	18A	1830 - 5
AT56771	3D20	4	1830 - 7
AT58147	3C14	13	1810 - 21
AT58741	4C22	6	3160 - 8
AT59593	3I12	26	2160 - 45
AT59593	3I12	33	2160 - 45
AT59593	3I14	11	2160 - 47
AT60644	1E24	6	0360 - 7
AT61613	3I12	27	2160 - 45
AT63106	2C9	1	1011 - 1
AT63265	2F22	3	1674 - 25
AT63266	2F22	2	1674 - 25
AT63452	1B14	1	0120 - 2
AT63496	1C25	2	0250 - 25
AT64180	1E9	24	0341 - 17
AT64180	1E18	1	0350 - 5
AT65004	2D19	..	1369 - 5
AT65087	1I21	6	0520 - 3
AT65088	1I21	4	0520 - 3
AT65088	2E3	10	1399 - 3
AT65241	1J5	12	0560 - 3
AT65241	1J7	23	0560 - 5
AT65296	1I19	4	0520 - 1
AT65296	2E3	10	1399 - 3
AT65746	1E2	18	0341 - 11
AT66133	1F5	7	0360 - 13
AT66134	1F5	5	0360 - 13
AT66136	1B13	1	0110 - 1
AT66231	1E16	3	0350 - 3
AT66232	1E16	5	0350 - 3
AT66370	1B24	17	0230 - 3
AT66371	1B24	22	0230 - 3
AT66458	1F2	7	0360 - 9
AT66459	1F2	19	0360 - 9
AT66461	1F2	20	0360 - 9
AT66481	3C14	21	1810 - 21
AT66517	5E25	15	3340 - 3
AT66518	5E25	4	3340 - 3
AT66632	2D13	..	1330 - 1
AT66766	3B25	30	1810 - 9
AT66805	1B13	1	0110 - 1
AT67085	1F5	8	0360 - 13
AT67734	1G9	2A	0407 - 1B
AT67734	1G9	2B	0407 - 1B
AT67957	1E22	4	0360 - 5
AT67957	2E3	1	1399 - 3
AT67958	1E22	8	0360 - 5
AT68613	3F24	4	2004 - 2
AT69017	3H15	16	2160 - 31
AT69845	3G23	36	2160 - 19
AT69938	2C7	8	0960 - 18
AT69969	2E22	2A	1674 - 3
AT71473	1I21	5	0520 - 3
AT71474	1I19	5	0520 - 1
AT72276	1E18	27	0350 - 5
AT72624	1J2	11	0530 - 2
AT73296	1I6	1	0505 - 1
AT73984	1B14	1	0120 - 2
AT73986	1D21	4	0341 - 5
AT73990	1D21	21	0341 - 5
AT73994	1E4	6	0341 - 13
AT74103	2C13	7	1060 - 5
AT74103	3H15	19	2160 - 31
AT74127	5G8	21	3360 - 7
AT74127	5G14	21	3360 - 13
AT74127	5G16	18	3360 - 15
AT74127	5G16	21	3360 - 15
AT74127	5G18	24	3360 - 17
AT74127	5G21	24	3360 - 20
AT74133	5G20	10	3360 - 19
AT74173	1J1	8	0530 - 1
AT74173	1J2	8	0530 - 2
AT74543	1H8	6	0417 - 2
AT74891	1B13	1	0110 - 1
AT74891	1B13	3	0110 - 1
AT74936	2E16	7	1673 - 1
AT74938	2E16	4	1673 - 1
AT74940	1I6	9	0505 - 1
AT75311	3C6	16	1810 - 13
AT75445	3I14	25	2160 - 47
AT75557	3G21	29	2160 - 17
AT75688	4C10	10	3115 - 7
AT75731	1D17	14	0341 - 1
AT75769	3I6	29	2160 - 39
AT75769	3I8	8	2160 - 41
AT75874	3C25	12	1821 - 3
AT76182	1C3	1	0250 - 3
AT76183	1C3	4	0250 - 3
AT76998	1I9	9	0510 - 1
AT76998	1I13	19	0510 - 3B
AT77699	1F2	15	0360 - 9
AT77700	1F2	22	0360 - 9
AT78371	4C22	4	3160 - 8
AT78527	4D12	23	3160 - 23
AT78603	3F2	1	1830 - 37
AT78603	3F4	1	1830 - 39
AT79491	3H6	43	2160 - 23B
AT79697	2D21	..	1369 - 7
AT79722	6C2	..	3360A - 15
AT79722	6C7	..	3360A - 21
AT79723	6C2	19	3360A - 15
AT79728	6C7	19	3360A - 21
AT79754	1B25	11	0230 - 4
AT79755	1B25	9	0230 - 4
AT79756	1B25	10	0230 - 4
AT79961	3F2	39	1830 - 37
AT80098	6C2	14	3360A - 15
AT80099	6C7	14	3360A - 21
AT80224	6C21	17	3360A - 37
AT82210	3I6	13	2160 - 39
AT82210	3I8	10	2160 - 41
AT82797	5F14	4	3340 - 18
AT82797	5F14	5	3340 - 18
AT82866	3G21	6	2160 - 17
AT83174	5D6	20	3315 - 13
AT83174	5D8	19	3315 - 15

NUMERICAL INDEX - CONTINUED

PART NO.	GRID	KEY	PAGE
AT83174	5G24	1	3360 - 23
AT83174	5H6	1	3360 - 31
AT83613	1J2	9	0530 - 2
AT84174	6C7	32	3360A - 21
AT84174	6C8	10	3360A - 22
AT84175	6C2	12	3360A - 15
AT84175	6C7	12	3360A - 21
AT84176	6C7	13	3360A - 21
AT84216	3D2	11	1821 - 5
AT84224	3D2	24	1821 - 5
AT84225	3D4	62	1821 - 7
AT84226	3D4	55	1821 - 7
AT84228	3D4	47	1821 - 7
AT84229	3D4	60	1821 - 7
AT84231	3D2	19A	1821 - 5
AT84266	3E22	12	1830 - 33
AT84713	1C15	1	0250 - 15
AT85174	1D21	7	0341 - 5
AT85174	2F12	27	1674 - 17
AT85174	2F14	27	1674 - 19
AT85174	2F16	27	1674 - 19B
AT85197	2D20	9	1369 - 6
AT85506	1E9	1	0341 - 17
AT85506	1E9	9	0341 - 17
AT86422	4B18	5	3102 - 5
AT86422	4B22	3	3102 - 9
AT86425	5F13	5	3340 - 17
AT86426	1B24	12	0230 - 3
AT86427	4B18	7	3102 - 5
AT86427	4B22	7	3102 - 9
AT86544	1C7	8	0250 - 7
AT86545	1C7	6	0250 - 7
AT86546	1C7	6	0250 - 7
AT86950	1D15	2	0315 - 12
AT86988	1G6	1	0404 - 9
AT86989	1G6	1	0404 - 9
AT87527	3C2	9	1810 - 9B
AT87556	2E18	8	1673 - 3
AT87556	2E20	7	1673 - 5
AT87558	3C2	11	1810 - 9B
AT87559	3C2	12	1810 - 9B
AU13551	5B24	7	3302 - 3
AU13558	5E23	6	3340 - 1
AU13769	5B21	4	3301 - 1
AU149810	2B15	..	0960 - 1A
AU43853	3C14	14	1810 - 21
AZ23708	5F7	5	3340 - 11
A24073	4B24	2	3102 - 11
A24073	4B24	18	3102 - 11
A24073	4C2	1	3102 - 13
A31870	1E13	2	0342 - 1
A3190R	3G9	32	2160 - 5
A3190R	3G15	11	2160 - 11
A3190R	6C1	5	3360A - 14
A3190R	6C6	5	3360A - 20
A3581R	5F1	12	3340 - 4
A3581R	5F1	14	3340 - 4
A3606R	1E22	1	0360 - 5
A3606R	2D17	..	1369 - 3
A3910R	1G18	6	0409 - 3
A3917R	1F3	15	0360 - 10
A3917R	1F5	6	0360 - 13
A3917R	1F7	5	0360 - 15
A3917R	2C7	6	0960 - 18
A3917R	2D13	..	1330 - 1
A3917R	2D17	..	1369 - 3
A3917R	3I12	6	2160 - 45
A3917R	4C20	10	3160 - 5
A3917R	5G10	5	3360 - 9
A3917R	5G12	5	3360 - 11
A3917R	5G19	1	3360 - 18
A3917R	5G20	5	3360 - 19
A4270R	3D24	18	1830 - 11
A4365R	2D13	..	1330 - 1
A4365R	2D17	..	1369 - 3
A4365R	3F2	20	1830 - 37
A4365R	3F2	31	1830 - 37
A4730R	2D17	..	1369 - 3
A4827R	1F21	11	0402 - 5
A48970	3C6	7	1810 - 13
A49232	5I6	4	3360 - 55
BP12214	1D10	19	0315 - 7
BP12214	1D12	16	0315 - 9
BP13712	3B23	18	1810 - 7
BP13712	3C19	8	1810 - 27
BP13712	3F20	10	2001 - 3
BU10758	5B21	5	3301 - 1
B10937	3I14	21	2160 - 47
B15646	2D13	..	1330 - 1
B177R	2C11	21	1060 - 3
B2762R	2D17	..	1369 - 3
B28042	5C24	13	3315 - 7
B28042	5D2	4	3315 - 9
B28163	3D4	33	1821 - 7
B28568	5F23	6	3340 - 27
B28568	6C2	31	3360A - 15
B28568	6C7	31	3360A - 21
B32585	1I11	26	0510 - 3
B32585	1I13	5	0510 - 3B
B3690R	2C7	2	0960 - 18
B3690R	2D17	..	1369 - 3
B5235H	1D15	12	0315 - 12
CD12569	2D11	49	1320 - 5B
CD14148	2D7	16	1320 - 3
CD16045	1H24	4	0429 - 2
C15104	2C7	1	0960 - 18
C15107	2C7	3	0960 - 18
C16054	2G17	4	1746 - 4
C16054	4D20	30	3160 - 31
C16054	5H14	5	3360 - 39
C16054	5H24	1	3360 - 49
C3937E	1E14	14	0350 - 1
C985R	3D24	20	1830 - 11
DD12120	1F19	2	0402 - 3
DSO345	2D23	1	1369 - 11
DSO346	2D23	1	1369 - 11
DT2127W	1B22	10	0230 - 1
D10259	1E14	1	0350 - 1
D2361R	2C11	27	1060 - 3
ET14808	3I12	21	2160 - 45
E12379	2E2	6	1370 - 1
E14814	1J5	6	0560 - 3
E45229	3C25	8	1821 - 3
E46066	2G8	2	1676 - 3
E46066	3D16	10	1830 - 3
E49244	5J12	11	3360 - 85
E69392	1F16	23	0401 - 3
E73240	2F8	32	1674 - 13
E73240	2F10	21	1674 - 15
E73240	2F12	22	1674 - 17
F1056R	2D17	..	1369 - 3
F1430R	4E6	11	3160 - 39
F1430R	4E7	11	3160 - 40
F1430R	4E8	11	3160 - 41
F1430R	4E9	11	3160 - 42
F1430R	5J14	11	3360 - 87
F1430R	5J16	11	3360 - 89
F1430R	6B15	11	3360A - 3
F1430R	6B17	11	3360A - 5
F1870R	1D21	26	0341 - 5
F1870R	2D17	..	1369 - 3
F1870R	3G13	23	2160 - 9
F1870R	3G15	14	2160 - 11
F2367R	1D21	36	0341 - 5
F2367R	1E2	10	0341 - 11
F2367R	1E11	36	0341 - 19
F2653R	2C17	7	1115 - 1
F2863R	2C11	17	1060 - 3
F2863R	4C6	10	3115 - 3
F2863R	4C12	16	3115 - 9
F3171R	2D17	..	1369 - 3
F3220R	1B21	10	0210 - 3
F3353R	2D17	..	1369 - 3
F3450R	5J10	8	3360 - 83
F3607R	5B23	2	3302 - 2A
F950R	4E10	11	3160 - 43
F950R	4E11	11	3160 - 44
F950R	5I17	15	3360 - 66
F950R	5I18	15	3360 - 67
F950R	5I20	28	3360 - 69
F950R	5I22	28	3360 - 71
F950R	6B18	11	3360A - 6
F950R	6B20	11	3360A - 8
F950R	6C13	11	3360A - 29
F950R	6C15	10	3360A - 31
H104855	2F24	9	1674 - 27
H110232	3F7	19	1910 - 3
H110232	3F9	15	1910 - 5
H111706	3B20	14	1810 - 5
H121168	4B24	11	3102 - 11
H121168	4C2	11	3102 - 13
H129201	5E2	19	3315 - 31
H129201	5E6	19	3315 - 33
H129201	5E12	46	3315 - 35B
H130192	6C21	6	3360A - 37
H135156	4B24	10	3102 - 11
H135156	4C2	10	3102 - 13
H140812	5J2	27	3360 - 75
H140812	6B23	27	3360A - 11
H140816	5J2	12	3360 - 75
H140816	5J4	14	3360 - 77
H140816	5J12	20	3360 - 85
H140817	6B23	18	3360A - 11
H140817	6B25	18	3360A - 13
H140818	5J2	13	3360 - 75
H140818	5J4	15	3360 - 77
H140818	5J6	8	3360 - 79
H140818	5J8	8	3360 - 81
H140818	5J12	19	3360 - 85
H140819	6B23	17	3360A - 11
H140819	6B25	17	3360A - 13
H140820	5J2	11	3360 - 75
H140820	5J4	13	3360 - 77
H140820	5J12	18	3360 - 85
H140821	6B23	23	3360A - 11
H140822	6B23	19	3360A - 11
H140822	6B25	19	3360A - 13
H140823	5J2	14	3360 - 75
H140823	5J4	16	3360 - 77
H140823	5J12	23	3360 - 85
H140824	5J2	10	3360 - 75

NUMERICAL INDEX - CONTINUED

PART NO.	GRID	KEY	PAGE
H140824	5J4	12	3360 - 77
H140824	5J12	21	3360 - 85
H140825	5J2	31	3360 - 75
H140825	6B23	31	3360A - 11
H140826	5J2	15	3360 - 75
H140826	5J4	17	3360 - 77
H140826	5J12	3	3360 - 85
H140827	5J2	30	3360 - 75
H140827	6B23	30	3360A - 11
H140830	2B16	13	0960 - 2
H141511	5J2	26	3360 - 75
H141511	6B23	26	3360A - 11
H141559	6B23	12	3360A - 11
H141559	6B25	12	3360A - 13
H141980	5J2	28	3360 - 75
H141980	6B23	28	3360A - 11
H142020	5J6	11	3360 - 79
H142020	5J8	11	3360 - 81
H142024	5J6	6	3360 - 79
H142024	5J8	6	3360 - 81
H142025	5J6	7	3360 - 79
H142025	5J8	7	3360 - 81
H142026	5J6	9	3360 - 79
H142026	5J6	..	3360 - 79
H142026	5J8	9	3360 - 81
H142209	5I20	22	3360 - 69
H142209	5I22	22	3360 - 71
H143332	3C25	19	1821 - 3
H144094	2E15	2	1672 - 5
H144095	2E15	3	1672 - 5
H144296	5J5	3	3360 - 78
H144296	5J7	3	3360 - 80
H144296	6C13	2	3360A - 29
H144765	6B18	7	3360A - 6
H144765	6B20	7	3360A - 8
H145139	6B19	22	3360A - 7
H145139	6B21	22	3360A - 9
H145161	6B19	21	3360A - 7
H145161	6B21	21	3360A - 9
H145175	6C13	4	3360A - 29
H145175	6C15	3	3360A - 31
H145437	5J12	7	3360 - 85
H145456	4E10	6	3160 - 43
H145456	4E11	6	3160 - 44
H145456	6C13	7	3360A - 29
H145456	6C15	6	3360A - 31
H148844	6C3	10	3360A - 16
H148844	6C9	10	3360A - 24
H149342	5J2	8	3360 - 75
H149342	5J4	24	3360 - 77
H149342	6B25	23	3360A - 13
H149421	6B15	21	3360A - 3
H149421	6B17	21	3360A - 5
H150217	5J12	14	3360 - 85
H150292	6C3	1	3360A - 16
H150292	6C3	10	3360A - 16
H150292	6C4	10	3360A - 17
H150292	6C9	1	3360A - 24
H150292	6C9	10	3360A - 24
H150292	6C10	10	3360A - 25
H150344	5J12	25	3360 - 85
H150617	5J2	8	3360 - 75
H150617	5J4	26	3360 - 77
H150617	6B25	26	3360A - 13
H151328	5I20	4	3360 - 69
H151328	5I22	4	3360 - 71
H151330	5I20	8	3360 - 69
H151330	5I22	8	3360 - 71
H152202	4E7	9	3160 - 40
H152202	4E9	8	3160 - 42
H152202	6C4	5	3360A - 17
H152202	6C10	5	3360A - 25
H152203	4E5	16	3160 - 38B
H152203	4E11	8	3160 - 44
H152203	5I18	13	3360 - 67
H152203	5I22	13	3360 - 71
H152203	5J14	9	3360 - 87
H152203	5J16	9	3360 - 89
H152203	6B17	9	3360A - 5
H152203	6C15	8	3360A - 31
H152204	6B20	9	3360A - 8
H152347	6C4	11	3360A - 17
H152793	4E7	14	3160 - 40
H152793	4E9	10	3160 - 42
H152793	6C4	7	3360A - 17
H152793	6C10	7	3360A - 25
H152794	4E11	10	3160 - 44
H152794	5I18	18	3360 - 67
H152794	5I22	18	3360 - 71
H152794	5J16	14	3360 - 89
H152794	6B17	14	3360A - 5
H152794	6C15	13	3360A - 31
H152795	5J8	19	3360 - 81
H152795	6B20	14	3360A - 8
H154352	5J14	10	3360 - 87
H154352	5J16	10	3360 - 89
H154352	6B15	10	3360A - 3
H154352	6B17	10	3360A - 5
H157427	6B18	10	3360A - 6
H157427	6B20	10	3360A - 8
H157428	5J6	13	3360 - 79
H157428	5J8	13	3360 - 81
H157510	6C3	11	3360A - 16
H157510	6C4	11	3360A - 17
H157510	6C7	17	3360A - 21
H157510	6C9	11	3360A - 24
H157510	6C10	11	3360A - 25
H157642	4E6	10	3160 - 39
H157642	4E7	10	3160 - 40
H157642	4E8	9	3160 - 41
H157642	4E9	9	3160 - 42
H157662	2B14	14	0960 - 1
H157662	2B15	14	0960 - 1A
H157978	4E10	9	3160 - 43
H157978	4E11	9	3160 - 44
H157978	5I17	14	3360 - 66
H157978	5I18	14	3360 - 67
H157978	5I20	14	3360 - 69
H157978	5I22	14	3360 - 71
H157978	6C13	10	3360A - 29
H157978	6C15	9	3360A - 31
H158676	2B15	12	0960 - 1A
H158676	2B17	12	0960 - 3
H161330	2B16	13	0960 - 2
H161330	2B17	13	0960 - 3
H165693	6C21	6	3360A - 37
H169509	2B14	6	0960 - 1
H169509	2B15	6	0960 - 1A
H170539	4E10	3	3160 - 43
H170539	4E11	3	3160 - 44
H170539	5I17	6	3360 - 66
H170539	5I18	6	3360 - 67
H170539	5I20	6	3360 - 69
H170539	5I22	6	3360 - 71
H177854	4E5	4	3160 - 38B
H179692	4E5	8	3160 - 38B
H180402	5I20	22	3360 - 69
H180402	5I22	22	3360 - 71
H180927	4E5	6	3160 - 38B
H29619	4E4	2	3160 - 38A
H35226	5F23	2	3340 - 27
H35226	6C2	29	3360A - 15
H35226	6C7	29	3360A - 21
H35238	4C24	5	3160 - 10
H35244	1E4	7	0341 - 13
H35244	1F16	24	0401 - 3
H35244	1F17	15	0401 - 3A
H35244	2D17	..	1369 - 3
H410R	1B21	12	0210 - 3
H60816	4C24	7	3160 - 10
H61354	3G21	20	2160 - 17
H61354	3H2	7	2160 - 21
H61354	3H6	29	2160 - 23B
H61355	2D17	..	1369 - 3
H64373	1G23	7	0413 - 5
H75541	3E24	28	1830 - 35
H75541	3F2	11	1830 - 37
H75541	3F4	12	1830 - 39
H77698	1I6	8	0505 - 1
H77698	1I15	9	0510 - 5
H77698	2E22	11	1674 - 3
H77698	3B25	35	1810 - 9
H77698	3D16	23	1830 - 3
H77698	3H10	12	2160 - 25B
H77698	3H12	11	2160 - 27
H77698	3H15	8	2160 - 31
H77698	3H17	3	2160 - 33
H81608	3I10	28	2160 - 43
H81608	5G19	6	3360 - 18
H85233	3E4	12	1830 - 15
H85233	3E4	30	1830 - 15
H85233	3E6	12	1830 - 17
H85233	3E6	44	1830 - 17
H871R	1E16	10	0350 - 3
H89524	5E23	3	3340 - 1
H91792	2E18	10	1673 - 3
H91792	2E20	11	1673 - 5
H99452	3E2	28	1830 - 13
H99923	3D8	30	1821 - 11
H99923	3D8	31	1821 - 11
H99923	3D10	22	1821 - 13
IPSKIT3	2D23	1	1369 - 11
JD10190	1B22	8	0230 - 1
JD10212	3D4	31	1821 - 7
JD10249	1C11	12	0250 - 11
JD10249	1C13	22	0250 - 13
JD10329	1H7	4	0417 - 1
JD10329	1H8	2	0417 - 2
JD27	1B14	1	0120 - 2
JD27	1B14	3	0120 - 2
JD3216	1B14	1	0120 - 2
JD37087	1C19	5	0250 - 19
JD37219	1C19	16	0250 - 19
JD5612	2D9	27A	1320 - 5
JD5624	2D9	25	1320 - 5
JD5625	2D9	25	1320 - 5
JD5811	5J6	30	3360 - 79
JD5811	5J8	30	3360 - 81
JD5901	3C19	20	1810 - 27
JD7241	1E4	3	0341 - 13
JD7241	1E14	3	0350 - 1

NUMERICAL INDEX - CONTINUED

PART NO.	GRID	KEY	PAGE
JD7262	1E14	13	0350 - 1
JD7263	1D21	23	0341 - 5
JD7263	1D25	31	0341 - 9
JD7266	1B22	7	0230 - 1
JD7291	1E4	24	0341 - 13
JD7291	1E14	2	0350 - 1
JD7424	1D21	18	0341 - 5
JD7424	1D25	20	0341 - 9
JD7425	1B19	4	0210 - 1
JD7444	1B22	4	0230 - 1
JD7686	1H7	4	0417 - 1
JD7686	1H8	2	0417 - 2
JD7759	2B14	15	0960 - 1
JD7759	2B15	15	0960 - 1A
JD7759	2B16	1	0960 - 2
JD7759	2B17	1	0960 - 3
JD7759	4C15	1	3140 - 4
JD7759	5F17	4	3340 - 21
JD7759	5F23	9	3340 - 27
JD7759	5G2	1	3340 - 31
JD7759	5I24	4	3360 - 73
JD7759	5J2	6	3360 - 75
JD7759	5J10	12	3360 - 83
JD7763	5I24	12	3360 - 73
JD7771	5F13	1	3340 - 17
JD7779	5J5	5B	3360 - 78
JD7779	5J7	5B	3360 - 80
JD7782	5J5	5A	3360 - 78
JD7782	5J7	5A	3360 - 80
JD7797	1B25	7	0230 - 4
JD7797	1C3	3	0250 - 3
JD7797	2E2	5	1370 - 1
JD7797	4E3	11	3160 - 38
JD7797	4E4	11	3160 - 38A
JD7798	1B24	4	0230 - 3
JD7798	2B14	15	0960 - 1
JD7798	2B16	18	0960 - 2
JD7798	2B17	18	0960 - 3
JD7798	2E2	5	1370 - 1
JD7798	4B18	3	3102 - 5
JD7798	4B22	5	3102 - 9
JD7798	4C6	7	3115 - 3
JD7798	4C8	9	3115 - 5
JD7798	4C14	4	3140 - 3
JD7798	4C14	10	3140 - 3
JD7798	4C15	1	3140 - 4
JD7798	4E6	24	3160 - 39
JD7798	4E7	19	3160 - 40
JD7798	4E7	24	3160 - 40
JD7798	4E10	2	3160 - 43
JD7798	5E24	9	3340 - 2
JD7798	5F7	1	3340 - 11
JD7798	5F9	1	3340 - 13
JD7798	5F13	8	3340 - 17
JD7798	5F15	2	3340 - 19
JD7798	5F16	2	3340 - 20
JD7798	5F19	26	3340 - 23
JD7798	5F21	23	3340 - 25
JD7798	5G2	1	3340 - 31
JD7798	5I17	25	3360 - 66
JD7798	5I18	25	3360 - 67
JD7798	5I20	27	3360 - 69
JD7798	5I22	27	3360 - 71
JD7798	5I24	4	3360 - 73
JD7798	5J2	6	3360 - 75
JD7798	5J2	36	3360 - 75
JD7798	5J4	4	3360 - 77
JD7798	5J4	8	3360 - 77
JD7798	5J6	26	3360 - 79
JD7798	5J8	26	3360 - 81
JD7798	5J10	12	3360 - 83
JD7798	5J12	27	3360 - 85
JD7798	5J14	19	3360 - 87
JD7798	5J16	19	3360 - 89
JD7798	6B15	19	3360A - 3
JD7798	6B17	19	3360A - 5
JD7798	6B19	19	3360A - 7
JD7798	6B21	19	3360A - 9
JD7798	6B23	4	3360A - 11
JD7798	6B25	4	3360A - 13
JD7798	6C13	21	3360A - 29
JD7799	1B17	1	0201 - 1
JD7799	1B24	25	0230 - 3
JD7799	2G12	2	1740 - 2
JD7799	2G14	7	1740 - 5
JD7799	4E6	24	3160 - 39
JD7799	4E7	24	3160 - 40
JD7799	4E8	2	3160 - 41
JD7799	4E9	2	3160 - 42
JD7799	4E10	2	3160 - 43
JD7799	4E11	2	3160 - 44
JD7799	5F11	1	3340 - 15
JD7799	5F21	22	3340 - 25
JD7799	5J14	30	3360 - 87
JD7799	5J16	30	3360 - 89
JD7799	6B15	30	3360A - 3
JD7799	6B17	30	3360A - 5
JD7799	6B18	4	3360A - 6
JD7799	6B20	4	3360A - 8
JD7799	6B23	7	3360A - 11
JD7799	6B25	7	3360A - 13
JD7801	2E2	7	1370 - 1
JD7803	4E3	11	3160 - 38
JD7808	5F9	1	3340 - 13
JD7838	1B24	21	0230 - 3
JD7838	2E2	1	1370 - 1
JD7844	4C6	12	3115 - 3
JD7844	4C6	19	3115 - 3
JD7844	4C6	27	3115 - 3
JD7844	4E8	2	3160 - 41
JD7844	4E9	2	3160 - 42
JD7844	4E10	2	3160 - 43
JD7844	5J12	26	3360 - 85
JD7846	4C6	19	3115 - 3
JD7846	4C6	26	3115 - 3
JD7846	4C6	28	3115 - 3
JD7847	5I24	12	3360 - 73
JD8114	1E14	15	0350 - 1
JD8147	1B19	5	0210 - 1
JD8159	1C25	4	0250 - 25
JD8159	1C25	7	0250 - 25
JD8192	3G7	21	2160 - 3
JD8206	1B19	17	0210 - 1
JD8206	1D21	30	0341 - 5
JD8210	1C25	5	0250 - 25
JD8223	3G7	20	2160 - 3
JD8236	1C19	19	0250 - 19
JD8251	1C11	5	0250 - 11
JD8251	1E4	1	0341 - 13
JD8255	1E15	2	0350 - 2
JD8257	1C19	13	0250 - 19
JD8257	1E15	8	0350 - 2
JD8901	1C19	18	0250 - 19
JD8929	1C11	5	0250 - 11
JD8929	1E4	2	0341 - 13
JD8946	1B19	15	0210 - 1
JD8946	1D21	40	0341 - 5
JD8961	1B22	3	0230 - 1
JD8968	1D21	19	0341 - 5
JD8968	1D25	19	0341 - 9
JD8976	1D21	24	0341 - 5
JD8976	1D25	30	0341 - 9
JD8997	1E15	1	0350 - 2
JD9065	1D25	15	0341 - 9
JD9125	1D25	14	0341 - 9
JD9159	1D21	16	0341 - 5
JD9344	1D21	37	0341 - 5
JD9344	1E2	12	0341 - 11
JD9344	1E11	37	0341 - 19
JD9449	2E14	8	1672 - 4
JD9602	1D21	17	0341 - 5
J20570	5C24	15	3315 - 7
J20570	5D2	7	3315 - 9
K40001	3C25	8	1821 - 3
K40006	4B24	29	3102 - 11
K40006	4C4	4	3102 - 15
K40015	4C4	16	3102 - 15
K40015	4C4	21	3102 - 15
K40457	3G21	23	2160 - 17
K40457	3H2	15	2160 - 21
L100057	1C19	15	0250 - 19
L100057	1C21	4	0250 - 21
L100058	1C19	15	0250 - 19
L100059	1C19	15	0250 - 19
L100060	1C19	15	0250 - 19
L100060	1C21	4	0250 - 21
L100061	1C19	15	0250 - 19
L100062	1C19	15	0250 - 19
L100063	1C19	15	0250 - 19
L100063	1C21	4	0250 - 21
L100064	1C19	15	0250 - 19
L100065	1C19	15	0250 - 19
L100066	1C19	15	0250 - 19
L100066	1C21	4	0250 - 21
L100067	1C19	15	0250 - 19
L100068	1C19	15	0250 - 19
L100069	1C19	15	0250 - 19
L100069	1C21	4	0250 - 21
L100070	1C19	15	0250 - 19
L100074	1C21	4	0250 - 21
L100077	1C21	4	0250 - 21
L100080	1C21	4	0250 - 21
L100083	1C21	4	0250 - 21
L100086	1C21	4	0250 - 21
L100089	1C21	4	0250 - 21
L100092	1C21	4	0250 - 21
L100096	1C21	4	0250 - 21
L100102	1C13	16	0250 - 13
L100106	1C13	16	0250 - 13
L100109	1C13	16	0250 - 13
L100141	1C9	11	0250 - 9
L100145	1C9	11	0250 - 9
L100150	1C17	4	0250 - 17
L100151	1C17	4	0250 - 17
L100152	1C17	4	0250 - 17
L100153	1C17	5	0250 - 17
L100154	1C17	6	0250 - 17
L100158	1C17	2	0250 - 17
L100169	1C5	3	0250 - 5
L100228	1C9	14	0250 - 9
L100230	1C21	7	0250 - 21

NUMERICAL INDEX - CONTINUED

PART NO.	GRID	KEY	PAGE
L100238	1C13	24	0250 - 13
L100239	1C13	20	0250 - 13
L100240	1C9	20	0250 - 9
L100241	1C5	5	0250 - 5
L100242	1C5	7	0250 - 5
L100632	1C13	7	0250 - 13
L100633	1C13	8	0250 - 13
L100635	1C13	5	0250 - 13
L100636	1C13	4	0250 - 13
L101698	1C15	9	0250 - 15
L110233	1C7	15	0250 - 7
L110233	1C9	18	0250 - 9
L110233	1C11	3	0250 - 11
L112197	1C17	11	0250 - 17
L1610N	6C5	15	3360A - 19
L1610N	6C11	15	3360A - 27
L2083C	1B24	9	0230 - 3
L2301CU	5I17	3	3360 - 66
L2301CU	5I18	3	3360 - 67
L2301CU	5I20	3	3360 - 69
L2301CU	5I22	3	3360 - 71
L25678	3D2	29	1821 - 5
L2646N	1J10	6	0641 - 1
L29884	2C17	11	1115 - 1
L32144	2C19	35	1115 - 3
L32504	2C11	14	1060 - 3
L32705	2C11	4	1060 - 3
L33269	1E14	14	0350 - 1
L33271	1E14	14	0350 - 1
L33272	1E14	14	0350 - 1
L33993	2E12	2	1672 - 2
L34059	1E4	11	0341 - 13
L34060	1E4	10	0341 - 13
L34061	1E4	12	0341 - 13
L34062	1E4	17	0341 - 13
L34063	1E4	15	0341 - 13
L34064	1E4	16	0341 - 13
L34067	1E4	13	0341 - 13
L34068	1E4	19	0341 - 13
L34378	4C23	10	3160 - 9
L34432	3G16	3	2160 - 12
L34569	3G16	1	2160 - 12
L34575	3G16	7	2160 - 12
L35577	1C15	2	0250 - 15
L35714	1C21	9	0250 - 21
L36255	3D2	17	1821 - 5
L37025	1E4	14	0341 - 13
L38138	2F4	19	1674 - 9
L38138	2F6	18	1674 - 11
L38138	2F8	30	1674 - 13
L38138	2F10	5	1674 - 15
L38258	1E4	18	0341 - 13
L38847	3D4	35	1821 - 7
L38851	3D4	34	1821 - 7
L38852	3D4	51	1821 - 7
L38853	3D4	53	1821 - 7
L38854	3D4	54	1821 - 7
L38855	3D4	61	1821 - 7
L38857	3D4	38	1821 - 7
L38861	3D4	42	1821 - 7
L38862	3D4	50	1821 - 7
L38866	3D4	36	1821 - 7
L38889	3D2	22	1821 - 5
L38890	3D2	28	1821 - 5
L38891	3D2	27	1821 - 5
L38892	3D2	20	1821 - 5
L39638	3B18	22	1810 - 3
L39840	1E4	8	0341 - 13
L39997	1C4	8	0250 - 4
L39999	2B19	15	0960 - 5
L40014	1C9	16	0250 - 9
L40121	1C4	8	0250 - 4
L40130	1C15	3	0250 - 15
L40155	2B19	15	0960 - 5
L40156	2B19	15	0960 - 5
L40157	2B19	15	0960 - 5
L40158	2B19	15	0960 - 5
L40159	2B19	15	0960 - 5
L40160	2B19	15	0960 - 5
L40161	2B19	15	0960 - 5
L40162	2B19	15	0960 - 5
L40192	1C15	9	0250 - 15
L40208	1C15	4	0250 - 15
L40253	1C15	8	0250 - 15
L40254	1C15	6	0250 - 15
L4027T	1D8	7	0315 - 5
L40276	1C11	4	0250 - 11
L40276	1C13	10	0250 - 13
L40306	1C9	10	0250 - 9
L40317	1C11	17	0250 - 11
L40317	1C13	25	0250 - 13
L40318	2B19	2	0960 - 5
L40318	2B19	7	0960 - 5
L40319	2B19	7	0960 - 5
L40320	2B19	6	0960 - 5
L4035T	1D8	8	0315 - 5
L4035T	1E6	2	0341 - 15
L40420	2C17	1	1115 - 1
L40982	1C19	2	0250 - 19
L40982	1C21	3	0250 - 21
L40983	1C19	2	0250 - 19
L40984	1C19	2	0250 - 19
L40985	1C19	2	0250 - 19
L40985	1C21	3	0250 - 21
L40986	1C19	2	0250 - 19
L40987	1C19	2	0250 - 19
L40988	1C19	2	0250 - 19
L40988	1C21	3	0250 - 21
L40989	1C19	2	0250 - 19
L40990	1C19	2	0250 - 19
L40991	1C19	2	0250 - 19
L40991	1C21	3	0250 - 21
L40992	1C19	2	0250 - 19
L40993	1C19	2	0250 - 19
L40994	1C19	2	0250 - 19
L40994	1C21	3	0250 - 21
L40995	1C19	2	0250 - 19
L40996	1C19	2	0250 - 19
L41008	1C4	8	0250 - 4
L41170	1C4	8	0250 - 4
L41317	2B19	4	0960 - 5
L41318	2B19	5	0960 - 5
L41333	3C4	4	1810 - 11
L41333	3C4	28	1810 - 11
L42038	3D4	41	1821 - 7
L42039	3D4	57	1821 - 7
L42040	3D4	59	1821 - 7
L42041	3D4	48	1821 - 7
L42042	3D4	49	1821 - 7
L4694T	4C12	9	3115 - 9
L53869	1C11	6	0250 - 11
L55580	1C5	9	0250 - 5
L55580	1C7	12	0250 - 7
L55580	1C9	19	0250 - 9
L55598	1C11	15	0250 - 11
L55598	1C13	23	0250 - 13
L55601	1C4	11	0250 - 4
L55602	1C4	8	0250 - 4
L55603	1C4	8	0250 - 4
L55605	1C9	4	0250 - 9
L55606	1C19	2	0250 - 19
L55606	1C21	3	0250 - 21
L55607	1C19	2	0250 - 19
L55608	1C19	2	0250 - 19
L55610	1C19	2	0250 - 19
L55610	1C21	3	0250 - 21
L56128	2C17	9	1115 - 1
L56244	2C9	3	1011 - 1
L56246	2C9	4	1011 - 1
L56822	1C9	17	0250 - 9
L57881	3D16	3	1830 - 3
L60088	1C7	14	0250 - 7
L60088	1C11	2	0250 - 11
L60092	1C7	16	0250 - 7
L60103	1C17	8	0250 - 17
L60104	1C17	10	0250 - 17
L60115	2B19	15	0960 - 5
L61263	1C9	11	0250 - 9
L61267	1C9	11	0250 - 9
L61271	1C9	11	0250 - 9
L61275	1C9	11	0250 - 9
L62419	1C15	2	0250 - 15
L62420	1C15	2	0250 - 15
L63562	3D2	22	1821 - 5
L77651	3C12	28	1810 - 19
L77652	3C12	27	1810 - 19
L78069	5E24	4B	3340 - 2
L78069	5E24	14	3340 - 2
L79729	1C5	1	0250 - 5
MG272321	5H8	20	3360 - 33
MT2491	4C10	38	3115 - 7
MT2491	4C12	38	3115 - 9
M1102T	1D5	1	0315 - 2
M1102T	1D17	1	0341 - 1
M112886	1F9	1	0360 - 17
M114270	1G23	7	0413 - 5
M117904	2C2	31	0960 - 13
M117904	2C4	31	0960 - 15
M137181	5H8	30	3360 - 33
M1746T	1H25	3	0433 - 1
M2054T	1C24	4	0250 - 24
M2055T	1C24	4	0250 - 24
M2353T	1D21	35	0341 - 5
M2353T	1E2	13	0341 - 11
M2353T	2C19	33	1115 - 3
M359T	5E2	9	3315 - 31
M359T	5E6	9	3315 - 33
M359T	5E10	29	3315 - 35
M359T	5E18	12	3315 - 41
M359T	5E20	12	3315 - 43
M3742T	1I18	7A	0515 - 3
M3853T	1G15	5	0407 - 6
M40333	2E9	12	1671 - 3
M40333	2E11	16	1671 - 5
M40333	2F4	18	1674 - 9
M40333	2F6	8	1674 - 11
M40333	2F8	8	1674 - 13
M40333	2F10	8	1674 - 15
M40333	3B25	15	1810 - 9
M40333	3C2	28	1810 - 9B
M42230	3D24	18	1830 - 11

NUMERICAL INDEX - CONTINUED

PART NO.	GRID	KEY	PAGE
M4237T	2D17	..	1369 - 3
M43835	2F24	2	1674 - 27
M45937	1I23	1	0520 - 5
M46935	4C6	1	3115 - 3
M526T	2D3	3	1313 - 1
M61266	1I11	27	0510 - 3
M61266	1I11	39	0510 - 3
M61266	1I13	4	0510 - 3B
M61266	1I13	33	0510 - 3B
M63431	1H1	1	0413 - 8
M63431	3C2	6	1810 - 9B
M63707	2C21	1	1115 - 5
M68954	1B21	10	0210 - 3
M68954	1B21	24	0210 - 3
M68954	4C8	26	3115 - 5
M68954	4C10	9	3115 - 7
M68954	4C12	7	3115 - 9
M68954	5C18	6	3315 - 3B
M68954	5C22	6	3315 - 5B
M68954	5C24	9	3315 - 7
M68954	5D2	17	3315 - 9
M68954	5D4	17	3315 - 11
M68954	5D6	17	3315 - 13
M68954	5D8	6	3315 - 15
M68954	5D10	6	3315 - 17
M68954	5D10	19	3315 - 17
M68954	5D12	11	3315 - 19
M68954	5D14	6	3315 - 21
M68954	5D16	4	3315 - 23
M68954	5D18	21	3315 - 25
M68954	5D20	8	3315 - 27
M68954	5D22	4	3315 - 29
M68954	5E2	10	3315 - 31
M68954	5E6	10	3315 - 33
M68954	5E12	33	3315 - 35B
M68954	5E12	38	3315 - 35B
M68954	5E14	4	3315 - 37
M68954	5E16	7	3315 - 39
M68954	5E18	10	3315 - 41
M68954	5E20	10	3315 - 43
M68997	3F10	12	1913 - 2
M68997	3F11	9	1913 - 3
M72076	4C10	27	3115 - 7
M74635	5I4	29	3360 - 53
M74794	3D24	21	1830 - 11
M74794	3E12	2	1830 - 23
M78771	3E24	20	1830 - 35
M80373	4C6	13	3115 - 3
M80373	4C6	30	3115 - 3
M80373	4C8	29	3115 - 5
M82259	3F7	7	1910 - 3
M82259	3F9	14	1910 - 5
M83123	3E14	15	1830 - 25
M84110	1D25	28	0341 - 9
M84972	3B20	19	1810 - 5
M84972	3B23	18	1810 - 7
M84972	3C23	18	1810 - 31
M84972	3F20	7	2001 - 3
M86436	3C12	33	1810 - 19
M86436	3C16	15	1810 - 23
M86436	3C16	19A	1810 - 23
M86436	3C16	19B	1810 - 23
M86758	3D24	23	1830 - 11
M86758	3E2	6	1830 - 13
M86758	3G1	3	2005 - 2
M86863	3I6	37	2160 - 39
M86863	3I8	24	2160 - 41
M87534	5D4	4	3315 - 11
M87534	5D6	4	3315 - 13
M87534	5D8	2	3315 - 15
M87534	5D10	4	3315 - 17
M87534	5D12	13	3315 - 19
M87534	5D14	4	3315 - 21
M87534	5D16	2	3315 - 23
M87534	5E2	11	3315 - 31
M87534	5E6	11	3315 - 33
M87534	5E10	22	3315 - 35
M87571	1E9	12	0341 - 17
M87571	3H8	7	2160 - 25
M87571	3H10	6	2160 - 25B
M87571	3I6	39	2160 - 39
M87733	1H5	3	0416 - 2
M87733	1H6	1B	0416 - 3
M87795	6C17	24	3360A - 33
M87795	6C19	17	3360A - 35
M90214	1D4	7	0315 - 1
M92064	3H23	10	2160 - 35B
M92064	3I2	5	2160 - 37
N100870	1J2	4	0530 - 2
N10215	1F21	4	0402 - 5
N10215	1G12	7	0407 - 3
N10215	1G16	9	0408 - 2
N10215	1G19	8	0410 - 2
N10215	1H7	21	0417 - 1
N10215	1H23	9	0423 - 1
N10215	3D6	8	1821 - 9
N10215	3D12	19	1821 - 15
N105572	5I24	5	3360 - 73
N112006	1J5	24	0560 - 3
N112006	1J7	13	0560 - 5
N115096	2F24	11	1674 - 27
N119316	1C3	2	0250 - 3
N119479	5D4	26	3315 - 11
N119479	5D12	15	3315 - 19
N119479	5D14	15	3315 - 21
N119479	5D16	16	3315 - 23
N125411	3E10	10	1830 - 21
N125411	3E14	8	1830 - 25
N131838	2D17	..	1369 - 3
N188273	3I8	29	2160 - 41
N231749	1B18	2	0201 - 2
N231749	1B18	5	0201 - 2
N30256	3B23	8	1810 - 7
N30256	3C23	7	1810 - 31
N31772	4C21	2	3160 - 6
N31772	4C23	14	3160 - 9
N31772	4C25	9	3160 - 11
N34349	2B16	15	0960 - 2
N34349	2B17	15	0960 - 3
N34377	1D16	2	0325 - 2
N52020	5F3	13	3340 - 7
N85588	1F10	4	0360 - 18
N85588	1F11	3	0360 - 19
PBT69309	4B18	4	3102 - 5
PM797NA	2G2	57	1674 - 29
P41858	3E14	14	1830 - 25
P44946	1D10	11	0315 - 7
P44946	1D12	27	0315 - 9
P46051	2D17	..	1369 - 3
P46051	3G17	3	2160 - 13
P46051	3G18	6	2160 - 13A
P46765	5J2	24	3360 - 75
P46765	5J4	28	3360 - 77
P46765	5J6	14	3360 - 79
P46765	6B23	24	3360A - 11
P46765	6B25	21	3360A - 13
P47889	3I12	17	2160 - 45
P48403	2D17	..	1369 - 3
P50631	2C6	2	0960 - 17
P50631	2D17	..	1369 - 3
P50883	2D13	..	1330 - 1
P51212	2D13	..	1330 - 1
P51212	3F2	29	1830 - 37
RE10191	1G12	1	0407 - 3
RE10973	3E16	5	1830 - 27
RE10974	3E18	11	1830 - 29
RE10975	3E18	13	1830 - 29
RE10976	3E20	1	1830 - 31
RE10977	3E16	6	1830 - 27
RE10978	3E16	3	1830 - 27
RE10979	3E16	1	1830 - 27
RE10980	3E18	4	1830 - 29
RE10981	3E18	1	1830 - 29
RE10982	3E18	2	1830 - 29
RE11154	2G2	57	1674 - 29
RE11156	2G2	36	1674 - 29
RE11157	2G2	37	1674 - 29
RE11910	5J10	3	3360 - 83
RE12176	1I23	4	0520 - 5
RE12330	2G4	14	1674 - 31
RE12331	2G4	12	1674 - 31
RE12332	2G4	18	1674 - 31
RE12333	2G4	21	1674 - 31
RE12334	2G4	8	1674 - 31
RE12362	2G4	4	1674 - 31
RE12363	1D10	22	0315 - 7
RE12363	1D12	10	0315 - 9
RE12363	2F4	15	1674 - 9
RE12363	2F6	15	1674 - 11
RE12363	2F8	20	1674 - 13
RE12363	2F10	3	1674 - 15
RE12363	2G4	11	1674 - 31
RE12364	2G4	16	1674 - 31
RE12365	2G4	20	1674 - 31
RE12366	2G4	25	1674 - 31
RE12373	5J10	11	3360 - 83
RE12842	2D21	..	1369 - 7
RE13571	1F17	11	0401 - 3A
RE13798	2E14	6	1672 - 4
RE13965	3G10	5	2160 - 6
RE14740	3G7	18	2160 - 3
RE14744	5J10	..	3360 - 83
RE14745	5J10	..	3360 - 83
RE15490	1G14	16	0407 - 5
RE155938	2F22	2	1674 - 25
RE15647	5J10	28	3360 - 83
RE15648	5J10	2	3360 - 83
RE15674	1F22	6	0403 - 2
RE15883	5J10	21	3360 - 83
RE16149	1G7	5	0404 - 10
RE16600	3G7	15	2160 - 3
RE17162	1E18	6	0350 - 5
RE17287	3G10	4	2160 - 6
RE17524	3G7	5	2160 - 3
RE17525	3G7	3	2160 - 3
RE17525	3G13	2	2160 - 9
RE17525	3G15	2	2160 - 11
RE190139	3F20	6	2001 - 3
RE19031	1F19	6A	0402 - 3
RE19265	1H6	9	0416 - 3
RE19455	3G10	6	2160 - 6

NUMERICAL INDEX - CONTINUED

PART NO.	GRID	KEY	PAGE
RE19797	1G23	15	0413 - 5
RE19799	1G23	13	0413 - 5
RE198074	3E6	37	1830 - 17
RE198074	3F2	25	1830 - 37
RE20254	3F21	1	2002 - 1
RE20343	4E10	5	3160 - 43
RE20343	4E11	5	3160 - 44
RE20343	5I17	10	3360 - 66
RE20343	5I18	10	3360 - 67
RE20343	5I20	10	3360 - 69
RE20343	5I22	10	3360 - 71
RE20343	6B18	6	3360A - 6
RE20343	6B20	6	3360A - 8
RE20343	6C13	6	3360A - 29
RE20343	6C15	5	3360A - 31
RE20344	4E6	6	3160 - 39
RE20344	4E7	6	3160 - 40
RE20344	4E8	5	3160 - 41
RE20344	4E9	5	3160 - 42
RE20344	5J14	6	3360 - 87
RE20344	5J16	6	3360 - 89
RE20344	6B15	6	3360A - 3
RE20344	6B17	6	3360A - 5
RE20434	4E6	..	3160 - 39
RE20434	4E8	..	3160 - 41
RE20434	6C3	..	3360A - 16
RE20434	6C9	..	3360A - 24
RE20491	4E6	8	3160 - 39
RE20491	4E8	7	3160 - 41
RE20491	6C3	4	3360A - 16
RE20491	6C9	4	3360A - 24
RE20595	4E10	..	3160 - 43
RE20595	5I17	..	3360 - 66
RE20595	5I20	..	3360 - 69
RE20595	5J14	..	3360 - 87
RE20595	6B15	..	3360A - 3
RE20595	6C13	..	3360A - 29
RE20757	4E10	7	3160 - 43
RE20757	5I17	11	3360 - 66
RE20757	5I20	11	3360 - 69
RE20757	5J14	8	3360 - 87
RE20757	6B15	8	3360A - 3
RE20757	6C13	8	3360A - 29
RE20809	5J2	18	3360 - 75
RE20809	5J4	20	3360 - 77
RE20809	5J6	12	3360 - 79
RE20809	5J8	12	3360 - 81
RE20809	6B23	14	3360A - 11
RE20809	6B25	14	3360A - 13
RE20851	1G14	3	0407 - 5
RE21730	2G5	5	1674 - 32
RE21731	2G5	5	1674 - 32
RE21732	2G5	6	1674 - 32
RE21790	1I8	2	0505 - 3
RE21846	2B14	11	0960 - 1
RE21846	2B16	11	0960 - 2
RE21875	2B14	..	0960 - 1
RE21875	2B16	..	0960 - 2
RE22410	4E10	17	3160 - 43
RE22410	4E11	17	3160 - 44
RE22413	2B14	3	0960 - 1
RE22413	2B15	3	0960 - 1A
RE22415	2B14	5	0960 - 1
RE22415	2B15	5	0960 - 1A
RE22415	2B16	17	0960 - 2
RE22415	2B17	17	0960 - 3
RE22493	4E8	17	3160 - 41
RE22493	4E9	17	3160 - 42
RE22501	5J14	18	3360 - 87
RE22501	5J16	18	3360 - 89
RE22501	6B15	18	3360A - 3
RE22501	6B17	18	3360A - 5
RE22686	6B18	3	3360A - 6
RE22686	6B20	3	3360A - 8
RE22776	5J2	21	3360 - 75
RE22776	5J4	23	3360 - 77
RE22776	5J12	9	3360 - 85
RE22776	6B23	20	3360A - 11
RE22776	6B25	20	3360A - 13
RE22776	6B25	25	3360A - 13
RE22777	5J2	29	3360 - 75
RE22777	5J12	4	3360 - 85
RE22777	6B23	29	3360A - 11
RE22781	5J2	34	3360 - 75
RE22781	5J4	31	3360 - 77
RE24532	2B14	13	0960 - 1
RE24532	2B16	14	0960 - 2
RE24535	4E6	15	3160 - 39
RE24535	4E8	13	3160 - 41
RE24535	6C3	12	3360A - 16
RE24535	6C9	12	3360A - 24
RE24535	6C10	12	3360A - 25
RE24536	4E10	13	3160 - 43
RE24536	5I17	21	3360 - 66
RE24536	5I20	21	3360 - 69
RE24536	5J14	15	3360 - 87
RE24536	6B15	15	3360A - 3
RE24536	6C13	15	3360A - 29
RE24536	6C15	14	3360A - 31
RE24537	5J2	8	3360 - 75
RE24537	5J4	30	3360 - 77
RE24537	6B25	28	3360A - 13
RE25151	5J2	..	3360 - 75
RE25151	5J4	..	3360 - 77
RE25151	5J12	..	3360 - 85
RE25151	6B23	..	3360A - 11
RE25622	5J14	29	3360 - 87
RE25623	5J13	3	3360 - 86
RE25623	5J15	3	3360 - 88
RE26342	1H5	2	0416 - 2
RE26343	1H5	2	0416 - 2
RE26577	6C13	18	3360A - 29
RE26577	6C15	17	3360A - 31
RE27711	3G9	3	2160 - 5
RE27895	1F21	12A	0402 - 5
RE28790	3G7	8	2160 - 3
RE28790	3G13	4	2160 - 9
RE28790	3G15	4	2160 - 11
RE28848	5I17	5	3360 - 66
RE28848	5I18	5	3360 - 67
RE28849	5I17	23	3360 - 66
RE28849	5I18	23	3360 - 67
RE28920	1F22	7	0403 - 2
RE28966	1F22	7	0403 - 2
RE28966	1F22	10	0403 - 2
RE28977	1F22	10	0403 - 2
RE29110	3G13	25	2160 - 9
RE29430	1H6	2A	0416 - 3
RE30100	2B16	..	0960 - 2
RE30100	2B17	..	0960 - 3
RE30121	5J2	23	3360 - 75
RE30121	5J4	27	3360 - 77
RE30121	5J12	5	3360 - 85
RE30121	6B23	22	3360A - 11
RE30121	6B25	27	3360A - 13
RE30162	5J12	16	3360 - 85
RE30695	1G12	2A	0407 - 3
RE30717	3G9	31	2160 - 5
RE31089	1H11	10	0419 - 3
RE31140	6B23	..	3360A - 11
RE31299	1G10	3	0407 - 2
RE31299	1G10	4	0407 - 2
RE31299	1G10	5A	0407 - 2
RE31323	1G18	3	0409 - 3
RE31517	1F23	20	0404 - 1
RE31617	1G18	5	0409 - 3
RE31617	1G18	14	0409 - 3
RE31716	5J6	..	3360 - 79
RE31716	6B19	..	3360A - 7
RE31717	5J6	17	3360 - 79
RE31717	6B18	8	3360A - 6
RE31718	5J6	20	3360 - 79
RE31718	6B18	15	3360A - 6
RE31973	1F19	6A	0402 - 3
RE32529	3G11	1	2160 - 7
RE33472	5I17	24	3360 - 66
RE33524	3G9	17	2160 - 5
RE33524	3G9	28	2160 - 5
RE33539	3G15	30	2160 - 11
RE33603	3G5	1	2160 - 1
RE33636	1I8	1	0505 - 3
RE33968	6C3	3	3360A - 16
RE33968	6C4	3	3360A - 17
RE33968	6C9	3	3360A - 24
RE33968	6C10	3	3360A - 25
RE36215	3C8	2	1810 - 15
RE36215	3C10	4	1810 - 17
RE36215	3C12	7	1810 - 19
RE36215	3C14	22	1810 - 21
RE36425	1G15	15	0407 - 6
RE36428	1G18	9	0409 - 3
RE36514	1H5	2	0416 - 2
RE36515	1H5	2	0416 - 2
RE36550	1H12	10	0420 - 1
RE37089	1H1	12	0413 - 8
RE37091	1H1	3	0413 - 8
RE37545	1G18	15	0409 - 3
RE37715	1I3	33	0452 - 3
RE38087	1G21	6	0413 - 2
RE38087	1G21	10	0413 - 2
RE38227	4E8	19	3160 - 41
RE38228	4E8	1	3160 - 41
RE38228	4E9	1	3160 - 42
RE38230	4E10	19	3160 - 43
RE38231	4E10	1	3160 - 43
RE38231	4E11	1	3160 - 44
RE38851	1I1	13	0452 - 1
RE39243	1H20	9	0422 - 3
RE39245	1H20	10	0422 - 3
RE39247	1H18	20	0422 - 1B
RE39247	1H20	14	0422 - 3
RE39249	1H18	15	0422 - 1B
RE39249	1H20	3	0422 - 3
RE39250	1H18	19	0422 - 1B
RE39250	1H20	11	0422 - 3
RE39251	1H18	17	0422 - 1B
RE39251	1H20	1	0422 - 3
RE39252	1F21	12A	0402 - 5
RE39997	1G23	22	0413 - 5
RE40574	1G23	22	0413 - 5
RE42102	1H12	3	0420 - 1

NUMERICAL INDEX - CONTINUED

PART NO.	GRID	KEY	PAGE
RE42139	1I6	7	0505 - 1
RE42211	1H15	2	0421 - 1
RE42777	1H18	10	0422 - 1B
RE42777	1H20	6	0422 - 3
RE43289	1G23	12	0413 - 5
RE43290	1G23	11	0413 - 5
RE43291	1G23	10	0413 - 5
RE43292	1G23	9	0413 - 5
RE43384	1F19	6B	0402 - 3
RE43421	1H16	10	0422 - 1
RE43497	2G8	2	1676 - 3
RE44279	1G2	1	0404 - 5
RE44574	1F15	1	0401 - 2
RE44574	1F17	12	0401 - 3A
RE44574	1H25	14	0433 - 1
RE45329	1H16	2	0422 - 1
RE45329	1H18	1	0422 - 1B
RE46742	3D16	11B	1830 - 3
RE46784	1H2	3	0414 - 1
RE46784	1H2	6	0414 - 1
RE46959	1G23	22	0413 - 5
RE47070	3D16	13B	1830 - 3
RE47867	1F17	9	0401 - 3A
RE48310	1I8	10	0505 - 3
RE48321	1I8	8	0505 - 3
RE48615	1G18	15	0409 - 3
RE48616	1G18	9	0409 - 3
RE48818	1F22	6	0403 - 2
RE48876	2F4	4	1674 - 9
RE48876	2F6	4	1674 - 11
RE48876	2F8	4	1674 - 13
RE48876	2F10	29	1674 - 15
RE49566	1G12	2B	0407 - 3
RE49600	1F20	3	0402 - 4
RE49636	3E4	13	1830 - 15
RE49636	3E6	13	1830 - 17
RE500024	1F22	8	0403 - 2
RE500024	1F22	12	0403 - 2
RE500160	1H14	10A	0420 - 3
RE500160	1H14	12	0420 - 3
RE500160	1H14	20	0420 - 3
RE501568	1G6	1	0404 - 9
RE501568	1I3	33	0452 - 3
RE502861	1F19	5	0402 - 3
RE502861	1F19	17	0402 - 3
RE502874	1F19	2	0402 - 3
RE502874	1F19	16	0402 - 3
RE50306	2C6	..	0960 - 17
RE503213	1H6	2B	0416 - 3
RE503219	1H6	2B	0416 - 3
RE50671	1F23	20	0404 - 1
RE50671	1F25	24	0404 - 3
RE50752	1H14	11	0420 - 3
RE50997	1G23	22	0413 - 5
RE51052	3E19	1	1830 - 30
RE51649	1H14	13	0420 - 3
RE516512	1H14	21	0420 - 3
RE516513	1H14	21	0420 - 3
RE516553	1H14	11	0420 - 3
RE52454	3E19	4	1830 - 30
RE52454	3E24	35	1830 - 35
RE52506	3E19	2	1830 - 30
RE52507	3E21	1	1830 - 32
RE52509	3E17	1	1830 - 28
RE52510	3E19	5	1830 - 30
RE52660	3F21	1	2002 - 1
RE53073	1F22	7	0403 - 2
RE53073	1F22	10	0403 - 2
RE53400	1H14	10A	0420 - 3
RE53408	3E19	6	1830 - 30
RE53408	3E19	7	1830 - 30
RE53716	1F22	3	0403 - 2
RE53868	1G23	12	0413 - 5
RE53869	1G23	11	0413 - 5
RE53870	1G23	10	0413 - 5
RE53871	1G23	9	0413 - 5
RE54883	1F17	1	0401 - 3A
RE55343	1G15	13	0407 - 6
RE55378	1H18	9	0422 - 1B
RE55520	1H14	6	0420 - 3
RE55762	1H14	12	0420 - 3
RE56109	2C6	..	0960 - 17
RE56322	1G23	25	0413 - 5
RE56322	1H12	7	0420 - 1
RE56322	1H14	3	0420 - 3
RE56443	1F21	12B	0402 - 5
RE56672	1G11	3	0407 - 2A
RE57108	1G23	22	0413 - 5
RE57203	1G2	1	0404 - 5
RE57203	1G4	1	0404 - 7
RE57204	1G2	1	0404 - 5
RE57204	1G4	1	0404 - 7
RE57279	1F17	10	0401 - 3A
RE57575	3E6	33	1830 - 17
RE57793	1H6	2B	0416 - 3
RE58348	3E19	6	1830 - 30
RE58348	3E19	7	1830 - 30
RE58897	1H5	2	0416 - 2
RE58898	1H5	2	0416 - 2
RE60005	1G18	3	0409 - 3
RE60652	1H14	1	0420 - 3
RE60887	2F22	2	1674 - 25
RE60888	2F22	3	1674 - 25
RE61405	1H14	6	0420 - 3
RE61612	1G6	1	0404 - 9
RE61648	3F20	19	2001 - 3
RE62065	1H6	2B	0416 - 3
RE62097	1H6	7	0416 - 3
RE62097	1H6	9	0416 - 3
RE62148	1F19	6B	0402 - 3
RE62419	1H14	10A	0420 - 3
RE62419	1H14	10B	0420 - 3
RE62419	1H14	12	0420 - 3
RE62419	2E3	6	1399 - 3
RE63181	1H14	12	0420 - 3
RE63694	1G6	1	0404 - 9
RE63913	1F22	5	0403 - 2
RE63913	1F22	14	0403 - 2
RE65188	1H18	9	0422 - 1B
RE66820	1F22	6	0403 - 2
RE68327	2F8	4	1674 - 13
RE68327	2F10	29	1674 - 15
RE70474	1H22	7	0422 - 5
RE70487	1H22	5	0422 - 5
RE70680	1H22	4	0422 - 5
RE70756	1H22	8	0422 - 5
RE70756	1H22	11	0422 - 5
RE70960	1H16	10	0422 - 1
RE70960	1H18	9	0422 - 1B
RE70960	1H22	1	0422 - 5
RE70960	1H22	7	0422 - 5
RE70960	1H22	12	0422 - 5
RE70979	1G10	5A	0407 - 2
RE70979	1G10	5B	0407 - 2
RE70979	1G10	11	0407 - 2
RE70979	1G10	12	0407 - 2
RE71256	1H22	6	0422 - 5
R100105	1F15	16	0401 - 2
R100508	1H18	21	0422 - 1B
R100508	1H20	13	0422 - 3
R100509	1H18	12	0422 - 1B
R100509	1H20	8	0422 - 3
R100511	1H18	13	0422 - 1B
R100511	1H20	7	0422 - 3
R100512	1H18	18	0422 - 1B
R100512	1H20	12	0422 - 3
R100513	1H18	11	0422 - 1B
R100513	1H20	5	0422 - 3
R100850	1F17	4	0401 - 3A
R10093	1G12	11	0407 - 3
R10093	2C7	5	0960 - 18
R10093	2D13	..	1330 - 1
R10093	2D13	..	1330 - 1
R10093	2D17	..	1369 - 3
R10093	3E6	50	1830 - 17
R10093	3F2	28	1830 - 37
R10093	3F4	22	1830 - 39
R101201	1G21	5	0413 - 2
R101201	1G23	6	0413 - 5
R104592	1F23	17	0404 - 1
R104592	1F25	22	0404 - 3
R104592	1G18	13	0409 - 3
R104592	1H3	4	0414 - 2
R104592	1H12	15	0420 - 1
R104595	3C23	4	1810 - 31
R104677	1H16	3	0422 - 1
R104907	1G23	19	0413 - 5
R105346	1H6	10	0416 - 3
R105346	1I1	9	0452 - 1
R105346	1I3	26	0452 - 3
R105547	3G9	5	2160 - 5
R105584	3G7	14	2160 - 3
R106116	1F19	12	0402 - 3
R106697	3G9	23	2160 - 5
R107731	1F19	9B	0402 - 3
R108404	1H23	2	0423 - 1
R108755	1F25	24	0404 - 3
R108755	1G4	1	0404 - 7
R108755	1G14	10	0407 - 5
R108755	1G14	11	0407 - 5
R108755	1G14	12	0407 - 5
R109114	3G9	21	2160 - 5
R109123	1C24	11A	0250 - 24
R109123	1C24	11B	0250 - 24
R11049	2E12	5	1672 - 2
R110531	1H2	1	0414 - 1
R110562	1H11	31B	0419 - 3
R111135	1F23	20	0404 - 1
R111135	1F25	12	0404 - 3
R111135	1F25	24	0404 - 3
R111137	1F23	20	0404 - 1
R111137	1F25	13	0404 - 3
R111137	1F25	24	0404 - 3
R1115R	3G9	12	2160 - 5
R11151	2F4	10	1674 - 9
R11151	2F6	10	1674 - 11
R11151	2F8	16	1674 - 13
R11151	2F10	16	1674 - 15
R111632	2G8	1	1676 - 3
R111632	3D16	9	1830 - 3
R111949	1G18	9	0409 - 3

NUMERICAL INDEX - CONTINUED

PART NO.	GRID	KEY	PAGE
R111949	1G18	15	0409 - 3
R112049	3C14	20	1810 - 21
R112706	1G12	5B	0407 - 3
R11278	3F23	1	2004 - 1
R112857	2D19	..	1369 - 5
R112867	1F23	20	0404 - 1
R112867	1F25	16	0404 - 3
R112867	1F25	24	0404 - 3
R112867	1G2	1	0404 - 5
R112867	1G4	1	0404 - 7
R112867	1G4	4	0404 - 7
R112867	1G14	12	0407 - 5
R113050	2D13	..	1330 - 1
R113050	3E6	30	1830 - 17
R113050	3E24	30	1830 - 35
R113050	3F2	5	1830 - 37
R113050	3F4	5	1830 - 39
R113562	1H14	14	0420 - 3
R113563	1H14	15	0420 - 3
R113565	1H14	9	0420 - 3
R113752	1G15	16	0407 - 6
R115119	1C13	13	0250 - 13
R115390	1F25	14	0404 - 3
R115390	1G14	10	0407 - 5
R115397	3E24	3	1830 - 35
R115742	3E19	3	1830 - 30
R115743	3E19	6	1830 - 30
R116031	5H8	5	3360 - 33
R116339	1G23	19	0413 - 5
R116424	1G14	1	0407 - 5
R116424	1G14	2	0407 - 5
R116713	3G7	27	2160 - 3
R116851	1F22	3	0403 - 2
R117721	3D16	10	1830 - 3
R119269	1F21	13	0402 - 5
R119269	1I3	19	0452 - 3
R119314	1F19	11	0402 - 3
R119360	1G9	1	0407 - 1B
R119360	1I3	20	0452 - 3
R120013	1H6	6	0416 - 3
R120653	3C23	4	1810 - 31
R120743	1G11	3	0407 - 2A
R121294	3E24	3	1830 - 35
R121314	1F21	13	0402 - 5
R121314	1I3	19	0452 - 3
R121522	1H14	2	0420 - 3
R121867	1F22	8	0403 - 2
R121891	1H6	3B	0416 - 3
R122226	1F21	1	0402 - 5
R122226	1F23	6	0404 - 1
R122226	1F25	6	0404 - 3
R122351	3E19	6	1830 - 30
R122351	3E19	7	1830 - 30
R1225R	1D16	8	0325 - 2
R122618	1F21	7	0402 - 5
R122618	1G12	9	0407 - 3
R122618	1H23	4	0423 - 1
R122848	2E12	6	1672 - 2
R123161	1F19	14	0402 - 3
R123514	1F19	15	0402 - 3
R123572	1G19	6	0410 - 2
R123572	1I1	10	0452 - 1
R123572	1I3	29	0452 - 3
R123593	1G23	2	0413 - 5
R124230	1F22	5	0403 - 2
R124277	1F21	7	0402 - 5
R124277	1H6	7	0416 - 3
R124277	1H6	9	0416 - 3
R124851	1F25	24	0404 - 3
R124851	1G2	1	0404 - 5
R124851	1G4	1	0404 - 7
R125066	1F21	5	0402 - 5
R125066	1I3	21	0452 - 3
R125223	3F4	38	1830 - 39
R125863	1G18	12	0409 - 3
R125863	1I1	12	0452 - 1
R125863	1I2	9	0452 - 2
R125880	1F19	12	0402 - 3
R125881	1F19	11	0402 - 3
R126041	1F21	6	0402 - 5
R131238	1G10	5B	0407 - 2
R131794	1G7	1	0404 - 10
R131794	1I2	1	0452 - 2
R132874	1G23	20	0413 - 5
R132874	1G23	22	0413 - 5
R132874	1G25	15	0413 - 7
R135509	1H22	2	0422 - 5
R135510	1H22	3	0422 - 5
R1742R	1E20	11	0360 - 3
R1888R	2C19	36	1115 - 3
R206883	1I6	5	0505 - 1
R26081	5C24	14	3315 - 7
R26081	5D2	5	3315 - 9
R26125	1G18	4	0409 - 3
R26137	3G7	7	2160 - 3
R26198	1B17	5	0201 - 1
R26282	5J2	20	3360 - 75
R26282	5J4	22	3360 - 77
R26282	5J12	12	3360 - 85
R26282	6B23	16	3360A - 11
R26282	6B25	16	3360A - 13
R26286	1D21	6	0341 - 5
R26286	1G23	24	0413 - 5
R26286	1H12	8	0420 - 1
R26286	1H14	4	0420 - 3
R26286	1I23	3	0520 - 5
R26286	2D17	..	1369 - 3
R26287	1B17	3	0201 - 1
R26287	1B17	14	0201 - 1
R26287	1E2	8	0341 - 11
R26287	2C11	30	1060 - 3
R26287	2C19	18	1115 - 3
R26287	2D17	..	1369 - 3
R26287	3G23	63	2160 - 19
R26287	3H15	13	2160 - 31
R26287	3I10	24	2160 - 43
R26287	5G6	7	3360 - 3
R26287	5G8	4	3360 - 7
R26287	5G14	4	3360 - 13
R26287	5G16	4	3360 - 15
R26287	5G18	17	3360 - 17
R26287	5G21	4	3360 - 20
R26287	5G22	1	3360 - 21
R26287	5H2	4	3360 - 27
R26287	5H3	2	3360 - 28
R26375	1D14	3	0315 - 11
R26375	1D18	14	0341 - 2
R26375	1D19	1	0341 - 3
R26375	1E9	5	0341 - 17
R26375	1E20	12	0360 - 3
R26375	1E22	11	0360 - 5
R26375	1F3	17	0360 - 10
R26375	2B23	1	0960 - 9
R26375	2B23	20	0960 - 9
R26375	2B25	8	0960 - 11
R26375	2C2	1	0960 - 13
R26375	2C2	23	0960 - 13
R26375	2C2	40	0960 - 13
R26375	2C4	1	0960 - 15
R26375	2C4	23	0960 - 15
R26375	2C4	40	0960 - 15
R26375	2C11	25	1060 - 3
R26375	2C19	6	1115 - 3
R26375	2C21	9	1115 - 5
R26375	2D17	..	1369 - 3
R26375	3G7	16	2160 - 3
R26375	3G9	13	2160 - 5
R26375	3G9	24	2160 - 5
R26375	3G11	2	2160 - 7
R26375	3G13	7	2160 - 9
R26375	3G13	10	2160 - 9
R26375	3G15	7	2160 - 11
R26375	3G15	19	2160 - 11
R26375	3G15	22	2160 - 11
R26375	3G15	27	2160 - 11
R26375	3G17	4	2160 - 13
R26375	3G18	7	2160 - 13A
R26375	3H8	14	2160 - 25
R26375	3H10	4	2160 - 25B
R26375	3H15	11	2160 - 31
R26375	3H17	12	2160 - 33
R26375	3I10	6	2160 - 43
R26375	4D2	12	3160 - 13
R26375	4D4	12	3160 - 15
R26375	5H10	5	3360 - 35
R26375	5H12	1	3360 - 37
R26375	5H12	7	3360 - 37
R26375	5H14	11	3360 - 39
R26375	5H16	2	3360 - 41
R26375	5H16	9	3360 - 41
R26375	5H18	1	3360 - 43
R26375	6C2	28	3360A - 15
R26375	6C5	3	3360A - 19
R26375	6C7	28	3360A - 21
R26375	6C8	1	3360A - 22
R26375	6C11	3	3360A - 27
R26448	1D14	11	0315 - 11
R26448	1D15	1	0315 - 12
R26448	1D21	8	0341 - 5
R26448	1D23	9	0341 - 7
R26448	1E11	56	0341 - 19
R26448	1E12	9	0341 - 21
R26448	1F3	20	0360 - 10
R26448	1G10	5A	0407 - 2
R26448	1G10	11	0407 - 2
R26448	1G11	2	0407 - 2A
R26448	1H6	13	0416 - 3
R26448	2B23	16	0960 - 9
R26448	2C2	26	0960 - 13
R26448	2C2	41	0960 - 13
R26448	2C4	26	0960 - 15
R26448	2C4	41	0960 - 15
R26448	2C11	3	1060 - 3
R26448	2C13	8	1060 - 5
R26448	2D17	..	1369 - 3
R26448	3G9	4	2160 - 5
R26448	3G9	15	2160 - 5
R26448	3G9	18	2160 - 5
R26448	3G13	18	2160 - 9
R26448	3G13	22	2160 - 9
R26448	3G15	17	2160 - 11

NUMERICAL INDEX - CONTINUED

PART NO.	GRID	KEY	PAGE
R26448	3G15	20	2160 - 11
R26448	3G15	21	2160 - 11
R26448	3G15	23	2160 - 11
R26448	3G15	24	2160 - 11
R26448	3H15	20	2160 - 31
R26448	3I14	7	2160 - 47
R26448	4B24	15	3102 - 11
R26448	4C2	15	3102 - 13
R26448	4D2	6	3160 - 13
R26448	4D2	23	3160 - 13
R26448	4D4	6	3160 - 15
R26448	4D4	23	3160 - 15
R26448	5H8	28	3360 - 33
R26448	5H18	8	3360 - 43
R26448	6C5	9	3360A - 19
R26448	6C8	8	3360A - 22
R26448	6C11	9	3360A - 27
R26448	6C17	11	3360A - 33
R26448	6C17	27	3360A - 33
R26448	6C19	14	3360A - 35
R26448	6C21	4	3360A - 37
R26491	3C16	28	1810 - 23
R26493	1F25	7	0404 - 3
R26552	1D5	4	0315 - 2
R26552	1D6	3	0315 - 3
R26552	1E2	6	0341 - 11
R26552	3G23	61	2160 - 19
R26650	1B17	9	0201 - 1
R26650	1F23	9	0404 - 1
R26650	1F25	8	0404 - 3
R26686	1E22	15	0360 - 5
R26773	2D17	..	1369 - 3
R26863	2D17	..	1369 - 3
R26871	3C8	33	1810 - 15
R26871	3C10	17	1810 - 17
R26906	1D14	18	0315 - 11
R26906	1D14	24	0315 - 11
R26906	1D18	20	0341 - 2
R26906	1D19	25	0341 - 3
R26906	1D23	11	0341 - 7
R26906	1E11	60	0341 - 19
R26906	1E12	11	0341 - 21
R26906	1F3	13	0360 - 10
R26906	1G18	15	0409 - 3
R26906	2C11	7	1060 - 3
R26906	2C19	16	1115 - 3
R26906	2C21	4	1115 - 5
R26906	2D17	..	1369 - 3
R26906	3G19	3	2160 - 14
R26906	3G21	8	2160 - 17
R26906	3I10	18	2160 - 43
R26906	3I12	9	2160 - 45
R26906	4D9	2	3160 - 20
R26906	4D14	18	3160 - 25
R26906	4D18	7	3160 - 29
R26906	6C17	17	3360A - 33
R26906	6C17	19	3360A - 33
R26906	6C19	8	3360A - 35
R26906	6C21	26	3360A - 37
R26908	2D5	3	1313 - 3
R26936	3D8	5	1821 - 11
R26936	3D8	36	1821 - 11
R27094	1H14	7	0420 - 3
R27149	1H25	7	0433 - 1
R27166	2D13	..	1330 - 1
R27166	2D17	..	1369 - 3
R27166	3I12	13	2160 - 45
R27175	1E20	4	0360 - 3
R27175	2C21	19	1115 - 5
R27175	3H21	12	2160 - 35
R27175	3H23	1	2160 - 35B
R27175	3I4	28	2160 - 37B
R27181	1J5	21	0560 - 3
R27181	1J7	3	0560 - 5
R27218	1F3	21	0360 - 10
R27218	1G10	12	0407 - 2
R27218	1G11	1	0407 - 2A
R27218	3I14	8	2160 - 47
R27218	4D2	5	3160 - 13
R27218	4D4	5	3160 - 15
R27434	5C24	12	3315 - 7
R27434	5D2	3	3315 - 9
R27474	4D9	1	3160 - 20
R27478	3G7	29	2160 - 3
R27479	3G7	29	2160 - 3
R27490	3G13	14	2160 - 9
R27490	3G15	29	2160 - 11
R27490	3I12	23	2160 - 45
R27491	2C2	32	0960 - 13
R27491	2C2	35	0960 - 13
R27491	2C4	32	0960 - 15
R27491	2C4	35	0960 - 15
R27491	2C13	10	1060 - 5
R27491	2C15	8	1060 - 7
R27491	2E2	2	1370 - 1
R27928	2D17	..	1369 - 3
R27928	4C23	13	3160 - 9
R27928	4C23	15	3160 - 9
R27928	4C25	7	3160 - 11
R27928	4C25	10	3160 - 11
R27928	5G12	11	3360 - 11
R28009	3C2	3	1810 - 9B
R28574	1B22	2	0230 - 1
R28583	1I8	5	0505 - 3
R28776	1B21	13	0210 - 3
R28776	1D14	19	0315 - 11
R28776	1E20	8	0360 - 3
R28776	1E22	13	0360 - 5
R28776	2D13	..	1330 - 1
R28776	2D17	..	1369 - 3
R28776	3F2	7	1830 - 37
R28776	3F2	29	1830 - 37
R28776	3F4	7	1830 - 39
R28782	2B25	13	0960 - 11
R28782	2B25	15	0960 - 11
R28782	2C2	14	0960 - 13
R28782	2C4	14	0960 - 15
R28782	2D17	..	1369 - 3
R28782	3G13	5	2160 - 9
R28782	3G15	5	2160 - 11
R28782	3G21	14	2160 - 17
R28782	3H2	4	2160 - 21
R28782	3H2	6	2160 - 21
R28782	3H2	32	2160 - 21
R28782	3H6	53	2160 - 23B
R28782	3I6	20	2160 - 39
R28782	3I8	39	2160 - 41
R28782	3I10	26	2160 - 43
R28782	4C20	6	3160 - 5
R28794	1I25	2	0520 - 7
R29463	2D17	..	1369 - 3
R29936	2C11	5	1060 - 3
R29936	2D17	..	1369 - 3
R29936	3G13	19	2160 - 9
R29936	3G13	24	2160 - 9
R29936	3G15	13	2160 - 11
R29936	3G15	14	2160 - 11
R29936	3G21	9	2160 - 17
R29936	3G23	42	2160 - 19
R29936	3G23	45	2160 - 19
R29936	3H2	31	2160 - 21
R29936	3H4	36	2160 - 23
R29936	3H4	38	2160 - 23
R29936	3H4	39	2160 - 23
R29936	3H4	66	2160 - 23
R29936	3H6	2	2160 - 23B
R29936	3H6	40	2160 - 23B
R29936	3H6	51	2160 - 23B
R29936	3H15	12	2160 - 31
R29936	3I4	32	2160 - 37B
R29936	3I6	15	2160 - 39
R29936	3I6	38	2160 - 39
R29936	3I8	15	2160 - 41
R29936	3I8	28	2160 - 41
R29936	3I8	32	2160 - 41
R29936	3I16	5	2160 - 49
R29936	4C17	7	3160 - 2
R29936	4D9	4	3160 - 20
R29936	5G6	5	3360 - 3
R29936	5H2	2	3360 - 27
R29936	5H10	1	3360 - 35
R29936	5H10	9	3360 - 35
R29936	5H10	11	3360 - 35
R29936	5H10	20	3360 - 35
R29936	5H12	8	3360 - 37
R29936	5H12	10	3360 - 37
R29936	5H12	12	3360 - 37
R29936	5H12	16	3360 - 37
R29936	5I8	1	3360 - 57
R30200	2B16	5	0960 - 2
R30200	2B17	5	0960 - 3
R30378	2G2	43	1674 - 29
R30903	2D17	..	1369 - 3
R30903	3I10	10	2160 - 43
R31378	3H13	9	2160 - 29
R31631	1B17	2	0201 - 1
R31631	2C19	19	1115 - 3
R31631	3H15	14	2160 - 31
R31631	5G6	8	3360 - 3
R31631	5H2	3	3360 - 27
R31631	5H3	1	3360 - 28
R31933	3H13	2	2160 - 29
R31935	3H13	6	2160 - 29
R32024	2G5	3	1674 - 32
R32025	2G5	4	1674 - 32
R32026	2G2	48	1674 - 29
R32101	1D19	19	0341 - 3
R32548	2C11	28	1060 - 3
R33012	1E18	16	0350 - 5
R33058	1E16	13	0350 - 3
R33138	1E22	10	0360 - 5
R33138	3G7	17	2160 - 3
R33246	1E18	12	0350 - 5
R33247	1E18	22	0350 - 5
R33255	1E16	7	0350 - 3
R33259	1D14	20	0315 - 11
R33259	2D13	..	1330 - 1
R33259	2D13	..	1330 - 1
R33259	2D17	..	1369 - 3
R33259	3E6	31	1830 - 17
R33259	3F2	31	1830 - 37

NUMERICAL INDEX - CONTINUED

PART NO.	GRID	KEY	PAGE
R33259	3F4	19	1830 - 39
R33521	1E20	16	0360 - 3
R33521	1E20	18	0360 - 3
R33976	1I18	27	0515 - 3
R34140	1E4	4	0341 - 13
R34447	1H12	5	0420 - 1
R34764	1I3	33	0452 - 3
R34812	1G25	2	0413 - 7
R34812	2D13	..	1330 - 1
R34985	1H7	23	0417 - 1
R34985	1H11	4	0419 - 3
R35226	1D10	25	0315 - 7
R35226	1D12	20	0315 - 9
R35226	1E6	6	0341 - 15
R35352	1G23	14	0413 - 5
R35643	1E11	35	0341 - 19
R35684	6C2	22	3360A - 15
R35684	6C7	22	3360A - 21
R36158	5E23	5	3340 - 1
R36235	3B23	16	1810 - 7
R36358	3G13	13	2160 - 9
R36358	3G15	28	2160 - 11
R36540	1G25	7	0413 - 7
R36636	4D9	3	3160 - 20
R36636	5H2	1	3360 - 27
R36636	5H10	10	3360 - 35
R36636	5H12	11	3360 - 37
R375R	2D17	..	1369 - 3
R39112	1E20	14	0360 - 3
R39112	2C11	24	1060 - 3
R39112	3G9	14	2160 - 5
R39125	1E16	2	0350 - 3
R39129	3D2	9	1821 - 5
R39253	1F9	10	0360 - 17
R39279	1E4	5	0341 - 13
R39304	1E4	9	0341 - 13
R394R	1E22	2	0360 - 5
R394R	2D13	..	1330 - 1
R394R	2D17	..	1369 - 3
R39503	1H6	4	0416 - 3
R39503	1H11	1	0419 - 3
R39554	1I8	13	0505 - 3
R39554	2G8	5	1676 - 3
R39554	2G8	12	1676 - 3
R39741	1F23	3	0404 - 1
R39741	1F25	4	0404 - 3
R39783	1E11	45	0341 - 19
R39783	1E11	55	0341 - 19
R39876	1F2	17	0360 - 9
R39985	1I18	28	0515 - 3
R40791	1G16	6	0408 - 2
R40791	1G16	11	0408 - 2
R41035	1E18	8	0350 - 5
R41057	3I12	14	2160 - 45
R41166	1E18	19	0350 - 5
R41985	3D16	2	1830 - 3
R42729	1F19	8	0402 - 3
R42852	1H11	20	0419 - 3
R42926	1D14	16	0315 - 11
R43206	1D10	16	0315 - 7
R43206	1D12	21	0315 - 9
R43206	1E6	5	0341 - 15
R43409	1G18	8	0409 - 3
R43538	3C25	18	1821 - 3
R43659	1E16	8	0350 - 3
R43696	1J10	2	0641 - 1
R43724	1G19	2	0410 - 2
R44255	1D4	6	0315 - 1
R44302	1H16	6	0422 - 1
R44302	1I6	8	0505 - 1
R44302	2B23	7	0960 - 9
R44302	2C2	44	0960 - 13
R44302	2C4	18	0960 - 15
R44302	2C4	19	0960 - 15
R44302	2C4	44	0960 - 15
R44302	2E9	13	1671 - 3
R44302	2E11	14	1671 - 5
R44302	2E20	17	1673 - 5
R44302	2E22	8	1674 - 3
R44302	2F4	6	1674 - 9
R44302	2F6	6	1674 - 11
R44302	2F8	6	1674 - 13
R44302	2F10	6	1674 - 15
R44302	2F12	16	1674 - 17
R44302	2F14	54	1674 - 19
R44302	2F16	54	1674 - 19B
R44302	3C23	6	1810 - 31
R44302	3D16	5	1830 - 3
R44302	3E4	28	1830 - 15
R44302	3E6	42	1830 - 17
R44302	3F20	15	2001 - 3
R44302	3I6	3	2160 - 39
R44302	3I6	34	2160 - 39
R44302	3I8	3	2160 - 41
R44302	3I14	26	2160 - 47
R44342	2G8	3	1676 - 3
R44742	1D19	18	0341 - 3
R44742	1E18	13	0350 - 5
R44795	1E11	46A	0341 - 19
R44816	1E18	2	0350 - 5
R44817	1E18	3	0350 - 5
R459R	2D17	..	1369 - 3
R45925	3G13	16	2160 - 9
R460R	2D17	..	1369 - 3
R463R	1J5	17	0560 - 3
R463R	1J7	9	0560 - 5
R46414	5I4	15	3360 - 53
R46414	5I6	25	3360 - 55
R46414	5I14	10	3360 - 63
R46528	4C6	11	3115 - 3
R46528	4C8	18	3115 - 5
R46528	5D4	10	3315 - 11
R46528	5D6	10	3315 - 13
R46528	5D8	14	3315 - 15
R46528	5D12	7	3315 - 19
R46528	5D14	11	3315 - 21
R46528	5D16	14	3315 - 23
R46528	5D18	14	3315 - 25
R46528	5D20	13	3315 - 27
R46528	5E2	4	3315 - 31
R46528	5E4	48	3315 - 31B
R46528	5E6	4	3315 - 33
R46528	5E8	48	3315 - 33B
R46528	5E10	10	3315 - 35
R46528	5E14	11	3315 - 37
R46625	1H11	27	0419 - 3
R46625	1H11	30	0419 - 3
R46704	1E2	9	0341 - 11
R46704	3G23	64	2160 - 19
R46856	2C11	2	1060 - 3
R46919	2B23	14	0960 - 9
R46919	4D14	5	3160 - 25
R46919	4D14	13	3160 - 25
R46919	4D14	24	3160 - 25
R46919	4D14	33	3160 - 25
R46919	4D16	9	3160 - 27
R46919	4D16	24	3160 - 27
R46919	4D18	9	3160 - 29
R46919	4D18	24	3160 - 29
R46919	4D20	9	3160 - 31
R46919	4D20	22	3160 - 31
R46919	4D22	10	3160 - 33
R46919	4D22	50	3160 - 33
R46919	4D24	10	3160 - 35
R46919	4E2	10	3160 - 37
R46919	5H14	7	3360 - 39
R46973	1B24	24	0230 - 3
R46973	1C1	4	0250 - 1
R46973	1C2	4	0250 - 2
R47077	1H1	4	0413 - 8
R47154	3G7	2	2160 - 3
R47154	3G13	1	2160 - 9
R47154	3G15	1	2160 - 11
R47160	1I8	4	0505 - 3
R47172	1D10	13	0315 - 7
R47172	1D12	17	0315 - 9
R47235	2D13	..	1330 - 1
R47319	1E11	40	0341 - 19
R47449	1E11	39	0341 - 19
R47693	1I6	5	0505 - 1
R47998	2C6	1	0960 - 17
R48000	1G21	8	0413 - 2
R48000	1I3	33	0452 - 3
R48071	1H12	6	0420 - 1
R48235	1E18	5	0350 - 5
R48236	1E18	7	0350 - 5
R48599	1G23	21	0413 - 5
R48599	1G23	22	0413 - 5
R48599	1G25	16	0413 - 7
R48600	1G23	20	0413 - 5
R48600	1G25	15	0413 - 7
R48638	2D17	..	1369 - 3
R48685	1D17	7	0341 - 1
R48685	1D18	7	0341 - 2
R48685	1D18	15	0341 - 2
R48685	1D19	7	0341 - 3
R48685	1D19	16	0341 - 3
R48685	1F15	2	0401 - 2
R48685	1F17	13	0401 - 3A
R48685	1F23	2	0404 - 1
R48685	1F23	15	0404 - 1
R48685	1F25	5	0404 - 3
R48738	3G7	13	2160 - 3
R48795	1H1	9	0413 - 8
R48887	2F24	17	1674 - 27
R49297	3G7	12	2160 - 3
R49465	4D2	8	3160 - 13
R49465	4D4	8	3160 - 15
R49465	5G21	20	3360 - 20
R495R	2C11	15	1060 - 3
R495R	2D17	..	1369 - 3
R49856	2D15	..	1369 - 1
R49921	2F12	30	1674 - 17
R49921	2F14	30	1674 - 19
R49921	2F16	30	1674 - 19B
R49921	3H19	15	2160 - 33B
R50110	2C11	31	1060 - 3
R501373	1H9	6	0418 - 2
R501373	1I1	7	0452 - 1
R501373	1I2	12	0452 - 2
R50279	3B18	18	1810 - 3

NUMERICAL INDEX - CONTINUED

PART NO.	GRID	KEY	PAGE
R50378	2D17	..	1369 - 3
R50642	3B25	3	1810 - 9
R50704	2C9	3	1011 - 1
R50879	2C11	20	1060 - 3
R50901	1H18	14	0422 - 1B
R50901	1H20	4	0422 - 3
R50902	1H18	16	0422 - 1B
R50902	1H20	2	0422 - 3
R51328	1E9	18	0341 - 17
R51577	1E20	15	0360 - 3
R51936	1G23	3	0413 - 5
R51937	1G23	2	0413 - 5
R52107	5C24	1	3315 - 7
R52107	5D2	12	3315 - 9
R52119	2E22	13	1674 - 3
R52130	3D18	19	1830 - 5
R52130	3D20	15	1830 - 7
R52130	3D22	13	1830 - 9
R52589	1E20	13	0360 - 3
R52725	2G8	3	1676 - 3
R52819	1G19	15	0410 - 2
R52921	3B25	34	1810 - 9
R52921	3C6	17	1810 - 13
R53108	1H18	8	0422 - 1B
R53169	1E11	41	0341 - 19
R53169	3G23	70	2160 - 19
R53422	3F2	37	1830 - 37
R53422	3F4	26	1830 - 39
R53543	2D17	..	1369 - 3
R54114	1F22	4	0403 - 2
R54114	1G6	1	0404 - 9
R54123	1I6	4	0505 - 1
R54124	1B13	4	0110 - 1
R54380	1J3	3	0540 - 1
R54388	2E24	2	1674 - 5
R54445	3C23	4	1810 - 31
R54503	1H25	11	0433 - 1
R54565	1F19	1	0402 - 3
R54565	1F19	2	0402 - 3
R54614	1G15	9	0407 - 6
R54615	1G15	8	0407 - 6
R54621	1H25	6	0433 - 1
R54629	1G14	16	0407 - 5
R54632	1G14	7	0407 - 5
R54634	1H4	7	0415 - 1
R54634	1H4	10	0415 - 1
R54635	1H4	2	0415 - 1
R54638	1H9	6	0418 - 2
R54638	1I1	7	0452 - 1
R54638	1I2	12	0452 - 2
R54639	1H9	4	0418 - 2
R54641	1H9	10	0418 - 2
R54802	1F23	14	0404 - 1
R54802	1F25	21	0404 - 3
R54815	1G14	10	0407 - 5
R54823	1G10	2	0407 - 2
R54823	1G11	4	0407 - 2A
R54824	1G10	8	0407 - 2
R54826	1H11	3	0419 - 3
R54828	1H11	21	0419 - 3
R54829	1H11	14	0419 - 3
R54830	1H11	12	0419 - 3
R54987	1F19	2	0402 - 3
R54987	1F19	5	0402 - 3
R55233	1F23	1	0404 - 1
R55233	1F25	25	0404 - 3
R55326	1D12	5	0315 - 9
R55326	3B18	23	1810 - 3
R55326	3B18	24	1810 - 3
R55326	3B18	25	1810 - 3
R55967	1H9	9	0418 - 2
R56101	1I14	8	0510 - 4
R56101	1I15	3	0510 - 5
R56186	1F22	2	0403 - 2
R56187	1F22	3	0403 - 2
R56264	2G8	5	1676 - 3
R56264	3B23	8	1810 - 7
R56424	1G23	7	0413 - 5
R56461	1H9	8	0418 - 2
R56461	1I2	13	0452 - 2
R56461	2D17	..	1369 - 3
R56463	1G16	1	0408 - 2
R56463	1I1	4	0452 - 1
R56463	1I2	6	0452 - 2
R56463	2D17	..	1369 - 3
R56464	4C20	9	3160 - 5
R56464	4C20	22	3160 - 5
R56464	4C23	4	3160 - 9
R56464	5G10	2	3360 - 9
R56464	5G12	2	3360 - 11
R56464	5G20	2	3360 - 19
R56464	5H8	10	3360 - 33
R56549	1H2	3	0414 - 1
R56551	1H2	2	0414 - 1
R56552	1H2	1	0414 - 1
R56588	1H12	2	0420 - 1
R56751	2D17	..	1369 - 3
R56751	3G7	10	2160 - 3
R56751	3G9	6	2160 - 5
R56751	3G13	3	2160 - 9
R56751	3G13	17	2160 - 9
R56751	3G15	3	2160 - 11
R56751	3G15	18	2160 - 11
R56812	1H7	16	0417 - 1
R56814	1H11	16	0419 - 3
R56814	1I3	30	0452 - 3
R56815	1H11	17	0419 - 3
R56815	1I3	31	0452 - 3
R56902	2D7	16	1320 - 3
R56903	2D7	16	1320 - 3
R57059	1G15	1	0407 - 6
R57100	1E18	24	0350 - 5
R57119	1I22	6	0520 - 4
R57160	1F23	8	0404 - 1
R57160	1F25	9	0404 - 3
R57160	1H4	1	0415 - 1
R57260	1H23	6	0423 - 1
R57270	1G19	1	0410 - 2
R57374	3G9	20	2160 - 5
R58007	1H4	6	0415 - 1
R58632	1H11	5	0419 - 3
R59047	1G16	10	0408 - 2
R60170	3F4	11	1830 - 39
R60332	2D17	..	1369 - 3
R60357	1G12	5A	0407 - 3
R61871	1G14	4	0407 - 5
R61871	1G15	11	0407 - 6
R61871	1H11	25	0419 - 3
R61871	1I2	15	0452 - 2
R62129	1D17	11	0341 - 1
R62129	1D19	11	0341 - 3
R62191	1H7	3	0417 - 1
R62192	1H7	3	0417 - 1
R62193	1H7	3	0417 - 1
R62194	1H7	3	0417 - 1
R63548	1G10	5A	0407 - 2
R63548	1H5	4	0416 - 2
R63548	1H6	11	0416 - 3
R63548	1H6	12	0416 - 3
R63556	1B22	5	0230 - 1
R63666	3C12	8	1810 - 19
R63666	3C14	6	1810 - 21
R63667	3C8	15	1810 - 15
R63667	3C10	7	1810 - 17
R63667	3C12	9	1810 - 19
R63667	3C14	7	1810 - 21
R63668	3C12	10	1810 - 19
R63668	3C14	8	1810 - 21
R63669	3C12	11	1810 - 19
R63669	3C14	9	1810 - 21
R63670	3C12	12	1810 - 19
R63670	3C14	10	1810 - 21
R63671	3C8	16	1810 - 15
R63671	3C10	8	1810 - 17
R63850	1B21	16	0210 - 3
R63980	1E20	7	0360 - 3
R63980	1E22	12	0360 - 5
R64059	5D4	26	3315 - 11
R64059	5D12	15	3315 - 19
R64059	5D14	15	3315 - 21
R64059	5D16	16	3315 - 23
R64350	1D17	11	0341 - 1
R64350	1D18	18	0341 - 2
R64350	1D19	11	0341 - 3
R64700	3F23	2	2004 - 1
R65215	1F23	12	0404 - 1
R65215	1F25	19	0404 - 3
R65563	4C6	15	3115 - 3
R65563	4C8	19	3115 - 5
R65563	4C10	33	3115 - 7
R65563	4C10	45	3115 - 7
R65563	4C12	33	3115 - 9
R65563	5D4	9	3315 - 11
R65563	5D6	9	3315 - 13
R65563	5D8	13	3315 - 15
R65563	5D12	6	3315 - 19
R65563	5D14	12	3315 - 21
R65563	5D16	13	3315 - 23
R65563	5D18	13	3315 - 25
R65563	5D20	14	3315 - 27
R65563	5E4	47	3315 - 31B
R65563	5E8	47	3315 - 33B
R65563	5E12	42	3315 - 35B
R65563	5E14	10	3315 - 37
R65570	3C6	2	1810 - 13
R65602	2G2	49	1674 - 29
R65607	2G2	46	1674 - 29
R65694	3G9	22	2160 - 5
R66090	1G23	4	0413 - 5
R66177	1G14	13	0407 - 5
R66197	1E16	11	0350 - 3
R662R	1I18	8	0515 - 3
R66320	2F24	24	1674 - 27
R66321	2F24	24	1674 - 27
R66821	1H12	11	0420 - 1
R66862	5J10	14	3360 - 83
R67293	1E9	10	0341 - 17
R67840	1E18	21	0350 - 5
R68823	1E18	11	0350 - 5
R68824	1E18	9	0350 - 5
R69670	4C24	5	3160 - 10

NUMERICAL INDEX - CONTINUED

PART NO.	GRID	KEY	PAGE
R70182	1F15	10	0401 - 2
R70210	2G2	41	1674 - 29
R70211	2G2	40	1674 - 29
R70212	2G2	41	1674 - 29
R70213	2G2	40	1674 - 29
R70214	2G2	41	1674 - 29
R70215	2G2	40	1674 - 29
R70216	2G2	41	1674 - 29
R70217	2G2	40	1674 - 29
R70218	2G2	41	1674 - 29
R70219	2G2	40	1674 - 29
R70220	2G2	50	1674 - 29
R70221	2G2	39	1674 - 29
R70222	2G2	38	1674 - 29
R71197	3E22	1	1830 - 33
R71250	1H23	2	0423 - 1
R71400	2E14	3	1672 - 4
R71732	2D17	..	1369 - 3
R72328	5H8	7	3360 - 33
R72385	5J10	10	3360 - 83
R72385	5J12	1	3360 - 85
R72507	3G7	23	2160 - 3
R72579	5F19	9	3340 - 23
R72579	5F21	10	3340 - 25
R72579	5F24	6	3340 - 28
R72579	5F25	6	3340 - 29
R72579	5G2	5	3340 - 31
R72645	1H7	17	0417 - 1
R72651	1H25	12	0433 - 1
R72660	1I18	8	0515 - 3
R72700	2B14	2	0960 - 1
R72700	2B15	2	0960 - 1A
R72700	2B16	16	0960 - 2
R72700	2B17	16	0960 - 3
R72745	1F22	11	0403 - 2
R72855	1B21	27	0210 - 3
R72855	4C6	4	3115 - 3
R72855	4C8	5	3115 - 5
R73292	1I11	9A	0510 - 3
R73292	1I11	9B	0510 - 3
R73322	1H7	11	0417 - 1
R73380	4C6	8	3115 - 3
R73380	4C8	10	3115 - 5
R73498	1I8	9	0505 - 3
R73521	1F20	4	0402 - 4
R73521	1I2	8	0452 - 2
R73530	5H8	23	3360 - 33
R73595	1F22	11	0403 - 2
R73596	1F22	11	0403 - 2
R73597	1F22	11	0403 - 2
R73598	1F22	11	0403 - 2
R73975	1G16	7	0408 - 2
R73998	5J10	18	3360 - 83
R74195	1F22	1	0403 - 2
R74210	2D13	..	1330 - 1
R74354	1G15	10	0407 - 6
R74552	1G14	1	0407 - 5
R74552	1G15	2	0407 - 6
R74553	1G14	1	0407 - 5
R74553	1G14	2	0407 - 5
R74553	1G15	3	0407 - 6
R74553	1G15	14	0407 - 6
R74852	1E18	18	0350 - 5
R75376	3G9	16	2160 - 5
R75522	1C11	9	0250 - 11
R75522	1C15	6	0250 - 15
R75645	3G7	18	2160 - 3
R75683	3G7	9	2160 - 3
R76126	3G10	7	2160 - 6
R76241	1H11	31A	0419 - 3
R76308	1E16	6	0350 - 3
R76350	5J10	9	3360 - 83
R76477	1H16	4	0422 - 1
R76477	1H18	5	0422 - 1B
R76477	1I20	7	0520 - 2
R76477	3H15	17	2160 - 31
R76477	5I6	4	3360 - 55
R76578	1G25	14	0413 - 7
R76695	3F20	23	2001 - 3
R76721	3G10	3	2160 - 6
R76721	3G15	30	2160 - 11
R76723	3G10	1	2160 - 6
R76729	1G25	4	0413 - 7
R77016	1G12	10	0407 - 3
R77052	2D17	..	1369 - 3
R77389	3E18	15	1830 - 29
R77390	3E18	14	1830 - 29
R77391	3E18	8	1830 - 29
R77392	3E18	9	1830 - 29
R77393	3E18	10	1830 - 29
R77394	3E18	12	1830 - 29
R77396	3E16	7	1830 - 27
R77397	3E16	2	1830 - 27
R77399	3E16	4	1830 - 27
R77400	3E18	6	1830 - 29
R77401	3E18	5	1830 - 29
R77456	2F24	27	1674 - 27
R77457	2F24	29	1674 - 27
R77458	2F24	28	1674 - 27
R77462	2F24	25	1674 - 27
R77463	2F24	30	1674 - 27
R77464	2F24	26	1674 - 27
R77465	2F24	31	1674 - 27
R77466	2F24	33	1674 - 27
R77467	2F24	34	1674 - 27
R77468	2F24	32	1674 - 27
R77469	2G2	35	1674 - 29
R77470	2G2	45	1674 - 29
R77471	2G2	45	1674 - 29
R77472	2G2	45	1674 - 29
R77473	2G2	45	1674 - 29
R77474	2G2	44	1674 - 29
R77475	2F24	13	1674 - 27
R77476	2F24	3	1674 - 27
R77477	2F24	4	1674 - 27
R77478	2F24	15	1674 - 27
R77479	2F24	5	1674 - 27
R77480	2F24	6	1674 - 27
R77481	2F24	7	1674 - 27
R77482	2F24	8	1674 - 27
R77483	2F24	16	1674 - 27
R77484	2F24	19	1674 - 27
R77485	2F24	21	1674 - 27
R77486	2F24	22	1674 - 27
R77487	2F24	23	1674 - 27
R77488	2G2	51	1674 - 29
R77489	2G2	51	1674 - 29
R77490	2G2	51	1674 - 29
R77491	2G2	54	1674 - 29
R77492	2G2	54	1674 - 29
R77493	2G2	51	1674 - 29
R77494	2G2	55	1674 - 29
R77495	2G2	52	1674 - 29
R77496	2G2	52	1674 - 29
R77497	2G2	53	1674 - 29
R77498	2F24	24	1674 - 27
R77499	2F24	24	1674 - 27
R77500	2F24	24	1674 - 27
R77501	2F24	24	1674 - 27
R77502	2G2	56	1674 - 29
R77503	2G2	56	1674 - 29
R77611	3G7	24	2160 - 3
R77611	3G13	9	2160 - 9
R77611	3G15	9	2160 - 11
R77673	1H14	8	0420 - 3
R78047	2G4	3	1674 - 31
R78048	2G4	10	1674 - 31
R78049	2G4	15	1674 - 31
R78050	2G4	19	1674 - 31
R78051	2G4	24	1674 - 31
R78052	2G4	5	1674 - 31
R78053	2E22	2A	1674 - 3
R78053	2G4	13	1674 - 31
R78053	3I6	30	2160 - 39
R78053	3I6	33	2160 - 39
R78053	3I8	2	2160 - 41
R78054	2G4	17	1674 - 31
R78055	2G4	22	1674 - 31
R78056	2G4	26	1674 - 31
R78057	2G4	2	1674 - 31
R78058	2G4	23	1674 - 31
R78059	2G4	1	1674 - 31
R78060	2G4	2	1674 - 31
R78060	2G4	9	1674 - 31
R78061	2E22	2A	1674 - 3
R78061	2G4	6	1674 - 31
R78061	2G4	23	1674 - 31
R78062	2G4	1	1674 - 31
R78063	2E22	2A	1674 - 3
R78063	2G4	1	1674 - 31
R78063	2G4	7	1674 - 31
R78064	2G4	27	1674 - 31
R78065	2G6	3	1674 - 33
R78066	2G6	2	1674 - 33
R78067	2G6	3	1674 - 33
R78068	2G6	2	1674 - 33
R78069	2G6	1	1674 - 33
R78202	3G16	2	2160 - 12
R78393	2B16	9	0960 - 2
R78393	2B17	9	0960 - 3
R78994	5I17	2	3360 - 66
R78994	5I18	2	3360 - 67
R78994	5I20	2	3360 - 69
R78994	5I22	2	3360 - 71
R79001	5J2	25	3360 - 75
R79001	5J4	29	3360 - 77
R79001	5J6	15	3360 - 79
R79001	5J8	15	3360 - 81
R79001	6B23	25	3360A - 11
R79001	6B25	22	3360A - 13
R79077	1E18	14	0350 - 5
R79078	1E18	15	0350 - 5
R79089	1F23	13	0404 - 1
R79089	1F25	20	0404 - 3
R79101	4E6	12	3160 - 39
R79101	4E7	12	3160 - 40
R79101	4E8	12	3160 - 41
R79101	4E9	12	3160 - 42
R79101	5J14	12	3360 - 87
R79101	5J16	12	3360 - 89
R79101	6B15	12	3360A - 3

NUMERICAL INDEX - CONTINUED

PART NO.	GRID	KEY	PAGE
R79101	6B17	12	3360A - 5
R79117	2B14	9	0960 - 1
R79117	2B15	9	0960 - 1A
R79151	3G7	22	2160 - 3
R79170	5J10	7	3360 - 83
R79177	5J10	15	3360 - 83
R79496	1C7	3	0250 - 7
R79560	1G14	5	0407 - 5
R79561	1G14	12	0407 - 5
R79562	1G14	14	0407 - 5
R79563	1G14	15	0407 - 5
R79604	1G21	4	0413 - 2
R79605	1G21	3	0413 - 2
R79606	1G21	2	0413 - 2
R79661	5J10	6	3360 - 83
R80500	1F22	8	0403 - 2
R80558	3G7	28	2160 - 3
R80615	3G13	20	2160 - 9
R80632	1G14	11	0407 - 5
R80632	1I2	14	0452 - 2
R80632	3G13	15	2160 - 9
R80637	3G13	21	2160 - 9
R80661	3G7	6	2160 - 3
R80813	1E18	25	0350 - 5
R81210	1H6	6	0416 - 3
R81275	1H2	8	0414 - 1
R81275	1H3	5	0414 - 2
R81275	1I1	8	0452 - 1
R81275	1I3	16	0452 - 3
R81313	3G10	6	2160 - 6
R81487	5I17	4	3360 - 66
R81487	5I18	4	3360 - 67
R81488	5I17	22	3360 - 66
R81488	5I18	22	3360 - 67
R81494	1E18	4	0350 - 5
R81578	3G7	5	2160 - 3
R81597	2E14	4	1672 - 4
R81766	4E6	10	3160 - 39
R81766	4E8	9	3160 - 41
R81767	6C3	11	3360A - 16
R81767	6C7	17	3360A - 21
R81771	4E6	7	3160 - 39
R81771	4E7	7	3160 - 40
R81771	4E8	6	3160 - 41
R81771	4E9	6	3160 - 42
R81775	4E10	4	3160 - 43
R81775	4E11	4	3160 - 44
R81775	5I17	9	3360 - 66
R81775	5I18	9	3360 - 67
R81775	5I20	9	3360 - 69
R81775	5I22	9	3360 - 71
R81775	6B18	5	3360A - 6
R81775	6B20	5	3360A - 8
R81775	6C13	5	3360A - 29
R81775	6C15	4	3360A - 31
R81776	4E6	5	3160 - 39
R81776	4E7	5	3160 - 40
R81776	4E8	4	3160 - 41
R81776	4E9	4	3160 - 42
R81776	5J13	5	3360 - 86
R81776	5J15	5	3360 - 88
R81776	6B14	5	3360A - 2
R81776	6B16	5	3360A - 4
R81779	4E6	14	3160 - 39
R81779	4E8	10	3160 - 41
R81779	6C3	7	3360A - 16
R81779	6C9	7	3360A - 24
R81787	4E10	14	3160 - 43
R81787	4E11	14	3160 - 44
R81787	5I17	17	3360 - 66
R81787	5I18	17	3360 - 67
R81787	5I20	17	3360 - 69
R81787	5I22	17	3360 - 71
R81787	6B18	13	3360A - 6
R81787	6B20	13	3360A - 8
R81787	6C13	13	3360A - 29
R81787	6C15	12	3360A - 31
R81788	4E6	13	3160 - 39
R81788	4E7	13	3160 - 40
R81788	4E8	14	3160 - 41
R81788	4E9	14	3160 - 42
R81788	5J14	13	3360 - 87
R81788	5J16	13	3360 - 89
R81788	6B15	13	3360A - 3
R81788	6B17	13	3360A - 5
R81789	6C3	8	3360A - 16
R81789	6C4	8	3360A - 17
R81789	6C9	8	3360A - 24
R81789	6C10	8	3360A - 25
R81793	4E10	15	3160 - 43
R81793	4E11	15	3160 - 44
R81793	5I17	20	3360 - 66
R81793	5I18	20	3360 - 67
R81793	5I20	20	3360 - 69
R81793	5I22	20	3360 - 71
R81793	6B19	16	3360A - 7
R81793	6B21	16	3360A - 9
R81793	6C13	16	3360A - 29
R81793	6C15	16	3360A - 31
R81794	4E6	16	3160 - 39
R81794	4E7	16	3160 - 40
R81794	4E8	15	3160 - 41
R81794	4E9	15	3160 - 42
R81794	5J14	16	3360 - 87
R81794	5J16	16	3360 - 89
R81794	6B15	16	3360A - 3
R81794	6B17	16	3360A - 5
R81795	6C3	13	3360A - 16
R81795	6C4	13	3360A - 17
R81795	6C9	13	3360A - 24
R81795	6C10	13	3360A - 25
R81796	5I17	7	3360 - 66
R81796	5I18	7	3360 - 67
R81796	5I20	7	3360 - 69
R81796	5I22	7	3360 - 71
R81796	6B19	29	3360A - 7
R81796	6B21	29	3360A - 9
R81804	3G7	4	2160 - 3
R81811	3G7	11	2160 - 3
R81850	4E6	17	3160 - 39
R81850	4E7	17	3160 - 40
R81850	4E8	16	3160 - 41
R81850	4E9	16	3160 - 42
R81850	5J13	2	3360 - 86
R81850	5J15	2	3360 - 88
R81854	2B14	1	0960 - 1
R81854	2B15	1	0960 - 1A
R81854	2B16	2	0960 - 2
R81854	2B17	2	0960 - 3
R81856	4E6	9	3160 - 39
R81856	4E8	8	3160 - 41
R81856	6C3	5	3360A - 16
R81856	6C9	5	3360A - 24
R81862	4E10	12	3160 - 43
R81862	4E11	12	3160 - 44
R81862	5I17	16	3360 - 66
R81862	5I18	16	3360 - 67
R81862	5I20	16	3360 - 69
R81862	5I22	16	3360 - 71
R81862	6B18	12	3360A - 6
R81862	6B20	12	3360A - 8
R81862	6C13	12	3360A - 29
R81862	6C15	11	3360A - 31
R81864	6C3	6	3360A - 16
R81864	6C4	6	3360A - 17
R81864	6C9	6	3360A - 24
R81864	6C10	6	3360A - 25
R81866	4E6	4	3160 - 39
R81866	4E7	4	3160 - 40
R81866	4E8	3	3160 - 41
R81866	4E9	3	3160 - 42
R81866	5J13	4	3360 - 86
R81866	5J15	4	3360 - 88
R81866	6B14	4	3360A - 2
R81866	6B16	4	3360A - 4
R81866	6C3	2	3360A - 16
R81866	6C4	2	3360A - 17
R81866	6C9	2	3360A - 24
R81866	6C10	2	3360A - 25
R81929	1G25	10	0413 - 7
R81968	6B18	2	3360A - 6
R81968	6B20	2	3360A - 8
R81968	6C13	2	3360A - 29
R81971	6C13	24	3360A - 29
R81971	6C15	18	3360A - 31
R81972	4E10	9	3160 - 43
R81972	5I17	14	3360 - 66
R81972	5I20	14	3360 - 69
R81972	6C13	10	3360A - 29
R81973	4E10	8	3160 - 43
R81973	5I17	13	3360 - 66
R81973	5I20	13	3360 - 69
R81973	5J14	9	3360 - 87
R81973	6B15	9	3360A - 3
R81973	6C13	9	3360A - 29
R81975	4E10	10	3160 - 43
R81975	5I17	18	3360 - 66
R81975	5I20	18	3360 - 69
R81975	5J14	14	3360 - 87
R81975	6B15	14	3360A - 3
R81975	6C13	14	3360A - 29
R81989	1F16	25	0401 - 3
R81989	1F17	14	0401 - 3A
R82052	1H7	5	0417 - 1
R82052	1H8	3	0417 - 2
R82075	5J2	7	3360 - 75
R82075	5J4	9	3360 - 77
R82075	6B23	8	3360A - 11
R82075	6B25	8	3360A - 13
R82077	5J14	17	3360 - 87
R82077	5J16	17	3360 - 89
R82077	6B15	17	3360A - 3
R82077	6B17	17	3360A - 5
R82077	6B19	23	3360A - 7
R82077	6B21	23	3360A - 9
R82086	5J6	22	3360 - 79
R82086	5J8	22	3360 - 81
R82088	5J14	10	3360 - 87
R82088	6B15	10	3360A - 3
R82090	5J14	7	3360 - 87
R82090	5J16	7	3360 - 89

NUMERICAL INDEX - CONTINUED

PART NO.	GRID	KEY	PAGE
R82090	6B15	7	3360A - 3
R82090	6B17	7	3360A - 5
R82092	5J6	31	3360 - 79
R82092	5J8	31	3360 - 81
R82093	5J6	16	3360 - 79
R82093	5J8	16	3360 - 81
R82095	5J2	17	3360 - 75
R82095	5J4	19	3360 - 77
R82095	5J6	10	3360 - 79
R82095	5J8	10	3360 - 81
R82095	6B23	13	3360A - 11
R82095	6B25	13	3360A - 13
R82131	1H12	9	0420 - 1
R82131	1H14	5	0420 - 3
R82192	3G5	3	2160 - 1
R82198	1C7	2	0250 - 7
R82437	3E22	10	1830 - 33
R82437	3E24	19	1830 - 35
R82566	2B14	12	0960 - 1
R82566	2B16	12	0960 - 2
R82570	2B14	4	0960 - 1
R82570	2B15	4	0960 - 1A
R82570	2B16	4	0960 - 2
R82570	2B17	4	0960 - 3
R82571	2B14	10	0960 - 1
R82571	2B15	10	0960 - 1A
R82820	1F18	3	0402 - 2
R82896	1F19	9A	0402 - 3
R82945	1H7	1	0417 - 1
R82954	4E6	2	3160 - 39
R82954	4E7	2	3160 - 40
R82960	4E10	16	3160 - 43
R82960	4E11	16	3160 - 44
R82969	2B14	2	0960 - 1
R82969	2B16	16	0960 - 2
R82969	2B17	16	0960 - 3
R83169	1F23	20	0404 - 1
R83169	1F25	11	0404 - 3
R83169	1F25	24	0404 - 3
R83169	1G2	1	0404 - 5
R83169	1G4	1	0404 - 7
R83169	1G4	2	0404 - 7
R83211	5J2	33	3360 - 75
R83211	5J4	32	3360 - 77
R83213	5J2	22	3360 - 75
R83213	5J12	8	3360 - 85
R83213	6B23	21	3360A - 11
R83215	6B23	11	3360A - 11
R83215	6B25	11	3360A - 13
R83216	6B23	10	3360A - 11
R83216	6B25	10	3360A - 13
R83221	6B23	33	3360A - 11
R83221	6B25	29	3360A - 13
R83513	3G7	25	2160 - 3
R83518	1C11	14	0250 - 11
R83576	6B15	11	3360A - 3
R83577	5I20	15	3360 - 69
R83577	5I22	15	3360 - 71
R83578	5J8	14	3360 - 81
R84663	1G23	19	0413 - 5
R84978	1H24	5	0429 - 2
R85363	1G18	1	0409 - 3
R85391	1H24	2	0429 - 2
R85557	3G7	26	2160 - 3
R85558	3G7	27	2160 - 3
R85687	1G18	7	0409 - 3
R85688	3E18	7	1830 - 29
R86103	5J2	9	3360 - 75
R86103	5J4	11	3360 - 77
R86103	5J12	22	3360 - 85
R86290	5J2	19	3360 - 75
R86290	5J4	21	3360 - 77
R86290	5J12	13	3360 - 85
R86290	6B23	15	3360A - 11
R86290	6B25	15	3360A - 13
R87627	1I1	3	0452 - 1
R87627	1I3	32	0452 - 3
R87764	2E12	2	1672 - 2
R87907	3I6	2	2160 - 39
R88114	2B16	10	0960 - 2
R88114	2B17	10	0960 - 3
R89332	3G9	34	2160 - 5
R89332	3G15	10	2160 - 11
R89480	5I17	8	3360 - 66
R89480	5I18	8	3360 - 67
R89562	3G7	1	2160 - 3
R89824	1F15	7	0401 - 2
R89824	1F16	22	0401 - 3
R89879	1G19	6	0410 - 2
R89879	1I1	10	0452 - 1
R89879	1I3	29	0452 - 3
R90170	1F23	20	0404 - 1
R90170	1G2	1	0404 - 5
R90267	2B16	8	0960 - 2
R90267	2B17	8	0960 - 3
R90548	3G9	8	2160 - 5
R90565	2B14	16	0960 - 1
R90565	2B15	16	0960 - 1A
R90584	3G9	19	2160 - 5
R90591	3G9	10	2160 - 5
R90648	1G7	1	0404 - 10
R90648	1I2	1	0452 - 2
R90653	5J12	15	3360 - 85
R90653	5J12	17	3360 - 85
R90658	1G19	14	0410 - 2
R90658	1G20	2	0410 - 3
R90658	1I1	6	0452 - 1
R90658	1I3	22	0452 - 3
R90692	1G18	10	0409 - 3
R91360	1G23	21	0413 - 5
R91597	1G10	5A	0407 - 2
R91624	5J6	21	3360 - 79
R91624	5J8	21	3360 - 81
R91708	1H4	1	0415 - 1
R91726	2B14	6	0960 - 1
R91726	2B15	6	0960 - 1A
R91729	6C3	9	3360A - 16
R91729	6C4	9	3360A - 17
R91729	6C9	9	3360A - 24
R91729	6C10	9	3360A - 25
R91730	4E6	20	3160 - 39
R91730	4E7	20	3160 - 40
R91730	4E8	18	3160 - 41
R91730	4E9	18	3160 - 42
R91730	5J14	20	3360 - 87
R91730	5J16	20	3360 - 89
R91730	6B15	20	3360A - 3
R91730	6B17	20	3360A - 5
R91731	4E10	18	3160 - 43
R91731	4E11	18	3160 - 44
R91731	5I17	19	3360 - 66
R91731	5I18	19	3360 - 67
R91731	5I20	19	3360 - 69
R91731	5I22	19	3360 - 71
R91731	6B19	24	3360A - 7
R91731	6B21	24	3360A - 9
R91731	6C13	19	3360A - 29
R91889	1G18	2	0409 - 3
R92208	2B16	6	0960 - 2
R92208	2B17	6	0960 - 3
R92309	5J6	18	3360 - 79
R92309	5J8	18	3360 - 81
R92309	6B18	9	3360A - 6
R92310	5J6	19	3360 - 79
R92310	6B18	14	3360A - 6
R92314	6B18	10	3360A - 6
R92321	5J6	13	3360 - 79
R92352	1G21	7	0413 - 2
R92425	1G18	12	0409 - 3
R92425	1I1	12	0452 - 1
R92425	1I2	9	0452 - 2
R92436	1H9	7	0418 - 2
R92898	3G9	9	2160 - 5
R93219	2G5	6	1674 - 32
R93220	2G5	6	1674 - 32
R93221	2G5	6	1674 - 32
R93222	2G5	6	1674 - 32
R93755	5I17	1	3360 - 66
R93755	5I18	1	3360 - 67
R93755	5I20	1	3360 - 69
R93755	5I22	1	3360 - 71
R93910	1G18	7	0409 - 3
R94417	2B14	14	0960 - 1
R94418	2B14	8	0960 - 1
R94418	2B15	8	0960 - 1A
R96445	6C7	17	3360A - 21
R96445	6C9	11	3360A - 24
R96703	1H22	9	0422 - 5
R96784	5J2	16	3360 - 75
R96784	5J4	18	3360 - 77
R97185	1F25	15	0404 - 3
R97185	1G14	11	0407 - 5
R97348	1I1	2	0452 - 1
R97348	1I3	27	0452 - 3
R97350	1H15	1	0421 - 1
R97350	1I3	24	0452 - 3
R97351	1H25	10	0433 - 1
R97351	1I2	4	0452 - 2
R97352	1G13	1	0407 - 4
R97352	1I3	23	0452 - 3
R97454	1F21	13	0402 - 5
R97454	1I3	19	0452 - 3
R97490	1G18	11	0409 - 3
R97491	1G18	11	0409 - 3
R97492	1G18	10	0409 - 3
R97493	1G18	10	0409 - 3
R97628	1G18	9	0409 - 3
R97628	1G18	15	0409 - 3
R97724	6B18	2	3360A - 6
R97724	6B20	2	3360A - 8
R97726	5J6	23	3360 - 79
R97726	5J8	23	3360 - 81
R97773	1F21	5	0402 - 5
R97773	1I3	21	0452 - 3
R97848	6B14	2	3360A - 2
R97848	6B16	2	3360A - 4
R98062	1G18	11	0409 - 3
R98063	1G18	7	0409 - 3
R98322	6C3	3	3360A - 16
R98322	6C4	3	3360A - 17
R98322	6C9	3	3360A - 24

NUMERICAL INDEX - CONTINUED

PART NO.	GRID	KEY	PAGE
R98322	6C10	3	3360A - 25
R98323	6C3	3	3360A - 16
R98323	6C4	3	3360A - 17
R98323	6C9	3	3360A - 24
R98323	6C10	3	3360A - 25
R98335	1G18	7	0409 - 3
R98472	1H7	12	0417 - 1
R98486	1H11	8	0419 - 3
R98486	1I3	18	0452 - 3
R98487	1H11	18	0419 - 3
R98487	1I2	10	0452 - 2
R98488	1G11	8	0407 - 2A
R98488	1I2	3	0452 - 2
R98489	1H11	9	0419 - 3
R98489	1I2	2	0452 - 2
R98667	5J12	10	3360 - 85
R98844	1J2	10	0530 - 2
R98915	1B17	7	0201 - 1
R99016	3F20	11	2001 - 3
SE500292	1G6	1	0404 - 9
SE500293	1G6	1	0404 - 9
SE500294	1G6	1	0404 - 9
SE500305	1G6	1	0404 - 9
SE500306	1G6	1	0404 - 9
SE500307	1G6	1	0404 - 9
SE500318	1G6	1	0404 - 9
TF23	5B24	4	3302 - 3
TF23	5C1	4	3302 - 4
TF23	5C3	4	3302 - 6
TF23	5C5	4	3302 - 8
TF23	5C7	4	3302 - 9
TF23D	5C10	5	3302 - 11B
TF23D	5C12	11	3302 - 11D
TF23P	5B24	6	3302 - 3
TF23P	5C2	6	3302 - 5
TF23P	5C4	6	3302 - 7
TF23P	5C5	6	3302 - 8
TF23P	5C7	6	3302 - 9
TF23P	5C10	4	3302 - 11B
TF23P	5C12	8	3302 - 11D
TH104034	3E10	12	1830 - 21
TY15130	2D13	..	1330 - 1
TY15939	2D13	..	1330 - 1
TY15969	1J5	12	0560 - 3
TY15969	1J7	23	0560 - 5
TY15969	2D14	..	1330 - 2
TY16004	2D21	..	1369 - 7
TY16005	2D21	..	1369 - 7
TY16285	2D14	..	1330 - 2
TY16302	3B25	20	1810 - 9
TY16304	3C8	17	1810 - 15
TY16304	3C10	49	1810 - 17
TY16304	3C12	39	1810 - 19
TY16312	3B25	20	1810 - 9
TY16312	3B25	41	1810 - 9
TY16312	3C8	17	1810 - 15
TY16312	3C8	43	1810 - 15
TY16312	3C10	49	1810 - 17
TY16312	3C10	50	1810 - 17
TY16312	3C12	39	1810 - 19
TY16312	3C12	46	1810 - 19
TY21766	2E9	7	1671 - 3
TY21766	2E11	10	1671 - 5
TY22462	1E9	11	0341 - 17
TY22462	1J5	14	0560 - 3
TY22462	1J7	12	0560 - 5
TY22462	2C2	13	0960 - 13
TY22462	2C4	13	0960 - 15
TY22462	2C15	9	1060 - 7
TY22462	3I6	36	2160 - 39
TY22462	6C17	25	3360A - 33
TY22462	6C19	18	3360A - 35
TY22464	1F10	5	0360 - 18
TY22464	1F11	1	0360 - 19
TY22464	2B25	14	0960 - 11
TY22464	2C19	10	1115 - 3
TY22464	2C21	11	1115 - 5
TY22464	3H6	22	2160 - 23B
TY22464	3H12	5	2160 - 27
TY22464	3H15	7	2160 - 31
TY22464	3H17	1	2160 - 33
TY22464	3H19	1	2160 - 33B
TY22464	3H19	11	2160 - 33B
TY22464	3I8	23	2160 - 41
TY22470	1D8	9	0315 - 5
TY22470	1D10	17	0315 - 7
TY22470	1D12	24	0315 - 9
TY22470	1E6	4	0341 - 15
TY22471	1H18	2	0422 - 1B
TY22472	1I11	5	0510 - 3
TY22472	1I11	28	0510 - 3
TY22472	1I11	31	0510 - 3
TY22472	1I13	8	0510 - 3B
TY22472	1I13	27	0510 - 3B
TY22489	6C21	27	3360A - 37
TY22492	6C17	13	3360A - 33
TY22494	6C19	19	3360A - 35
TY22495	6C17	12	3360A - 33
TY22495	6C19	19	3360A - 35
TY22495	6C21	11	3360A - 37
TY22562	1F10	6	0360 - 18
TY22562	1F11	2	0360 - 19
TY22562	2C19	11	1115 - 3
TY22562	2C21	12	1115 - 5
TY22562	3H12	10	2160 - 27
TY22562	3H15	9	2160 - 31
TY22562	3H17	4	2160 - 33
TY24446	3C2	17	1810 - 9B
TY24446	3C2	21	1810 - 9B
TY24446	3C2	..	1810 - 9B
TY24446	3C8	12	1810 - 15
TY24446	3C8	..	1810 - 15
TY24446	3C10	12	1810 - 17
TY24446	3C10	..	1810 - 17
TY24485	2E12	1	1672 - 2
TY24485	2E15	1	1672 - 5
TY24485	2F12	8	1674 - 17
TY25803	2E9	7	1671 - 3
TY25803	2E11	10	1671 - 5
TY6127	2E9	7	1671 - 3
TY6127	2E11	10	1671 - 5
TY6305	2D14	..	1330 - 2
TY6626	3E18	16	1830 - 29
TY6750	2E12	1	1672 - 2
TY6750	2E15	1	1672 - 5
TY6750	2F12	8	1674 - 17
TY6750	2F14	8	1674 - 19
TY6765	3E19	8	1830 - 30
TY6765	3E24	35	1830 - 35
TY6784	3E19	8	1830 - 30
TY6799	2E15	1	1672 - 5
TY6799	2E15	2	1672 - 5
T100017	1E14	11	0350 - 1
T100018	1D16	1	0325 - 2
T100019	1E15	15	0350 - 2
T100021	1E15	16	0350 - 2
T100188	4B18	8	3102 - 5
T100188	4B22	4	3102 - 9
T100188	5F21	18	3340 - 25
T100188	5F23	7	3340 - 27
T100188	5F24	2	3340 - 28
T100188	5J14	28	3360 - 87
T100188	5J16	28	3360 - 89
T100188	6B15	24	3360A - 3
T100188	6B17	24	3360A - 5
T100195	2D7	17	1320 - 3
T100195	5D10	34	3315 - 17
T100195	5D22	19	3315 - 29
T100195	5E16	21	3315 - 39
T100196	2D7	17	1320 - 3
T100196	5D10	34	3315 - 17
T100196	5D22	19	3315 - 29
T100196	5E16	21	3315 - 39
T100294	1I11	24	0510 - 3
T100294	1I13	26	0510 - 3B
T100317	4E6	22	3160 - 39
T100449	2C17	5	1115 - 1
T100451	2C17	17	1115 - 1
T100474	2G8	16	1676 - 3
T100475	2G8	15	1676 - 3
T100526	3H17	8	2160 - 33
T100628	1D18	1	0341 - 2
T100628	1D19	13	0341 - 3
T100629	1J3	2	0540 - 1
T100705	2G18	2	1749 - 1
T100755	5F17	5	3340 - 21
T100762	5F17	1	3340 - 21
T100763	5F17	2	3340 - 21
T100812	2G8	20	1676 - 3
T100813	1B24	7	0230 - 3
T100858	1J1	6	0530 - 1
T100859	1I20	6	0520 - 2
T100924	1E14	11	0350 - 1
T100926	1D23	3	0341 - 7
T100926	1E2	3	0341 - 11
T100926	1E12	3	0341 - 21
T100974	6C2	26	3360A - 15
T100974	6C7	26	3360A - 21
T100981	5H24	16	3360 - 49
T101084	5F24	7	3340 - 28
T101084	5F24	13	3340 - 28
T101084	5F25	7	3340 - 29
T101084	5F25	13	3340 - 29
T101090	3C6	8	1810 - 13
T101148	5F24	14	3340 - 28
T101148	5F25	14	3340 - 29
T101569	3G19	9	2160 - 14
T101571	3G19	5	2160 - 14
T101624	2G17	3	1746 - 4
T101624	6C5	7	3360A - 19
T101624	6C8	6	3360A - 22
T101624	6C11	7	3360A - 27
T101807	3B23	10	1810 - 7
T101807	3C19	15	1810 - 27
T102005	6C21	21	3360A - 37
T102781	2F4	2	1674 - 9
T102781	2F6	2	1674 - 11
T102781	2F8	29	1674 - 13
T102934	2E9	15	1671 - 3
T102934	2E9	29	1671 - 3
T102934	2E11	18	1671 - 5

NUMERICAL INDEX - CONTINUED

PART NO.	GRID	KEY	PAGE
T102934	2E11	21	1671 - 5
T102934	2E11	32	1671 - 5
T102934	2F2	5	1674 - 7
T102934	2F8	12	1674 - 13
T102934	2F10	12	1674 - 15
T102934	2F12	18	1674 - 17
T102934	2F14	18	1674 - 19
T102934	2F16	18	1674 - 19B
T102934	3D16	18	1830 - 3
T102934	5I6	11	3360 - 55
T102934	5I6	24	3360 - 55
T103461	1J5	4	0560 - 3
T103461	1J5	26	0560 - 3
T103461	1J7	5	0560 - 5
T104773	5G8	6	3360 - 7
T104773	5G8	17	3360 - 7
T104773	5G14	6	3360 - 13
T104773	5G14	17	3360 - 13
T104773	5G16	6	3360 - 15
T104773	5G16	17	3360 - 15
T104773	5G18	18	3360 - 17
T104773	5G18	22	3360 - 17
T104773	5G21	12	3360 - 20
T104773	5G21	14	3360 - 20
T104773	5G22	10	3360 - 21
T105564	4D5	9	3160 - 16
T105710	5B24	15	3302 - 3
T105720	4D20	32	3160 - 31
T105720	4D24	29	3160 - 35
T105720	4E2	29	3160 - 37
T105740	3C8	38	1810 - 15
T105740	3C10	20	1810 - 17
T105760	1I20	5	0520 - 2
T105767	2G15	1	1746 - 2
T105773	4D20	29	3160 - 31
T105773	4D24	34	3160 - 35
T105773	4E2	6	3160 - 37
T105773	5H24	3	3360 - 49
T105773	6C21	12	3360A - 37
T105774	5H14	4	3360 - 39
T105774	5I10	8	3360 - 59
T105901	1D25	17	0341 - 9
T105902	1D25	18	0341 - 9
T105903	1D25	7	0341 - 9
T106099	1B24	10	0230 - 3
T106147	4C19	5	3160 - 4
T106147	4C23	2	3160 - 9
T106147	4C25	3	3160 - 11
T106161	5F3	17	3340 - 7
T106175	3G21	15	2160 - 17
T106175	3H2	5	2160 - 21
T106183	4C22	18	3160 - 8
T106183	4C24	9	3160 - 10
T106183	4C25	15	3160 - 11
T106184	4C22	19	3160 - 8
T106184	4C24	8	3160 - 10
T106194	4C24	10	3160 - 10
T106206	3I10	19	2160 - 43
T106207	3I10	21	2160 - 43
T106208	3I10	7	2160 - 43
T106258	5F17	13	3340 - 21
T106258	5F23	8	3340 - 27
T106259	5F17	9	3340 - 21
T106260	5F17	7	3340 - 21
T106261	5F17	1	3340 - 21
T106262	5F17	5	3340 - 21
T106298	4C20	4	3160 - 5
T106298	4C23	13	3160 - 9
T106298	4C23	15	3160 - 9
T106298	5D4	20	3315 - 11
T106298	5G10	9	3360 - 9
T106298	5G12	9	3360 - 11
T106298	5G12	12	3360 - 11
T106298	5G19	7	3360 - 18
T106298	5G20	9	3360 - 19
T106298	5G21	26	3360 - 20
T106305	5G8	5	3360 - 7
T106305	5G14	5	3360 - 13
T106305	5G16	5	3360 - 15
T106305	5G18	5	3360 - 17
T106305	5G21	3	3360 - 20
T106306	4C25	14	3160 - 11
T106306	5G8	1	3360 - 7
T106306	5G14	1	3360 - 13
T106306	5G16	1	3360 - 15
T106306	5G18	1	3360 - 17
T106306	5G21	1	3360 - 20
T106361	1J10	7	0641 - 1
T106368	4C17	6	3160 - 2
T106368	4C20	3	3160 - 5
T106369	4C17	4	3160 - 2
T106370	4C17	5	3160 - 2
T106389	4E6	22	3160 - 39
T106428	3F2	17	1830 - 37
T106428	3F4	18	1830 - 39
T106429	3F2	42	1830 - 37
T106430	3F2	40	1830 - 37
T106430	3F4	29	1830 - 39
T106493	5E23	7	3340 - 1
T106594	3H8	10	2160 - 25
T106594	3H10	10	2160 - 25B
T106595	3H8	9	2160 - 25
T106595	3H10	9	2160 - 25B
T107116	2E11	13	1671 - 5
T107117	2E9	9	1671 - 3
T107117	2E11	8	1671 - 5
T10745	2E12	1	1672 - 2
T10745	2E12	4	1672 - 2
T10745	2E15	4	1672 - 5
T108235	1J8	1	0560 - 6
T11180	1H5	1	0416 - 2
T11180	1H6	1A	0416 - 3
T11234	1B24	19	0230 - 3
T11234	3F22	3	2002 - 2
T11290	1G25	6	0413 - 7
T112958	5H10	15	3360 - 35
T112958	5H12	22A	3360 - 37
T112995	1I9	12	0510 - 1
T112995	1J2	1	0530 - 2
T112996	1I9	15	0510 - 1
T113021	4C20	17	3160 - 5
T113029	5G8	16	3360 - 7
T113029	5G14	16	3360 - 13
T113029	5G16	16	3360 - 15
T113029	5G18	23	3360 - 17
T113029	5G21	13	3360 - 20
T113029	5G22	5	3360 - 21
T113057	4C15	10	3140 - 4
T113127	1D16	10	0325 - 2
T113128	1C3	7	0250 - 3
T113166	1D18	12	0341 - 2
T113166	1D19	12	0341 - 3
T113279	5F19	11	3340 - 23
T113279	5F21	9	3340 - 25
T113315	1I9	5	0510 - 1
T113347	5F23	10	3340 - 27
T113347	6C2	30	3360A - 15
T113347	6C7	30	3360A - 21
T113400	5F15	11	3340 - 19
T113400	5F16	11	3340 - 20
T113400	5G2	12	3340 - 31
T113402	1D19	24	0341 - 3
T113436	5F19	12	3340 - 23
T113755	5B22	7	3302 - 2
T113755	5B23	7	3302 - 2A
T113755	5C2	8	3302 - 5
T113755	5C4	8	3302 - 7
T113755	5C5	8	3302 - 8
T113755	5C7	8	3302 - 9
T113755	5C8	8	3302 - 10
T113756	5B22	8	3302 - 2
T113756	5B23	8	3302 - 2A
T113756	5B24	9	3302 - 3
T113756	5C2	9	3302 - 5
T113756	5C4	9	3302 - 7
T113756	5C5	9	3302 - 8
T113756	5C7	9	3302 - 9
T113756	5C8	9	3302 - 10
T114738	3G19	4	2160 - 14
T115030	3F22	5	2002 - 2
T116784	2B19	14	0960 - 5
T116785	2B19	9	0960 - 5
T116789	2B19	11	0960 - 5
T116794	1C19	9	0250 - 19
T116795	1C4	3	0250 - 4
T116796	2B19	8	0960 - 5
T116819	1C11	11	0250 - 11
T116820	1C7	15	0250 - 7
T116820	1C9	18	0250 - 9
T116820	1C11	3	0250 - 11
T116821	1C19	8	0250 - 19
T116822	1C11	18	0250 - 11
T116825	1C19	7	0250 - 19
T116826	2B19	3	0960 - 5
T116827	1C11	19	0250 - 11
T116828	2B19	10	0960 - 5
T116829	2B19	12	0960 - 5
T116831	1C11	8	0250 - 11
T116834	2B19	16	0960 - 5
T116835	2B19	18	0960 - 5
T116839	1C11	7	0250 - 11
T116840	1C11	7	0250 - 11
T116841	1C11	7	0250 - 11
T116842	1C11	7	0250 - 11
T116843	1C11	7	0250 - 11
T116844	1C11	7	0250 - 11
T116846	1C11	7	0250 - 11
T116848	1C11	7	0250 - 11
T116851	1C17	9	0250 - 17
T118593	2G10	30	1676 - 5
T118680	5F3	6	3340 - 7
T118680	5F5	6	3340 - 9
T118681	4D10	5	3160 - 21
T118681	4D10	..	3160 - 21
T118681	5H5	3	3360 - 30
T118683	4D5	6	3160 - 16
T118685	4D5	3	3160 - 16
T118685	4D6	3	3160 - 17
T118685	4D7	1	3160 - 18
T118685	4D8	3	3160 - 19
T118685	5D6	21	3315 - 13

NUMERICAL INDEX - CONTINUED

PART NO.	GRID	KEY	PAGE
T118685	5D8	16	3315 - 15
T118685	5G25	12	3360 - 25
T118685	5H1	11	3360 - 26
T118685	5H3	3	3360 - 28
T118699	4D5	7	3160 - 16
T118700	4D5	8	3160 - 16
T118702	4D5	15	3160 - 16
T118703	4D5	10	3160 - 16
T118704	4D5	14	3160 - 16
T118705	4D5	11	3160 - 16
T118708	4D6	7	3160 - 17
T118709	4D6	11	3160 - 17
T118710	4D6	13	3160 - 17
T118711	4D6	12	3160 - 17
T118712	4D6	8	3160 - 17
T118714	4D6	16	3160 - 17
T118715	4D6	15	3160 - 17
T118723	1I22	9	0520 - 4
T118725	1I20	1	0520 - 2
T118733	1E14	9	0350 - 1
T118736	4C19	7	3160 - 4
T118736	4C23	3	3160 - 9
T118736	4C25	1	3160 - 11
T118737	4C19	4	3160 - 4
T118737	4C23	6	3160 - 9
T118737	4C25	2	3160 - 11
T118768	4B18	4	3102 - 5
T118768	4B20	2	3102 - 7
T118799	4D5	4	3160 - 16
T118799	4D6	4	3160 - 17
T118799	4D8	8	3160 - 19
T118799	5G25	10	3360 - 25
T118799	5H1	4	3360 - 26
T118808	4D8	7	3160 - 19
T118808	5G25	9	3360 - 25
T118808	5H1	3	3360 - 26
T118848	1D17	17	0341 - 1
T118848	1D18	11	0341 - 2
T118848	1D19	20	0341 - 3
T118853	4C22	21	3160 - 8
T118853	4C24	2	3160 - 10
T118866	4D10	6	3160 - 21
T118866	5H5	10	3360 - 30
T118867	4D10	7	3160 - 21
T118867	5H5	9	3360 - 30
T118949	1B19	9	0210 - 1
T118950	1B19	10	0210 - 1
T118977	4B16	2	3102 - 3
T118977	4B18	4	3102 - 5
T11899	1G25	13	0413 - 7
T11918	1G25	1	0413 - 7
T119198	2G18	1	1749 - 1
T11935	1H1	10	0413 - 8
T11937	1H1	11	0413 - 8
T119564	3F22	10	2002 - 2
T119912	1B24	29	0230 - 3
T119912	1C23	5	0250 - 23
T119912	2G20	3	1749 - 3
T120259	2D9	26	1320 - 5
T120536	2F8	31	1674 - 13
T120536	5I6	17	3360 - 55
T120536	5I14	12	3360 - 63
T120540	3D6	15	1821 - 9
T120541	3D6	15	1821 - 9
T120543	3D6	14	1821 - 9
T120544	3D6	16	1821 - 9
T120545	3D6	13	1821 - 9

PART NO.	GRID	KEY	PAGE
T121258	4C20	5	3160 - 5
T121288	2E9	10	1671 - 3
T121288	2E11	11	1671 - 5
T121903	2G18	7	1749 - 1
T122034	5G8	10	3360 - 7
T122034	5G14	10	3360 - 13
T122034	5G16	10	3360 - 15
T122034	5G18	10	3360 - 17
T122034	5G21	9	3360 - 20
T122034	5G22	4	3360 - 21
T122063	4C19	2	3160 - 4
T122063	4C24	4	3160 - 10
T122063	4C25	19	3160 - 11
T122075	2C19	34	1115 - 3
T122076	1E15	14	0350 - 2
T122082	2C17	12	1115 - 1
T122374	3D24	17	1830 - 11
T12275	2D17	..	1369 - 3
T122979	3C8	19	1810 - 15
T122979	3C10	11	1810 - 17
T123001	1C19	3	0250 - 19
T123022	1C19	2	0250 - 19
T123023	1C19	2	0250 - 19
T123030	1C19	10	0250 - 19
T123031	1C19	11	0250 - 19
T123033	1C15	5	0250 - 15
T123034	1C15	10	0250 - 15
T123035	1C7	17	0250 - 7
T123036	1C7	18	0250 - 7
T123043	1C4	2	0250 - 4
T123044	1C4	6	0250 - 4
T123045	1C4	4	0250 - 4
T123046	1C4	5	0250 - 4
T123047	1C4	1	0250 - 4
T123048	1C4	13	0250 - 4
T123049	1C4	12	0250 - 4
T123050	1C4	7	0250 - 4
T123088	2E12	3	1672 - 2
T123088	2E15	6	1672 - 5
T123729	2E13	3	1672 - 3
T124602	2C11	33	1060 - 3
T125724	3F22	4	2002 - 2
T125808	5E2	16	3315 - 31
T125808	5E6	16	3315 - 33
T125808	5E10	26	3315 - 35
T125808	5E18	4	3315 - 41
T125808	5E20	4	3315 - 43
T12582	6C3	6	3360A - 16
T12582	6C4	6	3360A - 17
T125845	1B17	6	0201 - 1
T125874	1B17	4	0201 - 1
T125922	5G2	2	3340 - 31
T125926	5B22	3	3302 - 2
T125926	5B23	3B	3302 - 2A
T125926	5C2	7	3302 - 5
T125926	5C4	7	3302 - 7
T125926	5C5	7	3302 - 8
T125926	5C7	7	3302 - 9
T125926	5C8	7	3302 - 10
T125926	5F24	19	3340 - 28
T125926	5F25	11	3340 - 29
T125929	5F24	2	3340 - 28
T125931	5C2	13	3302 - 5
T125931	5C4	13	3302 - 7
T125931	5C6	13	3302 - 8A
T125931	5C7	13	3302 - 9
T125931	5C8	4	3302 - 10

PART NO.	GRID	KEY	PAGE
T125931	5F24	10	3340 - 28
T125931	5F25	10	3340 - 29
T125936	6B19	26	3360A - 7
T125936	6B21	26	3360A - 9
T125936	6B23	5	3360A - 11
T125936	6B25	5	3360A - 13
T125937	5F21	18	3340 - 25
T125937	5F23	7	3340 - 27
T125937	5F24	2	3340 - 28
T125937	5J14	28	3360 - 87
T125937	5J16	28	3360 - 89
T125937	6B15	24	3360A - 3
T125937	6B17	24	3360A - 5
T125938	5J14	24A	3360 - 87
T125938	5J14	24B	3360 - 87
T125938	5J16	24A	3360 - 89
T125938	5J16	24B	3360 - 89
T125939	5F24	9	3340 - 28
T125939	5J13	1A	3360 - 86
T125939	5J14	26A	3360 - 87
T125939	5J15	1A	3360 - 88
T125939	5J16	26A	3360 - 89
T125941	5J2	4	3360 - 75
T125941	5J4	5	3360 - 77
T125942	5J2	2A	3360 - 75
T125942	5J10	22A	3360 - 83
T125943	6B19	25A	3360A - 7
T125943	6B21	25A	3360A - 9
T125944	5J10	24	3360 - 83
T125944	5J12	30	3360 - 85
T125945	6B23	2A	3360A - 11
T125946	5F23	7	3340 - 27
T125946	5F24	2	3340 - 28
T125955	5F24	3	3340 - 28
T125955	5F25	3	3340 - 29
T125955	5J14	25	3360 - 87
T125955	5J16	25	3360 - 89
T125955	6B15	25	3360A - 3
T125955	6B17	25	3360A - 5
T125956	5E24	13	3340 - 2
T126033	5F23	12	3340 - 27
T126033	6B19	26	3360A - 7
T126033	6B21	26	3360A - 9
T126034	5F13	7	3340 - 17
T126052	3F4	30	1830 - 39
T126071	1F9	9	0360 - 17
T126095	4C17	7	3160 - 2
T126186	2C17	16	1115 - 1
T126299	3F2	51	1830 - 37
T126299	3F4	35	1830 - 39
T126301	4D12	22	3160 - 23
T126311	1I9	6	0510 - 1
T126774	4B16	5	3102 - 3
T126774	4B18	14	3102 - 5
T126774	4C4	7	3102 - 15
T126774	4C4	10	3102 - 15
T126833	1D18	10	0341 - 2
T126833	1D19	10	0341 - 3
T126833	3H17	10	2160 - 33
T126867	5E24	1	3340 - 2
T126868	5F1	1	3340 - 4
T126974	1D8	2	0315 - 5
T126974	4C10	4	3115 - 7
T126975	1D8	5	0315 - 5
T126975	1D10	5	0315 - 7
T126975	1D12	1	0315 - 9
T126975	4C10	4	3115 - 7

NUMERICAL INDEX - CONTINUED

PART NO.	GRID	KEY	PAGE
T126989	2D7	3	1320 - 3
T127125	2C11	34	1060 - 3
T127257	5H8	14	3360 - 33
T127258	5H8	6	3360 - 33
T127260	5H8	22	3360 - 33
T127261	5H8	19	3360 - 33
T127263	5H8	18	3360 - 33
T127264	5H8	21	3360 - 33
T127265	5H8	1	3360 - 33
T127268	5H8	2	3360 - 33
T127269	5H8	7	3360 - 33
T127437	6C13	1	3360A - 29
T127644	5F11	4	3340 - 15
T127673	5F11	6	3340 - 15
T127868	1C22	4	0250 - 22
T128064	2C13	11	1060 - 5
T128180	3I14	18	2160 - 47
T128181	3I14	22	2160 - 47
T128204	2G19	1	1749 - 2
T128205	2G19	3	1749 - 2
T128309	4C14	6	3140 - 3
T128437	3F22	8	2002 - 2
T128528	4E3	7	3160 - 38
T128529	4E3	5	3160 - 38
T128530	4E3	12	3160 - 38
T128531	4B24	18	3102 - 11
T128531	4C2	18	3102 - 13
T128532	4B24	2	3102 - 11
T128532	4C2	2	3102 - 13
T128533	4C4	6	3102 - 15
T128534	4B24	31	3102 - 11
T128534	4C4	1	3102 - 15
T128535	4B24	28	3102 - 11
T128535	4C4	2	3102 - 15
T128536	4B24	19	3102 - 11
T128536	4C2	19	3102 - 13
T128538	4C4	8	3102 - 15
T128658	5F1	1	3340 - 4
T128826	5G18	4	3360 - 17
T128889	4C4	15	3102 - 15
T12889	4C4	16	3102 - 15
T129165	2E9	3	1671 - 3
T129165	2E11	3	1671 - 5
T129732	1I18	31	0515 - 3
T129928	3B25	23	1810 - 9
T129938	2G8	14	1676 - 3
T130086	1I18	23	0515 - 3
T130110	3D18	16	1830 - 5
T130111	3D18	14	1830 - 5
T130112	3D18	12	1830 - 5
T130279	2C11	29	1060 - 3
T130336	5E24	2	3340 - 2
T130369	5F1	13	3340 - 4
T130425	3B23	4	1810 - 7
T130426	3C19	25	1810 - 27
T130525	2G10	29	1676 - 5
T130526	2G10	29	1676 - 5
T130662	1I11	27	0510 - 3
T130662	1I13	4	0510 - 3B
T130662	1I13	5	0510 - 3B
T130662	1I13	29	0510 - 3B
T130662	1I13	32	0510 - 3B
T131177	1D4	5	0315 - 1
T13119	1I8	7	0505 - 3
T13119	2D17	..	1369 - 3
T131327	3C19	6A	1810 - 27
T131327	3C19	6B	1810 - 27
T131327	3C21	4A	1810 - 29
T131327	3C21	4B	1810 - 29
T131564	3C6	3	1810 - 13
T131938	2D9	38	1320 - 5
T13213	1G9	2A	0407 - 1B
T13213	1G9	5	0407 - 1B
T13213	1H25	4	0433 - 1
T13213	1I2	7	0452 - 2
T132816	3B25	37	1810 - 9
T132817	3C6	14	1810 - 13
T132842	4C6	24	3115 - 3
T132842	4C10	36	3115 - 7
T132847	3B23	3	1810 - 7
T132889	3C2	10	1810 - 9B
T132945	2C19	32	1115 - 3
T132952	3C2	25	1810 - 9B
T132977	3B20	17	1810 - 5
T132978	3B20	8	1810 - 5
T132979	3B20	20	1810 - 5
T132983	4C12	10	3115 - 9
T132984	3C6	15	1810 - 13
T132993	3B18	6	1810 - 3
T132994	3B18	4	1810 - 3
T132995	2C6	24	0960 - 17
T133007	3C2	16	1810 - 9B
T133009	3B18	7	1810 - 3
T133009	5D20	21	3315 - 27
T133009	5D22	15	3315 - 29
T133009	5E10	20	3315 - 35
T133009	5E20	33	3315 - 43
T133010	3B18	6	1810 - 3
T133010	3B18	10	1810 - 3
T133022	4C10	43	3115 - 7
T133023	5C24	20	3315 - 7
T133023	5D2	2	3315 - 9
T133065	1I18	24	0515 - 3
T133078	2C11	18	1060 - 3
T133108	3B18	17	1810 - 3
T133113	4C10	17	3115 - 7
T133116	3C19	1	1810 - 27
T133190	3D18	17	1830 - 5
T133191	3D18	15	1830 - 5
T133192	3D18	10	1830 - 5
T133239	2E3	7	1399 - 3
T133239	3D24	2	1830 - 11
T133288	3F15	5	1927 - 2
T133289	3F15	3	1927 - 2
T133289	3F17	1	1927 - 4
T133291	4C12	1	3115 - 9
T133291	5D10	13	3315 - 17
T133291	5D18	26	3315 - 25
T133291	5D20	1	3315 - 27
T133291	5D22	1	3315 - 29
T133291	5E16	1	3315 - 39
T133292	5C16	10	3315 - 3
T133292	5C18	1	3315 - 3B
T133292	5C20	10	3315 - 5
T133292	5C22	1	3315 - 5B
T133292	5C24	17	3315 - 7
T133292	5D2	1	3315 - 9
T133327	3B20	21	1810 - 5
T133328	3B20	15	1810 - 5
T133333	3C2	22	1810 - 9B
T133333	3C10	3	1810 - 17
T133334	3C2	23	1810 - 9B
T133334	3C10	21	1810 - 17
T133335	3C2	18	1810 - 9B
T133335	3C8	11	1810 - 15
T133336	3C2	19	1810 - 9B
T133336	3C8	29	1810 - 15
T133344	3C16	20	1810 - 23
T133345	3C16	8	1810 - 23
T133347	3C16	16	1810 - 23
T133350	3C4	2	1810 - 11
T133351	3C4	14	1810 - 11
T133352	3C4	13	1810 - 11
T133353	3C4	1	1810 - 11
T133354	3C4	12A	1810 - 11
T133357	3B20	1	1810 - 5
T133386	5D18	9	3315 - 25
T133398	2C11	35	1060 - 3
T133399	3D24	1	1830 - 11
T133399	3E2	18	1830 - 13
T133405	3D18	4	1830 - 5
T133446	3B25	25	1810 - 9
T133463	3B25	16	1810 - 9
T133466	5D18	28	3315 - 25
T133487	1I18	29	0515 - 3
T133487	3C16	9	1810 - 23
T133491	3C2	5	1810 - 9B
T133492	3C2	7	1810 - 9B
T133493	3C2	2	1810 - 9B
T133495	3C2	4	1810 - 9B
T133509	5D10	29A	3315 - 17
T133509	5D18	10	3315 - 25
T133509	5E16	16A	3315 - 39
T133561	5F7	18	3340 - 11
T133567	3B25	12	1810 - 9
T133570	5I20	26	3360 - 69
T133570	5I22	26	3360 - 71
T133594	3C19	2	1810 - 27
T133610	3B23	15	1810 - 7
T133611	3B23	15	1810 - 7
T133618	5F7	10	3340 - 11
T133665	5C16	7	3315 - 3
T133665	5C20	7	3315 - 5
T133666	5C16	5	3315 - 3
T133666	5C20	5	3315 - 5
T133674	3B20	5	1810 - 5
T133674	3C4	11	1810 - 11
T133674	3C6	4	1810 - 13
T133674	3C6	24	1810 - 13
T133674	3C16	6	1810 - 23
T133674	3C17	6	1810 - 24
T133674	3C21	2B	1810 - 29
T133674	3F20	1	2001 - 3
T133689	5J6	28	3360 - 79
T133689	5J8	28	3360 - 81
T133699	1D25	13	0341 - 9
T133700	1D25	11	0341 - 9
T134340	2E22	3	1674 - 3
T134345	1D15	5	0315 - 12
T134363	4C12	4	3115 - 9
T134383	3B20	3	1810 - 5
T134383	5D10	33	3315 - 17
T134383	5D22	18	3315 - 29
T134383	5E16	20	3315 - 39
T134430	3C16	19A	1810 - 23
T134452	2D7	13	1320 - 3
T134453	2D7	13	1320 - 3
T134459	1H16	5	0422 - 1
T134489	3E10	6	1830 - 21
T134490	3D24	9	1830 - 11
T134490	3E2	8	1830 - 13

NUMERICAL INDEX - CONTINUED

PART NO.	GRID	KEY	PAGE
T134492	3D16	24	1830 - 3
T134493	3E10	2	1830 - 21
T134494	3D24	8	1830 - 11
T134494	3E2	4	1830 - 13
T134495	3D24	7	1830 - 11
T134495	3E2	5	1830 - 13
T134509	1D15	11	0315 - 12
T134579	3C16	13	1810 - 23
T134580	3C16	12	1810 - 23
T134582	3C8	25	1810 - 15
T134582	3C10	30	1810 - 17
T134583	3C8	30	1810 - 15
T134583	3C10	27	1810 - 17
T134584	3C8	24	1810 - 15
T134584	3C10	31	1810 - 17
T134586	3C8	34	1810 - 15
T134586	3C10	26	1810 - 17
T134590	3C16	21	1810 - 23
T134591	3C16	22	1810 - 23
T134592	3C16	4	1810 - 23
T134594	3B20	11	1810 - 5
T134603	3B20	17	1810 - 5
T134611	3F15	2	1927 - 2
T134635	2C6	10	0960 - 17
T134671	1D6	6	0315 - 3
T134754	3C8	28	1810 - 15
T134754	3C10	15	1810 - 17
T134755	3C8	26	1810 - 15
T134755	3C10	13	1810 - 17
T134782	2D7	18	1320 - 3
T134785	2D7	18	1320 - 3
T134805	2D7	11	1320 - 3
T134836	1E15	5	0350 - 2
T134850	3B20	1	1810 - 5
T134874	3B20	9	1810 - 5
T134874	3C4	11	1810 - 11
T134876	3B20	1	1810 - 5
T134877	5E4	45	3315 - 31B
T134877	5E10	2	3315 - 35
T134878	5E8	45	3315 - 33B
T134878	5E14	13	3315 - 37
T134881	5G25	7	3360 - 25
T134881	5H1	2	3360 - 26
T134887	2E18	4	1673 - 3
T134887	2E20	18	1673 - 5
T134895	3B20	7	1810 - 5
T134895	3C4	6	1810 - 11
T134895	3C12	42	1810 - 19
T134895	3C16	14	1810 - 23
T134895	3F20	28	2001 - 3
T134895	3F21	6	2002 - 1
T134896	3B20	16	1810 - 5
T134907	5D4	6	3315 - 11
T134907	5D6	6	3315 - 13
T134907	5D10	5	3315 - 17
T134907	5D14	5	3315 - 21
T134919	1E15	6	0350 - 2
T134921	1E15	13	0350 - 2
T134922	1E15	11	0350 - 2
T134923	1E15	7	0350 - 2
T134924	1E15	7	0350 - 2
T134938	1E15	7	0350 - 2
T134941	1D6	4	0315 - 3
T134961	3C4	7	1810 - 11
T134962	3C4	5	1810 - 11
T135000	3F21	3	2002 - 1
T135019	1B19	14	0210 - 1
T135033	1D5	8	0315 - 2
T135078	5I10	11	3360 - 59
T135176	1D8	11	0315 - 5
T135211	3C25	16	1821 - 3
T135241	5D18	11	3315 - 25
T135241	5E4	43	3315 - 31B
T135241	5E22	1	3315 - 45
T135246	3C21	8	1810 - 29
T135247	3C21	5	1810 - 29
T135282	3F7	16	1910 - 3
T135303	5F3	16	3340 - 7
T135303	5F5	17	3340 - 9
T135303	5F9	19	3340 - 13
T135304	5F3	17	3340 - 7
T135304	5F5	16	3340 - 9
T135304	5F9	18	3340 - 13
T135305	5F5	18	3340 - 9
T135305	5F9	20	3340 - 13
T135339	5F3	15	3340 - 7
T135342	1I18	13	0515 - 3
T135343	1I18	35	0515 - 3
T135349	1D17	13	0341 - 1
T135373	1B21	4	0210 - 3
T135377	4C17	8	3160 - 2
T135386	3C10	40	1810 - 17
T135387	3C10	23	1810 - 17
T135395	5D4	18	3315 - 11
T135395	5D4	27	3315 - 11
T135395	5G18	4	3360 - 17
T135398	4C25	16	3160 - 11
T135403	3C8	41	1810 - 15
T135404	3C8	35	1810 - 15
T135405	3C8	6	1810 - 15
T135406	3C8	9	1810 - 15
T135418	2C19	26	1115 - 3
T135419	2C19	38	1115 - 3
T135420	3C16	10	1810 - 23
T135421	3C8	32	1810 - 15
T135421	3C10	29	1810 - 17
T135423	3C8	8	1810 - 15
T135423	3C8	38	1810 - 15
T135423	3C10	20	1810 - 17
T135423	3C16	11	1810 - 23
T135425	3C8	31	1810 - 15
T135425	3C10	28	1810 - 17
T135427	3C8	23	1810 - 15
T135427	3C10	33	1810 - 17
T135479	3C16	17	1810 - 23
T135565	2D9	22	1320 - 5
T135567	2D7	20	1320 - 3
T135571	2D7	14	1320 - 3
T135582	3F12	6	1921 - 1
T135583	3C8	40	1810 - 15
T135583	3C10	38	1810 - 17
T135584	3C12	16	1810 - 19
T135586	3C8	7	1810 - 15
T135586	3C10	19	1810 - 17
T135589	5E24	4A	3340 - 2
T135590	3F12	4	1921 - 1
T135625	3C8	3	1810 - 15
T135625	3C10	42	1810 - 17
T135630	2D7	4A	1320 - 3
T135631	2D7	5A	1320 - 3
T135632	2D7	6A	1320 - 3
T135633	2D7	1A	1320 - 3
T135634	2D7	2A	1320 - 3
T135642	2D9	32	1320 - 5
T135675	3C2	14	1810 - 9B
T135680	3C10	43	1810 - 17
T135682	3C8	39	1810 - 15
T135682	3C10	37	1810 - 17
T135730	1D6	9	0315 - 3
T135736	3C4	1	1810 - 11
T135736	3C4	2	1810 - 11
T135736	3C4	13	1810 - 11
T135736	3C4	14	1810 - 11
T135736	3F21	5	2002 - 1
T135748	3C10	1	1810 - 17
T135748	3C19	7	1810 - 27
T135749	2C9	4	1011 - 1
T135764	3C23	5	1810 - 31
T13630	2C6	3	0960 - 17
T137302	3C25	9	1821 - 3
T137307	3F7	13	1910 - 3
T137308	3F7	3	1910 - 3
T137318	1I18	18	0515 - 3
T137321	1I18	32	0515 - 3
T137322	1I18	33	0515 - 3
T137349	2C19	29A	1115 - 3
T137349	2C19	29B	1115 - 3
T13742	4C8	13	3115 - 5
T13744	2F12	28	1674 - 17
T13744	2F14	28	1674 - 19
T13744	2F16	28	1674 - 19B
T138914	2D9	33	1320 - 5
T139101	3E12	8	1830 - 23
T139165	2D9	38	1320 - 5
T139706	5C1	1	3302 - 4
T139706	5C3	1	3302 - 6
T139706	5C5	1	3302 - 8
T139707	5C1	5	3302 - 4
T139707	5C3	5	3302 - 6
T139707	5C5	5	3302 - 8
T139806	2D7	12	1320 - 3
T139806	4B24	32	3102 - 11
T139806	4C14	13	3140 - 3
T139810	2D9	24	1320 - 5
T139812	2D7	15	1320 - 3
T139821	1I18	5	0515 - 3
T139827	1J1	9	0530 - 1
T139827	1J2	7	0530 - 2
T139939	3F14	1	1921 - 3
T140019	5C7	1	3302 - 9
T140019	5C8	1	3302 - 10
T140020	5C7	5	3302 - 9
T140020	5C8	5	3302 - 10
T140069	1E15	7	0350 - 2
T140070	1E15	7	0350 - 2
T140083	3C17	3	1810 - 24
T140086	4C14	7	3140 - 3
T140086	4C14	15	3140 - 3
T140086	4E6	23	3160 - 39
T140086	4E7	23	3160 - 40
T140092	5B24	2	3302 - 3
T140092	5C1	2	3302 - 4
T140092	5C3	2	3302 - 6
T140092	5C5	2	3302 - 8
T140092	5C7	2	3302 - 9
T140110	5C3	1	3302 - 6
T140110	5C7	1	3302 - 9
T140110	5C8	1	3302 - 10
T140111	5C3	5	3302 - 6
T140111	5C7	5	3302 - 9
T140111	5C8	5	3302 - 10

NUMERICAL INDEX - CONTINUED

PART NO.	GRID	KEY	PAGE
T140128	5C3	1	3302 - 6
T140128	5C5	1	3302 - 8
T140129	5C3	5	3302 - 6
T140129	5C5	5	3302 - 8
T140133	2D7	9	1320 - 3
T140174	2D9	28	1320 - 5
T140176	2D9	28	1320 - 5
T140179	2D9	29	1320 - 5
T140181	2D9	29	1320 - 5
T140207	1B24	6	0230 - 3
T140211	1B24	8	0230 - 3
T140211	1C1	2	0250 - 1
T140211	1C2	2	0250 - 2
T140229	5E18	34	3315 - 41
T140229	5E20	34	3315 - 43
T140260	2F12	23	1674 - 17
T140261	5E4	44A	3315 - 31B
T140261	5E8	44A	3315 - 33B
T140268	2C19	2	1115 - 3
T140271	3D14	4A	1822 - 3
T140277	1E15	6	0350 - 2
T140278	1E14	9	0350 - 1
T140283	2D7	8	1320 - 3
T140284	2D7	7	1320 - 3
T140288	5E22	3	3315 - 45
T140289	5E18	23	3315 - 41
T140289	5E22	2	3315 - 45
T140299	5D4	13	3315 - 11
T140299	5D6	13	3315 - 13
T140299	5D8	10	3315 - 15
T140299	5E22	2	3315 - 45
T140300	5D18	17	3315 - 25
T140300	5E16	13	3315 - 39
T140300	5E18	16	3315 - 41
T140300	5E18	25	3315 - 41
T140321	4C10	13	3115 - 7
T140323	4C10	14	3115 - 7
T140324	4C12	18	3115 - 9
T140325	4C12	15	3115 - 9
T140328	4C6	18	3115 - 3
T140328	4C8	20	3115 - 5
T140328	4C10	30	3115 - 7
T140328	4C10	31	3115 - 7
T140328	4C12	31	3115 - 9
T140328	5D4	11	3315 - 11
T140328	5D6	11	3315 - 13
T140328	5D8	12	3315 - 15
T140328	5D10	11	3315 - 17
T140328	5D10	28	3315 - 17
T140328	5D12	5	3315 - 19
T140328	5D14	13	3315 - 21
T140328	5D16	11	3315 - 23
T140328	5D18	15	3315 - 25
T140328	5D20	15	3315 - 27
T140328	5D22	9	3315 - 29
T140328	5E4	36	3315 - 31B
T140328	5E8	36	3315 - 33B
T140328	5E12	32	3315 - 35B
T140328	5E14	9	3315 - 37
T140328	5E16	15	3315 - 39
T140328	5E18	18	3315 - 41
T140328	5E18	22	3315 - 41
T140328	5E20	18	3315 - 43
T140328	5E20	22	3315 - 43
T140331	5C24	10	3315 - 7
T140355	4C10	29	3115 - 7
T140356	4C10	28	3115 - 7
T140357	4C6	16	3115 - 3
T140357	4C12	29	3115 - 9
T140362	5C2	10	3302 - 5
T140362	5C4	10	3302 - 7
T140362	5C6	10	3302 - 8A
T140362	5C7	10	3302 - 9
T140362	5C8	10	3302 - 10
T140362	5F24	8	3340 - 28
T140362	5F25	8	3340 - 29
T140363	3C4	2	1810 - 11
T140399	1I14	12A	0510 - 4
T140401	3C25	3	1821 - 3
T140401	3D6	11	1821 - 9
T140411	2D9	34	1320 - 5
T140411	5E4	46	3315 - 31B
T140411	5E10	1	3315 - 35
T140412	2D9	34	1320 - 5
T140412	5E8	43	3315 - 33B
T140412	5E12	43	3315 - 35B
T140419	2D7	10	1320 - 3
T140425	5F5	10	3340 - 9
T140425	5F9	15	3340 - 13
T140432	3B23	13	1810 - 7
T140432	3C19	21	1810 - 27
T14045	1E15	10	0350 - 2
T140470	1B17	11A	0201 - 1
T14050	1H12	19	0420 - 1
T140521	5B24	1	3302 - 3
T140522	5B24	5	3302 - 3
T140571	5E18	32A	3315 - 41
T140580	5G3	4	3340 - 32
T140588	5G3	1	3340 - 32
T140598	3F20	21	2001 - 3
T140620	5F5	15	3340 - 9
T140649	5E18	35	3315 - 41
T140649	5E20	35	3315 - 43
T14065	4E5	2	3160 - 38B
T140650	5E18	7	3315 - 41
T140650	5E20	7	3315 - 43
T140669	5B24	8	3302 - 3
T140673	5C3	1	3302 - 6
T140674	5C3	5	3302 - 6
T140740	5F5	12	3340 - 9
T140740	5F9	13	3340 - 13
T140751	3C8	22	1810 - 15
T140751	3C10	34	1810 - 17
T140780	2E18	11	1673 - 3
T140780	2E18	12	1673 - 3
T140790	3C10	48	1810 - 17
T140791	3C10	47	1810 - 17
T14083	2D5	7	1313 - 3
T140857	3C25	17	1821 - 3
T140858	3C25	10	1821 - 3
T140860	5F3	12	3340 - 7
T140880	5B23	3B	3302 - 2A
T140880	5C2	7	3302 - 5
T140880	5C4	7	3302 - 7
T140880	5C5	7	3302 - 8
T140880	5C7	7	3302 - 9
T140880	5F25	11	3340 - 29
T140881	5C2	13	3302 - 5
T140881	5C4	13	3302 - 7
T140881	5C6	13	3302 - 8A
T140881	5C7	13	3302 - 9
T140881	5C8	4	3302 - 10
T140881	5F25	10	3340 - 29
T140882	3C8	13	1810 - 15
T140882	3C10	25	1810 - 17
T140887	3C17	7	1810 - 24
T140891	1I11	14	0510 - 3
T140899	3C10	24	1810 - 17
T140905	5F25	9	3340 - 29
T140905	5J13	1B	3360 - 86
T140905	5J14	26A	3360 - 87
T140905	5J14	26B	3360 - 87
T140905	5J15	1B	3360 - 88
T140905	5J16	26A	3360 - 89
T140905	5J16	26B	3360 - 89
T140905	6B15	26	3360A - 3
T140905	6B17	26	3360A - 5
T140906	5F25	2	3340 - 29
T140907	5B24	7	3302 - 3
T140908	5B24	15	3302 - 3
T140911	3C8	20	1810 - 15
T140911	3C10	45	1810 - 17
T140912	3C10	46	1810 - 17
T140923	1D4	9	0315 - 1
T140923	2D7	19	1320 - 3
T141043	3C4	14	1810 - 11
T141051	2D9	24	1320 - 5
T141108	5E2	5	3315 - 31
T141108	5E6	5	3315 - 33
T141108	5E10	9	3315 - 35
T141109	5E8	38	3315 - 33B
T141109	5E10	28	3315 - 35
T141126	5D10	18	3315 - 17
T141126	5D18	28	3315 - 25
T141126	5D20	7	3315 - 27
T141126	5D22	5	3315 - 29
T141126	5E2	17	3315 - 31
T141126	5E6	17	3315 - 33
T141126	5E12	39	3315 - 35B
T141126	5E16	6	3315 - 39
T141126	5E18	30	3315 - 41
T141126	5E20	30	3315 - 43
T141128	1F3	11	0360 - 10
T141130	1F3	6	0360 - 10
T141131	1F3	5	0360 - 10
T141132	1F3	2	0360 - 10
T141151	3C8	10	1810 - 15
T141151	3C10	6	1810 - 17
T141151	3C10	44	1810 - 17
T141152	3C10	34	1810 - 17
T141170	4C12	10	3115 - 9
T141171	4C10	17	3115 - 7
T141234	3B20	26	1810 - 5
T141234	3C4	16	1810 - 11
T141234	6B15	..	3360A - 3
T141234	6B17	..	3360A - 5
T141235	3B20	26	1810 - 5
T141235	3C4	16	1810 - 11
T141242	3B20	17	1810 - 5
T141244	3B20	17	1810 - 5
T141257	3C4	12A	1810 - 11
T141265	2G10	29	1676 - 5
T141266	2G10	29	1676 - 5
T141285	3C8	5	1810 - 15
T141285	3C10	18	1810 - 17
T141298	5E22	4	3315 - 45
T141316	5D18	5	3315 - 25
T141316	5D18	9	3315 - 25
T141322	3B20	23	1810 - 5
T141375	1F3	4	0360 - 10
T141379	3C10	22	1810 - 17

NUMERICAL INDEX - CONTINUED

PART NO.	GRID	KEY	PAGE
T141379	3C10	24	1810 - 17
T141379	3C10	35	1810 - 17
T141380	3C10	22	1810 - 17
T141380	3C10	24	1810 - 17
T141380	3C10	35	1810 - 17
T141397	3D2	1	1821 - 5
T141426	1F3	14	0360 - 10
T141484	3D24	3	1830 - 11
T141484	3E2	20	1830 - 13
T141500	3B23	3	1810 - 7
T141506	3F7	17	1910 - 3
T141506	3F9	11	1910 - 5
T141529	3C8	19	1810 - 15
T141529	3C10	11	1810 - 17
T141566	1C24	10	0250 - 24
T141626	3E22	4	1830 - 33
T141652	2D7	20	1320 - 3
T141659	5F3	15	3340 - 7
T141724	2D7	20	1320 - 3
T141724	3B23	13	1810 - 7
T141724	3C19	21	1810 - 27
T141727	5F5	15	3340 - 9
T141727	5F9	12	3340 - 13
T141798	3F15	2	1927 - 2
T141859	3C19	6A	1810 - 27
T141859	3C19	6B	1810 - 27
T141859	3C21	4A	1810 - 29
T141859	3C21	4B	1810 - 29
T141872	5D6	19	3315 - 13
T141872	5D8	18	3315 - 15
T141872	5H4	1	3360 - 29
T141872	5H6	2	3360 - 31
T141904	3F7	16	1910 - 3
T141964	4C6	13	3115 - 3
T141964	4C6	22	3115 - 3
T142072	5B23	9	3302 - 2A
T142081	3I6	28	2160 - 39
T142081	3I8	5	2160 - 41
T142093	3I6	25	2160 - 39
T142093	3I8	35	2160 - 41
T142094	3B23	15	1810 - 7
T142094	3C19	20	1810 - 27
T142096	3I6	16	2160 - 39
T142096	3I8	34	2160 - 41
T142121	6B19	26	3360A - 7
T142121	6B21	26	3360A - 9
T142249	3F20	3A	2001 - 3
T142249	3F20	4	2001 - 3
T142249	3F20	5	2001 - 3
T142250	3F20	2	2001 - 3
T142414	2C19	29B	1115 - 3
T142434	3F20	9	2001 - 3
T142447	3C19	26	1810 - 27
T142447	3C21	13	1810 - 29
T142464	3B23	3	1810 - 7
T142464	3B23	17	1810 - 7
T142465	3B23	3	1810 - 7
T142465	3B23	19	1810 - 7
T142482	5G2	9	3340 - 31
T142482	5J14	24A	3360 - 87
T142482	5J14	24B	3360 - 87
T142482	5J16	24A	3360 - 89
T142482	5J16	24B	3360 - 89
T142483	5J2	2B	3360 - 75
T142483	5J4	3	3360 - 77
T142483	5J10	22B	3360 - 83
T142483	5J12	32	3360 - 85
T142484	5F13	3	3340 - 17
T142484	6B19	25B	3360A - 7
T142484	6B21	25B	3360A - 9
T142485	6B23	2B	3360A - 11
T142485	6B25	3	3360A - 13
T142516	1D8	5	0315 - 5
T142516	1D10	5	0315 - 7
T142517	3C14	17	1810 - 21
T142518	3C14	20	1810 - 21
T142519	3C12	14	1810 - 19
T142519	3C14	12	1810 - 21
T142520	3C12	13	1810 - 19
T142520	3C14	4	1810 - 21
T142616	1D6	1	0315 - 3
T142651	3B25	8	1810 - 9
T142651	3C16	5	1810 - 23
T142698	5J5	2	3360 - 78
T142698	5J7	2	3360 - 80
T142699	6B19	25B	3360A - 7
T142699	6B21	25B	3360A - 9
T142703	3D24	27	1830 - 11
T142703	3E2	12	1830 - 13
T142704	3D24	22	1830 - 11
T142704	3E12	3	1830 - 23
T142706	3D24	30	1830 - 11
T142706	3E2	23	1830 - 13
T142714	3D24	33	1830 - 11
T142714	3E12	5	1830 - 23
T142718	3D24	24	1830 - 11
T142718	3E2	24	1830 - 13
T142748	1I18	7B	0515 - 3
T142750	1I18	5	0515 - 3
T142819	3F9	2	1910 - 5
T142819	3F9	19	1910 - 5
T142875	3C16	19A	1810 - 23
T142875	3C16	19B	1810 - 23
T142887	2C6	10	0960 - 17
T142888	4B16	2	3102 - 3
T142888	4B18	4	3102 - 5
T142955	1J1	9	0530 - 1
T142955	1J2	7	0530 - 2
T142992	3B25	17	1810 - 9
T143070	5F14	3	3340 - 18
T143070	5F14	7	3340 - 18
T143166	2D13	..	1330 - 1
T143166	4C17	4	3160 - 2
T143167	2D13	..	1330 - 1
T143169	2D13	..	1330 - 1
T143169	3E6	49	1830 - 17
T143169	3F4	23	1830 - 39
T143207	5F21	3	3340 - 25
T143208	5F19	14	3340 - 23
T143209	5F19	2	3340 - 23
T143209	5F21	2	3340 - 25
T143213	3F10	3	1913 - 2
T143213	3F10	5B	1913 - 2
T143214	3F10	5B	1913 - 2
T143249	5F19	8	3340 - 23
T143262	6C5	16	3360A - 19
T143262	6C11	16	3360A - 27
T143647	5J14	..	3360 - 87
T143647	5J16	..	3360 - 89
T143647	6B19	26	3360A - 7
T143647	6B21	26	3360A - 9
T143679	4C4	8	3102 - 15
T143679	4C4	9	3102 - 15
T143802	4C4	5	3102 - 15
T143802	4C4	7	3102 - 15
T143937	5F21	14	3340 - 25
T143994	5F24	12	3340 - 28
T143994	5F25	12	3340 - 29
T144073	3C21	9	1810 - 29
T144129	5F19	15	3340 - 23
T144129	5F19	17	3340 - 23
T144129	5F21	15	3340 - 25
T144129	5F21	17	3340 - 25
T144130	5F19	13	3340 - 23
T144130	5F21	13	3340 - 25
T144184	5F19	7	3340 - 23
T144360	3D14	4A	1822 - 3
T144441	5F19	22	3340 - 23
T144532	5F21	12	3340 - 25
T144536	5F21	8	3340 - 25
T144537	5F21	7	3340 - 25
T145057	3B25	12	1810 - 9
T145057	3C2	29	1810 - 9B
T145143	3D18	18B	1830 - 5
T145143	3D20	13	1830 - 7
T145143	3D22	11	1830 - 9
T145219	4C14	12	3140 - 3
T145220	5F7	3	3340 - 11
T145253	4C17	7	3160 - 2
T145283	2D9	34	1320 - 5
T145283	5E8	43	3315 - 33B
T145283	5E14	12	3315 - 37
T145291	1D14	26	0315 - 11
T145295	1D25	17	0341 - 9
T145297	1D21	3	0341 - 5
T145346	5J14	28	3360 - 87
T145346	5J16	28	3360 - 89
T145346	6B19	..	3360A - 7
T145346	6B21	..	3360A - 9
T145353	5F7	8	3340 - 11
T145377	6C5	17	3360A - 19
T145377	6C11	17	3360A - 27
T145402	3B23	21	1810 - 7
T145402	3C2	26	1810 - 9B
T145402	3C10	10	1810 - 17
T145547	3D18	10	1830 - 5
T145559	5F3	15	3340 - 7
T145560	2D9	33	1320 - 5
T145608	3F10	10	1913 - 2
T145878	1J3	2	0540 - 1
T145896	2E18	3	1673 - 3
T145896	2E20	3	1673 - 5
T145897	2E18	3	1673 - 3
T145897	2E20	3	1673 - 5
T145907	3E24	6	1830 - 35
T145936	3D14	3	1822 - 3
T145936	3F7	20	1910 - 3
T145936	3F9	3	1910 - 5
T145936	3F10	13	1913 - 2
T145936	3F11	3	1913 - 3
T145936	3F12	14	1921 - 1
T145936	3F14	7	1921 - 3
T145959	3D18	4	1830 - 5
T145959	3D20	10	1830 - 7
T145959	3D22	8	1830 - 9
T145993	3C19	6B	1810 - 27
T145993	3C21	4B	1810 - 29
T146009	3F15	1	1927 - 2
T146010	3F15	1	1927 - 2
T146081	2D11	50	1320 - 5B
T146097	2D9	23	1320 - 5

NUMERICAL INDEX - CONTINUED

PART NO.	GRID	KEY	PAGE
T146098	2D9	23	1320 - 5
T146099	2D9	23	1320 - 5
T146102	1H16	5	0422 - 1
T146102	1H18	4	0422 - 1B
T146102	1H22	10	0422 - 5
T146102	2D7	13	1320 - 3
T146103	1H16	5	0422 - 1
T146104	2D7	13	1320 - 3
T146106	2D7	13	1320 - 3
T146262	3F2	42	1830 - 37
T146262	3F4	31	1830 - 39
T146388	2D9	27B	1320 - 5
T146399	2D9	27B	1320 - 5
T146412	2D7	2B	1320 - 3
T146413	2D7	4B	1320 - 3
T146414	2D7	5B	1320 - 3
T146415	2D7	6B	1320 - 3
T146416	2D9	35	1320 - 5
T146635	5F19	6	3340 - 23
T146635	5F21	6	3340 - 25
T146639	3D2	13	1821 - 5
T146639	3D2	14	1821 - 5
T146639	3D4	60	1821 - 7
T146652	3D2	6	1821 - 5
T146652	3D2	13	1821 - 5
T146652	3D4	60	1821 - 7
T146662	2D7	15	1320 - 3
T146687	5F15	8	3340 - 19
T146687	5F16	8	3340 - 20
T146687	5F19	25	3340 - 23
T146687	5F21	21	3340 - 25
T146688	6C8	9	3360A - 22
T146689	6C8	11	3360A - 22
T146757	4C6	1	3115 - 3
T146757	4C8	4	3115 - 5
T146759	2C9	2	1011 - 1
T146906	5G18	6	3360 - 17
T147000	5G18	4	3360 - 17
T147000	5G18	6	3360 - 17
T147001	5G18	6	3360 - 17
T147002	6B15	..	3360A - 3
T147002	6B17	..	3360A - 5
T147002	6B23	5	3360A - 11
T147002	6B25	5	3360A - 13
T147004	5G10	11	3360 - 9
T147004	5G12	15	3360 - 11
T147005	5F15	7	3340 - 19
T147005	5F16	7	3340 - 20
T147012	2D9	39	1320 - 5
T147012	5D4	7	3315 - 11
T147012	5D6	7	3315 - 13
T147012	5D10	35	3315 - 17
T147015	3B20	20	1810 - 5
T147070	2G14	4	1740 - 5
T147113	2G10	29	1676 - 5
T147119	2G10	29	1676 - 5
T147135	2D9	40	1320 - 5
T147139	2D9	40	1320 - 5
T147142	5F19	21	3340 - 23
T147142	5F21	28	3340 - 25
T147178	5J14	31	3360 - 87
T147178	5J16	31	3360 - 89
T147178	6B15	28	3360A - 3
T147178	6B17	28	3360A - 5
T147186	5F19	20	3340 - 23
T147187	5F19	20	3340 - 23
T147187	5F21	24	3340 - 25
T147188	5F21	25	3340 - 25
T147269	1B18	3	0201 - 2
T147357	2D9	36	1320 - 5
T147357	2D9	41	1320 - 5
T147440	5C8	2	3302 - 10
T147497	1C11	8	0250 - 11
T147687	3F10	9B	1913 - 2
T147687	3F10	10	1913 - 2
T147761	1D14	26	0315 - 11
T14787	6C2	8	3360A - 15
T14787	6C7	8	3360A - 21
T147876	3C2	16	1810 - 9B
T147877	3C2	16	1810 - 9B
T147894	3B18	23	1810 - 3
T147945	3C8	9	1810 - 15
T148000	1D25	1	0341 - 9
T148055	1I14	12B	0510 - 4
T148150	2D9	31	1320 - 5
T148151	2D9	40	1320 - 5
T148167	3B23	15	1810 - 7
T148167	3C19	20	1810 - 27
T148168	3B23	15	1810 - 7
T148168	3C19	20	1810 - 27
T148178	5E24	15	3340 - 2
T148178	5F24	3	3340 - 28
T148178	5F25	3	3340 - 29
T148178	5J14	25	3360 - 87
T148178	5J14	26A	3360 - 87
T148178	5J16	25	3360 - 89
T148178	5J16	26A	3360 - 89
T148182	4C6	2	3115 - 3
T148182	4C8	3	3115 - 5
T148187	5F7	6	3340 - 11
T148187	5F9	6	3340 - 13
T148228	3C17	3	1810 - 24
T148259	4C10	29	3115 - 7
T148260	4C10	28	3115 - 7
T148269	4C10	41	3115 - 7
T148269	4C12	40	3115 - 9
T148281	4C10	13	3115 - 7
T148282	4C10	14	3115 - 7
T148304	3F14	4	1921 - 3
T148313	2G14	6	1740 - 5
T148331	3F14	6	1921 - 3
T148346	5E24	4B	3340 - 2
T148346	6C13	20B	3360A - 29
T148347	1B19	14	0210 - 1
T148349	1E9	32	0341 - 17
T148361	1I9	6	0510 - 1
T148374	5G4	1	3340 - 33
T148381	2G20	1	1749 - 3
T148382	2G20	2	1749 - 3
T148382	2G20	5	1749 - 3
T148382	2G20	6	1749 - 3
T148387	2G14	18	1740 - 5
T148387	5I20	30	3360 - 69
T148387	5I22	30	3360 - 71
T148395	1E14	9	0350 - 1
T148396	1E14	5	0350 - 1
T148397	1D6	7	0315 - 3
T148398	1D6	8	0315 - 3
T148409	2G14	3	1740 - 5
T148410	2G14	2	1740 - 5
T148422	3D14	4B	1822 - 3
T148431	3D20	1	1830 - 7
T148433	5D2	18A	3315 - 9
T148434	5D2	14	3315 - 9
T148435	5D2	10	3315 - 9
T148436	4C10	14	3115 - 7
T148436	5D2	21	3315 - 9
T148453	3C12	31	1810 - 19
T148454	3C12	26	1810 - 19
T148469	3B23	21	1810 - 7
T148469	3C2	26	1810 - 9B
T148469	3C10	10	1810 - 17
T148470	3C12	6	1810 - 19
T148471	3C12	5	1810 - 19
T148472	3C12	3	1810 - 19
T148473	3C12	17	1810 - 19
T148474	3C12	18	1810 - 19
T148478	3C12	4	1810 - 19
T148482	3C12	21	1810 - 19
T148485	3C12	24	1810 - 19
T148512	3F11	5	1913 - 3
T148573	1C22	5	0250 - 22
T148574	1C22	4	0250 - 22
T148633	3D20	6	1830 - 7
T148636	4C8	22	3115 - 5
T148640	4C8	11	3115 - 5
T148641	4C8	14	3115 - 5
T148642	4C8	16	3115 - 5
T148643	3F9	4	1910 - 5
T148657	3H2	24	2160 - 21
T148721	3F9	9	1910 - 5
T148722	3F9	5	1910 - 5
T148728	3C8	42	1810 - 15
T148738	1F9	7	0360 - 17
T148741	5D20	17	3315 - 27
T148741	5E14	7	3315 - 37
T148741	5E20	16	3315 - 43
T148741	5E20	25	3315 - 43
T148741	5E22	3	3315 - 45
T148743	4E6	22	3160 - 39
T148812	1E4	8	0341 - 13
T148812	1E4	25	0341 - 13
T148813	1E4	8	0341 - 13
T148813	1E4	26	0341 - 13
T148817	3F22	7	2002 - 2
T148818	3F22	1	2002 - 2
T148823	4C12	29	3115 - 9
T148825	4C12	18	3115 - 9
T148844	5D18	10	3315 - 25
T148848	5D10	9	3315 - 17
T148848	5D12	3	3315 - 19
T148848	5D14	9	3315 - 21
T148848	5D16	9	3315 - 23
T148848	5E20	23	3315 - 43
T148848	5E22	2	3315 - 45
T148875	3B20	20	1810 - 5
T148903	3B20	20	1810 - 5
T148917	3F2	9	1830 - 37
T148917	3F4	9	1830 - 39
T148940	5F19	7	3340 - 23
T148940	5F19	16	3340 - 23
T148940	5F19	17	3340 - 23
T148940	5F21	7	3340 - 25
T148940	5F21	16	3340 - 25
T148940	5F21	17	3340 - 25
T148941	5F19	7	3340 - 23
T148941	5F19	16	3340 - 23
T148941	5F19	17	3340 - 23
T148941	5F21	7	3340 - 25
T148941	5F21	16	3340 - 25
T148941	5F21	17	3340 - 25

NUMERICAL INDEX - CONTINUED

PART NO.	GRID	KEY	PAGE
T148942	5F19	7	3340 - 23
T148942	5F19	16	3340 - 23
T148942	5F19	17	3340 - 23
T148942	5F21	7	3340 - 25
T148942	5F21	16	3340 - 25
T148942	5F21	17	3340 - 25
T149083	1C24	13	0250 - 24
T149084	1C24	11A	0250 - 24
T149084	1C24	14	0250 - 24
T149093	1B17	6	0201 - 1
T149173	5D4	8	3315 - 11
T149173	5D6	8	3315 - 13
T149173	5D8	15	3315 - 15
T149173	5D14	14	3315 - 21
T149173	5D16	15	3315 - 23
T149199	3I6	32	2160 - 39
T149199	3I8	36	2160 - 41
T149268	3F23	3	2004 - 1
T149269	2F14	46	1674 - 19
T149269	2F16	46	1674 - 19B
T149301	1E14	4	0350 - 1
T149317	2C9	2	1011 - 1
T149324	3C17	9	1810 - 24
T149325	3C17	3	1810 - 24
T149398	3F12	6	1921 - 1
T149510	1I20	9B	0520 - 2
T149516	2G10	29	1676 - 5
T149517	2G10	29	1676 - 5
T149556	1I9	10	0510 - 1
T149556	3F2	46	1830 - 37
T149560	5H2	5	3360 - 27
T149570	5G23	3	3360 - 22
T149570	5G24	2	3360 - 23
T149571	5G23	3	3360 - 22
T149571	5G24	2	3360 - 23
T149575	5D6	18	3315 - 13
T149575	5G23	3	3360 - 22
T149575	5G24	2	3360 - 23
T149576	5D6	18	3315 - 13
T149576	5G23	3	3360 - 22
T149576	5G24	2	3360 - 23
T149577	5D8	17	3315 - 15
T149577	5G23	3	3360 - 22
T149577	5G24	2	3360 - 23
T149578	5D8	17	3315 - 15
T149578	5G23	3	3360 - 22
T149578	5G24	2	3360 - 23
T149618	1B17	11B	0201 - 1
T149633	5F9	3	3340 - 13
T149634	5F9	3	3340 - 13
T149651	2D11	47	1320 - 5B
T149657	3H19	6	2160 - 33B
T149658	3H19	7	2160 - 33B
T149677	1I9	5	0510 - 1
T149677	3F2	48	1830 - 37
T149678	1I9	6	0510 - 1
T149678	3F2	47	1830 - 37
T149680	3H19	12	2160 - 33B
T149740	5G8	16	3360 - 7
T149740	5G14	16	3360 - 13
T149740	5G16	16	3360 - 15
T149740	5G18	23	3360 - 17
T149740	5G21	13	3360 - 20
T149740	5G22	5	3360 - 21
T149743	1B19	12	0210 - 1
T149743	1B19	14	0210 - 1
T149745	1B19	14	0210 - 1
T149772	1B24	10	0230 - 3
T149829	2G10	35	1676 - 5
T149834	2G14	5	1740 - 5
T149843	3C12	23	1810 - 19
T149893	1B21	23	0210 - 3
T149894	1B21	11	0210 - 3
T149963	1D25	18	0341 - 9
T149964	1D25	7	0341 - 9
T150320	2D9	27C	1320 - 5
T150332	2D7	1B	1320 - 3
T150334	2D9	43	1320 - 5
T150335	2D9	42	1320 - 5
T150336	2D7	2B	1320 - 3
T150337	2D11	45	1320 - 5B
T150338	2D9	44	1320 - 5
T150355	2E18	2	1673 - 3
T150355	2E20	2	1673 - 5
T150407	1F11	4	0360 - 19
T150413	1E16	15	0350 - 3
T150417	6C13	28	3360A - 29
T150487	4B20	2	3102 - 7
T150511	1D25	1	0341 - 9
T150517	4B20	5	3102 - 7
T150605	3E24	27	1830 - 35
T150605	3F2	16	1830 - 37
T150753	3H4	69	2160 - 23
T150753	5H12	22B	3360 - 37
T150851	3H4	70	2160 - 23
T151072	1C21	8	0250 - 21
T151074	1C13	17	0250 - 13
T151075	1C17	7	0250 - 17
T151077	1C17	3	0250 - 17
T151080	1C17	11	0250 - 17
T151085	1C5	2	0250 - 5
T151087	1C13	15	0250 - 13
T151088	1C13	15	0250 - 13
T151089	1C9	13	0250 - 9
T151128	1D10	15	0315 - 7
T151128	1D12	22	0315 - 9
T151128	1E6	1	0341 - 15
T151129	1E6	11	0341 - 15
T151148	1D10	8	0315 - 7
T151148	1D12	14	0315 - 9
T151159	1B17	6	0201 - 1
T151169	2G10	33	1676 - 5
T151178	3B20	4	1810 - 5
T151192	5I6	18	3360 - 55
T151192	5I14	11	3360 - 63
T151248	6C5	21	3360A - 19
T151255	5H20	10	3360 - 45
T151255	5H22	10	3360 - 47
T151255	5I8	6	3360 - 57
T151261	1C9	15	0250 - 9
T151262	1C9	9	0250 - 9
T151264	1C13	14	0250 - 13
T151273	3H17	2	2160 - 33
T151328	4C22	12	3160 - 8
T151365	4D9	5	3160 - 20
T151374	3H6	28	2160 - 23B
T151488	3F11	11	1913 - 3
T151507	2D7	21	1320 - 3
T151507	2D9	35	1320 - 5
T151507	2D11	53	1320 - 5B
T151513	3C12	1	1810 - 19
T151638	3E24	3	1830 - 35
T151682	4D7	6	3160 - 18
T151753	1D18	15	0341 - 2
T151754	1D19	16	0341 - 3
T151783	2D9	40	1320 - 5
T151794	5D10	29B	3315 - 17
T151794	5D20	20	3315 - 27
T151794	5D22	14	3315 - 29
T151794	5E16	16B	3315 - 39
T151794	5E18	32B	3315 - 41
T151858	3E24	24	1830 - 35
T151863	3F15	5	1927 - 2
T151864	3F15	3	1927 - 2
T151864	3F17	1	1927 - 4
T151873	1I11	27	0510 - 3
T151873	1I13	4	0510 - 3B
T151873	1I13	33	0510 - 3B
T151914	1B21	22	0210 - 3
T151953	2D5	9	1313 - 3
T151953	4C14	15	3140 - 3
T152082	3H6	13	2160 - 23B
T152207	3D20	12	1830 - 7
T152207	3D22	10	1830 - 9
T152230	2E18	10	1673 - 3
T152233	1D12	1	0315 - 9
T152236	1E6	16	0341 - 15
T152236	2C15	18	1060 - 7
T152301	1C7	20	0250 - 7
T152361	4D7	3	3160 - 18
T152373	1C25	1	0250 - 25
T152374	4D7	4	3160 - 18
T152377	4D5	5	3160 - 16
T152392	2D5	1	1313 - 3
T152398	4D6	10	3160 - 17
T152399	5E4	44B	3315 - 31B
T152399	5E8	44B	3315 - 33B
T152399	5E10	18	3315 - 35
T152404	4D6	5	3160 - 17
T152442	2D5	5	1313 - 3
T152442	2D11	48	1320 - 5B
T152598	2G14	9	1740 - 5
T152608	2C2	30	0960 - 13
T152608	2C4	30	0960 - 15
T152648	3C12	22	1810 - 19
T152677	2G20	2	1749 - 3
T152677	2G20	6	1749 - 3
T152677	2G20	8	1749 - 3
T152691	2D9	42	1320 - 5
T152694	2D9	41	1320 - 5
T152698	1I15	6	0510 - 5
T152709	1E9	32	0341 - 17
T152759	5F7	13	3340 - 11
T152763	3F14	11	1921 - 3
T152764	3F14	13	1921 - 3
T152825	2D11	51	1320 - 5B
T152825	3I14	27	2160 - 47
T152826	4C10	31	3115 - 7
T152828	3H19	3	2160 - 33B
T152845	2D11	46	1320 - 5B
T152845	4C6	12	3115 - 3
T152845	4C6	19	3115 - 3
T152845	4C6	26	3115 - 3
T152845	4C6	29	3115 - 3
T152871	4D2	4	3160 - 13
T152871	4D4	4	3160 - 15
T152873	4D2	2	3160 - 13
T152873	4D4	2	3160 - 15
T152886	3E24	27	1830 - 35
T152886	3F2	16	1830 - 37
T152886	3F4	17	1830 - 39

NUMERICAL INDEX - CONTINUED

PART NO.	GRID	KEY	PAGE
T152922	1B19	12	0210 - 1
T152922	1B19	13	0210 - 1
T152922	1B19	14	0210 - 1
T152979	1C24	1	0250 - 24
T153055	2G8	26	1676 - 3
T153055	2G10	29	1676 - 5
T153055	2G10	35	1676 - 5
T153056	2G8	26	1676 - 3
T153056	2G10	29	1676 - 5
T153056	2G10	35	1676 - 5
T153058	5E20	32	3315 - 43
T153105	4D8	6	3160 - 19
T153138	3C12	32	1810 - 19
T153177	2E3	7	1399 - 3
T153177	3E2	19	1830 - 13
T153178	3E2	11	1830 - 13
T153180	5J2	2B	3360 - 75
T153180	5J4	3	3360 - 77
T153180	5J10	22B	3360 - 83
T153180	5J12	32	3360 - 85
T153243	1E6	11	0341 - 15
T153271	3C12	38	1810 - 19
T153303	2G14	19	1740 - 5
T153304	2G14	20	1740 - 5
T153373	2D5	6	1313 - 3
T153614	1I18	5	0515 - 3
T153680	2D9	37	1320 - 5
T153720	1C13	9	0250 - 13
T153721	1C13	6	0250 - 13
T153722	1C13	6	0250 - 13
T153723	2B21	2	0960 - 7
T153733	3C12	41	1810 - 19
T153734	3C12	32	1810 - 19
T153742	2B21	3	0960 - 7
T153743	2B21	4	0960 - 7
T153744	2B21	14	0960 - 7
T153802	3H6	56	2160 - 23B
T153803	3H6	35	2160 - 23B
T153981	3C12	44	1810 - 19
T154018	1I9	6	0510 - 1
T154018	1I11	13	0510 - 3
T154018	1I13	25	0510 - 3B
T154018	3F2	47	1830 - 37
T154034	2G17	1	1746 - 4
T154092	5F19	1A	3340 - 23
T154092	5F19	1C	3340 - 23
T154092	5F21	1A	3340 - 25
T154092	5F21	1C	3340 - 25
T154187	5H8	6	3360 - 33
T154240	3F9	5	1910 - 5
T154271	5F19	1A	3340 - 23
T154271	5F19	1B	3340 - 23
T154271	5F21	1A	3340 - 25
T154271	5F21	1B	3340 - 25
T154361	2G8	5	1676 - 3
T154361	3B23	8	1810 - 7
T154364	2D5	7	1313 - 3
T154440	1D10	15	0315 - 7
T154440	1D12	22	0315 - 9
T154440	1E6	1	0341 - 15
T154695	1I11	27	0510 - 3
T154695	1I13	4	0510 - 3B
T154695	1I13	33	0510 - 3B
T155064	3C17	4A	1810 - 24
T155065	3C17	4B	1810 - 24
T155126	3E24	6	1830 - 35
T155276	3F11	5	1913 - 3
T155333	1D17	13	0341 - 1
T155333	1D18	15	0341 - 2
T155333	1D19	16	0341 - 3
T155333	2C17	11	1115 - 1
T155333	2C17	12	1115 - 1
T155333	2C17	15	1115 - 1
T155333	2C17	17	1115 - 1
T155374	5G4	1	3340 - 33
T155426	1D17	13	0341 - 1
T155426	1D18	15	0341 - 2
T155426	1D19	16	0341 - 3
T155426	2C17	11	1115 - 1
T155426	2C17	12	1115 - 1
T155426	2C17	15	1115 - 1
T155426	2C17	17	1115 - 1
T155431	3C4	26	1810 - 11
T155525	3E4	27	1830 - 15
T155632	1I22	8	0520 - 4
T155632	1I22	9	0520 - 4
T155750	1D17	13	0341 - 1
T155750	1D18	15	0341 - 2
T155750	1D19	16	0341 - 3
T155750	2C17	11	1115 - 1
T155750	2C17	12	1115 - 1
T155750	2C17	15	1115 - 1
T155750	2C17	17	1115 - 1
T155858	1I8	5	0505 - 3
T15634	1H4	12	0415 - 1
T15712	1G25	12	0413 - 7
T15712	1I8	6	0505 - 3
T157513	6C17	15	3360A - 33
T157536	2G17	2	1746 - 4
T157549	2D11	52	1320 - 5B
T157549	6C17	16	3360A - 33
T157549	6C19	9	3360A - 35
T157600	1D17	13	0341 - 1
T157600	1D18	15	0341 - 2
T157600	1D19	16	0341 - 3
T157600	2C17	5	1115 - 1
T157600	2C17	11	1115 - 1
T157600	2C17	12	1115 - 1
T157600	2C17	15	1115 - 1
T157600	2C17	17	1115 - 1
T157646	5F19	11	3340 - 23
T157646	5F21	9	3340 - 25
T157694	5C18	22	3315 - 3B
T157694	5C22	22	3315 - 5B
T157697	4D6	6	3160 - 17
T157697	4D6	14	3160 - 17
T157698	4D6	6	3160 - 17
T157698	4D6	14	3160 - 17
T157709	3C12	40	1810 - 19
T157803	3D8	5	1821 - 11
T157803	3D8	37	1821 - 11
T157811	3C4	1	1810 - 11
T157811	3C4	13	1810 - 11
T157811	3C4	14	1810 - 11
T157811	3C4	27	1810 - 11
T157831	5E24	2	3340 - 2
T157836	3D22	4	1830 - 9
T158026	5E4	38	3315 - 31B
T158026	5E8	38	3315 - 33B
T158026	5E10	28	3315 - 35
T158031	3C17	4A	1810 - 24
T158068	3C17	4B	1810 - 24
T158071	4E6	22	3160 - 39
T158072	4C14	1	3140 - 3
T158072	4E6	21	3160 - 39
T158072	4E7	21	3160 - 40
T158080	3C12	28	1810 - 19
T158081	3C12	27	1810 - 19
T158112	5E24	4B	3340 - 2
T158127	3E6	32	1830 - 17
T158182	5F9	3	3340 - 13
T158187	3C17	3	1810 - 24
T158272	4C10	39C	3115 - 7
T158351	3C4	2	1810 - 11
T158419	5F7	5	3340 - 11
T158481	3D10	14	1821 - 13
T158507	2G10	29	1676 - 5
T158584	2E15	7	1672 - 5
T158612	5F7	18	3340 - 11
T158613	5F7	3	3340 - 11
T158623	3F15	1	1927 - 2
T158623	3F16	1	1927 - 3
T158624	3F15	1	1927 - 2
T158624	3F16	1	1927 - 3
T158639	3B20	17	1810 - 5
T158810	5D2	18A	3315 - 9
T158810	5D2	18B	3315 - 9
T158810	5D10	26	3315 - 17
T158810	5D22	11	3315 - 29
T158810	5E4	41	3315 - 31B
T158810	5E8	41	3315 - 33B
T158810	5E10	30	3315 - 35
T158810	5E14	7	3315 - 37
T158810	5E18	25	3315 - 41
T158810	5E20	25	3315 - 43
T158812	5D10	9	3315 - 17
T158812	5E4	34	3315 - 31B
T158812	5E8	34	3315 - 33B
T158812	5E12	41	3315 - 35B
T158812	5E18	23	3315 - 41
T158812	5E20	23	3315 - 43
T158825	3D22	3	1830 - 9
T158840	3C4	9	1810 - 11
T158842	3E4	4	1830 - 15
T158842	3E6	4	1830 - 17
T158845	3E14	7	1830 - 25
T158846	3E14	6	1830 - 25
T158848	3E4	16	1830 - 15
T158848	3E6	16	1830 - 17
T158856	3E14	13	1830 - 25
T158862	3E4	17	1830 - 15
T158862	3E6	17	1830 - 17
T158865	3E6	27	1830 - 17
T158866	3E6	26	1830 - 17
T158867	3E14	9	1830 - 25
T158871	3E4	18	1830 - 15
T158871	3E6	18	1830 - 17
T158873	3E6	25	1830 - 17
T158875	3E14	10	1830 - 25
T158902	5F5	8	3340 - 9
T158902	5F9	5	3340 - 13
T158906	4C14	3B	3140 - 3
T158906	4E6	22	3160 - 39
T158906	4E7	22	3160 - 40
T159158	3D12	20	1821 - 15
T159694	5F7	8	3340 - 11
T159864	1E15	4	0350 - 2
T159945	3C4	23	1810 - 11
T159946	3C4	24	1810 - 11
T160010	4C10	39C	3115 - 7
T160136	3E6	41	1830 - 17

NUMERICAL INDEX - CONTINUED

PART NO.	GRID	KEY	PAGE
T160230	5G4	1	3340 - 33
T160275	3E4	31	1830 - 15
T160275	3E6	45	1830 - 17
T160276	3E6	46	1830 - 17
T160449	5C18	8	3315 - 3B
T160449	5C22	8	3315 - 5B
T160493	5F7	3	3340 - 11
T160516	4D7	6	3160 - 18
T160517	4D7	3	3160 - 18
T160728	3C19	6B	1810 - 27
T160728	3C21	4B	1810 - 29
T160891	5C18	20	3315 - 3B
T160905	5C18	15	3315 - 3B
T160905	5C22	15	3315 - 5B
T160996	5G8	17	3360 - 7
T160996	5G14	17	3360 - 13
T160996	5G16	17	3360 - 15
T160996	5G18	22	3360 - 17
T160996	5G21	12	3360 - 20
T160996	5G22	9	3360 - 21
T160999	5E10	18	3315 - 35
T161036	5E24	15	3340 - 2
T161036	5F24	3	3340 - 28
T161036	5F25	3	3340 - 29
T161036	5J14	25	3360 - 87
T161036	5J16	25	3360 - 89
T161053	5F9	3	3340 - 13
T161054	5F9	3	3340 - 13
T161172	5C18	24	3315 - 3B
T161213	5E4	42	3315 - 31B
T161213	5E8	42	3315 - 33B
T161213	5E18	16	3315 - 41
T161213	5E20	16	3315 - 43
T161255	5C22	20	3315 - 5B
T161279	5B24	2	3302 - 3
T161279	5C1	2	3302 - 4
T161279	5C3	2	3302 - 6
T161279	5C5	2	3302 - 8
T161279	5C10	2	3302 - 11B
T161279	5C12	9	3302 - 11D
T161294	3C4	1	1810 - 11
T161294	3C4	2	1810 - 11
T161294	3C4	13	1810 - 11
T161294	3C4	14	1810 - 11
T161294	3C4	26	1810 - 11
T161294	3C4	29	1810 - 11
T161319	5C5	2	3302 - 8
T161319	5C7	2	3302 - 9
T161319	5C8	2	3302 - 10
T161319	5C10	2	3302 - 11B
T161319	5C12	9	3302 - 11D
T161327	5C18	25	3315 - 3B
T161373	3C16	27	1810 - 23
T161379	5D10	18	3315 - 17
T161379	5D18	28	3315 - 25
T161379	5D20	7	3315 - 27
T161379	5D22	5	3315 - 29
T161427	3C4	2	1810 - 11
T161427	3C4	26	1810 - 11
T161431	5C18	19	3315 - 3B
T161720	3C19	1	1810 - 27
T161721	3C19	2	1810 - 27
T161902	3C12	44	1810 - 19
T162003	5F19	20	3340 - 23
T162004	5F19	20	3340 - 23
T162004	5F21	24	3340 - 25
T162108	5C10	1	3302 - 11B
T162396	1B24	4	0230 - 3
T162396	1B24	12	0230 - 3
T162396	1B24	25	0230 - 3
T162396	2B14	15	0960 - 1
T162396	2B15	15	0960 - 1A
T162396	2B16	18	0960 - 2
T162396	2B17	18	0960 - 3
T162396	2E2	5	1370 - 1
T162396	4B18	3	3102 - 5
T162396	4B22	5	3102 - 9
T162396	4C6	6	3115 - 3
T162396	4C6	7	3115 - 3
T162396	4C8	8	3115 - 5
T162396	4C8	9	3115 - 5
T162396	4C14	4	3140 - 3
T162396	4C14	10	3140 - 3
T162396	4C15	1	3140 - 4
T162396	4E6	19	3160 - 39
T162396	4E6	24	3160 - 39
T162396	4E7	19	3160 - 40
T162396	4E7	24	3160 - 40
T162396	4E8	2	3160 - 41
T162396	4E9	2	3160 - 42
T162396	4E10	2	3160 - 43
T162396	4E11	2	3160 - 44
T162396	5E2	3	3315 - 31
T162396	5E2	29	3315 - 31
T162396	5E6	3	3315 - 33
T162396	5E6	29	3315 - 33
T162396	5E10	11	3315 - 35
T162396	5E12	43	3315 - 35B
T162396	5E24	9	3340 - 2
T162396	5F7	1	3340 - 11
T162396	5F9	1	3340 - 13
T162396	5F13	8	3340 - 17
T162396	5F15	2	3340 - 19
T162396	5F16	2	3340 - 20
T162396	5F19	26	3340 - 23
T162396	5F21	23	3340 - 25
T162396	5G2	1	3340 - 31
T162396	5I17	25	3360 - 66
T162396	5I18	25	3360 - 67
T162396	5I20	27	3360 - 69
T162396	5I22	27	3360 - 71
T162396	5I24	4	3360 - 73
T162396	5J2	6	3360 - 75
T162396	5J2	36	3360 - 75
T162396	5J4	4	3360 - 77
T162396	5J4	8	3360 - 77
T162396	5J6	26	3360 - 79
T162396	5J8	26	3360 - 81
T162396	5J10	12	3360 - 83
T162396	5J12	27	3360 - 85
T162396	5J14	19	3360 - 87
T162396	5J16	19	3360 - 89
T162396	6B15	19	3360A - 3
T162396	6B17	19	3360A - 5
T162396	6B19	19	3360A - 7
T162396	6B21	19	3360A - 9
T162396	6B23	4	3360A - 11
T162396	6B25	4	3360A - 13
T162396	6C13	21	3360A - 29
T162535	5C12	12	3302 - 11D
T162535	5C12	14	3302 - 11D
T162569	5C12	12	3302 - 11D
T162569	5C12	14	3302 - 11D
T162582	5F11	2	3340 - 15
T162582	5F13	2	3340 - 17
T162933	4C10	13	3115 - 7
T163002	3C12	44	1810 - 19
T163002	3C12	45	1810 - 19
T163092	2C11	15	1060 - 3
T163116	4E4	7	3160 - 38A
T163117	4E4	5	3160 - 38A
T163118	4E4	12	3160 - 38A
T16318	1G25	5	0413 - 7
T163576	2D9	31	1320 - 5
T163636	5F21	25	3340 - 25
T164602	5E4	44B	3315 - 31B
T164602	5E8	44B	3315 - 33B
T164602	5E10	18	3315 - 35
T164738	3E6	27	1830 - 17
T164738	3E6	28	1830 - 17
T165214	5D10	9	3315 - 17
T165214	5D16	9	3315 - 23
T165214	5E18	23	3315 - 41
T165214	5E20	23	3315 - 43
T165222	5C24	5A	3315 - 7
T165222	5C24	5B	3315 - 7
T165222	5E14	7	3315 - 37
T165222	5E18	25	3315 - 41
T165222	5E20	16	3315 - 43
T165222	5E20	25	3315 - 43
T165520	3D22	4	1830 - 9
T165521	3D22	3	1830 - 9
T165567	3B25	13	1810 - 9
T165760	3B25	16	1810 - 9
T165761	3B25	16	1810 - 9
T165920	5C24	2	3315 - 7
T165920	5C24	5A	3315 - 7
T165920	5D2	18A	3315 - 9
T165920	5D2	19	3315 - 9
T166145	1C13	16	0250 - 13
T166146	1C13	16	0250 - 13
T166147	1C13	16	0250 - 13
T166148	1C13	16	0250 - 13
T166149	1C13	16	0250 - 13
T166150	1C13	16	0250 - 13
T166182	5C12	13	3302 - 11D
T166258	5F1	1	3340 - 4
T166443	3C23	14	1810 - 31
T167059	4B24	28	3102 - 11
T167059	4C4	2	3102 - 15
T167259	5E4	58	3315 - 31B
T167259	5E8	57	3315 - 33B
T167259	5E12	55	3315 - 35B
T16752	2D17	..	1369 - 3
T17148	2C6	4	0960 - 17
T17949	1G25	9	0413 - 7
T17951	1G25	11	0413 - 7
T18145	1B24	28	0230 - 3
T18145	1C23	4	0250 - 23
T183678	1C4	8	0250 - 4
T183679	1C4	8	0250 - 4
T183680	1C4	8	0250 - 4
T183681	1C4	8	0250 - 4
T183682	1C4	8	0250 - 4
T183683	1C4	8	0250 - 4
T183684	1C4	8	0250 - 4
T183756	4D12	22	3160 - 23
T183757	5D6	19	3315 - 13
T183757	5D8	18	3315 - 15
T183757	5H4	1	3360 - 29
T183757	5H6	2	3360 - 31

NUMERICAL INDEX - CONTINUED

PART NO.	GRID	KEY	PAGE
T18407	1H7	14	0417 - 1
T184135	3C6	8	1810 - 13
T184676	2F14	46	1674 - 19
T184676	2F16	46	1674 - 19B
T184816	1B24	12	0230 - 3
T184860	3F20	3B	2001 - 3
T184860	3F20	6	2001 - 3
T184988	5F1	13	3340 - 4
T185041	4B24	19	3102 - 11
T185041	4C2	19	3102 - 13
T185678	3C12	28	1810 - 19
T185792	5C12	7	3302 - 11D
T185793	5C12	6	3302 - 11D
T185829	5C12	3	3302 - 11D
T185830	5C12	4	3302 - 11D
T187114	5C12	6	3302 - 11D
T187115	5C12	7	3302 - 11D
T18786	5C16	13	3315 - 3
T18786	5C20	13	3315 - 5
T188397	1C13	17	0250 - 13
T188806	3C6	4	1810 - 13
T18891	1B21	18	0210 - 3
T18891	1D17	4	0341 - 1
T18891	1D18	4	0341 - 2
T18891	1D19	4	0341 - 3
T18891	1F23	7	0404 - 1
T19042	1F10	7	0360 - 18
T19044	1F10	8	0360 - 18
T19044	1F11	5	0360 - 19
T19044	1G10	1	0407 - 2
T19044	1G11	5	0407 - 2A
T19044	2E3	3	1399 - 3
T191318	4B24	1	3102 - 11
T191318	4B24	19	3102 - 11
T191318	4C2	1	3102 - 13
T191318	4C2	19	3102 - 13
T191318	4E4	14	3160 - 38A
T19242	1E15	7	0350 - 2
T19572	1E13	3	0342 - 1
T19572	1J3	5	0540 - 1
T19572	6C2	27	3360A - 15
T19572	6C7	27	3360A - 21
T19687	2D17	..	1369 - 3
T19832	2D19	..	1369 - 5
T19855	1G25	8	0413 - 7
T19898	1F7	11	0360 - 15
T19898	1H6	3A	0416 - 3
T19935	1F3	9	0360 - 10
T19935	1I11	34	0510 - 3
T19935	2C19	46	1115 - 3
T19935	2F14	16	1674 - 19
T19935	2F14	55	1674 - 19
T19935	2F14	56	1674 - 19
T19935	2F16	8	1674 - 19B
T19935	2F16	16	1674 - 19B
T19935	2F16	55	1674 - 19B
T19977	1H1	1	0413 - 8
T20034	1F15	9	0401 - 2
T20046	1F15	13	0401 - 2
T20046	1F17	3	0401 - 3A
T20070	1F18	2	0402 - 2
T20072	1F18	4	0402 - 2
T20073	1F19	10	0402 - 3
T20091	1G15	7	0407 - 6
T20094	1F15	4	0401 - 2
T20094	1F17	5	0401 - 3A
T20098	1G9	2A	0407 - 1B
T20098	1G9	6	0407 - 1B
T20130	1H4	9	0415 - 1
T20133	1H4	5	0415 - 1
T20166	1G7	4	0404 - 10
T20168	1F23	11	0404 - 1
T20168	1F25	18	0404 - 3
T20200	1G20	1	0410 - 3
T20215	1I1	11	0452 - 1
T20219	1I1	5	0452 - 1
T20219	1I3	17	0452 - 3
T20243	1H7	18	0417 - 1
T20243	1I3	28	0452 - 3
T20273	1I2	11	0452 - 2
T20298	1G14	8	0407 - 5
T20298	1G15	17	0407 - 6
T20314	1F19	4	0402 - 3
T20315	1F19	2	0402 - 3
T20315	1F19	5	0402 - 3
T20316	1F19	3	0402 - 3
T20328	1I2	5	0452 - 2
T20362	1F21	6	0402 - 5
T206432	1C9	9	0250 - 9
T206569	5F1	1	3340 - 4
T21158	4C6	3	3115 - 3
T21158	4C8	6	3115 - 5
T21242	3G21	3	2160 - 17
T212520	1E9	22	0341 - 17
T212521	1F2	11	0360 - 9
T212522	1E11	48	0341 - 19
T21401	1B19	14	0210 - 1
T21418	1C24	11A	0250 - 24
T21424	1C24	10	0250 - 24
T21429	1C25	3	0250 - 25
T21430	1B19	7	0210 - 1
T21432	1B19	16	0210 - 1
T21433	1B19	2	0210 - 1
T21434	1B19	3	0210 - 1
T21435	1B19	3	0210 - 1
T21436	1B19	3	0210 - 1
T21442	1E14	10	0350 - 1
T21443	1E14	10	0350 - 1
T21444	1E14	10	0350 - 1
T21577	2C17	13	1115 - 1
T21579	2C17	10	1115 - 1
T21596	1B19	6	0210 - 1
T21816	2C11	26	1060 - 3
T21819	1B21	20	0210 - 3
T21839	1B21	14	0210 - 3
T21840	1B21	17	0210 - 3
T21841	1B21	19	0210 - 3
T21875	1B19	11	0210 - 1
T21937	1D17	5	0341 - 1
T21937	1D18	5	0341 - 2
T21937	1D19	5	0341 - 3
T21970	1D25	16	0341 - 9
T21974	1B19	8	0210 - 1
T22101	2C11	16	1060 - 3
T22150	1I18	11	0515 - 3
T22240	1I18	9	0515 - 3
T22241	1I18	3	0515 - 3
T22827	4C22	9	3160 - 8
T22827	4C22	10	3160 - 8
T22874	1B19	1	0210 - 1
T230SP	4C4	14	3102 - 15
T230SP	4C4	16	3102 - 15
T23214	1F16	20	0401 - 3
T23215	1F16	21	0401 - 3
T23260	1G13	2	0407 - 4
T23442	1G23	18	0413 - 5
T23474	1F23	10	0404 - 1
T23474	1F25	17	0404 - 3
T23552	1F16	20	0401 - 3
T23554	1F16	20	0401 - 3
T23556	1F16	20	0401 - 3
T23558	1F16	20	0401 - 3
T23574	1F16	21	0401 - 3
T23576	1F16	21	0401 - 3
T23578	1F16	21	0401 - 3
T23580	1F16	21	0401 - 3
T23851	2F20	4	1674 - 23
T23876	1D15	7	0315 - 12
T23891	1H25	2	0433 - 1
T240	5B21	3	3301 - 1
T24472	1G21	9	0413 - 2
T24535	1I3	20	0452 - 3
T24653	1C11	21	0250 - 11
T24715	4E3	2	3160 - 38
T24945	1H12	16	0420 - 1
T24958	5I4	4	3360 - 53
T24958	5I16	34	3360 - 65
T24958	6C5	11	3360A - 19
T24958	6C8	14	3360A - 22
T24958	6C11	11	3360A - 27
T24959	2C2	29	0960 - 13
T24959	2C4	29	0960 - 15
T25285	2C17	2	1115 - 1
T25335	2D19	..	1369 - 5
T25614	1D5	9	0315 - 2
T25614	1D6	5	0315 - 3
T25701	1F23	6	0404 - 1
T25701	1F25	6	0404 - 3
T25701	1H7	22	0417 - 1
T25803	3C25	11	1821 - 3
T26209	1F3	16	0360 - 10
T26321	1F15	17	0401 - 2
T26322	1F15	18	0401 - 2
T26324	1F15	6	0401 - 2
T26326	1F15	11	0401 - 2
T26327	1F15	12	0401 - 2
T26565	1D17	12	0341 - 1
T26565	1H25	5	0433 - 1
T27022	3H23	9	2160 - 35B
T27022	3I2	4	2160 - 37
T27077	3D16	7	1830 - 3
T27293	5C18	23	3315 - 3B
T27293	5C22	23	3315 - 5B
T27644	1E6	10	0341 - 15
T27644	2C19	41	1115 - 3
T27657	1F21	10	0402 - 5
T27658	1F23	20	0404 - 1
T27658	1F25	10	0404 - 3
T27658	1F25	24	0404 - 3
T27658	1G2	1	0404 - 5
T27658	1G4	1	0404 - 7
T27658	1G4	3	0404 - 7
T27716	1D5	3	0315 - 2
T27716	1D6	2	0315 - 3
T27716	1E2	7	0341 - 11
T27716	3G23	62	2160 - 19
T27860	1G23	17	0413 - 5
T27860	1H15	3	0421 - 1
T27986	1H2	3	0414 - 1
T27986	1H2	6	0414 - 1
T28041	1F18	1	0402 - 2

NUMERICAL INDEX - CONTINUED

PART NO.	GRID	KEY	PAGE
T28041	1H4	4	0415 - 1
T28342	5C2	15	3302 - 5
T28549	1F2	9	0360 - 9
T28583	2F24	1	1674 - 27
T28585	2F24	12	1674 - 27
T28586	2F24	14	1674 - 27
T28745	1H4	3	0415 - 1
T28862	1G12	4	0407 - 3
T28949	1I11	7	0510 - 3
T28949	1I11	36	0510 - 3
T28949	3H6	8	2160 - 23B
T29049	5F7	12	3340 - 11
T29299	1G12	4	0407 - 3
T29342	2G16	3	1746 - 3
T29342	3F12	13	1921 - 1
T29342	3F14	2	1921 - 3
T29342	5B24	14	3302 - 3
T29342	5C2	15	3302 - 5
T29342	5C4	15	3302 - 7
T29342	5C6	15	3302 - 8A
T29342	5C10	9	3302 - 11B
T29342	5C16	16	3315 - 3
T29342	5C20	16	3315 - 5
T29342	5F1	3	3340 - 4
T29342	5G6	3	3360 - 3
T29342	5G23	1	3360 - 22
T29342	5G24	7	3360 - 23
T29527	1H12	19	0420 - 1
T29839	1D23	14	0341 - 7
T29839	1E12	14	0341 - 21
T29969	1G23	8	0413 - 5
T29969	2C13	16	1060 - 5
T29969	2C15	11	1060 - 7
T29969	2C15	14	1060 - 7
T30053	1D5	7	0315 - 2
T30253	1B19	12	0210 - 1
T30253	1B19	14	0210 - 1
T30254	1B19	12	0210 - 1
T30254	1B19	13	0210 - 1
T30929	3H15	15	2160 - 31
T30929	5G6	6	3360 - 3
T31174	1G21	1	0413 - 2
T31792	1E15	3	0350 - 2
T31793	1E15	3	0350 - 2
T31794	1E15	3	0350 - 2
T31948	1H3	3	0414 - 2
T32255	3C14	16	1810 - 21
T32270	2D9	37	1320 - 5
T32341	1D25	22	0341 - 9
T32552	5E2	19	3315 - 31
T32552	5E6	19	3315 - 33
T32552	5E12	46	3315 - 35B
T32688	3C25	19	1821 - 3
T32707	4D14	24	3160 - 25
T32707	4D20	9	3160 - 31
T33089	1B18	2	0201 - 2
T33089	1B18	5	0201 - 2
T33279	1F25	6	0404 - 3
T33389	1B21	11	0210 - 3
T33593	1D21	43	0341 - 5
T33593	1E2	21	0341 - 11
T33644	5E25	9	3340 - 3
T34067	2F24	18	1674 - 27
T34248	2D19	..	1369 - 5
T34301	5F19	10	3340 - 23
T34301	5F21	11	3340 - 25
T34301	5G2	6	3340 - 31
T34972	2C7	7	0960 - 18
T35233	5E2	26	3315 - 31
T35233	5E6	26	3315 - 33
T35233	5E12	51	3315 - 35B
T35233	5E14	1	3315 - 37
T35233	5E18	1	3315 - 41
T35233	5E20	1	3315 - 43
T35887	1I18	15	0515 - 3
T36492	4C23	10	3160 - 9
T37041	1F10	9	0360 - 18
T37041	3D16	16	1830 - 3
T38049	1C24	13	0250 - 24
T38282	2C21	10	1115 - 5
T38489	5J10	16	3360 - 83
T40187	1D10	9	0315 - 7
T40187	1D12	15	0315 - 9
T40308	1F7	7	0360 - 15
T40308	1F7	9	0360 - 15
T40308	3G9	25	2160 - 5
T40308	3G11	3	2160 - 7
T40308	3G13	11	2160 - 9
T40308	3G15	26	2160 - 11
T40910	4C4	13	3102 - 15
T40910	4C4	16	3102 - 15
T40910	5C2	6	3302 - 5
T40910	5C4	6	3302 - 7
T40910	5C5	6	3302 - 8
T40910	5C7	6	3302 - 9
T40990	2G8	4	1676 - 3
T41314	5G2	7	3340 - 31
T41326	1D21	11	0341 - 5
T41471	6C2	23	3360A - 15
T41471	6C7	23	3360A - 21
T41596	2D3	4	1313 - 1
T41597	2D3	1	1313 - 1
T42977	1E13	5	0342 - 1
T42977	1J3	6	0540 - 1
T43512	2D14	..	1330 - 2
T43513	2D14	..	1330 - 2
T43514	1E15	10	0350 - 2
T43514	2D14	..	1330 - 2
T43515	2D14	..	1330 - 2
T44200	3G21	2	2160 - 17
T44200	3H4	63	2160 - 23
T44200	3H6	18	2160 - 23B
T44730	5C16	12	3315 - 3
T44730	5C20	12	3315 - 5
T46842	1I11	9A	0510 - 3
T46842	1I11	9B	0510 - 3
T47700	2C13	18	1060 - 5
T47700	2C15	15	1060 - 7
T48434	1D21	28	0341 - 5
T49819	4C17	6	3160 - 2
T49819	4C23	16	3160 - 9
T49819	5D4	21	3315 - 11
T49819	5G10	1	3360 - 9
T49819	5G12	1	3360 - 11
T49819	5G19	4	3360 - 18
T49819	5G20	1	3360 - 19
T49819	5G21	25	3360 - 20
T51497	1I11	20	0510 - 3
T51497	1I11	38	0510 - 3
T51497	1I13	18	0510 - 3B
T51859	5F17	3	3340 - 21
T54317	4C4	14	3102 - 15
T54568	4B24	4	3102 - 11
T54568	4C2	4	3102 - 13
T54922	5G8	18	3360 - 7
T54922	5G16	18	3360 - 15
T54922	5G18	21	3360 - 17
T54922	5G21	18	3360 - 20
T54967	5H8	29	3360 - 33
T55208	3D10	1	1821 - 13
T55210	3D10	2	1821 - 13
T55214	3D10	17	1821 - 13
T55224	3D10	15	1821 - 13
T55273	3I12	8	2160 - 45
T55274	3I12	11	2160 - 45
T55275	3I12	10	2160 - 45
T55277	3I12	7	2160 - 45
T55278	3I12	5	2160 - 45
T55279	3I12	32	2160 - 45
T55280	3I12	31	2160 - 45
T55281	3I12	28	2160 - 45
T55282	3I12	24	2160 - 45
T55283	3I12	22	2160 - 45
T55284	3I12	21	2160 - 45
T55285	3I12	20	2160 - 45
T55286	3I12	19	2160 - 45
T55287	3I12	18	2160 - 45
T55420	1C24	5	0250 - 24
T55501	2G8	12	1676 - 3
T55585	1I8	13	0505 - 3
T55585	2G8	5	1676 - 3
T56112	1E11	54	0341 - 19
T57177	3C8	5	1810 - 15
T57177	3C10	18	1810 - 17
T57247	2D13	..	1330 - 1
T57247	3G15	16	2160 - 11
T57374	3G9	26	2160 - 5
T57374	3G11	4	2160 - 7
T57374	3G13	12	2160 - 9
T57374	3G15	25	2160 - 11
T58109	5D4	2	3315 - 11
T58109	5D6	2	3315 - 13
T58109	5D8	3	3315 - 15
T58109	5D10	2	3315 - 17
T58109	5D12	9	3315 - 19
T58109	5D12	12	3315 - 19
T58109	5D14	2	3315 - 21
T58109	5D16	3	3315 - 23
T58109	5E2	2	3315 - 31
T58109	5E6	2	3315 - 33
T58109	5E10	13	3315 - 35
T58474	2C21	17	1115 - 5
T58477	1D18	21	0341 - 2
T58477	1D19	26	0341 - 3
T58477	1F3	12	0360 - 10
T58477	1G18	15	0409 - 3
T59937	2E16	6	1673 - 1
T59938	3B18	9	1810 - 3
T59938	3C4	9	1810 - 11
T59938	3D18	13	1830 - 5
T60314	1E20	17	0360 - 3
T60920	3F22	6	2002 - 2
T60983	3I16	3	2160 - 49
T60985	3E22	10	1830 - 33
T61148	4C22	12	3160 - 8
T61149	4C22	13	3160 - 8
T61150	4C22	14	3160 - 8
T61152	4C22	15	3160 - 8
T61157	4C22	3	3160 - 8
T61158	4C22	8	3160 - 8
T61226	4C14	1	3140 - 3

NUMERICAL INDEX - CONTINUED

PART NO.	GRID	KEY	PAGE
T61226	4E6	21	3160 - 39
T61226	4E7	21	3160 - 40
T61798	1I11	37	0510 - 3
T61798	3F7	2	1910 - 3
T61798	3F9	18	1910 - 5
T63019	3B18	9	1810 - 3
T63019	3B23	20	1810 - 7
T63019	3C4	9	1810 - 11
T63798	3D10	12	1821 - 13
T66413	3D16	15	1830 - 3
T66419	3B23	20	1810 - 7
T66701	1J5	25	0560 - 3
T66701	1J7	11	0560 - 5
T66860	1B13	6	0110 - 1
T66908	1C24	2	0250 - 24
T66909	1C24	3	0250 - 24
T66910	1C24	12	0250 - 24
T66911	1C24	1	0250 - 24
T66912	1C24	6	0250 - 24
T66913	1C24	8	0250 - 24
T66915	1B17	10	0201 - 1
T66916	1C24	9	0250 - 24
T66917	1C24	9	0250 - 24
T66919	1E20	1	0360 - 3
T66920	1E20	2	0360 - 3
T66921	1E20	10	0360 - 3
T67056	1B18	3	0201 - 2
T67196	1E9	32	0341 - 17
T67197	1E9	24	0341 - 17
T67197	1E18	1	0350 - 5
T67198	1E9	22	0341 - 17
T67205	5E24	13	3340 - 2
T67205	5F3	7	3340 - 7
T67205	5F5	7	3340 - 9
T67706	1E18	17	0350 - 5
T67855	5F11	2	3340 - 15
T67855	5F13	2	3340 - 17
T67997	1D16	6	0325 - 2
T67998	1D16	9	0325 - 2
T68098	1J1	13	0530 - 1
T68144	3F7	18	1910 - 3
T68150	1E20	9	0360 - 3
T68296	6C13	20A	3360A - 29
T68579	1I11	4	0510 - 3
T68579	1I13	9	0510 - 3B
T68589	3H12	7	2160 - 27
T68654	1E2	18	0341 - 11
T68655	1D23	5	0341 - 7
T68655	1E2	5	0341 - 11
T68655	1E12	5	0341 - 21
T68670	1D8	10	0315 - 5
T68670	1D10	18	0315 - 7
T68670	1D12	25	0315 - 9
T68670	1E6	3	0341 - 15
T68671	2C9	2	1011 - 1
T68686	1F3	7	0360 - 10
T68699	1E16	16	0350 - 3
T68725	1D5	11	0315 - 2
T68818	4C14	14	3140 - 3
T68891	1J10	3	0641 - 1
T69025	1F5	4	0360 - 13
T69027	1B24	5	0230 - 3
T69030	5I24	7	3360 - 73
T69146	2G12	3	1740 - 2
T69201	1E16	12	0350 - 3
T69202	1E16	14	0350 - 3
T69203	1E16	15	0350 - 3
T69204	1E16	4	0350 - 3
T69354	1B24	23	0230 - 3
T69355	1B24	13	0230 - 3
T69360	1B25	3	0230 - 4
T69363	1B24	15	0230 - 3
T69364	1B24	14	0230 - 3
T69365	1B24	12	0230 - 3
T69373	1F2	7	0360 - 9
T69374	1F2	3	0360 - 9
T69375	1F2	6	0360 - 9
T69376	1F2	4	0360 - 9
T69377	1F2	1	0360 - 9
T69378	1F2	8	0360 - 9
T69379	1F2	13	0360 - 9
T69380	1F2	11	0360 - 9
T69381	1F2	19	0360 - 9
T69382	1F2	18	0360 - 9
T69383	1F2	16	0360 - 9
T69408	3G16	4	2160 - 12
T69472	5E24	7	3340 - 2
T69472	5E25	7	3340 - 3
T69472	5F1	7	3340 - 4
T69627	5E4	59	3315 - 31B
T69627	5E8	58	3315 - 33B
T69627	5E12	56	3315 - 35B
T69938	1C3	6	0250 - 3
T70307	3D18	5	1830 - 5
T70321	2C7	4	0960 - 18
T70456	2G19	4	1749 - 2
T70502	2F20	5	1674 - 23
T70654	5F3	18	3340 - 7
T70655	5F3	16	3340 - 7
T71023	1E9	20	0341 - 17
T71306	1B19	18	0210 - 1
T71307	1E9	19	0341 - 17
T71733	3B18	20	1810 - 3
T71733	3H8	4	2160 - 25
T72326	1E11	47	0341 - 19
T72401	1E11	38	0341 - 19
T72837	1E14	6	0350 - 1
T73834	3B25	8	1810 - 9
T73834	3C16	5	1810 - 23
T74416	1E9	27	0341 - 17
T74416	2B23	23	0960 - 9
T74416	2E24	6	1674 - 5
T74416	2F2	8	1674 - 7
T74416	2F12	41	1674 - 17
T74416	2F14	41	1674 - 19
T74416	2F16	33	1674 - 19B
T74416	2F16	41	1674 - 19B
T74477	1I9	10	0510 - 1
T74478	1I9	11	0510 - 1
T74664	1D16	7	0325 - 2
T74665	1E18	27	0350 - 5
T74666	1E18	20	0350 - 5
T74952	3F20	26	2001 - 3
T75197	1J7	14	0560 - 5
T75197	2E24	6	1674 - 5
T75383	1B24	2A	0230 - 3
T75383	1C23	2A	0250 - 23
T75500	2E22	3	1674 - 3
T75506	1B22	12	0230 - 1
T75656	1C25	1	0250 - 25
T75815	4C14	2	3140 - 3
T75815	4E6	26	3160 - 39
T75815	4E7	26	3160 - 40
T75862	1D21	33	0341 - 5
T75863	1D21	32	0341 - 5
T75864	1D21	32	0341 - 5
T75865	1D21	32	0341 - 5
T75868	1D21	1	0341 - 5
T75869	1D21	13	0341 - 5
T75870	1D21	13	0341 - 5
T75871	1D21	13	0341 - 5
T75872	1D21	31	0341 - 5
T75880	1D21	12	0341 - 5
T75880	1D25	23	0341 - 9
T75881	1D21	12	0341 - 5
T75881	1D25	23	0341 - 9
T75882	1D21	12	0341 - 5
T75882	1D25	23	0341 - 9
T75883	1D21	4	0341 - 5
T75890	1D21	39	0341 - 5
T75891	1E4	6	0341 - 13
T75892	1E4	23	0341 - 13
T75982	4C19	1	3160 - 4
T75982	4C24	6	3160 - 10
T75984	4C20	20	3160 - 5
T75984	4C23	17	3160 - 9
T75984	5G10	7	3360 - 9
T75984	5G12	7	3360 - 11
T75984	5G20	7	3360 - 19
T75990	5G8	19	3360 - 7
T75990	5G14	19	3360 - 13
T75990	5G16	19	3360 - 15
T75990	5G18	19	3360 - 17
T75990	5G21	15	3360 - 20
T75991	5G8	3	3360 - 7
T75991	5G14	3	3360 - 13
T75991	5G16	3	3360 - 15
T75991	5G18	3	3360 - 17
T75991	5G21	5	3360 - 20
T75992	5G8	7	3360 - 7
T75992	5G14	7	3360 - 13
T75992	5G16	7	3360 - 15
T75992	5G18	7	3360 - 17
T75992	5G21	6	3360 - 20
T75992	5G22	8	3360 - 21
T75996	4C23	12	3160 - 9
T75996	4C23	16	3160 - 9
T75996	4C25	6	3160 - 11
T75996	4C25	11	3160 - 11
T75997	5G8	8	3360 - 7
T75997	5G14	8	3360 - 13
T75997	5G16	8	3360 - 15
T75997	5G18	8	3360 - 17
T75997	5G21	7	3360 - 20
T75997	5G22	2	3360 - 21
T75998	5G8	17	3360 - 7
T75998	5G14	17	3360 - 13
T75998	5G16	17	3360 - 15
T75998	5G18	22	3360 - 17
T75998	5G21	12	3360 - 20
T76002	5G8	9	3360 - 7
T76002	5G14	9	3360 - 13
T76002	5G16	9	3360 - 15
T76002	5G18	9	3360 - 17
T76002	5G21	8	3360 - 20
T76002	5G22	3	3360 - 21
T76027	1E11	44	0341 - 19
T76090	5I24	9	3360 - 73
T76149	1E14	8	0350 - 1
T76186	1B18	6	0201 - 2
T76228	1B17	6	0201 - 1

NUMERICAL INDEX - CONTINUED

PART NO.	GRID	KEY	PAGE
T76230	5I24	8	3360 - 73
T76252	1J5	9	0560 - 3
T76308	2G12	4	1740 - 2
T76479	1D21	38	0341 - 5
T76479	1E2	11	0341 - 11
T76576	1D21	27	0341 - 5
T76576	1D25	29	0341 - 9
T76607	2E16	1	1673 - 1
T76608	2E16	5	1673 - 1
T76609	2E16	3	1673 - 1
T76610	2E16	9	1673 - 1
T76637	4C15	4	3140 - 4
T76638	4C14	11	3140 - 3
T76639	4C14	9	3140 - 3
T76639	4C15	5	3140 - 4
T76712	1E4	21	0341 - 13
T76713	1E4	22	0341 - 13
T76771	4C6	24	3115 - 3
T76772	4C10	31	3115 - 7
T76788	1D16	1	0325 - 2
T76830	3C6	19	1810 - 13
T76831	3C6	11	1810 - 13
T76832	3C6	10	1810 - 13
T76833	3C6	6	1810 - 13
T76938	2D20	11	1369 - 6
T76938	2D20	12	1369 - 6
T76938	2D20	6	1369 - 6
T76938	3G21	1	2160 - 17
T76938	3H4	41	2160 - 23
T76938	3H4	67	2160 - 23
T76938	3H6	4	2160 - 23B
T76938	3H21	3	2160 - 35
T76938	3I2	7	2160 - 37
T76938	3I6	11	2160 - 39
T76938	3I8	17	2160 - 41
T76938	3I8	19	2160 - 41
T76938	3I8	21	2160 - 41
T76938	3I16	7	2160 - 49
T76938	3I16	9	2160 - 49
T76938	3I16	11	2160 - 49
T76938	3I16	12	2160 - 49
T76938	5H10	14	3360 - 35
T76938	5H12	14	3360 - 37
T76938	5H12	18	3360 - 37
T76938	5H20	9	3360 - 45
T76938	5H20	16	3360 - 45
T76938	5H22	9	3360 - 47
T76938	5H24	27	3360 - 49
T76938	5I4	7	3360 - 53
T76938	5I4	9	3360 - 53
T76938	5I8	3	3360 - 57
T76938	5I14	24	3360 - 63
T76938	5I16	24	3360 - 65
T76938	5I16	26	3360 - 65
T76938	6C21	18	3360A - 37
T76940	1E11	49	0341 - 19
T77165	1I18	10	0515 - 3
T77170	1E11	43	0341 - 19
T77348	5F3	4	3340 - 7
T77348	5F5	4	3340 - 9
T77348	5F9	8	3340 - 13
T77497	5F3	20	3340 - 7
T77497	5F5	20	3340 - 9
T77506	5F1	1	3340 - 4
T77530	1D21	3	0341 - 5
T77613	1D14	4	0315 - 11
T77613	2B23	9	0960 - 9
T77613	2C2	7	0960 - 13
T77613	2C2	9	0960 - 13
T77613	2C2	11	0960 - 13
T77613	2C2	37	0960 - 13
T77613	2C4	7	0960 - 15
T77613	2C4	9	0960 - 15
T77613	2C4	11	0960 - 15
T77613	2C4	37	0960 - 15
T77613	2D20	3	1369 - 6
T77613	2D20	4	1369 - 6
T77613	2D20	2	1369 - 6
T77613	3G23	40	2160 - 19
T77613	3H2	28	2160 - 21
T77613	3H6	24	2160 - 23B
T77613	3I6	22	2160 - 39
T77613	3I6	35	2160 - 39
T77613	3I8	37	2160 - 41
T77613	3I10	8	2160 - 43
T77613	5H14	3	3360 - 39
T77613	5H14	18	3360 - 39
T77613	5H18	3	3360 - 43
T77613	5H18	6	3360 - 43
T77613	5I14	19	3360 - 63
T77613	6C17	9	3360A - 33
T77613	6C21	8	3360A - 37
T77814	1B17	12	0201 - 1
T77814	1D14	9	0315 - 11
T77814	1D21	41	0341 - 5
T77814	1J5	1	0560 - 3
T77814	1J7	18	0560 - 5
T77814	2B25	17	0960 - 11
T77814	2C2	16	0960 - 13
T77814	2C2	24	0960 - 13
T77814	2C4	16	0960 - 15
T77814	2C4	24	0960 - 15
T77814	2C11	1	1060 - 3
T77814	2C13	4	1060 - 5
T77814	2C15	4	1060 - 7
T77814	2D20	1	1369 - 6
T77814	2D20	2	1369 - 6
T77814	2D20	1	1369 - 6
T77814	3G21	10	2160 - 17
T77814	3H2	33	2160 - 21
T77814	3I10	16	2160 - 43
T77814	4D2	25	3160 - 13
T77814	4D4	25	3160 - 15
T77828	5G18	6	3360 - 17
T77833	3C25	7	1821 - 3
T77834	1B21	2	0210 - 3
T77834	1D8	14	0315 - 5
T77834	1D10	23	0315 - 7
T77834	1D12	5	0315 - 9
T77857	1D14	6	0315 - 11
T77857	1D23	16	0341 - 7
T77857	1E9	3	0341 - 17
T77857	1E9	32	0341 - 17
T77857	1E12	16	0341 - 21
T77857	1E24	15	0360 - 7
T77857	2B23	3	0960 - 9
T77857	2B25	2A	0960 - 11
T77857	2B25	2B	0960 - 11
T77857	2B25	4	0960 - 11
T77857	2B25	11	0960 - 11
T77857	2C2	3	0960 - 13
T77857	2C2	4	0960 - 13
T77857	2C2	21	0960 - 13
T77857	2C4	3	0960 - 15
T77857	2C4	4	0960 - 15
T77857	2C4	21	0960 - 15
T77857	2C11	3	1060 - 3
T77857	2C19	3	1115 - 3
T77857	2C21	14	1115 - 5
T77857	2D20	5	1369 - 6
T77857	2D20	6	1369 - 6
T77857	2D20	3	1369 - 6
T77857	2F12	14B	1674 - 17
T77857	2F14	15	1674 - 19
T77857	2F16	15	1674 - 19B
T77857	3H12	1	2160 - 27
T77857	3I14	2	2160 - 47
T77857	4B24	7	3102 - 11
T77857	4C2	7	3102 - 13
T77857	4D2	10	3160 - 13
T77857	4D4	10	3160 - 15
T77857	4D4	20	3160 - 15
T77857	4D14	1	3160 - 25
T77857	4D14	11	3160 - 25
T77857	4D16	19	3160 - 27
T77857	4D18	19	3160 - 29
T77857	4D22	26	3160 - 33
T77857	4D24	14	3160 - 35
T77857	4E2	14	3160 - 37
T77857	5H10	7	3360 - 35
T77857	5H12	3	3360 - 37
T77857	5H14	3	3360 - 39
T77857	5H14	18	3360 - 39
T77857	5H16	5	3360 - 41
T77857	5H16	11	3360 - 41
T77857	5H20	12	3360 - 45
T77857	5H20	15	3360 - 45
T77857	5H22	12	3360 - 47
T77857	5H24	20	3360 - 49
T77857	5H24	34	3360 - 49
T77857	5I2	3	3360 - 51
T77857	5I2	17	3360 - 51
T77857	5I4	2	3360 - 53
T77857	5I4	5	3360 - 53
T77857	5I4	32	3360 - 53
T77857	5I6	5	3360 - 55
T77857	5I6	12	3360 - 55
T77857	5I8	9	3360 - 57
T77857	5I8	11	3360 - 57
T77857	5I10	5	3360 - 59
T77857	5I10	13	3360 - 59
T77857	5I10	21	3360 - 59
T77857	5I10	27	3360 - 59
T77857	5I12	3	3360 - 61
T77857	5I12	5	3360 - 61
T77857	5I12	18	3360 - 61
T77857	5I14	3	3360 - 63
T77857	5I16	3	3360 - 65
T77857	5I16	22	3360 - 65
T77857	5I16	36	3360 - 65
T77857	6C5	1	3360A - 19
T77857	6C5	4	3360A - 19
T77857	6C8	3	3360A - 22
T77857	6C11	1	3360A - 27
T77857	6C11	4	3360A - 27
T77857	6C17	5	3360A - 33
T77857	6C19	11	3360A - 35
T77857	6C21	20	3360A - 37
T77858	1J5	20	0560 - 3
T77858	1J7	21	0560 - 5
T77858	2D20	9	1369 - 6

NUMERICAL INDEX - CONTINUED

PART NO.	GRID	KEY	PAGE
T77858	2D20	10	1369 - 6
T77858	2D20	5	1369 - 6
T77858	3G23	47	2160 - 19
T77858	3G23	52	2160 - 19
T77858	3G23	59	2160 - 19
T77858	3H4	45	2160 - 23
T77858	3H4	48	2160 - 23
T77858	3H4	50	2160 - 23
T77858	3H6	5	2160 - 23B
T77858	3H6	46	2160 - 23B
T77858	3H21	10	2160 - 35
T77858	3H23	6	2160 - 35B
T77858	3I2	2	2160 - 37
T77858	3I8	12	2160 - 41
T77858	4D14	21	3160 - 25
T77858	4D14	29	3160 - 25
T77858	4D20	14	3160 - 31
T77858	4D22	17	3160 - 33
T77858	5H24	29	3360 - 49
T77858	5H24	33	3360 - 49
T77858	5I2	15	3360 - 51
T77858	5I2	18	3360 - 51
T77858	5I4	25	3360 - 53
T77858	5I6	3	3360 - 55
T77858	5I6	8	3360 - 55
T77858	5I10	23	3360 - 59
T77858	5I12	8	3360 - 61
T77858	5I12	22	3360 - 61
T77858	5I14	26	3360 - 63
T77858	6C17	3	3360A - 33
T77858	6C19	2	3360A - 35
T77858	6C19	21	3360A - 35
T77858	6C21	14	3360A - 37
T77932	1E9	32	0341 - 17
T77932	1E24	2	0360 - 7
T77932	2C19	13	1115 - 3
T77932	2C21	6	1115 - 5
T77932	2D20	7	1369 - 6
T77932	2D20	8	1369 - 6
T77932	2D20	4	1369 - 6
T77932	3I6	31	2160 - 39
T77932	4D2	20	3160 - 13
T77932	4D2	22	3160 - 13
T77932	4D4	22	3160 - 15
T77932	4D16	3	3160 - 27
T77932	4D16	6	3160 - 27
T77932	4D20	2	3160 - 31
T77932	4D22	1	3160 - 33
T77932	4D24	3	3160 - 35
T77932	5H20	13	3360 - 45
T77932	5H24	31	3360 - 49
T77932	5I2	12	3360 - 51
T77932	5I4	2	3360 - 53
T77932	5I4	9	3360 - 53
T77932	5I4	35	3360 - 53
T77932	5I10	3	3360 - 59
T77932	6C2	25	3360A - 15
T77932	6C7	25	3360A - 21
T77932	6C17	21	3360A - 33
T77932	6C19	6	3360A - 35
T78184	1E5	2	0341 - 14
T78192	4C22	2	3160 - 8
T78313	3G21	19	2160 - 17
T78313	3H2	8	2160 - 21
T78313	3H6	31	2160 - 23B
T78313	3I16	1	2160 - 49
T78313	3I16	2	2160 - 49
T78315	3B25	5	1810 - 9
T78394	1E14	4	0350 - 1
T78395	1E14	5	0350 - 1
T78497	1H16	7	0422 - 1
T78497	3H15	2	2160 - 31
T78606	2C2	43	0960 - 13
T78606	2C4	18	0960 - 15
T78606	2C4	19	0960 - 15
T78606	2C4	43	0960 - 15
T78612	1D23	15	0341 - 7
T78612	1E2	20	0341 - 11
T78612	1E9	6	0341 - 17
T78612	1E12	15	0341 - 21
T78612	2D20	13	1369 - 6
T78612	2D20	14	1369 - 6
T78612	2D20	7	1369 - 6
T78612	3G21	13	2160 - 17
T78612	3H2	3	2160 - 21
T78612	3H6	25	2160 - 23B
T78612	3H21	7	2160 - 35
T78612	3I2	13	2160 - 37
T78612	5H10	3	3360 - 35
T78612	5H12	14	3360 - 37
T78662	1D17	9	0341 - 1
T78662	1D18	9	0341 - 2
T78662	1D19	9	0341 - 3
T78662	1D21	14	0341 - 5
T78662	1E11	51	0341 - 19
T78715	3H21	18	2160 - 35
T78715	3I2	23	2160 - 37
T78716	5H24	26	3360 - 49
T78716	5I2	6	3360 - 51
T78716	5I4	33	3360 - 53
T78716	5I10	14	3360 - 59
T78716	5I12	6	3360 - 61
T78716	5I14	14	3360 - 63
T78716	5I16	21	3360 - 65
T78784	2D20	15	1369 - 6
T78784	2D20	16	1369 - 6
T78784	2D20	8	1369 - 6
T78787	3H17	2	2160 - 33
T78787	5I6	24	3360 - 55
T78795	5F3	2	3340 - 7
T78795	5F5	2	3340 - 9
T78888	3C19	5	1810 - 27
T78888	3C21	1	1810 - 29
T79092	4C14	3A	3140 - 3
T79092	4C14	3B	3140 - 3
T79154	1F2	2	0360 - 9
T79450	1E11	48	0341 - 19
T79477	1I14	4	0510 - 4
T79477	1I15	7	0510 - 5
T79477	1I15	8	0510 - 5
T79719	6C2	17	3360A - 15
T79720	6C2	20	3360A - 15
T79720	6C7	20	3360A - 21
T79781	6C1	1	3360A - 14
T79781	6C6	1	3360A - 20
T79782	6C1	3	3360A - 14
T79782	6C6	3	3360A - 20
T79786	1B25	5	0230 - 4
T79844	3F2	36	1830 - 37
T80027	1C1	3	0250 - 1
T80027	1C2	3	0250 - 2
T80176	2F18	3A	1674 - 21
T80176	2F20	3	1674 - 23
T80176	3B23	2	1810 - 7
T80176	3C19	13	1810 - 27
T80176	3C19	18	1810 - 27
T80176	3C21	11	1810 - 29
T80306	5H24	5	3360 - 49
T80306	5I2	13	3360 - 51
T80306	5I4	34	3360 - 53
T80306	5I16	21	3360 - 65
T80561	4D2	4	3160 - 13
T80561	4D4	4	3160 - 15
T80563	4D2	2	3160 - 13
T80563	4D4	2	3160 - 15
T80883	3B23	12	1810 - 7
T80883	3C19	16	1810 - 27
T80937	1J5	2	0560 - 3
T80937	1J7	17	0560 - 5
T81007	3G23	35	2160 - 19
T81164	1F10	3	0360 - 18
T81219	1B17	8	0201 - 1
T81221	1E22	3	0360 - 5
T81247	1D14	17	0315 - 11
T81524	4D5	19	3160 - 16
T81524	4D6	20	3160 - 17
T81524	4D8	4	3160 - 19
T81524	5G25	2	3360 - 25
T81524	5H1	9	3360 - 26
T81538	4D5	1	3160 - 16
T81538	4D6	1	3160 - 17
T81538	4D8	1	3160 - 19
T81538	5G25	14	3360 - 25
T81538	5H1	12	3360 - 26
T81539	4D5	2	3160 - 16
T81539	4D6	2	3160 - 17
T81539	4D8	2	3160 - 19
T81539	5G25	15	3360 - 25
T81539	5H1	13	3360 - 26
T81540	4D5	16	3160 - 16
T81540	4D8	10	3160 - 19
T81540	5G25	6	3360 - 25
T81540	5H1	6	3360 - 26
T81541	4D8	9	3160 - 19
T81541	5G25	8	3360 - 25
T81541	5H1	5	3360 - 26
T81963	1B25	4	0230 - 4
T82216	3D2	1	1821 - 5
T82217	3D2	3	1821 - 5
T82218	3D2	4	1821 - 5
T82219	3D2	5	1821 - 5
T82221	3D2	10	1821 - 5
T82227	3D4	40	1821 - 7
T82231	3D4	37	1821 - 7
T82265	3E22	4	1830 - 33
T82528	1C19	17	0250 - 19
T82529	1C19	4	0250 - 19
T82535	1C15	2	0250 - 15
T82618	1C15	11	0250 - 15
T82791	2E18	7	1673 - 3
T82791	2E20	8	1673 - 5
T82791	2G8	24	1676 - 3
T82791	3C4	8A	1810 - 11
T82792	2E18	6	1673 - 3
T82792	2E20	6	1673 - 5
T82792	2G8	23	1676 - 3
T82792	3C4	3	1810 - 11
T82851	1B24	17	0230 - 3
T82852	1B24	22	0230 - 3
T82907	1I23	2	0520 - 5
T83060	2F4	7	1674 - 9

NUMERICAL INDEX - CONTINUED

PART NO.	GRID	KEY	PAGE
T83060	2F4	12	1674 - 9
T83060	2F4	14	1674 - 9
T83060	2F6	7	1674 - 11
T83060	2F6	12	1674 - 11
T83060	2F6	14	1674 - 11
T83060	2F8	7	1674 - 13
T83060	2F8	18	1674 - 13
T83060	2F8	19	1674 - 13
T83060	2F10	7	1674 - 15
T83060	2F10	18	1674 - 15
T83060	2F10	19	1674 - 15
T83060	3C4	6	1810 - 11
T83060	3C4	8B	1810 - 11
T83060	3C19	11	1810 - 27
T83426	2G14	17	1740 - 5
T83426	5F5	13	3340 - 9
T83426	5F9	10	3340 - 13
T83428	5I24	3	3360 - 73
T83429	5I24	11	3360 - 73
T84067	2B19	17	0960 - 5
T84069	1C11	13	0250 - 11
T84081	1C7	9	0250 - 7
T84194	4B16	5	3102 - 3
T84194	4B18	14	3102 - 5
T84194	4B20	5	3102 - 7
T84194	4C4	10	3102 - 15
T84314	2D9	23	1320 - 5
T84580	2D9	23	1320 - 5
T84582	2D9	23	1320 - 5
T84944	3B25	16	1810 - 9
T85308	1B21	23	0210 - 3
T85312	3F15	1	1927 - 2
T85313	3F15	1	1927 - 2
U10289	2D19	..	1369 - 5
U10516	4D24	19	3160 - 35
U10516	4D24	26	3160 - 35
U10516	4E2	19	3160 - 37
U10516	4E2	26	3160 - 37
U10746	1D21	10	0341 - 5
U10746	2D19	..	1369 - 5
U10746	3G7	19	2160 - 3
U10746	3G10	2	2160 - 6
U10746	3G13	8	2160 - 9
U10746	3G15	8	2160 - 11
U10776	1E14	16	0350 - 1
U10776	2D19	..	1369 - 5
U11030	5B24	16	3302 - 3
U11030	5C2	16	3302 - 5
U11030	5C4	16	3302 - 7
U11030	5C6	16	3302 - 8A
U11030	5C7	16	3302 - 9
U11030	5C8	13	3302 - 10
U11030	5F25	18	3340 - 29
U11031	5B23	11	3302 - 2A
U11031	5B24	17	3302 - 3
U11031	5C2	17	3302 - 5
U11031	5C4	17	3302 - 7
U11031	5C6	17	3302 - 8A
U11031	5C7	17	3302 - 9
U11031	5C8	14	3302 - 10
U11031	5F25	19	3340 - 29
U11121	5B21	1	3301 - 1
U11326	2D19	..	1369 - 5
U11343	2D19	..	1369 - 5
U11649	5B24	11	3302 - 3
U11649	5C2	11	3302 - 5
U11649	5C4	11	3302 - 7
U11649	5C6	11	3302 - 8A
U11649	5C7	11	3302 - 9
U11649	5C8	11	3302 - 10
U11649	5F23	3	3340 - 27
U11649	5F24	4	3340 - 28
U11650	5B22	4	3302 - 2
U11650	5B24	10	3302 - 3
U11773	4B18	9	3102 - 5
U11773	4B18	10	3102 - 5
U12037	2D19	..	1369 - 5
U12037	3G5	4	2160 - 1
U12037	3G13	6	2160 - 9
U12037	3G15	6	2160 - 11
U12198	2D19	..	1369 - 5
U12331	2D19	..	1369 - 5
U12331	6C2	24	3360A - 15
U12331	6C7	24	3360A - 21
U12547	1E9	5	0341 - 17
U12547	1E9	32	0341 - 17
U12547	1E20	3	0360 - 3
U12547	1E24	7	0360 - 7
U12547	1F3	3	0360 - 10
U12547	2B25	6	0960 - 11
U12547	2C11	32	1060 - 3
U12547	2C21	18	1115 - 5
U12547	2D17	..	1369 - 3
U12547	2D19	..	1369 - 5
U12547	3G23	57	2160 - 19
U12547	3H4	53	2160 - 23
U12547	3H6	45	2160 - 23B
U12547	3H12	3	2160 - 27
U12547	3H21	1	2160 - 35
U12547	3H23	2	2160 - 35B
U12547	3I2	10	2160 - 37
U12547	3I2	21	2160 - 37
U12547	3I6	18	2160 - 39
U12547	3I8	14	2160 - 41
U12547	3I10	3	2160 - 43
U12547	3I12	25	2160 - 45
U12547	4D2	18	3160 - 13
U12547	4D4	18	3160 - 15
U12547	4D12	13	3160 - 23
U12547	4D12	20	3160 - 23
U12547	4D14	18	3160 - 25
U12547	4D14	27	3160 - 25
U12547	4D16	1	3160 - 27
U12547	4D16	36	3160 - 27
U12547	4D20	3	3160 - 31
U12547	4D20	17	3160 - 31
U12547	4D22	19	3160 - 33
U12547	4D24	1	3160 - 35
U12547	4D24	33	3160 - 35
U12547	4E2	5	3160 - 37
U12547	5G19	10	3360 - 18
U12547	5H14	2	3360 - 39
U12547	5H16	2	3360 - 41
U12547	5H20	1	3360 - 45
U12547	5H20	5	3360 - 45
U12547	5H22	1	3360 - 47
U12547	5H24	10	3360 - 49
U12547	5H24	25	3360 - 49
U12547	5I2	1	3360 - 51
U12547	5I2	11	3360 - 51
U12547	5I4	21	3360 - 53
U12547	5I6	1	3360 - 55
U12547	5I6	10	3360 - 55
U12547	5I6	14	3360 - 55
U12547	5I8	7	3360 - 57
U12547	5I8	13	3360 - 57
U12547	5I10	1	3360 - 59
U12547	5I10	25	3360 - 59
U12547	5I12	1	3360 - 61
U12547	5I12	20	3360 - 61
U12547	5I14	1	3360 - 63
U12547	5I14	22	3360 - 63
U12547	5I14	28	3360 - 63
U12547	6C17	2	3360A - 33
U12547	6C19	4	3360A - 35
U12595	4C6	21	3115 - 3
U12595	4C8	32	3115 - 5
U12857	4C6	12	3115 - 3
U12857	4C6	19	3115 - 3
U12857	4C6	26	3115 - 3
U12857	4C12	21	3115 - 9
U13184	1I9	19	0510 - 1
U13184	1I18	20	0515 - 3
U13184	1I18	39	0515 - 3
U13184	1J1	4	0530 - 1
U13184	1J2	6	0530 - 2
U13639	1D23	13	0341 - 7
U13639	1E9	14	0341 - 17
U13639	1E12	13	0341 - 21
U13639	1F23	4	0404 - 1
U13639	1F25	3	0404 - 3
U13639	1I3	25	0452 - 3
U13639	1I6	6	0505 - 1
U13639	2D19	..	1369 - 5
U13639	3G21	11	2160 - 17
U13639	3G23	37	2160 - 19
U13639	3G23	51	2160 - 19
U13639	3G23	66	2160 - 19
U13639	3H2	1	2160 - 21
U13639	3H4	54	2160 - 23
U13639	3H6	49	2160 - 23B
U13639	3H6	55	2160 - 23B
U13639	3H8	12	2160 - 25
U13639	3H21	5	2160 - 35
U13639	3I2	15	2160 - 37
U14273	1E9	2	0341 - 17
U14555	1B25	8	0230 - 4
U14555	5D8	5	3315 - 15
U14555	5D12	8	3315 - 19
U14555	5D16	6	3315 - 23
U15192	4D7	5	3160 - 18
U15192	5H8	5	3360 - 33
U15242	4C20	9	3160 - 5
U15242	4C23	5	3160 - 9
U15242	4C23	11	3160 - 9
U15242	4C25	5	3160 - 11
U15242	4C25	12	3160 - 11
U15411	5F17	14	3340 - 21
U15411	5F23	4	3340 - 27
U15415	2D19	..	1369 - 5
U15939	5H20	18	3360 - 45
U15939	5H22	3	3360 - 47
U15939	5H22	5	3360 - 47
U15939	5I8	16	3360 - 57
U15973	1E11	42	0341 - 19
U15973	2D19	..	1369 - 5
U15977	3G21	27	2160 - 17
U15977	3H2	21	2160 - 21
U15980	4C23	18	3160 - 9
U15980	5G10	4	3360 - 9
U15980	5G12	4	3360 - 11

NUMERICAL INDEX - CONTINUED

PART NO.	GRID	KEY	PAGE
U15980	5G19	3	3360 - 18
U15980	5G20	4	3360 - 19
U15981	4C20	19	3160 - 5
U15981	5G10	3	3360 - 9
U15981	5G12	3	3360 - 11
U15981	5G20	3	3360 - 19
U16017	5B21	2	3301 - 1
U16541	5B21	3	3301 - 1
U17406	5G14	20	3360 - 13
U17406	5G16	20	3360 - 15
U17406	5G18	20	3360 - 17
U17406	5G21	16	3360 - 20
U17409	1D17	8	0341 - 1
U17409	1D18	8	0341 - 2
U17409	1D19	8	0341 - 3
U17409	1D21	15	0341 - 5
U17409	1E11	52	0341 - 19
U17409	1E11	57	0341 - 19
U17409	2D19	..	1369 - 5
U17409	3G23	42	2160 - 19
U17409	3H4	42	2160 - 23
U17409	3H6	41	2160 - 23B
U17409	3I2	21	2160 - 37
U17409	4D2	7	3160 - 13
U17409	4D4	7	3160 - 15
U17409	5D4	19	3315 - 11
U17409	5G8	15	3360 - 7
U17409	5G10	6	3360 - 9
U17409	5G12	6	3360 - 11
U17409	5G12	13	3360 - 11
U17409	5G14	15	3360 - 13
U17409	5G16	15	3360 - 15
U17409	5G18	15	3360 - 17
U17409	5G19	9	3360 - 18
U17409	5G20	6	3360 - 19
U17409	5G21	17	3360 - 20
U17409	5G21	21	3360 - 20
U17409	5G21	27	3360 - 20
U17409	5H20	5	3360 - 45
U17409	5H22	1	3360 - 47
U17409	5H24	10	3360 - 49
U17409	5I2	11	3360 - 51
U17409	5I4	21	3360 - 53
U17409	5I16	1	3360 - 65
U40398	4B24	24	3102 - 11
U40398	4D20	19	3160 - 31
U40398	4D22	7	3160 - 33
U40398	4D22	23	3160 - 33
U40398	5H24	7	3360 - 49
U40398	5I2	22	3360 - 51
U40398	5I4	16	3360 - 53
U40398	5I4	24	3360 - 53
U40398	5I4	28	3360 - 53
U40398	5I6	19	3360 - 55
U40398	5I10	18	3360 - 59
U40398	5I12	13	3360 - 61
U40398	5I14	9	3360 - 63
U40398	5I16	8	3360 - 65
U40398	5I16	11	3360 - 65
U40398	5I16	30	3360 - 65
U40876	5E23	2	3340 - 1
U41353	3G9	30	2160 - 5
U41353	3H2	19	2160 - 21
U41353	3H12	8	2160 - 27
U42111	2D19	..	1369 - 5
U42208	3F2	4	1830 - 37
U42208	3F4	4	1830 - 39
U43352	1E22	5	0360 - 5
U43641	3G23	46	2160 - 19
U43641	3H4	44	2160 - 23
U43641	3H21	14	2160 - 35
U43641	3H23	17	2160 - 35B
U43792	5B24	3	3302 - 3
U43792	5C1	3	3302 - 4
U43792	5C3	3	3302 - 6
U43792	5C5	3	3302 - 8
U43792	5C7	3	3302 - 9
U43792	5C10	3	3302 - 11B
U43792	5C12	10	3302 - 11D
U43882	1D21	25	0341 - 5
U43882	1D25	32	0341 - 9
U43999	5J10	17	3360 - 83
U44000	5J10	19	3360 - 83
U44508	5J10	5	3360 - 83
U45113	3D24	11	1830 - 11
U45230	5J10	13	3360 - 83
U45760	1E2	19	0341 - 11
U45760	3G23	65	2160 - 19
U46219	5I2	25	3360 - 51
U46219	5I12	26	3360 - 61
U46219	5I16	15	3360 - 65
U46370	2F24	20	1674 - 27
U46506	3C14	15	1810 - 21
U46507	3C14	5	1810 - 21
U46508	3C14	21	1810 - 21
U46508	3C14	23	1810 - 21
U46518	3B25	30	1810 - 9
U46518	3B25	38	1810 - 9
U46519	3B25	4	1810 - 9
U46519	3B25	30	1810 - 9
U46520	3B25	30	1810 - 9
U46520	3B25	39	1810 - 9
U46662	2F24	10	1674 - 27
U46662	3I14	4	2160 - 47
U46664	2G2	47	1674 - 29
U46731	5H8	7	3360 - 33
W23122	5F3	10	3340 - 7
W23122	5F7	9	3340 - 11
W37172	3I10	15	2160 - 43
Z29304	3I10	29	2160 - 43
Z45833	2G10	34	1676 - 5
Z45833	3B18	5	1810 - 3
Z45833	3B18	17	1810 - 3
Z45833	3B18	19	1810 - 3
Z45961	2G8	27	1676 - 3
Z46941	3B18	13	1810 - 3
Z57041	3E4	28	1830 - 15
Z57041	3E6	42	1830 - 17
30690	5G6	1	3360 - 3
32240	2D13	..	1330 - 1
32246	3G9	11	2160 - 5
32246	3G9	33	2160 - 5
32246	3G15	12	2160 - 11
32246	3G15	15	2160 - 11
32246	3G15	16	2160 - 11
32246	5H8	10	3360 - 33
400R	1E18	10	0350 - 5
PART NO.	GRID	KEY	PAGE