INTRODUCTION AND CUSTOMER INFORMATION

T134142 -UN-10OCT00

OUTUBRO 2000

RUTHZIL TRATOR COMERCIAL DE PEÇAS LTDA 11 97083-6812 ROLANDO

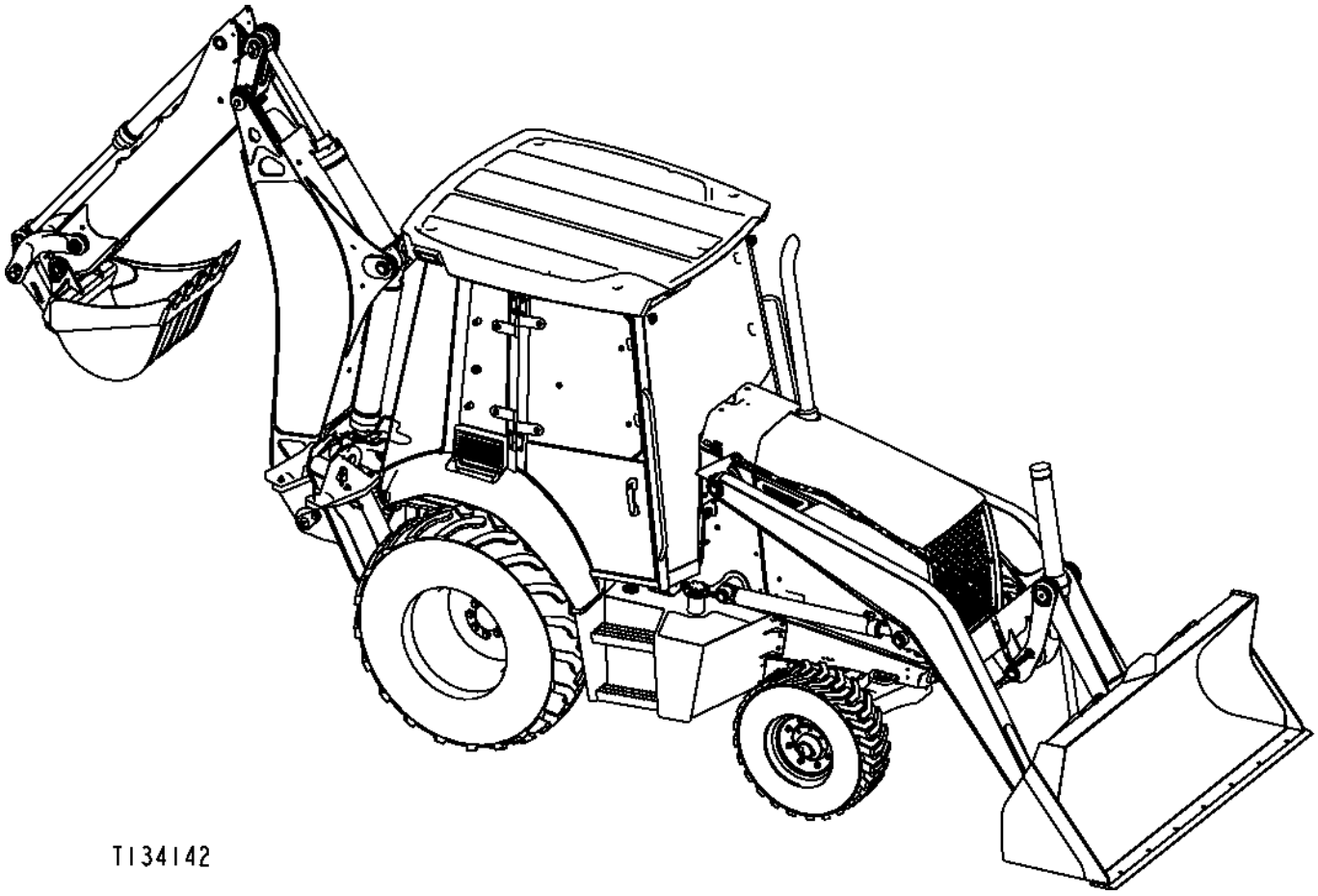

SIDE VIEW OF JOHN DEERE BACKHOE LOADER
(MANUFACTURED 2000-)

TO THE CUSTOMER

THE PART NUMBERS IN THIS PARTS CATALOG WERE CORRECT AT THE TIME YOUR CATALOG WAS PUBLISHED. IT IS OUR POLICY TO CONSTANTLY IMPROVE OUR MACHINES AND, THEREFORE, PART NUMBERS MAY CHANGE. WHEN ORDERING PARTS, VERIFY PART NUMBERS THROUGH YOUR DEALER.

(SPECIFICATIONS AND DESIGN SUBJECT TO CHANGE WITHOUT NOTICE.)

SERIAL NUMBER LOCATIONS

EACH 410G BACKHOE LOADER HAS SIX SERIAL NUMBERS, A PRODUCT IDENTIFICATION NUMBER PLATE, AN ENGINE SERIAL NUMBER PLATE, A HYDRAULIC PUMP SERIAL NUMBER PLATE, A MFWD AXLE SERIAL NUMBER PLATE, A TRANSMISSION SERIAL NUMBER PLATE, AND A REAR AXLE SERIAL NUMBER PLATE.

THE PRODUCT IDENTIFICATION NUMBER IS ON THE LEFT-HAND SIDE OF THE LOADER FRAME JUST ABOVE THE LIFT CYLINDER PIVOT BOSS.

THE ENGINE SERIAL NUMBER PLATE IS LOCATED ON THE RIGHT-HAND SIDE OF THE CYLINDER BLOCK NEAR THE FUEL PUMP.

THE MFWD AXLE SERIAL NUMBER PLATE IS LOCATED ON THE RIGHT-HAND (REAR) SIDE OF THE MFWD AXLE HOUSING.

THE REAR AXLE SERIAL NUMBER PLATE IS LOCATED ON THE RIGHT-HAND (FRONT) SIDE OF THE AXLE HOUSING.

THE TRANSMISSION SERIAL NUMBER PLATE IS LOCATED ON THE BOTTOM-REAR FACE OF THE HOUSING.

THE HYDRAULIC PUMP SERIAL NUMBER IS LOCATED ON THE BOTTOM FACE OF THE PUMP.

LEFT-HAND SIDE, RIGHT-HAND SIDE, FRONT AND REAR OF THE BACKHOE LOADER ARE VIEWED BY FACING IN THE DIRECTION OF THE BACKHOE LOADER FORWARD TRAVEL.

LEFT-HAND SIDE, RIGHT-HAND SIDE, FRONT AND REAR OF THE BACKHOE COMPONENTS ARE DETERMINED WHEN SEATED IN THE BACKHOE OPERATING POSITION.

IF PRODUCT IDENTIFICATION NUMBERS OR SERIAL NUMBERS ARE REQUIRED FOR WARRANTY CLAIMS OR CORRESPONDENCE PERTAINING TO THIS PRODUCT. IT IS EXTREMELY IMPORTANT THAT ALL CHARACTERS BE FURNISHED. THIS POINT CANNOT BE OVEREMPHASIZED.

ENGINE SERIAL NUMBER PLATE

T134833 -UN-23OCT00



T134833

1. DESIGNATES ENGINE MANUFACTURER	T-JOHN DEERE DUBUQUE WORKS
2. DESIGNATES NUMBER OF CYL. AND LITERS	4045 (4.5 LITER)
3. DESIGNATES FUEL TYPE OR SPECIAL CONDITIONS.	TF TURBOCHARGED DIESEL ENGINE
4. DESIGNATES ENGINE SERIAL NUMBER	123456
5. DESIGNATES THE ENGINE APPLICATION AND FACTORY USER.	TO4045TT082 - PE4045TT082(410G)(WITH TURBOCHARGER)

SERIAL NUMBER LISTING INFORMATION

SERIAL NUMBER INFORMATION IS LISTED TO SHOW ON WHICH MACHINES EACH PART CAN BE USED; FOR EXAMPLE:

-	THE PART CAN BE USED ON ALL MACHINES.
000000-	THE PART CAN BE USED ON ALL MACHINES BEGINNING WITH THE SERIAL NUMBER LISTED.
-000000	THE PART CAN BE USED ON ALL MACHINES UP TO AND INCLUDING THE SERIAL NUMBER LISTED.
000000-000000	THE PART CAN BE USED ON ALL MACHINES BETWEEN AND INCLUDING THE SERIAL NUMBERS LISTED.

WHEN XXXXXX'S ARE LISTED IN PLACE OF A SERIAL NUMBER, A SERIAL NUMBER CHANGE WAS MADE BUT THE EXACT SERIAL NUMBER WAS NOT AVAILABLE WHEN THE CATALOG WAS PRODUCED.

DIRECTION ARROW

ARROWS ARE USED WITH ILLUSTRATIONS TO INDICATE THE FRONT OF THE UNIT. "RIGHT-HAND" AND "LEFT-HAND" SIDES OF THE LOADER OR TRACTOR PARTS ARE DETERMINED BY FACING IN THE DIRECTION OF MACHINE FORWARD TRAVEL

EXCEPTION: FOR ALL BACKHOE PARTS, "RIGHT-HAND" AND "LEFT-HAND" SIDES, "FRONT" AND "REAR" ARE DETERMINED WHEN SEATED FOR BACKHOE OPERATION.

BOX-ENCLOSED ILLUSTRATIONS

A KEY NUMBER, SHOWN IN THE PARTS LIST, IS ASSIGNED TO A BOX ENCLOSING ALL PARTS SOLD AS A SERVICE ASSEMBLY.

COMPLETE GOODS LISTINGS

COMPLETE GOODS ARE LISTED IN THE REMARKS COLUMN. ORDER SEPARATELY.
DO NOT INCLUDE ON REPLACEMENT PARTS ORDER.

SI UNITS OF MEASURE

METRIC DIMENSIONS ARE GIVEN, WHERE APPLICABLE, THROUGHOUT THIS PARTS CATALOG.

CHANGE INDICATOR LINE

CHANGES AFFECTING THE ORDERING OF PARTS ARE IDENTIFIED BY VERTICAL LINES MARKED IN THE LEFT-HAND MARGIN OF REVISED PARTS LISTING IMAGES. A LINE IS ALSO AT THE LEFT-HAND EDGE OF THE SAME PART NUMBER IN THE NUMERICAL INDEX TO SHOW THE LOCATION OF REVISED INFORMATION.

MFWD AXLE SERIAL NUMBER PLATE

TP19438 -UN-01JAN94

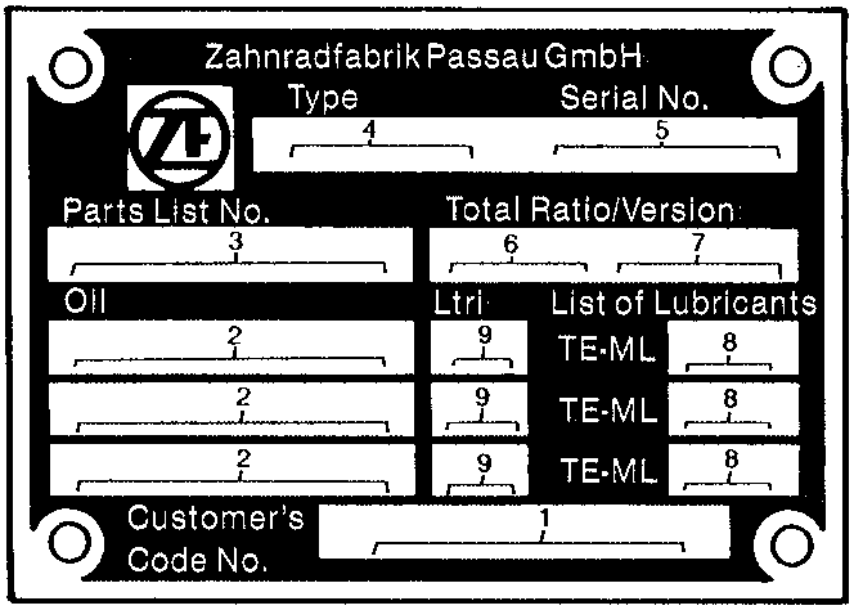

TP19438

1. DESIGNATES CUSTOMER'S CODE NUMBER	JOHN DEERE PART NUMBER
2. DESIGNATES TYPE OF LUBRICANT	M1L-L-2105B, SAE90
3. DESIGNATES ZF-PARTS-LIST NUMBER	4464 006 101
4. DESIGNATES AXLE TYPE	AP-11H
5. DESIGNATES AXLE SERIAL NUMBER	12345
6. DESIGNATES TOTAL - RATIO OF THE AXLE	20.28
7. DESIGNATES VERSION	SP. DIFF. (WITH OR WITHOUT SELF-LOCKING DIFFERENTIAL)
8. DESIGNATES LUBRICANT SPECIFICATION	05
9. DESIGNATES CAPACITY	LTR (DIFFERENTIAL CARRIER AND PLANETARY GEAR ASSEMBLY

ALPHABETICAL INDEX

GRID		PAGE
	A	
1K7	A/C SWITCH	1674 - 6
1E1	ACCESS COVER, INJECTION PUMP GEAR (ENG.SER.NO.-900932)	0402 - 6
2G23	ACCUMULATOR SEAL KIT	2160 - 26
2H1	ACCUMULATOR SEAL KIT	2160 - 28
2G23	ACCUMULATOR VALVE	2160 - 26
2H1	ACCUMULATOR VALVE	2160 - 28
3E7	ACCUMULATOR, MANIFOLD (PILOT CONTROL)	3362 - 30
2G23	ACCUMULATOR, RIDE CONTROL	2160 - 26
2H1	ACCUMULATOR, RIDE CONTROL	2160 - 28
1F23	ADAPTER KIT, STARTER MOTOR	0422 - 4
1H13	ADAPTER STC (SERIAL NO. -911131)	0960 - 8
1F15	ADAPTER,ENGINE OIL COOLER	0419 - 2
1E23	ADAPTER,EXHAUST	0410 - 2
1H17	ADAPTERS STC	0960 - 12
1H19	ADAPTERS STC	0960 - 14
1H15	ADAPTERS STC (SERIAL NO. 911132-)	0960 - 10
1G1	ADJUSTING STRAP, ALTERNATOR	0423 - 2
1G22	AIR CLEANER	0520 - 2
1G22	AIR CLEANER ELEMENT	0520 - 2
1G22	AIR CLEANER HOSE	0520 - 2
1G22	AIR CLEANER RESTRICTION INDICATOR SWITCH	0520 - 2
2E3	AIR CONDITIONING	1830 - 6
2E8	AIR CONDITIONING COMPRESSOR	1830 - 12
2E10	AIR CONDITIONING COMPRESSOR	1830 - 14
2E8	AIR CONDITIONING COMPRESSOR MOUNTING BRACKETS	1830 - 12
2E10	AIR CONDITIONING COMPRESSOR MOUNTING BRACKETS	1830 - 14
2E8	AIR CONDITIONING COMPRESSOR DRIVE BELT	1830 - 12
2E10	AIR CONDITIONING COMPRESSOR DRIVE BELT	1830 - 14
2E8	AIR CONDITIONING COMPRESSOR HOSES	1830 - 12
2E10	AIR CONDITIONING COMPRESSOR HOSES	1830 - 14
2E8	AIR CONDITIONING CONDENSER	1830 - 12
2E10	AIR CONDITIONING CONDENSER	1830 - 14
2D23	AIR CONDITIONING DUCTS	1830 - 2
2E1	AIR CONDITIONING DUCTS	1830 - 4
2E8	AIR CONDITIONING RECEIVER DRYER	1830 - 12
2E10	AIR CONDITIONING RECEIVER DRYER	1830 - 14
2D3	AIR CONDITIONING THERMOSTAT SWITCH	1816 - 12
1F3	AIR INTAKE SYSTEM	0414 - 1
1K7	AIR SUSPENSION SEAT SWITCH	1674 - 6
2F6	ALARM, TRAVEL WARNING	2004 - 2
2F6	ALARM,BACK UP	2004 - 2
1J20	ALTERNATOR	1672 - 2
1G1	ALTERNATOR ADJUSTING STRAP	0423 - 2
1J20	ALTERNATOR FAN	1672 - 2
1G1	ALTERNATOR MOUNTING BRACKETS	0423 - 2
1J20	ALTERNATOR PULLEY	1672 - 2
1J24	ANCHOR, TIE BAND MOUNT, HARNESS	1673 - 4
2D9	ANGLE,BACKREST ADJUSTMENT	1821 - 2
2F2	ANTENNA, RADIO	2001 - 2
2I17	ANTI-CAVITATION, BOOM SECTION	3162 - 10
2I21	ANTI-CAVITATION, BUCKET SECTION	3162 - 14
3D3	ARM GRIP REPAIR KIT, EXT. DIPPER	3346 - 6
2D9	ARM RESTS	1821 - 2
2I5	ARM, LOADER LIFT	3140 - 2
2D5	ARM, PILOT CONTROLLER (LEFT SIDE)	1816 - 14
2D7	ARM, PILOT CONTROLLER (RIGHT SIDE)	1816 - 16
3C23	ARM, STANDARD	3346 - 2
3D4	ARM,STABLIZER	3348 - 2
1D23	ARMS, ROCKER	0402 - 3
3F19	ATTACHMENT PLUMBING KIT	3363 - 30
2G1	ATTENUATOR, CAB HYDRAULIC	2160 - 8
2G3	ATTENUATOR, CANOPY HYDRAULIC	2160 - 10
3F13	AUGER COUPLERS	3363 - 24
3F15	AUGER COUPLERS	3363 - 26
3F15	AUGER HYDRAULICS	3363 - 26
2H12	AUXILIARY CUTTING EDGE,MULTI-PURPOSE BUCKET	3102 - 8
3F7	AUXILIARY EQUIPMENT HYDRAULICS, EXTENDAB LE DIPPERSTICK	3363 - 18
3F5	AUXILIARY EQUIPMENT HYDRAULICS, STANDARD DIPPERSTICK	3363 - 16
3C5	AUXILIARY FUNCTION PEDAL (PILOT CONTROL)	3315 - 13A
2I23	AUXILIARY SECTION RELIEF VALVE	3162 - 16
2J3	AUXILIARY SECTION RELIEF VALVE	3162 - 20
3D22	AUXILIARY SECTION RELIEF VALVE	3362 - 20
3D22	AUXILIARY SECTION, BACKHOE VALVE	3362 - 20
3D24	AUXILIARY SECTION, BACKHOE VALVE	3362 - 22
2I23	AUXILIARY SECTION, LOADER VALVE	3162 - 16
2J3	AUXILIARY SECTION, LOADER VALVE	3162 - 20
2J1	AUXILIARY VALVE KIT, LOADER	3162 - 18
3F17	AUXILIARY, LOW PRESSURE RETURN KIT	3363 - 28
1B7	AXLE ASSEMBLY,REAR	0201 - 2
1C1	AXLE HOUSING ASSEMBLY (MFWD)	0250 - 4
1B20	AXLE HOUSING, FRONT (WITHOUT MFWD) (SERIAL NO. 911132-)	0230 - 6
1B16	AXLE PIVOT PIN (WITHOUT MFWD) (SERIAL NO. -911131)	0230 - 2
1B21	AXLE SWIVEL HOUSING, FRONT (WITHOUT MFWD)	0230 - 7
1B23	AXLE, FRONT (MFWD)	0250 - 2
1B19	AXLE, FRONT (WITHOUT MFWD)	0230 - 5
1B16	AXLE, FRONT (WITHOUT MFWD) (SERIAL NO. -911131)	0230 - 2
	B	
2F6	BACK-UP ALARM	2004 - 2
3C19	BACKHOE BOOM	3344 - 2
3F23	BACKHOE BOOM CYLINDER	3365 - 2
3F23	BACKHOE BOOM CYLINDER REPAIR KIT	3365 - 2
3C11	BACKHOE BOOM LOCK	3315 - 18
3C9	BACKHOE BOOM LOCK CONTROL LEVER	3315 - 16
3C19	BACKHOE BOOM PIN	3344 - 2
3C20	BACKHOE BOOM PROTECTION KIT	3344 - 3
3C19	BACKHOE BOOM STOP/CLAMP	3344 - 2
3B12	BACKHOE BUCKET	3302 - 8
3B12	BACKHOE BUCKET CUTTING EDGE	3302 - 8
3F25	BACKHOE BUCKET CYLINDER	3365 - 4
3E20	BACKHOE BUCKET CYLINDER HYDRAULICS	3363 - 6
3F25	BACKHOE BUCKET CYLINDER REPAIR KIT	3365 - 4
3B12	BACKHOE BUCKET PINS	3302 - 8
2C19	BACKHOE CONSOLE (PILOT CONTROL)	1816 - 5A
3D8	BACKHOE CONTROL VALVE	3362 - 6
3B18	BACKHOE CONTROL VALVE LINKAGE, TWO LEVER	3315 - 4
2C15	BACKHOE CONTROLS COVER	1816 - 2
2D5	BACKHOE CONTROLS, PILOT CONTROLLER ARM (LEFT SIDE)	1816 - 14
2D7	BACKHOE CONTROLS, PILOT CONTROLLER ARM (RIGHT SIDE)	1816 - 16
2C17	BACKHOE LEVER COVER	1816 - 4
2C15	BACKHOE LEVERS COVER	1816 - 2

ALPHABETICAL INDEX - CONTINUED

GRID		PAGE
3C7	BACKHOE LINKAGE, FIFTH FN LEVER FOR THREE LEVER CONTROLS	3315 - 14
3E14	BACKHOE STABILIZER CYLINDER HYDRAULICS	3363 - 2
3E16	BACKHOE STABILIZER CYLINDER HYDRAULICS	3363 - 3A
3C9	BACKHOE SWING LOCK CONTROL LEVER	3315 - 16
3B20	BACKHOE THREE LEVER CONTROL VALVE CONVERSION KIT	3315 - 6
3D22	BACKHOE VALVE AUXILIARY SECTION	3362 - 20
3D24	BACKHOE VALVE AUXILIARY SECTION	3362 - 22
3D12	BACKHOE VALVE BOOM SECTION	3362 - 10
3D14	BACKHOE VALVE BUCKET SECTION	3362 - 12
3D16	BACKHOE VALVE CROWD SECTION	3362 - 14
3D20	BACKHOE VALVE EXTENDIBLE SECTION	3362 - 18
3D10	BACKHOE VALVE INLET SECTION	3362 - 8
3B14	BACKHOE VALVE MOUNTING PLATE	3315 - 2
3B16	BACKHOE VALVE MOUNTING PLATE (PILOT CONTROL)	3315 - 3A
3E1	BACKHOE VALVE OUTLET SECTION	3362 - 24
3D18	BACKHOE VALVE SWING SECTION	3362 - 16
3B18	BACKHOE VALVE TWO LEVER CONVERSION KIT	3315 - 4
3B22	BACKHOE, FOUR-LEVER CONTROLS, STANDARD	3315 - 8
3B20	BACKHOE, THREE LEVER CONTROL VALVE LINKAGE	3315 - 6
2D9	BACKREST ADJUSTMENT ANGLE	1821 - 2
1F4	BALANCER SHAFT, ENGINE	0415 - 2
1J10	BANK, FRONT AXLE GREASE	1370 - 2
1I20	BAR, CYLINDER SERVICE LOCK	1313 - 2
2E12	BARRIER, HEAT AND NOISE	1834 - 2
2D17	BASE, NON-SUSPENDED SEAT	1821 - 10
2D19	BASE, SEAT FOR NON-SUSPENDED SEAT	1821 - 12
1J15	BATTERIES,DUAL	1671 - 4
2E17	BATTERY BOX	1913 - 2
1J18	BATTERY BOX STEP	1671 - 7
1J13	BATTERY CABLE, SINGLE	1671 - 2
2E17	BATTERY COVER	1913 - 2
1J17	BATTERY DISCONNECT SWITCH,MASTER	1671 - 6
1J13	BATTERY INSTALLATION, SINGLE	1671 - 2
1J22	BEACON, ROTATING	1673 - 2
1J22	BEACON, STROBE	1673 - 2
1B20	BEARING,FRONT AXLE HOUSING (WITHOUT MFWD)(SERIAL NO. 911132-)	0230 - 6
1D21	BEARINGS, MAIN	0401 - 2
1E5	BEARINGS,C0NNECTING ROD	0403 - 2
1B18	BEARINGS,FRONT WHEEL(WITHOUT MFWD) (SERIAL NO. -911131)	0230 - 4
1C15	BELL HOUSING	0341 - 2
1C21	BELLVILLEWASHER, FIRST GEAR, POWER SHIFT	0350 - 4
1D5	BELLVILLEWASHER, FORWARD, POWER SHIFT	0350 - 12
1D7	BELLVILLEWASHER, REVERSE, POWER SHIFT	0350 - 14
1C23	BELLVILLEWASHER, 2ND GEAR, POWER SHIFT	0350 - 6
1D1	BELLVILLEWASHER, 3RD GEAR, POWER SHIFT	0350 - 8
1D3	BELLVILLEWASHER, 4TH GEAR, POWER SHIFT	0350 - 10
1G3	BELT, DRIVE	0429 - 4
2E8	BELT,AIR CONDITIONING COMPRESSOR DRIVE	1830 - 12
2E10	BELT,AIR CONDITIONING COMPRESSOR DRIVE	1830 - 14
1G18	BELT,FAN DRIVE	0510 - 2
2D9	BELTS, SEAT	1821 - 2
2D17	BELTS, TETHER WITH NON-SUSPENDED SEAT	1821 - 10
1C6	BEVEL DRIVE GEAR (MFWD)	0250 - 10
1E7	BLOCK, CYLINDER	0404 - 2
2E3	BLOWER MOTOR PRESSURIZER	1830 - 6
2E15	BOLT, STRIKER, HOOD	1910 - 2
3F9	BOOM CYL.KIT, LOWERING DEVICE,CONTOLLED	3363 - 20
3F9	BOOM CYL.KIT,CONTROLLED LOWERING DEVICE	3363 - 20
3E18	BOOM CYLINDER HYDRAULIC HOSES	3363 - 4
3E18	BOOM CYLINDER HYDRAULIC OIL LINES	3363 - 4
2J15	BOOM CYLINDER HYDRAULICS, LOADER	3163 - 2
3F23	BOOM CYLINDER REPAIR KIT, BACKHOE	3365 - 2
3F23	BOOM CYLINDER, BACKHOE	3365 - 2
2D1	BOOM LEVER LOCK COVER	1816 - 10
2D3	BOOM LEVER LOCK COVER	1816 - 12
3C11	BOOM LOCK, BACKHOE	3315 - 18
3C19	BOOM PIN, BACKHOE	3344 - 2
2I15	BOOM SECTION RELIEF VALVE	3162 - 8
2I17	BOOM SECTION RELIEF VALVE	3162 - 10
3D12	BOOM SECTION RELIEF VALVE	3362 - 10
2I17	BOOM SECTION, ANTI-CAVITATION RELIEF	3162 - 10
3D12	BOOM SECTION, BACKHOE VALVE	3362 - 10
2I15	BOOM SECTION, LOADER VALVE	3162 - 8
2I17	BOOM SECTION, LOADER VALVE	3162 - 10
1I20	BOOM SERVICE LOCK BAR	1313 - 2
3C19	BOOM STOP/CLAMP,BACKHOE	3344 - 2
3C19	BOOM, BACKHOE	3344 - 2
2I5	BOOM, LOADER	3140 - 2
3C20	BOOM,BACKHOE,PROTECTION KIT	3344 - 3
2C19	BOOT, WINCH CONTROL (PILOT CONTROL)	1816 - 5A
2B5	BOTTOM GUARD	1746 - 4
2E17	BOX, BATTERY	1913 - 2
2E17	BOX, TOOL	1913 - 2
1G22	BRACKET, AIR CLEANER MOUNTING	0520 - 2
1H3	BRACKET, ENGINE MOUNTING	0540 - 2
2F5	BRACKET, EXTERNAL REAR VIEW MIRROR	2002 - 3
2F8	BRACKET, HORN (SERIAL NO. -XXXXXX)	2004 - 4
2F4	BRACKET, INTERIOR REAR VIEW MIRROR	2002 - 2
1I22	BRACKET, LICENCE PLATE	1314 - 2
2E15	BRACKET, STRIKER BOLT	1910 - 2
3B14	BRACKET,BACKHOE VALVE MOUNTING	3315 - 2
3B16	BRACKET,BACKHOE VALVE MOUNTING (PILOT CONTROL)	3315 - 3A
2F2	BRACKET,RADIO ANTENA	2001 - 2
3B14	BRACKET,STABLIZER VALVE MOUNTING	3315 - 2
3B16	BRACKET,STABLIZER VALVE MOUNTING (PILOT CONTROL)	3315 - 3A
2D9	BRACKETS ,SEAT	1821 - 2
1G1	BRACKETS, ALTERNATOR MOUNTING	0423 - 2
1I2	BRAKE DISK	1011 - 2
1I2	BRAKE HOUSING	1011 - 2
1I4	BRAKE LIGHT PRESSURE SWITCH	1060 - 2
1I4	BRAKE PEDAL	1060 - 2
1I2	BRAKE PISTON	1011 - 2
1I8	BRAKE SERVICE, HYDRAULICS	1060 - 6
1I4	BRAKE VALVE	1060 - 2
1I6	BRAKE VALVE	1060 - 4
1I10	BRAKE VALVE BOOST PLUMBING (CAB)	1060 - 8
1I12	BRAKE VALVE BOOST PLUMBING (ROPS)	1060 - 10
1I4	BRAKE VALVE HOUSING	1060 - 2
1I6	BRAKE VALVE HOUSING	1060 - 4
1I6	BRAKE VALVE KIT	1060 - 4
1I4	BRAKE VALVE MOUNTING PLATE	1060 - 2
1I6	BRAKE VALVE PUSH ROD	1060 - 4
1I15	BRAKE, PARK (SERIAL NO. -902685)	1111 - 2
1I17	BRAKE, PARK (SERIAL NO. 902686-)	1111 - 4
1I2	BRAKES, SERVICE	1011 - 2
2G15	BREATHER FILTER, HYDRAULIC RESERVOIR	2160 - 18
1C15	BREATHER, TRANSMISSION	0341 - 2
3E20	BUCKET CYLINDER HYDRAULICS, BACKHOE	3363 - 6
3E20	BUCKET CYLINDER LINES, BACKHOE	3363 - 6
3F25	BUCKET CYLINDER, BACKHOE	3365 - 4
2K2	BUCKET CYLINDER, LOADER	3165 - 4

ALPHABETICAL INDEX - CONTINUED

GRID		PAGE
2H16	BUCKET CYLINDER, MULTI-PURPOSE	3102 - 12
2H17	BUCKET LEVELING LINKAGE	3115 - 2
2H19	BUCKET LEVELING LINKAGE	3115 - 4
2H17	BUCKET LEVELING ROD	3115 - 2
2H19	BUCKET LEVELING ROD	3115 - 4
2H17	BUCKET LEVELING YOKE	3115 - 2
2H19	BUCKET LEVELING YOKE	3115 - 4
2I7	BUCKET LINKAGE, LOADER	3140 - 4
3C21	BUCKET LINKS AND PINS,BACKHOE	3345 - 2
2H10	BUCKET PINS, LOADER	3102 - 6
2I19	BUCKET SECTION RELIEF VALVE	3162 - 12
2I21	BUCKET SECTION RELIEF VALVE	3162 - 14
3D14	BUCKET SECTION RELIEF VALVE	3362 - 12
2I21	BUCKET SECTION, ANTI-CAVITATION RELIEF	3162 - 14
3D14	BUCKET SECTION, BACKHOE VALVE	3362 - 12
2I19	BUCKET SECTION, LOADER VALVE	3162 - 12
2I21	BUCKET SECTION, LOADER VALVE	3162 - 14
3C23	BUCKET SPACER, SYNTHETIC	3346 - 2
2H6	BUCKET, LOADER .96 CUBIC METER (1.25 CUBIC YARD)	3102 - 2
2H12	BUCKET, MULTI-PURPOSE	3102 - 8
3B12	BUCKET,BACKHOE	3302 - 8
2H8	BUCKET,LOADER 1.00 CUBIC METER (1.30 CUBIC YARD)	3102 - 4
2H8	BUCKET,LOADER 1.15 CUBIC METER (1.50 CUBIC YARD)	3102 - 4
2H14	BUCKET,MULTI-PURPOSE	3102 - 10
2B7	BUMPER (SERIAL NUMBER -901551)	1747 - 2
2B9	BUMPER (SERIAL NUMBER 901552-)	1747 - 4
2B7	BUMPER, MAIN FRAME (SERIAL NUMBER -901551)	1747 - 2
2B9	BUMPER, MAIN FRAME (SERIAL NUMBER 901552-)	1747 - 4
3D1	BUSHING, EXTENDIBLE ARM	3346 - 4
2H12	BUSHING, MULTI-PURPOSE BUCKET	3102 - 8
2H14	BUSHING, MULTI-PURPOSE BUCKET CYLINDER	3102 - 10
1B20	BUSHING,FRONT AXLE HOUSING (WITHOUT MFWD) (SERIAL NO. 911132-)	0230 - 6

C

2F2	CAB DOME LIGHT	2001 - 2
2C1	CAB DOOR CYLINDER	1814 - 2
2C3	CAB DOOR CYLINDER	1814 - 4
2C1	CAB DOOR HINGES	1814 - 2
2C3	CAB DOOR HINGES	1814 - 4
2C1	CAB DOORS	1814 - 2
2C3	CAB DOORS	1814 - 4
2B19	CAB FRAME	1811 - 4
2B19	CAB HEADLINER	1811 - 4
2E3	CAB HEATER	1830 - 6
2E7	CAB HEATER (20,000 BTU)	1830 - 10
2D23	CAB HEATER DUCTS	1830 - 2
2E1	CAB HEATER DUCTS	1830 - 4
2E7	CAB HEATER MOTOR (20,000 BTU)	1830 - 10
2G1	CAB HYDRAULIC ATTENUATOR	2160 - 8
1K1	CAB MAIN WIRE HARNESS	1674 - 2
1K3	CAB MAIN WIRE HARNESS	1674 - 4
2B19	CAB MOUNTING ISOLATORS	1811 - 4
2C7	CAB REAR WINDOWS	1814 - 8
2B21	CAB ROOF	1811 - 6
2C1	CAB SIDE WINDOW LATCH	1814 - 2
2C3	CAB SIDE WINDOW LATCH	1814 - 4
2C1	CAB SIDE WINDOWS	1814 - 2
2C3	CAB SIDE WINDOWS	1814 - 4
2E23	CAB SKIRT	1927 - 2
2C5	CAB WINDSHIELD	1814 - 6
1G20	CABLE, ENGINE SPEED CONTROL	0515 - 2
2F2	CABLE, RADIO	2001 - 2
2H17	CABLE, RETURN-TO-DIG	3115 - 2
2H17	CABLE, SELF-LEVELING	3115 - 2
1J13	CABLE, SINGLE BATTERY	1671 - 2
2E5	CABLE,HEATER VALVE CONTROL,CANOPY	1830 - 8
3C13	CABLES, STABILIZER CONTROL	3315 - 20
1J15	CABLES,DUAL BATTERY	1671 - 4
1D22	CAMSHAFT	0402 - 2
1D22	CAMSHAFT GEAR	0402 - 2
2B17	CANOPY	1811 - 2
2E5	CANOPY HEATER	1830 - 8
2E5	CANOPY HEATER HOSE	1830 - 8
2E5	CANOPY HEATER SHUT-OFF VALVE	1830 - 8
2E5	CANOPY HEATER VALVE CONTROL CABLE	1830 - 8
2G3	CANOPY HYDRAULIC ATTENUATOR	2160 - 10
1H5	CAP, FUEL TANK	0560 - 2
1G18	CAP, RADIATOR	0510 - 2
1E11	CAP,ENGINE OIL FILL INLET	0407 - 2
1B18	CAP,HUB FRONT WHEEL(WITHOUT MFWD) (SERIAL NO. -911131)	0230 - 4
1E7	CAP,MAIN BEARING	0404 - 2
1B9	CARRIER, PLANETARY PINION	0210 - 1
1F6	CENTER HOUSING,TURBOCHARGER	0416 - 2
2B23	CENTER KICK PANEL, REAR	1812 - 2
1D11	CHARGE PUMP,TRANSMISSION	0360 - 1
1K1	CIRCUIT BREAKERS	1674 - 2
1C21	CLUTCH ASSEMBLY, FIRST GEAR, POWER SHIFT	0350 - 4
1D5	CLUTCH ASSEMBLY,FORWARD, POWER SHIFT	0350 - 12
1D3	CLUTCH ASSEMBLY,FOURTH GEAR, POWER SHIFT	0350 - 10
1D7	CLUTCH ASSEMBLY,REVERSE, POWER SHIFT	0350 - 14
1C23	CLUTCH ASSEMBLY,SECOND GEAR, POWER SHIFT	0350 - 6
1D1	CLUTCH ASSEMBLY,THIRD GEAR, POWER SHIFT	0350 - 8
1C21	CLUTCH BACKING PLATE, POWER SHIFT	0350 - 4
1C23	CLUTCH BACKING PLATE, POWER SHIFT	0350 - 6
1D1	CLUTCH BACKING PLATE, POWER SHIFT	0350 - 8
1D3	CLUTCH BACKING PLATE, POWER SHIFT	0350 - 10
1D5	CLUTCH BACKING PLATE, POWER SHIFT	0350 - 12
1D7	CLUTCH BACKING PLATE, POWER SHIFT	0350 - 14
1C21	CLUTCH CARRIER, FIRST GEAR, POWER SHIFT	0350 - 4
1D5	CLUTCH CARRIER, FORWARD, POWER SHIFT	0350 - 12
1D3	CLUTCH CARRIER, FOURTH GEAR, POWER SHIFT	0350 - 10
1D7	CLUTCH CARRIER, REVERSE, POWER SHIFT	0350 - 14
1C23	CLUTCH CARRIER, SECOND GEAR, POWER SHIFT	0350 - 6
1D1	CLUTCH CARRIER, THIRD GEAR, POWER SHIFT	0350 - 8
1I15	CLUTCH DISK, PARK BRAKE (SERIAL NO. -902685)	1111 - 2
1I17	CLUTCH DISK, PARK BRAKE (SERIAL NO. 902686-)	1111 - 4
1G14	COLD WEATHER STARTING AID	0505 - 4
1G16	COLD WEATHER STARTING AID	0505 - 6
1G14	COLD WEATHER STARTING AID SOLENOID	0505 - 4
1G16	COLD WEATHER STARTING AID SOLENOID	0505 - 6
1H8	COLUMN, STEERING	0960 - 2
1H10	COLUMN, STEERING	0960 - 4
1H10	COLUMN, TILT STEERING	0960 - 4
2E8	COMPRESSOR MOUNTING BRACKETS, AIR CONDITIONING	1830 - 12
2E10	COMPRESSOR MOUNTING BRACKETS, AIR CONDITIONING	1830 - 14
2E8	COMPRESSOR,AIR CONDITIONING	1830 - 12
2E10	COMPRESSOR,AIR CONDITIONING	1830 - 14
2E8	CONDENSER,AIR CONDITIONING	1830 - 12
2E10	CONDENSER,AIR CONDITIONING	1830 - 14

ALPHABETICAL INDEX - CONTINUED

GRID		PAGE
1E5	CONNECTING ROD	0403 - 2
1E5	CONNECTING ROD BEARINGS	0403 - 2
1K1	CONSOLE WIRING HARNESS, FRONT	1674 - 2
2C19	CONSOLE, BACKHOE (PILOT CONTROL)	1816 - 5A
2C17	CONSOLE, BACKHOE CONTROL LEVER	1816 - 4
2C23	CONSOLE, FRONT	1816 - 8
3F9	CONTOLLED LOWERING DEVICE, BOOM CYL.KIT	3363 - 20
3F11	CONTOLLED LOWERING DEVICE,CROWD CYL.KIT	3363 - 22
2C15	CONTROL COVER, BACKHOE, TWO LEVER	1816 - 2
2C17	CONTROL LEVER CONSOLE, BACKHOE	1816 - 4
1C12	CONTROL LEVER, TRANSMISSION	0315 - 4
3C9	CONTROL LEVER,BACKHOE BOOM LOCK	3315 - 16
3C9	CONTROL LEVER,BACKHOE SWING LOCK	3315 - 16
3C13	CONTROL VALVE LINKAGE, STABILIZER	3315 - 20
3B20	CONTROL VALVE LINKAGE, THREE LEVER, BACKHOE	3315 - 6
3B18	CONTROL VALVE LINKAGE,BACKHOE, TWO LEVER	3315 - 4
1D12	CONTROL VALVE PISTON, POWER SHIFT	0360 - 2
3D8	CONTROL VALVE, BACKHOE	3362 - 6
2I11	CONTROL VALVE, LOADER/STABILIZER	3162 - 4
1D12	CONTROL VALVE, TRANSMISSION, POWER SHIFT	0360 - 2
2G23	CONTROL, RIDE	2160 - 26
2H1	CONTROL, RIDE	2160 - 28
2E5	CONTROL,TEMPERATURE HEATER	1830 - 8
2D5	CONTROLLER ARM, PILOT (LEFT SIDE)	1816 - 14
2D7	CONTROLLER ARM, PILOT (RIGHT SIDE)	1816 - 16
1K11	CONTROLLER,SELECTIVE FLOW CONTROL	1674 - 10
3B22	CONTROLS, FOUR-LEVER STANDARD BACKHOE	3315 - 8
1C18	CONVERTER, TORQUE	0350 - 1
1G18	COOLANT RECOVERY TANK	0510 - 2
1G12	COOLANT, ENGINE HEATER	0505 - 2
2G19	COOLER, OIL	2160 - 22
2G21	COOLER,HYDRAULIC OIL AND HOSES (HI-AMBIENT)	2160 - 24
2E7	CORE, HEATER (20,000 BTU)	1830 - 10
2C7	CORNER WINDOWPANE, REAR	1814 - 8
2B12	COUNTERWEIGHT FRAME	1749 - 3
2B11	COUNTERWEIGHT, FRONT	1749 - 2
2J21	COUPLER, FRONT	3163 - 6
2J23	COUPLER, FRONT	3163 - 7A
2J21	COUPLER, LOADER BUCKET	3163 - 6
2J23	COUPLER, LOADER BUCKET	3163 - 7A
2G5	COUPLER, QUICK CONNECT	2160 - 12
2G7	COUPLER, QUICK CONNECT	2160 - 13A
3B10	COUPLER, QUICK COUPLER (CASE)	3302 - 6
3B8	COUPLER, QUICK COUPLER (STANDARD)	3302 - 4
3B6	COUPLER, QUICK COUPLER (UNIVERSAL)	3302 - 2
3F13	COUPLERS, AUGER	3363 - 24
3F15	COUPLERS,AUGER	3363 - 26
1E1	COVER, ACCESS, INJECTION PUMP GEAR (ENG.SER.NO.-900932)	0402 - 6
2C15	COVER, BACKHOE CONTROLS	1816 - 2
2C17	COVER, BACKHOE LEVER	1816 - 4
2C15	COVER, BACKHOE LEVERS	1816 - 2
2E17	COVER, BATTERY	1913 - 2
2D1	COVER, BOOM LEVER LOCK	1816 - 10
2D3	COVER, BOOM LEVER LOCK	1816 - 12
2B23	COVER, FLOOR TO FRONT CONSOLE	1812 - 2
2C23	COVER, FUSE PANEL	1816 - 8
1K9	COVER, JUMP START PROTECTION	1674 - 8
2B23	COVER, LINKAGE	1812 - 2
2D3	COVER, LOADER CONTROL	1816 - 12
2E19	COVER, LOADER PLUMBING	1913 - 4
2B23	COVER, MIDDLE FLOOR	1812 - 2
1E11	COVER, OIL FILLER OPENING	0407 - 2
2E23	COVER, OPERATOR STATION	1927 - 2
2B23	COVER, REAR FLOOR	1812 - 2
1D24	COVER, ROCKER ARM	0402 - 4
2D1	COVER, STABILIZER CONTROL	1816 - 10
2D3	COVER, STABILIZER CONTROL	1816 - 12
2C21	COVER, STEERING COLUMN	1816 - 6
1F13	COVER, THERMOSTAT	0418 - 2
1E1	COVER, TIMING GEAR (ENG.SER.NO.-900932)	0402 - 6
1B22	COVER, WHEEL HUB (WITHOUT MFWD) (SERIAL NO. 911132-)	0230 - 8
1J19	COVER,REMOTE START POST	1671 - 8
2D9	COVER,SEAT BELT	1821 - 2
1E3	COVER,TIMING GEAR (ENG. SER. NO. 900933-)	0402 - 8
1D21	CRANKSHAFT	0401 - 2
1D21	CRANKSHAFT GEAR	0401 - 2
3F11	CROWD CYL.KIT, CONTOLLED LOWERING DEVICE	3363 - 22
3F11	CROWD CYL.KIT, LOWERING DEVICE,CONTOLLED	3363 - 22
2K1	CROWD CYLINDER	3165 - 3
3G1	CROWD CYLINDER	3365 - 5
3E24	CROWD CYLINDER HYDRAULIC HOSES	3363 - 10
3E24	CROWD CYLINDER HYDRAULIC OIL LINES	3363 - 10
3E24	CROWD CYLINDER HYDRAULICS	3363 - 10
3C23	CROWD CYLINDER PIN	3346 - 2
2K1	CROWD CYLINDER REPAIR KIT	3165 - 3
3G1	CROWD CYLINDER REPAIR KIT	3365 - 5
3D16	CROWD SECTION RELIEF VALVE	3362 - 14
3D16	CROWD SECTION, BACKHOE VALVE	3362 - 14
3C23	CROWD SPACER, SYNTHETIC	3346 - 2
2D9	CUSHIONS,SEAT	1821 - 2
2H8	CUTTING EDGE ,LOADER BUCKET 1.00 CUBIC METER (1.30 CUBIC YARD)	3102 - 4
3B12	CUTTING EDGE,BACKHOE BUCKET	3302 - 8
2H6	CUTTING EDGE,LOADER BUCKET .96 CUBIC METER (1.25 CUBIC YARD)	3102 - 2
2H8	CUTTING EDGE,LOADER BUCKET 1.15CUBIC METER(1.50 CUBIC YARD)	3102 - 4
2H12	CUTTING EDGE,MULTI-PURPOSE BUCKET	3102 - 8
1E7	CYLINDER BLOCK	0404 - 2
2C1	CYLINDER CAB DOOR	1814 - 2
2C3	CYLINDER CAB DOOR	1814 - 4
1E20	CYLINDER HEAD	0409 - 2
1E20	CYLINDER HEAD GASKET	0409 - 2
1G7	CYLINDER HEAD REMOVAL GASKET SET	0452 - 1
1E5	CYLINDER LINER	0403 - 2
1E5	CYLINDER LINER O-RING KIT	0403 - 2
3F23	CYLINDER REPAIR KIT, BACKHOE BOOM	3365 - 2
3F25	CYLINDER REPAIR KIT, BACKHOE BUCKET	3365 - 4
3G3	CYLINDER REPAIR KITS, STABLIZER	3365 - 7
1I20	CYLINDER ROD LOCK BAR	1313 - 2
3F23	CYLINDER, BACKHOE BOOM	3365 - 2
3F25	CYLINDER, BACKHOE BUCKET	3365 - 4
3E20	CYLINDER, BACKHOE BUCKET HYDRAULICS	3363 - 6
3E14	CYLINDER, BACKHOE STABILIZER HYDRAULICS	3363 - 2
3E16	CYLINDER, BACKHOE STABILIZER HYDRAULICS	3363 - 3A
2K1	CYLINDER, CROWD	3165 - 3
3G4	CYLINDER, EXTENDIBLE ARM	3365 - 8
3G5	CYLINDER, EXTENDIBLE ARM	3365 - 9
3G4	CYLINDER, EXTENDIBLE DIPPERSTICK	3365 - 8
3G5	CYLINDER, EXTENDIBLE DIPPERSTICK	3365 - 9
2J25	CYLINDER, LOADER BOOM LIFT	3165 - 2
2H16	CYLINDER, MULTI-PURPOSE BUCKET	3102 - 12

ALPHABETICAL INDEX - CONTINUED

GRID		PAGE
1H23	CYLINDER, POWER STEERING (WITHOUT MFWD)	0960 - 18
3G3	CYLINDER, STABILIZER	3365 - 7
1H21	CYLINDER, STEERING, (WITH MFWD)	0960 - 16
3G2	CYLINDER, SWING	3365 - 6
3G1	CYLINDER,CROWD	3365 - 5
3D1	CYLINDER,EXTENDIBLE DIPPERSTICK	3346 - 4
1B21	CYLINDER,FRONT AXLE STEERING (WITHOUT MFWD)	0230 - 7
2K2	CYLINDER,LOADER BUCKET	3165 - 4

D

1I24	DECALS	1320 - 2
1J1	DECALS	1320 - 4
1J24	DELUXE LIGHTS	1673 - 4
3F9	DEVICE,CONTROLLED LOWERING,BOOM CYL.KIT	3363 - 20
3F11	DEVICE,CONTROLLED LOWERING,CROWD CYL.KIT	3363 - 22
2G11	DIAGNOSTIC RECEPTACLE, LOAD SENSE	2160 - 16
2G13	DIAGNOSTIC RECEPTACLE, LOAD SENSE	2160 - 17A
1B10	DIFFERENTIAL ASSEMBLY WITH LOCK	0210 - 2
1B10	DIFFERENTIAL HOUSING WITH LOCK	0210 - 2
1B7	DIFFERENTIAL HOUSING,REAR	0201 - 2
1B14	DIFFERENTIAL LOCK PLUMBING	0210 - 6
1K13	DIFFERENTIAL LOCK PUSH BUTTON	1674 - 12
1K13	DIFFERENTIAL LOCK SWITCH	1674 - 12
1C8	DIFFERENTIAL SPIRAL BEVEL GEAR (MFWD)	0250 - 12
1B10	DIFFERENTIAL WITH LOCK	0210 - 2
1C6	DIFFERENTIAL,LIMITED SLIP (MFWD)	0250 - 10
1K9	DIODES	1674 - 8
3D1	DIPPERSTICK EXTENDIBLE	3346 - 4
3D1	DIPPERSTICK EXTENDIBLE ARM CYLINDER	3346 - 4
3G4	DIPPERSTICK, CYLINDER EXTENDIBLE	3365 - 8
3G5	DIPPERSTICK, CYLINDER EXTENDIBLE	3365 - 9
3D3	DIPPERSTICK, EXT. ARM GRIP REPAIR	3346 - 6
3D3	DIPPERSTICK,EXT.PROTECTION KIT	3346 - 6
3C23	DIPPERSTICK,STANDARD	3346 - 2
1E12	DIPSTICK TUBE, ENGINE OIL	0407 - 3
1E12	DIPSTICK, ENGINE OIL	0407 - 3
2B5	DIPSTICK, GUARD, TRANSMISSION	1746 - 4
1C17	DIPSTICK,TRANSMISSION OIL	0341 - 4
1I2	DISK, BRAKE	1011 - 2
2B19	DOME LIGHT	1811 - 4
2C3	DOOR STRAP	1814 - 4
2C3	DOOR TETHER	1814 - 4
2C1	DOORS,CAB	1814 - 2
2C3	DOORS,CAB	1814 - 4
2G17	DP SWITCH KIT	2160 - 20
1J8	DRAIN PACKAGE, ENVIORMENTAL	1369 - 6
2J13	DRAIN REGULATOR, STABILIZER VALVE	3162 - 30
1G18	DRAIN VALVE,RADIATOR	0510 - 2
1B24	DRIVE SHAFT YOKE (MFWD)	0250 - 3
1B24	DRIVE SHAFT, UNIVERSAL (MFWD)	0250 - 3
1C14	DRIVE SHAFT,REAR (REVERSER)	0325 - 1
1B3	DRIVE WHEEL,FRONT(MFWD)	0110 - 3
1B2	DRIVE WHEEL,REAR	0110 - 2
1C5	DRIVE,PLANETARY (MFWD)	0250 - 8
1F20	DRIVE,STARTER MOTOR	0422 - 1
3C21	DRIVER LINK	3345 - 2
2E8	DRYER,RECEIVER, AIR CONDITIONING	1830 - 12
2E10	DRYER,RECEIVER, AIR CONDITIONING	1830 - 14
1J15	DUAL BATTERIES	1671 - 4
1J15	DUAL BATTERY CABLES	1671 - 4
2D23	DUCTS, AIR CONDITIONING	1830 - 2
2E1	DUCTS, AIR CONDITIONING	1830 - 4
2D23	DUCTS, CAB HEATER	1830 - 2
2E1	DUCTS, CAB HEATER	1830 - 4

E

1G18	EDGING, ISOLATOR	0510 - 2
1E23	ELBOW,EXHAUST	0410 - 2
1K5	ELECTRICAL, PILOT ENABLE	1674 - 5A
1G14	ELECTRONIC ETHER STARTING AID	0505 - 4
1G22	ELEMENT, AIR CLEANER	0520 - 2
2G17	ELEMENT, FILTER	2160 - 20
1F17	ELEMENT,FUEL FILTER	0420 - 2
2F13	EMBLEM, SMV	2008 - 2
1F4	ENGINE BALANCER SHAFT	0415 - 2
1G12	ENGINE COOLANT HEATER	0505 - 2
1K9	ENGINE COOLANT TEMPERATURE SENDER	1674 - 8
1G5	ENGINE FLYWHEEL	0433 - 2
1E6	ENGINE FRONT PLATE	0404 - 1
1G8	ENGINE MAJOR OVERHAUL GASKET SET	0452 - 2
1H3	ENGINE MOUNT ISOLATOR	0540 - 2
1H3	ENGINE MOUNTING BRACKET	0540 - 2
1E7	ENGINE OIL BY-PASS VALVE (ENG. SER. NO. 889025-)	0404 - 2
1F15	ENGINE OIL COOLER	0419 - 2
1F15	ENGINE OIL COOLER ADAPTER	0419 - 2
1E12	ENGINE OIL DIPSTICK	0407 - 3
1E12	ENGINE OIL DIPSTICK TUBE	0407 - 3
1E11	ENGINE OIL FILL INLET CAP	0407 - 2
1E15	ENGINE OIL FILTER	0407 - 6
1E15	ENGINE OIL FILTER HEADER	0407 - 6
1E13	ENGINE OIL PAN	0407 - 4
1E1	ENGINE OIL PRESSURE REGULATING VALVE (ENG. SER. NO. -889024)	0402 - 6
1K9	ENGINE OIL PRESSURE SWITCH	1674 - 8
1E17	ENGINE OIL PUMP	0407 - 8
1E17	ENGINE OIL PUMP GEAR	0407 - 8
1E17	ENGINE OIL PUMP HOUSING	0407 - 8
1E17	ENGINE OIL PUMP INTAKE	0407 - 8
1G8	ENGINE OVERHAUL KIT	0452 - 2
1E5	ENGINE PISTON	0403 - 2
1G8	ENGINE REBUILD KIT	0452 - 2
1E9	ENGINE SHORT BLOCK	0404 - 4
2E15	ENGINE SIDE PANELS	1910 - 2
2E15	ENGINE SIDE SHIELDS	1910 - 2
1G20	ENGINE SPEED CONTROL	0515 - 2
1G20	ENGINE SPEED CONTROL CABLE	0515 - 2
1G20	ENGINE SPEED CONTROL LEVER	0515 - 2
1G20	ENGINE SPEED CONTROL LINKAGE	0515 - 2
1H3	ENGINE SUPPORT	0540 - 2
1F13	ENGINE THERMOSTAT	0418 - 2
1E18	ENGINE VENTILATING HOSE	0408 - 2
1E18	ENGINE VENTILATING SYSTEM	0408 - 2
1K9	ENGINE WIRING HARNESS	1674 - 8
1J8	ENVIORMENTAL DRAIN PACKAGE	1369 - 6
1K7	ETHER SWITCH	1674 - 6
2E3	EVAPORATOR	1830 - 6
1E23	EXHAUST ADAPTER	0410 - 2
1E23	EXHAUST ELBOW	0410 - 2
1H1	EXHAUST EXTENSION	0530 - 2
1E22	EXHAUST MANIFOLD	0410 - 1
1E22	EXHAUST MANIFOLD GASKET	0410 - 1
1E20	EXHAUST VALVE	0409 - 2
2E3	EXPANSION VALVE	1830 - 6
3D3	EXT.DIPPER ARM GRIP REPAIR KIT	3346 - 6
3D3	EXT.DIPPERSTICK PROTECTION KIT	3346 - 6
3F7	EXTENDABLE DIPPERSTICK AUXILIARY HYDRAULICS	3363 - 18
3E22	EXTENDABLE DIPPERSTICK HYDRAULIC BUCKET CYLINDER HYDRAULIC HOSES	3363 - 8
3G4	EXTENDIBLE ARM CYLINDER	3365 - 8

ALPHABETICAL INDEX - CONTINUED

GRID		PAGE
3G5	EXTENDIBLE ARM CYLINDER	3365 - 9
3D1	EXTENDIBLE ARM LOCKING PIN	3346 - 4
3D1	EXTENDIBLE ARM PAD	3346 - 4
3D1	EXTENDIBLE ARM WEARSTRIPS	3346 - 4
3C1	EXTENDIBLE DIPPER PEDAL (PILOT CONTROL)	3315 - 11A
3D1	EXTENDIBLE DIPPERSTICK	3346 - 4
3G4	EXTENDIBLE DIPPERSTICK CYLINDER	3365 - 8
3G5	EXTENDIBLE DIPPERSTICK CYLINDER	3365 - 9
3D20	EXTENDIBLE SECTION SHUT-OFF PLUG	3362 - 18
3D20	EXTENDIBLE SECTION, BACKHOE VALVE	3362 - 18
3F3	EXTENSION CYLINDER HYDRAULICS HOSES (WITH EXTENDIBLE DIPPERSTICK)	3363 - 14
1H1	EXTENSION, EXHAUST	0530 - 2
2F5	EXTERNAL REAR VIEW MIRROR	2002 - 3

F

1G18	FAN DRIVE BELT	0510 - 2
1G3	FAN DRIVE BELT TENSIONER	0429 - 4
1G3	FAN DRIVE HOUSING	0429 - 4
1G3	FAN DRIVE HUB	0429 - 4
1G3	FAN DRIVE PULLEY	0429 - 4
1G18	FAN SHROUD	0510 - 2
1G18	FAN SHROUD, RADIATOR	0510 - 2
1J20	FAN, ALTERNATOR	1672 - 2
2E7	FAN, CAB HEATER (20,000 BTU)	1830 - 10
2E23	FENDERS	1927 - 2
3C7	FIFTH FN LEVER FOR THREE LEVER CONTROLS	3315 - 14
3B24	FIFTH FUNCTION FOOT CONTROL	3315 - 10
3E3	FIFTH FUNCTION MANUAL VALVE KIT	3362 - 26
3B24	FIFTH FUNCTION PEDAL	3315 - 10
3C1	FIFTH FUNCTION PEDAL (PILOT CONTROL)	3315 - 11A
2G17	FILTER ELEMENT	2160 - 20
3E10	FILTER ELEMENT, PILOT CONTROL	3363 - 1A
2G15	FILTER, BREATHER, HYDRAULIC RESERVOIR	2160 - 18
1E15	FILTER, ENGINE OIL	0407 - 6
2D3	FILTER, FRESH AIR	1816 - 12
1F17	FILTER, FUEL	0420 - 2
2G17	FILTER, HYDRAULIC OIL	2160 - 20
3F17	FILTER,LOW PRESSURE AUXILIARY KIT	3363 - 28
1G22	FILTERS, AIR CLEANER	0520 - 2
1C21	FIRST GEAR CLUTCH ASSEMBLY, POWER SHIFT	0350 - 4
1C21	FIRST GEAR CLUTCH CARRIER, POWER SHIFT	0350 - 4
1C21	FIRST GEAR, BELLVILLEWASHER, POWER SHIFT	0350 - 4
1I6	FITTINGS, BRAKE VALVE	1060 - 4
3F1	FITTINGS, SWING CYLINDER	3363 - 12
1K1	FLASHER, 12 VOLT	1674 - 2
1C18	FLEXPLATE, TORQUE CONVERTOR	0350 - 1
2B23	FLOOR COVER, REAR	1812 - 2
2B23	FLOOR MATS	1812 - 2
2H21	FLOOR PLATE, LOADER LINKAGE	3115 - 6
3E10	FLOW CONTROL VALVE	3363 - 1A
1J4	FLUID ANALYSIS PRODUCTS (OILSCAN PLUS TEST KIT)	1369 - 2
1G14	FLUID, STARTING	0505 - 4
1G6	FLYWHEEL HOUSING	0433 - 3
1G5	FLYWHEEL RING GEAR	0433 - 2
1G5	FLYWHEEL, ENGINE	0433 - 2
1C12	FNR, RANGE SWITCH	0315 - 4
3B24	FOOT CONTROL, FIFTH FUNCTION	3315 - 10
3C3	FOOT CONTROL, SIXTH FUNCTION	3315 - 12
1D5	FORWARD CLUTCH ASSEMBLY, POWER SHIFT	0350 - 12
1D5	FORWARD CLUTCH CARRIER, POWER SHIFT	0350 - 12
1D5	FORWARD, BELLVILLEWASHER, POWERSHIFT	0350 - 12
1C12	FORWARD, NEUTRAL, REVERSE CONTROL	0315 - 4
1D3	FOURTH GEAR CLUTCH ASSEMBLY, POWER SHIFT	0350 - 10
1D3	FOURTH GEAR CLUTCH CARRIER, POWER SHIFT	0350 - 10
1D3	FOURTH GEAR, BELLVILLEWASHER, POWERSHIFT	0350 - 10
2B19	FRAME, CAB	1811 - 4
2B12	FRAME, COUNTERWEIGHT	1749 - 3
2B2	FRAME, MAIN FRAME	1740 - 2
2B17	FRAME, ROPS	1811 - 2
3C17	FRAME, SWING	3343 - 2
2D3	FRESH AIR FILTER	1816 - 12
1B23	FRONT AXLE (MFWD)	0250 - 2
1B19	FRONT AXLE (WITHOUT MFWD)	0230 - 5
1B16	FRONT AXLE (WITHOUT MFWD) (SERIAL NO. -911131)	0230 - 2
1C1	FRONT AXLE HOUSING (MFWD)	0250 - 4
1C3	FRONT AXLE HOUSING (MFWD)	0250 - 6
1C1	FRONT AXLE HOUSING (MWFD)	0250 - 4
1B20	FRONT AXLE HOUSING (WITHOUT MFWD) (SERIAL NO. 911132-)	0230 - 6
1C3	FRONT AXLE HUB (MFWD)	0250 - 6
1J10	FRONT AXLE LUBRICATION SYSTEM	1370 - 2
1B23	FRONT AXLE PIVOT PIN (MFWD)	0250 - 2
1B19	FRONT AXLE PIVOT PIN (WITHOUT MFWD)	0230 - 5
1B21	FRONT AXLE SWIVEL HOUSING (WITHOUT MFWD)	0230 - 7
1C3	FRONT AXLE UNIVERSAL DRIVE SHAFT (MFWD)	0250 - 6
1B22	FRONT AXLE WHEEL HUB(WITHOUT MFWD) (SERIAL NO. 911132-)	0230 - 8
2C23	FRONT CONSOLE	1816 - 8
2B23	FRONT CONSOLE COVER,FLOOR	1812 - 2
1K1	FRONT CONSOLE SWITCHES	1674 - 2
1K1	FRONT CONSOLE WIRING HARNESS WITH CAB	1674 - 2
2B11	FRONT COUNTERWEIGHT	1749 - 2
1B3	FRONT DRIVE WHEEL (MFWD)	0110 - 3
1B3	FRONT DRIVE WHEEL VALVE STEM (MFWD)	0110 - 3
2B23	FRONT FLOOR MAT	1812 - 2
1E6	FRONT PLATE, ENGINE	0404 - 1
1B4	FRONT WHEEL (WITHOUT MFWD)	0120 - 1
1B18	FRONT WHEEL BEARINGS(WITHOUT MFWD) (SERIAL NO. -911131)	0230 - 4
1B18	FRONT WHEEL HUB(WITHOUT MFWD) (SERIAL NO. -911131)	0230 - 4
2C9	FRONT WINDSHIELD WIPER MOTOR	1814 - 10
1F17	FUEL FILTER	0420 - 2
1F17	FUEL FILTER ELEMENT	0420 - 2
1F17	FUEL FILTER FUEL LINES	0420 - 2
1F17	FUEL FILTER HEATER	0420 - 2
1F17	FUEL FILTER SERVICE KIT	0420 - 2
1H5	FUEL GAUGE SENDER	0560 - 2
1H5	FUEL HOSES	0560 - 2
1F1	FUEL INJECTION LINES	0413 - 2
1E24	FUEL INJECTION NOZZLE	0413 - 1
1F1	FUEL INJECTION PUMP	0413 - 2
1F1	FUEL INJECTION PUMP DRIVE GEAR	0413 - 2
1F1	FUEL INJECTION SYSTEM	0413 - 2
1F17	FUEL LINES,FUEL FILTER	0420 - 2
1H5	FUEL TANK	0560 - 2
1H5	FUEL TANK CAP	0560 - 2
1J18	FUEL TANK STEP	1671 - 7
1H5	FUEL TANK STRAINER	0560 - 2
1F19	FUEL TRANSFER PUMP	0421 - 2
1F19	FUEL TRANSFER PUMP PUSH ROD	0421 - 2
1K1	FUSE PANEL	1674 - 2
2C23	FUSE PANEL COVER	1816 - 8
1K1	FUSES	1674 - 2

ALPHABETICAL INDEX - CONTINUED

GRID		PAGE
	G	
1G7	GASKET SET, CYLINDER HEAD REMOVAL	0452 - 1
1G8	GASKET SET,ENGINE MAJOR OVERHAUL	0452 - 2
1G7	GASKET SET,IN CHASSIS OVERHAUL	0452 - 1
1E20	GASKET, CYLINDER HEAD	0409 - 2
1E22	GASKET, EXHAUST MANIFOLD	0410 - 1
1E1	GASKET, TIMING GEAR COVER (ENG.SER.NO-900932)	0402 - 6
1F6	GASKET, TURBOCHARGER	0416 - 2
1E13	GASKET,OIL PAN	0407 - 4
1D24	GASKET,ROCKER ARM COVER	0402 - 4
1E3	GASKET,TIMING GEAR COVER (ENG. SER. NO. 900933-)	0402 - 8
1D16	GASKETS, INTERMEDIATE PLATE, POWER SHIFT	0360 - 6
1D22	GEAR, CAMSHAFT	0402 - 2
1D21	GEAR, CRANKSHAFT	0401 - 2
1E17	GEAR, ENGINE OIL PUMP	0407 - 8
1F1	GEAR, FUEL INJECTION PUMP DRIVE	0413 - 2
1C5	GEAR, PLANET (MFWD)	0250 - 8
1B9	GEAR, PLANETARY PINION	0210 - 1
1B9	GEAR, PLANETARY RING	0210 - 1
1C5	GEAR, RING (MFWD)	0250 - 8
1B10	GEAR, SPIRAL BEVEL WITH LOCK	0210 - 2
1C6	GEAR,BEVEL DRIVE (MFWD)	0250 - 10
1C8	GEAR,DIFFERENTIAL SPIRAL BEVEL (MFWD)	0250 - 12
1J10	GREASE BANK, FRONT AXLE	1370 - 2
2E21	GRILLE	1921 - 2
2E21	GRILLE HOUSING	1921 - 2
2E21	GRILLE SCREEN	1921 - 2
2E7	GRILLE, CAB HEATER (20,000 BTU)	1830 - 10
3D3	GRIPPER TEETH, REPAIR KIT, EXT. DIPPER	3346 - 6
1K9	GROUND CABLE	1674 - 8
1K9	GROUND STRAP	1674 - 8
2B5	GUARD, BOTTOM	1746 - 4
2E19	GUARD, LOADER PLUMBING	1913 - 4
1G18	GUARD, RADIATOR FAN	0510 - 2
1C12	GUARD, TRANSMISSION CONTROL LEVER	0315 - 4
2B4	GUARD,STABILIZER KIT 310G,310SG	1746 - 2
	H	
3F21	HAND HELD HYDRAULIC TOOL KIT	3363 - 32
1K9	HARNESS CONNECTOR KIT	1674 - 8
1J24	HARNESS, ANCHOR, TIE BAND MOUNT	1673 - 4
3E8	HARNESS, PATTERN SELECTOR	3362 - 32
1K5	HARNESS, PILOT ENABLE WIRING	1674 - 5A
2F2	HARNESS, RADIO	2001 - 2
2G23	HARNESS, RIDE CONTROL	2160 - 26
2H1	HARNESS, RIDE CONTROL	2160 - 28
1J24	HARNESS, ROOF WIRING	1673 - 4
1E20	HEAD, CYLINDER	0409 - 2
1E15	HEADER, ENGINE OIL FILTER	0407 - 6
2B19	HEADLINER LAMP	1811 - 4
2B19	HEADLINER, CAB	1811 - 4
2B17	HEADLINER, ROPS	1811 - 2
2E12	HEAT AND NOISE BARRIER	1834 - 2
2E7	HEATER CORE (20,000 BTU)	1830 - 10
2E5	HEATER HOSE, CANOPY	1830 - 8
2E5	HEATER VALVE CONTROL	1830 - 8
2E5	HEATER VALVE CONTROL CABLE,CANOPY	1830 - 8
2E5	HEATER VALVE KNOB	1830 - 8
2E7	HEATER, CAB (20,000 BTU)	1830 - 10
2E5	HEATER, CANOPY	1830 - 8
1G12	HEATER, ENGINE COOLANT	0505 - 2
1F17	HEATER,FUEL FILTER	0420 - 2
2E5	HEATER,TEMERATURE CONTROL	1830 - 8
2D19	HEIGHT ADJUSTER FOR NON-SUSPENDED SEAT	1821 - 12
2E3	HIGH PRESSURE SWITCH	1830 - 6
2H12	HINGE PINS, MULTI-PURPOSE BUCKET	3102 - 8
2C1	HINGES, CAB DOORS	1814 - 2
2C3	HINGES, CAB DOORS	1814 - 4
2E15	HOOD	1910 - 2
2E15	HOOD LATCH	1910 - 2
2E15	HOOD SUPPORT	1910 - 2
2F8	HORN (SERIAL NO. -XXXXXX)	2004 - 4
2F10	HORN (SERIAL NO. XXXXXX-)	2004 - 6
1K7	HORN SWITCH	1674 - 6
1G22	HOSE, AIR CLEANER	0520 - 2
1E18	HOSE, ENGINE VENTILATING	0408 - 2
2G23	HOSE, HYDRAULIC, RIDE CONTROL	2160 - 26
2H1	HOSE, HYDRAULIC, RIDE CONTROL	2160 - 28
2C11	HOSE, WINDSHIELD WASHER	1814 - 12
3F19	HOSES, ATTACHMENT KIT	3363 - 30
1H5	HOSES, FUEL	0560 - 2
3F21	HOSES, HAND HELD HYDRAULIC TOOL KIT	3363 - 32
3F17	HOSES, HYDRAULIC	3363 - 28
2J15	HOSES, LOADER BOOM LIFT CYLINDER HOSES	3163 - 2
2J17	HOSES, LOADER BUCKET CYLINDER HOSES	3163 - 4
2J19	HOSES, LOADER BUCKET CYLINDER HOSES	3163 - 5A
2G5	HOSES, MAIN HYDRAULIC	2160 - 12
2G7	HOSES, MAIN HYDRAULIC	2160 - 13A
2G9	HOSES, MAIN HYDRAULIC	2160 - 14
2G11	HOSES, MAIN HYDRAULIC, LOAD SENSE	2160 - 16
2G13	HOSES, MAIN HYDRAULIC, LOAD SENSE	2160 - 17A
2H14	HOSES, MULTI-PURPOSE BUCKET	3102 - 10
2G19	HOSES, OIL COOLER	2160 - 22
1G18	HOSES, RADIATOR	0510 - 2
1H13	HOSES, STEERING (WITH MFWD) (SERIAL NO. -911131)	0960 - 8
1H15	HOSES, STEERING (WITH MFWD) (SERIAL NO. 911132-)	0960 - 10
1H17	HOSES, STEERING (WITHOUT MFWD)	0960 - 12
1H19	HOSES, STEERING (WITHOUT MFWD)	0960 - 14
3F1	HOSES, SWING CYLINDER	3363 - 12
2J17	HOSES, THIRD FUNCTION HYDRAULIC HOSES	3163 - 4
2J19	HOSES, THIRD FUNCTION HYDRAULIC HOSES	3163 - 5A
2E8	HOSES,AIR CONDITIONING COMPRESSOR	1830 - 12
2E10	HOSES,AIR CONDITIONING COMPRESSOR	1830 - 14
2E8	HOSES,AIR CONDITIONING COMPRESSOR, RECEIVER DRYER	1830 - 12
2E10	HOSES,AIR CONDITIONING COMPRESSOR, RECEIVER DRYER	1830 - 14
2E8	HOSES,RECEIVER DRYER, AIR CONDITIONING COMPRESSOR	1830 - 12
2E10	HOSES,RECEIVER DRYER, AIR CONDITIONING COMPRESSOR	1830 - 14
1C15	HOUSING, BELL	0341 - 2
1I2	HOUSING, BRAKE	1011 - 2
1I4	HOUSING, BRAKE VALVE	1060 - 2
1I6	HOUSING, BRAKE VALVE	1060 - 4
1B10	HOUSING, DIFFERENTIAL WITH LOCK	0210 - 2
1G3	HOUSING, FAN DRIVE	0429 - 4
1G6	HOUSING, FLYWHEEL	0433 - 3
2C23	HOUSING, FRONT INSTRUMENT PANEL	1816 - 8
2E21	HOUSING, GRILLE	1921 - 2
1I15	HOUSING, PARK BRAKE (SERIAL NO. -902685)	1111 - 2
1I17	HOUSING, PARK BRAKE (SERIAL NO. 902686-)	1111 - 4
2D1	HOUSING, SIDE INSTRUMENT PANEL	1816 - 10
2D3	HOUSING, SIDE INSTRUMENT PANEL	1816 - 12

ALPHABETICAL INDEX - CONTINUED

GRID		PAGE
1B21	HOUSING, SWIVEL, FRONT AXLE (WITHOUT MFWD)	0230 - 7
1C15	HOUSING, TRANSMISSION, POWER SHIFT	0341 - 2
1E17	HOUSING,ENGINE OIL PUMP	0407 - 8
1C3	HOUSING,FRONT AXLE (MFWD)	0250 - 6
1C1	HOUSING,FRONT AXLE (MWFD)	0250 - 4
1B20	HOUSING,FRONT AXLE (WITHOUT MFWD) (SERIAL NO. 911132-)	0230 - 6
1B7	HOUSING,REAR AXLE	0201 - 2
1B18	HUB CAP FRONT WHEEL(WITHOUT MFWD) (SERIAL NO. -911131)	0230 - 4
1G3	HUB, FAN DRIVE	0429 - 4
1B22	HUB, FRONT AXLE WHEEL (WITHOUT MFWD) (SERIAL NO. 911132-)	0230 - 8
1C3	HUB,FRONT AXLE (MFWD)	0250 - 6
1B18	HUB,FRONT WHEEL(WITHOUT MFWD) (SERIAL NO. -911131)	0230 - 4
2G1	HYDRAULIC ATTENUATOR, CAB	2160 - 8
2G3	HYDRAULIC ATTENUATOR, CANAOPY	2160 - 10
2H14	HYDRAULIC CYLINDER,MULTI-PURPOSE BUCKET	3102 - 10
3F17	HYDRAULIC FILTER, LOW PRESSURE AUX. KIT	3363 - 28
2J21	HYDRAULIC FRONT COUPLER	3163 - 6
2J23	HYDRAULIC FRONT COUPLER	3163 - 7A
2J21	HYDRAULIC FRONT COUPLER SWITCH	3163 - 6
2J23	HYDRAULIC FRONT COUPLER SWITCH	3163 - 7A
2G23	HYDRAULIC HOSE, RIDE CONTROL	2160 - 26
2H1	HYDRAULIC HOSE, RIDE CONTROL	2160 - 28
3F17	HYDRAULIC HOSES	3363 - 28
3F19	HYDRAULIC HOSES FOR ATTACHMENT KIT	3363 - 30
3F21	HYDRAULIC HOSES, HAND HELD TOOL KIT	3363 - 32
3E18	HYDRAULIC HOSES,BOOM CYLINDER	3363 - 4
3E24	HYDRAULIC HOSES,CROWD CYLINDER	3363 - 10
3E22	HYDRAULIC HOSES,EXTENDABLE DIPPERSTICK BUCKET CYLINDER	3363 - 8
3F3	HYDRAULIC HOSES,EXTENSION CYLINDER (WITH EXTENDIBLE DIPPERSTICK)	3363 - 14
2G9	HYDRAULIC LINES	2160 - 14
2J21	HYDRAULIC LOADER COUPLER, BUCKET	3163 - 6
2J23	HYDRAULIC LOADER COUPLER, BUCKET	3163 - 7A
2G21	HYDRAULIC OIL COOLER AND HOSES (HI-AMBIENT)	2160 - 24
2G17	HYDRAULIC OIL FILTER	2160 - 20
2J17	HYDRAULIC OIL LINES LOADER BUCKET CYLINDER	3163 - 4
2J19	HYDRAULIC OIL LINES LOADER BUCKET CYLINDER	3163 - 5A
3E18	HYDRAULIC OIL LINES,BOOM CYLINDER	3363 - 4
3E24	HYDRAULIC OIL LINES,CROWD CYLINDER	3363 - 10
2H14	HYDRAULIC OIL LINES,MULTI-PURPOSE BUCKET	3102 - 10
2J17	HYDRAULIC OIL LINES,THIRD FUNCTION	3163 - 4
2J19	HYDRAULIC OIL LINES,THIRD FUNCTION	3163 - 5A
2F17	HYDRAULIC PUMP,MAIN	2160 - 2
3E5	HYDRAULIC REMOTE KIT	3362 - 28
2G15	HYDRAULIC RESERVOIR	2160 - 18
2G15	HYDRAULIC RESERVOIR BREATHER FILTER	2160 - 18
2G23	HYDRAULIC RIDE CONTROL	2160 - 26
2H1	HYDRAULIC RIDE CONTROL	2160 - 28
2F16	HYDRAULIC SYSTEM, VEHICLE MAIN	2100 - 1
2I9	HYDRAULIC VALVE, LOADER	3162 - 2
2I11	HYDRAULIC VALVE, LOADER/STABILIZER	3162 - 4
3F13	HYDRAULICS, AUGER	3363 - 24
3F15	HYDRAULICS, AUGER	3363 - 26
3F7	HYDRAULICS, AUXILIARY EQUIPMENT, EXTENDABLE DIPPERSTICK	3363 - 18
3F5	HYDRAULICS, AUXILIARY EQUIPMENT, STANDARD DIPPERSTICK	3363 - 16
3E20	HYDRAULICS, BACKHOE BUCKET CYLINDER	3363 - 6
3E14	HYDRAULICS, BACKHOE STABILIZER CYLINDER	3363 - 2
3E16	HYDRAULICS, BACKHOE STABILIZER CYLINDER	3363 - 3A
3E24	HYDRAULICS, CROWD CYLINDER	3363 - 10
2J15	HYDRAULICS, LOADER BOOM CYLINDER	3163 - 2
2G5	HYDRAULICS, MAIN	2160 - 12
2G7	HYDRAULICS, MAIN	2160 - 13A
2G9	HYDRAULICS, MAIN	2160 - 14
3E10	HYDRAULICS, PILOT CONTROL	3363 - 1A
3E12	HYDRAULICS, PILOT CONTROL	3363 - 1C
3E12	HYDRAULICS, PILOT SELECTOR VALVE	3363 - 1C
1I8	HYDRAULICS, SERVICE BRAKE	1060 - 6
1H15	HYDRAULICS, STEERING (WITH MFWD) (SERIAL NO. 911132-)	0960 - 10
1H17	HYDRAULICS, STEERING (WITHOUT MFWD)	0960 - 12
1H19	HYDRAULICS, STEERING (WITHOUT MFWD)	0960 - 14
1H13	HYDRAULICS, STEERING VALVE (WITH MFWD) (SERIAL NO. -911131)	0960 - 8
3F1	HYDRAULICS, SWING CYLINDER	3363 - 12
1I10	HYDRAULICS,BRAKE VALVE BOOST (CAB)	1060 - 8
1I12	HYDRAULICS,BRAKE VALVE BOOST (ROPS)	1060 - 10

I

1K7	IGNITION SWITCH	1674 - 6
1K7	IGNITION SWITCH KEY	1674 - 6
1F11	IMPELLER,WATER PUMP (ENG.SER.NO.-900932)	0417 - 3
1G7	IN CHASSIS OVERHAUL GASKET SET	0452 - 1
1E11	INLET OIL FILL	0407 - 2
3D10	INLET SECTION RELIEF VALVE	3362 - 8
3D10	INLET SECTION, BACKHOE VALVE	3362 - 8
2I13	INLET SECTION, LOADER VALVE	3162 - 6
1F10	INLET, WATER PUMP	0417 - 2
1C8	INPUT FLANGE,(MFWD)	0250 - 12
1B12	INPUT PINION, SPIRAL BEVEL	0210 - 4
1C19	INPUT SHAFT	0350 - 2
1I15	INPUT SHAFT SEAL (SERIAL NO. -902685)	1111 - 2
1I17	INPUT SHAFT SEAL (SERIAL NO. 902686-)	1111 - 4
2F4	INSIDE MIRROR	2002 - 2
2D1	INSTRUMENT PANEL VANDAL GUARD	1816 - 10
2D1	INSTRUMENT PANEL, SIDE	1816 - 10
2D3	INSTRUMENT PANEL, SIDE	1816 - 12
1F3	INTAKE SYSTEM, AIR	0414 - 1
1E20	INTAKE VALVE	0409 - 2
1E17	INTAKE, ENGINE OIL PUMP	0407 - 8
2F4	INTERIOR REAR VIEW MIRROR	2002 - 2
1D16	INTERMEDIATE PLATE GASKETS, POWER SHIFT	0360 - 6
1D16	INTERMEDIATE PLATE, POWER SHIFT	0360 - 6
1G18	ISOLATOR EDGING	0510 - 2
1G18	ISOLATOR SEAL	0510 - 2
1H3	ISOLATOR, ENGINE MOUNT	0540 - 2
2B19	ISOLATORS, CAB MOUNTING	1811 - 4
2B17	ISOLATORS, ROPS FRAME	1811 - 2

J

1C14	JOINT,UNIVERSAL (REVERSER)	0325 - 1
1K9	JUMP START PROTECTION COVER	1674 - 8

ALPHABETICAL INDEX - CONTINUED

GRID		PAGE
	K	
1K7	KEY,IGNITION SWITCH	1674 - 6
1B16	KING PIN (WITHOUT MFWD) (SERIAL NO. -911131)	0230 - 2
1B21	KINGPIN, FRONT AXLE (WITHOUT MFWD)	0230 - 7
3F19	KIT, ATTACHMENT PLUMBING KIT	3363 - 30
2J1	KIT, AUXILIARY VALVE, LOADER	3162 - 18
3F23	KIT, BACKHOE BOOM CYLINDER REPAIR	3365 - 2
3F25	KIT, BACKHOE BUCKET CYLINDER REPAIR	3365 - 4
1I6	KIT, BRAKE VALVE	1060 - 4
1E5	KIT, CYLINDER LINER O-RING	0403 - 2
2G17	KIT, DP SWITCH	2160 - 20
1G8	KIT, ENGINE OVERHAUL	0452 - 2
3D3	KIT, EXT. KIPPER ARM GRIP REPAIR	3346 - 6
3E3	KIT, FIFTH FUNCTION MANUAL VALVE	3362 - 26
1F17	KIT, FUEL FILTER SERVICE	0420 - 2
3F21	KIT, HAND HELD HYDRAULIC TOOL KIT	3363 - 32
1K9	KIT, HARNESS CONNECTOR	1674 - 8
3E5	KIT, HYDRAULIC REMOTE	3362 - 28
2K2	KIT, LOADER BUCKET CYLINDER REPAIR	3165 - 4
1J3	KIT, LOCTITE SERVICE	1330 - 2
3F17	KIT, LOW PRESSURE AUXILIARY	3363 - 28
1J6	KIT, O-RING	1369 - 4
3E8	KIT, PATTERN SELECTOR VALVE	3362 - 32
1H24	KIT, POWER STEERING VALVE SEAL REPAIR	0960 - 19
2C7	KIT, REAR WINDOW LATCH	1814 - 8
3E4	KIT, SIXTH FUNCTION MANUAL VALVE	3362 - 27
2B4	KIT, STABILIZER GUARD 310G,310SG	1746 - 2
1F23	KIT, STARTER MOTOR ADAPTER	0422 - 4
1H12	KIT, STEERING VALVE REPAIR	0960 - 6
2D15	KIT, SUSPENDED SEAT POSITION SENSOR	1821 - 8
1B24	KIT, UNIVERSAL DRIVE SHAFT (MFWD)	0250 - 3
1F11	KIT, WATER PUMP REPAIR (ENG.SER.NO.-900932)	0417 - 3
2C7	KIT, WINDOW SEAL	1814 - 8
3B20	KIT,BACKHOE THREE LEVER CONTROL VALVE CONVERSION KIT	3315 - 6
3B18	KIT,BACKHOE VALVE TWO LEVER CONVERSION	3315 - 4
2K1	KIT,CROWD CYLINDER REPAIR	3165 - 3
3G1	KIT,CROWD CYLINDER REPAIR	3365 - 5
1G8	KIT,ENGINE REBUILD	0452 - 2
2G23	KIT,HYDRAULIC RIDE CONTROL	2160 - 26
2H1	KIT,HYDRAULIC RIDE CONTROL	2160 - 28
2F19	KIT,MAIN HYDRAULIC PUMP REPAIR	2160 - 4
2F21	KIT,MAIN HYDRAULIC PUMP REPAIR	2160 - 5A
2F23	KIT,MAIN HYDRAULIC PUMP REPAIR	2160 - 6
2H16	KIT,MULTI-PURPOSE BUCKET CYLINDER REPAIR	3102 - 12
1H23	KIT,POWER STEERING CYLINDER REPAIR (WITHOUT MFWD)	0960 - 18
3C20	KIT,PROTECTION,BACKHOE BOOM	3344 - 3
3D3	KIT,PROTECTION,EXT.DIPPERSTICK	3346 - 6
1B2	KIT,REAR DRIVE WHEEL SPACER	0110 - 2
3C15	KIT,SAE BACKHOE CONTROL VALVE LINKAGE PATTERN KIT	3315 - 22
2D11	KIT,SEAT SLIDE LATCH	1821 - 4
2D13	KIT,SLIDE PUCK SERVICE	1821 - 6
1F20	KIT,STARTER MOTOR	0422 - 1
1F21	KIT,STARTER MOTOR	0422 - 2
1H17	KIT,STC ADAPTER REPAIR	0960 - 12
1H19	KIT,STC ADAPTER REPAIR	0960 - 14
1H13	KIT,STC ADAPTER REPAIR (SERIAL NO. -911131)	0960 - 8
1H15	KIT,STC ADAPTER REPAIR (SERIAL NO. 911132-)	0960 - 10
1H21	KIT,STEERING CYLINDER(WITH MFWD)	0960 - 16
3G2	KIT,SWING CYLINDER REPAIR	3365 - 6
2D13	KIT,SWIVEL LATCH	1821 - 6
1F12	KIT,WATER PUMP REPAIR (ENG.SER.NO.900933-)	0417 - 4
2J9	KITS, STABILIZER VALVE	3162 - 26
2E5	KNOB, HEATER VALVE	1830 - 8
1B16	KNUCKLE AND SPINDLE ASSEMBLY (WITHOUT MFWD) (SERIAL NO. -911131)	0230 - 2
	L	
1I24	LABELS	1320 - 2
1J1	LABELS	1320 - 4
2B19	LAMP, HEADLINER	1811 - 4
2E15	LATCH, HOOD	1910 - 2
2C7	LATCH, REAR WINDOW	1814 - 8
2C1	LATCH, SIDE WINDOW LATCH	1814 - 2
2C3	LATCH, SIDE WINDOW LATCH	1814 - 4
2D13	LATCH,SEAT SWIVEL	1821 - 6
3C7	LEVER, FIFTH FN FOR THREE LEVER CONTROLS	3315 - 14
3B22	LEVER, FOUR-LEVER CONTROLS, STANDARD BACKHOE	3315 - 8
3C13	LEVER, STABILIZER	3315 - 20
2I1	LEVER, THIRD FUNCTION LOADER CONTROL	3115 - 10
2I3	LEVER, THIRD FUNCTION LOADER CONTROL	3115 - 12
3B20	LEVER, THREE, BACKHOE CONTROL VALVE	3315 - 6
1G20	LEVER, THROTTLE	0515 - 2
1C12	LEVER, TRANSMISSION CONTROL	0315 - 4
3C9	LEVER,BACKHOE BOOM LOCK CONTROL	3315 - 16
3C9	LEVER,BACKHOE SWING LOCK CONTROL	3315 - 16
1G20	LEVER,ENGINE SPEED CONTROL	0515 - 2
2H21	LEVER,LOADER CONTROL VALVE	3115 - 6
2H23	LEVER,LOADER CONTROL VALVE	3115 - 8
2D11	LEVER,SEAT LUMBAR SUPPORT CONTROL	1821 - 4
2D11	LEVER,SEAT SLIDE CONTROL	1821 - 4
2D11	LEVER,SEAT SWIVEL CONTROL	1821 - 4
2C15	LEVERS, BACKHOE COVER	1816 - 2
1I22	LICENCE PLATE BRACKET	1314 - 2
1I22	LICENCE PLATE LIGHT	1314 - 2
2I5	LIFT ARM, LOADER	3140 - 2
2J15	LIFT ARM, LOADER	3163 - 2
1C15	LIFT BRACKET, TRANSMISSION	0341 - 2
2J25	LIFT CYLINDER, LOADER BOOM	3165 - 2
2B19	LIGHT, DOME	1811 - 4
1I22	LIGHT, LICENCE PLATE	1314 - 2
2F2	LIGHT,CAB DOME	2001 - 2
1J24	LIGHTS,STANDARD AND DELUXE	1673 - 4
1C6	LIMITED SLIP DIFFERENTIAL (MFWD)	0250 - 10
1E5	LINER, CYLINDER	0403 - 2
3F7	LINES, AUXILIARY EQUIPMENT, EXTENDABLE D IPPERSTICK	3363 - 18
3F5	LINES, AUXILIARY EQUIPMENT, STANDARD DIP PERSITCK	3363 - 16
3E20	LINES, BUCKET CYLINDER, BACKHOE	3363 - 6
1F1	LINES, FUEL INJECTION	0413 - 2
2G9	LINES, HYDRAULIC	2160 - 14
1I8	LINES, SERVICE BRAKE	1060 - 6
1F8	LINES, TURBOCHARGER OIL	0416 - 4
3C7	LINKAGE BACKHOE, FIFTH FN LEVER FOR THREE LEVER CONTROLS	3315 - 14
3B20	LINKAGE THREE LEVER BACKHOE CONTROL VALVE	3315 - 6
2H17	LINKAGE, BUCKET LEVELING	3115 - 2

ALPHABETICAL INDEX - CONTINUED

GRID		PAGE
2H19	LINKAGE, BUCKET LEVELING	3115 - 4
1G20	LINKAGE, ENGINE SPEED CONTROL	0515 - 2
2B23	LINKAGE, FLOOR COVER	1812 - 2
3B22	LINKAGE, FOUR-LEVER CONTROL VALVE, STANDARD BACKHOE	3315 - 8
3B18	LINKAGE, TWO LEVER BACKHOE CONTROL VALVE	3315 - 4
2I7	LINKAGE,LOADER BUCKET	3140 - 4
2H21	LINKAGE,LOADER CONTROL VALVE	3115 - 6
2H23	LINKAGE,LOADER CONTROL VALVE	3115 - 8
2H17	LINKAGE,RETURN-TO-DIG	3115 - 2
3C13	LINKAGE,STABLIZER VALVE	3315 - 20
2I1	LINKAGE,THIRD FUNCTION LOADER CONTROL VALVE	3115 - 10
2I3	LINKAGE,THIRD FUNCTION LOADER CONTROL VALVE	3115 - 12
2G11	LOAD SENSE DIAGNOSTIC RECEPTACLE	2160 - 16
2G13	LOAD SENSE DIAGNOSTIC RECEPTACLE	2160 - 17A
1I20	LOADER ARM SERVICE LOCK	1313 - 2
2I5	LOADER BOOM	3140 - 2
2J15	LOADER BOOM CYLINDER HYDRAULICS	3163 - 2
2J25	LOADER BOOM LIFT CYLINDER	3165 - 2
2J25	LOADER BOOM LIFT CYLINDER REPAIR KIT	3165 - 2
2J15	LOADER BOOM OIL LINES	3163 - 2
1I20	LOADER BOOM SERVICE LOCK	1313 - 2
2H6	LOADER BUCKET .96 CUBIC METER (1.25 CUBIC YARD)	3102 - 2
2H8	LOADER BUCKET 1.00 CUBIC METER (1.30 CUBIC YARD)	3102 - 4
2H8	LOADER BUCKET 1.15 CUBIC METER (1.50 CUBIC YARD)	3102 - 4
2H6	LOADER BUCKET CUTTING EDGE .96 CUBIC METER (1.25 CUBIC YARD)	3102 - 2
2H8	LOADER BUCKET CUTTING EDGE 1.00 CUBIC METER (1.30 CUBIC YARD)	3102 - 4
2H8	LOADER BUCKET CUTTING EDGE 1.15 CUBIC METER (1.50 CUBIC YARD)	3102 - 4
2K2	LOADER BUCKET CYLINDER	3165 - 4
2H10	LOADER BUCKET CYLINDER PINS	3102 - 6
2K2	LOADER BUCKET CYLINDER REPAIR KIT	3165 - 4
2K2	LOADER BUCKET HYDRAULIC CYLINDER	3165 - 4
2J17	LOADER BUCKET LIFT CYLINDER HYDRAULICS	3163 - 4
2J19	LOADER BUCKET LIFT CYLINDER HYDRAULICS	3163 - 5A
2H10	LOADER BUCKET LINK PINS	3102 - 6
2I7	LOADER BUCKET LINKAGE	3140 - 4
2I7	LOADER BUCKET LINKAGE PINS	3140 - 4
2H10	LOADER BUCKET PINS	3102 - 6
2D3	LOADER CONTROL COVER	1816 - 12
2I9	LOADER CONTROL VALVE	3162 - 2
2H21	LOADER CONTROL VALVE LEVER	3115 - 6
2H23	LOADER CONTROL VALVE LEVER	3115 - 8
2H21	LOADER CONTROL VALVE LINKAGE	3115 - 6
2H23	LOADER CONTROL VALVE LINKAGE	3115 - 8
2J21	LOADER COUPLER, BUCKET	3163 - 6
2J23	LOADER COUPLER, BUCKET	3163 - 7A
2I5	LOADER LIFT ARM	3140 - 2
2J15	LOADER LIFT ARM	3163 - 2
2I5	LOADER LIFT ARM PIN	3140 - 2
2H21	LOADER LINKAGE FLOOR PLATE	3115 - 6
2E19	LOADER PLUMBING SHIELD	1913 - 4
2J1	LOADER VALVE AUXILIARY KIT	3162 - 18
2I23	LOADER VALVE AUXILIARY SECTION	3162 - 16
2J3	LOADER VALVE AUXILIARY SECTION	3162 - 20
2I15	LOADER VALVE BOOM SECTION	3162 - 8
2I17	LOADER VALVE BOOM SECTION	3162 - 10
2I19	LOADER VALVE BUCKET SECTION	3162 - 12
2I21	LOADER VALVE BUCKET SECTION	3162 - 14
2I13	LOADER VALVE INLET SECTION	3162 - 6
2J5	LOADER VALVE OUTLET SECTION	3162 - 22
2I11	LOADER/STABILIZER CONTROL VALVE	3162 - 4
1I20	LOCK BAR, BOOM SERVICE	1313 - 2
1K13	LOCK SWITCH, DIFFERENTIAL	1674 - 12
3C11	LOCK, BACHOE BOOM	3315 - 18
1B10	LOCK, DIFFERENTIAL ASSEMBLY	0210 - 2
2D1	LOCK,VANDAL GUARD	1816 - 10
3D1	LOCKING PIN, EXTENDIBLE ARM	3346 - 4
1J3	LOCTITE SERVICE KIT	1330 - 2
2E1	LOUVER, AIR CONDITIONING	1830 - 4
3F17	LOW PRESSURE AUXILIARY RETURN KIT	3363 - 28
2E3	LOW PRESSURE SWITCH	1830 - 6
3F9	LOWERING DEVICE,CONTOLLED, BOOM CYL.KIT	3363 - 20
3F11	LOWERING DEVICE,CONTOLLED, CROWD CYL.KIT	3363 - 22
1J10	LUBRICATION SYSTEM, FRONT AXLE	1370 - 2

M

2I19	MAGNET, RETURN-TO-DIG	3162 - 12
2I21	MAGNET, RETURN-TO-DIG	3162 - 14
1E7	MAIN BEARING CAP	0404 - 2
1D21	MAIN BEARINGS	0401 - 2
2B2	MAIN FRAME	1740 - 2
2B7	MAIN FRAME BUMPER (SERIAL NUMBER -901551)	1747 - 2
2B9	MAIN FRAME BUMPER (SERIAL NUMBER 901552-)	1747 - 4
2G5	MAIN HYDRAULIC HOSES	2160 - 12
2G7	MAIN HYDRAULIC HOSES	2160 - 13A
2G9	MAIN HYDRAULIC HOSES	2160 - 14
2F17	MAIN HYDRAULIC PUMP	2160 - 2
2F19	MAIN HYDRAULIC PUMP REPAIR KIT	2160 - 4
2F21	MAIN HYDRAULIC PUMP REPAIR KIT	2160 - 5A
2F23	MAIN HYDRAULIC PUMP REPAIR KIT	2160 - 6
2G15	MAIN HYDRAULIC RESERVOIR	2160 - 18
2F16	MAIN HYDRAULIC SYSTEM, VEHICLE	2100 - 1
2G5	MAIN HYDRAULICS	2160 - 12
2G7	MAIN HYDRAULICS	2160 - 13A
2G9	MAIN HYDRAULICS	2160 - 14
2G11	MAIN HYDRAULICS, LOAD SENSE	2160 - 16
2G13	MAIN HYDRAULICS, LOAD SENSE	2160 - 17A
1K1	MAIN WIRE HARNESS,CAB	1674 - 2
1K3	MAIN WIRE HARNESS,CAB	1674 - 4
3E10	MANIFOLD, PILOT ACTIVATING	3363 - 1A
3E7	MANIFOLD, PILOT CONTROL	3362 - 30
1E22	MANIFOLD,EXHAUST	0410 - 1
3D24	MANUAL AUXILIARY BACKHOE VALVE	3362 - 22
2B17	MANUAL HOLDER, OPERATOR	1811 - 2
1J17	MASTER DISCONNECT BATTERY SWITCH	1671 - 6
1J17	MASTER SWITCH MOUNTING PLATE	1671 - 6
2B23	MATS, FLOOR	1812 - 2
1C5	MFWD PLANETARY DRIVE	0250 - 8
1D16	MFWD SOLINOID HOLE PLUG, POWER SHIFT	0360 - 6
1K7	MFWD SWITCH	1674 - 6
2B23	MIDDLE FLOOR COVER	1812 - 2
2F4	MIRROR BRACKET, INTERIOR REAR VIEW	2002 - 2
2F5	MIRROR, EXTERNAL REAR VIEW	2002 - 3
2F4	MIRROR, INTERIOR REAR VIEW	2002 - 2
2F5	MIRROR, OUTSIDE	2002 - 3
2C23	MODE DOOR	1816 - 8
2C23	MODE DOOR WIRING HARNESS	1816 - 8
2H12	MOLDBOARD,MULTI-PURPOSE BUCKET	3102 - 8
1K7	MONITOR	1674 - 6
1K7	MONITOR PANEL	1674 - 6
1K7	MONITOR PANEL SWITCHES	1674 - 6
1H3	MOTOR MOUNTS	0540 - 2

ALPHABETICAL INDEX - CONTINUED

GRID		PAGE
2E7	MOTOR, CAB HEATER (20,000 BTU)	1830 - 10
2C9	MOTOR, FRONT WINDSHIELD WIPER	1814 - 10
2C13	MOTOR, REAR WINDSHIELD WIPER	1814 - 14
1F20	MOTOR,STARTING	0422 - 1
1F21	MOTOR,STARTING	0422 - 2
2E8	MOUNTING BRACKETS, COMPRESSOR, AIR CONDITIONING	1830 - 12
2E10	MOUNTING BRACKETS, COMPRESSOR, AIR CONDITIONING	1830 - 14
3B14	MOUNTING PLATE, BACKHOE VALVE	3315 - 2
3B16	MOUNTING PLATE, BACKHOE VALVE (PILOT CONTROL)	3315 - 3A
1I4	MOUNTING PLATE, BRAKE VALVE	1060 - 2
2F2	MOUNTING PLATE, RADIO/SPEAKER	2001 - 2
3B14	MOUNTING PLATE, STABILIZER VALVE	3315 - 2
3B16	MOUNTING PLATE, STABILIZER VALVE (PILOT CONTROL)	3315 - 3A
1J17	MOUNTING PLATE,MASTER DISCONNECT SWITCH	1671 - 6
1H1	MUFFLER	0530 - 2
2H12	MULTI-PURPOSE BUCKET	3102 - 8
2H14	MULTI-PURPOSE BUCKET	3102 - 10
2H12	MULTI-PURPOSE BUCKET AUXILIARY CUTTING EDGE	3102 - 8
2H12	MULTI-PURPOSE BUCKET CUTTING EDGE	3102 - 8
2H16	MULTI-PURPOSE BUCKET CYLINDER	3102 - 12
2H16	MULTI-PURPOSE BUCKET CYLINDER REPAIR KIT	3102 - 12
2H14	MULTI-PURPOSE BUCKET CYLINDER PINS	3102 - 10
2H14	MULTI-PURPOSE BUCKET HYDRAULIC OIL LINES	3102 - 10
2H14	MULTI-PURPOSE BUCKET HYDRAULIC CYLINDER	3102 - 10
2H12	MULTI-PURPOSE BUCKET MOLDBOARD	3102 - 8

N

2E12	NOISE AND HEAT BARRIER	1834 - 2
2D17	NON-SUSPENDED SEAT BASE	1821 - 10
2D19	NON-SUSPENDED SEAT HEIGHT ADJUSTER	1821 - 12
1E24	NOZZLE, FUEL INJECTION	0413 - 1

O

1J6	O-RING KIT	1369 - 4
2G19	OIL COOLER	2160 - 22
1F15	OIL COOLER, ENGINE	0419 - 2
1E11	OIL FILL INLET	0407 - 2
1E11	OIL FILLER OPENING COVER	0407 - 2
1E15	OIL FILTER, ENGINE	0407 - 6
1D11	OIL FILTER, TRANSMISSION	0360 - 1
2J15	OIL LINES, LOADER BOOM	3163 - 2
1F8	OIL LINES, TURBOCHARGER	0416 - 4
1E13	OIL PAN GASKET	0407 - 4
1E13	OIL PAN,ENGINE	0407 - 4
2G9	OIL TEMPERATURE SENSOR	2160 - 14
1J4	OILSCAN PLUS TEST KIT, FLUID ANALYSIS	1369 - 2
2B17	OPERATOR MANUAL HOLDER	1811 - 2
2E23	OPERATOR STATION SKIRTS	1927 - 2
2J5	OUTLET SECTION RELIEF VALVE	3162 - 22
3E1	OUTLET SECTION RELIEF VALVE	3362 - 24
3E1	OUTLET SECTION, BACKHOE VALVE	3362 - 24
2J5	OUTLET SECTION, LOADER VALVE	3162 - 22
1D1	OUTPUT SHAFT YOKE, TRANSMISSION	0350 - 8
1D9	OUTPUT SHAFT, TRANSMISSION (MFWD)	0350 - 16
2F5	OUTSIDE MIRROR	2002 - 3

GRID		PAGE

P

1J8	PACKAGE, ENVIORMENTAL DRAIN	1369 - 6
2D9	PAD SEAT BACK	1821 - 2
3D1	PAD, EXTENDIBLE ARM	3346 - 4
1E13	PAN,ENGINE OIL	0407 - 4
2C23	PANEL, FRONT INSTRUMENT	1816 - 8
2F2	PANEL, RADIO TRIM	2001 - 2
2B23	PANEL, REAR KICK	1812 - 2
1K1	PANEL,FUSE	1674 - 2
1K7	PANEL,MONITOR	1674 - 6
2E15	PANELS, ENGINE SIDE	1910 - 2
1I15	PARK BRAKE (SERIAL NO. -902685)	1111 - 2
1I17	PARK BRAKE (SERIAL NO. 902686-)	1111 - 4
1I15	PARK BRAKE CLUTCH DISK (SERIAL NO. -902685)	1111 - 2
1I17	PARK BRAKE CLUTCH DISK (SERIAL NO. 902686-)	1111 - 4
1I15	PARK BRAKE HOUSING (SERIAL NO. -902685)	1111 - 2
1I17	PARK BRAKE HOUSING (SERIAL NO. 902686-)	1111 - 4
1K9	PARK BRAKE OIL PRESSURE SWITCH	1674 - 8
1I15	PARK BRAKE PISTON (SERIAL NO. -902685)	1111 - 2
1I17	PARK BRAKE PISTON (SERIAL NO. 902686-)	1111 - 4
1I15	PARK BRAKE SEPERATOR PLATE (SERIAL NO. -902685)	1111 - 2
1I17	PARK BRAKE SEPERATOR PLATE (SERIAL NO. 902686-)	1111 - 4
3E8	PATTERN SELECTOR HARNESS	3362 - 32
3E8	PATTERN SELECTOR VALVE	3362 - 32
3E8	PATTERN SELECTOR, SWITCH	3362 - 32
3C5	PEDAL, AUXILIARY FUNCTION (PILOT CONTROL)	3315 - 13A
1I4	PEDAL, BRAKE	1060 - 2
3C1	PEDAL, EXTENDIBLE DIPPER (PILOT CONTROL)	3315 - 11A
3B24	PEDAL, FIFTH FUNCTION	3315 - 10
3C1	PEDAL, FIFTH FUNCTION (PILOT CONTROL)	3315 - 11A
3C3	PEDAL, SIXTH FUNCTION	3315 - 12
3C5	PEDAL, SIXTH FUNCTION (PILOT CONTROL)	3315 - 13A
1G20	PEDAL, SPEED CONTROL	0515 - 2
3E10	PILOT ACTIVATING MANIFOLD	3363 - 1A
3E10	PILOT CONTROL HYDRAULICS	3363 - 1A
3E12	PILOT CONTROL HYDRAULICS	3363 - 1C
3E7	PILOT CONTROL MANIFOLD	3362 - 30
2D5	PILOT CONTROLLER ARM (LEFT SIDE)	1816 - 14
2D7	PILOT CONTROLLER ARM (RIGHT SIDE)	1816 - 16
1K5	PILOT ENABLE	1674 - 5A
1K5	PILOT ENABLE SWITCH	1674 - 5A
3E12	PILOT SELECTOR VALVE HYDRAULICS	3363 - 1C
1B16	PIN, AXLE PIVOT (WITHOUT MFWD) (SERIAL NO. -911131)	0230 - 2
3C19	PIN, BACKHOE BOOM	3344 - 2
1B16	PIN, KING (WITHOUT MFWD) (SERIAL NO. -911131)	0230 - 2
3C23	PIN,CROWD CYLINDER	3346 - 2
1B23	PIN,FRONT AXLE PIVOT (MFWD)	0250 - 2
1B19	PIN,FRONT AXLE PIVOT (WITHOUT MFWD)	0230 - 5

ALPHABETICAL INDEX - CONTINUED

GRID		PAGE
2I5	PIN,LOADER LIFT ARM	3140 - 2
3C23	PIN,STANDARD DIPPERSTICK	3346 - 2
1B9	PINION GEAR, PLANETARY	0210 - 1
1B10	PINION, BEVEL WITH LOCK	0210 - 2
3C21	PINS AND BUCKET LINKS,BACKHOE	3345 - 2
3C21	PINS, BACKHOE BUCKET AND LINKS	3345 - 2
2H10	PINS, LOADER BUCKET CYLINDER	3102 - 6
2H10	PINS, LOADER BUCKET LINK	3102 - 6
2H14	PINS, MULTI-PURPOSE BUCKET CYLINDER	3102 - 10
2H12	PINS, MULTI-PURPOSE BUCKET HINGE	3102 - 8
3C17	PINS, SWING FRAME	3343 - 2
3B12	PINS,BACKHOE BUCKET	3302 - 8
2H10	PINS,LOADER BUCKET	3102 - 6
2I7	PINS,LOADER BUCKET LINKAGE	3140 - 4
3D4	PINS,STABLIZER ARM	3348 - 2
3D6	PINS,STABLIZER CYLINDER	3348 - 4
1H1	PIPE, EXHAUST PIPE	0530 - 2
1E5	PISTON RINGS	0403 - 2
1I2	PISTON, BRAKE	1011 - 2
1I6	PISTON, BRAKE VALVE	1060 - 4
1E5	PISTON, ENGINE	0403 - 2
1I15	PISTON, PARK BRAKE (SERIAL NO. -902685)	1111 - 2
1I17	PISTON, PARK BRAKE (SERIAL NO. 902686-)	1111 - 4
1D14	PISTON, RANGE SHIFT VALVE, POWER SHIFT	0360 - 4
1D12	PISTON, TRANSMISSION CONTROL VALVE, PST	0360 - 2
1C5	PLANET GEAR (MFWD)	0250 - 8
1B9	PLANETARY CARRIER SHAFT	0210 - 1
1C5	PLANETARY DRIVE (MFWD)	0250 - 8
1B9	PLANETARY PINION CARRIER	0210 - 1
1B9	PLANETARY PINION GEAR	0210 - 1
1B9	PLANETARY RING GEAR	0210 - 1
1I4	PLATE,BRAKE VALVE MOUNTING	1060 - 2
1B7	PLATE,REAR AXLE HOUSING MOUNTING	0201 - 2
3F19	PLUMBING KIT, ATTACHMENT	3363 - 30
1I10	PLUMBING, BRAKE VALVE BOOST (CAB)	1060 - 8
1I12	PLUMBING, BRAKE VALVE BOOST (ROPS)	1060 - 10
1B14	PLUMBING, DIFFERENTIAL LOCK	0210 - 6
2D15	POSITION SWITCH, SEAT	1821 - 8
1J19	POST,REMOTE START	1671 - 8
3C21	POWER LINK	3345 - 2
1C21	POWER SHIFT CLUTCH ASSEMBLY, FIRST GEAR	0350 - 4
1D5	POWER SHIFT CLUTCH ASSEMBLY, FORWARD	0350 - 12
1D3	POWER SHIFT CLUTCH ASSEMBLY, FOURTH GEAR	0350 - 10
1D7	POWER SHIFT CLUTCH ASSEMBLY, REVERSE	0350 - 14
1C23	POWER SHIFT CLUTCH ASSEMBLY, SECOND GEAR	0350 - 6
1D1	POWER SHIFT CLUTCH ASSEMBLY, THIRD GEAR	0350 - 8
1H23	POWER STEERING CYLINDER (WITHOUT MFWD)	0960 - 18
1H23	POWER STEERING CYLINDER REPAIR KIT (WITHOUT MFWD)	0960 - 18
1H24	POWER STEERING VALVE SEAL REPAIR KIT	0960 - 19
1G24	PRE CLEANER	0520 - 4
3E7	PRESSURE REDUCING VALVE, MANIFOLD (PILOT CONTROL)	3362 - 30
1I4	PRESSURE SWITCH, BRAKE LIGHT	1060 - 2
1K9	PRESSURE, ENGINE OIL SWITCH	1674 - 8
2E19	PROTECTION COVER, LOADER PLUMBING	1913 - 4
3C20	PROTECTION KIT,BACKHOE BOOM	3344 - 3
3D3	PROTECTION KIT,EXT.DIPPERSTICK	3346 - 6
2G19	PROTECTIVE SLEEVES	2160 - 22
1C19	PTO PUMP DRIVE SHAFT	0350 - 2
1J20	PULLEY ALTERNATOR	1672 - 2
1G3	PULLEY, FAN DRIVE	0429 - 4
1F10	PULLEY, WATER PUMP	0417 - 2
1E17	PUMP, ENGINE OIL	0407 - 8
1F1	PUMP, FUEL INJECTION	0413 - 2
1F19	PUMP, FUEL TRANSFER	0421 - 2
2C11	PUMP, WINDSHIELD WASHER	1814 - 12
2F17	PUMP,MAIN HYDRAULIC	2160 - 2
1F11	PUMP,WATER (ENG.SER.NO.-900932)	0417 - 3
1F12	PUMP,WATER (ENG.SER.NO.900933-)	0417 - 4
1K13	PUSH BUTTON, DIFFERENTIAL LOCK	1674 - 12
1I6	PUSH ROD, BRAKE VALVE	1060 - 4
1F19	PUSH ROD,FUEL TRANSFER PUMP	0421 - 2
1D23	PUSH RODS	0402 - 3

Q

2B17	QUARTER CAB	1811 - 2
2B21	QUARTER CAB ROOF	1811 - 6
2C5	QUARTER CAB WINDSHIELD	1814 - 6
2G5	QUICK CONNECT COUPLER	2160 - 12
2G7	QUICK CONNECT COUPLER	2160 - 13A
3B10	QUICK COUPLER (CASE)	3302 - 6
3B8	QUICK COUPLER (STANDARD)	3302 - 4
3B6	QUICK COUPLER (UNIVERSAL)	3302 - 2
2J21	QUICK COUPLER, LOADER BUCKET	3163 - 6
2J23	QUICK COUPLER, LOADER BUCKET	3163 - 7A

R

1G18	RADIATOR	0510 - 2
1G18	RADIATOR CAP	0510 - 2
1G18	RADIATOR DRAIN VALVE	0510 - 2
1G18	RADIATOR FAN GUARD	0510 - 2
1G18	RADIATOR FAN SHROUD	0510 - 2
1G18	RADIATOR HOSES	0510 - 2
2F2	RADIO	2001 - 2
2F2	RADIO ANTENA	2001 - 2
2F2	RADIO SPEAKER	2001 - 2
1D14	RANGE SHIFT VALVE, POWER SHIFT	0360 - 4
1B7	REAR AXLE ASSEMBLY	0201 - 2
1B7	REAR AXLE HOUSING	0201 - 2
1B7	REAR AXLE HOUSING MOUNTING PLATE	0201 - 2
1B12	REAR AXLE RING GEAR AND PINION	0210 - 4
1B7	REAR AXLE ROLLER BEARING	0201 - 2
1B7	REAR AXLE SHAFT	0201 - 2
1B12	REAR AXLE SPIRAL BEVEL INPUT PINION	0210 - 4
1B12	REAR AXLE YOKE	0210 - 4
2C17	REAR CONSOLE COVER FOR THREE LEVERS	1816 - 4
2C7	REAR CORNER WINDOWPANE	1814 - 8
1B7	REAR DIFFERENTIAL HOUSING	0201 - 2
1C14	REAR DRIVE SHAFT(REVERSER)	0325 - 1
1B2	REAR DRIVE WHEEL	0110 - 2
1B2	REAR DRIVE WHEEL SPACER KIT	0110 - 2
1B2	REAR DRIVE WHEEL VALVE STEM	0110 - 2
2B23	REAR FLOOR COVER	1812 - 2
2B23	REAR FLOOR MAT	1812 - 2
2B23	REAR KICK PANEL	1812 - 2
2F5	REAR VIEW MIRROR, EXTERNAL	2002 - 3
2F4	REAR VIEW MIRROR, INTERIOR	2002 - 2
2C7	REAR WINDOW LATCH	1814 - 8
2C7	REAR WINDOW WEATHERSTRIP	1814 - 8
2C7	REAR WINDOWS	1814 - 8

ALPHABETICAL INDEX - CONTINUED

GRID		PAGE
2C13	REAR WINDSHIELD WIPER MOTOR	1814 - 14
2E8	RECEIVER DRYER HOSES	1830 - 12
2E10	RECEIVER DRYER HOSES	1830 - 14
2E8	RECEIVER DRYER, AIR CONDITIONING	1830 - 12
2E10	RECEIVER DRYER, AIR CONDITIONING	1830 - 14
2E3	REFRIGERANT HOSE	1830 - 6
2E3	REFRIGERANT LINE	1830 - 6
2J13	REGULATOR, DRAIN, STABILIZER VALVE	3162 - 30
1K9	RELAY, STARTER	1674 - 8
1K3	RELAY, TIMER	1674 - 4
3F19	RELIEF VALVE, ATTACHMENT PLUMBING KIT	3363 - 30
2I23	RELIEF VALVE, AUXILIARY SECTION	3162 - 16
2J3	RELIEF VALVE, AUXILIARY SECTION	3162 - 20
3D22	RELIEF VALVE, AUXILIARY SECTION	3362 - 20
2I15	RELIEF VALVE, BOOM SECTION	3162 - 8
2I17	RELIEF VALVE, BOOM SECTION	3162 - 10
3D12	RELIEF VALVE, BOOM SECTION	3362 - 10
2I19	RELIEF VALVE, BUCKET SECTION	3162 - 12
2I21	RELIEF VALVE, BUCKET SECTION	3162 - 14
3D14	RELIEF VALVE, BUCKET SECTION	3362 - 12
3D16	RELIEF VALVE, CROWD SECTION	3362 - 14
3D10	RELIEF VALVE, INLET SECTION	3362 - 8
2J5	RELIEF VALVE, OUTLET SECTION	3162 - 22
3E1	RELIEF VALVE, OUTLET SECTION	3362 - 24
3D18	RELIEF VALVE, SWING SECTION	3362 - 16
3E5	REMOTE KIT, HYDRAULIC	3362 - 28
1J19	REMOTE START POST	1671 - 8
1J19	REMOTE START POST COVER	1671 - 8
3F23	REPAIR KIT, BACKHOE BOOM CYLINDER	3365 - 2
3F25	REPAIR KIT, BACKHOE BUCKET CYLINDER	3365 - 4
2J25	REPAIR KIT, LOADER BOOM LIFT CYLINDER	3165 - 2
2K2	REPAIR KIT, LOADER BUCKET CYLINDER	3165 - 4
1H24	REPAIR KIT, POWER STEERING VALVE	0960 - 19
1H12	REPAIR KIT, STEERING VALVE	0960 - 6
3G2	REPAIR KIT, SWING CYLINDER	3365 - 6
2K1	REPAIR KIT,CROWD CYLINDER	3165 - 3
3G3	REPAIR KITS, STABLIIZER CYLINDER	3365 - 7
2F19	REPAIR KITS,MAIN HYDRAULIC PUMP	2160 - 4
2F21	REPAIR KITS,MAIN HYDRAULIC PUMP	2160 - 5A
2F23	REPAIR KITS,MAIN HYDRAULIC PUMP	2160 - 6
2G15	RESERVOIR BREATHER FILTER, HYDRAULIC	2160 - 18
2G15	RESERVOIR, MAIN HYDRAULIC SCREEN	2160 - 18
2G15	RESERVOIR, MAIN HYDRAULICS	2160 - 18
2C11	RESERVOIR, WINDSHIELD WASHER	1814 - 12
1G22	RESTRICTION INDICATOR SWITCH,AIR CLEANER	0520 - 2
2H17	RETURN-TO-DIG CABLE	3115 - 2
2H17	RETURN-TO-DIG LINKAGE	3115 - 2
2H19	RETURN-TO-DIG LINKAGE	3115 - 4
1K15	RETURN-TO-DIG SWITCH	1674 - 14
2I19	RETURN-TO-DIGMAGNET	3162 - 12
2I21	RETURN-TO-DIGMAGNET	3162 - 14
1D7	REVERSE CLUTCH ASSEMBLY, POWER SHIFT	0350 - 14
1D7	REVERSE CLUTCH CARRIER, POWER SHIFT	0350 - 14
1D7	REVERSE, BELLVILLEWASHER, POWERSHIFT	0350 - 14
2G23	RIDE CONTROL	2160 - 26
2H1	RIDE CONTROL	2160 - 28
2G23	RIDE CONTROL HYDRAULIC HOSE	2160 - 26
2H1	RIDE CONTROL HYDRAULIC HOSE	2160 - 28
1K7	RIDE CONTROL SWITCH	1674 - 6
1B4	RIM, FRONT WHEEL (WITHOUT MFWD)	0120 - 1
1C5	RING GEAR (MFWD)	0250 - 8
1B12	RING GEAR AND PINION, REAR AXLE	0210 - 4
1G5	RING GEAR, FLYWHEEL	0433 - 2
1B9	RING GEAR, PLANETARY	0210 - 1
1E5	RINGS, PISTON	0403 - 2
1D24	ROCKER ARM COVER	0402 - 4
1D24	ROCKER ARM COVER GASKET	0402 - 4
1D23	ROCKER ARM SHAFT	0402 - 3
1D23	ROCKER ARMS	0402 - 3
1C1	ROD ASSEMBLY,TIE (MFWD)	0250 - 4
2H17	ROD, BUCKET LEVELING	3115 - 2
2H19	ROD, BUCKET LEVELING	3115 - 4
1E5	ROD, CONNECTING	0403 - 2
1I20	ROD, CYLINDER LOCK BAR	1313 - 2
1B15	ROD, TIE, ASSEMBLY (WITHOUT MFWD)	0230 - 1
1D23	RODS, PUSH	0402 - 3
1B7	ROLLER BEARING,REAR AXLE	0201 - 2
1J24	ROOF WIRING HARNESS	1673 - 4
1J24	ROOF WIRING HARNESS	1673 - 4
2B21	ROOF,CAB	1811 - 6
2B21	ROOF,QUARTER CAB	1811 - 6
2B21	ROOF,ROPS	1811 - 6
2B17	ROPS FRAME	1811 - 2
2B17	ROPS FRAME ISOLATORS	1811 - 2
2B17	ROPS HEADLINER	1811 - 2
2B21	ROPS ROOF	1811 - 6
2E23	ROPS SKIRT	1927 - 2
1J22	ROTATING BEACON	1673 - 2
1J22	ROTATING BEACON SWITCH	1673 - 2

S

3C15	SAE BACKHOE CONTROL VALVE LINKAGE PATTERN KIT	3315 - 22
2E7	SCREEN, CAB HEATER FAN (20,000 BTU)	1830 - 10
2E21	SCREEN, GRILLE	1921 - 2
2G15	SCREEN, MAIN HYDRAULIC RESERVOIR	2160 - 18
1H24	SEAL KIT, POWER STEERING VALVE REPAIR	0960 - 19
1I15	SEAL, INPUT SHAFT (SERIAL NO. -902685)	1111 - 2
1G18	SEAL, ISOLATOR	0510 - 2
1I17	SEAL, SHAFT, INPUT (SERIAL NO. 902686-)	1111 - 4
1B24	SEAL,SLIDING YOKE (MFWD)	0250 - 3
2D9	SEAT BACK PAD	1821 - 2
2D19	SEAT BASE FOR NON-SUSPENDED SEAT	1821 - 12
2D17	SEAT BASE, NON-SUSPENDED	1821 - 10
2D9	SEAT BELT COVER	1821 - 2
2D9	SEAT BELTS	1821 - 2
2D9	SEAT BRACKETS	1821 - 2
2D9	SEAT CUSHIONS	1821 - 2
2D11	SEAT LUMBAR SUPPORT CONTROL LEVER	1821 - 4
2D11	SEAT SLIDE CONTROL LEVER	1821 - 4
2D11	SEAT SLIDE LATCH KIT	1821 - 4
2D21	SEAT SUSPENSION (AIR SUSPENSION)	1821 - 14
2D13	SEAT SWIVEL	1821 - 6
2D11	SEAT SWIVEL CONTROL LEVER	1821 - 4
2D13	SEAT SWIVEL LATCH	1821 - 6
2D21	SEAT, SUSPENSION (AIR SUSPENSION)	1821 - 14
1C23	SECOND GEAR CLUTCH ASSEMBLY, POWER SHIFT	0350 - 6
1C23	SECOND GEAR CLUTCH CARRIER, POWER SHIFT	0350 - 6
1C23	SECOND GEAR, BELLVILLEWASHER, POWERSHIFT	0350 - 6
1K11	SELECTIVE FLOW CONTROL CONTROLLER	1674 - 10
1K11	SELECTIVE FLOW CONTROL SWITCH	1674 - 10
1K11	SELECTIVE FLOW CONTROL WIRE HARNESS	1674 - 10
3D22	SELECTIVE FLOW SOLENOID VALVE	3362 - 20
3E12	SELECTOR VALVE HYDRAULICS	3363 - 1C
3E8	SELECTOR VALVE, PATTERN	3362 - 32
2H17	SELF-LEVELING CABLE	3115 - 2
1K9	SENDER, ENGINE COOLANT TEMPERATURE	1674 - 8

ALPHABETICAL INDEX - CONTINUED

GRID		PAGE
1H5	SENDER, FUEL GAUGE	0560 - 2
2G9	SENSOR, OIL TEMPERATURE	2160 - 14
2D15	SENSOR,SUSPENDED SEAT POSITION	1821 - 8
1I15	SEPERATOR PLATE, PARK BRAKE (SERIAL NO. -902685)	1111 - 2
1I17	SEPERATOR PLATE, PARK BRAKE (SERIAL NO. 902686-)	1111 - 4
1I8	SERVICE BRAKE HYDRAULICS	1060 - 6
1I8	SERVICE BRAKE LINES	1060 - 6
1I2	SERVICE BRAKES	1011 - 2
1I20	SERVICE LOCK BAR, BOOM	1313 - 2
1I20	SERVICE LOCK, LOADER ARM	1313 - 2
1F4	SHAFT, ENGINE BALANCER	0415 - 2
1C19	SHAFT, INPUT	0350 - 2
1I17	SHAFT, INPUT SEAL (SERIAL NO. 902686-)	1111 - 4
1B9	SHAFT, PLANETARY SHAFT	0210 - 1
1C19	SHAFT, PTO PUMP DRIVE	0350 - 2
1D23	SHAFT, ROCKER ARM	0402 - 3
1I15	SHAFT, SEAL, INPUT (SERIAL NO. -902685)	1111 - 2
1C19	SHAFT, STATOR	0350 - 2
1C5	SHAFT, SUN GEAR (MFWD)	0250 - 8
1C19	SHAFT, TURBINE	0350 - 2
1B24	SHAFT, UNIVERSAL DRIVE (MFWD)	0250 - 3
1B7	SHAFT,REAR AXLE	0201 - 2
2E19	SHIELD, LOADER PLUMBING	1913 - 4
2B5	SHIELD, TRANSMISSION DIPSTICK	1746 - 4
2E15	SHIELDS, ENGINE SIDE	1910 - 2
2D15	SHOCK ABSORBER, SUSPENDED SEAT	1821 - 8
1E9	SHORT BLOCK,ENGINE	0404 - 4
1G18	SHROUD,FAN	0510 - 2
3D20	SHUT-OFF PLUG, EXTENDIBLE SECTION	3362 - 18
1K3	SIDE CONSOLE WIRING HARNESS WITH CAB	1674 - 4
2D1	SIDE INSTRUMENT PANEL HOUSING	1816 - 10
2D3	SIDE INSTRUMENT PANEL HOUSING	1816 - 12
2E15	SIDE PANELS, ENGINE	1910 - 2
2E19	SIDE SHIELD, LOADER PLUMBING	1913 - 4
2E15	SIDE SHIELDS, ENGINE	1910 - 2
2C1	SIDE WINDOWS,CAB	1814 - 2
2C3	SIDE WINDOWS,CAB	1814 - 4
1J13	SINGLE BATTERY CABLE	1671 - 2
1J13	SINGLE BATTERY INSTALLATION	1671 - 2
3C3	SIXTH FUNCTION FOOT CONTROL	3315 - 12
3E4	SIXTH FUNCTION MANUAL VALVE KIT	3362 - 27
3C3	SIXTH FUNCTION PEDAL	3315 - 12
3C5	SIXTH FUNCTION PEDAL (PILOT CONTROL)	3315 - 13A
2E23	SKIRTS, OPERATOR STATION	1927 - 2
2D11	SLIDE LATCH KIT,SEAT	1821 - 4
2D13	SLIDE PUCK SERVICE KIT	1821 - 6
2C7	SLIDING REAR WINDOWS	1814 - 8
1B24	SLIDING YOKE, SEAL (MFWD)	0250 - 3
2F13	SMV EMBLEM	2008 - 2
3E7	SOLENOID VALVE, MANIFOLD (PILOT CONTROL)	3362 - 30
1D14	SOLENOID VALVE, RANGE SHIFT,POWER SHIFT	0360 - 4
3D22	SOLENOID VALVE, SELECTIVE FLOW	3362 - 20
1D12	SOLENOID VALVE, TRANSMISSION,POWER SHIFT	0360 - 2
2I19	SOLENOID, RETURN-TO-DIG	3162 - 12
2I21	SOLENOID, RETURN-TO-DIG	3162 - 14
1G14	SOLENOID,COLD WEATHER STARTING AID	0505 - 4
1G16	SOLENOID,COLD WEATHER STARTING AID	0505 - 6
1F20	SOLENOID,STARTER MOTOR	0422 - 1
3C23	SPACER, SYNTHETIC BUCKET	3346 - 2
3C23	SPACER, SYNTHETIC CROWD	3346 - 2
3D6	SPACERS, STABILIZER CYLINDER	3348 - 4
2F2	SPEAKER, RADIO	2001 - 2
1G20	SPEED CONTROL ENGINE	0515 - 2
1G20	SPEED CONTROL PEDAL	0515 - 2
1B16	SPINDLE AND KNUCKLE ASSEMBLY (WITHOUT MFWD) (SERIAL NO. -911131)	0230 - 2
1C8	SPIRAL BEVEL GEAR,DIFFGERENTIAL (MFWD)	0250 - 12
1B12	SPIRAL BEVEL INPUT PINION	0210 - 4
3D4	STABILIZER ARM	3348 - 2
3D4	STABILIZER ARM PINS	3348 - 2
3D4	STABILIZER ARM STREET PAD	3348 - 2
3C13	STABILIZER CONTROL CABLES	3315 - 20
2D1	STABILIZER CONTROL COVER	1816 - 10
2D3	STABILIZER CONTROL COVER	1816 - 12
3G3	STABILIZER CYLINDER	3365 - 7
3E14	STABILIZER CYLINDER HYDRAULICS, BACKHOE	3363 - 2
3E16	STABILIZER CYLINDER HYDRAULICS, BACKHOE	3363 - 3A
3D6	STABILIZER CYLINDER PINS	3348 - 4
3D6	STABILIZER CYLINDER SPACERS	3348 - 4
2B4	STABILIZER GUARD KIT 310G,310SG	1746 - 2
3C13	STABILIZER LEVER	3315 - 20
3C13	STABILIZER LINKAGE	3315 - 20
2J13	STABILIZER THERMAL RELIEF VALVE	3162 - 30
2J7	STABILIZER VALVE	3162 - 24
2J9	STABILIZER VALVE	3162 - 26
2J11	STABILIZER VALVE	3162 - 28
2J13	STABILIZER VALVE	3162 - 30
2J13	STABILIZER VALVE DRAIN REGULATOR	3162 - 30
2J9	STABILIZER VALVE KITS	3162 - 26
3C13	STABILIZER VALVE LINKAGE	3315 - 20
3B14	STABILIZER VALVE MOUNTING PLATE	3315 - 2
3B16	STABILIZER VALVE MOUNTING PLATE (PILOT CONTROL)	3315 - 3A
2I11	STABILIZER/LOADER CONTROL VALVE	3162 - 4
3G3	STABLIIZER CYLINDER REPAIR KITS	3365 - 7
3C23	STANDARD ARM	3346 - 2
3C23	STANDARD DIPPERSTICK	3346 - 2
3F5	STANDARD DIPPERSTICK, AUXILIARY HYDRAULICS	3363 - 16
1J24	STANDARD LIGHTS	1673 - 4
1F23	STARTER MOTOR ADAPTER KIT	0422 - 4
1F20	STARTER MOTOR DRIVE,	0422 - 1
1F20	STARTER MOTOR KIT	0422 - 1
1F21	STARTER MOTOR KIT	0422 - 2
1F20	STARTER MOTOR SOLENOID	0422 - 1
1K9	STARTER RELAY	1674 - 8
1K9	STARTER,JUMP START PROTECTION COVER	1674 - 8
1G14	STARTING AID, COLD WEATHER	0505 - 4
1G16	STARTING AID, COLD WEATHER	0505 - 6
1G14	STARTING FLUID	0505 - 4
1F20	STARTING MOTOR (SERIAL NO. -894287)	0422 - 1
1F21	STARTING MOTOR (SERIAL NO.894288-)	0422 - 2
1C19	STATOR SHAFT	0350 - 2
1H13	STC ADAPTER (SERIAL NO. -911131)	0960 - 8
1H17	STC ADAPTERS	0960 - 12
1H19	STC ADAPTERS	0960 - 14
1H15	STC ADAPTERS (SERIAL NO. 911132-)	0960 - 10
1H8	STEERING COLUMN	0960 - 2
1H10	STEERING COLUMN	0960 - 4
2C21	STEERING COLUMN COVER	1816 - 6
1H10	STEERING COLUMN, TILT	0960 - 4
1H21	STEERING CYLINDER (WITH MFWD)	0960 - 16

ALPHABETICAL INDEX - CONTINUED

GRID		PAGE
1H21	STEERING CYLINDER KIT(WITH MFWD)	0960 - 16
1B21	STEERING CYLINDER, FRONT AXLE (WITHOUT MFWD)	0230 - 7
1H23	STEERING CYLINDER, POWER (WITHOUT MFWD)	0960 - 18
1H13	STEERING HOSES (WITH MFWD) (SERIAL NO. -911131)	0960 - 8
1H15	STEERING HOSES(WITH MFWD) (SERIAL NO. 911132-)	0960 - 10
1H15	STEERING HYDRAULICS (WITH MFWD) (SERIAL NO. 911132-)	0960 - 10
1H17	STEERING HYDRAULICS (WITHOUT MFWD)	0960 - 12
1H19	STEERING HYDRAULICS (WITHOUT MFWD)	0960 - 14
1H24	STEERING VALVE	0960 - 19
1H19	STEERING VALVE (WITHOUT MFWD)	0960 - 14
1H13	STEERING VALVE HYDRAULICS (WITH MFWD) (SERIAL NO. -911131)	0960 - 8
1H12	STEERING VALVE REPAIR KIT	0960 - 6
1H8	STEERING WHEEL	0960 - 2
1H10	STEERING WHEEL	0960 - 4
1B4	STEM, VALVE (WITHOUT MFWD)	0120 - 1
1J18	STEP, FUEL TANK	1671 - 7
1J18	STEP,BATTERY BOX	1671 - 7
1J18	STEPS	1671 - 7
1I4	STOP LIGHT SWITCH	1060 - 2
3C19	STOP, BACKHOE BOOM	3344 - 2
1H5	STRAINER, FUEL TANK	0560 - 2
2C3	STRAP, DOOR	1814 - 4
3D4	STREET PAD,STABILIZER ARM	3348 - 2
2E15	STRIKER BOLT, HOOD	1910 - 2
1J22	STROBE BEACON	1673 - 2
1C3	STUDS, WHEEL (MFWD)	0250 - 6
1C15	SUCTION PIPE, TRANSMISSION	0341 - 2
1C5	SUN GEAR SHAFT (MFWD)	0250 - 8
2F11	SUN VISOR	2007 - 2
1H3	SUPPORT, ENGINE	0540 - 2
2E15	SUPPORT, HOOD	1910 - 2
2D15	SUSPENDED SEAT POSITION SENSOR	1821 - 8
2D15	SUSPENDED SEAT POSITION SWITCH	1821 - 8
2D15	SUSPENDED SEAT SHOCK ABSORBER	1821 - 8
2D15	SUSPENDED SEAT SUSPENSION	1821 - 8
2D15	SUSPENDED SEAT TETHER BELT	1821 - 8
2D21	SUSPENSION SEAT (AIR SUSPENSION)	1821 - 14
2D15	SUSPENSION,SUSPENDED SEAT	1821 - 8
3G2	SWING CYLINDER	3365 - 6
3F1	SWING CYLINDER FITTINGS	3363 - 12
3F1	SWING CYLINDER HOSES	3363 - 12
3F1	SWING CYLINDER HYDRAULICS	3363 - 12
3G2	SWING CYLINDER REPAIR KIT	3365 - 6
3C17	SWING FRAME	3343 - 2
3C17	SWING FRAME PINS	3343 - 2
3C9	SWING LOCK CONTROL LEVER AND LINKAGE	3315 - 16
3D18	SWING SECTION RELIEF VALVE	3362 - 16
3D18	SWING SECTION, BACKHOE VALVE	3362 - 16
1K7	SWITCH, A/C	1674 - 6
2D3	SWITCH, AIR CONDITIONING THERMOSTAT	1816 - 12
1K7	SWITCH, AIR SUSPENSION SEAT	1674 - 6
1I4	SWITCH, BRAKE LIGHT, PRESSURE	1060 - 2
1K13	SWITCH, DIFFERENTIAL LOCK	1674 - 12
1K9	SWITCH, ENGINE OIL PRESSURE	1674 - 8
1K7	SWITCH, ETHER	1674 - 6
1C12	SWITCH, FORWARD, NEUTRAL, REVERSE	0315 - 4
2E3	SWITCH, HIGH PRESSURE	1830 - 6
1K7	SWITCH, HORN	1674 - 6
2E3	SWITCH, LOW PRESSURE	1830 - 6
1K7	SWITCH, MFWD	1674 - 6
1K9	SWITCH, PARK BRAKE OIL PRESSURE	1674 - 8
3E8	SWITCH, PATTERN SELECTOR	3362 - 32
1K5	SWITCH, PILOT ENABLE	1674 - 5A
1K15	SWITCH, RETURN-TO-DIG	1674 - 14
1K7	SWITCH, RIDE CONTROL	1674 - 6
1J22	SWITCH, ROTATING BEACON	1673 - 2
1I4	SWITCH, STOP LIGHT	1060 - 2
2D15	SWITCH, SUSPENDED SEAT POSITION KIT	1821 - 8
1K7	SWITCH, TEMPERATURE CONTROL	1674 - 6
1C12	SWITCH, TRANSMISSION CONTROL LEVER	0315 - 4
2C11	SWITCH, WINDSHIELD WASHER	1814 - 12
1J17	SWITCH,BATTERY,MASTER DISCONNECT	1671 - 6
2J21	SWITCH,HYDRAULIC FRONT COUPLER	3163 - 6
2J23	SWITCH,HYDRAULIC FRONT COUPLER	3163 - 7A
1K7	SWITCH,IGNITION	1674 - 6
1K11	SWITCH,SELECTIVE FLOW CONTROL	1674 - 10
1F21	SWITCH,STARTER MOTOR	0422 - 2
1K1	SWITCHES, FRONT CONSOLE	1674 - 2
1K7	SWITCHES,MONITOR PANEL	1674 - 6
1B21	SWIVEL HOUSING,FRONT AXLE (WITHOUT MFWD)	0230 - 7
2D13	SWIVEL SERVICE KIT	1821 - 6
2D13	SWIVEL,SEAT	1821 - 6
3C23	SYNTHETIC BUCKET SPACER	3346 - 2
3C23	SYNTHETIC CROWD SPACER	3346 - 2
1F1	SYSTEM, FUEL INJECTION	0413 - 2

T

1H5	TANK, FUEL	0560 - 2
1G18	TANK,COOLANT RECOVERY	0510 - 2
1K7	TEMPERATURE CONTROL SWITCH	1674 - 6
2E5	TEMPERATURE CONTROL,HEATER	1830 - 8
1K9	TEMPERATURE, TORQUE CONVERTER	1674 - 8
1G3	TENSIONER, FAN DRIVE BELT	0429 - 4
1J4	TEST KIT, FLUID ANALYSIS PRODUCTS (OILSCAN)	1369 - 2
2D15	TETHER BELT,SUSPENDED SEAT	1821 - 8
2D17	TETHER BELTS WITH NON-SUSPENDED SEAT	1821 - 10
2C3	TETHER, DOOR	1814 - 4
2J13	THERMAL RELIEF VALVE, STABILIZER	3162 - 30
1F13	THERMOSTAT COVER	0418 - 2
1F13	THERMOSTAT COVER TUBE	0418 - 2
2D3	THERMOSTAT SWITCH, A/C	1816 - 12
1F13	THERMOSTAT, ENGINE	0418 - 2
2J17	THIRD FUCTION HYDRAULIC OIL LINES	3163 - 4
2J19	THIRD FUCTION HYDRAULIC OIL LINES	3163 - 5A
2I1	THIRD FUNCTION LOADER CONTROL VALVE LINKAGE	3115 - 10
2I3	THIRD FUNCTION LOADER CONTROL VALVE LINKAGE	3115 - 12
1D1	THIRD GEAR CLUTCH ASSEMBLY, POWER SHIFT	0350 - 8
1D1	THIRD GEAR CLUTCH CARRIER, POWER SHIFT	0350 - 8
1D1	THIRD GEAR, BELLVILLEWASHER, POWERSHIFT	0350 - 8
3B20	THREE LEVER BACKHOE CONTROL VALVE LINKAGE	3315 - 6
1G20	THROTTLE LEVER	0515 - 2
1J24	TIE BAND MOUNT ANCHOR, HARNESS	1673 - 4
1C1	TIE ROD ASSEMBLY (MFWD)	0250 - 4
1B15	TIE ROD ASSEMBLY (WITHOUT MFWD)	0230 - 1
1H10	TILT STEERING COLUMN	0960 - 4
1K3	TIMER RELAY	1674 - 4
1E3	TIMING GEAR COVER (ENG. SER. NO. 900933-)	0402 - 8
1E1	TIMING GEAR COVER (ENG.SER.NO.-900932)	0402 - 6

ALPHABETICAL INDEX - CONTINUED

GRID		PAGE
1E1	TIMING GEAR COVER GASKET (ENG.SER.NO.-900932)	0402 - 6
1E3	TIMING GEAR COVER GASKET (ENG.SER.NO.900933-)	0402 - 8
2E17	TOOL BOX	1913 - 2
3F21	TOOL KIT, HAND HELD HYDRAULIC	3363 - 32
1C18	TORQUE CONVERTER	0350 - 1
1K9	TORQUE CONVERTER TEMPERATURE	1674 - 8
1C18	TORQUE CONVERTOR FLEXPLATE	0350 - 1
1I24	TRADEMARKS	1320 - 2
1J1	TRADEMARKS	1320 - 4
1C17	TRANSMISSION	0341 - 4
1C15	TRANSMISSION BREATHER	0341 - 2
1D11	TRANSMISSION CHARGE PUMP	0360 - 1
1C12	TRANSMISSION CONTROL LEVER	0315 - 4
1C12	TRANSMISSION CONTROL LEVER SWITCH	0315 - 4
1D16	TRANSMISSION CONTROL VALVE SOLENOID, PST	0360 - 6
1D12	TRANSMISSION CONTROL VALVE, POWER SHIFT	0360 - 2
2B5	TRANSMISSION DIPSTICK GUARD	1746 - 4
1C15	TRANSMISSION HOUSING, POWER SHIFT	0341 - 2
1D16	TRANSMISSION INTERMEDIATE PLATE, PST	0360 - 6
1C15	TRANSMISSION LIFT BRACKET	0341 - 2
1C17	TRANSMISSION OIL DIPSTICK	0341 - 4
1C17	TRANSMISSION OIL DIPSTICK TUBE	0341 - 4
1D11	TRANSMISSION OIL FILTER	0360 - 1
1D9	TRANSMISSION OUTPUT SHAFT (MFWD)	0350 - 16
1D1	TRANSMISSION OUTPUT SHAFT YOKE	0350 - 8
2B5	TRANSMISSION SHIELD	1746 - 4
1D12	TRANSMISSION SOLENOID VALVE, POWER SHIFT	0360 - 2
1C15	TRANSMISSION SUCTION PIPE	0341 - 2
2F6	TRAVEL WARNING ALARM	2004 - 2
1C17	TUBE, TRANSMISSION OIL DIPSTICK	0341 - 4
1F13	TUBE,THERMOSTAT COVER	0418 - 2
1C19	TURBINE SHAFT	0350 - 2
1F6	TURBOCHARGER	0416 - 2
1F6	TURBOCHARGER CENTER HOUSING	0416 - 2
1F6	TURBOCHARGER GASKET	0416 - 2
1F8	TURBOCHARGER OIL LINES	0416 - 4
2C15	TWO LEVER BACKHOE CONTROL COVER	1816 - 2
3B18	TWO LEVER BACKHOE CONTROL VALVE LINKAGE	3315 - 4

U

1B24	UNIVERSAL DRIVE SHAFT (MFWD)	0250 - 3
1B24	UNIVERSAL DRIVE SHAFT KIT (MFWD)	0250 - 3
1C3	UNIVERSAL DRIVE SHAFT,FRONT AXLE (MFWD)	0250 - 6
1C14	UNIVERSAL JOINT (REVERSER)	0325 - 1
1I15	UNIVERSAL JOINT YOKE (SERIAL NO. -902685)	1111 - 2
1I17	UNIVERSAL JOINT YOKE (SERIAL NO. 902686-)	1111 - 4

V

3E3	VALVE KIT,FIFTH FUNCTION MANUAL	3362 - 26
3C13	VALVE LINKAGE, STABILIZER	3315 - 20
3B14	VALVE MOUNTING PLATE, BACKHOE	3315 - 2
3B16	VALVE MOUNTING PLATE, BACKHOE (PILOT CONTROL)	3315 - 3A
3B14	VALVE MOUNTING PLATE, STABILIZER	3315 - 2
3B16	VALVE MOUNTING PLATE, STABILIZER (PILOT CONTROL)	3315 - 3A
1H19	VALVE STEERING (WITHOUT MFWD)	0960 - 14
1B4	VALVE STEM (WITHOUT MFWD)	0120 - 1
1B3	VALVE STEM,FRONT DRIVE WHEEL (MFWD)	0110 - 3
1B2	VALVE STEM,REAR DRIVE WHEEL	0110 - 2
2J1	VALVE, AUXILIARY KIT, LOADER	3162 - 18
3D22	VALVE, BACKHOE AUXILIARY SECTION	3362 - 20
3D24	VALVE, BACKHOE AUXILIARY SECTION	3362 - 22
3D12	VALVE, BACKHOE BOOM SECTION	3362 - 10
3D14	VALVE, BACKHOE BUCKET SECTION	3362 - 12
3D8	VALVE, BACKHOE CONTROL	3362 - 6
3D16	VALVE, BACKHOE CROWD SECTION	3362 - 14
3D20	VALVE, BACKHOE EXTENDIBLE SECTION	3362 - 18
3D18	VALVE, BACKHOE SWING SECTION	3362 - 16
1I4	VALVE, BRAKE	1060 - 2
1I6	VALVE, BRAKE	1060 - 4
2E5	VALVE, CANOPY HEATER SHUT-OFF	1830 - 8
1E1	VALVE, ENGINE OIL PRESSURE REGULATING (ENG. SER. NO. -889024)	0402 - 6
1E20	VALVE, EXHAUST	0409 - 2
3E10	VALVE, FLOW CONTROL	3363 - 1A
1E20	VALVE, INTAKE	0409 - 2
2I23	VALVE, LOADER AUXILIARY SECTION	3162 - 16
2J3	VALVE, LOADER AUXILIARY SECTION	3162 - 20
2I15	VALVE, LOADER BOOM SECTION	3162 - 8
2I17	VALVE, LOADER BOOM SECTION	3162 - 10
2I19	VALVE, LOADER BUCKET SECTION	3162 - 12
2I21	VALVE, LOADER BUCKET SECTION	3162 - 14
2I9	VALVE, LOADER CONTROL	3162 - 2
2I11	VALVE, LOADER/STABILIZER CONTROL	3162 - 4
3E8	VALVE, PATTERN SELECTOR	3362 - 32
3E7	VALVE, PRESSURE REDUCING, MANIFOLD (PILOT CONTROL)	3362 - 30
1D14	VALVE, RANGE SHIFT, POWER SHIFT	0360 - 4
3D22	VALVE, SELECTIVE FLOW SOLENOID	3362 - 20
3E7	VALVE, SOLENOID (MANIFOLD) (PILOT CONTROL)	3362 - 30
2J7	VALVE, STABILIZER	3162 - 24
2J9	VALVE, STABILIZER	3162 - 26
2J11	VALVE, STABILIZER	3162 - 28
2J13	VALVE, STABILIZER	3162 - 30
1H24	VALVE, STEERING	0960 - 19
1H15	VALVE, STEERING (WITH MFWD) (SERIAL NO. 911132-)	0960 - 10
1D12	VALVE, TRANSMISSION CONTROL, POWER SHIFT	0360 - 2
1D12	VALVE, TRANSMISSION SOLENOID,POWER SHIFT	0360 - 2
1I10	VALVE,BRAKE VALVE BOOST HYDRAULICS (CAB)	1060 - 8
1I12	VALVE,BRAKE VALVE BOOST HYDRAULICS (ROPS)	1060 - 10
1E7	VALVE,ENGINE OIL BY-PASS (ENG. SER. NO. 889025-)	0404 - 2
2D1	VANDAL GUARD LOCK	1816 - 10
2D1	VANDAL GUARD,INSTRUMENT PANEL	1816 - 10
2F16	VEHICLE MAIN HYDRAULIC SYSTEM	2100 - 1
1K9	VEHICLE WIRING HARNESS	1674 - 8
1E18	VENTILATING SYSTEM, ENGINE	0408 - 2
2F11	VISOR, SUN	2007 - 2

W

2F6	WARNING ALARM, TRAVEL	2004 - 2
2C11	WASHER, WINDSHIELD RESERVOIR	1814 - 12
1F12	WATER PUMP (ENG.SER.NO.900933-)	0417 - 4
1F11	WATER PUMP (ENG.SER.N0.-900932)	0417 - 3

ALPHABETICAL INDEX - CONTINUED

GRID		PAGE
1F11	WATER PUMP IMPELLER (ENG.SER.NO.-900932)	0417 - 3
1F10	WATER PUMP INLET	0417 - 2
1F10	WATER PUMP PULLEY	0417 - 2
1F11	WATER PUMP REPAIR KIT (ENG.SER.NO.-900932)	0417 - 3
1F12	WATER PUMP REPAIR KIT (ENG.SER.NO.900933-)	0417 - 4
3D1	WEARSTRIPS, EXTENDIBLE ARM	3346 - 4
2C7	WEATHERSTRIP, REAR WINDOW	1814 - 8
3E5	WET CAP KIT, HYDRAULIC	3362 - 28
1B22	WHEEL HUB, FRONT AXLE (WITHOUT MFWD) (SERIAL NO. 911132-)	0230 - 8
1C3	WHEEL STUDS (MFWD)	0250 - 6
1B4	WHEEL, FRONT (WITHOUT MFWD)	0120 - 1
1H8	WHEEL, STEERING	0960 - 2
1H10	WHEEL, STEERING	0960 - 4
1B3	WHEEL,FRONT DRIVE(MFWD)	0110 - 3
2C19	WINCH CONTROL BOOT (PILOT CONTROL)	1816 - 5A
2C1	WINDOW, CAB SIDE	1814 - 2
2C3	WINDOW, CAB SIDE	1814 - 4
2C7	WINDOWPANE, REAR CORNER	1814 - 8
2C7	WINDOWS, REAR	1814 - 8
2C11	WINDSHIELD WASHER HOSE	1814 - 12
2C11	WINDSHIELD WASHER PUMP	1814 - 12
2C9	WINDSHIELD WIPER MOTOR, FRONT	1814 - 10
2C13	WINDSHIELD WIPER MOTOR, REAR	1814 - 14
2C5	WINDSHIELD, CAB OR QUARTER CAB	1814 - 6
2C11	WINDSHIELD, WASHER RESERVOIR	1814 - 12
2C9	WINDSHILD WIPER BLADE, FRONT	1814 - 10
2C13	WINDSHILD WIPER BLADE, REAR	1814 - 14
2C9	WIPER BLADE, FRONT	1814 - 10
2C13	WIPER BLADE, REAR	1814 - 14
2C9	WIPER MOTOR, FRONT WINDSHIELD	1814 - 10
2C13	WIPER MOTOR, REAR WINDSHIELD	1814 - 14
1K11	WIRE HARNESS,SELECTIVE FLOW CONTROL	1674 - 10
1K1	WIRING HARNESS FRONT CONSOLE WITH CAB	1674 - 2
1K9	WIRING HARNESS, ENGINE	1674 - 8
2C23	WIRING HARNESS, MODE DOOR	1816 - 8
1J24	WIRING HARNESS, ROOF	1673 - 4
1K9	WIRING HARNESS, VEHICLE	1674 - 8
1K5	WIRING HARNESS,PILOT ENABLE	1674 - 5A
1K3	WIRING HARNESS,SIDE CONSOLE WITH CAB	1674 - 4

Y

2H17	YOKE, BUCKET LEVELING	3115 - 2
2H19	YOKE, BUCKET LEVELING	3115 - 4
1B24	YOKE, DRIVE SHAFT (MFWD)	0250 - 3
1B12	YOKE, REAL AXLE	0210 - 4
1I15	YOKE, REAR AXLE (SERIAL NO. -902685)	1111 - 2
1D1	YOKE, TRANSMISSION OUTPUT SHAFT	0350 - 8
1B12	YOKE, UNIVERSAL JOINT	0210 - 4
1I15	YOKE, UNIVERSAL JOINT (SERIAL NO. -902685)	1111 - 2
1I17	YOKE, UNIVERSAL JOINT (SERIAL NO. 902686-)	1111 - 4
1B24	YOKE,SEAL,SLIDING (MFWD)	0250 - 3

REAR DRIVE WHEEL

TP50562 -UN-07JAN97

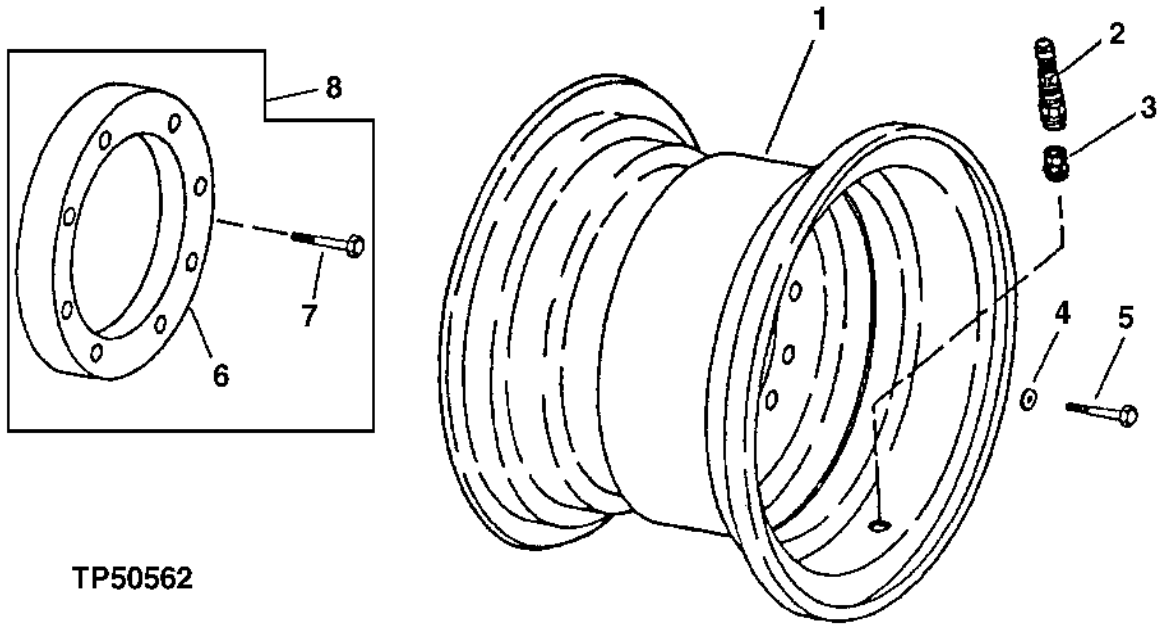

TP50562

KEY	PART NO.	PART NAME	QTY	SERIAL NO.	REMARKS
1	AT66805	WHEEL	1		(FOR F/19.5L X 24 TIRE)
	AT74891	WHEEL	1		(FOR F/21L X 24 TIRE)
2	AT25226	TIRE VALVE STEM	1		
3	AH86866	PLUG	1		(USE WITH AT74891)
4	R54124	WASHER	8		
5	19H2717	CAP SCREW	8		HS, SAE 8, 3/4" X 1-3/4"
6	T66860	SPACER	2		
7	19H3196	CAP SCREW	16		HS, SAE 8, 3/4" X 4"
8	AT179287	WHEEL KIT	1		WHEEL SPACER (WHOLE GOODS)

FRONT DRIVE WHEEL
(WITH MECHANICAL FRONT WHEEL DRIVE)

TP50502 -UN-17OCT96

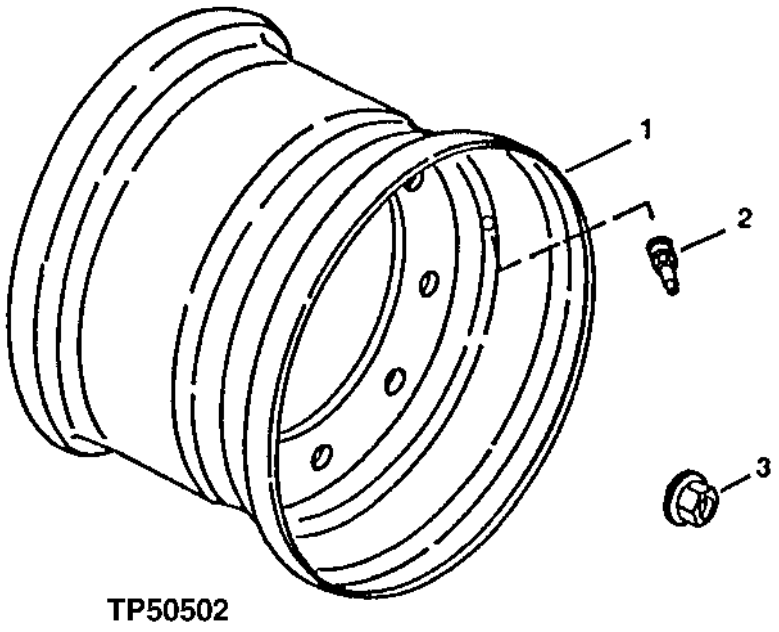

TP50502

KEY	PART NO.	PART NAME	QTY	SERIAL NO.	REMARKS
1	AT169550	WHEEL	1		(FOR F/12.5/80 X 18 TIRE)
2	AN132749	TIRE VALVE STEM	1		
3	14M7332	FLANGE NUT	8		M18

MEMORANDA

FRONT WHEEL
(WITHOUT MECHANICAL FRONT WHEEL DRIVE)

TP50564 -UN-07JAN97

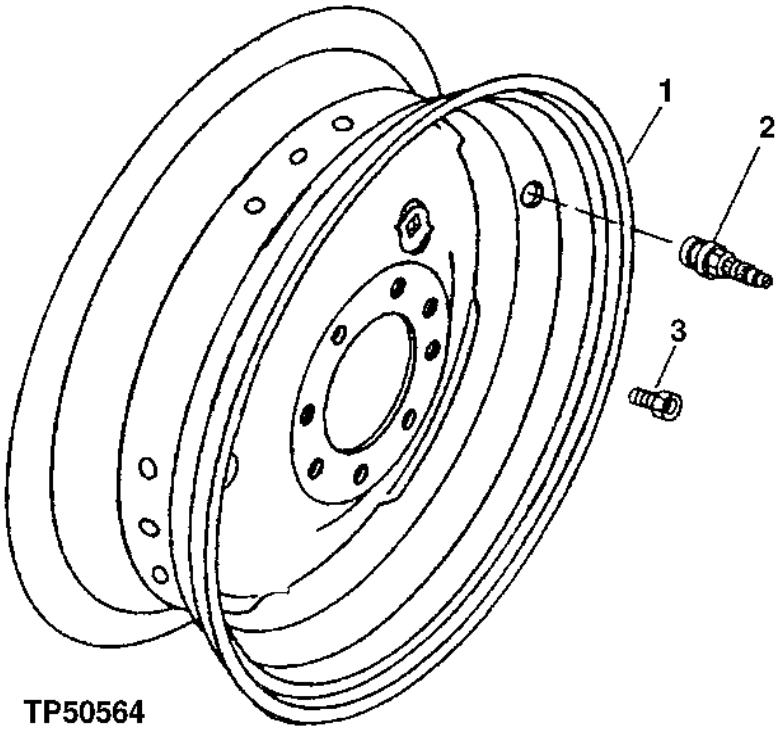

KEY	PART NO.	PART NAME	QTY	SERIAL NO.	REMARKS
1	JD3216	WHEEL	1		(FOR 11L X 16 TIRE) (USE WITH (8) JD27)
	AT187347	WHEEL	1		(FOR F/14.5/75 X 16.1 TIRE) (USE WITH (8) 19H3418)
2	AN132749	TIRE VALVE STEM	1		(TUBELESS)
3	JD27	SCREW	8		(USE WITH JD3216)
	19H3418	CAP SCREW	8		5/8" X 1-1/2", (USE WITH AT187347)

DIFFERENTIAL HOUSING, AXLE HOUSING AND SHAFT

T142285 -UN-25MAY01

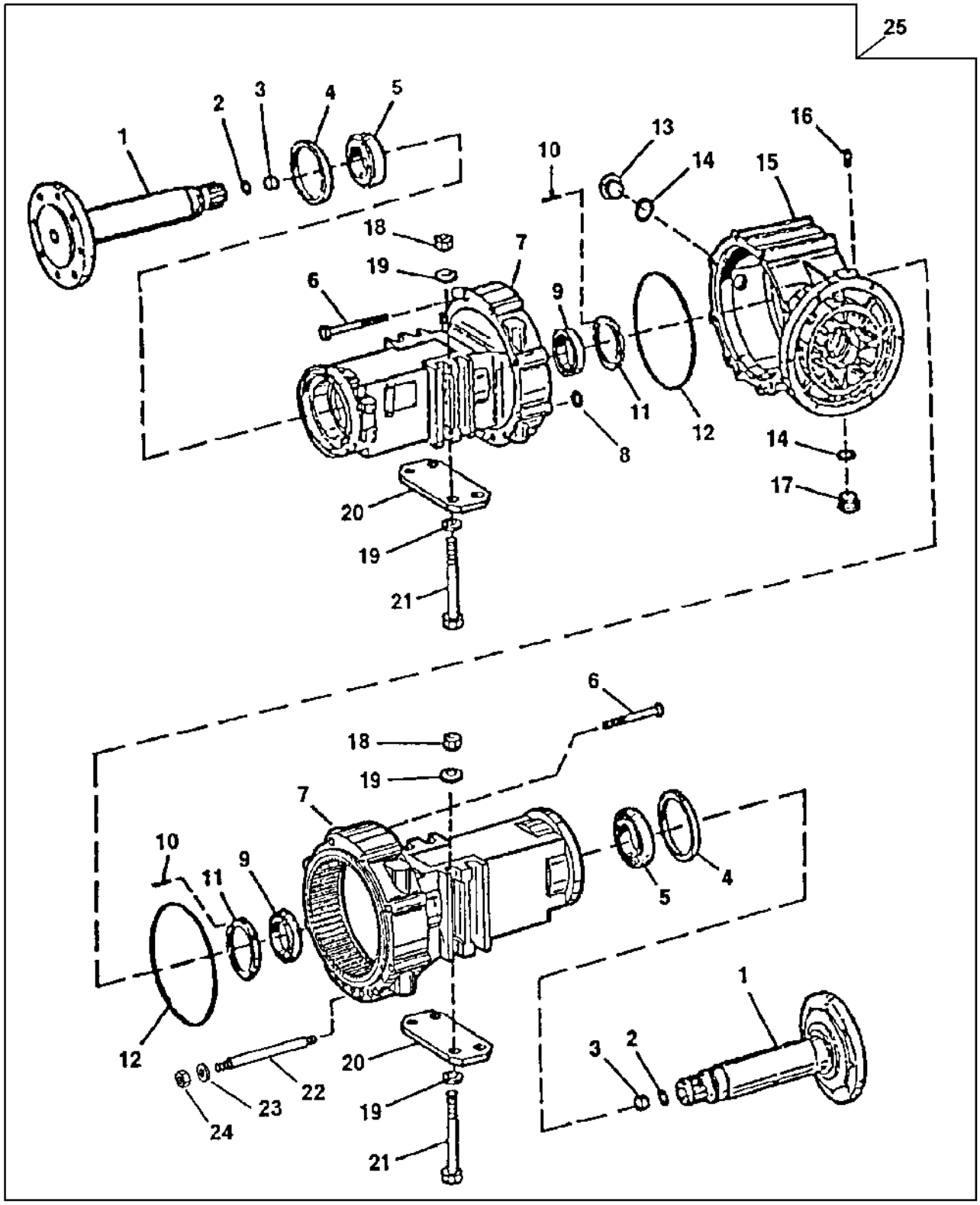

T142285

DIFFERENTIAL HOUSING, AXLE HOUSING AND SHAFT

KEY	PART NO.	PART NAME	QTY	SERIAL NO.	REMARKS
1	T154951	SHAFT	2		
2	R75384	SHIM	AR		.3 MM
	R75383	SHIM	AR		.5 MM
	R75382	SOLID SHIM	AR		1.0 MM
	T183496	SOLID SHIM	AR		2.0 MM
	R75385	SOLID SHIM	AR		3.0 MM
3	R79132	PIN	2		
4	AT179502	SEAL	2		
5	AT179500	TAPERED ROLLER BEARING	2		
6	19M7677	CAP SCREW	16		M16 X 240
7	AT179499	HOUSING	2		
8	T159373	O-RING	2		
9	AT179501	TAPERED ROLLER BEARING	2		
10	AT186927	KIT	2		GROOVE PIN
11	T185444	NUT	2		(SUB FOR T159371)
12	T159362	O-RING	2		
13	15M7030	PIPE PLUG	1		
14	L55580	O-RING	2		
15	T164998	HOUSING	1	-902685	
	T188279	HOUSING	1	902686-	
16	AL32877	VENT	1		BREATHER
17	L56822	PIPE PLUG	1		
18	14M7315	NUT	8		M20
19	N231749	WASHER	16		
20	T147269	PLATE	2		
21	19M8001	CAP SCREW	8		M20 X 260
22	T159388	STUD	4		
23	T159386	WASHER	4		
24	T159389	NUT	4		
25	AT184406	REAR AXLE	1	-902685	REMANUFACTURED (ALSO INCLUDES PLANETARY PINION CARRIER,RING GEAR ASSEMBLY,DIFFERENTIAL ASSEMBLY WITH LOCK SERVICE BRAKE,PARK BRAKE ASSEMBLY AND INPUT YOKE)
	AT195929	REAR AXLE	1	902686-	REMANUFACTURED (ALSO INCLUDES PLANETARY PINION CARRIER,RING GEAR ASSEMBLY,DIFFERENTIAL ASSEMBLY WITH LOCK SERVICE BRAKE,PARK BRAKE ASSEMBLY AND INPUT YOKE)

MEMORANDA

PLANETARY PINION CARRIER

T138066 -UN-16FEB01

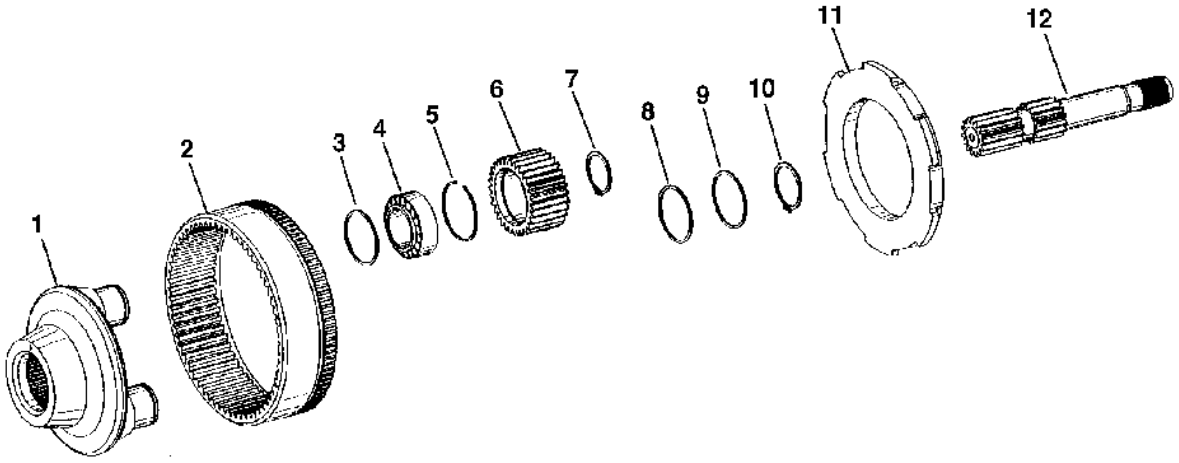

KEY	T138066 PART NO.	PART NAME	QTY	SERIAL NO.	REMARKS
1	T166084	PLANET PINION CARRIER	1		
2	.....	HOUSING	1		AXLE, RING GEAR, (ORDER AT179499)
3	T183922	WASHER	6		
4	AT179538	TAPERED ROLLER BEARING	3		
5	T183923	SNAP RING	6		
6	T183921	PLANET PINION	3		
7	L110729	SNAP RING	3		
8	T159518	THRUST WASHER	1		
9	T159525	SHIM	1		0.2 MM
	T159523	SHIM	1		0.3 MM
	T159522	SHIM	1		0.5 MM
	T161249	SHIM	1		1.5 MM
	T161248	SHIM	1		2.0 MM
10	T159519	SNAP RING	1		
11	T166085	PLATE	1		
12	T154952	SHAFT	1		

DIFFERENTIAL ASSEMBLY WITH LOCK

T138067 -UN-16FEB01

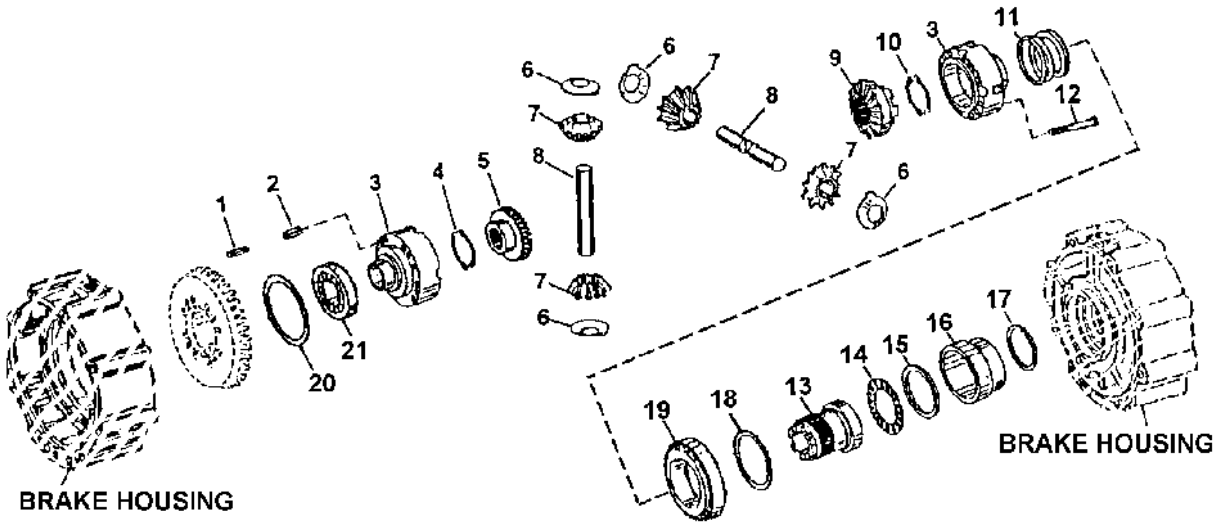

T138067

DIFFERENTIAL ASSEMBLY WITH LOCK

KEY	PART NO.	PART NAME	QTY	SERIAL NO.	REMARKS
1	T159359	SPRING PIN	4		
2	T159358	SPRING PIN	4		
3	AT186312	DIFFERENTIAL	1		(CONTAINS LEFT AND RIGHT SIDE)
4	T163374	THRUST WASHER	1		(RING GEAR SIDE)
5	T159348	BEVEL GEAR	1		
6	T159351	THRUST WASHER	4		
7	T159350	BEVEL GEAR	4		
8	T164431	PINION SHAFT	2		
9	T163810	BEVEL GEAR	1		
10	T163375	THRUST WASHER	1		(DIFF LOCK SIDE)
11	T159341	SPRING	1		
12	19M8771	SCREW	12		M14 X 120
13	T166336	SHIFT COLLAR	1		
14	AT179498	NEEDLE BEARING	1		
15	T159344	SEAL	1		
16	T159343	PISTON	1		
17	T159346	SEAL	1		
18	T159444	SHIM	1		0.1 MM
	T159445	SHIM	1		0.15 MM
	T159443	SHIM	1		0.2 MM
	T159440	SHIM	1		0.3 MM
	T159441	SHIM	1		0.5 MM
	T159442	SHIM	1		1.0 MM
	T159446	SHIM	1		1.1 MM
	T159447	SHIM	1		1.2 MM
	T159448	SHIM	1		1.3 MM
	T159449	SHIM	1		1.4 MM
	T159450	SHIM	1		1.5 MM
	T159451	SHIM	1		1.6 MM
	T159452	SHIM	1		1.7 MM
	T159453	SHIM	1		1.8 MM
	T159457	SHIM	1		2.8 MM
	T159459	SHIM	1		3.0 MM
	T159461	SHIM	1		3.2 MM
	T159463	SHIM	1		3.4 MM
19	AT179504	TAPERED ROLLER BEARING	1		LEFT
20	T161247	SHIM	1		0.20 MM
	T161246	SHIM	1		0.30 MM
	T161245	SHIM	1		0.40 MM
	T161244	SHIM	1		0.50 MM
	T161243	SHIM	1		0.70 MM
	T161242	SHIM	1		0.75 MM
	T161241	SHIM	1		0.80 MM
	T161240	SHIM	1		0.85 MM
	T161239	SHIM	1		0.90 MM
	T161238	SHIM	1		0.95 MM
21	AT179505	TAPERED ROLLER BEARING	1		RIGHT

SPIRAL BEVEL INPUT PINION AND RING GEAR SET

TP58173 -UN-21FEB00

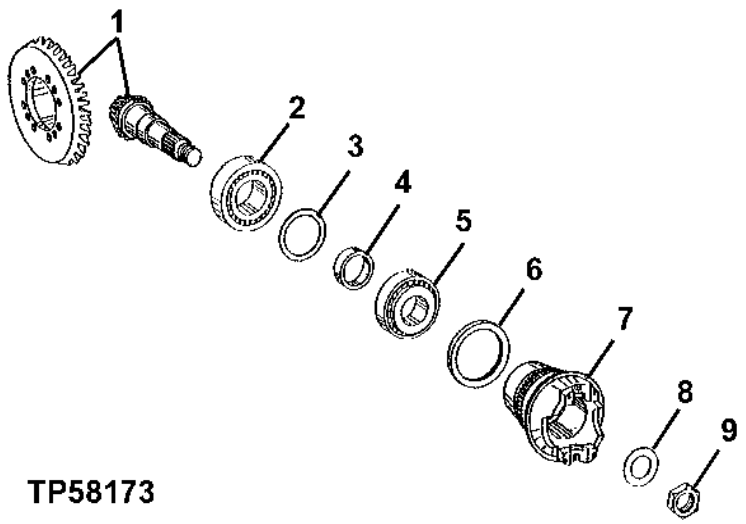

SPIRAL BEVEL INPUT PINION AND RING GEAR SET

KEY	PART NO.	PART NAME	QTY	SERIAL NO.	REMARKS
1	AT171644	BEVEL GEAR DRIVE	1		
2	AT176491	CYLINDRICAL ROLLER BEARING	1		
3	T159310	SHIM	1		1.2 MM
4	T159322	RING	1		16.40 MM
	T159323	RING	1		16.50 MM
	T183482	SOLID SHIM	1		16.56 MM
	T159324	RING	1		16.60 MM
	T183483	SOLID SHIM	1		16.62 MM
	T183484	SOLID SHIM	1		16.64 MM
	T183485	SOLID SHIM	1		16.68 MM
	T159325	RING	1		16.70 MM
	T183486	SOLID SHIM	1		16.72 MM
	T183487	SOLID SHIM	1		16.74 MM
	.....	RING	1		16.75 MM
	T183489	SOLID SHIM	1		16.76 MM
	T183490	SOLID SHIM	1		16.78 MM
	T159326	RING	1		16.80 MM
	T183491	SOLID SHIM	1		16.82 MM
	.....	RING	1		16.83 MM
	T183492	SOLID SHIM	1		16.84 MM
	T159334	RING	1		16.86 MM
	T183493	SOLID SHIM	1		16.88 MM
	.....	RING	1		16.89 MM
	T183494	SOLID SHIM	1		16.90 MM
	T159327	RING	1		16.92 MM
	T183495	SOLID SHIM	1		16.94 MM
	.....	RING	1		16.95 MM
	T159337	RING	1		16.98 MM
	.....	RING	1		17.01 MM
	T159338	RING	1		17.04 MM
	T159339	RING	1		17.07 MM
	T159329	RING	1		17.10 MM
	T159330	RING	1		17.20 MM
	T159331	RING	1		17.30 MM
	T159332	RING	1		17.40 MM
5	AL79794	TAPERED ROLLER BEARING	1		
6	AT179537	SEAL	1		
7	T158438	UNIVERSAL JOINT YOKE	1	-902685	
	T188240	UNIVERSAL JOINT YOKE	1	902686-	
8	T159316	WASHER	1		
9	T159317	NUT	1		

DIFFERENTIAL LOCK PLUMBING

TP57723 -UN-06MAY97

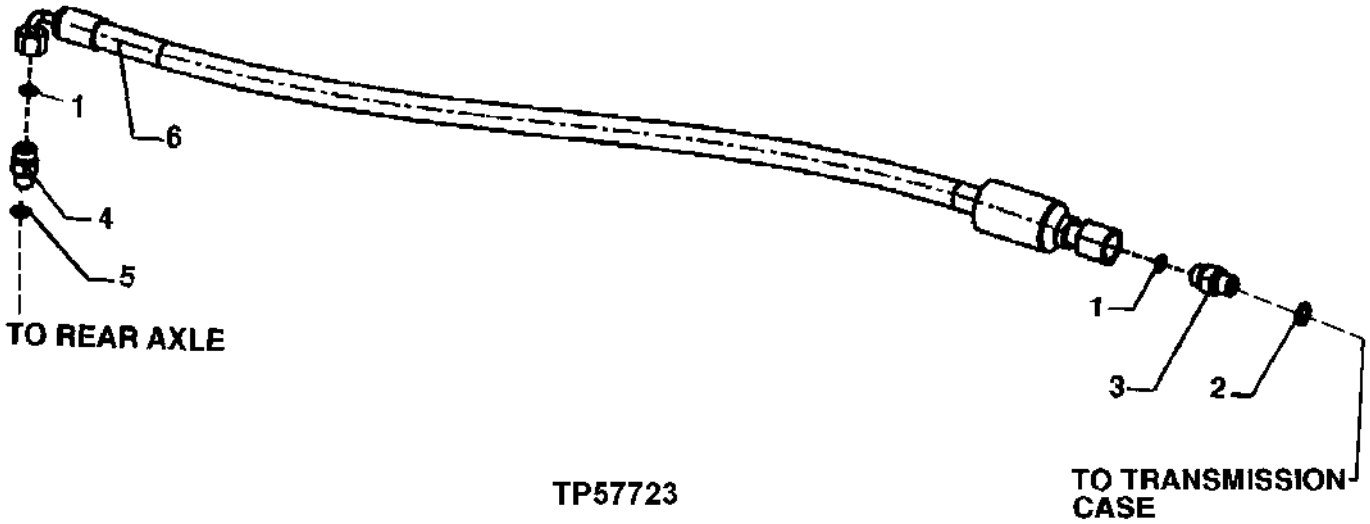

TP57723

KEY	PART NO.	PART NAME	QTY	SERIAL NO.	REMARKS
1	T77814	O-RING	2		
2	R26448	O-RING	1		
3	38H1168	ADAPTER	1		
4	38H1159	ADAPTER	1		
5	R28782	O-RING	1		
6	AT171637	HYDRAULIC HOSE - FABRICATE	1		9/16" X 915 MM (36") X 9/16"

TIE ROD ASSEMBLY
(WITHOUT MECHANICAL FRONT WHEEL DRIVE)
(SERIAL NO. -911131)

TP15881 -UN-01JAN94

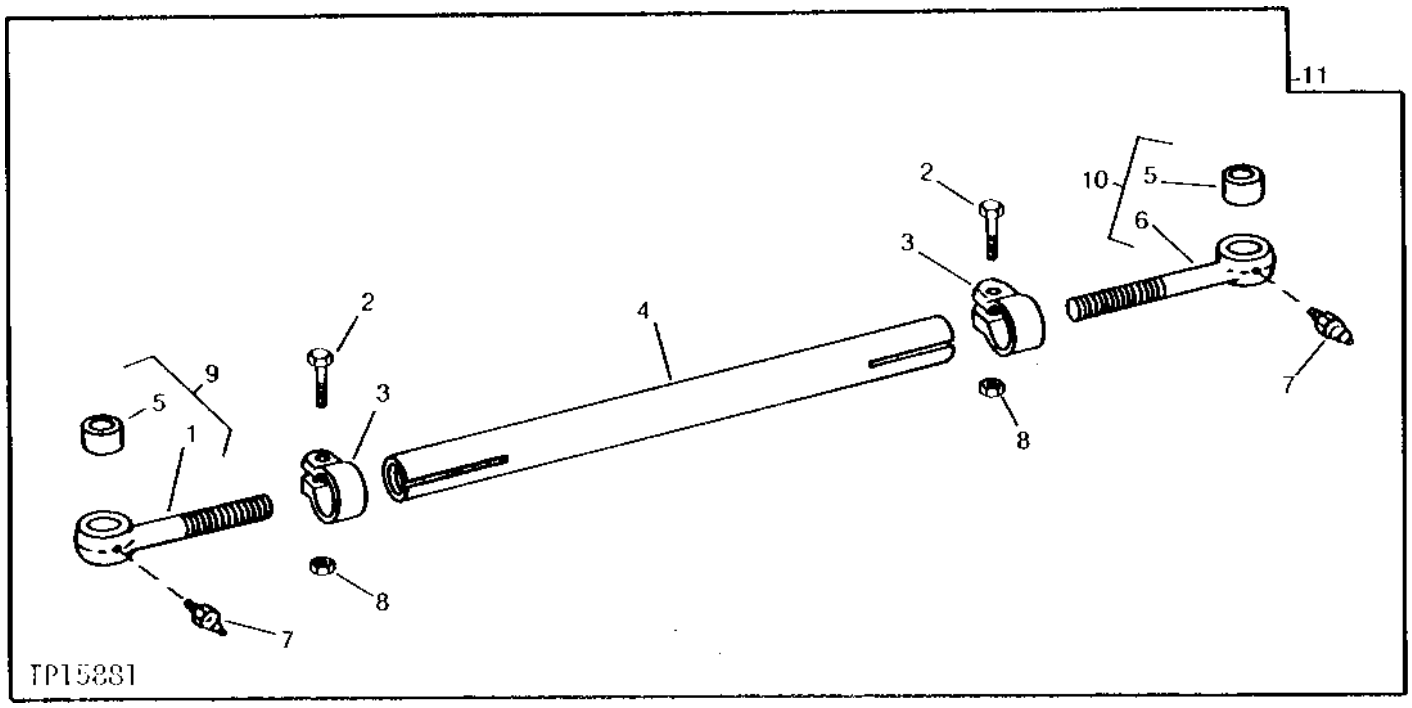

KEY	PART NO.	PART NAME	QTY	SERIAL NO.	REMARKS
1	.....	BOLT	1		LEFT (LEFT-HAND THREAD)
2	19H3208	CAP SCREW	2		5/8" X 3"
3	T69360	CLIP	2		
4	T81963	TUBE	1		
5	T79786	BUSHING	2		
6	.....	BOLT	1		RIGHT (RIGHT-HAND THREAD)
7	JD7797	LUBRICATION FITTING	2		1/4"
8	U14555	LOCK NUT	2		
9	AT79756	BOLT	1		LEFT (LEFT-HAND THREAD)
10	AT79755	BOLT	1		RIGHT (RIGHT-HAND THREAD)
11	AT79754	TIE ROD	1		

FRONT AXLE, SPINDLE AND KNUCKLE ASSEMBLY
(WITHOUT MECHANICAL FRONT WHEEL DRIVE)
(SERIAL NO. -911131)

TP57966 -UN-11NOV98

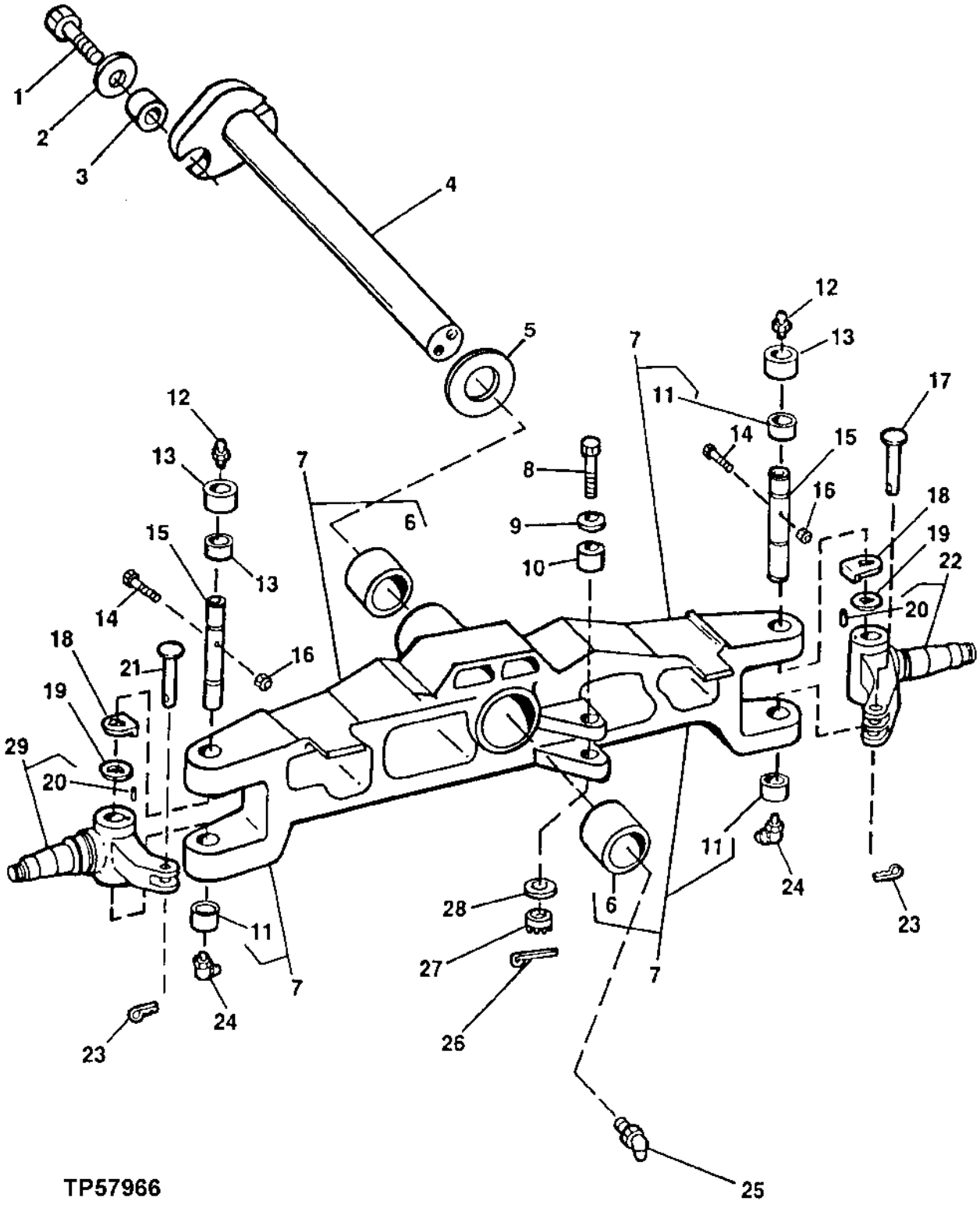

FRONT AXLE, SPINDLE AND KUNCKLE ASSEMBLY
(WITHOUT MECHANICAL FRONT WHEEL DRIVE)
(SERIAL NO. -911131)

KEY	PART NO.	PART NAME	QTY	SERIAL NO.	REMARKS
1	19M8035	CAP SCREW	1		M16 X 35
2	T119912	WASHER	1		
3	T18145	BUSHING	1		
4	AT164442	PIN	2		
5	R46973	THRUST WASHER	4		
6	T140211	BUSHING	2		
7	AT169654	FRONT AXLE	1		(MARKED T154594)
8	19M6575	CAP SCREW	1		M12 X 110
9	24H1162	WASHER	2		17/32" X 1-1/4" X 0.060"
10	T100813	BUSHING	1		
11	T140207	BUSHING	4		
12	T162396	LUBRICATION FITTING	2		
13	T69027	SEAL	2		
14	19H3445	CAP SCREW	2		3/8" X 3-3/4"
15	T184816	KINGPIN	2		
16	T11234	LOCK NUT	2		
17	T69355	PIN	1		
18	T69364	THRUST WASHER	2		
19	T69363	THRUST WASHER	2		
20	34M7117	SPRING PIN	2		5 X 10 MM
21	T69354	PIN	1		
22	AT182387	KNUCKLE	1		(MARKED T82851)
23	11M7030	COTTER PIN	2		5 X 40 MM
24	T162396	LUBRICATION FITTING	2		
25	JD7838	ADAPTER	2		
26	11M7086	COTTER PIN	1		2.500 X 50 MM
27	14M7184	NUT	1		M12
28	24H1162	WASHER	2		17/32" X 1-1/4" X 0.060"
29	AT182388	KNUCKLE	1		(MARKED T82852)

FRONT WHEEL HUB, CAP AND BEARINGS
(WITHOUT MECHANICAL FRONT WHEEL DRIVE)
(SERIAL NO. -911131)

TP3685 -UN-01JAN94

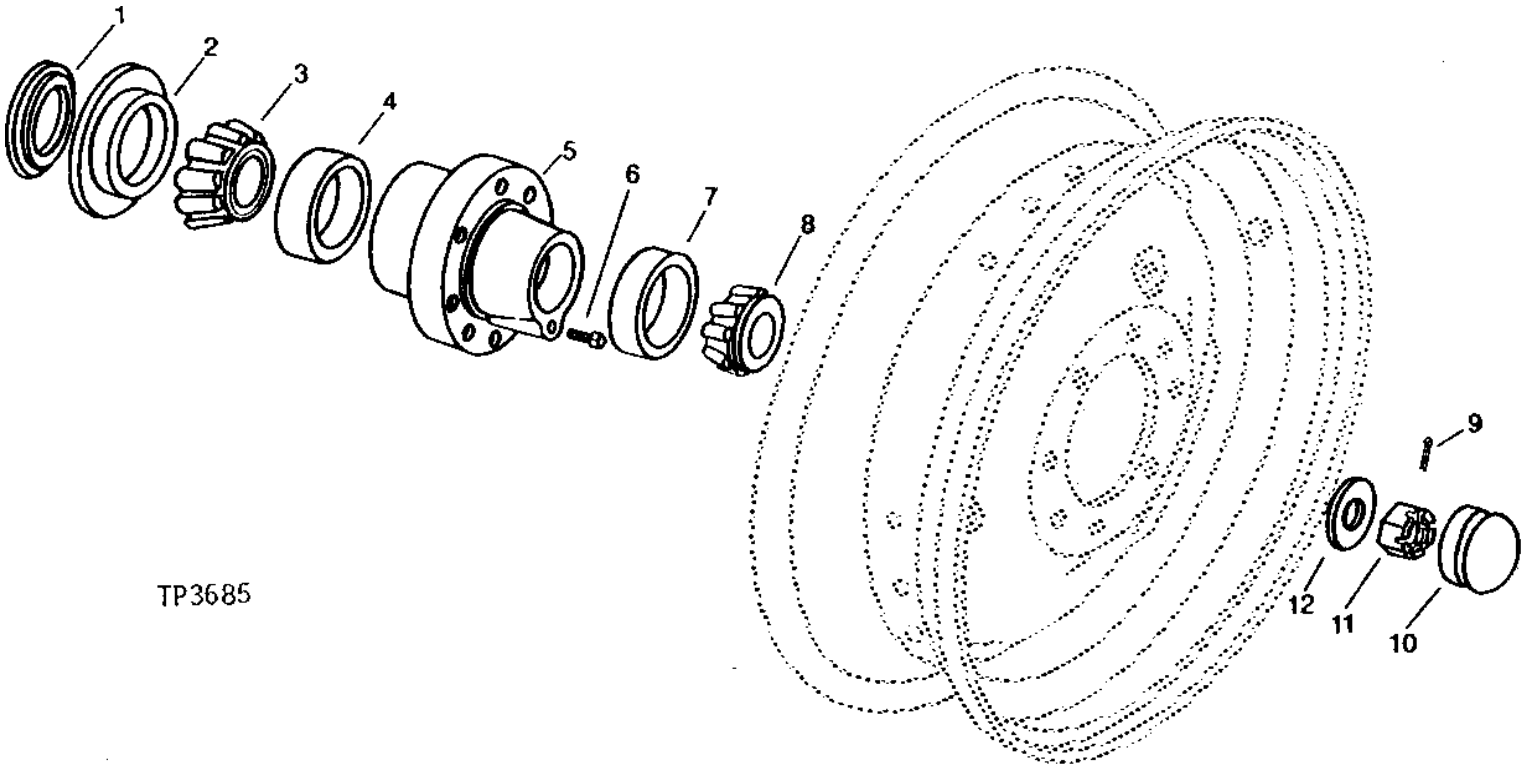

KEY	PART NO.	PART NAME	QTY	SERIAL NO.	REMARKS
1	AR27806	SEAL	1		
2	R28574	SEAL	1		
3	JD8961	BEARING CONE	1		
4	JD7444	BEARING CUP	1		
5	R63556	HUB	1		
6	22H841	SET SCREW	1		1/4" X 1/4"
7	JD7266	TAPERED ROLLER BEARING	1		
8	JD10190	BEARING CONE	1		
9	11M7030	COTTER PIN	1		5 X 40 MM
10	DT2127W	CAP	1		
11	14M7213	NUT	1		M24
12	T75506	WASHER	1		

STANDARD FRONT AXLE
(WITHOUT MECHANICAL FRONT WHEEL DRIVE)
(SERIAL NO. 911132-)

T161375 -UN-20DEC02

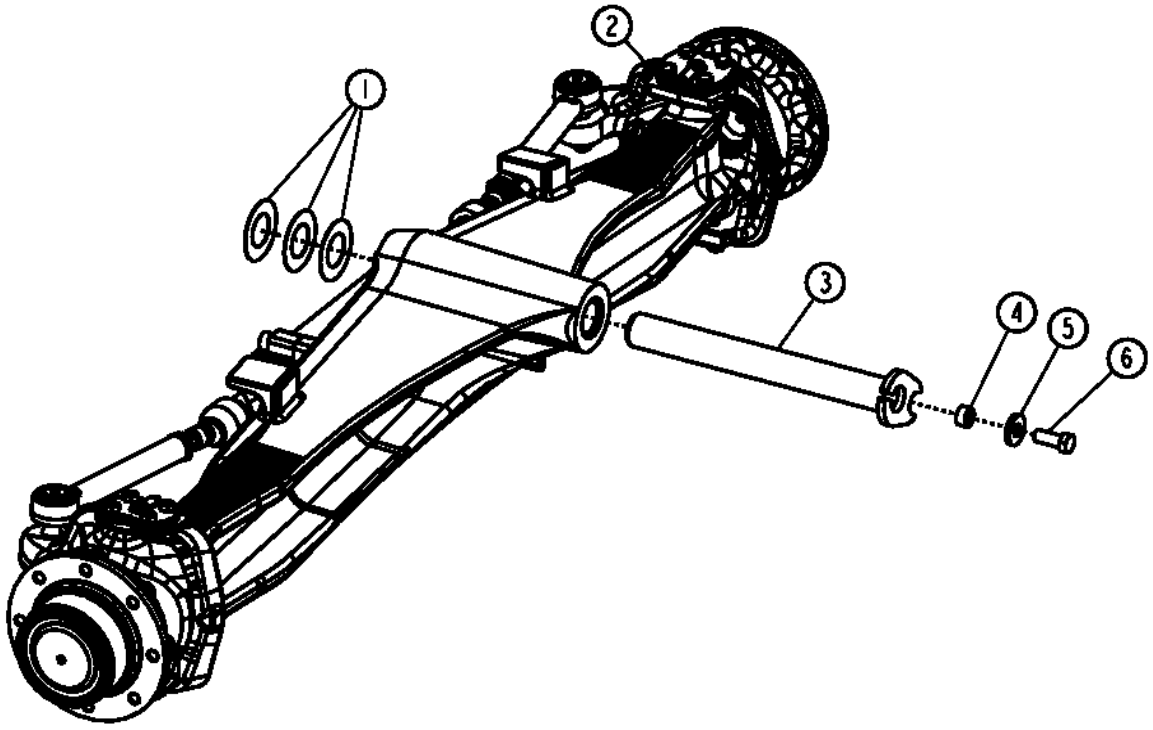

T161375

KEY	PART NO.	PART NAME	QTY	TRACTOR SERIAL NO.	REMARKS
1	R46973	THRUST WASHER	3		
2	AT196429	FRONT AXLE	1		
3	AT164442	PIN	1		
4	T18145	BUSHING	1		
5	T119912	WASHER	1		
6	19M8035	CAP SCREW	1		M16 X 35
7	T18145	BUSHING	1		
8	T119912	WASHER	1		
9	19M7488	CAP SCREW	1		M16 X 40
10	AT195136	AXLE	1		CONVENIENCE ASSEMBLY

STANDARD FRONT AXLE HOUSING
(WITHOUT MECHANICAL FRONT WHEEL DRIVE)
(SERIAL NO. 911132-)

T161376 -UN-13NOV02

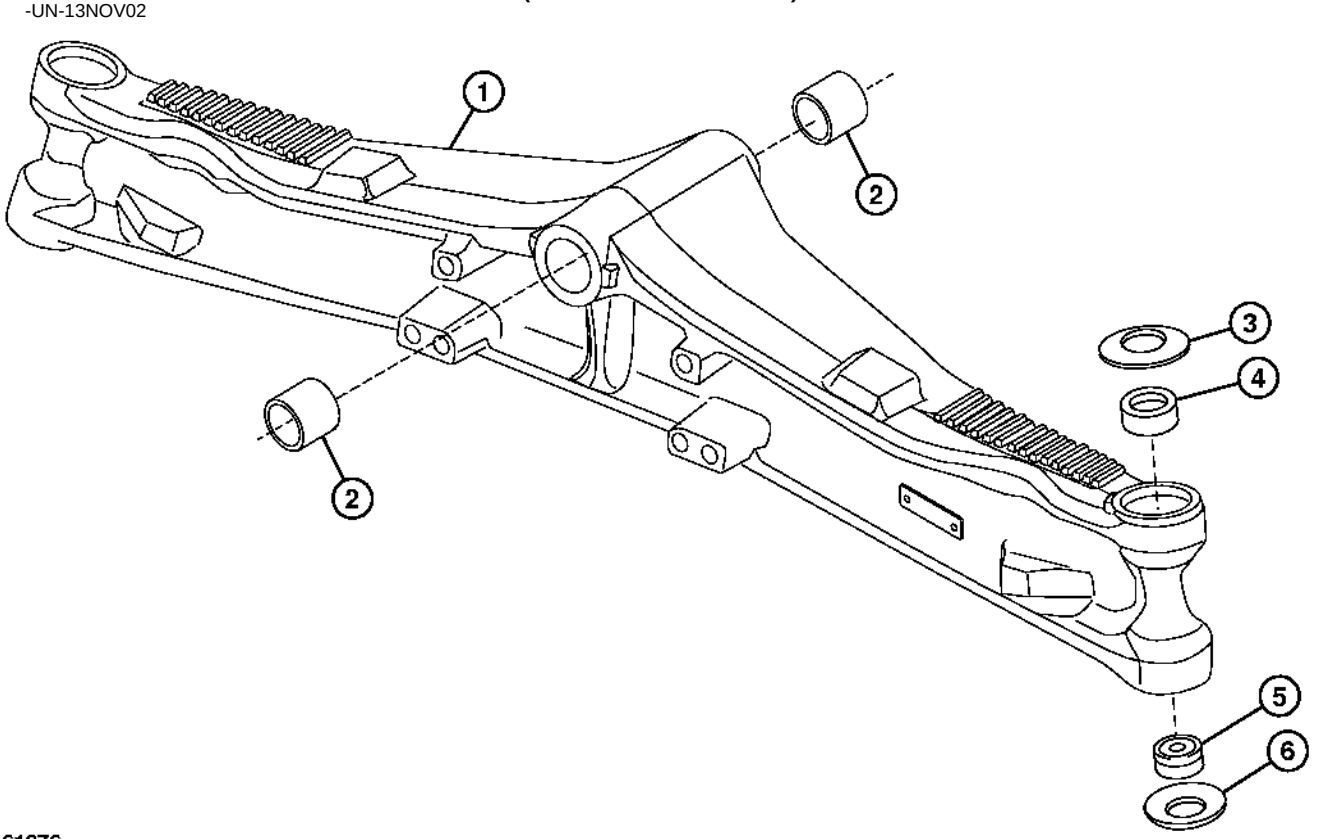

T161376

KEY	PART NO.	PART NAME	QTY	TRACTOR SERIAL NO.	REMARKS
1	T190750	AXLE	1		
2	T140211	BUSHING	2		
3	R121593	WASHER	2		
4	R113780	BUSHING	2		
5	RE45896	BEARING	2		
6	19M8035	CAP SCREW	1		M16 X 35

SWIVEL HOUSINGS AND STEERING CYLINDER
(WITHOUT MECHANICAL FRONT WHEEL DRIVE)
(SERIAL NO. 911132-)

T161377 -UN-19DEC02

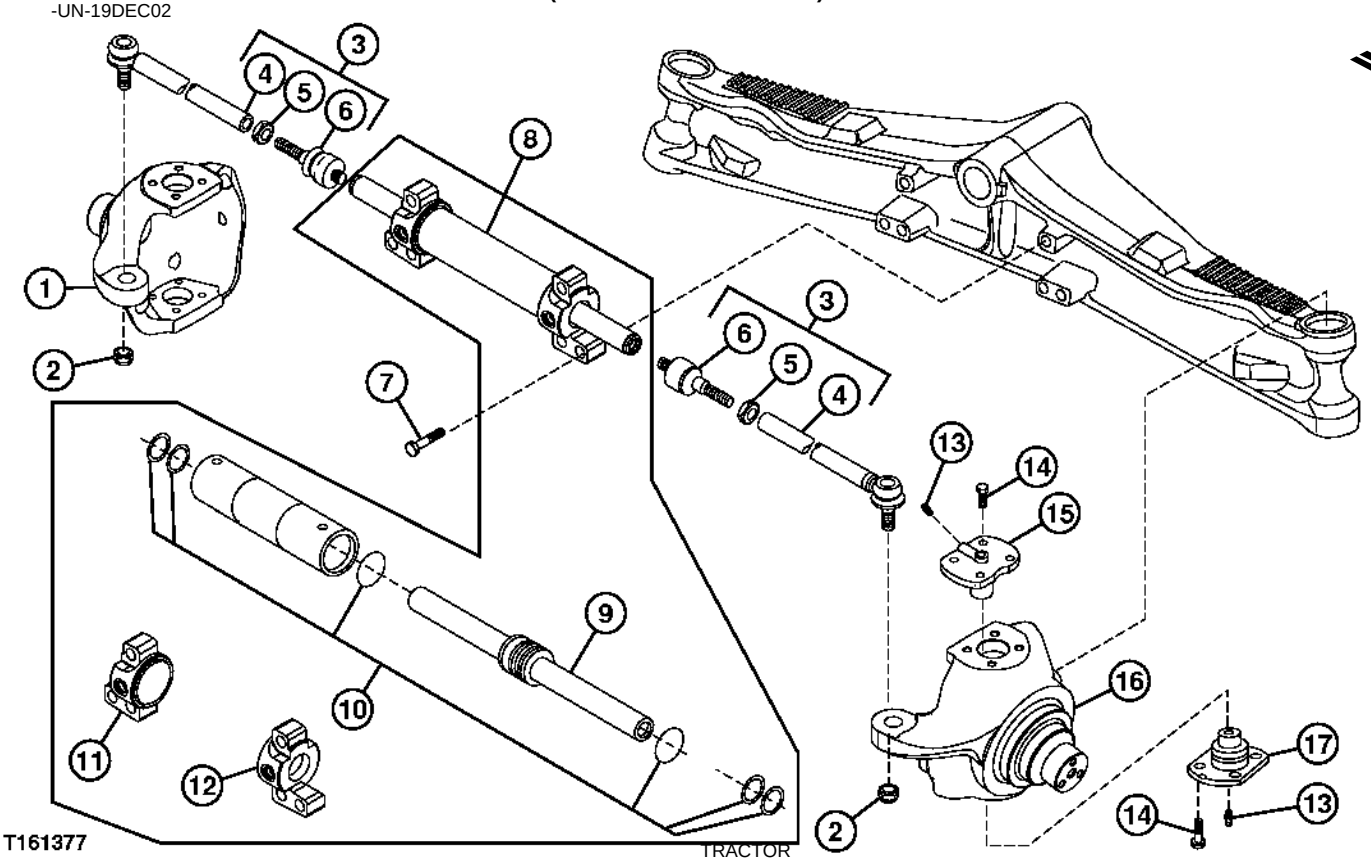

KEY	PART NO.	PART NAME	QTY	TRACTOR SERIAL NO.	REMARKS
1	T190745	HOUSING	1		L.H.
2	AT280268	LOCK NUT	2		M20
3	AT198602	TIE ROD	2		
4	T191428	TIE ROD	2		
5	14M7309	NUT	2		M24
6	T191427	BALL JOINT	2		
7	T116290	BOLT	6		M20 X 80
8	AT198603	CYLINDER	1		
9	AT280868	ROD	1		
10	T191429	SEAL KIT	1		
11	.....	HYDRAULIC CYLINDER CAP	1		L.H.
12	.....	HYDRAULIC CYLINDER CAP	1		R.H.
13	R140070	LUBRICATION FITTING	4		
14	19M8011	CAP SCREW	16		M12 X 30
15	RE57471	TRUNNION	2		
	R122218	SPACER	AR		
16	T190746	HOUSING	1		R.H.
17	RE57472	TRUNNION	2		

WHEEL HUB
(WITHOUT MECHANICAL FRONT WHEEL DRIVE)
(SERIAL NO. 911132-)

T161378 -UN-13NOV02

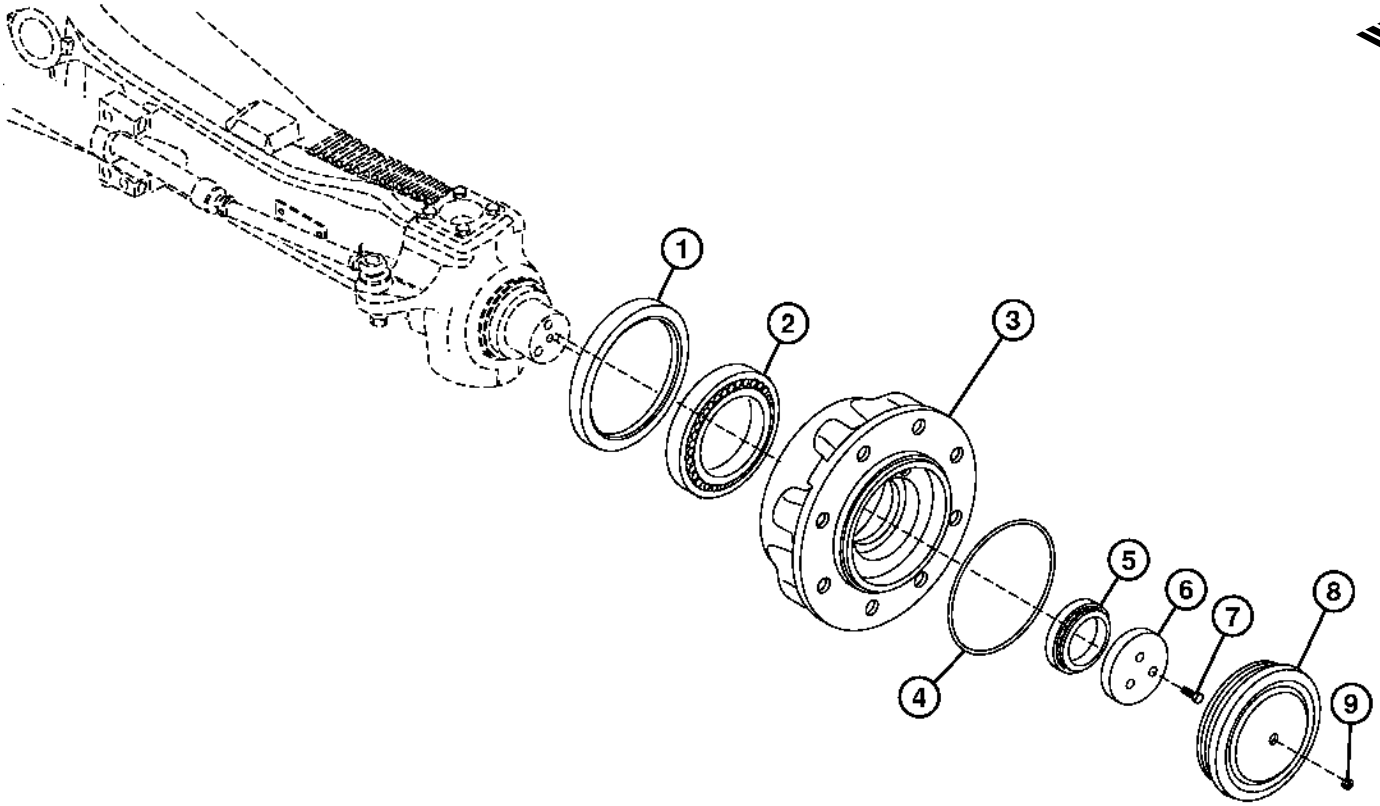

T161378

KEY	PART NO.	PART NAME	QTY	TRACTOR SERIAL NO.	REMARKS
1	AT280866	SEAL	2		
2	AT196169	BEARING	2		
3	T190749	HUB	2		
4	T188441	O-RING	2		
5	JD10063	TAPERED ROLLER BEARING	2		
6	T188442	RING	2		
7	19M8011	CAP SCREW	6		M12 X 30
8	T188448	CAP	2		
9	R121079	PLUG	2		

MEMORANDA

FRONT AXLE
(WITH MECHANICAL FRONT WHEEL DRIVE)

TP57965 -UN-11NOV98

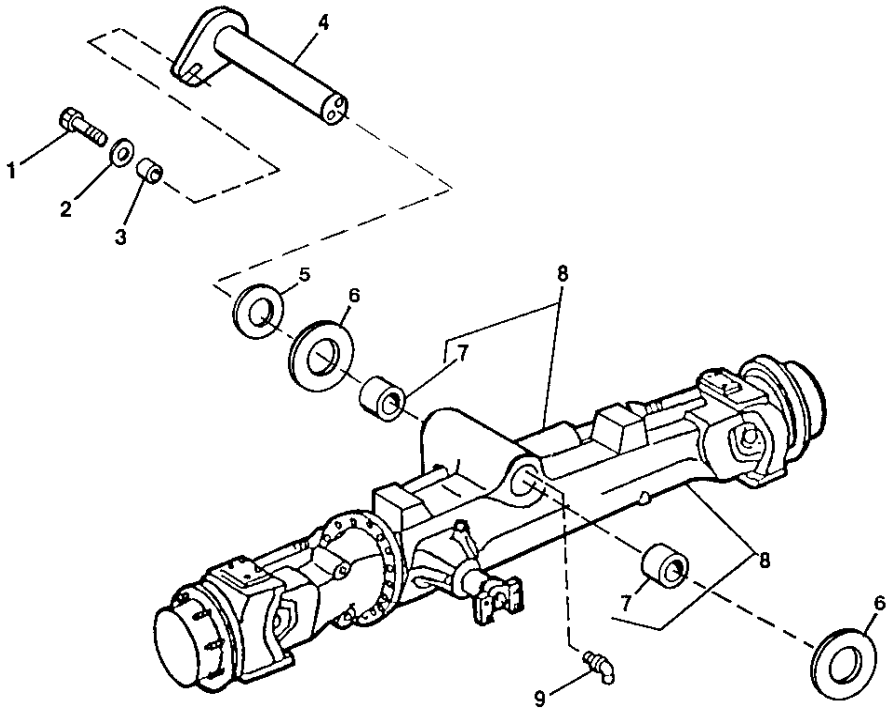

TP57965

KEY	PART NO.	PART NAME	QTY	TRACTOR SERIAL NO.	REMARKS
1	19M7488	CAP SCREW	1		M16 X 40
2	T119912	WASHER	1		
3	T18145	BUSHING	1		
4	AT164442	PIN	1		
5	R46973	THRUST WASHER	4		
6	T80027	THRUST WASHER	2		
7	T140211	BUSHING	2		
8	AT171135	FRONT AXLE	1	-911131	CONVENIENCE ASSEMBLY
	AT280333	FRONT AXLE	1	911132-	CONVENIENCE ASSEMBLY
9	JD7838	ADAPTER	2		

DRIVE SHAFT
(WITH MECHANICAL FRONT WHEEL DRIVE)

TP57917 -UN-10SEP98

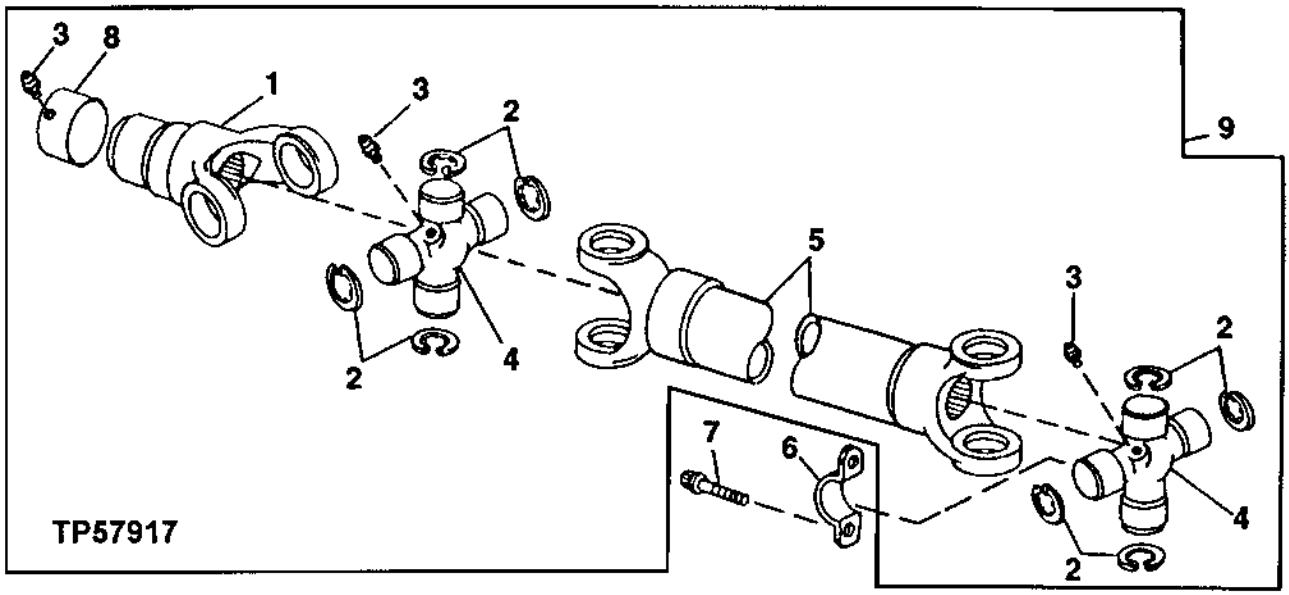

KEY	PART NO.	PART NAME	QTY	SERIAL NO.	REMARKS
1	AT179596	YOKE	1		
2	N119316	SNAP RING	6		
3	JD7797	LUBRICATION FITTING	1		
4	AT178387	KIT	2		(U-JOINT) GREASEABLE
	AT178389	KIT	2		(U-JOINT) LUBED OF LIFE
5	.....	DRIVE SHAFT	1		
6	T69938	HALF CLAMP	2		
7	T113128	CAP SCREW	4		
8	AT179590	SEAL	1		(SLIDING YOKE)
9	AT182735	UNIVERSAL DRIVESHAFT	1		LUBED FOR LIFE

FRONT AXLE HOUSING AND TIE RODS
(WITH MECHANICAL FRONT WHEEL DRIVE)

TP58193 -UN-22MAR00

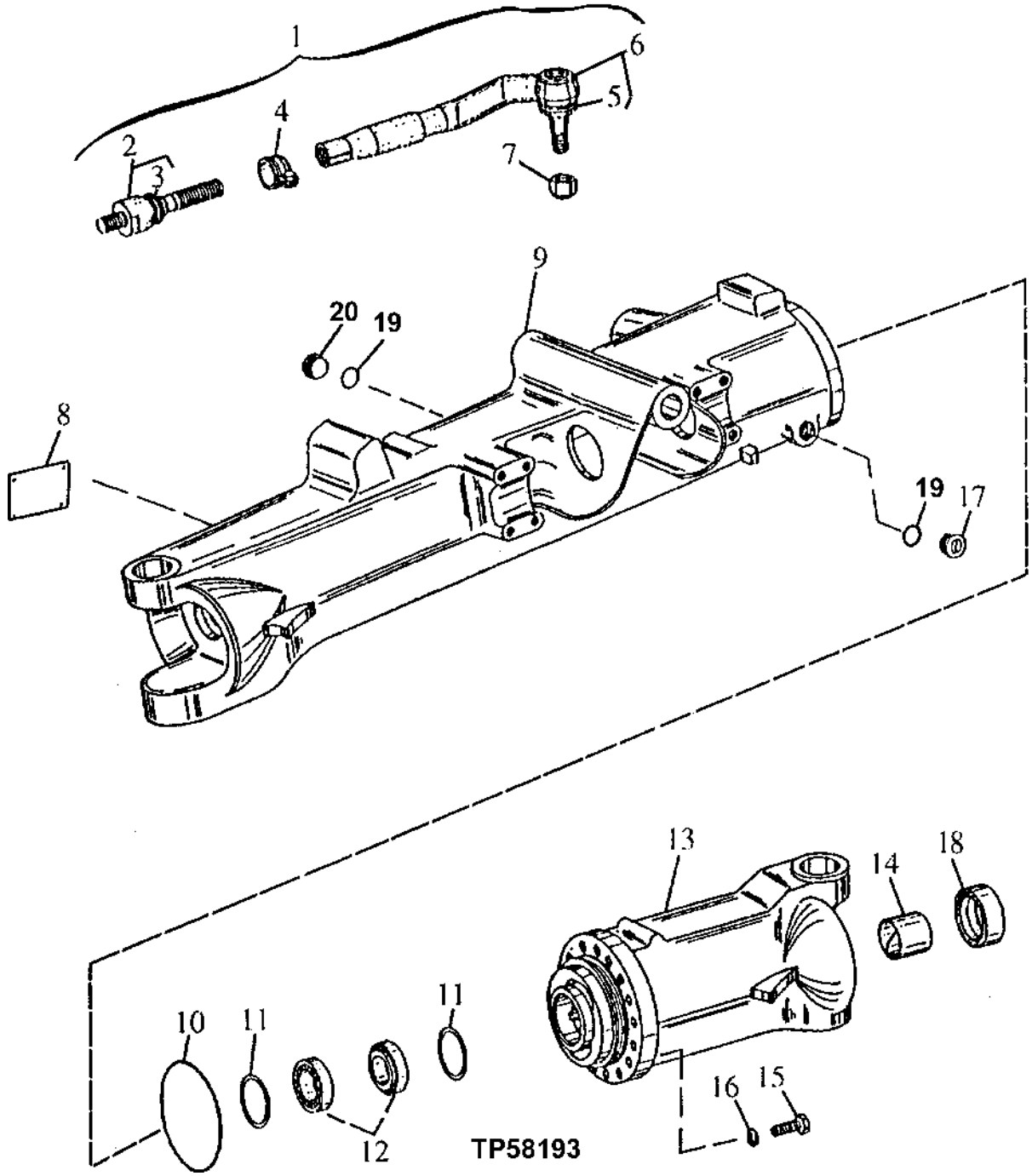

FRONT AXLE HOUSING AND TIE RODS
(WITH MECHANICAL FRONT WHEEL DRIVE)

KEY	PART NO.	PART NAME	QTY	SERIAL NO.	REMARKS
1	AT170205	TIE ROD	1		L.H.
	AT170204	TIE ROD	1		R.H. (NOT ILLUSTRATED)
2	AL80542	TIE ROD	1		END
3	AL113451	BOOT	1		
4	AT170209	CLAMP	1		
5	AL113460	BOOT	1		
6	AT170206	TIE ROD	1		L.H.
	AT170208	TIE ROD	1		R.H. (NOT ILLUSTRATED)
7	14M7513	LOCK NUT	1		M22
8	.....	SERIAL NUMBER PLATE	1		
9	T151262	HOUSING	1		R.H.
10	L40306	O-RING	1		
11	L100141	WASHER	AR		1.15MM (0.0453")
	L100145	WASHER	AR		1.35MM (0.0531")
	L61263	WASHER	AR		1.50MM (0.0591")
	L61267	WASHER	AR		1.70MM (0.0669)
	L61271	WASHER	AR		1.90MM (0.0748")
	L61275	WASHER	AR		2.10MM (0.0827")
	T183518	SOLID SHIM	AR		2.65MM
	T183519	SOLID SHIM	AR		2.70MM
	T183520	SOLID SHIM	AR		2.75MM
	T183521	SOLID SHIM	AR		2.80MM
	T183522	SOLID SHIM	AR		2.85MM
	T183523	SOLID SHIM	AR		2.90MM
	T183524	SOLID SHIM	AR		2.95MM
	T183525	SOLID SHIM	AR		3.00MM
	T183526	SOLID SHIM	AR		3.10MM
	T183527	SOLID SHIM	AR		3.35MM
	T183528	SOLID SHIM	AR		3.40MM
12	AL79808	TAPERED ROLLER BEARING	2		
13	T151089	HOUSING	1		L.H.
14	L114558	BUSHING	2		
15	T151261	CAP SCREW	15		
16	L40014	WASHER	15		
17	L56822	PIPE PLUG	1		
18	T116820	SEAL	2		
19	L55580	O-RING	2		
20	15M7030	PIPE PLUG	1		

FRONT AXLE HOUSINGS,HUBS AND UNIVERSAL JOINTS
(WITH MECHANICAL FRONT WHEEL DRIVE)

T144555 -UN-14AUG01

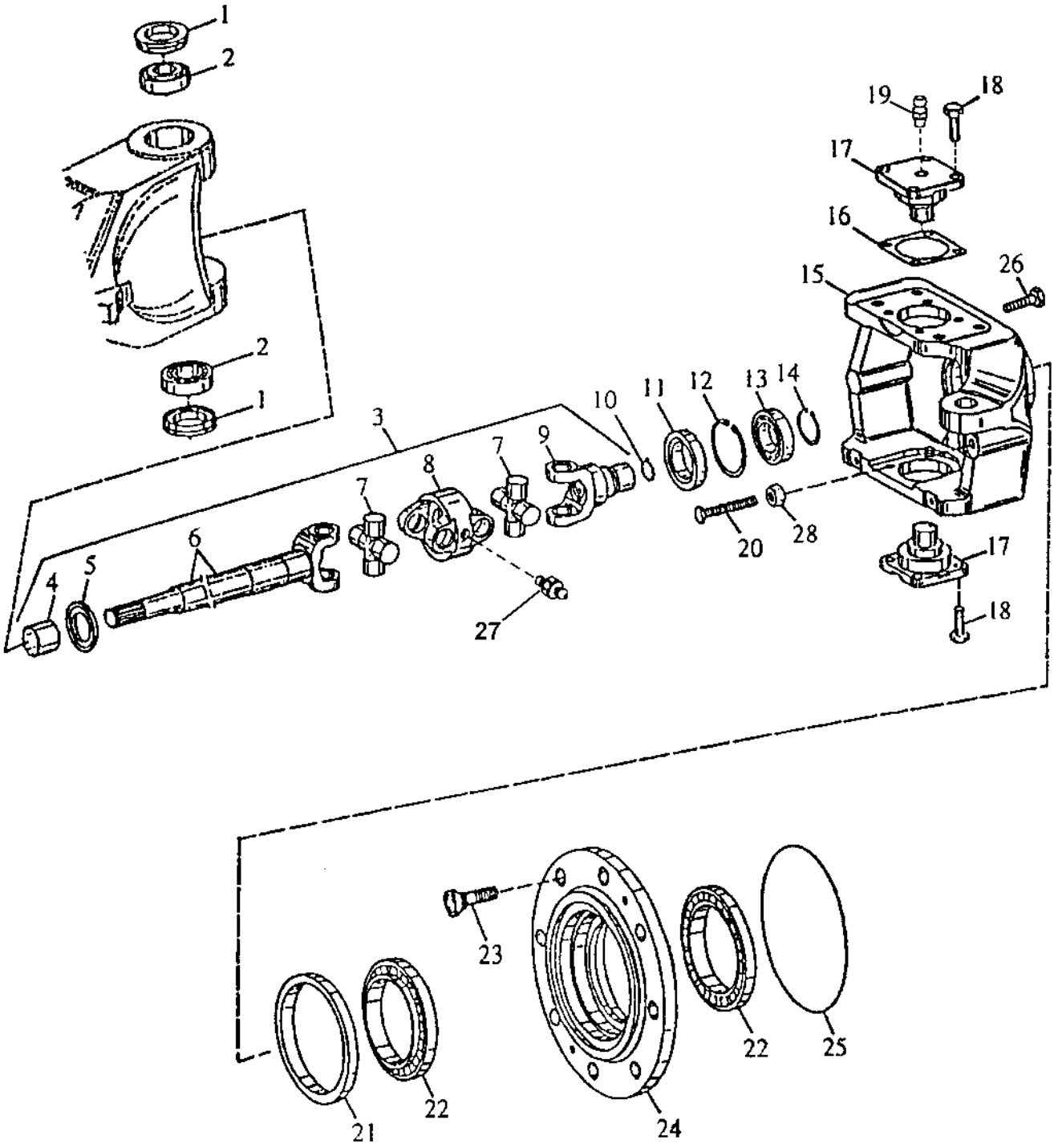

T144555

FRONT AXLE HOUSINGS,HUBS AND UNIVERSAL JOINTS
(WITH MECHANICAL FRONT WHEEL DRIVE)

KEY	PART NO.	PART NAME	QTY	SERIAL NO.	REMARKS
1	AL79902	SEAL	2		
2	AL79901	TAPERED ROLLER BEARING	2		
3	AT167118	UNIVERSAL DRIVESHAFT	1		L.H.
	AT167119	UNIVERSAL DRIVESHAFT	1		R.H. (NOT ILLUSTRATED)
4	L100636	BUSHING	1		
5	L100635	SHEET	1		
6	T153722	SHAFT	1		L.H.
	T153721	SHAFT	1		R.H. (NOT ILLUSTRATED)
7	L100632	UNIVERSAL JOINT CROSS	2		
8	L100633	YOKE	1		
9	T153720	UNIVERSAL JOINT	1		
10	L40276	SNAP RING	1		
11	AL79951	SEAL	1		
12	40M5099	SNAP RING	1		
13	R115119	BEARING	1		
14	T151264	SNAP RING	1		
15	T151088	HOUSING	1		L.H.
	T151087	HOUSING	1		R.H. (NOT ILLUSTRATED)
16	L100102	SHIM	AR		0.2 MM
	L100103	SHIM	AR		0.3 MM
	L100104	SHIM	AR		0.4 MM
	T166150	SHIM	AR		0.5 MM
	L100105	SHIM	AR		0.6 MM
	T166149	SHIM	AR		0.7 MM
	L100106	SHIM	AR		0.8 MM
	T166145	SHIM	AR		0.9 MM
	L100107	SHIM	AR		1.0 MM
	T166148	SHIM	AR		1.1 MM
	T166147	SHIM	AR		1.2 MM
	T166146	SHIM	AR		1.3 MM
	L100109	SHIM	AR		1.6 MM
	L100111	SHIM	AR		2.0MM
17	T188397	PIN	2		(SUB FOR T151074, THIS APPLICATION) (ALSO ORDER 58M5573)
18	19M8011	CAP SCREW	8		
19	58M5573	LUBRICATION FITTING	2		
20	L100239	SCREW	1		
21	AL79950	SEAL	1		
22	JD10249	TAPERED ROLLER BEARING	2		
23	L55598	WHEEL BOLT	8		
24	L100238	HUB	1		
25	L40317	O-RING	1		
26	19M8738	CAP SCREW	8		M10 X 45
27	58M5574	LUBRICATION FITTING	2		
28	14M7345	NUT	1		M14

PLANETARY DRIVE
(WITH MECHANICAL FRONT WHEEL DRIVE)

TP57921 -UN-04SEP98

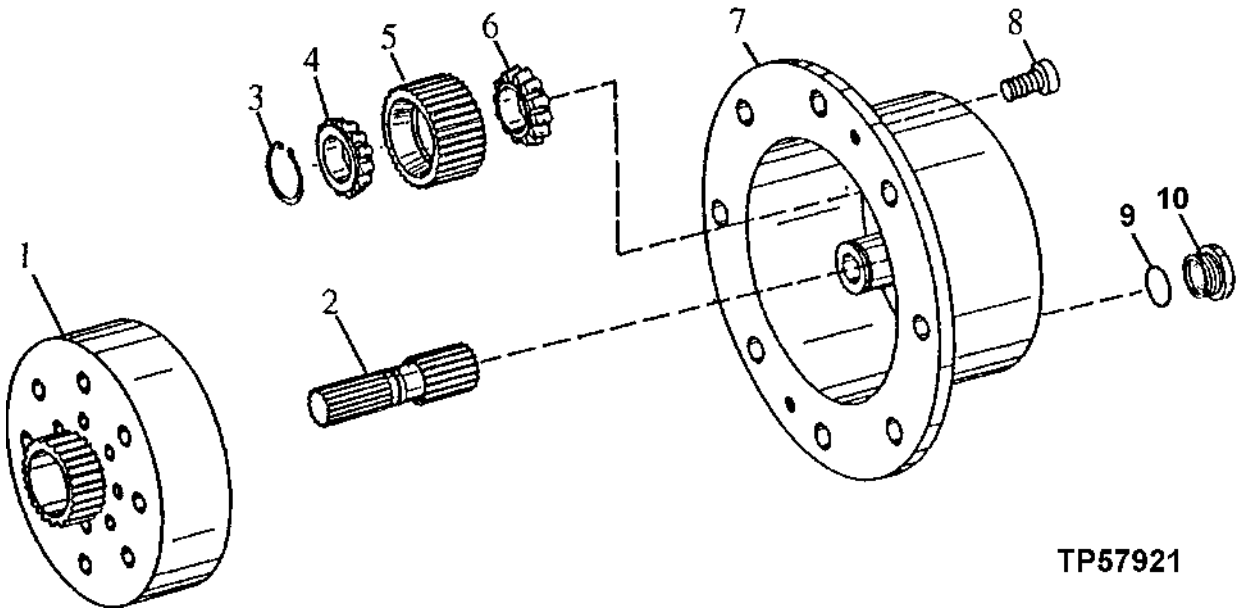

KEY	PART NO.	PART NAME	QTY	SERIAL NO.	REMARKS
1	L79729	RING GEAR	1		
2	T151085	SUN GEAR	1		
3	L100169	SNAP RING	3		
4	AL117021	ROLLER BEARING	3		(SUB FOR AL81853)
5	T165415	PLANET PINION	3		(SUB FOR L100241, THIS APPLICATION)
6	AL117022	ROLLER BEARING	3		(SUB FOR AL81854)
7	T165416	PLANET PINION CARRIER	1		
8	19M5039	SCREW	2		M10 X 20
9	L55580	O-RING	1		
10	L100240	DRAIN PLUG	1		

MEMORANDA

LIMITED SLIP DIFFERENTIAL
(WITH MECHANICAL FRONT WHEEL DRIVE)

TP44518 -UN-01JAN94

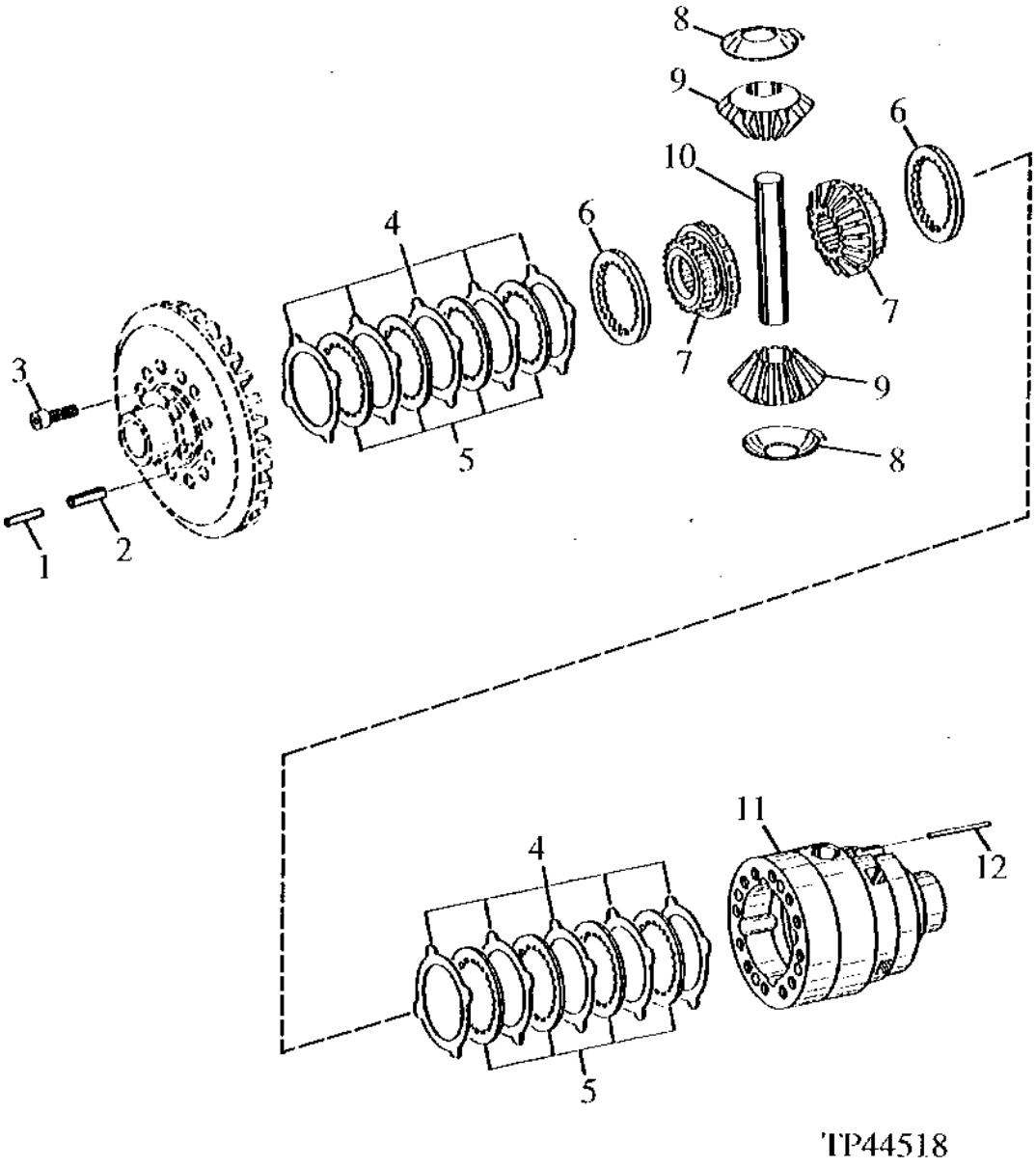

TP44518

LIMITED SLIP DIFFERENTIAL
(WITH MECHANICAL FRONT WHEEL DRIVE)

KEY	PART NO.	PART NAME	QTY	SERIAL NO.	REMARKS
1	34M7110	SPRING PIN	4		8 X 26 MM
2	L100158	SPRING PIN	4		
3	19M8533	SCREW	12		(SUB FOR T151077)
4	L100150	DISK, WITH OUTER SPLINE	10		1.0MM (0.0394")
	L100151	DISK, WITH OUTER SPLINE	10		1.1MM (0.0433")
	L100152	DISK, WITH OUTER SPLINE	10		1.2MM (0.0472")
5	L100153	DISK, WITH INNER SPLINE	8		
6	L100154	THRUST WASHER	2		
7	T151075	BEVEL GEAR DRIVE	2		
8	L60103	THRUST WASHER	2		
9	T116851	BEVEL GEAR	2		
10	L60104	PIN FASTENER	1		
11	L112197	HOUSING	1		(ALSO ORDER 34M5723) (SUB FOR T151080)
12	34M5723	SPRING PIN	1		5 X 55 MM

SPIRAL BEVEL GEAR AND INPUT FLANGE
(WITH MECHANICAL FRONT WHEEL DRIVE)

TP44517 -UN-01JAN94

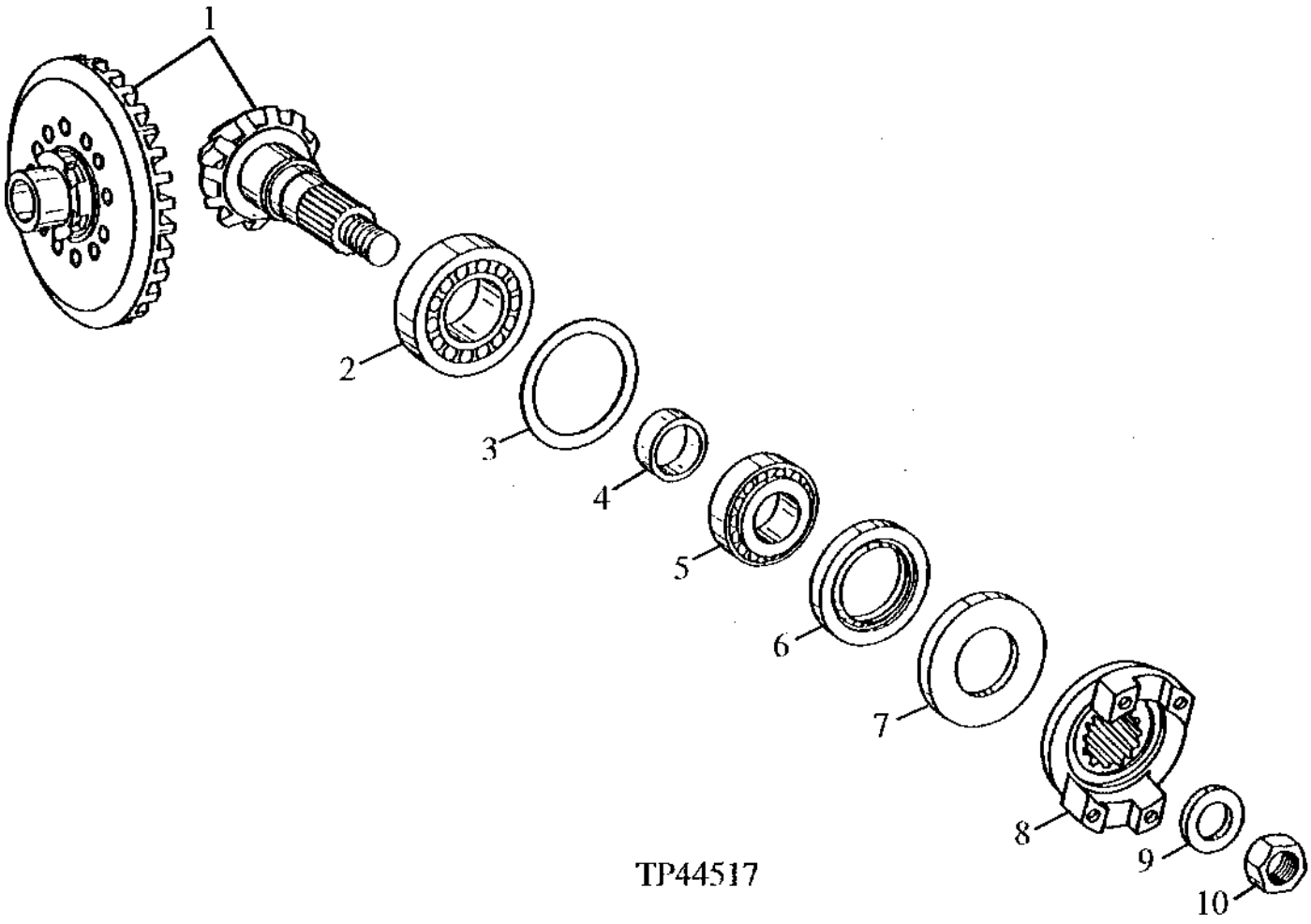

SPIRAL BEVEL GEAR AND INPUT FLANGE
(WITH MECHANICAL FRONT WHEEL DRIVE)

KEY	PART NO.	PART NAME	QTY	SERIAL NO.	REMARKS
1	AT178002	BEVEL GEAR DRIVE	1		
2	AL79794	TAPERED ROLLER BEARING	1		
3	L55606	SHIM	AR		0.650 MM (0.026")
	L55610	WASHER	AR		72 X 88.600 X 0.850 MM (2.835" X 3.488" X 0.033")
	L40982	WASHER	AR		72 X 88.600 X 1 MM (2.835" X 3.488" X 0.039")
	L40985	WASHER	AR		72 X 88.600 X 1.150 MM (2.835" X 3.488" X 0.045")
	L40988	WASHER	AR		72 X 88.600 X 1.300 MM (2.835" X 3.488" X 0.051")
	L40991	WASHER	AR		72 X 88.600 X 1.450 MM (2.835" X 3.488" X 0.057")
	L40994	WASHER	AR		72 X 88.600 X 1.600 MM (2.835" X 3.488" X 0.063")
4	L100057	SPACER	AR		15.10MM (0.5945")
	L100092	SPACER	AR		15.33MM (0.6035")
	L100060	SPACER	AR		15.40MM (0.6063")
	L100089	SPACER	AR		15.46MM (0.6089")
	L100096	SPACER	AR		15.48MM (0.6094")
	L100086	SPACER	AR		15.63MM (0.6154")
	T183508	SPACER	AR		15.69MM
	L100063	SPACER	AR		15.70MM (0.6181")
	T183509	SPACER	AR		15.72MM
	L100083	SPACER	AR		15.76MM (0.6205")
	T183510	SPACER	AR		15.78MM
	T183511	SPACER	AR		15.81MM
	T183512	SPACER	AR		15.84MM
	T183513	SPACER	AR		15.88MM
	T183514	SPACER	AR		15.89MM
	T183515	SPACER	AR		15.91MM
	L100080	SPACER	AR		15.93MM (0.6272)
	T183516	SPACER	AR		15.94MM
	T183517	SPACER	AR		15.97MM
	L100066	SPACER	AR		16,00MM (0.6299")
	L100077	SPACER	AR		16.06MM (0.6323")
	L100074	SPACER	AR		16.23MM (0.6390")
	L100069	SPACER	AR		16.30MM (0.6417")
5	AL111096	BEARING	1		
6	AT113921	SEAL	1		
7	L100230	GUARD	1		
8	T151072	FLANGE	1		
9	L35714	WASHER	1		
10	14M7498	LOCK NUT	1		M24

TRANSMISSION CONTROL LEVER

T135287 -UN-08NOV00

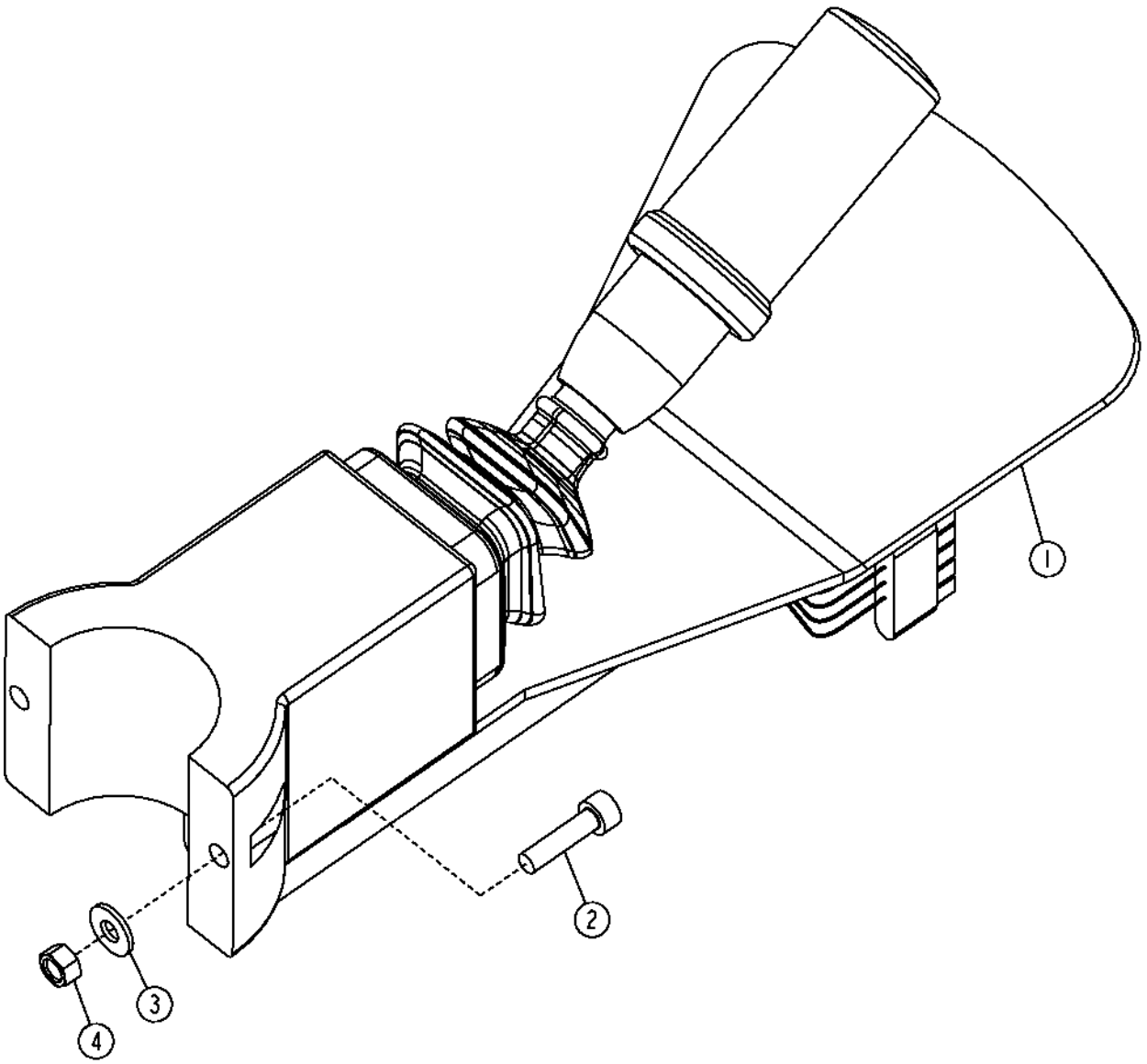

T135287

TRANSMISSION CONTROL LEVER

KEY	PART NO.	PART NAME	QTY	SERIAL NO.	REMARKS
1	AT182520	SWITCH	1		
2	19M8581	SCREW	2		M5 X 20
3	24H1283	WASHER	2		
4	14M7297	NUT	2		M5

MEMORANDA

REAR DRIVESHAFT AND UNIVERSAL JOINTS

TP50532 -UN-20NOV96

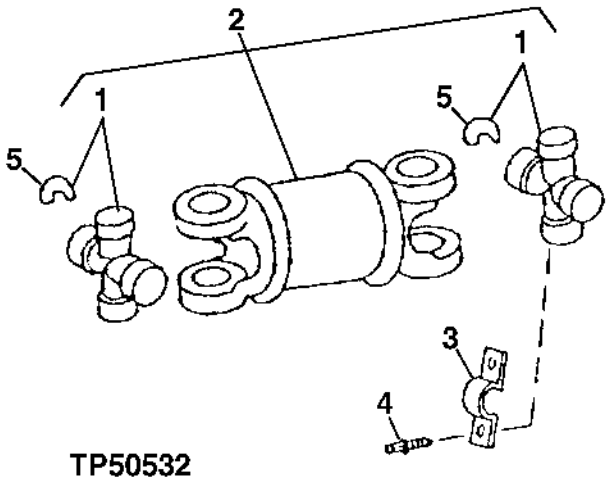

TP50532

KEY	PART NO.	PART NAME	QTY	SERIAL NO.	REMARKS
1	AT178390	UNIVERSAL JOINT CROSS	2		
2	AT179065	REVERSER	1		POWER-SHIFT
3	T69938	HALF CLAMP	4		
4	T113128	CAP SCREW	8		
5	N119316	SNAP RING	4		

TRANSMISSION HOUSING
POWER SHIFT

T145277 -UN-07SEP01

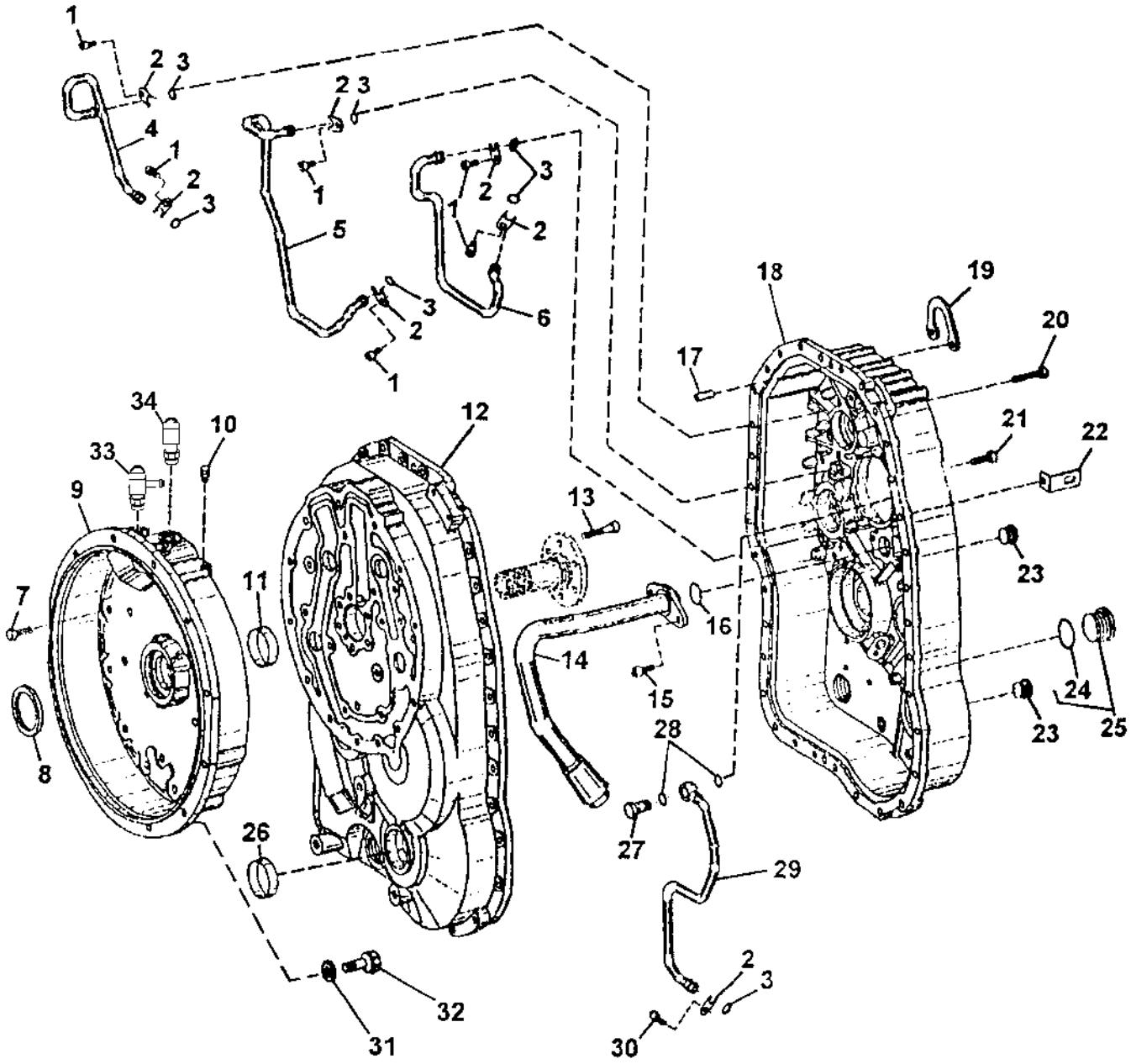

T145277

TRANSMISSION HOUSING
POWER SHIFT

KEY	PART NO.	PART NAME	QTY	SERIAL NO.	REMARKS
1	T164648	CAP SCREW	6		
2	T164573	PLATE	6		
3	T161218	O-RING	6		
4	AT184060	OIL LINE	1		
5	AT184061	OIL LINE	1		
6	AT184062	OIL LINE	1		
7	T164660	SCREW	24		
8	AT179316	SEAL	1		
9	T164659	HOUSING	1		
10	T116918	BREATHER	1		
11	T164665	BUSHING	1		
12	T164657	HOUSING	1		FRONT, (ALSO ORDER T159683)
13	T164666	CAP SCREW	6		
14	AT184059	PIPE	1		
15	T161182	CAP SCREW	2		
16	T161181	O-RING	1		
17	T164662	PIN	2		
18	T164658	HOUSING	1		REAR
19	T159567	PLATE	1		
20	T164661	SCREW	6		
21	T164660	SCREW	28		
22	T164671	BRACKET	2		
23	T159565	PLUG	2		
24	U13639	O-RING	1		
25	AT185791	PLUG	1		
26	T159683	COVER	1		MFWD OUTPUT SHAFT HOLE PLUG
27	T164703	CAP SCREW	1		
28	T164704	O-RING	1		
29	AT183995	OIL LINE	1		
30	T164648	CAP SCREW	1		
31	24M7239	WASHER	12		
32	19M7662	CAP SCREW	12		M10 X 30
33	AT186237	TEE FITTING	1		
34	AH64349	HOSE FITTING	1		

TRANSMISSION OIL DIPSTICK AND TUBE

TP52798 -UN-01NOV96

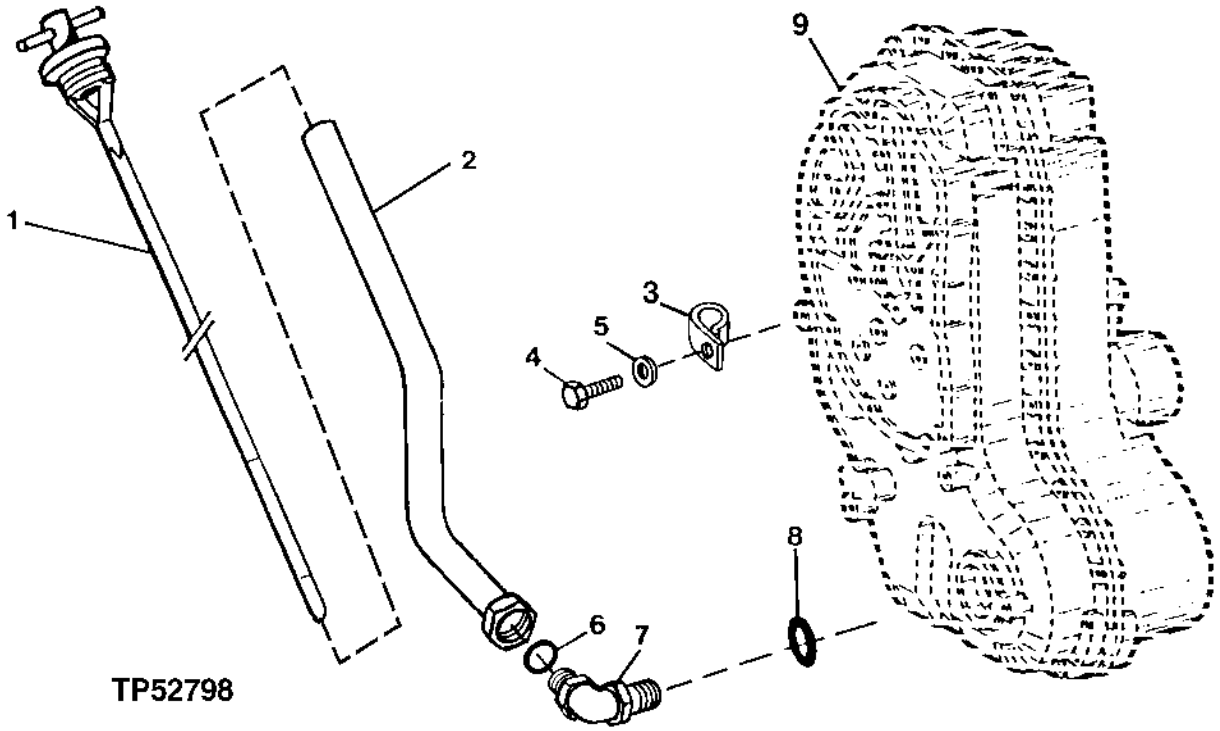

KEY	PART NO.	PART NAME	QTY	SERIAL NO.	REMARKS
1	AT174898	DIPSTICK	1		
2	AT174365	DIPSTICK TUBE	1		
3	T26955	CLAMP	1		
4	19M7938	CAP SCREW	1		M10 X 20
5	24M7028	WASHER	1		
6	T78612	O-RING	1		
7	38H1050	ELBOW FITTING	1		
8	U13639	O-RING	1		
9	AT178731	TRANSMISSION	1		POWER SHIFT (CONVENIENCE ASSEMBLY) (WITH MFWD)(ALSO INCLUDES TORQUE CONVERTOR, BELL HOUSING,TRANSMISSION CONTROL VALVE, TRANSMISSION SOLENOIDS,CHARGE PUMP AND OIL FILTER)
	AT178730	TRANSMISSION	1		POWER SHIFT (CONVENIENCE ASSEMBLY) (WITHOUT MFWD)(ALSO INCLUDES TORQUE CONVERTOR ,BELL HOUSING,TRANSMISSION CONTROL VALVE, TRANSMISSION SOLENOIDS,CHARGE PUMP AND FILTER AND OUTPUT SHAFT)

TORQUE CONVERTOR

TP69688 -UN-14SEP00

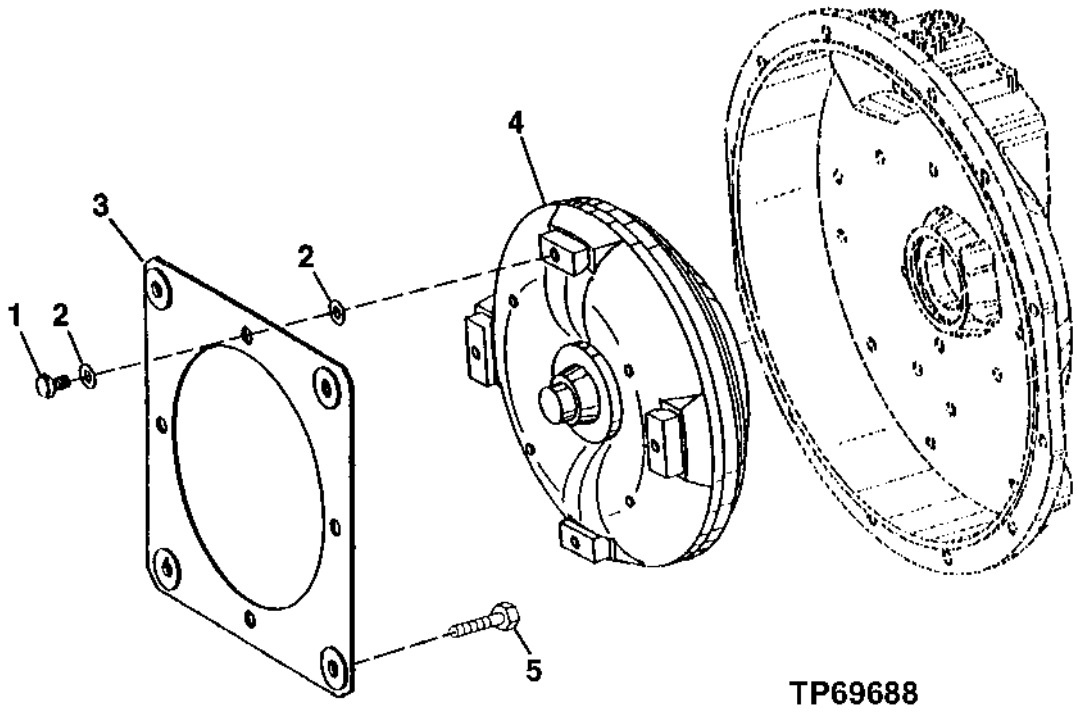

KEY	PART NO.	PART NAME	QTY	SERIAL NO.	REMARKS
1	19M8289	CAP SCREW	4		M10 X 16
2	T155324	PLATE	8		
3	AT179312	PLATE	2		
4	AT196805	TORQUE CONVERTER	1		(SUB FOR AT172908, THIS APPLICATION)
5	19M7402	CAP SCREW	4		M10 X 25

TRANSMISSION INPUT SHAFT
POWER SHIFT

TP58038 -UN-18MAY99

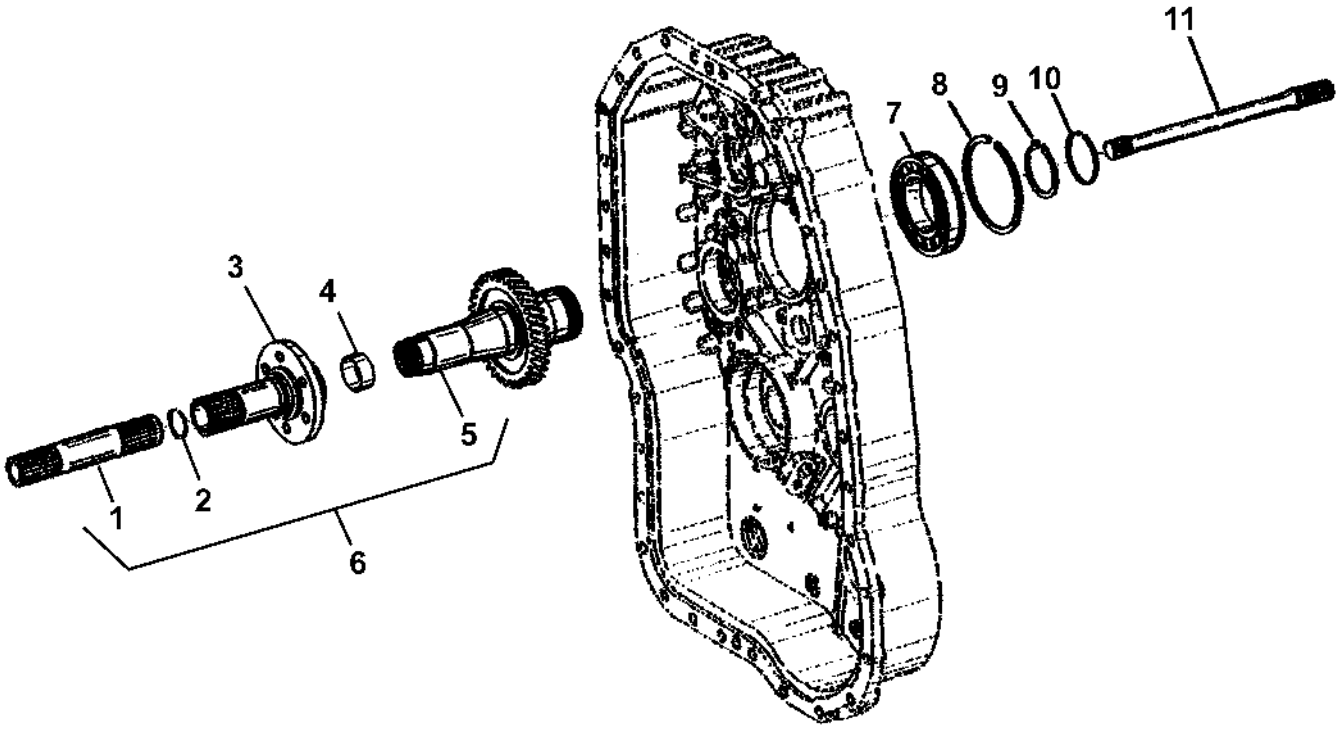

TP58038

TRANSMISSION INPUT SHAFT
POWER SHIFT

KEY	PART NO.	PART NAME	QTY	SERIAL NO.	REMARKS
1	.....	SHAFT	1		
2	T158720	SNAP RING	1		
3	T164654	SHAFT	1		
4	T164655	BUSHING	1		
5	.....	SHAFT	1		
6	AT187711	SHAFT	1		
7	AT179314	BALL BEARING	1		
8	T158717	SNAP RING	1		
9	T158718	SNAP RING	1		
10	T158740	PACKING	1		
11	T155259	SHAFT	1		

FIRST GEAR CLUTCH ASSEMBLY
POWER SHIFT

TP57927 -UN-16SEP98

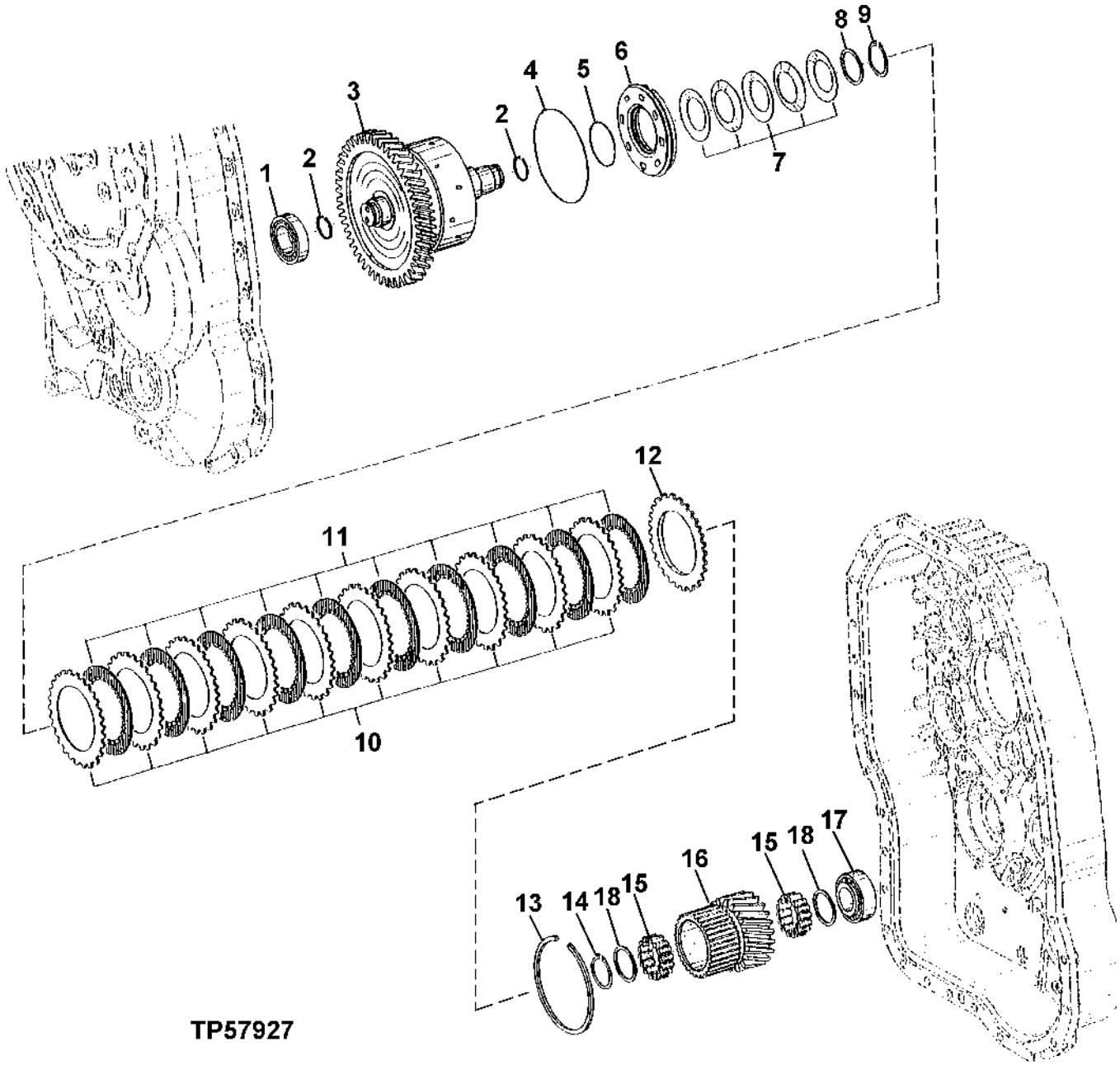

FIRST GEAR CLUTCH ASSEMBLY
POWER SHIFT

KEY	PART NO.	PART NAME	QTY	SERIAL NO.	REMARKS
1	AT179472	TAPERED ROLLER BEARING	1		
2	T158742	RING	2		
3	AT184048	DRUM	1		DISK CARRIER
4	.....	RING	1		(SUB AT193704) (T158739 NO LONGER AVAILABLE)
5	.....	RING	1		(SUB AT193704) (T158743 NO LONGER AVAILABLE)
6	AT193704	PISTON	1		(SUB FOR T158789)
7	T158775	DISK SPRING	5		
8	T164712	SHIM	1		2 MM
9	40M7058	SNAP RING	1		
10	T158801	CLUTCH PLATE	10		
11	T164626	DISK	10		
12	T161147	PLATE	1		
13	T161183	SNAP RING	1		4 MM
	T158778	SNAP RING	1		3.5 MM
	T159568	SNAP RING	1		3 MM
	T159569	SNAP RING	1		2.5 MM
	T159570	SNAP RING	1		2 MM
14	40M7058	SNAP RING	1		
15	AT185793	ROLLER	2		
16	T164640	GEAR	1		
17	AT184052	ROLLER	1		
18	T166062	THRUST WASHER	2		

SECOND GEAR CLUTCH ASSEMBLY
POWER SHIFT

TP57928 -UN-16SEP98

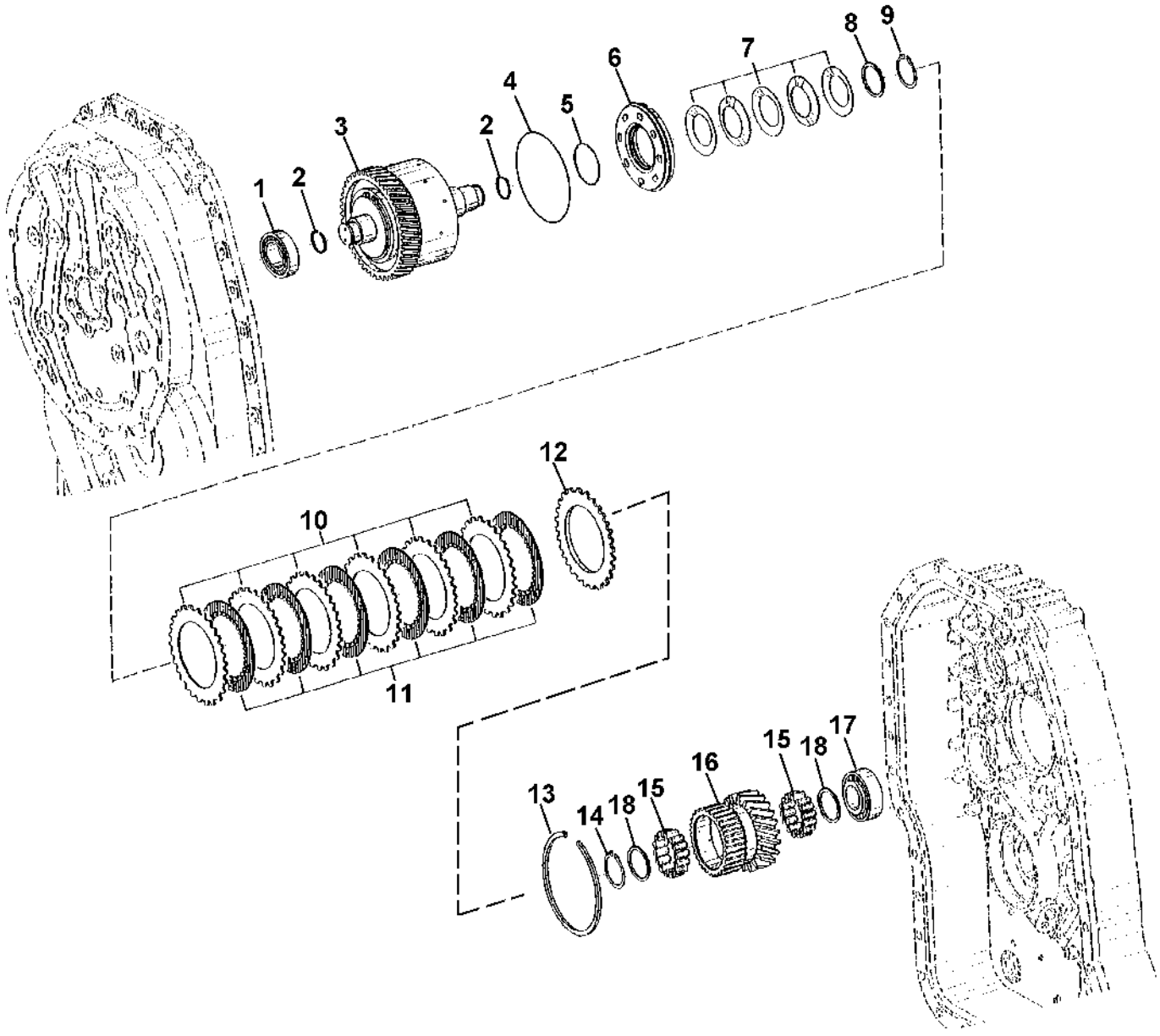

TP57928

SECOND GEAR CLUTCH ASSEMBLY
POWER SHIFT

KEY	PART NO.	PART NAME	QTY	SERIAL NO.	REMARKS
1	AT179472	TAPERED ROLLER BEARING	1		
2	T158742	RING	2		
3	AT184053	DRUM	1		DISK CARRIER
4	.....	RING	1		(SUB AT193704) (T158739 NO LONGER AVAILABLE)
5	.....	RING	1		(SUB AT193704) (T158743 NO LONGER AVAILABLE)
6	AT193704	PISTON	1		(SUB FOR T158789)
7	T158775	DISK SPRING	5		
8	T164712	SHIM	1		
9	40M7058	SNAP RING	1		2 MM
10	T158801	CLUTCH PLATE	6		
11	T164626	DISK	6		
12	T161147	PLATE	1		
13	T161183	SNAP RING	1		4 MM
	T158778	SNAP RING	1		3.5 MM
	T159568	SNAP RING	1		3 MM
	T159569	SNAP RING	1		2.5 MM
	T159570	SNAP RING	1		2 MM
14	40M7058	SNAP RING	1		
15	AT185793	ROLLER	2		
16	T164643	GEAR	1		
17	AT184052	ROLLER BEARING	1		
18	T166062	SNAP RING	2		

THIRD GEAR CLUTCH ASSEMBLY
POWER SHIFT

TP57929 -UN-18SEP98

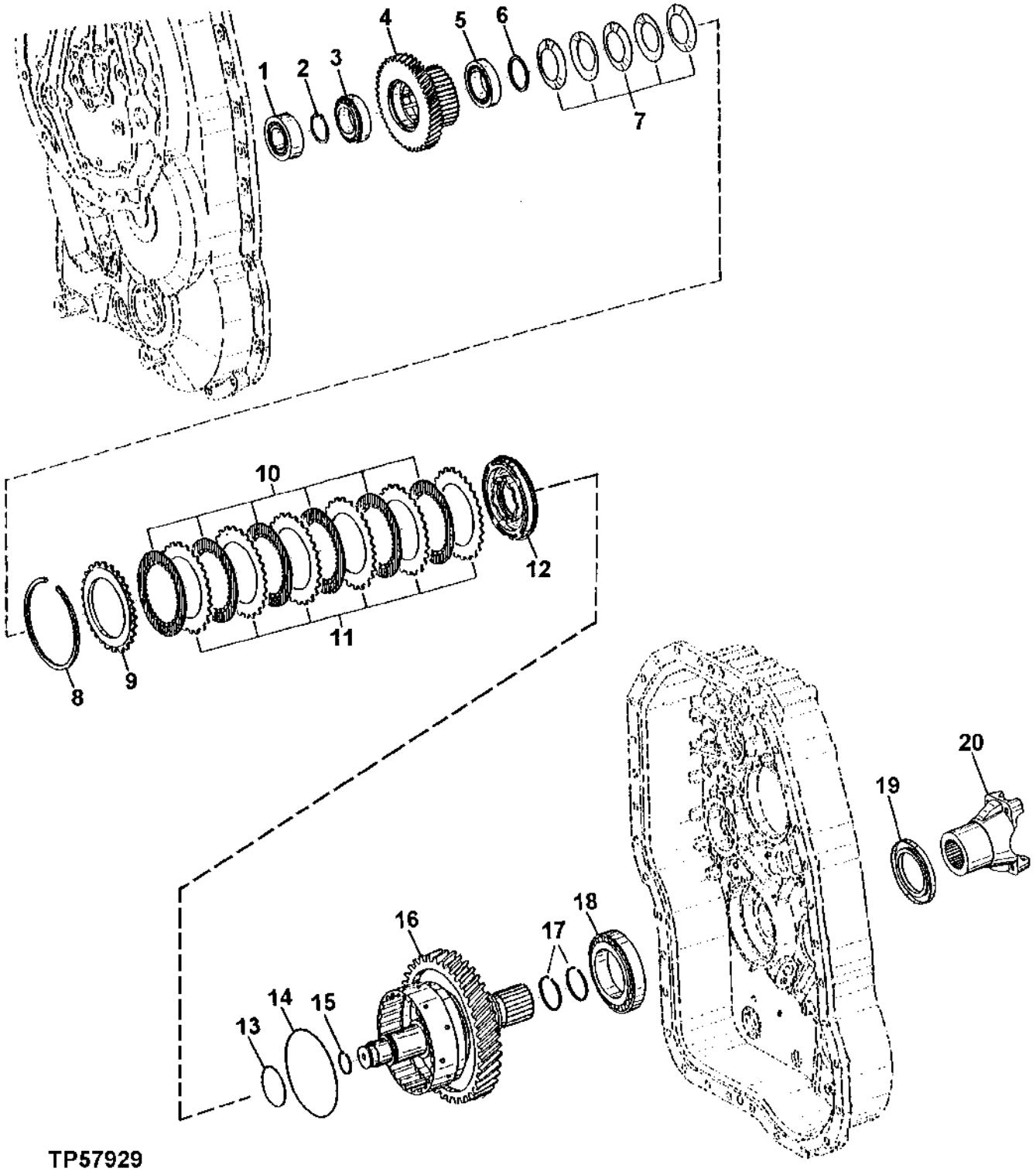

THIRD GEAR CLUTCH ASSEMBLY
POWER SHIFT

KEY	PART NO.	PART NAME	QTY	SERIAL NO.	REMARKS
1	AT184052	ROLLER BEARING	1		
2	T161186	SNAP RING	1		3.2 MM
	T161187	SNAP RING	1		3.1 MM
	T161188	SNAP RING	1		3 MM
	T161189	SNAP RING	1		2.9 MM
	T161190	SNAP RING	1		2.8 MM
	T161191	SNAP RING	1		2.7 MM
	T161192	SNAP RING	1		2.6 MM
	T161193	SNAP RING	1		2.5 MM
	T164628	SNAP RING	1		2.3 MM
	T164629	SNAP RING	1		2.2 MM
	T164630	SNAP RING	1		2.1 MM
3	AT179470	TAPERED ROLLER BEARING	1		
4	T166065	GEAR	1		
5	AT179469	TAPERED ROLLER BEARING	1		
6	T158756	WASHER	1		
7	T158775	DISK SPRING	5		
8	T161183	SNAP RING	1		4 MM
	T158778	SNAP RING	1		3.5 MM
	T159568	SNAP RING	1		3 MM
	T159569	SNAP RING	1		2.5 MM
	T159570	SNAP RING	1		2 MM
9	T161147	PLATE	1		2 MM
10	T164626	DISK	6		
11	T158801	CLUTCH PLATE	6		
12	AT193704	PISTON	1		(SUB FOR T158789)
13	.....	RING	1		(SUB AT193704) (T158743 NO LONGER AVAILABLE)
14	.....	RING	1		(SUB AT193704) (T158739 NO LONGER AVAILABLE)
15	T158742	RING	1		
16	AT184055	DRUM	1		DISK CARRIER
17	T164646	O-RING	2		
18	AT184056	ROLLER BEARING	1		
19	AT179481	SEAL	1		
20	AT177702	UNIVERSAL JOINT YOKE	1		

FOURTH GEAR CLUTCH ASSEMBLY
POWER SHIFT

TP57932 -UN-16SEP98

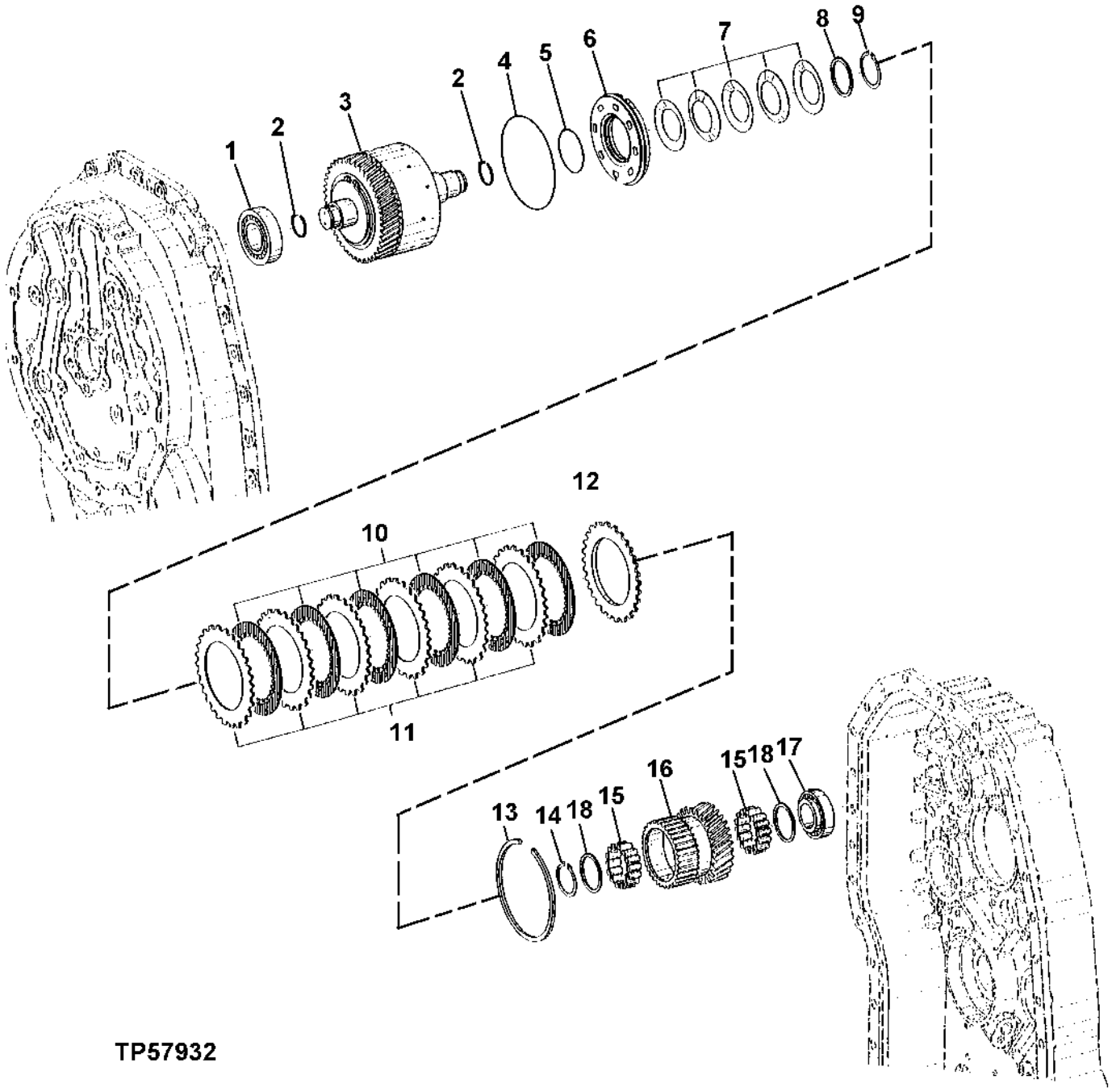

TP57932

FOURTH GEAR CLUTCH ASSEMBLY
POWER SHIFT

KEY	PART NO.	PART NAME	QTY	SERIAL NO.	REMARKS
1	AT184042	BEARING	1		
2	T158742	RING	2		
3	AT184057	DRUM	1		DISK CARRIER
4	.....	RING	1		(SUB AT193704) (T158739 NO LONGER AVAILABLE)
5	.....	RING	1		(SUB AT193704) (T158743 NO LONGER AVAILABLE)
6	AT193704	PISTON	1		(SUB FOR T158789)
7	T158775	DISK SPRING	5		
8	T164712	SHIM	1		
9	40M7058	SNAP RING	1		2 MM
10	T158801	CLUTCH PLATE	6		
11	T164626	DISK	6		
12	T161147	PLATE	1		
13	T161183	SNAP RING	1		4 MM
	T158778	SNAP RING	1		3.5 MM
	T159568	SNAP RING	1		3 MM
	T159569	SNAP RING	1		2.5 MM
	T159570	SNAP RING	1		2 MM
14	40M7058	SNAP RING	1		
15	AT185793	ROLLER	2		
16	T164647	GEAR	1		
17	AT179471	TAPERED ROLLER BEARING	1		
18	T166062	THRUST WASHER	2		

FORWARD CLUTCH ASSEMBLY
POWER SHIFT

TP57933 -UN-15SEP98

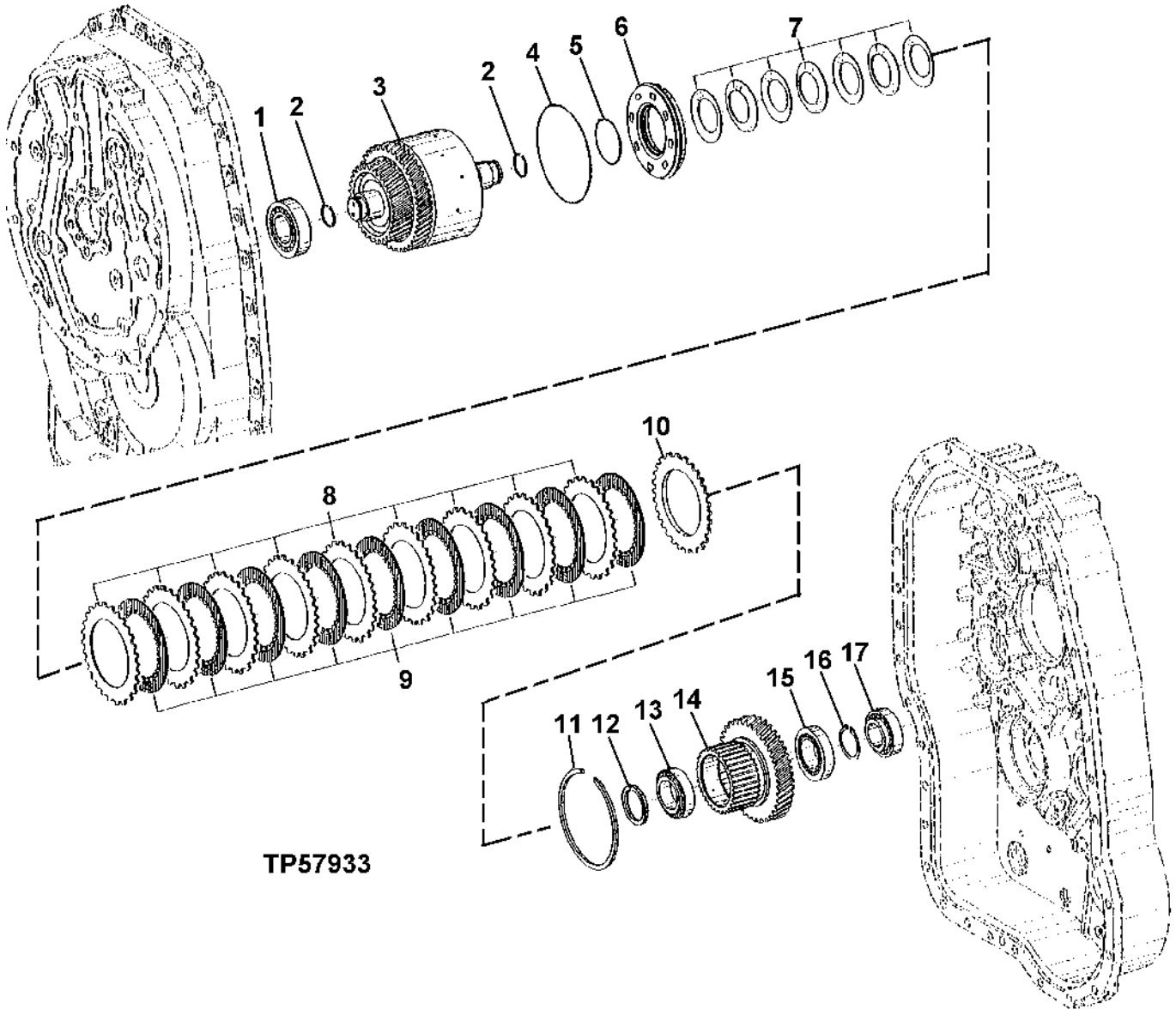

TP57933

FORWARD CLUTCH ASSEMBLY
POWER SHIFT

KEY	PART NO.	PART NAME	QTY	SERIAL NO.	REMARKS
1	AT184042	BEARING	1		
2	T158742	RING	2		
3	AT184043	DRUM	1		DISK CARRIER
4	.....	RING	1		(SUB AT193704) (T158739 NO LONGER AVAILABLE)
5	.....	RING	1		(SUB AT193704) (T158743 NO LONGER AVAILABLE)
6	AT193704	PISTON	1		(SUB FOR T158789)
7	T158775	DISK SPRING	7		
8	T158801	CLUTCH PLATE	9		
9	AT179473	DISK, WITH INNER SPLINE	9		
10	T161147	PLATE	1		
11	T161183	SNAP RING	1		4 MM
	T158778	SNAP RING	1		3.5 MM
	T159568	SNAP RING	1		3 MM
	T159569	SNAP RING	1		2.5 MM
	T159570	SNAP RING	1		2 MM
12	T158756	WASHER	1		
13	AT179469	TAPERED ROLLER BEARING	1		
14	T164711	GEAR	1		
15	AT179470	TAPERED ROLLER BEARING	1		
16	T161186	SNAP RING	1		3.2 MM
	T161187	SNAP RING	1		3.1 MM
	T161188	SNAP RING	1		3 MM
	T161189	SNAP RING	1		2.9 MM
	T161190	SNAP RING	1		2.8 MM
	T161191	SNAP RING	1		2.7 MM
	T161192	SNAP RING	1		2.6 MM
	T161193	SNAP RING	1		2.5 MM
	T164628	SNAP RING	1		2.3 MM
	T164629	SNAP RING	1		2.2 MM
	T164630	SNAP RING	1		2.1 MM
17	AT179471	TAPERED ROLLER BEARING	1		

REVERSE CLUTCH ASSEMBLY
POWER SHIFT

TP57934 -UN-15SEP98

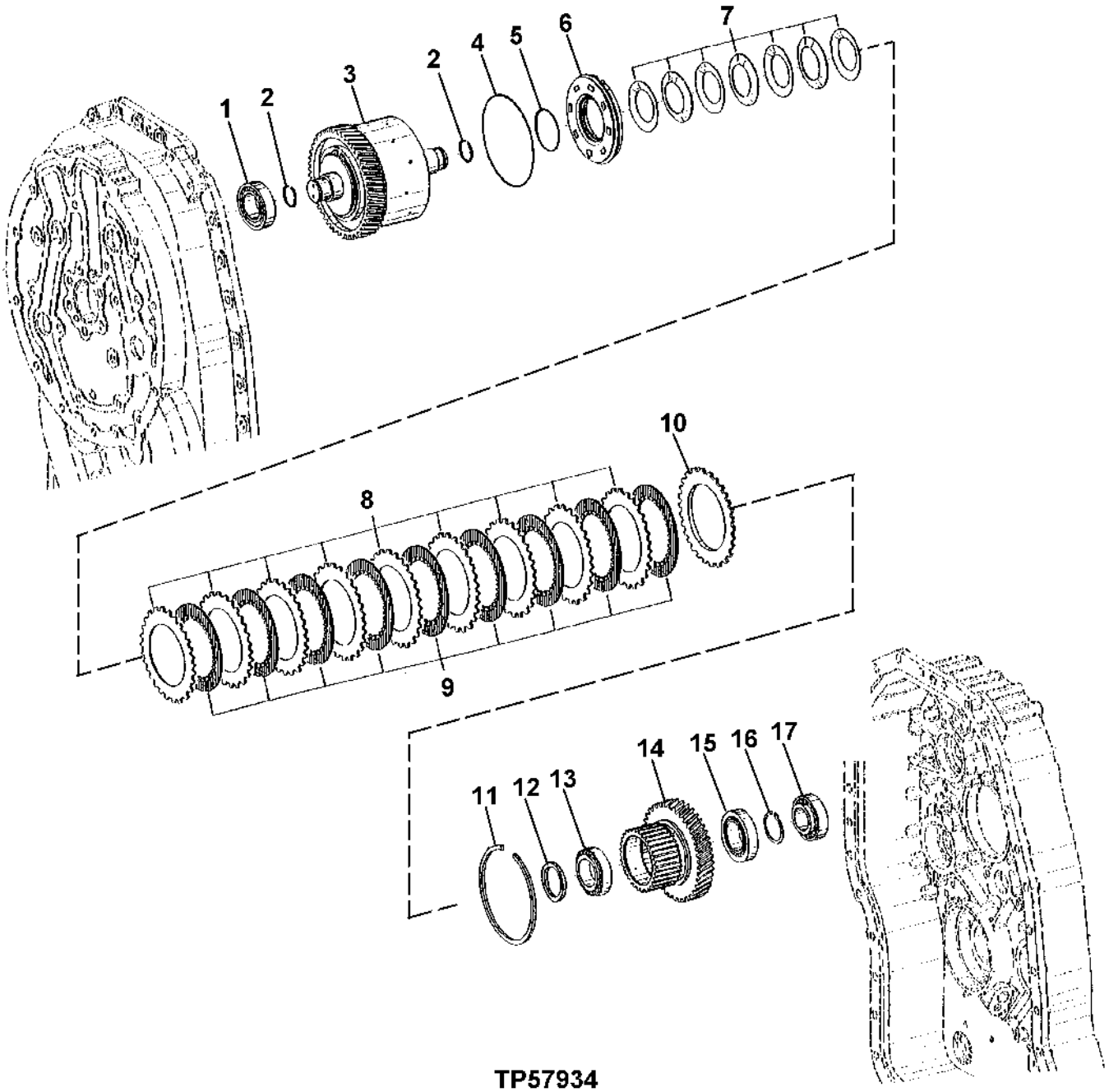

TP57934

REVERSE CLUTCH ASSEMBLY
POWER SHIFT

KEY	PART NO.	PART NAME	QTY	SERIAL NO.	REMARKS
1	AT179472	TAPERED ROLLER BEARING	1		
2	T158742	RING	2		
3	AT184045	DRUM	1		DISK CARRIER
4	.....	RING	1		(SUB AT193704) (T158739 NO LONGER AVAILABLE)
5	.....	RING	1		(SUB AT193704) (T158743 NO LONGER AVAILABLE)
6	AT193704	PISTON	1		(SUB FOR T158789)
7	T158775	DISK SPRING	7		
8	T158801	CLUTCH PLATE	9		
9	AT179473	DISK, WITH INNER SPLINE	9		
10	T161147	PLATE	1		
11	T161183	SNAP RING	1		4 MM
	T158778	SNAP RING	1		3.5 MM
	T159568	SNAP RING	1		3 MM
	T159569	SNAP RING	1		2.5 MM
	T159570	SNAP RING	1		2 MM
12	T158756	WASHER	1		
13	AT179469	TAPERED ROLLER BEARING	1		
14	T164711	DISK	1		
15	AT179470	TAPERED ROLLER BEARING	1		
16	T161186	SNAP RING	1		3.2 MM
	T161187	SNAP RING	1		3.1 MM
	T161188	SNAP RING	1		3 MM
	T161189	SNAP RING	1		2.9 MM
	T161190	SNAP RING	1		2.8 MM
	T161191	SNAP RING	1		2.7 MM
	T161192	SNAP RING	1		2.6 MM
	T161193	SNAP RING	1		2.5 MM
	T164628	SNAP RING	1		2.3 MM
	T164629	SNAP RING	1		2.2 MM
	T164630	SNAP RING	1		2.1 MM
17	AT179471	TAPERED ROLLER BEARING	1		

TRANSMISSION OUTPUT SHAFT
POWER SHIFT
(WITH MECHANICAL FRONT WHEEL DRIVE)

TP57935 -UN-16SEP98

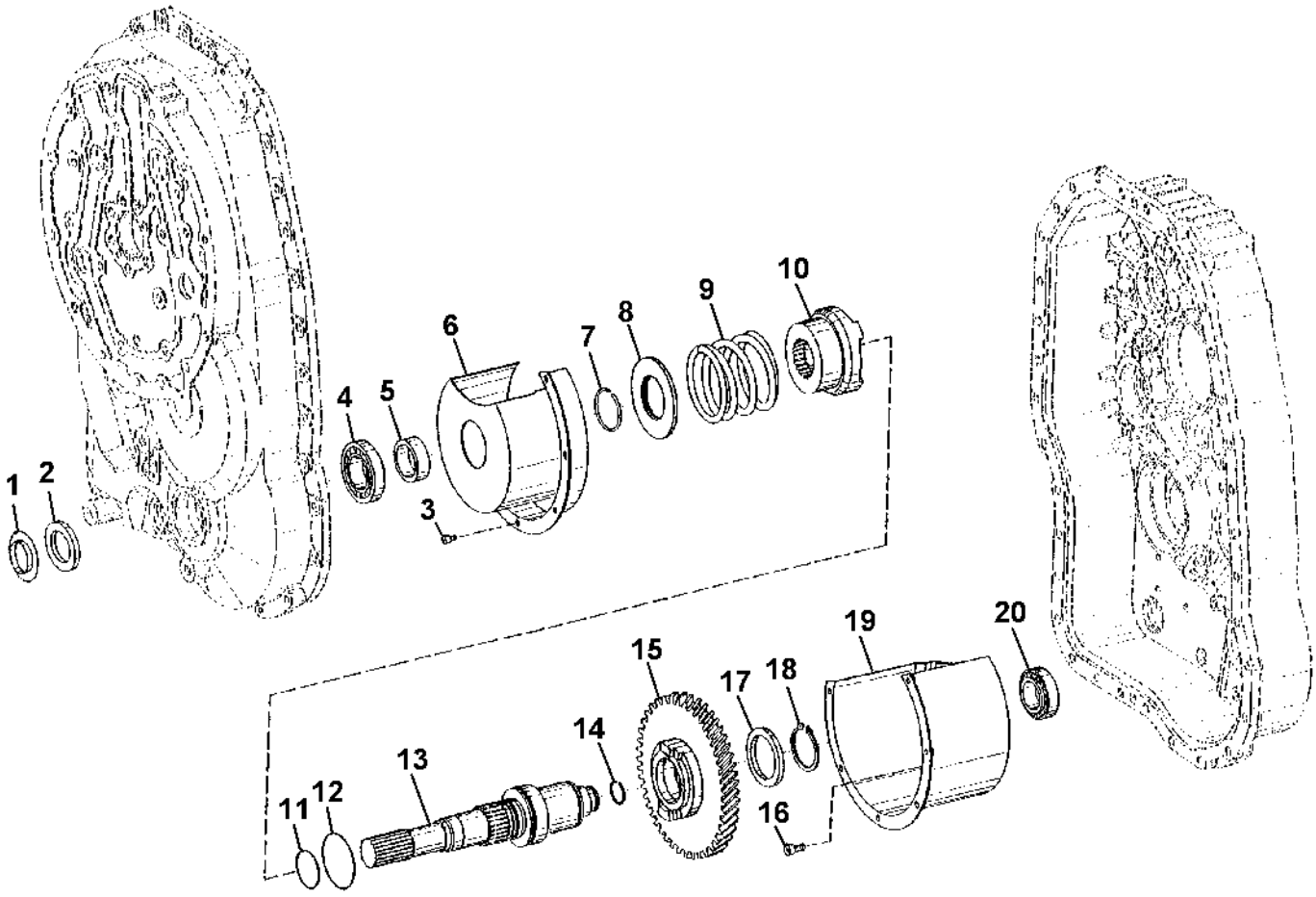

TP57935

TRANSMISSION OUTPUT SHAFT
POWER SHIFT
(WITH MECHANICAL FRONT WHEEL DRIVE)

KEY	PART NO.	PART NAME	QTY	SERIAL NO.	REMARKS
1	T159572	SEAL	1		
2	AT179466	SEAL	1		
3	T166078	SCREW	6		
4	AT179468	TAPERED ROLLER BEARING	1		
5	T164572	BUSHING	1		
6	T164576	SCREEN	1		
7	T158722	SNAP RING	1		
8	T158855	END PLATE	1		
9	T158762	SPRING	1		
10	T158859	SLEEVE	1		
11	T158744	RING	1		
12	T158745	RING	1		
13	T164574	SHAFT	1		
14	T158742	RING	1		
15	T164575	GEAR	1		
16	19M7931	SCREW	3		M8 X 16
17	T158760	THRUST WASHER	1		
18	L78069	RING	1		
19	T184918	SCREEN	1		
20	AT179472	TAPERED ROLLER BEARING	1		

MEMORANDA

TRANSMISSION CHARGE PUMP

TP57925 -UN-14SEP98

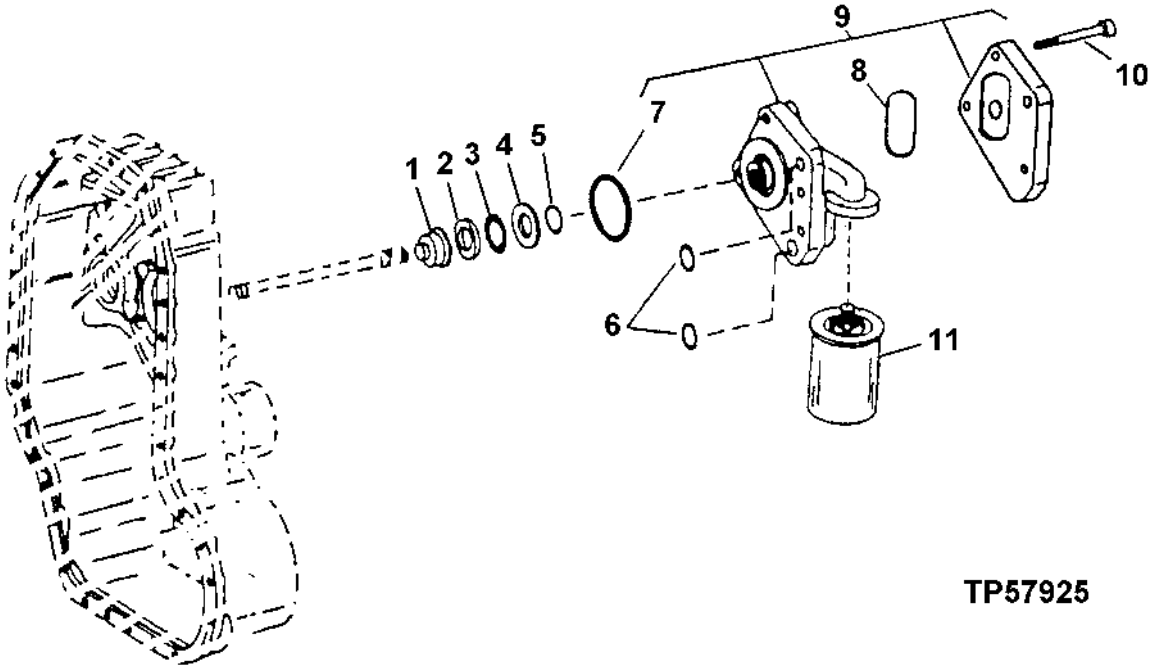

KEY	PART NO.	PART NAME	QTY	SERIAL NO.	REMARKS
1	T166077	STOP	1		
2	T158732	DISK	1		
3	AT179153	NEEDLE BEARING	1		
4	T158749	THRUST WASHER	1		
5	T141689	O-RING	1		
6	T19854	O-RING	1		
7	T162446	PACKING	1		
8	T162935	O-RING	1		
9	AT186167	HYDRAULIC PUMP	1		
10	T158754	CAP SCREW	4		
11	AT179323	OIL FILTER	1		

TRANSMISSION CONTROL VALVE GROUP
POWER SHIFT

T150758 -UN-05FEB02

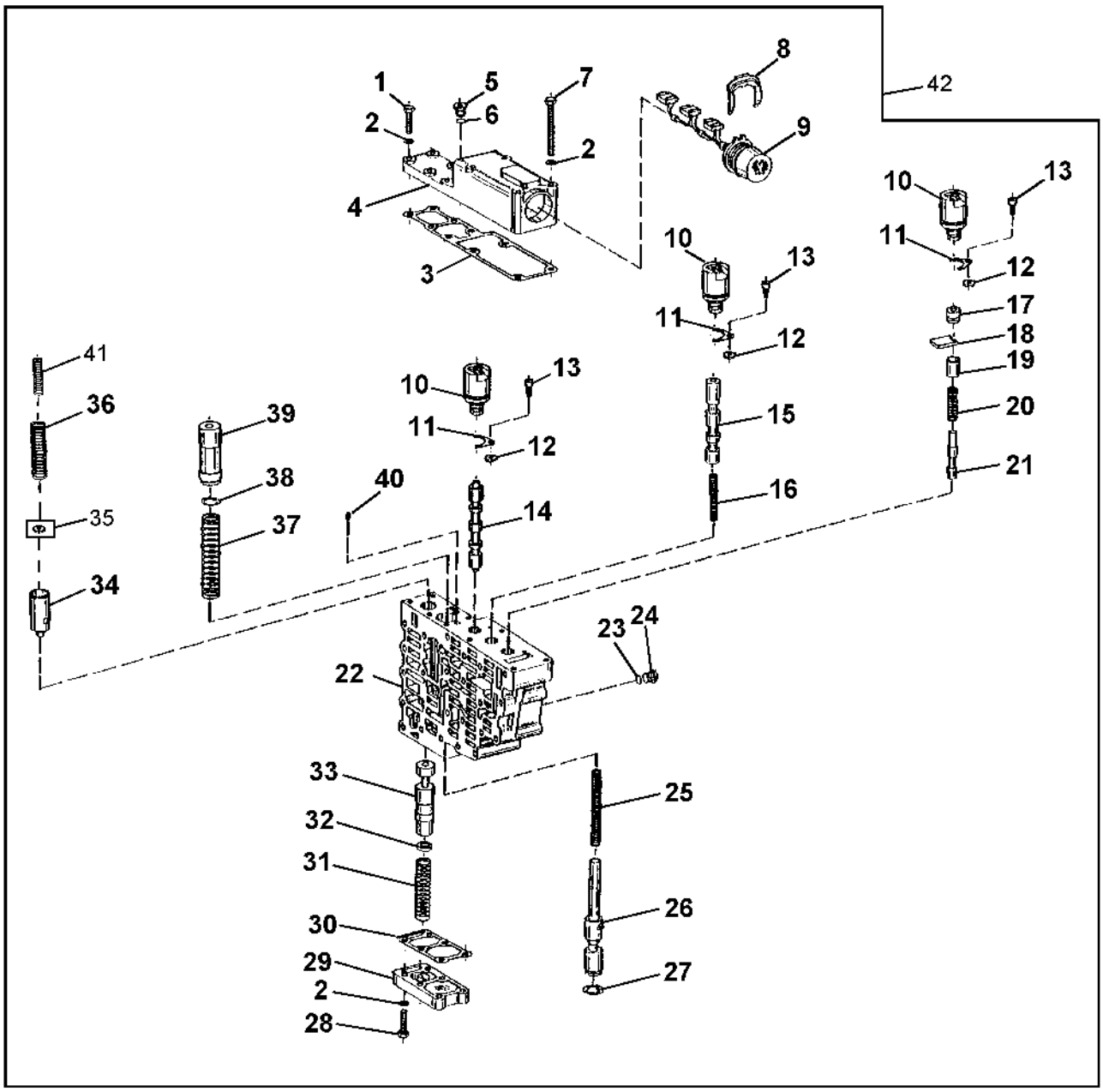

T150758

TRANSMISSION CONTROL VALVE GROUP
POWER SHIFT

KEY	PART NO.	PART NAME	QTY	SERIAL NO.	REMARKS
1	T159593	CAP SCREW	6		
2	T161204	WASHER	16		
3	T159604	GASKET	1		
4	T185606	COVER	1		
5	T161194	PLUG	3		
6	L11698	O-RING	3		
7	T159607	CAP SCREW	4		
8	T161207	CLAMP	1		
9	AT179492	WIRING HARNESS	1		
10	AT179491	SOLENOID VALVE	3		FORWARD, NEUTRAL, REVERSE
11	T144486	PLATE	3		
12	T144487	WASHER	3		
13	T164693	SCREW	3		
14	AT182947	PISTON	1		
15	T164578	PISTON	1		
16	T159596	SPRING	1		
17	T159599	PLUG	1		
18	T159600	PLATE	1		
19	T164585	SPACER	1		
20	T159598	SPRING	1		
21	T159597	PISTON	1		
22	T159582	HOUSING	1		
23	L11698	O-RING	5		
24	T161194	PLUG	5		
25	T159589	SPRING	1		
26	T159587	PISTON	1		
27	T159588	LOCK WASHER	1		
28	T159593	CAP SCREW	6		
29	T159592	COVER	1		
30	T159591	GASKET	1		
31	T159586	SPRING	1		
32	T161200	SPACER	1		2.4 MM
	T161199	SPACER	1		2.8 MM
	T161198	SPACER	1		3.2 MM
	T161197	SPACER	1		3.6 MM
33	T164579	PISTON	1		
34	.....	PISTON	1		(SUB T188172 AND T188173) (T159583 NO LONGER AVAILABLE)
	T188172	PISTON	1		
35	.....	SPACER	1		(SUB T188172 AND T188173) (T161196 NO LONGER AVAILABLE)
36	T159584	SPRING	1		
37	T161202	SPRING	1		
38	T164584	SPACER	1		.2 MM
	T164583	SPACER	1		.3 MM
	T164582	SPACER	1		.5 MM
	T161203	SHIM	1		1 MM
	T164581	SPACER	1		2 MM
39	T162947	PISTON	1		
40	T164577	ORIFICE	1		
41	T188173	SPRING	1		
42	AT195753	HYD ACTUATED CONTROL VALVE	1		(SUB FOR AT183972)

RANGE SHIFT VALVE GROUP
POWER SHIFT

TP57938 -UN-17SEP98

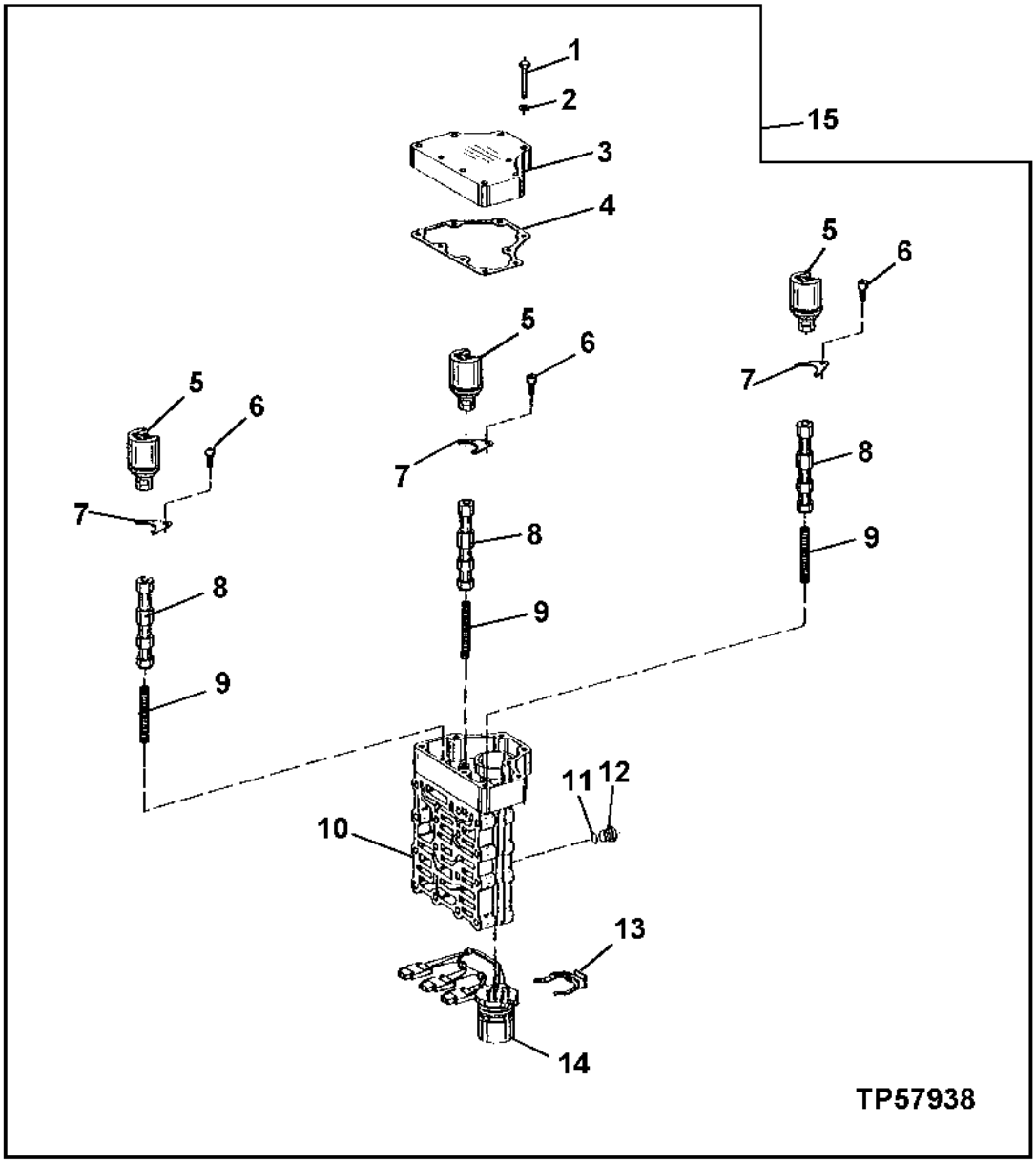

RANGE SHIFT VALVE GROUP
POWER SHIFT

KEY	PART NO.	PART NAME	QTY	SERIAL NO.	REMARKS
1	T166066	CAP SCREW	9		
2	T164702	WASHER	9		
3	T164611	COVER	1		
4	T164612	GASKET	1		
5	AT179491	SOLENOID VALVE	3		
6	T164693	SCREW	3		
7	T144486	PLATE	3		
8	T164610	PISTON	3		
9	T159596	SPRING	3		
10	T164609	HOUSING	1		
11	L11698	RING	4		
12	T161194	PLUG	4		
13	T161207	CLAMP	1		
14	AT184007	WIRING HARNESS	1		
15	AT183973	HYD ACTUATED CONTROL VALVE	1		

TRANSMISSION INTERMEDIATE PLATE AND GASKETS
POWER SHIFT

T143501 -UN-29JUN01

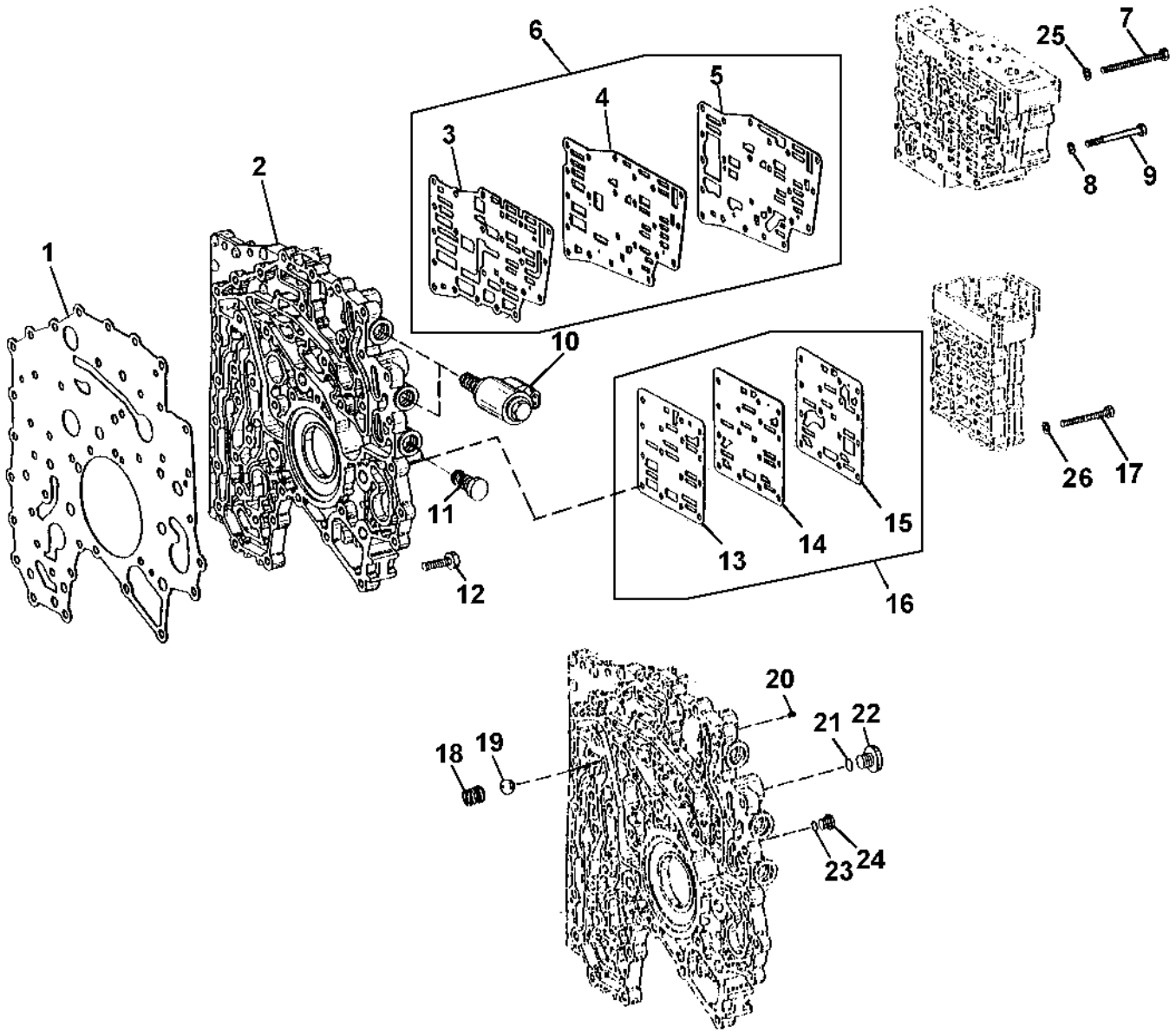

T143501

TRANSMISSION INTERMEDIATE PLATE AND GASKETS
POWER SHIFT

KEY	PART NO.	PART NAME	QTY	SERIAL NO.	REMARKS
1	T164592	GASKET	1		
2	T186560	HOUSING	1		(SUB FOR T164591)
3	.....	GASKET	1		(SUB AT192552) (ALSO ORDER (19) T159607) (SUB FOR T159612)
4	.....	PLATE	1		(SUB AT192552) (ALSO ORDER (19) T159607) (SUB FOR T164595)
5	.....	GASKET	1		(SUB AT192552) (ALSO ORDER (19) T159607) (SUB FOR T164596)
6	AT192552	PLATE	1		(SUB FOR T159612, T164595 AND T164596) (ALSO ORDER (19) T159607)
7	T159613	CAP SCREW	4		
8	T161204	WASHER	19		
9	T159607	CAP SCREW	19		
10	AT177703	SOLENOID VALVE	3		
	.....	SOLENOID	3		(AT179318 NO LONGER AVAILABLE) (SERVICED IN AT177703)
	AT179319	ELECTRICAL COIL	3		
	AT179320	O-RING KIT	3		
	T161144	NUT	3		
11	T159684	PLUG	1		MFWD SOLINOID HOLE PLUG
12	T161208	CAP SCREW	43		
13	.....	GASKET	1		(SUB AT192553) (ALSO ORDER (19) T159607) (SUB FOR T164597)
14	.....	PLATE	1		(SUB AT192553) (ALSO ORDER (19) T159607) (SUB FOR T164598)
15	.....	GASKET	1		(SUB AT192553) (ALSO ORDER (19) T159607) (SUB FOR T164599)
16	AT192553	PLATE	1		(SUB FOR T164597, T164598, T164599) (ALSO ORDER (19) T159607)
17	T164686	CAP SCREW	15		
18	T144494	COMPRESSION SPRING	1		
19	T144493	BALL	1		
20	T164577	ORIFICE	1		
21	R26286	O-RING	1		
22	R27094	DRAIN PLUG	1		
23	L11698	O-RING	1		
24	T161194	PLUG	1		
25	T161204	WASHER	4		
26	T161204	WASHER	15		

CRANKSHAFT, GEAR AND MAIN BEARINGS
TO4045TT082 - PE4045TT082

T155453 -UN-05JUN02

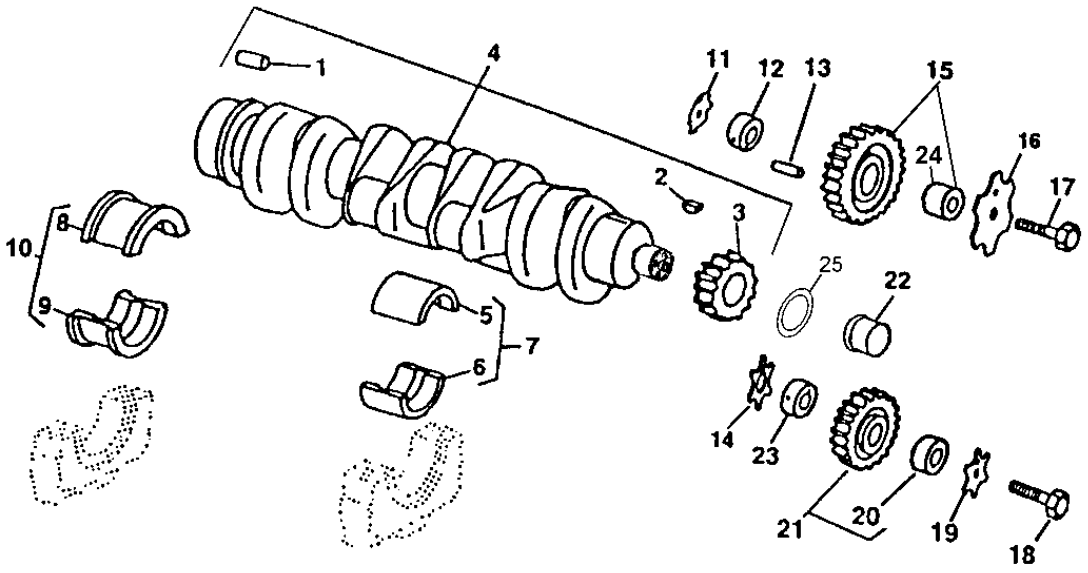

T155453

KEY	PART NO.	PART NAME	QTY	ENGINE SERIAL NO.	REMARKS
1	R48685	DOWEL PIN	1		12.700 X 28.448 MM (1/2" X 1.120")
2	26M4224	SHAFT KEY	1	-903066	4 X 16 MM
	R505609	SHAFT KEY	1	903067-	
3	R120631	GEAR	1		(30 TEETH)
4	RE50618	CRANKSHAFT	1	-903066	(MARKED R113596) (SUB RE504638 AND RE516340) (ALSO ORDER RE59811)
	RE504638	CRANKSHAFT	1	903067-	(MARKED R113596) (ALSO ORDER RE516340)
5	.....	BEARING	4		STANDARD UPPER, (MARKED R123561)
	.....	BEARING	4		UNDERSIZE UPPER .254 MM, (MARKED R130576)
6	.....	BEARING	4		STANDARD LOWER, (MARKED R123562)
	.....	BEARING	4		UNDERSIZE LOWER .254 MM, (MARKED R130577)
7	RE65165	BEARING KIT	4		STANDARD
	RE65911	BEARING	4		UNDERSIZE .254 MM
8	.....	BEARING	1		STANDARD UPPER, (MARKED R123563)
	.....	BEARING	1		UNDERSIZE UPPER .254 MM, (MARKED R130574)
9	.....	BEARING	1		STANDARD LOWER, (MARKED R123564)
	.....	BEARING	1		UNDERSIZE LOWER .254 MM, (MARKED R130575)
10	RE65168	BEARING KIT	1		STANDARD
	RE65912	THRUST BEARING	1		UNDERSIZE .254 MM
11	R101225	THRUST WASHER	1		
12	R109863	SHAFT	1		
13	34H288	SPRING PIN	1		3/16" X 1-3/4"
14	R101225	THRUST WASHER	1		
15	RE500631	GEAR	1		(MARKED R500363)
16	R131283	THRUST WASHER	1		
17	19M8844	SCREW	1		M10 X 60
18	19M8966	SCREW	1		M10 X 50
19	R131283	THRUST WASHER	1		
20	R114193	BUSHING	1		
21	RE56369	GEAR	1		
22	RE59811	SLEEVE	1		
23	R114194	SHAFT	1		
24	T20034	BUSHING	1		
25	RE516340	KIT	1	903067-	

MEMORANDA

CAMSHAFT
TO4045TT082 - PE4045TT082

TP69520 -UN-02JUN00

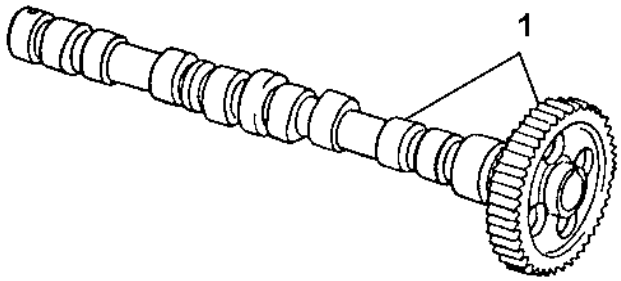

TP69520

KEY	PART NO.	PART NAME	QTY	ENGINE SERIAL NO.	REMARKS
1	RE56375	CAMSHAFT	1		(WITH GEAR AND KEY) (MARKED R135439)

ROCKER ARM SHAFT, PUSH RODS AND ROCKER ARMS
TO4045TT082 - PE4045TT082

TP49263 -UN-20JUN95

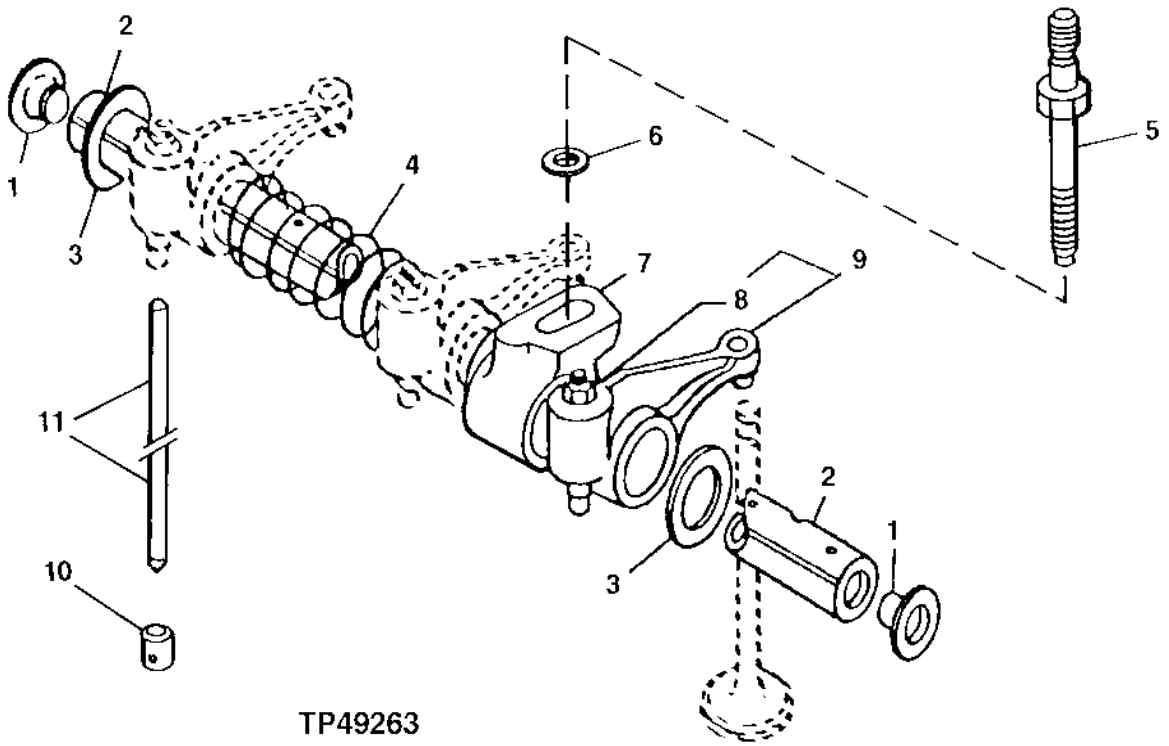

TP49263

KEY	PART NO.	PART NAME	QTY	ENGINE SERIAL NO.	REMARKS
1	R54565	PLUG	2		
2	R123513	ROCKER ARM SHAFT	1		
3	T20316	WASHER	2		
4	T20314	SPRING	3		
5	R123271	STUD	4		
6	24M7346	WASHER	4		(SUB FOR (4) R42729, THIS APPLICATION)
7	R123161	SUPPORT	4		
8	14M7148	NUT	1		M10
9	RE68695	ROCKER ARM	8		
10	R123565	CAM FOLLOWER	8		
11	R107731	PUSH ROD	8		

ROCKER ARM COVER AND GASKET
TO4045TT082 - PE4045TT082

TP69529 -UN-26JUL00

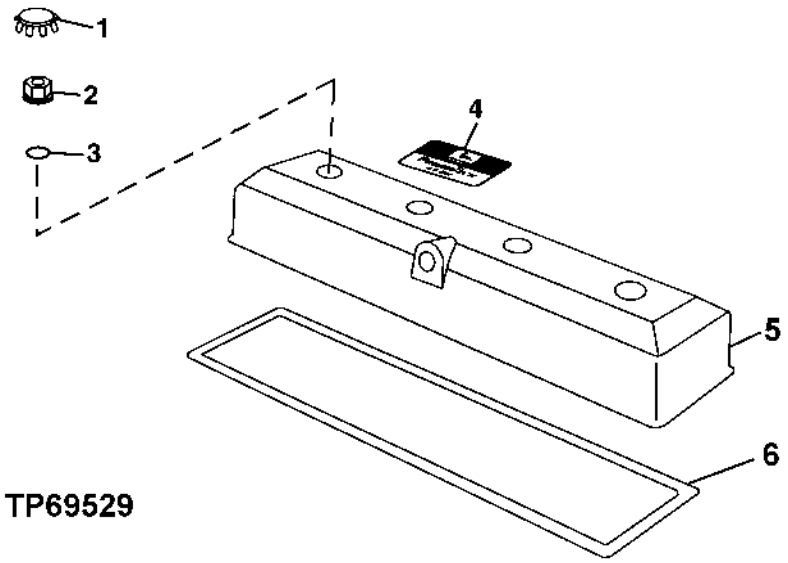

KEY	PART NO.	PART NAME	QTY	ENGINE SERIAL NO.	REMARKS
1	H23125	PLUG	4		
2	R123574	NUT	4		
3	R123575	O-RING	4		
4	R116324	MEDALLION	1		
5	RE502969	VALVE COVER	1		
6	R123542	GASKET	1		

MEMORANDA

TIMING GEAR COVER AND GASKET
TO4045TT082 - PE4045TT082
(ENGINE SERIAL NUMBER -900932)

T146583 -UN-15OCT01

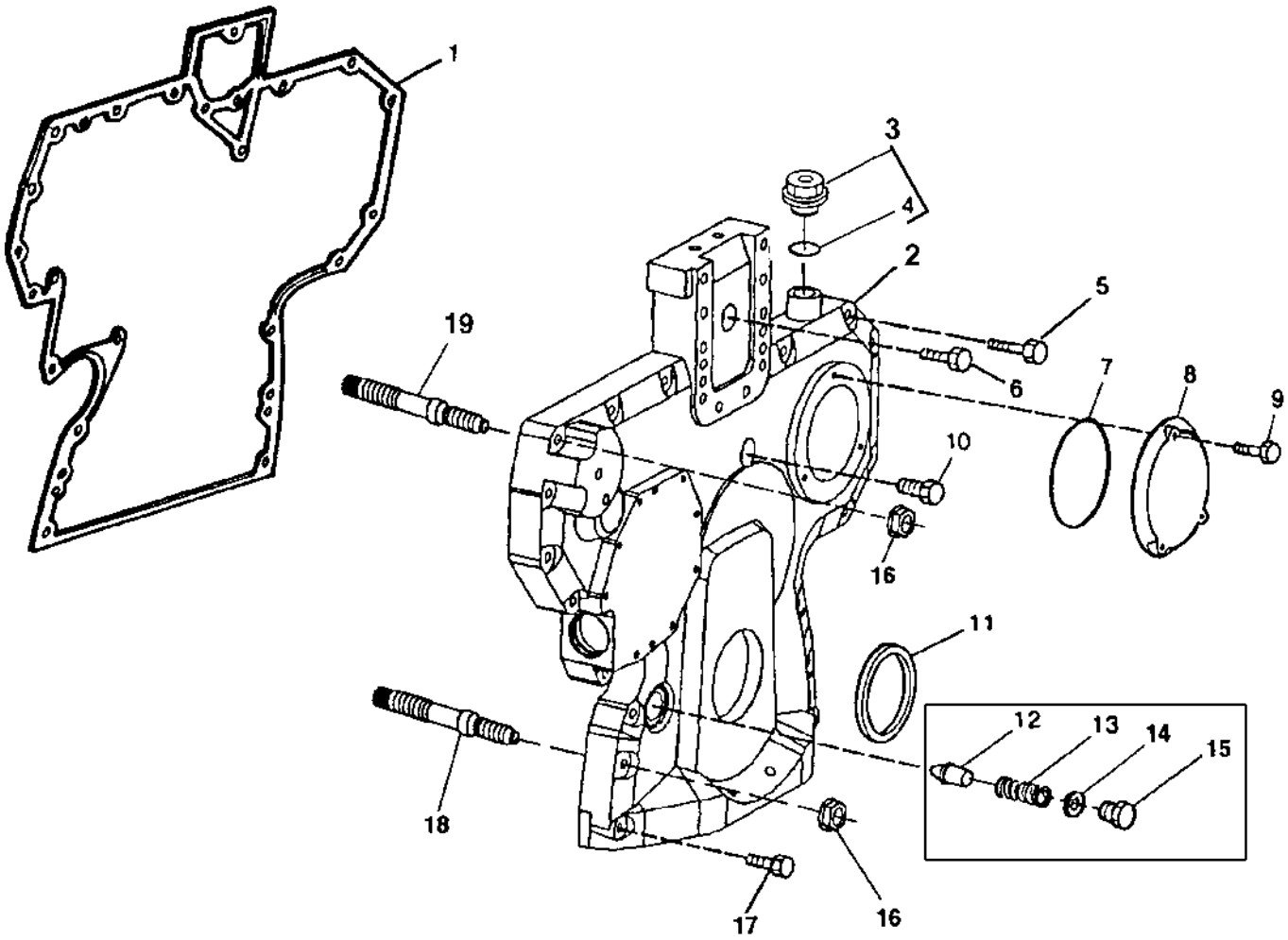

T146583

TIMING GEAR COVER AND GASKET
TO4045TT082 - PE4045TT082
(ENGINE SERIAL NUMBER -900932)

KEY	PART NO.	PART NAME	QTY	ENGINE SERIAL NO.	REMARKS
1	R136516	GASKET	1		
2	R505462	COVER	1		(SUB FOR R134531) (SUB R504725 AND RE515978)
3	RE501938	PLUG	1		(WITHOUT TACHOMETER SENSOR)
4	51M7044	O-RING	1		17.300 X 2.200 MM
5	19M8317	SCREW	6		M8 X 40
	19M7801	SCREW	1		M8 X 60
	19M7867	SCREW	1		M8 X 25
	RE67239	SCREW	1		
6	19M8291	SCREW	1		M8 X 35
7	R121424	O-RING	1		
8	R121411	COVER	1		
9	19M7775	SCREW	3		M6 X 16
10	19M7801	SCREW	1		M8 X 60
11	RE59810	SEAL	1		
12	R83169	VALVE	1	-889024	
13	R131425	SPRING	1	-889024	
14	A4827R	WASHER	1	-889024	
15	R91692	PLUG	1	-889024	OIL PRESSURE REGULATING
16	14M7296	FLANGE NUT	6		M10
17	19M7979	SCREW	2		M8 X 55
18	R123584	STUD	4		
19	R134518	STUD	2		

TIMING GEAR COVER
TO4045TT082 - PE4045TT082
(ENGINE SERIAL NO. 900933-)

T149705 -UN-07FEB02

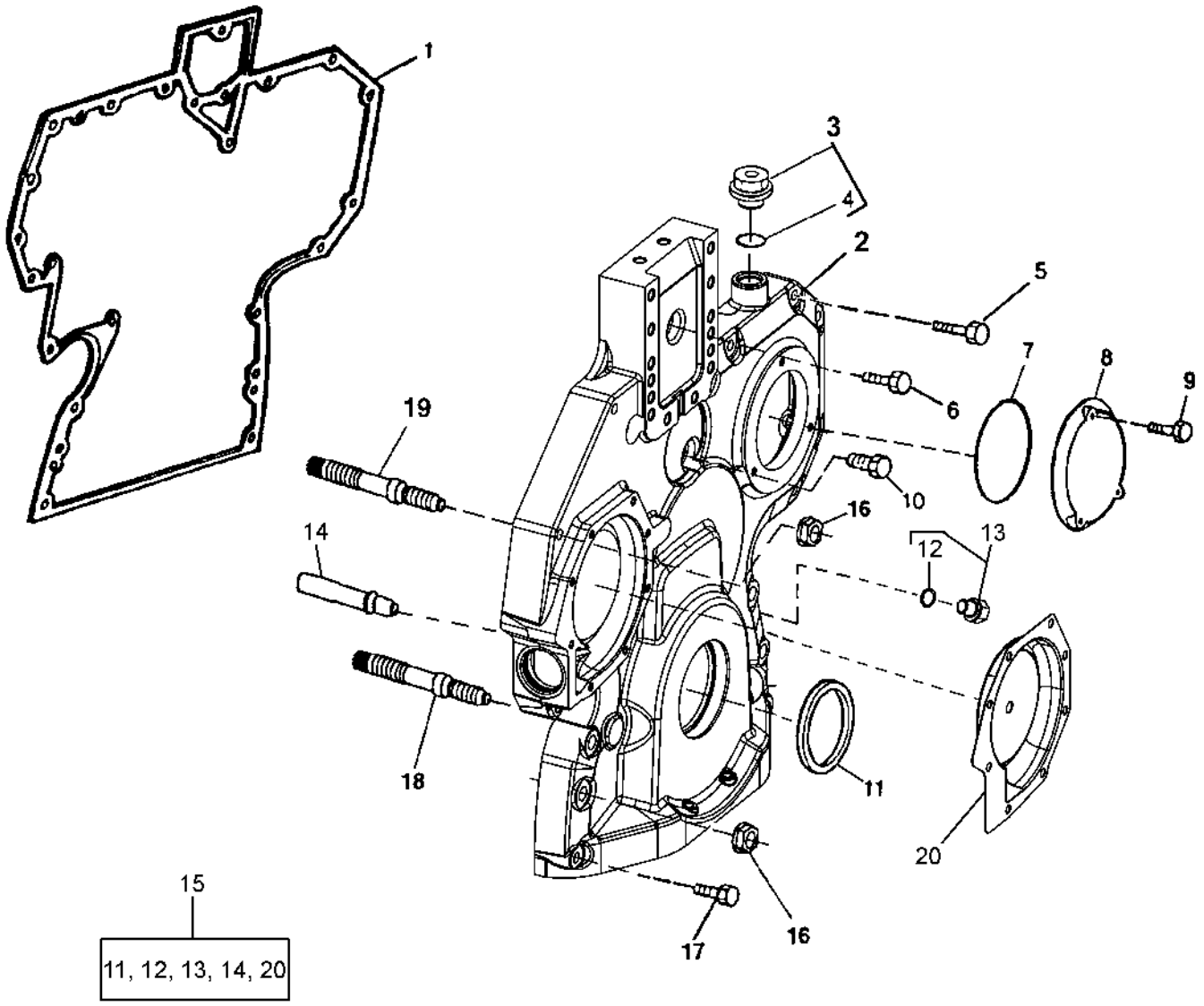

T149705

TIMING GEAR COVER
TO4045TT082 - PE4045TT082
(ENGINE SERIAL NO. 900933-)

KEY	PART NO.	PART NAME	QTY	ENGINE SERIAL NO.	REMARKS
1	R136516	GASKET	1		
2	R504725	COVER	1		
3	RE501938	PLUG	1		(WITHOUT TACHOMETER SENSOR)
4	51M7044	O-RING	1		17.300 X 2.200 MM
5	19M8317	SCREW	6		M8 X 40
	19M7867	SCREW	1		M8 X 25
	RE67239	SCREW	1		
6	19M8291	SCREW	1		M8 X 35
7	R121424	O-RING	1		
8	R121411	COVER	1		
9	19M7775	SCREW	3		M6 X 16
10	19M7801	SCREW	1		M8 X 60
11	RE59810	SEAL	1		
12	51M7044	O-RING	1		17.300 X 2.200 MM
13	RE501938	PLUG	1		
14	RE505501	VALVE	1		
15	RE515978	KIT	1		
16	14M7296	FLANGE NUT	6		M10
17	19M7979	SCREW	2		M8 X 55
18	R123584	STUD	4		
19	R134518	STUD	2		
20	RE508566	KIT	1		(WATER PUMP INSERT REPAIR)

PISTON, PISTON AND CYLINDER LINER KIT, CONNECTING RODS AND CONNECTING ROD BEARINGS
TO4045TT082 - PE4045TT082

TP49283 -UN-17JUL95

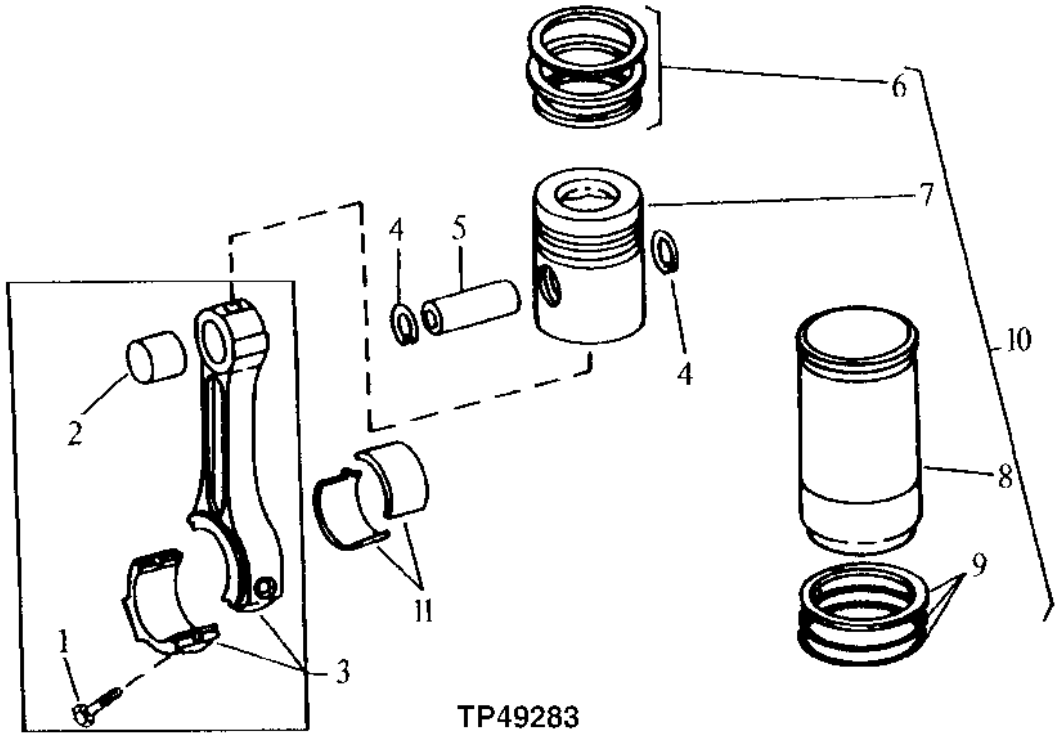

KEY	PART NO.	PART NAME	QTY	ENGINE SERIAL NO.	REMARKS
1	R501124	SCREW	8		
2	R123960	BUSHING	4		
3	RE500002	CONNECTING ROD	4		(MARKED RE500000)
4	M41029	SNAP RING	8		
5	R123178	PISTON PIN	4		
6	RE66271	PISTON RING KIT	4		
7	.....	PISTON	4		FURNISH RE505111
8	.....	CYLINDER LINER	4		FURNISH RE505111
9	AR65507	O-RING KIT	4		CYLINDER LINER
10	RE505111	PISTON-LINER KIT	4	-877782	PISTON WITH LINER
	RE505111	PISTON-LINER KIT	4	877783-	(SUB FOR RE65967)
11	RE65908	BEARING	4		STANDARD
	RE65909	BEARING	4		.010" UNDERSIZE

ENGINE FRONT PLATE
TO4045TT082 - PE4045TT082

TP49330 -UN-14NOV95

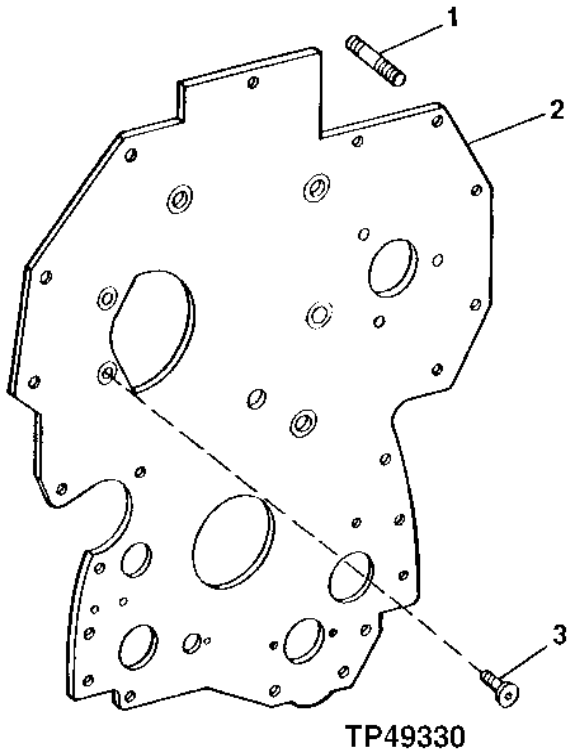

TP49330

KEY	PART NO.	PART NAME	QTY	ENGINE SERIAL NO.	REMARKS
1	R116386	STUD	3		
2	R134527	PLATE	1		
3	R136475	SCREW	4		

CYLINDER BLOCK AND MAIN BEARING CAP
TO4045TT082 - PE4045TT082

T146586 -UN-15OCT01

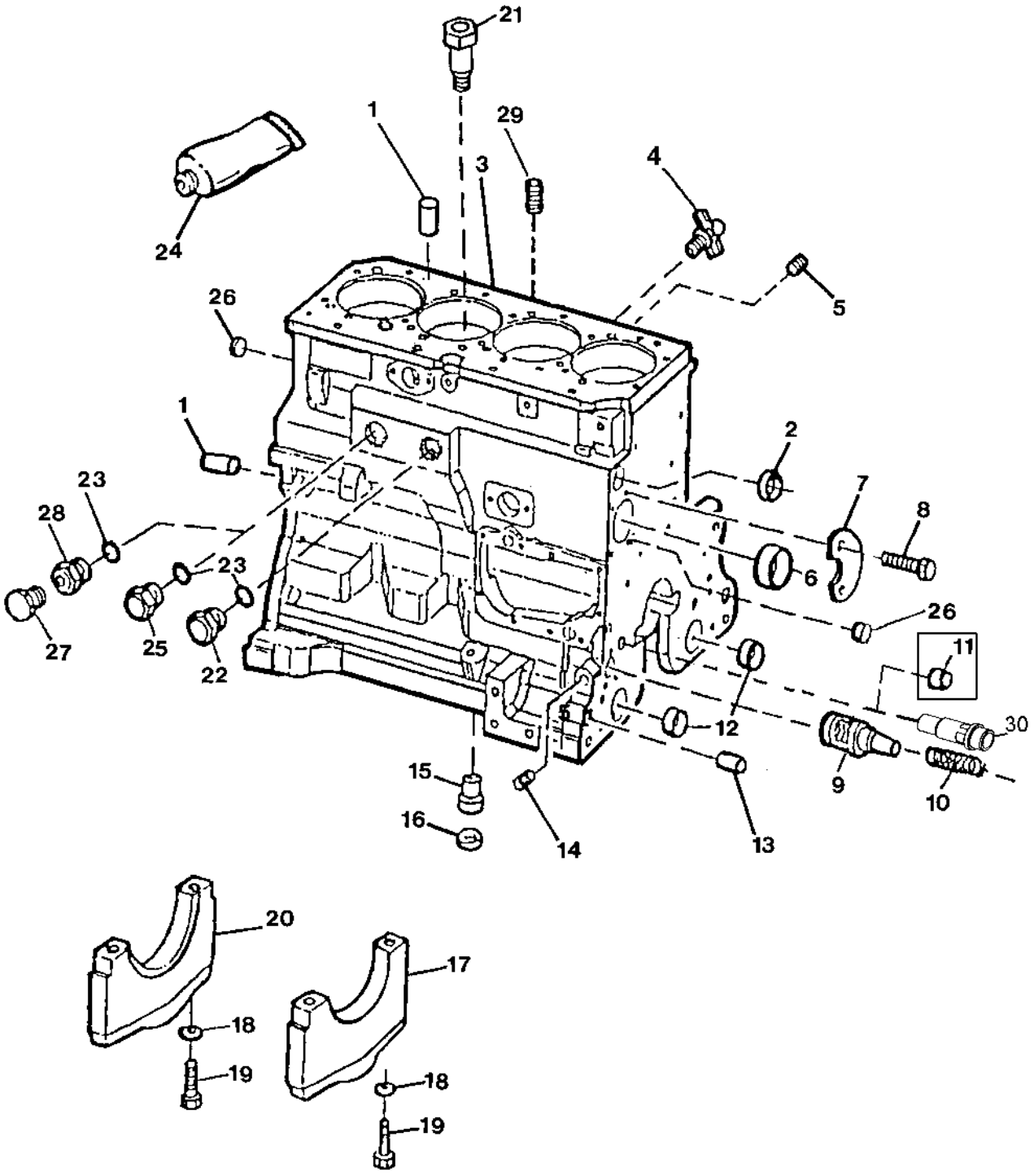

T146586

CYLINDER BLOCK AND MAIN BEARING CAP
TO4045TT082 - PE4045TT082

KEY	PART NO.	PART NAME	QTY	ENGINE SERIAL NO.	REMARKS
1	R48685	DOWEL PIN	4		
2	R116466	PLUG	1		
3	.....	CYLINDER BLOCK	1		(MARKED R115081) (ORDER RE516099)
4	AT13740	DRAIN VALVE	1		
5	R104592	PIPE PLUG	5		
6	R119874	BUSHING	1		CAMSHAFT
7	R132518	PLATE	1		
8	19M8999	SCREW	2		M8 X 25
9	R121043	FLOW CONTROL HYD. VALVE	1		ENGINE OIL BY-PASS
10	R111137	SPRING	1		
11	R26493	BUSHING	1	-889024	OIL PRESSURE REGULATING
12	R115299	BUSHING	6		BALANCER SHAFT
13	R26650	DOWEL PIN	2		
14	15H623	PIPE PLUG	1		
15	R115390	BUSHING	1		
16	R75892	O-RING	1		
17	R114241	BEARING CAP	4		
18	T20168	WASHER	10		
19	T23474	CAP SCREW	10		
20	R132186	BEARING CAP	1		
21	R131182	ORIFICE	4		
22	R39741	DRAIN PLUG	1		
23	U13639	O-RING	2		
24	TY6304	SEALANT	1		PLASTIC GASKET
25	R39741	DRAIN PLUG	1		WITHOUT CAB HEATER
26	T18891	CAP	2		
27	RE46685	PLUG	1		WITHOUT CAB HEATER
28	R123616	PLUG	1		WITH CAB HEATER
29	15H624	PIPE PLUG	1		1/2", (WITHOUT TURBOCHARGER)
30	RE505501	VALVE	1	889025-	(OIL PRESSURE REGULATING)

ENGINE SHORT BLOCK
TO4045TT082 - PE4045TT082

T156111 -UN-13JUN02

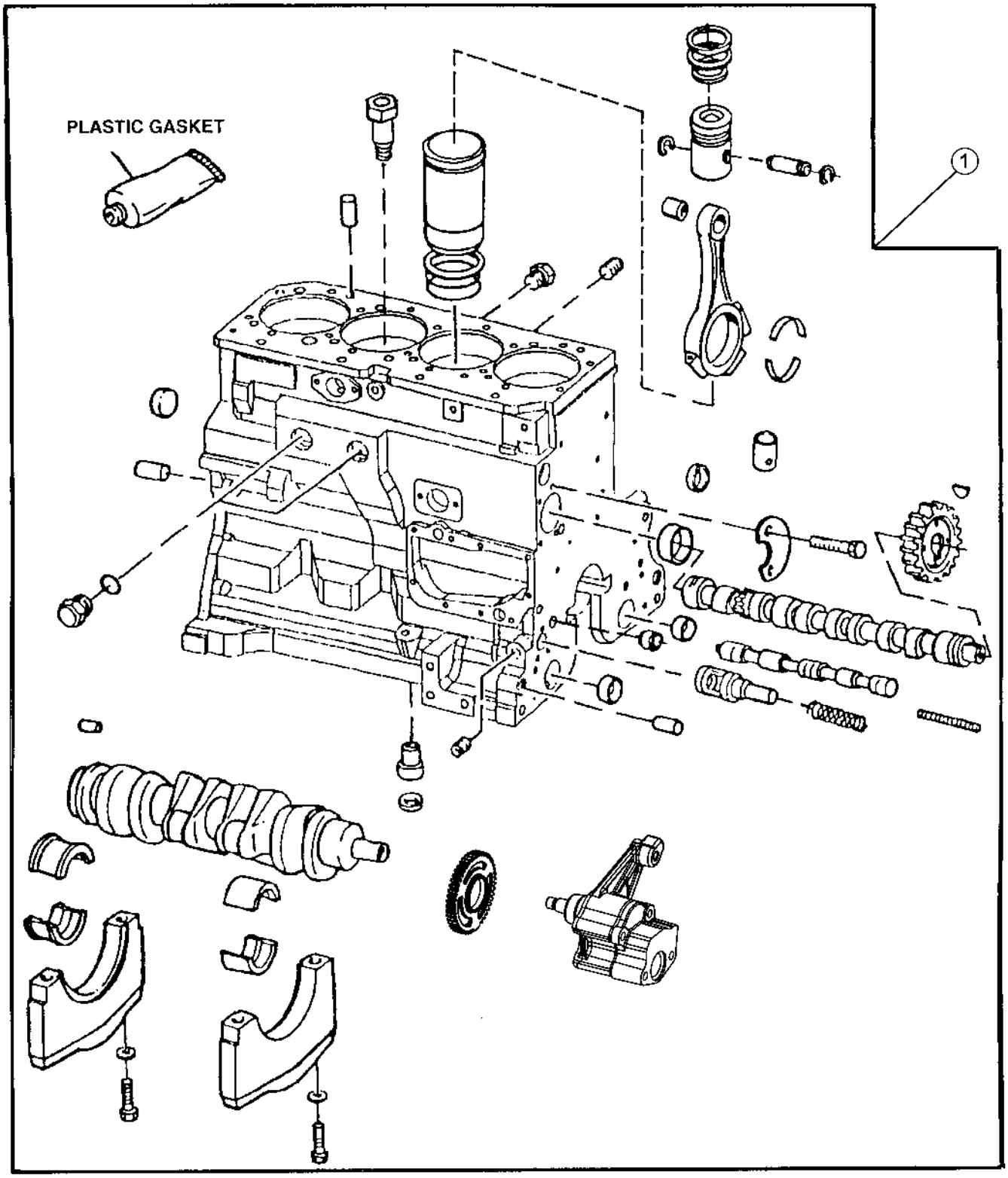

T156111

ENGINE SHORT BLOCK
TO4045TT082 - PE4045TT082

KEY	PART NO.	PART NAME	QTY	ENGINE SERIAL NO.	REMARKS
1	RE516099	SHORT BLOCK ASSEMBLY	1		(MARKED R115081) (SUB FOR RE65953) (DOES NOT INCLUDE FRONT PLATE)

ENGINE OIL FILLER INLET
TO4045TT082 - PE4045TT082

TP69531 -UN-26JUL00

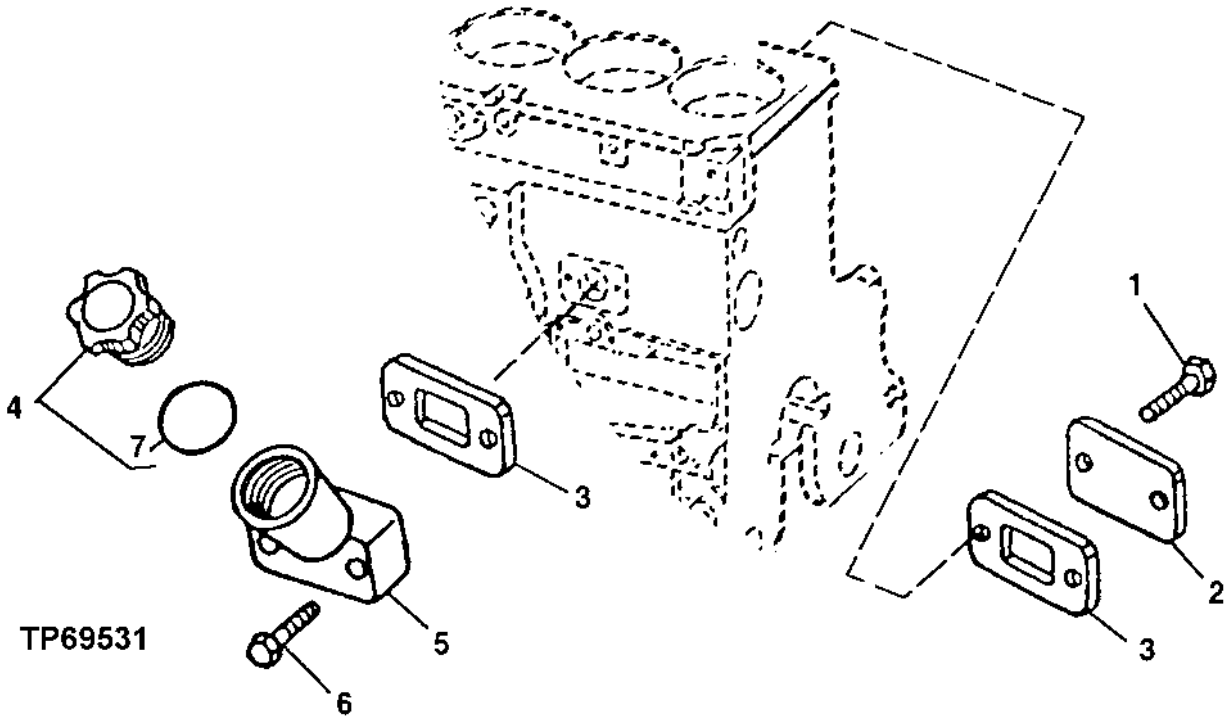

KEY	PART NO.	PART NAME	QTY	ENGINE SERIAL NO.	REMARKS
1	RE67238	SCREW	2		M8 X 20 (WITH PRE-APPLIED SEALANT)
2	R116296	COVER	1		
3	R136495	GASKET	2		
4	RE500005	FILLER CAP	1		
5	RE501377	FILLER NECK	1		
6	RE67239	SCREW	2		M8 X 100 (WITH PRE-APPLIED SEALANT)
7	R502902	PACKING	1		

ENGINE OIL DIPSTICK AND DIPSTICK TUBE
TO4045TT082 - PE4045TT082

TP49535 -UN-03JAN97

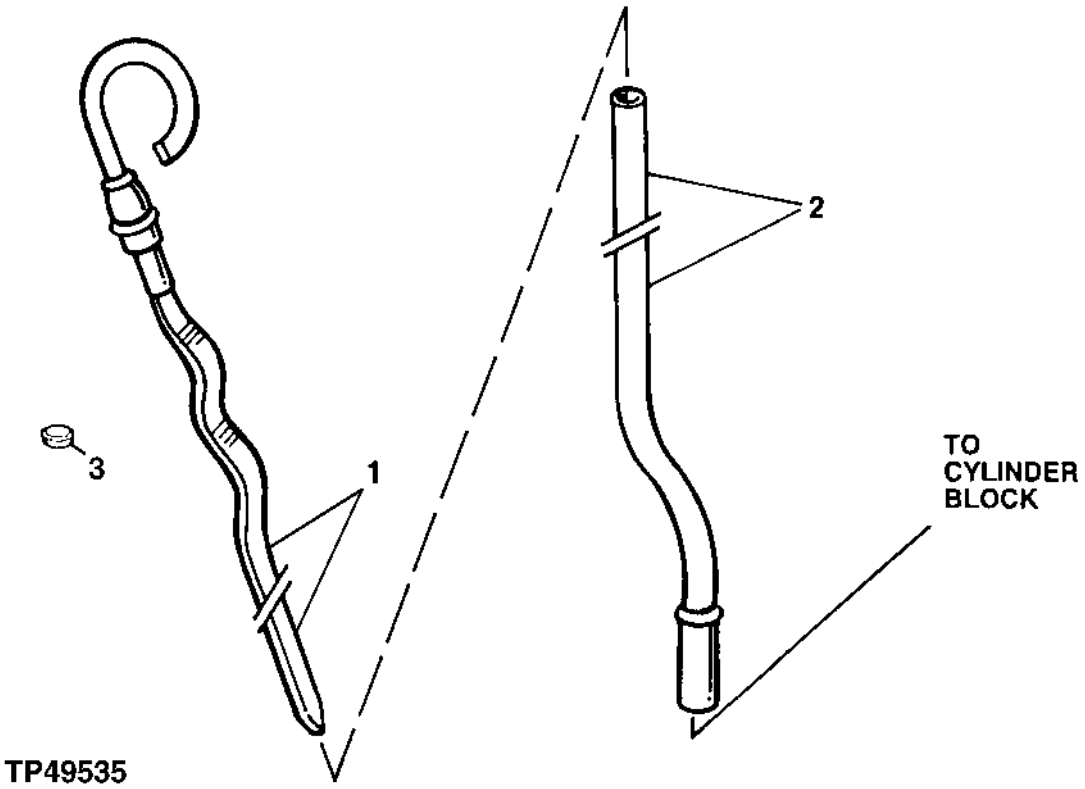

KEY	PART NO.	PART NAME	QTY	ENGINE SERIAL NO.	REMARKS
1	RE69243	DIPSTICK	1		
2	R502604	DIPSTICK TUBE	1		
3	R502725	PLUG	1		

ENGINE OIL PAN AND GASKET
TO4045TT082 - PE4045TT082

TP55183 -UN-18AUG97

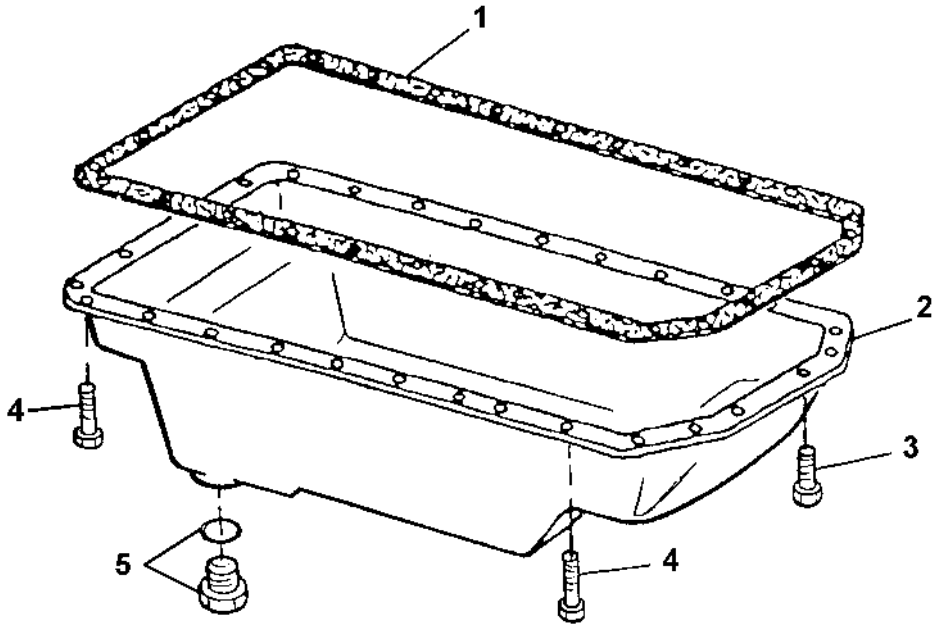

ENGINE OIL PAN AND GASKET
TO4045TT082 - PE4045TT082

KEY	PART NO.	PART NAME	QTY	ENGINE SERIAL NO.	REMARKS
1	R123352	GASKET	1		
2	RE59545	OIL PAN	1		
3	19M8062	CAP SCREW	6		M8 X 20
4	19M8163	CAP SCREW	22		M8 X 16
5	RE46685	PLUG	1		

ENGINE OIL FILTER AND OIL FILTER HEADER
TO4045TT082 - PE4045TT082

TP69533 -UN-07AUG00

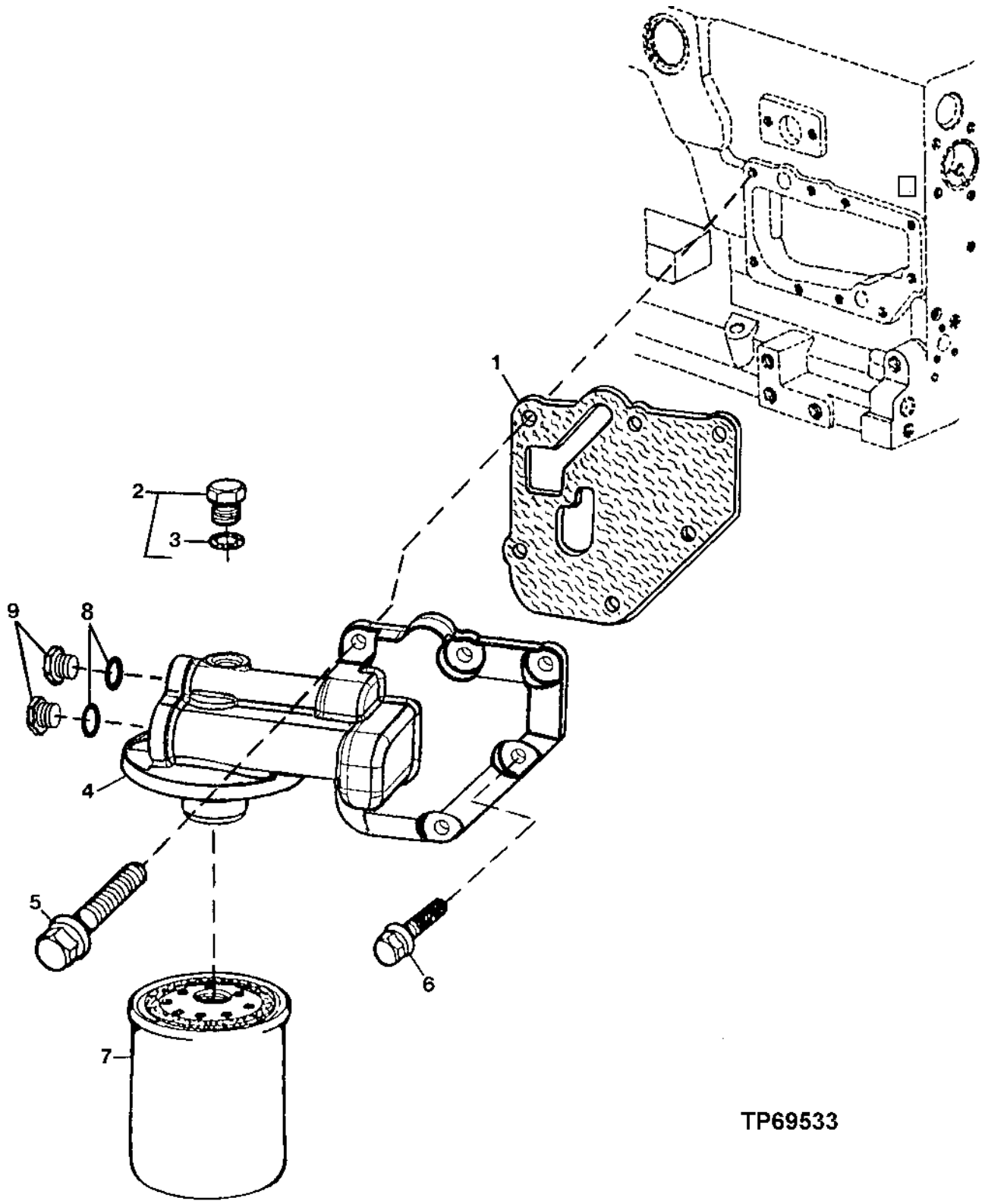

ENGINE OIL FILTER AND OIL FILTER HEADER
TO4045TT082 - PE4045TT082

KEY	PART NO.	PART NAME	QTY	ENGINE SERIAL NO.	REMARKS
1	R500374	GASKET	1		
2	RE52242	DRAIN PLUG	1		
3	51M7042	O-RING	1		13.300 X 2.200 MM
4	RE500133	FILTER HEAD	1		
5	19M7802	SCREW	5		M8 X 65
6	RE67238	SCREW	1		M8 X 20 (WITH PRE-APPLIED SEALANT)
7	RE59754	OIL FILTER	1		
8	51M7045	O-RING	2		19.300 X 2.200 MM
9	R116115	FITTING	2		

ENGINE OIL PUMP AND OIL PUMP INTAKE
TO4045TT082 - PE4045TT082

TP49570 -UN-17FEB97

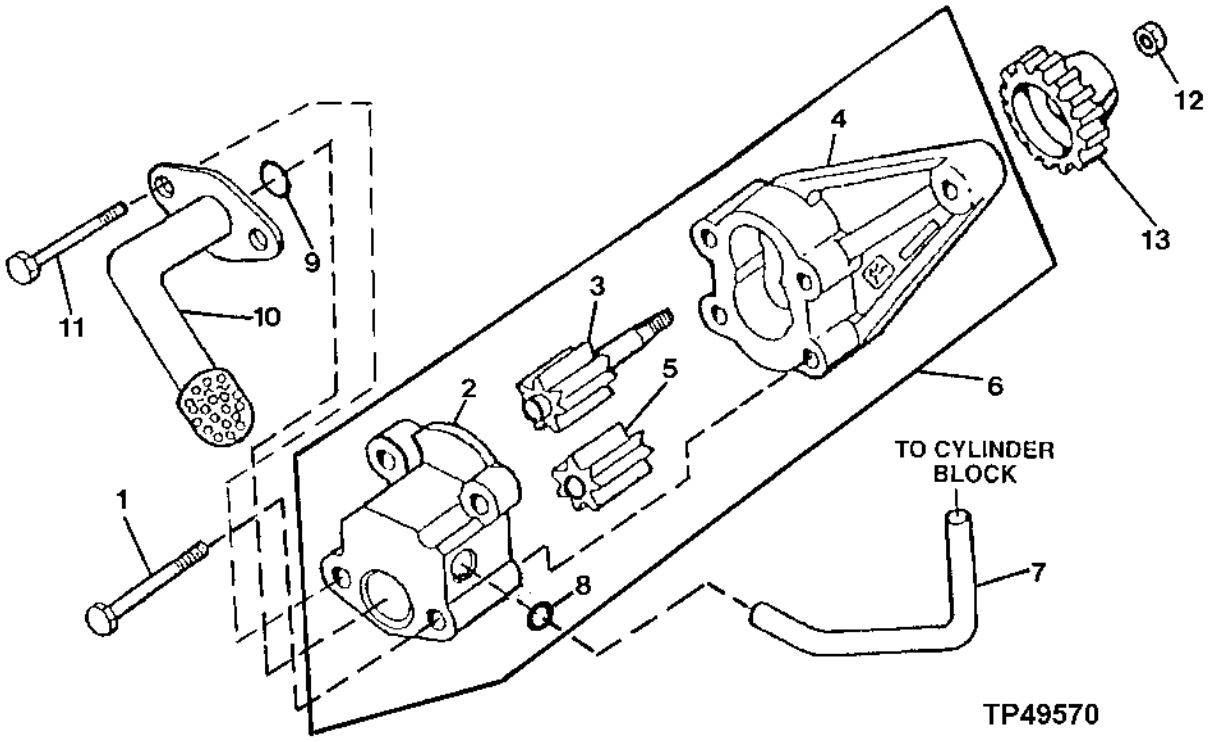

KEY	PART NO.	PART NAME	QTY	ENGINE SERIAL NO.	REMARKS
1	19M8987	SCREW	2		M8 X 65
2	.....	COVER	1		
3	.....	GEAR	1		
4	.....	HOUSING	1		
5	.....	GEAR	1		
6	RE504914	OIL PUMP	1		(MARKED R502867)
7	R121376	TUBE	1		
8	R97185	O-RING	1		
9	R61871	O-RING	1		
10	RE57619	OIL PUMP INTAKE	1		
11	19M8986	SCREW	2		M8 X 100
12	14M7066	NUT	1		M12
13	R120638	GEAR	1		(30 TEETH)

MEMORANDA

ENGINE VENTILATING SYSTEM
TO4045TT082 - PE4045TT082

TP49041 -UN-06SEP95

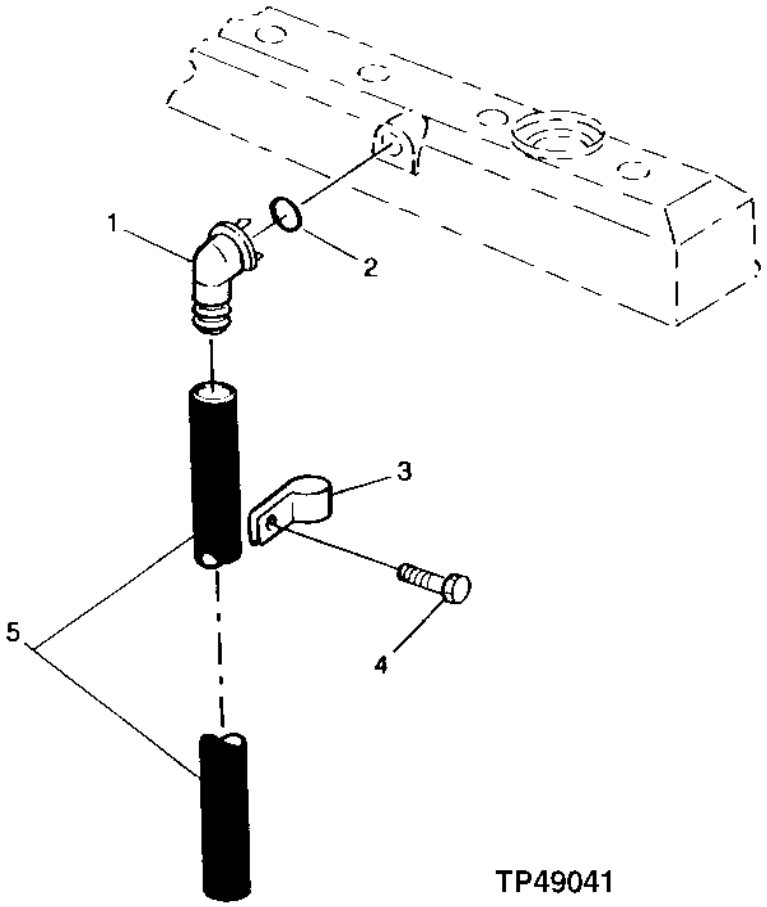

TP49041

ENGINE VENTILATING SYSTEM
TO4045TT082 - PE4045TT082

KEY	PART NO.	PART NAME	QTY	ENGINE SERIAL NO.	REMARKS
1	R120467	ELBOW FITTING	1		
2	R72328	O-RING	1		18.720 X 2.616 MM (0.737" X 0.103")
3	R72659	CLAMP	1		
4	19M7866	SCREW	1		M8 X 20
5	H36031	HOSE	1		

CYLINDER HEAD, HEAD GASKET AND VALVES
TO4045TT082 - PE4045TT082

TP49042 -UN-06SEP95

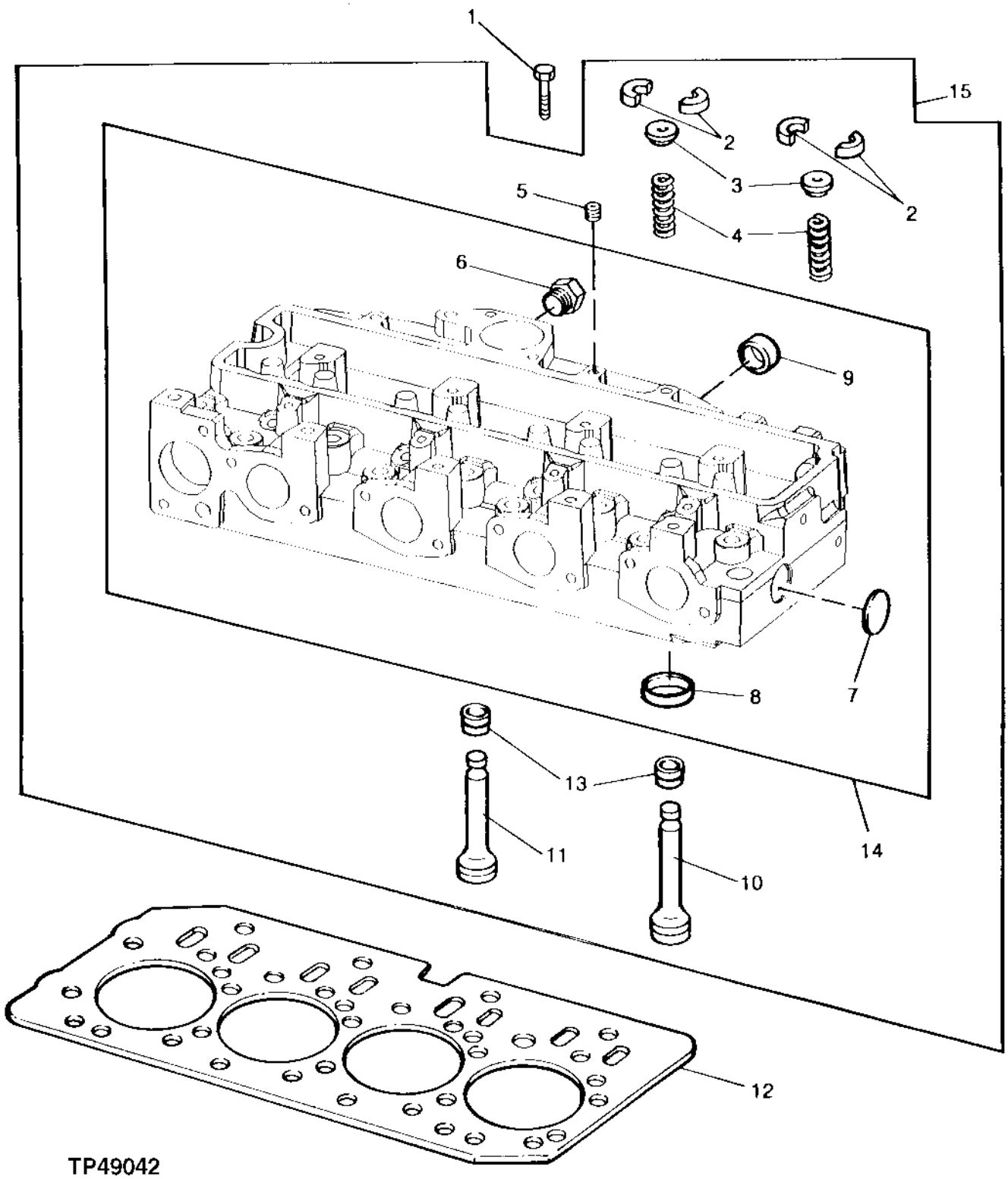

CYLINDER HEAD, HEAD GASKET AND VALVES
TO4045TT082 - PE4045TT082

KEY	PART NO.	PART NAME	QTY	ENGINE SERIAL NO.	REMARKS
1	R85363	CAP SCREW	18		
2	R91889	RETAINER	16		
3	RE60005	ROTATOR	8		
4	R26125	SPRING	8		
5	R104592	PIPE PLUG	1		
6	T58477	FITTING	1		
	R26906	O-RING	1		
7	CD16284	CAP	1		
8	R98063	VALVE SEAT INSERT	4		STANDARD SIZE INTAKE VALVE
	R98335	VALVE SEAT INSERT	4		OVERSIZE INTAKE VALVE
	R85687	VALVE SEAT INSERT	4		STANDARD SIZE EXHAUST VALVE
	R93910	VALVE SEAT INSERT	4		OVERSIZE EXHAUST VALVE
9	R43409	CAP	2		
10	R90692	EXHAUST VALVE	4		STANDARD
11	R98062	INTAKE VALVE	4		STANDARD
12	R116515	ENGINE CYLINDER HEAD GASKET	1		
13	RE31617	SEAL	8		
14	.....	CYLINDER HEAD	1		(MARKED R121402)
15	RE57234	CYLINDER HEAD	1		(MARKED R121402)

MEMORANDA

EXHAUST MANIFOLD AND GASKET
TO4045TT082 - PE4045TT082

TP49344 -UN-22NOV95

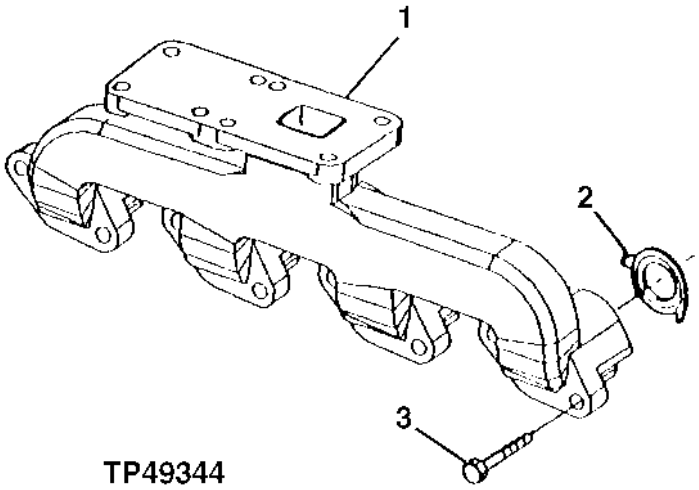

KEY	PART NO.	PART NAME	QTY	ENGINE SERIAL NO.	REMARKS
1	R132261	EXHAUST MANIFOLD	1		
2	R90658	GASKET	4		
3	19M7810	SCREW	8		M10 X 80

EXHAUST ELBOW
TO4045TT082 - PE4045TT082

TP49256 -UN-15MAY95

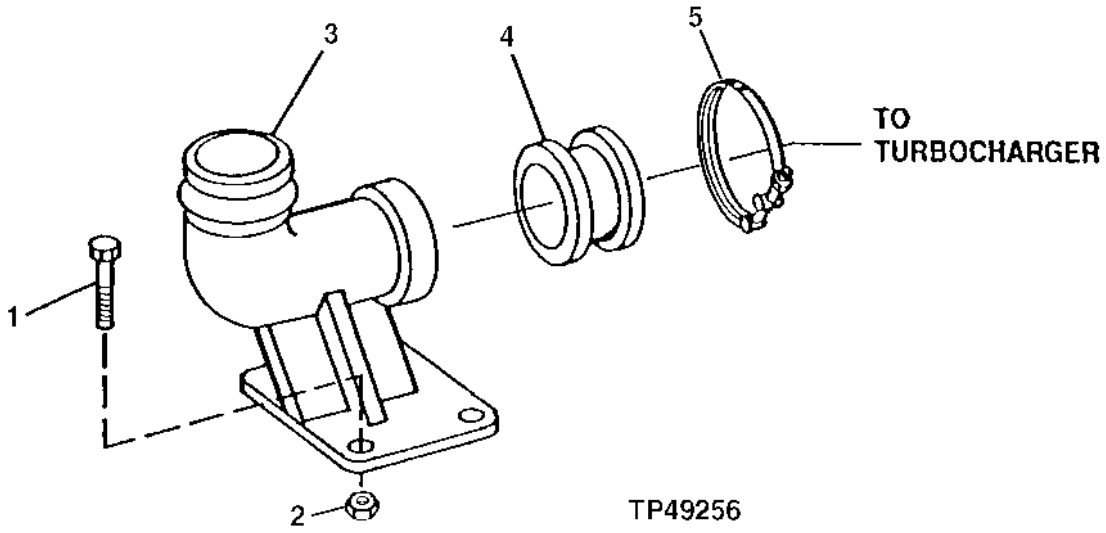

KEY	PART NO.	PART NAME	QTY	ENGINE SERIAL NO.	REMARKS
1	19M8162	CAP SCREW	4		M10 X 40
2	14M7296	FLANGE NUT	4		M10
3	R123246	PIPE ELBOW	1		
4	R87732	ADAPTER	1		
5	RE40048	CLAMP	1		

FUEL INJECTION NOZZLE
TO4045TT082 - PE4045TT082

TP48976 -UN-26OCT96

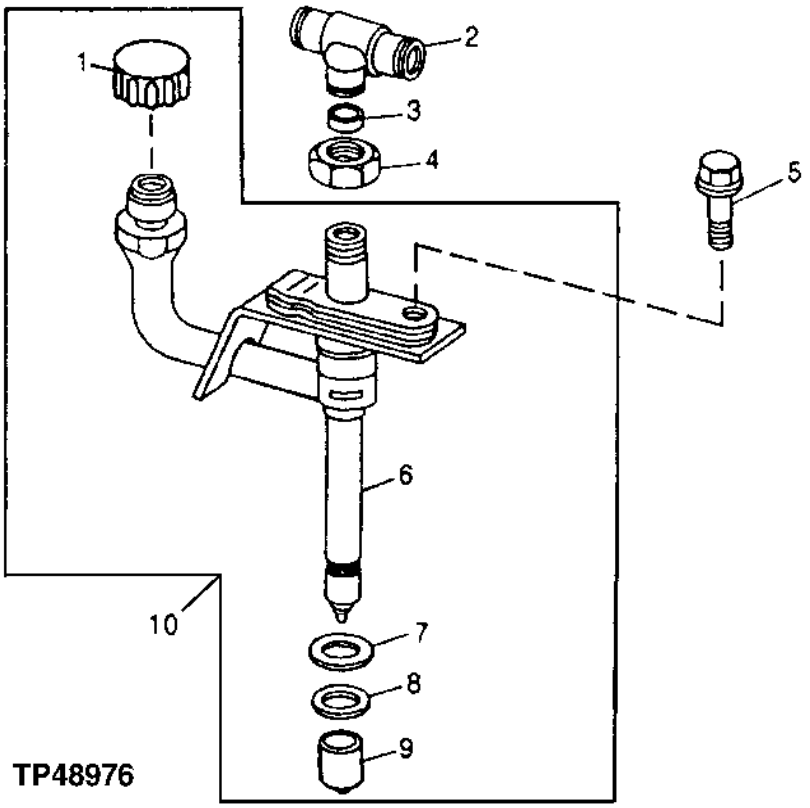

KEY	PART NO.	PART NAME	QTY	ENGINE SERIAL NO.	REMARKS
1	.....	CAP (HAT)	1		
2	R71963	TEE FITTING	1		
3	R79605	WASHER	1		
4	R79604	TUBE NUT	1		
5	R116366	SCREW	1		
6	.....	NOZZLE	1		
7	R92352	PACKING	1		
8	R48000	SEAL	1		(USE WITH OVERSIZE NOZZLE BORE) (NOT INCLUDED WITH RE48786)
	R500390	WASHER	1		(USE WITH STANDARD NOZZLE BORE)
9	T24472	PLUG	1		
10	RE48786	INJECTION NOZZLE	1		

FUEL INJECTION SYSTEM
TO4045TT082 - PE4045TT082
(STANADYNE)

TP59234 -UN-09OCT97

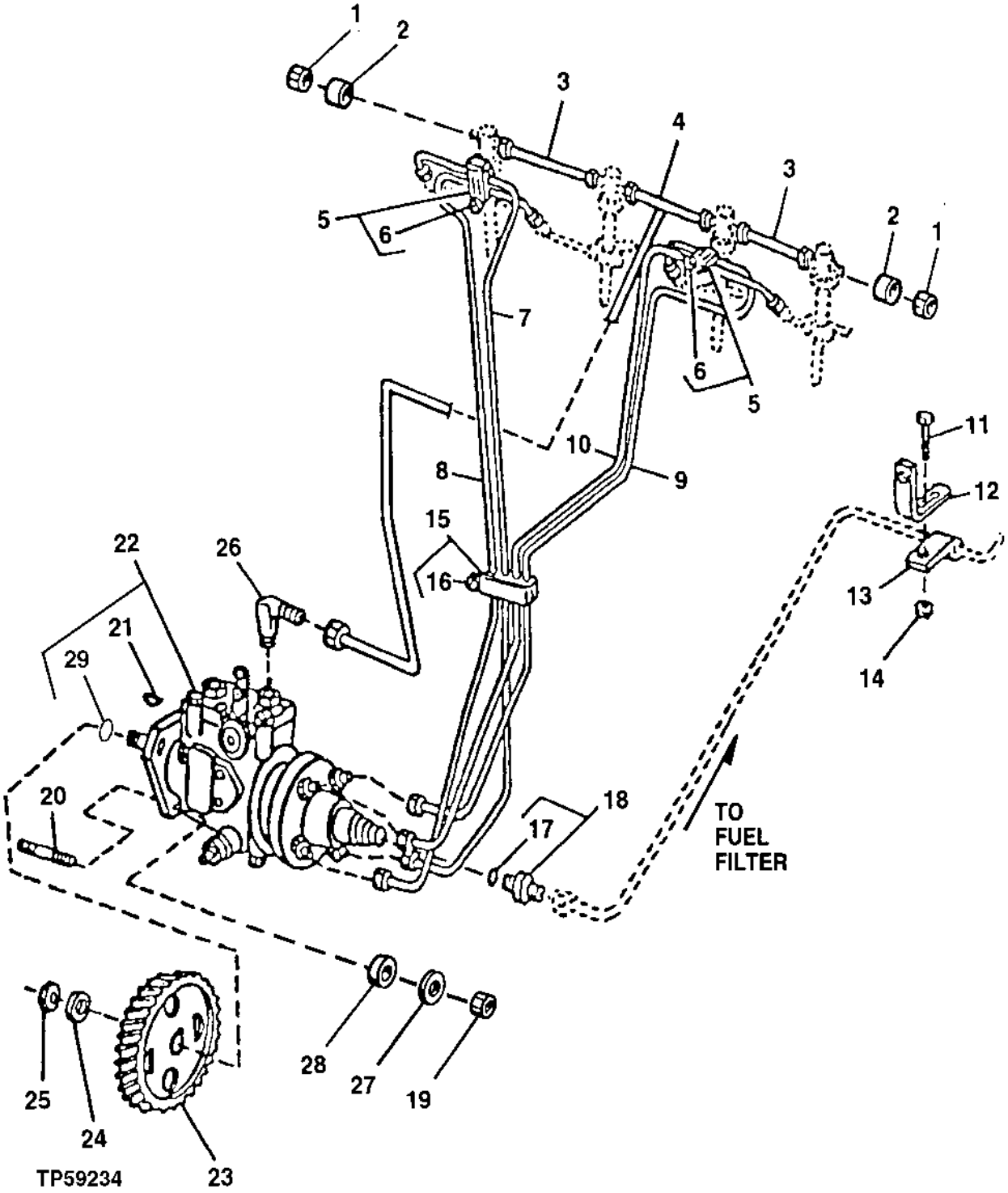

FUEL INJECTION SYSTEM
TO4045TT082 - PE4045TT082
(STANADYNE)

KEY	PART NO.	PART NAME	QTY	ENGINE SERIAL NO.	REMARKS
1	AR85519	PLUG	2		
2	R123593	TUBE NUT	2		
3	RE68748	TUBE	2		
	R51936	SEALING WASHER	2		(NOT ILLUSTRATED)
4	RE70848	FUEL LINE	1		LEAK-OFF
	R51936	SEALING WASHER	3		(NOT ILLUSTRATED)
5	RE19797	CLAMP	2		
6	19M7923	CAP SCREW	2		M6 X 12, (SUB FOR 19M7300)
7	RE59447	FUEL LINE	1		NO. 1
8	RE59448	FUEL LINE	1		NO. 2
9	RE59449	FUEL LINE	1		NO. 3
10	RE59450	FUEL LINE	1		NO. 4
11	19M7865	SCREW	1		M8 X 16, NO. 2
12	R116116	BRACKET	1		
13	T14050	CLAMP	1		
14	14M7298	FLANGE NUT	1		M8
15	RE19799	CLAMP	1		
16	19M7923	CAP SCREW	1		M6 X 12, (SUB FOR 19M7300)
17	51M7040	O-RING	1		9.300 X 2.200 MM
18	RE60029	ADAPTER	1		
19	14M7273	NUT	3		M8
20	R116386	STUD	3		
21	26H10	SHAFT KEY	1		5/32" X 5/8"
22	RE502376	FUEL INJECTION PUMP	1		(A)
23	R132267	GEAR	1		(60 TEETH)
24	R132874	WASHER	1		
25	R91360	NUT	1		M14
26	R67364	ELBOW FITTING	1		
27	12M7065	LOCK WASHER	3		8 MM
28	T27860	WASHER	3		
29	T16318	O-RING	1		
	R502076	BACK-UP RING	1		

(A) SEE YOUR AUTHORIZED PUMP REPAIR STATION FOR INTERNAL PARTS

MEMORANDA

AIR INTAKE SYSTEM
TO4045TT082 - PE4045TT082

TP49348 -UN-14DEC95

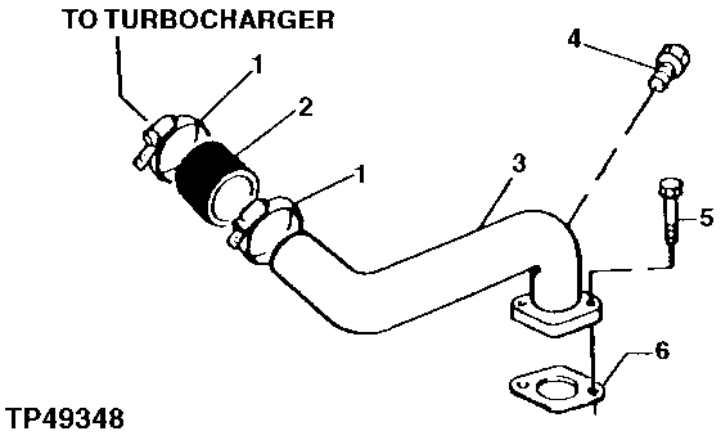

KEY	PART NO.	PART NAME	QTY	ENGINE SERIAL NO.	REMARKS
1	R110531	CLAMP	2		
2	R500596	HOSE	1		
3	51M7039	O-RING	1		8.100 X 1.600 MM
4	RE60071	FITTING	1		(SUB FOR RE502903)
5	19M7785	SCREW	2		M10 X 25
6	R81275	GASKET	1		
7	RE506662	TUBE	1		(AIR INLET)

ENGINE BALANCER SHAFT
TO4045TT082 - PE4045TT082

T149536 -UN-03JAN02

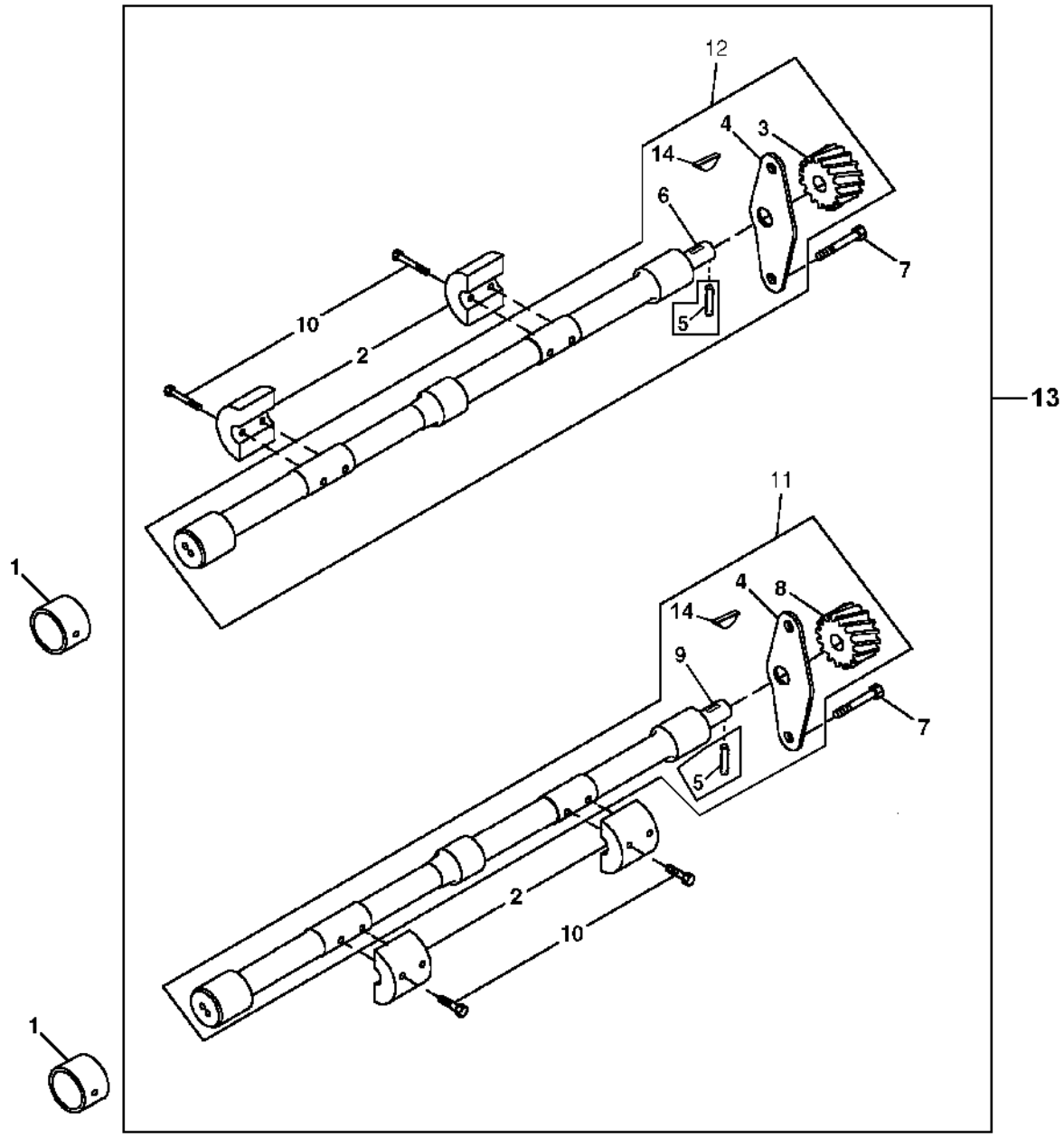

T149536

ENGINE BALANCER SHAFT
TO4045TT082 - PE4045TT082

KEY	PART NO.	PART NAME	QTY	SERIAL NO.	REMARKS
1	R115299	BUSHING	6		
2	R500265	WEIGHT	4		
3	.....	GEAR	1		L.H. (15 TEETH)
4	.....	PLATE	2		
5	34M7089	DOWEL PIN	2	-785945	4 X 12 MM
6	.....	BALANCER SHAFT	1		L.H.
7	19M8998	SCREW	4		M8 X 12 (HS, HEAD MARKED 10.9)
8	.....	GEAR	1		R.H. (15 TEETH)
9	.....	BALANCER SHAFT	1		R.H.
10	19M8882	SCREW	8		M8 X 40 (HS, HEAD MARKED 10.9)
11	RE500448	BALANCER SHAFT	1		R.H.
12	RE500449	BALANCER SHAFT	1		L.H.
13	RE504741	BALANCER SHAFT	1		KIT
14	R133303	SHAFT KEY	2	782946-	

TURBOCHARGER AND GASKET
TO4045TT082 - PE4045TT082

TP49341 -UN-27SEP96

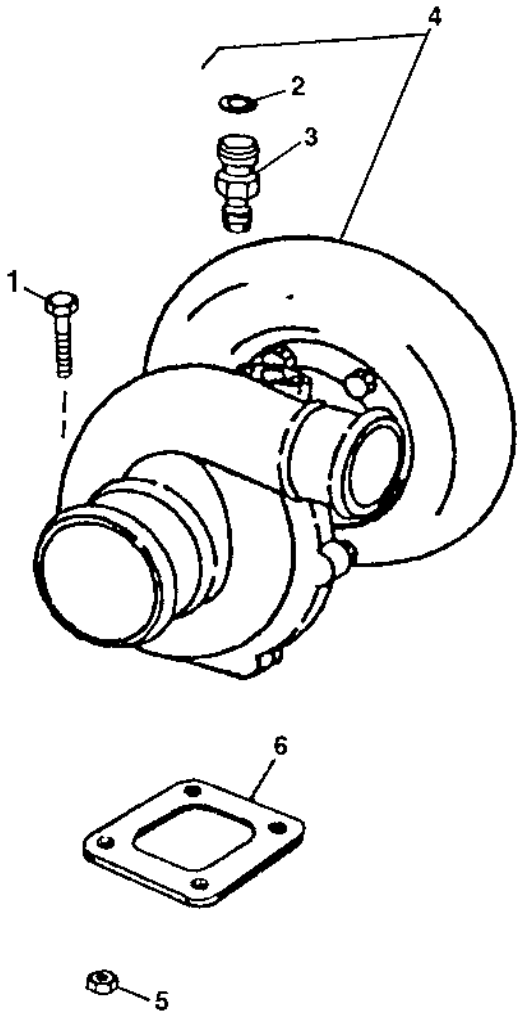

TP49341

TURBOCHARGER AND GASKET
TO4045TT082 - PE4045TT082

KEY	PART NO.	PART NAME	QTY	ENGINE SERIAL NO.	REMARKS
1	19M8162	CAP SCREW	4		M10 X 40
2	R63548	O-RING	1		
3	M87733	ADAPTER	1		
4	RE505047	TURBOCHARGER	1		
5	14M7296	FLANGE NUT	4		M10
6	R92097	GASKET	1		

TURBOCHARGER OIL LINES
TO4045TT082 - PE4045TT082

TP54936 -UN-11DEC96

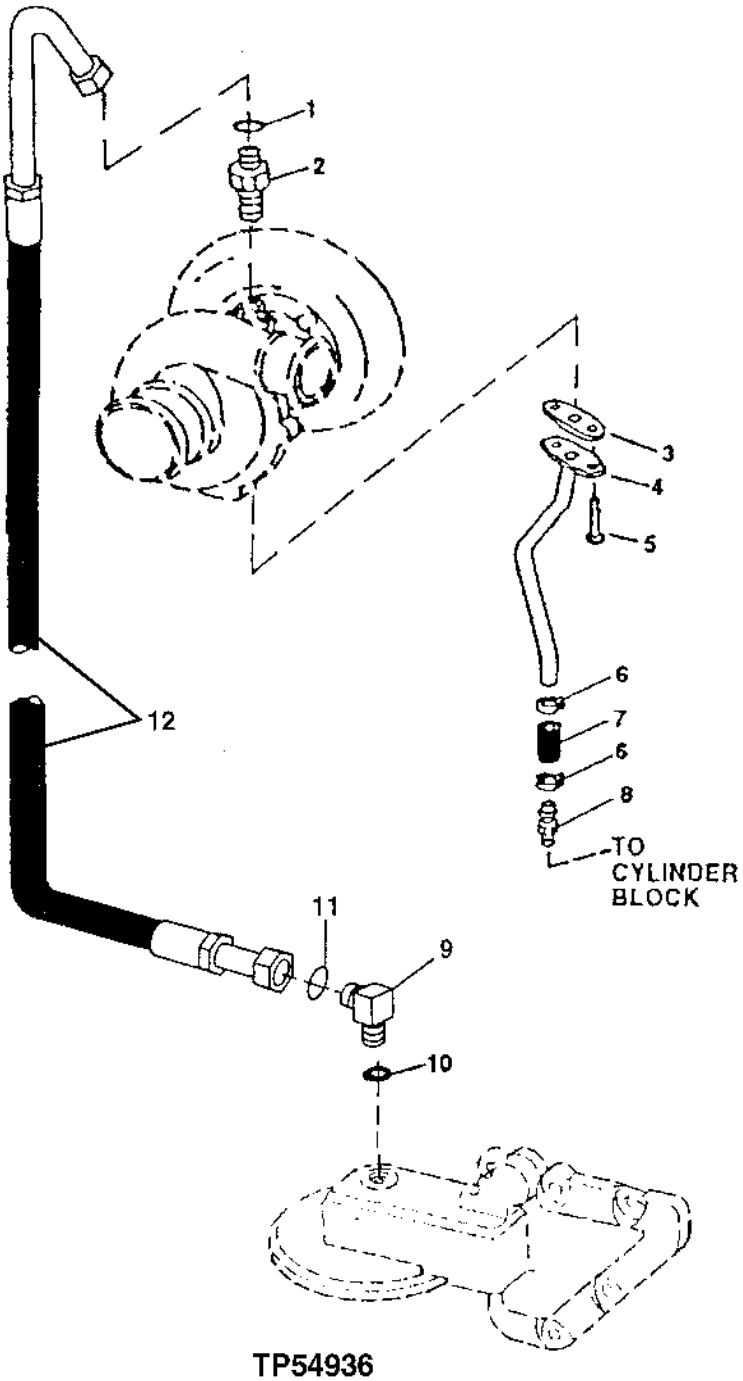

TP54936

TURBOCHARGER OIL LINES
TO4045TT082 - PE4045TT082

KEY	PART NO.	PART NAME	QTY	ENGINE SERIAL NO.	REMARKS
1	R63548	O-RING	1		
2	M87733	ADAPTER	1		
3	R123570	GASKET	1		
4	RE59547	OIL LINE	1		
5	19M7866	SCREW	2		M8 X 20
6	RE65978	CLAMP	1		
7	.....	HOSE	1		(MAKE FROM R120013 BULK MATERIAL)
8	RE54885	HOSE FITTING	1		
9	38H5154	ELBOW FITTING	1		
10	51M7042	O-RING	1		
11	T77613	O-RING	1		
12	RE501260	OIL LINE	1		

WATER PUMP INLET AND PULLEY
TO4045TT082 - PE4045TT082

TP49372 -UN-18JAN96

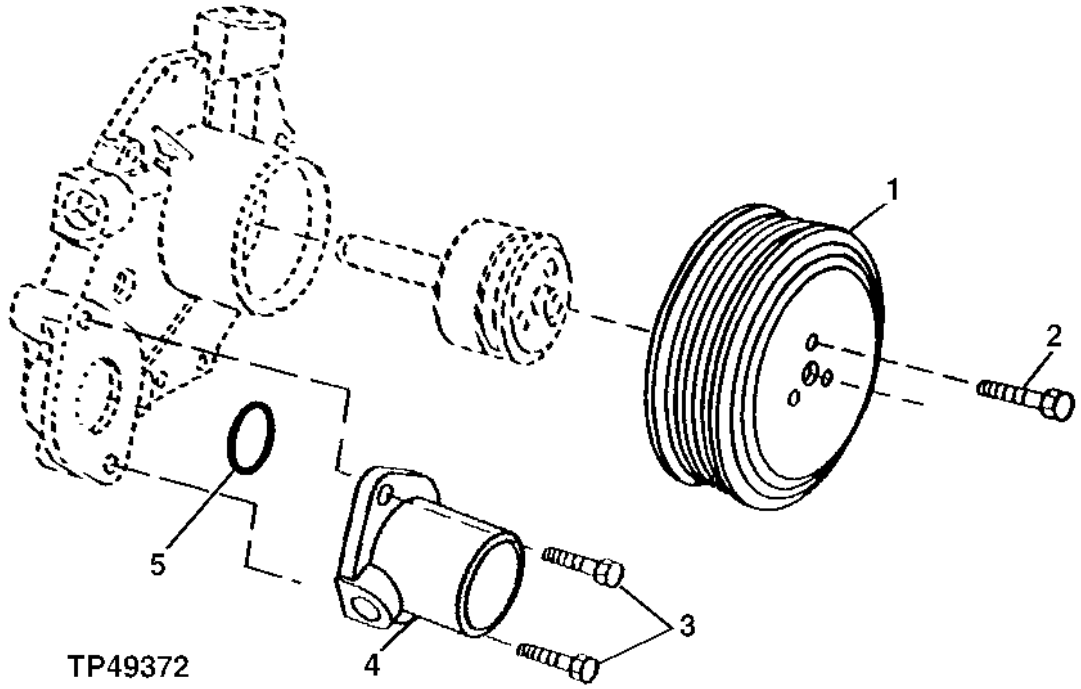

KEY	PART NO.	PART NAME	QTY	ENGINE SERIAL NO.	REMARKS
1	R121038	PULLEY	1		
2	19M7774	SCREW	3		M6 X 12
3	19M7867	SCREW	2		M8 X 25
4	R121634	WATER PUMP CONNECTION	1		
5	R89944	O-RING	1		

WATER PUMP AND WATER PUMP REPAIR KIT
(ENGINE SERIAL NUMBER -900932)
TO4045TT082 - PE4045TT082

TP69534 -UN-18JUL00

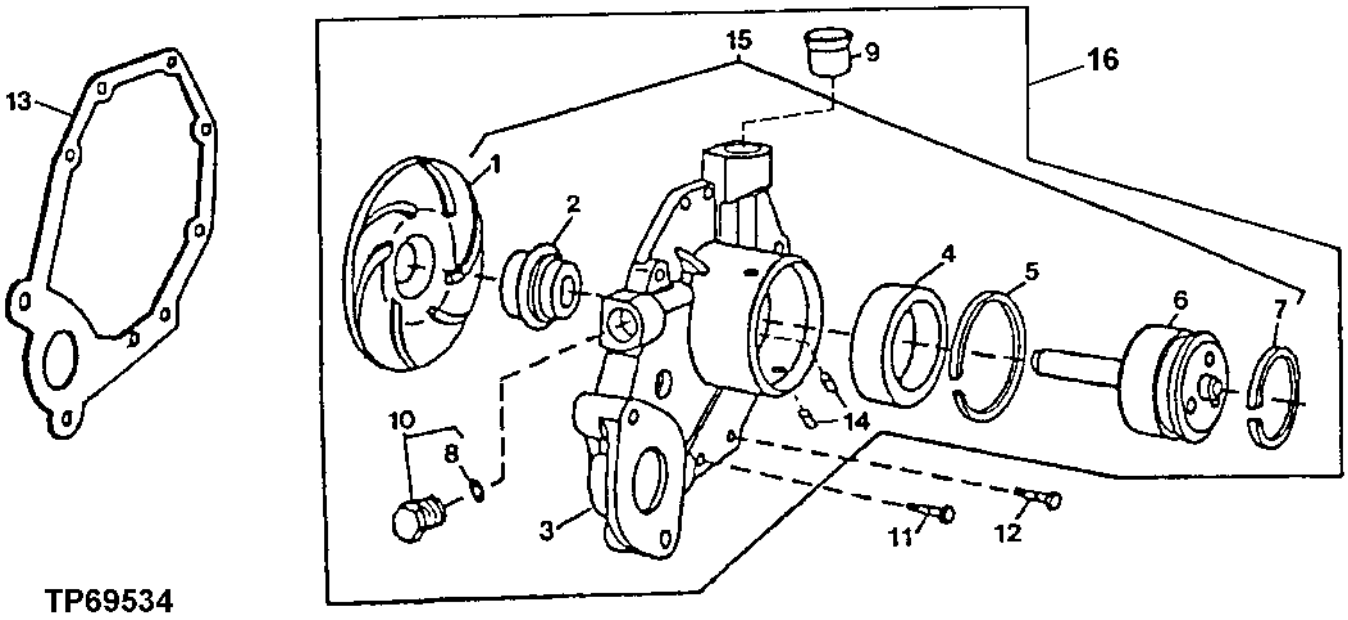

TP69534

KEY	PART NO.	PART NAME	QTY	ENGINE SERIAL NO.	REMARKS
1	.....	IMPELLER	1		
2	.....	SEAL	1		
3	.....	HOUSING	1		
4	.....	BALL BEARING	1		
5	.....	RING	1		
6	.....	SHAFT	1		
7	A364R	SNAP RING	1		
8	51M7043	O-RING	1		15.300 X 2.200 MM
9	R123226	SEAL	1		
10	RE46685	PLUG	1		
11	19M7796	SCREW	3		M6 X 30
12	19M7863	SCREW	5		M6 X 25
13	R123417	GASKET	1		
14	R100369	FILTER	2		
15	RE71240	KIT	1		
16	RE500737	WATER PUMP	1		(MARKED R500401) (SUB RE505981 AND RE508566)

WATER PUMP
(ENGINE SERIAL NO.900933-)
TO4045TT082 - PE4045TT082

T149718 -UN-07JAN02

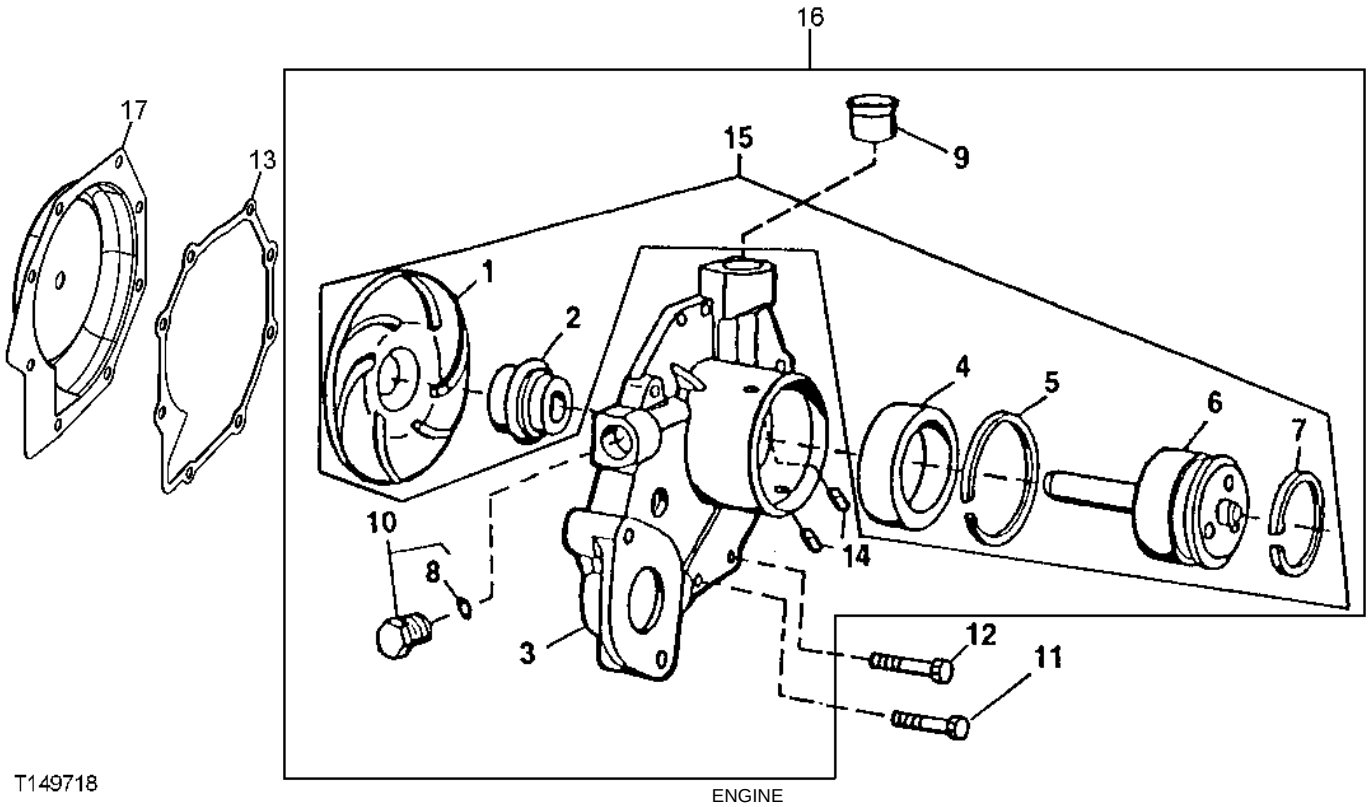

T149718

KEY	PART NO.	PART NAME	QTY	ENGINE SERIAL NO.	REMARKS
1	.....	IMPELLER	1		(MARKED R121036)
2	.....	SEAL	1		(MARKED R503509)
3	.....	HOUSING	1		
4	.....	BALL BEARING	1		
5	.....	RING	1		
6	.....	SHAFT	1		
7	A364R	SNAP RING	1		
8	51M7043	O-RING	1		15.300 X 2.200 MM
9	R123226	SEAL	1		
10	RE46685	PLUG	1		
11	19M7863	SCREW	5		M6 X 25
12	19M7796	SCREW	3		M6 X 30
13	R123417	GASKET	1		
14	R100369	FILTER	2		
15	RE70962	KIT	1		
16	RE505981	WATER PUMP	1		(MARKED R503509)
17	RE508566	KIT	1		(WATER PUMP INSERT REPAIR)

MEMORANDA

THERMOSTAT AND THERMOSTAT COVER
TO4045TT082 - PE4045TT082

TP55165 -UN-08AUG97

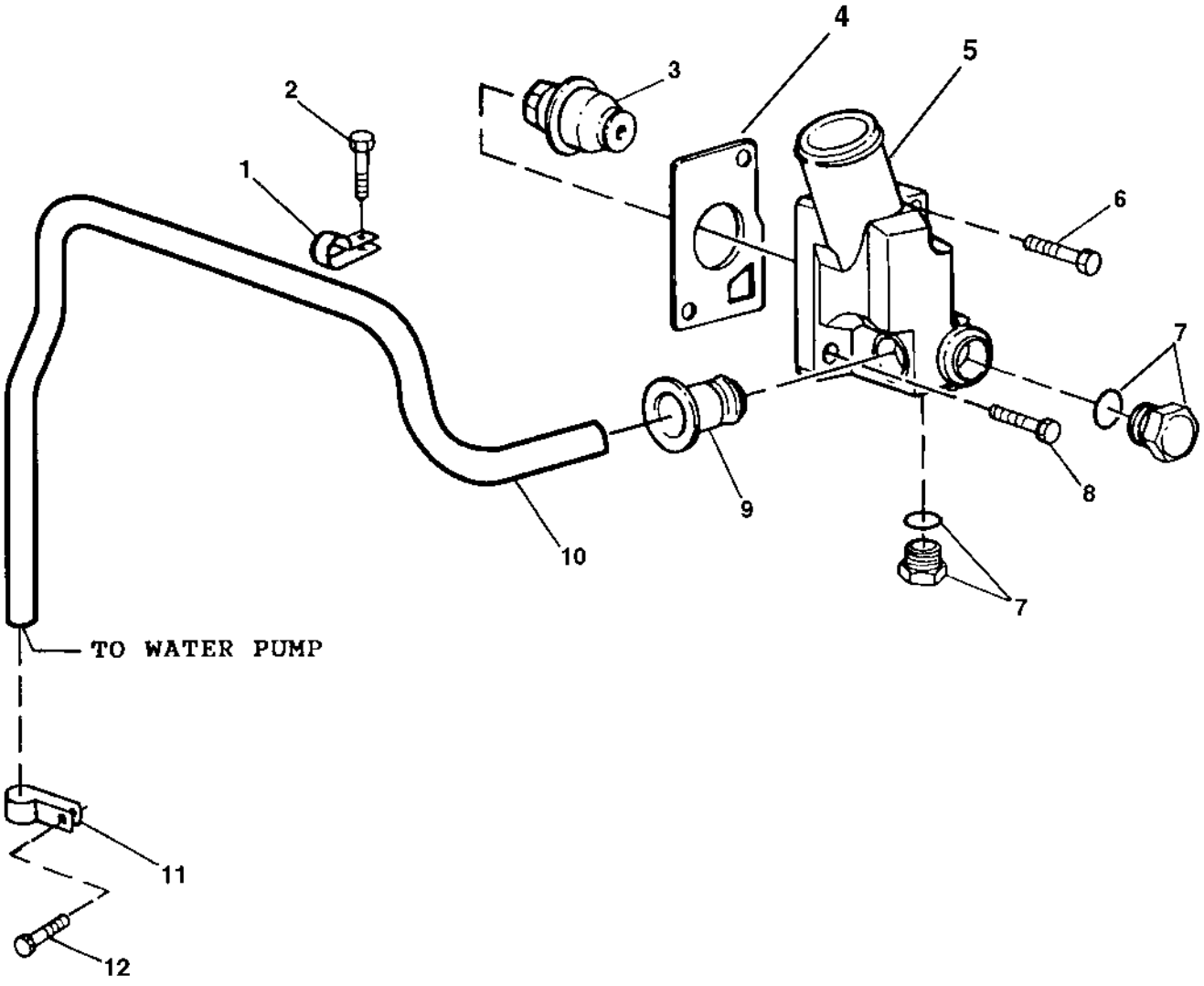

TP55165

THERMOSTAT AND THERMOSTAT COVER
TO4045TT082 - PE4045TT082

KEY	PART NO.	PART NAME	QTY	ENGINE SERIAL NO.	REMARKS
1	R123323	CLAMP	1		
2	19M7788	SCREW	1		M12 X 25
3	RE506300	THERMOSTAT	1		82° C (180° F)
4	R502814	GASKET	1		(SUB FOR R135896)
5	R131016	COVER	1		
6	19M8292	SCREW	1		M10 X 50
7	RE46684	PLUG	2		
8	19M7786	SCREW	1		M10 X 30
9	R123226	SEAL	1		
10	R501144	TUBE	1		
11	R123324	CLAMP	1		
12	19M7801	SCREW	1		M8 X 60

ENGINE OIL COOLER AND ADAPTER
TO4045TT082 - PE4045TT082

T137126 -UN-15JAN01

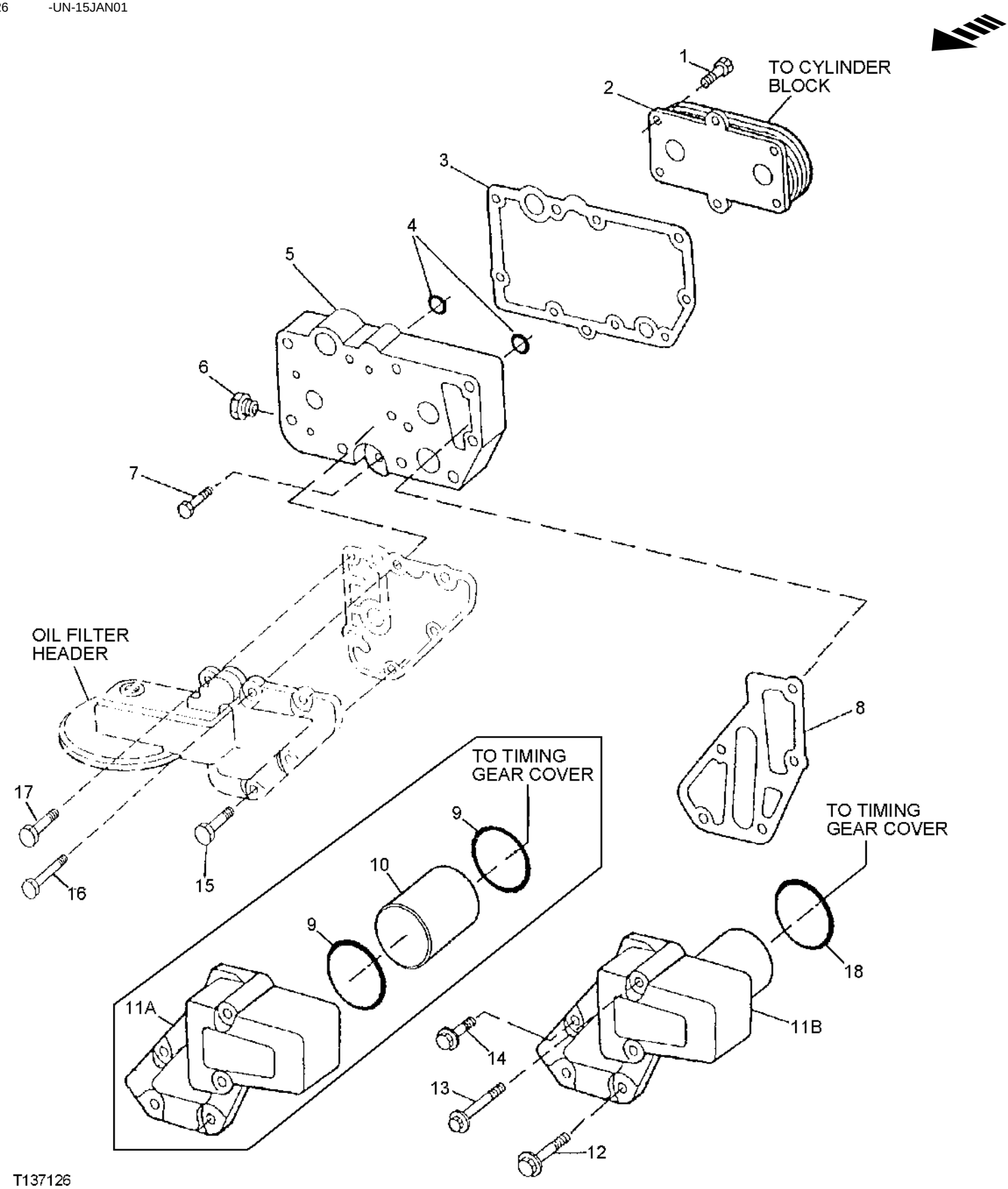

ENGINE OIL COOLER AND ADAPTER
TO4045TT082 - PE4045TT082

KEY	PART NO.	PART NAME	QTY	ENGINE SERIAL NO.	REMARKS
1	RE67231	SCREW	6		M6 X 16 (WITH PRE-APPLIED SEALANT)
2	RE59296	OIL COOLER	1		
3	R123501	GASKET	1		
4	T122075	O-RING	2		
5	R123471	HOUSING	1		
6	RE46686	PLUG	1		
7	RE46685	PLUG	1		
8	R501428	GASKET	1		
9	R61105	O-RING	2	-873088	
10	R115252	TUBE	1	-873088	
11A	R135177	ADAPTER	1	-873088	(SUB R502811)
11B	R502811	ADAPTER	1	873089-	
12	19M7802	SCREW	2		M8 X 65
13	19M7970	SCREW	2		M8 X 100
14	RE67238	SCREW	1		M8 X 20 (WITH PRE-APPLIED SEALANT)
15	19M7802	SCREW	4		M8 X 65
16	19M7970	SCREW	1		M8 X 100
17	RE67238	SCREW	1		M8 X 20 (WITH PRE-APPLIED SEALANT)
18	R504734	O-RING	1	873089-	

FUEL FILTER, FUEL FILTER FUEL LINES AND SERVICE KITS
TO4045TT082 - PE4045TT082

T152603 -UN-13MAR02

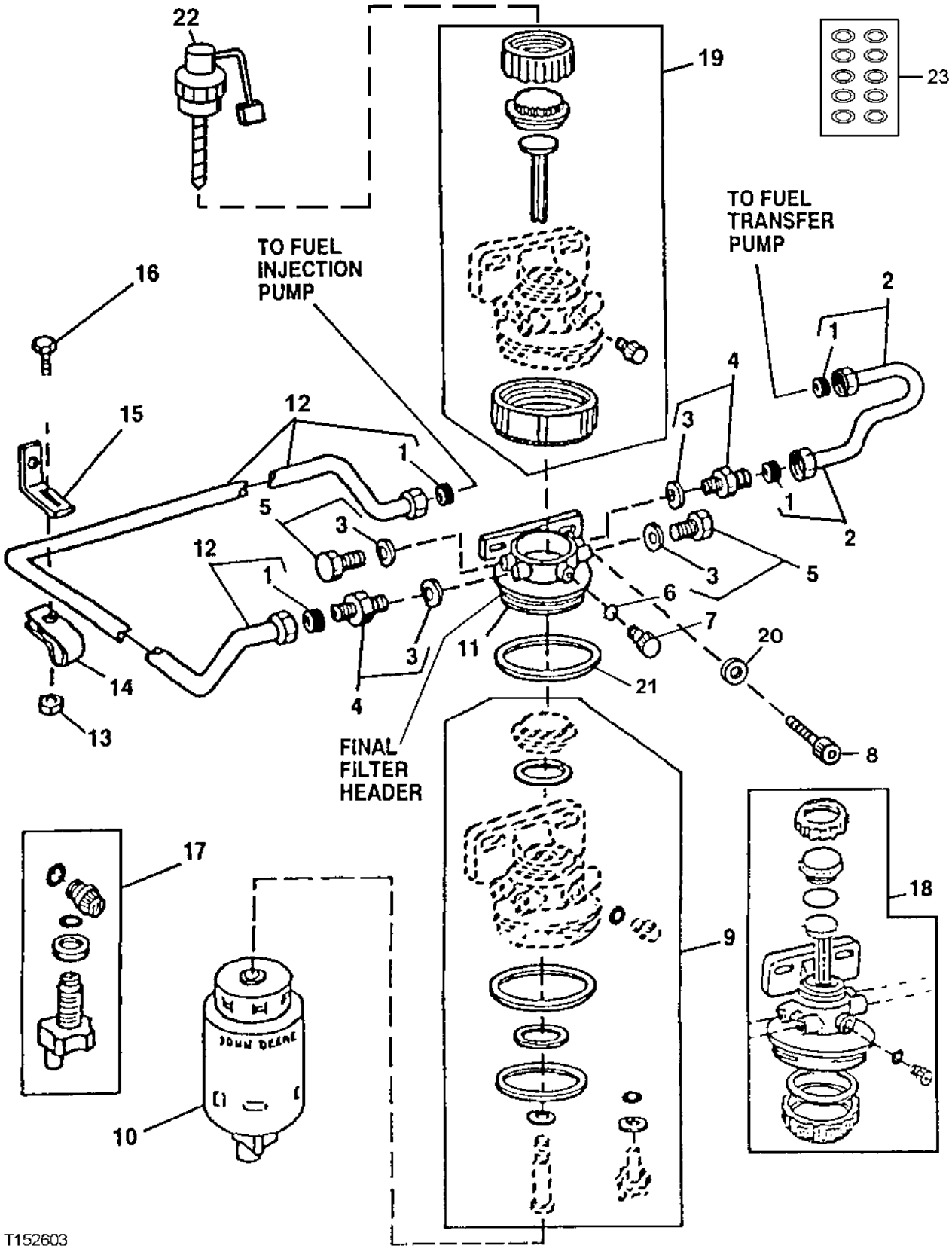

FUEL FILTER, FUEL FILTER FUEL LINES AND SERVICE KITS
TO4045TT082 - PE4045TT082

KEY	PART NO.	PART NAME	QTY	ENGINE SERIAL NO.	REMARKS
1	R74012	SEALING WASHER	4		
2	RE60037	FUEL LINE	1		
3	51M7040	O-RING	1		
4	RE60029	ADAPTER	2		
5	RE56323	PLUG	2		
6	R113562	O-RING	1		
7	R113563	DRAIN PLUG	1		
8	19M8328	SCREW	1		
9	RE516553	KIT	1		(SUB FOR RE50752) FUEL FILTER
10	RE62418	FUEL FILTER	1		INCLUDES DRAIN VALVE
11	.....	FILTER HEAD	1		(FURNISH RE70358)
12	RE60025	FUEL LINE	1		
13	14M7298	FLANGE NUT	1		M8
14	T14050	CLAMP	1		
15	R116116	BRACKET	1		
16	19M7865	SCREW	1		M8 X 16
17	RE60854	KIT	1		DRAIN VALVE
18	RE70358	KIT	1		FINAL FILTER
19	RE51649	SEAL KIT	1		FUEL FILTER
20	24M7096	WASHER	2		10.500 X 18 X 1.600 MM
21	R113565	O-RING	1		
22	RE51648	KIT	1		FUEL FILTER HEATER (12-VOLT)
23	RE516513	KIT	1		(WITH HAND PRIMER) (CONTAINS 10 O-RINGS)
	RE516512	KIT	1		(WITHOUT HAND PRIMER) (CONTAINS 10 O-RINGS)

FUEL TRANSFER PUMP
TO4045TT082 - PE4045TT082

TP69536 -UN-18JUL00

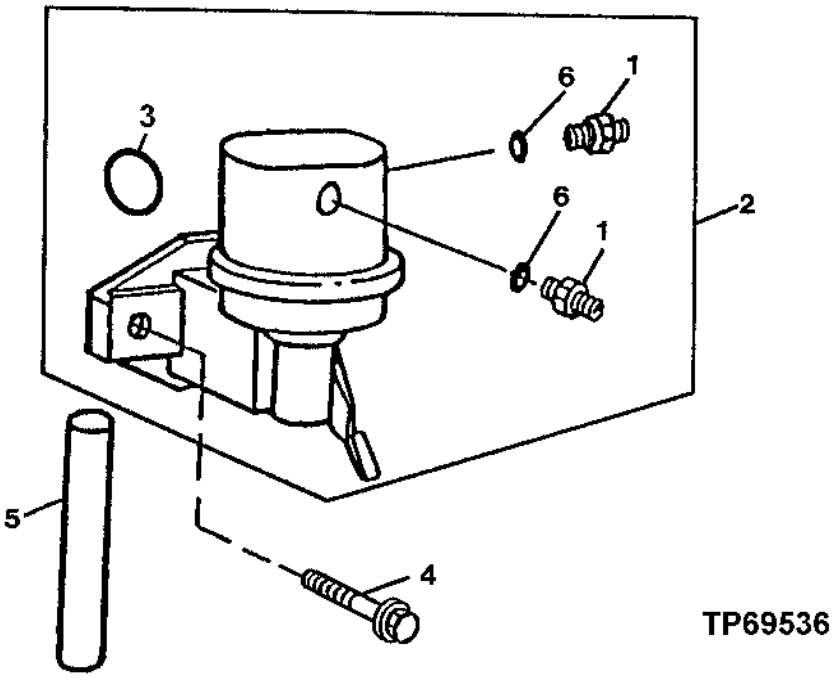

KEY	PART NO.	PART NAME	QTY	ENGINE SERIAL NO.	REMARKS
1	R500270	FITTING	2		
2	RE66153	FUEL PUMP	1		
3	R123273	O-RING	1		
4	RE504233	CAP SCREW	2		
5	R133405	PUSH ROD	1		
6	R500271	O-RING	2		

STARTING MOTOR AND ATTACHING PARTS (ISKRA)
TO4045TT082 - PE4045TT082
(ENGINE SERIAL NO. -894287)

T135657 -UN-27NOV00

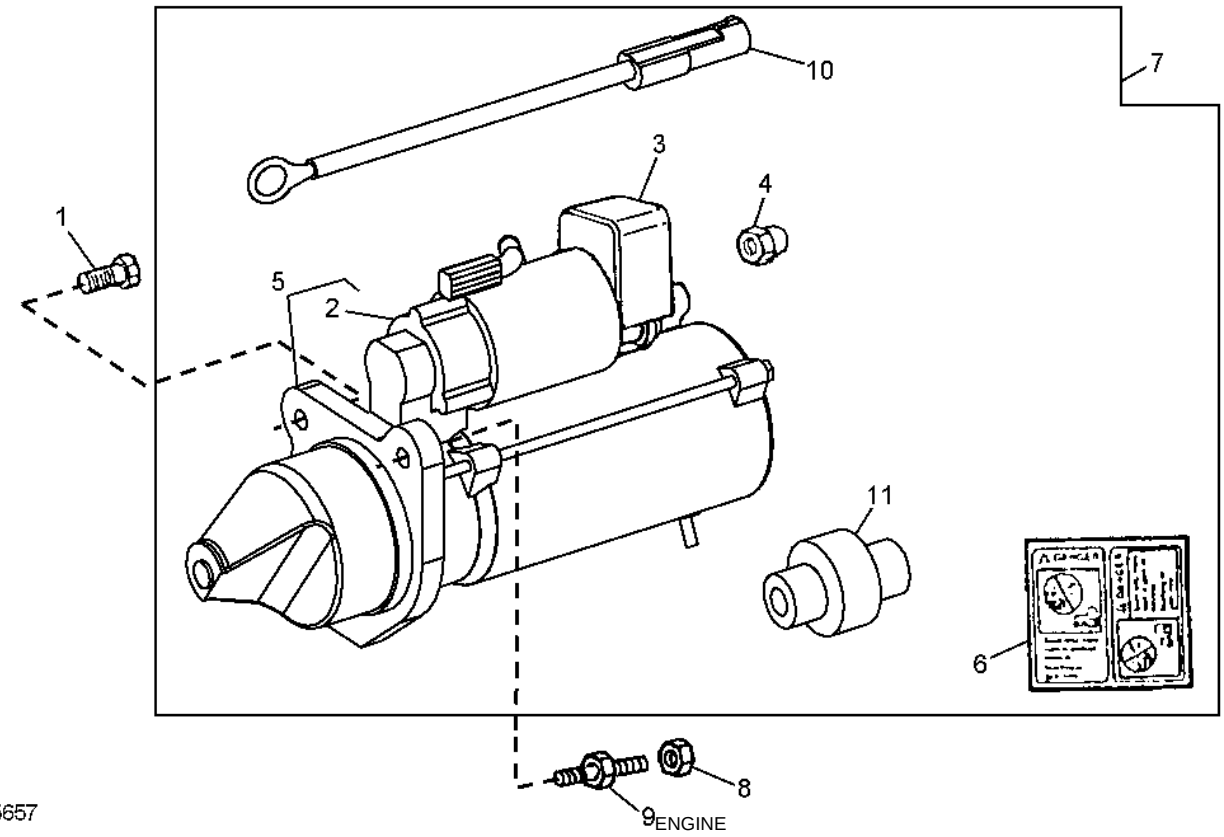

T135657

KEY	PART NO.	PART NAME	QTY	ENGINE SERIAL NO.	REMARKS
1	19M7786	SCREW	2		M10 X 30
2	RE515428	SOLENOID	1		(SUB FOR RE507637)
3	R135431	COVER	1		
4	R135432	NUT	1		
5	.....	STARTER MOTOR	1		(12 VOLT)
6	T146102	LABEL	1		
7	.....	KIT	1		(SUB FOR RE501767, THIS APPLICATION) (SUB RE506105 AND AT196314)
8	14M7296	FLANGE NUT	1		M10
9	R503419	STUD	1		
10	RE505400	BATTERY CABLE	1		
11	RE515688	STARTER MOTOR DRIVE	1		(SUB FOR RE507638)

STARTING MOTOR (DENSO)
(ENGINE SERIAL NO.894288-)
TO4045TT082 - PE4045TT082

T149124 -UN-14DEC01

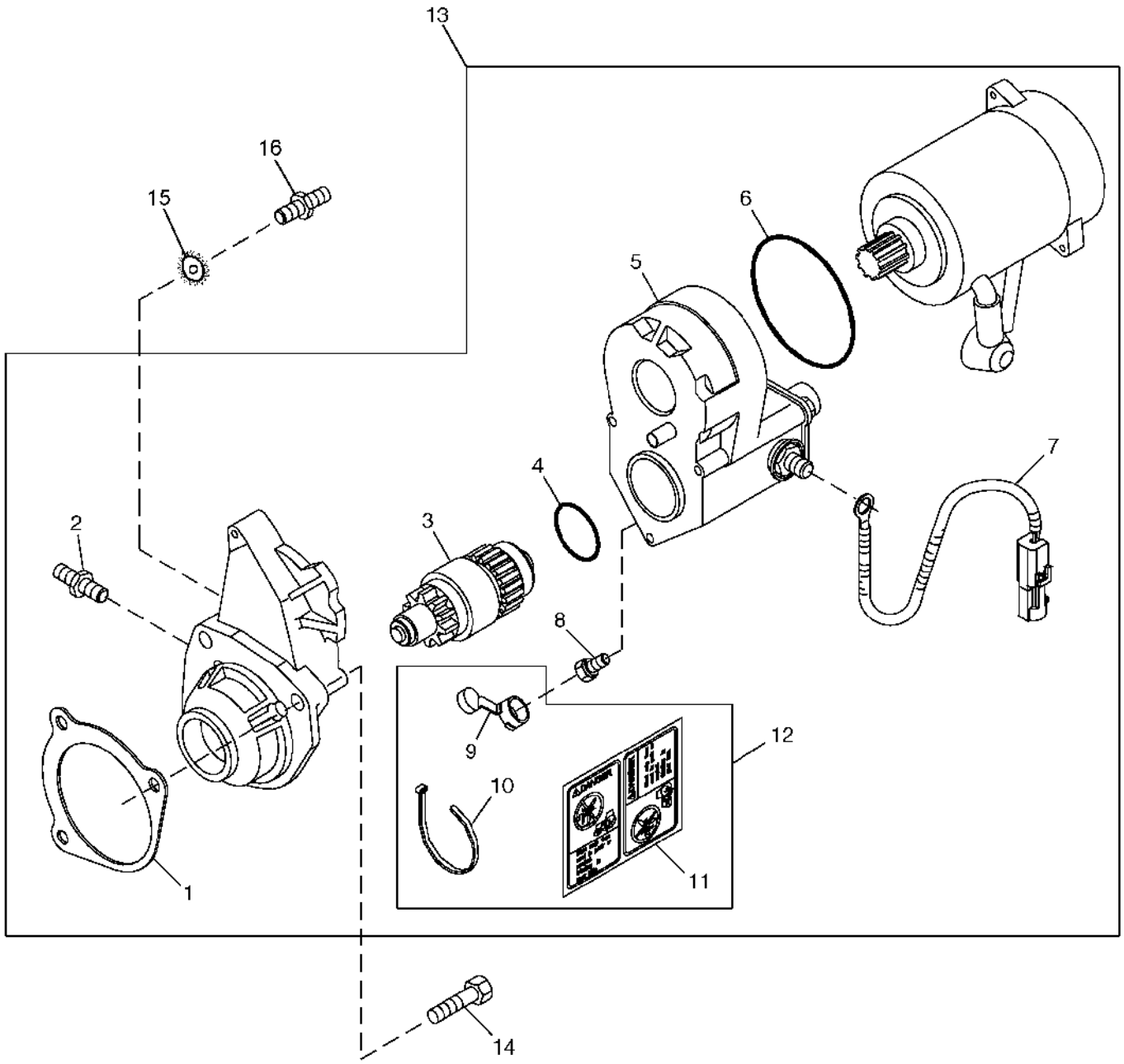

T149124

STARTING MOTOR (DENSO)
(ENGINE SERIAL NO.894288-)
TO4045TT082 - PE4045TT082

KEY	PART NO.	PART NAME	QTY	ENGINE SERIAL NO.	REMARKS
1	R53108	GASKET	1		NOT USED IN THIS APPLICATION
2	R136052	STUD	1		
3	RE70487	CLUTCH	1		
4	R135510	O-RING	1		
5	RE70486	SOLENOID	1		
6	R135509	SEAL	1		
7	RE505400	WIRING HARNESS	1		
8	RE71256	SCREW, WITH WASHER	1		
9	.....	COVER	1		(ORDER RE70756)
10	R96703	TIE BAND	1		NOT USED IN THIS APPLICATION
11	T146102	LABEL	1		"DANGER: START ONLY FROM SEAT..."
12	RE70756	KIT	1		
13	RE506105	STARTER MOTOR KIT	1		DENSO 12V WET SEALED, (MARKED RE504244)
14	19M7786	SCREW	2		M10 X 30
15	12M7033	LOCK WASHER	1		10.500 MM
16	R503419	STUD	1		

STARTER MOTOR ADAPTER KIT
(TO CONVERT ISKRA STARTER TO DENSO STARTER)
TO4045TT082 - PE4045TT082

T143910 -UN-16JUL01

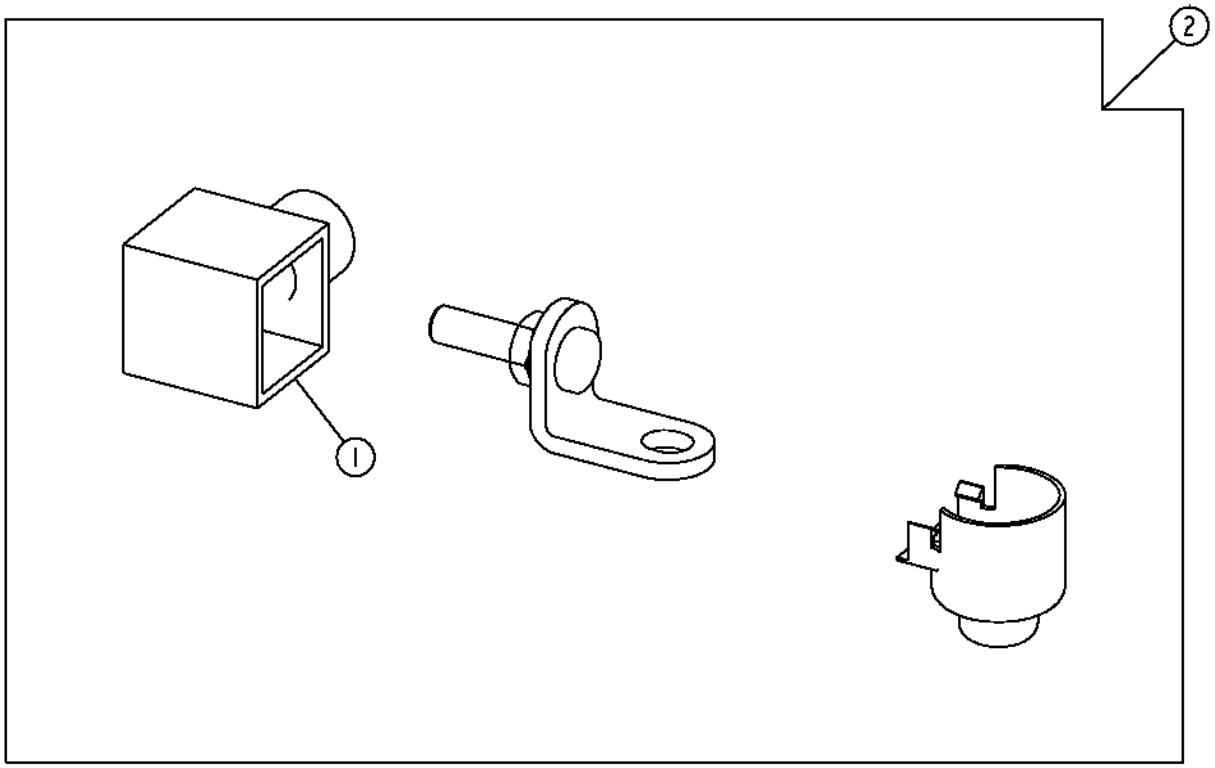

T143910

STARTER MOTOR ADAPTER KIT
(TO CONVERT ISKRA STARTER TO DENSO STARTER)
TO4045TT082 - PE4045TT082

KEY	PART NO.	PART NAME	QTY	SERIAL NO.	REMARKS
1	T129165	BOOT	1		
2	AT196314	KIT	1		(ALSO ORDER RE506105 STARTER MOTOR KIT)

ALTERNATOR MOUNTING BRACKETS
TO4045TT082 - PE4045TT082

TP69537 -UN-26JUL00

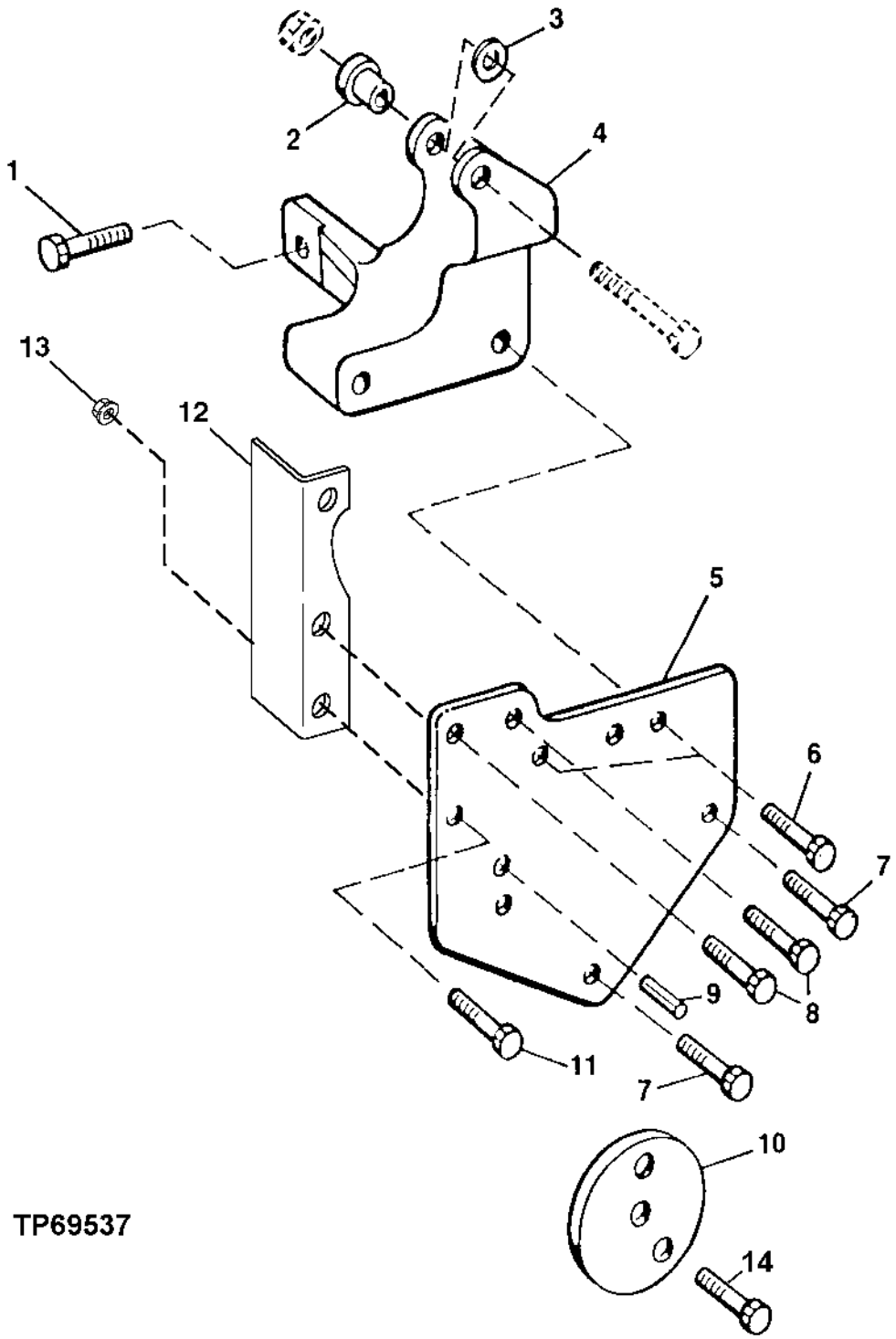

ALTERNATOR MOUNTING BRACKETS
TO4045TT082 - PE4045TT082

KEY	PART NO.	PART NAME	QTY	ENGINE SERIAL NO.	REMARKS
1	19M7786	SCREW	2		M10 X 30 (HS, HEAD MARKED 10.9)
2	R100377	BUSHING	1		
3	R64525	THRUST WASHER	1		
4	R132166	BRACKET	1		
5	R133978	SUPPORT	1		
6	19M7785	SCREW	2		M10 X 25 (HS, HEAD MARKED 10.9)
7	19M7801	SCREW	2		M8 X 60 (HS, HEAD MARKED 10.9)
8	19M7786	SCREW	2		M10 X 30 (HS, HEAD MARKED 10.9)
9	34M7061	SPRING PIN	1		8 X 20 MM
10	R500322	SPACER	1		
11	19M7786	SCREW	4		M10 X 30 (HS, HEAD MARKED 10.9)
12	R500531	STRAP	1		
13	14M7296	FLANGE NUT	2		M10
14	19M7811	SCREW	1		M10 X 90

FAN DRIVE HOUSING,PULLEYS, DRIVE BELT AND TENSIONERS
TO4045TT082 - PE4045TT082

TP69539 -UN-26JUL00

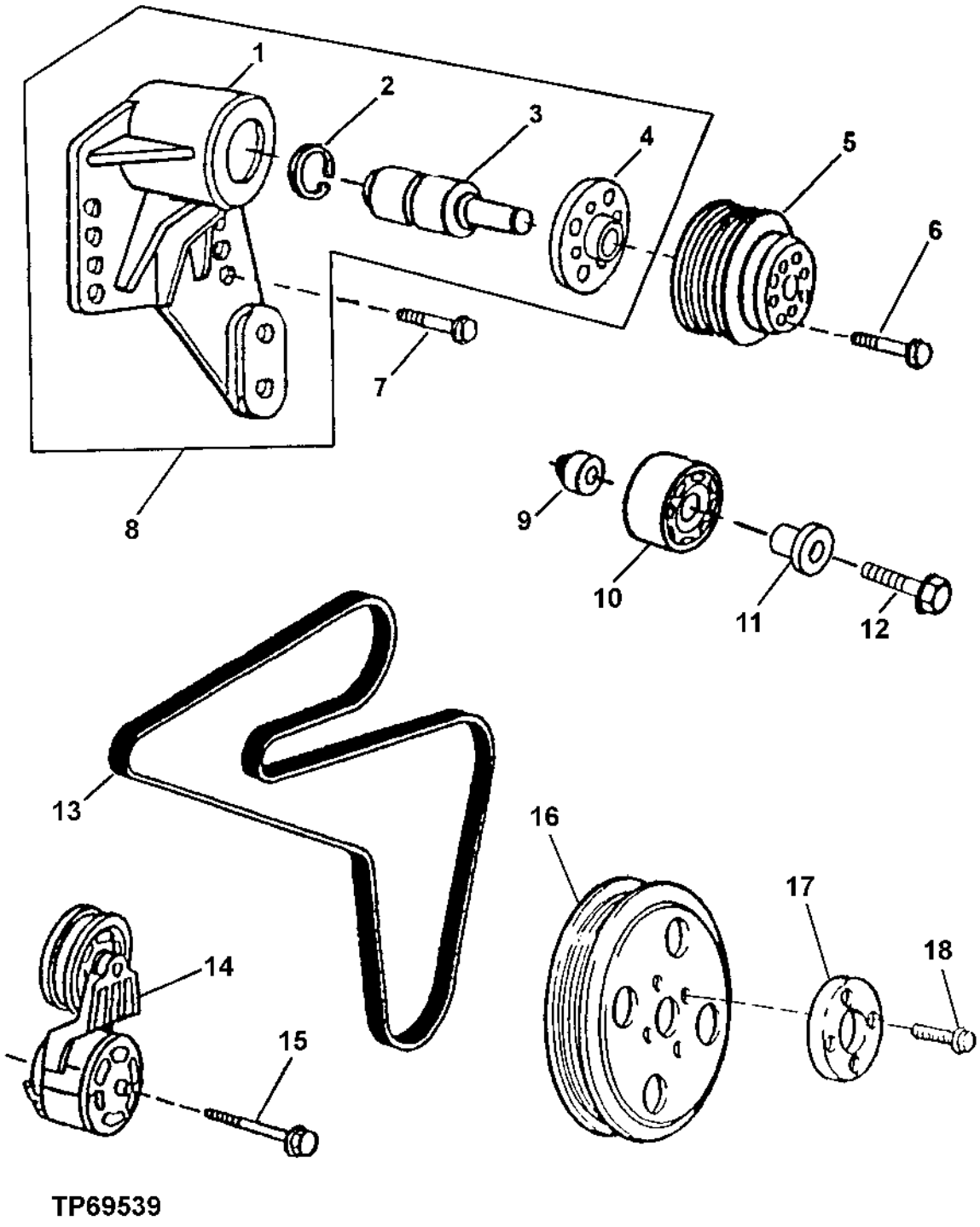

FAN DRIVE HOUSING,PULLEYS, DRIVE BELT AND TENSIONERS
TO4045TT082 - PE4045TT082

KEY	PART NO.	PART NAME	QTY	ENGINE SERIAL NO.	REMARKS
1	.....	HOUSING	1		(MARKED R500304)
2	H80753	SNAP RING	1		
3	.....	BALL BEARING	1		
4	.....	HUB	1		(MARKED R500598)
5	R128660	PULLEY	1		
6	19M8197	CAP SCREW	4		M10 X 85
7	19M7835	SCREW	4		M10 X 35
8	RE500539	BEARING HOUSING W/ BEARING	1		(MARKED R500304)
9	R500320	SPACER	1		(WITH AIR CONDITIONING)
10	RE505264	IDLER	1		(WITH AIR CONDITIONING)
11	R502079	SLEEVE	1		(WITH AIR CONDITIONING)
12	19M7808	SCREW	1		M10 X 65, (WITH AIR CONDITIONING)
13	R504023	V-BELT	1		(WITH AIR CONDITIONING)
	R504022	V-BELT	1		(WITHOUT AIR CONDITIONING)
14	RE70535	TIGHTENER	1		
15	19M7811	SCREW	2		M10 X 90
16	R133295	PULLEY	1		
17	R500649	FLANGE	1		
18	R121897	BOLT	1		

ENGINE FLYWHEEL
TO4045TT082 - PE4045TT082

TP69538 -UN-18JUL00

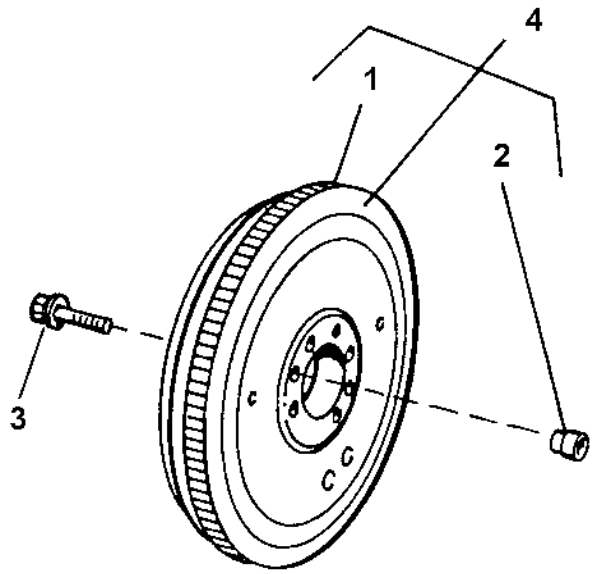

TP69538

KEY	PART NO.	PART NAME	QTY	ENGINE SERIAL NO.	REMARKS
1	R28811	RING GEAR	1		(129 TEETH)
2	R123521	SLEEVE	1		
3	R135918	BOLT	4		
4	RE500137	FLYWHEEL	4		(MARKED R500096)

FLYWHEEL HOUSING
TO4045TT082 - PE4045TT082

T157770 -UN-02AUG02

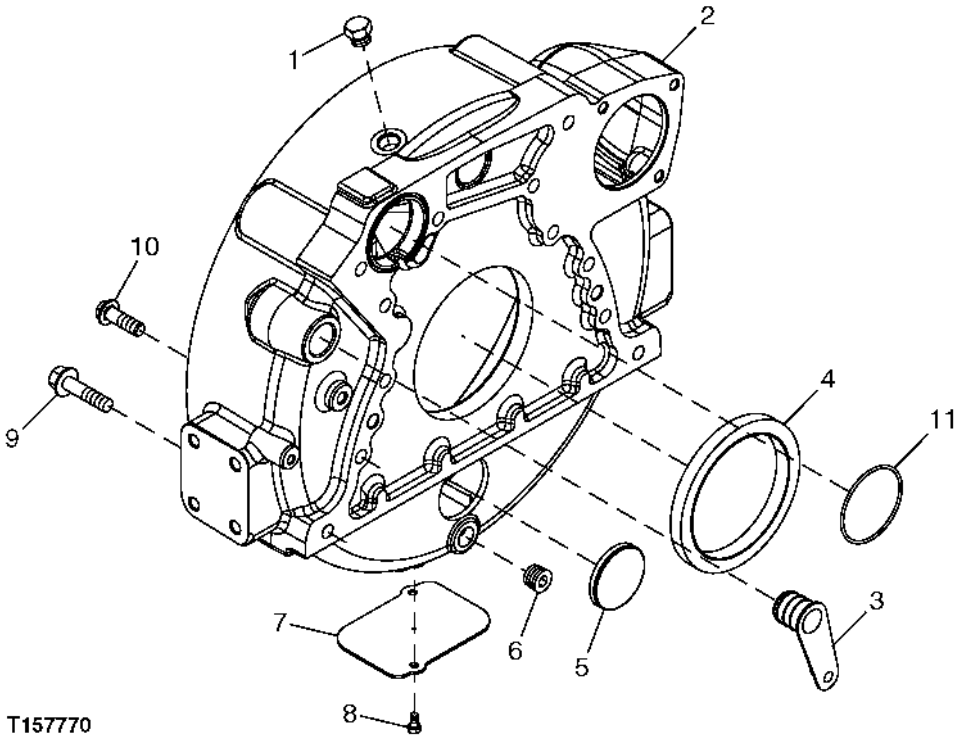

KEY	PART NO.	PART NAME	QTY	ENGINE SERIAL NO.	REMARKS
1	R39112	FITTING	1		
2	R501188	HOUSING	1		(SUB R503449 AND R61467)
	R503449	HOUSING	1		(ALSO ORDER R61467)
3	R131769	PLUG	1		
4	RE44574	SEAL	1		
5	T13518	CAP	1		
6	15H624	PIPE PLUG	1		1/2"
7	R121039	PLATE	2		
8	19M7923	CAP SCREW	2		M6 X 12
9	19M8306	SCREW	4		M12 X 50
10	R135918	BOLT	8		
11	R61467	O-RING	1	867795-	

MEMORANDA

CYLINDER HEAD REMOVAL AND IN VEHICLE OVERHAUL GASKET SETS
TO4045TT082 - PE4045TT082

T150756 -UN-31JAN02

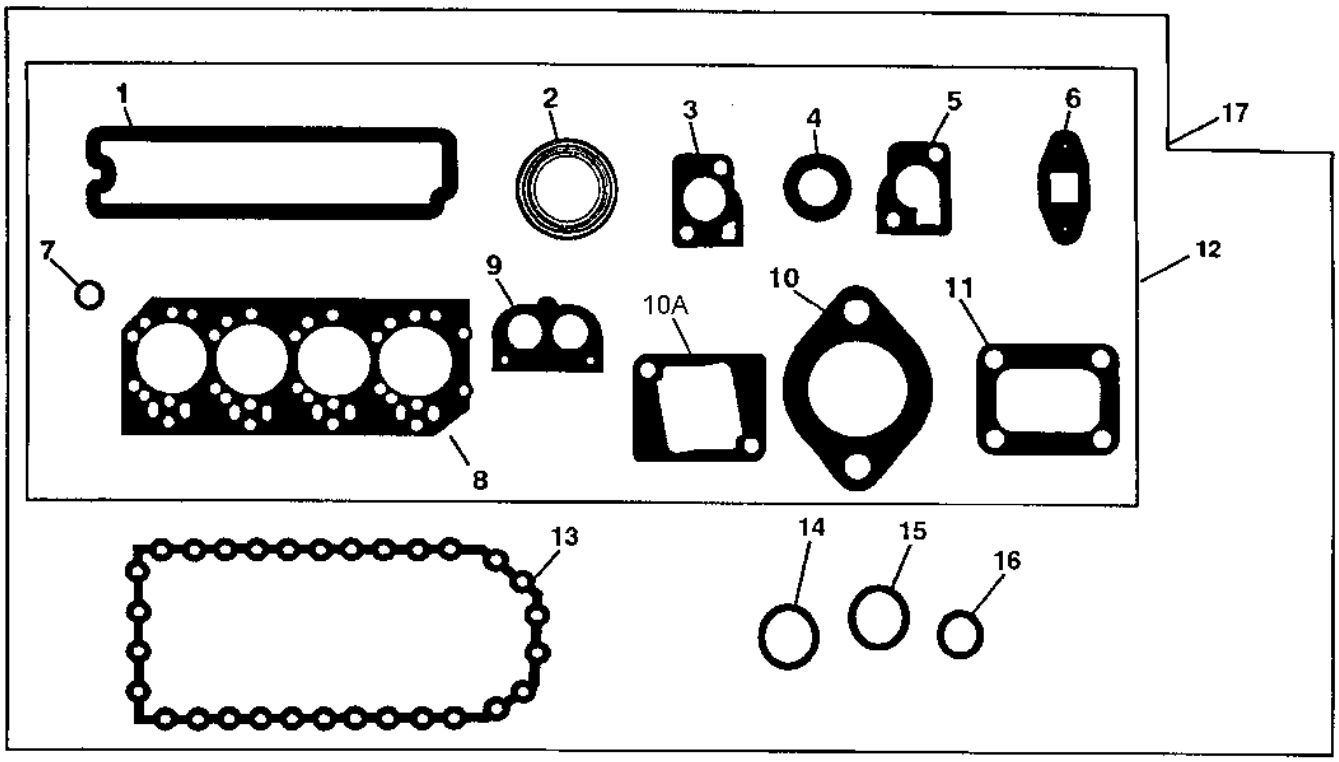

T150756

KEY	PART NO.	PART NAME	QTY	ENGINE SERIAL NO.	REMARKS
1	R123542	GASKET	1		ROCKER ARM COVER
2	R90658	GASKET	4		EXHAUST MANIFOLD
3	R502814	GASKET	1		(SUB FOR R135896) THERMOSTAT COVER
4	R123226	SEAL	2		WATER BY-PASS TUBE
5	R123345	GASKET	1		THERMOSTAT HOUSING
6	R123570	GASKET	1		TURBOCHARGER OIL OUTLET LINE
7	R123575	O-RING	4		ROCKER ARM COVER HOLD DOWN STUD
8	R116515	ENGINE CYLINDER HEAD GASKET	1		CYLINDER HEAD
9	R501373	GASKET	1		THERMOSTAT COVER
10	R81275	GASKET	1		AIR INLET
10A	R133893	GASKET	1		AIR INLET
11	R92097	GASKET	1		TURBOCHARGER TO EXHAUST MANIFOLD
12	RE66082	GASKET KIT	1		CYLINDER HEAD REMOVAL
13	R123352	GASKET	1		ENGINE OIL PAN
14	R75892	O-RING	1		OIL PUMP TUBE CONNECTOR
15	R97185	O-RING	1		OIL PUMP OUTLET TUBE TO COVER
16	R61871	O-RING	1		OIL PUMP INTAKE TUBE
17	RE66084	GASKET KIT	1		IN CHASSIS OVERHAUL

ENGINE MAJOR OVERHAUL GASKET SET AND ENGINE OVERHAUL KIT
TO4045TT082 - PE4045TT082

TP69540 -UN-26JUL00

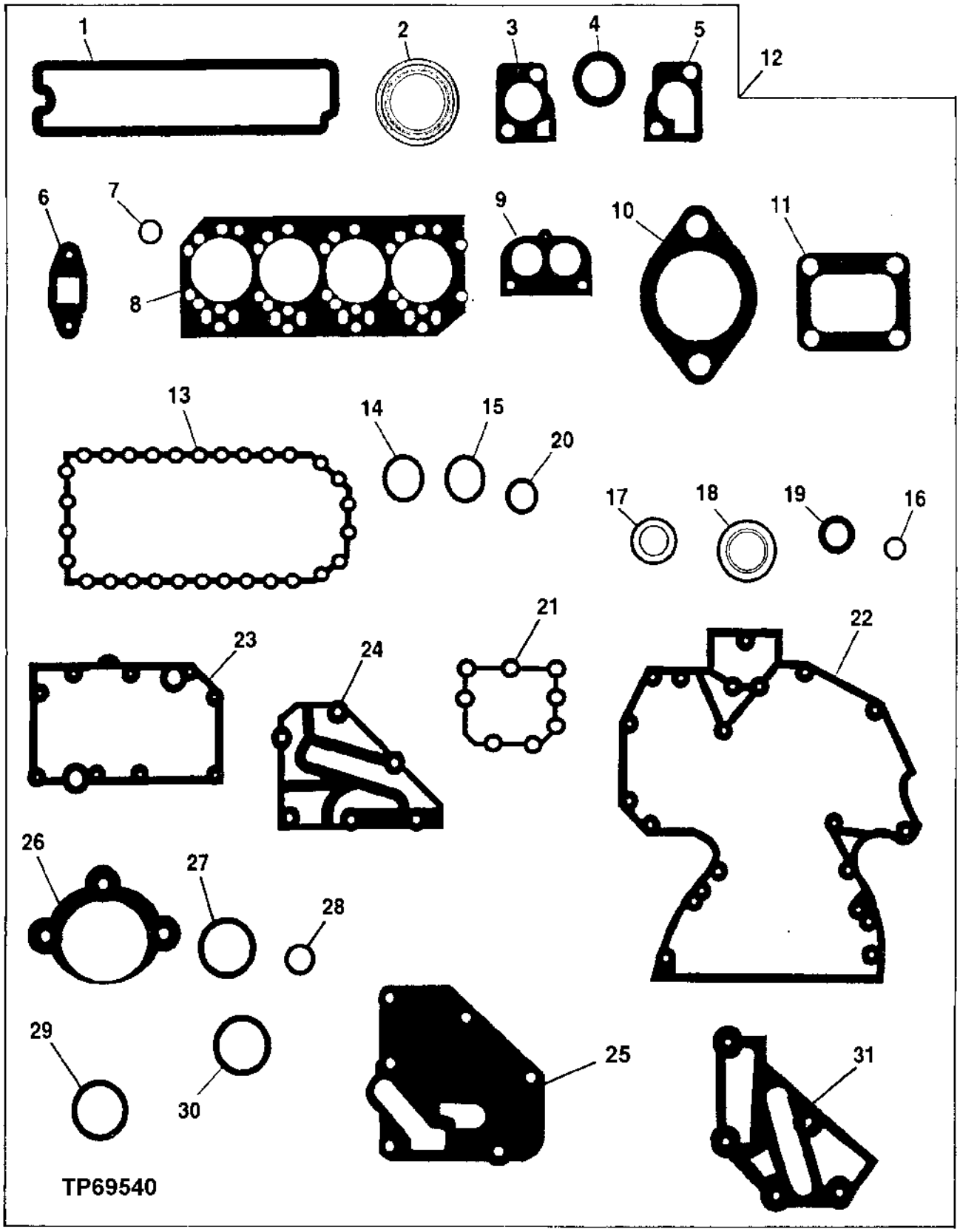

ENGINE MAJOR OVERHAUL GASKET SET AND ENGINE OVERHAUL KIT
TO4045TT082 - PE4045TT082

KEY	PART NO.	PART NAME	QTY	ENGINE SERIAL NO.	REMARKS
1	R123542	GASKET	1		ROCKER ARM COVER
2	R90658	GASKET	4		EXHAUST MANIFOLD
3	R502814	GASKET	1		(SUB FOR R135896) THERMOSTAT COVER
4	R123226	SEAL	2		WATER BY-PASS TUBE
5	R123345	GASKET	1		THERMOSTAT HOUSING
6	R123570	GASKET	1		TURBOCHARGER OIL OUTLET TUBE
7	R123575	O-RING	4		ROCKER ARM COVER HOLD DOWN STUD
8	R116515	ENGINE CYLINDER HEAD GASKET	1		CYLINDER HEAD
9	R501373	GASKET	1		THERMOSTAT COVER
10	R81275	GASKET	1		AIR INLET
11	R92097	GASKET	1		TURBOCHARGER TO EXHAUST MANIFOLD
12	RE501455	GASKET KIT	1		
	RE66093	ENGINE OVERHAUL KIT	1		ENGINE OVERHAUL
13	R123352	GASKET	1		ENGINE OIL PAN
14	R75892	O-RING	1		OIL PUMP TUBE CONNECTOR
15	R97185	O-RING	1		OIL PUMP OUTLET TUBE TO COVER
16	R61871	O-RING	1		OIL PUMP INTAKE TUBE
17	A4827R	WASHER	1		OIL PRESSURE REGULATOR PLUG
18	RE44574	SEAL	1		REAR OIL SEAL
19	RE59810	SEAL KIT	1		FRONT OIL SEAL
20	R123273	O-RING	1		FUEL TRANSFER PUMP
21	R123417	GASKET	1		WATER PUMP
22	R136515	GASKET	1		TIMING GEAR COVER(WITH AUXILLARY DRIVE)
	R136516	GASKET	1		TIMING GEAR COVER(WITHOUT AUXILLARY DRIVE)
23	R123501	GASKET	1		OIL COOLER HOUSING
24	R502864	GASKET	1		REMOTE OIL FILTER ADAPTER
25	R500374	GASKET	1		OIL FILTER HEADER
26	R53108	GASKET	1		STARTING MOTOR
27	R72328	O-RING	4		OIL FILTER TUBES
28	R89944	O-RING	1		WATER PUMP INLET
29	R61105	O-RING	2		CONNECTOR TUBE TO TIMING GEAR COVER
30	T122075	O-RING	2		OIL COOLER TO HOUSING
31	R501428	GASKET	1		COOLANT PASSAGE ADAPTER

ENGINE COOLANT HEATER

TP58143 -UN-03OCT00

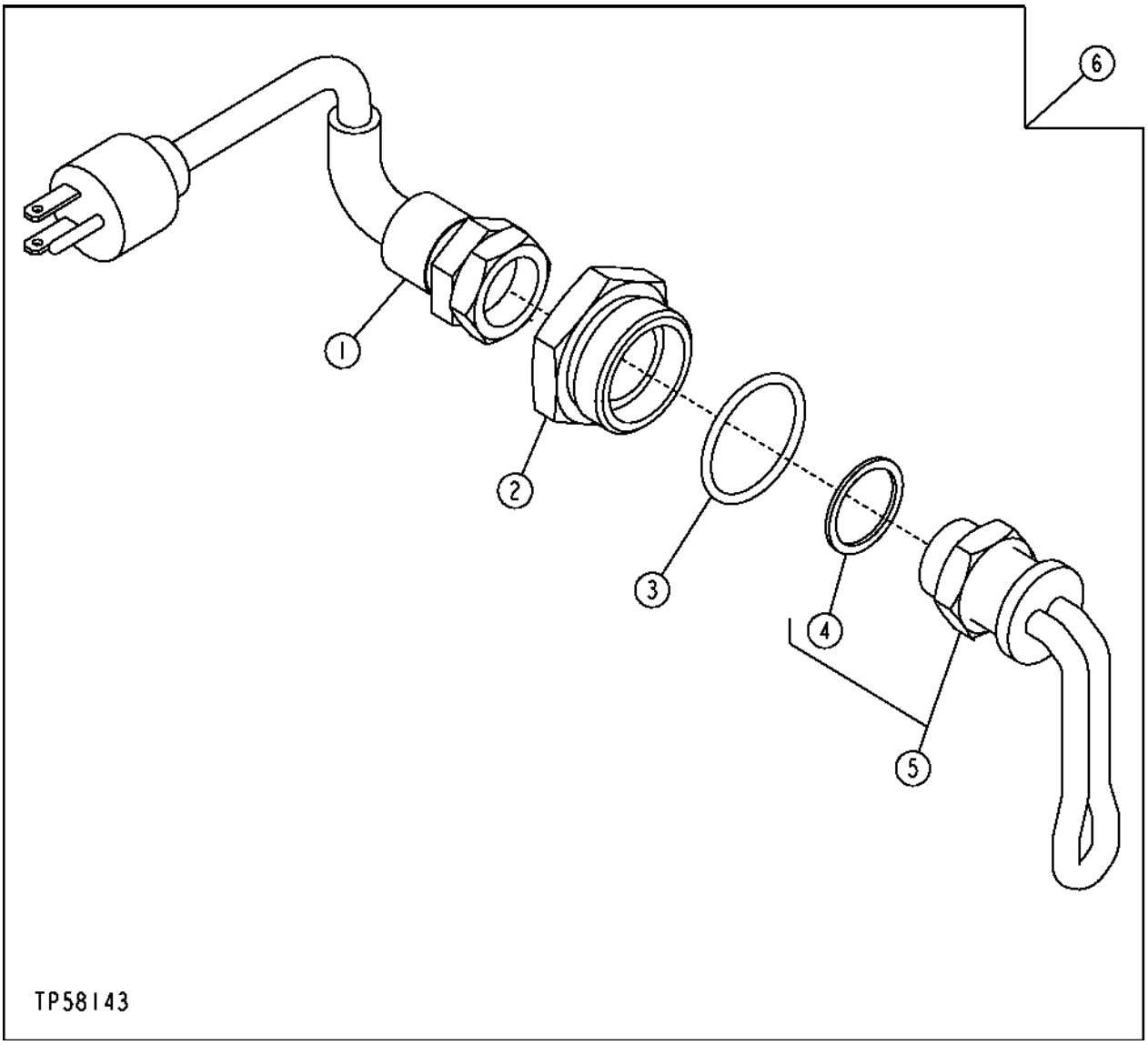

ENGINE COOLANT HEATER

KEY	PART NO.	PART NAME	QTY	SERIAL NO.	REMARKS
1	AT73296	POWER CORD	1		
2	R54123	ADAPTER	1		
3	U13639	O-RING	1		
4	R47693	GASKET	1		
5	RE42139	HEATING ELEMENT	1		
6	AT74940	COOLANT HEATER	1		

COLD WEATHER STARTING AID

T134800 -UN-08NOV00

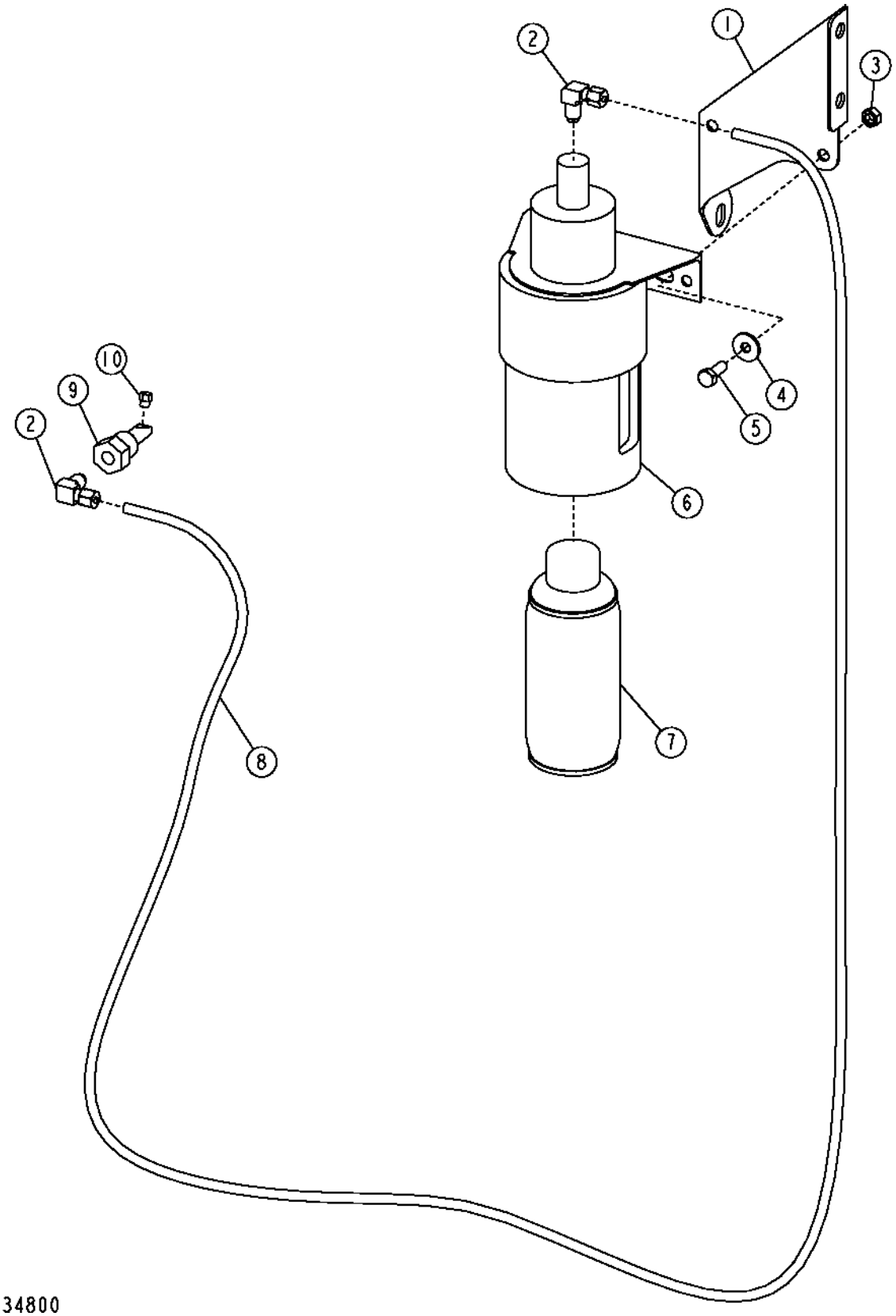

COLD WEATHER STARTING AID

KEY	PART NO.	PART NAME	QTY	SERIAL NO.	REMARKS
1	T185387	BRACKET	1		
2	RE21790	ELBOW FITTING	2		
3	14M7272	NUT	2		M6
4	24M7139	WASHER	2		
5	19M8425	CAP SCREW	2		M6 X 16
6	RE48310	STARTING AID SOLENOID	1		
7	RE33636	STARTING FLUID	1		
8	.....	TUBE	1		(MAKE FROM T78593, BULK MATERIAL)
9	R47160	NOZZLE HOLDER	1		
10	T155858	NOZZLE	1		

COLD WEATHER STARTING AID

TP69693 -UN-05OCT00

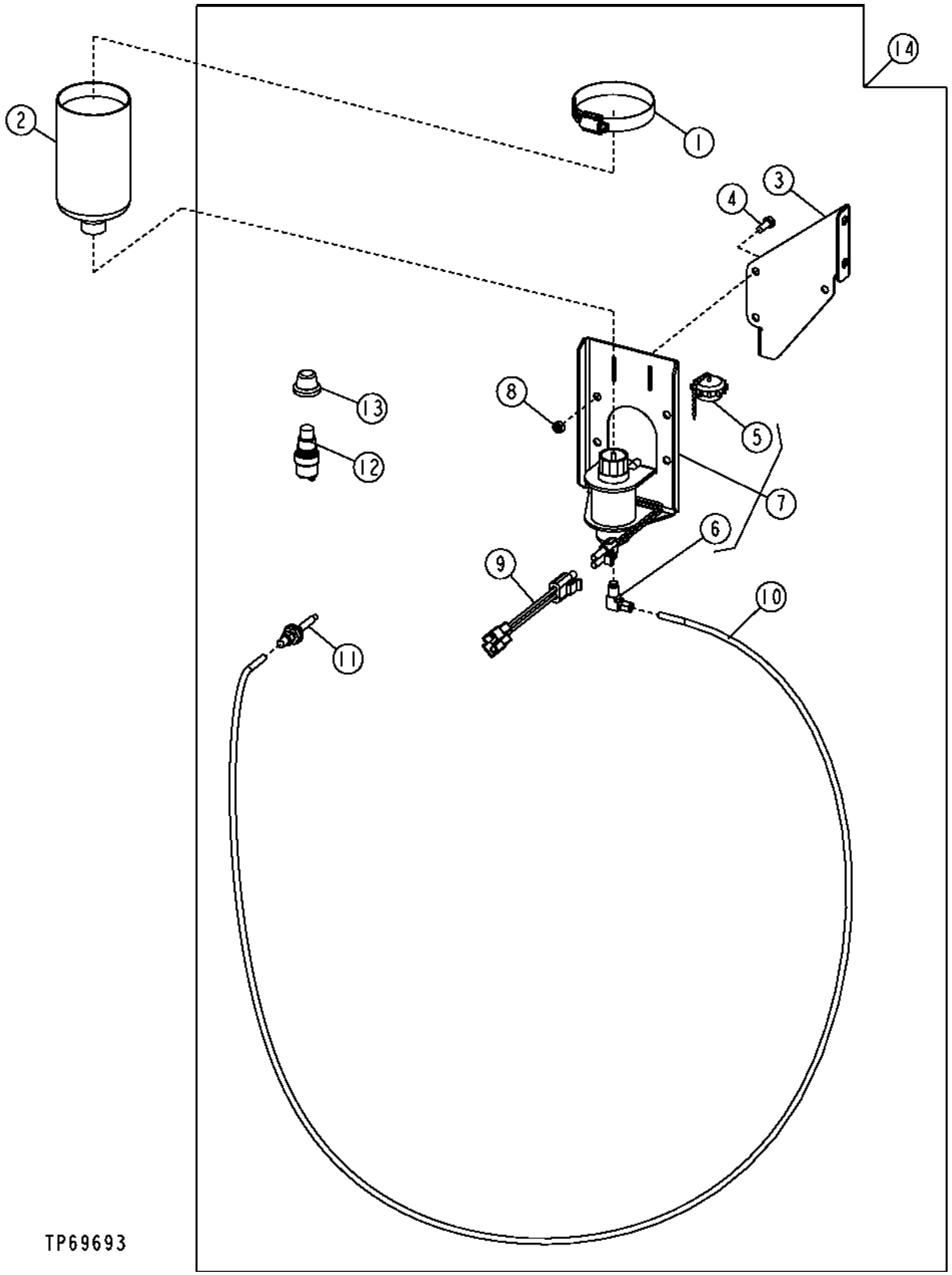

COLD WEATHER STARTING AID

KEY	PART NO.	PART NAME	QTY	SERIAL NO.	REMARKS
1	AR21999	HOSE CLAMP	1		
2	AT171162	STARTING FLUID	1		
3	T185933	BRACKET	1		
4	19M8425	CAP SCREW	3		M6 X 16
5	AT171539	CAP (HAT)	1		
6	AT181582	ELBOW FITTING	1		
7	AT173385	STARTING AID SOLENOID	1		
8	14M7272	NUT	3		M6
9	AT182257	WIRING HARNESS	1	-910055	(USE WITH AT196262)
	AT199714	WIRING HARNESS	1	-910055	(USE WITH AT199060)
10	.....	TUBE	1		(MAKE FROM T78593 BULK MATERIAL CUT TO 1.5 FT. (457MM) LENGTH)
11	AT183222	NOZZLE	1		
12	R39554	SWITCH	1		
13	T55585	CAP	1		
14	AT192153	KIT	1		

RADIATOR, RADIATOR HOSES, FAN SHROUD AND FAN GUARD

T147477 -UN-29OCT01

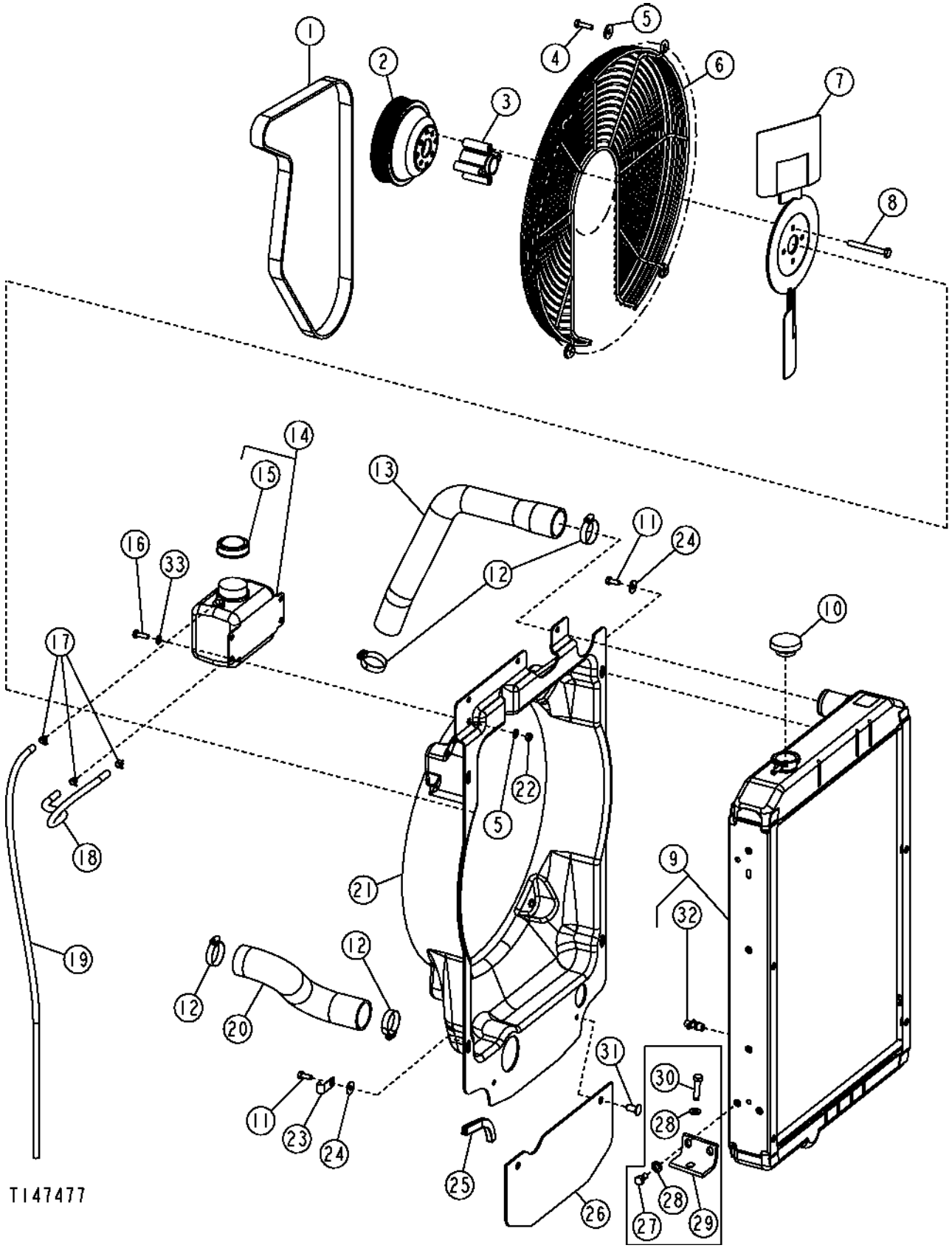

RADIATOR, RADIATOR HOSES, FAN SHROUD AND FAN GUARD

KEY	PART NO.	PART NAME	QTY	SERIAL NO.	REMARKS
1	R504022	V-BELT	1		(WITHOUT AIR CONDITIONING)
	R504023	V-BELT	1		(WITH AIR CONDITIONING)
2	R128660	PULLEY	1		
3	T160508	SPACER	1		
4	19M7513	CAP SCREW	4		M8 X 30
5	24M7024	WASHER	4		(SUB FOR 24M7238, THIS APPLICATION)
6	.....	GUARD	1		(AT186906 NO LONGER AVAILABLE) (SUB AT195907) (ALSO ORDER (4) 24M7024)
	AT195907	GUARD	1		
7	AT178394	FAN	1		
8	19M8197	CAP SCREW	4		M10 X 85
9	AT190595	RADIATOR	1		
10	AT173610	FILLER CAP	1		
11	M86877	BOLT	4		M8 X 20
12	AR65294	CLAMP	4		
13	T155826	RADIATOR HOSE	1		
14	AN205068	TANK	1		
15	AT186925	FILLER CAP	1		
16	19M7881	SCREW	3		M8 X 20
17	R56101	CLIP	3		
18	.....	HOSE	1		(MAKE FROM T119816, CUT TO 1.2 FT.)
19	.....	HOSE	1		(MAKE FROM T119816, CUT TO 2.96 FT.)
20	T155827	HOSE	1		
21	AT186747	SHROUD	1		
22	14M7273	NUT	3		M8
23	AH89557	CLIP	1		
24	24M7298	WASHER	4		
25	.....	ISOLATOR	2		(MAKE FROM T61861, CUT TO .43 FT.)
26	T183669	DEFLECTOR	1		
27	19M7938	CAP SCREW	4	-903149	M10 X 20
28	24M7239	WASHER	6	-903149	
29	T164701	ANGLE	2	-903149	
30	19M7572	CAP SCREW	2	-903149	M10 X 45
31	T161380	PLUG	2		
32	AT13740	DRAIN VALVE	1		
33	24M7238	WASHER	6		

ENGINE SPEED CONTROL LINKAGE

T149577 -UN-02JAN02

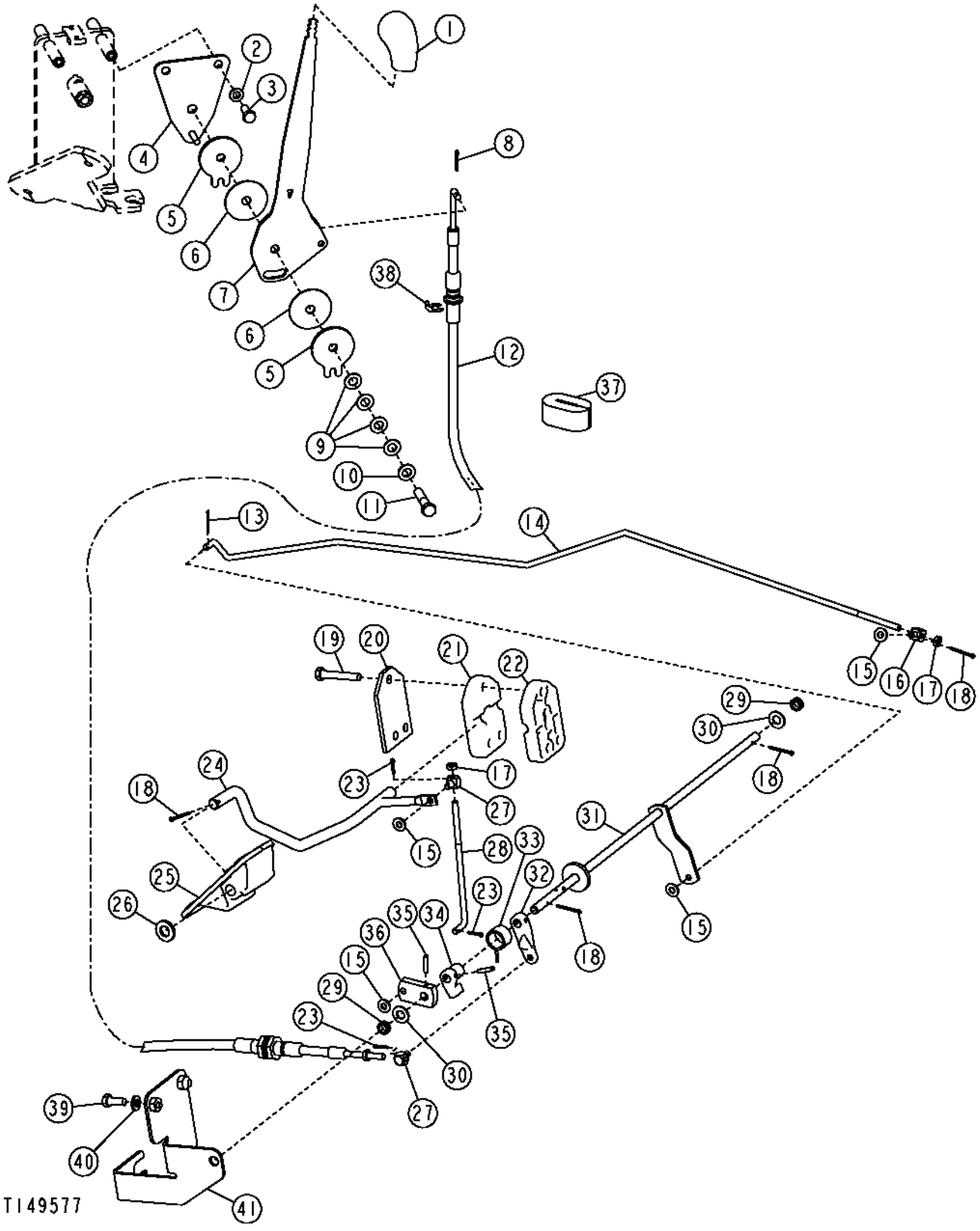

THIS PARTS LISTING IS CONTINUED

ENGINE SPEED CONTROL LINKAGE

KEY	PART NO.	PART NAME	QTY	SERIAL NO.	REMARKS
1	M48534	KNOB	1		
2	24M7055	WASHER	2		
3	19M7139	CAP SCREW	2		M8 X 20
4	AT191631	BRACKET	1	-913479	
	AT300768	BRACKET	1	913480-	
5	R33976	PLATE	2		
6	R105812	WASHER	2		
7	T185491	LEVER	1		
8	11M7081	COTTER PIN	1		2.500 X 20 MM, (SUB FOR 11M7099, THIS APPLICATION)
9	12M7117	DISK SPRING	4		
10	24M7028	WASHER	1		
11	R41920	CAP SCREW	1		3/8" X 1-3/4"
12	AT196338	PUSH PULL CABLE	1		(SUB FOR AT185848)
13	11M7077	COTTER PIN	1		1.600 X 25 MM
14	T166157	ROD	1		INJECTION PUMP
15	24H1287	WASHER	4		
16	T142748	SWIVEL	1		
17	14H649	NUT	1		1/4"
18	11M7082	COTTER PIN	4		2.500 X 25 MM
19	19M8397	CAP SCREW	3		M8 X 50
20	T129732	PLATE	1		
21	T137321	SUPPORT	1		
22	T137322	SUPPORT	1		
23	11M7079	COTTER PIN	3		2.500 X 12 MM
24	AT185836	ROD	1		
25	T137318	PEDAL	1		ACCELERATOR
26	24M7240	WASHER	1		
27	T35887	SWIVEL	1		
28	T166174	ROD	1		
29	T22241	GROMMET	2		
30	24H1305	WASHER	2		
31	AT185849	LINKAGE	1		
32	T22240	ARM	1		
33	T77165	SPRING	1		
34	T22150	ARM	1		
35	34H264	SPRING PIN	1		5/32" X 7/8"
36	T135342	LEVER	1		
37	T183217	GROMMET	1		
38	R26871	SNAP RING	1		
39	19M7881	SCREW	2		M8 X 20
40	24M7238	WASHER	2		
41	AT195550	BRACKET	1		

AIR CLEANER, MOUNTING BRACKETS, ELEMENTS AND RESTRICTION SENSOR

T145872 -UN-21NOV01

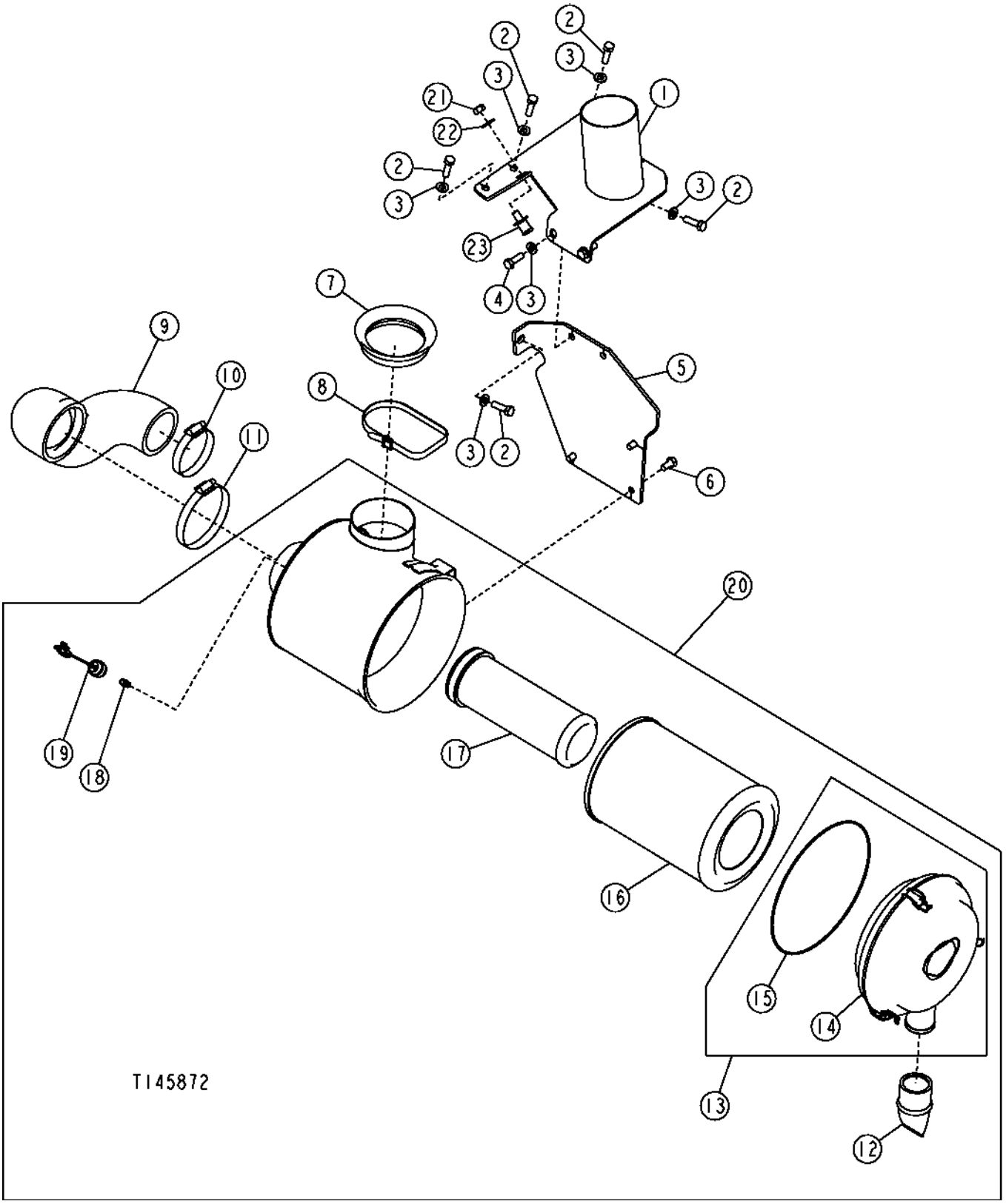

AIR CLEANER, MOUNTING BRACKETS, ELEMENTS AND RESTRICTION SENSOR

KEY	PART NO.	PART NAME	QTY	SERIAL NO.	REMARKS
1	AT184913	SUPPORT	1	-903502	
	AT196656	SUPPORT	1	903503-	
2	19M7550	CAP SCREW	5		M10 X 35
3	24M7239	WASHER	7		
4	19M7662	CAP SCREW	2		M10 X 30
5	AT187814	SUPPORT	1	-903502	
	AT196854	SUPPORT	1	903503-	
6	19M7938	CAP SCREW	3		M10 X 20
7	T166137	SEAL	1		
8	N189220	TIE BAND	1		
9	T158482	HOSE	1		
10	AH104837	HOSE CLAMP	1		
11	AH103182	HOSE CLAMP	1		
12	T158495	PNEUMATIC PRESSURE VALVE	1		
13	AT175357	COVER	1		
14	AT209926	CLIP	3		
15	T163113	O-RING	1		
16	AT175344	AIR FILTER	1		PRIMARY
17	AT175345	AIR FILTER	1		SECONDARY
18	AR44361	FITTING	1		
19	AT178542	AIR RESTRICTION SENSOR	1		
20	AT175278	AIR CLEANER	1		
21	14H1047	NUT	1	903503-	7/16"
22	T105740	WASHER	1	903503-	
23	AR91896	STRIKER	1	903503-	

PRE CLEANER

T138319 -UN-15MAR01

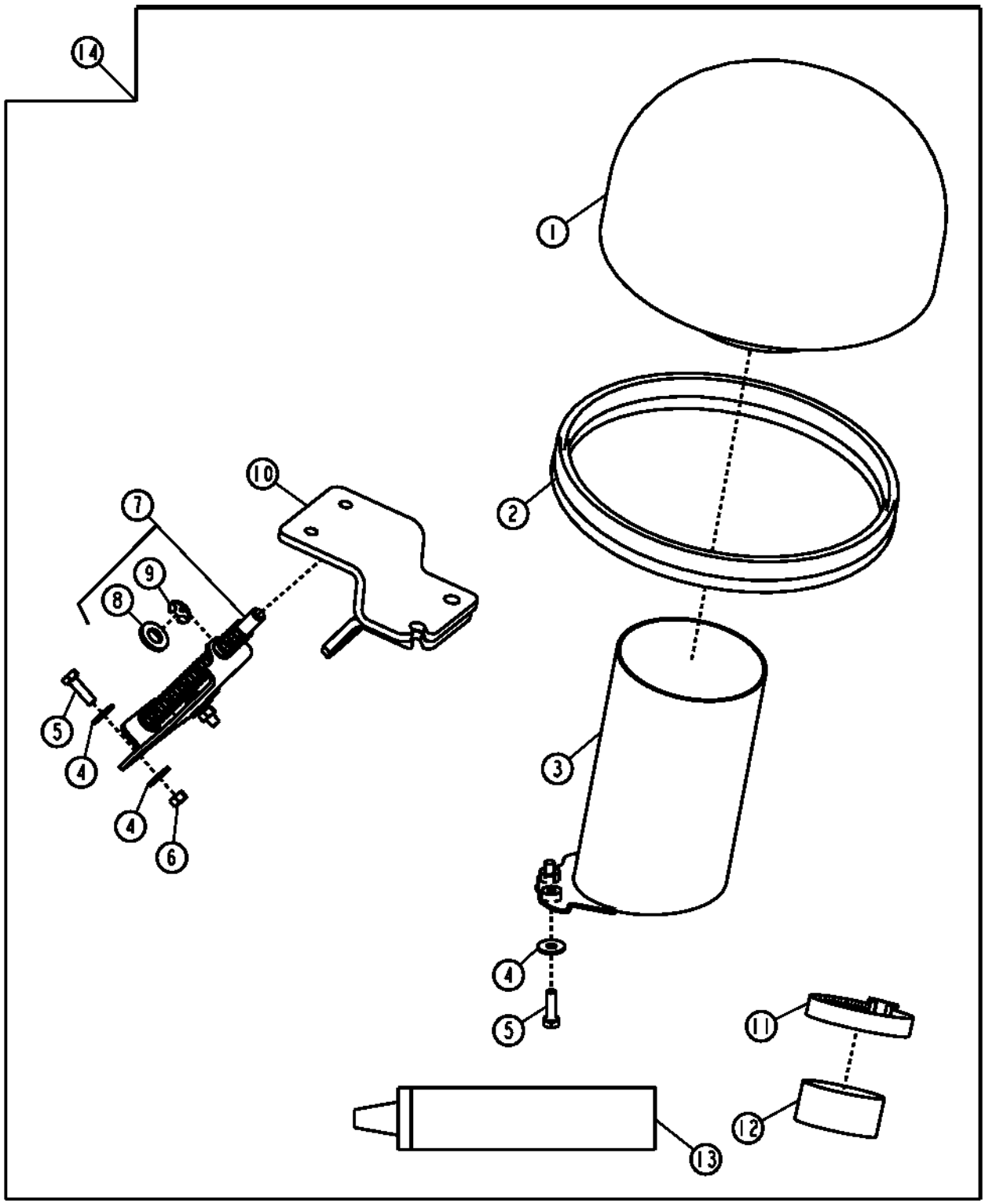

T138319

PRE CLEANER

KEY	PART NO.	PART NAME	QTY	SERIAL NO.	REMARKS
1	AT220930	PRECLEANER	1		
2	AH140044	ISOLATOR	1		
3	AT192522	TUBE	1		
4	24M7139	WASHER	6		
5	19M7077	CAP SCREW	4		M6 X 20
6	14M7272	NUT	2		M6
7	AT191153	SPRING	1		
8	24M7239	WASHER	1		
9	R72655	SNAP RING	1		
10	.....	BRACKET	1		(AT192456 NO LONGER AVAILABLE) (ORDER AT189400)
11	AR40418	HOSE CLAMP	1		
12	T176553	PLUG	1		
13	TY24344	LIQUID GASKET	1		
14	**AT192517**	**KIT**	**1**		**PRE CLEANER (WHOLE GOODS)**

EXHAUST EXTENSION AND MUFFLER

TP58067 -UN-04OCT00

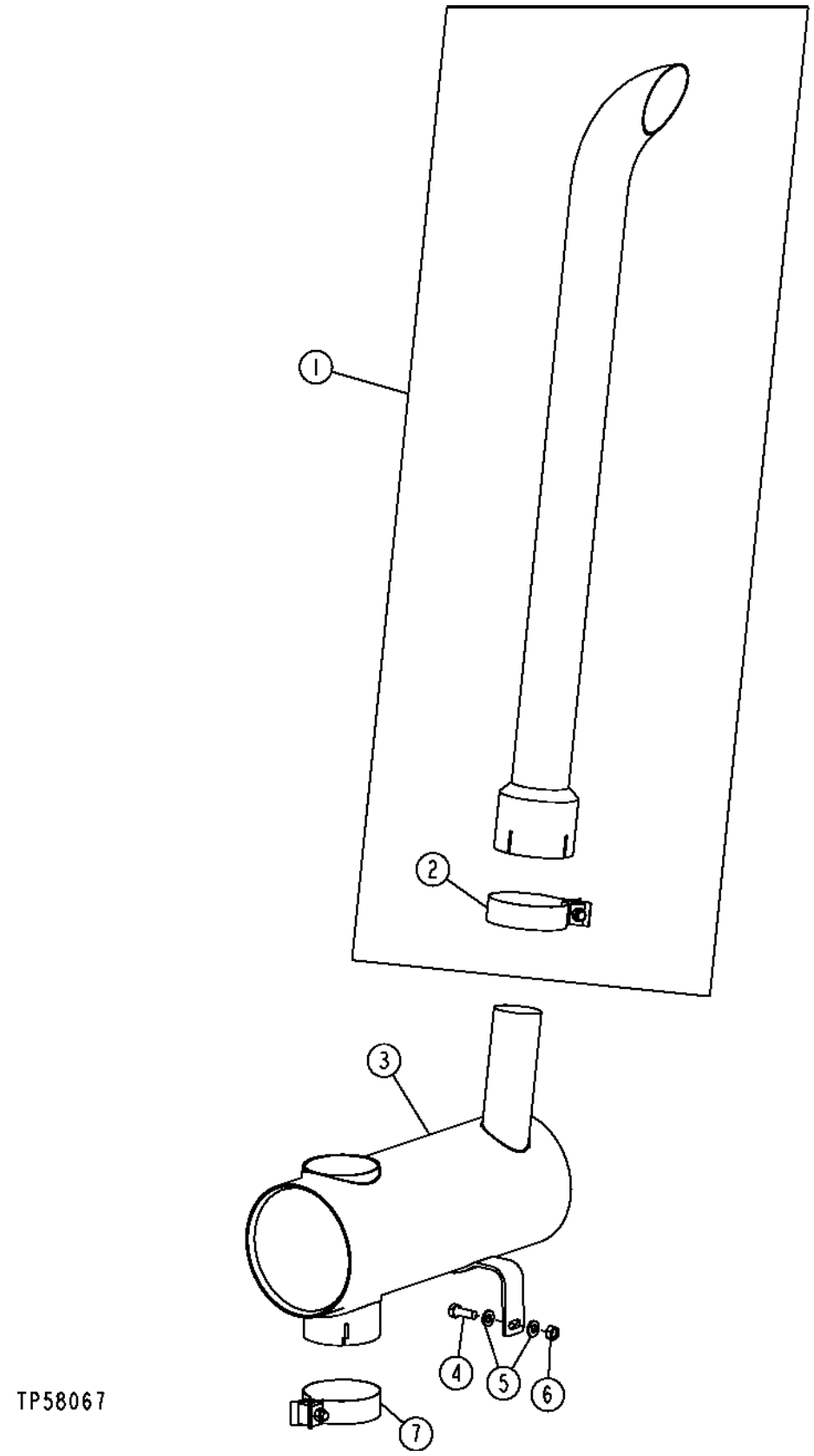

EXHAUST EXTENSION AND MUFFLER

KEY	PART NO.	PART NAME	QTY	SERIAL NO.	REMARKS
1	AT184716	MUFFLER EXTENSION	1		
	AT184848	MUFFLER EXTENSION	1		CHROME
2	RE52087	CLAMP	1		
3	AT183219	MUFFLER	1		
4	19M7662	CAP SCREW	1		M10 X 30
5	24M7239	WASHER	2		
6	14M7274	NUT	1		M10
7	AT183426	CLAMP	1		

ENGINE MOUNTS AND ISOLATORS

TP69661 -UN-03OCT00

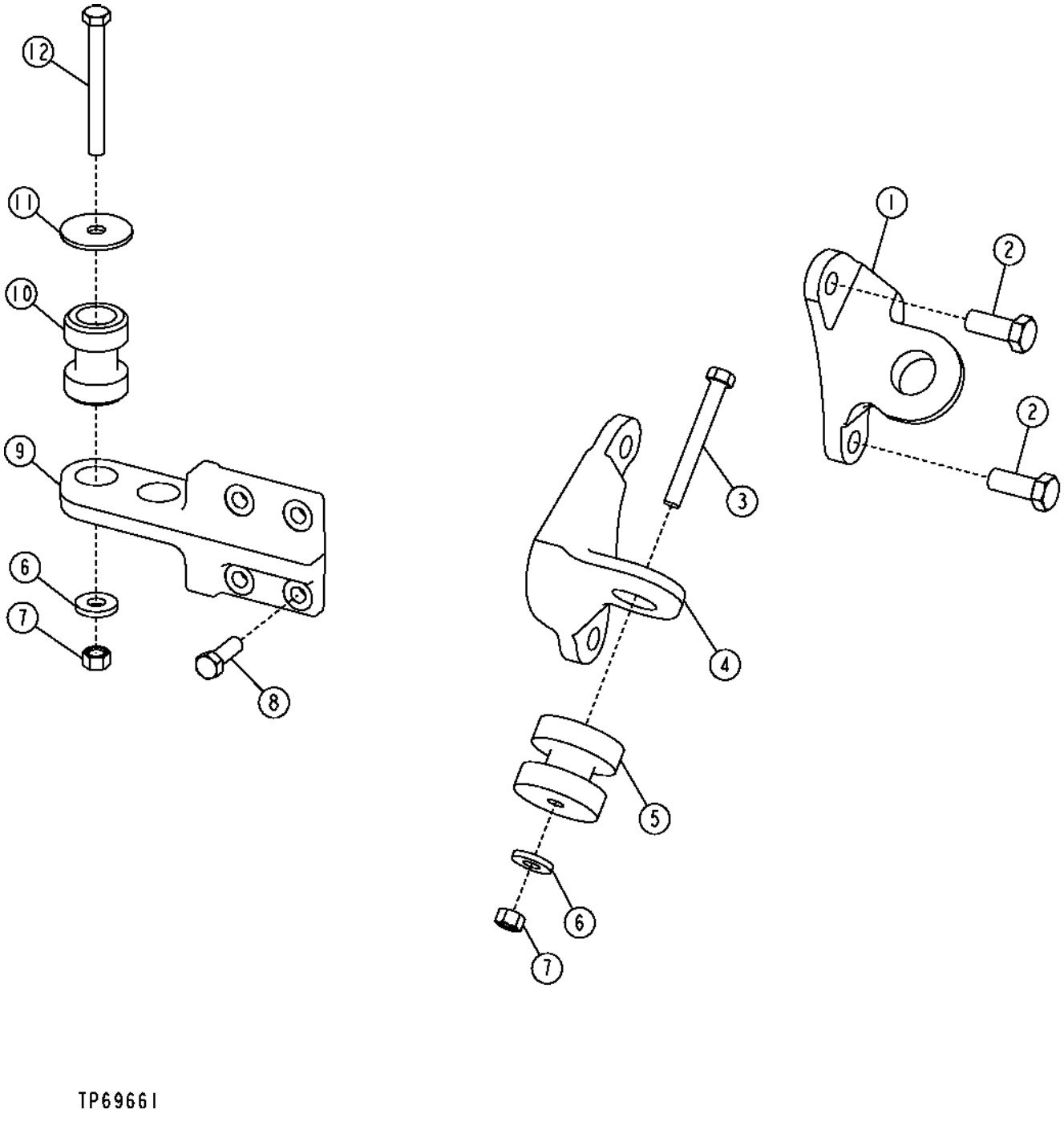

ENGINE MOUNTS AND ISOLATORS

KEY	PART NO.	PART NAME	QTY	SERIAL NO.	REMARKS
1	T187571	SUPPORT	1		(SUB FOR T170783)
2	19M7488	CAP SCREW	4		M16 X 40
3	19M7949	CAP SCREW	2		M12 X 100
4	T170784	SUPPORT	1		
5	AT173400	ISOLATOR	2		
6	T29342	WASHER	6		
7	14M7275	NUT	6		M12
8	19M7403	CAP SCREW	8		M12 X 35
9	T154449	PLATE	2		
10	AT175374	ISOLATOR	4		
11	T158648	WASHER	4		
12	19M7908	CAP SCREW	4		M12 X 110

FUEL TANK, FUEL HOSES AND FUEL GAUGE SENDER

T154779 -UN-13MAY02

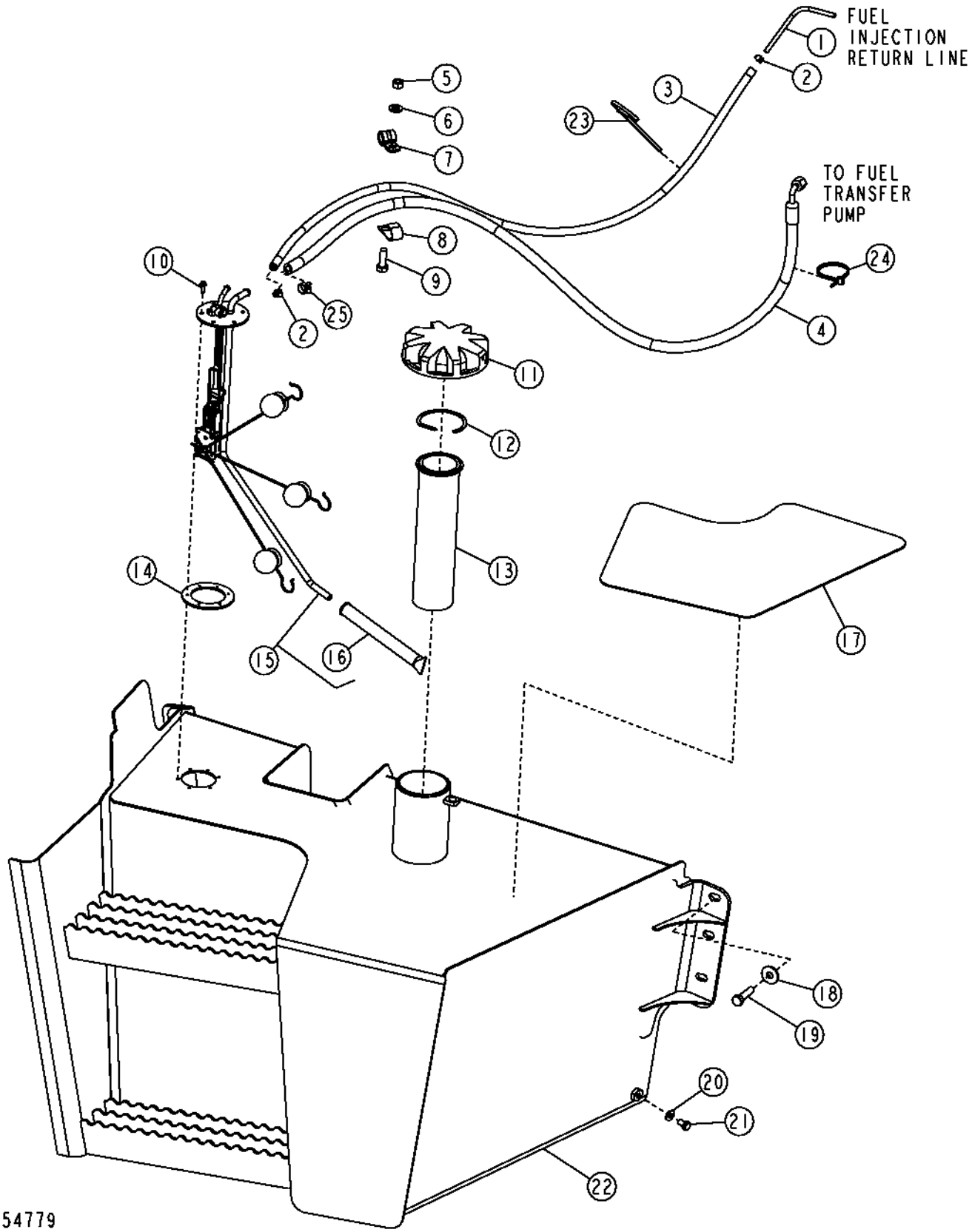

FUEL TANK, FUEL HOSES AND FUEL GAUGE SENDER

KEY	PART NO.	PART NAME	QTY	SERIAL NO.	REMARKS
1	T66701	LINE	1		
2	AR48236	CLAMP	2		
3	.....	HOSE	1		(MAKE FROM N112006, CUT TO 3.5 FEET)
4	AT183881	HOSE	1		
	E87197	PACKING	1		
5	14M7274	NUT	1		M10
6	24M7239	WASHER	1		
7	T76252	CLAMP	1		
8	AH96317	CLIP	1		
9	19M7662	CAP SCREW	1		M10 X 30
10	37H129	SCREW	6		
11	AT156445	FILLER CAP	1		
	T103461	SEALING WASHER	1		
12	T39155	SNAP RING	1		(SERVICE ONLY)
13	AT161638	STRAINER	1		
14	T165292	GASKET	1		
15	AT183874	FUEL SENDER	1		
16	AT65241	STRAINER	1		
	TY15969	ADHESIVE	1		
17	T165295	ANTI-SKID PAD	1		
18	24M7296	WASHER	6		
19	19M8637	CAP SCREW	6		M10 X 40
20	R463R	WASHER	1		
21	19H2020	CAP SCREW	1		5/16" X 1/2"
22	AT195076	FUEL TANK	1		(SUB FOR AT183389)
23	H77698	TIE BAND	1		
24	R44302	TIE BAND	2		
25	AR77962	HOSE CLAMP	1		

STEERING WHEEL, AND COLUMN

T146670 -UN-15OCT01

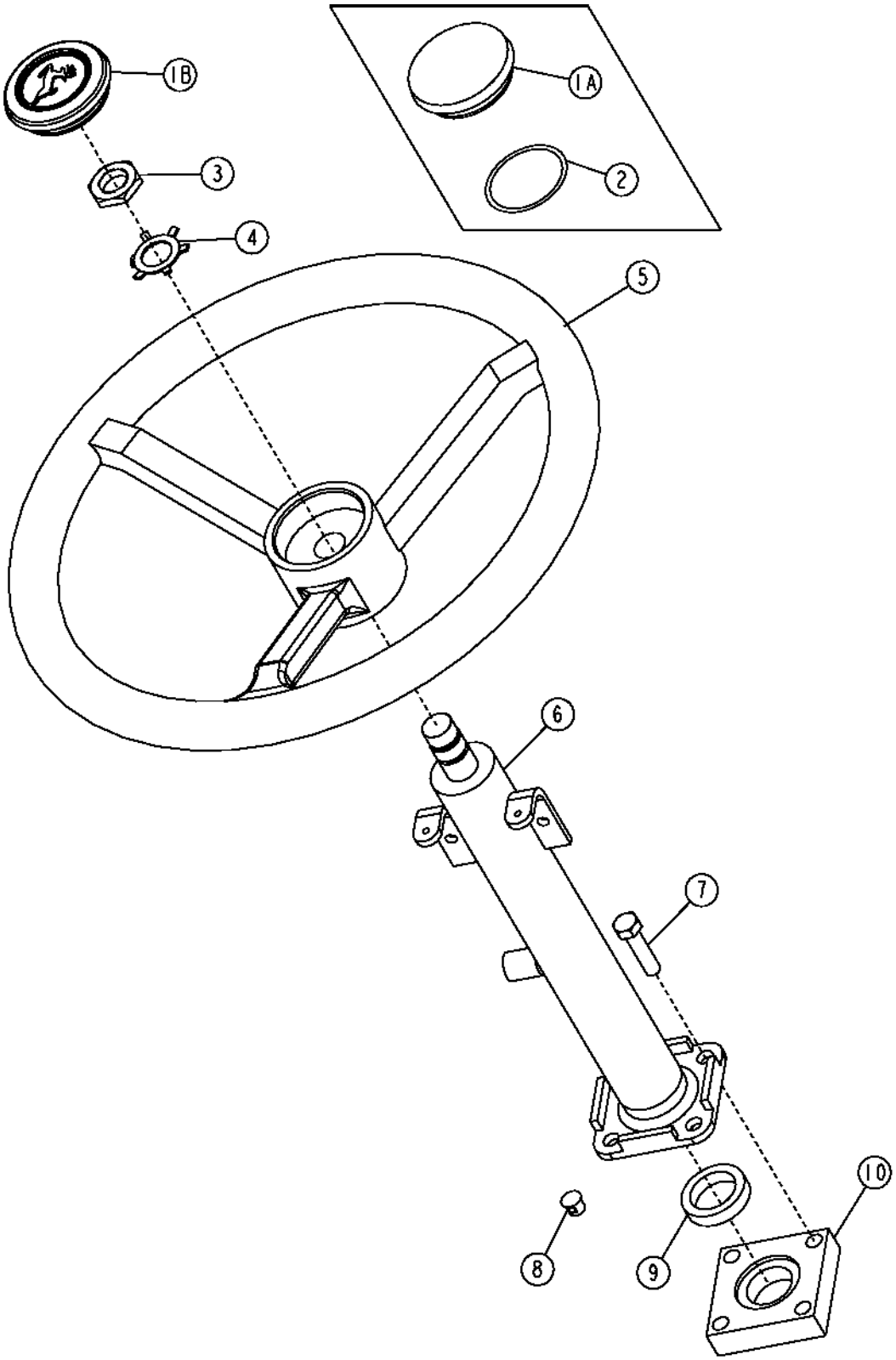

STEERING WHEEL, AND COLUMN

KEY	PART NO.	PART NAME	QTY	SERIAL NO.	REMARKS
1	R47998	CAP	1	-902607	
	AL155227	COVER	1	902608-	
2	P50631	O-RING	1	-902607	
3	T13630	NUT	1		
4	T17148	LOCK WASHER	1		
5	AT139694	STEERING WHEEL	1		
6	AT184728	STEERING COLUMN	1		
7	19H2633	CAP SCREW	4		3/8" X 1-1/2"
8	H113924	PLUG	8		
9	T167416	WASHER	1		
10	T167319	ADAPTER	1		

STEERING WHEEL, AND TILT COLUMN

T146674 -UN-24OCT01

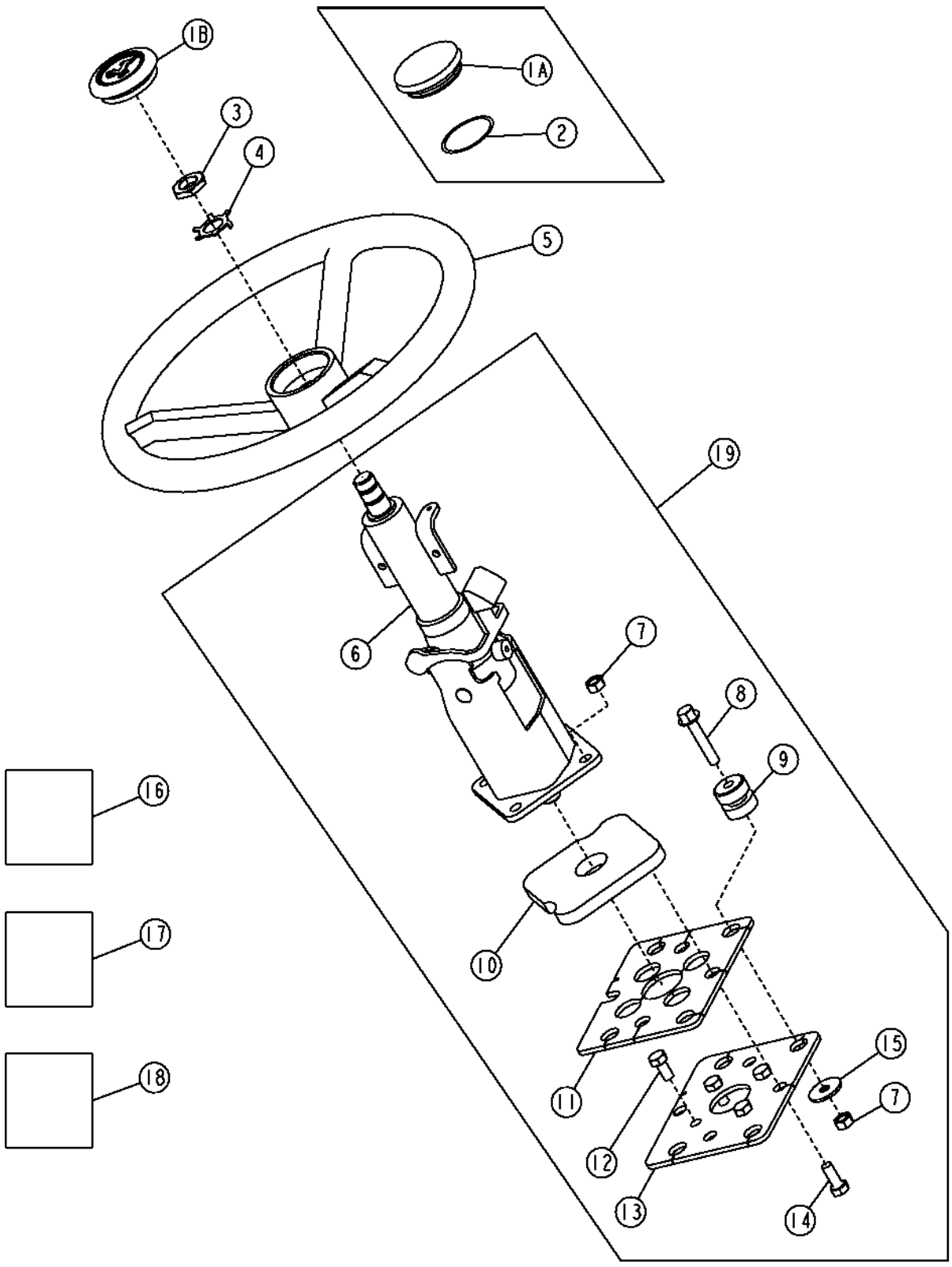

STEERING WHEEL, AND TILT COLUMN

KEY	PART NO.	PART NAME	QTY	SERIAL NO.	REMARKS
1	AL155227	COVER	1		(SUB FOR AL118173 OR R47998)
2	P50631	O-RING	1	-902607	
3	T13630	NUT	1		
4	T17148	LOCK WASHER	1		
5	AT139694	STEERING WHEEL	1		
6	AT184397	STEERING COLUMN	1		
7	14M7274	NUT	8		M10
8	19M8528	SCREW	4		M10 X 55
9	AT219940	ISOLATOR	4		
10	T165533	GASKET	1		
11	T165188	PLATE	1		
12	19H1648	CAP SCREW	4	-911131	3/8" X 3/4"
	19M7938	CAP SCREW	4	911132-	M10 X 20
13	T165256	PLATE	1		
14	19M7402	CAP SCREW	4		M10 X 25
15	24H1312	WASHER	4		13/32" X 1-3/8" X 0.105"
16	AT192278	KIT	1		COLUMN TILT UP SPRING KIT
17	AT192279	KIT	1		LEVER RETURN SPING KIT
18	AT192280	KIT	1		KNOB KIT
19	AT195686	KIT	1		(WHOLE GOODS) TILT STEERING

POWER STEERING VALVE SEAL REPAIR KIT

TP52855 -UN-16NOV96

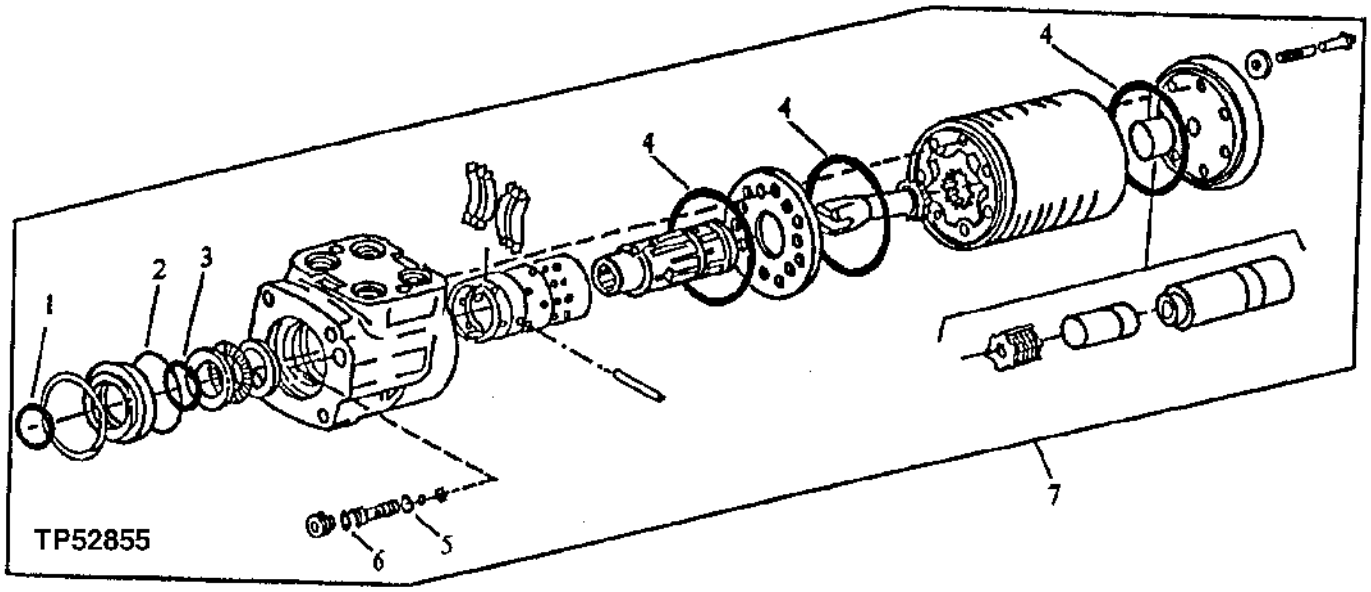

KEY	PART NO.	PART NAME	QTY	SERIAL NO.	REMARKS
1	C15104	SEAL	1		
2	B3690R	O-RING	1		
3	C15107	O-RING	1		
4	T152288	O-RING	3		
5	R10093	O-RING	1		
6	A3917R	O-RING	1		
7	AT168632	SEAL KIT	1		

MEMORANDA

STEERING HYDRAULICS
(WITH MECHANICAL FRONT WHEEL DRIVE)
(SERIAL NO. -911131)

T149750 -UN-14JAN02

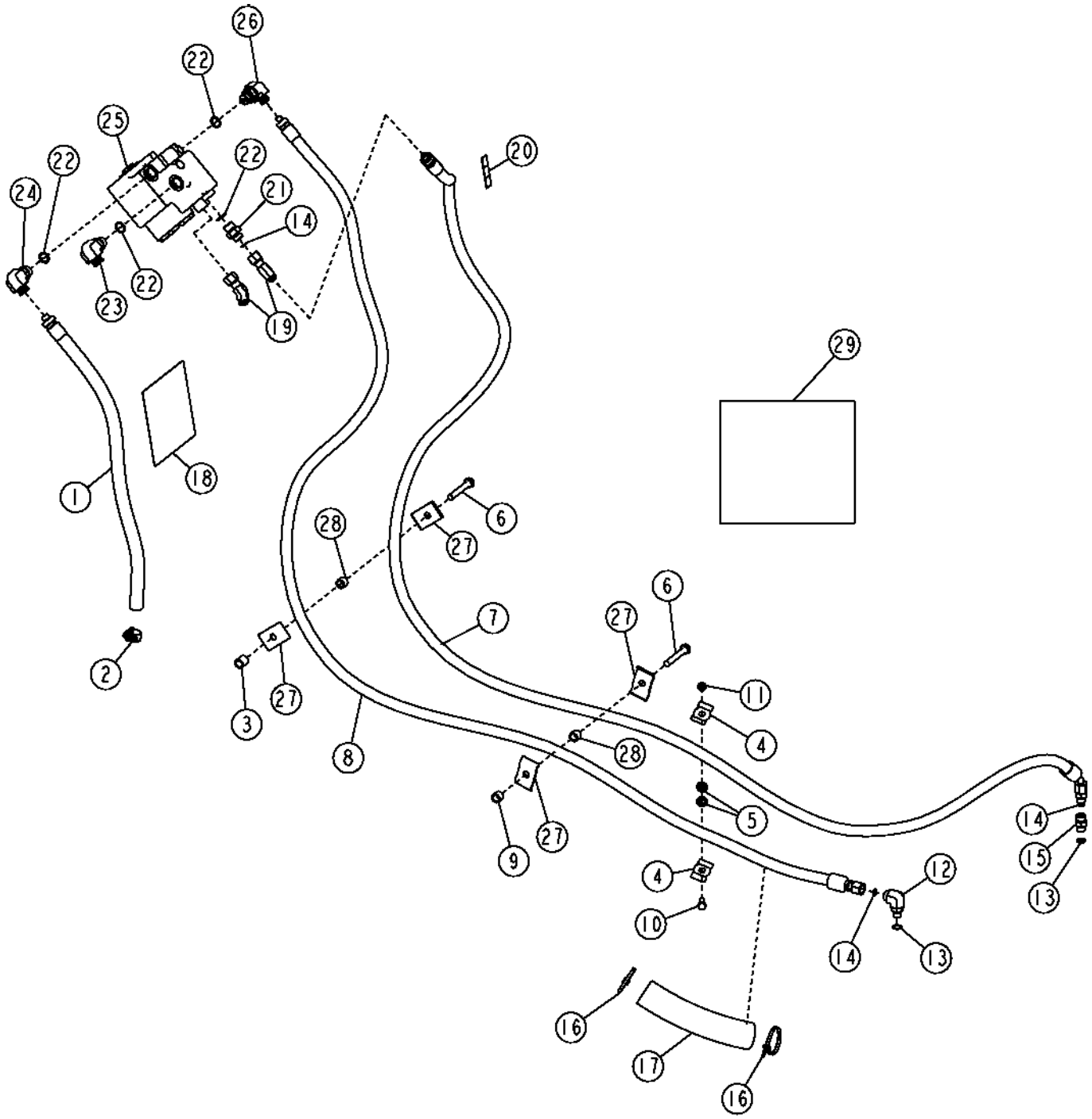

STEERING HYDRAULICS
(WITH MECHANICAL FRONT WHEEL DRIVE)
(SERIAL NO. -911131)

KEY	PART NO.	PART NAME	QTY	SERIAL NO.	REMARKS
1	AT184900	HYDRAULIC HOSE - FABRICATE	1		(ALSO ORDER 62H1043 AND T77857)
	62H1043	ADAPTER	1		STC
2	AR21836	CLAMP	1		
3	28H3383	BUSHING	1		
4	R27491	CLAMP	2		
5	24M7106	WASHER	2		
6	19M8412	SCREW	2	-906604	(SUB FOR T184328)
	19M7742	CAP SCREW	2	906605-	
7	AT188382	HYDRAULIC HOSE - FABRICATE	1		(ALSO ORDER 62H1042 AND T77613)
	62H1042	ADAPTER	1		STC
8	AT188383	HYDRAULIC HOSE - FABRICATE	1		(ALSO ORDER 62H1042 AND T77613)
	62H1042	ADAPTER	1		STC
9	28H3394	BUSHING	1		
10	19M7881	SCREW	1		M8 X 20
11	14M7273	NUT	1		M8
12	38H1004	ELBOW FITTING	1		
13	R26448	O-RING	2		
14	T77613	O-RING	4		
15	38H1160	ADAPTER	1		
16	R44302	TIE BAND	2		
17	.....	SLEEVE	1		MAKE FROM T78606,BULK MATERIAL, (CUT TO 254MM)
18	T185019	LABEL	1		HOSE
19	AT194701	ELBOW FITTING	2		(-06) (SUB FOR AT188009)
20	T185394	LABEL	1		HOSE
21	38H1171	ADAPTER	1		
22	R26375	O-RING	5		
23	AT187668	ELBOW FITTING	1		(-08)
24	AT187668	ELBOW FITTING	1		(-08)
25	AT172609	VALVE	1		CONVENIENCE ASSEMBLY
26	AT195202	ELBOW FITTING	1		(-06) (SUB FOR AT188009)
27	R27491	CLAMP	4	-906604	
	R46919	HALF CLAMP	4	906605-	
28	24M7106	WASHER	2	-906604	
	28H3394	BUSHING	2	906605-	
29	AT193365	KIT	1		STC REPAIR (-06)
	AT193366	KIT	1		STC REPAIR (-08)

STEERING HYDRAULICS
(WITH MECHANICAL FRONT WHEEL DRIVE)
(SERIAL NO. 911132-)

T163935 -UN-14JAN03

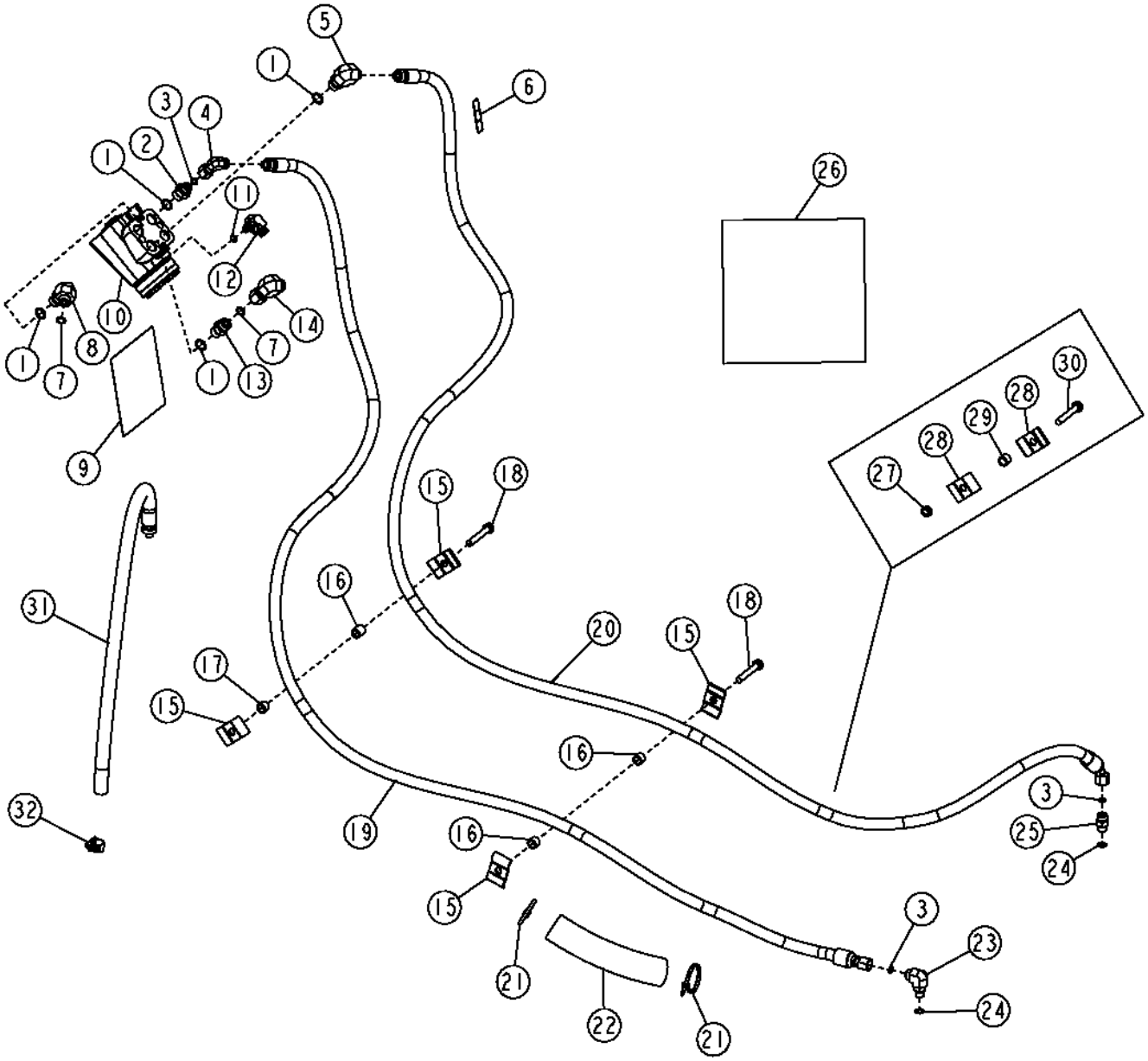

STEERING HYDRAULICS
(WITH MECHANICAL FRONT WHEEL DRIVE)
(SERIAL NO. 911132-)

KEY	PART NO.	PART NAME	QTY	SERIAL NO.	REMARKS
1	R26375	O-RING	4		
2	38H1171	ADAPTER	1		
3	T77613	O-RING	3		
4	AT195201	ELBOW FITTING	1		(-06)
5	AT195202	ELBOW FITTING	1		(-06)
6	T185394	LABEL	1		
7	T77857	O-RING	2		
8	38H1005	ELBOW FITTING	1		
9	T191425	LABEL	1		
10	AT192243	MANUAL HYDRAULIC VALVE	1		
	AT198090	SEAL KIT	1		
11	R28782	O-RING	1		
12	AT188010	ELBOW FITTING	1		(-06)
13	38H1161	ADAPTER	1		
14	AT195203	ELBOW FITTING	1		(-08)
15	R46919	HALF CLAMP	4		
16	28H3394	BUSHING	3		
17	28H3383	BUSHING	1		
18	19M7742	CAP SCREW	2		
19	AT188383	HYDRAULIC HOSE - FABRICATE	1		
20	AT188382	HYDRAULIC HOSE - FABRICATE	1		
21	R44302	TIE BAND	2		
22			1		MAKE FROM T78606, BULK MATERIAL, (CUT TO 254MM)
23	38H1004	ELBOW FITTING	1		
24	R26448	O-RING	2		
25	38H1160	ADAPTER	1		
26	AT193365	KIT	1		STC REPAIR (-06)
	AT193366	KIT	1		STC REPAIR (-08)
27	14M7273	NUT	1		
28	R27491	CLAMP	2		
29	24M7106	WASHER	2		
30	19M7881	SCREW	1		
31	AT184900	HYDRAULIC HOSE - FABRICATE	1		
32	AR21836	CLAMP	1		

STEERING HYDRAULICS
(WITHOUT MECHANICAL FRONT WHEEL DRIVE)
(SERIAL NO. -911131)

T148154 -UN-07JAN02

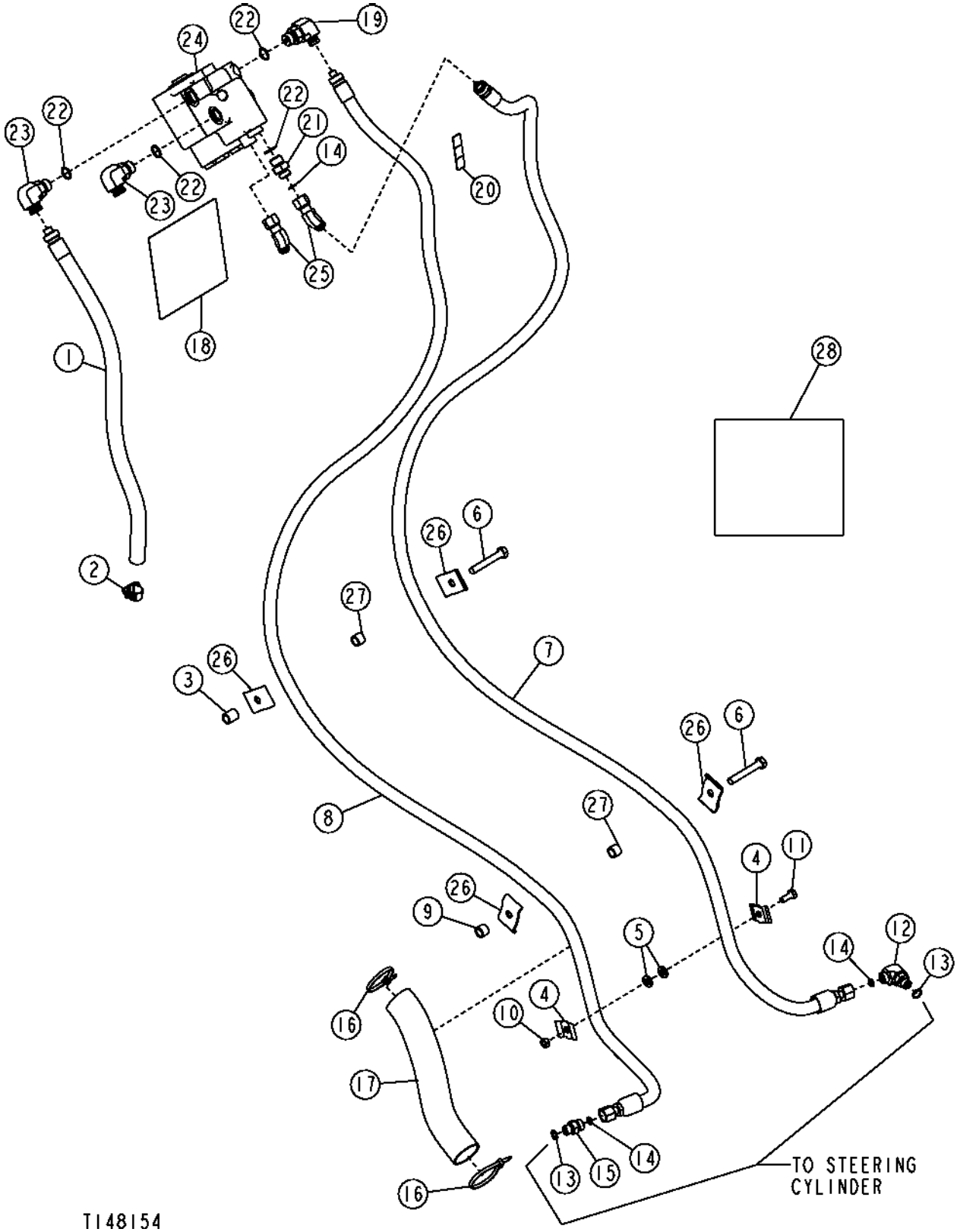

STEERING HYDRAULICS
(WITHOUT MECHANICAL FRONT WHEEL DRIVE)
(SERIAL NO. -911131)

KEY	PART NO.	PART NAME	QTY	SERIAL NO.	REMARKS
1	AT184900	HYDRAULIC HOSE - FABRICATE	1		(ALSO ORDER 62H1043 AND T77857)
	62H1043	ADAPTER	1		STC
2	AR21836	CLAMP	1		
3	28H3383	BUSHING	1		
4	R27491	CLAMP	2		
5	24M7106	WASHER	2		
6	19M8412	SCREW	2	-906604	(SUB FOR T184328)
	19M7742	CAP SCREW	2	906605-	
7	AT188386	HYDRAULIC HOSE - FABRICATE	1		(ALSO ORDER 62H1042 AND T77613)
	62H1042	ADAPTER	1		STC
8	AT188385	HYDRAULIC HOSE - FABRICATE	1		(ALSO ORDER 62H1042 AND T77613)
	62H1042	ADAPTER	1		STC
9	28H3394	BUSHING	1		
10	14M7273	NUT	1		M8
11	19M7881	SCREW	1		M8 X 20
12	38H1004	ELBOW FITTING	1		
13	R26448	O-RING	2		
14	T77613	O-RING	4		
15	38H1160	ADAPTER	1		
16	R44302	TIE BAND	2		
17	.....	SLEEVE	1		MAKE FROM T78606,BULK MATERIAL, (CUT TO 254MM)
18	T185019	LABEL	1		HOSE
19	AT195202	ELBOW FITTING	1		(SUB FOR AT188009)
20	T185394	LABEL	1		HOSE
21	38H1171	ADAPTER	2		
22	R26375	O-RING	4		
23	AT187668	ELBOW FITTING	2		
24	AT194701	ELBOW FITTING	2		(SUB FOR AT188009)
25	AT172609	VALVE	1		CONVENIENCE ASSEMBLY
26	R27491	CLAMP	4	-906604	
	R46919	HALF CLAMP	4	906605-	
27	24M7106	WASHER	2	-906604	
	28H3394	BUSHING	2	906605-	
28	AT193365	KIT	1		STC REPAIR (-06)
	AT193366	KIT	1		STC REPAIR (-08)

STEERING HYDRAULICS
(WITHOUT MECHANICAL FRONT WHEEL DRIVE)
(SERIAL NO. 911132-)

T162737 -UN-10DEC02

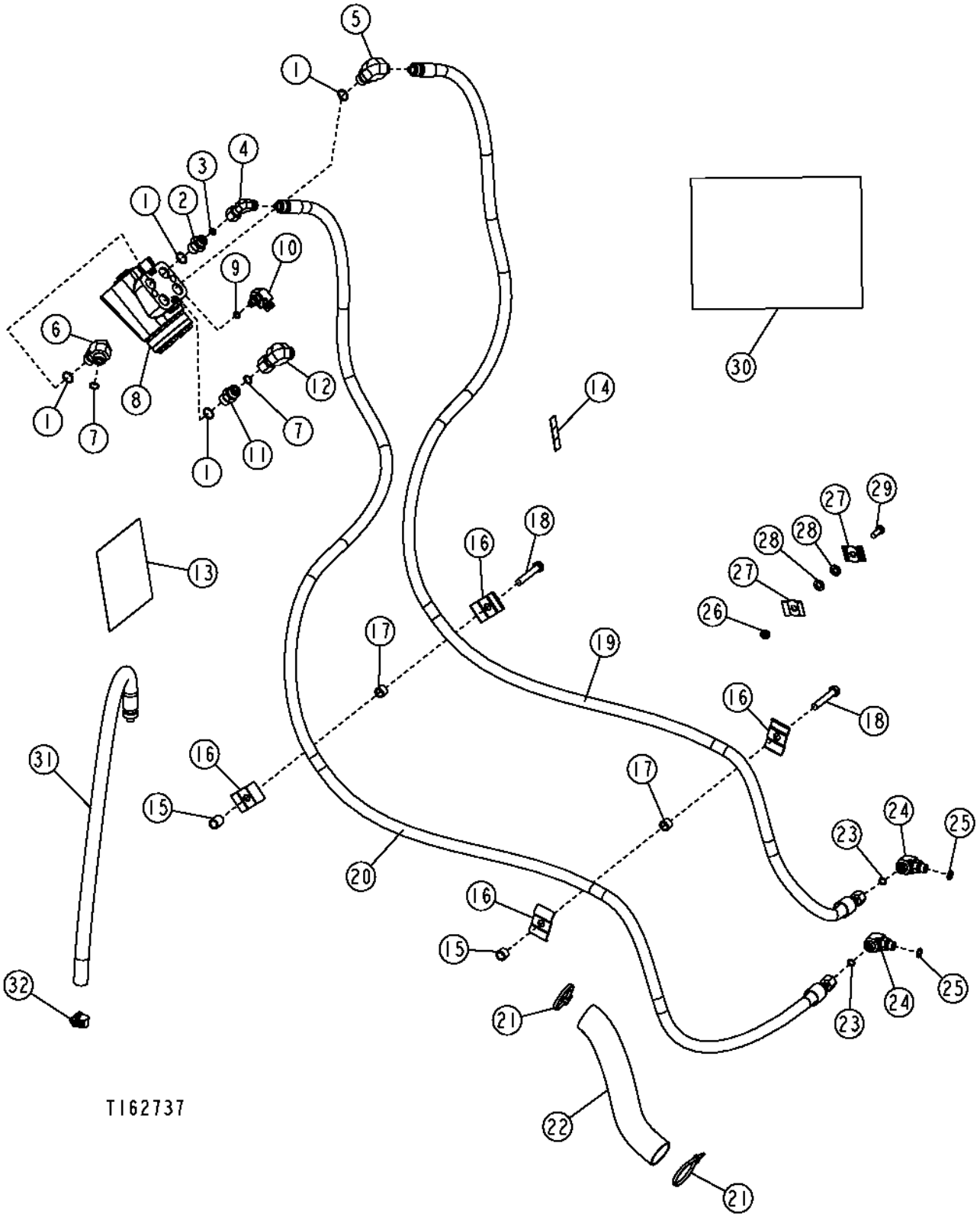

STEERING HYDRAULICS
(WITHOUT MECHANICAL FRONT WHEEL DRIVE)
(SERIAL NO. 911132-)

KEY	PART NO.	PART NAME	QTY	SERIAL NO.	REMARKS
1	R26375	O-RING	4		
2	38H1171	ADAPTER	1		
3	T77613	O-RING	3		
4	AT195201	ELBOW FITTING	1		(-06)
5	AT195202	ELBOW FITTING	1		(-06)
6	38H1005	ELBOW FITTING	1		
7	T77857	O-RING	2		
8	AT192243	MANUAL HYDRAULIC VALVE	1		
	AT198090	SEAL KIT	1		
9	R28782	O-RING	1		
10	AT188010	ELBOW FITTING	1		(-06)
11	38H1161	ADAPTER	1		
12	AT195203	ELBOW FITTING	1		(-08)
13	T191425	LABEL	1		
14	T185394	LABEL	1		
15	28H3394	BUSHING	2		
16	R46919	HALF CLAMP	4		
17	28H3383	BUSHING	2		
18	19M7742	CAP SCREW	2		
19	AT188385	HYDRAULIC HOSE - FABRICATE	1		
20	AT197853	HYDRAULIC HOSE - FABRICATE	1		
21	R44302	TIE BAND	2		
22	.....	HOSE GUARD	1		
23	T77613	O-RING	2		
24	38H1004	ELBOW FITTING	2		
25	R26448	O-RING	2		
26	14M7273	NUT	1		
27	R27491	CLAMP	2		
28	24H1304	WASHER	2		
29	19M7881	SCREW	1		
30	AT193365	KIT	1		STC REPAIR (-06)
	AT193366	KIT	1		STC REPAIR (-08)
31	AT184900	HYDRAULIC HOSE - FABRICATE	1		
32	AR21836	CLAMP	1		

THIS PARTS LISTING IS CONTINUED

STEERING CYLINDER
(MECHANICAL FRONT WHEEL DRIVE)

TP70433 -UN-30AUG00

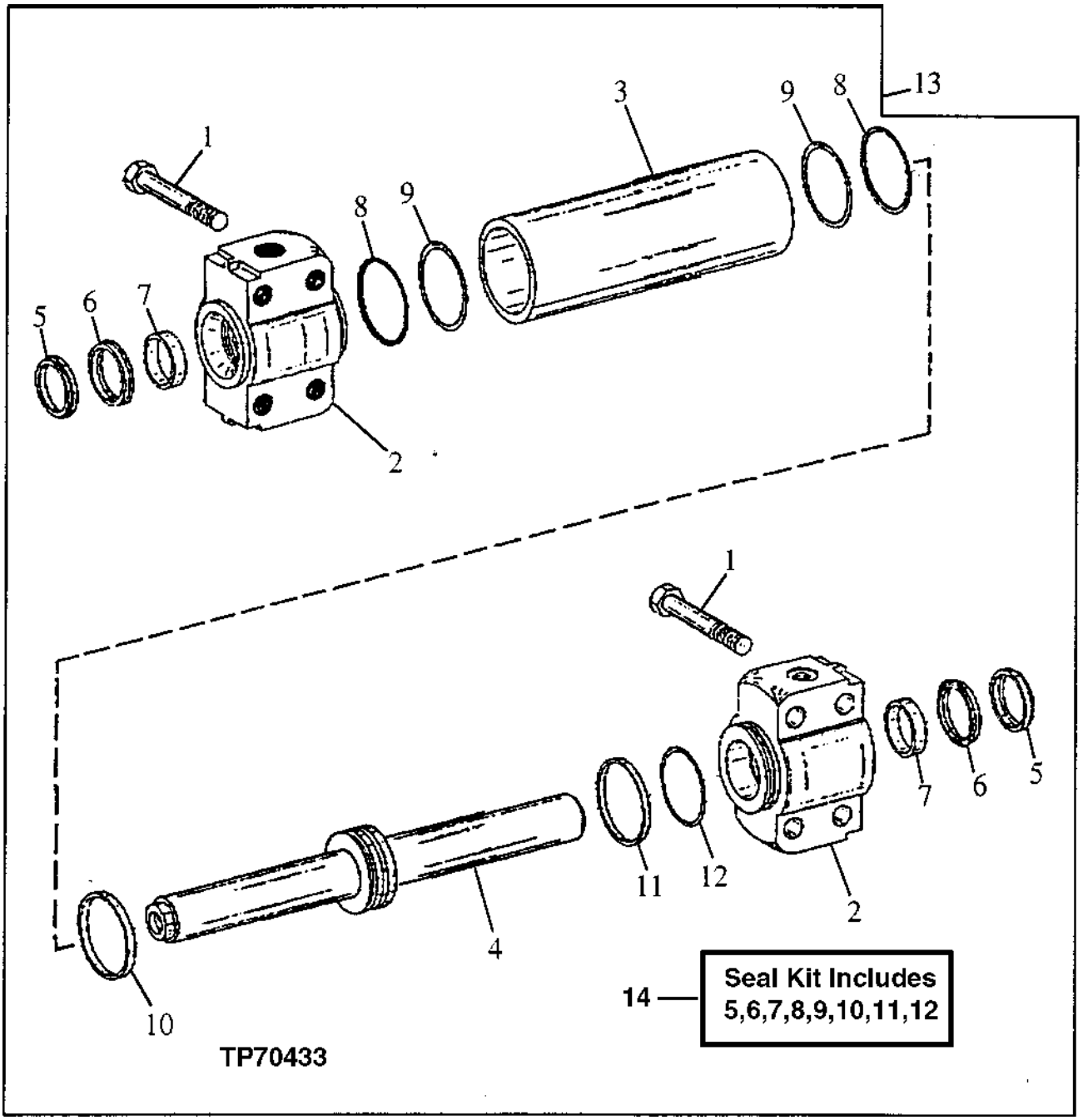

STEERING CYLINDER
(MECHANICAL FRONT WHEEL DRIVE)

KEY	PART NO.	PART NAME	QTY	SERIAL NO.	REMARKS
1	19M8632	CAP SCREW	8		M16 X 75
2	T153723	CYLINDER	2	-911131	
	T201269	HYDR. CYLINDER ROD GUIDE	2	911132-	
3	T153742	CYLINDER	1	-911131	
	T201270	HYDRAULIC CYLINDER BARREL	1	911132-	
4	AT195573	CYLINDER	1	-911131	(SUB FOR T153743)
	AT301769	PISTON	1	911132-	
5	.....	SEAL	2		(A)
6	.....	SEAL	2		(A)
7	.....	GUIDE	2		(A)
8	.....	O-RING	2		(A)
9	.....	RING	2		(A)
10	.....	SEAL	1		(A)
11	.....	GUIDE	1		(A)
12	.....	O-RING	1		(A)
13	AT195570	CYLINDER	1	-911131	(SUB FOR AT167332)
	AT280334	CYLINDER	1	911132-	
14	T153744	HYDRAULIC CYLINDER KIT	1	-911131	(STEERING CYLINDER SEAL KIT) INCLUDES ALL (A) PARTS
	AT301906	HYDRAULIC CYLINDER KIT	1	911132-	

POWER STEERING CYLINDER
(WITHOUT MECHANICAL FRONT WHEEL DRIVE)

TP62439 -UN-11JUL00

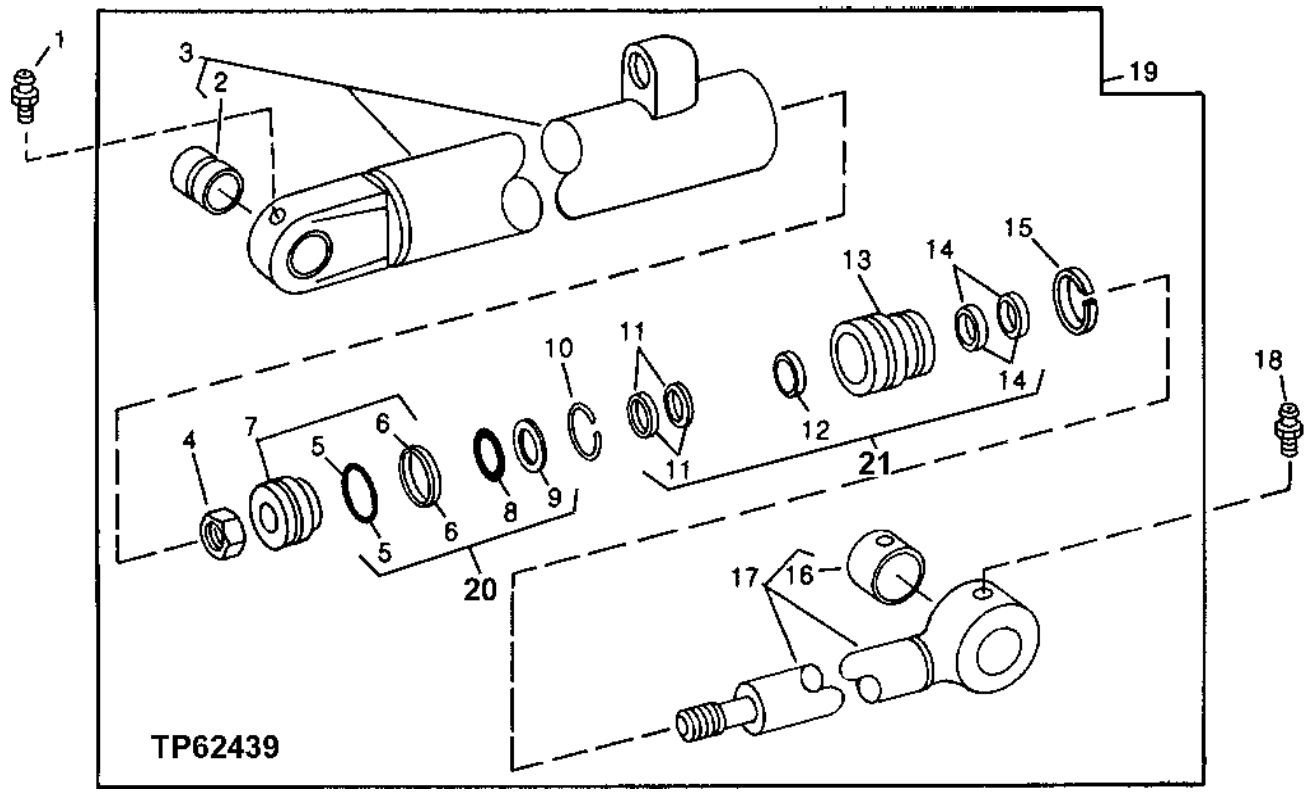

KEY	PART NO.	PART NAME	QTY	SERIAL NO.	REMARKS
1	JD7759	LUBRICATION FITTING	1		
2	R81854	BUSHING	1		
3	AH134479	HYDRAULIC CYLINDER BARREL	1		
4	H170534	NUT	1		
5	R30200	O-RING	1		
6	R92208	PACKING	1		
7	AH135785	PISTON	1		(INCLUDES WEAR RINGS AND SEALS
	.....	WEAR RING	2		
	.....	SEAL	1		FACE
	.....	SEAL	1		INTERNAL
8	H155964	O-RING	1		
9	R78393	BACK-UP RING	1		
10	R88114	SNAP RING	1		
11	AH151381	SEAL	1		
12	H158676	SEAL	1		
13	H161330	HYDR. CYLINDER ROD GUIDE	1		
14	AH151380	SEAL	1		
15	N34349	SNAP RING	1		
16	R72700	BUSHING	1		
17	RE22415	ROD	1		
18	T162396	LUBRICATION FITTING	1		
19	AH154774	HYDRAULIC CYLINDER	1		
20	RE30100	HYDRAULIC CYLINDER KIT	1		CYLINDER BORE REPAIR
21	AH149810	HYDRAULIC CYLINDER KIT	1		CYLINDER ROD REPAIR

POWER STEERING/PRIORITY VALVE SEAL KIT
(SERIAL NO. -911131)

TP68654 -UN-15DEC99

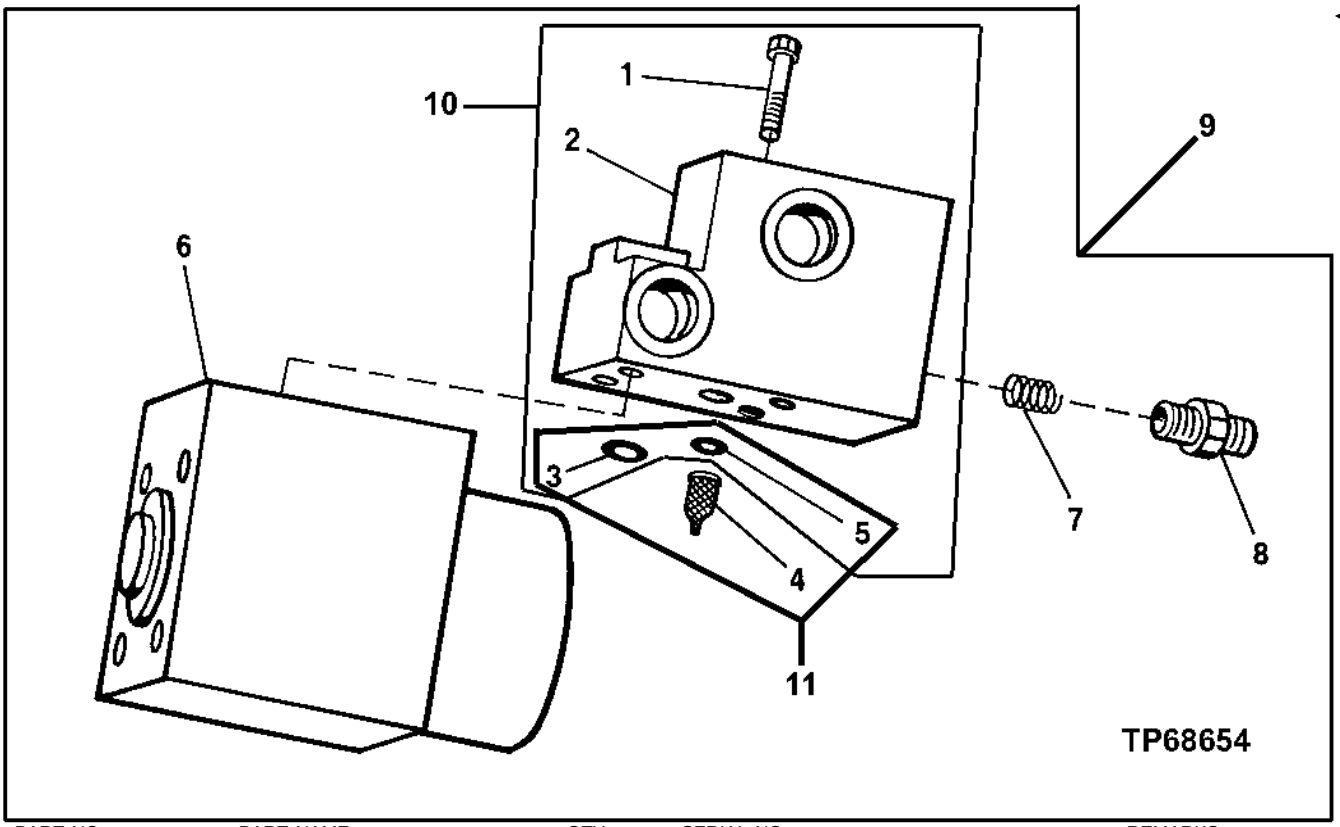

KEY	PART NO.	PART NAME	QTY	SERIAL NO.	REMARKS
1	.....	CAP SCREW	2		
2	.....	VALVE	1		PRIORITY
3	N130510	O-RING	4		
4	.....	SCREEN	1		
5	.....	O-RING	1		
6	.....	VALVE	1		STEERING, (SUB AT172609) (INCLUDES AT175622, A3917R, B3690R, C15104, R10093 AND (3) T152288)
	AT175622	SEAL	1		
	A3917R	O-RING	1		
	B3690R	O-RING	1		
	C15104	SEAL	1		
	R10093	O-RING	1		
	T152288	O-RING	3		
	AT167183	SEAL KIT	1		
7	T161621	SPRING	1		
8	AT180122	FITTING	1		
9	AT172609	VALVE	1		CONVENIENCE ASSEMBLY
10	AT178645	KIT	1		PRIORITY VALVE WITH INTERFACE SEALS
11	AT178646	KIT	1		INTERFACE SEALS

SERVICE BRAKE ASSEMBLY

T138068 -UN-16FEB01

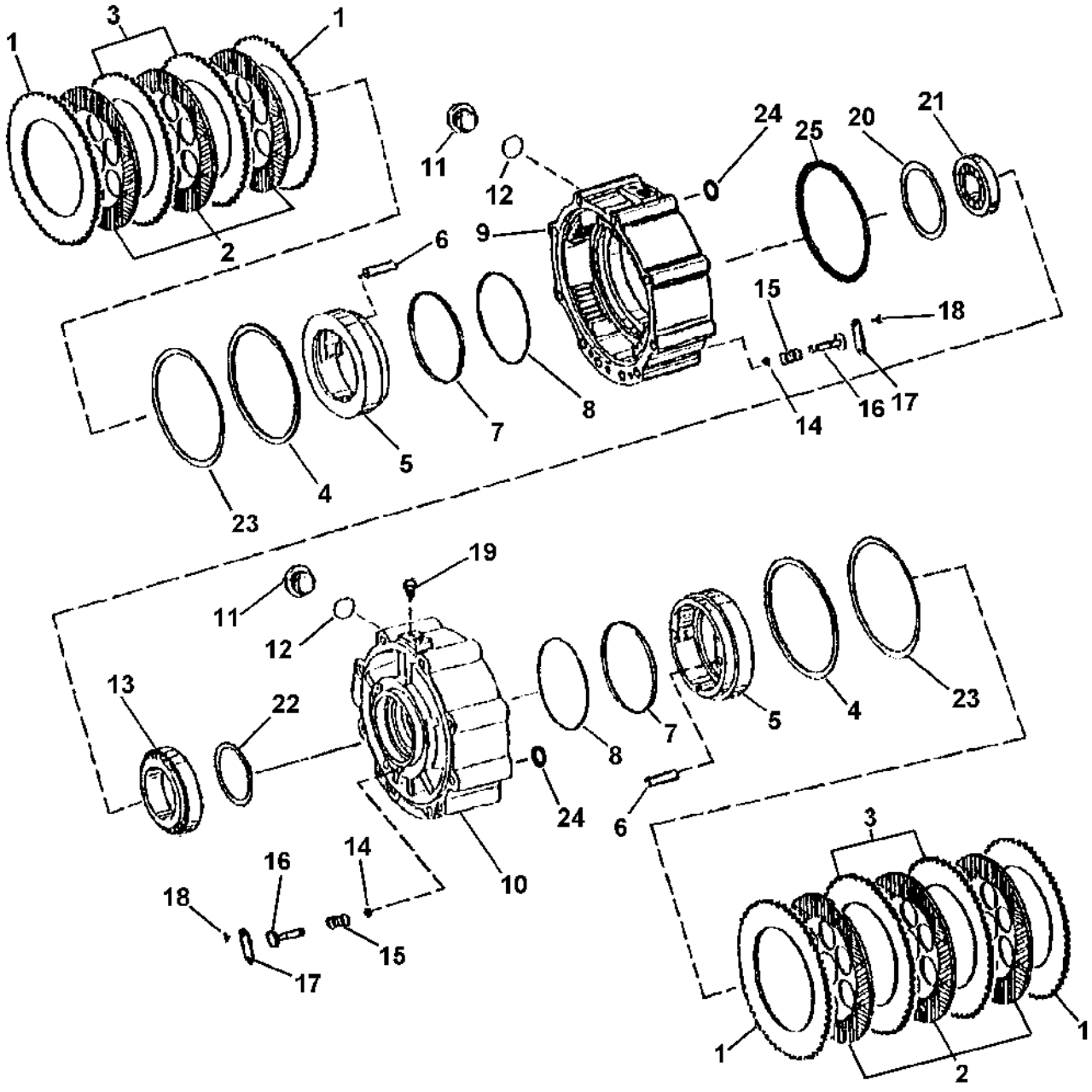

T138068

SERVICE BRAKE ASSEMBLY

KEY	PART NO.	PART NAME	QTY	SERIAL NO.	REMARKS
1	T159409	PLATE	4		(3MM)
2	AT179503	BRAKE DISK	6		
3	T161233	DISK	4		(4MM)
4	T159402	SEAL	2		
5	T185443	PISTON	2		
6	T159399	DOWEL PIN	4		
7	T159400	SEAL	2		
8	T159401	BACK-UP RING	2		
9	T159396	HOUSING	1		RIGHT
10	T159397	HOUSING	1		LEFT
11	15M7030	PIPE PLUG	2		
12	L55580	O-RING	2		
13	AT179504	TAPERED ROLLER BEARING	1		LEFT
14	T159407	RING	6		
15	T159408	SPRING	6		
16	T159406	PIN	6		
17	T159398	LOCK PLATE	6		
18	19M8425	CAP SCREW	12		
19	T162517	BLEED VALVE	2		
20	T161247	SHIM	1		.20 MM
	T161246	SHIM	1		.30 MM
	T161245	SHIM	1		.40 MM
	T161244	SHIM	1		.50 MM
	T161243	SHIM	1		.70 MM
	T161242	SHIM	1		.75 MM
	T161241	SHIM	1		.80 MM
	T161240	SHIM	1		.85 MM
	T161239	SHIM	1		.90 MM
	T161238	SHIM	1		.95 MM
	T159435	SHIM	1		1.0 MM
	T159431	SHIM	1		1.2 MM
	T159429	SHIM	1		1.3 MM
	T159427	SHIM	1		1.4 MM
	T159425	SHIM	1		1.5 MM
21	AT179505	TAPERED ROLLER BEARING	1		RIGHT
22	T159444	SHIM	1		.1 MM
	T159445	SHIM	1		.15 MM
	T159443	SHIM	1		.2 MM
	T159440	SHIM	1		.3 MM
	T159441	SHIM	1		.5 MM
	T159442	SHIM	1		1.0 MM
	T159446	SHIM	1		1.1 MM
	T159447	SHIM	1		1.2 MM
	T159448	SHIM	1		1.3 MM
	T159449	SHIM	1		1.4 MM
	T159450	SHIM	1		1.5 MM
	T159451	SHIM	1		1.6 MM
	T159452	SHIM	1		1.7 MM
	T159453	SHIM	1		1.8 MM
	T183500	SOLID SHIM	1		2.15 MM
	T183502	SOLID SHIM	1		2.25 MM
	T183505	SOLID SHIM	1		2.4 MM
	T183506	SOLID SHIM	1		2.45 MM
	T183507	SOLID SHIM	1		2.5 MM
	T159457	SHIM	1		2.8 MM
	T159459	SHIM	1		3.0 MM
	T159461	SHIM	1		3.2 MM
	T159463	SHIM	1		3.4 MM
23	T159403	BACK-UP RING	2		
24	T159373	O-RING	8		
25	T159362	O-RING	1		

BRAKE VALVE AND PEDALS

T162157 -UN-12DEC02

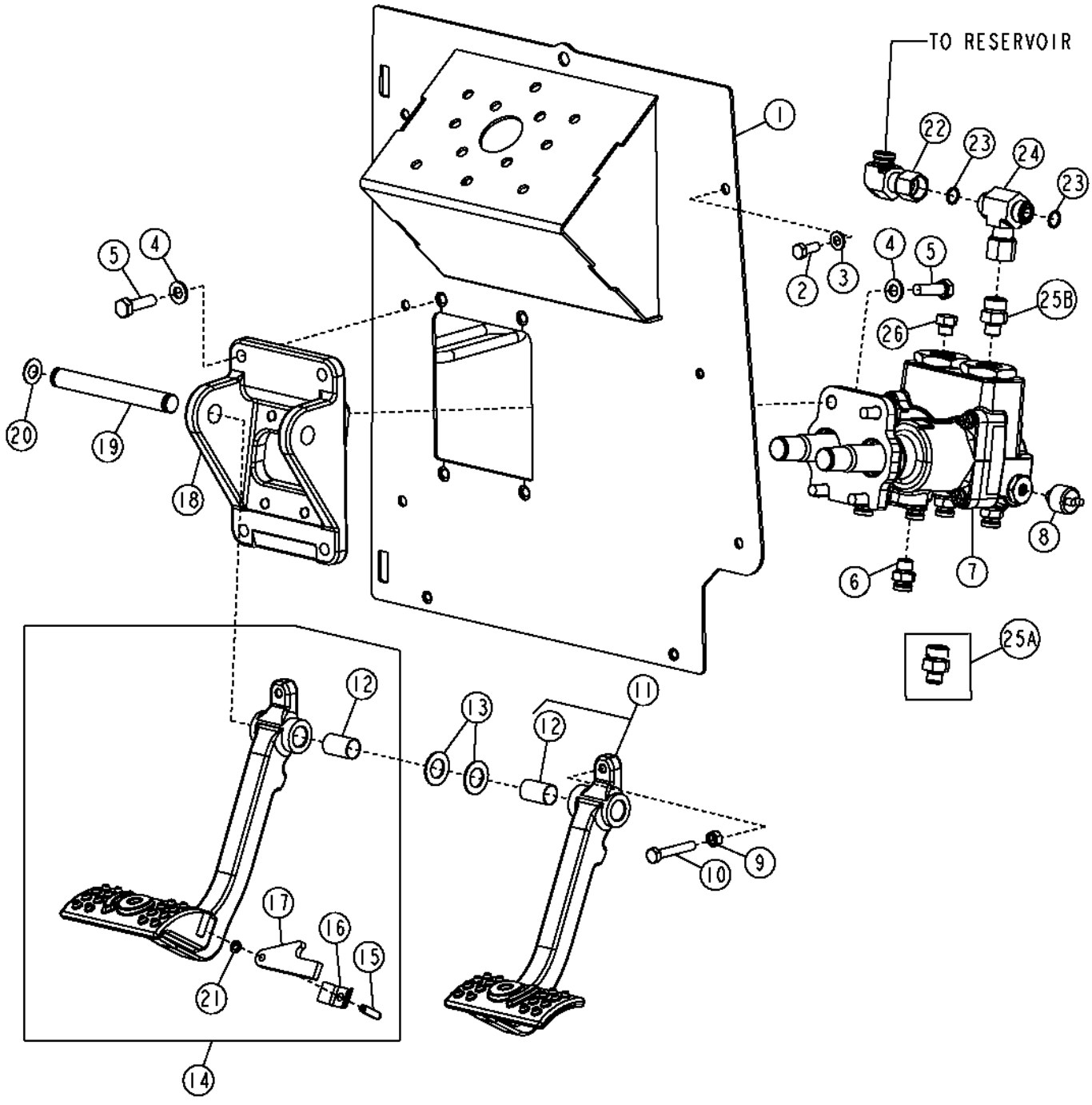

BRAKE VALVE AND PEDALS

KEY	PART NO.	PART NAME	QTY	SERIAL NO.	REMARKS
1	AT186839	SUPPORT	1		
2	19M7881	SCREW	4		M8 X 20
3	24M7238	WASHER	4		
4	24M7239	WASHER	8		
5	19M7550	CAP SCREW	8		M10 X 35
6	AT187666	ADAPTER	7		
7	AT184578	MANUAL HYDRAULIC VALVE	1		
8	R32548	TOUCH SWITCH	2		(BRAKE LIGHT PRESSURE SWITCH)
9	14M7273	NUT	2		M8
10	19M7164	CAP SCREW	2		M8 X 50
11	AT184592	PEDAL	1		RIGHT
12	B177R	BUSHING	1		
13	24H1381	WASHER	2		
14	AT184579	PEDAL	1		LEFT
15	34H101	SPRING PIN	1		1/4" X 1"
16	R50034	LEAF SPRING	1		
17	R50879	ARM	1		
18	T166171	BRACKET	1		
19	T165282	PIN FASTENER	1		
20	F2863R	SNAP RING	2		
21	24H1285	WASHER	AR		
22	AT195203	ELBOW FITTING	1	-913479	
	AT280459	ADAPTER	1	913480-	
23	T77857	O-RING	2		
24	38H1039	TEE FITTING	1		
25A	AT187666	ADAPTER	1		
25B	38H1173	ADAPTER	1		
26	R27218	FITTING PLUG	1		

BRAKE VALVE ASSEMBLY

TP69682 -UN-22SEP00

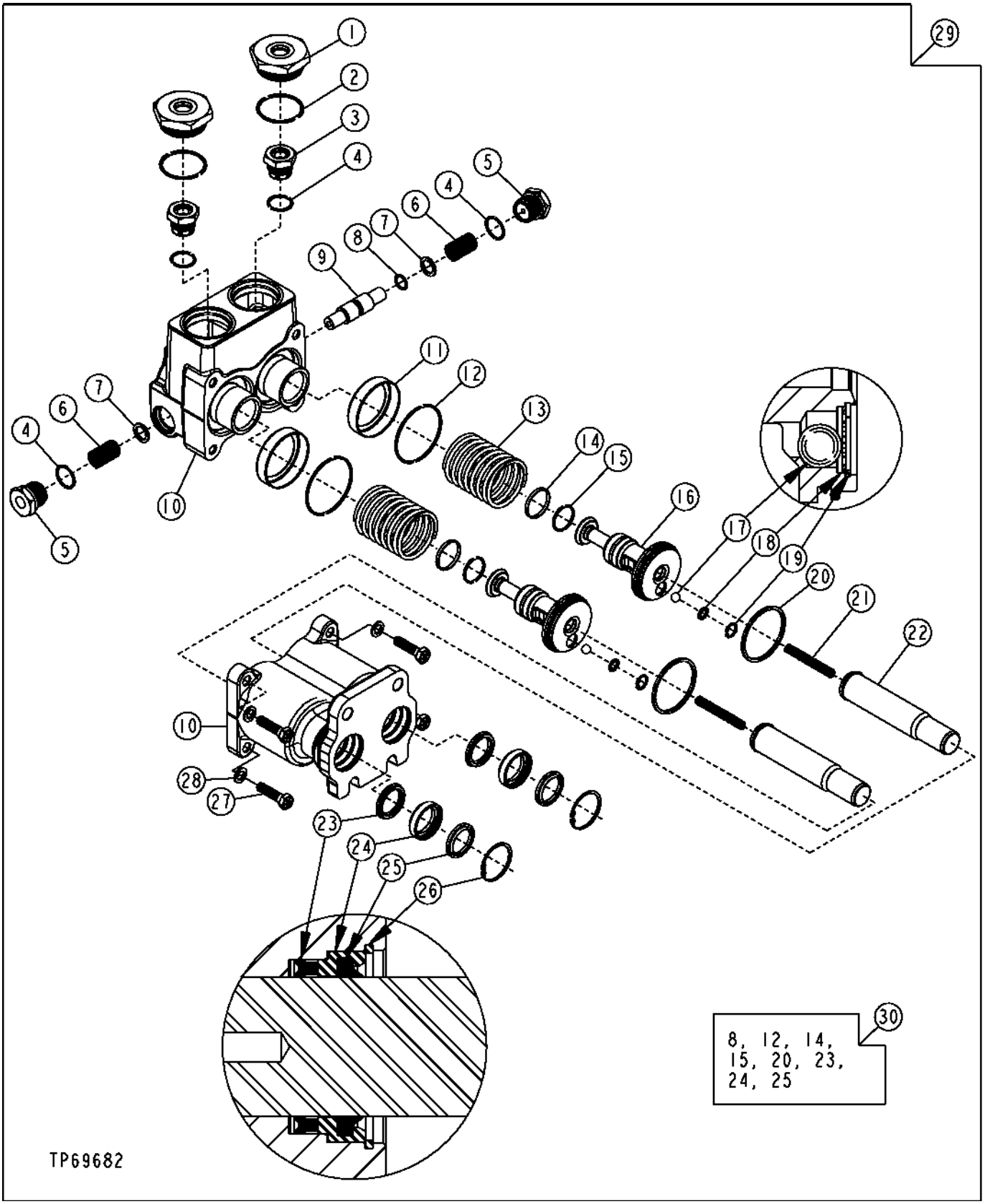

BRAKE VALVE ASSEMBLY

KEY	PART NO.	PART NAME	QTY	SERIAL NO.	REMARKS
1	T183268	FITTING	2		
2	U13639	O-RING	2		
3	AT188343	ADAPTER	2		
4	R26906	O-RING	4		
5	T185926	PLUG	2		
6	T183274	SPRING	2		
7	T183273	WASHER	2		
8	.....	RING	2		(A)
9	T183272	PISTON	1		
10	.....	HOUSING	1		(ORDER AT184578)
11	T183271	RETAINER	2		
12	.....	O-RING	2		(A)
13	T183270	SPRING	2		
14	.....	SEAL	2		(A)
15	.....	RING	2		(A)
16	T183276	PISTON	2		
17	R26552	BALL	2		
18	T185078	LOCK WASHER	2		
19	R48523	SNAP RING	2		
20	T183362	PISTON RING	2		(A)
21	T183269	SPRING	2		
22	AT192151	PUSH ROD	2		
23	.....	SEAL	2		(A)
24	.....	SEAL	2		(A)
25	T183357	RETAINING WASHER	2		(A)
26	M41029	SNAP RING	2		
27	19H1849	CAP SCREW	4		5/16" X 1-1/4"
28	T183310	WASHER	4		
29	AT184578	MANUAL HYDRAULIC VALVE	1		
30	AT192419	KIT	1		(A) (BRAKE VALVE OVERHAUL) (REQUIRES 1 KIT PER VALVE)

SERVICE BRAKE HYDRAULICS

TP58126 -UN-04OCT00

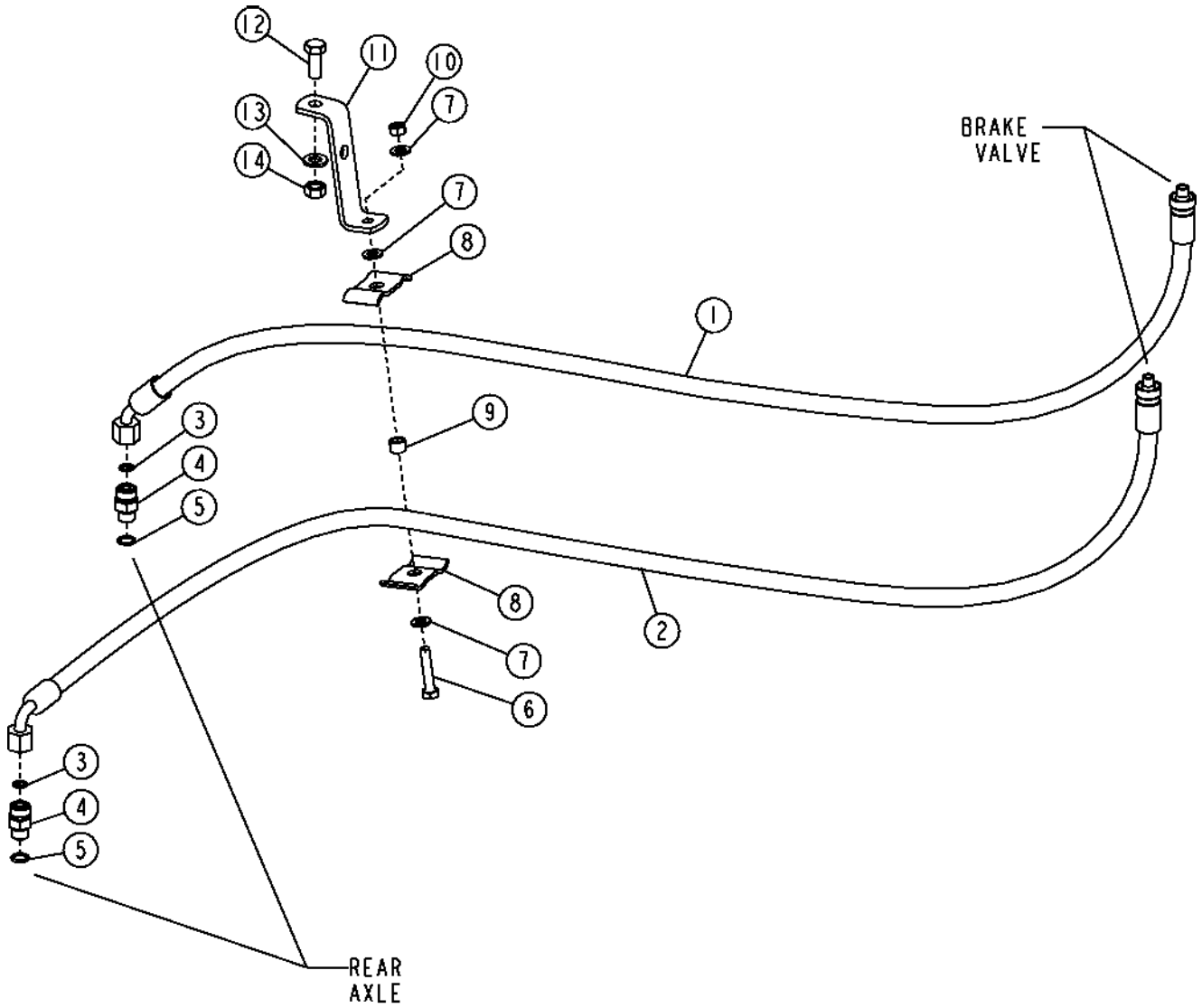

TP58126

SERVICE BRAKE HYDRAULICS

KEY	PART NO.	PART NAME	QTY	SERIAL NO.	REMARKS
1	AT185513	HYDRAULIC HOSE - FABRICATE	1		
2	AT184894	HYDRAULIC HOSE - FABRICATE	1		
3	T77613	O-RING	2		
4	38H1212	ADAPTER	2		
5	R26448	O-RING	2		
6	19M7922	CAP SCREW	1		M8 X 40
7	24M7238	WASHER	3		
8	R46919	HALF CLAMP	2		
9	T186859	WASHER	1		
10	14M7273	NUT	1		M8
11	T158245	STRAP	1		
12	19M7402	CAP SCREW	1		M10 X 25
13	24M7239	WASHER	1		
14	14M7274	NUT	1		M10

BRAKE VALVE BOOST PLUMBING
(CAB)

T136938 -UN-06JAN01

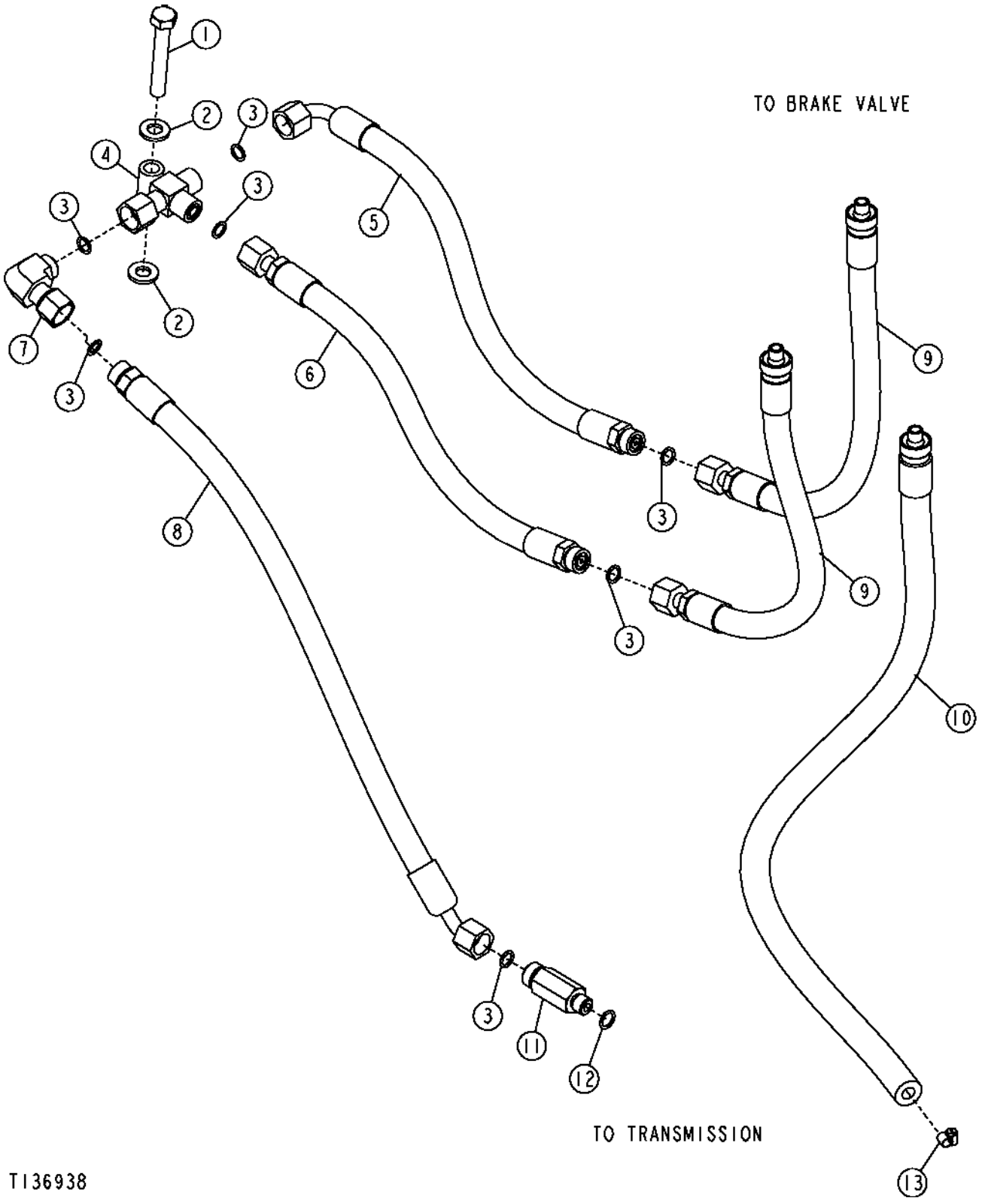

BRAKE VALVE BOOST PLUMBING
(CAB)

KEY	PART NO.	PART NAME	QTY	SERIAL NO.	REMARKS
1	19M7742	CAP SCREW	1		M10 X 65
2	24M7239	WASHER	2		
3	T77613	O-RING	7		
4	AT191868	TEE FITTING	1		
5	AT194417	HYDRAULIC HOSE - FABRICATE	1		
6	AT194416	HYDRAULIC HOSE - FABRICATE	1		
7	38H1094	ELBOW FITTING	1		
8	AT193981	HYDRAULIC HOSE - FABRICATE	1		
9	AT194412	HYDRAULIC HOSE - FABRICATE	2		
10	AT186740	HYDRAULIC HOSE - FABRICATE	1		(ALSO ORDER 62H1042 AND T77613)
	62H1042	ADAPTER	1		STC
11	38H1575	ADAPTER	1		
12	R26286	O-RING	1		
13	AR48236	CLAMP	1		

BRAKE VALVE BOOST PLUMBING
(ROPS)

T136937 -UN-06JAN01

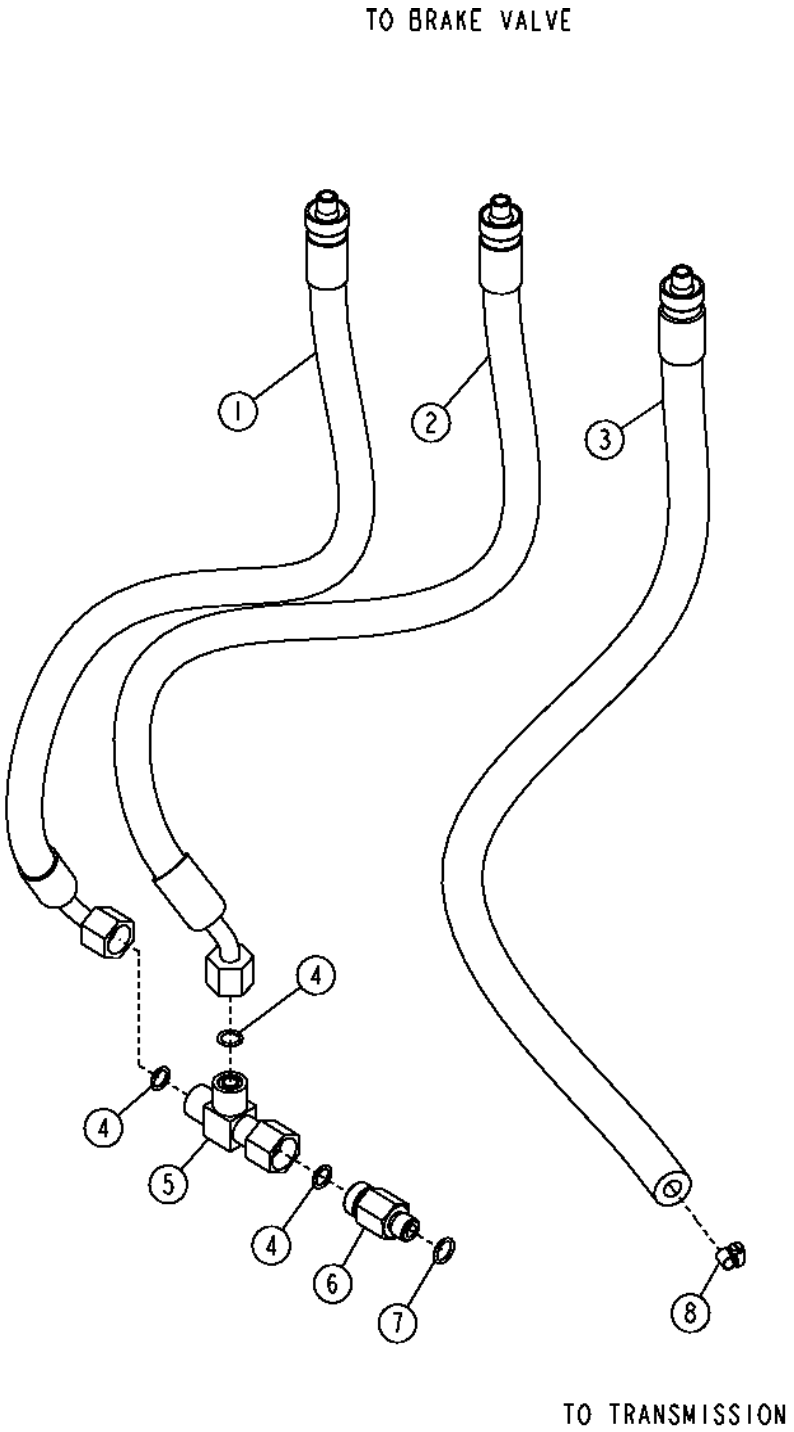

BRAKE VALVE BOOST PLUMBING
(ROPS)

KEY	PART NO.	PART NAME	QTY	SERIAL NO.	REMARKS
1	AT192415	HYDRAULIC HOSE - FABRICATE	1		
2	AT192416	HYDRAULIC HOSE - FABRICATE	1		
3	AT186740	HYDRAULIC HOSE - FABRICATE	1		
4	T77613	O-RING	3		
5	AT192417	TEE FITTING	1		
6	T186238	ADAPTER	1		
7	R26286	O-RING	1		
8	AR48236	CLAMP	1		

PARKING BRAKE
(SERIAL NO. -902685)

T138069 -UN-16FEB01

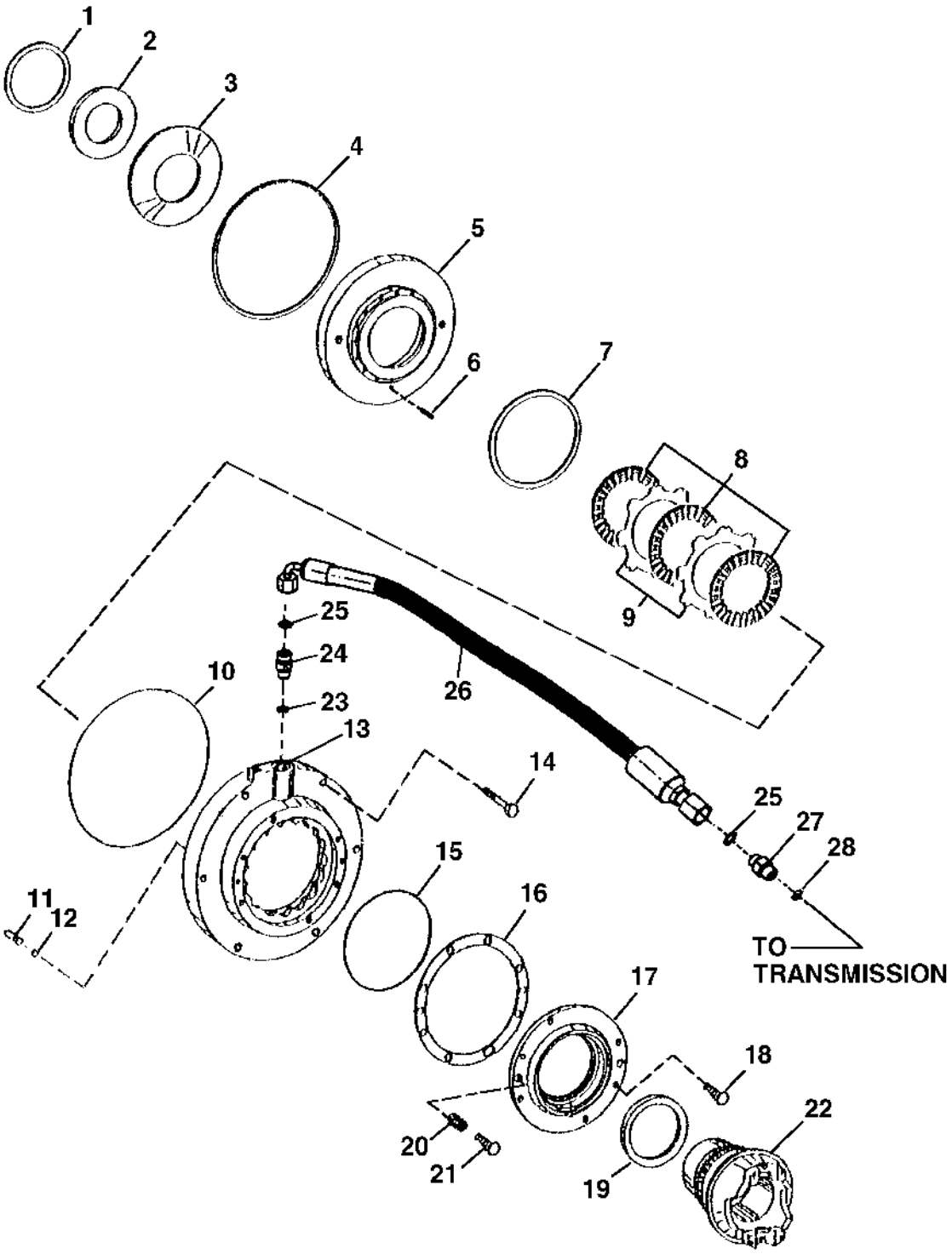

T138069

PARKING BRAKE
(SERIAL NO. -902685)

KEY	PART NO.	PART NAME	QTY	SERIAL NO.	REMARKS
1	T159479	SHIM	1		0.6 MM
	T159480	SHIM	1		0.7 MM
	T159481	SHIM	1		0.8 MM
	T159482	SHIM	1		0.9 MM
	T159483	SHIM	1		2.0 MM
2	T159484	SUPPORT	1		
3	T159485	DISK SPRING	1		
4	T159478	SEAL	1		
5	T159476	PISTON	1		
6	T159473	SPRING PIN	1		
7	T159477	SEAL	1		
8	T159475	CLUTCH DISK	3		
9	T159474	PLATE	2		
10	T159472	O-RING	1		
11	T159486	PIN	2		
12	T159487	O-RING	2		
13	T159471	HOUSING	1		
14	19M7935	CAP SCREW	6		M10 X 55
15	T159491	O-RING	1		
16	T159492	SHIM	1		1.0 MM
	T159493	SHIM	1		0.5 MM
	T159494	SHIM	1		0.3 MM
	T159495	SHIM	1		0.1 MM
	T159496	SHIM	1		0.15 MM
	T159497	SHIM	1		0.2 MM
17	T159490	COVER	1		
18	19M8761	SCREW	6		M10 X 22
19	AT179537	SEAL	1		
20	T159502	LOCK NUT	2		(MANUAL RELEASE-PARK BRAKE)
21	T159499	CAP SCREW	2		(MANUAL RELEASE-PARK BRAKE)
22	T158438	UNIVERSAL JOINT YOKE	1		
23	R26906	O-RING	1		
24	38H1162	ADAPTER	1		
25	T77932	O-RING	2		
26	AT179899	HYDRAULIC HOSE - FABRICATE	1		1" X 655 MM (25-3/4") X 1"
27	38H1317	FITTING	1		
28	R26375	O-RING	1		

PARKING BRAKE
(SERIAL NO. 902686-)

TP57991 -UN-09FEB99

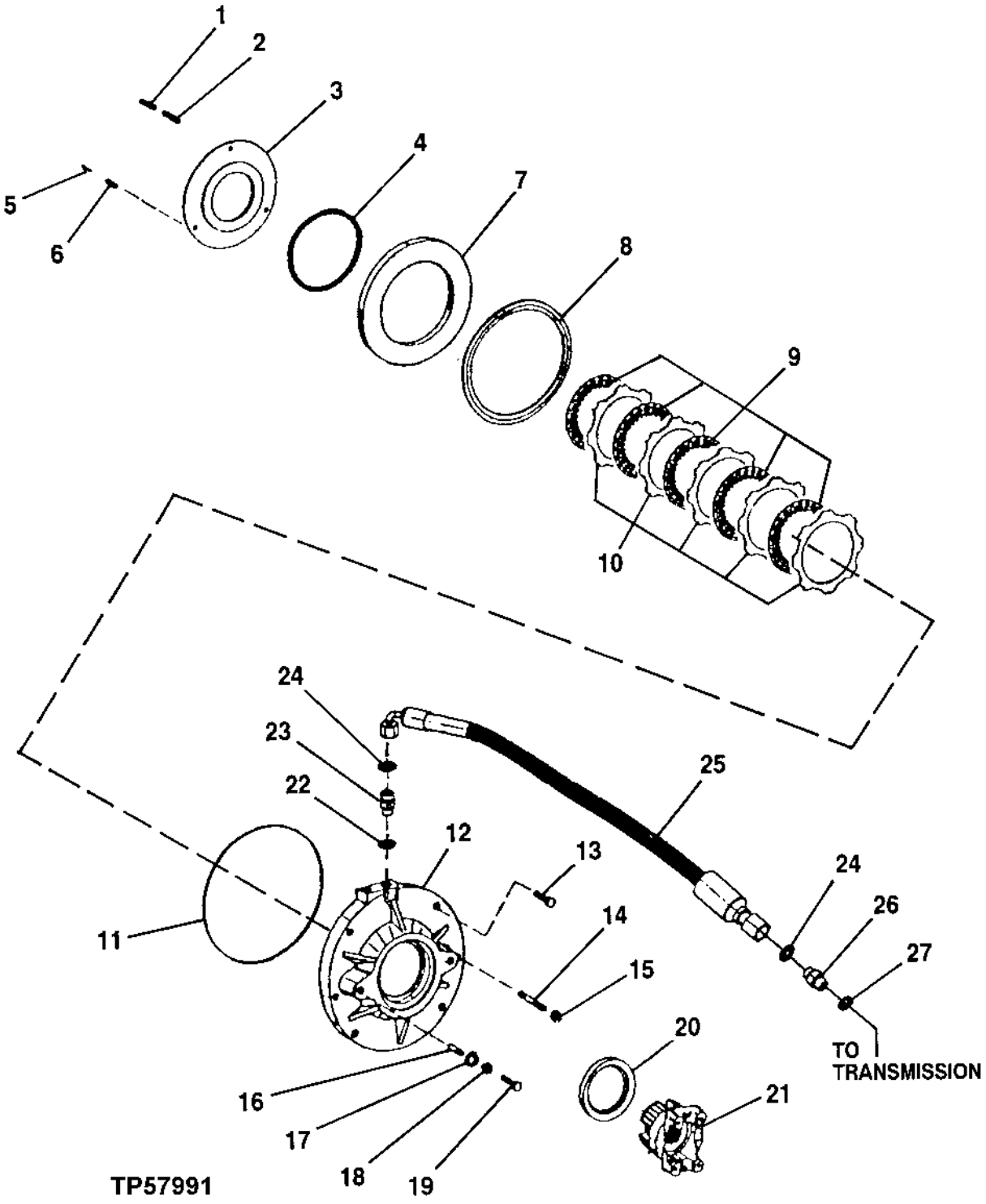

PARKING BRAKE
(SERIAL NO. 902686-)

KEY	PART NO.	PART NAME	QTY	SERIAL NO.	REMARKS
1	T164917	COMPRESSION SPRING	14		
2	T164916	COMPRESSION SPRING	14		
3	T164915	PLATE	2		
4	T159477	SEAL	1		
5	T164911	PIN	1		
6	T159359	SPRING PIN	2		
7	T164914	PISTON	1		
8	T159478	SEAL	1		
9	T159475	CLUTCH DISK	3		
10	T159474	PLATE	3		
11	T164909	O-RING	1		
12	T188234	HOUSING	1		
13	19M7179	CAP SCREW	4		M10 X 50
14	T164912	STUD	2		
15	T164913	NUT	2		
16	T164918	PIN	2		
17	T159487	O-RING	2		
18	T159502	LOCK NUT	2		
19	T164922	SCREW	2		
20	AT179537	SEAL	1		
21	T188240	UNIVERSAL JOINT YOKE	1		
22	R26906	O-RING	1		
23	38H1162	ADAPTER	1		
24	T77932	O-RING	2		
25	AT179899	HYDRAULIC HOSE - FABRICATE	1		
26	38H1317	FITTING	1		
27	R26375	O-RING	1		

LOADER ARM SERVICE LOCK

T134150 -UN-30SEP00

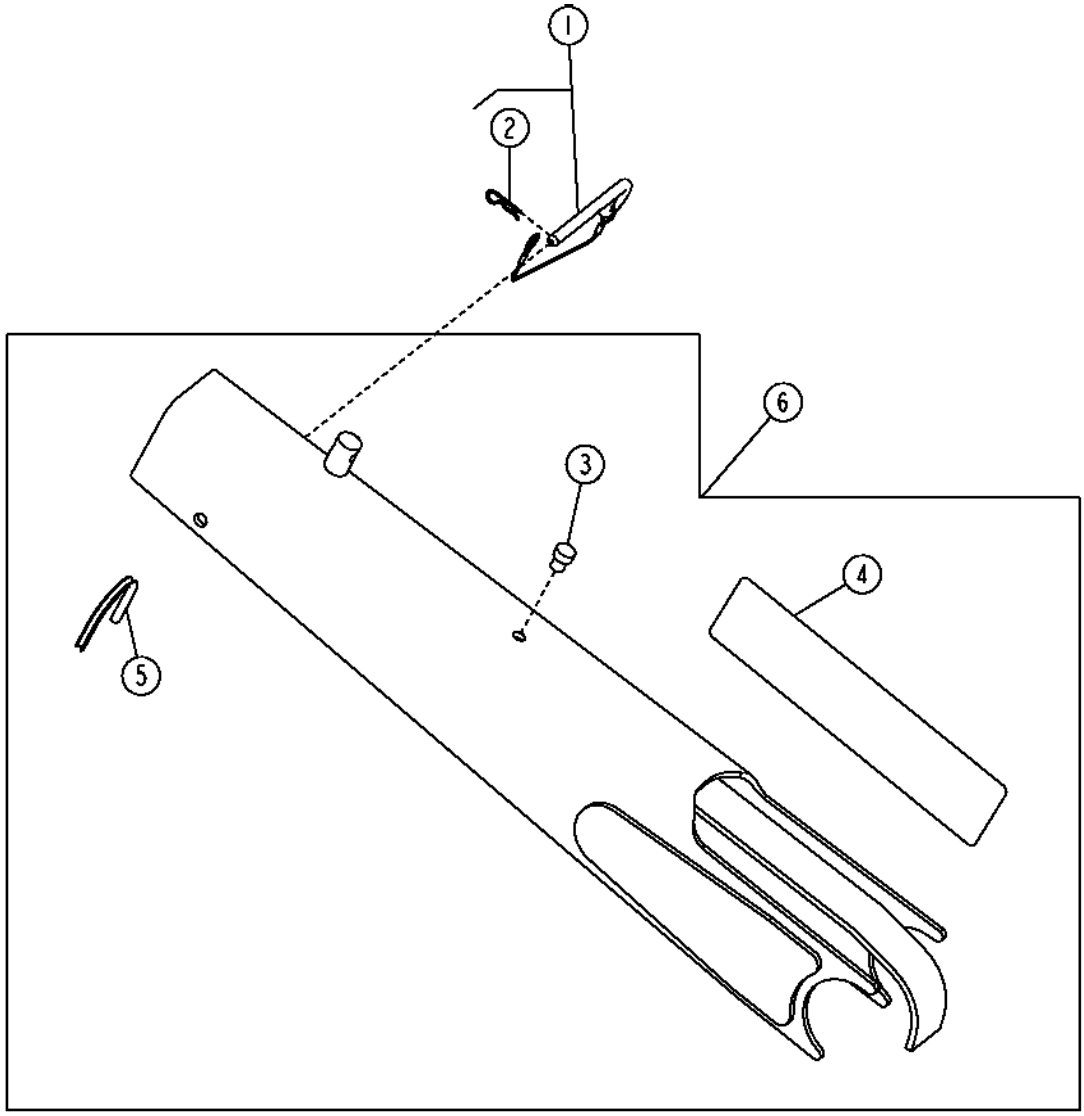

T134150

LOADER ARM SERVICE LOCK

KEY	PART NO.	PART NAME	QTY	SERIAL NO.	REMARKS
1	AT178745	PIN	1		
2	J16931	PIN	1		
3	T14083	BUMPER	1		
4	T185902	LABEL	1		
5	T152648	ISOLATOR	1		
6	AT192367	ARM	1		SERVICE LOCK

LICENCE PLATE LIGHT AND BRACKET

T139757 -UN-12MAR01

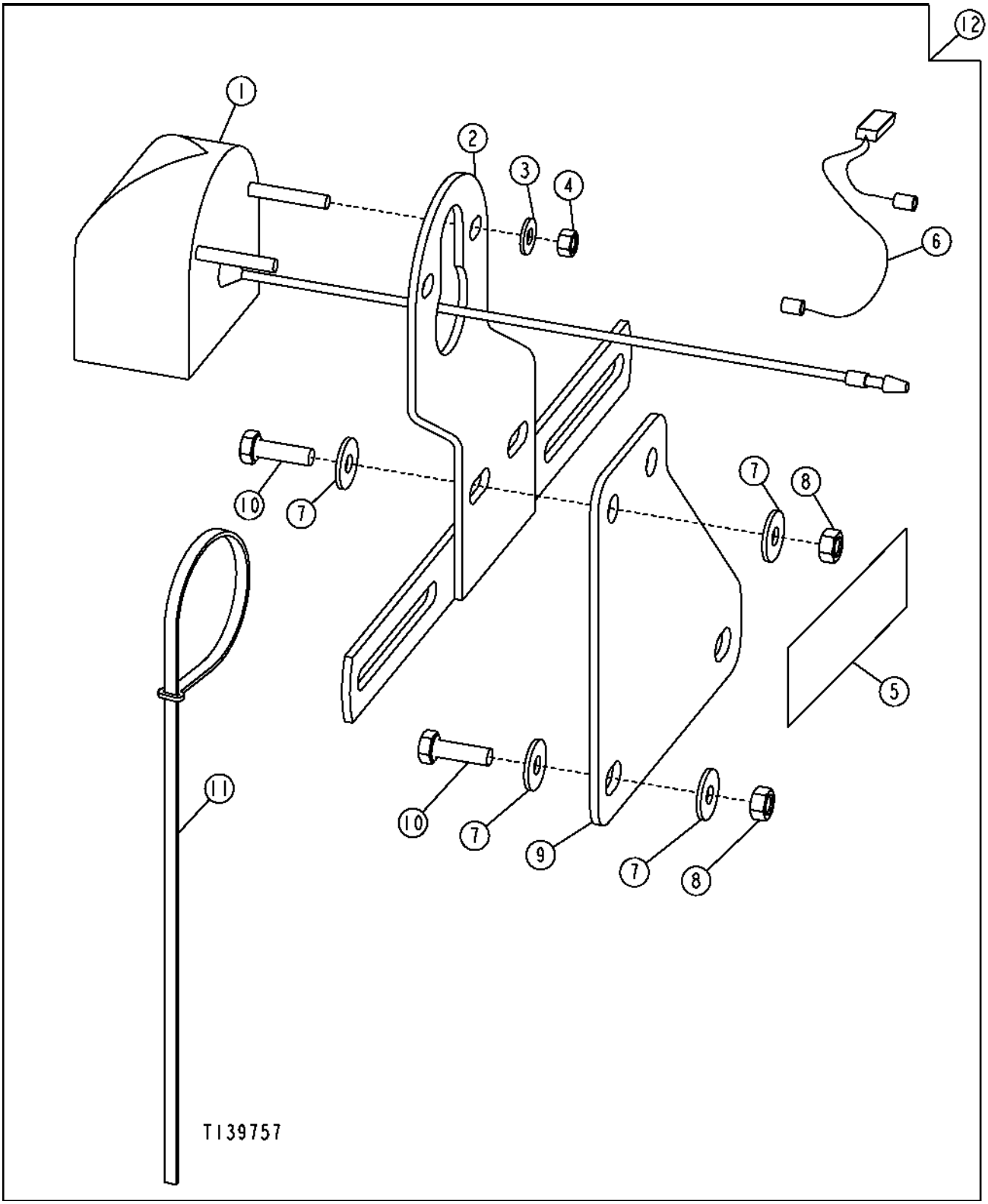

LICENCE PLATE LIGHT AND BRACKET

KEY	PART NO.	PART NAME	QTY	SERIAL NO.	REMARKS
1	AT34211	LAMP	1		(INCLUDES (2) 24H1283 AND (2) 14M7297)
	AB2599R	BULB	1		
2	AT34210	BRACKET	1		
3	24H1283	WASHER	2		
4	14M7297	NUT	2		M5
5	JD5920	REFLECTOR	2		
6	AT187708	WIRING HARNESS	1		
7	24M7139	WASHER	8		
8	14M7272	NUT	4		
9	T186062	PLATE	1		
10	19M7077	CAP SCREW	4		M6 X 20
11	H77698	TIE BAND	6		
12	AT187707	MOUNTING PARTS	1		(WHOLE GOODS)

TRADEMARKS AND LABELS

T158965 -UN-03SEP02

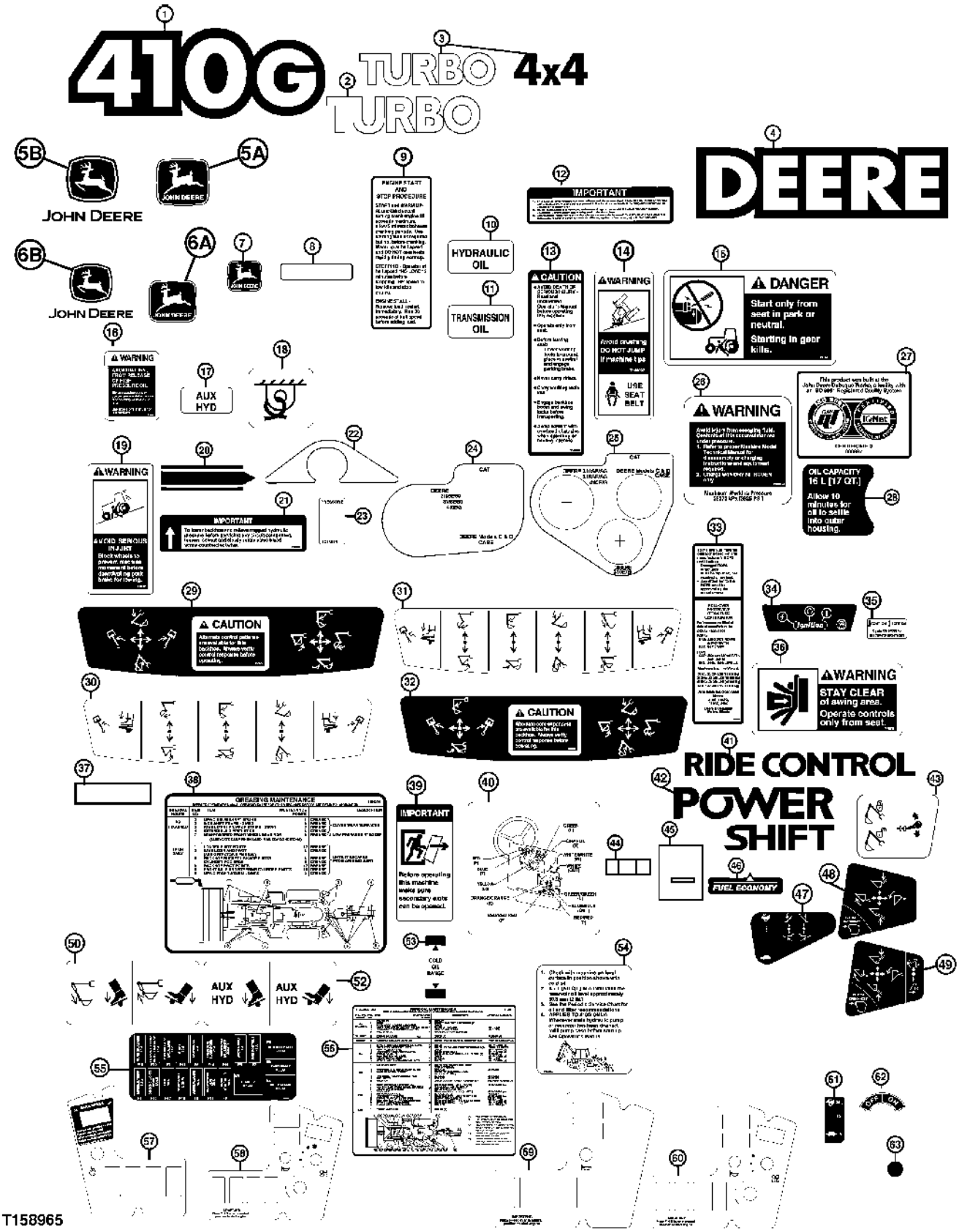

TRADEMARKS AND LABELS

KEY	PART NO.	PART NAME	QTY	SERIAL NO.	REMARKS
1	T166977	LABEL	2		MODEL DESIGNATION
2	T166001	LABEL	2		TURBO
3	T166002	LABEL	2		TURBO 4X4
4	T184759	LABEL	1		DEERE
5A	JD5621	LABEL	1	-902607	LEAPING DEER
5B	JD5750	LABEL	1	902608-	LEAPING DEER
6A	JD5694	LABEL	1	-902607	LEAPING DEER
6B	JD5750	LABEL	1	902608-	LEAPING DEER
7	T184519	LABEL	1	-902607	LEAPING DEER(WINDOW)
8	JD5920	REFLECTOR	2		REFLECTIVE LABEL(RED)
9	T131938	LABEL	1		ENGINE START/STOP
10	T140283	LABEL	1		HYDRAULIC OIL
11	T140311	LABEL	1		TRANSMISSION OIL
12	T145560	LABEL	1		RECEIVER/DRYER
13	T146080	LABEL	1		CAUTION
14	T146097	LABEL	1		SEAT BELT WARNING
15	T146102	LABEL	1		BYPASS STARTING
16	T146792	SAFETY SIGN	1		RIDE CONTROL
17	T149199	LABEL	1		AUXILIARY HYDRAULICS
18	T153680	LABEL	4		TIE DOWN
19	T159028	LABEL	1		PARK BRAKE WARNING
20	T160759	LABEL	1		BUCKET LEVEL INDICATOR
21	T161665	LABEL	1		SERVICE VALVE
22	T161678	LABEL	1		PROTECTIVE
23	T162404	LABEL	1		HAND HELD HYDRAULICS
24	T162847	DECAL	1		COUPLER
25	T162848	DECAL	1		
26	T164124	LABEL	1		
27	.....	LABEL	1		ISO
28	T164999	LABEL	1		AXLE OIL LEVEL
29	T165584	LABEL	1		BACKHOE CONTROL(TWO LEVER)
30	T165585	LABEL	1		BACKHOE CONTROL LEVER(THREE LEVER)
	T165604	LABEL	1		BACKHOE CONTROL (FOUR LEVER)
31	T165586	LABEL	1		BACKHOE CONTROL LEVER(EXTENDIBLE)
32	T165595	LABEL	1		SAE CONTROL
33	T166051	LABEL	1		ROPS
34	T166300	LABEL	1		START SWITCH
35	T166538	LABEL	1		FLOW CONTROL
36	T183768	LABEL	1		CLEARANCE WARNING
37	T184116	LABEL	1		PROTECTIVE
38	T184514	LABEL	1		PERIODIC GREASING
39	T184789	LABEL	1		EXIT UNLOCK
40	T185019	LABEL	1		HOSE ROUTING
41	T185145	LABEL	1		RIDE CONTROL
42	T185146	LABEL	1		POWERSHIFT TRANSMISSION
43	T185300	BAR	1		BOOM LOCK
44	T185394	LABEL	1		HOSE GUIDE
45	T185469	LABEL	1		PROTECTIVE
46	T185556	LABEL	1		FUEL ECONOMY
47	T185646	LABEL	1		STABILIZER CONTROL
48	T185675	LABEL	1		LOADER CONTROL
49	T185676	LABEL	1		LOADER CONTROL(THIRD FUNCTION)
50	T185691	LABEL	1		FOOT PEDAL
51	T186855	LABEL	1		FLOW CONTROL
52	T185692	LABEL	1		AUXILIARY HYDRAULICS
53	T186123	LABEL	1		HYDRAULIC OIL COLD RANGE
54	T186124	LABEL	1		HYDRAULIC OIL RESERVOIR
55	T186360	LABEL	1		FUSE BLOCK
56	T186396	LABEL	1	-911915	PERIODIC MAINTENANCE
	T200746	LABEL	1	911916-	
57	T186400	LABEL	1		INSTRUMENT PANEL L.H.
58	T186401	LABEL	1		INSTRUMENT PANEL R.H. (CAB)
59	T186402	LABEL	1		INSTRUMENT PANEL R.H. (CANOPY)
60	T186552	LABEL	1		INSTRUMENT PANEL (CANOPY WITH HEATER)
61	.....	LABEL	1		SPEED CONTROL
62	T42199	LABEL	1		ON/OFF SWITCH
63	T186793	LABEL	9		GRAY CIRCLE

TRADEMARKS AND LABELS (FRENCH AND SPANISH)

T142993 -UN-11JUN01

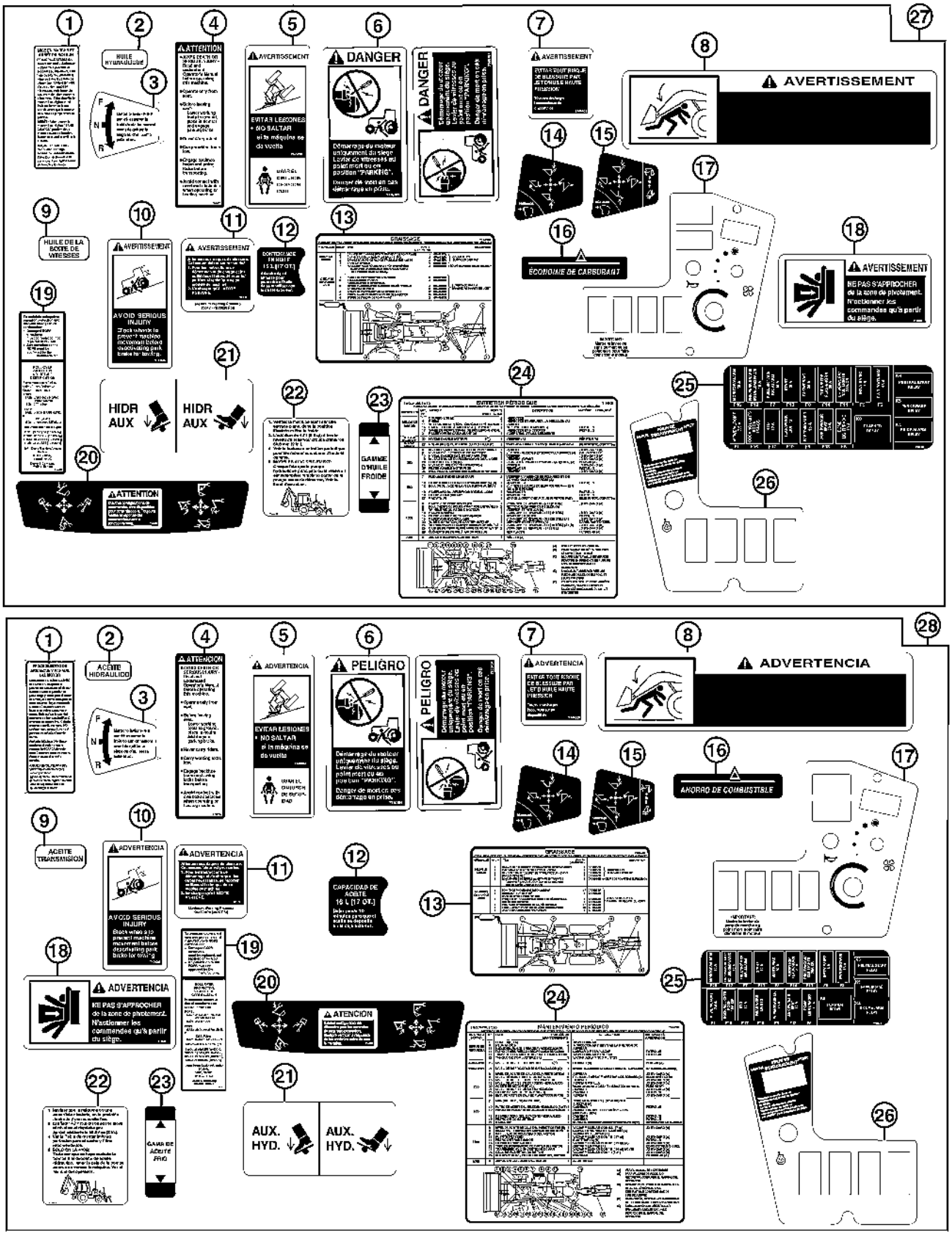

T142993

TRADEMARKS AND LABELS
(FRENCH AND SPANISH)

KEY	PART NO.	PART NAME	QTY	SERIAL NO.	REMARKS
1	T139165	LABEL	1		ENGINE START AND STOP (FRENCH)
	T139167	LABEL	1		ENGINE START AND STOP (SPANISH)
2	.....	LABEL	1		HYDRAULIC OIL
3	.....	LABEL	1		DIRECTION CONTROL SWITCH
4	.....	LABEL	1		CAUTION, SAFETY
5	T146099	SAFETY SIGN	1		WARNING SEAT BELT (FRENCH)
	T146098	SAFETY SIGN	1		WARNING SEAT BELT (SPANISH)
6	T146104	LABEL	1		BY-PASS (FRENCH)
	T146106	LABEL	1		BY-PASS (SPANISH)
7	T146908	LABEL	1		WARNING (FRENCH)
	T146911	LABEL	1		WARNING (SPANISH)
8	.....	LABEL	1		BOOM LOCK
9	.....	LABEL	1		TRANSMISSION OIL
10	T160762	LABEL	1		PARK BRAKE WARNING (FRENCH)
	T160769	LABEL	1		PARK BRAKE WARNING (SPANISH)
11	T164128	LABEL	1		ACCUMULATOR (FRENCH)
	T164129	LABEL	1		ACCUMULATOR (SPANISH)
12	.....	LABEL	1		AXLE OIL CAPACITY
13	.....	LABEL	1		PERIODIC GREASING
14	.....	LABEL	1		LOADER CONTROL
15	.....	LABEL	1		LOADER 4 IN 1
16	.....	LABEL	1		FUEL ECONOMY
17	.....	LABEL	1		
18	T185571	LABEL	1		WARNING (FRENCH)
	T185549	SAFETY SIGN	1		WARNING (SPANISH)
19	.....	LABEL	1		ROPS
20	.....	LABEL	1		BACKHOE CONTROL
	T188018	LABEL	1		SAE (FRENCH)
	T188019	LABEL	1		SAE (SPANISH)
21	T185695	LABEL	1		FOOT PEDAL (FRENCH)
	T185696	LABEL	1		FOOT PEDAL (SPANISH)
22	.....	LABEL	1		HYDRAULIC OIL RANGE
23	.....	LABEL	1		HYD. OIL RANGE
24	.....	LABEL	1		PERIODIC MAINTENANCE CHART
25	.....	LABEL	1		FUSEBLOCK
26	.....	LABEL	1		
27	AT193515	DECAL KIT	1		(FRENCH)
28	AT193516	DECAL KIT	1		(SPANISH)

LOCTITE SERVICE KIT
(PARTS LISTED BELOW ARE NOT ILLUSTRATED)

KEY	PART NO.	PART NAME	QTY	SERIAL NO.	REMARKS
1	TY16285	PRIMER	1		
	T43512	SEALANT	1		LOCTITE
	T43513	SEALANT	1		
	T43514	GASKET	1		PLASTIC
	TY15969	ADHESIVE	1		

MEMORANDA

FLUID ANALYSIS PRODUCTS (OILSCAN PLUS TEST KIT)

T135474 -UN-15NOV00



T135474

FLUID ANALYSIS PRODUCTS (OILSCAN PLUS TEST KIT)

KEY	PART NO.	PART NAME	QTY	SERIAL NO.	REMARKS
1	AT178840	KIT	1		STANDARD ENGINE, TRANSMISSION, GEARBOXES & BASIC HYDRAULIC SYSTEM, SELF EXTRACTION 12 PER PACKAGE)(INCLUDES SPECTROCHEMICAL ANALYSIS, VISCOSITY, ° WATER, FUEL DILUTION, GLYCOL, FUEL SOOT)
	AT180333	KIT	1		STANDARD ENGINE, 4 OZ BOTTLE (10 PER PACKAGE) (SAME AS AT178840)
	AT178842	KIT	1		COMPREHENSIVE ENGINE W/TBN (EXTENDED DRAIN) (12 PER PACKAGE)(SAME AS AT178840 PLUS TBN)
	AT180334	KIT	1		COMPREHENSIVE ENGINE W/TBN (EXTENDED DRAIN) 4 OZ BOTTLE (10 PRT PACKAGE) (SAME AS AT178842)
	AT178844	KIT	1		COMPREHENSIVE HYDRAULIC & HYDROSTATIC SYSTEMS, 4 OZ BOTTLE (10 PER PACKAGE) (REQUIRES USE OF A SAMPLING VALVE FOR ACCURATE RESULTS)
	AT182602	ASSEMBLY LINE PARTS	1		VALVE, SAMPLING, 1000 PSI RATING, (5 PER PACKAGE) (PUSH BUTTON, 1/8" NPT MALE)
	AT182603	KIT	1		FITTING, PRESSURE REDUCING (5 PER PACKAGE) (REQUIRED FOR CIRCUIT PRESSURE OVER 100 PSI) (USED WITH AT182602) (7/16"O-RING MALE X 1/8" NPT FEMALE WITH 0.025" ORIFACE)
	ISPKIT3	PUMP	1		OIL EXTRACTION (1 PER PACKAGE)(CAN BE USED WITH AT180333 AND AT180334 KITS TO EXTRACAT OIL SAMPLE)
	DSO345	TUBE	1		500'ROLL (USED WITH IPSKIT3 PUMP TO EXTRACT SAMPLE)
	DSO346	TUBE	1		100' ROLL (USED WITH IPSKIT3 PUMP TO EXTRACT SAMPLE)

O-RING KIT

TP70402 -UN-13JUL00

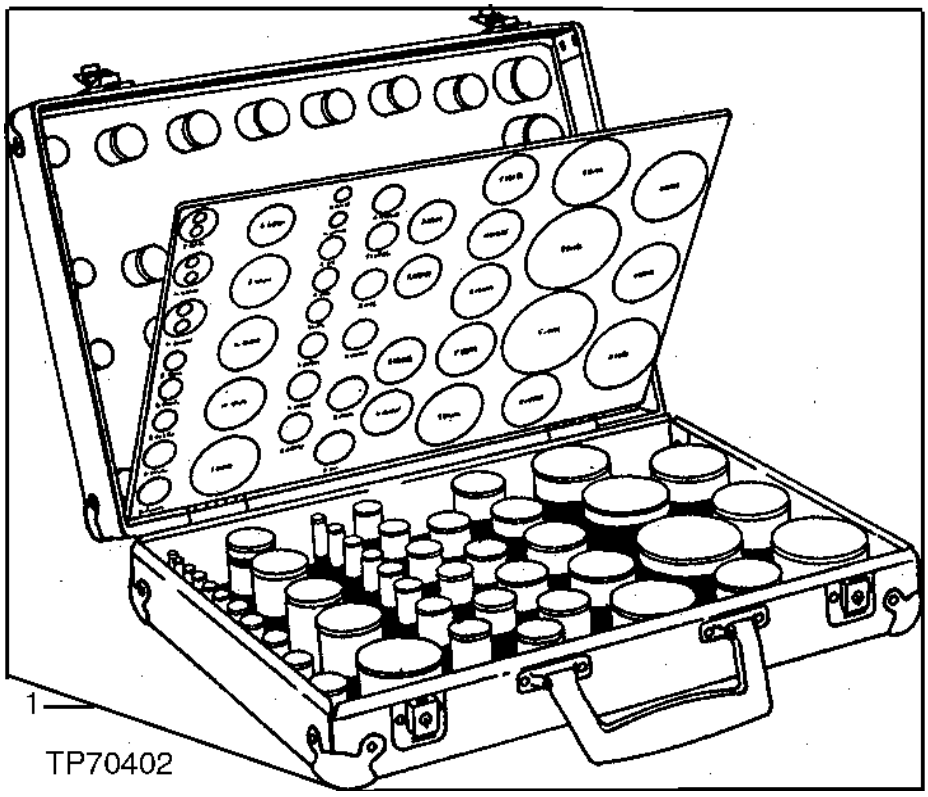

O-RING KIT

KEY	PART NO.	PART NAME	QTY	SERIAL NO.	REMARKS
1	AT130208	O-RING KIT	1		(CONTAINS FIVE OF EACH O-RING LISTED BELOW) (INCLUDES CARRYING CASE)
	A3606R	O-RING	1		
	A3917R	O-RING	1		
	A4365R	O-RING	1		
	A4730R	O-RING	1		
	B2762R	O-RING	1		
	B3690R	O-RING	1		
	F1056R	O-RING	1		
	F1870R	O-RING	1		
	U12547	O-RING	1		
	F3353R	O-RING	1		
	H35244	RING	1		
	T78313	O-RING	1		
	M4237T	O-RING	1		
	N131838	O-RING	1		
	P46051	O-RING	1		
	P48403	O-RING	1		
	P50631	O-RING	1		
	R375R	O-RING	1		
	R394R	O-RING	1		
	R459R	O-RING	1		
	R460R	O-RING	1		
	R495R	O-RING	1		
	R10093	O-RING	1		
	R26286	O-RING	1		
	R26287	O-RING	1		
	R26375	O-RING	1		
	R26448	O-RING	1		
	R26773	O-RING	1		
	R26863	O-RING	1		
	R26906	O-RING	1		
	R27166	O-RING	1		
	R27928	O-RING	1		
	R28776	O-RING	1		
	R28782	O-RING	1		
	R29463	O-RING	1		
	R29936	O-RING	1		
	R30903	O-RING	1		
	R33259	O-RING	1		
	R56461	O-RING	1		
	R48638	O-RING	1		
	R71732	O-RING	1		
	R53543	O-RING	1		
	R56463	O-RING	1		
	R56751	O-RING	1		
	R60332	O-RING	1		
	R80632	O-RING	1		
	T12275	O-RING	1		
	T13119	O-RING	1		
	T16752	O-RING	1		
	T19687	O-RING	1		
	R112857	O-RING	1		
	T25335	O-RING	1		
	T34248	O-RING	1		
	U10289	O-RING	1		
	U10746	O-RING	1		
	U10776	O-RING	1		
	U11326	O-RING	1		
	U11343	O-RING	1		
	U12037	O-RING	1		
	U12198	O-RING	1		
	U12331	O-RING	1		
	U12547	O-RING	1		
	U13639	O-RING	1		
	U15415	O-RING	1		
	U15973	O-RING	1		
	U17409	O-RING	1		
	U42111	O-RING	1		

ENVIORMENTAL DRAIN PACKAGE

TP50533 -UN-02JAN97

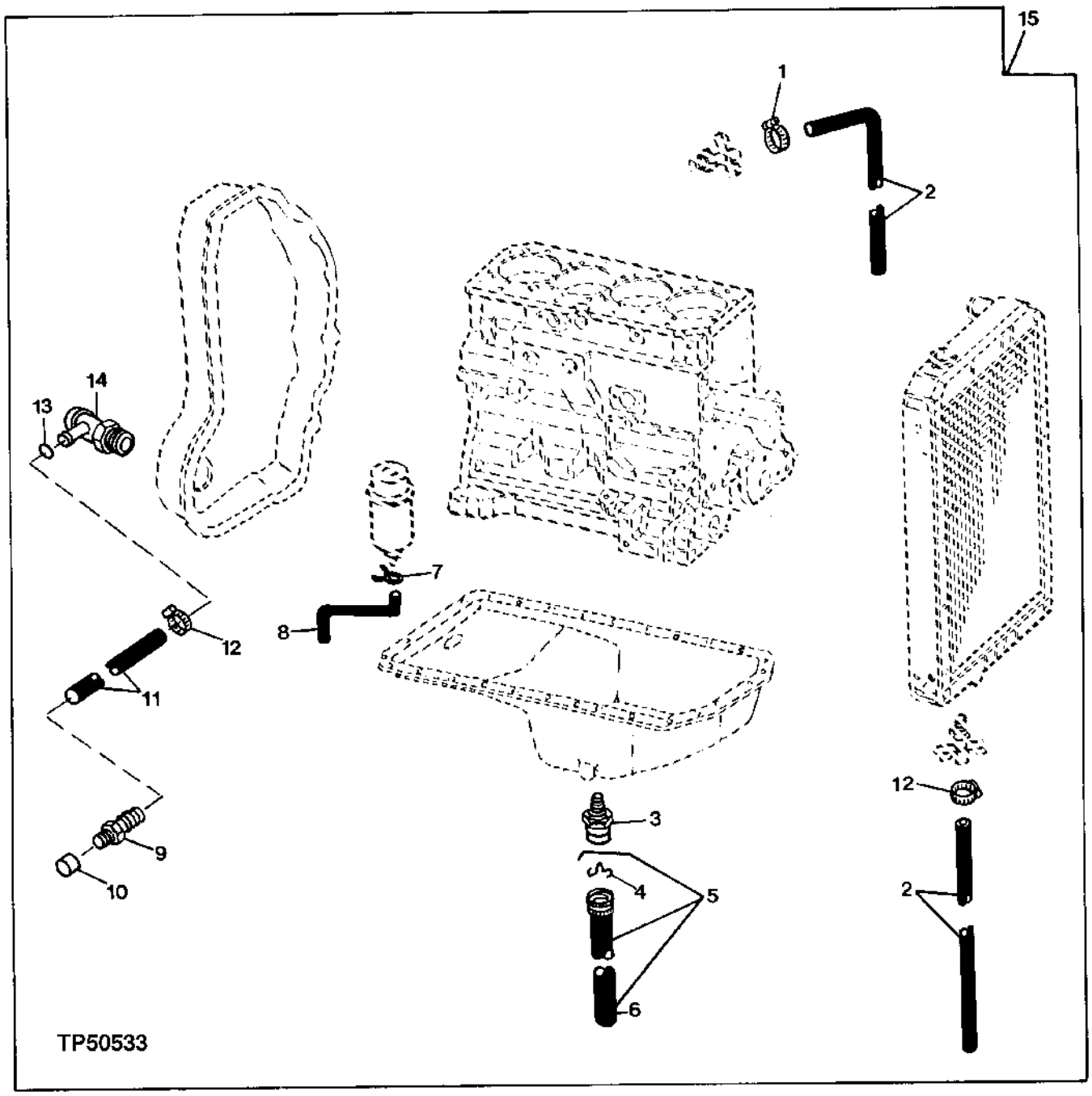

ENVIORMENTAL DRAIN PACKAGE

KEY	PART NO.	PART NAME	QTY	SERIAL NO.	REMARKS
1	AR21837	CLAMP	1		
2	T161002	HOSE	2		
3	AT179995	DRAIN VALVE	1		
4	T161615	PIN	1		
5	AT179996	HOSE	1		
6	.....	HYDRAULIC HOSE	1		(MAKE FROM T60811 BULK MATERIAL, CUT TO LENGTH)
7	T13254	CLAMP	1		
8	T161093	HOSE	1		
9	H23196	FITTING	1		
10	15H3	FITTING	1		
11	.....	HYDRAULIC HOSE	1		(MAKE FROM T60811 BULK MATERIAL, CUT TO LENGTH)
12	RE65978	CLAMP	2		
13	R26906	O-RING	1		
14	AT152180	DRAIN VALVE	1		
15	AT179053	KIT	1		(WHOLE GOODS)

FRONT AXLE AND STEERING CYLINDER LUBRICATION SYSTEM
(SERIAL NO. -911131)

TP57956 -UN-28OCT98

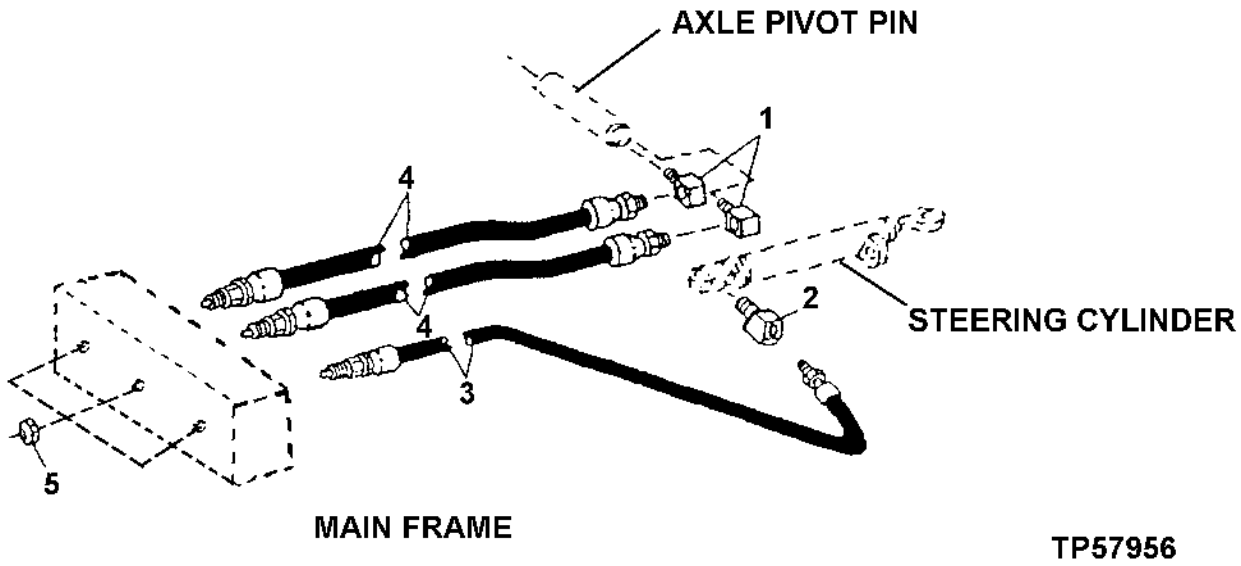

KEY	PART NO.	PART NAME	QTY	SERIAL NO.	REMARKS
1	JD7838	ADAPTER	2		
2	JD7838	ADAPTER	1		
3	AT173254	HYDRAULIC HOSE	1		
4	AT173254	HYDRAULIC HOSE	2		
5	E12379	NUT	3		

MEMORANDA

SINGLE BATTERY INSTALLATION

T145407 -UN-20SEP01

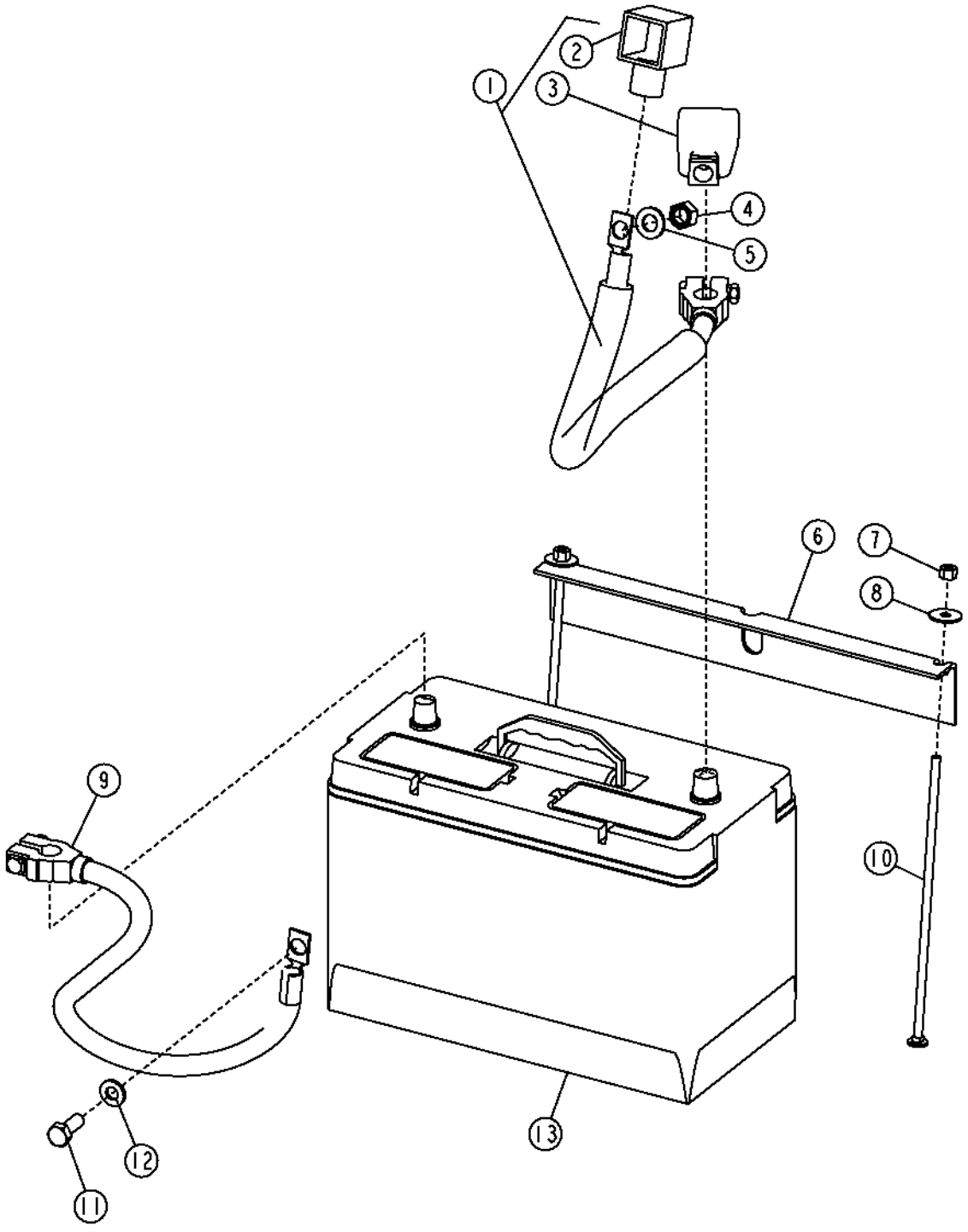

SINGLE BATTERY INSTALLATION

KEY	PART NO.	PART NAME	QTY	SERIAL NO.	REMARKS
1	AT196446	BATTERY CABLE	1		POSITIVE, (SUB FOR AT185689)
2	T129165	BOOT	1		
3	T107117	COVER	1		
4	14M7275	NUT	1		M12
5	24M7047	WASHER	1		
6	T121288	ANGLE	1		
7	M40333	LOCK NUT	2		1/4"
8	24H1288	WASHER	2		
9	AT195995	BATTERY CABLE	1		NEGATIVE, (SUB FOR AT185690)
10	03H2208	BOLT	2		1/4" X 9-1/4"
11	19M7402	CAP SCREW	1		M10 X 25
12	24M7239	WASHER	2		
13	TY6128	DRY CHARGED BATTERY	1		(SUB FOR TY21766, THIS APPLICATION)

DUAL BATTERY INSTALLATION

T145408 -UN-20SEP01

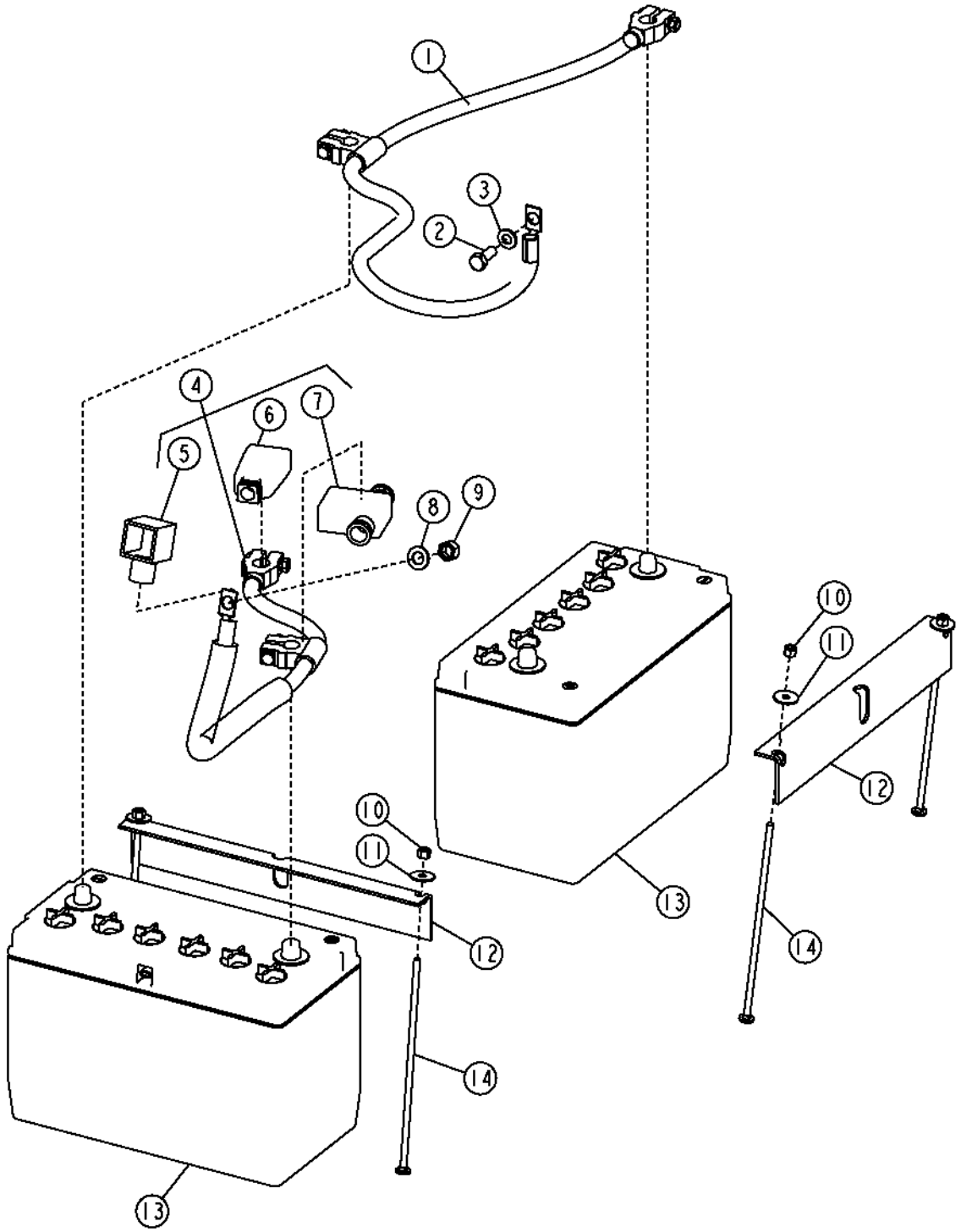

DUAL BATTERY INSTALLATION

KEY	PART NO.	PART NAME	QTY	SERIAL NO.	REMARKS
1	AT195911	BATTERY CABLE	1		NEGATIVE, (SUB FOR AT191817)
2	19M7402	CAP SCREW	1		M10 X 25
3	24M7239	WASHER	1		
4	AT195910	BATTERY CABLE	1	-894287	POSITIVE, (SUB FOR AT185691)
	AT196447	BATTERY CABLE	1	894288-	POSITIVE
5	T129165	BOOT	1		
6	T107117	COVER	1		
7	T107116	COVER	1		
8	24M7047	WASHER	1		
9	14M7275	NUT	1		M12
10	M40333	LOCK NUT	4		6.350 MM
11	24H1288	WASHER	4		
12	T121288	ANGLE	2		
13	TY6128	DRY CHARGED BATTERY	2		
14	03H2208	BOLT	4		1/4" X 9-1/4"

MASTER BATTERY DISCONNECT

T152635 -UN-21MAR02

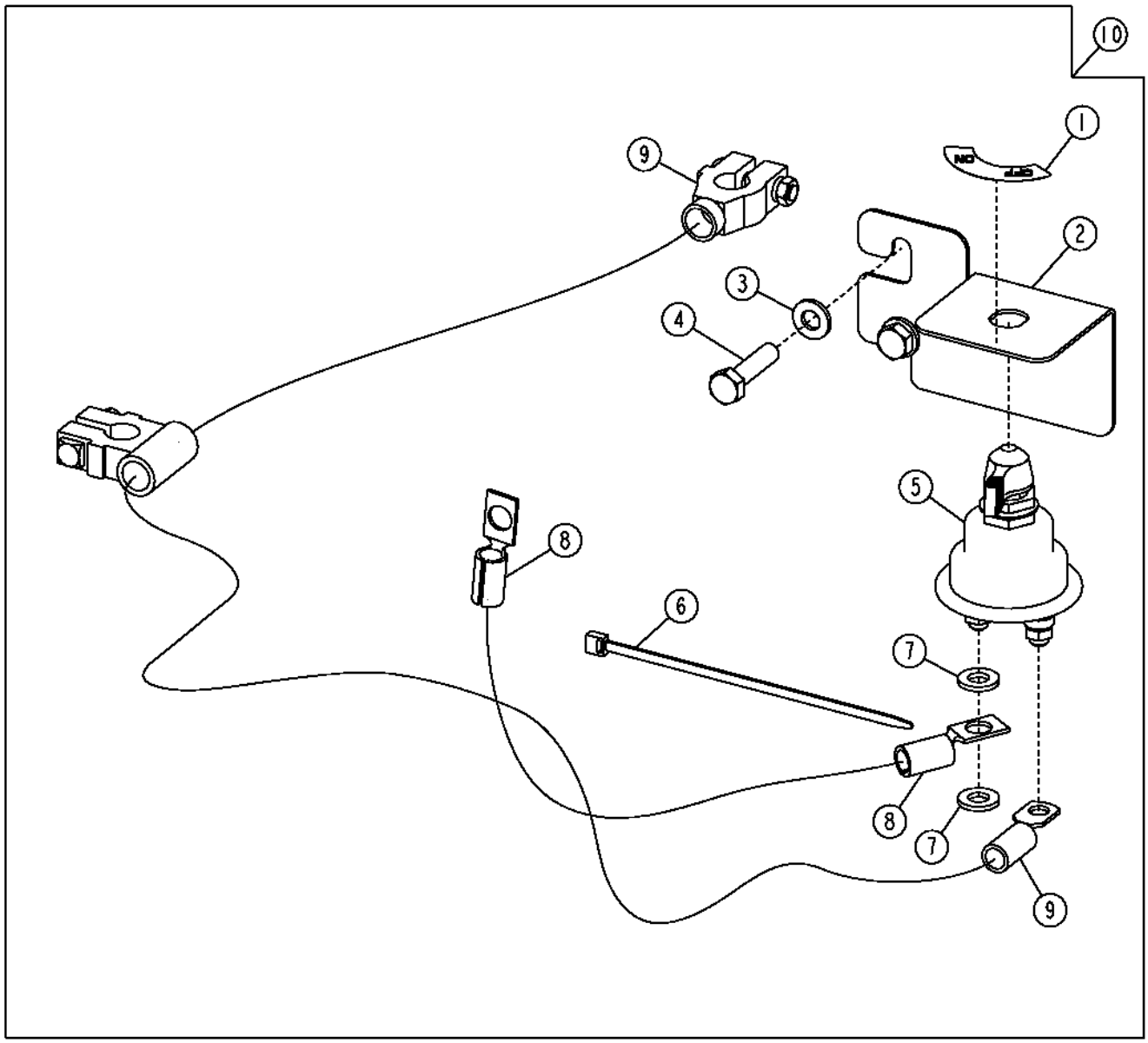

T152635

MASTER BATTERY DISCONNECT

KEY	PART NO.	PART NAME	QTY	SERIAL NO.	REMARKS
1	T42199	LABEL	1		
2	T190658	BRACKET	1		
3	24M7239	WASHER	2		
4	19M7384	CAP SCREW	2		M10 X 60
5	AT41188	SWITCH	1		
6	R44302	TIE BAND	1		
7	24M7239	WASHER	2		
8	AR67069	GROUND CABLE	1		
9	AT197922	BATTERY CABLE	1		
10	AT198096	KIT	1		WHOLE GOODS, (SUB FOR AT186452, THIS APPLICATION)

REMOTE START POST

T144950 -UN-20AUG01

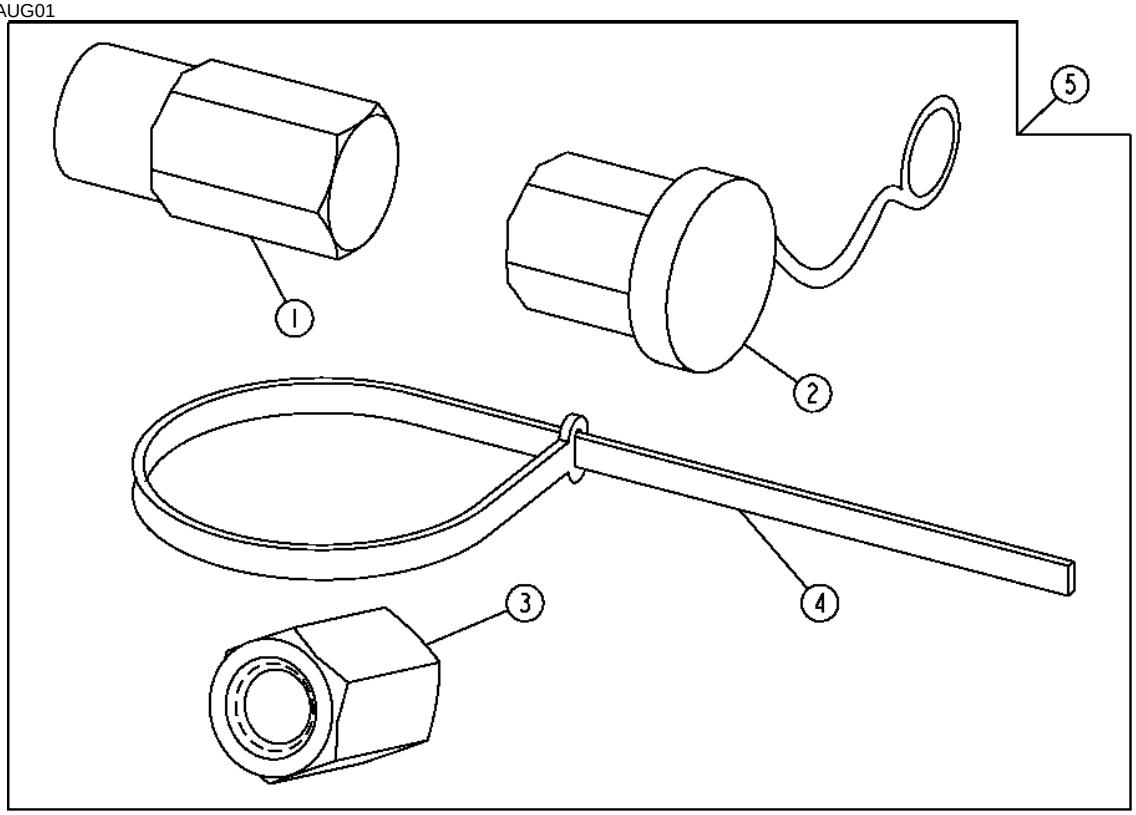

T144950

KEY	PART NO.	PART NAME	QTY	SERIAL NO.	REMARKS
1	T172353	TERMINAL	1		ISKRA
2	T134104	COVER	1		REMOTE START POST
3	T174530	ELEC. CONNECTOR TERMINAL	1		DENSO
4	H77698	TIE BAND	1		
5	AT186213	KIT	1		(WHOLE GOODS)

MEMORANDA

ALTERNATOR

T152387 -UN-03APR02

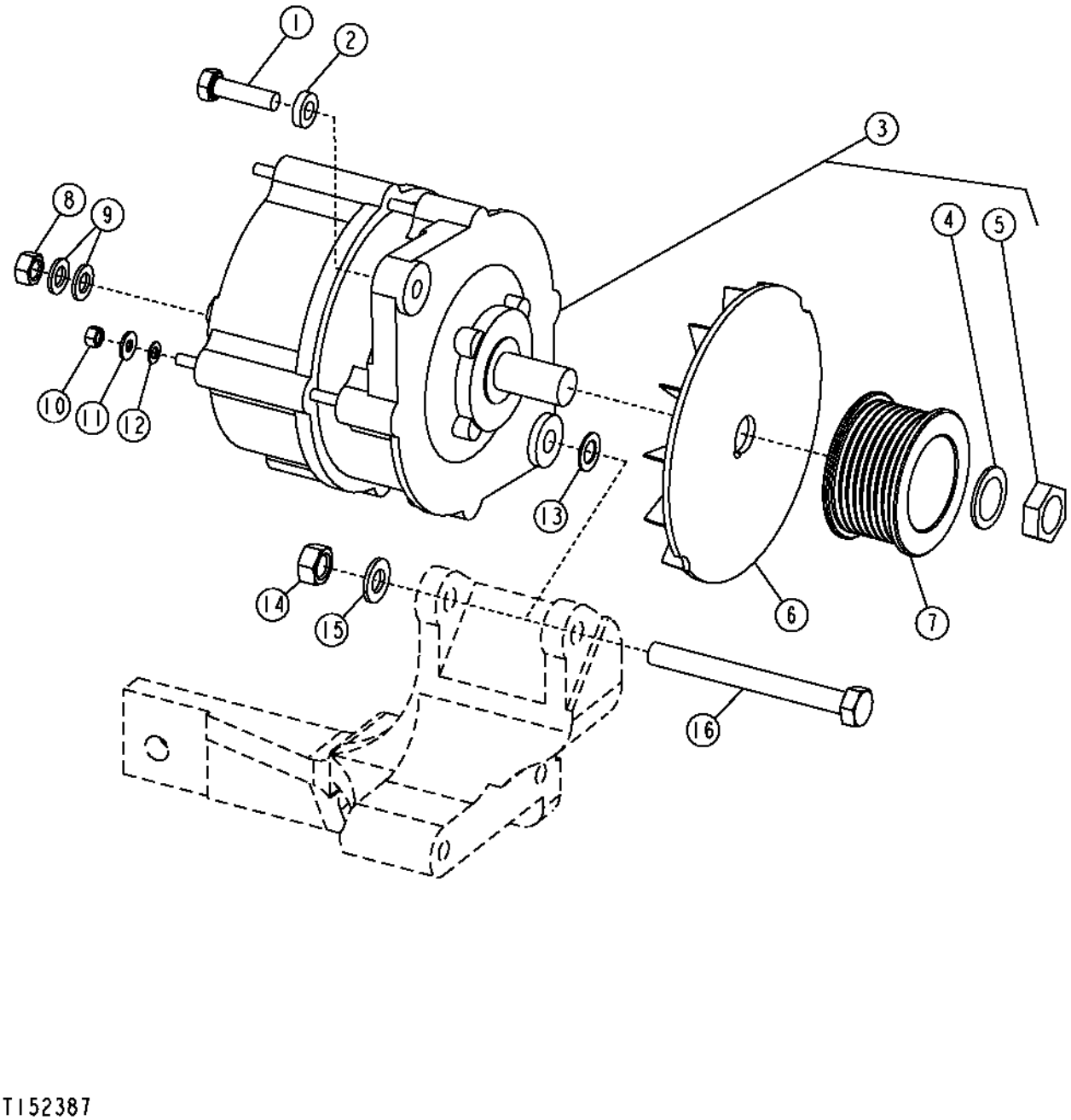

T152387

ALTERNATOR

KEY	PART NO.	PART NAME	QTY	SERIAL NO.	REMARKS
1	19M7513	CAP SCREW	1		M8 X 30
2	R48808	WASHER	1		
3	AT220394	ALTERNATOR	1		12 VOLT 95 AMPERE (CONVENIENCE ASSEMBLY)
	TY24485	ALTERNATOR	1		12 VOLT 95 AMPERE (REMANUFACTURED) (SUB FOR TY6750)
	AT220393	ALTERNATOR	1		12 VOLT 65 AMPERE (CONVENIENCE ASSEMBLEY)
	TY6799	ALTERNATOR	1		12 VOLT 65 AMPERE (REMANUFACTURED)
4	T10745	WASHER	1		
5	14M7158	NUT	1		M16
6	T158584	FAN	1		
7	R501486	PULLEY	1		
8	14M7273	NUT	1		M8
9	24M7036	WASHER	2		
10	14M7297	NUT	2		M5
11	24H1283	WASHER	2		
12	12M7060	WASHER	2		
13	R64525	THRUST WASHER	1		
14	14M7274	NUT	1		M10
15	24M7028	WASHER	1		
16	19M8093	CAP SCREW	1		M10 X 100

ROTATING BEACON

T143017 -UN-12JUN01

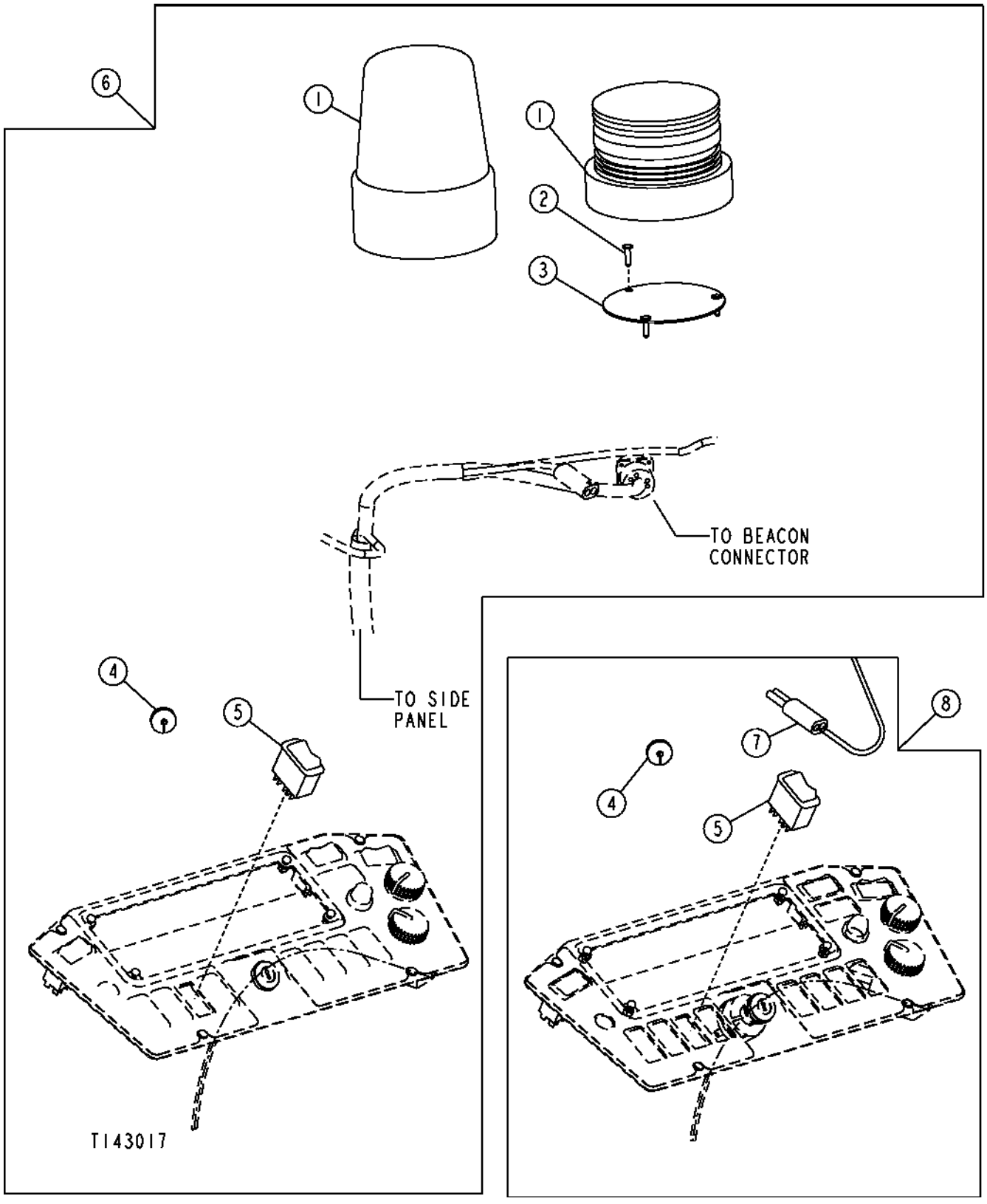

ROTATING BEACON

KEY	PART NO.	PART NAME	QTY	SERIAL NO.	REMARKS
1	AT187816	STROBE LIGHT	1		STROBE
	AT194822	LAMP	1		BEACON
2	37M7218	SCREW	3		
3	T167214	PLATE	1		
4	T74952	GROMMET	1		
5	AT175603	ROCKER SWITCH	1		
6	AT187815	KIT	1		(WHOLE GOODS) STROBE LIGHT
	AT194821	KIT	1		(WHOLE GOODS) ROTATING BEACON
7	AT195461	ROOF WIRING HARNESS	1		
8	**AT195462**	**KIT**	**1**		**(WHOLE GOODS) WIRING KIT**

STANDARD LIGHTS, DELUXE LIGHTS AND ROOF HARNESS

T138541 -UN-22FEB01

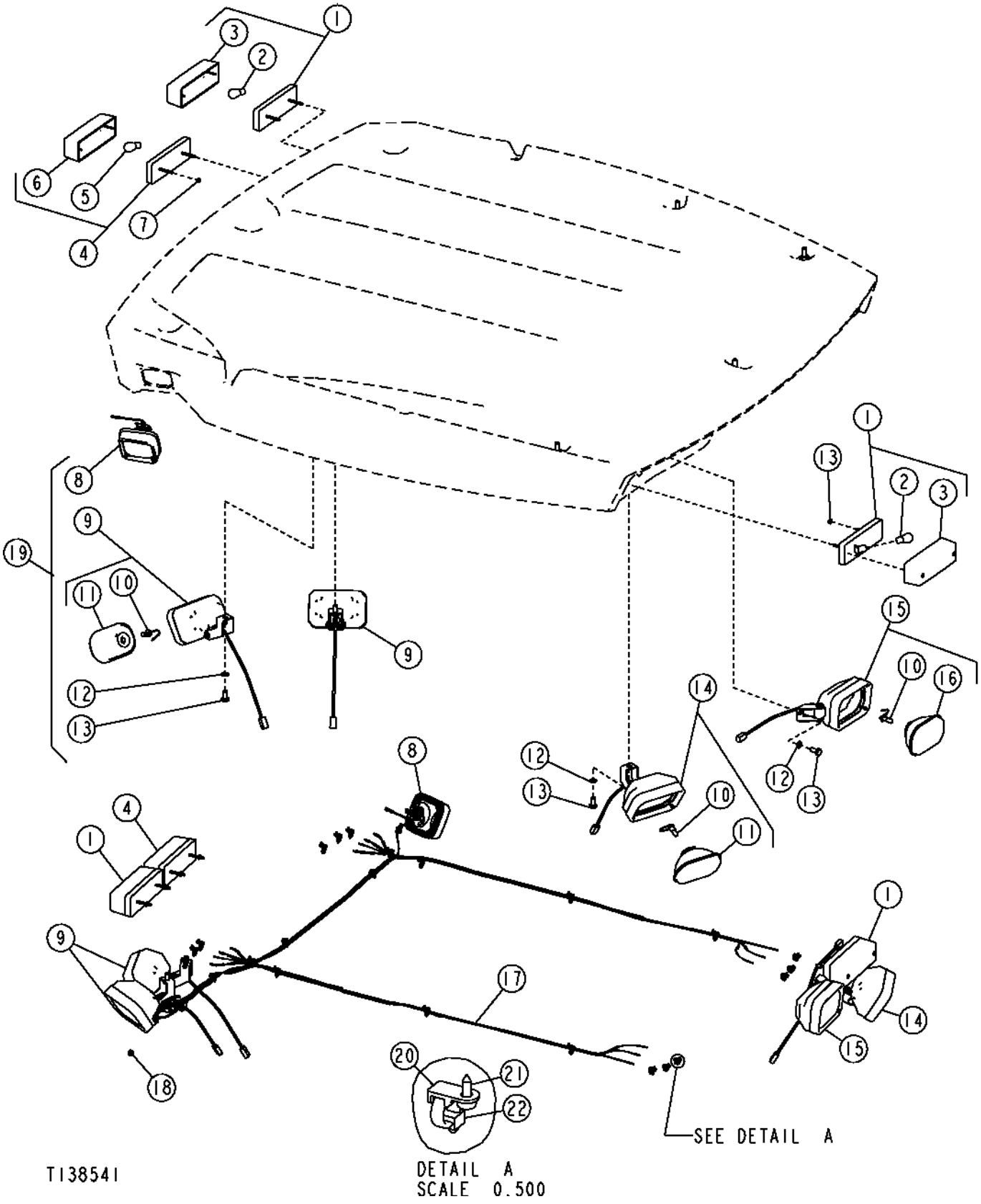

STANDARD LIGHTS, DELUXE LIGHTS AND ROOF HARNESS

KEY	PART NO.	PART NAME	QTY	SERIAL NO.	REMARKS
1	AT184736	LAMP	4		(WARNING)
2	AD2062R	BULB	4		
3	T165542	LENS	4		(AMBER)
4	AT184737	LAMP	2		(STOP/TAIL)
5	AR48041	BULB	2		
6	T165543	LENS	2		(RED)
7	14M7375	FLANGE NUT	12		M5
8	AT187868	LAMP	2		(DOCKING)
	AT130104	BULB	2		(HALOGEN LONG LIFE)
	AT191409	LENS	2		
9	AT191875	LAMP	4		(WORK)
10	AT130104	BULB	4		(HALOGEN LONG LIFE)
11	AT191408	LENS	4		
12	24M7096	WASHER	8		
13	19M8324	CAP SCREW	8		M10 X 16
14	AT192460	LAMP	2		(WORK)
	AT130104	BULB	2		(HALOGEN LONG LIFE)
	AT191408	LENS	2		
15	AT184972	LAMP	1		(RIGHT)
	AT185451	LAMP	1		(LEFT)
16	AT191407	LENS	2		(WITH REFLECTOR)
17	AT191873	ROOF WIRING HARNESS	1		
18	R41440	GROMMET	2		
19	AT192242	KIT	1		WHOLE GOODS
20	T187394	ANCHOR	30		(SUB FOR (4) T185713 AND (5) T185714)
21	T185769	SCREW	30		
22	R44302	TIE BAND	30		

FRONT CONSOLE WIRING HARNESSES

T149792 -UN-08JAN02

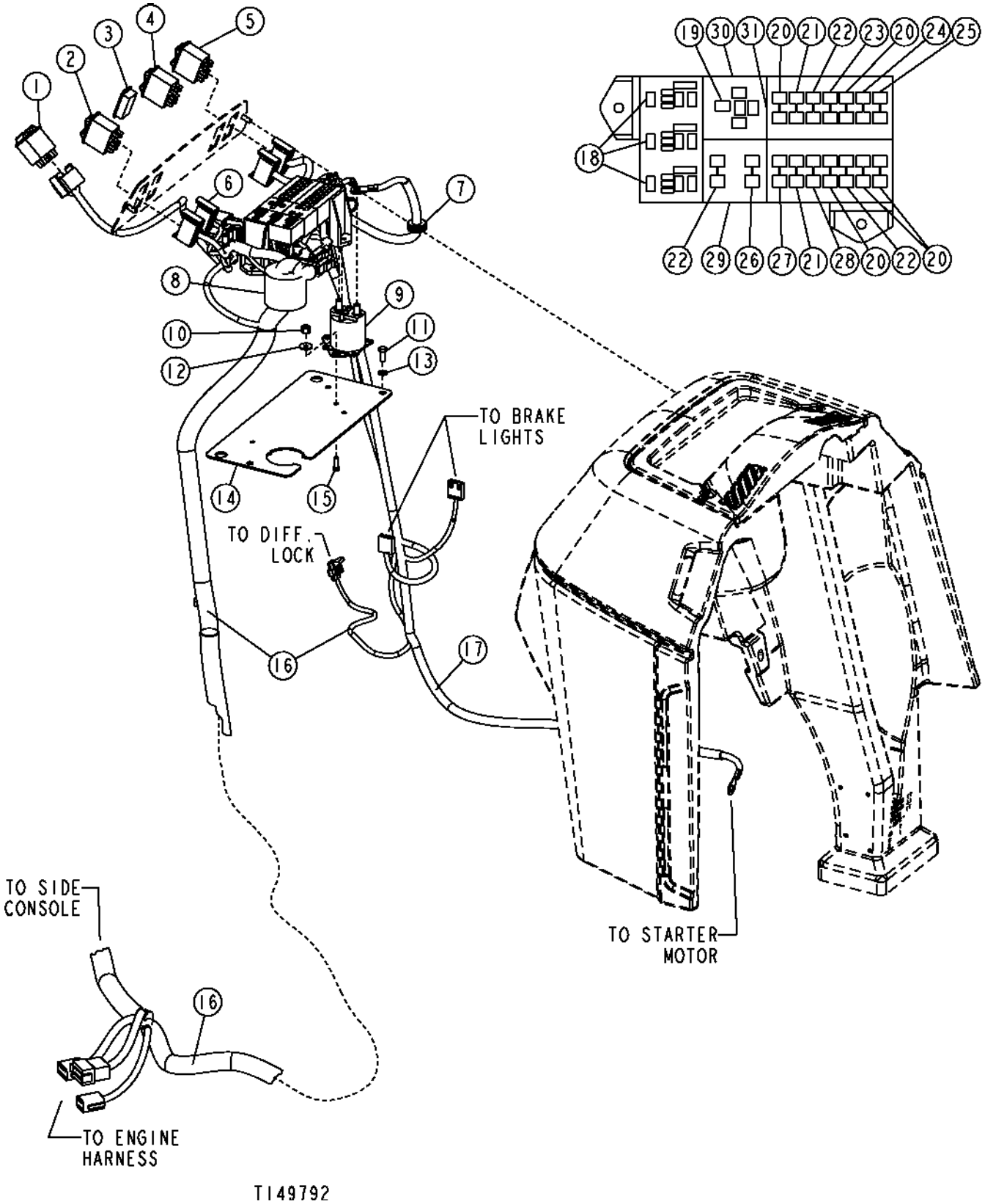

FRONT CONSOLE WIRING HARNESSES

KEY	PART NO.	PART NAME	QTY	SERIAL NO.	REMARKS
1	AT175300	SWITCH	1		TURN SIGNAL
	T162380	BULB	1		
2	AT175071	WIPER SWITCH	1		FRONT WIPER
3	T163309	PLUG	1		BLANK
4	AT175070	SWITCH	1		WARNING
5	AT175069	SWITCH	1		LIGHTS
6	AT191701	WIRING HARNESS	1		QUARTER CAB WIPER HARNESS
7	M85517	GROMMET	1		
8	T166244	GROMMET	1		
9	AR73144	RELAY	1		
10	M40333	LOCK NUT	2		
11	19M8425	CAP SCREW	2		M6 X 16
12	24M7210	WASHER	2		5.500 X 18 X 2 MM
13	24M7054	WASHER	2		6.400 X 12 X 1.600 MM
14	T183600	PLATE	1		
15	19M7372	CAP SCREW	2		M5 X 16
16	AT199372	WIRING HARNESS	1		CAB, (SUB FOR AT186625)
	AT186626	WIRING HARNESS	1		CANOPY OR QUARTER CAB
17	AT196390	WIRING HARNESS	1		(SUB FOR AT192769)
18	AT189041	RELAY	3		
19	AT163088	FLASHER	1		
20	57M7121	FUSE	5		10 AMP
21	57M7120	FUSE	2		20 AMP
22	99M7065	FUSE	3		15 AMP
23	T103834	CIRCUIT BREAKER	1		
24	T108357	CIRCUIT BREAKER	1		
25	99M7064	FUSE	1		7-1/2 AMP
26	57M7125	FUSE	1		5 AMP
27	T102780	CIRCUIT BREAKER	1		
28	57M7146	FUSE	1		30 AMP
29	T190197	MODULE	1		
30	T190198	RELAY MODULE	1		
31	T190199	WEDGE	AR		

SIDE CONSOLE WIRING HARNESSES

T157578 -UN-30SEP02

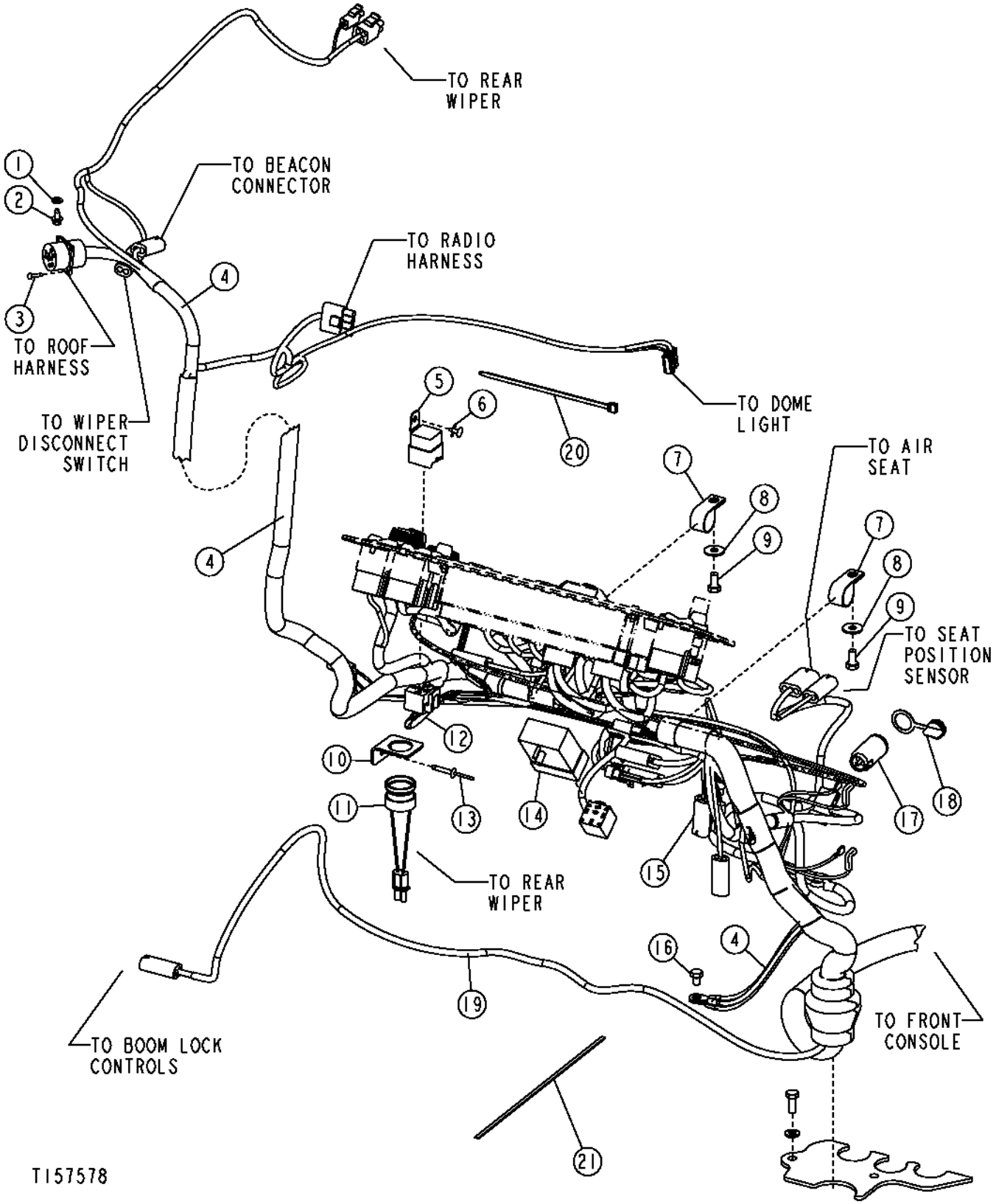

SIDE CONSOLE WIRING HARNESSES

KEY	PART NO.	PART NAME	QTY	SERIAL NO.	REMARKS
1	24M7054	WASHER	1		6.400 X 12 X 1.600 MM
2	37M7089	SCREW	1		M6 X 12
3	37M7066	SCREW	4		
4	AT199372	WIRING HARNESS	1		CAB, (SUB FOR AT186625)
	AT186626	WIRING HARNESS	1		CANOPY OR QUARTER CAB
5	AT75769	RELAY	1		
6	T184345	RIVET	1		
7	T102934	CLAMP	2		
8	24M7207	WASHER	2		8.400 X 24 X 2 MM
9	19M7932	CAP SCREW	2		M8 X 16
10	T166344	BRACKET	1		
11	AT178526	AUDIBLE WARNING ALARM	1		WARNING
12	AT191747	WIRING HARNESS	1		A/C SWITCH TO CONSOLE HARNESS CONNECTOR
13	T184345	RIVET	1		
14	AT180485	RELAY MODULE	1		TIMER RELAY
15	AT189174	WIRING HARNESS	1		RIDE CONTROL
16	19M7008	CAP SCREW	1		M8 X 10
17	AT78633	HOUSING	3		
18	R131671	PLUG	3		
19	AT191953	POWER SUPPLY	2		
20	R44302	TIE BAND	14		
21	H77698	TIE BAND	6		

**PILOT ENABLE
ELECTRICAL**

T165340 -UN-13FEB03

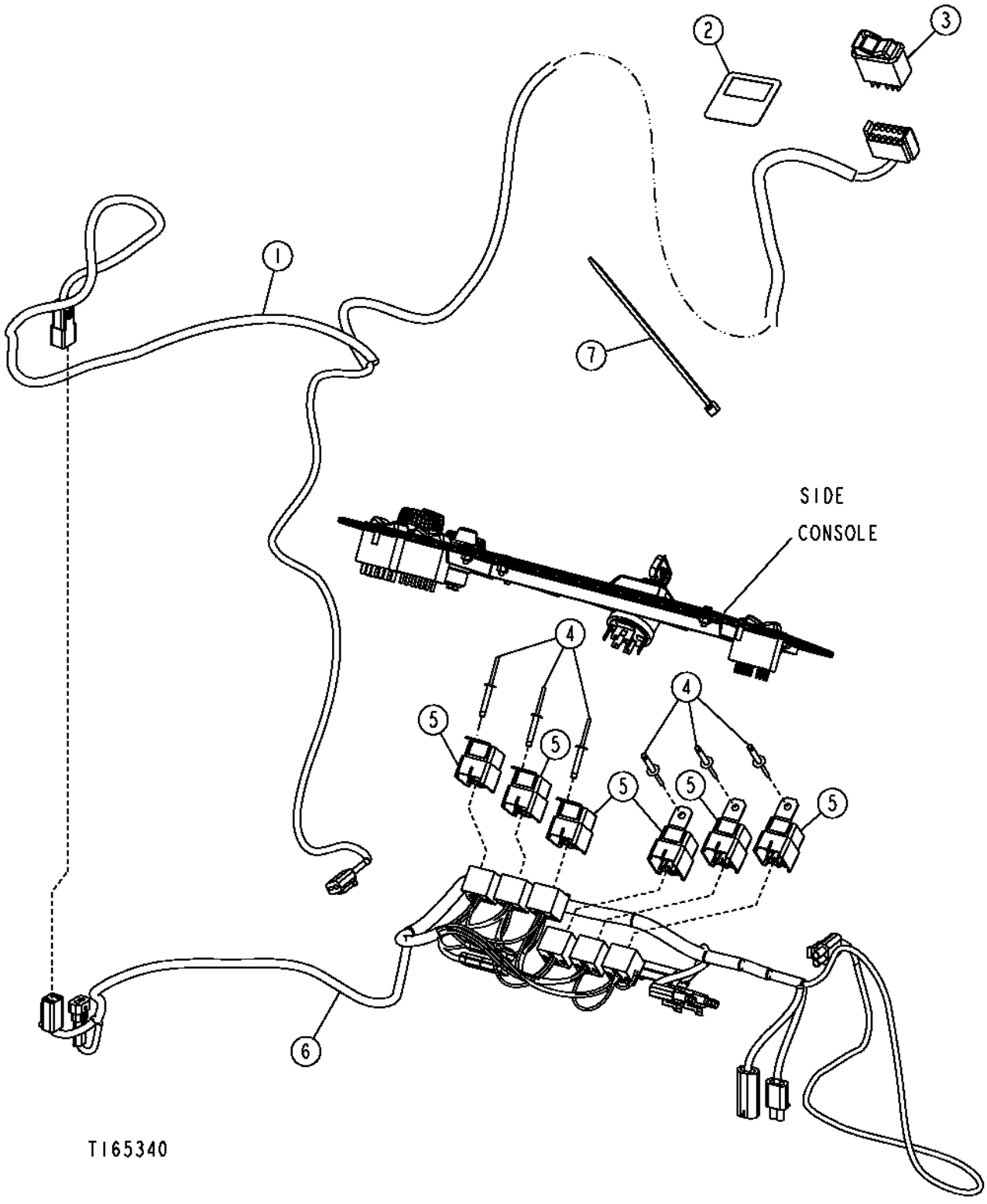

PILOT ENABLE
ELECTRICAL

KEY	PART NO.	PART NAME	QTY	SERIAL NO.	REMARKS
1	AT199016	CAB WIRING HARNESS	1		
2	T200424	LABEL	1		
3	AT301427	SWITCH	1		
4	T184345	RIVET	6		
5	AT75769	RELAY	6		
6	AT198844	WIRING HARNESS	1		
7	R44302	TIE BAND	1		

MONITOR PANEL WITH MONITOR,SWITCHES AND LABELS

TP69709 -UN-02OCT00

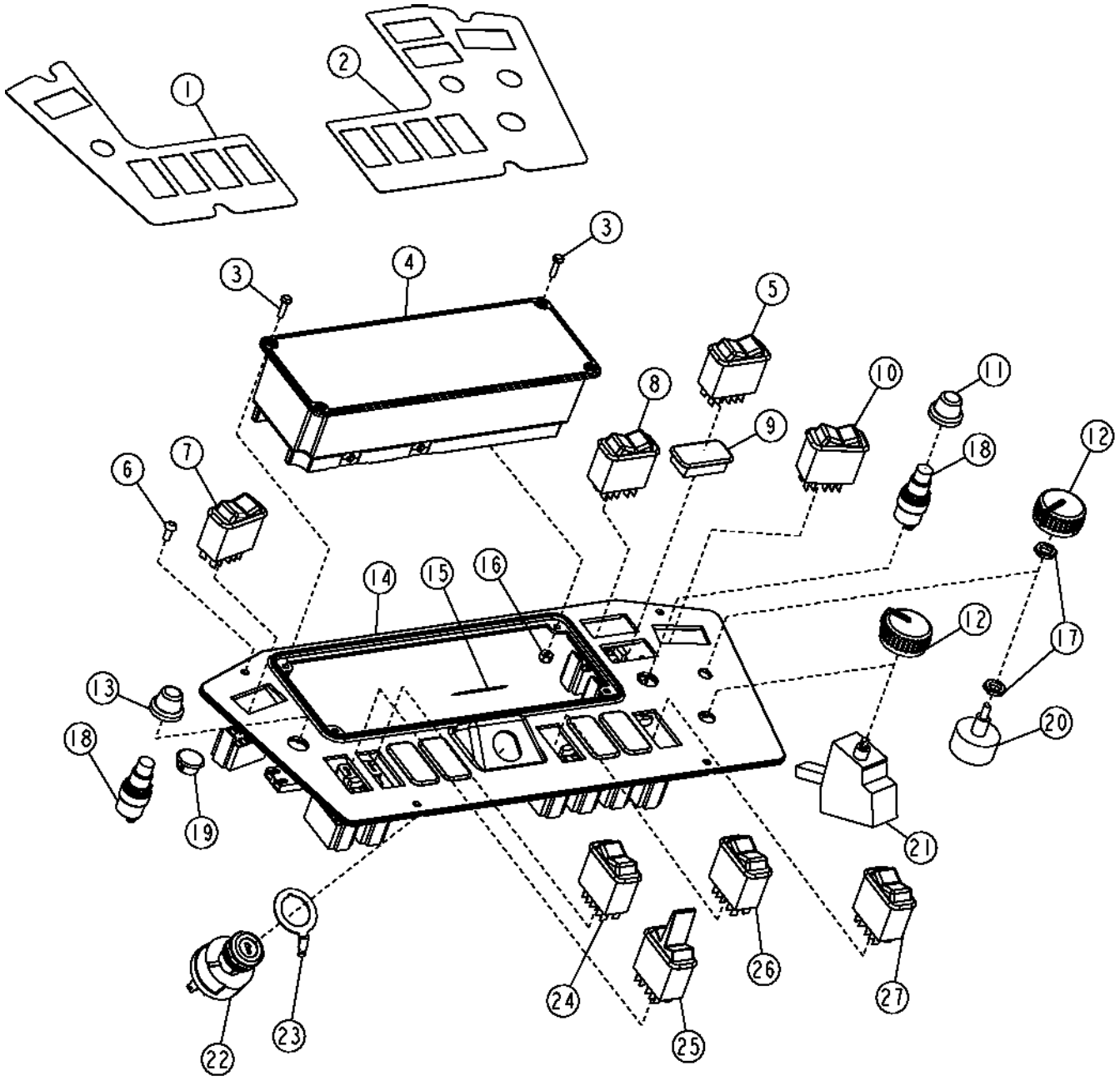

TP69709

MONITOR PANEL WITH MONITOR,SWITCHES AND LABELS

KEY	PART NO.	PART NAME	QTY	SERIAL NO.	REMARKS
1	T186400	LABEL	1		L.H.
2	T186401	LABEL	1		R.H.
3	T82791	SCREW	4		4.166 X 16.002 MM
4	AT197382	MONITOR	1		(SUB FOR AT193877)
	AT300129	MONITOR	1		(PILOT COTROLS)
5	AT189473	LIGHT SWITCH	1		DOCKING LIGHT
6	21M7271	SCREW	4		M5 X 16
7	AT189088	SWITCH	1		PARK BRAKE
8	AT189473	LIGHT SWITCH	1		REAR LIGHT
9	T163309	PLUG	9		BLANK
10	AT189630	WIPER SWITCH	1		REAR WIPER
11	T55501	CAP	1		
12	R111632	KNOB	2		
13	T55585	CAP	1		
14	T167065	INSTRUMENT PANEL	1		
15	T166300	LABEL	1		START SWITCH
16	M63431	LOCK NUT	4		4.166 MM
17	R44165	LOCK NUT	2		7/16"
18	R39554	SWITCH	1		ETHER OR HORN
19	T154361	PLUG	1		
20	RE43497	CONTROL	1		FAN SPEED
21	RE46742	AC/HEAT TEMPERATURE SWITCH	1		TEMPERATURE CONTROL
	12H292	LOCK WASHER	1		
	14H934	NUT	1		7/16"
22	AT195301	SWITCH	1		(SUB FOR AT145931) IGNITION
	AT145929	KEY	1	-902604	
	AT195302	KEY	1	902605-	
	R44342	NUT	1		1"
23	R52725	CONNECTOR	1		
24	AT184335	SWITCH	1		RIDE CONTROL
25	AT189692	SWITCH	1		MFWD
26	AT189145	SWITCH	1		AIR SEAT
27	AT192716	ROCKER SWITCH	1		A/C SWITCH

ENGINE WIRING HARNESS

T151725 -UN-15MAR02

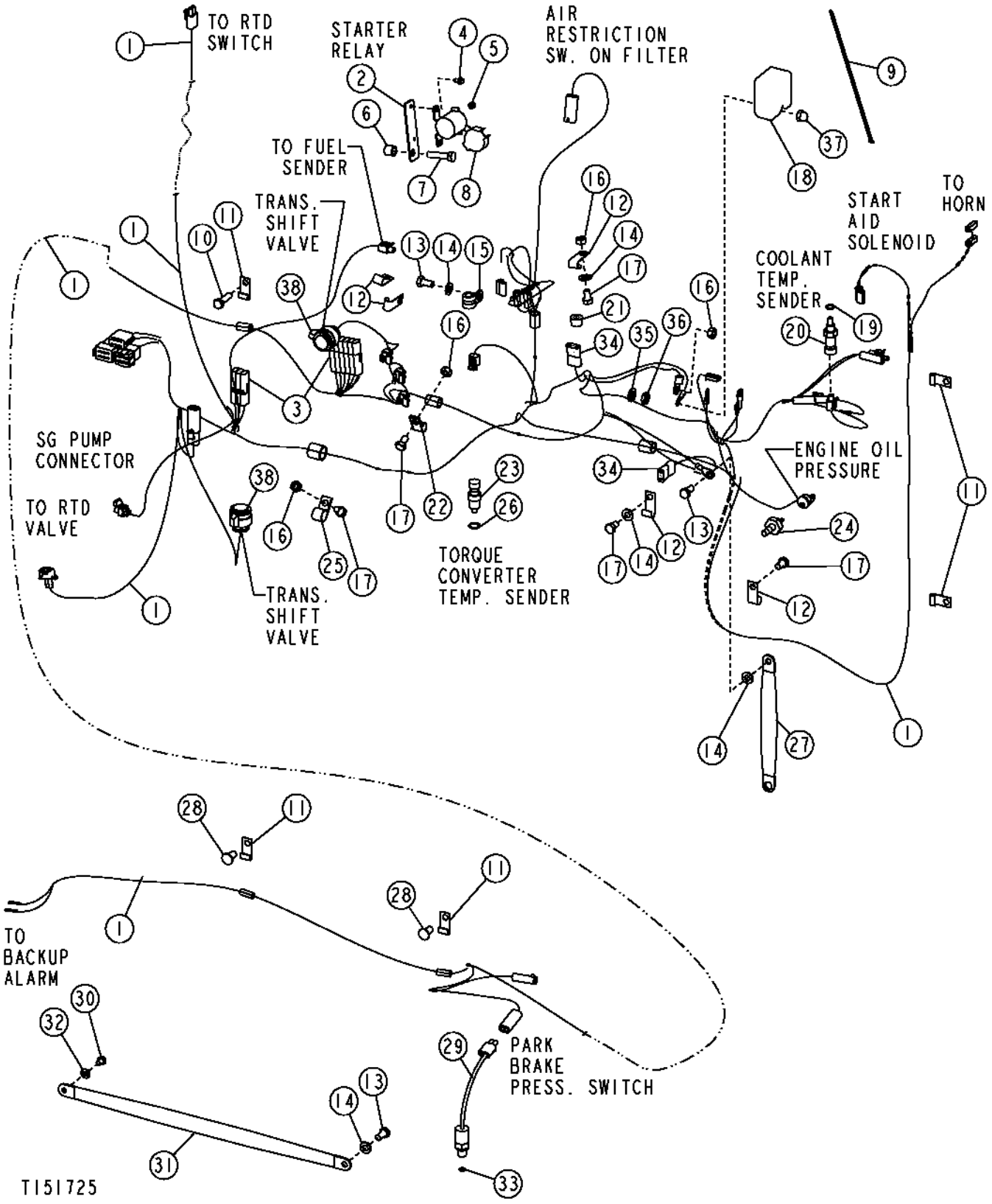

ENGINE WIRING HARNESS

KEY	PART NO.	PART NAME	QTY	SERIAL NO.	REMARKS
1	AT199060	WIRING HARNESS	1	-901683	(SUB FOR AT185678 AND AT196262) (ALSO ORDER AT196246)
	AT199060	WIRING HARNESS	1	901684-	(SUB FOR AT196262)
2	T184676	STRAP	1		
3	AR94101	DIODE	9		DIFF LOCK, MFWD, PARK BRAKE, REVERSE, AND FORWARD SOLENOIDS
4	37H116	SCREW	2		
5	14M7272	NUT	2		M6
6	28H3381	SPACER	1		
7	19M7572	CAP SCREW	1		M10 X 45
8	AT141011	RELAY	1		
9	H77698	TIE BAND	AR		
10	19M7662	CAP SCREW	1		M10 X 30
11	T19935	CLAMP	5		
12	AH89557	CLIP	5		
13	19M7938	CAP SCREW	3		M10 X 20
14	24M7239	WASHER	5		
15	T76252	CLAMP	1		
16	14M7274	NUT	4		M10, STARTER
17	19M7557	CAP SCREW	5		M10 X 16
18	R135431	COVER	1	-866615	
19	51M7041	O-RING	1		
20	RE52722	SENSOR	1		ENGINE COOLANT TEMPERATURE
	51M7041	O-RING	1		
21	15H624	PIPE PLUG	1		
22	T75197	CLAMP	1		
23	AT183823	SENDER	1		TORQUE CONVERTER TEMPERATURE
24	AT85174	SWITCH	1		ENGINE OIL PRESSURE
25	T74416	CLAMP	1		
26	R26375	O-RING	1		
27	AT167399	GROUND CABLE	1		GROUND
28	T161380	PLUG	2		
29	AT159811	SWITCH	1		PARK BRAKE OIL PRESSURE
30	19M7008	CAP SCREW	1		M8 X 10
31	AT180705	GROUND CABLE	1		GROUND
32	24M7238	WASHER	1		
33	51M7039	O-RING	1		
34	AT103399	DIODE	2		ALTERNATOR AND STARTER
35	24M7047	WASHER	1		
36	14M7415	NUT	1		M12
37	R135432	NUT	1	-866615	STARTER COVER
38	AT180706	KIT	1		HARNESS CONNECTOR
	.....	CONNECTOR	6		(ORDER AT180706)
	.....	SEAL	6		(ORDER AT180706)
	.....	PLUG	14		(ORDER AT180706)
	.....	CONNECTOR	1		(ORDER AT180706)

SELECTIVE FLOW CONTROL CONTROLLER AND WIRE HARNESS

TP69698 -UN-04OCT00

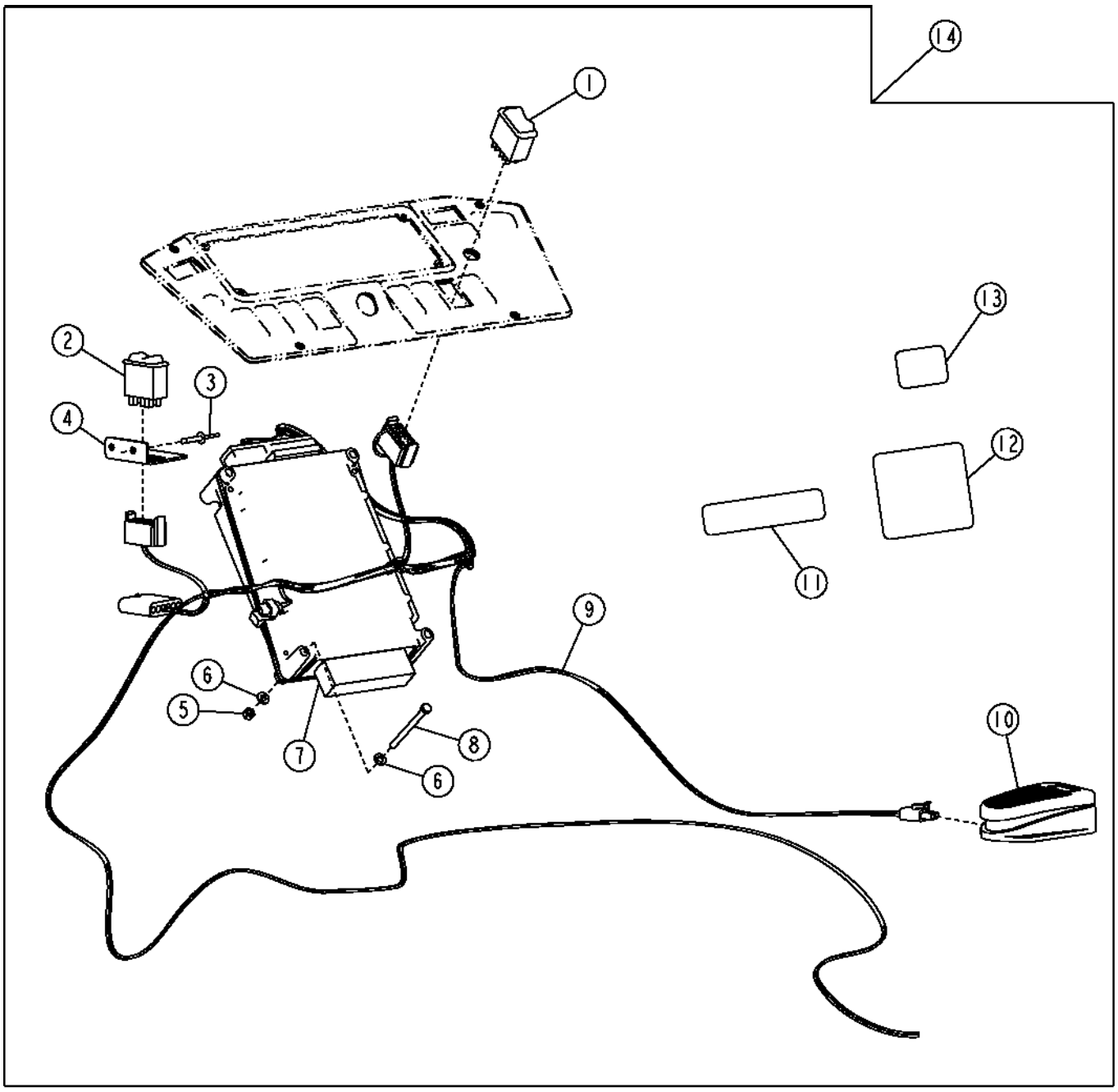

TP69698

SELECTIVE FLOW CONTROL CONTROLLER AND WIRE HARNESS

KEY	PART NO.	PART NAME	QTY	SERIAL NO.	REMARKS
1	AT175604	SWITCH	1		
2	AT188714	SWITCH	1		
3	T184345	RIVET	2		
4	T183420	BRACKET	1		
5	14M7165	LOCK NUT	4		M6
6	24M7293	WASHER	8		6.500 X 13 X 1.600 MM
7	RE201235	PUMP/VALVE CONTROLLER	1		(SUB FOR RE154354)
8	19M7689	CAP SCREW	4		M6 X 80
9	AT186564	WIRING HARNESS	1		
10	AT82210	SWITCH	1		
11	.....	LABEL	1		(AUX HYD) (T149199 NO LONGER AVAILABLE)
12	T166538	LABEL	1		(FLOW CONTROL)
13	T186855	LABEL	1		(FLOW SELECT SWITCH)
14	AT186717	KIT	1		(WHOLE GOODS) (INCLUDES AT191721, AT184547, AT175220, AT192078, AT193881 AND AT300928)

DIFFERENTIAL LOCK SWITCH

TP58124 -UN-03OCT00

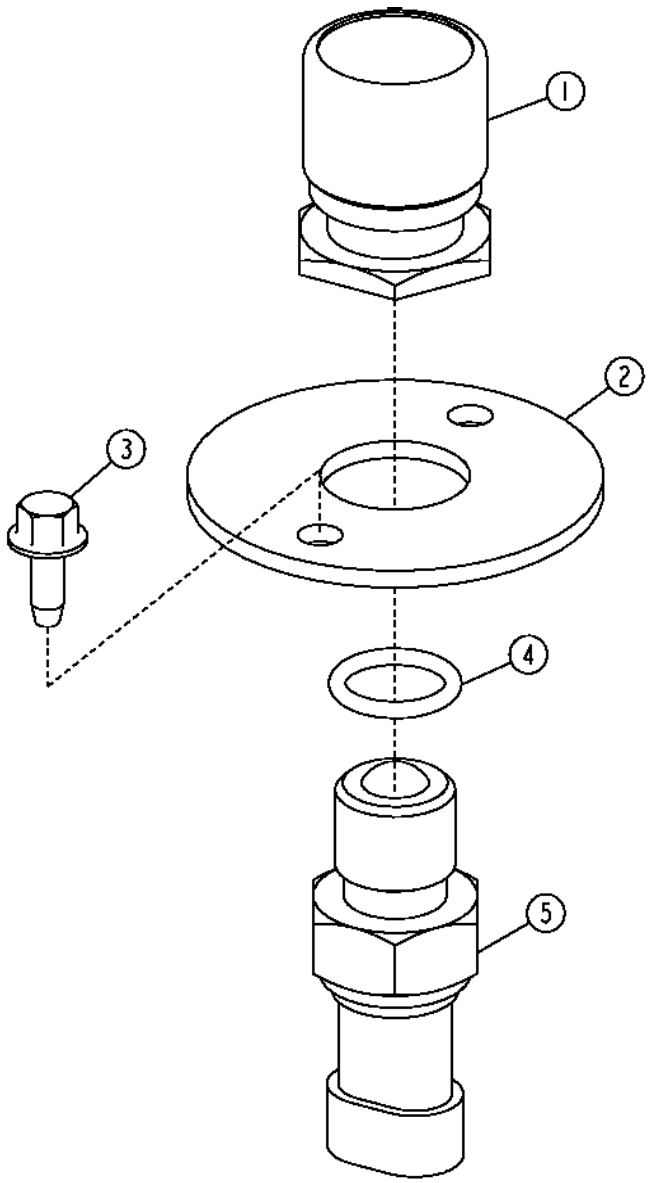

TP58124

DIFFERENTIAL LOCK SWITCH

KEY	PART NO.	PART NAME	QTY	SERIAL NO.	REMARKS
1	RE43637	PUSH BUTTON	1		
2	T186024	PLATE	1		
3	37M7059	SCREW	2		M5 X 12
4	51M7042	O-RING	1		
5	RE46534	SWITCH	1		(DIFFERENTIAL LOCK)

RETURN-TO-DIG SWITCH

T144515 -UN-14AUG01

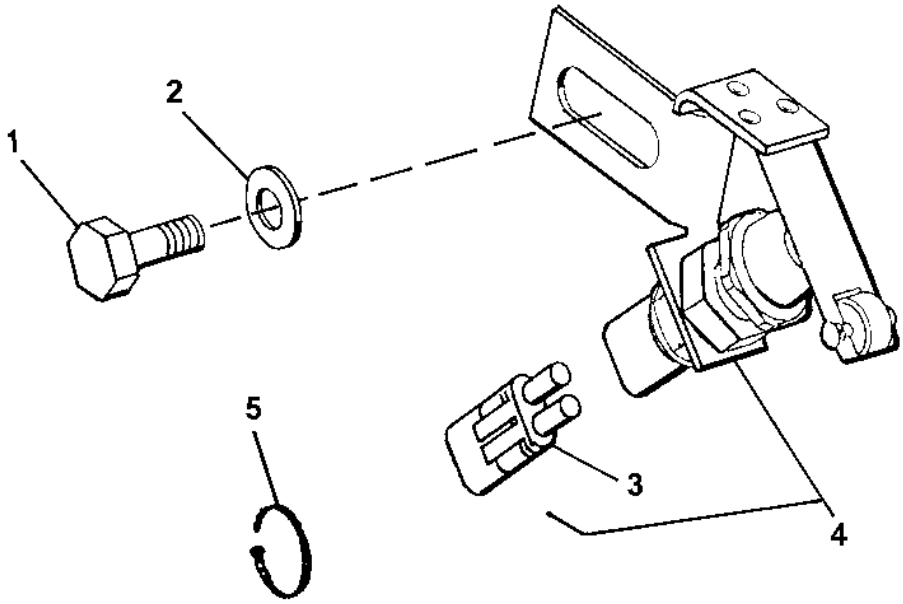

T144515

KEY	PART NO.	PART NAME	QTY	SERIAL NO.	REMARKS
1	19M8017	CAP SCREW	1		M12 X 20
2	24M7047	WASHER	1		13 X 24 X 2.500 MM
3	RE12363	CONNECTOR	1		
4	AT183246	SWITCH	1		
5	R44302	TIE BAND	AR		

MEMORANDA

MAIN FRAME

T136263 -UN-24JAN01

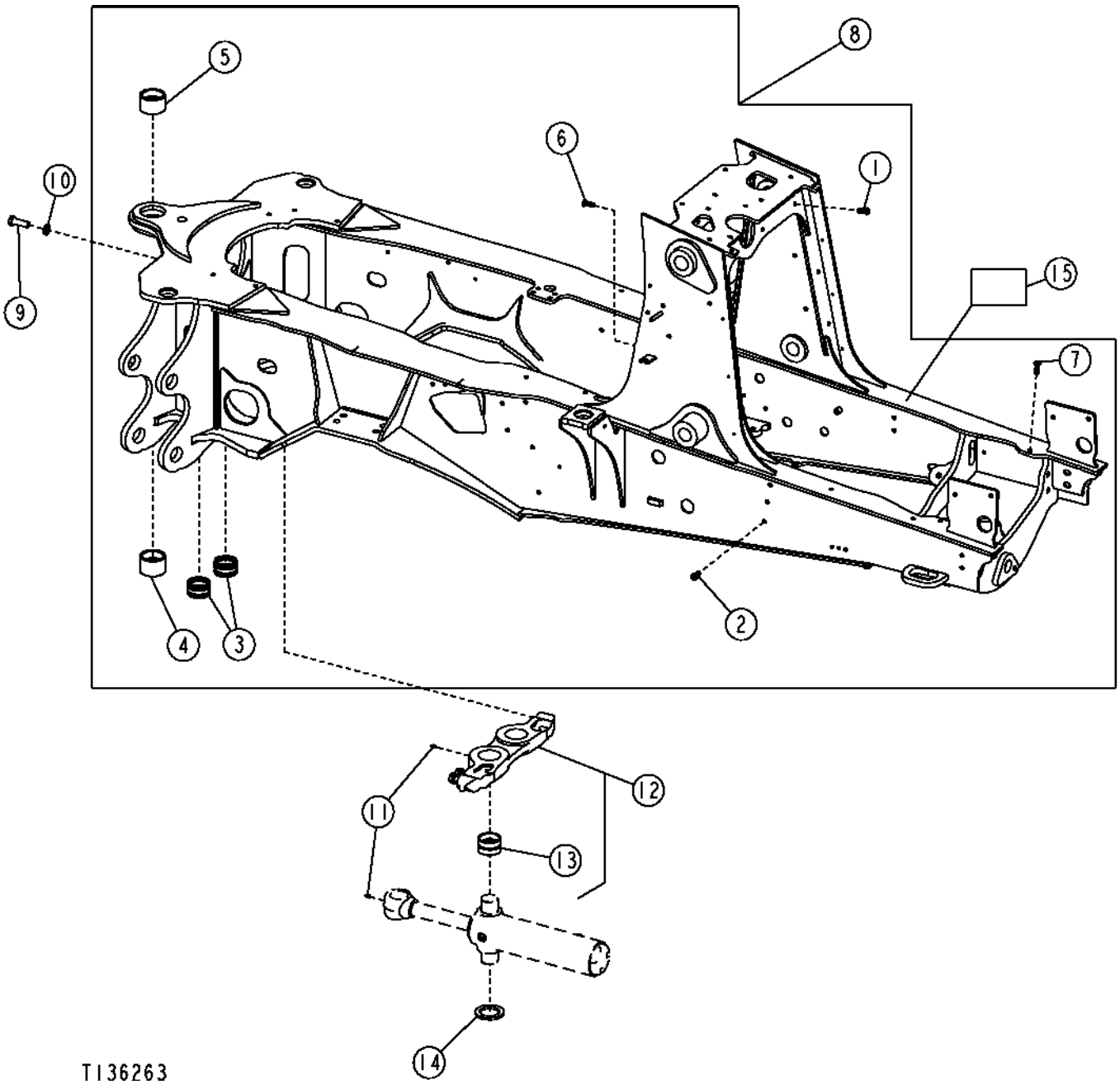

MAIN FRAME

KEY	PART NO.	PART NAME	QTY	SERIAL NO.	REMARKS
1	T148411	NUT	18		M10
2	T148409	NUT	23		M10
3	T147070	BUSHING	2		
4	T154643	BUSHING	1		
5	T154621	BUSHING	1		
6	T148410	NUT	1	-905528	M10
7	T150768	NUT	15		M10
8	AT185048	MAIN FRAME	1	-913479	CONVENIENCE ASSEMBLY, (ALSO ORDER T146102)
	AT197262	MAIN FRAME	1	913480-	CONVENIENCE ASSEMBLY, (ALSO ORDER T146102)
9	19M8224	CAP SCREW	4		M20 X 60
10	T83426	WASHER	4		
11	T162396	LUBRICATION FITTING	6		
12	AT169804	TRUNNION	1		
13	T153303	BUSHING	2		
14	T148387	WASHER	2		
15	T146102	LABEL	1		BY PASS STARTING WARNING

STABILIZER CYLINDER GUARD KIT

TP58027 -UN-30APR99

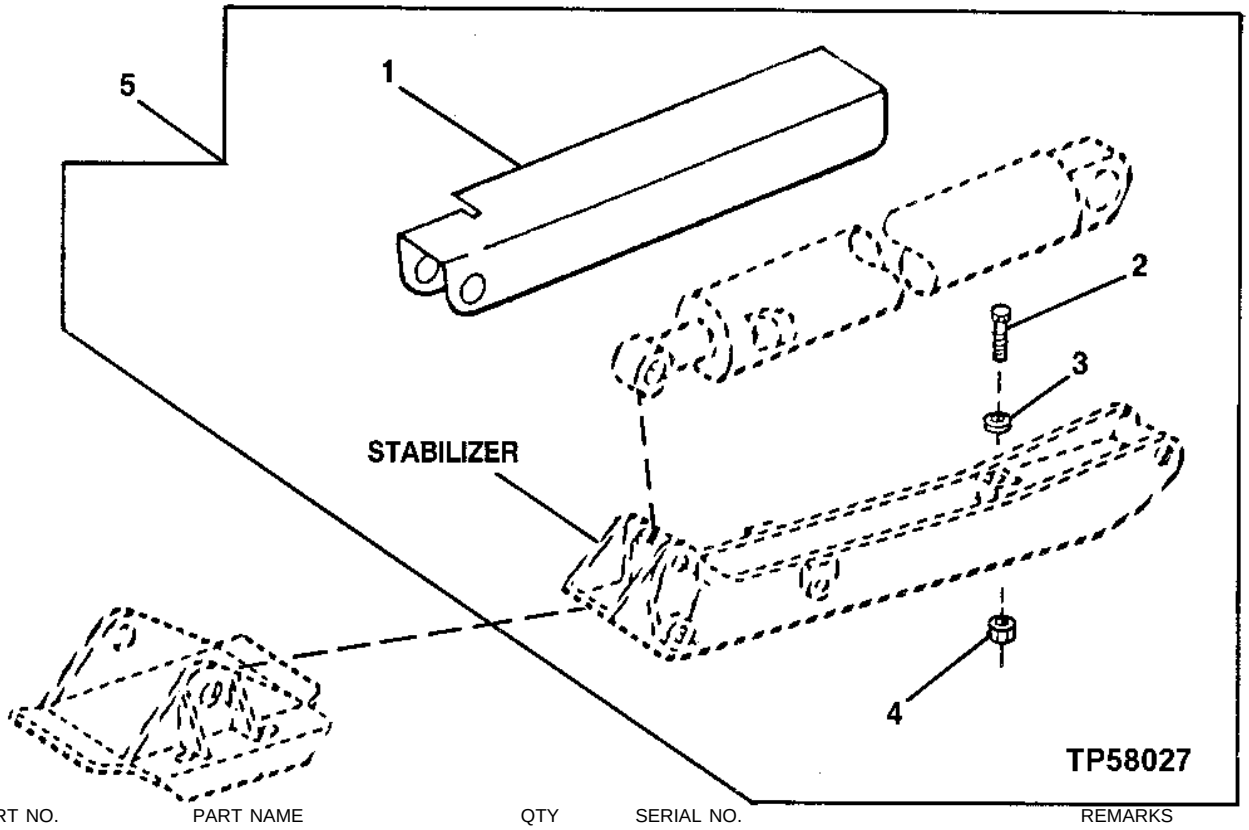

KEY	PART NO.	PART NAME	QTY	SERIAL NO.	REMARKS
1	T185989	COVER	1		(RIGHT)
	T185990	COVER	1		(LEFT)
2	19H2261	CAP SCREW	2		5/8" X 2-1/2"
3	24M7241	WASHER	14		
4	.....	NUT	2		
5	AT192188	KIT	1		(WHOLE GOODS)

MEMORANDA

BOTTOM GUARD

T143527 -UN-30NOV01

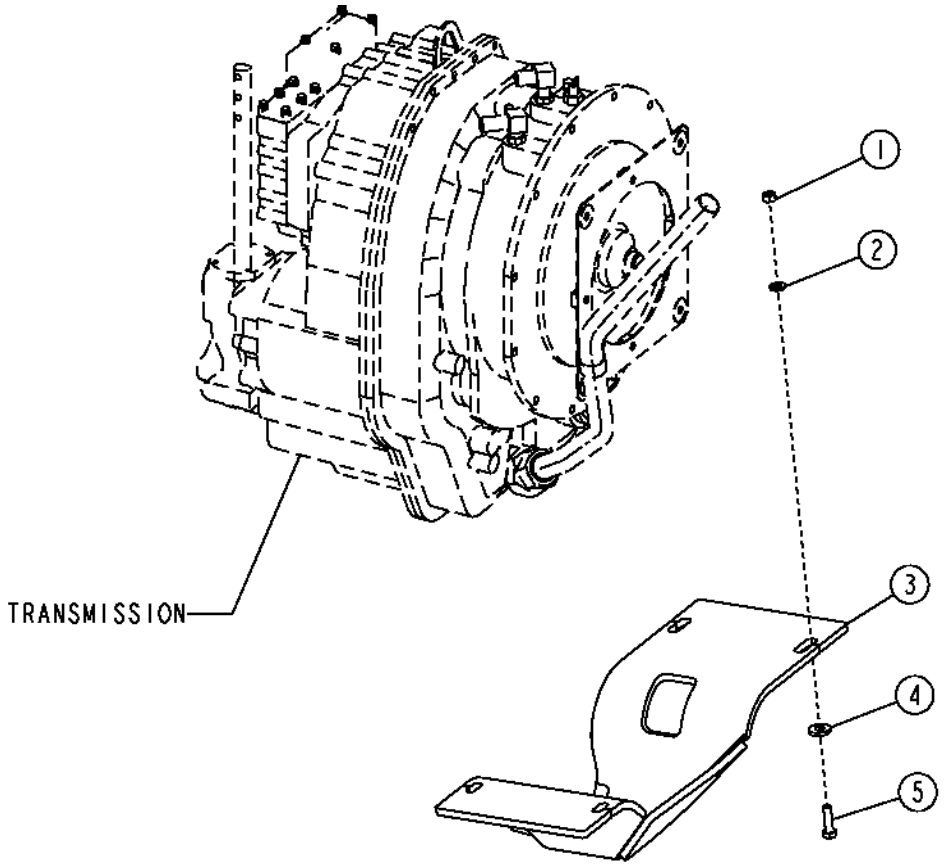

T143527

BOTTOM GUARD

KEY	PART NO.	PART NAME	QTY	SERIAL NO.	REMARKS
1	14M7274	NUT	4		M10
2	24M7239	WASHER	4		
3	AT178315	GUARD	1		
4	24H1886	WASHER	4		
5	19M7550	CAP SCREW	4		M10 X 35

BUMPER
(SERIAL NUMBER -901551)

TP69619 -UN-05OCT00

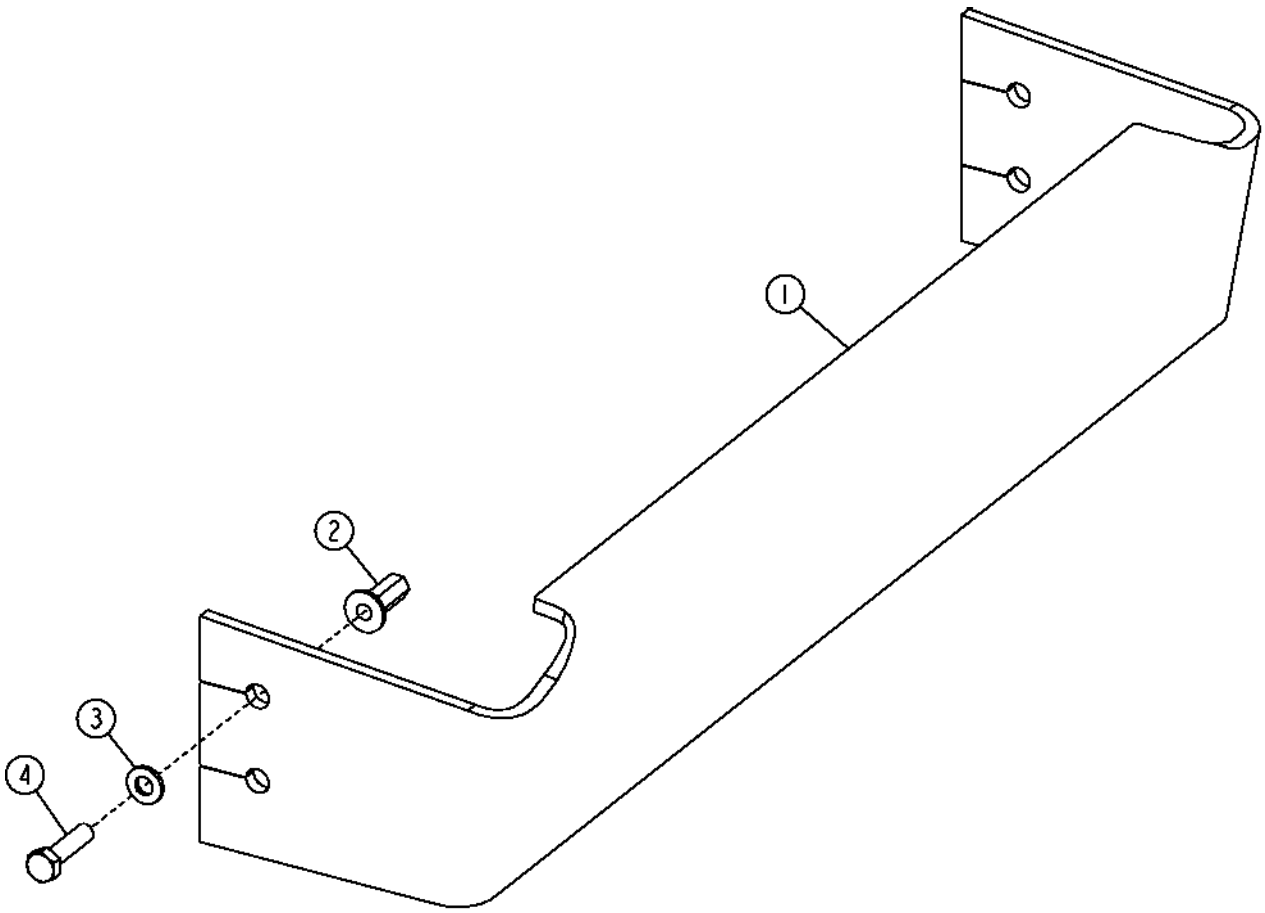

TP69619

BUMPER
(SERIAL NUMBER -901551)

KEY	PART NO.	PART NAME	QTY	SERIAL NO.	REMARKS
1	.....	BUMPER	1		(T166329 NO LONGER AVAILABLE) (SUB T188360, (2) 24H1368, (2) 19M8029)
2	T148409	NUT	4		M10
3	24M7239	WASHER	4		
4	19M8637	CAP SCREW	4		M10 X 40

BUMPER
(SERIAL NUMBER 901552-)

T144867 -UN-20SEP01

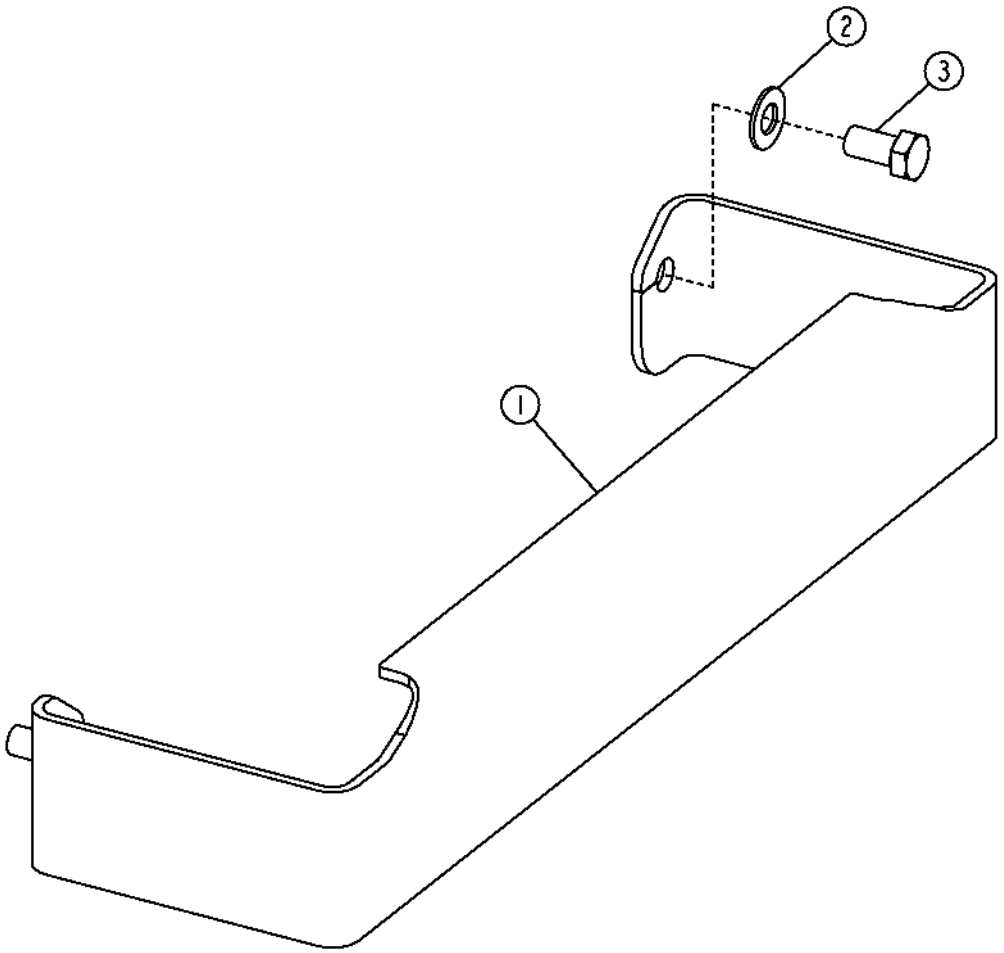

T144867

BUMPER
(SERIAL NUMBER 901552-)

KEY	PART NO.	PART NAME	QTY	SERIAL NO.	REMARKS
1	T188360	BUMPER	1		
2	24H1368	WASHER	2		
3	19M8029	CAP SCREW	2		M16 X 30

FRONT COUNTERWEIGHT

TP58100 -UN-06OCT00

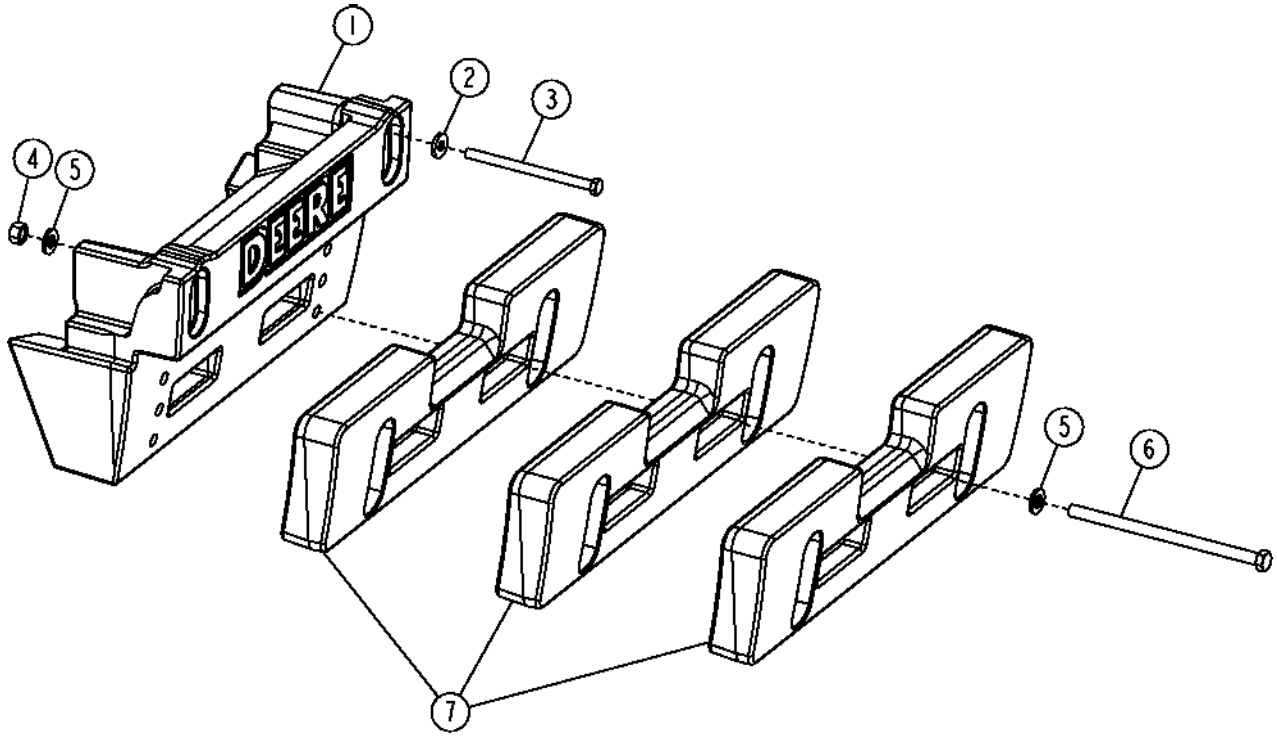

TP58100

FRONT COUNTERWEIGHT

KEY	PART NO.	PART NAME	QTY	SERIAL NO.	REMARKS
1	**T165950**	**COUNTERWEIGHT**	**1**		**(WHOLE GOODS) (400 LB.) PRIMARY COUNTERWEIGHT**
	T165525	**COUNTERWEIGHT**	**1**		**(WHOLE GOODS) (600 LB.) PRIMARY COUNTERWEIGHT**
2	T119912	WASHER	4		(USE WITH PRIMARY COUNTERWEIGHT)
3	19M9027	BOLT	4		M16 X 240, (USE WITH PRIMARY COUNTERWEIGHT)
4	14M7277	NUT	2		M20, (USE WITH ADDITIONAL COUNTERWEIGHT)
5	24M7242	WASHER	4		(USE WITH ADDITIONAL COUNTERWEIGHT)
6	19M7645	BOLT	2		M20 X 200, (USE WITH T165739) (250 LB.) ADDITIONAL COUNTERWEIGHT
	19M8389	BOLT	2		M20 X 280, (USE WITH (2) T165739) (250 LB.) ADDITIONAL COUNTERWEIGHTS
	19M8817	BOLT	2		M20 X 360, (USE WITH (3) T165739) (250 LB.) ADDITIONAL COUNTERWEIGHT
7	**T165739**	**COUNTERWEIGHT**	**1**		**(WHOLE GOODS) (250 LB.) ADDITIONAL COUNTERWEIGHT**

ROPS CANOPY OR QUARTER CAB, HEADLINER AND MOUNTING ISOLATORS

TP58120 -UN-05OCT00

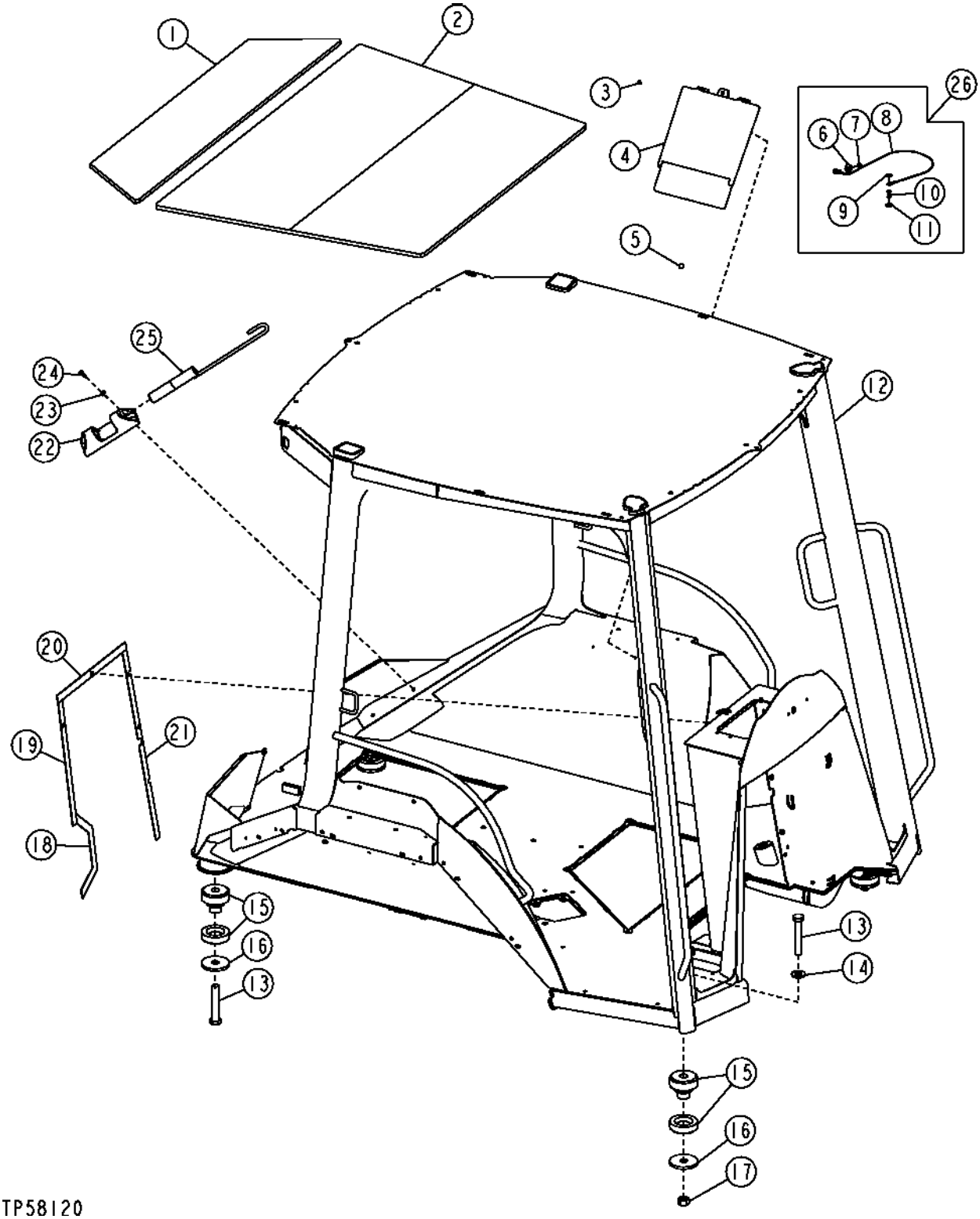

ROPS CANOPY OR QUARTER CAB, HEADLINER AND MOUNTING ISOLATORS

KEY	PART NO.	PART NAME	QTY	SERIAL NO.	REMARKS
1	T186029	HEADLINER	1		REAR HEADLINER
2	T186030	HEADLINER	1		FRONT HEADLINER
3	R79033	RIVET	2		
4	AT195894	HOLDER	1		(SUB FOR RE14246, THIS APPLICATION)
5	R55326	RIVET	1		
6	24M7100	WASHER	1		
7	.....	SCREW	1		
8	AT164804	CABLE	1		
9	24M7139	WASHER	1		
10	AT164803	BOLT	1		
11	24M7139	WASHER	1		
12	AT185757	FRAME	1	-903163	(INCLUDES T166051) (ALSO ORDER AT195550 AND (2) 19M7881 AND (2) 24M7238)
	AT185757	FRAME	1	903164-	(INCLUDES T166051)
13	19M7883	SCREW	4		M20 X 120
14	24M7242	WASHER	2		
15	AT165288	ISOLATOR	4		
16	T101807	WASHER	4		
17	14M7277	NUT	2		M20
18	T185785	GASKET	1		
19	T185784	GASKET	1		
20	T185782	GASKET	1		
21	T185783	GASKET	1		
22	T141234	HOLDER	1		
23	T83061	WASHER	2		
24	T134895	SELF-LOCKING SCREW	2		
25	AT150725	PIN FASTENER	1		SWING PIN
26	AT192032	KIT	1		(WHOLE GOODS) (OPERATOR MANUAL TETHER KIT)

CAB FRAME, HEADLINER AND CAB MOUNTING ISOLATORS

TP58119 -UN-06OCT00

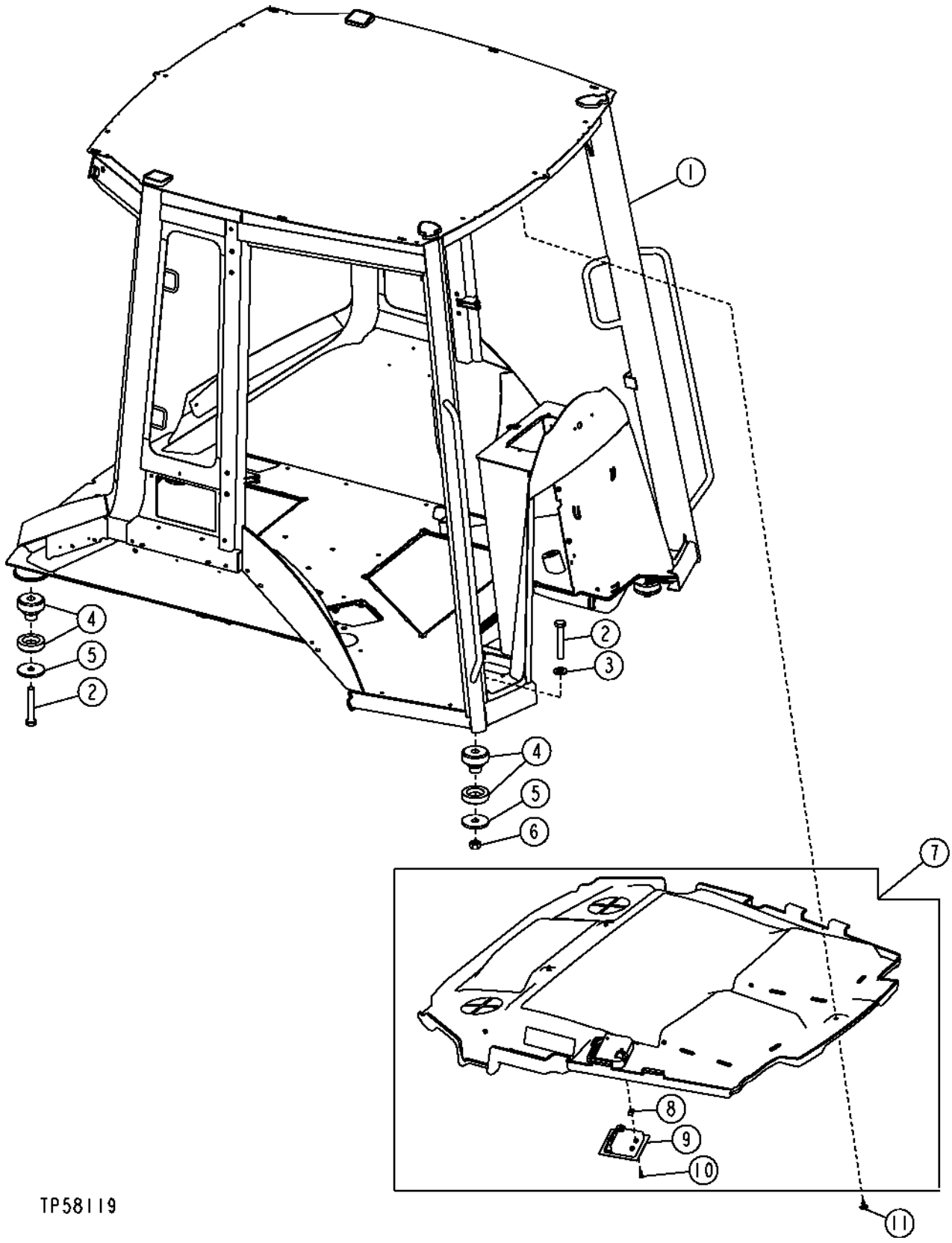

CAB FRAME, HEADLINER AND CAB MOUNTING ISOLATORS

KEY	PART NO.	PART NAME	QTY	SERIAL NO.	REMARKS
1	AT184761	ROPS	1	-903163	(ALSO ORDER AT195550 AND (2) 19M7881 AND (2) 24M7238)
	AT184761	ROPS	1	903164-	(LEVER CONTROL)
	AT199735	ROPS	1		(PILOT CONTROL)
2	19M7883	SCREW	4		M20 X 120
3	24M7242	WASHER	2		
4	AT165288	ISOLATOR	4		
5	T101807	WASHER	4		
6	14M7277	NUT	2		M20
7	AT185498	HEADLINER	1		WITHOUT RADIO
	AT185499	HEADLINER	1		WITH RADIO
8	M84972	NUT	2		6 MM
9	AT185500	LAMP	1		
10	T134895	SELF-LOCKING SCREW	2		
11	T184892	RETAINER	9		

ROOF WITH CAB,QUARTER CAB OR ROPS

T138530 -UN-22FEB01

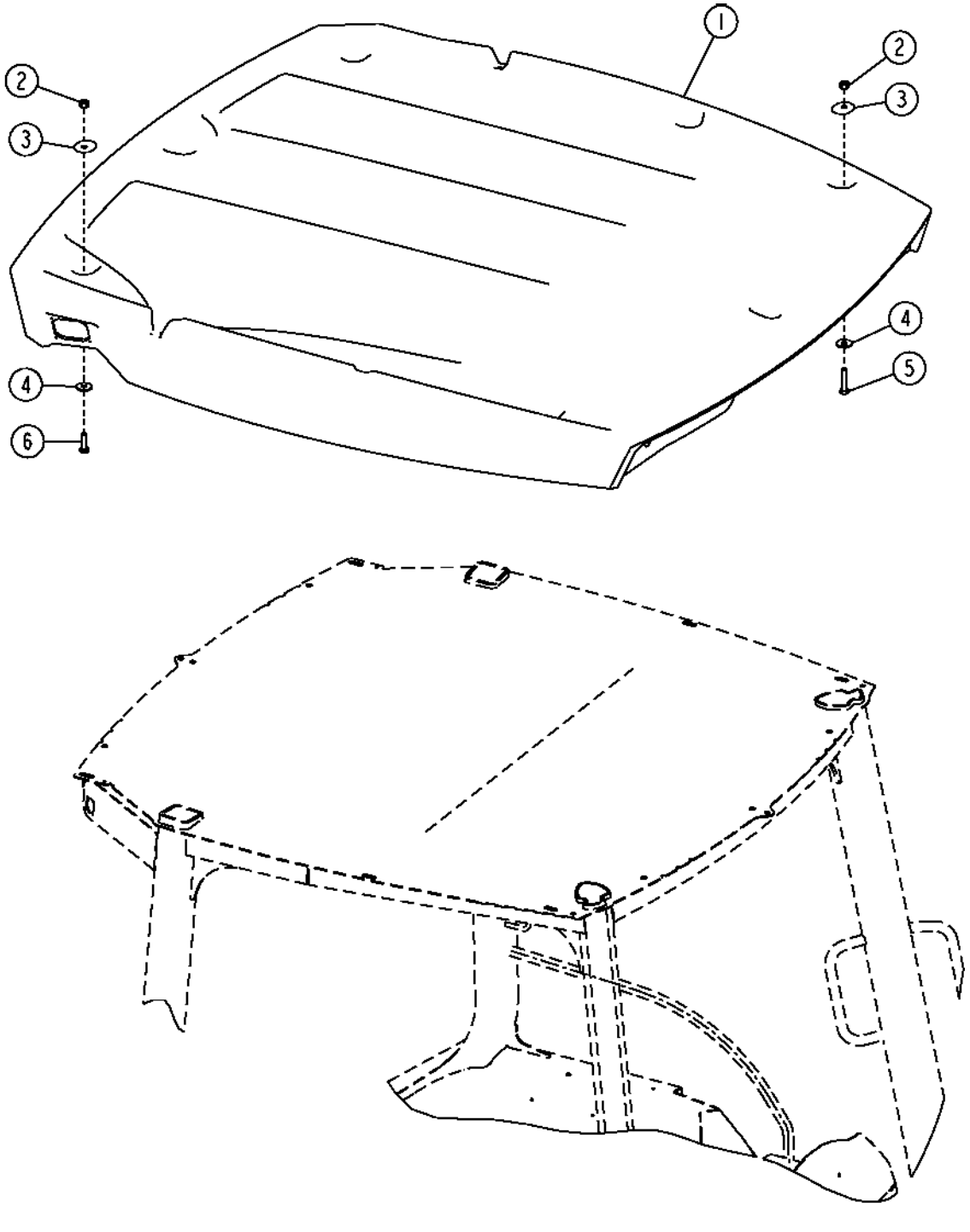

ROOF WITH CAB,QUARTER CAB OR ROPS

KEY	PART NO.	PART NAME	QTY	SERIAL NO.	REMARKS
1	T185328	ROOF	1		(WITH DELUXE LIGHYING)(YELLOW)
	T185329	ROOF	1		(WITH STANDARD LIGHTING)(YELLOW)
2	14M7517	LOCK NUT	8		M10
3	T185664	SEALING WASHER	8		
4	24M7101	WASHER	8		11 X 34 X 3 MM
5	19M7550	CAP SCREW	3		M10 X 35
6	19M8600	CAP SCREW	5		M10 X 50

FLOOR RAMPS, FLOOR MATS AND ANTI-SKID MATS

T136077 -UN-05DEC00

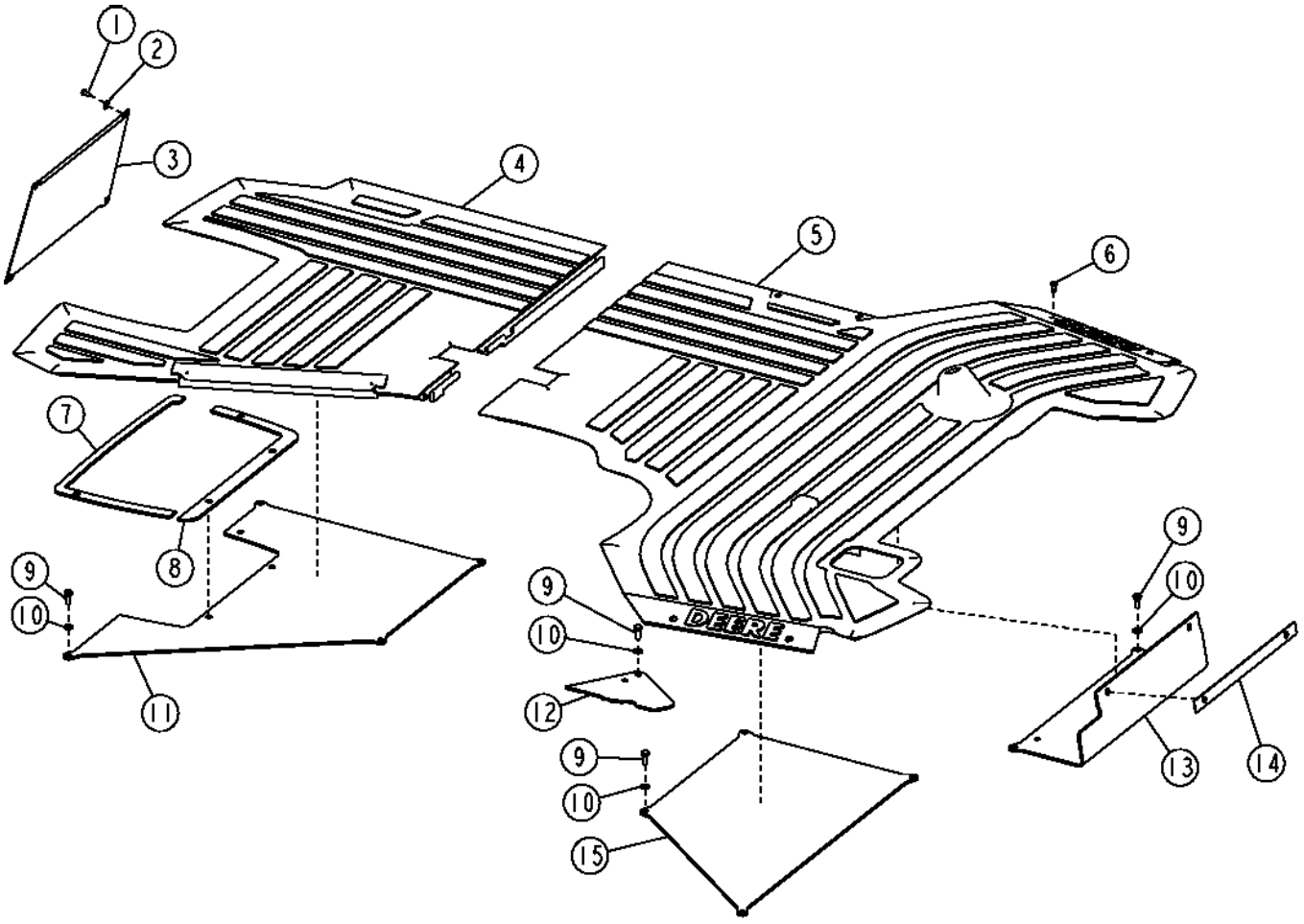

T136077

FLOOR RAMPS, FLOOR MATS AND ANTI-SKID MATS

KEY	PART NO.	PART NAME	QTY	SERIAL NO.	REMARKS
1	19M7923	CAP SCREW	4		M6 X 12
2	24M7139	WASHER	4		
3	T185524	PANEL	1		
4	T166000	MAT	1		REAR
	T188726	MAT	1		REAR FLOOR (PILOT CONTROLS)
5	T165969	MAT	1		FRONT
6	T133674	SELF-LOCKING SCREW	4		M6 X 16
7	T185773	GASKET	1		
8	T185774	GASKET	1		(LEVER CONTROLS)
	T191142	GASKET	1		(PILOT CONTROLS)
9	19M7881	SCREW	13		M8 X 20
10	24M7238	WASHER	13		
11	AT186321	COVER	1		REAR
	AT196294	COVER	1		REAR (PILOT CONTROLS)
12	AT191976	COVER	1	-913479	LINKAGE
	AT197479	COVER	1	913480-	LINKAGE
	AT193881	COVER	1	-913479	LINKAGE WITH RIDE CONTROL OR SEL. FLOW VALVE
	AT300928	COVER	1	913480-	LINKAGE WITH RIDE CONTROL OR SEL. FLOW VALVE
13	T188565	COVER	1		FRONT, (SUB FOR T185666)
14	T185775	GASKET	1		
15	T165948	COVER	1		MIDDLE

DOORS AND SIDE WINDOWS FOR CAB

T145767 -UN-20SEP01

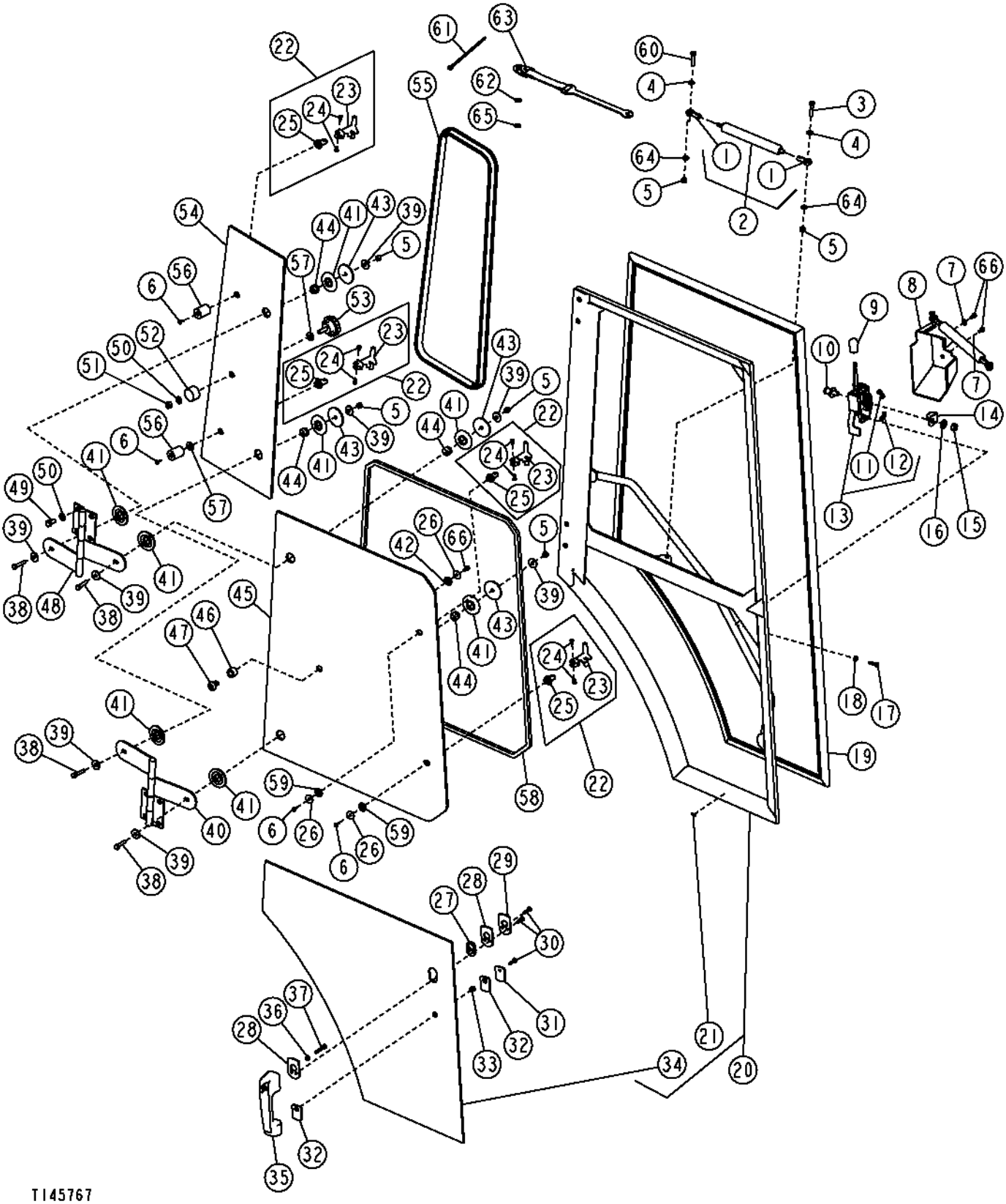

DOORS AND SIDE WINDOWS FOR CAB

KEY	PART NO.	PART NAME	QTY	SERIAL NO.	REMARKS
1	AW24539	END	2	-904214	
	AM102062	BALL JOINT	2	904215-	
2	.....	CYLINDER	1	-904214	(AT193621 NO LONGER AVAILABLE) (SUB AT194718, 19M7922 AND (4) 24M7238) (SUB FOR AT184407)
	AT194718	CYLINDER	1	904215-	
3	19M8008	CAP SCREW	2		M8 X 35
4	24M7238	WASHER	4		
5	14M7426	LOCK NUT	6		M8
6	T133674	SELF-LOCKING SCREW	4	-902299	
	T188806	SCREW	4	902300-	
	T133674	SELF-LOCKING SCREW	3		
7	.....	WASHER	2		
8	T165095	COVER	1		RIGHT
	T165096	COVER	1		LEFT
9	T133487	KNOB	1		
10	AR91896	STRIKER	1		
11	T161373	CLIP	1		
12	R26491	CLIP	1		
13	AT145792	LATCH	1		RIGHT
	AT184767	LATCH	1		LEFT
14	T135583	GUARD	1		STRICKER
15	14H1047	NUT	1		7/16"
16	T105740	WASHER	1		
17	19H1914	CAP SCREW	2		1/4" X 1"
18	24H1287	WASHER	2		
19	AT184652	ISOLATOR	1		RIGHT
	AT184719	ISOLATOR	1		LEFT
20	AT184416	DOOR	1		RIGHT
	AT184417	DOOR	1		LEFT
21	T135675	STAND-OFF	7		
22	.....	LATCH	4	-902299	(AT118766 NO LONGER AVAILABLE) (SUB AT196522 AND T188806)
	AT196522	LATCH	4	902300-	
23	T119153	LATCH	1		
24	A48970	DUAL LOCK FASTENER	2		
25	.....	BASE	1		
26	24H1288	WASHER	3		
27	T175645	SPACER	1		
28	T175642	GROMMET	2		
29	T175641	PLATE	1		
30	T134895	SELF-LOCKING SCREW	3		
31	T175644	PLATE	1		
32	T175643	GROMMET	2		
33	T175646	SPACER	1		
34	T165158	WINDOWPANE	1		RIGHT
	T165336	WINDOWPANE	1		LEFT

THIS PARTS LISTING IS CONTINUED

DOORS AND SIDE WINDOWS FOR CAB

T145767 -UN-20SEP01

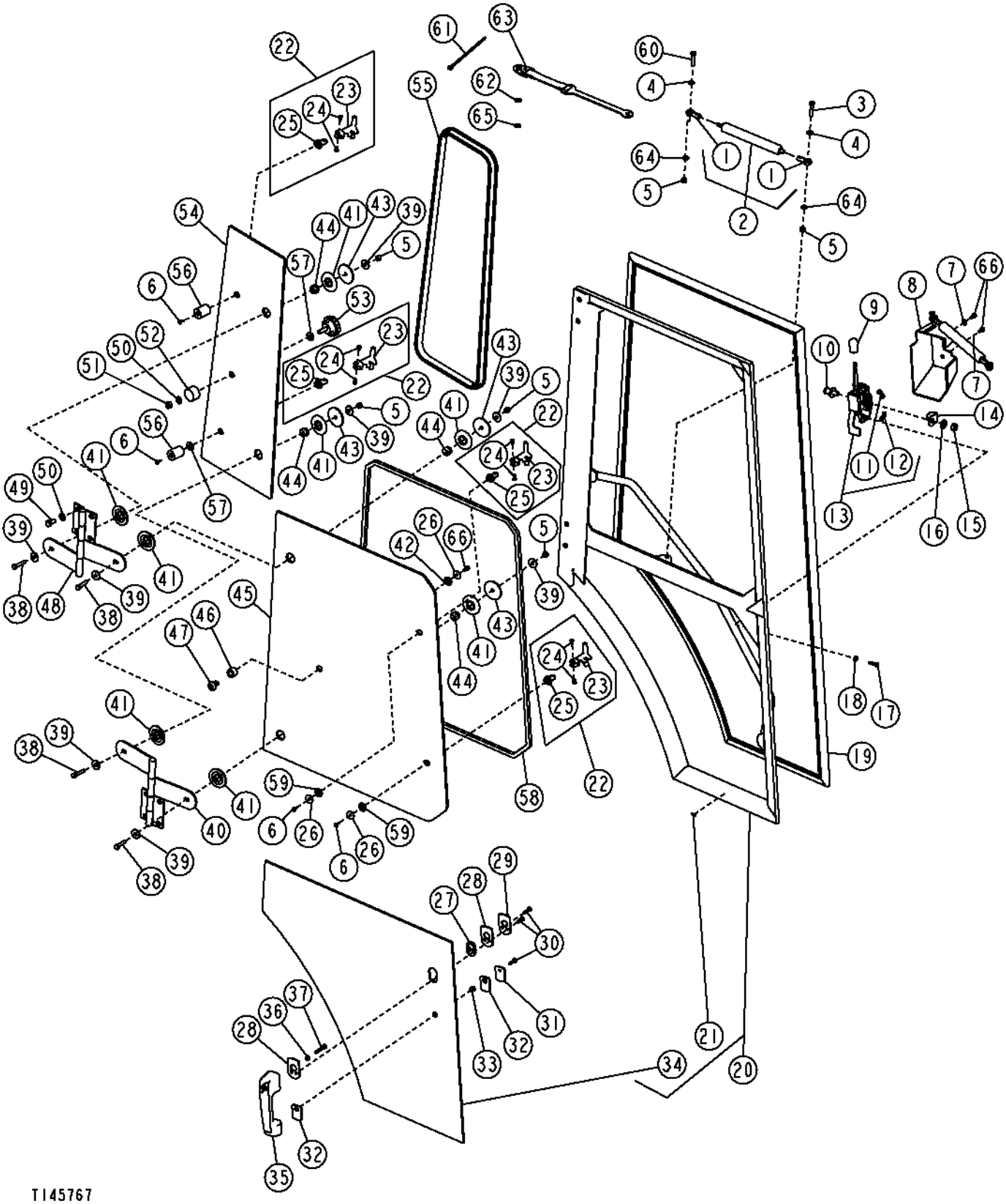

DOORS AND SIDE WINDOWS FOR CAB

KEY	PART NO.	PART NAME	QTY	SERIAL NO.	REMARKS
35	AT220317	HANDLE	1		
36	14H786	NUT	1		
37	T166035	SCREW	1		
38	19M7922	CAP SCREW	4		M8 X 40
39	24M7024	WASHER	8		
40	AT184524	HINGE	1		RIGHT
	AT184651	HINGE	1		LEFT
41	T158081	WASHER	8		
42	T76832	WASHER	1		
43	T185678	WASHER	4		
44	T158358	BUSHING	4		
45	T164707	WINDOWPANE	1		RIGHT AND LEFT
46	T186017	BUSHING	1		
47	T186016	BUSHING	1		
48	AT184651	HINGE	1		RIGHT
	AT184524	HINGE	1		LEFT
49	19M7938	CAP SCREW	8		M10 X 20
50	24M7239	WASHER	8		
51	14M7167	LOCK NUT	1		M10
52	T76830	GUARD	1		
53	AT75311	KNOB	1		
54	T164706	WINDOWPANE	1		RIGHT
	T166060	WINDOWPANE	1		LEFT
55	T164710	ISOLATOR	1		RIGHT
	T164709	ISOLATOR	1		LEFT
56	T186018	BUMPER	2		
57	R52921	WASHER	2		
58	T165357	ISOLATOR	1		
59	T76833	WASHER	2		
60	19M8397	CAP SCREW	1	-904214	M8 X 50
	19M7922	CAP SCREW	1	904215-	M8 X 40
61	R44302	TIE BAND	1	-904214	
62	M87534	SPRING WASHER	1	-904214	
63	.....	STRAP	1	-904214	(AT194407 NO LONGER AVAILABLE) (SUB AT194718, 19M7922 AND (4) 24M7238)
64	24M7298	WASHER	2	-904214	
	24M7238	WASHER	2	904215-	
65	28H1511	WASHER	1	-904214	
66	T133674	SELF-LOCKING SCREW	3		

WINDSHIELD GLASS FOR CAB OR QUARTER CAB

TP69621 -UN-05OCT00

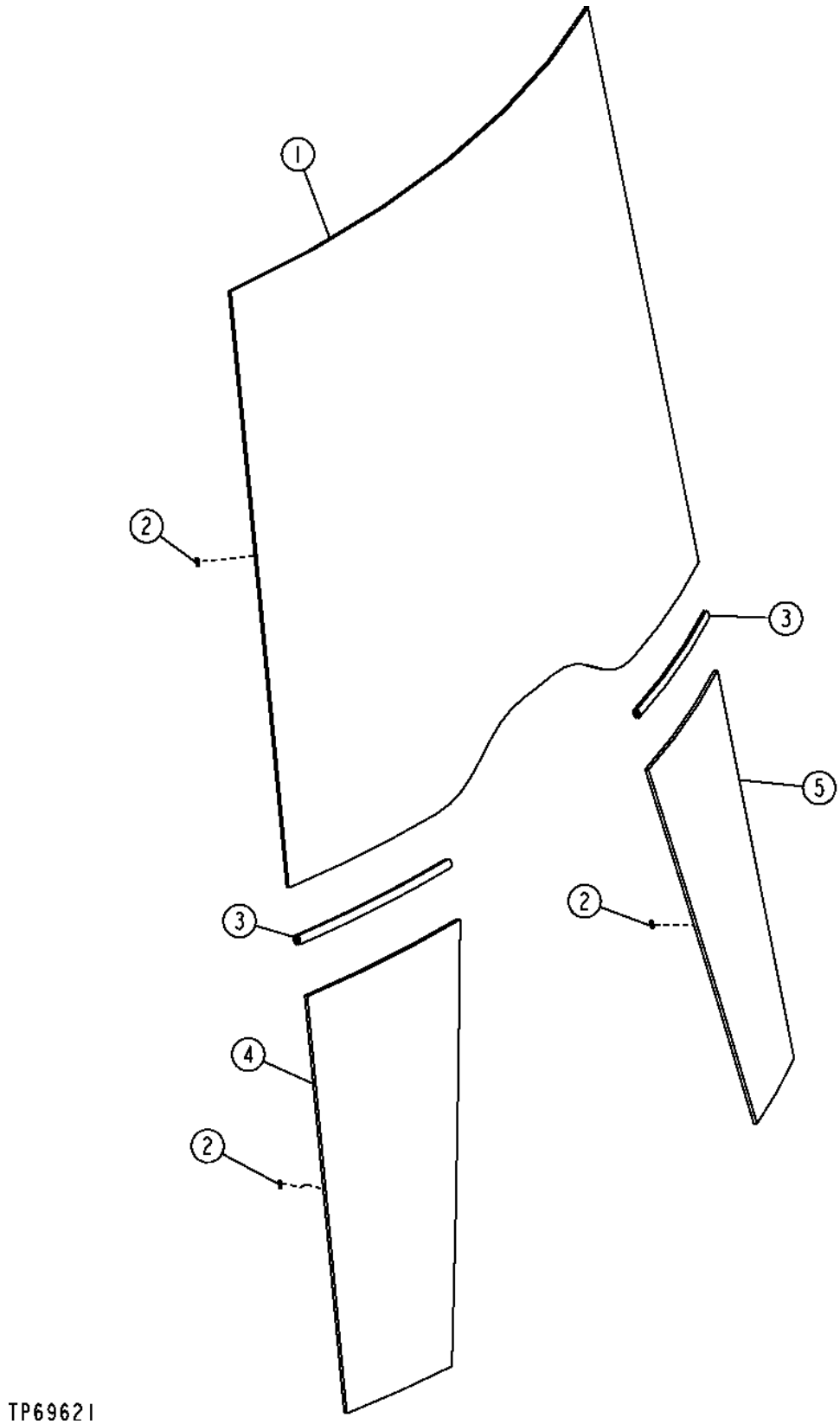

WINDSHIELD GLASS FOR CAB OR QUARTER CAB

KEY	PART NO.	PART NAME	QTY	SERIAL NO.	REMARKS
1	T191071	WINDOWPANE	1		(SUB FOR T164694)
2	T135675	STAND-OFF	22		
3	T164697	ISOLATOR	2		
4	T191072	WINDOWPANE	1		LOWER RIGHT, (SUB FOR T164695)
5	T191073	WINDOWPANE	1		LOWER LEFT, (SUB FOR T164696)

SLIDING REAR WINDOWS AND CORNER WINDOWPANES

T152680 -UN-14MAR02

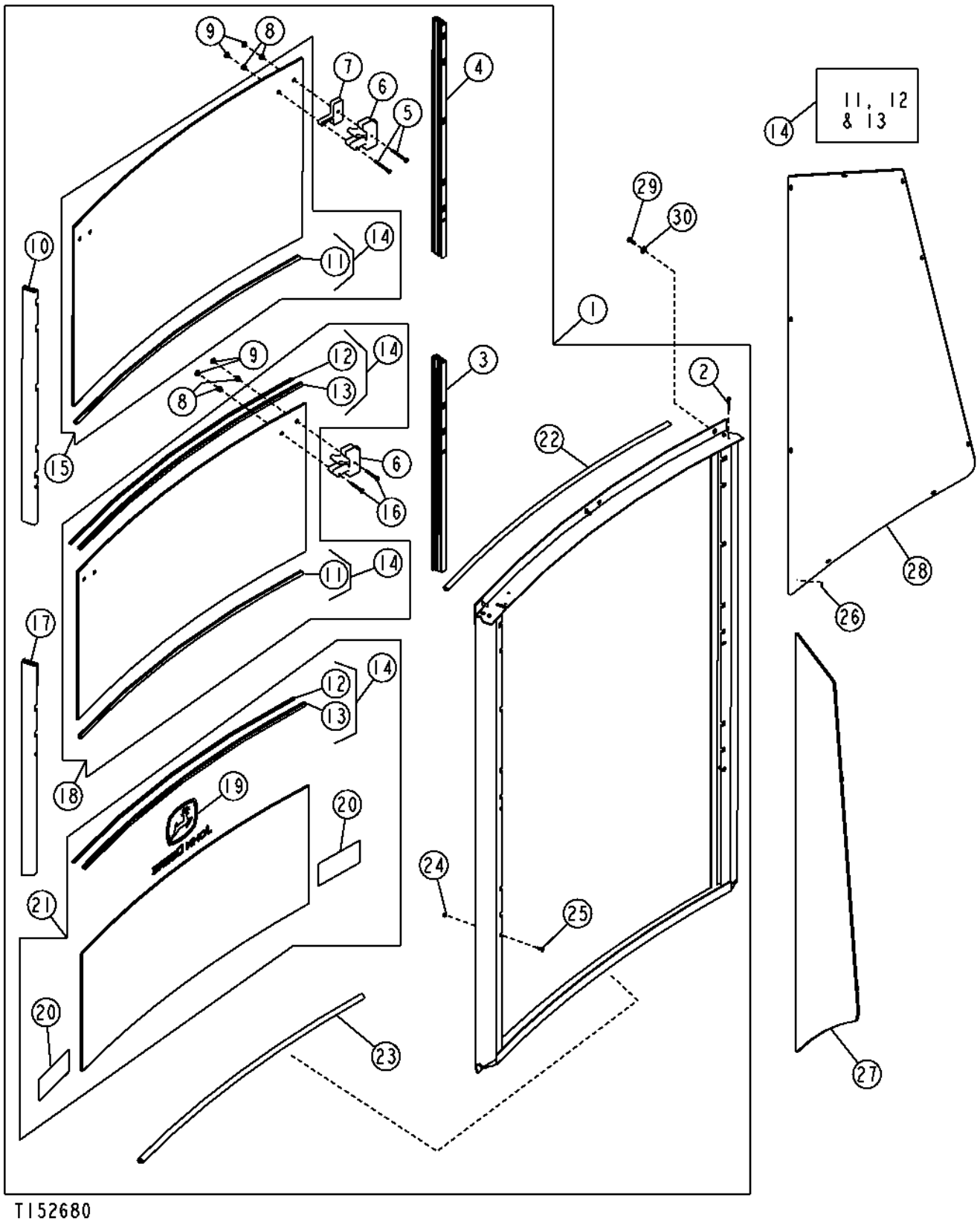

SLIDING REAR WINDOWS AND CORNER WINDOWPANES

KEY	PART NO.	PART NAME	QTY	SERIAL NO.	REMARKS
1	AT184089	WINDOW	1		CONVENIENCE ASSEMBLY
2	T164698	SCREW	8		
3	AT190194	GUIDE	1		(BOTTOM LEFT WINDOW)
4	AT190193	GUIDE	1		(TOP LEFT WINDOW)
5	T166368	SCREW	2		
6	AT196391	LATCH	1		(DOES NOT INCLUDE HARDWARE)
7	T165561	SPACER	1		
8	T166371	GROMMET	2		
9	T187765	INSERT	2		(SUB FOR T166370)
10	AT190191	GUIDE	1		(TOP RIGHT WINDOW)
11	.....	SEAL	1		(A) (ORDER AT190490)
12	.....	WEATHERSTRIP	1		(A) (ORDER AT190490)
13	.....	SEAL	1		(A) (ORDER AT190490)
14	AT190490	KIT	1		(A) ONE KIT WILL SERVICE THE MIDDLE WINDOW, TWO KITS WILL SERVICE ALL THREE WINDOWS
15	AT189176	WINDOW	1		(UPPER WINDOW)
16	T166369	SCREW	2		
17	AT190192	GUIDE	1		(BOTTOM RIGHT WINDOW)
18	AT189175	WINDOW	1		(MIDDLE WINDOW)
19	JD5694	LABEL	1	-902607	LEAPING DEER
	JD5750	LABEL	1	902608-	LEAPING DEER
20	T183768	LABEL	2		WARNING
21	AT187036	WINDOW	1		(LOWER WINDOW)
22	T166881	WEATHERSTRIP	1		
23	T187780	ISOLATOR	1		(SUB FOR T166881, THIS APPLICATION)
24	T185378	NUT	2		
25	T185377	SCREW	2		
26	T135675	STAND-OFF	22		
27	T164705	WINDOWPANE	1		(RIGHT REAR CORNER)
28	T164708	WINDOWPANE	1		(LEFT REAR CORNER)
29	19M7077	CAP SCREW	6		M6 X 20
30	24M7139	WASHER	6		

FRONT WINDSHIELD WIPER SYSTEM

T137150 -UN-30JAN01

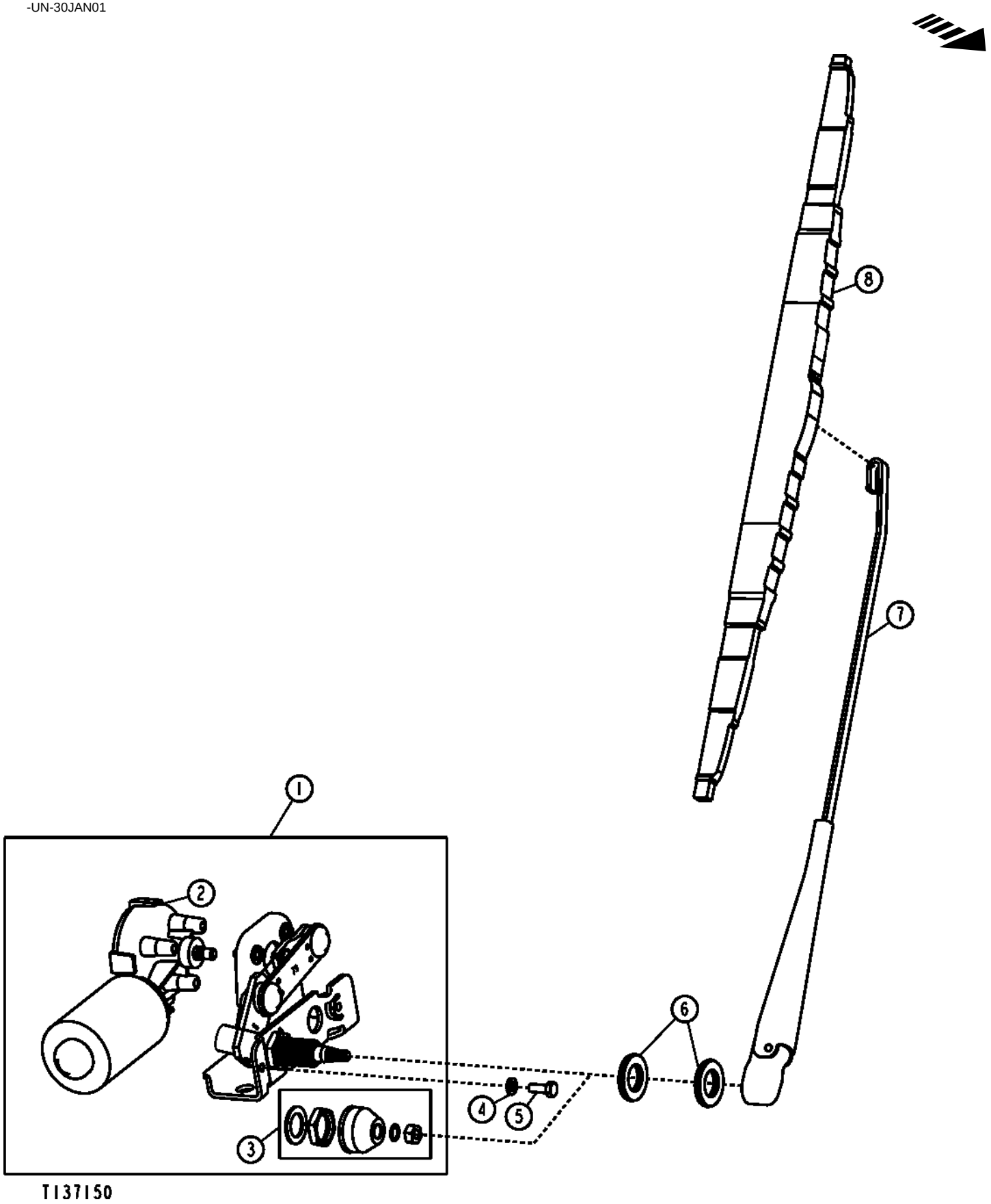

FRONT WINDSHIELD WIPER SYSTEM

KEY	PART NO.	PART NAME	QTY	SERIAL NO.	REMARKS
1	.....	WIPER MOTOR	1	-895627	(AT189103 NO LONGER AVAILABLE) (SUB AT192587 AND (2) 19M8425)
	AT192587	WIPER MOTOR	1	895628-	
2	AT189101	WIPER MOTOR	1		
3	RE40049	KIT	1		
4	12H302	LOCK WASHER	2		1/4"
5	19H2651	CAP SCREW	2	-896627	1/4" X 3/4"
	19M8425	CAP SCREW	1	895628-	M6 X 16
6	T183664	SPACER	2		
7	AT184965	WIPER ARM	1		
8	AT184966	WIPER BLADE	1		

FRONT WINDSHIELD WASHER RESERVOIR AND PUMP

TP58145 -UN-05OCT00

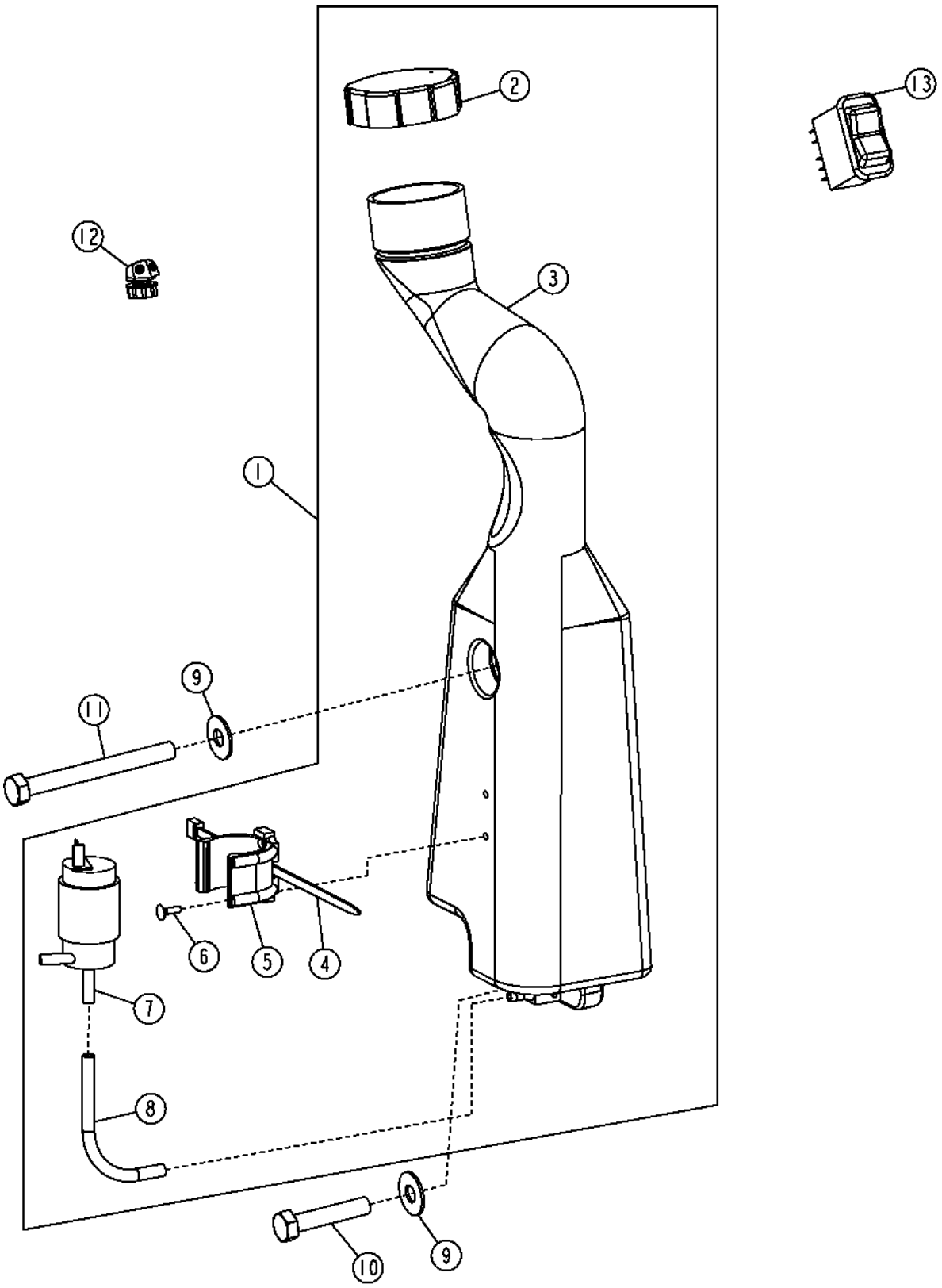

FRONT WINDSHIELD WASHER RESERVOIR AND PUMP

KEY	PART NO.	PART NAME	QTY	SERIAL NO.	REMARKS
1	AT187710	WINDSHIELD WASHER	1		
2	AT173193	CAP	1		(SUB FOR AT189043)
3	T179055	RESERVOIR	1		
4	R44302	TIE BAND	1		
5	T183344	BRACKET	1		
6	R116089	SCREW	2		0.138" X 1/2"
7	AT174348	PUMP	1		
8	.....	HOSE	1		(MAKE FROM R120653 BULK MATERIAL, CUT TO LENGTH)
9	24H1307	WASHER	2		
10	R151507	CAP SCREW	1		M10 X 50
11	M132832	CAP SCREW	1		M10 X 100
12	AT188766	NOZZLE	1		
13	AT175072	WIPER SWITCH	1		

REAR WINDSHIELD WIPER SYSTEM

T137153 -UN-30JAN01

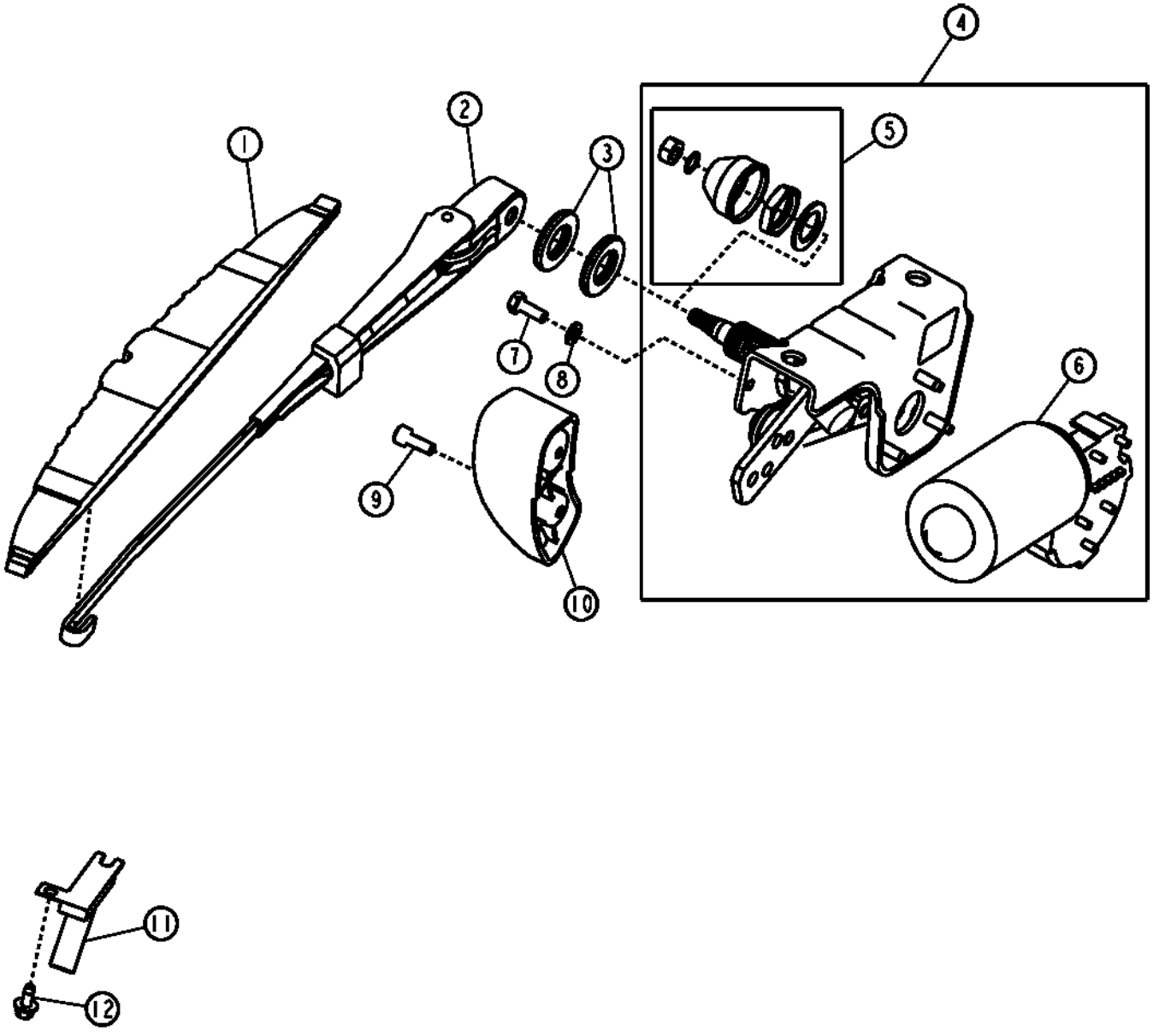

REAR WINDSHIELD WIPER SYSTEM

KEY	PART NO.	PART NAME	QTY	SERIAL NO.	REMARKS
1	AT184970	WIPER BLADE	1		
2	AT184969	WIPER ARM	1		
3	T183664	SPACER	2		
4	.....	WIPER MOTOR	1	-895627	(AT184968 NO LONGER AVAILABLE) (SUB AT194279 AND (2) 19M8425)
	AT194279	WIPER MOTOR	1	895628-	(INCLUDES DRIVE ASSEMBLY)
5	RE40049	KIT	1		
6	AT189101	WIPER MOTOR	1		
7	19H2651	CAP SCREW	2	-895627	1/4" X 3/4"
	19M8425	CAP SCREW	2	895628-	M6 X 16
8	12H302	LOCK WASHER	2		
9	19M8553	SCREW	2		M6 X 16
10	AT187229	RAMP	1		
11	AT186913	SWITCH	1		
12	37M7089	SCREW	2		M6 X 12

BACKHOE CONTROL CONSOLE
TWO LEVER

TP58177 -UN-12AUG00

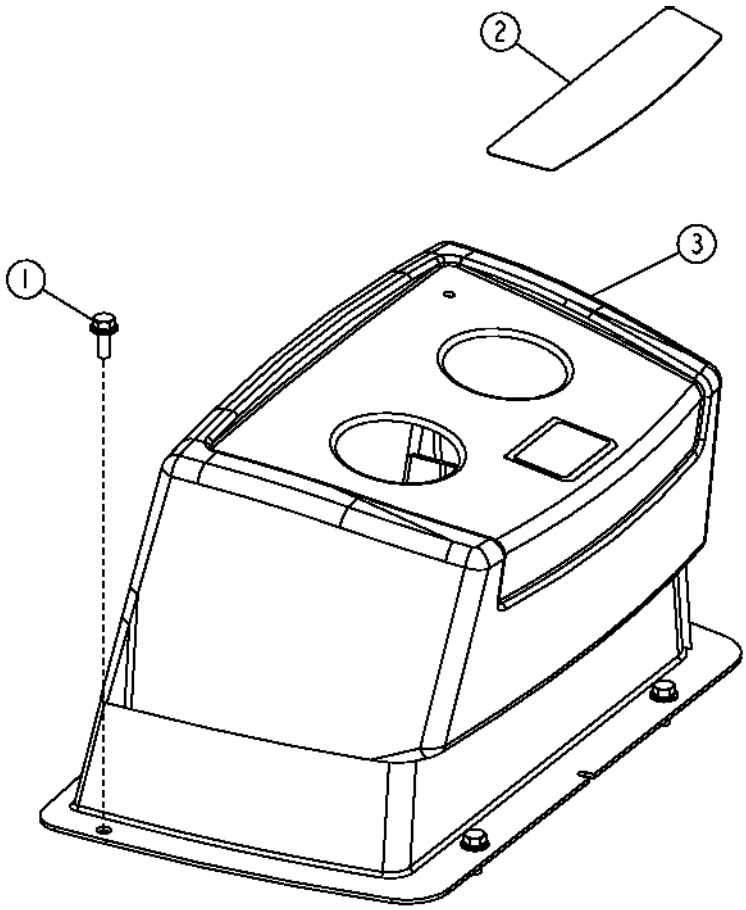

TP58177

BACKHOE CONTROL CONSOLE
TWO LEVER

KEY	PART NO.	PART NAME	QTY	SERIAL NO.	REMARKS
1	19M7866	SCREW	4		M8 X 20
2	T165584	LABEL	1		
3	AT189269	COVER	1		
	AT189270	COVER	1		WITH RIGHT PEDAL
	AT189271	COVER	1		WITH LEFT AND RIGHT PEDAL

BACKHOE CONTROL LEVER CONSOLE, MULTIPLE LEVERS

TP69618 -UN-12AUG00

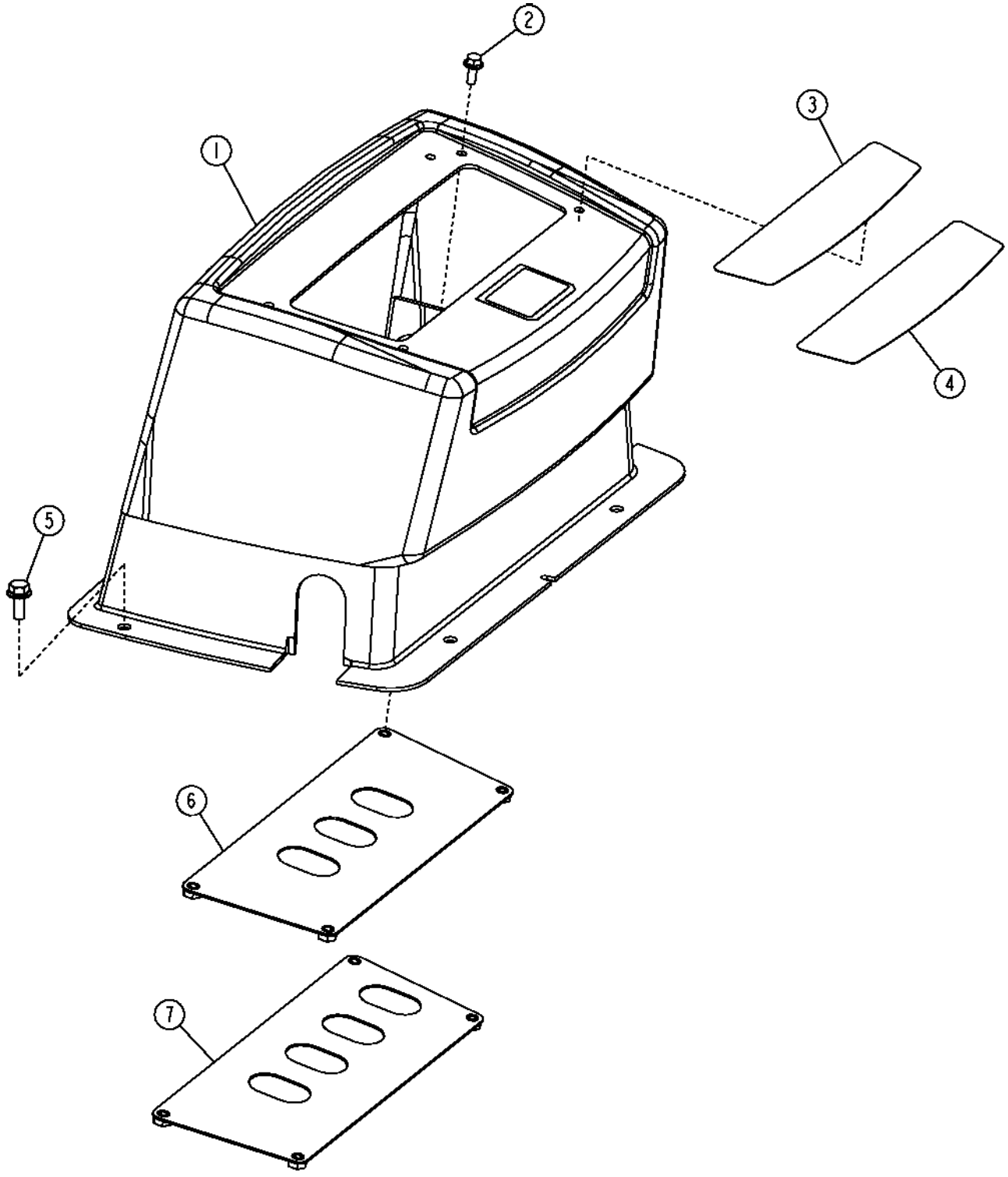

BACKHOE CONTROL LEVER CONSOLE, MULTIPLE LEVERS

KEY	PART NO.	PART NAME	QTY	SERIAL NO.	REMARKS
1	AT189272	COVER	1		
2	19M7775	SCREW	4		M6 X 16
3	T165585	LABEL	1		THREE LEVER
4	T165586	LABEL	1		THREE LEVER WITH EXTENDIBLE
5	19M7866	SCREW	4		M8 X 20
6	AT186045	COVER	1		THREE LEVER
7	AT186050	COVER	1		THREE LEVER WITH EXTENDIBLE

BACKHOE CONSOLE
(PILOT CONTROL)

T165569 -UN-18FEB03

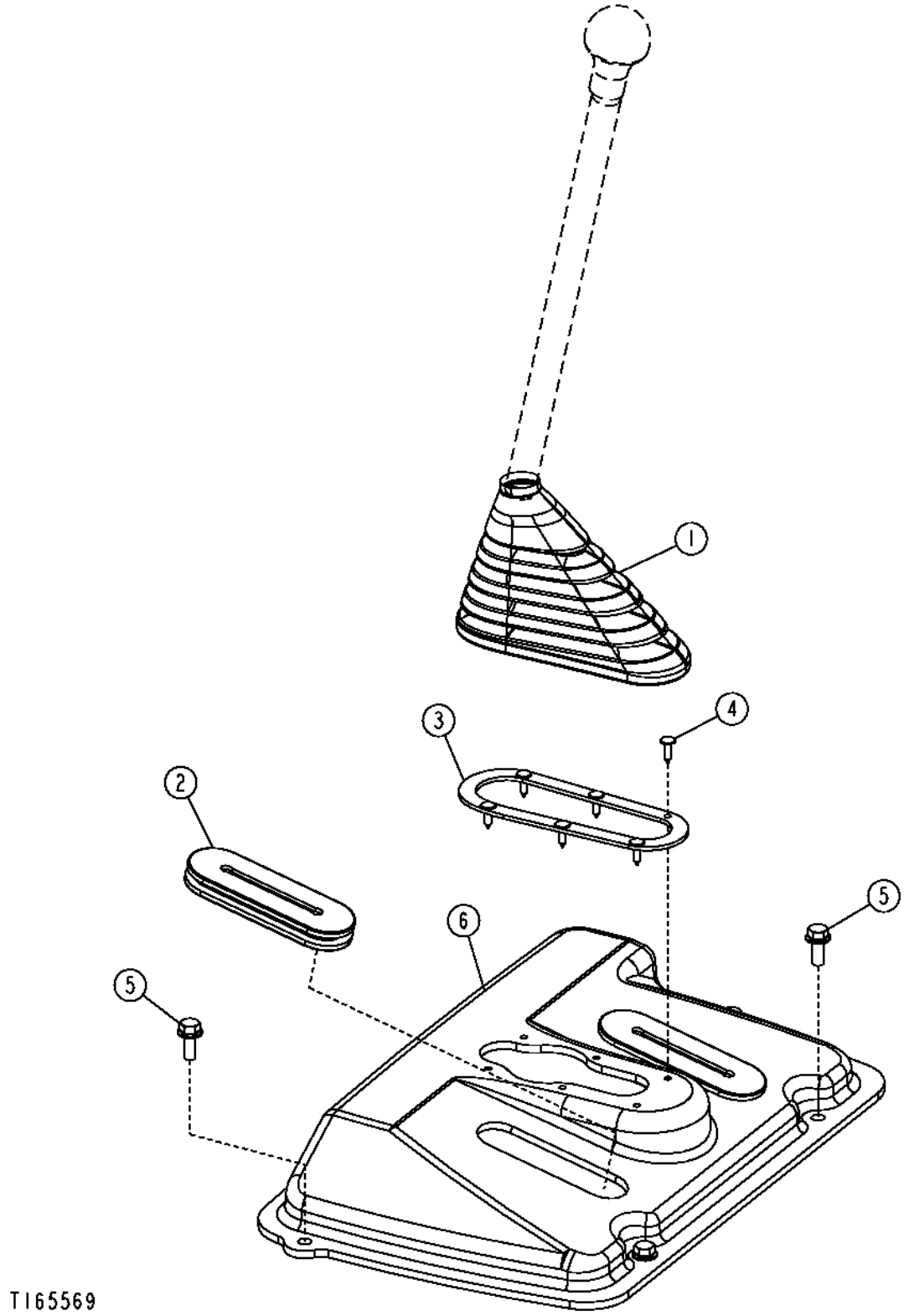

BACKHOE CONSOLE
(PILOT CONTROL)

KEY	PART NO.	PART NAME	QTY	SERIAL NO.	REMARKS
1	T183468	BOOT	1		
2	T200095	GROMMET	AR		
3	T183404	RING	1		
4	T183882	CLIP	6		
5	19M7866	SCREW	4		
6	T200092	COVER	1		(NO PEDALS)
	T200093	COVER	1		(ONE PEDAL)
	T200094	COVER	1		(TWO PEDALS)

STEERING COLUMN COVERS

TP58083 -UN-05OCT00

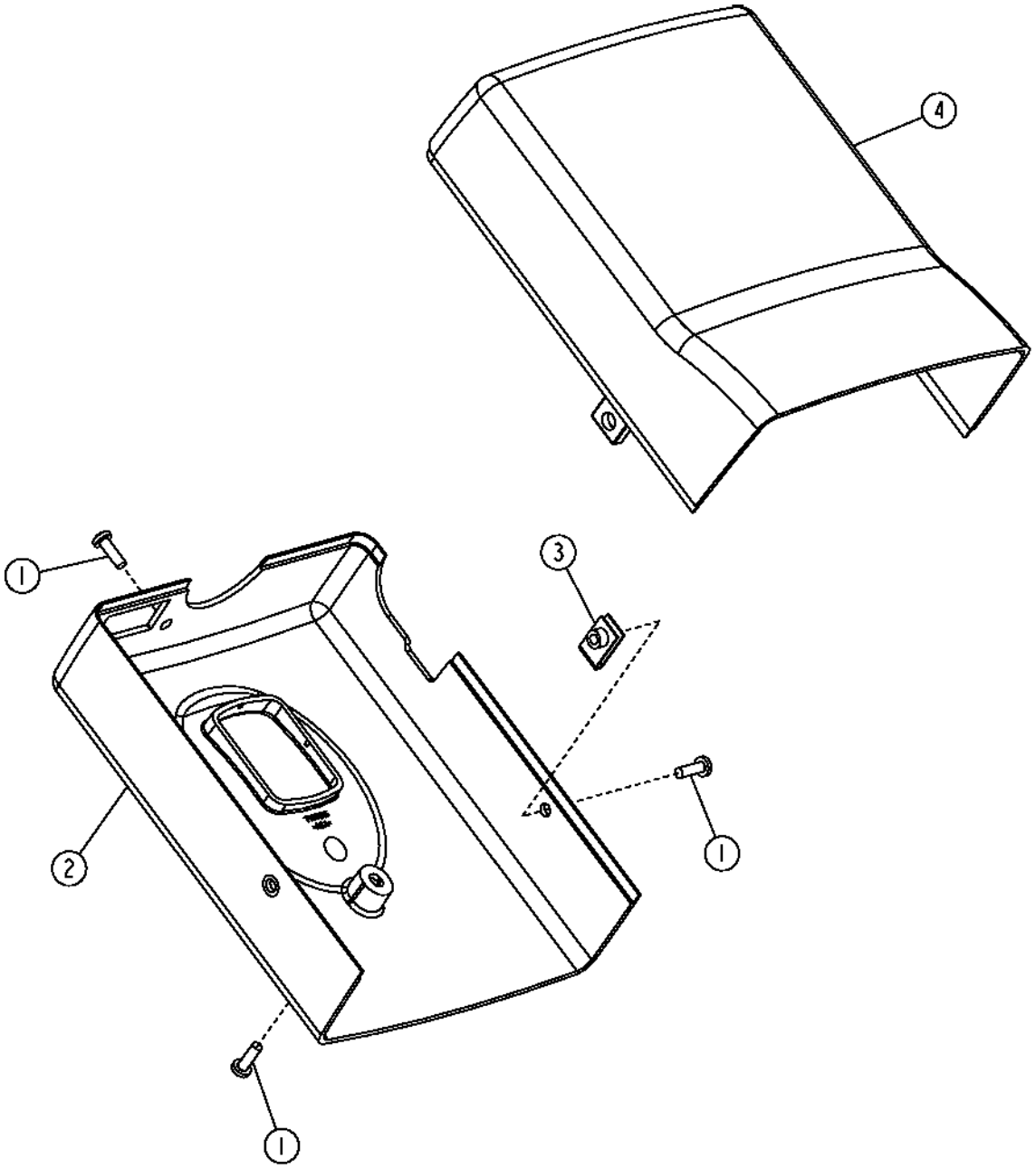

TP58083

STEERING COLUMN COVERS

KEY	PART NO.	PART NAME	QTY	SERIAL NO.	REMARKS
1	21M7271	SCREW	5		M5 X 16
2	T166213	COVER	1		STANDARD
	T166213	COVER	1		TILT, (SUB FOR T166215)
3	R117892	NUT	2		5 MM
4	T166211	COVER	1		

FRONT CONSOLE FOR CAB AND CANOPY

T137478 -UN-23JAN01

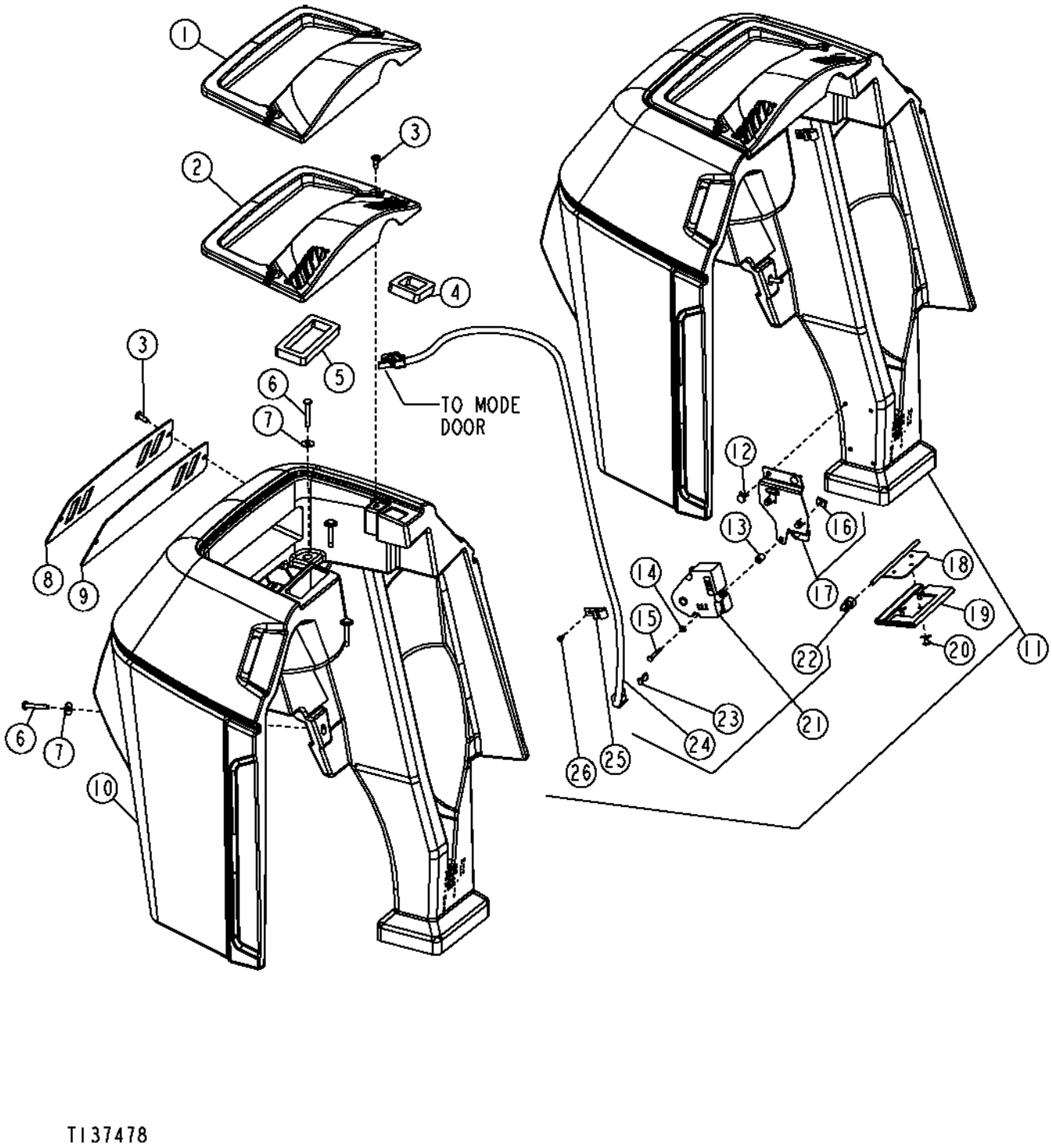

FRONT CONSOLE FOR CAB AND CANOPY

KEY	PART NO.	PART NAME	QTY	SERIAL NO.	REMARKS
1	T183706	PANEL	1		(CANOPY)
2	T167083	PANEL	1		(CAB)
3	T133674	SELF-LOCKING SCREW	4		M6 X 16
4	T184008	ISOLATOR	1		LEFT
5	T184009	ISOLATOR	1		RIGHT
6	T134874	SELF-LOCKING SCREW	4		M6 X 40
7	24H1821	WASHER	4		(SUB FOR 24H1646)
8	T167150	PANEL	1		(CAB)
9	T167149	PANEL	1		(CANOPY)
10	T167082	COVER	1		(CAB)
	T167119	COVER	1		(CANOPY/ROPS)
11	AT191629	COVER	1		(WITH AIR CONDITIONING)
12	T184345	RIVET	6		
13	T134586	SPACER	1		
14	24M7117	WASHER	3		
15	19M7715	CAP SCREW	3		M4 X 30
16	T185742	NUT	3		
17	AT191877	BRACKET	1		
18	AT191826	GATE	1		
19	AT191688	PLATE	1		(WITH SEAL)
20	T184345	RIVET	6		
21	AT191876	ACTUATOR	1		
22	T185485	ADAPTER	1		
23	T186022	ELECTRICAL CONNECTOR ASSY	1		
24	AT191919	WIRING HARNESS	1		
25	T185743	CLIP	3		
26	T185769	SCREW	3		

SIDE INSTRUMENT PANEL HOUSING AND STABILIZER LEVER COVER (CANOPY)

T137242 -UN-05MAR02

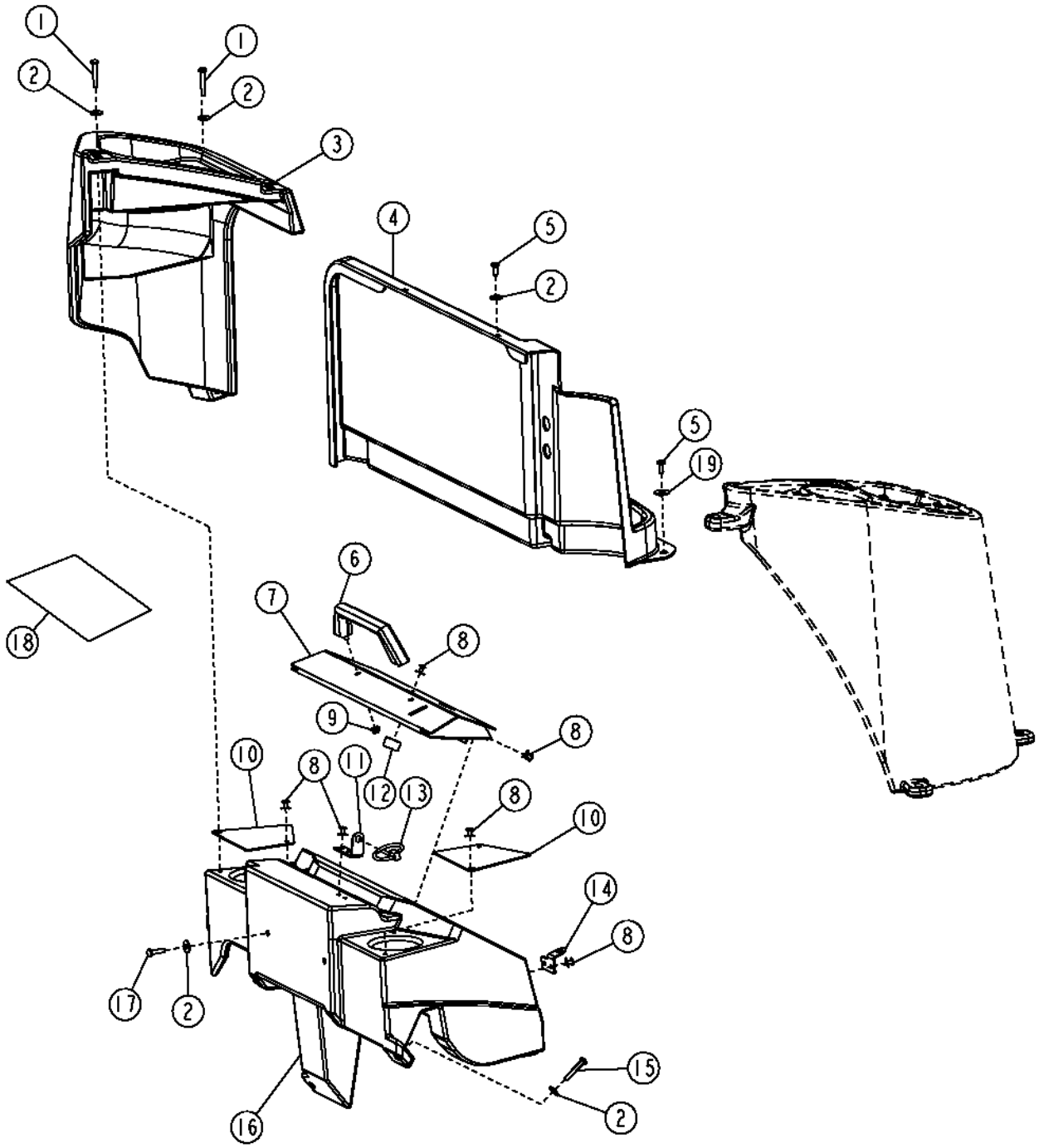

SIDE INSTRUMENT PANEL HOUSING AND STABILIZER LEVER COVER (CANOPY)

KEY	PART NO.	PART NAME	QTY	SERIAL NO.	REMARKS
1	T134874	SELF-LOCKING SCREW	3		M6 X 40
2	24H1821	WASHER	9		
3	T185619	COVER	1		STABILIZER CONTROL
4	T166875	COVER	1		CENTER
5	T133674	SELF-LOCKING SCREW	5		M6 X 16
6	AM118928	HANDLE	1		
7	AT192122	COVER	1		VANDAL PROTECTION
8	T184345	RIVET	13		
9	14M7303	FLANGE NUT	2		M6
10	T185654	PANEL	2		
11	T185905	STRAP	1		
12	T134896	BUMPER	1		VANDAL PROTECTION
13	M72598	QUICK LOCK PIN	1		
14	T183151	STRAP	1		
15	T134874	SELF-LOCKING SCREW	2		M6 X 40
16	T185653	HOUSING	1		INSTRUMENT PANEL
17	T134895	SELF-LOCKING SCREW	2		M6 X 25
18	T186552	LABEL	1		TEMPERATURE AND FAN SPEED CONTROL
19	24M7207	WASHER	3		

SIDE INSTRUMENT PANEL HOUSING AND STABILIZER CONTROL COVER (CAB)

T147548 -UN-30OCT01

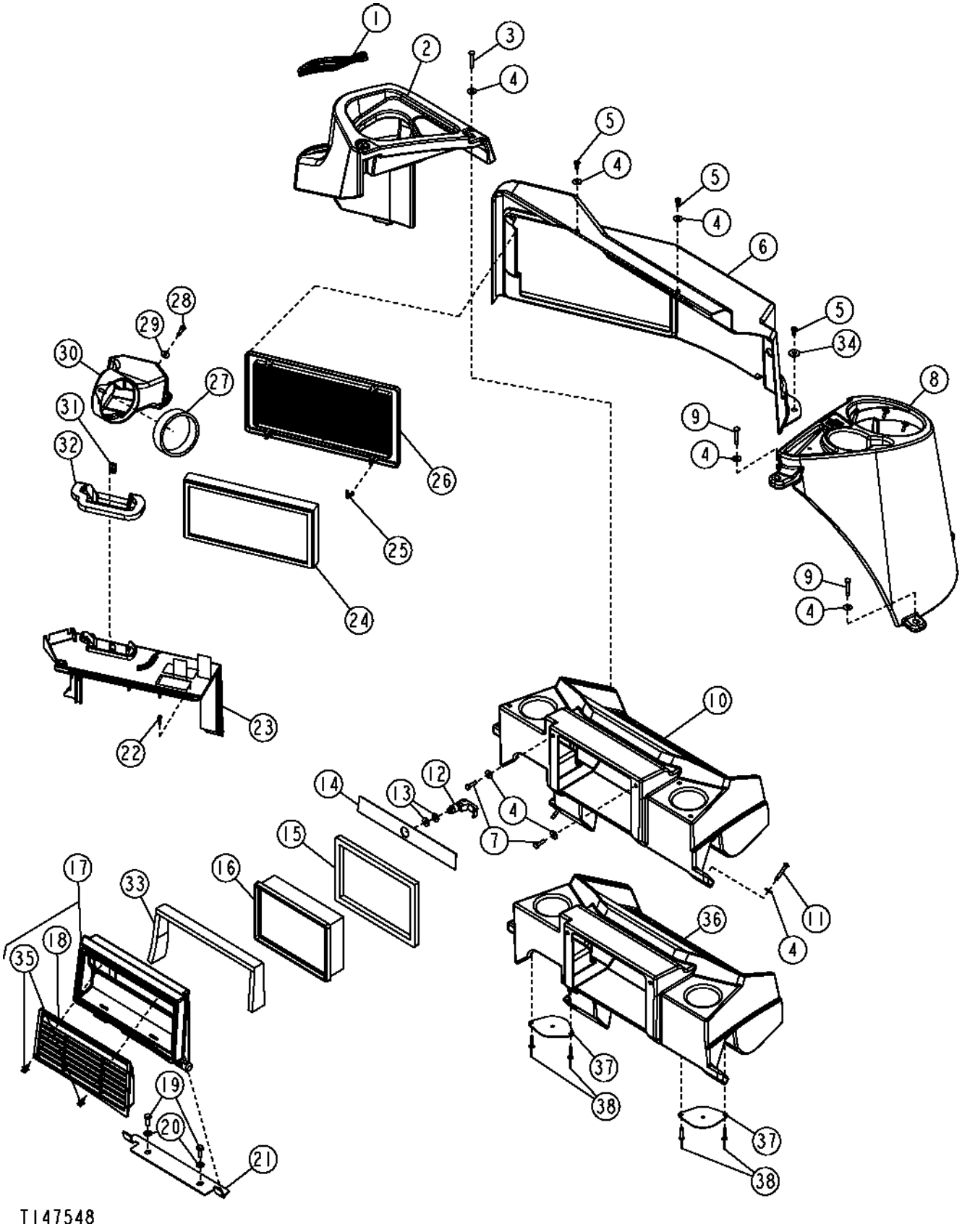

SIDE INSTRUMENT PANEL HOUSING AND STABILIZER CONTROL COVER (CAB)

KEY	PART NO.	PART NAME	QTY	SERIAL NO.	REMARKS
1	.....	ISOLATOR	1		(MAKE FROM T58056, CUT TO 445 MM)
2	T185494	COVER	1		STABILIZER CONTROL
3	T134874	SELF-LOCKING SCREW	3		M6 X 40
4	24H1821	WASHER	12		
5	T133674	SELF-LOCKING SCREW	5		M6 X 16
6	T166874	ASSEMBLY LINE PARTS	1		CENTER
7	T134895	SELF-LOCKING SCREW	2		M6 X 25
8	T185493	COVER	1		LOADER CONTROL
9	T134874	SELF-LOCKING SCREW	3		M6 X 40
10	T185495	HOUSING	1		INSTRUMENT PANEL (AIR CONDITIONING)
11	T134874	SELF-LOCKING SCREW	2		M6 X 40
12	AT222150	LATCH	1		
13	24H1136	WASHER	2		
14	T185896	ISOLATOR	1		
15	T185770	ISOLATOR	1		
16	AT191102	AIR FILTER	1		FRESH AIR
17	AT185396	COVER	1		FRESH AIR
18	T165808	GRILLE	1		
19	19M7881	SCREW	2		M8 X 20
20	24M7238	WASHER	2		
21	T184164	BRACKET	1		
22	T184620	SCREW	4		
23	T164620	HOUSING	1		TOP ACCESS
24	AT184590	AIR FILTER	1		
25	R120160	CLIP	4		
26	T164621	GRILLE	1		
27	T185844	ISOLATOR	1		
28	19M7933	CAP SCREW	2		M6 X 25
29	24M7139	WASHER	2		
30	T166322	AIR DUCT	1		
31	M84972	NUT	1		6 MM
32	T184370	SEAL	1		
33	T187110	ISOLATOR	1		
34	24M7207	WASHER	3		
35	T184214	RIVET	2		
36	T185651	HOUSING	1		INSTRUMENT PANEL (HEATER)
37	T185652	PANEL	2		
38	T184345	RIVET	4		

PILOT CONTROLLER ARM
(LEFT SIDE)

T165325 -UN-12FEB03

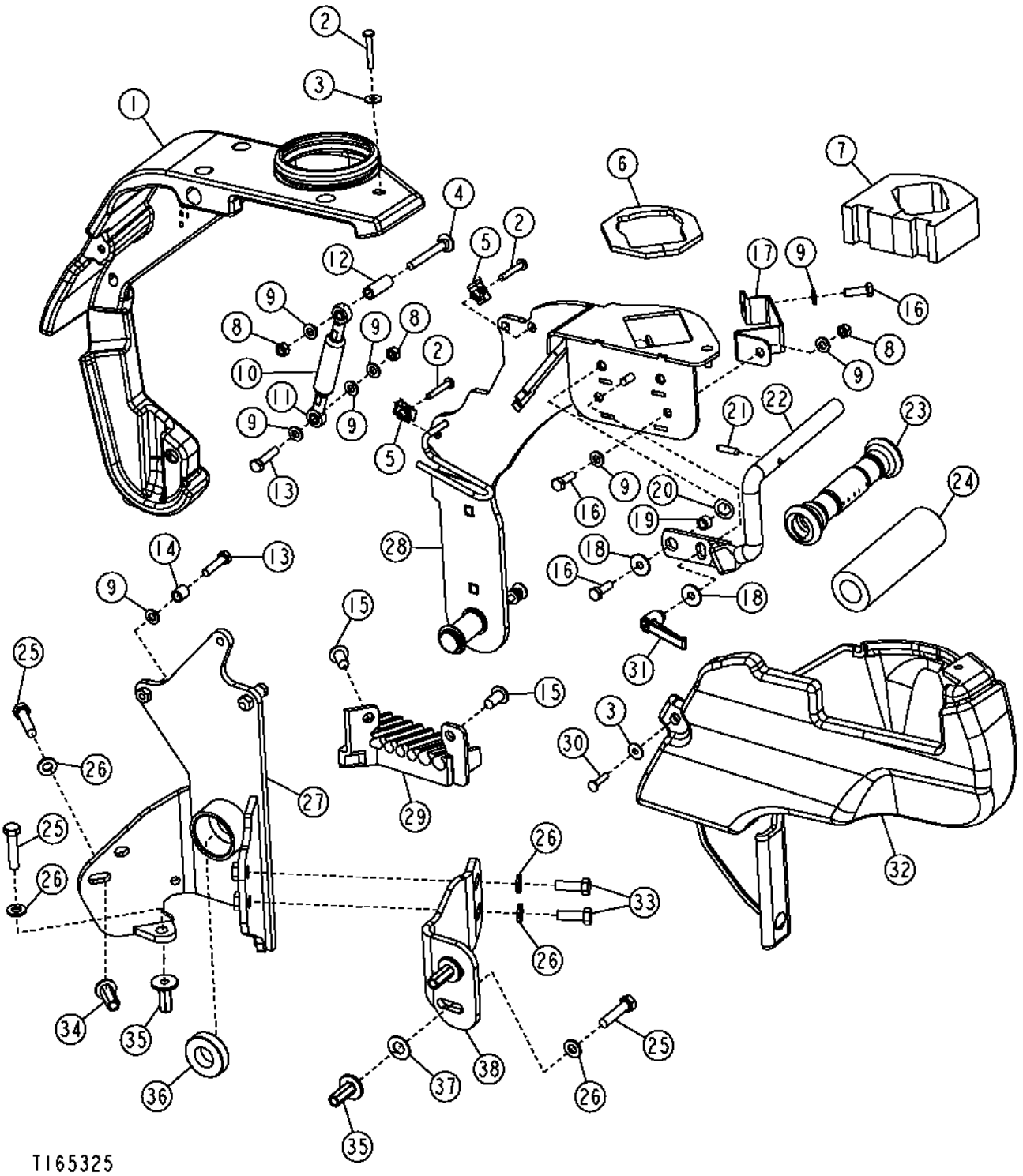

PILOT CONTROLLER ARM
(LEFT SIDE)

KEY	PART NO.	PART NAME	QTY	SERIAL NO.	REMARKS
1	AT199591	COVER	1		
2	T134874	SELF-LOCKING SCREW	3		M6 X 40
3	T134530	WASHER	5		
4	03M7305	BOLT	1		M8 X 70
5	R120332	NUT	2		
6	T190998	ISOLATOR	1		
7	T190999	ISOLATOR	1		
8	14M7273	NUT	3		M8
9	24M7238	WASHER	9		
10	AT280674	GAS OPERATED CYLINDER	1		
11	AM102062	BALL JOINT	2		
12	28H1956	BUSHING	1		
13	19M8008	CAP SCREW	3		M8 X 35
14	28H3376	SPACER	2		
15	T161380	PLUG	2		
16	19M7407	CAP SCREW	3		M8 X 25
17	T190868	STRAP	1		
18	24M7298	WASHER	2		
19	28H3392	WASHER	1		
20	M87534	SPRING WASHER	1		
21	T190956	PIN	1		
22	AT300750	BRACKET	1		
23	T190602	SLEEVE	1		
24	T190603	ISOLATOR	1		
25	19M7572	CAP SCREW	4		M10 X 45
26	24M7239	WASHER	5		
27	AT198778	SUPPORT	1		
28	AT198777	ARM	1		
29	T190960	GUIDE	1		
30	T134895	SELF-LOCKING SCREW	2		M6 X 25
31	AT227063	LEVER	1		
32	AT199592	COVER	1		
33	19M7662	CAP SCREW	2		M10 X 30
34	T148410	NUT	2		M10
35	H173411	NUT	3		M10
36	JD10373	BEARING	2		
37	24H1261	WASHER	2		
38	T190912	SUPPORT	1		

PILOT CONTROLLER ARM
(RIGHT SIDE)

T165261 -UN-11FEB03

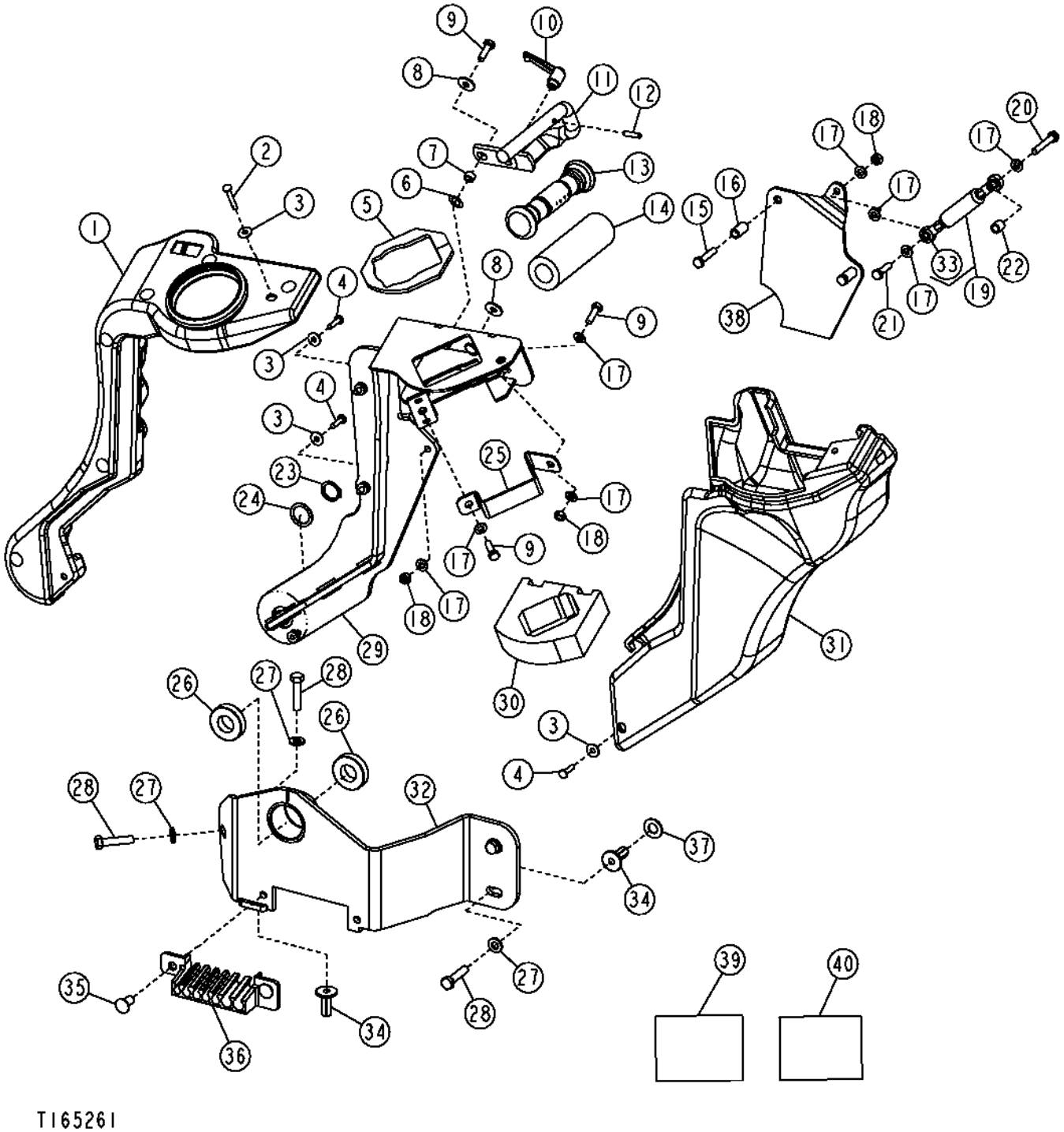

PILOT CONTROLLER ARM
(RIGHT SIDE)

KEY	PART NO.	PART NAME	QTY	SERIAL NO.	REMARKS
1	AT199594	COVER	1		
2	T134874	SELF-LOCKING SCREW	1		M6 X 40
3	T134530	WASHER	5		
4	T134895	SELF-LOCKING SCREW	4		M6 X 25
5	T191000	ISOLATOR	1		
6	M87534	SPRING WASHER	1		
7	28H3392	WASHER	1		
8	24M7298	WASHER	2		
9	19M7407	CAP SCREW	3		M8 X 25
10	AT227063	LEVER	1		
11	AT300885	BRACKET	1		
12	T190956	PIN	1		
13	T190602	SLEEVE	1		
14	T190603	ISOLATOR	1		
15	19M7922	CAP SCREW	2		M8 X 40
16	28H3390	SPACER	2		
17	24M7238	WASHER	8		
18	14M7273	NUT	3		M8
19	AT280674	GAS OPERATED CYLINDER	1		
20	19M8397	CAP SCREW	1		M8 X 50
21	19M7513	CAP SCREW	1		M8 X 30
22	28H3376	SPACER	1		
23	W23122	SNAP RING	1		
24	24H1844	WASHER	1		
25	T190868	STRAP	1		
26	JD10373	BEARING	2		
27	24M7239	WASHER	5		
28	19M7572	CAP SCREW	4		M10 X 45
29	AT198776	ARM	1		
30	T190999	ISOLATOR	1		
31	AT199595	COVER	1		
32	AT198865	SUPPORT	1		
33	AM102062	BALL JOINT	2		
34	H173411	NUT	6		M10
35	T161380	PLUG	2		
36	T190964	GUIDE	1		
37	24H1261	WASHER	2		
38	.....	SUPPORT	1		(SUB AT198865)
39	T200658	SAFETY SIGN	1		
40	T200781	DECAL	1		(BACKHOE CONTROLS DECAL)

SEATS,SEAT BELTS,AND ARM REST

T160495 -UN-21OCT02

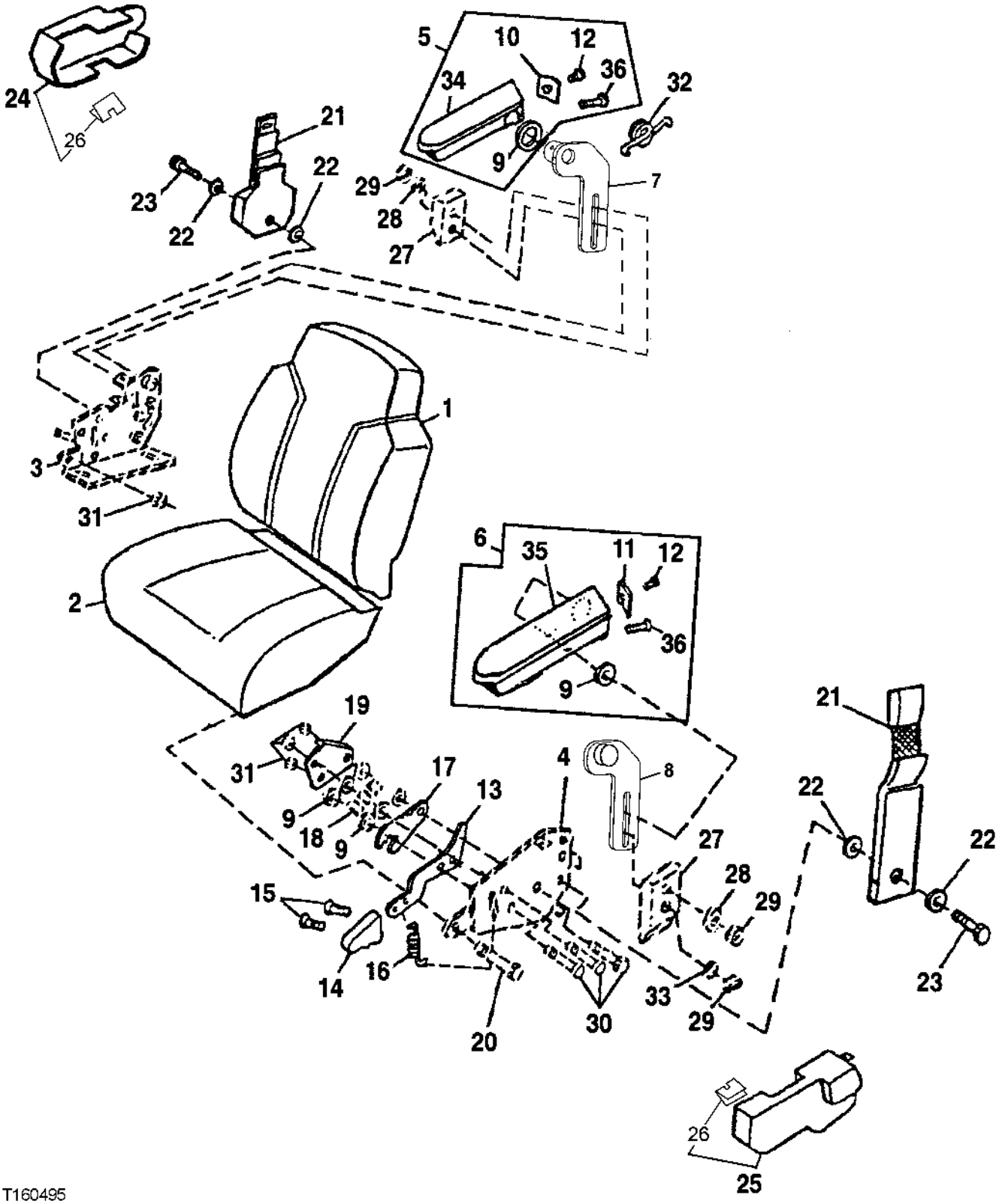

T160495

SEATS,SEAT BELTS,AND ARM RESTS

KEY	PART NO.	PART NAME	QTY	SERIAL NO.	REMARKS
1	AT221020	CUSHION	1		(BACK PAD,CLOTH)
	AT221016	CUSHION	1		(BACK PAD,VINYL)
	T171686	CLIP	4		
2	AT221019	CUSHION	1		(SEAT PAD, CLOTH)
	AT221015	CUSHION	1		(SEAT PAD, VINYL)
3	.....	PLATE	1		(RIGHT BACKREST ANGLE ADJUSTMENT)
4	.....	PLATE	1		(LEFT BACKREST ANGLE ADJUSTMENT)
5	AT186152	ARMREST	1		(RIGHT HAND)
6	AT186156	ARMREST	1		(LEFT HAND)
7	AT189059	BRACKET	1		(R.H. ARM REST ASSEMBLY)
8	AT189030	BRACKET	1		(L.H. ARM REST ASSEMBLY)
9	T120545	WASHER	2		(WAVE)
10	T166226	PLATE	1		(R.H. COVER PLATE)
11	T166227	PLATE	1		(L.H. COVER PLATE)
12	T120543	SCREW	2		(SET SCREW)
13	AT209225	KIT	1		(RECLINER KIT) INCLUDES EXTENSION SPRING, TORSION SPRING, BACKING PLATE, LATCH, SPACERS AND HARDWARE.
	.....	LEVER	1		
14	AT209025	KIT	1		(KNOB AND SCREW) (RECLINER)
15	37H121	SCREW	2		(RECLINER KNOB)
16	.....	SPRING	1		(TILT LEVER)
17	.....	LATCH	1		(RECLINER-SAW TOOTH)
18	.....	SPACER	3		(BETWEEN SMALL AND LARGE PLATE) (TILT LEVER)
19	.....	PLATE	1		(SMALL 3 -HOLE INSIDE PLATE)
20	19H1813	CAP SCREW	2		5/16" X 5/8", (TILT LEVER)
	24H1136	WASHER	2		
21	AT179423	SEAT BELT	1		(2 INCH) (ALSO ORDER (4) T105740 AND (2) 19H2109)
	AT178065	SEAT BELT	1		(3 INCH) (ALSO ORDER (4) T105740 AND (2) 19H2109)
22	T105740	WASHER	4		(SEAT BELT)
23	19H2109	CAP SCREW	2		7/16" X 1-1/4", (SEAT BELT)
24	T160896	COVER	1		(SEAT BELT - RIGHT) REQUIRES SCREWS
25	T163962	COVER	1		(SUB FOR T160895, THIS APPLICATION) (SEAT BELT - LEFT) REQUIRES SCREWS
26	.....	CLIP	1		
27	.....	SPACER	2		
28	.....	WASHER	4		
29	.....	NUT	4		
30	19H1914	CAP SCREW	3		1/4" X 1"
	24H1287	WASHER	6		
31	M453T	LOCK NUT	3		1/4", (RECLINER)
32	.....	SPRING	1		
33	.....	WASHER	2		
34	.....	ARMREST	1		(RIGHT HAND)
35	.....	ARMREST	1		(LEFT HAND)
36	T120544	SCREW	2		

SEAT SLIDE,SEAT SWIVEL AND LUMBAR ADJUSTER CONTROL LEVERS

T144454 -UN-08AUG01

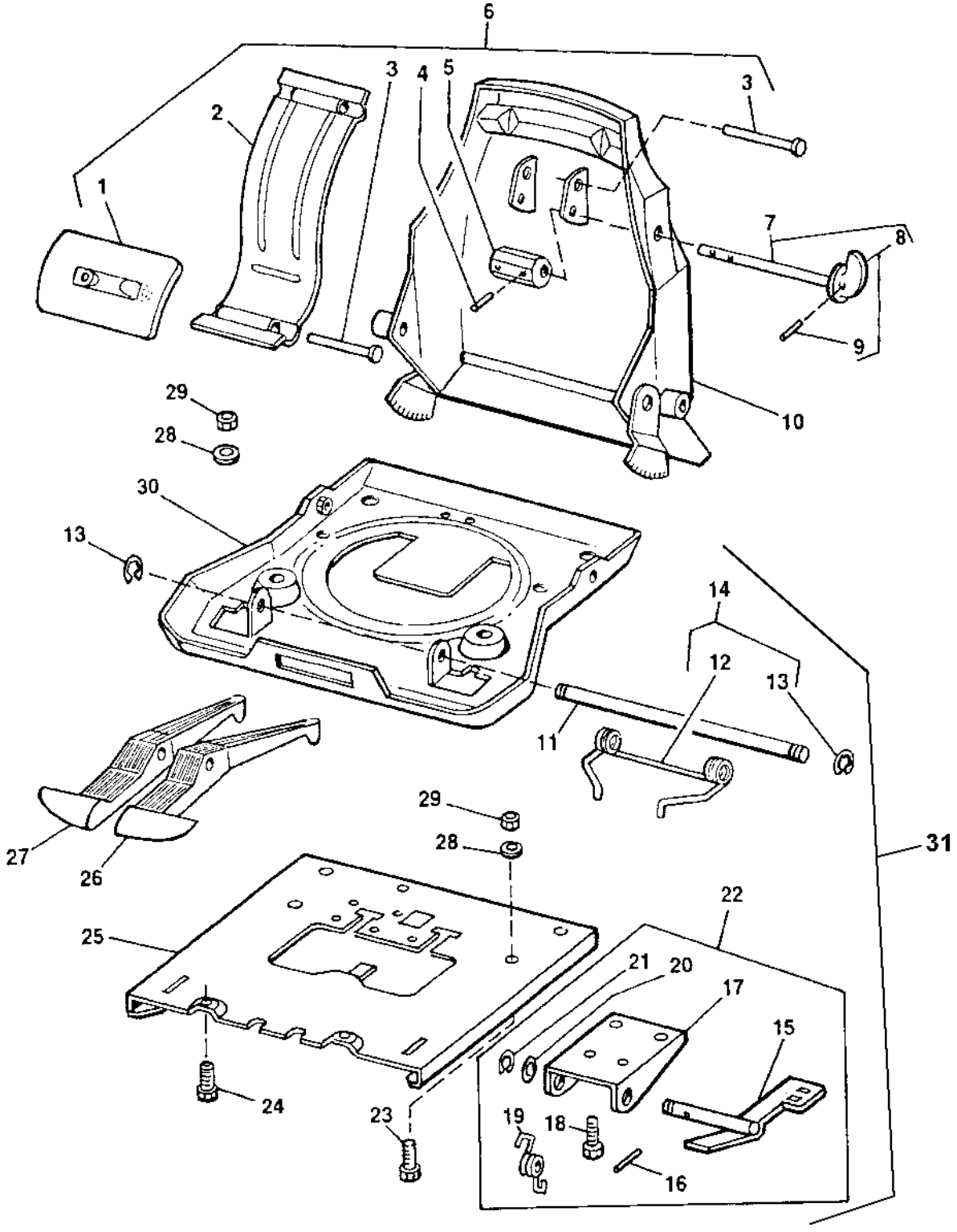

T144454

SEAT SLIDE,SEAT SWIVEL AND LUMBAR ADJUSTER CONTROL LEVERS

KEY	PART NO.	PART NAME	QTY	SERIAL NO.	REMARKS
1	.....	PADDLE	1		
2	.....	TORSION SPRING	1		
3	.....	NAIL	2		
4	34H387	SPRING PIN	1		3/16" X 3/4"
5	.....	CAM	1		
6	AT209026	KIT	1		(LUMBAR ADJUSTER)
7	.....	KNOB	1		WITH SHAFT(LUMBAR ADJUSTER)
8	AT209024	KIT	1		(LUMBAR ADJUSTER KNOB)
9	34H262	SPRING PIN	1		5/32" X 3/4"
10	AT280583	SEAT BACK	1		
11	.....	SHAFT	1		
12	.....	SPRING	1		(DOUBLE TORSION)
13	R72655	SNAP RING	2		
14	AT179688	KIT	1		(SLIDE LATCH SPRING)
15	.....	LATCH	1		
16	34H262	SPRING PIN	1		5/32" X 3/4"
17	.....	BRACKET	1		
18	19H1227	CAP SCREW	4		1/4" X 1/2"
19	.....	SPRING	1		
20	24H1305	WASHER	2		
21	R72655	SNAP RING	1		
22	AT179691	KIT	1		(SLIDE CONTROL)
23	.....	BOLT	3		
24	.....	CAP SCREW	2		
25	.....	PLATE	1		
26	.....	CONTROL LEVER	1		(SWIVEL) (ORDER AT179692)
27	.....	CONTROL LEVER	1		(FORE-AFT) (ORDER AT179691)
28	.....	WASHER	2		
29	.....	NUT	2		
30	.....	PAN	1		
31	AT179686	KIT	1		ALSO INCLUDES SWIVEL SERVICE KIT, SWIVEL LATCH KIT AND SLIDE PUCK

SEAT SWIVEL AND SWIVEL LATCH
(WITH OR WITHOUT SUSPENDED SEAT)

T138328 -UN-20FEB01

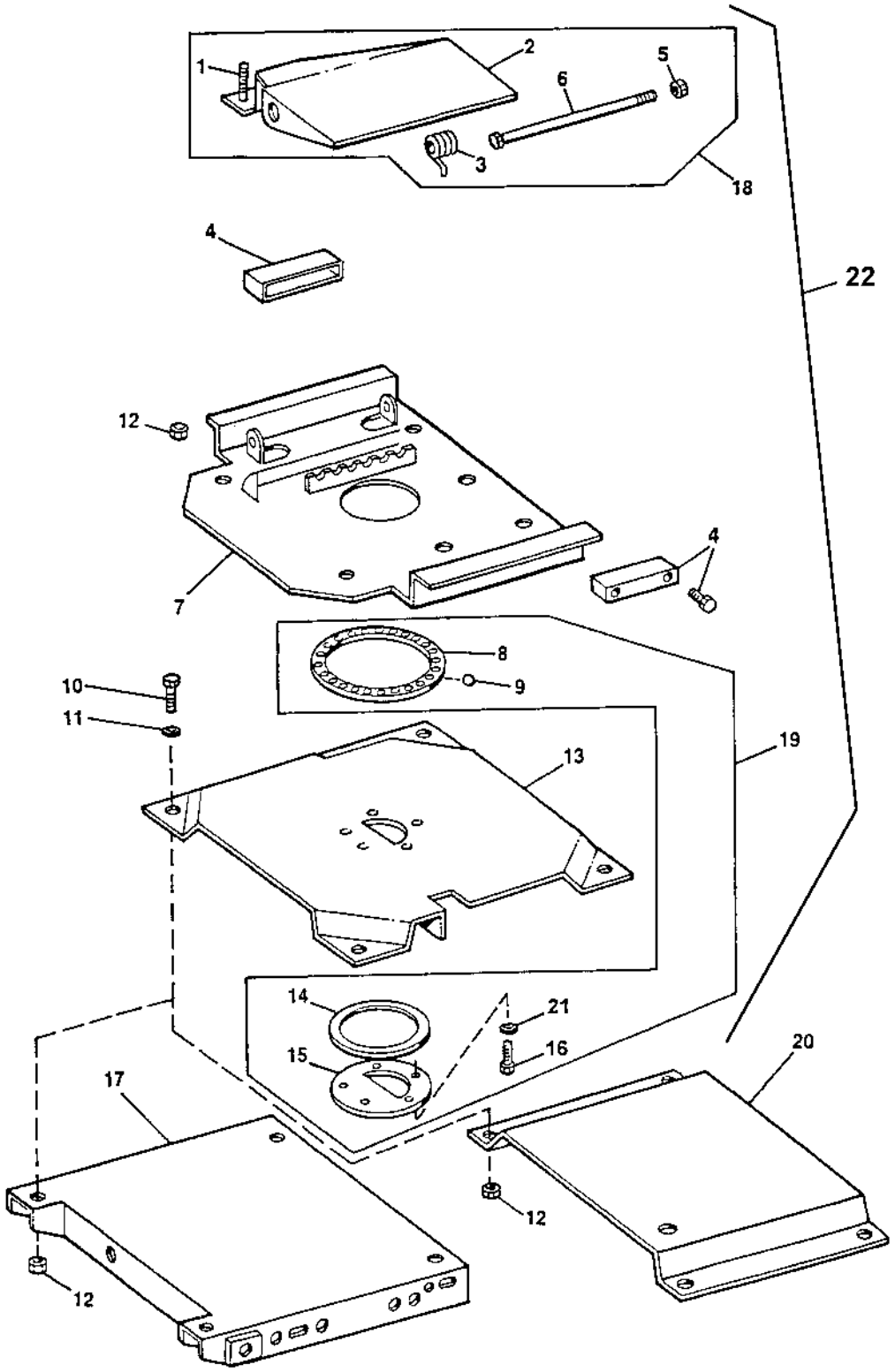

SEAT SWIVEL AND SWIVEL LATCH
(WITH OR WITHOUT SUSPENDED SEAT)

KEY	PART NO.	PART NAME	QTY	SERIAL NO.	REMARKS
1	.....	CLIP	1		
2	.....	LOCK PLATE	1		
3	.....	SPRING	1		
4	AT209020	KIT	1		(SLIDE PUCK)
5	M47031	LOCK NUT	1		(SUB FOR (2) R72655, THIS APPLICATION)
6	.....	BOLT	1		3/8-16 X 8.5
7	.....	PLATE	1		(TOP SWIVEL)
8	.....	RETAINER	1		(BALL BEARING)
9	M87261	BALL	24		BEARING
10	19M7402	CAP SCREW	4		M10 X 25
11	24M7239	WASHER	4		
12	M47031	LOCK NUT	4		9.525 MM
13	.....	PLATE	1		(BOTTOM SWIVEL)
14	.....	PLATE	1		(BEARING)
15	.....	PLATE	1		(RETAINING)
16	.....	BOLT	5		(SHOULDER)
17	.....	TRAY	1		(UPPER)(WITH SUSPENDED SEAT)
18	AT179692	KIT	1		(SWIVEL LATCH)
19	AT179687	KIT	1		(SWIVEL)
20	.....	PLATFORM	1		(WITH NON SUSPENDED SEAT)
	AT186701	PLATE	1		(AIR SUSPENSION TO SWIVEL)
21	24M6504	WASHER	5		
22	AT179686	KIT	1		ALSO INCLUDES SLIDE LATCH KIT AND SLIDE CONTROL KIT

SEAT SUSPENSION AND SHOCK ABSORBER
(WITH SUSPENDED SEAT)

TP50540 -UN-02JAN97

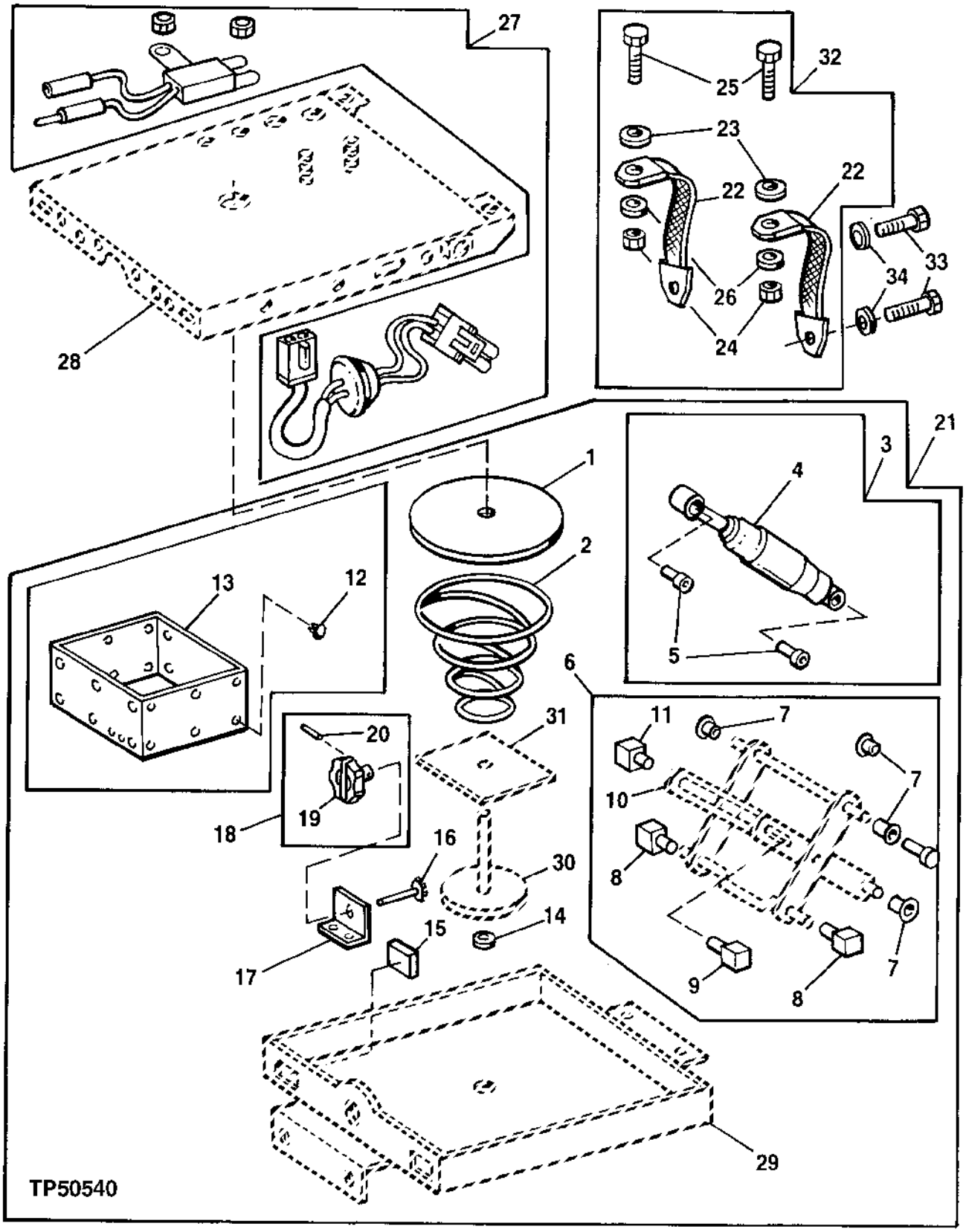

SEAT SUSPENSION AND SHOCK ABSORBER
(WITH SUSPENDED SEAT)

KEY	PART NO.	PART NAME	QTY	SERIAL NO.	REMARKS
1	T55208	PAD	1		
2	AT125801	SPRING	1		(REGULAR)
	T160315	SPRING	1		(HEAVY DUTY)
3	AT175436	KIT	1		(SHOCK ABSORBER)
4	.....	ABSORBER	1		(SHOCK)
5	T55222	BUSHING	2		(SHOCK ABSORBER)
6	AT106397	KIT	1		(BEARING/BUSHING)
7	.....	BUSHING	4		
8	.....	BAR	1		
9	.....	END	1		
10	.....	FRAME	1		(SCISSOR)
11	.....	BAR	1		
12	T63798	PLUG	25		(FASTENER)
13	AT179699	BOOT	1		(VINYL)
14	T158481	WASHER	1		
15	T55224	ISOLATOR	2		
16	AT175353	GEAR	1		
17	T55214	ANGLE	1		
18	AT125805	KIT	1		(ADJUSTING KNOB)
19	AT125829	KNOB	1		
20	34H266	SPRING PIN	1		(ADJUSTING KNOB)
21	AT186150	KIT	1		(GUARDIAN SUSPENSION)
22	.....	BELT	2		(TETHER)
23	M1340T	WASHER	2		(TETHER)
24	M47031	LOCK NUT	2		9.525 MM, (TETHER)
25	19H2676	CAP SCREW	2		3/8" X 1", (TETHER)
26	24H1305	WASHER	2		(TETHER)
27	AT179694	KIT	1		(SWIVEL SWITCH KIT)
	AT197414	KIT	1		(SWIVEL SWITCH KIT) (WITH PILOT CONTROLS)
	AT192687	KIT	1		(SEAT POSITION SWITCH)
	.....	SENSOR	1		
	.....	WIRE	1		
	M453T	LOCK NUT	4		6.350 MM
	.....	TIE BAND	2		(PLASTIC)
28	.....	TRAY	1		(UPPER)
29	.....	TRAY	1		(LOWER)
30	.....	GEAR	1		(LARGE BASE)
31	.....	PLATE	1		(SPRING SUPPORT)
32	AT179693	KIT	1		(TETHER BELT SET)
33	19M7402	CAP SCREW	2		M10 X 25
34	24M7239	WASHER	2		

SEAT BASE TETHER BELT
(WITH NON-SUSPENDED SEAT)

T134229 -UN-06OCT00

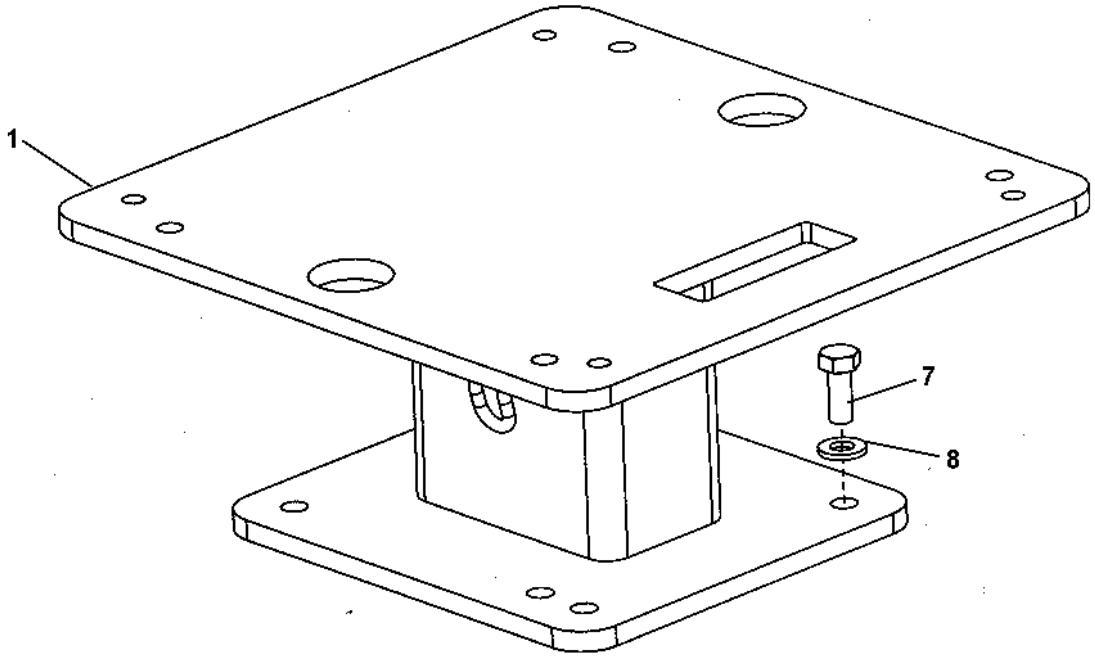

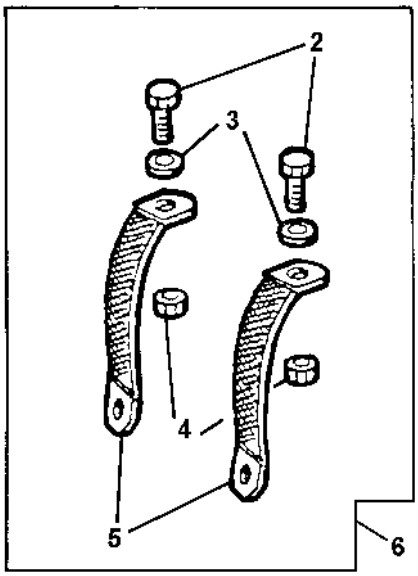

T134229

SEAT BASE TETHER BELT
(WITH NON-SUSPENDED SEAT)

KEY	PART NO.	PART NAME	QTY	SERIAL NO.	REMARKS
1	AT184609	BASE	1		
2	19H2676	CAP SCREW	2		3/8" X 1"
3	24H1305	WASHER	2		
4	M47031	LOCK NUT	2		
5	.....	BELT	4		
6	AT179714	KIT	1		TETHER BELT
7	19M7402	CAP SCREW	4		M10 X 25
8	24M7239	WASHER	4		

SEAT BASE AND HEIGHT ADJUSTER
(WITH NON-SUSPENDED SEAT)

T137895 -UN-08FEB01

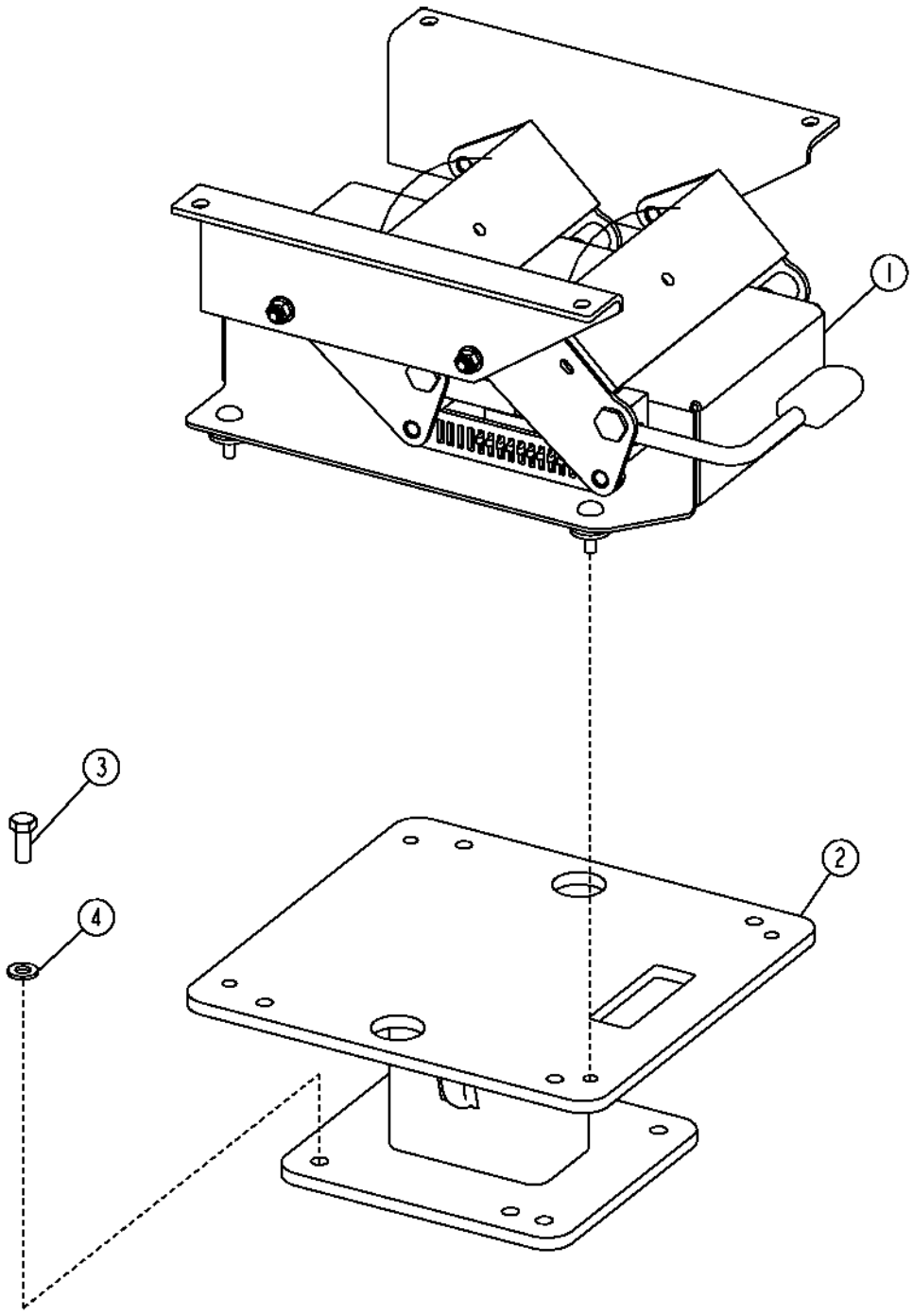

SEAT BASE AND HEIGHT ADJUSTER
(WITH NON-SUSPENDED SEAT)

KEY	PART NO.	PART NAME	QTY	SERIAL NO.	REMARKS
1	AT186204	ADJUSTER	1		
2	AT184609	BASE	1		
3	19M7402	CAP SCREW	4		M10 X 25
4	24M7239	WASHER	4		

AIR SUSPENSION SEAT

TP55819 -UN-27JAN98

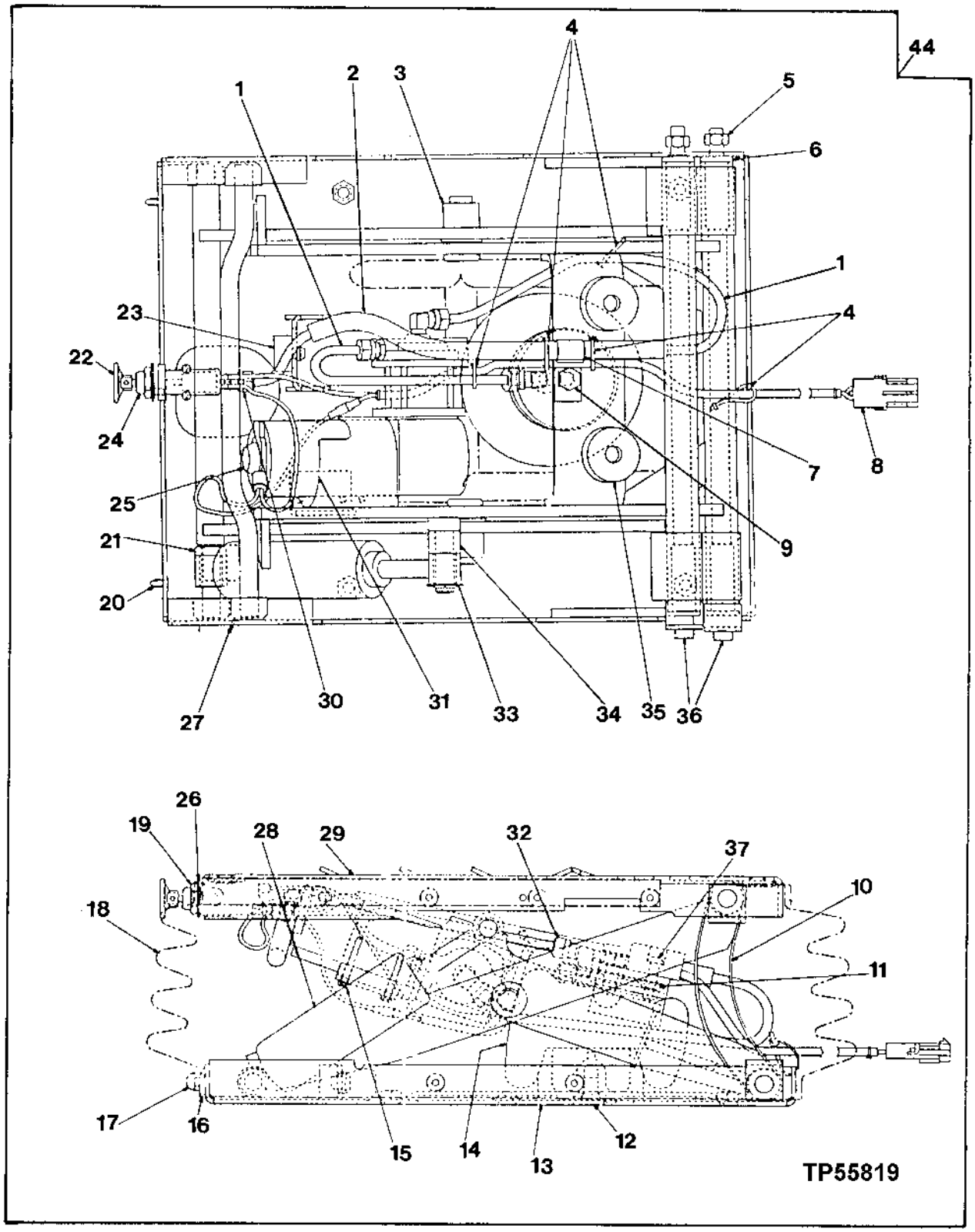

AIR SUSPENSION SEAT

KEY	PART NO.	PART NAME	QTY	SERIAL NO.	REMARKS
1	.....	LINE	3		(SUB AT208493)
2	.....	TUBE	1		(SUB AT208493 AIRLINE FITTING KIT)
3	AT208485	ARM	1		(WELDMENT)
4	.....	TIE BAND	5		(SUB AT208493)
5	.....	LOCK NUT	2		(SUB AT173313)
6	.....	TUBE	4		(SUB AT173313)
7	.....	CLIP	1		(SUB AT208493)
8	AT192689	KIT	1		(WIRE HARNESS)
	AT208488	WIRING HARNESS	1		(WITH PILOT CONTROLS)
9	.....	CAP SCREW	1		
10	AT173315	KIT	1		
11	.....	LOCK NUT	1		(SUB AT209469)
12	.....	BOLT	1		
13	AT208483	HOUSING	1		(LOWER HOUSING WELDMENT)
14	AT208486	SPRING	1		
15	37H142	SCREW	2		0.164" X 1"
16	.....	CLIP	23		(SUB AT173321)
17	.....	PUSH NUT	3		(SUB AT173321)
18	AT208491	KIT	1		
19	.....	NUT	1		(SUB AT208490)
20	.....	CLIP	3		(SUB AT173321)
21	.....	BEARING	1		(SUB AT208487)
22	.....	KNOB	1		(SUB AT208490)
23	.....	BUMPER	1		(SUB AT208483)
24	.....	CONTROL VALVE	1		(SUB AT208490)
25	AT198694	KIT	1		COMPRESSOR
	AT198869	KIT	1		COMPRESSOR (WITH PILOT CONTROLS)
26	.....	LOCK WASHER	1		(SUB AT208490)
27	AT173314	SEAT BEARING ROLLER KIT	1		
28	.....	ABSORBER	1		(SUB AT208487)
29	AT208484	HOUSING	1		(UPPER HOUSING WELDMENT)
30	.....	CONNECTOR	2		(SUB AT208493)
31	.....	BRACKET	1		(SUB AT182949)
32	.....	ELBOW FITTING	2		(SUB AT208493)
33	.....	BOLT	1		(SUB AT208487)
34	.....	BEARING	1		(SUB AT208487)
35	.....	BUMPER	1		(SUB AT209469)
36	.....	BEARING	2		SHAFT, WELDMENT (SUB AT173313)
37	.....	SCREW	1		(SUB AT209469)
38	AT173313	KIT	1		SUSPENSION SHAFT SERVICE (INCLUDES KEYS: 5, 6 AND 36) (NOT ILLUSTRATED)
39	AT173321	KIT	1		BOOT CLIP (INCLUDES KEYS: 16,17 AND 20) (NOT ILLUSTRATED)
40	AT182954	KIT	1		SUSPENSION SHOCK SERVICE (INCLUDES KEYS: 21, 28, 33 AND 34) (NOT ILLUSTRATED)
41	AT208490	SELECTIVE CONTROL VALVE	1		CONTROL, AIR (INCLUDES KEYS: 19, 22, 24 AND 26) (NOT ILLUSTRATED)
42	AT208493	KIT	1		AIRLINE/FITTINGS SERVICE (INCLUDES KEKYS: 1, 4, 7, 30 AND 32) (NOT ILLUSTRATED)
43	AT209469	KIT	1		BUMPER SERVICE (INCLUDES KEYS: 11, 35 AND 37) (NOT ILLUSTRATED)
44	AT182949	SEAT SUSPENSION	1		AIR (WITH PILOT CONTROLS)

CAB HEATER AND AIR CONDITIONING DUCTING

T142008 -UN-10MAY01

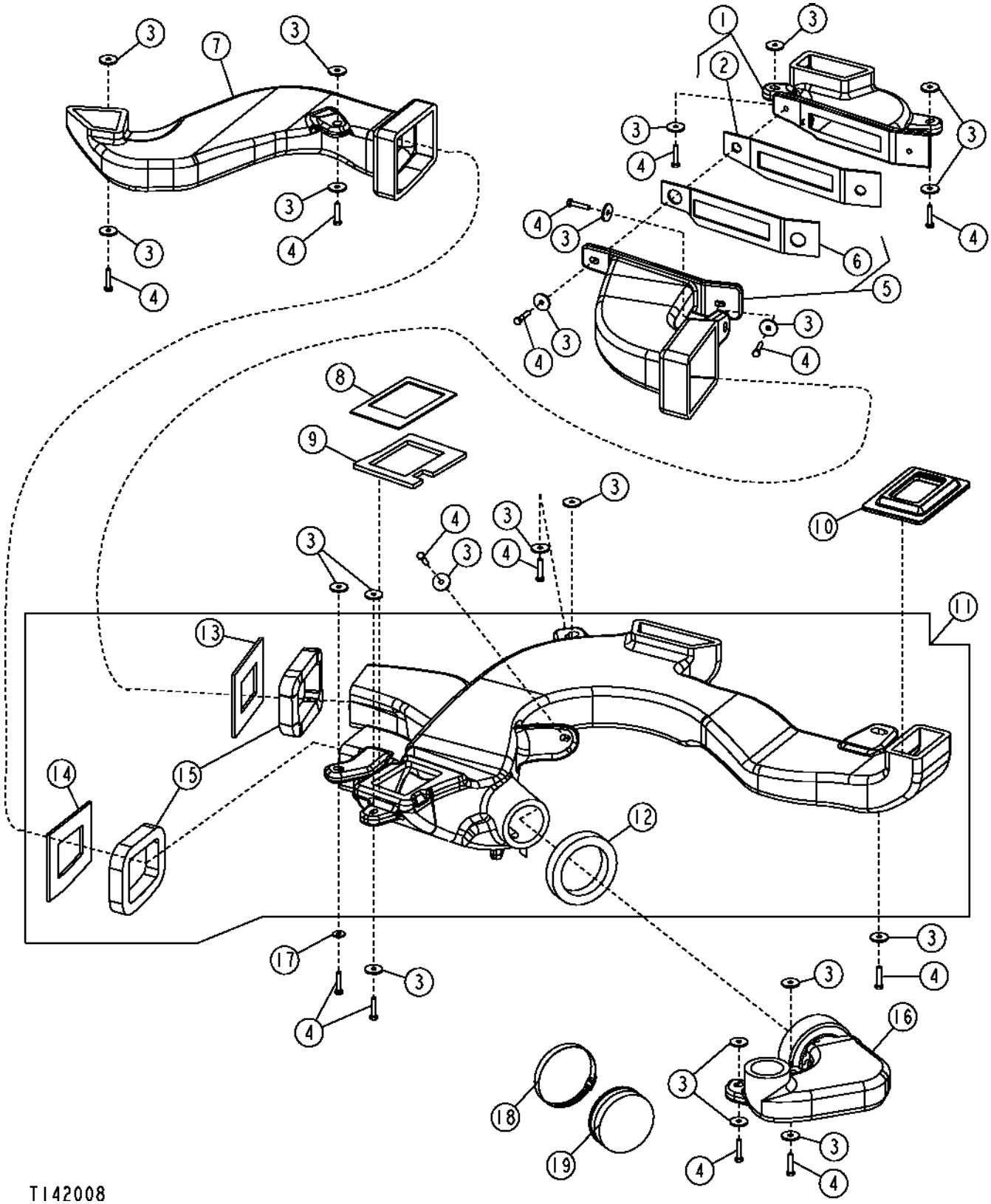

CAB HEATER AND AIR CONDITIONING DUCTING

KEY	PART NO.	PART NAME	QTY	SERIAL NO.	REMARKS
1	AT188307	AIR DUCT	1		(LEFT REAR)
2	T185841	ISOLATOR	1		
3	24H1296	WASHER	21		
4	19M7922	CAP SCREW	15		M8 X 40
5	AT192074	AIR DUCT	1		(REAR CONNECTOR)
6	T185840	ISOLATOR	1		
7	T167325	AIR DUCT	1		(RIGHT REAR)
8	T185842	ISOLATOR	1		
9	T185843	ISOLATOR	1		
10	T185850	ISOLATOR	1		
11	AT188306	AIR DUCT	1		(MAIN BOTTOM)
12	T185867	ISOLATOR	1		
13	T185779	ISOLATOR	1		
14	T185780	ISOLATOR	1		
15	T185866	ISOLATOR	2		
16	T167324	AIR DUCT	1		(RIGHT FRONT)
17	24M7207	WASHER	2		
18	TY22490	HOSE CLAMP	1		
19	T185673	CAP	1		

CAB HEATER AND AIR CONDITIONING DUCTING

T137941 -UN-10MAY01

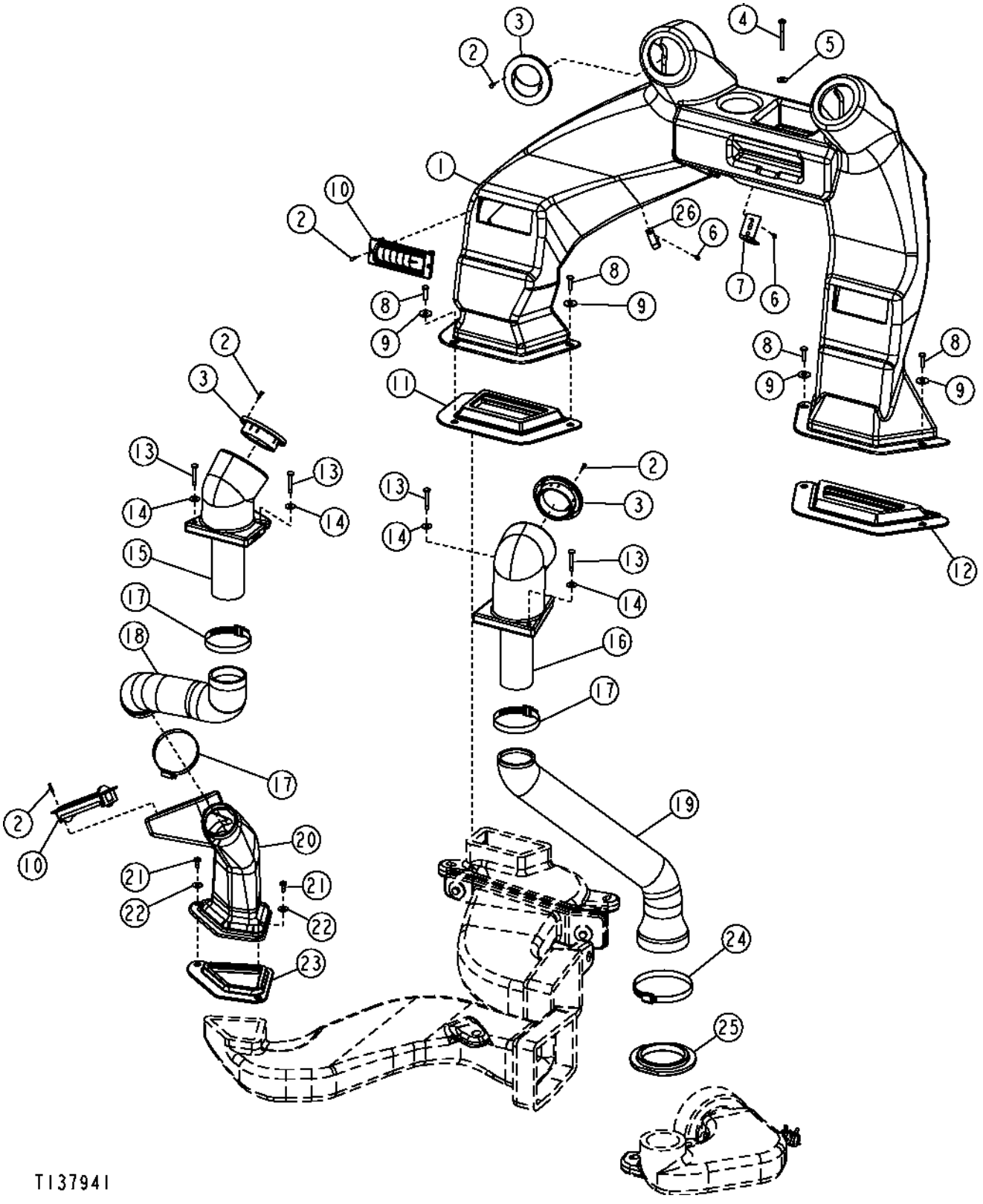

CAB HEATER AND AIR CONDITIONING DUCTING

KEY	PART NO.	PART NAME	QTY	SERIAL NO.	REMARKS
1	T185540	AIR DUCT	1		(LEFT FENDER) WITH AIR CONDITIONING
	T185744	AIR DUCT	1		(LEFT FENDER) WITHOUT AIR CONDITIONING
2	37M7333	SCREW	22		
3	AT151036	LOUVER	4		
4	T186873	SELF-LOCKING SCREW	1		
5	24H1821	WASHER	1		
6	T185769	SCREW	5		
7	T183560	BRACKET	1		
8	T134895	SELF-LOCKING SCREW	4		M6 X 25
9	24M7207	WASHER	4		
10	AT177227	LOUVER	AR		
11	T185848	ISOLATOR	1		
12	T185849	ISOLATOR	1		
13	T134874	SELF-LOCKING SCREW	4		M6 X 40
14	24H1821	WASHER	4		
15	T185479	AIR DUCT	1		(REAR EXTENSION)
16	T185478	AIR DUCT	1		(FRONT EXTENSION)
17	AR62936	CLAMP	3		
18	T185482	AIR DUCT	1		(REAR UPPER)
19	T185480	AIR DUCT	1		(FRONT)
20	T185481	AIR DUCT	1		(REAR LOWER)
21	T133674	SELF-LOCKING SCREW	2		M6 X 16, (SUB FOR T134895, THIS APPLICATION)
22	24H1821	WASHER	2		
23	T185847	ISOLATOR	1		
24	AR21842	CLAMP	1		
25	T185846	ISOLATOR	1		
26	T185743	CLIP	3		

HEATER, AIR CONDITIONING WITH PRESSURIZER

T147470 -UN-15NOV01

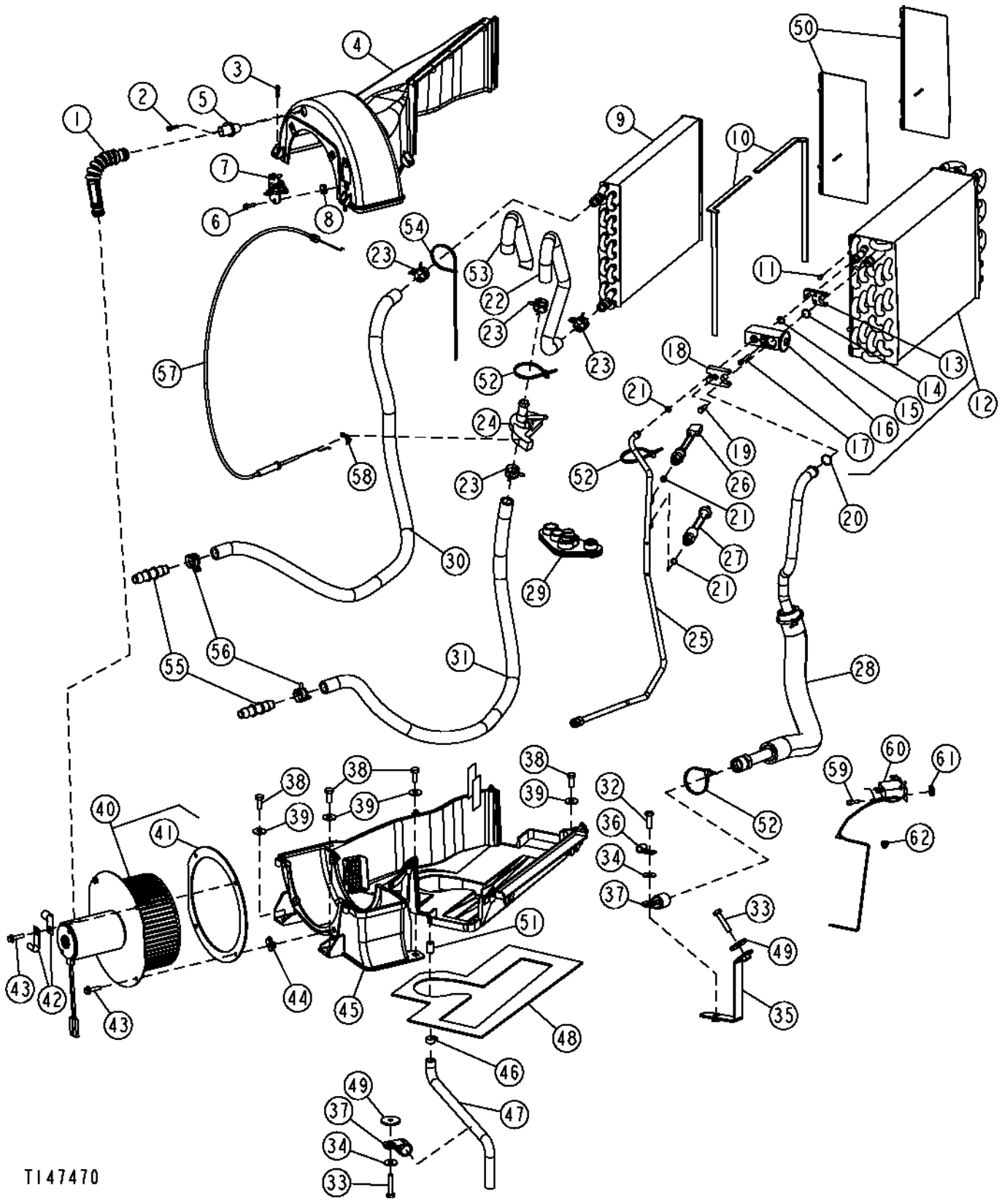

HEATER, AIR CONDITIONING WITH PRESSURIZER

KEY	PART NO.	PART NAME	QTY	SERIAL NO.	REMARKS
1	T165169	HOSE	1		
2	T184620	SCREW	1		
3	T184620	SCREW	9		
4	T164619	HOUSING	1		(TOP)
5	RE36133	TUBE	1		(AIR OUTLET)
6	37M7073	SCREW	2		
7	AT210515	RESISTOR	1		
8	R50279	NUT	2		0.190"
9	AT191993	CORE	1		(HEATER)
10	T184369	SEAL	2		
11	H85092	SCREW	4		
12	AT191994	EVAPORATOR	1		
13	T181522	PLATE	1		(SUB FOR T186760)
14	R33259	O-RING	1		
15	R113050	O-RING	1		
16	RE174764	VALVE	1		(EXPANSION) (SUB FOR AT189639, THIS APPLICATION)
17	PT11778	BOLT	2		
18	R125223	PLATE	1		
19	19M8553	SCREW	1		M6 X 16
20	T143169	O-RING	1		
21	R10093	O-RING	3		
22	T185789	RADIATOR HOSE	1		
23	T184924	HOSE CLAMP	4		
24	AT193500	HAND OPERATED VALVE	1		(WATER)
25	AT192033	LINE	1		(LIQUID REFRIGERANT)
26	RE155938	LOW PRESSURE SWITCH	1		
27	RE60888	HIGH PRESSURE SWITCH	1		
28	AT191990	REFRIGERANT HOSE	1		
29	T166297	GROMMET	1		
30	.....	BULK HOSE	1		(MAKE FROM T60811, CUT TO 38 INCHES)
31	.....	BULK HOSE	1		(MAKE FROM T60811, CUT TO 33 INCHES)
32	19M7407	CAP SCREW	1		M8 X 25
33	19M7922	CAP SCREW	2		M8 X 40
34	24H1296	WASHER	2		
35	AT192509	BRACKET	1		
36	T13814	CLAMP	1		
37	T70659	CLAMP	2		
38	19M7881	SCREW	4		
39	24M7207	WASHER	4		
40	AT195731	BLOWER MOTOR	1		(PRESSURIZER) (SUB FOR AT184530)
41	T184368	SEAL	2		
42	AH89557	CLIP	2		
43	19M7863	SCREW	4		M6 X 25
44	M84972	NUT	5		6 MM
45	T164618	HOUSING	1		(BOTTOM)
46	AR77962	HOSE CLAMP	1		
47	AT186304	HOSE	1		(CONDENSATE)
48	T185845	ISOLATOR	1		
49	24H1296	WASHER	2		
50	T184414	SHEET	2		
51	T184415	PLUG	1		
52	R44302	TIE BAND	4		
53	T186766	HOSE GUARD	1		
54	H77698	TIE BAND	1		
55	T160492	ELECT. CONNECTOR ACCESSORY	2		
56	R117721	CLAMP	2		
57	AT186289	CABLE	1		(HEATER CONTROL)
58	L57881	CLIP	1		
59	37M7073	SCREW	2		
60	RE198074	AC/HEAT TEMPERATURE SWITCH	1		A/C THERMOSTAT SWITCH, (SUB FOR AH144020, THIS APPLICATION)
61	R50279	NUT	2		
62	T178971	GROMMET	1		

CANOPY HEATER,HOSES AND HEATER CONTROL

T134910 -UN-08NOV00

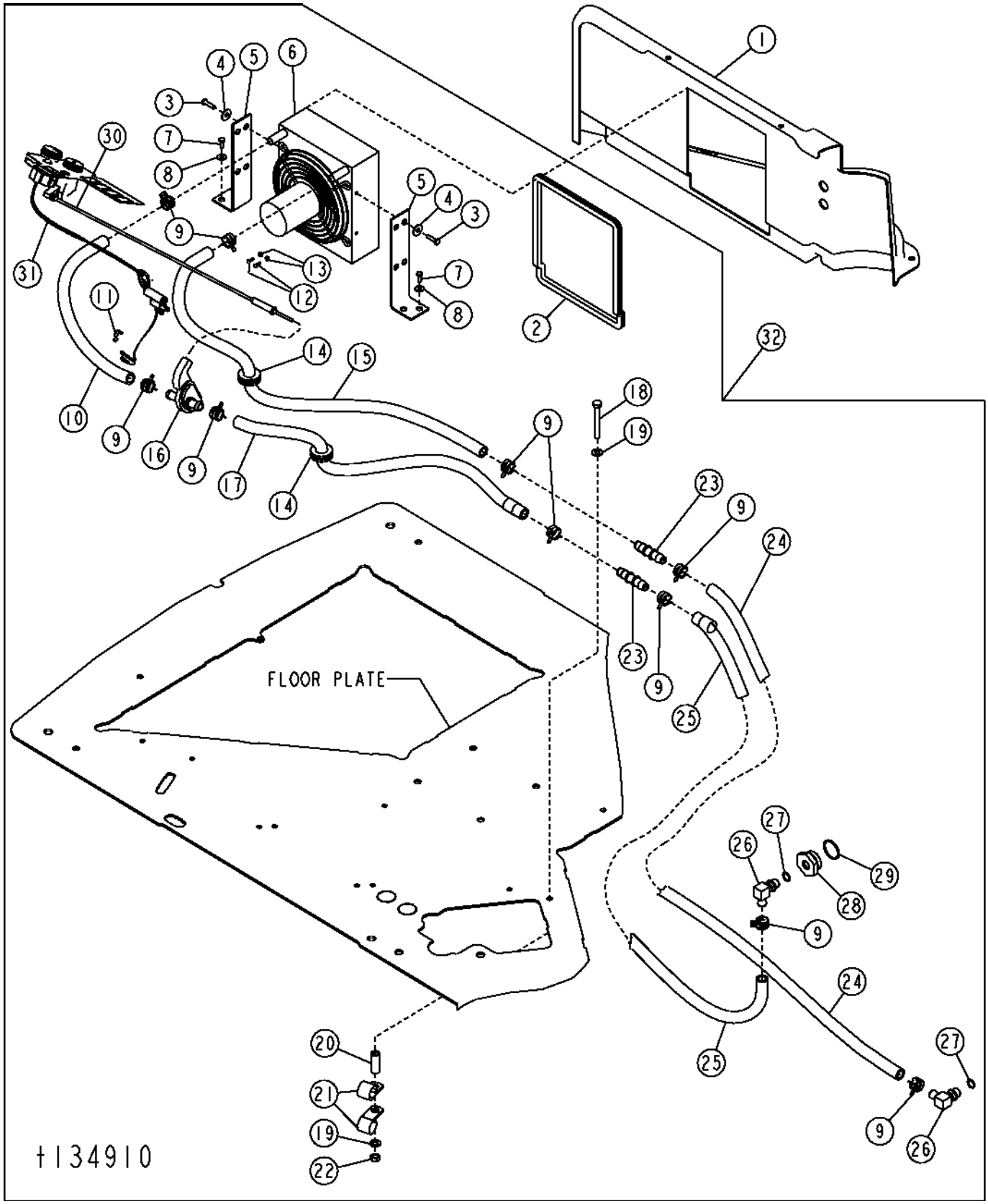

CANOPY HEATER,HOSES AND HEATER CONTROL

KEY	PART NO.	PART NAME	QTY	SERIAL NO.	REMARKS
1	T185763	COVER	1		
2	.....	ISOLATOR	1		(MAKE FROM T58056 BULK MATERIAL, CUT TO 3.23 FT. (986 MM)
3	19H1914	CAP SCREW	4		1/4" X 1"
4	24H1287	WASHER	4		
5	T185762	BRACKET	2		
6	AT169175	HEATER	1		
7	19M8425	CAP SCREW	4		M6 X 16
8	24M7139	WASHER	4		
9	R117721	CLAMP	10		
10	.....	HOSE	1		(MAKE FROM T60811 BULK MATERIAL, CUT TO 1.37 FT. (416MM)
11	L57881	CLIP	1		
12	21H1290	SCREW	2		0.138" X 1/2", CONNECTS HEATER UNIT ELECTRICL EYELETS TO VEHICLE HARNESS
13	14H1026	NUT	2		0.138"
14	T58739	GROMMET	2		
15	.....	HOSE	1		(MAKE FROM T60811 BULK MATERIAL, CUT TO 2.92 FT. (890MM)
16	AT193500	HAND OPERATED VALVE	1		(TEMPERATURE/HEATER)
17	.....	HOSE	1		(MAKE FROM T60811 BULK MATERIAL, CUT TO 2.21 FT. (675MM)
18	19M8081	CAP SCREW	1		M10 X 80
19	24M7239	WASHER	2		
20	T101975	BUSHING	1		
21	R46667	CLAMP	2		
22	14M7274	NUT	1		M10
23	T160492	ELECT. CONNECTOR ACCESSORY	2		
24	.....	BULK HOSE	1		(MAKE FROM T60811 CUT TO LENGTH)
25	.....	BULK HOSE	1		(MAKE FROM T60811 CUT TO LENGTH)
26	AT174697	PIPE ELBOW	2		
27	51M7043	O-RING	2		
28	R123616	PLUG	1		
29	U13639	O-RING	1		
30	AT171023	PUSH PULL CABLE	1		
31	AT191507	MOTOR WIRING HARNESS	1		
32	**AT192200**	**COOLANT HEATER**	**1**		**(WHOLE GOODS)**

CAB HEATER
(20,000 BTU)

TP32349 -UN-01JAN94

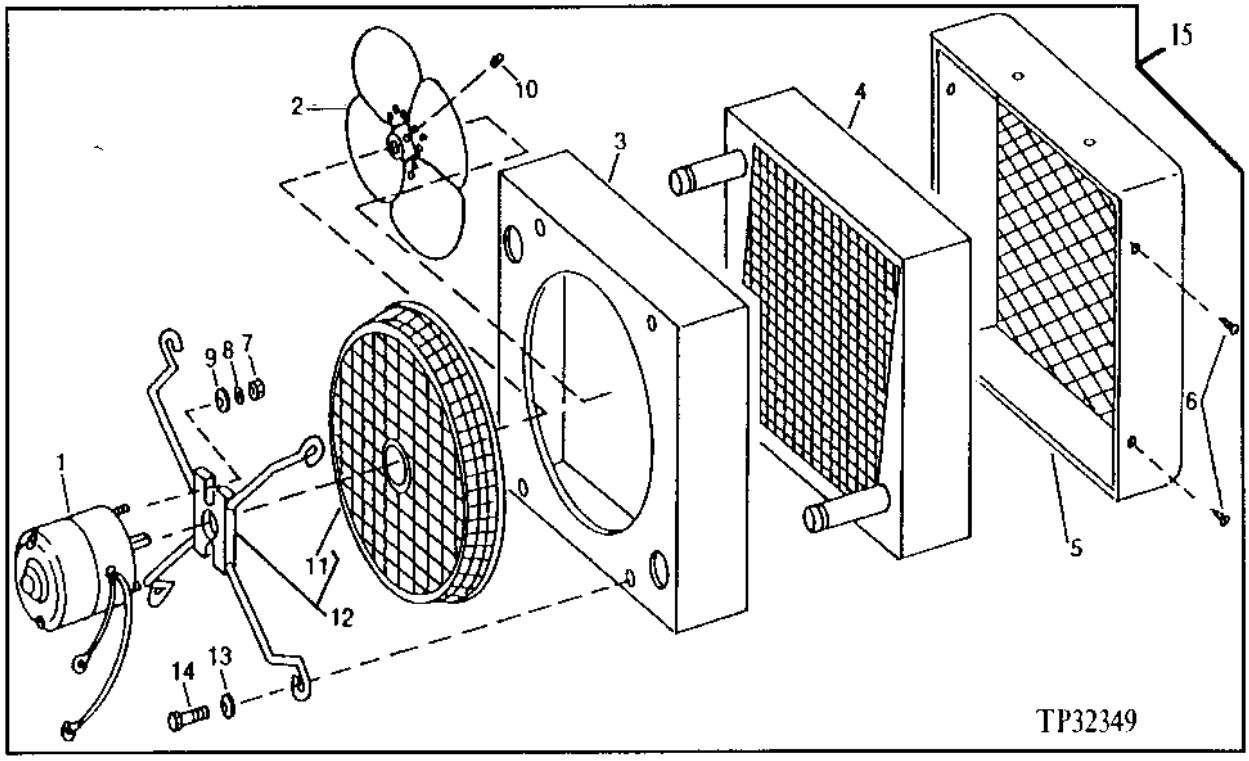

KEY	PART NO.	PART NAME	QTY	SERIAL NO.	REMARKS
1	AT169180	ELECTRIC MOTOR	1		
2	AT112810	FAN	1		
3	.....	CASE	1		(ORDER AT169175)
4	AT156440	CORE	1		
	AT169929	HEATING ELEMENT	1		(NOT ILLUSTRATED)
5	.....	SHROUD	1		(ORDER AT169175)
6	37H43	SCREW	4		
7	14H778	NUT	2		0.190"
8	12M7060	WASHER	2		
9	24H1283	WASHER	2		
10	22H897	SET SCREW	1		1/4" X 1/4"
11	.....	SCREEN	1		(ORDER T114774)
12	T114774	GUARD	1		
13	24H1287	WASHER	4		
14	19H1227	CAP SCREW	4		1/4" X 1/2"
15	AT169175	HEATER	1		

MEMORANDA

AIR CONDITIONING COMPRESSOR, MOUNTING BRACKETS, RECEIVER DRYER,CONDENSER AND HOSES

T152388 -UN-15MAR02

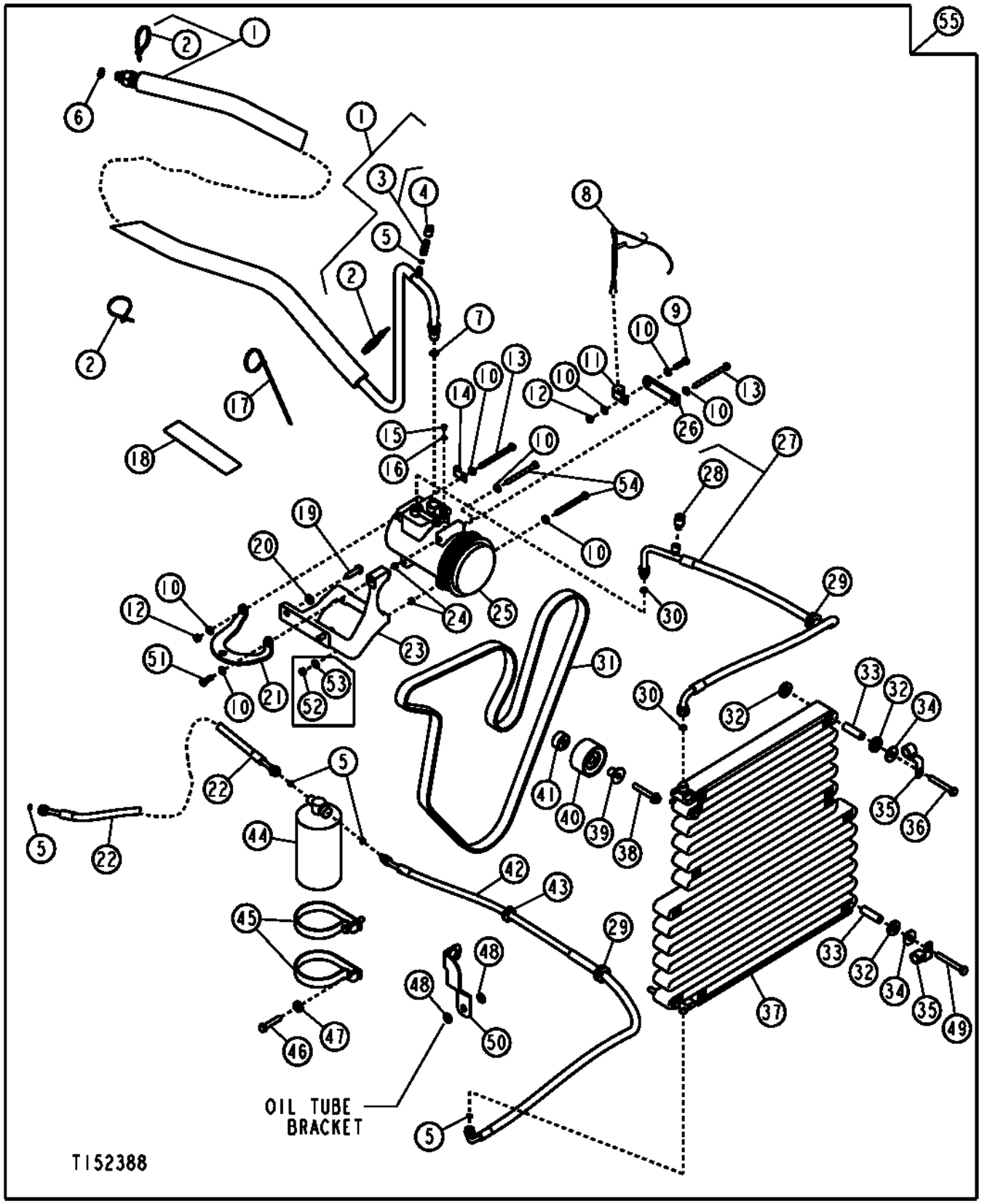

AIR CONDITIONING COMPRESSOR, MOUNTING BRACKETS, RECEIVER DRYER,CONDENSER AND HOSES

KEY	PART NO.	PART NAME	QTY	SERIAL NO.	REMARKS
1	AT188368	REFRIGERANT HOSE	1		
2	R44302	TIE BAND	3		
3	AT181530	FLOW CONTROL HYD. VALVE	1		(LOW SIDE)
4	T162557	CAP	1		
5	R10093	O-RING	5		
6	T143169	O-RING	1		
7	R33259	O-RING	1		
8	AT190658	AC COMPRESSOR WRG HARNESS	1		
9	19M7513	CAP SCREW	1		M8 X 30
10	24M7238	WASHER	9		
11	T78787	CLAMP	1		
12	14M7273	NUT	1		M8
13	19M8456	CAP SCREW	2		M8 X 100
14	T19935	CLAMP	1		
15	21M7283	SCREW	1		M5 X 8
16	12H316	LOCK WASHER	1		
17	H77698	TIE BAND	1		
18	T145560	LABEL	1		
19	19M7402	CAP SCREW	2	-901696	M10 X 25
	19M7550	CAP SCREW	2	901697-	M10 X 35
20	24M7239	WASHER	2		
21	R132690	SUPPORT	1	-901696	
	R504191	BRACKET	1	901697-	
22	AT188369	REFRIGERANT HOSE	1		
23	.....	BRACKET	1	-901696	(AT180350 NO LONGER AVAILABLE) (SUB R504192) (ALSO ORDER R504191, 19M7407, (2) 19M7550 AND (3) 19M8539)
	R504192	BRACKET	1	901697-	
24	34M7189	SPRING PIN	1		11 X 8 MM
25	RE46609	COMPRESSOR	1		NEW
	TY6764	COMPRESSOR	1		REMANUFACURED
26	M86533	STRAP	1		
27	AT199081	REFRIGERANT HOSE	1		(SUB FOR AT186263)
28	AT178930	HYDRAULIC CYLINDER PORT	1		
29	R137851	GROMMET	2	-903152	
	T190177	GROMMET	2	903153-	
30	R113050	O-RING	2		
31	R504023	V-BELT	1		
32	T158424	WASHER	8		
33	L3483N	BUSHING	4		
34	24M7101	WASHER	4		
35	AT192168	CLAMP	2		
36	19M7328	CAP SCREW	2		M10 X 70
37	AT184522	VAPOR CONDENSER	1		
38	19M7808	SCREW	1		M10 X 65
39	R502079	SLEEVE	1		

AIR CONDITIONING COMPRESSOR, MOUNTING BRACKETS, RECEIVER DRYER,CONDENSER AND HOSES

T152388 -UN-15MAR02

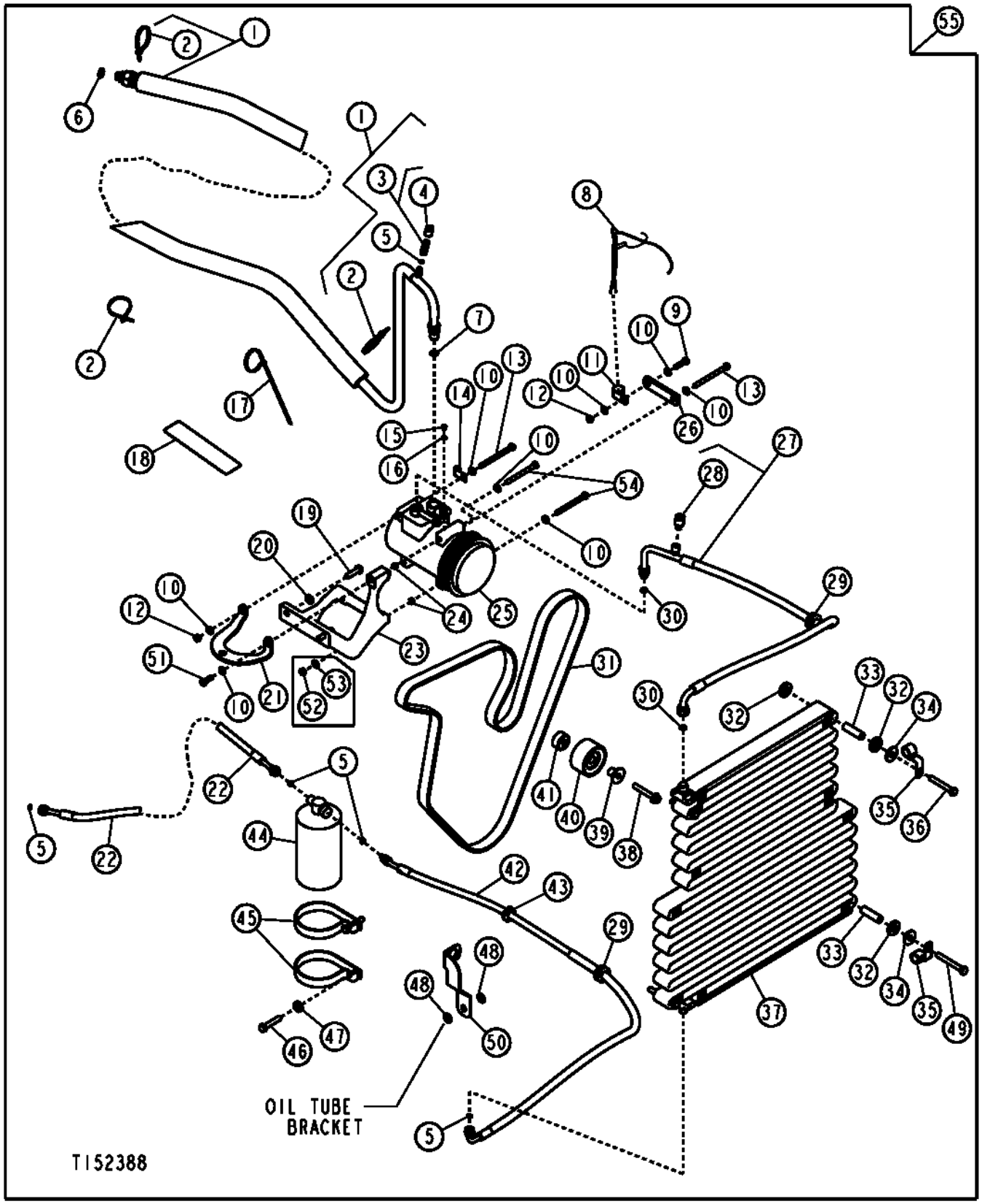

AIR CONDITIONING COMPRESSOR, MOUNTING BRACKETS, RECEIVER DRYER,CONDENSER AND HOSES

KEY	PART NO.	PART NAME	QTY	SERIAL NO.	REMARKS
40	RE505264	IDLER	1		
41	R500320	SPACER	1		
42	AT193499	REFRIGERANT HOSE	1		
43	R115350	GROMMET	1		
44	AT162848	RECEIVER-DRYER	1		
45	T190438	CLAMP	2		(SUB FOR 99M7102, THIS APPLICATION)
46	19M7384	CAP SCREW	2		M10 X 60
47	24H1781	WASHER	2		
48	24M7239	WASHER	1		
49	19M8049	CAP SCREW	2		M10 X 80
50	T185949	BRACKET	1		
51	19M7407	CAP SCREW	1	901697-	M8 X 25
52	14M7273	NUT	1	-901696	M8
53	24M7238	WASHER	1	-901696	
54	19M8456	CAP SCREW	2	-901696	M8 X 100
	19M8539	CAP SCREW	2	901697-	M8 X 90
55	AT187442	KIT	1		(WHOLE GOODS) WITH BASE COOLING, (INCLUDES AT192656)
	AT187440	KIT	1		(WHOLE GOODS) WITH HIGH AMBIENT COOLING

HEAT AND NOISE BARRIER

T145246 -UN-04SEP01

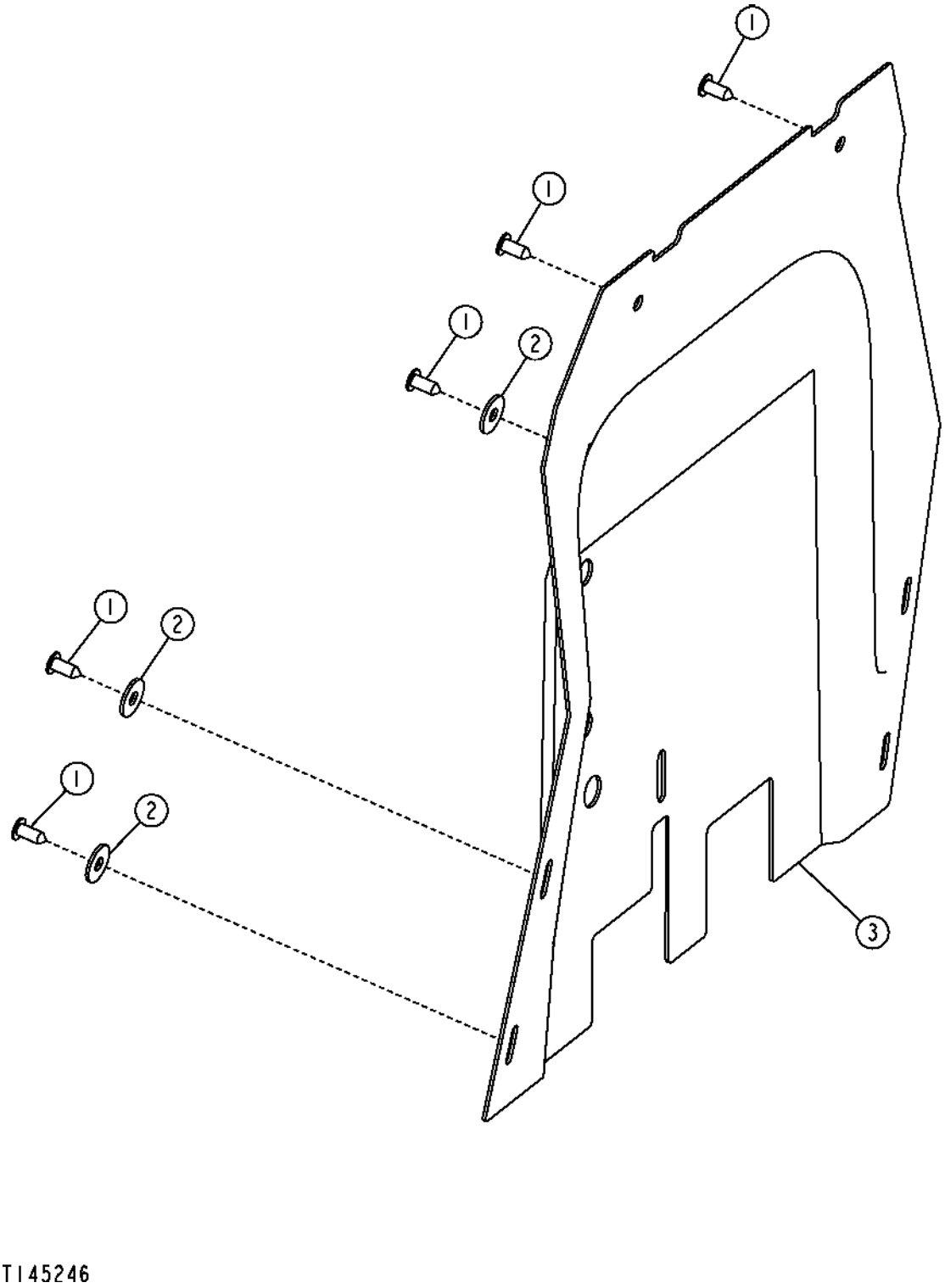

HEAT AND NOISE BARRIER

KEY	PART NO.	PART NAME	QTY	SERIAL NO.	REMARKS
1	T161380	PLUG	5		(SUB FOR 19M7662, THIS APPLICATION)
2	24M7180	WASHER	3		
3	T185663	ISOLATOR	1	-913479	
	T191101	ISOLATOR	1	913480-	

HOOD AND ENGINE SIDE PANELS

T147911 -UN-29NOV01

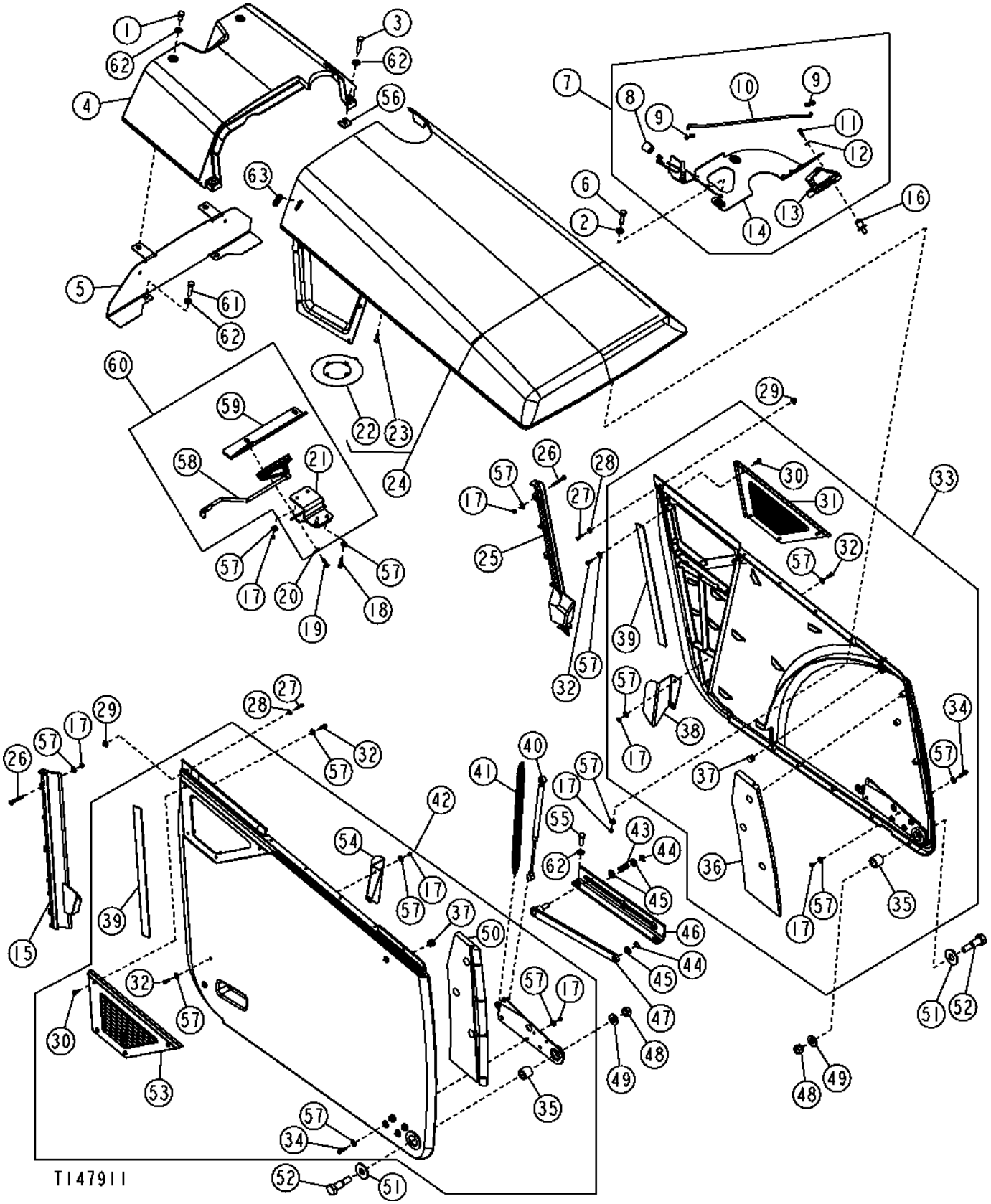

THIS PARTS LISTING IS CONTINUED

HOOD AND ENGINE SIDE PANELS

KEY	PART NO.	PART NAME	QTY	SERIAL NO.	REMARKS
1	19M7938	CAP SCREW	2		M10 X 20
2	24M7239	WASHER	3	-903502	
3	19M8600	CAP SCREW	2		M10 X 50
4	T165982	HOOD	1	-903502	
	T188707	HOOD	1	903503-	
5	AT185683	SUPPORT	1		
6	19M8637	CAP SCREW	3	-903502	M10 X 40
7	.....	LATCH	1	-903502	ORDER COMPONENTS, (SERVICED IN AT196815)
8	T133487	KNOB	1	-903502	
9	T161373	CLIP	2	-903502	
10	T165973	ROD	1	-903502	
11	19M7077	CAP SCREW	2	-903502	M6 X 20
12	24M7139	WASHER	1	-903502	
13	AT185680	LATCH	1	-903502	
14	.....	LATCH	1	-903502	(AT191557 NO LONGER AVAILABLE) (SUB AT196815)
15	T165976	GUIDE	1		RIGHT
16	AR91896	STRIKER	1	-903502	
17	14M7272	NUT	28		M6
18	19M7874	CAP SCREW	2		M6 X 30
19	14H1047	NUT	1	-903502	7/16"
	19M7933	CAP SCREW	2	903503-	M6 X 25
20	T105740	WASHER	1	-903502	
	24M7139	WASHER	2	903503-	
21	AT189400	BRACKET	1	-903502	STIKER BOLT
	AT195399	BRACKET	1	903503-	
22	T184032	PLATE	1		
23	T187272	SCREW	4		(SUB FOR T165985)
24	.....	HOOD	1	-903502	(AT185717 NO LONGER AVAILABLE) (SUB AT196828 AND T188642)
	AT196828	HOOD	1	903503-	
25	T184393	GUIDE	1		LEFT
26	19M9100	SCREW	6		M6 X 50
27	19M7373	CAP SCREW	4		M5 X 20
28	24M7138	WASHER	4		
29	T183773	NUT	4		
30	21M7246	SCREW	8		M6 X 16
31	T165916	LOUVER	1		LEFT
32	19M8425	CAP SCREW	12		M6 X 16
33	AT185539	PANEL	1		LEFT SIDE
34	19M7933	CAP SCREW	10		M6 X 25
35	T165911	BUSHING	2		
36	.....	SHIELD	1		(T183781 NO LONGER AVAILABLE) LEFT SIDE
37	T165997	INSERT	2		
38	T184788	BRACKET	1		LEFT GUIDE
39	T184116	LABEL	2		
40	AT191760	GAS OPERATED CYLINDER	1		
41	T165977	EXTENSION SPRING	2		
42	AT185538	PANEL	1		RIGHT SIDE
43	T165981	COMPRESSION SPRING	1		
44	R26871	SNAP RING	2		
45	24M7047	WASHER	3		
46	T165978	GUIDE	1		
47	AT189661	BAR	1		
48	14M7328	LOCK NUT	2		M16
49	24M7241	WASHER	2		
50	.....	SHIELD	1		(T183780 NO LONGER AVAILABLE) RIGHT SIDE
51	24H1236	WASHER	2		
52	T165975	BOLT	2		
53	T165915	LOUVER	1		RIGHT
54	T184787	BRACKET	1		RIGHT GUIDE
55	19M7662	CAP SCREW	2		M10 X 30
56	T187393	ADJUSTING STRAP	2		
57	24M7139	WASHER	52		
58	AT196358	LATCH	1	903503-	
59	.....	BRACKET	1	903503-	
60	AT196815	KIT	1		(INCLUDES T188642)
61	19M8637	CAP SCREW	2		M10 X 40
62	24M7239	WASHER	8		
63	T188642	GROMMET	1	903503-	

BATTERY ENCLOSURE AND TOOL BOX

T136445 -UN-11DEC00

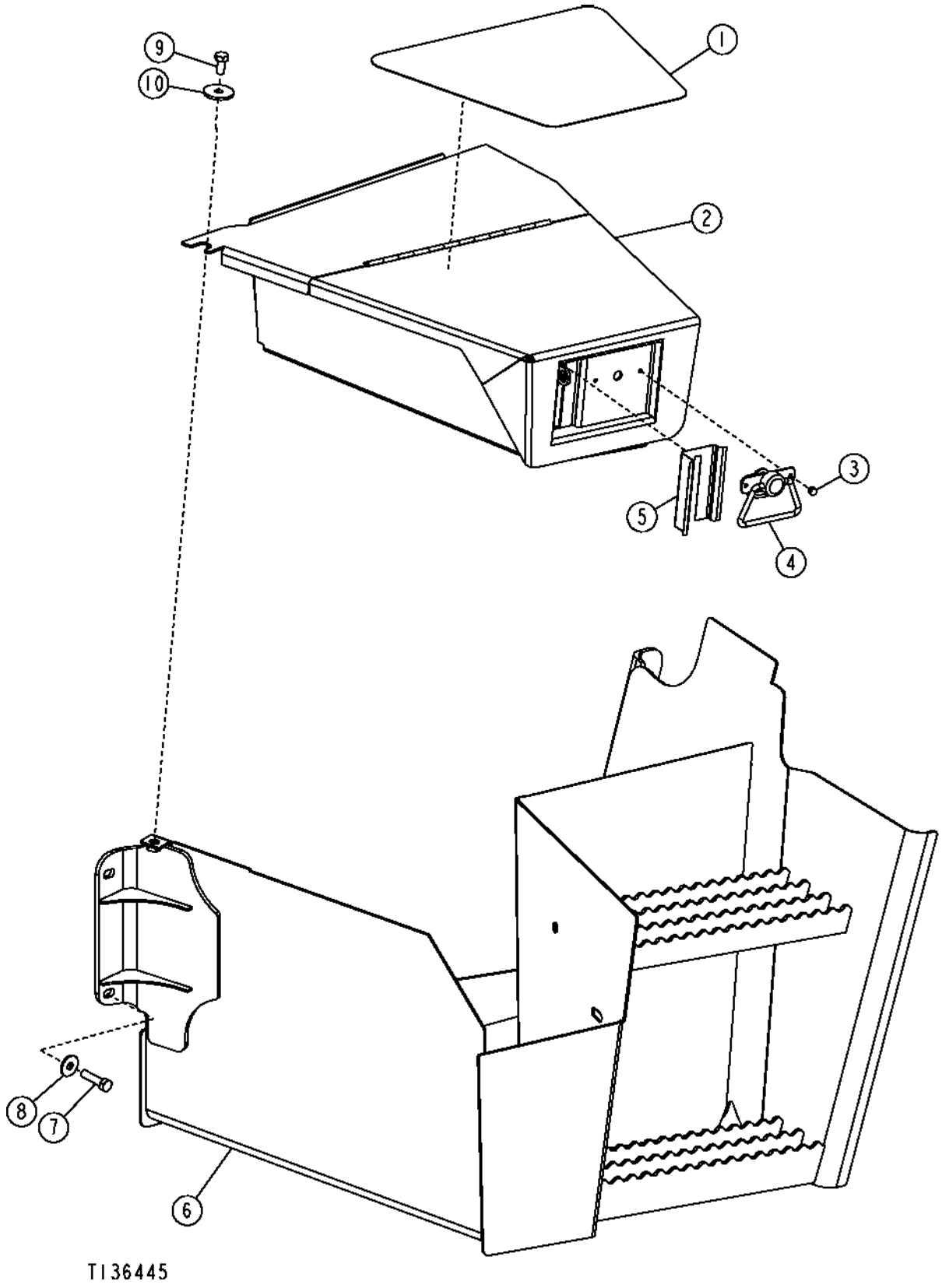

BATTERY ENCLOSURE AND TOOL BOX

KEY	PART NO.	PART NAME	QTY	SERIAL NO.	REMARKS
1	T165290	ANTI-SKID PAD	1		
2	AT183428	TOOLBOX	1		
3	M63200	RIVET	2		
4	T185360	LATCH	1		(ALSO ORDER (2) M63200)
5	T185469	LABEL	1		PROTECTIVE
6	AT183411	BATTERY BOX	1		
7	19M8637	CAP SCREW	4		M10 X 40
8	24M7296	WASHER	6		
9	19M7938	CAP SCREW	3		M10 X 20
10	24H1718	WASHER	1		

LOADER PLUMBING SHIELD

TP50367 -UN-29OCT96

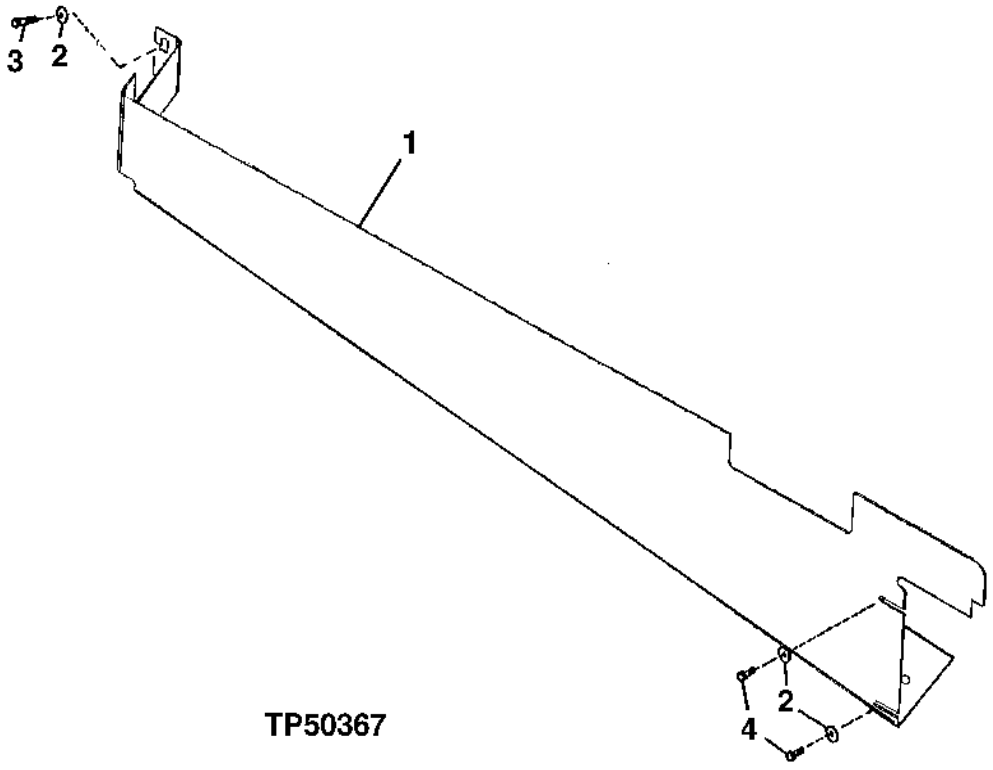

LOADER PLUMBING SHIELD

KEY	PART NO.	PART NAME	QTY	SERIAL NO.	REMARKS
1	T166531	SHIELD	1		
2	24M7296	WASHER	1		
3	19M7662	CAP SCREW	1		M10 X 30

GRILLE AND GRILLE HOUSING

TP58071 -UN-06SEP00

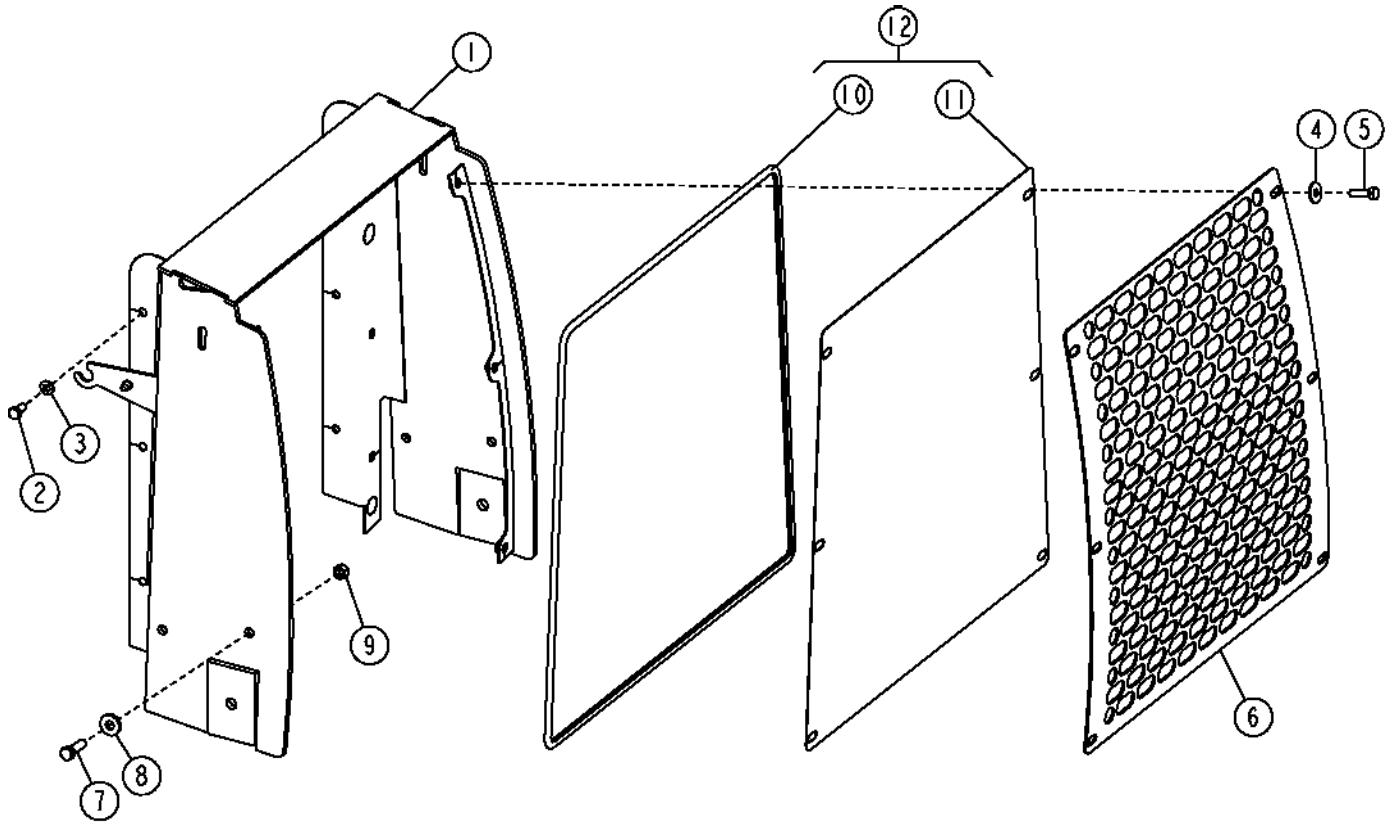

TP58071

GRILLE AND GRILLE HOUSING

KEY	PART NO.	PART NAME	QTY	SERIAL NO.	REMARKS
1	AT197001	KIT	1	-903149	(SUB FOR AT185004)
	AT195872	FRAME	1	903150-	
2	19M7938	CAP SCREW	6		M10 X 20
3	24M7239	WASHER	6		
4	24M7296	WASHER	6		
5	19M7550	CAP SCREW	6		M10 X 35
6	T165896	SCREEN	1		
7	19M7493	CAP SCREW	4		M12 X 40
8	T29342	WASHER	4		
9	14M7275	NUT	4		M12
10	.....	MOLDING	1		(MAKE FROM T58056, CUT TO 8.74 FEET)
11	AT189091	SCREEN	1		(TRASH SCREEN)
12	AT189090	SCREEN	1		WHOLE GOODS

OPERATOR STATION FENDERS AND SKIRTS

TP58069 -UN-05OCT00

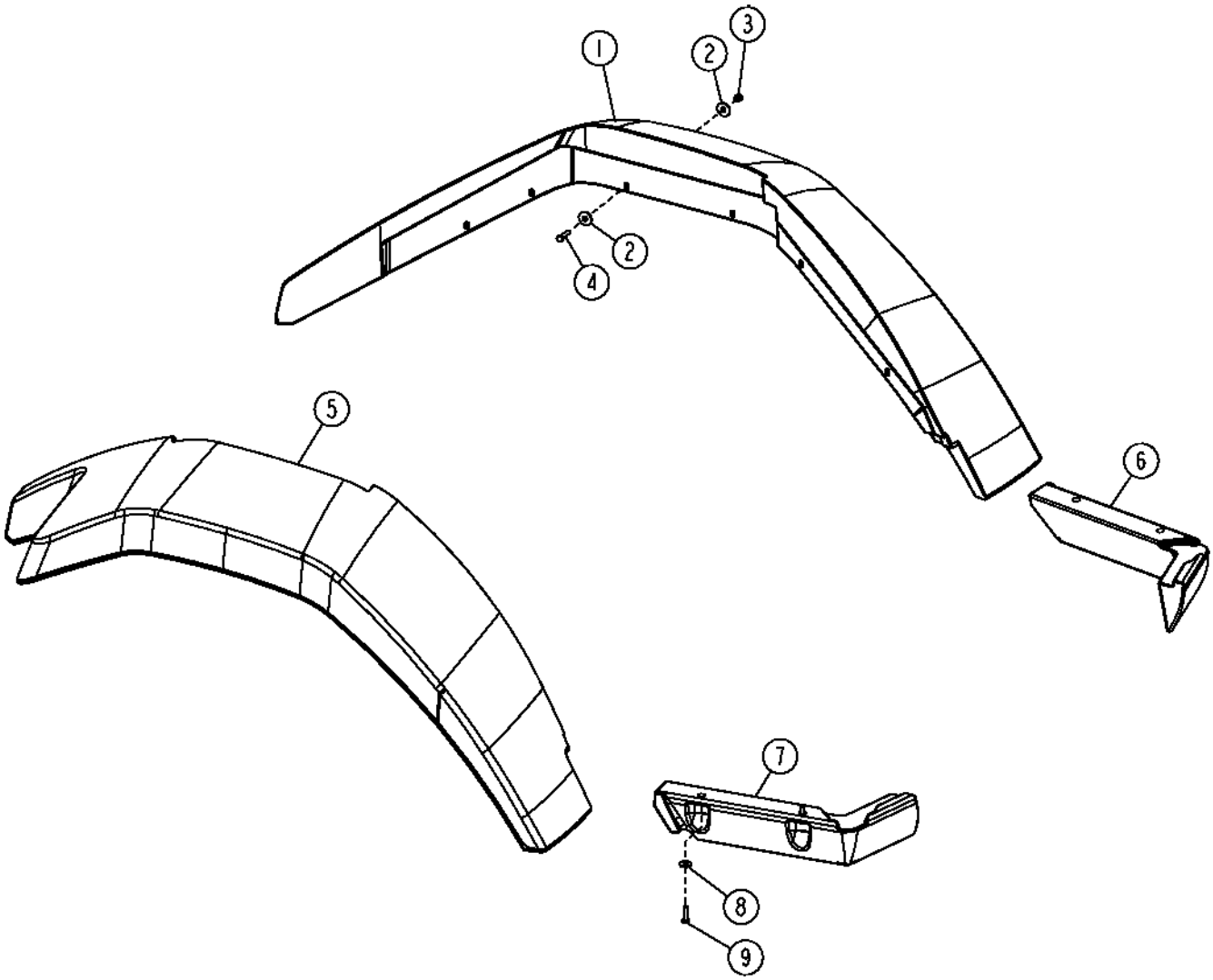

TP58069

OPERATOR STATION FENDERS AND SKIRTS

KEY	PART NO.	PART NAME	QTY	SERIAL NO.	REMARKS
1	T177187	FENDER	1		LEFT
2	24M7296	WASHER	24		
3	14M7426	LOCK NUT	12		M8
4	19M7513	CAP SCREW	12		M8 X 30
5	T165870	FENDER	1		RIGHT
6	T166331	COVER	1		LEFT
7	T166332	COVER	1		RIGHT
8	24M7298	WASHER	4		
9	19M7513	CAP SCREW	4		M8 X 30

RADIO,RADIO ANTENA,SPEAKERS AND WIRE HARNESS
(FOR USE WITH CAB ONLY)

T142516 -UN-06JUN01

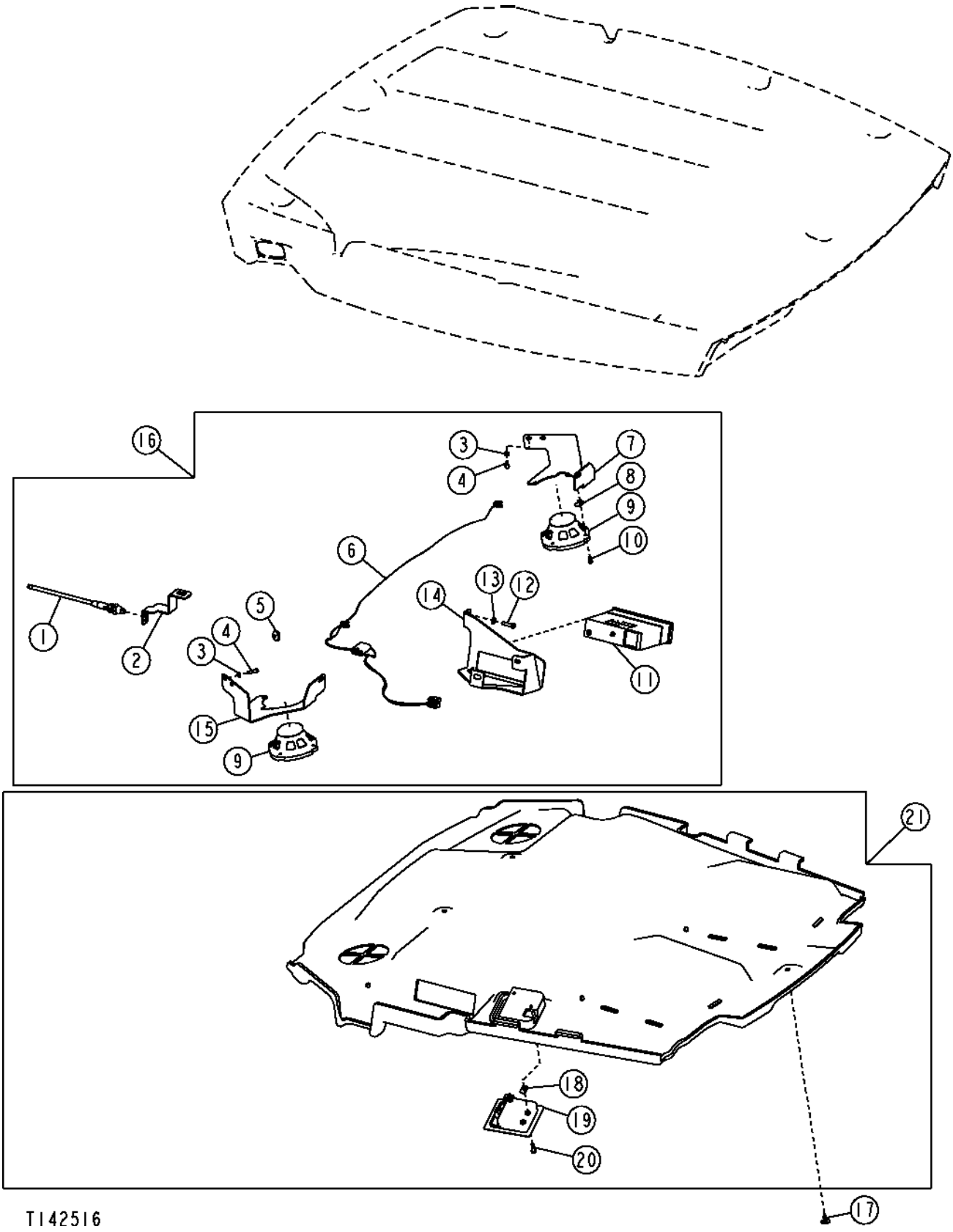

RADIO,RADIO ANTENA,SPEAKERS AND WIRE HARNESS
(FOR USE WITH CAB ONLY)

KEY	PART NO.	PART NAME	QTY	SERIAL NO.	REMARKS
1	AT199388	ANTENNA	1		(SUB FOR AT185366)
2	T167232	BRACKET	1		
3	24M7054	WASHER	6		6.400 X 12 X 1.600 MM
4	19M7933	CAP SCREW	6		M6 X 25
5	T74952	GROMMET	1		
6	AT191575	WIRING HARNESS	1		
7	T186443	BRACKET	1		
8	R117892	NUT	6		RADIO/SPEAKER MOUNTING
9	AT188759	SPEAKER	2		
10	21M7271	SCREW	6		M5 X 16
11	RE190139	RADIO	1		AM/FM STEREO, (SUB FOR AT192956, THIS APPLICATION)
12	19M7513	CAP SCREW	2		M8 X 30
13	24M7238	WASHER	2		8.700 X 17 X 2 MM
14	T165951	BRACKET	1		
15	T186444	BRACKET	1		
16	**AT192217**	**RADIO**	**1**		**(WHOLE GOODS)**
17	T184892	RETAINER	9		
18	M84972	NUT	2		
19	AT185500	LAMP	1		
20	T134895	SELF-LOCKING SCREW	1		
21	AT185499	HEADLINER	1		HEADLINER FOR RADIO

INTERIOR REAR VIEW MIRROR

T145088 -UN-24AUG01

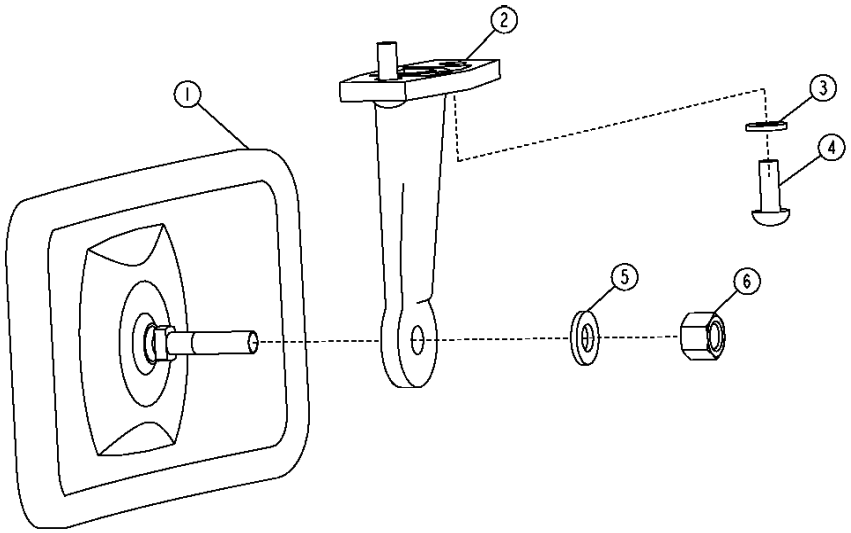

KEY	PART NO.	PART NAME T145088	QTY	SERIAL NO.	REMARKS
1	AT222333	REAR VIEW MIRROR	1		(RECOMMENDED FOR USE IN HIGHLY CORROSIVE ENVIRONMENT)
	AT196427	REAR VIEW MIRROR	1		
2	L75379	BRACKET	1		
3	24M7293	WASHER	2		
4	21M7246	SCREW	2		M6 X 16
5	24M7238	WASHER	1		
6	14M7426	LOCK NUT	1		M8

EXTERNAL MIRROR

T146538 -UN-11OCT01

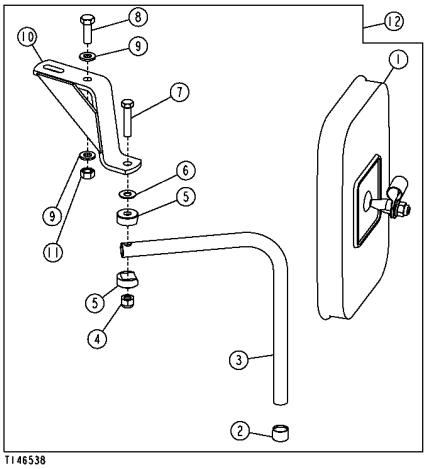

KEY	PART NO.	PART NAME	QTY	SERIAL NO.	REMARKS
1	AT103919	REAR VIEW MIRROR	2		
2	T128437	CAP	2		
3	T148817	TUBE	2		
4	T11234	LOCK NUT	2		3/8"
5	T115030	HALF CLAMP	4		
6	T60920	WASHER	2		
7	19H3217	CAP SCREW	2		3/8" X 1-3/4"
8	19M7662	CAP SCREW	2		M10 X 30
9	24M7239	WASHER	4		
10	AT195814	BRACKET	1		LEFT, (SUB FOR T166898)
	AT195815	BRACKET	1		RIGHT, (SUB FOR T166898)
11	14M7274	NUT	2		M10
12	AT186155	REAR VIEW MIRROR	1		

BACK-UP ALARM SYSTEM

T160036 -UN-01OCT02

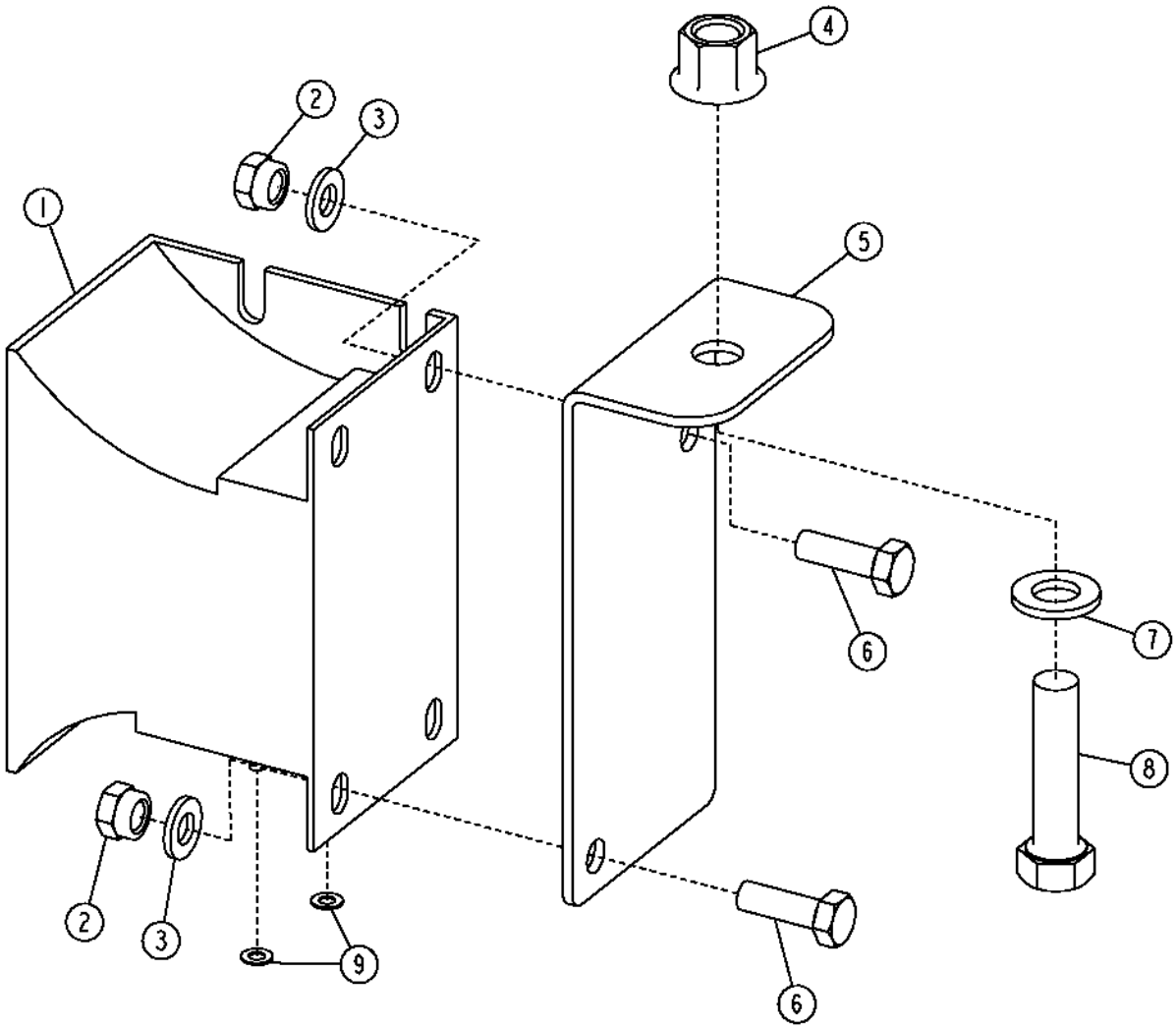

BACK-UP ALARM SYSTEM

KEY	PART NO.	PART NAME	QTY	SERIAL NO.	REMARKS
1	AT120461	TRAVEL WARNING ALARM	1		
2	14M7426	LOCK NUT	2		M8
3	24M7238	WASHER	2		
4	14M7401	LOCK NUT	1		M12
5	T161521	BRACKET	1		
6	19M7407	CAP SCREW	2		M8 X 25
7	24M7047	WASHER	1		
8	19M7361	CAP SCREW	1		M12 X 50, (SUB FOR 19M7361, THIS APPLICATION)
9	12M7084	LOCK WASHER	2		

HORN
(SERIAL NO. -143915)

TP58115 -UN-09OCT00

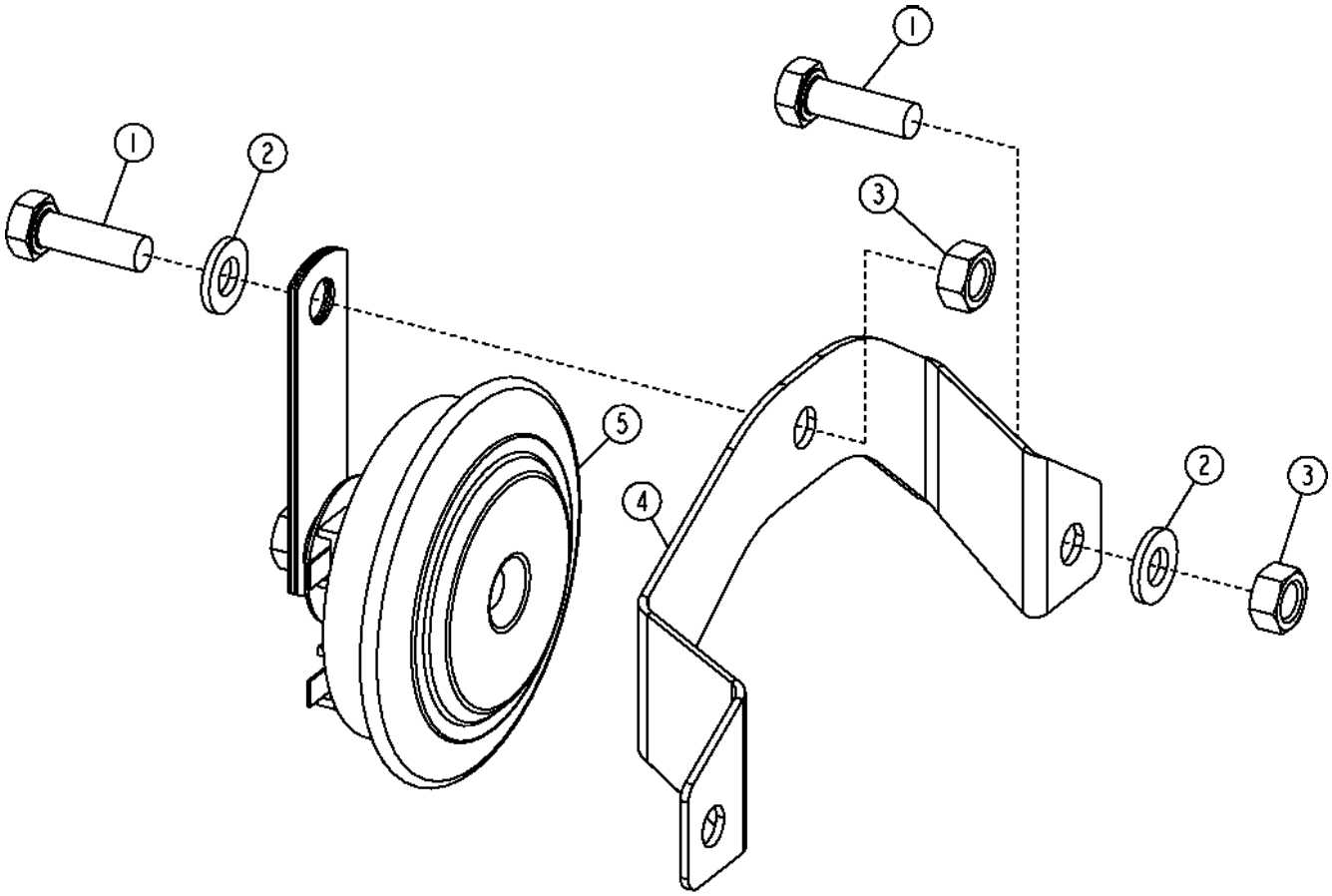

TP58115

HORN
(SERIAL NO. -143915)

KEY	PART NO.	PART NAME	QTY	SERIAL NO.	REMARKS
1	M86877	BOLT	2		M8 X 20
2	24M7238	WASHER	2		
3	14M7273	NUT	2		M8
4	T185699	BRACKET	1		
5	AT222276	HORN	1		
6	24M7238	WASHER	4		
7	14M7426	LOCK NUT	2		M8
8	19M7361	CAP SCREW	1		M12 X 50
9	19M7407	CAP SCREW	2		M8 X 25

HORN
(SERIAL NO. 143916-)

T158341 -UN-06AUG02

KEY	PART NO.	PART NAME	QTY	SERIAL NO.	REMARKS
1	19M7407	CAP SCREW	1		
2	24M7238	WASHER	1		
3	14M7273	NUT	1		
4	AT222276	HORN	1		

MEMORANDA

SUN VISOR

TP58072 -UN-09OCT00

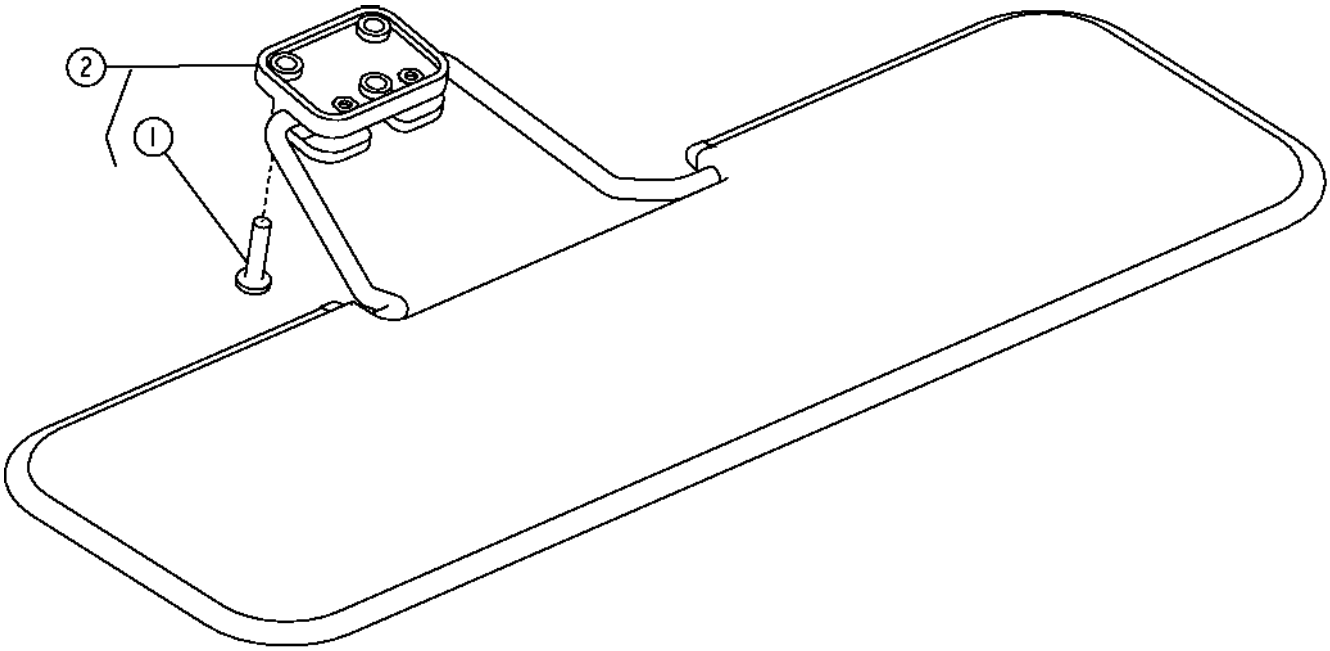

TP58072

SUN VISOR

KEY	PART NO.	PART NAME	QTY	SERIAL NO.	REMARKS
1	T134895	SELF-LOCKING SCREW	3		M6 X 25
2	AT186307	SUN VISOR	1		WHOLE GOODS

TP69633 -UN-09OCT00

SMV EMBLEM

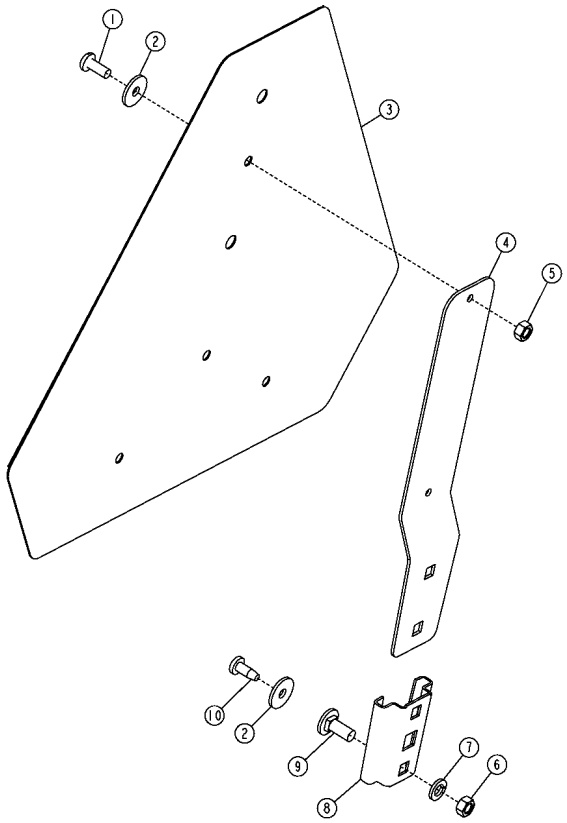

KEY	PART NO.	PART NAME TP69633	QTY	SERIAL NO.	REMARKS
1	21H1302	SCREW	2		1/4" X 5/8"
2	24M7100	WASHER	4		
3	JD5930	SMV EMBLEM	1		
4	JD5404	BRACKET	1		
5	14H786	NUT	2		1/4"
6	14H785	NUT	2		5/16"
7	12M7065	LOCK WASHER	2		
8	JD126	BRACKET	1		
9	03H1268	BOLT	2		5/16" X 3/4"
10	37M7074	SCREW	2		

VEHICLE HYDRAULIC SYSTEM

TP69665 -UN-10OCT00

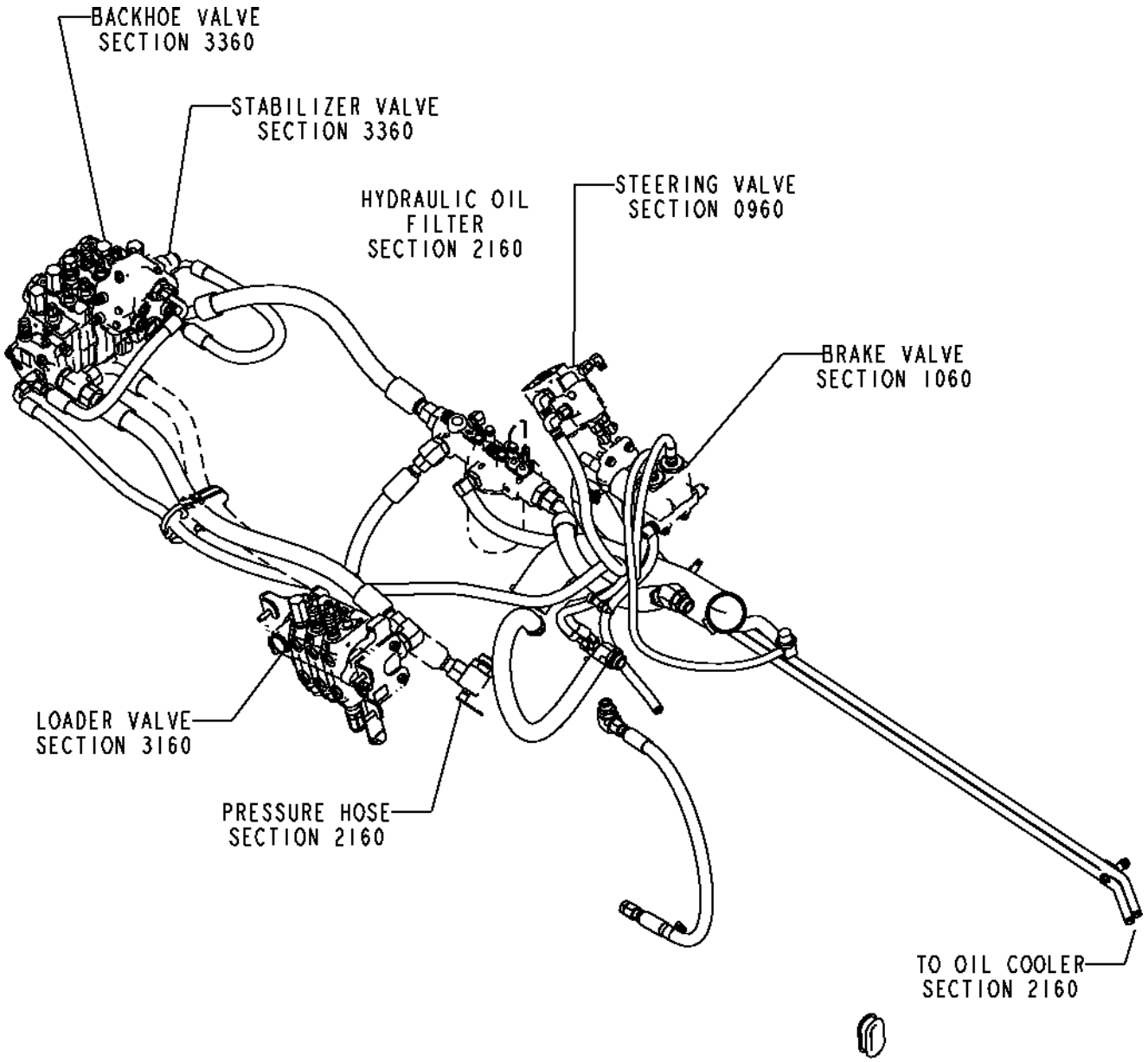

TP69665

MAIN HYDRAULIC PUMP

T142093 -UN-14MAY01

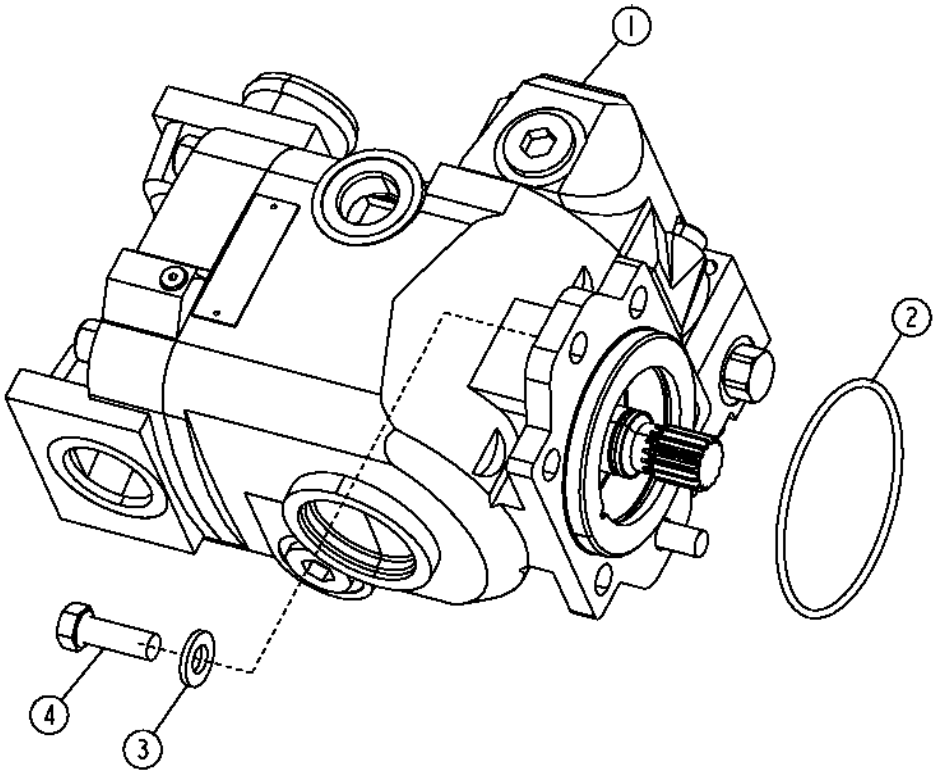

T142093

MAIN HYDRAULIC PUMP

KEY	PART NO.	PART NAME	QTY	SERIAL NO.	REMARKS
1	AT197383	HYDRAULIC PUMP	1		CONVENIENCE ASSEMBLY, (SUB FOR AT191574)
2	F37030242	O-RING	1		PUMP PILOT
3	24M7240	WASHER	2		
4	19M7403	CAP SCREW	2		M12 X 35

MAIN HYDRAULIC PUMP REPAIR KITS
(SERIAL NO. -907935)

T150269 -UN-22JAN02

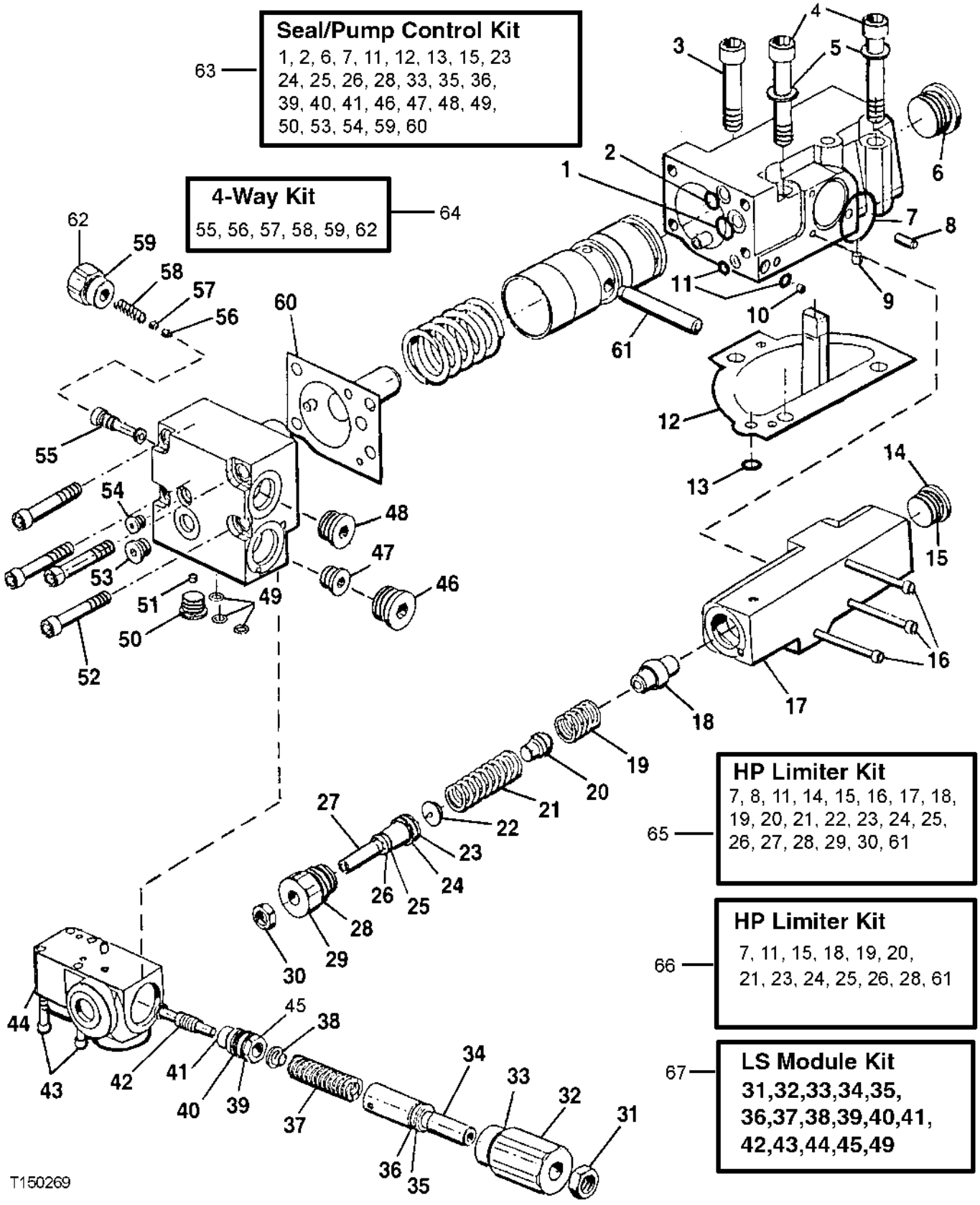

MAIN HYDRAULIC PUMP REPAIR KITS
(SERIAL NO. -907935)

KEY	PART NO.	PART NAME	QTY	SERIAL NO.	REMARKS
1	T40308	O-RING	1		(A)
2	T166274	O-RING	1		(A)
3	19H3806	SCREW	1		7/16" X 1-3/4"
4	19H3805	SCREW	2		7/16" X 2-1/2"
5	T166395	WASHER	2		
6	T118681	O-RING	1		(A)
7	T166278	O-RING	1		(A) (C) (D)
8	.....	SPRING PIN	1		(C)
9	T166404	ORIFICE	1		
10	.....	ORIFICE	1		
11	T166275	O-RING	2		(A) (C) (D)
12	T166279	GASKET	1		(A)
13	T166274	O-RING	1		(A)
14	.....	PLUG	1		(C)
15	R47151	O-RING	1		(A) (C) (D)
16	19H3245	SCREW	3		(C)
17	.....	HOUSING	1		(C)
18	.....	PISTON	1		(C) (D)
19	.....	SPRING	1		(C) (D)
20	.....	POPPET	1		(C) (D)
21	.....	SPRING	1		(C) (D)
22	.....	POPPET	1		(C)
23	T166276	BACK-UP RING	1		(A) (C) (D)
24	AT108777	O-RING	1		(A) (C) (D)
25	T166277	BACK-UP RING	1		(A) (C) (D)
26	Z53159	O-RING	1		(A) (C) (D)
27	.....	SCREW	1		(C)
28	R47151	O-RING	1		(A) (C) (D)
29	.....	PLUG	1		(C)
30	.....	NUT	1		(C)
31	.....	NUT	1		(E)
32	.....	CAP	1		(E)
33	T118681	O-RING	1		(A) (E)
34	.....	SLEEVE	1		(E)
35	AT108777	O-RING	1		(A) (E)
36	T166276	O-RING	1		(A) (E)
37	.....	SPRING	1		(E)
38	.....	GUIDE	1		(E)
39	T166276	BACK-UP RING	1		(A) (E)
40	AT108777	O-RING	1		(A) (E)
41	T70177	O-RING	1		(A) (E)
42	.....	SPOOL	1		(E)
43	19H3464	SCREW	4		(E) 0.190" X 1-1/2"
44	.....	MODULE	1		(E)
45	.....	SEAT	1		(E)
46	R47151	O-RING	1		(A)
47	T70177	O-RING	1		(A)
48	R47150	O-RING	1		(A)
49	T166275	O-RING	3		(A) (E)
50	T70177	O-RING	1		(A)
51	T166400	ORIFICE	1		
52	M507T	BOLT	4		5/16" X 2-1/2"
53	T118689	O-RING	1		(A)
54	T166273	O-RING	1		(A)
55	.....	SPOOL	1		(B)
56	.....	ORIFICE	1		(B)
57	.....	ORIFICE	1		(B)
58	.....	SPRING	1		(B)
59	R47150	O-RING	1		(A) (B)
60	T166280	GASKET	1		(A)
61	.....	PIN	1		(C) (D)
62	.....	PLUG	1		(B)
63	AT178678	KIT	1		INCLUDES ALL (A) PARTS (SEAL/PUMP CONTROL)
64	AT186257	KIT	1		INCLUDES ALL (B) PARTS (4-WAY)
65	AT186255	KIT	1		INCLUDES ALL (C) PARTS (HP LIMITER)
66	AT186256	KIT	1		INCLUDES ALL (D) PARTS (HP LIMITER)
67	AT178680	KIT	1		INCLUDES ALL (E) PARTS (LS MODULE)

MAIN HYDRAULIC PUMP REPAIR KITS
(SERIAL NO. 907936-)

T150529 -UN-28JAN02

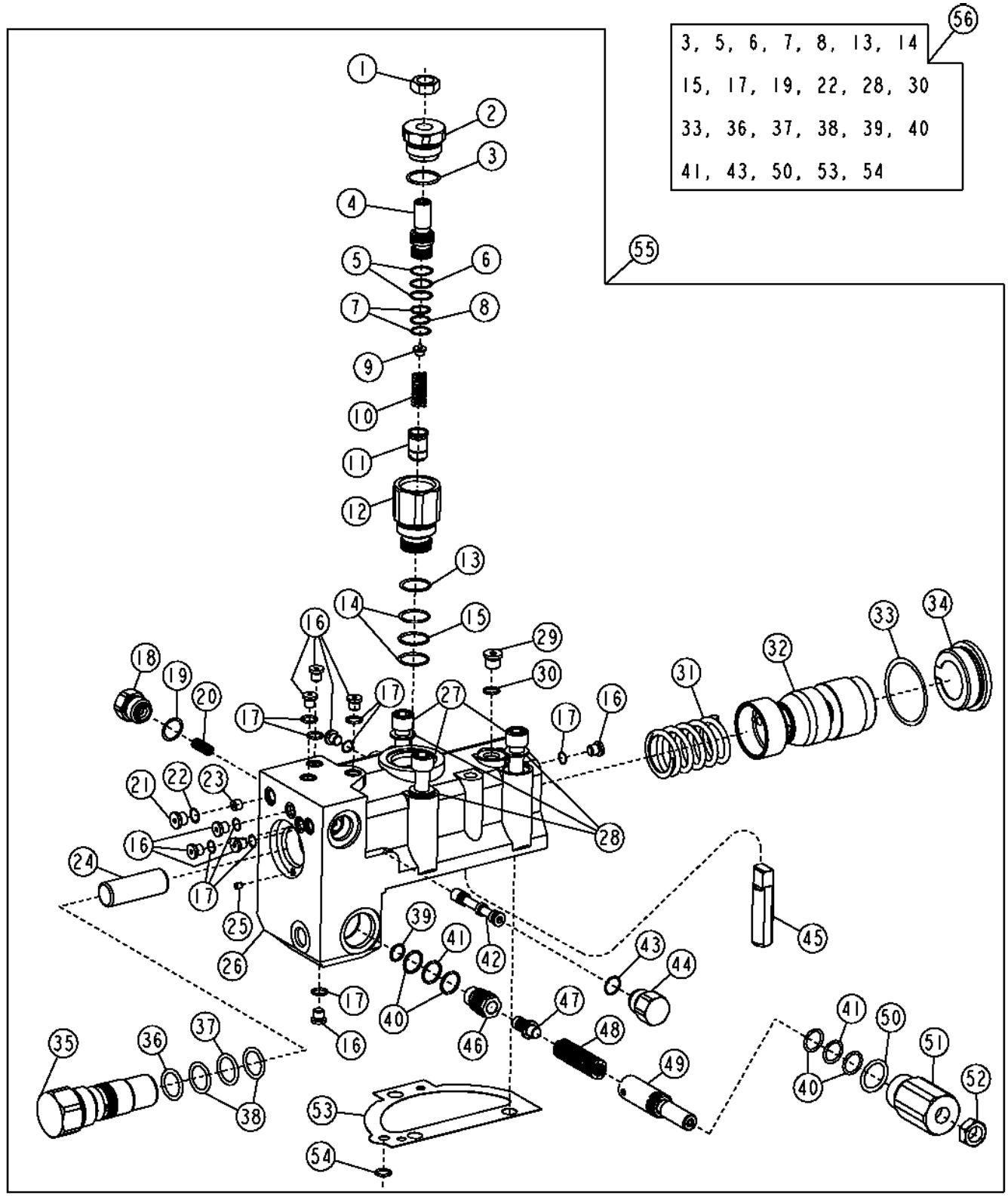

MAIN HYDRAULIC PUMP REPAIR KITS
(SERIAL NO. 907936-)

KEY	PART NO.	PART NAME	QTY	SERIAL NO.	REMARKS
1	.....	NUT	1		
2	.....	PLUG	1		
3	.....	O-RING	1		
4	.....	SCREW	1		
5	.....	O-RING	2		
6	.....	O-RING	1		
7	.....	O-RING	2		
8	.....	O-RING	1		
9	.....	GUIDE	1		
10	.....	SPRING	1		
11	.....	PISTON	1		
12	.....	SEAT	1		
13	.....	O-RING	1		
14	.....	O-RING	2		
15	.....	O-RING	1		
16	.....	PLUG	9		
17	.....	O-RING	9		
18	.....	PLUG	1		
19	.....	O-RING	1		
20	.....	SPRING	1		
21	.....	PLUG	1		
22	.....	O-RING	1		
23	.....	ORIFICE	1		
24	.....	PISTON	1		
25	.....	PLUG	1		
26	.....	HOUSING	1		
27	.....	SCREW	3		
28	.....	WASHER	3		
29	.....	PLUG	1		
30	.....	O-RING	1		
31	.....	SPRING	1		
32	.....	PISTON	1		
33	.....	O-RING	1		
34	.....	CAP	1		
35	.....	SCREW	1		BIAS CARTRIDGE
36	.....	O-RING	1		
37	.....	O-RING	1		
38	.....	BACK-UP RING	2		
39	.....	O-RING	1		
40	.....	O-RING	4		
41	.....	O-RING	2		
42	.....	SPOOL	1		
43	.....	O-RING	1		
44	.....	PLUG	1		
45	.....	PIN	1		
46	.....	SEAT	1		
47	.....	SPOOL	1		
48	.....	SPRING	1		
49	.....	SCREW	1		
50	.....	O-RING	1		
51	.....	CAP	1		
52	.....	NUT	1		
53	T166279	GASKET	1		
54	T166274	O-RING	1		
55	AT197405	KIT	1		COMPLETE CONTROL KIT
56	AT197406	KIT	1		(INCLUDES AT208643) SEAL KIT (PUMP, CONTROL)

MAIN HYDRAULIC PUMP REPAIR KITS

T150271 -UN-22JAN02

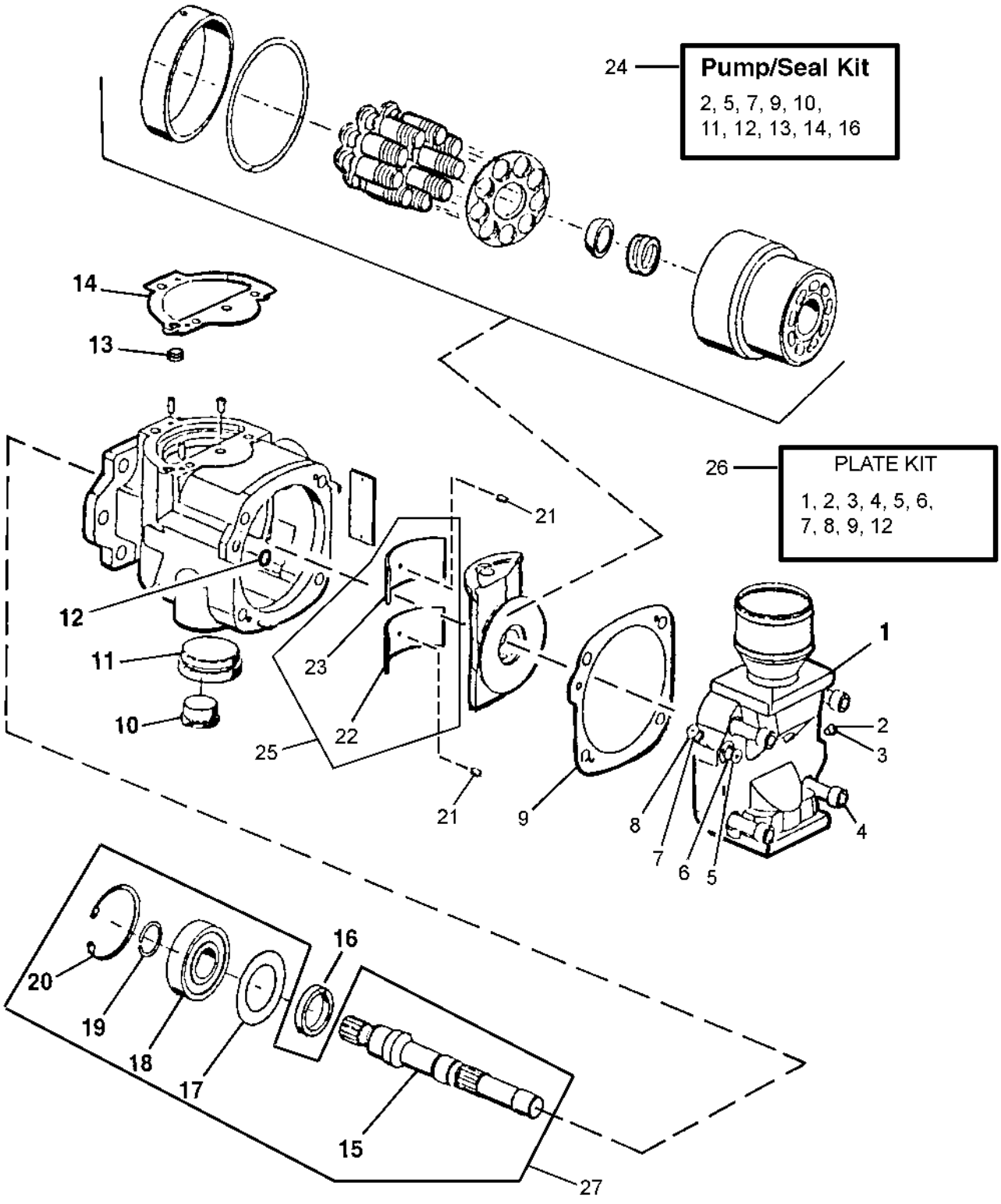

T150271

MAIN HYDRAULIC PUMP REPAIR KITS

KEY	PART NO.	PART NAME	QTY	SERIAL NO.	REMARKS
1	.....	PLATE	1		(H)
2	.....	O-RING	1		(F) (H)
3	.....	PLUG	1		(H)
4	.....	SCREW	4		(H)
5	.....	O-RING	1		(F) (H)
6	.....	PLUG	1		(H)
7	.....	O-RING	1		(F) (H)
8	.....	PLUG	1		(H)
9	.....	GASKET	1		(F) (H)
10	.....	O-RING	1		(F)
11	.....	O-RING	1		(F)
12	.....	O-RING	1		(F) (H)
13	T166274	O-RING	1		(F)
14	T166279	GASKET	1		(F)
15	.....	SHAFT	1		(I)
16	.....	SEAL	1		(F)
17	.....	RETAINER	1		(I)
18	.....	BEARING	1		(I)
19	.....	SNAP RING	1		(I)
20	.....	SNAP RING	1		(I)
21	.....	SPRING PIN	2		
22	.....	BEARING	1		(G)
23	.....	BEARING	1		(G)
24	AT208643	SEAL KIT	1		INCLUDES ALL (F) PARTS (PUMP/SEAL)PVG-75 (INCLUDED IN AT197406)
25	AT208644	BEARING KIT	1		INCLUDES ALL (G) PARTS (SWASH BEARING)
26	AT184385	PLATE	1		INCLUDES ALL (H) PARTS (QUIET VALVE)
27	AT179588	SHAFT	1		INCLUDES ALL (I) PARTS (SHAFT AND BEARING)

CAB ATTENUATOR HYDRAULICS

T152802 -UN-17APR02

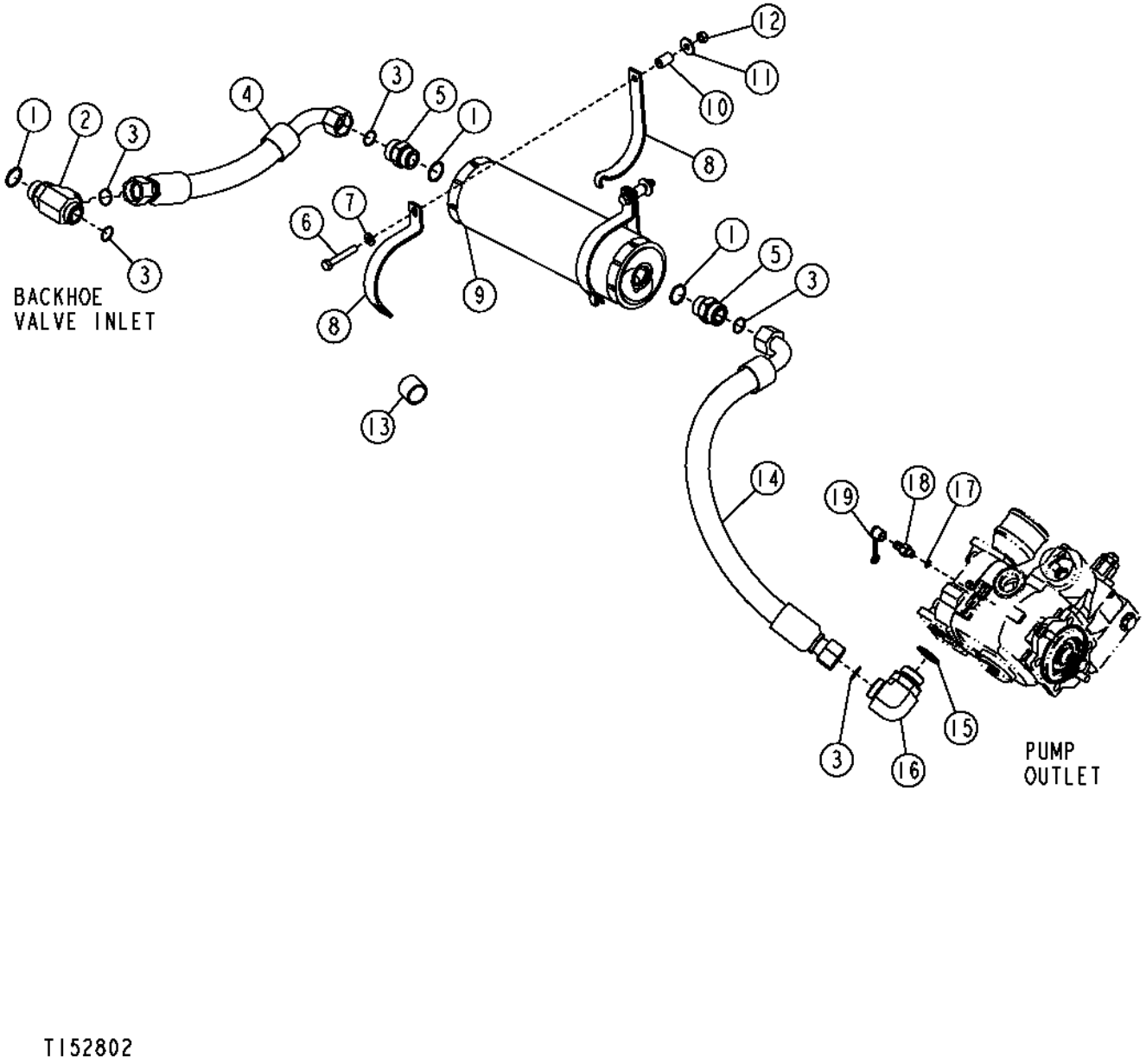

CAB ATTENUATOR HYDRAULICS

KEY	PART NO.	PART NAME	QTY	SERIAL NO.	REMARKS
1	R29936	O-RING	3		
2	38H1027	TEE FITTING	1		
3	T76938	O-RING	5		
4	AT192077	HYDRAULIC HOSE - FABRICATE	1		USE WITH 4 FUNCTION AND 5 FUNCTION VALVE
	AT192078	HYDRAULIC HOSE - FABRICATE	1		USE WITH 6 FUNCTION VALVE
	AT192079	HYDRAULIC HOSE - FABRICATE	1		USE WITH 7 FUNCTION VALVE
5	38H1164	ADAPTER	2		
6	19M7742	CAP SCREW	2		M10 X 65
7	24M7239	WASHER	2		
8	AT186653	CLAMP	2		TOP AND BOTTOM HALF
9	AT195859	HYDRAULIC ACCUMULATOR	1		(SUB FOR AT190740)
	AT161527	SEAL KIT	1		(NOT ILLUSTRATED)
10	H141836	BUSHING	2		
11	24M7296	WASHER	2		
12	14M7274	NUT	2		M10
13	T186026	SPACER	1		(RUBBER GATHERING CLAMP)
14	AT192099	HYDRAULIC HOSE - FABRICATE	1	-913479	
	AT197338	HYDRAULIC HOSE - FABRICATE	1	913480-	
15	U13639	O-RING	1		
16	.....	TEE FITTING	1	-906304	(AT178356 NO LONGER AVAILABLE) (SUB 38H1325) (ALSO ORDER RE31495, R77175 AND R28782)
	38H1325	ELBOW FITTING	1	906305-	
17	R26448	O-RING	1	-906304	
	R28782	O-RING	1	906305-	
18	AH125760	HYD. QUICK-CONNECT COUPLER	1	-906304	
	RE31495	RECEPTACLE	1	906305-	
19	R77175	COVER	1		DUST

CANOPY PUMP HYDRAULICS

T152759 -UN-19MAR02

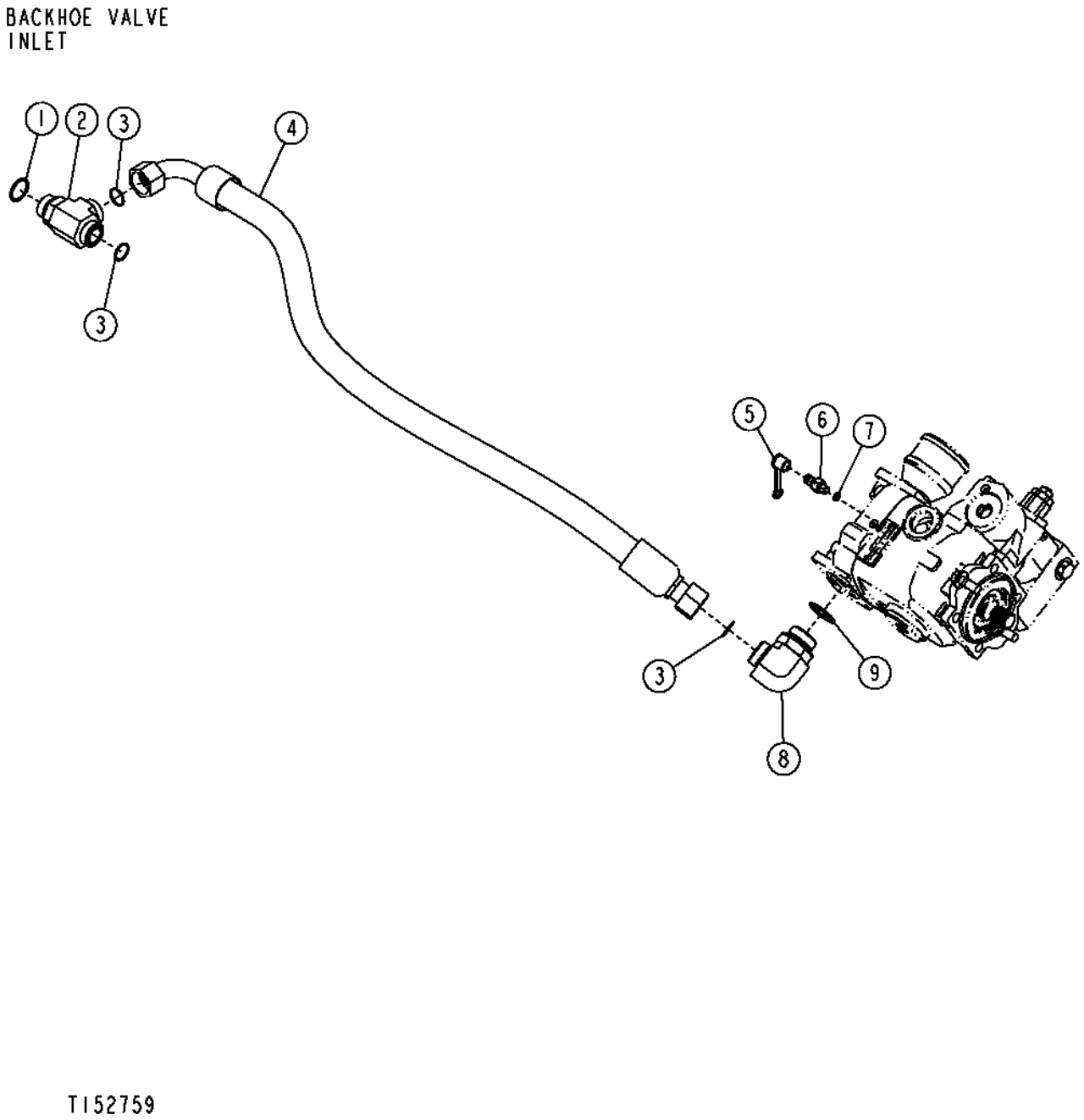

CANOPY PUMP HYDRAULICS

KEY	PART NO.	PART NAME	QTY	SERIAL NO.	REMARKS
1	R29936	O-RING	1		
2	38H1027	TEE FITTING	1		
3	T76938	O-RING	3		
4	AT190908	HYDRAULIC HOSE - FABRICATE	1		
5	R77175	COVER	1		
6	AH125760	HYD. QUICK-CONNECT COUPLER	1	-906304	
	RE31495	RECEPTACLE	1	906305-	
7	R26448	O-RING	1	-906304	
	R28782	O-RING	1	906305-	
8	.....	TEE FITTING	1	-906304	(AT178356 NO LONGER AVAILABLE) (SUB 38H1325) (ALSO ORDER RE31495, R77175 AND R28782)
	38H1325	ELBOW FITTING	1	906305-	
9	U13639	O-RING	1		

MAIN HYDRAULIC SYSTEM
(SERIAL NO. -913479)

T150109 -UN-14JAN02

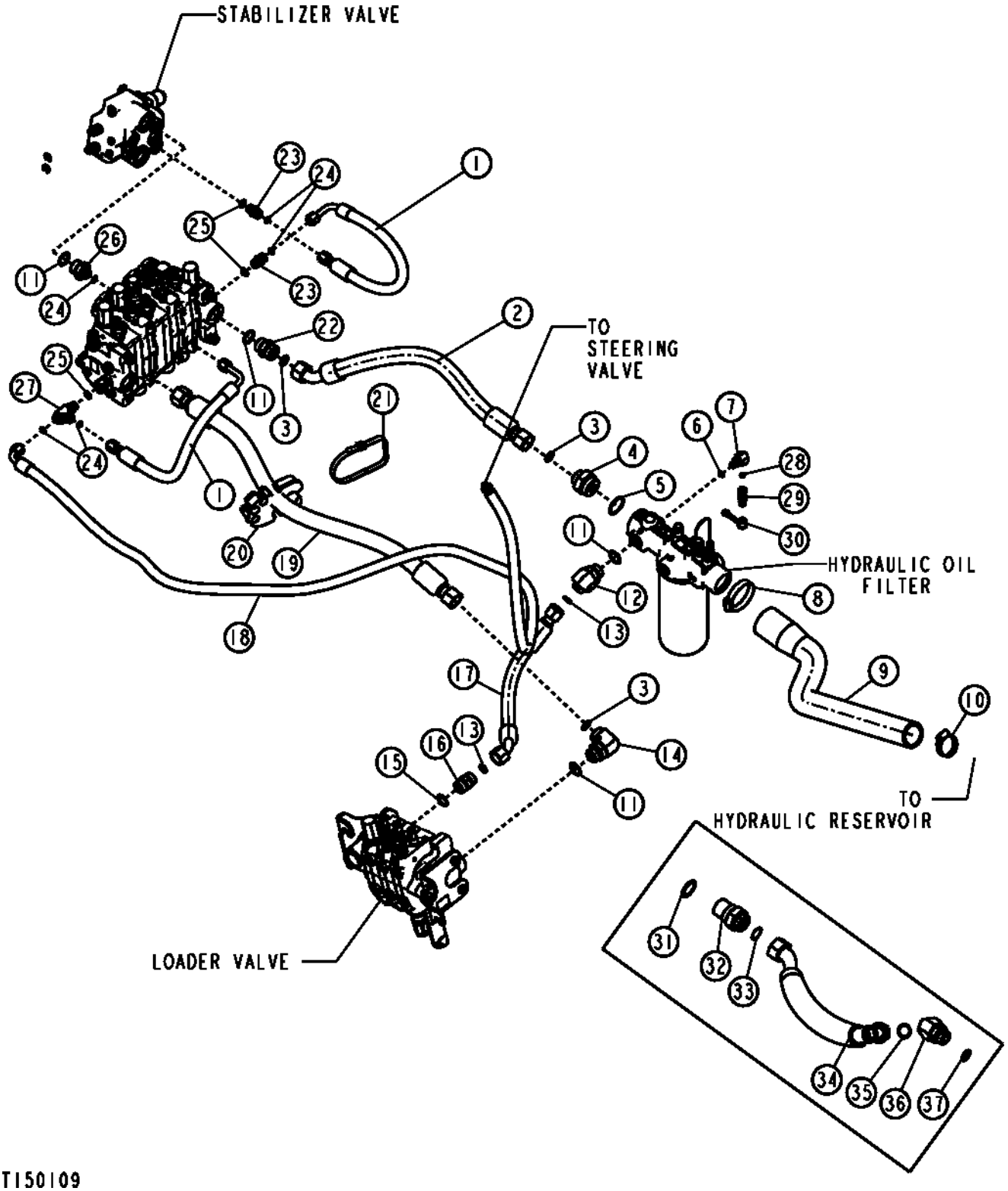

MAIN HYDRAULIC SYSTEM
(SERIAL NO. -913479)

KEY	PART NO.	PART NAME	QTY	SERIAL NO.	REMARKS
1	AT186454	HYDRAULIC HOSE - FABRICATE	2		13/16" X 555 MM (21-3/4") X 13/16"
2	AT186456	HYDRAULIC HOSE - FABRICATE	1	-905457	1-7/16" X 785 MM (31") X 1-7/16"
	AT195663	HYDRAULIC HOSE - FABRICATE	1	905458-	1-7/16" X 705 MM (27-3/4") X 1-7/16"
3	T76938	O-RING	2		
4	38H1581	ADAPTER	1		
5	R26773	O-RING	1		
6	R26448	O-RING	1		
7	38H1009	ELBOW FITTING	1		
8	AR85328	CLAMP	1	905458-	
9	AT195662	HOSE	1	905458-	
10	TY22472	CLAMP	1	905458-	
11	R29936	O-RING	4		
12	38H1073	ELBOW FITTING	1		
13	T77858	O-RING	2		
14	38H1037	ELBOW FITTING	1		
15	U17409	O-RING	1		
16	38H1343	ADAPTER	1		
17	AT186425	HYDRAULIC HOSE - FABRICATE	1		1-3/16" X 410 MM (16-1/4") X 1-3/16"
18	AT188365	HYDRAULIC HOSE - FABRICATE	1		(ALSO ORDER 62H1043 AND T77857)
19	AT186424	HYDRAULIC HOSE - FABRICATE	1		1-7/16" X 1 000 MM (39-1/4") X 1-7/16"
20	T166603	HOSE CLAMP	1	-911131	GATHERING CLAMP, (SUB FOR T166603)
	T190669	HOSE CLAMP	1	911132-	
21	N189220	TIE BAND	1		
22	38H1164	ADAPTER	1		
23	38H1161	ADAPTER	2		
24	T77857	O-RING	4		
25	R26375	O-RING	2		
26	38H1176	ADAPTER	1		
27	38H1024	TEE FITTING	1		
28	T77814	O-RING	1		
29	RE60700	FITTING	1		
30	R77175	COVER	1		
31	R26773	O-RING	1	-905457	
32	AT194995	CHECK VALVE	1	-905457	
33	T78612	O-RING	1	-905457	
34	AT195047	HYDRAULIC HOSE - FABRICATE	1	-905457	1-7/16" X 545 MM (21-1/2") X 1-11/16"
35	T76938	O-RING	1	-905457	
36	38H1049	ELBOW FITTING	1	-905457	
37	R29936	O-RING	1	-905457	

MAIN HYDRAULIC SYSTEM
(SERIAL NO. 913480-)

T163605 -UN-08JAN03

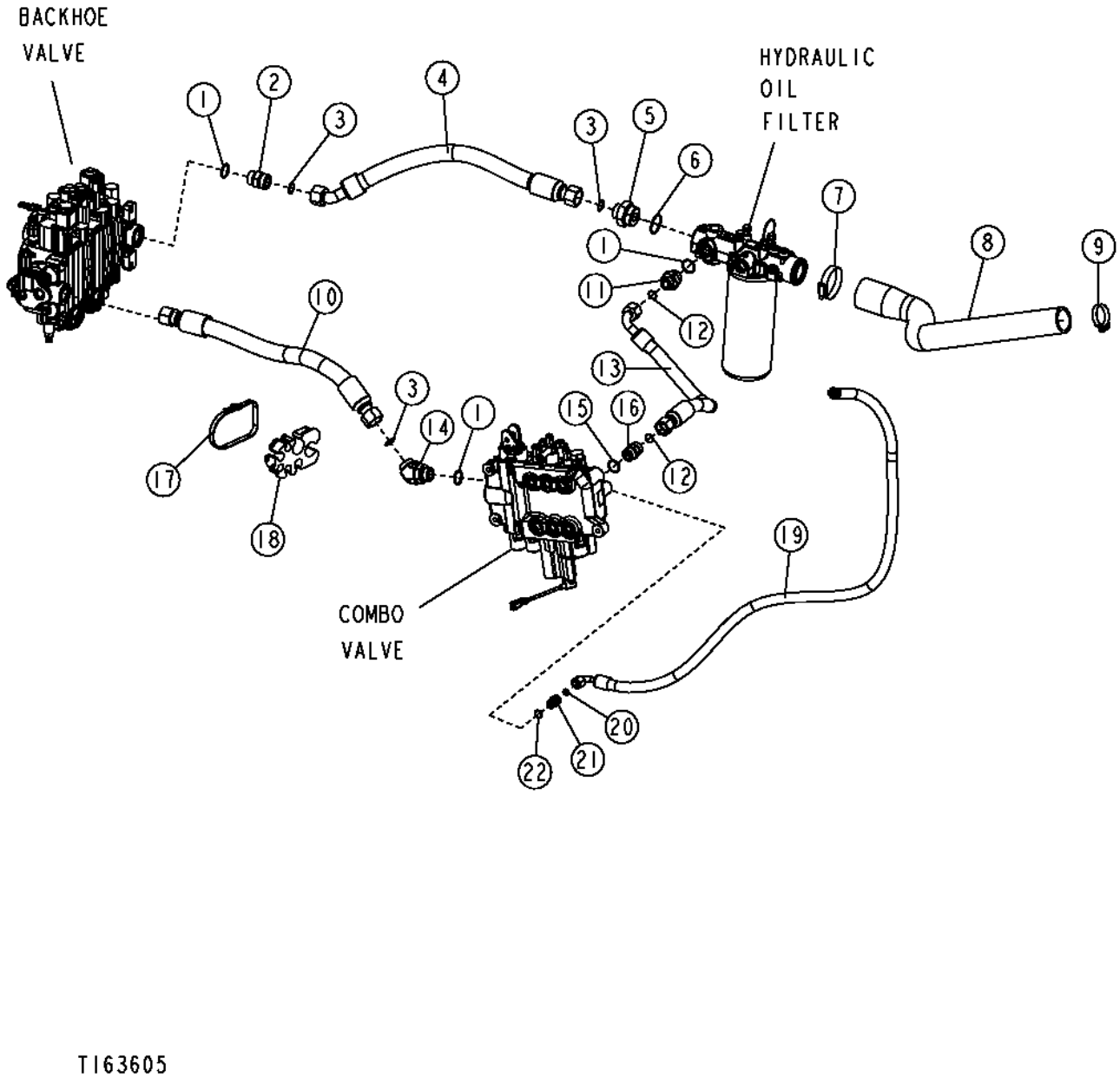

MAIN HYDRAULIC SYSTEM
(SERIAL NO. 913480-)

KEY	PART NO.	PART NAME	QTY	SERIAL NO.	REMARKS
1	R29936	O-RING	3		
2	38H1164	ADAPTER	1		
3	T76938	O-RING	3		
4	AT195663	HYDRAULIC HOSE - FABRICATE	1		1-7/16" X 705 MM (27-3/4") X 1-7/16"
5	38H1581	ADAPTER	1		
6	R26773	O-RING	1		
7	AR85328	CLAMP	1		
8	AT195662	HOSE	1		
9	AT145651	CLAMP	1		
10	AT196413	HYDRAULIC HOSE - FABRICATE	1		1" X 705 MM (27-3/4") X 1"
11	38H1194	ADAPTER	1		
12	T77858	O-RING	2		
13	AT196422	HYDRAULIC HOSE - FABRICATE	1		13/16" X 554 MM (21-3/4") X 13/16"
14	38H1049	ELBOW FITTING	1		
15	U17409	O-RING	1		
16	38H1343	ADAPTER	1		
17	N189220	TIE BAND	1		
18	T190669	HOSE CLAMP	1		
19	AT196489	HYDRAULIC HOSE - FABRICATE	1		9/16" X 1 600 MM (63") X 9/16"
20	T77857	O-RING	1		
21	38H1161	ADAPTER	1		
22	R26375	O-RING	1		

MAIN HYDRAULIC SYSTEM

T154906 -UN-24MAY02

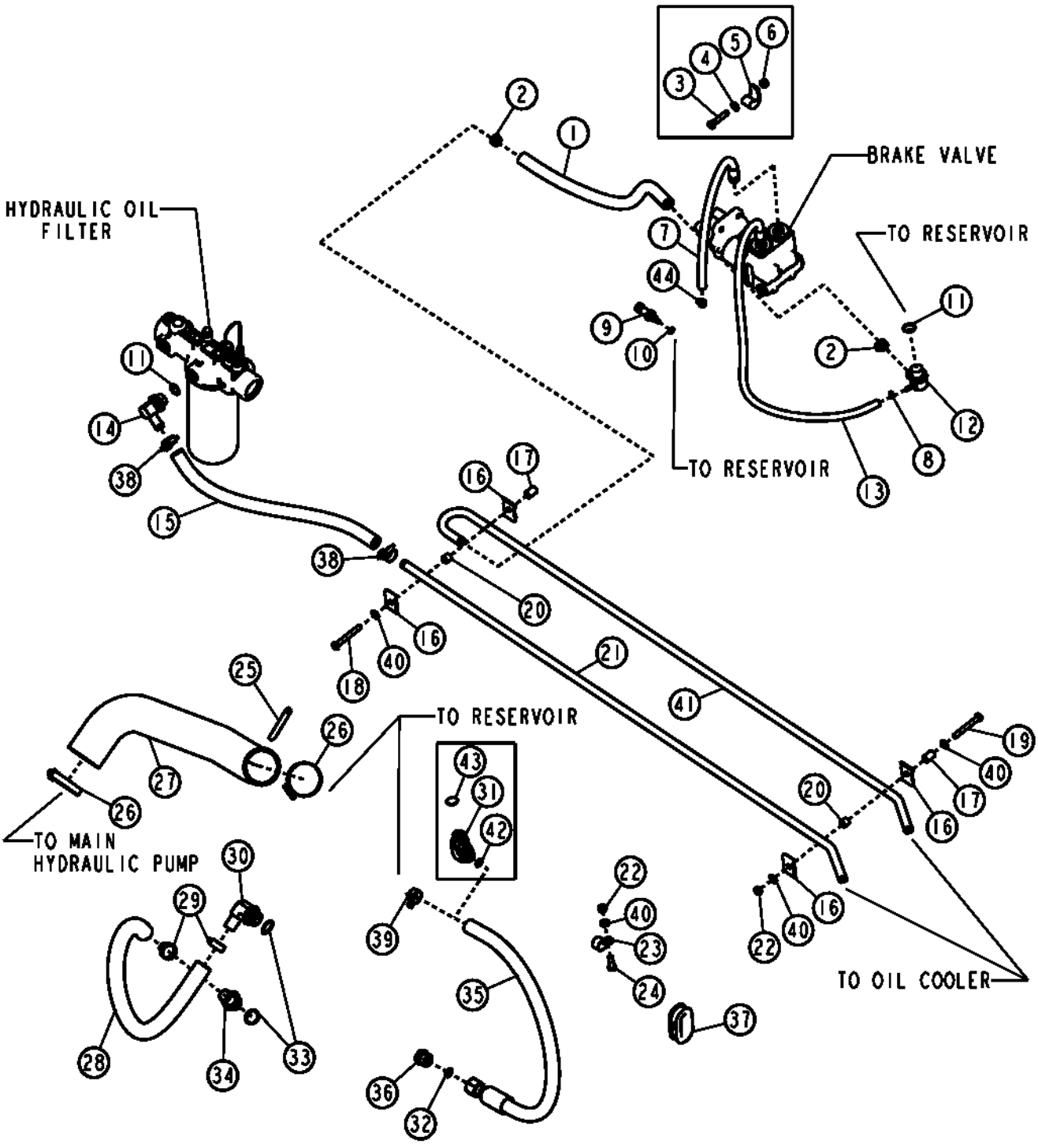

T154906

MAIN HYDRAULIC SYSTEM

KEY	PART NO.	PART NAME	QTY	SERIAL NO.	REMARKS
1	.....	HOSE	1		(MAKE FROM T78497, CUT TO 3'6" LENGTH)
2	RE65978	CLAMP	2		
3	19M8600	CAP SCREW	2	-902890	M10 X 50
4	24M7239	WASHER	2	-902890	
5	R46667	CLAMP	2	-902890	
6	28H3412	SPACER	2	-902890	
7	AT185078	HYDRAULIC HOSE - FABRICATE	1	-911131	
	AT101779	HYDRAULIC HOSE - FABRICATE	1	911132-	(STEERING TO BRAKE VALVE)
8	AR48236	CLAMP	1		
9	RE52722	SENSOR	1		TEMPERATURE
10	51M7041	O-RING	1		
11	U12547	O-RING	2	-911131	
12	AT187779	TEE FITTING	1	-911131	
13	AT185077	HYDRAULIC HOSE - FABRICATE	1	-911131	
	AT280598	HYDRAULIC HOSE - FABRICATE	1	911132-	
14	AH61472	HOSE FITTING	1		
15	.....	HOSE	1		(MAKE FROM T78497, CUT TO 1'10.5" LENGTH)
16	R46919	HALF CLAMP	4		
17	H141836	BUSHING	2		
18	19M8081	CAP SCREW	1		M10 X 80
19	19M8081	CAP SCREW	1		M10 X 80
20	T126052	SPACER	2		
21	T183913	OIL TUBE	1		UPPER
22	14M7274	NUT	2		M10
23	T102934	CLAMP	1		
24	19M7662	CAP SCREW	1		
25	.....	MOLDING	1	-902890	(MAKE FROM T61861, CUT TO 152MM LENGTH)
26	AR85328	CLAMP	1		
27	AT184137	SUCTION HOSE	1		
28	T166617	HYDRAULIC HOSE - FABRICATE	1		
29	AH105968	HOSE CLAMP	2		
30	AH75162	FITTING	1		
31	38H1404	ELBOW FITTING	1	-902890	
32	T77932	O-RING	1	-902890	
	T77858	O-RING	1	902891-	
33	R29936	O-RING	2		
34	T29747	HOSE FITTING	1		
35	AT191884	HYDRAULIC HOSE - FABRICATE	1	-902890	1" X 813 MM (32") X 1"
	AT196814	HYDRAULIC HOSE - FABRICATE	1	902891-	
36	38H1148	FITTING PLUG	1	-902890	
	38H1149	FITTING PLUG	1	902891-	
37	T158476	GROMMET	1		
38	AT196496	CLAMP	1		
39	T185826	CLAMP	1	902891-	
40	24M7239	WASHER	4		
41	.....	OIL TUBE	1	-902890	LOWER, (SUB T188573)
	T188573	OIL TUBE	1	902891-	LOWER
42	T77932	O-RING	1	-902890	
43	U12547	O-RING	1	-902890	
44	AR77962	HOSE CLAMP	1	-911131	

LOAD SENSE HYDRAULICS
(SERIAL NO. -913479)

TP69601 -UN-10OCT00

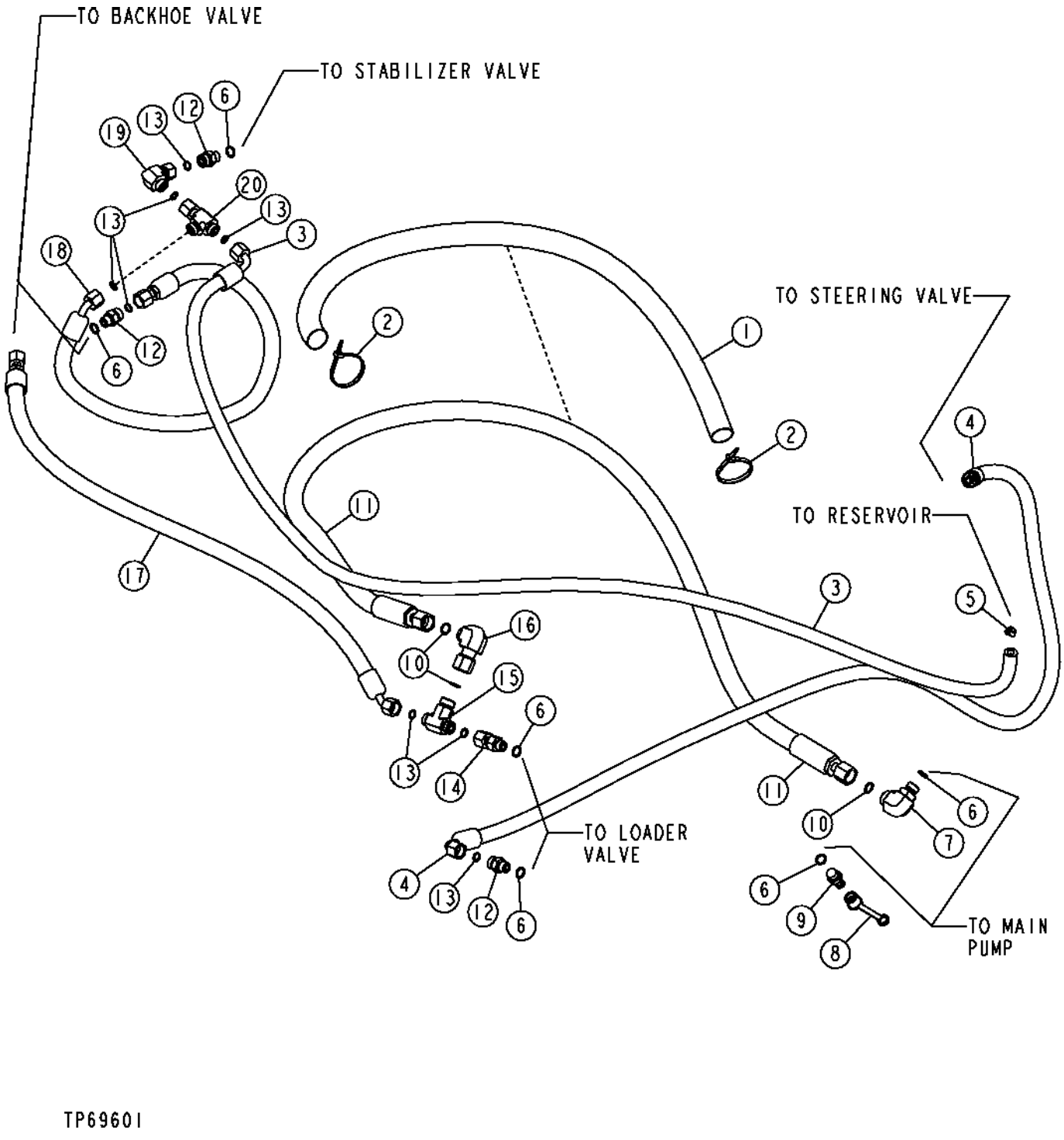

LOAD SENSE HYDRAULICS
(SERIAL NO. -913479)

KEY	PART NO.	PART NAME	QTY	SERIAL NO.	REMARKS
1	T185089	SLEEVE	1		
2	R44302	TIE BAND	2		
3	AT190909	HYDRAULIC HOSE - FABRICATE	1		
4	AT186422	HYDRAULIC HOSE - FABRICATE	1		(ALSO ORDER 62H1042 AND T77613)
5	AR48236	CLAMP	1		
6	R26448	O-RING	1		
7	38H1314	ELBOW FITTING	1		
8	R77175	COVER	1		
9	AH125760	HYD. QUICK-CONNECT COUPLER	1		DIAGNOSTIC RECEPTACLE
10	T77857	O-RING	3		
11	AT188552	HYDRAULIC HOSE - FABRICATE	1		13/16" X 1 630 MM (64-1/4") X 13/16"
12	38H1160	ADAPTER	3		
13	T77613	O-RING	8		
14	38H1067	ADAPTER	1		
15	AT180887	CHECK VALVE	1		
16	38H1095	ELBOW FITTING	1		
17	AT186455	HYDRAULIC HOSE - FABRICATE	1		
18	AT186455	HYDRAULIC HOSE - FABRICATE	1		
19	38H1094	ELBOW FITTING	1		
20	AT194935	TEE FITTING	1		(INCLUDES (2) T77613) (SUB FOR AT173046, THIS APPLICATION)

LOAD SENSE HYDRAULICS
(SERIAL NO. 913480-)

T163575 -UN-07JAN03

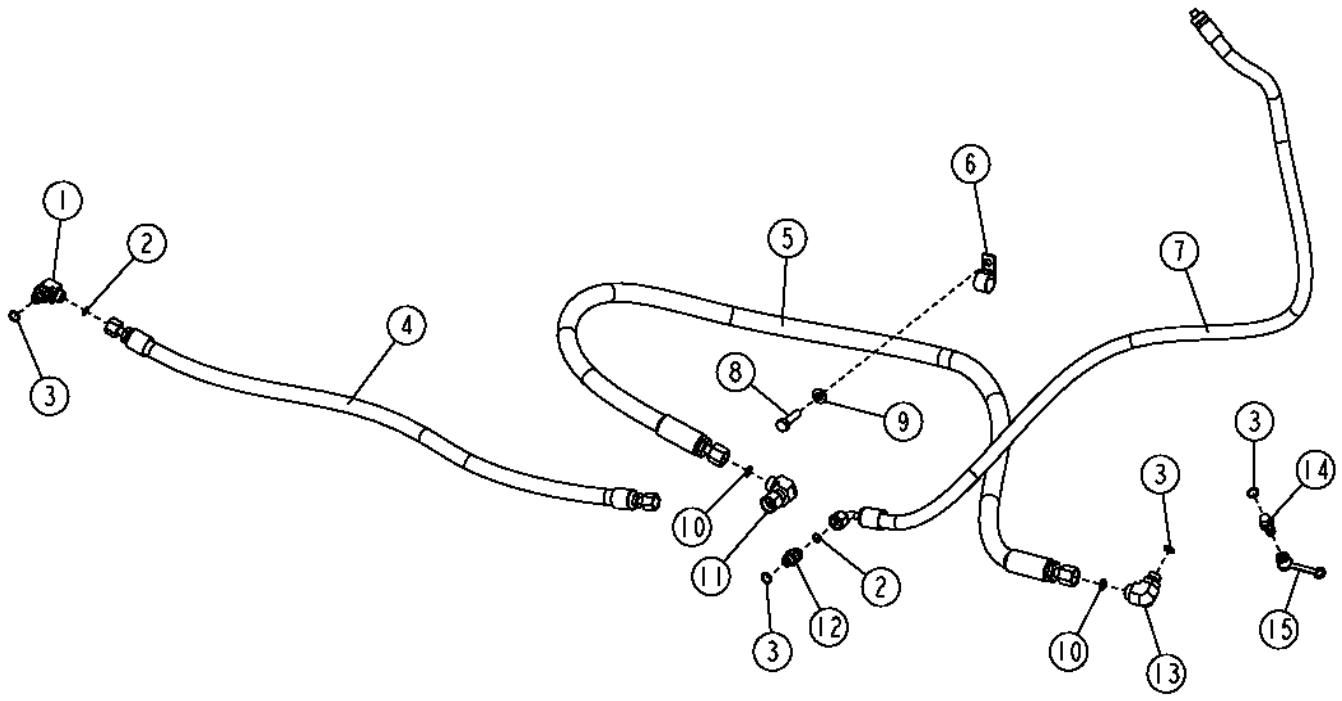

TI63575

LOAD SENSE HYDRAULICS
(SERIAL NO. 913480-)

KEY	PART NO.	PART NAME	QTY	SERIAL NO.	REMARKS
1	38H1004	ELBOW FITTING	1		
2	T77613	O-RING	2		
3	R26448	O-RING	4		
4	AT196483	HYDRAULIC HOSE - FABRICATE	1		
5	AT300492	HYDRAULIC HOSE - FABRICATE	1		
6	T102934	CLAMP	1		
7	AT196482	HYDRAULIC HOSE - FABRICATE	1		
8	19M8637	CAP SCREW	1		
9	24M7239	WASHER	1		
10	T77857	O-RING	2		
11	38H1095	ELBOW FITTING	1		
12	38H1160	ADAPTER	1		
13	38H1314	ELBOW FITTING	1		
14	AH125760	HYD. QUICK-CONNECT COUPLER	1		
15	R77175	COVER	1		

MAIN HYDRAULIC SYSTEM RESERVOIR

T148344 -UN-30JAN02

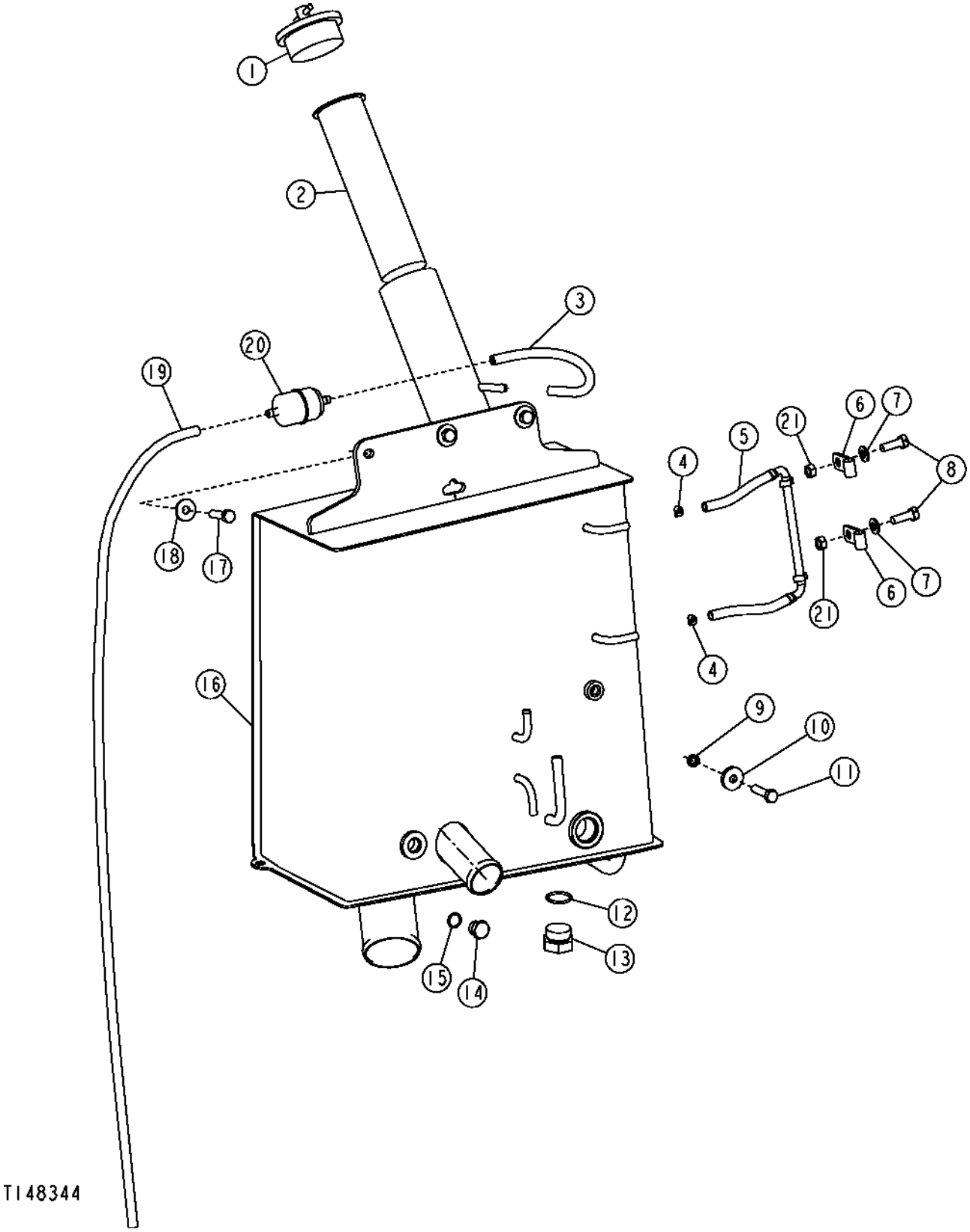

MAIN HYDRAULIC SYSTEM RESERVOIR

KEY	PART NO.	PART NAME	QTY	SERIAL NO.	REMARKS
1	AT174743	FILLER CAP	1		
2	AT161638	STRAINER	1		(SERVICE ONLY)
3	.....	HOSE	1		(MAKE FROM M87571, BULK MATERIAL CUT TO LENGTH)
4	AR77962	HOSE CLAMP	2		
5	AT191813	LEVEL GAUGE	1		
6	T185683	CLIP	2		
7	24M7239	WASHER	2		
8	19M7662	CAP SCREW	2		M10 X 30
9	T184657	SPACER	1		
10	24H1311	WASHER	1		
11	19M8637	CAP SCREW	1		M10 X 40
12	R29936	O-RING	1	-913479	
	R26375	O-RING	1	913480-	
13	R36636	FITTING PLUG	1	-913479	
	R39112	FITTING	1	913480-	
14	R39112	FITTING	1		
15	R26375	O-RING	1		
16	AT184948	HYDRAULIC RESERVOIR	1	-905457	
	AT196927	HYDRAULIC RESERVOIR	1	905458-911131	
	AT280394	HYDRAULIC RESERVOIR	1	911132-913479	
	AT198197	HYDRAULIC RESERVOIR	1	913480-	
17	19M8637	CAP SCREW	3		M10 X 40
18	24M7296	WASHER	3		
19	.....	HOSE	1		(MAKE FROM M87571, BULK MATERIAL CUT TO LENGTH)
20	AT101565	AIR FILTER	1		BREATHER (INSTALL WITH FLOW ARROW POINTING TOWARD RESERVOIR)
21	14M7274	NUT	2		M10

HYDRAULIC OIL FILTER

TP69662 -UN-10OCT00

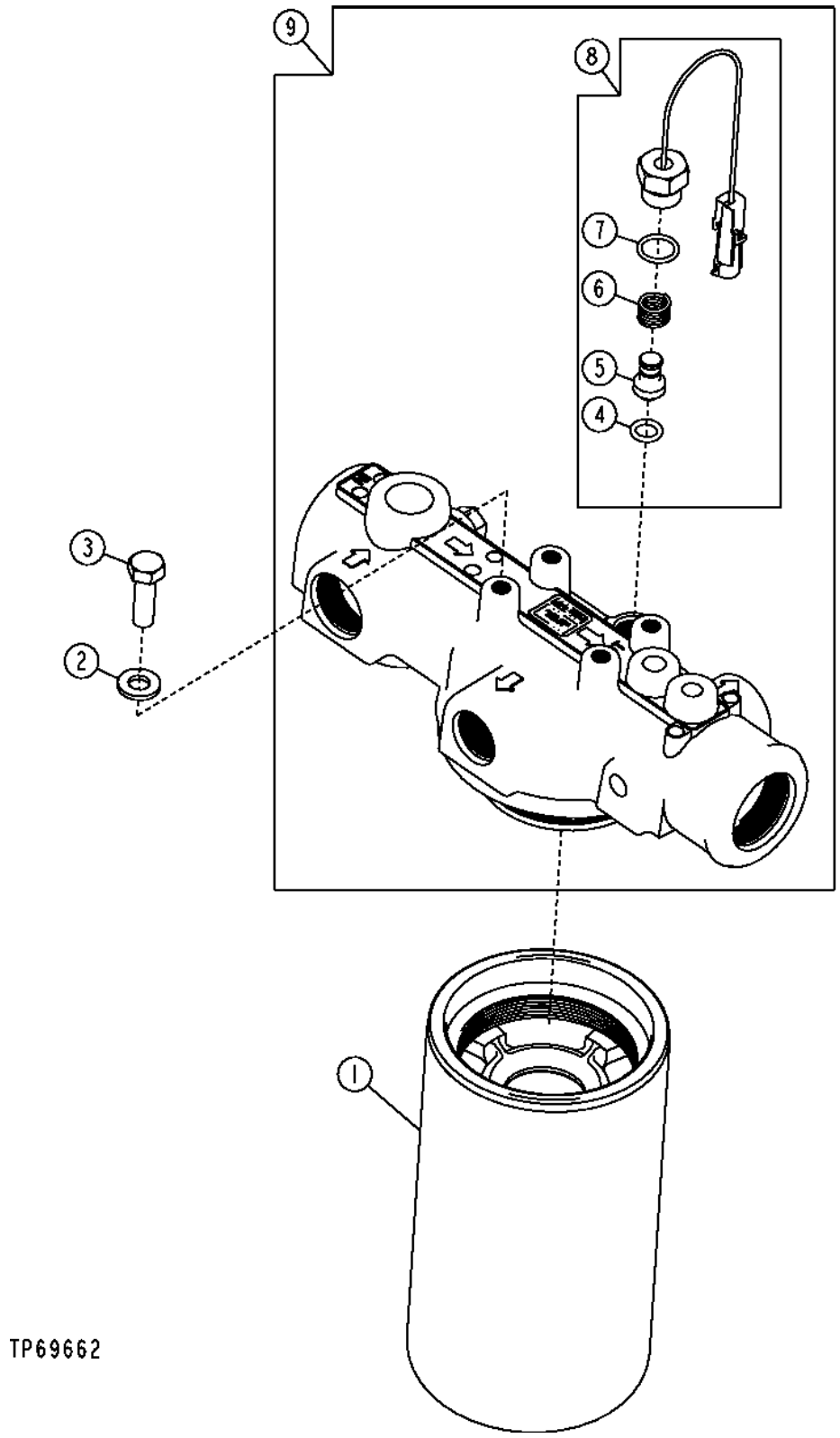

HYDRAULIC OIL FILTER

KEY	PART NO.	PART NAME	QTY	SERIAL NO.	REMARKS
1	AT195915	HYDRAULIC FILTER	1	-905457	(SUB FOR AT189924)
	AT228474	HYDRAULIC FILTER	1	905458-	(SUB FOR AT223235)
2	24M7239	WASHER	4		
3	19M7662	CAP SCREW	4		M10 X 30
4	T186154	O-RING	1		
5	.....	PISTON	1		
6	.....	SPRING	1		
7	R26375	O-RING	1		
8	AT192373	KIT	1		
9	AT195083	FILTER HEAD	1	-905457	
	AT195276	FILTER HEAD	1	905458-	

HYDRAULIC OIL COOLER AND HOSES

T146574 -UN-11OCT01

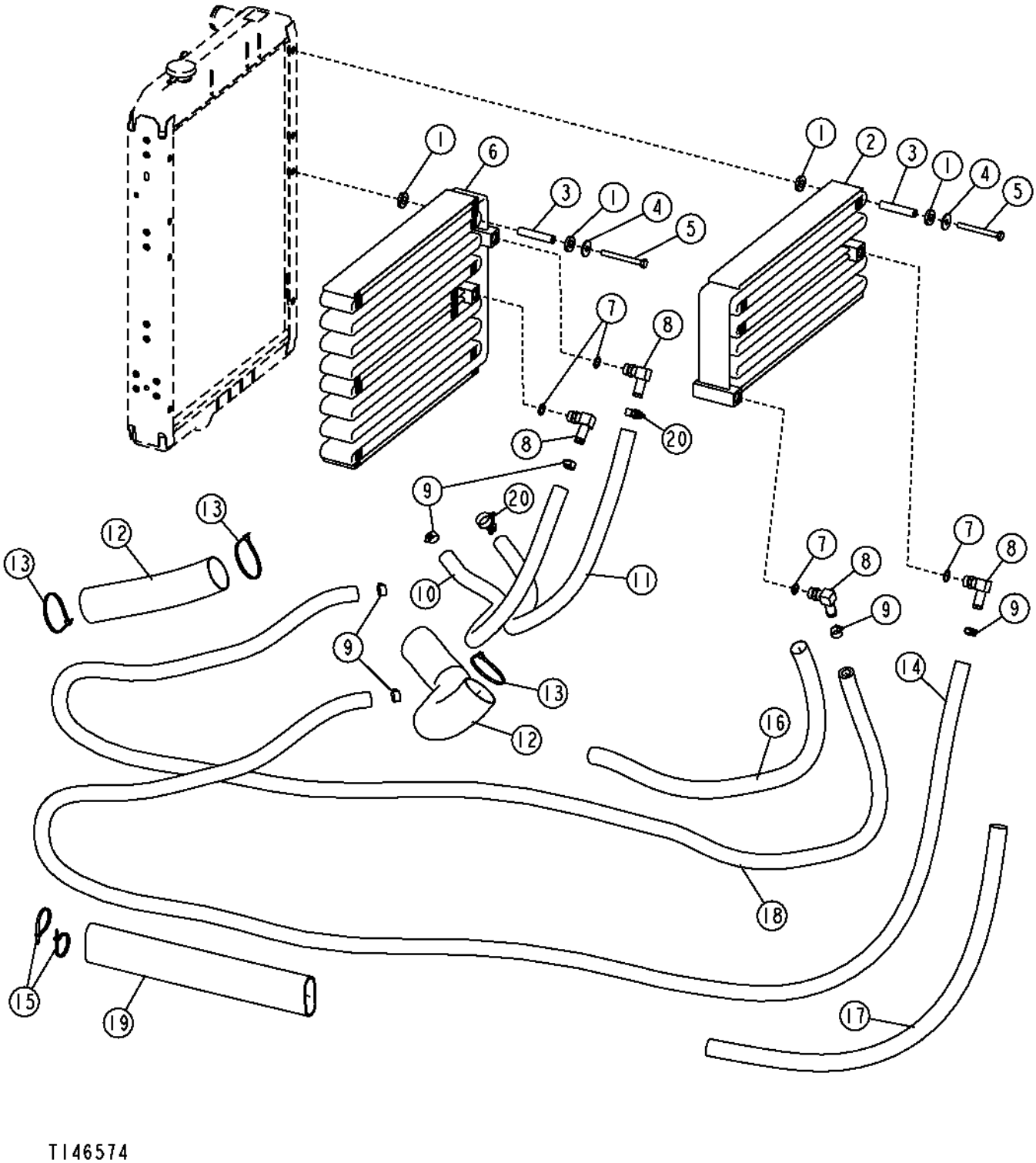

HYDRAULIC OIL COOLER AND HOSES

KEY	PART NO.	PART NAME	QTY	SERIAL NO.	REMARKS
1	T158424	WASHER	16		
2	AT178693	OIL COOLER	1		SUPPLEMENTAL
3	N117290	SPACER	8		
4	24M7101	WASHER	8		
5	19M8093	CAP SCREW	8		M10 X 100
6	AT177204	OIL COOLER	1		
7	R26906	O-RING	4		
8	AH64349	HOSE FITTING	4		
9	RE65978	CLAMP	6		
10	.....	HYDRAULIC HOSE	1		(MAKE FROM T78497, CUT TO 2.5 FT.)
11	.....	HYDRAULIC HOSE	4		(MAKE FROM T78497, CUT TO 3 FT.)
12	T161463	SLEEVE	2		
13	N198516	TIE BAND	3		
14	.....	HYDRAULIC HOSE	1		(MAKE FROM T78497, CUT TO 11.7 FT.)
15	R44302	TIE BAND	2		
16	T185090	SLEEVE	1		CODURA
17	T185089	SLEEVE	1		CODURA
18	.....	HOSE	1		(MAKE FROM T78497, CUT TO 11.3 FT.)
19	T161464	SLEEVE	1		
20	AT196496	CLAMP	2		

HYDRAULIC OIL COOLER AND HOSES
(HI-AMBIENT)

T146585 -UN-11OCT01

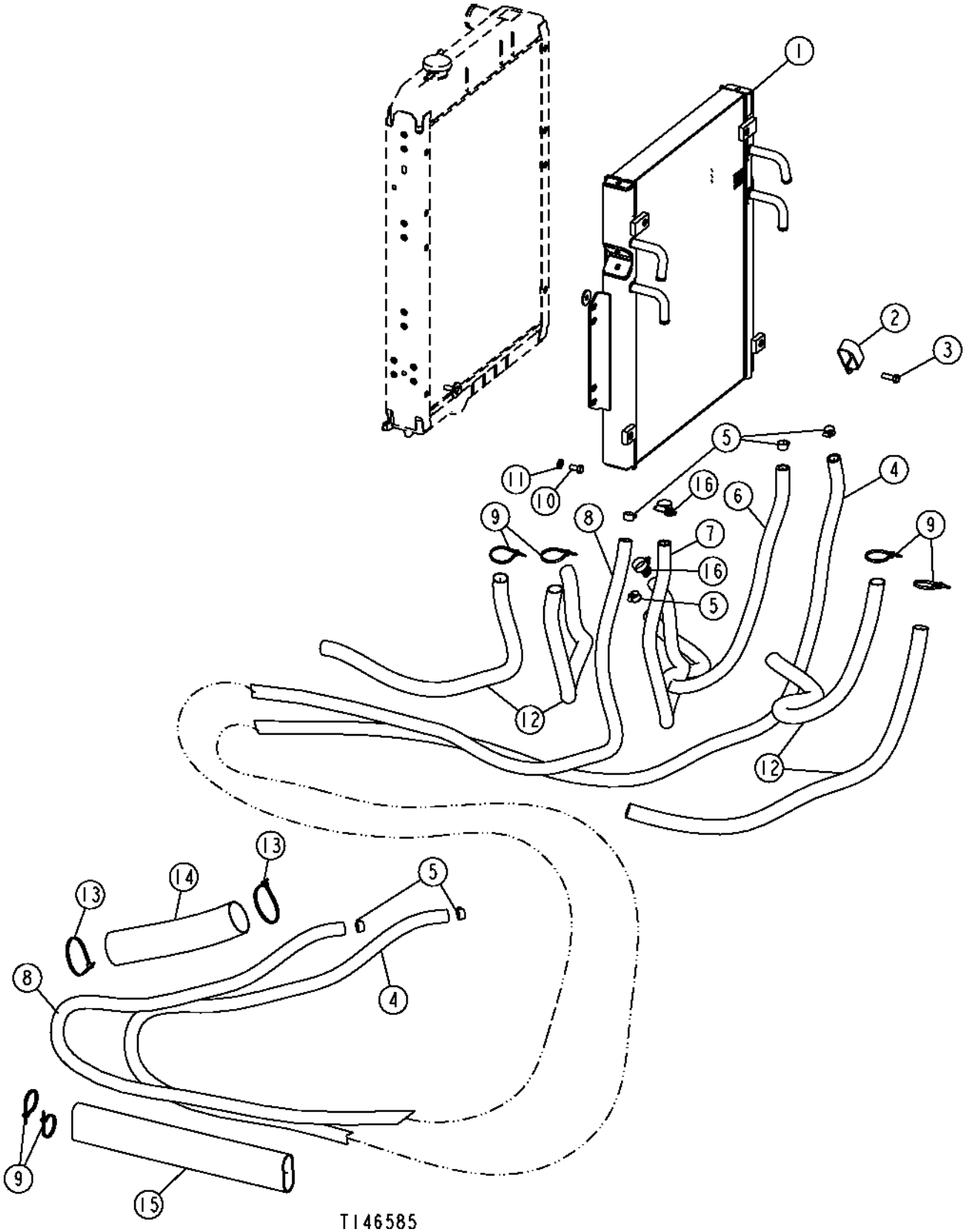

HYDRAULIC OIL COOLER AND HOSES
(HI-AMBIENT)

KEY	PART NO.	PART NAME	QTY	SERIAL NO.	REMARKS
1	AT192656	OIL COOLER	1		(SUB FOR AT184519)
2	T185154	CLAMP	2		
3	19M7662	CAP SCREW	2		M10 X 30
4	.....	HYDRAULIC HOSE	1		(MAKE FROM T78497, CUT TO 11.88 FT.)
5	RE65978	CLAMP	6		
6	.....	HYDRAULIC HOSE	1		(MAKE FROM T78497, CUT TO 3.58 FT.)
7	.....	HYDRAULIC HOSE	1		(MAKE FROM T78497, CUT TO 3.75 FT.)
8	.....	HYDRAULIC HOSE	1		(MAKE FROM T78497, CUT TO 11.58 FT.)
9	R44302	TIE BAND	6		
10	19M7402	CAP SCREW	4		M10 X 25
11	24M7239	WASHER	4		
12	T185089	SLEEVE	4		
13	N198516	TIE BAND	2		
14	T161463	SLEEVE	1		
15	T161464	SLEEVE	1		
16	AT196496	CLAMP	2		

RIDE CONTROL
(SERIAL NO. -911132)

T141414 -UN-18APR01

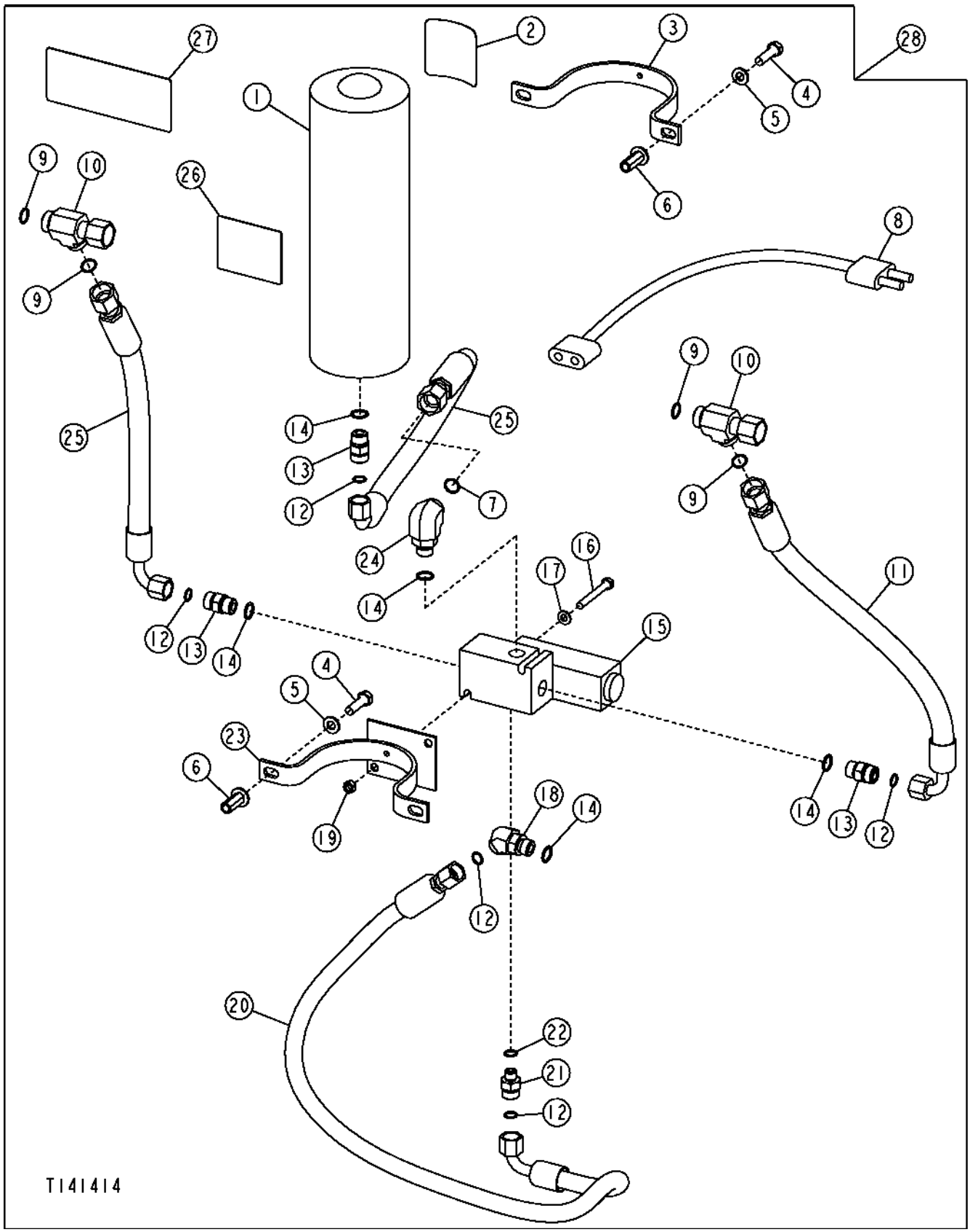

RIDE CONTROL
(SERIAL NO. -911132)

KEY	PART NO.	PART NAME	QTY	SERIAL NO.	REMARKS
1	AT188819	PNEUMATIC ACCUMULATOR	1	-902361	(ALSO ORDER T164124, T164128 OR T164129)
	AT196351	HYDRAULIC ACCUMULATOR	1	902362-	(ALSO ORDER T164124, T164128 OR T164129)
	AT161527	SEAL KIT	1	-902361	(NOT ILLUSTRATED)
	AT161528	HYD ACTUATED CONTROL VALVE	1	-902361	(NOT ILLUSTRATED)
	T146481	CAP	1	-902361	(NOT ILLUSTRATED)
	AT196760	KIT	1	902362-	(NOT ILLUSTRATED) (SCHRADER VALVE SERVICE KIT)
2	T164124	LABEL	1		ENGLISH ACCUMULATOR WARNING
	T164128	LABEL	1		FRENCH ACCUMULATOR WARNING
	T164129	LABEL	1		SPANISH ACCUMULATOR WARNING
3	T166761	CLAMP	1		
4	19M7550	CAP SCREW	4		M10 X 35
5	24M7239	WASHER	4		
6	T148409	NUT	4		M10
7	T77932	O-RING	1		
8	AT183590	WIRING HARNESS	1		
9	T77932	O-RING	4		
10	38H1032	TEE FITTING	2		
11	AT186898	HYDRAULIC HOSE - FABRICATE	1		
12	T77857	O-RING	5		
13	38H1161	ADAPTER	3		
14	R26375	O-RING	5		
15	AT191176	ELEC.PROPORTIONAL VALVE	1		(SUB AT198760) (ALSO ORDER AT199646 AND (2) 19M7663)
	19H3070	SCREW	4		0.190" X 1-1/4"
	AT184161	ELECTRICAL COIL	1		
	N203255	NUT	1		
	AT172179	SEAL KIT	1		
16	19M8402	CAP SCREW	2		M8 X 65
17	24M7238	WASHER	2		
18	38H1046	ELBOW FITTING	1		
19	14M7273	NUT	2		M8
20	AT188401	HYDRAULIC HOSE - FABRICATE	1		
21	38H1173	ADAPTER	1		
22	R26448	O-RING	1		
23	AT189210	CLAMP	1		
24	38H1405	ELBOW FITTING	1		
25	AT186899	HYDRAULIC HOSE - FABRICATE	2		
26	T146792	SAFETY SIGN	1		HIGH PRESSURE OIL WARNING
27	T185145	LABEL	2		RIDE CONTROL
28	.....	KIT	1		(WHOLE GOODS) (AT185950 NO LONGER AVAILABLE) (INCLUDES AT193881, T162238 AND T70341) (SUB AT280742)

RIDE CONTROL
(SERIAL NO. 911133-)

T164160 -UN-17JAN03

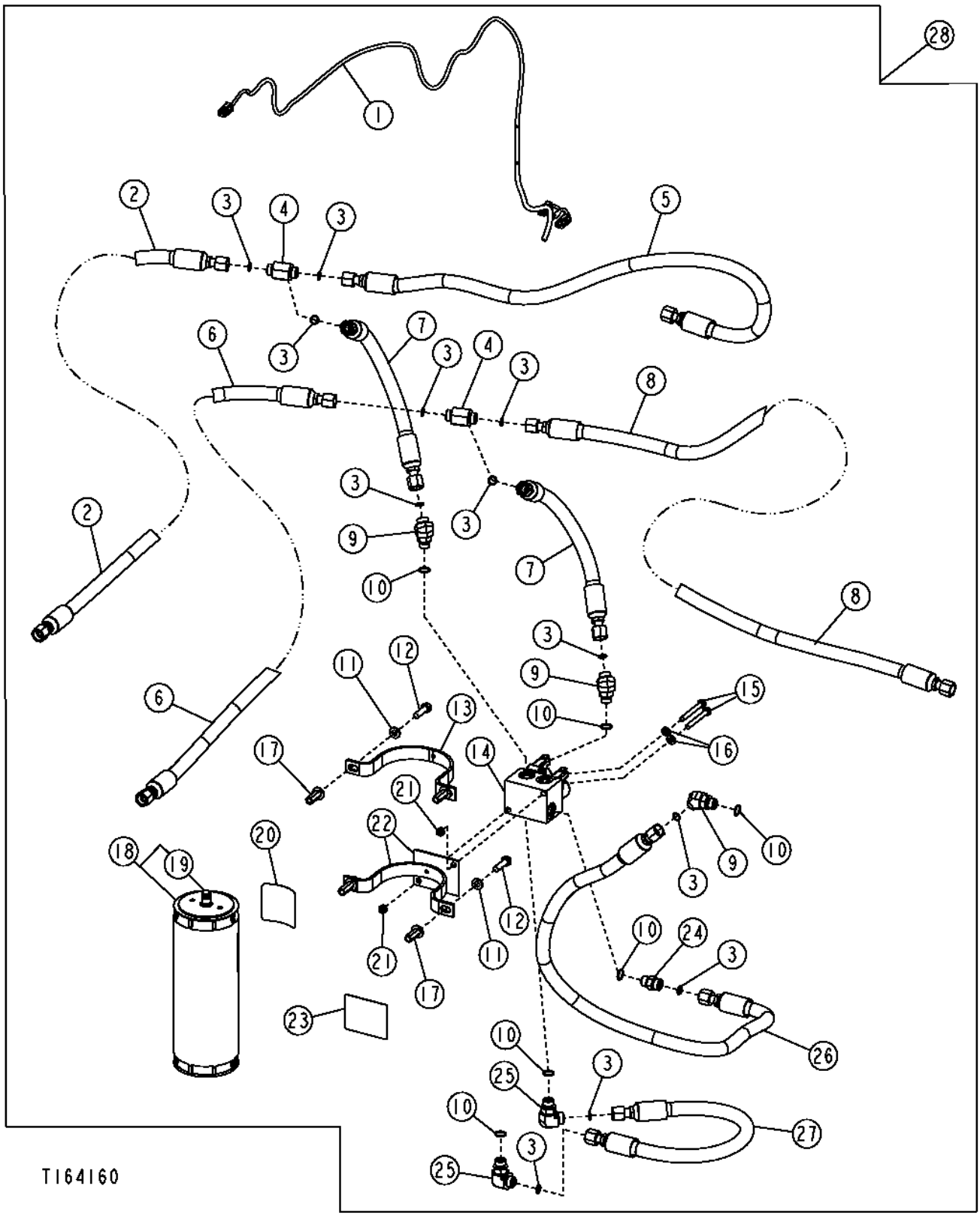

RIDE CONTROL
(SERIAL NO. 911133-)

KEY	PART NO.	PART NAME	QTY	SERIAL NO.	REMARKS
1	AT199646	WIRING HARNESS	1		
2	AT199643	HYDRAULIC HOSE - FABRICATE	1		
3	T77857	O-RING	12		
4	38H1032	TEE FITTING	2	-913479	
	38H1206	TEE FITTING	2	913480-	
5	AT199645	HYDRAULIC HOSE - FABRICATE	1		
6	AT199642	HYDRAULIC HOSE - FABRICATE	1		
7	AT280509	HYDRAULIC HOSE - FABRICATE	2	-913479	
	AT199639	HYDRAULIC HOSE - FABRICATE	2	913480-	
8	AT199644	HYDRAULIC HOSE - FABRICATE	1		
9	38H1161	ADAPTER	2	-913479	(STRAIGHT FITTING)
	38H1046	ELBOW FITTING	2	913480-	(45 DEGREE FITTING)
10	R26375	O-RING	6		
11	24M7239	WASHER	4		
12	19M7550	CAP SCREW	4		M10 X 35
13	T166761	CLAMP	1		
14	AT198760	SOLENOID HYDRAULIC VALVE	1		
	AT280440	SOLENOID HYDRAULIC VALVE	2		CARTRIDGE
	AT280441	SOLENOID VALVE COIL	2		COIL
	E71998	BACK-UP RING	2		
	R28776	O-RING	2		
	R47151	O-RING	2		
	14M7477	NUT	2		M18
15	19M7663	CAP SCREW	2		M8 X 70
16	24M7238	WASHER	2		
17	T148409	NUT	4		M10
18	AT196351	HYDRAULIC ACCUMULATOR	1		
19	AT196760	KIT	1		
20	T164124	LABEL	1		
21	14M7273	NUT	2		M8
22	AT189210	CLAMP	1		
23	T146792	SAFETY SIGN	1		
24	38H1161	ADAPTER	1		
25	38H1005	ELBOW FITTING	2		
26	AT199641	HYDRAULIC HOSE - FABRICATE	1		
27	AT199640	HYDRAULIC HOSE - FABRICATE	1		
28	AT280742	KIT	1	-913479	
	AT197238	KIT	1	913480-	(INCLUDES AT300928)

LOADER BUCKET AND CUTTING EDGE
.96 CUBIC METER (1.25 CUBIC YARD)

TP69675 -UN-10OCT00

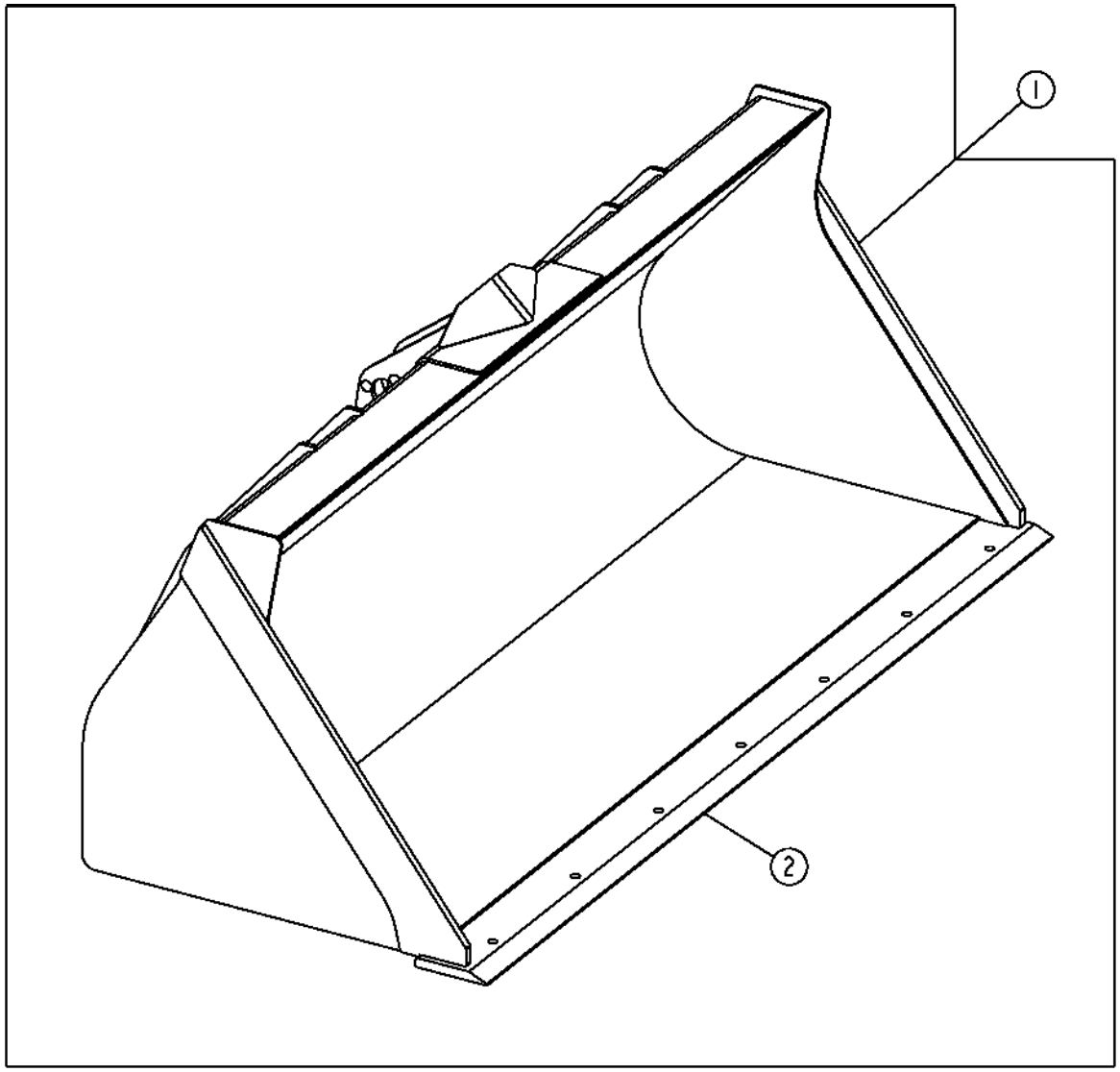

TP69675

LOADER BUCKET AND CUTTING EDGE
.96 CUBIC METER (1.25 CUBIC YARD)

KEY	PART NO.	PART NAME	QTY	SERIAL NO.	REMARKS
1	AT185522	LOADER BUCKET	1		.96 CUBIC METER (1.25 CUBIC YARD) (WHOLE GOODS)
2	T150487	CUTTING EDGE	1		(WELDED ON) SBF .96 CUBIC METER (1.25 CUBIC YARD)
	T150517	CUTTING EDGE	1		(AUXILIARY) (SERVICE ONLY) 3/4 THICK X 8 INCH DBF X 86. INCH, (ALSO ORDER (7) 09H1759, (7) 14H1039 AND (7) 24M7241)

LOADER BUCKET AND CUTTING EDGE
1.00 CUBIC METER (1.30 CUBIC YARD)
1.15 CUBIC METER (1.50 CUBIC YARD)

TP58156 -UN-10OCT00

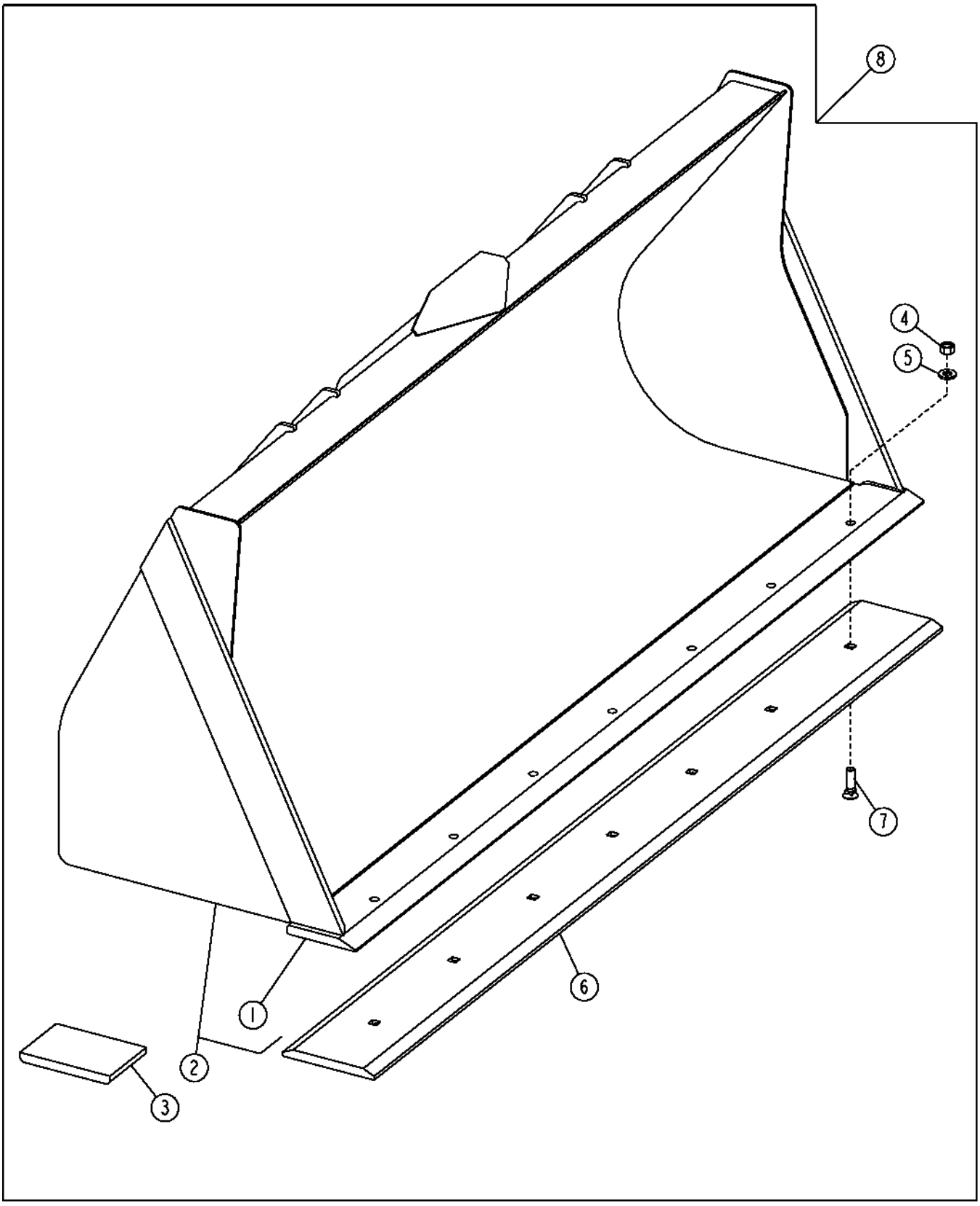

LOADER BUCKET
1.00 CUBIC METER (1.30 CUBIC YARD)
1.15 CUBIC METER (1.50 CUBIC YARD)

KEY	PART NO.	PART NAME	QTY	SERIAL NO.	REMARKS
1	T118768	CUTTING EDGE	1		(1.30 CUBIC YARD) 3/4" SBF
	T164728	CUTTING EDGE	1		(1.50 CUBIC YARD) 3/4" SBF
2	.....	LOADER BUCKET	1		
3	T147296	PLATE	2		
4	14H1039	NUT	8		5/8"
5	24M7241	WASHER	8		17 X 34 X 4 MM
6	T84194	CUTTING EDGE	1		(AUXILIARY) 3/4 THICK X 8 INCH DBF X 92 3/8 INCH LONG (1.30 CUBIC YARD)
	T143804	CUTTING EDGE	1		(AUXILIARY) 3/4 THICK X 8 INCH DBF X 94 1/4 INCH LONG (1.50 CUBIC YARD)
7	09H1759	BOLT	8		5/8" X 2-1/4"
8	**AT185519**	**LOADER BUCKET**	**1**		**1.00 CUBIC METER (1.30 CUBIC YARD) (WHOLE GOODS)**
	AT185516	**LOADER BUCKET**	**1**		**1.15 CUBIC METER (1.50 CUBIC YARD) HD LONG LIP (WHOLE GOODS)**
	AT180839	**LOADER BUCKET**	**1**		**1.00 CUBIC METER (1.30 CUBIC YARD) FRONT COUPLER BUCKET (WHOLE GOODS)**

LOADER BUCKET PINS

TP58136 -UN-15DEC99

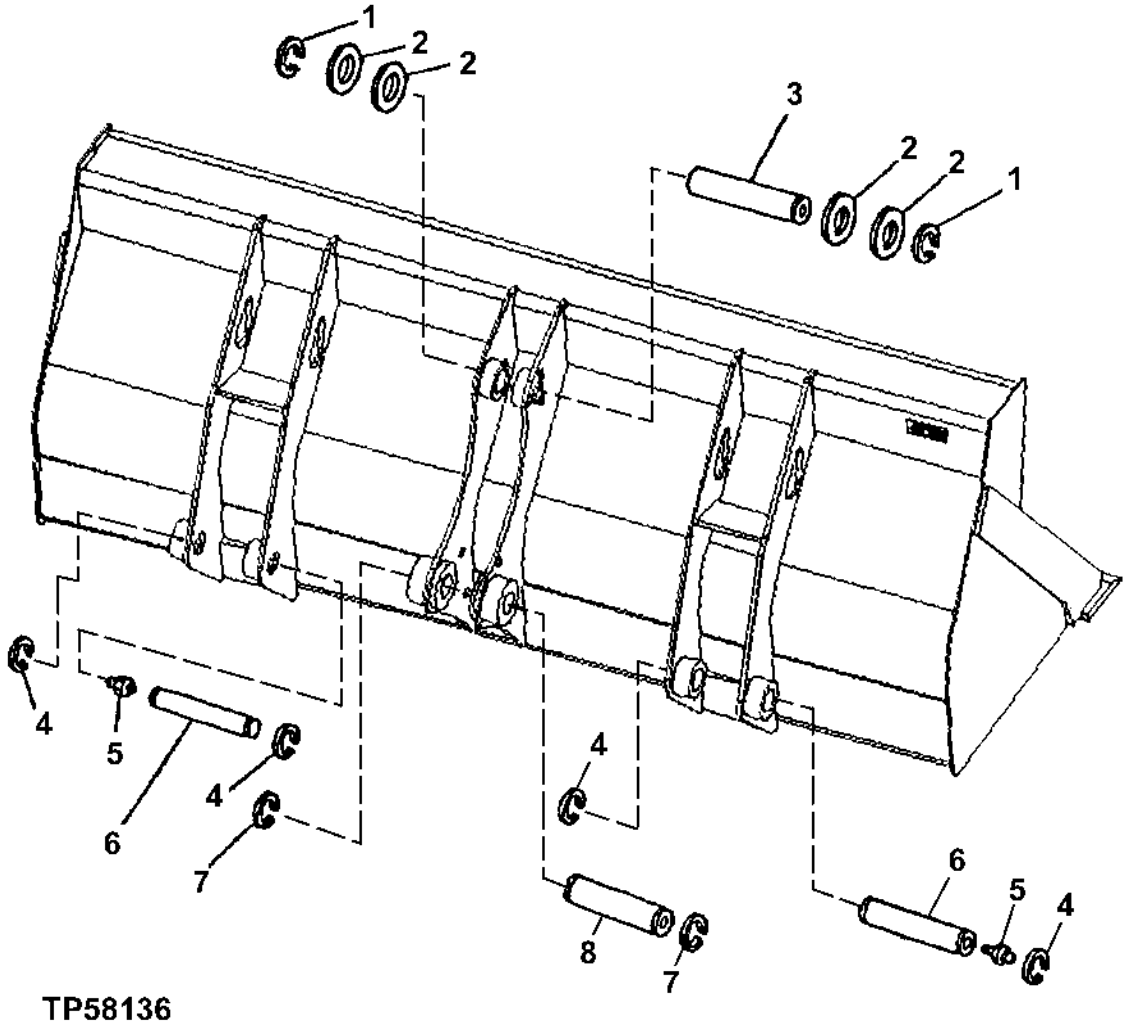

LOADER BUCKET PINS

KEY	PART NO.	PART NAME	QTY	SERIAL NO.	REMARKS
1	40M7066	SNAP RING	2		
2	T161036	WASHER	4		
3	T165333	PIN FASTENER	1		54.475 X 246 MM (2.145" X 9.685")
4	40M7166	SNAP RING	2		
5	T162396	LUBRICATION FITTING	2		
6	T154360	PIN FASTENER	2		
7	40M7166	SNAP RING	2		
8	T165332	PIN FASTENER	1		49.475 X 244.600 MM (1.948" X 9.630")

MULTI-PURPOSE BUCKET MOLDBOARD, CUTTING EDGE AND HINGE

TP58184 -UN-12AUG00

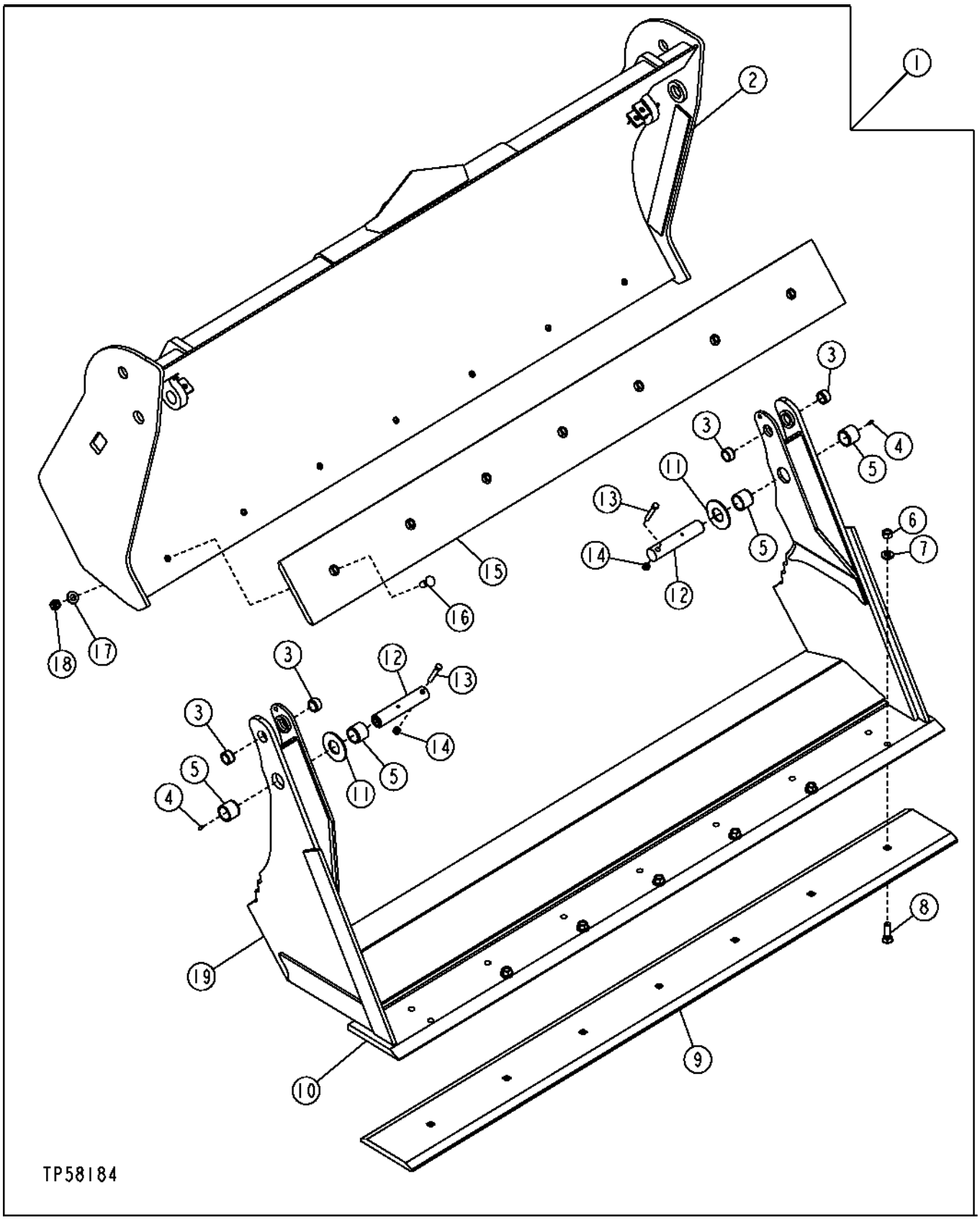

MULTI-PURPOSE BUCKET MOLDBOARD, CUTTING EDGE AND HINGE

KEY	PART NO.	PART NAME	QTY	SERIAL NO.	REMARKS
1	AT185644	MULTI-PURPOSE BUCKET	1		INCLUDES CYLINDERS, LINES AND HOSES (WHOLE GOODS)
2	.....	MOLDBOARD	1		(ORDER AT185644)
3	T166433	BUSHING	4		
4	JD7797	LUBRICATION FITTING	2		
5	T128533	BUSHING	4		
6	14H1039	NUT	8		5/8"
7	24M7241	WASHER	8		
8	09H1759	BOLT	8		5/8" X 2-1/4"
9	T84194	CUTTING EDGE	1		AUXILIARY
10	T128538	CUTTING EDGE	1		
11	24H1554	WASHER	2		
12	T167059	PIN	2		
13	19H2106	CAP SCREW	2		7/16" X 2-3/4"
14	K40006	LOCK NUT	2		7/16"
15	T143802	CUTTING EDGE	1		
16	09H1776	BOLT	8		5/8" X 1-3/4"
17	24M7241	WASHER	8		
18	14H1039	NUT	8		5/8"
19	.....	HINGE	1		(ORDER AT185644)

MULTI-PURPOSE BUCKET,BUCKET CYLINDER AND HYDRAULIC OIL LINES

TP58171 -UN-12AUG00

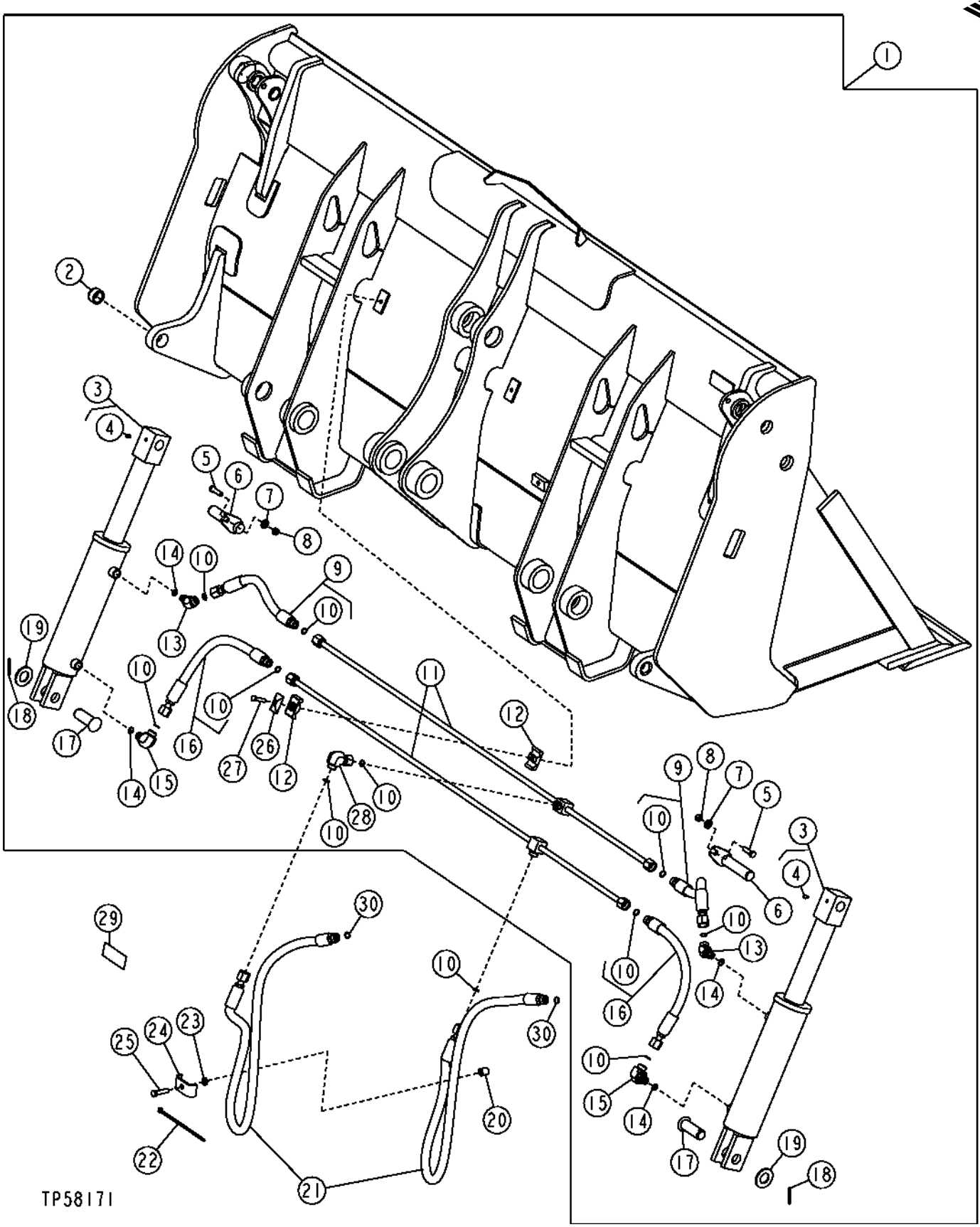

THIS PARTS LISTING IS CONTINUED

MULTI-PURPOSE BUCKET,BUCKET CYLINDER AND HYDRAULIC OIL LINES

KEY	PART NO.	PART NAME	QTY	SERIAL NO.	REMARKS
1	AT185644	MULTI-PURPOSE BUCKET	1		(WHOLE GOODS)
2	T166433	BUSHING	2		
3	AT190880	CYLINDER	2		
	A24073	BUSHING	8		1" X 1-1/4" X 0.780"
4	JD7797	LUBRICATION FITTING	2		
5	19H3239	CAP SCREW	2		3/8" X 1-1/4"
6	AT190900	U-JOINT LOCK PIN	2		
7	24M7239	WASHER	2		
8	T54568	LOCK NUT	2		3/8"
9	AT189822	HYDRAULIC HOSE - FABRICATE	2		
10	T77857	O-RING	AR		
11	AT189819	LINE	2		
12	H135156	CLAMP	6		
13	38H1521	ELBOW FITTING	2		
14	R26448	O-RING	4		
15	38H1314	ELBOW FITTING	2		
16	AT190701	HYDRAULIC HOSE - FABRICATE	2		13/16" X 470 MM (18-1/2") X 13/16"
17	T185041	PIN	2		
18	11M7030	COTTER PIN	2		
19	24H1138	WASHER	2		
20	28H3383	BUSHING	1		
21	AT172386	HYDRAULIC HOSE - FABRICATE	2		13/16" X 1 170 MM (46") X 1"
22	R44302	TIE BAND	AR		
23	24M7106	WASHER	1		
24	T27022	CLAMP	1		
25	19H2633	CAP SCREW	1		3/8" X 1-1/2"
26	H121168	PLATE	3		
27	19H3552	CAP SCREW	3		5/16" X 1-1/2"
28	38H1095	ELBOW FITTING	1		
29	T160759	LABEL	1		BUCKET LEVEL INDICATOR
30	T77932	O-RING	2		

MULTI-PURPOSE BUCKET CYLINDER AND REPAIR KIT

TP62438 -UN-06JUL00

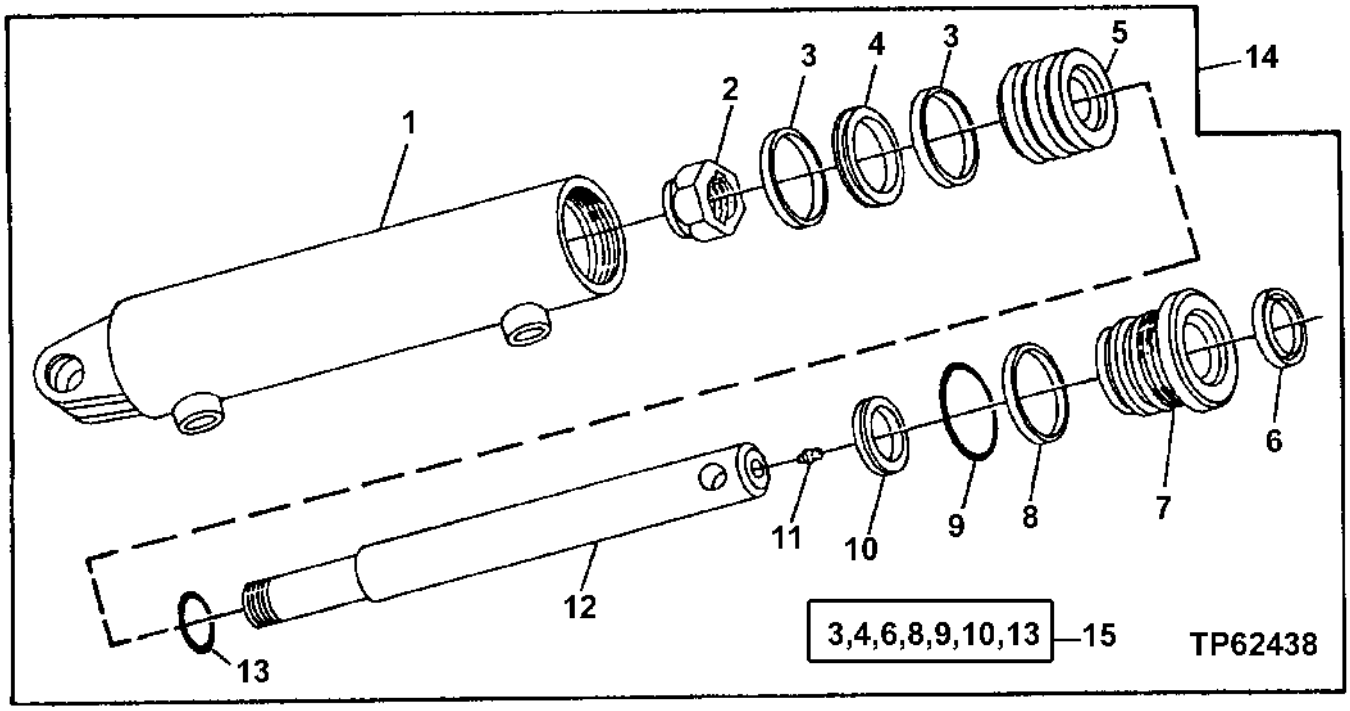

KEY	PART NO.	PART NAME	QTY	SERIAL NO.	REMARKS
1	AT190881	BARREL	1		
2	H29619	LOCK NUT	1		
3	.....	WEAR RING	2		
4	.....	SEAL	1		
5	T163117	PISTON	1		
6	.....	SEAL	1		
7	T163116	HYDR. CYLINDER ROD GUIDE	1		
8	.....	BACK-UP RING	1		
9	.....	O-RING	1		
10	.....	SEAL	1		
11	JD7797	LUBRICATION FITTING	1		
12	T163118	ROD	1		
13	.....	O-RING	1		
14	AT190880	CYLINDER	1		
15	AT190898	KIT	1		

MEMORANDA

BUCKET LEVELING AND RETURN-TO-DIG LINKAGE
(SERIAL NO. -913479)

T144118 -UN-07SEP01

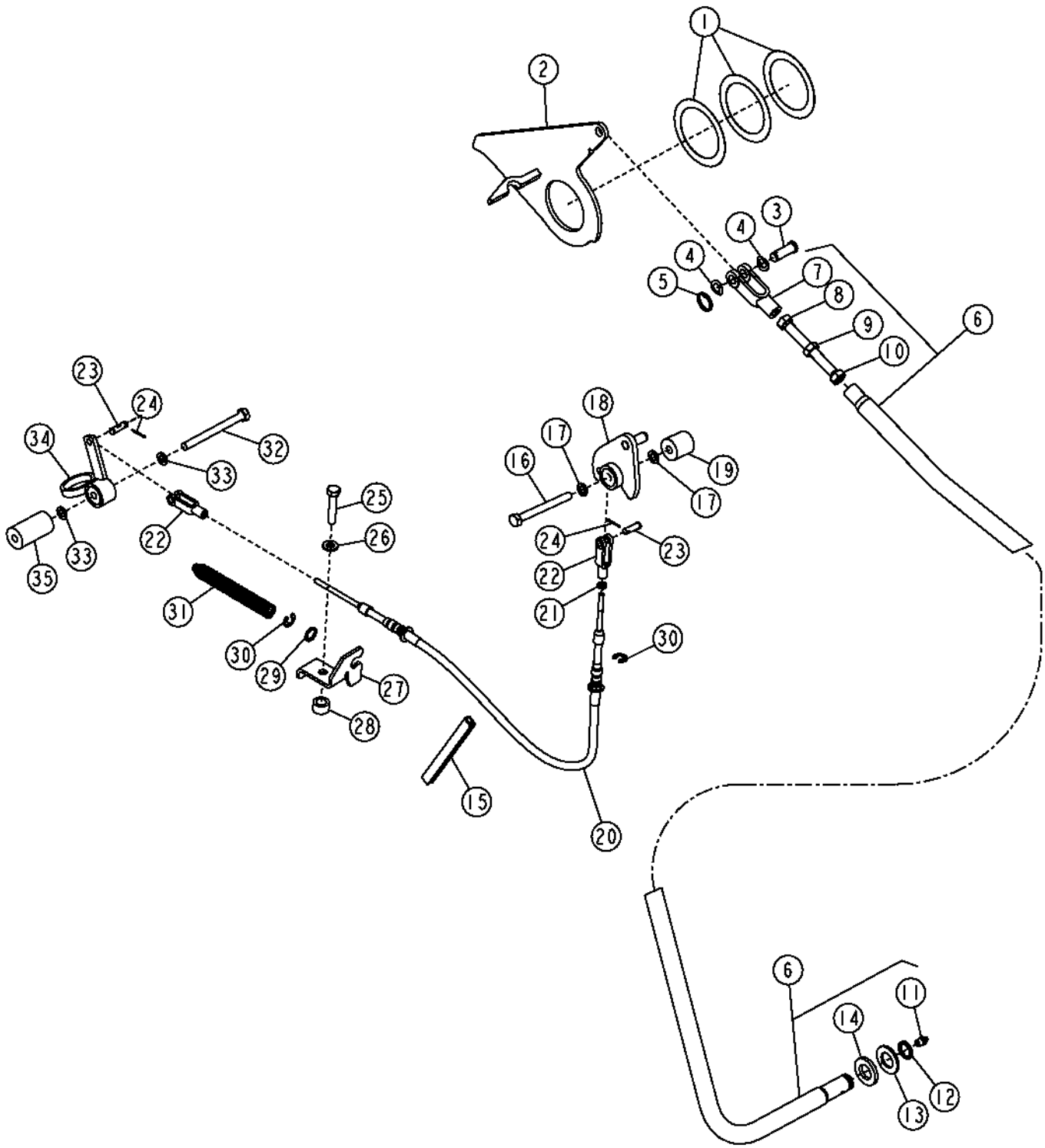

T144118

BUCKET LEVELING AND RETURN-TO-DIG LINKAGE
(SERIAL NO. -913479)

KEY	PART NO.	PART NAME	QTY	SERIAL NO.	REMARKS
1	T161497	SHIM	3		
2	AT185957	BRACKET	1		
3	R72855	PIN FASTENER	1		
4	T146757	WASHER	2		
5	T148182	RING	1		
6	AT184682	TUBE	1		
7	T159981	YOKE	1		
8	14H881	NUT	1		1/2"
9	T159980	STUD	1		
10	14H856	NUT	1		1/2"
11	T162396	LUBRICATION FITTING	1		
12	5787YT	SNAP RING	1		
13	24H1659	WASHER	1		
14	T160720	WASHER	1		
15	.....	MOLDING	1		(T61861 BULK MATERIAL, CUT TO 152MM)
16	19M8093	CAP SCREW	1		M10 X 100
17	24M7096	WASHER	2		
18	AT185440	BELLCRANK	1		
19	T184873	BUSHING	1		
20	.....	CABLE	1	-894048	(AT184341 NO LONGER AVAILABLE) (SUB AT196333 AND AT194487)
	AT196333	PUSH PULL CABLE	1	894049-	(SUB FOR AT194488)
21	14H649	NUT	1		1/4"
22	T184870	YOKE	2		
23	P10456	PIN FASTENER	2		
24	11M7078	COTTER PIN	2		2 X 20 MM
25	19M8600	CAP SCREW	1		M10 X 50
26	24M7239	WASHER	1		
27	T186082	BRACKET	1		
28	T186083	SPACER	1		
29	24M7228	WASHER	1		
30	R26871	SNAP RING	2		(SUB FOR R106466)
31	T185700	COMPRESSION SPRING	1		
32	19M8166	CAP SCREW	1		M10 X 110
33	24M7096	WASHER	2		
34	.....	BELLCRANK	1	-894048	(AT191023 NO LONGER AVAILABLE) (SUB AT194487 AND AT196333)
	AT194487	BELLCRANK	1	894049-	
35	T164953	SPACER	1		

BUCKET LEVELING AND RETURN-TO-DIG LINKAGE
(SERIAL NO. 913480-)

T164134 -UN-16JAN03

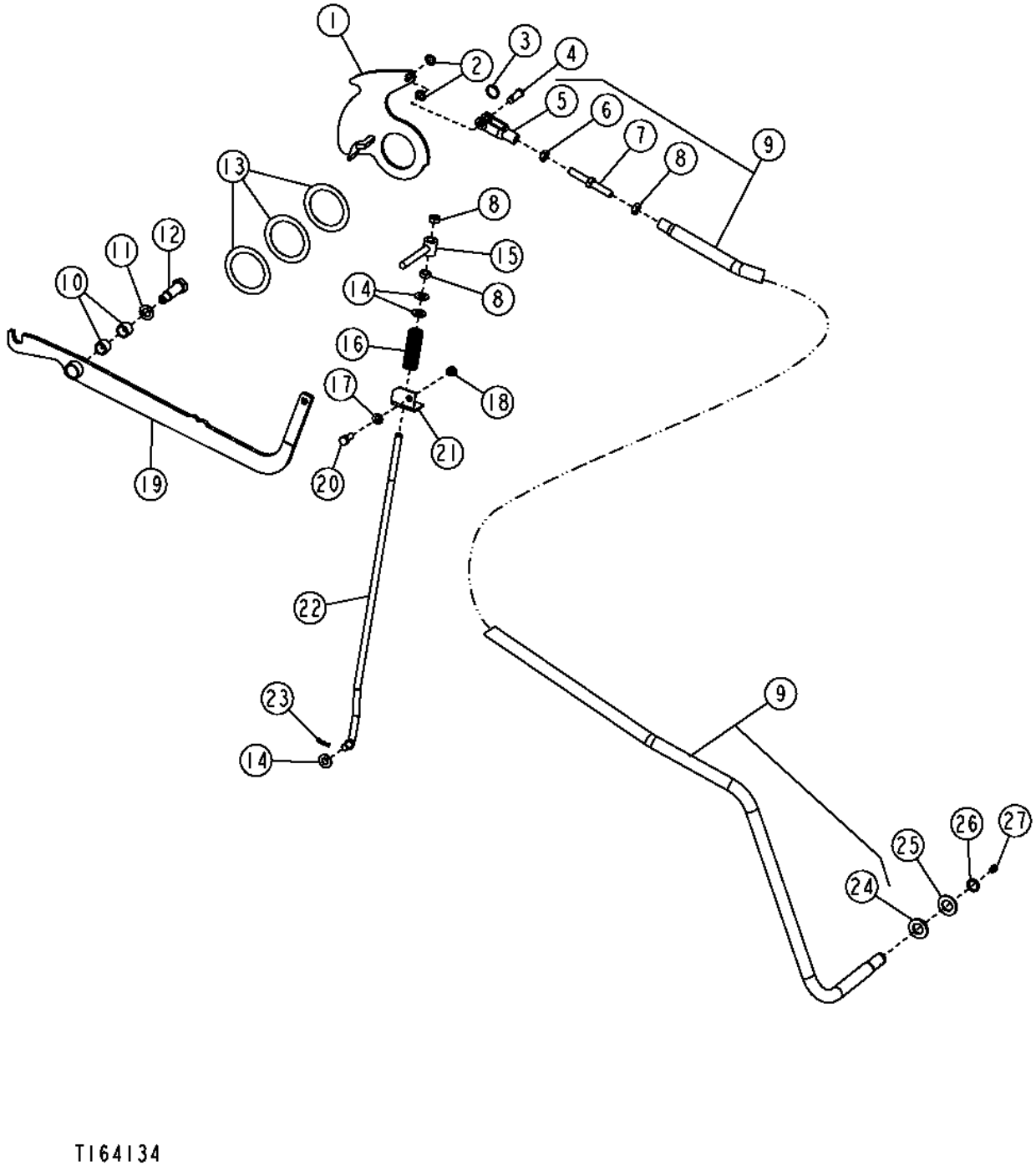

T164134

BUCKET LEVELING AND RETURN-TO-DIG LINKAGE
(SERIAL NO. 913480-)

KEY	PART NO.	PART NAME	QTY	SERIAL NO.	REMARKS
1	AT197105	PLATE	1		
2	T146757	WASHER	2		
3	T148182	RING	1		
4	R72855	PIN FASTENER	1		
5	T159981	YOKE	1		
6	14H881	NUT	1		
7	T159980	STUD	1		
8	14H856	NUT	3		
9	AT184682	TUBE	1		
10	JD9954	CYLINDRICAL ROLLER BEARING	2		
11	24M7338	WASHER	1		
12	T191285	BOLT	1		
13	T161497	SHIM	3		
14	24H1111	WASHER	3		
15	AT300159	LINK	1		
16	T190992	COMPRESSION SPRING	1		
17	24M7239	WASHER	1		
18	14M7274	NUT	1		
19	AT199335	ARM	1		
20	19M7402	CAP SCREW	1		
21	T190357	SUPPORT	1		
22	T191226	ROD	1		
23	R46528	SPRING LOCKING PIN	1		
24	T160720	WASHER	1		
25	24H1659	WASHER	1		
26	5787YT	SNAP RING	1		
27	T162396	LUBRICATION FITTING	1		

LOADER CONTROL VALVE LINKAGE
(SERIAL NO. -913479)

T158663 -UN-20AUG02

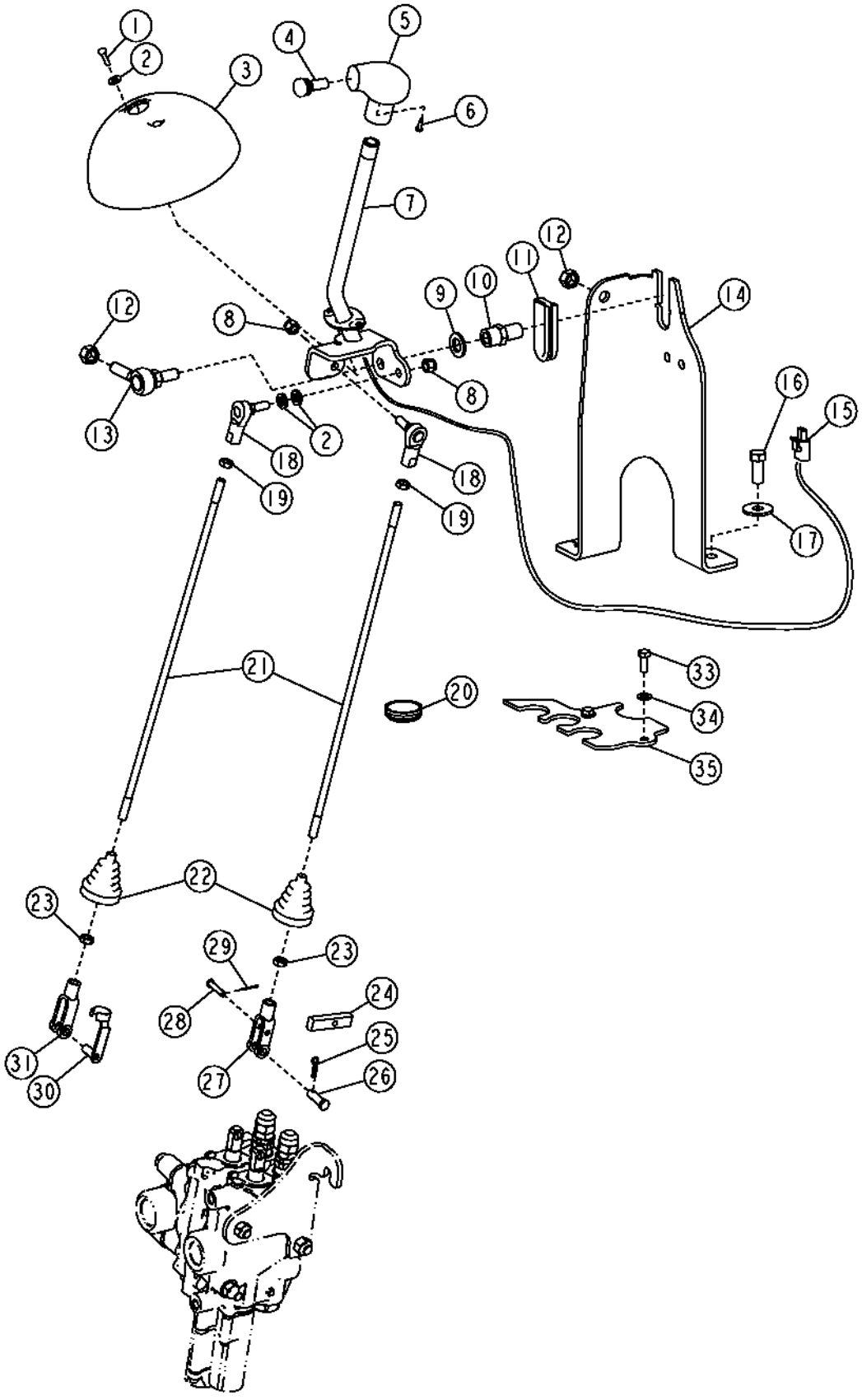

LOADER CONTROL VALVE LINKAGE
(SERIAL NO. -913479)

KEY	PART NO.	PART NAME	QTY	SERIAL NO.	REMARKS
1	21H1406	SCREW	2		0.190" X 3/4"
2	T83061	WASHER	2		
3	T166899	COVER	1		
4	AT162180	SWITCH	1		
5	AT171550	KNOB	1		
6	37H95	SCREW	2		
7	AT184156	LEVER	1		
8	M68954	LOCK NUT	2		3/8"
9	24M7053	WASHER	1		
10	T187072	SPACER	1		(SUB FOR T167104)
11	T167192	INSERT	1		
12	14H865	NUT	2		1/2"
13	AT124107	BALL JOINT	1		
14	T165299	SUPPORT	1		
15	RE12363	CONNECTOR	1		
16	19M8011	CAP SCREW	2		M12 X 30
17	24M7180	WASHER	2		
18	AT169087	BALL JOINT	2		
19	14H774	NUT	2		3/8"
20	T185711	PLUG	2		THIRD FUNCTION
21	T164257	ROD	2		
22	T185710	BOOT	2		
23	14H913	NUT	2		3/8"
24	T184821	STRAP	1		
25	R46528	SPRING LOCKING PIN	1		
26	R65563	PIN FASTENER	1		
27	T185004	YOKE	1		(L.H.)
28	45M7036	PIN FASTENER	1		
29	11M7093	COTTER PIN	1		1.600 X 20 MM
30	T183617	PIN FASTENER	1		
31	T140328	YOKE	1		(L.H.)
32	24M7106	WASHER	2		
33	19M7881	SCREW	2		M8 X 20
34	24M7238	WASHER	2		
35	T185748	PLATE	1		

LOADER CONTROL VALVE LINKAGE
(SERIAL NO. 913480-)

T164098 -UN-16JAN03

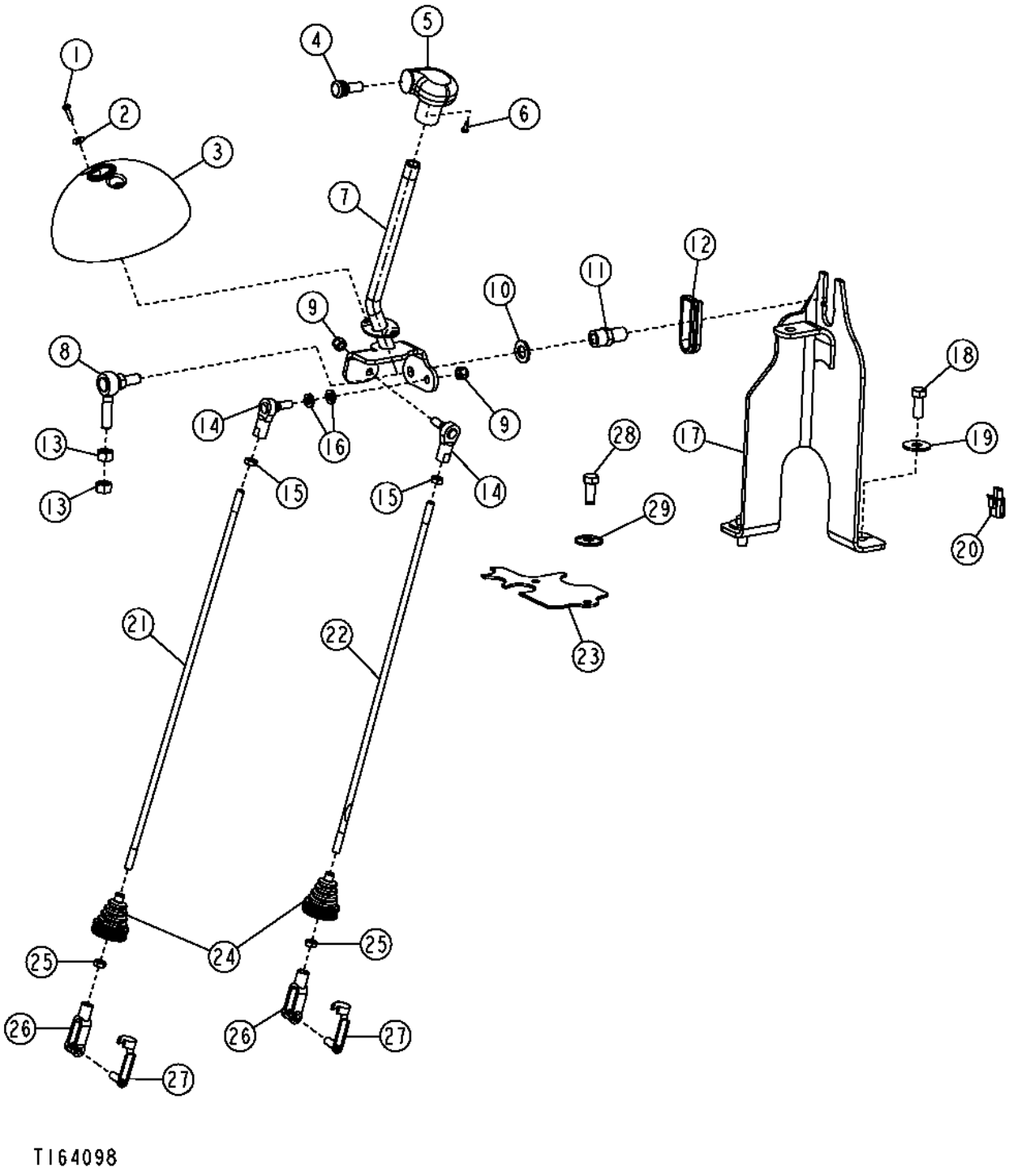

LOADER CONTROL VALVE LINKAGE
(SERIAL NO. 913480-)

KEY	PART NO.	PART NAME	QTY	SERIAL NO.	REMARKS
1	21H1406	SCREW	2		0.190" X 3/4"
2	T83061	WASHER	2		
3	T166899	COVER	1		
4	AT162180	SWITCH	1		
5	AT171550	KNOB	1		
6	37H95	SCREW	2		
7	AT196591	LEVER	1		
8	AT124107	BALL JOINT	1		
9	M68954	LOCK NUT	2		9.525 MM
10	24M7053	WASHER	1		
11	T187072	SPACER	1		
12	T167192	INSERT	1		
13	14H865	NUT	2		1/2"
14	AT169087	BALL JOINT	2		
15	14H774	NUT	2		3/8"
16	24M7106	WASHER	2		10 X 18 X 2.500 MM
17	AT196590	CONTROL SUPPORT	1		
18	19M8011	CAP SCREW	2		M12 X 30
19	24M7180	WASHER	2		
20	RE12363	CONNECTOR	1		
21	T188976	STUD	1		
22	T188976	STUD	1		
23	T190473	PLATE	1		
24	T185710	BOOT	2		
25	14H913	NUT	2		3/8"
26	T140328	YOKE	2		
27	T183617	PIN FASTENER	2		
28	19M7881	SCREW	2		M8 X 20
29	24M7238	WASHER	2		

THIRD FUNCTION LOADER CONTROL VALVE LINKAGE
(SERIAL NO. -913479)

T154270 -UN-23APR02

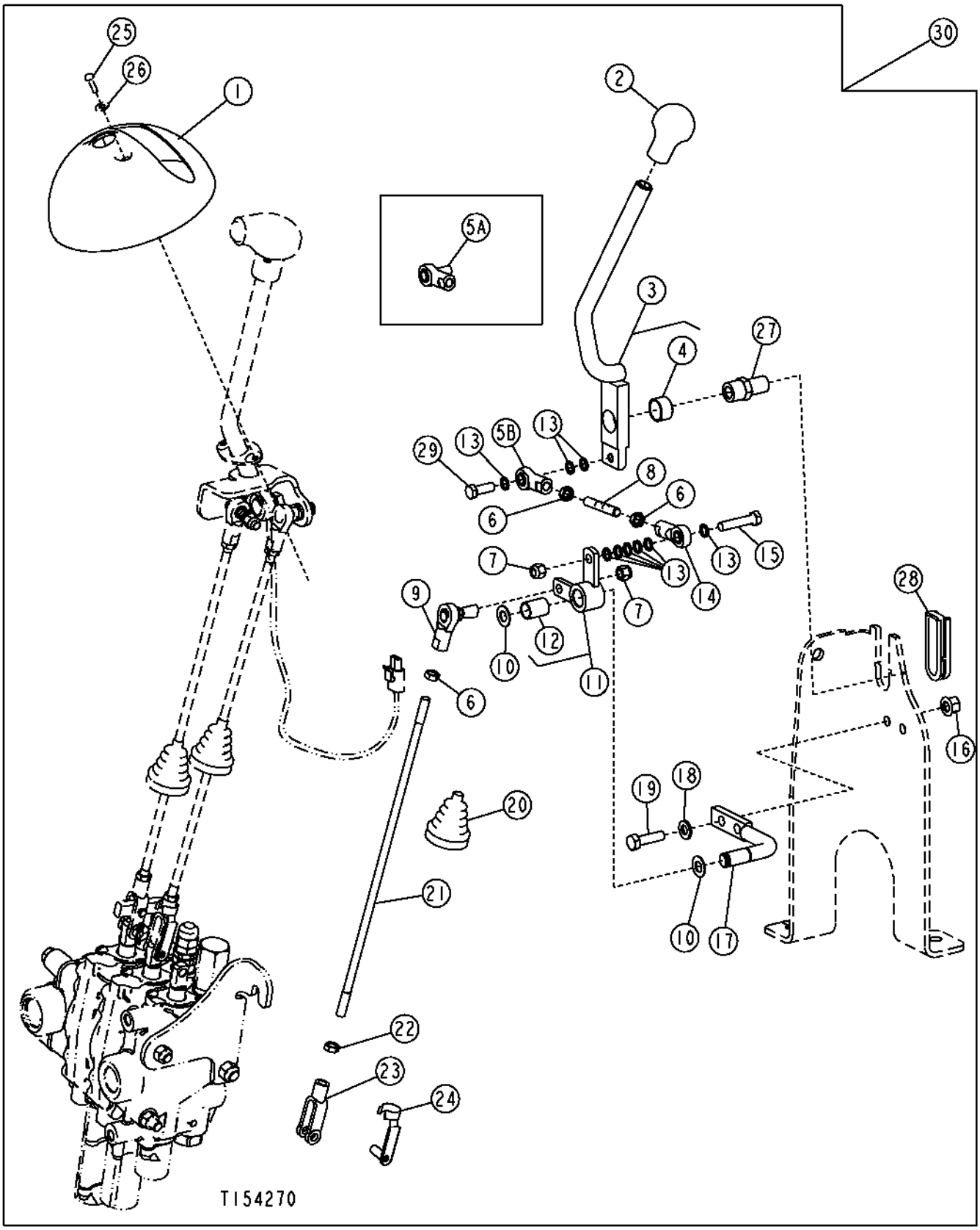

THIRD FUNCTION LOADER CONTROL VALVE LINKAGE
(SERIAL NO. -913479)

KEY	PART NO.	PART NAME	QTY	SERIAL NO.	REMARKS
1	T166900	COVER	1		
2	T133291	KNOB	1		
3	AT192261	LEVER	1		
4	L4694T	BUSHING	1		
5A	.....	BALL JOINT	1	-906331	(AT192684 NO LONGER AVAILABLE) (SUB AE37072, 19H2987, 19H2960 AND (5) 24H1301)
5B	AE37072	TIE ROD END	1	906332-	
6	14H774	NUT	3		3/8"
7	M68954	LOCK NUT	2		3/8"
8	T165431	STUD	1		
9	AT169087	BALL JOINT	1		
10	F2863R	SNAP RING	2		
11	AT184744	BELLCRANK	1		
12	U12857	BUSHING	1		
13	24H1301	WASHER	4	-906331	
	24H1301	WASHER	9	906332-	
14	AE37072	TIE ROD END	1		
15	19H2544	CAP SCREW	1	-906331	3/8" X 1-1/2"
	19H2960	CAP SCREW	1	906332-	3/8" X 1-3/4"
16	14M7400	LOCK NUT	2		M10
17	T185338	SUPPORT	1		
18	24M7239	WASHER	2		
19	19M7550	CAP SCREW	2		M10 X 35
20	T185710	BOOT	1		
21	T164259	STUD	1		
22	14H913	NUT	1		3/8"
23	T140328	YOKE	1		
24	T183617	PIN FASTENER	1		
25	21H1406	SCREW	2		0.190" X 3/4"
26	T83061	WASHER	2		
27	T187072	SPACER	1		
28	T167192	INSERT	1		
29	19H2987	CAP SCREW	1	906332-	
30	**AT194372**	**KIT**	**1**		**(WHOLE GOODS) INCLUDES HYDRAULIC OIL LINES,ADAPTERS AND ATTACHING HARDWARE, (ALSO ORDER AT192173)**

THIRD FUNCTION LOADER CONTROL VALVE LINKAGE
(SERIAL NO. 913480-)

T164102 -UN-16JAN03

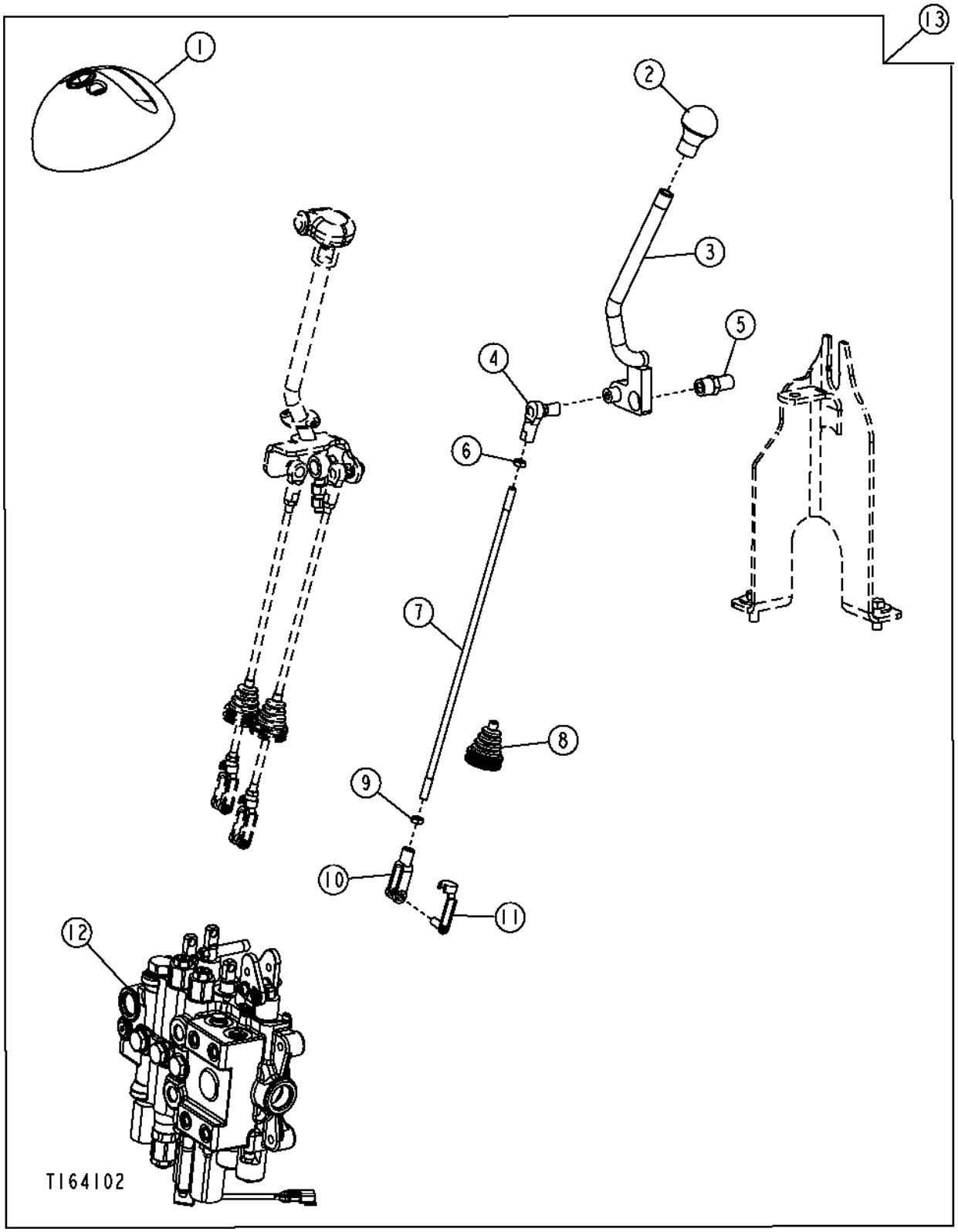

THIRD FUNCTION LOADER CONTROL VALVE LINKAGE
(SERIAL NO. 913480-)

KEY	PART NO.	PART NAME	QTY	SERIAL NO.	REMARKS
1	T166900	COVER	1		
2	T133291	KNOB	1		
3	AT196596	LEVER	1		
4	AT169087	BALL JOINT	1		
5	L4694T	BUSHING	1		
6	14H774	NUT	1		3/8"
7	T188976	STUD	1		
8	T185710	BOOT	1		
9	14H913	NUT	1		3/8"
10	T140328	YOKE	1		
11	T183617	PIN FASTENER	1		
12	AT196632	CONTROL VALVE	1		
13	**AT197268**	**KIT**	**1**		**(WHOLE GOODS) INCLUDES HYDRAULIC OIL LINES, ADAPTERS AND ATTACHING HARDWARE.**

LOADER LIFT ARM

T152287 -UN-05MAR02

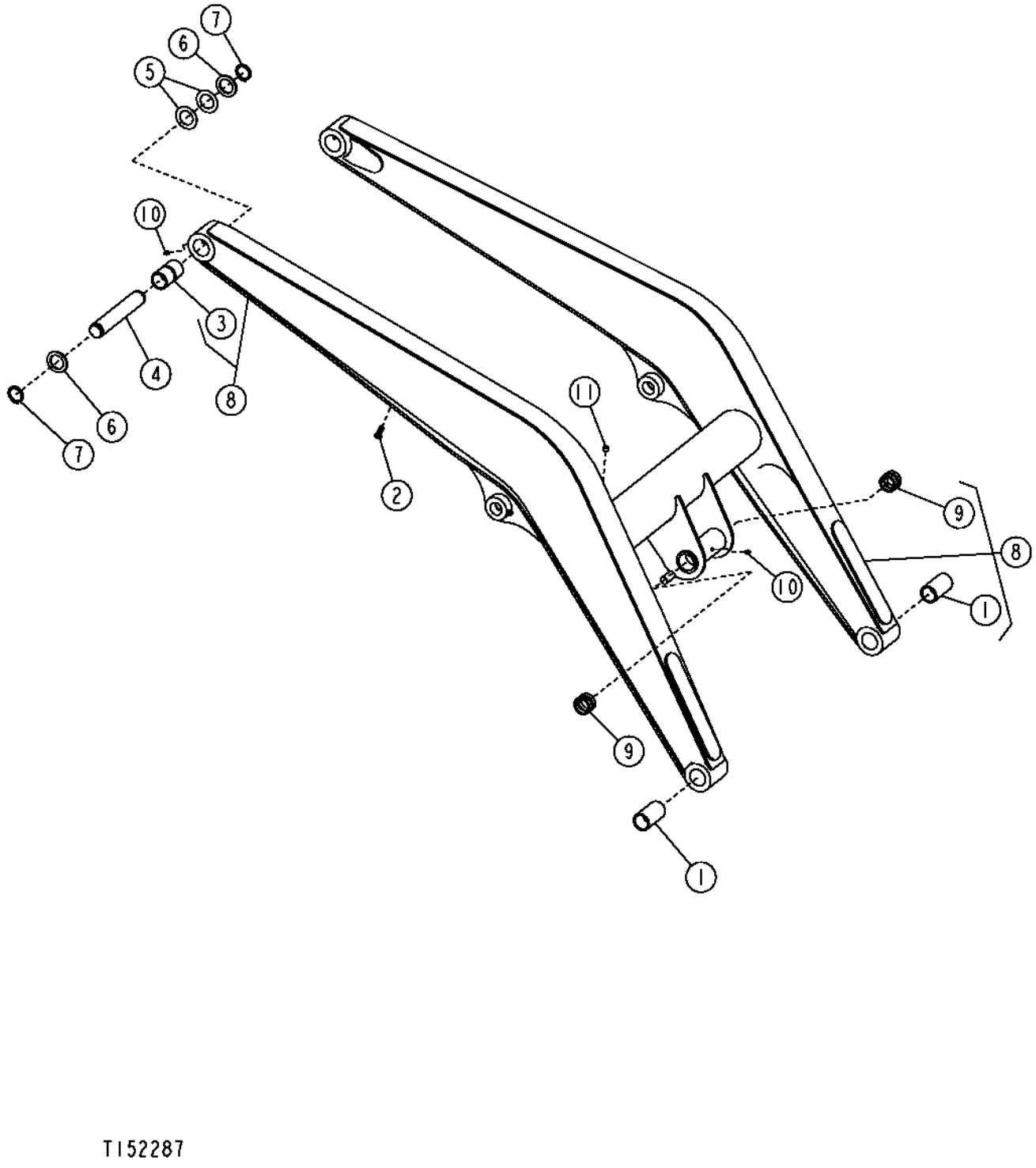

LOADER LIFT ARM

KEY	PART NO.	PART NAME	QTY	SERIAL NO.	REMARKS
1	T154165	BUSHING	2		
2	T148411	NUT	1		M10, (KREMNUT)(BLACK NO.10 FOR 10 MM PLATE)
3	T154764	BUSHING	2		
4	T154769	PIN	2		54.475 X 296 MM (2.145" X 11.654")
5	24H1679	WASHER	4		
6	T75816	WASHER	4		
7	T158181	SNAP RING	4		
8	.....	LOADER BOOM	1	-896854	(AT184845 NO LONGER AVAILABLE) (SUB AT194465) (ALSO ORDER (2) T187275, (2) T187276 AND (2) 19M7784)
	AT194465	LOADER BOOM	1	896855-913479	
	AT199741	LIFT ARM	1	913480-	
9	T154058	BUSHING	2		
10	T162396	LUBRICATION FITTING	3		

LOADER BUCKET LINKAGE AND PINS

TP58139 -UN-10OCT00

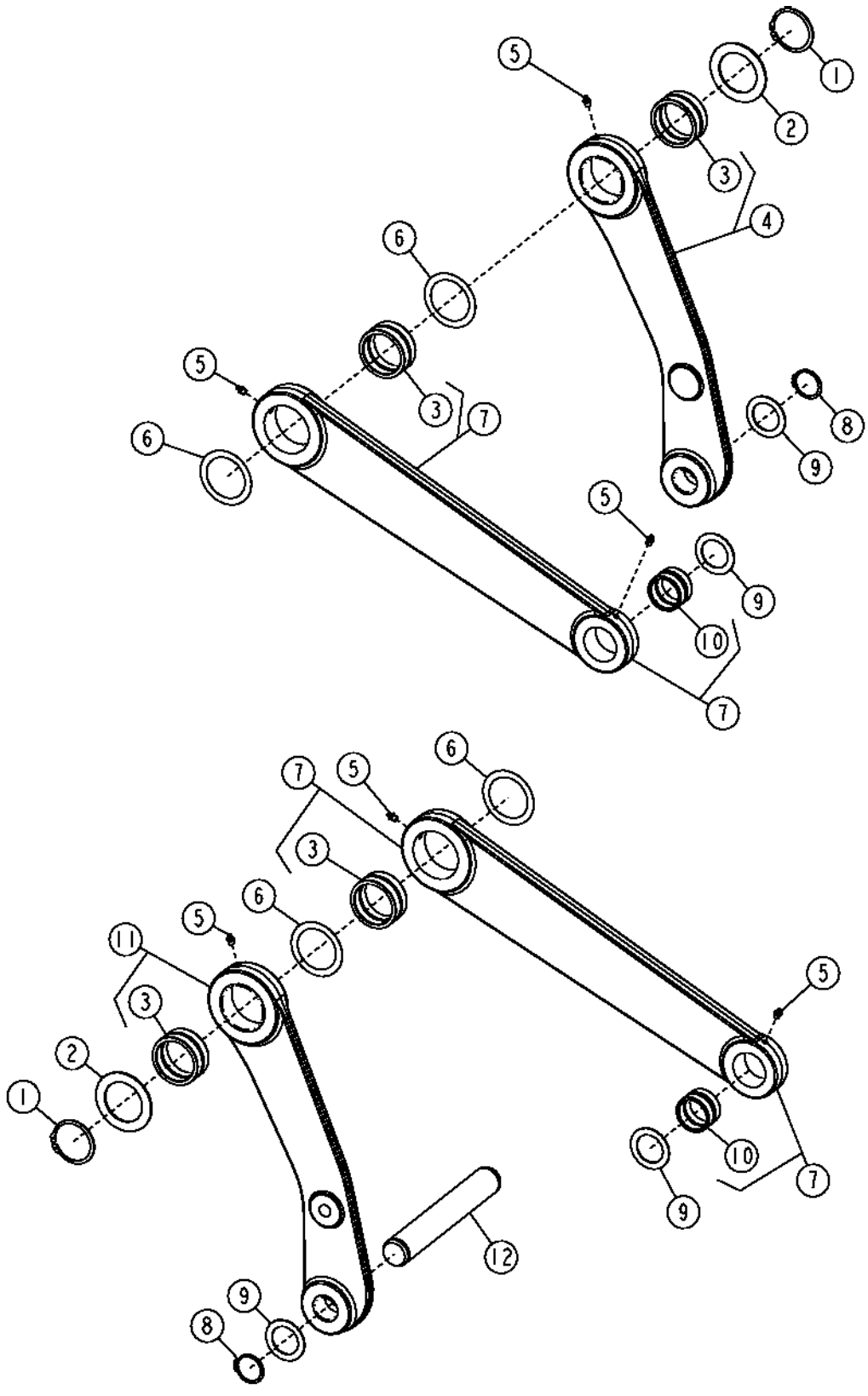

LOADER BUCKET LINKAGE AND PINS

KEY	PART NO.	PART NAME	QTY	SERIAL NO.	REMARKS
1	40M7217	SNAP RING	2		
2	T158579	WASHER	1		
3	T165310	BUSHING	4		
4	AT184647	LINK	1		LEFT
5	T162396	LUBRICATION FITTING	6		
6	T161497	SHIM	4		
7	AT184064	LINK	2		
8	40M7166	SNAP RING	2		
9	24H1595	WASHER	4		
10	T183356	BUSHING	1		
11	AT184646	LINK	1		RIGHT
12	T165314	PIN	1		49.475 X 330.100 MM (1.948" X 12.996")

LOADER CONTROL VALVE
(HUSCO)
(SERIAL NO. -913479)

TP69646 -UN-09OCT00

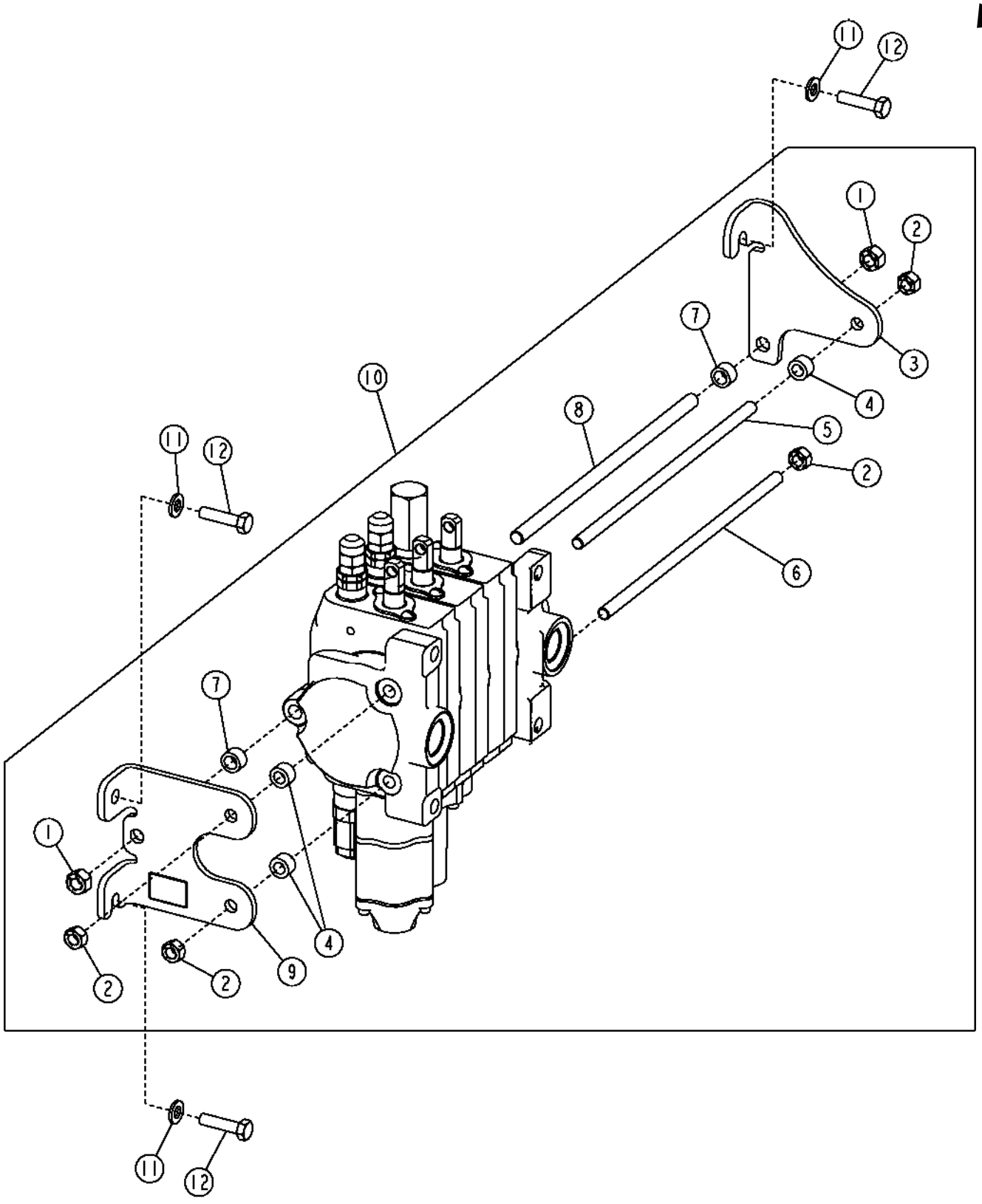

TP69646

LOADER CONTROL VALVE
(HUSCO)
(SERIAL NO. -913479)

KEY	PART NO.	PART NAME	QTY	SERIAL NO.	REMARKS
1	14H865	NUT	2		1/2"
2	14H807	NUT	4		7/16"
3	T167186	BRACKET	1		
4	.....	SPACER	3		
5	T185981	STUD	1		(2 FUNCTION)
	T122865	STUD	1		(3 FUNCTION)
6	T121240	STUD	1		(2 FUNCTION)
	T185980	BOLT	1		(3 FUNCTION)
7	.....	SPACER	2		
8	T185984	STUD	1		(2 FUNCTION)
	T122864	STUD	1		(3 FUNCTION)
9	T164089	BRACKET	1		
10	AT186029	SPOOL VALVE	1		CONVENIENCE ASSEMBLY (2 FUNCTION)
	AT186030	SPOOL VALVE	1		CONVENIENCE ASSEMBLY (3 FUNCTION)
11	24M7239	WASHER	3		
12	19M8637	CAP SCREW	3		M10 X 40

LOADER/STABILIZER CONTROL VALVE
(HUSCO)
(SERIAL NO. 913480-)

T164823 -UN-29JAN03

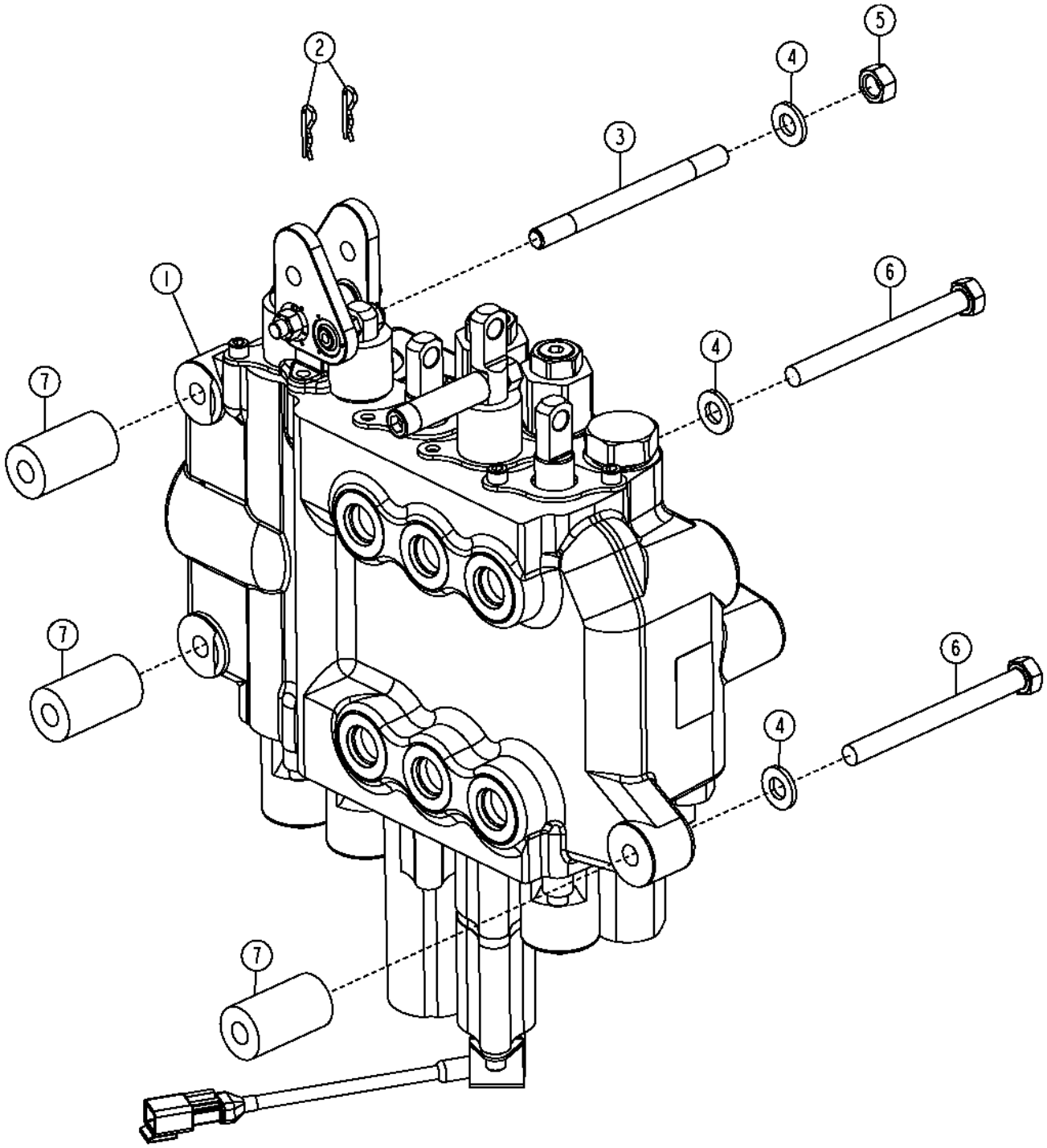

LOADER/STABILIZER CONTROL VALVE
(HUSCO)
(SERIAL NO. 913480-)

KEY	PART NO.	PART NAME	QTY	SERIAL NO.	REMARKS
1	AT196630	SPOOL VALVE	1		(FOUR FUNCTION) CONVENIENCE ASSEMBLY
	AT196632	SPOOL VALVE	1		(FIVE FUNCTION) CONVENIENCE ASSEMBLY
2	R46528	SPRING LOCKING PIN	2		
3	T190300	STUD	1		
4	24M7239	WASHER	3		
5	14M7274	NUT	1		M10
6	19M8166	CAP SCREW	2		M10 X 110
7	T190296	SPACER	3		

INLET SECTION
LOADER VALVE
(SERIAL NO. -913479)

TP69649 -UN-09OCT00

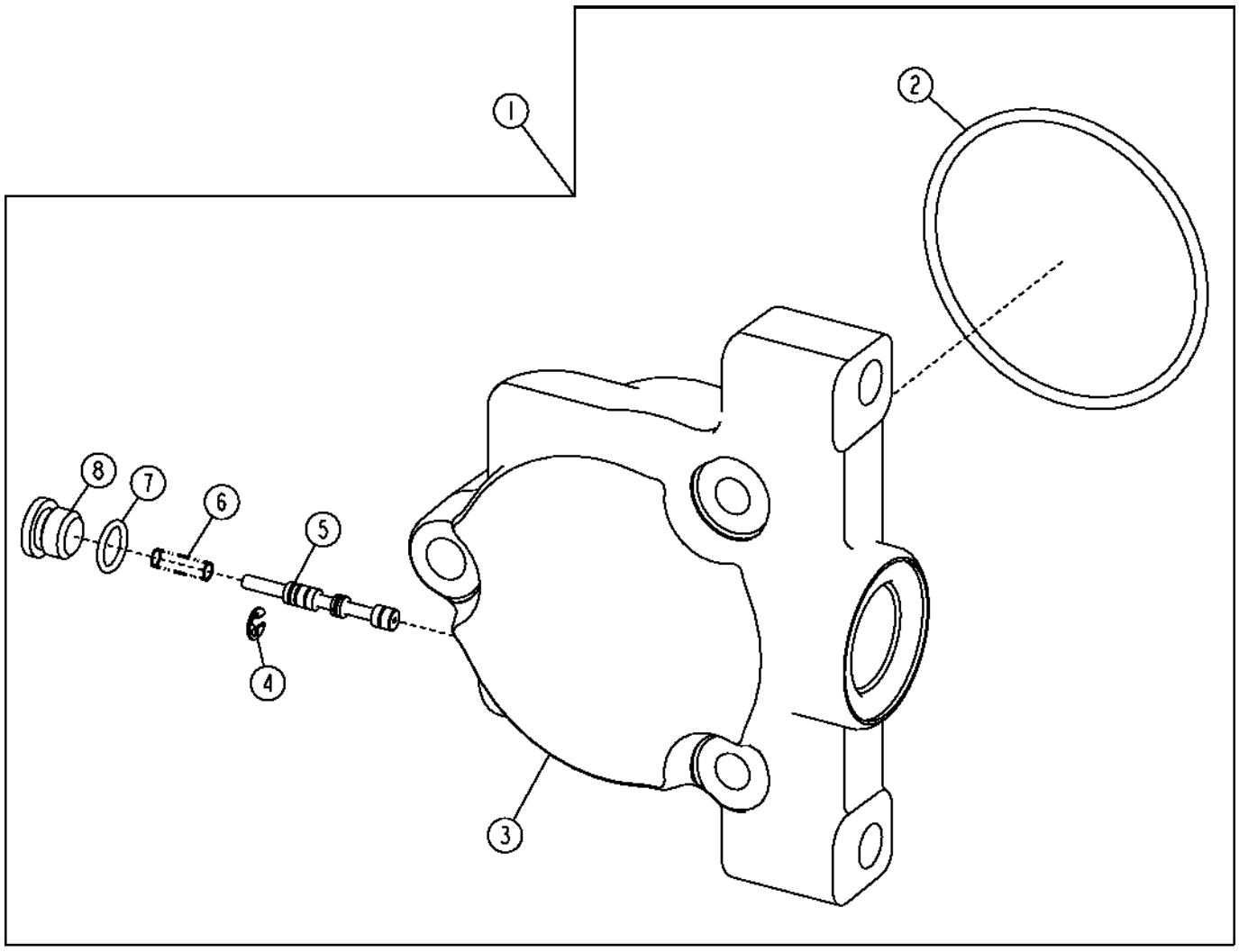

TP69649

INLET SECTION
LOADER VALVE
(SERIAL NO. -913479)

KEY	PART NO.	PART NAME	QTY	SERIAL NO.	REMARKS
1	AT186065	HYD ACTUATED CONTROL VALVE	1		
2	T118685	O-RING	1		
3	.....	HOUSING	1		
4	.....	RETAINER	1		
5	.....	SPOOL	1		
6	.....	SPRING	1		
7	.....	O-RING	1		
8	.....	PLUG	1		

BOOM SECTION
LOADER VALVE
(SERIAL NO. -913479)

T142255 -UN-18MAY01

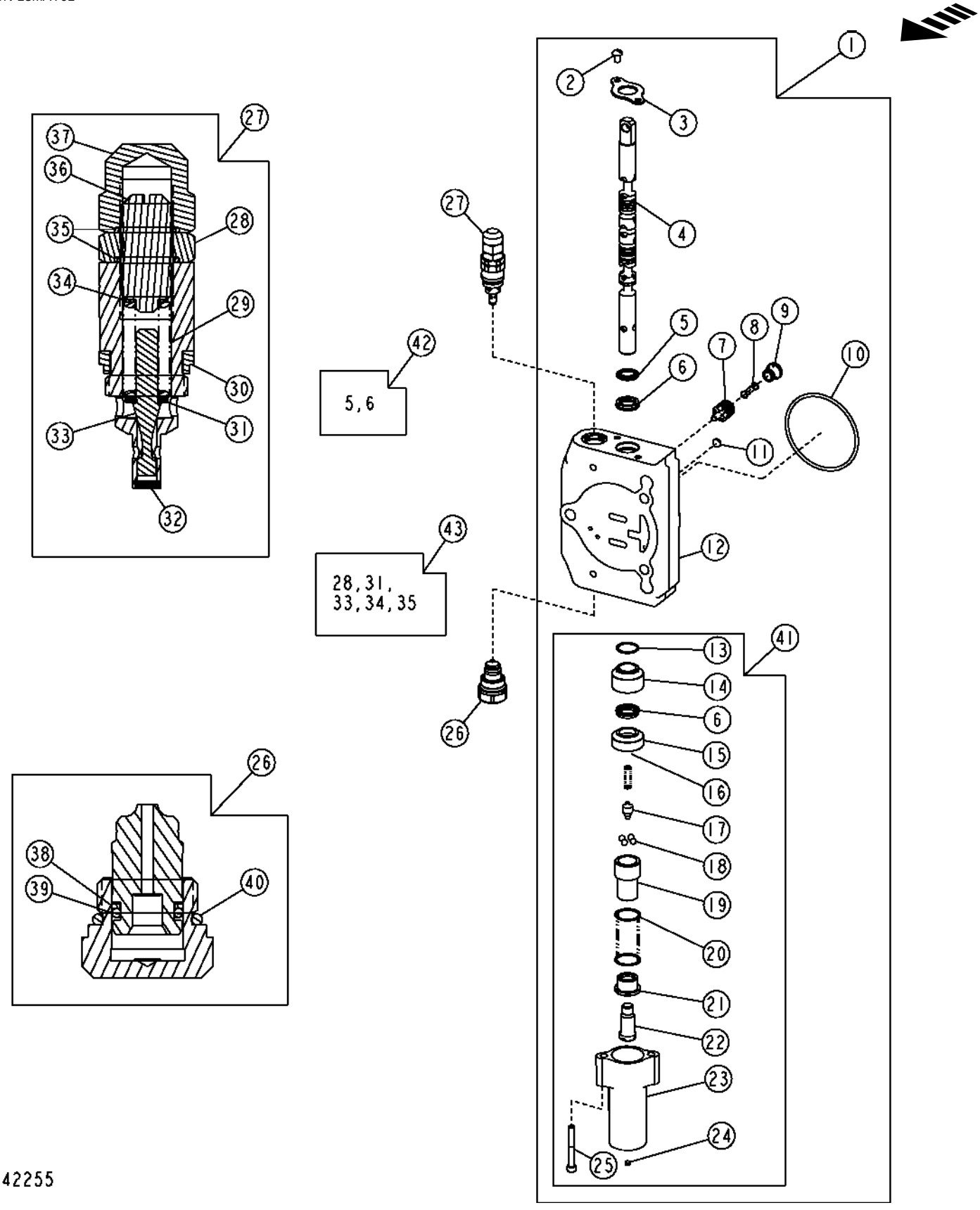

THIS PARTS LISTING IS CONTINUED

BOOM SECTION
LOADER VALVE
(SERIAL NO. -913479)

KEY	PART NO.	PART NAME	QTY	SERIAL NO.	REMARKS
1	AT191722	HYD ACTUATED CONTROL VALVE	1		
2	21H1352	SCREW	2		1/4" X 3/8"
3	T81524	PLATE	1		
4	.....	SPOOL VALVE	1		
5	.....	SEAL	2		
6	.....	SEAL	2		
7	.....	COMPENSATOR	1		
8	T161835	COMPRESSION SPRING	1		
9	.....	LOCK	1		
10	T118685	O-RING	1		
11	R95493	DISK	1		
12	.....	HOUSING	1		
13	.....	O-RING	1		
14	T152404	SLEEVE	1		
15	T152401	SLEEVE	1		
16	.....	SPRING	1		
17	T118715	CAM	1		
18	R111270	BALL	4		
19	T118708	SEAT	1		
20	T118884	SPRING	1		
21	T118709	SEAT	1		
22	T118711	END	1		
23	T152398	CAP	1		
24	T118799	FILTER	1		
25	T118712	SCREW	2		
26	AT169373	CHECK VALVE	1		
27	AT174217	PRESSURE RELIEF VALVE	1		(5000 PSI)
28	T67424	NUT	1		
29	.....	SPRING	1		
30	T183756	SEAL	1		
31	.....	RETAINER	1		
32	.....	PLUG	1		
33	.....	POPPET	1		
34	.....	SHIM	1		
35	.....	O-RING	2		
36	.....	SCREW	1		
37	T67425	NUT	1		
38	.....	BACK-UP RING	1		
39	.....	O-RING	1		
40	T118681	O-RING	1		
41	AT192372	DETENT	1		POSITIONER
42	AT178372	SEAL KIT	1		(SPOOL SEAL)
43	AT189413	SEAL KIT	1		(RELIEF VALVE SEAL)

BOOM SECTION
LOADER/STABILIZER VALVE
(SERIAL NO. 913480-)

T163447 -UN-08JAN03

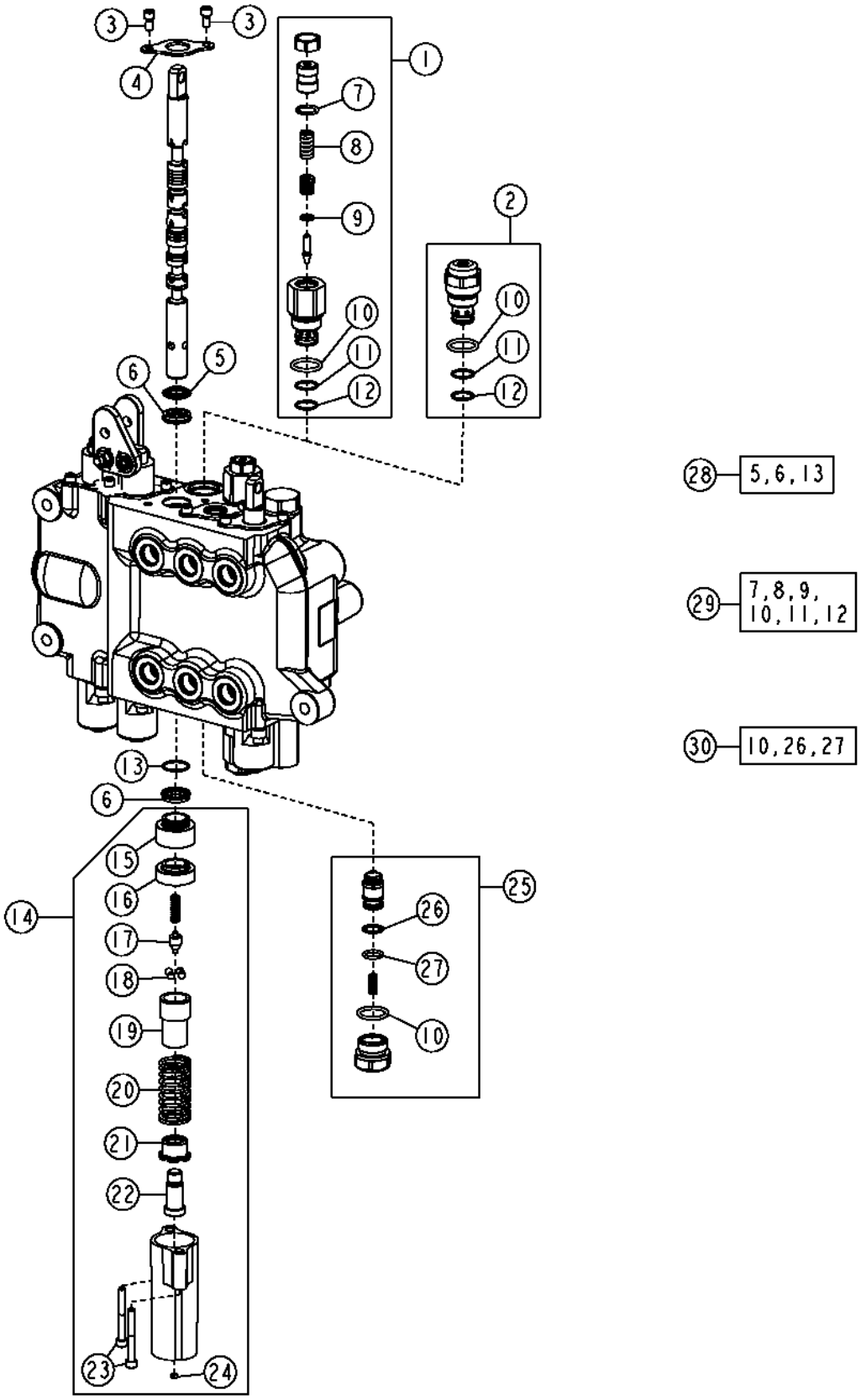

BOOM SECTION
LOADER/STABILIZER VALVE
(SERIAL NO. 913480-)

KEY	PART NO.	PART NAME	QTY	SERIAL NO.	REMARKS
1	AT300803	PRESSURE RELIEF VALVE	1		(NOT ANTI-CAVITATION) (5000 PSI)
2	AT301128	PRESSURE RELIEF VALVE	1		(ANTI-CAVITATION) (5000 PSI)
3	21H1352	SCREW	2		1/4" X 3/8"
4	T81524	PLATE	1		
5	.....	SEAL	1		
6	.....	SEAL	2		
7	.....	O-RING	1		
8	.....	SPRING	1		
9	R63548	O-RING	1		
10	T118681	O-RING	1		
11	.....	BACK-UP RING	2		
12	T107887	O-RING	2		
13	.....	O-RING	1		
14	AT192372	DETENT	1		
15	T152404	SLEEVE	1		
16	T152401	SLEEVE	1		
17	T118715	CAM	1		
18	T81535	BALL	4		
19	T118708	VALVE SEAT INSERT	1		
20	T118884	SPRING	1		
21	T118709	VALVE SEAT INSERT	1		
22	T118711	END	1		
23	T118712	SCREW	2		
24	T118799	FILTER	1		
25	AT169373	CHECK VALVE	1		
26	.....	BACK-UP RING	1		
27	.....	O-RING	1		
28	AT280406	SEAL KIT	1		
29	AT300801	SEAL KIT	2		
30	AT189413	SEAL KIT	1		

BUCKET SECTION
LOADER VALVE
(SERIAL NO. -913479)

T149787 -UN-01FEB02

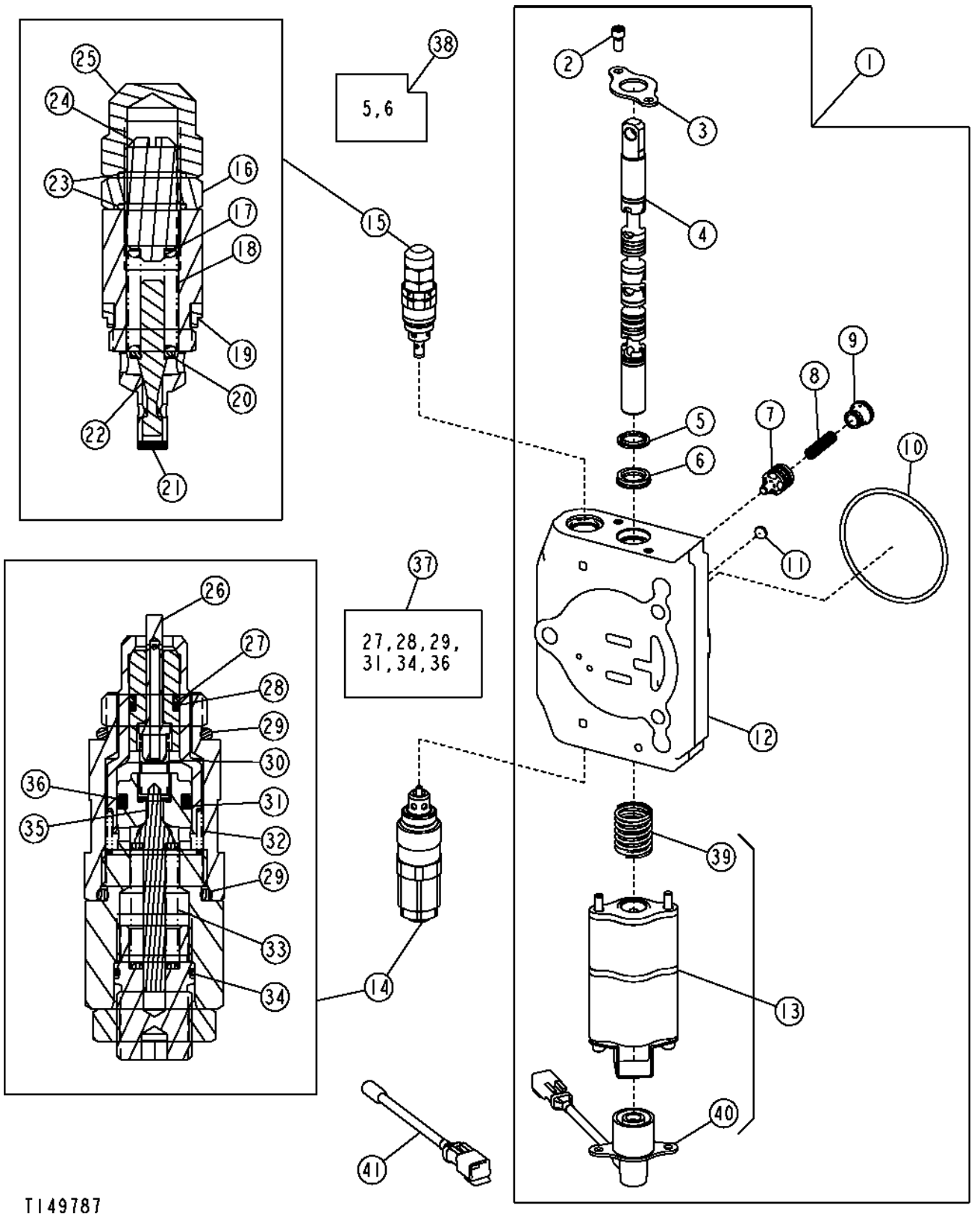

BUCKET SECTION
LOADER VALVE
(SERIAL NO. -913479)

KEY	PART NO.	PART NAME	QTY	SERIAL NO.	REMARKS
1	AT173885	CONTROL VALVE	1		
2	21H1352	SCREW	2		1/4" X 3/8"
3	T81524	PLATE	1		
4	.....	SPOOL VALVE	1		
5	.....	SEAL	2		
6	.....	SEAL	2		
7	.....	COMPENSATOR	1		
8	T161835	COMPRESSION SPRING	1		
9	.....	LOCK	1		
10	T118685	O-RING	1		
11	R95493	DISK	1		
12	.....	HOUSING	1		
13	AT196245	DETENT	1	-901683	(ALSO ORDER AT183590) (SUB FOR AT178326) (SEE D-TAC SOL 51993)
	AT196245	DETENT	1	901684-	
14	AT192457	PRESSURE RELIEF VALVE	1		(4600 PSI)
15	AT172937	PRESSURE RELIEF VALVE	1		(4600 PSI)
16	T67424	NUT	1		
17	.....	SHIM	1		
18	.....	SPRING	1		
19	T183756	SEAL	1		
20	.....	RETAINER	1		
21	.....	PLUG	1		
22	.....	POPPET	1		
23	.....	O-RING	2		
24	.....	SCREW	1		
25	T67425	NUT	1		
26	.....	POPPET	1		
27	.....	BACK-UP RING	1		
28	.....	O-RING	1		
29	T118681	O-RING	2		
30	.....	SPRING	1		
31	.....	BACK-UP RING	1		
32	.....	SPRING	1		
33	.....	SPRING	1		
34	.....	O-RING	1		
35	.....	POPPET	1		
36	.....	O-RING	1		
37	AT189413	SEAL KIT	1		(RELIEF VALVE SEAL)
38	AT178372	SEAL KIT	1		(SPOOL SEAL)
39	T134881	SPRING	1		
40	AT196246	MAGNET	1		
41	AT183590	WIRING HARNESS	1	-901683	(SEE D-TAC SOL 51993)

BUCKET SECTION
LOADER/STABILIZER VALVE
(SERIAL NO. 913480-)

T163432 -UN-08JAN03

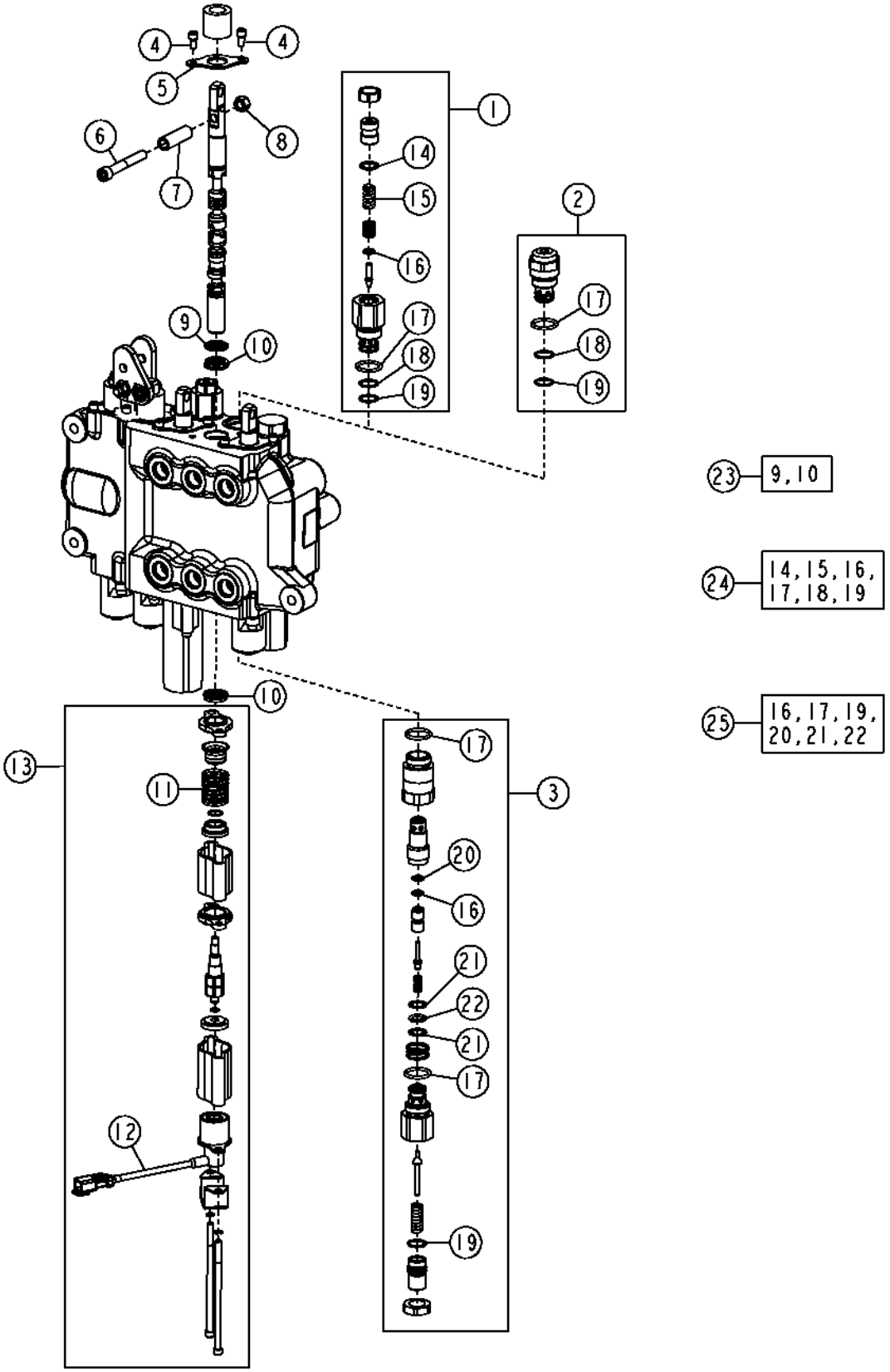

BUCKET SECTION
LOADER/STABILIZER VALVE
(SERIAL NO. 913480-)

KEY	PART NO.	PART NAME	QTY	SERIAL NO.	REMARKS
1	AT301526	PRESSURE RELIEF VALVE	1		(NOT ANTI-CAVITATION) (4600 PSI)
2	AT301527	PRESSURE RELIEF VALVE	1		(ANTI-CAVITATION) (4600 PSI)
3	AT192457	PRESSURE RELIEF VALVE	1		(4600 PSI)
4	21H1352	SCREW	2		1/4" X 3/8"
5	T81524	PLATE	1		
6	19H3317	SCREW	1		3/8" X 2-3/4"
7	T190795	TUBE	1		
8	14H1076	NUT	1		
9	.....	SEAL	1		
10	.....	SEAL	2		
11	T134881	SPRING	1		
12	AT196246	MAGNET	1		
13	AT196245	DETENT	1		
14	.....	O-RING	1		
15	.....	SPRING	1		
16	R63548	O-RING	2		
17	T118681	O-RING	4		
18	.....	BACK-UP RING	2		
19	T107887	O-RING	3		
20	T150958	BACK-UP RING	1		
21	.....	BACK-UP RING	2		
22	.....	O-RING	1		
23	AT280406	SEAL KIT	1		
24	AT300801	SEAL KIT	2		
25	AT189413	SEAL KIT	1		

AUXILIARY SECTION
LOADER VALVE
(SERIAL NO. -913479)

T158859 -UN-03SEP02

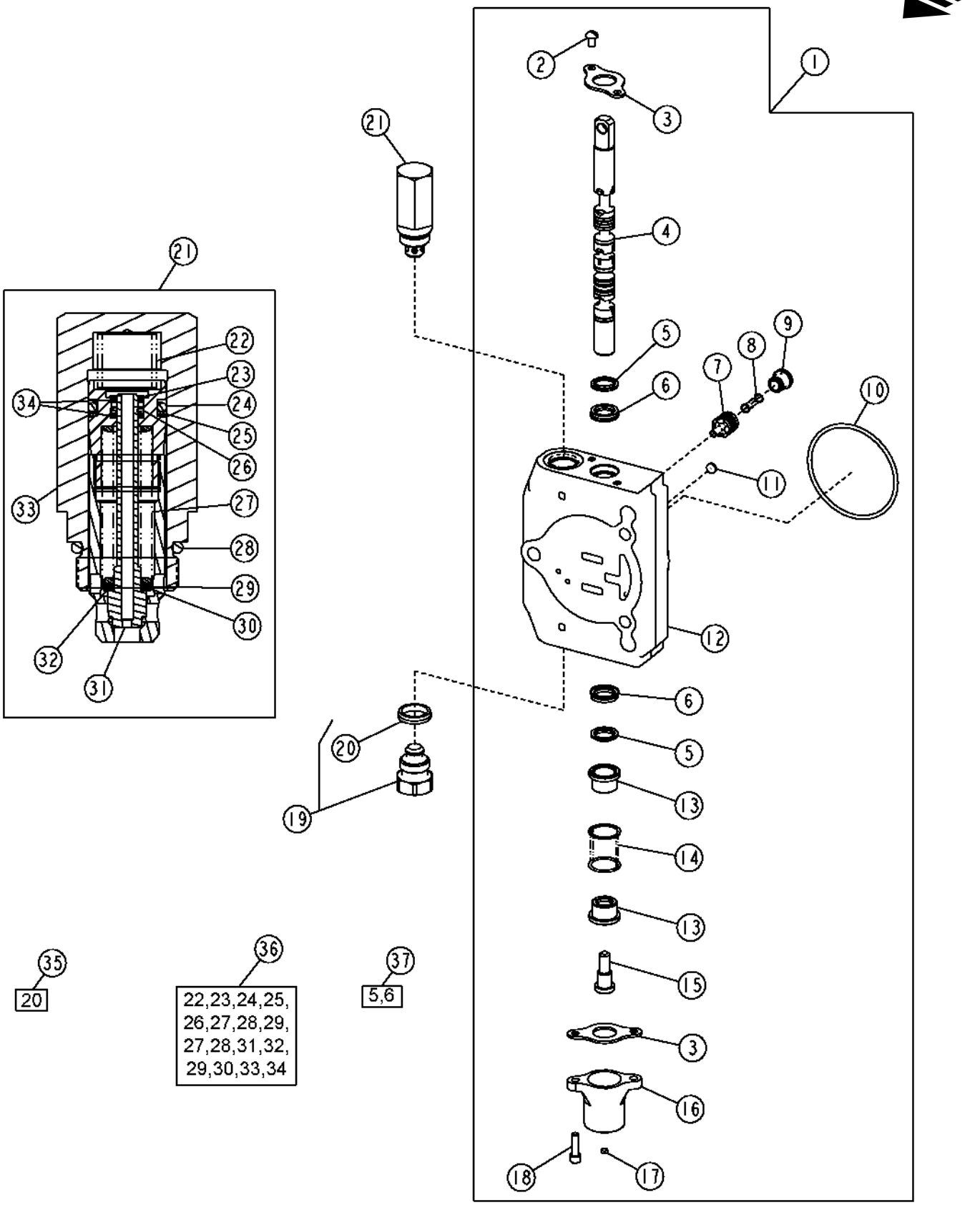

T158859

AUXILIARY SECTION
LOADER VALVE
(SERIAL NO. -913479)

KEY	PART NO.	PART NAME	QTY	SERIAL NO.	REMARKS
1	AT191723	SPOOL VALVE	1		
2	21H1352	SCREW	2		1/4" X 3/8"
3	T81524	PLATE	1		
4	.....	SPOOL VALVE	1		
5	.....	SEAL	2		
6	.....	SEAL	2		
7	.....	COMPENSATOR	1		
8	T161835	COMPRESSION SPRING	1		
9	.....	LOCK	1		
10	T118685	O-RING	1		
11	R95493	DISK	1		
12	.....	HOUSING	1		
13	T81540	RETAINER	2		
14	T177849	EXTENSION SPRING	1		(SUB FOR T153105, THIS APPLICATION)
15	T81541	SCREW	1		
16	T118808	CAP	1		
17	T118799	FILTER	1	-906011	
18	19H3554	SCREW	2		1/4" X 0.880"
19	AT83174	PLUG	1		
20	T183757	SEAL	1		
21	.....	RELIEF VALVE	1		(3800 PSI) (ORDER AT178362)
22	T118867	SPRING	1		
23	.....	RETAINER	1		
24	.....	O-RING	1		
25	.....	BACK-UP RING	1		
26	.....	O-RING	1		
27	.....	SPRING	1		
28	T118681	O-RING	1		
29	.....	WASHER	1		
30	.....	WASHER	1		
31	.....	POPPET	1		
32	.....	WASHER	1		
33	T118866	HOUSING	1		
34	.....	BACK-UP RING	2		
35	AT189413	SEAL KIT	1		(RELIEF VALVE SEAL)
36	AT178362	KIT	1		(RELIEF VALVE CARTRIDGE)
37	AT178372	SEAL KIT	1		(SPOOL SEAL)

AUXILIARY VALVE KIT
LOADER VALVE
(SERIAL NO. -913479)

T140769 -UN-06APR01

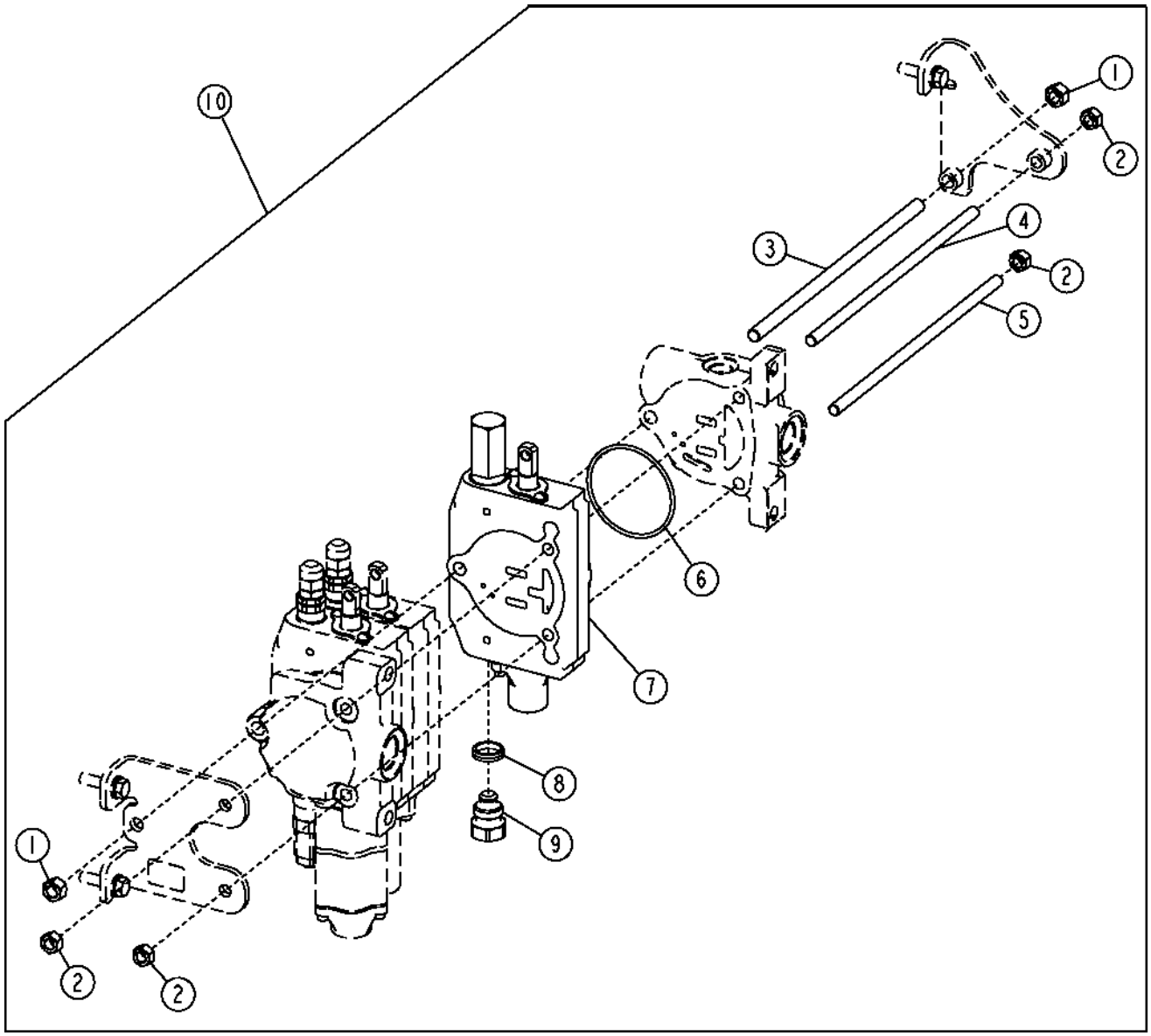

TI40769

AUXILIARY VALVE KIT
LOADER VALVE
(SERIAL NO. -913479)

KEY	PART NO.	PART NAME	QTY	SERIAL NO.	REMARKS
1	14H865	NUT	2		1/2"
2	14H807	NUT	4		7/16"
3	T185984	STUD	1		
4	T185981	STUD	1		
5	T121240	STUD	1		
6	T118681	O-RING	1		
7	AT191723	SPOOL VALVE	1		
8	T183757	SEAL	1		
9	AT83174	PLUG	1		
10	AT192173	KIT	1		(WHOLE GOODS) (ALSO ORDER AT194372)

AUXILIARY SECTION
LOADER /STABILIZER VALVE
(SERIAL NO. 913480-)

T163410 -UN-08JAN03

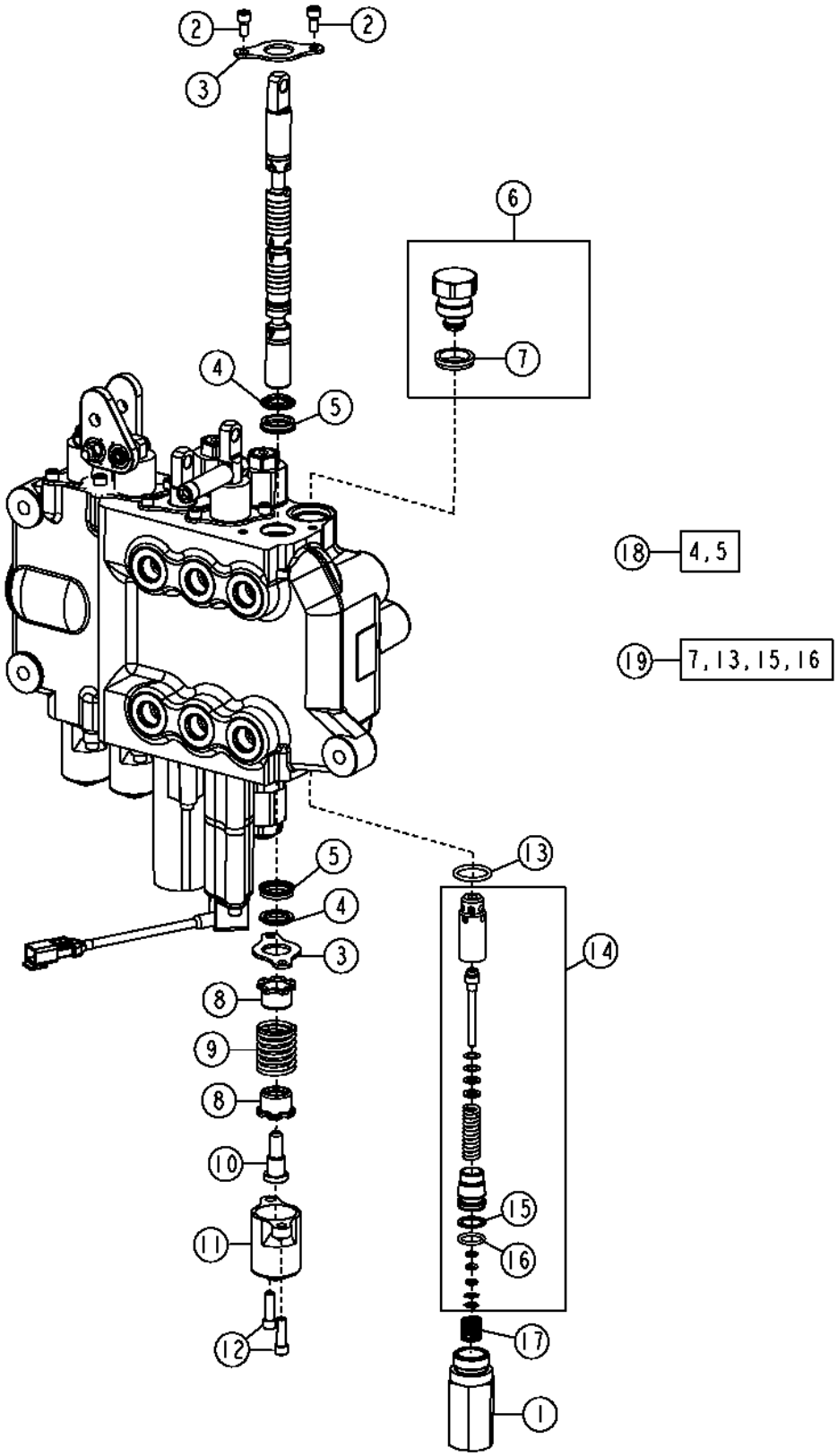

T163410

AUXILIARY SECTION
LOADER/STABILIZER VALVE
(SERIAL NO. 913480-)

KEY	PART NO.	PART NAME	QTY	SERIAL NO.	REMARKS
1	T118866	HOUSING	1		
2	21H1352	SCREW	2		1/4" X 3/8"
3	T81524	PLATE	2		
4	.....	SEAL	2		
5	.....	SEAL	2		
6	AT83174	PLUG	1		
7	T183757	SEAL	1		
8	T81540	RETAINER	2		
9	T118879	SPRING	1		
10	T81541	SCREW	1		
11	T118808	CAP	1		
12	19H3554	SCREW	2		
13	T118681	O-RING	1		
14	AT178362	KIT	1		(3800 PSI)
15	.....	BACK-UP RING	1		
16	.....	O-RING	1		
17	T118867	SPRING	1		
18	AT280406	SEAL KIT	1		
19	AT189413	SEAL KIT	1		

**OUTLET SECTION
LOADER VALVE
(SERIAL NO. -913479)**

TP69655 -UN-09OCT00

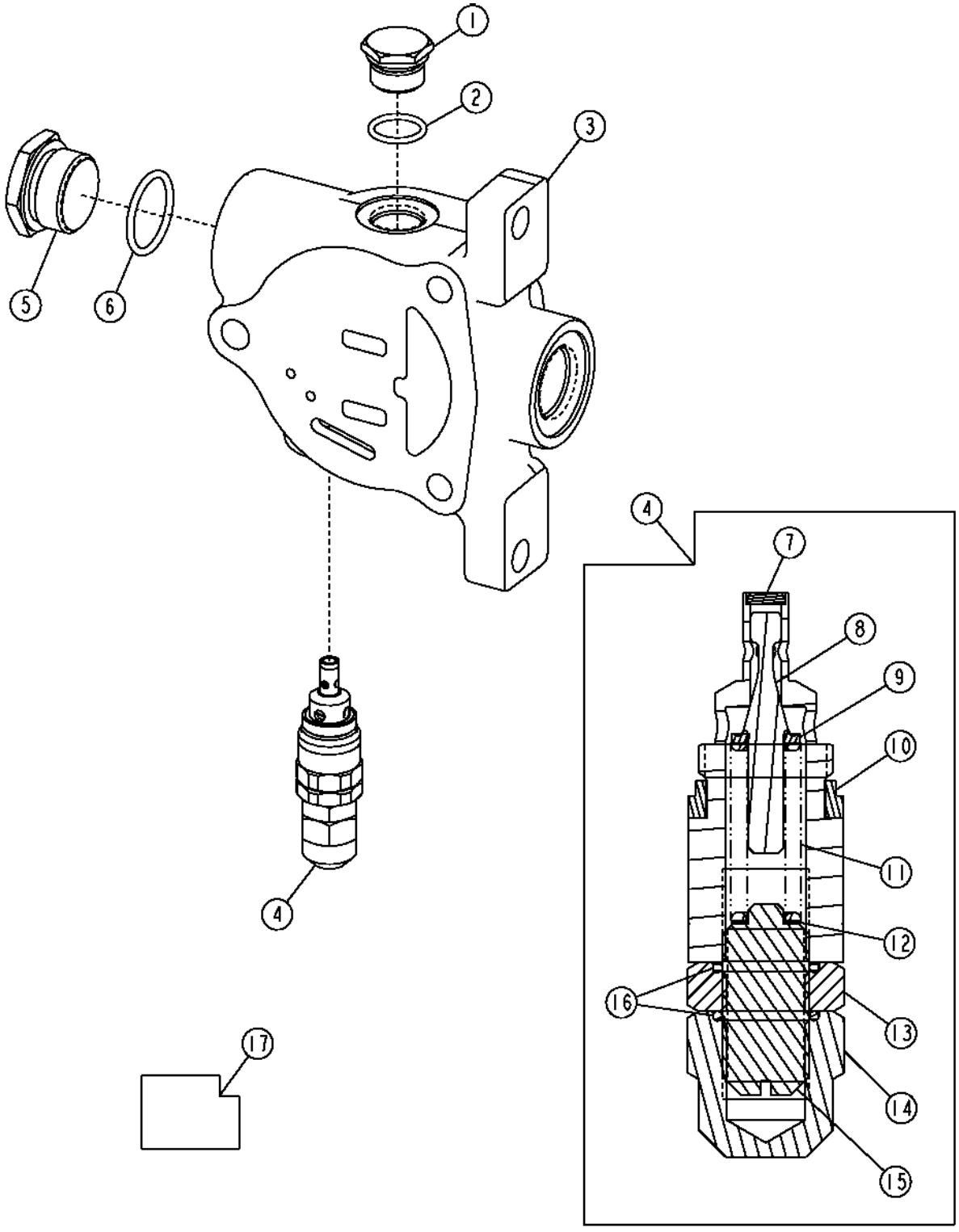

TP69655

OUTLET SECTION
LOADER VALVE
(SERIAL NO. -913479)

KEY	PART NO.	PART NAME	QTY	SERIAL NO.	REMARKS
1	R27474	DRAIN PLUG	1		
2	R26906	O-RING	1		
3	T166194	COVER	1		
4	AT173840	PRESSURE RELIEF VALVE	1		(3625 PSI)
5	R36636	FITTING PLUG	1		
6	R26906	O-RING	1		
7	.....	PLUG	1		
8	.....	POPPET	1		
9	.....	RETAINER	1		
10	T183756	SEAL	1		
11	.....	SPRING	1		
12	.....	SHIM	1		
13	T67424	NUT	1		
14	T67425	NUT	1		
15	.....	SCREW	1		
16	.....	O-RING	2		
17	AT189413	SEAL KIT	1		(RELIEF VALVE SEAL)

STABILIZER VALVE
(EATON)
(SERIAL NO. -913479)

T144119 -UN-17JUL01

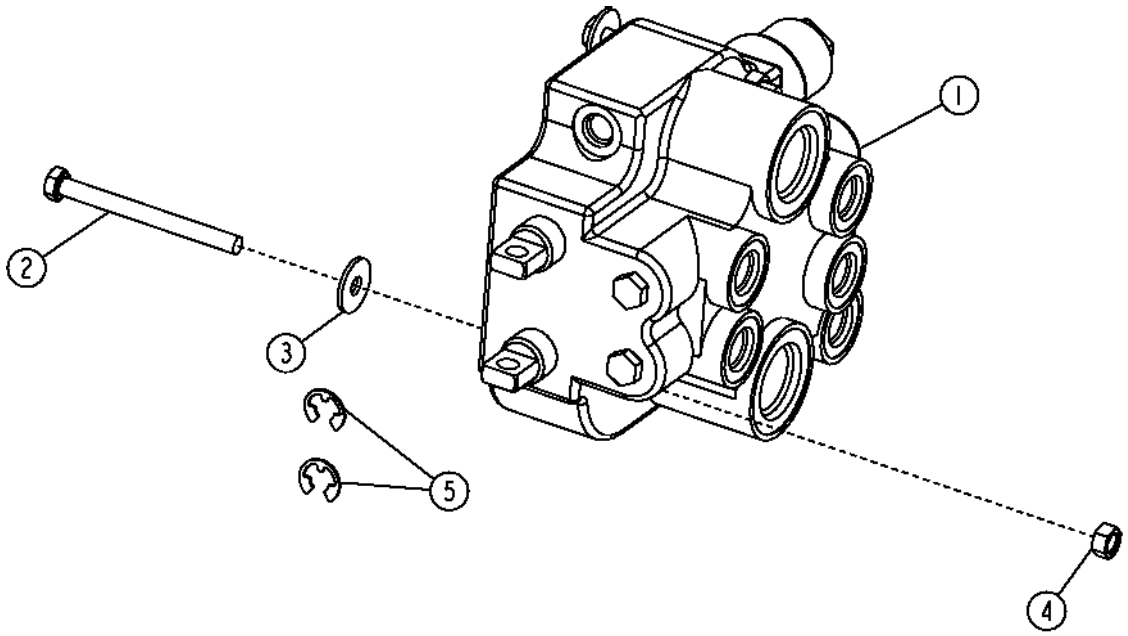

T144119

STABILIZER VALVE
(EATON)
(SERIAL NO. -913479)

KEY	PART NO.	PART NAME	QTY	SERIAL NO.	REMARKS
1	AT190331	SPOOL VALVE	1		
2	19M8539	CAP SCREW	2		M8 X 90
3	24M7298	WASHER	2		
4	14M7273	NUT	2		M8
5	R26871	SNAP RING	2		(SUB FOR R106466)

STABILIZER VALVE
(EATON)
(SERIAL NO. -913479)

T160068 -UN-19OCT02

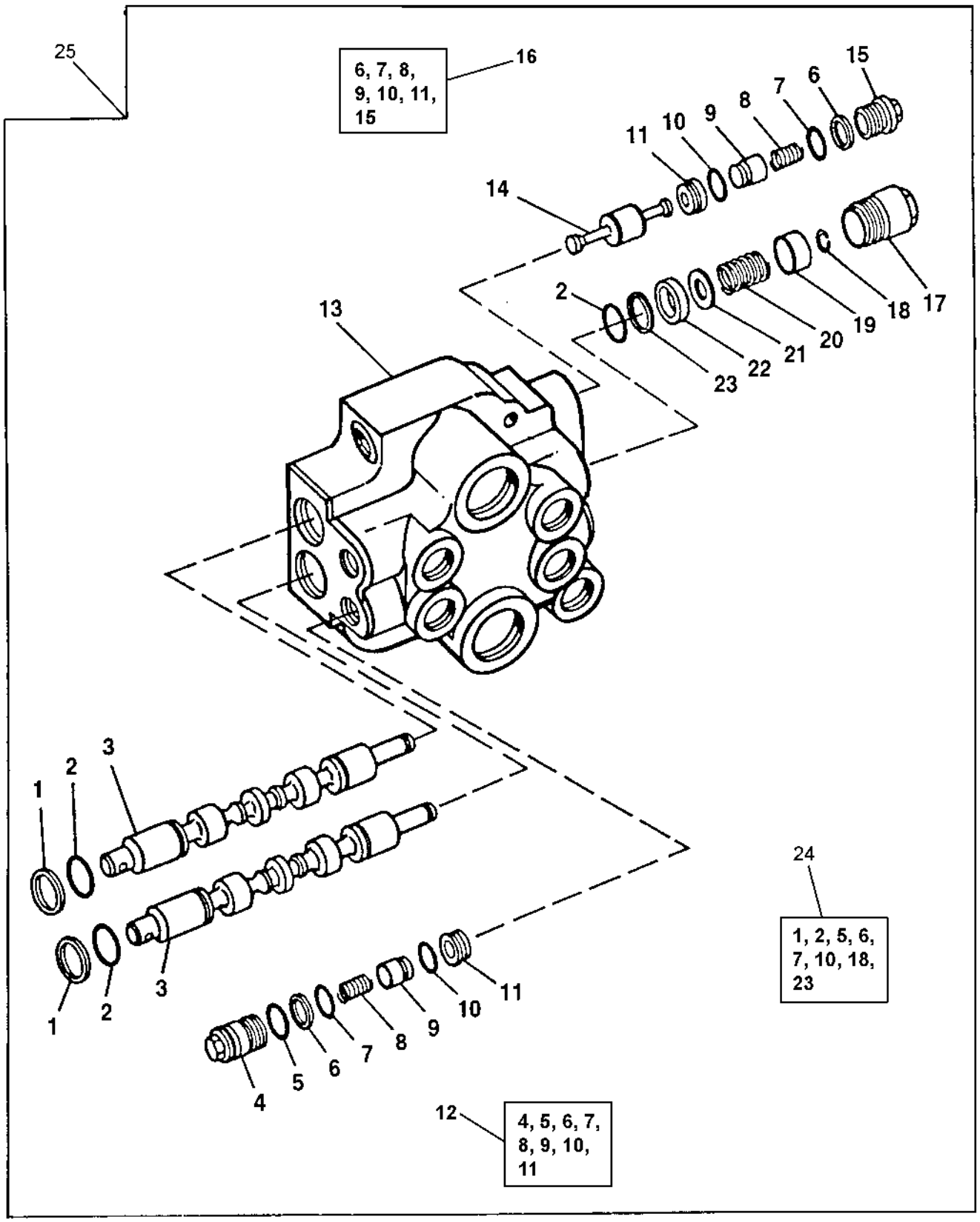

T160068

STABILIZER VALVE
(EATON)
(SERIAL NO. -913479)

KEY	PART NO.	PART NAME	QTY	SERIAL NO.	REMARKS
1	T127265	SEAL	2		
2	T127268	O-RING	4		
3	.....	VALVE SPOOL	2		(SUB AT190331)
4	.....	RETAINER	2		(SUB AT190334)
5	R116031	O-RING	2		
6	T154187	BACK-UP RING	4		
7	R72328	O-RING	4		
8	.....	SPRING	4		(SUB AT190333 AND AT190334)
9	.....	POPPET	4		(SUB AT190333 AND AT190334)
10	R56464	O-RING	4		
11	.....	SEAT	4		(SUB AT190333 AND AT190334)
12	AT190334	KIT	2		(THERMAL RELIEF)
13	.....	HOUSING	1		(SUB AT190331)
14	T127257	PLUNGER	2		
15	.....	RETAINER	2		(SUB AT190333)
16	AT190333	KIT	2		(STANDARD)
17	AT135767	CAP	2		
18	T127263	SNAP RING	2		
19	T127261	RETAINER	2		
20	MG272321	SPRING	2		
21	T127264	WASHER	2		
22	T127260	SPACER	2		
23	R73530	BACK-UP RING	2		
24	AT190741	SEAL KIT	1		
25	AT190331	SPOOL VALVE	1		

STABILIZER/LOADER VALVE
(HUSCO)
(SERIAL NO. 913480-)

T163599 -UN-08JAN03

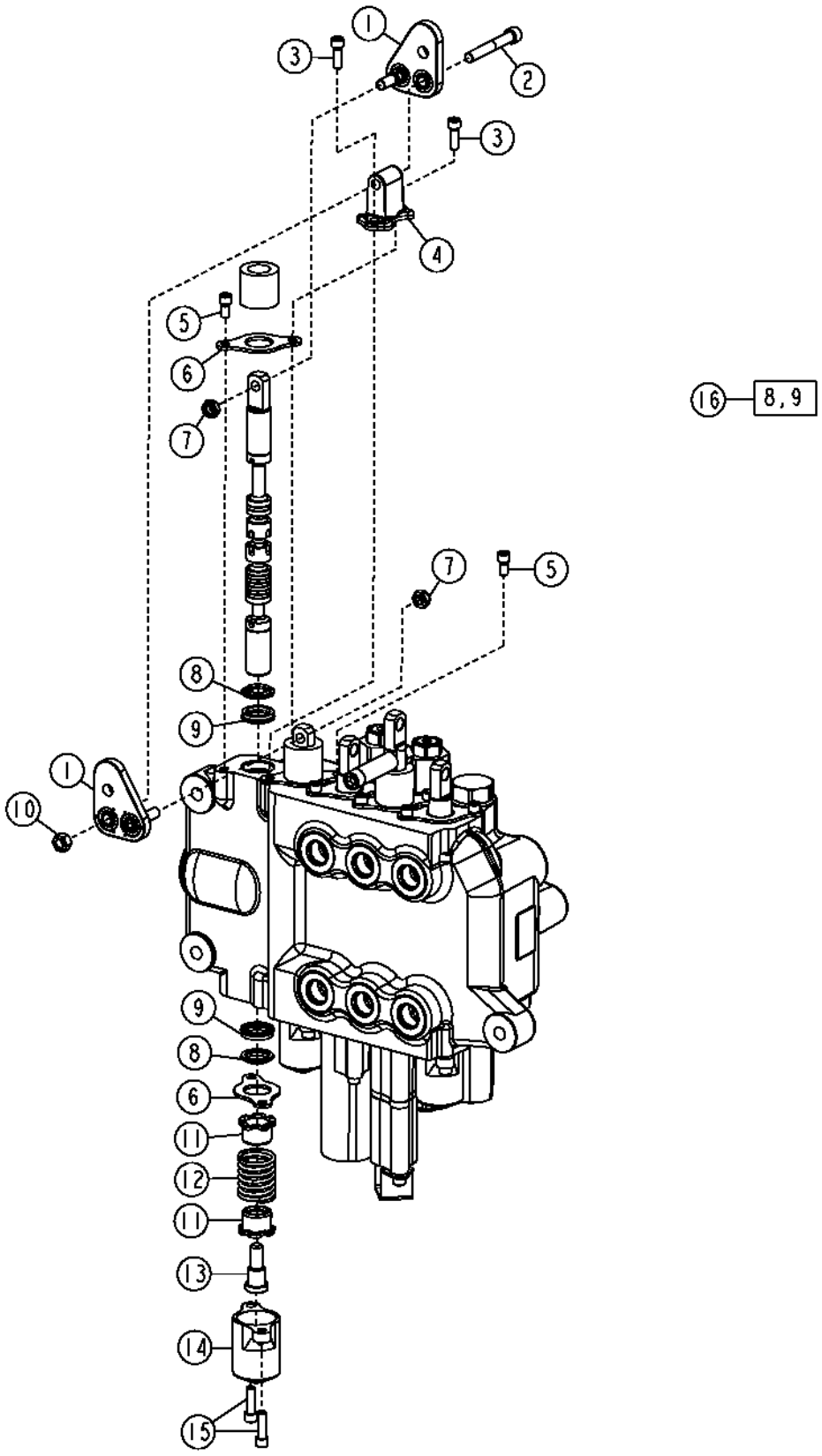

STABILIZER/LOADER VALVE
(HUSCO)
(SERIAL NO. 913480-)

KEY	PART NO.	PART NAME	QTY	SERIAL NO.	REMARKS
1	AT199656	BELLCRANK	2		
2	19H3152	SCREW	1		5/16" X 2-3/4"
3	19H2924	SCREW	2		1/4" X 3/4"
4	AT199657	BASE	1		
5	21H1352	SCREW	2		1/4" X 3/8"
6	T81524	PLATE	4		
7	R11151	LOCK NUT	2		
8	.....	SEAL	4		
9	.....	SEAL	4		
10	14H785	NUT	1		5/16"
11	T81540	RETAINER	4		
12	T118683	SPRING	2		
13	T81541	SCREW	2		
14	T118808	CAP	2		
15	19H3554	SCREW	4		1/4" X 0.880"
16	AT280406	SEAL KIT	2		

STABILIZER/LOADER VALVE
(HUSCO)
(SERIAL NO. 913480-)

T163317 -UN-14JAN03

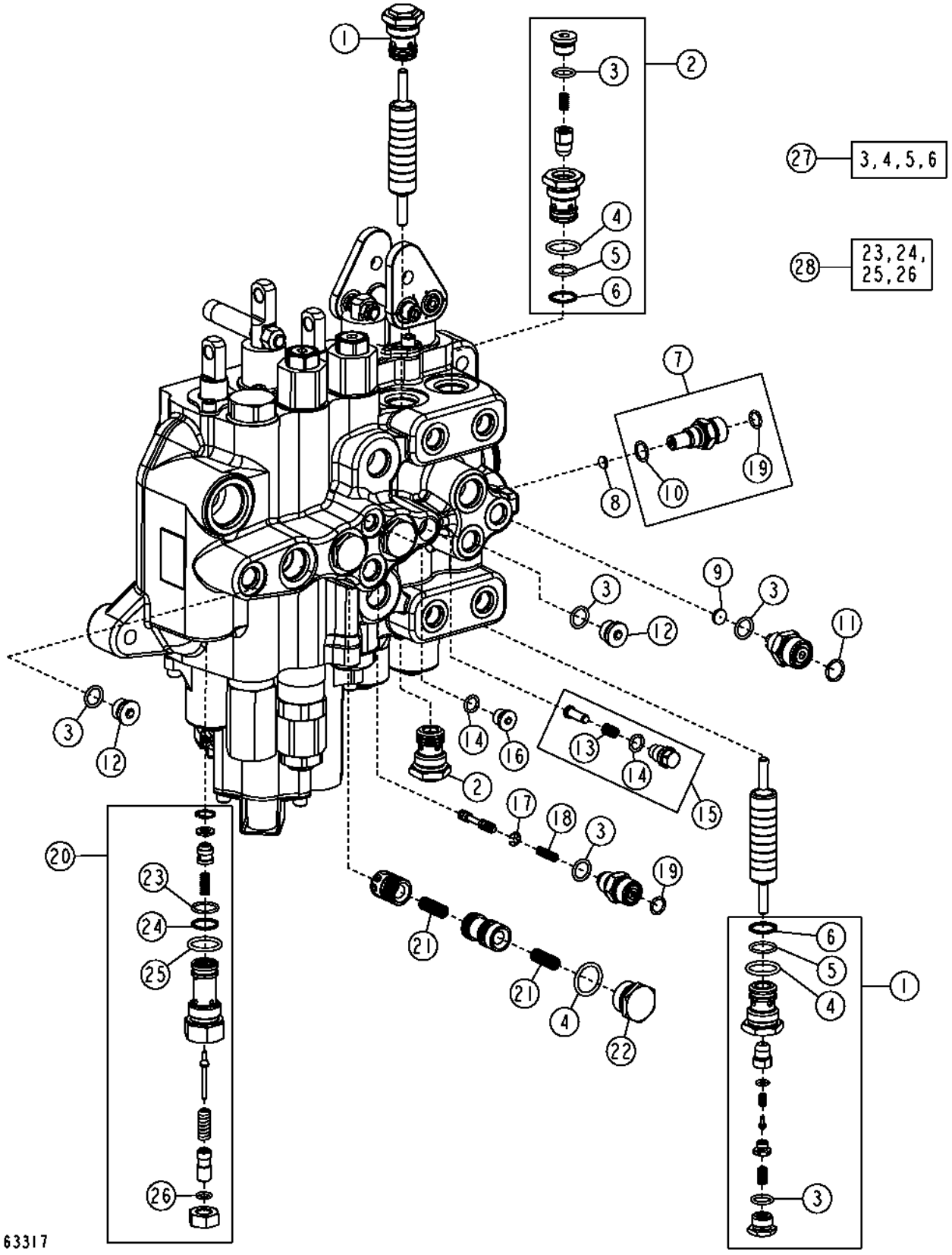

STABILIZER/LOADER VALVE
(HUSCO)
(SERIAL NO. 913480-)

KEY	PART NO.	PART NAME	QTY	SERIAL NO.	REMARKS
1	AT199654	FLOW CONTROL HYD. VALVE	2		(WITH THERMAL RELIEF VALVE)
2	AT199652	FLOW CONTROL HYD. VALVE	2		(WITHOUT THERMAL RELIEF VALVE)
3	T70177	O-RING	8		
4	R26906	O-RING	7		
5	.....	O-RING	4		
6	.....	BACK-UP RING	4		
7	RE154027	FITTING	1		
8	R111292	DISK	1		
9	.....	DISK	1		
10	51M7041	O-RING	1		
11	H81608	O-RING	1		
12	R111493	FITTING PLUG	2		
13	T76509	SPRING	1		
14	R28782	O-RING	2		
15	AT199672	KIT	1		
16	T54904	FITTING PLUG	1		
17	T160619	SNAP RING	1		
18	T160617	SPRING	1		
19	T77613	O-RING	2		
20	AT199670	FLOW CONTROL HYD. VALVE	1		(DRAIN REGULATOR)
21	T161835	COMPRESSION SPRING	6		
22	T76502	FITTING	3		
23	.....	O-RING	1		
24	.....	BACK-UP RING	1		
25	KV12858	O-RING	1		
26	R79060	O-RING	1		
27	AT199653	SEAL KIT	2		
28	AT199671	SEAL KIT	1		

LOADER BOOM LIFT CYLINDER HYDRAULICS

T137067 -UN-13FEB01

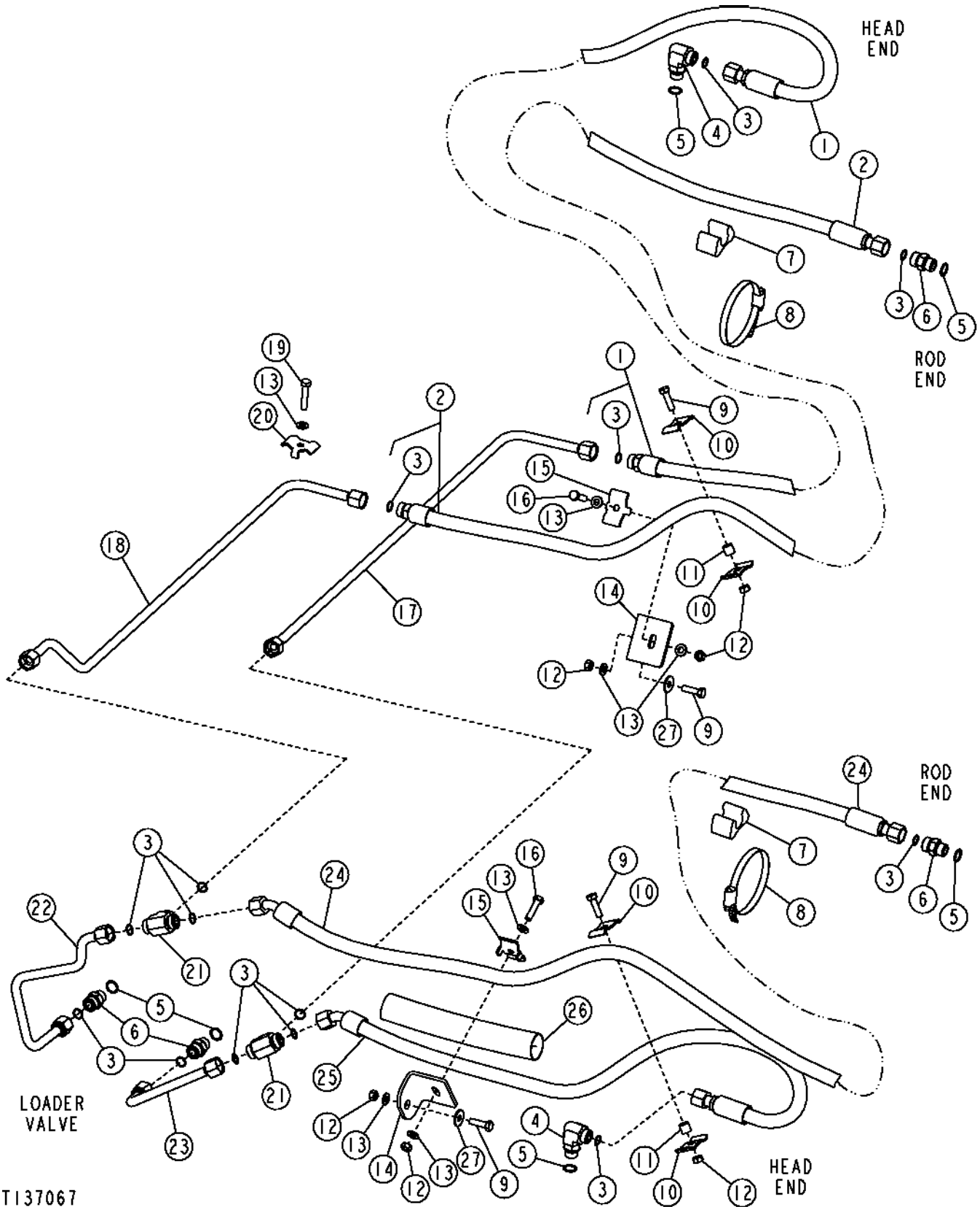

LOADER BOOM LIFT CYLINDER HYDRAULICS

KEY	PART NO.	PART NAME	QTY	SERIAL NO.	REMARKS
1	AT189423	HYDRAULIC HOSE - FABRICATE	1		
2	AT185799	HYDRAULIC HOSE - FABRICATE	1		
3	T77932	O-RING	13		
4	38H1006	ELBOW FITTING	2		
5	R26906	O-RING	6		
6	38H1162	ADAPTER	4		
7	T105773	GUIDE	2		
8	C16054	CLAMP	2		
9	19M7550	CAP SCREW	4		M10 X 35
10	R46919	HALF CLAMP	4		
11	28H3381	SPACER	2		
12	14M7274	NUT	6		M10
13	24M7239	WASHER	7		
14	T165864	ANGLE	2		
15	T160550	CLAMP	2		
16	19M8637	CAP SCREW	2		M10 X 40
17	AT183722	OIL LINE	1		
18	AT183721	OIL LINE	1		
19	19M8600	CAP SCREW	1		M10 X 50
20	T159954	CLAMP	1		
21	38H1207	TEE FITTING	2		
22	AT183717	OIL LINE	1		
23	AT183718	OIL LINE	1		
24	AT185797	HYDRAULIC HOSE - FABRICATE	1		
25	AT185798	HYDRAULIC HOSE - FABRICATE	1		
26	.....	SLEEVE	1		(MAKE FROM T78606, BULK MATERIAL, CUT TO 254 MM)
27	24M7296	WASHER	2		

LOADER BUCKET CYLINDER AND THIRD FUNCTION HYDRAULICS
(SERIAL NO. -913479)

T134785 -UN-08NOV00

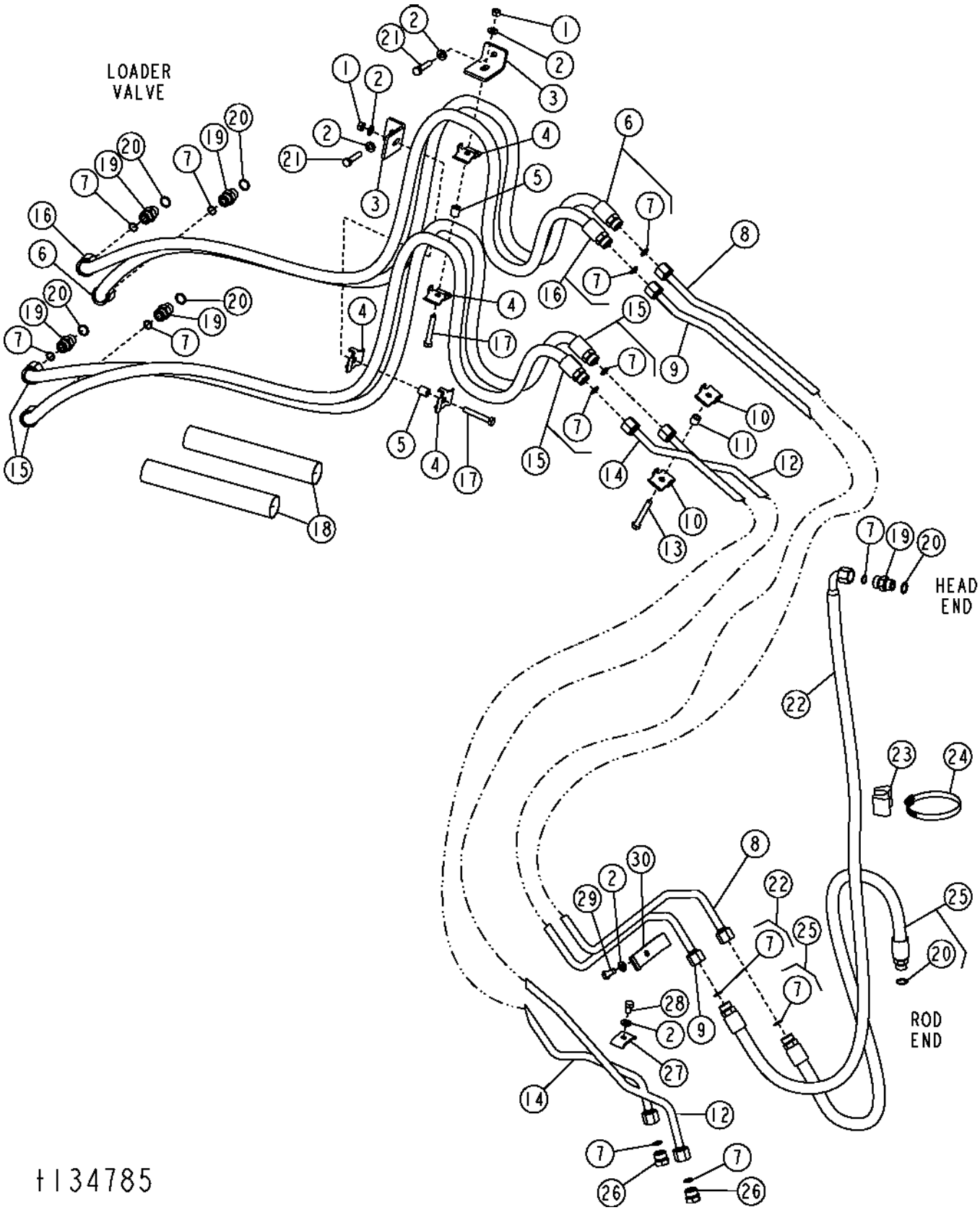

LOADER BUCKET CYLINDER AND THIRD FUNCTION HYDRAULICS
(SERIAL NO. -913479)

KEY	PART NO.	PART NAME	QTY	SERIAL NO.	REMARKS
1	14M7274	NUT	2		M10
2	24M7239	WASHER	6		
3	T166245	ANGLE	2		
4	T160550	CLAMP	4		
5	28H3383	BUSHING	2		
6	AT190748	HYDRAULIC HOSE - FABRICATE	1		(SUB FOR AT186857)
7	T77932	O-RING	14		
8	AT186493	OIL LINE	1		
9	AT185977	OIL LINE	1		
10	T159954	CLAMP	2		
11	28H3381	SPACER	1		
12	AT186494	OIL LINE	1		
13	19M7875	CAP SCREW	1		
14	AT186495	OIL LINE	1		
15	AT186496	HYDRAULIC HOSE - FABRICATE	2		
16	AT190748	HYDRAULIC HOSE - FABRICATE	1		
17	19M7742	CAP SCREW	2		M10 X 65
18	.....	SLEEVE	1		(MAKE FROM T78606, CUT TO 254 MM)
19	38H1162	ADAPTER	5		
20	R26906	O-RING	6		
21	19M8600	CAP SCREW	2		
22	AT173128	HYDRAULIC HOSE - FABRICATE	1		
23	T105773	GUIDE	1		
24	AU12450	HOSE CLAMP	1		
25	AT173129	HYDRAULIC HOSE - FABRICATE	1		7/8" X 1 226 MM (48-1/4") X 1"
26	38H1148	FITTING PLUG	2		
27	U10516	HOSE CLAMP	1		
28	19M8324	CAP SCREW	1		M10 X 16
29	19M7838	SCREW	1		
30	T105720	CLAMP	1		
31	H77698	TIE BAND	6		

LOADER BUCKET CYLINDER AND THIRD FUNCTION HYDRAULICS
(SERIAL NO. 913480-)

T163839 -UN-13JAN03

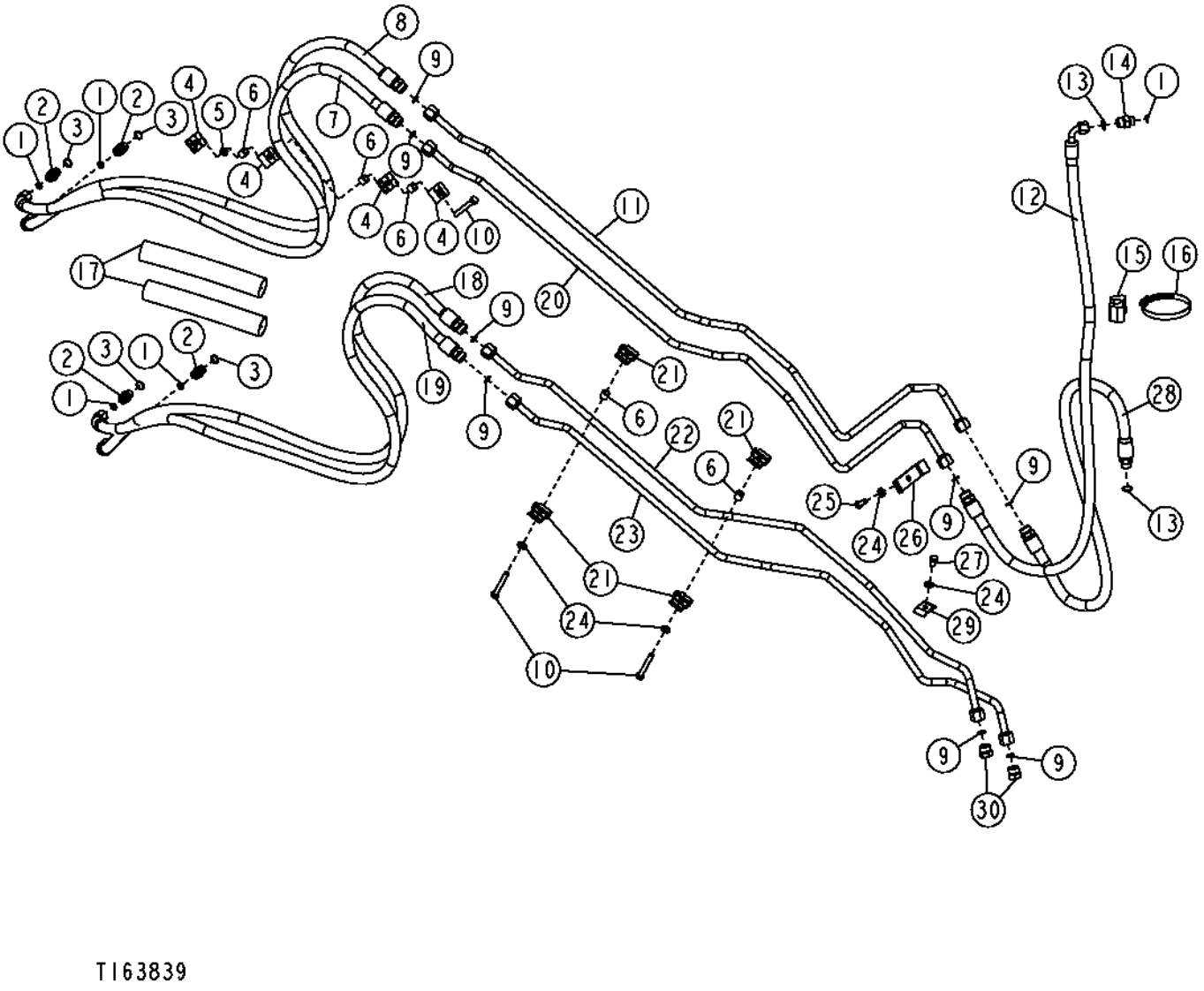

THIS PARTS LISTING IS CONTINUED

LOADER BUCKET CYLINDER AND THIRD FUNCTION HYDRAULICS
(SERIAL NO. 913480-)

KEY	PART NO.	PART NAME	QTY	SERIAL NO.	REMARKS
1	T77857	O-RING	4		
2	38H1161	ADAPTER	4		
3	R26375	O-RING	4		
4	R46919	HALF CLAMP	4		
5	14M7274	NUT	1		
6	28H3381	SPACER	5		
7	AT198258	HYDRAULIC HOSE - FABRICATE	1		
8	AT198257	HYDRAULIC HOSE - FABRICATE	1		
9	T77932	O-RING	8		
10	19M7875	CAP SCREW	3		
11	AT198249	OIL LINE	1		
12	AT197760	HYDRAULIC HOSE - FABRICATE	1		
13	R26906	O-RING	2		
14	38H1174	ADAPTER	1		
15	T105773	GUIDE	1		
16	AU12450	HOSE CLAMP	1		
17	.....	HOSE GUARD	1		(MAKE FROM T78606, CUT TO 254 MM)
18	AT198254	HYDRAULIC HOSE - FABRICATE	1		
19	AT198260	HYDRAULIC HOSE - FABRICATE	1		
20	AT197649	OIL LINE	1		
21	T159954	CLAMP	4		
22	AT198251	OIL LINE	1		
23	AT198253	OIL LINE	1		
24	24M7239	WASHER	4		
25	19M7938	CAP SCREW	1		
26	T105720	CLAMP	1		
27	19M8324	CAP SCREW	1		
28	AT173129	HYDRAULIC HOSE - FABRICATE	1		
29	U10516	HOSE CLAMP	1		
30	38H1148	FITTING PLUG	1		

HYDRAULIC FRONT COUPLER
(SERIAL NO. -913479)

T142946 -UN-12JUN01

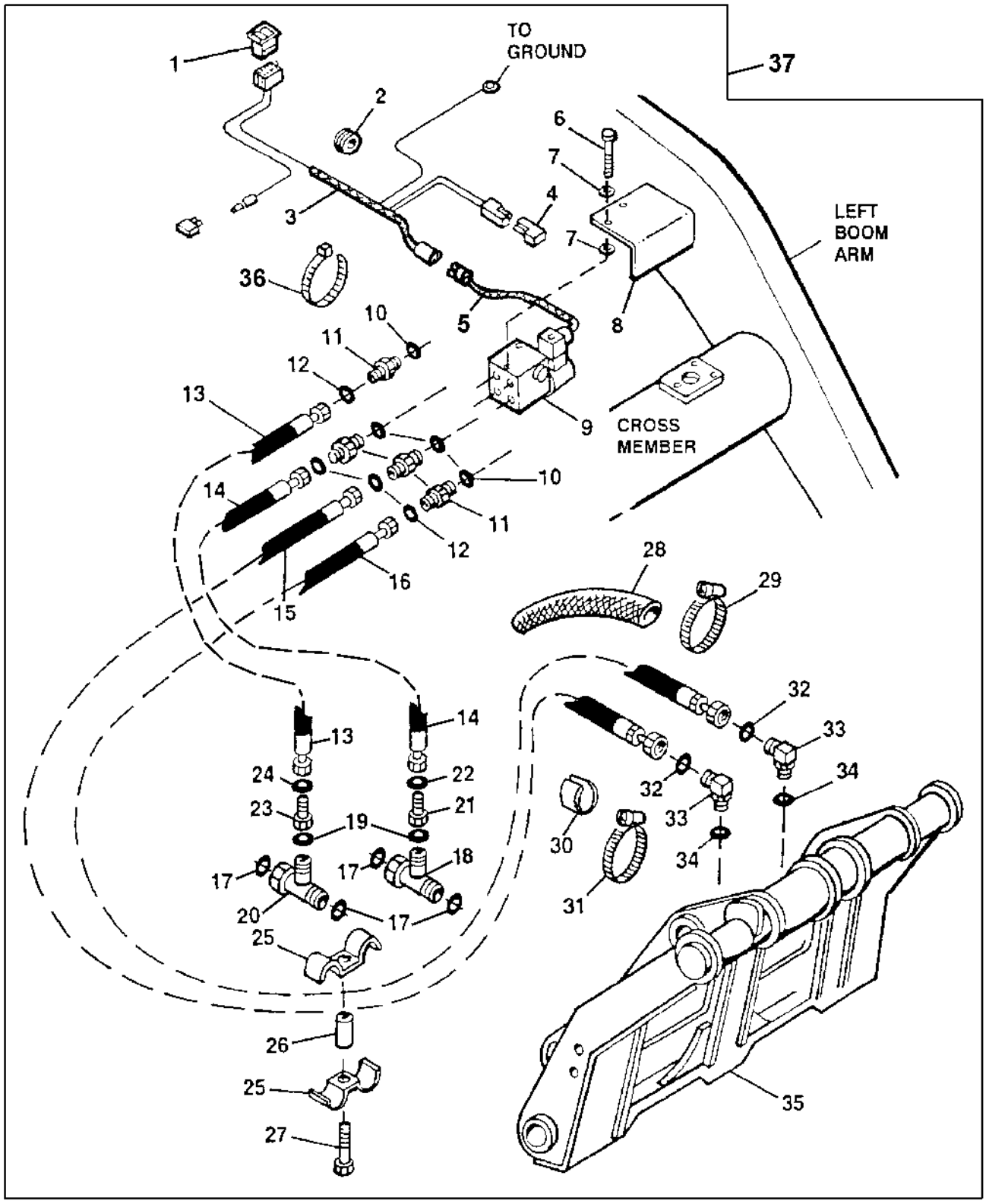

T142946

HYDRAULIC FRONT COUPLER
(SERIAL NO. -913479)

KEY	PART NO.	PART NAME	QTY	SERIAL NO.	REMARKS
1	AT181292	SWITCH	1		
2	N30256	GROMMET	1		
	T70341	GROMMET	1		
3	AT193699	CAB WIRING HARNESS	1		(ALSO ORDER AT185876) (SUB FOR AT185877)
4	AR94101	DIODE	1		
5	AT185876	WIRING HARNESS	1		(ALSO ORDER AT193699)
6	19M7763	CAP SCREW	2		M6 X 75
7	24M7250	WASHER	4		6.400 X 17 X 3 MM
8	.....	COVER	1		(ORDER A36518 FROM JRB)
9	AT181422	VALVE	1		
10	R26448	O-RING	4		
11	38H1168	ADAPTER	4		
12	T77814	O-RING	4		
13	AT195862	HYDRAULIC HOSE	1		(SUB FOR AT194784, THIS APPLICATION)
14	AT195862	HYDRAULIC HOSE	1		(SUB FOR AT194784, THIS APPLICATION)
15	AT194785	HYDRAULIC HOSE	1		
16	AT194786	HYDRAULIC HOSE	1		
17	T77932	O-RING	4		
18	38H1031	TEE FITTING	1		
19	T77857	O-RING	2		
20	38H1032	TEE FITTING	1		
21	38H1471	REDUCER	1		(410G ONLY)
22	T77932	O-RING	1		
23	38H1471	REDUCER	1		
24	T77613	O-RING	1		
25	R46919	HALF CLAMP	2		
26	28H1878	SPACER	1		
27	19M7179	CAP SCREW	1		
28	T162439	HOSE GUARD	1		
29	AR21842	CLAMP	2		
30	.....	BULK HOSE	2		(MAKE FROM T60811 BULK MATERIAL)
31	AR21839	CLAMP	2		
32	T77613	O-RING	2		
33	38H1009	ELBOW FITTING	2		
34	R26448	O-RING	2		
35	.....	QUICK COUPLER	1		
36	H77698	TIE BAND	12		
37	AT194410	KIT	1		(WHOLE GOODS) (SUB FOR AT185635) (INCLUDES AT183881 AND AT300928)

HYDRAULIC FRONT COUPLER
(SERIAL NO. 913480-)

T163917 -UN-14JAN03

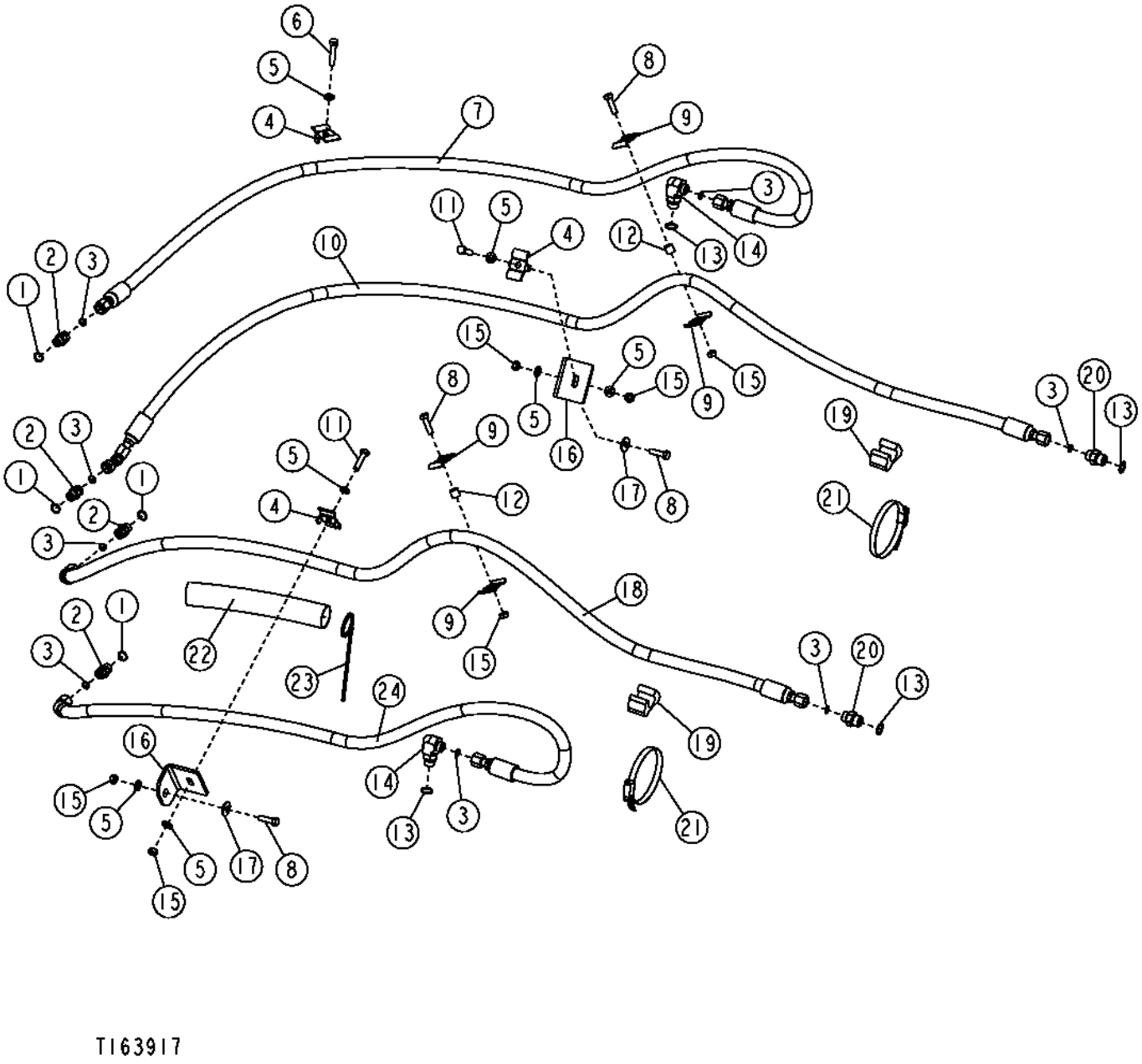

HYDRAULIC FRONT COUPLER
(SERIAL NO. 913480-)

KEY	PART NO.	PART NAME	QTY	SERIAL NO.	REMARKS
1	R26375	O-RING	4		
2	38H1161	ADAPTER	4		
3	T77857	O-RING	8		
4	T160550	CLAMP	3		
5	24M7239	WASHER	7		
6	19M8600	CAP SCREW	1		M10 X 50
7	AT197654	HYDRAULIC HOSE - FABRICATE	1		
8	19M7550	CAP SCREW	4		M10 X 35
9	R46919	HALF CLAMP	4		
10	AT197647	HYDRAULIC HOSE - FABRICATE	1		
11	19M8637	CAP SCREW	2		M10 X 40
12	28H3381	SPACER	2		
13	R26906	O-RING	4		
14	38H1012	ELBOW FITTING	2		
15	14M7274	NUT	6		M10
16	T165864	ANGLE	2		
17	24M7296	WASHER	2		
18	AT197645	HYDRAULIC HOSE - FABRICATE	1		
19	T105773	GUIDE	2		
20	38H1174	ADAPTER	2		
21	C16054	CLAMP	2		
22	.....	HOSE GUARD	1		(MAKE FROM T78606, CUT TO 254 MM)
23	H77698	TIE BAND	2		
24	AT197646	HYDRAULIC HOSE - FABRICATE	1		

BOOM LIFT CYLINDER AND REPAIR KITS

T136454 -UN-02FEB01

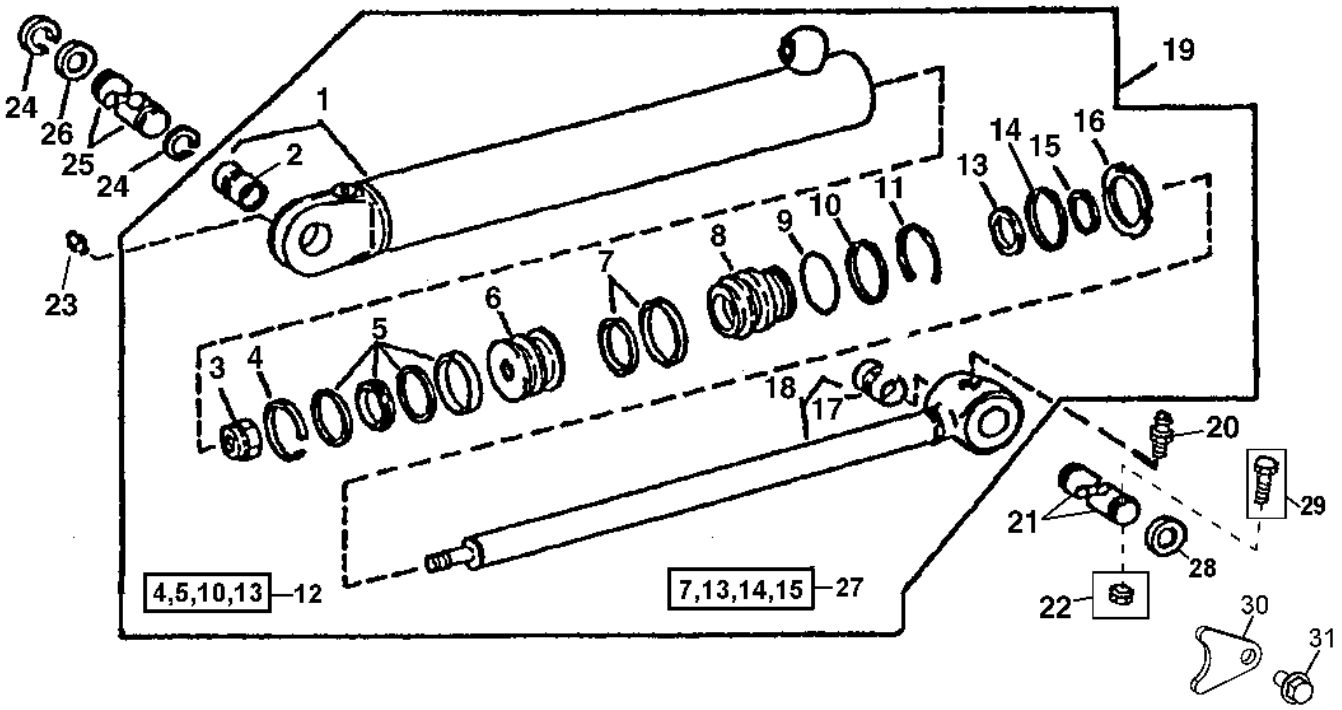

T136454

KEY	PART NO.	PART NAME	QTY	SERIAL NO.	REMARKS
1	AH146876	HYDRAULIC CYLINDER BARREL	1		
2	H159941	BUSHING	1		
3	H170538	NUT	1		
4	R81777	WEAR RING	1		
5	RE20345	SEAL	1		
6	H145359	PISTON	1		
7	AH146561	SEAL	1		
8	H152345	HYDR. CYLINDER ROD GUIDE	1		
9	T12582	O-RING	1		
10	R81864	BACK-UP RING	1		
11	R81789	RING	1		
12	AH149842	HYDRAULIC CYLINDER KIT	1		CYLINDER BORE REPAIR
13	H152203	SEAL	1		
14	H152794	WEAR RING	1		
15	AH146557	SEAL	1		
16	R81795	NUT	1		
17	H151542	BUSHING	1		
18	AH146875	ROD	1		
19	.....	HYDRAULIC CYLINDER	1	-910494	(AH146874 NO LONGER AVAILABLE) (SUB AH207401)
20	T162396	LUBRICATION FITTING	1		STRAIGHT
21	T186354	PIN	2	-896854	
	T187275	PIN FASTENER	2	896855-	
22	14M7168	LOCK NUT	2	-896854	M12
23	T162396	LUBRICATION FITTING	1		
24	T61226	SNAP RING	4		
25	T158132	PIN	1		
26	T75815	WASHER	AR		
27	AH148164	HYDRAULIC CYLINDER KIT	1		CYLINDER ROD SEAL REPAIR
28	24H1577	WASHER	8	-896854	1-25/32" X 2-7/8" X 0.036"
29	19M7949	CAP SCREW	2	-896854	M12 X 100
30	T187276	PLATE	1	896855-	RETAINER
31	19M7784	SCREW	1	896855-	M10 X 20

BOOM LIFT CYLINDER
(SERIAL NO. 910495-)

T161672 -UN-18NOV02

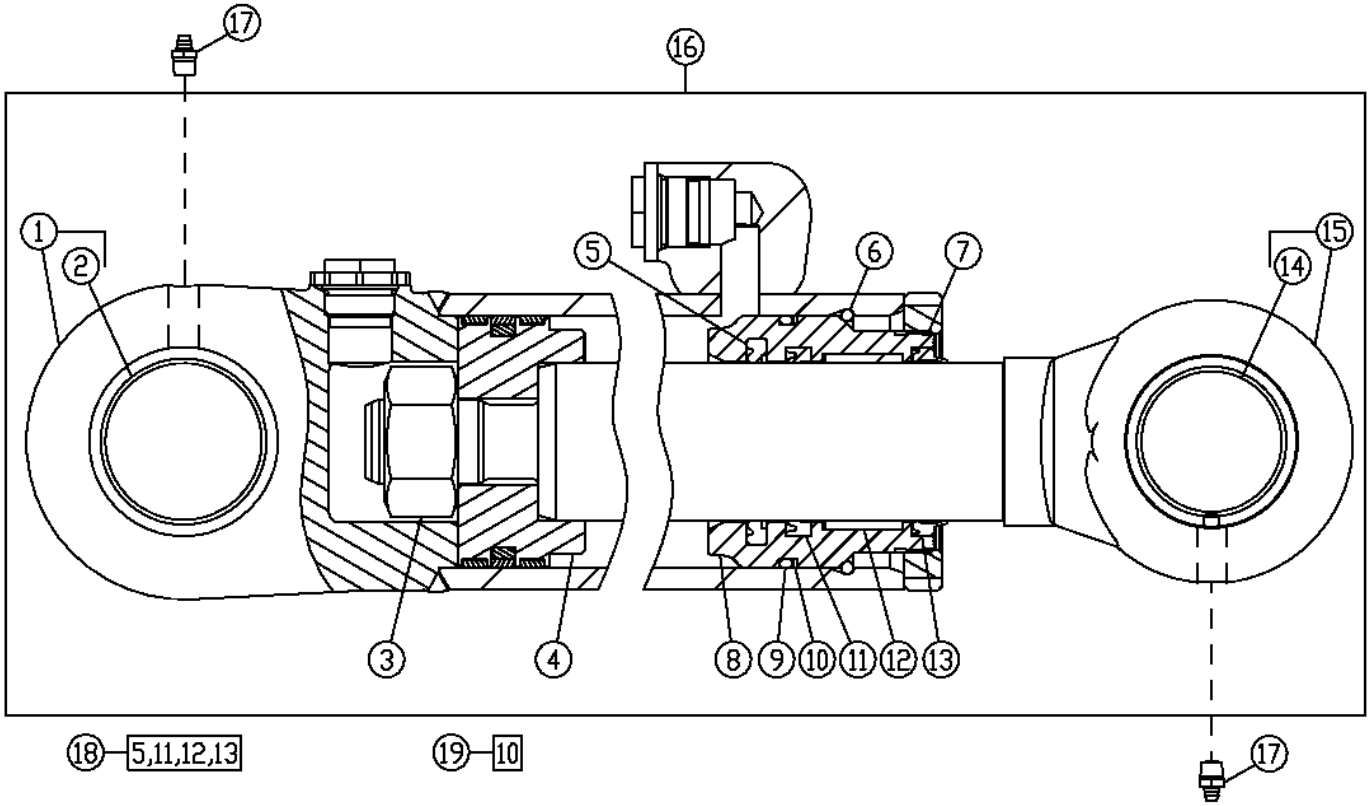

T161672

KEY	PART NO.	PART NAME	QTY	SERIAL NO.	REMARKS
1	AH146876	HYDRAULIC CYLINDER BARREL	1		
2	H159941	BUSHING	1		
3	H170538	NUT	1		
4	AH165826	PISTON	1		
5	AH146561	SEAL	1		
6	R81789	RING	1		
7	R81795	NUT	1		
8	H152345	HYDR. CYLINDER ROD GUIDE	1		
9	T12582	O-RING	1		
10	R81864	BACK-UP RING	1		
11	H152203	SEAL	1		
12	H152794	WEAR RING	1		
13	AH146557	SEAL	1		
14	H151542	BUSHING	1		
15	AH146875	ROD	1		
16	AH207401	HYDRAULIC CYLINDER	1		
17	T162396	LUBRICATION FITTING	2		
18	AH148164	HYDRAULIC CYLINDER KIT	1		CYLINDER ROD SEAL KIT
19	AH202080	HYDRAULIC CYLINDER KIT	1		CYLINDER BORE SEAL KIT

LOADER BUCKET CYLINDER AND REPAIR KIT

TP62470 -UN-26SEP00

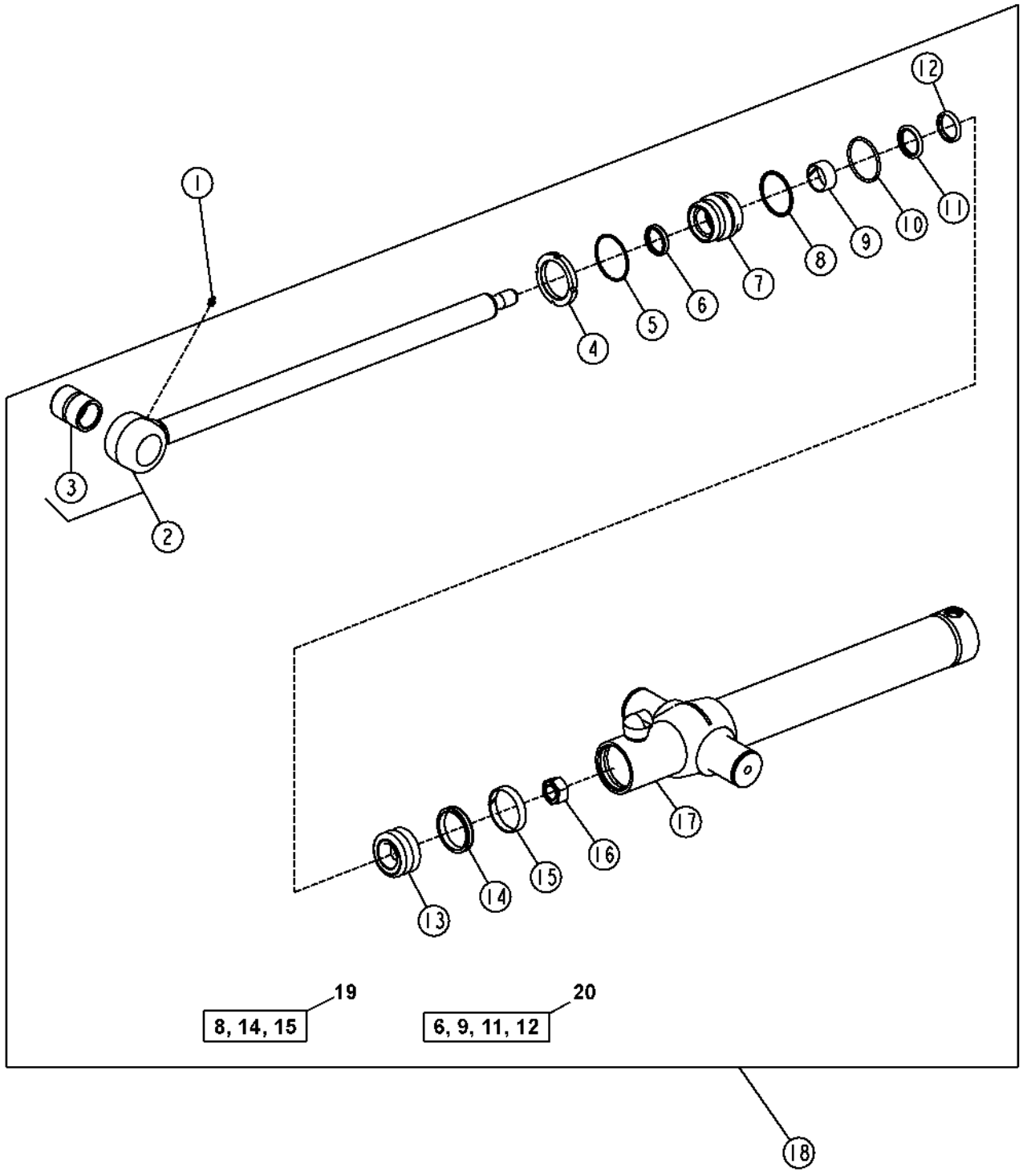

TP62470

LOADER BUCKET CYLINDER AND REPAIR KIT

KEY	PART NO.	PART NAME	QTY	SERIAL NO.	REMARKS
1	T162396	LUBRICATION FITTING	1		
2	AH162040	END	1		
3	H151594	BUSHING	1		
4	R81794	NUT	1		
5	R81788	RING	1		
6	AH146557	SEAL	1		
7	H154352	HYDR. CYLINDER ROD GUIDE	1		
8	R79101	BACK-UP RING	1		
9	H152794	WEAR RING	1		
10	F1430R	O-RING	1		
11	AH146561	SEAL	1		
12	H152203	SEAL	1		
13	H142090	PISTON	1		
14	RE20344	SEAL	1		
15	R81776	WEAR RING	1		
16	H170539	NUT	1		
17	AH173568	HYDRAULIC CYLINDER BARREL	1		(SUB FOR AH173568)
18	AH173567	HYDRAULIC CYLINDER	1		
19	AH149843	HYDRAULIC CYLINDER KIT	1		CYLINDER BORE REPAIR KIT
20	AH148164	HYDRAULIC CYLINDER KIT	1		CYLINDER ROD REPAIR KIT

QUICK COUPLER (UNIVERSAL)

T151499 -UN-14FEB02

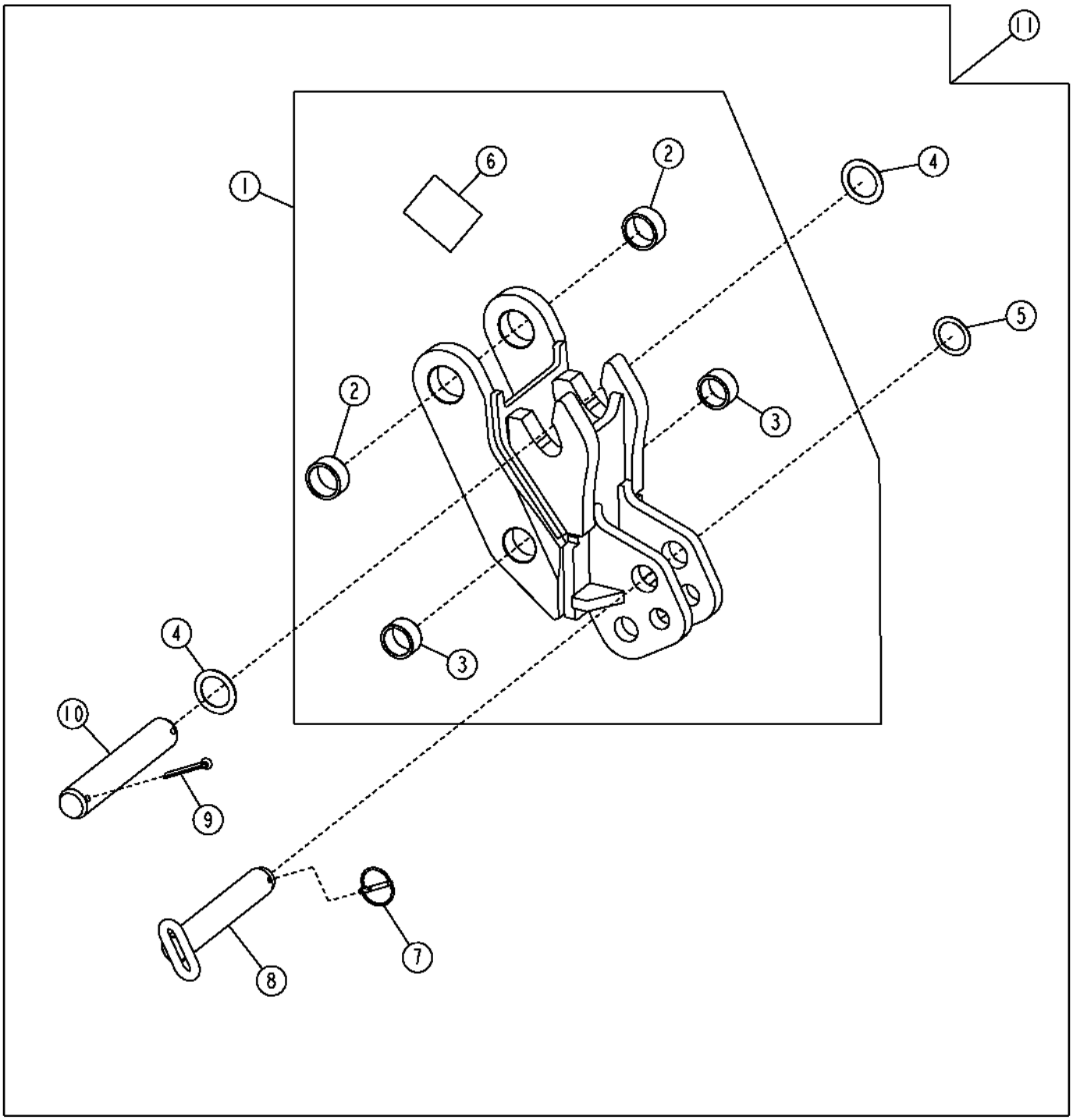

QUICK COUPLER (UNIVERSAL)

KEY	PART NO.	PART NAME	QTY	SERIAL NO.	REMARKS
1	AT192106	QUICK COUPLER	1		
2	T187117	BUSHING	2		
3	T187116	BUSHING	2		
4	T161036	WASHER	2		
5	24H1683	WASHER	1		
6	T162847	DECAL	1		
7	AR83396	QUICK LOCK PIN	1		
8	AT192111	PIN	1		
9	11H227	COTTER PIN	2		
10	T185832	PIN FASTENER	1		
11	AT192092	QUICK COUPLER	1		(WHOLE GOODS)

QUICK COUPLER (STANDARD)

T151505 -UN-14FEB02

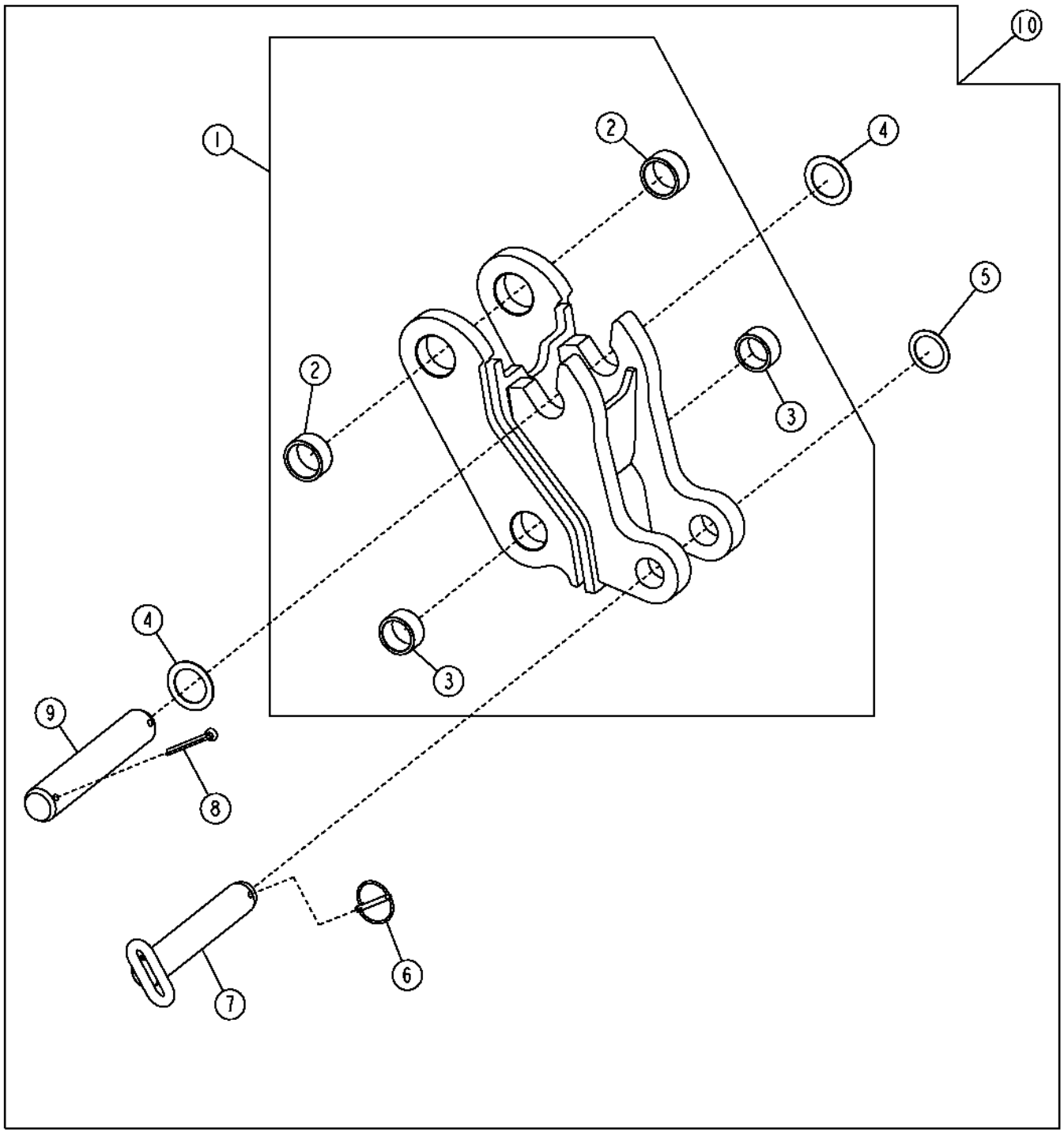

T151505

QUICK COUPLER
(STANDARD)

KEY	PART NO.	PART NAME	QTY	SERIAL NO.	REMARKS
1	AT192107	QUICK COUPLER	1		
2	T187117	BUSHING	2		
3	T187116	BUSHING	2		
4	T161036	WASHER	2		
5	24H1683	WASHER	1		
6	AR83396	QUICK LOCK PIN	1		
7	AT192111	PIN	1		
8	11H227	COTTER PIN	2		
9	T185832	PIN FASTENER	1		
10	AT192093	QUICK COUPLER	1		(WHOLE GOODS)

QUICK COUPLER (CASE)

TP69671 -UN-05SEP00

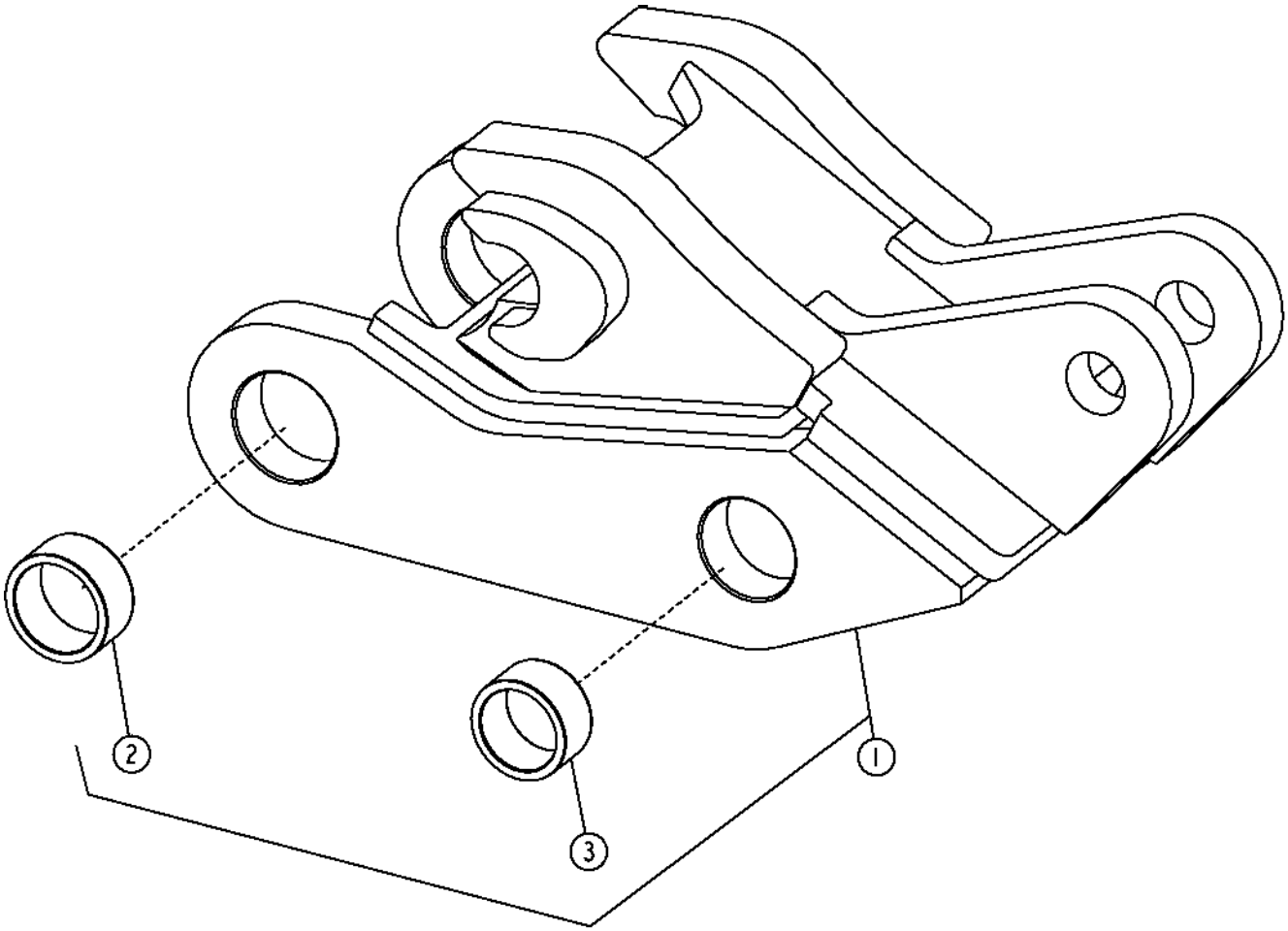

TP69671

QUICK COUPLER (CASE)

KEY	PART NO.	PART NAME	QTY	SERIAL NO.	REMARKS
1	AT192094	QUICK COUPLER	1		(WHOLE GOODS)
2	T187117	BUSHING	2		
3	T187116	BUSHING	2		

BACKHOE BUCKETS AND PINS

T135930 -UN-25JAN01

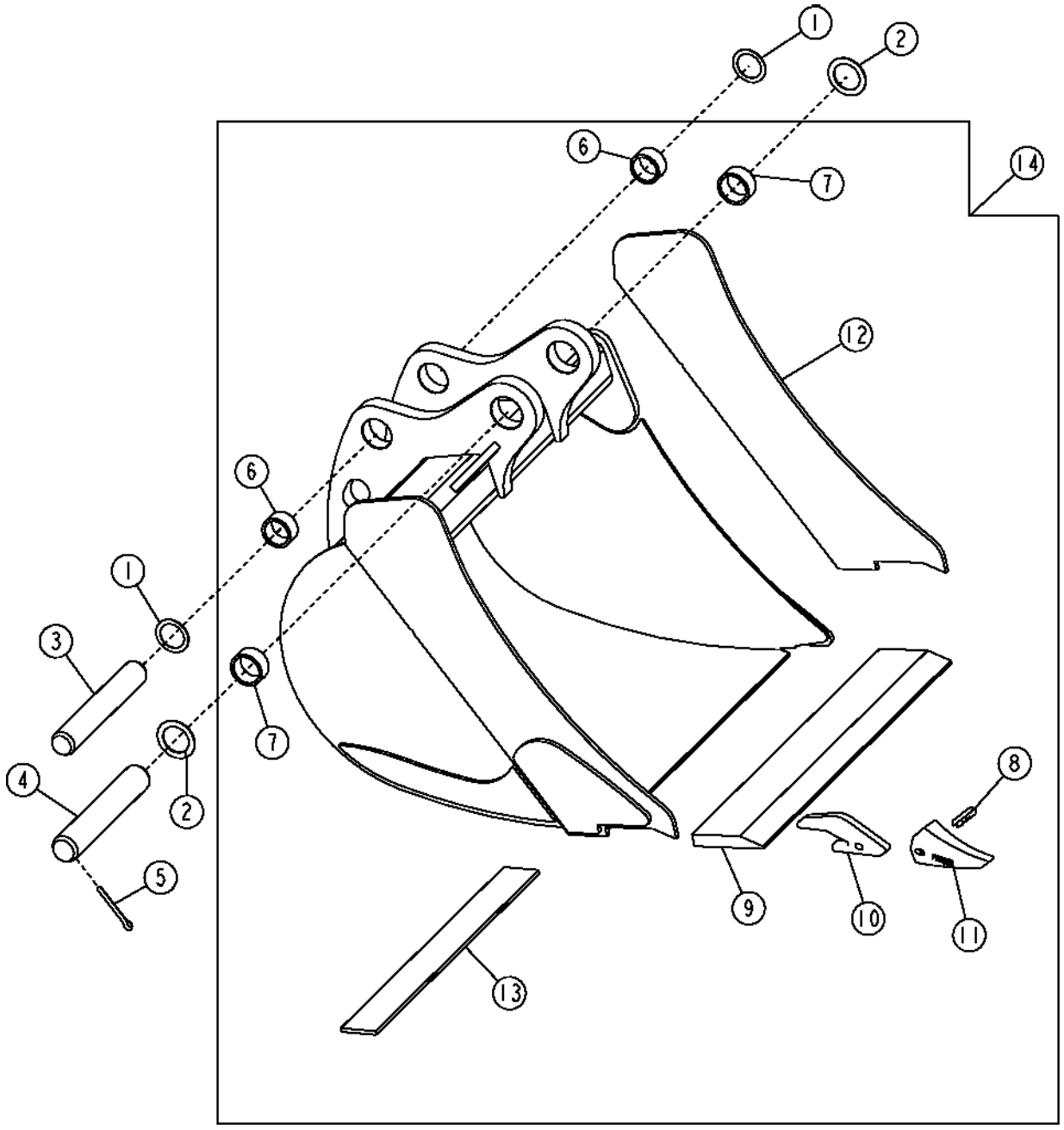

T135930

BACKHOE BUCKETS AND PINS

KEY	PART NO.	PART NAME	QTY	SERIAL NO.	REMARKS
1	24H1683	WASHER	2		
2	T161036	WASHER	1		
3	T185831	PIN FASTENER	1		
4	T185832	PIN FASTENER	1		54.475 X 320 MM
5	11H227	COTTER PIN	4		3/8" X 3"
6	T187116	BUSHING	2		
7	T187117	BUSHING	2		
8	TF23P	PIN	AR		(FLEX)
9	T161279	CUTTING EDGE	1		(A)(CUT TO LENGTH)
	T161319	CUTTING EDGE	1		(B)(CUT TO LENGTH)
10	U43792	BUCKET TOOTH ADAPTER	AR		
11	TF23D	TOOTH	AR		(TIP)
12	T162535	PLATE	2		
	T162553	PLATE	2		
	T162569	PLATE	2		
13	T166182	WEAR PLATE	1		(USE WITH SEVERE DUTY BUCKET)
14	AT192011	BACKHOE BUCKET	1		(A) 304MM (12") HEAVY DUTY 3.3 CUBIC FEET, (CONTAINS (2) T162535) (WHOLE GOODS)
	AT192012	BACKHOE BUCKET	1		(A) 457MM (18") HEAVY DUTY 5.1 CUBIC FEET, (CONTAINS (2) T162535) (WHOLE GOODS)
	AT192013	BACKHOE BUCKET	1		(A) 457MM (18") SEVERE DUTY 5.1 CUBIC FEET, (CONTAINS (2) T162553) (WHOLE GOODS)
	AT192014	BACKHOE BUCKET	1		(A) 610MM (24") STANDARD 7.5 CUBIC FEET, (CONTAINS (2) T162535) (WHOLE GOODS)
	AT192015	BACKHOE BUCKET	1		(A) 610MM (24") HEAVY DUTY 7.5 CUBIC FEET, (CONTAINS (2) T162535) (WHOLE GOODS)
	AT192016	BACKHOE BUCKET	1		(A) 610MM (24") SEVERE DUTY 7.5 CUBIC FEET, (CONTAINS (2) T162553) (WHOLE GOODS)
	AT192017	BACKHOE BUCKET	1		(A) 610MM (24") HEAVY DUTY 8.8 CUBIC FEET, (CONTAINS (2) T162569) (WHOLE GOODS)
	AT192018	BACKHOE BUCKET	1		(A) 610MM (24") SEVERE DUTY 8.8 CUBIC FEET, (CONTAINS (2) T162569) (WHOLE GOODS)
	AT192019	BACKHOE BUCKET	1		(B) 762MM (30") HEAVY DUTY 10.0 CUBIC FEET, (CONTAINS (2) T162535) (WHOLE GOODS)
	AT192020	BACKHOE BUCKET	1		(B) 762MM (30") SEVERE DUTY 10.0 CUBIC FEET, (CONTAINS (5) T162553) (WHOLE GOODS)
	AT192022	BACKHOE BUCKET	1		(B) 914MM (36") DITCHING 12.5 CUBIC FEET, (CONTAINS (2) T162553) (WHOLE GOODS)
	AT192021	BACKHOE BUCKET	1		(B) 914MM (36") HEAVY DUTY 12.5 CUBIC FEET, (CONTAINS (2) T162553) (WHOLE GOODS)

BACKHOE VALVE MOUNTING PLATE

T134496 -UN-10OCT00

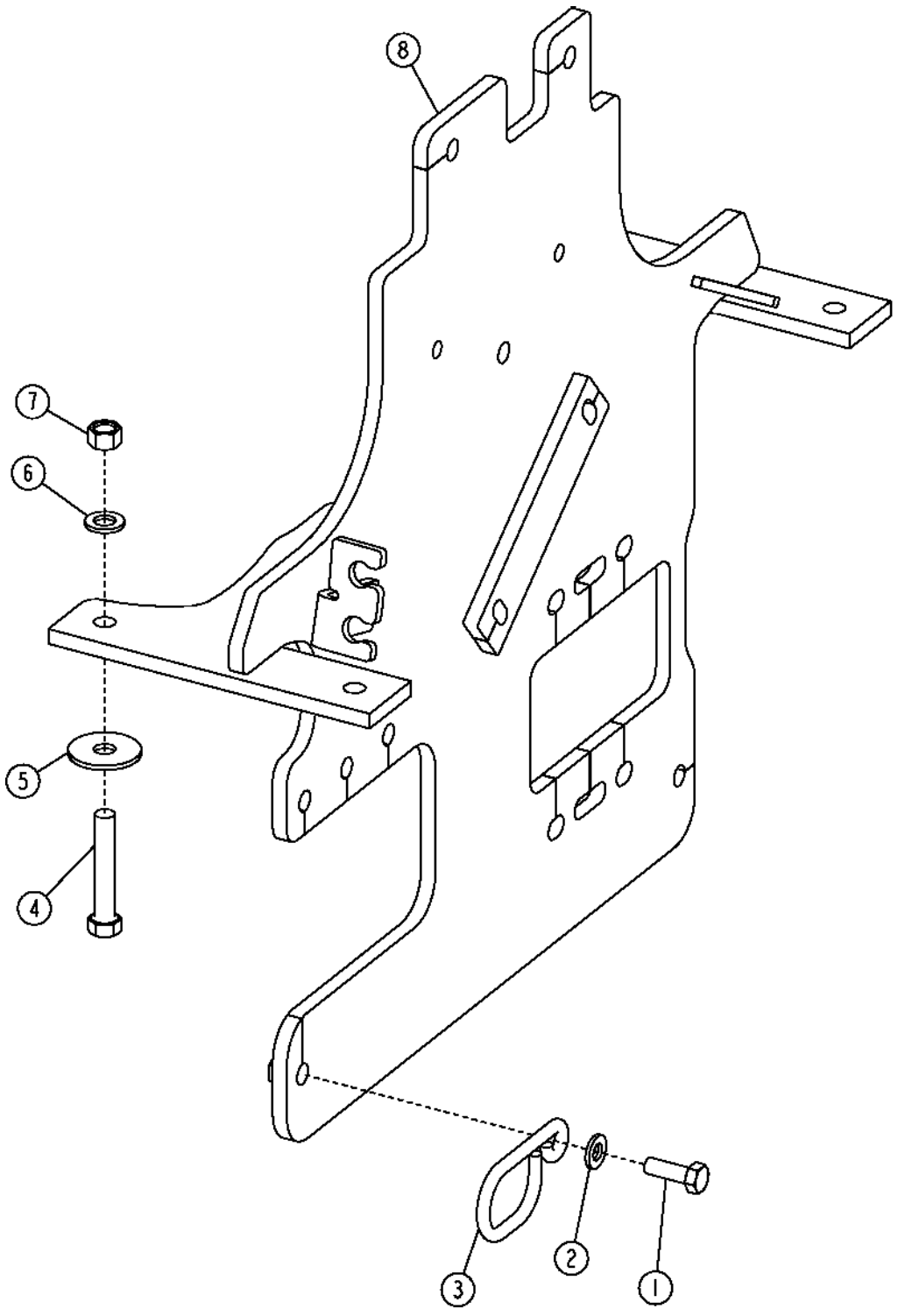

BACKHOE VALVE MOUNTING PLATE

KEY	PART NO.	PART NAME	QTY	SERIAL NO.	REMARKS
1	19M7662	CAP SCREW	2		M10 X 30
2	24M7239	WASHER	2		
3	T166223	GUIDE	2		
4	19M8348	CAP SCREW	4		M12 X 65, (SUB FOR 19M7753, THIS APPLICATION)
5	T187044	WASHER	4		
6	24M7345	WASHER	4		
7	14M7275	NUT	4		M12
8	AT192363	SUPPORT	1	-913479	
	AT197136	SUPPORT	1	913480-	

BACKHOE VALVE MOUNTING PLATE
(PILOT CONTROL)

T165714 -UN-20FEB03

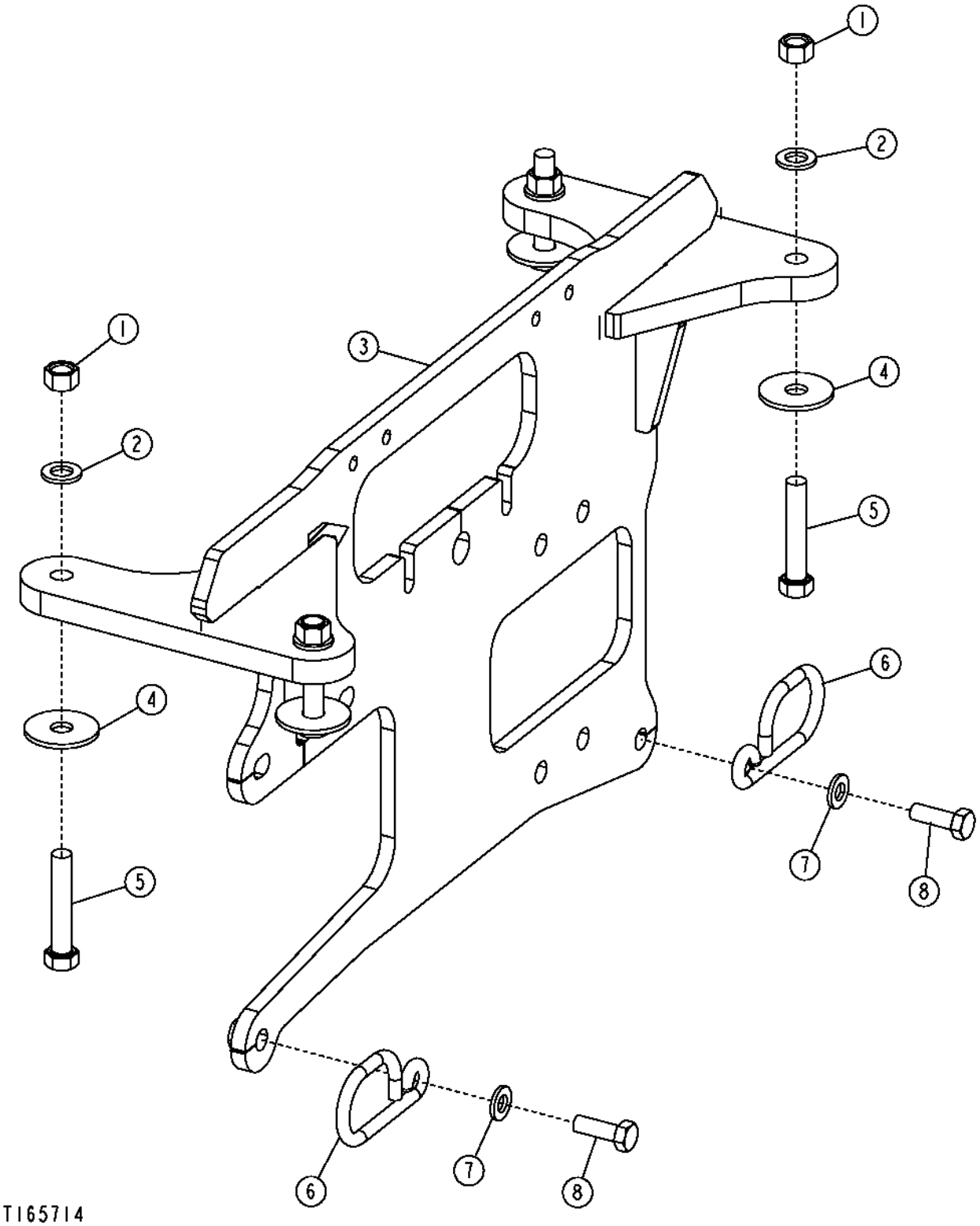

BACKHOE VALVE MOUNTING PLATE
(PILOT CONTROL)

KEY	PART NO.	PART NAME	QTY	SERIAL NO.	REMARKS
1	14M7275	NUT	4		M12
2	24M7345	WASHER	4		
3	AT300048	BRACKET	1		
4	T187044	WASHER	4		
5	19M8348	CAP SCREW	4		M12 X 65
6	T166223	GUIDE	2		
7	24M7239	WASHER	2		
8	19M7662	CAP SCREW	2		M10 X 30

TWO LEVER BACKHOE CONTROL VALVE LINKAGE CONVERSION KIT

T147514 -UN-29OCT01

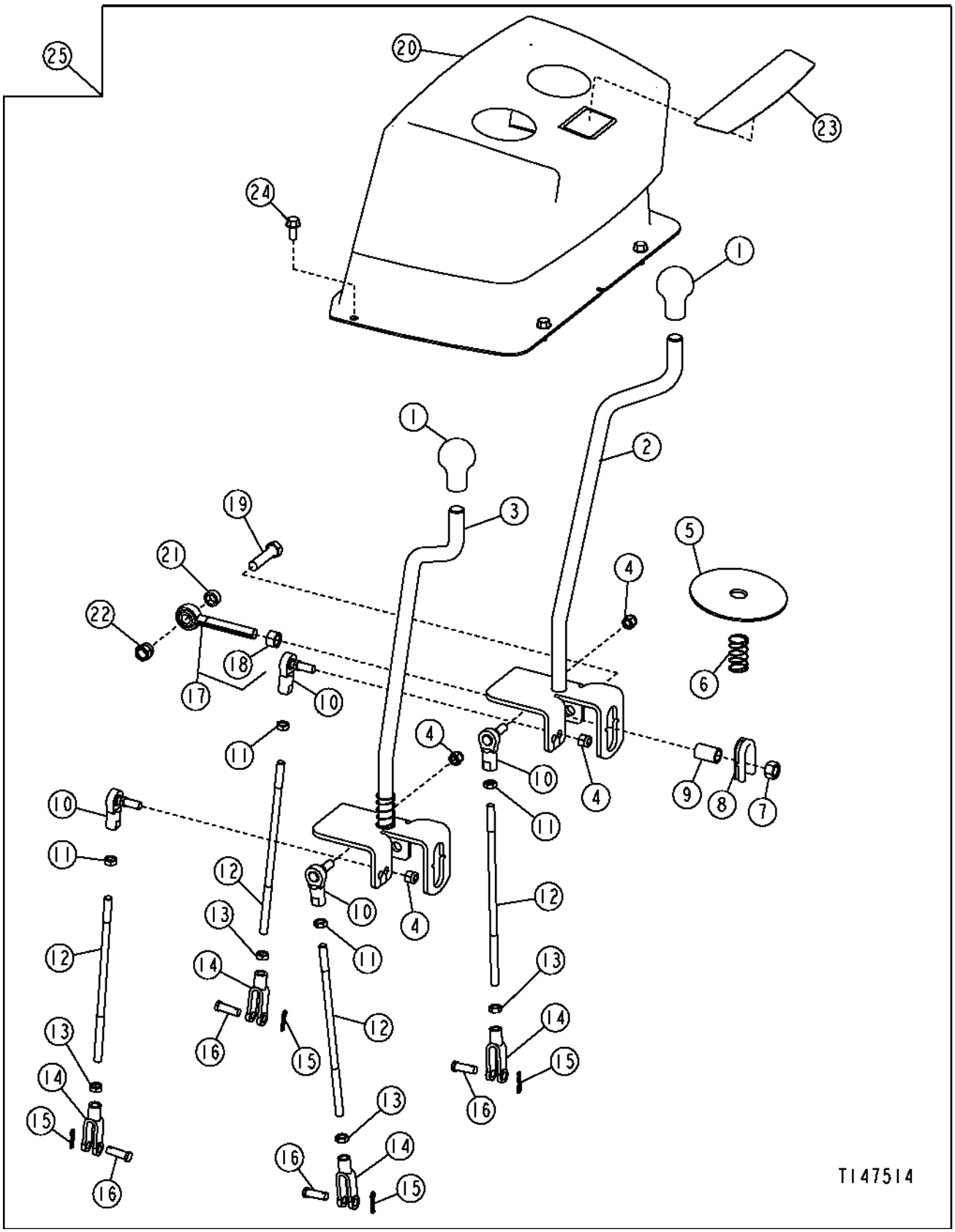

TWO LEVER BACKHOE CONTROL VALVE LINKAGE CONVERSION KIT

KEY	PART NO.	PART NAME	QTY	SERIAL NO.	REMARKS
1	T133291	KNOB	2		
2	AT184599	LEVER	1		(RIGHT HAND)
3	AT184598	LEVER	1		(LEFT HAND)
4	M68954	LOCK NUT	4		3/8"
5	T165590	DUST SHIELD	2		
6	T185085	SPRING	2		
7	14H865	NUT	2		1/2"
8	T188639	GROMMET	2		(SUB FOR T166749)
9	T166772	SPACER	2		
10	AT169087	BALL JOINT	4		
11	14H774	NUT	4		3/8"
12	T165697	ROD	4		
13	14H913	NUT	4		3/8"
14	T140328	YOKE	4		
15	R46528	SPRING LOCKING PIN	4		
16	R65563	PIN FASTENER	4		
17	AT300152	TIE ROD END	2		(SUB FOR AT186382)
18	14H865	NUT	1		1/2"
19	19M7361	CAP SCREW	2		M12 X 50
20	AT189269	COVER	1		
21	T166773	WASHER	2		
22	14M7313	LOCK NUT	2		M12
23	T165584	LABEL	1		
24	19M7866	SCREW	4		M8 X 20
25	**AT185624**	**LINKAGE**	**1**		**(WHOLE GOODS) TWO LEVER BACKHOE VALVE CONVERSION KIT**

THREE LEVER CONTROL VALVE LINKAGE AND CONVERSION KIT

TP58092 -UN-02OCT00

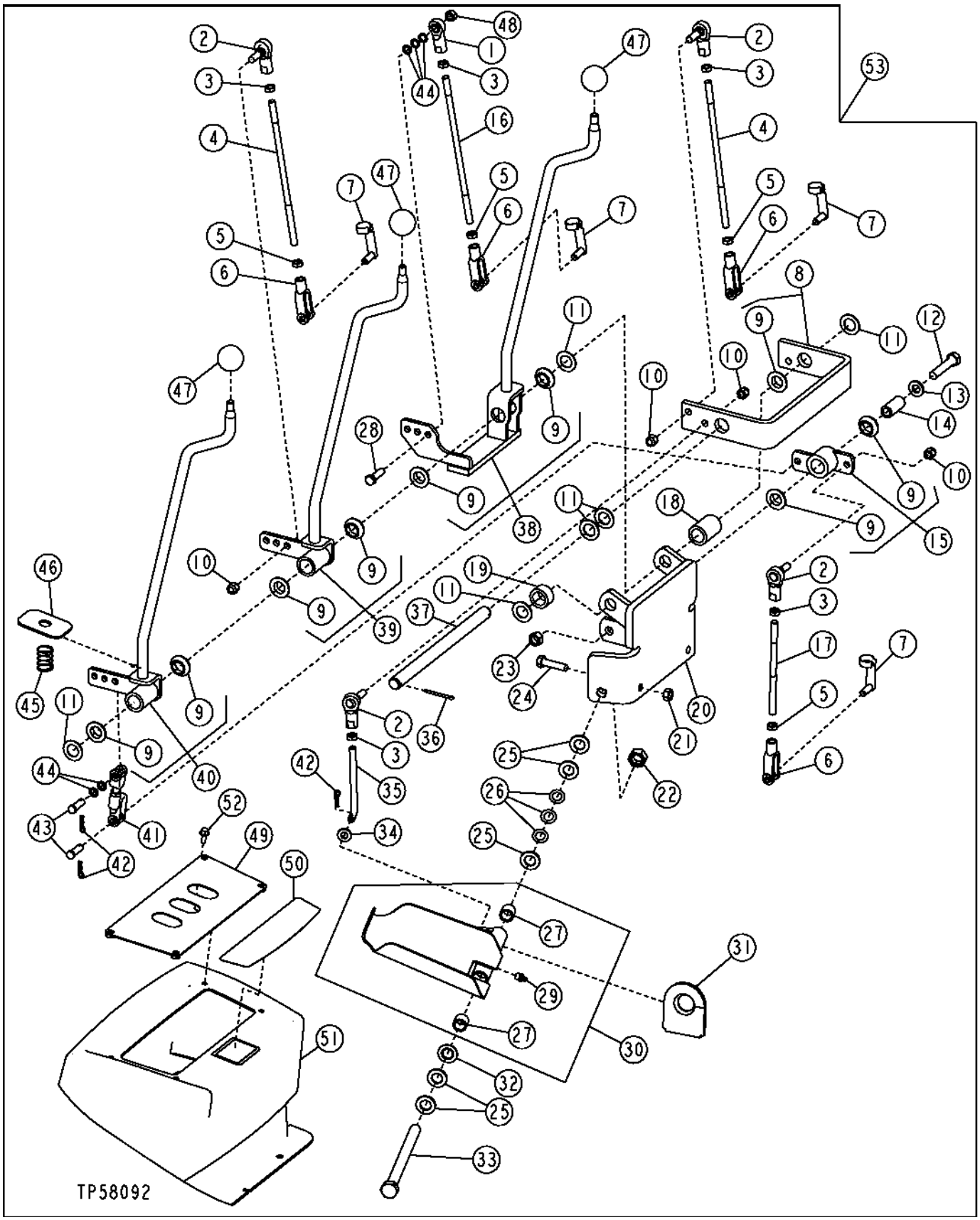

THREE LEVER CONTROL VALVE LINKAGE AND CONVERSION KIT

KEY	PART NO.	PART NAME	QTY	SERIAL NO.	REMARKS
1	AE37072	TIE ROD END	1		
2	AT169087	BALL JOINT	4		
3	14H774	NUT	5		3/8"
4	T165697	ROD	2		
5	14H913	NUT	4		3/8"
6	T140328	YOKE	4		
7	T183617	PIN FASTENER	4		
8	AT185340	BRACKET	1		
9	T166097	BEARING	10		
10	M68954	LOCK NUT	7		9.525 MM
11	24H1391	WASHER	8		25/32" X 1-5/16" X 0.060"
12	19M7363	CAP SCREW	1		M12 X 60
13	24M7240	WASHER	1		
14	T166031	SPACER	1		
15	AT186043	BELLCRANK	1		
16	T165788	ROD	1		
17	T165787	ROD	1		
18	T185648	SPACER	1		
19	T167247	SPACER	1		
20	AT185339	SUPPORT	1		
21	14M7274	NUT	2		M10
22	U14555	LOCK NUT	2		5/8"
23	14M7275	NUT	1		M12
24	19M7550	CAP SCREW	2		M10 X 35
25	24M7053	WASHER	10		
26	M87534	SPRING WASHER	6		
27	T58109	BUSHING	2		
28	19H3239	CAP SCREW	1		3/8" X 1-1/4"
29	T162396	LUBRICATION FITTING	1		
30	AT185749	PEDAL	1		LEFT FOOT
	AT185750	PEDAL	1		RIGHT FOOT
31	T166224	GROMMET	1		
32	AT48016	SEAL	1		
33	19H3323	CAP SCREW	1		5/8" X 8"
34	24M7239	WASHER	1		
35	T165785	ROD	1		
36	11M7087	COTTER PIN	1		
37	T167248	PIN	1		
38	AT185338	CONTROL LEVER	1		
39	AT185337	LEVER	1		
40	AT187885	CONTROL LEVER	1		
41	AT188077	LINK	1		
42	R46528	SPRING LOCKING PIN	2		
43	R65563	PIN FASTENER	2		
44	M359T	WASHER	5		
45	T165591	SPRING	1		
46	T183149	COVER	1		
47	39M1709	KNOB	1		
48	H129201	LOCK NUT	1		3/8"
49	AT186045	COVER	1		
50	T165585	LABEL	1		
51	AT189272	COVER	1		
52	19M7775	SCREW	1		
53	**AT185626**	**KIT**	**1**		**(WHOLE GOODS) THREE LEVER BACKHOE VALVE CONVERSION KIT**

THIS PARTS LISTING IS CONTINUED

FOUR LEVER CONTROL VALVE LINKAGE

T137932 -UN-08FEB01

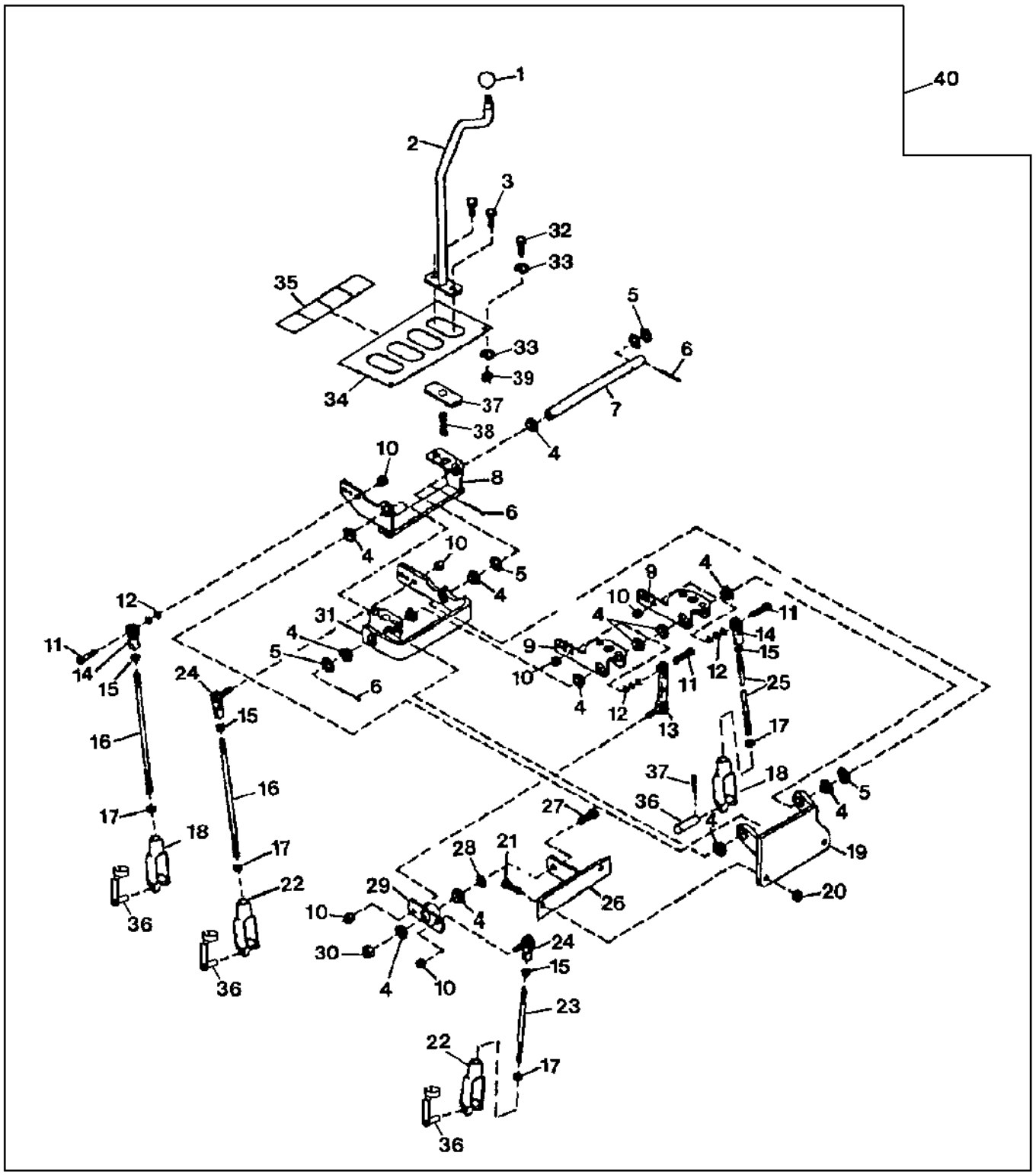

T137932

FOUR LEVER CONTROL VALVE LINKAGE

KEY	PART NO.	PART NAME	QTY	SERIAL NO.	REMARKS
1	T35233	GRIP	4		(SUB FOR T140650, THIS APPLICATION)
2	AT169512	LEVER	4		
3	19M7402	CAP SCREW	8		M10 X 25
4	T125808	BUSHING	11		
5	24H1746	WASHER	4		
6	11M7087	COTTER PIN	2		4 X 40 MM
7	T188268	SHAFT	1		(SUB FOR T140650, THIS APPLICATION)
8	AT150763	BASE	1		
9	AT150762	BASE	2		
10	M68954	LOCK NUT	6		3/8"
11	19H2544	CAP SCREW	3		3/8" X 1-1/2"
12	M359T	WASHER	10		
13	AT158198	LINK	1		
14	AE37072	TIE ROD END	2		
15	14H774	NUT	4		3/8"
16	T148741	ROD	2		266MM
	T165788	ROD	2		256MM
17	14H913	NUT	4		3/8"
18	T140328	YOKE	2		
19	AT194686	SUPPORT	1		
20	14M7274	NUT	2		M10
21	19M8600	CAP SCREW	2		M10 X 50
22	T140328	YOKE	2		
23	T187530	ROD	1		170MM
	T158812	ROD	1		152MM
24	AT169087	BALL JOINT	2		
25	T165697	ROD	1		
	T158810	ROD	1		
26	AT194684	SUPPORT	1		69MM FROM RIGHT END TO TAB
	AT196839	SUPPORT	1		79MM FROM RIGHT END TO TAB
27	19H3030	CAP SCREW	1		1/2" X 1-1/4"
28	24M7047	WASHER	1		
29	AT158197	BELLCRANK	1		
30	T141126	SPACER	1		
31	AT195877	BASE	1		(SUB FOR AT150764, THIS APPLICATION)
32	T133674	SELF-LOCKING SCREW	4		M6 X 16
33	24H1646	WASHER	8		
34	AT196419	PANEL	4		(SUB FOR T187505)
35	T165604	LABEL	1		CONTROL LEVER
36	T183617	PIN FASTENER	4		
37	T183149	COVER	4		
38	T165591	SPRING	4		
39	14M7272	NUT	4		M6
40	AT185628	KIT	1		(WHOLE GOODS)

FIFTH FUNCTION PEDAL

TP58078 -UN-20SEP00

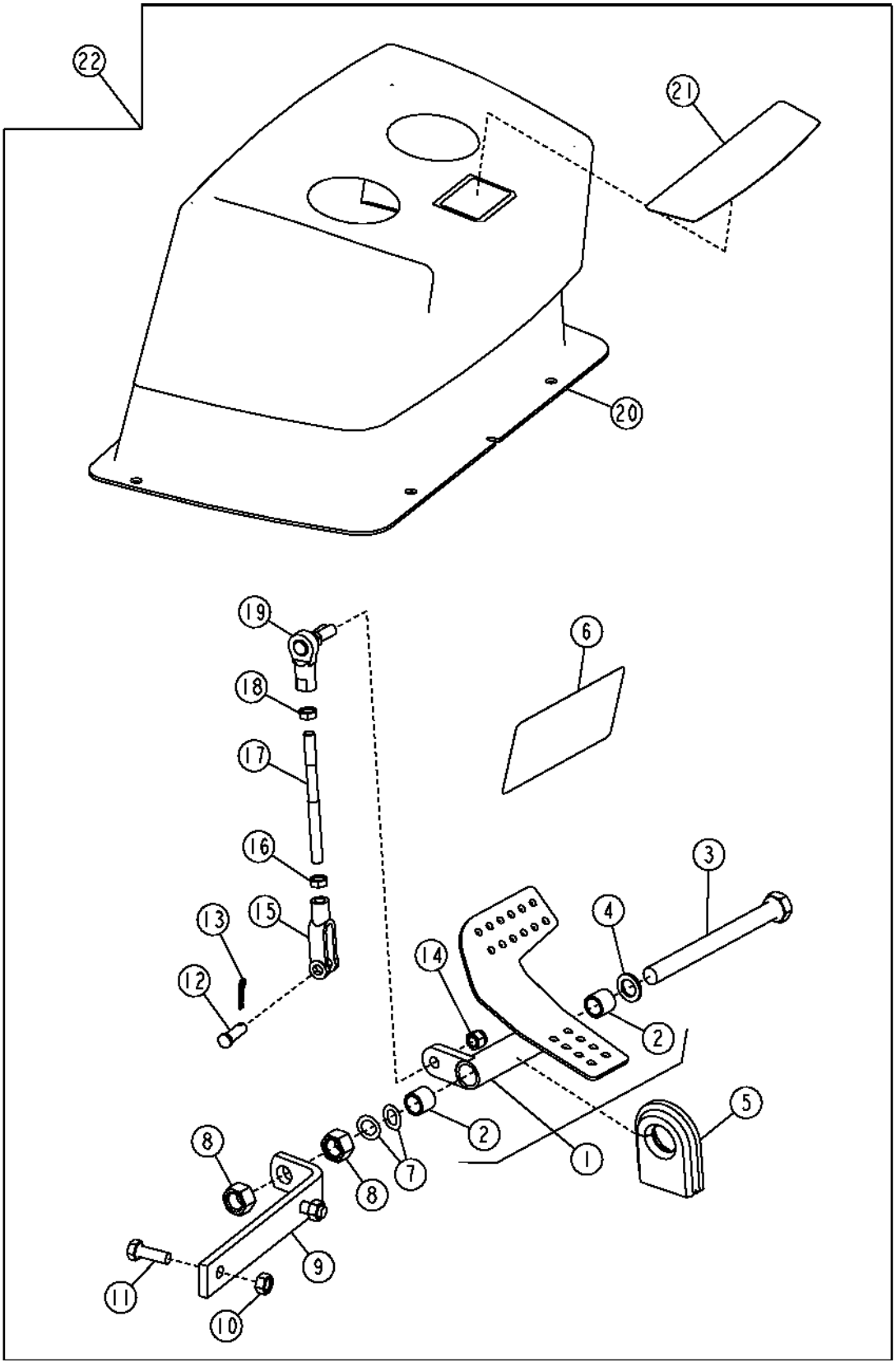

FIFTH FUNCTION PEDAL

KEY	PART NO.	PART NAME	QTY	SERIAL NO.	REMARKS
1	AT191446	PEDAL	1		
2	T58109	BUSHING	2		
3	19H3450	CAP SCREW	1		5/8" X 6-3/4"
4	R64059	WASHER	1		
5	T166224	GROMMET	1		
6	T185691	LABEL	1		(FOR USE WITH EXTENDABLE DIPPERSTICK)
	T185692	LABEL	1		(FOR USE WITHOUT EXTENDABLE DIPPERSTICK)
7	M87534	SPRING WASHER	2		
8	U14555	LOCK NUT	2		
9	T183548	ANGLE	1		
10	14M7274	NUT	2		M10
11	19M7550	CAP SCREW	2		M10 X 35
12	R65563	PIN FASTENER	1		
13	R46528	SPRING LOCKING PIN	1		
14	M68954	LOCK NUT	1		3/8"
15	T140328	YOKE	1		
16	14H913	NUT	1		3/8"
17	T184129	ROD	1		
18	14H774	NUT	1		3/8"
19	AT169087	BALL JOINT	1		
20	AT189270	COVER	1		
21	T165584	LABEL	1		
22	**AT185625**	**KIT**	**1**		

FIFTH FUNCTION PEDAL
(PILOT CONTROL)

T165496 -UN-17FEB03

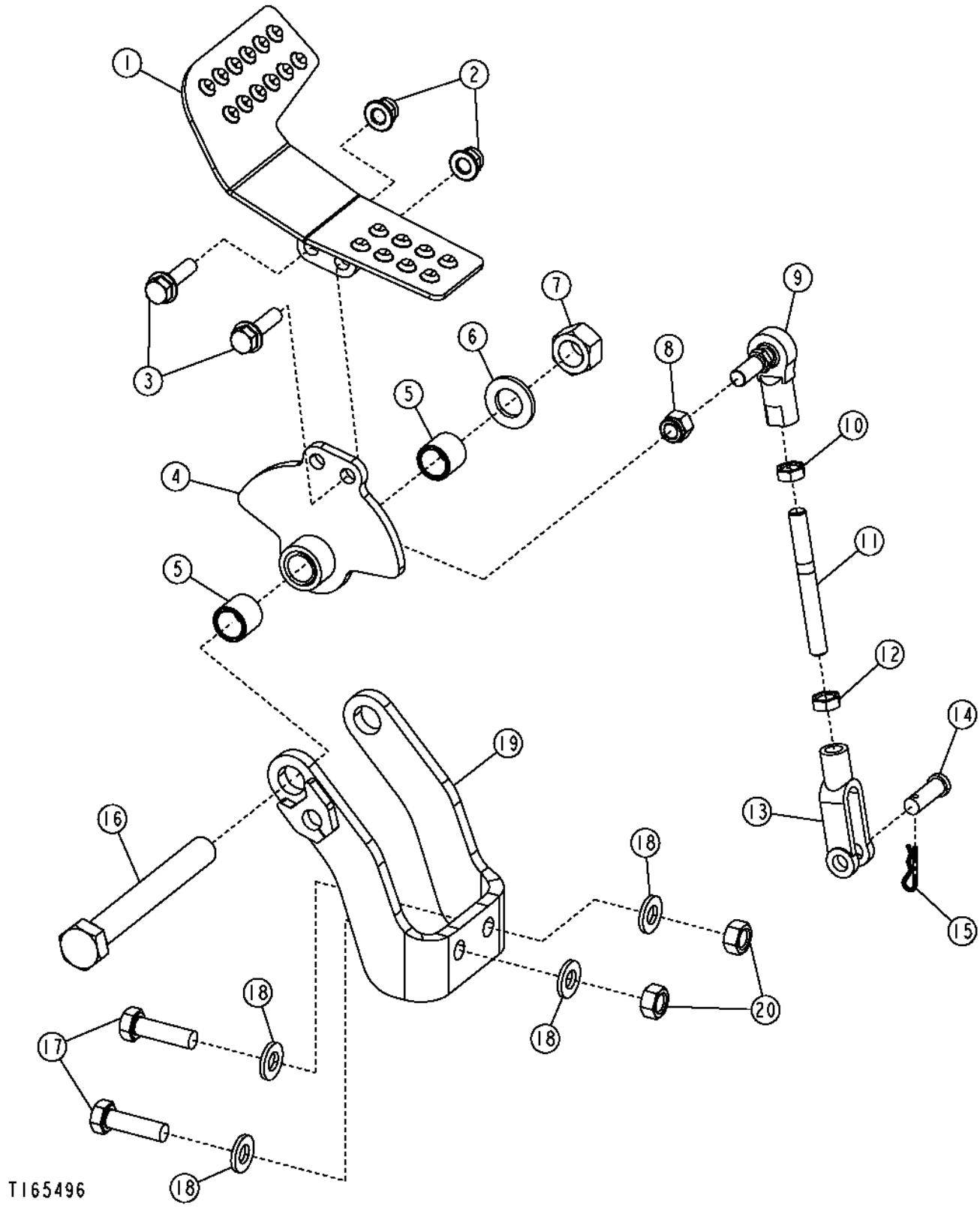

FIFTH FUNCTION PEDAL
(PILOT CONTROL)

KEY	PART NO.	PART NAME	QTY	SERIAL NO.	REMARKS
1	AT300058	PEDAL	1		
2	14M7396	LOCK NUT	2		M8
3	19M7868	SCREW	2		M8 X 30
4	AT300056	PIVOT	1		
5	T58109	BUSHING	2		
6	24M7053	WASHER	1		
7	U14555	LOCK NUT	1		5/8"
8	M68954	LOCK NUT	1		3/8"
9	AT169087	BALL JOINT	1		
10	14H774	NUT	1		3/8"
11	T200078	STUD	1		
12	14H913	NUT	1		3/8"
13	T140328	YOKE	1		
14	R65563	PIN FASTENER	1		
15	R46528	SPRING LOCKING PIN	1		
16	19H3353	CAP SCREW	1		5/8" X 5"
17	19M7868	SCREW	2		M8 X 30
18	24M7238	WASHER	4		
19	AT300060	BRACKET	1		
20	14M7396	LOCK NUT	2		M8

SIXTH FUNCTION PEDAL

TP58179 -UN-28AUG00

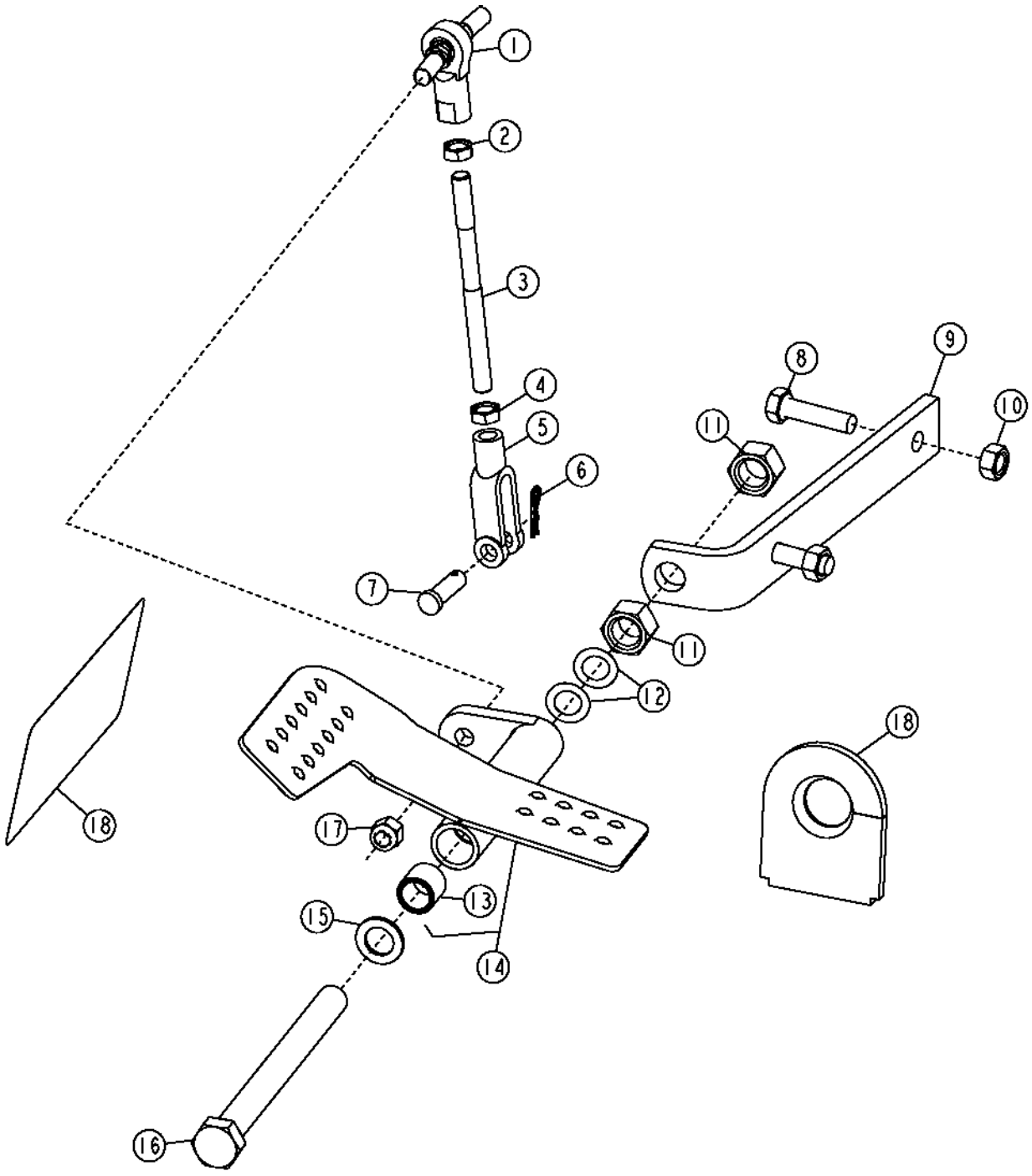

TP58179

SIXTH FUNCTION PEDAL

KEY	PART NO.	PART NAME	QTY	SERIAL NO.	REMARKS
1	AT169087	BALL JOINT	1		
2	14H774	NUT	1		3/8"
3	T184129	ROD	1		
4	14H913	NUT	1		3/8"
5	T140328	YOKE	1		
6	R46528	SPRING LOCKING PIN	1		
7	R65563	PIN FASTENER	1		
8	19M8637	CAP SCREW	2		M10 X 40
9	T184133	ANGLE	1		
10	14M7274	NUT	2		M10
11	U14555	LOCK NUT	2		
12	M87534	SPRING WASHER	2		
13	T58109	BUSHING	2		
14	AT190073	PEDAL	1		
15	R64059	WASHER	1		
16	19H3450	CAP SCREW	1		5/8" X 6-3/4"
17	M68954	LOCK NUT	1		3/8"
18	T185692	LABEL	1		
19	T166224	GROMMET	1		
20	AT189271	COVER	1		
21	T165584	LABEL	1		
22	19M7866	SCREW	4		M8 X 20
23	**AT185629**	**KIT**	**1**		

**SIXTH FUNCTION PEDAL
(PILOT CONTROL)**

T165490 -UN-17FEB03

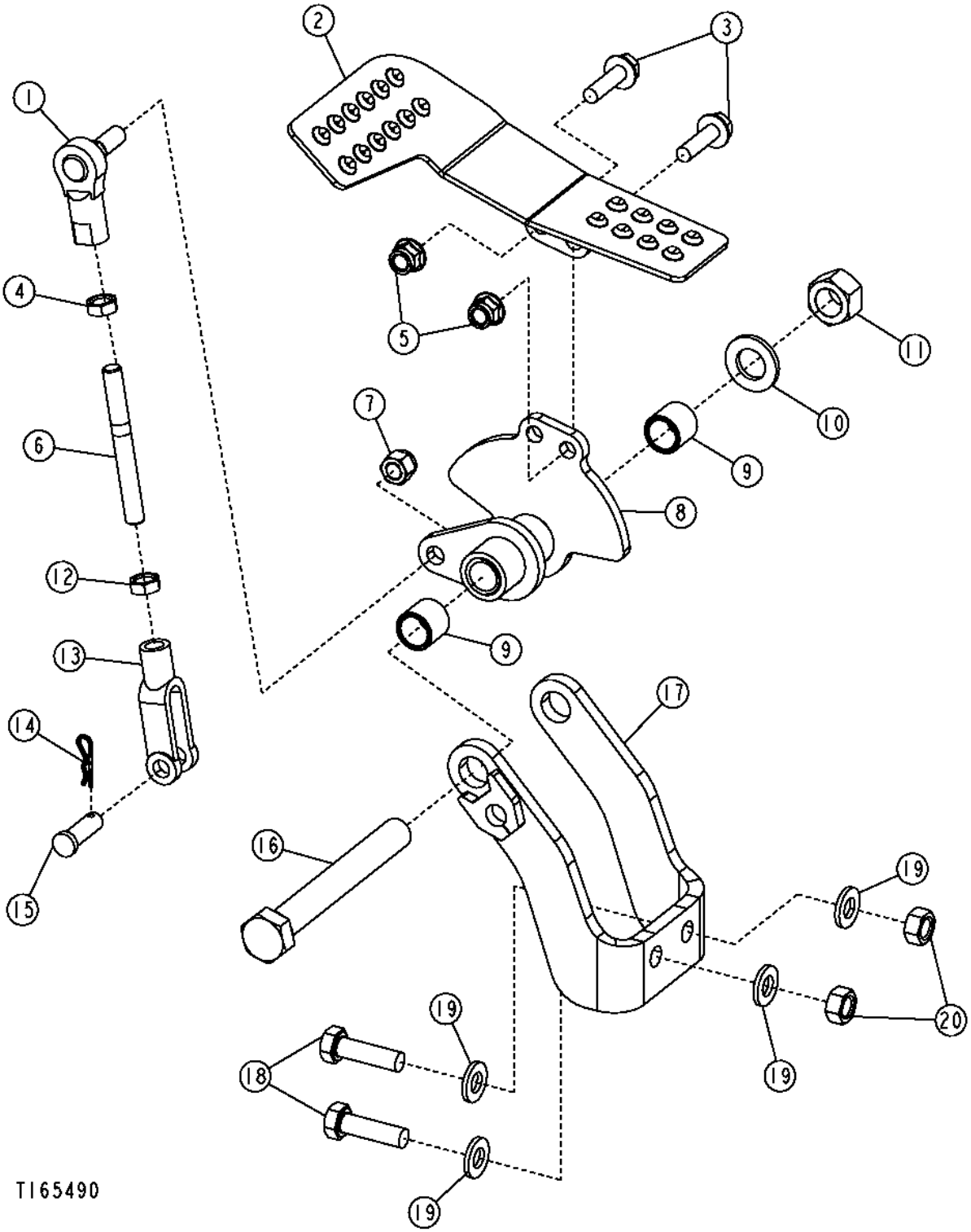

SIXTH FUNCTION PEDAL
(PILOT CONTROL)

KEY	PART NO.	PART NAME	QTY	SERIAL NO.	REMARKS
1	AT169087	BALL JOINT	1		
2	AT300057	PEDAL	1		
3	19M7868	SCREW	2		M8 X 30
4	14H774	NUT	1		3/8"
5	14M7396	LOCK NUT	2		M8
6	T200078	STUD	1		
7	M68954	LOCK NUT	1		3/8"
8	AT300055	PIVOT	1		
9	T58109	BUSHING	2		
10	24M7053	WASHER	1		
11	U14555	LOCK NUT	1		5/8"
12	14H913	NUT	1		3/8"
13	T140328	YOKE	1		
14	R46528	SPRING LOCKING PIN	1		
15	R65563	PIN FASTENER	1		
16	19H3353	CAP SCREW	1		5/8" X 5"
17	AT300060	BRACKET	1		
18	19M7868	SCREW	2		M8 X 30
19	24M7238	WASHER	4		
20	14M7396	LOCK NUT	2		M8

FIFTH FN LEVER FOR THREE LEVER CONTROLS AND CONVERSION KIT

TP69704 -UN-02OCT00

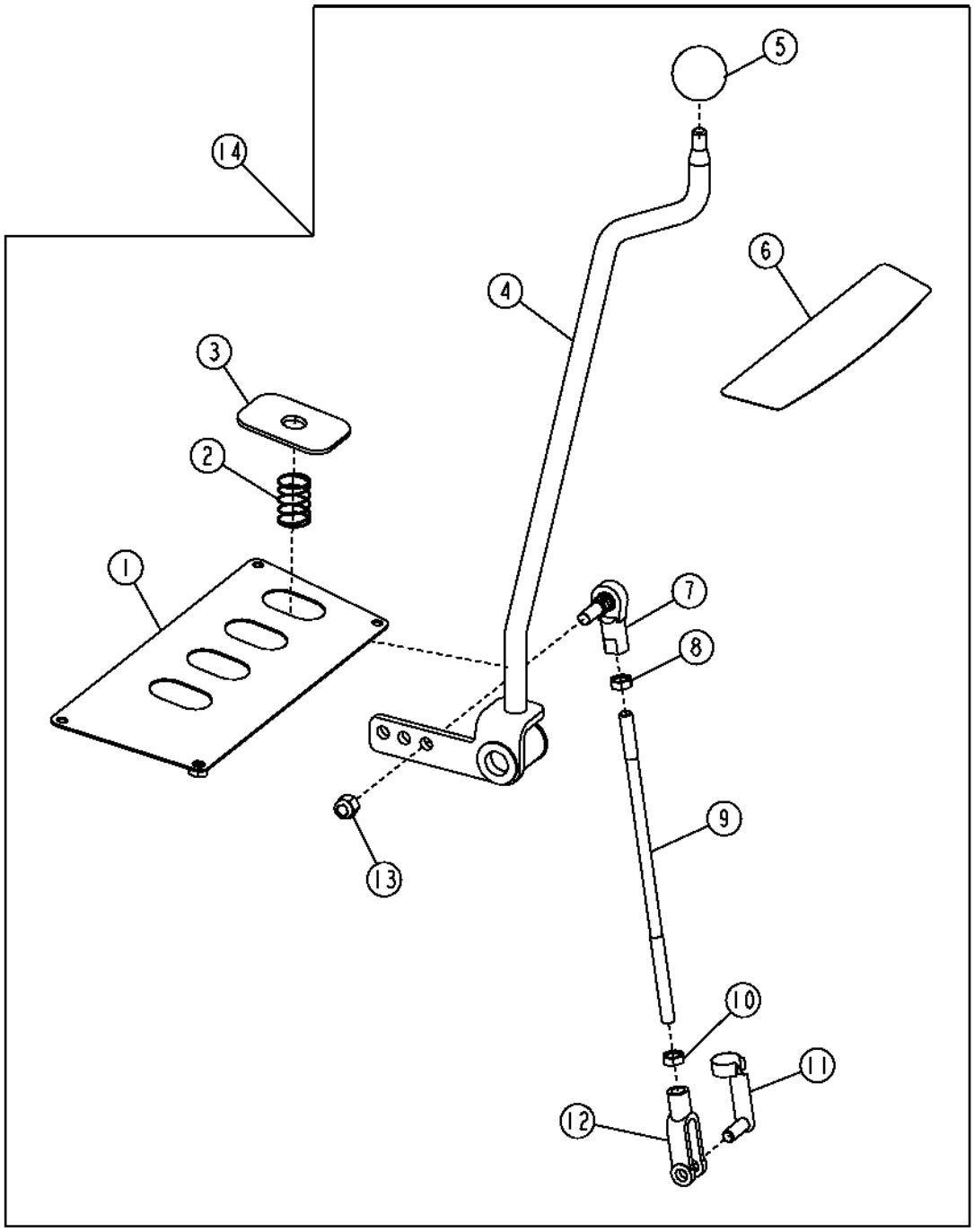

TP69704

FIFTH FN LEVER FOR THREE LEVER CONTROLS AND CONVERSION KIT

KEY	PART NO.	PART NAME	QTY	SERIAL NO.	REMARKS
1	AT186050	COVER	1		
2	T165591	SPRING	1		
3	T183149	COVER	1		
4	AT189580	CONTROL LEVER	1		
5	39M1709	KNOB	1		
6	T165586	LABEL	1		
7	AT169087	BALL JOINT	1		(SUB FOR AT49300)
8	14H774	NUT	1		3/8"
9	T165697	ROD	1		
10	14H913	NUT	1		3/8"
11	T183617	PIN FASTENER	1		
12	T140328	YOKE	1		
13	M68954	LOCK NUT	1		
14	**AT185627**	**CONTROL LEVER**	**1**		**(WHOLE GOODS) FIFTH FUNCTION LEVER CONVERSION KIT**

BACKHOE BOOM LOCK CONTROL LEVER AND LINKAGE

T160156 -UN-03OCT02

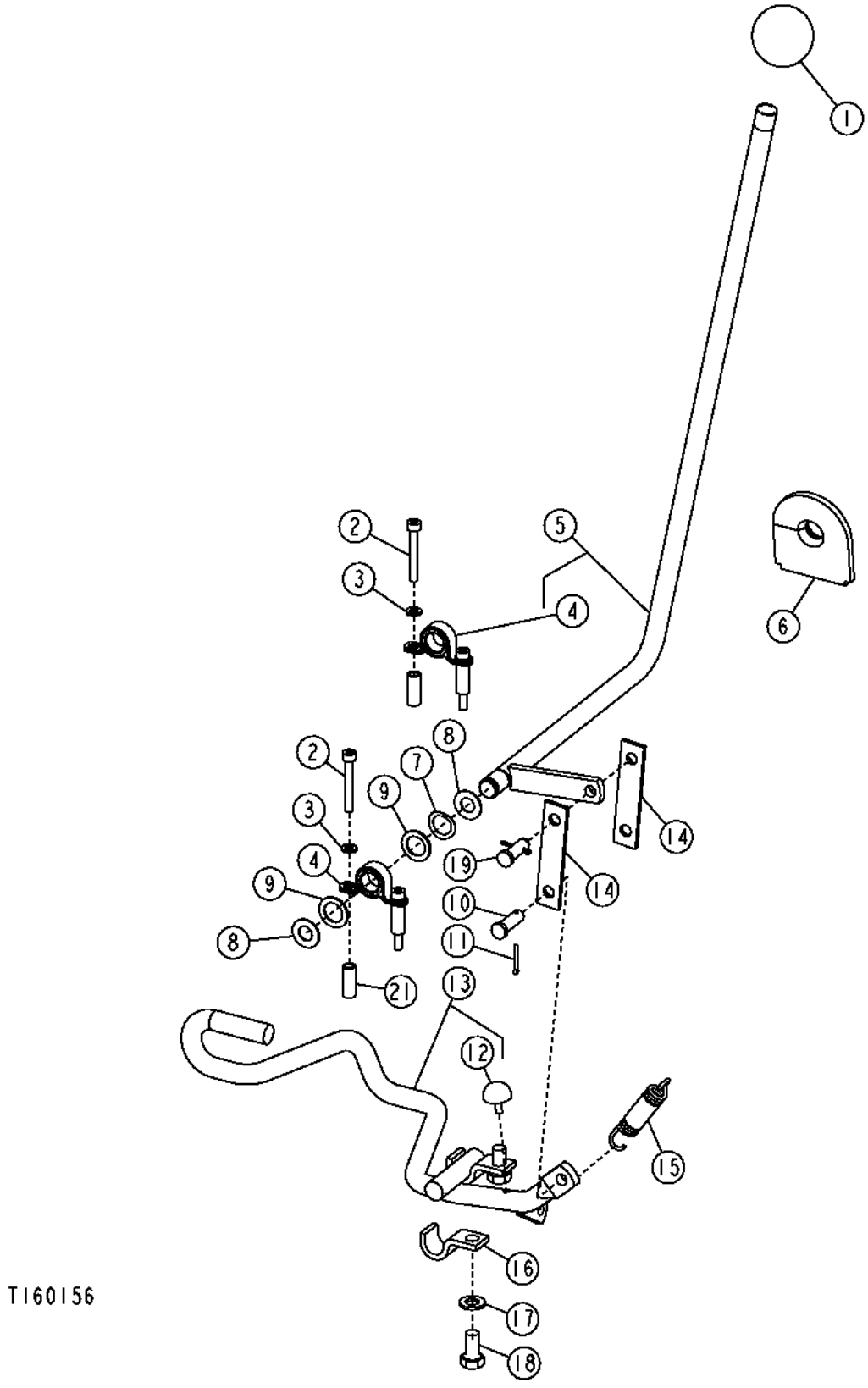

BACKHOE BOOM LOCK CONTROL LEVER AND LINKAGE

KEY	PART NO.	PART NAME	QTY	SERIAL NO.	REMARKS
1	T185309	KNOB	1		
2	19M7603	SCREW	4	-911194	M6 X 20, (SUB FOR 19M8627, THIS APPLICATION)
	19M8713	SCREW	4	911195-	M6 X 45
3	24M7054	WASHER	4		
4	AT195620	PILLOW BLOCK	2		(SUB FOR AT185317)
5	AT195623	LEVER	1		(STANDARD CONTROLS) (SUB FOR AT185311)
	AT196387	LEVER	1		
6	T177623	GROMMET	1		
7	T166237	SPRING WASHER	1		
8	F2863R	SNAP RING	2		
9	24H1658	WASHER	1		21/32" X 1" X 0.060", (STANDARD CONTROLS)
	24H1658	WASHER	3		(PILOT CONTROLS)
10	M40569	PIN FASTENER	1		(SUB FOR R65563, THIS APPLICATION)
11	11M7081	COTTER PIN	2		(SUB FOR R46528 AND 11M7078, THIS APPLICATION)
12	AT185847	BUMPER	1		
13	AT185773	ROD	1		
14	.....	LINK	1	-903254	(AT191528 NO LONGER AVAILABLE) (SUB (2) T188356) (ALSO ORDER (2) M40569 AND (2) 11M7078)
	T188356	STRAP	2	903255-	
15	.....	SPRING	1		
16	T157785	CLAMP	2		
17	24M7040	WASHER	2		11 X 20 X 2 MM
18	19M7938	CAP SCREW	2		M10 X 20
19	M40569	PIN FASTENER	1		(SUB FOR R65563, THIS APPLICATION)
20	24H1658	WASHER	1	-903254	
21	28H1921	BUSHING	4	911195-	

BACKHOE BOOM LOCK

T157614 -UN-17JUL02

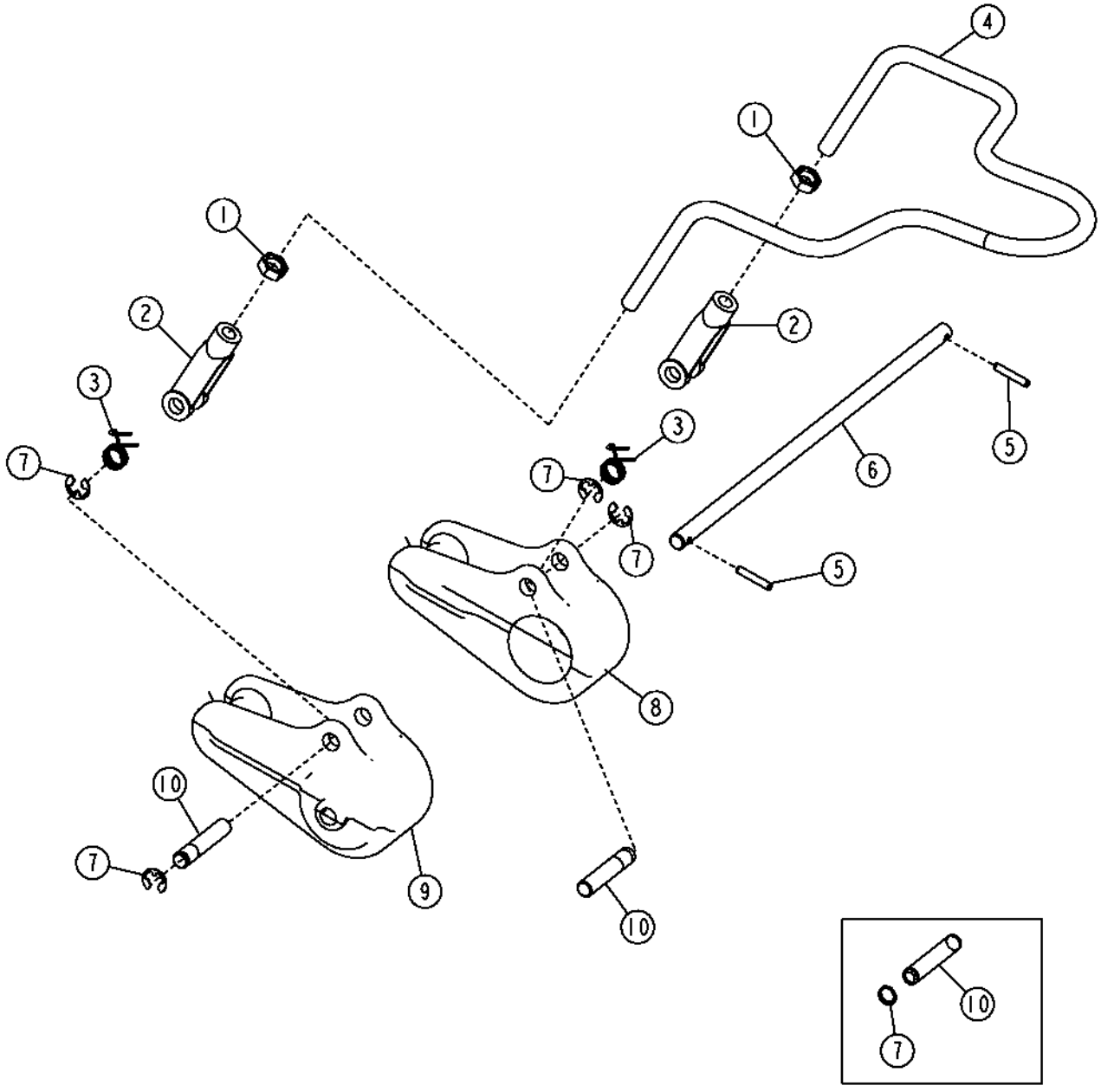

BACKHOE BOOM LOCK

KEY	PART NO.	PART NAME	QTY	SERIAL NO.	REMARKS
1	14H856	NUT	2		1/2"
2	T121474	YOKE	2		
3	T160589	SPRING	2		
4	T157762	ROD	1		
5	34M7141	SPRING PIN	2		
6	T160515	ROD	1		
7	T161598	SNAP RING	4	-910310	
	R26871	SNAP RING	4	910311-	
8	T186005	LOCK	1		L.H. (SUB FOR T160638)
9	T186006	LOCK	1		R.H. (SUB FOR T160639)
10	.....	PIN	2	-910310	(T158397 NO LONGER AVAILABLE) (SUB (2) T186000) (ALSO ORDER (4) R26871)
	T186000	PIN FASTENER	2	910311-	

STABILIZER VALVE LINKAGE

T163660 -UN-15JAN03

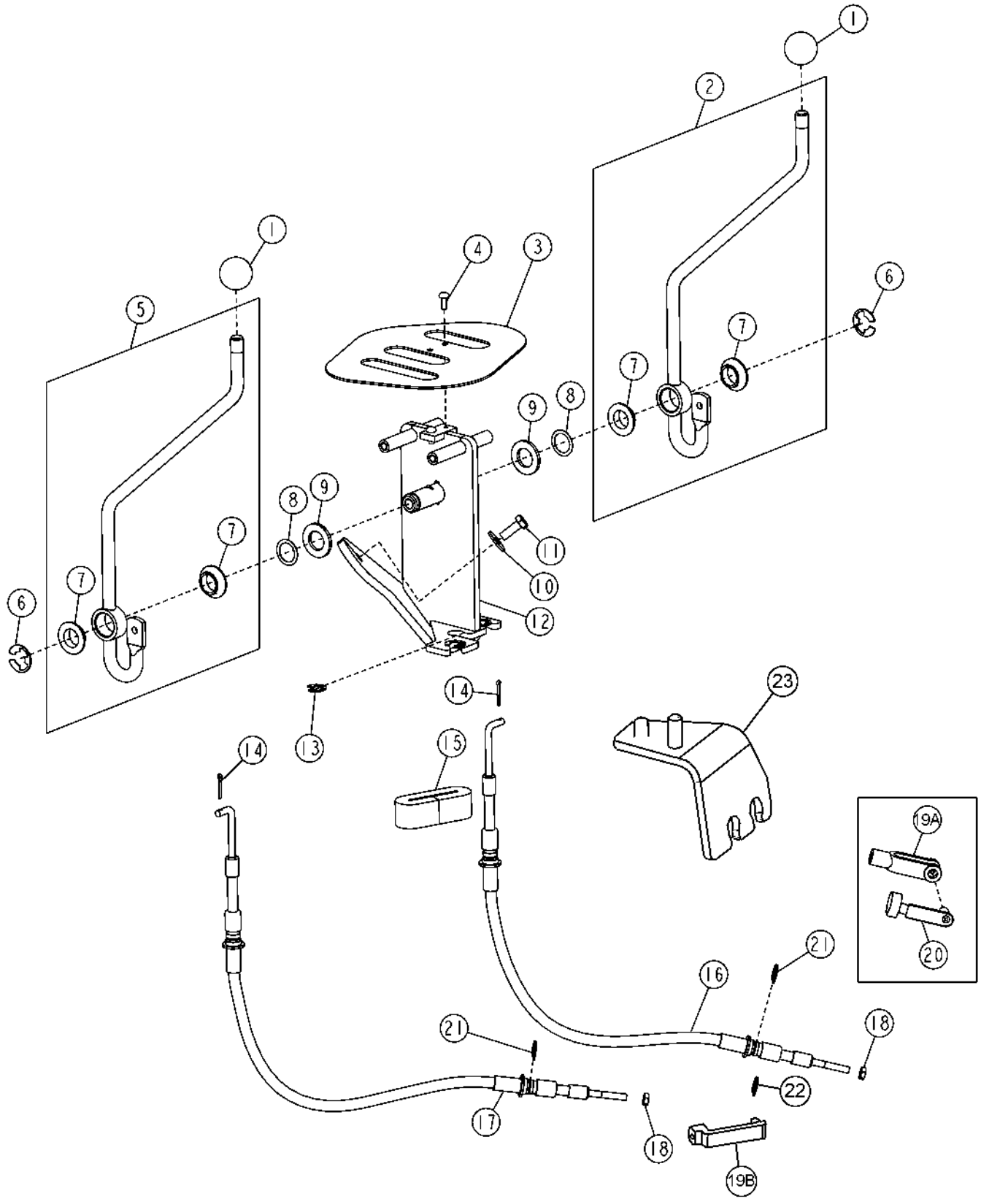

STABILIZER VALVE LINAKGE

KEY	PART NO.	PART NAME	QTY	SERIAL NO.	REMARKS
1	T185766	KNOB	2		
2	AT185851	CONTROL LEVER	1	-913479	
	AT300770	CONTROL LEVER	1	913480-	
3	T185496	PLATE	1		
4	21H1316	SCREW	2		0.190" X 1/2", (SUB FOR 21H1406, THIS APPLICATION)
5	AT185851	CONTROL LEVER	1	-913479	
	AT300771	CONTROL LEVER	1	913480-	
6	R27434	SNAP RING	2		
7	T166097	BEARING	4		
8	R26081	WASHER	2		
9	24H1392	WASHER	2		
10	24M7207	WASHER	2		
11	19M7376	CAP SCREW	2		M8 X 22
12	AT186983	BRACKET	1	-913479	
	AT300769	BRACKET	1	913480-	
13	R26871	SNAP RING	2		(SUB FOR R106466, THIS APPLICATION)
14	11M7081	COTTER PIN	2		2.500 X 20 MM
15	T183905	GROMMET	1		
16	AT196336	PUSH PULL CABLE	1	-913479	(RIGHT STABILIZER) (SUB FOR AT185855)
	AT196606	PUSH PULL CABLE	1	913480-	
17	AT196337	PUSH PULL CABLE	1	-913479	(LEFT STABILIZER) (SUB FOR AT185856)
	AT196606	PUSH PULL CABLE	1	913480-	
18	14H649	NUT	2		1/4"
19A	T166102	YOKE	2	-913479	
19B	T191245	SWIVEL	2	913480-	
20	T183617	PIN FASTENER	2		
21	R26871	SNAP RING	4		(SUB FOR R106466)
22	11M7081	COTTER PIN	1	913480-	
23	AT280363	BRACKET	1	913480-	
	14M7517	LOCK NUT	1	913480-	M10

SAE BACKHOE CONTROL LINKAGE PATTERN KIT

T136030 -UN-04DEC00

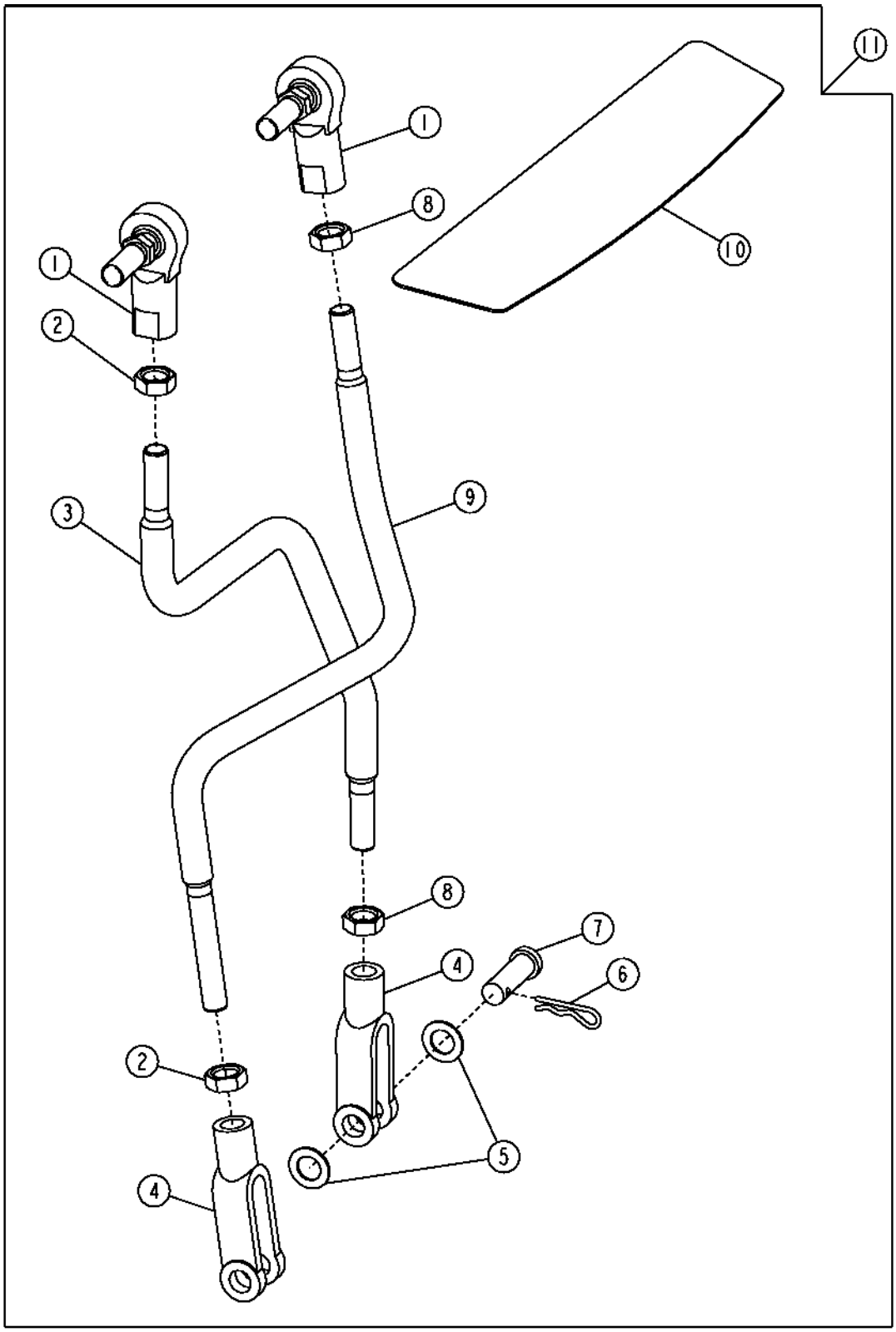

T136030

SAE BACKHOE CONTROL LINKAGE PATTERN KIT

KEY	PART NO.	PART NAME	QTY	SERIAL NO.	REMARKS
1	AT169087	BALL JOINT	2		(SUB FOR AT49300)
2	14H913	NUT	1		3/8"
3	T191445	ROD	1		(T183884 NO LONGER AVAILABLE)
4	T140328	YOKE	2		
5	24H1302	WASHER	6		13/32" X 11/16" X 0.035"
6	R46528	SPRING LOCKING PIN	2		
7	R65563	PIN FASTENER	2		
8	14H774	NUT	1		3/8"
9	T183885	STUD	1		
10	T165595	LABEL	1		BACKHOE CONTROL
11	AT301434	KIT	1		(WHOLE GOODS)

SWING FRAME AND PINS

T158687 -UN-07NOV02

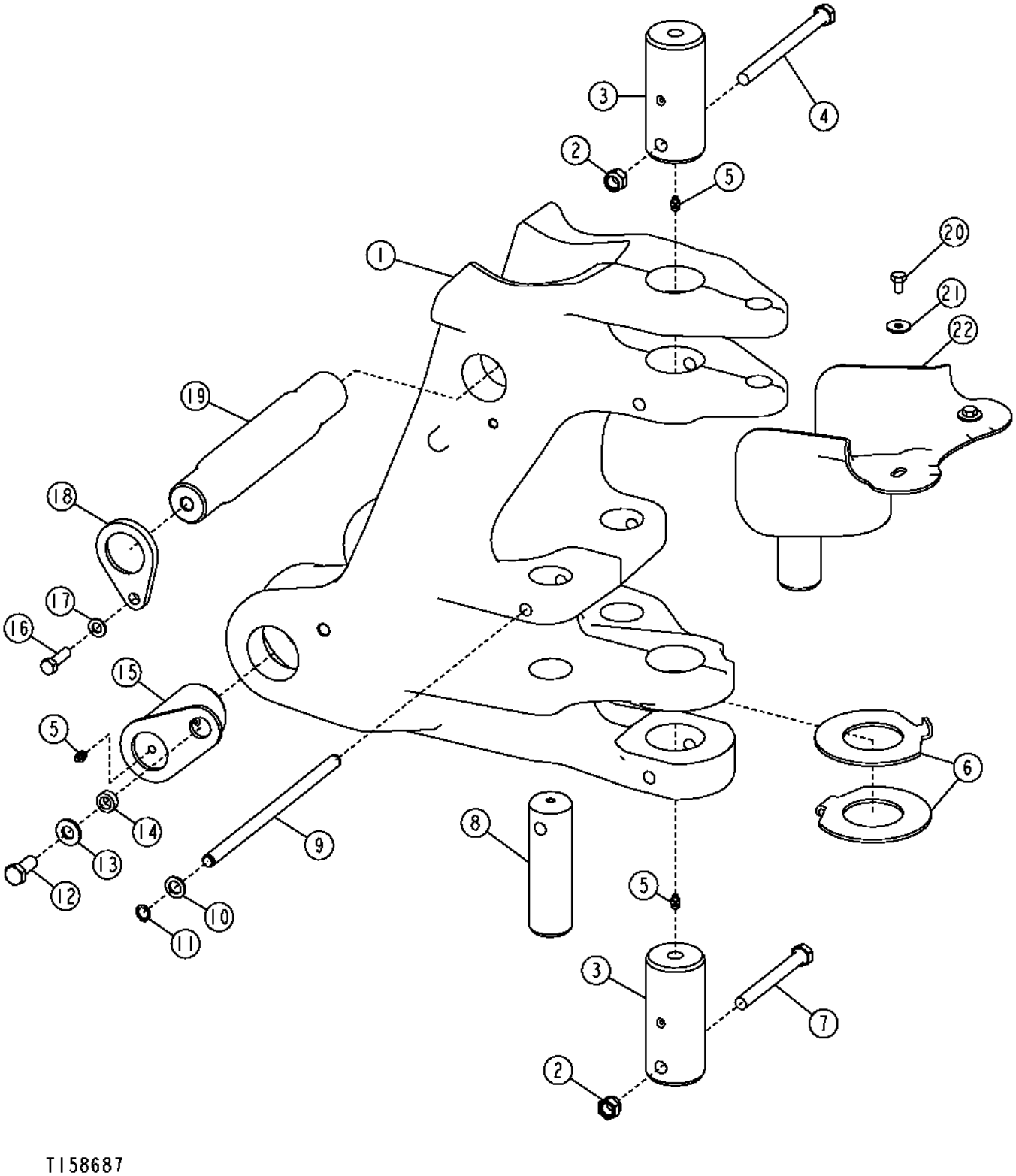

SWING FRAME AND PINS

KEY	PART NO.	PART NAME	QTY	SERIAL NO.	REMARKS
1	T154110	FRAME	1		
2	14M7328	LOCK NUT	2		M16
3	T153531	PIN FASTENER	2		STANDARD
	T165563	PIN	2		OVERSIZED
4	19M8021	CAP SCREW	1		M16 X 200
5	T162396	LUBRICATION FITTING	4		
6	T154712	WASHER	2		
7	19M7954	CAP SCREW	1		M16 X 150
8	T154821	PIN	2	-911128	STANDARD
	T200240	PIN FASTENER	2	911129-	STANDARD
	T164669	PIN FASTENER	2		OVERSIZED
9	T159800	PIN	1		
10	24M7097	WASHER	2		
11	N105572	SNAP RING	2		
12	19M8035	CAP SCREW	2		M16 X 35
13	24M7241	WASHER	2		
14	M2649DN	WASHER	2		
15	AT174631	PIN	2		STANDARD
	AT184196	PIN FASTENER	2		OVERSIZED
16	19M7493	CAP SCREW	2		M12 X 40
17	24M7047	WASHER	2		
18	T159999	LOCKING COLLAR	2		
19	T160567	PIN	1		
20	19M8324	CAP SCREW	2	911129-	M10 X 16
21	24M7296	WASHER	2	911129-	
22	T190924	HOSE GUARD	1	911129-	

BACKHOE BOOM AND PINS

TP62471 -UN-06OCT00

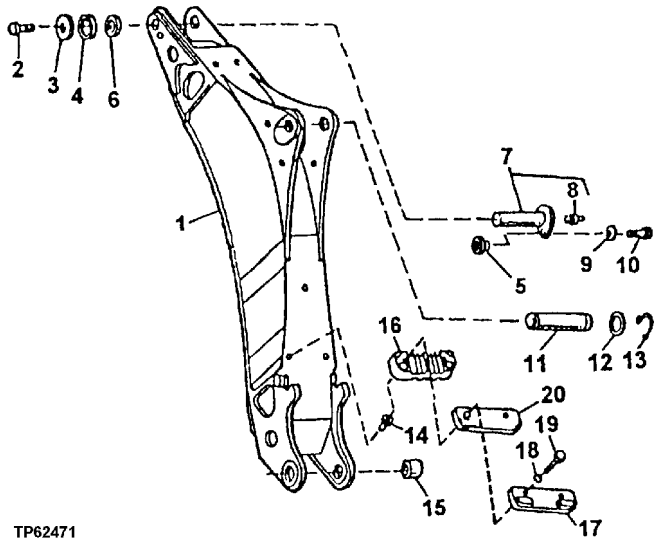

KEY	PART NO.	PART NAME	QTY	SERIAL NO.	REMARKS
1	.....	BACKHOE BOOM	1	-900824	(SUB AT196370) (ALSO ORDER (5) T148410 AND (2) T188183)
	AT196370	BACKHOE BOOM	1	900825-	
2	19M7597	CAP SCREW	1		M20 X 50, (SUB FOR 19M8224, THIS APPLICATION)
3	T101807	WASHER	1		
4	T33376	SHIM	AR		0.508 MM
5	T188568	BUSHING	1		(SUB FOR T157922)
6	24H1616	WASHER	AR		65.075 X 95.250 X 0.914 MM
7	AT197726	PIN	1		(SUB FOR AT171702)
8	T162396	LUBRICATION FITTING	1		1/8"
9	T29342	WASHER	1		
10	19M8935	CAP SCREW	1		M12 X 16
11	T154922	PIN	1		
12	24H1635	WASHER	2		66.675 X 85.725 X 3.048 MM
13	40M7120	SNAP RING	2		
14	T148410	NUT	5		M10, (KREMNUT)(RED NO.8 FOR 8 MM PLATE)
15	T164183	BUSHING	2		
16	AT178026	CLAMP	1		
17	AT177812	STOP	1		
18	24M7239	WASHER	2		
19	19M8183	CAP SCREW	2		
20	T161852	STRAP	1		

BACKHOE BOOM PROTECTION KIT

T145191 -UN-07SEP01

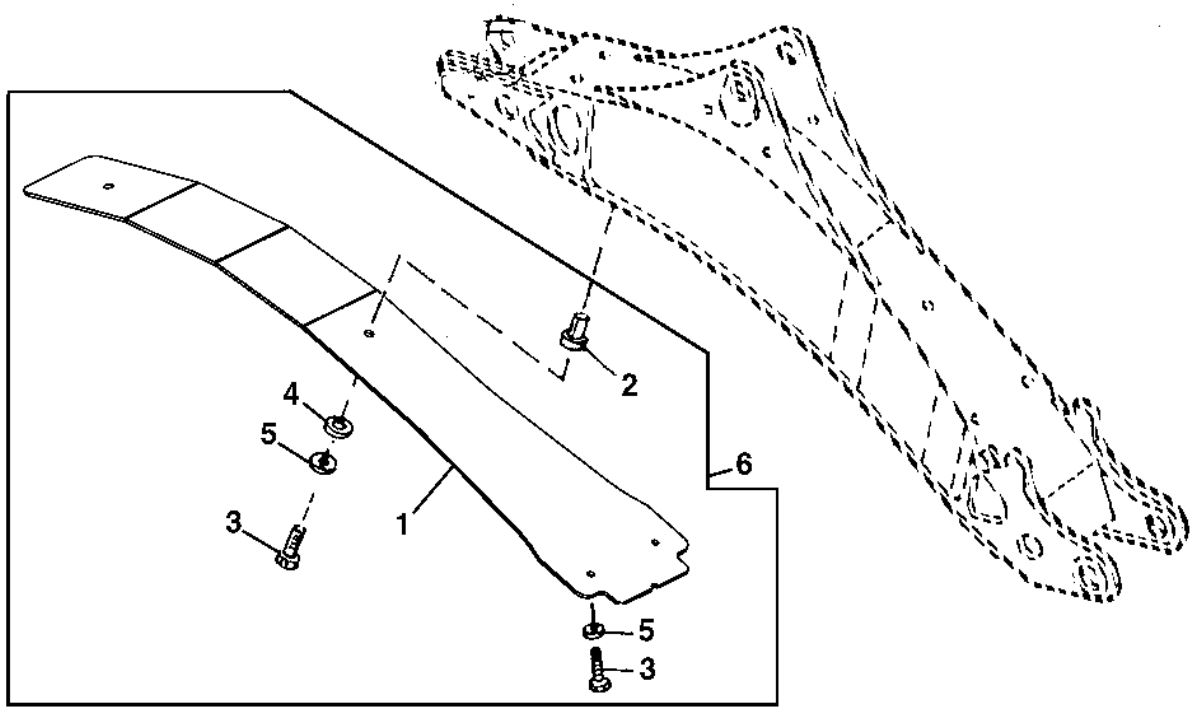

T145191

KEY	PART NO.	PART NAME	QTY	SERIAL NO.	REMARKS
1	AT196353	PLATE	1		(SUB FOR AT179475)
2	T148409	NUT	4		M10, (KREMNUT)(GOLD NO.6 FOR 6 MM PLATE)
3	19M8637	CAP SCREW	4		M10 X 40
4	28H1519	WASHER	2		0.493" X 0.675" X 3/8"
5	24M7296	WASHER	4		10.500 X 30 X 2.500 MM
6	AT196352	KIT	1		(WHOLE GOODS) BOOM PROTECTION, (SUB FOR AT179474)

BACKHOE BUCKET LINKS AND PINS

TP69681 -UN-04OCT00

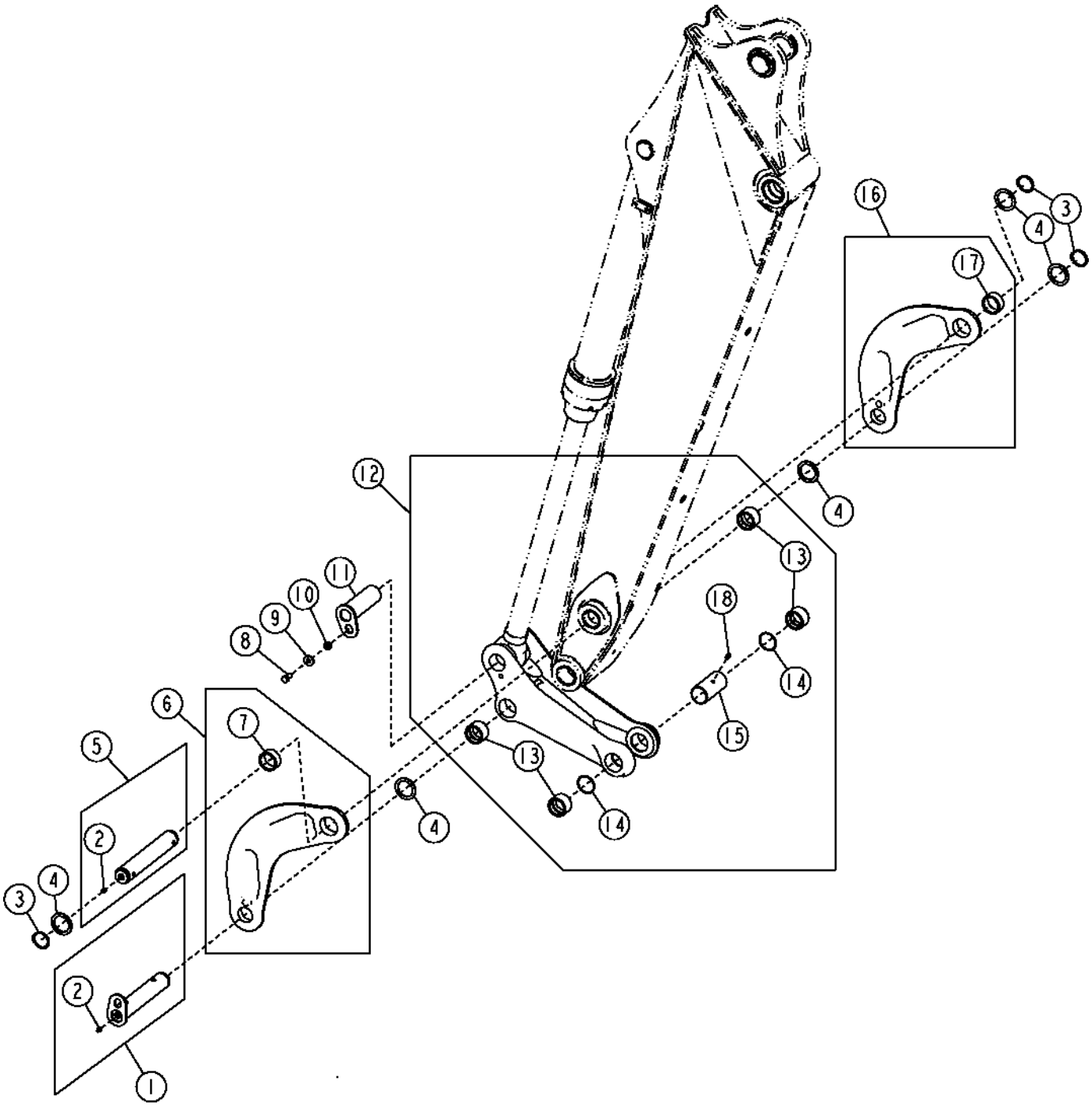

BACKHOE BUCKET LINKS AND PINS

KEY	PART NO.	PART NAME	QTY	SERIAL NO.	REMARKS
1	AT171077	PIN	1		
2	T162396	LUBRICATION FITTING	4		
3	40M7166	SNAP RING	3		
4	24H1594	WASHER	5		
5	AT171079	PIN	1		
6	AT181714	LINK	1		
7	T166715	BUSHING	1		
8	19M7872	CAP SCREW	1		M12 X 25
9	T29342	WASHER	1		
10	28H3418	WASHER	1		
11	AT171078	PIN	1		
12	AT192121	LINK	1		
13	T154273	BUSHING	4		
14	R30916	O-RING	2		
15	T187184	STRUCTURAL TUBING	1		(SUB FOR T185904)
16	AT181715	LINK	1		
17	T166715	BUSHING	1		
18	JD7798	LUBRICATION FITTING	2		

STANDARD ARM AND PINS

T149640 -UN-11JAN02

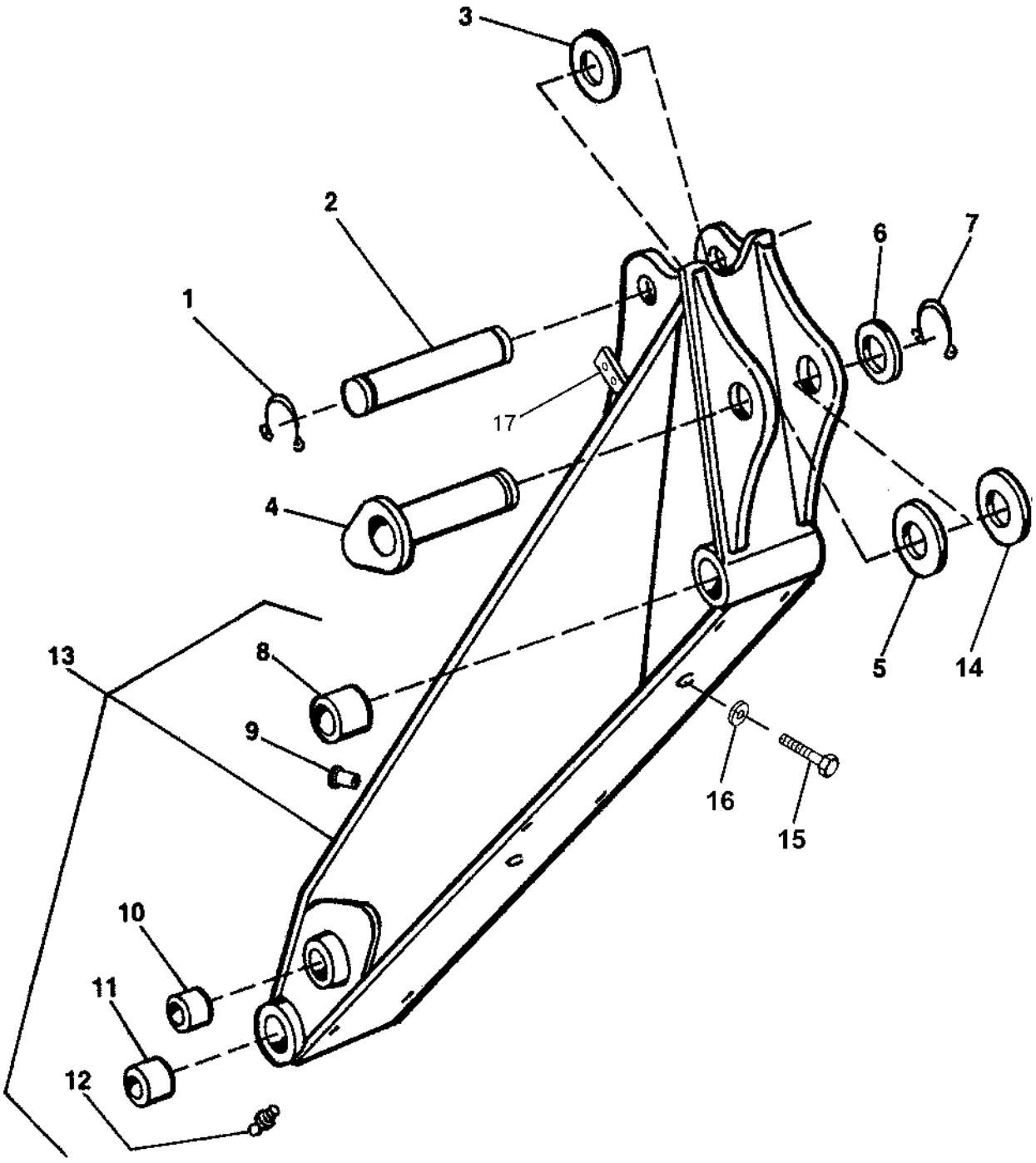

T149640

STANDARD ARM AND PINS

KEY	PART NO.	PART NAME	QTY	SERIAL NO.	REMARKS
1	40M7066	SNAP RING	2		
2	T153567	PIN	1		STANDARD
3	24H1679	WASHER	2		57.556 X 82.550 X 1.524 MM
4	AT169831	PIN	1		
5	T160302	SPACER	2		
	24H1616	WASHER	2		65.075 X 95.250 X 0.914 MM
6	24H1635	WASHER	1		
7	40M7120	SNAP RING	1		
8	T162581	BUSHING	2		
9	T148411	NUT	4		M10
	T148410	NUT	2		M10
10	T166715	BUSHING	2		
11	T166686	BUSHING	2		
12	T162396	LUBRICATION FITTING	1		
13	AT171352	DIPPERSTICK	1		
14	T160299	WEAR PLATE	2		
15	19M7662	CAP SCREW	2		M10 X 30
16	24M7239	WASHER	2		10.700 X 21 X 2.500 MM
17	T159853	STRAP	2		

EXTENDABLE ARM,HYDRAULIC CYLINDER AND PINS

T138030 -UN-14FEB01

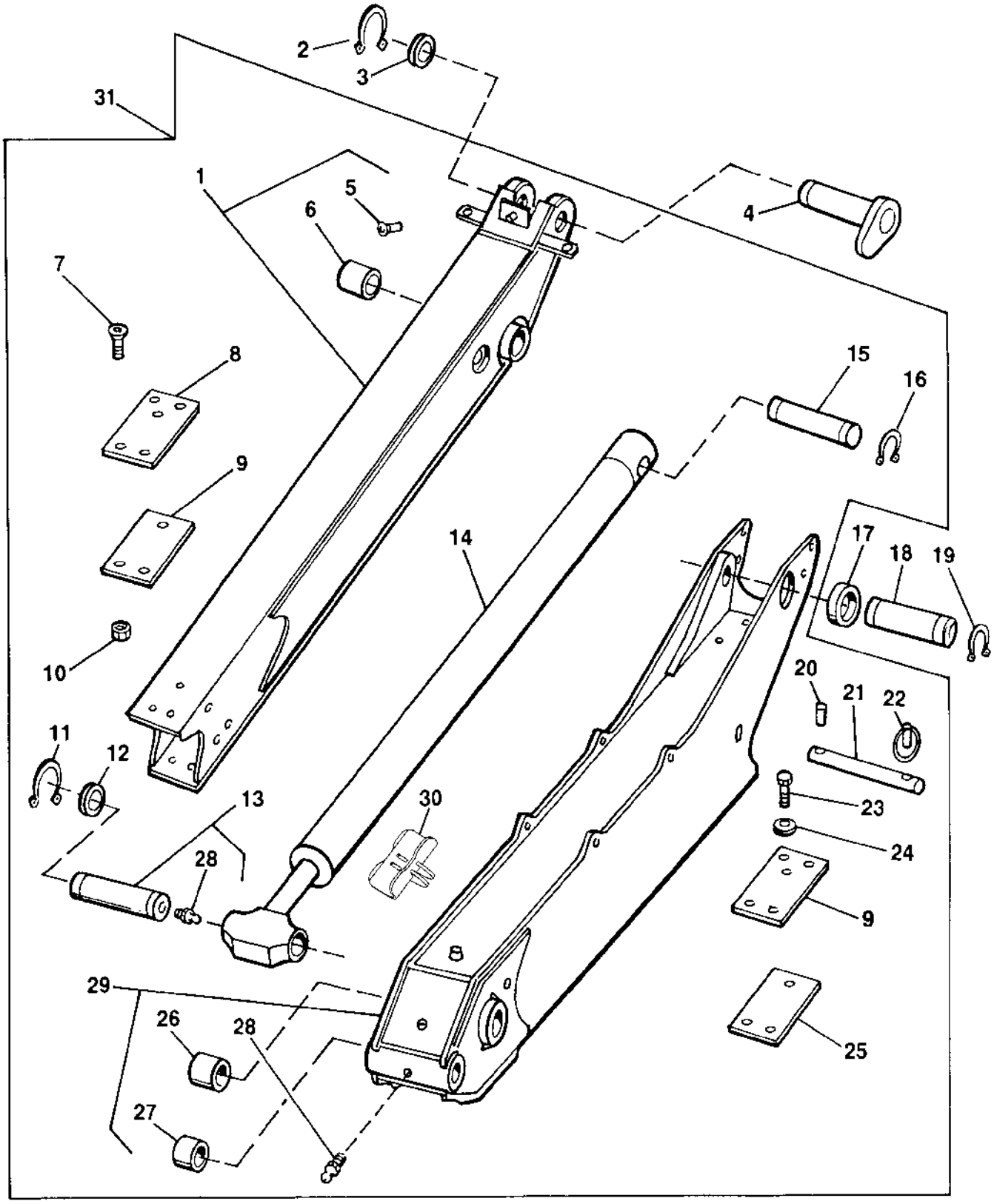

T138030

EXTENDABLE ARM,HYDRAULIC CYLINDER AND PINS

KEY	PART NO.	PART NAME	QTY	SERIAL NO.	REMARKS
1	AT175403	DIPPERSTICK	1		(STATIONARY MEMBER)
2	40M7120	SNAP RING	1		
3	24H1635	WASHER	1		2-5/8" X 3-3/8" X 0.120"
4	AT169831	PIN	1		
5	T148410	NUT	1		M10, (KREMNUT)(RED NO.8 FOR 8 MM PLATE)
6	T162581	BUSHING	2		(SUB FOR T127792)
7	19M7666	SCREW	12		M10 X 40
8	T157792	WEAR PLATE	4		
9	T157796	SHIM	AR		
10	14M7400	LOCK NUT	12		M10
11	40M7166	SNAP RING	2		
12	24H1594	WASHER	2		
13	AT171079	PIN	1		
14	AH206600	HYDRAULIC CYLINDER	1		(SUB FOR AH152474 AND AH175183)
15	T160384	PIN	1		(SUB FOR T153320)
16	40M7179	SNAP RING	2		
17	T160300	WEAR PLATE	AR		SYNTHETIC
	24H1679	WASHER	AR		
18	T153567	PIN	1		
19	40M7066	SNAP RING	2		
20	34M7054	SPRING PIN	1		10 X 50 MM
21	T153322	PIN	1		
22	AR83396	QUICK LOCK PIN	1		
23	19H2472	CAP SCREW	6		1/2" X 1"
24	24M7240	WASHER	6		
25	AT173933	WEAR PLATE	2		
26	T166715	BUSHING	2		(SUB FOR T154277)
27	T166686	BUSHING	2		(SUB FOR T162582, THIS APPLICATION) (SUB FOR T67855)
28	T162396	LUBRICATION FITTING	7		
29	AT175402	DIPPERSTICK	1		(EXTENDING MEMBER)
30	AT191241	GUIDE	1		
31	AT179904	ARM	1		(WHOLE GOODS) INCLUDES HYDRAULIC HOSES, FITTINGS, CLAMPS AND HARDWARE CONTAINED INSIDE THE EXTENDABLE ARM

PROTECTION AND ARM GRIP KIT
(EXTENDIBLE DIPPERSTICK)

TP57776 -UN-30SEP97

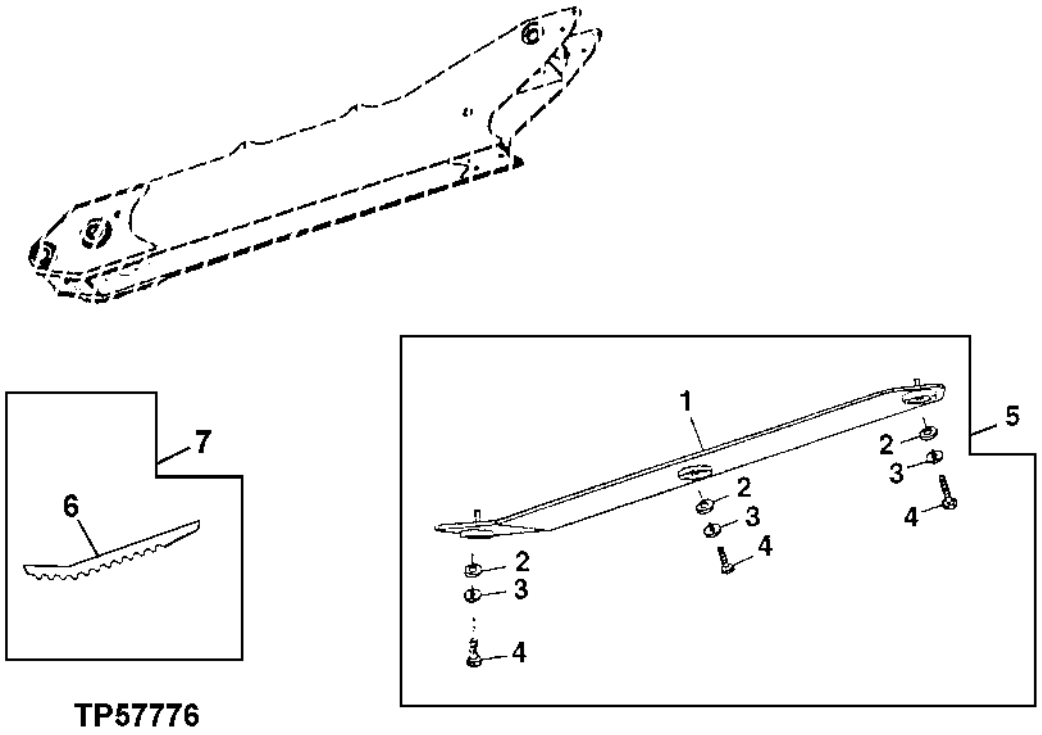

TP57776

KEY	PART NO.	PART NAME	QTY	SERIAL NO.	REMARKS
1	AT179690	PLATE	1		(PROTECTION)
2	T188568	BUSHING	3		(SUB FOR T157922)
3	24M7180	WASHER	3		13 X 37 X 3 MM
4	19M8935	CAP SCREW	3		M12 X 16
5	AT179689	KIT	1		(WHOLE GOODS) PROTECTION (EXTENDIBLE DIPPERSTICK)
6	T163052	GRIP	2		
7	AT182197	KIT	1		(WHOLE GOODS) GRIPPER TEETH (EXTENDIBLE DIPPER)

MEMORANDA

STABILIZER ARMS,FEET AND PINS

T145703 -UN-20SEP01

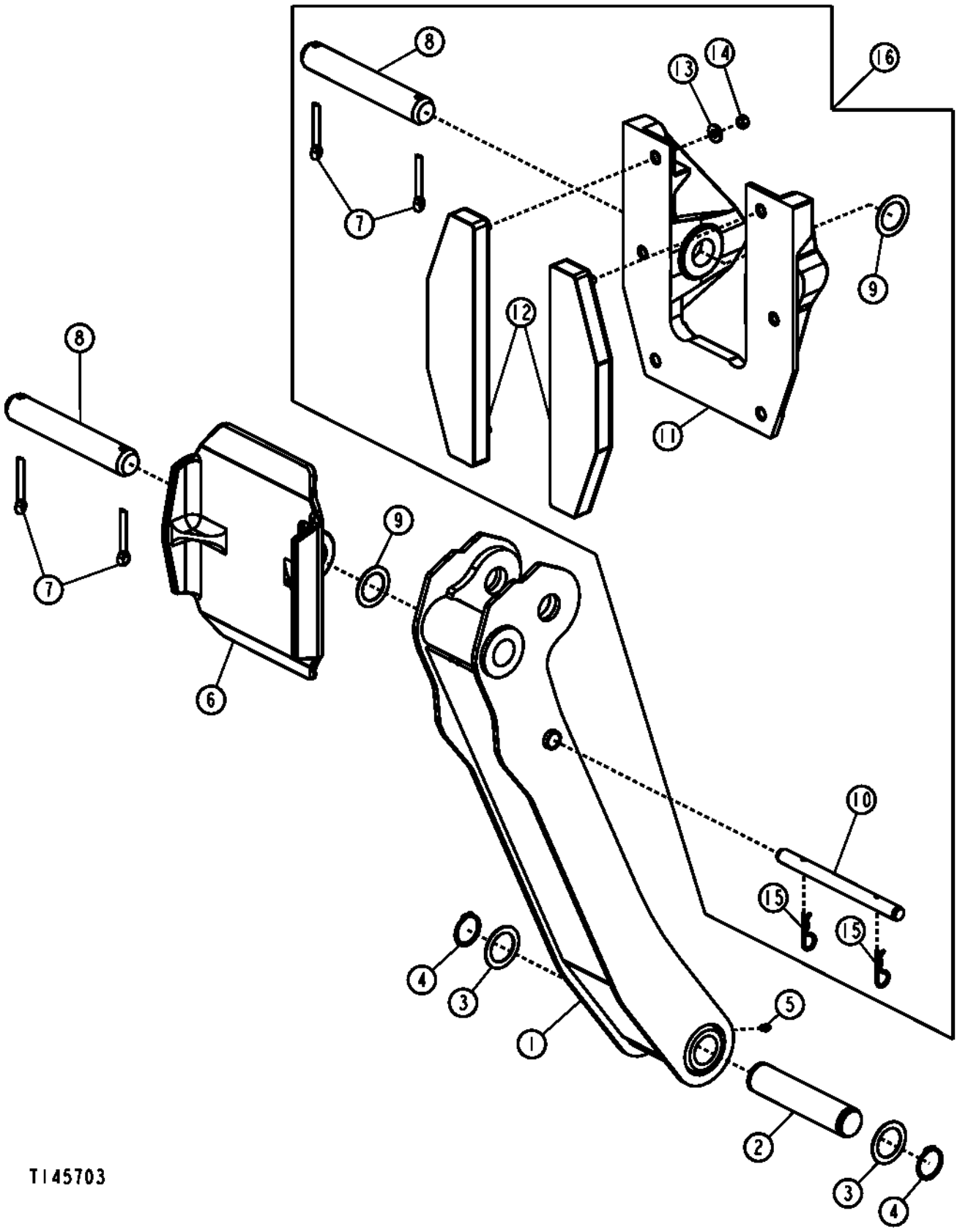

STABILIZER ARMS,FEET AND PINS

KEY	PART NO.	PART NAME	QTY	SERIAL NO.	REMARKS
1	AT196204	STABILIZER	1		(SUB FOR AT185062)
2	T163109	PIN FASTENER	2		
3	T161036	WASHER	4		
4	40M7066	SNAP RING	4		
5	T162396	LUBRICATION FITTING	2		
6	.....	STABILIZER FOOT	2		(T126867 NO LONGER AVAILABLE) (SUB T166258)
7	11H270	COTTER PIN	4		12.700 X 76.200 MM
8	T69472	PIN FASTENER	2		
9	24H1595	WASHER	2		
10	T184988	PIN FASTENER	2		
11	T166258	STABILIZER FOOT	2		
12	AT195669	STREET PAD	4		(SUB FOR AT192120)
13	T29432	LABEL	12		
14	14H1040	NUT	12		1/2"
15	A3581R	SPRING LOCKING PIN	4		
16	AT157327	KIT	1		(WHOLE GOODS) REVERSIBLE STREET PAD

STABILIZER CYLINDER PINS AND SPACERS

TP57843 -UN-25MAR98

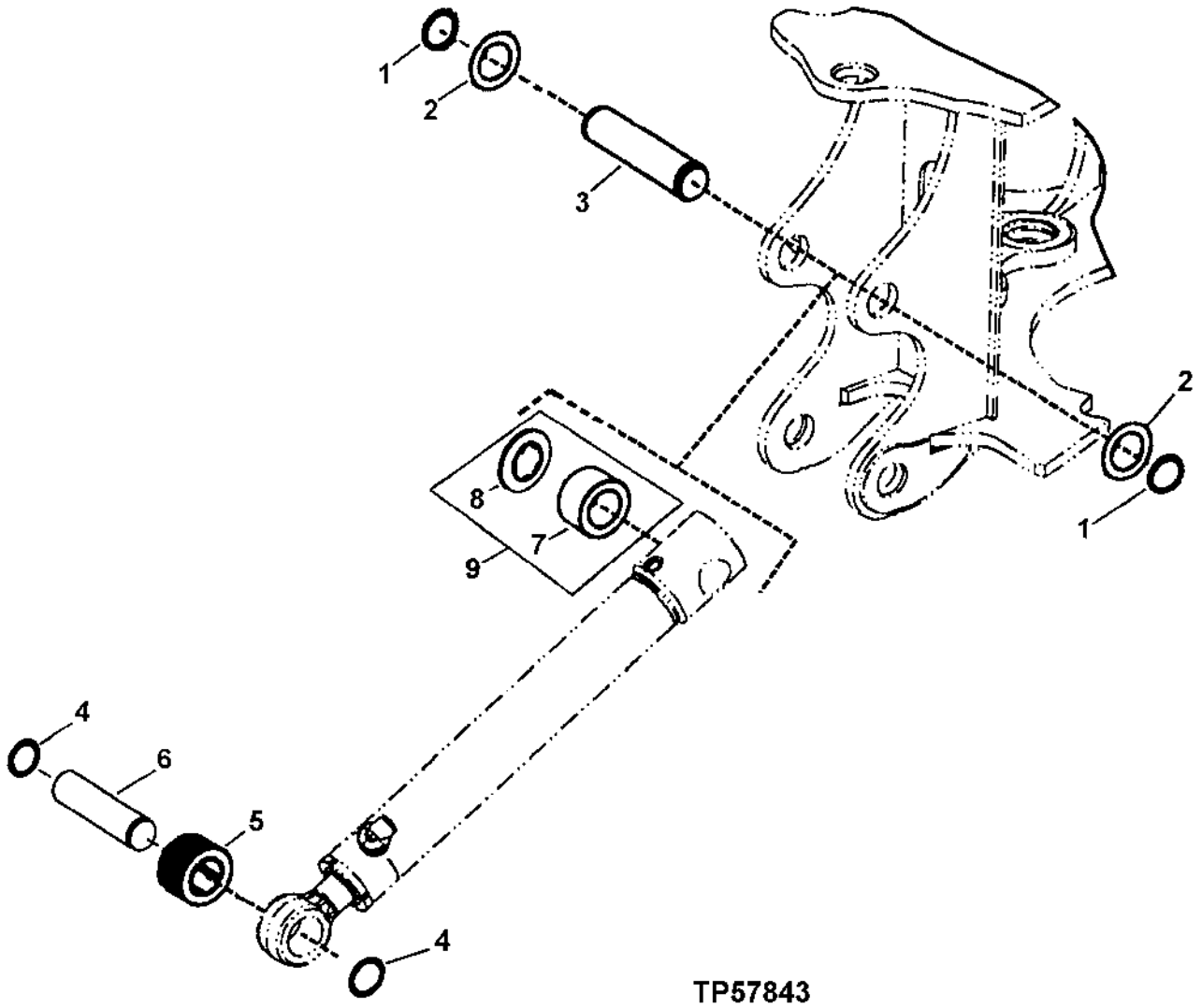

TP57843

STABILIZER CYLINDER PINS AND SPACERS

KEY	PART NO.	PART NAME	QTY	SERIAL NO.	REMARKS
1	40M7066	SNAP RING	2		
2	T161036	WASHER	2		
3	T163109	PIN FASTENER	1		
4	40M7166	SNAP RING	2		
5	T189080	SPACER	1		(HOSE SEGMENT) (SUB FOR T164086)
6	T127437	PIN FASTENER	1		
7	.....	WEAR PLATE	1	-902508	
8	T160303	SPACER	1	-902508	
9	AT181327	KIT	1		BARREL END

BACKHOE CONTROL VALVE
(HUSCO)

TP69603 -UN-03OCT00

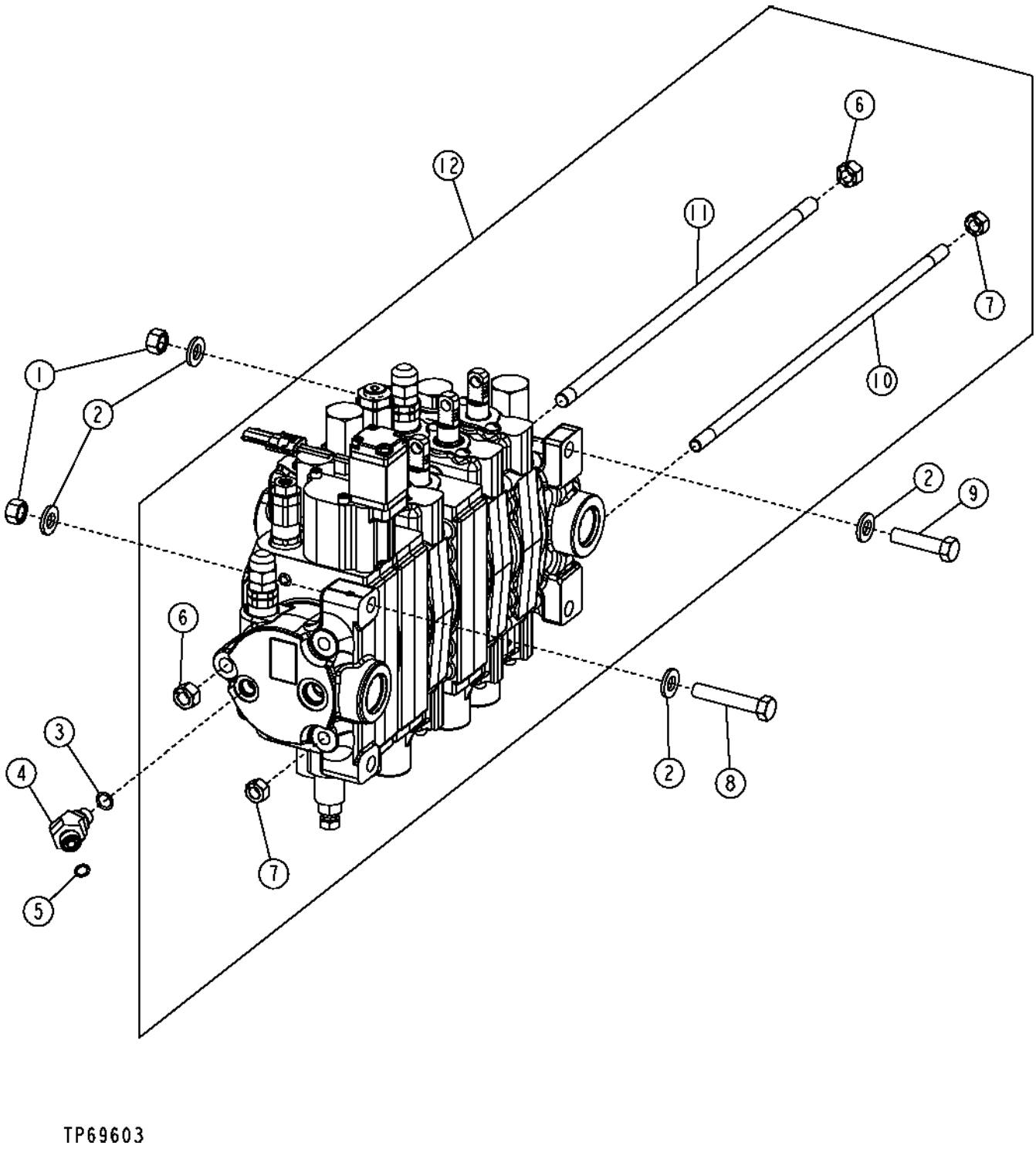

BACKHOE CONTROL VALVE (HUSCO)

KEY	PART NO.	PART NAME	QTY	SERIAL NO.	REMARKS
1	14M7275	NUT	3		M12
2	24M7240	WASHER	6		
3	R26448	O-RING	1		
4	38H1045	ELBOW FITTING	1		L.S. PORT
5	T77613	O-RING	1		
6	14H865	NUT	2		1/2"
7	14H807	NUT	4		7/16"
8	19M7753	CAP SCREW	1		M12 X 70
9	19M7361	CAP SCREW	2		M12 X 50
10	T149571	STUD	2		(4 FUNCTION)
	T149576	STUD	2		(5 FUNCTION)
	T149578	STUD	2		(6 FUNCTION)
	T163203	STUD	2		(7 FUNCTION)
11	T149570	STUD	1		(4 FUNCTION)
	T149575	STUD	1		(5 FUNCTION)
	T149577	STUD	1		(6 FUNCTION)
	T163204	STUD	1		(7 FUNCTION)
12	AT192544	SPOOL VALVE	1		CONVENIENCE ASSEMBLY, (4-FUNCTION)
	AT192545	CONTROL VALVE	1		CONVENIENCE ASSEMBLY, (5-FUNCTION)
	AT186064	CONTROL VALVE	1		CONVENIENCE ASSEMBLY, (6-FUNCTION)
	AT192184	CONTROL VALVE	1		CONVENIENCE ASSEMBLY, (6 FUNCTION VALVE WITH MANUAL AUXILIARY)
	AT192203	SPOOL VALVE	1		CONVENIENCE ASSEMBLY, (7 FUNCTION WITH MANUAL AND FLOW CONTROL AUXILIARIES)

INLET SECTION
BACKHOE VALVE

TP69610 -UN-03OCT00

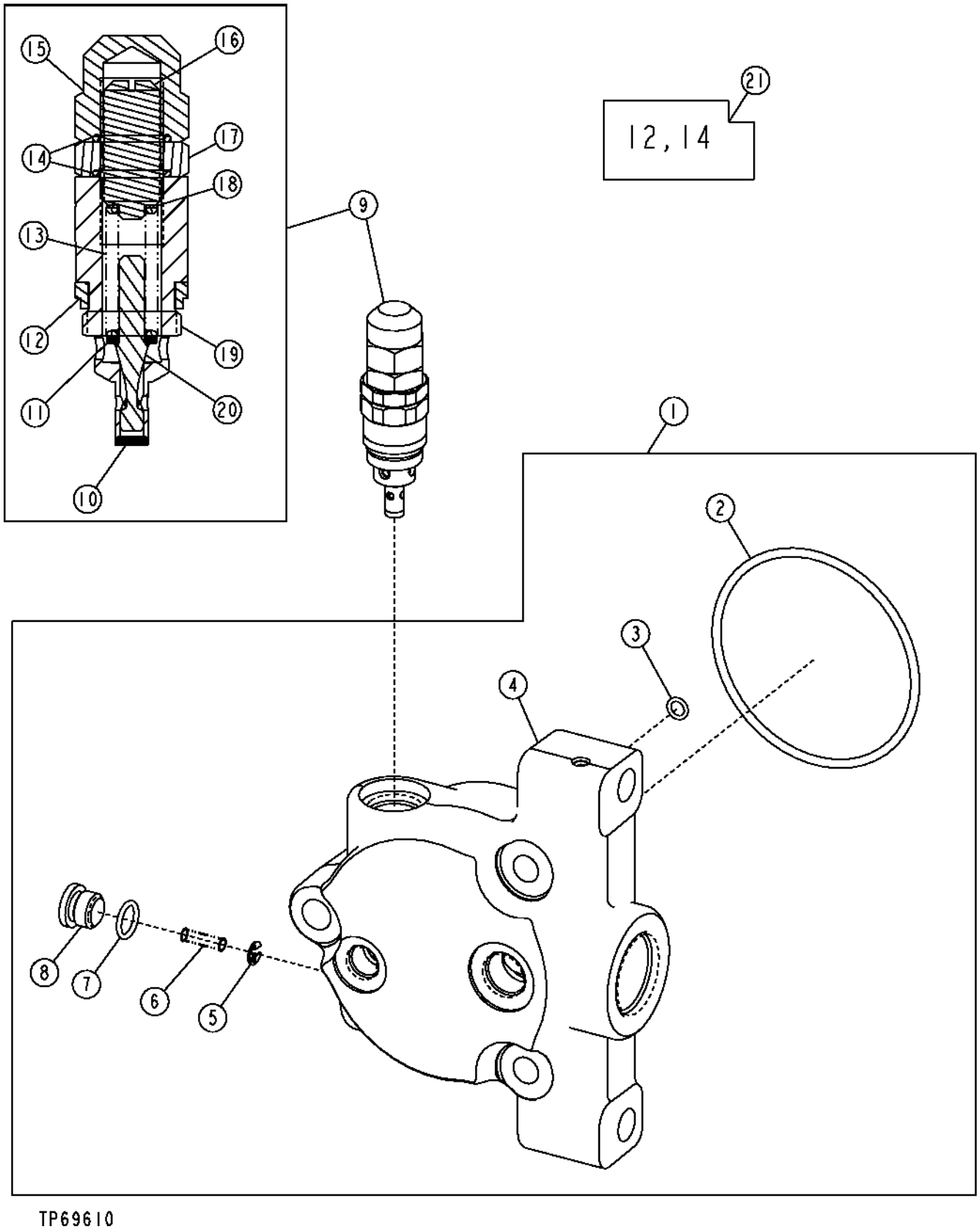

INLET SECTION
BACKHOE VALVE

KEY	PART NO.	PART NAME	QTY	SERIAL NO.	REMARKS
1	AT173839	HYD ACTUATED CONTROL VALVE	1		(4 AND 5 FUNCTION)
	AT175220	HYD ACTUATED CONTROL VALVE	1		(6 AND 7 FUNCTION)
2	T118685	O-RING	1		
3	U40962	O-RING	1		
4	.....	HOUSING	1		
5	T160619	SNAP RING	1		(6 AND 7 FUNCTION)
6	T160617	SPRING	1		(6 AND 7 FUNCTION)
7	T70177	O-RING	1		(6 AND 7 FUNCTION)
8	R111493	FITTING PLUG	1		(6 AND 7 FUNCTION)
9	AT173840	PRESSURE RELIEF VALVE	1		(3625 PSI)
10	.....	PLUG	1		
11	.....	RETAINER	1		
12	.....	SEAL	1		
13	.....	SPRING	1		
14	.....	O-RING	2		
15	.....	NUT	1		
16	.....	SCREW	1		
17	.....	NUT	1		
18	.....	SHIM	1		
19	.....	HOUSING	1		
20	.....	POPPET	1		
21	AT189413	SEAL KIT	1		

BOOM SECTION
BACKHOE VALVE

TP69604 -UN-03OCT00

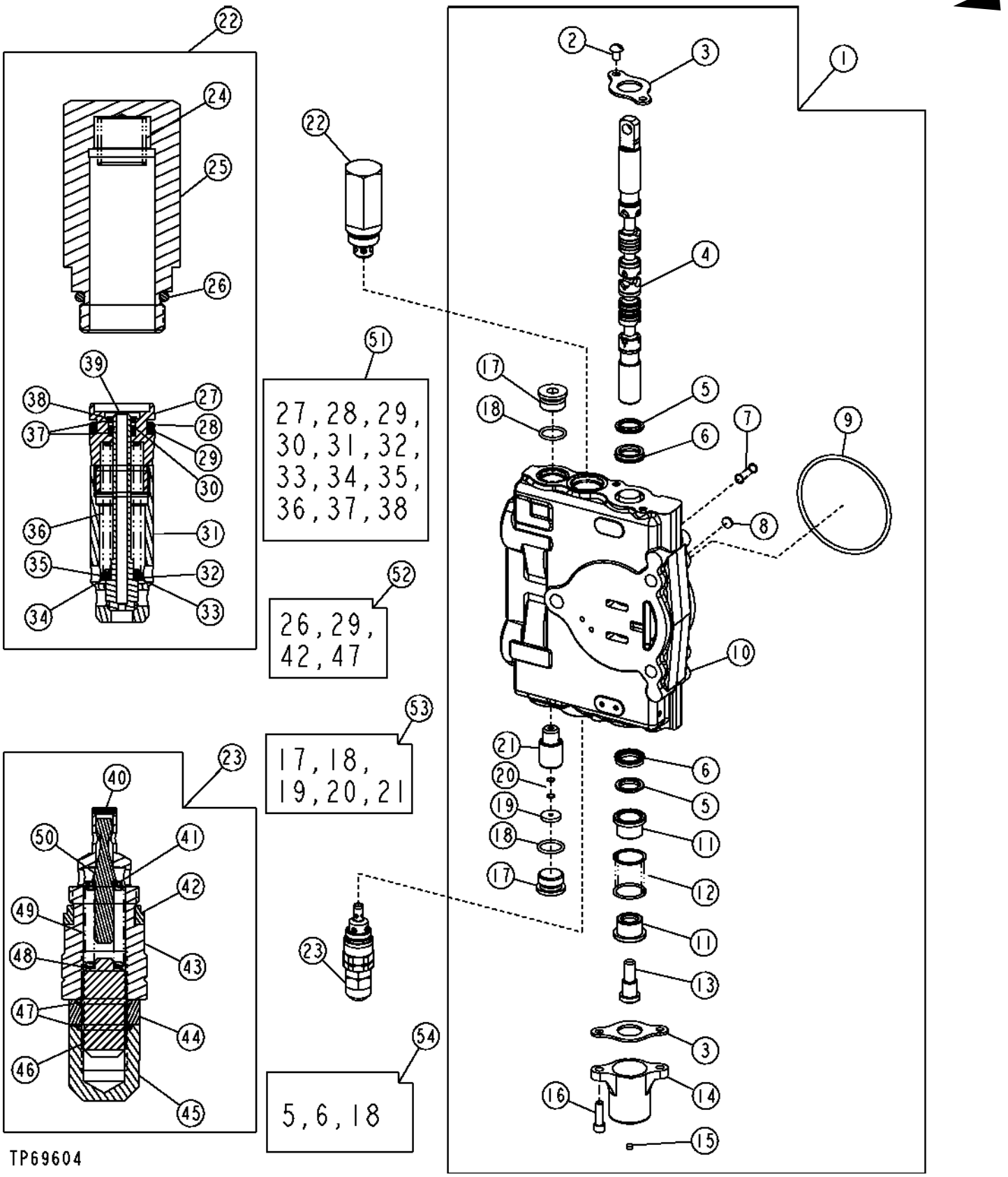

BOOM SECTION
BACKHOE VALVE

KEY	PART NO.	PART NAME	QTY	SERIAL NO.	REMARKS
1	AT173894	VALVE	1		
2	21H1352	SCREW	2		1/4" X 3/8"
3	T81524	PLATE	2		
4	.....	SPOOL VALVE	1		
5	.....	SEAL	2		
6	.....	SEAL	2		
7	T161835	COMPRESSION SPRING	1		
8	R95493	DISK	1		
9	T118685	O-RING	1		
10	.....	HOUSING	1		
11	T81540	RETAINER	2		
12	T177849	EXTENSION SPRING	1		(SUB FOR T153105, THIS APPLICATION)
13	T81541	SCREW	1		
14	T118808	CAP	1		
15	T118799	FILTER	1	-906011	
16	19H3554	SCREW	2		
17	.....	PLUG	1		
18	.....	O-RING	1		
19	.....	WASHER	1		
20	R124455	SPRING	1		
21	.....	POPPET	1		
22	AT171403	PRESSURE RELIEF VALVE	1		(2150 PSI)
23	AT182248	PRESSURE RELIEF VALVE	1		(5500 PSI)
24	T118867	SPRING	1		
25	T118866	HOUSING	1		
26	T118681	O-RING	1		
27	.....	HOUSING	1		
28	.....	O-RING	1		
29	.....	BACK-UP RING	1		
30	.....	O-RING	1		
31	.....	SLEEVE	1		
32	.....	SHIM	1		
33	.....	WASHER	1		
34	.....	WASHER	1		
35	.....	WASHER	1		
36	.....	SPRING	1		
37	.....	BACK-UP RING	2		
38	.....	RETAINER	1		
39	.....	POPPET	1		
40	.....	PLUG	1		
41	.....	RETAINER	1		
42	.....	SEAL	1		
43	.....	HOUSING	1		
44	.....	NUT	1		
45	.....	NUT	1		
46	.....	SCREW	1		
47	.....	O-RING	2		
48	.....	SHIM	1		
49	.....	SPRING	1		
50	.....	POPPET	1		
51	AT178363	KIT	1		(RELIEF VALVE CARTRIDGE)
52	AT189413	SEAL KIT	1		(RELIEF VALVE SEAL)
53	AT178371	SEAL KIT	1		(DRIFT CHECK)
54	AT178372	SEAL KIT	1		(SPOOL SEAL)

BUCKET SECTION
BACKHOE VALVE

TP69605 -UN-03OCT00

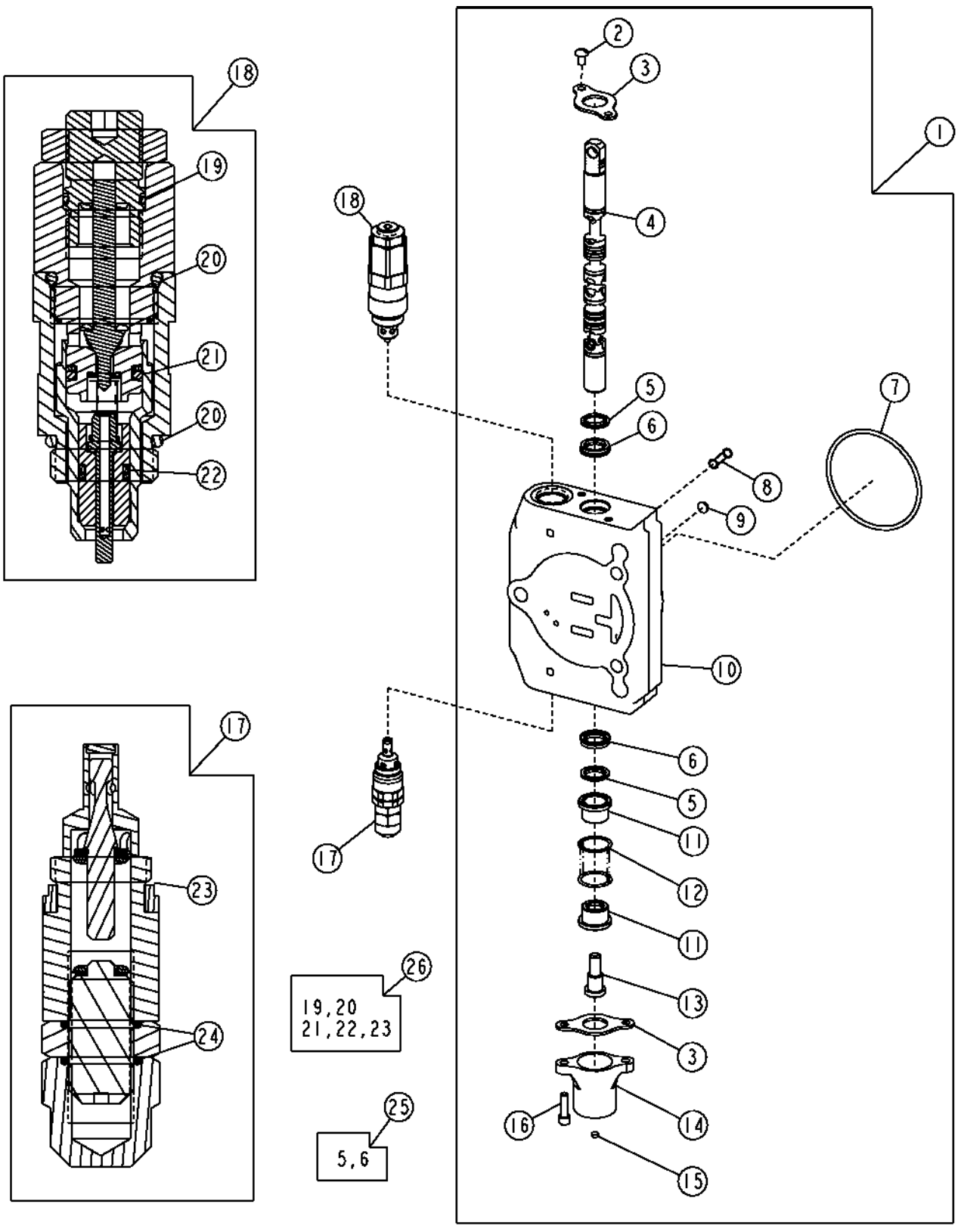

TP69605

BUCKET SECTION
BACKHOE VALVE

KEY	PART NO.	PART NAME	QTY	SERIAL NO.	REMARKS
1	AT173895	VALVE	1		
2	21H1352	SCREW	2		1/4" X 3/8"
3	T81524	PLATE	2		
4	.....	SPOOL VALVE	1		
5	.....	SEAL	2		
6	.....	SEAL	2		
7	T118685	O-RING	1		
8	T161835	COMPRESSION SPRING	1		
9	R95493	DISK	1		
10	.....	HOUSING	1		
11	T81540	RETAINER	2		
12	T177849	EXTENSION SPRING	1		(SUB FOR T153105, THIS APPLICATION)
13	T81541	SCREW	1		
14	T118808	CAP	1		
15	T118799	FILTER	1	-906011	
16	19H3554	SCREW	2		1/4" X 0.880"
17	AT172937	RELIEF VALVE	1		(4600 PSI)
18	AT192457	PRESSURE RELIEF VALVE	1		(4600 PSI)
19	.....	O-RING	1		
20	T118681	O-RING	1		
21	.....	O-RING	1		
22	.....	O-RING	1		
23	T183756	SEAL	1		
24	.....	O-RING	1		
25	AT178372	SEAL KIT	1		(SPOOL SEAL)
26	AT189413	SEAL KIT	1		(RELIEF VALVE SEAL)

CROWD SECTION
BACKHOE VALVE

T158846 -UN-03SEP02

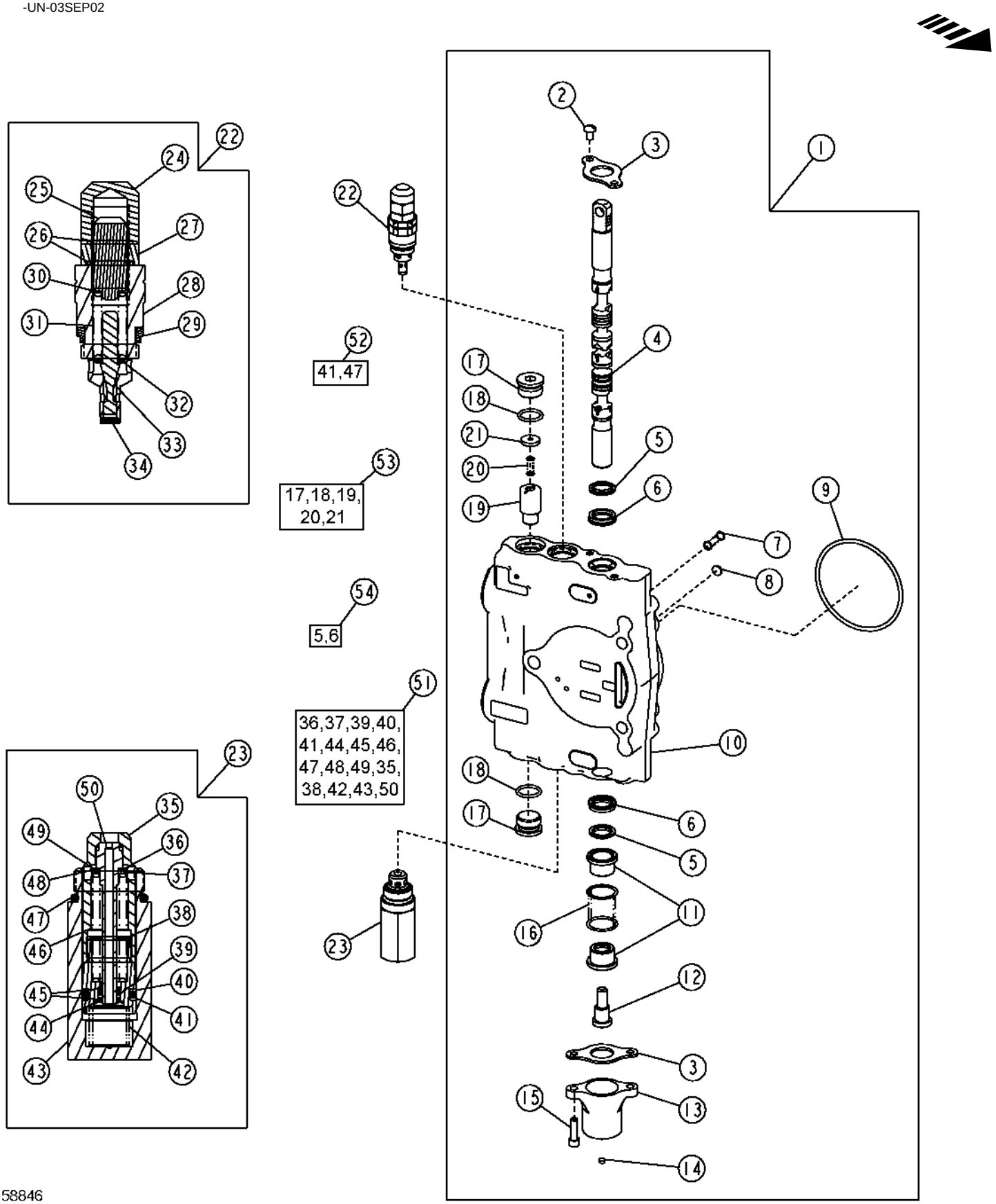

CROWD SECTION
BACKHOE VALVE

KEY	PART NO.	PART NAME	QTY	SERIAL NO.	REMARKS
1	AT173896	VALVE	1		
2	21H1352	SCREW	2		1/4" X 3/8"
3	T81524	PLATE	2		
4	.....	SPOOL VALVE	1		
5	.....	SEAL	2		
6	.....	SEAL	2		
7	T161835	COMPRESSION SPRING	1		
8	R95493	DISK	1		
9	T118685	O-RING	1		
10	.....	HOUSING	1		
11	T81540	RETAINER	2		
12	T81541	SCREW	1		
13	T118808	CAP	1		
14	T118799	FILTER	1	-906011	
15	19H3554	SCREW	2		
16	T177849	EXTENSION SPRING	1		(SUB FOR T177849, THIS APPLICATION)
17	.....	PLUG	1		
18	.....	O-RING	1		
19	.....	CHECK VALVE	1		
20	R124455	SPRING	1		
21	.....	SPACER	1		
22	AT171404	PRESSURE RELIEF VALVE	1		(4750 PSI)
23	.....	RELIEF VALVE	1		(3800 PSI) (ORDER AT178362)
24	.....	NUT	1		
25	.....	SCREW	1		
26	.....	O-RING	2		
27	.....	NUT	1		
28	.....	HOUSING	1		
29	.....	SEAL	1		
30	.....	SHIM	1		
31	.....	SPRING	1		
32	.....	RETAINER	1		
33	.....	POPPET	1		
34	.....	PLUG	1		
35	.....	SLEEVE	1		
36	.....	WASHER	1		
37	.....	SHIM	1		
38	.....	HOUSING	1		
39	.....	O-RING	1		
40	.....	BACK-UP RING	1		
41	.....	O-RING	1		
42	T118867	SPRING	1		
43	T118866	HOUSING	1		
44	.....	RETAINING WASHER	1		
45	.....	BACK-UP RING	2		
46	.....	SPRING	1		
47	T118681	O-RING	1		
48	.....	WASHER	1		
49	.....	SHIM	1		
50	.....	POPPET	1		
51	AT178362	KIT	1		(RELIEF VALVE CARTRIDGE)
52	AT189413	SEAL KIT	1		(RELIEF VALVE SEAL)
53	AT178371	SEAL KIT	1		(DRIFT CHECK)
54	AT178372	SEAL KIT	1		(SPOOL SEAL)

SWING SECTION
BACKHOE VALVE

TP69607 -UN-03OCT00

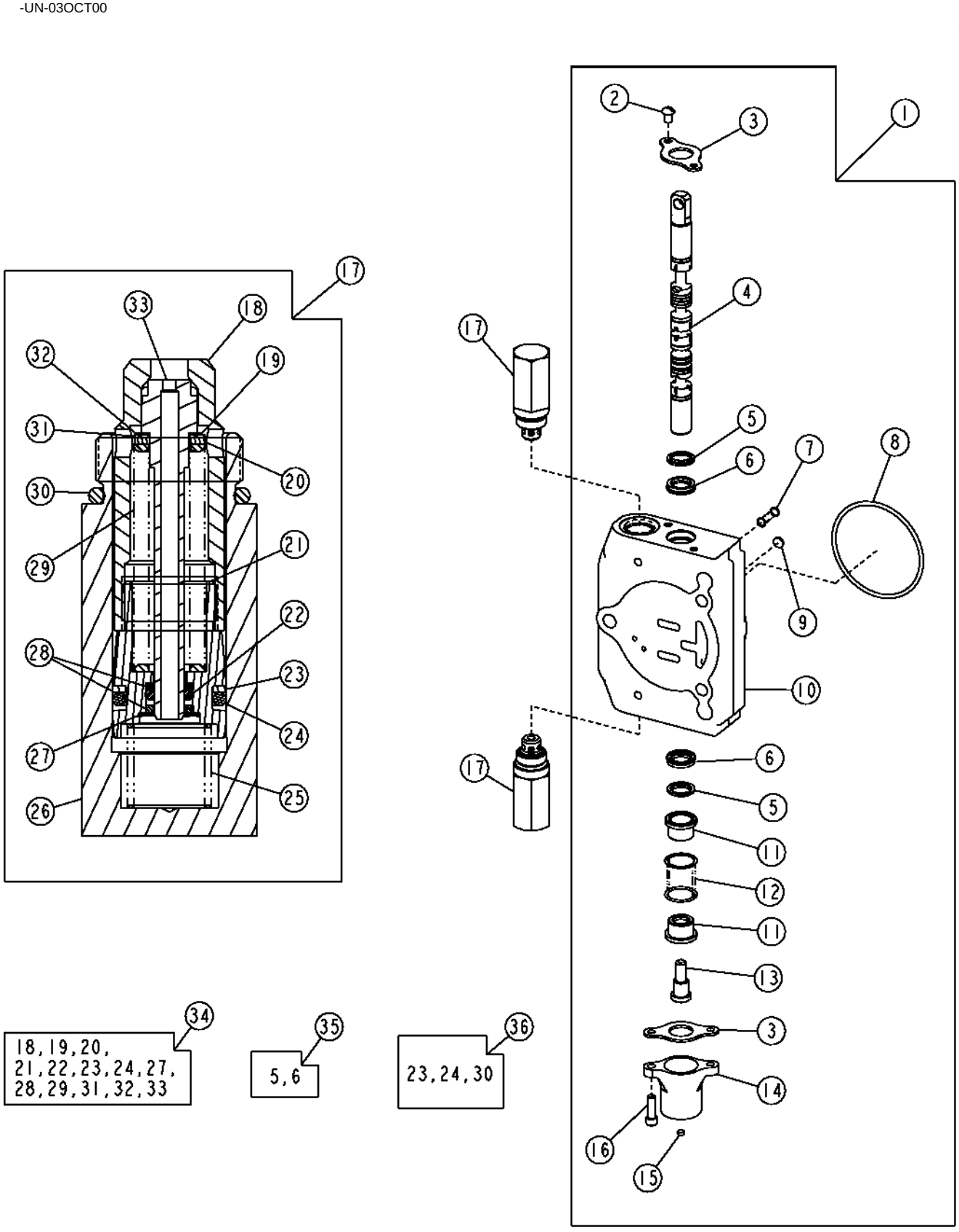

SWING SECTION
BACKHOE VALVE

KEY	PART NO.	PART NAME	QTY	SERIAL NO.	REMARKS
1	AT173893	VALVE	1		
2	21H1352	SCREW	2		1/4" X 3/8"
3	T81524	PLATE	2		
4	.....	SPOOL VALVE	1		
5	.....	SEAL	2		
6	.....	SEAL	2		
7	T161835	COMPRESSION SPRING	1		
8	T118685	O-RING	1		
9	R95493	DISK	1		
10	.....	HOUSING	1		
11	T81540	RETAINER	2		
12	T177849	EXTENSION SPRING	1		(SUB FOR T153105, THIS APPLICATION)
13	T81541	SCREW	1		
14	T118808	CAP	1		
15	T118799	FILTER	1	-906011	
16	19H3554	SCREW	2		1/4" X 0.880"
17	.....	RELIEF VALVE	2		(4200 PSI)
18	.....	SLEEVE	1		
19	.....	WASHER	1		
20	.....	WASHER	1		
21	.....	SCREW	1		
22	.....	O-RING	1		
23	.....	BACK-UP RING	1		
24	.....	O-RING	1		
25	T118867	SPRING	1		
26	T118866	HOUSING	1		
27	.....	RETAINER	1		
28	.....	BACK-UP RING	2		
29	.....	SPRING	1		
30	T118681	O-RING	1		
31	.....	WASHER	1		
32	.....	WASHER	1		
33	.....	POPPET	1		
34	AT178402	SEAL KIT	1		(RELIEF VALVE CARTRIDGE)
35	AT178372	SEAL KIT	1		(SPOOL SEAL)
36	AT189413	SEAL KIT	1		(RELIEF VALVE SEAL)

EXTENDIBLE SECTION
BACKHOE VALVE

TP69608 -UN-03OCT00

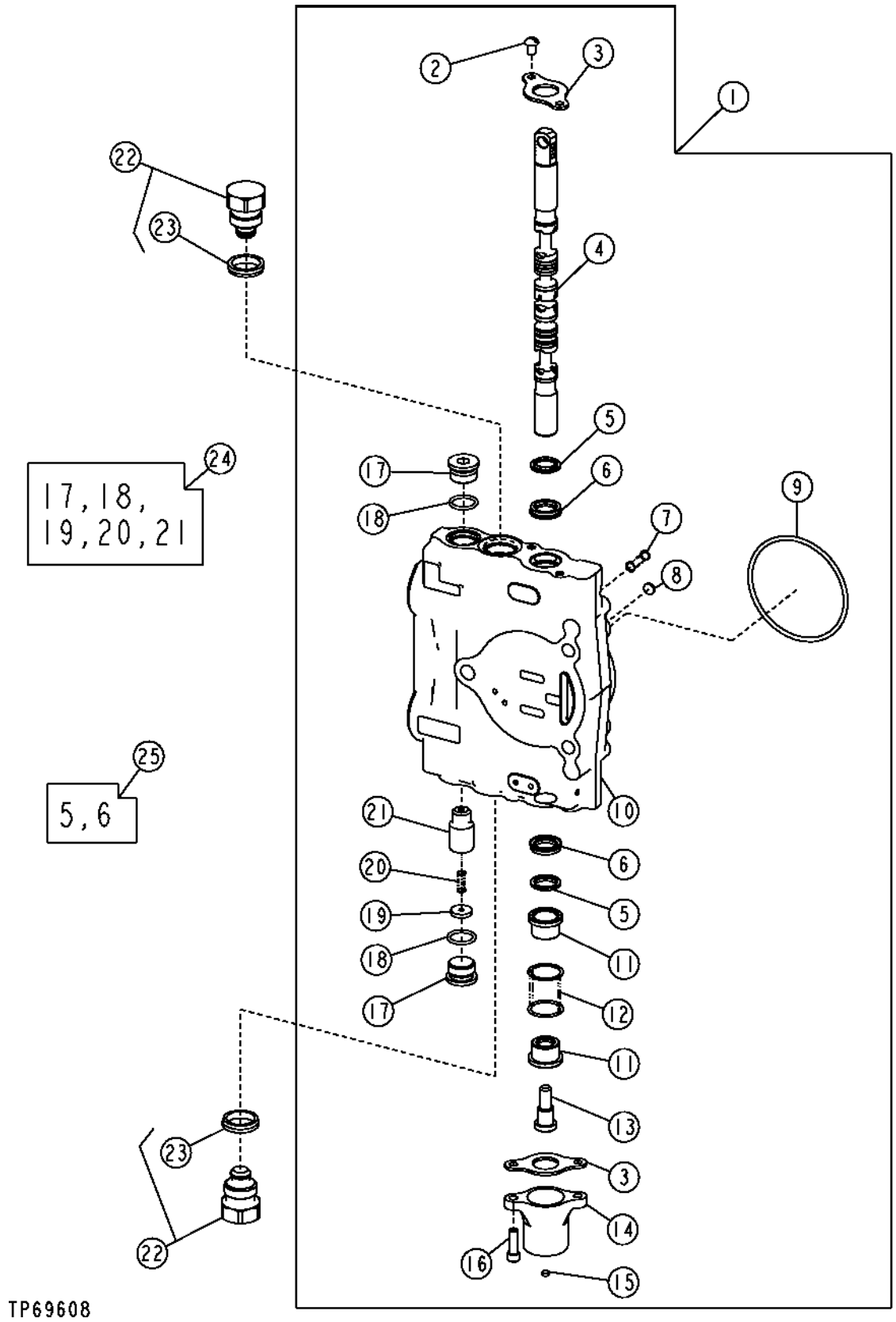

EXTENDIBLE SECTION
BACKHOE VALVE

KEY	PART NO.	PART NAME	QTY	SERIAL NO.	REMARKS
1	AT173897	VALVE	1		
2	21H1352	SCREW	2		1/4" X 3/8"
3	T81524	PLATE	2		
4	.....	SPOOL VALVE	1		
5	.....	SEAL	2		
6	.....	SEAL	2		
7	T161835	COMPRESSION SPRING	1		
8	R95493	DISK	1		
9	T118685	O-RING	1		
10	.....	HOUSING	1		
11	T81540	RETAINER	2		
12	T177849	EXTENSION SPRING	1		(SUB FOR T153105, THIS APPLICATION)
13	T81541	SCREW	1		
14	T118808	CAP	1		
15	T118799	FILTER	1	-906011	
16	19H3554	SCREW	2		1/4" X 0.880"
17	.....	PLUG	1		
18	.....	O-RING	1		
19	.....	WASHER	1		
20	R124455	SPRING	1		
21	.....	POPPET	1		
22	AT83174	PLUG	2		
23	T183757	SEAL	2		
24	AT178371	SEAL KIT	1		(DRIFT CHECK)
25	AT178372	SEAL KIT	1		(SPOOL SEAL)

AUXILIARY SECTION (SELECTIVE FLOW SOLENOID)
BACKHOE VALVE

TP69609 -UN-06OCT00

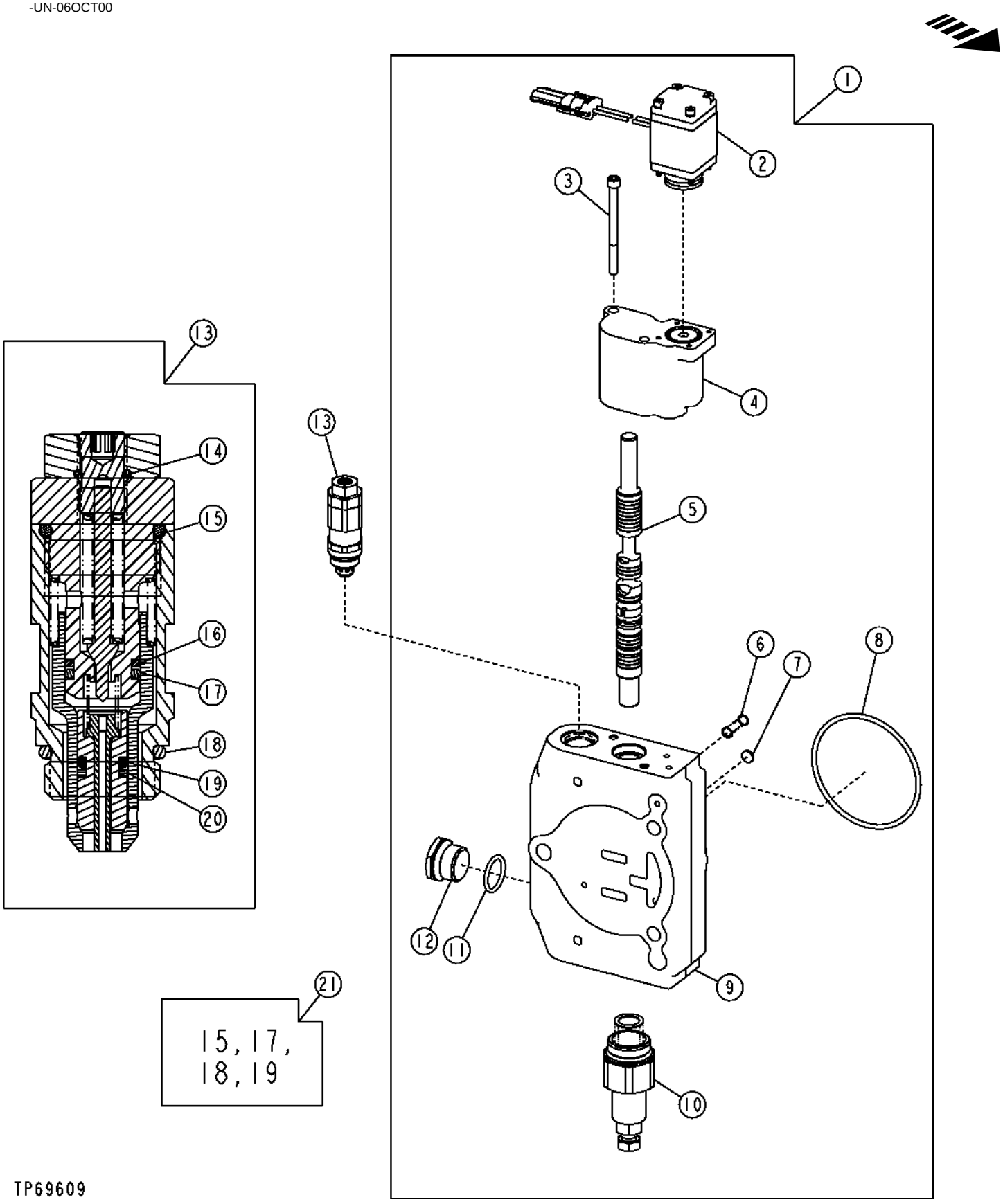

AUXILIARY SECTION (SELECTIVE FLOW SOLENOID)
BACKHOE VALVE

KEY	PART NO.	PART NAME	QTY	SERIAL NO.	REMARKS
1	AT191721	VALVE	1		
2	AT178467	KIT	1		EHP SOLENOID W/CONNECTOR
3	19H2935	SCREW	2		1/4" X 1-1/2"
4	AT192235	KIT	1		EHP BLOCK W/SOLENOID
	AT178468	KIT	1		EHP SEAL KIT
5	.....	SPOOL VALVE	1		
6	T161835	COMPRESSION SPRING	1		
7	R95493	DISK	1		
8	T118685	O-RING	1		
9	.....	HOUSING	1		
10	AT192080	KIT	1		SPOOL STOP
11	R26906	O-RING	1		
12	R27474	DRAIN PLUG	1		
13	AT184547	PRESSURE RELIEF VALVE	1		(2900 PSI)
14	.....	O-RING	1		
15	.....	O-RING	1		
16	.....	BACK-UP RING	1		
17	.....	O-RING	1		
18	.....	O-RING	1		
19	.....	O-RING	1		
20	.....	BACK-UP RING	1		
21	AT189413	SEAL KIT	1		(RELIEF VALVE SEAL)

AUXILIARY SECTION (MANUAL VALVE)
BACKHOE VALVE

T135772 -UN-28NOV00

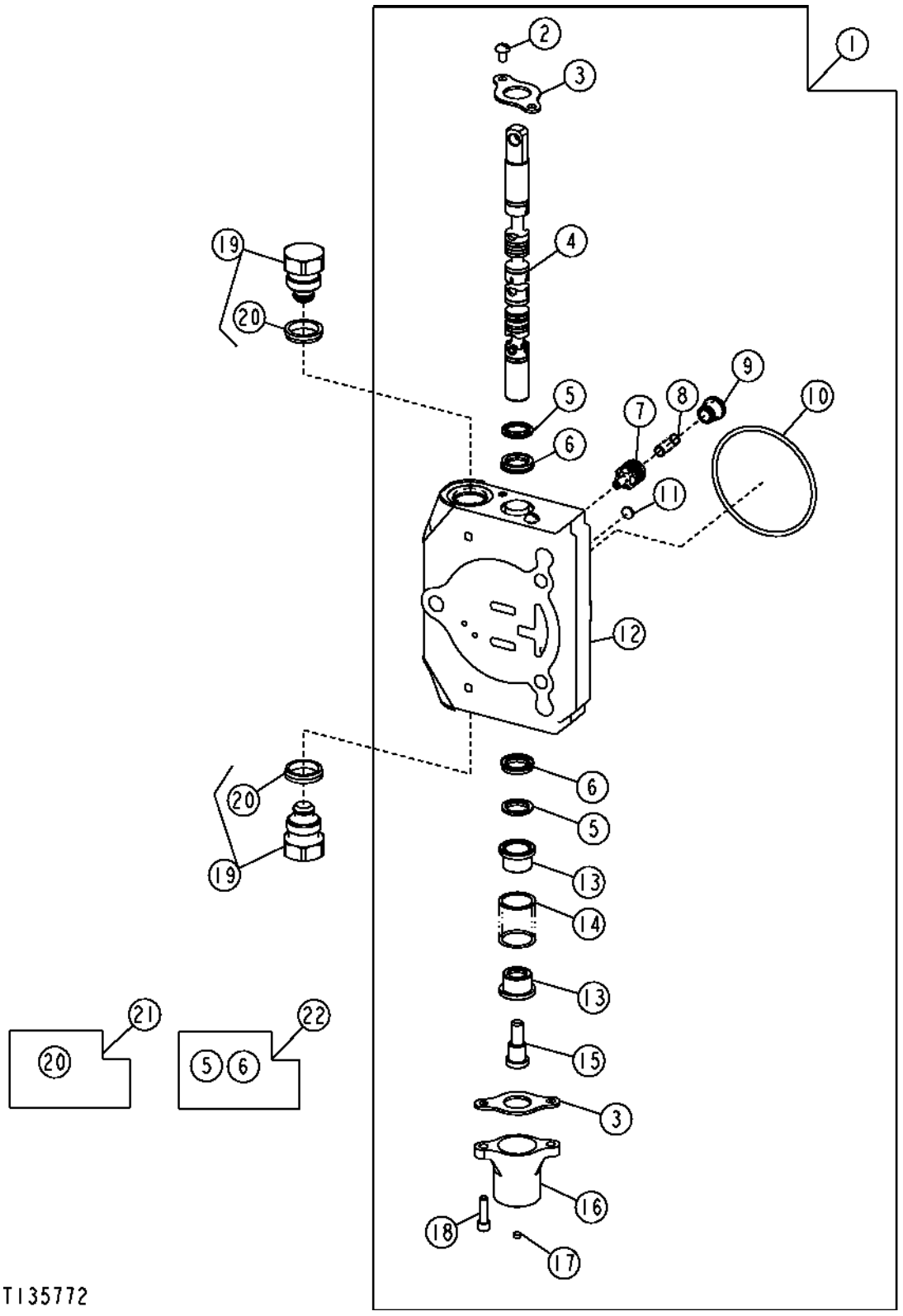

AUXILIARY SECTION (MANUAL VALVE)
BACKHOE VALVE

KEY	PART NO.	PART NAME	QTY	SERIAL NO.	REMARKS
1	AT191723	SPOOL VALVE	1		
2	21H1352	SCREW	2		1/4" X 3/8"
3	T81524	PLATE	1		
4	.....	SPOOL VALVE	1		
5	.....	SEAL	2		
6	.....	SEAL	2		
7	.....	COMPENSATOR	1		
8	T161835	COMPRESSION SPRING	1		
9	.....	LOCK	1		
10	T118685	O-RING	1		
11	R95493	DISK	1		
12	.....	HOUSING	1		
13	T81540	RETAINER	2		
14	T177849	EXTENSION SPRING	1		(SUB FOR T153105, THIS APPLICATION)
15	T81541	SCREW	1		
16	T118808	CAP	1		
17	T118799	FILTER	1	-906011	
18	19H3554	SCREW	2		1/4" X 0.880"
19	AT83174	PLUG	2		
20	T183757	SEAL	2		
21	AT189413	SEAL KIT	1		(RELIEF VALVE SEAL)
22	AT178372	SEAL KIT	1		(SPOOL SEAL)

OUTLET SECTION
BACKHOE VALVE

TP69611 -UN-03OCT00

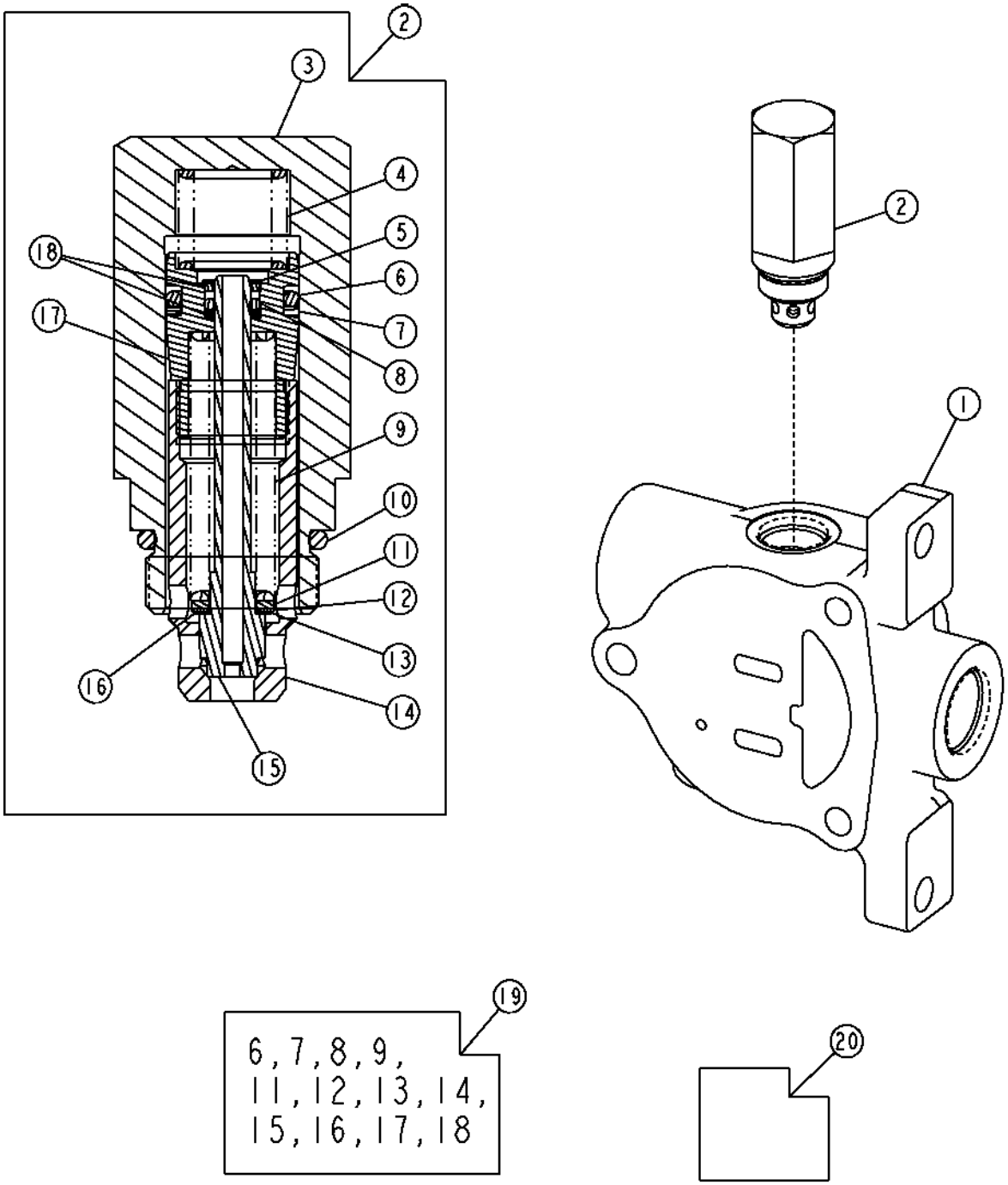

OUTLET SECTION
BACKHOE VALVE

KEY	PART NO.	PART NAME	QTY	SERIAL NO.	REMARKS
1	T158366	HYD ACTUATED CONTROL VALVE	1		
2	.....	RELIEF VALVE	1		(4000 PSI)
3	T118866	HOUSING	1		
4	T127401	SPRING	1		
5	.....	RETAINER	1		
6	.....	O-RING	1		
7	.....	BACK-UP RING	1		
8	.....	O-RING	1		
9	.....	SPRING	1		
10	T118681	O-RING	1		
11	.....	WASHER	1		
12	.....	WASHER	1		
13	.....	WASHER	1		
14	.....	HOUSING	1		
15	.....	POPPET	1		
16	.....	RETAINER	1		
17	.....	SLEEVE	1		
18	.....	O-RING	1		
19	AT178632	KIT	1		(RELIEF VALVE CARTRIDGE)
20	AT189413	SEAL KIT	1		(RELIEF VALVE SEAL)

FIFTH FUNCTION MANUAL VALVE KIT

TP54968 -UN-13JAN97

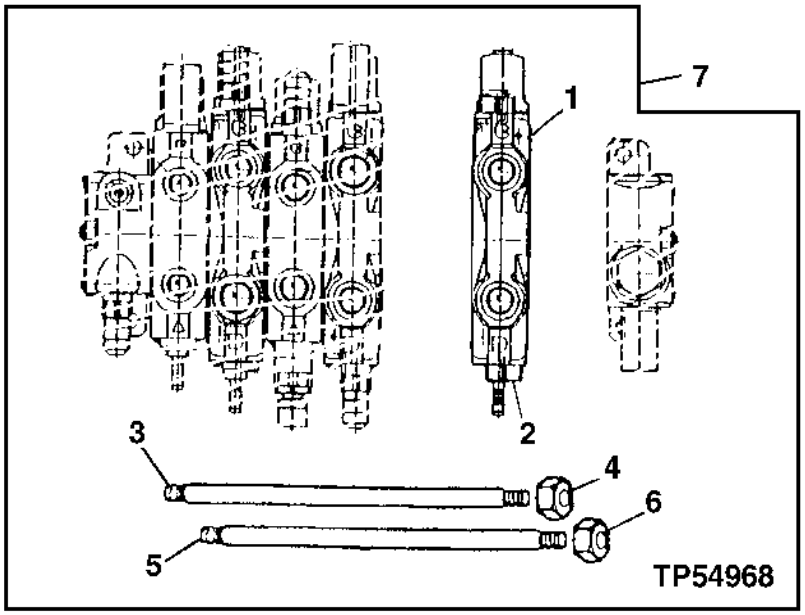

KEY	PART NO.	PART NAME	QTY	SERIAL NO.	REMARKS
1	AT173897	VALVE	1		(EXTENDIBLE DIPPERSTICK)
2	AT83174	PLUG	2		
	T183757	SEAL	2		
3	T149575	STUD	1		
4	14H807	NUT	4		7/16"
5	T149576	STUD	2		
6	14H865	NUT	2		
7	AT178794	KIT	1		(WHOLE GOODS)

SIXTH FUNCTION MANUAL VALVE KIT

TP54969 -UN-13JAN97

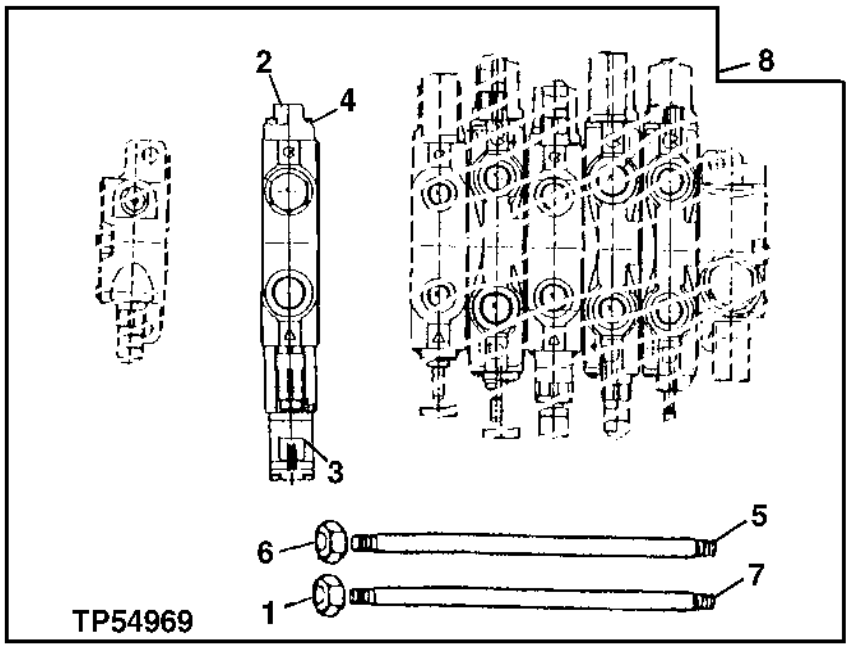

KEY	PART NO.	PART NAME	QTY	SERIAL NO.	REMARKS
1	14H865	NUT	2		
2	AT191723	VALVE	1		(AUXILIARY)
3	AT83174	PLUG	1		
4	AT83174	PLUG	1		
	T183757	SEAL	1		
5	T149576	STUD	2		(USED WHEN ADDING TO THE 5-FUNCTION VALVE)
	T149578	STUD	2		(USED WHEN ADDING TO THE 6-FUNCTION VALVE)
6	14H807	NUT	4		7/16"
7	T149575	STUD	1		(USED WHEN ADDING TO THE 5-FUNCTION VALVE)
	T149577	STUD	1		(USED WHEN ADDING TO THE 6-FUNCTION VALVE)
8	AT192626	KIT	1		(WHOLE GOODS) (INCLUDES AT192078)

HYDRAULIC REMOTE KIT

T143055 -UN-19JUN01

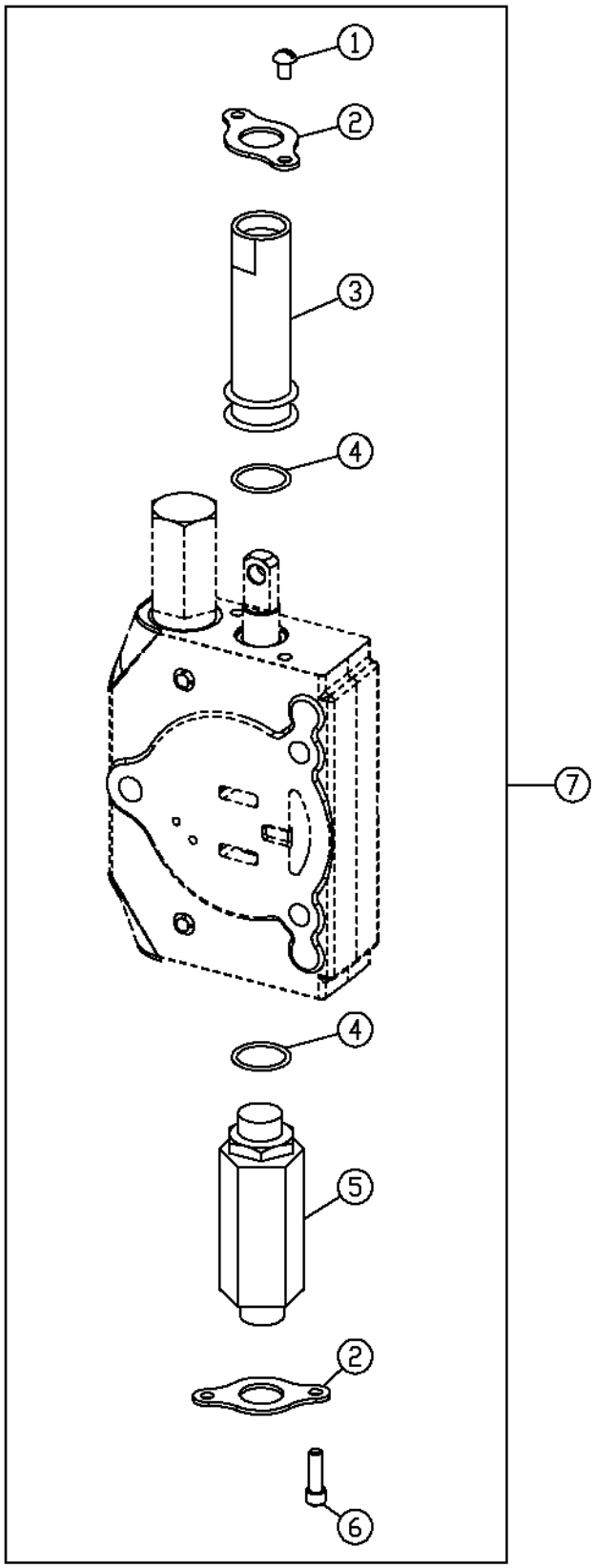

HYDRAULIC REMOTE KIT

KEY	PART NO.	PART NAME	QTY	SERIAL NO.	REMARKS
1	.....	SCREW	2		
2	.....	PLATE	2		
3	.....	SLEEVE	1		
4	U15192	O-RING	2		
5	.....	HOUSING	1		
6	.....	SCREW	2		
7	AT181856	KIT	1		(REQUIRES ADDITIONAL CUSTOM COMPONENTS)

PILOT CONTROL MANIFOLD (SPAM VALVE)

T165574 -UN-18FEB03

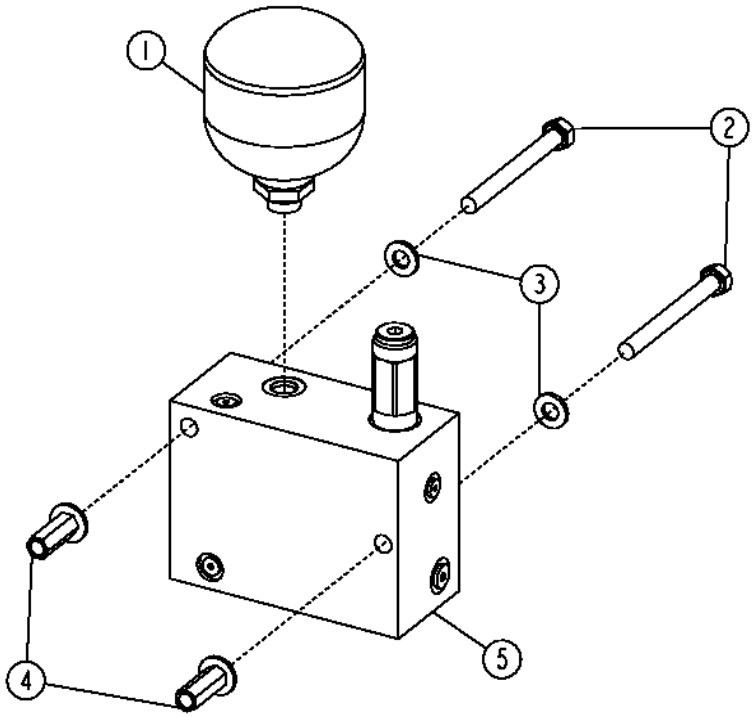

TI65574

KEY	PART NO.	PART NAME	QTY	SERIAL NO.	REMARKS
1	AT195957	PNEUMATIC ACCUMULATOR	1		
2	19M8093	CAP SCREW	2		M10 X 100
3	24M7239	WASHER	2		
4	T148410	NUT	2		M10
5	AT197769	FLOW CONTROL HYD. VALVE	1		
	AT121123	BOLT	1		M5 X 8
	AT300230	HYDRAULIC PRESSURE VALVE	1		
	AT300254	SOLENOID HYDRAULIC VALVE	1		
	AT300255	SEAL KIT	1		
	AT49216	FITTING	1		(INCLUDES R26448)
	T105368	FITTING PLUG	1		

**PATTERN SELECTOR VALVE
(PILOT CONTROL)**

T164959 -UN-04FEB03

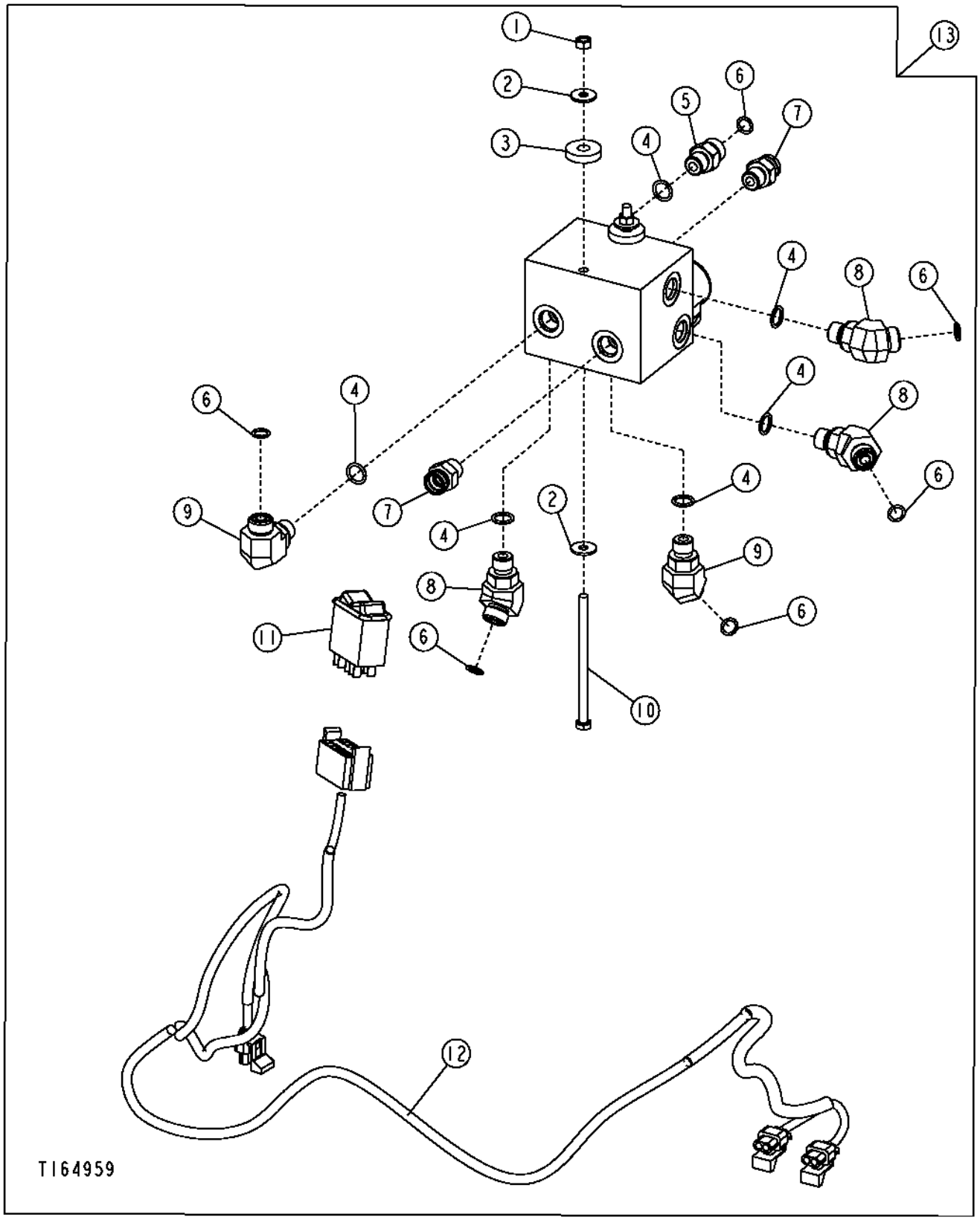

PATTERN SELECTOR VALVE
(PILOT CONTROL)

KEY	PART NO.	PART NAME	QTY	SERIAL NO.	REMARKS
1	14M7272	NUT	2		M6
2	24M7139	WASHER	4		
3	24H1621	WASHER	2		
4	R26448	O-RING	6		
5	38H1160	ADAPTER	1		
6	T77613	O-RING	6		
7	AT187666	ADAPTER	2		
8	38H1045	ELBOW FITTING	3		
9	38H1004	ELBOW FITTING	2		(90 DEGREE FITTING)
10	19M9090	CAP SCREW	2		
11	AT199633	ROCKER SWITCH	1		
12	AT198847	WIRING HARNESS	1		
13	**AT197165**	**KIT**	**1**		

PILOT CONTROL HYDRAULICS

T165703 -UN-20FEB03

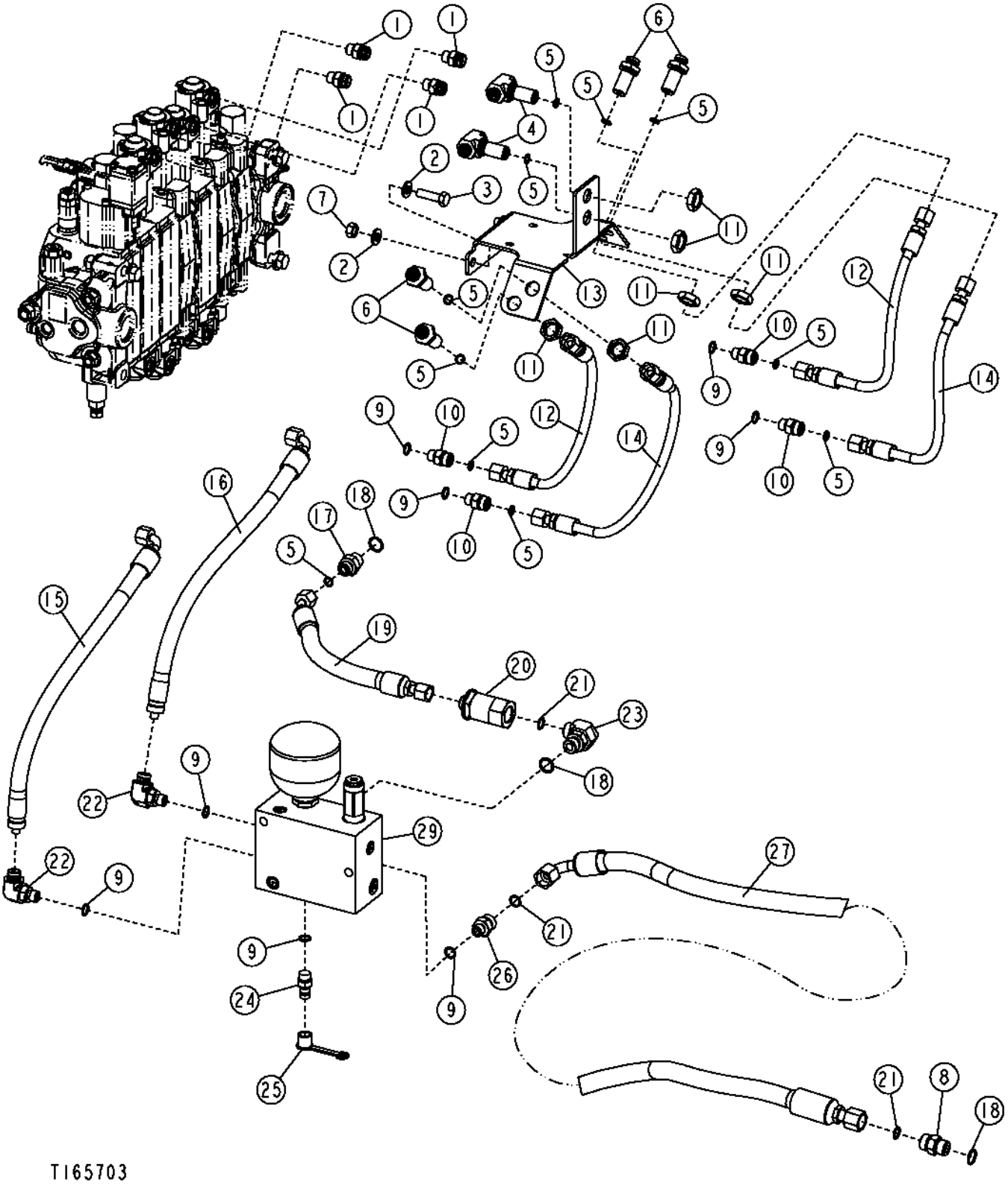

PILOT CONTROL HYDRAULICS

KEY	PART NO.	PART NAME	QTY	SERIAL NO.	REMARKS
1	AT187666	ADAPTER	4		
2	24M7239	WASHER	4		
3	19M7550	CAP SCREW	2		M10 X 35
4	AT199496	TEE FITTING	2		
5	T77613	O-RING	11		
6	AT199495	FITTING	4		
7	14M7274	NUT	2		M10
8	38H1161	ADAPTER	1		
9	R26448	O-RING	8		
10	38H1160	ADAPTER	4		
11	T81029	NUT	6		
12	AT197209	HYDRAULIC HOSE - FABRICATE	2		11/16" X 362 MM (14-1/4") X 11/16"
13	T190311	BRACKET	1		
14	AT197208	HYDRAULIC HOSE - FABRICATE	2		11/16" X 400 MM (15-3/4") X 11/16"
15	AT199649	HYDRAULIC HOSE - FABRICATE	1		
16	AT197211	HYDRAULIC HOSE - FABRICATE	1		
17	38H1171	ADAPTER	1		
18	R26375	O-RING	3		
19	AT197612	HYDRAULIC HOSE - FABRICATE	1		11/16" X 310 MM (12-1/4") X 11/16"
20	AT183869	FILTER ELEMENT	1		
21	T77857	O-RING	3		
22	AT187669	ADAPTER	2		
23	38H1005	ELBOW FITTING	1		
24	AH125760	HYD. QUICK-CONNECT COUPLER	1		
25	R77175	COVER	1		
26	38H1173	ADAPTER	1		
27	AT197213	HYDRAULIC HOSE - FABRICATE	1		13/16" X 1 540 MM (60-3/4") X 13/16"

PILOT CONTROL HYDRAULICS

T164946 -UN-03FEB03

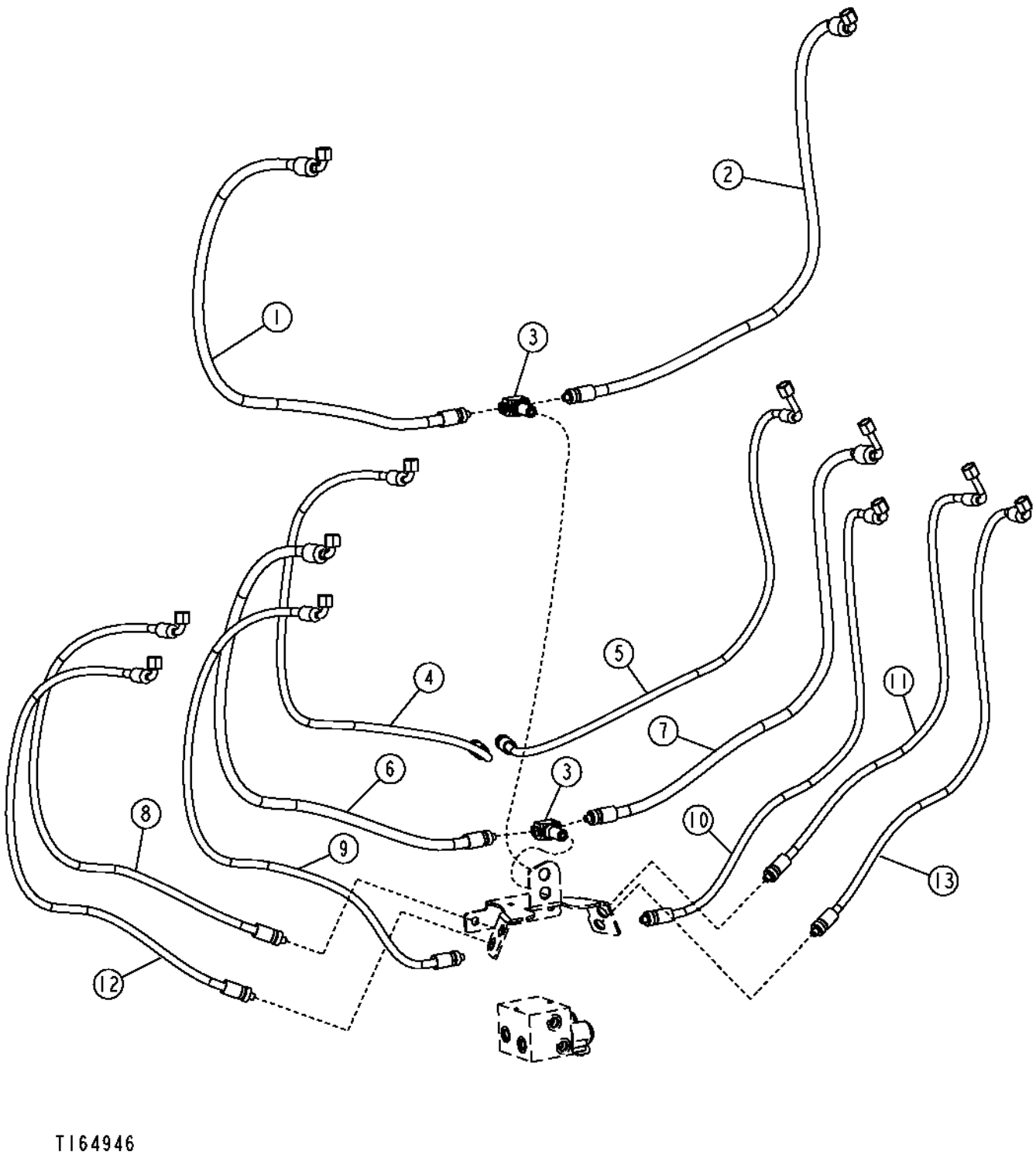

PILOT CONTROL HYDRAULICS

KEY	PART NO.	PART NAME	QTY	SERIAL NO.	REMARKS
1	AT198350	HYDRAULIC HOSE - FABRICATE	1		11/16" X 1 048 MM (41-1/4") X 11/16"
2	AT198355	HYDRAULIC HOSE - FABRICATE	1		11/16" X 1 033 MM (40-3/4") X 11/16"
3	AT199496	TEE FITTING	2		
4	AT198351	HYDRAULIC HOSE - FABRICATE	1		11/16" X 1 100 MM (43-1/4") X 11/16"
5	AT198360	HYDRAULIC HOSE - FABRICATE	1		11/16" X 1 070 MM (42-1/4") X 11/16"
6	AT198349	HYDRAULIC HOSE - FABRICATE	1		11/16" X 1 075 MM (42-1/4") X 11/16"
7	AT198356	HYDRAULIC HOSE - FABRICATE	1		11/16" X 1 015 MM (40") X 11/16"
8	AT198352	HYDRAULIC HOSE - FABRICATE	1		11/16" X 1 005 MM (39-1/2") X 11/16"
9	AT198354	HYDRAULIC HOSE - FABRICATE	1		11/16" X 1 125 MM (44-1/4") X 11/16"
10	AT198358	HYDRAULIC HOSE - FABRICATE	1		11/16" X 1 021 MM (40-1/4") X 11/16"
11	AT198357	HYDRAULIC HOSE - FABRICATE	1		11/16" X 938 MM (37") X 11/16"
12	AT198353	HYDRAULIC HOSE - FABRICATE	1		11/16" X 1 047 MM (41-1/4") X 11/16"
13	AT198359	HYDRAULIC HOSE - FABRICATE	1		11/16" X 981 MM (38-1/2") X 11/16"

STABILIZER CYLINDER HYDRAULIC HOSES
(SERIAL NO. -913479)

TP52870 -UN-02DEC96

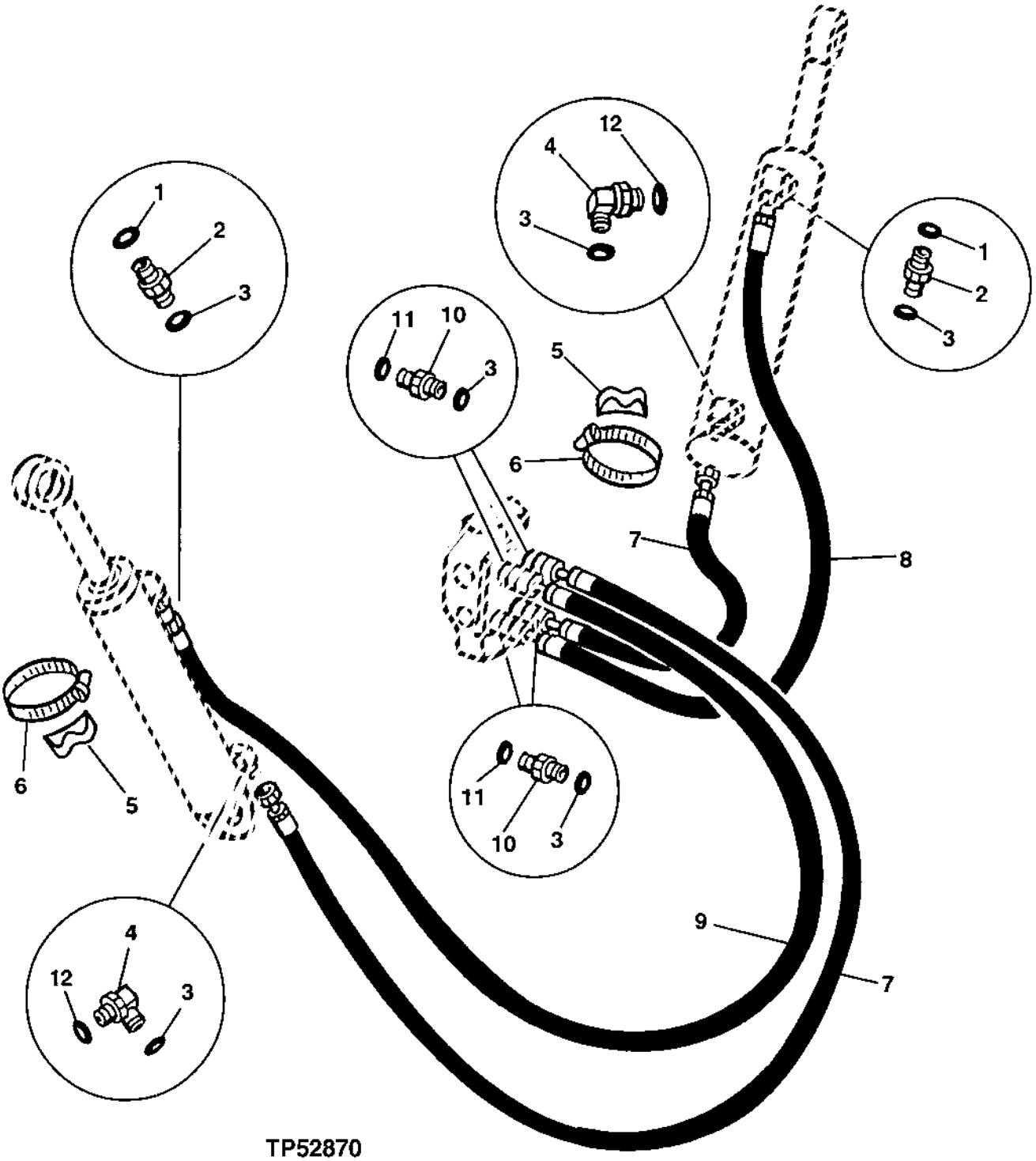

TP52870

STABILIZER CYLINDER HYDRAULIC HOSES
(SERIAL NO. -913479)

KEY	PART NO.	PART NAME	QTY	SERIAL NO.	REMARKS
1	R26906	O-RING	2		
2	38H1172	ADAPTER	2		
3	T77613	O-RING	8		
4	38H1010	ELBOW FITTING	2		
5	T105774	GUIDE	4		
6	C16054	CLAMP	2		
7	AT175648	HYDRAULIC HOSE - FABRICATE	2		11/16" X 1 217 MM (48") X 11/16"
8	AT172610	HYDRAULIC HOSE - FABRICATE	1		11/16" X 1 714 MM (67-1/2") X 11/16"
9	AT172610	HYDRAULIC HOSE - FABRICATE	1		11/16" X 1 714 MM (67-1/2") X 11/16"
10	38H1171	ADAPTER	4		
11	R26375	O-RING	4		
12	R26375	O-RING	2		

STABILIZER CYLINDER HYDRAULIC HOSES
(SERIAL NO. 913480-)

T163469 -UN-06JAN03

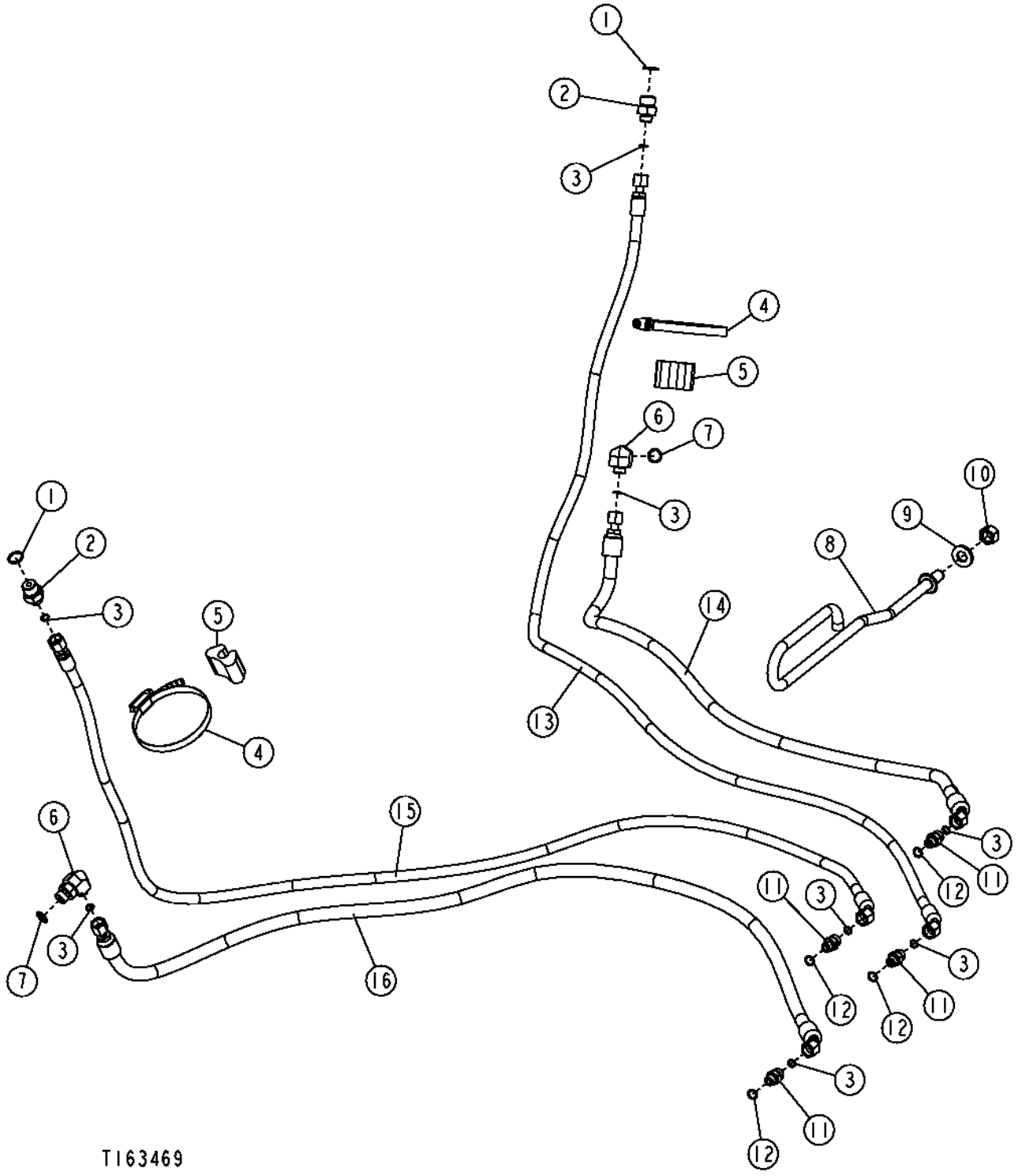

STABILIZER CYLINDER HYDRAULIC HOSES
(SERIAL NO. 913480-)

KEY	PART NO.	PART NAME	QTY	SERIAL NO.	REMARKS
1	R26906	O-RING	2		
2	38H1172	ADAPTER	2		
3	T77613	O-RING	8		
4	C16054	CLAMP	2		
5	T105774	GUIDE	2		
6	38H1010	ELBOW FITTING	2		
7	R26375	O-RING	2		
8	T200362	HOSE SUPPORT	1		
9	24M7241	WASHER	1		
10	14M7276	NUT	1		
11	38H1160	ADAPTER	4		
12	R26448	O-RING	4		
13	AT197068	HYDRAULIC HOSE - FABRICATE	1		
14	AT197065	HYDRAULIC HOSE - FABRICATE	1		
15	AT196525	HYDRAULIC HOSE - FABRICATE	1		
16	AT196513	HYDRAULIC HOSE - FABRICATE	1		

BOOM CYLINDER HYDRAULIC HOSES AND FITTINGS

TP71600 -UN-07SEP00

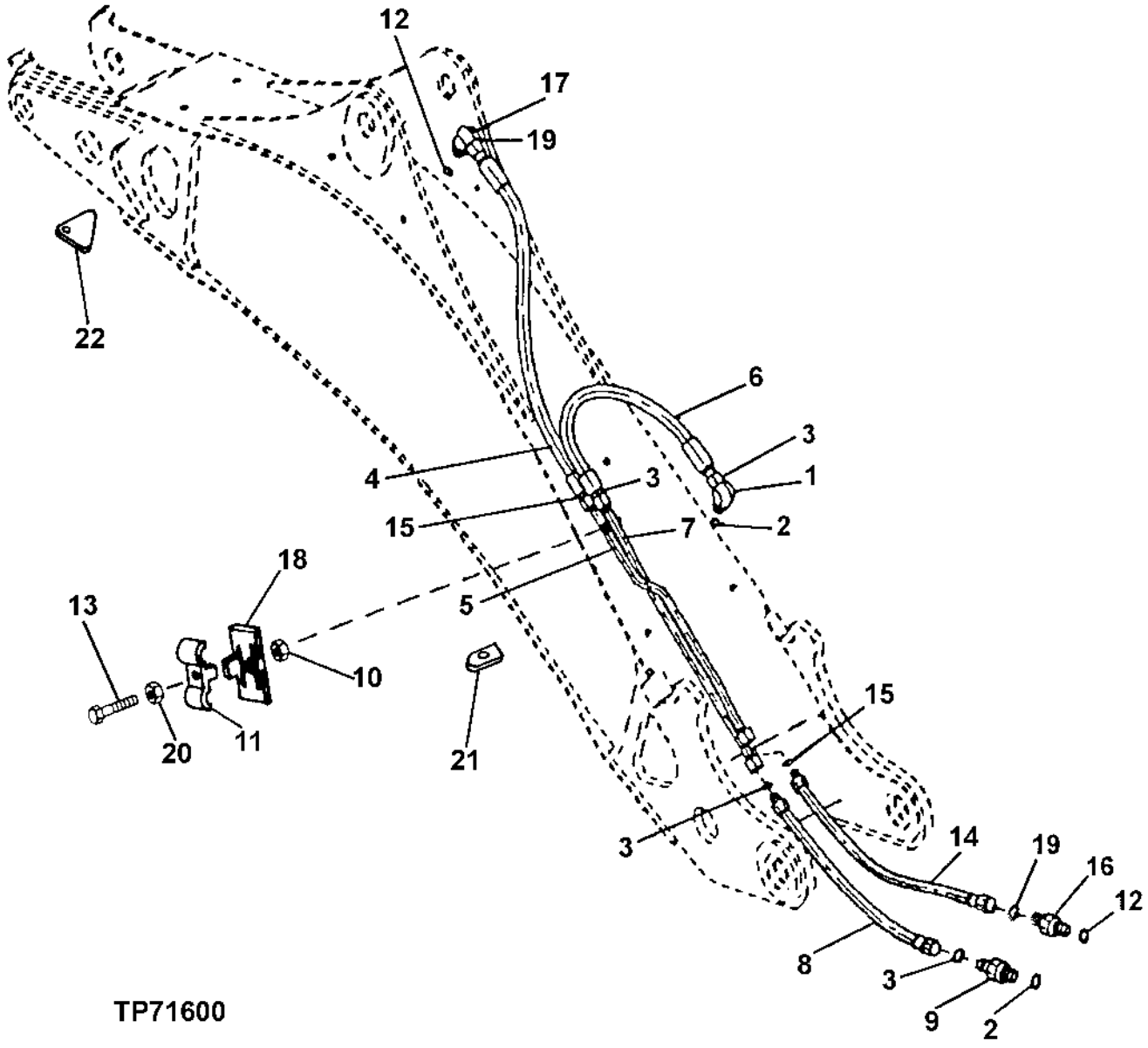

BOOM CYLINDER HYDRAULIC HOSES AND FITTINGS

KEY	PART NO.	PART NAME	QTY	SERIAL NO.	REMARKS
1	38H1006	ELBOW FITTING	1		
2	R26906	O-RING	2		
3	T77932	O-RING	3		
4	AT173923	HYDRAULIC HOSE - FABRICATE	1		1-3/16" X 893 MM (35-1/4") X 1-7/16"
5	AT174454	OIL LINE	1		
6	AT174355	HYDRAULIC HOSE - FABRICATE	1		1" X 825 MM (32-1/2") X 1"
7	AT174450	OIL LINE	1		
8	AT177613	HYDRAULIC HOSE - FABRICATE	1	-911128	1" X 1 170 MM (46") X 1"
	AT280340	HYDRAULIC HOSE - FABRICATE	1	911129-	1" X 1 170 MM (46") X 1"
9	38H1162	ADAPTER	1		
10	14M7274	NUT	1		
11	T159848	CLAMP	1		
12	U12547	O-RING	2		
13	19M7662	CAP SCREW	1		M10 X 30
14	AT177615	HYDRAULIC HOSE - FABRICATE	1	-911128	1-3/16" X 1 170 MM (46") X 1-7/16"
	AT280342	HYDRAULIC HOSE - FABRICATE	1	911129-	1-3/16" X 1 170 MM (46") X 1-7/16"
15	T76938	O-RING	2		
16	38H1163	ADAPTER	1		
17	38H1007	ELBOW FITTING	1		
18	T159956	CLAMP	1		
19	T77858	O-RING	2		
20	24M7239	WASHER	1		10.700 X 21 X 2.500 MM
21	T165740	ISOLATOR	2		
22	T165742	ISOLATOR	2		

BUCKET CYLINDER HYDRAULICS
(STANDARD DIPPERSTICK)

T145215 -UN-31AUG01

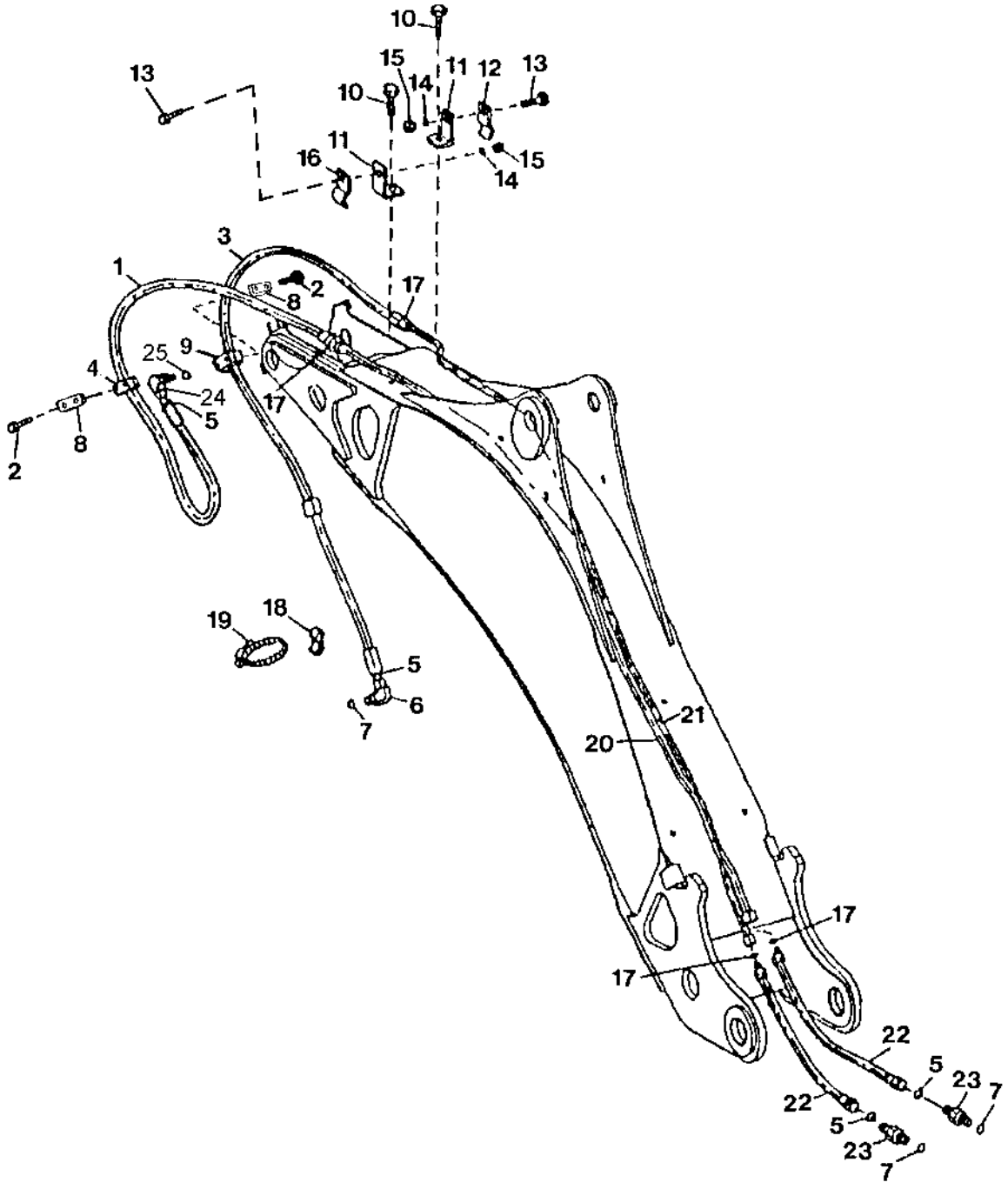

T145215

BUCKET CYLINDER HYDRAULICS
(STANDARD DIPPERSTICK)

KEY	PART NO.	PART NAME	QTY	SERIAL NO.	REMARKS
1	AT174907	HYDRAULIC HOSE - FABRICATE	1		1" X 1 685 MM (66-1/4") X 1-3/16"
2	19M7981	CAP SCREW	4		M8 X 55
3	AT174908	HYDRAULIC HOSE - FABRICATE	1		1" X 1 836 MM X 1-3/16"
4	T162004	CLAMP	2		
5	T77932	O-RING	4		
6	38H1006	ELBOW FITTING	1		
7	R26906	O-RING	4		
8	T162005	STRAP	2		
9	T162004	CLAMP	2		
10	19M7550	CAP SCREW	2		M10 X 35
11	T159829	BRACKET	2	-900824	
	T188183	BRACKET	2	900825-	
12	T160376	CLAMP	1		
13	19M7550	CAP SCREW	2		M10 X 35
14	24M7239	WASHER	2		
15	14M7274	NUT	2		M10
16	T160376	CLAMP	1		
17	T77858	O-RING	4		
18	T105773	GUIDE	1		
19	TY22476	CLAMP	1		
20	AT174456	OIL LINE	1	-900824	
	AT195809	OIL LINE	1	900825-	
21	AT174455	OIL LINE	1	-900824	
	AT195808	OIL LINE	1	900825-	
22	AT177614	HYDRAULIC HOSE - FABRICATE	2	-911128	1" X 1 170 MM (46") X 1-3/16"
	AT280341	HYDRAULIC HOSE - FABRICATE	2	911129-	
23	38H1214	ADAPTER	2		
24	38H1404	ELBOW FITTING	1		
25	U12547	O-RING	1		

BUCKET CYLINDER HYDRAULIC HOSES AND OIL LINES (EXTENDABLE DIPPERSTICK)

TP56201 -UN-12SEP00

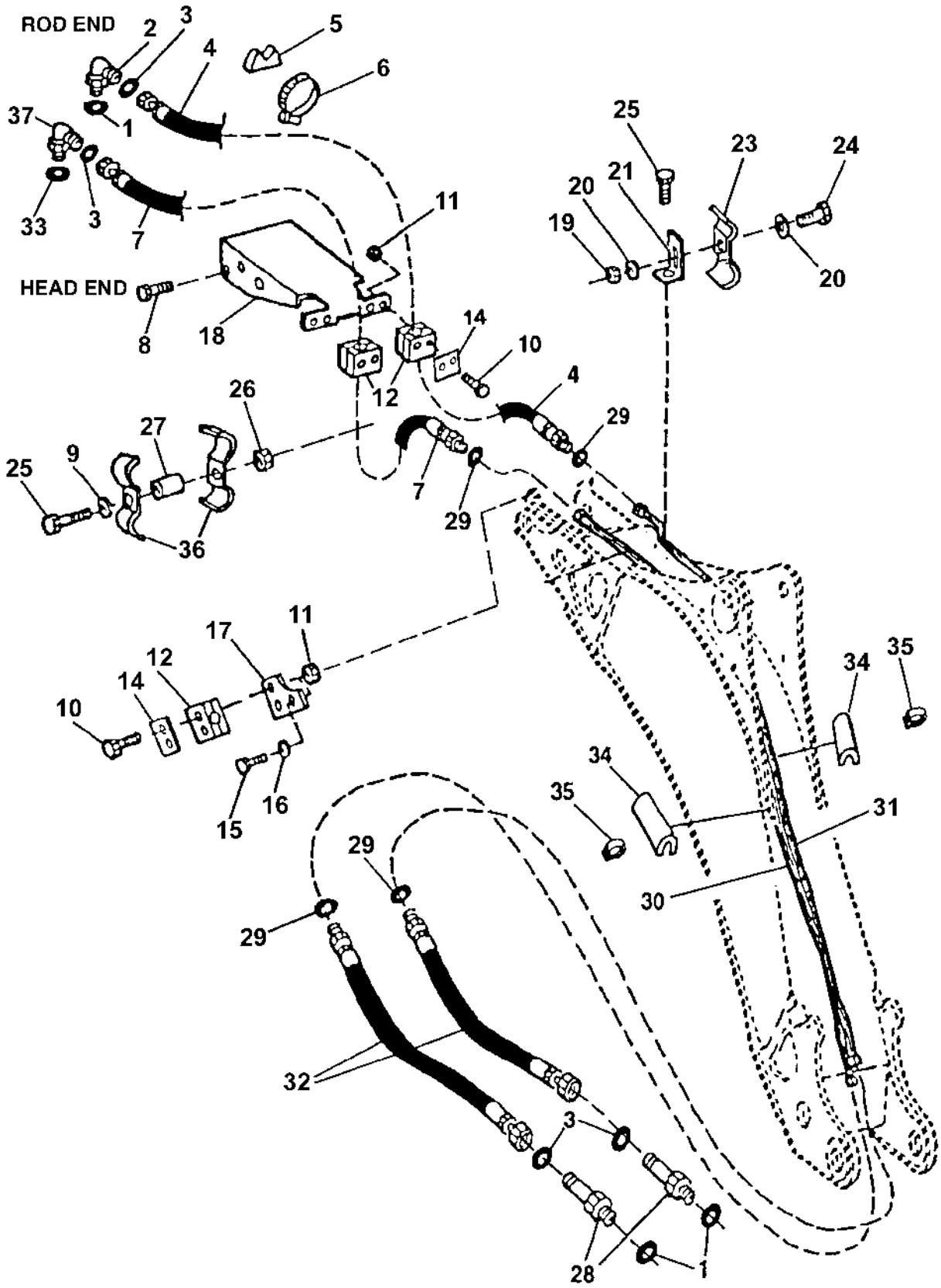

BUCKET CYLINDER HYDRAULIC HOSES AND OIL LINES
(EXTENDIBLE DIPPERSTICK)

KEY	PART NO.	PART NAME	QTY	SERIAL NO.	REMARKS
1	R26906	O-RING	4		
2	38H1006	ELBOW FITTING	1		
3	T77932	O-RING	4		
4	AT174604	HYDRAULIC HOSE - FABRICATE	1		1" X 3 200 MM (126") X 1-3/16"
5	T105773	GUIDE	1		
6	TY22476	CLAMP	1		
7	AT174605	HYDRAULIC HOSE - FABRICATE	1		1" X 2 270 MM (89-1/4") X 1-3/16"
8	T165889	SCREW	4		M10 X 30
9	24M7239	WASHER	2		10.700 X 21 X 2.500 MM
10	19M7185	CAP SCREW	8		M8 X 60
11	14M7426	LOCK NUT	6		M8
12	T162004	CLAMP	8		
14	T162005	STRAP	4		
15	19M7932	CAP SCREW	2		M8 X 16
16	24M7238	WASHER	2		
17	T161342	PLATE	2		
18	AT179046	HOSE SUPPORT	1		
19	14M7274	NUT	2		M10
20	24M7239	WASHER	6		
21	T159829	BRACKET	2	-900824	
	T188183	BRACKET	2	900825-	
23	R46919	HALF CLAMP	2		
24	19M7658	CAP SCREW	3		M10 X 50
25	19M7550	CAP SCREW	4		M10 X 35
26	14M7274	NUT	2		M10
27	28H3381	SPACER	2		
28	38H1214	ADAPTER	2		
29	T77858	O-RING	4		
30	AT174456	OIL LINE	1	-900824	
	AT195809	OIL LINE	1	900825-	
31	AT174455	OIL LINE	1	-900824	
	AT195808	OIL LINE	1	900825-	
32	AT177614	HYDRAULIC HOSE - FABRICATE	2	-911128	1" X 1 170 MM (46") X 1-3/16"
	AT280341	HYDRAULIC HOSE - FABRICATE	2	911129-	
33	U12547	O-RING	1		0.924" X 0.116"
34	T189065	HOSE	4		(SUB FOR T153193, THIS APPLICATION)
35	AR21839	CLAMP	2		
36	R46919	HALF CLAMP	4		
37	38H1404	ELBOW FITTING	1		

CROWD CYLINDER HYDRAULIC HOSES AND OIL LINES

TP62465 -UN-07SEP00

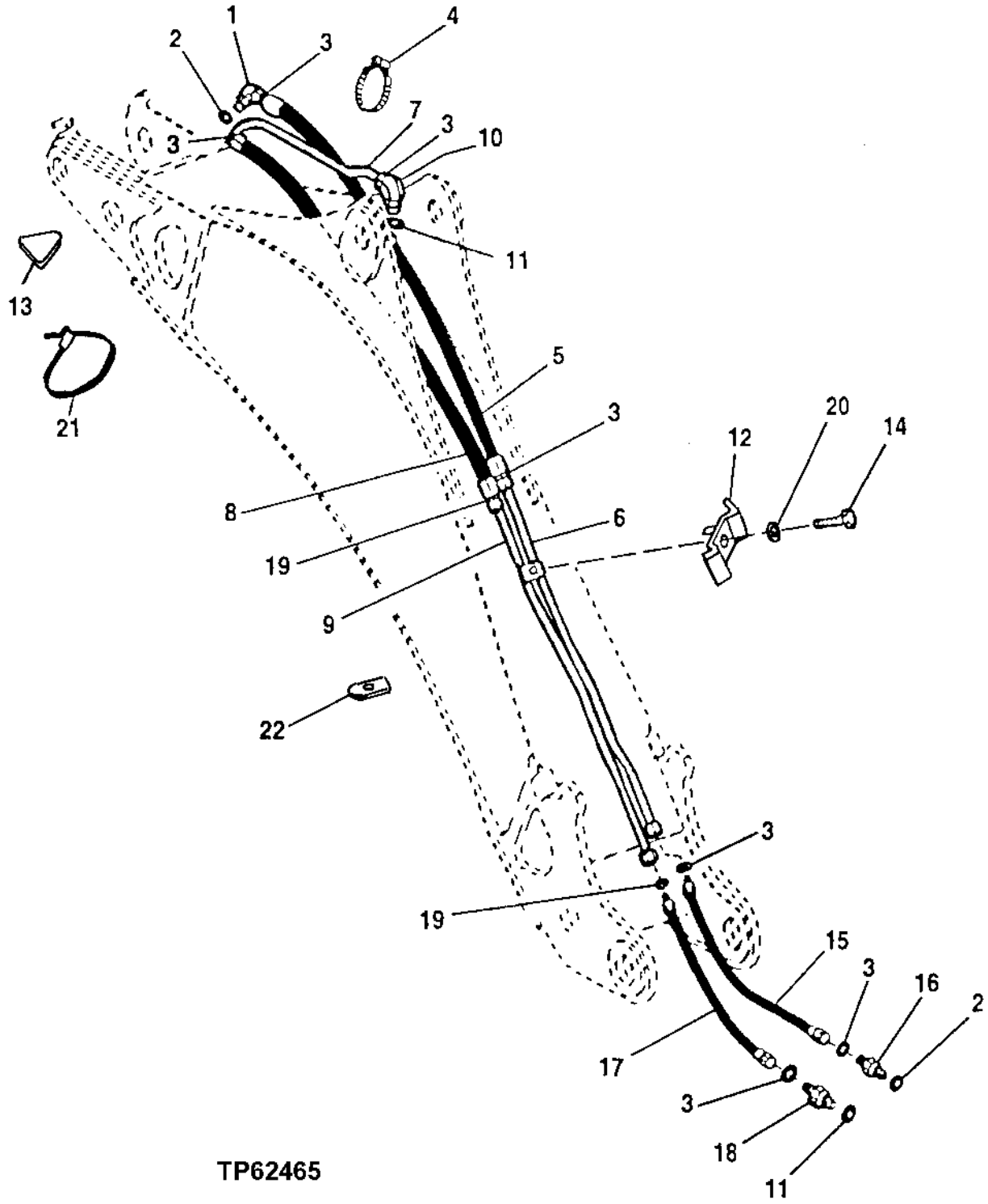

CROWD CYLINDER HYDRAULIC HOSES AND OIL LINES

KEY	PART NO.	PART NAME	QTY	SERIAL NO.	REMARKS
1	38H1006	ELBOW FITTING	1		
2	R26906	O-RING	2		
3	T77932	O-RING	7		
4	AR85327	CLAMP	1		
5	AT174607	HYDRAULIC HOSE - FABRICATE	1		1" X 1 480 MM (58-1/4") X 1"
6	AT174474	OIL LINE	1		
7	AT177540	OIL LINE	1		
8	AT174606	HYDRAULIC HOSE - FABRICATE	1		1" X 1 255 MM (49-1/2") X 1-3/16"
9	AT174473	OIL LINE	1		
10	38H1404	ELBOW FITTING	1		
11	U12547	O-RING	2		
12	T160554	CLAMP	1		
13	T165742	ISOLATOR	1		
14	19M7572	CAP SCREW	1		M10 X 45
15	AT177613	HYDRAULIC HOSE - FABRICATE	1	-911128	1" X 1 170 MM (46") X 1"
	AT280340	HYDRAULIC HOSE - FABRICATE	1	911129-	1" X 1 170 MM (46") X 1"
16	38H1162	ADAPTER	1		
17	AT177614	HYDRAULIC HOSE - FABRICATE	1	-911128	1" X 1 170 MM (46") X 1-3/16"
	AT280341	HYDRAULIC HOSE - FABRICATE	1	911129-	1" X 1 170 MM (46") X 1-3/16"
18	38H1329	ADAPTER	1		
19	T77858	O-RING	2		
20	24M7239	WASHER	1		10.700 X 21 X 2.500 MM
21	R76477	TIE BAND	1		(SUB FOR A49232)
22	T165740	ISOLATOR	2		

SWING CYLINDER HYDRAULIC HOSES

TP52821 -UN-01OCT96

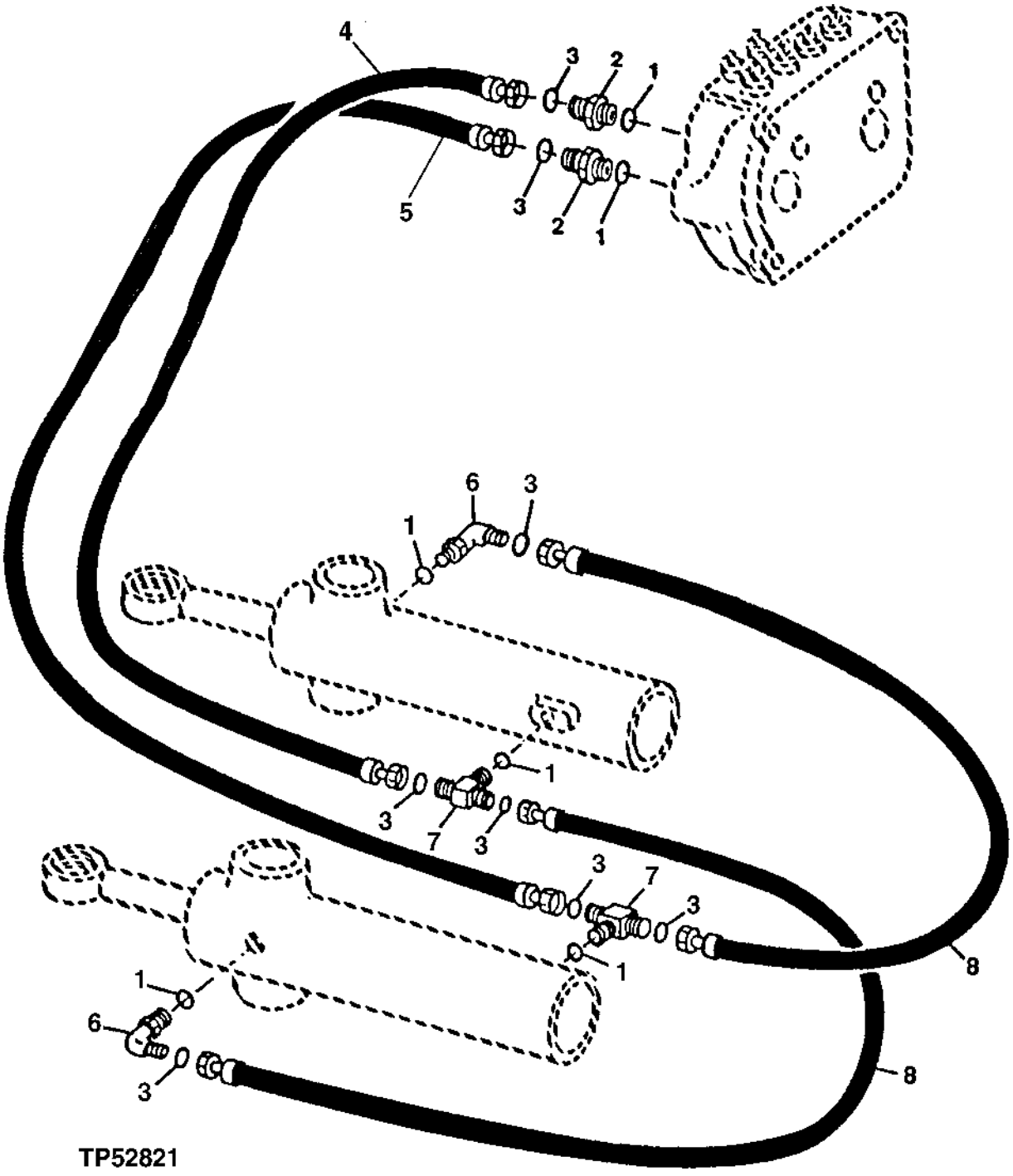

SWING CYLINDER HYDRAULIC HOSES

KEY	PART NO.	PART NAME	QTY	SERIAL NO.	REMARKS
1	R26375	O-RING	6		
2	AT178274	CHECK VALVE	2		
3	T77857	O-RING	8		
4	AT176157	HYDRAULIC HOSE - FABRICATE	1		13/16" X 880 MM (34-3/4") X 13/16"
5	AT171758	HYDRAULIC HOSE - FABRICATE	1		13/16" X 813 MM (32") X 13/16"
6	38H1005	ELBOW FITTING	2		
7	38H1017	TEE FITTING	2		
8	AT171759	HYDRAULIC HOSE - FABRICATE	2		13/16" X 914 MM (36") X 13/16"

EXTENSION CYLINDER HYDRAULICS
(EXTENDABLE DIPPERSTICK)

T161338 -UN-14NOV02

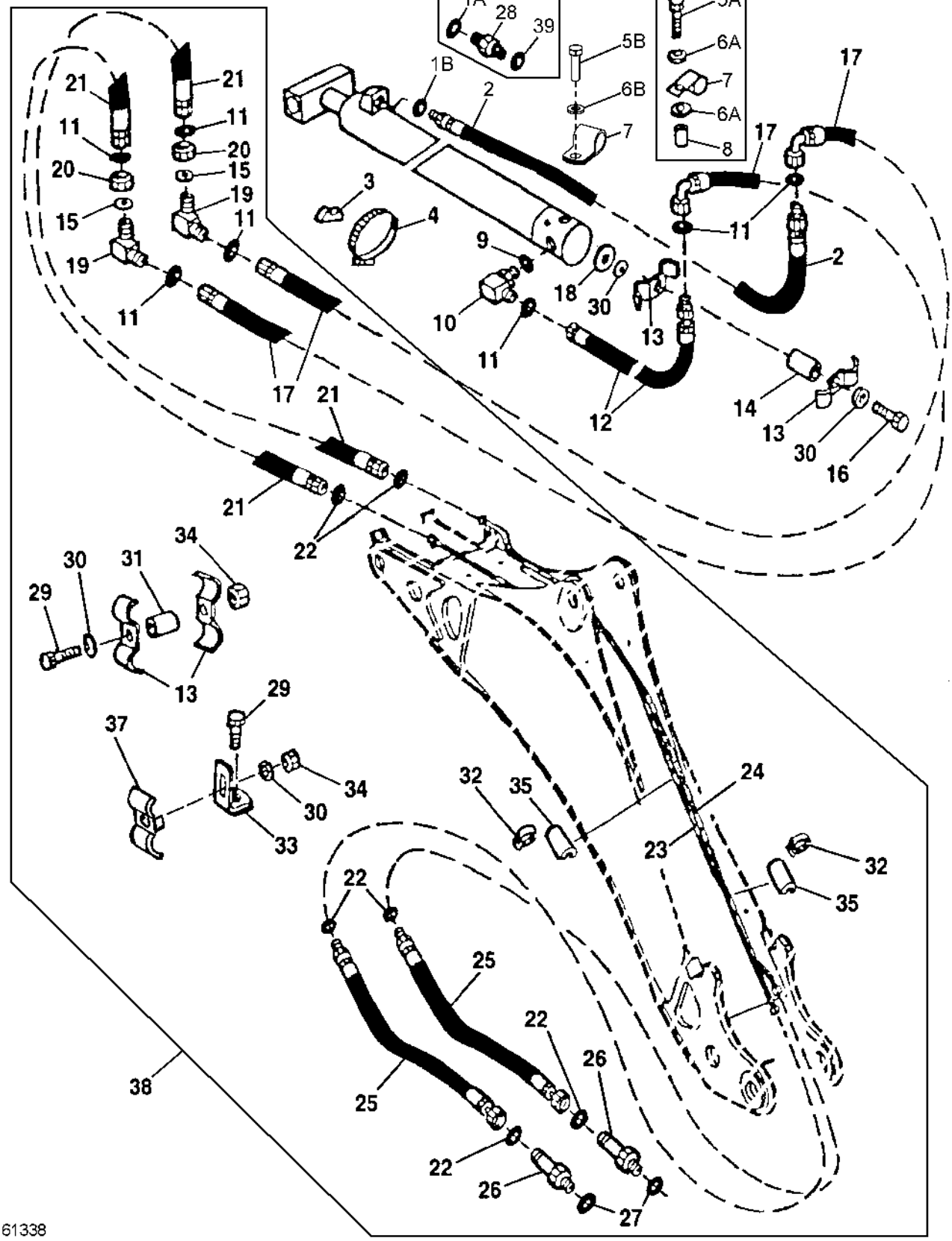

T161338

EXTENSION CYLINDER HYDRAULICS
(EXTENDIBLE DIPPERSTICK)

KEY	PART NO.	PART NAME	QTY	SERIAL NO.	REMARKS
1A	R26448	O-RING	1	-911725	
1B	R26375	O-RING	1	911726-	
2	AT172330	HYDRAULIC HOSE - FABRICATE	1	-911725	13/16" X 2 052 MM (80-3/4") X 13/16"
	AT280514	HYDRAULIC HOSE - FABRICATE	1	911726-	
3	T105774	GUIDE	4		
4	AR21841	CLAMP	1		
5A	19M7513	CAP SCREW	1	-906309	M8 X 30
5B	M86877	BOLT	1	906310-	M8 X 20
6A	24M7238	WASHER	2	-906309	
6B	24M7238	WASHER	1	906310-	
7	T70659	CLAMP	1		(SUB FOR T74416, THIS APPLICATION)
8	R54701	SPACER	1	-906309	
9	R26375	O-RING	1		
10	38H1005	ELBOW FITTING	1		
11	T77857	O-RING	4		12.421 X 1.778 MM (0.489" X 0.070")
12	AT172156	HYDRAULIC HOSE - FABRICATE	1		13/16" X 705 MM (27-3/4") X 13/16"
13	R46919	HALF CLAMP	6		
14	T190403	BUSHING	1		(SUB FOR 28H3383, THIS APPLICATION)
15	24M7396	WASHER	4		21 X 34 X 3 MM
16	19M7742	CAP SCREW	1		M10 X 65
17	AT179238	HYDRAULIC HOSE - FABRICATE	2		13/16" X 460 MM (18") X 13/16"
18	T29342	WASHER	1		13.487 X 31.750 X 4.572 MM (17/32" X 1-1/4" X 0.180")
19	38H1323	ELBOW FITTING	2		
20	T78716	NUT	2		13/16"
21	AT178413	HYDRAULIC HOSE - FABRICATE	2		13/16" X 1 200 MM (47-1/4") X 1"
22	T77932	O-RING	8		
23	AT174475	OIL LINE	1	-900824	UPPER TUBE
	AT195810	OIL LINE	1	900825-	
24	AT174476	OIL LINE	1	-900824	LOWER TUBE
	AT195811	OIL LINE	1	900825-	
25	AT177613	HYDRAULIC HOSE - FABRICATE	2		1" X 1 170 MM (46") X 1"
26	38H1162	ADAPTER	2		
27	R26906	O-RING	2		
28	38H1173	ADAPTER	1	-911725	
29	19M7550	CAP SCREW	6		M10 X 35
30	24M7239	WASHER	6		10.700 X 21 X 2.500 MM
31	28H3381	SPACER	2		
33	T159829	BRACKET	2	-900824	
	T188183	BRACKET	2	900825-	
34	14M7274	NUT	4		M10
35	T189065	HOSE	4		(SUB FOR T153193, THIS APPLICATION)
37	T160548	CLAMP	2		
38	AT178798	KIT	1		(WHOLE GOODS) (ALSO INCLUDES ADDTIONAL HYDRAULIC HOSES, OIL LINES,FITTINGS,0-RINGS,SUPPORT,CLAMPS AND HARDWARE)
39	T77857	O-RING	1	-911725	

AUXILIARY EQUIPMENT HYDRAULIC HOSES AND OIL LINES (STANDARD DIPPERSTICK)

TP56200 -UN-02AUG00

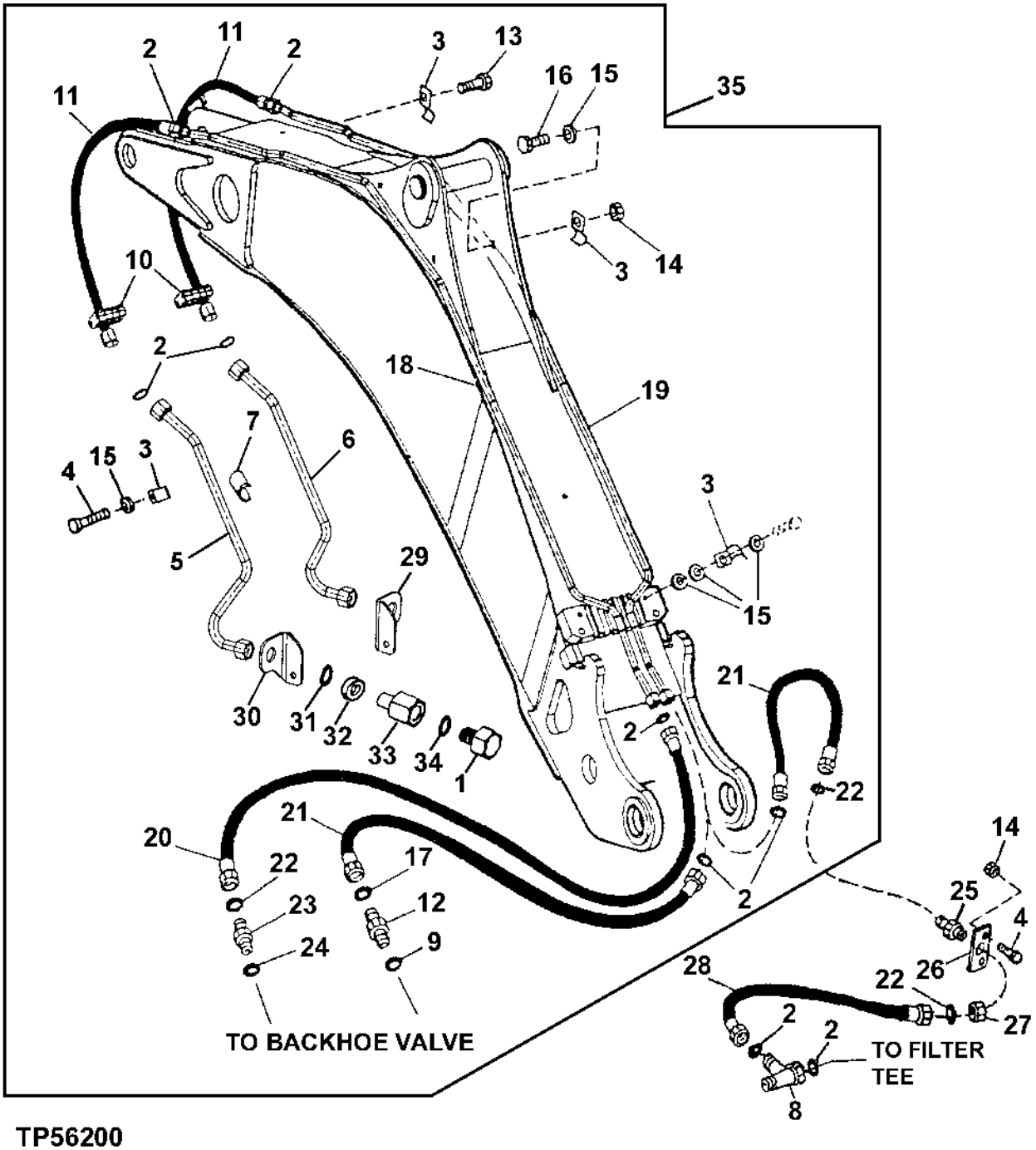

TP56200

AUXILIARY EQUIPMENT HYDRAULIC HOSES AND OIL LINES (STANDARD DIPPERSTICK)

KEY	PART NO.	PART NAME	QTY	SERIAL NO.	REMARKS
1	R27175	DRAIN PLUG	2		
2	T77858	O-RING	9		
3	T160376	CLAMP	12		
4	19M7662	CAP SCREW	4		M10 X 30
5	AT181685	OIL LINE	1		
6	AT181686	OIL LINE	1		
7	T189065	HOSE	4		(SUB FOR T153193, THIS APPLICATION)
8	38H1033	TEE FITTING	1		
9	R29936	O-RING	1		
10	T162004	CLAMP	4		
11	AT179414	HYDRAULIC HOSE - FABRICATE	2		1-3/16" X 1 150 MM (45-1/4") X 1-3/16"
12	38H1447	ADAPTER	1		
13	19M7572	CAP SCREW	2		M10 X 45
14	14M7274	NUT	4		
15	24M7239	WASHER	10		
16	03M7192	BOLT	4		M10 X 30
17	T77932	O-RING	1		
18	AT179405	OIL LINE	1	-900824	
	AT195812	OIL LINE	1	900825-	
19	AT179406	OIL LINE	1	-900824	
	AT195813	OIL LINE	1	900825-	
20	AT179409	HOSE	1		
21	AT179409	HOSE	1		
22	T77932	O-RING	2		
	T77932	O-RING	2		
23	38H1329	ADAPTER	1		
24	U12547	O-RING	1		
25	38H1286	ADAPTER	1		
26	T161082	STRAP	1		
27	14H876	NUT	1		25.400 MM (1")
28	AT179400	HYDRAULIC HOSE - FABRICATE	1		
29	T162681	BRACKET	1		
30	T162682	BRACKET	1		
31	T77858	O-RING	2		
32	T78707	NUT	2		30.175 MM (1-3/16")
33	T163702	REDUCER	2		
34	T77858	O-RING	2		
	U12547	O-RING	2		
35	AT178792	KIT	1		(WHOLE GOODS)

AUXILIARY EQUIPMENT HYDRAULIC HOSES AND OIL LINES (EXTENDABLE DIPPERSTICK)

TP57788 -UN-25NOV97

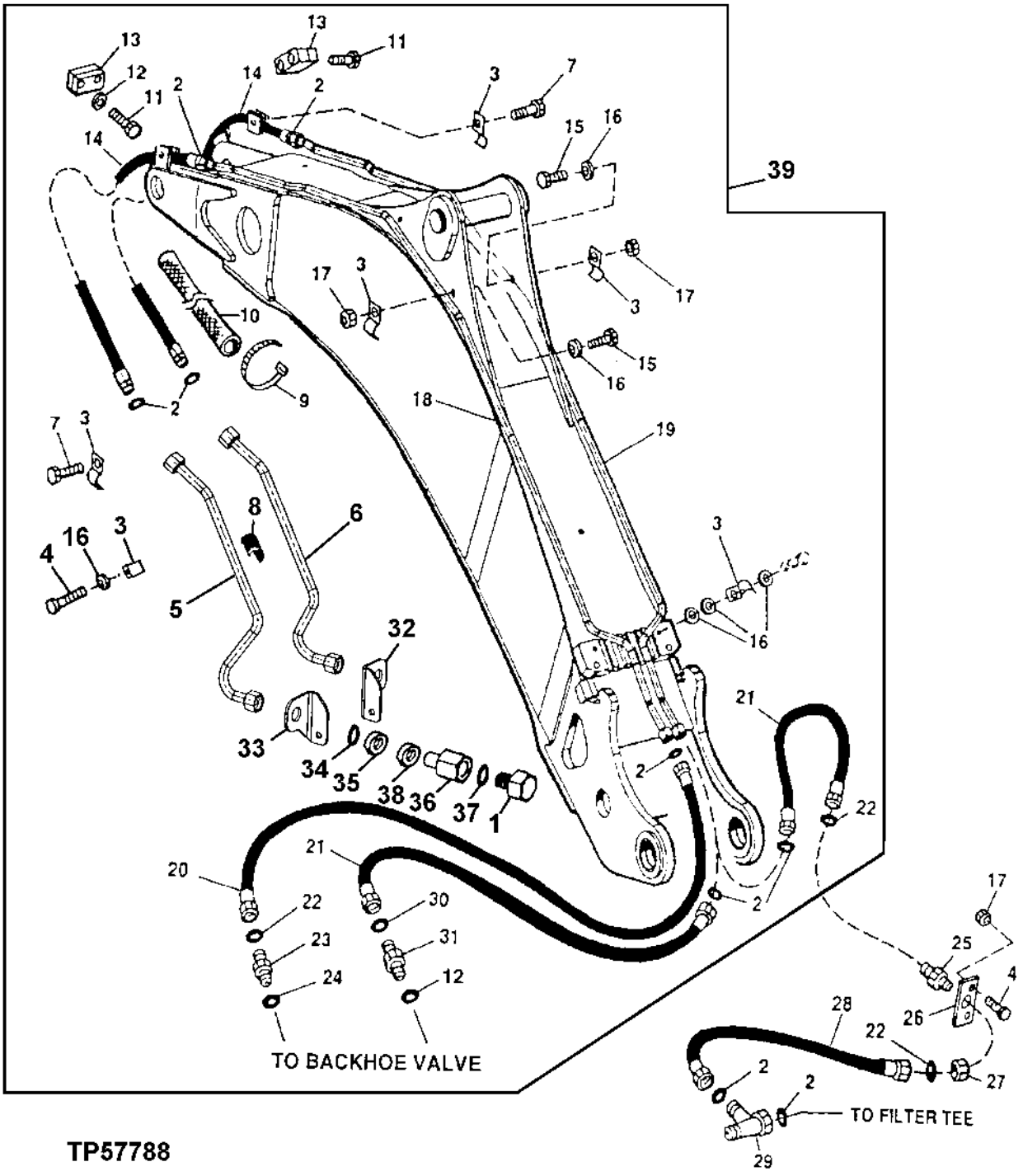

AUXILIARY EQUIPMENT HYDRAULIC HOSES AND OIL LINES
(EXTENDIBLE DIPPERSTICK)

KEY	PART NO.	PART NAME	QTY	SERIAL NO.	REMARKS
1	R27175	DRAIN PLUG	2		
2	T77858	O-RING	6		
3	T160376	CLAMP	12		
4	19M7662	CAP SCREW	4		M10 X 30
5	AT186920	OIL LINE	1		
6	AT186915	OIL LINE	1		
7	19M7572	CAP SCREW	2		M10 X 45
8	T189065	ISOLATOR	4		(SUB FOR T153193, THIS APPLICATION)
9	H77698	TIE BAND	5		
10	T161365	SLEEVE	2		FABRIC
11	19M8456	CAP SCREW	8		M8 X 100
12	R29936	O-RING	1		
13	T162004	CLAMP	8		
14	AT179411	HYDRAULIC HOSE - FABRICATE	2		
15	03M7192	BOLT	4		M10 X 30
16	24M7239	WASHER	AR		
17	14M7274	NUT	4		M10
18	AT179405	OIL LINE	1	-900824	
	AT195812	OIL LINE	1	900825-	
19	AT179406	OIL LINE	1	-900824	
	AT195813	OIL LINE	1	900826-	
20	AT179409	HYDRAULIC HOSE - FABRICATE	1		1" X 1 245 MM (49") X 1-3/16"
21	AT179409	HYDRAULIC HOSE - FABRICATE	1		1" X 1 245 MM (49") X 1-3/16"
22	T77932	O-RING	3		
23	38H1329	ADAPTER	1		
24	U12547	O-RING	1		
25	38H1286	ADAPTER	1		
26	T161082	STRAP	1		
27	14H876	NUT	1		1"
28	AT179400	HYDRAULIC HOSE - FABRICATE	1		
29	38H1033	TEE FITTING	1		
30	T77932	O-RING	1		
31	38H1447	ADAPTER	1		
32	T166780	BRACKET	1		
33	T166781	BRACKET	1		
34	T77858	O-RING	2		
35	T78707	NUT	2		
36	T163702	REDUCER	2		
37	T77858	O-RING	2		
	U12547	O-RING	2		
39	AT188789	KIT	1		(WHOLE GOODS)

CONTROLLED LOAD LOWERING DEVISE, BOOM CYLINDER KIT

TP50647 -UN-28MAY97

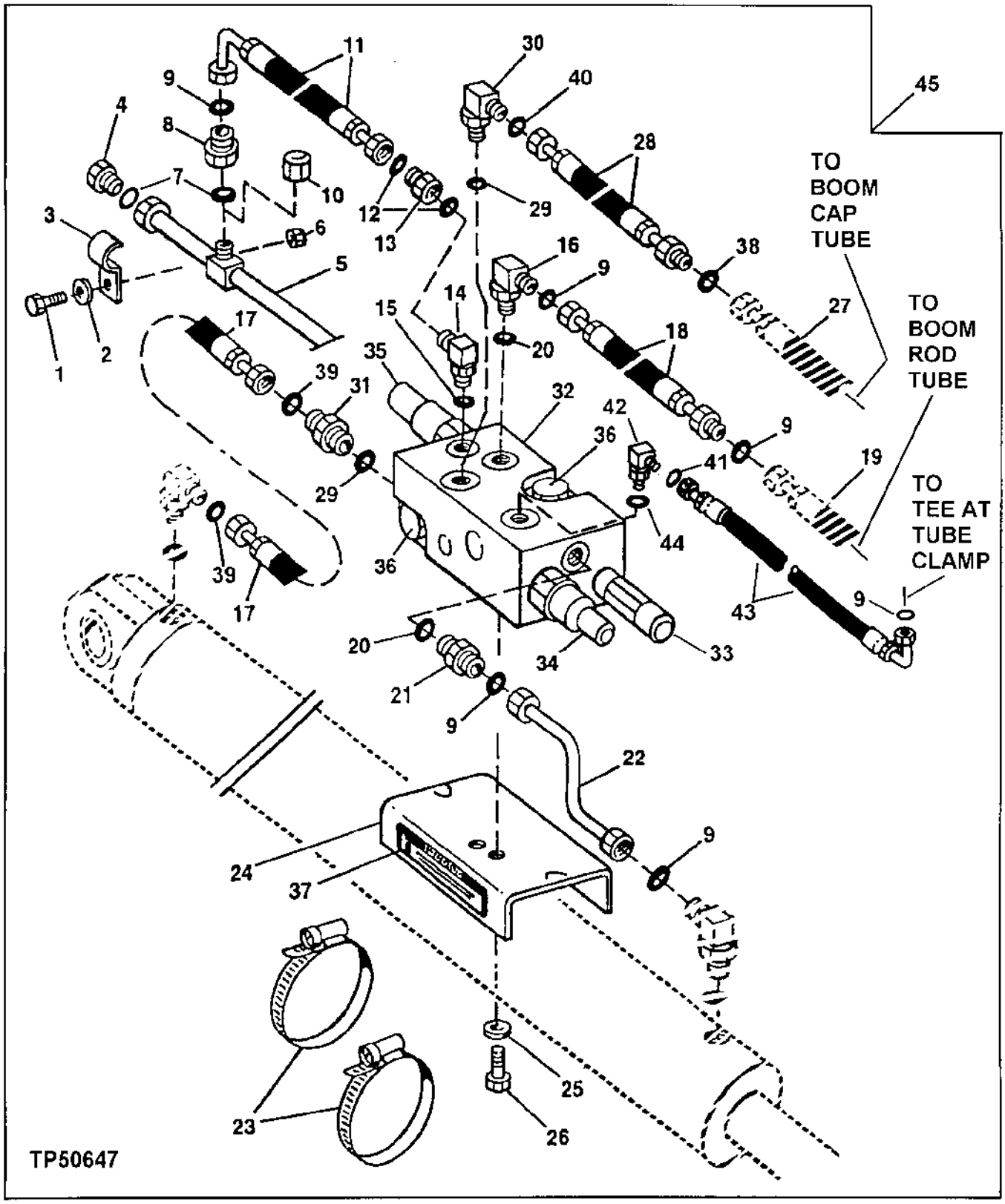

CONTROLLED LOAD LOWERING DEVICE, BOOM CYLINDER KIT

KEY	PART NO.	PART NAME	QTY	SERIAL NO.	REMARKS
1	03M7192	BOLT	2		M10 X 30, (RETURN LINE)
2	24M7239	WASHER	2		10.700 X 21 X 2.500 MM
3	T160376	CLAMP	4		(RIGHT SIDE BOOM LINE)
4	38H1149	FITTING PLUG	1		(RETURN LINE)
5	AT180885	OIL LINE	1		(RIGHT SIDE OF BOOM)
6	14M7274	NUT	2		M10, (RETURN LINE)
7	T77858	O-RING	6		
8	38H1482	REDUCER	1		(RETURN LINE)
9	T77932	O-RING	6		
10	38H1418	FITTING PLUG	1		(TEE CAP WHEN CROWD CLLD IS NOT REQUIRED)
11	AT180208	HYDRAULIC HOSE - FABRICATE	1		13/16" X 803 MM (31-1/2") X 1", (PORT "M")
12	T77857	O-RING	2		(PORT "M" FITTING)
13	38H1161	ADAPTER	1		(PORT "M")
14	38H1095	ELBOW FITTING	1		(PORT "M")
15	R26375	O-RING	1		
16	38H1006	ELBOW FITTING	1		(PORT "B")
17	AT180859	HYDRAULIC HOSE - FABRICATE	1		(PORT "FB")
18	AT180212	HYDRAULIC HOSE - FABRICATE	1		1" X 825 MM (32-1/2") X 1", (PORT "B")
19	.....	OIL LINE	1		(TO BOOM ROD TUBE)
20	R26906	O-RING	2		(PORT "B" (1) - PORT "ANN" (1))
21	38H1162	ADAPTER	1		(PORT "ANN")
22	AT180205	OIL LINE	1		(PORT "ANN")
23	AT84191	HOSE CLAMP	2		(MOUNTING PLATE)
24	T161769	PLATE	1		(TO BOOM CYLINDER)
25	24M7239	WASHER	6		(RETURN LINE)
26	19H1134	CAP SCREW	2		3/8" X 3/4", (MOUNTING BRACKET)
27	.....	OIL LINE	1		(TO BOOM CAP TUBE)
28	AT180860	HYDRAULIC HOSE - FABRICATE	2		1-3/16" X 883 MM (34-3/4") X 1-7/16", (PORT "A")
29	U12547	O-RING	2		(PORT "FB" (1) - PORT "A" (1))
30	38H1007	ELBOW FITTING	1		(PORT "A")
31	38H1163	ADAPTER	1		(PORT "FB")
32	AT175177	HYD ACTUATED CONTROL VALVE	1		CONTROLLED LOAD LOWERING DEVICE (BOOM)
33	AT180076	PRESSURE RELIEF VALVE	1		RELIEF (5000 PSI)
	AT180081	SEAL KIT	1		
34	AT180408	HYD ACTUATED CONTROL VALVE	1		SEQUENCE (470 PSI)
	AT180082	SEAL KIT	1		
35	AT180409	HYD ACTUATED CONTROL VALVE	1		LOAD CONTROL (470 PSI)
	AT180083	SEAL KIT	1		
36	AT180079	CHECK VALVE	1		CHECK
	AT180086	SEAL KIT	1		
37	T161665	LABEL	1		(SERVICE VALVE)
38	T76938	O-RING	1		(BOOM CAP TUBE END)
39	T77858	O-RING	2		(PORT "FB" HOSE)
40	T77858	O-RING	1		(BETWEEN PORT "A" FITTING AND HOSE)
41	T77814	O-RING	1		(BETWEEN PORT "D" FITTING AND HOSE)
42	38H1003	ELBOW FITTING	1		(PORT "D")
43	AT180861	HYDRAULIC HOSE - FABRICATE	1		9/16" X 868 MM (34-1/4") X 9/16", (PORT "D" ELBOW)
44	R28782	O-RING	1		(PORT "D" ELBOW)
45	AT194441	KIT	1		(WHOLE GOODS) (SUB FOR AT178796) (ALSO INCLUDES ADDITIONAL HYDRAULIC HOSES, FITTINGS AND MISCELLANEOUS PARTS)

CONTROLLED LOAD LOWERING DEVICE,CROWD CYLINDER KIT

TP50648 -UN-28MAY97

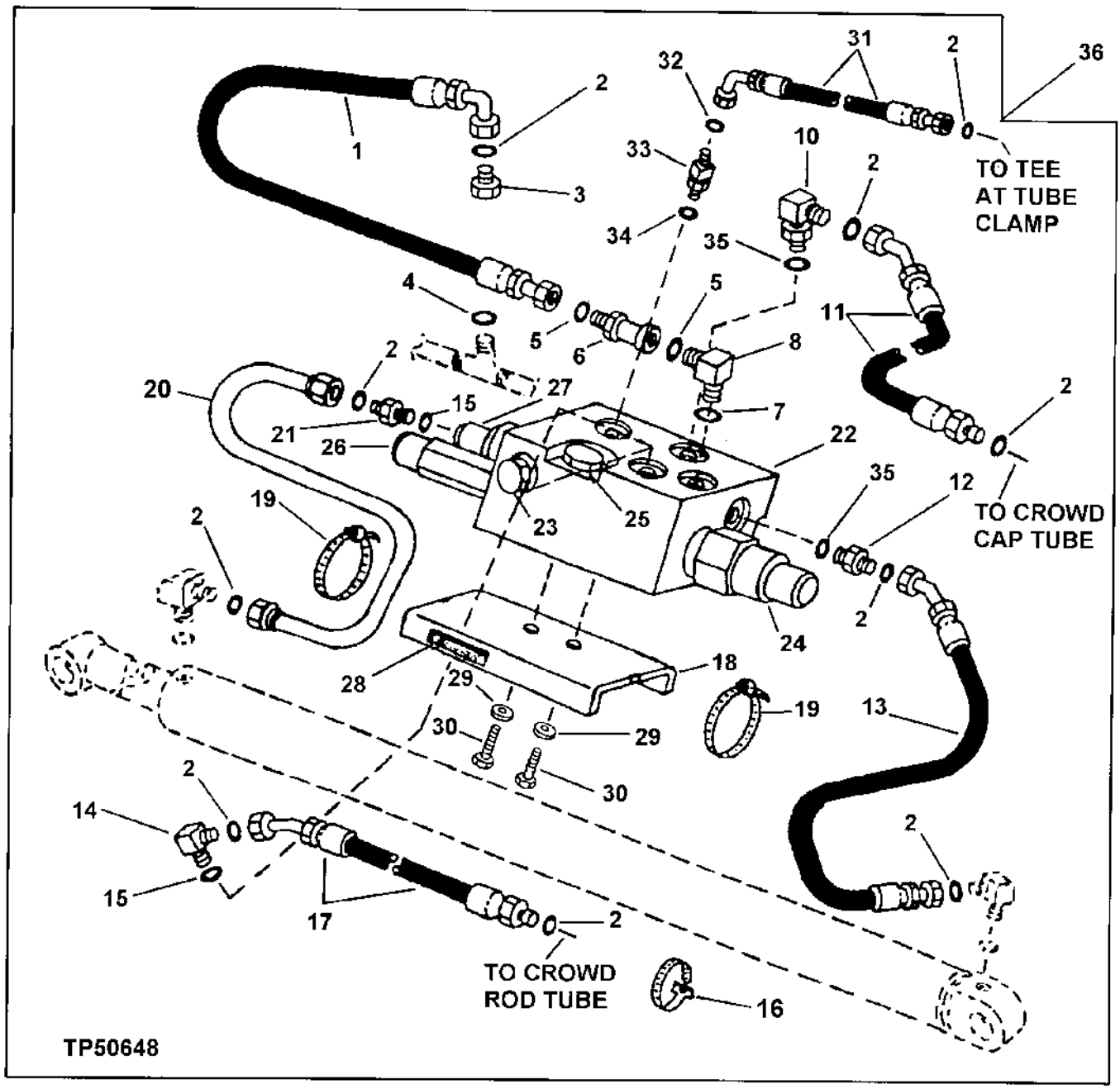

CONTROLLED LOAD LOWERING DEVICE, CROWD CYLINDER KIT

KEY	PART NO.	PART NAME	QTY	SERIAL NO.	REMARKS
1	AT181510	HYDRAULIC HOSE - FABRICATE	1		13/16" X 762 MM (30") X 1", (PORT "M")
2	T77932	O-RING	AR		
3	38H1482	REDUCER	1		(RETURN LINE)
4	T77858	O-RING	1		
5	T77857	O-RING	2		(PORT "M" HOSE ENDS)
6	38H1095	ELBOW FITTING	1		(PORT "M")
7	R26375	O-RING	1		(PORT "M")
8	38H1161	ADAPTER	1		(PORT "M")
9	T77858	O-RING	1		(PORT "A" (1)
10	38H1404	ELBOW FITTING	1		(PORT "A")
11	AT181110	HYDRAULIC HOSE - FABRICATE	1		(PORT "A")
12	38H1329	ADAPTER	1		(PORT "FB")
13	AT181108	HYDRAULIC HOSE - FABRICATE	1		1" X 456 MM (18") X 1", (PORT "FB")
14	38H1006	ELBOW FITTING	1		(PORT "B")
15	R26906	O-RING	2		(PORT "B" (1) - PORT "ANN" (1)
16	R44302	TIE BAND	1		(PORT "A" AND PORT "B" HOSES)
17	AT181111	HYDRAULIC HOSE - FABRICATE	1		(PORT "B")
18	T161769	PLATE	1		(TO CROWD CYLINDER)
19	TY22493	HOSE CLAMP	2		(MOUNTING PLATE)
20	AT180206	OIL LINE	1		(PORT "ANN")
21	38H1162	ADAPTER	1		(PORT "ANN")
22	AT175177	HYD ACTUATED CONTROL VALVE	1		(CONTROLLED LOAD LOWERING DEVICE - CROWD)
23	.....	SCREW	1		ADJUSTABLE (CLLD)
	.....	SEAL	1		LOCK NUT (CLLD VALVE)
24	AT180076	PRESSURE RELIEF VALVE	1		RELIEF (5000 PSI)
	AT180081	SEAL KIT	1		
25	AT180408	HYD ACTUATED CONTROL VALVE	1		SEQUENCE (450 PSI)
	AT180082	SEAL KIT	1		
26	AT180409	HYD ACTUATED CONTROL VALVE	1		LOAD CONTROL (400 PSI)
	AT180083	SEAL KIT	1		
27	AT180079	CHECK VALVE	1		CHECK
	AT180086	SEAL KIT	1		
28	T161665	LABEL	1		(SERVICE VALVE)
29	24M7239	WASHER	2		(MOUNTING BRACKET SCREWS)
30	19H1648	CAP SCREW	2		(MOUNTING BRACKET)
31	AT181146	HYDRAULIC HOSE - FABRICATE	1		9/16" X 1 823 MM (71-3/4") X 9/16", (PORT "D")
32	T77814	O-RING	1		(PORT "D" FITTING TO HOSE)
33	38H1003	ELBOW FITTING	1		(PORT "D")
34	R28782	O-RING	1		(PORT "D")
35	U12547	O-RING	2		(PORT "FB"(1) - PORT "A" (1))
36	AT178797	KIT	1		(WHOLE GOODS) (ALSO INCLUDES ADDITIONAL HYDRAULIC HOSES, FITTINGS AND MISCELANEOUS PARTS)

AUGER HYDRAULICS

TP60763 -UN-31JUL00

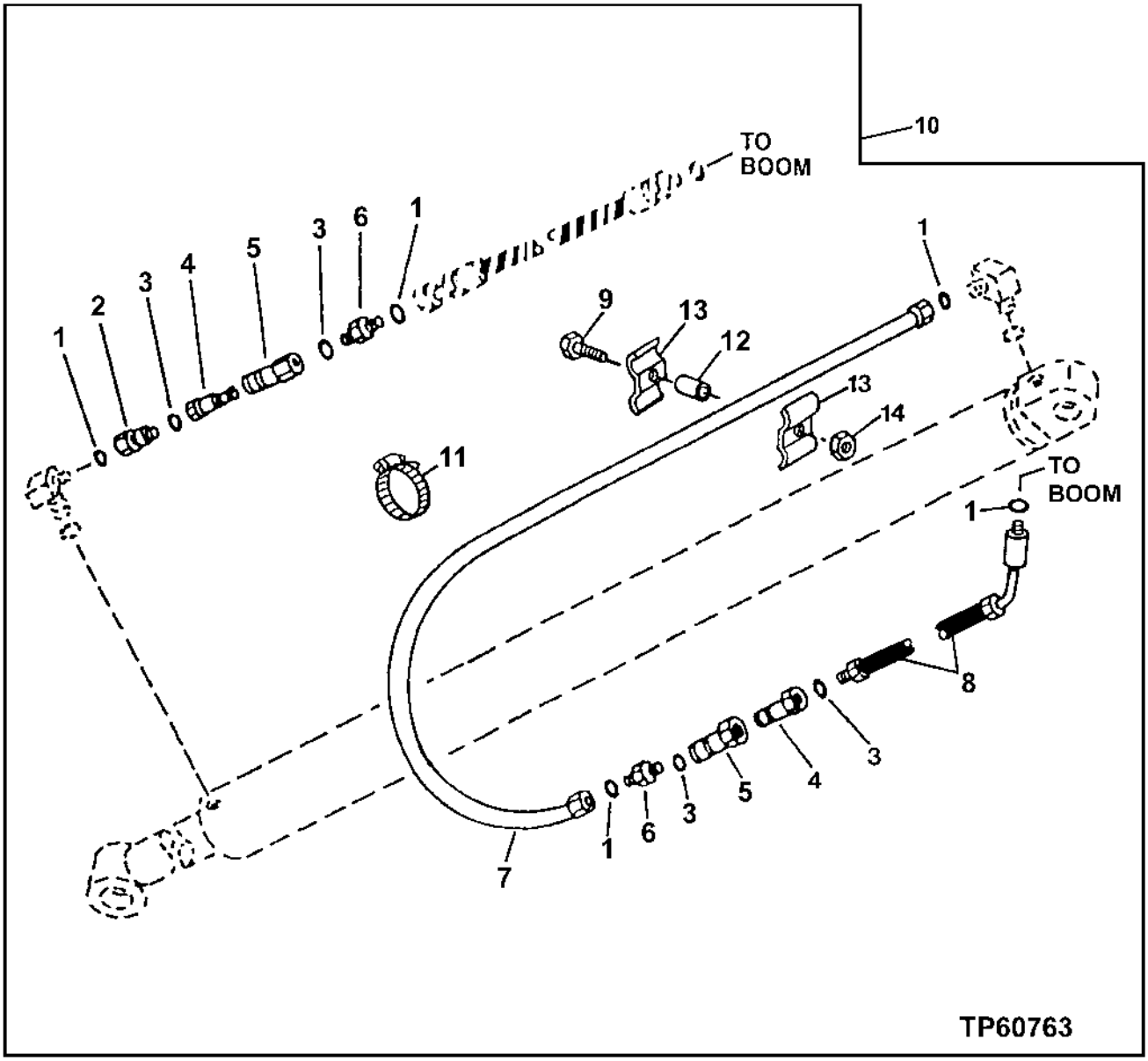

AUGER HYDRAULICS
(EXTENDIBLE DIPPERSTICK)

KEY	PART NO.	PART NAME	QTY	SERIAL NO.	REMARKS
1	T77932	O-RING	3		15.596 X 1.778 MM (0.614" X 0.070")
2	38H1069	FITTING	1		(SWIVEL)
3	R26906	O-RING	2		19.177 X 2.464 MM (0.755" X 0.097")
4	XH4-63-T10	HYDR.QUICK COUPLER SOCKET	2		
5	XH4-62-T10	HYDR.QUICK COUPLER PLUG	2		
6	38H1162	ADAPTER	2		(STRAIGHT)
7	AT177540	OIL LINE	1		
8	AT184494	HYDRAULIC HOSE - FABRICATE	1		
9	19M7550	CAP SCREW	1		M10 X 35
10	AT180828	KIT	1		(WHOLE GOODS)
11	AR21842	CLAMP	1		
12	28H3383	BUSHING	1		0.493" X 0.675" X 3/4"
13	R46919	HALF CLAMP	2		
14	14M7274	NUT	1		M10

AUGER HYDRAULICS
(STANDARD)

TP50651 -UN-31JUL00

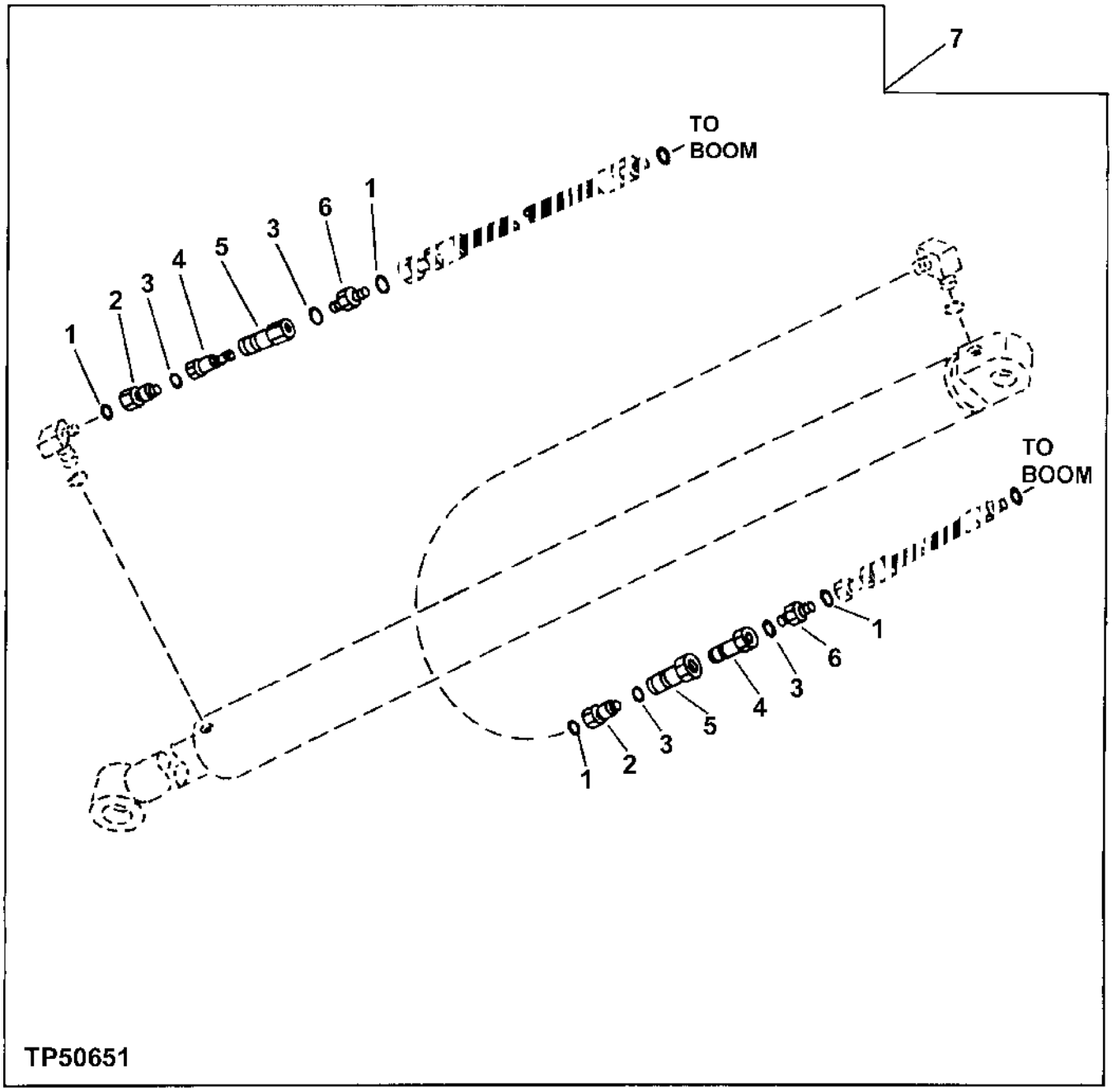

AUGER HYDRAULICS
(STANDARD)

KEY	PART NO.	PART NAME	QTY	SERIAL NO.	REMARKS
1	T77932	O-RING	2		15.596 X 1.778 MM (0.614" X 0.070")
2	38H1069	FITTING	2		(SWIVEL)
3	R26906	O-RING	4		19.177 X 2.464 MM (0.755" X 0.097")
4	XH4-63-T10	HYDR.QUICK COUPLER SOCKET	2		
5	XH4-62-T10	HYDR.QUICK COUPLER PLUG	2		
6	38H1162	ADAPTER	2		
7	AT181192	KIT	1		(WHOLE GOODS)

LOW PRESSURE AUXILIARY RETURN KIT

T143004 -UN-11JUN01

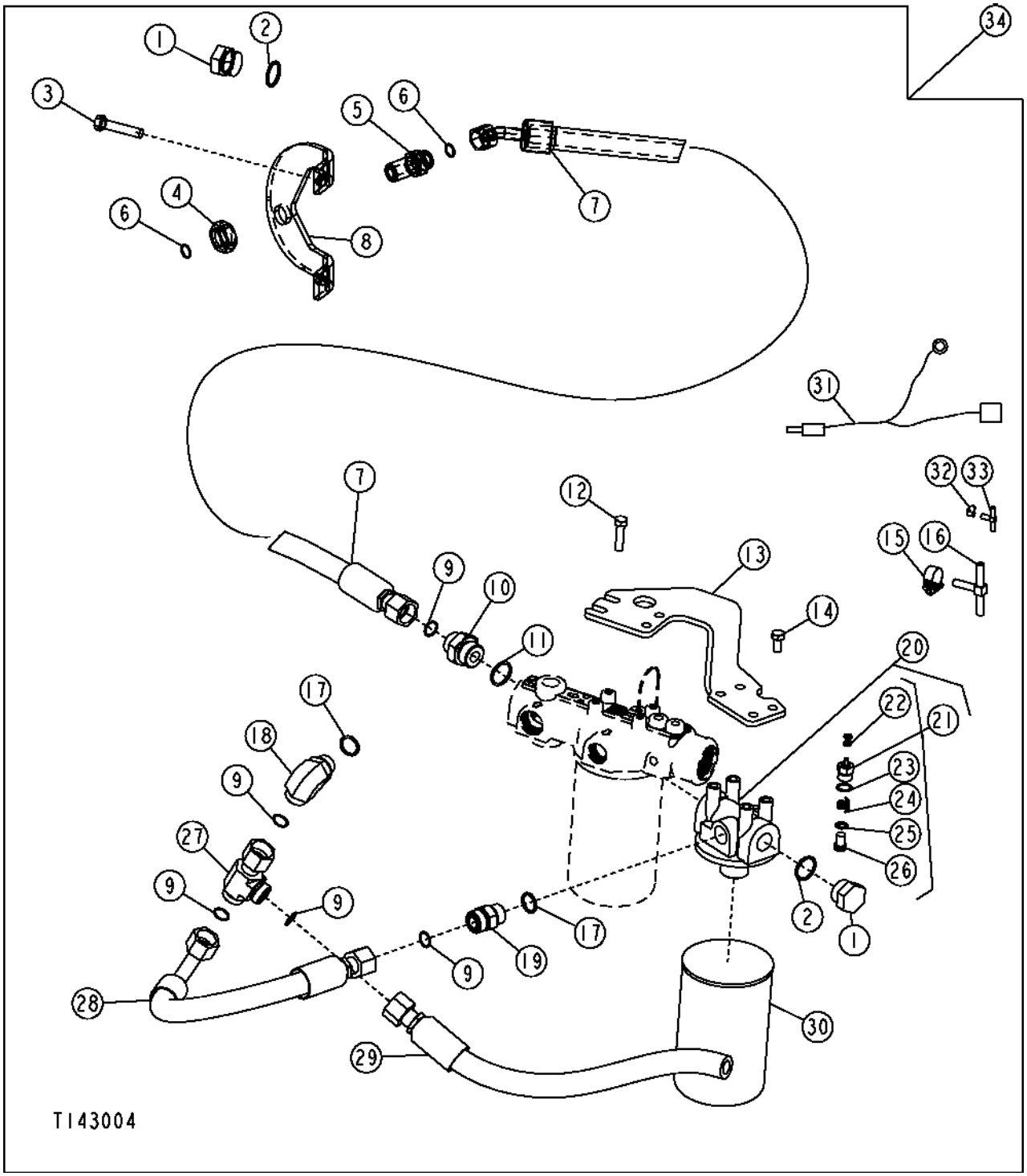

LOW PRESSURE AUXILIARY RETURN KIT

KEY	PART NO.	PART NAME	QTY	SERIAL NO.	REMARKS
1	R36636	FITTING PLUG	1		
2	R29936	O-RING	2		
3	19M7363	CAP SCREW	2		M12 X 60
4	14H876	NUT	1		1"
5	38H1286	ADAPTER	1		
6	T77932	O-RING	2		
7	AT194453	HYDRAULIC HOSE - FABRICATE	1		(SUB FOR AT180374)
8	T161836	BRACKET	1		
9	T77858	O-RING	5		
10	38H1194	ADAPTER	1		
11	R29936	O-RING	1		
12	19M8637	CAP SCREW	4		M10 X 40
13	T187100	BRACKET	1		
14	19M7938	CAP SCREW	4		M10 X 20
15	AR21837	CLAMP	3		
16	M86863	TEE FITTING	1		
17	U12547	O-RING	2		
18	38H1007	ELBOW FITTING	1		
19	38H1163	ADAPTER	1		
20	AT179364	FILTER HEAD	1		
21	AT184704	SWITCH	1		
22	14H778	NUT	2		
23	R26375	O-RING	1		
24	.....	SPRING	1		
25	.....	O-RING	1		
26	.....	PISTON	1		
27	38H1033	TEE FITTING	1		
28	AT180316	HYDRAULIC HOSE - FABRICATE	1		
29	AT194403	HYDRAULIC HOSE - FABRICATE	1		
30	AT184206	FILTER ELEMENT	1		
31	AT182178	WIRING HARNESS	1		
32	AR48236	CLAMP	3		
33	M87795	TEE FITTING	1		
34	AT194402	KIT	1		(WHOLE GOODS)

ATTACHMENT PLUMBING KIT

T141784 -UN-02MAY01

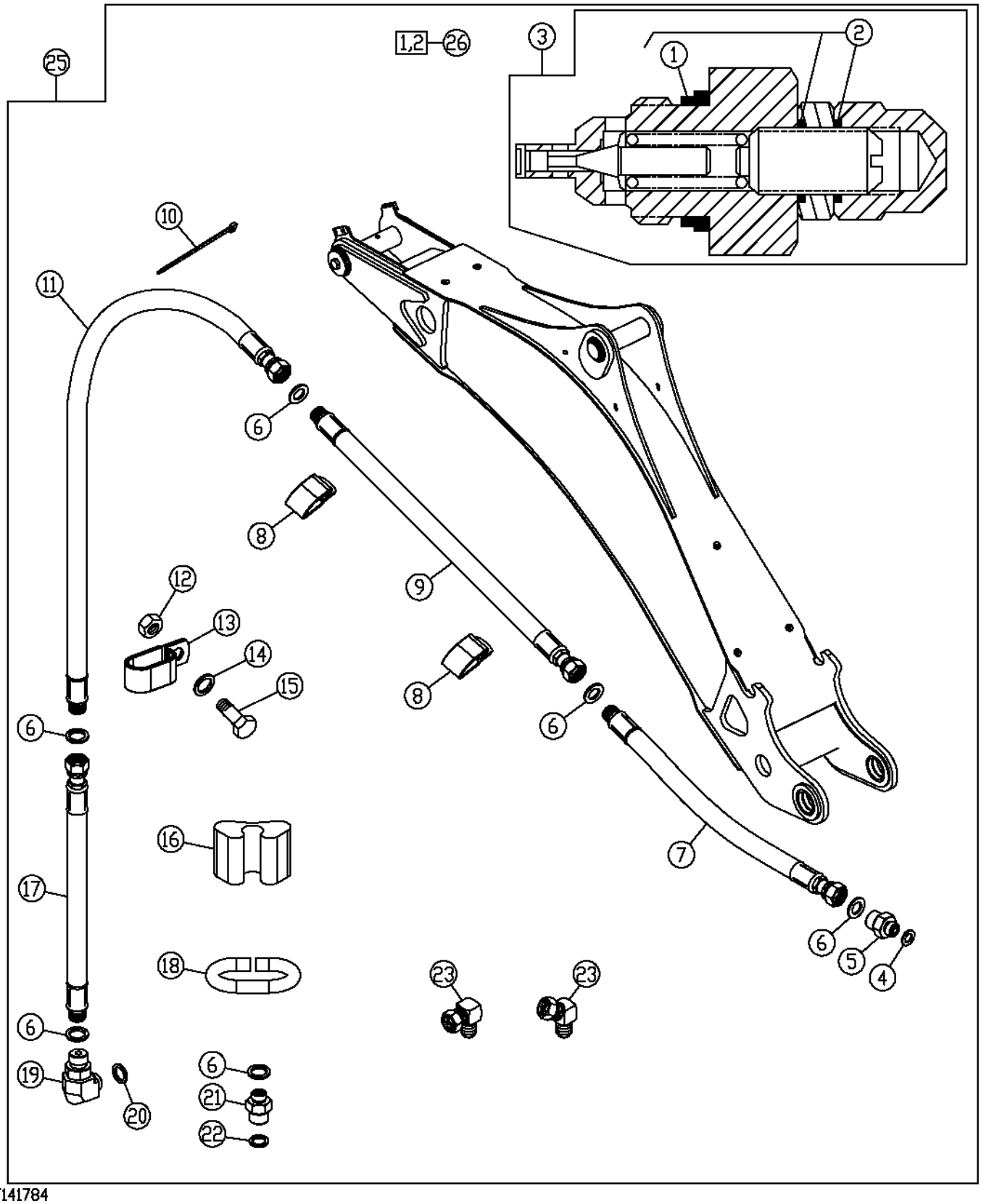

T141784

ATTACHMENT PLUMBING KIT

KEY	PART NO.	PART NAME	QTY	SERIAL NO.	REMARKS
1	T183757	SEAL	2		
2	.....	O-RING	4		
3	AT170061	PRESSURE RELIEF VALVE	2		
4	R26906	O-RING	2		
5	38H1172	ADAPTER	2		
6	T77613	O-RING	10		
7	AT194389	HYDRAULIC HOSE - FABRICATE	2		11/16" X 1 219 MM (48") X 11/16"
8	T24959	CLAMP	14		
9	AT194390	HYDRAULIC HOSE - FABRICATE	2		11/16" X 2 591 MM (102") X 11/16"
10	R44302	TIE BAND	10		
11	AT194398	HYDRAULIC HOSE - FABRICATE	2		11/16" X 1 778 MM (70") X 11/16", (STANDARD DIPPERSTICK)
	AT194391	HYDRAULIC HOSE - FABRICATE	2		11/16" X 3 556 MM (140") X 11/16", (EXTENDABLE DIPPERSTICK)
12	14M7400	LOCK NUT	4		M10
13	R49921	CLAMP	2		
14	24M7040	WASHER	4		
15	19M7938	CAP SCREW	4		M10 X 20
16	T105774	GUIDE	4		
17	AT194397	HYDRAULIC HOSE - FABRICATE	2		11/16" X 1 778 MM (70") X 11/16", (STANDARD AND EXTENDABLE) (THUMB OR CLAMP)
	AT194388	HYDRAULIC HOSE - FABRICATE	2		1/4" X 1 905 MM (75") X 11/16", (EXTENDABLE) (WAIN-ROY JAW BUCKET CYLINDER)
18	T159976	GUIDE	2		
19	38H1010	ELBOW FITTING	1		(THUMB OR CLAMP)
20	R26375	O-RING	1		
21	38H1172	ADAPTER	1		(THUMB OR CLAMP)
22	R26906	O-RING	1		
23	AP22688	HOSE FITTING	2		(SWINGER)
24	AM3762T	ELBOW FITTING	1		(SWINGER)
25	AT194368	KIT	1		(WHOLE GOODS)
26	AT189413	SEAL KIT	1		

HAND HELD HYDRAULIC TOOL KIT

T141874 -UN-03MAY01

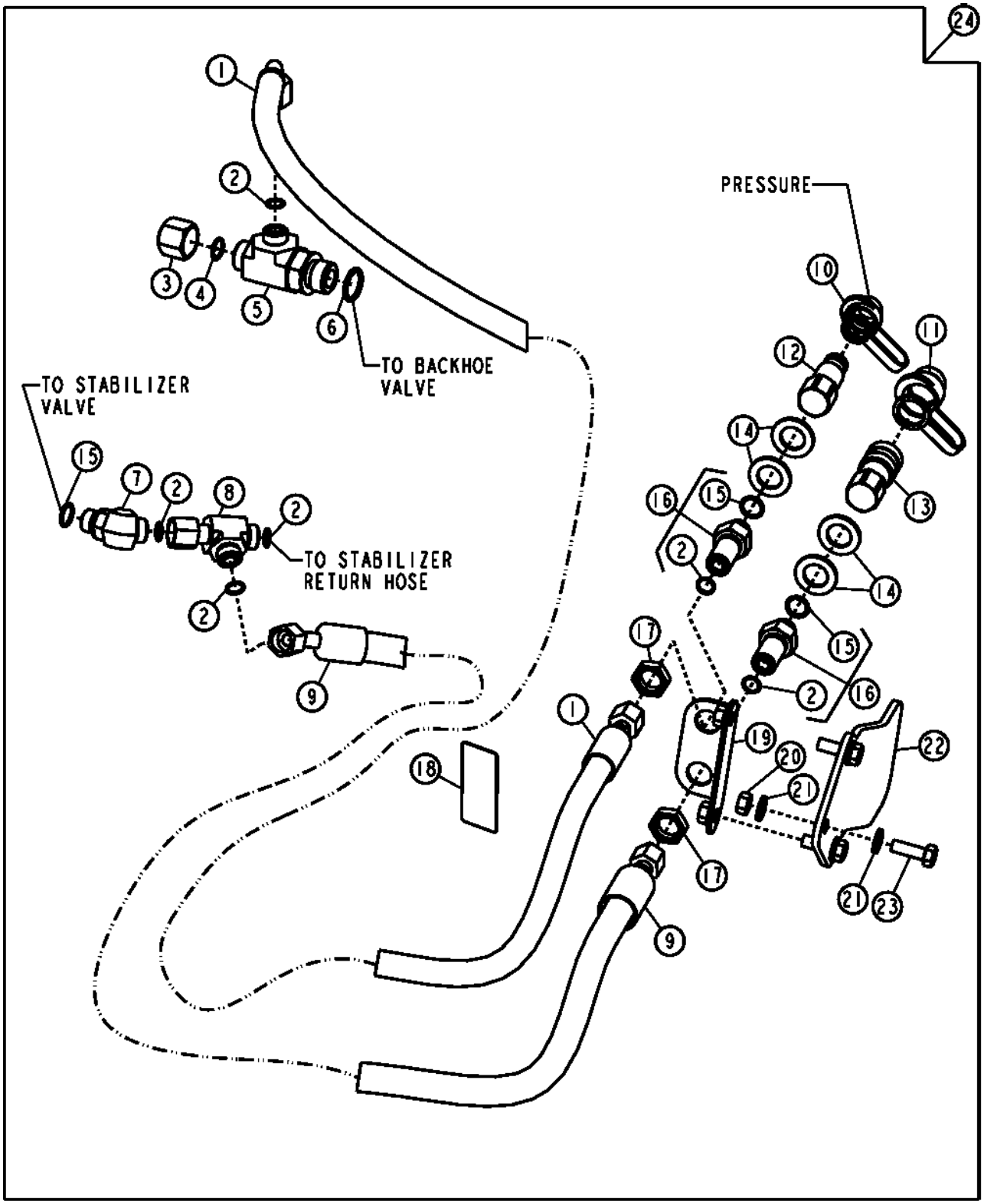

HAND HELD HYDRAULIC TOOL KIT

KEY	PART NO.	PART NAME	QTY	SERIAL NO.	REMARKS
1	AT192154	HYDRAULIC HOSE - FABRICATE	1		13/16" X 3 560 MM (140-1/4") X 13/16"
2	T77857	O-RING	6		
3	38H1417	FITTING PLUG	1		
4	T77932	O-RING	1		
5	38H1390	TEE FITTING	1		
6	U12547	O-RING	1		
7	38H1046	ELBOW FITTING	1		
8	38H1031	TEE FITTING	1		
9	AT192155	HYDRAULIC HOSE - FABRICATE	1		13/16" X 2 890 MM (113-3/4") X 13/16"
10	.....	COVER	1		PARKER HANNIFIN NR-37
11	.....	COVER	1		PARKER HANNIFIN NR-50
12	.....	HYD. QUICK-CONNECT COUPLER	1		PARKER HANNIFIN FF-372-87O
13	.....	HYD. QUICK-CONNECT COUPLER	1		PARKER HANNIFIN FF-371-87O
14	24M7090	WASHER	4		
15	R26375	O-RING	3		
16	.....	ADAPTER	2		(ORDER M135646, R26375 AND T77857)
17	T78716	NUT	2		13/16"
18	T162404	LABEL	1		(HAND HELD HYDRAULICS)
19	T186282	BRACKET	1		
20	14M7274	NUT	3		M10
21	24M7239	WASHER	6		
22	T186474	GUARD	1		
23	19M7662	CAP SCREW	3		M10 X 30
24	AT190118	KIT	1		(WHOLE GOODS)

BOOM CYLINDER

TP62420 -UN-05JUN00

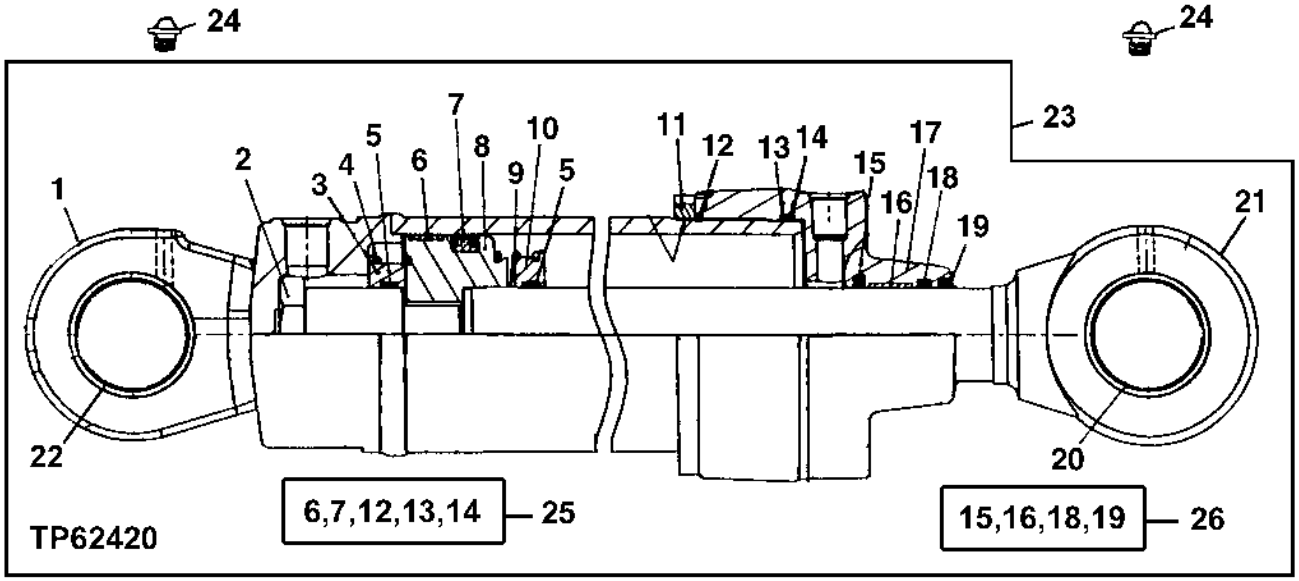

KEY	PART NO.	PART NAME	QTY	SERIAL NO.	REMARKS
1	AH149007	HYDRAULIC CYLINDER BARREL	1		
2	H151650	NUT	1		
3	H151660	CUSHION	1		
4	H140818	SPRING	1		
5	H140822	BACK-UP RING	2		
6	R90653	WEAR RING	1		
7	RE30162	SEAL	1		
8	H156334	PISTON	1		
9	H169161	SPRING	1		
10	H151659	PISTON	1		

THIS PARTS LISTING IS CONTINUED

BOOM CYLINDER

KEY	PART NO.	PART NAME	QTY	SERIAL NO.	REMARKS
11	H151780	NUT	1		
12	E52687	O-RING	1		
13	H151890	BACK-UP RING	1		
14	R72032	O-RING	1		(SUB FOR H154387)
15	AH146563	SEAL	1		
16	H152796	WEAR RING	1		
17	H155737	HYDR. CYLINDER ROD GUIDE	1		
18	H152205	SEAL	1		
19	AH146559	SEAL	1		
20	H152123	BUSHING	1		
21	AH175516	ROD	1		(SUB FOR AH147367, THIS APPLICATION)
22	H151655	BUSHING	2		
23	AH175514	HYDRAULIC CYLINDER	1		(SUB FOR AH149001)
24	T162396	LUBRICATION FITTING	3		
25	AH149848	KIT	1		CYLINDER BORE REPAIR KIT
26	AH149815	HYDRAULIC CYLINDER KIT	1		CYLINDER ROD REPAIR KIT

BUCKET CYLINDER AND REPAIR KIT

TP62469 -UN-26SEP00

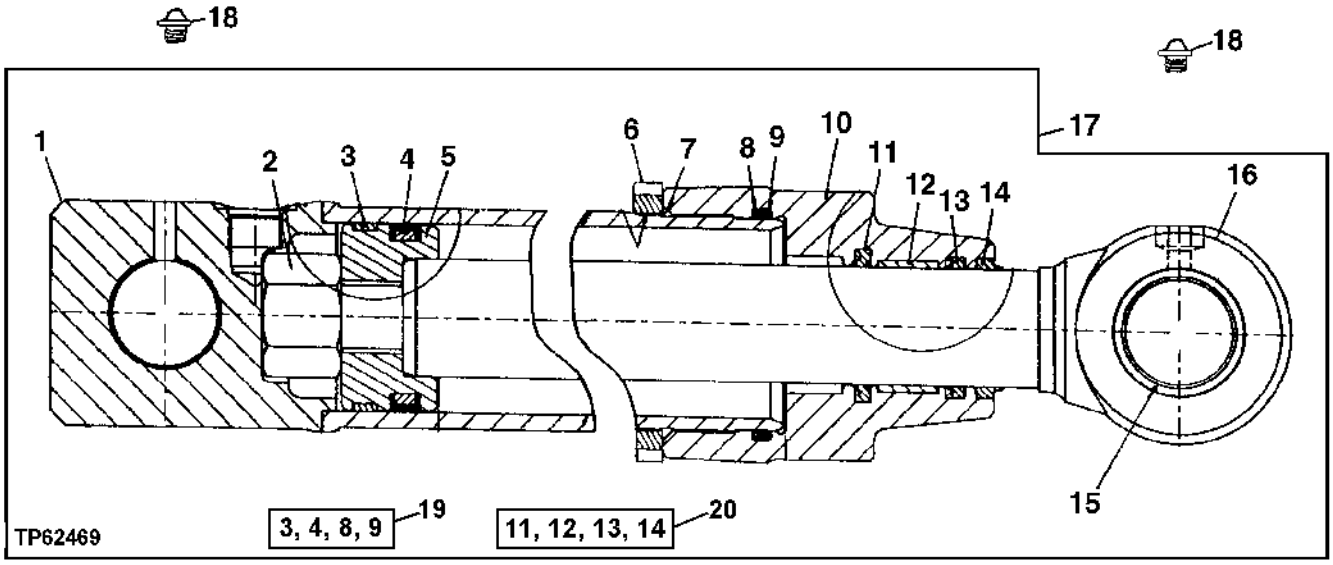

KEY	PART NO.	PART NAME	QTY	SERIAL NO.	REMARKS
1	AH150211	HYDRAULIC CYLINDER BARREL	1		
2	H151815	NUT	1		
3	R81775	WEAR RING	1		
4	RE20343	SEAL	1		
5	H151893	PISTON	1		
6	H151892	NUT	1		
7	H154382	O-RING	1		
8	H152065	BACK-UP RING	1		
9	E49244	O-RING	1		(SUB FOR H154383)
10	H155740	HYDR. CYLINDER ROD GUIDE	1		
11	AH146563	SEAL	1		
12	H152796	WEAR RING	1		
13	H152205	SEAL	1		
14	AH146559	SEAL	1		
15	H154269	BUSHING	1		
16	AH146318	ROD	1		
17	AH149791	HYDRAULIC CYLINDER	1		
18	T162396	LUBRICATION FITTING	2		
19	AH149844	KIT	1		CYLINDER BORE REPAIR KIT
20	AH149815	HYDRAULIC CYLINDER KIT	1		CYLINDER ROD REPAIR KIT

CROWD CYLINDER AND REPAIR KIT

TP62449 -UN-14AUG00

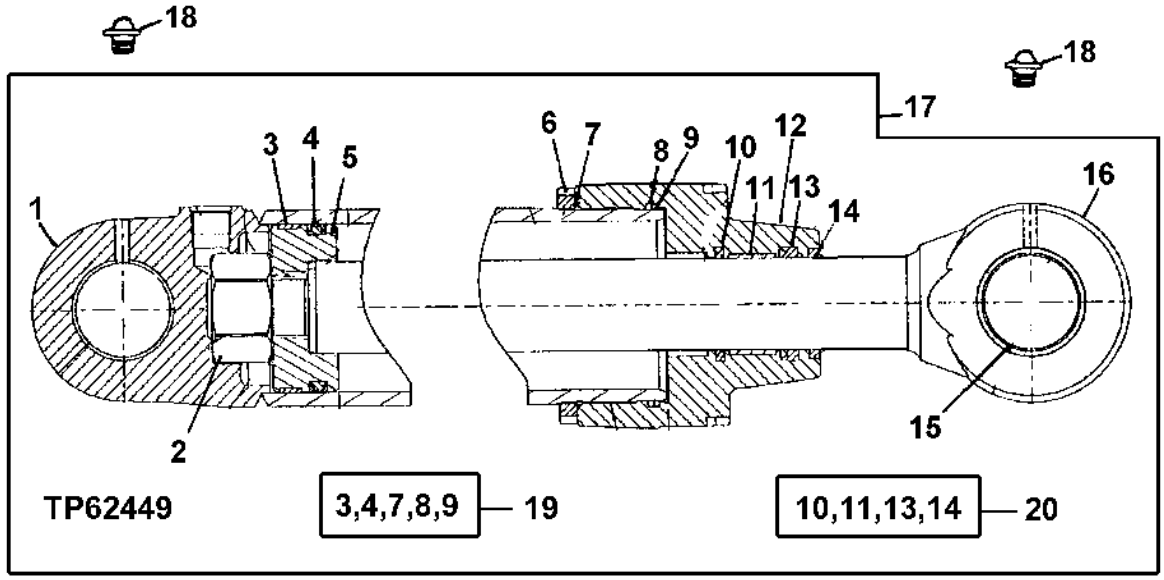

KEY	PART NO.	PART NAME	QTY	SERIAL NO.	REMARKS
1	AH158579	HYDRAULIC CYLINDER BARREL	1		
2	H170372	NUT	1		
3	R82095	WEAR RING	1		
4	RE20809	SEAL	1		
5	H170371	PISTON	1		
6	H151781	NUT	1		
7	T12275	O-RING	1		
8	H151891	BACK-UP RING	1		
9	T38485	O-RING	1		(SUB FOR H154385)
10	AH146563	SEAL	1		
11	H152796	WEAR RING	1		
12	H155769	HYDR. CYLINDER ROD GUIDE	1		
13	H152205	SEAL	1		
14	AH146559	SEAL	1		
15	H151820	BUSHING	1		
16	AH164139	ROD	1		
17	AH164138	CYLINDER	1		
18	T162396	LUBRICATION FITTING	2		
19	AH149846	KIT	1		CYLINDER BORE REPAIR
20	AH149815	HYDRAULIC CYLINDER KIT	1		CYLINDER ROD REPAIR

SWING CYLINDER AND REPAIR KIT

TP62435 -UN-27JUN00

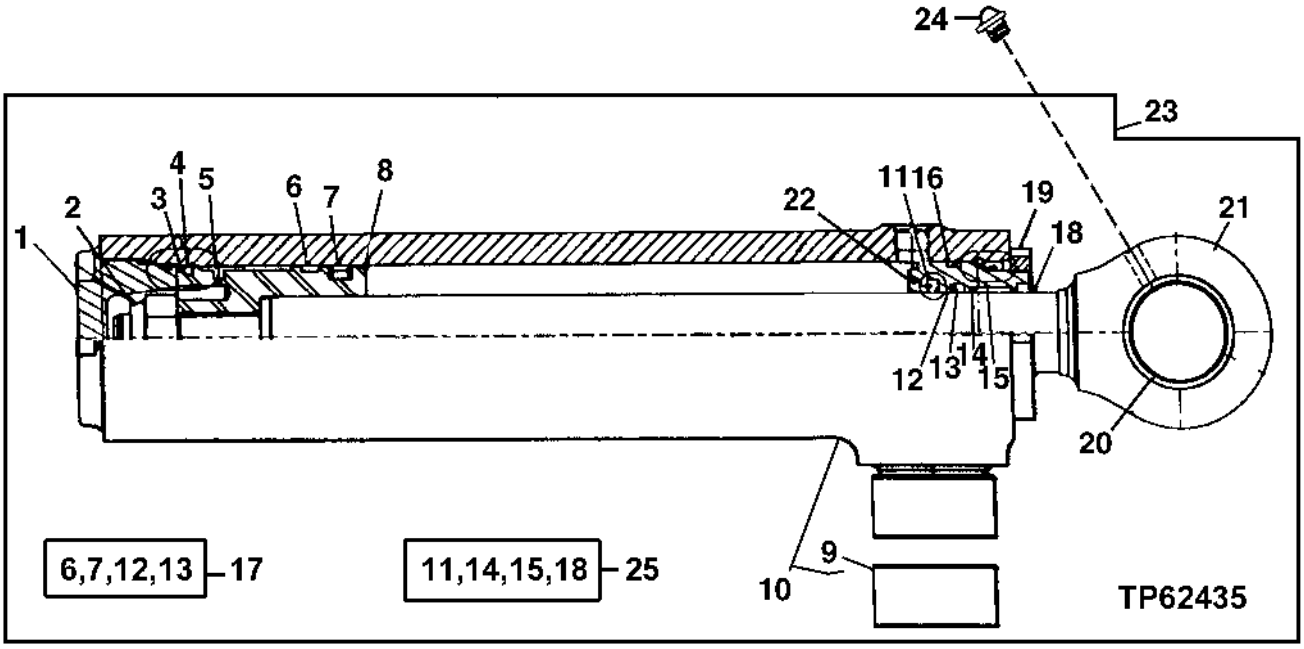

KEY	PART NO.	PART NAME	QTY	SERIAL NO.	REMARKS
1	H156486	HYDRAULIC CYLINDER CAP	1		
2	H170539	NUT	1		
3	H154373	BACK-UP RING	1		
4	P48403	O-RING	1		
5	H150947	PISTON RING	1		
6	R81776	WEAR RING	1		
7	RE20344	SEAL	1		
8	H154372	PISTON	1		
9	H151328	BUSHING	2		
10	AH147889	HYDRAULIC CYLINDER BARREL	1		
11	AH146561	SEAL	1		
12	F1430R	O-RING	1		
13	R79101	BACK-UP RING	1		
14	H152203	SEAL	1		
15	H152794	WEAR RING	1		
16	R81788	RING	1		
17	AH149843	HYDRAULIC CYLINDER KIT	1		CYLINDER BORE REPAIR KIT
18	AH146557	SEAL	1		
19	R81794	NUT	1		
20	H142209	BUSHING	1		
21	AH147893	ROD	1		
22	H154352	HYDR. CYLINDER ROD GUIDE	1		
23	AH173163	HYDRAULIC CYLINDER	1		(SUB AH147888)
24	T162396	LUBRICATION FITTING	3		
25	AH148164	HYDRAULIC CYLINDER KIT	1		CYLINDER ROD REPAIR KIT

STABILIZER CYLINDER AND REPAIR KIT

TP62468 -UN-25SEP00

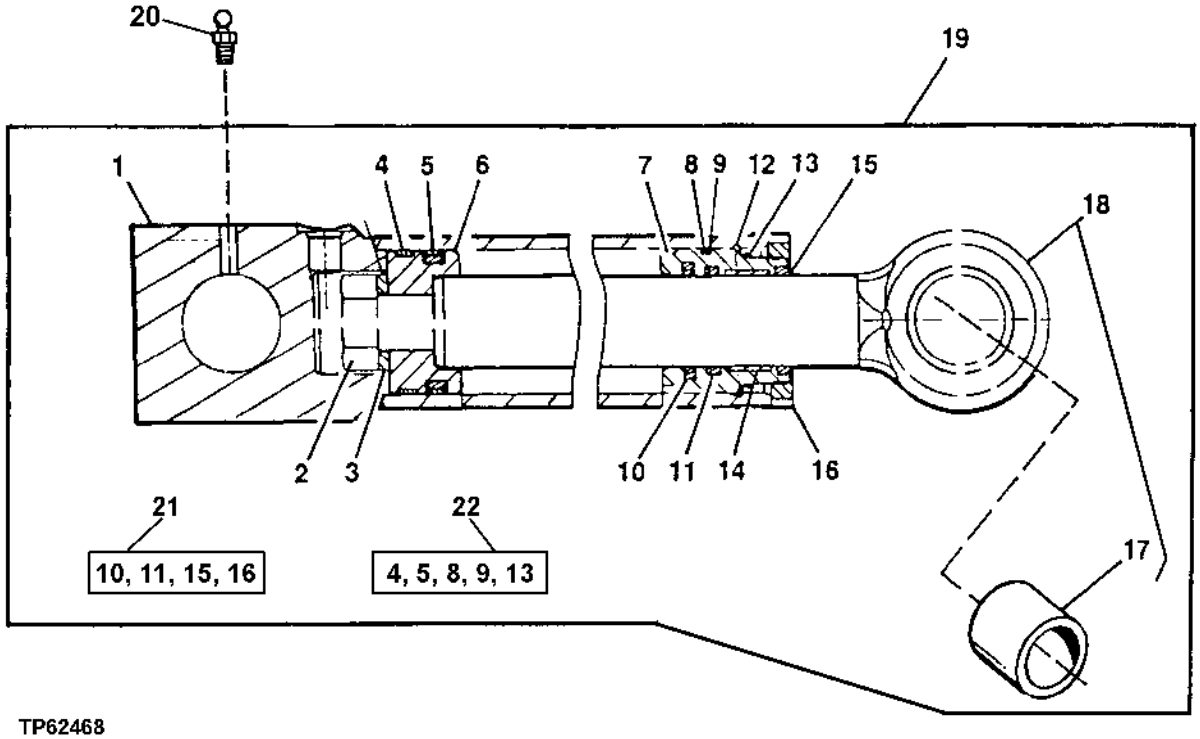

TP62468

KEY	PART NO.	PART NAME	QTY	SERIAL NO.	REMARKS
1	AH148676	HYDRAULIC CYLINDER BARREL	1		(L.H.)
	AH148677	HYDRAULIC CYLINDER BARREL	1		(R.H.)
2	19M8353	CAP SCREW	1		M30 X 80
3	H145175	WASHER	1		
4	R81775	WEAR RING	1		
5	RE20343	SEAL	1		
6	H145456	PISTON	1		
7	H157978	HYDR. CYLINDER ROD GUIDE	1		
8	R83577	O-RING	1		
9	R81862	BACK-UP RING	1		
10	AH146561	SEAL	1		
11	H152203	SEAL	1		
12	R81787	RING	1		
13	R91731	RING	AR		
14	H152794	WEAR RING	1		
15	AH146557	SEAL	1		
16	R81793	NUT	1		
17	H154404	BUSHING	1		
18	AH147902	ROD	1		
19	AH148674	HYDRAULIC CYLINDER	1		(L.H.)
	AH148675	HYDRAULIC CYLINDER	1		(R.H.)
20	T162396	LUBRICATION FITTING	1		
21	AH148164	HYDRAULIC CYLINDER KIT	1		CYLINDER ROD REPAIR KIT
22	AH149844	KIT	1		CYLINDER BORE REPAIR KIT

EXTENDIBLE DIPPERSTICK CYLINDER
(SERIAL NO. -911725)

T136793 -UN-29DEC00

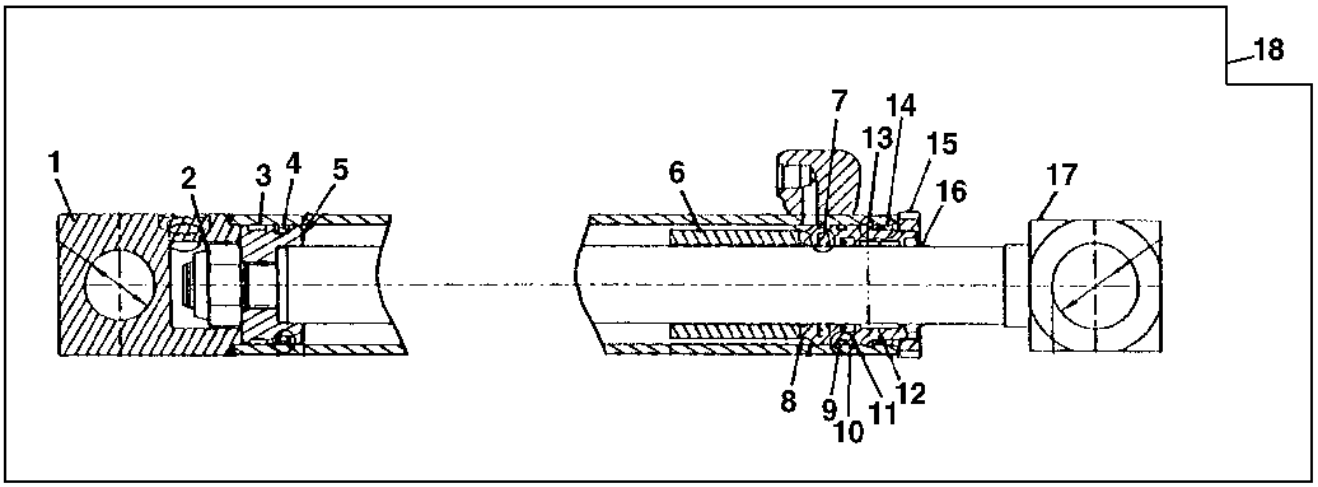

7,11,12,16–19 3,4,9,10,14–20

T136793

KEY	PART NO.	PART NAME	QTY	SERIAL NO.	REMARKS
1	AH152477	HYDRAULIC CYLINDER BARREL	1		
2	R81866	NUT	1		
3	R81774	SCRAPER RING	1		(BK)
4	RE20342	SEAL	1		(BK)
5	R86085	PISTON	1		
6	H151790	BUSHING	1		
7	AH146560	SEAL	1		(RK)
8	H154402	HYDR. CYLINDER ROD GUIDE	1		
9	R83469	O-RING	1		(BK)
10	R81195	BACK-UP RING	1		(BK)
11	H152202	SEAL	1		(RK)
12	H152793	BACK-UP RING	1		(RK)
13	R81786	RING	1		
14	R91728	BACK-UP RING	1		(BK)
15	R81792	NUT	1		
16	AH146556	SEAL	1		(RK)
17	.....	ROD	1	-903324	(SUB AH175520) (AH146264 NO LONGER AVAILABLE)
	AH175520	ROD	1	903325-	
18	.....	HYDRAULIC CYLINDER	1	-903324	(AH152474 NO LONGER AVAILABLE) (SUB AH206600)
	.....	HYDRAULIC CYLINDER	1	903325-	(AH175183 NO LONGER AVAILABLE) (SUB AH206600)
19	AH149813	HYDRAULIC CYLINDER KIT	1		INCLUDES ALL (RK) PARTS (ROD SEAL)
20	RE20428	HYDRAULIC CYLINDER KIT	1		INCLUDES ALL (BK) PARTS (BORE SEAL)

THIS PARTS LISTING IS CONTINUED

EXTENDIBLE DIPPERSTICK CYLINDER
(SERIAL NO. 911726-)

T161388 -UN-12NOV02

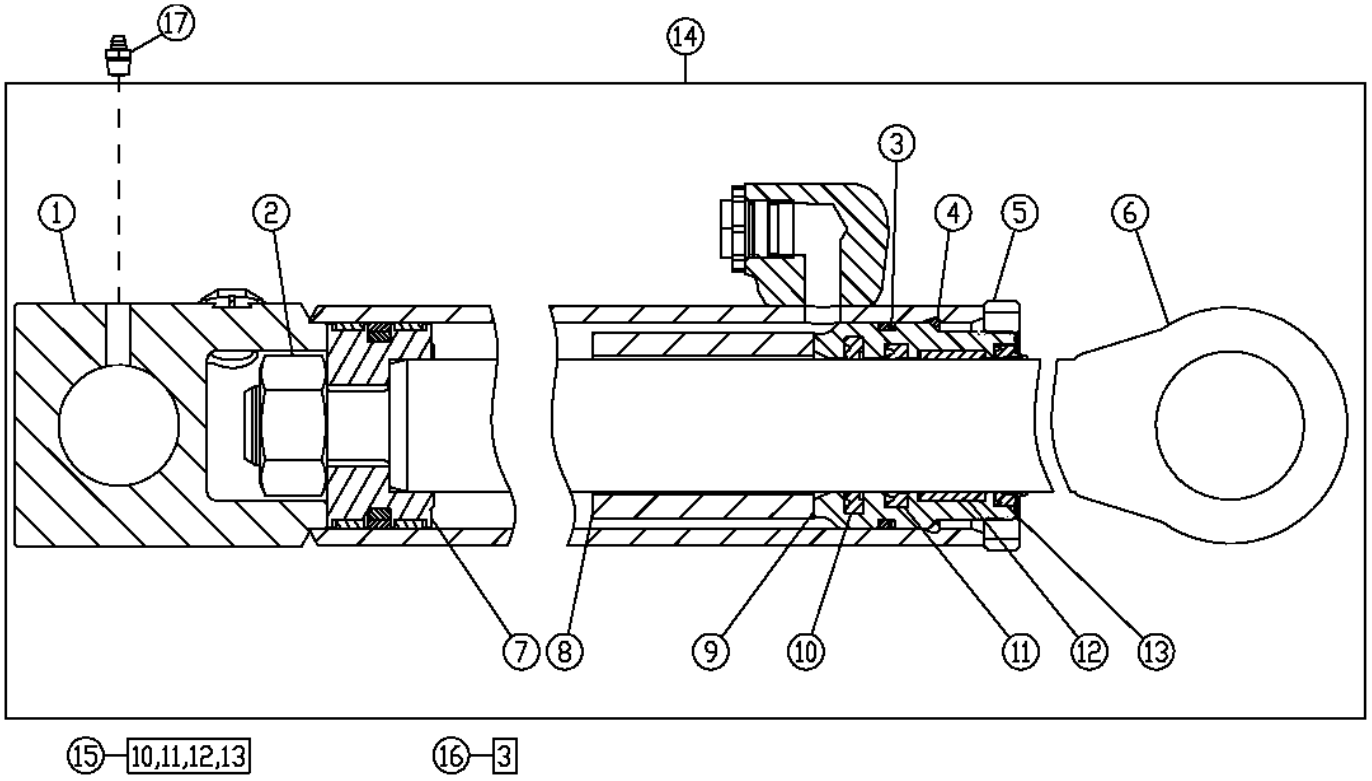

T161388

KEY	PART NO.	PART NAME	QTY	SERIAL NO.	REMARKS
1	AH207704	HYDRAULIC CYLINDER BARREL	1		
2	H170538	NUT	1		
3	R81195	BACK-UP RING	1		
4	R81786	RING	1		
5	R81792	NUT	1		
6	AH175520	ROD	1		
7	AH165962	PISTON	1		
8	H151790	BUSHING	1		
9	H154402	HYDR. CYLINDER ROD GUIDE	1		
10	AH146560	SEAL	1		
11	H152202	SEAL	1		
12	H152793	BACK-UP RING	1		
13	AH146556	SEAL	1		
14	AH206600	HYDRAULIC CYLINDER	1		
15	AH149813	HYDRAULIC CYLINDER KIT	1		
16	AH202070	HYDRAULIC CYLINDER KIT	1		
17	T162396	LUBRICATION FITTING	1		

MEMORANDA

NUMERICAL INDEX

PART NO.	GRID	KEY	PAGE
AB2599R	1I23	1	1314 - 3
AD2062R	1J25	2	1673 - 5
AE37072	2I2	5A	3115 - 11
AE37072	2I2	5B	3115 - 11
AE37072	2I2	14	3115 - 11
AE37072	3B21	1	3315 - 7
AE37072	3B23	14	3315 - 9
AH103182	1G23	11	0520 - 3
AH104837	1G23	10	0520 - 3
AH105968	2G10	29	2160 - 15
AH125760	2G2	18	2160 - 9
AH125760	2G4	6	2160 - 11
AH125760	2G12	9	2160 - 17
AH125760	2G14	14	2160 - 17B
AH125760	3E11	24	3363 - 1B
AH134479	1H23	3	0960 - 18
AH135785	1H23	7	0960 - 18
AH140044	1G25	2	0520 - 5
AH144020	2E4	60	1830 - 7
AH146264	3G4	17	3365 - 8
AH146318	3F25	16	3365 - 4
AH146556	3G4	16	3365 - 8
AH146556	3G5	13	3365 - 9
AH146557	2J25	15	3165 - 2
AH146557	2K1	13	3165 - 3
AH146557	2K3	6	3165 - 5
AH146557	3G2	18	3365 - 6
AH146557	3G3	15	3365 - 7
AH146559	3F24	19	3365 - 3
AH146559	3F25	14	3365 - 4
AH146559	3G1	14	3365 - 5
AH146560	3G4	7	3365 - 8
AH146560	3G5	10	3365 - 9
AH146561	2J25	7	3165 - 2
AH146561	2K1	5	3165 - 3
AH146561	2K3	11	3165 - 5
AH146561	3G2	11	3365 - 6
AH146561	3G3	10	3365 - 7
AH146563	3F24	15	3365 - 3
AH146563	3F25	11	3365 - 4
AH146563	3G1	10	3365 - 5
AH146874	2J25	19	3165 - 2
AH146875	2J25	18	3165 - 2
AH146875	2K1	15	3165 - 3
AH146876	2J25	1	3165 - 2
AH146876	2K1	1	3165 - 3
AH147367	3F24	21	3365 - 3
AH147888	3G2	23	3365 - 6
AH147889	3G2	10	3365 - 6
AH147893	3G2	21	3365 - 6
AH147902	3G3	18	3365 - 7
AH148164	2J25	27	3165 - 2
AH148164	2K1	18	3165 - 3
AH148164	2K3	20	3165 - 5
AH148164	3G2	25	3365 - 6
AH148164	3G3	21	3365 - 7
AH148674	3G3	19	3365 - 7
AH148675	3G3	19	3365 - 7
AH148676	3G3	1	3365 - 7
AH148677	3G3	1	3365 - 7
AH149001	3F24	23	3365 - 3
AH149007	3F23	1	3365 - 2
AH149791	3F25	17	3365 - 4
AH149810	1H23	21	0960 - 18
AH149813	3G4	19	3365 - 8
AH149813	3G5	15	3365 - 9
AH149815	3F24	26	3365 - 3
AH149815	3F25	20	3365 - 4
AH149815	3G1	20	3365 - 5
AH149842	2J25	12	3165 - 2
AH149843	2K3	19	3165 - 5
AH149843	3G2	17	3365 - 6
AH149844	3F25	19	3365 - 4
AH149844	3G3	22	3365 - 7
AH149846	3G1	19	3365 - 5
AH149848	3F24	25	3365 - 3
AH150211	3F25	1	3365 - 4
AH151380	1H23	14	0960 - 18
AH151381	1H23	11	0960 - 18
AH152474	3D2	14	3346 - 5
AH152474	3G4	18	3365 - 8
AH152477	3G4	1	3365 - 8
AH154774	1H23	19	0960 - 18
AH158579	3G1	1	3365 - 5
AH162040	2K3	2	3165 - 5
AH164138	3G1	17	3365 - 5
AH164139	3G1	16	3365 - 5
AH165826	2K1	4	3165 - 3
AH165962	3G5	7	3365 - 9
AH173163	3G2	23	3365 - 6
AH173567	2K3	18	3165 - 5
AH173568	2K3	17	3165 - 5
AH175183	3D2	14	3346 - 5
AH175183	3G4	18	3365 - 8
AH175514	3F24	23	3365 - 3
AH175516	3F24	21	3365 - 3
AH175520	3G4	17	3365 - 8
AH175520	3G5	6	3365 - 9
AH202070	3G5	16	3365 - 9
AH202080	2K1	19	3165 - 3
AH206600	3D2	14	3346 - 5
AH206600	3G4	18	3365 - 8
AH206600	3G5	14	3365 - 9
AH207401	2J25	19	3165 - 2
AH207401	2K1	16	3165 - 3
AH207704	3G5	1	3365 - 9
AH61472	2G10	14	2160 - 15
AH64349	1C16	34	0341 - 3
AH64349	2G20	8	2160 - 23
AH75162	2G10	30	2160 - 15
AH86866	1B2	3	0110 - 2
AH89557	1G19	23	0510 - 3
AH89557	1K10	12	1674 - 9
AH89557	2E4	42	1830 - 7
AH96317	1H6	8	0560 - 3
AL111096	1C9	5	0250 - 13
AL113451	1C2	3	0250 - 5
AL113460	1C2	5	0250 - 5
AL117021	1C5	4	0250 - 8
AL117022	1C5	6	0250 - 8
AL118173	1H11	1	0960 - 5
AL155227	1H9	1	0960 - 3
AL155227	1H11	1	0960 - 5
AL32877	1B8	16	0201 - 3
AL79794	1B13	5	0210 - 5
AL79794	1C9	2	0250 - 13
AL79808	1C2	12	0250 - 5
AL79901	1C4	2	0250 - 7
AL79902	1C4	1	0250 - 7
AL79950	1C4	21	0250 - 7
AL79951	1C4	11	0250 - 7
AL80542	1C2	2	0250 - 5
AL81853	1C5	4	0250 - 8
AL81854	1C5	6	0250 - 8
AM102062	2C2	1	1814 - 3
AM102062	2D6	11	1816 - 15
AM102062	2D8	33	1816 - 17
AM118928	2D2	6	1816 - 11
AM3762T	3F20	24	3363 - 31
AN132749	1B3	2	0110 - 3
AN132749	1B4	2	0120 - 1
AN205068	1G19	14	0510 - 3
AP22688	3F20	23	3363 - 31
AR21836	1H14	2	0960 - 9
AR21836	1H16	32	0960 - 11
AR21836	1H18	2	0960 - 13
AR21836	1H20	32	0960 - 15
AR21837	1J9	1	1369 - 7
AR21837	3F18	15	3363 - 29
AR21839	2J22	31	3163 - 7
AR21839	3E23	35	3363 - 9
AR21841	3F4	4	3363 - 15
AR21842	2E2	24	1830 - 5
AR21842	2J22	29	3163 - 7
AR21842	3F14	11	3363 - 25
AR21999	1G17	1	0505 - 7
AR27806	1B18	1	0230 - 4
AR40418	1G25	11	0520 - 5
AR44361	1G23	18	0520 - 3
AR48041	1J25	5	1673 - 5
AR48236	1H6	2	0560 - 3
AR48236	1I11	13	1060 - 9
AR48236	1I13	8	1060 - 11
AR48236	2G10	8	2160 - 15
AR48236	2G12	5	2160 - 17
AR48236	3F18	32	3363 - 29
AR62936	2E2	17	1830 - 5
AR65294	1G19	12	0510 - 3
AR65507	1E5	9	0403 - 2
AR67069	1J18	8	1671 - 7
AR73144	1K2	9	1674 - 3
AR77962	1H6	25	0560 - 3
AR77962	2E4	46	1830 - 7
AR77962	2G10	44	2160 - 15
AR77962	2G16	4	2160 - 19
AR83396	3B7	7	3302 - 3
AR83396	3B9	6	3302 - 5
AR83396	3D2	22	3346 - 5
AR85327	3E25	4	3363 - 11
AR85328	2G6	8	2160 - 13
AR85328	2G8	7	2160 - 13B
AR85328	2G10	26	2160 - 15
AR85519	1F2	1	0413 - 3
AR91896	1G23	23	0520 - 3
AR91896	2C2	10	1814 - 3
AR91896	2E16	16	1910 - 3
AR94101	1K10	3	1674 - 9
AR94101	2J22	4	3163 - 7
AT101565	2G16	20	2160 - 19
AT101779	2G10	7	2160 - 15
AT103399	1K10	34	1674 - 9
AT103919	2F5	1	2002 - 3
AT106397	2D16	6	1821 - 9
AT108777	2F20	24	2160 - 5
AT108777	2F20	35	2160 - 5
AT108777	2F20	40	2160 - 5
AT112810	2E7	2	1830 - 10
AT113921	1C9	6	0250 - 13
AT118766	2C2	22	1814 - 3
AT120461	2F7	1	2004 - 3
AT121123	3E7	5	3362 - 30

NUMERICAL INDEX - CONTINUED

PART NO.	GRID	KEY	PAGE
AT124107	2H22	13	3115 - 7
AT124107	2H24	8	3115 - 9
AT125801	2D16	2	1821 - 9
AT125805	2D16	18	1821 - 9
AT125829	2D16	19	1821 - 9
AT130104	1J25	8	1673 - 5
AT130104	1J25	10	1673 - 5
AT130104	1J25	14	1673 - 5
AT130208	1J7	1	1369 - 5
AT135767	2J10	17	3162 - 27
AT13740	1E8	4	0404 - 3
AT13740	1G19	32	0510 - 3
AT139694	1H9	5	0960 - 3
AT139694	1H11	5	0960 - 5
AT141011	1K10	8	1674 - 9
AT145651	2G8	9	2160 - 13B
AT145792	2C2	13	1814 - 3
AT145929	1K8	22	1674 - 7
AT145931	1K8	22	1674 - 7
AT150725	2B18	25	1811 - 3
AT150762	3B23	9	3315 - 9
AT150763	3B23	8	3315 - 9
AT150764	3B23	31	3315 - 9
AT151036	2E2	3	1830 - 5
AT152180	1J9	14	1369 - 7
AT156440	2E7	4	1830 - 10
AT156445	1H6	11	0560 - 3
AT157327	3D5	16	3348 - 3
AT158197	3B23	29	3315 - 9
AT158198	3B23	13	3315 - 9
AT159811	1K10	29	1674 - 9
AT161527	2G2	9	2160 - 9
AT161527	2G24	1	2160 - 27
AT161528	2G24	1	2160 - 27
AT161638	1H6	13	0560 - 3
AT161638	2G16	2	2160 - 19
AT162180	2H22	4	3115 - 7
AT162180	2H24	4	3115 - 9
AT162848	2E11	44	1830 - 15
AT163088	1K2	19	1674 - 3
AT164442	1B17	4	0230 - 3
AT164442	1B19	3	0230 - 5
AT164442	1B23	4	0250 - 2
AT164803	2B18	10	1811 - 3
AT164804	2B18	8	1811 - 3
AT165288	2B18	15	1811 - 3
AT165288	2B20	4	1811 - 5
AT167118	1C4	3	0250 - 7
AT167119	1C4	3	0250 - 7
AT167183	1H24	6	0960 - 19
AT167332	1H22	13	0960 - 17
AT167399	1K10	27	1674 - 9
AT168632	1H12	7	0960 - 6
AT169087	2H22	18	3115 - 7
AT169087	2H24	14	3115 - 9
AT169087	2I2	9	3115 - 11
AT169087	2I4	4	3115 - 13
AT169087	3B19	10	3315 - 5
AT169087	3B21	2	3315 - 7
AT169087	3B23	24	3315 - 9
AT169087	3B25	19	3315 - 11
AT169087	3C2	9	3315 - 11B
AT169087	3C4	1	3315 - 13
AT169087	3C6	1	3315 - 13B
AT169087	3C8	7	3315 - 15
AT169087	3C16	1	3315 - 23
AT169175	2E6	6	1830 - 9
AT169175	2E7	3	1830 - 10
AT169175	2E7	5	1830 - 10
AT169175	2E7	15	1830 - 10
AT169180	2E7	1	1830 - 10
AT169373	2I16	26	3162 - 9
AT169373	2I18	25	3162 - 11
AT169512	3B23	2	3315 - 9
AT169550	1B3	1	0110 - 3
AT169654	1B17	7	0230 - 3
AT169804	2B3	12	1740 - 3
AT169831	3C24	4	3346 - 3
AT169831	3D2	4	3346 - 5
AT169929	2E7	4	1830 - 10
AT170061	3F20	3	3363 - 31
AT170204	1C2	1	0250 - 5
AT170205	1C2	1	0250 - 5
AT170206	1C2	6	0250 - 5
AT170208	1C2	6	0250 - 5
AT170209	1C2	4	0250 - 5
AT171023	2E6	30	1830 - 9
AT171077	3C22	1	3345 - 3
AT171078	3C22	11	3345 - 3
AT171079	3C22	5	3345 - 3
AT171079	3D2	13	3346 - 5
AT171135	1B23	8	0250 - 2
AT171162	1G17	2	0505 - 7
AT171352	3C24	13	3346 - 3
AT171403	3D13	22	3362 - 11
AT171404	3D17	22	3362 - 15
AT171539	1G17	5	0505 - 7
AT171550	2H22	5	3115 - 7
AT171550	2H24	5	3115 - 9
AT171637	1B14	6	0210 - 6
AT171644	1B13	1	0210 - 5
AT171702	3C19	7	3344 - 2
AT171758	3F2	5	3363 - 13
AT171759	3F2	8	3363 - 13
AT172156	3F4	12	3363 - 15
AT172179	2G24	15	2160 - 27
AT172330	3F4	2	3363 - 15
AT172386	2H15	21	3102 - 11
AT172609	1H14	25	0960 - 9
AT172609	1H18	25	0960 - 13
AT172609	1H24	6	0960 - 19
AT172609	1H24	9	0960 - 19
AT172610	3E15	8	3363 - 3
AT172610	3E15	9	3363 - 3
AT172908	1C18	4	0350 - 1
AT172937	2I20	15	3162 - 13
AT172937	3D15	17	3362 - 13
AT173046	2G12	20	2160 - 17
AT173128	2J18	22	3163 - 5
AT173129	2J18	25	3163 - 5
AT173129	2J20	28	3163 - 5B
AT173193	2C12	2	1814 - 13
AT173254	1J10	3	1370 - 2
AT173254	1J10	4	1370 - 2
AT173313	2D22	5	1821 - 15
AT173313	2D22	6	1821 - 15
AT173313	2D22	36	1821 - 15
AT173313	2D22	38	1821 - 15
AT173314	2D22	27	1821 - 15
AT173315	2D22	10	1821 - 15
AT173321	2D22	16	1821 - 15
AT173321	2D22	17	1821 - 15
AT173321	2D22	20	1821 - 15
AT173321	2D22	39	1821 - 15
AT173385	1G17	7	0505 - 7
AT173400	1H4	5	0540 - 3
AT173610	1G19	10	0510 - 3
AT173839	3D11	1	3362 - 9
AT173840	2J6	4	3162 - 23
AT173840	3D11	9	3362 - 9
AT173885	2I20	1	3162 - 13
AT173893	3D19	1	3362 - 17
AT173894	3D13	1	3362 - 11
AT173895	3D15	1	3362 - 13
AT173896	3D17	1	3362 - 15
AT173897	3D21	1	3362 - 19
AT173897	3E3	1	3362 - 26
AT173923	3E19	4	3363 - 5
AT173933	3D2	25	3346 - 5
AT174217	2I16	27	3162 - 9
AT174348	2C12	7	1814 - 13
AT174355	3E19	6	3363 - 5
AT174365	1C17	2	0341 - 4
AT174450	3E19	7	3363 - 5
AT174454	3E19	5	3363 - 5
AT174455	3E21	21	3363 - 7
AT174455	3E23	31	3363 - 9
AT174456	3E21	20	3363 - 7
AT174456	3E23	30	3363 - 9
AT174473	3E25	9	3363 - 11
AT174474	3E25	6	3363 - 11
AT174475	3F4	23	3363 - 15
AT174476	3F4	24	3363 - 15
AT174604	3E23	4	3363 - 9
AT174605	3E23	7	3363 - 9
AT174606	3E25	8	3363 - 11
AT174607	3E25	5	3363 - 11
AT174631	3C18	15	3343 - 3
AT174697	2E6	26	1830 - 9
AT174743	2G16	1	2160 - 19
AT174898	1C17	1	0341 - 4
AT174907	3E21	1	3363 - 7
AT174908	3E21	3	3363 - 7
AT175069	1K2	5	1674 - 3
AT175070	1K2	4	1674 - 3
AT175071	1K2	2	1674 - 3
AT175072	2C12	13	1814 - 13
AT175177	3F10	32	3363 - 21
AT175177	3F12	22	3363 - 23
AT175220	1K12	14	1674 - 11
AT175220	3D11	1	3362 - 9
AT175278	1G23	20	0520 - 3
AT175300	1K2	1	1674 - 3
AT175344	1G23	16	0520 - 3
AT175345	1G23	17	0520 - 3
AT175353	2D16	16	1821 - 9
AT175357	1G23	13	0520 - 3
AT175374	1H4	10	0540 - 3
AT175402	3D2	29	3346 - 5
AT175403	3D2	1	3346 - 5
AT175436	2D16	3	1821 - 9
AT175603	1J23	5	1673 - 3
AT175604	1K12	1	1674 - 11
AT175622	1H24	6	0960 - 19
AT175648	3E15	7	3363 - 3
AT176157	3F2	4	3363 - 13
AT176491	1B13	2	0210 - 5
AT177204	2G20	6	2160 - 23
AT177227	2E2	10	1830 - 5
AT177540	3E25	7	3363 - 11
AT177540	3F14	7	3363 - 25

NUMERICAL INDEX - CONTINUED

PART NO.	GRID	KEY	PAGE
AT177613	3E19	8	3363 - 5
AT177613	3E25	15	3363 - 11
AT177613	3F4	25	3363 - 15
AT177614	3E21	22	3363 - 7
AT177614	3E23	32	3363 - 9
AT177614	3E25	17	3363 - 11
AT177615	3E19	14	3363 - 5
AT177702	1D2	20	0350 - 9
AT177703	1D17	10	0360 - 7
AT177812	3C19	17	3344 - 2
AT178002	1C9	1	0250 - 13
AT178026	3C19	16	3344 - 2
AT178065	2D10	21	1821 - 3
AT178274	3F2	2	3363 - 13
AT178315	2B6	3	1746 - 5
AT178326	2I20	13	3162 - 13
AT178356	2G2	16	2160 - 9
AT178356	2G4	8	2160 - 11
AT178362	2I24	21	3162 - 17
AT178362	2I24	36	3162 - 17
AT178362	2J4	14	3162 - 21
AT178362	3D17	23	3362 - 15
AT178362	3D17	51	3362 - 15
AT178363	3D13	51	3362 - 11
AT178371	3D13	53	3362 - 11
AT178371	3D17	53	3362 - 15
AT178371	3D21	24	3362 - 19
AT178372	2I16	42	3162 - 9
AT178372	2I20	38	3162 - 13
AT178372	2I24	37	3162 - 17
AT178372	3D13	54	3362 - 11
AT178372	3D15	25	3362 - 13
AT178372	3D17	54	3362 - 15
AT178372	3D19	35	3362 - 17
AT178372	3D21	25	3362 - 19
AT178372	3D25	22	3362 - 23
AT178387	1B24	4	0250 - 3
AT178389	1B24	4	0250 - 3
AT178390	1C14	1	0325 - 1
AT178394	1G19	7	0510 - 3
AT178402	3D19	34	3362 - 17
AT178413	3F4	21	3363 - 15
AT178467	3D23	2	3362 - 21
AT178468	3D23	4	3362 - 21
AT178526	1K4	11	1674 - 5
AT178542	1G23	19	0520 - 3
AT178632	3E2	19	3362 - 25
AT178645	1H24	10	0960 - 19
AT178646	1H24	11	0960 - 19
AT178678	2F20	63	2160 - 5
AT178680	2F20	67	2160 - 5
AT178693	2G20	2	2160 - 23
AT178730	1C17	9	0341 - 4
AT178731	1C17	9	0341 - 4
AT178745	1I21	1	1313 - 3
AT178792	3F6	35	3363 - 17
AT178794	3E3	7	3362 - 26
AT178796	3F10	45	3363 - 21
AT178797	3F12	36	3363 - 23
AT178798	3F4	38	3363 - 15
AT178840	1J5	1	1369 - 3
AT178842	1J5	1	1369 - 3
AT178844	1J5	1	1369 - 3
AT178930	2E9	28	1830 - 13
AT179046	3E23	18	3363 - 9
AT179053	1J9	15	1369 - 7
AT179065	1C14	2	0325 - 1
AT179153	1D11	3	0360 - 1
AT179238	3F4	17	3363 - 15
AT179287	1B2	8	0110 - 2
AT179312	1C18	3	0350 - 1
AT179314	1C20	7	0350 - 3
AT179316	1C16	8	0341 - 3
AT179319	1D17	10	0360 - 7
AT179320	1D17	10	0360 - 7
AT179323	1D11	11	0360 - 1
AT179364	3F18	20	3363 - 29
AT179400	3F6	28	3363 - 17
AT179400	3F8	28	3363 - 19
AT179405	3F6	18	3363 - 17
AT179405	3F8	18	3363 - 19
AT179406	3F6	19	3363 - 17
AT179406	3F8	19	3363 - 19
AT179409	3F6	20	3363 - 17
AT179409	3F6	21	3363 - 17
AT179409	3F8	20	3363 - 19
AT179409	3F8	21	3363 - 19
AT179411	3F8	14	3363 - 19
AT179414	3F6	11	3363 - 17
AT179423	2D10	21	1821 - 3
AT179466	1D10	2	0350 - 17
AT179468	1D10	4	0350 - 17
AT179469	1D2	5	0350 - 9
AT179469	1D6	13	0350 - 13
AT179469	1D8	13	0350 - 15
AT179470	1D2	3	0350 - 9
AT179470	1D6	15	0350 - 13
AT179470	1D8	15	0350 - 15
AT179471	1D4	17	0350 - 11
AT179471	1D6	17	0350 - 13
AT179471	1D8	17	0350 - 15
AT179472	1C22	1	0350 - 5
AT179472	1C24	1	0350 - 7
AT179472	1D8	1	0350 - 15
AT179472	1D10	20	0350 - 17
AT179473	1D6	9	0350 - 13
AT179473	1D8	9	0350 - 15
AT179474	3C20	6	3344 - 3
AT179475	3C20	1	3344 - 3
AT179481	1D2	19	0350 - 9
AT179491	1D13	10	0360 - 3
AT179491	1D15	5	0360 - 5
AT179492	1D13	9	0360 - 3
AT179498	1B11	14	0210 - 3
AT179499	1B8	7	0201 - 3
AT179499	1B9	2	0210 - 1
AT179500	1B8	5	0201 - 3
AT179501	1B8	9	0201 - 3
AT179502	1B8	4	0201 - 3
AT179503	1I3	2	1011 - 3
AT179504	1B11	19	0210 - 3
AT179504	1I3	13	1011 - 3
AT179505	1B11	21	0210 - 3
AT179505	1I3	21	1011 - 3
AT179537	1B13	6	0210 - 5
AT179537	1I16	19	1111 - 3
AT179537	1I18	20	1111 - 5
AT179538	1B9	4	0210 - 1
AT179588	2F24	27	2160 - 7
AT179590	1B24	8	0250 - 3
AT179596	1B24	1	0250 - 3
AT179686	2D12	31	1821 - 5
AT179686	2D14	22	1821 - 7
AT179687	2D14	19	1821 - 7
AT179688	2D12	14	1821 - 5
AT179689	3D3	5	3346 - 6
AT179690	3D3	1	3346 - 6
AT179691	2D12	22	1821 - 5
AT179691	2D12	27	1821 - 5
AT179692	2D12	26	1821 - 5
AT179692	2D14	18	1821 - 7
AT179693	2D16	32	1821 - 9
AT179694	2D16	27	1821 - 9
AT179699	2D16	13	1821 - 9
AT179714	2D18	6	1821 - 11
AT179899	1I16	26	1111 - 3
AT179899	1I18	25	1111 - 5
AT179904	3D2	31	3346 - 5
AT179995	1J9	3	1369 - 7
AT179996	1J9	5	1369 - 7
AT180076	3F10	33	3363 - 21
AT180076	3F12	24	3363 - 23
AT180079	3F10	36	3363 - 21
AT180079	3F12	27	3363 - 23
AT180081	3F10	33	3363 - 21
AT180081	3F12	24	3363 - 23
AT180082	3F10	34	3363 - 21
AT180082	3F12	25	3363 - 23
AT180083	3F10	35	3363 - 21
AT180083	3F12	26	3363 - 23
AT180086	3F10	36	3363 - 21
AT180086	3F12	27	3363 - 23
AT180122	1H24	8	0960 - 19
AT180205	3F10	22	3363 - 21
AT180206	3F12	20	3363 - 23
AT180208	3F10	11	3363 - 21
AT180212	3F10	18	3363 - 21
AT180316	3F18	28	3363 - 29
AT180333	1J5	1	1369 - 3
AT180334	1J5	1	1369 - 3
AT180350	2E9	23	1830 - 13
AT180374	3F18	7	3363 - 29
AT180408	3F10	34	3363 - 21
AT180408	3F12	25	3363 - 23
AT180409	3F10	35	3363 - 21
AT180409	3F12	26	3363 - 23
AT180485	1K4	14	1674 - 5
AT180705	1K10	31	1674 - 9
AT180706	1K10	38	1674 - 9
AT180828	3F14	10	3363 - 25
AT180839	2H9	8	3102 - 5
AT180859	3F10	17	3363 - 21
AT180860	3F10	28	3363 - 21
AT180861	3F10	43	3363 - 21
AT180885	3F10	5	3363 - 21
AT180887	2G12	15	2160 - 17
AT181108	3F12	13	3363 - 23
AT181110	3F12	11	3363 - 23
AT181111	3F12	17	3363 - 23
AT181146	3F12	31	3363 - 23
AT181192	3F16	7	3363 - 27
AT181292	2J22	1	3163 - 7
AT181327	3D7	9	3348 - 5
AT181422	2J22	9	3163 - 7
AT181510	3F12	1	3363 - 23
AT181530	2E9	3	1830 - 13
AT181582	1G17	6	0505 - 7
AT181685	3F6	5	3363 - 17
AT181686	3F6	6	3363 - 17
AT181714	3C22	6	3345 - 3
AT181715	3C22	16	3345 - 3

NUMERICAL INDEX - CONTINUED

PART NO.	GRID	KEY	PAGE
AT181856	3E6	7	3362 - 29
AT182178	3F18	31	3363 - 29
AT182197	3D3	7	3346 - 6
AT182248	3D13	23	3362 - 11
AT182257	1G17	9	0505 - 7
AT182387	1B17	22	0230 - 3
AT182388	1B17	29	0230 - 3
AT182520	1C13	1	0315 - 5
AT182602	1J5	1	1369 - 3
AT182603	1J5	1	1369 - 3
AT182735	1B24	9	0250 - 3
AT182947	1D13	14	0360 - 3
AT182949	2D22	31	1821 - 15
AT182949	2D22	44	1821 - 15
AT182954	2D22	40	1821 - 15
AT183219	1H2	3	0530 - 3
AT183222	1G17	11	0505 - 7
AT183246	1K15	4	1674 - 14
AT183389	1H6	22	0560 - 3
AT183411	2E18	6	1913 - 3
AT183426	1H2	7	0530 - 3
AT183428	2E18	2	1913 - 3
AT183590	2G24	8	2160 - 27
AT183590	2I20	13	3162 - 13
AT183590	2I20	41	3162 - 13
AT183717	2J16	22	3163 - 3
AT183718	2J16	23	3163 - 3
AT183721	2J16	18	3163 - 3
AT183722	2J16	17	3163 - 3
AT183823	1K10	23	1674 - 9
AT183869	3E11	20	3363 - 1B
AT183874	1H6	15	0560 - 3
AT183881	1H6	4	0560 - 3
AT183881	2J22	37	3163 - 7
AT183972	1D13	42	0360 - 3
AT183973	1D15	15	0360 - 5
AT183995	1C16	29	0341 - 3
AT184007	1D15	14	0360 - 5
AT184042	1D4	1	0350 - 11
AT184042	1D6	1	0350 - 13
AT184043	1D6	3	0350 - 13
AT184045	1D8	3	0350 - 15
AT184048	1C22	3	0350 - 5
AT184052	1C22	17	0350 - 5
AT184052	1C24	17	0350 - 7
AT184052	1D2	1	0350 - 9
AT184053	1C24	3	0350 - 7
AT184055	1D2	16	0350 - 9
AT184056	1D2	18	0350 - 9
AT184057	1D4	3	0350 - 11
AT184059	1C16	14	0341 - 3
AT184060	1C16	4	0341 - 3
AT184061	1C16	5	0341 - 3
AT184062	1C16	6	0341 - 3
AT184064	2I8	7	3140 - 5
AT184089	2C8	1	1814 - 9
AT184137	2G10	27	2160 - 15
AT184156	2H22	7	3115 - 7
AT184161	2G24	15	2160 - 27
AT184196	3C18	15	3343 - 3
AT184206	3F18	30	3363 - 29
AT184335	1K8	24	1674 - 7
AT184341	2H18	20	3115 - 3
AT184385	2F24	26	2160 - 7
AT184397	1H11	6	0960 - 5
AT184406	1B8	25	0201 - 3
AT184407	2C2	2	1814 - 3
AT184416	2C2	20	1814 - 3
AT184417	2C2	20	1814 - 3
AT184494	3F14	8	3363 - 25
AT184519	2G22	1	2160 - 25
AT184522	2E9	37	1830 - 13
AT184524	2C4	40	1814 - 5
AT184524	2C4	48	1814 - 5
AT184530	2E4	40	1830 - 7
AT184547	1K12	14	1674 - 11
AT184547	3D23	13	3362 - 21
AT184578	1I5	7	1060 - 3
AT184578	1I7	10	1060 - 5
AT184578	1I7	29	1060 - 5
AT184579	1I5	14	1060 - 3
AT184590	2D4	24	1816 - 13
AT184592	1I5	11	1060 - 3
AT184598	3B19	3	3315 - 5
AT184599	3B19	2	3315 - 5
AT184609	2D18	1	1821 - 11
AT184609	2D20	2	1821 - 13
AT184646	2I8	11	3140 - 5
AT184647	2I8	4	3140 - 5
AT184651	2C4	40	1814 - 5
AT184651	2C4	48	1814 - 5
AT184652	2C2	19	1814 - 3
AT184682	2H18	6	3115 - 3
AT184682	2H20	9	3115 - 5
AT184704	3F18	21	3363 - 29
AT184716	1H2	1	0530 - 3
AT184719	2C2	19	1814 - 3
AT184728	1H9	6	0960 - 3
AT184736	1J25	1	1673 - 5
AT184737	1J25	4	1673 - 5
AT184744	2I2	11	3115 - 11
AT184761	2B20	1	1811 - 5
AT184767	2C2	13	1814 - 3
AT184845	2I6	8	3140 - 3
AT184848	1H2	1	0530 - 3
AT184894	1I9	2	1060 - 7
AT184900	1H14	1	0960 - 9
AT184900	1H16	31	0960 - 11
AT184900	1H18	1	0960 - 13
AT184900	1H20	31	0960 - 15
AT184913	1G23	1	0520 - 3
AT184948	2G16	16	2160 - 19
AT184965	2C10	7	1814 - 11
AT184966	2C10	8	1814 - 11
AT184968	2C14	4	1814 - 15
AT184969	2C14	2	1814 - 15
AT184970	2C14	1	1814 - 15
AT184972	1J25	15	1673 - 5
AT185004	2E22	1	1921 - 3
AT185048	2B3	8	1740 - 3
AT185062	3D5	1	3348 - 3
AT185077	2G10	13	2160 - 15
AT185078	2G10	7	2160 - 15
AT185311	3C10	5	3315 - 17
AT185317	3C10	4	3315 - 17
AT185337	3B21	39	3315 - 7
AT185338	3B21	38	3315 - 7
AT185339	3B21	20	3315 - 7
AT185340	3B21	8	3315 - 7
AT185366	2F3	1	2001 - 3
AT185396	2D4	17	1816 - 13
AT185440	2H18	18	3115 - 3
AT185451	1J25	15	1673 - 5
AT185498	2B20	7	1811 - 5
AT185499	2B20	7	1811 - 5
AT185499	2F3	21	2001 - 3
AT185500	2B20	9	1811 - 5
AT185500	2F3	19	2001 - 3
AT185513	1I9	1	1060 - 7
AT185516	2H9	8	3102 - 5
AT185519	2H9	8	3102 - 5
AT185522	2H7	1	3102 - 3
AT185538	2E16	42	1910 - 3
AT185539	2E16	33	1910 - 3
AT185624	3B19	25	3315 - 5
AT185625	3B25	22	3315 - 11
AT185626	3B21	53	3315 - 7
AT185627	3C8	14	3315 - 15
AT185628	3B23	40	3315 - 9
AT185629	3C4	23	3315 - 13
AT185635	2J22	37	3163 - 7
AT185644	2H13	1	3102 - 9
AT185644	2H13	2	3102 - 9
AT185644	2H13	19	3102 - 9
AT185644	2H15	1	3102 - 11
AT185678	1K10	1	1674 - 9
AT185680	2E16	13	1910 - 3
AT185683	2E16	5	1910 - 3
AT185689	1J14	1	1671 - 3
AT185690	1J14	9	1671 - 3
AT185691	1J16	4	1671 - 5
AT185717	2E16	24	1910 - 3
AT185749	3B21	30	3315 - 7
AT185750	3B21	30	3315 - 7
AT185757	2B18	12	1811 - 3
AT185773	3C10	13	3315 - 17
AT185791	1C16	25	0341 - 3
AT185793	1C22	15	0350 - 5
AT185793	1C24	15	0350 - 7
AT185793	1D4	15	0350 - 11
AT185797	2J16	24	3163 - 3
AT185798	2J16	25	3163 - 3
AT185799	2J16	2	3163 - 3
AT185836	1G21	24	0515 - 3
AT185847	3C10	12	3315 - 17
AT185848	1G21	12	0515 - 3
AT185849	1G21	31	0515 - 3
AT185851	3C14	2	3315 - 21
AT185851	3C14	5	3315 - 21
AT185855	3C14	16	3315 - 21
AT185856	3C14	17	3315 - 21
AT185876	2J22	3	3163 - 7
AT185876	2J22	5	3163 - 7
AT185877	2J22	3	3163 - 7
AT185950	2G24	28	2160 - 27
AT185957	2H18	2	3115 - 3
AT185977	2J18	9	3163 - 5
AT186029	2I10	10	3162 - 3
AT186030	2I10	10	3162 - 3
AT186043	3B21	15	3315 - 7
AT186045	2C18	6	1816 - 5
AT186045	3B21	49	3315 - 7
AT186050	2C18	7	1816 - 5
AT186050	3C8	1	3315 - 15
AT186064	3D9	12	3362 - 7
AT186065	2I14	1	3162 - 7
AT186150	2D16	21	1821 - 9
AT186152	2D10	5	1821 - 3
AT186155	2F5	12	2002 - 3
AT186156	2D10	6	1821 - 3
AT186167	1D11	9	0360 - 1

NUMERICAL INDEX - CONTINUED

PART NO.	GRID	KEY	PAGE
AT186204	2D20	1	1821 - 13
AT186213	1J19	5	1671 - 8
AT186237	1C16	33	0341 - 3
AT186255	2F20	65	2160 - 5
AT186256	2F20	66	2160 - 5
AT186257	2F20	64	2160 - 5
AT186263	2E9	27	1830 - 13
AT186289	2E4	57	1830 - 7
AT186304	2E4	47	1830 - 7
AT186307	2F12	2	2007 - 3
AT186312	1B11	3	0210 - 3
AT186321	2B24	11	1812 - 3
AT186382	3B19	17	3315 - 5
AT186422	2G12	4	2160 - 17
AT186424	2G6	19	2160 - 13
AT186425	2G6	17	2160 - 13
AT186452	1J18	10	1671 - 7
AT186454	2G6	1	2160 - 13
AT186455	2G12	17	2160 - 17
AT186455	2G12	18	2160 - 17
AT186456	2G6	2	2160 - 13
AT186493	2J18	8	3163 - 5
AT186494	2J18	12	3163 - 5
AT186495	2J18	14	3163 - 5
AT186496	2J18	15	3163 - 5
AT186564	1K12	9	1674 - 11
AT186625	1K2	16	1674 - 3
AT186625	1K4	4	1674 - 5
AT186626	1K2	16	1674 - 3
AT186626	1K4	4	1674 - 5
AT186653	2G2	8	2160 - 9
AT186701	2D14	20	1821 - 7
AT186717	1K12	14	1674 - 11
AT186740	1I11	10	1060 - 9
AT186740	1I13	3	1060 - 11
AT186747	1G19	21	0510 - 3
AT186839	1I5	1	1060 - 3
AT186857	2J18	6	3163 - 5
AT186898	2G24	11	2160 - 27
AT186899	2G24	25	2160 - 27
AT186906	1G19	6	0510 - 3
AT186913	2C14	11	1814 - 15
AT186915	3F8	6	3363 - 19
AT186920	3F8	5	3363 - 19
AT186925	1G19	15	0510 - 3
AT186927	1B8	10	0201 - 3
AT186983	3C14	12	3315 - 21
AT187036	2C8	21	1814 - 9
AT187229	2C14	10	1814 - 15
AT187347	1B4	1	0120 - 1
AT187347	1B4	3	0120 - 1
AT187440	2E11	55	1830 - 15
AT187442	2E11	55	1830 - 15
AT187666	1I5	6	1060 - 3
AT187666	1I5	25A	1060 - 3
AT187666	3E9	7	3362 - 33
AT187666	3E11	1	3363 - 1B
AT187668	1H14	23	0960 - 9
AT187668	1H14	24	0960 - 9
AT187668	1H18	23	0960 - 13
AT187669	3E11	22	3363 - 1B
AT187707	1I23	12	1314 - 3
AT187708	1I23	6	1314 - 3
AT187710	2C12	1	1814 - 13
AT187711	1C20	6	0350 - 3
AT187779	2G10	12	2160 - 15
AT187814	1G23	5	0520 - 3
AT187815	1J23	6	1673 - 3
AT187816	1J23	1	1673 - 3
AT187868	1J25	8	1673 - 5
AT187885	3B21	40	3315 - 7
AT188009	1H14	19	0960 - 9
AT188009	1H14	26	0960 - 9
AT188009	1H18	19	0960 - 13
AT188009	1H18	24	0960 - 13
AT188010	1H16	12	0960 - 11
AT188010	1H20	10	0960 - 15
AT188077	3B21	41	3315 - 7
AT188306	2D24	11	1830 - 3
AT188307	2D24	1	1830 - 3
AT188343	1I7	3	1060 - 5
AT188365	2G6	18	2160 - 13
AT188368	2E9	1	1830 - 13
AT188369	2E9	22	1830 - 13
AT188382	1H14	7	0960 - 9
AT188382	1H16	20	0960 - 11
AT188383	1H14	8	0960 - 9
AT188383	1H16	19	0960 - 11
AT188385	1H18	8	0960 - 13
AT188385	1H20	19	0960 - 15
AT188386	1H18	7	0960 - 13
AT188401	2G24	20	2160 - 27
AT188552	2G12	11	2160 - 17
AT188714	1K12	2	1674 - 11
AT188759	2F3	9	2001 - 3
AT188766	2C12	12	1814 - 13
AT188789	3F8	39	3363 - 19
AT188819	2G24	1	2160 - 27
AT189030	2D10	8	1821 - 3
AT189041	1K2	18	1674 - 3
AT189043	2C12	2	1814 - 13
AT189059	2D10	7	1821 - 3
AT189088	1K8	7	1674 - 7
AT189090	2E22	12	1921 - 3
AT189091	2E22	11	1921 - 3
AT189101	2C10	2	1814 - 11
AT189101	2C14	6	1814 - 15
AT189103	2C10	1	1814 - 11
AT189145	1K8	26	1674 - 7
AT189174	1K4	15	1674 - 5
AT189175	2C8	18	1814 - 9
AT189176	2C8	15	1814 - 9
AT189210	2G24	23	2160 - 27
AT189210	2H2	22	2160 - 29
AT189269	2C16	3	1816 - 3
AT189269	3B19	20	3315 - 5
AT189270	2C16	3	1816 - 3
AT189270	3B25	20	3315 - 11
AT189271	2C16	3	1816 - 3
AT189271	3C4	20	3315 - 13
AT189272	2C18	1	1816 - 5
AT189272	3B21	51	3315 - 7
AT189400	1G25	10	0520 - 5
AT189400	2E16	21	1910 - 3
AT189413	2I16	43	3162 - 9
AT189413	2I18	30	3162 - 11
AT189413	2I20	37	3162 - 13
AT189413	2I22	25	3162 - 15
AT189413	2I24	35	3162 - 17
AT189413	2J4	19	3162 - 21
AT189413	2J6	17	3162 - 23
AT189413	3D11	21	3362 - 9
AT189413	3D13	52	3362 - 11
AT189413	3D15	26	3362 - 13
AT189413	3D17	52	3362 - 15
AT189413	3D19	36	3362 - 17
AT189413	3D23	21	3362 - 21
AT189413	3D25	21	3362 - 23
AT189413	3E2	20	3362 - 25
AT189413	3F20	26	3363 - 31
AT189423	2J16	1	3163 - 3
AT189473	1K8	5	1674 - 7
AT189473	1K8	8	1674 - 7
AT189580	3C8	4	3315 - 15
AT189630	1K8	10	1674 - 7
AT189639	2E4	16	1830 - 7
AT189661	2E16	47	1910 - 3
AT189692	1K8	25	1674 - 7
AT189819	2H15	11	3102 - 11
AT189822	2H15	9	3102 - 11
AT189924	2G18	1	2160 - 21
AT190073	3C4	14	3315 - 13
AT190118	3F22	24	3363 - 33
AT190191	2C8	10	1814 - 9
AT190192	2C8	17	1814 - 9
AT190193	2C8	4	1814 - 9
AT190194	2C8	3	1814 - 9
AT190331	2J8	1	3162 - 25
AT190331	2J10	3	3162 - 27
AT190331	2J10	13	3162 - 27
AT190331	2J10	25	3162 - 27
AT190333	2J10	8	3162 - 27
AT190333	2J10	9	3162 - 27
AT190333	2J10	11	3162 - 27
AT190333	2J10	15	3162 - 27
AT190333	2J10	16	3162 - 27
AT190334	2J10	4	3162 - 27
AT190334	2J10	8	3162 - 27
AT190334	2J10	9	3162 - 27
AT190334	2J10	11	3162 - 27
AT190334	2J10	12	3162 - 27
AT190490	2C8	11	1814 - 9
AT190490	2C8	12	1814 - 9
AT190490	2C8	13	1814 - 9
AT190490	2C8	14	1814 - 9
AT190595	1G19	9	0510 - 3
AT190658	2E9	8	1830 - 13
AT190701	2H15	16	3102 - 11
AT190740	2G2	9	2160 - 9
AT190741	2J10	24	3162 - 27
AT190748	2J18	6	3163 - 5
AT190748	2J18	16	3163 - 5
AT190880	2H15	3	3102 - 11
AT190880	2H16	14	3102 - 12
AT190881	2H16	1	3102 - 12
AT190898	2H16	15	3102 - 12
AT190900	2H15	6	3102 - 11
AT190908	2G4	4	2160 - 11
AT190909	2G12	3	2160 - 17
AT191023	2H18	34	3115 - 3
AT191102	2D4	16	1816 - 13
AT191153	1G25	7	0520 - 5
AT191176	2G24	15	2160 - 27
AT191241	3D2	30	3346 - 5
AT191407	1J25	16	1673 - 5
AT191408	1J25	11	1673 - 5
AT191408	1J25	14	1673 - 5
AT191409	1J25	8	1673 - 5
AT191446	3B25	1	3315 - 11
AT191507	2E6	31	1830 - 9
AT191528	3C10	14	3315 - 17

NUMERICAL INDEX - CONTINUED

PART NO.	GRID	KEY	PAGE
AT191557	2E16	14	1910 - 3
AT191574	2F18	1	2160 - 3
AT191575	2F3	6	2001 - 3
AT191629	2C24	11	1816 - 9
AT191631	1G21	4	0515 - 3
AT191688	2C24	19	1816 - 9
AT191701	1K2	6	1674 - 3
AT191721	1K12	14	1674 - 11
AT191721	3D23	1	3362 - 21
AT191722	2I16	1	3162 - 9
AT191723	2I24	1	3162 - 17
AT191723	2J2	7	3162 - 19
AT191723	3D25	1	3362 - 23
AT191723	3E4	2	3362 - 27
AT191747	1K4	12	1674 - 5
AT191760	2E16	40	1910 - 3
AT191813	2G16	5	2160 - 19
AT191817	1J16	1	1671 - 5
AT191826	2C24	18	1816 - 9
AT191868	1I11	4	1060 - 9
AT191873	1J25	17	1673 - 5
AT191875	1J25	9	1673 - 5
AT191876	2C24	21	1816 - 9
AT191877	2C24	17	1816 - 9
AT191884	2G10	35	2160 - 15
AT191919	2C24	24	1816 - 9
AT191953	1K4	19	1674 - 5
AT191976	2B24	12	1812 - 3
AT191990	2E4	28	1830 - 7
AT191993	2E4	9	1830 - 7
AT191994	2E4	12	1830 - 7
AT192011	3B13	14	3302 - 9
AT192012	3B13	14	3302 - 9
AT192013	3B13	14	3302 - 9
AT192014	3B13	14	3302 - 9
AT192015	3B13	14	3302 - 9
AT192016	3B13	14	3302 - 9
AT192017	3B13	14	3302 - 9
AT192018	3B13	14	3302 - 9
AT192019	3B13	14	3302 - 9
AT192020	3B13	14	3302 - 9
AT192021	3B13	14	3302 - 9
AT192022	3B13	14	3302 - 9
AT192032	2B18	26	1811 - 3
AT192033	2E4	25	1830 - 7
AT192074	2D24	5	1830 - 3
AT192077	2G2	4	2160 - 9
AT192078	1K12	14	1674 - 11
AT192078	2G2	4	2160 - 9
AT192078	3E4	8	3362 - 27
AT192079	2G2	4	2160 - 9
AT192080	3D23	10	3362 - 21
AT192092	3B7	11	3302 - 3
AT192093	3B9	10	3302 - 5
AT192094	3B11	1	3302 - 7
AT192099	2G2	14	2160 - 9
AT192106	3B7	1	3302 - 3
AT192107	3B9	1	3302 - 5
AT192111	3B7	8	3302 - 3
AT192111	3B9	7	3302 - 5
AT192120	3D5	12	3348 - 3
AT192121	3C22	12	3345 - 3
AT192122	2D2	7	1816 - 11
AT192151	1I7	22	1060 - 5
AT192153	1G17	14	0505 - 7
AT192154	3F22	1	3363 - 33
AT192155	3F22	9	3363 - 33
AT192168	2E9	35	1830 - 13
AT192173	2I2	30	3115 - 11
AT192173	2J2	10	3162 - 19
AT192184	3D9	12	3362 - 7
AT192188	2B4	5	1746 - 2
AT192200	2E6	32	1830 - 9
AT192203	3D9	12	3362 - 7
AT192217	2F3	16	2001 - 3
AT192235	3D23	4	3362 - 21
AT192242	1J25	19	1673 - 5
AT192243	1H16	10	0960 - 11
AT192243	1H20	8	0960 - 15
AT192261	2I2	3	3115 - 11
AT192278	1H11	16	0960 - 5
AT192279	1H11	17	0960 - 5
AT192280	1H11	18	0960 - 5
AT192363	3B15	8	3315 - 3
AT192367	1I21	6	1313 - 3
AT192372	2I16	41	3162 - 9
AT192372	2I18	14	3162 - 11
AT192373	2G18	8	2160 - 21
AT192415	1I13	1	1060 - 11
AT192416	1I13	2	1060 - 11
AT192417	1I13	5	1060 - 11
AT192419	1I7	30	1060 - 5
AT192456	1G25	10	0520 - 5
AT192457	2I20	14	3162 - 13
AT192457	2I22	3	3162 - 15
AT192457	3D15	18	3362 - 13
AT192460	1J25	14	1673 - 5
AT192509	2E4	35	1830 - 7
AT192517	1G25	14	0520 - 5
AT192522	1G25	3	0520 - 5
AT192544	3D9	12	3362 - 7
AT192545	3D9	12	3362 - 7
AT192552	1D17	3	0360 - 7
AT192552	1D17	4	0360 - 7
AT192552	1D17	5	0360 - 7
AT192552	1D17	6	0360 - 7
AT192553	1D17	13	0360 - 7
AT192553	1D17	14	0360 - 7
AT192553	1D17	15	0360 - 7
AT192553	1D17	16	0360 - 7
AT192587	2C10	1	1814 - 11
AT192626	3E4	8	3362 - 27
AT192656	2E11	55	1830 - 15
AT192656	2G22	1	2160 - 25
AT192684	2I2	5A	3115 - 11
AT192687	2D16	27	1821 - 9
AT192689	2D22	8	1821 - 15
AT192716	1K8	27	1674 - 7
AT192769	1K2	17	1674 - 3
AT192956	2F3	11	2001 - 3
AT193365	1H14	29	0960 - 9
AT193365	1H16	26	0960 - 11
AT193365	1H18	28	0960 - 13
AT193365	1H20	30	0960 - 15
AT193366	1H14	29	0960 - 9
AT193366	1H16	26	0960 - 11
AT193366	1H18	28	0960 - 13
AT193366	1H20	30	0960 - 15
AT193499	2E11	42	1830 - 15
AT193500	2E4	24	1830 - 7
AT193500	2E6	16	1830 - 9
AT193515	1J2	27	1320 - 5
AT193516	1J2	28	1320 - 5
AT193621	2C2	2	1814 - 3
AT193699	2J22	3	3163 - 7
AT193699	2J22	5	3163 - 7
AT193704	1C22	4	0350 - 5
AT193704	1C22	5	0350 - 5
AT193704	1C22	6	0350 - 5
AT193704	1C24	4	0350 - 7
AT193704	1C24	5	0350 - 7
AT193704	1C24	6	0350 - 7
AT193704	1D2	12	0350 - 9
AT193704	1D2	13	0350 - 9
AT193704	1D2	14	0350 - 9
AT193704	1D4	4	0350 - 11
AT193704	1D4	5	0350 - 11
AT193704	1D4	6	0350 - 11
AT193704	1D6	4	0350 - 13
AT193704	1D6	5	0350 - 13
AT193704	1D6	6	0350 - 13
AT193704	1D8	4	0350 - 15
AT193704	1D8	5	0350 - 15
AT193704	1D8	6	0350 - 15
AT193877	1K8	4	1674 - 7
AT193881	1K12	14	1674 - 11
AT193881	2B24	12	1812 - 3
AT193881	2G24	28	2160 - 27
AT193981	1I11	8	1060 - 9
AT194279	2C14	4	1814 - 15
AT194368	3F20	25	3363 - 31
AT194372	2I2	30	3115 - 11
AT194372	2J2	10	3162 - 19
AT194388	3F20	17	3363 - 31
AT194389	3F20	7	3363 - 31
AT194390	3F20	9	3363 - 31
AT194391	3F20	11	3363 - 31
AT194397	3F20	17	3363 - 31
AT194398	3F20	11	3363 - 31
AT194402	3F18	34	3363 - 29
AT194403	3F18	29	3363 - 29
AT194407	2C4	63	1814 - 5
AT194410	2J22	37	3163 - 7
AT194412	1I11	9	1060 - 9
AT194416	1I11	6	1060 - 9
AT194417	1I11	5	1060 - 9
AT194441	3F10	45	3363 - 21
AT194453	3F18	7	3363 - 29
AT194465	2I6	8	3140 - 3
AT194487	2H18	20	3115 - 3
AT194487	2H18	34	3115 - 3
AT194488	2H18	20	3115 - 3
AT194684	3B23	26	3315 - 9
AT194686	3B23	19	3315 - 9
AT194701	1H14	19	0960 - 9
AT194701	1H18	24	0960 - 13
AT194718	2C2	2	1814 - 3
AT194718	2C4	63	1814 - 5
AT194784	2J22	13	3163 - 7
AT194784	2J22	14	3163 - 7
AT194785	2J22	15	3163 - 7
AT194786	2J22	16	3163 - 7
AT194821	1J23	6	1673 - 3
AT194822	1J23	1	1673 - 3
AT194935	2G12	20	2160 - 17
AT194995	2G6	32	2160 - 13
AT195047	2G6	34	2160 - 13
AT195076	1H6	22	0560 - 3
AT195083	2G18	9	2160 - 21
AT195136	1B19	10	0230 - 5
AT195201	1H16	4	0960 - 11

NUMERICAL INDEX - CONTINUED

PART NO.	GRID	KEY	PAGE
AT195201	1H20	4	0960 - 15
AT195202	1H14	26	0960 - 9
AT195202	1H16	5	0960 - 11
AT195202	1H18	19	0960 - 13
AT195202	1H20	5	0960 - 15
AT195203	1H16	14	0960 - 11
AT195203	1H20	12	0960 - 15
AT195203	1I5	22	1060 - 3
AT195276	2G18	9	2160 - 21
AT195301	1K8	22	1674 - 7
AT195302	1K8	22	1674 - 7
AT195399	2E16	21	1910 - 3
AT195461	1J23	7	1673 - 3
AT195462	1J23	8	1673 - 3
AT195550	1G21	41	0515 - 3
AT195550	2B18	12	1811 - 3
AT195550	2B20	1	1811 - 5
AT195570	1H22	13	0960 - 17
AT195573	1H22	4	0960 - 17
AT195620	3C10	4	3315 - 17
AT195623	3C10	5	3315 - 17
AT195662	2G6	9	2160 - 13
AT195662	2G8	8	2160 - 13B
AT195663	2G6	2	2160 - 13
AT195663	2G8	4	2160 - 13B
AT195669	3D5	12	3348 - 3
AT195686	1H11	19	0960 - 5
AT195731	2E4	40	1830 - 7
AT195753	1D13	42	0360 - 3
AT195808	3E21	21	3363 - 7
AT195808	3E23	31	3363 - 9
AT195809	3E21	20	3363 - 7
AT195809	3E23	30	3363 - 9
AT195810	3F4	23	3363 - 15
AT195811	3F4	24	3363 - 15
AT195812	3F6	18	3363 - 17
AT195812	3F8	18	3363 - 19
AT195813	3F6	19	3363 - 17
AT195813	3F8	19	3363 - 19
AT195814	2F5	10	2002 - 3
AT195815	2F5	10	2002 - 3
AT195859	2G2	9	2160 - 9
AT195862	2J22	13	3163 - 7
AT195862	2J22	14	3163 - 7
AT195872	2E22	1	1921 - 3
AT195877	3B23	31	3315 - 9
AT195894	2B18	4	1811 - 3
AT195907	1G19	6	0510 - 3
AT195910	1J16	4	1671 - 5
AT195911	1J16	1	1671 - 5
AT195915	2G18	1	2160 - 21
AT195929	1B8	25	0201 - 3
AT195957	3E7	1	3362 - 30
AT195995	1J14	9	1671 - 3
AT196169	1B22	2	0230 - 8
AT196204	3D5	1	3348 - 3
AT196245	2I20	13	3162 - 13
AT196245	2I22	13	3162 - 15
AT196246	1K10	1	1674 - 9
AT196246	2I20	40	3162 - 13
AT196246	2I22	12	3162 - 15
AT196262	1G17	9	0505 - 7
AT196262	1K10	1	1674 - 9
AT196294	2B24	11	1812 - 3
AT196314	1F20	7	0422 - 1
AT196314	1F24	2	0422 - 5
AT196333	2H18	20	3115 - 3
AT196333	2H18	34	3115 - 3
AT196336	3C14	16	3315 - 21
AT196337	3C14	17	3315 - 21
AT196338	1G21	12	0515 - 3
AT196351	2G24	1	2160 - 27
AT196351	2H2	18	2160 - 29
AT196352	3C20	6	3344 - 3
AT196353	3C20	1	3344 - 3
AT196358	2E16	58	1910 - 3
AT196370	3C19	1	3344 - 2
AT196387	3C10	5	3315 - 17
AT196390	1K2	17	1674 - 3
AT196391	2C8	6	1814 - 9
AT196413	2G8	10	2160 - 13B
AT196419	3B23	34	3315 - 9
AT196422	2G8	13	2160 - 13B
AT196427	2F4	1	2002 - 2
AT196429	1B19	2	0230 - 5
AT196446	1J14	1	1671 - 3
AT196447	1J16	4	1671 - 5
AT196482	2G14	7	2160 - 17B
AT196483	2G14	4	2160 - 17B
AT196489	2G8	19	2160 - 13B
AT196496	2G10	38	2160 - 15
AT196496	2G20	20	2160 - 23
AT196496	2G22	16	2160 - 25
AT196513	3E17	16	3363 - 3B
AT196522	2C2	22	1814 - 3
AT196525	3E17	15	3363 - 3B
AT196590	2H24	17	3115 - 9
AT196591	2H24	7	3115 - 9
AT196596	2I4	3	3115 - 13
AT196606	3C14	16	3315 - 21
AT196606	3C14	17	3315 - 21
AT196630	2I12	1	3162 - 5
AT196632	2I4	12	3115 - 13
AT196632	2I12	1	3162 - 5
AT196656	1G23	1	0520 - 3
AT196760	2G24	1	2160 - 27
AT196760	2H2	19	2160 - 29
AT196805	1C18	4	0350 - 1
AT196814	2G10	35	2160 - 15
AT196815	2E16	7	1910 - 3
AT196815	2E16	14	1910 - 3
AT196815	2E16	60	1910 - 3
AT196828	2E16	24	1910 - 3
AT196839	3B23	26	3315 - 9
AT196854	1G23	5	0520 - 3
AT196927	2G16	16	2160 - 19
AT197001	2E22	1	1921 - 3
AT197065	3E17	14	3363 - 3B
AT197068	3E17	13	3363 - 3B
AT197105	2H20	1	3115 - 5
AT197136	3B15	8	3315 - 3
AT197165	3E9	13	3362 - 33
AT197208	3E11	14	3363 - 1B
AT197209	3E11	12	3363 - 1B
AT197211	3E11	16	3363 - 1B
AT197213	3E11	27	3363 - 1B
AT197238	2H2	28	2160 - 29
AT197262	2B3	8	1740 - 3
AT197268	2I4	13	3115 - 13
AT197338	2G2	14	2160 - 9
AT197382	1K8	4	1674 - 7
AT197383	2F18	1	2160 - 3
AT197405	2F22	55	2160 - 5B
AT197406	2F22	56	2160 - 5B
AT197406	2F24	24	2160 - 7
AT197414	2D16	27	1821 - 9
AT197479	2B24	12	1812 - 3
AT197612	3E11	19	3363 - 1B
AT197645	2J24	18	3163 - 7B
AT197646	2J24	24	3163 - 7B
AT197647	2J24	10	3163 - 7B
AT197649	2J20	20	3163 - 5B
AT197654	2J24	7	3163 - 7B
AT197726	3C19	7	3344 - 2
AT197760	2J20	12	3163 - 5B
AT197769	3E7	5	3362 - 30
AT197853	1H20	20	0960 - 15
AT197922	1J18	9	1671 - 7
AT198090	1H16	10	0960 - 11
AT198090	1H20	8	0960 - 15
AT198096	1J18	10	1671 - 7
AT198197	2G16	16	2160 - 19
AT198249	2J20	11	3163 - 5B
AT198251	2J20	22	3163 - 5B
AT198253	2J20	23	3163 - 5B
AT198254	2J20	18	3163 - 5B
AT198257	2J20	8	3163 - 5B
AT198258	2J20	7	3163 - 5B
AT198260	2J20	19	3163 - 5B
AT198349	3E13	6	3363 - 1D
AT198350	3E13	1	3363 - 1D
AT198351	3E13	4	3363 - 1D
AT198352	3E13	8	3363 - 1D
AT198353	3E13	12	3363 - 1D
AT198354	3E13	9	3363 - 1D
AT198355	3E13	2	3363 - 1D
AT198356	3E13	7	3363 - 1D
AT198357	3E13	11	3363 - 1D
AT198358	3E13	10	3363 - 1D
AT198359	3E13	13	3363 - 1D
AT198360	3E13	5	3363 - 1D
AT198602	1B21	3	0230 - 7
AT198603	1B21	8	0230 - 7
AT198694	2D22	25	1821 - 15
AT198760	2G24	15	2160 - 27
AT198760	2H2	14	2160 - 29
AT198776	2D8	29	1816 - 17
AT198777	2D6	28	1816 - 15
AT198778	2D6	27	1816 - 15
AT198844	1K6	6	1674 - 5B
AT198847	3E9	12	3362 - 33
AT198865	2D8	32	1816 - 17
AT198865	2D8	38	1816 - 17
AT198869	2D22	25	1821 - 15
AT199016	1K6	1	1674 - 5B
AT199060	1G17	9	0505 - 7
AT199060	1K10	1	1674 - 9
AT199081	2E9	27	1830 - 13
AT199335	2H20	19	3115 - 5
AT199372	1K2	16	1674 - 3
AT199372	1K4	4	1674 - 5
AT199388	2F3	1	2001 - 3
AT199495	3E11	6	3363 - 1B
AT199496	3E11	4	3363 - 1B
AT199496	3E13	3	3363 - 1D
AT199591	2D6	1	1816 - 15
AT199592	2D6	32	1816 - 15
AT199594	2D8	1	1816 - 17
AT199595	2D8	31	1816 - 17
AT199633	3E9	11	3362 - 33
AT199639	2H2	7	2160 - 29

NUMERICAL INDEX - CONTINUED

PART NO.	GRID	KEY	PAGE
AT199640	2H2	27	2160 - 29
AT199641	2H2	26	2160 - 29
AT199642	2H2	6	2160 - 29
AT199643	2H2	2	2160 - 29
AT199644	2H2	8	2160 - 29
AT199645	2H2	5	2160 - 29
AT199646	2G24	15	2160 - 27
AT199646	2H2	1	2160 - 29
AT199649	3E11	15	3363 - 1B
AT199652	2J14	2	3162 - 31
AT199653	2J14	27	3162 - 31
AT199654	2J14	1	3162 - 31
AT199656	2J12	1	3162 - 29
AT199657	2J12	4	3162 - 29
AT199670	2J14	20	3162 - 31
AT199671	2J14	28	3162 - 31
AT199672	2J14	15	3162 - 31
AT199714	1G17	9	0505 - 7
AT199735	2B20	1	1811 - 5
AT199741	2I6	8	3140 - 3
AT208483	2D22	13	1821 - 15
AT208483	2D22	23	1821 - 15
AT208484	2D22	29	1821 - 15
AT208485	2D22	3	1821 - 15
AT208486	2D22	14	1821 - 15
AT208487	2D22	21	1821 - 15
AT208487	2D22	28	1821 - 15
AT208487	2D22	33	1821 - 15
AT208487	2D22	34	1821 - 15
AT208488	2D22	8	1821 - 15
AT208490	2D22	19	1821 - 15
AT208490	2D22	22	1821 - 15
AT208490	2D22	24	1821 - 15
AT208490	2D22	26	1821 - 15
AT208490	2D22	41	1821 - 15
AT208491	2D22	18	1821 - 15
AT208493	2D22	1	1821 - 15
AT208493	2D22	2	1821 - 15
AT208493	2D22	4	1821 - 15
AT208493	2D22	7	1821 - 15
AT208493	2D22	30	1821 - 15
AT208493	2D22	32	1821 - 15
AT208493	2D22	42	1821 - 15
AT208643	2F22	56	2160 - 5B
AT208643	2F24	24	2160 - 7
AT208644	2F24	25	2160 - 7
AT209020	2D14	4	1821 - 7
AT209024	2D12	8	1821 - 5
AT209025	2D10	14	1821 - 3
AT209026	2D12	6	1821 - 5
AT209225	2D10	13	1821 - 3
AT209469	2D22	11	1821 - 15
AT209469	2D22	35	1821 - 15
AT209469	2D22	37	1821 - 15
AT209469	2D22	43	1821 - 15
AT209926	1G23	14	0520 - 3
AT210515	2E4	7	1830 - 7
AT219940	1H11	9	0960 - 5
AT220317	2C4	35	1814 - 5
AT220393	1J21	3	1672 - 3
AT220394	1J21	3	1672 - 3
AT220930	1G25	1	0520 - 5
AT221015	2D10	2	1821 - 3
AT221016	2D10	1	1821 - 3
AT221019	2D10	2	1821 - 3
AT221020	2D10	1	1821 - 3
AT222150	2D4	12	1816 - 13
AT222276	2F9	5	2004 - 5
AT222276	2F10	4	2004 - 6
AT222333	2F4	1	2002 - 2
AT223235	2G18	1	2160 - 21
AT227063	2D6	31	1816 - 15
AT227063	2D8	10	1816 - 17
AT228474	2G18	1	2160 - 21
AT25226	1B2	2	0110 - 2
AT280268	1B21	2	0230 - 7
AT280333	1B23	8	0250 - 2
AT280334	1H22	13	0960 - 17
AT280340	3E19	8	3363 - 5
AT280340	3E25	15	3363 - 11
AT280341	3E21	22	3363 - 7
AT280341	3E23	32	3363 - 9
AT280341	3E25	17	3363 - 11
AT280342	3E19	14	3363 - 5
AT280363	3C14	23	3315 - 21
AT280394	2G16	16	2160 - 19
AT280406	2I18	28	3162 - 11
AT280406	2I22	23	3162 - 15
AT280406	2J4	18	3162 - 21
AT280406	2J12	16	3162 - 29
AT280440	2H2	14	2160 - 29
AT280441	2H2	14	2160 - 29
AT280459	1I5	22	1060 - 3
AT280509	2H2	7	2160 - 29
AT280514	3F4	2	3363 - 15
AT280583	2D12	10	1821 - 5
AT280598	2G10	13	2160 - 15
AT280674	2D6	10	1816 - 15
AT280674	2D8	19	1816 - 17
AT280742	2G24	28	2160 - 27
AT280742	2H2	28	2160 - 29
AT280866	1B22	1	0230 - 8
AT280868	1B21	9	0230 - 7
AT300048	3B17	3	3315 - 3B
AT300055	3C6	8	3315 - 13B
AT300056	3C2	4	3315 - 11B
AT300057	3C6	2	3315 - 13B
AT300058	3C2	1	3315 - 11B
AT300060	3C2	19	3315 - 11B
AT300060	3C6	17	3315 - 13B
AT300129	1K8	4	1674 - 7
AT300152	3B19	17	3315 - 5
AT300159	2H20	15	3115 - 5
AT300230	3E7	5	3362 - 30
AT300254	3E7	5	3362 - 30
AT300255	3E7	5	3362 - 30
AT300492	2G14	5	2160 - 17B
AT300750	2D6	22	1816 - 15
AT300768	1G21	4	0515 - 3
AT300769	3C14	12	3315 - 21
AT300770	3C14	2	3315 - 21
AT300771	3C14	5	3315 - 21
AT300801	2I18	29	3162 - 11
AT300801	2I22	24	3162 - 15
AT300803	2I18	1	3162 - 11
AT300885	2D8	11	1816 - 17
AT300928	1K12	14	1674 - 11
AT300928	2B24	12	1812 - 3
AT300928	2H2	28	2160 - 29
AT300928	2J22	37	3163 - 7
AT301128	2I18	2	3162 - 11
AT301427	1K6	3	1674 - 5B
AT301434	3C16	11	3315 - 23
AT301526	2I22	1	3162 - 15
AT301527	2I22	2	3162 - 15
AT301769	1H22	4	0960 - 17
AT301906	1H22	14	0960 - 17
AT34210	1I23	2	1314 - 3
AT34211	1I23	1	1314 - 3
AT41188	1J18	5	1671 - 7
AT48016	3B21	32	3315 - 7
AT49216	3E7	5	3362 - 30
AT49300	3C8	7	3315 - 15
AT49300	3C16	1	3315 - 23
AT65241	1H6	16	0560 - 3
AT66805	1B2	1	0110 - 2
AT73296	1G13	1	0505 - 3
AT74891	1B2	1	0110 - 2
AT74891	1B2	3	0110 - 2
AT74940	1G13	6	0505 - 3
AT75311	2C4	53	1814 - 5
AT75769	1K4	5	1674 - 5
AT75769	1K6	5	1674 - 5B
AT78633	1K4	17	1674 - 5
AT79754	1B15	11	0230 - 1
AT79755	1B15	10	0230 - 1
AT79756	1B15	9	0230 - 1
AT82210	1K12	10	1674 - 11
AT83174	2I24	19	3162 - 17
AT83174	2J2	9	3162 - 19
AT83174	2J4	6	3162 - 21
AT83174	3D21	22	3362 - 19
AT83174	3D25	19	3362 - 23
AT83174	3E3	2	3362 - 26
AT83174	3E4	3	3362 - 27
AT83174	3E4	4	3362 - 27
AT84191	3F10	23	3363 - 21
AT85174	1K10	24	1674 - 9
AU12450	2J18	24	3163 - 5
AU12450	2J20	16	3163 - 5B
AW24539	2C2	1	1814 - 3
A24073	2H15	3	3102 - 11
A3581R	3D5	15	3348 - 3
A3606R	1J7	1	1369 - 5
A364R	1F11	7	0417 - 3
A364R	1F12	7	0417 - 4
A36518	2J22	8	3163 - 7
A3917R	1H12	6	0960 - 6
A3917R	1H24	6	0960 - 19
A3917R	1J7	1	1369 - 5
A4365R	1J7	1	1369 - 5
A4730R	1J7	1	1369 - 5
A4827R	1E2	14	0402 - 7
A4827R	1G9	17	0452 - 3
A48970	2C2	24	1814 - 3
A49232	3E25	21	3363 - 11
B177R	1I5	12	1060 - 3
B2762R	1J7	1	1369 - 5
B3690R	1H12	2	0960 - 6
B3690R	1H24	6	0960 - 19
B3690R	1J7	1	1369 - 5
CD16284	1E21	7	0409 - 3
C15104	1H12	1	0960 - 6
C15104	1H24	6	0960 - 19
C15107	1H12	3	0960 - 6
C16054	2J16	8	3163 - 3
C16054	2J24	21	3163 - 7B
C16054	3E15	6	3363 - 3
C16054	3E17	4	3363 - 3B
DSO345	1J5	1	1369 - 3
DSO346	1J5	1	1369 - 3

NUMERICAL INDEX - CONTINUED

PART NO.	GRID	KEY	PAGE
DT2127W	1B18	10	0230 - 4
E12379	1J10	5	1370 - 2
E49244	3F25	9	3365 - 4
E52687	3F24	12	3365 - 3
E71998	2H2	14	2160 - 29
E87197	1H6	4	0560 - 3
FF-371-87O	3F22	13	3363 - 33
FF-372-87O	3F22	12	3363 - 33
F1056R	1J7	1	1369 - 5
F1430R	2K3	10	3165 - 5
F1430R	3G2	12	3365 - 6
F1870R	1J7	1	1369 - 5
F2863R	1I5	20	1060 - 3
F2863R	2I2	10	3115 - 11
F2863R	3C10	8	3315 - 17
F3353R	1J7	1	1369 - 5
F37030242	2F18	2	2160 - 3
H113924	1H9	8	0960 - 3
H121168	2H15	26	3102 - 11
H129201	3B21	48	3315 - 7
H135156	2H15	12	3102 - 11
H140818	3F23	4	3365 - 2
H140822	3F23	5	3365 - 2
H141836	2G2	10	2160 - 9
H141836	2G10	17	2160 - 15
H142090	2K3	13	3165 - 5
H142209	3G2	20	3365 - 6
H145175	3G3	3	3365 - 7
H145359	2J25	6	3165 - 2
H145456	3G3	6	3365 - 7
H150947	3G2	5	3365 - 6
H151328	3G2	9	3365 - 6
H151542	2J25	17	3165 - 2
H151542	2K1	14	3165 - 3
H151594	2K3	3	3165 - 5
H151650	3F23	2	3365 - 2
H151655	3F24	22	3365 - 3
H151659	3F23	10	3365 - 2
H151660	3F23	3	3365 - 2
H151780	3F24	11	3365 - 3
H151781	3G1	6	3365 - 5
H151790	3G4	6	3365 - 8
H151790	3G5	8	3365 - 9
H151815	3F25	2	3365 - 4
H151820	3G1	15	3365 - 5
H151890	3F24	13	3365 - 3
H151891	3G1	8	3365 - 5
H151892	3F25	6	3365 - 4
H151893	3F25	5	3365 - 4
H152065	3F25	8	3365 - 4
H152123	3F24	20	3365 - 3
H152202	3G4	11	3365 - 8
H152202	3G5	11	3365 - 9
H152203	2J25	13	3165 - 2
H152203	2K1	11	3165 - 3
H152203	2K3	12	3165 - 5
H152203	3G2	14	3365 - 6
H152203	3G3	11	3365 - 7
H152205	3F24	18	3365 - 3
H152205	3F25	13	3365 - 4
H152205	3G1	13	3365 - 5
H152345	2J25	8	3165 - 2
H152345	2K1	8	3165 - 3
H152793	3G4	12	3365 - 8
H152793	3G5	12	3365 - 9
H152794	2J25	14	3165 - 2
H152794	2K1	12	3165 - 3
H152794	2K3	9	3165 - 5
H152794	3G2	15	3365 - 6
H152794	3G3	14	3365 - 7
H152796	3F24	16	3365 - 3
H152796	3F25	12	3365 - 4
H152796	3G1	11	3365 - 5
H154269	3F25	15	3365 - 4
H154352	2K3	7	3165 - 5
H154352	3G2	22	3365 - 6
H154372	3G2	8	3365 - 6
H154373	3G2	3	3365 - 6
H154382	3F25	7	3365 - 4
H154383	3F25	9	3365 - 4
H154385	3G1	9	3365 - 5
H154387	3F24	14	3365 - 3
H154402	3G4	8	3365 - 8
H154402	3G5	9	3365 - 9
H154404	3G3	17	3365 - 7
H155737	3F24	17	3365 - 3
H155740	3F25	10	3365 - 4
H155769	3G1	12	3365 - 5
H155964	1H23	8	0960 - 18
H156334	3F23	8	3365 - 2
H156486	3G2	1	3365 - 6
H157978	3G3	7	3365 - 7
H158676	1H23	12	0960 - 18
H159941	2J25	2	3165 - 2
H159941	2K1	2	3165 - 3
H161330	1H23	13	0960 - 18
H169161	3F23	9	3365 - 2
H170371	3G1	5	3365 - 5
H170372	3G1	2	3365 - 5
H170534	1H23	4	0960 - 18
H170538	2J25	3	3165 - 2
H170538	2K1	3	3165 - 3
H170538	3G5	2	3365 - 9
H170539	2K3	16	3165 - 5
H170539	3G2	2	3365 - 6
H173411	2D6	35	1816 - 15
H173411	2D8	34	1816 - 17
H23125	1D24	1	0402 - 4
H23196	1J9	9	1369 - 7
H29619	2H16	2	3102 - 12
H35244	1J7	1	1369 - 5
H36031	1E19	5	0408 - 3
H77698	1H6	23	0560 - 3
H77698	1I23	11	1314 - 3
H77698	1J19	4	1671 - 8
H77698	1K4	21	1674 - 5
H77698	1K10	9	1674 - 9
H77698	2E4	54	1830 - 7
H77698	2E9	17	1830 - 13
H77698	2J18	31	3163 - 5
H77698	2J22	36	3163 - 7
H77698	2J24	23	3163 - 7B
H77698	3F8	9	3363 - 19
H80753	1G4	2	0429 - 5
H81608	2J14	11	3162 - 31
H85092	2E4	11	1830 - 7
IPSKIT3	1J5	1	1369 - 3
ISPKIT3	1J5	1	1369 - 3
JD10063	1B22	5	0230 - 8
JD10190	1B18	8	0230 - 4
JD10249	1C4	22	0250 - 7
JD10373	2D6	36	1816 - 15
JD10373	2D8	26	1816 - 17
JD126	2F13	8	2008 - 2
JD27	1B4	1	0120 - 1
JD27	1B4	3	0120 - 1
JD3216	1B4	1	0120 - 1
JD3216	1B4	3	0120 - 1
JD5404	2F13	4	2008 - 2
JD5621	1I25	5A	1320 - 3
JD5694	1I25	6A	1320 - 3
JD5694	2C8	19	1814 - 9
JD5750	1I25	5B	1320 - 3
JD5750	1I25	6B	1320 - 3
JD5750	2C8	19	1814 - 9
JD5920	1I23	5	1314 - 3
JD5920	1I25	8	1320 - 3
JD5930	2F13	3	2008 - 2
JD7266	1B18	7	0230 - 4
JD7444	1B18	4	0230 - 4
JD7759	1H23	1	0960 - 18
JD7797	1B15	7	0230 - 1
JD7797	1B24	3	0250 - 3
JD7797	2H13	4	3102 - 9
JD7797	2H15	4	3102 - 11
JD7797	2H16	11	3102 - 12
JD7798	3C22	18	3345 - 3
JD7838	1B17	25	0230 - 3
JD7838	1B23	9	0250 - 2
JD7838	1J10	1	1370 - 2
JD7838	1J10	2	1370 - 2
JD8961	1B18	3	0230 - 4
JD9954	2H20	10	3115 - 5
J16931	1I21	2	1313 - 3
KV12858	2J14	25	3162 - 31
K40006	2H13	14	3102 - 9
L100057	1C9	4	0250 - 13
L100060	1C9	4	0250 - 13
L100063	1C9	4	0250 - 13
L100066	1C9	4	0250 - 13
L100069	1C9	4	0250 - 13
L100074	1C9	4	0250 - 13
L100077	1C9	4	0250 - 13
L100080	1C9	4	0250 - 13
L100083	1C9	4	0250 - 13
L100086	1C9	4	0250 - 13
L100089	1C9	4	0250 - 13
L100092	1C9	4	0250 - 13
L100096	1C9	4	0250 - 13
L100102	1C4	16	0250 - 7
L100103	1C4	16	0250 - 7
L100104	1C4	16	0250 - 7
L100105	1C4	16	0250 - 7
L100106	1C4	16	0250 - 7
L100107	1C4	16	0250 - 7
L100109	1C4	16	0250 - 7
L100111	1C4	16	0250 - 7
L100141	1C2	11	0250 - 5
L100145	1C2	11	0250 - 5
L100150	1C7	4	0250 - 11
L100151	1C7	4	0250 - 11
L100152	1C7	4	0250 - 11
L100153	1C7	5	0250 - 11
L100154	1C7	6	0250 - 11
L100158	1C7	2	0250 - 11
L100169	1C5	3	0250 - 8
L100230	1C9	7	0250 - 13
L100238	1C4	24	0250 - 7
L100239	1C4	20	0250 - 7
L100240	1C5	10	0250 - 8
L100241	1C5	5	0250 - 8

NUMERICAL INDEX - CONTINUED

PART NO.	GRID	KEY	PAGE
L100632	1C4	7	0250 - 7
L100633	1C4	8	0250 - 7
L100635	1C4	5	0250 - 7
L100636	1C4	4	0250 - 7
L110729	1B9	7	0210 - 1
L112197	1C7	11	0250 - 11
L114558	1C2	14	0250 - 5
L11698	1D13	6	0360 - 3
L11698	1D13	23	0360 - 3
L11698	1D15	11	0360 - 5
L11698	1D17	23	0360 - 7
L3483N	2E9	33	1830 - 13
L35714	1C9	9	0250 - 13
L40014	1C2	16	0250 - 5
L40276	1C4	10	0250 - 7
L40306	1C2	10	0250 - 5
L40317	1C4	25	0250 - 7
L40982	1C9	3	0250 - 13
L40985	1C9	3	0250 - 13
L40988	1C9	3	0250 - 13
L40991	1C9	3	0250 - 13
L40994	1C9	3	0250 - 13
L4694T	2I2	4	3115 - 11
L4694T	2I4	5	3115 - 13
L55580	1B8	14	0201 - 3
L55580	1C2	19	0250 - 5
L55580	1C5	9	0250 - 8
L55580	1I3	12	1011 - 3
L55598	1C4	23	0250 - 7
L55606	1C9	3	0250 - 13
L55610	1C9	3	0250 - 13
L56822	1B8	17	0201 - 3
L56822	1C2	17	0250 - 5
L57881	2E4	58	1830 - 7
L57881	2E6	11	1830 - 9
L60103	1C7	8	0250 - 11
L60104	1C7	10	0250 - 11
L61263	1C2	11	0250 - 5
L61267	1C2	11	0250 - 5
L61271	1C2	11	0250 - 5
L61275	1C2	11	0250 - 5
L75379	2F4	2	2002 - 2
L78069	1D10	18	0350 - 17
L79729	1C5	1	0250 - 8
MG272321	2J10	20	3162 - 27
M132832	2C12	11	1814 - 13
M1340T	2D16	23	1821 - 9
M135646	3F22	16	3363 - 33
M2649DN	3C18	14	3343 - 3
M359T	3B21	44	3315 - 7
M359T	3B23	12	3315 - 9
M40333	1J14	7	1671 - 3
M40333	1J16	10	1671 - 5
M40333	1K2	10	1674 - 3
M40569	3C10	10	3315 - 17
M40569	3C10	14	3315 - 17
M40569	3C10	19	3315 - 17
M41029	1E5	4	0403 - 2
M41029	1I7	26	1060 - 5
M4237T	1J7	1	1369 - 5
M453T	2D10	31	1821 - 3
M453T	2D16	27	1821 - 9
M47031	2D14	5	1821 - 7
M47031	2D14	12	1821 - 7
M47031	2D16	24	1821 - 9
M47031	2D18	4	1821 - 11
M48534	1G21	1	0515 - 3
M507T	2F20	52	2160 - 5
M63200	2E18	3	1913 - 3
M63200	2E18	4	1913 - 3
M63431	1K8	16	1674 - 7
M68954	2H22	8	3115 - 7
M68954	2H24	9	3115 - 9
M68954	2I2	7	3115 - 11
M68954	3B19	4	3315 - 5
M68954	3B21	10	3315 - 7
M68954	3B23	10	3315 - 9
M68954	3B25	14	3315 - 11
M68954	3C2	8	3315 - 11B
M68954	3C4	17	3315 - 13
M68954	3C6	7	3315 - 13B
M68954	3C8	13	3315 - 15
M72598	2D2	13	1816 - 11
M84972	2B20	8	1811 - 5
M84972	2D4	31	1816 - 13
M84972	2E4	44	1830 - 7
M84972	2F3	18	2001 - 3
M85517	1K2	7	1674 - 3
M86533	2E9	26	1830 - 13
M86863	3F18	16	3363 - 29
M86877	1G19	11	0510 - 3
M86877	2F9	1	2004 - 5
M86877	3F4	5B	3363 - 15
M87261	2D14	9	1821 - 7
M87534	2C4	62	1814 - 5
M87534	2D6	20	1816 - 15
M87534	2D8	6	1816 - 17
M87534	3B21	26	3315 - 7
M87534	3B25	7	3315 - 11
M87534	3C4	12	3315 - 13
M87571	2G16	3	2160 - 19
M87571	2G16	19	2160 - 19
M87733	1F7	3	0416 - 3
M87733	1F9	2	0416 - 5
M87795	3F18	33	3363 - 29
NR-37	3F22	10	3363 - 33
NR-50	3F22	11	3363 - 33
N105572	3C18	11	3343 - 3
N112006	1H6	3	0560 - 3
N117290	2G20	3	2160 - 23
N119316	1B24	2	0250 - 3
N119316	1C14	5	0325 - 1
N130510	1H24	3	0960 - 19
N131838	1J7	1	1369 - 5
N189220	1G23	8	0520 - 3
N189220	2G6	21	2160 - 13
N189220	2G8	17	2160 - 13B
N198516	2G20	13	2160 - 23
N198516	2G22	13	2160 - 25
N203255	2G24	15	2160 - 27
N231749	1B8	19	0201 - 3
N30256	2J22	2	3163 - 7
N34349	1H23	15	0960 - 18
PT11778	2E4	17	1830 - 7
P10456	2H18	23	3115 - 3
P46051	1J7	1	1369 - 5
P48403	1J7	1	1369 - 5
P48403	3G2	4	3365 - 6
P50631	1H9	2	0960 - 3
P50631	1H11	2	0960 - 5
P50631	1J7	1	1369 - 5
RE12363	1K15	3	1674 - 14
RE12363	2H22	15	3115 - 7
RE12363	2H24	20	3115 - 9
RE14246	2B18	4	1811 - 3
RE154027	2J14	7	3162 - 31
RE154354	1K12	7	1674 - 11
RE155938	2E4	26	1830 - 7
RE174764	2E4	16	1830 - 7
RE190139	2F3	11	2001 - 3
RE19797	1F2	5	0413 - 3
RE19799	1F2	15	0413 - 3
RE198074	2E4	60	1830 - 7
RE201235	1K12	7	1674 - 11
RE20342	3G4	4	3365 - 8
RE20343	3F25	4	3365 - 4
RE20343	3G3	5	3365 - 7
RE20344	2K3	14	3165 - 5
RE20344	3G2	7	3365 - 6
RE20345	2J25	5	3165 - 2
RE20428	3G4	20	3365 - 8
RE20809	3G1	4	3365 - 5
RE21790	1G15	2	0505 - 5
RE22415	1H23	17	0960 - 18
RE30100	1H23	20	0960 - 18
RE30162	3F23	7	3365 - 2
RE31495	2G2	16	2160 - 9
RE31495	2G2	18	2160 - 9
RE31495	2G4	6	2160 - 11
RE31495	2G4	8	2160 - 11
RE31617	1E21	13	0409 - 3
RE33636	1G15	7	0505 - 5
RE36133	2E4	5	1830 - 7
RE40048	1E23	5	0410 - 2
RE40049	2C10	3	1814 - 11
RE40049	2C14	5	1814 - 15
RE42139	1G13	5	0505 - 3
RE43497	1K8	20	1674 - 7
RE43637	1K14	1	1674 - 13
RE44574	1G6	4	0433 - 3
RE44574	1G9	18	0452 - 3
RE45896	1B20	5	0230 - 6
RE46534	1K14	5	1674 - 13
RE46609	2E9	25	1830 - 13
RE46684	1F14	7	0418 - 3
RE46685	1E8	27	0404 - 3
RE46685	1E14	5	0407 - 5
RE46685	1F11	10	0417 - 3
RE46685	1F12	10	0417 - 4
RE46685	1F16	7	0419 - 3
RE46686	1F16	6	0419 - 3
RE46742	1K8	21	1674 - 7
RE48310	1G15	6	0505 - 5
RE48786	1E24	8	0413 - 1
RE48786	1E24	10	0413 - 1
RE500000	1E5	3	0403 - 2
RE500002	1E5	3	0403 - 2
RE500005	1E11	4	0407 - 2
RE500133	1E16	4	0407 - 7
RE500137	1G5	4	0433 - 2
RE500448	1F5	11	0415 - 3
RE500449	1F5	12	0415 - 3
RE500539	1G4	8	0429 - 5
RE500631	1D21	15	0401 - 2
RE500737	1F11	16	0417 - 3
RE501260	1F9	12	0416 - 5
RE501377	1E11	5	0407 - 2
RE501455	1G9	12	0452 - 3
RE501767	1F20	7	0422 - 1
RE501938	1E2	3	0402 - 7
RE501938	1E4	3	0402 - 9

NUMERICAL INDEX - CONTINUED

PART NO.	GRID	KEY	PAGE
RE501938	1E4	13	0402 - 9
RE502376	1F2	22	0413 - 3
RE502903	1F3	4	0414 - 1
RE502969	1D24	5	0402 - 4
RE504233	1F19	4	0421 - 2
RE504244	1F22	13	0422 - 3
RE504638	1D21	4	0401 - 2
RE504741	1F5	13	0415 - 3
RE504914	1E17	6	0407 - 8
RE505047	1F7	4	0416 - 3
RE505111	1E5	10	0403 - 2
RE505264	1G4	10	0429 - 5
RE505264	2E11	40	1830 - 15
RE505400	1F20	10	0422 - 1
RE505400	1F22	7	0422 - 3
RE505501	1E4	14	0402 - 9
RE505501	1E8	30	0404 - 3
RE505981	1F11	16	0417 - 3
RE505981	1F12	16	0417 - 4
RE506105	1F20	7	0422 - 1
RE506105	1F22	13	0422 - 3
RE506105	1F24	2	0422 - 5
RE50618	1D21	4	0401 - 2
RE506300	1F14	3	0418 - 3
RE506662	1F3	7	0414 - 1
RE50752	1F18	9	0420 - 3
RE507637	1F20	2	0422 - 1
RE507638	1F20	11	0422 - 1
RE508566	1E4	20	0402 - 9
RE508566	1F11	16	0417 - 3
RE508566	1F12	17	0417 - 4
RE515428	1F20	2	0422 - 1
RE515688	1F20	11	0422 - 1
RE515978	1E2	2	0402 - 7
RE515978	1E4	15	0402 - 9
RE516099	1E8	3	0404 - 3
RE516099	1E10	1	0404 - 5
RE516340	1D21	4	0401 - 2
RE516340	1D21	25	0401 - 2
RE51648	1F18	22	0420 - 3
RE51649	1F18	19	0420 - 3
RE516512	1F18	23	0420 - 3
RE516513	1F18	23	0420 - 3
RE516553	1F18	9	0420 - 3
RE52087	1H2	2	0530 - 3
RE52242	1E16	2	0407 - 7
RE52722	1K10	20	1674 - 9
RE52722	2G10	9	2160 - 15
RE54885	1F9	8	0416 - 5
RE56323	1F18	5	0420 - 3
RE56369	1D21	21	0401 - 2
RE56375	1D22	1	0402 - 2
RE57234	1E21	15	0409 - 3
RE57471	1B21	15	0230 - 7
RE57472	1B21	17	0230 - 7
RE57619	1E17	10	0407 - 8
RE59296	1F16	2	0419 - 3
RE59447	1F2	7	0413 - 3
RE59448	1F2	8	0413 - 3
RE59449	1F2	9	0413 - 3
RE59450	1F2	10	0413 - 3
RE59545	1E14	2	0407 - 5
RE59547	1F9	4	0416 - 5
RE59754	1E16	7	0407 - 7
RE59810	1E2	11	0402 - 7
RE59810	1E4	11	0402 - 9
RE59810	1G9	19	0452 - 3
RE59811	1D21	4	0401 - 2
RE59811	1D21	22	0401 - 2
RE60005	1E21	3	0409 - 3
RE60025	1F18	12	0420 - 3
RE60029	1F2	18	0413 - 3
RE60029	1F18	4	0420 - 3
RE60037	1F18	2	0420 - 3
RE60071	1F3	4	0414 - 1
RE60700	2G6	29	2160 - 13
RE60854	1F18	17	0420 - 3
RE60888	2E4	27	1830 - 7
RE62418	1F18	10	0420 - 3
RE65165	1D21	7	0401 - 2
RE65168	1D21	10	0401 - 2
RE65908	1E5	11	0403 - 2
RE65909	1E5	11	0403 - 2
RE65911	1D21	7	0401 - 2
RE65912	1D21	10	0401 - 2
RE65953	1E10	1	0404 - 5
RE65967	1E5	10	0403 - 2
RE65978	1F9	6	0416 - 5
RE65978	1J9	12	1369 - 7
RE65978	2G10	2	2160 - 15
RE65978	2G20	9	2160 - 23
RE65978	2G22	5	2160 - 25
RE66082	1G7	12	0452 - 1
RE66084	1G7	17	0452 - 1
RE66093	1G9	12	0452 - 3
RE66153	1F19	2	0421 - 2
RE66271	1E5	6	0403 - 2
RE67231	1F16	1	0419 - 3
RE67238	1E11	1	0407 - 2
RE67238	1E16	6	0407 - 7
RE67238	1F16	14	0419 - 3
RE67238	1F16	17	0419 - 3
RE67239	1E2	5	0402 - 7
RE67239	1E4	5	0402 - 9
RE67239	1E11	6	0407 - 2
RE68695	1D23	9	0402 - 3
RE68748	1F2	3	0413 - 3
RE69243	1E12	1	0407 - 3
RE70358	1F18	11	0420 - 3
RE70358	1F18	18	0420 - 3
RE70486	1F22	5	0422 - 3
RE70487	1F22	3	0422 - 3
RE70535	1G4	14	0429 - 5
RE70756	1F22	9	0422 - 3
RE70756	1F22	12	0422 - 3
RE70848	1F2	4	0413 - 3
RE70962	1F12	15	0417 - 4
RE71240	1F11	15	0417 - 3
RE71256	1F22	8	0422 - 3
R100369	1F11	14	0417 - 3
R100369	1F12	14	0417 - 4
R100377	1G2	2	0423 - 3
R10093	1H12	5	0960 - 6
R10093	1H24	6	0960 - 19
R10093	1J7	1	1369 - 5
R10093	2E4	21	1830 - 7
R10093	2E9	5	1830 - 13
R101225	1D21	11	0401 - 2
R101225	1D21	14	0401 - 2
R104592	1E8	5	0404 - 3
R104592	1E21	5	0409 - 3
R105812	1G21	6	0515 - 3
R106466	2H18	30	3115 - 3
R106466	2J8	5	3162 - 25
R106466	3C14	13	3315 - 21
R106466	3C14	21	3315 - 21
R107731	1D23	11	0402 - 3
R109863	1D21	12	0401 - 2
R110531	1F3	1	0414 - 1
R111137	1E8	10	0404 - 3
R111270	2I16	18	3162 - 9
R111292	2J14	8	3162 - 31
R111493	2J14	12	3162 - 31
R111493	3D11	8	3362 - 9
R11151	2J12	7	3162 - 29
R111632	1K8	12	1674 - 7
R112857	1J7	1	1369 - 5
R113050	2E4	15	1830 - 7
R113050	2E9	30	1830 - 13
R113562	1F18	6	0420 - 3
R113563	1F18	7	0420 - 3
R113565	1F18	21	0420 - 3
R113596	1D21	4	0401 - 2
R113780	1B20	4	0230 - 6
R114193	1D21	20	0401 - 2
R114194	1D21	23	0401 - 2
R114241	1E8	17	0404 - 3
R115081	1E8	3	0404 - 3
R115081	1E10	1	0404 - 5
R115119	1C4	13	0250 - 7
R115252	1F16	10	0419 - 3
R115299	1E8	12	0404 - 3
R115299	1F5	1	0415 - 3
R115350	2E11	43	1830 - 15
R115390	1E8	15	0404 - 3
R116031	2J10	5	3162 - 27
R116089	2C12	6	1814 - 13
R116115	1E16	9	0407 - 7
R116116	1F2	12	0413 - 3
R116116	1F18	15	0420 - 3
R116296	1E11	2	0407 - 2
R116324	1D24	4	0402 - 4
R116366	1E24	5	0413 - 1
R116386	1E6	1	0404 - 1
R116386	1F2	20	0413 - 3
R116466	1E8	2	0404 - 3
R116515	1E21	12	0409 - 3
R116515	1G7	8	0452 - 1
R116515	1G9	8	0452 - 3
R117721	2E4	56	1830 - 7
R117721	2E6	9	1830 - 9
R117892	2C22	3	1816 - 7
R117892	2F3	8	2001 - 3
R119874	1E8	6	0404 - 3
R120160	2D4	25	1816 - 13
R120332	2D6	5	1816 - 15
R120467	1E19	1	0408 - 3
R120631	1D21	3	0401 - 2
R120638	1E17	13	0407 - 8
R120653	2C12	8	1814 - 13
R121036	1F12	1	0417 - 4
R121038	1F10	1	0417 - 2
R121039	1G6	7	0433 - 3
R121043	1E8	9	0404 - 3
R121079	1B22	9	0230 - 8
R121376	1E17	7	0407 - 8
R121402	1E21	14	0409 - 3
R121402	1E21	15	0409 - 3
R121411	1E2	8	0402 - 7
R121411	1E4	8	0402 - 9
R121424	1E2	7	0402 - 7

NUMERICAL INDEX - CONTINUED

PART NO.	GRID	KEY	PAGE
R121424	1E4	7	0402 - 9
R121593	1B20	3	0230 - 6
R121634	1F10	4	0417 - 2
R121897	1G4	18	0429 - 5
R122218	1B21	15	0230 - 7
R123161	1D23	7	0402 - 3
R123178	1E5	5	0403 - 2
R123226	1F11	9	0417 - 3
R123226	1F12	9	0417 - 4
R123226	1F14	9	0418 - 3
R123226	1G7	4	0452 - 1
R123226	1G9	4	0452 - 3
R123246	1E23	3	0410 - 2
R123271	1D23	5	0402 - 3
R123273	1F19	3	0421 - 2
R123273	1G9	20	0452 - 3
R123323	1F14	1	0418 - 3
R123324	1F14	11	0418 - 3
R123345	1G7	5	0452 - 1
R123345	1G9	5	0452 - 3
R123352	1E14	1	0407 - 5
R123352	1G7	13	0452 - 1
R123352	1G9	13	0452 - 3
R123417	1F11	13	0417 - 3
R123417	1F12	13	0417 - 4
R123417	1G9	21	0452 - 3
R123471	1F16	5	0419 - 3
R123501	1F16	3	0419 - 3
R123501	1G9	23	0452 - 3
R123513	1D23	2	0402 - 3
R123521	1G5	2	0433 - 2
R123542	1D24	6	0402 - 4
R123542	1G7	1	0452 - 1
R123542	1G9	1	0452 - 3
R123561	1D21	5	0401 - 2
R123562	1D21	6	0401 - 2
R123563	1D21	8	0401 - 2
R123564	1D21	9	0401 - 2
R123565	1D23	10	0402 - 3
R123570	1F9	3	0416 - 5
R123570	1G7	6	0452 - 1
R123570	1G9	6	0452 - 3
R123574	1D24	2	0402 - 4
R123575	1D24	3	0402 - 4
R123575	1G7	7	0452 - 1
R123575	1G9	7	0452 - 3
R123584	1E2	18	0402 - 7
R123584	1E4	18	0402 - 9
R123593	1F2	2	0413 - 3
R123616	1E8	28	0404 - 3
R123616	2E6	28	1830 - 9
R123960	1E5	2	0403 - 2
R124455	3D13	20	3362 - 11
R124455	3D17	20	3362 - 15
R124455	3D21	20	3362 - 19
R125223	2E4	18	1830 - 7
R128660	1G4	5	0429 - 5
R128660	1G19	2	0510 - 3
R130574	1D21	8	0401 - 2
R130575	1D21	9	0401 - 2
R130576	1D21	5	0401 - 2
R130577	1D21	6	0401 - 2
R131016	1F14	5	0418 - 3
R131182	1E8	21	0404 - 3
R131283	1D21	16	0401 - 2
R131283	1D21	19	0401 - 2
R131425	1E2	13	0402 - 7
R131671	1K4	18	1674 - 5
R131769	1G6	3	0433 - 3
R132166	1G2	4	0423 - 3
R132186	1E8	20	0404 - 3
R132261	1E22	1	0410 - 1
R132267	1F2	23	0413 - 3
R132518	1E8	7	0404 - 3
R132690	2E9	21	1830 - 13
R132874	1F2	24	0413 - 3
R133295	1G4	16	0429 - 5
R133303	1F5	14	0415 - 3
R133405	1F19	5	0421 - 2
R133893	1G7	10A	0452 - 1
R133978	1G2	5	0423 - 3
R134518	1E2	19	0402 - 7
R134518	1E4	19	0402 - 9
R134527	1E6	2	0404 - 1
R134531	1E2	2	0402 - 7
R135177	1F16	11A	0419 - 3
R135431	1F20	3	0422 - 1
R135431	1K10	18	1674 - 9
R135432	1F20	4	0422 - 1
R135432	1K10	37	1674 - 9
R135439	1D22	1	0402 - 2
R135509	1F22	6	0422 - 3
R135510	1F22	4	0422 - 3
R135896	1F14	4	0418 - 3
R135896	1G7	3	0452 - 1
R135896	1G9	3	0452 - 3
R135918	1G5	3	0433 - 2
R135918	1G6	10	0433 - 3
R136052	1F22	2	0422 - 3
R136475	1E6	3	0404 - 1
R136495	1E11	3	0407 - 2
R136515	1G9	22	0452 - 3
R136516	1E2	1	0402 - 7
R136516	1E4	1	0402 - 9
R136516	1G9	22	0452 - 3
R137851	2E9	29	1830 - 13
R140070	1B21	13	0230 - 7
R151507	2C12	10	1814 - 13
R26081	3C14	8	3315 - 21
R26125	1E21	4	0409 - 3
R26286	1D17	21	0360 - 7
R26286	1I11	12	1060 - 9
R26286	1I13	7	1060 - 11
R26286	1J7	1	1369 - 5
R26287	1J7	1	1369 - 5
R26375	1H14	22	0960 - 9
R26375	1H16	1	0960 - 11
R26375	1H18	22	0960 - 13
R26375	1H20	1	0960 - 15
R26375	1I16	28	1111 - 3
R26375	1I18	27	1111 - 5
R26375	1J7	1	1369 - 5
R26375	1K10	26	1674 - 9
R26375	2G6	25	2160 - 13
R26375	2G8	22	2160 - 13B
R26375	2G16	12	2160 - 19
R26375	2G16	15	2160 - 19
R26375	2G18	7	2160 - 21
R26375	2G24	14	2160 - 27
R26375	2H2	10	2160 - 29
R26375	2J20	3	3163 - 5B
R26375	2J24	1	3163 - 7B
R26375	3E11	18	3363 - 1B
R26375	3E15	11	3363 - 3
R26375	3E15	12	3363 - 3
R26375	3E17	7	3363 - 3B
R26375	3F2	1	3363 - 13
R26375	3F4	1B	3363 - 15
R26375	3F4	9	3363 - 15
R26375	3F10	15	3363 - 21
R26375	3F12	7	3363 - 23
R26375	3F18	23	3363 - 29
R26375	3F20	20	3363 - 31
R26375	3F22	15	3363 - 33
R26375	3F22	16	3363 - 33
R26448	1B14	2	0210 - 6
R26448	1H14	13	0960 - 9
R26448	1H16	24	0960 - 11
R26448	1H18	13	0960 - 13
R26448	1H20	25	0960 - 15
R26448	1I9	5	1060 - 7
R26448	1J7	1	1369 - 5
R26448	2G2	17	2160 - 9
R26448	2G4	7	2160 - 11
R26448	2G6	6	2160 - 13
R26448	2G12	6	2160 - 17
R26448	2G14	3	2160 - 17B
R26448	2G24	22	2160 - 27
R26448	2H15	14	3102 - 11
R26448	2J22	10	3163 - 7
R26448	2J22	34	3163 - 7
R26448	3D9	3	3362 - 7
R26448	3E7	5	3362 - 30
R26448	3E9	4	3362 - 33
R26448	3E11	9	3363 - 1B
R26448	3E17	12	3363 - 3B
R26448	3F4	1A	3363 - 15
R26491	2C2	12	1814 - 3
R26493	1E8	11	0404 - 3
R26552	1I7	17	1060 - 5
R26650	1E8	13	0404 - 3
R26773	1J7	1	1369 - 5
R26773	2G6	5	2160 - 13
R26773	2G6	31	2160 - 13
R26773	2G8	6	2160 - 13B
R26863	1J7	1	1369 - 5
R26871	1G21	38	0515 - 3
R26871	2E16	44	1910 - 3
R26871	2H18	30	3115 - 3
R26871	2J8	5	3162 - 25
R26871	3C12	7	3315 - 19
R26871	3C12	10	3315 - 19
R26871	3C14	13	3315 - 21
R26871	3C14	21	3315 - 21
R26906	1E21	6	0409 - 3
R26906	1I7	4	1060 - 5
R26906	1I16	23	1111 - 3
R26906	1I18	22	1111 - 5
R26906	1J7	1	1369 - 5
R26906	1J9	13	1369 - 7
R26906	2G20	7	2160 - 23
R26906	2J6	2	3162 - 23
R26906	2J6	6	3162 - 23
R26906	2J14	4	3162 - 31
R26906	2J16	5	3163 - 3
R26906	2J18	20	3163 - 5
R26906	2J20	13	3163 - 5B
R26906	2J24	13	3163 - 7B
R26906	3D23	11	3362 - 21
R26906	3E15	1	3363 - 3
R26906	3E17	1	3363 - 3B

NUMERICAL INDEX - CONTINUED

PART NO.	GRID	KEY	PAGE
R26906	3E19	2	3363 - 5
R26906	3E21	7	3363 - 7
R26906	3E23	1	3363 - 9
R26906	3E25	2	3363 - 11
R26906	3F4	27	3363 - 15
R26906	3F10	20	3363 - 21
R26906	3F12	15	3363 - 23
R26906	3F14	3	3363 - 25
R26906	3F16	3	3363 - 27
R26906	3F20	4	3363 - 31
R26906	3F20	22	3363 - 31
R27094	1D17	22	0360 - 7
R27166	1J7	1	1369 - 5
R27175	3F6	1	3363 - 17
R27175	3F8	1	3363 - 19
R27218	1I5	26	1060 - 3
R27434	3C14	6	3315 - 21
R27474	2J6	1	3162 - 23
R27474	3D23	12	3362 - 21
R27491	1H14	4	0960 - 9
R27491	1H14	27	0960 - 9
R27491	1H16	28	0960 - 11
R27491	1H18	4	0960 - 13
R27491	1H18	26	0960 - 13
R27491	1H20	27	0960 - 15
R27928	1J7	1	1369 - 5
R28574	1B18	2	0230 - 4
R28776	1J7	1	1369 - 5
R28776	2H2	14	2160 - 29
R28782	1B14	5	0210 - 6
R28782	1H16	11	0960 - 11
R28782	1H20	9	0960 - 15
R28782	1J7	1	1369 - 5
R28782	2G2	16	2160 - 9
R28782	2G2	17	2160 - 9
R28782	2G4	7	2160 - 11
R28782	2G4	8	2160 - 11
R28782	2J14	14	3162 - 31
R28782	3F10	44	3363 - 21
R28782	3F12	34	3363 - 23
R28811	1G5	1	0433 - 2
R29463	1J7	1	1369 - 5
R29936	1J7	1	1369 - 5
R29936	2G2	1	2160 - 9
R29936	2G4	1	2160 - 11
R29936	2G6	11	2160 - 13
R29936	2G6	37	2160 - 13
R29936	2G8	1	2160 - 13B
R29936	2G10	33	2160 - 15
R29936	2G16	12	2160 - 19
R29936	3F6	9	3363 - 17
R29936	3F8	12	3363 - 19
R29936	3F18	2	3363 - 29
R29936	3F18	11	3363 - 29
R30200	1H23	5	0960 - 18
R30903	1J7	1	1369 - 5
R30916	3C22	14	3345 - 3
R32548	1I5	8	1060 - 3
R33259	1J7	1	1369 - 5
R33259	2E4	14	1830 - 7
R33259	2E9	7	1830 - 13
R33976	1G21	5	0515 - 3
R36636	2G16	13	2160 - 19
R36636	2J6	5	3162 - 23
R36636	3F18	1	3363 - 29
R375R	1J7	1	1369 - 5
R39112	1G6	1	0433 - 3
R39112	2G16	13	2160 - 19
R39112	2G16	14	2160 - 19
R394R	1J7	1	1369 - 5
R39554	1G17	12	0505 - 7
R39554	1K8	18	1674 - 7
R39741	1E8	22	0404 - 3
R39741	1E8	25	0404 - 3
R41440	1J25	18	1673 - 5
R41920	1G21	11	0515 - 3
R42729	1D23	6	0402 - 3
R43409	1E21	9	0409 - 3
R44165	1K8	17	1674 - 7
R44302	1H6	24	0560 - 3
R44302	1H14	16	0960 - 9
R44302	1H16	21	0960 - 11
R44302	1H18	16	0960 - 13
R44302	1H20	21	0960 - 15
R44302	1J18	6	1671 - 7
R44302	1J25	22	1673 - 5
R44302	1K4	20	1674 - 5
R44302	1K6	7	1674 - 5B
R44302	1K15	5	1674 - 14
R44302	2C4	61	1814 - 5
R44302	2C12	4	1814 - 13
R44302	2E4	52	1830 - 7
R44302	2E9	2	1830 - 13
R44302	2G12	2	2160 - 17
R44302	2G20	15	2160 - 23
R44302	2G22	9	2160 - 25
R44302	2H15	22	3102 - 11
R44302	3F12	16	3363 - 23
R44302	3F20	10	3363 - 31
R44342	1K8	22	1674 - 7
R459R	1J7	1	1369 - 5
R460R	1J7	1	1369 - 5
R463R	1H6	20	0560 - 3
R46528	2H20	23	3115 - 5
R46528	2H22	25	3115 - 7
R46528	2I12	2	3162 - 5
R46528	3B19	15	3315 - 5
R46528	3B21	42	3315 - 7
R46528	3B25	13	3315 - 11
R46528	3C2	15	3315 - 11B
R46528	3C4	6	3315 - 13
R46528	3C6	14	3315 - 13B
R46528	3C10	11	3315 - 17
R46528	3C16	6	3315 - 23
R46667	2E6	21	1830 - 9
R46667	2G10	5	2160 - 15
R46919	1H14	27	0960 - 9
R46919	1H16	15	0960 - 11
R46919	1H18	26	0960 - 13
R46919	1H20	16	0960 - 15
R46919	1I9	8	1060 - 7
R46919	2G10	16	2160 - 15
R46919	2J16	10	3163 - 3
R46919	2J20	4	3163 - 5B
R46919	2J22	25	3163 - 7
R46919	2J24	9	3163 - 7B
R46919	3E23	23	3363 - 9
R46919	3E23	36	3363 - 9
R46919	3F4	13	3363 - 15
R46919	3F14	13	3363 - 25
R46973	1B17	5	0230 - 3
R46973	1B19	1	0230 - 5
R46973	1B23	5	0250 - 2
R47150	2F20	48	2160 - 5
R47150	2F20	59	2160 - 5
R47151	2F20	15	2160 - 5
R47151	2F20	28	2160 - 5
R47151	2F20	46	2160 - 5
R47151	2H2	14	2160 - 29
R47160	1G15	9	0505 - 5
R47693	1G13	4	0505 - 3
R47998	1H9	1	0960 - 3
R47998	1H11	1	0960 - 5
R48000	1E24	8	0413 - 1
R48523	1I7	19	1060 - 5
R48638	1J7	1	1369 - 5
R48685	1D21	1	0401 - 2
R48685	1E8	1	0404 - 3
R48808	1J21	2	1672 - 3
R495R	1J7	1	1369 - 5
R49921	3F20	13	3363 - 31
R500096	1G5	4	0433 - 2
R500265	1F5	2	0415 - 3
R500270	1F19	1	0421 - 2
R500271	1F19	6	0421 - 2
R500304	1G4	1	0429 - 5
R500304	1G4	8	0429 - 5
R500320	1G4	9	0429 - 5
R500320	2E11	41	1830 - 15
R500322	1G2	10	0423 - 3
R50034	1I5	16	1060 - 3
R500363	1D21	15	0401 - 2
R500374	1E16	1	0407 - 7
R500374	1G9	25	0452 - 3
R500390	1E24	8	0413 - 1
R500401	1F11	16	0417 - 3
R500531	1G2	12	0423 - 3
R500596	1F3	2	0414 - 1
R500598	1G4	4	0429 - 5
R500649	1G4	17	0429 - 5
R501124	1E5	1	0403 - 2
R501144	1F14	10	0418 - 3
R501188	1G6	2	0433 - 3
R501373	1G7	9	0452 - 1
R501373	1G9	9	0452 - 3
R501428	1F16	8	0419 - 3
R501428	1G9	31	0452 - 3
R501486	1J21	7	1672 - 3
R502076	1F2	29	0413 - 3
R502079	1G4	11	0429 - 5
R502079	2E9	39	1830 - 13
R502604	1E12	2	0407 - 3
R502725	1E12	3	0407 - 3
R50279	2E4	8	1830 - 7
R50279	2E4	61	1830 - 7
R502811	1F16	11A	0419 - 3
R502811	1F16	11B	0419 - 3
R502814	1F14	4	0418 - 3
R502814	1G7	3	0452 - 1
R502814	1G9	3	0452 - 3
R502864	1G9	24	0452 - 3
R502867	1E17	6	0407 - 8
R502902	1E11	7	0407 - 2
R503419	1F20	9	0422 - 1
R503419	1F22	16	0422 - 3
R503449	1G6	2	0433 - 3
R503509	1F12	16	0417 - 4
R504022	1G4	13	0429 - 5
R504022	1G19	1	0510 - 3
R504023	1G4	13	0429 - 5
R504023	1G19	1	0510 - 3

NUMERICAL INDEX - CONTINUED

PART NO.	GRID	KEY	PAGE
R504023	2E9	31	1830 - 13
R504191	2E9	21	1830 - 13
R504191	2E9	23	1830 - 13
R504192	2E9	23	1830 - 13
R504725	1E2	2	0402 - 7
R504725	1E4	2	0402 - 9
R504734	1F16	18	0419 - 3
R505462	1E2	2	0402 - 7
R505609	1D21	2	0401 - 2
R50879	1I5	17	1060 - 3
R51936	1F2	3	0413 - 3
R51936	1F2	4	0413 - 3
R52725	1K8	23	1674 - 7
R52921	2C4	57	1814 - 5
R53108	1F22	1	0422 - 3
R53108	1G9	26	0452 - 3
R53543	1J7	1	1369 - 5
R54123	1G13	2	0505 - 3
R54124	1B2	4	0110 - 2
R54565	1D23	1	0402 - 3
R54701	3F4	8	3363 - 15
R55326	2B18	5	1811 - 3
R56101	1G19	17	0510 - 3
R56461	1J7	1	1369 - 5
R56463	1J7	1	1369 - 5
R56464	2J10	10	3162 - 27
R56751	1J7	1	1369 - 5
R60332	1J7	1	1369 - 5
R61105	1F16	9	0419 - 3
R61105	1G9	29	0452 - 3
R61467	1G6	2	0433 - 3
R61467	1G6	11	0433 - 3
R61871	1E17	9	0407 - 8
R61871	1G7	16	0452 - 1
R61871	1G9	16	0452 - 3
R63548	1F7	2	0416 - 3
R63548	1F9	1	0416 - 5
R63548	2I18	9	3162 - 11
R63548	2I22	16	3162 - 15
R63556	1B18	5	0230 - 4
R64059	3B25	4	3315 - 11
R64059	3C4	15	3315 - 13
R64525	1G2	3	0423 - 3
R64525	1J21	13	1672 - 3
R65563	2H22	26	3115 - 7
R65563	3B19	16	3315 - 5
R65563	3B21	43	3315 - 7
R65563	3B25	12	3315 - 11
R65563	3C2	14	3315 - 11B
R65563	3C4	7	3315 - 13
R65563	3C6	15	3315 - 13B
R65563	3C10	10	3315 - 17
R65563	3C10	19	3315 - 17
R65563	3C16	7	3315 - 23
R67364	1F2	26	0413 - 3
R71732	1J7	1	1369 - 5
R71963	1E24	2	0413 - 1
R72032	3F24	14	3365 - 3
R72328	1E19	2	0408 - 3
R72328	1G9	27	0452 - 3
R72328	2J10	7	3162 - 27
R72655	1G25	9	0520 - 5
R72655	2D12	13	1821 - 5
R72655	2D12	21	1821 - 5
R72655	2D14	5	1821 - 7
R72659	1E19	3	0408 - 3
R72700	1H23	16	0960 - 18
R72855	2H18	3	3115 - 3
R72855	2H20	4	3115 - 5
R73530	2J10	23	3162 - 27
R74012	1F18	1	0420 - 3
R75382	1B8	2	0201 - 3
R75383	1B8	2	0201 - 3
R75384	1B8	2	0201 - 3
R75385	1B8	2	0201 - 3
R75892	1E8	16	0404 - 3
R75892	1G7	14	0452 - 1
R75892	1G9	14	0452 - 3
R76477	3E25	21	3363 - 11
R77175	2G2	16	2160 - 9
R77175	2G2	19	2160 - 9
R77175	2G4	5	2160 - 11
R77175	2G4	8	2160 - 11
R77175	2G6	30	2160 - 13
R77175	2G12	8	2160 - 17
R77175	2G14	15	2160 - 17B
R77175	3E11	25	3363 - 1B
R78393	1H23	9	0960 - 18
R79033	2B18	3	1811 - 3
R79060	2J14	26	3162 - 31
R79101	2K3	8	3165 - 5
R79101	3G2	13	3365 - 6
R79132	1B8	3	0201 - 3
R79604	1E24	4	0413 - 1
R79605	1E24	3	0413 - 1
R80632	1J7	1	1369 - 5
R81195	3G4	10	3365 - 8
R81195	3G5	3	3365 - 9
R81275	1F3	6	0414 - 1
R81275	1G7	10	0452 - 1
R81275	1G9	10	0452 - 3
R81774	3G4	3	3365 - 8
R81775	3F25	3	3365 - 4
R81775	3G3	4	3365 - 7
R81776	2K3	15	3165 - 5
R81776	3G2	6	3365 - 6
R81777	2J25	4	3165 - 2
R81786	3G4	13	3365 - 8
R81786	3G5	4	3365 - 9
R81787	3G3	12	3365 - 7
R81788	2K3	5	3165 - 5
R81788	3G2	16	3365 - 6
R81789	2J25	11	3165 - 2
R81789	2K1	6	3165 - 3
R81792	3G4	15	3365 - 8
R81792	3G5	5	3365 - 9
R81793	3G3	16	3365 - 7
R81794	2K3	4	3165 - 5
R81794	3G2	19	3365 - 6
R81795	2J25	16	3165 - 2
R81795	2K1	7	3165 - 3
R81854	1H23	2	0960 - 18
R81862	3G3	9	3365 - 7
R81864	2J25	10	3165 - 2
R81864	2K1	10	3165 - 3
R81866	3G4	2	3365 - 8
R82095	3G1	3	3365 - 5
R83169	1E2	12	0402 - 7
R83469	3G4	9	3365 - 8
R83577	3G3	8	3365 - 7
R85363	1E21	1	0409 - 3
R85687	1E21	8	0409 - 3
R86085	3G4	5	3365 - 8
R87732	1E23	4	0410 - 2
R88114	1H23	10	0960 - 18
R89944	1F10	5	0417 - 2
R89944	1G9	28	0452 - 3
R90653	3F23	6	3365 - 2
R90658	1E22	2	0410 - 1
R90658	1G7	2	0452 - 1
R90658	1G9	2	0452 - 3
R90692	1E21	10	0409 - 3
R91360	1F2	25	0413 - 3
R91692	1E2	15	0402 - 7
R91728	3G4	14	3365 - 8
R91731	3G3	13	3365 - 7
R91889	1E21	2	0409 - 3
R92097	1F7	6	0416 - 3
R92097	1G7	11	0452 - 1
R92097	1G9	11	0452 - 3
R92208	1H23	6	0960 - 18
R92352	1E24	7	0413 - 1
R93910	1E21	8	0409 - 3
R95493	2I16	11	3162 - 9
R95493	2I20	11	3162 - 13
R95493	2I24	11	3162 - 17
R95493	3D13	8	3362 - 11
R95493	3D15	9	3362 - 13
R95493	3D17	8	3362 - 15
R95493	3D19	9	3362 - 17
R95493	3D21	8	3362 - 19
R95493	3D23	7	3362 - 21
R95493	3D25	11	3362 - 23
R96703	1F22	10	0422 - 3
R97185	1E17	8	0407 - 8
R97185	1G7	15	0452 - 1
R97185	1G9	15	0452 - 3
R98062	1E21	11	0409 - 3
R98063	1E21	8	0409 - 3
R98335	1E21	8	0409 - 3
TF23D	3B13	11	3302 - 9
TF23P	3B13	8	3302 - 9
TY15969	1H6	16	0560 - 3
TY15969	1J3	1	1330 - 2
TY16285	1J3	1	1330 - 2
TY21766	1J14	13	1671 - 3
TY22472	2G6	10	2160 - 13
TY22476	3E21	19	3363 - 7
TY22476	3E23	6	3363 - 9
TY22490	2D24	18	1830 - 3
TY22493	3F12	19	3363 - 23
TY24344	1G25	13	0520 - 5
TY24485	1J21	3	1672 - 3
TY6128	1J14	13	1671 - 3
TY6128	1J16	13	1671 - 5
TY6304	1E8	24	0404 - 3
TY6750	1J21	3	1672 - 3
TY6764	2E9	25	1830 - 13
TY6799	1J21	3	1672 - 3
T100813	1B17	10	0230 - 3
T101807	2B18	16	1811 - 3
T101807	2B20	5	1811 - 5
T101807	3C19	3	3344 - 2
T101975	2E6	20	1830 - 9
T102780	1K2	27	1674 - 3
T102934	1K4	7	1674 - 5
T102934	2G10	23	2160 - 15
T102934	2G14	6	2160 - 17B
T103461	1H6	11	0560 - 3
T103834	1K2	23	1674 - 3
T105368	3E7	5	3362 - 30

NUMERICAL INDEX - CONTINUED

PART NO.	GRID	KEY	PAGE
T105720	2J18	30	3163 - 5
T105720	2J20	26	3163 - 5B
T105740	1G23	22	0520 - 3
T105740	2C2	16	1814 - 3
T105740	2D10	21	1821 - 3
T105740	2D10	22	1821 - 3
T105740	2E16	20	1910 - 3
T105773	2J16	7	3163 - 3
T105773	2J18	23	3163 - 5
T105773	2J20	15	3163 - 5B
T105773	2J24	19	3163 - 7B
T105773	3E21	18	3363 - 7
T105773	3E23	5	3363 - 9
T105774	3E15	5	3363 - 3
T105774	3E17	5	3363 - 3B
T105774	3F4	3	3363 - 15
T105774	3F20	16	3363 - 31
T107116	1J16	7	1671 - 5
T107117	1J14	3	1671 - 3
T107117	1J16	6	1671 - 5
T10745	1J21	4	1672 - 3
T107887	2I18	12	3162 - 11
T107887	2I22	19	3162 - 15
T108357	1K2	24	1674 - 3
T11234	1B17	16	0230 - 3
T11234	2F5	4	2002 - 3
T113128	1B24	7	0250 - 3
T113128	1C14	4	0325 - 1
T114774	2E7	11	1830 - 10
T114774	2E7	12	1830 - 10
T115030	2F5	5	2002 - 3
T116290	1B21	7	0230 - 7
T116820	1C2	18	0250 - 5
T116851	1C7	9	0250 - 11
T116918	1C16	10	0341 - 3
T118681	2F20	6	2160 - 5
T118681	2F20	33	2160 - 5
T118681	2I16	40	3162 - 9
T118681	2I18	10	3162 - 11
T118681	2I20	29	3162 - 13
T118681	2I22	17	3162 - 15
T118681	2I24	28	3162 - 17
T118681	2J2	6	3162 - 19
T118681	2J4	13	3162 - 21
T118681	3D13	26	3362 - 11
T118681	3D15	20	3362 - 13
T118681	3D17	47	3362 - 15
T118681	3D19	30	3362 - 17
T118681	3E2	10	3362 - 25
T118683	2J12	12	3162 - 29
T118685	2I14	2	3162 - 7
T118685	2I16	10	3162 - 9
T118685	2I20	10	3162 - 13
T118685	2I24	10	3162 - 17
T118685	3D11	2	3362 - 9
T118685	3D13	9	3362 - 11
T118685	3D15	7	3362 - 13
T118685	3D17	9	3362 - 15
T118685	3D19	8	3362 - 17
T118685	3D21	9	3362 - 19
T118685	3D23	8	3362 - 21
T118685	3D25	10	3362 - 23
T118689	2F20	53	2160 - 5
T118708	2I16	19	3162 - 9
T118708	2I18	19	3162 - 11
T118709	2I16	21	3162 - 9
T118709	2I18	21	3162 - 11
T118711	2I16	22	3162 - 9
T118711	2I18	22	3162 - 11
T118712	2I16	25	3162 - 9
T118712	2I18	23	3162 - 11
T118715	2I16	17	3162 - 9
T118715	2I18	17	3162 - 11
T118768	2H9	1	3102 - 5
T118799	2I16	24	3162 - 9
T118799	2I18	24	3162 - 11
T118799	2I24	17	3162 - 17
T118799	3D13	15	3362 - 11
T118799	3D15	15	3362 - 13
T118799	3D17	14	3362 - 15
T118799	3D19	15	3362 - 17
T118799	3D21	15	3362 - 19
T118799	3D25	17	3362 - 23
T118808	2I24	16	3162 - 17
T118808	2J4	11	3162 - 21
T118808	2J12	14	3162 - 29
T118808	3D13	14	3362 - 11
T118808	3D15	14	3362 - 13
T118808	3D17	13	3362 - 15
T118808	3D19	14	3362 - 17
T118808	3D21	14	3362 - 19
T118808	3D25	16	3362 - 23
T118866	2I24	33	3162 - 17
T118866	2J4	1	3162 - 21
T118866	3D13	25	3362 - 11
T118866	3D17	43	3362 - 15
T118866	3D19	26	3362 - 17
T118866	3E2	3	3362 - 25
T118867	2I24	22	3162 - 17
T118867	2J4	17	3162 - 21
T118867	3D13	24	3362 - 11
T118867	3D17	42	3362 - 15
T118867	3D19	25	3362 - 17
T118879	2J4	9	3162 - 21
T118884	2I16	20	3162 - 9
T118884	2I18	20	3162 - 11
T119153	2C2	23	1814 - 3
T119816	1G19	18	0510 - 3
T119816	1G19	19	0510 - 3
T119912	1B17	2	0230 - 3
T119912	1B19	5	0230 - 5
T119912	1B19	8	0230 - 5
T119912	1B23	2	0250 - 2
T119912	2B12	2	1749 - 3
T120543	2D10	12	1821 - 3
T120544	2D10	36	1821 - 3
T120545	2D10	9	1821 - 3
T121240	2I10	6	3162 - 3
T121240	2J2	5	3162 - 19
T121288	1J14	6	1671 - 3
T121288	1J16	12	1671 - 5
T121474	3C12	2	3315 - 19
T122075	1F16	4	0419 - 3
T122075	1G9	30	0452 - 3
T12275	1J7	1	1369 - 5
T12275	3G1	7	3365 - 5
T122864	2I10	8	3162 - 3
T122865	2I10	5	3162 - 3
T125808	3B23	4	3315 - 9
T12582	2J25	9	3165 - 2
T12582	2K1	9	3165 - 3
T126052	2G10	20	2160 - 15
T126867	3D5	6	3348 - 3
T127257	2J10	14	3162 - 27
T127260	2J10	22	3162 - 27
T127261	2J10	19	3162 - 27
T127263	2J10	18	3162 - 27
T127264	2J10	21	3162 - 27
T127265	2J10	1	3162 - 27
T127268	2J10	2	3162 - 27
T127401	3E2	4	3362 - 25
T127437	3D7	6	3348 - 5
T127792	3D2	6	3346 - 5
T128437	2F5	2	2002 - 3
T128533	2H13	5	3102 - 9
T128538	2H13	10	3102 - 9
T129165	1F24	1	0422 - 5
T129165	1J14	2	1671 - 3
T129165	1J16	5	1671 - 5
T129732	1G21	20	0515 - 3
T13119	1J7	1	1369 - 5
T131938	1I25	9	1320 - 3
T13254	1J9	7	1369 - 7
T133291	2I2	2	3115 - 11
T133291	2I4	2	3115 - 13
T133291	3B19	1	3315 - 5
T133487	2C2	9	1814 - 3
T133487	2E16	8	1910 - 3
T133674	2B24	6	1812 - 3
T133674	2C2	6	1814 - 3
T133674	2C4	66	1814 - 5
T133674	2C24	3	1816 - 9
T133674	2D2	5	1816 - 11
T133674	2D4	5	1816 - 13
T133674	2E2	21	1830 - 5
T133674	3B23	32	3315 - 9
T134104	1J19	2	1671 - 8
T134530	2D6	3	1816 - 15
T134530	2D8	3	1816 - 17
T134586	2C24	13	1816 - 9
T134874	2C24	6	1816 - 9
T134874	2D2	1	1816 - 11
T134874	2D2	15	1816 - 11
T134874	2D4	3	1816 - 13
T134874	2D4	9	1816 - 13
T134874	2D4	11	1816 - 13
T134874	2D6	2	1816 - 15
T134874	2D8	2	1816 - 17
T134874	2E2	13	1830 - 5
T134881	2I20	39	3162 - 13
T134881	2I22	11	3162 - 15
T134895	2B18	24	1811 - 3
T134895	2B20	10	1811 - 5
T134895	2C2	30	1814 - 3
T134895	2D2	17	1816 - 11
T134895	2D4	7	1816 - 13
T134895	2D6	30	1816 - 15
T134895	2D8	4	1816 - 17
T134895	2E2	8	1830 - 5
T134895	2E2	21	1830 - 5
T134895	2F3	20	2001 - 3
T134895	2F12	1	2007 - 3
T134896	2D2	12	1816 - 11
T13518	1G6	5	0433 - 3
T135342	1G21	36	0515 - 3
T135583	2C2	14	1814 - 3
T135675	2C2	21	1814 - 3
T135675	2C6	2	1814 - 7
T135675	2C8	26	1814 - 9
T13630	1H9	3	0960 - 3
T13630	1H11	3	0960 - 5

NUMERICAL INDEX - CONTINUED

PART NO.	GRID	KEY	PAGE
T137318	1G21	25	0515 - 3
T137321	1G21	21	0515 - 3
T137322	1G21	22	0515 - 3
T13814	2E4	36	1830 - 7
T139165	1J2	1	1320 - 5
T139167	1J2	1	1320 - 5
T140207	1B17	11	0230 - 3
T140211	1B17	6	0230 - 3
T140211	1B20	2	0230 - 6
T140211	1B23	7	0250 - 2
T140283	1I25	10	1320 - 3
T140311	1I25	11	1320 - 3
T140328	2H22	31	3115 - 7
T140328	2H24	26	3115 - 9
T140328	2I2	23	3115 - 11
T140328	2I4	10	3115 - 13
T140328	3B19	14	3315 - 5
T140328	3B21	6	3315 - 7
T140328	3B23	18	3315 - 9
T140328	3B23	22	3315 - 9
T140328	3B25	15	3315 - 11
T140328	3C2	13	3315 - 11B
T140328	3C4	5	3315 - 13
T140328	3C6	13	3315 - 13B
T140328	3C8	12	3315 - 15
T140328	3C16	4	3315 - 23
T14050	1F2	13	0413 - 3
T14050	1F18	14	0420 - 3
T140650	3B23	1	3315 - 9
T140650	3B23	7	3315 - 9
T14083	1I21	3	1313 - 3
T141126	3B23	30	3315 - 9
T141234	2B18	22	1811 - 3
T141689	1D11	5	0360 - 1
T142748	1G21	16	0515 - 3
T143169	2E4	20	1830 - 7
T143169	2E9	6	1830 - 13
T143802	2H13	15	3102 - 9
T143804	2H9	6	3102 - 5
T144486	1D13	11	0360 - 3
T144486	1D15	7	0360 - 5
T144487	1D13	12	0360 - 3
T144493	1D17	19	0360 - 7
T144494	1D17	18	0360 - 7
T145560	1I25	12	1320 - 3
T145560	2E9	18	1830 - 13
T146080	1I25	13	1320 - 3
T146097	1I25	14	1320 - 3
T146098	1J2	5	1320 - 5
T146099	1J2	5	1320 - 5
T146102	1F20	6	0422 - 1
T146102	1F22	11	0422 - 3
T146102	1I25	15	1320 - 3
T146102	2B3	8	1740 - 3
T146102	2B3	15	1740 - 3
T146104	1J2	6	1320 - 5
T146106	1J2	6	1320 - 5
T146481	2G24	1	2160 - 27
T146757	2H18	4	3115 - 3
T146757	2H20	2	3115 - 5
T146792	1I25	16	1320 - 3
T146792	2G24	26	2160 - 27
T146792	2H2	23	2160 - 29
T146908	1J2	7	1320 - 5
T146911	1J2	7	1320 - 5
T147070	2B3	3	1740 - 3
T147269	1B8	20	0201 - 3
T147296	2H9	3	3102 - 5
T148182	2H18	5	3115 - 3
T148182	2H20	3	3115 - 5
T148387	2B3	14	1740 - 3
T148409	2B3	2	1740 - 3
T148409	2B8	2	1747 - 3
T148409	2G24	6	2160 - 27
T148409	2H2	17	2160 - 29
T148409	3C20	2	3344 - 3
T148410	2B3	6	1740 - 3
T148410	2D6	34	1816 - 15
T148410	3C19	1	3344 - 2
T148410	3C19	14	3344 - 2
T148410	3C24	9	3346 - 3
T148410	3D2	5	3346 - 5
T148410	3E7	4	3362 - 30
T148411	2B3	1	1740 - 3
T148411	2I6	2	3140 - 3
T148411	3C24	9	3346 - 3
T148741	3B23	16	3315 - 9
T148817	2F5	3	2002 - 3
T149199	1I25	17	1320 - 3
T149199	1K12	11	1674 - 11
T149570	3D9	11	3362 - 7
T149571	3D9	10	3362 - 7
T149575	3D9	11	3362 - 7
T149575	3E3	3	3362 - 26
T149575	3E4	7	3362 - 27
T149576	3D9	10	3362 - 7
T149576	3E3	5	3362 - 26
T149576	3E4	5	3362 - 27
T149577	3D9	11	3362 - 7
T149577	3E4	7	3362 - 27
T149578	3D9	10	3362 - 7
T149578	3E4	5	3362 - 27
T150487	2H7	2	3102 - 3
T150517	2H7	2	3102 - 3
T150768	2B3	7	1740 - 3
T150958	2I22	20	3162 - 15
T151072	1C9	8	0250 - 13
T151074	1C4	17	0250 - 7
T151075	1C7	7	0250 - 11
T151077	1C7	3	0250 - 11
T151080	1C7	11	0250 - 11
T151085	1C5	2	0250 - 8
T151087	1C4	15	0250 - 7
T151088	1C4	15	0250 - 7
T151089	1C2	13	0250 - 5
T151261	1C2	15	0250 - 5
T151262	1C2	9	0250 - 5
T151264	1C4	14	0250 - 7
T152288	1H12	4	0960 - 6
T152288	1H24	6	0960 - 19
T152398	2I16	23	3162 - 9
T152401	2I16	15	3162 - 9
T152401	2I18	16	3162 - 11
T152404	2I16	14	3162 - 9
T152404	2I18	15	3162 - 11
T152648	1I21	5	1313 - 3
T153105	2I24	14	3162 - 17
T153105	3D13	12	3362 - 11
T153105	3D15	12	3362 - 13
T153105	3D19	12	3362 - 17
T153105	3D21	12	3362 - 19
T153105	3D25	14	3362 - 23
T153193	3E23	34	3363 - 9
T153193	3F4	35	3363 - 15
T153193	3F6	7	3363 - 17
T153193	3F8	8	3363 - 19
T153303	2B3	13	1740 - 3
T153320	3D2	15	3346 - 5
T153322	3D2	21	3346 - 5
T153531	3C18	3	3343 - 3
T153567	3C24	2	3346 - 3
T153567	3D2	18	3346 - 5
T153680	1I25	18	1320 - 3
T153720	1C4	9	0250 - 7
T153721	1C4	6	0250 - 7
T153722	1C4	6	0250 - 7
T153723	1H22	2	0960 - 17
T153742	1H22	3	0960 - 17
T153743	1H22	4	0960 - 17
T153744	1H22	14	0960 - 17
T154058	2I6	9	3140 - 3
T154110	3C18	1	3343 - 3
T154165	2I6	1	3140 - 3
T154187	2J10	6	3162 - 27
T154273	3C22	13	3345 - 3
T154277	3D2	26	3346 - 5
T154360	2H11	6	3102 - 7
T154361	1K8	19	1674 - 7
T154449	1H4	9	0540 - 3
T154594	1B17	7	0230 - 3
T154621	2B3	5	1740 - 3
T154643	2B3	4	1740 - 3
T154712	3C18	6	3343 - 3
T154764	2I6	3	3140 - 3
T154769	2I6	4	3140 - 3
T154821	3C18	8	3343 - 3
T154922	3C19	11	3344 - 2
T154951	1B8	1	0201 - 3
T154952	1B9	12	0210 - 1
T155259	1C20	11	0350 - 3
T155324	1C18	2	0350 - 1
T155826	1G19	13	0510 - 3
T155827	1G19	20	0510 - 3
T155858	1G15	10	0505 - 5
T157762	3C12	4	3315 - 19
T157785	3C10	16	3315 - 17
T157792	3D2	8	3346 - 5
T157796	3D2	9	3346 - 5
T157922	3C19	5	3344 - 2
T157922	3D3	2	3346 - 6
T158081	2C4	41	1814 - 5
T158132	2J25	25	3165 - 2
T158181	2I6	7	3140 - 3
T158245	1I9	11	1060 - 7
T158358	2C4	44	1814 - 5
T158366	3E2	1	3362 - 25
T158397	3C12	10	3315 - 19
T158424	2E9	32	1830 - 13
T158424	2G20	1	2160 - 23
T158438	1B13	7	0210 - 5
T158438	1I16	22	1111 - 3
T158476	2G10	37	2160 - 15
T158481	2D16	14	1821 - 9
T158482	1G23	9	0520 - 3
T158495	1G23	12	0520 - 3
T158579	2I8	2	3140 - 5
T158584	1J21	6	1672 - 3
T158648	1H4	11	0540 - 3
T158717	1C20	8	0350 - 3
T158718	1C20	9	0350 - 3
T158720	1C20	2	0350 - 3

NUMERICAL INDEX - CONTINUED

PART NO.	GRID	KEY	PAGE
T158722	1D10	7	0350 - 17
T158732	1D11	2	0360 - 1
T158739	1C22	4	0350 - 5
T158739	1C24	4	0350 - 7
T158739	1D2	14	0350 - 9
T158739	1D4	4	0350 - 11
T158739	1D6	4	0350 - 13
T158739	1D8	4	0350 - 15
T158740	1C20	10	0350 - 3
T158742	1C22	2	0350 - 5
T158742	1C24	2	0350 - 7
T158742	1D2	15	0350 - 9
T158742	1D4	2	0350 - 11
T158742	1D6	2	0350 - 13
T158742	1D8	2	0350 - 15
T158742	1D10	14	0350 - 17
T158743	1C22	5	0350 - 5
T158743	1C24	5	0350 - 7
T158743	1D2	13	0350 - 9
T158743	1D4	5	0350 - 11
T158743	1D6	5	0350 - 13
T158743	1D8	5	0350 - 15
T158744	1D10	11	0350 - 17
T158745	1D10	12	0350 - 17
T158749	1D11	4	0360 - 1
T158754	1D11	10	0360 - 1
T158756	1D2	6	0350 - 9
T158756	1D6	12	0350 - 13
T158756	1D8	12	0350 - 15
T158760	1D10	17	0350 - 17
T158762	1D10	9	0350 - 17
T158775	1C22	7	0350 - 5
T158775	1C24	7	0350 - 7
T158775	1D2	7	0350 - 9
T158775	1D4	7	0350 - 11
T158775	1D6	7	0350 - 13
T158775	1D8	7	0350 - 15
T158778	1C22	13	0350 - 5
T158778	1C24	13	0350 - 7
T158778	1D2	8	0350 - 9
T158778	1D4	13	0350 - 11
T158778	1D6	11	0350 - 13
T158778	1D8	11	0350 - 15
T158789	1C22	6	0350 - 5
T158789	1C24	6	0350 - 7
T158789	1D2	12	0350 - 9
T158789	1D4	6	0350 - 11
T158789	1D6	6	0350 - 13
T158789	1D8	6	0350 - 15
T158801	1C22	10	0350 - 5
T158801	1C24	10	0350 - 7
T158801	1D2	11	0350 - 9
T158801	1D4	10	0350 - 11
T158801	1D6	8	0350 - 13
T158801	1D8	8	0350 - 15
T158810	3B23	25	3315 - 9
T158812	3B23	23	3315 - 9
T158855	1D10	8	0350 - 17
T158859	1D10	10	0350 - 17
T159028	1I25	19	1320 - 3
T159310	1B13	3	0210 - 5
T159316	1B13	8	0210 - 5
T159317	1B13	9	0210 - 5
T159322	1B13	4	0210 - 5
T159323	1B13	4	0210 - 5
T159324	1B13	4	0210 - 5
T159325	1B13	4	0210 - 5
T159326	1B13	4	0210 - 5
T159327	1B13	4	0210 - 5
T159329	1B13	4	0210 - 5
T159330	1B13	4	0210 - 5
T159331	1B13	4	0210 - 5
T159332	1B13	4	0210 - 5
T159334	1B13	4	0210 - 5
T159337	1B13	4	0210 - 5
T159338	1B13	4	0210 - 5
T159339	1B13	4	0210 - 5
T159341	1B11	11	0210 - 3
T159343	1B11	16	0210 - 3
T159344	1B11	15	0210 - 3
T159346	1B11	17	0210 - 3
T159348	1B11	5	0210 - 3
T159350	1B11	7	0210 - 3
T159351	1B11	6	0210 - 3
T159358	1B11	2	0210 - 3
T159359	1B11	1	0210 - 3
T159359	1I18	6	1111 - 5
T159362	1B8	12	0201 - 3
T159362	1I3	25	1011 - 3
T159371	1B8	11	0201 - 3
T159373	1B8	8	0201 - 3
T159373	1I3	24	1011 - 3
T159386	1B8	23	0201 - 3
T159388	1B8	22	0201 - 3
T159389	1B8	24	0201 - 3
T159396	1I3	9	1011 - 3
T159397	1I3	10	1011 - 3
T159398	1I3	17	1011 - 3
T159399	1I3	6	1011 - 3
T159400	1I3	7	1011 - 3
T159401	1I3	8	1011 - 3
T159402	1I3	4	1011 - 3
T159403	1I3	23	1011 - 3
T159406	1I3	16	1011 - 3
T159407	1I3	14	1011 - 3
T159408	1I3	15	1011 - 3
T159409	1I3	1	1011 - 3
T159425	1I3	20	1011 - 3
T159427	1I3	20	1011 - 3
T159429	1I3	20	1011 - 3
T159431	1I3	20	1011 - 3
T159435	1I3	20	1011 - 3
T159440	1B11	18	0210 - 3
T159440	1I3	22	1011 - 3
T159441	1B11	18	0210 - 3
T159441	1I3	22	1011 - 3
T159442	1B11	18	0210 - 3
T159442	1I3	22	1011 - 3
T159443	1B11	18	0210 - 3
T159443	1I3	22	1011 - 3
T159444	1B11	18	0210 - 3
T159444	1I3	22	1011 - 3
T159445	1B11	18	0210 - 3
T159445	1I3	22	1011 - 3
T159446	1B11	18	0210 - 3
T159446	1I3	22	1011 - 3
T159447	1B11	18	0210 - 3
T159447	1I3	22	1011 - 3
T159448	1B11	18	0210 - 3
T159448	1I3	22	1011 - 3
T159449	1B11	18	0210 - 3
T159449	1I3	22	1011 - 3
T159450	1B11	18	0210 - 3
T159450	1I3	22	1011 - 3
T159451	1B11	18	0210 - 3
T159451	1I3	22	1011 - 3
T159452	1B11	18	0210 - 3
T159452	1I3	22	1011 - 3
T159453	1B11	18	0210 - 3
T159453	1I3	22	1011 - 3
T159457	1B11	18	0210 - 3
T159457	1I3	22	1011 - 3
T159459	1B11	18	0210 - 3
T159459	1I3	22	1011 - 3
T159461	1B11	18	0210 - 3
T159461	1I3	22	1011 - 3
T159463	1B11	18	0210 - 3
T159463	1I3	22	1011 - 3
T159471	1I16	13	1111 - 3
T159472	1I16	10	1111 - 3
T159473	1I16	6	1111 - 3
T159474	1I16	9	1111 - 3
T159474	1I18	10	1111 - 5
T159475	1I16	8	1111 - 3
T159475	1I18	9	1111 - 5
T159476	1I16	5	1111 - 3
T159477	1I16	7	1111 - 3
T159477	1I18	4	1111 - 5
T159478	1I16	4	1111 - 3
T159478	1I18	8	1111 - 5
T159479	1I16	1	1111 - 3
T159480	1I16	1	1111 - 3
T159481	1I16	1	1111 - 3
T159482	1I16	1	1111 - 3
T159483	1I16	1	1111 - 3
T159484	1I16	2	1111 - 3
T159485	1I16	3	1111 - 3
T159486	1I16	11	1111 - 3
T159487	1I16	12	1111 - 3
T159487	1I18	17	1111 - 5
T159490	1I16	17	1111 - 3
T159491	1I16	15	1111 - 3
T159492	1I16	16	1111 - 3
T159493	1I16	16	1111 - 3
T159494	1I16	16	1111 - 3
T159495	1I16	16	1111 - 3
T159496	1I16	16	1111 - 3
T159497	1I16	16	1111 - 3
T159499	1I16	21	1111 - 3
T159502	1I16	20	1111 - 3
T159502	1I18	18	1111 - 5
T159518	1B9	8	0210 - 1
T159519	1B9	10	0210 - 1
T159522	1B9	9	0210 - 1
T159523	1B9	9	0210 - 1
T159525	1B9	9	0210 - 1
T159565	1C16	23	0341 - 3
T159567	1C16	19	0341 - 3
T159568	1C22	13	0350 - 5
T159568	1C24	13	0350 - 7
T159568	1D2	8	0350 - 9
T159568	1D4	13	0350 - 11
T159568	1D6	11	0350 - 13
T159568	1D8	11	0350 - 15
T159569	1C22	13	0350 - 5
T159569	1C24	13	0350 - 7
T159569	1D2	8	0350 - 9
T159569	1D4	13	0350 - 11
T159569	1D6	11	0350 - 13
T159569	1D8	11	0350 - 15
T159570	1C22	13	0350 - 5

NUMERICAL INDEX - CONTINUED

PART NO.	GRID	KEY	PAGE
T159570	1C24	13	0350 - 7
T159570	1D2	8	0350 - 9
T159570	1D4	13	0350 - 11
T159570	1D6	11	0350 - 13
T159570	1D8	11	0350 - 15
T159572	1D10	1	0350 - 17
T159582	1D13	22	0360 - 3
T159583	1D13	34	0360 - 3
T159584	1D13	36	0360 - 3
T159586	1D13	31	0360 - 3
T159587	1D13	26	0360 - 3
T159588	1D13	27	0360 - 3
T159589	1D13	25	0360 - 3
T159591	1D13	30	0360 - 3
T159592	1D13	29	0360 - 3
T159593	1D13	1	0360 - 3
T159593	1D13	28	0360 - 3
T159596	1D13	16	0360 - 3
T159596	1D15	9	0360 - 5
T159597	1D13	21	0360 - 3
T159598	1D13	20	0360 - 3
T159599	1D13	17	0360 - 3
T159600	1D13	18	0360 - 3
T159604	1D13	3	0360 - 3
T159607	1D13	7	0360 - 3
T159607	1D17	3	0360 - 7
T159607	1D17	4	0360 - 7
T159607	1D17	5	0360 - 7
T159607	1D17	6	0360 - 7
T159607	1D17	9	0360 - 7
T159607	1D17	13	0360 - 7
T159607	1D17	14	0360 - 7
T159607	1D17	15	0360 - 7
T159607	1D17	16	0360 - 7
T159612	1D17	3	0360 - 7
T159612	1D17	6	0360 - 7
T159613	1D17	7	0360 - 7
T159683	1C16	12	0341 - 3
T159683	1C16	26	0341 - 3
T159684	1D17	11	0360 - 7
T159800	3C18	9	3343 - 3
T159829	3E21	11	3363 - 7
T159829	3E23	21	3363 - 9
T159829	3F4	33	3363 - 15
T159848	3E19	11	3363 - 5
T159853	3C24	17	3346 - 3
T159954	2J16	20	3163 - 3
T159954	2J18	10	3163 - 5
T159954	2J20	21	3163 - 5B
T159956	3E19	18	3363 - 5
T159976	3F20	18	3363 - 31
T159980	2H18	9	3115 - 3
T159980	2H20	7	3115 - 5
T159981	2H18	7	3115 - 3
T159981	2H20	5	3115 - 5
T159999	3C18	18	3343 - 3
T160299	3C24	14	3346 - 3
T160300	3D2	17	3346 - 5
T160302	3C24	5	3346 - 3
T160303	3D7	8	3348 - 5
T160315	2D16	2	1821 - 9
T160376	3E21	12	3363 - 7
T160376	3E21	16	3363 - 7
T160376	3F6	3	3363 - 17
T160376	3F8	3	3363 - 19
T160376	3F10	3	3363 - 21
T160384	3D2	15	3346 - 5
T160492	2E4	55	1830 - 7
T160492	2E6	23	1830 - 9
T160508	1G19	3	0510 - 3
T160515	3C12	6	3315 - 19
T160548	3F4	37	3363 - 15
T160550	2J16	15	3163 - 3
T160550	2J18	4	3163 - 5
T160550	2J24	4	3163 - 7B
T160554	3E25	12	3363 - 11
T160567	3C18	19	3343 - 3
T160589	3C12	3	3315 - 19
T160617	2J14	18	3162 - 31
T160617	3D11	6	3362 - 9
T160619	2J14	17	3162 - 31
T160619	3D11	5	3362 - 9
T160638	3C12	8	3315 - 19
T160639	3C12	9	3315 - 19
T160720	2H18	14	3115 - 3
T160720	2H20	24	3115 - 5
T160759	1I25	20	1320 - 3
T160759	2H15	29	3102 - 11
T160762	1J2	10	1320 - 5
T160769	1J2	10	1320 - 5
T160895	2D10	25	1821 - 3
T160896	2D10	24	1821 - 3
T161002	1J9	2	1369 - 7
T161036	2H11	2	3102 - 7
T161036	3B7	4	3302 - 3
T161036	3B9	4	3302 - 5
T161036	3B13	2	3302 - 9
T161036	3D5	3	3348 - 3
T161036	3D7	2	3348 - 5
T161082	3F6	26	3363 - 17
T161082	3F8	26	3363 - 19
T161093	1J9	8	1369 - 7
T161144	1D17	10	0360 - 7
T161147	1C22	12	0350 - 5
T161147	1C24	12	0350 - 7
T161147	1D2	9	0350 - 9
T161147	1D4	12	0350 - 11
T161147	1D6	10	0350 - 13
T161147	1D8	10	0350 - 15
T161181	1C16	16	0341 - 3
T161182	1C16	15	0341 - 3
T161183	1C22	13	0350 - 5
T161183	1C24	13	0350 - 7
T161183	1D2	8	0350 - 9
T161183	1D4	13	0350 - 11
T161183	1D6	11	0350 - 13
T161183	1D8	11	0350 - 15
T161186	1D2	2	0350 - 9
T161186	1D6	16	0350 - 13
T161186	1D8	16	0350 - 15
T161187	1D2	2	0350 - 9
T161187	1D6	16	0350 - 13
T161187	1D8	16	0350 - 15
T161188	1D2	2	0350 - 9
T161188	1D6	16	0350 - 13
T161188	1D8	16	0350 - 15
T161189	1D2	2	0350 - 9
T161189	1D6	16	0350 - 13
T161189	1D8	16	0350 - 15
T161190	1D2	2	0350 - 9
T161190	1D6	16	0350 - 13
T161190	1D8	16	0350 - 15
T161191	1D2	2	0350 - 9
T161191	1D6	16	0350 - 13
T161191	1D8	16	0350 - 15
T161192	1D2	2	0350 - 9
T161192	1D6	16	0350 - 13
T161192	1D8	16	0350 - 15
T161193	1D2	2	0350 - 9
T161193	1D6	16	0350 - 13
T161193	1D8	16	0350 - 15
T161194	1D13	5	0360 - 3
T161194	1D13	24	0360 - 3
T161194	1D15	12	0360 - 5
T161194	1D17	24	0360 - 7
T161196	1D13	35	0360 - 3
T161197	1D13	32	0360 - 3
T161198	1D13	32	0360 - 3
T161199	1D13	32	0360 - 3
T161200	1D13	32	0360 - 3
T161202	1D13	37	0360 - 3
T161203	1D13	38	0360 - 3
T161204	1D13	2	0360 - 3
T161204	1D17	8	0360 - 7
T161204	1D17	25	0360 - 7
T161204	1D17	26	0360 - 7
T161207	1D13	8	0360 - 3
T161207	1D15	13	0360 - 5
T161208	1D17	12	0360 - 7
T161218	1C16	3	0341 - 3
T161233	1I3	3	1011 - 3
T161238	1B11	20	0210 - 3
T161238	1I3	20	1011 - 3
T161239	1B11	20	0210 - 3
T161239	1I3	20	1011 - 3
T161240	1B11	20	0210 - 3
T161240	1I3	20	1011 - 3
T161241	1B11	20	0210 - 3
T161241	1I3	20	1011 - 3
T161242	1B11	20	0210 - 3
T161242	1I3	20	1011 - 3
T161243	1B11	20	0210 - 3
T161243	1I3	20	1011 - 3
T161244	1B11	20	0210 - 3
T161244	1I3	20	1011 - 3
T161245	1B11	20	0210 - 3
T161245	1I3	20	1011 - 3
T161246	1B11	20	0210 - 3
T161246	1I3	20	1011 - 3
T161247	1B11	20	0210 - 3
T161247	1I3	20	1011 - 3
T161248	1B9	9	0210 - 1
T161249	1B9	9	0210 - 1
T161279	3B13	9	3302 - 9
T161319	3B13	9	3302 - 9
T161342	3E23	17	3363 - 9
T161365	3F8	10	3363 - 19
T161373	2C2	11	1814 - 3
T161373	2E16	9	1910 - 3
T161380	1G19	31	0510 - 3
T161380	1K10	28	1674 - 9
T161380	2D6	15	1816 - 15
T161380	2D8	35	1816 - 17
T161380	2E13	1	1834 - 3
T161463	2G20	12	2160 - 23
T161463	2G22	14	2160 - 25
T161464	2G20	19	2160 - 23
T161464	2G22	15	2160 - 25
T161497	2H18	1	3115 - 3
T161497	2H20	13	3115 - 5
T161497	2I8	6	3140 - 5

NUMERICAL INDEX - CONTINUED

PART NO.	GRID	KEY	PAGE
T161521	2F7	5	2004 - 3
T161598	3C12	7	3315 - 19
T161615	1J9	4	1369 - 7
T161621	1H24	7	0960 - 19
T161665	1I25	21	1320 - 3
T161665	3F10	37	3363 - 21
T161665	3F12	28	3363 - 23
T161678	1I25	22	1320 - 3
T161769	3F10	24	3363 - 21
T161769	3F12	18	3363 - 23
T161835	2I16	8	3162 - 9
T161835	2I20	8	3162 - 13
T161835	2I24	8	3162 - 17
T161835	2J14	21	3162 - 31
T161835	3D13	7	3362 - 11
T161835	3D15	8	3362 - 13
T161835	3D17	7	3362 - 15
T161835	3D19	7	3362 - 17
T161835	3D21	7	3362 - 19
T161835	3D23	6	3362 - 21
T161835	3D25	8	3362 - 23
T161836	3F18	8	3363 - 29
T161852	3C19	20	3344 - 2
T162004	3E21	4	3363 - 7
T162004	3E21	9	3363 - 7
T162004	3E23	12	3363 - 9
T162004	3F6	10	3363 - 17
T162004	3F8	13	3363 - 19
T162005	3E21	8	3363 - 7
T162005	3E23	14	3363 - 9
T162238	2G24	28	2160 - 27
T162380	1K2	1	1674 - 3
T162396	1B17	12	0230 - 3
T162396	1B17	24	0230 - 3
T162396	1H23	18	0960 - 18
T162396	2B3	11	1740 - 3
T162396	2H11	5	3102 - 7
T162396	2H18	11	3115 - 3
T162396	2H20	27	3115 - 5
T162396	2I6	10	3140 - 3
T162396	2I8	5	3140 - 5
T162396	2J25	20	3165 - 2
T162396	2J25	23	3165 - 2
T162396	2K1	17	3165 - 3
T162396	2K3	1	3165 - 5
T162396	3B21	29	3315 - 7
T162396	3C18	5	3343 - 3
T162396	3C19	8	3344 - 2
T162396	3C22	2	3345 - 3
T162396	3C24	12	3346 - 3
T162396	3D2	28	3346 - 5
T162396	3D5	5	3348 - 3
T162396	3F24	24	3365 - 3
T162396	3F25	18	3365 - 4
T162396	3G1	18	3365 - 5
T162396	3G2	24	3365 - 6
T162396	3G3	20	3365 - 7
T162396	3G5	17	3365 - 9
T162404	1I25	23	1320 - 3
T162404	3F22	18	3363 - 33
T162439	2J22	28	3163 - 7
T162446	1D11	7	0360 - 1
T162517	1I3	19	1011 - 3
T162535	3B13	12	3302 - 9
T162535	3B13	14	3302 - 9
T162553	3B13	12	3302 - 9
T162553	3B13	14	3302 - 9
T162557	2E9	4	1830 - 13
T162569	3B13	12	3302 - 9
T162569	3B13	14	3302 - 9
T162581	3C24	8	3346 - 3
T162581	3D2	6	3346 - 5
T162582	3D2	27	3346 - 5
T162681	3F6	29	3363 - 17
T162682	3F6	30	3363 - 17
T162847	1I25	24	1320 - 3
T162847	3B7	6	3302 - 3
T162848	1I25	25	1320 - 3
T162935	1D11	8	0360 - 1
T162947	1D13	39	0360 - 3
T163052	3D3	6	3346 - 6
T163109	3D5	2	3348 - 3
T163109	3D7	3	3348 - 5
T163113	1G23	15	0520 - 3
T163116	2H16	7	3102 - 12
T163117	2H16	5	3102 - 12
T163118	2H16	12	3102 - 12
T16318	1F2	29	0413 - 3
T163203	3D9	10	3362 - 7
T163204	3D9	11	3362 - 7
T163309	1K2	3	1674 - 3
T163309	1K8	9	1674 - 7
T163374	1B11	4	0210 - 3
T163375	1B11	10	0210 - 3
T163702	3F6	33	3363 - 17
T163702	3F8	36	3363 - 19
T163810	1B11	9	0210 - 3
T163962	2D10	25	1821 - 3
T164086	3D7	5	3348 - 5
T164089	2I10	9	3162 - 3
T164124	1I25	26	1320 - 3
T164124	2G24	1	2160 - 27
T164124	2G24	2	2160 - 27
T164124	2H2	20	2160 - 29
T164128	1J2	11	1320 - 5
T164128	2G24	1	2160 - 27
T164128	2G24	2	2160 - 27
T164129	1J2	11	1320 - 5
T164129	2G24	1	2160 - 27
T164129	2G24	2	2160 - 27
T164183	3C19	15	3344 - 2
T164257	2H22	21	3115 - 7
T164259	2I2	21	3115 - 11
T164431	1B11	8	0210 - 3
T164572	1D10	5	0350 - 17
T164573	1C16	2	0341 - 3
T164574	1D10	13	0350 - 17
T164575	1D10	15	0350 - 17
T164576	1D10	6	0350 - 17
T164577	1D13	40	0360 - 3
T164577	1D17	20	0360 - 7
T164578	1D13	15	0360 - 3
T164579	1D13	33	0360 - 3
T164581	1D13	38	0360 - 3
T164582	1D13	38	0360 - 3
T164583	1D13	38	0360 - 3
T164584	1D13	38	0360 - 3
T164585	1D13	19	0360 - 3
T164591	1D17	2	0360 - 7
T164592	1D17	1	0360 - 7
T164595	1D17	4	0360 - 7
T164595	1D17	6	0360 - 7
T164596	1D17	5	0360 - 7
T164596	1D17	6	0360 - 7
T164597	1D17	13	0360 - 7
T164597	1D17	16	0360 - 7
T164598	1D17	14	0360 - 7
T164598	1D17	16	0360 - 7
T164599	1D17	15	0360 - 7
T164599	1D17	16	0360 - 7
T164609	1D15	10	0360 - 5
T164610	1D15	8	0360 - 5
T164611	1D15	3	0360 - 5
T164612	1D15	4	0360 - 5
T164618	2E4	45	1830 - 7
T164619	2E4	4	1830 - 7
T164620	2D4	23	1816 - 13
T164621	2D4	26	1816 - 13
T164626	1C22	11	0350 - 5
T164626	1C24	11	0350 - 7
T164626	1D2	10	0350 - 9
T164626	1D4	11	0350 - 11
T164628	1D2	2	0350 - 9
T164628	1D6	16	0350 - 13
T164628	1D8	16	0350 - 15
T164629	1D2	2	0350 - 9
T164629	1D6	16	0350 - 13
T164629	1D8	16	0350 - 15
T164630	1D2	2	0350 - 9
T164630	1D6	16	0350 - 13
T164630	1D8	16	0350 - 15
T164640	1C22	16	0350 - 5
T164643	1C24	16	0350 - 7
T164646	1D2	17	0350 - 9
T164647	1D4	16	0350 - 11
T164648	1C16	1	0341 - 3
T164648	1C16	30	0341 - 3
T164654	1C20	3	0350 - 3
T164655	1C20	4	0350 - 3
T164657	1C16	12	0341 - 3
T164658	1C16	18	0341 - 3
T164659	1C16	9	0341 - 3
T164660	1C16	7	0341 - 3
T164660	1C16	21	0341 - 3
T164661	1C16	20	0341 - 3
T164662	1C16	17	0341 - 3
T164665	1C16	11	0341 - 3
T164666	1C16	13	0341 - 3
T164669	3C18	8	3343 - 3
T164671	1C16	22	0341 - 3
T164686	1D17	17	0360 - 7
T164693	1D13	13	0360 - 3
T164693	1D15	6	0360 - 5
T164694	2C6	1	1814 - 7
T164695	2C6	4	1814 - 7
T164696	2C6	5	1814 - 7
T164697	2C6	3	1814 - 7
T164698	2C8	2	1814 - 9
T164701	1G19	29	0510 - 3
T164702	1D15	2	0360 - 5
T164703	1C16	27	0341 - 3
T164704	1C16	28	0341 - 3
T164705	2C8	27	1814 - 9
T164706	2C4	54	1814 - 5
T164707	2C4	45	1814 - 5
T164708	2C8	28	1814 - 9
T164709	2C4	55	1814 - 5
T164710	2C4	55	1814 - 5
T164711	1D6	14	0350 - 13
T164711	1D8	14	0350 - 15
T164712	1C22	8	0350 - 5

NUMERICAL INDEX - CONTINUED

PART NO.	GRID	KEY	PAGE
T164712	1C24	8	0350 - 7
T164712	1D4	8	0350 - 11
T164728	2H9	1	3102 - 5
T164909	1I18	11	1111 - 5
T164911	1I18	5	1111 - 5
T164912	1I18	14	1111 - 5
T164913	1I18	15	1111 - 5
T164914	1I18	7	1111 - 5
T164915	1I18	3	1111 - 5
T164916	1I18	2	1111 - 5
T164917	1I18	1	1111 - 5
T164918	1I18	16	1111 - 5
T164922	1I18	19	1111 - 5
T164953	2H18	35	3115 - 3
T164998	1B8	15	0201 - 3
T164999	1I25	28	1320 - 3
T165095	2C2	8	1814 - 3
T165096	2C2	8	1814 - 3
T165158	2C2	34	1814 - 3
T165169	2E4	1	1830 - 7
T165188	1H11	11	0960 - 5
T165256	1H11	13	0960 - 5
T165282	1I5	19	1060 - 3
T165290	2E18	1	1913 - 3
T165292	1H6	14	0560 - 3
T165295	1H6	17	0560 - 3
T165299	2H22	14	3115 - 7
T165310	2I8	3	3140 - 5
T165314	2I8	12	3140 - 5
T165332	2H11	8	3102 - 7
T165333	2H11	3	3102 - 7
T165336	2C2	34	1814 - 3
T165357	2C4	58	1814 - 5
T165415	1C5	5	0250 - 8
T165416	1C5	7	0250 - 8
T165431	2I2	8	3115 - 11
T165525	2B12	1	1749 - 3
T165533	1H11	10	0960 - 5
T165542	1J25	3	1673 - 5
T165543	1J25	6	1673 - 5
T165561	2C8	7	1814 - 9
T165563	3C18	3	3343 - 3
T165584	1I25	29	1320 - 3
T165584	2C16	2	1816 - 3
T165584	3B19	23	3315 - 5
T165584	3B25	21	3315 - 11
T165584	3C4	21	3315 - 13
T165585	1I25	30	1320 - 3
T165585	2C18	3	1816 - 5
T165585	3B21	50	3315 - 7
T165586	1I25	31	1320 - 3
T165586	2C18	4	1816 - 5
T165586	3C8	6	3315 - 15
T165590	3B19	5	3315 - 5
T165591	3B21	45	3315 - 7
T165591	3B23	38	3315 - 9
T165591	3C8	2	3315 - 15
T165595	1I25	32	1320 - 3
T165595	3C16	10	3315 - 23
T165604	1I25	30	1320 - 3
T165604	3B23	35	3315 - 9
T165697	3B19	12	3315 - 5
T165697	3B21	4	3315 - 7
T165697	3B23	25	3315 - 9
T165697	3C8	9	3315 - 15
T165739	2B12	6	1749 - 3
T165739	2B12	7	1749 - 3
T165740	3E19	21	3363 - 5
T165740	3E25	22	3363 - 11
T165742	3E19	22	3363 - 5
T165742	3E25	13	3363 - 11
T165785	3B21	35	3315 - 7
T165787	3B21	17	3315 - 7
T165788	3B21	16	3315 - 7
T165788	3B23	16	3315 - 9
T165808	2D4	18	1816 - 13
T165864	2J16	14	3163 - 3
T165864	2J24	16	3163 - 7B
T165870	2E24	5	1927 - 3
T165889	3E23	8	3363 - 9
T165896	2E22	6	1921 - 3
T165911	2E16	35	1910 - 3
T165915	2E16	53	1910 - 3
T165916	2E16	31	1910 - 3
T165948	2B24	15	1812 - 3
T165950	2B12	1	1749 - 3
T165951	2F3	14	2001 - 3
T165969	2B24	5	1812 - 3
T165973	2E16	10	1910 - 3
T165975	2E16	52	1910 - 3
T165976	2E16	15	1910 - 3
T165977	2E16	41	1910 - 3
T165978	2E16	46	1910 - 3
T165981	2E16	43	1910 - 3
T165982	2E16	4	1910 - 3
T165985	2E16	23	1910 - 3
T165997	2E16	37	1910 - 3
T166000	2B24	4	1812 - 3
T166001	1I25	2	1320 - 3
T166002	1I25	3	1320 - 3
T166031	3B21	14	3315 - 7
T166035	2C4	37	1814 - 5
T166051	1I25	33	1320 - 3
T166051	2B18	12	1811 - 3
T166060	2C4	54	1814 - 5
T166062	1C22	18	0350 - 5
T166062	1C24	18	0350 - 7
T166062	1D4	18	0350 - 11
T166065	1D2	4	0350 - 9
T166066	1D15	1	0360 - 5
T166077	1D11	1	0360 - 1
T166078	1D10	3	0350 - 17
T166084	1B9	1	0210 - 1
T166085	1B9	11	0210 - 1
T166097	3B21	9	3315 - 7
T166097	3C14	7	3315 - 21
T166102	3C14	19A	3315 - 21
T166137	1G23	7	0520 - 3
T166145	1C4	16	0250 - 7
T166146	1C4	16	0250 - 7
T166147	1C4	16	0250 - 7
T166148	1C4	16	0250 - 7
T166149	1C4	16	0250 - 7
T166150	1C4	16	0250 - 7
T166157	1G21	14	0515 - 3
T166171	1I5	18	1060 - 3
T166174	1G21	28	0515 - 3
T166182	3B13	13	3302 - 9
T166194	2J6	3	3162 - 23
T166211	2C22	4	1816 - 7
T166213	2C22	2	1816 - 7
T166215	2C22	2	1816 - 7
T166223	3B15	3	3315 - 3
T166223	3B17	6	3315 - 3B
T166224	3B21	31	3315 - 7
T166224	3B25	5	3315 - 11
T166224	3C4	19	3315 - 13
T166226	2D10	10	1821 - 3
T166227	2D10	11	1821 - 3
T166237	3C10	7	3315 - 17
T166244	1K2	8	1674 - 3
T166245	2J18	3	3163 - 5
T166258	3D5	6	3348 - 3
T166258	3D5	11	3348 - 3
T166273	2F20	54	2160 - 5
T166274	2F20	2	2160 - 5
T166274	2F20	13	2160 - 5
T166274	2F22	54	2160 - 5B
T166274	2F24	13	2160 - 7
T166275	2F20	11	2160 - 5
T166275	2F20	49	2160 - 5
T166276	2F20	23	2160 - 5
T166276	2F20	36	2160 - 5
T166276	2F20	39	2160 - 5
T166277	2F20	25	2160 - 5
T166278	2F20	7	2160 - 5
T166279	2F20	12	2160 - 5
T166279	2F22	53	2160 - 5B
T166279	2F24	14	2160 - 7
T166280	2F20	60	2160 - 5
T166297	2E4	29	1830 - 7
T166300	1I25	34	1320 - 3
T166300	1K8	15	1674 - 7
T166322	2D4	30	1816 - 13
T166329	2B8	1	1747 - 3
T166331	2E24	6	1927 - 3
T166332	2E24	7	1927 - 3
T166336	1B11	13	0210 - 3
T166344	1K4	10	1674 - 5
T166368	2C8	5	1814 - 9
T166369	2C8	16	1814 - 9
T166370	2C8	9	1814 - 9
T166371	2C8	8	1814 - 9
T166395	2F20	5	2160 - 5
T166400	2F20	51	2160 - 5
T166404	2F20	9	2160 - 5
T166433	2H13	3	3102 - 9
T166433	2H15	2	3102 - 11
T166531	2E20	1	1913 - 5
T166538	1I25	35	1320 - 3
T166538	1K12	12	1674 - 11
T166603	2G6	20	2160 - 13
T166617	2G10	28	2160 - 15
T166686	3C24	11	3346 - 3
T166686	3D2	27	3346 - 5
T166715	3C22	7	3345 - 3
T166715	3C22	17	3345 - 3
T166715	3C24	10	3346 - 3
T166715	3D2	26	3346 - 5
T166749	3B19	8	3315 - 5
T166761	2G24	3	2160 - 27
T166761	2H2	13	2160 - 29
T166772	3B19	9	3315 - 5
T166773	3B19	21	3315 - 5
T166780	3F8	32	3363 - 19
T166781	3F8	33	3363 - 19
T166874	2D4	6	1816 - 13
T166875	2D2	4	1816 - 11
T166881	2C8	22	1814 - 9
T166881	2C8	23	1814 - 9
T166898	2F5	10	2002 - 3

NUMERICAL INDEX - CONTINUED

PART NO.	GRID	KEY	PAGE
T166899	2H22	3	3115 - 7
T166899	2H24	3	3115 - 9
T166900	2I2	1	3115 - 11
T166900	2I4	1	3115 - 13
T166977	1I25	1	1320 - 3
T167059	2H13	12	3102 - 9
T167065	1K8	14	1674 - 7
T167082	2C24	10	1816 - 9
T167083	2C24	2	1816 - 9
T167104	2H22	10	3115 - 7
T167119	2C24	10	1816 - 9
T167149	2C24	9	1816 - 9
T167150	2C24	8	1816 - 9
T167186	2I10	3	3162 - 3
T167192	2H22	11	3115 - 7
T167192	2H24	12	3115 - 9
T167192	2I2	28	3115 - 11
T167214	1J23	3	1673 - 3
T167232	2F3	2	2001 - 3
T167247	3B21	19	3315 - 7
T167248	3B21	37	3315 - 7
T167319	1H9	10	0960 - 3
T167324	2D24	16	1830 - 3
T167325	2D24	7	1830 - 3
T167416	1H9	9	0960 - 3
T16752	1J7	1	1369 - 5
T170783	1H4	1	0540 - 3
T170784	1H4	4	0540 - 3
T17148	1H9	4	0960 - 3
T17148	1H11	4	0960 - 5
T171686	2D10	1	1821 - 3
T172353	1J19	1	1671 - 8
T174530	1J19	3	1671 - 8
T175641	2C2	29	1814 - 3
T175642	2C2	28	1814 - 3
T175643	2C2	32	1814 - 3
T175644	2C2	31	1814 - 3
T175645	2C2	27	1814 - 3
T175646	2C2	33	1814 - 3
T176553	1G25	12	0520 - 5
T177187	2E24	1	1927 - 3
T177623	3C10	6	3315 - 17
T177849	2I24	14	3162 - 17
T177849	3D13	12	3362 - 11
T177849	3D15	12	3362 - 13
T177849	3D17	16	3362 - 15
T177849	3D19	12	3362 - 17
T177849	3D21	12	3362 - 19
T177849	3D25	14	3362 - 23
T178971	2E4	62	1830 - 7
T179055	2C12	3	1814 - 13
T18145	1B17	3	0230 - 3
T18145	1B19	4	0230 - 5
T18145	1B19	7	0230 - 5
T18145	1B23	3	0250 - 2
T181522	2E4	13	1830 - 7
T183149	3B21	46	3315 - 7
T183149	3B23	37	3315 - 9
T183149	3C8	3	3315 - 15
T183151	2D2	14	1816 - 11
T183217	1G21	37	0515 - 3
T183268	1I7	1	1060 - 5
T183269	1I7	21	1060 - 5
T183270	1I7	13	1060 - 5
T183271	1I7	11	1060 - 5
T183272	1I7	9	1060 - 5
T183273	1I7	7	1060 - 5
T183274	1I7	6	1060 - 5
T183276	1I7	16	1060 - 5
T183310	1I7	28	1060 - 5
T183344	2C12	5	1814 - 13
T183356	2I8	10	3140 - 5
T183357	1I7	25	1060 - 5
T183362	1I7	20	1060 - 5
T183404	2C20	3	1816 - 5B
T183420	1K12	4	1674 - 11
T183468	2C20	1	1816 - 5B
T183482	1B13	4	0210 - 5
T183483	1B13	4	0210 - 5
T183484	1B13	4	0210 - 5
T183485	1B13	4	0210 - 5
T183486	1B13	4	0210 - 5
T183487	1B13	4	0210 - 5
T183489	1B13	4	0210 - 5
T183490	1B13	4	0210 - 5
T183491	1B13	4	0210 - 5
T183492	1B13	4	0210 - 5
T183493	1B13	4	0210 - 5
T183494	1B13	4	0210 - 5
T183495	1B13	4	0210 - 5
T183496	1B8	2	0201 - 3
T183500	1I3	22	1011 - 3
T183502	1I3	22	1011 - 3
T183505	1I3	22	1011 - 3
T183506	1I3	22	1011 - 3
T183507	1I3	22	1011 - 3
T183508	1C9	4	0250 - 13
T183509	1C9	4	0250 - 13
T183510	1C9	4	0250 - 13
T183511	1C9	4	0250 - 13
T183512	1C9	4	0250 - 13
T183513	1C9	4	0250 - 13
T183514	1C9	4	0250 - 13
T183515	1C9	4	0250 - 13
T183516	1C9	4	0250 - 13
T183517	1C9	4	0250 - 13
T183518	1C2	11	0250 - 5
T183519	1C2	11	0250 - 5
T183520	1C2	11	0250 - 5
T183521	1C2	11	0250 - 5
T183522	1C2	11	0250 - 5
T183523	1C2	11	0250 - 5
T183524	1C2	11	0250 - 5
T183525	1C2	11	0250 - 5
T183526	1C2	11	0250 - 5
T183527	1C2	11	0250 - 5
T183528	1C2	11	0250 - 5
T183548	3B25	9	3315 - 11
T183560	2E2	7	1830 - 5
T183600	1K2	14	1674 - 3
T183617	2H22	30	3115 - 7
T183617	2H24	27	3115 - 9
T183617	2I2	24	3115 - 11
T183617	2I4	11	3115 - 13
T183617	3B21	7	3315 - 7
T183617	3B23	36	3315 - 9
T183617	3C8	11	3315 - 15
T183617	3C14	20	3315 - 21
T183664	2C10	6	1814 - 11
T183664	2C14	3	1814 - 15
T183669	1G19	26	0510 - 3
T183706	2C24	1	1816 - 9
T183756	2I16	30	3162 - 9
T183756	2I20	19	3162 - 13
T183756	2J6	10	3162 - 23
T183756	3D15	23	3362 - 13
T183757	2I24	20	3162 - 17
T183757	2J2	8	3162 - 19
T183757	2J4	7	3162 - 21
T183757	3D21	23	3362 - 19
T183757	3D25	20	3362 - 23
T183757	3E3	2	3362 - 26
T183757	3E4	4	3362 - 27
T183757	3F20	1	3363 - 31
T183768	1I25	36	1320 - 3
T183768	2C8	20	1814 - 9
T183773	2E16	29	1910 - 3
T183780	2E16	50	1910 - 3
T183781	2E16	36	1910 - 3
T183882	2C20	4	1816 - 5B
T183884	3C16	3	3315 - 23
T183885	3C16	9	3315 - 23
T183905	3C14	15	3315 - 21
T183913	2G10	21	2160 - 15
T183921	1B9	6	0210 - 1
T183922	1B9	3	0210 - 1
T183923	1B9	5	0210 - 1
T184008	2C24	4	1816 - 9
T184009	2C24	5	1816 - 9
T184032	2E16	22	1910 - 3
T184116	1I25	37	1320 - 3
T184116	2E16	39	1910 - 3
T184129	3B25	17	3315 - 11
T184129	3C4	3	3315 - 13
T184133	3C4	9	3315 - 13
T184164	2D4	21	1816 - 13
T184214	2D4	35	1816 - 13
T184328	1H14	6	0960 - 9
T184328	1H18	6	0960 - 13
T184345	1K4	6	1674 - 5
T184345	1K4	13	1674 - 5
T184345	1K6	4	1674 - 5B
T184345	1K12	3	1674 - 11
T184345	2C24	12	1816 - 9
T184345	2C24	20	1816 - 9
T184345	2D2	8	1816 - 11
T184345	2D4	38	1816 - 13
T184368	2E4	41	1830 - 7
T184369	2E4	10	1830 - 7
T184370	2D4	32	1816 - 13
T184393	2E16	25	1910 - 3
T184414	2E4	50	1830 - 7
T184415	2E4	51	1830 - 7
T184514	1I25	38	1320 - 3
T184519	1I25	7	1320 - 3
T184620	2D4	22	1816 - 13
T184620	2E4	2	1830 - 7
T184620	2E4	3	1830 - 7
T184657	2G16	9	2160 - 19
T184676	1K10	2	1674 - 9
T184759	1I25	4	1320 - 3
T184787	2E16	54	1910 - 3
T184788	2E16	38	1910 - 3
T184789	1I25	39	1320 - 3
T184816	1B17	15	0230 - 3
T184821	2H22	24	3115 - 7
T184870	2H18	22	3115 - 3
T184873	2H18	19	3115 - 3
T184892	2B20	11	1811 - 5
T184892	2F3	17	2001 - 3
T184918	1D10	19	0350 - 17

NUMERICAL INDEX - CONTINUED

PART NO.	GRID	KEY	PAGE
T184924	2E4	23	1830 - 7
T184988	3D5	10	3348 - 3
T185004	2H22	27	3115 - 7
T185019	1H14	18	0960 - 9
T185019	1H18	18	0960 - 13
T185019	1I25	40	1320 - 3
T185041	2H15	17	3102 - 11
T185078	1I7	18	1060 - 5
T185085	3B19	6	3315 - 5
T185089	2G12	1	2160 - 17
T185089	2G20	17	2160 - 23
T185089	2G22	12	2160 - 25
T185090	2G20	16	2160 - 23
T185145	1I25	41	1320 - 3
T185145	2G24	27	2160 - 27
T185146	1I25	42	1320 - 3
T185154	2G22	2	2160 - 25
T185300	1I25	43	1320 - 3
T185309	3C10	1	3315 - 17
T185328	2B22	1	1811 - 7
T185329	2B22	1	1811 - 7
T185338	2I2	17	3115 - 11
T185360	2E18	4	1913 - 3
T185377	2C8	25	1814 - 9
T185378	2C8	24	1814 - 9
T185387	1G15	1	0505 - 5
T185394	1H14	20	0960 - 9
T185394	1H16	6	0960 - 11
T185394	1H18	20	0960 - 13
T185394	1H20	14	0960 - 15
T185394	1I25	44	1320 - 3
T185443	1I3	5	1011 - 3
T185444	1B8	11	0201 - 3
T185469	1I25	45	1320 - 3
T185469	2E18	5	1913 - 3
T185478	2E2	16	1830 - 5
T185479	2E2	15	1830 - 5
T185480	2E2	19	1830 - 5
T185481	2E2	20	1830 - 5
T185482	2E2	18	1830 - 5
T185485	2C24	22	1816 - 9
T185491	1G21	7	0515 - 3
T185493	2D4	8	1816 - 13
T185494	2D4	2	1816 - 13
T185495	2D4	10	1816 - 13
T185496	3C14	3	3315 - 21
T185524	2B24	3	1812 - 3
T185540	2E2	1	1830 - 5
T185549	1J2	18	1320 - 5
T185556	1I25	46	1320 - 3
T185571	1J2	18	1320 - 5
T185606	1D13	4	0360 - 3
T185619	2D2	3	1816 - 11
T185646	1I25	47	1320 - 3
T185648	3B21	18	3315 - 7
T185651	2D4	36	1816 - 13
T185652	2D4	37	1816 - 13
T185653	2D2	16	1816 - 11
T185654	2D2	10	1816 - 11
T185663	2E13	3	1834 - 3
T185664	2B22	3	1811 - 7
T185666	2B24	13	1812 - 3
T185673	2D24	19	1830 - 3
T185675	1I25	48	1320 - 3
T185676	1I25	49	1320 - 3
T185678	2C4	43	1814 - 5
T185683	2G16	6	2160 - 19
T185691	1I25	50	1320 - 3
T185691	3B25	6	3315 - 11
T185692	1I25	52	1320 - 3
T185692	3B25	6	3315 - 11
T185692	3C4	18	3315 - 13
T185695	1J2	21	1320 - 5
T185696	1J2	21	1320 - 5
T185699	2F9	4	2004 - 5
T185700	2H18	31	3115 - 3
T185710	2H22	22	3115 - 7
T185710	2H24	24	3115 - 9
T185710	2I2	20	3115 - 11
T185710	2I4	8	3115 - 13
T185711	2H22	20	3115 - 7
T185713	1J25	20	1673 - 5
T185714	1J25	20	1673 - 5
T185742	2C24	16	1816 - 9
T185743	2C24	25	1816 - 9
T185743	2E2	26	1830 - 5
T185744	2E2	1	1830 - 5
T185748	2H22	35	3115 - 7
T185762	2E6	5	1830 - 9
T185763	2E6	1	1830 - 9
T185766	3C14	1	3315 - 21
T185769	1J25	21	1673 - 5
T185769	2C24	26	1816 - 9
T185769	2E2	6	1830 - 5
T185770	2D4	15	1816 - 13
T185773	2B24	7	1812 - 3
T185774	2B24	8	1812 - 3
T185775	2B24	14	1812 - 3
T185779	2D24	13	1830 - 3
T185780	2D24	14	1830 - 3
T185782	2B18	20	1811 - 3
T185783	2B18	21	1811 - 3
T185784	2B18	19	1811 - 3
T185785	2B18	18	1811 - 3
T185789	2E4	22	1830 - 7
T185826	2G10	39	2160 - 15
T185831	3B13	3	3302 - 9
T185832	3B7	10	3302 - 3
T185832	3B9	9	3302 - 5
T185832	3B13	4	3302 - 9
T185840	2D24	6	1830 - 3
T185841	2D24	2	1830 - 3
T185842	2D24	8	1830 - 3
T185843	2D24	9	1830 - 3
T185844	2D4	27	1816 - 13
T185845	2E4	48	1830 - 7
T185846	2E2	25	1830 - 5
T185847	2E2	23	1830 - 5
T185848	2E2	11	1830 - 5
T185849	2E2	12	1830 - 5
T185850	2D24	10	1830 - 3
T185866	2D24	15	1830 - 3
T185867	2D24	12	1830 - 3
T185896	2D4	14	1816 - 13
T185902	1I21	4	1313 - 3
T185904	3C22	15	3345 - 3
T185905	2D2	11	1816 - 11
T185926	1I7	5	1060 - 5
T185933	1G17	3	0505 - 7
T185949	2E11	50	1830 - 15
T185980	2I10	6	3162 - 3
T185981	2I10	5	3162 - 3
T185981	2J2	4	3162 - 19
T185984	2I10	8	3162 - 3
T185984	2J2	3	3162 - 19
T185989	2B4	1	1746 - 2
T185990	2B4	1	1746 - 2
T186000	3C12	10	3315 - 19
T186005	3C12	8	3315 - 19
T186006	3C12	9	3315 - 19
T186016	2C4	47	1814 - 5
T186017	2C4	46	1814 - 5
T186018	2C4	56	1814 - 5
T186022	2C24	23	1816 - 9
T186024	1K14	2	1674 - 13
T186026	2G2	13	2160 - 9
T186029	2B18	1	1811 - 3
T186030	2B18	2	1811 - 3
T186062	1I23	9	1314 - 3
T186082	2H18	27	3115 - 3
T186083	2H18	28	3115 - 3
T186123	1I25	53	1320 - 3
T186124	1I25	54	1320 - 3
T186154	2G18	4	2160 - 21
T186238	1I13	6	1060 - 11
T186282	3F22	19	3363 - 33
T186354	2J25	21	3165 - 2
T186360	1I25	55	1320 - 3
T186396	1I25	56	1320 - 3
T186400	1I25	57	1320 - 3
T186400	1K8	1	1674 - 7
T186401	1I25	58	1320 - 3
T186401	1K8	2	1674 - 7
T186402	1I25	59	1320 - 3
T186443	2F3	7	2001 - 3
T186444	2F3	15	2001 - 3
T186474	3F22	22	3363 - 33
T186552	1I25	60	1320 - 3
T186552	2D2	18	1816 - 11
T186560	1D17	2	0360 - 7
T186760	2E4	13	1830 - 7
T186766	2E4	53	1830 - 7
T186793	1I25	63	1320 - 3
T186855	1I25	51	1320 - 3
T186855	1K12	13	1674 - 11
T186859	1I9	9	1060 - 7
T186873	2E2	4	1830 - 5
T187044	3B15	5	3315 - 3
T187044	3B17	4	3315 - 3B
T187072	2H22	10	3115 - 7
T187072	2H24	11	3115 - 9
T187072	2I2	27	3115 - 11
T187100	3F18	13	3363 - 29
T187110	2D4	33	1816 - 13
T187116	3B7	3	3302 - 3
T187116	3B9	3	3302 - 5
T187116	3B11	3	3302 - 7
T187116	3B13	6	3302 - 9
T187117	3B7	2	3302 - 3
T187117	3B9	2	3302 - 5
T187117	3B11	2	3302 - 7
T187117	3B13	7	3302 - 9
T187184	3C22	15	3345 - 3
T187272	2E16	23	1910 - 3
T187275	2I6	8	3140 - 3
T187275	2J25	21	3165 - 2
T187276	2I6	8	3140 - 3
T187276	2J25	30	3165 - 2
T187393	2E16	56	1910 - 3
T187394	1J25	20	1673 - 5
T187505	3B23	34	3315 - 9

NUMERICAL INDEX - CONTINUED

PART NO.	GRID	KEY	PAGE
T187530	3B23	23	3315 - 9
T187571	1H4	1	0540 - 3
T187765	2C8	9	1814 - 9
T187780	2C8	23	1814 - 9
T188018	1J2	20	1320 - 5
T188019	1J2	20	1320 - 5
T188172	1D13	34	0360 - 3
T188172	1D13	35	0360 - 3
T188173	1D13	34	0360 - 3
T188173	1D13	35	0360 - 3
T188173	1D13	41	0360 - 3
T188183	3C19	1	3344 - 2
T188183	3E21	11	3363 - 7
T188183	3E23	21	3363 - 9
T188183	3F4	33	3363 - 15
T188234	1I18	12	1111 - 5
T188240	1B13	7	0210 - 5
T188240	1I18	21	1111 - 5
T188268	3B23	7	3315 - 9
T188279	1B8	15	0201 - 3
T188356	3C10	14	3315 - 17
T188360	2B8	1	1747 - 3
T188360	2B10	1	1747 - 5
T188397	1C4	17	0250 - 7
T188441	1B22	4	0230 - 8
T188442	1B22	6	0230 - 8
T188448	1B22	8	0230 - 8
T188565	2B24	13	1812 - 3
T188568	3C19	5	3344 - 2
T188568	3D3	2	3346 - 6
T188573	2G10	41	2160 - 15
T188639	3B19	8	3315 - 5
T188642	2E16	24	1910 - 3
T188642	2E16	60	1910 - 3
T188642	2E16	63	1910 - 3
T188707	2E16	4	1910 - 3
T188726	2B24	4	1812 - 3
T188806	2C2	6	1814 - 3
T188806	2C2	22	1814 - 3
T18891	1E8	26	0404 - 3
T188976	2H24	21	3115 - 9
T188976	2H24	22	3115 - 9
T188976	2I4	7	3115 - 13
T189065	3E23	34	3363 - 9
T189065	3F4	35	3363 - 15
T189065	3F6	7	3363 - 17
T189065	3F8	8	3363 - 19
T189080	3D7	5	3348 - 5
T190177	2E9	29	1830 - 13
T190197	1K2	29	1674 - 3
T190198	1K2	30	1674 - 3
T190199	1K2	31	1674 - 3
T190296	2I12	7	3162 - 5
T190300	2I12	3	3162 - 5
T190311	3E11	13	3363 - 1B
T190357	2H20	21	3115 - 5
T190403	3F4	14	3363 - 15
T190438	2E11	45	1830 - 15
T190473	2H24	23	3115 - 9
T190602	2D6	23	1816 - 15
T190602	2D8	13	1816 - 17
T190603	2D6	24	1816 - 15
T190603	2D8	14	1816 - 17
T190658	1J18	2	1671 - 7
T190669	2G6	20	2160 - 13
T190669	2G8	18	2160 - 13B
T190745	1B21	1	0230 - 7
T190746	1B21	16	0230 - 7
T190749	1B22	3	0230 - 8
T190750	1B20	1	0230 - 6
T190795	2I22	7	3162 - 15
T190868	2D6	17	1816 - 15
T190868	2D8	25	1816 - 17
T190912	2D6	38	1816 - 15
T190924	3C18	22	3343 - 3
T190956	2D6	21	1816 - 15
T190956	2D8	12	1816 - 17
T190960	2D6	29	1816 - 15
T190964	2D8	36	1816 - 17
T190992	2H20	16	3115 - 5
T190998	2D6	6	1816 - 15
T190999	2D6	7	1816 - 15
T190999	2D8	30	1816 - 17
T191000	2D8	5	1816 - 17
T191071	2C6	1	1814 - 7
T191072	2C6	4	1814 - 7
T191073	2C6	5	1814 - 7
T191101	2E13	3	1834 - 3
T191142	2B24	8	1812 - 3
T191226	2H20	22	3115 - 5
T191245	3C14	19B	3315 - 21
T191285	2H20	12	3115 - 5
T191425	1H16	9	0960 - 11
T191425	1H20	13	0960 - 15
T191427	1B21	6	0230 - 7
T191428	1B21	4	0230 - 7
T191429	1B21	10	0230 - 7
T191445	3C16	3	3315 - 23
T19687	1J7	1	1369 - 5
T19854	1D11	6	0360 - 1
T19935	1K10	11	1674 - 9
T19935	2E9	14	1830 - 13
T200078	3C2	11	3315 - 11B
T200078	3C6	6	3315 - 13B
T200092	2C20	6	1816 - 5B
T200093	2C20	6	1816 - 5B
T200094	2C20	6	1816 - 5B
T200095	2C20	2	1816 - 5B
T200240	3C18	8	3343 - 3
T20034	1D21	24	0401 - 2
T200362	3E17	8	3363 - 3B
T200424	1K6	2	1674 - 5B
T200658	2D8	39	1816 - 17
T200746	1I25	56	1320 - 3
T200781	2D8	40	1816 - 17
T201269	1H22	2	0960 - 17
T201270	1H22	3	0960 - 17
T20168	1E8	18	0404 - 3
T20314	1D23	4	0402 - 3
T20316	1D23	3	0402 - 3
T22150	1G21	34	0515 - 3
T22240	1G21	32	0515 - 3
T22241	1G21	29	0515 - 3
T23474	1E8	19	0404 - 3
T24472	1E24	9	0413 - 1
T24959	3F20	8	3363 - 31
T25335	1J7	1	1369 - 5
T26955	1C17	3	0341 - 4
T27022	2H15	24	3102 - 11
T27860	1F2	28	0413 - 3
T29342	1H4	6	0540 - 3
T29342	2E22	8	1921 - 3
T29342	3C19	9	3344 - 2
T29342	3C22	9	3345 - 3
T29342	3F4	18	3363 - 15
T29432	3D5	13	3348 - 3
T29747	2G10	34	2160 - 15
T33376	3C19	4	3344 - 2
T34248	1J7	1	1369 - 5
T35233	3B23	1	3315 - 9
T35887	1G21	27	0515 - 3
T38485	3G1	9	3365 - 5
T39155	1H6	12	0560 - 3
T40308	2F20	1	2160 - 5
T42199	1I25	62	1320 - 3
T42199	1J18	1	1671 - 7
T43512	1J3	1	1330 - 2
T43513	1J3	1	1330 - 2
T43514	1J3	1	1330 - 2
T54568	2H15	8	3102 - 11
T54904	2J14	16	3162 - 31
T55208	2D16	1	1821 - 9
T55214	2D16	17	1821 - 9
T55222	2D16	5	1821 - 9
T55224	2D16	15	1821 - 9
T55501	1K8	11	1674 - 7
T55585	1G17	13	0505 - 7
T55585	1K8	13	1674 - 7
T58056	2D4	1	1816 - 13
T58056	2E6	2	1830 - 9
T58056	2E22	10	1921 - 3
T58109	3B21	27	3315 - 7
T58109	3B25	2	3315 - 11
T58109	3C2	5	3315 - 11B
T58109	3C4	13	3315 - 13
T58109	3C6	9	3315 - 13B
T58477	1E21	6	0409 - 3
T58739	2E6	14	1830 - 9
T60811	1J9	6	1369 - 7
T60811	1J9	11	1369 - 7
T60811	2E4	30	1830 - 7
T60811	2E4	31	1830 - 7
T60811	2E6	10	1830 - 9
T60811	2E6	15	1830 - 9
T60811	2E6	17	1830 - 9
T60811	2E6	24	1830 - 9
T60811	2E6	25	1830 - 9
T60811	2J22	30	3163 - 7
T60920	2F5	6	2002 - 3
T61226	2J25	24	3165 - 2
T61861	1G19	25	0510 - 3
T61861	2G10	25	2160 - 15
T61861	2H18	15	3115 - 3
T63798	2D16	12	1821 - 9
T66701	1H6	1	0560 - 3
T66860	1B2	6	0110 - 2
T67424	2I16	28	3162 - 9
T67424	2I20	16	3162 - 13
T67424	2J6	13	3162 - 23
T67425	2I16	37	3162 - 9
T67425	2I20	25	3162 - 13
T67425	2J6	14	3162 - 23
T67855	3D2	27	3346 - 5
T69027	1B17	13	0230 - 3
T69354	1B17	21	0230 - 3
T69355	1B17	17	0230 - 3
T69360	1B15	3	0230 - 1
T69363	1B17	19	0230 - 3
T69364	1B17	18	0230 - 3
T69472	3D5	8	3348 - 3
T69938	1B24	6	0250 - 3

NUMERICAL INDEX - CONTINUED

PART NO.	GRID	KEY	PAGE
T69938	1C14	3	0325 - 1
T70177	2F20	41	2160 - 5
T70177	2F20	47	2160 - 5
T70177	2F20	50	2160 - 5
T70177	2J14	3	3162 - 31
T70177	3D11	7	3362 - 9
T70341	2G24	28	2160 - 27
T70341	2J22	2	3163 - 7
T70659	2E4	37	1830 - 7
T70659	3F4	7	3363 - 15
T74416	1K10	25	1674 - 9
T74416	3F4	7	3363 - 15
T74952	1J23	4	1673 - 3
T74952	2F3	5	2001 - 3
T75197	1K10	22	1674 - 9
T75506	1B18	12	0230 - 4
T75815	2J25	26	3165 - 2
T75816	2I6	6	3140 - 3
T76252	1H6	7	0560 - 3
T76252	1K10	15	1674 - 9
T76502	2J14	22	3162 - 31
T76509	2J14	13	3162 - 31
T76830	2C4	52	1814 - 5
T76832	2C4	42	1814 - 5
T76833	2C4	59	1814 - 5
T76938	2G2	3	2160 - 9
T76938	2G4	3	2160 - 11
T76938	2G6	3	2160 - 13
T76938	2G6	35	2160 - 13
T76938	2G8	3	2160 - 13B
T76938	3E19	15	3363 - 5
T76938	3F10	38	3363 - 21
T77165	1G21	33	0515 - 3
T77613	1F9	11	0416 - 5
T77613	1H14	7	0960 - 9
T77613	1H14	8	0960 - 9
T77613	1H14	14	0960 - 9
T77613	1H16	3	0960 - 11
T77613	1H18	7	0960 - 13
T77613	1H18	8	0960 - 13
T77613	1H18	14	0960 - 13
T77613	1H20	3	0960 - 15
T77613	1H20	23	0960 - 15
T77613	1I9	3	1060 - 7
T77613	1I11	3	1060 - 9
T77613	1I11	10	1060 - 9
T77613	1I13	4	1060 - 11
T77613	2G12	4	2160 - 17
T77613	2G12	13	2160 - 17
T77613	2G12	20	2160 - 17
T77613	2G14	2	2160 - 17B
T77613	2J14	19	3162 - 31
T77613	2J22	24	3163 - 7
T77613	2J22	32	3163 - 7
T77613	3D9	5	3362 - 7
T77613	3E9	6	3362 - 33
T77613	3E11	5	3363 - 1B
T77613	3E15	3	3363 - 3
T77613	3E17	3	3363 - 3B
T77613	3F20	6	3363 - 31
T77814	1B14	1	0210 - 6
T77814	2G6	28	2160 - 13
T77814	2J22	12	3163 - 7
T77814	3F10	41	3363 - 21
T77814	3F12	32	3363 - 23
T77857	1H14	1	0960 - 9
T77857	1H16	7	0960 - 11
T77857	1H18	1	0960 - 13
T77857	1H20	7	0960 - 15
T77857	1I5	23	1060 - 3
T77857	2G6	18	2160 - 13
T77857	2G6	24	2160 - 13
T77857	2G8	20	2160 - 13B
T77857	2G12	10	2160 - 17
T77857	2G14	10	2160 - 17B
T77857	2G24	12	2160 - 27
T77857	2H2	3	2160 - 29
T77857	2H15	10	3102 - 11
T77857	2J20	1	3163 - 5B
T77857	2J22	19	3163 - 7
T77857	2J24	3	3163 - 7B
T77857	3E11	21	3363 - 1B
T77857	3F2	3	3363 - 13
T77857	3F4	11	3363 - 15
T77857	3F4	39	3363 - 15
T77857	3F10	12	3363 - 21
T77857	3F12	5	3363 - 23
T77857	3F22	2	3363 - 33
T77857	3F22	16	3363 - 33
T77858	2G6	13	2160 - 13
T77858	2G8	12	2160 - 13B
T77858	2G10	32	2160 - 15
T77858	3E19	19	3363 - 5
T77858	3E21	17	3363 - 7
T77858	3E23	29	3363 - 9
T77858	3E25	19	3363 - 11
T77858	3F6	2	3363 - 17
T77858	3F6	31	3363 - 17
T77858	3F6	34	3363 - 17
T77858	3F8	2	3363 - 19
T77858	3F8	34	3363 - 19
T77858	3F8	37	3363 - 19
T77858	3F10	7	3363 - 21
T77858	3F10	39	3363 - 21
T77858	3F10	40	3363 - 21
T77858	3F12	4	3363 - 23
T77858	3F12	9	3363 - 23
T77858	3F18	9	3363 - 29
T77932	1I16	25	1111 - 3
T77932	1I18	24	1111 - 5
T77932	2G10	32	2160 - 15
T77932	2G10	42	2160 - 15
T77932	2G24	7	2160 - 27
T77932	2G24	9	2160 - 27
T77932	2H15	30	3102 - 11
T77932	2J16	3	3163 - 3
T77932	2J18	7	3163 - 5
T77932	2J20	9	3163 - 5B
T77932	2J22	17	3163 - 7
T77932	2J22	22	3163 - 7
T77932	3E19	3	3363 - 5
T77932	3E21	5	3363 - 7
T77932	3E23	3	3363 - 9
T77932	3E25	3	3363 - 11
T77932	3F4	22	3363 - 15
T77932	3F6	17	3363 - 17
T77932	3F6	22	3363 - 17
T77932	3F8	22	3363 - 19
T77932	3F8	30	3363 - 19
T77932	3F10	9	3363 - 21
T77932	3F12	2	3363 - 23
T77932	3F14	1	3363 - 25
T77932	3F16	1	3363 - 27
T77932	3F18	6	3363 - 29
T77932	3F22	4	3363 - 33
T78313	1J7	1	1369 - 5
T78497	2G10	1	2160 - 15
T78497	2G10	15	2160 - 15
T78497	2G20	10	2160 - 23
T78497	2G20	14	2160 - 23
T78497	2G20	18	2160 - 23
T78497	2G22	4	2160 - 25
T78497	2G22	6	2160 - 25
T78497	2G22	7	2160 - 25
T78497	2G22	8	2160 - 25
T78593	1G15	8	0505 - 5
T78593	1G17	10	0505 - 7
T78606	1H14	17	0960 - 9
T78606	1H16	22	0960 - 11
T78606	1H18	17	0960 - 13
T78606	2J16	26	3163 - 3
T78606	2J18	18	3163 - 5
T78612	1C17	6	0341 - 4
T78612	2G6	33	2160 - 13
T78707	3F6	32	3363 - 17
T78707	3F8	35	3363 - 19
T78716	3F4	20	3363 - 15
T78716	3F22	17	3363 - 33
T78787	2E9	11	1830 - 13
T79786	1B15	5	0230 - 1
T80027	1B23	6	0250 - 2
T81029	3E11	11	3363 - 1B
T81524	2I16	3	3162 - 9
T81524	2I18	4	3162 - 11
T81524	2I20	3	3162 - 13
T81524	2I22	5	3162 - 15
T81524	2I24	3	3162 - 17
T81524	2J4	3	3162 - 21
T81524	2J12	6	3162 - 29
T81524	3D13	3	3362 - 11
T81524	3D15	3	3362 - 13
T81524	3D17	3	3362 - 15
T81524	3D19	3	3362 - 17
T81524	3D21	3	3362 - 19
T81524	3D25	3	3362 - 23
T81535	2I18	18	3162 - 11
T81540	2I24	13	3162 - 17
T81540	2J4	8	3162 - 21
T81540	2J12	11	3162 - 29
T81540	3D13	11	3362 - 11
T81540	3D15	11	3362 - 13
T81540	3D17	11	3362 - 15
T81540	3D19	11	3362 - 17
T81540	3D21	11	3362 - 19
T81540	3D25	13	3362 - 23
T81541	2I24	15	3162 - 17
T81541	2J4	10	3162 - 21
T81541	2J12	13	3162 - 29
T81541	3D13	13	3362 - 11
T81541	3D15	13	3362 - 13
T81541	3D17	12	3362 - 15
T81541	3D19	13	3362 - 17
T81541	3D21	13	3362 - 19
T81541	3D25	15	3362 - 23
T81963	1B15	4	0230 - 1
T82791	1K8	3	1674 - 7
T82851	1B17	22	0230 - 3
T82852	1B17	29	0230 - 3
T83061	2B18	23	1811 - 3
T83061	2H22	2	3115 - 7
T83061	2H24	2	3115 - 9

NUMERICAL INDEX - CONTINUED

PART NO.	GRID	KEY	PAGE
T83061	2I2	26	3115 - 11
T83426	2B3	10	1740 - 3
T84194	2H9	6	3102 - 5
T84194	2H13	9	3102 - 9
U10289	1J7	1	1369 - 5
U10516	2J18	27	3163 - 5
U10516	2J20	29	3163 - 5B
U10746	1J7	1	1369 - 5
U10776	1J7	1	1369 - 5
U11326	1J7	1	1369 - 5
U11343	1J7	1	1369 - 5
U12037	1J7	1	1369 - 5
U12198	1J7	1	1369 - 5
U12331	1J7	1	1369 - 5
U12547	1J7	1	1369 - 5
U12547	2G10	11	2160 - 15
U12547	2G10	43	2160 - 15
U12547	3E19	12	3363 - 5
U12547	3E21	25	3363 - 7
U12547	3E23	33	3363 - 9
U12547	3E25	11	3363 - 11
U12547	3F6	24	3363 - 17
U12547	3F6	34	3363 - 17
U12547	3F8	24	3363 - 19
U12547	3F8	37	3363 - 19
U12547	3F10	29	3363 - 21
U12547	3F12	35	3363 - 23
U12547	3F18	17	3363 - 29
U12547	3F22	6	3363 - 33
U12857	2I2	12	3115 - 11
U13639	1C16	24	0341 - 3
U13639	1C17	8	0341 - 4
U13639	1E8	23	0404 - 3
U13639	1G13	3	0505 - 3
U13639	1I7	2	1060 - 5
U13639	1J7	1	1369 - 5
U13639	2E6	29	1830 - 9
U13639	2G2	15	2160 - 9
U13639	2G4	9	2160 - 11
U14555	1B15	8	0230 - 1
U14555	3B21	22	3315 - 7
U14555	3B25	8	3315 - 11
U14555	3C2	7	3315 - 11B
U14555	3C4	11	3315 - 13
U14555	3C6	11	3315 - 13B
U15192	3E6	4	3362 - 29
U15415	1J7	1	1369 - 5
U15973	1J7	1	1369 - 5
U17409	1J7	1	1369 - 5
U17409	2G6	15	2160 - 13
U17409	2G8	15	2160 - 13B
U40962	3D11	3	3362 - 9
U42111	1J7	1	1369 - 5
U43792	3B13	10	3302 - 9
W23122	2D8	23	1816 - 17
XH4-62-T10	3F14	5	3363 - 25
XH4-62-T10	3F16	5	3363 - 27
XH4-63-T10	3F14	4	3363 - 25
XH4-63-T10	3F16	4	3363 - 27
Z53159	2F20	26	2160 - 5
51993	2I20	13	3162 - 13
51993	2I20	41	3162 - 13
5787YT	2H18	12	3115 - 3
5787YT	2H20	26	3115 - 5

PART NO.	GRID	KEY	PAGE

PART NO.	GRID	KEY	PAGE