410J and 410TMC
BACKHOE LOADERS

RUTHZIL TRATOR COMERCIAL DE PEÇAS LTDA 11 97083-6812 ROLANDO CITRANGULO

JOHN DEERE

PARTS CATALOG

410J and 410TMC
BACKHOE LOADERS

PC10006 (Jan-07) English

Worldwide Construction and Forestry Division
Worldwide Edition
Litho In U.S.A. (Revised)
COPYRIGHT © 2007
DEERE & COMPANY
Moline, Illinois
All rights reserved

INTRODUCTION AND CUSTOMER INFORMATION

TX1015033A -UN-07DEC06



SIDE VIEW OF JOHN DEERE BACKHOE LOADER
(MANUFACTURED 2007-)

TO THE CUSTOMER

THE PART NUMBERS IN THIS PARTS CATALOG WERE CORRECT AT THE TIME YOUR CATALOG WAS PUBLISHED. IT IS OUR POLICY TO CONSTANTLY IMPROVE OUR MACHINES AND, THEREFORE, PART NUMBERS MAY CHANGE. WHEN ORDERING PARTS, VERIFY PART NUMBERS THROUGH YOUR DEALER.

(SPECIFICATIONS AND DESIGN SUBJECT TO CHANGE WITHOUT NOTICE.)

SERIAL NUMBER LOCATIONS

EACH 410J AND 410TJ BACKHOE LOADER HAS SIX SERIAL NUMBERS, A PRODUCT IDENTIFITION NUMBER PLATE , AND ENGINE SERIAL NUMBER PLATE, A HYDRAULIC PUMP SERIAL NUM BER PLATE, A MFWD AXLE SERIAL NUMBER PLATE, A TRANSMISSION SERIAL NUMBER PLATE, AND A REAR AXLE SERIAL NUMBER PLATE.
THE PRODUCT IDENTIFICATION NUMBER IS ON THE LEFT-HAND SIDE OF THE LOADER FRAME JUST ABOVE THE LIFT CYLINDER PIVOT BOSS.
THE ENGINE SERIAL NUMBER PLATE IS LOCATED ON THE RIGHT-HAND SIDE OF THE CYLINDER BLOCK NEAR THE FUEL PUMP.
THE MFWD AXLE SERIAL NUMBER PLATE IS LOCATED ON THE RIGHT-HAND (REAR) SIDE OF THE MFWD AXLE HOUSING.
THE REAR AXLE SERIAL NUMBER PLATE IS LOCATED NEAR THE REAR AXLEHOUSING FILL PLUG.
THE TRANSMISSION SERIAL NUMBER PLATE IS LOCATED ON THE BOTTOM-REAR FACE OF THE HOUSING.
THE HYDRAULIC PUMP SERIAL NUMBER IS LOCATED ON THE BOTTOM FACE OF THE PUMP.
LEFT-HAND SIDE, RIGHT-HAND SIDE, FRONT AND REAR OF THE BACKHOE LOADER ARE VIEWED BY FACING IN THE DIRECTION OF THE BACKHOE LOADER FORWARD TRAVEL.
LEFT-HAND SIDE, RIGHT-HAND SIDE, FRONT AND REAR OF THE BACKHOE COMPONENTS ARE DETERMINED WHEN SEATED IN THE BACKHOE OPERATING POSITION.
IF PRODUCT IDENTIFICATION NUMBERS OR SERIAL NUMBERS ARE REQUIRED FOR WARRANTY CLAIMS OR CORRESPONDENCE PERTAINING TO THIS PRODUCT. IT IS EXTREMELY IMPORTANT THAT ALL CHARACTERS BE FURNISHED. THIS POINT CANNOT BE OVEREMPHASIZED.

PRODUCT IDENTIFICATION NUMBER

TP16004 -UN-01JAN94

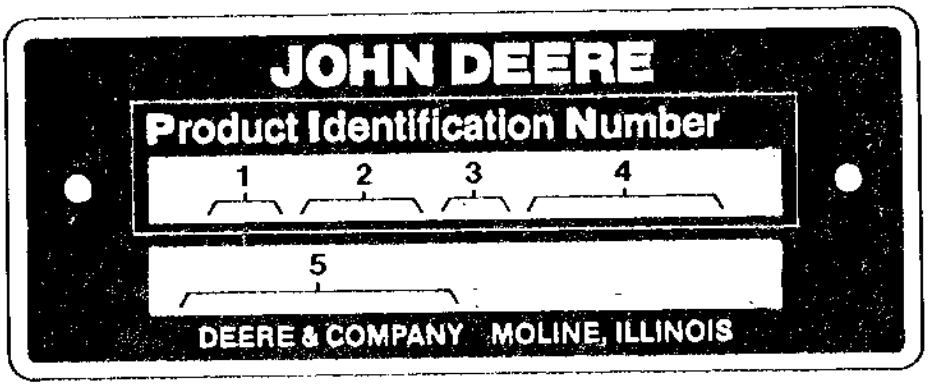

TP16004

1. DESIGNATES BACKHOE MANUFACTURER	T0 - JOHN DEERE DUBUQUE WORKS
2. DESIGNATES BACKHOE MODEL	310
3. DESIGNATES BACKHOE CONFIGURATION	SJ
4. DESIGNATES DUBUQUE WORKS SERIAL NUMBERS	
5. DESIGNATES UNIT TYPE	BACKHOE LOADER

ENGINE SERIAL NUMBER PLATE

T134833 -UN-23OCT00



T134833

1. DESIGNATES ENGINE MANUFACTURER	P-JOHN DEERE MOTORES
2. DESIGNATES NUMBER OF CYL. AND LITERS	4045 (4.5 LITER)
3. DESIGNATES FUEL TYPE OR SPECIAL CONDITIONS.	TF TURBOCHARGED DIESEL ENGINE
4. DESIGNATES ENGINE SERIAL NUMBER	123456
5. DESIGNATES THE ENGINE APPLICATION AND FACTORY USER.	PE4045TT095

SHORT BLOCK SERIAL NUMBER IDENTIFICATION

RGP4460 -UN-05MAR04

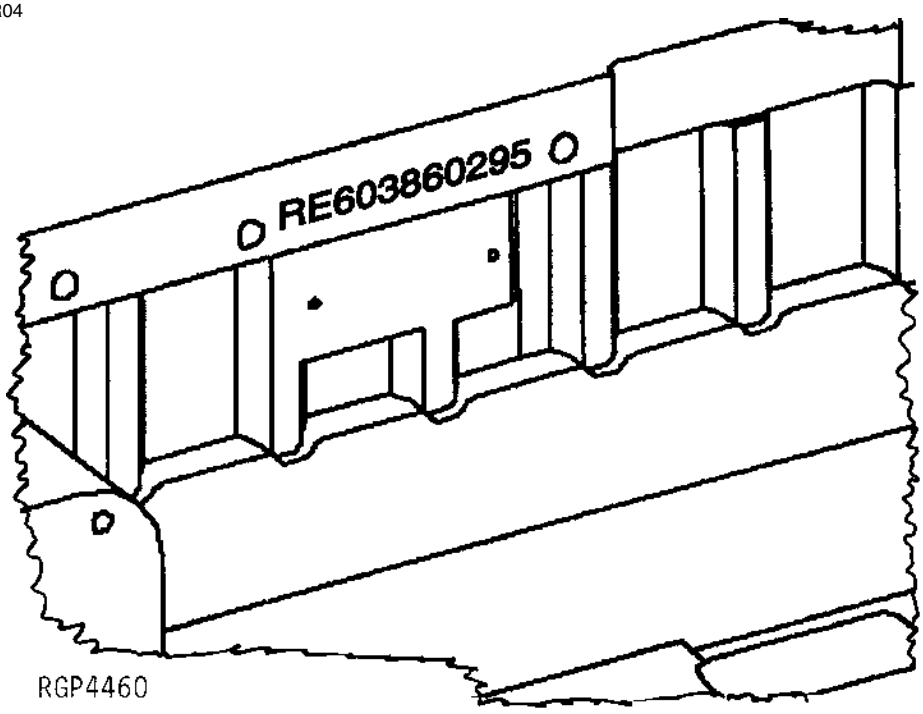

SERIAL NUMBER STAMPED INTO CASTING OF BLOCK NEAR PREVIOUS SERIAL NUMBER PLATE.

EXAMPLE: RE603860295

1. RE60386	SERVICE PART NUMBER
2. 02	MONTH ASSEMBLED
3. 95	YEAR ASSEMBLED

OPTION CODE STICKER

CD30524 -UN-27MAY98



TO ASSIST YOUR DEALER IN GIVING YOU PROMPT AND EFFICIENT SERVICE, AN OPTION CODE STICKER IS ATTACHED TO THE ROCKER ARM COVER. PLEASE REFERENCE THIS STICKER TO HELP IDENTIFY PARTS THAT ARE UNIQUE TO THE ORIGINAL EQUIPMENT MANUFACTURER'S APPLICATION BY OPTION CODE. THE BASE ENGINE CODE IDENTIFIES THE ENGINE MODEL.

PARTS THAT ARE COMMON TO MULTIPLE ENGINE MODELS WILL HAVE X'S IN THE MODEL COLUMNS ON EACH PAGE. CONVERSELY, UNIQUE ENGINES (AF01 AND TF001,FOR EXAMPLE) WILL BE IDENTIFIED AT THE TOP OF THE PAGE TO SIGNIFY "USE WITH" APPLICATIONS.

AF001	HF001
X	
X	

THIS IS DONE TO MINIMIZE THE DUPLICATION OF ART AND AT THE SAME TIME, IDENTIFY THE CORRECT PART NUMBERS BY OPTION CODE.

THE ORIGINAL EQUIPMENT MANUFACTURER FOR ACCESSORIES NOT SOLD BY YOUR DEALER, WILL BE RESPONSIBLE FOR WARRANTY SERVICE ON THIS CATEGORY OF ACCESSORIES.

MFWD AXLE SERIAL NUMBER PLATE

TP19438 -UN-01JAN94

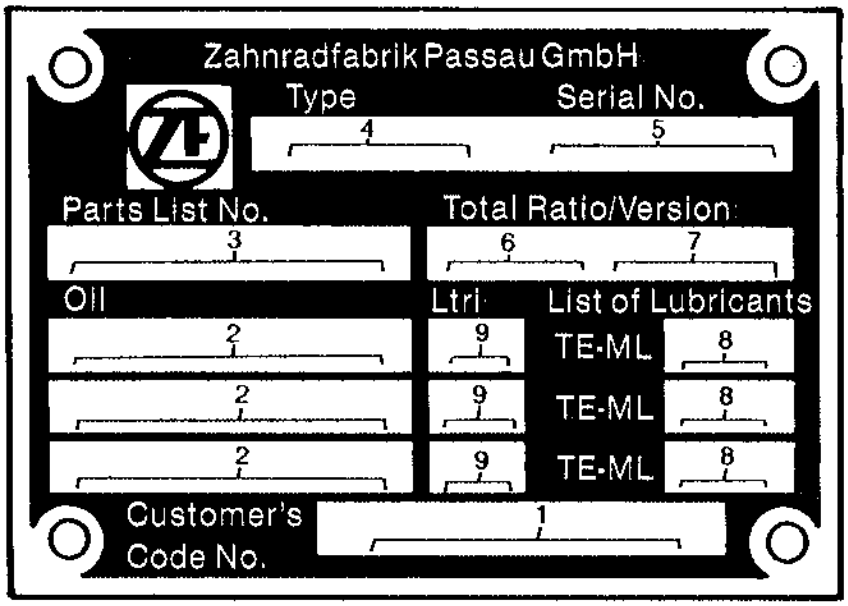

TP19438

1. DESIGNATES CUSTOMER'S CODE NUMBER	JOHN DEERE PART NUMBER
2. DESIGNATES TYPE OF LUBRICANT	JOHN DEERE HY GARD (J20C)
3. DESIGNATES ZF-PARTS-LIST NUMBER	4475 004 095
4. DESIGNATES AXLE TYPE	MS-B3025
5. DESIGNATES AXLE SERIAL NUMBER	12345
6. DESIGNATES TOTAL - RATIO OF THE AXLE	14.759
7. DESIGNATES VERSION	SP. DIFF. (WITH OR WITHOUT SELF-LOCKING DIFFERENTIAL)
8. DESIGNATES LUBRICANT SPECIFICATION	05
9. DESIGNATES CAPACITY	LTR (DIFFERENTIAL CARRIER AND PLANETARY GEAR ASSEMBLY

SERIAL NUMBER LISTING INFORMATION

SERIAL NUMBER INFORMATION IS LISTED TO SHOW ON WHICH MACHINES EACH PART CAN BE USED; FOR EXAMPLE:

- THE PART CAN BE USED ON ALL MACHINES.
000000- THE PART CAN BE USED ON ALL MACHINES BEGINNING WITH THE SERIAL NUMBER LISTED.
-000000 THE PART CAN BE USED ON ALL MACHINES UP TO AND INCLUDING THE SERIAL NUMBER LISTED.
000000-000000 THE PART CAN BE USED ON ALL MACHINES BETWEEN AND INCLUDING THE SERIAL NUMBERS LISTED.

WHEN XXXXXX'S ARE LISTED IN PLACE OF A SERIAL NUMBER, A SERIAL NUMBER CHANGE WAS MADE BUT THE EXACT SERIAL NUMBER WAS NOT AVAILABLE WHEN THE CATALOG WAS PRODUCED.

DIRECTION ARROW

ARROWS ARE USED WITH ILLUSTRATIONS TO INDICATE THE FRONT OF THE UNIT. "RIGHT-HAND" AND "LEFT-HAND" SIDES OF THE LOADER OR TRACTOR PARTS ARE DETERMINED BY FACING IN THE DIRECTION OF MACHINE FORWARD TRAVEL

EXCEPTION: FOR ALL BACKHOE PARTS, "RIGHT-HAND" AND "LEFT-HAND" SIDES, "FRONT" AND "REAR" ARE DETERMINED WHEN SEATED FOR BACKHOE OPERATION.

BOX-ENCLOSED ILLUSTRATIONS

A KEY NUMBER, SHOWN IN THE PARTS LIST, IS ASSIGNED TO A BOX ENCLOSING ALL PARTS SOLD AS A SERVICE ASSEMBLY.

COMPLETE GOODS LISTINGS

COMPLETE GOODS ARE LISTED IN THE REMARKS COLUMN. ORDER SEPARATELY.
DO NOT INCLUDE ON REPLACEMENT PARTS ORDER.

SI UNITS OF MEASURE

METRIC DIMENSIONS ARE GIVEN, WHERE APPLICABLE, THROUGHOUT THIS PARTS CATALOG.

CHANGE INDICATOR LINE

CHANGES AFFECTING THE ORDERING OF PARTS ARE IDENTIFIED BY VERTICAL LINES MARKED IN THE LEFT-HAND MARGIN OF REVISED PARTS LISTING IMAGES. A LINE IS ALSO AT THE LEFT-HAND EDGE OF THE SAME PART NUMBER IN THE NUMERICAL INDEX TO SHOW THE LOCATION OF REVISED INFORMATION.

REMARKS AND ABBREVIATIONS

THE FOLLOWING REMARKS AND ABBREVIATIONS MAY APPEAR THROUGHOUT THE PARTS CATALOG.
REFER TO THE FOLLOWING CHART FOR TRANSLATIONS TO LANGUAGES OTHER THAN ENGLISH.

REMARKS AND ABBREVIATIONS

TX1007193 -UN-04MAY06

PHRASE	ENGLISH	FRANCAIS	DEUTSCH	ITALIANO	ESPANOL	SVENSKA
ALSO ORDER, ORD W/	Also order	Commander aussi	Ebenso bestellen	Ordinare anche	Pedir también	Beställ även
AMP	Ampere	Ampère	Ampere	Ampere	Amperio	Ampere
APPL, APPL ONLY	This application only	Uniquement pour cette utilisation	Nur für diese Anwendung	Solo per questa applicazione	Solo para este propósito	Endast för denna användning
AR	As required	Selon le besoin	Nach Bedarf	Secondo necessità	Según necesidad	Vid behov
ASSY	Complete assembly	Ensemble complet	Kompl.-Zusammenbau	Gruppo completo	Montaje completo	Komplett montering
CA, CONVENIENCE ASSY	Convenience assembly	Ensemble convenance	Komfort-Zusammenbau	Montaggio pratico	Montaje de conveniencia	Lämplig montering
CCW	Counter-clockwise	Sens anti-horaire	Gegen Uhrzeigersinn	Senso antiorario	A la izquierda	Moturs
COMPLETE	Complete	Complet	Vollständig	Completo	Completo	Fullständig
COMPLETE GOODS	Complete goods	Compléter marchandises	Vollst. Waren	Merci complete	Mercancías completas	Kompletta varor
CTL CUT TO LENGTH	Cut to length	Couper à la longueur	Auf Länge zurechtschneiden	Tagliare alla lunghezza	Corte a la longitud	Skära till längd
CW	Clockwise	Sens horaire	Im Uhrzeigersinn	In senso orario	A la derecha	Medurs
FOR	For	Pour	Für	Per	Para	För
FRONT	Front	Avant	Vorn	Anteriore	Frente	Fram
GAS	Gasoline	Essence	Benzin	Benzina	Gasolina	Bensin
HP	Horsepower	Puissance en cv	Leistung	Potenza	Potencia	Hästkraft
HFWD	Hydraulic Front-wheel Drive	Traction Avant Hydraulique	Hydraulischer Vorderradantrieb	Trazione Anteriore Idraulica	Traccion Delantera Hidraulica	Hydraulisk Framhjulsdrift
HS, HEAD MARKED	High strength, head marked	Haute résistance, tête marquée	Hochfest, vorn gekennzeichnet	Contrassegnato in testa, ad alta resistenza	Alta fuerza, marca en cabeza	Hög styrka, huvudmärkt
ID	Inside diameter	Diamétre intérieur	Innendurch-messer	Diametro interno	Diá. interior	Innerdiameter
INCH	Inch	Pouce	In.	Pollice	Pulg.	Tum
INCL KEYS	Includes keys...	Comprend les positions...	Einschließlich Schlüssel...	Include le chiavette...	Incluye posiciones...	Inklusive nycklar...
INCL, INCLUDES	Includes...	Comprend...	Enthält...	Include...	Incluye...	Inkluderar...
INCLUDES PARTS/ ITEMS MARKED	Includes parts/items marked...	Comprend les pièces/articles marqués...	Enthält gekennzeichnete Teile/Pos. ...	Include i pezzi e gli elementi contrassegnati...	Incluye piezas marcadas...	Inkluderar markerade delar/artiklar...
INNER	Inner	Intérieur	Innerer	Interno	Interno	Inre, invändig
KIT	Kit	Kit	Kit	Kit	Juego	Sats
L	Number of links	Nombre de maillons	Anzahl der Glieder	Numero di maglie	Nº de eslabones	Antal länkar
LGTH	Length	Longueur	Länge	Lunghezza	Longitud	Längd
LGP	Low Ground Pressure	Faible Pression Au Sol	Niederer Bodendruck	Bassa Pressione Sul Suelo	Baja Presion Sobre El Suelo	Laagt Marktryck
LH	Left-hand	Gauche	Links	Sinistra	Izquierda	Vänster
LT	Long Track	Chenille Longue	Mit Langem Laufwerk	Cingolo Lungo	Cadena Largo	Laangt Larvband
LOW, LOWER	Lower	Inférieur	Unterer	Inferiore	Inferior	Nedre
MAKE FROM, MF	Make from	Faireavec	Herstellen von	Fabbricare da	Hacer de	Tillverka av
MARKED	Marked	Marqué	Markiert	Contrassegnato	Marcado	Märkt

TX1007193

REMARKS AND ABBREVIATIONS

TX1007195 -UN-04MAY06

PHRASE	ENGLISH	FRANCAIS	DEUTSCH	ITALIANO	ESPANOL	SVENSKA
MATCHED SET	Matched set	Ensemble assorti	Passender Satz	Set abbinato	Sistema emparejado	Anpassad sats
MFWD	Mechanical Front-Wheel Drive	Pont Avant	Allradantrieb	Ruota Motrice Meccanica Anteriore	Traccion Delantera Mecanica	Mekanisk Framhjulsdrift
NA, NOT USED THIS APPL	Not used this application	Ne sert pas pour cette application	In dieser Anwendung nicht benutzt	Non usato in questa applicazione	No se usa en esta aplicación	Ej använd i detta sammanhang
NLA	No longer available	Epuisé	Nicht mehr lieferbar	Non più disponibile	Descontinuado	Ej längre tillgänglig
NSEP	Not supplied separately	Non livré séparément	Nicht einzeln lieferbar	Non fornito separatamente	No se suministra por separado	Kan ej erhållas separat
OD	Outside diameter	Diamètre extérieur	Außendurch-messer	Diametro esterno	Diá. exterior	Ytterdiameter
OPTIONAL	Optional	En option	Wahlweise	Opzionale	Opcional	Valfri
OR	Or	Ou	Oder	Oppure	O	Eller
ORD, ORDER	Order	Commander	Bestellen	Ordinare	Pídase	Order
OS	Oversize	Sur-dimension	Übergröße	Maggiorato	Sobretamaño	Överdimension
OUTER	Outer	Externe	Äußerer	Esterno	Externo	Yttre, utvändig
PKG, PACKG	Package, Packet of	Emballage, paquet de	Verpackung, verpackt mit	In confezione da	Paquete de	I sats; paket
PTO	Power Take Off	Prise De Force	Zapfwelle	Presa Di Forza	Toma De Fuerza	Kraftuttag
RATIO	Ratio	Rapport	Übersetzungs-verhältnis	Rapporto	Índice	Förhållande
REAR	Rear	Arrière	Hinten	Posteriore	Trasero	Bak; bakre
REMAN	Remanufactured	Echange Standard	Generalveberholt	Refatto	Refabricador por	Renoverad
REPL	Replaces	Remplace	Ersetzt	Sostituisce	Sustituye	Ersätter
RH	Right-hand	Droit	Rechts	Destra	Derecha	Höger
SN	Serial number	Numéro de série	Seriennummer	Numero di serie	Nº de serie	Serienummer
STD	Standard	Standard	Standard	Standard	Normal	Standard
SUB	Replaced by	Remplacé par	Ersetzt durch	Sostituito da	Sustituido por	Ersatt med
SUB COMPONENTS	Substitute components (of the kit or assy)	Substituer les composants (du kit ou de l'ensemble)	Komponenten ersetzen (des Kits oder der Baugruppe)	Sostituire i componenti (del kito del gruppo)	Sustituir los componentes	Ersätta komponenterna (i satsen eller monteringen)
SUB FOR	Subsitutes for	Remplace	Ersatz für	Sostituisce	Sustitución para	Ersätter
TEETH, Z	Number of gear teeth	Nombre de dents d'engrenages	Zahl der Zahnradzähne	Numero di denti dell'ingranaggio	Nº de dientes de engranaje	Antal redskapständer
TK	Thickness	Épaisseur	Stärke	Spessore	Espesor	Tjocklek
UP, UPPER	Upper	Supérieur	Oberer	Superiore	Superior	Övre
US	Undersize	Sous-dimension	Untergröße	Minorato	Subtamaño	Underdimension
USE WITH	Use with	À utiliser avec	Verwenden mit	Usare con	Usar con	Använd med
USE UNTIL EXHAUSTED	Use until exhausted	Utilisation jusqu'à épuisé	Verwenden, bis erschöpft	Usare fino all'esaurimento	Usar hasta agotar	Använda till uttömd
W/	With	Avec	Mit	Con	Con	Med; inklusive
W/O	Without	Sans	Ohne	Senza	Sin	Utan; exklusive
WHOLE GOODS	Whole goods	Marchandises entières	Vollständige Waren	Merci intere	Mercancías enteras	Hela varor
XLT	Extra Long Track	Chenille Extra Longue	Mit Extra Langem Laufwerk	Cingolo Extra Lungo	Cadena Extra Larga	Extra Laangt Larvband
VEC	Vehicle Electronic Controller	Controleur Elektronisches Du Vehicule	Elektronisches Steuergeraet Des Fahrzeugs	Unità Di Comando Elettronica Del Veicolo	Unidad de Control Electronico del Vehiculo	Elektronisk Fordonsstyrenhet
VLC	Vehicle Load Center	Coffret De Repartition Du Vehicule	Verteilerstation Des Fahrzeugs	Centro Di Carico Del Veicolo	Centro De Cargas Del Vehiculo	Fordonets Elcentral

TX1007195

ALPHABETICAL INDEX

PAGE

A

A/C AND BASIC FAN PACKAGE 0510-8
A/C DIODE....1674-28
A/C PRESSURE SWITCH HARNESS.... 1674-5E
A/C SWITCH....1674-6
A/C SWITCH....1674-28
A/C WIRING HARNESS 1674-28
ABSORBERS, SOUND....9006-2
ABSORBERS, SOUND....9006-4
ACCELERATOR ELECTRICAL....0515-2
ACCU-SWING VALVE KIT 3362-28
ACCUMULATOR (EH)
(410TMC) 3362-72
ACCUMULATOR SEAL KIT 2160-24
ACCUMULATOR VALVE 2160-24
ACCUMULATOR, CAB ATTENUATOR 2160-20
ACCUMULATOR, MANIFOLD
(PILOT CONTROL) 3362-30
ACCUMULATOR, RIDE CONTROL....2160-24
ACTUATOR DOOR RELAY 1674-5E
ADAPTER,ENGINE OIL COOLER 0400-38
ADAPTER,EXHAUST (TT095)....0400-24
ADJUSTING STRAP, ALTERNATOR (TT095) 0400-46
AIR CLEANER 0520-4
AIR CLEANER ELEMENT 0520-4
AIR CLEANER HOSE....0520-4
AIR CLEANER RESTRICTION INDICATOR SWITCH 0520-4
AIR CONDITIONING 1830-6
AIR CONDITIONING COMPRESSOR 1830-12
AIR CONDITIONING COMPRESSOR
MOUNTING BRACKETS 1830-12
AIR CONDITIONING COMPRESSOR DRIVE BELT....1830-12
AIR CONDITIONING COMPRESSOR HOSES....1830-12
AIR CONDITIONING CONDENSER 1830-12
AIR CONDITIONING DOOR ACTUATOR RELAY 1674-5E
AIR CONDITIONING DUCTS....1830-2
AIR CONDITIONING DUCTS....1830-4
AIR CONDITIONING RECEIVER DRYER....1830-12
AIR INTAKE (PE4045TT095)....0400-28
AIR INTAKE TEMPERATURE SENSOR
(PE4045TT095)....0400-28
AIR SUSPENSION SEAT COMPRESSOR....1821-16
AIR SUSPENSION SEAT SWITCH 1674-6
AIR SUSPENSION SEAT SWITCH 1674-28
ALARM, BACK-UP ALARM 2004-4
ALARM, BACK-UP ALARM (410TMC) 2004-6
ALARM, LOADER COUPLER....1675-10
ALARM, TRAVEL WARNING....2004-4
ALARM, TRAVEL WARNING (410TMC)....2004-6
ALTERNATE SWITCH PLACEMENT....1674-28
ALTERNATOR....1672-4
ALTERNATOR ADJUSTING STRAP (TT095)....0400-46
ALTERNATOR FAN....1672-4
ALTERNATOR MOUNTING BRACKETS (TT095) 0400-46
ALTERNATOR PULLEY 1672-4
ANCHOR, TIE BAND MOUNT, HARNESS....1673-6
ANGLE,BACKREST ADJUSTMENT 1821-2
ANTENNA, RADIO 2001-2
ANTI-CAVITATION, BOOM SECTION (410J) 3162-4
ANTI-CAVITATION, BUCKET SECTION (410J) 3162-6
ANTI-RATTLE INSULATORS....9006-2
ANTI-RATTLE INSULATORS....9006-4
ANTI-THEFT LABELS 1675-10
ARM PROTECTION PLATE....3344-6
ARM RESTS 1821-2
ARM, LOADER LIFT....3143-2

PAGE

ARM, LOADER LIFT (TOOL CARRIER).... 3143-4
ARM, PILOT CONTROLLER
(LEFT SIDE).... 1816-14
ARM, PILOT CONTROLLER
(RIGHT SIDE).... 1816-16
ARM, STANDARD 3346-2
ARM,STABLIZER 3348-2
ARMREST (TMC) 1821-12
ARMREST FOR TOTAL MACHINE CONTROL 1821-12
ARMS, ROCKER (TT095).... 0400-5
ATTACHMENT PLUMBING KIT 3363-44
ATTACHMENT PLUMBING KIT
(410TMC) 3363-46
ATTENUATOR, CAB HYDRAULIC 2160-2
ATTENUATOR, CAB HYDRAULIC 2160-20
ATTENUATOR, CANOPY HYDRAULIC 2160-4
AUDIBLE ALARM, QUICK COUPLER PIN ENGAGEM
ENT 1674-5C
AUGER COUPLERS.... 3363-24
AUGER COUPLERS
(STANDARD DIPPERSTICK).... 3363-40
AUGER HYDRAULICS
(STANDARD DIPPERSTICK).... 3363-40
AUXILIARY CUTTING EDGE,MULTI-PURPOSE
BUCKET.... 3102-8
AUXILIARY EQUIPMENT HYDRAULICS, EXTENDAB
LE DIPPERSTICK.... 3363-18
AUXILIARY EQUIPMENT HYDRAULICS, STANDARD
DIPPERSTICK.... 3363-16
AUXILIARY FUNCION HYDRAULIC HOSES,
LOADER.... 3163-6
AUXILIARY FUNCION HYDRAULIC HOSES,
LOADER (310TMC).... 3163-8
AUXILIARY FUNCTION PEDAL
(PILOT CONTROL) 3315-34
AUXILIARY HYDRAULIC CONTROL SWITCH 1674-11A
AUXILIARY LOADER VALVE (410J).... 3162-2
AUXILIARY SECTION RELIEF VALVE 3362-20
AUXILIARY SECTION RELIEF VALVE (410J) 3162-8
AUXILIARY SECTION, BACKHOE VALVE 3362-20
AUXILIARY SECTION, BACKHOE VALVE 3362-22
AUXILIARY SECTION, BACKHOE VALVE
410TMC.... 3363-2
AUXILIARY SECTION, LOADER VALVE (410J).... 3162-8
AUXILIARY VALVE KIT, FLOW CONTROL
410TMC.... 3363-2
AUXILIARY, LOW PRESSURE RETURN KIT.... 3363-30
AUXILLARY, PLUGS LOADER
(410TMC) 3363-38
AXLE HOUSING, FRONT (WITHOUT MFWD).... 0230-6
AXLE SWIVEL HOUSING, FRONT
(WITHOUT MFWD) 0230-7
AXLE,FRONT (W/MFWD).... 0250-2

B

BACK-UP ALARM SYSTEM 2004-4
BACK-UP ALARM SYSTEM (410TMC).... 2004-6
BACKHOE BOOM.... 3344-2
BACKHOE BOOM CYLINDER.... 3365-3
BACKHOE BOOM CYLINDER REPAIR KIT.... 3365-3
BACKHOE BOOM LOCK.... 3315-18
BACKHOE BOOM LOCK
(310G AND 310SG).... 3315-36
BACKHOE BOOM LOCK CONTROL LEVER.... 3315-16
BACKHOE BOOM PINS 3344-2

ALPHABETICAL INDEX - CONTINUED

PAGE

BACKHOE BOOM PROTECTION PLATE 3344-4
BACKHOE BUCKET 3302-8
BACKHOE BUCKET CUTTING EDGE 3302-8
BACKHOE BUCKET CYLINDER 3365-4
BACKHOE BUCKET CYLINDER HYDRAULICS 3363-6
BACKHOE BUCKET CYLINDER REPAIR KIT 3365-4
BACKHOE BUCKET PINS 3302-8
BACKHOE BUCKET, CUTTING EDGE 3302-10
BACKHOE CONSOLE, BOOM LOCK LEVER (PILOT CONTROL) 1816-5A
BACKHOE CONTROL LEVER CONVERSION LINKAGE (SAE PATTERN) 3315-28
BACKHOE CONTROL VALVE 3362-6
BACKHOE CONTROL VALVE (EH) (410TMC) 3362-58
BACKHOE CONTROL VALVE LINKAGE, TWO LEVER 3315-4
BACKHOE CONTROLS COVER (410J) 1816-2
BACKHOE CONTROLS, PILOT CONTROLLER ARM (LEFT SIDE) 1816-14
BACKHOE CONTROLS, PILOT CONTROLLER ARM (RIGHT SIDE) 1816-16
BACKHOE LEVER COVER (410J) 1816-4
BACKHOE LEVERS COVER (410J) 1816-2
BACKHOE LINKAGE, FIFTH FN LEVER FOR THREE LEVER CONTROLS 3315-20
BACKHOE STABILIZER CYLINDER HYDRAULICS 3363-3A
BACKHOE STABILIZER CYLINDER HYDRAULICS (410TMC) 3363-38
BACKHOE THREE LEVER CONTROL VALVE CONVERSION KIT 3315-6
BACKHOE VALVE AUXILIARY SECTION 3362-20
BACKHOE VALVE AUXILIARY SECTION 3362-22
BACKHOE VALVE AUXILIARY SECTION 410TMC 3363-2
BACKHOE VALVE BOOM SECTION 3362-10
BACKHOE VALVE BOOM SECTION (410TMC) 3362-50
BACKHOE VALVE BOOM,PILOT SECTION 3362-40
BACKHOE VALVE BUCKET SECTION 3362-12
BACKHOE VALVE BUCKET SECTION (410TMC) 3362-52
BACKHOE VALVE BUCKET, PILOT SECTION 3362-42
BACKHOE VALVE CROWD SECTION 3362-14
BACKHOE VALVE CROWD SECTION (410TMC) 3362-54
BACKHOE VALVE CROWD, PILOT SECTION 3362-44
BACKHOE VALVE EXTENDIBLE SECTION 3362-18
BACKHOE VALVE HAMMER SECTION (410TMC) 3362-56
BACKHOE VALVE INLET SECTION 3362-8
BACKHOE VALVE MOUNTING PLATE (PILOT CONTROL) 3315-26
BACKHOE VALVE MOUNTING PLATE (410J) 3315-2
BACKHOE VALVE MOUNTING PLATE 410TMC 3315-24
BACKHOE VALVE OUTLET SECTION 3362-24
BACKHOE VALVE SWING (EH) (410TMC) 3362-62
BACKHOE VALVE SWING SECTION 3362-16
BACKHOE VALVE SWING, PILOT SECTION 3362-46
BACKHOE VALVE TWO LEVER CONVERSION KIT 3315-4
BACKHOE, FOUR-LEVER CONTROLS, STANDARD 3315-8
BACKHOE, QUICK COUPLER BUCKET 3302-10
BACKHOE, THREE LEVER CONTROL VALVE LINKAGE 3315-6
BACKREST ADJUSTMENT ANGLE 1821-2

PAGE

BALANCER SHAFT, ENGINE (TT095) 0400-30
BAR, CYLINDER SERVICE LOCK 1313-2
BAR, CYLINDER SERVICE LOCK (TOOL CARRIER 1313-4
BARRIER, HEAT AND NOISE 1834-2
BATTERIES,DUAL 1671-4
BATTERY BOX 1913-2
BATTERY CABLE, SINGLE 1671-2
BATTERY COVER 1913-2
BATTERY DISCONNECT SWITCH,MASTER 1671-6
BATTERY INSTALLATION, SINGLE 1671-2
BEACON, ROTATING 1673-2
BEACON, STROBE 1673-2
BEARING,FRONT AXLE HOUSING (WITHOUT MFWD) 0230-6
BEARINGS, MAIN (TT095) 0400-2
BEARINGS,C0NNECTING ROD (TT095) 0400-10
BELT, DRIVE (TT095) 0400-48
BELT, SEAT 1821-14
BELT, TETHER 1821-16
BELT,AIR CONDITIONING COMPRESSOR DRIVE 1830-12
BLOCK, CYLINDER (TT095) 0400-16
BLOCK,TRUNNION SWING CYLINDER 1740-2
BLOWER MOTOR PRESSURIZER 1830-6
BOLT, STRIKER, HOOD 1910-2
BOOM BUCKET AND CROWD VALVE COVERS 1913-4
BOOM CYL.KIT, LOWERING DEVICE,CONTOLLED 3363-20
BOOM CYL.KIT,CONTROLLED LOWERING DEVICE 3363-20
BOOM CYLINDER HYDRAULICS, LOADER (310TMC) 3163-4
BOOM CYLINDER HYDRAULICS, LOADER (410J) 3163-2
BOOM CYLINDER REPAIR KIT, BACKHOE 3365-3
BOOM CYLINDER, BACKHOE 3365-3
BOOM LEVER LOCK COVER 1816-10
BOOM LIFT CYLINDER 3165-2
BOOM LIFT CYLINDER (TOOL CARRIER) 3165-4
BOOM LIFT CYLINDER HARDWARE 3165-12
BOOM LIFT CYLINDER HARDWARE (TOOL CARRIER) 3165-10
BOOM LOCK CONTROL LEVER 3315-16
BOOM LOCK LEVER COVER (PILOT CONTROL) 1816-5A
BOOM LOCK LEVER COVER (MANUAL) (410J) 1816-2
BOOM LOCK, BACKHOE 3315-18
BOOM LOCK, BACKHOE (310G AND 310SG) 3315-36
BOOM PROTECTION PLATE 3344-4
BOOM SECTION RELIEF VALVE 3362-10
BOOM SECTION RELIEF VALVE (410TMC) 3362-50
BOOM SECTION RELIEF VALVE (EH) (410TMC) 3362-68
BOOM SECTION RELIEF VALVE (410J) 3162-4
BOOM SECTION, ANTI-CAVITATION RELIEF (410J) 3162-4
BOOM SECTION, BACKHOE VALVE 3362-10
BOOM SECTION, BACKHOE VALVE (410TMC) 3362-50
BOOM SECTION, LOADER VALVE (EH) (410TMC) 3362-68
BOOM SECTION, LOADER VALVE (410J) 3162-4
BOOM SERVICE LOCK BAR 1313-2
BOOM SERVICE LOCK BAR (TOOL CARRIER) 1313-4
BOOM, BACKHOE 3344-2
BOOM, LOADER 3143-2
BOOM, LOADER (TOOL CARRIER) 3143-4

ALPHABETICAL INDEX - CONTINUED

PAGE

BOOM, PILOT SECTION RELIEF VALVE 3362-40
BOOM,PILOT SECTION, BACKHOE VALVE 3362-40
BOOT, MECHANICAL SUSPENDED SEAT 1821-8
BOX, BATTERY....1913-2
BOX, TOOL....1913-2
BRACKET, AIR CLEANER MOUNTING....0520-4
BRACKET, EXTERNAL REAR VIEW MIRROR....2002-3
BRACKET, INTERIOR REAR VIEW MIRROR....2002-4
BRACKET, LICENCE PLATE....1314-2
BRACKET, STRIKER BOLT....1910-2
BRACKET, WIRING HARNESS....1674-26
BRACKET,BACKHOE VALVE MOUNTING (PILOT CONTROL)....3315-26
BRACKET,BACKHOE VALVE MOUNTING (410J)....3315-2
BRACKET,BACKHOE VALVE MOUNTING 410TMC....3315-24
BRACKET,RADIO ANTENA....2001-2
BRACKET,STABLIZER VALVE MOUNTING (PILOT CONTROL)....3315-26
BRACKET,STABLIZER VALVE MOUNTING (410J)....3315-2
BRACKET,STABLIZER VALVE MOUNTING 410TMC....3315-24
BRACKETS ,SEAT....1821-2
BRACKETS, ALTERNATOR MOUNTING (TT095)....0400-46
BRAKE DISC....1011-2
BRAKE LIGHT PRESSURE SWITCH....1060-2
BRAKE PEDAL....1060-2
BRAKE SERVICE, HYDRAULICS....1060-6
BRAKE VALVE....1060-2
BRAKE VALVE....1060-4
BRAKE VALVE BOOST PLUMBING (CAB)....1060-8
BRAKE VALVE BOOST PLUMBING (ROPS)....1060-10
BRAKE VALVE HOUSING....1060-2
BRAKE VALVE HOUSING....1060-4
BRAKE VALVE KIT....1060-4
BRAKE VALVE MOUNTING PLATE....1060-2
BRAKE VALVE PUSH ROD....1060-4
BRAKES, SERVICE....1011-2
BREATHER FILTER, HYDRAULIC RESERVOIR....2160-14
BUCKET BOOM AND CROWD VALVE COVERS....1913-4
BUCKET CYLINDER HYDRAULICS, BACKHOE....3363-6
BUCKET CYLINDER LINES, BACKHOE....3363-6
BUCKET CYLINDER, BACKHOE....3365-4
BUCKET CYLINDER, LOADER....3165-6
BUCKET CYLINDER, LOADER (TOOL CARRIER)....3165-8
BUCKET CYLINDER, MULTI-PURPOSE....3102-13
BUCKET LEVELING LINKAGE....3115-2
BUCKET LEVELING ROD....3115-2
BUCKET LEVELING YOKE....3115-2
BUCKET LINKAGE, LOADER (410J,410TMC)....3143-6
BUCKET LINKAGE, LOADER (TOOL CARRIER)....3143-8
BUCKET LINKS AND PINS,BACKHOE....3345-2
BUCKET PINS,LOADER....3102-6
BUCKET SECTION RELIEF VALVE....3362-12
BUCKET SECTION RELIEF VALVE (410TMC)....3362-52
BUCKET SECTION RELIEF VALVE (EH) (410TMC)....3362-66
BUCKET SECTION RELIEF VALVE (410J)....3162-6
BUCKET SECTION, ANTI-CAVITATION RELIEF (410J)....3162-6

PAGE

BUCKET SECTION, BACKHOE VALVE 3362-12
BUCKET SECTION, BACKHOE VALVE (410TMC) 3362-52
BUCKET SECTION, LOADER VALVE (EH) (410TMC) 3362-66
BUCKET SECTION, LOADER VALVE (410J).... 3162-6
BUCKET SPACER, SYNTHETIC 3346-2
BUCKET VALVE WIRING HARNESS 1674-26
BUCKET, LOADER .96 CUBIC METER (1.25 CUBIC YARD).... 3102-2
BUCKET, LOADER .96 CUBIC METER (1.25 CUBIC YARD).... 3102-14
BUCKET, MULTI-PURPOSE.... 3102-8
BUCKET, PILOT SECTION RELIEF VALVE 3362-42
BUCKET, PILOT SECTION, BACKHOE VALVE 3362-42
BUCKET,BACKHOE.... 3302-8
BUCKET,LOADER 1.00 CUBIC METER (1.30 CUBIC YARD).... 3102-4
BUCKET,LOADER 1.15 CUBIC METER (1.50 CUBIC YARD).... 3102-4
BUCKET,LOADER,COUPLER 1.00 CUBIC METER (1.31 CUBIC YARD).... 3102-16
BUCKET,LOADER,COUPLER 1.15 CUBIC METER (1.50 CUBIC YARD).... 3102-16
BUCKET,MULTI-PURPOSE.... 3102-10
BUCKET,MULTI-PURPOSE, COUPLER.... 3102-18
BUMPER.... 1747-4
BUMPER, MAIN FRAME 1747-4
BUSHING, EXTENDIBLE ARM 3346-4
BUSHING, MULTI-PURPOSE BUCKET 3102-8
BUSHING, MULTI-PURPOSE BUCKET CYLINDER.... 3102-10
BUSHING, MULTI-PURPOSE BUCKET CYLINDER, COUPLER 3102-18
BUSHING,FRONT AXLE HOUSING (WITHOUT MFWD) 0230-6

C

CAB DOME LIGHT 2001-2
CAB DOOR CYLINDER.... 1814-2
CAB DOOR HINGES 1814-2
CAB DOORS.... 1814-2
CAB FRAME 1811-4
CAB HEADLINER 1811-4
CAB HEATER.... 1830-6
CAB HEATER DUCTS 1830-2
CAB HEATER DUCTS 1830-4
CAB HYDRAULIC ATTENUATOR.... 2160-2
CAB HYDRAULIC ATTENUATOR.... 2160-20
CAB MAIN WIRE HARNESS 1674-5E
CAB MOUNTING ISOLATORS 1811-4
CAB REAR WINDOWS.... 1814-8
CAB SIDE WINDOW LATCH 1814-2
CAB SIDE WINDOWS 1814-2
CAB SKIRT 1927-2
CAB WINDSHIELD 1814-6
CAB WIRE HARNESS 1674-4
CABLE, HEATER VALVE CONTROL.... 1830-6
CABLE, RADIO 2001-2
CABLE, SINGLE BATTERY 1671-2
CABLES, STABILIZER CONTROL 3315-22
CABLES,DUAL BATTERY.... 1671-4
CAMSHAFT (TT095).... 0400-4
CAMSHAFT GEAR (TT095) 0400-4
CAN RESISTOR 1674-4
CAN TERMINATION RESISTOR 1674-8

ALPHABETICAL INDEX - CONTINUED

PAGE

CAN TERMINATION RESISTORS 1674-5E
CANOPY 1811-2
CANOPY HYDRAULIC ATTENUATOR 2160-4
CAP, FUEL TANK 0560-2
CAP, RADIATOR 0510-4
CAP,ENGINE OIL FILL INLET (TT095) 0400-20
CAP,MAIN BEARING (TT095) 0400-16
CARRIER,DISC BRAKE 1011-2
CARRIER,PARK BRAKE CLUTCH DISC 1111-2
CARRIER,REAR AXLE PLANET PINION 0201-2
CASE,DIFFERENTIAL 0210-6
CASE,DIFFERENTIAL 0230-4
CENTER KICK PANEL, REAR 1812-2
CENTER KICK PANEL, REAR (410TMC) 1812-4
CHARGE PUMP,TRANSMISSION 0360-2
CHASSIS, ELECTRICAL INCOVA 1675-8
CHECK VALVE, COMBO VALVE (410J) 3162-12
CHECK VALVE, LOADER VALVE LOAD SENSE (410J) 3162-12
CHROME EXHAUST EXTENSION 0530-2
CLAMP, SHOVEL 3140-6
CLAMP,GATHERING 2160-6
CLAMP,GATHERING (410TMC) 2160-8
CLUTCH ASSEMBLY,FIRST SPEED 0350-8
CLUTCH ASSEMBLY,HIGH RANGE FORWARD 0350-6
CLUTCH ASSEMBLY,LOW RANGE FORWARD 0350-4
CLUTCH ASSEMBLY,MFWD 0350-14
CLUTCH ASSEMBLY,SECOND SPEED 0350-10
CLUTCH ASSEMBLY,THIRD SPEED 0350-12
CLUTCH DISC,LIMITED SLIP DIFFERNTIAL (MFWD) 0250-10
CLUTCH DISC,MFWD 0350-14
CLUTCH DISC,PARK BRAKE 1111-2
CLUTCH DISK,FIRST SPEED 0350-8
CLUTCH DISK,HIGH RANGE FORWARD 0350-6
CLUTCH DISK,LOW RANGE FORWARD 0350-4
CLUTCH DISK,SECOND SPEED 0350-10
CLUTCH DISK,THIRD SPEED 0350-12
CLUTCH DISK,TRANSMISSION INPUT SHAFT 0350-2
CLUTCH,DISC BRAKE 1011-2
COLD WEATHER STARTING AID 0505-4
COLD WEATHER STARTING AID SOLENOID 0505-4
COLUMN, STEERING 0960-4
COLUMN, TILT STEERING 0960-4
COMBO VALVE CHECK VALVE (410J) 3162-12
COMPLETE REAR AXLE ASSEMBLY 0201-8
COMPRESSOR MOUNTING BRACKETS, AIR CONDITIONING 1830-12
COMPRESSOR,AIR CONDITIONING 1830-12
COMPRESSOR,AIR SUSPENSION SEAT 1821-16
CONDENSER,AIR CONDITIONING 1830-12
CONNECTING ROD (TT095) 0400-10
CONNECTING ROD BEARINGS (TT095) 0400-10
CONNECTOR, SOLENOID, STANADYNE DE10 (PE4045TT095) 0400-14
CONSOLE WIRING HARNESS,SIDE WITH CAB 1674-5E
CONSOLE WIRING HARNESS,SIDE, CAB 1674-4
CONSOLE, BACKHOE BOOM LOCK LEVER (PILOT CONTROL) 1816-5A
CONSOLE, BACKHOE CONTROL LEVER (410J) 1816-4
CONSOLE, FRONT 1816-8
CONTOLLED LOWERING DEVICE, BOOM CYL.KIT 3363-20
CONTOLLED LOWERING DEVICE,CROWD CYL.KIT 3363-22
CONTROL CABLE, HEATER VALVE 1830-6

PAGE

CONTROL COVER, BACKHOE, TWO LEVER (410J) 1816-2
CONTROL HANDLE, PILOT,BUTTON FUNTION KIT 3362-38
CONTROL LEVER CONSOLE, BACKHOE (410J) 1816-4
CONTROL LEVER,BACKHOE BOOM LOCK 3315-16
CONTROL LEVER,FORWARD,NEUTRAL AND REVERSE 0315-2
CONTROL VALVE ELECTRICAL HARNESS AND MOUNTING BRACKET 1674-11A
CONTROL VALVE LINKAGE, STABILIZER 3315-22
CONTROL VALVE LINKAGE, THREE LEVER, BACKHOE 3315-6
CONTROL VALVE LINKAGE,BACKHOE, TWO LEVER 3315-4
CONTROL VALVE, BACKHOE 3362-6
CONTROL VALVE, BACKHOE (EH) (410TMC) 3362-58
CONTROL VALVE, LOADER/STABILIZER (410J) 3162-2
CONTROL VALVE, PILOT, (410TMC) WITH AUX ROLLER 3315-30
CONTROL VALVE, PILOT, (410TMC) WITHOUT AUXILLARY ROLLER 3315-32
CONTROL VALVE, PILOT, LEFT 3362-34
CONTROL VALVE, PILOT, RIGHT 3362-36
CONTROL, RIDE 2160-24
CONTROL, RIDE , ELECTRICAL 1675-2
CONTROLLER ARM, PILOT (LEFT SIDE) 1816-14
CONTROLLER ARM, PILOT (RIGHT SIDE) 1816-16
CONTROLLER, (410TMC) WITH AUX ROLLER 3315-30
CONTROLLER, (410TMC) WITHOUT AUXILLARY ROLLER 3315-32
CONTROLLER, ENGINE (TT095) 0400-12
CONTROLLER, LEFT HAND VALVE 3362-34
CONTROLLER, RIGHT HAND VALVE 3362-36
CONTROLLER, VEHICLE (410J,410TMC) 1674-5A
CONTROLS, FOUR-LEVER STANDARD BACKHOE 3315-8
CONVERSION, BACKHOE CONTROL LEVER LINKAGE (SAE PATTERN) 3315-28
CONVERTER, TORQUE 0350-1
COOLANT RECOVERY TANK 0510-4
COOLANT, ENGINE HEATER 0505-2
COOLANT, ENGINE HEATER (TT095) 0400-56
COOLER, TRANSMISSION, HYD. OIL 2160-18
COOLER,HYDRAULIC OIL AND HOSES 2160-18
CORD, MANUAL HOLDER ATTACHMENT 1811-2
CORNER WINDOWPANE, REAR 1814-8
COUNTERWEIGHT FRAME 1749-3
COUNTERWEIGHT, FRONT 1749-2
COUPLER FRAME, FORKLIFT 3103-2
COUPLER LOADER BUCKET 1.00 CUBIC METER (1.31 CUBIC YARD) 3102-16
COUPLER LOADER BUCKET 1.15 CUBIC METER (1.50 CUBIC YARD) 3102-16
COUPLER, CYLINDER, FRONT 3104-4
COUPLER, HYDRAULIC FRONT 3104-2
COUPLER, HYDRAULIC HOSES (410J) 3163-10
COUPLER, LOADER BUCKET VALVE (410J) 3163-12
COUPLER, LOADER, ELECTRICAL 1675-10
COUPLER, QUICK (STANDARD) 3302-4
COUPLER, QUICK (TOP LOCK) 3302-12
COUPLER, QUICK (UNIVERSAL) 3302-2
COUPLER, QUICK CONNECT 2160-6
COUPLER, QUICK CONNECT (410TMC) 2160-8

ALPHABETICAL INDEX - CONTINUED

PAGE

COUPLER, QUICK CONNECT, 3RD FUNCTION 3102-18
COUPLERS, AUGER....3363-24
COUPLERS,AUGER (STANDARD DIPPERSTICK)....3363-40
COVER, BACKHOE CONTROLS (410J)....1816-2
COVER, BACKHOE LEVER (410J)....1816-4
COVER, BACKHOE LEVERS (410J)....1816-2
COVER, BATTERY....1913-2
COVER, BOOM LEVER LOCK....1816-10
COVER, BOOM LOCK LEVER (PILOT CONTROL)....1816-5A
COVER, BOOM LOCK LEVER (MANUAL) (410J)....1816-2
COVER, BOOM LOCK LEVER (MANUAL) (410J)....1816-4
COVER, FLOOR TO FRONT CONSOLE....1812-2
COVER, FLOOR TO FRONT CONSOLE (410TMC)....1812-4
COVER, FUSE PANEL....1816-8
COVER, LINKAGE....1812-2
COVER, LINKAGE (410TMC)....1812-4
COVER, LINKAGE W/ COMBO VALVE....1674-5E
COVER, LOADER CONTROL....1816-12
COVER, LOADER CONTROL VALVE PLUMBING....1913-6
COVER, MIDDLE FLOOR....1812-2
COVER, MIDDLE FLOOR (410TMC)....1812-4
COVER, NO SHIFTER....1811-2
COVER, OIL FILLER OPENING (TT095)....0400-20
COVER, OPERATOR STATION....1927-2
COVER, REAR FLOOR....1812-2
COVER, REAR FLOOR (410TMC)....1812-4
COVER, ROCKER ARM (TT095)....0400-6
COVER, STABILIZER CONTROL....1816-10
COVER, STABILIZER CONTROL....1816-12
COVER, STEERING COLUMN....1816-6
COVER, THERMOSTAT....0400-36
COVER,TIMING GEAR (TT095)....0400-8
COVER,TRANSMISSION TORQUE CONVERTER....0341-4
COVERS, BOOM BUCKET AND CROWD VALVE....1913-4
CRANKSHAFT (TT095)....0400-2
CRANKSHAFT GEAR (TT095)....0400-2
CRANKSHAFT TIMING WHEEL (TT095)....0400-2
CROSS AND BEARING,REAR DRIVESHAFT....0325-2
CROWD BOOM AND BUCKET VALVE COVERS....1913-4
CROWD CYL.KIT, CONTOLLED LOWERING DEVICE....3363-22
CROWD CYL.KIT, LOWERING DEVICE,CONTOLLED....3363-22
CROWD CYLINDER (410J)....3365-6
CROWD CYLINDER (410TMC)....3365-7
CROWD CYLINDER PIN....3346-2
CROWD CYLINDER REPAIR KIT (410J)....3365-6
CROWD CYLINDER REPAIR KIT (410TMC)....3365-7
CROWD SECTION RELIEF VALVE....3362-14
CROWD SECTION RELIEF VALVE (410TMC)....3362-54
CROWD SECTION, BACKHOE VALVE....3362-14
CROWD SECTION, BACKHOE VALVE (410TMC)....3362-54
CROWD SPACER, SYNTHETIC....3346-2
CROWD, PILOT SECTION RELIEF VALVE....3362-44
CROWD, PILOT SECTION, BACKHOE VALVE....3362-44
CUSHIONS,SEAT....1821-2
CUTTING EDGE ,COUPLER, LOADER BUCKET 1.00 CUBIC METER (1.31 CUBIC YARD)....3102-16

PAGE

CUTTING EDGE ,COUPLER, LOADER BUCKET 1.15 CUBIC METER (1.50 CUBIC YARD)....3102-16
CUTTING EDGE ,LOADER BUCKET 1.00 CUBIC METER (1.30 CUBIC YARD)....3102-4
CUTTING EDGE,BACKHOE BUCKET....3302-8
CUTTING EDGE,BACKHOE BUCKET....3302-10
CUTTING EDGE,LOADER BUCKET .96 CUBIC METER (1.25 CUBIC YARD)....3102-2
CUTTING EDGE,LOADER BUCKET .96 CUBIC METER (1.25 CUBIC YARD)....3102-14
CUTTING EDGE,LOADER BUCKET 1.15CUBIC METER(1.50 CUBIC YARD)....3102-4
CUTTING EDGE,MULTI-PURPOSE BUCKET....3102-8
CYLINDER BLOCK (TT095)....0400-16
CYLINDER CAB DOOR....1814-2
CYLINDER HEAD (TT095)....0400-64
CYLINDER HEAD GASKET (TT095)....0400-64
CYLINDER HEAD REMOVAL GASKET SET (TT095)....0400-58
CYLINDER LINER (TT095)....0400-10
CYLINDER REPAIR KIT, BACKHOE BOOM....3365-3
CYLINDER REPAIR KIT, BACKHOE BUCKET....3365-4
CYLINDER REPAIR KITS, STABLIZER....3365-12
CYLINDER ROD LOCK BAR....1313-2
CYLINDER ROD LOCK BAR (TOOL CARRIER)....1313-4
CYLINDER, BACKHOE BOOM....3365-3
CYLINDER, BACKHOE BUCKET....3365-4
CYLINDER, BACKHOE BUCKET HYDRAULICS....3363-6
CYLINDER, BACKHOE STABILIZER HYDRAULICS....3363-3A
CYLINDER, BACKHOE STABILIZER HYDRAULICS (410TMC)....3363-38
CYLINDER, BOOM LIFT....3165-2
CYLINDER, BOOM LIFT (TOOL CARRIER)....3165-4
CYLINDER, BOOM LIFT HARDWARE....3165-12
CYLINDER, EXTENDIBLE ARM....3365-15
CYLINDER, EXTENDIBLE DIPPERSTICK....3365-15
CYLINDER, FRONT COUPLER....3104-4
CYLINDER, LOADER BUCKETR....3165-6
CYLINDER, LOADER BUCKETR (TOOL CARRIER)....3165-8
CYLINDER, MULTI-PURPOSE BUCKET....3102-13
CYLINDER, STABILIZER....3365-12
CYLINDER, SWING (410J)....3365-8
CYLINDER, SWING (410TMC)....3365-7A
CYLINDER,CROWD (410J)....3365-6
CYLINDER,CROWD (410TMC)....3365-7
CYLINDER,EXTENDIBLE DIPPERSTICK....3346-4
CYLINDER,FRONT AXLE STEERING (WITHOUT MFWD)....0230-7
CYLINDER,STEERING (W/MFWD)....0960-2
CYLINDER,SWING TRUNNION BLOCK....1740-2

D

DECALS....1320-2
DECALS (FRENCH AND SPANISH)....1320-4
DECALS (FRENCH AND SPANISH) (CONTINUED)....1320-6
DELUXE LIGHTS....1673-6
DEVICE,CONTROLLED LOWERING,BOOM CYL.KIT....3363-20
DEVICE,CONTROLLED LOWERING,CROWD CYL.KIT....3363-22

ALPHABETICAL INDEX - CONTINUED

PAGE

DIAGNOSTIC RECEPTACLE, LOAD SENSE (TOTAL MACHINE CONTROL) 2160-22
DIAGNOSTIC RECEPTACLE, LOAD SENSE (410J) 2160-10
DIFFERENTIAL CASE....0210-6
DIFFERENTIAL CASE....0230-4
DIFFERENTIAL CASE,LIMITED SLIP (MFWD) 0250-10
DIFFERENTIAL GEAR,LIMITED SLIP (MFWD)....0250-10
DIFFERENTIAL GEARS....0210-6
DIFFERENTIAL GEARS....0230-4
DIFFERENTIAL HOUSING,REAR....0201-2
DIFFERENTIAL LOCK PLUMBING....0210-8
DIFFERENTIAL LOCK PUSH BUTTON 1674-12
DIFFERENTIAL LOCK SWITCH 1674-12
DIFFERENTIAL PINION SHAFT 0210-6
DIFFERENTIAL PINION SHAFT 0230-4
DIFFERENTIAL W/REAR AXLE ASSEMBLY 0201-8
DIFFERENTIAL,LIMITED SLIP (MFWD)....0250-10
DIODE, A/C....1674-28
DIODES 1674-8
DIPPERSTICK EXTENDIBLE....3346-4
DIPPERSTICK EXTENDIBLE ARM CYLINDER 3346-4
DIPPERSTICK EXTENDIBLE GRIP....3344-6
DIPPERSTICK EXTENDIBLE, PROTECTION 3344-6
DIPPERSTICK, CYLINDER EXTENDIBLE 3365-15
DIPPERSTICK,STANDARD....3346-2
DIPSTICK TUBE, ENGINE OIL (TT095) 0400-21
DIPSTICK TUBE, TRANSMISSION 0341-6
DIPSTICK, ENGINE OIL (TT095) 0400-21
DIPSTICK, TRANSMISSION 0341-6
DISC BRAKE 1011-2
DISC BRAKE CARRIER 1011-2
DISC BRAKE CLUTCH....1011-2
DISC BRAKE PISTON 1011-2
DOME LIGHT....1811-4
DOOR FLAP RELAY, A/C 1674-5E
DOOR SENSOR, RIGHT HAND....1675-4
DOORS,CAB....1814-2
DP SWITCH KIT 2160-12
DRAIN PACKAGE, ENVIORMENTAL 1369-6
DRAIN REGULATOR, STABILIZER VALVE (410J)....3162-12
DRAIN VALVE,RADIATOR....0510-4
DRIVE SHAFT U-JOINT(W/MFWD) 0250-14
DRIVE SHAFT YOKE (MFWD) 0250-3
DRIVE SHAFT(W/MFWD) 0250-14
DRIVE SHAFT, UNIVERSAL (MFWD)....0250-3
DRIVE,PLANETARY (MFWD)....0250-8
DRIVER LINK 3345-2
DRIVESHAFT,REAR....0325-2
DRYER,RECEIVER, AIR CONDITIONING....1830-12
DUAL BATTERIES....1671-4
DUAL BATTERY CABLES 1671-4
DUCTS, AIR CONDITIONING 1830-2
DUCTS, AIR CONDITIONING 1830-4
DUCTS, CAB HEATER 1830-2
DUCTS, CAB HEATER 1830-4

E

EDGING, ISOLATOR 0510-4
EH ACCUMULATOR (410TMC) 3362-72
EH BACKHOE CONTROL VALVE (410TMC) 3362-58
EH BACKHOE SWING SECTION VALVE (410TMC) 3362-62

PAGE

EH BACKHOE VALVE EXTENDIBLE SECTION (410TMC) 3362-64
EH LOADER VALVE BOOM SECTION (410TMC) 3362-68
EH LOADER VALVE BUCKET SECTION (410TMC) 3362-66
EH MID INLET VALVE SECTION (410TMC) 3362-70
EH STABILIZER VALVE SECTION (410TMC) 3362-60
ELBOW,EXHAUST (TT095) 0400-24
ELECTRICAL ACCELERATOR.... 0515-2
ELECTRICAL CHASSIS, INCOVA.... 1675-8
ELECTRICAL HARNESS, CONTROL VALVE, MOUNTING BRACKET 1674-11A
ELECTRICAL LOADER COUPLER.... 1675-10
ELECTRICAL, FRONT COUPLER HARNESS....1674-5C
ELECTRICAL, HARNESS, INCOVA 1675-8
ELECTRICAL, PILOT ENABLE....1674-5A
ELECTRICAL, RIDE CONTROL.... 1675-2
ELECTRONIC ETHER STARTING AID 0505-4
ELEMENT, AIR CLEANER.... 0520-4
ELEMENT, ENGINE OIL FILTER (TT095) 0400-63
ELEMENT, FILTER.... 2160-12
ELEMENT,TRANSMISSION OIL FILTER 0360-4
EMBLEM, SMV 2008-2
ENABLE SWITCH, REAR WIPER 1814-14
ENGINE BALANCER SHAFT (TT095) 0400-30
ENGINE CONTROLLER (TT095) 0400-12
ENGINE COOLANT HEATER.... 0505-2
ENGINE COOLANT HEATER (TT095) 0400-56
ENGINE FLYWHEEL (TT095).... 0400-50
ENGINE MAJOR OVERHAUL GASKET SET (TT095)..... 0400-54
ENGINE MOUNT 0540-2
ENGINE OIL BY-PASS VALVE (TT095) 0400-16
ENGINE OIL COOLER 0400-38
ENGINE OIL COOLER ADAPTER.... 0400-38
ENGINE OIL DIPSTICK (TT095) 0400-21
ENGINE OIL DIPSTICK TUBE (TT095).... 0400-21
ENGINE OIL FILL INLET CAP (TT095) 0400-20
ENGINE OIL FILTER (TT095).... 0400-63
ENGINE OIL FILTER HEADER (TT095).... 0400-63
ENGINE OIL PAN (TT095).... 0400-22
ENGINE OIL PRESSURE SWITCH.... 1674-8
ENGINE OVERHAUL KIT (TT095).... 0400-52
ENGINE OVERHAUL KIT (TT095).... 0400-54
ENGINE REBUILD KIT (TT095) 0400-54
ENGINE SHORT BLOCK (TT095).... 0400-18
ENGINE SIDE PANELS 1910-2
ENGINE SIDE SHIELDS.... 1910-2
ENGINE SUPPORT 0540-2
ENGINE SUPPORT ISOLATOR.... 0540-2
ENGINE THERMOSTAT 0400-36
ENGINE VENTILATING HOSE (TT095) 0400-60
ENGINE WIRING HARNESS.... 1674-8
ENVIORMENTAL DRAIN PACKAGE 1369-6
ETHER SWITCH.... 1674-6
EVAPORATOR 1830-6
EXHAUST ADAPTER (TT095).... 0400-24
EXHAUST ELBOW (TT095).... 0400-24
EXHAUST EXTENSION.... 0530-2
EXHAUST EXTENSION, NOISE REDUCTION HOOD ASSEMBLY.... 9006-2
EXHAUST EXTENSION, NOISE REDUCTION HOOD ASSEMBLY.... 9006-4
EXHAUST MANIFOLD (TT095).... 0400-66
EXHAUST MANIFOLD GASKET (TT095) 0400-66

ALPHABETICAL INDEX - CONTINUED

PAGE

EXHAUST VALVE (TT095)....0400-64
EXPANSION VALVE....1830-6
EXTENDABLE DIPPERSTICK AUXILIARY HYDRAUL ICS....3363-18
EXTENDIBLE ARM CYLINDER....3365-15
EXTENDIBLE ARM LOCKING PIN....3346-4
EXTENDIBLE ARM PAD....3346-4
EXTENDIBLE ARM WEARSTRIPS....3346-4
EXTENDIBLE DIPPER PEDAL (PILOT CONTROL)....3315-12
EXTENDIBLE DIPPERSTICK....3346-4
EXTENDIBLE DIPPERSTICK CYLINDER....3365-15
EXTENDIBLE DIPPERSTICK GRIP REPAIR....3344-6
EXTENDIBLE DIPPERSTICK PROTECTION PLATE....3344-6
EXTENDIBLE SECTION SHUT-OFF PLUG....3362-18
EXTENDIBLE SECTION, BACKHOE VALVE....3362-18
EXTENDIBLE SECTION, BACKHOE VALVE (EH) (410TMC)....3362-64
EXTENSION CYLINDER HYDRAULICS HOSE KIT....3363-14
EXTENSION CYLINDER HYDRAULICS HOSES (WITH EXTENDIBLE DIPPERSTICK)....3363-14
EXTENSION CYLINDER HYDRAULICS HOSES (WITH EXTENDIBLE DIPPERSTICK)....3363-15A
EXTENSION CYLINDER HYDRAULICS HOSES (WITH EXTENDIBLE DIPPERSTICK)(410TMC)....3363-48
EXTENSION CYLINDER HYDRAULICS HOSES (WITH EXTENDIBLE DIPPERSTICK)(410TMC)....3363-50
EXTENSION, EXHAUST....0530-2
EXTERNAL REAR VIEW MIRROR....2002-3
EXTINGUISER, FIRE....2003-2

F

FAN DRIVE BELT TENSIONER (TT095)....0400-48
FAN DRIVE HOUSING (TT095)....0400-48
FAN DRIVE HUB (TT095)....0400-48
FAN DRIVE PULLEY (TT095)....0400-48
FAN SHROUD....0510-4
FAN SHROUD, RADIATOR....0510-4
FAN, ALTERNATOR....1672-4
FAN, BASIC AND A/C....0510-8
FAN, HIGH AMBIENT....0510-8
FENDERS....1927-2
FIFTH FN LEVER FOR THREE LEVER CONTROLS....3315-20
FIFTH FUNCTION FOOT CONTROL....3315-10
FIFTH FUNCTION MANUAL VALVE KIT....3362-26
FIFTH FUNCTION PEDAL....3315-10
FIFTH FUNCTION PEDAL (PILOT CONTROL)....3315-12
FILLER TUBE,TRANSMISSION OIL....0341-2
FILTER ELEMENT....2160-12
FILTER ELEMENT, PILOT CONTROL....3363-1A
FILTER ELEMENT, PILOT CONTROL....3363-1E
FILTER, BREATHER, HYDRAULIC RESERVOIR....2160-14
FILTER, ENGINE OIL (TT095)....0400-63
FILTER, FRESH AIR....1816-12
FILTER, FUEL (TT095)....0400-40
FILTER, HYDRAULIC OIL....2160-12
FILTER,LOW PRESSURE AUXILIARY KIT....3363-30
FILTERS, AIR CLEANER....0520-4
FIRE EXTINGUISER....2003-2
FIRST SPEED CLUTCH ASSEMBLY....0350-8
FIRST SPEED CLUTCH DISK....0350-8
FITTINGS, BRAKE VALVE....1060-4
FITTINGS, SWING CYLINDER....3363-12
FITTINGS, SWING CYLINDER....3363-36
FLEXPLATE, TORQUE CONVERTOR....0350-1
FLOOR COVER, REAR....1812-2
FLOOR COVER, REAR (410TMC)....1812-4
FLOOR MATS....1812-2
FLOOR MATS (410TMC)....1812-4
FLOW CONTROL AUXILIARY VALVE KIT 410TMC....3363-2
FLOW CONTROL VALVE....3363-1A
FLOW CONTROL VALVE....3363-1E
FLUID SAMPLING PORTS....1390-2
FLUID, STARTING....0505-4
FLYWHEEL HOUSING (TT095)....0400-51
FLYWHEEL RING GEAR (TT095)....0400-50
FLYWHEEL, ENGINE (TT095)....0400-50
FOOT CONTROL, FIFTH FUNCTION....3315-10
FOOT CONTROL, SIXTH FUNCTION....3315-14
FORKLIFT FORKS....3103-2
FORKS, PALLET....3103-2
FORKS,LOADER FORKLIFT....3103-2
FORWARD,NEUTRAL AND REVERSE CONTROL LEVER....0315-2
FRAME, CAB....1811-4
FRAME, COUNTERWEIGHT....1749-3
FRAME, FORKLIFT COUPLER....3103-2
FRAME, ROPS....1811-2
FRAME, SWING....3343-2
FRAME,MAIN FRAME....1740-2
FRESH AIR FILTER....1816-12
FRONT AXLE (W/MFWD)....0250-2
FRONT AXLE HOUSING (MFWD)....0250-4
FRONT AXLE HOUSING (WITHOUT MFWD)....0230-6
FRONT AXLE HUB (MFWD)....0250-6
FRONT AXLE INPUT PINION GEAR YOKE (W/MFWD)....0250-12
FRONT AXLE KING PIN (MFWD)....0250-6
FRONT AXLE LUBE HOSE(W/MFWD)....0250-2
FRONT AXLE PIVOT PIN(W/MFWD)....0250-2
FRONT AXLE RING GEAR AND PINION (W/MFWD)....0250-12
FRONT AXLE RING GEAR(W/MFWD)....0250-12
FRONT AXLE SPIRAL BEVEL INPUT PINION GEAR(W/MFWD)....0250-12
FRONT AXLE SWIVEL HOUSING (WITHOUT MFWD)....0230-7
FRONT AXLE TIE ROD ASSEMBLY (MFWD)....0250-4
FRONT AXLE UNIVERSAL DRIVE SHAFT (MFWD)....0250-6
FRONT CONSOLE....1816-8
FRONT CONSOLE COVER,FLOOR....1812-2
FRONT CONSOLE COVER,FLOOR (410TMC)....1812-4
FRONT CONSOLE SEAL....1811-2
FRONT COUNTERWEIGHT....1749-2
FRONT COUPLER CYLINDER....3104-4
FRONT COUPLER VALVE (410J)....3163-12
FRONT COUPLER, HYDRAULIC....3104-2
FRONT COUPLER, HYDRAULIC (HOSES) (410J)....3163-10
FRONT DRIVE WHEEL (MFWD)....0110-4
FRONT FLOOR MAT....1812-2
FRONT FLOOR MAT (410TMC)....1812-4
FRONT PLATE (W/O AUX. DRIVE) (TT095)....0400-11
FRONT TRANSMISSION HOUSING....0341-4
FRONT WHEEL (WITHOUT MFWD)....0120-1
FRONT WINDSHIELD WIPER MOTOR....1814-10
FUEL FILTER (TT095)....0400-40
FUEL GAUGE SENDER....0560-2
FUEL HOSES....0560-2

ALPHABETICAL INDEX - CONTINUED

PAGE

FUEL INJECTION LINES (TT095)....0400-12
FUEL INJECTION NOZZLE(TT095)....0400-26
FUEL INJECTION PUMP (TT095)....0400-12
FUEL INJECTION PUMP DRIVE GEAR (TT095) 0400-12
FUEL INJECTION SEAL (TT095)....0400-27
FUEL TANK....0560-2
FUEL TANK CAP 0560-2
FUEL TANK STRAINER 0560-2
FUEL TEMPERATURE SENSOR, STANADYNE DE10 (PE4045TT095)....0400-14
FUEL TRANSFER PUMP (TT095) 0400-42
FUEL TRANSFER PUMP PUSH ROD (TT095) 0400-42
FUSE PANEL COVER 1816-8

G

GAS PEDAL....0515-2
GASKET SET, CYLINDER HEAD REMOVAL(TT095)....0400-58
GASKET SET,ENGINE MAJOR OVERHAUL (TT095) 0400-54
GASKET SET,IN CHASSIS OVERHAUL (TT095) 0400-58
GASKET, CYLINDER HEAD (TT095)....0400-64
GASKET, EXHAUST MANIFOLD (TT095)....0400-66
GASKET, FRONT CONSOLE....1811-2
GASKET,OIL PAN (TT095) 0400-22
GASKET,ROCKER ARM COVER (TT095) 0400-6
GASKET,TIMING GEAR COVER (TT095)....0400-8
GATHERING CLAMP....2160-6
GATHERING CLAMP (410TMC) 2160-8
GEAR, CAMSHAFT (TT095) 0400-4
GEAR, CRANKSHAFT (TT095)....0400-2
GEAR, FUEL INJECTION PUMP DRIVE (TT095) 0400-12
GEAR, UPPER IDLER (W/O AUX. DRIVE) (TT095)....0400-11
GEAR,REAR AXLE PLANET....0201-6
GEAR,SPIRAL BEVEL INPUT PINION FRONT AXLE(W/MFWD) 0250-12
GEARS,DIFFERENTIAL....0210-6
GEARS,DIFFERENTIAL....0230-4
GRILLE 1921-2
GRILLE HOUSING 1921-2
GRILLE SCREEN 1921-2
GRIP REPAIR, EXTENDIBLE DIPPERSTICK....3344-6
GROUND CABLE 1674-8
GROUND STRAP 1674-8
GUARD, LOADER CONTROL VALVE PLUMBING....1913-6
GUARD, MFWD 1740-2
GUARD, RADIATOR FAN....0510-4
GUARD,STABILIZER KIT....1746-2

H

HAMMER SECTION RELIEF VALVE (410TMC) 3362-56
HAMMER SECTION, BACKHOE VALVE (410TMC) 3362-56
HAND HELD HYDRAULIC TOOL KIT 3363-34
HARNESS AND SWITCH, PILOT ENABLE 1674-5E
HARNESS, A/C PRESSURE SWITCH.... 1674-5E
HARNESS, AC COMPRESSOR....1830-12
HARNESS, ANCHOR, TIE BAND MOUNT 1673-6
HARNESS, AUXILIARY CONTROL SWITCH.... 1674-11A
HARNESS, BACKHOE BOOM, INCOVA....1674-26
HARNESS, BUCKET VALVE WIRING....1674-26
HARNESS, ENGINE WIRING....1674-8
HARNESS, INCOVA ELECTRICAL 1675-8

PAGE

HARNESS, LOAD COUPLER CONTROL CHASSIS 1674-5C
HARNESS, LOADER BOOM 1674-24
HARNESS, LOADER COUPLER, CAB 1674-5C
HARNESS, PATTERN SELECTOR.... 3362-32
HARNESS, PILOT ENABLE WIRING 1674-5A
HARNESS, QUICK COUPLER 1674-5C
HARNESS, RADIO 2001-2
HARNESS, RETURN TO DIG.... 1674-8
HARNESS, RIDE CONTROL....1674-5C
HARNESS, RIDE CONTROL.... 1675-2
HARNESS, RIDE CONTROL.... 2160-24
HARNESS, ROOF WIRING 1673-6
HARNESS, SIDE CONSOLE WIRING, CAB 1674-4
HARNESS, SIDE CONSOLE WIRING, WITH CAB....1674-5E
HARNESS, WIRING, A/C.... 1674-28
HEAD, CYLINDER (TT095) 0400-64
HEADER, ENGINE OIL FILTER (TT095).... 0400-63
HEADER,TRANSMISSION OIL FILTER.... 0360-4
HEADLINER LAMP.... 1811-4
HEADLINER, CAB 1811-4
HEADLINER, ROPS 1811-2
HEAT AND NOISE BARRIER 1834-2
HEATER HOSES 1830-8
HEATER PLUMBING 1830-8
HEATER VALVE CONTROL CABLE.... 1830-6
HEATER, ENGINE COOLANT.... 0505-2
HEATER, ENGINE COOLANT (TT095) 0400-56
HIGH AMBIENT FAN PACKAGE.... 0510-8
HIGH PRESSURE SWITCH 1830-6
HIGH RANGE FORWARD CLUTCH ASSEMBLY.... 0350-6
HIGH RANGE FORWARD CLUTCH DISK 0350-6
HINGE PINS, MULTI-PURPOSE BUCKET.... 3102-8
HINGES, CAB DOORS.... 1814-2
HOLDER, SWING LOCK PIN 1811-2
HOOD 1910-2
HOOD ASSEMBLY, NOISE REDUCTION, EXHAUST EXTENSION.... 9006-2
HOOD ASSEMBLY, NOISE REDUCTION, EXHAUST EXTENSION.... 9006-4
HOOD LATCH 1910-2
HOOD SUPPORT 1910-2
HORN.... 2004-2
HORN SWITCH 1674-6
HOSE, AIR CLEANER 0520-4
HOSE, ENGINE VENTILATING (TT095) 0400-60
HOSE, HYDRAULIC, RIDE CONTROL 2160-24
HOSE, WINDSHIELD WASHER.... 1814-12
HOSES, ATTACHMENT KIT 3363-44
HOSES, ATTACHMENT KIT (410TMC) 3363-46
HOSES, FRONT HYDRAULIC COUPLER (410J) 3163-10
HOSES, FUEL 0560-2
HOSES, HAND HELD HYDRAULIC TOOL KIT 3363-34
HOSES, HEATER.... 1830-8
HOSES, HYDRAULIC 3363-30
HOSES, LOADER BOOM LIFT CYLINDER HOSES (310TMC) 3163-4
HOSES, LOADER BOOM LIFT CYLINDER HOSES (410J) 3163-2
HOSES, LOADER BUCKET CYLINDER HOSES.... 3163-6
HOSES, LOADER BUCKET CYLINDER HOSES (310TMC) 3163-8
HOSES, MAIN HYDRAULIC 2160-6
HOSES, MAIN HYDRAULIC (410TMC).... 2160-8
HOSES, MAIN HYDRAULIC, LOAD SENSE (TOTAL MACHINE CONTROL) 2160-22

ALPHABETICAL INDEX - CONTINUED

PAGE

HOSES, MAIN HYDRAULIC, LOAD SENSE (410J) 2160-10
HOSES, MULTI-PURPOSE BUCKET 3102-10
HOSES, MULTI-PURPOSE BUCKET, COUPLER 3102-18
HOSES, OIL COOLER 2160-18
HOSES, PLUMBING, HEATER 1830-8
HOSES, RADIATOR 0510-4
HOSES, STEERING (WITH MFWD) 0960-8
HOSES, STEERING (WITHOUT MFWD) 0960-10
HOSES, SWING CYLINDER 3363-12
HOSES, SWING CYLINDER 3363-36
HOSES, THIRD FUNCTION HYDRAULIC HOSES 3163-6
HOSES, THIRD FUNCTION HYDRAULIC HOSES (310TMC) 3163-8
HOSES,AIR CONDITIONING COMPRESSOR 1830-12
HOSES,AIR CONDITIONING COMPRESSOR, RECEIVER DRYER 1830-12
HOSES,RECEIVER DRYER, AIR CONDITIONING COMPRESSOR 1830-12
HOUSING, BRAKE VALVE 1060-2
HOUSING, BRAKE VALVE 1060-4
HOUSING, FAN DRIVE (TT095) 0400-48
HOUSING, FLYWHEEL (TT095) 0400-51
HOUSING, FRONT INSTRUMENT PANEL 1816-8
HOUSING, GRILLE 1921-2
HOUSING, SIDE INSTRUMENT PANEL 1816-10
HOUSING, SIDE INSTRUMENT PANEL 1816-12
HOUSING, SWIVEL, FRONT AXLE (WITHOUT MFWD) 0230-7
HOUSING,FRONT AXLE (MWFD) 0250-4
HOUSING,FRONT AXLE (WITHOUT MFWD) 0230-6
HOUSING,PARK BRAKE 1111-2
HOUSING,REAR AXLE 0201-2
HOUSING,REAR AXLE 0201-4
HOUSING,REAR DIFFERENTIAL 0201-4
HOUSING,TRANSMISSION TORQUE CONVERTER 0341-4
HUB, FAN DRIVE (TT095) 0400-48
HUB,FRONT AXLE (MFWD) 0250-6
HUB,REAR AXLE PLANETARY DRIVE 0201-6
HYDRAULIC ATTENUATOR, CAB 2160-2
HYDRAULIC ATTENUATOR, CAB 2160-20
HYDRAULIC ATTENUATOR, CANAOPY 2160-4
HYDRAULIC CONTROL, AUXILIARY, SWITCH 1674-11A
HYDRAULIC CYLINDER,MULTI-PURPOSE BUCKET 3102-10
HYDRAULIC CYLINDER,MULTI-PURPOSE BUCKET 3102-18
HYDRAULIC FILTER, LOW PRESSURE AUX. KIT 3363-30
HYDRAULIC FRONT COUPLER 3104-2
HYDRAULIC FRONT COUPLER CYLINDER 3104-4
HYDRAULIC FRONT COUPLER HARNESS 1674-5C
HYDRAULIC FRONT COUPLER VALVE (410J) 3163-12
HYDRAULIC FRONT COUPLER,LINES (410J) 3163-10
HYDRAULIC HOSE, RIDE CONTROL 2160-24
HYDRAULIC HOSES 3363-30
HYDRAULIC HOSES FOR ATTACHMENT KIT 3363-44
HYDRAULIC HOSES FOR ATTACHMENT KIT (410TMC) 3363-46
HYDRAULIC HOSES, HAND HELD TOOL KIT 3363-34
HYDRAULIC HOSES,EXTENSION CYLINDER (WITH EXTENDIBLE DIPPERSTICK) 3363-14
HYDRAULIC HOSES,EXTENSION CYLINDER (WITH EXTENDIBLE DIPPERSTICK) 3363-15A
HYDRAULIC HOSES,EXTENSION CYLINDER (WITH EXTENDIBLE DIPPERSTICK)(410TMC) 3363-48
HYDRAULIC HOSES,EXTENSION CYLINDER (WITH EXTENDIBLE DIPPERSTICK)(410TMC) 3363-50
HYDRAULIC LOADER COUPLER VALVE (410J) 3163-12
HYDRAULIC OIL COOLER AND HOSES 2160-18

PAGE

HYDRAULIC OIL COOLER LINES 2160-6
HYDRAULIC OIL COOLER LINES (410TMC) 2160-8
HYDRAULIC OIL FILTER 2160-12
HYDRAULIC OIL LINES LOADER BUCKET CYLINDER 3163-6
HYDRAULIC OIL LINES LOADER BUCKET CYLINDER (310TMC) 3163-8
HYDRAULIC OIL LINES,MULTI-PURPOSE BUCKET 3102-10
HYDRAULIC OIL LINES,MULTI-PURPOSE BUCKET, COUPLER 3102-18
HYDRAULIC OIL LINES,THIRD FUNCTION 3163-6
HYDRAULIC OIL LINES,THIRD FUNCTION (310TMC) 3163-8
HYDRAULIC RESERVOIR 2160-14
HYDRAULIC RESERVOIR BREATHER FILTER 2160-14
HYDRAULIC RIDE CONTROL 2160-24
HYDRAULIC TEMPERATURE SENDER 1674-8
HYDRAULIC TEMPERATURE SENSOR 1674-8
HYDRAULIC VALVE, LOADER/STABILIZER (410J) 3162-2
HYDRAULICS, AUGER 3363-24
HYDRAULICS, AUXILIARY EQUIPMENT, STANDARD DIPPERSTICK 3363-16
HYDRAULICS, AUXILIARY EQUIPMENT, EXTENDA BLE DIPPERSTICK 3363-18
HYDRAULICS, BACKHOE BUCKET CYLINDER 3363-6
HYDRAULICS, BACKHOE STABILIZER CYLINDER 3363-3A
HYDRAULICS, BACKHOE STABILIZER CYLINDER (410TMC) 3363-38
HYDRAULICS, LOADER BOOM CYLINDER (310TMC) 3163-4
HYDRAULICS, LOADER BOOM CYLINDER (410J) 3163-2
HYDRAULICS, MAIN 2160-6
HYDRAULICS, MAIN (410TMC) 2160-8
HYDRAULICS, PILOT CONTROL 3363-1A
HYDRAULICS, PILOT CONTROL 3363-1C
HYDRAULICS, PILOT SELECTOR VALVE 3363-1C
HYDRAULICS, SELECTOR VALVE (PILOT CONTROL) 3363-1E
HYDRAULICS, SERVICE BRAKE 1060-6
HYDRAULICS, STEERING VALVE (WITH MFWD) 0960-8
HYDRAULICS, STEERING,(WITHOUT MFWD) 0960-10
HYDRAULICS, SWING CYLINDER 3363-12
HYDRAULICS, SWING CYLINDER 3363-36
HYDRAULICS,AUGER (STANDARD DIPPERSTICK) 3363-40
HYDRAULICS,BRAKE VALVE BOOST (CAB) 1060-8
HYDRAULICS,BRAKE VALVE BOOST (ROPS) 1060-10

I

IGNITION SWITCH 1674-6
IGNITION SWITCH KEY 1674-6
IN CHASSIS OVERHAUL GASKET SET (TT095) 0400-58
INCOVA BACKHOE BOOM HARNESS 1674-26
INCOVA ELECTRICAL CHASSIS 1675-8
INCOVA ELECTRICAL HARNESS 1675-8
INJECTION NOZZLE (TT095) 0400-27
INJECTION PUMP, FUEL (TT095) 0400-12
INLET OIL FILL (TT095) 0400-20
INLET SECTION RELIEF VALVE 3362-8
INLET SECTION, BACKHOE VALVE 3362-8
INLET, WATER PUMP (TT095) 0400-33

ALPHABETICAL INDEX - CONTINUED

PAGE

INPUT PINION, SPIRAL BEVEL 0210-2
INPUT PINION, SPIRAL BEVEL 0210-4
INPUT SHAFT,TRANSMISSION 0350-2
INSIDE MIRROR....2002-4
INSTRUMENT PANEL VANDAL GUARD 1816-10
INSTRUMENT PANEL, SIDE....1816-10
INSTRUMENT PANEL, SIDE....1816-12
INSULATORS, ANTI-RATTLE....9006-2
INSULATORS, ANTI-RATTLE....9006-4
INSULATORS, SOUND REDUCTION 9006-2
INSULATORS, SOUND REDUCTION 9006-4
INTAKE SYSTEM,AIR (PE4045TT095) 0400-28
INTAKE VALVE (TT095)....0400-64
INTERIOR REAR VIEW MIRROR 2002-4
ISOLATOR EDGING 0510-4
ISOLATOR SEAL 0510-4
ISOLATOR, TRANSMISSION MOUNTING 0342-2
ISOLATOR,ENGINE SUPPORT 0540-2
ISOLATORS, CAB MOUNTING 1811-4
ISOLATORS, ROPS FRAME 1811-2

J

JOY STICK, CONTROL VALVE, (410TMC) WITH AUX ROLLER....3315-30
JOY STICK, CONTROL VALVE, (410TMC) WITHOUT AUXILLARY ROLLER....3315-32
JOY STICK, CONTROL VALVE, BUTTON FUNCION KIT 3362-38
JOY STICK, CONTROL VALVE, LEFT 3362-34
JOY STICK, CONTROL VALVE, RIGHT 3362-36

K

KEY,IGNITION SWITCH 1674-6
KING PIN, FRONT AXLE (MFWD) 0250-6
KINGPIN, FRONT AXLE (WITHOUT MFWD) 0230-7
KIT, ACCU-SWING VALVE 3362-28
KIT, ATTACHMENT PLUMBING KIT....3363-44
KIT, ATTACHMENT PLUMBING KIT (410TMC) 3363-46
KIT, BACKHOE BOOM CYLINDER REPAIR 3365-3
KIT, BACKHOE BUCKET CYLINDER REPAIR....3365-4
KIT, BRAKE VALVE....1060-4
KIT, CYLINDER LINER O-RING (TT095) 0400-10
KIT, DP SWITCH....2160-12
KIT, ENGINE OVERHAUL (TT095)....0400-52
KIT, ENGINE OVERHAUL (TT095)....0400-54
KIT, EXTENSION CYLINDER HYDRAULICS HOSES 3363-14
KIT, FIFTH FUNCTION MANUAL VALVE 3362-26
KIT, FLOW CONTROL AUXILIARY VALVE 410TMC....3363-2
KIT, FRONT COUPLER CYLINDER REPAIR 3104-4
KIT, HAND HELD HYDRAULIC TOOL KIT 3363-34
KIT, HYDRAULIC COUPLER (COUPLER) 3104-2
KIT, HYDRAULIC COUPLER (HOSES AND VALVE) (410J) 3163-10
KIT, LOADER BUCKET CYLINDER REPAIR 3165-6
KIT, LOADER BUCKET CYLINDER REPAIR (TOOL CARRIER) 3165-8
KIT, LOW PRESSURE AUXILIARY....3363-30
KIT, MAIN HYDRAULIC PUMP....2160-16
KIT, PATTERN SELECTOR VALVE....3362-32
KIT, REAR WINDOW LATCH....1814-8

PAGE

KIT, REPAIR, SWING CYLINDER (410J) 3365-8
KIT, REPAIR, SWING CYLINDER (410TMC) 3365-7A
KIT, SIXTH FUNCTION MANUAL VALVE 3362-27
KIT, STABILIZER GUARD 1746-2
KIT, THIRD FUNCTION LOADER CONTROL 3115-6
KIT, UNIVERSAL DRIVE SHAFT (MFWD) 0250-3
KIT, WINDOW SEAL 1814-8
KIT,BACKHOE THREE LEVER CONTROL VALVE CONVERSION KIT.... 3315-6
KIT,BACKHOE VALVE TWO LEVER CONVERSION 3315-4
KIT,CROWD CYLINDER REPAIR (410J) 3365-6
KIT,CROWD CYLINDER REPAIR (410TMC) 3365-7
KIT,ENGINE REBUILD (TT095).... 0400-54
KIT,HYDRAULIC RIDE CONTROL 2160-24
KIT,MULTI-PURPOSE BUCKET 3102-13
KIT,PILOT CONTROL HANDLE,BUTTON FUNCTION 3362-38
KIT,SAE BACKHOE CONTROL LINKAGE PATTERN 3315-28
KIT,SEAT SLIDE LATCH 1821-4
KIT,SLIDE PUCK SERVICE 1821-6
KIT,STARTER MOTOR (TT095).... 0400-44
KIT,SWIVEL LATCH 1821-6
KIT,WATER PUMP REPAIR (TT095).... 0400-34
KITS, BOOM LIFT CYLINDER.... 3165-2
KITS, BOOM LIFT CYLINDER (TOOL CARRIER) 3165-4
KITS, STABILIZER CYLINDER REPAIR.... 3365-12
KNOB, TEMPERATURE CONTROL.... 1674-28

L

LABEL, VALVE WIRING.... 1675-8
LABELS.... 1320-2
LABELS (FRENCH AND SPANISH) 1320-4
LABELS (FRENCH AND SPANISH) (CONTINUED).... 1320-6
LABELS, ANTI-THEFT.... 1675-10
LAMP, HEADLINER 1811-4
LATCH, HOOD 1910-2
LATCH, REAR WINDOW 1814-8
LATCH, SIDE WINDOW LATCH 1814-2
LATCH,SEAT SWIVEL 1821-6
LEVER CONVERSION LINKAGE, BACKHOE (SAE PATTERN).... 3315-28
LEVER COVER, BACKHOE (MANUAL) (410J).... 1816-4
LEVER COVER, BOOM LOCK (PILOT CONTROL) 1816-5A
LEVER COVER, BOOM LOCK (MANUAL) (410J).... 1816-4
LEVER, FIFTH FN FOR THREE LEVER CONTROLS.... 3315-20
LEVER, FOUR-LEVER CONTROLS, STANDARD BACKHOE 3315-8
LEVER, STABILIZER 3315-22
LEVER, THIRD FUNCTION LOADER CONTROL.... 3115-6
LEVER, THREE, BACKHOE CONTROL VALVE.... 3315-6
LEVER, TRANSMISSION CONTROL.... 0315-2
LEVER,BACKHOE BOOM LOCK CONTROL.... 3315-16
LEVER,LOADER CONTROL VALVE 3115-4
LEVER,SEAT LUMBAR SUPPORT CONTROL.... 1821-4
LEVER,SEAT SLIDE CONTROL.... 1821-4
LEVER,SEAT SWIVEL CONTROL 1821-4
LEVERS, BACKHOE COVER (410J).... 1816-2

ALPHABETICAL INDEX - CONTINUED

PAGE

LICENCE PLATE BRACKET....1314-2
LICENCE PLATE LIGHT....1314-2
LIFT ARM CYLINDER....3165-2
LIFT ARM CYLINDER (TOOL CARRIER)....3165-4
LIFT ARM, LOADER....3143-2
LIFT ARM, LOADER (TOOL CARRIER)....3143-4
LIGHT, DOME....1811-4
LIGHT, LICENCE PLATE....1314-2
LIGHT,CAB DOME....2001-2
LIGHTS,STANDARD AND DELUXE....1673-6
LIMITED SLIP DIFFERENTIAL (MFWD)....0250-10
LIMITED SLIP DIFFERENTIAL CASE (MFWD)....0250-10
LIMITED SLIP DIFFERENTIAL CLUTCH DISC (MFWD)....0250-10
LIMITED SLIP DIFFERENTIAL SHAFT(MFWD)....0250-10
LINER, CYLINDER (TT095)....0400-10
LINES, AUXILIARY EQUIPMENT, EXTENDABLE D IPPERSTICK....3363-18
LINES, AUXILIARY EQUIPMENT, STANDARD DIPPERSTICK....3363-16
LINES, BUCKET CYLINDER, BACKHOE....3363-6
LINES, FRONT HYDRAULIC COUPLER (410J)....3163-10
LINES, FUEL INJECTION(TT095)....0400-12
LINES, OIL COOLER, HYDRAULIC....2160-6
LINES, OIL COOLER, HYDRAULIC (410TMC)....2160-8
LINES, SERVICE BRAKE....1060-6
LINKAGE BACKHOE, FIFTH FN LEVER FOR THREE LEVER CONTROLS....3315-20
LINKAGE FLOOR COVER....1812-2
LINKAGE FLOOR COVER (410TMC)....1812-4
LINKAGE THREE LEVER BACKHOE CONTROL VALVE....3315-6
LINKAGE W/COMBO VALVE COVER....1674-5E
LINKAGE, BACKHOE CONTROL (SAE PATTERN)....3315-28
LINKAGE, BUCKET LEVELING....3115-2
LINKAGE, FOUR-LEVER CONTROL VALVE, STANDARD BACKHOE....3315-8
LINKAGE, STABILIZER VALVE....3315-22
LINKAGE, TWO LEVER BACKHOE CONTROL VALVE....3315-4
LINKAGE,LOADER BUCKET (410J,410TMC)....3143-6
LINKAGE,LOADER BUCKET (TOOL CARRIER)....3143-8
LINKAGE,LOADER CONTROL VALVE....3115-4
LINKAGE,RETURN-TO-DIG....3115-2
LINKAGE,THIRD FUNCTION LOADER CONTROL VALVE....3115-6
LOAD SENSE CHECK VALVE, LOADER (410J)....3162-12
LOAD SENSE DIAGNOSTIC RECEPTACLE (TOTAL MACHINE CONTROL)....2160-22
LOAD SENSE DIAGNOSTIC RECEPTACLE (410J)....2160-10
LOAD SENSE RELIEF VALVE (410J)....3162-12
LOADER ARM SERVICE LOCK....1313-2
LOADER ARM SERVICE LOCK (TOOL CARRIER)....1313-4
LOADER BOOM....3143-2
LOADER BOOM (TOOL CARRIER)....3143-4
LOADER BOOM CYLINDER HYDRAULICS (310TMC)....3163-4
LOADER BOOM CYLINDER HYDRAULICS (410J)....3163-2
LOADER BOOM HARNESS....1674-24
LOADER BOOM OIL LINES (310TMC)....3163-4
LOADER BOOM OIL LINES (410J)....3163-2
LOADER BOOM SERVICE LOCK....1313-2
LOADER BOOM SERVICE LOCK (TOOL CARRIER)....1313-4
LOADER BUCKET .96 CUBIC METER (1.25 CUBIC YARD)....3102-2

PAGE

LOADER BUCKET .96 CUBIC METER (1.25 CUBIC YARD)....3102-14
LOADER BUCKET 1.00 CUBIC METER (1.30 CUBIC YARD)....3102-4
LOADER BUCKET 1.15 CUBIC METER (1.50 CUBIC YARD)....3102-4
LOADER BUCKET CUTTING EDGE .96 CUBIC METER (1.25 CUBIC YARD)....3102-2
LOADER BUCKET CUTTING EDGE .96 CUBIC METER (1.25 CUBIC YARD)....3102-14
LOADER BUCKET CUTTING EDGE 1.00 CUBIC METER (1.30 CUBIC YARD)....3102-4
LOADER BUCKET CUTTING EDGE 1.15 CUBIC METER (1.50 CUBIC YARD)....3102-4
LOADER BUCKET CYLINDER....3165-6
LOADER BUCKET CYLINDER (TOOL CARRIER)....3165-8
LOADER BUCKET CYLINDER PINS....3102-6
LOADER BUCKET CYLINDER REPAIR KIT....3165-6
LOADER BUCKET CYLINDER REPAIR KIT (TOOL CARRIER)....3165-8
LOADER BUCKET HYDRAULIC CYLINDER....3165-6
LOADER BUCKET HYDRAULIC CYLINDER (TOOL CARRIER)....3165-8
LOADER BUCKET LIFT CYLINDER HYDRAULICS....3163-6
LOADER BUCKET LIFT CYLINDER HYDRAULICS (310TMC)....3163-8
LOADER BUCKET LINK PINS....3102-6
LOADER BUCKET LINKAGE (410J,410TMC)....3143-6
LOADER BUCKET LINKAGE (TOOL CARRIER)....3143-8
LOADER BUCKET PINS....3102-6
LOADER BUCKET,COUPLER 1.00 CUBIC METER (1.31 CUBIC YARD)....3102-16
LOADER BUCKET,COUPLER 1.15 CUBIC METER (1.50 CUBIC YARD)....3102-16
LOADER BUCKET,COUPLER, CUTTING EDGE 1.00 CUBIC METER (1.31 CUBIC YARD)....3102-16
LOADER BUCKET,COUPLER, CUTTING EDGE 1.15 CUBIC METER (1.50 CUBIC YARD)....3102-16
LOADER CONTROL COVER....1816-12
LOADER CONTROL VALVE LEVER....3115-4
LOADER CONTROL VALVE LINKAGE....3115-4
LOADER CONTROL VALVE PLUMBING SHIELD....1913-6
LOADER COUPLER....3104-2
LOADER COUPLER ELECTRICAL....1675-10
LOADER COUPLER, HYDRAULIC HOSES (410J)....3163-10
LOADER COUPLER, VALVE (410J)....3163-12
LOADER FORKLIFT FORKS....3103-2
LOADER LIFT ARM....3143-2
LOADER LIFT ARM (TOOL CARRIER)....3143-4
LOADER LIFT ARM CYLINDER....3165-2
LOADER LIFT ARM CYLINDER (TOOL CARRIER)....3165-4
LOADER LIFT ARM CYLINDER HARDWARE....3165-12
LOADER LIFT ARM CYLINDER HARDWARE (TOOL CARRIER)....3165-10
LOADER LIFT ARM PIN....3143-2
LOADER LIFT ARM PIN (TOOL CARRIER)....3143-4
LOADER POSITION, RETURN-TO-DIG SENSOR....1674-24
LOADER VALVE AUXILIARY SECTION (410J)....3162-8
LOADER VALVE BOOM SECTION (EH) (410TMC)....3362-68
LOADER VALVE BOOM SECTION (410J)....3162-4
LOADER VALVE BUCKET SECTION (EH) (410TMC)....3362-66

ALPHABETICAL INDEX - CONTINUED

PAGE

LOADER VALVE BUCKET SECTION (410J) 3162-6
LOADER VALVE LOAD SENSE CHECK VALVE (410J) 3162-12
LOADER VALVE RELIEF (410J) 3162-12
LOADER VALVE, WITH AUXILIARY (410J) 3162-2
LOADER/STABILIZER CONTROL VALVE (410J) 3162-2
LOADER, PLUGS, AUXILLARY (410TMC) 3363-38
LOCK BAR, BOOM SERVICE 1313-2
LOCK BAR, BOOM SERVICE (TOOL CARRIER) 1313-4
LOCK LEVER COVER, BOOM (MANUAL) (410J) 1816-2
LOCK PIN, HYDRAULIC FRONT COUPLER 3104-2
LOCK PIN, SWING 1811-2
LOCK SWITCH, DIFFERENTIAL 1674-12
LOCK, BACHOE BOOM 3315-18
LOCK, BACHOE BOOM (310G AND 310SG) 3315-36
LOCK, BOOM CONTROL LEVER 3315-16
LOCK,VANDAL GUARD 1816-10
LOCKING PIN, EXTENDIBLE ARM 3346-4
LOCKOUT VALVE, STABILIZER (410J) 3162-12
LOUVER, AIR CONDITIONING 1830-4
LOUVERS, VENTILATION 9006-2
LOUVERS, VENTILATION 9006-4
LOW PRESSURE AUXILIARY RETURN KIT 3363-30
LOW PRESSURE SWITCH 1830-6
LOW RANGE FORWARD CLUTCH ASSEMBLY 0350-4
LOW RANGE FORWARD CLUTCH DISK 0350-4
LOWERING DEVICE,CONTOLLED, BOOM CYL.KIT 3363-20
LOWERING DEVICE,CONTOLLED, CROWD CYL.KIT 3363-22
LUBE HOSE,FRONT AXLE(W/MFWD). 0250-2

M

MAGNET, RETURN-TO-DIG (410J) 3162-6
MAIN BEARING CAP (TT095) 0400-16
MAIN BEARINGS (TT095) 0400-2
MAIN FRAME 1740-2
MAIN FRAME BUMPER 1747-4
MAIN HYDRAULIC HOSES 2160-6
MAIN HYDRAULIC HOSES (410TMC) 2160-8
MAIN HYDRAULIC PUMP 2160-16
MAIN HYDRAULIC PUMP SOLENOID VALVE 2160-16
MAIN HYDRAULIC RESERVOIR 2160-14
MAIN HYDRAULIC SEAL KIT 2160-16
MAIN HYDRAULICS 2160-6
MAIN HYDRAULICS (410TMC) 2160-8
MAIN HYDRAULICS, LOAD SENSE (TOTAL MACHINE CONTROL) 2160-22
MAIN HYDRAULICS, LOAD SENSE (410J) 2160-10
MAIN WIRE HARNESS,CAB 1674-5E
MANIFOLD, PILOT ACTIVATING 3363-1A
MANIFOLD, PILOT ACTIVATING 3363-1E
MANIFOLD, PILOT CONTROL 3362-30
MANIFOLD,EXHAUST (TT095) 0400-66
MANUAL AUXILIARY BACKHOE VALVE 3362-22
MANUAL HOLDER CORD 1811-2
MANUAL HOLDER, OPERATOR 1811-2
MASTER DISCONNECT BATTERY SWITCH 1671-6
MASTER SWITCH MOUNTING PLATE 1671-6
MATS, FLOOR 1812-2
MATS, FLOOR (410TMC) 1812-4
MFWD CLUTCH ASSEMBLY 0350-14
MFWD CLUTCH DISC 0350-14
MFWD DRIVE CLUTCH SOLENOID 0350-14
MFWD GUARD 1740-2

PAGE

MFWD SWITCH 1674-6
MFWD SWITCH 1674-28
MID INLET VALVE SECTION (EH) (410TMC) 3362-70
MIDDLE FLOOR COVER 1812-2
MIDDLE FLOOR COVER (410TMC) 1812-4
MIRROR BRACKET, INTERIOR REAR VIEW 2002-4
MIRROR, EXTERNAL REAR VIEW 2002-3
MIRROR, INTERIOR REAR VIEW 2002-4
MIRROR, OUTSIDE 2002-3
MODE DOOR 1816-8
MODE DOOR WIRING HARNESS 1816-8
MOLDBOARD,MULTI-PURPOSE BUCKET 3102-8
MONITOR 1674-6
MONITOR PANEL 1674-6
MONITOR PANEL SWITCHES 1674-6
MOTOR, FRONT WINDSHIELD WIPER 1814-10
MOTOR, REAR WINDSHIELD WIPER 1814-14
MOTOR,STARTING (TT095) 0400-44
MOUNT,ENGINE 0540-2
MOUNTING BRACKET, CONTROL VALVE ELECTRICAL HARNESS 1674-11A
MOUNTING BRACKETS, COMPRESSOR, AIR CONDITIONING 1830-12
MOUNTING PLATE, BACKHOE VALVE (PILOT CONTROL) 3315-26
MOUNTING PLATE, BACKHOE VALVE (410J) 3315-2
MOUNTING PLATE, BACKHOE VALVE 410TMC 3315-24
MOUNTING PLATE, BRAKE VALVE 1060-2
MOUNTING PLATE, RADIO/SPEAKER 2001-2
MOUNTING PLATE, STABILIZER VALVE (PILOT CONTROL) 3315-26
MOUNTING PLATE, STABILIZER VALVE (410J) 3315-2
MOUNTING PLATE, STABILIZER VALVE 410TMC 3315-24
MOUNTING PLATE,MASTER DISCONNECT SWITCH 1671-6
MOUNTING SUPPORT,TRANSMISSION 0342-2
MUFFLER 0530-2
MULTI-PURPOSE BUCKET 3102-8
MULTI-PURPOSE BUCKET 3102-10
MULTI-PURPOSE BUCKET AUXILIARY CUTTING EDGE 3102-8
MULTI-PURPOSE BUCKET CUTTING EDGE 3102-8
MULTI-PURPOSE BUCKET CYLINDER 3102-13
MULTI-PURPOSE BUCKET CYLINDER PINS 3102-10
MULTI-PURPOSE BUCKET CYLINDER PINS COUPLER 3102-18
MULTI-PURPOSE BUCKET HYDRAULIC OIL LINES 3102-10
MULTI-PURPOSE BUCKET HYDRAULIC OIL LINES, COUPLER 3102-18
MULTI-PURPOSE BUCKET HYDRAULIC CYLINDER 3102-10
MULTI-PURPOSE BUCKET HYDRAULIC CYLINDER, COUPLER 3102-18
MULTI-PURPOSE BUCKET MOLDBOARD 3102-8
MULTI-PURPOSE BUCKET, COUPLER 3102-18

N

NOISE AND HEAT BARRIER 1834-2
NOISE REDUCTION HOOD ASSEMBLY WITH EXHAU ST EXTENSION 9006-2

ALPHABETICAL INDEX - CONTINUED

PAGE

NOISE REDUCTION HOOD ASSEMBLY WITH EXHAU ST EXTENSION....9006-4
NOZZLE, FUEL INJECTION (TT095)....0400-26
NOZZLE, INJECTION (TT095)....0400-27

O

OIL COOLER....2160-18
OIL COOLER LINES,HYDRAULIC....2160-6
OIL COOLER LINES,HYDRAULIC (410TMC)....2160-8
OIL COOLER, ENGINE....0400-38
OIL COOLER, HYDRAULIC....2160-18
OIL COOLER, TRANSMISSION....2160-18
OIL FILL INLET (TT095)....0400-20
OIL FILLER OPENING COVER (TT095)....0400-20
OIL FILTER, ENGINE (TT095)....0400-63
OIL FILTER,TRANSMISSION....0360-4
OIL LINES, LOADER BOOM (310TMC)....3163-4
OIL LINES, LOADER BOOM (410J)....3163-2
OIL LINES, TURBOCHARGER (PE4045TT095)....0400-32
OIL PAN GASKET (TT095)....0400-22
OIL PAN,ENGINE (TT095)....0400-22
OIL PUMP,TRANSMISSION OIL....0360-2
OPERATOR MANUAL HOLDER....1811-2
OPERATOR STATION SKIRTS....1927-2
OPERATOR'S SEAT....1821-18
OUTLET SECTION RELIEF VALVE....3362-24
OUTLET SECTION, BACKHOE VALVE....3362-24
OUTPUT SHAFT,TRANSMISSION....0350-16
OUTSIDE MIRROR....2002-3
OVERHAUL KIT, ENGINE (TT095)....0400-52

P

PACKAGE, ENVIORMENTAL DRAIN....1369-6
PAD SEAT BACK....1821-2
PAD, EXTENDIBLE ARM....3346-4
PALLET FORKS....3103-2
PAN,ENGINE OIL (TT095)....0400-22
PANEL, FRONT INSTRUMENT....1816-8
PANEL, RADIO TRIM....2001-2
PANEL, REAR KICK....1812-2
PANEL, REAR KICK (410TMC)....1812-4
PANEL,MONITOR....1674-6
PANELS, ENGINE SIDE....1910-2
PARK BRAKE CLUTCH DISC....1111-2
PARK BRAKE CLUTCH DISC CARRIER....1111-2
PARK BRAKE HOUSING....1111-2
PARK BRAKE OIL PRESSURE SWITCH....1674-8
PARK BRAKE PISTON....1111-2
PATTERN SELECTOR HARNESS....3362-32
PATTERN SELECTOR VALVE....3362-32
PATTERN SELECTOR, SWITCH....3362-32
PEDAL FIELD KIT, FIFTH FUNCTION (PILOT CONTROL)....3315-12
PEDAL FIELD KIT, SIXTH FUNCTION (PILOT CONTROL)....3315-34
PEDAL GAS....0515-2
PEDAL, AUXILIARY FUNCTION (PILOT CONTROL)....3315-34
PEDAL, BRAKE....1060-2
PEDAL, EXTENDIBLE DIPPER (PILOT CONTROL)....3315-12
PEDAL, FIFTH FUNCTION....3315-10

PAGE

PEDAL, FIFTH FUNCTION (PILOT CONTROL)....3315-12
PEDAL, SIXTH FUNCTION....3315-14
PEDAL, SIXTH FUNCTION (PILOT CONTROL)....3315-34
PILOT ACTIVATING MANIFOLD....3363-1A
PILOT ACTIVATING MANIFOLD....3363-1E
PILOT BACKHOE BOOM SECTION VALVE....3362-40
PILOT BACKHOE BUCKET SECTION VALVE....3362-42
PILOT BACKHOE CROWD SECTION VALVE....3362-44
PILOT BACKHOE SWING SECTION VALVE....3362-46
PILOT CONTROL HANDLE BUTTON FUNCTION KIT....3362-38
PILOT CONTROL HYDRAULICS....3363-1A
PILOT CONTROL HYDRAULICS....3363-1C
PILOT CONTROL MANIFOLD....3362-30
PILOT CONTROL VALVE, (410TMC) WITH AUX ROLLER....3315-30
PILOT CONTROL VALVE, (410TMC) WITHOUT AUXILLARY ROLLER....3315-32
PILOT CONTROL VALVE, BACKHOE....3362-6
PILOT CONTROL VALVE, LEFT....3362-34
PILOT CONTROL VALVE, RIGHT....3362-36
PILOT CONTROLLER ARM (LEFT SIDE)....1816-14
PILOT CONTROLLER ARM (RIGHT SIDE)....1816-16
PILOT ENABLE....1674-5A
PILOT ENABLE HARNESS AND SWITCH....1674-5E
PILOT ENABLE SWITCH....1674-5A
PILOT SELECTOR VALVE HYDRAULICS....3363-1C
PIN, KING, FRONT AXLE (MFWD)....0250-6
PIN,CROWD CYLINDER....3346-2
PIN,LOADER LIFT ARM....3143-2
PIN,LOADER LIFT ARM (TOOL CARRIER)....3143-4
PIN,STANDARD DIPPERSTICK....3346-2
PINION SHAFT,DIFFERENTIAL....0210-6
PINION SHAFT,DIFFERENTIAL....0230-4
PINS AND BUCKET LINKS,BACKHOE....3345-2
PINS, BACKHOE BOOM....3344-2
PINS, BACKHOE BUCKET AND LINKS....3345-2
PINS, LOADER BUCKET CYLINDER....3102-6
PINS, LOADER BUCKET LINK....3102-6
PINS, MULTI-PURPOSE BUCKET CYLINDER....3102-10
PINS, MULTI-PURPOSE BUCKET CYLINDER, COUPLER....3102-18
PINS, MULTI-PURPOSE BUCKET HINGE....3102-8
PINS, QUICK COUPLER (STANDARD)....3302-4
PINS, QUICK COUPLER (UNIVERSAL)....3302-2
PINS, SWING FRAME....3343-2
PINS,BACKHOE BUCKET....3302-8
PINS,LOADER BUCKET....3102-6
PINS,STABLIZER ARM....3348-2
PIPE, EXHAUST PIPE....0530-2
PISTON RINGS (TT095)....0400-10
PISTON, BRAKE VALVE....1060-4
PISTON, ENGINE (TT095)....0400-10
PISTON,DISC BRAKE....1011-2
PISTON,PARK BRAKE....1111-2
PIVOT PIN,FRONT AXLE(W/MFWD)....0250-2
PLACEMENT, SWITCHES, ALTERNATE....1674-28
PLANET CARRIER,REAR AXLE....0201-6
PLANETARY DRIVE (MFWD)....0250-8
PLANETARY DRIVE RING GEAR (MFWD)....0250-8
PLANETARY DRIVE SUN GEAR SHAFT (MFWD)....0250-8

ALPHABETICAL INDEX - CONTINUED

PAGE

PLANETARY DRIVE,REAR AXLE 0201-6
PLATE, BACKHOE BOOM PROTECTION 3344-4
PLATE, FLOOR, NO SHIFTER....1811-2
PLATE, FRONT (W/O AUX. DRIVE) (TT095)....0400-11
PLATE,BRAKE VALVE MOUNTING 1060-2
PLATE,REAR AXLE HOUSING MOUNTING....0201-2
PLATE,REAR AXLE HOUSING MOUNTING....0201-4
PLUGS, LOADER AUXILLARY (410TMC) 3363-38
PLUMBING HEATER 1830-8
PLUMBING HOSES, HEATER....1830-8
PLUMBING KIT, ATTACHMENT 3363-44
PLUMBING KIT, ATTACHMENT (410TMC) 3363-46
PLUMBING, BRAKE VALVE BOOST (CAB)....1060-8
PLUMBING, BRAKE VALVE BOOST (ROPS)....1060-10
PLUMBING, DIFFERENTIAL LOCK....0210-8
POWER LINK....3345-2
PRE CLEANER....0520-8
PRESSURE REDUCING VALVE, MANIFOLD (PILOT CONTROL) 3362-30
PRESSURE REGULATOR, STANADYNE DE10 (PE4045TT095)....0400-14
PRESSURE SWITCH HARNESS, A/C 1674-5E
PRESSURE SWITCH, BRAKE LIGHT 1060-2
PRESSURE, ENGINE OIL SWITCH 1674-8
PROTECTION COVER, LOADER PLUMBING....1913-6
PROTECTION PLATE, EXTENDIBLE DIPPERSTICK 3344-6
PROTECTION PLATE,BACKHOE BOOM 3344-4
PROTECTIVE SLEEVES....2160-18
PULLEY ALTERNATOR....1672-4
PULLEY, FAN DRIVE (TT095) 0400-48
PULLEY, WATER PUMP (TT095) 0400-33
PULLY AND V-BELT....0510-8
PUMP ATTENUATOR 2160-20
PUMP HYDRAULIC ATTENUATOR....2160-20
PUMP, FUEL INJECTION (TT095) 0400-12
PUMP, FUEL TRANSFER (TT095)....0400-42
PUMP, MAIN HYDRAULIC....2160-16
PUMP, WINDSHIELD WASHER 1814-12
PUMP,WATER (TT095)....0400-34
PUSH BUTTON, DIFFERENTIAL LOCK 1674-12
PUSH ROD, BRAKE VALVE 1060-4
PUSH ROD,FUEL TRANSFER PUMP (TT095)....0400-42
PUSH RODS (TT095)....0400-5

Q

QUICK CONNECT COUPLER....2160-6
QUICK CONNECT COUPLER (410TMC) 2160-8
QUICK CONNECT COUPLER, 3RD. FUNCTION 3102-18
QUICK COUPLER 3104-2
QUICK COUPLER (STANDARD)....3302-4
QUICK COUPLER (TOP LOCK)....3302-12
QUICK COUPLER (UNIVERSAL)....3302-2
QUICK COUPLER BACKHOE BUCKET 3302-10
QUICK COUPLER BUCKET, BACKHOE....3302-10
QUICK COUPLER FORKS AND FRAME....3103-2
QUICK COUPLER PIN ENGAGE AUDIBLE ALARM 1674-5C
QUICK COUPLER PIN, DISCONNECT SWITCH 1674-5C
QUICK COUPLER WIRING HARNESS....1674-5C
QUICK COUPLER, HYDRAULICS (410J) 3163-10
QUICK COUPLER,LOADER BUCKET VALVE (410J) 3163-12

R

RADIATOR 0510-4
RADIATOR CAP 0510-4
RADIATOR DRAIN VALVE 0510-4
RADIATOR FAN GUARD 0510-4
RADIATOR FAN SHROUD 0510-4
RADIATOR HOSES 0510-4
RADIO 2001-2
RADIO ANTENA 2001-2
RADIO SPEAKER 2001-2
REAR AXLE ASSEMBLY W/DIFFERENTIAL 0201-8
REAR AXLE ASSEMBLY,COMPLETE 0201-8
REAR AXLE HOUSING 0201-2
REAR AXLE HOUSING 0201-4
REAR AXLE HOUSING MOUNTING PLATE 0201-2
REAR AXLE HOUSING MOUNTING PLATE 0201-4
REAR AXLE PLANET CARRIER 0201-6
REAR AXLE PLANET GEAR 0201-6
REAR AXLE PLANET PINION CARRIER 0201-2
REAR AXLE PLANETARY DRIVE 0201-6
REAR AXLE PLANETARY DRIVE HUB 0201-6
REAR AXLE PLANETARY DRIVE SHAFT 0201-6
REAR AXLE RING GEAR AND PINION 0210-2
REAR AXLE RING GEAR AND PINION 0210-4
REAR AXLE SPIRAL BEVEL INPUT PINION 0210-2
REAR AXLE SPIRAL BEVEL INPUT PINION 0210-4
REAR AXLE YOKE 0210-2
REAR AXLE YOKE 0210-4
REAR CONSOLE COVER FOR THREE LEVERS (410 J).... 1816-4
REAR CORNER WINDOWPANE.... 1814-8
REAR DIFFERENTIAL HOUSING 0201-2
REAR DIFFERENTIAL HOUSING 0201-4
REAR DRIVE WHEEL 0110-2
REAR DRIVESHAFT 0325-2
REAR DRIVESHAFT CROSS AND BEARING 0325-2
REAR FLOOR COVER 1812-2
REAR FLOOR COVER (410TMC) 1812-4
REAR FLOOR MAT 1812-2
REAR FLOOR MAT (410TMC) 1812-4
REAR KICK PANEL 1812-2
REAR KICK PANEL (410TMC) 1812-4
REAR TRANSMISSION HOUSING 0341-2
REAR VIEW MIRROR, EXTERNAL.... 2002-3
REAR VIEW MIRROR, INTERIOR 2002-4
REAR WINDOW LATCH 1814-8
REAR WINDOW WEATHERSTRIP 1814-8
REAR WINDOWS 1814-8
REAR WINDSHIELD WIPER MOTOR.... 1814-14
REAR WIPER ENABLE SWITCH 1814-14
REAR WIPER SWITCH 1674-28
REAR WORKING LIGHTS SWITCH.... 1674-28
RECEIVER DRYER HOSES.... 1830-12
RECEIVER DRYER, AIR CONDITIONING.... 1830-12
REFRIGERANT HOSE 1830-6
REFRIGERANT LINE 1830-6
REGULATOR, DRAIN,STABILIZER VALVE (410J) 3162-12
REGULATOR, PRESSURE, STANADYNE DE10 (PE4045TT095) 0400-14
RELAY, ACTUATOR DOOR.... 1674-5E

ALPHABETICAL INDEX - CONTINUED

PAGE

RELAY, STARTER....1674-8
RELAY, TIMER.... 1674-5E
RELIEF VALVE, ATTACHMENT PLUMBING KIT....3363-44
RELIEF VALVE, ATTACHMENT PLUMBING KIT (410TMC)....3363-46
RELIEF VALVE, AUXILIARY SECTION....3362-20
RELIEF VALVE, AUXILIARY SECTION (410J)....3162-8
RELIEF VALVE, BOOM PILOT SECTION....3362-40
RELIEF VALVE, BOOM SECTION....3362-10
RELIEF VALVE, BOOM SECTION (410TMC)....3362-50
RELIEF VALVE, BOOM SECTION (EH) (410TMC)....3362-68
RELIEF VALVE, BOOM SECTION (410J)....3162-4
RELIEF VALVE, BUCKET PILOT SECTION....3362-42
RELIEF VALVE, BUCKET SECTION....3362-12
RELIEF VALVE, BUCKET SECTION (410TMC)....3362-52
RELIEF VALVE, BUCKET SECTION (EH) (410TMC)....3362-66
RELIEF VALVE, BUCKET SECTION (410J)....3162-6
RELIEF VALVE, CROWD PILOT SECTION....3362-44
RELIEF VALVE, CROWD SECTION....3362-14
RELIEF VALVE, CROWD SECTION (410TMC)....3362-54
RELIEF VALVE, HAMMER CROWD SECTION (410TMC)....3362-56
RELIEF VALVE, INLET SECTION....3362-8
RELIEF VALVE, LOADER (410J)....3162-12
RELIEF VALVE, OUTLET SECTION....3362-24
RELIEF VALVE, SWING PILOT SECTION....3362-46
RELIEF VALVE, SWING PILOT SECTION (EH) (410TMC)....3362-62
RELIEF VALVE, SWING SECTION....3362-16
RELIEF, MAIN HYDRAULIC PUMP....2160-16
REPAIR GRIP EXTENDIBLE DIPPERSTICK....3344-6
REPAIR KIT, BACKHOE BOOM CYLINDER....3365-3
REPAIR KIT, BACKHOE BUCKET CYLINDER....3365-4
REPAIR KIT, LOADER BUCKET CYLINDER....3165-6
REPAIR KIT, LOADER BUCKET CYLINDER (TOOL CARRIER)....3165-8
REPAIR KIT, SWING CYLINDER (410J)....3365-8
REPAIR KIT, SWING CYLINDER (410TMC).... 3365-7A
REPAIR KIT,STEERING CYLINDER (W/MFWD)....0960-2
REPAIR KITS, STABLIIZER CYLINDER....3365-12
RESERVOIR BREATHER FILTER, HYDRAULIC....2160-14
RESERVOIR, MAIN HYDRAULIC SCREEN....2160-14
RESERVOIR, MAIN HYDRAULICS....2160-14
RESERVOIR, WINDSHIELD WASHER....1814-12
RESISTOR, CAN....1674-4
RESISTOR, CAN TERMINATION....1674-8
RESISTORS, CAN TERMINATION.... 1674-5E
RESTRICTION INDICATOR SWITCH,AIR CLEANER....0520-4
RETURN TO DIG HARNESS....1674-8
RETURN-TO-DIG LINKAGE....3115-2
RETURN-TO-DIG SENSOR, LOADER POSITION....1674-24
RETURN-TO-DIG SWITCH....1674-14
RETURN-TO-DIG SWITCH....1674-25
RETURN-TO-DIG SWITCH....1674-27
RETURN-TO-DIGMAGNET (410J)....3162-6
REVERSE ALARM....2004-4
REVERSE ALARM (410TMC)....2004-6
RIDE CONTROL....2160-24
RIDE CONTROL ELECTRICAL....1675-2

PAGE

RIDE CONTROL HARNESS....1674-5C
RIDE CONTROL HYDRAULIC HOSE.... 2160-24
RIDE CONTROL SWITCH.... 1674-6
RIGHT HAND DOOR SENSOR.... 1675-4
RIM, FRONT WHEEL (MFWD).... 0110-4
RIM, FRONT WHEEL (WITHOUT MFWD).... 0120-1
RING GEAR AND PINION, REAR AXLE.... 0210-2
RING GEAR AND PINION, REAR AXLE.... 0210-4
RING GEAR AND PINION,FRONT AXLE (W/MFWD).... 0250-12
RING GEAR, FLYWHEEL (TT095).... 0400-50
RING GEAR,FRONT AXLE(W/MFWD).... 0250-12
RING GEAR,PLANETARY DRIVE (MFWD).... 0250-8
RINGS, PISTON (TT095).... 0400-10
ROCKER ARM COVER (TT095).... 0400-6
ROCKER ARM COVER GASKET (TT095).... 0400-6
ROCKER ARM SHAFT (TT095).... 0400-5
ROCKER ARMS (TT095).... 0400-5
ROD, BUCKET LEVELING.... 3115-2
ROD, CONNECTING (TT095).... 0400-10
ROD, CYLINDER LOCK BAR.... 1313-2
ROD, CYLINDER LOCK BAR (TOOL CARRIER).... 1313-4
RODS, PUSH (TT095).... 0400-5
ROOF WIRING HARNESS.... 1673-6
ROPS FRAME.... 1811-2
ROPS FRAME ISOLATORS.... 1811-2
ROPS HEADLINER.... 1811-2
ROPS SKIRT.... 1927-2
ROTARY, SELF LEVELING SENSOR.... 1674-24
ROTATING BEACON.... 1673-2
ROTATING BEACON SWITCH.... 1673-2

S

SAE BACKHOE CONTROL LINKAGE PATTERN KIT.... 3315-28
SAE PATTERN, BACKHOE CONTROL LEVER.... 3315-28
SCREEN, GRILLE.... 1921-2
SCREEN, MAIN HYDRAULIC RESERVOIR.... 2160-14
SEAL, FRONT CONSOLE.... 1811-2
SEAL, FUEL INJECTION (TT095).... 0400-27
SEAL, ISOLATOR.... 0510-4
SEAL, TRANSMISSION OUTPUT SHAFT.... 0350-16
SEAL,SLIDING YOKE (MFWD).... 0250-3
SEAT ADJUSTING SWITCH.... 1821-16
SEAT BACK PAD.... 1821-2
SEAT BELT.... 1821-14
SEAT BRACKETS.... 1821-2
SEAT CUSHIONS.... 1821-2
SEAT LUMBAR SUPPORT CONTROL LEVER.... 1821-4
SEAT SLIDE CONTROL LEVER.... 1821-4
SEAT SLIDE LATCH KIT.... 1821-4
SEAT SPRING, MECHANICAL SUSPENDED.... 1821-8
SEAT SUSPENSION,SUSPENDED SEAT.... 1821-16
SEAT SWIVEL.... 1821-6
SEAT SWIVEL CONTROL LEVER.... 1821-4
SEAT SWIVEL LATCH.... 1821-6
SEAT, COMPLETE ASSEMBLY.... 1821-18
SEAT, OPERATOR'S.... 1821-18
SECOND SPEED CLUTCH ASSEMBLY.... 0350-10
SECOND SPEED CLUTCH DISK.... 0350-10
SELECTIVE FLOW SOLENOID VALVE.... 3362-20
SELECTOR VALVE (PILOT CONTROL).... 3363-1E
SELECTOR VALVE HYDRAULICS.... 3363-1C
SELECTOR VALVE HYDRAULICS (PILOT CONTROL).... 3363-1E

ALPHABETICAL INDEX - CONTINUED

PAGE

SELECTOR VALVE, PATTERN....3362-32
SELF LEVELING ROTARY SENSOR....1674-24
SENDER, FUEL GAUGE....0560-2
SENDER, HYDRAULIC TEMPERATURE....1674-8
SENSOR, AIR INTAKE TEMPERATURE (PE4045TT095)....0400-28
SENSOR, FUEL TEMPERATURE STANADYNE DE10 (PE4045TT095)....0400-14
SENSOR, LOADER POSITION, RETURN TO DIG....1674-24
SENSOR, RIGHT HAND DOOR....1675-4
SENSOR, SELF LEVELING ROTARY....1674-24
SENSOR,SUSPENDED SEAT POSITION....1821-16
SENS0R, HYDRAULIC TEMPERATURE....1674-8
SERVICE BRAKE HYDRAULICS....1060-6
SERVICE BRAKE LINES....1060-6
SERVICE BRAKES....1011-2
SERVICE LOCK BAR, BOOM....1313-2
SERVICE LOCK BAR, BOOM (TOOL CARRIER)....1313-4
SERVICE LOCK, LOADER ARM....1313-2
SERVICE LOCK, LOADER ARM (TOOL CARRIER)....1313-4
SHAFT, ENGINE BALANCER (TT095)....0400-30
SHAFT, ROCKER ARM (TT095)....0400-5
SHAFT, UNIVERSAL DRIVE (MFWD)....0250-3
SHAFT,DRIVE(W/MFWD)....0250-14
SHAFT,LIMITED SLIP DIFFERENTIAL (MFWD)....0250-10
SHAFT,PLANETARY DRIVE SUN GEAR (MFWD)....0250-8
SHAFT,REAR AXLE PLANETARY DRIVE....0201-6
SHAFT,TRANSMISSION INPUT....0350-2
SHAFT,TRANSMISSION OUTPUT....0350-16
SHIELD, LOADER CONTROL VALVE PLUMBING....1913-6
SHIELDS, ENGINE SIDE....1910-2
SHIFT CONTROL SOLENOIDS,TRANSMISSION....0360-6
SHOCK ABSORBER, SUSPENDED SEAT....1821-8
SHOCK ABSORBER,SUSPENDED SEAT....1821-16
SHORT BLOCK,ENGINE (TT095)....0400-18
SHOVEL CLAMP....3140-6
SHROUD,FAN....0510-4
SHUT-OFF PLUG, EXTENDIBLE SECTION....3362-18
SIDE CONSOLE SWITCHES....1674-28
SIDE CONSOLE WIRING HARNESS WITH CAB....1674-5E
SIDE CONSOLE WIRING HARNESS, CAB....1674-4
SIDE INSTRUMENT PANEL HOUSING....1816-10
SIDE INSTRUMENT PANEL HOUSING....1816-12
SIDE PANELS, ENGINE....1910-2
SIDE SHIELD, LOADER PLUMBING....1913-6
SIDE SHIELDS, ENGINE....1910-2
SIDE WINDOWS,CAB....1814-2
SIDE WORKING LIGHTS SWITCH....1674-28
SINGLE BATTERY CABLE....1671-2
SINGLE BATTERY INSTALLATION....1671-2
SIXTH FUNCTION FOOT CONTROL....3315-14
SIXTH FUNCTION MANUAL VALVE KIT....3362-27
SIXTH FUNCTION PEDAL....3315-14
SIXTH FUNCTION PEDAL (PILOT CONTROL)....3315-34
SKIRT, MECHANICAL SUSPENDED SEAT....1821-8
SKIRTS, OPERATOR STATION....1927-2
SLIDE LATCH KIT,SEAT....1821-4
SLIDE PUCK SERVICE KIT....1821-6
SLIDING REAR WINDOWS....1814-8
SLIDING YOKE, SEAL (MFWD)....0250-3
SMV EMBLEM....2008-2
SOLENOID CONNECTOR, STANADYNE DE10 (PE4045TT095)....0400-14

PAGE

SOLENOID VALVE, MAIN HYDRAULIC PUMP....2160-16
SOLENOID VALVE, MANIFOLD (PILOT CONTROL)....3362-30
SOLENOID VALVE, SELECTIVE FLOW....3362-20
SOLENOID, MFWD DRIVE CLUTCH....0350-14
SOLENOID, RETURN-TO-DIG (410J)....3162-6
SOLENOID,COLD WEATHER STARTING AID....0505-4
SOLENOIDS,TRANSMISSION SHIFT CONTROL....0360-6
SOUND ABSORBERS....9006-2
SOUND ABSORBERS....9006-4
SOUND REDUCTION INSULATORS....9006-2
SOUND REDUCTION INSULATORS....9006-4
SPACER, SYNTHETIC BUCKET....3346-2
SPACER, SYNTHETIC CROWD....3346-2
SPACER, WHEEL....0110-2
SPEAKER, RADIO....2001-2
SPIRAL BEVEL INPUT PINION....0210-2
SPIRAL BEVEL INPUT PINION....0210-4
SPRING, MECHANICAL SUSPENDED SEAT....1821-8
SPRING, SUSPENSION SEAT....1821-16
STABILIZER ARM....3348-2
STABILIZER ARM PINS....3348-2
STABILIZER ARM STREET PAD....3348-2
STABILIZER CONTROL CABLES....3315-22
STABILIZER CONTROL COVER....1816-10
STABILIZER CONTROL COVER....1816-12
STABILIZER CYLINDER....3365-12
STABILIZER CYLINDER HYDRAULICS, BACKHOE....3363-3A
STABILIZER CYLINDER HYDRAULICS, BACKHOE (410TMC)....3363-38
STABILIZER GUARD KIT....1746-2
STABILIZER LEVER....3315-22
STABILIZER LINKAGE....3315-22
STABILIZER LOCKOUT VALVE (410J)....3162-12
STABILIZER THERMAL RELIEF VALVE (410J)....3162-12
STABILIZER VALVE (EH) (410TMC)....3362-60
STABILIZER VALVE (410J)....3162-10
STABILIZER VALVE DRAIN REGULATOR (410J)....3162-12
STABILIZER VALVE LINKAGE....3315-22
STABILIZER VALVE MOUNTING PLATE (PILOT CONTROL)....3315-26
STABILIZER VALVE MOUNTING PLATE (410J)....3315-2
STABILIZER VALVE MOUNTING PLATE 410TMC....3315-24
STABILIZER/LOADER CONTROL VALVE (410J)....3162-2
STABILIZER/LOADER VALVE (410J)....3162-12
STABLIIZER CYLINDER REPAIR KITS....3365-12
STANDARD ARM....3346-2
STANDARD DIPPERSTICK....3346-2
STANDARD DIPPERSTICK, AUXILIARY HYDRAULICS....3363-16
STANDARD LIGHTS....1673-6
START AID SWITCH....1674-28
STARTER MOTOR KIT (TT095)....0400-44
STARTER RELAY....1674-8
STARTING AID, COLD WEATHER....0505-4
STARTING FLUID....0505-4
STARTING MOTOR (TT095)....0400-44
STC TOOL....1913-2
STEERING COLUMN....0960-4
STEERING COLUMN COVER....1816-6
STEERING COLUMN, TILT....0960-4
STEERING CYLINDER (W/MFWD)....0960-2
STEERING CYLINDER REPAIR KIT (W/MFWD)....0960-2

ALPHABETICAL INDEX - CONTINUED

PAGE

STEERING CYLINDER, FRONT AXLE (WITHOUT MFWD) 0230-7
STEERING HOSES (WITH MFWD) 0960-8
STEERING HYDRAULICS (WITHOUT MFWD) 0960-10
STEERING VALVE (WITH MFWD) 0960-8
STEERING VALVE (WITHOUT MFWD) 0960-10
STEERING VALVE HOSE 2160-6
STEERING VALVE HOSE (410TMC) 2160-8
STEERING VALVE HYDRAULICS (WITH MFWD) 0960-8
STEERING WHEEL 0960-4
STEM, VALVE 0110-4
STEM, VALVE (WITHOUT MFWD) 0120-1
STOP LIGHT SWITCH 1060-2
STRAINER, FUEL TANK 0560-2
STREET PAD,STABILIZER ARM 3348-2
STRIKER BOLT, HOOD 1910-2
STROBE BEACON 1673-2
STUDS, WHEEL (MFWD) 0250-6
SUN VISOR 2007-2
SUPENSION TETHER 1821-8
SUPPORT, HOOD 1910-2
SUPPORT,ENGINE 0540-2
SUPPORT,TRANSMISSION MOUNTING 0342-2
SUSPENDED SEAT POSITION SENSOR 1821-16
SUSPENDED SEAT SHOCK ABSORBER 1821-8
SUSPENDED SEAT SHOCK ABSORBER 1821-16
SUSPENDED SEAT SUSPENSION 1821-8
SUSPENDED SEAT SUSPENSION 1821-16
SUSPENSION,SUSPENDED SEAT 1821-8
SWING CYLINDER (410J) 3365-8
SWING CYLINDER (410TMC) 3365-7A
SWING CYLINDER FITTINGS 3363-12
SWING CYLINDER FITTINGS 3363-36
SWING CYLINDER HOSES 3363-12
SWING CYLINDER HOSES 3363-36
SWING CYLINDER HYDRAULICS 3363-12
SWING CYLINDER HYDRAULICS 3363-36
SWING CYLINDER REPAIR KIT (410J) 3365-8
SWING CYLINDER REPAIR KIT (410TMC) 3365-7A
SWING CYLINDER TRUNNION BLOCK 1740-2
SWING FRAME 3343-2
SWING FRAME PINS 3343-2
SWING LOCK PIN AND HOLDER 1811-2
SWING SECTION RELIEF VALVE 3362-16
SWING SECTION, BACKHOE VALVE 3362-16
SWING SECTION, BACKHOE VALVE (EH) (410TMC) 3362-62
SWING VALVE ACCU-SWING KIT 3362-28
SWING, PILOT SECTION RELIEF VALVE 3362-46
SWING, PILOT SECTION RELIEF VALVE (EH) (410TMC) 3362-62
SWING, PILOT SECTION, BACKHOE VALVE 3362-46
SWITCH AND HARNESS, PILOT ENABLE 1674-5E
SWITCH REAR WIPER 1674-28
SWITCH, A/C 1674-6
SWITCH, A/C 1674-28
SWITCH, A/C PRESSURE HARNESS 1674-5E
SWITCH, AIR SUSPENSION SEAT 1674-6
SWITCH, AIR SUSPENSION SEAT 1674-28
SWITCH, AUXILIARY HYDRAULIC CONTROL 1674-11A
SWITCH, BRAKE LIGHT, PRESSURE 1060-2
SWITCH, DIFFERENTIAL LOCK 1674-12
SWITCH, ENGINE OIL PRESSURE 1674-8

PAGE

SWITCH, ETHER 1674-6
SWITCH, HIGH PRESSURE 1830-6
SWITCH, HORN 1674-6
SWITCH, LOW PRESSURE 1830-6
SWITCH, MFWD 1674-6
SWITCH, MFWD 1674-28
SWITCH, PARK BRAKE OIL PRESSURE 1674-8
SWITCH, PATTERN SELECTOR 3362-32
SWITCH, PILOT ENABLE 1674-5A
SWITCH, PIN DISCONNECT, QUICK COUPLER 1674-5C
SWITCH, REAR WIPER ENABLE 1814-14
SWITCH, REAR WORKING LIGHTS 1674-28
SWITCH, RETURN-TO-DIG 1674-14
SWITCH, RETURN-TO-DIG 1674-25
SWITCH, RETURN-TO-DIG 1674-27
SWITCH, RIDE CONTROL 1674-6
SWITCH, ROTATING BEACON 1673-2
SWITCH, SEAT ADJUSTING 1821-16
SWITCH, SIDE WORKING LIGHTS 1674-28
SWITCH, START AID 1674-28
SWITCH, STOP LIGHT 1060-2
SWITCH, TEMPERATURE CONTROL 1674-6
SWITCH, WINDSHIELD WASHER 1814-12
SWITCH,BATTERY,MASTER DISCONNECT 1671-6
SWITCH,IGNITION 1674-6
SWITCH,STARTER MOTOR (TT095) 0400-44
SWITCHES, SIDE CONSOLE 1674-28
SWITCHES,MONITOR PANEL 1674-6
SWIVEL HOUSING,FRONT AXLE (WITHOUT MFWD) 0230-7
SWIVEL SERVICE KIT 1821-6
SWIVEL,SEAT 1821-6
SYNTHETIC BUCKET SPACER 3346-2
SYNTHETIC CROWD SPACER 3346-2

T

TANK, FUEL 0560-2
TANK,COOLANT RECOVERY 0510-4
TEETH, BACKHOE BUCKET 3302-8
TEETH, BACKHOE BUCKET 3302-10
TEMPERATURE CONTROL KNOB 1674-28
TEMPERATURE CONTROL SWITCH 1674-6
TEMPERATURE SENSOR, FUEL, STANADYNE DE10 (PE4045TT095) 0400-14
TENSIONER, FAN DRIVE BELT (TT095) 0400-48
TERMINATION RESISTOR CAN 1674-8
TERMINATION RESISTORS, CAN 1674-5E
TEST PORTS, FLUID 1390-2
TETHER BELT 1821-8
TETHER BELT 1821-16
TETHER KIT, OPERATOR MANUAL 1811-2
THERMAL RELIEF VALVE, STABILIZER (410J) 3162-12
THERMOSTAT COVER 0400-36
THERMOSTAT COVER TUBE 0400-36
THERMOSTAT, ENGINE 0400-36
THIRD FUCTION HYDRAULIC OIL LINES 3163-6
THIRD FUCTION HYDRAULIC OIL LINES (310TMC) 3163-8
THIRD FUNCTION LOADER CONTROL VALVE LINKAGE 3115-6
THIRD SPEED CLUTCH ASSEMBLY 0350-12
THIRD SPEED CLUTCH DISK 0350-12
THREE LEVER BACKHOE CONTROL VALVE LINKAGE 3315-6
TIE BAND MOUNT ANCHOR, HARNESS 1673-6

ALPHABETICAL INDEX - CONTINUED

PAGE

TIE ROD ASSEMBLY,FRONT AXLE (MFWD) 0250-4
TILT STEERING COLUMN 0960-4
TIMER RELAY 1674-5E
TIMING GEAR COVER (TT095) 0400-8
TIMING GEAR COVER GASKET (TT095) 0400-8
TIMING, CRANKSHAFT WHEEL (TT095) 0400-2
TOOL BOX 1913-2
TOOL KIT, HAND HELD HYDRAULIC 3363-34
TOOTH, BACKHOE BUCKET 3302-8
TOOTH, BACKHOE BUCKET 3302-10
TORQUE CONVERTER 0350-1
TORQUE CONVERTOR FLEXPLATE 0350-1
TOTAL MACHINE CONTROL LOAD SENSE HYDRAULICS 2160-22
TRADEMARKS 1320-2
TRADEMARKS (FRENCH AND SPANISH) 1320-4
TRADEMARKS (FRENCH AND SPANISH) (CONTINUED) 1320-6
TRANSMISSION 0341-6
TRANSMISSION CHARGE OIL PUMP 0360-2
TRANSMISSION CHARGE PUMP 0360-2
TRANSMISSION CONTROL LEVER 0315-2
TRANSMISSION DIPSTICK TUBE 0341-6
TRANSMISSION FRONT HOUSING 0341-4
TRANSMISSION HOUSING,REAR 0341-2
TRANSMISSION INPUT SHAFT 0350-2
TRANSMISSION INPUT SHAFT CLUTCH DISK 0350-2
TRANSMISSION MOUNTING ISOLATOR 0342-2
TRANSMISSION MOUNTING SUPPORT 0342-2
TRANSMISSION OIL FILLER TUBE 0341-2
TRANSMISSION OIL FILTER 0360-4
TRANSMISSION OIL FILTER ELEMENT 0360-4
TRANSMISSION OIL FILTER HEADER 0360-4
TRANSMISSION OUTPUT SHAFT 0350-16
TRANSMISSION SHIFT CONTROL SOLENOIDS 0360-6
TRANSMISSION TORQUE CONVERTER COVER 0341-4
TRANSMISSION TORQUE CONVERTER HOUSING 0341-4
TRANSMISSION WIRING HARNESS 1674-8
TRANSMISSION, OIL COOLER 2160-18
TRANSMISSSION DIPSTICK 0341-6
TRAVEL WARNING ALARM 2004-4
TRAVEL WARNING ALARM (410TMC) 2004-6
TRUNNION BLOCK,SWING CYLINDER 1740-2
TUBE, TRANSMISSION DIPSTICK 0341-6
TUBE,THERMOSTAT COVER 0400-36
TUBE,TRANSMISSION OIL FILLER 0341-2
TURBOCHARGER (PE4045TT095) 0400-32
TWO LEVER BACKHOE CONTROL COVER (410J) 1816-2
TWO LEVER BACKHOE CONTROL VALVE LINKAGE 3315-4

U

U-JOINT,DRIVE SHAFT(W/MFWD) 0250-14
UNIVERSAL DRIVE SHAFT (MFWD) 0250-3
UNIVERSAL DRIVE SHAFT KIT (MFWD) 0250-3
UNIVERSAL DRIVE SHAFT,FRONT AXLE (MFWD) 0250-6

V

V-BELT AND PULLY 0510-8
VALVE COVERS, BOOM BUCKET AND CROWD 1913-4

PAGE

VALVE KIT, FLOW CONTROL AUXILIARY 410TMC 3363-2
VALVE KIT,FIFTH FUNCTION MANUAL 3362-26
VALVE LINKAGE, STABILIZER 3315-22
VALVE MOUNTING PLATE, BACKHOE (PILOT CONTROL) 3315-26
VALVE MOUNTING PLATE, BACKHOE (410J) 3315-2
VALVE MOUNTING PLATE, BACKHOE 410TMC 3315-24
VALVE MOUNTING PLATE, STABILIZER (PILOT CONTROL) 3315-26
VALVE MOUNTING PLATE, STABILIZER (410J) 3315-2
VALVE MOUNTING PLATE, STABILIZER 410TMC 3315-24
VALVE SECTION, MID INLET (EH) (410TMC) 3362-70
VALVE STEM 0110-4
VALVE STEM (WITHOUT MFWD) 0120-1
VALVE WIRING, LABEL 1675-8
VALVE, ACCU-SWING KIT 3362-28
VALVE, BACKHOE AUXILIARY SECTION 3362-20
VALVE, BACKHOE AUXILIARY SECTION 3362-22
VALVE, BACKHOE AUXILIARY SECTION 410TMC 3363-2
VALVE, BACKHOE BOOM SECTION 3362-10
VALVE, BACKHOE BOOM SECTION (410TMC) 3362-50
VALVE, BACKHOE BOOM, PILOT SECTION 3362-40
VALVE, BACKHOE BUCKET SECTION 3362-12
VALVE, BACKHOE BUCKET SECTION (410TMC) 3362-52
VALVE, BACKHOE BUCKET, PILOT SECTION 3362-42
VALVE, BACKHOE CONTROL 3362-6
VALVE, BACKHOE CONTROL (EH) (410TMC) 3362-58
VALVE, BACKHOE CROWD SECTION 3362-14
VALVE, BACKHOE CROWD SECTION (410TMC) 3362-54
VALVE, BACKHOE CROWD, PILOT SECTION 3362-44
VALVE, BACKHOE EXTENDIBLE SECTION 3362-18
VALVE, BACKHOE EXTENDIBLE SECTION (EH) (410TMC) 3362-64
VALVE, BACKHOE HAMMER SECTION (410TMC) 3362-56
VALVE, BACKHOE SWING (EH) (410TMC) 3362-62
VALVE, BACKHOE SWING SECTION 3362-16
VALVE, BACKHOE SWING, PILOT SECTION 3362-46
VALVE, BRAKE 1060-2
VALVE, BRAKE 1060-4
VALVE, BUCKET, HARNESS, WIRING 1674-26
VALVE, EXHAUST (TT095) 0400-64
VALVE, FLOW CONTROL 3363-1A
VALVE, FLOW CONTROL 3363-1E
VALVE, INTAKE (TT095) 0400-64
VALVE, LOADER AUXILIARY SECTION (410J) 3162-8
VALVE, LOADER BOOM SECTION (EH) (410TMC) 3362-68
VALVE, LOADER BOOM SECTION (410J) 3162-4
VALVE, LOADER BUCKET SECTION (EH) (410TMC) 3362-66
VALVE, LOADER BUCKET SECTION (410J) 3162-6
VALVE, LOADER WITH AUXILIARY (410J) 3162-2
VALVE, LOADER/STABILIZER CONTROL (410J) 3162-2
VALVE, PATTERN SELECTOR 3362-32

ALPHABETICAL INDEX - CONTINUED

PAGE

VALVE, PILOT CONTROL HANDLE BUTTON KIT....3362-38
VALVE, PILOT CONTROLLER, (410TMC) WITH AUX ROLLER....3315-30
VALVE, PILOT CONTROLLER, (410TMC) WITHOUT AUXILLARY ROLLER....3315-32
VALVE, PILOT CONTROLLER, LEFT....3362-34
VALVE, PILOT CONTROLLER, RIGHT....3362-36
VALVE, PRESSURE REDUCING, MANIFOLD (PILOT CONTROL)....3362-30
VALVE, QUICK COUPLER BUCKET (410J)....3163-12
VALVE, SELECTIVE FLOW SOLENOID....3362-20
VALVE, SOLENOID (MANIFOLD) (PILOT CONTROL)....3362-30
VALVE, SOLINOID FRONT COUPLER (410J)....3163-12
VALVE, STABILIZER (EH (410TMC)....3362-60
VALVE, STABILIZER (410J)....3162-10
VALVE, STABILIZER LOCKOUT (410J)....3162-12
VALVE, STABILIZER/LOADER (410J)....3162-12
VALVE, STEERING (WITH MFWD)....0960-8
VALVE, STEERING (WITHOUT MFWD)....0960-10
VALVE,BRAKE VALVE BOOST HYDRAULICS (CAB)....1060-8
VALVE,BRAKE VALVE BOOST HYDRAULICS (ROPS)....1060-10
VALVE,ENGINE OIL BY-PASS (TT095)....0400-16
VANDAL GUARD LOCK....1816-10
VANDAL GUARD,INSTRUMENT PANEL....1816-10
VEHICLE CONTROLLER (410J,410TMC)....1674-5A
VENTILATING HOSE, ENGINE (TT095)....0400-60
VENTILATION LOUVERS....9006-2
VENTILATION LOUVERS....9006-4
VISOR, SUN....2007-2

W

WARNING ALARM, TRAVEL....2004-4
WARNING ALARM, TRAVEL (410TMC)....2004-6
WASHER, WINDSHIELD RESERVOIR....1814-12
WATER PUMP (TT095)....0400-34
WATER PUMP INLET (TT095)....0400-33
WATER PUMP PULLEY (TT095)....0400-33
WATER PUMP REPAIR KIT (TT095)....0400-34
WEARSTRIPS, EXTENDIBLE ARM....3346-4
WEATHERSTRIP, REAR WINDOW....1814-8
WHEEL SPACER....0110-2
WHEEL STUDS (MFWD)....0250-6
WHEEL, DRIVE ,FRONT (MFWD)....0110-4
WHEEL, DRIVE ,REAR....0110-2
WHEEL, FRONT (WITHOUT MFWD)....0120-1
WHEEL, STEERING....0960-4
WHEEL,CRANKSHAFT TIMING (TT095)....0400-2
WINDOW, CAB SIDE....1814-2
WINDOWPANE, REAR CORNER....1814-8
WINDOWS, REAR....1814-8
WINDSHIELD WASHER HOSE....1814-12
WINDSHIELD WASHER PUMP....1814-12
WINDSHIELD WASHER SWITCH....1814-12
WINDSHIELD WIPER MOTOR, FRONT....1814-10
WINDSHIELD WIPER MOTOR, REAR....1814-14
WINDSHIELD, CAB....1814-6
WINDSHIELD, WASHER RESERVOIR....1814-12
WINDSHILD WIPER BLADE, FRONT....1814-10
WINDSHILD WIPER BLADE, REAR....1814-14
WIPER BLADE, FRONT....1814-10
WIPER BLADE, REAR....1814-14

PAGE

WIPER MOTOR, FRONT WINDSHIELD....1814-10
WIPER MOTOR, REAR WINDSHIELD....1814-14
WIRE HARNESS, AC COMPRESSOR....1830-12
WIRE HARNESS,CAB....1674-4
WIRING HARNESS BRACKET....1674-26
WIRING HARNESS, A/C....1674-28
WIRING HARNESS, BUCKET VALVE....1674-26
WIRING HARNESS, ENGINE....1674-8
WIRING HARNESS, MODE DOOR....1816-8
WIRING HARNESS, ROOF....1673-6
WIRING HARNESS, TRANSMISSION....1674-8
WIRING HARNESS,FRONT COUPLER....1674-5C
WIRING HARNESS,PILOT ENABLE....1674-5A
WIRING HARNESS,SIDE CONSOLE WITH CAB....1674-5E
WIRING HARNESS,SIDE CONSOLE, CAB....1674-4

Y

YOKE, BUCKET LEVELING....3115-2
YOKE, DRIVE SHAFT (MFWD)....0250-3
YOKE, REAL AXLE....0210-2
YOKE, REAL AXLE....0210-4
YOKE,FRONT AXLE INPUT PINION GEAR (W/MFWD)....0250-12
YOKE,SEAL,SLIDING (MFWD)....0250-3

REAR DRIVE WHEEL
ROUE MOTRICE ARRIERE
RUEDA MOTRIZ TRASERA

TX1016393 -UN-18DEC06

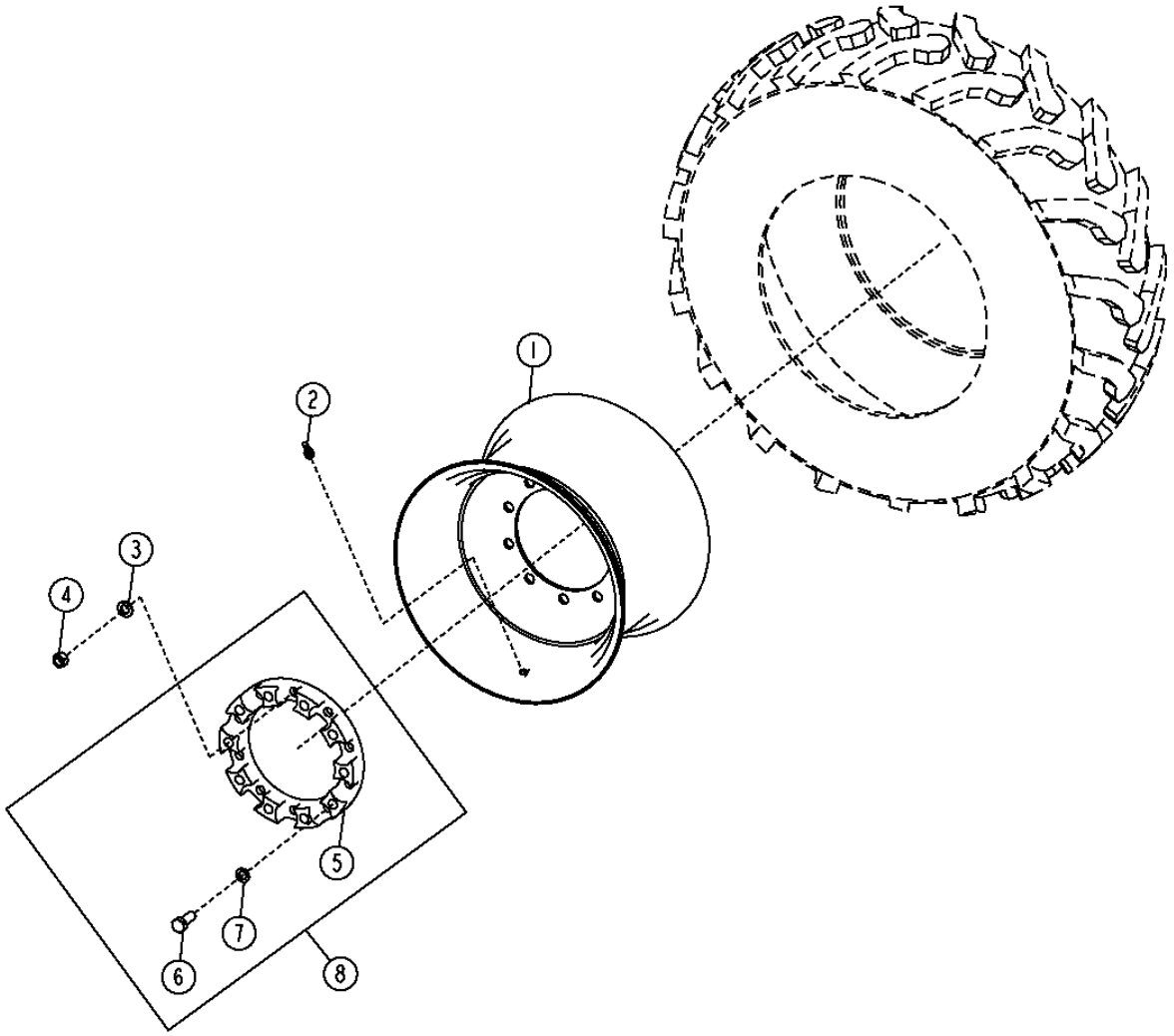

TX1016394

REAR DRIVE WHEEL
ROUE MOTRICE ARRIERE
RUEDA MOTRIZ TRASERA

KEY	PART NO.	PART NAME	QTY.	SERIAL NO.	410J 410TMC	REMARKS
1	AT317855	WHEEL	1		X X	(FOR 19.5L X 24 TIRE) (FOR 500/70R X 24 TIRE)
	AT314911	WHEEL	1		X X	
2	AT25226	TIRE VALVE STEM	1		X X	(WITH CALCIUM CHLORIDE)
	AN132749	TIRE VALVE STEM	1		X X	(WITHOUT CALCIUM CHLORIDE) (TUBELESS)
3	R52006	WASHER	10		X X	23.012 X 40.894 X 4.775 MM (29/32" X 1.610" X 3/16")
4	R94102	NUT	10		X X	M22
5	T211111	SPACER	2		X X	
6	19M9379	SCREW	20		X X	M22 X 55
7	24M7344	WASHER	20		X X	22 X 37 X 3 MM
8	**AT314898**	**WHEEL KIT**	**1**		**X X**	**(WHOLE GOODS)**

FRONT DRIVE WHEEL
ROUE MOTRICE AVANT
RUEDA MOTRIZ DELANTERA

TX1016394 -UN-15DEC06

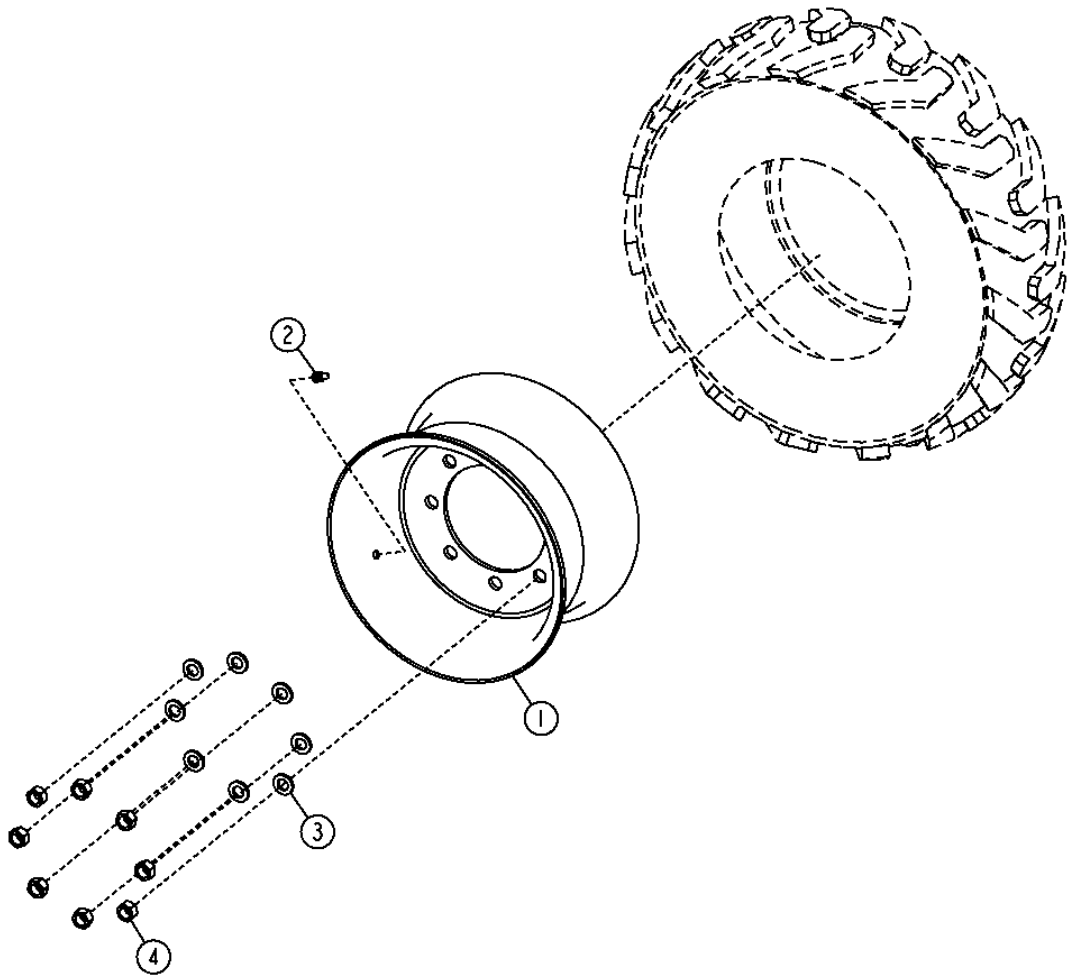

TX1016394

FRONT DRIVE WHEEL
ROUE MOTRICE AVANT
RUEDA MOTRIZ DELANTERA

KEY	PART NO.	PART NAME	QTY.	SERIAL NO.	410J 410TMC	REMARKS
1	AT317854	WHEEL	1		X X	(FOR 12.5/80 X 18 TIRE)
	AT338996	WHEEL	1		X X	(FOR 340/80R X 18 TIRE)
2	AN132749	TIRE VALVE STEM	1		X X	(TUBELESS)
3	R52006	WASHER	8		X X	
4	R94102	NUT	8		X X	

MEMORANDA
MEMORANDA
MEMORANDA

FRONT WHEEL (W/O (MFWD))
ROUE MOTRICE AVANT (W/O (MFWD))
RUEDA MOTRIZ DELANTERA (W/O (MFWD))

TP50564 -UN-07JAN97

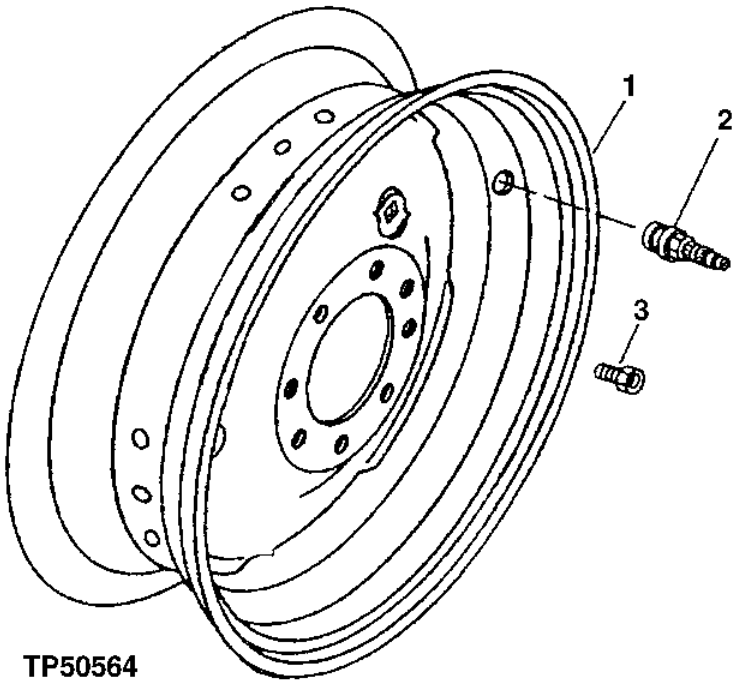

KEY	PART NO.	PART NAME	QTY.	SERIAL NO.	410J 410TMC	REMARKS
1	AT309106	WHEEL	1		X X	(FOR F/14.5/75 X 16.1 TIRE)
2	AN132749	TIRE VALVE STEM	1		X X	(TUBELESS)
3	JD27	SCREW	8		X X	(USE WITH AT310291)
	19H3418	SCREW	8		X X	5/8" X 1-1/2", (USE WITH AT309106)

DIFFERENTIAL AND REAR AXLE HOUSINGS
CARTERS DE DIFFERENTIEL ET D'ESSIEU ARRIERE
CAJAS DEL DIFERENCIAL Y PUENTE TRASERO

TX1016672 -UN-19DEC06

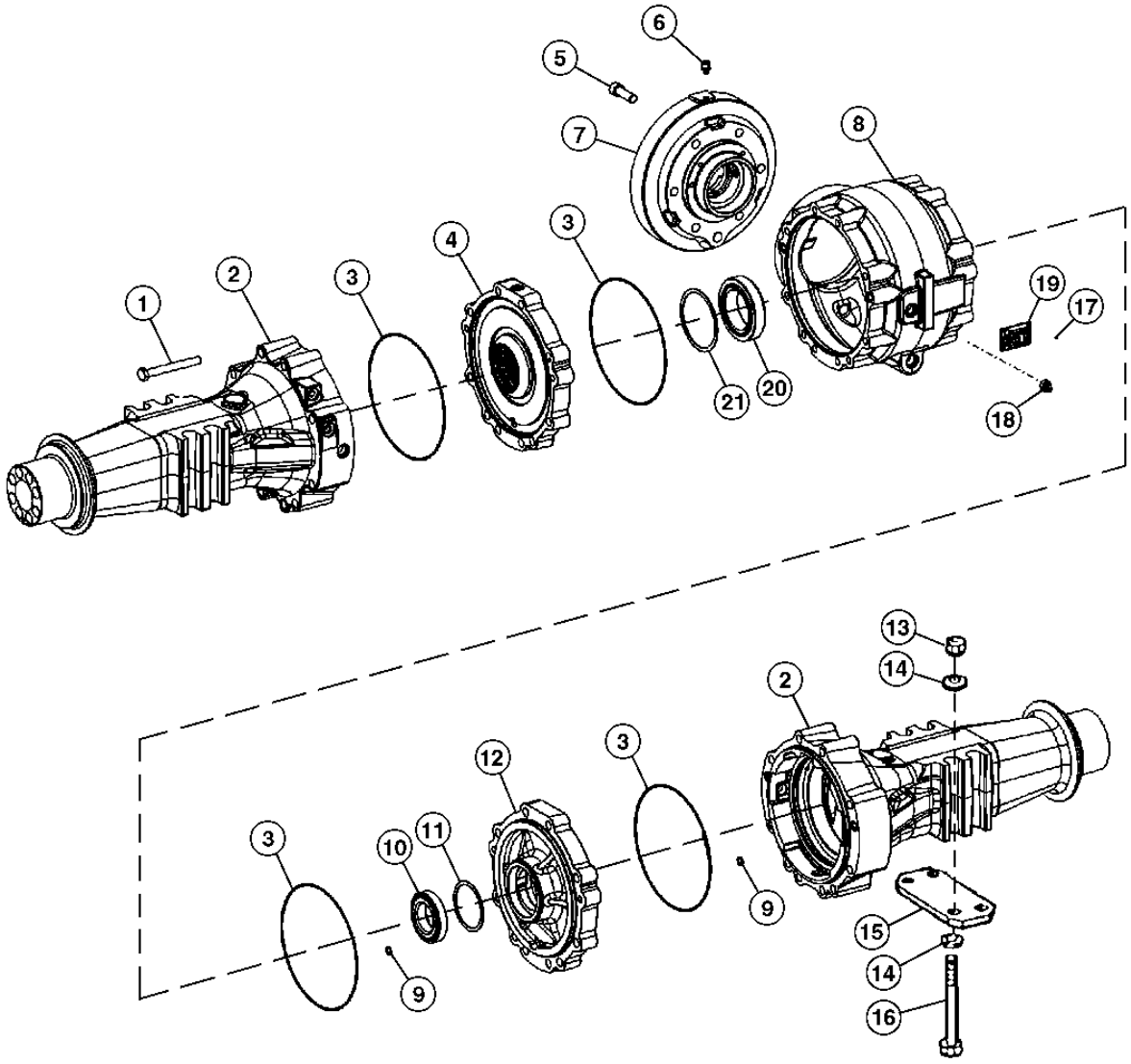

TX1016672

DIFFERENTIAL AND REAR AXLE HOUSINGS
CARTERS DE DIFFERENTIEL ET D'ESSIEU ARRIERE
CAJAS DEL DIFERENCIAL Y PUENTE TRASERO

KEY	PART NO.	PART NAME	QTY.	SERIAL NO.	410J	410TMC	REMARKS
1	T228913	SCREW	20		X	X	
2	T228970	HOUSING	2		X	X	
3	T218785	SEAL	4		X	X	
4	T228972	HOUSING	1		X	X	L.H.
5	T228939	SCREW	6		X	X	
6	AL32877	VENT	1		X	X	
7	T228908	PLANET PINION CARRIER	1		X	X	
8	T228957	HOUSING	1		X	X	
9	T159373	O-RING	8		X	X	
10	JD10229	BEARING CUP	1		X	X	
11	T228914	SHIM	1		X	X	2.0 MM
	T228915	SHIM	1		X	X	1.95 MM
	T228916	SHIM	1		X	X	1.9 MM
	T228917	SHIM	1		X	X	1.85 MM
	T228918	SHIM	1		X	X	1.8 MM
	T228919	SHIM	1		X	X	1.75 MM
	T228920	SHIM	1		X	X	1.7 MM
	T228921	SHIM	1		X	X	1.65 MM
	T228922	SHIM	1		X	X	1.6 MM
	T228923	SHIM	1		X	X	1.55 MM
	T228924	SHIM	1		X	X	1.5 MM
	T228925	SHIM	1		X	X	1.45 MM
	T228926	SHIM	1		X	X	1.4 MM
	T228927	SHIM	1		X	X	1.35 MM
	T228928	SHIM	1		X	X	1.3 MM
	T228929	SHIM	1		X	X	1.2 MM
	T228930	SHIM	1		X	X	1.20 MM
	T228931	SHIM	1		X	X	1.15 MM
	T228932	SHIM	1		X	X	1.1 MM
	T228933	SHIM	1		X	X	1.05 MM
	T228934	SHIM	1		X	X	1.00 MM
	T177394	SOLID SHIM	1		X	X	0.95 MM
	T228935	SHIM	1		X	X	0.9 MM
12	T228973	HOUSING	1		X	X	RH.
13	14M7315	NUT	6		X	X	M20
14	N231749	WASHER	16		X	X	
15	T147269	PLATE	4		X	X	

DIFFERENTIAL AND REAR AXLE HOUSINGS
CARTERS DE DIFFERENTIEL ET D'ESSIEU ARRIERE
CAJAS DEL DIFERENCIAL Y PUENTE TRASERO

TX1016672 -UN-19DEC06

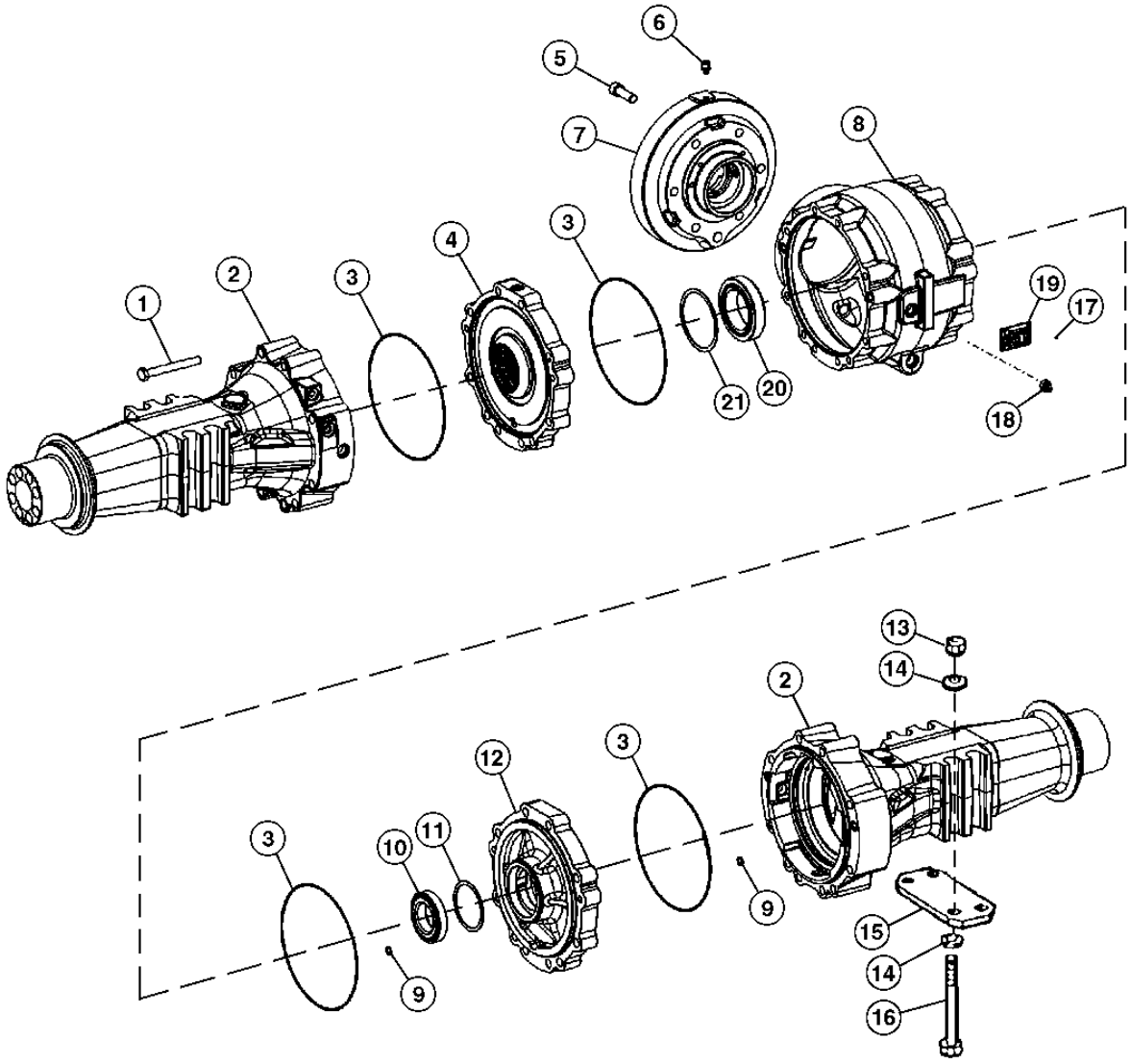

TX1016672

DIFFERENTIAL AND REAR AXLE HOUSINGS
CARTERS DE DIFFERENTIEL ET D'ESSIEU ARRIERE
CAJAS DEL DIFERENCIAL Y PUENTE TRASERO

KEY	PART NO.	PART NAME	QTY.	SERIAL NO.	410J	410TMC	REMARKS
16	19M8001	CAP SCREW	8		X	X	M20 X 260
17	25M7021	GROOVE PIN	4		X	X	
18	T159565	PLUG	2		X	X	
19	.....	PLATE	1		X	X	
20	AT179504	TAPERED ROLLER BEARING	1		X	X	
21	T159440	SHIM	1		X	X	0.3 MM
	T159441	SHIM	1		X	X	0.5 MM
	T159442	SHIM	1		X	X	1.0 MM
	T159443	SHIM	1		X	X	0.2 MM
	T159444	SHIM	1		X	X	0.1 MM
	T159445	SHIM	1		X	X	0.15 MM
	T159446	SHIM	1		X	X	1.1 MM
	T159447	SHIM	1		X	X	1.2 MM
	T159448	SHIM	1		X	X	1.3 MM
	T159449	SHIM	1		X	X	1.4 MM
	T159450	SHIM	1		X	X	1.5 MM
	T159451	SHIM	1		X	X	1.6 MM
	T159452	SHIM	1		X	X	1.7 MM
	T159453	SHIM	1		X	X	1.8 MM
	T159454	SHIM	1		X	X	2.6 MM
	T159455	SHIM	1		X	X	2.7 MM
	T159457	SHIM	1		X	X	2.8 MM
	T159458	SHIM	1		X	X	2.9 MM
	T159459	SHIM	1		X	X	3.0 MM
	T159460	SHIM	1		X	X	3.1 MM
	T159461	SHIM	1		X	X	3.2 MM
	T159462	SHIM	1		X	X	3.3 MM
	T159463	SHIM	1		X	X	3.4 MM
	TTZF160528	SHIM	1		X	X	2.0 MM
	TTZF160529	SHIM	1		X	X	2.05 MM
	TTZF160530	SHIM	1		X	X	2.1 MM
	T183500	SOLID SHIM	1		X	X	2.15 MM
	TTZF160532	SHIM	1		X	X	2.2 MM
	T183502	SOLID SHIM	1		X	X	2.25 MM
	TTZF160534	SHIM	1		X	X	2.3 MM
	TTZF160535	SHIM	1		X	X	2.35 MM
	T183505	SOLID SHIM	1		X	X	2.4 MM
	T183506	SOLID SHIM	1		X	X	2.45 MM
	T183507	SOLID SHIM	1		X	X	2.5 MM
	T228936	SHIM	1		X	X	0.75 MM

REAR AXLE PLANETARY DRIVE PINION CARRIER
PORTE-SATELLITES,ESSIEU ARRIERE
PORTAPINONES PLANETARIOS,EJE TRASERO

TX1016825 -UN-18DEC06

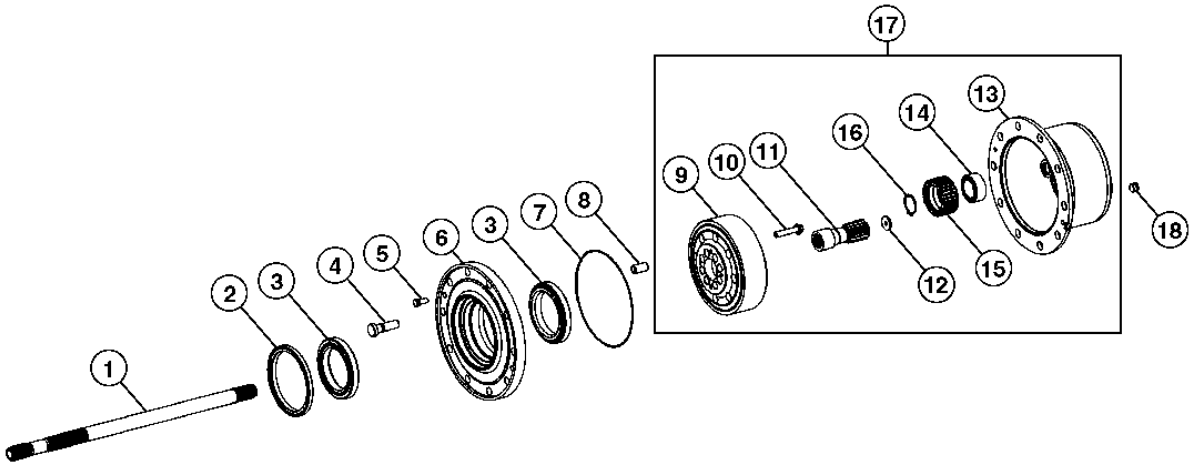

TX1016825

REAR AXLE PLANETARY DRIVE PINION CARRIER
PORTE-SATELLITES,ESSIEU ARRIERE
PORTAPINONES PLANETARIOS,EJE TRASERO

KEY	PART NO.	PART NAME	QTY.	SERIAL NO.	410J	410TMC	REMARKS
1	T228937	SHAFT	2		X	X	
2	T187684	SEAL	2		X	X	
3	AL81844	TAPERED ROLLER BEARING	4		X	X	
4	T218487	STUD	20		X	X	
5	AT321472	BOLT	4		X	X	
6	T228975	HUB	2		X	X	
7	T218785	SEAL	2		X	X	
8	T228942	BUSHING	16		X	X	
9	T228952	RING GEAR	2		X	X	
10	T228956	SCREW	16		X	X	
11	T228938	SHAFT	2		X	X	
12	T228974	PLUG	2		X	X	
13	T228940	PLANET PINION CARRIER	2		X	X	
14	AT339627	SPHERICAL ROLLER BEARING	8		X	X	
15	T228941	PLANET PINION	8		X	X	
16	40M7166	SNAP RING	8		X	X	
17	AT339615	PLANETARY ASSEMBLY	1		X	X	
18	T159565	PLUG	2		X	X	

COMPLETE REAR AXLE AND DIFFERENTIAL ASSEMBLY
ESSIEU ARRIERE AVEC DIFFERENTIEL
DIFERENCIAL Y FRENOS DE DISCO SECOS

TX1016834 -UN-21DEC06

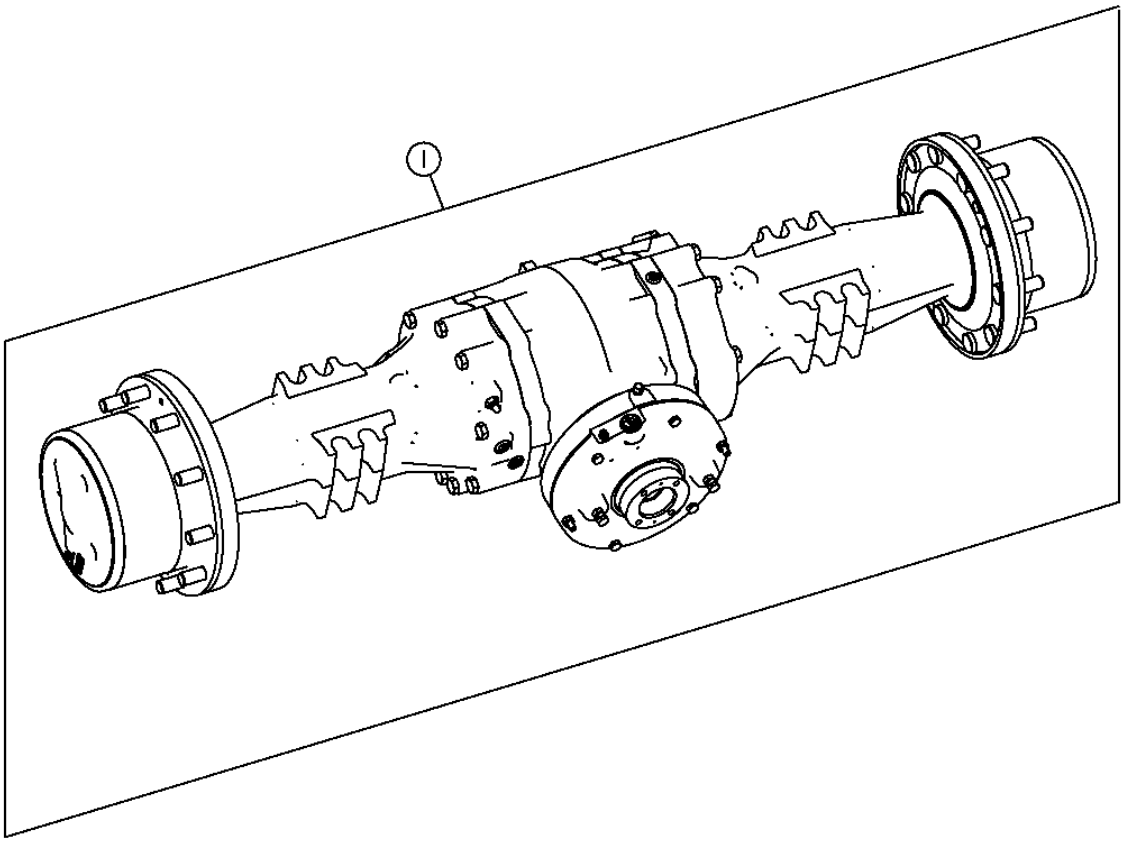

TX1016834

COMPLETE REAR AXLE AND DIFFERENTIAL ASSEMBLY
ESSIEU ARRIERE AVEC DIFFERENTIEL
DIFERENCIAL Y FRENOS DE DISCO SECOS

KEY	PART NO.	PART NAME	QTY.	AXLE SERIAL NO.	410J 410TMC	REMARKS
1	AT314904	REAR AXLE	1		X X	CONVIENCE ASSEMBLY

SPIRAL BEVEL INPUT PINION AND RING GEAR SET
JEU DE PIGNONS CONIQUES HELICOIDAUX D'ENTREE ET COURONNES
JUEGO DE PINON DE ENTRADA CONICO EN ESPIRAL Y CORONA DENTADA

TX1016576 -UN-20DEC06

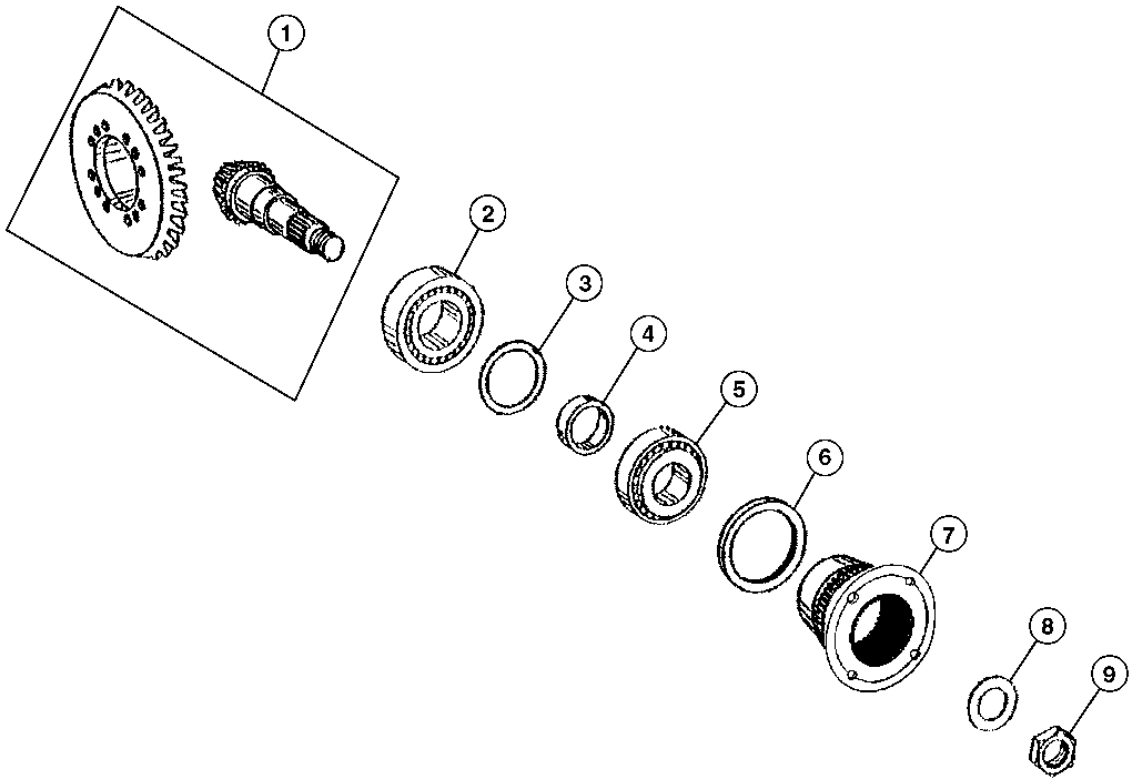

TX1016576

SPIRAL BEVEL INPUT PINION AND RING GEAR SET
JEU DE PIGNONS CONIQUES HELICOIDAUX D'ENTREE ET COURONNES
JUEGO DE PINON DE ENTRADA CONICO EN ESPIRAL Y CORONA DENTADA

KEY	PART NO.	PART NAME	QTY.	SERIAL NO.	410J	410TMC	REMARKS
1	.....	BEVEL GEAR	1		X	X	
2	AT176491	CYLINDRICAL ROLLER BEARING	1		X	X	
3	T159310	SHIM	1		X	X	1.2 MM
	T159315	SHIM	1		X	X	1.3 MM
	T159314	SHIM	1		X	X	1.4 MM
	T159309	SHIM	1		X	X	1.5 MM
	T159313	SHIM	1		X	X	1.6 MM
	T159308	SHIM	1		X	X	1.8 MM
	T159311	SHIM	1		X	X	1.9 MM
	T159307	SHIM	1		X	X	2.0 MM
	AT321701	SHIM	1		X	X	1.7 MM
	AT321702	SHIM	1		X	X	1.0 MM
	AT321703	SHIM	1		X	X	0.9 MM
	AT321704	SHIM	1		X	X	0.8 MM
	AT321705	SHIM	1		X	X	0.7 MM
	AT321706	SHIM	1		X	X	0.6 MM
	R75834	SHIM	1		X	X	0.5 MM
	R75404	SHIM	1		X	X	0.3 MM
	R75403	SHIM	1		X	X	0.2 MM
	R75405	SHIM	1		X	X	0.1 MM
	T228664	SHIM	1		X	X	0.75 MM
	T228665	SHIM	1		X	X	0.65 MM
	T228666	SHIM	1		X	X	1.25 MM
	T228667	SHIM	1		X	X	1.35 MM
	T228668	SHIM	1		X	X	1.45 MM
	T228669	SHIM	1		X	X	1.55 MM
	T228671	SHIM	1		X	X	1.65 MM
	T228672	SHIM	1		X	X	1.75 MM
	T228673	SHIM	1		X	X	1.85 MM

THIS PARTS LISTING IS CONTINUED

SPIRAL BEVEL INPUT PINION AND RING GEAR SET
JEU DE PIGNONS CONIQUES HELICOIDAUX D'ENTREE ET COURONNES
JUEGO DE PINON DE ENTRADA CONICO EN ESPIRAL Y CORONA DENTADA

TX1016576 -UN-20DEC06

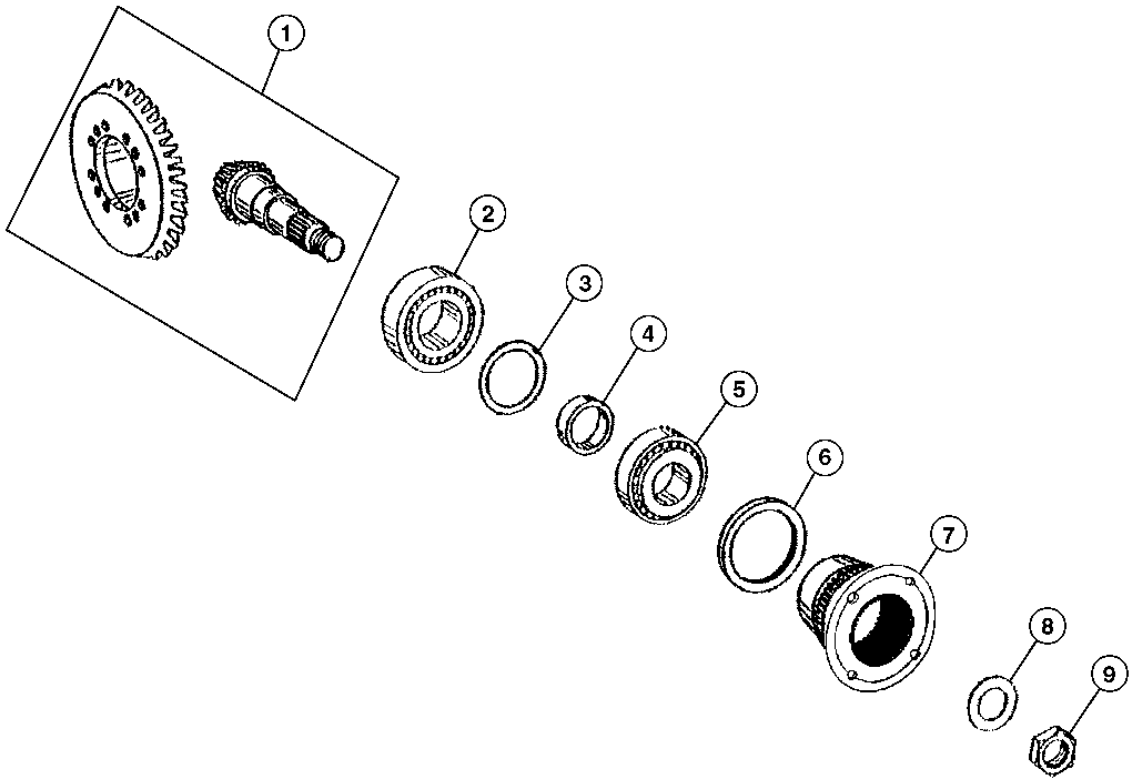

TX1016576

SPIRAL BEVEL INPUT PINION AND RING GEAR SET
JEU DE PIGNONS CONIQUES HELICOIDAUX D'ENTREE ET COURONNES
JUEGO DE PINON DE ENTRADA CONICO EN ESPIRAL Y CORONA DENTADA

KEY	PART NO.	PART NAME	QTY.	SERIAL NO.	410J	410TMC	REMARKS
4	T159322	RING	1		X	X	16.40 MM
	T159323	RING	1		X	X	16.50 MM
	T183482	SOLID SHIM	1		X	X	16.56 MM
	T159324	RING	1		X	X	16.60 MM
	T183483	SOLID SHIM	1		X	X	16.62 MM
	T183484	SOLID SHIM	1		X	X	16.64 MM
	T183485	SOLID SHIM	1		X	X	16.68 MM
	T159325	RING	1		X	X	16.70 MM
	T183486	SOLID SHIM	1		X	X	16.72 MM
	T183487	SOLID SHIM	1		X	X	16.74 MM
	T183489	SOLID SHIM	1		X	X	16.76 MM
	T183490	SOLID SHIM	1		X	X	16.78 MM
	T159326	RING	1		X	X	16.80 MM
	T183491	SOLID SHIM	1		X	X	16.82 MM
	T183492	SOLID SHIM	1		X	X	16.84 MM
	T159334	RING	1		X	X	16.86 MM
	T183493	SOLID SHIM	1		X	X	16.88 MM
	T183494	SOLID SHIM	1		X	X	16.90 MM
	T159327	RING	1		X	X	16.92 MM
	T183495	SOLID SHIM	1		X	X	16.94 MM
	T159337	RING	1		X	X	16.98 MM
	T159338	RING	1		X	X	17.04 MM
	T159329	RING	1		X	X	17.10 MM
	T159330	RING	1		X	X	17.20 MM
	T159331	RING	1		X	X	17.30 MM
	T159332	RING	1		X	X	17.40 MM
	T159318	SHIM	1		X	X	16.0 MM
	T159319	SHIM	1		X	X	16.1 MM
	T159320	SHIM	1		X	X	16.2 MM
	T228677	RING	1		X	X	16.66 MM
	T228679	RING	1		X	X	16.96 MM
	T228680	RING	1		X	X	17.0 MM
	T228681	RING	1		X	X	17.02 MM
	T228682	RING	1		X	X	17.06 MM
	T228683	RING	1		X	X	17.08 MM
	T228684	RING	1		X	X	17.12 MM
	T228685	RING	1		X	X	17.14 MM
	T228686	RING	1		X	X	17.16 MM
	T228687	RING	1		X	X	17.18 MM
	T228688	RING	1		X	X	17.2 MM
	T228689	RING	1		X	X	17.24 MM
	T228690	RING	1		X	X	17.26 MM
	T228691	RING	1		X	X	17.28 MM
	T159321	SHIM	1		X	X	16.30 MM
5	AL79794	TAPERED ROLLER BEARING	1		X	X	
6	T228722	GUARD	1		X	X	
7	T218489	FLANGE	1		X	X	
8	T159316	WASHER	1		X	X	
9	T228709	NUT	1		X	X	

DIFFERENTIAL CASE AND GEARS
BOITE DE DIFFERENTIEL ET ENGRENAGES
CAJA DEL DIFERENCIAL Y ENGRANAJES

TX1016644 -UN-18DEC06

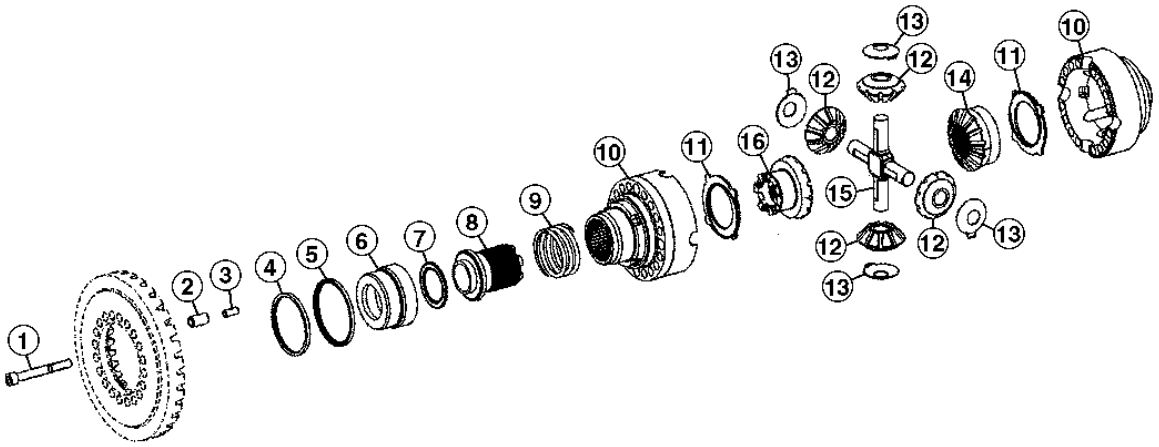

TX1016644

DIFFERENTIAL CASE AND GEARS
BOITE DE DIFFERENTIEL ET ENGRENAGES
CAJA DEL DIFERENCIAL Y ENGRANAJES

KEY	PART NO.	PART NAME	QTY.	SERIAL NO.	410J	410TMC	REMARKS
1	T228723	SCREW	16		X	X	
2	T228712	SPRING PIN	4		X	X	
3	T228713	SPRING PIN	4		X	X	
4	T218481	SEAL	1		X	X	
5	T218482	SEAL	1		X	X	
6	T159343	PISTON	1		X	X	
7	AT179498	NEEDLE BEARING	1		X	X	
8	T166336	SHIFT COLLAR	1		X	X	
9	T159341	SPRING	1		X	X	
10	AT338976	DIFFERENTIAL	1		X	X	
11	T228714	THRUST WASHER	2		X	X	
12	T228711	BEVEL GEAR	4		X	X	
13	T228716	THRUST WASHER	4		X	X	
14	T228710	BEVEL GEAR	1		X	X	
15	T228717	PINION SHAFT	1		X	X	
16	T228715	BEVEL GEAR	1		X	X	

DIFFERENTIAL LOCK PLUMBING
TUYAUTERIE DU BLOCAGE DU DIFFERENTIEL
TUBERIA DE TRABA DE DIFERENCIAL

T154477 -UN-30APR02

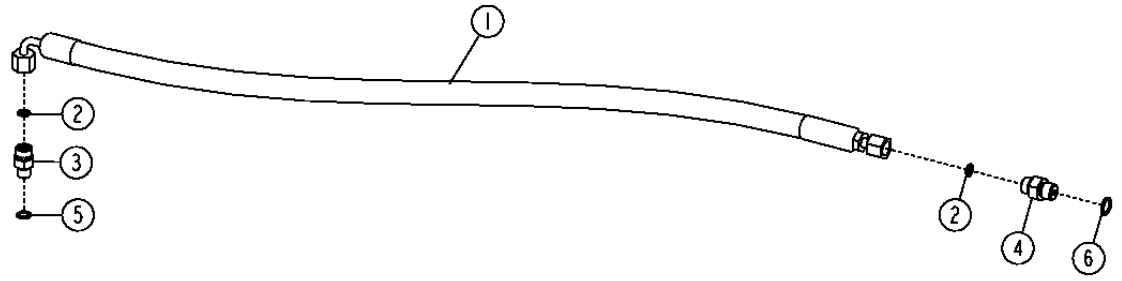

T154477

KEY	PART NO.	PART NAME	QTY.	SERIAL NO.	410J	410SJ	REMARKS
1	AT316670	HYDRAULIC HOSE - FABRICATE	1		X	X	9/16" X 1 168 MM (46") X 9/16"
2	T77814	O-RING	2		X	X	
3	38H1003	ELBOW FITTING	1		X	X	
4	38H1168	ADAPTER FITTING	1		X	X	
5	R28782	O-RING	1		X	X	
6	R26448	O-RING	1		X	X	

MEMORANDA
MEMORANDA
MEMORANDA

STANDARD FRONT AXLE (W/O MFWD)
ESSIEU AVANT STANDARD (W/O MFWD)
EJE DELANTERO ESTANDAR (W/O MFWD)

TX1016410 -UN-19DEC06

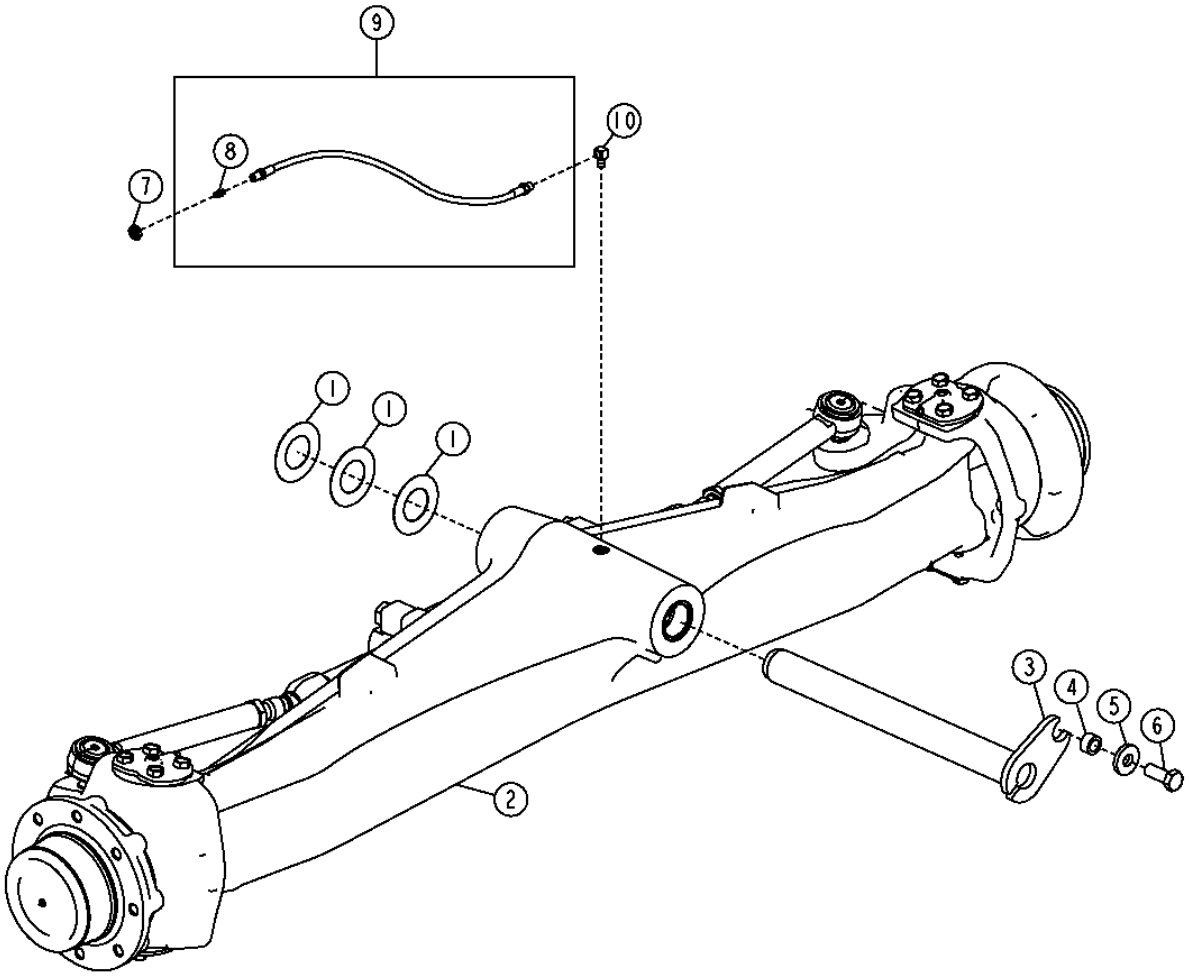

TX1016410

STANDARD FRONT AXLE (W/O MFWD)
ESSIEU AVANT STANDARD (W/O MFWD)
EJE DELANTERO ESTANDAR (W/O MFWD)

KEY	PART NO.	PART NAME	QTY.	SERIAL NO.	410J	410TMC	REMARKS
1	R46973	THRUST WASHER	3		X	X	
2	AT307741	FRONT AXLE	1		X	X	(COMPONENTS ON FOLLOWING PAGES)
3	AT306684	PIN	1		X	X	
4	T18145	BUSHING	1		X	X	
5	T119912	WASHER	1		X	X	
6	19M7488	CAP SCREW	1		X	X	
7	E12379	NUT	2		X	X	
8	JD7797	LUBRICATION FITTING	2		X	X	
9	AT224949	HOSE	1		X	X	
10	JD7838	ADAPTER FITTING	2		X	X	

STANDARD FRONT AXLE HOUSING (W/O MFWD)
ESSIEU AVANT STANDARD (W/O MFWD)
EJE DELANTERO ESTANDAR (W/O MFWD)

T188859 -UN-27MAR03

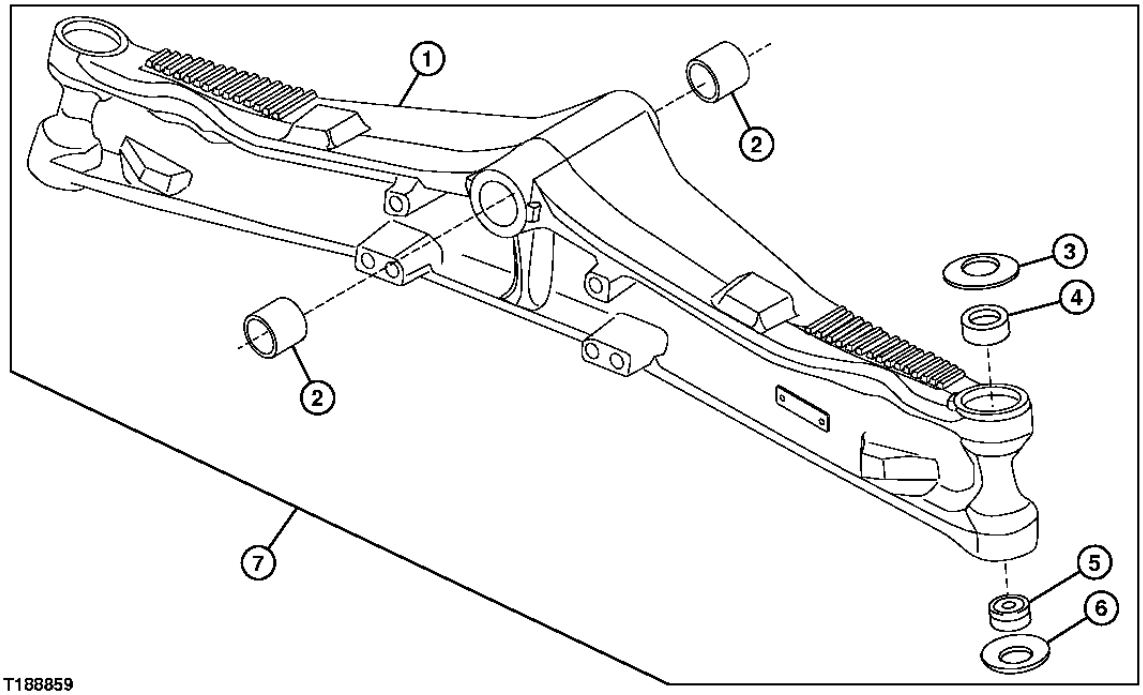

T188859

KEY	PART NO.	PART NAME	QTY.	SERIAL NO.	410J 410TMC	REMARKS
1	T218500	AXLE	1		X X	
2	T202499	BUSHING	2		X X	
3	R121593	WASHER	2		X X	
4	R204271	BUSHING	2		X X	
5	RE45896	BEARING	2		X X	
6	R121594	WASHER	2		X X	
7	**AT307741**	**FRONT AXLE**	**1**		**X X**	**(CA) (ADDITIONAL COMPONENTS ON FOLLOWING PAGES)**

SWIVEL HOUSINGS AND STEERING CYLINDER (W/O MFWD)
CARTERS PIVOTANTS ET VERIN DE DIRECTION (W/O MFWD)
CAJAS DE GIRO Y CILINDRO DE DIRECCION (W/O MFWD)

T188860 -UN-27MAR03

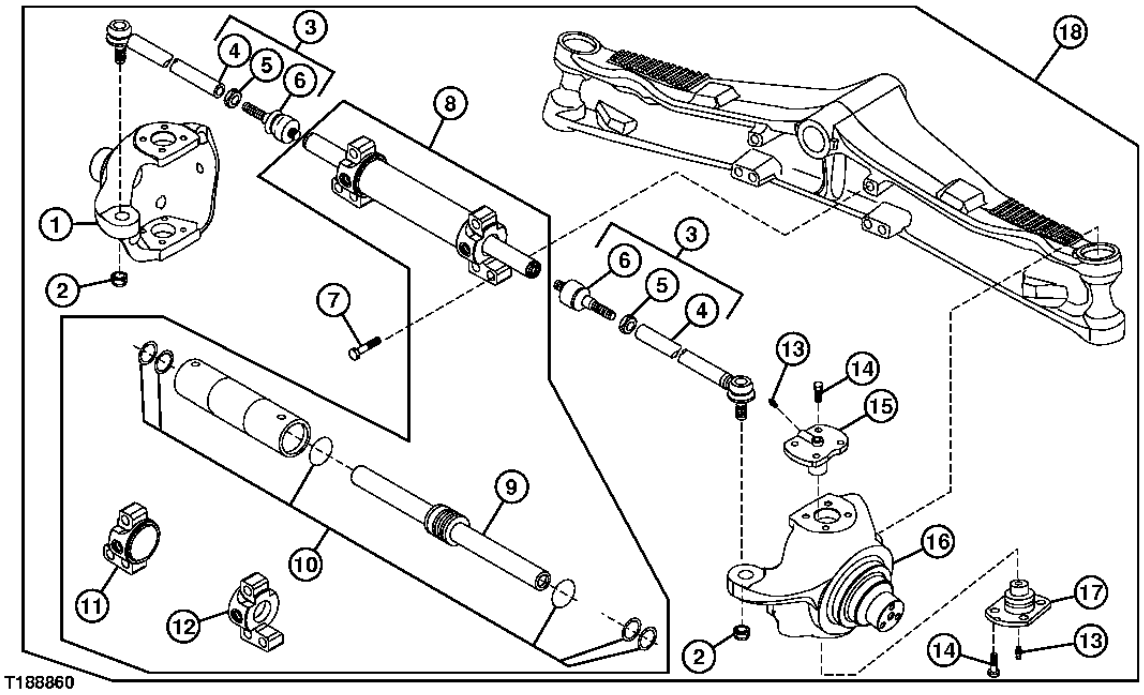

KEY	PART NO.	PART NAME	QTY.	SERIAL NO.	410J 410TMC	REMARKS
1	T190745	HOUSING	1		X X	(LH)
2	AT280268	LOCK NUT	2		X X	M20
3	AT198602	TIE ROD ASSEMBLY	2		X X	
4	T191428	TIE ROD ASSEMBLY	2		X X	
5	14M7309	NUT	2		X X	M24
6	T191427	BALL JOINT	2		X X	
7	T116290	BOLT	6		X X	M20 X 80
8	AT326535	HYDRAULIC CYLINDER	1		X X	
9	AT326536	ROD	1		X X	
10	T218499	SEAL KIT	1		X X	
11	.....	HYDRAULIC CYLINDER CAP	1		X X	(LH)
12	.....	HYDRAULIC CYLINDER CAP	1		X X	(RH)
13	R140070	LUBRICATION FITTING	4		X X	
14	19M8011	CAP SCREW	16		X X	M12 X 30
15	RE57471	TRUNNION	2		X X	
	R122218	SPACER	AR		X X	
16	T190746	HOUSING	1		X X	(RH)
17	RE57472	TRUNNION	2		X X	
18	**AT307741**	**FRONT AXLE**	**1**		**X X**	**(CA) (ADDITIONAL COMPONENTS ON PREVIOUS AND FOLLOWING PAGES)**

FRONT AXLE (W/MFWD)
ESSIEU AVANT (AVEC TRACTION AVANT MECANIQUE)
EJE DELANTERO (CON TRACCION DELANTERA MECANICA)

TX1016184 -UN-23DEC06

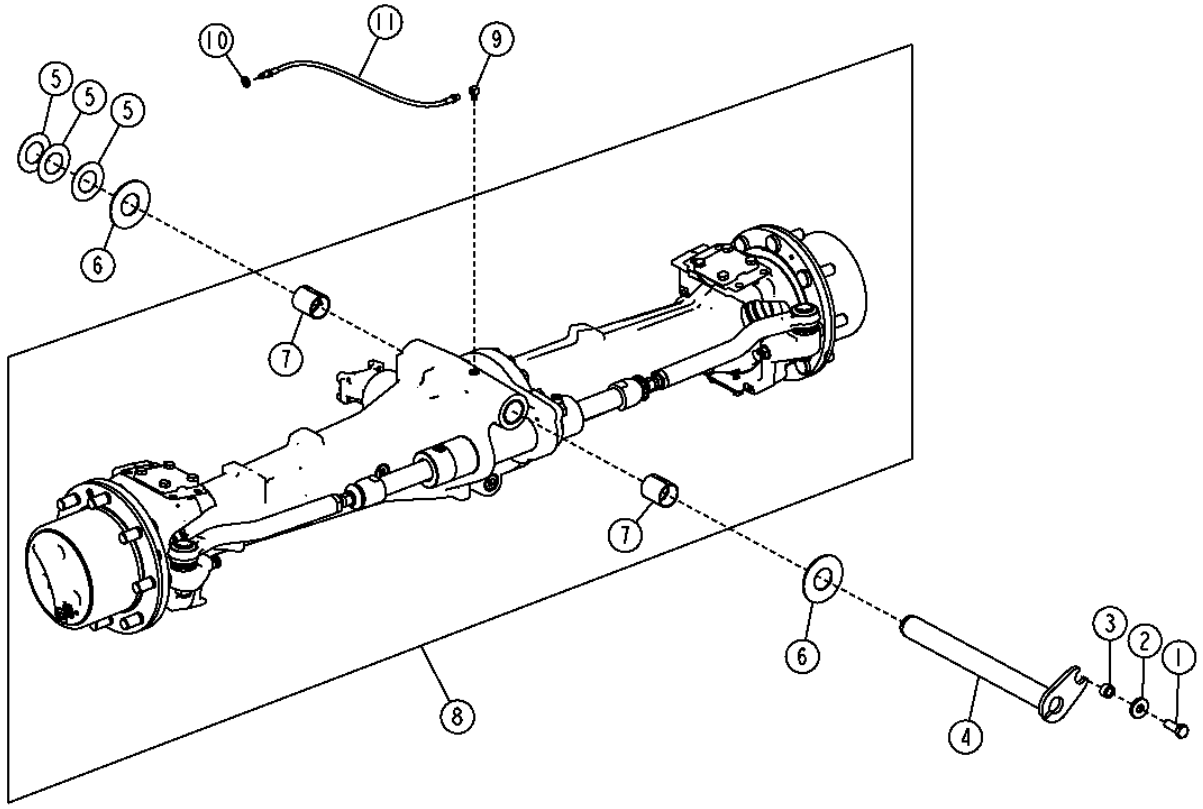

TX1016184

FRONT AXLE (W/MFWD)
ESSIEU AVANT (AVEC TRACTION AVANT MECANIQUE)
EJE DELANTERO (CON TRACCION DELANTERA MECANICA)

KEY	PART NO.	PART NAME	QTY.	SERIAL NO.	410J	410TMC	REMARKS
1	19M7488	CAP SCREW	1		X	X	M16 X 40
2	T119912	WASHER	1		X	X	
3	T18145	BUSHING	1		X	X	
4	AT314992	PIN	1		X	X	
5	R46973	THRUST WASHER	4		X	X	
6	T80027	THRUST WASHER	2		X	X	
7	T140211	BUSHING	2		X	X	
8	**AT311085**	**FRONT AXLE**	**1**		**X**	**X**	**CA**
9	JD7838	ADAPTER FITTING	1		X	X	
10	E12379	NUT	1		X	X	
11	AT224949	HOSE	1		X	X	

FRONT AXLE HOUSING AND TIE RODS (W/MFWD)
CARTER D'ESSIEU AVANT ET BARRES D'ACCOUPLEMENT (W/ MFWD)
CAJA DE EJE DELANTERO Y BARRAS DE ACOPLAMIENTO (W/ MFWD)

TX1016213 -UN-13DEC06

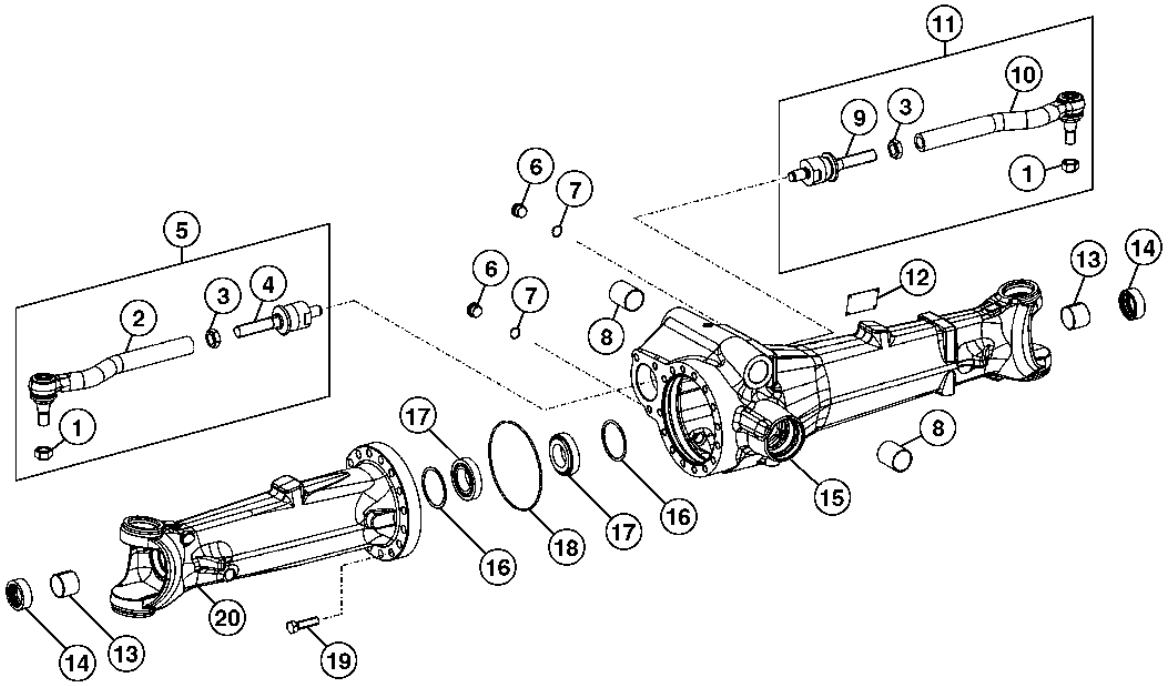

TX1016213

FRONT AXLE HOUSING AND TIE RODS (W/MFWD)
CARTER D'ESSIEU AVANT ET BARRES D'ACCOUPLEMENT (W/ MFWD)
CAJA DE EJE DELANTERO Y BARRAS DE ACOPLAMIENTO (W/ MFWD)

KEY	PART NO.	PART NAME	QTY.	SERIAL NO.	410J	410TMC	REMARKS
1	T229268	LOCK NUT	2		X	X	
2	AT326539	TIE ROD ASSEMBLY	1		X	X	LH.
3	T229269	NUT	2		X	X	
4	AT339807	TIE ROD END	1		X	X	
5	AT326538	TIE ROD ASSEMBLY	1		X	X	LH.
6	T229212	PLUG	2		X	X	
7	R82198	O-RING	2		X	X	21 X 2 MM
8	T140211	BUSHING	2		X	X	
9	AT339807	TIE ROD END	1		X	X	
10	AT326540	TIE ROD ASSEMBLY	1		X	X	RH.
11	AT326537	TIE ROD ASSEMBLY	1		X	X	RH.
12	.....	PLATE	1		X	X	
13	T229267	BUSHING	2		X	X	
14	L110233	SEAL	2		X	X	
15	T229262	HOUSING	1		X	X	RH.
16	T229086	SOLID SHIM	2		X	X	1.95 MM
	T229087	SOLID SHIM	2		X	X	1.90 MM
	T229088	SOLID SHIM	2		X	X	1.85 MM
	T229090	SOLID SHIM	2		X	X	1.75 MM
	T229091	SOLID SHIM	2		X	X	1.70 MM
	T229092	SOLID SHIM	2		X	X	1.65 MM
	T229093	SOLID SHIM	2		X	X	1.60 MM
	T229094	SOLID SHIM	2		X	X	1.55 MM
	T229096	SOLID SHIM	2		X	X	1.45 MM
	T229097	SOLID SHIM	2		X	X	1.40 MM
	T229098	SOLID SHIM	2		X	X	1.2 MM
	T229099	SOLID SHIM	2		X	X	1.0 MM
	T229100	SOLID SHIM	2		X	X	0.8 MM
	T229101	SOLID SHIM	2		X	X	0.6 MM
	T229102	SOLID SHIM	2		X	X	0.5 MM
	T229103	SOLID SHIM	2		X	X	0.4 MM
	T229104	SOLID SHIM	2		X	X	0.3 MM
	T229105	SOLID SHIM	2		X	X	0.2 MM
	T229106	SOLID SHIM	2		X	X	0.1 MM
	T229107	SOLID SHIM	2		X	X	0.65 MM
	T229108	SOLID SHIM	2		X	X	0.70 MM
	T229109	SOLID SHIM	2		X	X	0.75 MM
	T229110	SOLID SHIM	2		X	X	0.85 MM
	T229111	SOLID SHIM	2		X	X	0.90 MM
	T229112	SOLID SHIM	2		X	X	0.95 MM
	T229113	SOLID SHIM	2		X	X	1.10 MM
	T229114	SOLID SHIM	2		X	X	1.15 MM
	T229115	SOLID SHIM	2		X	X	1.25 MM
	T229116	SOLID SHIM	2		X	X	1.30 MM
	T229117	SOLID SHIM	2		X	X	1.35 MM
	T229118	SOLID SHIM	2		X	X	0.45 MM
	T229119	SOLID SHIM	2		X	X	0.55 MM
	T229120	SOLID SHIM	2		X	X	1.05 MM
	T229121	SOLID SHIM	2		X	X	2.05 MM
	T229122	SOLID SHIM	2		X	X	2.10 MM
	T229123	SOLID SHIM	2		X	X	2.15 MM
	T229124	SOLID SHIM	2		X	X	2.20 MM
	T229125	SOLID SHIM	2		X	X	2.25 MM
	T229126	SOLID SHIM	2		X	X	2.30 MM
	T229127	SOLID SHIM	2		X	X	2.35 MM
	T229128	SOLID SHIM	2		X	X	2.40 MM
	T229129	SOLID SHIM	2		X	X	2.45 MM
	T229130	SOLID SHIM	2		X	X	2.50 MM
17	AT303349	TAPERED ROLLER BEARING	2		X	X	
18	T218804	O-RING	1		X	X	
19	19M3005	CAP SCREW	15		X	X	M16 X 60
20	T229253	HOUSING	1		X	X	LH.

FRONT AXLE HOUSING HUBS,SHAFTS AND UNIVERSAL JOINTS(W/MFWD)
CARTERS D'ESSIEU AVANT,ARBRE,MOYEUX ET JOINTS UNIVERSELS (W/ MFWD)
CAJAS,EJE, CUBOS Y JUNTAS UNIVERSALES DE EJE DELANTERO (W/ MFWD)

TX1016261 -UN-13DEC06

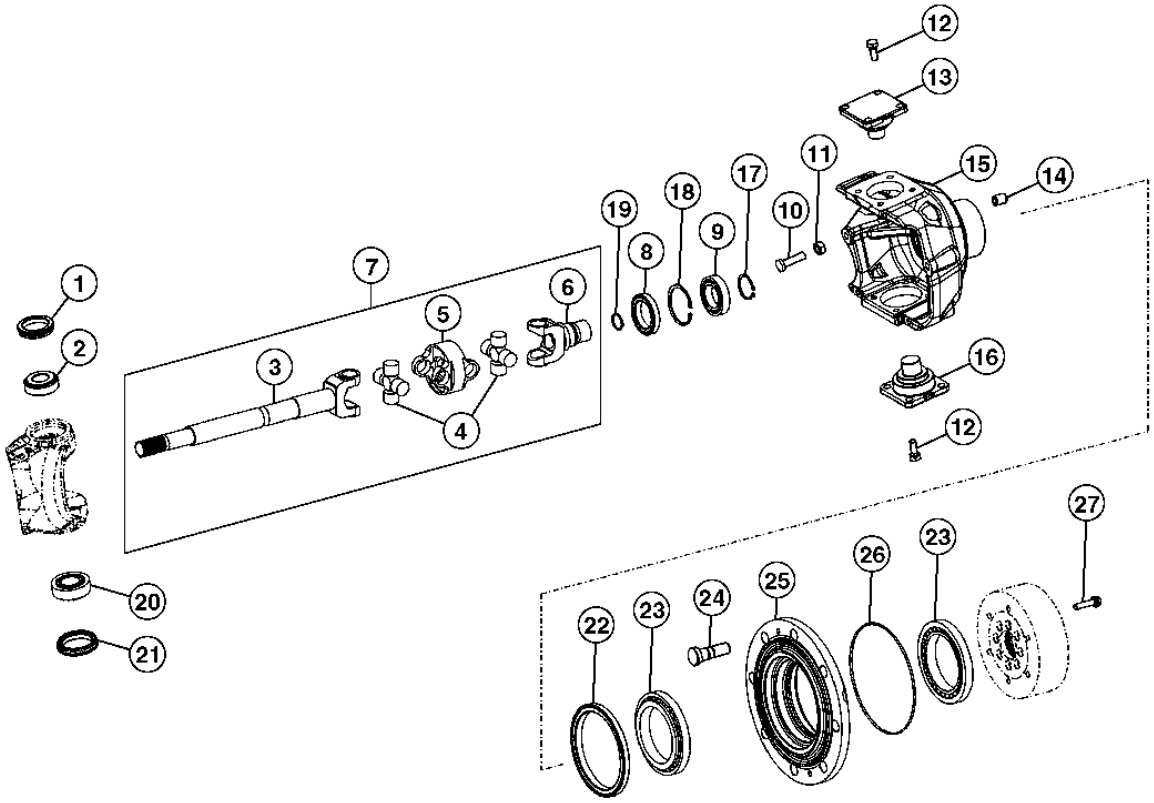

TX1016261

AXLE SHAFT, BEARINGS AND REDUCTION GEARS 0250

FRONT AXLE HOUSING HUBS,SHAFTS AND UNIVERSAL JOINTS(W/MFWD)
CARTERS D'ESSIEU AVANT,ARBRE,MOYEUX ET JOINTS UNIVERSELS (W/ MFWD)
CAJAS,EJE, CUBOS Y JUNTAS UNIVERSALES DE EJE DELANTERO (W/ MFWD)

KEY	PART NO.	PART NAME	QTY.	SERIAL NO.	410J	410TMC	REMARKS
1	AL79902	SEAL	2		X	X	
2	AT339808	TAPERED ROLLER BEARING	2		X	X	
3	T229254	SHAFT	2		X	X	
4	AT339809	CROSS AND BEARING ASSEMBLY	4		X	X	
5	T229270	YOKE	2		X	X	
6	T229255	SHAFT	2		X	X	
7	AT339629	UNIVERSAL DRIVESHAFT	2		X	X	
8	AL79951	SEAL	2		X	X	
9	R115119	BALL BEARING	2		X	X	
10	T229272	SCREW	4		X	X	
11	14M7437	NUT	4		X	X	M14
12	19M8011	CAP SCREW	16		X	X	M12 X 30
13	T229260	PIN	2		X	X	
14	T229271	BUSHING	16		X	X	
15	T229251	HOUSING	1		X	X	LH.
	T229252	HOUSING	1		X	X	RH. (NOT ILLUSTRATED)
16	T229285	PIN	2		X	X	0.2 MM
17	40M7047	SNAP RING	2		X	X	
18	40M5099	SNAP RING	2		X	X	
19	L40276	SNAP RING	2		X	X	
20	AT339806	TAPERED ROLLER BEARING	2		X	X	
21	AL110924	SEAL	2		X	X	
22	T218484	SEAL	2		X	X	
23	JD10249	TAPERED ROLLER BEARING	4		X	X	
24	T218487	STUD	16		X	X	
25	T229273	HUB	2		X	X	
26	L40317	O-RING	2		X	X	
27	19M8120	SCREW	16		X	X	M10 X 45

PLANETARY DRIVE (W/MFWD)
ENTRAINEMENT DE TRAIN PLANETAIRE(W/MFWD)
MANDO DE PLANETARIOS(W/MFWD)

TX1016284 -UN-14DEC06

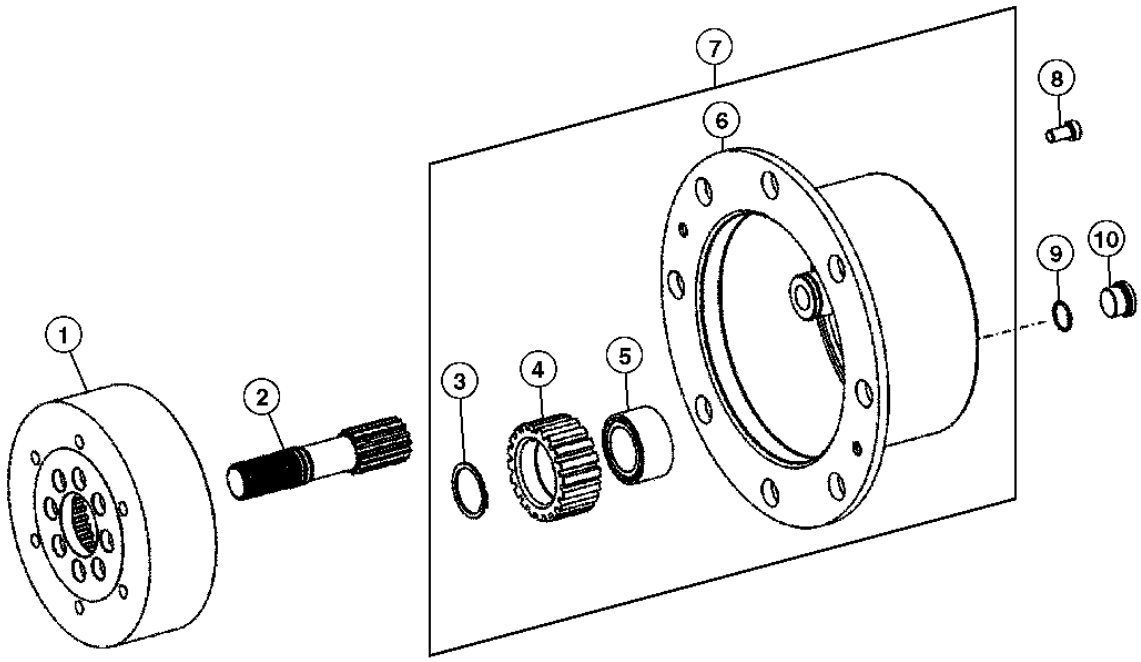

TX1016284

PLANETARY DRIVE (W/MFWD)
ENTRAINEMENT DE TRAIN PLANETAIRE(W/MFWD)
MANDO DE PLANETARIOS(W/MFWD)

KEY	PART NO.	PART NAME	QTY.	SERIAL NO.	410J	410TMC	REMARKS
1	T229274	RING GEAR	2		X	X	
2	T229250	SUN GEAR	2		X	X	
3	T228911	SNAP RING	6		X	X	
4	T229258	PLANET PINION	6		X	X	
5	AT339811	CYLINDRICAL ROLLER BEARING	6		X	X	
6	T229259	PLANET PINION CARRIER	2		X	X	
7	AT339810	PLANETARY ASSEMBLY	2		X	X	
8	19M5039	SCREW	4		X	X	M10 X 20
9	R82198	O-RING	2		X	X	
10	T229212	PLUG	2		X	X	

LIMITED SLIP DIFFERENTIAL (W/MFWD)
DIFFERENTIEL AUTOBLOQUANT(W/MFWD)
DIFERENCIAL DE PATINAJE LIMITADO(W/MFWD)

TX1016309 -UN-13DEC06

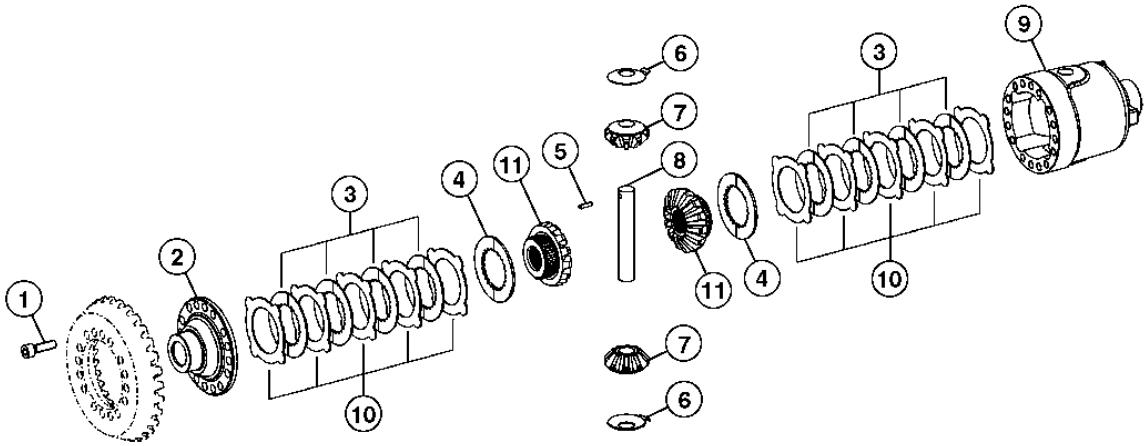

TX1016309

LIMITED SLIP DIFFERENTIAL (W/MFWD)
DIFFERENTIEL AUTOBLOQUANT(W/MFWD)
DIFERENCIAL DE PATINAJE LIMITADO (W/MFWD)

KEY	PART NO.	PART NAME	QTY.	SERIAL NO.	410J	410TMC	REMARKS
1	19M7180	CAP SCREW	16		X	X	M10 X 45
2	T229076	COVER	1		X	X	
3	AT339686	CLUTCH DISK	8		X	X	
4	T229082	THRUST WASHER	2		X	X	
5	34M7148	SPRING PIN	1		X	X	5 X 18 MM
6	T229083	THRUST WASHER	2		X	X	
7	T229080	BEVEL GEAR	2		X	X	
8	T229084	PINION SHAFT	1		X	X	
9	T229077	HOUSING	1		X	X	
10	.....	CLUTCH DISK	10		X	X	
11	T229081	BEVEL GEAR DRIVE	2		X	X	

FRONT SPIRAL BEVEL INPUT PINION AND RING GEAR(W/MFWD)
PIGNON D ENTRˆE CONIQUE HELICOIDAL AVANT ET TRAIN DE COURONNES (W/MFWD)
JUEGO DE CORONA DENTADA Y PINON CONICO DE ENTRADA DE DIENTES HELICOIDALES DELANTERO (W/MFWD)

TX1016112 -UN-13DEC06

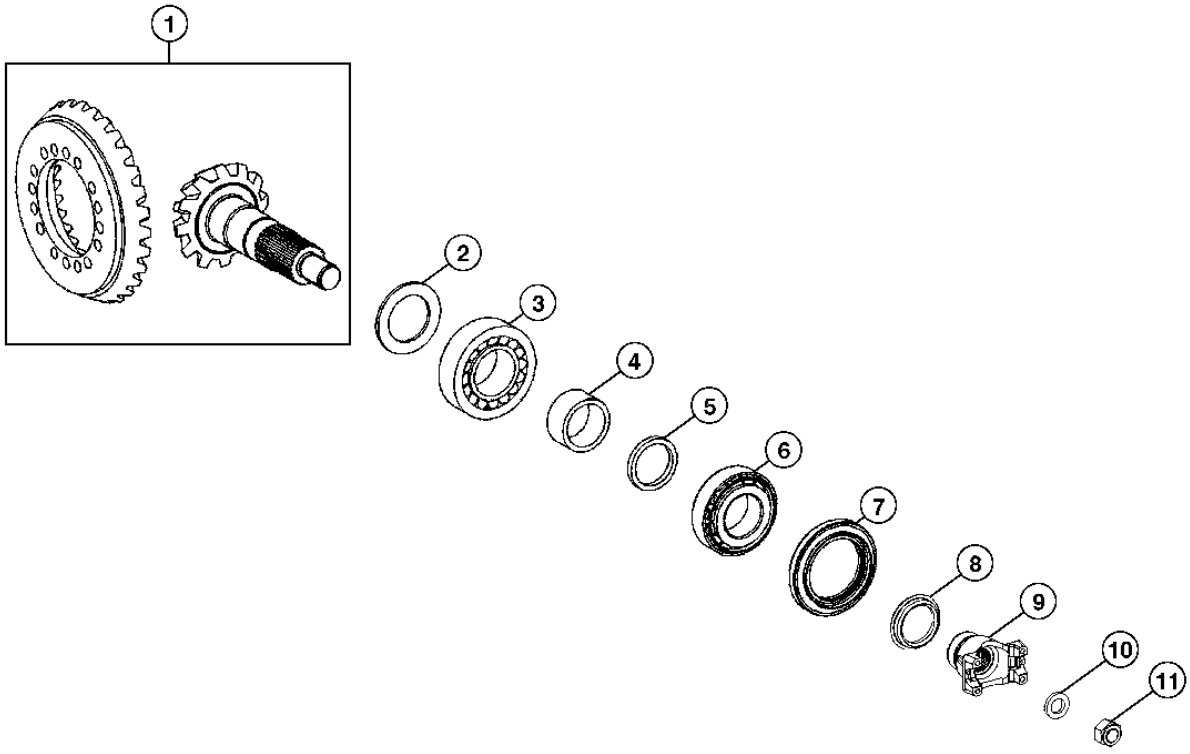

TX1016112

FRONT SPIRAL BEVEL INPUT PINION AND RING GEAR(W/MFWD)
PIGNON DENTRˆE CONIQUE HELICOIDAL AVANT ET TRAIN DE COURONNES (W/MFWD)
JUEGO DE CORONA DENTADA Y PINON CONICO DE ENTRADA DE DIENTES HELICOIDALES DELANTERO (W/MFWD)

KEY	PART NO.	PART NAME	QTY.	SERIAL NO.	410J	410TMC	REMARKS
1	AT326923	BEVEL GEAR DRIVE	1		X	X	
2	T228998	SHIM	1		X	X	3.3 MM
	T228999	SHIM	1		X	X	3.4 MM
	T229000	SHIM	1		X	X	3.5 MM
	T229001	SHIM	1		X	X	3.6 MM
	T229002	SHIM	1		X	X	3.7 MM
3	AL79794	TAPERED ROLLER BEARING	1		X	X	
4	T229009	BUSHING	1		X	X	
5	T229010	RING	1		X	X	5.55 MM
	T229011	RING	1		X	X	5.60 MM
	T229012	RING	1		X	X	5.65 MM
	T229013	RING	1		X	X	5.70 MM
	T229014	RING	1		X	X	5.75 MM
	T229015	RING	1		X	X	5.80 MM
	T229016	RING	1		X	X	5.85 MM
	T229017	RING	1		X	X	5.90 MM
	T229018	RING	1		X	X	5.95 MM
	T229019	RING	1		X	X	6.10 MM
	T229020	RING	1		X	X	6.15 MM
	T229021	RING	1		X	X	6.20 MM
	T229022	RING	1		X	X	6.25 MM
	T229023	RING	1		X	X	6.30 MM
	T229024	RING	1		X	X	6.35 MM
	T229025	RING	1		X	X	6.40 MM
	T229026	RING	1		X	X	6.45 MM
	T229027	RING	1		X	X	6.50 MM
	T229028	RING	1		X	X	6.55 MM
	T229029	RING	1		X	X	6.60 MM
	T229030	RING	1		X	X	6.70 MM
	T229031	RING	1		X	X	5.70 MM
	T229032	RING	1		X	X	5.98 MM
	T229033	RING	1		X	X	6.00 MM
	T229034	RING	1		X	X	6.2 MM
	T229035	RING	1		X	X	6.4 MM
	T229036	RING	1		X	X	6.7 MM
6	AT339648	TAPERED ROLLER BEARING	1		X	X	
7	AT321949	SEAL	1		X	X	
8	T218833	GUARD	1		X	X	
9	T218832	UNIVERSAL JOINT YOKE	1		X	X	
10	L35714	WASHER	1		X	X	
11	14M7498	LOCK NUT	1		X	X	M24

DRIVE SHAFT (W/MFWD)
ARBRE D'ENTRAINEMENT (W/MFWD)
EJE DE TRANSMISION (W/MFWD)

TX1016524 -UN-18DEC06

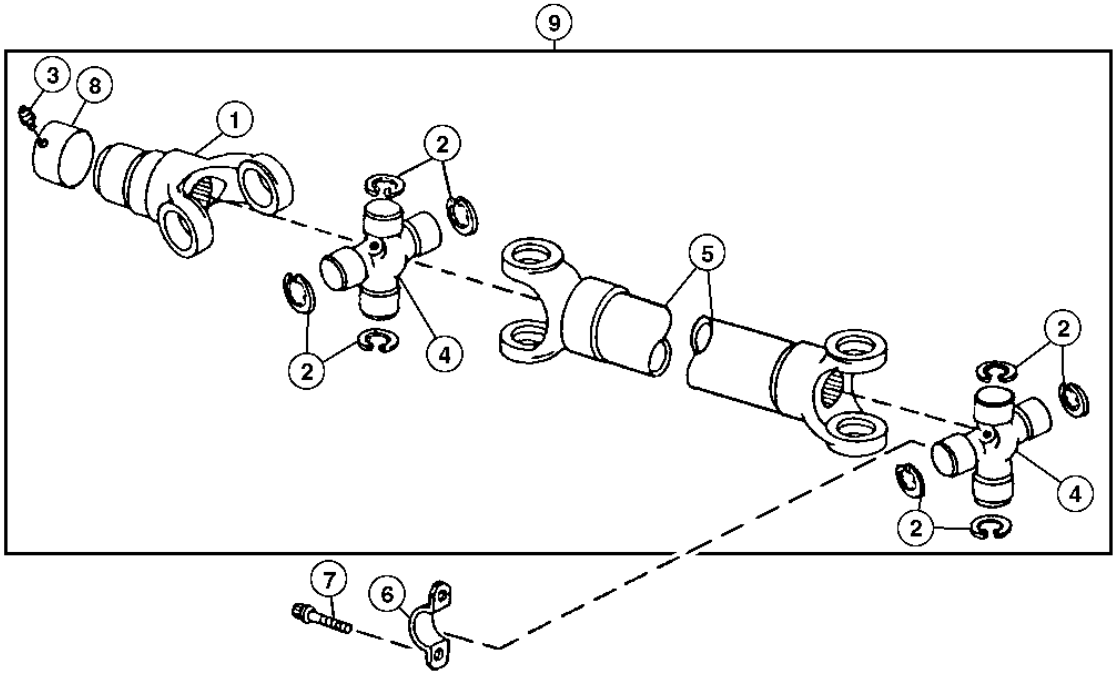

TX1016524

DRIVE SHAFT (W/MFWD)
LEVIER DE VITESSES
PALANCA DE CONTROL DE TRANSMISION

KEY	PART NO.	PART NAME	QTY.	SERIAL NO.	410J	410TMC	REMARKS
1	AT179596	UNIVERSAL JOINT YOKE	1		X	X	
2	N119316	SNAP RING	6		X	X	
3	JD7797	LUBRICATION FITTING	1		X	X	
4	AT178387	KIT	2		X	X	(U-JOINT) GREASEABLE
	AT178389	KIT	2		X	X	(U-JOINT) LUBED FOR LIFE
5	.....	DRIVE SHAFT	1		X	X	
6	T69938	HALF CLAMP	2		X	X	
7	T113128	SCREW	4		X	X	
8	AT179590	SEAL	1		X	X	
9	AT314922	UNIVERSAL DRIVESHAFT	1		X	X	

TRANSMISSION CONTROL LEVER
LEVIER DE VITESSES
PALANCA DE CONTROL DE TRANSMISION

TX1015124 -UN-18DEC06

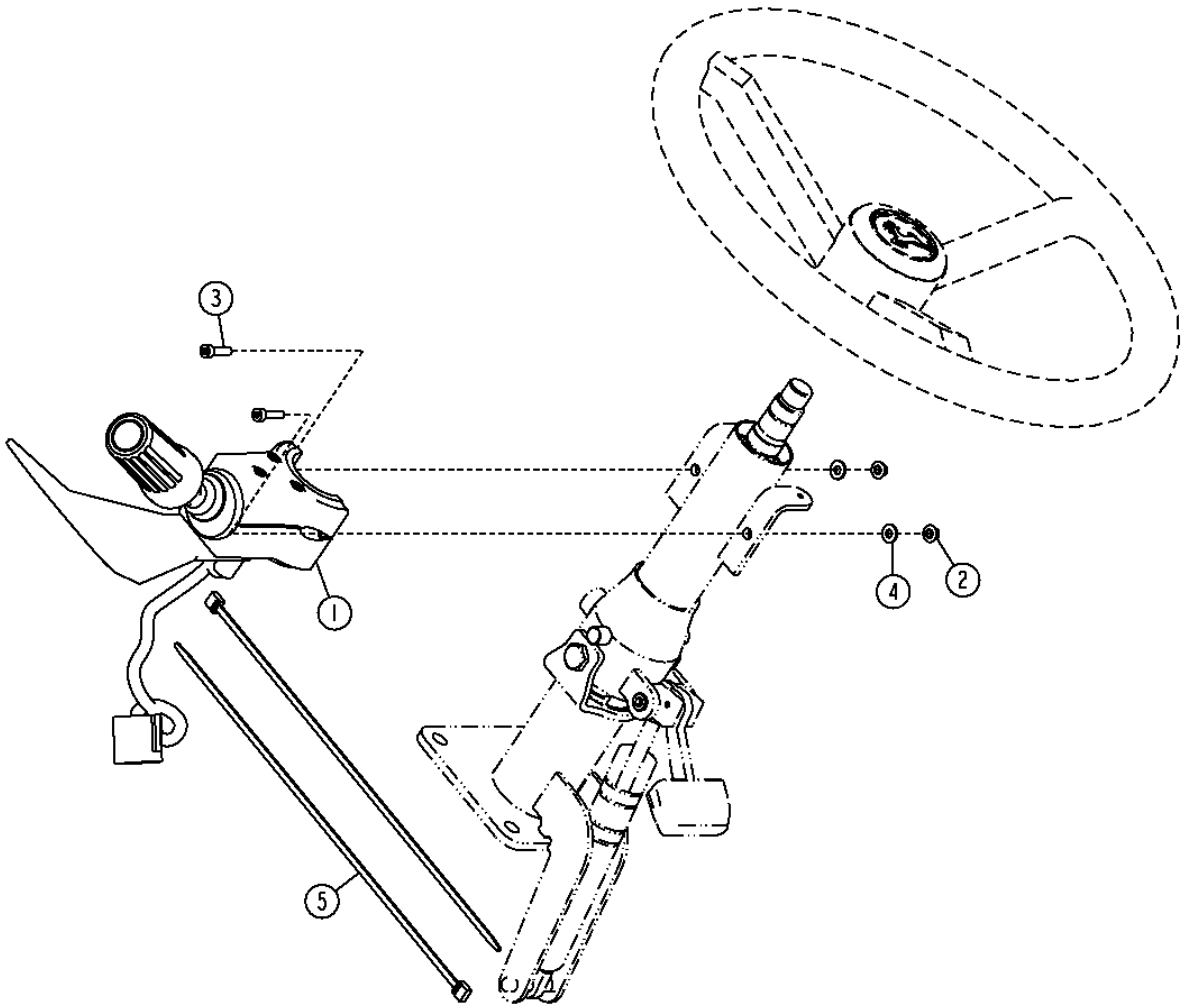

TX1015124

TRANSMISSION CONTROL LEVER
LEVIER DE VITESSES
PALANCA DE CONTROL DE TRANSMISION

KEY	PART NO.	PART NAME	QTY.	SERIAL NO.	410J	410TMC	REMARKS
1	AT314144	SWITCH	1		X	X	
2	14M7375	FLANGE NUT	2		X	X	M5
3	19M7709	SCREW	2		X	X	M5 X 20
4	24H1283	WASHER	2		X	X	7/32" X 1/2" X 0.049"
5	H77698	TIE BAND	2		X	X	

REAR DRIVESHAFT
ARBRE D'ENTRAINEMENT ARRIERE
EJE DE MANDO TRASERA

TX1014964 -UN-12DEC06

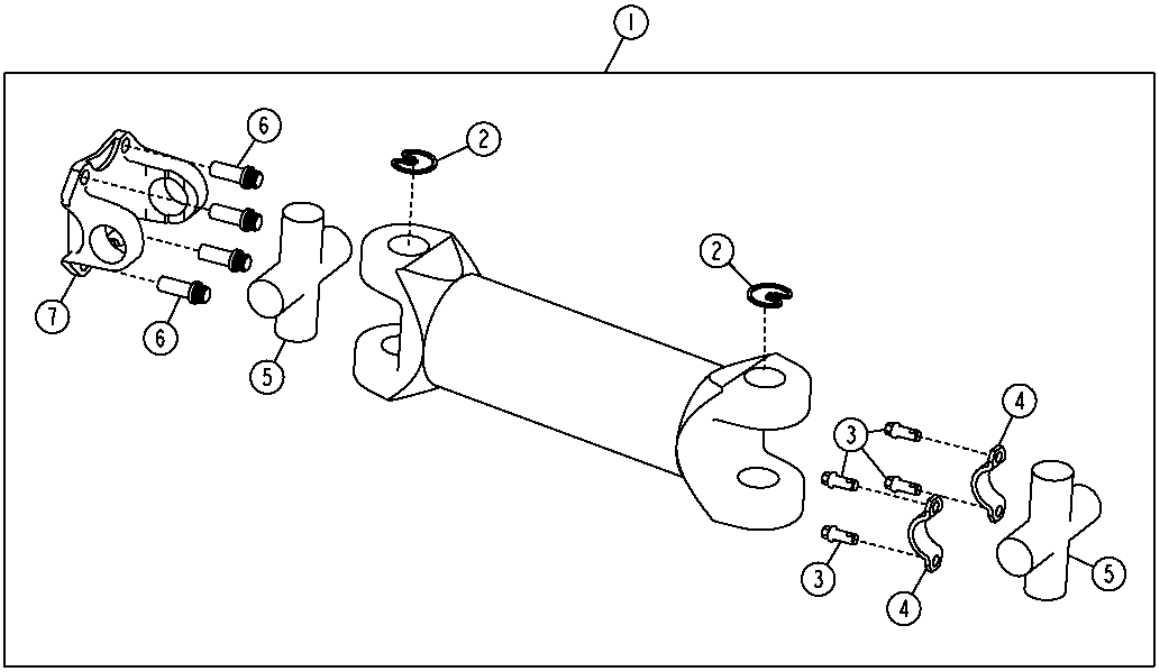

TX1014964

REAR DRIVESHAFT
ARBRE D'ENTRAINEMENT ARRIERE
EJE DE MANDO TRASERA

KEY	PART NO.	PART NAME	QTY.	SERIAL NO.	410J	410TMC	REMARKS
1	AT314592	UNIVERSAL DRIVESHAFT	1		X	X	
2	N119316	SNAP RING	4		X	X	
3	T113128	SCREW	4		X	X	
4	T69938	HALF CLAMP	2		X	X	
5	AT178390	CROSS AND BEARING ASSEMBLY	2		X	X	
6	T82430	SCREW	4		X	X	
7	T65974	UNIVERSAL JOINT YOKE	1		X	X	

TRANSMISSION REAR HOUSING AND OIL FILL TUBE
CARTER ARRIERE ET TUBE DE REMPLISSAGE D'HUILE DE TRANSMISSION
CAJA TRASERA DE TRANSMISION Y TUBO DE LLENADO DE ACEITE

TX1014473 -UN-15DEC06

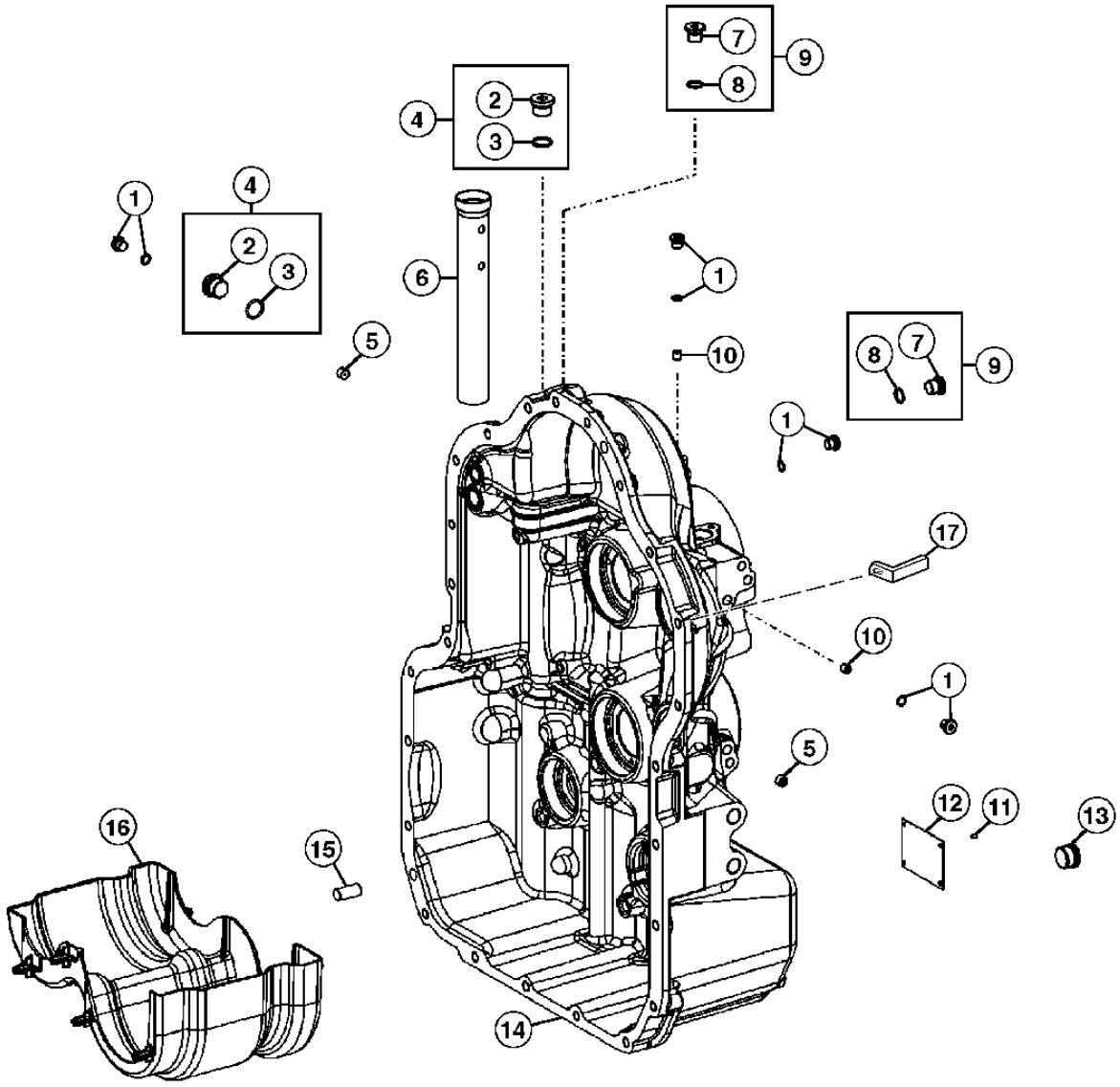

TX1014473

TRANSMISSION REAR HOUSING AND OIL FILL TUBE
CARTER ARRIERE ET TUBE DE REMPLISSAGE D'HUILE DE TRANSMISSION
CAJA TRASERA DE TRANSMISION Y TUBO DE LLENADO DE ACEITE

KEY	PART NO.	PART NAME	QTY.	SERIAL NO.	410J	410TMC	REMARKS
1	T161194	PLUG	AR		X	X	
2	T229350	PLUG	2		X	X	
3	T229396	O-RING	2		X	X	
4	AT339903	PLUG	2		X	X	
5	T229354	ORIFICE	2		X	X	1.4.MM
	T230433	ORIFICE	2		X	X	1.55
	T229387	ORIFICE	2		X	X	1.7
6	T229404	TUBE	1		X	X	
7	T229338	PLUG	3		X	X	
8	T229395	O-RING	3		X	X	
9	AT339901	PLUG	3		X	X	
10	.....	ORIFICE	1		X	X	
11	25M7021	GROOVE PIN	4		X	X	3 X 5 MM
12	.....	IDENTIFICATION PLATE	1		X	X	
13	T159565	PLUG	1		X	X	
14	T229389	HOUSING	1		X	X	(WITH MFWD)
	T229388	HOUSING	1		X	X	(WITHOUT MFWD)
15	T164662	PIN	2		X	X	
16	AT339921	SCREEN	1		X	X	
17	R73975	BRACKET	2		X	X	

TRANSMISSION FRONT HOUSING AND TORQUE CONVERTER COVER
CARTER AVANT DE TRANSMISSION ET PROTECTION DE CONVERTISSEUR DE COUPLE
CAJA DELANTERA DE TRANSMISION Y CUBIERTA DE CONVERTIDOR DE PAR

TX1014535 -UN-15DEC06

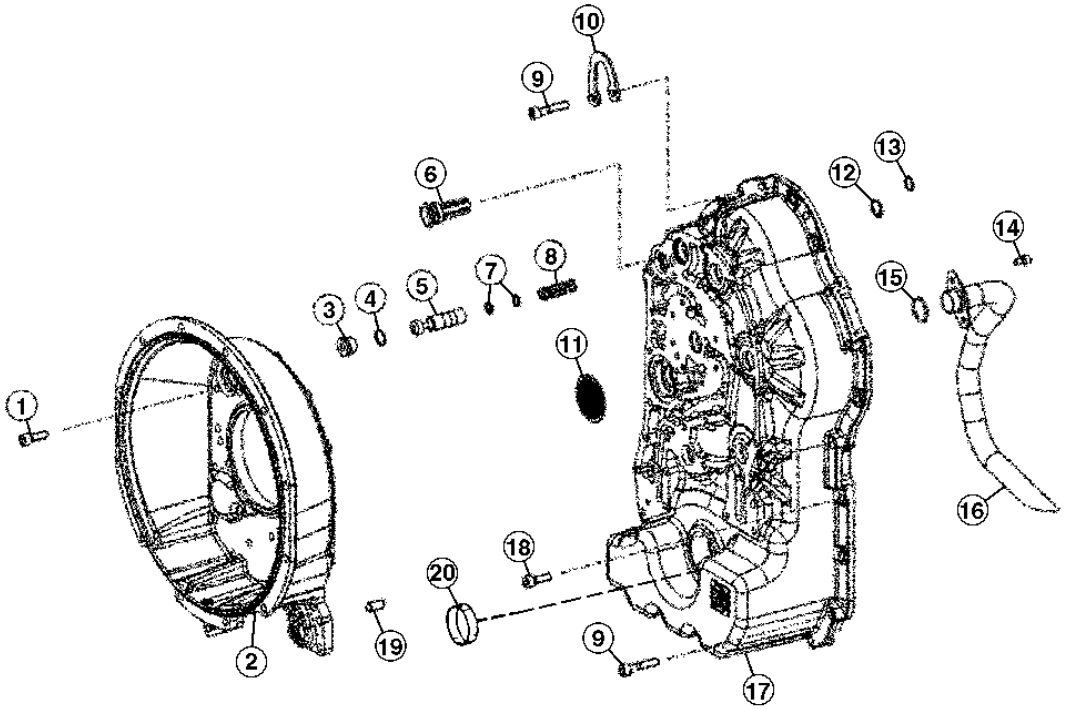

TX1014535

TRANSMISSION FRONT HOUSING AND TORQUE CONVERTER COVER
CARTER AVANT DE TRANSMISSION ET PROTECTION DE CONVERTISSEUR DE COUPLE
CAJA DELANTERA DE TRANSMISION Y CUBIERTA DE CONVERTIDOR DE PAR

KEY	PART NO.	PART NAME	QTY.	SERIAL NO.	410J	410TMC	REMARKS
1	T229351	CAP SCREW	30		X	X	
2	T229392	HOUSING	1		X	X	
3	15M7045	DRAIN PLUG	1		X	X	
4	T229399	O-RING	1		X	X	
5	T229400	PISTON	1		X	X	
6	T176526	VALVE	1		X	X	
7	T161197	SPACER	1		X	X	3.6 MM
	T161198	SPACER	1		X	X	3.2 MM
	T161199	SPACER	1		X	X	2.8 MM
	T161200	SPACER	1		X	X	2.4 MM
	T229360	SPACER	1		X	X	2.0 MM
	T229369	SPACER	1		X	X	2.2 MM
	T229376	SPACER	1		X	X	2.6 MM
8	T159586	SPRING	1		X	X	
9	T229363	CAP SCREW	10		X	X	
10	.....	BRACKET	1		X	X	
11	AT339923	SCREEN	1		X	X	
12	T229394	O-RING	1		X	X	
13	R104558	O-RING	1		X	X	
14	T164648	CAP SCREW	2		X	X	
15	T161181	O-RING	1		X	X	
16	AT339900	TUBE	1		X	X	
17	T229366	HOUSING	1		X	X	(WITH MFWD)
	T229362	HOUSING	1		X	X	(WITHOUT MFWD)
18	T229351	CAP SCREW	14		X	X	
19	T164662	PIN	2		X	X	
20	T159683	COVER	1		X	X	(WITHOUT MFWD)

TRANSMISSION, DIPSTICK AND TUBE
TRANSMISSION, JAUGE ET TUBE
TRANSMISION, VARILLA DE MEDICION Y TUBO

TX1016059 -UN-12DEC06

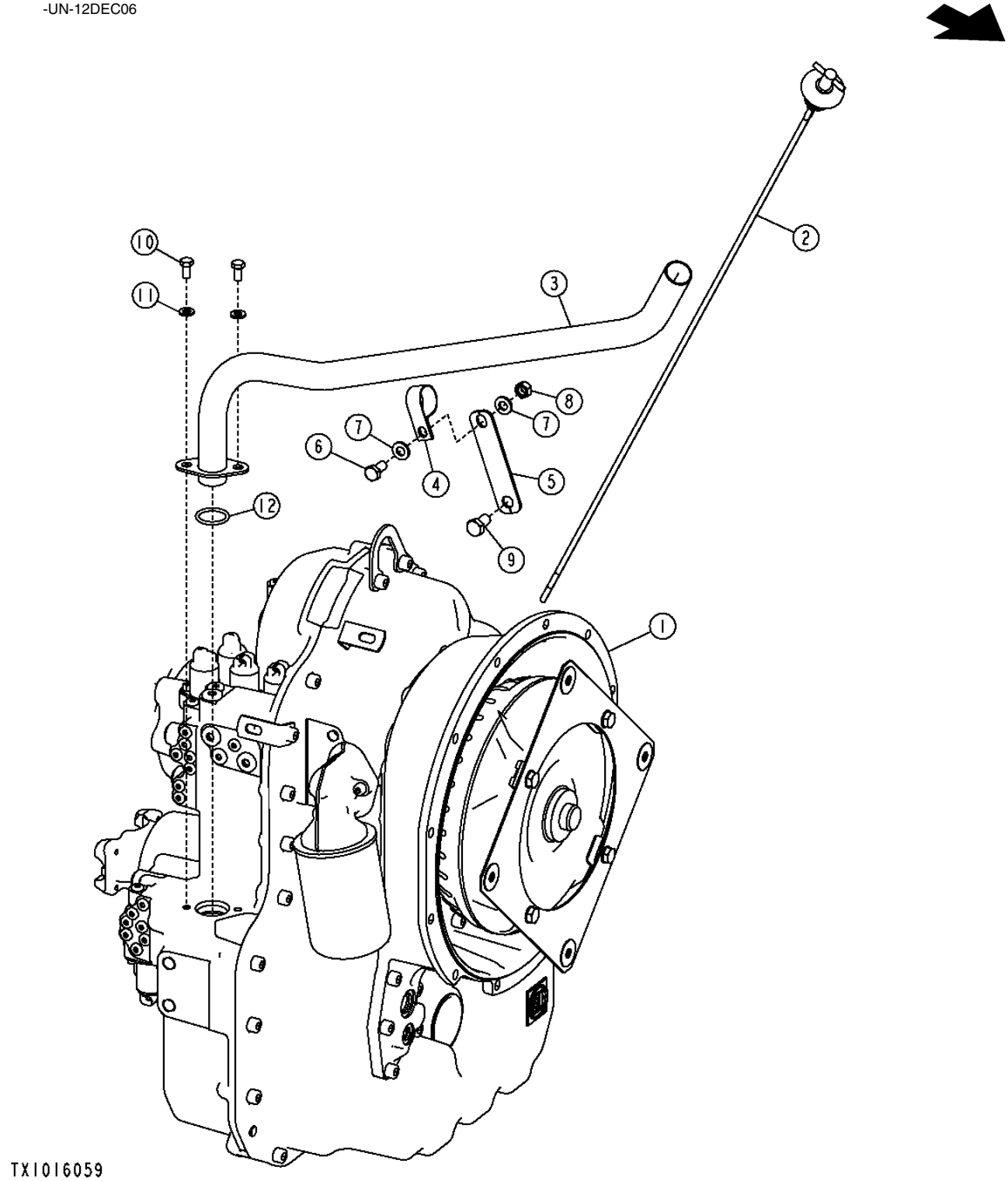

TRANSMISSION, DIPSTICK AND TUBE
TRANSMISSION, JAUGE ET TUBE
TRANSMISION, VARILLA DE MEDICION Y TUBO

KEY	PART NO.	PART NAME	QTY.	SERIAL NO.	410J	410TMC	REMARKS
1	AT310585	TRANSMISSION	1		X	X	(WITH MFWD) (CA) (INCLUDES HOUSING, TORQUE CONVERTER, CONTROL VALVE, SOLENOIDS, AND FILTER)
	AT314916	**TRANSMISSION**	**1**		**X**	**X**	**(WITHOUT MFWD) (CA) (INCLUDES HOUSING, TORQUE CONVERTER, CONTROL VALVE, SOLENOIDS, AND FILTER)**
2	AT303695	DIPSTICK	1		X	X	
3	AT311103	DIPSTICK TUBE	1		X	X	
4	T162675	CLAMP	1		X	X	
5	.....	PLATE	1		X	X	
6	19M7938	CAP SCREW	1		X	X	M10 X 20
7	24M7239	WASHER	2		X	X	10.700 X 21 X 2.500 MM
8	14M7274	NUT	1		X	X	M10
9	19M8017	CAP SCREW	1		X	X	M12 X 20
10	19M7932	CAP SCREW	2		X	X	M8 X 16
11	24M7238	WASHER	2		X	X	8.700 X 17 X 2 MM
12	R29463	O-RING	1		X	X	

TRANSMISSION REAR MOUNTING SUPPORT
SUPPORT DE MONTAGE ARRIERE DE TRANSMISSION
SOPORTE DE MONTAJE TRASERO DE LA TRANSMISION

TX1014880 -UN-28DEC06

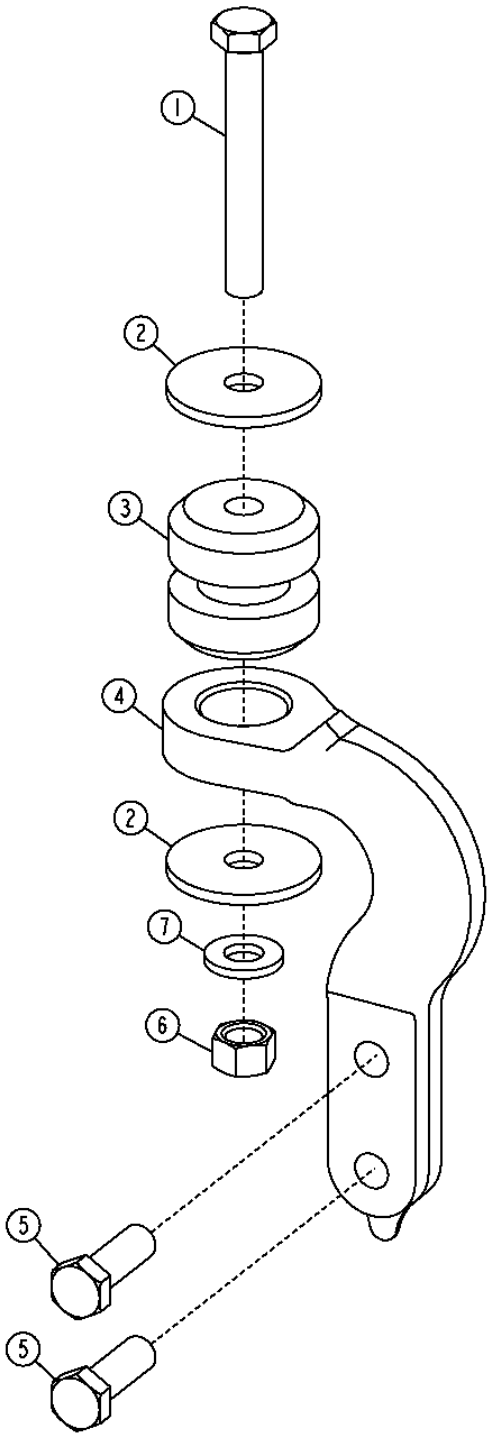

TX1014880

TRANSMISSION REAR MOUNTING SUPPORT
SUPPORT DE MONTAGE ARRIERE DE TRANSMISSION
SOPORTE DE MONTAJE TRASERO DE LA TRANSMISION

KEY	PART NO.	PART NAME	QTY.	SERIAL NO.	410J	410TMC	REMARKS
1	19M7941	CAP SCREW	2		X	X	M16 X 120
2	T179952	WASHER	4		X	X	
3	AT170854	ISOLATOR	2		X	X	
4	T214064	SUPPORT	2		X	X	
5	19M7489	CAP SCREW	4		X	X	M16 X 45, 1.50
6	14M7276	NUT	2		X	X	M16
8	24M7241	WASHER	2		X	X	17 X 34 X 4 MM

MEMORANDA
MEMORANDA
MEMORANDA

TORQUE CONVERTER
CONVERTISSEUR DE COUPLE
CONVERTIDOR DE PAR

TX1015943 -UN-13DEC06

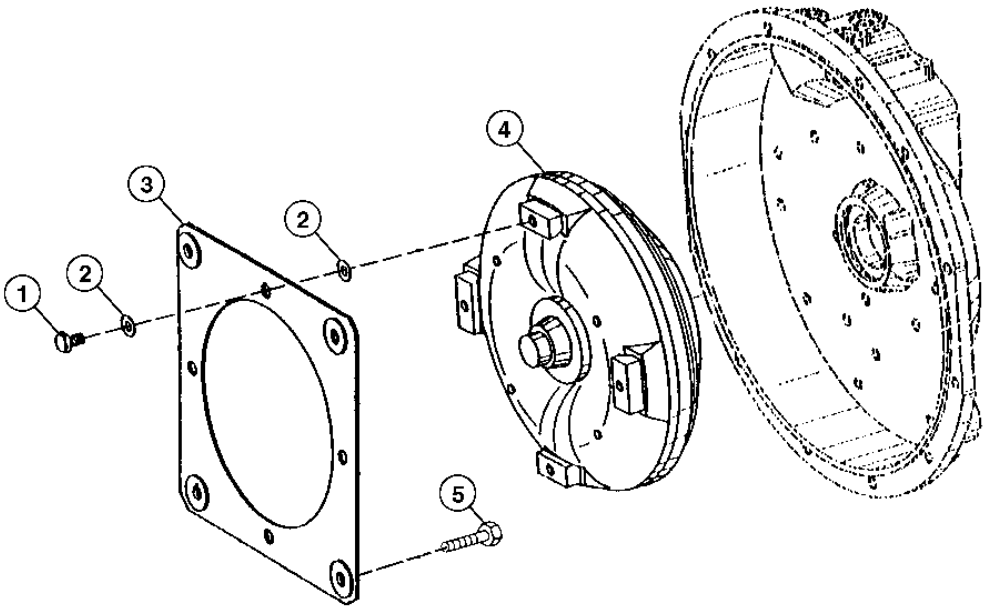

TX1015943

KEY	PART NO.	PART NAME	QTY.	SERIAL NO.	410J	410TMC	REMARKS
1	19M8289	CAP SCREW	4		X	X	M10 X 16
2	T155324	PLATE	8		X	X	
3	AT179312	PLATE	2		X	X	
4	AT310583	TORQUE CONVERTER	1		X	X	
5	19M7402	CAP SCREW	4		X	X	M10 X 25

TRANSMISSION INPUT SHAFT AND CLUTCH DISK
ARBRE PRIMAIRE DE LA TRANSMISSION
EJE DE ENTRADA DE LA TRANSMISION (POWER SHIFT)

TX1014398 -UN-01DEC06

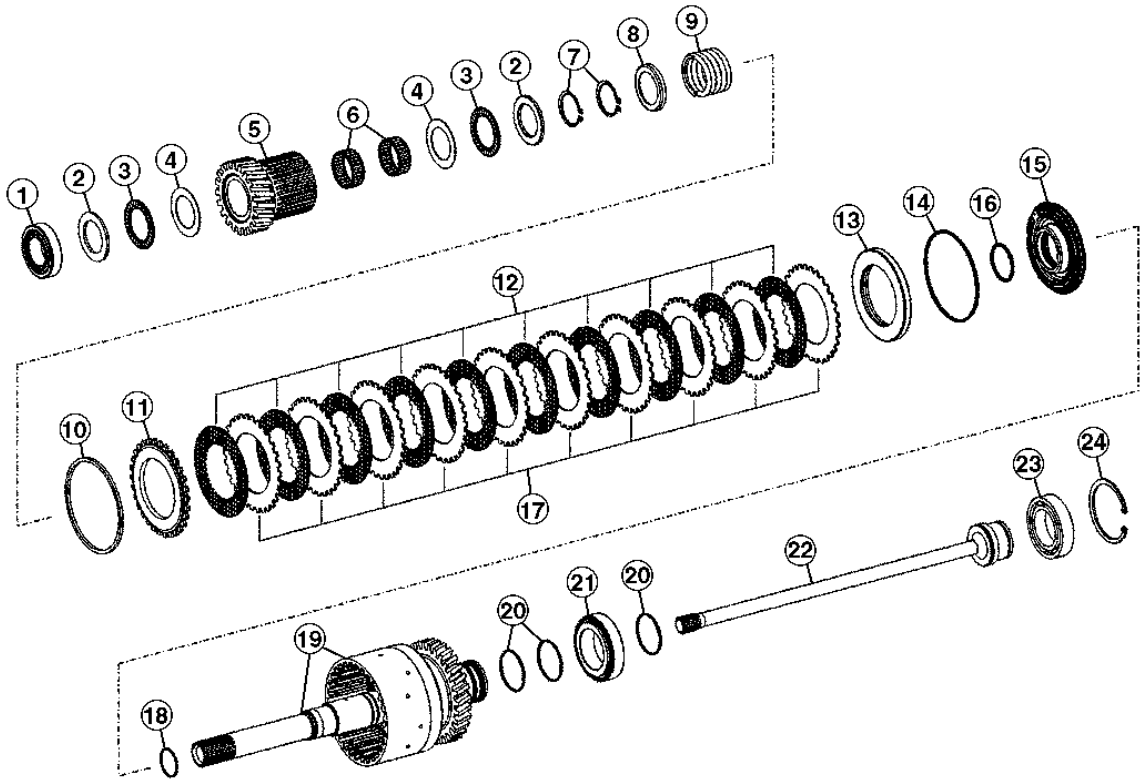

TX1014398

GEARS, SHAFTS, BEARINGS AND POWER SHIFT CLUTCH 0350

TRANSMISSION INPUT SHAFT AND CLUTCH DISK
ARBRE PRIMAIRE DE LA TRANSMISSION
EJE DE ENTRADA DE LA TRANSMISION (POWER SHIFT)

KEY	PART NO.	PART NAME	QTY.	SERIAL NO.	410J	410TMC	REMARKS
1	AT339915	TAPERED ROLLER BEARING	1		X	X	
2	T229356	THRUST WASHER	2		X	X	
3	JD37406	NEEDLE BEARING	2		X	X	
4	T158749	THRUST WASHER	2		X	X	
5	T229412	HUB	1		X	X	
6	AT339920	NEEDLE BEARING	2		X	X	
7	40M7058	SNAP RING	2		X	X	
8	T229468	ROUND RETAINER	1		X	X	
9	T229346	COMPRESSION SPRING	1		X	X	
10	T229341	SNAP RING	1		X	X	2.0 MM
	T229352	SNAP RING	1		X	X	2.5 MM
	T229359	SNAP RING	1		X	X	3.0 MM
	T229364	SNAP RING	1		X	X	3.5 MM
	T229379	SNAP RING	1		X	X	2.75 MM
	T229380	SNAP RING	1		X	X	3.25 MM
	T229381	SNAP RING	1		X	X	2.25 MM
11	T229340	DISK WITH OUTER SPLINE	1		X	X	
12	AT339922	CLUTCH DISK	9		X	X	
13	T229469	ROUND RETAINER	1		X	X	
14	T229398	O-RING	1		X	X	
15	T229403	PISTON	1		X	X	
16	AT258980	O-RING	1		X	X	
17	T229406	PLATE	10		X	X	
18	L153002	PISTON RING	1		X	X	
19	AT339910	MODULAR CLUTCH	1		X	X	
20	T172118	PISTON RING	3		X	X	
21	AT339914	TAPERED ROLLER BEARING	1		X	X	
22	T229335	SHAFT	1		X	X	
23	AT339899	BALL BEARING	1		X	X	
24	40M5099	SNAP RING	1		X	X	

LOW RANGE FORWARD CLUTCH ASSEMBLY
EMBRAYAGE GAMME BASSE MARCHE AVANT
EMBRAGUE GAMA BAJA DE AVANCE

TX1014588 -UN-14NOV06

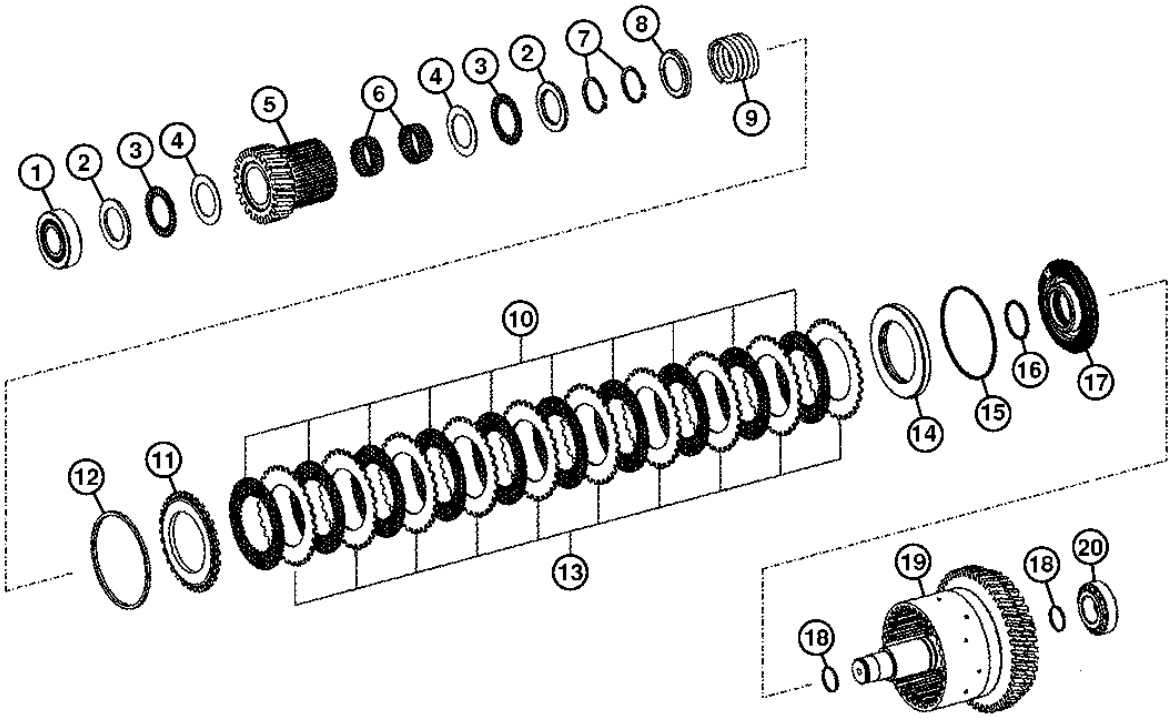

TX1014588

LOW RANGE FORWARD CLUTCH ASSEMBLY
EMBRAYAGE GAMME BASSE MARCHE AVANT
EMBRAGUE GAMA BAJA DE AVANCE

KEY	PART NO.	PART NAME	QTY.	SERIAL NO.	410J	410TMC	REMARKS
1	AT339917	TAPERED ROLLER BEARING	1		X	X	
2	T229356	THRUST WASHER	2		X	X	
3	JD37406	NEEDLE BEARING	2		X	X	
4	T158749	THRUST WASHER	2		X	X	
5	T229412	HUB	1		X	X	
6	AT339920	NEEDLE BEARING	2		X	X	
7	40M7058	SNAP RING	2		X	X	
8	T229468	ROUND RETAINER	1		X	X	
9	T229346	COMPRESSION SPRING	1		X	X	
10	AT339922	CLUTCH DISK	10		X	X	
11	T229340	DISK WITH OUTER SPLINE	1		X	X	
12	T229341	SNAP RING	1		X	X	2.0 MM
	T229352	SNAP RING	1		X	X	2.5 MM
	T229359	SNAP RING	1		X	X	3.0 MM
	T229364	SNAP RING	1		X	X	3.5 MM
	T229379	SNAP RING	1		X	X	2.75 MM
	T229380	SNAP RING	1		X	X	3.25 MM
	T229381	SNAP RING	1		X	X	2.25 MM
13	T229406	PLATE	10		X	X	
14	T229469	ROUND RETAINER	1		X	X	
15	T229398	O-RING	1		X	X	
16	AT258980	O-RING	1		X	X	
17	T229403	PISTON	1		X	X	
18	T229466	RING	2		X	X	
19	AT339912	MODULAR CLUTCH	1		X	X	
20	T158793	TAPERED ROLLER BEARING	1		X	X	

HIGH RANGE FORWARD CLUTCH ASSEMBLY
EMBRAYAGE MARCHE AVANT GAMME HAUTE
EMBRAGUE DE GAMA ALTA DE AVANCE

TX1014621 -UN-14NOV06

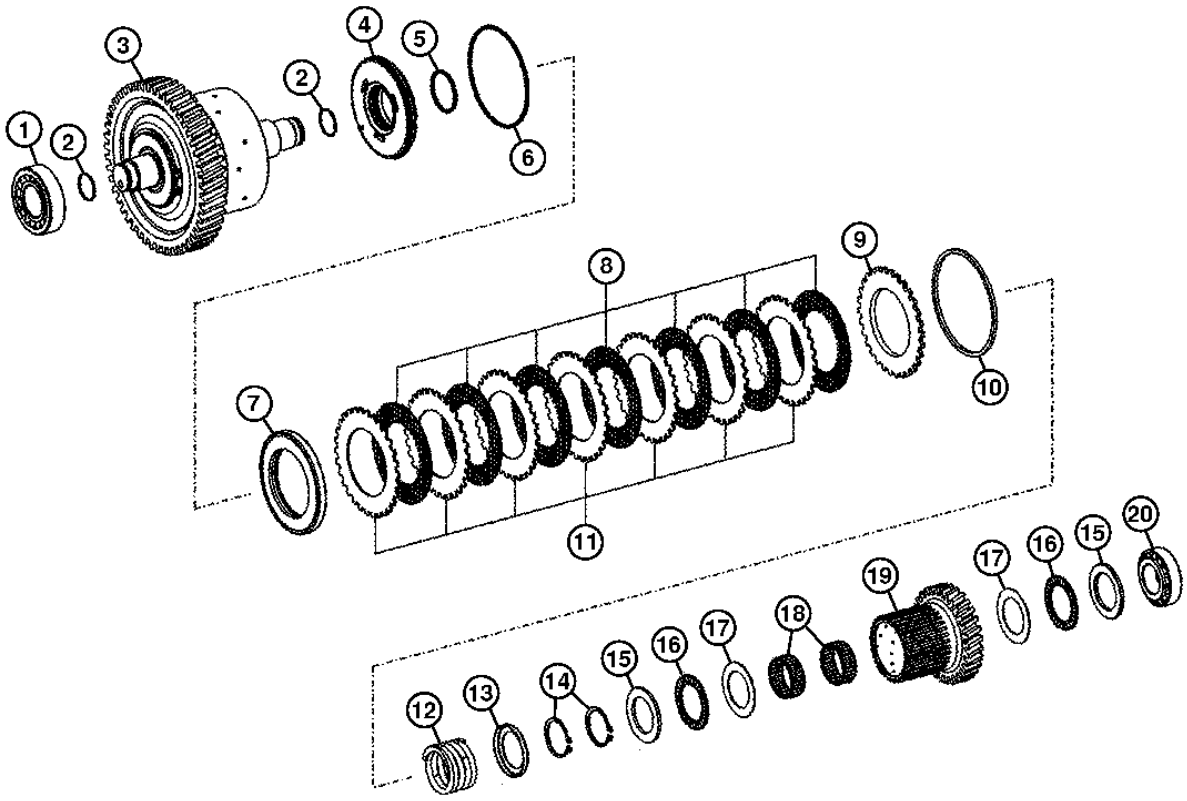

TX1014621

HIGH RANGE FORWARD CLUTCH ASSEMBLY
EMBRAYAGE MARCHE AVANT GAMME HAUTE
EMBRAGUE DE GAMA ALTA DE AVANCE

KEY	PART NO.	PART NAME	QTY.	SERIAL NO.	410J	410TMC	REMARKS
1	AT184042	BEARING	1		X	X	
2	T229466	RING	2		X	X	
3	AT339908	MODULAR CLUTCH	1		X	X	
4	T229403	PISTON	1		X	X	
5	AT258980	O-RING	1		X	X	
6	T229398	O-RING	1		X	X	
7	T229469	ROUND RETAINER	1		X	X	
8	AT339922	CLUTCH DISK	7		X	X	
9	T229340	DISK WITH OUTER SPLINE	1		X	X	
10	T229341	SNAP RING	1		X	X	2.0 MM
	T229352	SNAP RING	1		X	X	2.5 MM
	T229359	SNAP RING	1		X	X	3.0 MM
	T229364	SNAP RING	1		X	X	3.5 MM
	T229379	SNAP RING	1		X	X	2.75 MM
	T229380	SNAP RING	1		X	X	3.25 MM
	T229381	SNAP RING	1		X	X	2.25 MM
11	T229406	PLATE	7		X	X	
12	T229346	COMPRESSION SPRING	1		X	X	2.0 MM
13	T229468	ROUND RETAINER	1		X	X	
14	40M7058	SNAP RING	2		X	X	
15	T229356	THRUST WASHER	2		X	X	
16	JD37406	NEEDLE BEARING	2		X	X	
17	T158749	THRUST WASHER	2		X	X	
18	AT339920	NEEDLE BEARING	2		X	X	
19	T229411	HUB	1		X	X	
20	T158793	TAPERED ROLLER BEARING	1		X	X	

FIRST SPEED CLUTCH ASSEMBLY
EMBRAYAGE 1ER VITESSE
EMBRAGUE 1Œ VELOCIDAD

TX1014644 -UN-01DEC06

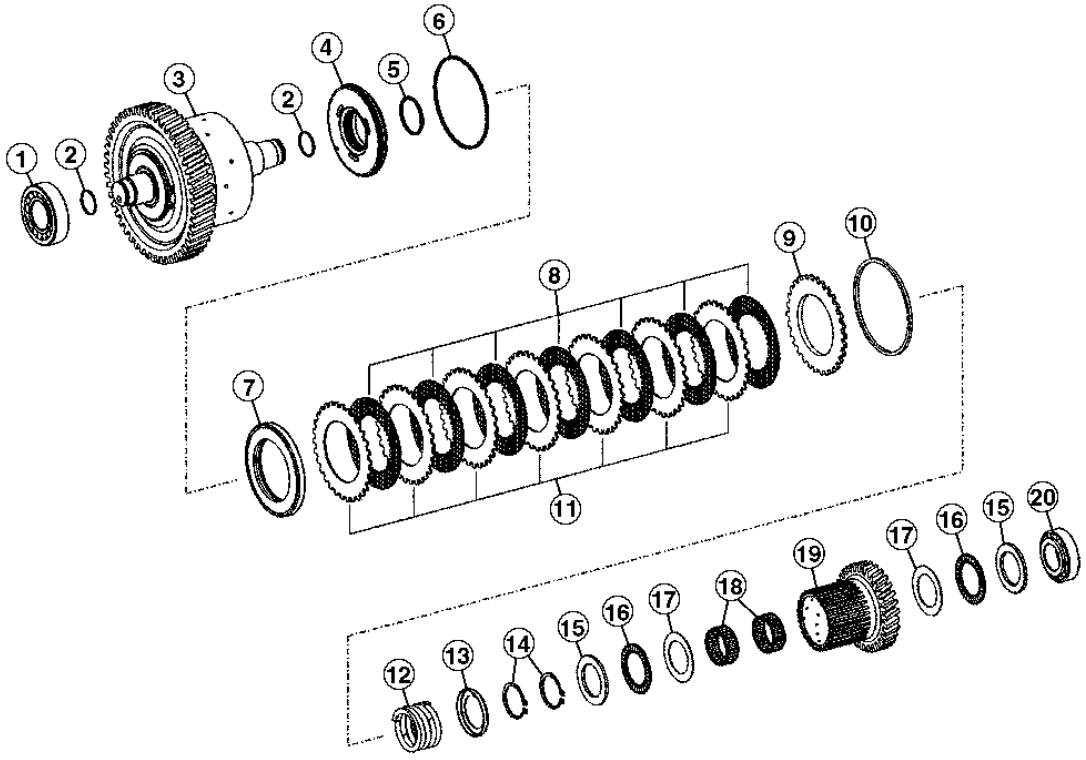

TX1014644

FIRST SPEED CLUTCH ASSEMBLY
EMBRAYAGE 1ER VITESSE
EMBRAGUE 1Œ VELOCIDAD

KEY	PART NO.	PART NAME	QTY.	SERIAL NO.	410J	410TMC	REMARKS
1	AT184042	BEARING	1		X	X	
2	T229466	RING	2		X	X	
3	AT339904	MODULAR CLUTCH	1		X	X	
4	T229402	PISTON	1		X	X	
5	AT258980	O-RING	1		X	X	
6	T229398	O-RING	1		X	X	
7	T229337	DISK SPRING	1		X	X	
8	AT339922	CLUTCH DISK	10		X	X	
9	T229340	DISK WITH OUTER SPLINE	1		X	X	
10	T229341	SNAP RING	1		X	X	2.0 MM
	T229352	SNAP RING	1		X	X	2.5 MM
	T229359	SNAP RING	1		X	X	3.0 MM
	T229364	SNAP RING	1		X	X	3.5 MM
	T229379	SNAP RING	1		X	X	2.75 MM
	T229380	SNAP RING	1		X	X	3.25 MM
	T229381	SNAP RING	1		X	X	2.25 MM
11	T229406	PLATE	10		X	X	
12	T229346	COMPRESSION SPRING	1		X	X	
13	T229468	ROUND RETAINER	1		X	X	
14	40M7058	SNAP RING	2		X	X	
15	T229356	THRUST WASHER	2		X	X	
16	JD37406	NEEDLE BEARING	2		X	X	
17	T158749	THRUST WASHER	2		X	X	
18	AT339920	NEEDLE BEARING	2		X	X	
19	T229408	HUB	1		X	X	
20	T158793	TAPERED ROLLER BEARING	1		X	X	

SECOND SPEED CLUTCH ASSEMBLY
EMBRAYAGE PREMIERE VITESSE
EMBRAGUE SEGUNDA VELOCIDAD

TX1014696 -UN-30NOV06

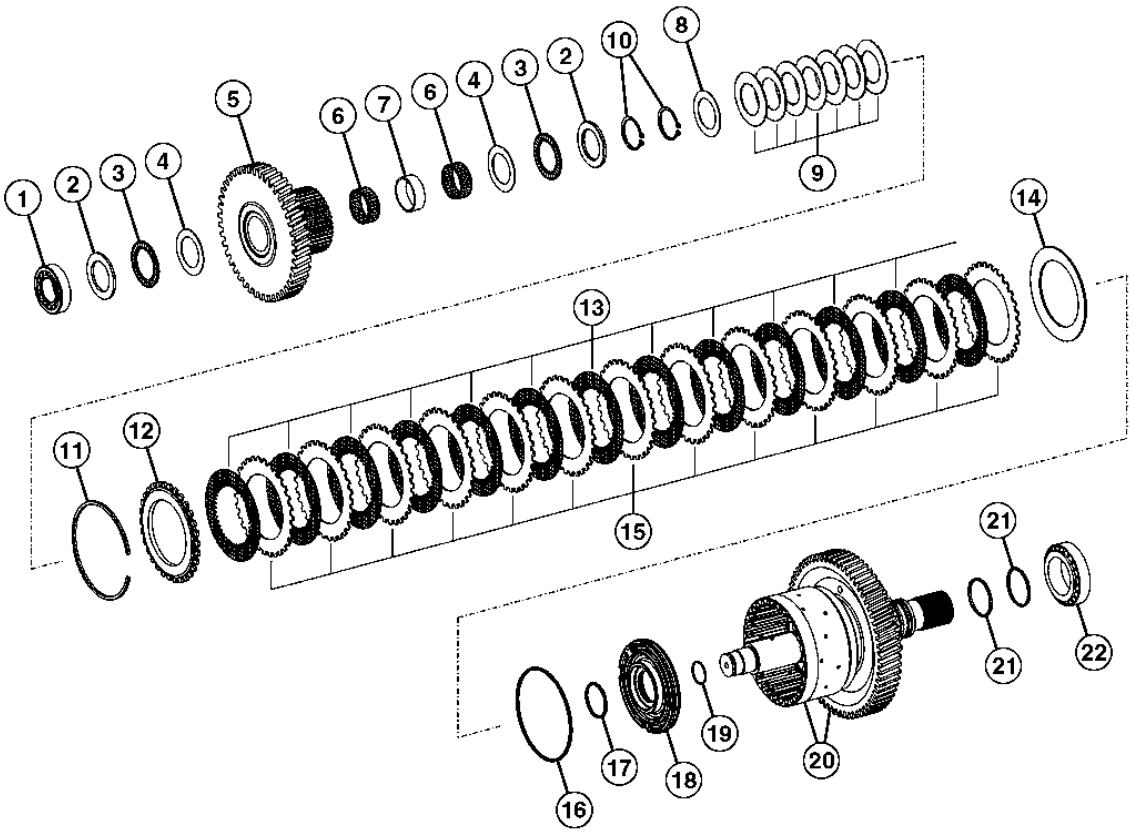

TX1014696

SECOND SPEED CLUTCH ASSEMBLY
EMBRAYAGE PREMIERE VITESSE
EMBRAGUE SEGUNDA VELOCIDAD

KEY	PART NO.	PART NAME	QTY.	SERIAL NO.	410J	410TMC	REMARKS
1	T158793	TAPERED ROLLER BEARING	1		X	X	
2	T229356	THRUST WASHER	2		X	X	
3	JD37406	NEEDLE BEARING	2		X	X	
4	T158749	THRUST WASHER	1		X	X	
5	T229409	HUB	1		X	X	
6	AT339920	NEEDLE BEARING	1		X	X	
7	T229353	SPACER	1		X	X	
8	T158749	THRUST WASHER	3		X	X	
9	T229373	DISK SPRING	7		X	X	
10	40M7058	SNAP RING	2		X	X	2.0 MM
11	T161183	SNAP RING	1		X	X	4.0 MM
	T158778	SNAP RING	1		X	X	3.5 MM
	T159568	SNAP RING	1		X	X	3.0 MM
	T159569	SNAP RING	1		X	X	2.5 MM
	T159570	SNAP RING	1		X	X	2.0 MM
	T229368	SNAP RING	1		X	X	3.25 MM
	T229375	SNAP RING	1		X	X	3.75 MM
	T229383	SNAP RING	1		X	X	2.25 MM
	T229386	SNAP RING	1		X	X	2.75 MM
12	T161147	PLATE	1		X	X	
13	T164626	DISK	13		X	X	
14	T229349	DISK SPRING	1		X	X	
15	T158801	CLUTCH PLATE	13		X	X	
16	T158739	RING	1		X	X	
17	AT258980	O-RING	1		X	X	
18	T229401	PISTON	1		X	X	
19	T229466	RING	1		X	X	
20	AT339905	MODULAR CLUTCH	1		X	X	
21	T172118	PISTON RING	2		X	X	
22	AT339914	TAPERED ROLLER BEARING	1		X	X	

THIRD SPEED CLUTCH ASSEMBLY
EMBRAYAGE TROISIEME VITESSE
EMBRAGUE TERCERA VELOCIDAD

TX1014727 -UN-29NOV06

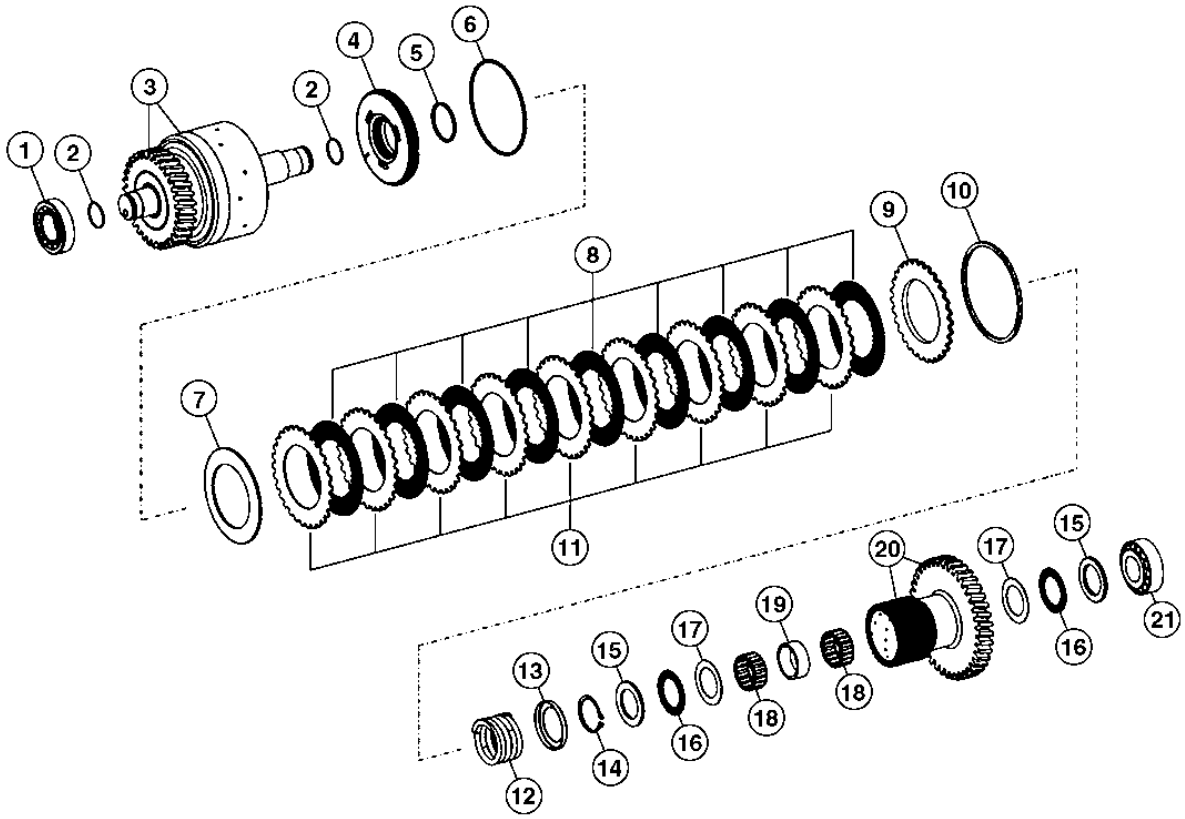

TX1014727

THIRD SPEED CLUTCH ASSEMBLY
EMBRAYAGE TROISIEME VITESSE
EMBRAGUE TERCERA VELOCIDAD

KEY	PART NO.	PART NAME	QTY.	SERIAL NO.	410J	410TMC	REMARKS
1	T158793	TAPERED ROLLER BEARING	1		X	X	
2	T229466	RING	2		X	X	
3	AT339906	MODULAR CLUTCH	1		X	X	
4	T229402	PISTON	1		X	X	
5	AT258590	CAP SCREW	1		X	X	
6	T229398	O-RING	1		X	X	
7	T229337	DISK SPRING	1		X	X	
8	AT339922	CLUTCH DISK	9		X	X	
9	T229340	DISK WITH OUTER SPLINE	1		X	X	
10	T229341	SNAP RING	1		X	X	2.0 MM
	T229352	SNAP RING	1		X	X	2.5 MM
	T229359	SNAP RING	1		X	X	3.0 MM
	T229364	SNAP RING	1		X	X	3.5 MM
	T229379	SNAP RING	1		X	X	2.75 MM
	T229380	SNAP RING	1		X	X	3.25 MM
	T229381	SNAP RING	1		X	X	2.25 MM
11	T229406	PLATE	9		X	X	4.0 MM
12	T229346	COMPRESSION SPRING	1		X	X	
13	T229468	ROUND RETAINER	1		X	X	
14	40M7058	SNAP RING	1		X	X	
15	T229348	THRUST WASHER	2		X	X	
16	AT339918	NEEDLE BEARING	2		X	X	
17	T229336	THRUST WASHER	3		X	X	
18	AT339919	NEEDLE BEARING	2		X	X	
19	T229342	SPACER	1		X	X	
20	T229410	HUB	1		X	X	
21	AT339916	TAPERED ROLLER BEARING	1		X	X	

MECHANICAL FRONT WHEEL DRIVE CLUTCH ASSEMBLY
EMBRAYAGE TRACTION AVANT MECANIQUE
CONJUNTO DEL EMBRAGUE ETRACCION DELANTERA MECANICA

TX1015039 -UN-07DEC06

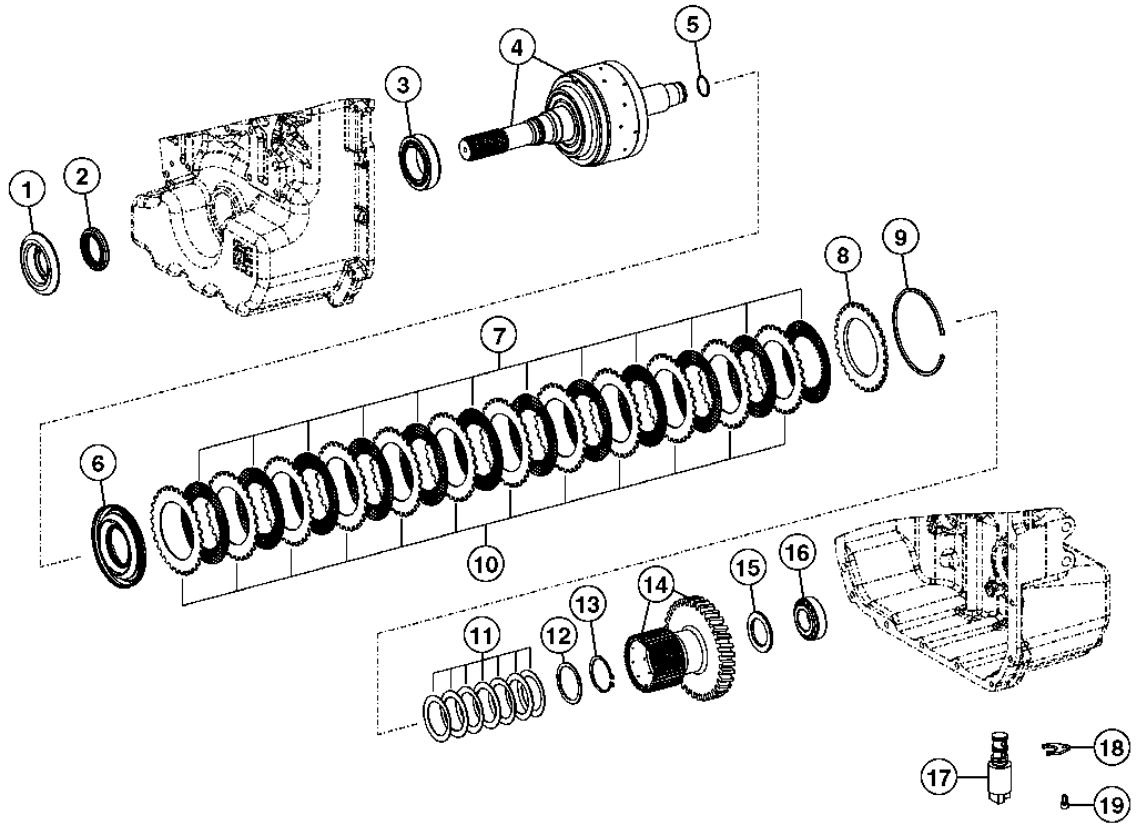

TX1015039

MECHANICAL FRONT WHEEL DRIVE CLUTCH ASSEMBLY
EMBRAYAGE TRACTION AVANT MECANIQUE
CONJUNTO DEL EMBRAGUE ETRACCION DELANTERA MECANICA

KEY	PART NO.	PART NAME	QTY.	SERIAL NO.	410J	410TMC	REMARKS
1	T218504	DUST SHIELD	1		X	X	
2	AT179466	SEAL	1		X	X	
	T229467	RING	1		X	X	
3	AT339914	TAPERED ROLLER BEARING	1		X	X	
4	AT339913	MODULAR CLUTCH	1		X	X	
5	T229466	RING	1		X	X	
6	AT193704	PISTON	1		X	X	
7	T164626	DISK	12		X	X	
8	T161147	PLATE	1		X	X	
9	T161183	SNAP RING	1		X	X	4.0 MM
	T158778	SNAP RING	1		X	X	3.5 MM
	T159568	SNAP RING	1		X	X	3.0 MM
	T159569	SNAP RING	1		X	X	2.5 MM
	T159570	SNAP RING	1		X	X	2.0 MM
	T229368	SNAP RING	1		X	X	3.25 MM
	T229375	SNAP RING	1		X	X	3.75 MM
	T229383	SNAP RING	1		X	X	2.25 MM
	T229386	SNAP RING	1		X	X	2.75 MM
10	T158801	CLUTCH PLATE	12		X	X	
11	T229357	DISK SPRING	7		X	X	
12	T229372	THRUST WASHER	1		X	X	
13	40M7166	SNAP RING	1		X	X	
14	T229407	HUB	1		X	X	
15	T229356	THRUST WASHER	1		X	X	
16	T158793	TAPERED ROLLER BEARING	1		X	X	
17	AT310584	SOLENOID HYDRAULIC VALVE	1		X	X	
18	T229343	PLATE	1		X	X	
19	L152999	SOCKET HEAD SCREW	1		X	X	

TRANSMISSION OUTPUT SHAFT
ARBRE DE SORTIE DE TRANSMISSION (ARRIERE)
EJE DE SALIDA DE LA TRANSMISION (TRASERO)

TX1014769 -UN-

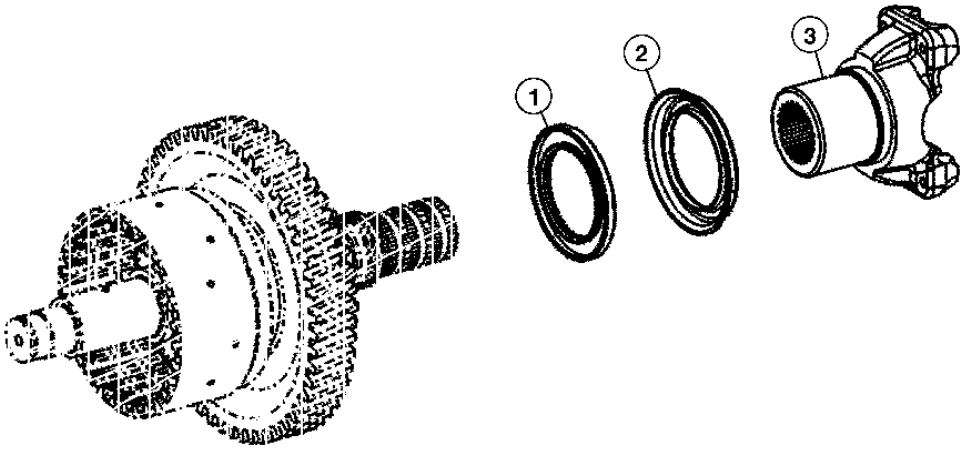

TX1014769

TRANSMISSION OUPUT SHAFT
ARBRE DE SORTIE DE TRANSMISSION (ARRIERE)
EJE DE SALIDA DE LA TRANSMISION (TRASERO)

KEY	PART NO.	PART NAME	QTY.	SERIAL NO.	410J	410TMC	REMARKS
1	AT179481	SEAL	1		X	X	
2	T229405	GUARD	1		X	X	
3	AT326541	UNIVERSAL JOINT YOKE	1		X	X	

TRANSMISSION CHARGE PUMP
POMPE DE GAVAGE DE TRANSMISSION
BOMBA DE CARGA DE LA TRANSMISION

TX1014801 -UN-13DEC06

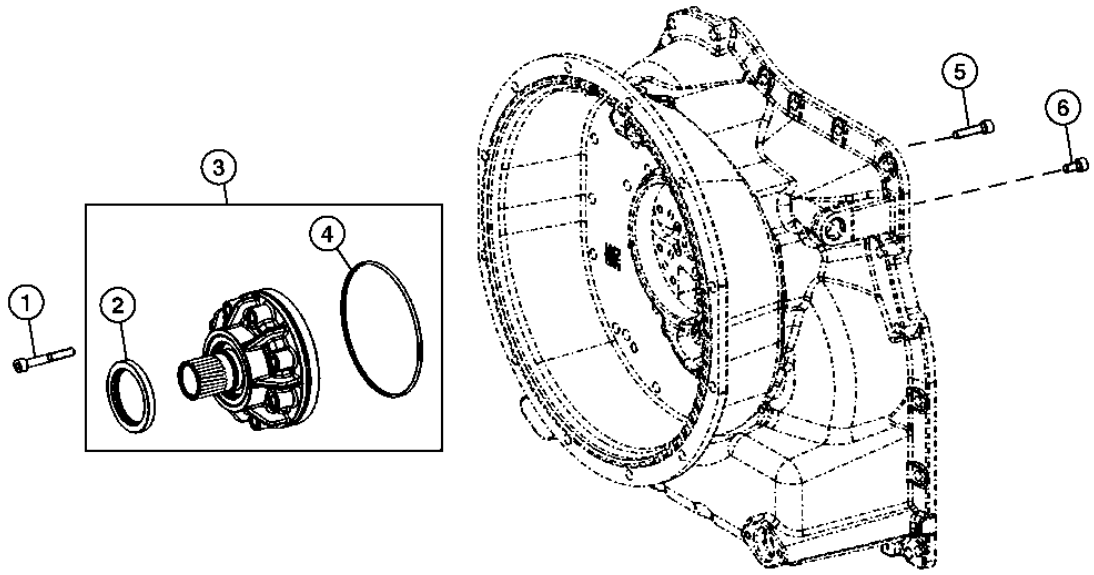

TX1014801

TRANSMISSION CHARGE PUMP
POMPE DE GAVAGE DE TRANSMISSION
BOMBA DE CARGA DE LA TRANSMISION

KEY	PART NO.	PART NAME	QTY.	SERIAL NO.	410J	410TMC	REMARKS
1	19M8658	SCREW	8		X	X	M8 X 60
2	AT179316	SEAL	1		X	X	
3	AT310590	HYDRAULIC PUMP	1		X	X	
4	T229393	O-RING	1		X	X	
5	T229382	CAP SCREW	2		X	X	
6	T164648	CAP SCREW	2		X	X	

TRANSMISSION OIL FILTER
FILTRE A HUILE DE BOITE
FILTRO DE ACEITE DE LA TRANSMISION

TX1014820 -UN-13DEC06

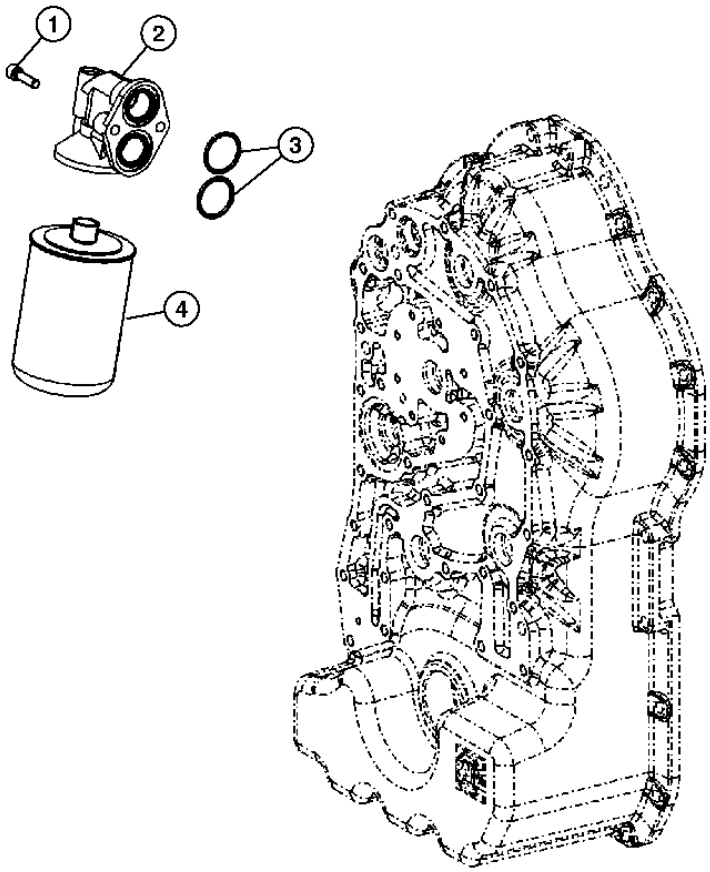

TX1014820

TRANSMISSION OIL FLTER
FILTRE A HUILE DE BOITE
FILTRO DE ACEITE DE LA TRANSMISION

KEY	PART NO.	PART NAME	QTY.	SERIAL NO.	410J	410TMC	REMARKS
1	T229385	CAP SCREW	2		X	X	
2	T177997	FILTER HEAD	1		X	X	
3	T172318	O-RING	2		X	X	
4	AT179323	OIL FILTER	1		X	X	

TRANSMISSION SHIFT CONTROL SOLENOIDS
SOLENOIDES COMMANDE DE PASSAGE DE VITESSES
SOLENOIDES CONTROL DE CAMBIOS DE TRANSMISION

TX1014830 -UN-13DEC06

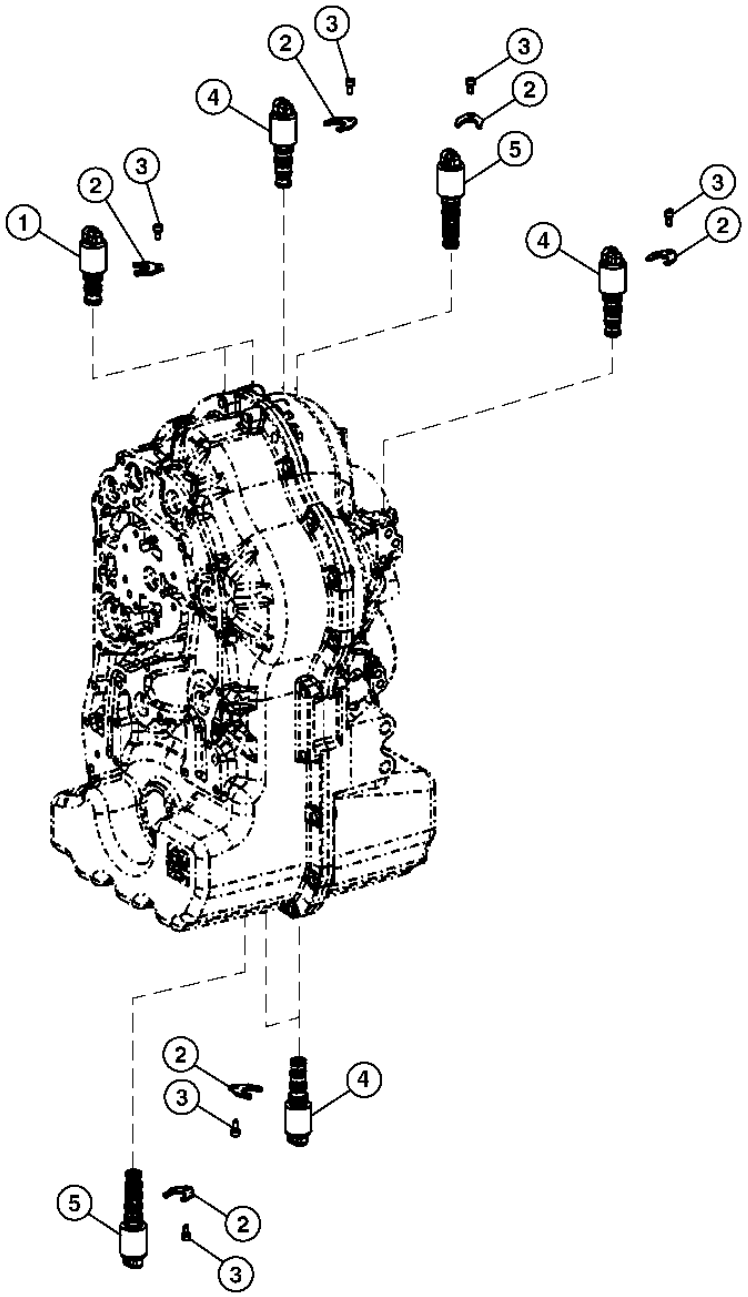

TX1014830

TRANSMISSION SHIFT CONTROL SOLENOIDS
SOLENOIDES COMMANDE DE PASSAGE DE VITESSES
SOLENOIDES CONTROL DE CAMBIOS DE TRANSMISION

KEY	PART NO.	PART NAME	QTY.	SERIAL NO.	410J	410TMC	REMARKS
1	AT310584	SOLENOID HYDRAULIC VALVE	2		X	X	
2	T229343	PLATE	8		X	X	
3	L152999	SOCKET HEAD SCREW	8		X	X	
4	AT310587	SOLENOID HYDRAULIC VALVE	4		X	X	
5	AT310586	SOLENOID HYDRAULIC VALVE	2		X	X	

CRANKSHAFT / BEARINGS
VILEBREQUIN / COUSSINETS
CIGUENAL / COJINETE

T145419 -UN-12NOV01

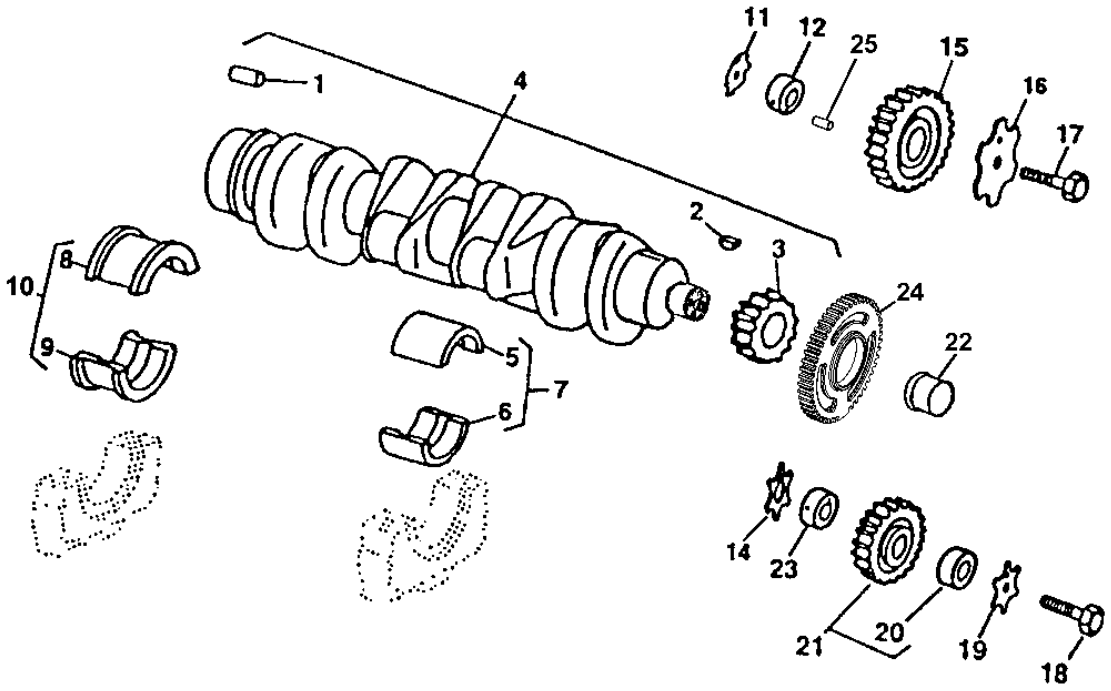

T145419

KEY	PART NO.	PART NAME	QTY.	ENGINE SERIAL NO.	4 1 0 J	REMARKS
1	R48685	DOWEL PIN	1		X	
2	R505609	SHAFT KEY	1		X	
3	R120631	GEAR	1		X	(30 TEETH)
4	RE504638	CRANKSHAFT	1		X	(MARKED R113596)
5	.....	BEARING	4		X	UNDERSIZE LOWER .254MM (MARKED R130575)
	.....	BEARING	4		X	
6	.....	BEARING	4		X	
	.....	BEARING	4		X	
7	RE65165	BEARING KIT	4		X	STANDARD
	RE65911	BEARING KIT	4		X	UNDERSIZE .254MM
8	.....	BEARING	1		X	
	.....	BEARING	1		X	
9	.....	BEARING	1		X	
	.....	BEARING	1		X	
10	RE65168	THRUST BEARING	1		X	STANDARD
	RE65912	THRUST BEARING	1		X	UNDERSIZE .254MM
11	R123174	THRUST WASHER	1		X	
12	R120641	SHAFT	1		X	
14	R101225	THRUST WASHER	1		X	
15	RE508932	GEAR	1		X	(MARKED R505121)
16	R131206	THRUST WASHER	1		X	
17	19M8997	SCREW	1		X	M10 X 65
18	19M8966	SCREW	1		X	M10 X 50
19	R131283	THRUST WASHER	1		X	
20	R114193	BUSHING	1		X	
21	RE56369	GEAR	1		X	
22	RE59811	SLEEVE	1		X	
23	R114194	SHAFT	1		X	
24	R517471	WHEEL	1		X	
25	34H288	SPRING PIN	1		X	

CAMSHAFT
ARBRE A CAMES
ARBOL DE LEVAS

TP69520 -UN-02JUN00

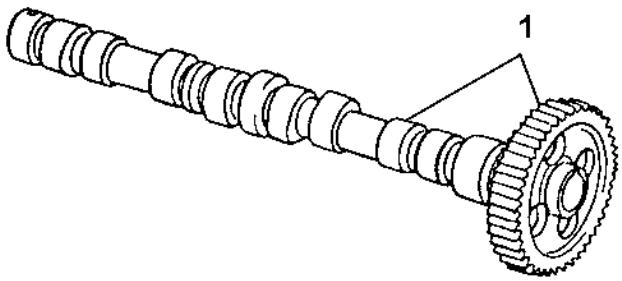

TP69520

KEY	PART NO.	PART NAME	QTY.	ENGINE SERIAL NO.	REMARKS
1	RE56375	KIT	1		(A) (WITH GEAR AND KEY) (MARKED R135439)
	RE507595	CAMSHAFT	1		(B) (WITH GEAR AND KEY) (MARKED R504534)

(A) TO4045TT000 PE4045TT000

(B) PE4045TT000

ROCKER ARM / SHAFT / TAPPET / PUSH ROD
CULBUTEUR / ARBRE / POUSSOIR DE SOUPAPE / TIGE
BALANCIN / ARBOL / BOTADOR / VARILLA DE EMPUJE

TP49263 -UN-20JUN95

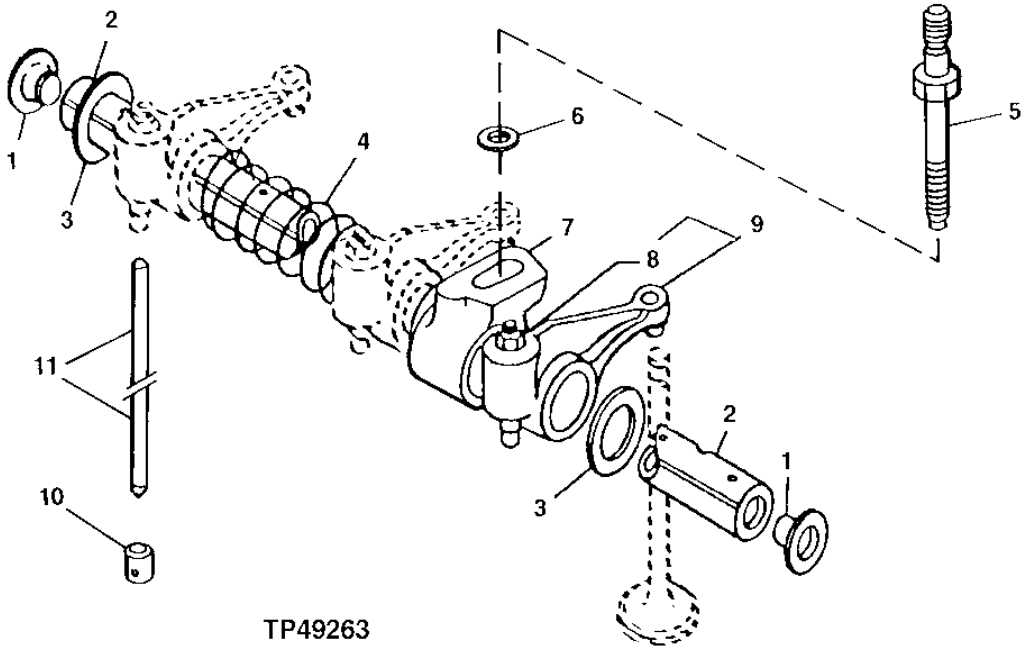

TP49263

KEY	PART NO.	PART NAME	QTY.	ENGINE SERIAL NO.	410J	REMARKS
1	R54565	PLUG	2		X	
2	R123513	ROCKER ARM SHAFT	1		X	
3	T20316	WASHER	2		X	
4	T20314	SPRING	3		X	
5	R123271	STUD	4		X	
6	24M7346	WASHER	4		X	11 X 20 X 2 MM
7	R123161	SUPPORT	4		X	
8	14M7148	NUT	1		X	M10
9	RE68695	ROCKER ARM	8		X	
10	R123565	CAM FOLLOWER	8		X	
11	R107731	PUSH ROD	8		X	

ROCKER ARM COVER
CACHE-CULBUTEURS
TAPA DE BALANCINES

TP69529 -UN-26JUL00

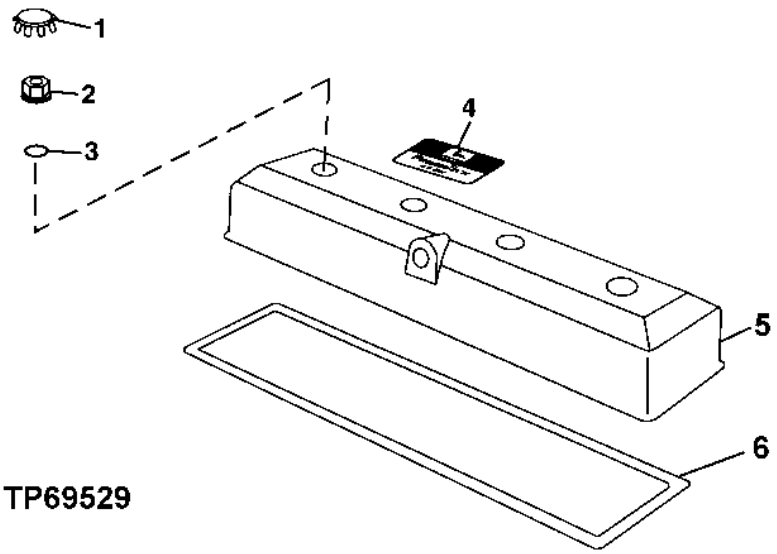

KEY	PART NO.	PART NAME	QTY.	ENGINE SERIAL NO. 410J	REMARKS
1	H23125	PLUG	4	X	
2	R123574	NUT	4	X	
3	R123575	O-RING	4	X	
4	R116324	MEDALLION	1	X	
5	RE502969	VALVE COVER	1	X	
6	R123542	GASKET	1	X	

MEMORANDA
MEMORANDA
MEMORANDA

4401 (TIMING GEAR COVER)
4401 (COUVERCLE DE DISTRIBUTION)
4401 (TAPA DE DISTRIBUCION PARA TRANSMISION)

T149705 -UN-07FEB02

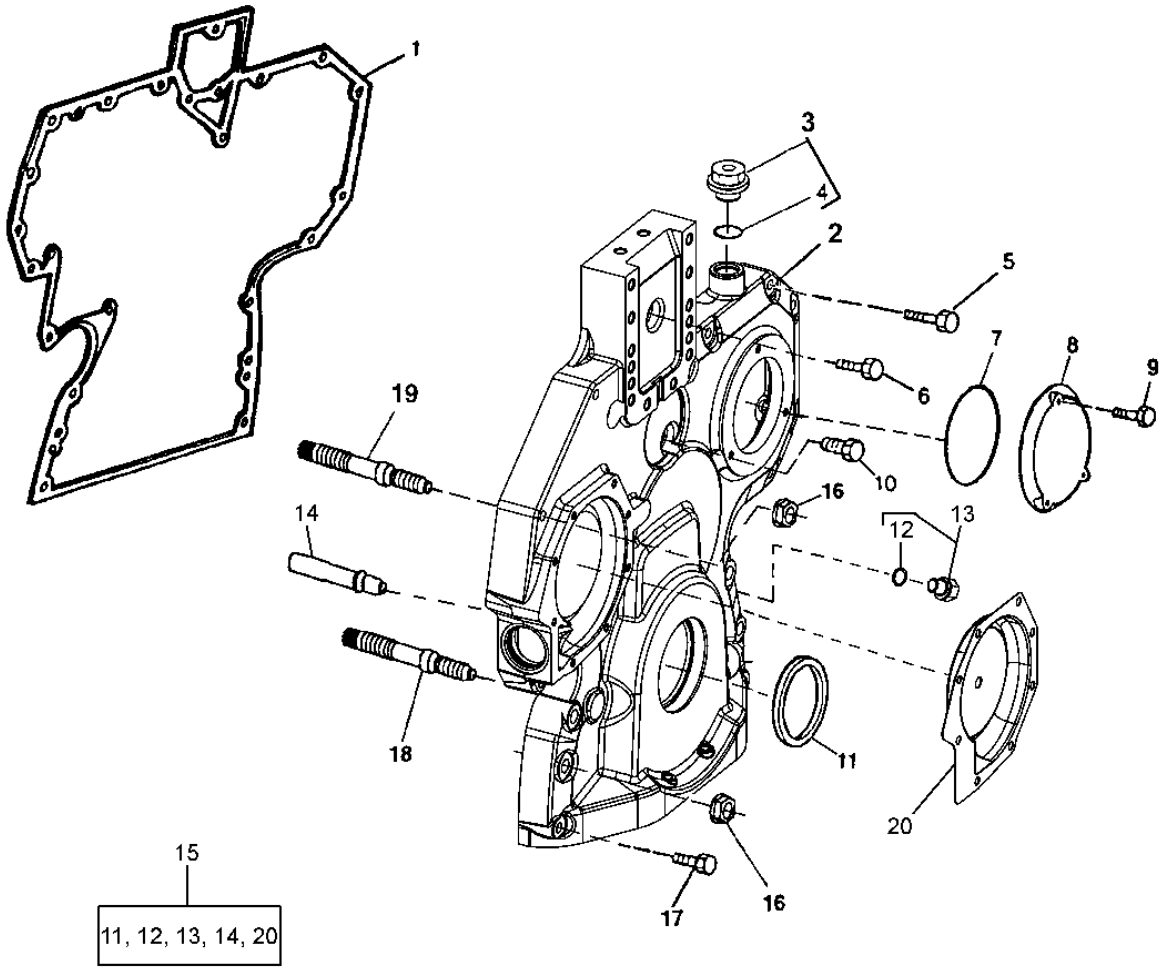

T149705

KEY	PART NO.	PART NAME	QTY.	ENGINE SERIAL NO.	4 1 0 J	REMARKS
1	R520132	GASKET	1		X	
2	R520130	COVER	1		X	
	RE523468	COVER	1		X	
3	RE517370	FITTING	1		X	
4	51M7044	O-RING	1		X	
5	19M8317	SCREW	6		X	M8 X 40
	19M7867	SCREW	1		X	M8 X 25
	RE67239	SCREW	1		X	
6	19M8291	SCREW	1		X	M8 X 35
7	R121424	O-RING	1		X	
8	R121411	COVER	1		X	
9	19M7775	SCREW	3		X	M6 X 16
10	19M7801	SCREW	1		X	M8 X 60
11	RE505515	SEAL	1		X	
12	51M7044	O-RING	1		X	17.300 X 2.200 MM
13	RE517370	FITTING	1		X	
14	RE505501	BLEED VALVE	1		X	
15	RE515978	KIT	1		X	
16	14M7296	FLANGE NUT	6		X	M10
17	19M7979	SCREW	2		X	M8 X 55
18	R123584	STUD	4		X	
19	R134518	STUD	2		X	(MARKED RE52346 OR RE505515)
20	RE508566	KIT	1		X	(WATER PUMP INSERT REPAIR)

PISTON / LINER - KIT
PISTON / CHEMISE - JEU DE PIECES
PISTON / CAMISA DE CILINDRO - JUEGO

TP49283 -UN-17JUL95

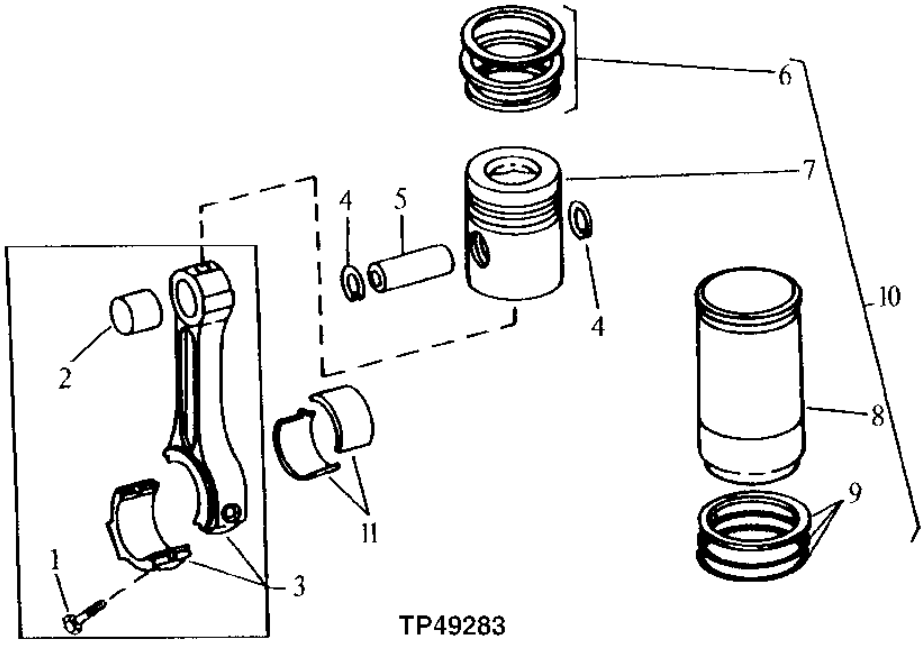

TP49283

KEY	PART NO.	PART NAME	QTY.	ENGINE SERIAL NO.	4 1 0 J	REMARKS
1	R501124	SCREW	8		X	
2	R123960	BUSHING	8		X	
3	RE500002	CONNECTING ROD	4		X	(MARKED R500000)
4	M41029	SNAP RING	8		X	
5	R123178	PISTON PIN	4		X	
6	RE66271	PISTON RING KIT	4		X	
7	.....	PISTON	4		X	(SUB RE505111)
8	.....	CYLINDER LINER	4		X	
9	AR65507	O-RING KIT	4		X	CYLINDER LINER
10	RE505111	PISTON-LINER KIT	4		X	(MARKED RE59277 OR RE505100)
11	RE65908	BEARING	4		X	STANDARD
	RE65909	BEARING	4		X	.010" UNDERSIZE

FRONT PLATE
PLAQUE AVANT
PLACA DELANTERA

RGP8269 -UN-07NOV01

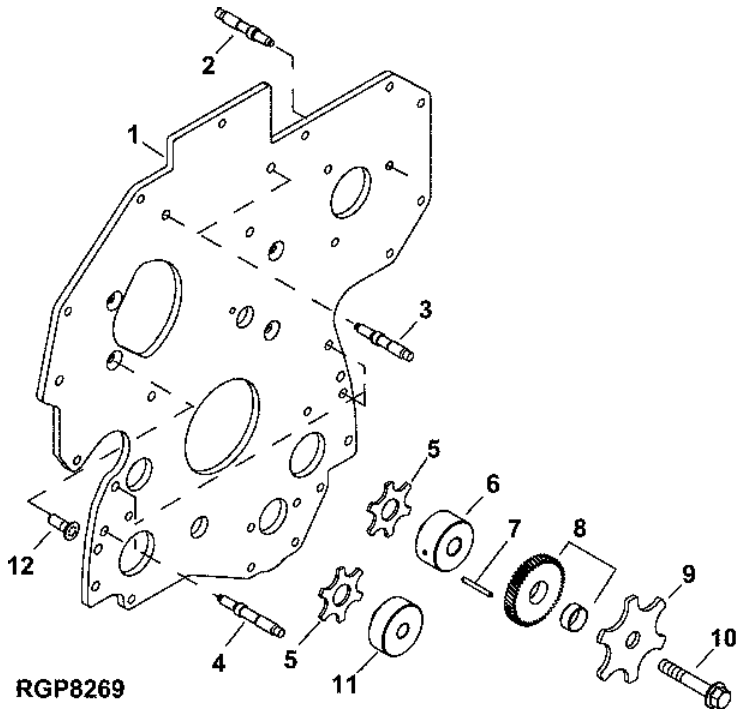

KEY	PART NO.	PART NAME	QTY.	ENGINE SERIAL NO. 410J	REMARKS
1	R134527	PLATE	1	X	
2	R116386	STUD	3	X	
3	R134518	STUD	2	X	
4	R123584	STUD	4	X	
5	R101225	THRUST WASHER	1	X	(LOWER)
6	R109863	SHAFT	1	X	
7	34H288	SPRING PIN	1	X	3/16" X 1-3/4"
8	RE508932	GEAR	1	X	(MARKED R505121)
9	R131283	THRUST WASHER	1	X	
10	19M8844	SCREW	1	X	M10 X 60
11	R114194	SHAFT	1	X	(LOWER)
12	R136475	SCREW	6	X	

FUEL INJECTION PUMP
POMPE D'INJECTION
BOMBA DE INYECCION

RGP10110 -UN-23SEP03

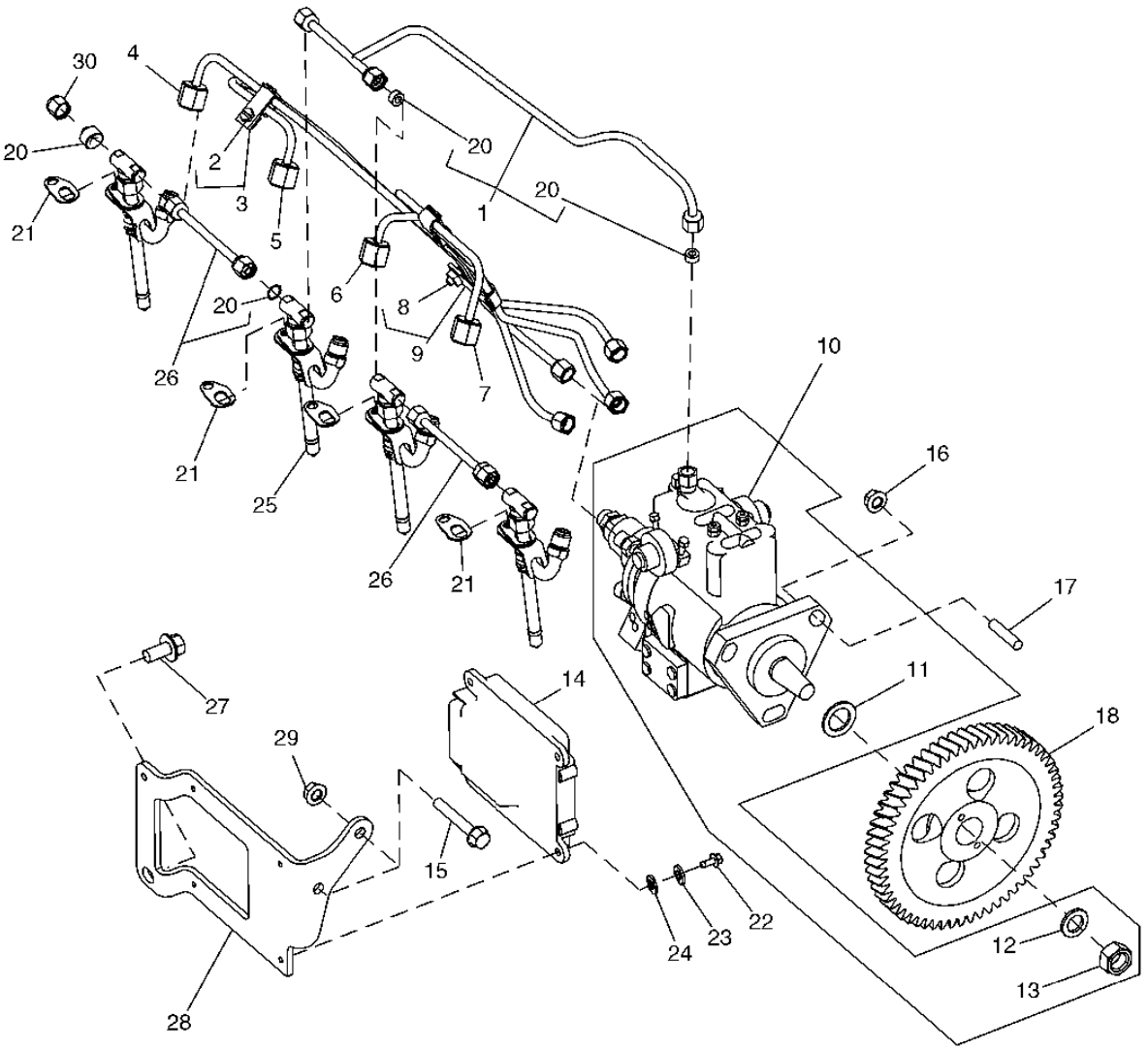

JOHN DEERE
RGP10110

KEY	PART NO.	PART NAME	QTY.	ENGINE SERIAL NO.	4 1 0 J	REMARKS
1	RE507598	FUEL LINE	1		X	
2	19M7923	CAP SCREW	2		X	M6 X 12
3	RE19797	CLAMP	2		X	
4	RE507646	FUEL LINE	1		X	NO.1
5	RE507647	FUEL LINE	1		X	NO.2
6	RE507648	FUEL LINE	1		X	NO.3
7	RE507649	FUEL LINE	1		X	NO.4
8	19M7923	CAP SCREW	1		X	M6 X 12
9	RE19799	CLAMP	1		X	
10	RE518087	FUEL INJECTION PUMP	1		X	(12V)
11	R502076	O-RING	1		X	
12	R132874	WASHER	1		X	
13	R91360	NUT	1		X	M14
14	RE522527	ENGINE CONTROLLER	1		X	(SERIAL NUMBER)
15	19M7979	SCREW	2		X	M8 X 55
16	14M7298	FLANGE NUT	3		X	M8
17	R116386	STUD	3		X	
18	R505472	GEAR	1		X	
19	R123593	TUBE NUT	1		X	
20	R51936	SEALING WASHER	6		X	
21	RE508716	CLAMP	4		X	
22	19M7640	CAP SCREW	4		X	M5 X 12
23	12H316	LOCK WASHER	4		X	5.486 MM
24	24M7027	WASHER	4		X	5.300 X 10 X 1 MM
25	RE507766	INJECTION NOZZLE	4		X	
	SE500830	NOZZLE	1		X	(PACKAGE OF FOUR)
	RE531116	KIT	AR		X	(INCLUDES TEE AND (2) O-RINGS)
26	RE68748	TUBE	2		X	
27	19M7784	SCREW	2		X	M10 X 20
28	R503520	BRACKET	1		X	
29	14M7298	FLANGE NUT	2		X	M8
30	AR85519	PLUG	2		X	

FUEL INJECTION PUMP
POMPE D'INJECTION
BOMBA DE INYECCION

CDP45922 -UN-09DEC03

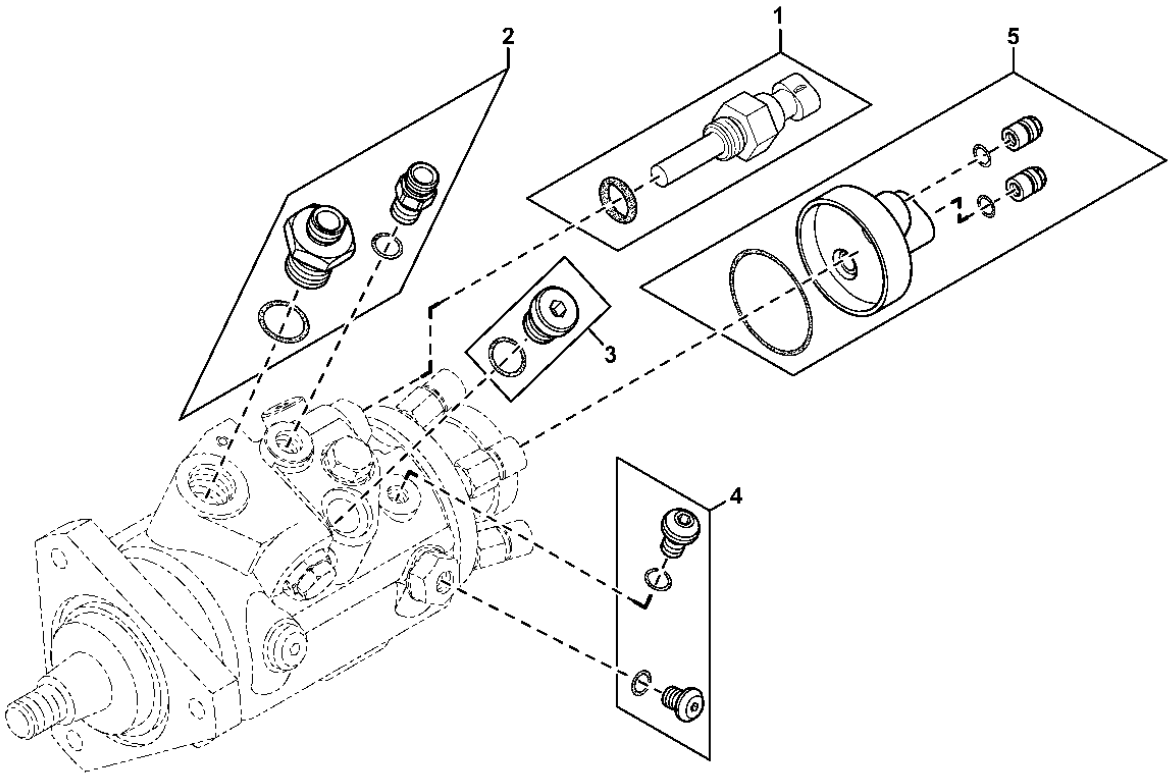

CDP45922

KEY	PART NO.	PART NAME	QTY.	ENGINE SERIAL NO.	410J	REMARKS
1	RE521822	FUEL TEMPERATURE SENSOR	1		X	(FUEL TEMPERATURE SENSOR)
2	RE521823	KIT	1		X	(PRESSURE REGULATOR AND FUEL INLET CONNECTOR)
3	RE521824	KIT	1		X	(TIMING PIN HOLE PLUG)
4	RE521825	KIT	1		X	ACCESS SCREW)
5	RE522109	KIT	1		X	(SOLENOID CONNECTOR ASSEMBLY)

CYLINDER BLOCK
BLOC-CYLINDRES
BLOQUE DE CILINDROS

T146586 -UN-15OCT01

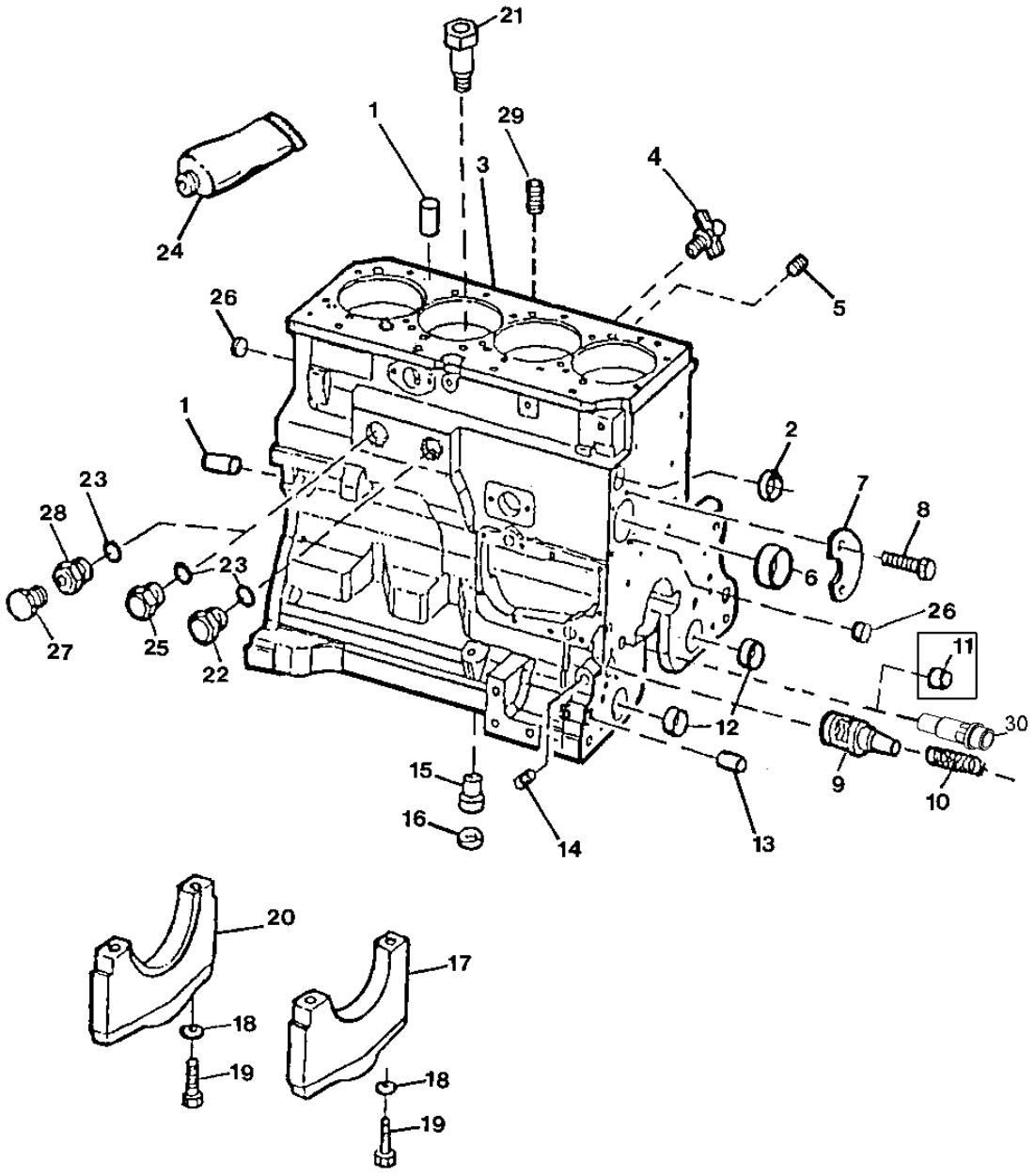

T146586

KEY	PART NO.	PART NAME	QTY.	ENGINE SERIAL NO.	4 1 0 J	REMARKS
1	R48685	DOWEL PIN	4		X	
2	R116466	PLUG	1		X	
3	.....	CYLINDER BLOCK	1		X	(MARKED R504849) (ORDER RE520023)
4	AT13740	DRAIN VALVE	1		X	
5	R104592	PIPE PLUG	5		X	
6	R119874	BUSHING	1		X	CAMSHAFT
7	R132518	PLATE	1		X	
8	19M8999	SCREW	2		X	M8 X 25
9	R121043	VALVE	1		X	ENGINE OIL BY-PASS
10	R111137	SPRING	1		X	
11	R26493	BUSHING	1		X	OIL PRESSURE REGULATING
12	R115299	BUSHING	6		X	BALANCER SHAFT
13	R26650	DOWEL PIN	2		X	
14	15H623	PIPE PLUG	1		X	9.525 MM (3/8")
15	R115390	BUSHING	1		X	
16	R75892	O-RING	1		X	
17	R114241	BEARING CAP	4		X	
18	T20168	WASHER	10		X	
19	T23474	CAP SCREW	10		X	
20	R132186	BEARING CAP	1		X	
21	R131182	ORIFICE	4		X	
22	R39741	DRAIN PLUG	1		X	WITHOUT CAB HEATER
	RE508185	FITTING	1		X	
23	U13639	O-RING	2		X	
24	PM38655	SEALANT	1		X	(LIQUID GASKET)
25	R39741	DRAIN PLUG	1		X	
26	T18891	PLUG	2		X	
27	RE46685	FITTING PLUG	1		X	WITHOUT CAB HEATER
28	R123616	PLUG	1		X	WITH CAB HEATER
29	RE57836	PIPE PLUG	1		X	1/2", (WITHOUT TURBOCHARGER)
30	RE505501	BLEED VALVE	1		X	(OIL PRESSURE REGULATING)

FOR SHORT BLOCK
POUR BLOC AVEC EQUIP.MOBILE
PARA BLOQUE DE CILINDROS CON PIEZAS MOVILES

T156111 -UN-13JUN02

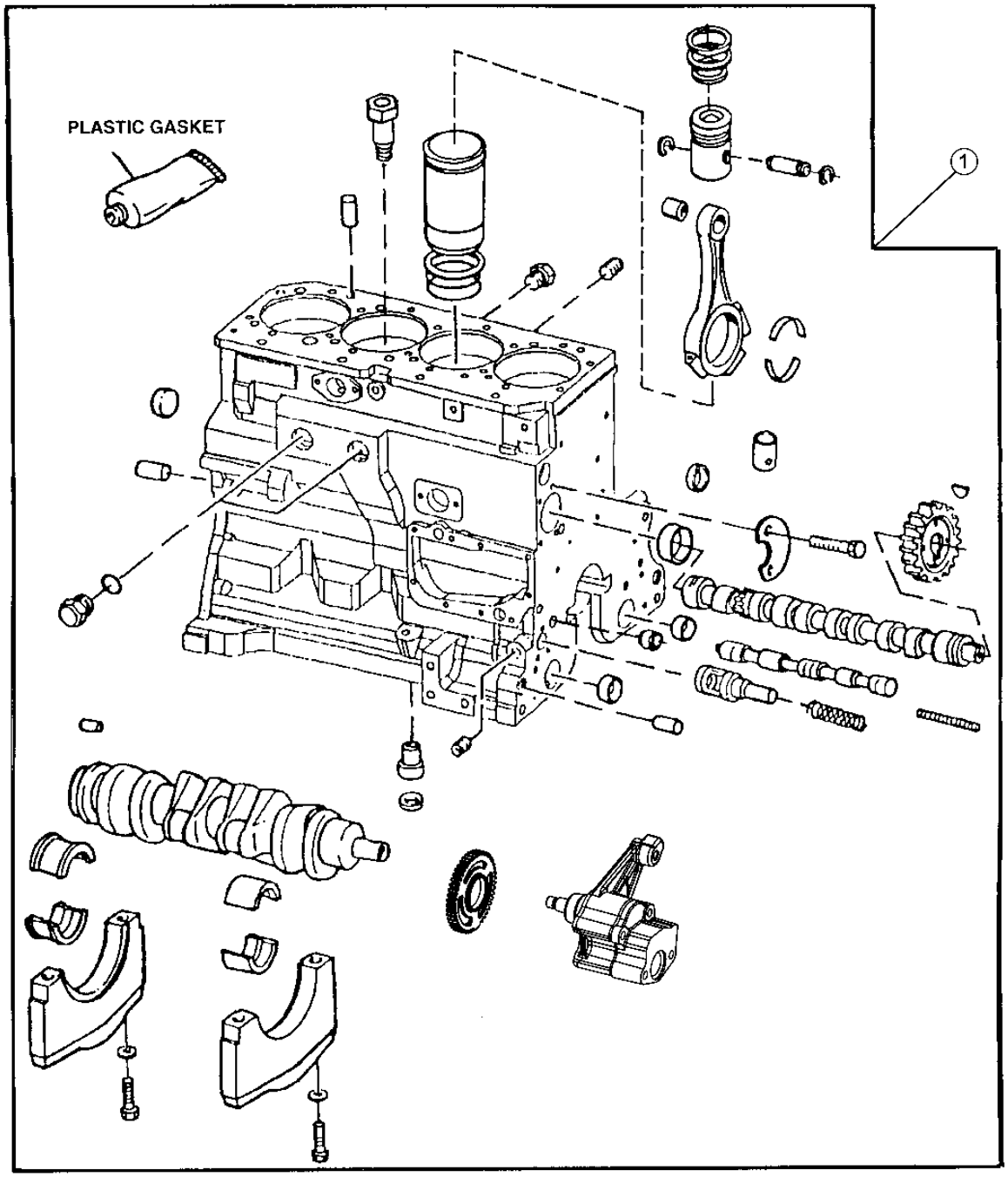

T156111

KEY	PART NO.	PART NAME	QTY.	ENGINE SERIAL NO.	410J	REMARKS
1	RE520023	SHORT BLOCK ASSEMBLY	1		X	(MARKED R504849)

OIL FILLER NECK
GOULOTTE DE REMPLISSAGE D'HUILE
BOCA DE LLENADO DE ACEITE

TP69531 -UN-26JUL00

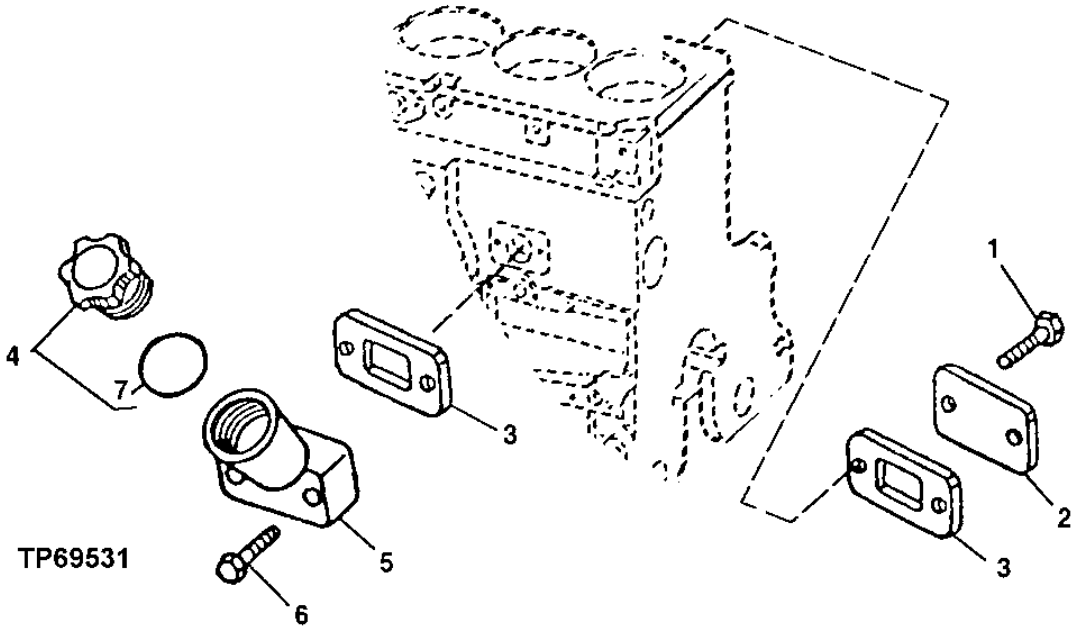

KEY	PART NO.	PART NAME	QTY.	ENGINE SERIAL NO.	410J	REMARKS
1	RE67238	SCREW	2		X	(WITH PRE-APPLIED SEALANT)
2	R116296	COVER	1		X	
3	R136495	GASKET	2		X	
4	RE500005	FILLER CAP	1		X	
5	RE501377	FILLER NECK	1		X	
6	RE67239	SCREW	2		X	(WITH PRE-APPLIED SEALANT)
7	R502902	O-RING	1		X	

OIL DIPSTICK / GUIDE
JAUGE A HUILE / GUIDE
ASPILLAACEITE / GUIA

TP49535 -UN-03JAN97

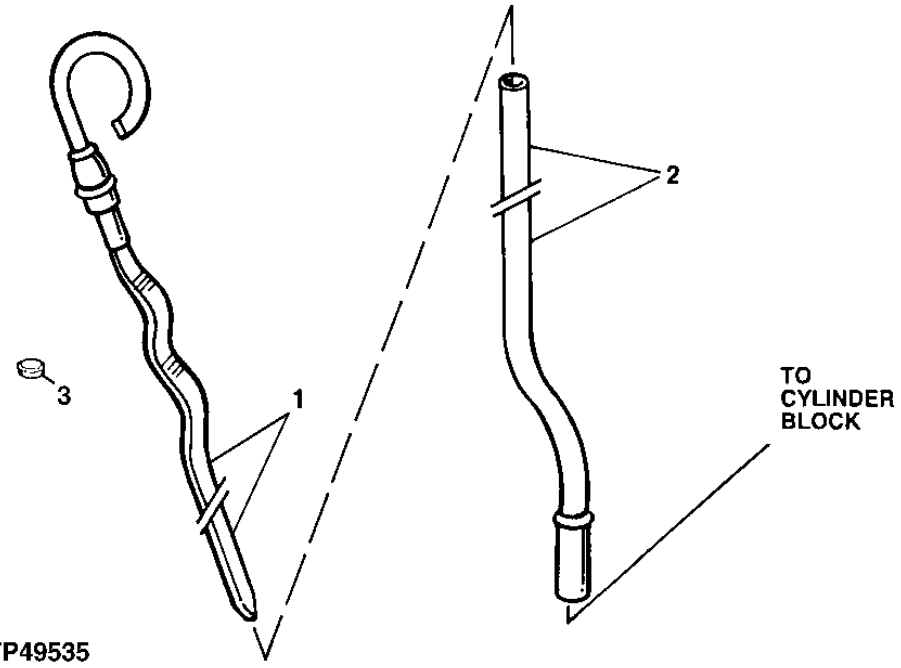

KEY	PART NO.	PART NAME	QTY.	ENGINE SERIAL NO. 410J	REMARKS
1	RE69243	DIPSTICK	1	X	
2	R502604	DIPSTICK TUBE	1	X	
3	R502725	PLUG	1	X	

OIL PAN (1901)
CARTER D'HUILE (1901)
CARTER DEL MOTOR (1901)

TP55183 -UN-18AUG97

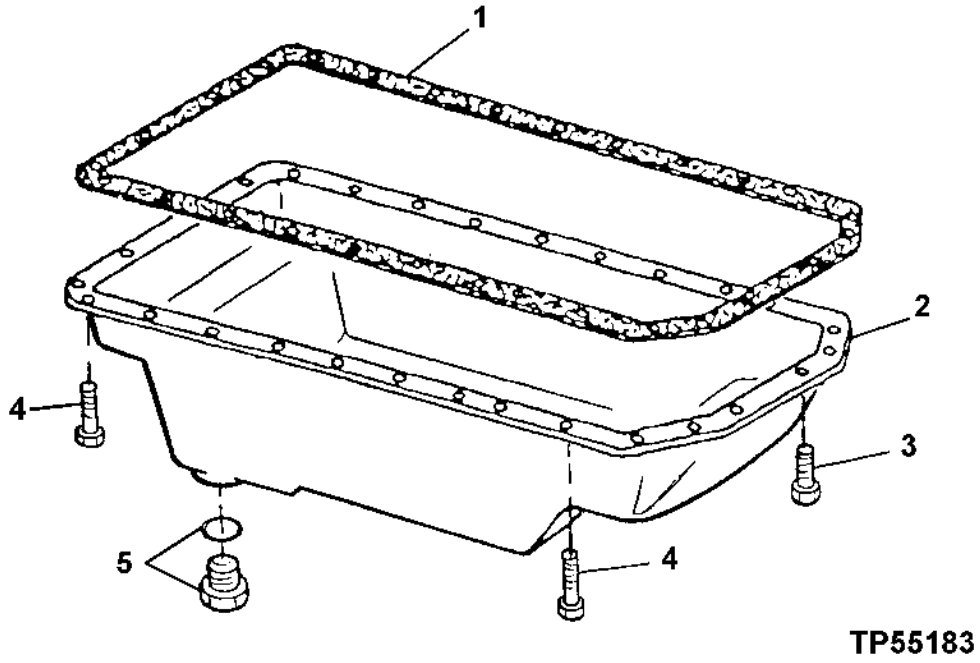

TP55183

KEY	PART NO.	PART NAME	QTY.	ENGINE SERIAL NO.	4 1 0 J	REMARKS
1	R123352	GASKET	1		X	
2	RE59545	OIL PAN	1		X	
3	19M7866	SCREW	6		X	M8 X 20
4	19M8163	BOLT	22		X	M8 X 16
5	RE46685	FITTING PLUG	1		X	

6435 (EXHAUST ELBOW)
6435 (COUDE D'ECHAPPEMENT)
6435 (CODO DE ESCAPE)

TP49256 -UN-15MAY95

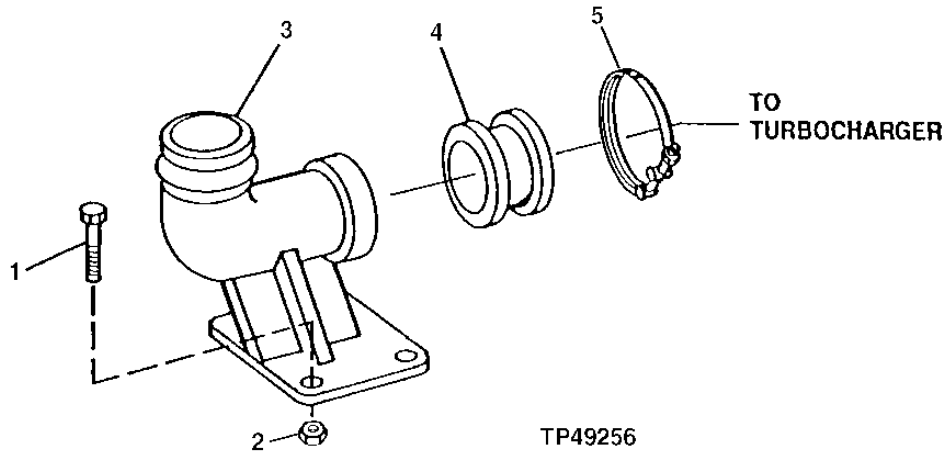

KEY	PART NO.	PART NAME	QTY.	ENGINE SERIAL NO.	410J	REMARKS
1	19M8162	SCREW	4		X	M10 X 40
2	14M7296	FLANGE NUT	4		X	M10
3	R123246	EXHAUST PIPE	1		X	
4	R87732	ADAPTER FITTING	1		X	
5	RE40048	CLAMP	1		X	

MEMORANDA
MEMORANDA
MEMORANDA

FUEL INJECTION NOZZLES AND LINES
INJECTEURS ET CONDUITES
INYECTORES Y TUBERIAS DE COMBUSTIBLE

TP48976 -UN-26OCT96

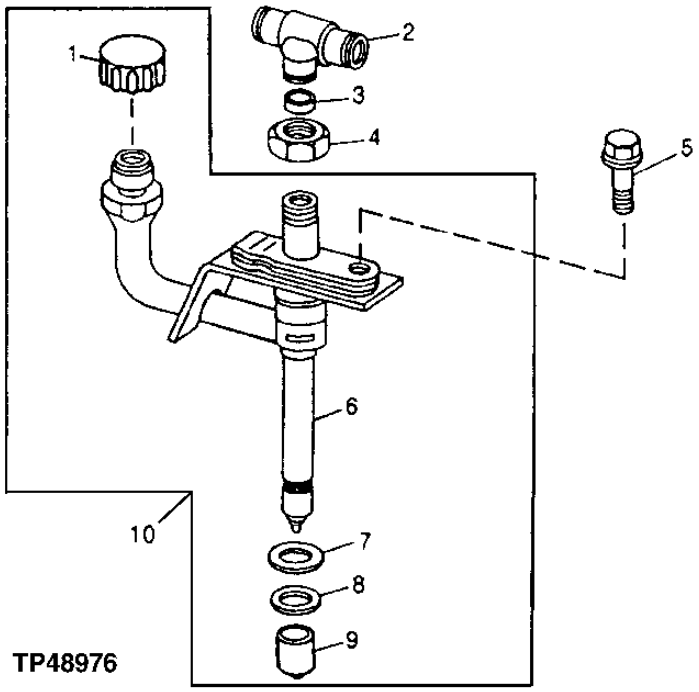

KEY	PART NO.	PART NAME	QTY.	ENGINE SERIAL NO.	410J	REMARKS
1	.....	CAP	1		X	
2	R71963	TEE FITTING	1		X	
3	R79605	WASHER	1		X	
4	R79604	TUBE NUT	1		X	
5	R116366	SCREW	1		X	
6	.....	NOZZLE	1		X	
7	R92352	PACKING	1		X	
8	R48000	SEAL	1		X	(NOT INCLUDED WITH RE48786)
	R500390	WASHER	1		X	(USE WITH STANDARD NOZZLE BORE)
9	T24472	CAP	1		X	
10	RE48786	INJECTION NOZZLE	1		X	
	SE500826	INJECTION NOZZLE	1		X	(REMANUFACTURED FOR RE48786) PKG 4
	SE501101	INJECTION NOZZLE	1		X	(REMANUFACTURED FOR RE48786) PKG 1

FUEL INJECTION NOZZLES AND LINES
INJECTEURS ET CONDUITES
INYECTORES Y TUBERIAS DE COMBUSTIBLE

RGP10096 -UN-28AUG03

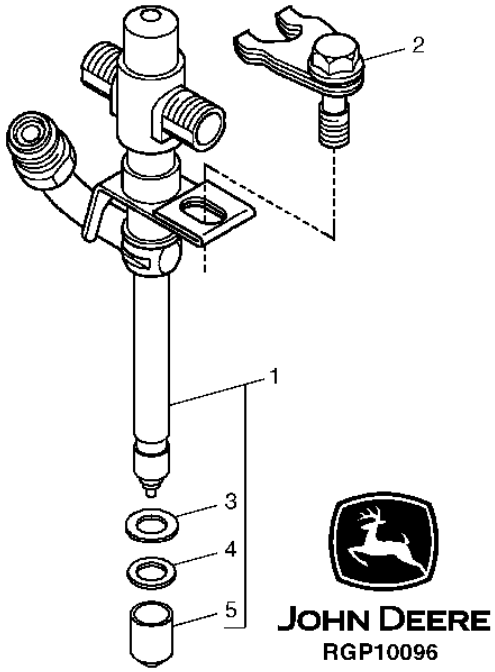

KEY	PART NO.	PART NAME	QTY.	ENGINE SERIAL NO.	REMARKS
1	RE507766	INJECTION NOZZLE	6		
	SE500830	NOZZLE	1		(PACKAGE OF FOUR)
	RE531116	KIT	AR		(INCLUDES TEE AND (2) O-RINGS)
2	RE508716	CLAMP	6		
3	R92352	PACKING	1		
4	R500390	WASHER	1		
5	T24472	CAP	1		

AIR INTAKE
ADMISSION D'AIR
ADMISION DE AIRE

RGP10088 -UN-28AUG03

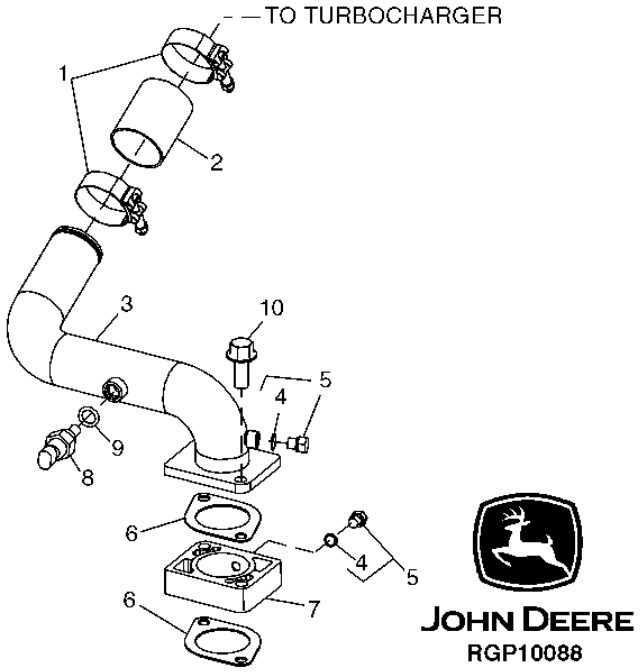

KEY	PART NO.	PART NAME	QTY.	ENGINE SERIAL NO.	410J	REMARKS
1	R110531	CLAMP	2		X	
2	R500596	HOSE	1		X	
3	RE506949	STRUCTURAL TUBING	1		X	
4	51M7039	O-RING	2		X	8.100 X 1.600 MM
5	RE60071	FITTING	2		X	
6	R81275	GASKET	2		X	
7	R501472	SPACER	1		X	(AIR INLET) (ALSO ORDER (2) R81275)
8	RE61812	SENSOR	1		X	(AIR INTAKE TEMPERATURE)
9	51M7041	O-RING	1		X	11.300 X 2.200 MM
10	19M8292	SCREW	2		X	M10 X 50

MEMORANDA

BALANCER SHAFT
ARBRE D'EQUILIBRAGE
EJE EQUILIBRADOR

T149536 -UN-03JAN02

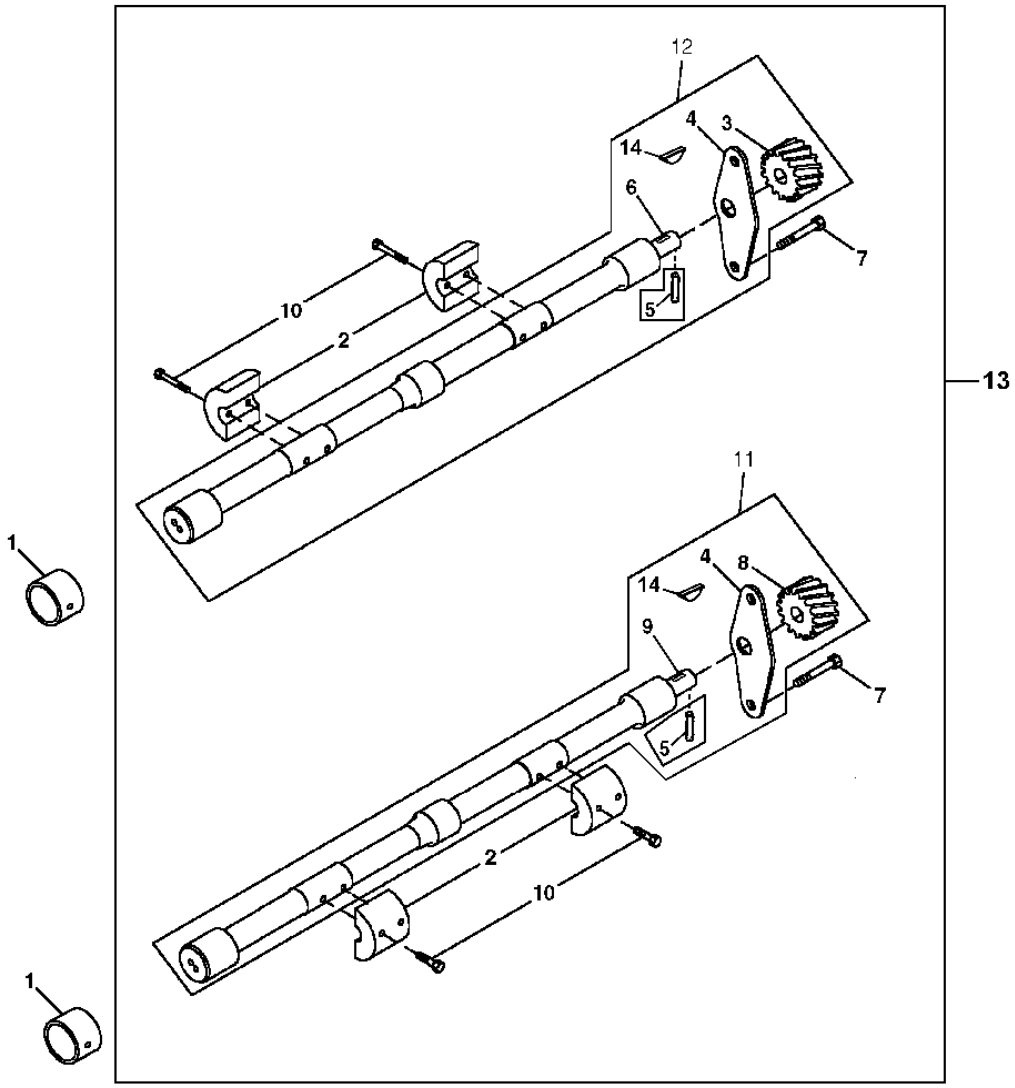

T149536

KEY	PART NO.	PART NAME	QTY.	SERIAL NO.	410J	REMARKS
1	R115299	BUSHING	6		X	
2	R500265	WEIGHT	4		X	
3	.....	GEAR	1		X	R.H.
4	.....	PLATE	2		X	
5	34M7089	DOWEL PIN	2		X	4 X 12 MM
6	.....	BALANCER SHAFT	1		X	
7	19M8998	SCREW	4		X	M8 X 12 (HS, HEAD MARKED 10.9)
8	.....	GEAR	1		X	
9	.....	BALANCER SHAFT	1		X	
10	19M8882	SCREW	8		X	M8 X 40 (HS, HEAD MARKED 10.9)
11	RE500448	BALANCER SHAFT	1		X	R.H.
12	RE500449	BALANCER SHAFT	1		X	L.H.
13	RE504741	BALANCER SHAFT	1		X	KIT
14	R133303	SHAFT KEY	2		X	

TURBOCHARGER OIL LINES
CONDUITES D'HUILE DU TURBOCOMPRESSEUR
TUBERIAS DE ACEITE DEL TUBOCARGADOR

RGP8404 -UN-29NOV01

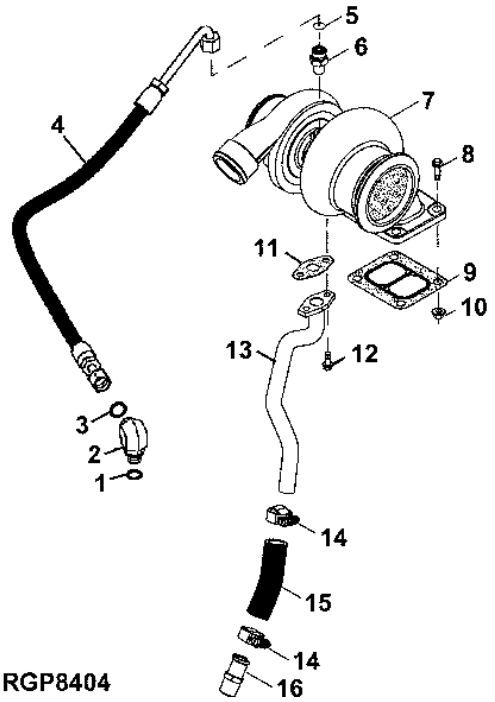

RGP8404

KEY	PART NO.	PART NAME	QTY.	ENGINE SERIAL NO.	410J	REMARKS
1	51M7042	O-RING	1		X	
2	38H5154	ELBOW FITTING	1		X	(INCLUDES 51M7042)
3	T77613	O-RING	1		X	
4	RE501260	OIL LINE	1		X	
5	R63548	O-RING	1		X	
6	M87733	ADAPTER FITTING	1		X	
7	RE509572	TURBOCHARGER	1		X	(A) (BORG-WARNER)
	SE501155	TURBOCHARGER	1		X	(CZ)
8	19M8162	SCREW	4		X	
9	R92097	GASKET	1		X	
10	14M7296	FLANGE NUT	4		X	
11	R123570	GASKET	1		X	(USE WITH SE501155)
12	19M7866	SCREW	2		X	M8 X 20, (USE WITH SE501155)
13	RE59547	OIL LINE	1		X	(USE WITH SE501155)
14	RE65978	CLAMP	2		X	
15	.....	HOSE	1		X	(MAKE FROM R120013)
16	RE54885	HOSE FITTING	1		X	

(A) REMANUFACTURED

WATER PUMP PULLEY
POULIE DE POMPE A EAU
POLEA DE LA BOMBA DE AGUA

TP49372 -UN-18JAN96

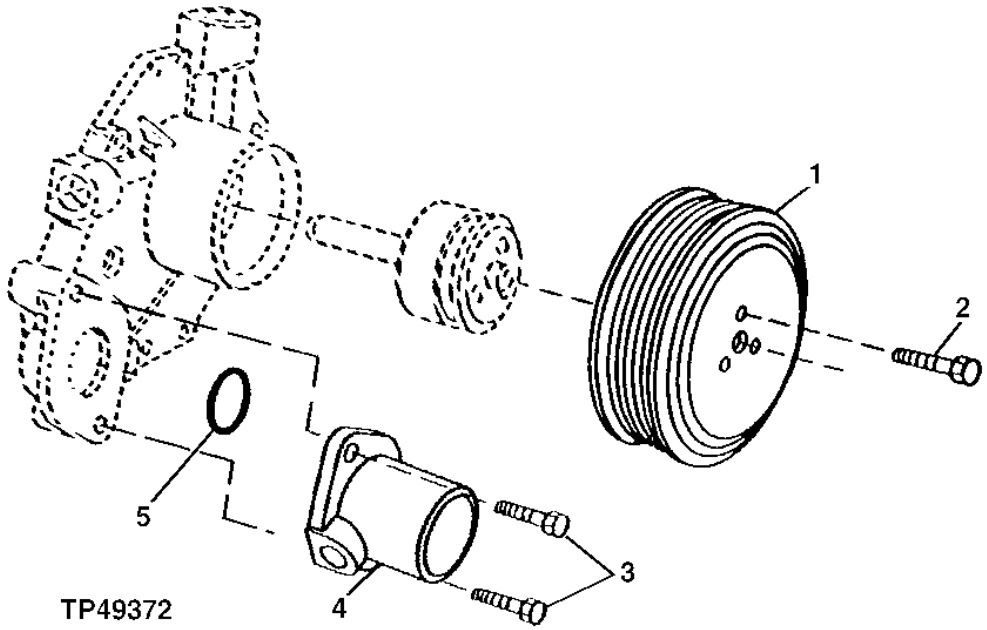

KEY	PART NO.	PART NAME	QTY.	ENGINE SERIAL NO.	410J	REMARKS
1	R121038	PULLEY	1		X	
2	19M7774	SCREW	3		X	M6 X 12
3	19M7867	SCREW	2		X	M8 X 25
4	R121634	HOUSING	1		X	
5	R89944	O-RING	1		X	

WATER PUMP
POMPE A EAU
BOMBA DE AGUA

T149718 -UN-07JAN02

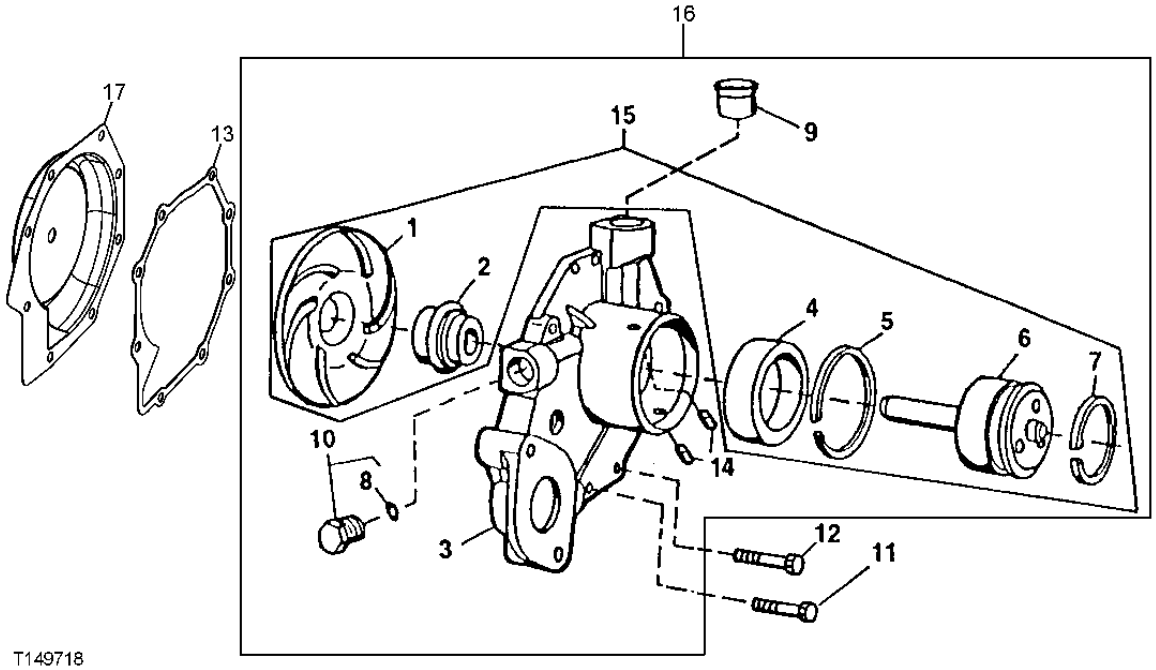

T149718

KEY	PART NO.	PART NAME	QTY.	ENGINE SERIAL NO.	410J	REMARKS
1	.....	IMPELLER	1		X	
2	.....	SEAL	1		X	
3	.....	HOUSING	1		X	
4	.....	BALL BEARING	1		X	
5	.....	RING	1		X	
6	.....	SHAFT	1		X	
7	A364R	SNAP RING	1		X	
8	51M7043	O-RING	1		X	15.300 X 2.200 MM
9	R123226	GASKET	1		X	
10	RE46685	FITTING PLUG	1		X	
11	19M7863	SCREW	5		X	M6 X 25
12	19M7796	SCREW	3		X	M6 X 30
13	R123417	GASKET	1		X	
14	R100369	FILTER	2		X	
15	RE70962	KIT	1		X	
16	RE505981	WATER PUMP	1		X	(A) (MARKED R503509)
17	RE508566	KIT	1		X	(WATER PUMP INSERT REPAIR)

(A) ALSO AVAILABLE WITH TIMING COVER ASSEMBLY

MEMORANDA
MEMORANDA
MEMORANDA

THERMOSTAT / COVER
THERMOSTAT / COUVERCLE
TERMOSTATO / TAPADERA

T165950 -UN-05MAR03

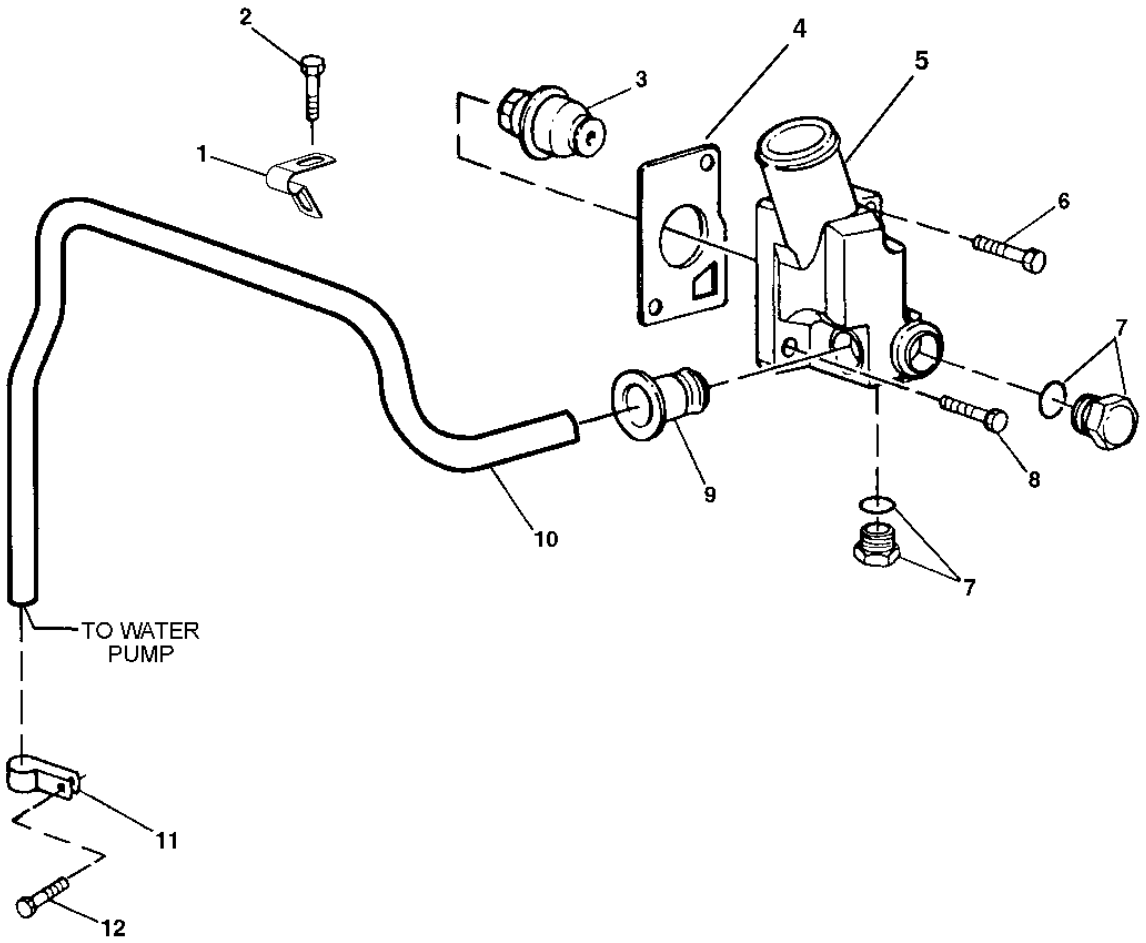

T165950

KEY	PART NO.	PART NAME	QTY.	ENGINE SERIAL NO.	REMARKS
1	R123323	CLAMP	1		
2	19M7788	SCREW	1		M12 X 25
3	RE522076	THERMOSTAT	1		82° C (180° F)
4	R502814	GASKET	1		
5	R131016	COVER	1		
6	19M8292	SCREW	1		M10 X 50
7	RE46684	FITTING PLUG	2		
8	19M7786	SCREW	1		M10 X 30
9	R123226	GASKET	1		
10	R501144	TUBE	1		
11	R123324	CLAMP	1		
12	19M7801	SCREW	1		M8 X 60

OIL COOLER
REFROIDISSEUR D'HUILE
ENFRIADOR DE ACEITE

T137126 -UN-15JAN01

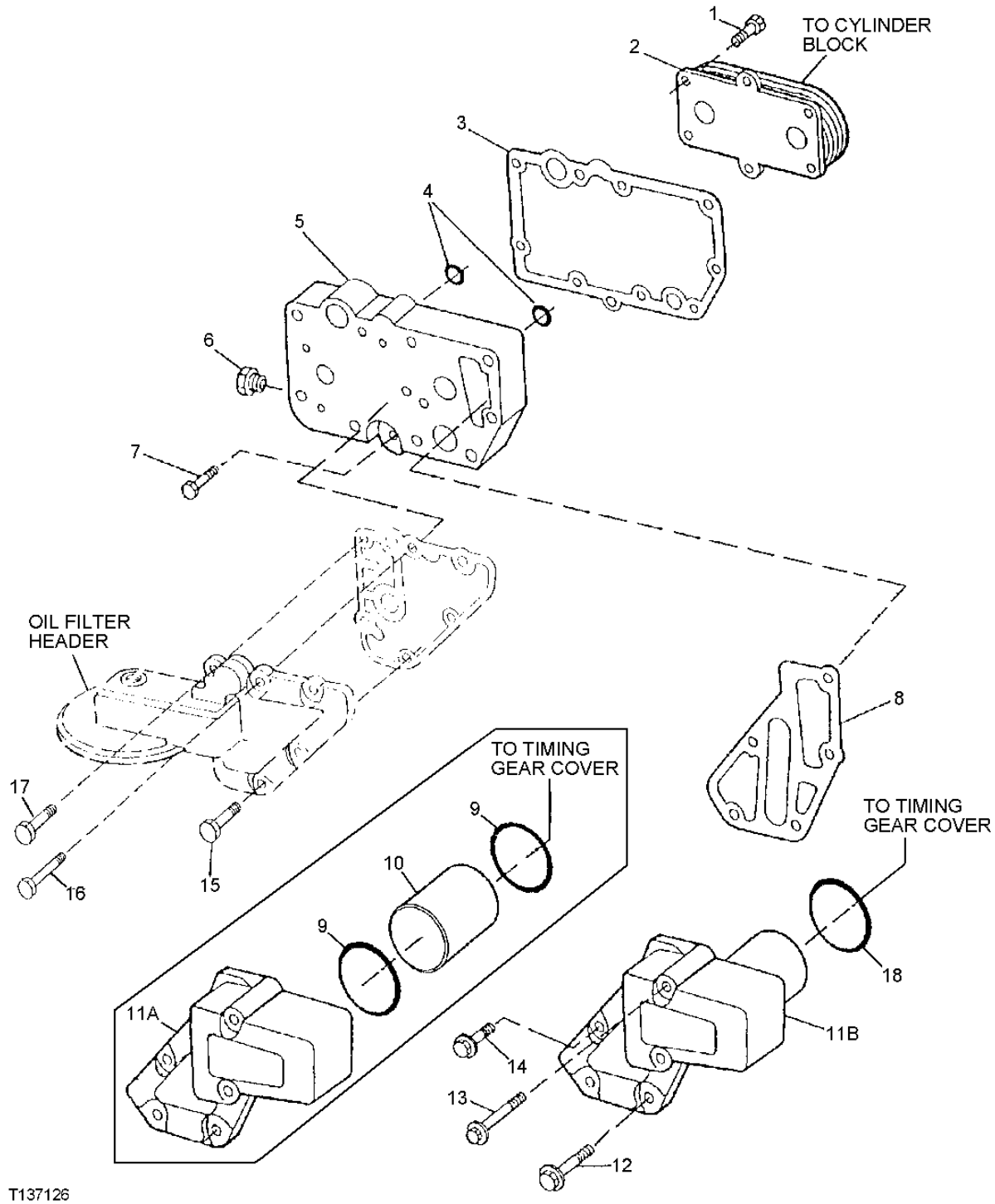

KEY	PART NO.	PART NAME	QTY.	ENGINE SERIAL NO.	REMARKS
1	RE67231	SCREW	6		(WITH PRE-APPLIED SEALANT)
2	RE59296	OIL COOLER	1		
	RE522820	OIL COOLER	1		(5-PLATE TESTED ASSEMBLY)
3	R123501	GASKET	1		
4	T122075	O-RING	2		
5	R123471	HOUSING	1		
6	RE46686	FITTING PLUG	1		
7	RE46685	FITTING PLUG	1		
8	R501428	GASKET	1		
9	R61105	O-RING	2		
10	R115252	BUSHING	1		
11A	R135177	ADAPTER FITTING	1		(SUB R502811)
11B	R502811	ADAPTER FITTING	1		
12	19M7802	SCREW	2		M8 X 65
13	19M7970	SCREW	2		M8 X 100
14	RE67238	SCREW	1		(WITH PRE-APPLIED SEALANT)
15	19M7802	SCREW	4		M8 X 65
16	19M7970	SCREW	1		M8 X 100
17	RE67238	SCREW	1		
18	R504734	O-RING	1		

FINAL FUEL FILTER / FUEL LINE
FILTRE A COMBUSTIBLE FINAL / CONDUITE DE COMBUSTIBLE
FILTRO FINAL DE COMBUSTIBLE / TUBERIA DE COMBUSTIBLE

RGP10111 -UN-02OCT03

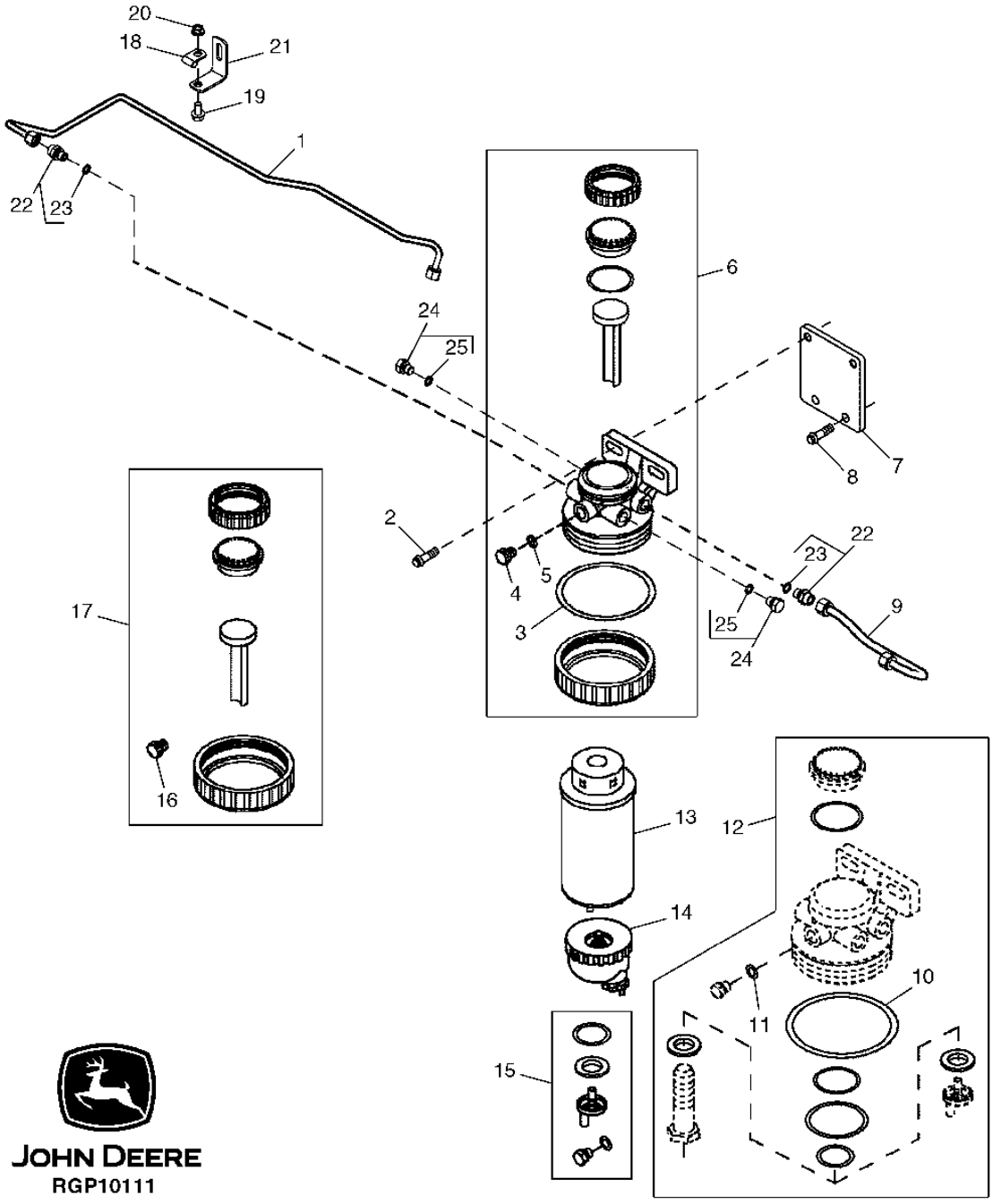

KEY	PART NO.	PART NAME	QTY.	ENGINE SERIAL NO.	REMARKS
1	RE507597	FUEL LINE	1		
2	19M7784	SCREW	2		M10 X 20
3	RE516553	SEAL KIT	1		
4	R113563	DRAIN PLUG	1		
5	R113562	O-RING	1		
6	RE509794	SEAL KIT	1		
7	R516437	BRACKET	1		
8	19M7784	SCREW	2		M10 X 20
9	RE60037	FUEL LINE	1		
10	RE516553	SEAL KIT	1		
11	R113562	O-RING	1		
12	RE516512	O-RING KIT	1		
13	RE509031	FILTER ELEMENT	1		
14	RE51650	SEDIMENT BOWL	1		(A)
15	RE60854	DRAIN VALVE	1		
16	R113563	DRAIN PLUG	1		
17	RE51649	SEAL KIT	1		
18	T14050	CLAMP	1		
19	19M7865	SCREW	1		M8 X 16
20	14M7298	FLANGE NUT	1		M8
21	R116116	BRACKET	1		
22	RE60029	ADAPTER FITTING	2		
23	51M7040	O-RING	1		
24	RE46686	FITTING PLUG	2		
	RE59487	FITTING	2		
25	51M7040	O-RING	1		

(A) TRANSPARENT

3713 (FUEL TRANSFER PUMP)
3713 (POMPE D'ALIMENTATION)
3713 (BOMBA DE ALIMENTACION DE COMBUSTIBLE)

TP69536 -UN-18JUL00

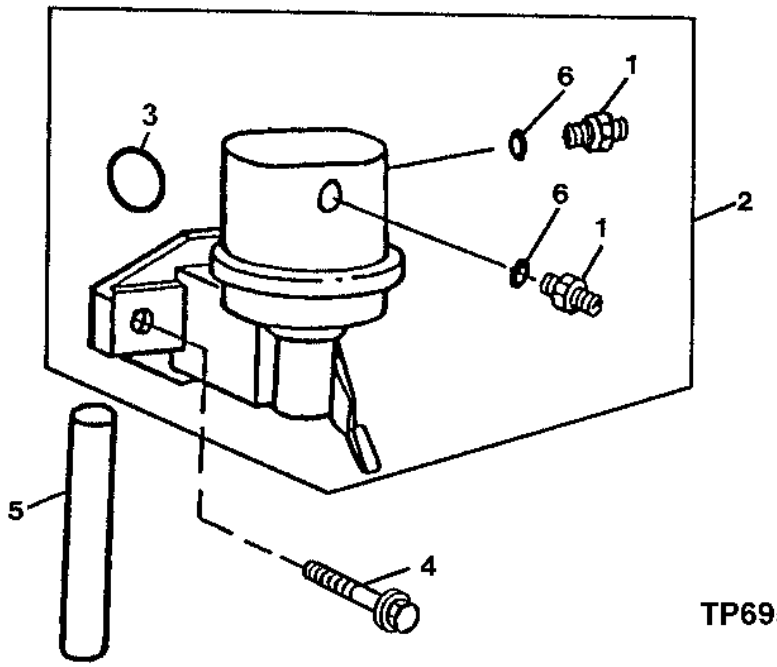

KEY	PART NO.	PART NAME	QTY.	ENGINE SERIAL NO.	REMARKS
1	R500270	FITTING	2		
2	RE66153	FUEL PUMP	1		
3	R123273	O-RING	1		
4	RE504233	CAP SCREW	2		
5	R133405	PIN	1		
6	R500271	O-RING	2		

MEMORANDA

STARTER MOTOR
DEMARREUR
MOTOR DE ARRANQUE

T149124 -UN-14DEC01

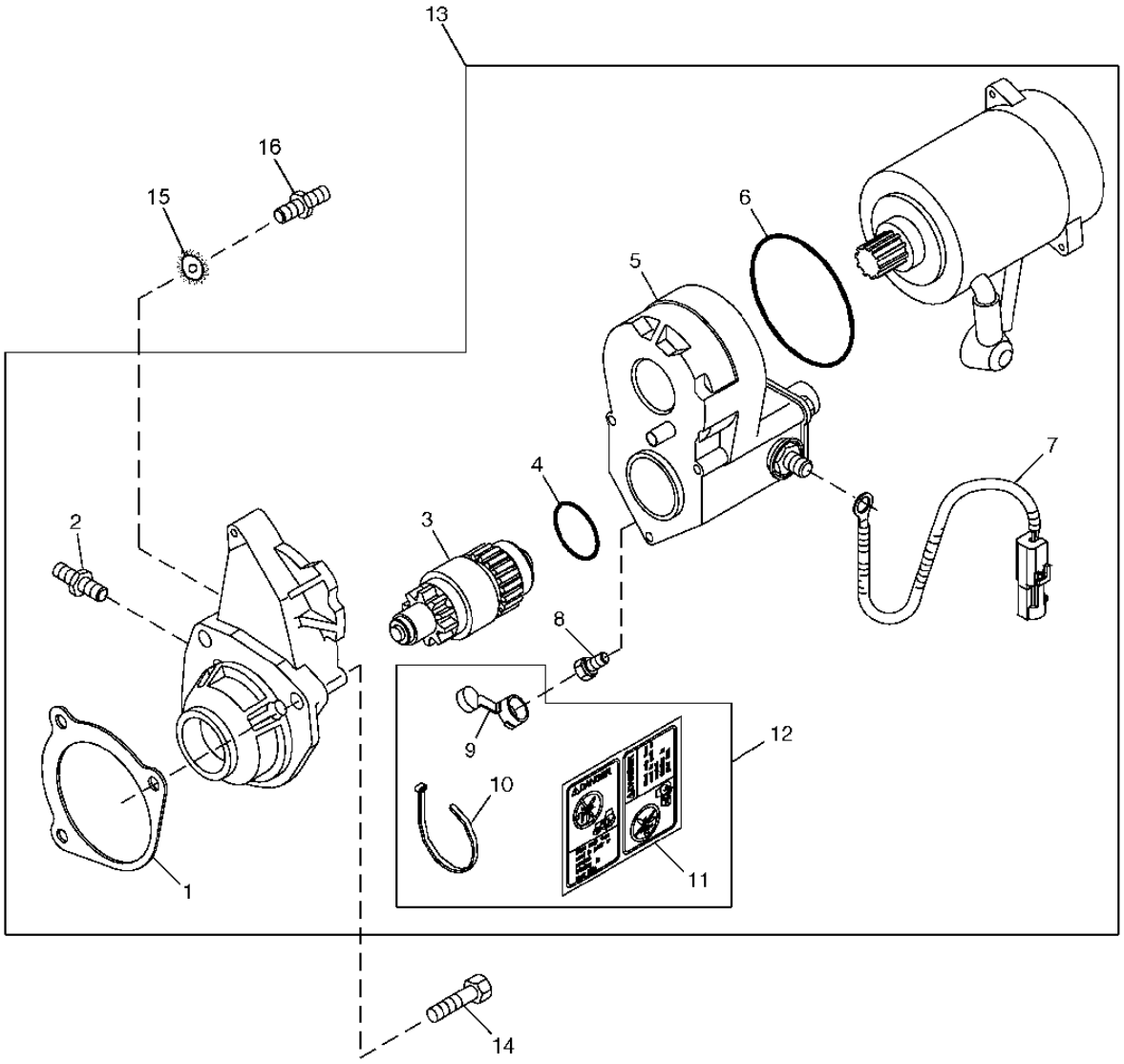

T149124

KEY	PART NO.	PART NAME	QTY.	ENGINE SERIAL NO.	REMARKS
1	R53108	GASKET	1		NOT USED IN THIS APPLICATION
2	R136052	STUD	1		
3	RE70487	CLUTCH	1		
4	R135510	O-RING	1		
5	RE70486	SWITCH	1		
6	R135509	SEAL	1		
7	RE505400	BATTERY CABLE	1		
8	RE71256	SCREW WITH WASHER	1		
9	.....	COVER	1		(ORDER RE70756)
10	R96703	TIE BAND	1		NOT USED IN THIS APPLICATION
11	T146102	LABEL	1		"DANGER: START ONLY FROM SEAT..."
12	RE70756	KIT	1		
13	RE506105	STARTER MOTOR KIT	1		(A) DENSO 12V WET SEALED, (MARKED RE504244)
	RE501298	STARTER MOTOR KIT	1		(B)
14	19M7786	SCREW	2		M10 X 30
15	12M7033	LOCK WASHER	1		10.500 MM
16	R503419	STUD	1		

(A) TO4045TT000

(B) PE4045TT000 PE4045TT000

ALTERNATOR BRACKETS
SUPPORTS DE L'ALTERNATEUR
SOPORTE DEL ALTERNADOR

TP69537 -UN-26JUL00

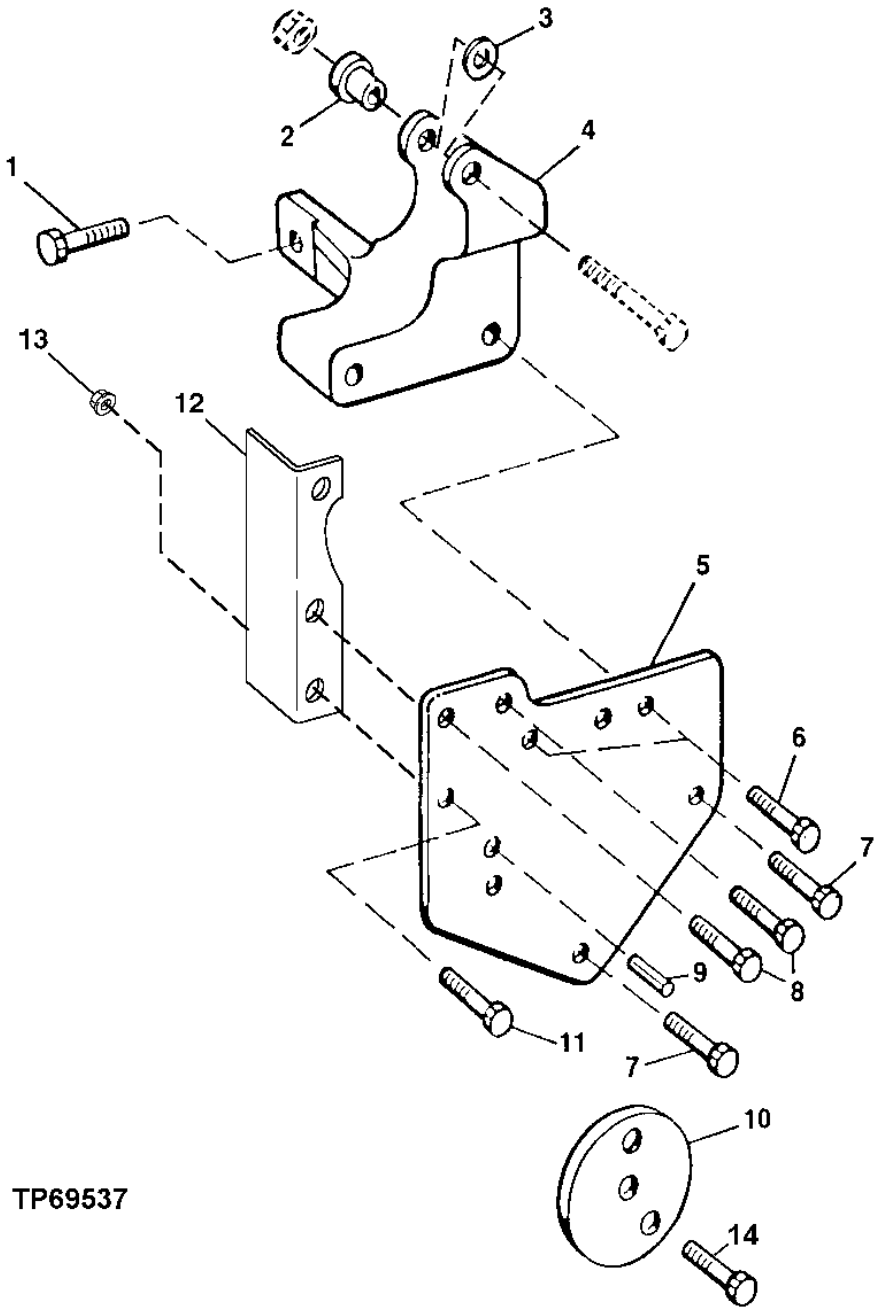

THIS PARTS LISTING IS CONTINUED

KEY	PART NO.	PART NAME	QTY.	ENGINE SERIAL NO.	REMARKS
1	19M7786	SCREW	2		M10 X 30 (HS, HEAD MARKED 10.9)
2	R100377	BUSHING	1		
3	R64525	THRUST WASHER	1		
4	R132166	BRACKET	1		
5	R133978	SUPPORT	1		
6	19M7785	SCREW	2		M10 X 25 (HS, HEAD MARKED 10.9)
7	19M7801	SCREW	2		M8 X 60 (HS, HEAD MARKED 10.9)
8	19M7786	SCREW	2		M10 X 30
9	34M7061	SPRING PIN	1		8 X 20 MM
10	R500322	SPACER	1		
11	19M7786	SCREW	4		M10 X 30
12	R500531	STRAP	1		
13	14M7296	FLANGE NUT	2		M10
14	19M7811	SCREW	1		M10 X 90

2302 (FAN DRIVE)
2302 (ENTRAINEMENT DU VENTILATEUR)
2302 (TRANSMISION DEL VENTILADOR)

TP69539 -UN-26JUL00

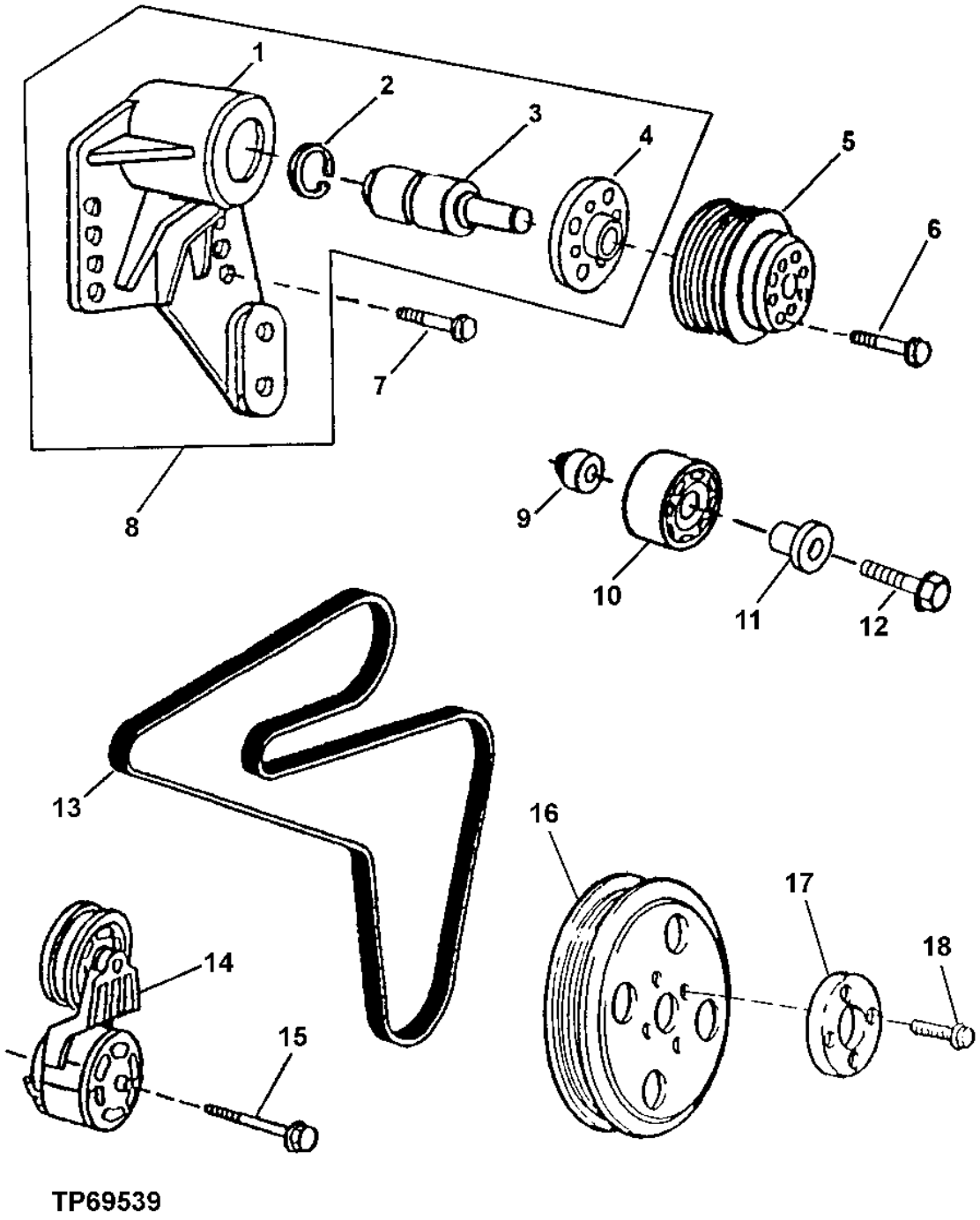

TP69539

KEY	PART NO.	PART NAME	QTY.	ENGINE SERIAL NO.	REMARKS
1	.....	HOUSING	1		(RE70535 NO LONGER AVAILABLE) (SUB RE518097 AND R516623)
2	H80753	SNAP RING	1		
3	.....	BALL BEARING	1		
4	.....	HUB	1		
5	R128660	PULLEY	1		
6	19M8197	CAP SCREW	4		M10 X 85
7	19M7835	SCREW	4		M10 X 35
8	RE500539	HUB	1		(MARKED R500304)
9	R500320	SPACER	1		(WITH AIR CONDITIONING)
10	RE505264	PULLEY	1		(WITH AIR CONDITIONING)
11	R502079	SLEEVE	1		(WITH AIR CONDITIONING)
12	19M7808	SCREW	1		M10 X 65, (WITH AIR CONDITIONING)
13	T225495	V-BELT	1		(WITH AIR CONDITIONING)
	T225494	V-BELT	1		(WITHOUT AIR CONDITIONING)
14	.....	TIGHTENER	1		
	RE518097	TIGHTENER	1		
15	19M7811	SCREW	2		M10 X 90
16	R133295	PULLEY	1		
17	R500649	FLANGE	1		
18	R121897	BOLT	1		

FLYWHEEL
VOLANT
VOLANTE MOTOR

TP69538 -UN-18JUL00

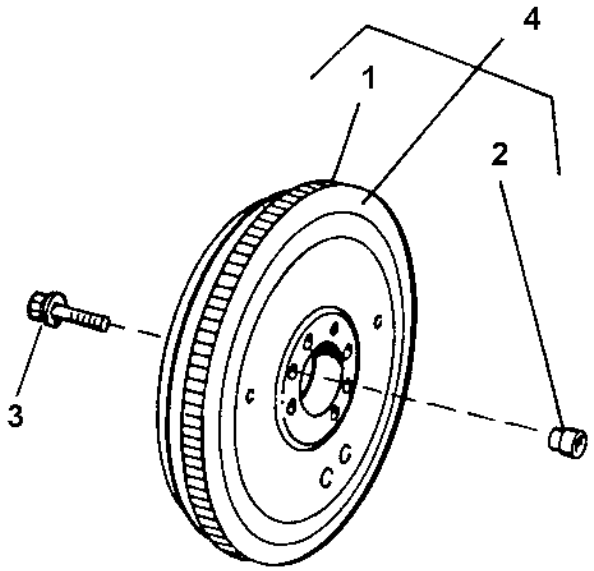

TP69538

KEY	PART NO.	PART NAME	QTY.	ENGINE SERIAL NO.	REMARKS
1	R28811	RING GEAR	1		(129 TEETH)
2	R123521	SLEEVE	1		
3	R135918	BOLT	4		
4	RE500137	FLYWHEEL	4		(MARKED R500096)

FLYWHEEL HOUSING
CARTER VOLANT
CAJA DEL VOLANTE MOTOR

T157770 -UN-02AUG02

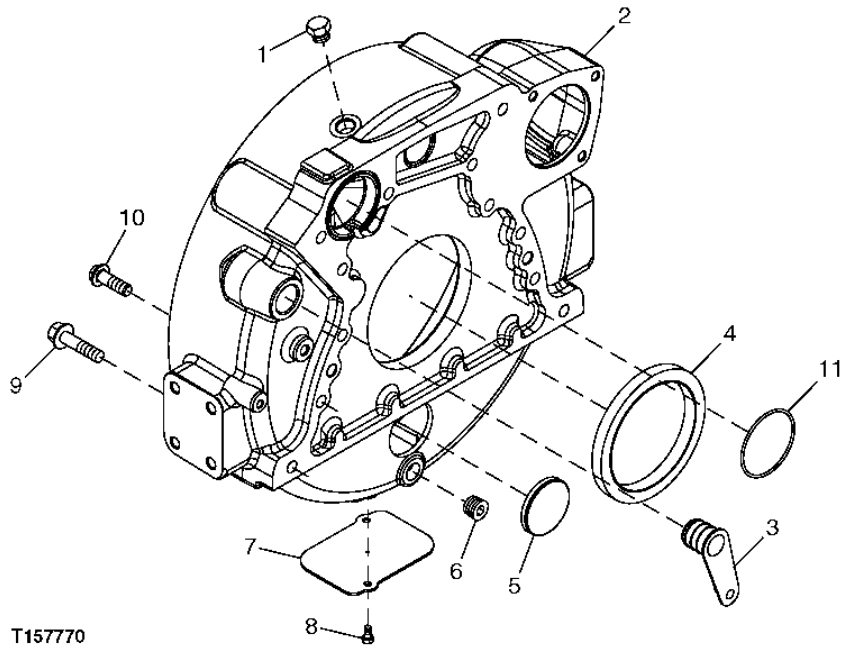

KEY	PART NO.	PART NAME	QTY.	ENGINE SERIAL NO.	REMARKS
1	R39112	FITTING	1		
2	R501188	HOUSING	1		(SUB R503449 AND R61467)
	R503449	HOUSING	1		(ALSO ORDER R61467)
3	R131769	PLUG	1		
4	RE44574	SEAL	1		
5	T13518	PLUG	1		
6	RE57836	PIPE PLUG	1		1/2"
7	R121039	PLATE	2		
8	19M7923	CAP SCREW	2		M6 X 12
9	19M8306	SCREW	4		M12 X 50
10	R135918	BOLT	8		
11	R61467	O-RING	1		

ENGINE OVERHAUL KIT
JEU DE REMISE EN ETAT MOTEUR
CONJUNTO REPARACION MOTOR

TP28491 -UN-01JAN94

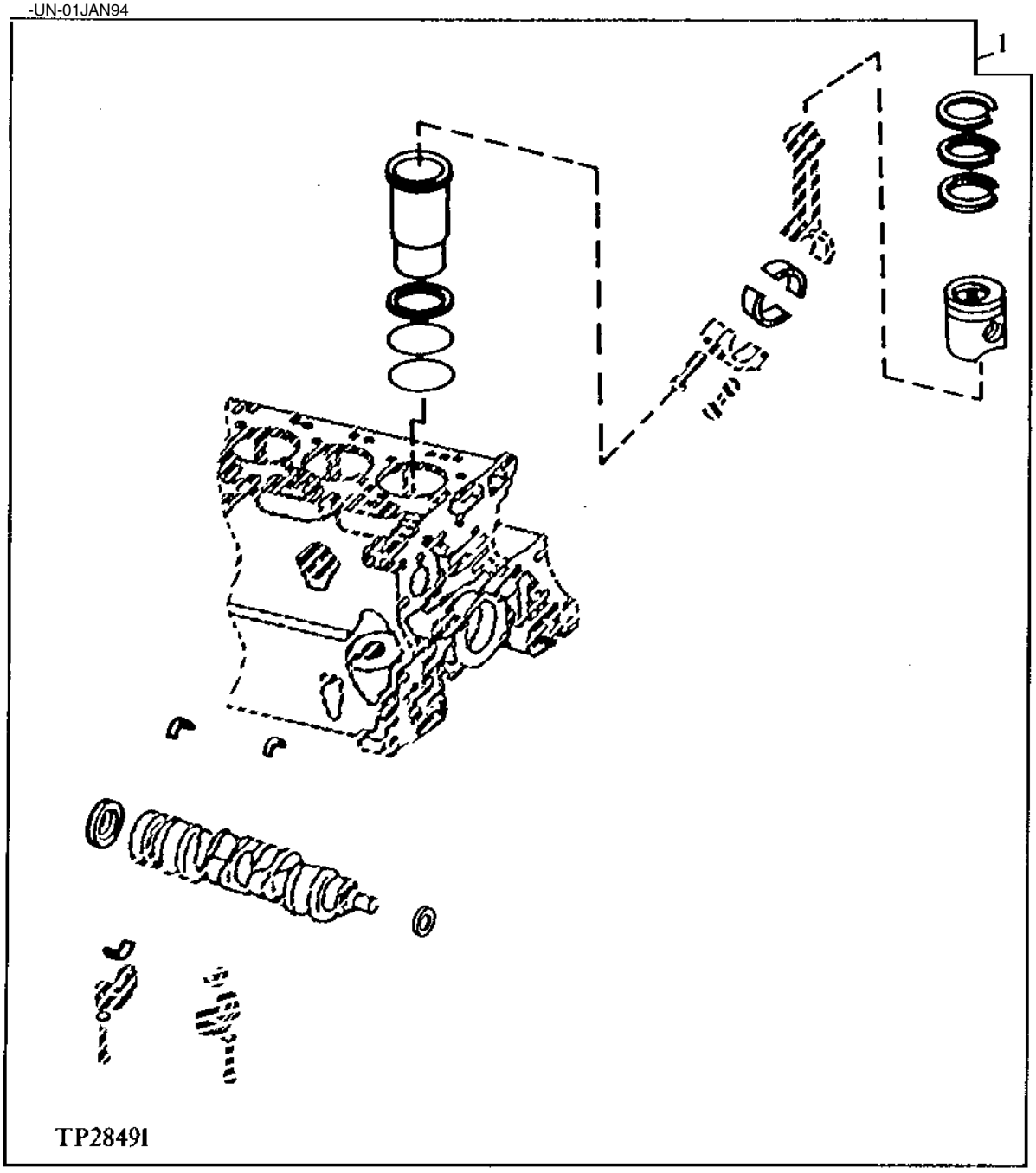

KEY	PART NO.	PART NAME	QTY.	ENGINE SERIAL NO.	REMARKS
1	RE527299	ENGINE OVERHAUL KIT	1		PISTON, (MARKED RE515372)

ENGINE GASKET SET
JEU DE JOINTS MOTEUR
JUEGO DE JUNTAS DEL MOTOR

RGP7893 -UN-12JUL01

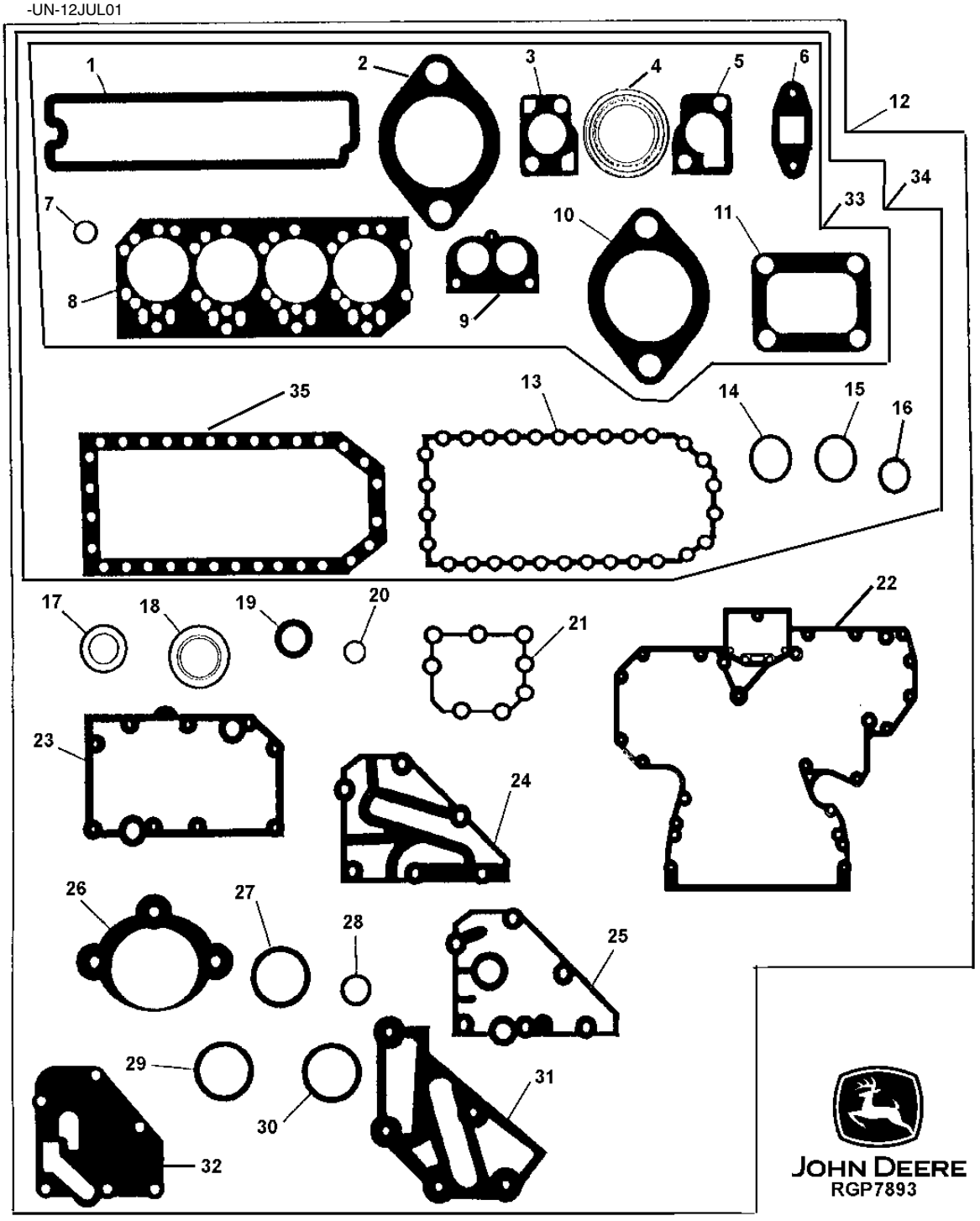

KEY	PART NO.	PART NAME	QTY.	ENGINE SERIAL NO.	REMARKS
1	R123542	GASKET	1		ROCKER ARM COVER
	RE520539	GASKET KIT	1		(NOT INCLUDED IN MAJOR KITS)
2	R521439	GASKET	4		EXHAUST MANIFOLD
3	R502814	GASKET	1		THERMOSTAT COVER, (SUB FOR R135896)
4	R123226	GASKET	2		WATER BY-PASS TUBE
5	R123345	GASKET	1		THERMOSTAT HOUSING
6	R123570	GASKET	1		TURBOCHARGER OIL OUTLET TUBE
	R503891	GASKET	1		TURBOCHARGER OIL OUTLET TUBE
7	R123575	O-RING	4		ROCKER ARM COVER HOLD DOWN STUD
8	R116515	ENGINE CYLINDER HEAD GASKET	1		CYLINDER HEAD
9	R501373	GASKET	1		THERMOSTAT COVER
10	R81275	GASKET	1		AIR INLET (OVAL)
	R133893	GASKET	1		AIR INLET (SQUARE)
11	R92097	GASKET	1		TURBOCHARGER TO EXHAUST MANIFOLD
12	RE527042	GASKET KIT	1		AND CRANKSHAFT MAIN BEARINGS) (SUB FOR RE66093 AND RE66084)
13	R522030	GASKET	1		ENGINE OIL PAN
14	R75892	O-RING	1		OIL PUMP TUBE CONNECTOR
15	R97185	O-RING	1		OIL PUMP OUTLET TUBE TO COVER
16	R61871	O-RING	1		OIL PUMP INTAKE TUBE
17	A4827R	WASHER	1		OIL PRESSURE REGULATOR PLUG
18	RE44574	SEAL	1		REAR OIL SEAL
19	RE505515	SEAL	1		FRONT OIL SEAL, (MARKED RE52346 OR RE505515) (SUB FOR RE516340)
20	R123273	O-RING	1		FUEL TRANSFER PUMP
21	R123417	GASKET	1		WATER PUMP
22	R136515	GASKET	1		TIMING GEAR COVER(WITH AUXILLARY DRIVE)
	R136516	GASKET	1		TIMING GEAR COVER(WITHOUT AUXILLARY DRIVE)
23	R123501	GASKET	1		OIL COOLER HOUSING
24	R502864	GASKET	1		REMOTE OIL FILTER ADAPTER
25	R123525	GASKET	1		OIL FILTER HEADER
26	R53108	GASKET	1		STARTING MOTOR
27	R72328	O-RING	4		OIL FILTER TUBES
28	R89944	O-RING	1		WATER PUMP INLET
29	R504734	O-RING	2		CONNECTOR TUBE TO TIMING GEAR COVER
30	T122075	O-RING	2		OIL COOLER TO HOUSING
31	R501428	GASKET	1		COOLANT PASSAGE ADAPTER
32	R500374	GASKET	1		OIL FILTER HEADER
33	RE526670	GASKET KIT	1		CYLINDER HEAD REMOVAL, (SUB FOR RE66082)
34	RE526671	GASKET KIT	1		IN CHASSIS OVERHAUL, (SUB FOR RE66084)
35	R123353	GASKET	1		ENGINE OIL PAN

ENGINE COOLANT HEATER
RECHAUFFEUR DU LIQUIDE DE REFROIDISSEMENT
DISPOSITIVO PARA EL CALENTAMIENTO DEL LIQUIDO REFRIGERANTE

TP58143 -UN-03OCT00

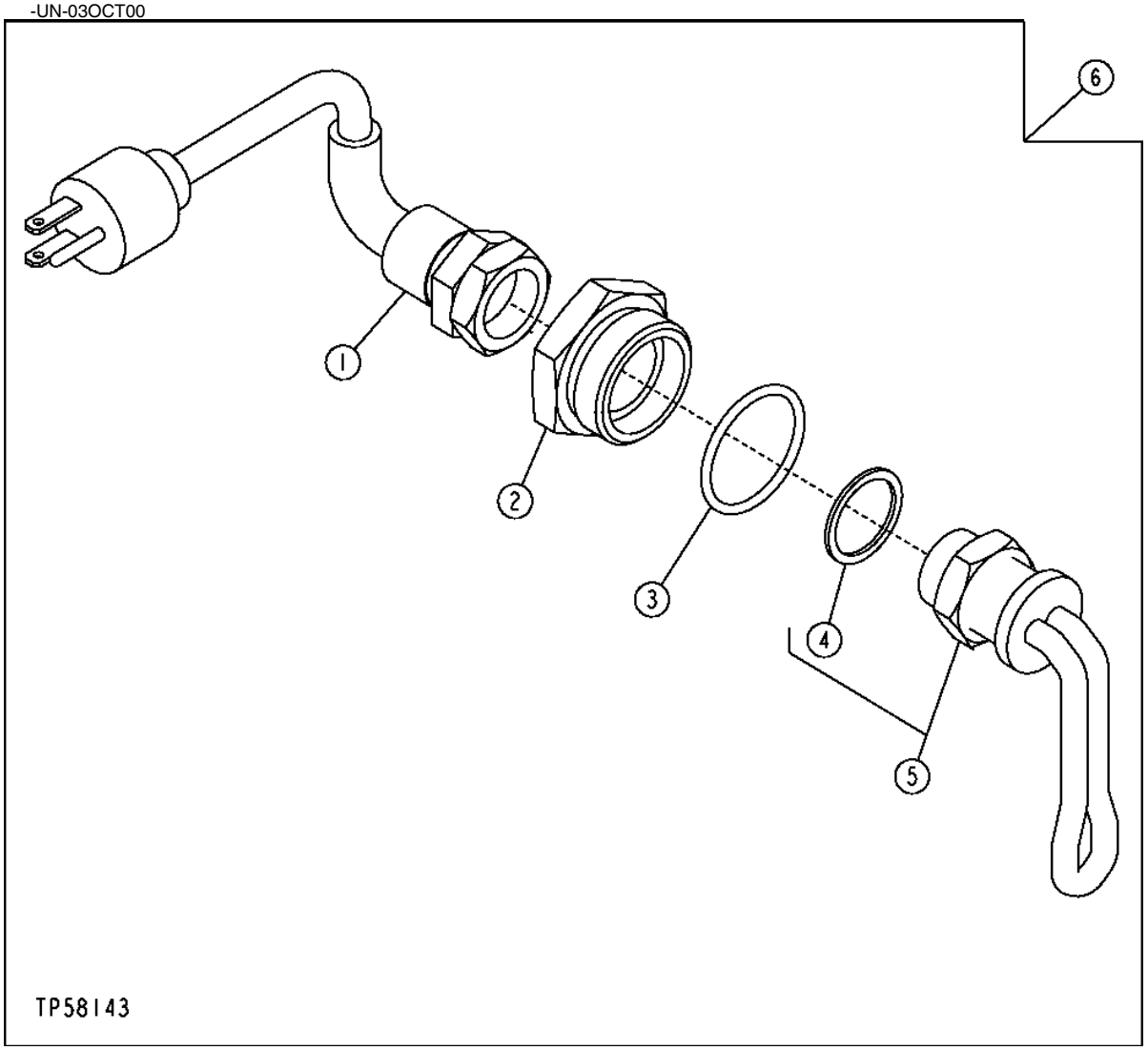

KEY	PART NO.	PART NAME	QTY.	SERIAL NO.	REMARKS
1	AT73296	POWER CORD	1		
2	R54123	ADAPTER FITTING	1		
3	U13639	O-RING	1		
4	R206883	WASHER	1		
5	RE42139	HEATING ELEMENT	1		
6	AT74940	COOLANT HEATER	1		

ENGINE GASKET SET
JEU DE JOINTS MOTEUR
JUEGO DE JUNTAS DEL MOTOR

T150756 -UN-31JAN02

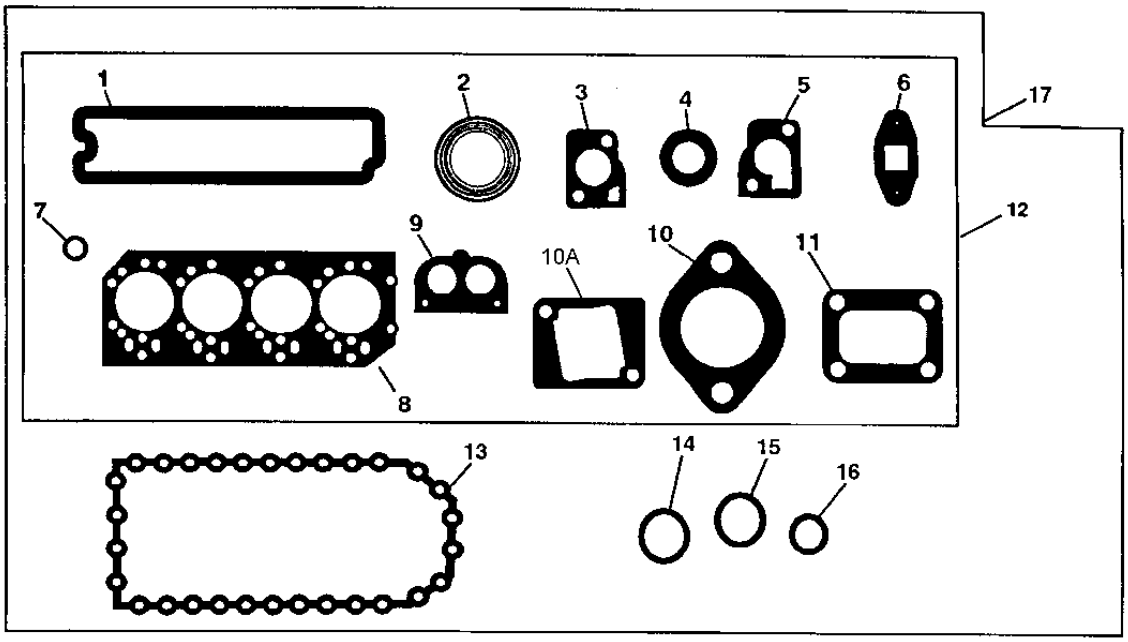

T150756

KEY	PART NO.	PART NAME	QTY.	ENGINE SERIAL NO.	REMARKS
1	R123542	GASKET	1		ROCKER ARM COVER
2	R521439	GASKET	4		EXHAUST MANIFOLD, (SUB FOR R90658)
3	R502814	GASKET	1		THERMOSTAT COVER, (SUB FOR R135896)
4	R123226	GASKET	2		WATER BY-PASS TUBE
5	R123345	GASKET	1		THERMOSTAT HOUSING
6	R123570	GASKET	1		(SQUARE)
	R503891	GASKET	1		(ROUND)
7	R123575	O-RING	4		ROCKER ARM COVER HOLD DOWN STUD
8	R116515	ENGINE CYLINDER HEAD GASKET	1		CYLINDER HEAD
9	R501373	GASKET	1		THERMOSTAT COVER
10	R81275	GASKET	1		AIR INLET
10A	R133893	GASKET	1		AIR INLET
11	R92097	GASKET	1		TURBOCHARGER TO EXHAUST MANIFOLD
12	RE526670	GASKET KIT	1		CYLINDER HEAD REMOVAL, (SUB FOR RE66082)
13	R123353	GASKET	1		ENGINE OIL PAN
	R522030	GASKET	1		(STEEL, 3/8")
14	R75892	O-RING	1		OIL PUMP TUBE CONNECTOR
15	R97185	O-RING	1		OIL PUMP OUTLET TUBE TO COVER
16	R61871	O-RING	1		OIL PUMP INTAKE TUBE
17	RE526671	GASKET KIT	1		IN CHASSIS OVERHAUL, (SUB FOR RE66084)

MEMORANDA

VENTILATING SYSTEM
SYSTEME DE VENTILATION
SISTEMA DE VENTILACION

TP49041 -UN-06SEP95

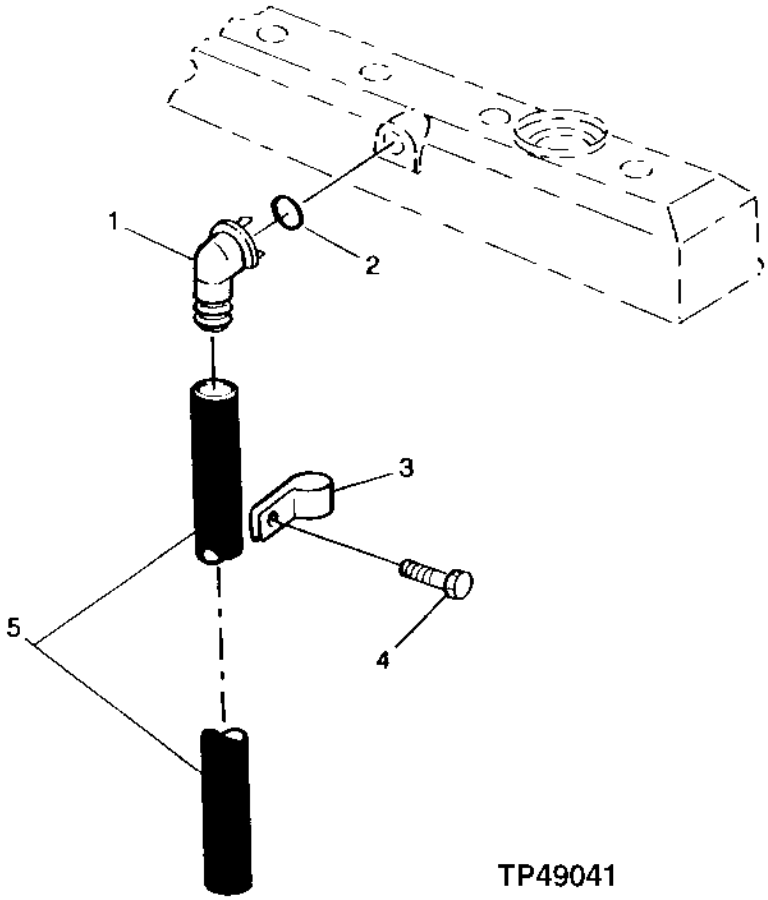

TP49041

KEY	PART NO.	PART NAME	QTY.	ENGINE SERIAL NO.	REMARKS
1	R120467	ELBOW FITTING	1		
2	R72328	O-RING	1		18.720 X 2.616 MM (0.737" X 0.103")
3	R72659	CLAMP	1		
4	19M7866	SCREW	1		M8 X 20
5	H36031	HOSE	1		

MEMORANDA

OIL FILTER
FILTRE A HUILE
FILTRO DE ACEITE

T145377 -UN-14SEP01

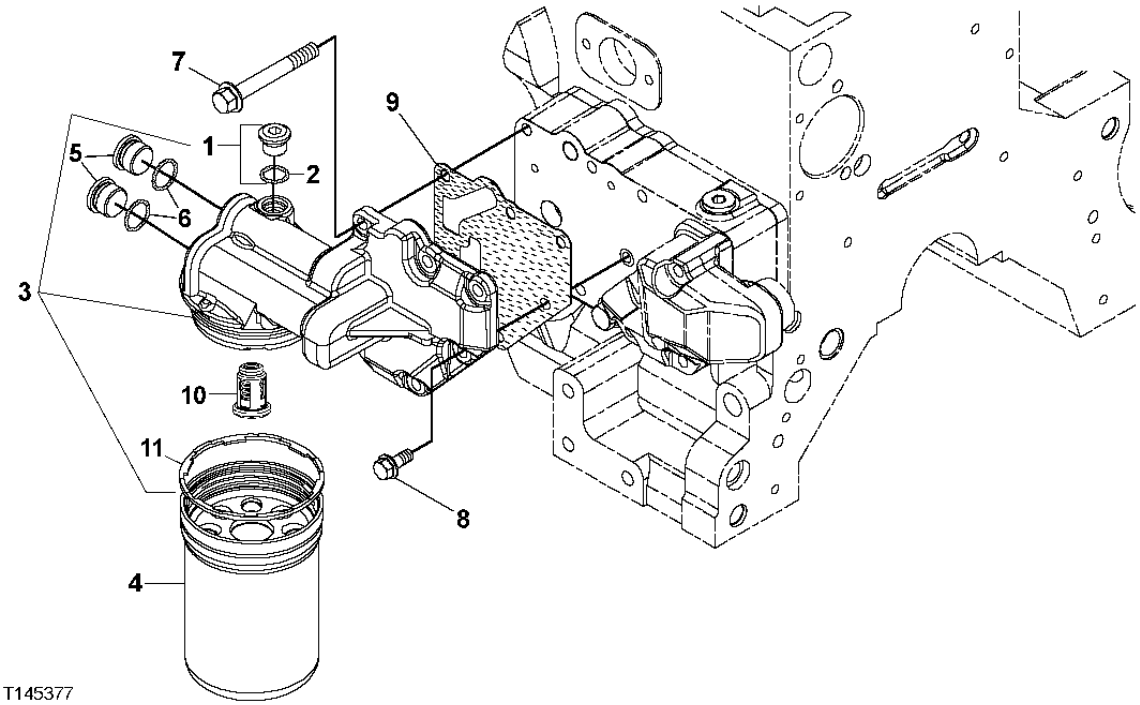

KEY	PART NO.	PART NAME	QTY.	ENGINE SERIAL NO.	REMARKS
1	RE52242	DRAIN PLUG	1		M16 X 1.5
2	51M7042	O-RING	1		13.300 X 2.200 MM
3	RE504564	FILTER HEAD	1		(MARKED R502505)
4	RE504836	OIL FILTER	1		(ALSO ORDER R502513)
5	R116115	FITTING	2		
6	51M7045	O-RING	2		19.300 X 2.200 MM
7	19M7802	SCREW	5		M8 X 65
8	RE67238	SCREW	1		M8 X 20, (WITH PRE-APPLIED SEALANT)
9	R500374	GASKET	1		
10	RE504543	VALVE	1		
11	R502513	SEAL	1		

CYLINDER HEAD
CULASSE
CULATA

TP49042 -UN-06SEP95

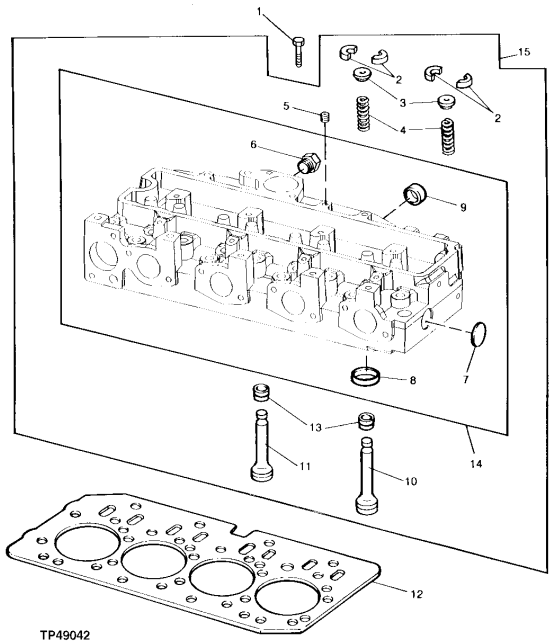

KEY	PART NO.	PART NAME	QTY.	ENGINE SERIAL NO.	REMARKS
1	R85363	CAP SCREW	18		
2	R91889	RETAINER	16		
3	RE60005	ROTATOR	8		
4	R26125	SPRING	8		
5	R104592	PIPE PLUG	1		
6	T58477	FITTING	1		
	R26906	O-RING	1		
7	CD16284	PLUG	1		
8	R98063	VALVE SEAT INSERT	4		INTAKE VALVE
	R98335	VALVE SEAT INSERT	4		OVERSIZE INTAKE VALVE
	R85687	VALVE SEAT INSERT	4		EXHAUST VALVE
	R93910	VALVE SEAT INSERT	4		OVERSIZE EXHAUST VALVE
9	R43409	PLUG	2		
10	R90692	EXHAUST VALVE	4		STANDARD
11	R98062	INTAKE VALVE	4		STANDARD
12	R116515	ENGINE CYLINDER HEAD GASKET	1		
13	RE31617	SEAL	8		
14	.....	CYLINDER HEAD	1		(MARKED R121402)
15	RE57234	CYLINDER HEAD	1		(MARKED R121402)

EXHAUST MANIFOLD
COLLECTEUR D'ECHAPPEMENT
COLECTOR DE ESCAPE

TP49344 -UN-22NOV95

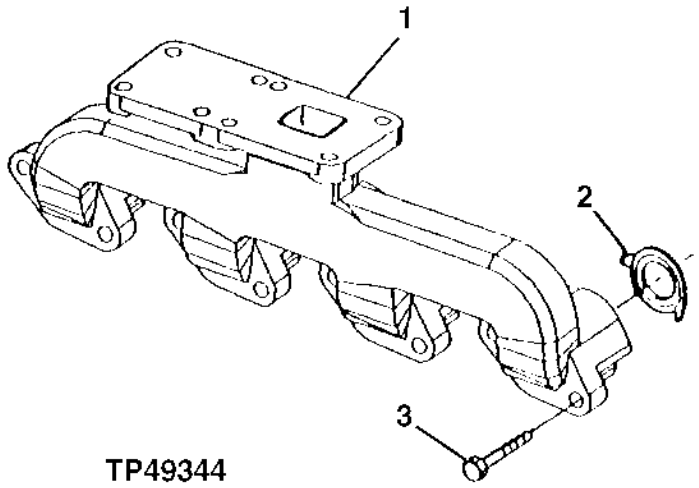

TP49344

KEY	*PART NO.*	*PART NAME*	*QTY.*	*ENGINE SERIAL NO.*	*REMARKS*
1	R132261	EXHAUST MANIFOLD	1		
2	R90658	GASKET	4		
3	19M7810	SCREW	8		M10 X 80

MEMORANDA
MEMORANDA
MEMORANDA

COOLANT HEATER
RECHAUFFEUR DE LIQUIDE REFRIGERANT
CALENTADOR DEL LIQUIDO REFRIGERADOR

TX1011738 -UN-11SEP06

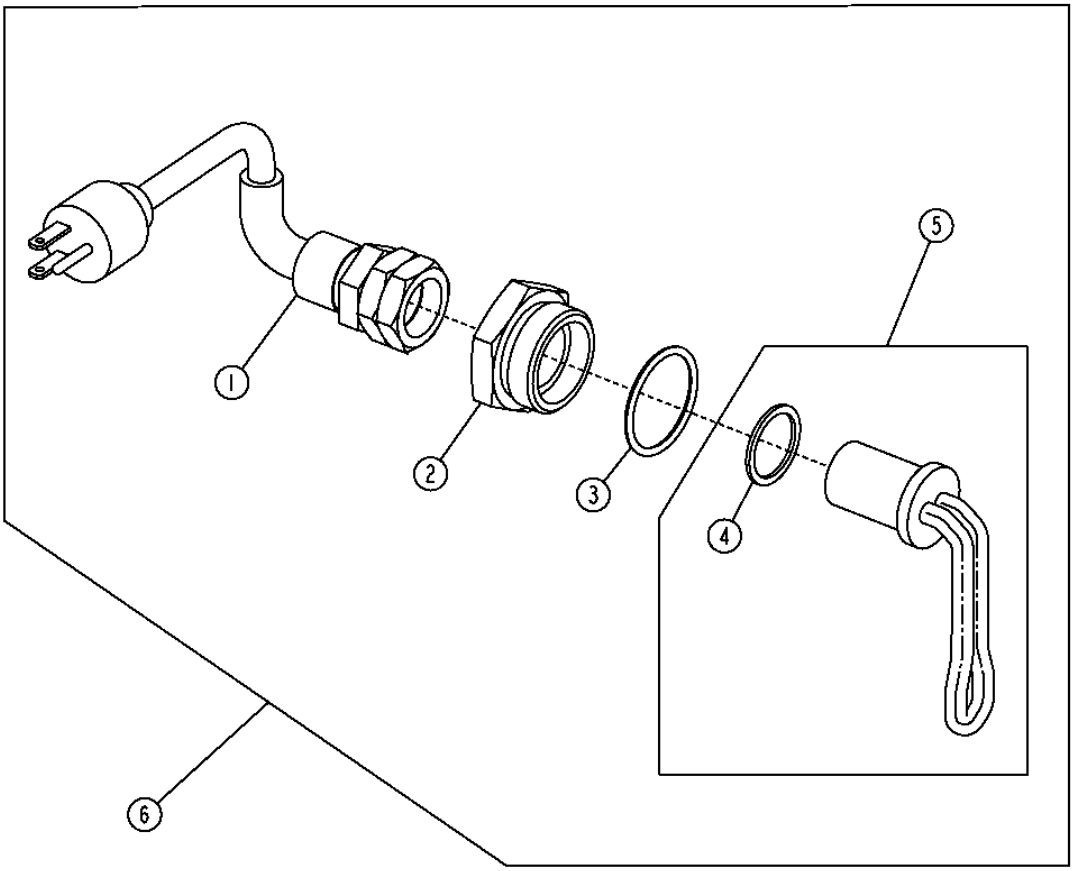

TX1011738

ENGINE COOLANT HEATER
CHAUFFE-BLOC MOTEUR
CALEFACTOR DE REFRIGERANTE DE MOTOR

KEY	PART NO.	PART NAME	QTY.	SERIAL NO.	410J	410TMC	REMARKS
1	AT73296	POWER CORD	1		X	X	
2	R54123	ADAPTER FITTING	1		X	X	
3	U13639	O-RING	1		X	X	
4	R206883	WASHER	1		X	X	
5	RE42139	HEATING ELEMENT	1		X	X	
6	AT74940	COOLANT HEATER	1		X	X	

COLD START AID
DISPOSITIF D'AIDE AU DEMARRAGE PAR TEMPS FROID
DISPOSITIVO PARA EL ARRANQUE EN TIEMPO FRIO

TX1015646 -UN-23DEC06

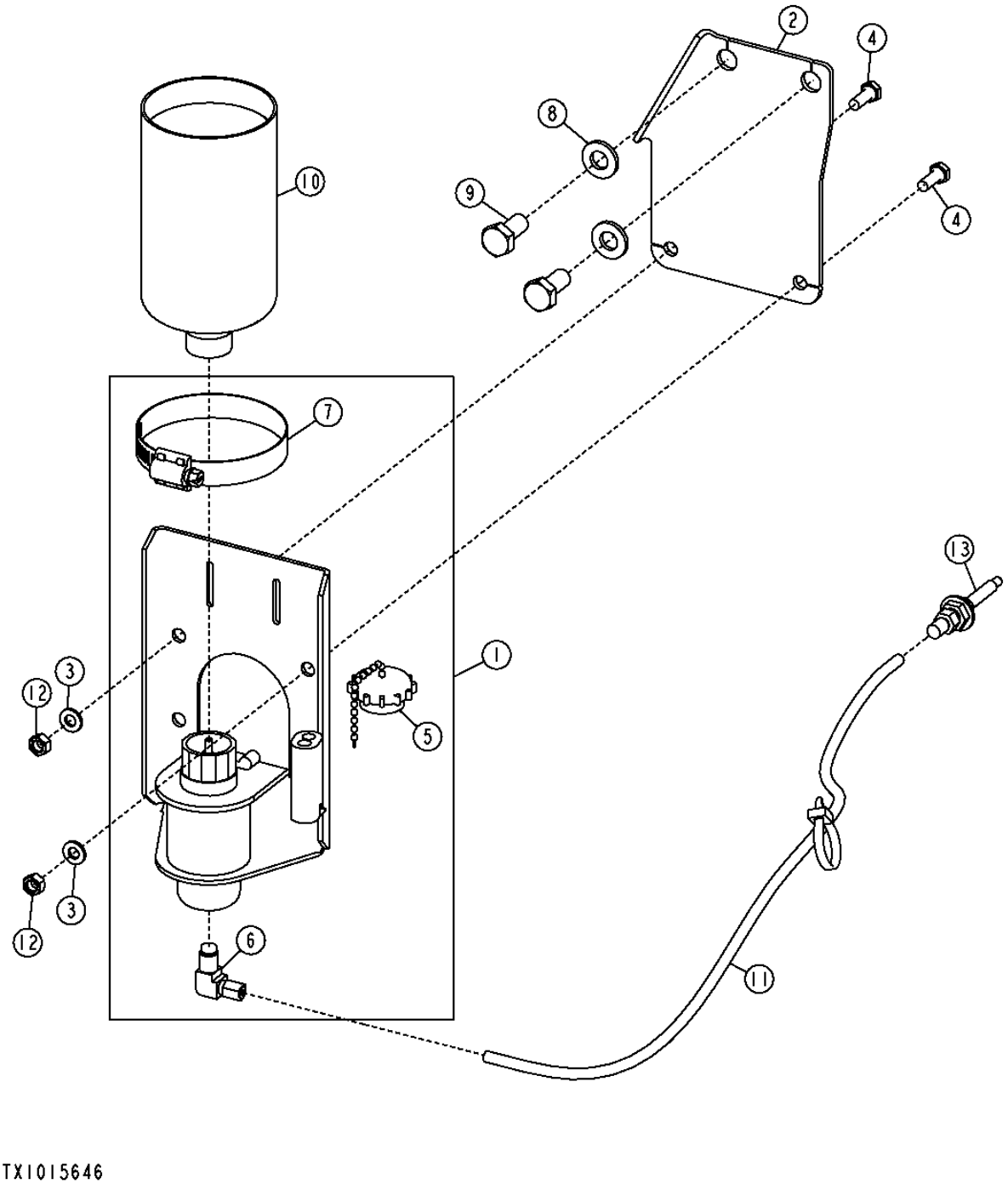

TX1015646

COLD START AID
DISPOSITIF D'AIDE AU DEMARRAGE PAR TEMPS FROID
DISPOSITIVO PARA EL ARRANQUE EN TIEMPO FRIO

KEY	PART NO.	PART NAME	QTY.	SERIAL NO.	410J	410TMC	REMARKS
1	AT173385	STARTING AID SOLENOID	1		X	X	
2	T216273	BRACKET	1		X	X	
3	24M7293	WASHER	2		X	X	6.500 X 13 X 1.600 MM
4	19M8425	CAP SCREW	2		X	X	M6 X 16
5	AT171539	CAP (HAT)	1		X	X	
6	AT181582	ELBOW FITTING	1		X	X	
7	AR21999	HOSE CLAMP	1		X	X	
8	24M7239	WASHER	3		X	X	10.700 X 21 X 2.500 MM
9	19M7938	CAP SCREW	3		X	X	M10 X 20
10	AT171162	STARTING FLUID	1		X	X	
11	.....	BULK HOSE	1		X	X	(MAKE FROM T78593) CTL
12	14M7272	NUT	2		X	X	M6
13	AT183222	NOZZLE	1		X	X	

RADIATOR, HOSES, FAN SHROUD AND GUARD
RADIATEUR, FLEXIBLES, CAPOT DE VENTILATEUR ET PROTECTION
RADIADOR, MANGUERAS, ENVUELTA DEL VENTILADOR Y PROTECTOR

TX1013397 -UN-28DEC06

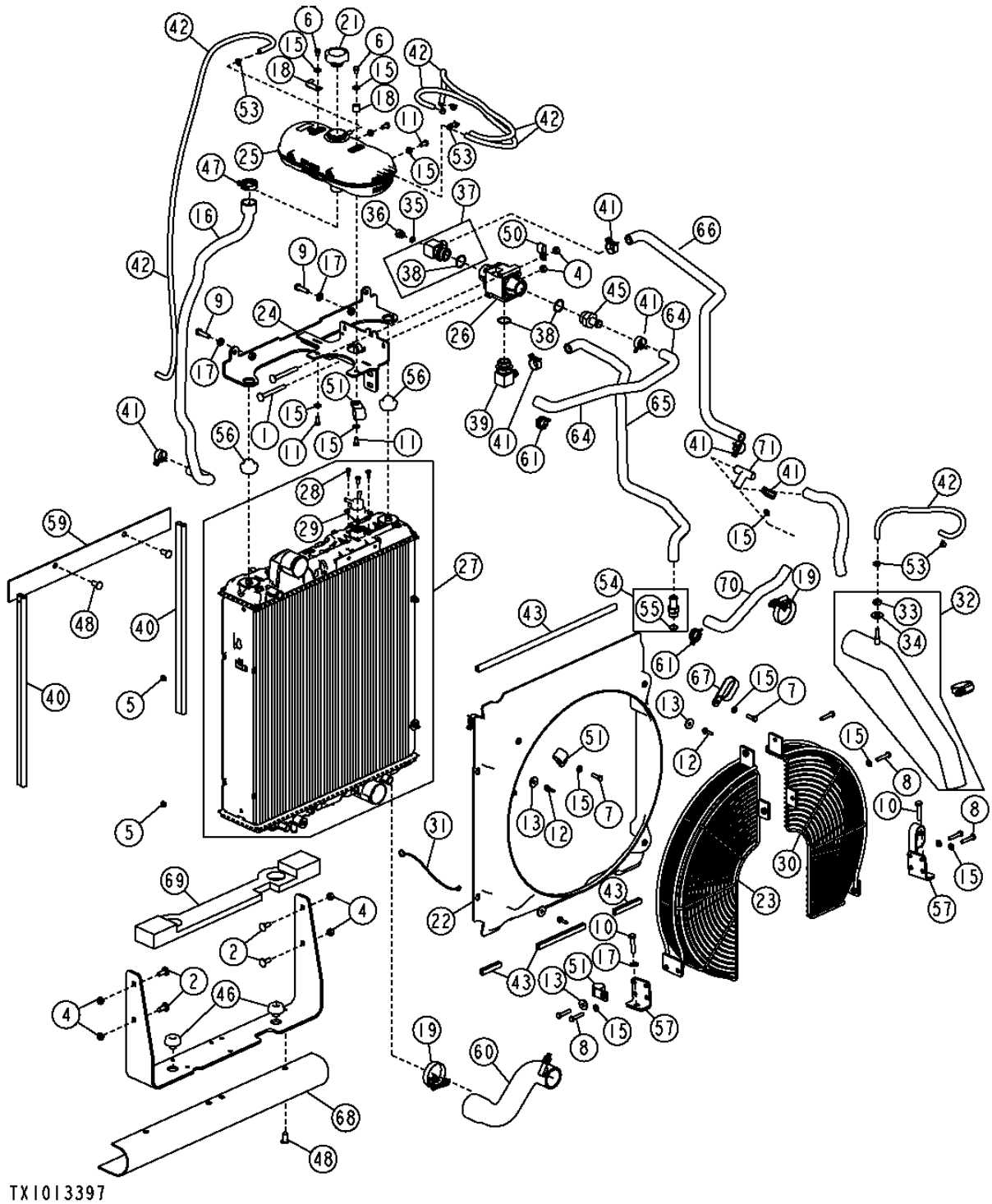

RADIATOR, HOSES, FAN SHROUD AND GUARD
RADIATEUR, FLEXIBLES, CAPOT DE VENTILATEUR ET PROTECTION
RADIADOR, MANGUERAS, ENVUELTA DEL VENTILADOR Y PROTECTOR

KEY	PART NO.	PART NAME	QTY.	SERIAL NO.	410J	410TMC	REMARKS
1	03M7247	BOLT	2		X	X	M10 X 90
2	03M7307	BOLT	4		X	X	M10 X 25
4	14M7274	NUT	6		X	X	M10
5	14M7397	LOCK NUT	4		X	X	M6
6	19M7008	CAP SCREW	2		X	X	M8 X 10
7	19M7407	CAP SCREW	2		X	X	M8 X 25
8	19M7922	CAP SCREW	6		X	X	M8 X 40
9	19M7550	CAP SCREW	2		X	X	M10 X 35
10	19M7572	CAP SCREW	2		X	X	M10 X 45
11	19M7932	CAP SCREW	4		X	X	M8 X 16
12	19M7933	CAP SCREW	4		X	X	M6 X 25
13	24M7024	WASHER	1		X	X	9 X 28 X 3 MM
15	24M7238	WASHER	13		X	X	8.700 X 17 X 2 MM
16	T217386	RADIATOR HOSE	1		X	X	
17	24M7239	WASHER	4		X	X	10.700 X 21 X 2.500 MM
18	AH89557	CLIP	2		X	X	
19	AH170895	CLAMP	2		X	X	
21	AT310335	FILLER CAP	1		X	X	
22	AT312425	SHROUD	1		X	X	
23	AT312426	GUARD	1		X	X	
24	AT318095	ANGLE	1		X	X	
25	AT320220	TANK	1		X	X	
26	AT320238	THERMOSTATIC CONTROL VALVE	1		X	X	
27	AT320239	RADIATOR	1		X	X	
28	21M7246	SCREW	3		X	X	M6 X 16
29	T214276	ADAPTER FITTING	1		X	X	
30	AT323152	GUARD	1		X	X	
31	AT324273	GROUND CABLE	1		X	X	
32	AT334333	RADIATOR HOSE	1		X	X	
33	14H856	NUT	1		X	X	
34	24H1789	WASHER	1		X	X	
35	R26448	O-RING	1		X	X	
36	T227450	DRAIN PLUG	1		X	X	
37	AT337030	ADAPTER FITTING	1		X	X	
38	R29936	O-RING	3		X	X	
39	AT43223	ELBOW FITTING	1		X	X	
40	T61861	ISOLATOR	2		X	X	
41	T185826	CLAMP	13		X	X	
42	.....	BULK HOSE	4		X	X	(MAKE FROM TY22566) CTL
43	.....	ISOLATOR	5		X	X	(MAKE FROM T68144) CTL
45	H65405	FITTING	1		X	X	
46	KV25173	ISOLATOR	2		X	X	
47	L154742	CLAMP	1		X	X	
48	MT2485	PLUG	7		X	X	
50	R35668	CLAMP	1		X	X	
51	R46667	CLAMP	5		X	X	
53	R56101	CLIP	7		X	X	
54	RE223627	HOSE FITTING	1		X	X	
55	51M7045	O-RING	1		X	X	
56	T216248	ISOLATOR	2		X	X	
57	T216350	PLATE	2		X	X	
59	T216877	DEFLECTOR	1		X	X	
60	T216934	RADIATOR HOSE	1		X	X	
61	T217175	HOSE CLAMP	2		X	X	
64	T225322	HOSE	1		X	X	
65	T225523	RADIATOR HOSE	1		X	X	
66	T230731	HOSE	1		X	X	
67	T225865	CLAMP	1		X	X	
68	T226097	DEFLECTOR	1		X	X	
69	T226132	DEFLECTOR	1		X	X	
70	.....	RADIATOR HOSE	1		X	X	
71	T29320	TUBE	1		X	X	

A/C FAN PACKAGE AND BASIC FAN PACKAGE
ENSEMBLE DE VENTILATEUR DE CLIMATISATION ET ENSEMBLE DE VENTILATEUR DE BASE
CONJUNTOS DE VENTILADOR DE A/A Y DE VENTILADOR BASICO

TX1015645 -UN-06DEC06

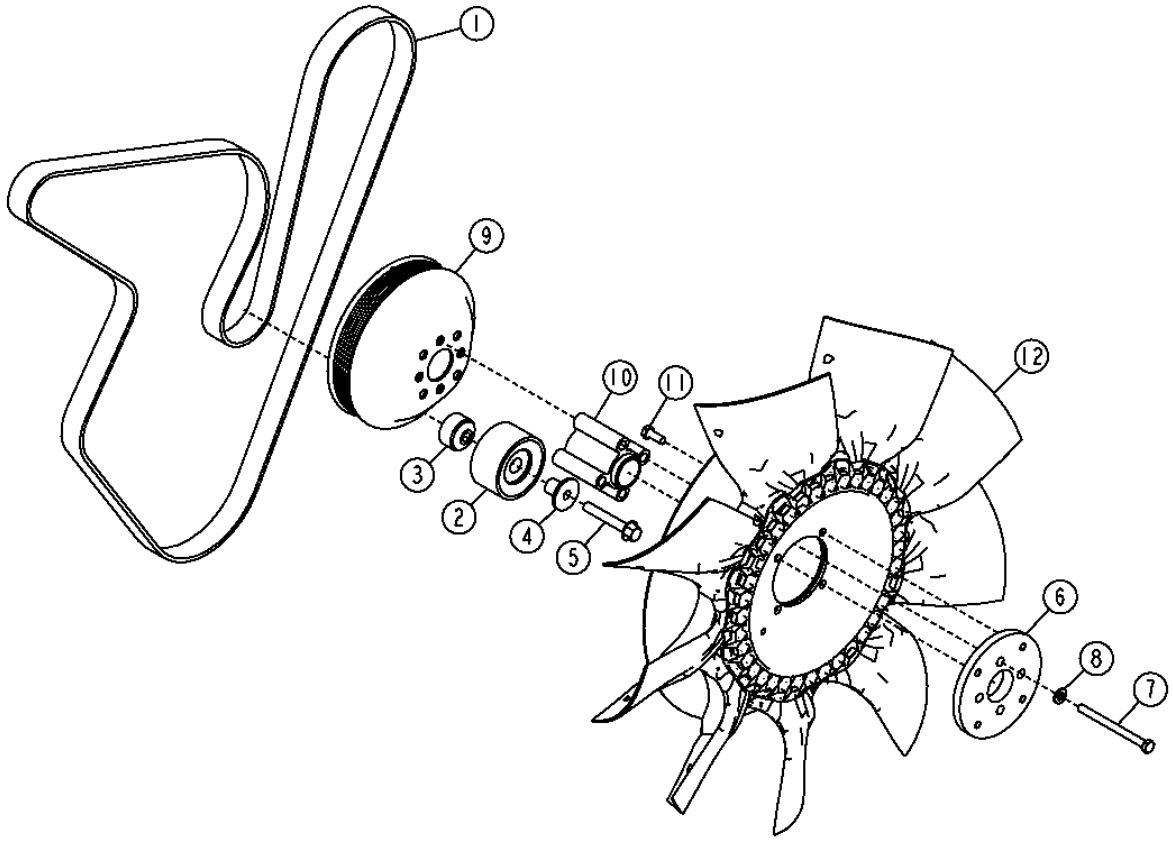

TX1015645

A/C FAN PACKAGE AND BASIC FAN PACKAGE
ENSEMBLE DE VENTILATEUR DE CLIMATISATION ET ENSEMBLE DE VENTILATEUR DE BASE
CONJUNTOS DE VENTILADOR DE A/A Y DE VENTILADOR BASICO

KEY	*PART NO.*	*PART NAME*	*QTY.*	*SERIAL NO.*	410J	410TMC	*REMARKS*
1	T227666	V-BELT	1		X	X	A/C FAN PACKAGE HIGH AMBIENT
	T227665	V-BELT	1		X	X	HIGH AMBIENT
	T227609	V-BELT	1		X	X	A/C FAN PACKAGE
	R504022	V-BELT	1		X	X	
2	RE505264	PULLEY	1		X	X	A/C FAN PACKAGE
3	R500320	SPACER	1		X	X	A/C FAN PACKAGE
4	R502079	SLEEVE	1		X	X	A/C FAN PACKAGE
5	19M7808	SCREW	1		X	X	M10 X 65, A/C FAN PACKAGE
6	T217238	HUB	1		X	X	
7	19M8456	CAP SCREW	1		X	X	M8 X 100
8	24M7238	WASHER	1		X	X	8.700 X 17 X 2 MM
9	R128661	PULLEY	1		X	X	HIGH AMBIENT
	R128662	PULLEY	1		X	X	
10	T208136	SPACER	1		X	X	
11	19M7881	SCREW	1		X	X	M8 X 20
12	AT322327	SUCTION FAN	1		X	X	HIGH AMBIENT
	AT312123	SUCTION FAN	1		X	X	

ELECTRICAL ACCEELERATOR
ACCELERATEUR ELECTRIQUE
ACELERADOR ELECTRICO

TX1015607 -UN-06DEC06

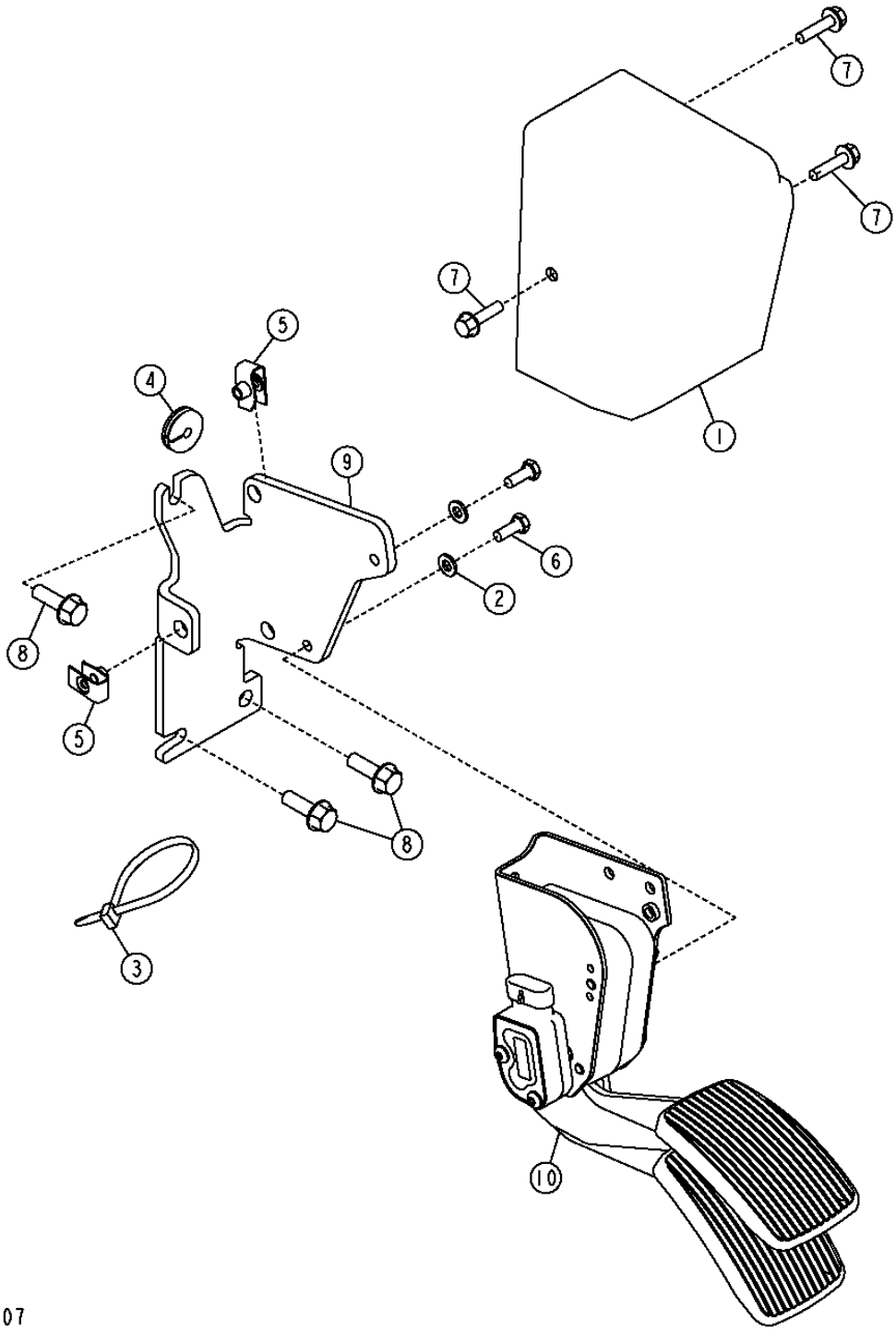

THIS PARTS LISTING IS CONTINUED

ELECTRICAL ACCELERATOR
ACCELERATEUR ELECTRIQUE
ACELERADOR ELECTRICO

KEY	PART NO.	PART NAME	QTY.	SERIAL NO.	410J	410TMC	REMARKS
1	T224315	COVER	1		X	X	
2	24M7293	WASHER	2		X	X	6.500 X 13 X 1.600 MM
3	R44302	TIE BAND	1		X	X	
4	T74952	GROMMET	1		X	X	
5	R134098	NUT	3		X	X	
6	19M8425	CAP SCREW	1		X	X	M6 X 16
7	19M7863	SCREW	3		X	X	M6 X 25
8	19M7867	SCREW	3		X	X	M8 X 25
9	T224233	BRACKET	1		X	X	
10	AT340698	PEDAL	1		X	X	

AIR CLEANER AND MOUNTING BRACKETS
FILTRE A AIR ET SUPPORTS DE MONTAGE
FILTRO DE AIRE Y SOPORTES DE MONTAJE

TX1012660 -UN-20NOV06

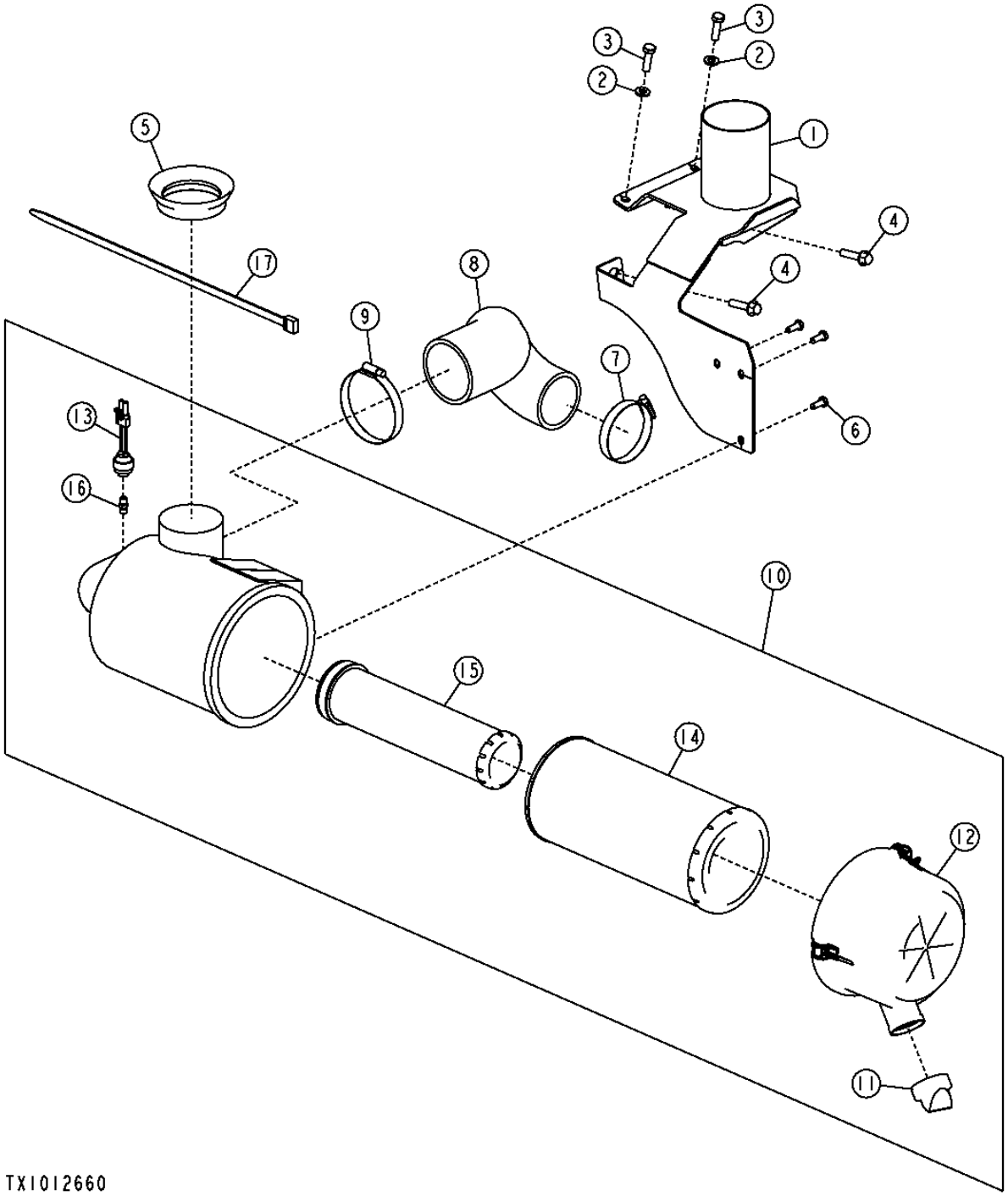

THIS PARTS LISTING IS CONTINUED

AIR CLEANER AND MOUNTING BRACKETS
FILTRE A AIR ET SUPPORTS DE MONTAGE
FILTRO DE AIRE Y SOPORTES DE MONTAJE

KEY	PART NO.	PART NAME	QTY.	SERIAL NO.	410J	410TMC	REMARKS
1	AT323649	AIR CLEANER	1		X	X	
2	24M7239	WASHER	2		X	X	
3	19M7550	CAP SCREW	2		X	X	M10 X 35
4	AR85329	CLAMP	1		X	X	
5	T226085	HOSE	1		X	X	
6	AH104837	HOSE CLAMP	1		X	X	
7	19M8320	SCREW	2		X	X	M10 X 45
8	19M7881	SCREW	3		X	X	M8 X 20
9	T166091	SEAL	1		X	X	
10	R48568	VALVE	1		X	X	
11	AT186281	AIR CLEANER	1		X	X	
12	AT178542	AIR RESTRICTION SENSOR	1		X	X	
13	AR44361	FITTING	1		X	X	
14	AT171854	AIR FILTER	1		X	X	SECONDARY
15	KV16429	AIR FILTER	1		X	X	PRIMARY
16	AT171855	COVER	1		X	X	

PRE CLEANER
PREFILTRE
PREFILTRO

T198040 -UN-16MAR04

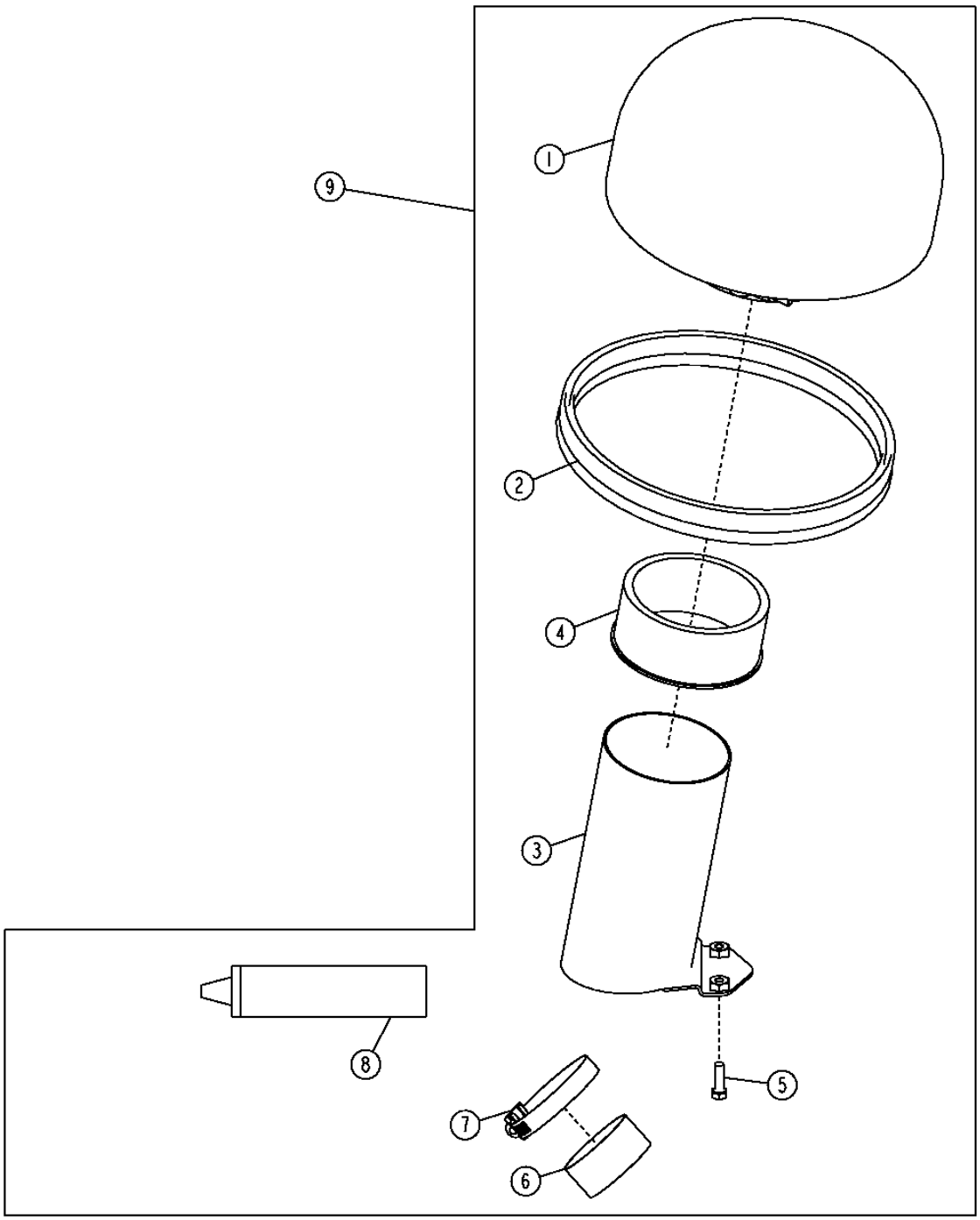

T198040

PRE CLEANER
PREFILTRE
PREFILTRO

KEY	*PART NO.*	*PART NAME*	*QTY.*	*SERIAL NO.*	*REMARKS*
1	AT220930	PRECLEANER	1		
2	AH140044	ISOLATOR	1		
3	AT191266	TUBE	1		
4	TY24867	KIT	1		ADAPTER
5	21M7351	SCREW	2		M6 X 20
6	T176553	PLUG	1		
7	AR40418	HOSE CLAMP	1		
8	TY24344	LIQUID GASKET	1		
9	**AT189492**	**KIT**	**1**		**PRE CLEANER**

EXHAUST EXTENSION AND MUFFLER
RALLONGE D'ECHAPPEMENT ET SILENCIEUX
EXTENSION DE ESCAPE Y SILENCIADOR

TP58067 -UN-04OCT00

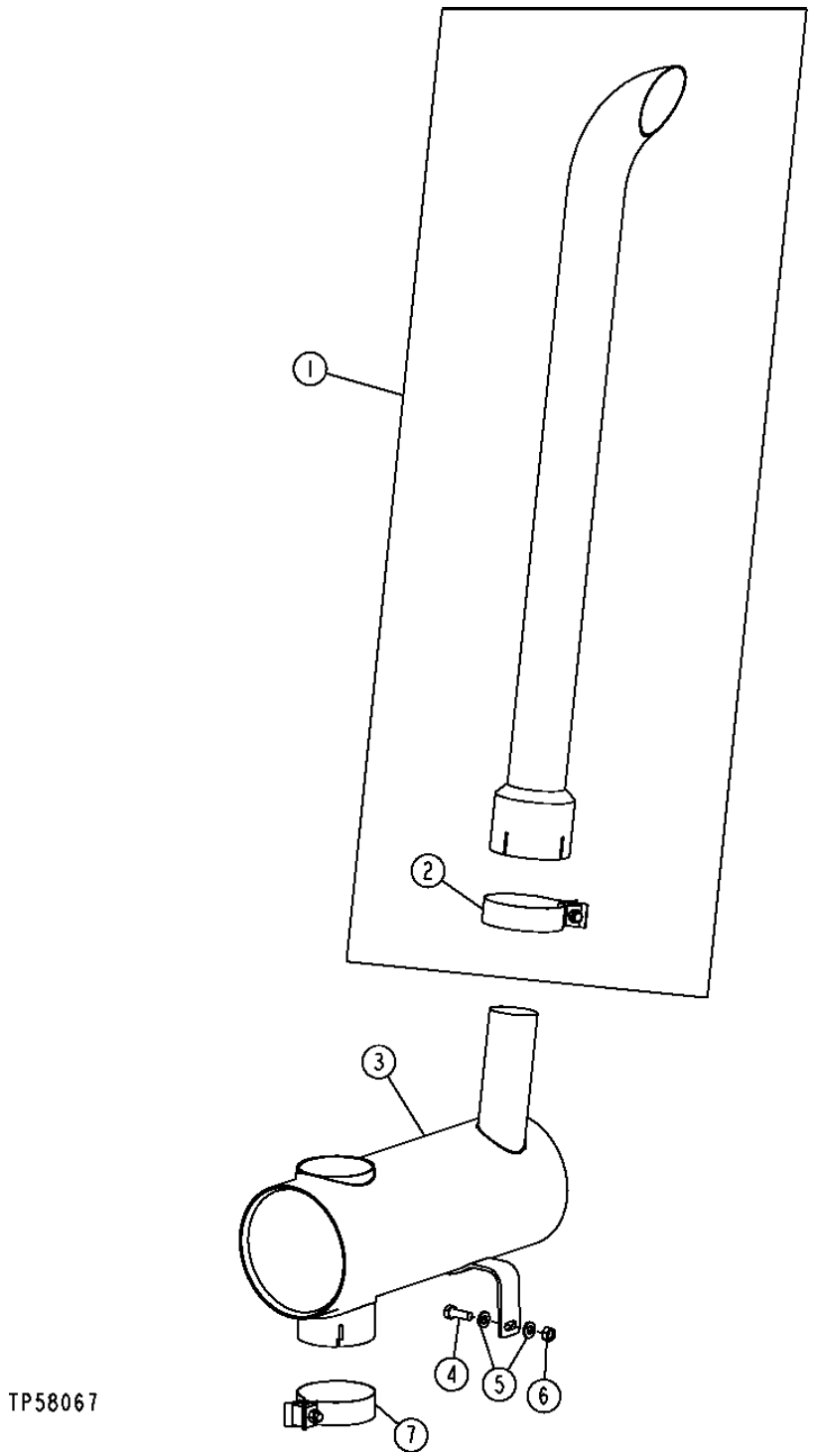

EXHAUST EXTENSION AND MUFFLER
RALLONGE D'ECHAPPEMENT ET SILENCIEUX
EXTENSION DE ESCAPE Y SILENCIADOR

KEY	*PART NO.*	*PART NAME*	*QTY.*	*SERIAL NO.*	*REMARKS*
1	AT184716	MUFFLER EXTENSION	1		
	AT184848	MUFFLER EXTENSION	1		CHROME
2	RE52087	CLAMP	1		
3	AT323177	MUFFLER	1		
4	19M7402	CAP SCREW	1		M10 X 25
5	24M7239	WASHER	2		
6	14M7274	NUT	1		M10
7	AT183426	CLAMP	1		

ENGINE MOUNTING SUPPORTS
SUPPORTS MONTAGE MOTEUR
SOPORTES DE MONTAJE DEL MOTOR

TX1014848 -UN-28DEC06

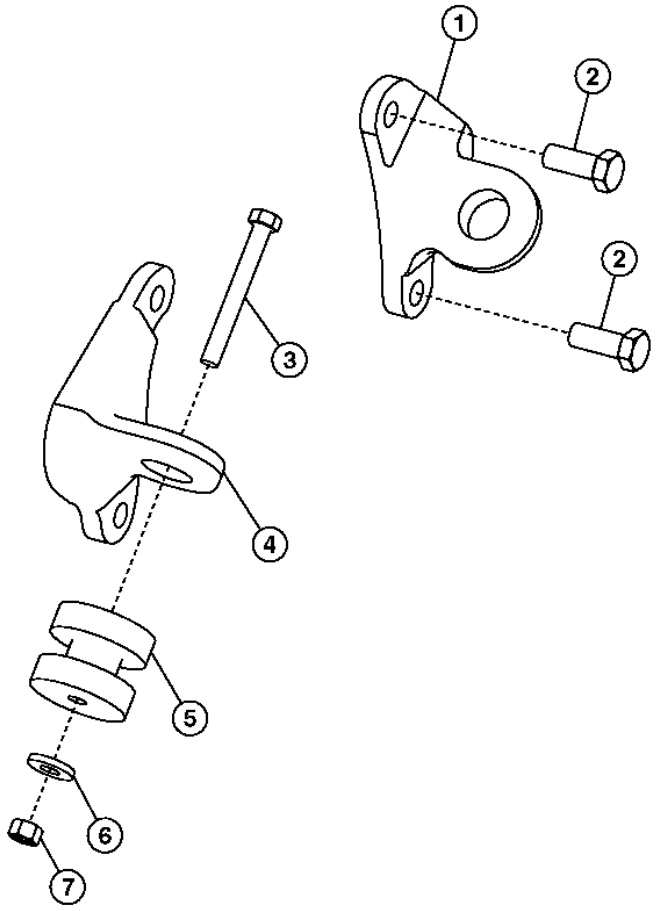

TX1014848

ENGINE MOUNTING SUPPORTS
SUPPORTS MONTAGE MOTEUR
SOPORTES DE MONTAJE DEL MOTOR

KEY	PART NO.	PART NAME	QTY.	SERIAL NO.	410J 410TMC	REMARKS
1	T187571	SUPPORT	1		X X	LH
2	19M7488	CAP SCREW	4		X X	M16 X 40
3	19M7949	CAP SCREW	2		X X	M12 X 100
4	T170784	SUPPORT	1		X X	R.H.
5	AT173400	ISOLATOR	2		X X	
6	T29342	WASHER	2		X X	
7	14M7275	NUT	2		X X	M12

FUEL TANK AND FUEL TANK HOSES
RESERVOIR CARBURANT ET FLEXIBLES RESERVOIR CARBURANT
TANQUE DE COMBUSTIBLE Y MANGUERAS DEL TANQUE DE COMBUSTIBLE

TX1012682 -UN-28OCT06

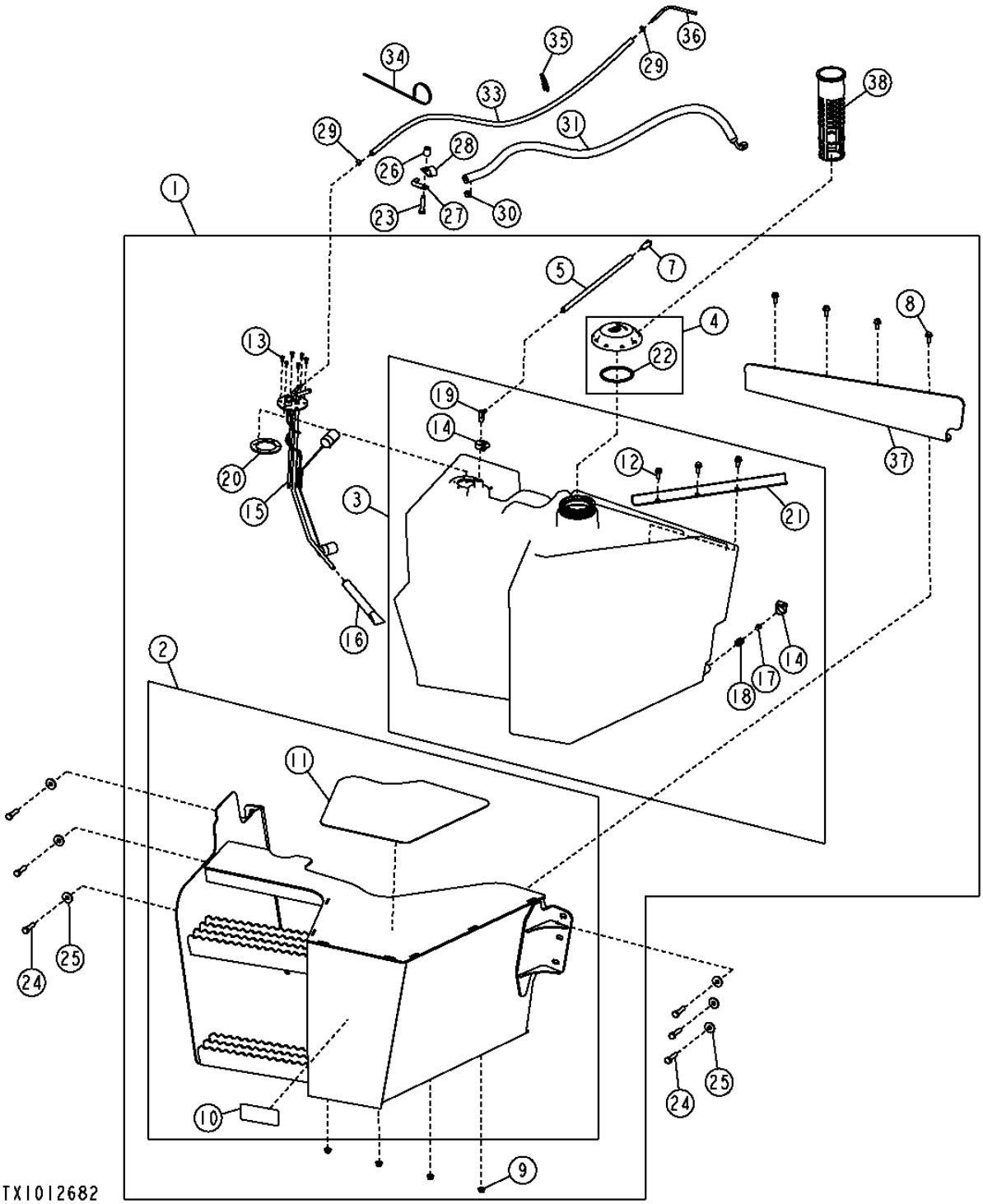

FUEL TANK AND FUEL TANK HOSES
RESERVOIR CARBURANT ET FLEXIBLES RESERVOIR CARBURANT
TANQUE DE COMBUSTIBLE Y MANGUERAS DEL TANQUE DE COMBUSTIBLE

KEY	PART NO.	PART NAME	QTY.	SERIAL NO.	410J	410TMC	REMARKS
1	AT322232	FUEL TANK	1		X	X	CONVENIENCE ASSEMBLY
2	AT320235	HOUSING	1		X	X	
3	AT339941	FUEL TANK	1		X	X	(ALSO ORDER T165292)
4	AT323593	CAP	1		X	X	
5	N112006	HOSE	1		X	X	
7	AM107314	FUEL FILTER	1		X	X	
8	19M7866	SCREW	4		X	X	M8 X 20
9	14M7298	FLANGE NUT	4		X	X	M8
10	JD5933	REFLECTOR	1		X	X	
11	T215367	ANTI-SKID PAD	1		X	X	
12	19M7866	SCREW	3		X	X	M8 X 20
13	21M7265	SCREW	6		X	X	M5 X 12
14	AR21837	CLAMP	2		X	X	
15	AT300958	FUEL SENDER	1		X	X	
16	AT65241	STRAINER	1		X	X	
17	L2646N	PIPE PLUG	1		X	X	1/8"
18	N30405	ADAPTER FITTING	1		X	X	1/8"
19	RE179976	CHECK VALVE	1		X	X	
20	T165292	GASKET	1		X	X	
21	T224200	ANGLE	1		X	X	
22	R36424	O-RING	1		X	X	3.225" X 0.210"
23	19M7572	CAP SCREW	1		X	X	M10 X 45
24	19M8637	CAP SCREW	6		X	X	M10 X 40
25	24M7296	WASHER	6		X	X	10.500 X 30 X 2.500 MM
26	28H3383	BUSHING	1		X	X	0.493" X 0.675" X 3/4"
27	AH89557	CLIP	1		X	X	
28	AH96317	CLIP	1		X	X	
29	TY22462	CLAMP	2		X	X	
30	AR77962	HOSE CLAMP	1		X	X	
31	AT183881	HOSE	1		X	X	
	E87197	PACKING	1		X	X	
33	N112006	HOSE	1		X	X	
34	H77698	TIE BAND	1		X	X	
35	R44302	TIE BAND	2		X	X	
36	T66701	LINE	1		X	X	
37	T214270	SUPPORT	1				
38	AH162914	STRAINER	1				

STEERING CYLINDER AND REPAIR KIT (W/MFWD)
VERIN DE DIRECTION ET KIT DE REPARATION(W/MFWD)
CILINDRO DE LA DIRECCION Y JUEGO DE REPARACION(W/MFWD)

TX1016365 -UN-15DEC06

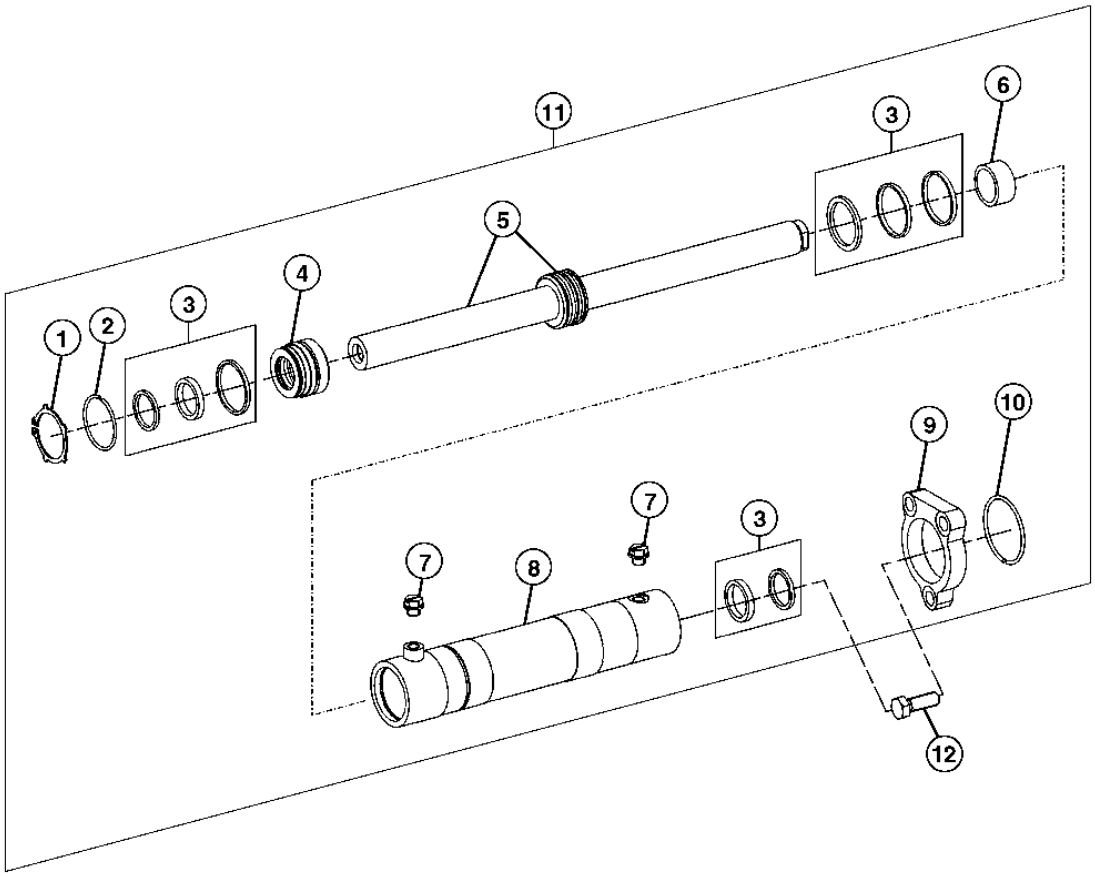

TX1016365

STEERING CYLINDER AND REPAIR KIT (W/MFWD)
VERIN DE DIRECTION ET KIT DE REPARATION(W/MFWD)
CILINDRO DE LA DIRECCION Y JUEGO DE REPARACION(W/MFWD)

KEY	PART NO.	PART NAME	QTY.	SERIAL NO.	410J	410TMC	REMARKS
1	T229279	SNAP RING	2		X	X	
2	T229275	SNAP RING	1		X	X	
3	T218502	HYDRAULIC CYLINDER KIT	1		X	X	
4	T229276	PLUG	1		X	X	
5	AT326543	ROD	1		X	X	
6	T229281	BUSHING	1		X	X	
7	T229277	PLUG	2		X	X	
8	T229261	HYDRAULIC CYLINDER BARREL	1		X	X	
9	T229280	FLANGE	1		X	X	
10	T229278	SNAP RING	1		X	X	
11	AT326542	HYDRAULIC CYLINDER	1		X	X	
12	T229282	CAP SCREW	3		X	X	

STEERING WHEEL AND TILT COLUMN
VOLANT ET COLONNE D'INCLINAISON
VOLANTE DE LA DIRECCION Y COLUMNA INCLINABLE

TX1013470 -UN-01DEC06

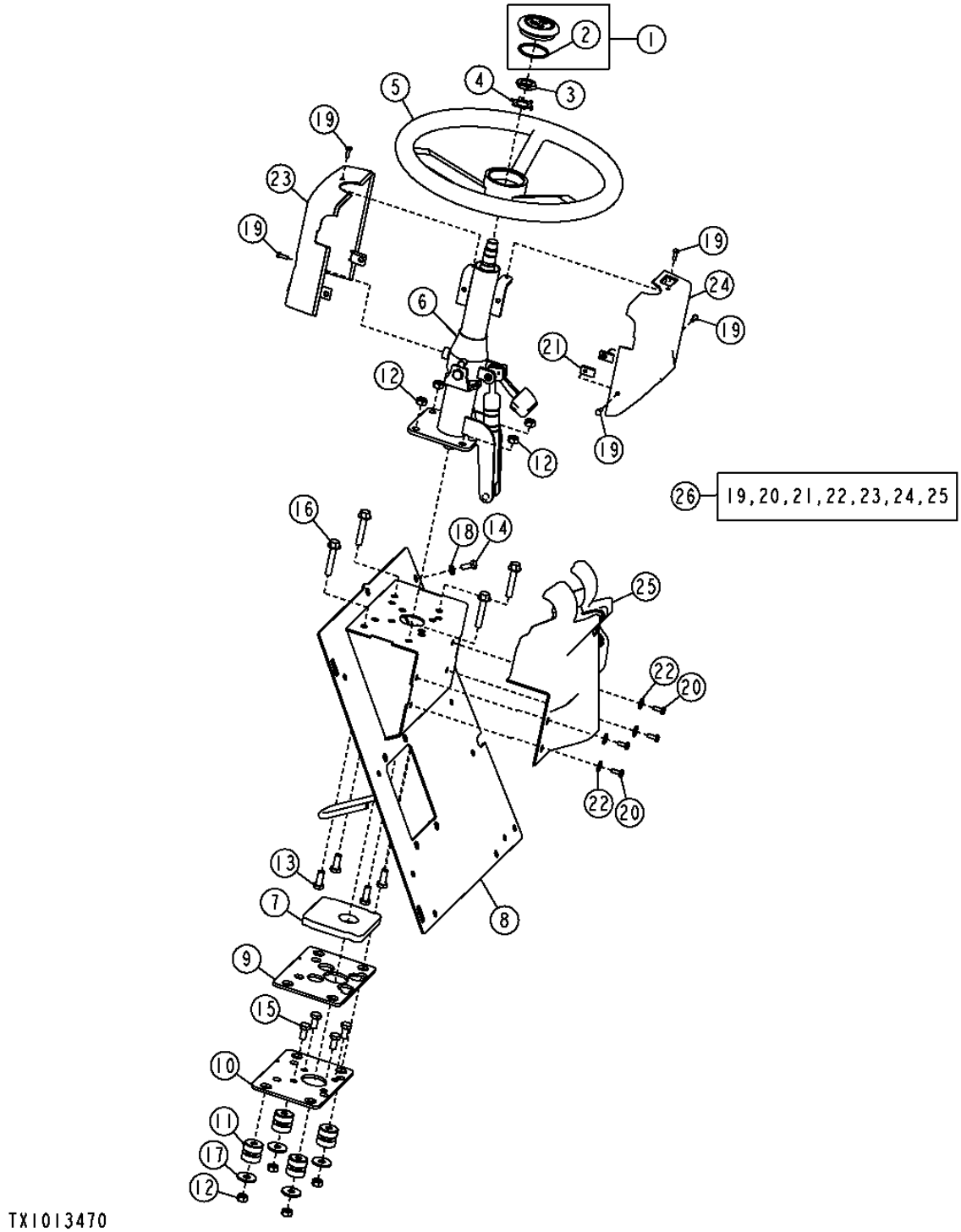

STEERING WHEEL AND TILT COLUMN
VOLANT ET COLONNE D'INCLINAISON
VOLANTE DE LA DIRECCION Y COLUMNA INCLINABLE

KEY	PART NO.	PART NAME	QTY.	SERIAL NO.	410J	410TMC	REMARKS
1	AL155227	COVER	1		X	X	
2	B3690R	O-RING	1		X	X	
3	T13630	NUT	1		X	X	
4	T17148	LOCK WASHER	1		X	X	
5	AT139694	STEERING WHEEL	1		X	X	
6	AT314024	STEERING COLUMN	1		X	X	
7	T216546	GASKET	1		X	X	
8	AT314030	SUPPORT	1		X	X	
9	T216524	PLATE	1		X	X	
10	T216525	PLATE	1		X	X	
11	AT219940	ISOLATOR	4		X	X	
12	14M7274	NUT	8		X	X	M10
13	19M7402	CAP SCREW	4		X	X	M10 X 25
14	19M7881	SCREW	1		X	X	M8 X 20
15	19M7938	CAP SCREW	4		X	X	M10 X 20
16	19M8528	SCREW	4		X	X	M10 X 55
17	24M7101	WASHER	4		X	X	11 X 34 X 3 MM
18	24M7238	WASHER	4		X	X	8.700 X 17 X 2 MM
19	21M7291	SCREW	5		X	X	M8 X 20
20	21M7292	SCREW	4		X	X	M6 X 16
21	R117892	NUT	2		X	X	
22	24H1881	WASHER	4		X	X	
23	T210623	COVER	1		X	X	
24	T210624	COVER	1		X	X	
25	T216833	COVER	1		X	X	
26	**AT313370**	**KIT**	**1**		**X**	**X**	**(WHOLE GOODS)**

STEERING HYDRAULICS (WITH MFWD)
CIRCUIT HYDRAULIQUE DE DIRECTION (WITH MFWD)
SISTEMA HIDRAULICO DE DIRECCION (WITH MFWD)

TX1015693 -UN-28DEC06

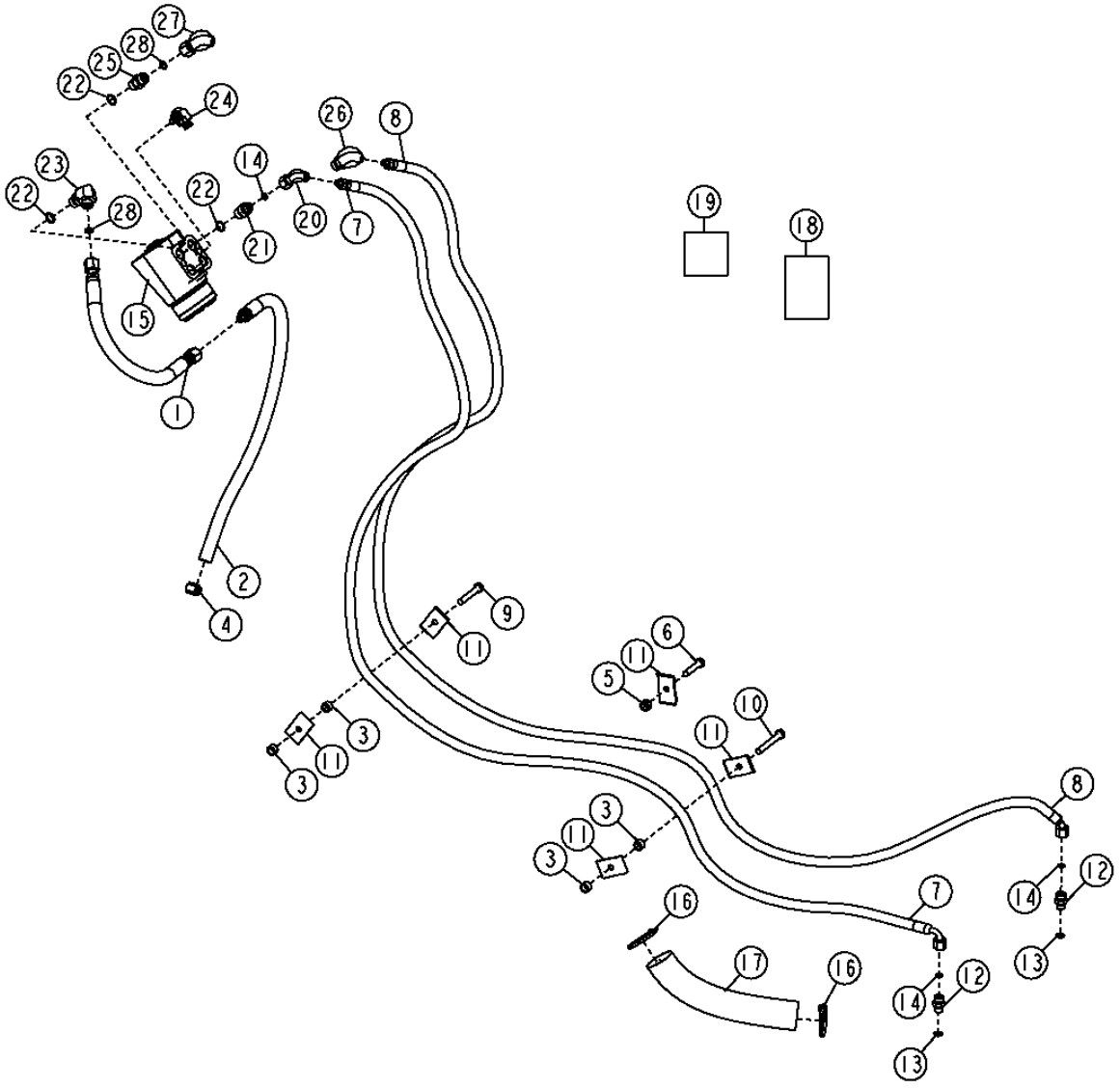

THIS PARTS LISTING IS CONTINUED

STEERING HYDRAULICS (WITH MFWD)
CIRCUIT HYDRAULIQUE DE DIRECTION (WITH MFWD)
SISTEMA HIDRAULICO DE DIRECCION (WITH MFWD)

KEY	PART NO.	PART NAME	QTY.	SERIAL NO.	410J	410TMC	REMARKS
1	AT101779	HYDRAULIC HOSE - FABRICATE	1		X	X	13/16" X 445 MM (17-1/2") X 13/16"
2	AT324031	HYDRAULIC HOSE	1		X	X	
3	28H3421	SPACER	4		X	X	
4	TY22464	CLAMP	1		X	X	
5	T166773	WASHER	1		X	X	
6	19M8637	CAP SCREW	1		X	X	M10 X 40
7	AT325998	BEARING	1		X	X	
8	AT324997	HYDRAULIC HOSE - FABRICATE	1		X	X	
9	19M7742	CAP SCREW	1		X	X	M10 X 65
10	19M8081	CAP SCREW	1		X	X	M10 X 80
11	R46919	HALF CLAMP	5		X	X	
12	38H1160	ADAPTER FITTING	1		X	X	
13	R26448	O-RING	1		X	X	
14	T77613	O-RING	2		X	X	
15	AT309882	MANUAL HYDRAULIC VALVE	1		X	X	
	AT316249	SEAL KIT	1		X	X	
16	R44302	TIE BAND	4		X	X	
17	.....	HOSE GUARD	1		X	X	(CTL) 254MM (10") (MAKE FROM T78606)
18	T191425	LABEL	1		X	X	HOSE
19	T184320	LABEL	1		X	X	HOSE
20	AT195201	ELBOW FITTING	1		X	X	
21	38H1171	ADAPTER FITTING	1		X	X	
22	R26375	O-RING	1		X	X	
23	38H1005	ELBOW FITTING	1		X	X	
24	AT188010	ELBOW FITTING	1		X	X	
25	38H1161	ADAPTER FITTING	1		X	X	
26	AT195202	ELBOW FITTING	1		X	X	
27	AT195203	ELBOW FITTING	1		X	X	
28	T77857	O-RING	1		X	X	
29	AT193365	KIT	1		X	X	STC™REPAIR (-06)
	AT193366	KIT	1		X	X	STC™REPAIR (-08)

STEERING HYDRAULICS (WITHOUT MFWD)
CIRCUIT HYDRAULIQUE DE DIRECTION (W/O MFWD)
SISTEMA HIDRAULICO DE DIRECCION (WITHOUT MFWD)

TX1016287 -UN-18DEC06

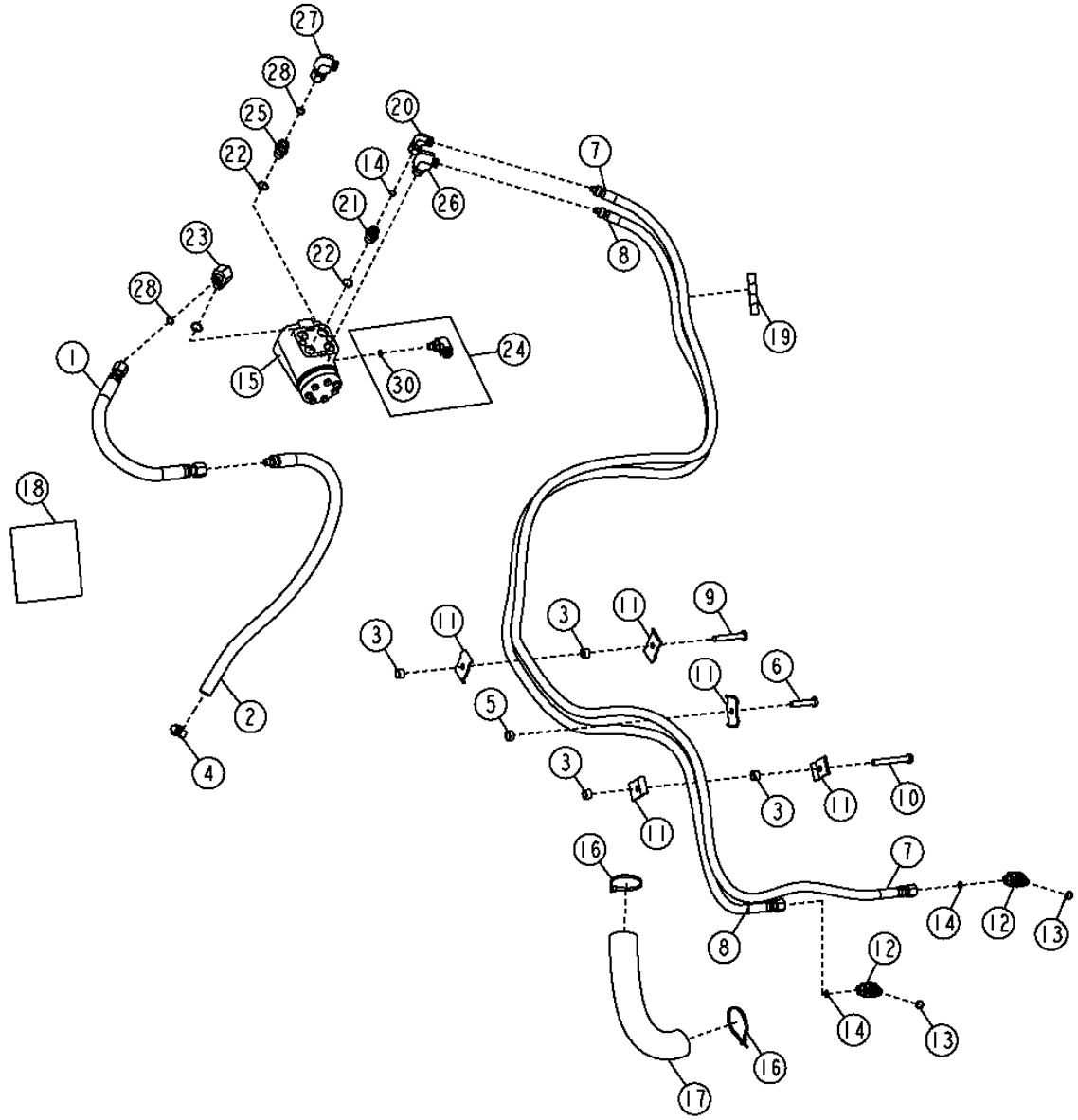

THIS PARTS LISTING IS CONTINUED

STEERING HYDRAULICS (WITHOUT MFWD)
CIRCUIT HYDRAULIQUE DE DIRECTION (WITHOUT MFWD)
SISTEMA HIDRAULICO DE DIRECCION (WITHOUT MFWD)

KEY	PART NO.	PART NAME	QTY.	SERIAL NO.	410J	410TMC	REMARKS
1	AT101779	HYDRAULIC HOSE - FABRICATE	1		X	X	13/16" X 445 MM (17-1/2") X 13/16"
2	AT324031	HYDRAULIC HOSE	1		X	X	
3	28H3421	SPACER	4		X	X	
4	TY22464	CLAMP	1		X	X	
5	T166773	WASHER	1		X	X	
6	19M8637	CAP SCREW	1		X	X	M10 X 40
7	AT325000	HYDRAULIC HOSE - FABRICATE	1		X	X	
8	AT324999	HYDRAULIC HOSE - FABRICATE	1		X	X	
	AT324997	HYDRAULIC HOSE - FABRICATE	1		X	X	
9	19M7742	CAP SCREW	1		X	X	M10 X 65
10	19M8081	CAP SCREW	1		X	X	M10 X 80
11	R46919	HALF CLAMP	5		X	X	
12	38H1004	ELBOW FITTING	1		X	X	
13	R26448	O-RING	1		X	X	
14	T77613	O-RING	2		X	X	
15	AT318271	MANUAL HYDRAULIC VALVE	1		X	X	
	AT316249	SEAL KIT	1		X	X	
16	R44302	TIE BAND	4		X	X	
17	.....	HOSE GUARD	1		X	X	(CTL) 254MM (10") (MAKE FROM T78606)
18	T191425	LABEL	1		X	X	HOSE
19	T184320	LABEL	1		X	X	HOSE
20	AT195201	ELBOW FITTING	1		X	X	
21	38H1171	ADAPTER FITTING	1		X	X	
22	R26375	O-RING	1		X	X	
23	38H1005	ELBOW FITTING	1		X	X	
24	AT188010	ELBOW FITTING	1		X	X	
25	38H1161	ADAPTER FITTING	1		X	X	
26	AT195202	ELBOW FITTING	1		X	X	
27	AT195203	ELBOW FITTING	1		X	X	
28	T77857	O-RING	1		X	X	
29	AT193365	KIT	1		X	X	STC™ REPAIR (-06) (NOT ILLISTRATED)
	AT193366	KIT	1		X	X	STC™ REPAIR (-08) (NOT ILLISTRATED)
30	R28782	O-RING	1		X	X	

SERVICE BRAKE CLUTCH DISC AND DISC CARRIER
FREIN DE SERVICE/DISQUE D'EMBRAYAGE/PORTE-DISQUE
FRENO DE SERVICIO/DISCO DE EMBRAGUE/PORTADISCO

TX1016729 -UN-18DEC06

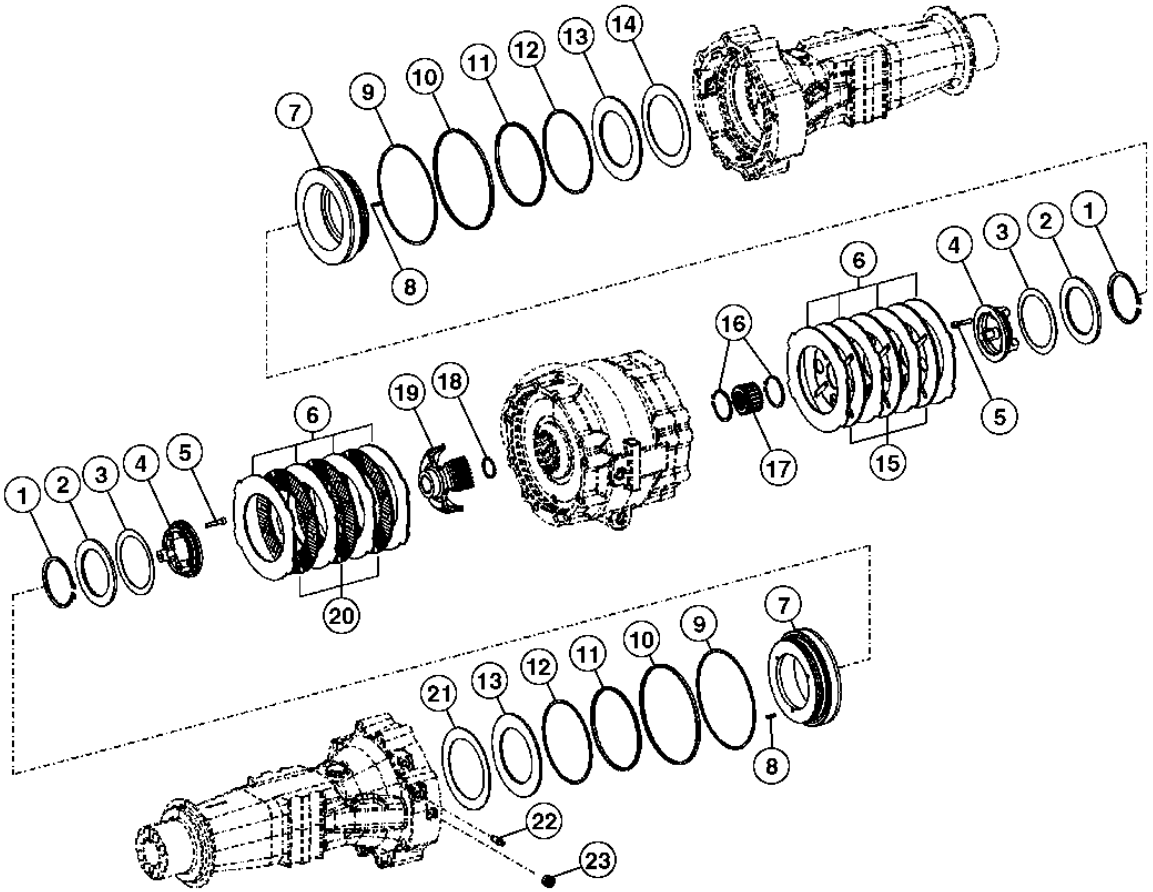

TX1016729

SERVICE BRAKE CLUTCH DISC AND DISC CARRIER
FREIN DE SERVICE/DISQUE D'EMBRAYAGE/PORTE-DISQUE
FRENO DE SERVICIO/DISCO DE EMBRAGUE/PORTADISCO

KEY	PART NO.	PART NAME	QTY.	SERIAL NO.	410J	410TMC	REMARKS
1	T228896	SNAP RING	2		X	X	
2	T228909	WASHER	2		X	X	
3	T228898	DISK SPRING	2		X	X	
4	T228728	SNAP RING	2		X	X	
5	19M8300	SCREW	6		X	X	M8 X 40
6	T228727	PLATE	6		X	X	
7	T228730	PISTON	2		X	X	
8	T228895	SPRING PIN	8		X	X	
9	T159403	BACK-UP RING	2		X	X	
10	T159402	SEAL	2		X	X	
11	T218485	SEAL	2		X	X	
12	T218483	BACK-UP RING	2		X	X	
13	T228910	WASHER	2		X	X	
14	T228912	DISK SPRING	2		X	X	
15	AT339059	BRAKE DISK	3		X	X	
16	T197832	SNAP RING	2		X	X	
17	T228729	DISK	1		X	X	
18	T228911	SNAP RING	1		X	X	
19	T228897	DISK	1		X	X	
20	AT339543	BRAKE DISK	3		X	X	
21	T228912	DISK SPRING	2		X	X	
22	T162517	BLEED VALVE	2		X	X	
23	T159565	PLUG	2		X	X	

BRAKE VALVE AND PEDALS
SOUPAPE ET PEDALES DES FREINS
VALVULA Y PEDLES DE FRENO

TX1013066 -UN-16NOV06

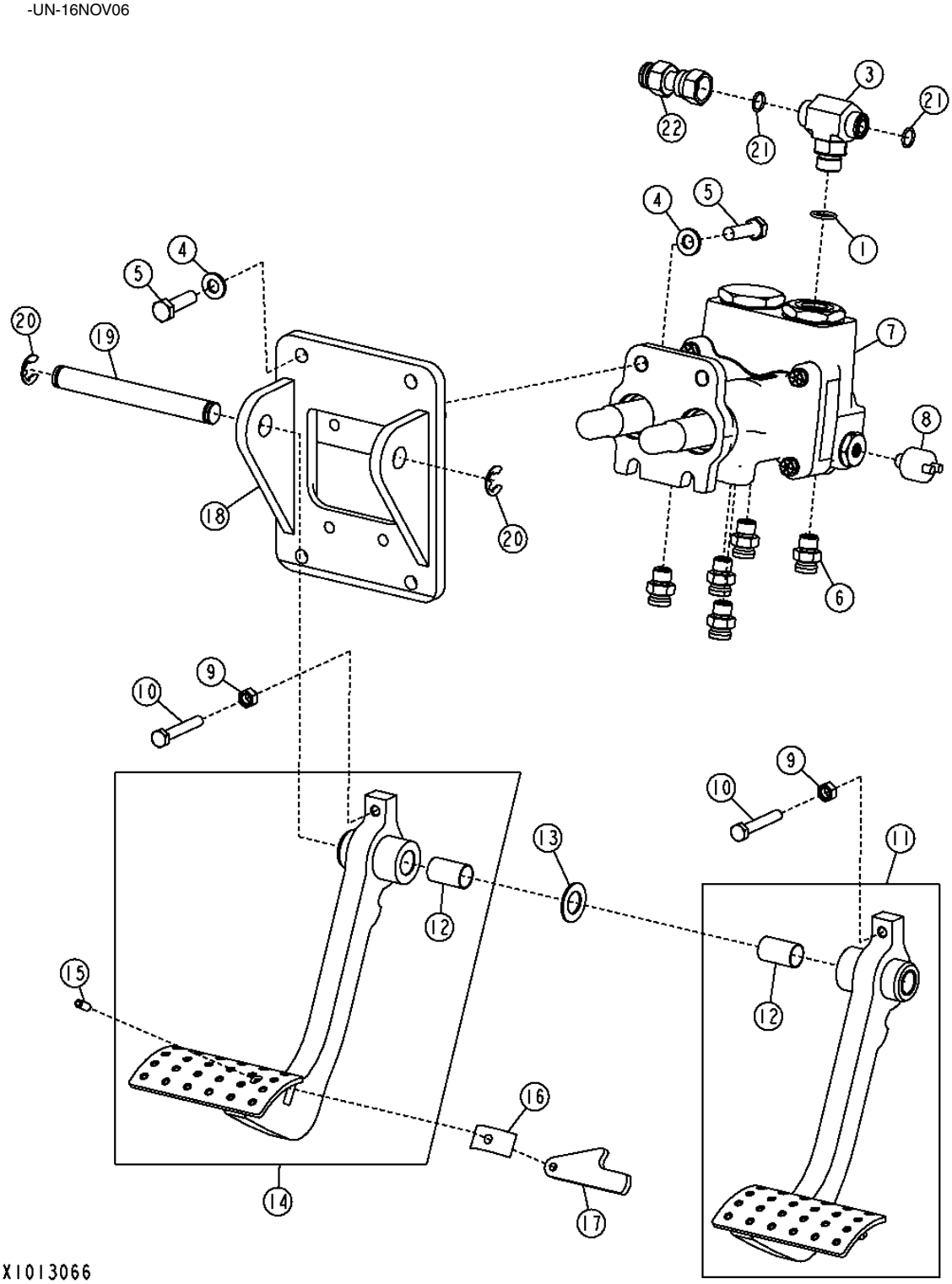

THIS PARTS LISTING IS CONTINUED

BRAKE VALVE AND PEDALS
SOUPAPE ET PEDALES DES FREINS
VALVULA Y PEDLES DE FRENO

KEY	PART NO.	PART NAME	QTY.	SERIAL NO.	410J	410TMC	REMARKS
1	R26375	O-RING	1		X	X	
3	38H1017	TEE FITTING	1		X	X	
4	24M7239	WASHER	8		X	X	
5	19M7550	CAP SCREW	8		X	X	M10 X 35
6	AT187666	ADAPTER FITTING	5		X	X	
	AT193365	KIT	1		X	X	
7	AT304761	MANUAL HYDRAULIC VALVE	1		X	X	
8	R32548	PRESSURE SWITCH	2		X	X	(BRAKE LIGHT)
9	14M7273	NUT	2		X	X	M8
10	19M7164	CAP SCREW	2		X	X	M8 X 50
11	AT336436	PEDAL	1		X	X	RH
12	B177R	BUSHING	2		X	X	
13	24H1381	WASHER	2		X	X	
14	AT336397	PEDAL	1		X	X	LH
15	34M7197	SPRING PIN	1		X	X	6 X 16 MM
16	R50034	LEAF SPRING	1		X	X	
17	R221354	ARM	1		X	X	
18	T227394	HOUSING	1		X	X	
19	T165282	PIN FASTENER	1		X	X	
20	F2863R	SNAP RING	2		X	X	
21	T77857	O-RING	2		X	X	
22	AT280459	ADAPTER FITTING	1		X	X	TO RESERVOIR

BRAKE VALVE ASSEMBLY
CLAPET DE FREIN
CONJUNTO DE VALVULA DE FRENOS

TX1007055 -UN-27APR06

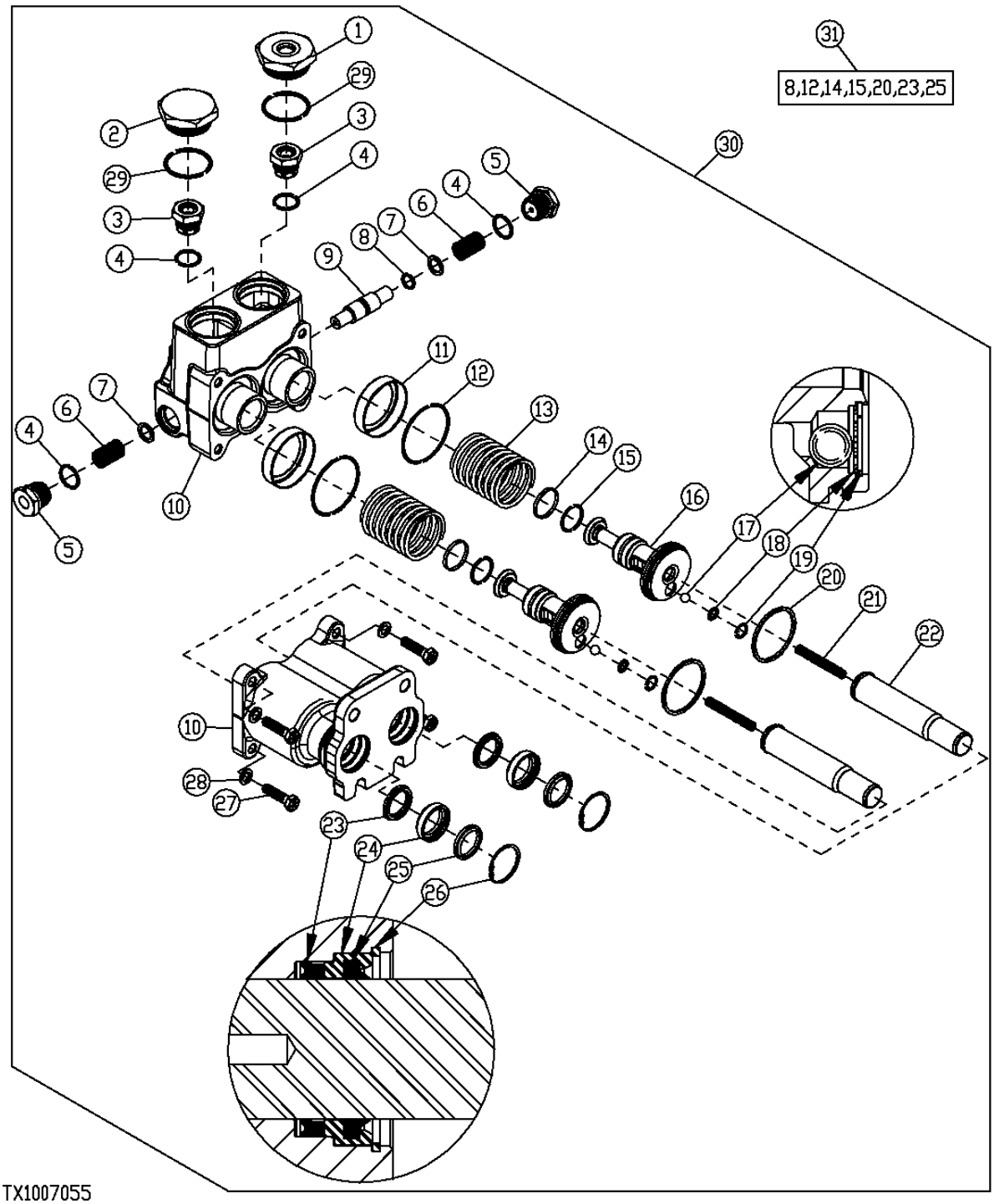

BRAKE VALVE ASSEMBLY
CLAPET DE FREIN
CONJUNTO DE VALVULA DE FRENOS

KEY	PART NO.	PART NAME	QTY.	SERIAL NO.	REMARKS
1	T203385	REDUCER	1		
2	T203374	FITTING PLUG	1		
3	AT188343	CHECK VALVE	2		
4	R26906	O-RING	4		
5	T185926	PLUG	2		
6	T183274	SPRING	2		
7	T183273	WASHER	2		
8	.....	RING	2		
9	T183272	PISTON	1		
10	.....	HOUSING	1		(ORDER AT304761)
11	T183271	RETAINER	2		
12	.....	O-RING	2		
13	T183270	SPRING	2		
14	.....	SEAL	2		
15	.....	RING	2		
16	T183276	PISTON	2		
17	R26552	BALL	2		
18	T185078	LOCK WASHER	2		
19	R48523	SNAP RING	2		
20	T183362	PISTON RING	2		
21	T183269	SPRING	2		
22	AT192151	PUSH ROD	2		
23	.....	SEAL	2		
24	T183357	RETAINER	2		
25	.....	SEAL	2		
26	M41029	SNAP RING	2		
27	19H1849	CAP SCREW	4		5/16" X 1-1/4"
28	T183310	WASHER	4		
29	U13639	O-RING	2		
30	AT304761	MANUAL HYDRAULIC VALVE	1		
31	AT192419	KIT	1		(BRAKE VALVE OVERHAUL) (REQUIRES 1 KIT PER VALVE)

SERVICE BRAKE HYDRAULICS
CIRCUIT HYDRAULIQUE DE FREINS DE SERVICE
SISTEMA HIDRAULICO DE FRENOS DE SERVICIO

TX1005714 -UN-03APR06

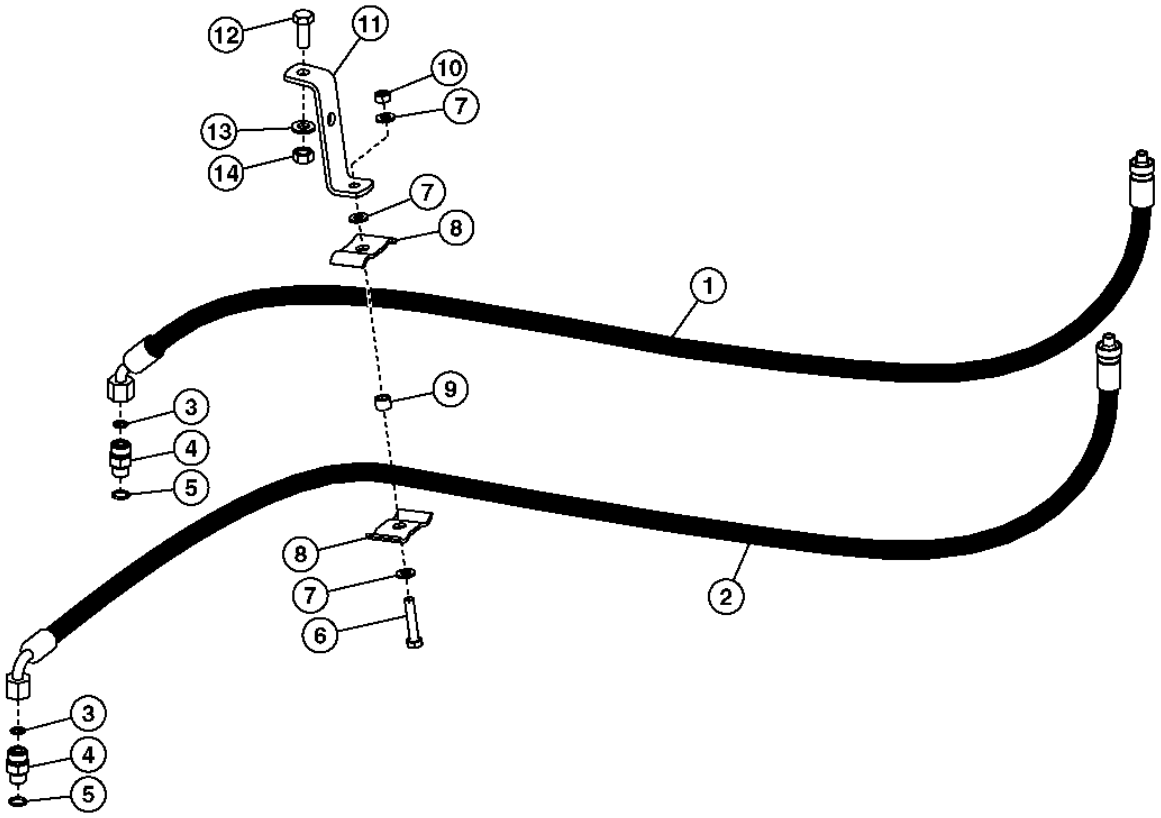

TX1005714

SERVICE BRAKE HYDRAULICS
CIRCUIT HYDRAULIQUE DE FREINS DE SERVICE
SISTEMA HIDRAULICO DE FRENOS DE SERVICIO

KEY	*PART NO.*	*PART NAME*	*QTY.*	*SERIAL NO.*	410J	410TMC	*REMARKS*
1	AT316689	HYDRAULIC HOSE - FABRICATE	1		X	X	(ALSO ORDER 62H1042 AND T77613) TO BRAKE VALVE
2	AT316690	HYDRAULIC HOSE - FABRICATE	1		X	X	(ALSO ORDER 62H1042 AND T77613) TO BRAKE VALVE
3	T77613	O-RING	2		X	X	
4	38H1160	ADAPTER FITTING	2		X	X	TO REAR AXLE
5	R26448	O-RING	2		X	X	
6	19M7922	CAP SCREW	1		X	X	M8 X 40
7	24M7238	WASHER	3		X	X	
8	R46919	HALF CLAMP	2		X	X	
9	T186859	WASHER	1		X	X	
10	14M7273	NUT	1		X	X	M8
11	T158245	STRAP	1		X	X	
12	19M7402	CAP SCREW	1		X	X	M10 X 25
13	24M7239	WASHER	1		X	X	
14	14M7274	NUT	1		X	X	M10

BRAKE VALVE BOOST PLUMBING (CAB)
CONDUITES HYDRAULIQUES SURALIMENTATION CLAPET DE FREIN
TUBERIA DE AUMENTO DE VALVULA DE FRENOS

TX1015731 -UN-06DEC06

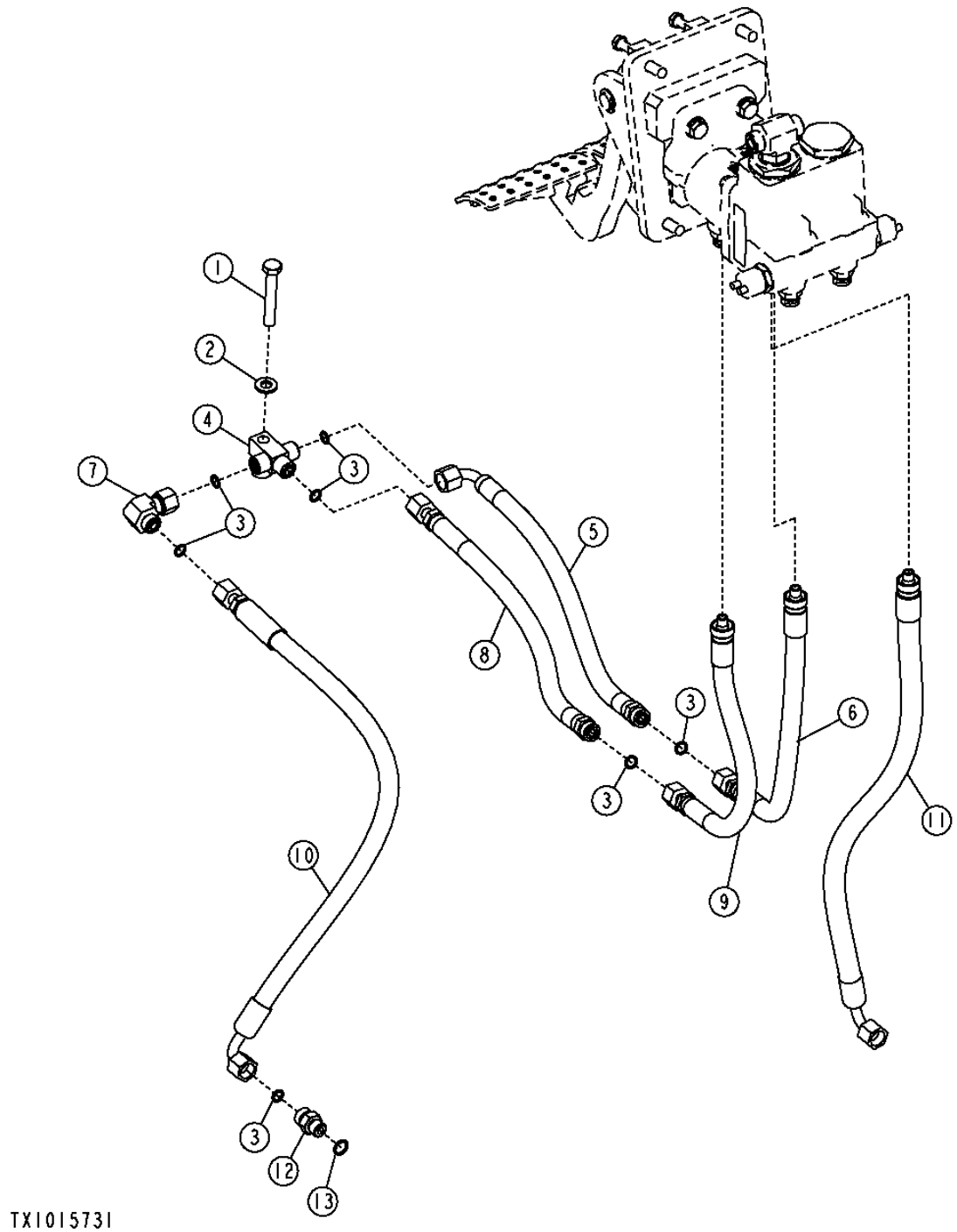

BRAKE VALVE BOOST PLUMBING (CAB)
CONDUITES HYDRAULIQUES SURALIMENTATION CLAPET FREIN
TUBERIA DE AUMENTO DE VALVULA DE FRENOS

KEY	PART NO.	PART NAME	QTY.	SERIAL NO.	410J	410TMC	REMARKS
1	19M7742	CAP SCREW	1		X	X	M10 X 65
2	24M7239	WASHER	1		X	X	10.700 X 21 X 2.500 MM
3	T77613	O-RING	7		X	X	
4	T212039	TEE FITTING	1		X	X	
5	AT194417	HYDRAULIC HOSE - FABRICATE	1		X	X	
6	AT194412	HYDRAULIC HOSE - FABRICATE	1		X	X	
7	38H1094	ELBOW FITTING	1		X	X	
8	AT194416	HYDRAULIC HOSE - FABRICATE	1		X	X	
9	AT318113	HYDRAULIC HOSE - FABRICATE	1		X	X	
10	AT322270	HYDRAULIC HOSE - FABRICATE	1		X	X	
11	AT322268	HYDRAULIC HOSE - FABRICATE	1		X	X	
12	38H1160	ADAPTER FITTING	1		X	X	
13	R26286	O-RING	1		X	X	

BRAKE VALVE BOOST PLUMBING (ROPS)
CONDUITES HYDRAULIQUES DE SURALIMENTATION DE CLAPET DE FREIN
TUBERIA DE AUMENTO DE VALVULA DE FRENOS

TX1015722 -UN-13DEC06

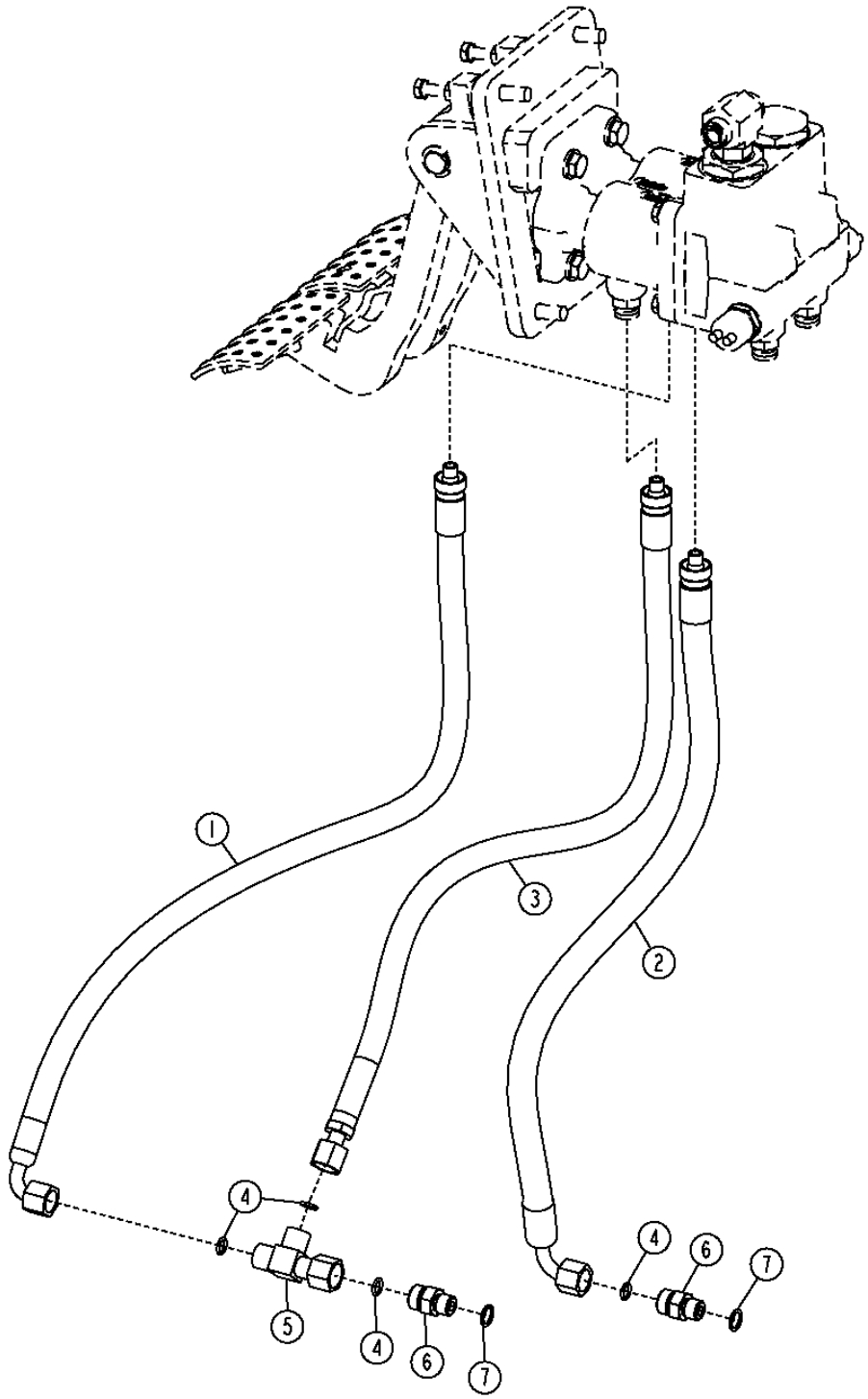

BRAKE VALVE BOOST PLUMBING (ROPS)
CONDUITES HYDRAULIQUES DE SURALIMENTATION DE CLAPET DE FREIN
TUBERIA DE AUMENTO DE VALVULA DE FRENOS

KEY	PART NO.	PART NAME	QTY.	SERIAL NO.	410J	410TMC	REMARKS
1	AT324239	HYDRAULIC HOSE - FABRICATE	1		X		
2	AT322268	HYDRAULIC HOSE - FABRICATE	1		X		
3	AT324240	HYDRAULIC HOSE - FABRICATE	1		X		
4	T77613	O-RING	3		X		
5	AT192417	TEE FITTING	1		X		
6	T186238	ADAPTER FITTING	1		X		
7	R26286	O-RING	1		X		

PARKING BRAKE HOUSING AND CLUTCH DISC
FREIN DE STATIONNEMENT/CARTER/DISQUE D'EMBRAYAGE
FRENO DE ESTACIONAMIENTO/CARCASA/DISCO DE EMBRAGUE

TX1016766 -UN-18DEC06

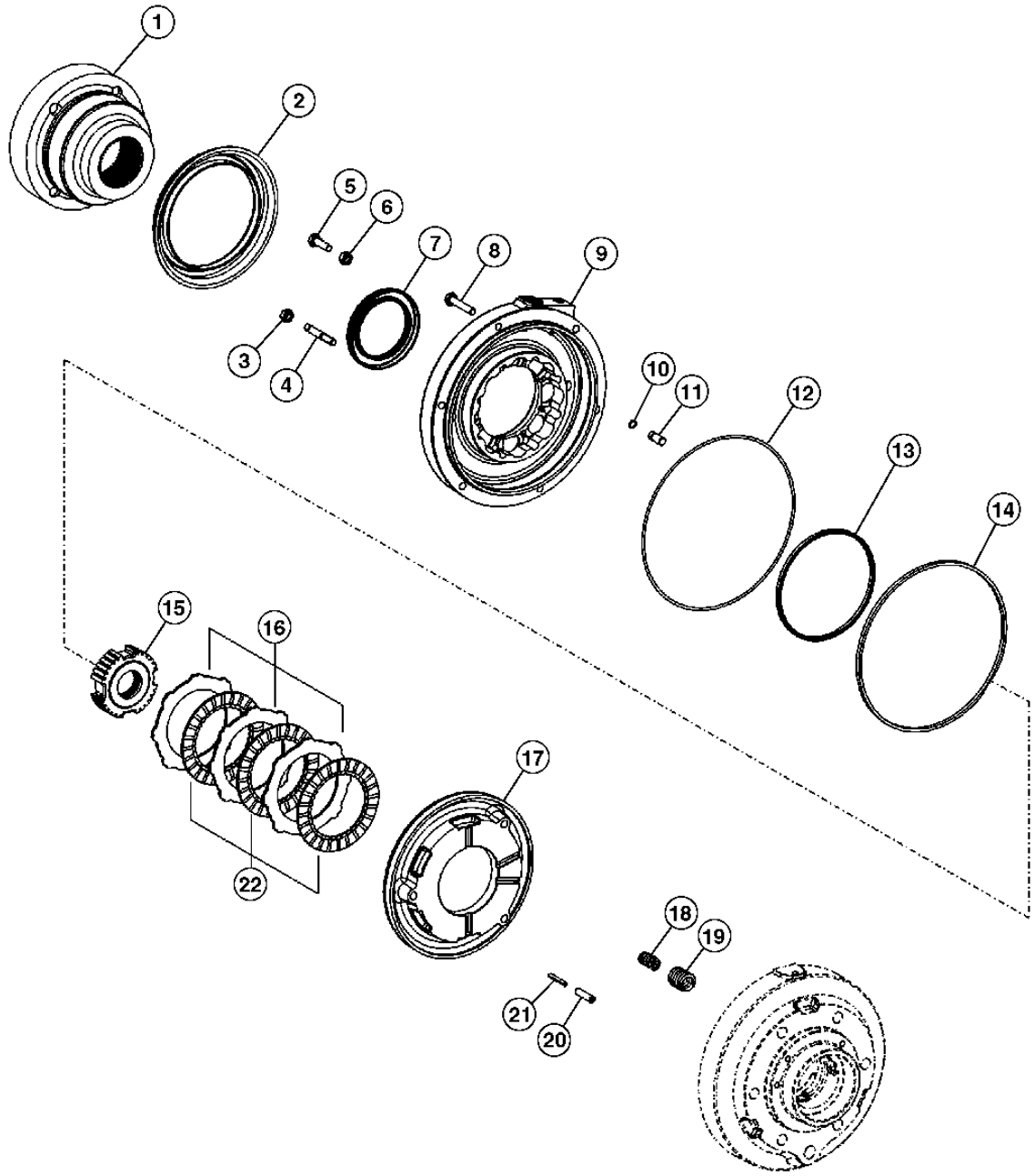

TX1016766

PARKING BRAKE HOUSING AND CLUTCH DISC
FREIN DE STATIONNEMENT/CARTER/DISQUE D'EMBRAYAGE
FRENO DE ESTACIONAMIENTO/CARCASA/DISCO DE EMBRAGUE

KEY	PART NO.	PART NAME	QTY.	SERIAL NO.	410J	410TMC	REMARKS
1	T218489	FLANGE	1		X	X	
2	T228722	GUARD	1		X	X	
3	T228995	NUT	2		X	X	
4	T228994	STUD	2		X	X	
5	T164922	SCREW	2		X	X	
6	T159502	LOCK NUT	2		X	X	
7	T218478	SEAL	1		X	X	
8	19M7181	CAP SCREW	4		X	X	M10 X 55
9	T218493	HOUSING	1		X	X	
10	T159487	O-RING	2		X	X	
11	T228996	PIN	2		X	X	
12	T218785	SEAL	1		X	X	
13	T218782	SEAL	1		X	X	
14	T218783	SEAL	1		X	X	
15	T218488	HUB	1		X	X	
16	T159474	PLATE	3		X	X	
17	T228997	PISTON	1		X	X	
18	T164917	COMPRESSION SPRING	14		X	X	
19	T164916	COMPRESSION SPRING	14		X	X	
20	T159359	SPRING PIN	3		X	X	
21	T164911	PIN	3		X	X	
22	T159475	CLUTCH DISK	3		X	X	

LOADER ARM SERVICE LOCK
VERROUILLAGE D'ENTRETIEN DE BRAS DE CHARGEUR
BLOQUEO DE SERVICIO DE BRAZO DE CARGADORA

TX1016038 -UN-29DEC06

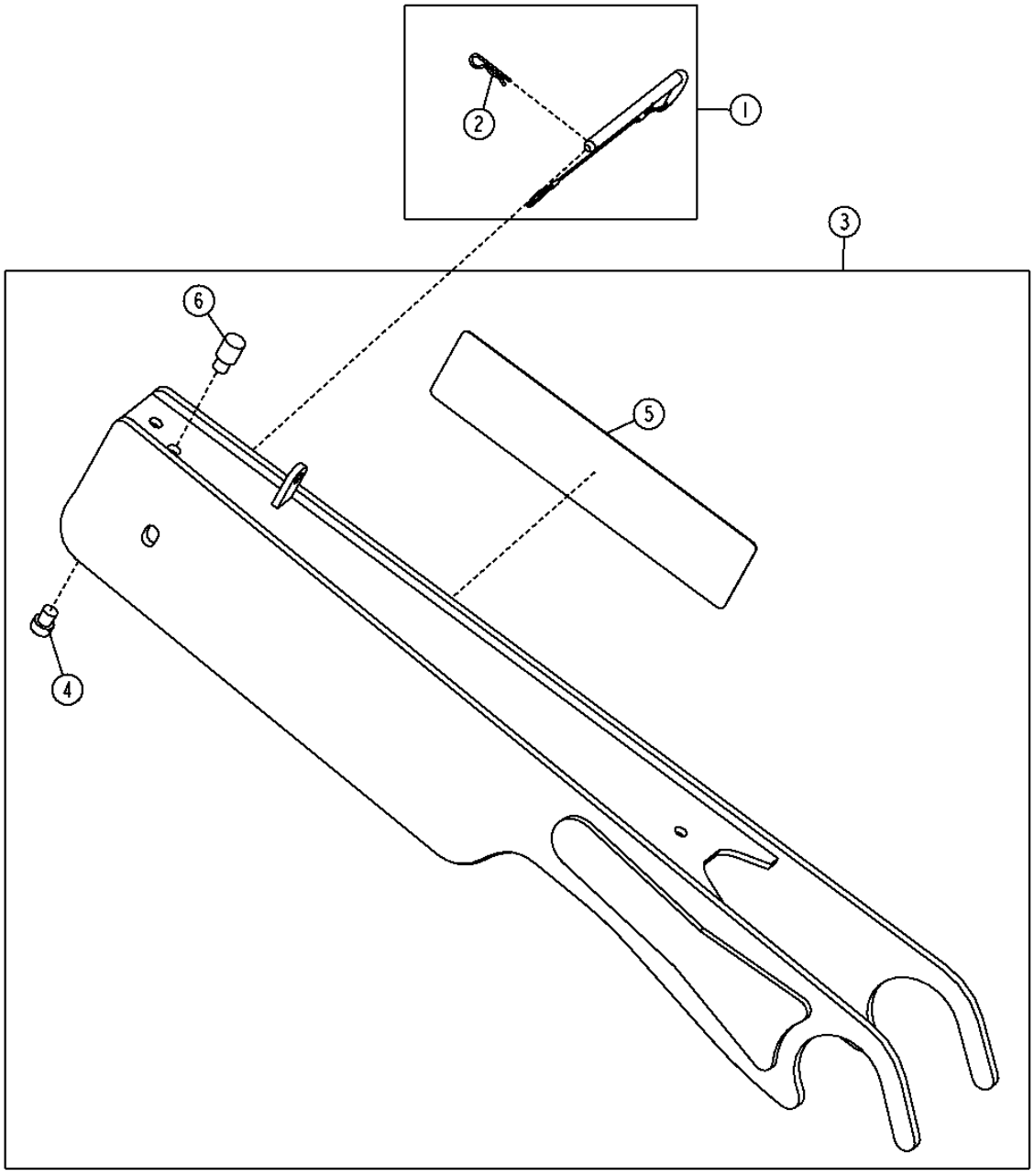

TX1016038

LOADER ARM SERVICE LOCK
VERROUILLAGE D'ENTRETIEN DE BRAS DE CHARGEUR
BLOQUEO DE SERVICIO DE BRAZO DE CARGADORA

KEY	PART NO.	PART NAME	QTY.	SERIAL NO.	410J	410TMC	REMARKS
1	AT195244	PIN FASTENER	1		X	X	
2	J16931	PIN	1		X	X	
3	AT337253	ARM	1		X	X	
4	T14083	BUMPER	1		X	X	
5	T185902	LABEL	1		X	X	
6	T211143	BUMPER	1		X	X	SERVICE LOCK

LOADER ARM SERVICE LOCK (TOOL CARRIER)
VERROUILLAGE D'ENTRETIEN DE BRAS DE CHARGEUR
BLOQUEO DE SERVICIO DE BRAZO DE CARGADORA

TX1016040 -UN-18DEC06

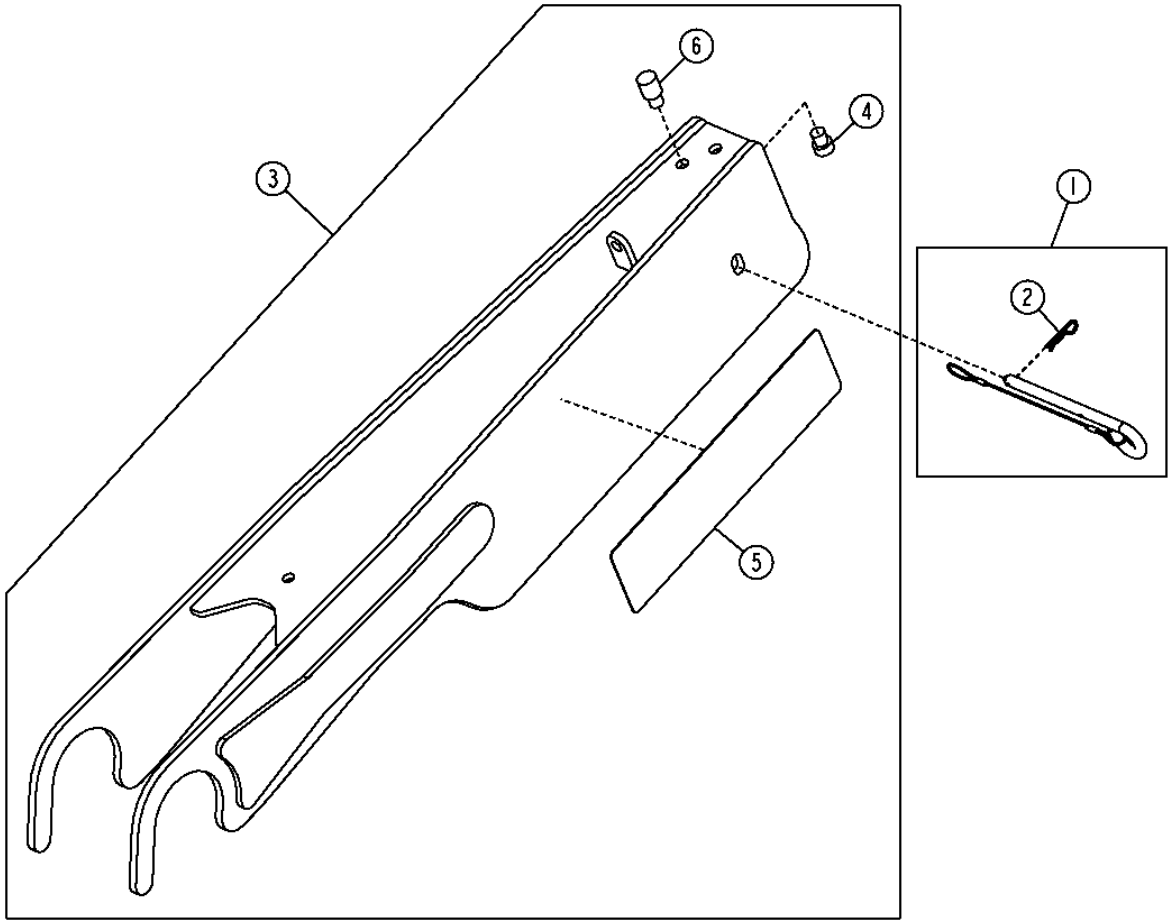

TX1016040

LOADER ARM SERVICE LOCK (TOOL CARRIER)
VERROUILLAGE D'ENTRETIEN DE BRAS DE CHARGEUR
BLOQUEO DE SERVICIO DE BRAZO DE CARGADORA

KEY	PART NO.	PART NAME	QTY.	SERIAL NO.	410J	410TMC	REMARKS
1	AT195244	PIN FASTENER	1			X	
2	J16931	PIN	1			X	
3	AT322256	ARM	1			X	
4	T14083	BUMPER	1			X	
5	T185902	LABEL	1			X	
6	T211143	BUMPER	1			X	SERVICE LOCK

LICENCE PLATE LIGHT AND BRACKET
ECLAIRAGE DE PLAQUE D'IMMATRICULATION ET SUPPORT
LUZ DE MATRICULA Y ESCUADRA

T139757 -UN-12MAR01

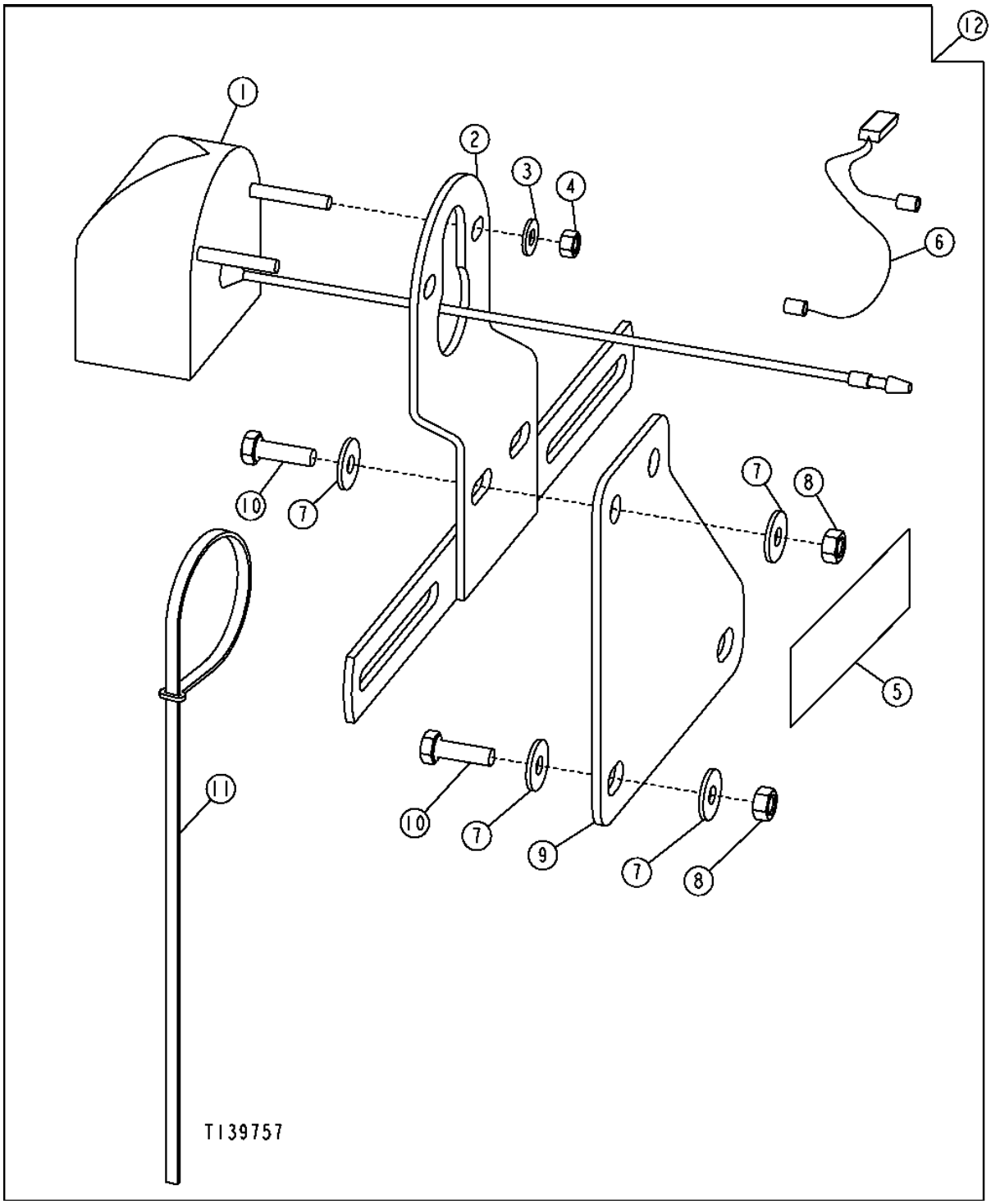

LICENCE PLATE LIGHT AND BRACKET
ECLAIRAGE DE PLAQUE D'IMMATRICULATION ET SUPPORT
LUZ DE MATRICULA Y ESCUADRA

KEY	*PART NO.*	*PART NAME*	*QTY.*	*SERIAL NO.*	*REMARKS*
1	AT34211	LAMP	1		(INCLUDES (2) 24H1283 AND (2) 14M7297)
	AB2599R	BULB	1		
2	AT34210	BRACKET	1		
3	24H1283	WASHER	2		
4	14M7297	NUT	2		M5
5	JD5920	REFLECTOR	2		
6	AT187708	WIRING HARNESS	1		
7	24M7139	WASHER	8		
8	14M7272	NUT	4		
9	T186062	PLATE	1		
10	19M7077	CAP SCREW	4		M6 X 20
11	H77698	TIE BAND	6		
12	AT187707	MOUNTING PARTS	1		(WHOLE GOODS)

TRADEMARKS AND LABELS
MARQUES DEPOSEES ET ETIQUETTES
MARCAS REGISTRADAS Y ETIQUETAS

TX1015333 -UN-27DEC06

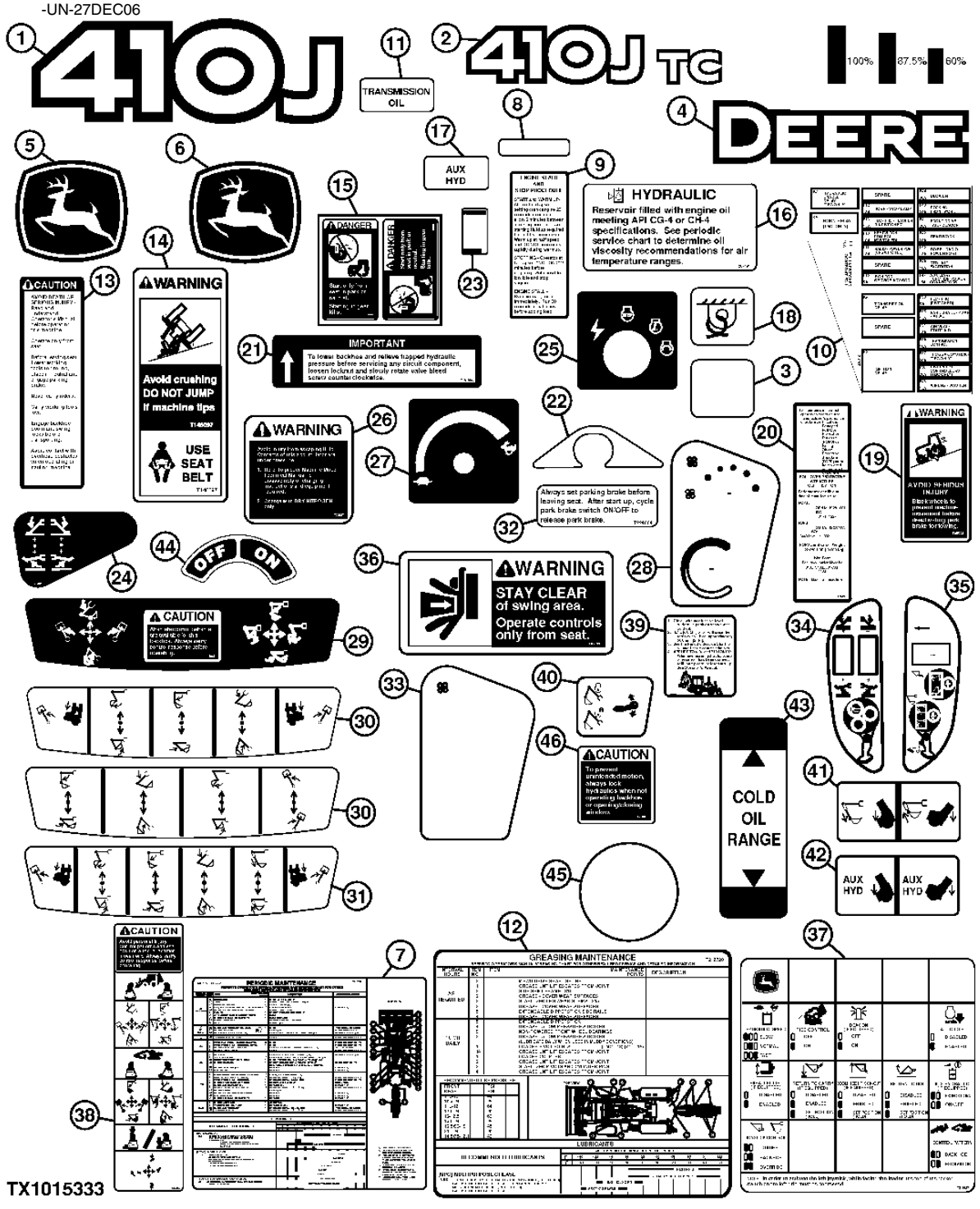

TRADEMARKS AND LABELS
MARQUES DEPOSEES ET ETIQUETTES
MARCAS REGISTRADAS Y ETIQUETAS

KEY	PART NO.	PART NAME	QTY.	SERIAL NO.	410J	410TMC	REMARKS
1	T216712	LABEL	2		X		MODEL DESIGNATION
2	T216776	LABEL	2			X	MODEL DESIGNATION
3	JD5933	REFLECTOR	2		X	X	REFLECTIVE LABEL,YELLOW
4	JD5836	LABEL	1		X	X	DEERE (BOLD OUTLINE)
5	JD5717	LABEL	1		X	X	LEAPING DEER (DOOR GLASS)
6	JD5761	LABEL	1		X	X	LEAPING DEER (GRILLE)
7	T216714	LABEL	1		X	X	PERIODIC MAINTENANCE-
8	JD5920	REFLECTOR	2		X	X	REFLECTIVE LABEL(RED)
9	T131938	LABEL	1		X	X	ENGINE START/STOP
10	T216528	LABEL	1		X	X	FUSEBLOCK
11	T140311	LABEL	1		X	X	TRANSMISSION OIL
12	T216720	LABEL	1		X	X	PERIODIC GREASING
13	T146080	LABEL	1		X	X	CAUTION
14	T146097	LABEL	1		X	X	SEAT BELT WARNING
15	T146102	LABEL	1		X	X	BYPASS STARTING
16	T207191	LABEL	1		X	X	HYDRAULIC
17	T149199	LABEL	1		X	X	AUXILIARY HYDRAULICS
18	T153680	LABEL	4		X	X	TIE DOWN
19	T159028	LABEL	1		X	X	PARK BRAKE WARNING
20	T218011	LABEL	1		X	X	ROPS
21	T161665	LABEL	1		X	X	SERVICE VALVE
22	T161678	LABEL	1		X	X	PROTECTIVE
23	T162404	LABEL	1		X	X	HAND HELD HYDRAULICS
24	T218014	LABEL	1		X	X	STABILIZER CONTROL
25	T218620	LABEL	1		X	X	IGNITION
26	T225374	LABEL	1		X	X	ACCUMULATOR
27	T218622	LABEL	1		X	X	THROTTLE CONTROL
28	T218623	LABEL	1		X	X	FAN AND TEMP. CONTROL
29	T165584	LABEL	1		X	X	BACKHOE CONTROL(TWO LEVER)
30	T165585	LABEL	1		X	X	BACKHOE CONTROL LEVER(THREE LEVER)
	T165604	LABEL	1		X	X	BACKHOE CONTROL (FOUR LEVER)
31	T165586	LABEL	1		X	X	BACKHOE CONTROL LEVER(EXTENDIBLE)
32	T224004	LABEL	1		X	X	SET PARK BRAKE
33	T218624	LABEL	1		X	X	BLACK
34	T218625	LABEL	1		X	X	LH, JOYSTICK COVER
35	T218626	LABEL	1		X	X	RH, JOYSTICK COVER
36	T183768	LABEL	1		X	X	CLEARANCE WARNING
37	T218627	LABEL	1		X	X	BACKHOE SSM
38	T222933	LABEL	1		X	X	BACKHOE CONTROL
39	T223060	LABEL	1		X	X	HYDRAULIC RESERVOIR
40	T185330	LABEL	1		X	X	BOOM LOCK(WITH STANDARD CONTROLS)
41	T185691	LABEL	1		X	X	FOOT PEDAL
42	T185692	LABEL	1		X	X	AUXILIARY HYDRAULICS
43	T186123	LABEL	1		X	X	HYDRAULIC OIL COLD RANGE
44	T42199	LABEL	1		X	X	ON/OFF SWITCH
45	T186793	LABEL	1		X	X	GRAY CIRCLE
46	T200658	SAFETY SIGN	1		X	X	CAUTION ,MOTION

THIS PARTS LISTING IS CONTINUED

TRADEMARKS AND LABELS (FRENCH AND SPANISH)
MARQUES DEPOSEES ET ETIQUETTES (FRANCAIS ET ESPAGNOLE)
MARCAS REGISTRADAS Y ETIQUETAS (FRANCES Y ESPANOL)

TX1015334 -UN-27DEC06

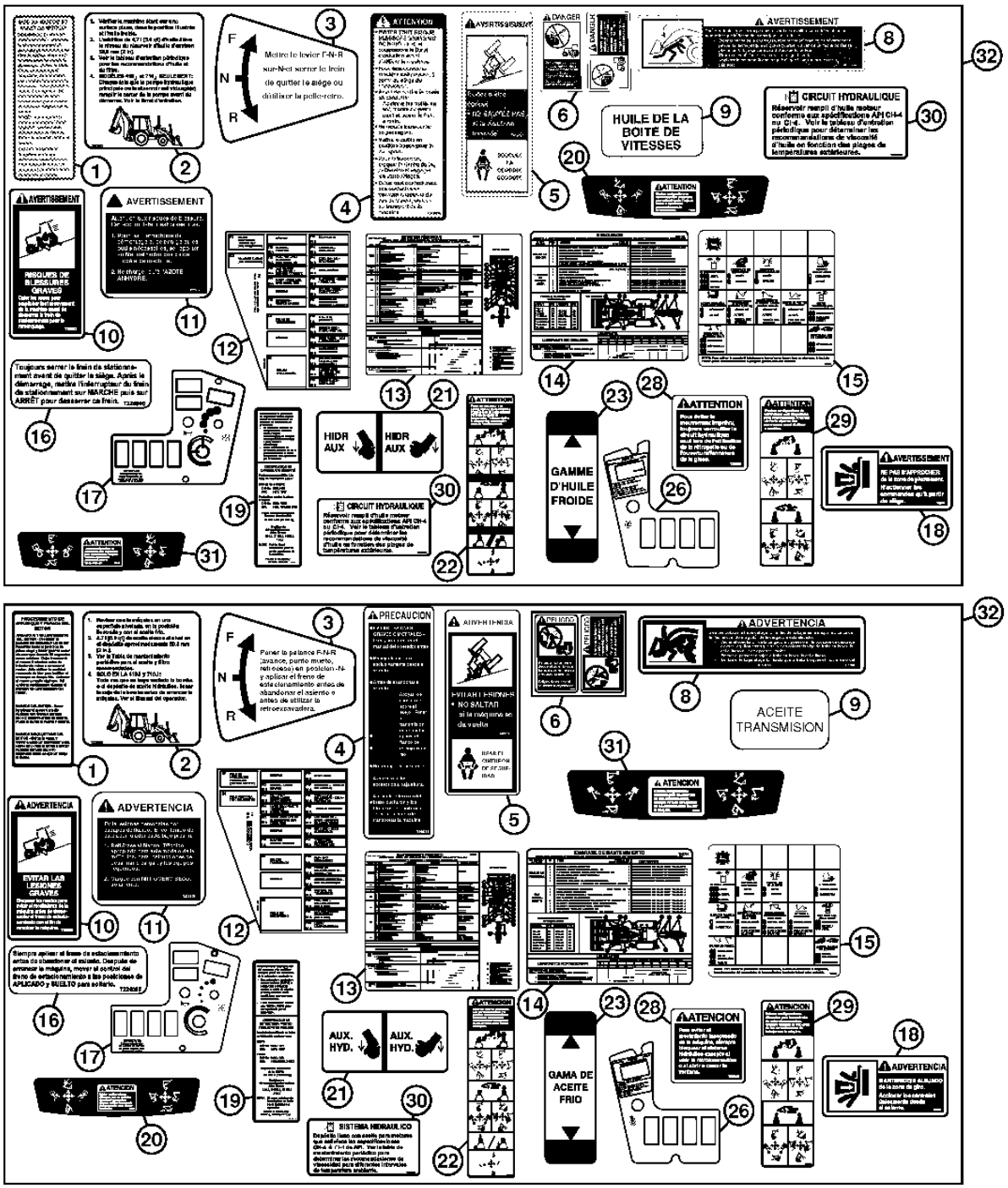

TX1015334

TRADEMARKS AND LABELS (FRENCH AND SPANISH)
MARQUES DEPOSEES ET ETIQUETTES (FRANCAIS ET ESPAGNOLE)
MARCAS REGISTRADAS Y ETIQUETAS (FRANCES Y ESPANOL)

KEY	PART NO.	PART NAME	QTY.	SERIAL NO.	REMARKS
1	T139165	LABEL	1		ENGINE START AND STOP (FRENCH)
	T139167	LABEL	1		ENGINE START AND STOP (SPANISH)
2	T223062	LABEL	1		HYDRAULIC RESERVOIR (FRENCH)
	T223061	LABEL	1		HYDRAULIC RESERVOIR (SPANISH)
3	T141096	LABEL	1		DIRECTION CONTROL SWITCH (FRENCH)
	T141078	LABEL	1		DIRECTION CONTROL SWITCH (SPANISH)
4	T146095	SAFETY SIGN	1		CAUTION SAFETY (FRENCH)
	T146089	SAFETY SIGN	1		CAUTION SAFETY (SPANISH)
5	T146099	SAFETY SIGN	1		WARNING SEAT BELT (FRENCH)
	T146098	SAFETY SIGN	1		WARNING SEAT BELT (SPANISH)
6	T146104	LABEL	1		BY-PASS (FRENCH)
	T146106	LABEL	1		BY-PASS (SPANISH)
8	T152997	LABEL	1		BOOM LOCK (FRENCH)
	T152996	LABEL	1		BOOM LOCK (SPANISH)
9	T160761	LABEL	1		TRANSMISSION OIL (FRENCH)
	T160763	LABEL	1		TRANSMISSION OIL (SPANISH)
10	T160762	LABEL	1		PARK BRAKE WARNING (FRENCH)
	T160769	LABEL	1		PARK BRAKE WARNING (SPANISH)
11	T225375	LABEL	1		ACCUMULATOR (FRENCH)
	T225376	LABEL	1		ACCUMULATOR (SPANISH)
12	T216530	LABEL	1		FUSEBLOCK (FRENCH)
	T216529	LABEL	1		FUSEBLOCK(SPANISH)
13	T216715	LABEL	1		PERIODIC MAINTENANCE (FRENCH)
	T216716	LABEL	1		PERIODIC MAINTENANCE(SPANISH)
14	T216722	LABEL	1		PERIODIC GREASING (FRENCH)
	T216721	LABEL	1		PERIODIC GREASING(SPANISH)
15	T221100	LABEL	1		BACKHOE SSM (FRENCH)
	T221099	LABEL	1		BACKHOE SSM (SPANISH)
16	T224006	LABEL	1		SET PARK BRAKE (FRENCH)
	T224005	LABEL	1		SET PARK BRAKE (SPANISH)
17	T185570	LABEL	1		START (FRENCH)
	T185548	LABEL	1		START (SPANISH)
18	T185571	LABEL	1		WARNING (FRENCH)
	T185549	LABEL	1		WARNING (SPANISH)
19	T218013	LABEL	1		ROPS (FRENCH)
	T218012	LABEL	1		ROPS (SPANISH)
20	T185577	LABEL	1		BACKHOE CONTROL (FRENCH)
	T185553	LABEL	1		BACKHOE CONTROL (SPANISH)

TRADEMARKS AND LABELS (FRENCH AND SPANISH)
MARQUES DEPOSEES ET ETIQUETTES (FRANCAIS ET ESPAGNOLE)
MARCAS REGISTRADAS Y ETIQUETAS (FRANCES Y ESPANOL)

TX1015334 -UN-27DEC06

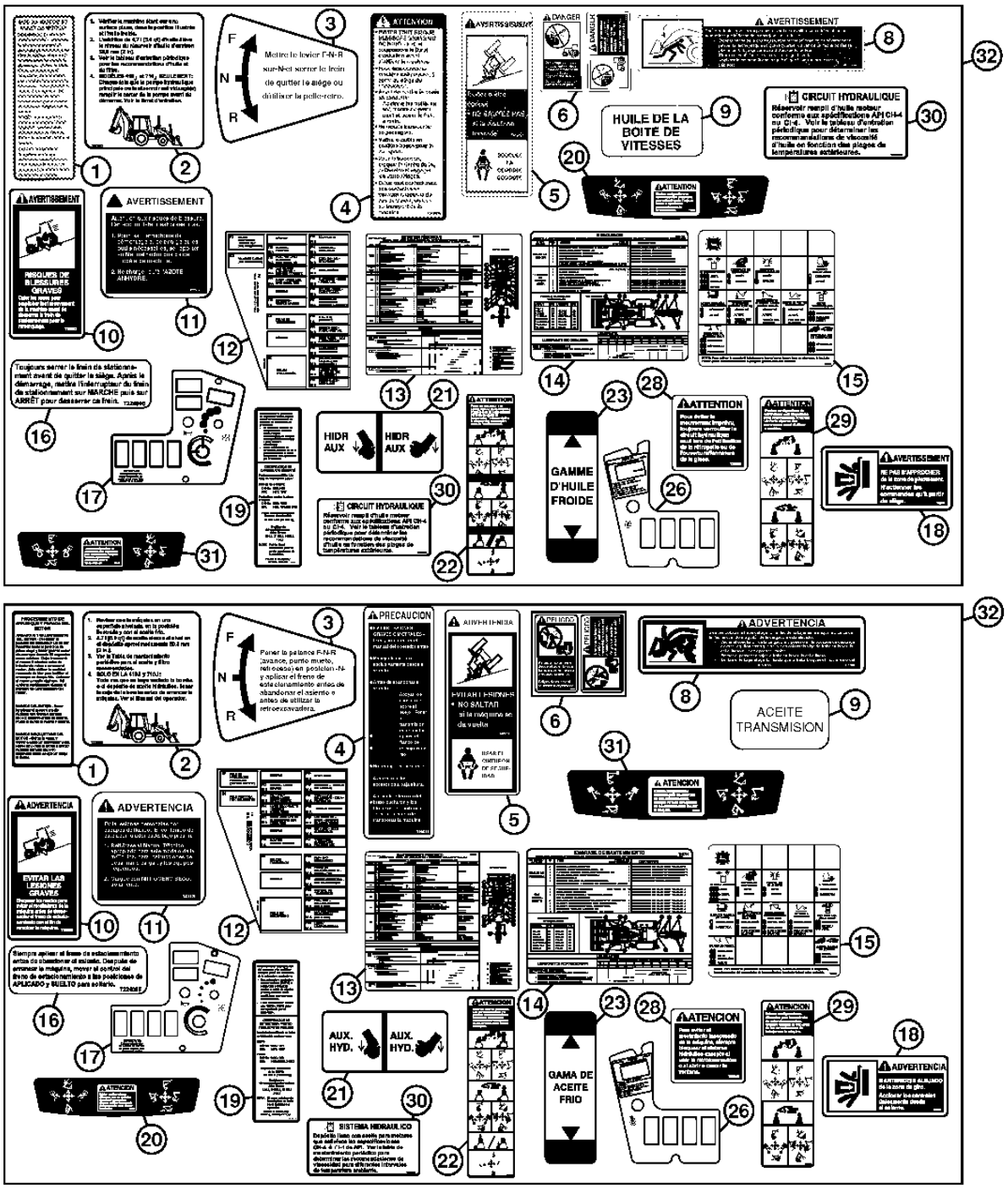

TX1015334

THIS PARTS LISTING IS CONTINUED

TRADEMARKS AND LABELS (FRENCH AND SPANISH)
MARQUES DEPOSEES ET ETIQUETTES (FRANCAIS ET ESPAGNOLE)
MARCAS REGISTRADAS Y ETIQUETAS (FRANCES Y ESPANOL)

KEY	PART NO.	PART NAME	QTY.	SERIAL NO.	REMARKS
21	T185695	LABEL	1		FOOT PEDAL (FRENCH)
	T185696	LABEL	1		FOOT PEDAL (SPANISH)
22	T224017	LABEL	1		BACKHOE CONTROLS (FRENCH)
	T224015	LABEL	1		BACKHOE CONTROLS (SPANISH)
23	T186128	LABEL	1		HYDRAULIC OIL RANGE (FRENCH)
	T186125	LABEL	1		HYD. OIL RANGE (SPANISH)
26	T186441	LABEL	1		PANEL (FRENCH)
	T186442	LABEL	1		PANEL (SPANISH)
28	T200659	SAFETY SIGN	1		CAUTION, MOTION (FRENCH)
	T200660	SAFETY SIGN	1		CAUTION, MOTION (SPANISH)
29	T200895	SAFETY SIGN	1		BACKHOE CONTROL (FRENCH)
	T200896	SAFETY SIGN	1		BACKHOE CONTROL (SPANISH)
30	T208008	LABEL	1		HYDRAULIC RESERVOIR (FRENCH)
	T208007	LABEL	1		HYDRAULIC RESERVOIR (SPANISH)
31	T188018	LABEL	1		SAE (FRENCH)
	T188019	LABEL	1		SAE (SPANISH)
32	.....	LABEL KIT	1		

ENVIORMENTAL DRAIN PACKAGE
ENSEMBLE DE VIDANGE ECOLOGIQUE
CONJUNTO DE VACIADO AMBIENTAL

TP50533 -UN-02JAN97

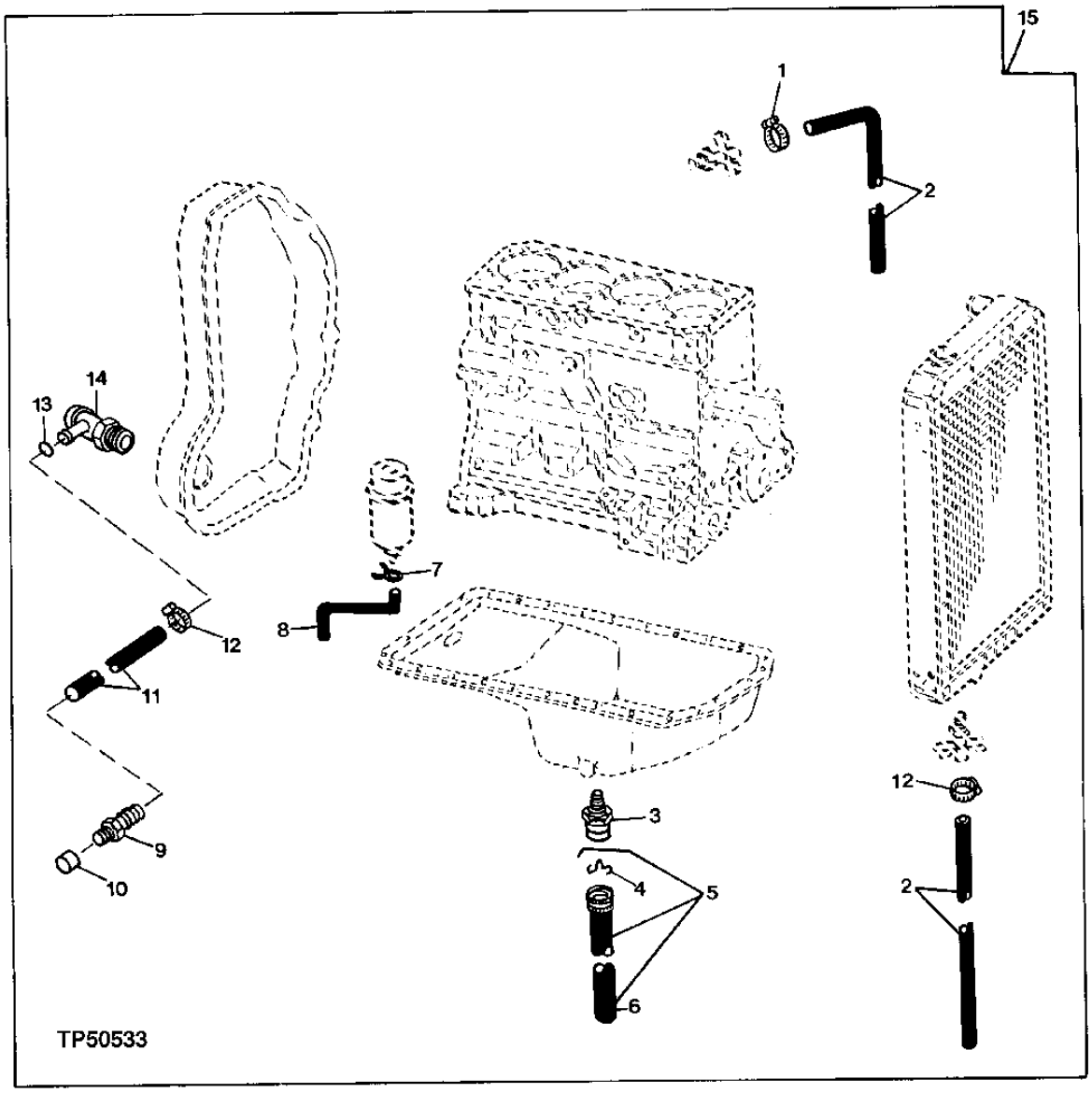

ENVIORMENTAL DRAIN PACKAGE
ENSEMBLE DE VIDANGE ECOLOGIQUE
CONJUNTO DE VACIADO AMBIENTAL

KEY	*PART NO.*	*PART NAME*	*QTY.*	*SERIAL NO.*	*REMARKS*
1	AR21837	CLAMP	1		
2	T161002	HOSE	1		
3	AT179995	DRAIN VALVE	1		
4	T161615	PIN	1		
5	AT179996	HOSE	1		
6	.....	BULK HOSE	1		(MAKE FROM TY22388) CTL
7	T13254	CLAMP	1		
8	T161093	HOSE	1		
9	H23196	FITTING	1		
10	15H3	FITTING	1		
11	.....	HYDRAULIC HOSE	1		(MAKE FROM TY22388) CTL
12	AR21837	CLAMP	2		
13	R26906	O-RING	1		
14	AT152180	DRAIN VALVE	1		
15	**AT322366**	**KIT**	**1**		**(WHOLE GOODS)**

FLUID SAMPLING PORTS
ORIFICES DECHANTILLONNAGE DES LIQUIDES
LUMBRERAS DE MUESTREO DE FLUIDOS

TX1013756 -UN-16NOV06

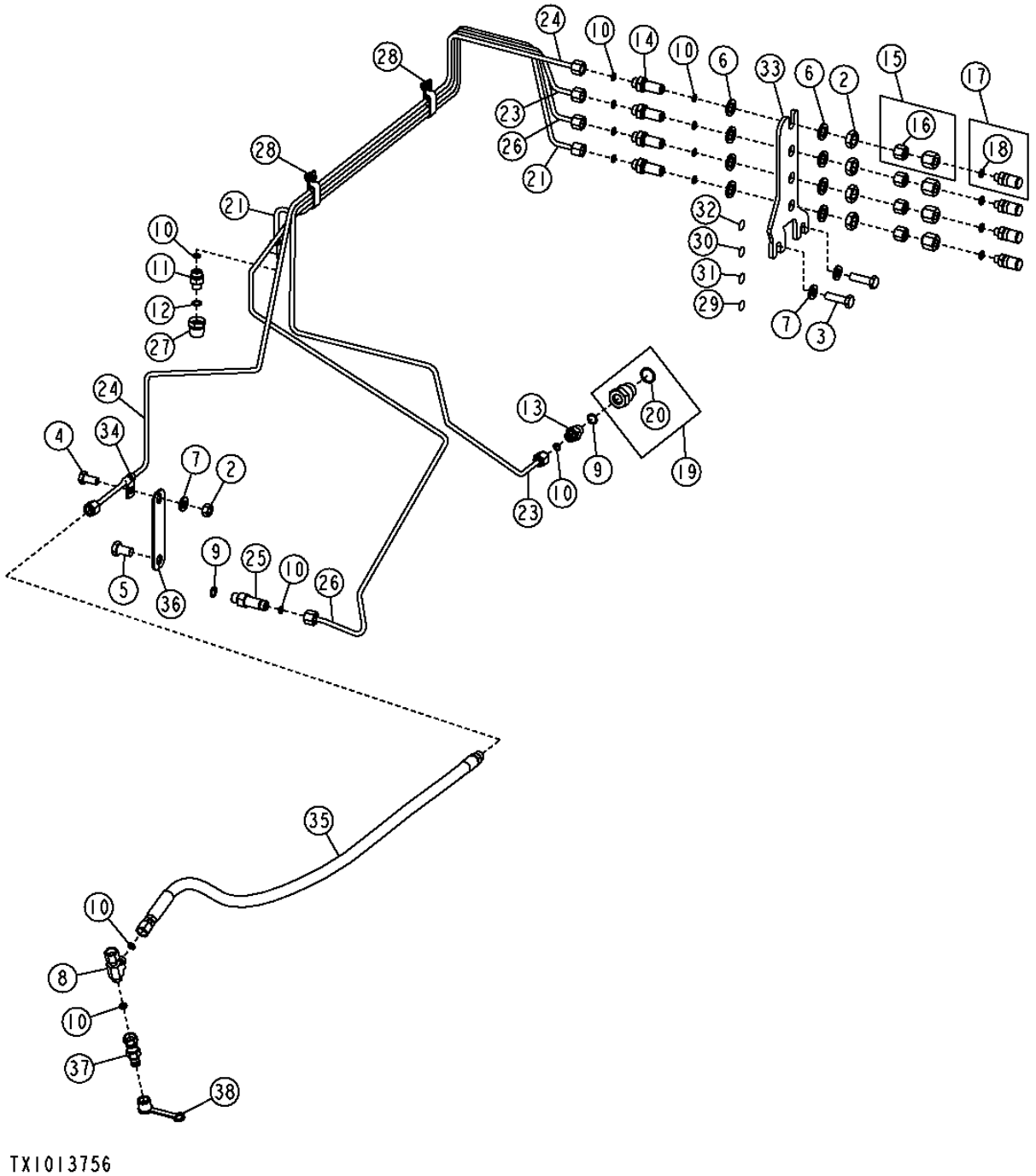

FLUID SAMPLING PORTS
ORIFICES DECHANTILLONNAGE DES LIQUIDES
LUMBRERAS DE MUESTREO DE FLUIDOS

KEY	PART NO.	PART NAME	QTY.	SERIAL NO.	REMARKS
1	14H832	NUT	4		14.275 MM
2	14M7274	NUT	1		M10
3	19M7550	CAP SCREW	2		M10 X 35
4	19M7938	CAP SCREW	1		M10 X 20
5	19M8017	CAP SCREW	1		M12 X 20
6	24M7145	WASHER	8		15 X 24 X 2.500 MM
7	24M7239	WASHER	3		10.700 X 21 X 2.500 MM
8	38H1029	TEE FITTING	1		
9	R26448	O-RING	2		
10	T77814	O-RING	13		
11	38H1167	ADAPTER FITTING	1		
12	R26286	O-RING	1		
13	38H1168	ADAPTER FITTING	1		
14	38H1284	ADAPTER FITTING	6		
15	AT225112	ADAPTER FITTING	4		
16	38H1414	FITTING	1		
17	AT321211	FITTING	4		
18	R28782	O-RING	1		
19	AT322359	ADAPTER FITTING	1		
20	51M7045	O-RING	1		19.300 X 2.200 MM
21	AT324481	OIL LINE	1		
22	T216078	PLATE	1		
23	AT324482	OIL LINE	1		
24	AT324483	OIL LINE	1		
25	T222521	FITTING	1		
26	AT328617	OIL LINE	1		
27	R71210	ADAPTER FITTING	1		
28	RE19799	CLAMP	2		
29	T217789	LABEL	1		ENGINE COOLANT
30	T217790	LABEL	1		ENGINE OIL
31	T217791	LABEL	1		TRANSMISSION OIL
32	T217792	LABEL	1		HYDRAULIC OIL
33	T224216	PLATE	1		
34	T74410	CLAMP	1		
35	AT331597	HYDRAULIC HOSE - FABRICATE	1		
36	T216078	BRACKET	1		
37	RE60700	DIAGNOSTIC COUPLING	1		
38	R77175	COVER	1		

SINGLE BATTERY INSTALLATION
INSTALLATION A BATTERIE UNIQUE
INSTALACION DE BATERIA SENCILLA

TX1013842 -UN-16NOV06

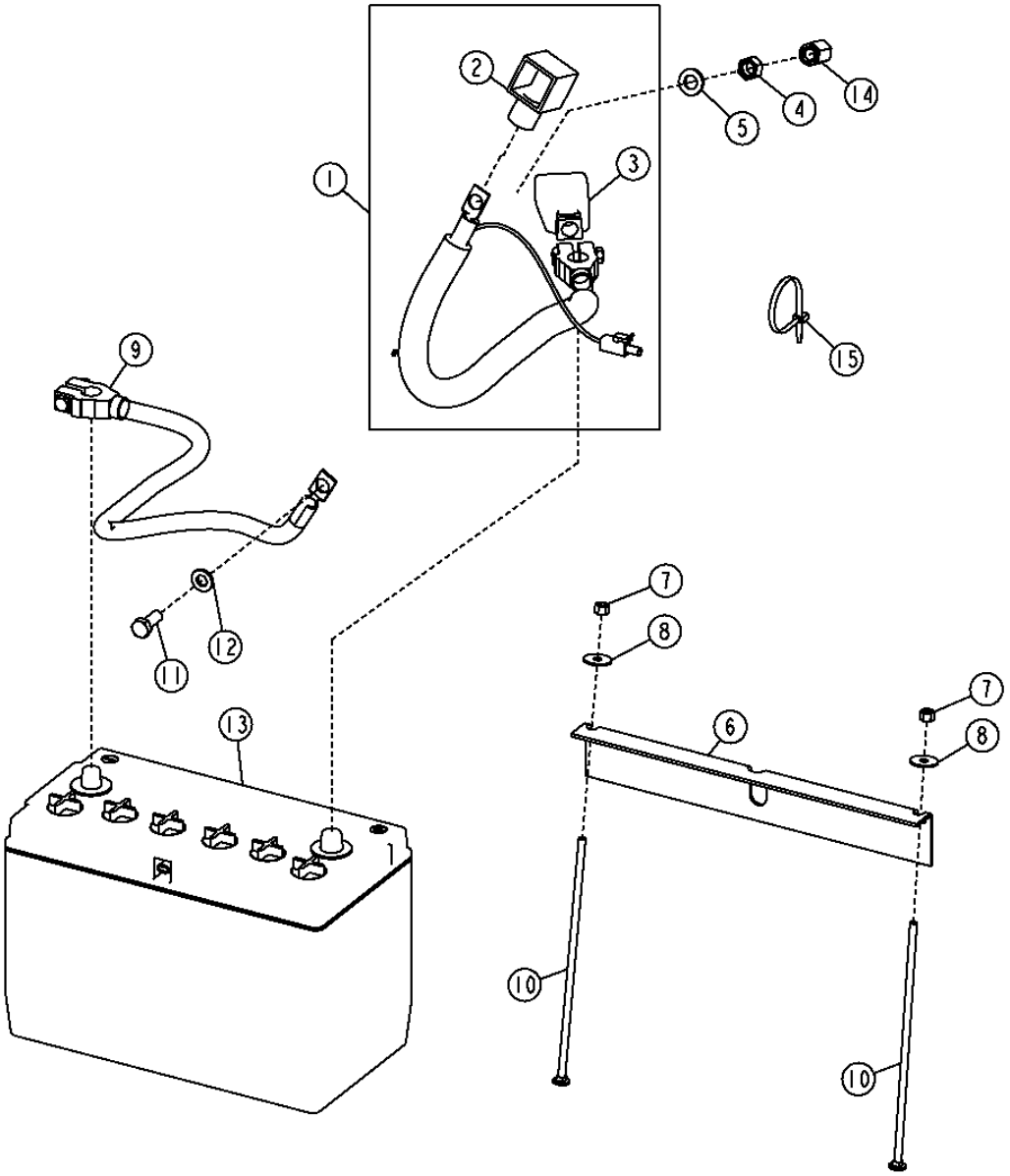

SINGLE BATTERY INSTALLATION
INSTALLATION A BATTERIE UNIQUE
INSTALACION DE BATERIA SENCILLA

KEY	PART NO.	PART NAME	QTY.	SERIAL NO.	410J	410TMC	REMARKS
1	AT322250	BATTERY CABLE	1		X	X	POSITIVE
2	T129165	BOOT	1		X	X	
3	T107117	COVER	1		X	X	
4	14M7275	NUT	1		X	X	M12
5	24M7047	WASHER	1		X	X	
6	T121288	ANGLE	1		X	X	
7	M40333	LOCK NUT	2		X	X	1/4"
8	24H1288	WASHER	2		X	X	
9	AT195995	BATTERY CABLE	1		X	X	NEGATIVE
10	03H2208	BOLT	2		X	X	1/4" X 9-1/4"
11	19M7402	CAP SCREW	1		X	X	M10 X 25
12	24M7239	WASHER	1		X	X	
13	TY6128	DRY CHARGED BATTERY	1		X	X	(WARRANTY NO. AT132864) (950 CCA)
14	E64052	NUT	1		X	X	
15	R44302	TIE BAND	1		X	X	

DUAL BATTERY INSTALLATION
INSTALLATION A BATTERIE DOUBLE
INSTALACION DE DOS BATERIAS

TX1013843 -UN-16NOV06

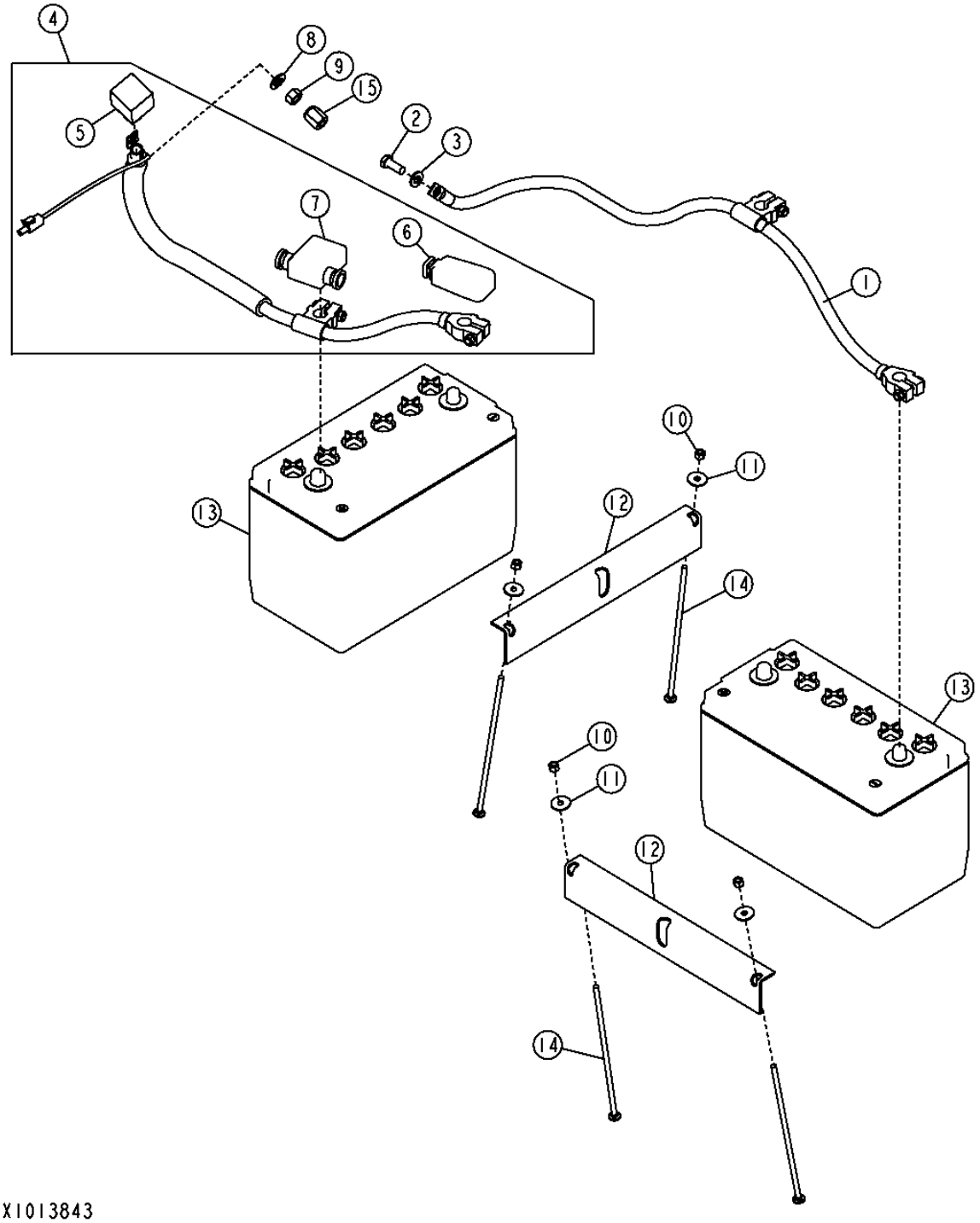

DUAL BATTERY INSTALLATION
INSTALLATION A BATTERIE DOUBLE
INSTALACION DE DOS BATERIAS

KEY	PART NO.	PART NAME	QTY.	SERIAL NO.	REMARKS
1	AT195911	BATTERY CABLE	1		NEGATIVE
2	19M7402	CAP SCREW	1		M10 X 25
3	24M7239	WASHER	1		
4	AT321526	BATTERY CABLE	1		POSITIVE
5	T129165	BOOT	1		
6	T107117	COVER	1		
7	T107116	COVER	1		
8	24M7047	WASHER	1		
9	14M7275	NUT	1		M12
10	M40333	LOCK NUT	4		6.350 MM
11	24H1288	WASHER	4		
12	T121288	ANGLE	2		
13	TY6128	DRY CHARGED BATTERY	2		(WARRANTY NO. AT132864) (950 CCA)
14	03H2208	BOLT	4		1/4" X 9-1/4"
15	E64052	NUT	1		

MASTER BATTERY DISCONNECT
SECTIONNEUR DE BATTERIE PRINCIPAL
DESCONEXION MAESTRA DE BATERIAS

T152635 -UN-21MAR02

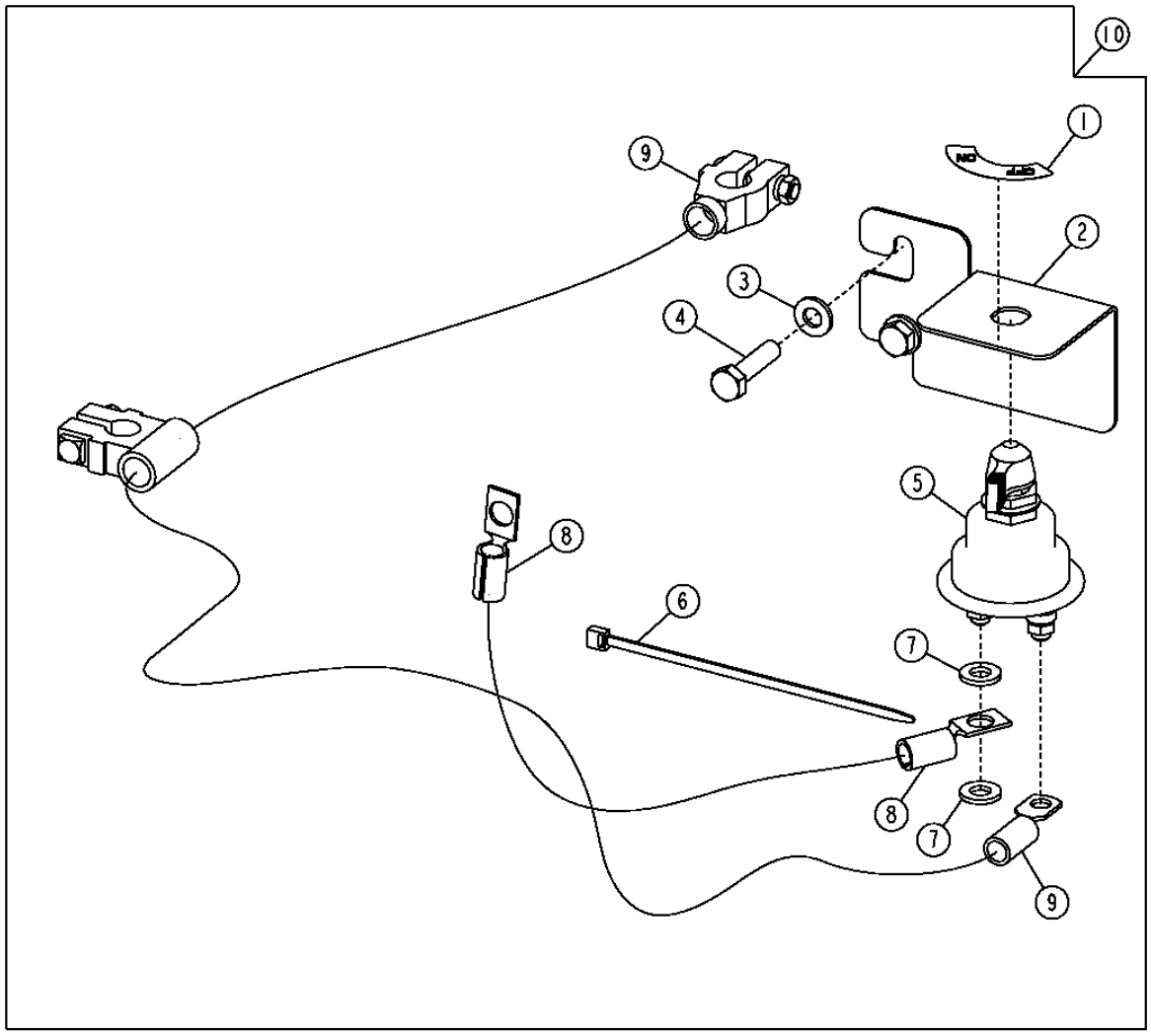

T152635

MASTER BATTERY DISCONNECT
SECTIONNEUR DE BATTERIE PRINCIPAL
DESCONEXION MAESTRA DE BATERIAS

KEY	*PART NO.*	*PART NAME*	*QTY.*	*SERIAL NO.*	*REMARKS*
1	T42199	LABEL	1		
2	T190658	BRACKET	1		
3	24M7239	WASHER	2		
4	19M7806	SCREW	2		M10 X 50
5	AT41188	SWITCH	1		
6	R44302	TIE BAND	1		
7	24M7239	WASHER	2		
8	AR67069	GROUND CABLE	1		
9	AT197922	BATTERY CABLE	1		(DUAL BATTERY)
	AT179926	GROUND CABLE	1		(SINGLE BATTERY) (NOT ILLUSTRATED) (NOT INCLUDED IN KIT)
10	**AT198096**	**KIT**	**1**		**WHOLE GOODS**

ALTERNATOR
ALTERNATEUR
ALTERNADOR

TX1007739 -UN-22JUN06

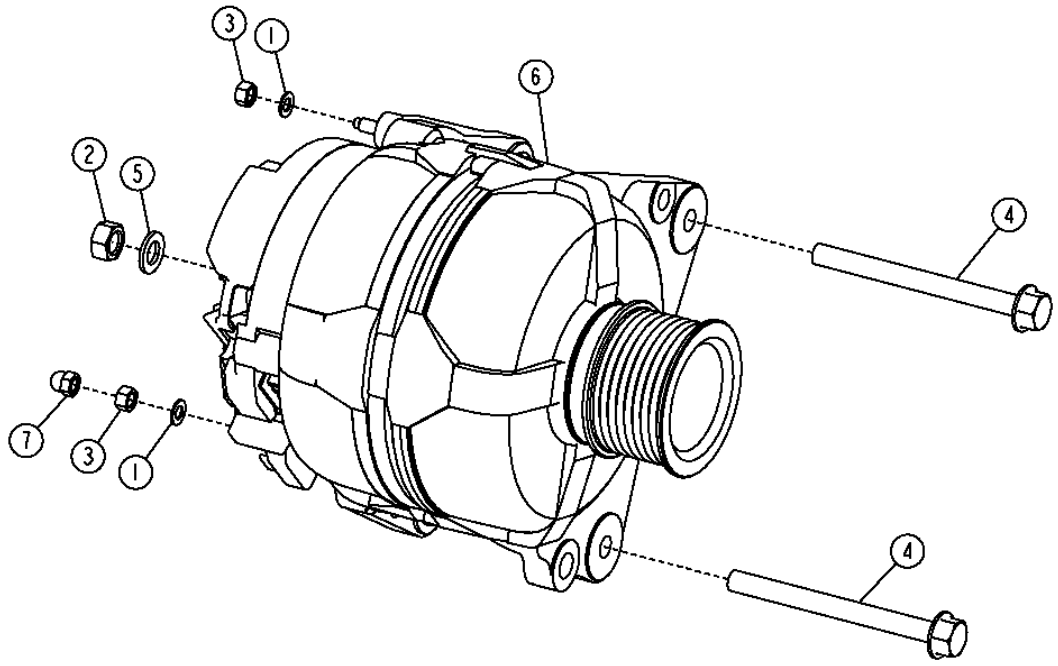

TX1007739

ALTERNATOR
ALTERNATEUR
ALTERNADOR

KEY	PART NO.	PART NAME	QTY.	SERIAL NO.	410J	410TMC	REMARKS
1	12M7060	WASHER	2		X	X	5.300 MM
2	14M7273	NUT	1		X	X	M8
3	14M7297	NUT	2		X	X	M5
4	19M7913	SCREW	2		X	X	M8 X 90
5	24M7036	WASHER	1		X	X	
6	AT317881	ALTERNATOR	1			X	12 VOLT - 120 AMPERE
	AT318374	ALTERNATOR	1		X		12 VOLT - 90 AMPERE
	AT334722	PULLEY	1				
7	T224227	NUT	1				

ROTATING BEACON
GYROPHARE
PROYECTOR GIRATORIO

TX1004828 -UN-16MAR06

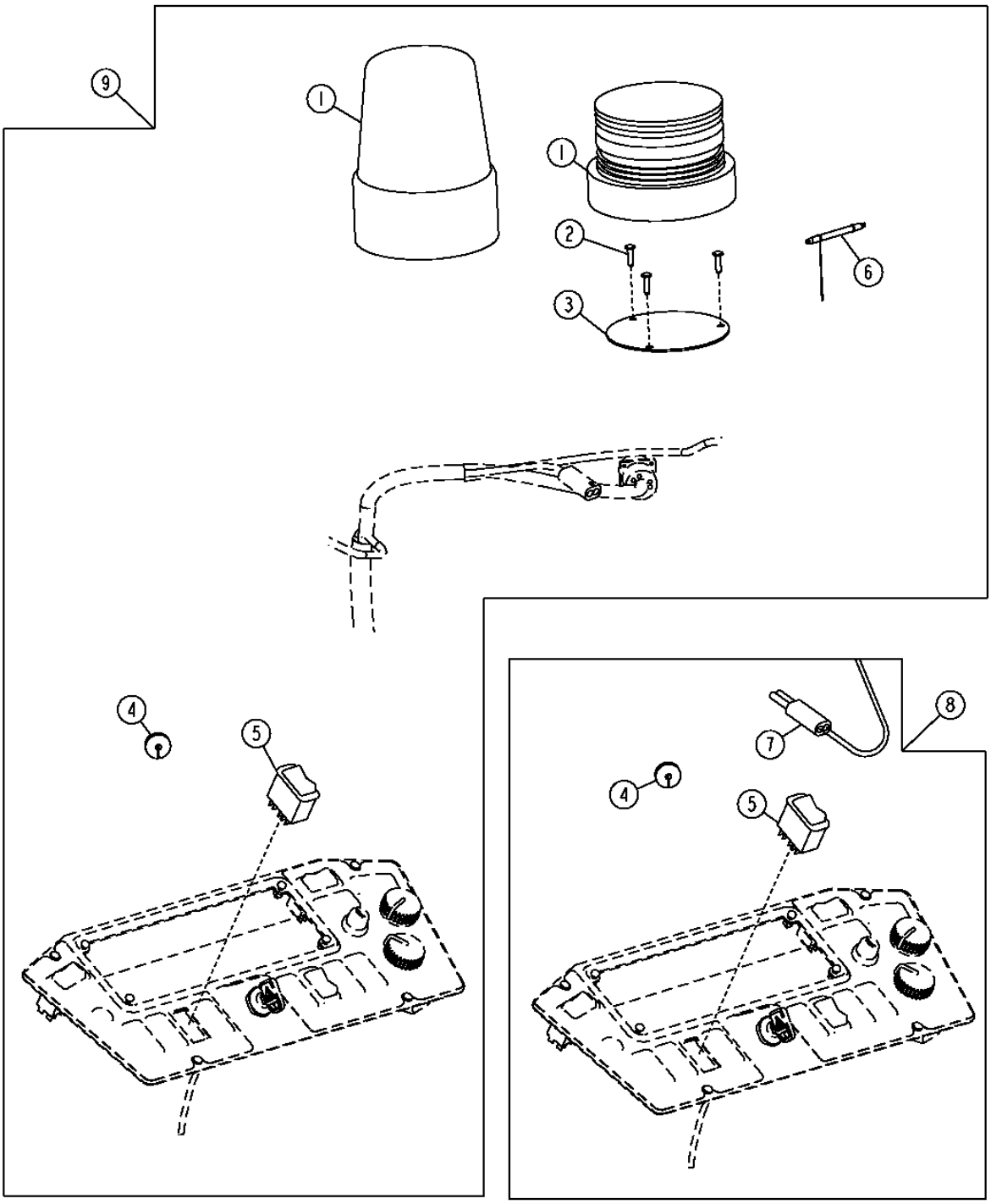

TX1004828

ROTATING BEACON AND STROBE LIGHT
GYROPHARE ET ECLAIRAGE STROBOSCOPIQUE
PROYECTOR GIRATORIO Y LUZ ESTROBOSCOPICA

KEY	PART NO.	PART NAME	QTY.	SERIAL NO.	410J	410TMC	REMARKS
1	AT187816	STROBE LIGHT	1		X	X	STROBE
	AT194822	REVOLVING LIGHT DOME	1		X	X	ROTATING BEACON
2	37M7218	SCREW	3		X	X	
3	T167214	PLATE	1		X	X	
4	T74952	GROMMET	1		X	X	
5	AT317463	TOGGLE/ROCKER SWITCH	1		X	X	
6	PML377	STROBE LIGHT	1		X	X	12 VOLT
7	AT195461	ROOF WIRING HARNESS	1		X	X	
8	**AT313589**	**KIT**	**1**		**X**	**X**	**(WHOLE GOODS) WIRING KIT**
9	**AT313583**	**KIT**	**1**		**X**	**X**	**(WHOLE GOODS) STROBE LIGHT**
	AT313592	**KIT**	**1**		**X**	**X**	**(WHOLE GOODS) ROTATING BEACON**

STANDARD LIGHTS, DELUXE LIGHTS AND ROOF HARNESS
ECLAIRAGE STANDARD, ECLAIRAGE DE LUXE ET FAISCEAU DE TOIT
LUCES ESTANDAR, LUCES DE LUJO Y ARNES DE TECHO

TX1014597 -UN-29DEC06

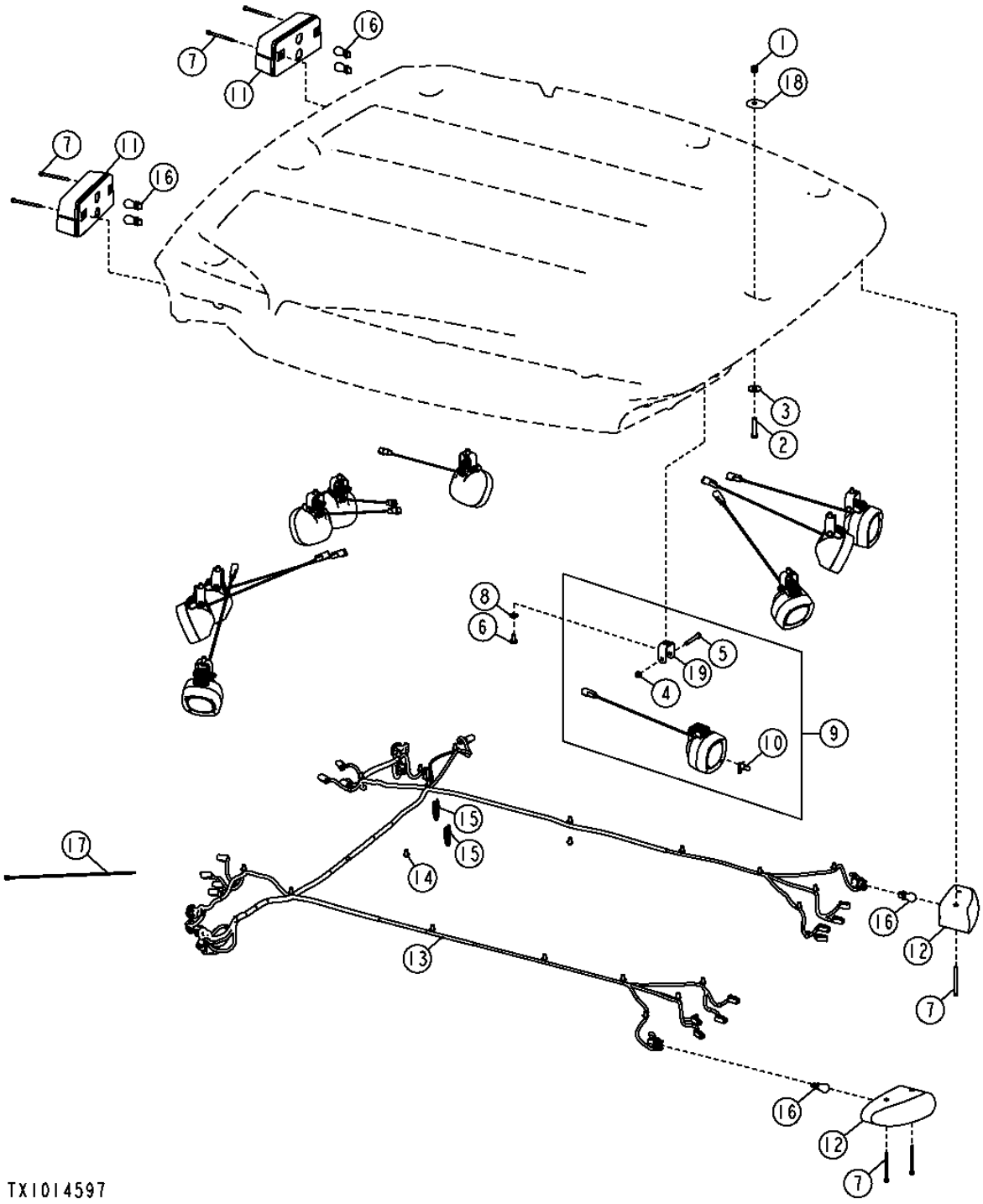

STANDARD LIGHTS, DELUXE LIGHTS AND ROOF HARNESS
ECLAIRAGE STANDARD, ECLAIRAGE DE LUXE ET FAISCEAU DE TOIT
LUCES ESTANDAR, LUCES DE LUJO Y ARNES DE TECHO

KEY	PART NO.	PART NAME	QTY.	SERIAL NO.	410J	410TMC	REMARKS
1	14M7517	LOCK NUT	8		X	X	M10
2	19M8600	CAP SCREW	8		X	X	M10 X 50
3	24M7101	WASHER	8		X	X	11 X 34 X 3 MM
4	14M7426	LOCK NUT	10		X	X	M8
5	19M7165	CAP SCREW	10		X	X	M8 X 55
6	19M8324	CAP SCREW	10		X	X	M10 X 16
7	19M8482	SCREW	8		X	X	M6 X 80
8	24M7239	WASHER	10		X	X	10.700 X 21 X 2.500 MM
9	AT323301	FLOODLAMP	10		X	X	
10	AT130104	BULB	10		X	X	(HALOGEN LONG LIFE)
11	AT324938	STOP LIGHT	2		X	X	
12	AT326622	LAMP	2		X	X	(WARNING LAMP)
13	AT321365	ROOF WIRING HARNESS	1		X	X	(DELUXE LIGHTS)
	AT326166	ROOF WIRING HARNESS	1		X	X	(STANDARD LIGHTS)
14	T209627	CLAMP	23		X	X	
15	R44302	TIE BAND	10		X	X	
16	RE49778	BULB	6		X	X	
17	H77698	TIE BAND	10		X	X	
18	T185664	SEALING WASHER	8		X	X	
19	T216731	BRACKET	10		X	X	

SIDE CONSOLE WIRING HARNESSES
FAISCEAUX DE FILS DE CONSOLE LATERALE
ARNESES DE ALAMBRADO DE CONSOLA LATERAL

TX1012983 -UN-29NOV06

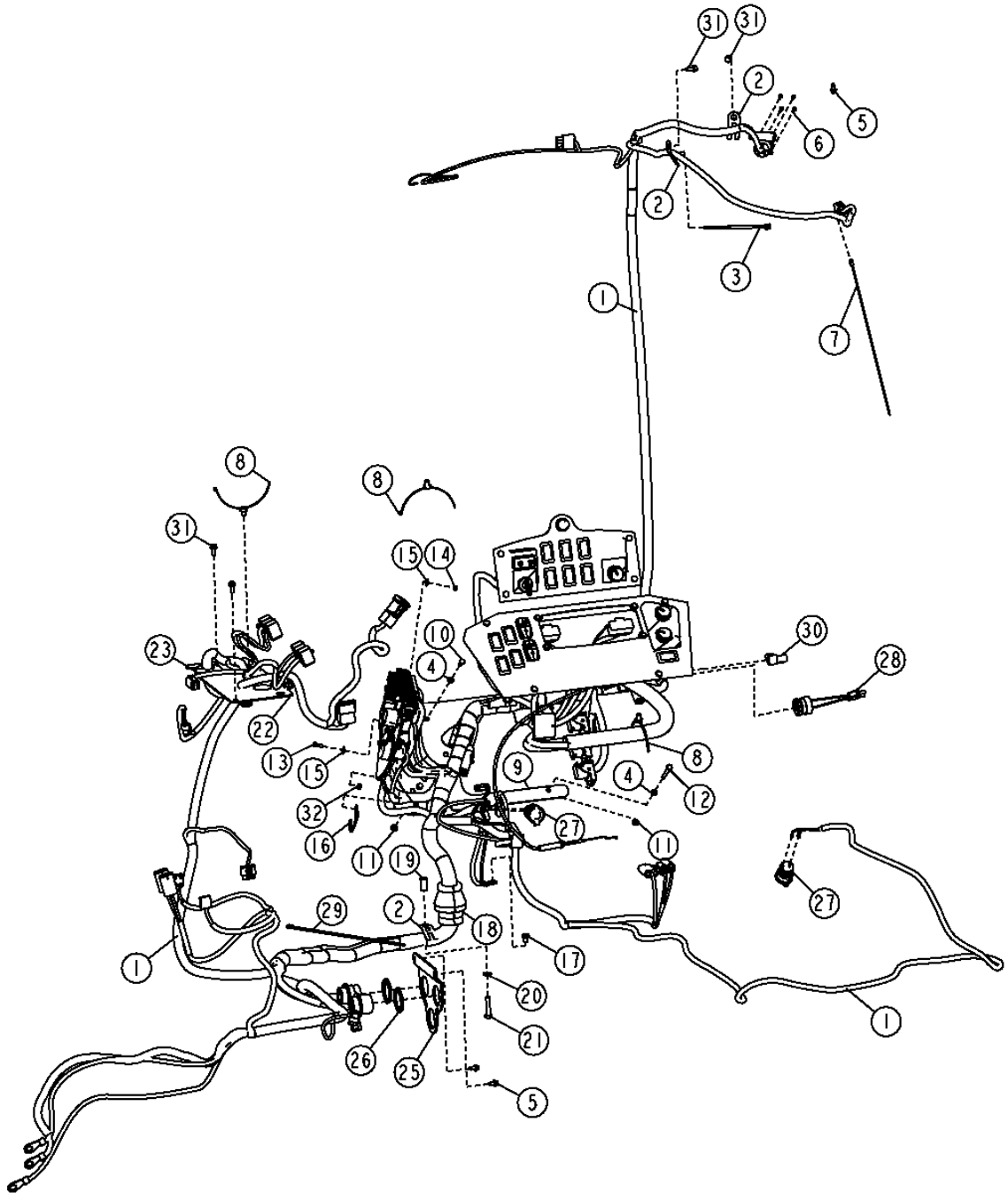

SIDE CONSOLE WIRING HARNESSES
FAISCEAUX DE FILS DE CONSOLE LATERALE
ARNESES DE ALAMBRADO DE CONSOLA LATERAL

KEY	PART NO.	PART NAME	QTY.	SERIAL NO.	410J	410TMC	REMARKS
1	AT312554	WIRING HARNESS	1		X		CAB
	AT316396	WIRING HARNESS	1			X	CAB (ELECTROHYDRAULIC)
	AT314088	WIRING HARNESS	1		X		CANOPY
2	T210717	BRACKET	2		X	X	
3	R44302	TIE BAND	24		X	X	
4	24M7054	WASHER	3		X		6.400 X 12 X 1.600 MM
	24M7054	WASHER	9			X	6.400 X 12 X 1.600 MM
	14M7303	FLANGE NUT	1		X	X	M6
5	37M7089	SCREW	3		X	X	M6 X 12
6	37M7066	SCREW	4		X	X	
7	H77698	TIE BAND	9		X	X	
8	T209627	CLAMP	3		X		
9	T213429	PLATE	1		X		
10	19M7933	CAP SCREW	2		X		M6 X 25
11	R201796	NUT	4		X		
12	19M7529	CAP SCREW	2		X		M6 X 55
13	19M7372	CAP SCREW	7		X		M5 X 16
14	14M7265	LOCK NUT	7		X		M5
15	24M7138	WASHER	11		X		5.300 X 15 X 1.200 MM
16	T214725	PLATE	1		X		
17	19M7008	CAP SCREW	1		X	X	M8 X 10
18	T143596	GROMMET	1		X	X	
19	28H3390	SPACER	2		X	X	0.364" X 0.540" X 1"
20	24M7238	WASHER	2		X		8.700 X 17 X 2 MM
	24M7238	WASHER	5			X	8.700 X 17 X 2 MM
21	19M7922	CAP SCREW	3		X	X	M8 X 40
22	T215153	PLATE	1		X		
23	T46876	GROMMET	1		X		
24	T74952	GROMMET	1		X		
25	T214566	BRACKET	1		X		
26	57M8035	NUT	2		X		
	57M8035	NUT	3			X	
27	GY20126	SOCKET OUTLET	2		X		
28	AT178526	AUDIBLE WARNING ALARM	1		X		
29	AT327368	TIE BAND	2		X	X	
30	57M8131	RESISTOR NETWORK	1		X		CAN RISISTOR
31	19M7775	SCREW	3		X		M6 X 16
	19M7775	SCREW	4			X	M6 X 16
32	14M7528	LOCK NUT	2		X		M6

PILOT ENABLE
ACTIVATION PILOTE
HABILITACION DE PILOTO

TX1015121 -UN-23DEC06

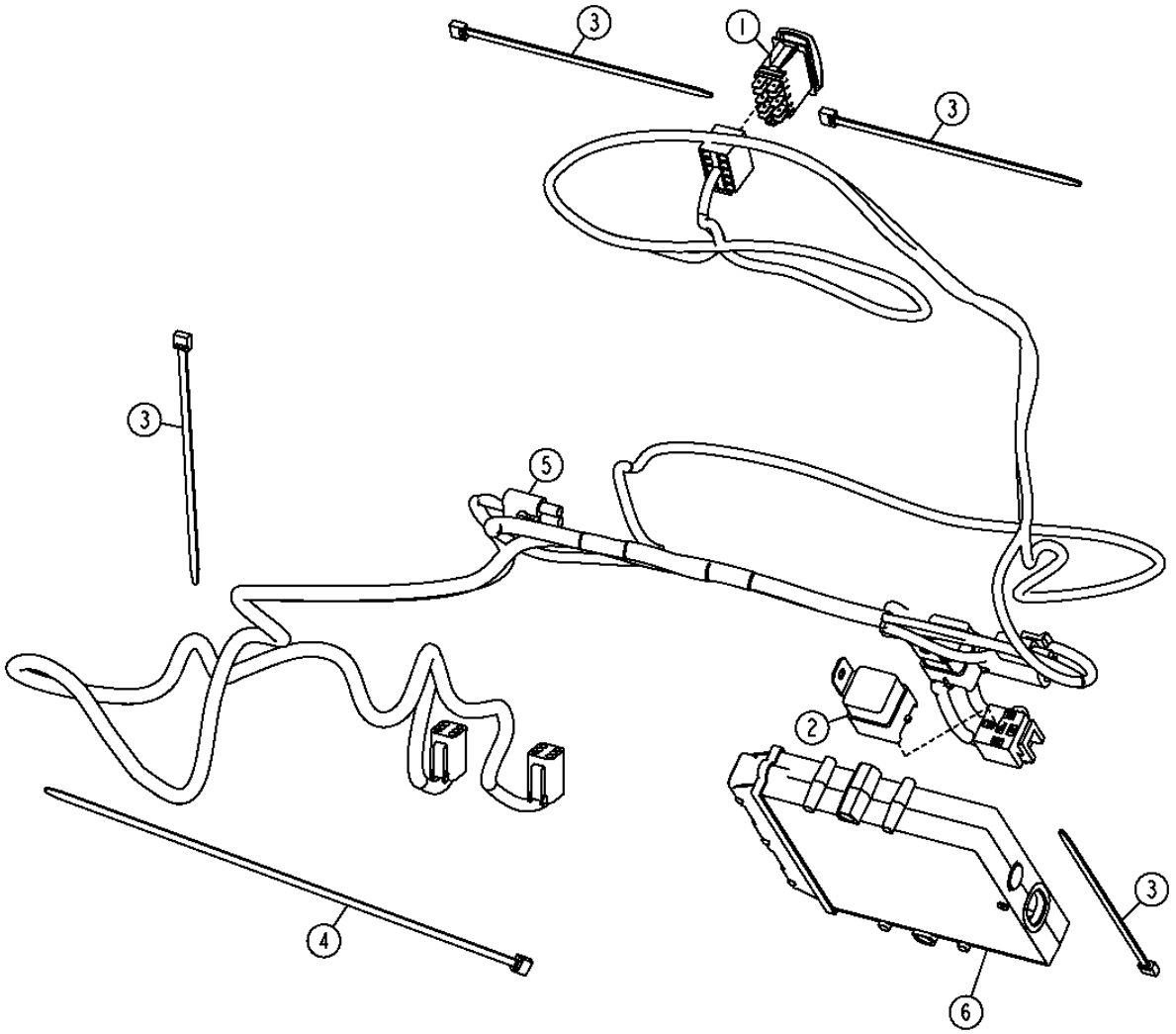

TX1015121

PILOT ENABLE
ACTIVATION PILOTE
HABILITACION DE PILOTO

KEY	PART NO.	PART NAME	QTY.	SERIAL NO.	410J	410TMC	REMARKS
1	AT317597	TOGGLE/ROCKER SWITCH	1		X		
2	AT75769	RELAY	1		X		
3	R44302	TIE BAND	4		X		
4	H77698	TIE BAND	1		X		
5	AT323159	WIRING HARNESS	1		X		
6	AT323254	VEHICLE CONTROLLER	1		X	X	

THIS PARTS LISTING IS CONTINUED

HYDRAULIC FRONT COUPLER HARNESS
FAISCEAU D'ACCOUPLEMENT AVANT HYDRAULIQUE
ARNES DE ACOPLADOR HIDRAULICO DELANTERO

TX1015058 -UN-18DEC06

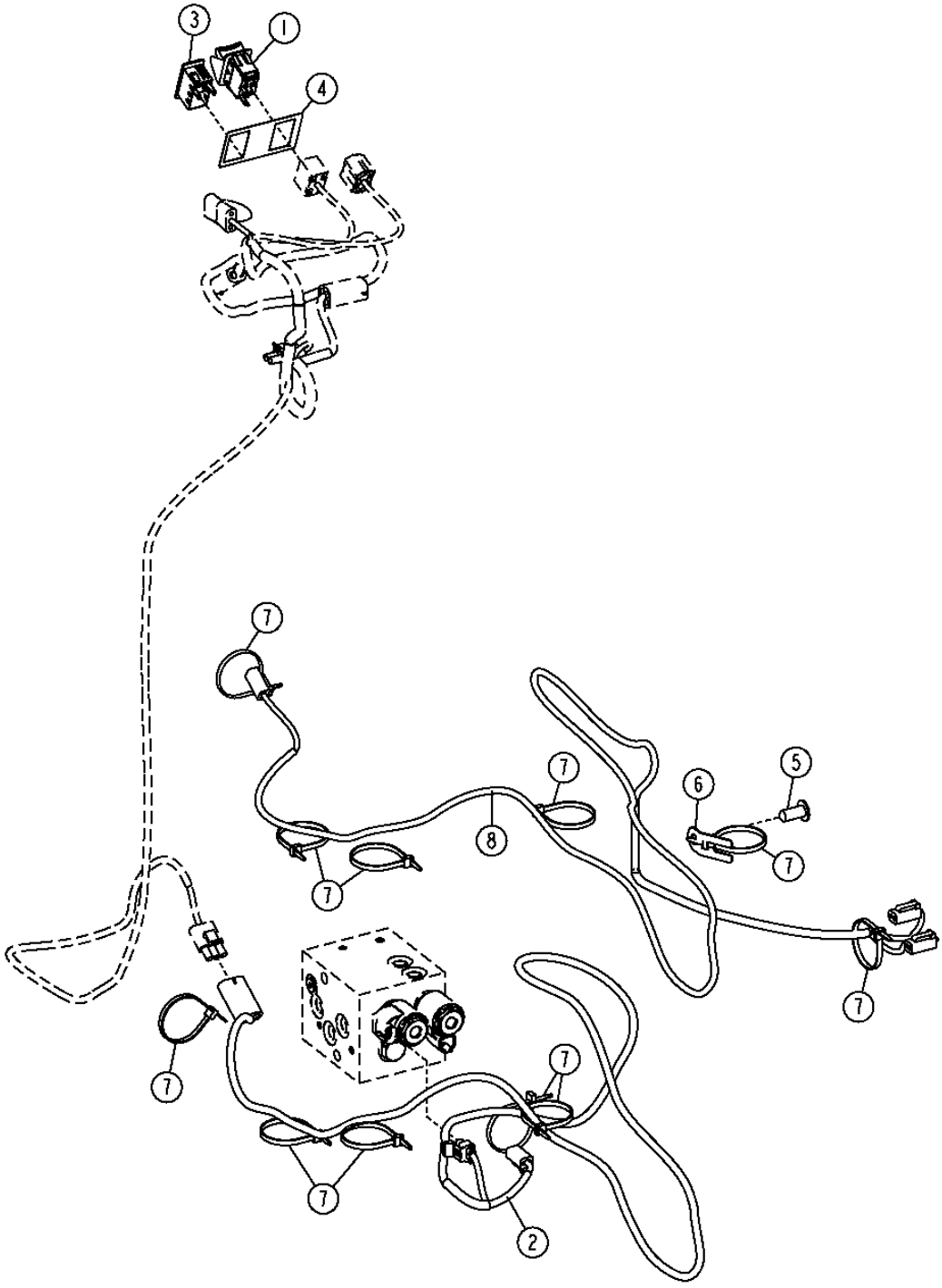

HYDRAULIC FRONT COUPLER HARNESS
FAISCEAU D'ACCOUPLEMENT AVANT HYDRAULIQUE
ARNES DE ACOPLADOR HIDRAULICO DELANTERO

KEY	PART NO.	PART NAME	QTY.	SERIAL NO.	410J	410TMC	REMARKS
1	AT225952	SWITCH	1		X	X	PIN DISCONNECT
2	AT329136	WIRING HARNESS	1		X	X	LOAD COUPLER CONTROL CHASSIS
3	AT311598	INDICATOR LAMP	1		X	X	PIN DISCONNECT
4	T209212	LABEL	1		X	X	ENABLE/DISABLE
5	MT2485	PLUG	1		X	X	
6	T210717	BRACKET	1		X	X	
7	R44302	TIE BAND	11		X	X	
8	AT329135	WIRING HARNESS	1		X	X	RIDE CONTROL

SIDE CONSOLE WIRING HARNESSES
FAISCEAUX DE FILS DE CONSOLE LATERALE
ARNESES DE ALAMBRADO DE CONSOLA LATERAL

TX1017165 -UN-

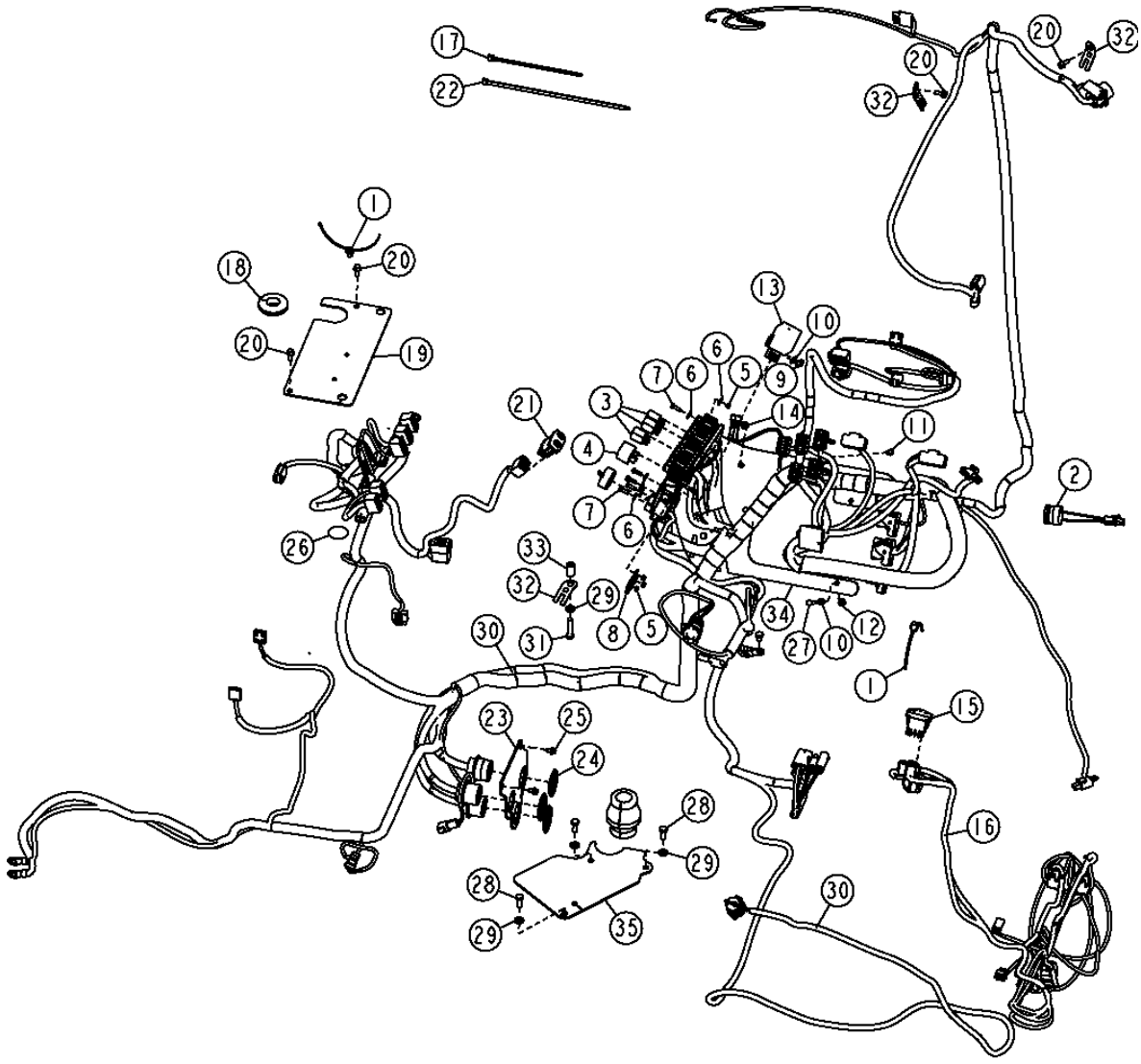

TX1017165

SIDE CONSOLE WIRING HARNESSES
FAISCEAUX DE FILS DE CONSOLE LATERALE
ARNESES DE ALAMBRADO DE CONSOLA LATERAL

KEY	PART NO.	PART NAME	QTY.	SERIAL NO.	410J	410TMC	REMARKS
1	T209627	CLAMP	2		X	X	
2	AT178526	AUDIBLE WARNING ALARM	1		X	X	
3	AT308380	RELAY	3		X	X	
4	AT322221	RELAY	1			X	
5	14M7265	LOCK NUT	7		X	X	M5
6	24M7138	WASHER	11		X	X	5.300 X 15 X 1.200 MM
7	19M7372	CAP SCREW	7		X	X	M5 X 16
8	T214725	PLATE	1		X	X	
9	14M7528	LOCK NUT	2		X	X	M6
10	24M7054	WASHER	10		X	X	6.400 X 12 X 1.600 MM
11	19M7560	CAP SCREW	2		X	X	M6 X 16
12	R201796	NUT	4		X	X	
13	AT318947	RELAY	1		X	X	
14	RE240999	RELAY	1		X		
15	AT317500	TOGGLE/ROCKER SWITCH	1		X		
16	AT321214	CAB WIRING HARNESS	1		X		
17	R44302	TIE BAND	1		X	X	
18	T46876	GROMMET	1		X	X	
19	T215153	PLATE	1		X	X	
20	19M7775	SCREW	4		X	X	
21	AT317435	SWITCH	1		X	X	
22	AT327368	TIE BAND	1		X	X	
23	T214566	BRACKET	1		X	X	
24	57M8035	NUT	3		X	X	
25	37M7089	SCREW	3		X	X	
26	T186793	LABEL	1		X	X	
27	19M7529	CAP SCREW	2		X	X	M6 X 55
28	19M7881	SCREW	3			X	M8 X 20
29	24M7238	WASHER	4		X	X	8.700 X 17 X 2 MM
30	AT316396	WIRING HARNESS	1			X	CAB (ELECTROHYDRAULIC)
	AT312554	WIRING HARNESS	1		X		CAB
	AT314088	WIRING HARNESS	1		X		CANOPY
31	19M7922	CAP SCREW	1		X	X	M8 X 40
32	T210717	BRACKET	3		X	X	
33	28H3390	SPACER	1		X	X	0.364" X 0.540" X 1"
34	T213429	PLATE	1		X	X	
35	AT324451	COVER	1			X	

MONITOR PANEL WITH MONITOR,SWITCHES AND LABELS
PANNEAU DE MONITEUR AVEC MONITEUR, INTERRUPTEURS ET ETIQUETTES
TABLERO DE MONITOR CON MONITOR, CONMUTADORES Y ROTULOS

TX1017164 -UN-03JAN07

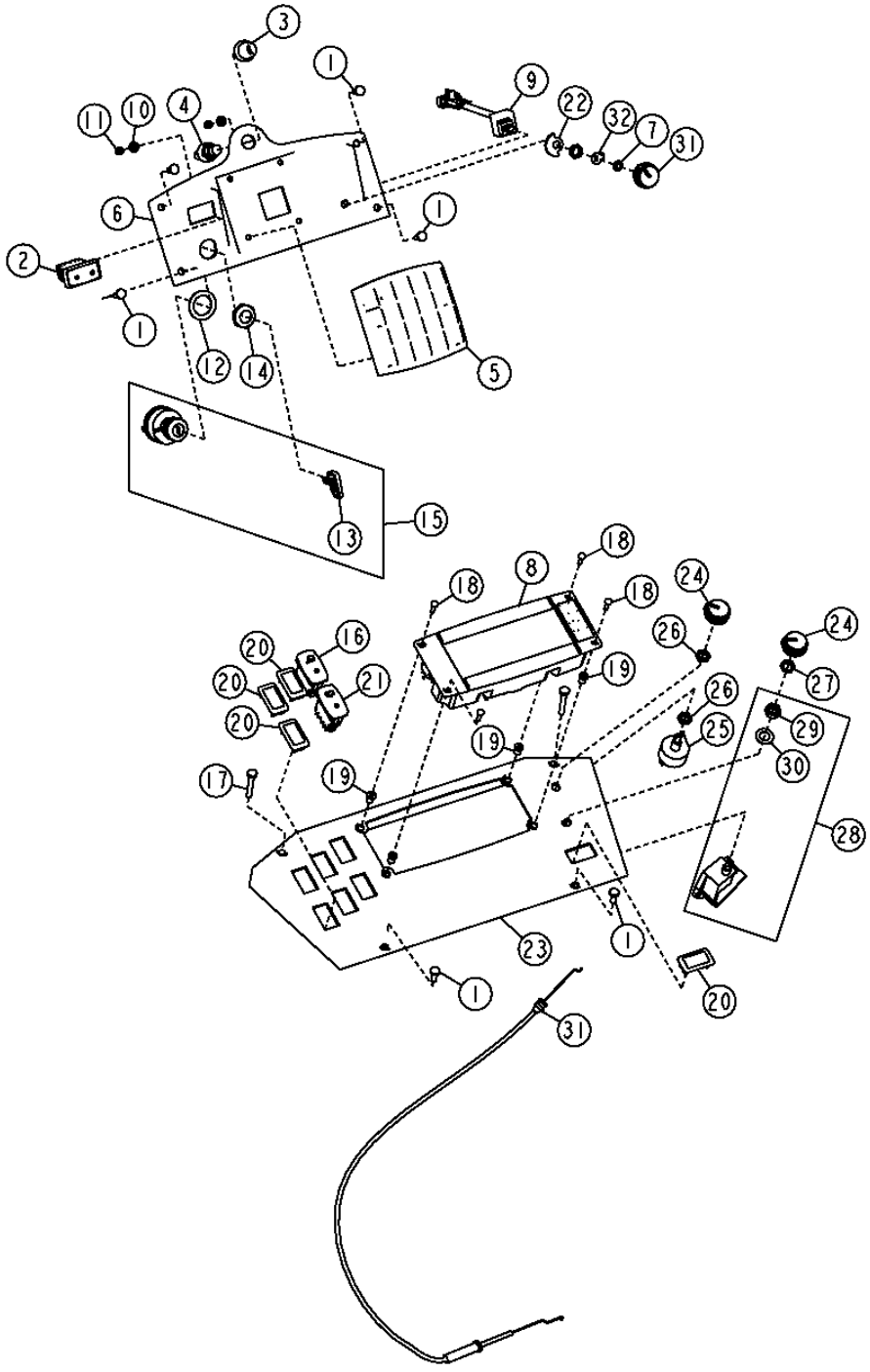

TX1017164

MONITOR PANEL WITH MONITOR,SWITCHES AND LABELS
PANNEAU DE MONITEUR AVEC MONITEUR, INTERRUPTEURS ET ETIQUETTES
TABLERO DE MONITOR CON MONITOR, CONMUTADORES Y ROTULOS

KEY	PART NO.	PART NAME	QTY.	SERIAL NO.	410J	410TMC	REMARKS
1	21M7292	SCREW	6		X	X	M6 X 16
2	AT317592	TOGGLE/ROCKER SWITCH	1		X	X	PARK BRAKE
3	T55501	CAP	1			X	HORN
4	R39554	SWITCH	1		X	X	HORN
5	AT308109	PUSH SWITCH	1			X	ELECTRONIC CONSOLE
6	T215179	INSTRUMENT PANEL	1			X	
7	R78035	PUSH NUT	1		X	X	
8	AT329989	VEHICLE MONITOR	1			X	
9	AT340550	POTENTIOMETER	1		X	X	THROTTLE
10	24M7054	WASHER	10		X	X	6.400 X 12 X 1.600 MM
11	14M7360	LOCK NUT	4			X	M5
12	24H1441	WASHER	1		X	X	1-1/64" X 1-1/2" X 0.048"
13	AT195302	KEY	1		X	X	IGNITION
14	R44342	NUT	1		X	X	1"
15	AT195301	SWITCH	1		X	X	IGNITION
16	AT309435	TOGGLE/ROCKER SWITCH	1		X	X	REAR LIGHT
17	21M7403	SCREW	2		X	X	M6 X 40
18	T82791	SCREW	4		X	X	4.166 X 16.002 MM
19	T82792	NUT	4		X	X	
20	M115279	PLUG	4		X	X	
21	AT317449	TOGGLE/ROCKER SWITCH	1			X	REAR WIPER
22	T226430	STOP	1		X	X	
23	T214214	INSTRUMENT PANEL	1		X	X	
24	AL76568	KNOB	3		X	X	RIDE CONTROL
25	RE43497	SWITCH	1			X	FAN SPEED
26	R44165	LOCK NUT	2			X	7/16"
27	R203687	NUT	1			X	A/C SWITCH
28	RE46742	CONTROL	1			X	TEMPERATURE CONTROL
29	14H934	NUT	1			X	7/16"
30	12H292	LOCK WASHER	1			X	1/2"
31	AT186289	CABLE	1			X	
32	T226427	WASHER	1		X	X	

ENGINE AND TRANSMISSION HARNESS
FAISCEAU DE TRANSMISSION ET MOTEUR
ARNES DE LA TRANSMISION Y MOTOR

TX1015541 -UN-12DEC06

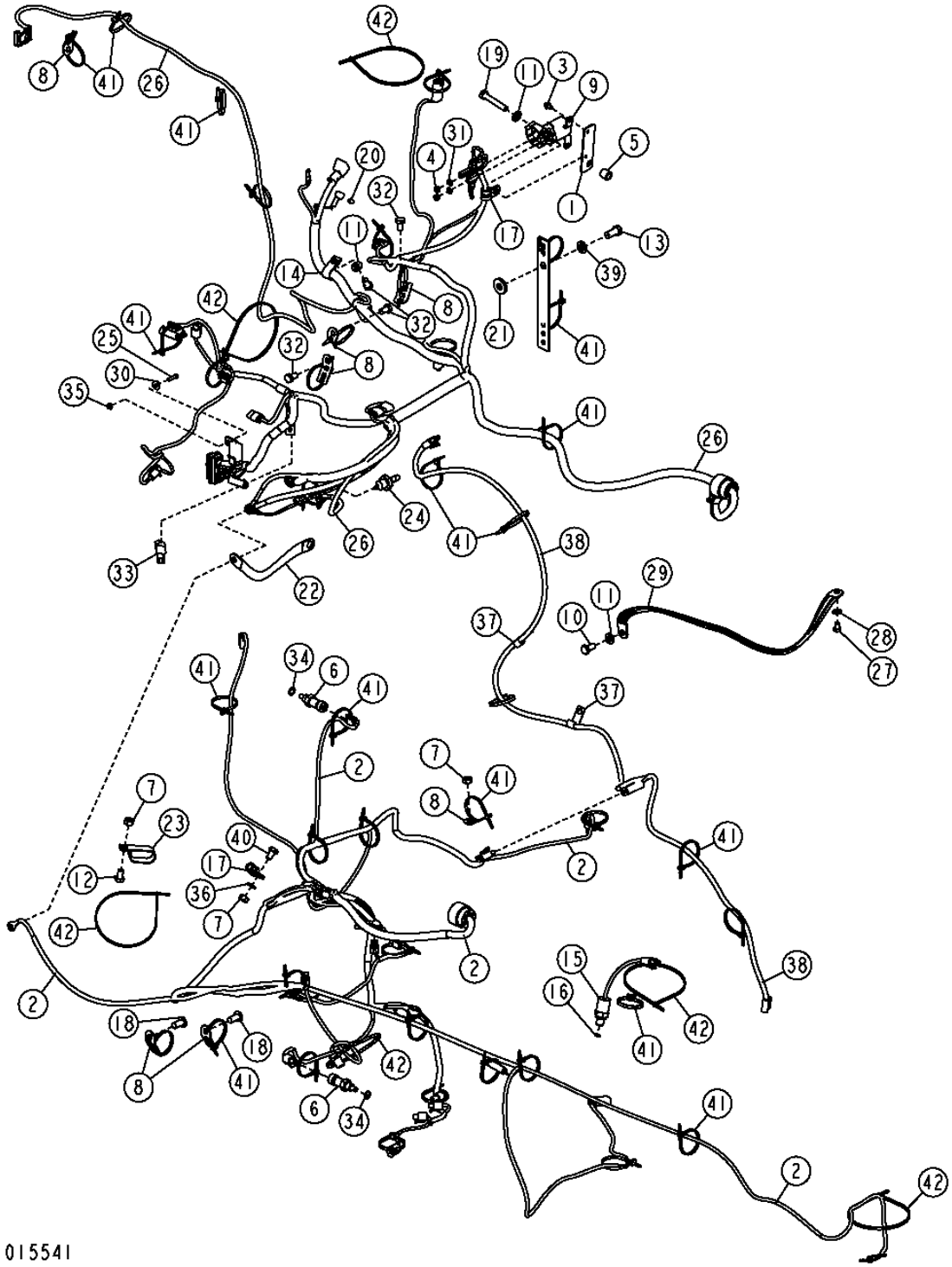

THIS PARTS LISTING IS CONTINUED

ENGINE AND TRANSMISSION HARNESS
FAISCEAU DE TRANSMISSION ET MOTEUR
ARNES DE LA TRANSMISION Y MOTOR

KEY	PART NO.	PART NAME	QTY.	SERIAL NO.	410J	410TMC	REMARKS
1	T184676	STRAP	1		X	X	
2	AT313210	WIRING HARNESS	1		X	X	TRANSMISSION
3	37H116	SCREW	2		X	X	
4	14M7272	NUT	2		X	X	M6
5	28H3381	SPACER	1		X	X	
6	RE52722	SENSOR	2		X	X	HYDRAULIC TEMPERATURE, (INCLUDES 51M7041)
7	14M7274	NUT	2		X	X	M10
8	T210717	BRACKET	7		X	X	
9	AT141011	RELAY	1		X	X	(12V) STARTER
10	19M7938	CAP SCREW	1		X	X	M10 X 20
11	24M7239	WASHER	3		X	X	10.700 X 21 X 2.500 MM
12	19M7557	CAP SCREW	1		X	X	M10 X 16
13	19M7872	CAP SCREW	1		X	X	M12 X 25
14	T74416	CLAMP	1		X	X	
15	AT159811	SWITCH	1		X	X	PARK BRAKE OIL PRESSURE
16	51M7039	O-RING	1		X	X	
17	T74412	CLAMP	2		X	X	
18	MT2485	PLUG	2		X	X	FASTENER
19	19M8499	CAP SCREW	1		X	X	
20	T224227	NUT	1		X	X	
21	T29342	WASHER	1		X	X	
22	AT167399	GROUND CABLE	1		X	X	GROUND
23	AH77869	CLIP	1		X	X	
24	AT85174	SWITCH	1		X	X	ENGINE OIL PRESSURE
25	19M7373	CAP SCREW	1		X	X	
26	AT312543	WIRING HARNESS	1		X	X	ENGINE
27	19M7008	CAP SCREW	1		X	X	M8 X 10
28	24M7238	WASHER	1		X	X	
29	AT180705	GROUND CABLE	1		X	X	GROUND
30	24M7139	WASHER	1		X	X	6.400 X 18 X 1.600 MM
31	24M7088	WASHER	2		X	X	6.600 X 12 X 1.600 MM
32	19M8324	CAP SCREW	4		X	X	M10 X 16
33	57M8131	RESISTOR NETWORK	1		X	X	CAN RESISTOR
34	51M7041	O-RING	1		X	X	
35	14M7375	FLANGE NUT	1		X	X	M5
36	24M7096	WASHER	1		X	X	10.500 X 18 X 1.600 MM
37	AH89557	CLIP	2		X		
38	AT325190	WIRING HARNESS	1		X		RETURN TO DIG
39	24M7047	WASHER	1		X	X	
40	19M8324	CAP SCREW	1		X	X	
41	R44302	TIE BAND	20		X	X	
42	H77698	TIE BAND	20		X	X	

CONTROL FLOW ELECTRICAL HARNESS AND MOUNTING BRACKET
KIT DE COMMANDE DE SOLENOIDE DE DEBIT SELECTIF
JUEGO DE CONTROL DE SOLENOIDE DE CAUDAL SELECTIVO

TX1015467 -UN-22DEC06

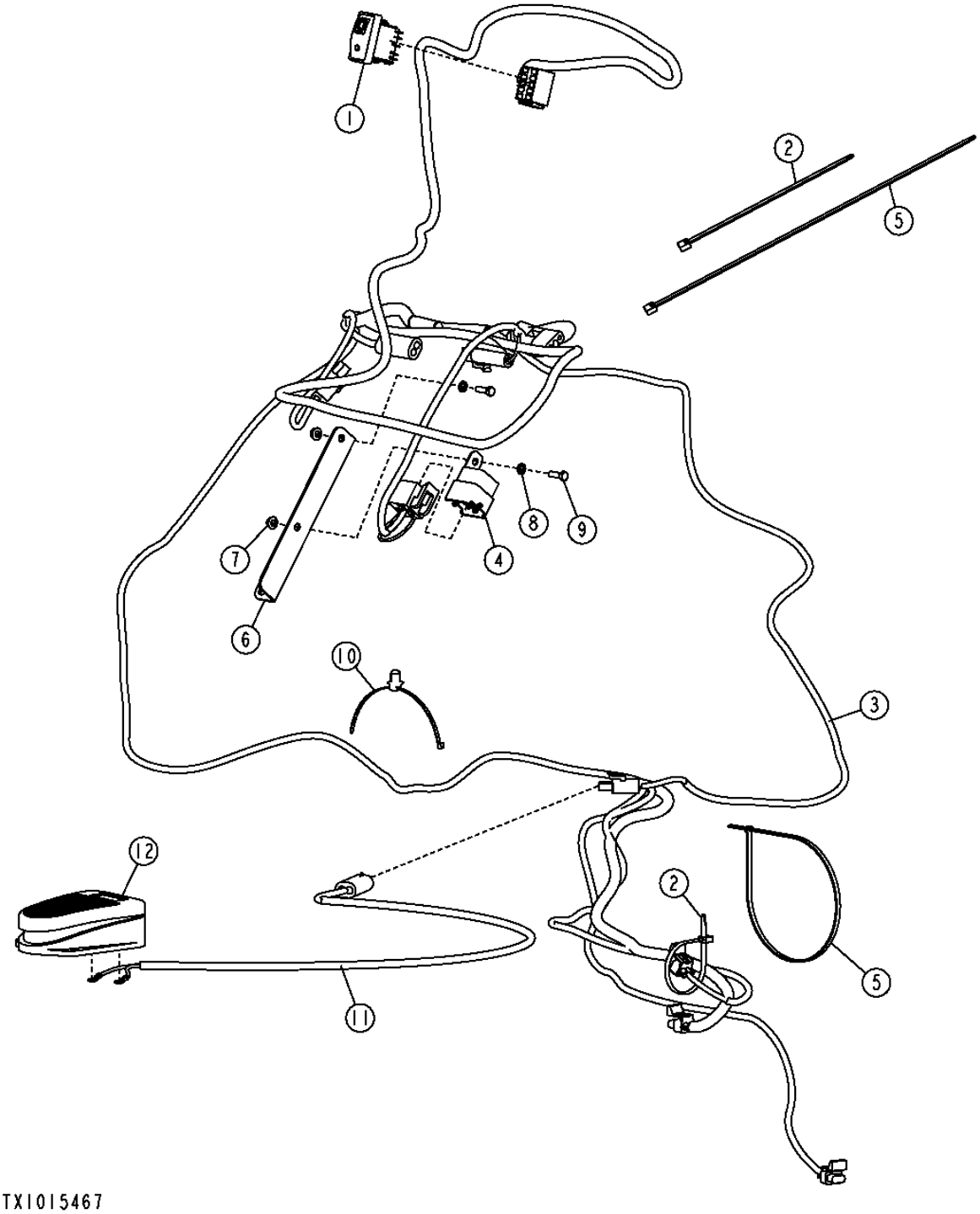

CONTROL FLOW ELECTRICAL HARNESS AND MOUNTING BRACKET
KIT DE COMMANDE DE SOLENOIDE DE DEBIT SELECTIF
JUEGO DE CONTROL DE SOLENOIDE DE CAUDAL SELECTIVO

KEY	*PART NO.*	*PART NAME*	*QTY.*	*SERIAL NO.*	410J	410TMC	*REMARKS*
1	AT317504	TOGGLE/ROCKER SWITCH	1		X		
2	R44302	TIE BAND	11		X		
3	AT322130	WIRING HARNESS	1		X		
4	AT75769	RELAY	1		X		
5	H77698	TIE BAND	2		X		
6	T216444	PLATE	1		X		
7	14M7375	FLANGE NUT	2		X		M5
8	24M7087	WASHER	2		X		5.500 X 10 X 1 MM
9	19M7372	CAP SCREW	2		X		M5 X 16
10	T209627	CLAMP	1		X		
11	AT156431	WIRING HARNESS	1		X		
12	AT82210	SWITCH	1		X		

DIFFERENTIAL LOCK SWITCH
INTERRUPTEUR DE BLOCAGE DU DIFFERENTIEL
CONTROL DE TRABA DEL DIFERENCIAL

TP58124 -UN-03OCT00

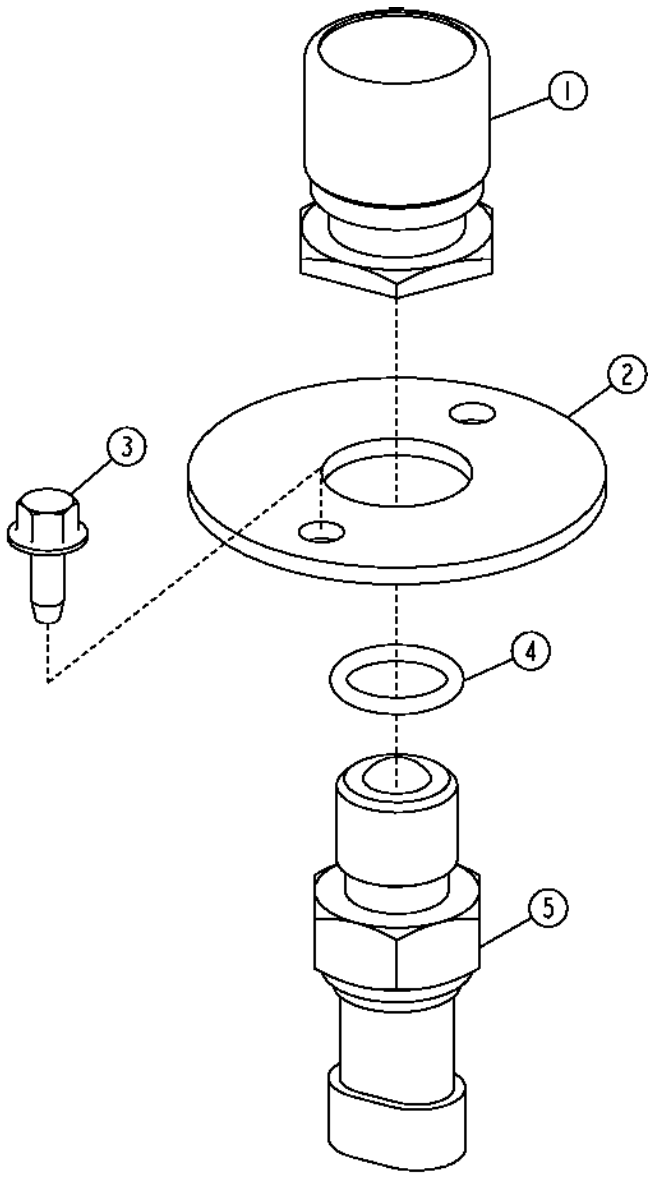

TP58124

DIFFERENTIAL LOCK SWITCH
INTERRUPTEUR DE BLOCAGE DU DIFFERENTIEL
CONTROL DE TRABA DEL DIFERENCIAL

KEY	PART NO.	PART NAME	QTY.	SERIAL NO.	410J	410TMC	REMARKS
1	RE43637	ACTUATOR	1		X	X	
2	T186024	PLATE	1		X	X	
3	37M7059	SCREW	2		X	X	M5 X 12
4	51M7042	O-RING	1		X	X	
5	RE46534	SWITCH	1		X	X	(DIFFERENTIAL LOCK)

RETURN-TO-DIG SWITCH
INTERRUPTEUR DE RETOUR EN POSITION DE CREUSEMENT
INTERRUPTOR DE RETORNO A EXCAVACION

TX1014987 -UN-28DEC06

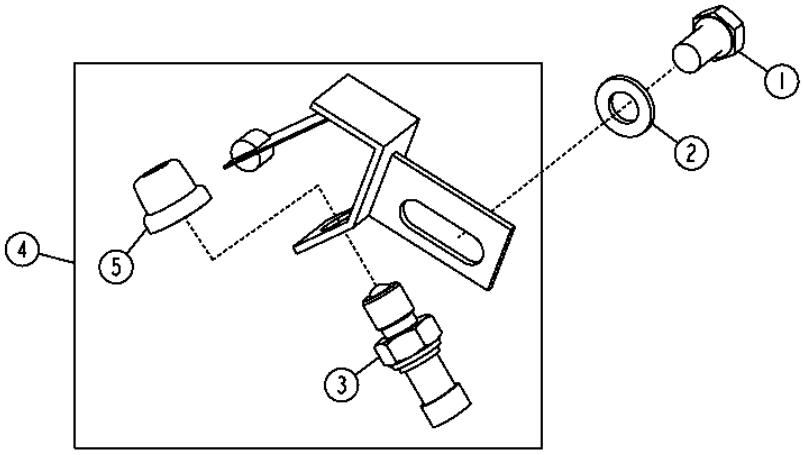

TX1014987

KEY	PART NO.	PART NAME	QTY.	SERIAL NO.	410J	410TMC	REMARKS
1	19M8017	CAP SCREW	1		X	X	M12 X 20
2	24M7047	WASHER	1		X	X	13 X 24 X 2.500 MM
3	RE46534	SWITCH	1		X	X	
4	AT183246	SWITCH	1		X	X	
5	T55501	CAP	1		X	X	

MEMORANDA
MEMORANDA
MEMORANDA

RETURN-TO-DIG LOADER POSITION SENSOR
CAPTEUR DE RETOUR EN POSITION DE CREUSEMENT DU CHARGEUR
SENSOR DE POSICION DE RETORNO PARA EXCAVAR DE LA CARGADORA

TX1015099 -UN-23DEC06

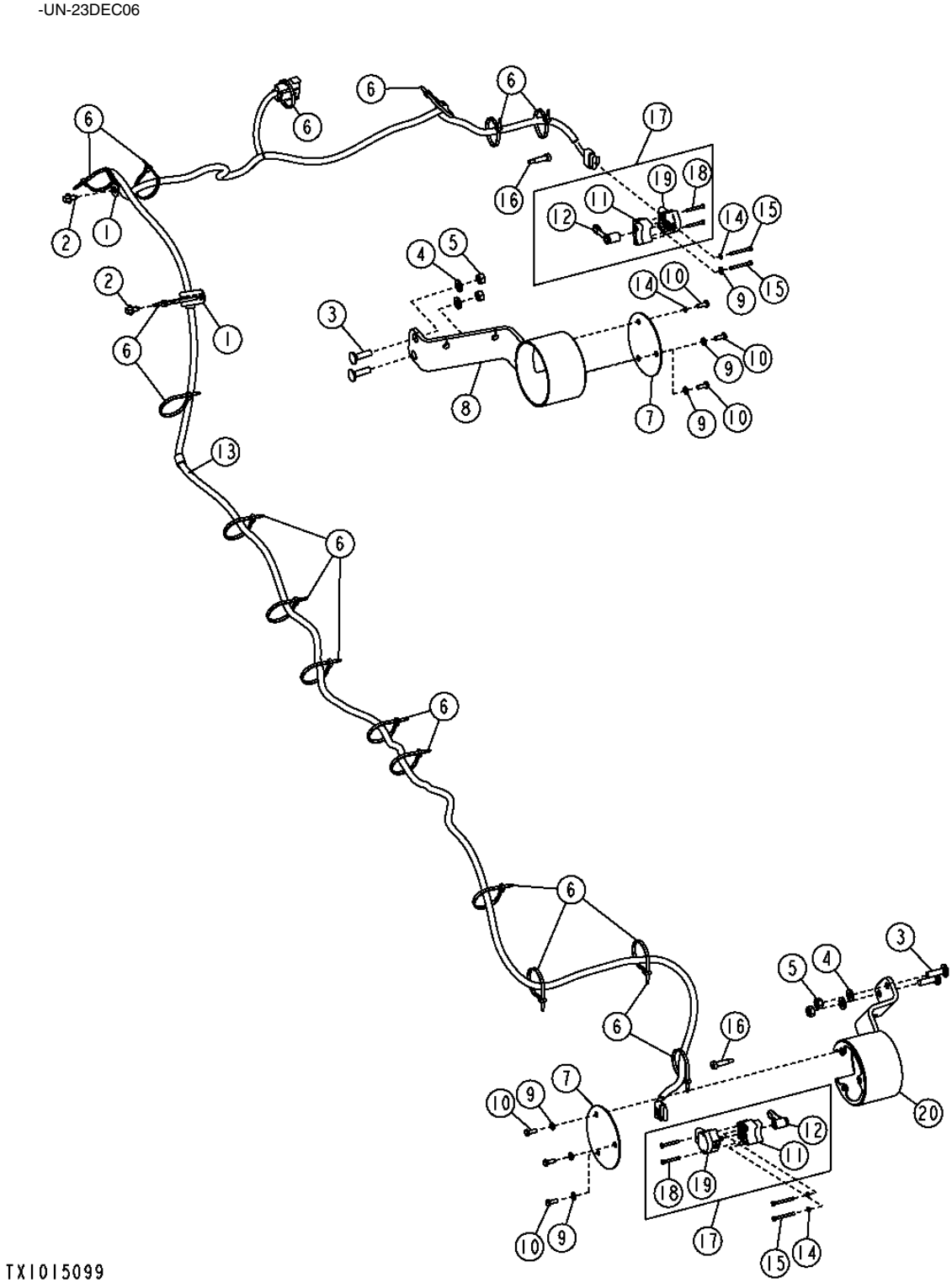

RETURN-TO-DIG LOADER POSITION SENSOR
CAPTEUR DE RETOUR EN POSITION DE CREUSEMENT DU CHARGEUR
SENSOR DE POSICION DE RETORNO PARA EXCAVAR DE LA CARGADORA

KEY	PART NO.	PART NAME	QTY.	SERIAL NO.	410J	410TMC	REMARKS
1	T210717	BRACKET	2			X	
2	37M7092	SCREW	2			X	M8 X 16
3	03M7193	BOLT	4			X	M10 X 35
4	24M7239	WASHER	4			X	10.700 X 21 X 2.500 MM
5	14M7039	NUT	4			X	M10
6	R44302	TIE BAND	AR			X	
7	T215126	PLATE	2			X	
8	AT321247	COVER	1			X	
9	24M7293	WASHER	6			X	6.500 X 13 X 1.600 MM
10	19M8425	CAP SCREW	6			X	M6 X 16
11	AT323752	SPACER	1			X	
12	T216117	SHAFT	1			X	
13	AT313550	WIRING HARNESS	1			X	
14	24M7117	WASHER	4			X	4.300 X 9 X 0.800 MM
15	19M9158	SCREW	4			X	M4 X 40
16	T188693	BOLT	2			X	
17	AT321248	SENSOR	2			X	
18	37M7293	SCREW	2			X	
19	AT320775	SENSOR	1			X	
20	AT322216	COVER	1			X	

THIS PARTS LISTING IS CONTINUED

BACKHOE WIRING HARNESS (410 TMC)
FAISCEAU DE FILS DE RETROPELLE (410 TMC)
ARNES DE ALAMBRADO DE RETROEXCAVADORA (410 TMC)

TX1015561 -UN-28DEC06

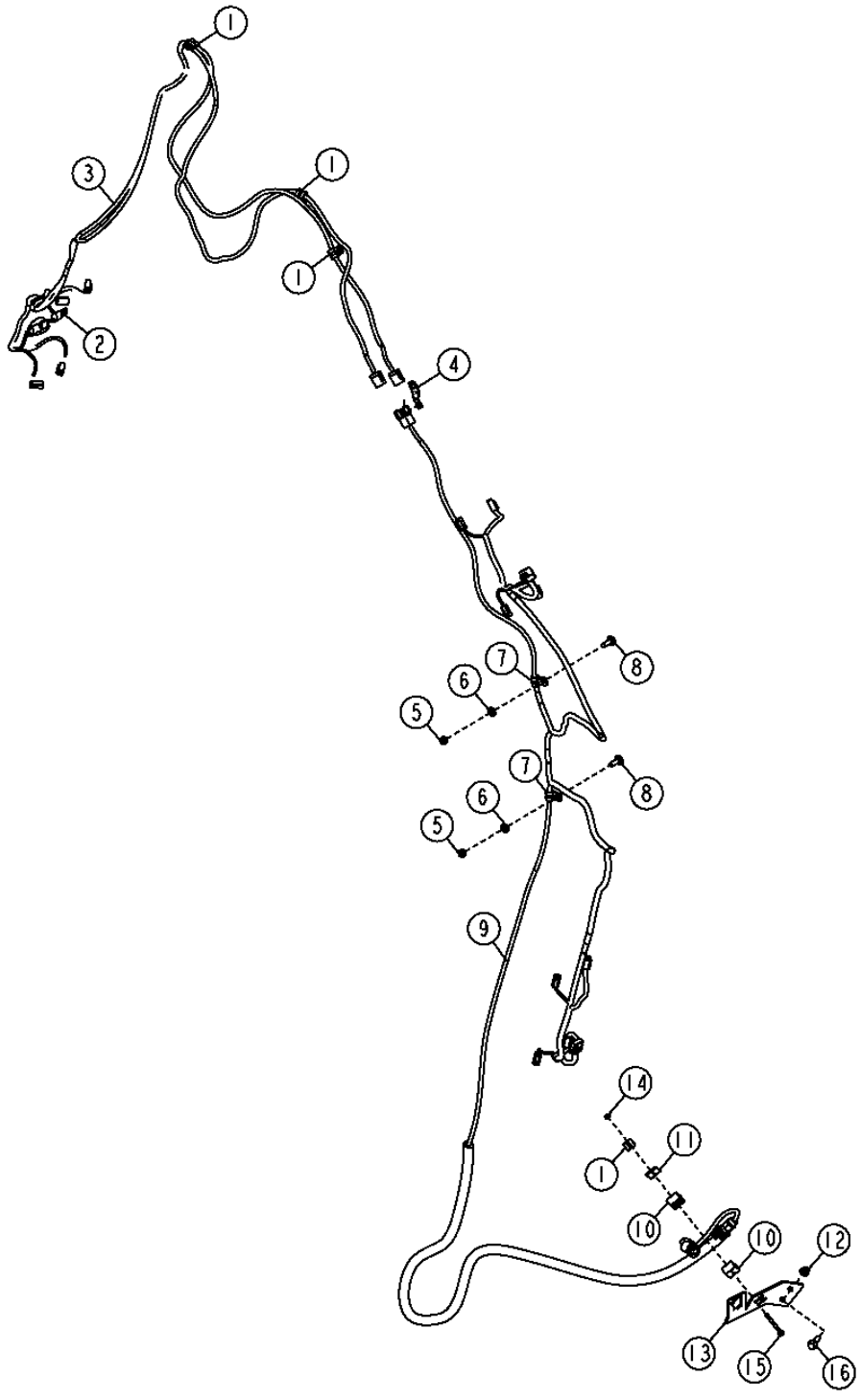

TX1015561

BACKHOE WIRING HARNESS (410 TMC)
FAISCEAU DE FILS DE RETROPELLE (410 TMC)
ARNES DE ALAMBRADO DE RETROEXCAVADORA (410 TMC)

KEY	PART NO.	PART NAME	QTY.	SERIAL NO.	410J	410TMC	REMARKS
1	T75276	CLAMP	4			X	
2	57M8131	ELEC. CONNECTOR TERMINAL	1			X	
3	AT312867	WIRING HARNESS	1			X	
4	57M8736	ELEC. CONNECTOR ACCESSORY	1			X	
5	14M7274	NUT	5			X	M10
6	24M7239	WASHER	3			X	10.700 X 21 X 2.500 MM
7	T74412	CLAMP	2			X	
8	03M7192	BOLT	2			X	M10 X 30
9	AT312865	WIRING HARNESS	1			X	
10	T211284	BLOCK CLAMP	2			X	
11	T211287	PLATE	1			X	
12	14M7400	LOCK NUT	2			X	M10
13	AT333576	BRACKET	1			X	
14	14M7303	FLANGE NUT	2			X	M6
15	19M8040	SCREW	2			X	M6 X 60
16	19M7835	SCREW	2			X	M10 X 35

THIS PARTS LISTING IS CONTINUED

SIDE CONSOLE SWITCHES
INTERRUPTEURS DE CONSOLE LATERALE
INTERRUPTORES DE LA CONSOLA LATERAL

TX1016691 -UN-28DEC06

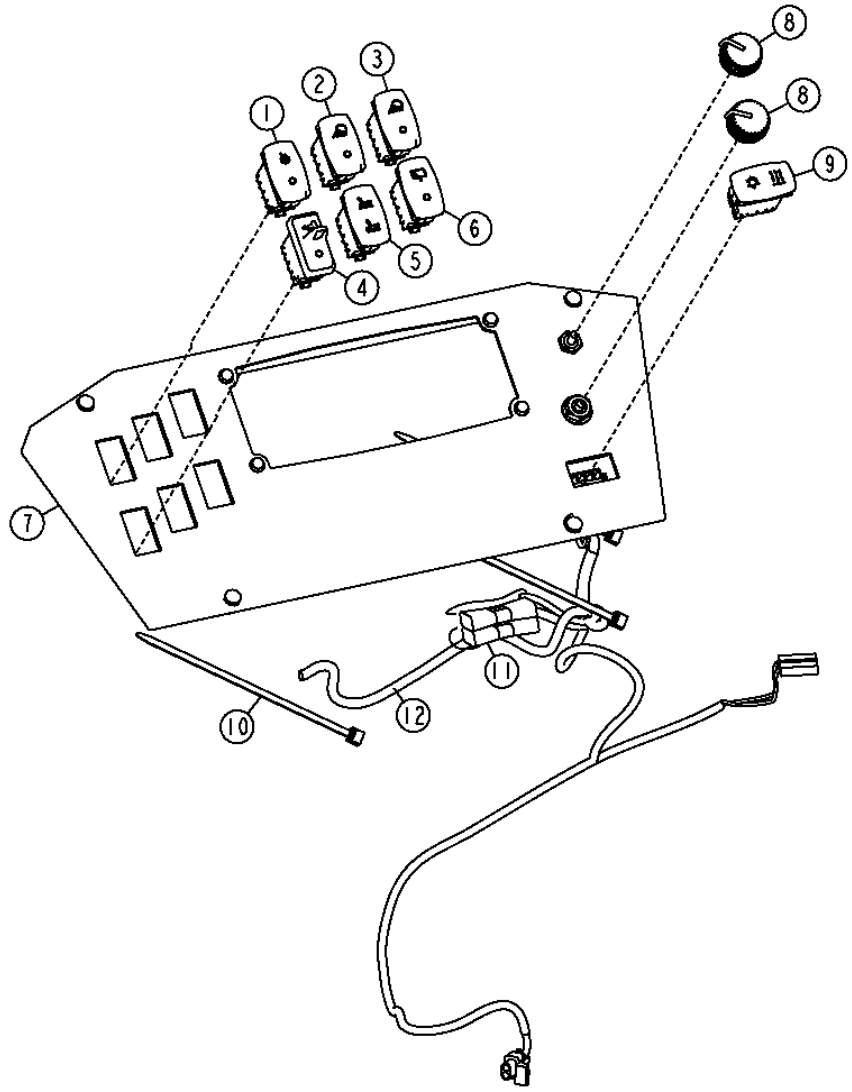

TX1016691

SIDE CONSOLE SWITCHES
INTERRUPTEURS DE CONSOLE LATERALE
INTERRUPTORES DE LA CONSOLA LATERAL

KEY	PART NO.	PART NAME	QTY.	SERIAL NO.	410J	410TMC	REMARKS
1	AT309946	TOGGLE/ROCKER SWITCH	1		X	X	START AID SWITCH
2	AT309435	TOGGLE/ROCKER SWITCH	1		X	X	SIDE LIGHT
3	AT309435	TOGGLE/ROCKER SWITCH	1		X	X	REAR LIGHT
4	AT317464	TOGGLE/ROCKER SWITCH	1		X	X	MFWD SWITCH
5	AT317596	TOGGLE/ROCKER SWITCH	1		X	X	AIR SEAT
6	AT317449	TOGGLE/ROCKER SWITCH	1		X	X	REAR WIPER
7	T214214	INSTRUMENT PANEL	1		X	X	
8	AL76568	KNOB	2		X	X	TEMPERATURE CONTROL
9	AT317594	TOGGLE/ROCKER SWITCH	1		X	X	A/C SWITCH
10	R44302	TIE BAND	3		X	X	
11	AT103399	DIODE	2		X	X	
12	AT321527	WIRING HARNESS	1		X	X	AIR CONDITIONING

RIDE CONTROL ELECTRICAL
COMMANDE DE POMPE
CONTROLE DE LA BOMBA

TX1015478 -UN-28DEC06

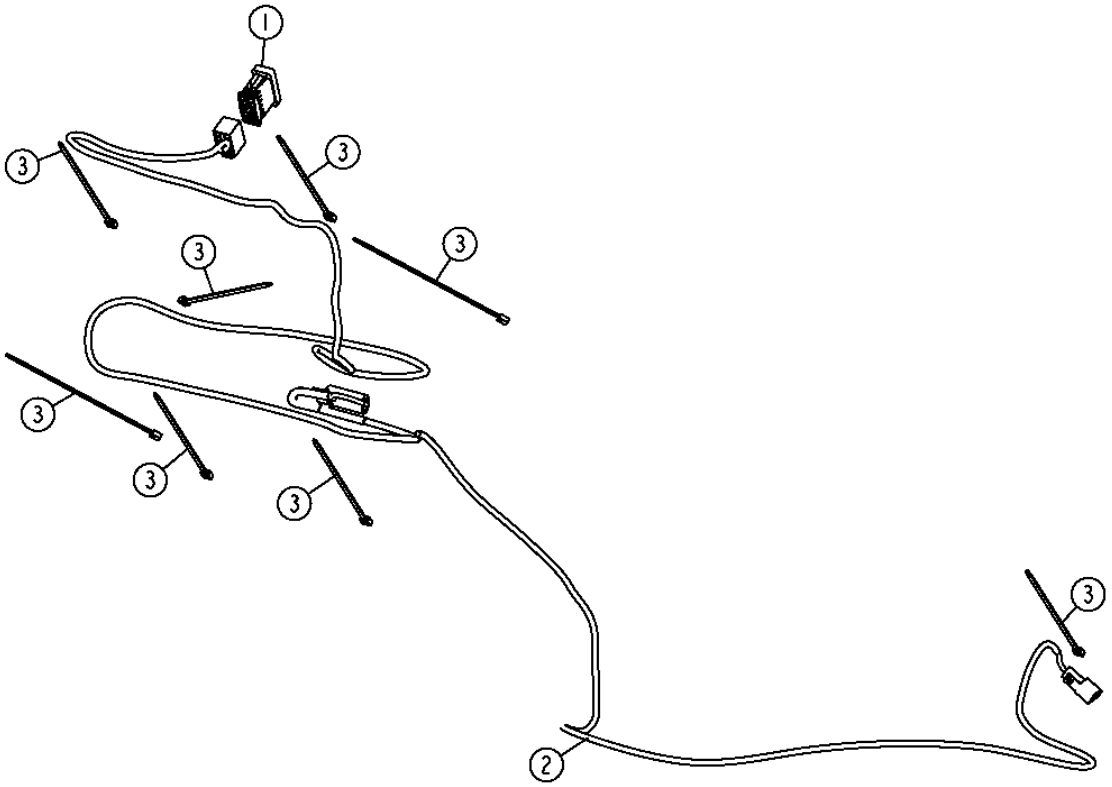

TX1015478

RIDE CONTROL ELECTRICAL
COMMANDE DE POMPE
CONTROLE DE LA BOMBA

KEY	PART NO.	PART NAME	QTY.	SERIAL NO.	410J	410TMC	REMARKS
1	AT317451	TOGGLE/ROCKER SWITCH	1		X		
2	AT321552	WIRING HARNESS	1		X		
3	R44302	TIE BAND	8		X		

RIGHT HAND DOOR SENSOR
CAPTEUR DE PORTIERE DROITE
SENSOR DE PUERTA DEL LADO DERECHO

TX1013912 -UN-13NOV06

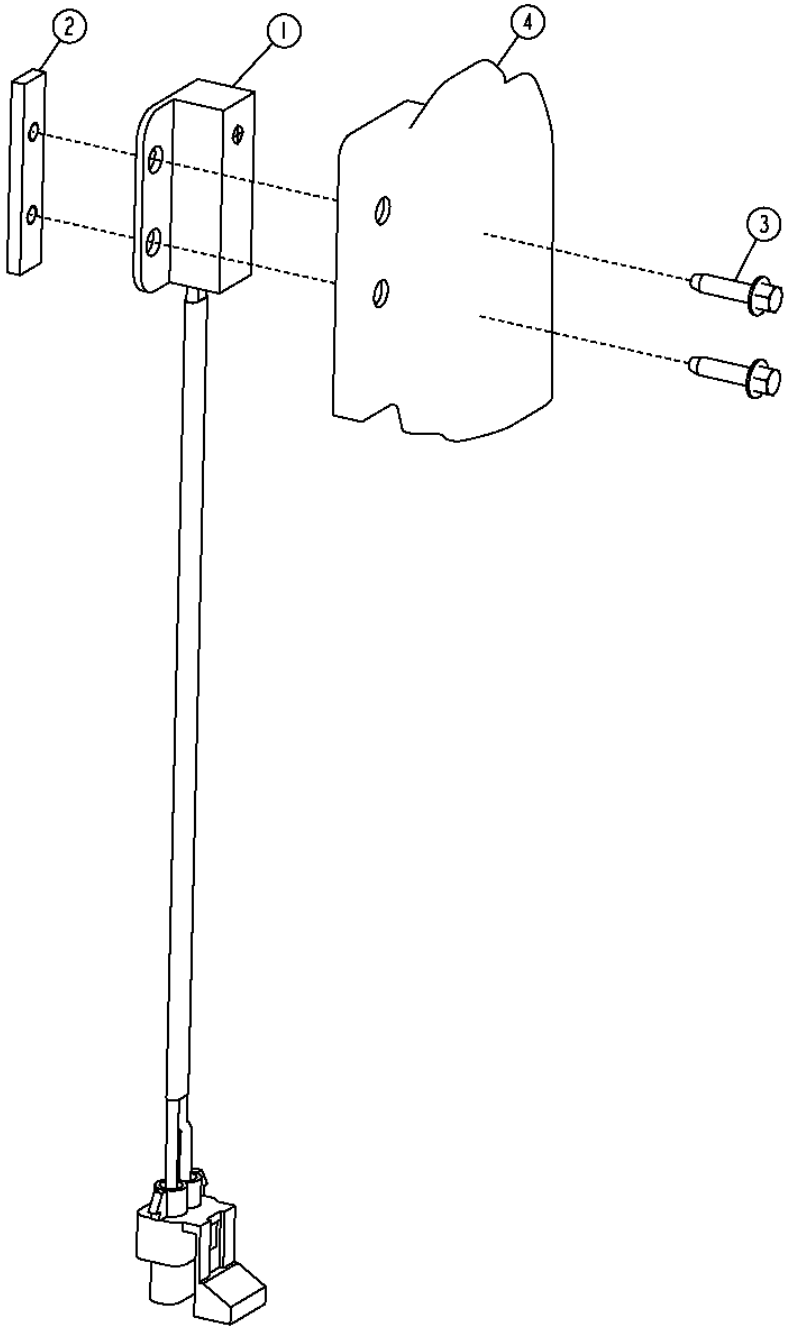

RIGHT HAND DOOR SENSOR
CAPTEUR DE PORTIERE DROITE
SENSOR DE PUERTA DEL LADO DERECHO

KEY	PART NO.	PART NAME	QTY.	SERIAL NO.	410J	410TMC	REMARKS
1	AT307779	SENSOR	1		X	X	
2	T208283	PLATE	1		X	X	
3	37M7314	SCREW	2		X	X	M4 X 16
4	T226751	BOOT	1		X	X	

INCOVA ELECTRICAL CHASSIS
CHASSIS ELECTRIQUE INCOVA
CHASIS ELECTRICO INCOVA

TX1015150 -UN-01DEC06

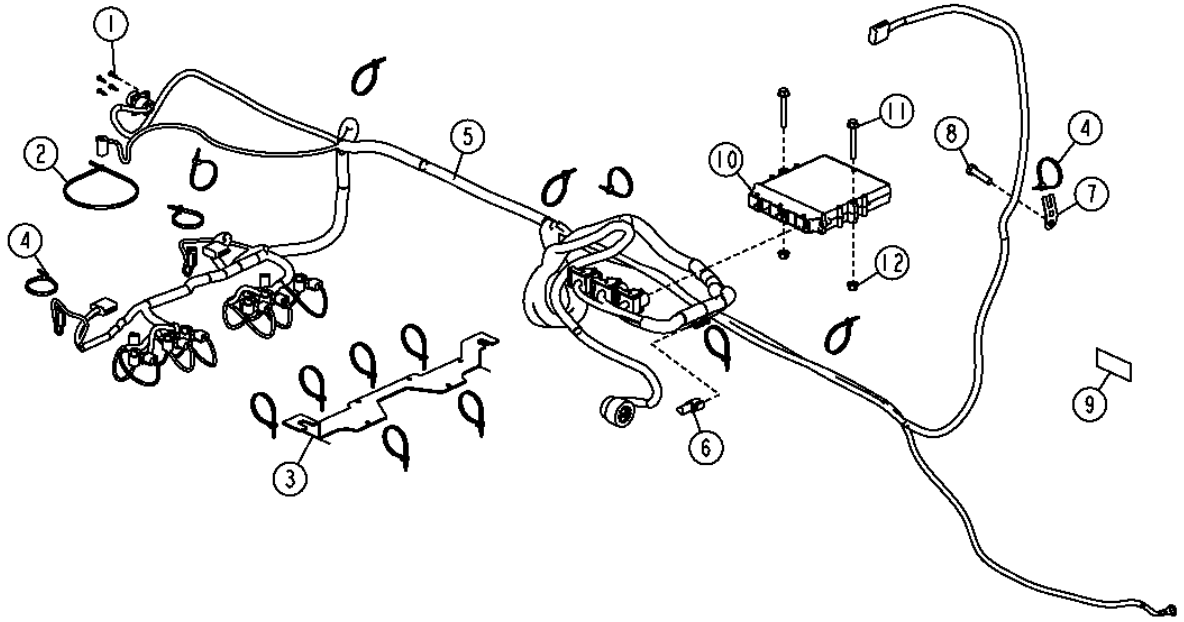

TX1015150

INCOVA ELECTRICAL CHASSIS
CHASSIS ELECTRIQUE INCOVA
CHASIS ELECTRICO INCOVA

KEY	PART NO.	PART NAME	QTY.	SERIAL NO.	410J	410TMC	REMARKS
1	37M7066	SCREW	4			X	
2	H77698	TIE BAND	2			X	
3	T216898	BRACKET	1			X	
4	R44302	TIE BAND	6			X	
5	AT312145	WIRING HARNESS	1			X	
6	57M8131	ELEC. CONNECTOR TERMINAL	1			X	
7	T210717	BRACKET	1			X	
8	19M8637	CAP SCREW	1			X	M10 X 40, RIDE CONTROL
9	T227309	LABEL	1			X	
10	AT323256	ELECTROHYDRAULIC CONTROLLER	1			X	
11	19M7801	SCREW	2			X	
12	14M7298	FLANGE NUT	2			X	

LOADER COUPLER ELECTRICAL AND ANTI-THEFT
CIRCUIT ELECTRIQUE ET ANTI-VOL D'ACCOUPLEMENT DE CHARGEUR
ACOPLADOR ELECTRICO Y SISTEMA ANTIRROBO DE CARGADORA

TX1015192 -UN-05DEC06

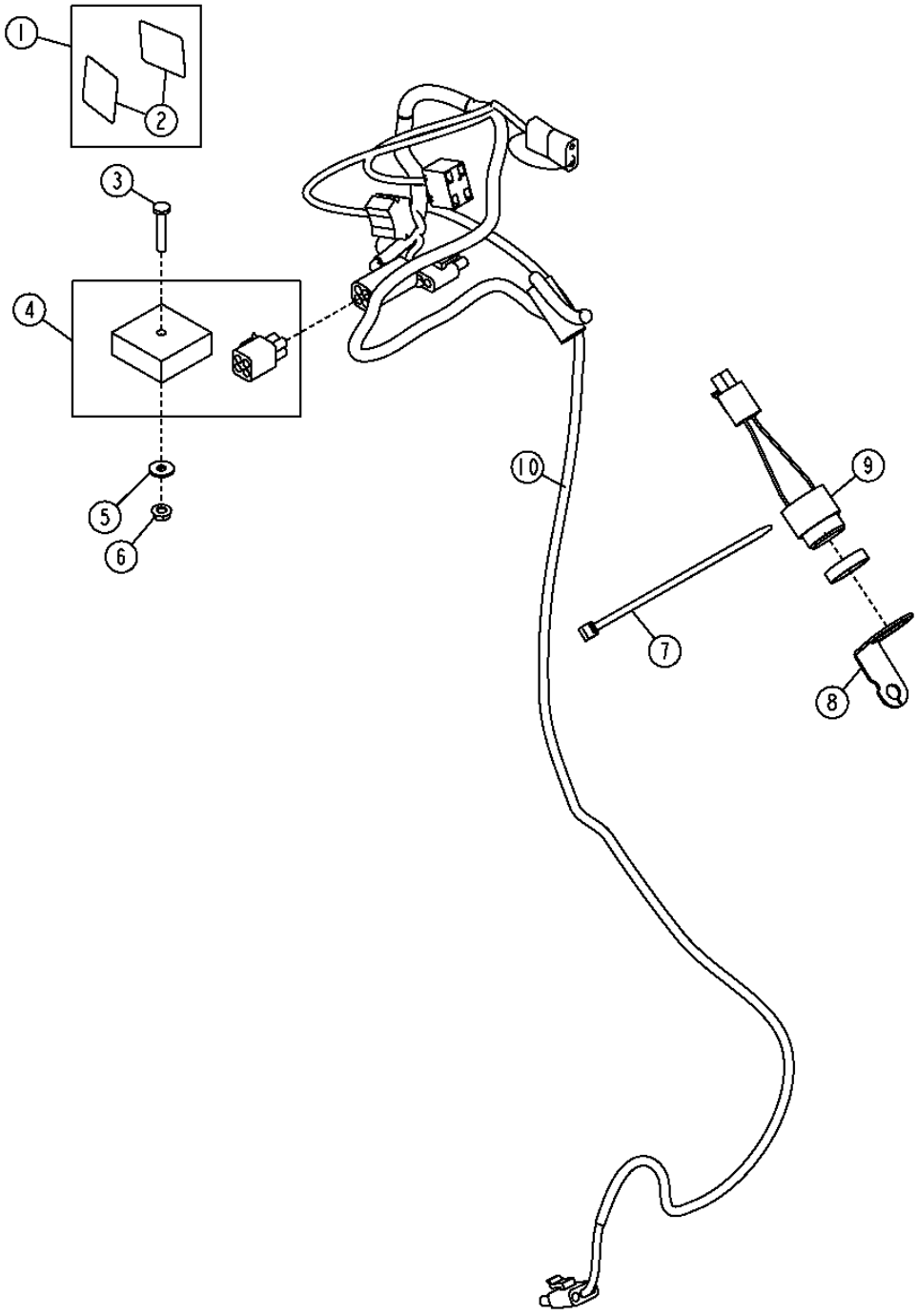

LOADER COUPLER ELECTRICAL AND ANTI-THEFT
CIRCUIT ELECTRIQUE ET ANTI-VOL D'ACCOUPLEMENT DE CHARGEUR
ACOPLADOR ELECTRICO Y SISTEMA ANTIRROBO DE CARGADORA

KEY	PART NO.	PART NAME	QTY.	SERIAL NO.	410J	410TMC	REMARKS
1	AT339526	LABEL KIT	1		X	X	ANTI-THEFT (WHOLE GOODS)
2	T228852	LABEL	2		X	X	ANTI-THEFT
3	21M7247	SCREW	1		X	X	M6 X 35
4	AT308237	RELAY MODULE	1		X	X	
5	24M7139	WASHER	1		X	X	6.400 X 18 X 1.600 MM
6	14M7303	FLANGE NUT	1		X	X	M6
7	R44302	TIE BAND	1		X	X	
8	T217077	BRACKET	1		X	X	ALARM MOUNTING
9	AE44436	HORN	1		X	X	
10	AT329137	WIRING HARNESS	1		X	X	

MAIN FRAME
CHASSIS PRINCIPAL
BASTIDOR PRINCIPAL

TX1012835 -UN-10OCT06

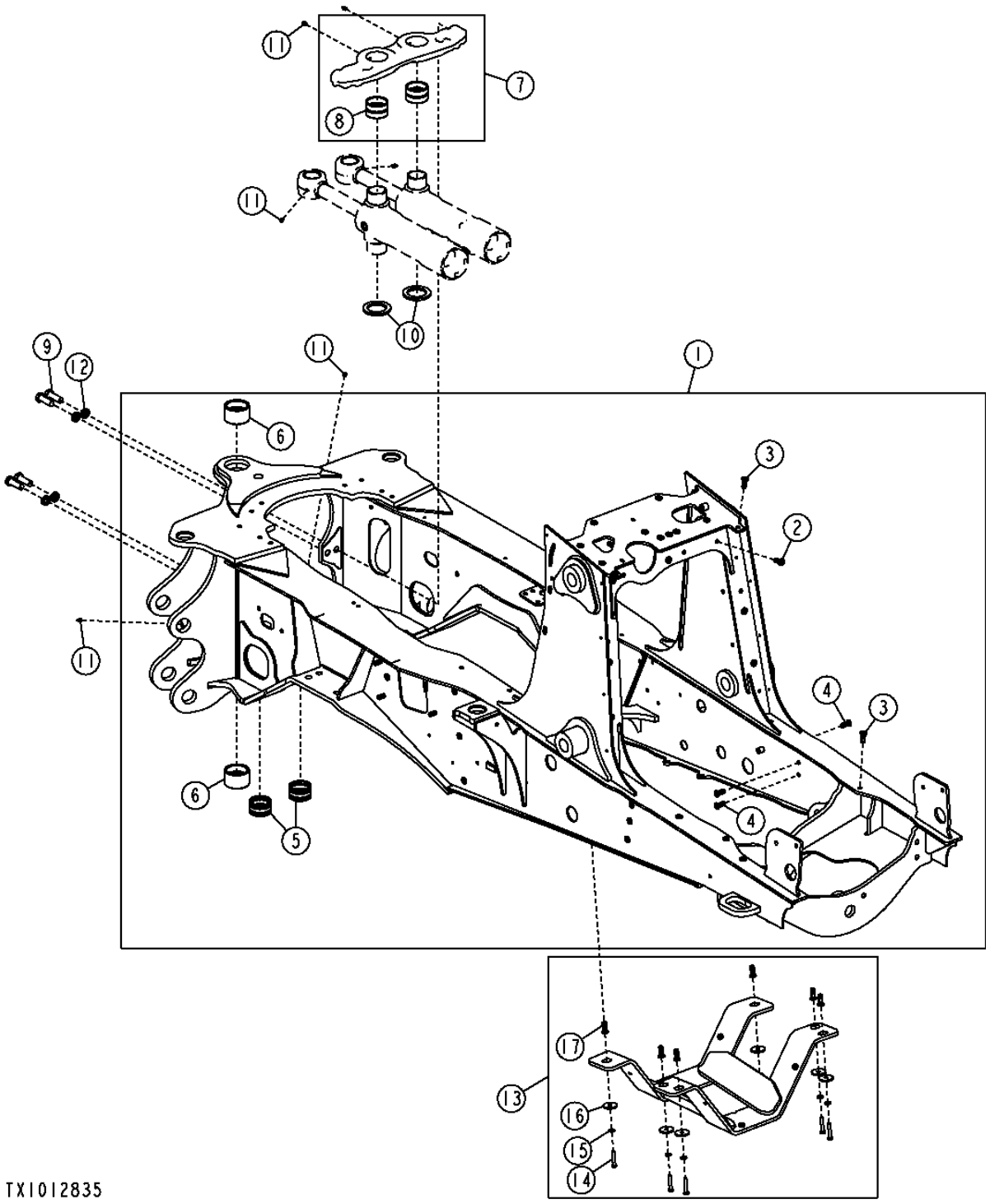

MAIN FRAME
CHASSIS PRINCIPAL
BASTIDOR PRINCIPAL

KEY	PART NO.	PART NAME	QTY.	SERIAL NO.	410J	410TMC	REMARKS
1	AT312319	MAIN FRAME	1		X	X	CA
	AT312318	**MAIN FRAME**	**1**			**X**	**CA, TOOL CARRIER**
2	T148410	NUT	AR		X	X	M10, 8MM PLATE
3	T148411	NUT	AR		X	X	M10, 10MM PLATE
4	T148409	NUT	AR		X	X	M10, 6MM PLATE
5	T147070	BUSHING	2		X	X	
6	T154621	BUSHING	2		X	X	
7	AT169804	TRUNNION	1		X	X	
8	T153303	BUSHING	2		X	X	
9	19M8224	CAP SCREW	4		X	X	M20 X 60
10	T148387	WASHER	2		X	X	
11	T162396	LUBRICATION FITTING	6		X	X	
12	T83426	WASHER	4		X	X	
13	AT325678	GUARD	1		X	X	
14	19M7935	CAP SCREW	6		X	X	
15	24M7239	WASHER	6		X	X	
16	R124347	WASHER	6		X	X	
17	T148410	NUT	6		X	X	8MM PLATE
	T148411	NUT	6		X	X	10MM PLATE

STABILIZER CYLINDER GUARD KIT
KIT DE PROTECTION DE VERIN DE STABILISATEUR
JUEGO DE PROTECTOR DE CILINDRO DE ESTABILIZADOR

TX1004954 -UN-17MAR06

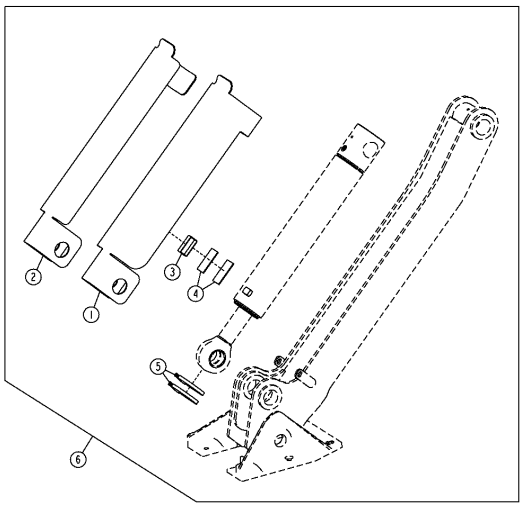

TX1004954

KEY	PART NO.	PART NAME	QTY.	SERIAL NO.	4 1 4 0 1 T 0 M J C	REMARKS
1	T203361	COVER	1		X X	(RIGHT)
2	T203362	COVER	1		X X	(LEFT)
3	T223304	STRUCTURAL TUBING	2		X X	
4	T208353	PAD	4		X X	
5	C16054	CLAMP	4		X X	
6	**AT305073**	**KIT**	**1**		**X X**	**(WHOLE GOODS)**

MEMORANDA
MEMORANDA
MEMORANDA

BUMPER
PARE-CHOCS
PARAGOLPES

TX1015885 -UN-23DEC06

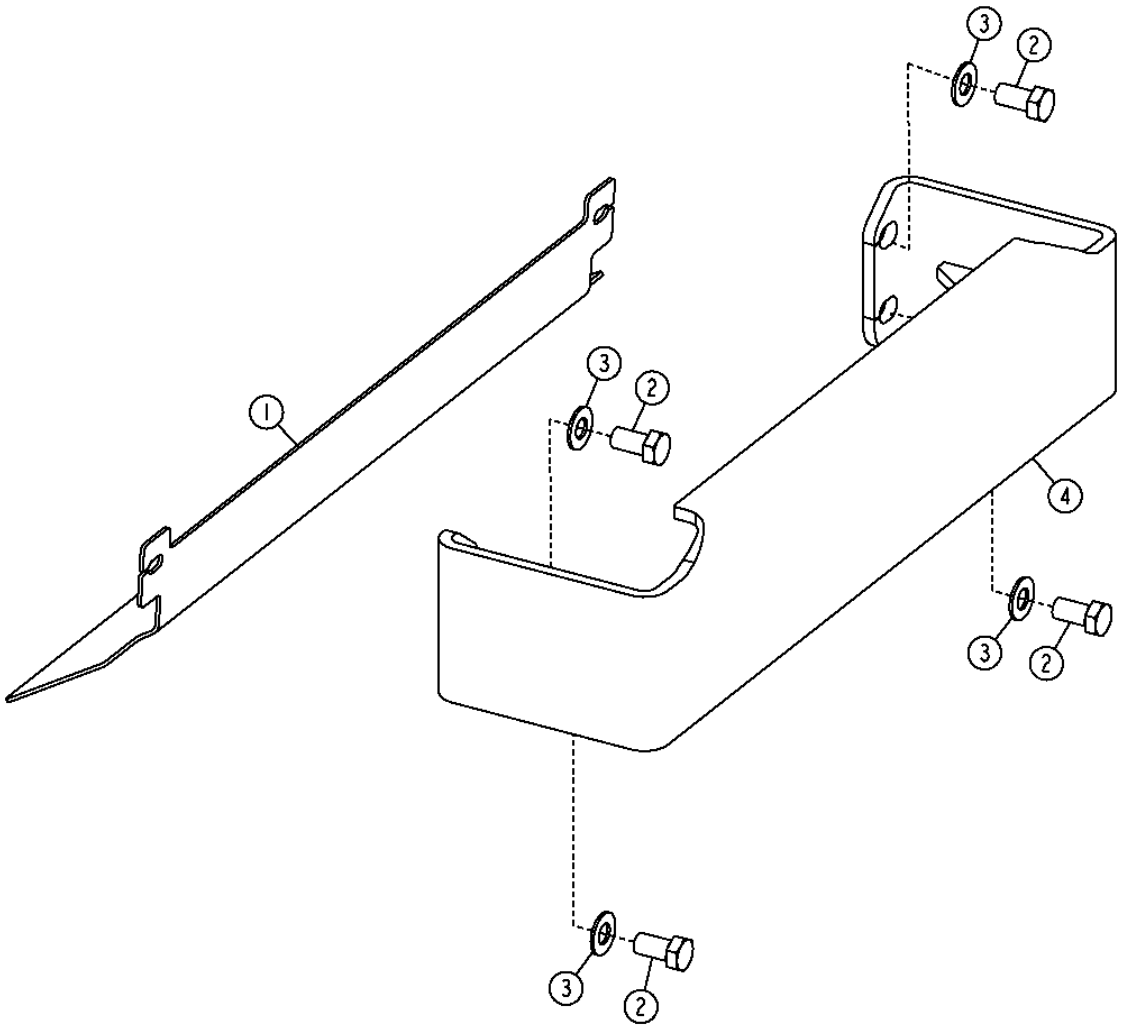

TX1015885

BUMPER
PARE-CHOCS
PARAGOLPES

KEY	PART NO.	PART NAME	QTY.	SERIAL NO.	410J	410TMC	REMARKS
1	T214677	BUMPER	1		X	X	
2	19M8029	CAP SCREW	4		X	X	M16 X 30
3	24H1368	WASHER	4		X	X	
4	AT335904	BUMPER	1		X	X	

FRONT COUNTERWEIGHT
CONTREPOIDS AVANT
CONTRAPESO DELANTERO

TX1012850 -UN-10OCT06

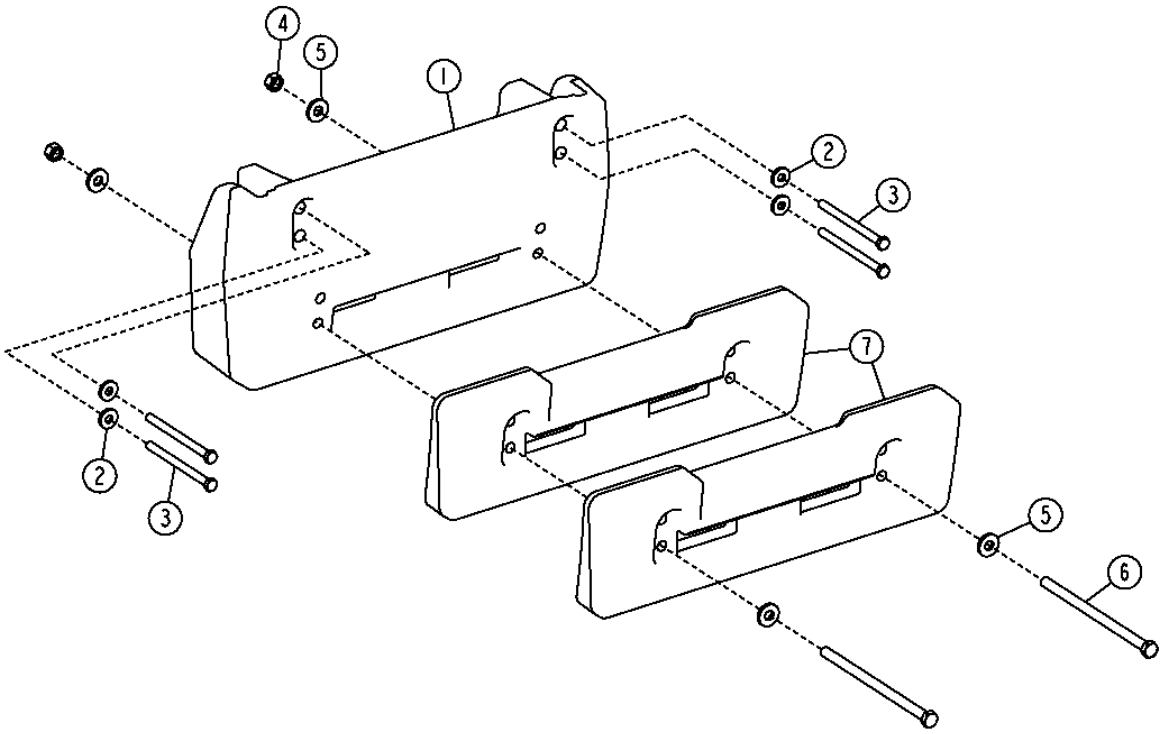

TX1012850

FRONT COUNTERWEIGHT
CONTREPOIDS AVANT
CONTRAPESO DELANTERO

KEY	*PART NO.*	*PART NAME*	*QTY.*	*SERIAL NO.*	*REMARKS*
1	T210306	COUNTERWEIGHT	1		(WHOLE GOODS) (450 LB.) PRIMARY COUNTERWEIGHT
	T210304	**COUNTERWEIGHT**	**1**		**(WHOLE GOODS) (970 LB.) PRIMARY COUNTERWEIGHT**
2	T119912	WASHER	4		(USE WITH PRIMARY COUNTERWEIGHT)
3	19M8044	BOLT	4		M16 X 210, (USE WITH PRIMARY COUNTERWEIGHT)
4	14M7277	NUT	2		M20, (USE WITH ADDITIONAL COUNTERWEIGHT)
5	T151797	WASHER	4		(USE WITH ADDITIONAL COUNTERWEIGHT)
6	19M7645	BOLT	2		M20 X 200, (235 LB.) ADDITIONAL COUNTERWEIGHT, (USE WITH T210304)
	19M8389	BOLT	2		M20 X 280, (235 LB.) ADDITIONAL COUNTERWEIGHT, (USE WITH T210306)
	19M8817	BOLT	2		M20 X 360, (470 LB.) ADDITIONAL COUNTERWEIGHT, (USE WITH T210306)
7	**T210305**	**COUNTERWEIGHT**	**1**		**(WHOLE GOODS) (235 LB.) ADDITIONAL COUNTERWEIGHT**

ROPS CANOPY HEADLINER AND MOUNTING ISOLATORS
REVETEMENT DE TOIT ET ISOLATEURS DE MONTAGE D'AUVENT D'ARCEAU DE SECURITE
FORRO INTERIOR DE DOSEL DE ROPS Y AMORTIGUADORES DE MONTAJE

TX1014118 -UN-18DEC06

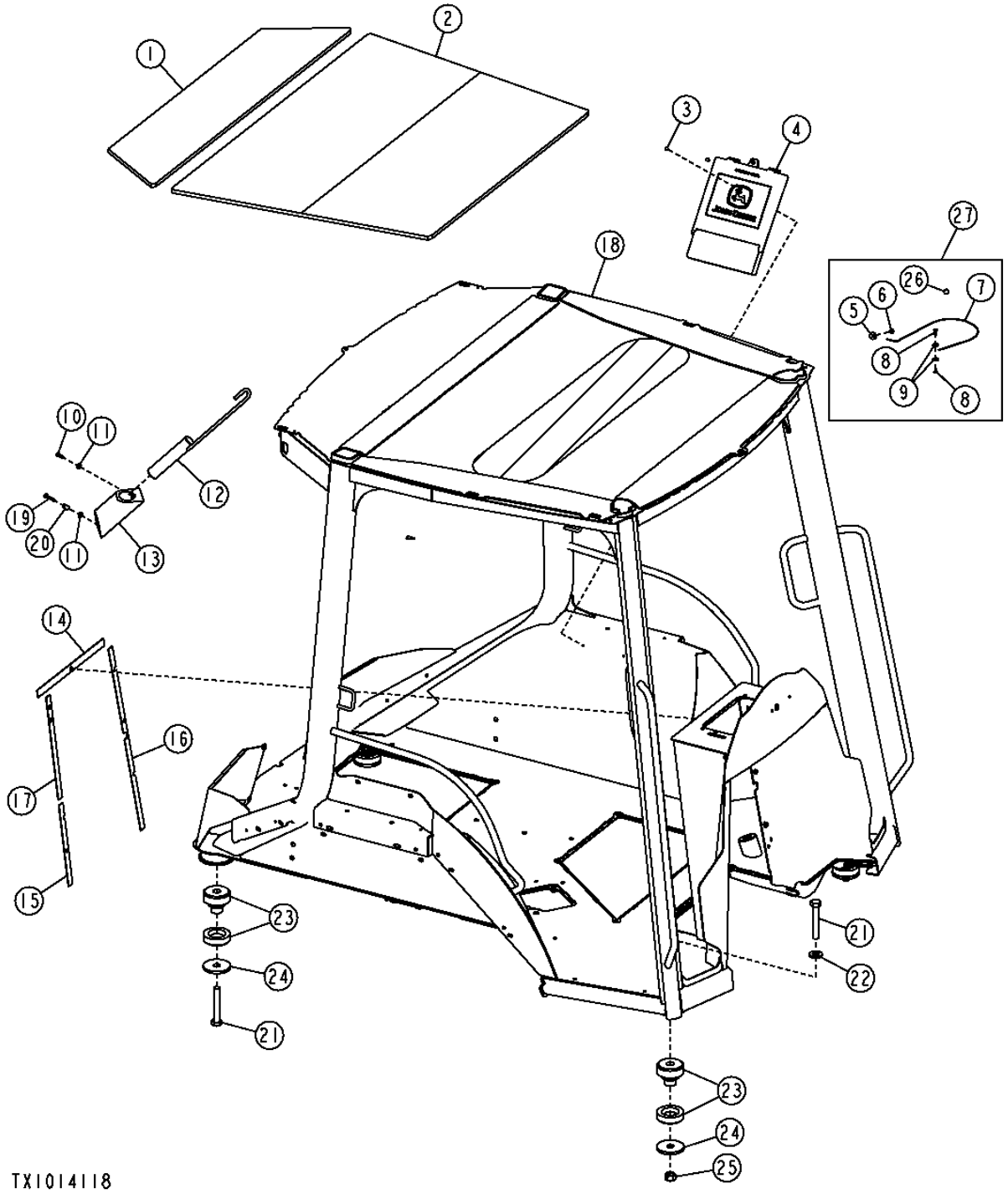

ROPS CANOPY HEADLINER AND MOUNTING ISOLATORS
REVETEMENT DE TOIT ET ISOLATEURS DE MONTAGE D'AUVENT D'ARCEAU DE SECURITE
FORRO INTERIOR DE DOSEL DE ROPS Y AMORTIGUADORES DE MONTAJE

KEY	PART NO.	PART NAME	QTY.	SERIAL NO.	410J	410TMC	REMARKS
1	T186029	HEADLINER	1		X		
2	T186030	HEADLINER	1		X		
3	R79033	RIVET	2		X		
4	AT195894	HOLDER	1		X		
5	24M7100	WASHER	1		X	X	
6	37M7109	SCREW	1		X	X	
7	AT164804	CABLE	1		X	X	
8	AT164803	BOLT	1		X	X	
9	24M7139	WASHER	2		X	X	
10	21M7310	SCREW	1		X	X	M6 X 25
11	24M7238	WASHER	2		X	X	
12	AT150725	PIN FASTENER	1		X	X	
13	T141234	HOLDER	1		X	X	
14	T185782	GASKET	1		X	X	
15	T185784	ISOLATOR	1		X	X	
16	T185783	GASKET	1		X	X	
17	T185783	GASKET	1		X	X	
18	AT188965	FRAME	1		X	X	(MANUAL CONTROLS) (INCLUDES T166896)
	AT304887	FRAME	1		X	X	(PILOT CONTROL) (INCLUDES T166896)
19	T134874	SELF-LOCKING SCREW	1		X	X	M6 X 40
20	H128841	SPACER	1		X	X	
21	19M7883	SCREW	4		X	X	M20 X 120
22	24M7242	WASHER	2		X	X	
23	AT165288	ISOLATOR	4		X	X	
24	T101807	WASHER	4		X	X	
25	14M7277	NUT	2		X	X	M20
26	R55326	RIVET	1		X	X	
27	**AT192032**	**KIT**	**1**		**X**	**X**	**(WHOLE GOODS) (OPERATOR MANUAL TETHER KIT)**

CAB FRAME, HEADLINER AND CAB MOUNTING ISOLATORS
OSSATURE DE CABINE, REVETEMENT DE TOIT ET ISOLATEURS DE MONTAGE DE CABINE
BASTIDOR DE CABINA, FORRO DE TECHO INTERIOR Y AMORTIGUADORES DE MONTAJE DE CABINA

TP58119 -UN-06OCT00

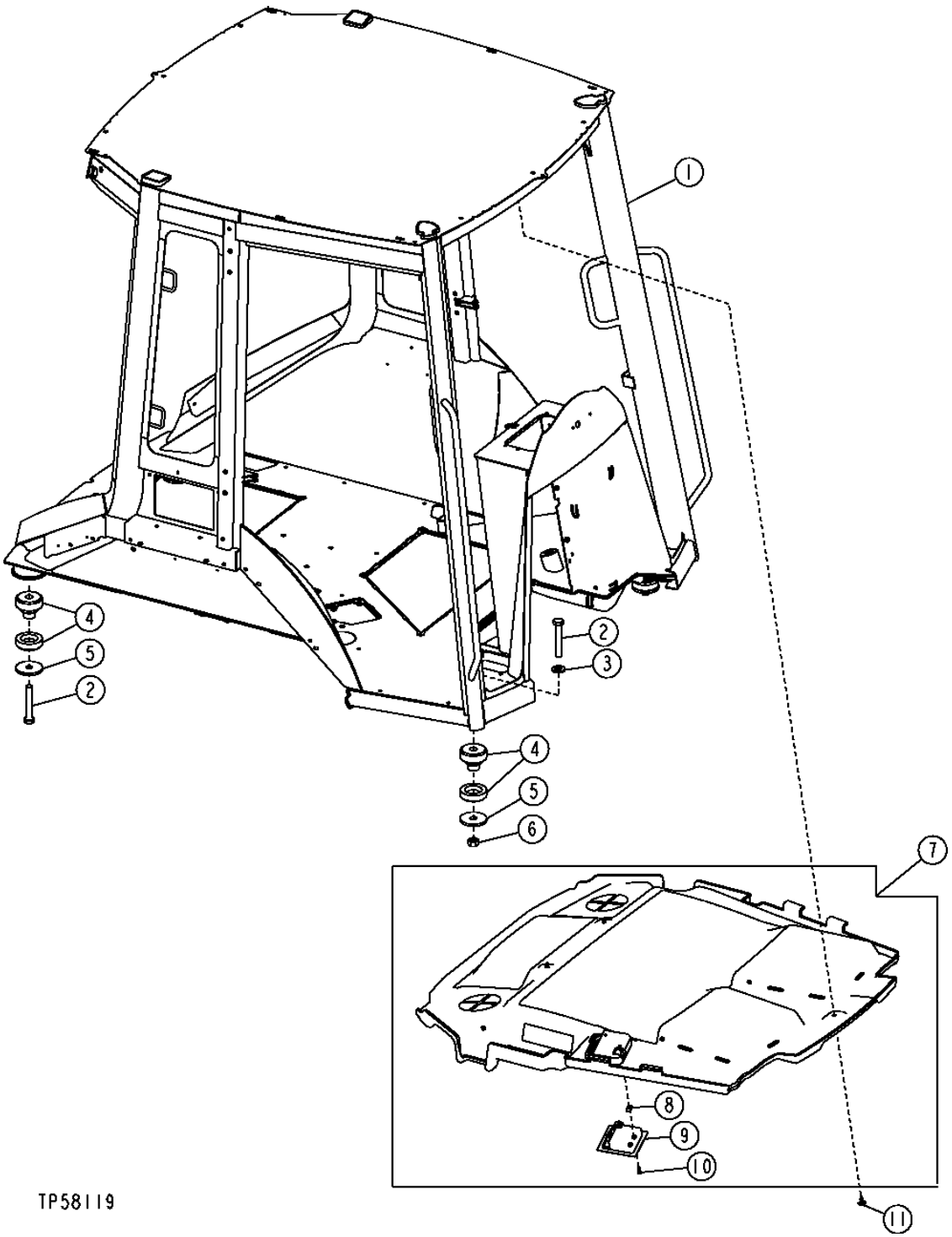

CAB FRAME, HEADLINER AND CAB MOUNTING ISOLATORS
OSSATURE DE CABINE, REVETEMENT DE TOIT ET ISOLATEURS DE MONTAGE DE CABINE
BASTIDOR DE CABINA, FORRO DE TECHO INTERIOR Y AMORTIGUADORES DE MONTAJE DE CABINA

KEY	PART NO.	PART NAME	QTY.	SERIAL NO.	410J	410TMC	REMARKS
1	AT187096	FRAME	1		X	X	(LEVER CONTROL)
	AT199734	FRAME	1		X	X	(PILOT CONTROL)
2	19M7883	SCREW	4		X	X	M20 X 120
3	24M7242	WASHER	2		X	X	
4	AT165288	ISOLATOR	4		X	X	
5	T101807	WASHER	4		X	X	
6	14M7277	NUT	2		X	X	M20
7	AT321004	HEADLINER	1		X	X	WITHOUT RADIO
	AT321005	HEADLINER	1		X	X	WITH RADIO
8	M84972	NUT	2		X	X	
9	AT320544	LAMP	1		X	X	(INCLUDES AT192414)
	AT192414	BULB	1		X	X	(NOT ILLUSTRATED)
10	T134895	SELF-LOCKING SCREW	2		X	X	
11	MT2485	PLUG	9		X	X	FASTENER

FLOOR MATS
TAPIS DE PLANCHER
FELPUDO DEL PISO

T136077 -UN-05DEC00

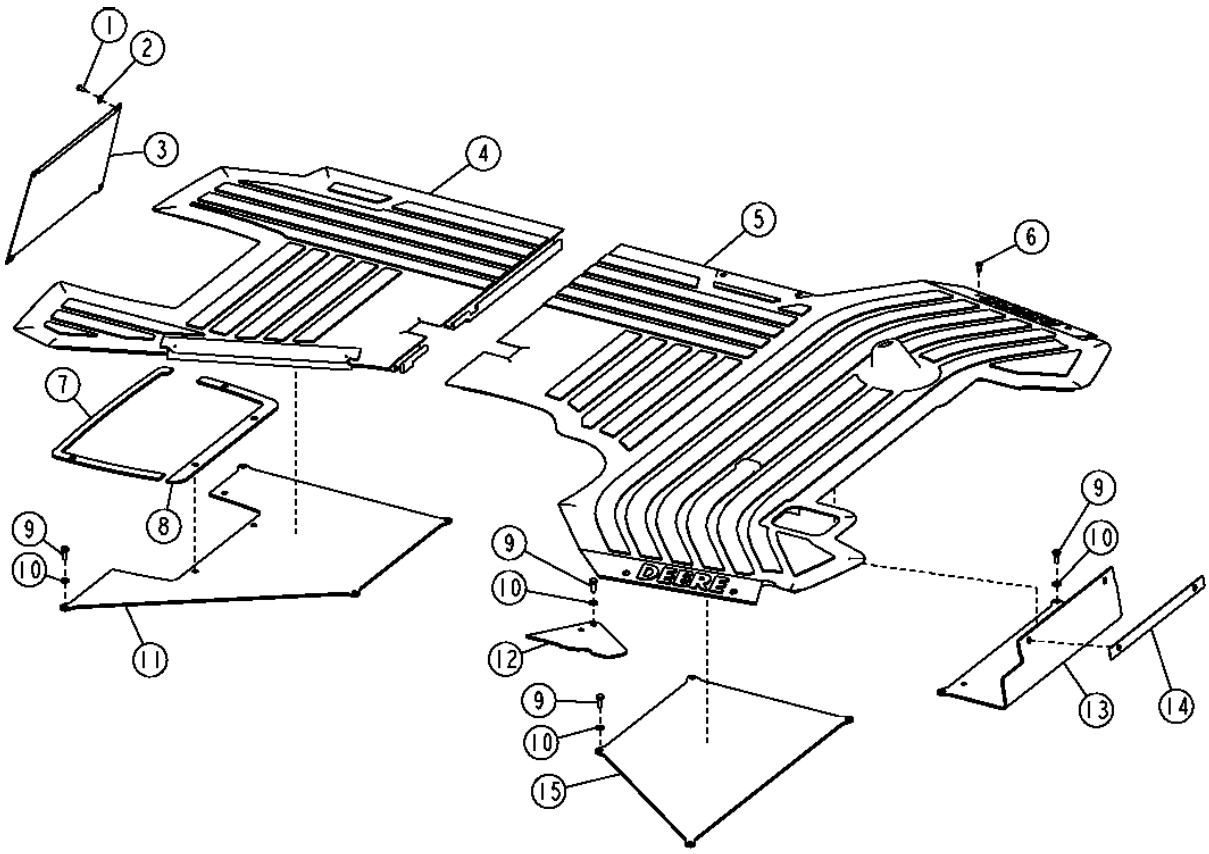

T136077

FLOOR MATS
TAPIS DE PLANCHER
FELPUDO DEL PISO

KEY	PART NO.	PART NAME	QTY.	SERIAL NO.	410J	410TMC	REMARKS
1	19M7923	CAP SCREW	4		X		M6 X 12
2	24M7139	WASHER	4		X		6.400 X 18 X 1.600 MM
3	T203458	PANEL	1		X		
4	T166000	MAT	1		X		REAR
	T188726	MAT	1		X		REAR FLOOR (PILOT CONTROLS)
5	T165969	MAT	1		X		FRONT
6	T133674	SELF-LOCKING SCREW	4		X		
7	T185773	GASKET	1		X		
8	T185774	GASKET	1		X		(LEVER CONTROLS)
	T191142	GASKET	1		X		(PILOT CONTROLS)
9	19M7881	SCREW	13		X		M8 X 20
10	24M7238	WASHER	13		X		8.700 X 17 X 2 MM
11	AT186321	COVER	1		X		REAR
	AT196294	COVER	1		X		REAR (PILOT CONTROLS)
12	AT197479	COVER	1		X		LINKAGE
	AT300928	COVER	1		X		LINKAGE WITH RIDE CONTROL OR SEL. FLOW VALVE
13	T188565	COVER	1		X		FRONT
14	T185775	GASKET	1		X		
15	T165948	COVER	1		X		MIDDLE

FLOOR MATS FOR (410TMC)
TAPIS DE PLANCHER
FELPUDO DEL PISO

TX1014975 -UN-12DEC06

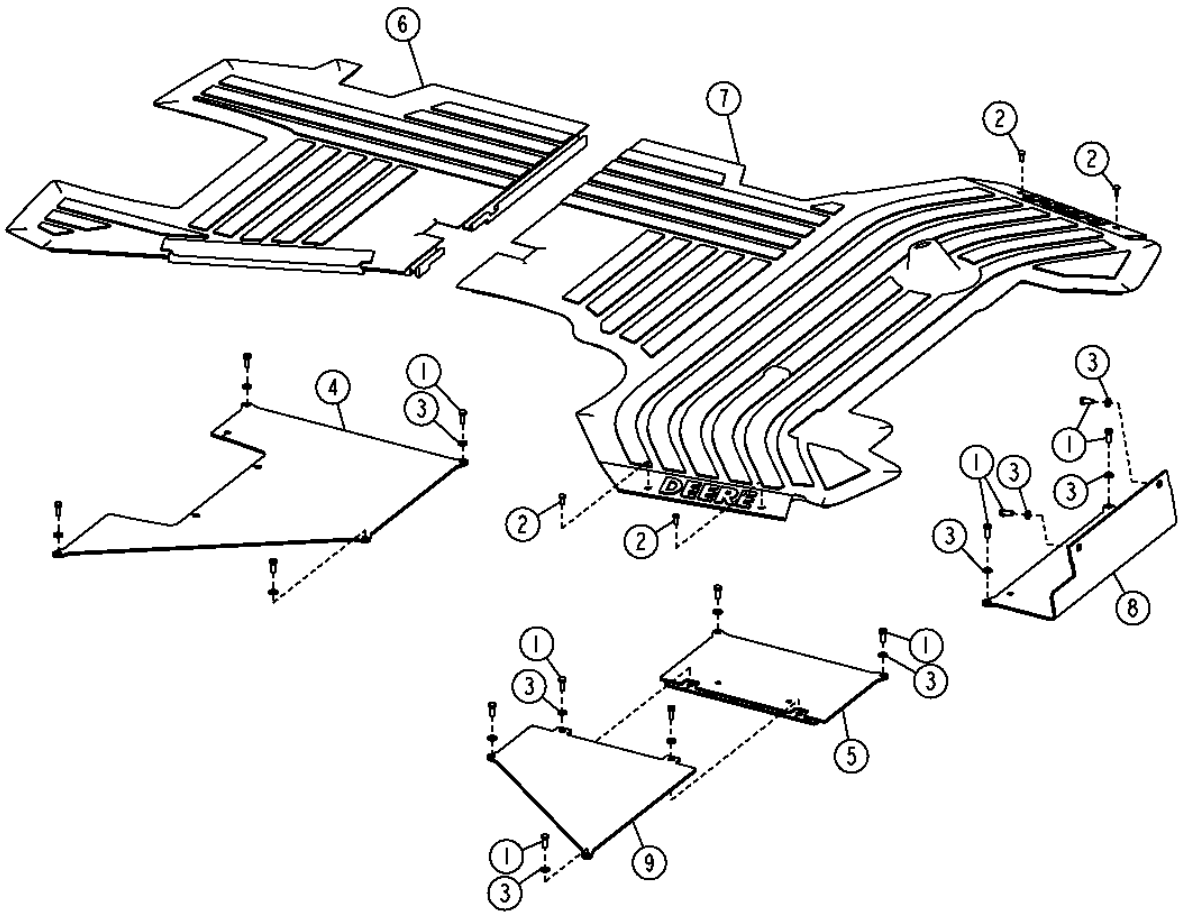

TX1014975

FLOOR MATS FOR (410TMC)
TAPIS DE PLANCHER
FELPUDO DEL PISO

KEY	PART NO.	PART NAME	QTY.	SERIAL NO.	410J	410TMC	REMARKS
1	19M7881	SCREW	14			X	M8 X 20
2	21M7292	SCREW	4			X	M6 X 16
3	24M7238	WASHER	14			X	8.700 X 17 X 2 MM
4	AT186321	COVER	1			X	REAR
5	AT323257	PLATE	1			X	RIGHT
6	T165970	MAT	1			X	REAR
7	T165969	MAT	1			X	FRONT
8	T188565	COVER	1			X	FRONT
9	T209385	COVER	1			X	LEFT

DOORS AND SIDE WINDOWS FOR CAB
PORTIERES ET GLACES LATERALES POUR CABINE
PUERTAS Y VENTANAS LATERALES DE CABINA

TX1017197 -UN-

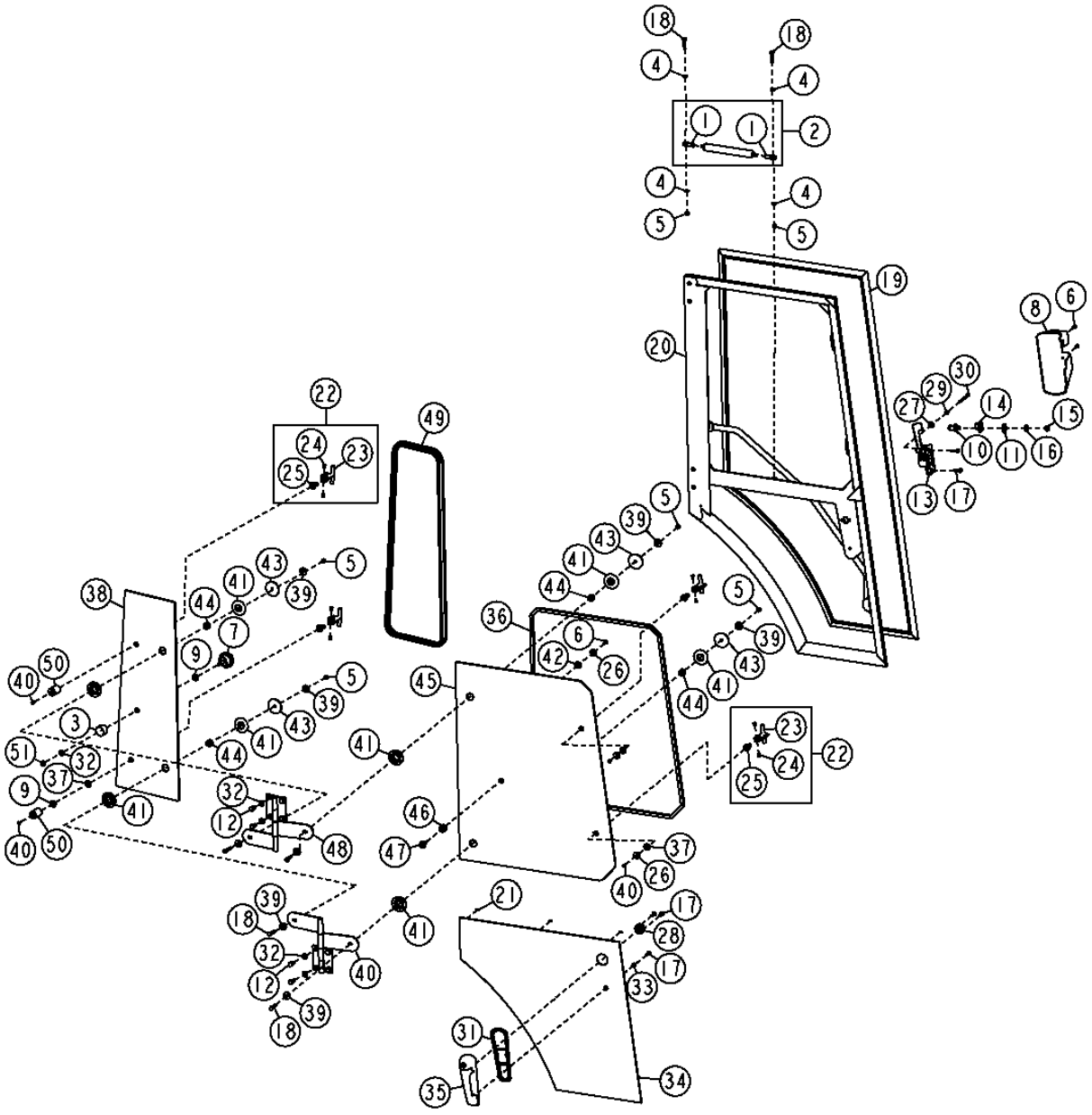

THIS PARTS LISTING IS CONTINUED

DOORS AND SIDE WINDOWS FOR CAB
PORTIERES ET GLACES LATERALES POUR CABINE
PUERTAS Y VENTANAS LATERALES DE CABINA

KEY	PART NO.	PART NAME	QTY.	SERIAL NO.	410J	410TMC	REMARKS
1	AM102062	LINK END	2		X	X	
2	AT340155	CYLINDER	1		X	X	
4	24M7238	WASHER	4		X	X	8.700 X 17 X 2 MM
5	14M7426	LOCK NUT	8		X	X	M8
6	T188806	SCREW	4		X	X	
	T133674	SELF-LOCKING SCREW	3		X	X	
8	T217432	COVER	1		X	X	RH
	T217433	COVER	1		X	X	LH
9	R52921	WASHER	2		X	X	PLASTIC
10	AR91896	STRIKER	2		X	X	
11	24H1330	WASHER	2		X	X	15/32" X 1-3/8" X 7/64"
12	19M7938	CAP SCREW	4		X	X	M10 X 20
13	AT326979	LATCH	1		X	X	RH
	AT326978	LATCH	1		X	X	LH
14	T135583	GUARD	1		X	X	STRICKER
15	14H1047	NUT	1		X	X	7/16"
16	T105740	WASHER	1		X	X	
17	19M7863	SCREW	5		X	X	M6 X 25
18	19M7922	CAP SCREW	4		X	X	M8 X 40
19	AT184652	ISOLATOR	1		X	X	RH
	AT184719	ISOLATOR	1		X	X	LH
20	.....	DOOR	1		X	X	RH
	.....	DOOR	1		X	X	LH
21	T135675	STAND-OFF	7		X	X	
22	AT196522	LATCH	4		X	X	
23	T119153	LATCH	4		X	X	
24	A48970	DUAL LOCK FASTENER	8		X	X	
25	.....	BASE	4		X	X	
26	24H1288	WASHER	3		X	X	9/32" X 1" X 1/16"
27	T218865	WASHER	1		X	X	PLASTIC
28	T205902	SPACER	2		X	X	
29	T218866	SPACER	2		X	X	
30	19M9402	CAP SCREW	3		X	X	M6 X 80
31	T204599	GASKET	2		X	X	
32	24M7239	WASHER	5		X	X	10.700 X 21 X 2.500 MM
33	T205901	WASHER	1		X	X	
34	T214548	WINDOWPANE	1		X	X	RH
	T214527	WINDOWPANE	1		X	X	LH
35	AT306181	HANDLE	1		X	X	
36	T165357	ISOLATOR	1		X	X	
37	T76833	WASHER	4		X	X	
39	24M7024	WASHER	8		X	X	9 X 28 X 3 MM
40	AT184524	HINGE	2		X	X	LOWER R.H. AND UPPER L.H.
41	T158081	WASHER	8		X	X	
42	T76832	WASHER	1		X	X	
43	T185678	WASHER	4		X	X	
44	T158358	BUSHING	4		X	X	
45	T164707	WINDOWPANE	2		X	X	RH AND LH
46	T186017	BUSHING	1		X	X	
47	T186016	BUSHING	1		X	X	
48	AT184651	HINGE	2		X	X	LOWER L.H. AND UPPER R.H.
51	14M7167	LOCK NUT	1		X	X	M10
52	T76830	GUARD	1		X	X	
53	AT75311	KNOB	1		X	X	
54	T164706	WINDOWPANE	1		X	X	RH
	T166060	WINDOWPANE	1		X	X	LH
55	T164710	ISOLATOR	1		X	X	RH
	T164709	ISOLATOR	1		X	X	LH
56	T186018	BUMPER	2		X	X	

THIS PARTS LISTING IS CONTINUED

WINDSHIELD GLASS FOR CAB
VITRE DE PARE-BRISE POUR CABINE
CRISTAL DE PARABRISAS PARA CABINA

TP69621 -UN-05OCT00

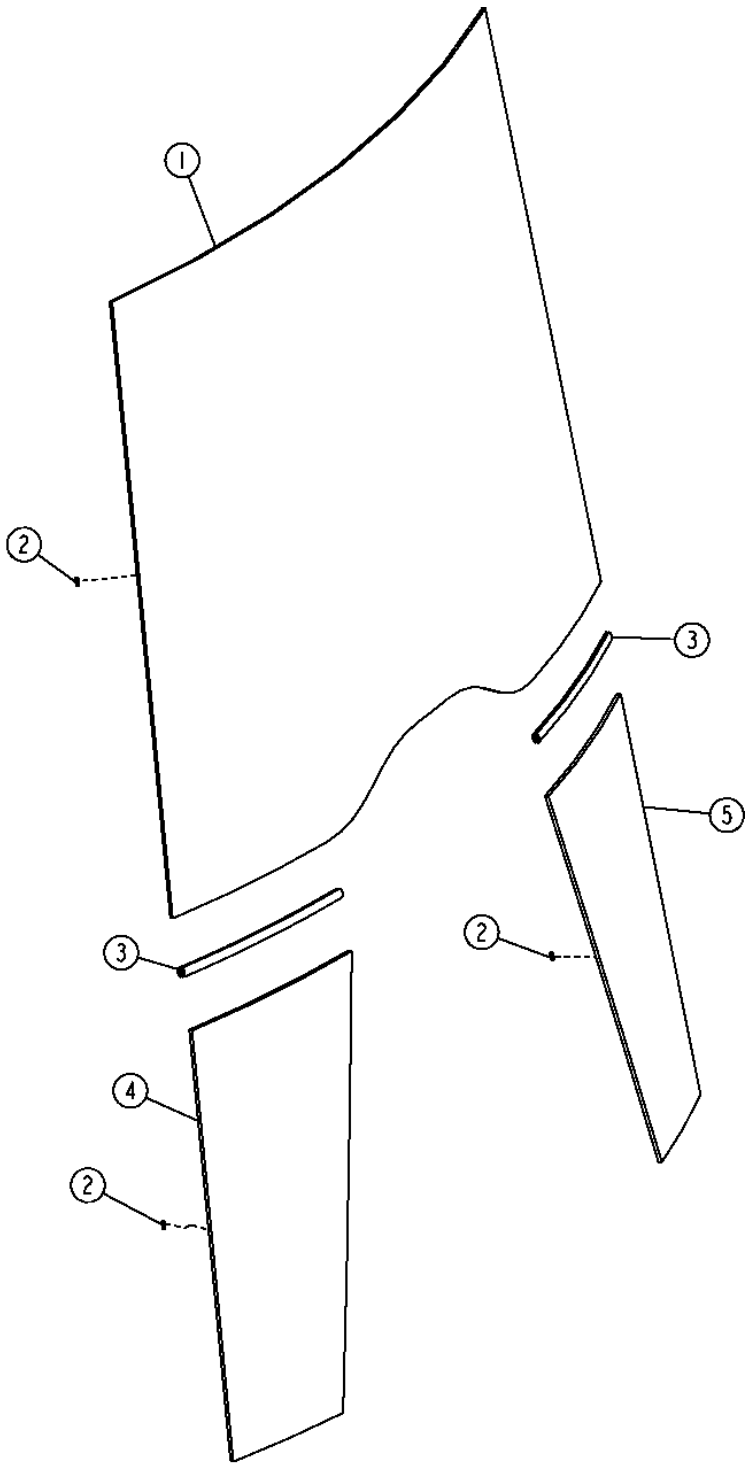

WINDSHIELD GLASS FOR CAB
VITRE DE PARE-BRISE POUR CABINE
CRISTAL DE PARABRISAS PARA CABINA

KEY	PART NO.	PART NAME	QTY.	SERIAL NO.	410J	410TMC	REMARKS
1	T191071	WINDOWPANE	1		X	X	
2	T135675	STAND-OFF	22		X	X	
3	T164697	ISOLATOR	2		X	X	
4	T191072	WINDOWPANE	1		X	X	LOWER RIGHT
5	T191073	WINDOWPANE	1		X	X	LOWER LEFT

SLIDING REAR WINDOWS AND CORNER WINDOWPANES
GLACES ARRIERE COULISSANTES ET GLACES DE COIN
VENTANAS TRASERAS DESLIZANTES Y CRISTALES DE ESQUINA

T200471 -UN-28MAY04

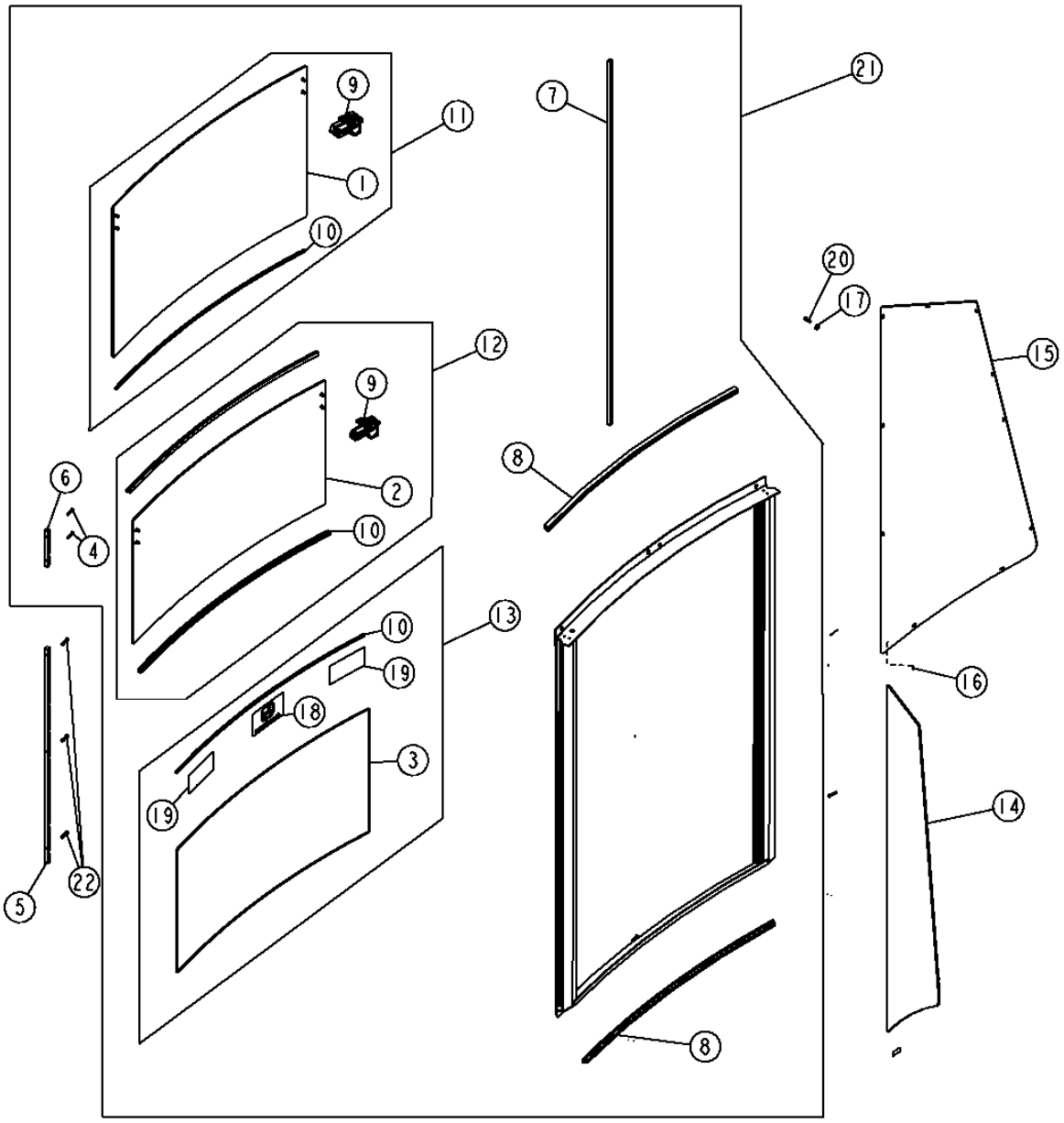

T200471

SLIDING REAR WINDOWS AND CORNER WINDOWPANES
GLACES ARRIERE COULISSANTES ET GLACES DE COIN
VENTANAS TRASERAS DESLIZANTES Y CRISTALES DE ESQUINA

KEY	PART NO.	PART NAME	QTY.	SERIAL NO.	410J	410TMC	REMARKS
1	T201955	WINDOWPANE	1		X	X	
2	T201954	WINDOWPANE	1		X	X	
3	T201953	WINDOWPANE	1		X	X	
4	T201952	SCREW	4		X	X	
5	T201957	FRAME	2		X	X	
6	T201956	FRAME	2		X	X	
7	T201958	WEATHERSTRIP	2		X	X	
8	T201968	GASKET	2		X	X	
9	AT302817	LATCH	1		X	X	(INCLUDES HARDWARE AND (1) LATCH)
	21H1395	SCREW	2		X	X	0.164" X 2", (TOP WINDOW)
	21H1367	SCREW	2		X	X	0.164" X 1-3/8", (MIDDLE WINDOW)
	T166371	GROMMET	2		X	X	
	T223289	INSERT	2		X	X	0.164"
10	AT307770	SEAL	4		X	X	
11	AT302816	WINDOW	1		X	X	
12	AT302815	WINDOW	1		X	X	
13	AT302813	WINDOW	1		X	X	
14	T164705	WINDOWPANE	1		X	X	(RIGHT REAR CORNER)
15	T164708	WINDOWPANE	1		X	X	(LEFT REAR CORNER)
16	T135675	STAND-OFF	22		X	X	
17	24M7139	WASHER	6		X	X	
18	JD5750	LABEL	1		X	X	
19	T183768	LABEL	1		X	X	
20	19M7775	SCREW	6		X	X	M6 X 16
21	AT302812	WINDOW	1		X	X	CONVENIENCE ASSY, (ALSO ORDER (2) T201957 AND (6) T208077)
22	T208077	SCREW	6		X	X	

FRONT WINDSHIELD WIPER SYSTEM
ESSUIE-GLACE AVANT
SISTEMA DE LIMPIAPARABRISAS

TX1014628 -UN-20DEC06

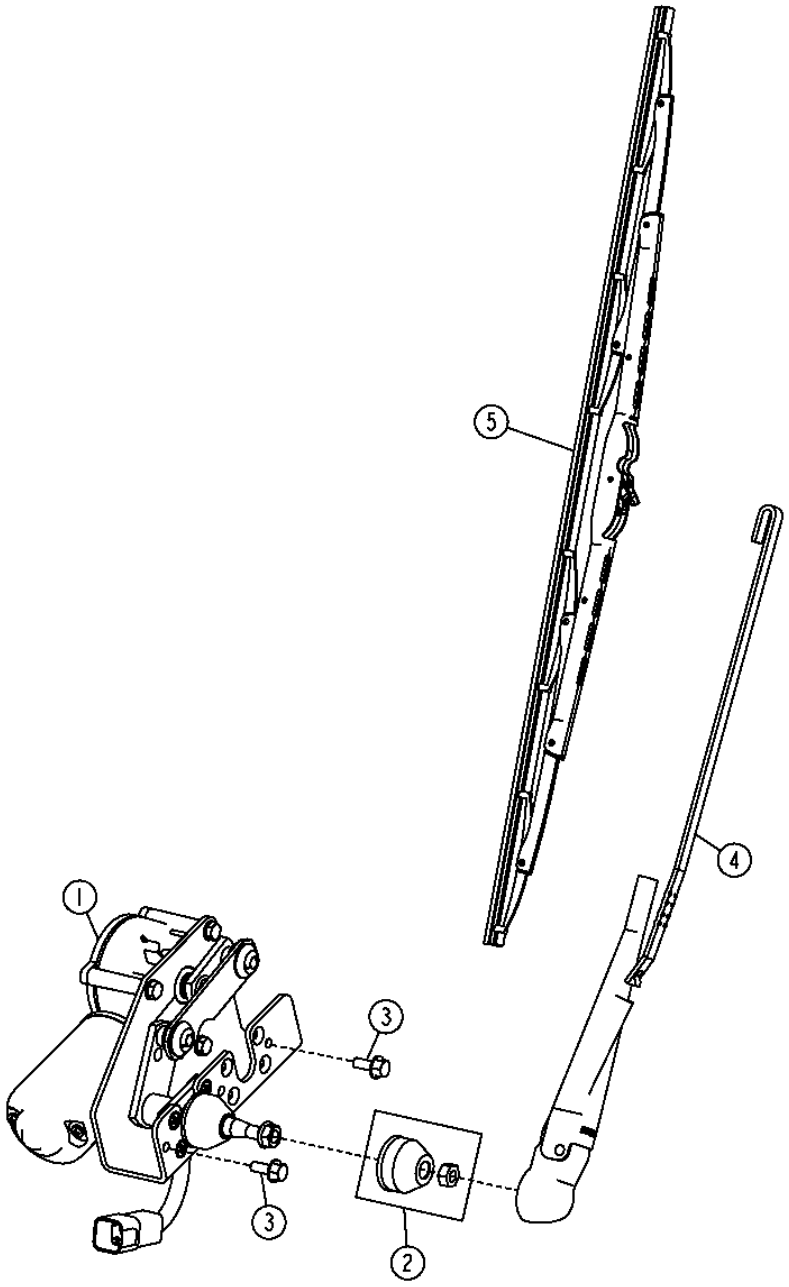

TX1014628

FRONT WINDSHIELD WIPER SYSTEM
ESSUIE-GLACE AVANT
SISTEMA DE LIMPIAPARABRISAS

KEY	PART NO.	PART NAME	QTY.	SERIAL NO.	410J	410TMC	REMARKS
1	AT315228	WIPER MOTOR	1		X	X	(INCLUDES RE40049)
2	RE40049	KIT	1		X	X	MOUNTING HARDWARE
3	19M7775	SCREW	2		X	X	M6 X 16
4	AT323012	WIPER ARM	1		X	X	
5	AL153661	WIPER BLADE	1		X	X	

FRONT WINDSHIELD WASHER RESERVOIR AND PUMP
RESERVOIR ET POMPE DE LAVE-GLACE AVANT
DEPOSITO DE LAVAPARABRISAS Y BOMBA

TP58145 -UN-05OCT00

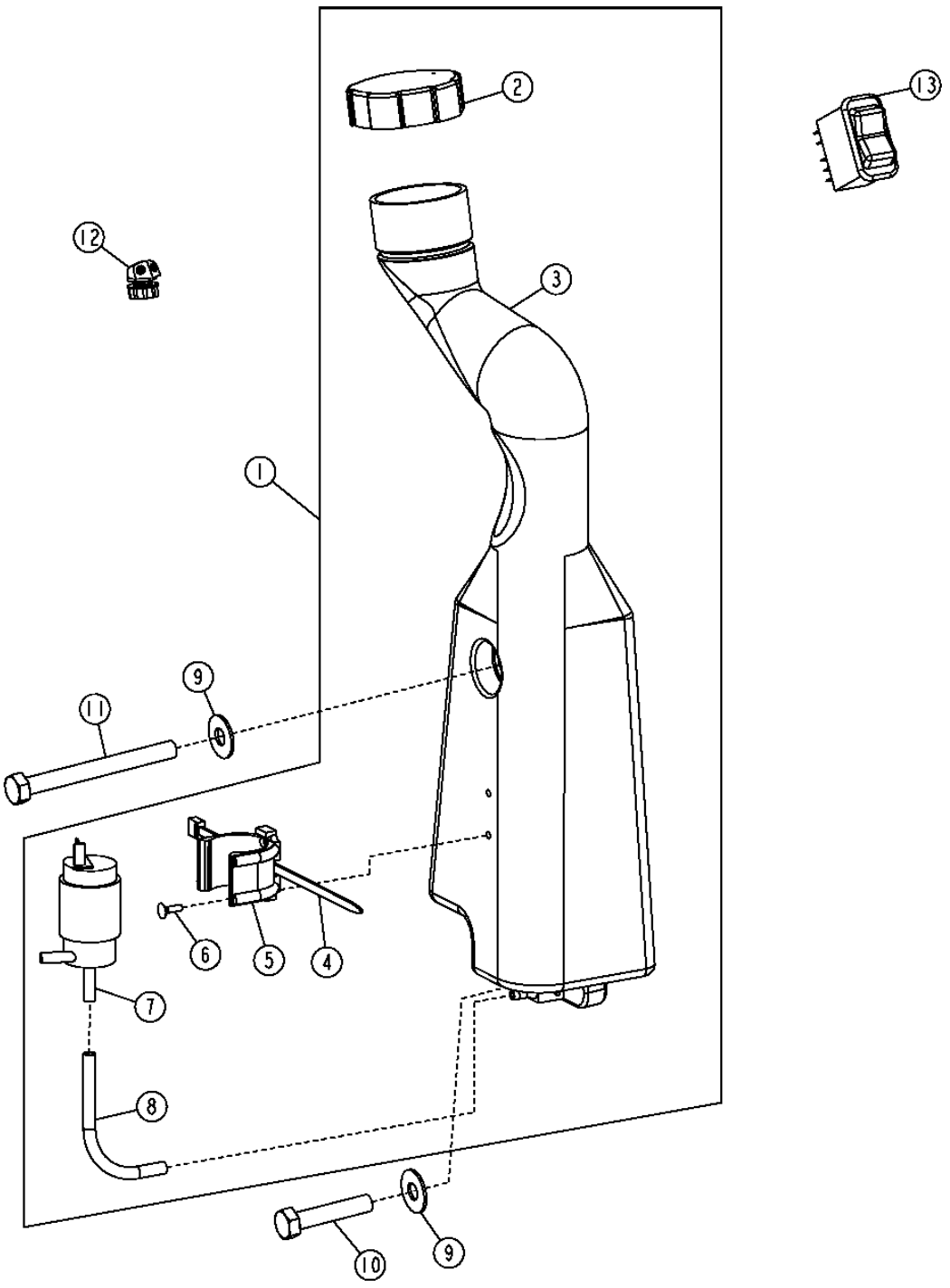

TP58145

FRONT WINDSHIELD WASHER RESERVOIR AND PUMP
RESERVOIR ET POMPE DE LAVE-GLACE AVANT
DEPOSITO DE LAVAPARABRISAS Y BOMBA

KEY	PART NO.	PART NAME	QTY.	SERIAL NO.	410J	410TMC	REMARKS
1	AT187710	WINDSHIELD WASHER	1		X	X	
2	AT173193	CAP	1		X	X	
3	T179055	RESERVOIR	1		X	X	
4	R44302	TIE BAND	1		X	X	
5	T183344	BRACKET	1		X	X	
6	R116089	SCREW	2		X	X	0.138" X 1/2"
7	AT174348	PUMP	1		X	X	
8	.....	HOSE	1		X	X	(MAKE FROM R120653 BULK MATERIAL, CUT TO LENGTH)
9	24H1307	WASHER	2		X	X	
10	R151507	CAP SCREW	1		X	X	M10 X 50
11	M132832	CAP SCREW	1		X	X	M10 X 100
12	AT188766	NOZZLE	1		X	X	
13	AT317446	TOGGLE/ROCKER SWITCH	1		X	X	

REAR WINDSHIELD WIPER SYSTEM
ESSUIE-GLACE ARRIERE
SISTEMA DE LIMPIACRISTAL

TX1014626 -UN-04DEC06

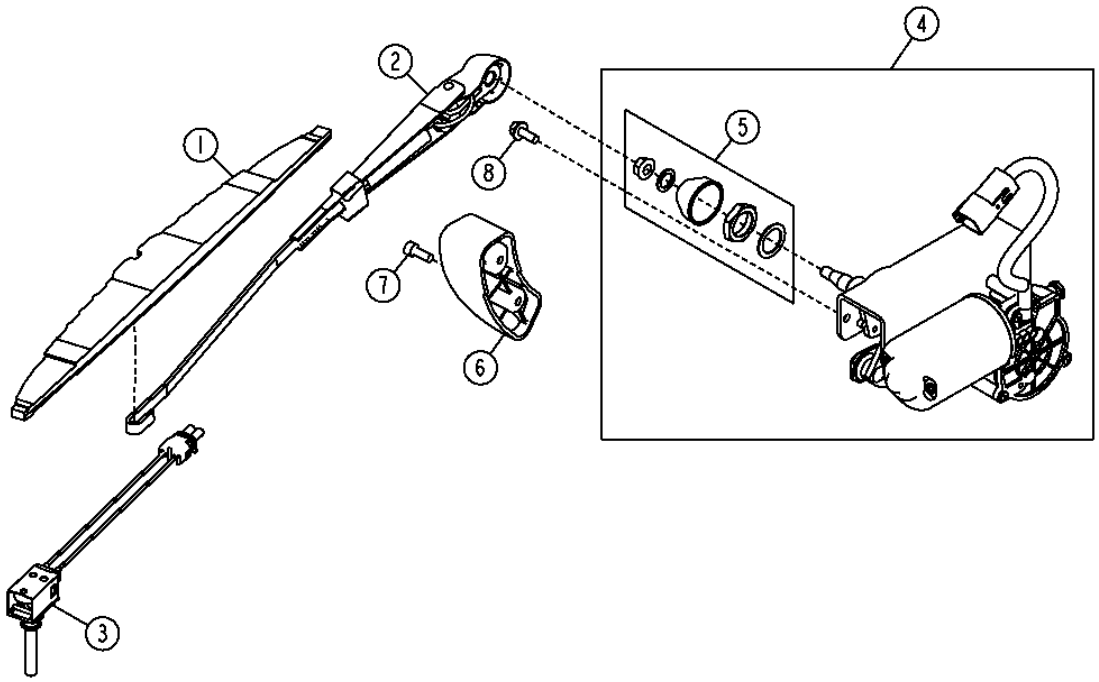

TX1014626

REAR WINDSHIELD WIPER SYSTEM
ESSUIE-GLACE ARRIERE
SISTEMA DE LIMPIACRISTAL

KEY	PART NO.	PART NAME	QTY.	SERIAL NO.	410J	410TMC	REMARKS
1	AT304631	WIPER BLADE	1		X	X	
2	AT323013	WIPER ARM	1		X	X	
3	AT305685	PUSH SWITCH	1		X	X	
4	AT315227	WIPER MOTOR	1		X	X	(INCLUDES RE40049)
5	RE40049	KIT	1		X	X	
6	AT340856	RAMP	2		X	X	
7	19M8553	SCREW	1		X	X	M6 X 16

BACKHOE CONTROL CONSOLE (410J)
CONSOLE DE COMMANDE DE RETROPELLE (410J)
CONSOLA DE CONTROL DE RETROEXCAVADORA (410J)

TP58177 -UN-12AUG00

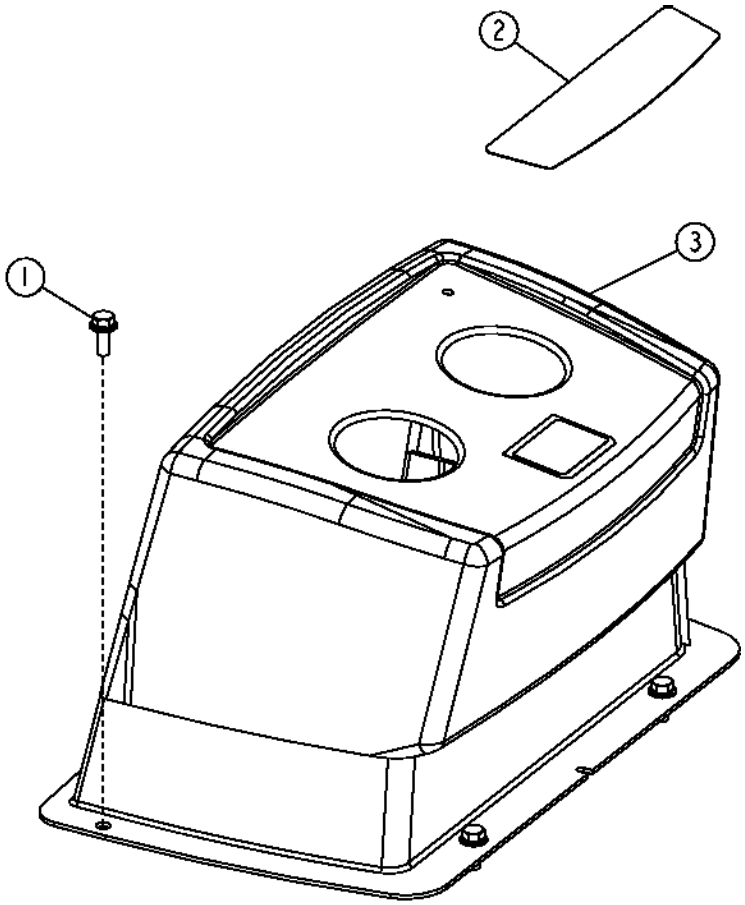

TP58177

BACKHOE CONTROL CONSOLE (410J)
CONSOLE DE COMMANDE DE RETROPELLE (410J)
CONSOLA DE CONTROL DE RETROEXCAVADORA (410J)

KEY	PART NO.	PART NAME	QTY.	SERIAL NO.	410J	410TMC	REMARKS
1	19M7866	SCREW	4		X		M8 X 20
2	T165584	LABEL	1		X		
3	AT189269	COVER	1		X		
	AT189270	COVER	1		X		W/ RIGHT PEDAL
	AT189271	COVER	1		X		W/ LEFT AND RIGHT PEDAL

BACKHOE CONTROL LEVER CONSOLE, MULTIPLE LEVERS (410J)
CONSOLE DE COMMANDE DE RETROPELLE, LEVIERS MULTIPLES (410J)
CONSOLA DE CONTROL DE RETROEXCAVADORA, PALANCAS MULTIPLES (410J)

TP69618 -UN-12AUG00

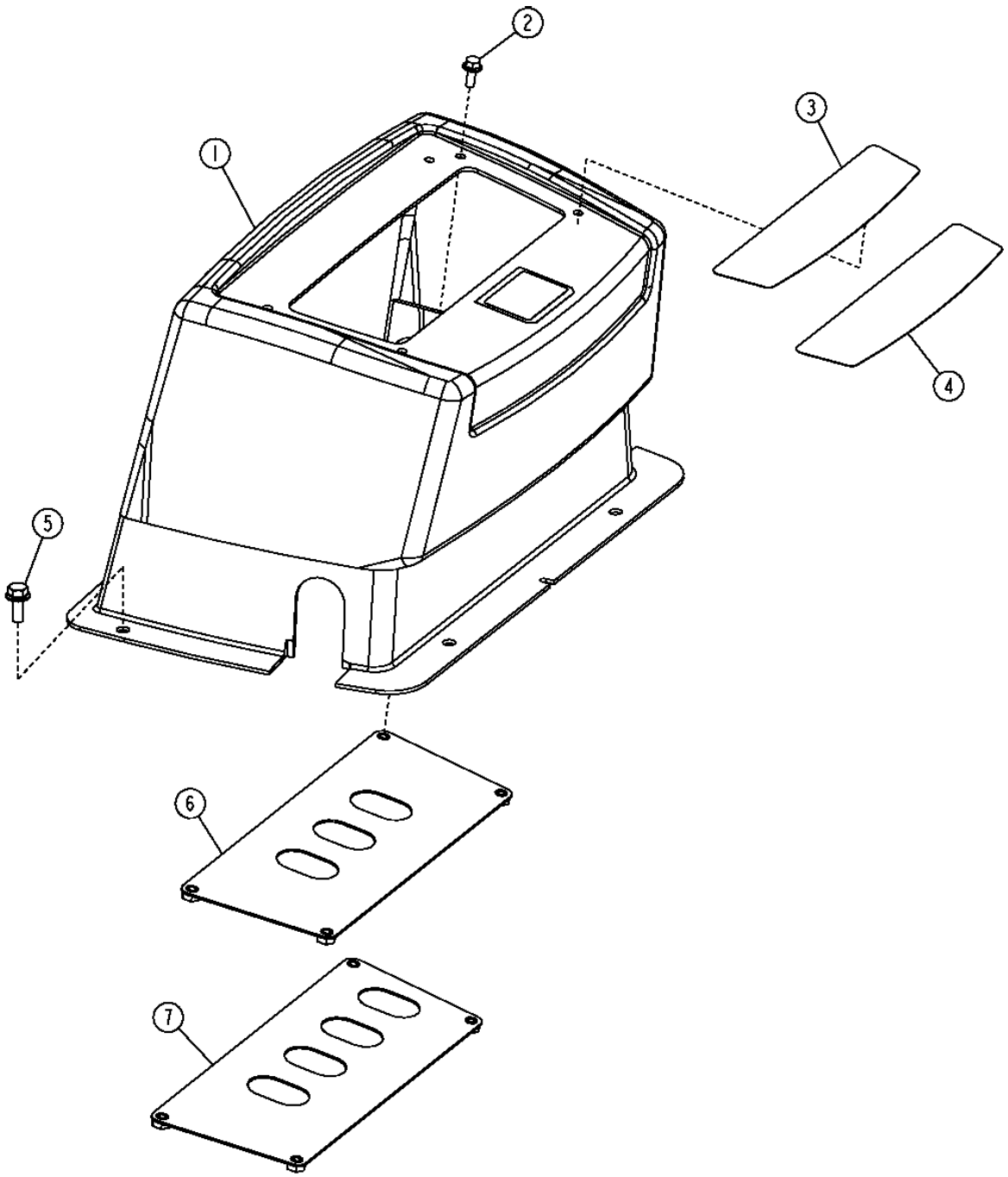

TP69618

BACKHOE CONTROL LEVER CONSOLE, MULTIPLE LEVERS (410J)
CONSOLE DE COMMANDE DE RETROPELLE, LEVIERS MULTIPLES (410J)
CONSOLA DE CONTROL DE RETROEXCAVADORA, PALANCAS MULTIPLES (410J)

KEY	PART NO.	PART NAME	QTY.	SERIAL NO.	410J	410TMC	REMARKS
1	AT189272	COVER	1		X		
2	19M7775	SCREW	4		X		M6 X 16
3	T165585	LABEL	1		X		THREE LEVER
4	T165586	LABEL	1		X		THREE LEVER WITH EXTENDIBLE
5	19M7866	SCREW	4		X		M8 X 20
6	AT312121	COVER	1		X		THREE LEVER
7	AT311929	COVER	1		X		THREE LEVER WITH EXTENDIBLE

BACKHOE CONSOLE (PILOT CONTROL)
CONSOLE DE RETROPELLE (COMMANDE PILOTE)
CONSOLA DE RETROEXCAVADORA (CONTROL PILOTO)

T165569 -UN-

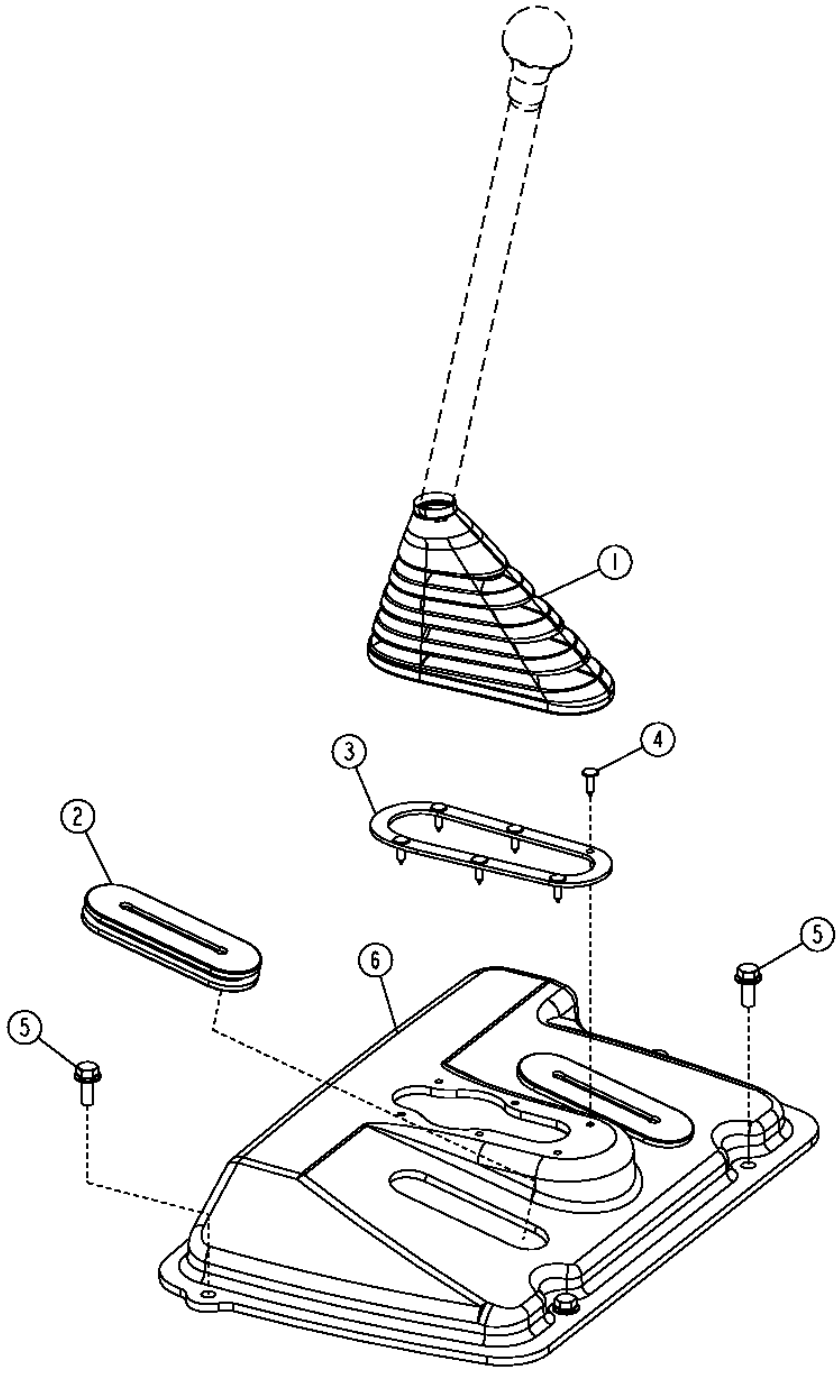

BACKHOE CONSOLE (PILOT CONTROL)
CONSOLE DE RETROPELLE (COMMANDE PILOTE)
CONSOLA DE RETROEXCAVADORA (CONTROL PILOTO)

KEY	PART NO.	PART NAME	QTY.	SERIAL NO.	410J	410TMC	REMARKS
1	T183468	BOOT	1		X	X	
2	T200095	GROMMET	AR		X	X	
3	T183404	RING	1		X	X	
4	T183882	CLIP	6		X	X	
5	19M7866	SCREW	4		X	X	
6	T200092	COVER	1		X	X	(NO PEDALS)
	T200093	COVER	1		X	X	(ONE PEDAL)
	T200094	COVER	1		X	X	(TWO PEDALS)

STEERING COLUMN COVERS
COUVERCLE DE COLONNE DE DIRECTION
CUBIERTA DE LA COLUMNA DE DIRECCION

TX1014870 -UN-20DEC06

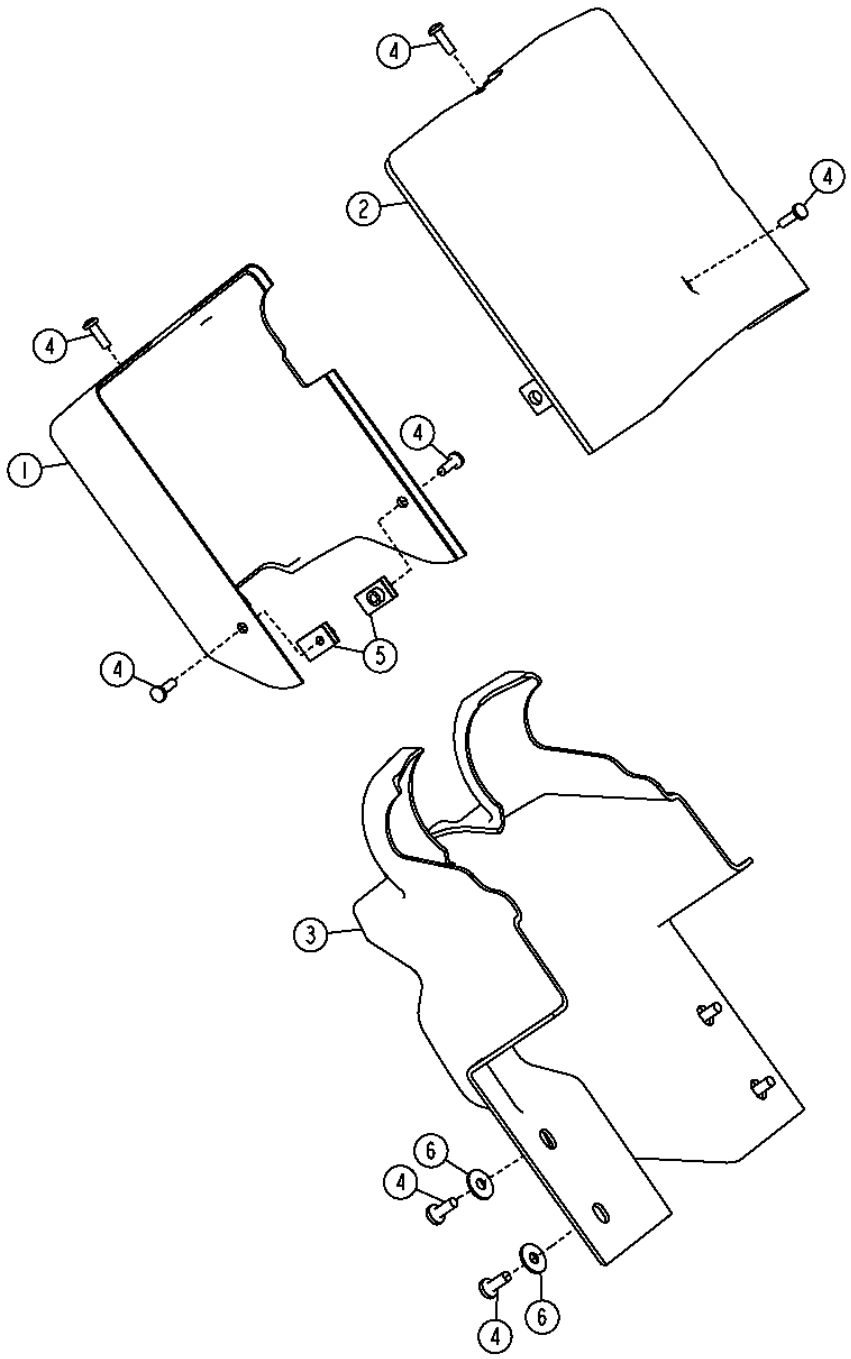

TX1014870

STEERING COLUMN COVERS
COUVERCLE DE COLONNE DE DIRECTION
CUBIERTA DE LA COLUMNA DE DIRECCION

KEY	PART NO.	PART NAME	QTY.	SERIAL NO.	410J	410TMC	REMARKS
1	T210624	COVER	1		X	X	COLUMN, LOWER
2	T210623	COVER	1		X	X	COLUMN, UPPER
3	T216833	COVER	1		X	X	STEERING COLUMN, STATIONARY
4	21M7271	SCREW	5		X	X	M5 X 16
5	R117892	NUT	2		X	X	
6	24H1646	WASHER	4		X	X	17/64" X 3/4" X 0.060"

FRONT CONSOLE (CAB OR CANOPY)
CONSOLE AVANT POUR CABINE ET AUVENT
CONSOLA DELANTERA DE CABINA Y DOSEL

TX1014847 -UN-29DEC06

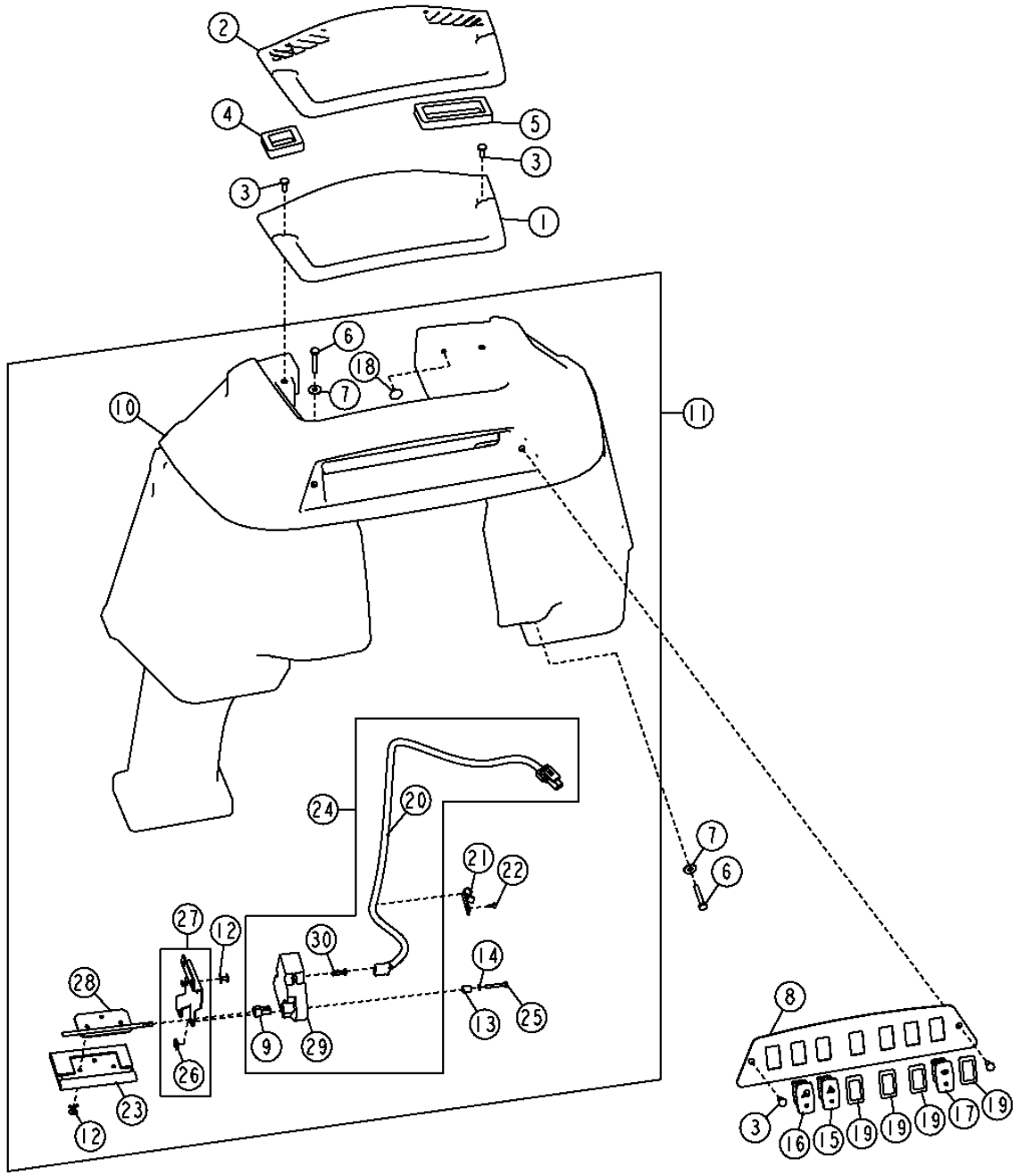

FRONT CONSOLE (CAB OR CANOPY)
CONSOLE AVANT POUR CABINE ET AUVENT
CONSOLA DELANTERA DE CABINA Y DOSEL

KEY	PART NO.	PART NAME	QTY.	SERIAL NO.	410J	410TMC	REMARKS
1	T183706	PANEL	1		X		(CANOPY)
2	T167083	PANEL	1		X	X	(CAB)
3	21M7292	SCREW	6		X	X	M6 X 16
4	T184008	ISOLATOR	1		X	X	LEFT
5	T184009	ISOLATOR	1		X	X	RIGHT
6	21M7403	SCREW	6		X	X	M6 X 40
7	24H1821	WASHER	4		X	X	9/32" X 47/64" X 1/16"
8	T216570	PANEL	1		X	X	
9	T185485	ADAPTER FITTING	1		X	X	
10	T167119	COVER	1		X		(CANOPY)
	T167082	COVER	1		X	X	(CAB)
11	AT191629	COVER	1		X	X	(WITH AIR CONDITIONING)
12	T184345	RIVET	6		X	X	
13	T134586	SPACER	1		X	X	6.580 X 9.525 X 12 MM
14	24M7117	WASHER	3		X	X	4.300 X 9 X 0.800 MM
15	AT304026	SWITCH	1		X	X	HAZARD
16	AT309435	TOGGLE/ROCKER SWITCH	1		X	X	FRONT LIGHTS
17	AT317445	TOGGLE/ROCKER SWITCH	1		X	X	FRONT WINDSHIELD WIPER
18	M111583	PLUG	1		X	X	
19	M115279	PLUG	4		X	X	(WITH SEAL)
20	AT191919	WIRING HARNESS	1		X	X	
21	T185743	CLIP	3		X	X	
22	T185769	SCREW	3		X	X	
23	AT191688	PLATE	1		X	X	(WITH SEAL)
24	AT191876	ACTUATOR	1		X	X	
25	19M7715	CAP SCREW	3		X	X	M4 X 30
26	T185742	NUT	3		X	X	
27	AT191877	BRACKET	1		X	X	
28	AT191826	GATE	1		X	X	
29	.....	ACTUATOR	1		X	X	(ORDER AT191876) MOTOR
30	T186022	ELECTRICAL CONNECTOR ASSY	1		X	X	

SIDE INSTRUMENT PANEL HOUSING AND STABILIZER LEVER COVER (CANOPY)
LOGEMENT DE TABLEAU DE BORD LATERAL ET PROTECTION DE LEVIER DE STABILISATEUR (TOIT DE PROTECTION)
CAJA DE TABLERO LATERAL DE INSTRUMENTOS Y CUBIERTA DE PALANCA DE ESTABILIZADOR (TECHO)

TX1014889 -UN-27DEC06

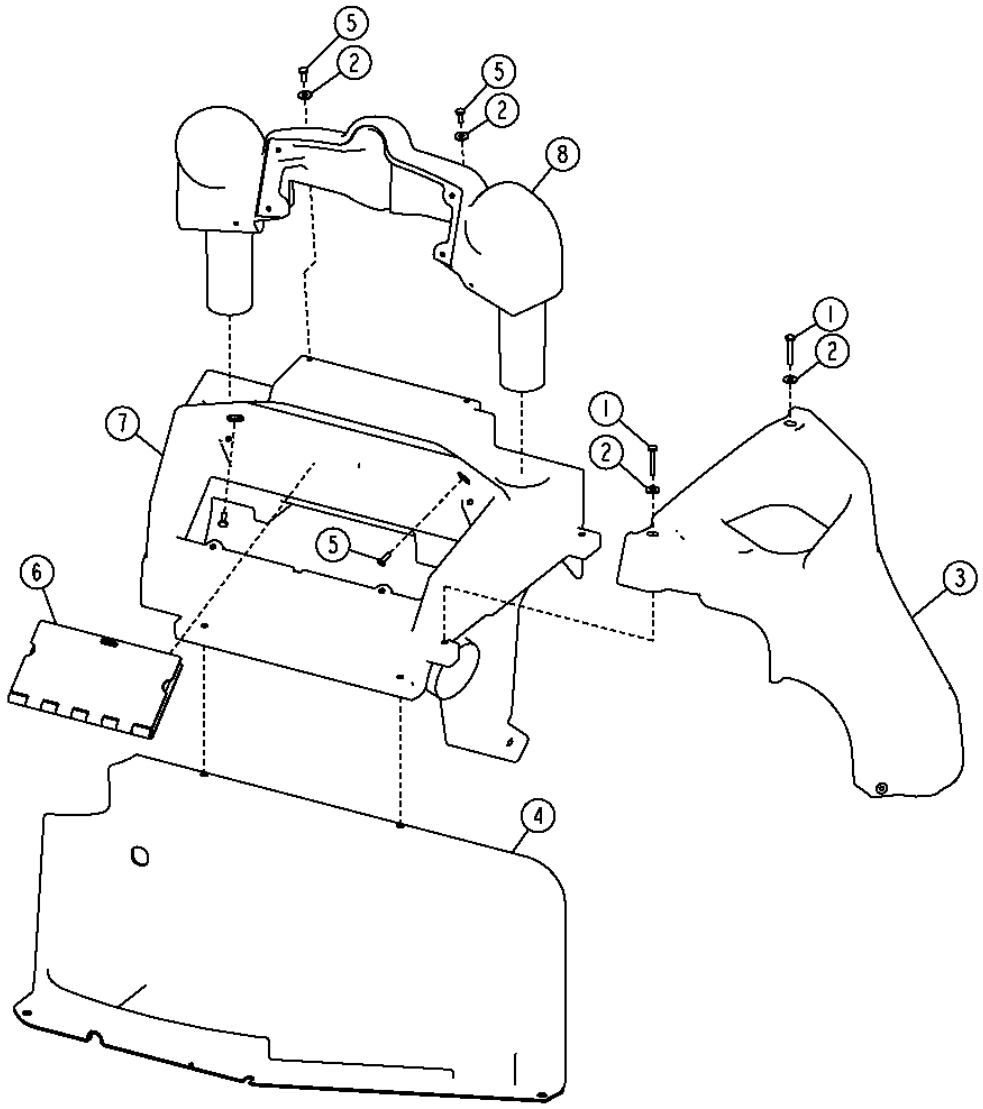

TX1014889

SIDE INSTRUMENT PANEL HOUSING AND STABILIZER LEVER COVER (CANOPY)
LOGEMENT DE TABLEAU DE BORD LATERAL ET PROTECTION DE LEVIER DE STABILISATEUR (TOIT DE PROTECTION)
CAJA DE TABLERO LATERAL DE INSTRUMENTOS Y CUBIERTA DE PALANCA DE ESTABILIZADOR (TECHO)

KEY	PART NO.	PART NAME	QTY.	SERIAL NO.	410J	410TMC	REMARKS
1	21M7403	SCREW	3		X	X	M6 X 40
2	24H1821	WASHER	9		X	X	9/32" X 47/64" X 1/16"
3	T185619	COVER	1		X		STABILIZER CONTROL
	AT304324	COVER	1		X		PILOT CONTROL
4	T216499	COVER	1		X		CENTER
5	21M7292	SCREW	4		X	X	M6 X 16
6	AT324916	COVER	1		X		VANDAL PROTECTION
7	T210390	HOUSING	1		X		
8	T215392	HOUSING	1		X	X	

SIDE INSTRUMENT PANEL HOUSING AND STABILIZER CONTROL COVER (CAB)
LOGEMENT DE TABLEAU DE BORD LATERAL ET PROTECTION DE COMMANDE DE STABILISATEUR (CABINE)
CAJA LATERAL DE TABLERO DE INSTRUMENTOS Y CUBIERTA DE CONTROL DEL ESTABILIZADOR (CABINA)

TX1014824 -UN-29DEC06

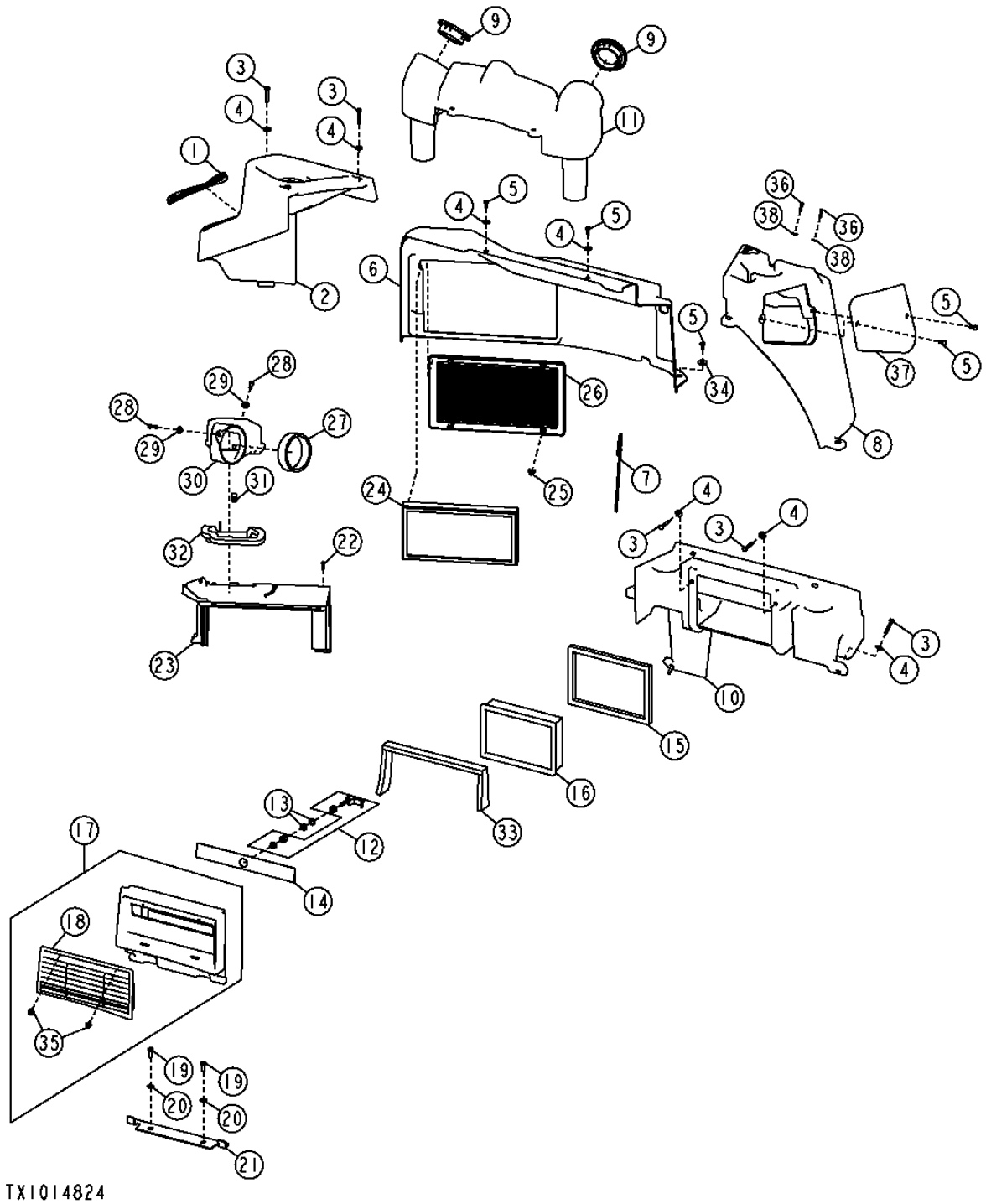

SIDE INSTRUMENT PANEL HOUSING AND STABILIZER CONTROL COVER (CAB)
LOGEMENT DE TABLEAU DE BORD LATERAL ET PROTECTION DE COMMANDE DE STABILISATEUR (CABINE)
CAJA LATERAL DE TABLERO DE INSTRUMENTOS Y CUBIERTA DE CONTROL DEL ESTABILIZADOR (CABINA)

KEY	PART NO.	PART NAME	QTY.	SERIAL NO.	410J	410TMC	REMARKS
1	T186452	ISOLATOR	1		X	X	
2	T185494	COVER	1		X		STABILIZER CONTROL
	T185619	COVER	1		X		STABILIZER CONTROL (FOR PILOT CONTROL WITH SELECTOR VALVE)
	T211367	COVER	1			X	ELECTROHYDRAULIC
3	21M7403	SCREW	17		X	X	M6 X 40
4	24H1821	WASHER	17		X	X	9/32" X 47/64" X 1/16"
5	21M7292	SCREW	14		X	X	M6 X 16
6	T216498	COVER	1		X	X	CENTER
7	H77698	TIE BAND	1		X	X	
8	T210372	COVER	1		X		LOADER CONTROL
9	AT227669	LOUVER	2		X	X	
10	T210388	HOUSING	1		X	X	INSTRUMENT PANEL (AIR CONDITIONING)
11	T215457	HOUSING	2		X	X	
12	AT222150	LATCH	1		X	X	
13	24H1136	WASHER	2		X	X	11/32" X 11/16" X 0.065"
14	T185896	ISOLATOR	1		X	X	
15	T185770	ISOLATOR	1		X	X	
16	AT191102	AIR FILTER	1		X	X	FRESH AIR
17	AT185396	COVER	1		X	X	FRESH AIR
18	T165808	GRILLE	1		X	X	
19	19M7881	SCREW	2		X	X	M8 X 20
20	24M7238	WASHER	2		X	X	8.700 X 17 X 2 MM
21	T184164	BRACKET	1		X	X	
22	T184620	SCREW	4		X	X	
23	T164620	HOUSING	1		X	X	TOP ACCESS
24	AT184590	AIR FILTER	1		X	X	
25	R120160	CLIP	4		X	X	
26	T164621	GRILLE	1		X	X	
27	T185844	ISOLATOR	1		X	X	
28	19M7933	CAP SCREW	2		X	X	M6 X 25
29	24M7139	WASHER	2		X	X	6.400 X 18 X 1.600 MM
30	T166322	AIR DUCT	1		X	X	
31	M84972	NUT	1		X	X	
32	T184370	SEAL	1		X	X	
33	T187110	ISOLATOR	1		X	X	
34	24M7207	WASHER	6		X	X	8.400 X 24 X 2 MM
35	T184214	RIVET	2		X	X	
36	37M7333	SCREW	10		X	X	
37	T216111	PANEL	1		X	X	
38	T83061	WASHER	2		X		

PILOT CONTROLLER ARM (LEFT SIDE)
BRAS DE COMMANDE PILOTE (COTE GAUCHE)
BRAZO DE PALANCA DE CONTROL PILOTO (LADO IZQUIERDO)

TX1014463 -UN-06DEC06

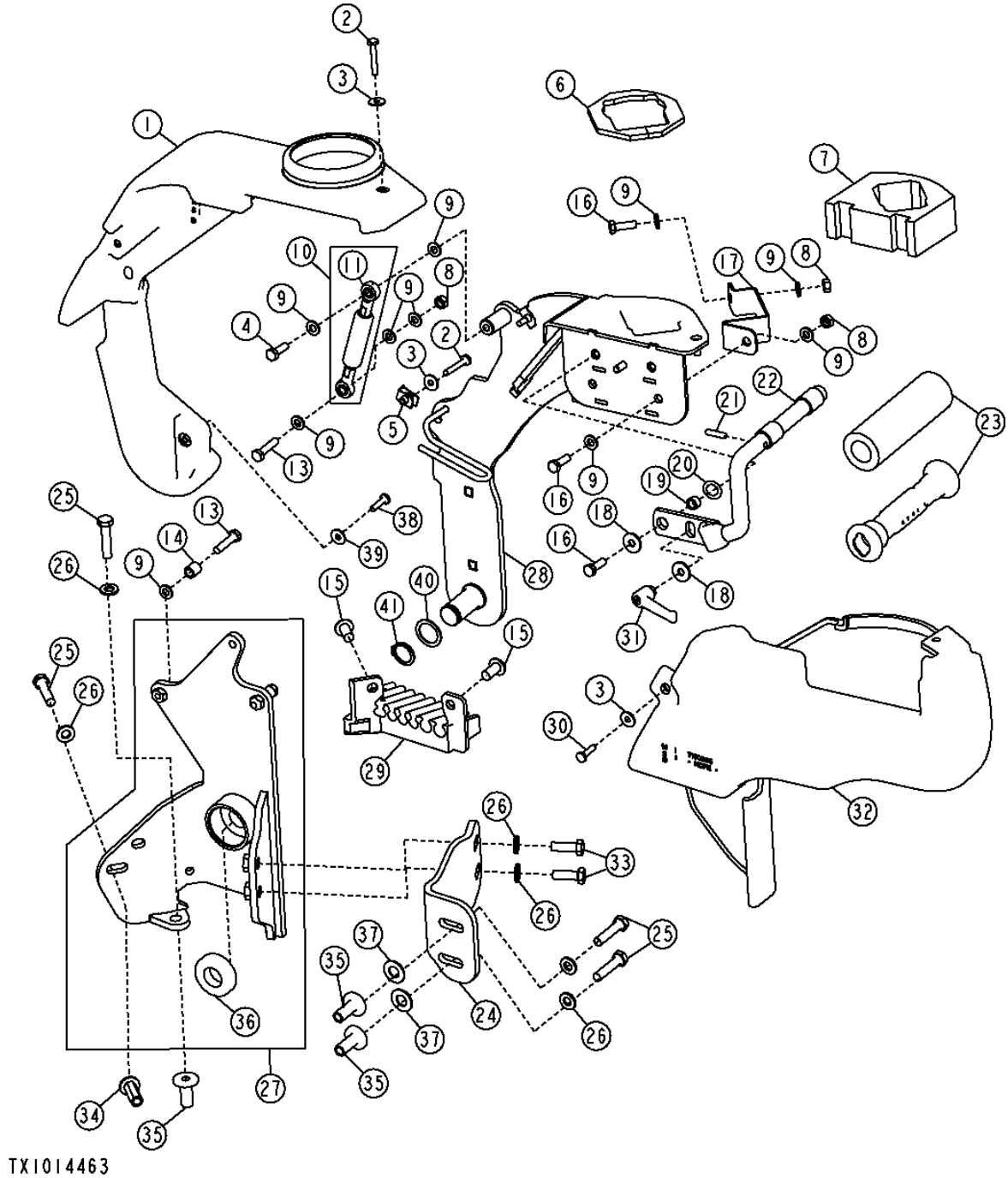

PILOT CONTROLLER ARM (LEFT SIDE)
BRAS DE COMMANDE PILOTE (COTE GAUCHE)
BRAZO DE PALANCA DE CONTROL PILOTO (LADO IZQUIERDO)

KEY	PART NO.	PART NAME	QTY.	SERIAL NO.	410J	410TMC	REMARKS
1	AT199591	COVER	1		X		
2	T134874	SELF-LOCKING SCREW	3		X		M6 X 40
3	24H1646	WASHER	5		X		
4	19M7407	CAP SCREW	1		X		M8 X 25
5	R120332	NUT	2		X		
6	T190998	ISOLATOR	1		X		
7	T190999	ISOLATOR	1		X		
8	14M7273	NUT	4		X		M8
9	24M7238	WASHER	9		X		
10	AT340156	GAS OPERATED CYLINDER	1		X		
11	AM102062	LINK END	2		X		
13	19M8008	CAP SCREW	3		X		M8 X 35
14	28H3376	SPACER	2		X		
15	MT2485	PLUG	2		X		FASTENER
16	19M7407	CAP SCREW	3		X		M8 X 25
17	T190868	STRAP	1		X		
18	24M7298	WASHER	2		X		
19	28H3392	WASHER	1		X		
20	M87534	SPRING WASHER	1		X		
21	T190956	PIN	1		X		
22	AT300750	BRACKET	1		X		
23	AT303853	SLEEVE	1		X		
24	T190912	SUPPORT	1		X		
25	19M7572	CAP SCREW	4		X		M10 X 45
26	24M7239	WASHER	5		X		
27	AT198778	SUPPORT	1		X		
28	AT198777	ARM	1		X		
29	T190960	GUIDE	1		X		
30	T134895	SELF-LOCKING SCREW	2		X		M6 X 25
31	AT227063	LEVER	1		X		
32	AT199592	COVER	1		X		
33	19M7662	CAP SCREW	2		X		M10 X 30
34	T148410	NUT	2		X		M10
35	H173411	NUT	3		X		M10
36	JD10373	BALL BEARING	2		X		
37	24H1261	WASHER	2		X		
38	21M7310	SCREW	2		X		M6 X 25
39	24H1646	WASHER	5		X		
40	24H1844	WASHER	1		X		
41	W23122	SNAP RING	1		X		

PILOT CONTROLLER ARM (RIGHT SIDE)
BRAS DE COMMANDE PILOTE (COTE DROIT)
BRAZO DE PALANCA DE CONTROL PILOTO (LADO DERECHA)

T199111 -UN-07APR04

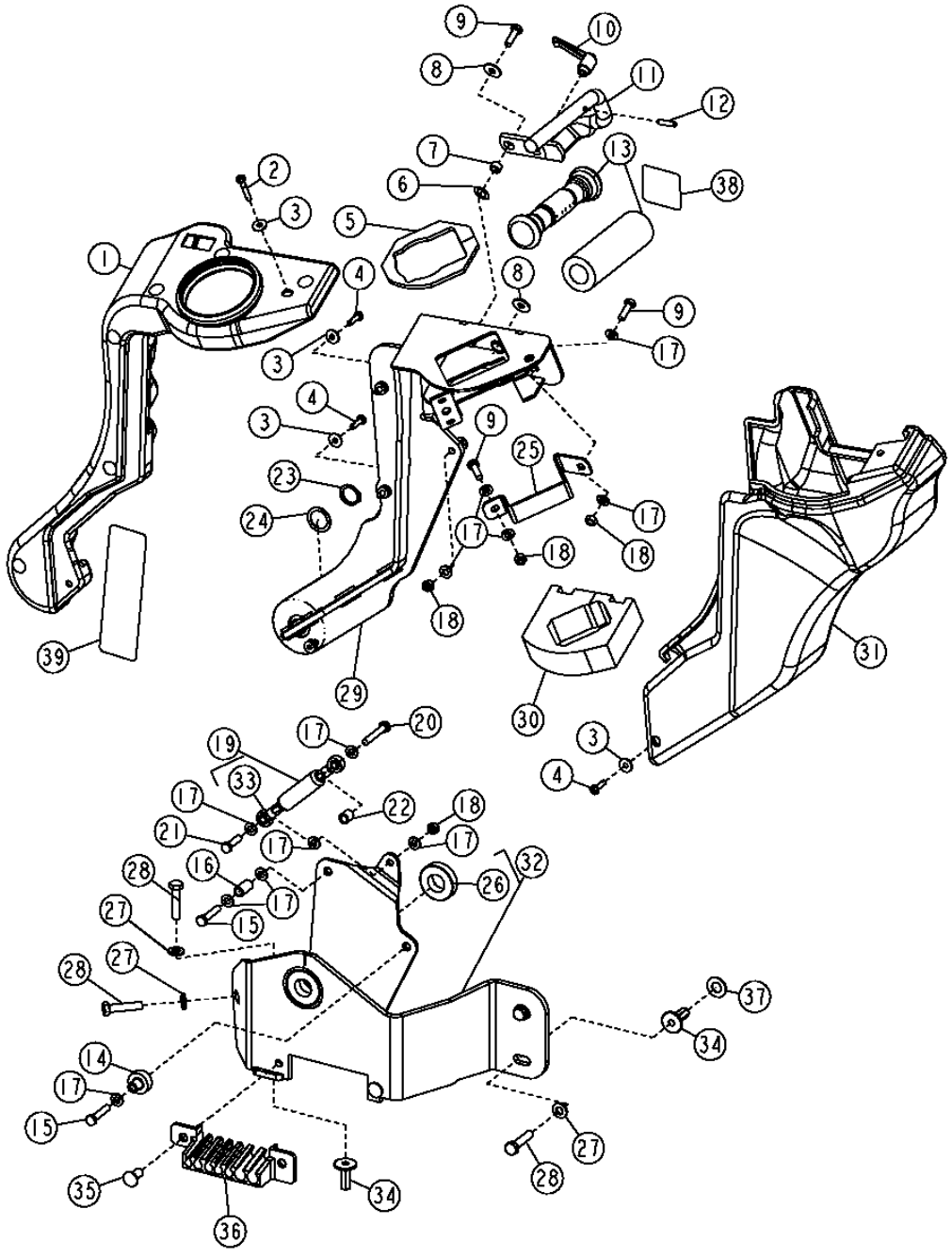

THIS PARTS LISTING IS CONTINUED

PILOT CONTROLLER ARM (RIGHT SIDE)
BRAS DE COMMANDE PILOTE (DROIT COTE)
BRAZO DE PALANCA DE CONTROL PILOTO (LADO DERECHO)

KEY	PART NO.	PART NAME	QTY.	SERIAL NO.	410J	410TMC	REMARKS
1	AT323820	COVER	1		X		
2	T134874	SELF-LOCKING SCREW	1		X		M6 X 40
3	24H1646	WASHER	5		X		
4	T134895	SELF-LOCKING SCREW	4		X		M6 X 25
5	T191000	ISOLATOR	1		X		
6	M87534	SPRING WASHER	1		X		
7	28H3392	WASHER	1		X		
8	24M7298	WASHER	2		X		
9	19M7407	CAP SCREW	3		X		M8 X 25
10	AT227063	LEVER	1		X		
11	AT300885	BRACKET	1		X		
12	T190956	PIN	1		X		
13	AT303853	SLEEVE	1		X		
14	T202720	BUSHING	1		X		
15	19M7922	CAP SCREW	2		X		M8 X 40
16	28H3390	SPACER	1		X		
17	24M7238	WASHER	14		X		
18	14M7273	NUT	4		X		M8
19	AT340156	GAS OPERATED CYLINDER	1		X		
20	19M8397	CAP SCREW	1		X		M8 X 50
21	19M7513	CAP SCREW	1		X		M8 X 30
22	28H3376	SPACER	1		X		
23	W23122	SNAP RING	1		X		
24	24H1844	WASHER	1		X		
25	T190868	STRAP	1		X		
26	JD10373	BALL BEARING	2		X		
27	24M7239	WASHER	5		X		
28	19M7572	CAP SCREW	4		X		M10 X 45
29	AT198776	ARM	1		X		
30	T190999	ISOLATOR	1		X		
31	AT199595	COVER	1		X		
32	AT198865	SUPPORT	1		X		
33	AM102062	LINK END	2		X		
34	H173411	NUT	6		X		M10
35	MT2485	PLUG	2		X		FASTENER
36	T190964	GUIDE	1		X		
37	24H1261	WASHER	2		X		
38	T200658	SAFETY SIGN	1		X		
39	T200781	LABEL	1		X		(BACKHOE CONTROLS)

SEAT / ARMREST
SIEGE / ACCOUDOIR
ASIENTO / REPOSABRAZOS

TX1014249 -UN-28DEC06

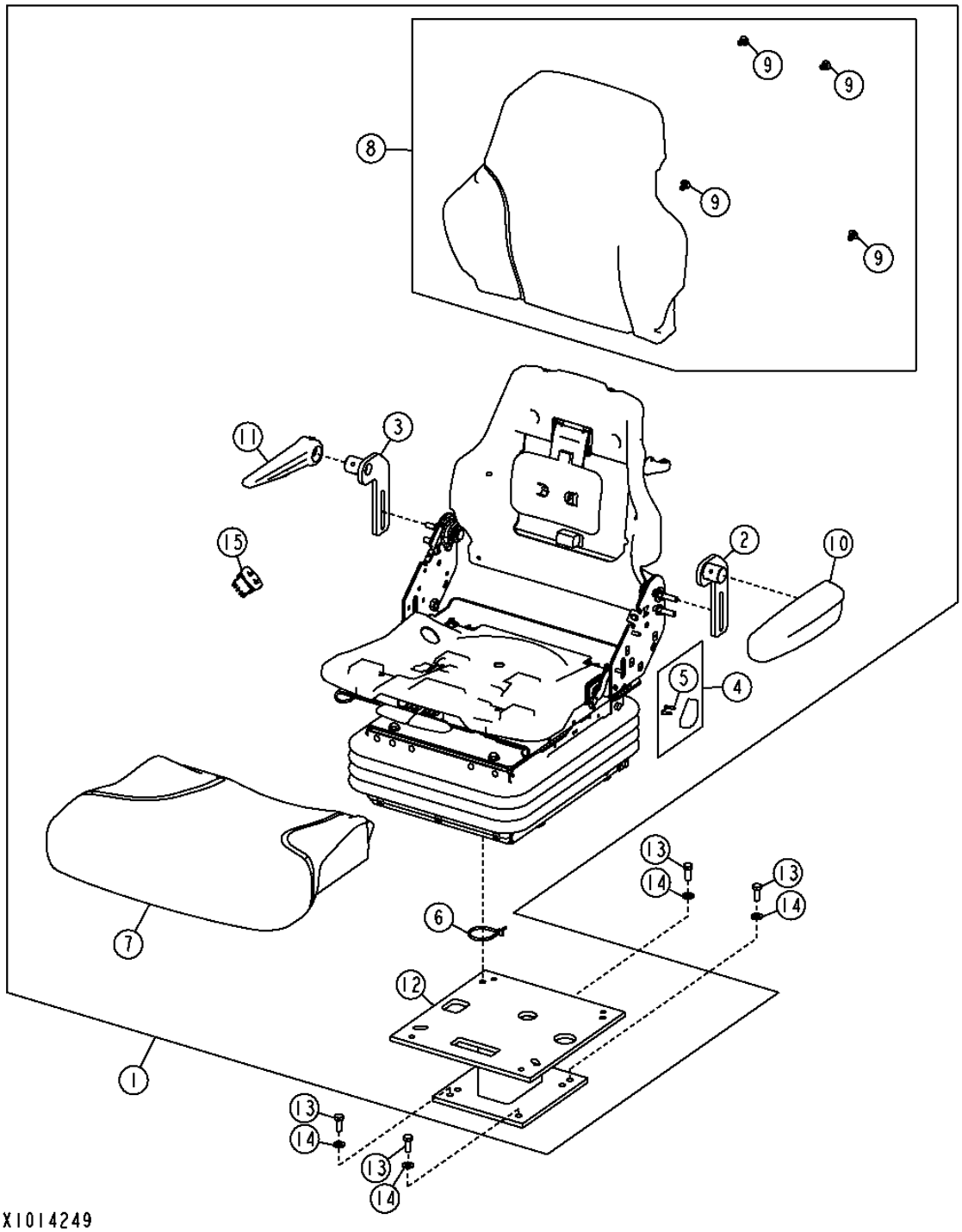

THIS PARTS LISTING IS CONTINUED

SEAT / ARMREST
SIEGE / ACCOUDOIR
ASIENTO / REPOSABRAZOS

KEY	PART NO.	PART NAME	QTY.	SERIAL NO.	410J	410TMC	REMARKS
1	AT322954	SEAT KIT	1		X		CLOTH WITH AIR SUSPENSION (W/O TMC) (INCLUDES SEAT, SUPENSION, ARMS AND BASE SHOWN ON OTHER PAGES)
	AT322955	SEAT KIT	1		X		VINYL WITH MECHANICAL SUSPENSION (W/O TMC) (INCLUDES SEAT, SUPENSION, ARMS AND BASE SHOWN ON OTHER PAGES)
	AT322956	SEAT KIT	1		X		CLOTH WITH MECHANICAL SUSPENSION (W/O TMC) (INCLUDES SEAT, SUPENSION, ARMS AND BASE SHOWN ON OTHER PAGES)
	AT312846	SEAT KIT	1			X	CLOTH WITH AIR SUPENSION (TMC) (INCLUDES SEAT, SUPENSION AND BASE SHOWN ON OTHER PAGES)
2	AT189030	BRACKET	1		X	X	LH
3	AT189059	BRACKET	1		X	X	RH
4	AT209025	KIT	1		X	X	
5	37H121	SCREW	2		X	X	
6	R44302	TIE BAND	1		X	X	
7	AT308795	CUSHION	1		X	X	(CLOTH SEAT BACK)
	AT221015	SEAT	1		X	X	(VINYL SEAT BACK)
8	AT308796	CUSHION	1		X	X	(CLOTH SEAT PAD)
	AT221016	PAD	1		X	X	(VINYL SEAT PAD)
9	T171686	CLIP	4		X	X	
10	AT312728	ARMREST KIT	1		X	X	LH
11	AT312730	ARMREST KIT	1		X	X	RH
12	AT209225	KIT	1		X	X	
13	19M7402	CAP SCREW	4		X	X	
14	24M7239	WASHER	4		X	X	
15	M115279	PLUG	1		X	X	

SEAT SLIDE AND ADJUSTER CONTROL LEVERS
GLISSIERE DE SIEGE ET LEVIERS DE COMMANDE DE REGLAGE
PALANCAS DE CONTROL DE DESLIZAMIENTO Y DE AJUSTE DEL ASIENTO

TX1014250 -UN-28DEC06

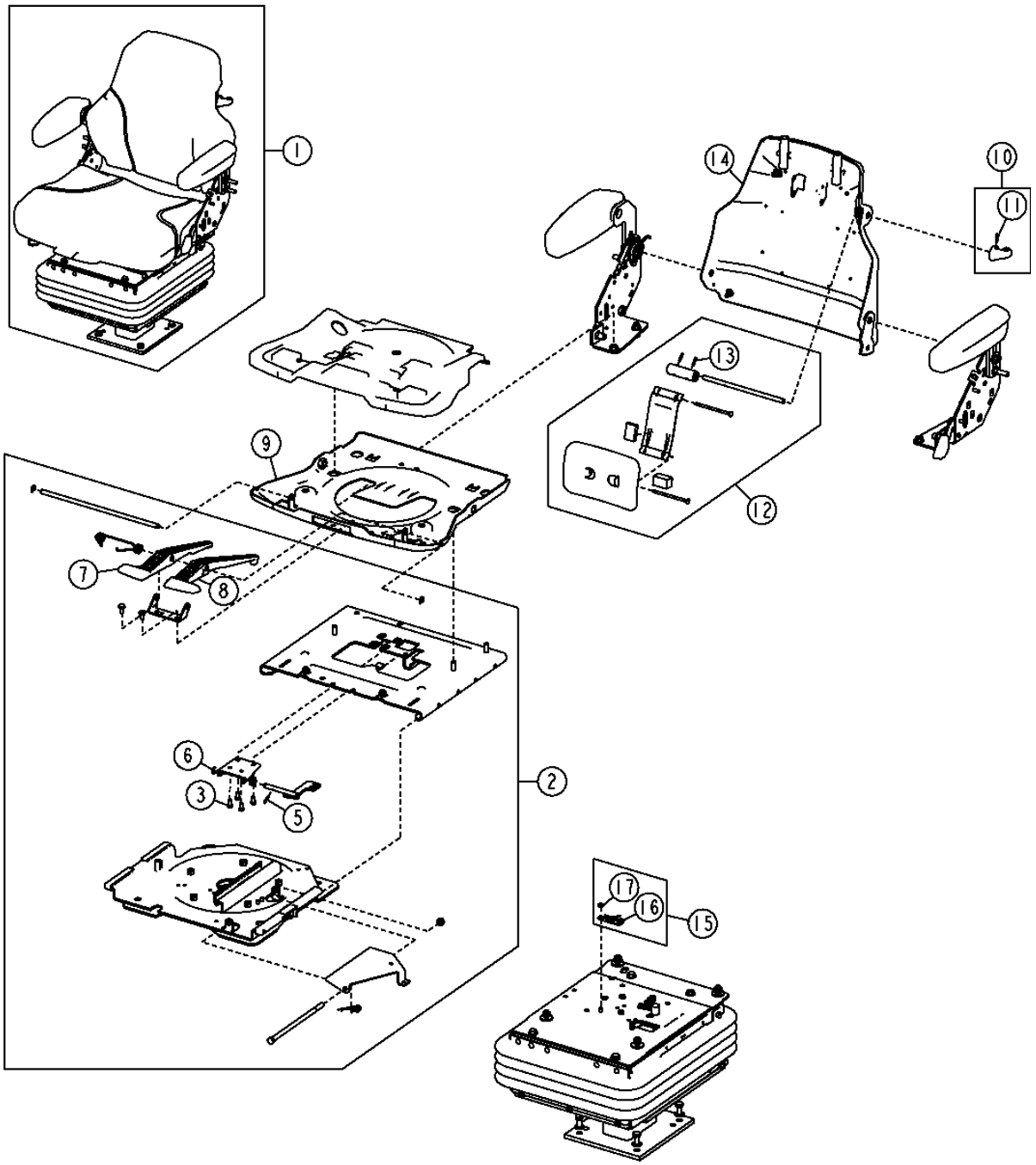

TX1014250

SEAT SLIDE AND ADJUSTER CONTROL LEVERS
GLISSIERE DE SIEGE ET LEVIERS DE COMMANDE DE REGLAGE
PALANCAS DE CONTROL DE DESLIZAMIENTO Y DE AJUSTE DEL ASIENTO

KEY	PART NO.	PART NAME	QTY.	SERIAL NO.	410J	410TMC	REMARKS
1	AT322954	SEAT KIT	1		X		CLOTH WITH AIR SUSPENSION (W/O TMC) (INCLUDES SEAT, SUPENSION, ARMS AND BASE SHOWN ON OTHER PAGES)
	AT322955	SEAT KIT	1		X		VINYL WITH MECHANICAL SUSPENSION (W/O TMC) (INCLUDES SEAT, SUPENSION, ARMS AND BASE SHOWN ON OTHER PAGES)
	AT322956	SEAT KIT	1		X		CLOTH WITH MECHANICAL SUSPENSION (W/O TMC) (INCLUDES SEAT, SUPENSION, ARMS AND BASE SHOWN ON OTHER PAGES)
	AT312846	SEAT KIT	1			X	CLOTH WITH AIR SUPENSION (TMC) (INCLUDES SEAT, SUPENSION AND BASE SHOWN ON OTHER PAGES)
2	AT179691	KIT	1		X	X	
3	19H1227	CAP SCREW	4		X	X	
4	21H1305	SCREW	2		X	X	
5	34H262	SPRING PIN	1		X	X	
6	R72655	SNAP RING	3		X	X	
7	AT179691	KIT	1		X	X	
8	AT179692	KIT	1		X	X	
9	AT191620	PAN	1		X	X	
10	AT209024	KIT	1		X	X	
11	34H262	SPRING PIN	1		X	X	5/32" X 3/4"
12	34H387	SPRING PIN	2		X	X	
13	AT209026	KIT	1		X	X	
14	AT280583	PAN	1		X	X	
15	AT304776	ELECTRICAL REPAIR KIT	1		X	X	
16	AT196793	SWITCH	1		X	X	
17	M453T	LOCK NUT	2		X	X	

SEAT SWIVEL AND SWIVEL LATCH
PIVOTEMENT DE SIEGE ET VERROU DE PIVOTEMENT
ADAPTADOR GIRATORIO DE ASIENTO Y BLOQUEO DE GIRO

TX1014251 -UN-28DEC06

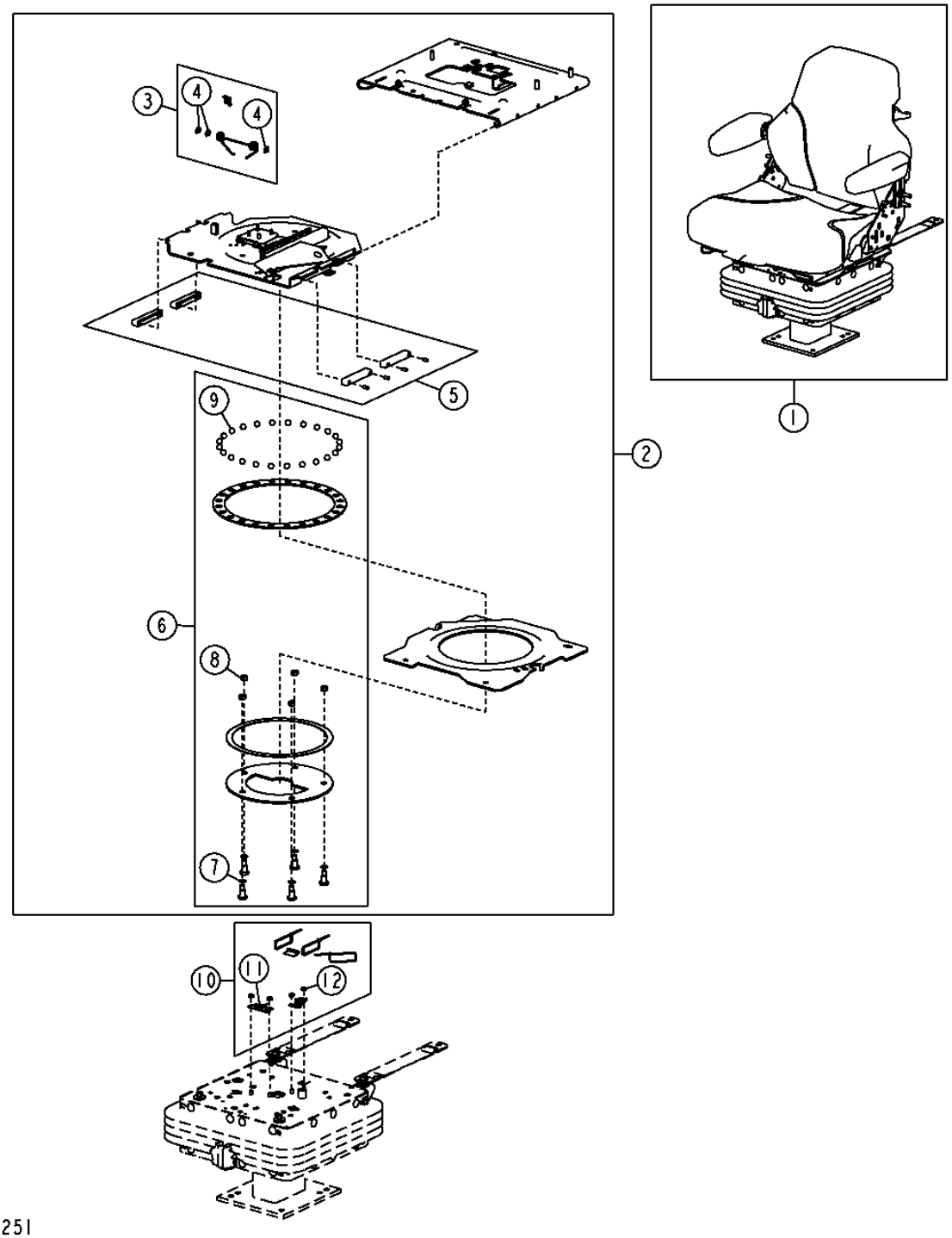

TX1014251

SEAT SWIVEL AND SWIVEL LATCH
PIVOTEMENT DE SIEGE ET VERROU DE PIVOTEMENT
ADAPTADOR GIRATORIO DE ASIENTO Y BLOQUEO DE GIRO

KEY	PART NO.	PART NAME	QTY.	SERIAL NO.	410J	410TMC	REMARKS
1	AT322954	SEAT KIT	1		X		CLOTH WITH AIR SUSPENSION (W/O TMC) (INCLUDES SEAT, SUPENSION, ARMS AND BASE SHOWN ON OTHER PAGES)
	AT322955	SEAT KIT	1		X		VINYL WITH MECHANICAL SUSPENSION (W/O TMC) (INCLUDES SEAT, SUPENSION, ARMS AND BASE SHOWN ON OTHER PAGES)
	AT322956	SEAT KIT	1		X		CLOTH WITH MECHANICAL SUSPENSION (W/O TMC) (INCLUDES SEAT, SUPENSION, ARMS AND BASE SHOWN ON OTHER PAGES)
	AT312846	SEAT KIT	1			X	CLOTH WITH AIR SUPENSION (TMC) (INCLUDES SEAT, SUPENSION AND BASE SHOWN ON OTHER PAGES)
2	AT335055	SWIVEL	1		X	X	
3	AT179688	KIT	1		X	X	
4	R72655	SNAP RING	3		X	X	
5	AT209020	KIT	1		X	X	
6	AT335110	KIT	1		X	X	
7	24M6504	WASHER	5		X	X	10 X 16 X 1.500 MM
8	M47031	LOCK NUT	5		X	X	3/8"
9	M87261	BALL	24		X	X	12.700 MM
10	AT335158	ELECTRICAL REPAIR KIT	1		X	X	
11	AT322915	SWITCH	1		X	X	
12	M453T	LOCK NUT	2		X	X	6.350 MM
13	AT304776	ELECTRICAL REPAIR KIT	1		X	X	
14	AT196793	SWITCH	1		X	X	
15	M453T	LOCK NUT	2		X	X	

SEAT SUSPENSION
SUSPENSION DE SIEGE
SUSPENSION DEL ASIENTO

TX1014252 -UN-28DEC06

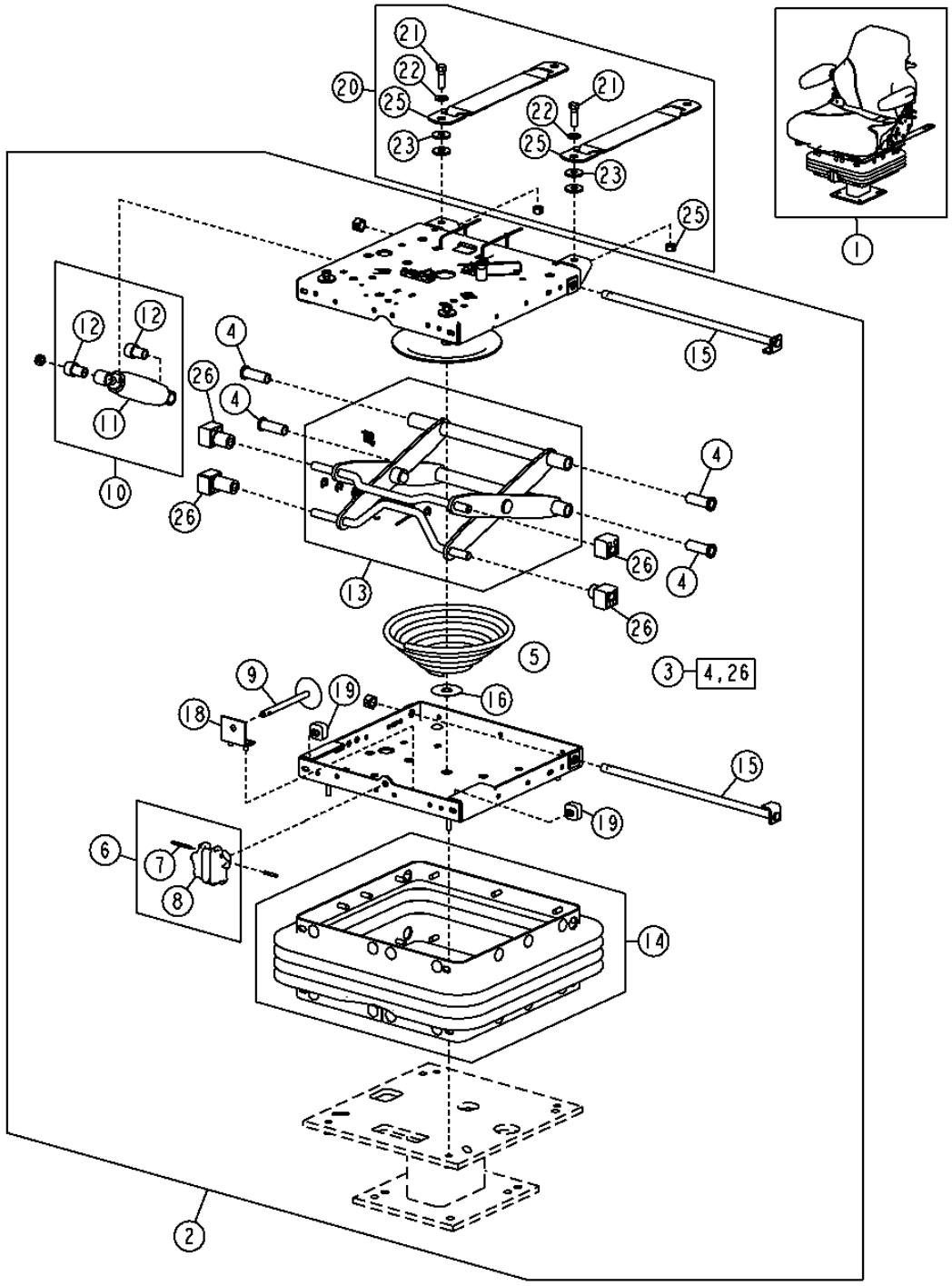

SEAT SUSPENSION
SUSPENSION DE SIEGE
SUSPENSION DEL ASIENTO

KEY	PART NO.	PART NAME	QTY.	SERIAL NO.	410J	410TMC	REMARKS
1	AT322955	SEAT KIT	1		X		VINYL WITH MECHANICAL SUSPENSION (W/O TMC) (INCLUDES SEAT, SUPENSION, ARMS AND BASE SHOWN ON OTHER PAGES)
	AT322956	SEAT KIT	1		X		CLOTH WITH MECHANICAL SUSPENSION (W/O TMC) (INCLUDES SEAT, SUPENSION, ARMS AND BASE SHOWN ON OTHER PAGES)
2	AT334381	SEAT SUSPENSION	1		X		
3	AT106397	BEARING KIT	1		X		
4	AT125801	SPRING	1		X		
5	AT125805	KIT	1		X		
6	34H266	SPRING PIN	1		X		
7	AT125829	KNOB	1		X		
8	AT175353	GEAR	1		X		
9	AT175436	KIT	1		X		
10	T55222	BUSHING	2		X		
11	AT191619	SEAT SUSPENSION	1		X		(ALSO ORDER AT106397)
12	AT335109	BOOT	1		X		
13	E67574	SHAFT	1		X		
14	T158481	WASHER	1		X		
15	T160315	SPRING	1		X		
16	T55214	ANGLE	1		X		
17	T55224	BUMPER	2		X		
18	AT179693	KIT	1		X		
19	19H1731	CAP SCREW	2		X		3/8" X 1"
20	24H1305	WASHER	2		X		
21	M1304T	WASHER	2		X		
22	M47031	LOCK NUT	2		X		3/8"
23	AT179693	KIT	2		X		

ARMREST FOR TOTAL MACHINE CONTROL
ACCOUDOIR POUR GESTION INTEGRALE MACHINE
APOYABRAZOS PARA CONTROL TOTAL DE LA MAQUINA

TX1017892 -UN-

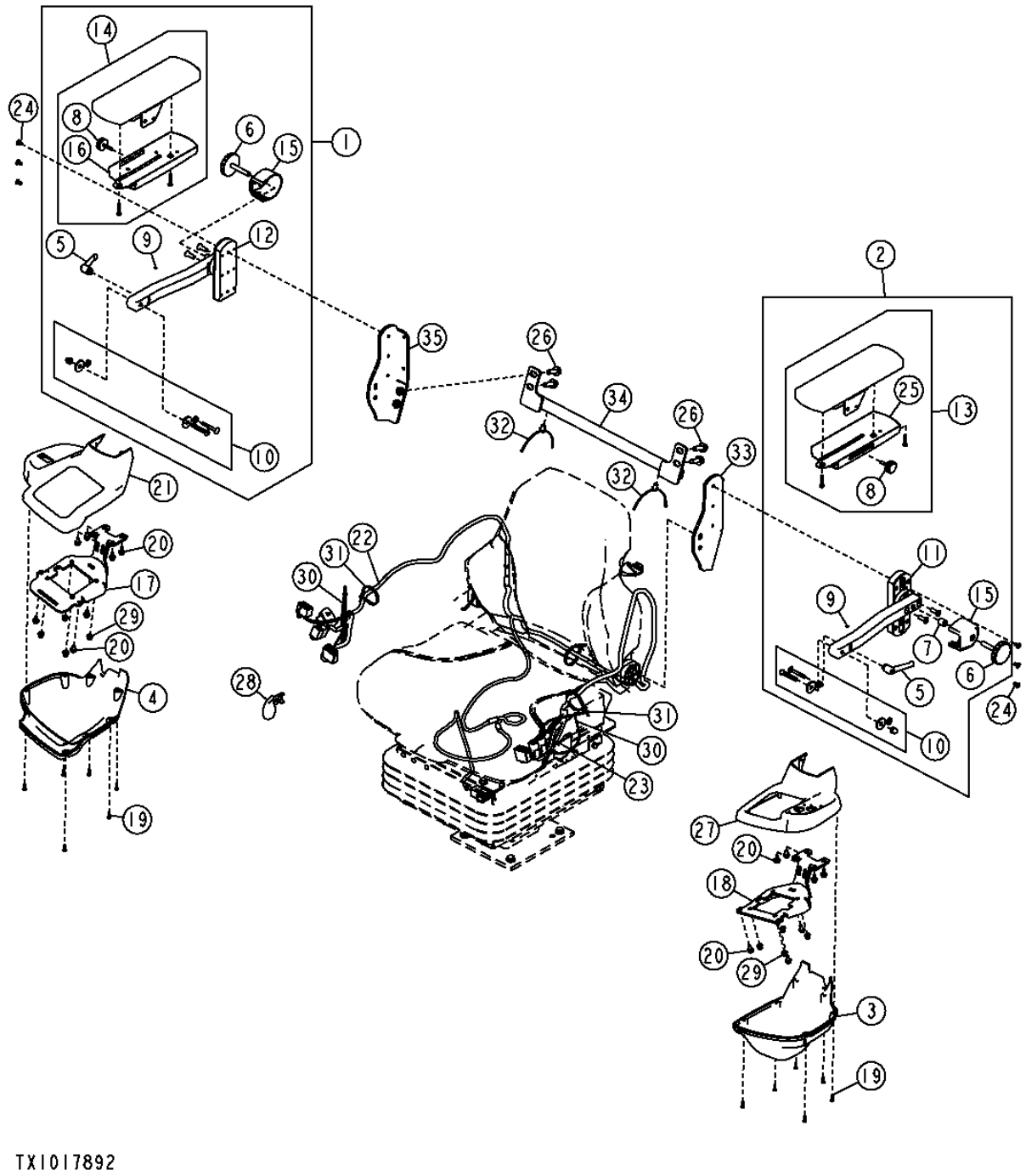

ARMREST FOR TOTAL MACHINE CONTROL
ACCOUDOIR POUR GESTION INTEGRALE MACHINE
APOYABRAZOS PARA CONTROL TOTAL DE LA MAQUINA

KEY	PART NO.	PART NAME	QTY.	SERIAL NO.	410J	410TMC	REMARKS
1	AT340902	ARMREST KIT	1			X	RH
2	AT340964	ARMREST KIT	1			X	LH
3	T209539	COVER	1			X	
4	T210744	COVER	1			X	
5	AT325662	HANDLE	2			X	
6	AT325664	KNOB	2			X	
7	AT325665	SPACER	2			X	
8	AT325667	KNOB	2			X	
9	AT325668	PIN	2			X	
10	AT325677	PACKAGE OF PARTS	2			X	
11	AT340966	BRACKET	4			X	
12	AT340903	BRACKET	2			X	
13	AT340965	BRACKET	1			X	
14	AT340904	BRACKET	1			X	
15	AT335408	COVER	2			X	
16	AT335409	COVER	1			X	
17	AT314307	BRACKET	1			X	RH
18	AT311997	BRACKET	1			X	LH
19	37M7340	BOLT	12			X	
20	19M7774	SCREW	14			X	M6 X 12
21	AT314834	COVER	1			X	RH
22	AT313612	WIRING HARNESS	1			X	
23	57M8131	ELEC. CONNECTOR TERMINAL	1			X	
24	T215154	SCREW	6			X	
25	AT330808	BRACKET	1			X	
26	19M7786	SCREW	4			X	
27	AT318525	COVER	1			X	LH
28	T222268	GUIDE	1			X	
29	14M7397	LOCK NUT	1			X	
30	H77698	TIE BAND	2			X	
31	R44302	TIE BAND	3			X	
32	T209627	CLAMP	2			X	
33	AT330669	BRACKET	1			X	LH
34	AT330670	BRACKET	1			X	
35	AT330671	BRACKET	1			X	RH

SEAT BELT
CEINTURE DE SECURITE
CINTURON DE SEGURIDAD

TX1014256 -UN-28DEC06

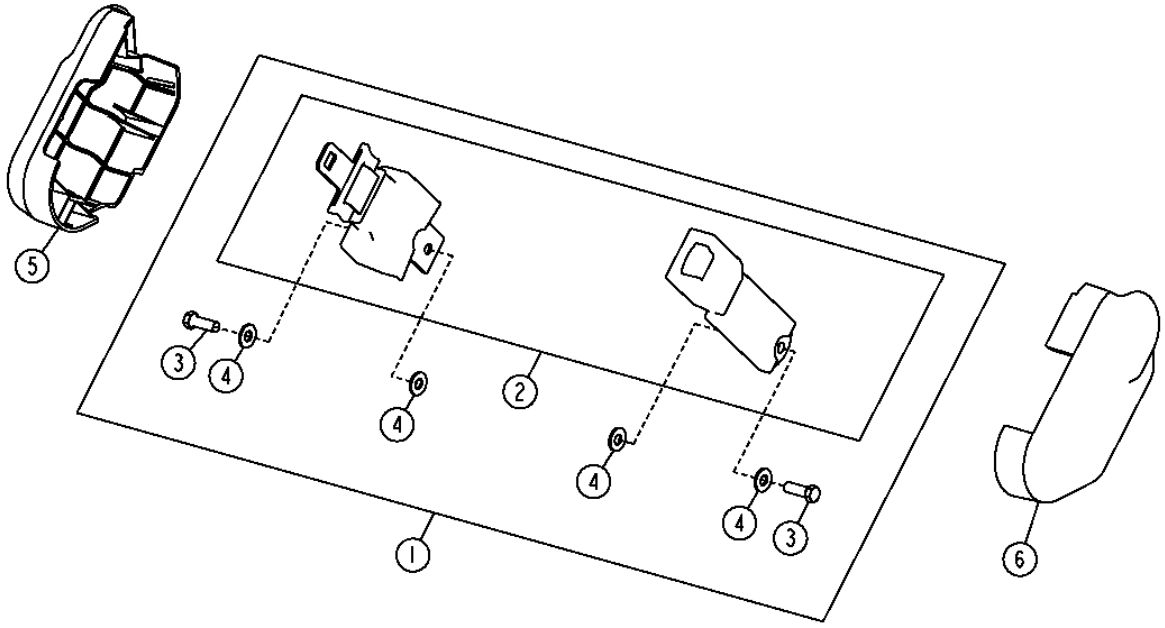

TX1014256

SEAT BELT
CEINTURE DE SECURITE
CINTURON DE SEGURIDAD

KEY	PART NO.	PART NAME	QTY.	SERIAL NO.	410J	410TMC	REMARKS
1	AT307769	KIT	1		X	X	2" SEAT BELT KIT
2	AT172910	SEAT BELT	1		X	X	2" SEAT BELT
	AT308199	SEAT BELT	1		X	X	3" SEAT BELT
3	19H2109	CAP SCREW	2		X	X	7/16" X 1-1/4"
4	T105740	WASHER	4		X	X	
5	T160896	COVER	1		X		LH
6	T163962	COVER	1		X		RH

AIR SUSPENSION SEAT AND SHOCK ABSORBER
SIEGE A SUSPENSION PNEUMATIQUE ET AMORTISSEUR
ASIENTO CON SUSPENSION NEUMATICA Y AMORTIGUADOR

TX1014253 -UN-29DEC06

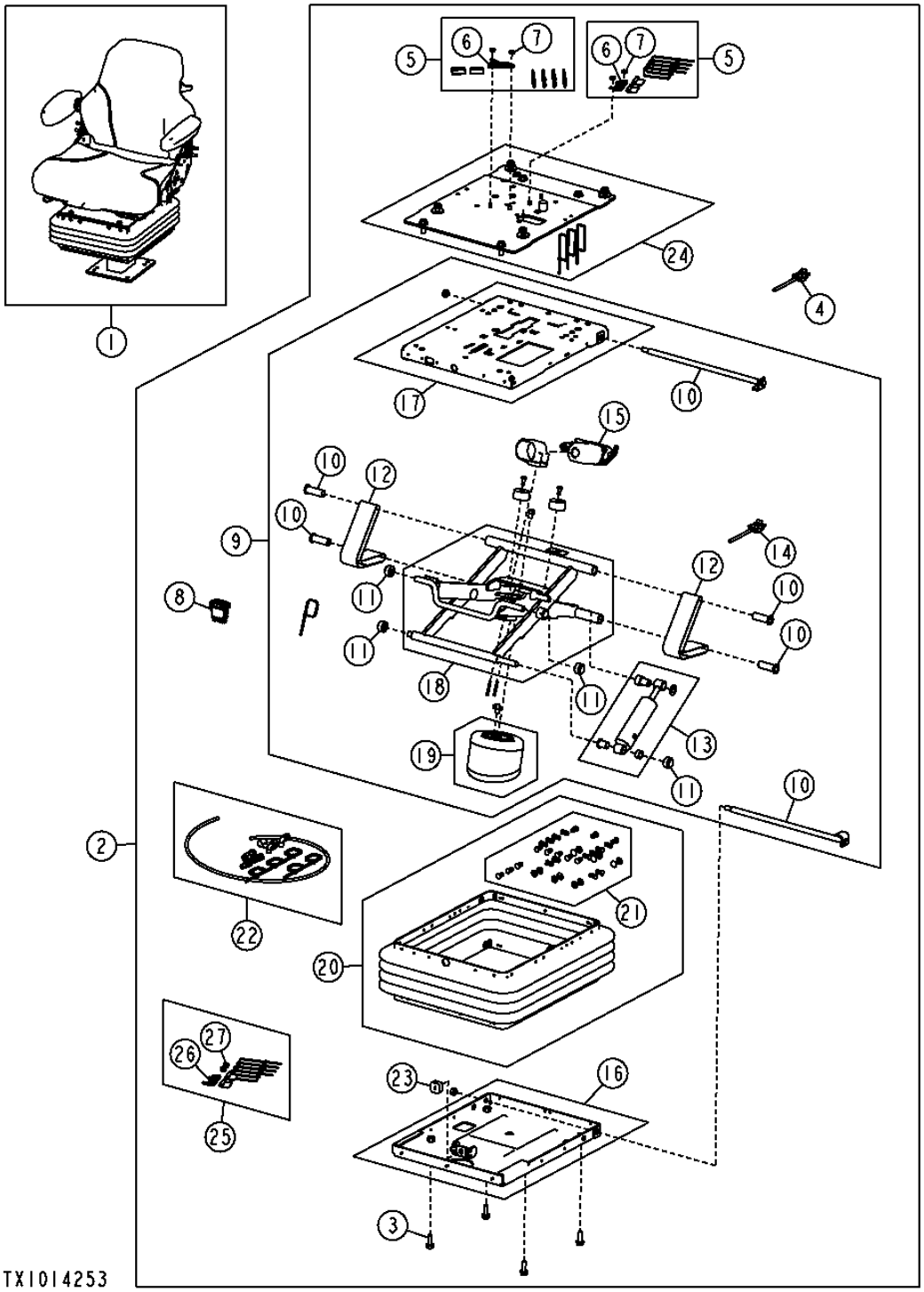

THIS PARTS LISTING IS CONTINUED

AIR SUSPENSION SEAT AND SHOCK ABSORBER
SIEGE A SUSPENSION PNEUMATIQUE ET AMORTISSEUR
ASIENTO CON SUSPENSION NEUMATICA Y AMORTIGUADOR

KEY	PART NO.	PART NAME	QTY.	SERIAL NO.	410J	410TMC	REMARKS
1	AT322954	SEAT KIT	1		X		CLOTH WITH AIR SUSPENSION (W/O TMC) (INCLUDES SEAT, SUPENSION, ARMS AND BASE SHOWN ON OTHER PAGES)
	AT312846	SEAT KIT	1			X	CLOTH WITH AIR SUPENSION (TMC) (INCLUDES SEAT, SUPENSION AND BASE SHOWN ON OTHER PAGES)
2	AT323836	AIR SPRING SEAT KIT	1		X	X	
3	19M7867	SCREW	4		X	X	M8 X 25
4	AT192689	KIT	1		X	X	
5	AT304776	ELECTRICAL REPAIR KIT	1		X	X	
6	AT196793	SWITCH	1		X	X	
7	M453T	LOCK NUT	2		X	X	
8	AT317596	TOGGLE/ROCKER SWITCH	1		X	X	
9	AT334383	SEAT SUSPENSION	2		X	X	
10	AT173313	SHAFT	1		X	X	
11	AT173314	SEAT BEARING ROLLER KIT	1		X	X	
12	AT173315	KIT	1		X	X	
13	AT182954	KIT	1		X	X	
14	AT192689	KIT	1		X	X	
15	AT198694	KIT	1		X	X	
16	AT208483	HOUSING	1		X	X	
17	AT208484	HOUSING	1		X	X	
18	AT208485	ARM	1		X	X	
19	AT208486	ABSORBER	1		X	X	
20	AT208491	KIT	1		X	X	
21	AT173321	SEAT SUSPENSION BOOT KIT	1		X	X	
22	AT208493	FITTING KIT	1		X	X	
23	T55224	BUMPER	1		X	X	
24	AT334384	PLATE	1		X	X	
	AT334385	PLATE	1		X	X	
25	AT335158	ELECTRICAL REPAIR KIT	1		X	X	
26	AT322915	SWITCH	1		X	X	
27	M453T	LOCK NUT	2		X	X	

SUSPENSION SEAT
SUSPENSION DE SIEGE
SUSPENSION DEL ASIENTO

TX1014255 -UN-28DEC06

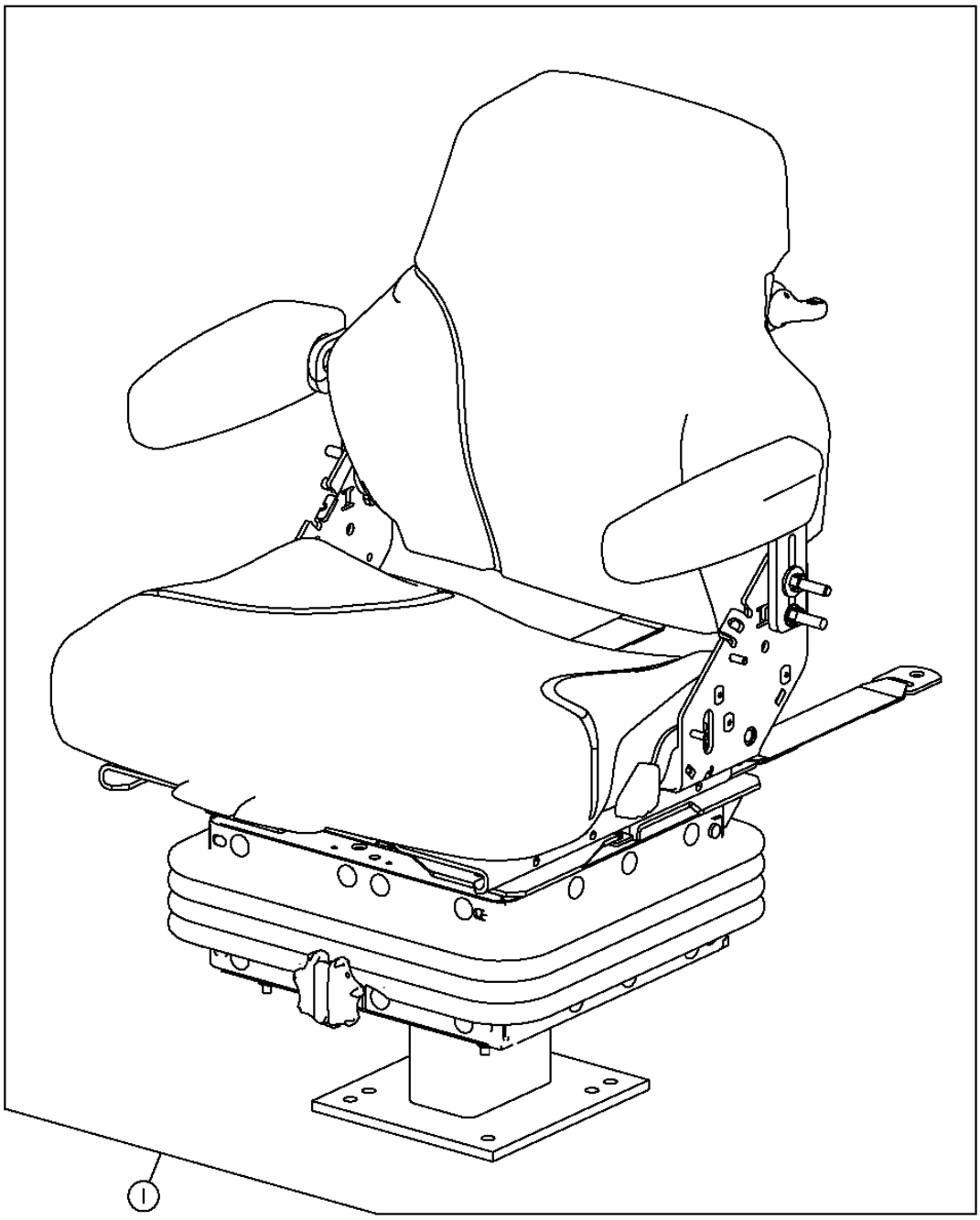

TX1014255

SUSPENSION SEAT
SUSPENSION DE SIEGE
SUSPENSION DEL ASIENTO

KEY	PART NO.	PART NAME	QTY.	SERIAL NO.	410J	410TMC	REMARKS
1	AT322954	SEAT KIT	1		X		CLOTH WITH AIR SUSPENSION (W/O TMC) (INCLUDES SEAT, SUPENSION, ARMS AND BASE SHOWN ON OTHER PAGES)
	AT322955	SEAT KIT	1		X		VINYL WITH MECHANICAL SUSPENSION (W/O TMC) (INCLUDES SEAT, SUPENSION, ARMS AND BASE SHOWN ON OTHER PAGES)
	AT322956	SEAT KIT	1		X		CLOTH WITH MECHANICAL SUSPENSION (W/O TMC) (INCLUDES SEAT, SUPENSION, ARMS AND BASE SHOWN ON OTHER PAGES)
	AT312846	SEAT KIT	1			X	CLOTH WITH AIR SUPENSION (TMC) (INCLUDES SEAT, SUPENSION AND BASE SHOWN ON OTHER PAGES) (ARMREST NOT INCLUDED IN KIT)

CAB HEATER AND AIR CONDITIONING DUCTING
CONDUITS DE CHAUFFAGE ET DE CLIMATISATION DE CABIN
CONDUCTOS DE CALEFACTOR Y ACONDICIONADOR DE AIRE DE CABINA

T142008 -UN-10MAY01

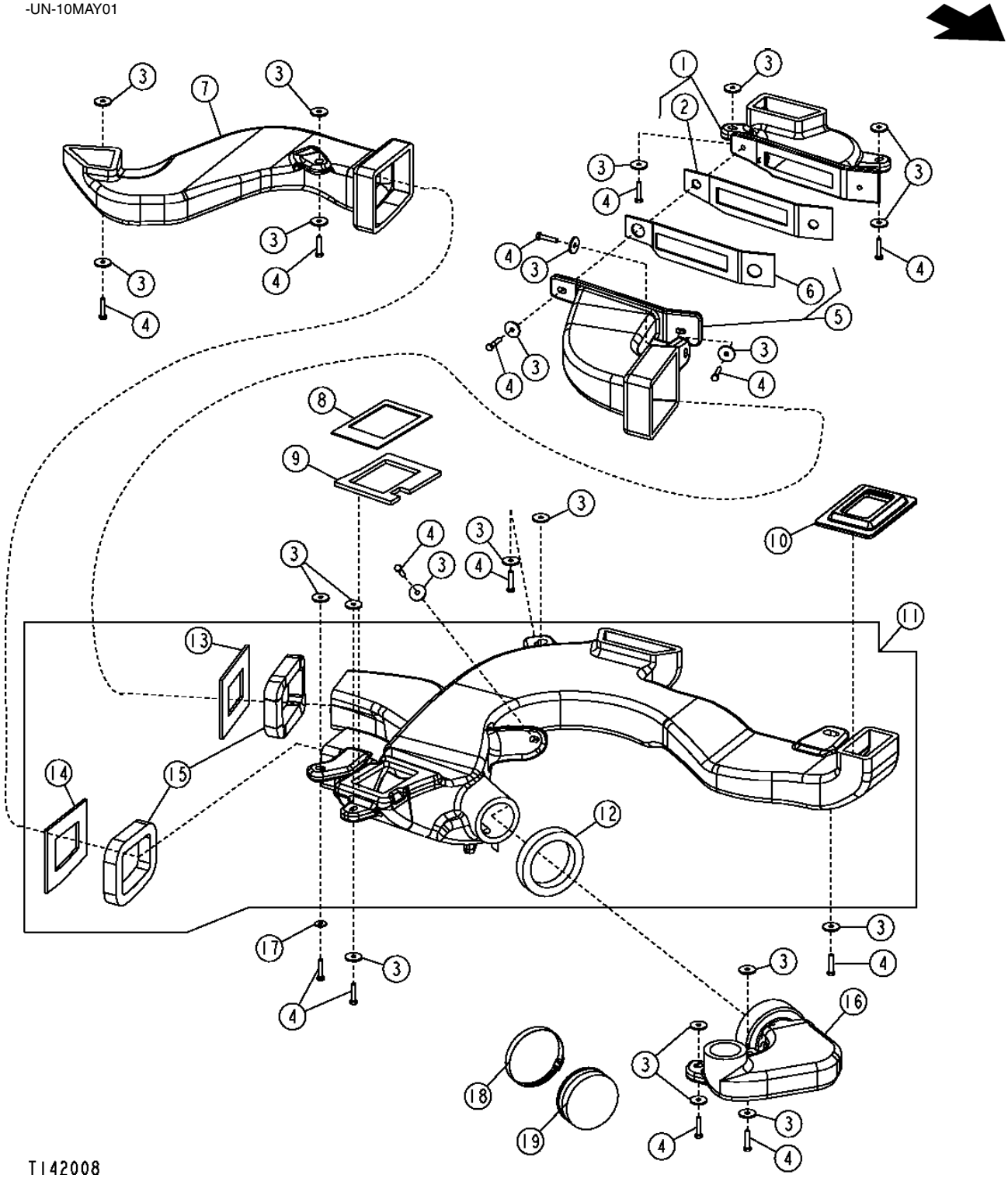

CAB HEATER AND AIR CONDITIONING DUCTING
CONDUITS DE CHAUFFAGE ET DE CLIMATISATION DE CABINE
CONDUCTOS DE CALEFACTOR Y ACONDICIONADOR DE AIRE DE CABINA

KEY	PART NO.	PART NAME	QTY.	SERIAL NO.	410J	410TMC	REMARKS
1	AT188307	AIR DUCT	1		X	X	(LEFT REAR)
2	T185841	ISOLATOR	1		X	X	
3	24H1296	WASHER	21		X	X	
4	19M7922	CAP SCREW	14		X	X	M8 X 40
5	AT192074	AIR DUCT	1		X	X	(REAR CONNECTOR)
6	T185840	ISOLATOR	1		X	X	
7	T167325	AIR DUCT	1		X	X	(RIGHT REAR)
8	T185842	ISOLATOR	1		X	X	
9	T185843	ISOLATOR	1		X	X	
10	T185850	ISOLATOR	1		X	X	
11	AT188306	AIR DUCT	1		X	X	(MAIN BOTTOM)
12	T185867	ISOLATOR	1		X	X	
13	T185779	ISOLATOR	1		X	X	
14	T185780	ISOLATOR	1		X	X	
15	T185866	ISOLATOR	2		X	X	
16	T167324	AIR DUCT	1		X	X	(RIGHT FRONT)
17	24M7207	WASHER	2		X	X	
18	TY22490	HOSE CLAMP	1		X	X	
19	T185673	CAP	1		X	X	

CAB HEATER AND AIR CONDITIONING DUCTING
CONDUITS DE CHAUFFAGE ET DE CLIMATISATION DE CABINE
CONDUCTOS DE CALEFACTOR Y ACONDICIONADOR DE AIRE DE CABINA

T157864 -UN-31OCT02

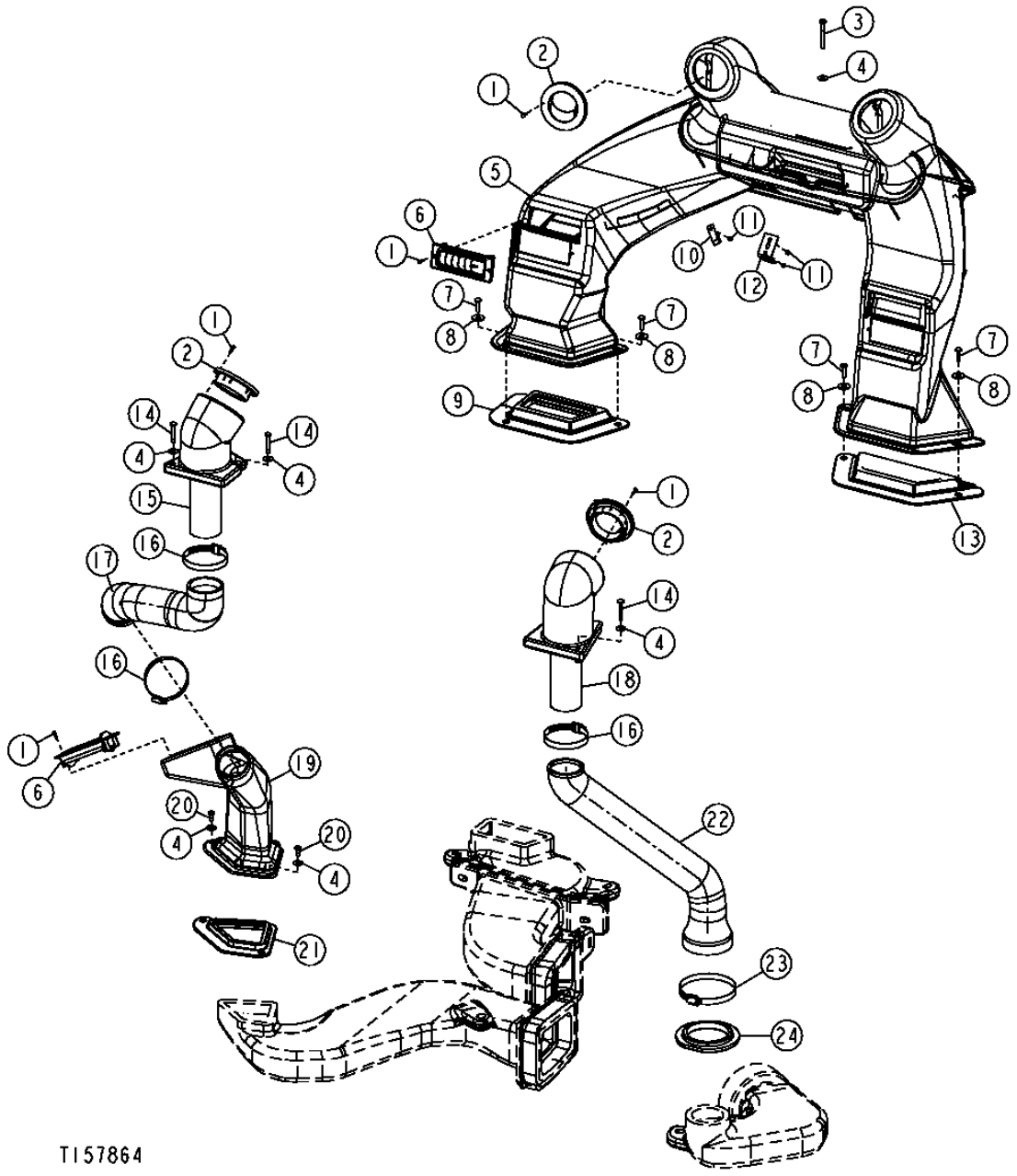

CAB HEATER AND AIR CONDITIONING DUCTING
CONDUITS DE CHAUFFAGE ET DE CLIMATISATION DE CABINE
CONDUCTOS DE CALEFACTOR Y ACONDICIONADOR DE AIRE DE CABINA

KEY	PART NO.	PART NAME	QTY.	SERIAL NO.	410J	410TMC	REMARKS
1	37M7333	SCREW	22		X	X	
2	AT227669	LOUVER	4		X	X	
3	T186873	SCREW	1		X	X	M6 X 60
4	24H1646	WASHER	7		X	X	
5	T185540	AIR DUCT	1		X	X	LEFT FENDER WITH AIR CONDITIONING
	T185744	AIR DUCT	1		X	X	LEFT FENDER WITHOUT AIR CONDITIONING
6	AT177227	LOUVER	AR		X	X	RECTANGULAR
7	21M7310	SCREW	4		X	X	M6 X 25
8	24M7207	WASHER	4		X	X	
9	T185848	ISOLATOR	1		X	X	
10	T185743	CLIP	3		X	X	
11	T185769	SCREW	5		X	X	
12	T183560	BRACKET	1		X	X	
13	T185849	ISOLATOR	1		X	X	
14	T134874	SELF-LOCKING SCREW	4		X	X	M6 X 40
15	T185479	AIR DUCT	1		X	X	(REAR EXTENSION)
16	AR62936	CLAMP	3		X	X	
17	T185482	AIR DUCT	1		X	X	(REAR UPPER)
18	T185478	AIR DUCT	1		X	X	(FRONT EXTENSION)
19	T185481	AIR DUCT	1		X	X	(REAR LOWER)
20	21M7310	SCREW	2		X	X	M6 X 25
21	T185847	ISOLATOR	1		X	X	
22	T185480	AIR DUCT	1		X	X	(FRONT)
23	AR21842	CLAMP	1		X	X	
24	T185846	ISOLATOR	1		X	X	

HEATER AND AIR CONDITIONING WITH PRESSURIZER
CHAUFFAGE ET CLIMATISATION AVEC PRESSURISATEUR
CALEFACTOR Y ACONDICIONADOR DE AIRE CON PRESURIZADOR

TX1017168 -UN-

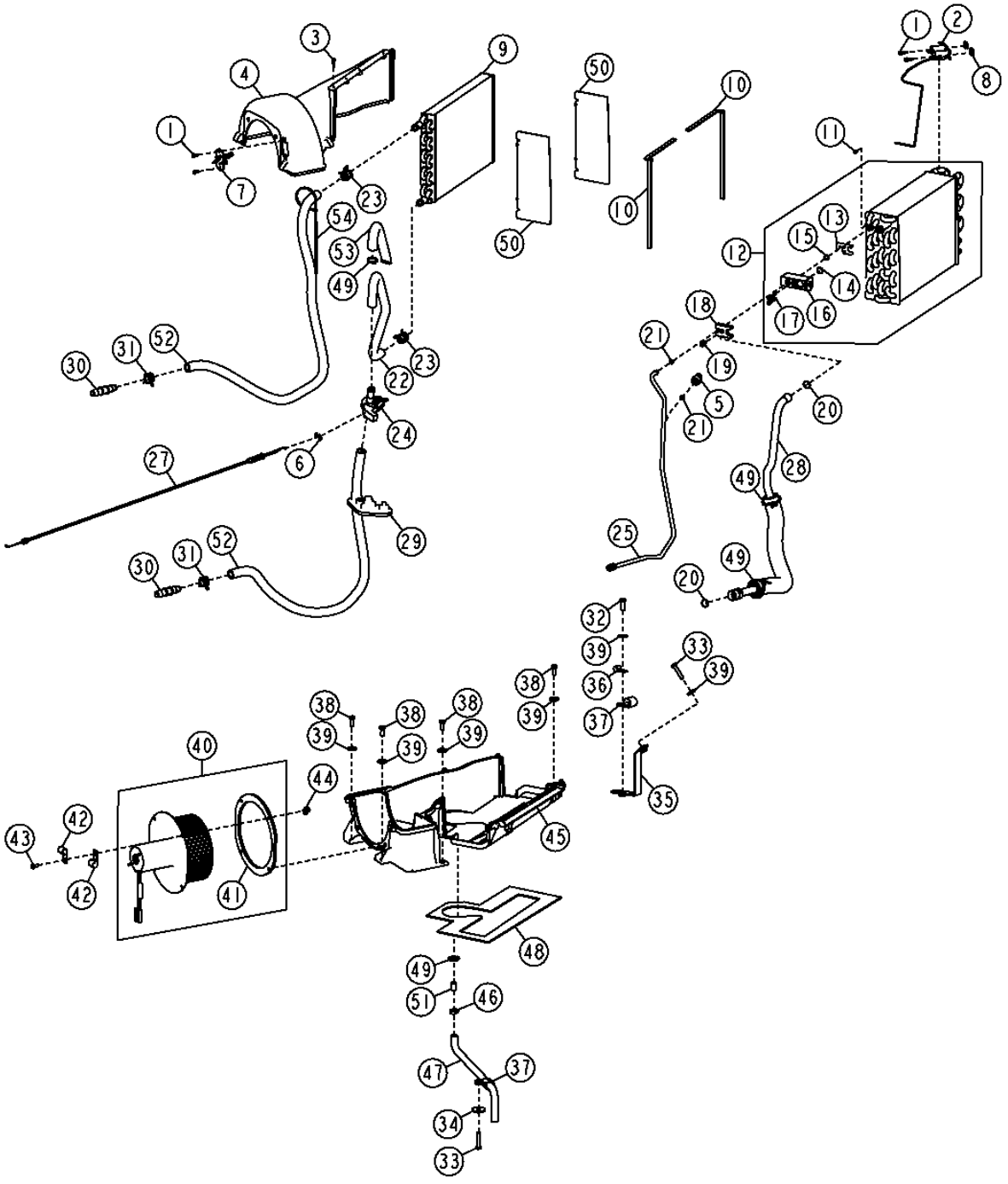

THIS PARTS LISTING IS CONTINUED

HEATER AND AIR CONDITIONING WITH PRESSURIZER
CHAUFFAGE ET CLIMATISATION AVEC PRESSURISATEUR
CALEFACTOR Y ACONDICIONADOR DE AIRE CON PRESURIZADOR

KEY	PART NO.	PART NAME	QTY.	SERIAL NO.	410J	410TMC	REMARKS
1	37M7073	SCREW	2		X	X	
2	RE198074	TEMPERATURE SWITCH	1		X	X	A/C THERMOSTAT SWITCH
3	T184620	SCREW	9		X	X	
4	T205969	HOUSING	1		X	X	(TOP)
5	RE157329	SWITCH	1		X	X	
6	L57881	CLIP	1		X	X	
7	AT210515	RESISTOR	1		X	X	
8	R50279	NUT	2		X	X	
9	AT191993	CORE	1		X	X	(HEATER)
10	T184369	SEAL	2		X	X	
11	H85092	SCREW	4		X	X	
12	AT191994	EVAPORATOR	1		X	X	
13	T181522	PLATE	1		X	X	
14	R33259	O-RING	1		X	X	
15	R113050	O-RING	1		X	X	
16	RE174764	VALVE	1		X	X	(EXPANSION)
17	PT11778	BOLT	2		X	X	
18	R125223	PLATE	1		X	X	
19	19M8553	SCREW	1		X	X	M6 X 16
20	T143169	O-RING	3		X	X	
21	R10093	O-RING	4		X	X	
22	T185789	RADIATOR HOSE	1		X	X	
23	T184924	HOSE CLAMP	4		X	X	
24	AT193500	HAND OPERATED VALVE	1		X	X	(WATER)
25	AT303214	LINE	1		X	X	(LIQUID REFRIGERANT)
26	T178971	GROMMET	1		X	X	(NOT ILLISTRATED)
27	AT186289	CABLE	1		X	X	
28	AT191990	REFRIGERANT HOSE	1		X	X	
29	T166297	GROMMET	1		X	X	
30	T160492	THREADED NIPPLE	2		X	X	
31	R117721	CLAMP	2		X	X	
32	19M7407	CAP SCREW	1		X	X	M8 X 25
33	19M7922	CAP SCREW	3		X	X	M8 X 40
34	24H1296	WASHER	2		X	X	
35	AT192509	BRACKET	1		X	X	
36	T13814	CLAMP	1		X	X	
37	T70659	CLAMP	2		X	X	
38	19M7881	SCREW	10		X	X	M8 X 20
39	24M7207	WASHER	2		X	X	8.400 X 24 X 2 MM
40	AT335177	BLOWER MOTOR	1		X	X	(PRESSURIZER)
41	H77698	TIE BAND	1		X	X	
42	AH89557	CLIP	2		X	X	
43	T178251	CAP SCREW	4		X	X	
44	T186766	HOSE GUARD	1		X	X	
45	T164618	HOUSING	1		X	X	(BOTTOM)
46	AR77962	HOSE CLAMP	1		X	X	
47	AT186304	HOSE	1		X	X	(CONDENSATE)
48	T185845	ISOLATOR	2		X	X	
49	R44302	TIE BAND	2		X	X	
50	T184414	SHEET	2		X	X	
51	T184415	PLUG	1		X	X	
52	.....	HOSE	1		X	X	(MAKE FROM T60811) (CTL 2.75 LIN. FT)
53	.....	HOSE	1		X	X	(MAKE FROM T60811) (CTL 3.17 LIN. FT.)
54	H77698	TIE BAND	1		X	X	

THIS PARTS LISTING IS CONTINUED

HEATER PLUMBING
TUYAUTERIE DE CHAUFFAGE
TUBERIA DE CALEFACTOR

TX1017193 -UN-

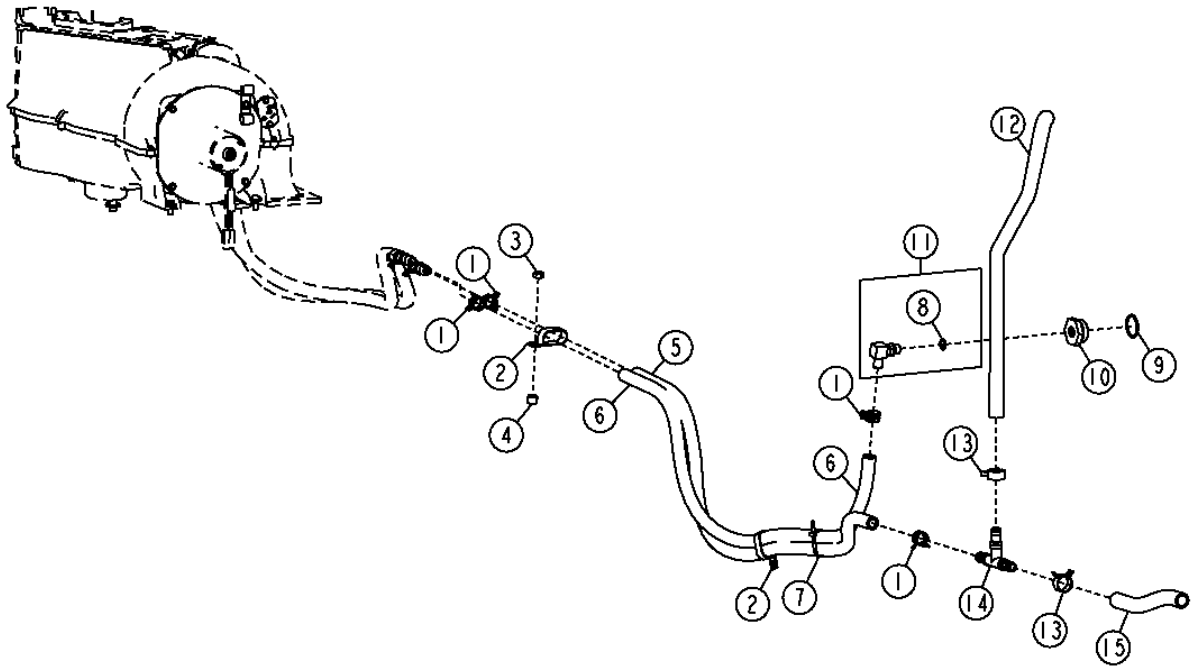

TX1017193

HEATER PLUMBING
TUYAUTERIE DE CHAUFFAGE
TUBERIA DE CALEFACTOR

KEY	PART NO.	PART NAME	QTY.	SERIAL NO.	410J	410TMC	REMARKS
1	R117721	CLAMP	4		X	X	
2	AH77869	CLIP	2		X	X	
3	14M7274	NUT	1		X	X	
4	28H3394	BUSHING	1		X	X	
5	.....	HOSE	1		X	X	(MAKE FROM T60811) (CUT TO LENGTH, 3.63 FT)
6	.....	HOSE	1		X	X	(MAKE FROM T60811) (CUT TO LENGTH 4.2 FT) (HEATER RETURN)
7	R44302	TIE BAND	1		X	X	
8	51M7043	O-RING	1		X	X	
9	U13639	O-RING	1		X	X	
10	R123616	PLUG	1		X	X	
11	AT174697	ELBOW FITTING	1		X	X	
12	T226542	RADIATOR HOSE	1		X	X	
13	T185826	CLAMP	3		X	X	
14	T62804	FITTING	1		X	X	
15	.....	HOSE	1		X	X	(MAKE FROM TY22330) (CUT TO LENGTH, 0.9 FT)

AIR CONDITIONING, HARDWARE AND HOSES
CLIMATISATION, BOULONNERIE ET FLEXIBLES
ACONDICIONADOR DE AIRE, TORNILLERIA Y MANGUERAS

TX1017829 -UN-

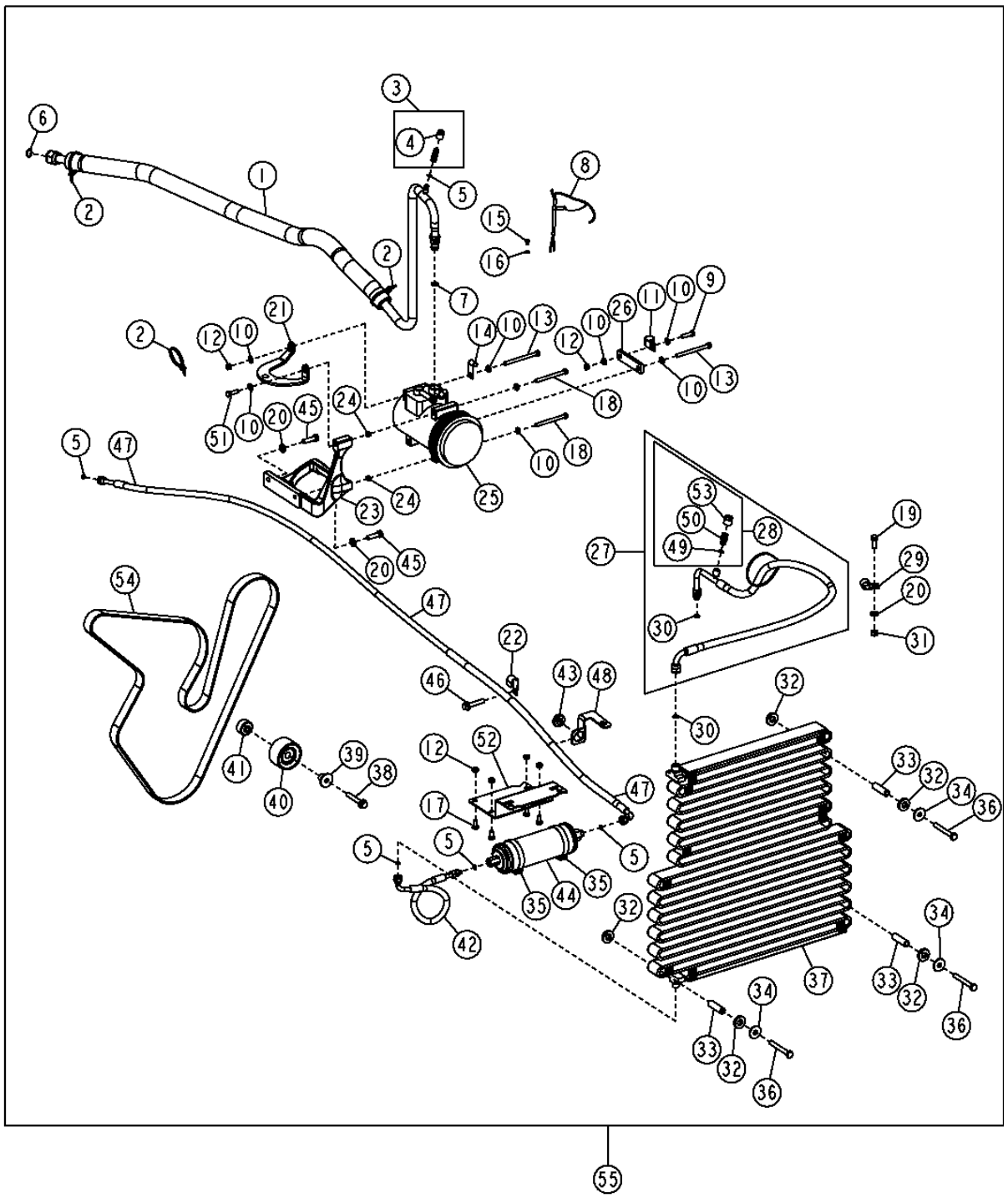

AIR CONDITIONING, HARDWARE AND HOSES
CLIMATISATION, BOULONNERIE ET FLEXIBLES
ACONDICIONADOR DE AIRE, TORNILLERIA Y MANGUERAS

KEY	PART NO.	PART NAME	QTY.	SERIAL NO.	410J	410TMC	REMARKS
1	AT188368	REFRIGERANT HOSE	1		X	X	
2	R44302	TIE BAND	3		X	X	
3	AT181530	FLOW CONTROL HYD. VALVE	1		X	X	(LOW SIDE)
4	T162557	CAP	1		X	X	
5	R10093	O-RING	8		X	X	
6	T143169	O-RING	1		X	X	
7	R33259	O-RING	1		X	X	
8	AT190658	AC COMPRESSOR WRG HARNESS	1		X	X	
9	19M7513	CAP SCREW	1		X	X	M8 X 30
10	24M7238	WASHER	11		X	X	
11	T78787	CLAMP	1		X	X	
12	14M7273	NUT	6		X	X	M8
13	19M8456	CAP SCREW	4		X	X	M8 X 100
14	AH89557	CLIP	1		X	X	
15	21M7283	SCREW	1		X	X	M5 X 8
16	12H316	LOCK WASHER	1		X	X	0.216"
17	19M7932	CAP SCREW	4		X	X	M8 X 16
18	19M8539	CAP SCREW	2		X	X	M8 X 90
19	19M7402	CAP SCREW	1		X	X	M10 X 25
	19M7550	CAP SCREW	2		X	X	M10 X 35
20	24M7239	WASHER	3		X	X	10.700 X 21 X 2.500 MM
21	R504191	BRACKET	1		X	X	
22	AH96317	CLIP	1		X	X	
23	R504192	BRACKET	1		X	X	
24	34M7189	SPRING PIN	2		X	X	11 X 8 MM
25	TY6764	COMPRESSOR	1		X	X	REMAN, (SUB FOR RE46609)
26	M86533	STRAP	1		X	X	
27	AT323702	REFRIGERANT HOSE	1		X	X	
28	AT178930	HYDRAULIC CYLINDER PORT	1		X	X	
29	T74416	CLAMP	1		X	X	
30	R113050	O-RING	2		X	X	
31	14M7274	NUT	1		X	X	M10
32	T158424	WASHER	8		X	X	RUBBER
33	L3483N	BUSHING	4		X	X	
34	24M7101	WASHER	4		X	X	11 X 34 X 3 MM
35	AR21999	HOSE CLAMP	2		X	X	
36	19M8081	CAP SCREW	4		X	X	M10 X 80
37	AT184522	VAPOR CONDENSER	1		X	X	
38	19M7808	SCREW	1		X	X	M10 X 65
39	R502079	SLEEVE	1		X	X	
40	RE505264	PULLEY	1		X	X	
41	R500320	SPACER	1		X	X	
42	AT323646	REFRIGERANT HOSE	1		X	X	
43	R115350	GROMMET	1		X	X	
44	RE214440	RECEIVER-DRYER	1		X	X	
45	19M7550	CAP SCREW	2		X	X	
46	19M7806	SCREW	1		X	X	M10 X 50
47	AT323647	REFRIGERANT HOSE	1		X	X	
48	T217367	BRACKET	1		X	X	
49	A3917R	O-RING	1		X	X	
50	AT178931	HYDRAULIC CYLINDER PORT	1		X	X	
51	19M7407	CAP SCREW	2		X	X	M8 X 25
52	T216548	BRACKET	1		X	X	
53	T160938	CAP	1		X	X	
54	T227609	V-BELT	1		X	X	28.450 X 2 520 MM
55	**AT314203**	**KIT**	**1**		**X**	**X**	**AIR CONDITIONER (WHOLE GOODS)**

HEAT AND NOISE BARRIER
CHAUFFAGE ET BARRIERE CONTRE LE BRUIT
BARRERA TERMICA Y DE RUIDOS

T145246 -UN-04SEP01

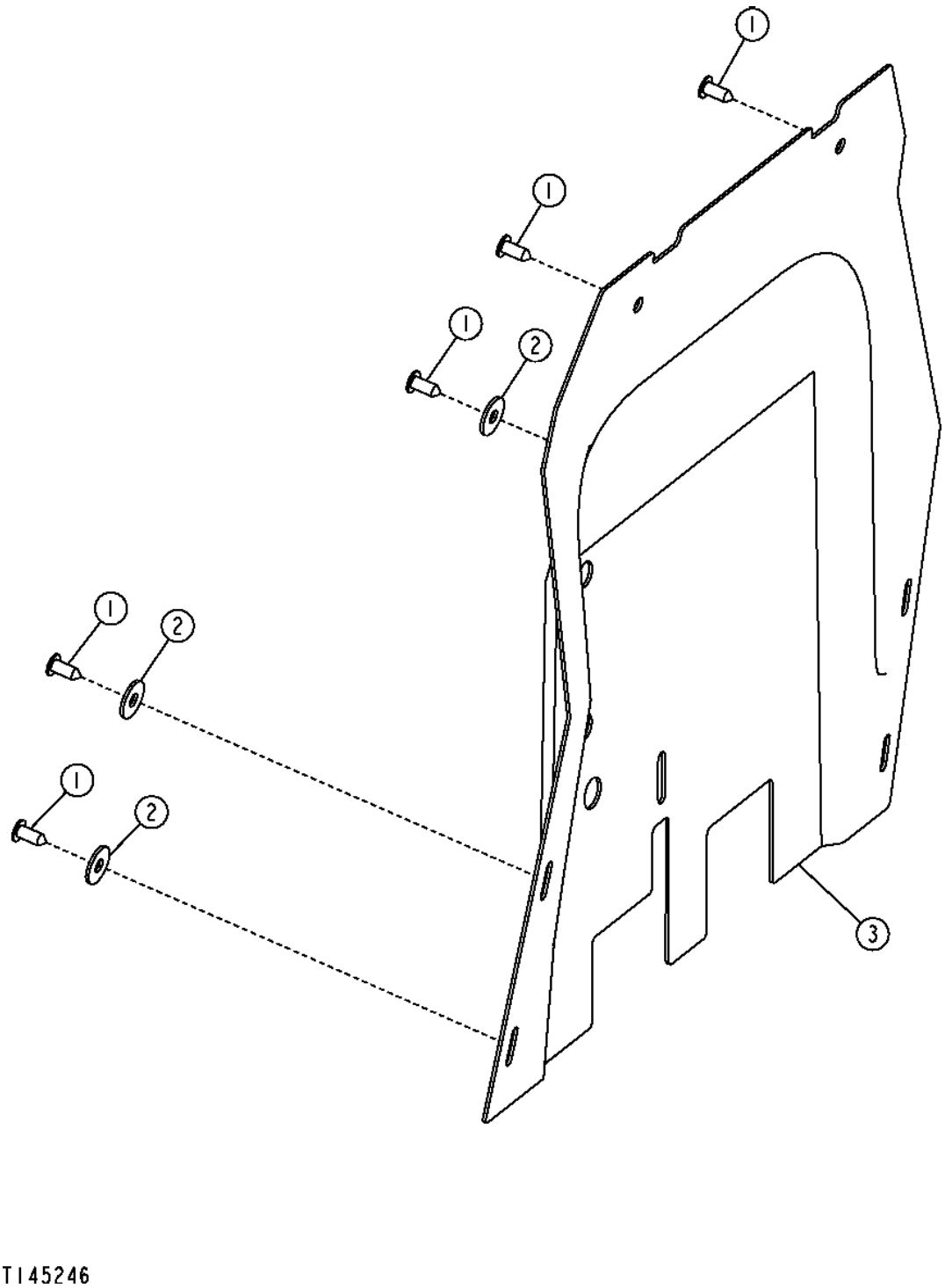

T145246

HEAT AND NOISE BARRIER
CHAUFFAGE ET BARRIERE CONTRE LE BRUIT
BARRERA TERMICA Y DE RUIDOS

KEY	PART NO.	PART NAME	QTY.	SERIAL NO.	410J	410TMC	REMARKS
1	MT2485	PLUG	5		X	X	FASTENER
2	24M7180	WASHER	3		X	X	
3	T216973	ISOLATOR	1		X	X	

HOOD AND SIDE PANELS
CAPOT ET PANNEAUX LATERAUX
CAPO Y PANELES LATERALES

TX1013669 -UN-09DEC06

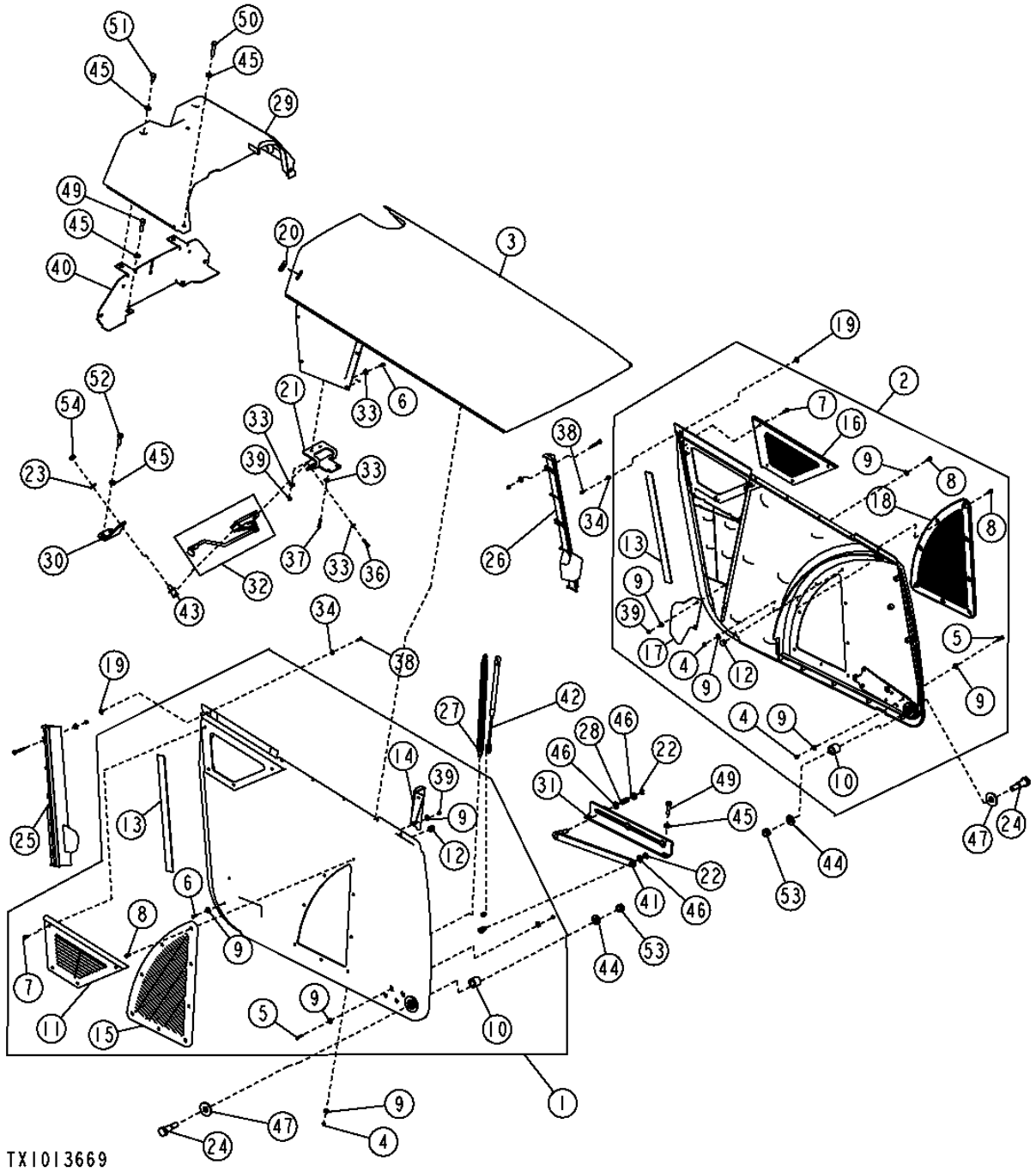

HOOD AND SIDE PANELS
CAPOT ET PANNEAUX LATERAUX
CAPO Y PANELES LATERALES

KEY	PART NO.	PART NAME	QTY.	SERIAL NO.	REMARKS
1	AT323237	PANEL	1		(RH)
2	AT323238	PANEL	1		(LH)
3	AT324645	HOOD	1		
4	14M7272	NUT	28		M6
5	19M7933	CAP SCREW	8		M6 X 25
6	19M8425	CAP SCREW	4		M6 X 16
7	21M7246	SCREW	8		M6 X 16
8	21M7267	SCREW	16		M6 X 20
9	24M7139	WASHER	40		6.400 X 18 X 1.600 MM
10	T165911	BUSHING	2		
11	T165915	LOUVER	1		
12	T165997	INSERT	2		
13	T184116	PROTECTIVE COATING MATERIAL	2		
14	T184787	BRACKET	1		
15	T211121	LOUVER	1		(RH)
16	T165916	LOUVER	1		(LH)
17	T184788	BRACKET	1		
18	T211122	LOUVER	1		
19	T183773	NUT	4		
20	T188642	GROMMET	1		
21	T201591	BRACKET	1		
22	R26871	SNAP RING	2		
23	T105740	WASHER	1		
24	T165975	BOLT	2		
25	T165976	GUIDE	1		(RH)
26	T184393	GUIDE	1		(LH)
27	T165977	EXTENSION SPRING	2		
28	T165981	COMPRESSION SPRING	1		
29	T209334	HOOD	1		
30	T215364	ANGLE	1		
31	T216614	GUIDE	1		
32	AT196358	LATCH	1		
33	24M7139	WASHER	28		6.400 X 18 X 1.600 MM
34	24M7138	WASHER	4		5.300 X 15 X 1.200 MM
35	19M8425	CAP SCREW	8		M6 X 16
36	19M7933	CAP SCREW	2		M6 X 25
37	19M7874	CAP SCREW	2		M6 X 30
38	19M7372	CAP SCREW	4		M5 X 16
39	14M7272	NUT	16		M6
40	AT324116	SUPPORT	1		
41	AT323670	BAR	1		
42	AT311334	GAS OPERATED CYLINDER	1		
43	AR91896	STRIKER	1		
44	24M7241	WASHER	2		17 X 34 X 4 MM
45	24M7239	WASHER	10		10.700 X 21 X 2.500 MM
46	24M7047	WASHER	3		13 X 24 X 2.500 MM
47	24H1236	WASHER	2		
48	19M9100	SCREW	6		M6 X 50
49	19M8637	CAP SCREW	4		M10 X 40
50	19M8600	CAP SCREW	2		M10 X 50
51	19M7938	CAP SCREW	2		M10 X 20
52	19M7550	CAP SCREW	2		M10 X 35
53	14M7238	FLANGE NUT	2		M18
54	14H1047	NUT	1		

BATTERY ENCLOSURE AND TOOL BOX
COMPARTIMENT BATTERIE ET BOITE A OUTILS
ENVUELTA DE BATERIA Y CAJA DE HERRAMIENTAS

TX1015821 -UN-18DEC06

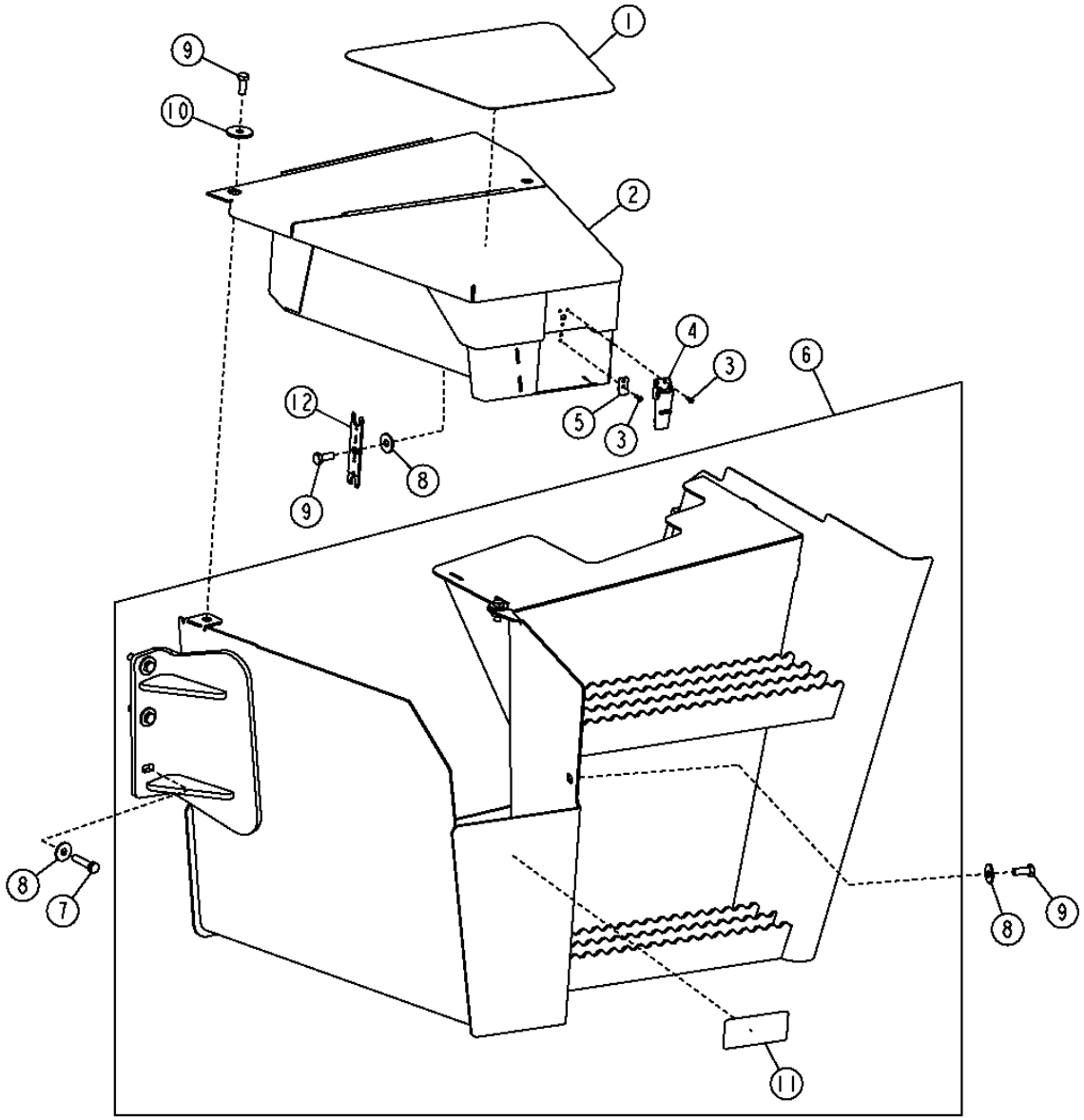

TX1015821

BATTERY ENCLOSURE AND TOOL BOX
COMPARTIMENT BATTERIE ET BOITE A OUTILS
ENVUELTA DE BATERIA Y CAJA DE HERRAMIENTAS

KEY	PART NO.	PART NAME	QTY.	SERIAL NO.	410J	410TMC	REMARKS
1	T165290	ANTI-SKID PAD	1		X	X	
2	AT332084	TOOLBOX	1		X	X	
3	AT333453	RIVET	5		X	X	
4	AT332153	LATCH	1		X	X	
5	T227945	ANGLE	1		X	X	
6	AT332597	BATTERY BOX	1		X	X	
7	19M8637	CAP SCREW	4		X	X	M10 X 40
8	24M7296	WASHER	6		X	X	
9	19M7402	CAP SCREW	4		X	X	M10 X 25
10	24H1718	WASHER	1		X	X	
11	JD5933	REFLECTOR	1		X	X	
12	T212304	TOOL	1		X	X	STC

BOOM, BUCKET AND CROWD VALVE COVERS
PROTECTIONS DE FLECHE, BENNE ET SOUPAPE DE CAVAGE
CUBIERTAS DE VALVULA DE AGUILON, CUCHARON Y EMPUJE

TX1016463 -UN-21DEC06

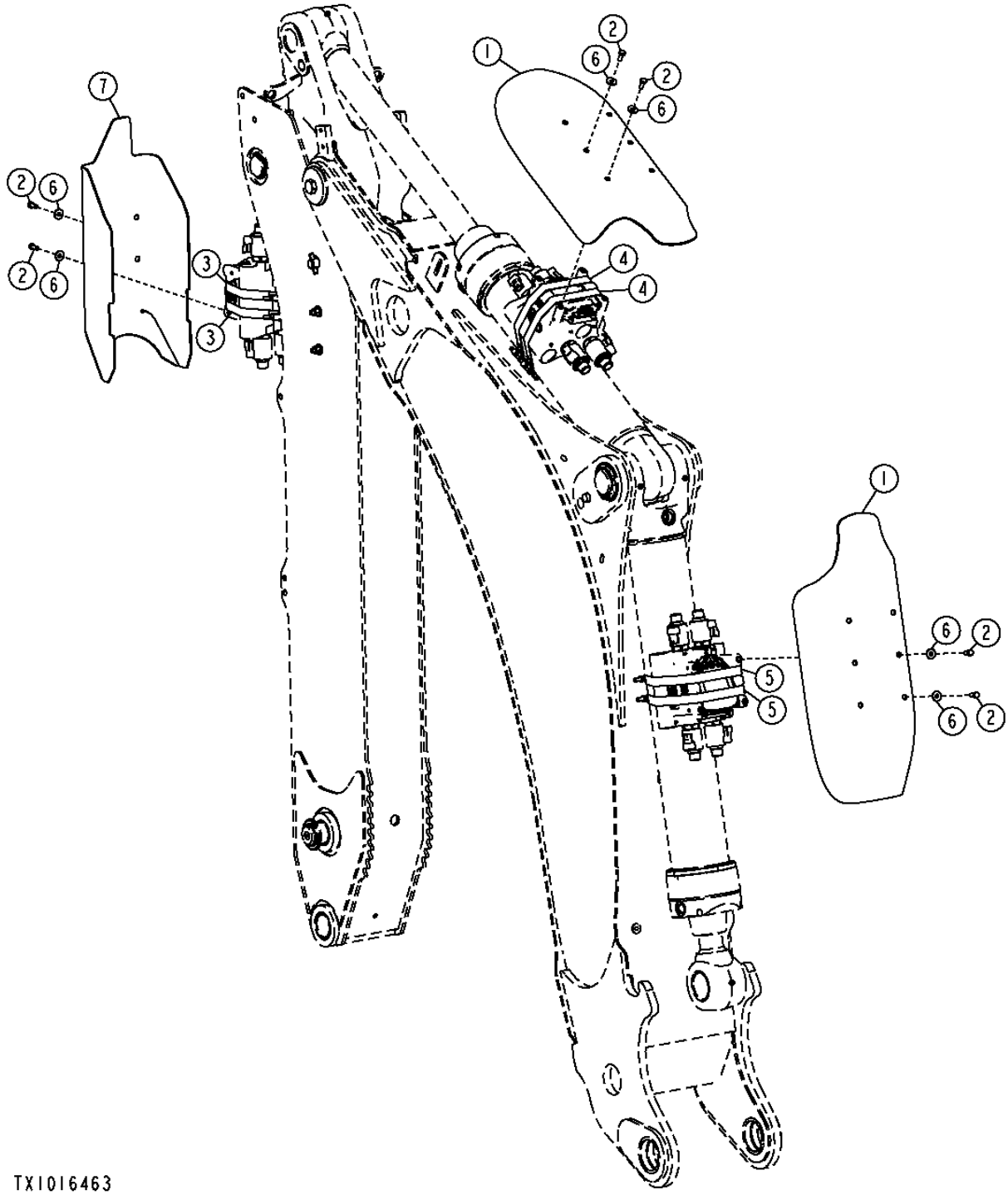

BOOM, BUCKET AND CROWD VALVE COVERS
PROTECTIONS DE FLECHE, BENNE ET SOUPAPE DE CAVAGE
CUBIERTAS DE VALVULA DE AGUILON, CUCHARON Y EMPUJE

KEY	PART NO.	PART NAME	QTY.	SERIAL NO.	410J	410TMC	REMARKS
1	T216230	COVER	2			X	
2	M86877	BOLT	12			X	M8 X 20
3	AT310119	CLAMP	2			X	BUCKET SECTION
4	AT310118	CLAMP	2			X	CROWD SECTION
5	AT310121	CLAMP	2			X	BOOM SECTION
6	24M7298	WASHER	12			X	8.400 X 25 X 2 MM
7	T230183	COVER	1			X	

LOADER PLUMBING SHIELD
PROTECTION DE CONDUITES HYDRAULIQUES DE CHARGEUR
ESCUDO DE TUBERIA DE CARGADORA

T135722 -UN-21APR04

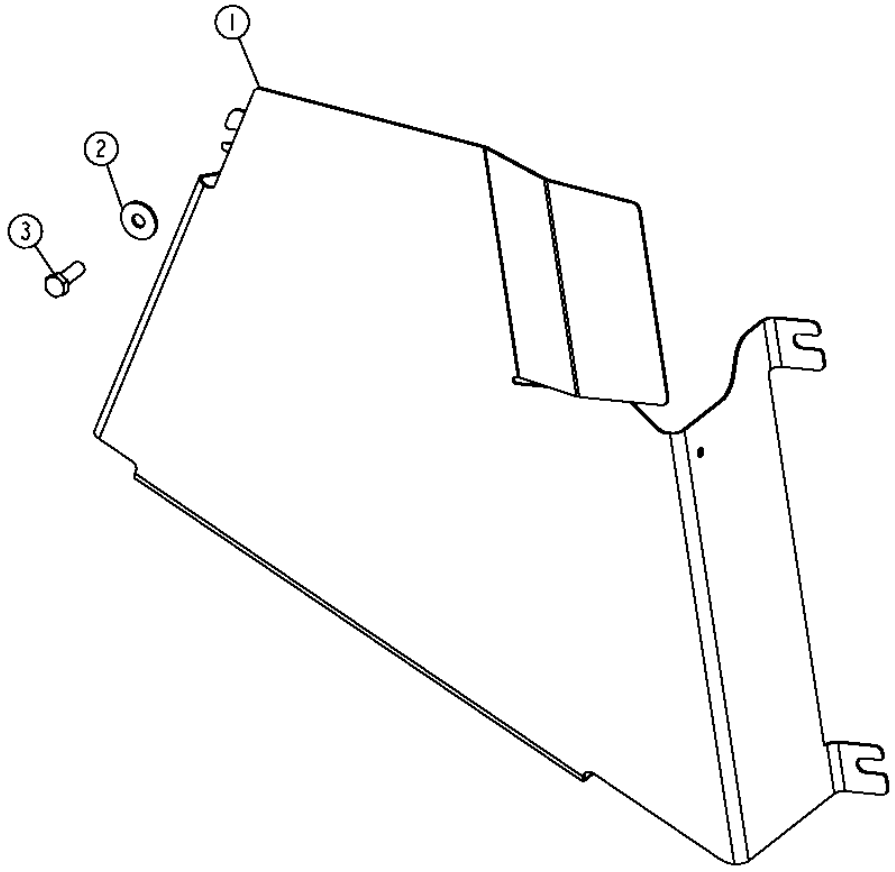

T135722

LOADER PLUMBING SHIELD
PROTECTION DE CONDUITES HYDRAULIQUES DE CHARGEUR
ESCUDO DE TUBERIA DE CARGADORA

KEY	PART NO.	PART NAME	QTY.	SERIAL NO.	410J	410TMC	REMARKS
1	T206908	SHIELD	1		X	X	
2	24M7296	WASHER	1		X	X	
3	19M7662	CAP SCREW	1		X	X	M10 X 30

EXTENDED GRILLE HOUSING
LOGEMENT DE CALANDRE ETENDU
CAJA DE PARRILLA EXTENDIDA

TX1013701 -UN-16NOV06

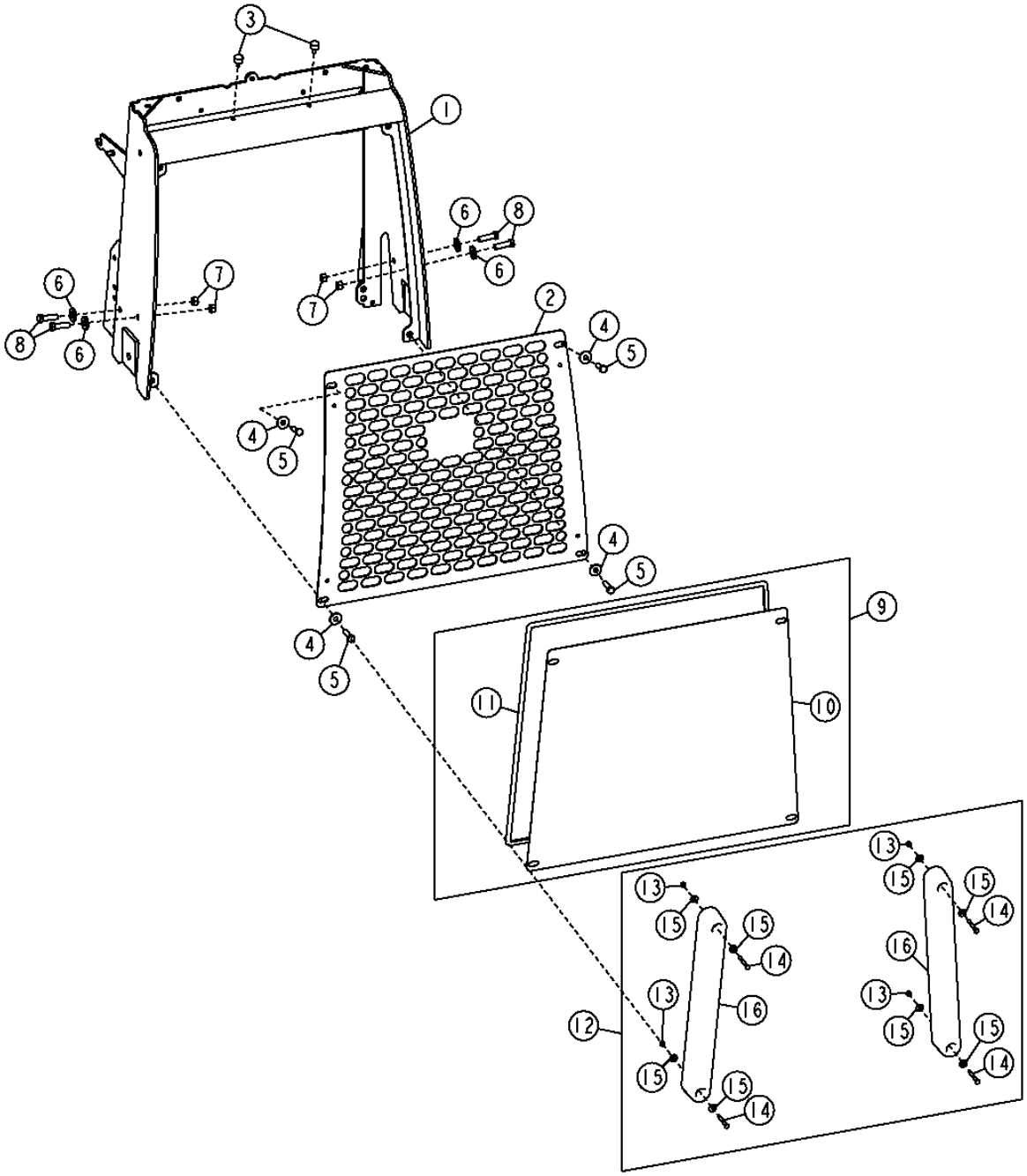

EXTENDED GRILLE HOUSING
LOGEMENT DE CALANDRE ETENDU
CAJA DE PARRILLA EXTENDIDA

KEY	PART NO.	PART NAME	QTY.	SERIAL NO.	410J	410TMC	REMARKS
1	AT318073	FRAME	1		X	X	
2	T210544	GRILLE	1		X	X	
3	H158596	BUMPER	2		X	X	
4	24M7296	WASHER	4		X	X	
5	19M7550	CAP SCREW	4		X	X	M10 X 35
6	T29342	WASHER	4		X	X	(WHOLE GOODS)
7	14M7275	NUT	4		X	X	(TRASH SCREEN)
8	19M7493	CAP SCREW	4		X	X	(MAKE FROM T58056)
9	**AT322742**	**SCREEN**	**1**		**X**	**X**	**(WHOLE GOODS)**
10	AT322743	SCREEN	1		X	X	
11	T58056	ISOLATOR	1		X	X	
12	**AT322879**	**GUARD KIT**	**1**		**X**	**X**	
13	14M7272	NUT	4		X	X	M6
14	19M8329	CAP SCREW	4		X	X	M6 X 50
15	24M7139	WASHER	8		X	X	6.400 X 18 X 1.600 MM
16	T212302	BUMPER	2		X	X	

OPERATOR STATION FENDERS AND SKIRTS
AILES ET JUPES DU POSTE DE CONDUITE
GUARDABARROS Y FALDILLAS DE PUESTO DEL OPERADOR

TP58069 -UN-05OCT00

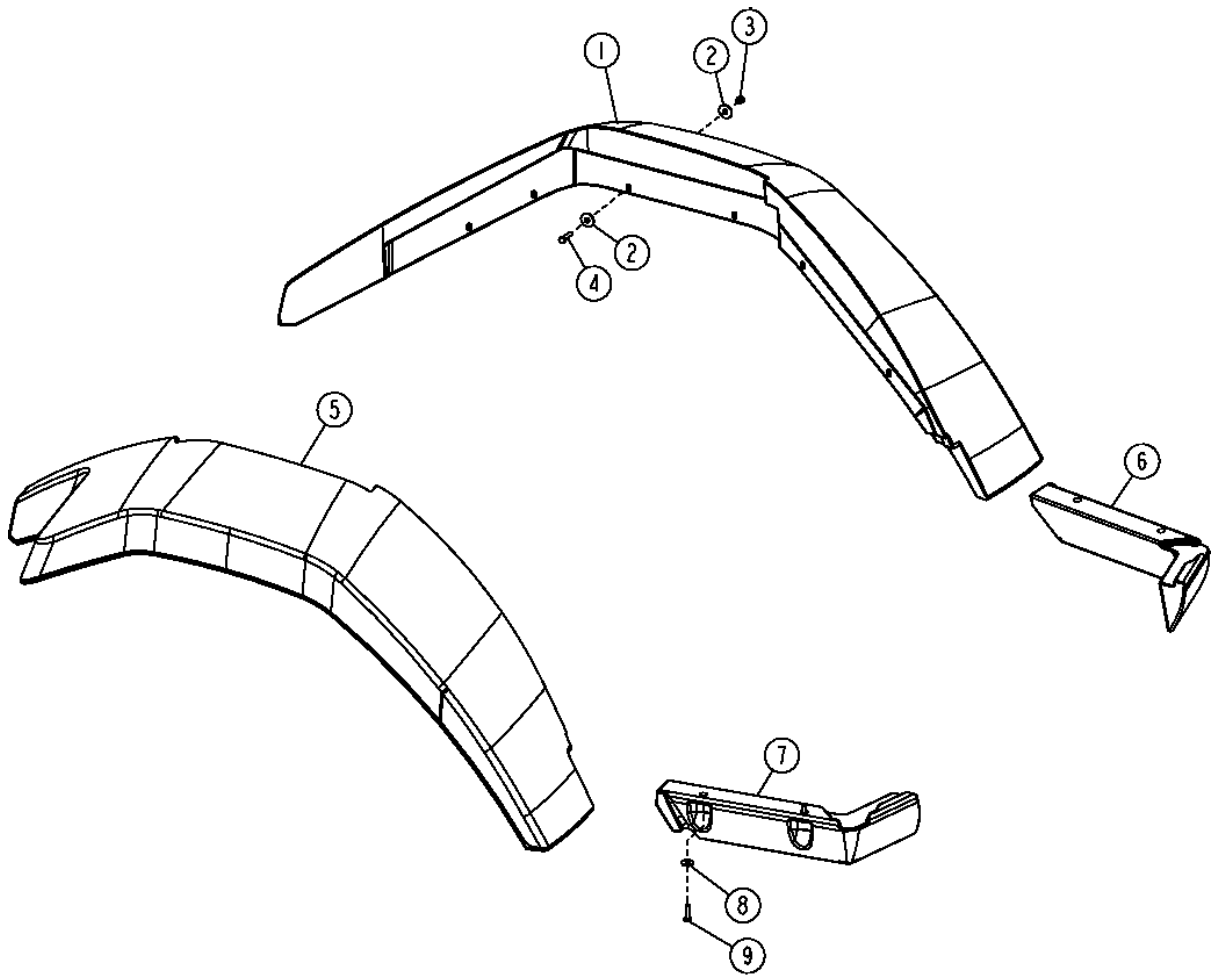

TP58069

OPERATOR STATION FENDERS AND SKIRTS
AILES ET JUPES DU POSTE DE CONDUITE
GUARDABARROS Y FALDILLAS DE PUESTO DEL OPERADOR

KEY	*PART NO.*	*PART NAME*	*QTY.*	*SERIAL NO.*	*REMARKS*
1	T177187	FENDER	1		LH
2	24M7296	WASHER	24		
3	14M7426	LOCK NUT	12		M8
4	19M7513	CAP SCREW	12		M8 X 30
5	T165870	FENDER	1		RH
6	T166331	COVER	1		LH (SERVICE ONLY)
7	T166332	COVER	1		RH (SERVICE ONLY)
8	24M7298	WASHER	4		
9	19M7513	CAP SCREW	4		M8 X 30

RADIO, ANTENNA, SPEAKERS AND WIRE HARNESS (FOR USE WITH CAB ONLY)
RADIO, HAUT-PARLEURS, FAISCEAU DE FILS ET ANTENNE (A UTILISER AVAC CABINE SEULE)
RADIO, ALTAVOCES, ARNES DE ALAMBRADO Y ANTENA (USAR CON CABINA SOLAMENTE)

TX1014614 -UN-18DEC06

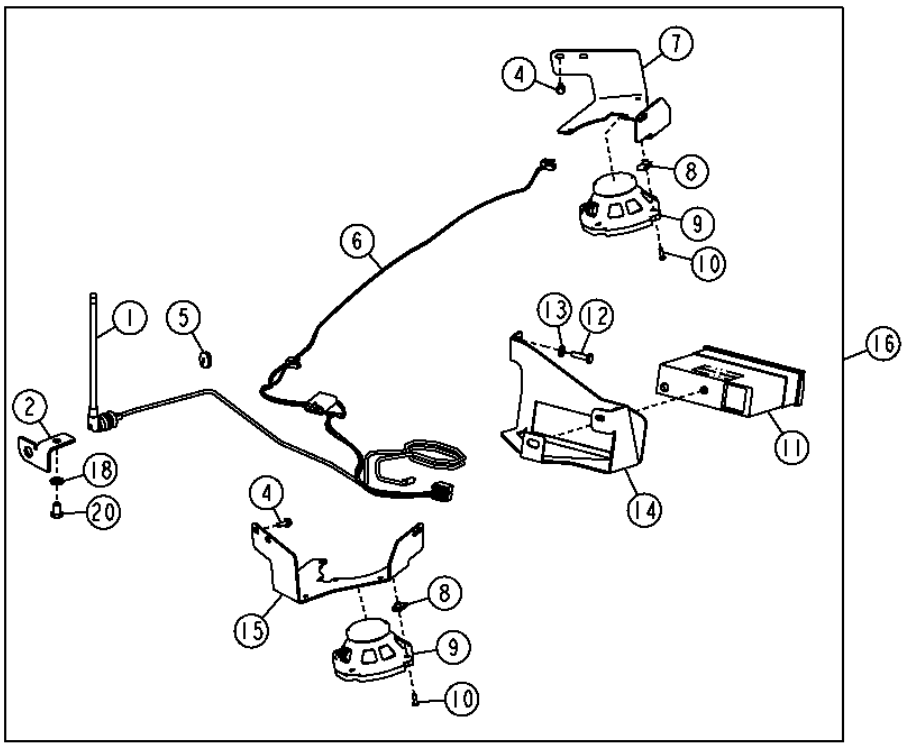

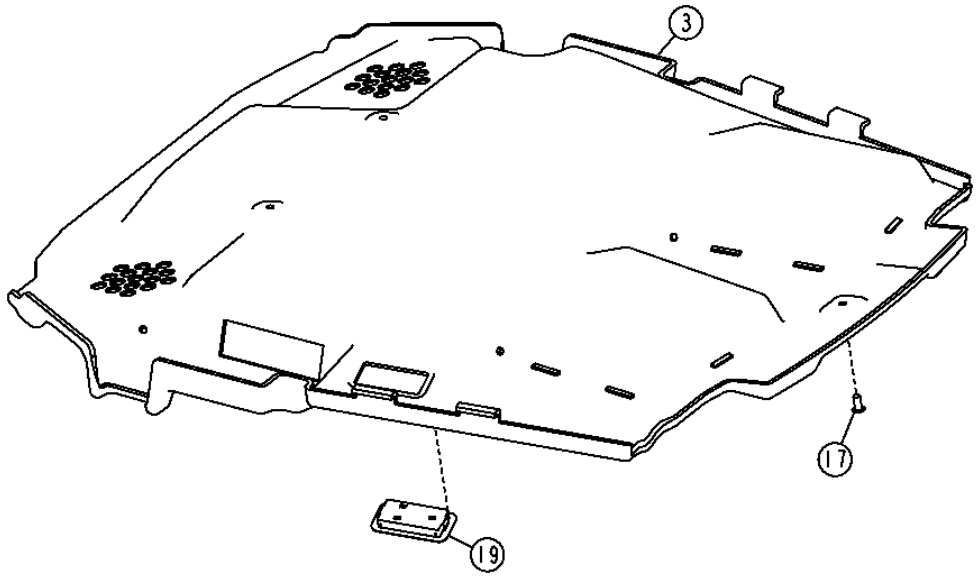

TX1014614

RADIO, ANTENNA, SPEAKERS AND WIRE HARNESS (FOR USE WITH CAB ONLY)
RADIO, HAUT-PARLEURS, FAISCEAU DE FILS ET ANTENNE (A UTILISER AVAC CABINE SEULE)
RADIO, ALTAVOCES, ARNES DE ALAMBRADO Y ANTENA (USAR CON CABINA SOLAMENTE)

KEY	PART NO.	PART NAME	QTY.	SERIAL NO.	410J	410TMC	REMARKS
1	AT199388	ANTENNA	1		X	X	
2	T204635	BRACKET	1		X	X	ANTENNA BRACKET
3	AT335596	HEADLINER	1		X	X	WITH RADIO
	AT335595	HEADLINER	1		X	X	WITHOUT RADIO
4	19M7933	CAP SCREW	6		X	X	M6 X 25
5	T74952	GROMMET	1		X	X	
6	AT191575	WIRING HARNESS	1		X	X	
7	T186443	BRACKET	1		X	X	LH SPEAKER
8	R117892	NUT	6		X	X	
9	AT188759	SPEAKER	2		X	X	
10	21M7271	SCREW	6		X	X	M5 X 16
11	RE190139	RADIO	1		X	X	AM/FM STEREO
	RE227953	RADIO	1		X	X	AM/FM/CD/WEATHER BAND STEREO
12	19M7513	CAP SCREW	2		X	X	M8 X 30
13	24M7238	WASHER	2		X	X	
14	T165951	BRACKET	1		X	X	RADIO
15	T186444	BRACKET	1		X	X	RH SPEAKER
16	**AT192217**	**RADIO**	**1**		**X**	**X**	**(WHOLE GOODS)**
17	MT2485	PLUG	9		X	X	(DRILL HOLE TO 10MM)
18	24M7239	WASHER	1		X	X	10.700 X 21 X 2.500 MM
19	AT320544	LAMP	1		X	X	
20	19M8324	CAP SCREW	1		X	X	M10 X 16

MEMORANDA
MEMORANDA
MEMORANDA

EXTERNAL MIRROR
RETROVISEUR EXTERIEUR
ESPEJO EXTERNO

TX1006003 -UN-17APR06

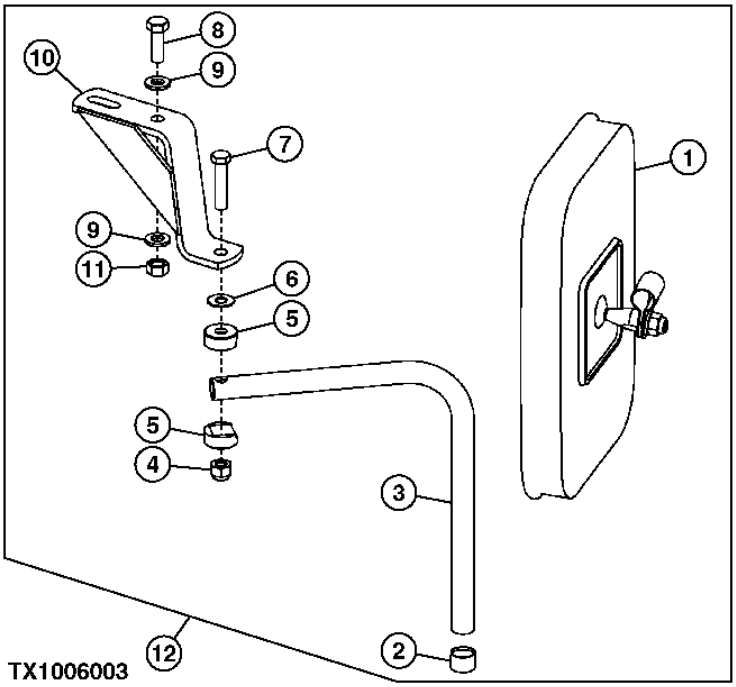

KEY	PART NO.	PART NAME	QTY.	SERIAL NO.	REMARKS
1	AT103919	REAR VIEW MIRROR	2		
2	T128437	CAP	2		
3	T148817	TUBE	2		
4	T11234	LOCK NUT	2		3/8"
5	T115030	HALF CLAMP	4		
6	T60920	WASHER	2		
7	19H3217	CAP SCREW	2		3/8" X 1-3/4"
8	19M7662	CAP SCREW	2		M10 X 30
9	24M7239	WASHER	4		
10	AT195814	BRACKET	1		LH
	AT195815	BRACKET	1		RH
11	14M7274	NUT	2		M10
12	AT186155	REAR VIEW MIRROR	1		

INTERIOR REAR VIEW MIRROR
RETROVISEUR LINTERIEUR
RETROVISOR DEL INTERIOR

TX1013261 -UN-16OCT06

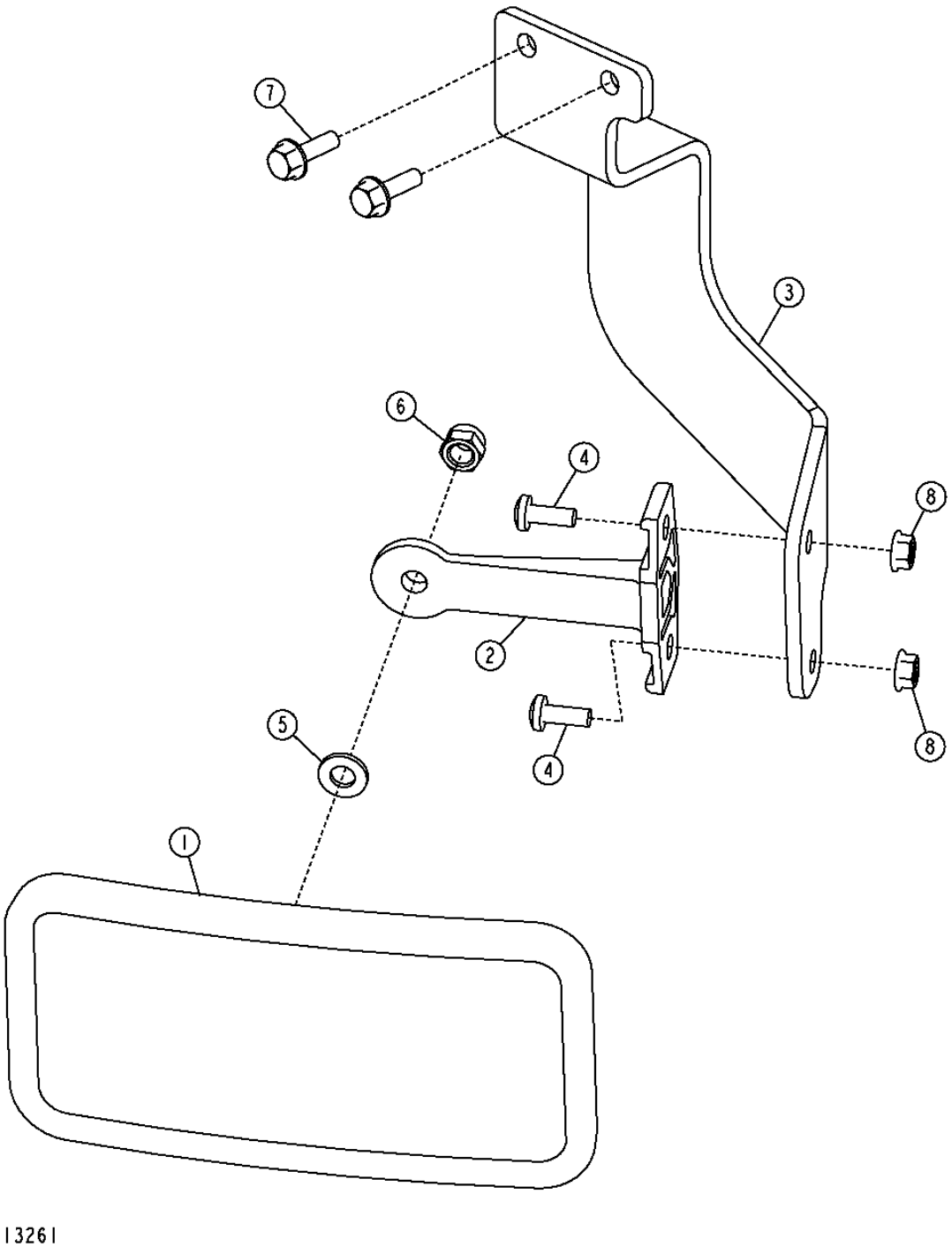

INTERIOR REAR VIEW MIRROR
RETROVISEUR L'INTERIEUR
RETROVISOR DEL INTERIOR

KEY	*PART NO.*	*PART NAME*	*QTY.*	*SERIAL NO.*	*REMARKS*
1	AT196427	REAR VIEW MIRROR	1		
2	L75379	BRACKET	1		
3	T226786	BRACKET	1		
4	21M7246	SCREW	2		M6 X 16
5	24M7238	WASHER	1		
6	14M7426	LOCK NUT	1		M8
7	19M7862	SCREW	2		M6 X 20
8	14M7303	FLANGE NUT	2		M6

FIRE EXTINGUISHER
EXTINCTEUR
EXTINTOR

TX1013736 -UN-20DEC06

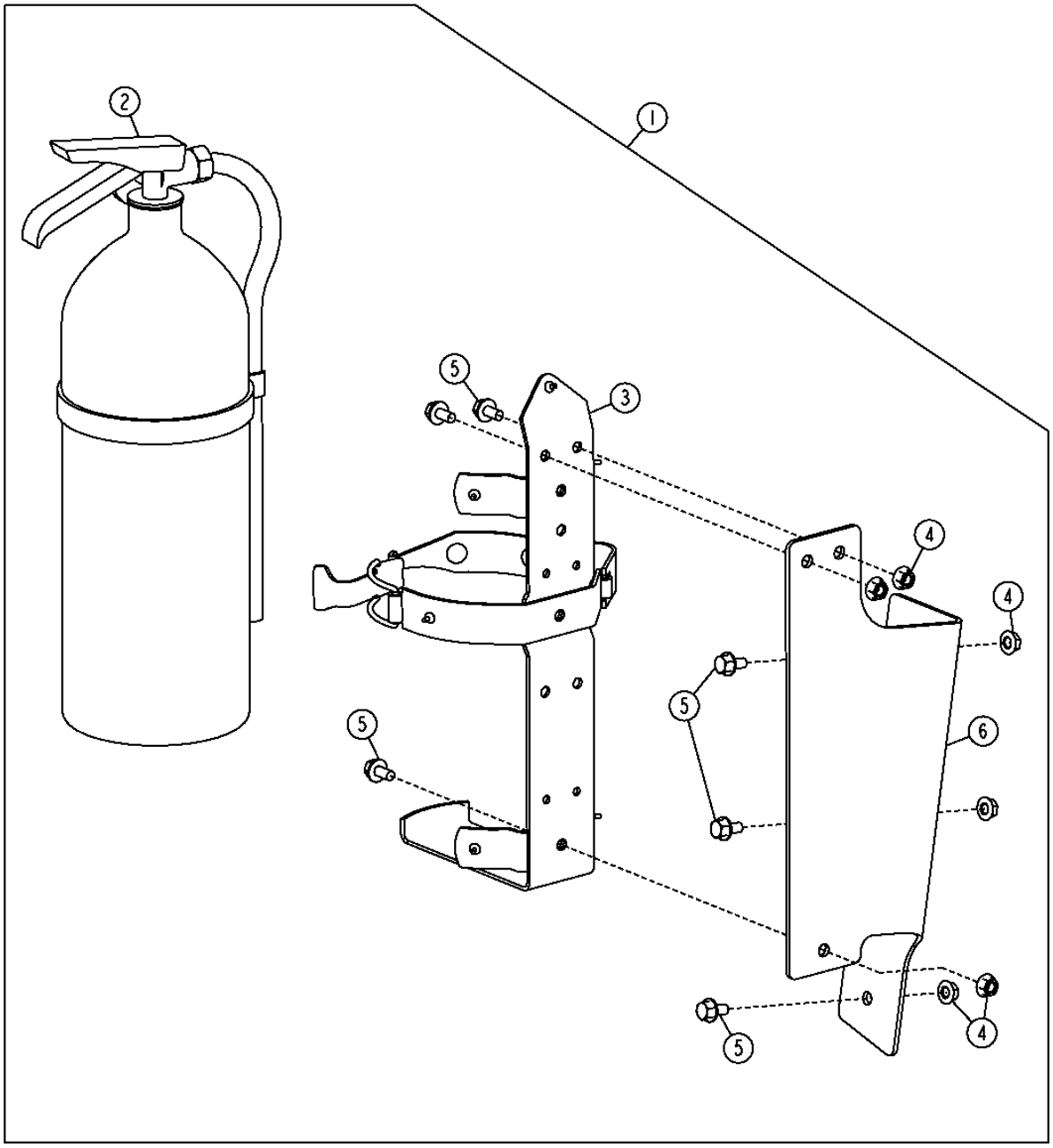

TX1013736

FIRE EXTINGUISER
EXTINCTEUR
EXTINTOR

KEY	PART NO.	PART NAME	QTY.	SERIAL NO.	410J	410TMC	REMARKS
1	AT334349	KIT	1		X	X	
2	AT189487	FIRE EXTINGUISHER	1		X	X	
3	AT189390	BRACKET	1		X	X	
4	14M7303	FLANGE NUT	6		X	X	M6
5	19M7774	SCREW	6		X	X	M6 X 12
6	T225838	PLATE	1		X	X	

WARNING DEVICES INCLUDING HORN AND REVERSE ALARM 2004

HORN
KLAXON
BOCINA

T154411 -UN-29APR02

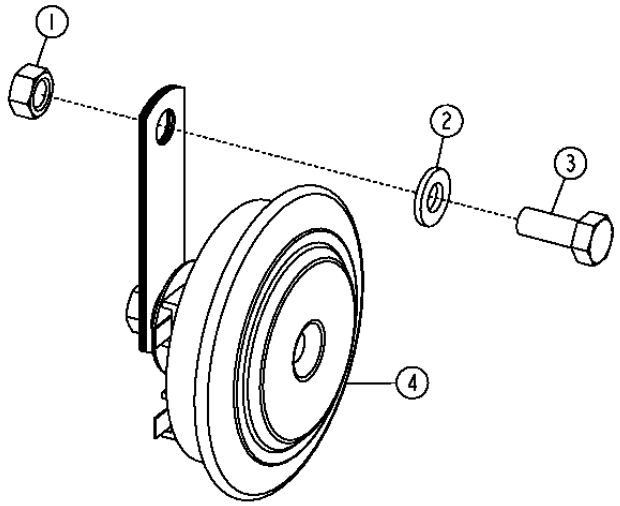

T154411

KEY	PART NO.	PART NAME	QTY.	SERIAL NO.	410JT 410JTMC	REMARKS
1	14M7273	NUT	1		X X	M8
2	24M7238	WASHER	1		X X	8.700 X 17 X 2 MM
3	M86877	BOLT	1		X X	M8 X 20
4	AT226281	HORN	1		X X	(12V)

MEMORANDA
MEMORANDA
MEMORANDA

BACK-UP ALARM SYSTEM
AVERTISSEUR SONORE DE MARCHE ARRIERE
BOCINA DE RETROCESO

T160036 -UN-01OCT02

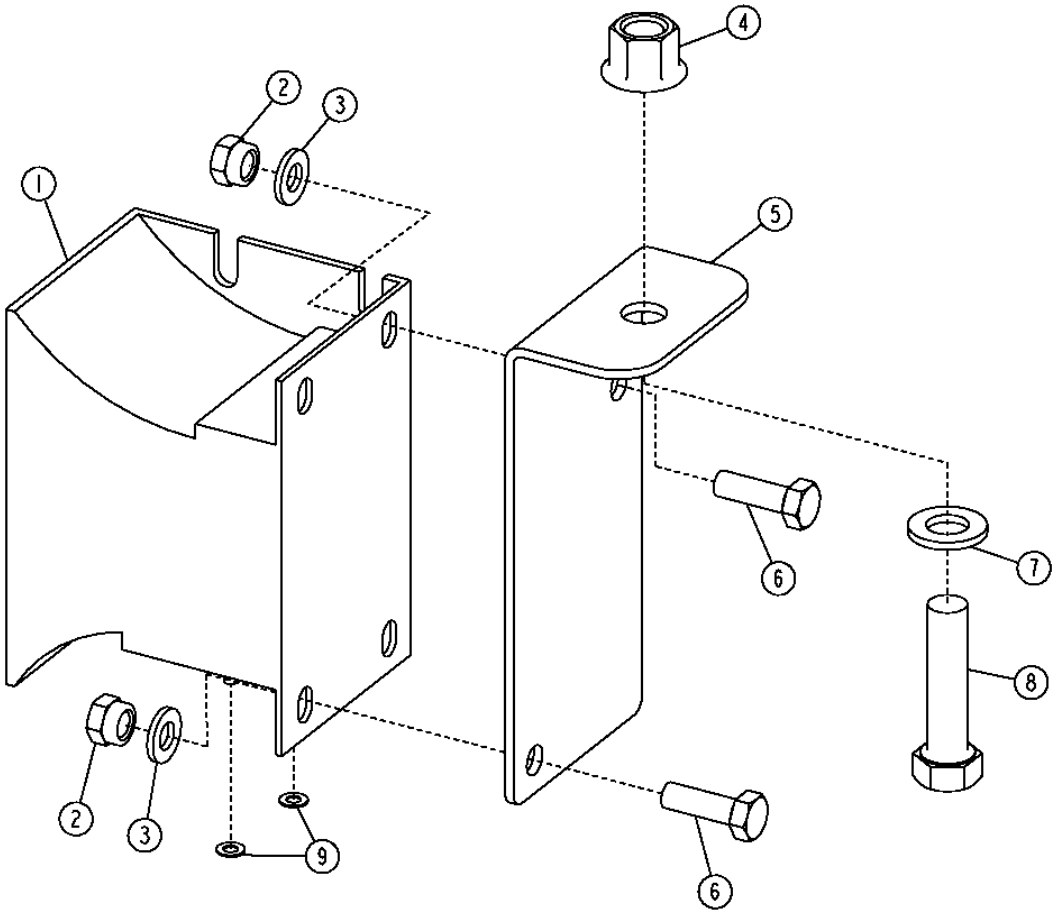

T160036

BACK-UP ALARM SYSTEM
AVERTISSEUR SONORE DE MARCHE ARRIERE
BOCINA DE RETROCESO

KEY	*PART NO.*	*PART NAME*	*QTY.*	*SERIAL NO.*	410J	410TMC	*REMARKS*
1	AT120461	TRAVEL WARNING ALARM	1		X		
2	14M7426	LOCK NUT	2		X		M8
3	24M7238	WASHER	2		X		
4	14M7401	LOCK NUT	1		X		M12
5	T161521	BRACKET	1		X		
6	19M7407	CAP SCREW	2		X		M8 X 25
7	24M7047	WASHER	1		X		
8	19M7496	CAP SCREW	1		X		M12 X 45
9	12M7084	LOCK WASHER	2		X		

BACK-UP ALARM SYSTEM (410TMC)
SYSTEME AVERTISSEUR SONORE DE MARCHE ARRIERE
SISTEMA DE BOCINA DE RETROCESO

TX1015900 -UN-29DEC06

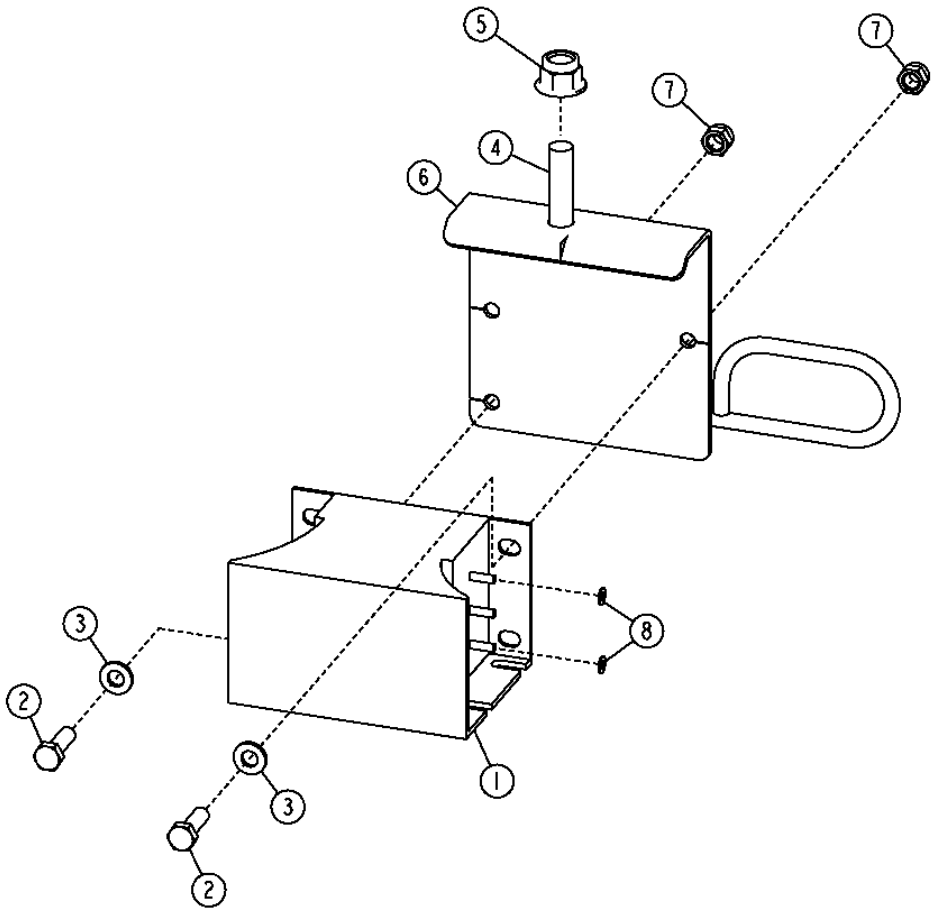

TX1015900

WARNING¦DEVICES¦INCLUDING¦HORN¦AND¦REVERSE ALARM 2004

BACK-UP ALARM SYSTEM (410TMC)
SYSTEME AVERTISSEUR SONORE DE MARCHE ARRIERE
SISTEMA DE BOCINA DE RETROCESO

KEY	PART NO.	PART NAME	QTY.	SERIAL NO.	410J	410TMC	REMARKS
1	AT120461	TRAVEL WARNING ALARM	1			X	
2	19M7407	CAP SCREW	2			X	M8 X 25
3	24M7238	WASHER	2			X	8.700 X 17 X 2 MM
4	19M7813	SCREW	1			X	
5	14M7401	LOCK NUT	1			X	
6	AT326208	BRACKET	1			X	
7	14M7426	LOCK NUT	2			X	M8
8	12M7084	LOCK WASHER	1			X	4.300 MM, (SUB FOR 19M7631 AND 19M7361, THIS APPLICATION)

SUN VISOR
PARE-SOLEIL
PARASOL

TP58072 -UN-09OCT00

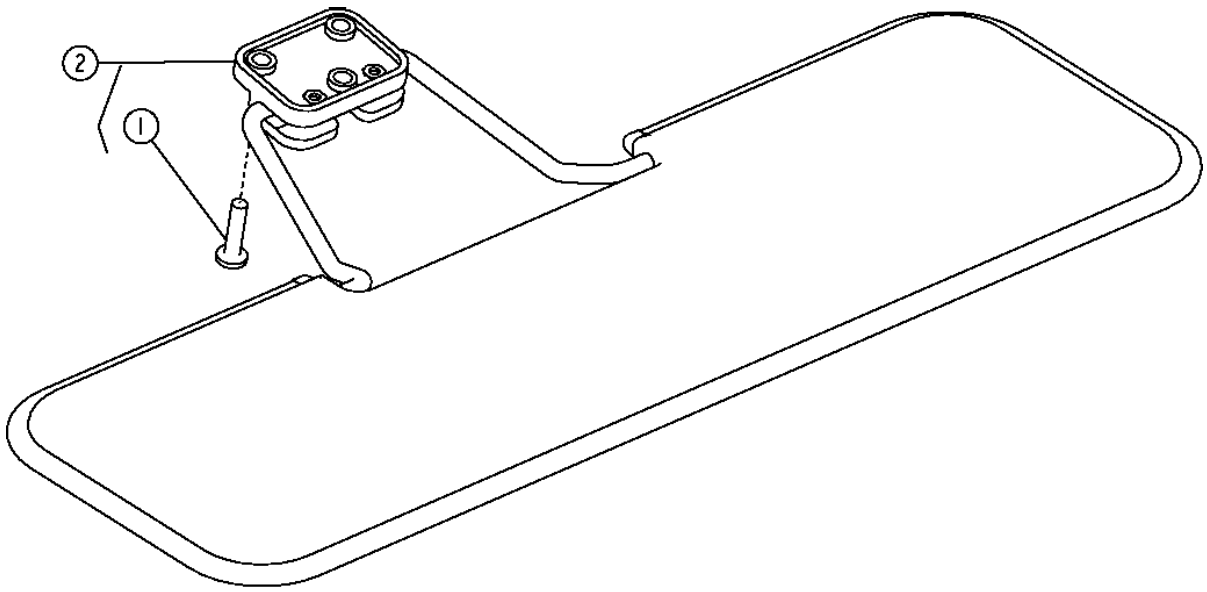

TP58072

SUN VISOR
PARE-SOLEIL
PARASOL

KEY	PART NO.	PART NAME	QTY.	SERIAL NO.	REMARKS
1	T134895	SELF-LOCKING SCREW	3		M6 X 25
2	**AT186307**	**SUN VISOR**	**1**		**WHOLE GOODS**

SMV EMBLEM
SYMBOLE DE VEHICULE LENT
DISTINTIVO SMV

TX1006002 -UN-17APR06

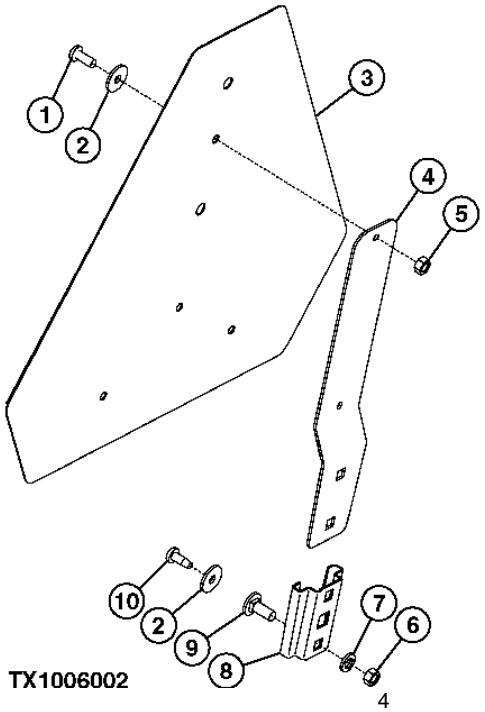

KEY	PART NO.	PART NAME	QTY.	SERIAL NO.	410J 410TMC	REMARKS
1	21H1302	SCREW	2		X X	1/4" X 5/8"
2	24M7100	WASHER	4		X X	
3	JD5930	SMV EMBLEM	1		X X	
4	JD5404	BRACKET	1		X X	
5	14H786	NUT	2		X X	1/4"
6	14H785	NUT	2		X X	5/16"
7	12M7065	LOCK WASHER	2		X X	
8	JD126	BRACKET	1		X X	
9	03H1268	BOLT	2		X X	5/16" X 3/4"
10	37M7074	SCREW	2		X X	M6

MEMORANDA
MEMORANDA
MEMORANDA

CAB ATTENUATOR HYDRAULICS
CIRCUIT HYDRAULIQUE D'ATTENUATEUR DE CABINE
SISTEMA HIDRAULICO DE AMORTIGUADOR DE CABINA

TX1014447 -UN-20DEC06

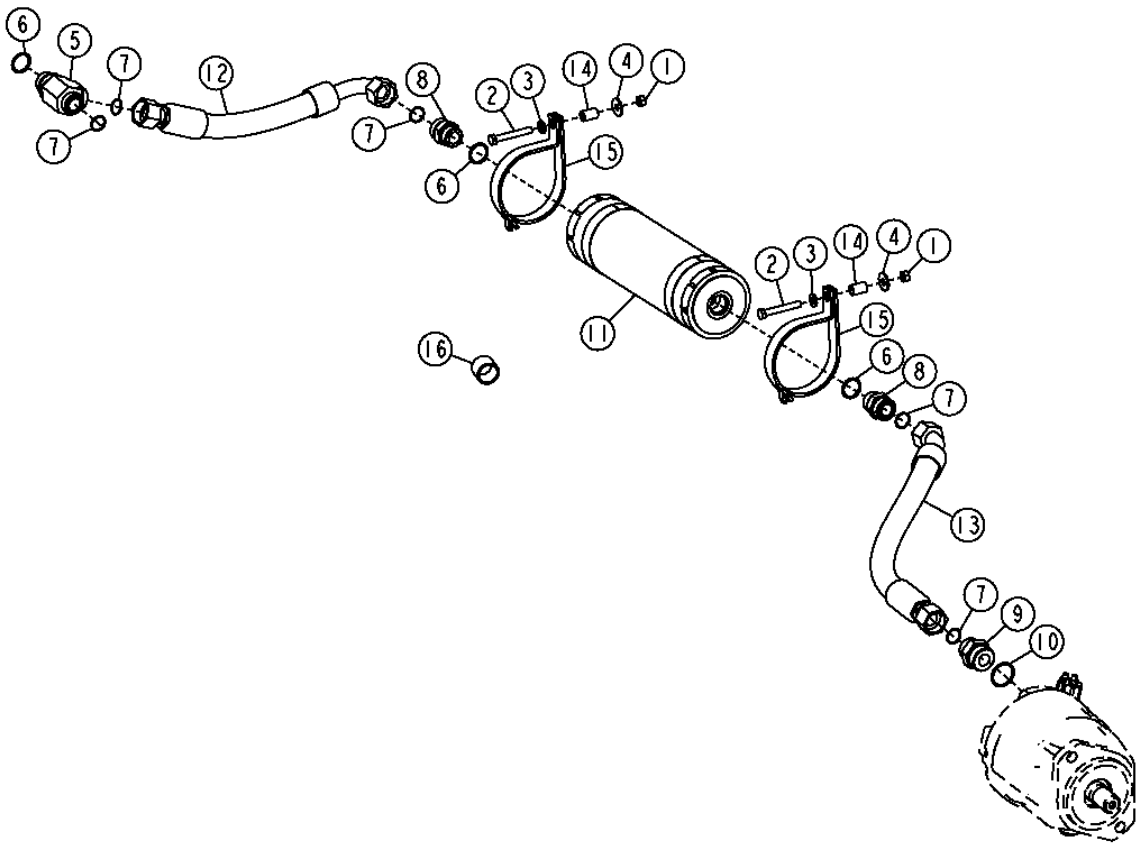

TX1014447

CAB ATTENUATOR HYDRAULICS
CIRCUIT HYDRAULIQUE D'ATTENUATEUR DE CABINE
SISTEMA HIDRAULICO DE AMORTIGUADOR DE CABINA

KEY	PART NO.	PART NAME	QTY.	SERIAL NO.	410J	410TMC	REMARKS
1	14M7274	NUT	2		X	X	M10
2	19M7742	CAP SCREW	2		X	X	M10 X 65
3	24M7239	WASHER	2		X	X	10.700 X 21 X 2.500 MM
4	24M7296	WASHER	2		X	X	10.500 X 30 X 2.500 MM
5	38H1027	TEE FITTING	1		X	X	
6	R29936	O-RING	2		X	X	
7	T76938	O-RING	4		X	X	
8	38H1164	ADAPTER FITTING	1		X	X	
9	38H1180	ADAPTER FITTING	1		X	X	
10	U13639	O-RING	1		X	X	
11	AT195859	HYDRAULIC ACCUMULATOR	1		X	X	
12	AT192077	HYDRAULIC HOSE - FABRICATE	1		X	X	USE WITH 4 AND 5 FUNCTION VALVE
	AT302176	HYDRAULIC HOSE - FABRICATE	1		X	X	USE WITH 6 FUNCTION VALVE
	AT192079	HYDRAULIC HOSE - FABRICATE	1		X	X	USE WITH 7 FUNCTION VALVE
13	AT325763	HYDRAULIC HOSE - FABRICATE	1		X	X	
14	H141836	BUSHING	2		X	X	
15	AT186653	CLAMP	2		X	X	
16	T186026	SPACER	1		X	X	

CANOPY PUMP HYDRAULICS
CIRCUIT HYDRAULIQUE DE POMPE D'AUVENT
SISTEMA HIDRAULICO DE BOMBA DE DOSEL

TX1014446 -UN-20DEC06

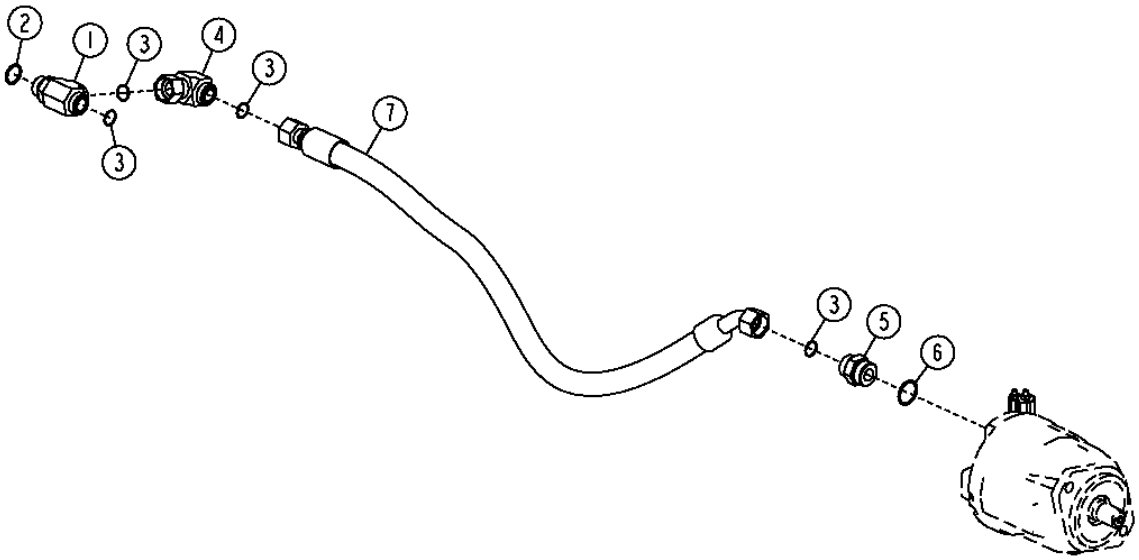

TX1014446

CANOPY PUMP HYDRAULICS
CIRCUIT HYDRAULIQUE DE POMPE D'AUVENT
SISTEMA HIDRAULICO DE BOMBA DE DOSEL

KEY	*PART NO.*	*PART NAME*	*QTY.*	*SERIAL NO.*	*REMARKS*
1	38H1027	TEE FITTING	1		
2	R29936	O-RING	1		
3	T76938	O-RING	4		
4	38H1098	ELBOW FITTING	1		
5	38H1180	ADAPTER FITTING	1		
6	U13639	O-RING	1		
7	AT325762	HYDRAULIC HOSE - FABRICATE	1		

MAIN HYDRAULIC SYSTEM
CIRCUIT HYDRAULIQUE PRINCIPAL
SISTEMA HIDRAULICO PRINCIPAL

TX1017821 -UN-

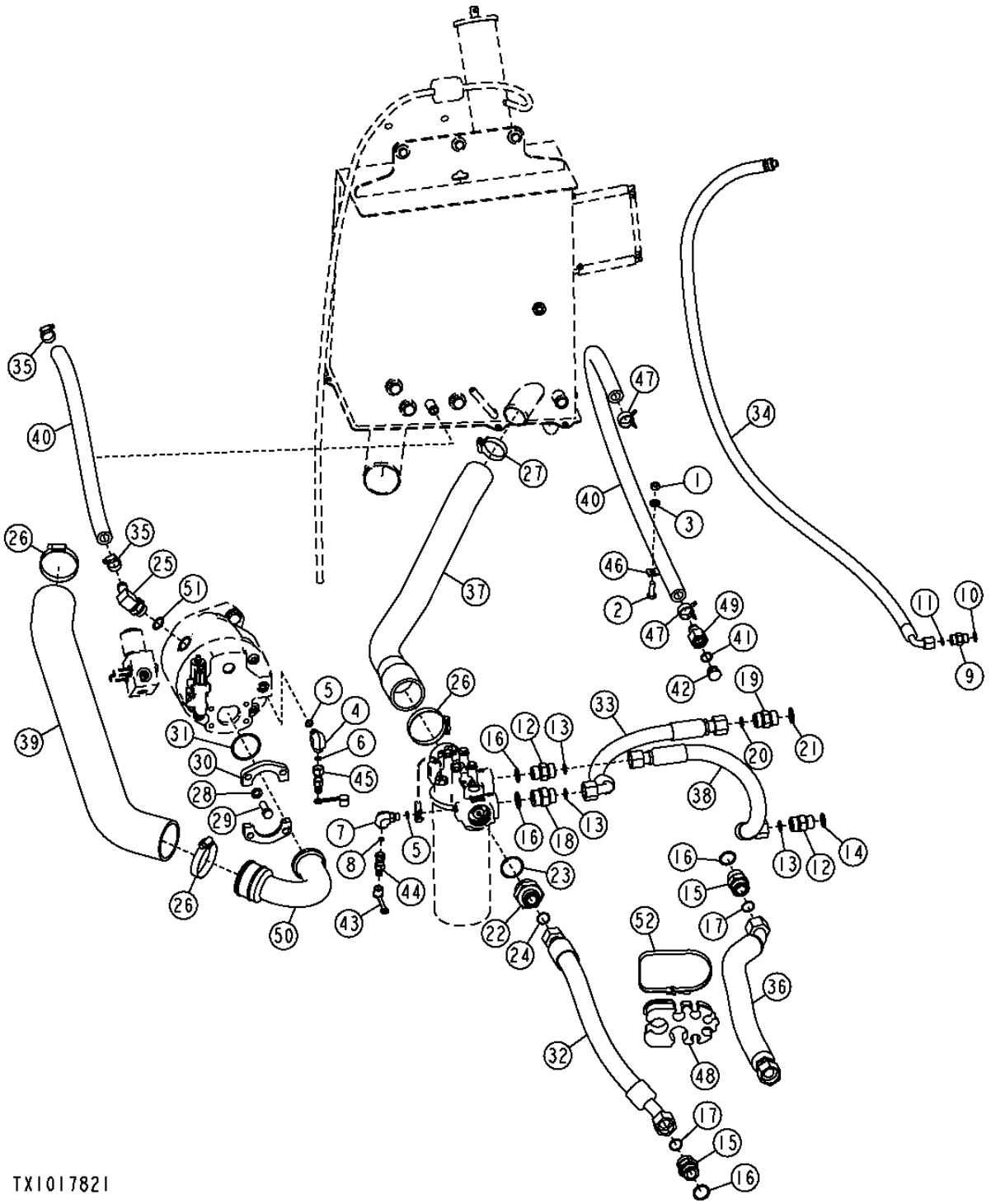

MAIN HYDRAULIC SYSTEM
CIRCUIT HYDRAULIQUE PRINCIPAL
SISTEMA HIDRAULICO PRINCIPAL

KEY	PART NO.	PART NAME	QTY.	SERIAL NO.	410J	410TMC	REMARKS
1	14M7274	NUT	1		X	X	M10
2	19M7662	CAP SCREW	1		X	X	M10 X 30
3	24M7239	WASHER	1		X	X	10.700 X 21 X 2.500 MM
4	38H1004	ELBOW FITTING	1		X	X	
5	R26448	O-RING	2		X	X	
6	T77613	O-RING	1		X	X	
7	38H1009	ELBOW FITTING	1		X	X	
8	T77814	O-RING	1		X	X	
9	38H1161	ADAPTER FITTING	1		X	X	
10	R26375	O-RING	1		X	X	
11	T77857	O-RING	1		X	X	
12	38H1163	ADAPTER FITTING	2		X	X	
13	T77858	O-RING	3		X	X	
14	U12547	O-RING	1		X	X	
15	38H1164	ADAPTER FITTING	2		X	X	
16	R29936	O-RING	4		X	X	
17	T76938	O-RING	2		X	X	
18	38H1194	ADAPTER FITTING	1		X	X	
19	38H1343	ADAPTER FITTING	1		X	X	
20	T77858	O-RING	1		X	X	
21	U17409	O-RING	1		X	X	
22	38H1581	ADAPTER FITTING	1		X	X	
23	R26773	O-RING	1		X	X	
24	T76938	O-RING	1		X	X	
25	AH61472	HOSE FITTING	1		X	X	
26	AR85328	CLAMP	3		X	X	
27	AT145651	CLAMP	1		X	X	
28	12H301	LOCK WASHER	4		X	X	
29	19H2993	CAP SCREW	4		X	X	1/2" X 1-1/2"
30	R37023	FLANGE FITTING	2		X	X	
31	U46457	O-RING	1		X	X	
32	AT195663	HYDRAULIC HOSE - FABRICATE	1		X	X	
33	AT196422	HYDRAULIC HOSE - FABRICATE	1		X	X	
34	AT196489	HYDRAULIC HOSE - FABRICATE	1		X	X	
35	AT301917	HOSE CLAMP	2		X	X	
36	AT322861	HYDRAULIC HOSE - FABRICATE	1		X	X	
37	AT323235	HOSE	1		X	X	
38	AT324745	HYDRAULIC HOSE - FABRICATE	1		X	X	
39	AT326408	SUCTION HOSE	1		X	X	
40	.....	BULK HOSE	1		X	X	(CTL, 5.25') (MAKE FROM T78497)
41	R26906	O-RING	1		X	X	
42	R27474	DRAIN PLUG	1		X	X	
43	R77175	COVER	2		X	X	
44	RE60700	DIAGNOSTIC COUPLING	1		X	X	
45	RE60701	DIAGNOSTIC COUPLING	1		X	X	
46	T102934	CLAMP	1		X	X	
47	T185826	CLAMP	2		X	X	
48	T190669	HOSE CLAMP	1		X	X	
49	T190892	HOSE FITTING	1		X	X	
50	T206755	TUBE	1		X	X	
51	U12547	O-RING	1		X	X	
52	N189220	TIE BAND	1		X	X	

THIS PARTS LISTING IS CONTINUED

MAIN HYDRAULIC SYSTEM (410TMC)
CIRCUIT HYDRAULIQUE PRINCIPAL (410TMC)
SISTEMA HIDRAULICO PRINCIPAL (410TMC)

TX1017830 -UN-

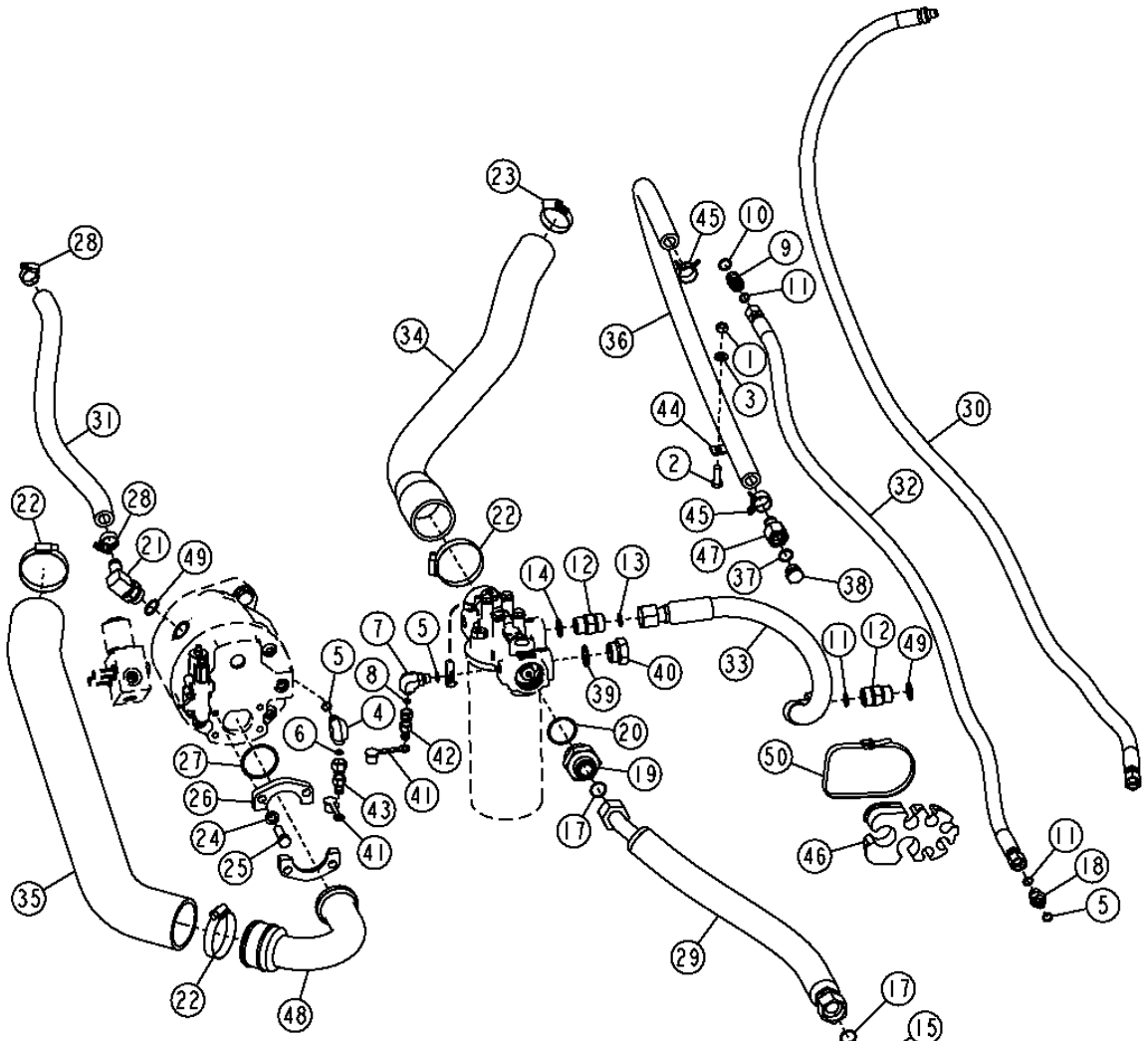

THIS PARTS LISTING IS CONTINUED

MAIN HYDRAULIC SYSTEM (410TMC)
CIRCUIT HYDRAULIQUE PRINCIPAL (410SJ)
SISTEMA HIDRAULICO PRINCIPAL (410TMC)

KEY	PART NO.	PART NAME	QTY.	SERIAL NO.	410J	410TMC	REMARKS
1	14M7274	NUT	1			X	M10
2	19M7662	CAP SCREW	1			X	M10 X 30
3	24M7239	WASHER	1			X	10.700 X 21 X 2.500 MM
4	38H1004	ELBOW FITTING	1			X	
5	R26448	O-RING	3			X	
6	T77613	O-RING	1			X	
7	38H1009	ELBOW FITTING	1			X	
8	T77814	O-RING	1			X	
9	38H1161	ADAPTER FITTING	1			X	
10	R26375	O-RING	1			X	
11	T77857	O-RING	2			X	
12	38H1163	ADAPTER FITTING	1			X	
13	T77858	O-RING	1			X	
14	U12547	O-RING	1			X	
15	38H1164	ADAPTER FITTING	1			X	
16	R29936	O-RING	1			X	
17	T76938	O-RING	2			X	
18	38H1173	ADAPTER FITTING	1			X	
19	38H1581	ADAPTER FITTING	1			X	
20	R26773	O-RING	1			X	
21	AH61472	HOSE FITTING	1			X	
22	AR85328	CLAMP	3			X	
23	AT145651	CLAMP	1			X	
24	12H301	LOCK WASHER	4			X	1/2"
25	19H2993	CAP SCREW	4			X	1/2" X 1-1/2"
26	R37023	FLANGE FITTING	2			X	
27	U46457	O-RING	1			X	
28	AT301917	HOSE CLAMP	2			X	
29	AT323594	HYDRAULIC HOSE - FABRICATE	1			X	
30	AT312265	HYDRAULIC HOSE - FABRICATE	1			X	
31	AT196489	HYDRAULIC HOSE - FABRICATE	1			X	
32	AT312464	HYDRAULIC HOSE - FABRICATE	1			X	
33	AT324745	HYDRAULIC HOSE - FABRICATE	1			X	
34	AT323235	HOSE	1			X	
35	AT326408	SUCTION HOSE	1			X	
36	.....	BULK HOSE	1			X	(CTL, 3.7') (MAKE FROM T78497)
37	R26906	O-RING	1			X	
38	R27474	DRAIN PLUG	1			X	
39	R29936	O-RING	1			X	
40	R36636	FITTING PLUG	1			X	
41	R77175	COVER	2			X	
42	RE60700	DIAGNOSTIC COUPLING	1			X	
43	RE60701	DIAGNOSTIC COUPLING	1			X	
44	T102934	CLAMP	1			X	
45	T185826	CLAMP	2			X	
46	T190669	HOSE CLAMP	1			X	
47	T190892	HOSE FITTING	1			X	
48	T206755	TUBE	1			X	
49	U12547	O-RING	1			X	
50	N189220	TIE BAND	1			X	

THIS PARTS LISTING IS CONTINUED

LOAD SENSE HYDRAULICS (410J)
CIRCUIT HYDRAULIQUE DE DETECTION DE CHARGE (410J)
SISTEMA HIDRAULICO DE DETECCION DE CARGA (410J)

TX1014381 -UN-20NOV06

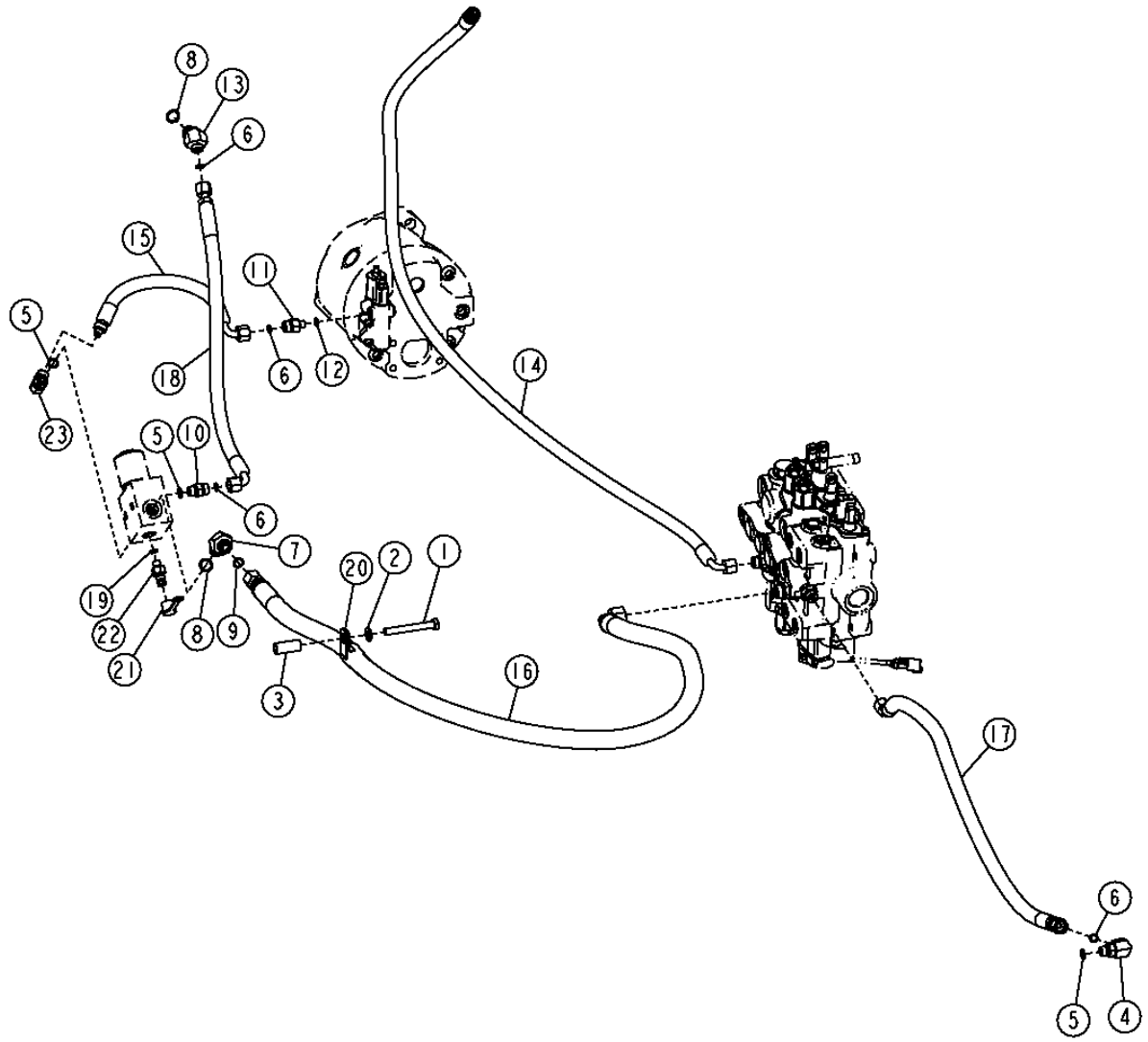

THIS PARTS LISTING IS CONTINUED

LOAD SENSE HYDRAULICS (410J)
CIRCUIT HYDRAULIQUE DE DETECTION DE CHARGE (410J)
SISTEMA HIDRAULICO DE DETECCION DE CARGA (410J)

KEY	PART NO.	PART NAME	QTY.	SERIAL NO.	410J	410TMC	REMARKS
1	19M8081	CAP SCREW	1		X		M10 X 80
2	24M7239	WASHER	1		X		10.700 X 21 X 2.500 MM
3	28H3379	SPACER	1		X		0.493" X 0.675" X 1-9/16"
4	38H1004	ELBOW FITTING	1		X		
5	R26448	O-RING	3		X		
6	T77613	O-RING	4		X		
7	38H1046	ELBOW FITTING	1		X		
8	R26375	O-RING	2		X		
9	T77857	O-RING	1		X		
10	38H1160	ADAPTER FITTING	1		X		
11	38H1309	ADAPTER FITTING	1		X		
12	R28782	O-RING	1		X		
13	38H1522	ELBOW FITTING	1		X		
14	AT196482	HYDRAULIC HOSE - FABRICATE	1		X		
15	AT303680	HYDRAULIC HOSE - FABRICATE	1		X		
16	AT303769	HYDRAULIC HOSE - FABRICATE	1		X		
17	AT322875	HYDRAULIC HOSE - FABRICATE	1		X		
18	AT324584	HYDRAULIC HOSE - FABRICATE	1		X		
19	R28782	O-RING	1		X		
20	R46667	CLAMP	1		X		
21	R77175	COVER	1				
22	RE31495	ELEC. CONNECTOR TERMINAL	1				
23	38H1011	ELBOW FITTING	1				

HYDRAULIC OIL FILTER
FILTRE A HUILE HYDRAULIQUE
FILTRO DE ACEITE HIDRAULICO

TP69662 -UN-10OCT00

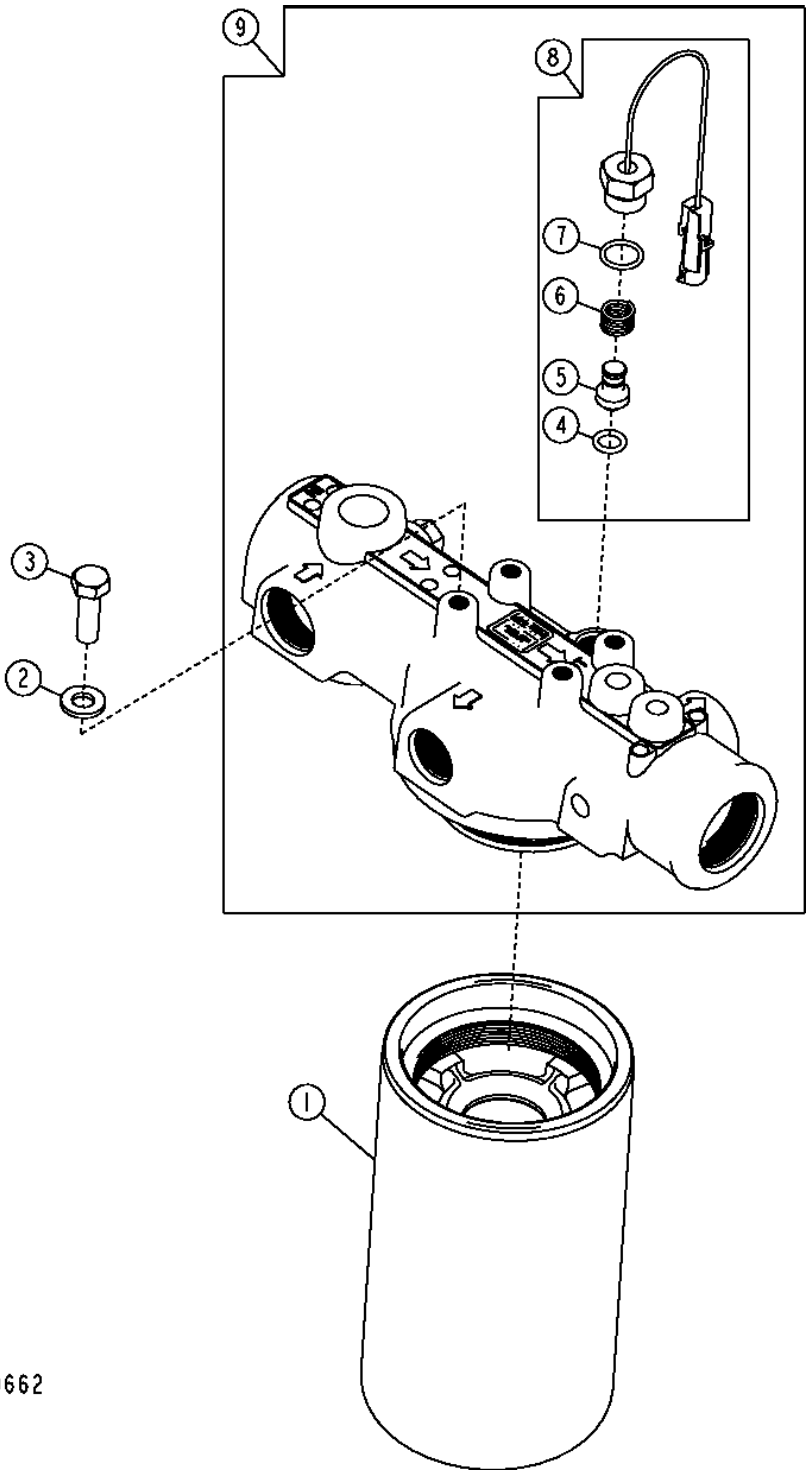

HYDRAULIC OIL FILTER
FILTRE A HUILE HYDRAULIQUE
FILTRO DE ACEITE HIDRAULICO

KEY	PART NO.	PART NAME	QTY.	SERIAL NO.	410J	410TMC	REMARKS
1	AT308274	OIL FILTER	1		X	X	
2	24M7239	WASHER	4		X	X	
3	19M7402	CAP SCREW	4		X	X	M10 X 25
4	T186154	O-RING	1		X	X	
5	.....	PISTON	1		X	X	NSEP
6	.....	SPRING	1		X	X	NSEP
7	R26375	O-RING	1		X	X	
8	AT192373	KIT	1		X	X	
9	AT195276	FILTER HEAD	1		X	X	

MAIN HYDRAULIC SYSTEM RESERVOIR
RESERVOIR DE CIRCUIT HYDRAULIQUE PRINCIPAL
DEPOSITO DEL SISTEMA HIDRAULICO PRINCIPAL

TX1014897 -UN-20DEC06

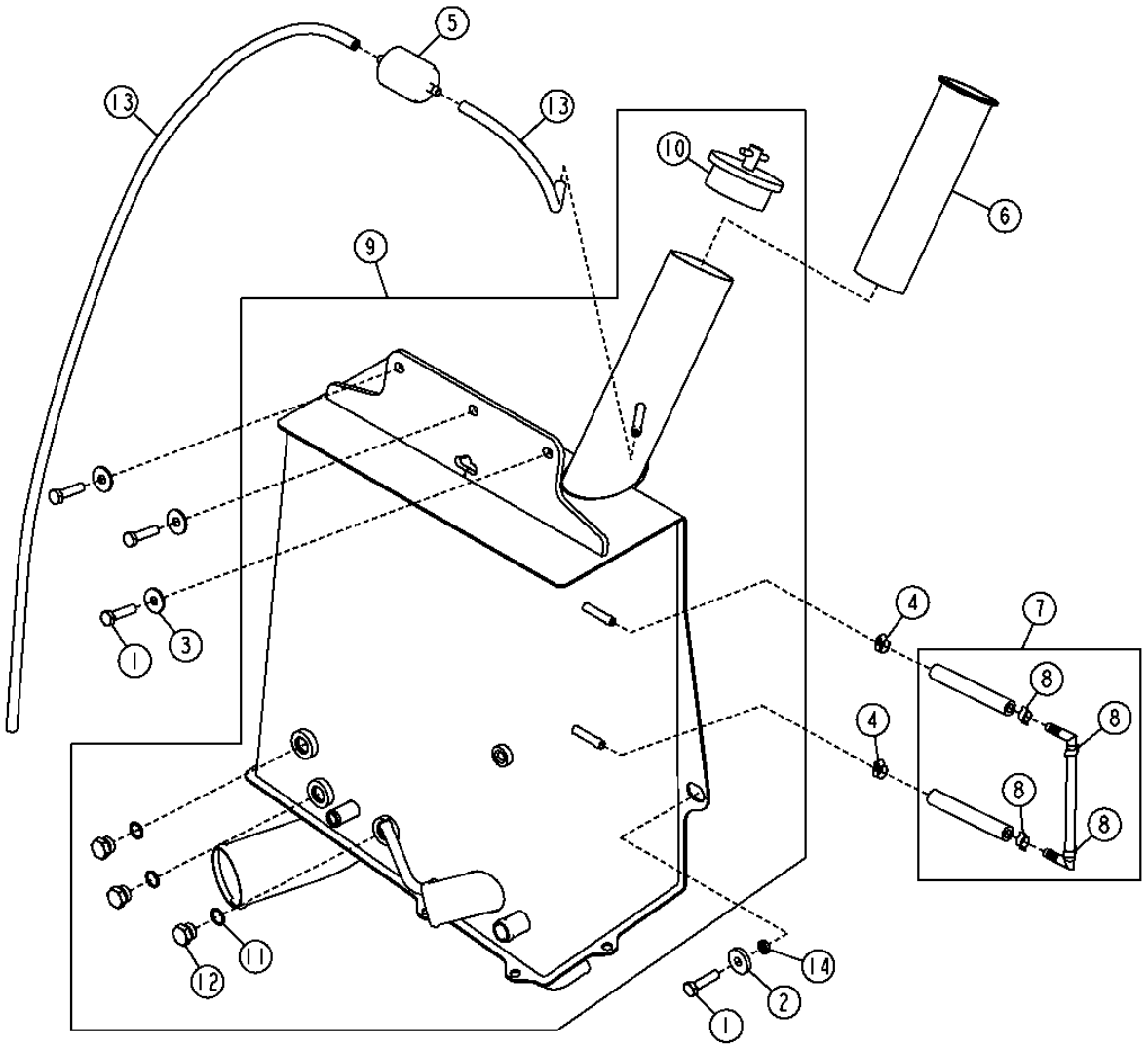

TX1014897

MAIN HYDRAULIC SYSTEM RESERVOIR
RESERVOIR DE CIRCUIT HYDRAULIQUE PRINCIPAL
DEPOSITO DEL SISTEMA HIDRAULICO PRINCIPAL

KEY	PART NO.	PART NAME	QTY.	SERIAL NO.	410J	410TMC	REMARKS
1	19M8637	CAP SCREW	4		X	X	M10 X 40
2	24H1311	WASHER	1		X	X	13/32" X 1-1/4" X 0.220"
3	24M7296	WASHER	3		X	X	10.500 X 30 X 2.500 MM
4	AR77962	HOSE CLAMP	2		X	X	
5	AT101565	AIR FILTER	1		X	X	
6	AT161638	STRAINER	1		X	X	
7	AT199541	LEVEL GAUGE	1		X	X	
8	AR21836	CLAMP	2		X	X	
9	AT318274	HYDRAULIC RESERVOIR	1		X	X	
10	AT174743	FILLER CAP	1		X	X	
11	R26375	O-RING	3		X	X	
12	R39112	FITTING	3		X	X	
13	.....	BULK HOSE	1		X	X	(CTL, 4.7') (MAKE FROM M87571)
14	T184657	SPACER	1		X	X	

MAIN HYDRAULIC PUMP
POMPE HYDRAULIQUE PRINCIPALE (310TMC)
BOMBA HIDRAULICA PRINCIPAL (310TMC)

TX1014936 -UN-01DEC06

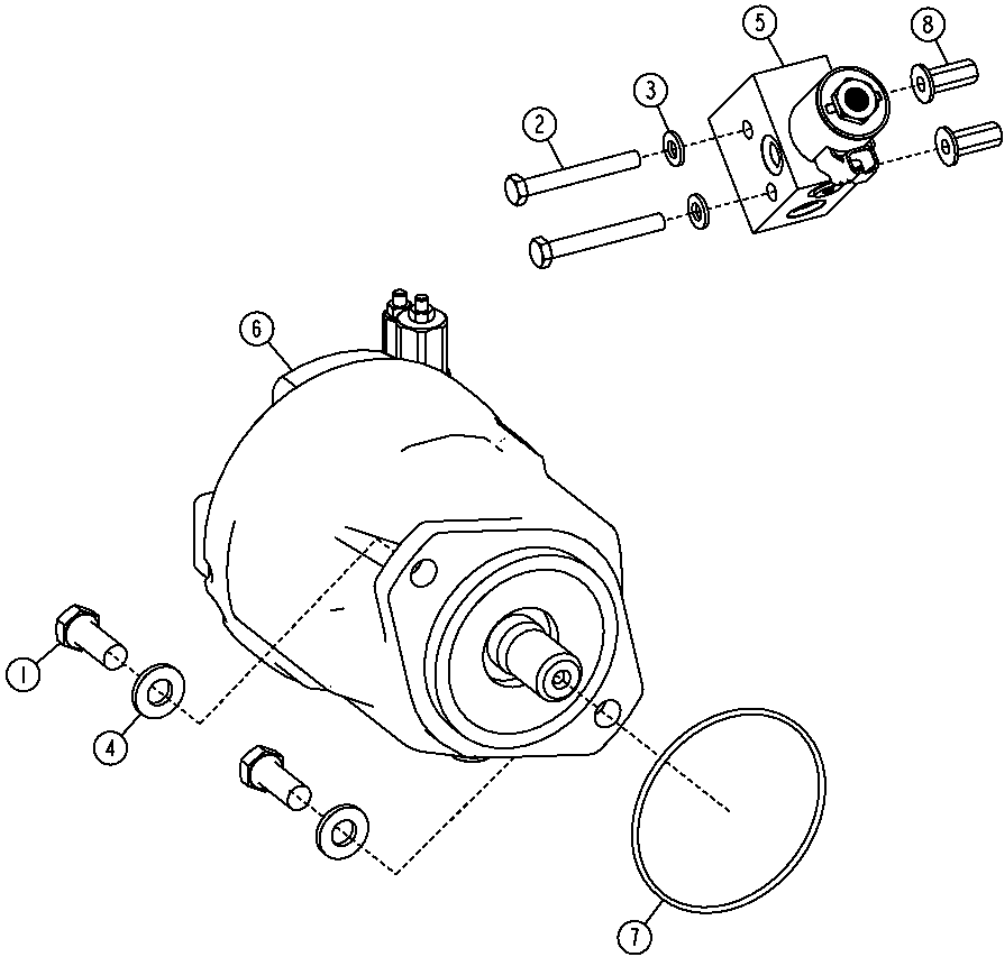

TX1014936

MAIN HYDRAULIC PUMP
POMPE HYDRAULIQUE PRINCIPALE (310TMC)
BOMBA HIDRAULICA PRINCIPAL (310TMC)

KEY	PART NO.	PART NAME	QTY.	SERIAL NO.	410J	410TMC	REMARKS
1	19M7395	CAP SCREW	2		X	X	M16 X 40
2	19M8081	CAP SCREW	2		X	X	M10 X 80
3	24M7239	WASHER	2		X	X	10.700 X 21 X 2.500 MM
4	24M7241	WASHER	2		X	X	17 X 34 X 4 MM
5	AT330663	SOLENOID VALVE	1		X	X	
	AT198518	PRESSURE RELIEF VALVE	1		X	X	
	AT224862	SEAL KIT	1		X	X	
	AT333814	SOLENOID VALVE COIL	1		X	X	
	T225294	NUT	1		X	X	
6	AT334876	HYDRAULIC PUMP	1		X	X	
	AT306219	SEAL KIT	1		X	X	(CONTROLLER)
	AT310889	SEAL KIT	1		X	X	
	AT334877	KIT	1		X	X	(PUMP CONTROLLER KIT)
	T201521	GASKET	1		X	X	(CONTROLLER SEAL PLATE)
	T201525	SEAL	1		X	X	
7	F37030250	O-RING	1		X	X	
8	T148409	NUT	2		X	X	

HYDRAULIC OIL COOLER AND HOSES
REFROIDISSEUR D'HUILE HYDRAULIQUE ET FLEXIBLES
ENFRIADOR DE ACEITE HIDRAULICO Y MANGUERAS

TX1017194 -UN-

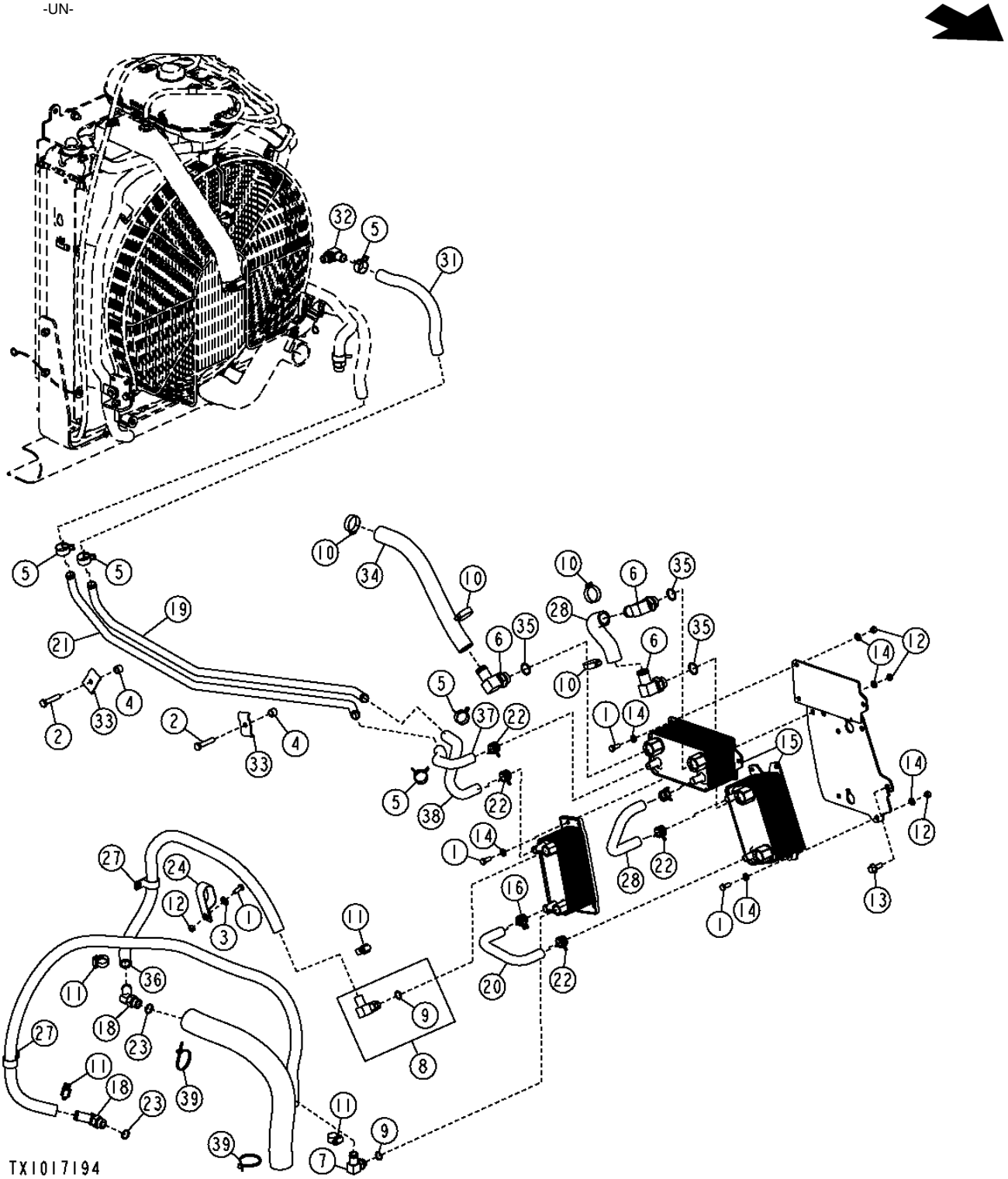

HYDRAULIC OIL COOLER AND HOSES
REFROIDISSEUR D'HUILE HYDRAULIQUE ET FLEXIBLES
ENFRIADOR DE ACEITE HIDRAULICO Y MANGUERAS

KEY	PART NO.	PART NAME	QTY.	SERIAL NO.	410J	410TMC	REMARKS
1	19M7881	SCREW	7		X	X	M8 X 20
2	19M8600	CAP SCREW	2		X	X	M10 X 50
3	24M7239	WASHER	5		X	X	10.700 X 21 X 2.500 MM
4	28H3394	BUSHING	2		X	X	
5	T185826	CLAMP	14		X	X	
6	AR68999	ELBOW FITTING	2		X	X	
7	AT118619	HOSE FITTING	1		X	X	
8	AT193927	HOSE FITTING	1		X	X	
9	R26375	O-RING	2		X	X	
10	AT300153	HOSE CLAMP	4		X	X	
11	AT301917	HOSE CLAMP	8		X	X	
12	14M7273	NUT	7		X	X	M8
13	19M7785	SCREW	3		X	X	M10 X 25
14	24M7238	WASHER	14		X	X	8.700 X 17 X 2 MM
15	AT318085	OIL COOLER	2		X	X	
16	RE201108	OIL COOLER	1		X	X	
18	AT324059	ELBOW FITTING	2		X	X	
19	AT330459	TUBE	1		X	X	
21	AT334340	TUBE	1		X	X	
22	R117721	CLAMP	4		X	X	
23	R26906	O-RING	2		X	X	
24	T149597	CLAMP	1		X	X	
26	T161463	SLEEVE	1		X	X	
27	T162675	CLAMP	2		X	X	
28	T216968	HOSE	1		X	X	
29	T223521	HOSE	1		X	X	
30	T223522	HOSE	1		X	X	
31	.....	BULK HOSE	1		X	X	(MAKE FROM TY22330) (CTL)
32	AH206095	ELBOW FITTING	1		X	X	
33	R46919	HALF CLAMP	2		X	X	
34	TY22556	HOSE	1		X	X	
35	U12547	O-RING	3		X	X	
36	.....	BULK HOSE	1		X	X	(MAKE FROM T78497) (CTL)
37	T223708	HOSE	1		X	X	
38	T223564	HOSE	1		X	X	
39	R44302	TIE BAND	1		X	X	

CAB ATTENUATOR HYDRAULICS (410TMC)
CIRCUIT HYDRAULIQUE D'ATTENUATEUR DE CABINE (410TMC)
SISTEMA HIDRAULICO DE AMORTIGUADOR DE CABINA (410TMC)

TX1015851 -UN-18DEC06

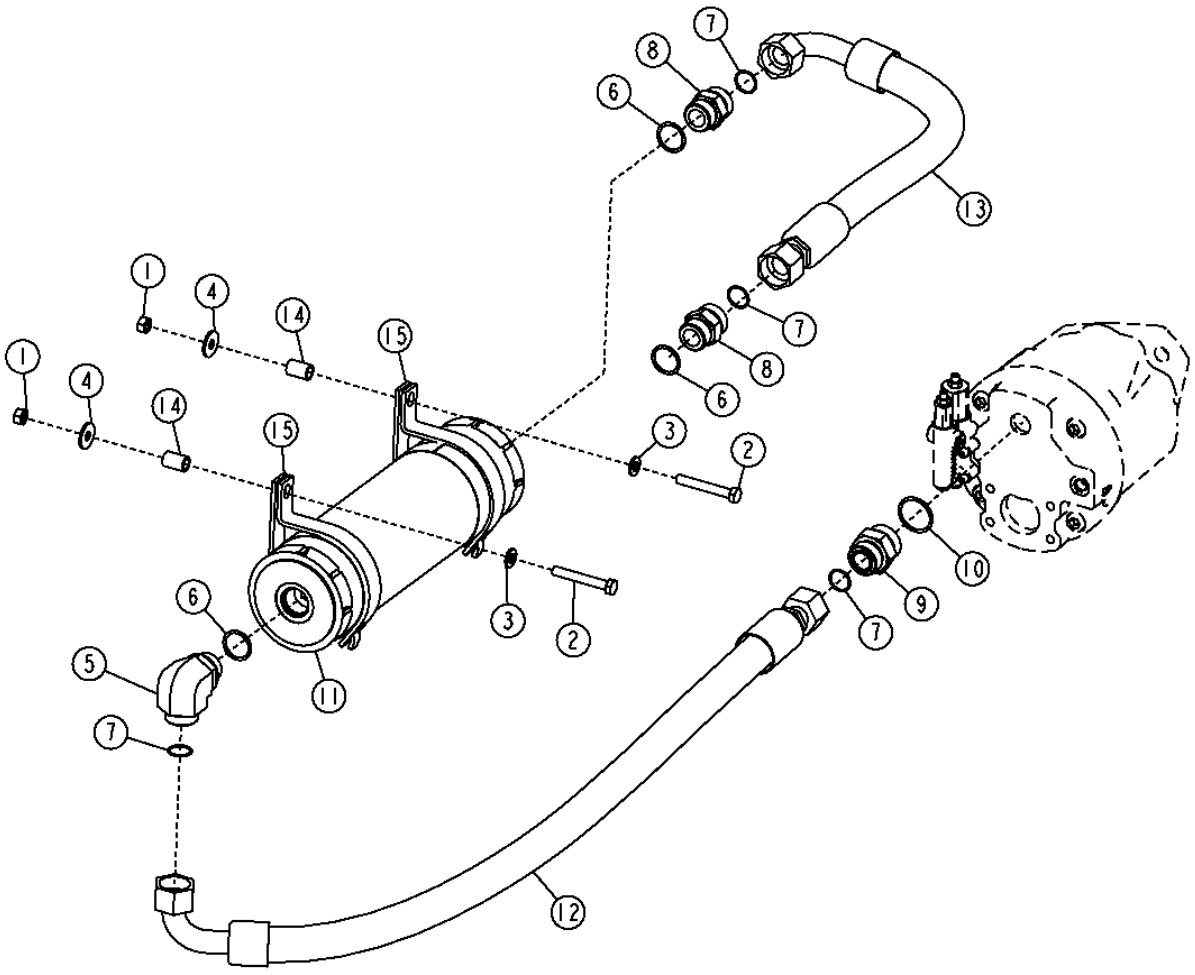

THIS PARTS LISTING IS CONTINUED

CAB ATTENUATOR HYDRAULICS (410TMC)
CIRCUIT HYDRAULIQUE D'ATTENUATEUR DE CABINE (410TMC)
SISTEMA HIDRAULICO DE AMORTIGUADOR DE CABINA (410TMC)

KEY	PART NO.	PART NAME	QTY.	SERIAL NO.	410J	410TMC	REMARKS
1	14M7274	NUT	2		X	X	M10
2	19M7875	CAP SCREW	2		X	X	M10 X 70
3	24M7239	WASHER	2		X	X	10.700 X 21 X 2.500 MM
4	24M7296	WASHER	2		X	X	10.500 X 30 X 2.500 MM
5	38H1037	ELBOW FITTING	1		X	X	
6	R29936	O-RING	3		X	X	
7	T76938	O-RING	4		X	X	
8	38H1164	ADAPTER FITTING	2		X	X	
9	38H1180	ADAPTER FITTING	1		X	X	
10	U13639	O-RING	1		X	X	
11	AT195859	HYDRAULIC ACCUMULATOR	1		X	X	
12	AT318992	HYDRAULIC HOSE - FABRICATE	1		X	X	
13	AT319030	HYDRAULIC HOSE - FABRICATE	1		X	X	
14	H141836	BUSHING	2		X	X	
15	AT186653	CLAMP	2		X	X	

LOAD SENSE HYDRAULICS (410TMC)
CIRCUIT HYDRAULIQUE DE DETECTION DE CHARGE (410TMC)
SISTEMA HIDRAULICO DE DETECCION DE CARGA (410TMC)

TX1015820 -UN-18DEC06

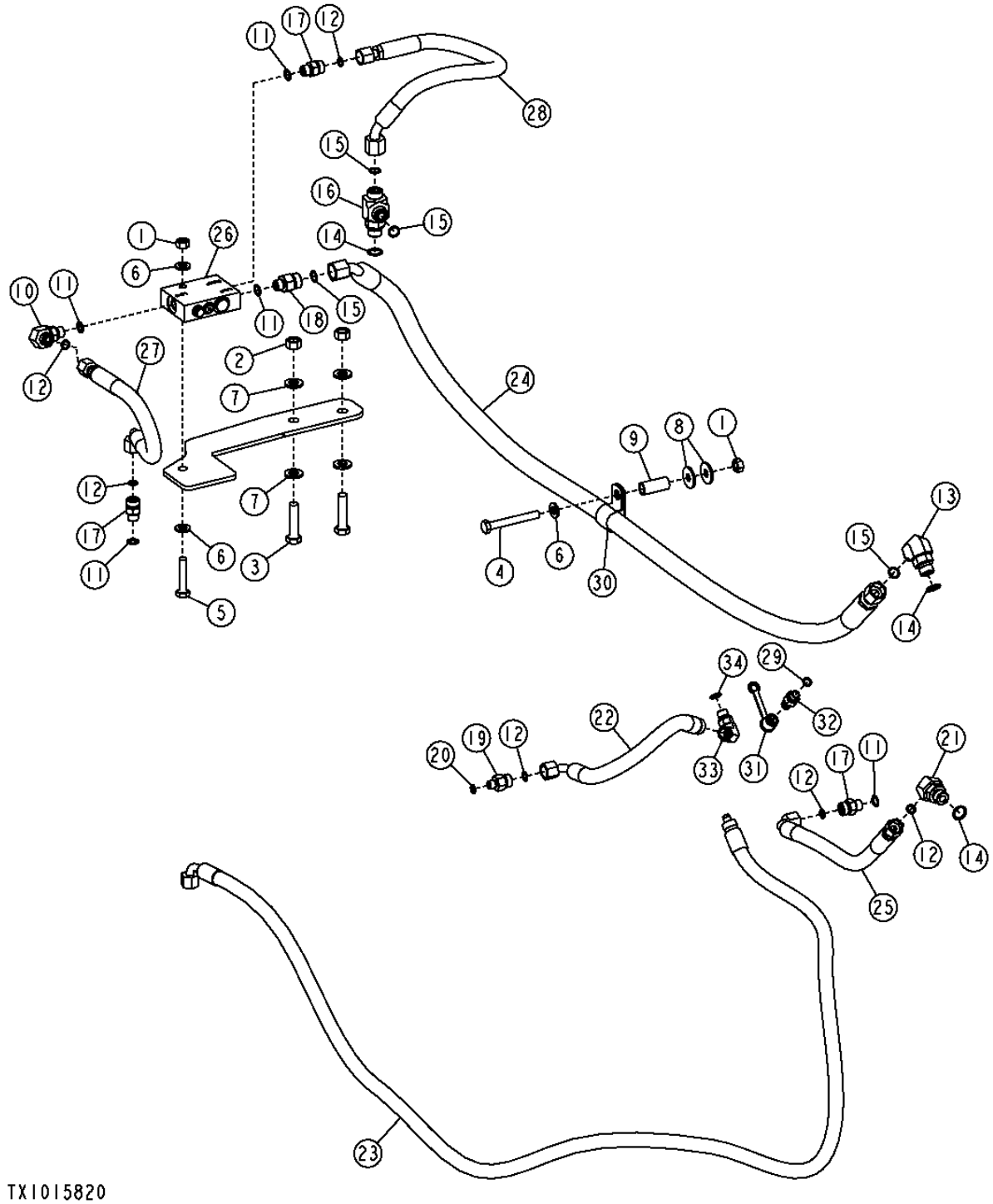

THIS PARTS LISTING IS CONTINUED

LOAD SENSE HYDRAULICS (410TMC)
CIRCUIT HYDRAULIQUE DE DETECTION DE CHARGE (410TMC)
SISTEMA HIDRAULICO DE DETECCION DE CARGA (410TMC)

KEY	PART NO.	PART NAME	QTY.	SERIAL NO.	410J	410TMC	REMARKS
1	14M7274	NUT	2			X	M10
2	14M7275	NUT	2			X	M12
3	19M7361	CAP SCREW	2			X	M12 X 50
4	19M8081	CAP SCREW	1			X	M10 X 80
5	19M8600	CAP SCREW	1			X	M10 X 50
6	24M7239	WASHER	3			X	10.700 X 21 X 2.500 MM
7	24M7240	WASHER	4			X	13 X 25 X 3 MM
8	24M7296	WASHER	2			X	10.500 X 30 X 2.500 MM
9	28H3379	SPACER	1			X	0.493" X 0.675" X 1-9/16"
10	38H1004	ELBOW FITTING	1			X	
11	R26448	O-RING	5			X	
12	T77613	O-RING	6			X	
13	38H1005	ELBOW FITTING	1			X	
14	R26375	O-RING	3			X	
15	T77857	O-RING	5			X	
16	38H1024	TEE FITTING	1			X	
17	38H1160	ADAPTER FITTING	3			X	
18	38H1173	ADAPTER FITTING	1			X	
19	38H1309	ADAPTER FITTING	1			X	
20	R28782	O-RING	1			X	
22	AT303680	HYDRAULIC HOSE - FABRICATE	1			X	
23	AT312463	HYDRAULIC HOSE - FABRICATE	1			X	
24	AT320797	HYDRAULIC HOSE - FABRICATE	1			X	
25	AT324584	HYDRAULIC HOSE - FABRICATE	1			X	
26	AT330280	VALVE	1			X	
27	AT330513	HYDRAULIC HOSE - FABRICATE	1			X	
28	AT330514	HYDRAULIC HOSE - FABRICATE	1			X	
29	R28782	O-RING	1			X	
30	R46667	CLAMP	1			X	
31	R77175	COVER	1			X	
32	RE31495	ELEC. CONNECTOR TERMINAL	1			X	
33	38H1011	ELBOW FITTING	1			X	
34	R26448	O-RING	1			X	

RIDE CONTROL KIT
KIT DE COMMANDE DE SUSPENSION
JUEGO DE CONTROL DE SUSPENSION

TX1016014 -UN-28DEC06

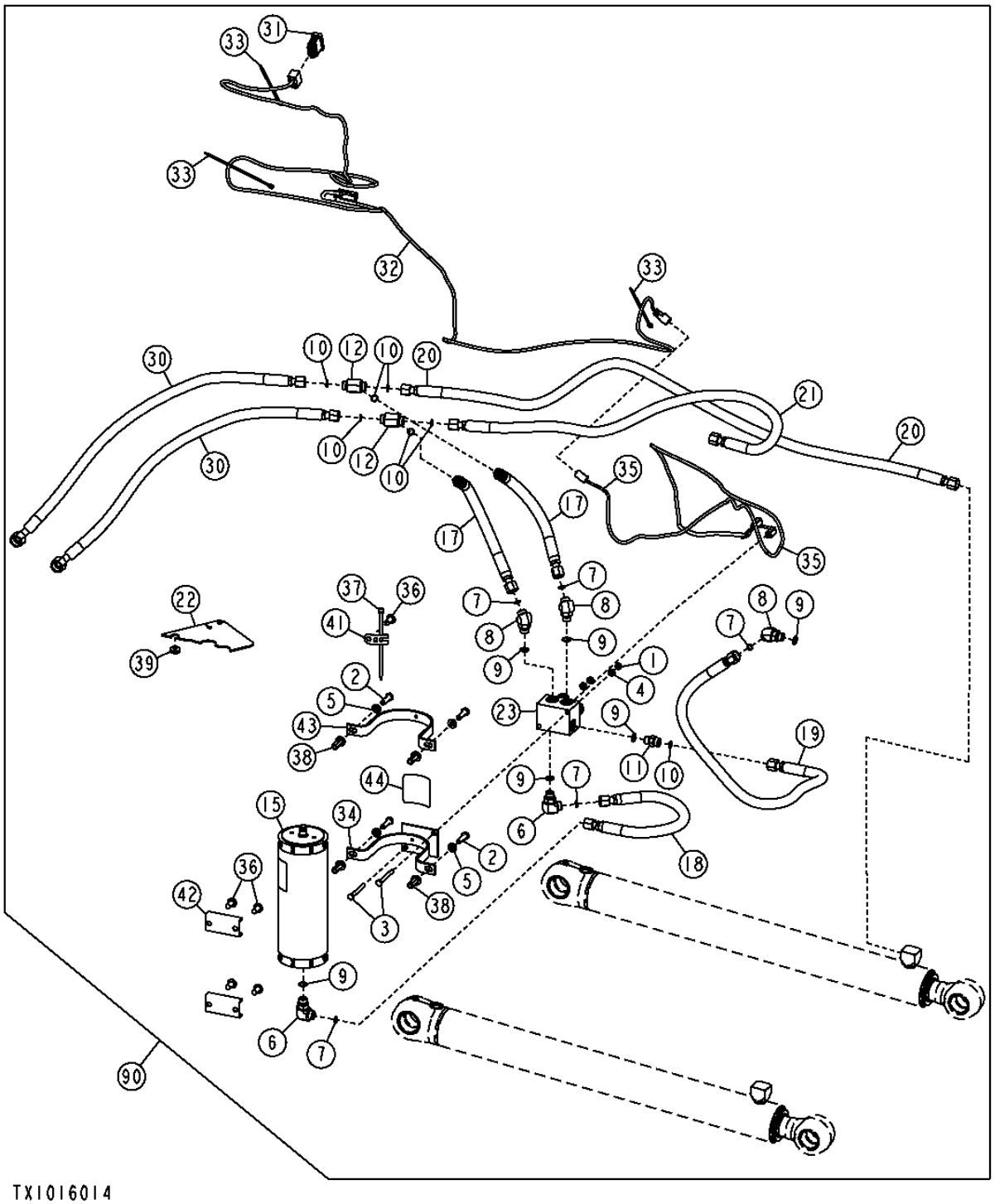

THIS PARTS LISTING IS CONTINUED

RIDE CONTROL KIT
KIT DE COMMANDE DE SUSPENSION
JUEGO DE CONTROL DE SUSPENSION

KEY	PART NO.	PART NAME	QTY.	SERIAL NO.	410J	410TMC	REMARKS
1	14M7273	NUT	4		X	X	M8
2	19M7550	CAP SCREW	4		X	X	M10 X 35
3	19M7663	CAP SCREW	2		X	X	M8 X 70
4	24M7238	WASHER	2		X	X	8.700 X 17 X 2 MM
5	24M7239	WASHER	4		X	X	10.700 X 21 X 2.500 MM
6	38H1005	ELBOW FITTING	2		X	X	
7	T77857	O-RING	4		X	X	
8	38H1046	ELBOW FITTING	3		X	X	
9	R26375	O-RING	6		X	X	
10	T77857	O-RING	2		X	X	
11	38H1161	ADAPTER FITTING	1		X	X	
12	38H5031	TEE FITTING	6		X	X	
15	AT196351	HYDRAULIC ACCUMULATOR	1		X	X	
	AT196760	KIT	1		X	X	GAS VALVE REPAIR
17	AT199639	HYDRAULIC HOSE - FABRICATE	2		X	X	
18	AT199640	HYDRAULIC HOSE - FABRICATE	1		X	X	
19	AT199641	HYDRAULIC HOSE - FABRICATE	1		X	X	
20	AT199644	HYDRAULIC HOSE - FABRICATE	1		X	X	
21	AT199645	HYDRAULIC HOSE - FABRICATE	1		X	X	
22	AT300928	PLATE	1		X	X	
23	AT310818	SOLENOID HYDRAULIC VALVE	1		X	X	
	14M7477	NUT	1		X	X	
	AT280440	SOLENOID HYDRAULIC VALVE	1		X	X	
	AT280441	SOLENOID VALVE COIL	1		X	X	
	E71998	BACK-UP RING	1		X	X	
	R28776	O-RING	1		X	X	
30	AT315450	HYDRAULIC HOSE - FABRICATE	2		X	X	
31	AT317451	TOGGLE/ROCKER SWITCH	1		X	X	
32	AT321552	WIRING HARNESS	1		X	X	
33	R44302	TIE BAND	8		X	X	
34	AT323844	CLAMP	1		X	X	
35	AT329135	WIRING HARNESS	1		X	X	
36	MT2485	PLUG	6		X	X	
37	R44302	TIE BAND	8		X	X	
38	T148409	NUT	4		X	X	
39	T162238	GROMMET	1		X	X	
41	T210717	BRACKET	1		X	X	
42	T216750	CHANNEL	2		X	X	
43	T216756	CLAMP	1		X	X	
44	T225374	LABEL	1		X	X	
90	**AT321323**	**FIELD INSTALLATION KIT**	**1**		**X**	**X**	**WHOLEGOODS, (INCLUDES AT193881 AND T187193) RIDE CONTROL KIT**
	AT193881	PLATE	1		X	X	
	T187193	LABEL	1		X	X	RIDE CONTROL

LOADER BUCKET AND CUTTING EDGE (.96 CUBIC METER)(1.25 CUBIC YARD)
BENNE DE CHARGEUR ET TRANCHANT (.96 METRE CUBE)(1.25 CUBIC YARD)
CUCHARON DE CARGADORA Y BORDE CORTANTE (.96 METROS CUBICOS)(1.25 YD3)

TP69675 -UN-10OCT00

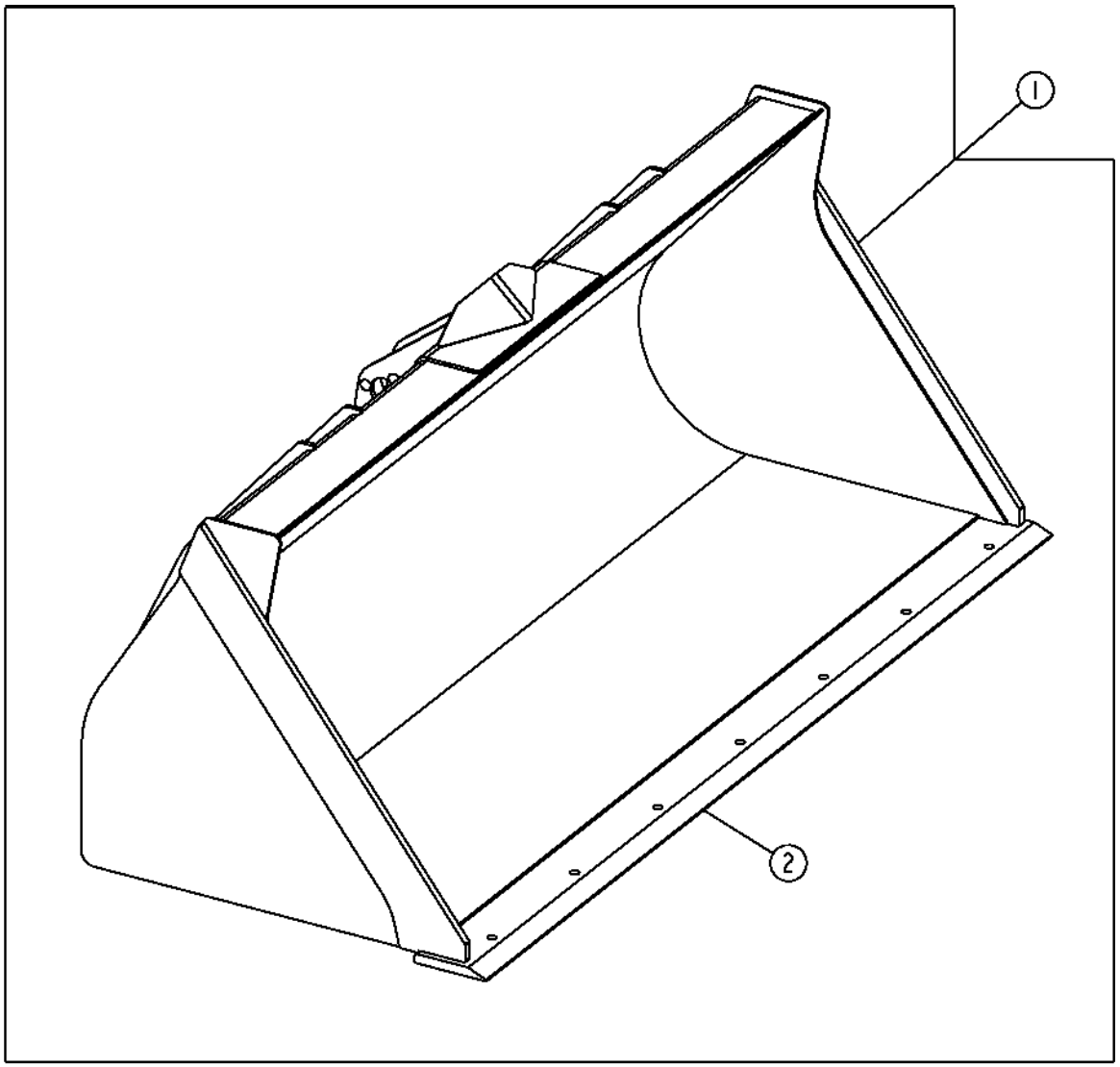

TP69675

LOADER BUCKET AND CUTTING EDGE (.96 CUBIC METER)(1.25 CUBIC YARD)
BENNE DE CHARGEUR ET TRANCHANT (.96 METRE CUBE)(1.25 CUBIC YARD)
CUCHARON DE CARGADORA Y BORDE CORTANTE (.96 METROS CUBICOS)(1.25 YD3)

KEY	PART NO.	PART NAME	QTY.	SERIAL NO.	410J	410TMC	REMARKS
1	AT308076	LOADER BUCKET	1		X	X	.96 CUBIC METER (1.25 CUBIC YARD) (WHOLE GOODS) (MARKED AT308076) (USE WITH (2) T204908, (2) 14M7319 AND (2) 19M7949)
2	T150487	CUTTING EDGE	1		X	X	(WELDED ON) SBF .96 CUBIC METER (1.25 CUBIC YARD)
	T150517	CUTTING EDGE	1		X	X	(AUXILIARY) (SERVICE ONLY) 3/4 THICK X 8 INCH DBF X 86 INCH (19.05 MM X 203.2 MM X 2.184 M) (ALSO ORDER (7) 09H1759, (7) 14H1039 AND (7) 24M7241)

LOADER BUCKET (1.00 CUBIC METER)(1.30 CUBIC YARD)(1.15 CUBIC YARD) (1.50 CUBIC YARD)
BENNE DE CHARGEUR ET TRANCHANT (1.00 METRE CUBE)(1.30 CUBIC YARD)
CUCHARON DE LA CARGADORA (1.00 METROS CUBICOS)(1.30 YDS)(1.15 METROS CUBICOS)(1.50 YDS)

TP58156 -UN-10OCT00

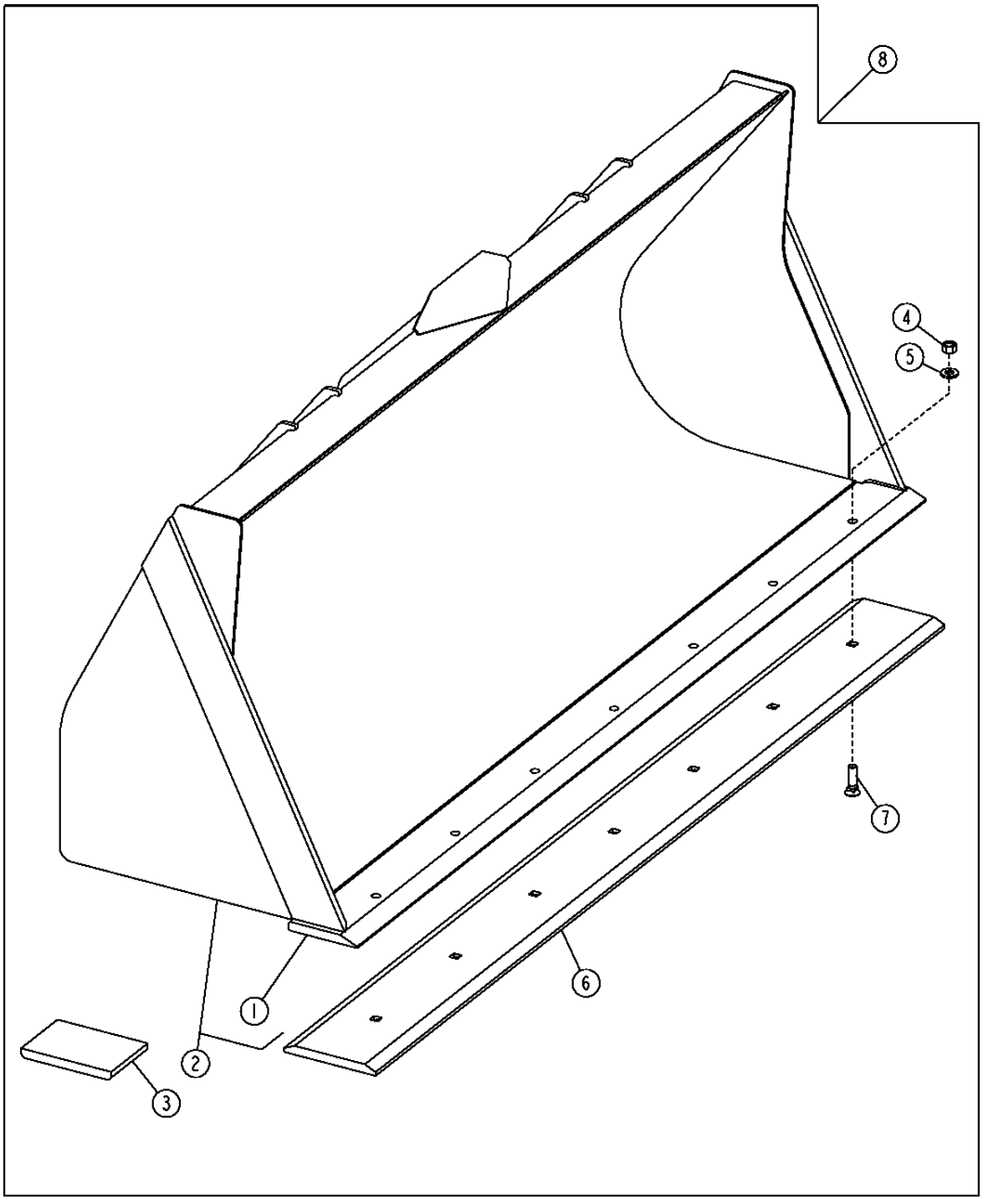

LOADER BUCKET (1.00 CUBIC METER)(1.30 CUBIC YARD)(1.15 CUBIC METER)(1.50 CUBIC YARD)
BENNE DU CHARGEUR (1.00 METRE CUBE)(1.30 CUBIC YARD)(1.15 METRE CUBE)(1.50 CUBIC YARD)
CUCHARON DE LA CARGADORA (1.00 METROS CUBICOS)(1.30 YDS)(1.15 METROS CUBICOS)(1.50 YDS)

KEY	PART NO.	PART NAME	QTY.	SERIAL NO.	410J	410TMC	REMARKS
1	T118768	CUTTING EDGE	1		X	X	(1.30 CUBIC YARD)(1.00 CUBIC METER) 3/4" (19.05 MM) SBF
	T164728	CUTTING EDGE	1		X	X	(1.50 CUBIC YARD)(1.15 CUBIC METER) 3/4" (19.05 MM) SBF
2	.....	LOADER BUCKET	1		X	X	
3	T147296	SHOE	2		X	X	
4	14H1039	NUT	8		X	X	5/8"
5	24M7241	WASHER	8		X	X	17 X 34 X 4 MM
6	T84194	CUTTING EDGE	1		X	X	(AUXILIARY) 3/4 THICK X 8 INCH DBF X 92-3/8 INCH LONG 19.05 MM TK X 203.2 MM DBF X 2.346M) (1.30 CUBIC YARD)(1.00 CUBIC METER)
	T143804	CUTTING EDGE	1		X	X	(AUXILIARY) 3/4" THICK X 8 INCH DBF X 94-1/4 INCH LONG (19.05 MM TK X 203.2 MM DBF X 2.394 M) (1.50 CUBIC YARD)(1.15 CUBIC METER)
7	09H1759	BOLT	8		X	X	5/8" X 2-1/4"
	09H1764	BOLT	8		X	X	5/8" X 2-1/2"
8	**AT308080**	**LOADER BUCKET**	**1**		**X**	**X**	**1.00 CUBIC METER (1.30 CUBIC YARD) (WHOLE GOODS) (MARKED AT308080) (USE WITH (2) T204908, (2) 14M7319 AND (2) 19M7949)**
	AT308082	**LOADER BUCKET**	**1**		**X**	**X**	**1.15 CUBIC METER (1.50 CUBIC YARD) HD LONG LIP (WHOLE GOODS) (MARKED AT308082) (USE WITH (2) T204908, (2) 14M7319 AND (2) 19M7949)**

LOADER BUCKET PINS
AXES DE BENNE DE CHARGEUR
PASADORES DE CUCHARON DE CARGADORA

TX1017846 -UN-

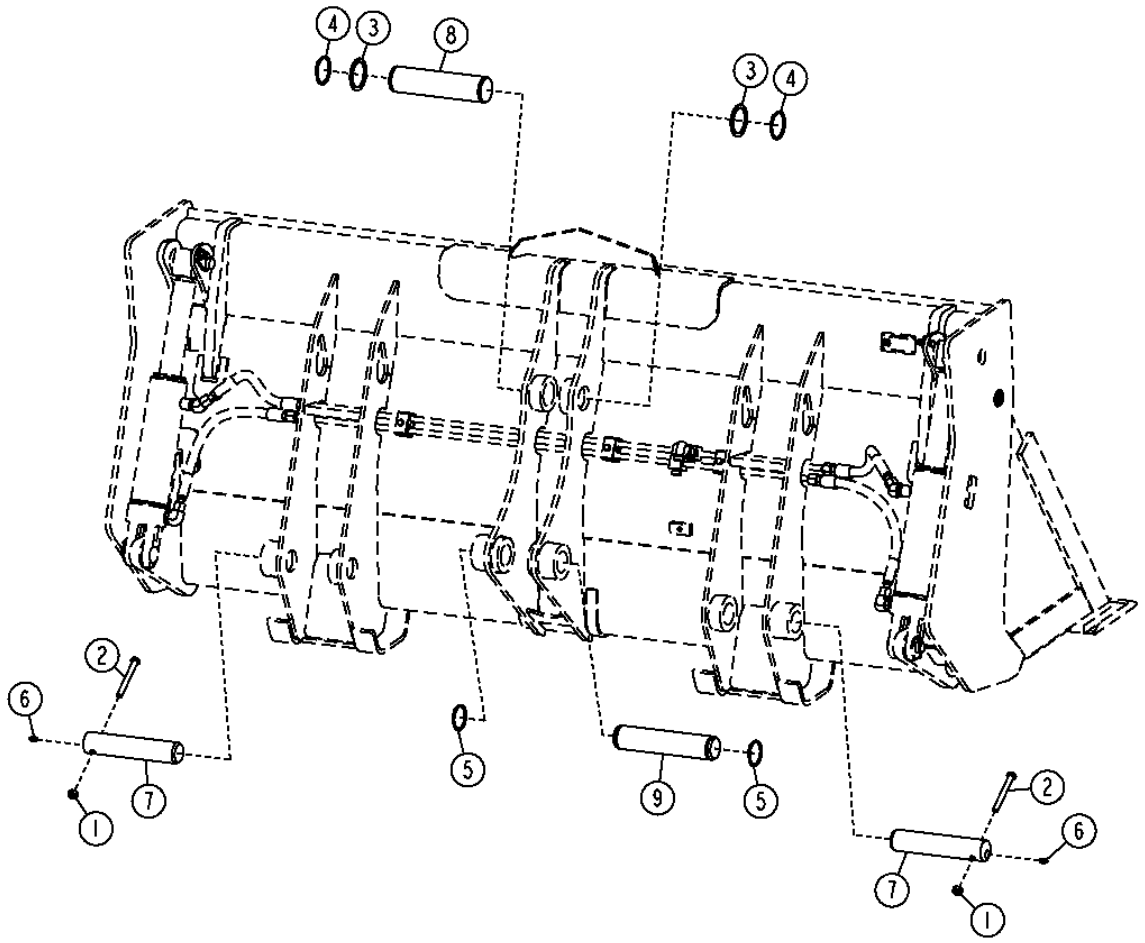

TX1017846

LOADER BUCKET PINS
AXES DE BENNE DE CHARGEUR
PASADORES DE CUCHARON DE CARGADORA

KEY	PART NO.	PART NAME	QTY.	SERIAL NO.	410J	410TMC	REMARKS
1	14M7319	LOCK NUT	2		X	X	M12
2	19M7949	CAP SCREW	2		X	X	M12 X 100
3	T161036	WASHER	4		X	X	56 X 80 X 2 MM
	24M7443	WASHER	2			X	60 X 75 X 3 MM, (FOR TOOL CARRIER)
4	40M7066	SNAP RING	2		X	X	
	40M7048	SNAP RING	2			X	(FOR TOOL CARRIER)
5	40M7166	SNAP RING	2		X	X	
	40M7066	SNAP RING	2			X	(FOR TOOL CARRIER)
6	T162396	LUBRICATION FITTING	2		X	X	
7	T204908	PIN FASTENER	2		X	X	
8	T165333	PIN FASTENER	1		X	X	54.475 X 246 MM
	T214970	PIN FASTENER	1			X	59.475 X 242 MM, (FOR TOOL CARRIER)
9	T165332	PIN FASTENER	1		X	X	
	T215010	PIN FASTENER	1			X	54.475 X 256.100 MM, (FOR TOOL CARRIER)

MULTI-PURPOSE BUCKET
BENNE UNIVERSELLE
CUCHARA POLIVALENTE

T201293 -UN-29JUN04

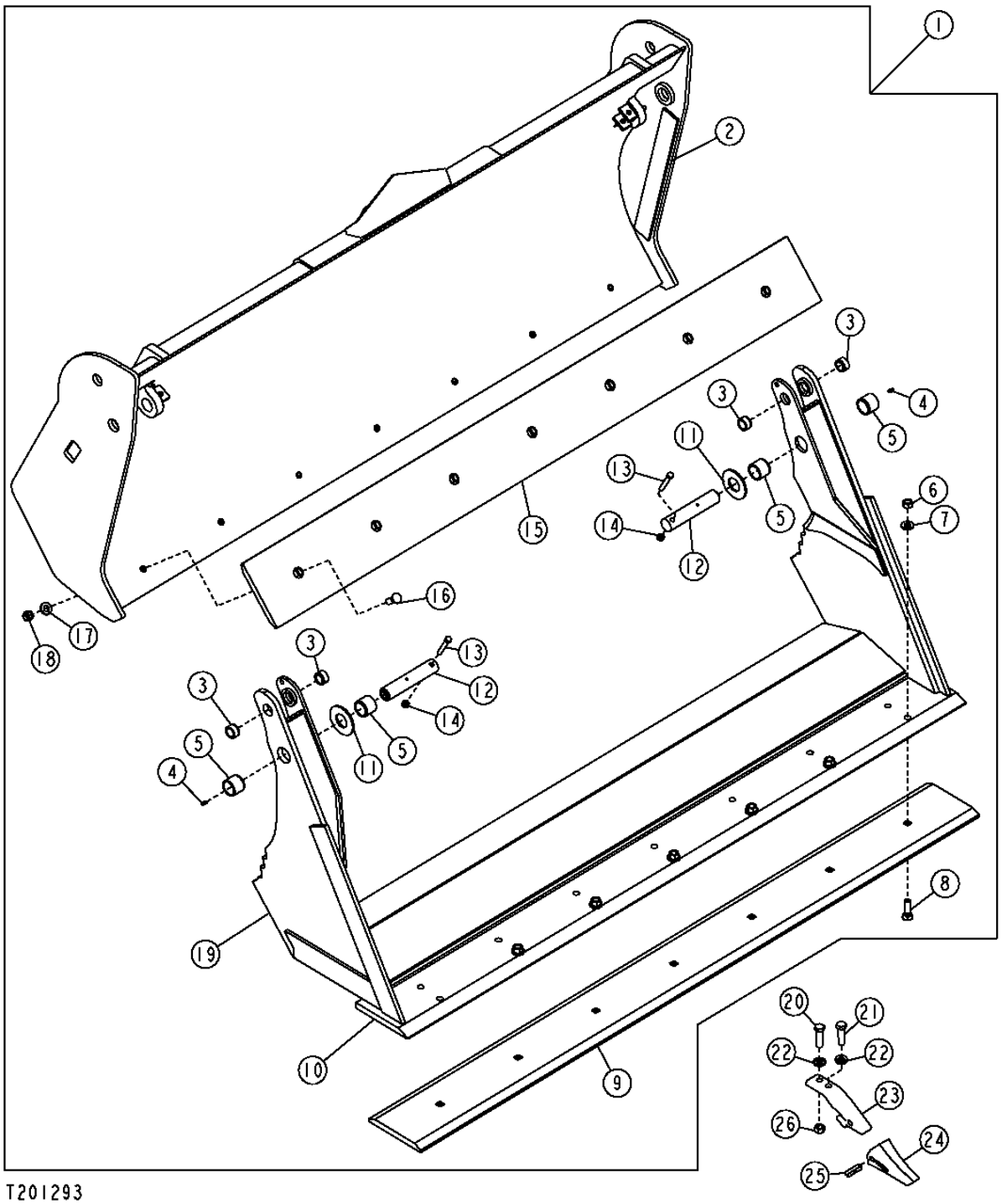

MULTI-PURPOSE BUCKET
BENNE UNIVERSELLE
CUCHARA POLIVALENTE

KEY	PART NO.	PART NAME	QTY.	SERIAL NO.	410J	410TMC	REMARKS
1	AT308195	MULTI-PURPOSE BUCKET	1		X	X	INCLUDES CYLINDERS, LINES AND HOSES (WHOLE GOODS) (MARKED AT308099) (USE WITH (2) T204908, (2) 14M7319 AND (2) 19M7949)
2	.....	MOLDBOARD	1		X	X	(ORDER AT308195)
3	T166433	BUSHING	4		X	X	
4	JD7797	LUBRICATION FITTING	2		X	X	
5	T128533	BUSHING	4		X	X	
6	14H1039	NUT	8		X	X	5/8"
7	24M7241	WASHER	8		X	X	
8	09H1759	BOLT	8		X	X	5/8" X 2-1/4"
	09H1764	BOLT	8		X	X	5/8" X 2-1/2"
9	T84194	CUTTING EDGE	1		X	X	AUXILIARY
	T84194HD	DURA-MAX TM CUTTING EDGE	1		X	X	(AUXILIARY) 1" THICK X 8 INCH DBF X 92 3/8 INCH LONG 25.4MM TK X 203.2MM DBF X 2.346M LONG
10	T128538	CUTTING EDGE	1		X	X	
11	24H1554	WASHER	2		X	X	
12	T167059	PIN	2		X	X	
13	19H2106	CAP SCREW	2		X	X	7/16" X 2-3/4"
14	K40006	LOCK NUT	2		X	X	7/16"
15	T143802	CUTTING EDGE	1		X	X	
16	09H1776	BOLT	8		X	X	5/8" X 1-3/4"
17	24M7241	WASHER	8		X	X	
18	14H1039	NUT	8		X	X	5/8"
19	.....	HINGE	1		X	X	(ORDER AT308195)
20	19H3244	CAP SCREW	1		X	X	5/8" X 2-1/4"
21	19H2599	CAP SCREW	1		X	X	5/8" X 2-1/2"
22	24H1367	WASHER	2		X	X	
23	T221X230	ADAPTER FITTING	1		X	X	
24	T230SP	TOOTH	1		X	X	
25	T23P	PIN	1		X	X	
26	14H1039	NUT	1		X	X	

MULTI-PURPOSE BUCKET,BUCKET CYLINDER AND HYDRAULIC OIL LINES
BENNE A USAGES MULTIPLES, VERIN DE BENNE ET FLEXIBLES ET CONDUITES HYDRAULIQUES
CUCHARON UNIVERSAL, CILINDRO DE CUCHARON, MANGUERAS Y LINEAS DE ACEITE HIDRAULICAS

T153162 -UN-10APR02

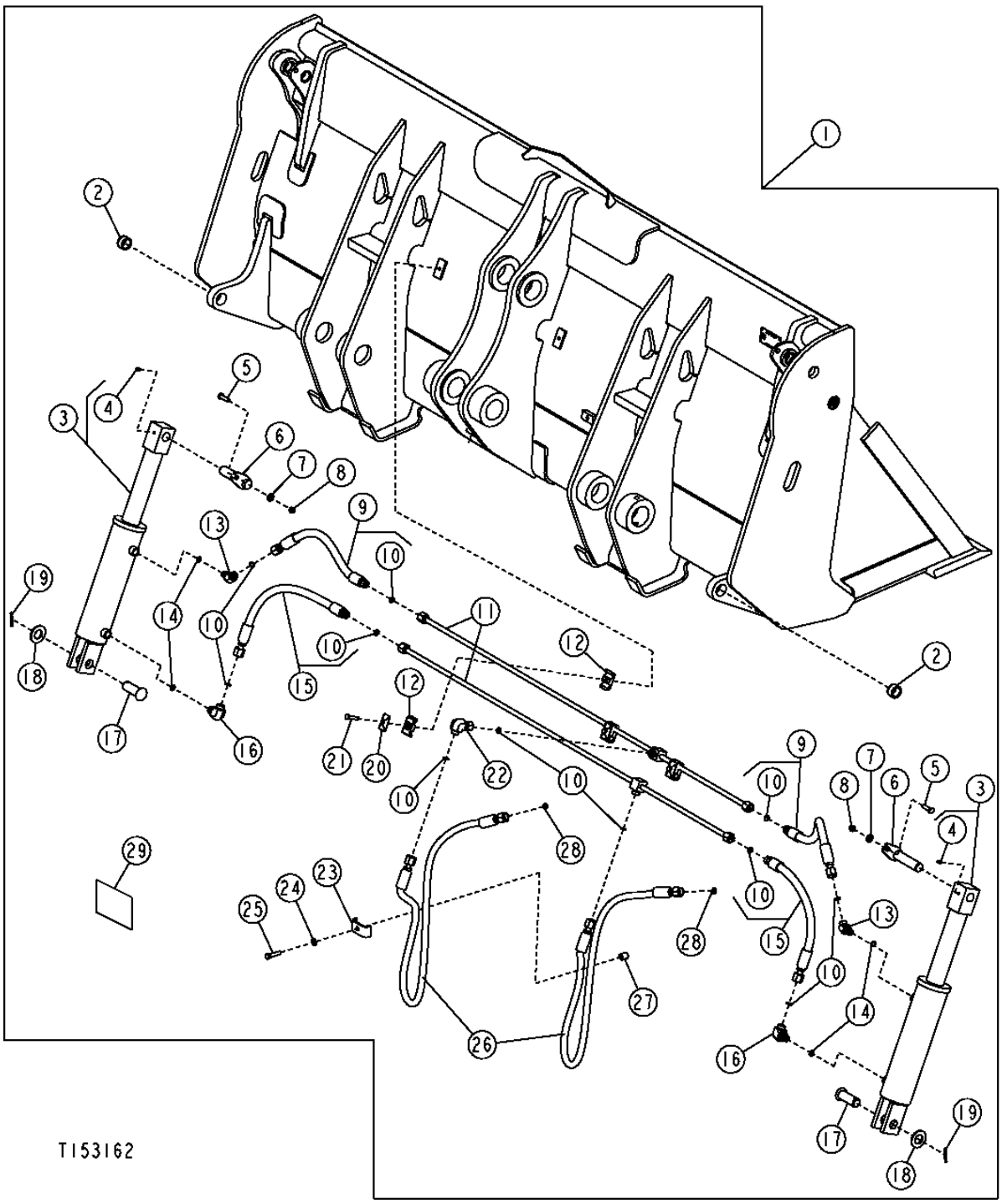

THIS PARTS LISTING IS CONTINUED

MULTI-PURPOSE BUCKET,BUCKET CYLINDER AND HYDRAULIC OIL LINES
BENNE A USAGES MULTIPLES, VERIN DE BENNE ET FLEXIBLES ET CONDUITES HYDRAULIQUES
CUCHARON UNIVERSAL, CILINDRO DE CUCHARON, MANGUERAS Y LINEAS DE ACEITE HIDRAULICAS

KEY	PART NO.	PART NAME	QTY.	SERIAL NO.	410J	410TMC	REMARKS
1	AT308195	MULTI-PURPOSE BUCKET	1		X	X	INCLUDES CYLINDERS, LINES AND HOSES (WHOLE GOODS) (MARKED AT308099) (USE WITH (2) T204908, (2) 14M7319 AND (2) 19M7949)
2	T166433	BUSHING	2		X	X	
3	AH210737	HYDRAULIC CYLINDER	2		X	X	
4	JD7844	LUBRICATION FITTING	2		X	X	
5	19H3239	CAP SCREW	2		X	X	3/8" X 1-1/4"
6	AT190900	PIN	2		X	X	
7	24M7239	WASHER	2		X	X	
8	T54568	LOCK NUT	2		X	X	3/8"
9	AT189822	HYDRAULIC HOSE - FABRICATE	2		X	X	
10	T77857	O-RING	AR		X	X	
11	AT189819	LINE	2		X	X	
12	H135156	CLAMP	6		X	X	
13	38H1521	ELBOW FITTING	2		X	X	
14	R26448	O-RING	4		X	X	
15	AT190701	HYDRAULIC HOSE - FABRICATE	2		X	X	13/16" X 470 MM (18-1/2") X 13/16"
16	38H1314	ELBOW FITTING	2		X	X	
17	T191318	PIN FASTENER	2		X	X	
18	24H1138	WASHER	2		X	X	
19	11M7030	COTTER PIN	2		X	X	
20	H121168	PLATE	3		X	X	
21	19H3552	CAP SCREW	3		X	X	5/16" X 1-1/2"
22	38H1095	ELBOW FITTING	1		X	X	
23	T27022	CLAMP	1		X	X	
24	24M7106	WASHER	1		X	X	
25	19H2633	CAP SCREW	1		X	X	3/8" X 1-1/2"
26	AT172386	HYDRAULIC HOSE - FABRICATE	2		X	X	13/16" X 1 170 MM (46") X 1"
27	28H3383	BUSHING	1		X	X	
28	T77932	O-RING	2		X	X	
29	T160759	LABEL	1		X	X	BUCKET LEVEL INDICATOR

MEMORANDA
MEMORANDA
MEMORANDA

MULTI-PURPOSE BUCKET CYLINDER AND REPAIR KIT
VERIN DE BENNE UNIVERSELLE ET KIT DE REPARATION
CILINDRO DE CUCHARON UNIVERSAL Y JUEGO DE REPARACION

T197121 -UN-08JAN04

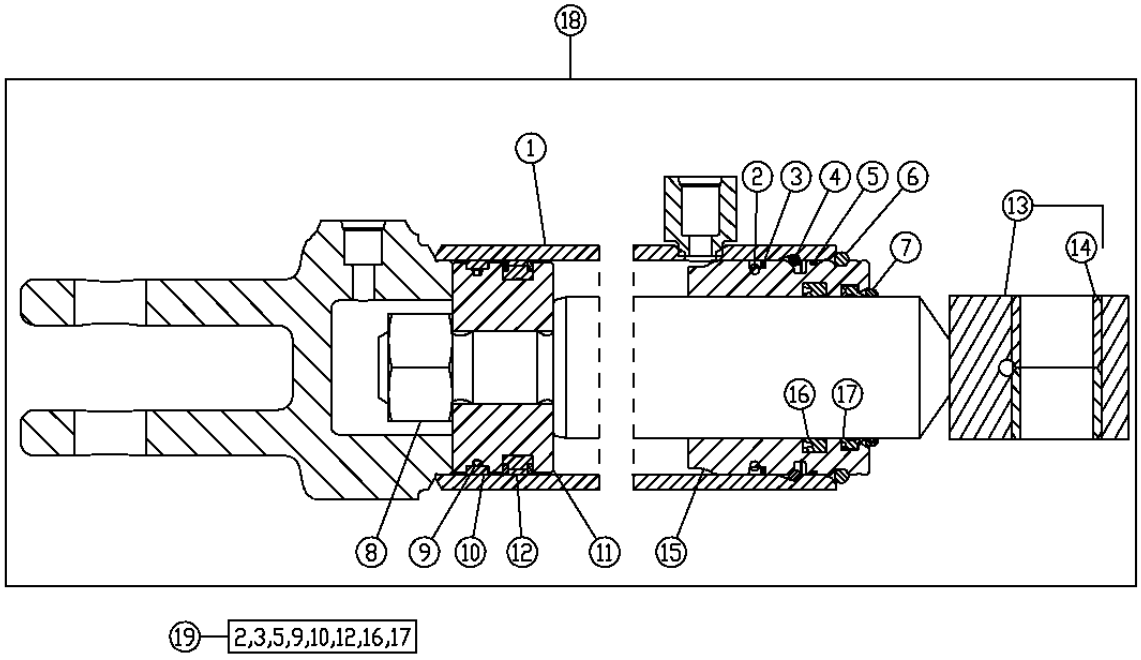

T197121

KEY	PART NO.	PART NAME	QTY.	SERIAL NO.	410J	410TMC	REMARKS
1	.....	HYDRAULIC CYLINDER BARREL	1		X	X	
2	T14065	O-RING	1		X	X	
3	.....	RING	2		X	X	
4	H177854	SNAP RING	1		X	X	
5	.....	O-RING	1		X	X	
6	H180927	SNAP RING	1		X	X	
7	.....	O-RING	1		X	X	
8	14H1112	NUT	1		X	X	1"
9	.....	WEAR RING	1		X	X	
10	.....	O-RING	1		X	X	
11	.....	PISTON	1		X	X	
12	.....	SEAL	1		X	X	
13	.....	ROD	1		X	X	
14	.....	BUSHING	1		X	X	
15	.....	HYDR. CYLINDER ROD GUIDE	1		X	X	
16	H152203	SEAL	1		X	X	
17	.....	SEAL	1		X	X	
18	AH210737	HYDRAULIC CYLINDER	1		X	X	
19	AH209022	HYDRAULIC CYLINDER KIT	1		X	X	

COUPLER LOADER BUCKET AND CUTTING EDGE (.96 CUBIC METER) 1.25 CUBIC YARD)
BENNE DE CHARGEUR A ACCOUPLEMENT ET TRANCHANT (.96 METRE CUBE)(1.25 CUBIC YARD)
ACOPLADOR DE CUCHARON DE CARGADORA Y BORDE CORTANTE (.96 METROS CUBICOS)(1.25 YD3)

TP69675 -UN-10OCT00

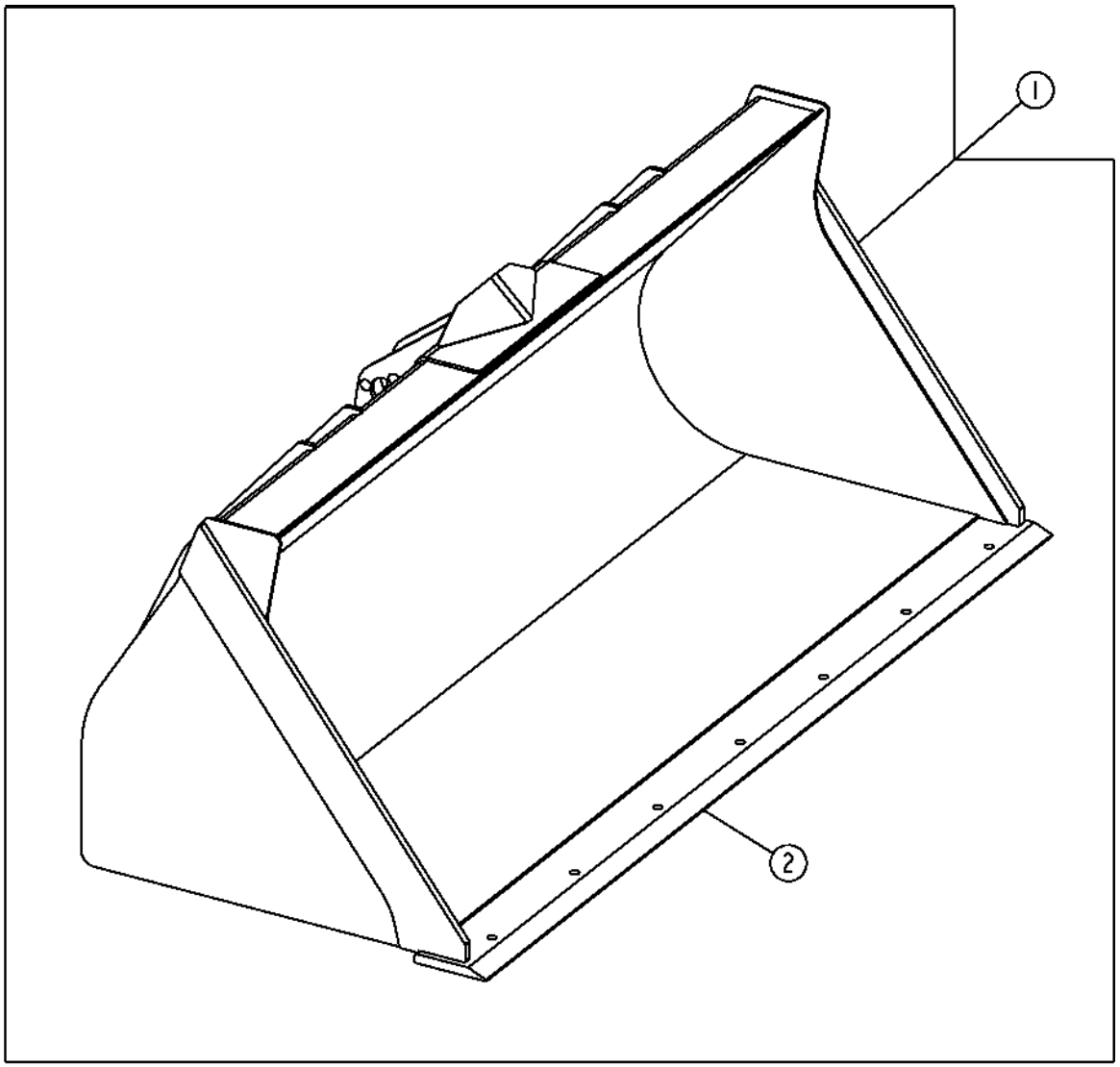

TP69675

COUPLER LOADER BUCKET AND CUTTING EDGE (.96 CUBIC METER)(1.25 CUBIC YARD)
BENNE DE CHARGEUR A ACCOUPLEMENT ET TRANCHANT (.96 METRE CUBE)(1.25 X CUBIC YARD)
ACOPLADOR DE CUCHARON DE CARGADORA Y BORDE CORTANTE (.96 METROS CUBICOS)(1.25 YD3)

KEY	PART NO.	PART NAME	QTY.	SERIAL NO.	310G	315SG	REMARKS
1	AT308968	LOADER BUCKET	1		X	X	.96 CUBIC METER (1.25 CUBIC YARD), FRONT COUPLER BUCKET, (WHOLE GOODS) (MARKED AT308968)
2	T150487	CUTTING EDGE	1		X	X	(WELDED ON) SBF

COUPLER LOADER BUCKET AND CUTTING EDGE (1.00/1.15 CUBIC METER)(1.31/1.50 CUBIC YARD)
BENNE DE CHARGEUR A ACCOUPLEMENT ET TRANCHANT (1.00/1.15 METRE CUBE)(1.31/1.50 CUBIC YARD)
ACOPLADOR DE CUCHARON DE CARGADORA Y BORDE CORTANTE (1.00/1.15 METROS CUBICOS)(1.31/1.50 YD3)

TP58156 -UN-10OCT00

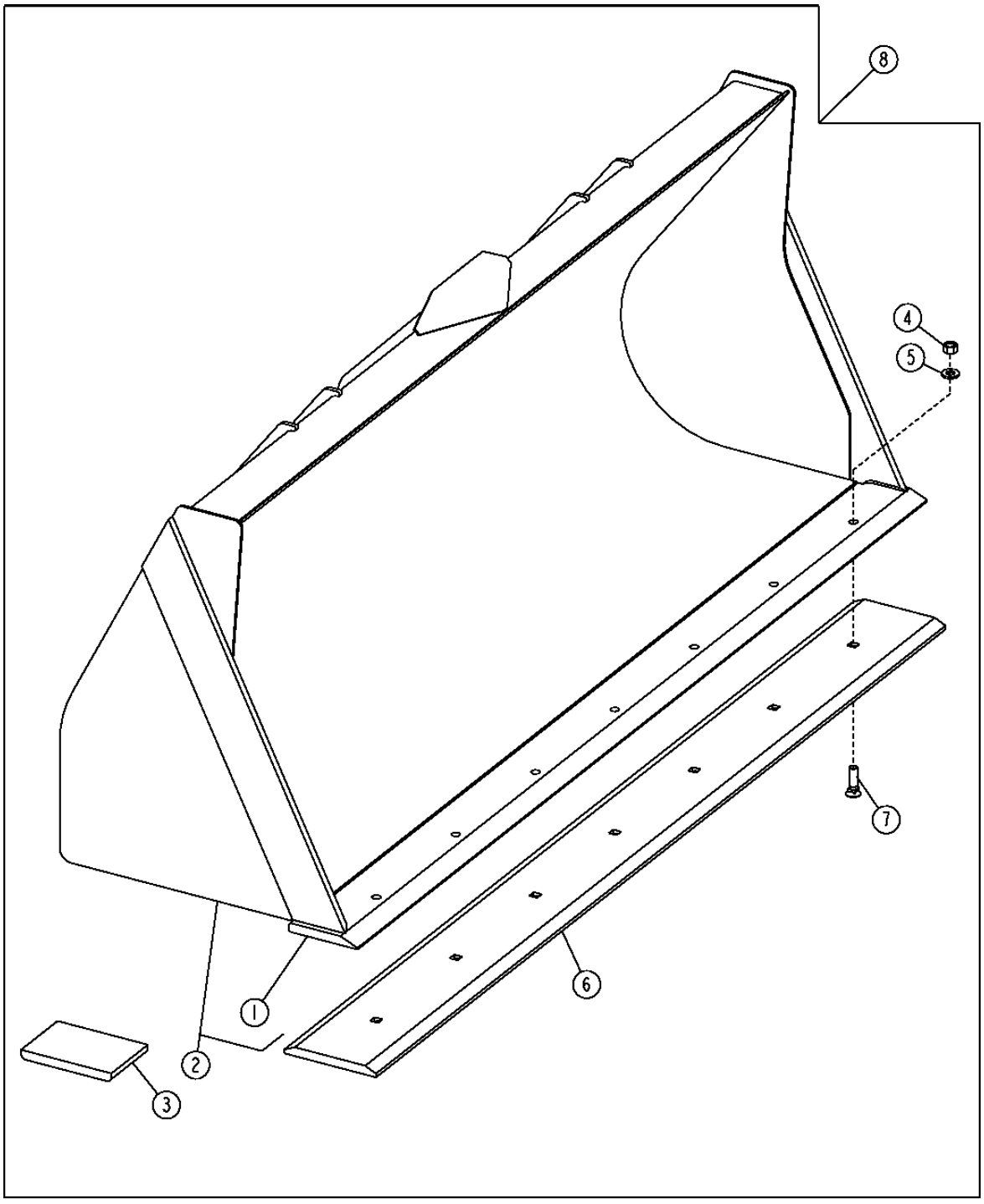

TP58156

THIS PARTS LISTING IS CONTINUED

COUPLER LOADER BUCKET AND CUTTING EDGE(1.00/1.15 CUBIC METER)(1.31/1.50 CUBIC YARD)
BENNE DE CHARGEUR A ACCOUPLEMENT ET TRANCHANT (1.00/1.15 METRE CUBE)(1.31/1.50 CUBIC YARD)
ACOPLADOR DE CUCHARON DE CARGADORA Y BORDE CORTANTE (1.00/1.15 METROS CUBICOS)(1.31/1.50 YD3)

KEY	PART NO.	PART NAME	QTY.	SERIAL NO.	410J	410TMC	REMARKS
1	T118768	CUTTING EDGE	1		X	X	(1.31 CUBIC YARD) (1.00 CUBIC METER) 3/4" (19.05 MM) SBF
	T164728	CUTTING EDGE	1		X	X	(1.50 CUBIC YARD) (1.15 CUBIC METER) 3/4" (19.05 MM) SBF
2	.....	LOADER BUCKET	1		X	X	
3	T147296	SHOE	2		X	X	
4	14H1039	NUT	8		X	X	5/8"
5	24M7241	WASHER	8		X	X	
6	T84194	CUTTING EDGE	1		X	X	(AUXILIARY) 3/4INCH TK X 8 INCH DBF X 92-3/8 INCH LONG (1.31 CUBIC YARD) (1.00 CUBIC METER)
	T84194HD	DURA-MAX TM CUTTING EDGE	1		X	X	(AUXILIARY) 1 INCH TK X 8 INCH DBF X 92-3/8 INCH LONG
	T143804	CUTTING EDGE	1		X	X	(AUXLIARY) 3/4 INCH TK X 8 INCH DBF X 94-1/4 INCH LONG 1.50 CUBIC YARD (1.15 CUBIC METER)
7	09H1759	BOLT	8		X	X	5/8" X 2-1/4"
	09H1764	BOLT	8		X	X	5/8" X 2-1/2"
8	**AT308966**	**LOADER BUCKET**	**1**		**X**	**X**	**1.00 CUBIC METER (1.31 CUBIC YARD) FRONT COUPLER BUCKET (WHOLE GOODS) (MARKED AT308965)**
	AT308965	**LOADER BUCKET**	**1**		**X**	**X**	**1.15 CUBIC METER (1.50 CUBIC YARD) HEAVY DUTY, LONG LIP FRONT COUPLER BUCKET (WHOLE GOODS) (MARKED AT308966)**

QUICK COUPLER MULTI-PURPOSE BUCKET, CYLINDERS AND HYDRAULIC OIL LINES
BENNE UNIVERSELLE A ACCOUPLEMENT RAPIDE, VERINS ET CONDUITES D'HUILE HYDRAULIQUE
ACOPLADOR RAPIDO DE CUCHARON UNIVERSAL, CILINDROS Y LINEAS DE ACEITE HIDRAULICO

T205143 -UN-23NOV04

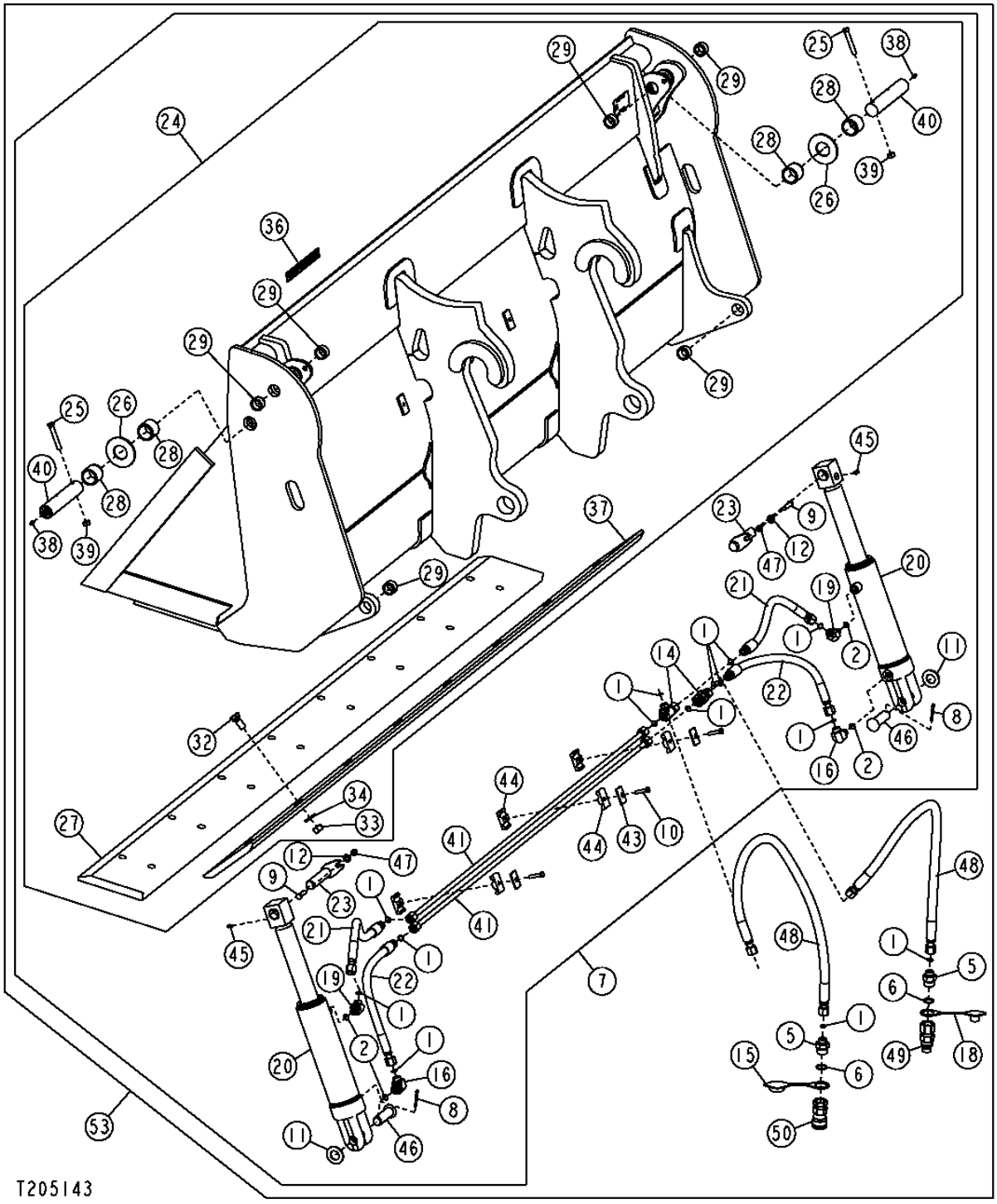

THIS PARTS LISTING IS CONTINUED

QUICK COUPLER MULTI-PURPOSE BUCKET, CYLINDERS AND HYDRAULIC OIL LINES
BENNE UNIVERSELLE A ACCOUPLEMENT RAPIDE, VERINS ET CONDUITES D'HUILE HYDRAULIQUE
ACOPLADOR RAPIDO DE CUCHARON UNIVERSAL, CILINDROS Y LINEAS DE ACEITE HIDRAULICO

KEY	PART NO.	PART NAME	QTY.	SERIAL NO.	410J	410TMC	REMARKS
1	T77857	O-RING	9		X	X	
2	R26448	O-RING	2		X	X	
5	38H1175	ADAPTER FITTING	1		X	X	
6	U12547	O-RING	1		X	X	
7	.....	MULTI-PURPOSE BUCKET	1		X	X	(ORDER AT308974)
8	11M7030	COTTER PIN	2		X	X	0.197" X 1.575"
9	19H3239	CAP SCREW	2		X	X	3/8" X 1-1/4"
10	19H3552	CAP SCREW	3		X	X	5/16" X 1-1/2"
11	24H1138	WASHER	2		X	X	
12	24M7239	WASHER	2		X	X	
14	38H1031	TEE FITTING	1		X	X	
15	T188879	BOOT	1		X	X	
16	38H1314	ELBOW FITTING	1		X	X	
18	T188880	BOOT	1		X	X	
19	38H1521	ELBOW FITTING	1		X	X	
20	AH210737	HYDRAULIC CYLINDER	2		X	X	
21	AT189822	HYDRAULIC HOSE - FABRICATE	2		X	X	
22	AT190701	HYDRAULIC HOSE - FABRICATE	2		X	X	13/16" X 470 MM (18-1/2") X 13/16"
23	AT190900	PIN	2		X	X	
24	.....	MOLDBOARD	1		X	X	(ORDER AT308974)
25	19H2106	CAP SCREW	2		X	X	7/16" X 2-3/4"
26	24H1554	WASHER	2		X	X	
27	T128538	CUTTING EDGE	1		X	X	WELDED ON
	T84194	CUTTING EDGE	1		X	X	AUXILIARY
28	T128533	BUSHING	4		X	X	
29	T166433	BUSHING	2		X	X	
32	09H1776	BOLT	8		X	X	5/8" X 1-3/4", MOLDBOARD
	09H1759	BOLT	8		X	X	5/8" X 2-1/4", AUXILIARY
33	14H1039	NUT	8		X	X	5/8"
34	24M7241	WASHER	8		X	X	
36	T213143	LABEL	1		X	X	WORKSITE PRO
37	T143804	CUTTING EDGE	1		X	X	DBF
38	JD7797	LUBRICATION FITTING	2		X	X	
39	K40006	LOCK NUT	2		X	X	7/16"
40	T167059	PIN	2		X	X	
41	AT311143	TUBE	2		X	X	
42	38H1354	TUBE NUT	2		X	X	
43	H121168	PLATE	3		X	X	
44	H135156	CLAMP	6		X	X	
45	JD7844	LUBRICATION FITTING	2		X	X	
46	T191318	PIN FASTENER	2		X	X	
47	T54568	LOCK NUT	2		X	X	3/8"
48	AT309936	HYDRAULIC HOSE	2		X	X	
	T77932	O-RING	2		X	X	
	AT309986	HYDRAULIC HOSE - FABRICATE	1		X	X	
	AT309934	HYDRAULIC HOSE - FABRICATE	1		X	X	
49	AT312470	HYD. QUICK-CONNECT COUPLER	1		X	X	
	KV11305	HYD. QUICK-CONNECT COUPLER	1		X	X	
	T77932	O-RING	1		X	X	
	T80306	NUT	1		X	X	
50	KV14216	HYD. QUICK-CONNECT COUPLER	1		X	X	
	KV11304	HYD. QUICK-CONNECT COUPLER	1		X	X	
53	**AT308974**	**MULTI-PURPOSE BUCKET**	**1**		**X**	**X**	**(2337MM - 92 INCH) (WHOLE GOODS)**

QUICK COUPLER FORKS AND FRAME
FOURCHES A ACCOUPLEMENT RAPIDE ET BATI
ACOPLADOR RAPIDO DE HORQUILLAS Y BASTIDOR

TX1007110 -UN-01MAY06

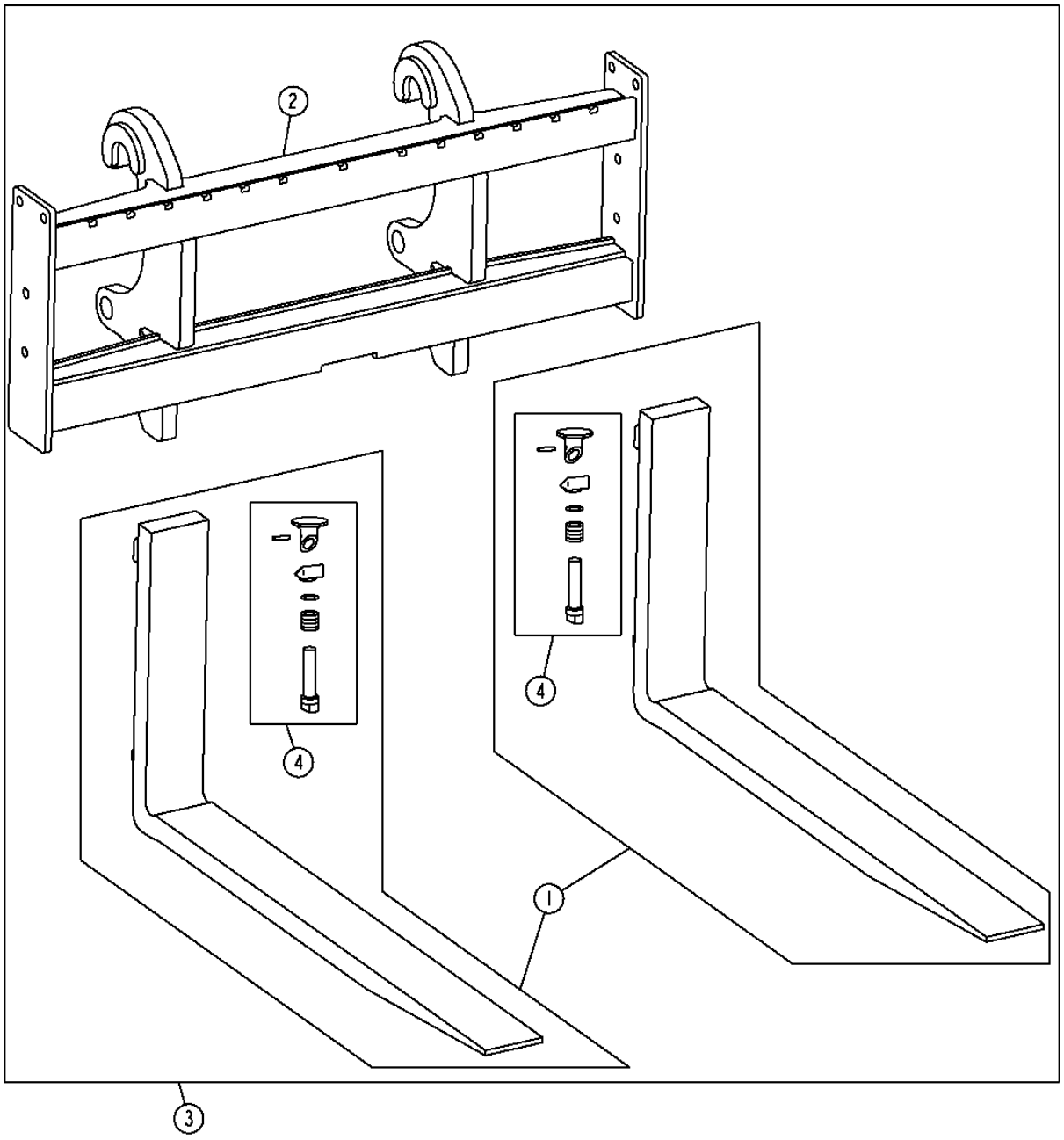

TX1007110

QUICK COUPLER FORKS AND FRAME
FOURCHES A ACCOUPLEMENT RAPIDE ET BATI
ACOPLADOR RAPIDO DE HORQUILLAS Y BASTIDOR

KEY	PART NO.	PART NAME	QTY.	SERIAL NO.	410J	410TMC	REMARKS
1	AT308925	FORK	1		X	X	CONVENIENCE ASSEMBLY (48 INCH) (1219MM)
	AT308926	**FORK**	**1**		**X**	**X**	**CONVENIENCE ASSEMBLY (60 INCH) (1524MM)**
2	**AT308910**	**FORK**	**1**		**X**	**X**	**CONVENIENCE ASSEMBLY**
3	**AT308138**	**FORKLIFT**	**1**		**X**	**X**	**(WHOLEGOODS) (48 INCH) (1219MM)**
	AT308139	**FORKLIFT**	**1**		**X**	**X**	**(WHOLEGOODS) (60 INCH) (1524MM)**
4	AT308067	LOCK	2		X	X	

HYDRAULIC FRONT COUPLER
ACCOUPLEMENT AVANT HYDRAULIQUE
ACOPLADOR HIDRAULICO DELANTERO

T209829 -UN-11APR05

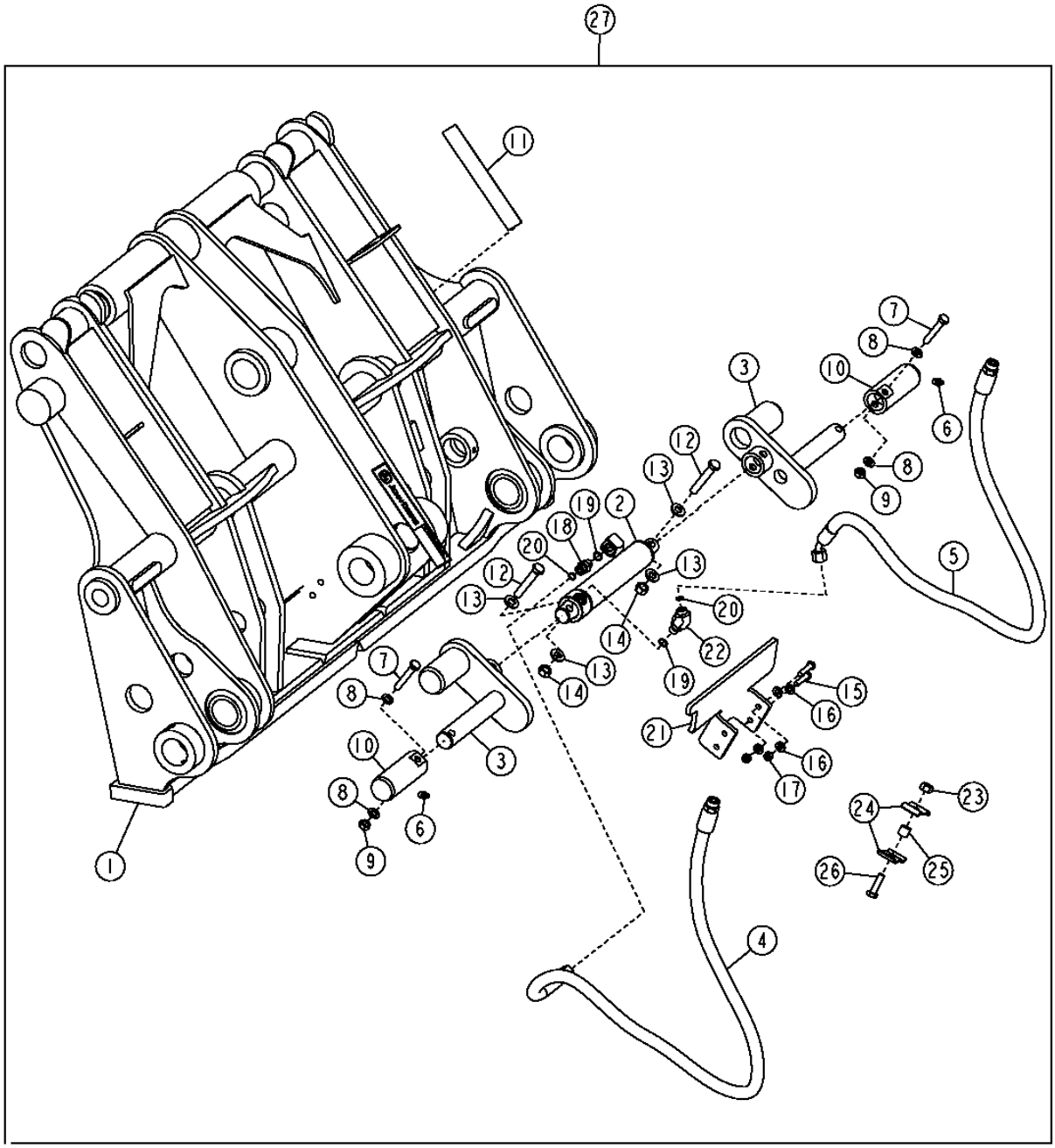

T209829

HYDRAULIC FRONT COUPLER
ACCOUPLEMENT AVANT HYDRAULIQUE
ACOPLADOR HIDRAULICO DELANTERO

KEY	PART NO.	PART NAME	QTY.	SERIAL NO.	410J	410TMC	REMARKS
1	AT320501	QUICK COUPLER	1		X	X	CA
2	AH217348	HYDRAULIC CYLINDER	1		X	X	
3	AT307106	PIN FASTENER	2		X	X	
4	AT309746	HYDRAULIC HOSE - FABRICATE	1		X	X	11/16" X 1 245 MM (49") X 11/16"
5	AT309747	HYDRAULIC HOSE - FABRICATE	1		X	X	11/16" X 1 125 MM (44-1/4") X 11/16"
6	T162396	LUBRICATION FITTING	2		X	X	
7	19M8499	CAP SCREW	2		X	X	M10 X 60
8	24M7346	WASHER	4		X	X	
9	14M7274	NUT	2		X	X	M10
10	T205017	PIN	2		X	X	
11	T213143	LABEL	1		X	X	
12	19M7753	CAP SCREW	2		X	X	M12 X 70
13	24M7240	WASHER	4		X	X	
14	14M7275	NUT	2		X	X	M12
15	19M8008	CAP SCREW	4		X	X	M8 X 35
16	24M7238	WASHER	8		X	X	
17	14M7273	NUT	4		X	X	M8
18	38H1160	ADAPTER FITTING	1		X	X	
19	R26448	O-RING	2		X	X	
20	T77613	O-RING	2		X	X	
21	T213288	BRACKET	1		X	X	
	T221175	BRACKET	1		X	X	
22	38H1045	ELBOW FITTING	1		X	X	
23	14M7274	NUT	1		X	X	
24	R46919	HALF CLAMP	2		X	X	
25	28H3381	SPACER	1		X	X	
26	19M7550	CAP SCREW	1		X	X	
27	**AT328988**	**FIELD INSTALLATION KIT**	**1**		**X**	**X**	**(WHOLE GOODS) INCLUDES HYDRAULIC LINES, FITTINGS, SOLENOID VALVE, HARNESS, SWITCHES AND HARDWARE**

FRONT COUPLER CYLINDER
VERIN D'ACCOUPLEMENT AVANT
CILINDRO DE ACOPLADOR DELANTERO

TX1015950 -UN-18DEC06

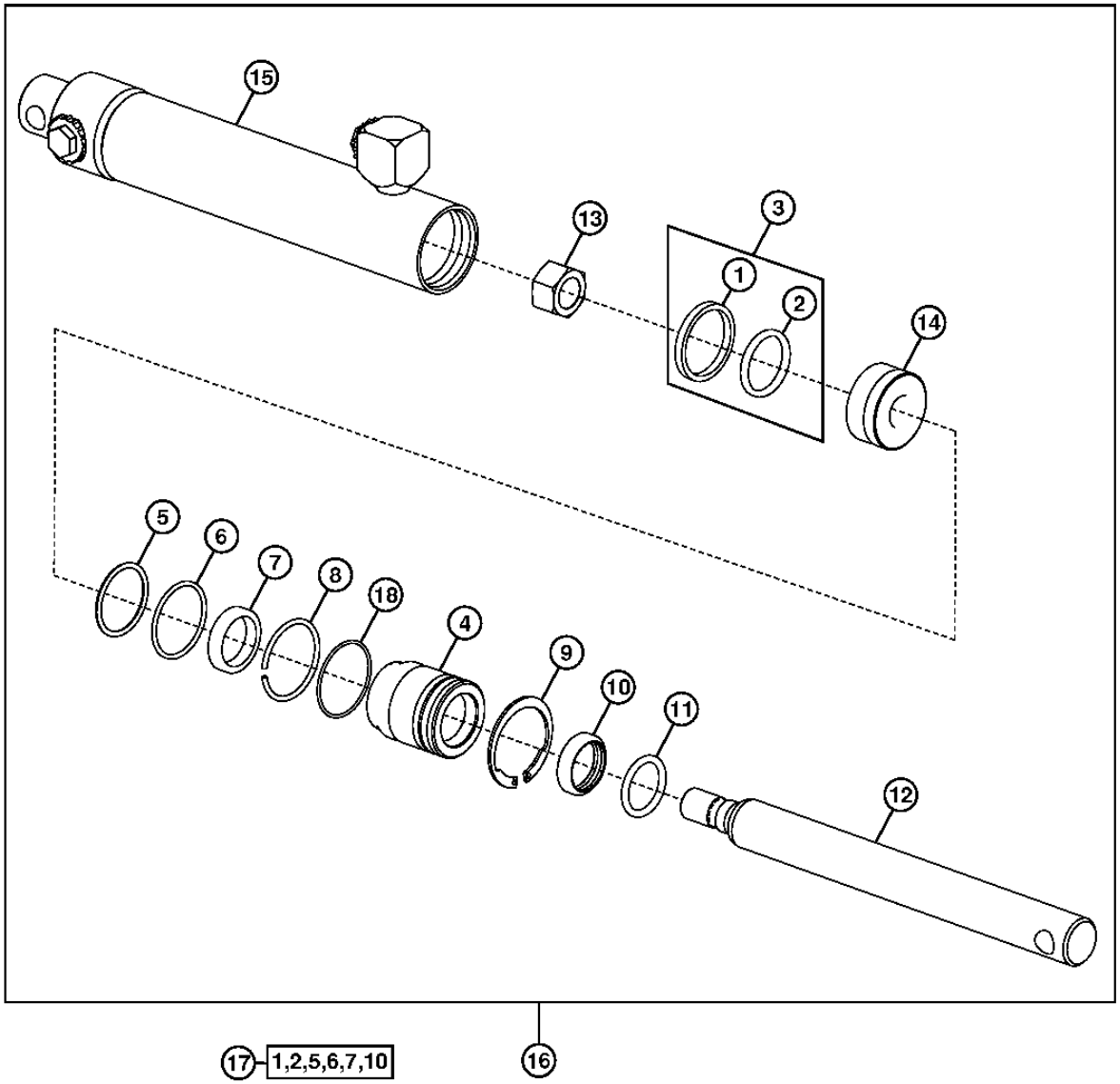

TX1015950

FRONT COUPLER CYLINDER
VERIN D'ACCOUPLEMENT AVANT
CILINDRO DE ACOPLADOR DELANTERO

KEY	PART NO.	PART NAME	QTY.	SERIAL NO.	410J	410TMC	REMARKS
1	.....	SEAL	1		X	X	(ORDER AH176230)
2	.....	O-RING	1		X	X	(ORDER AH176230)
3	AH176230	SEAL	1		X	X	
4	H173205	HYDR. CYLINDER ROD GUIDE	1		X	X	
5	M4125T	O-RING	1		X	X	
6	H162312	BACK-UP RING	1		X	X	
7	H158676	SEAL	1		X	X	
8	H173206	RING	1		X	X	
9	H173207	SNAP RING	1		X	X	
10	H164925	SEAL	1		X	X	
11	P45750	O-RING	1		X	X	
12	.....	ROD	1		X	X	(ORDER AH217348)
13	14H1083	NUT	1		X	X	5/8"
14	H173199	PISTON	1		X	X	
15	.....	HYDRAULIC CYLINDER BARREL	1		X	X	(ORDER AH176230)
16	AH217348	HYDRAULIC CYLINDER	1		X	X	
17	AH176272	HYDRAULIC CYLINDER KIT	1		X	X	
18	.....	O-RING	1		X	X	

BUCKET LEVELING AND RETURN-TO-DIG LINKAGE
TRINGLERIE DE MISE A NIVEAU DE BENNE ET DE RETOUR EN POSITION DE CREUSEMENT
VARILLAJE DE NIVELACION DE CUCHARON Y DE RETORNO A EXCAVACION

TX1005442 -UN-30MAR06

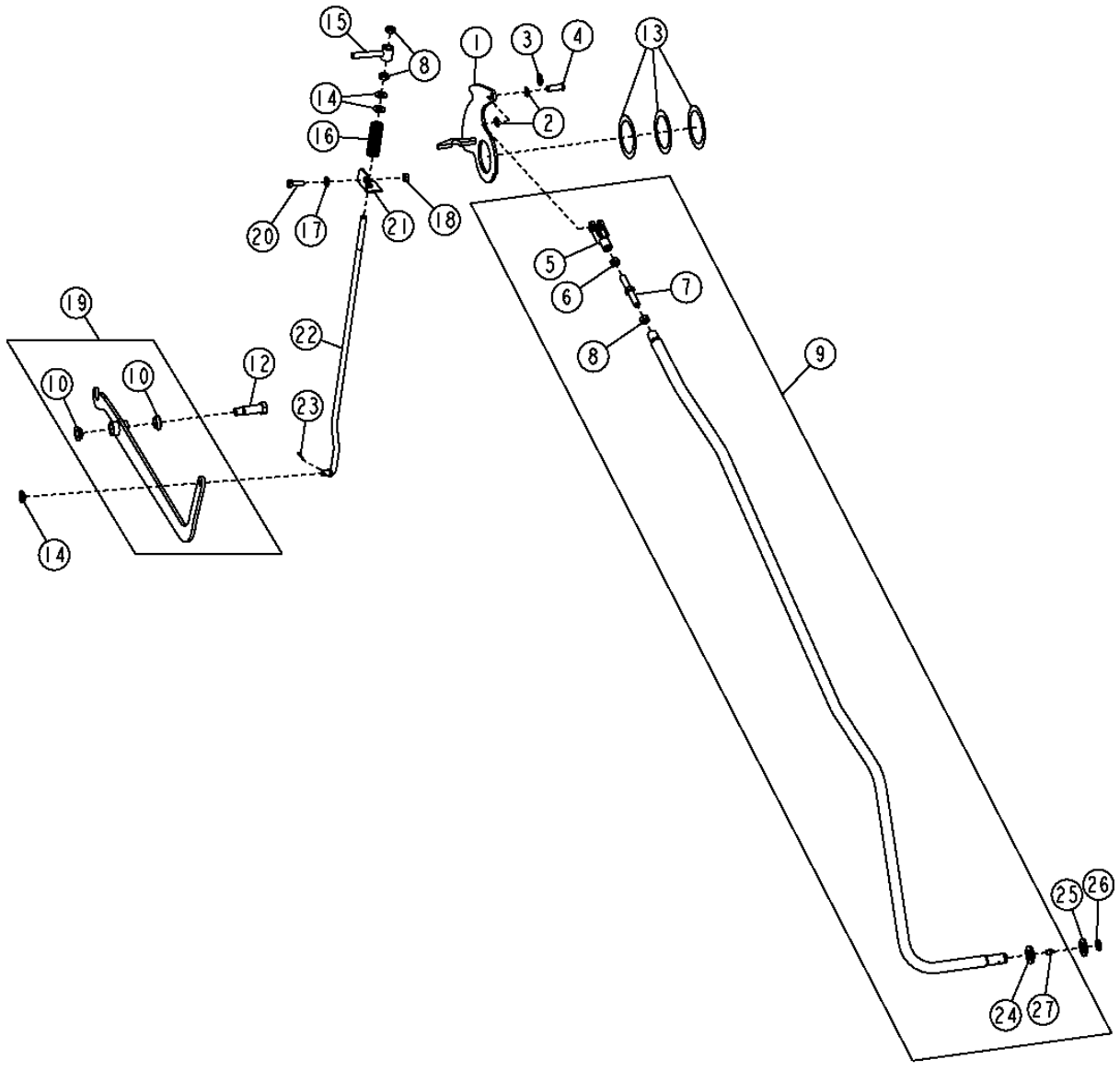

TX1005442

BUCKET LEVELING AND RETURN-TO-DIG LINKAGE
TRINGLERIE DE MISE A NIVEAU DE BENNE ET DE RETOUR EN POSITION DE CREUSEMENT
VARILLAJE DE NIVELACION DE CUCHARON Y DE RETORNO A EXCAVACION

KEY	PART NO.	PART NAME	QTY.	SERIAL NO.	410J	410TMC	REMARKS
1	AT322365	PLATE	1		X		
2	T146757	WASHER	2		X		
3	T148182	RING	1		X		
4	R72855	PIN FASTENER	1		X		
5	T159981	YOKE	1		X		
6	14H881	NUT	1		X		1/2"
7	T159980	STUD	1		X		
8	14H856	NUT	3		X		1/2"
9	AT184682	TUBE	1		X		
10	T166097	BEARING	2		X		
12	T191285	BOLT	1		X		
13	T161497	SHIM	3		X		
14	24H1111	WASHER	3		X		17/32" X 1-1/16" X 0.090"
15	AT326922	LINK	1		X		
16	T190992	COMPRESSION SPRING	1		X		
17	24M7239	WASHER	1		X		10.700 X 21 X 2.500 MM
18	14M7274	NUT	1		X		M10
19	AT199335	ARM	1		X		
20	19M7662	CAP SCREW	1		X		M10 X 30
21	T190357	SUPPORT	1		X		
22	T191226	ROD	1		X		
23	11M7082	COTTER PIN	1		X		
24	T160720	WASHER	1		X		
25	24H1659	WASHER	1		X		29/32" X 1-5/8" X 0.120"
26	5787YT	SNAP RING	1		X		
27	T162396	LUBRICATION FITTING	1		X		

LOADER CONTROL VALVE LINKAGE
TRINGLERIE DE DISTRIBUTEURS DE CHARGEUR
VARILLAJE DE VALVULA DE CONTROL DE CARGADORA

TX1015656 -UN-06DEC06

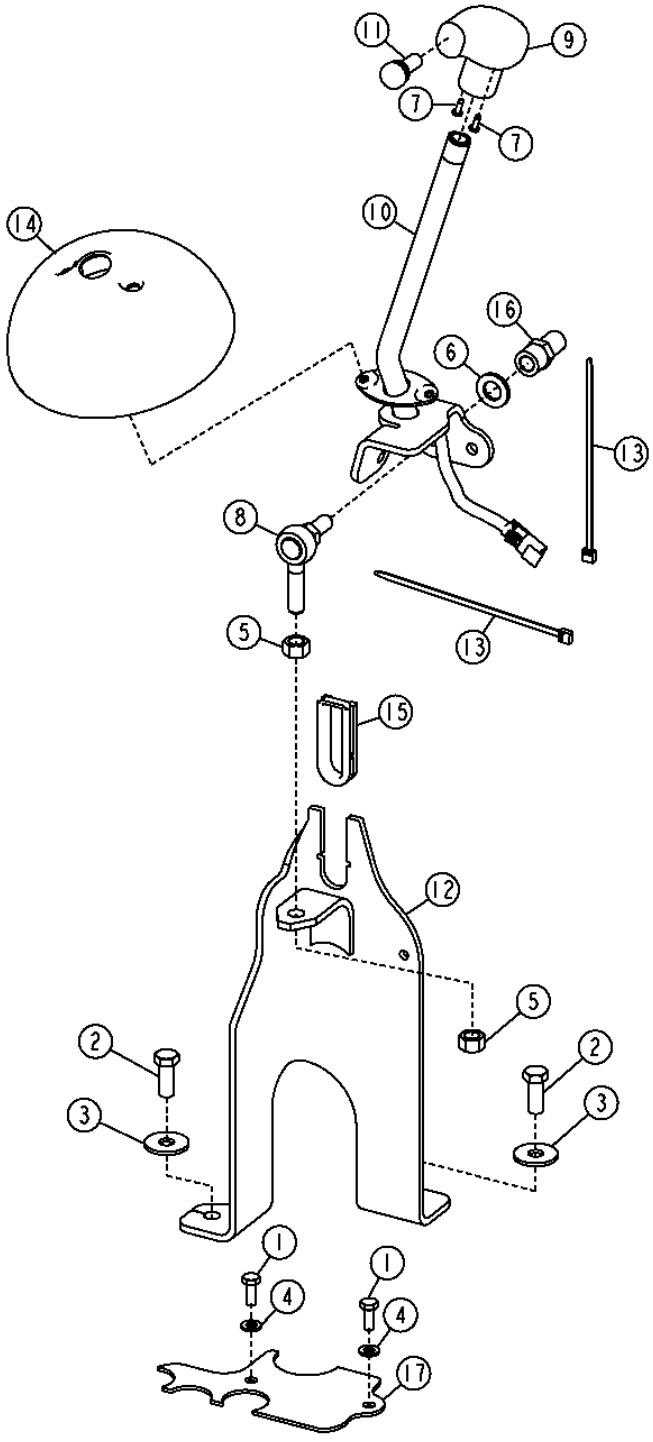

TX1015656

LOADER CONTROL VALVE LINKAGE
TRINGLERIE DE DISTRIBUTEURS DE CHARGEUR
VARILLAJE DE VALVULA DE CONTROL DE CARGADORA

KEY	PART NO.	PART NAME	QTY.	SERIAL NO.	410J	410TMC	REMARKS
1	19M7881	SCREW	2		X		M8 X 20
2	19M8011	CAP SCREW	2		X		M12 X 30
3	24M7180	WASHER	2		X		13 X 37 X 3 MM
4	24M7238	WASHER	2		X		8.700 X 17 X 2 MM
5	14H865	NUT	2		X		1/2"
6	24M7053	WASHER	1		X		17 X 30 X 3 MM
7	37H95	SCREW	2		X		
8	AT124107	BALL JOINT	1		X		
9	AT171550	KNOB	1		X		
10	AT196591	LEVER	1		X		
11	AT317764	SWITCH	1		X		
12	AT321366	CONTROL SUPPORT	1		X		
13	R44302	TIE BAND	2		X		
14	T166899	COVER	1		X		
15	T167192	INSERT	1		X		
16	T187072	SPACER	1		X		
17	T216928	PLATE	1		X		

THIRD FUNCTION LOADER CONTROL VALVE LINKAGE
TRINGLERIE DE DISTRIBUTEURS DE CHARGEUR A TROISIEME FONCTION
VARILLAJE DE VALVULA DE CONTROL DE CARGADORA DE TERCERA FUNCION

TX1015652 -UN-28DEC06

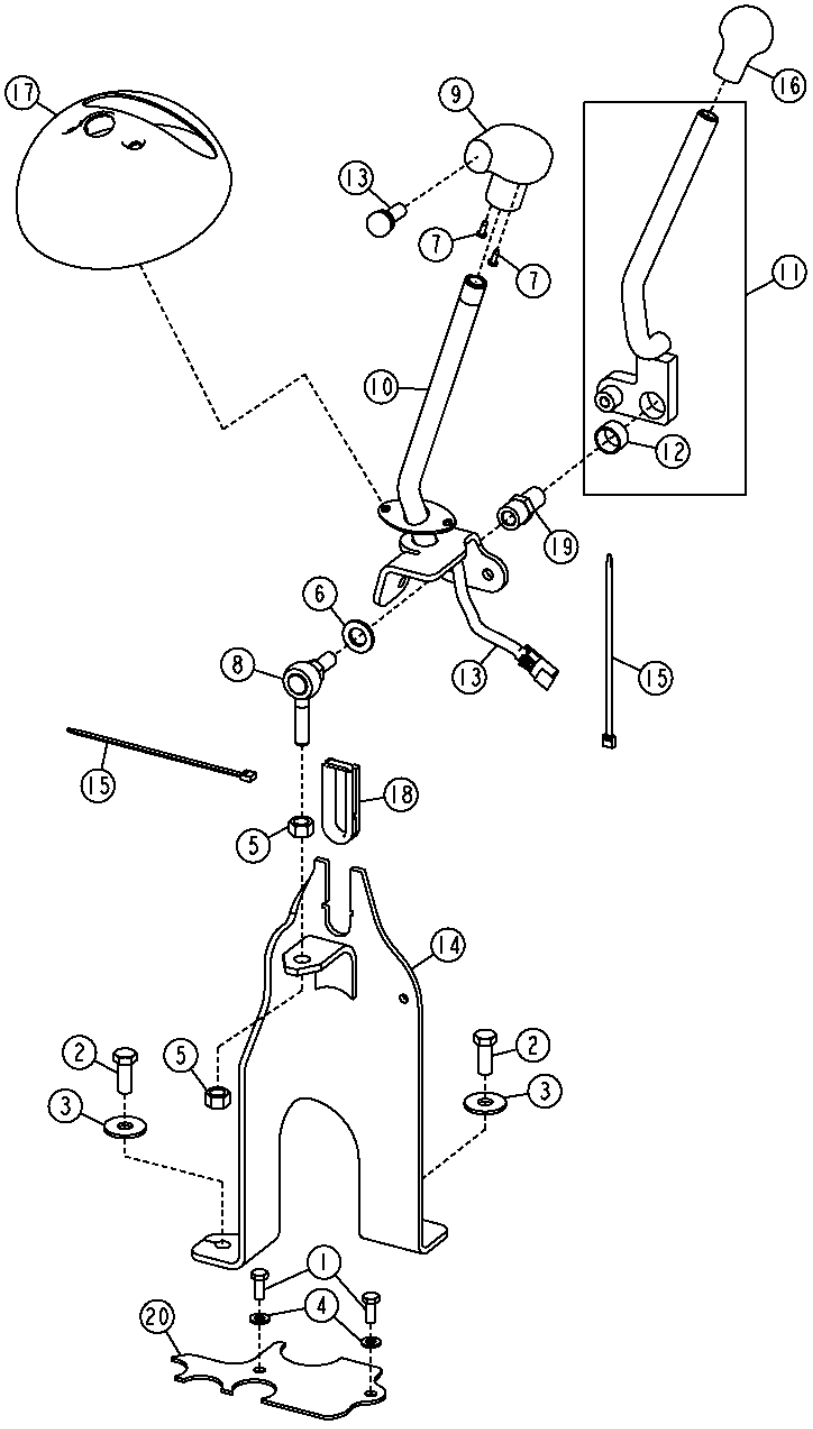

TX1015652

THIRD FUNCTION LOADER CONTROL VALVE LINKAGE
TRINGLERIE DE DISTRIBUTEURS DE CHARGEUR A TROISIEME FONCTION
VARILLAJE DE VALVULA DE CONTROL DE CARGADORA DE TERCERA FUNCION

KEY	PART NO.	PART NAME	QTY.	SERIAL NO.	410J	410TMC	REMARKS
1	19M7881	SCREW	2		X		M8 X 20
2	19M8011	CAP SCREW	2		X		M12 X 30
3	24M7180	WASHER	2		X		13 X 37 X 3 MM
4	24M7238	WASHER	2		X		8.700 X 17 X 2 MM
5	14H865	NUT	2		X		1/2"
6	24M7053	WASHER	1		X		17 X 30 X 3 MM
7	37H95	SCREW	2		X		
8	AT124107	BALL JOINT	1		X		
9	AT171550	KNOB	1		X		
10	AT196591	LEVER	1		X		
11	AT196596	LEVER	1		X		
	AT330851	**FIELD INSTALLATION KIT**	**1**		**X**		**(WHOLEGOODS) THIRD FUNCTION LOADER AUXILIARY VALVE KIT (INCLUDES CONTROLLER, LINKAGE, AND HOSES)**
12	L4694T	BUSHING	1		X		
13	AT317764	SWITCH	1		X		
14	AT321366	CONTROL SUPPORT	1		X		
15	R44302	TIE BAND	2		X		
16	T133291	KNOB	1		X		
17	T166900	COVER	1		X		
18	T167192	INSERT	1		X		
19	T187072	SPACER	1		X		
20	T216928	PLATE	1		X		

SHOVEL CLAMP FIELD KIT
VITRE DE PARE-BRISE POUR CABINE
CRISTAL DE PARABRISAS PARA CABINA

TX1016563 -UN-28DEC06

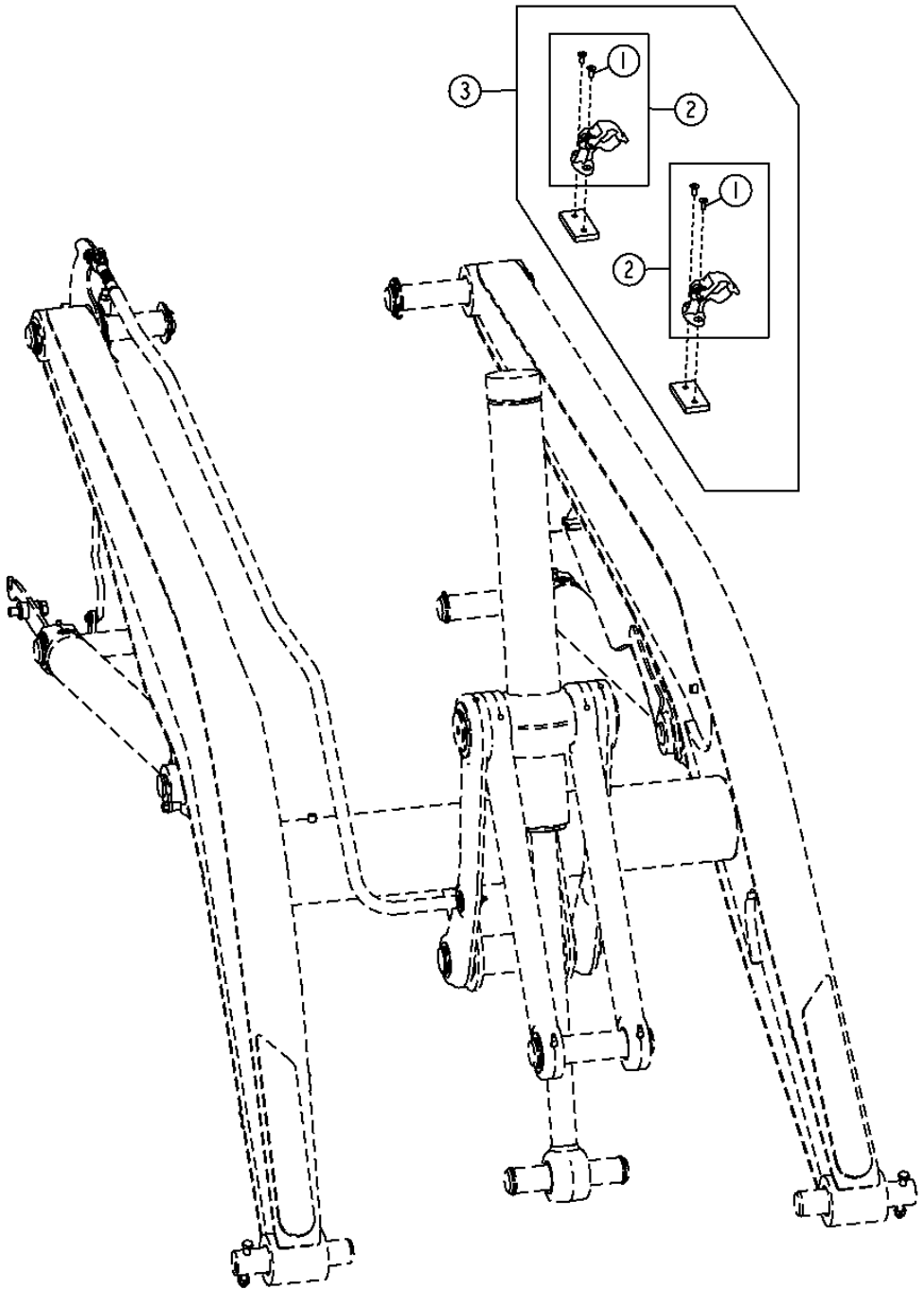

SHOVEL CLAMP FIELD KIT
VITRE DE PARE-BRISE POUR CABINE
CRISTAL DE PARABRISAS PARA CABINA

KEY	PART NO.	PART NAME	QTY.	SERIAL NO.	410J	410TMC	REMARKS
1	21H1225	SCREW	2		X	X	5/16" X 3/4"
2	AT339925	CLAMP	2		X	X	UTILITY
3	**AT339926**	**FIELD INSTALLATION KIT**	**1**		**X**	**X**	**(WHOLE GOODS) SHOVEL CLAMP**

LOADER LIFT ARM
BRAS DE RELEVAGE DE CHARGEUR
BRAZO ELEVADOR DE CARGADORA

TX1015736 -UN-18DEC06

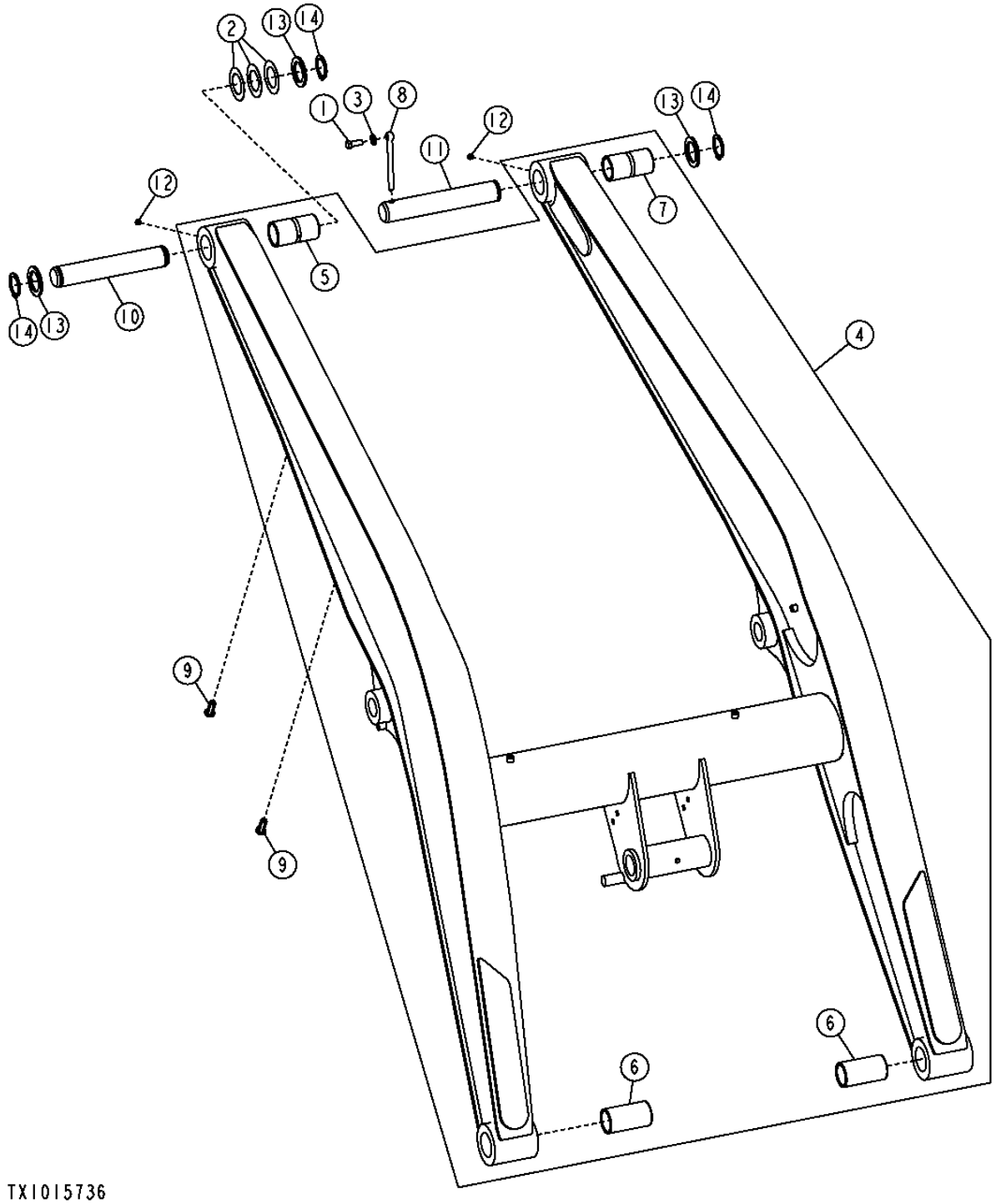

LOADER LIFT ARM
BRAS DE RELEVAGE DE CHARGEUR
BRAZO ELEVADOR DE CARGADORA

KEY	PART NO.	PART NAME	QTY.	SERIAL NO.	4101J	410TJ	REMARKS
1	19M8011	CAP SCREW	1			X	M12 X 30
2	24H1589	WASHER	3		X	X	2" X 3-3/16" X 0.036"
3	24M7240	WASHER	1			X	13 X 25 X 3 MM
4	AT324177	LIFT ARM	1		X	X	
5	T154166	BUSHING	1		X	X	
6	T154165	BUSHING	1		X	X	
7	T154166	BUSHING	1		X	X	
8	M113379	PIN FASTENER	1			X	
9	T148411	NUT	2		X	X	
10	T154352	PIN	1		X	X	
12	T162396	LUBRICATION FITTING	2		X	X	
13	T228611	WASHER	3		X	X	
14	T61226	SNAP RING	3		X	X	

LOADER LIFT ARM (TOOL CARRIER)
BRAS DE RELEVAGE DE CHARGEUR (TOOL CARRIER)
BRAZO ELEVADOR DE CARGADORA (TOOL CARRIER)

TX1015737 -UN-28DEC06

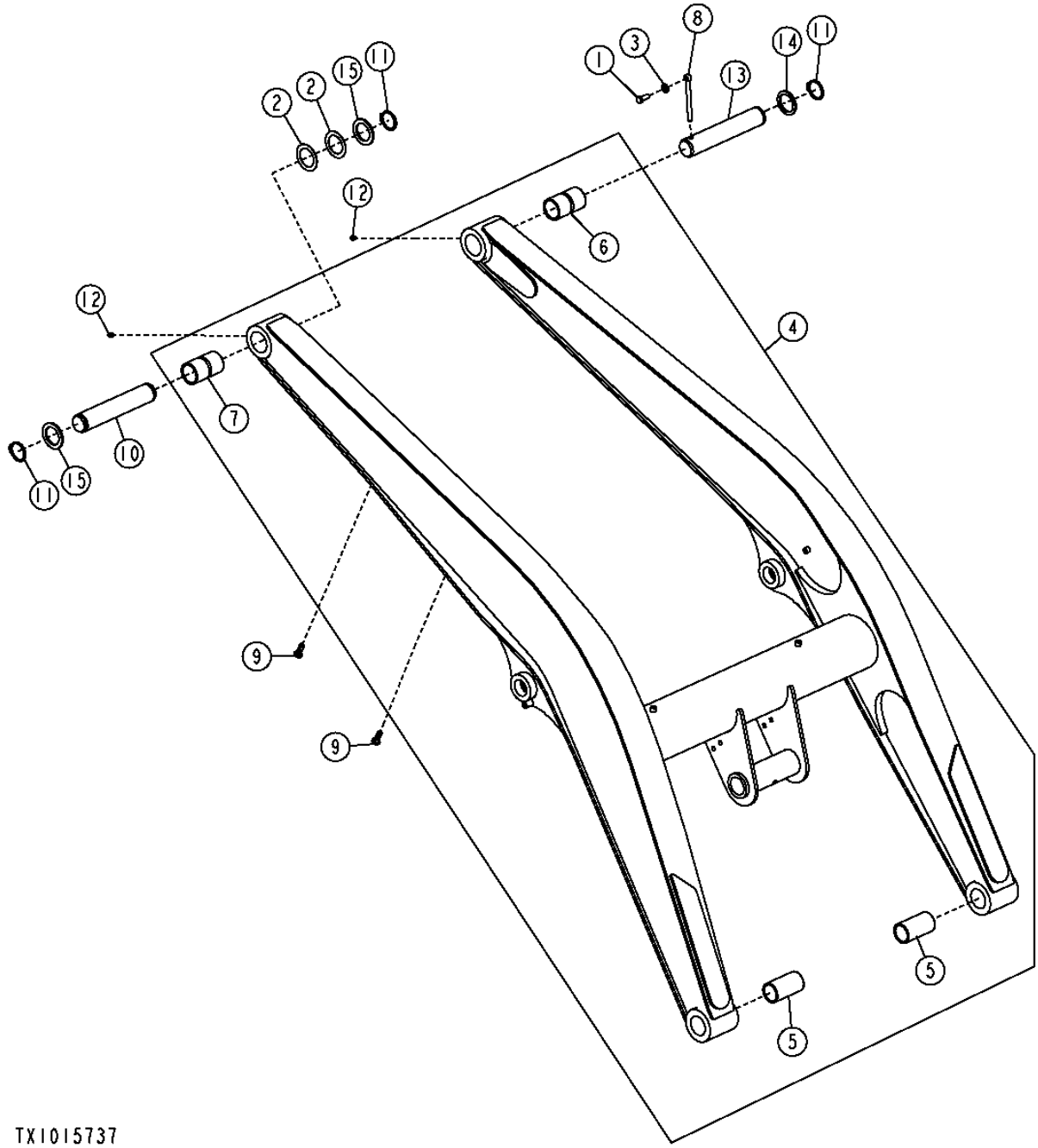

THIS PARTS LISTING IS CONTINUED

LOADER LIFT ARM (TOOL CARRIER)
BRAS DE RELEVAGE DE CHARGEUR (TOOL CARRIER)
BRAZO ELEVADOR DE CARGADORA (TOOL CARRIER)

KEY	PART NO.	PART NAME	QTY.	SERIAL NO.	410J	410TMC	REMARKS
1	19M8011	CAP SCREW	1			X	M12 X 30
2	24H1679	WASHER	2			X	57.556 X 82.550 X 1.524 MM
3	24M7240	WASHER	1			X	13 X 25 X 3 MM
4	AT318792	LIFT ARM	1			X	
5	T154165	BUSHING	1			X	49.940 X 60.130 X 110 MM
6	T154764	BUSHING	1			X	55.100 X 65.130 X 110 MM
7	T154764	BUSHING	1			X	55.100 X 65.130 X 110 MM
8	M113379	PIN FASTENER	1			X	
9	T148411	NUT	2			X	M10
10	T154769	PIN	1			X	54.475 X 296 MM
11	T158181	SNAP RING	3			X	
12	T162396	LUBRICATION FITTING	2			X	
13	T214969	PIN	1			X	54.475 X 302.500 MM
14	T228612	WASHER	1			X	55.500 X 72.500 X 5 MM
15	T75816	WASHER	2			X	55.500 X 80 X 5 MM

LOADER BUCKET LINKAGE (410J,410TMC)
TRINGLERIE DE BENNE DE CHARGEUR (410J,410TMC)
VARILLAJE DE CUCHARON DE CARGADORA (410J,410TMC)

TX1016032 -UN-18DEC06

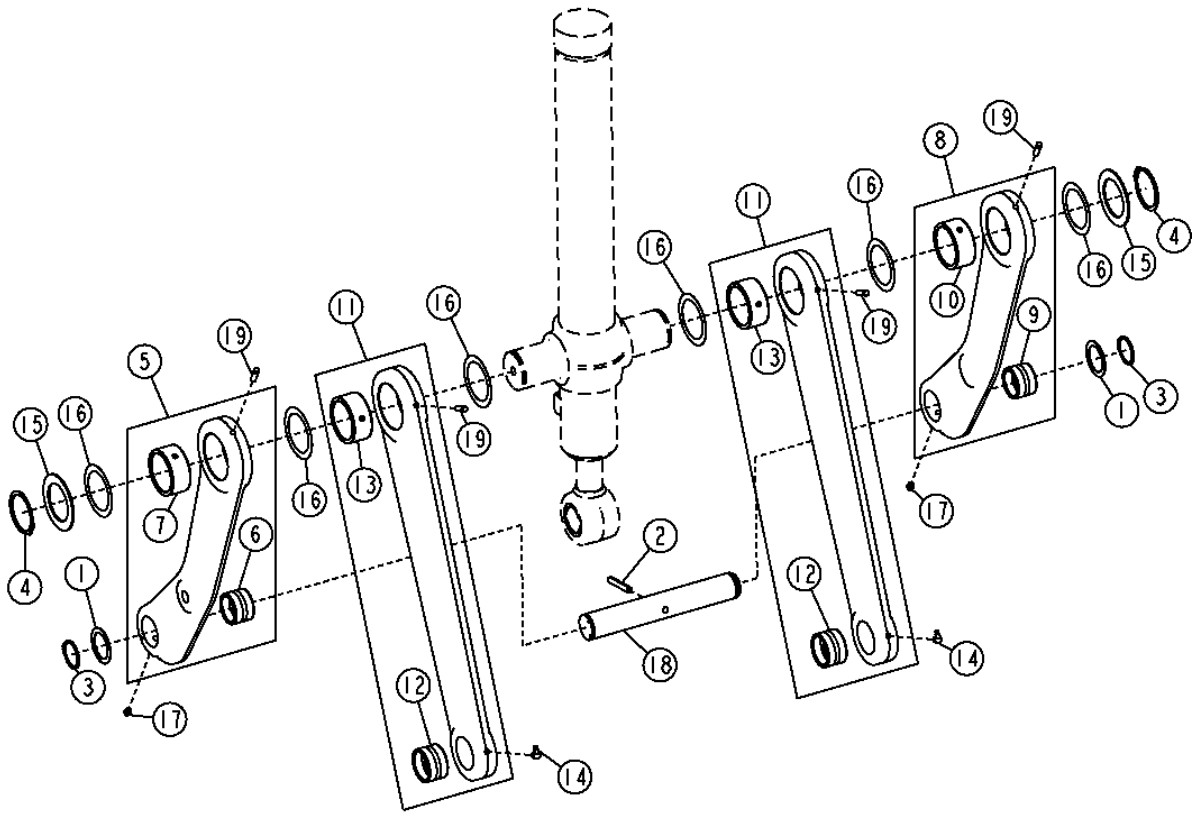

TX1016032

LOADER BUCKET LINKAGE (410J,410TMC)
TRINGLERIE DE BENNE DE CHARGEUR (410J,410TMC)
VARILLAJE DE CUCHARON DE CARGADORA (410J,410TMC)

KEY	PART NO.	PART NAME	QTY.	SERIAL NO.	410J	410TMC	REMARKS
1	24H1683	WASHER	2		X	X	2-1/32" X 2-3/4" X 0.060"
2	34H364	SPRING PIN	1		X	X	7/16" X 3"
3	40M7166	SNAP RING	2		X	X	
4	40M7217	SNAP RING	2		X	X	
5	AT322637	LINK	1		X	X	
6	T154058	BUSHING	1		X	X	49.860 X 60.130 X 40 MM
7	T216397	BUSHING	1		X	X	
8	AT322637	LINK	1		X	X	
9	T154058	BUSHING	1		X	X	49.860 X 60.130 X 40 MM
10	T216397	BUSHING	1		X	X	
11	AT324277	LINK	2		X	X	
12	T183356	BUSHING	1		X	X	54.860 X 65.130 X 40 MM
13	T216397	BUSHING	1		X	X	
14	JD7799	LUBRICATION FITTING	2		X	X	90° X 19.558 MM LONG
15	T158579	WASHER	2		X	X	75 X 110 X 3 MM
16	T161497	SHIM	6		X	X	0.508 MM
17	T162396	LUBRICATION FITTING	2		X	X	
18	T215654	PIN	1			X	49.475 X 324.280 MM
	T216060	PIN	1		X		49.475 X 324.280 MM
19	T224857	DOWEL PIN	4		X	X	

LOADER BUCKET LINKAGE (TOOL CARRIER)
TRINGLERIE DE BENNE DE CHARGEUR
VARILLAJE DE CUCHARON DE CARGADORA

TX1016033 -UN-18DEC06

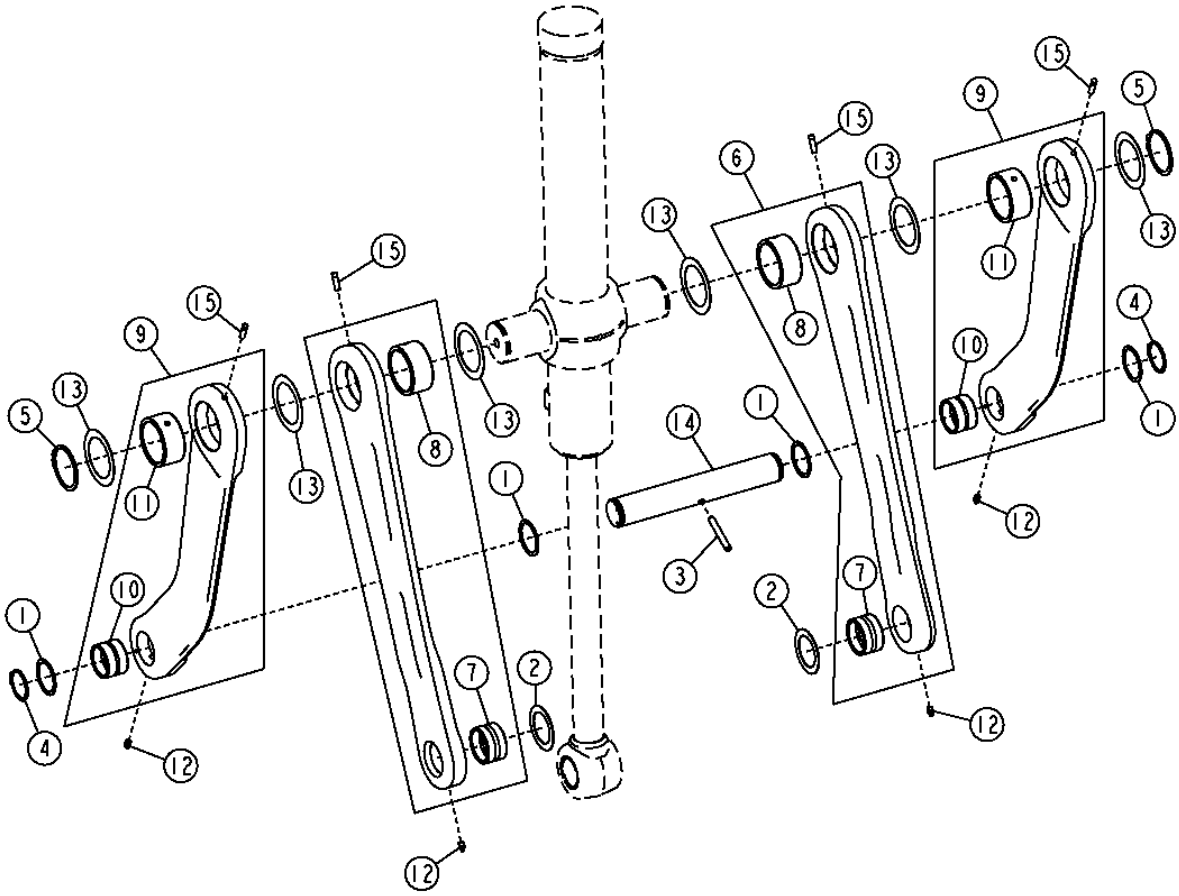

THIS PARTS LISTING IS CONTINUED

LOADER BUCKET LINKAGE (TOOL CARRIER)
TRINGLERIE DE BENNE DE CHARGEUR
VARILLAJE DE CUCHARON DE CARGADORA

KEY	PART NO.	PART NAME	QTY.	SERIAL NO.	410J	410TMC	REMARKS
1	24H1602	WASHER	4		X	X	57.556 X 69.850 X 1.524 MM
2	24H1609	WASHER	2		X	X	61.925 X 87.325 X 1.524 MM
3	34H364	SPRING PIN	1		X	X	11.125 X 76.200 MM
4	40M7066	SNAP RING	2		X	X	
5	40M7150	SNAP RING	2		X	X	
6	AT320703	LINK	2		X	X	
7	T214606	BUSHING	1		X	X	59.860 X 70.130 X 40.500 MM
8	T217031	BUSHING	1		X	X	
9	AT320705	LINK	2		X	X	
10	T214739	BUSHING	1		X	X	54.860 X 65.130 X 43.500 MM
11	T217031	BUSHING	1		X	X	
12	T162396	LUBRICATION FITTING	4		X	X	
13	T163643	WASHER	6		X	X	80.070 X 110.250 X 0.910 MM
14	T214709	PIN	1		X	X	54.475 X 355.380 MM
15	T224857	DOWEL PIN	4		X	X	9.525 X 33.500 MM

LOADER CONTROL VALVE (410J)
DISTRIBUTEUR DE CHARGEUR (410J)
VALVULA DE CONTROL DE CARGADORA (410J)

TX1016317 -UN-28DEC06

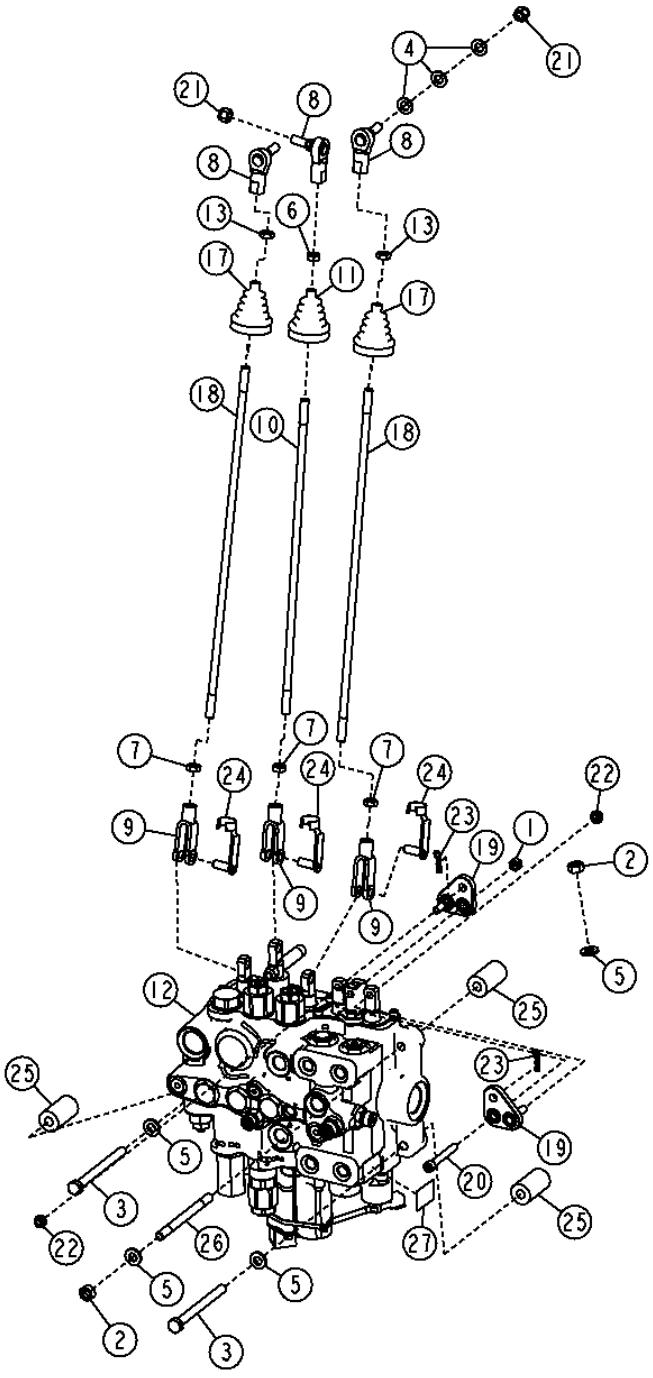

TX1016317

THIS PARTS LISTING IS CONTINUED

LOADER CONTROL VALVE (410J)
DISTRIBUTEUR DE CHARGEUR (410J)
VALVULA DE CONTROL DE CARGADORA (410J)

KEY	PART NO.	PART NAME	QTY.	SERIAL NO.	410J	410TMC	REMARKS
1	14H785	NUT	1		X		5/16"
2	14M7274	NUT	2		X		M10
3	19M8166	CAP SCREW	2		X		M10 X 110
4	24M7040	WASHER	3		X		11 X 20 X 2 MM
5	24M7239	WASHER	4		X		10.700 X 21 X 2.500 MM
6	14H774	NUT	1		X		3/8"
7	14H913	NUT	3		X		3/8"
8	AT169087	BALL JOINT	3		X		
9	T140328	YOKE	3		X		
10	T164259	ROD	1		X		
11	T185710	BOOT	1		X		
12	**AT196630**	**CONTROL VALVE**	**1**		**X**		**TWO FUNCTION**
	AT196632	**CONTROL VALVE**	**1**		**X**		**THREE FUNCTION**
	AT330851	**FIELD INSTALLATION KIT**	**1**		**X**		**(WHOLEGOODS) THREE FUNCTION (INCLUDES CONTROLLER, LINKAGE, AND HOSES)**
13	14H774	NUT	2		X		3/8"
17	T185710	BOOT	3		X		
18	T188976	ROD	2		X		
19	AT199656	BELLCRANK	2		X		
20	M1036T	SCREW	1		X		
21	M68954	LOCK NUT	2		X		
22	R11151	LOCK NUT	2		X		
23	R46528	SPRING LOCKING PIN	2		X		
24	T183617	PIN FASTENER	3		X		
25	T190296	SPACER	3		X		
26	T190300	STUD	1		X		
27	T223966	LABEL	1		X		

BOOM SECTION (410J)
SECTION DE FLECHE (SOUPAPE DE CHARGEUR) (410J)
SECCION DE AGUILON (VALVULA DE CARGADORA) (410J)

T163447 -UN-08JAN03

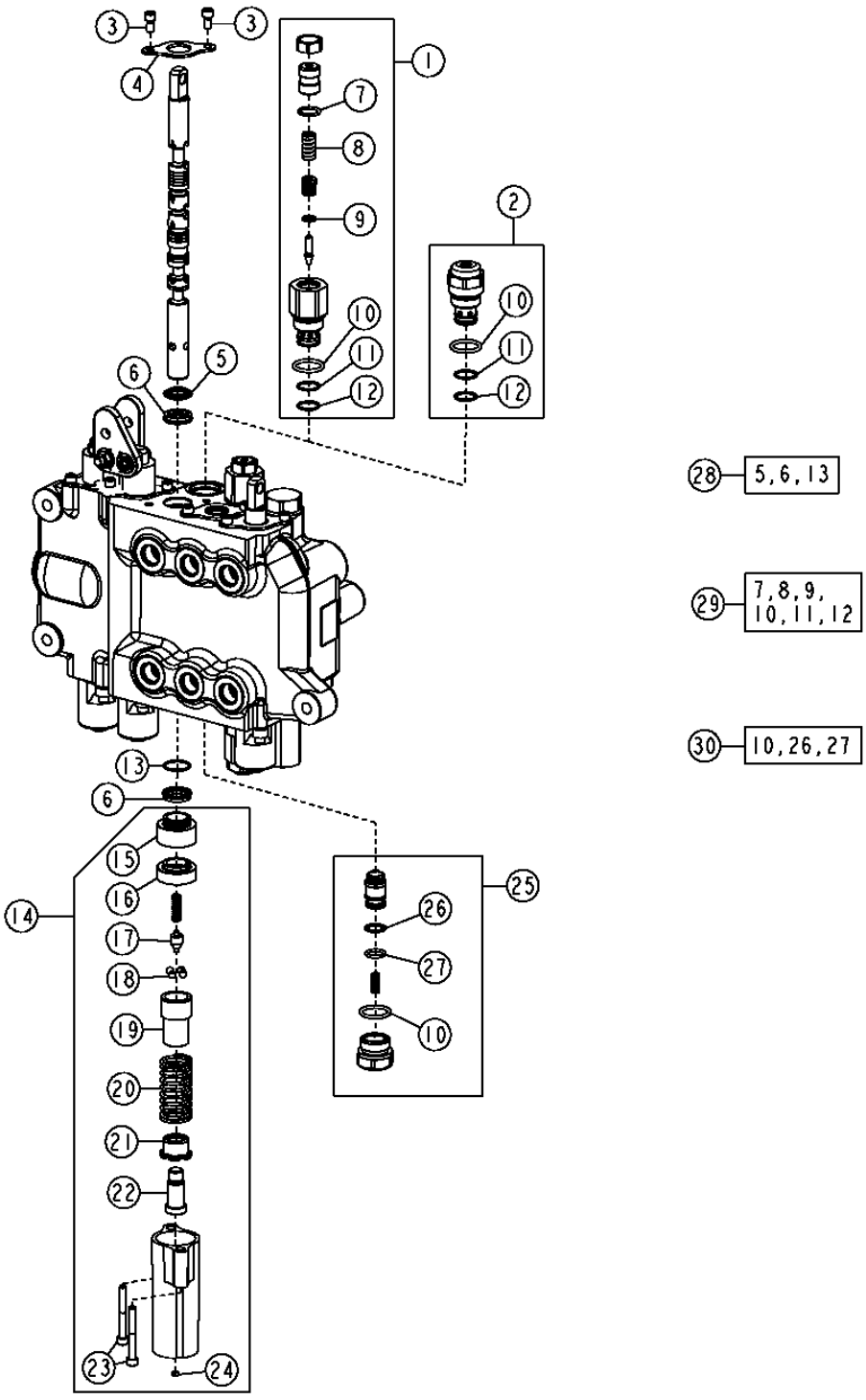

BOOM SECTION (410J)
SECTION DE FLECHE (SOUPAPE DE CHARGEUR) (410J)
SECCION DE AGUILON (VALVULA DE CARGADORA) (410J)

KEY	PART NO.	PART NAME	QTY.	SERIAL NO.	410J	410TMC	REMARKS
1	AT300803	PRESSURE RELIEF VALVE	1		X		(NOT ANTI-CAVITATION) (5000 PSI)
2	AT301128	PRESSURE RELIEF VALVE	1		X		(ANTI-CAVITATION) (5000 PSI)
3	21H1352	SCREW	2		X		1/4" X 3/8"
4	T81524	PLATE	1		X		
5	.....	SEAL	1		X		
6	.....	SEAL	2		X		
7	.....	O-RING	1		X		
8	.....	SPRING	1		X		
9	R63548	O-RING	1		X		
10	T118681	O-RING	1		X		
11	.....	BACK-UP RING	2		X		
12	T107887	O-RING	2		X		
13	.....	O-RING	1		X		
14	AT192372	DETENT	1		X		
15	T152404	SLEEVE	1		X		
16	T152401	SLEEVE	1		X		
17	T118715	CAM	1		X		
18	T81535	BALL	4		X		
19	T118708	VALVE SEAT INSERT	1		X		
20	T118884	SPRING	1		X		
21	T118709	VALVE SEAT INSERT	1		X		
22	T118711	END	1		X		
23	T118712	SCREW	2		X		
24	T118799	FILTER	1		X		
25	AT169373	CHECK VALVE	1		X		
26	.....	BACK-UP RING	1		X		
27	.....	O-RING	1		X		
28	AT280406	SEAL KIT	1		X		
29	AT300801	SEAL KIT	2		X		
30	AT314538	SEAL KIT	1		X		7/8" RELIEF VALVE SEAL KIT
	AT314539	SEAL KIT	1		X		1 1/16" RELIEF VALVE SEAL KIT

BUCKET SECTION (LOADER VALVE) (410J)
SECTION DE GODET (SOUPAPE DE CHARGEUR) (410J)
SECCION DE CUCHARON (VALVULA DE CARGADORA) (410J)

T163432 -UN-

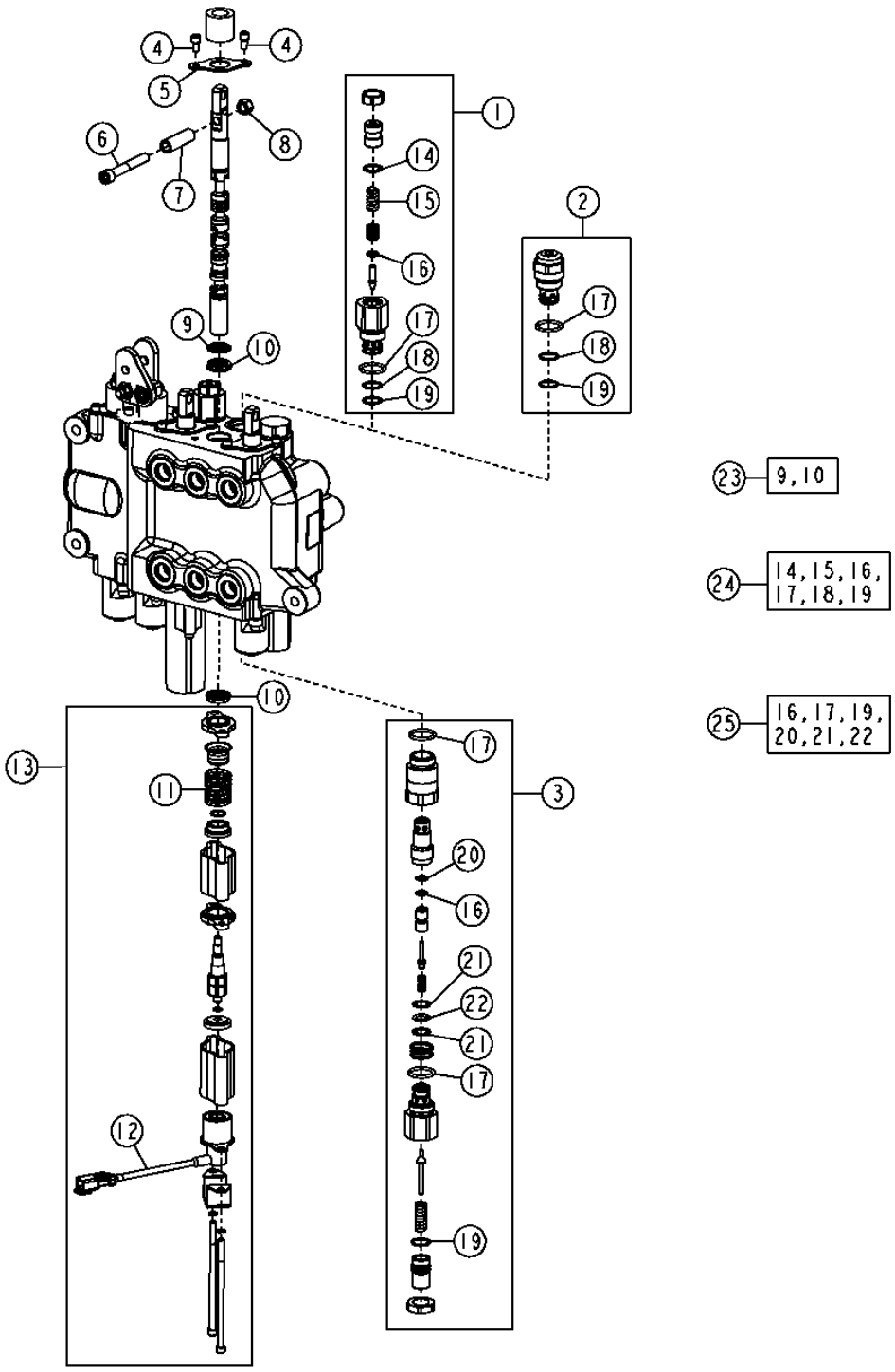

BUCKET SECTION (LOADER VALVE) (410J)
SECTION DE GODET (SOUPAPE DE CHARGEUR) (410J)
SECCION DE CUCHARON (VALVULA DE CARGADORA) (410J)

KEY	PART NO.	PART NAME	QTY.	SERIAL NO.	410J	410TMC	REMARKS
1	AT301526	PRESSURE RELIEF VALVE	1		X	X	(NOT ANTI-CAVITATION) (4600 PSI)
2	AT301527	PRESSURE RELIEF VALVE	1		X	X	(ANTI-CAVITATION) (4600 PSI)
3	AT192457	PRESSURE RELIEF VALVE	1		X	X	(4600 PSI)
4	21H1352	SCREW	2		X	X	1/4" X 3/8"
5	T81524	PLATE	1		X	X	
6	19H3317	SCREW	1		X	X	3/8" X 2-3/4"
7	T190795	TUBE	1		X	X	
8	14H1076	NUT	1		X	X	
9	.....	SEAL	1		X	X	
10	.....	SEAL	2		X	X	
11	T134881	SPRING	1		X	X	
12	AT196246	MAGNET	1		X	X	
13	AT196245	DETENT	1		X	X	
14	.....	O-RING	1		X	X	
15	.....	SPRING	1		X	X	
16	R63548	O-RING	2		X	X	
17	T118681	O-RING	4		X	X	
18	.....	BACK-UP RING	2		X	X	
19	T107887	O-RING	3		X	X	
20	T150958	BACK-UP RING	1		X	X	
21	.....	BACK-UP RING	2		X	X	
22	.....	O-RING	1		X	X	
23	AT280406	SEAL KIT	1		X	X	
24	AT300801	SEAL KIT	2		X	X	
25	AT314538	SEAL KIT	1		X	X	7/8" RELIEF VALVE SEAL KIT
	AT314539	SEAL KIT	1		X	X	1 1/16" RELIEF VALVE SEAL KIT

AUXILIARY SECTION (410J)
SECTION AUXILIAIRE (SOUPAPE DE CHARGEUR) (410J)
SECCION AUXILIAR (VALVULA DE CARGADORA) (410J)

T163410 -UN-08JAN03

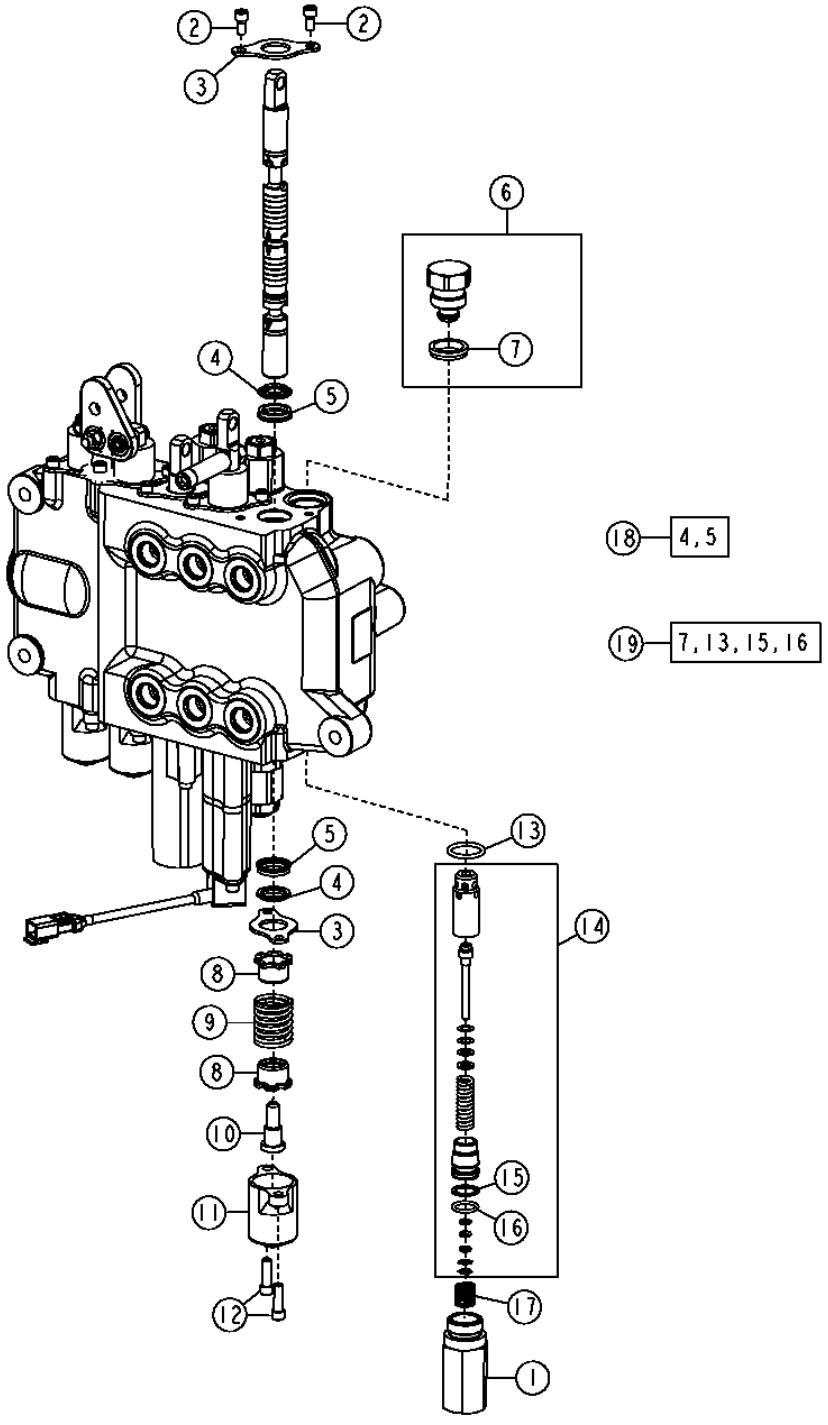

T163410

AUXILIARY SECTION (410J)
SECTION AUXILIAIRE (SOUPAPE DE CHARGEUR) (410J)
SECCION AUXILIAR (VALVULA DE CARGADORA) (410J)

KEY	PART NO.	PART NAME	QTY.	SERIAL NO.	410J	410TMC	REMARKS
1	T118866	HOUSING	1		X		
2	21H1352	SCREW	2		X		1/4" X 3/8"
3	T81524	PLATE	2		X		
4	.....	SEAL	2		X		
5	.....	SEAL	2		X		
6	AT83174	FITTING PLUG	1		X		
7	T183757	SEAL	1		X		
8	T81540	RETAINER	2		X		
9	T118879	SPRING	1		X		
10	T81541	SCREW	1		X		
11	T118808	CAP	1		X		
12	19H3554	SCREW	2		X		
13	T118681	O-RING	1		X		
14	AT178362	SEAL KIT	1		X		(3800 PSI)
15	.....	BACK-UP RING	1		X		
16	.....	O-RING	1		X		
17	T118867	SPRING	1		X		
18	AT280406	SEAL KIT	1		X		
19	AT314538	SEAL KIT	1		X		7/8" RELIEF VALVE SEAL KIT
	AT314539	SEAL KIT	1		X		1 1/16" RELIEF VALVE SEAL KIT

STABILIZER/LOADER VALVE (410J)
SOUPAPE DE STABILISATEUR (410J)
VALVULA ESTABILIZADORA (410J)

T163599 -UN-08JAN03

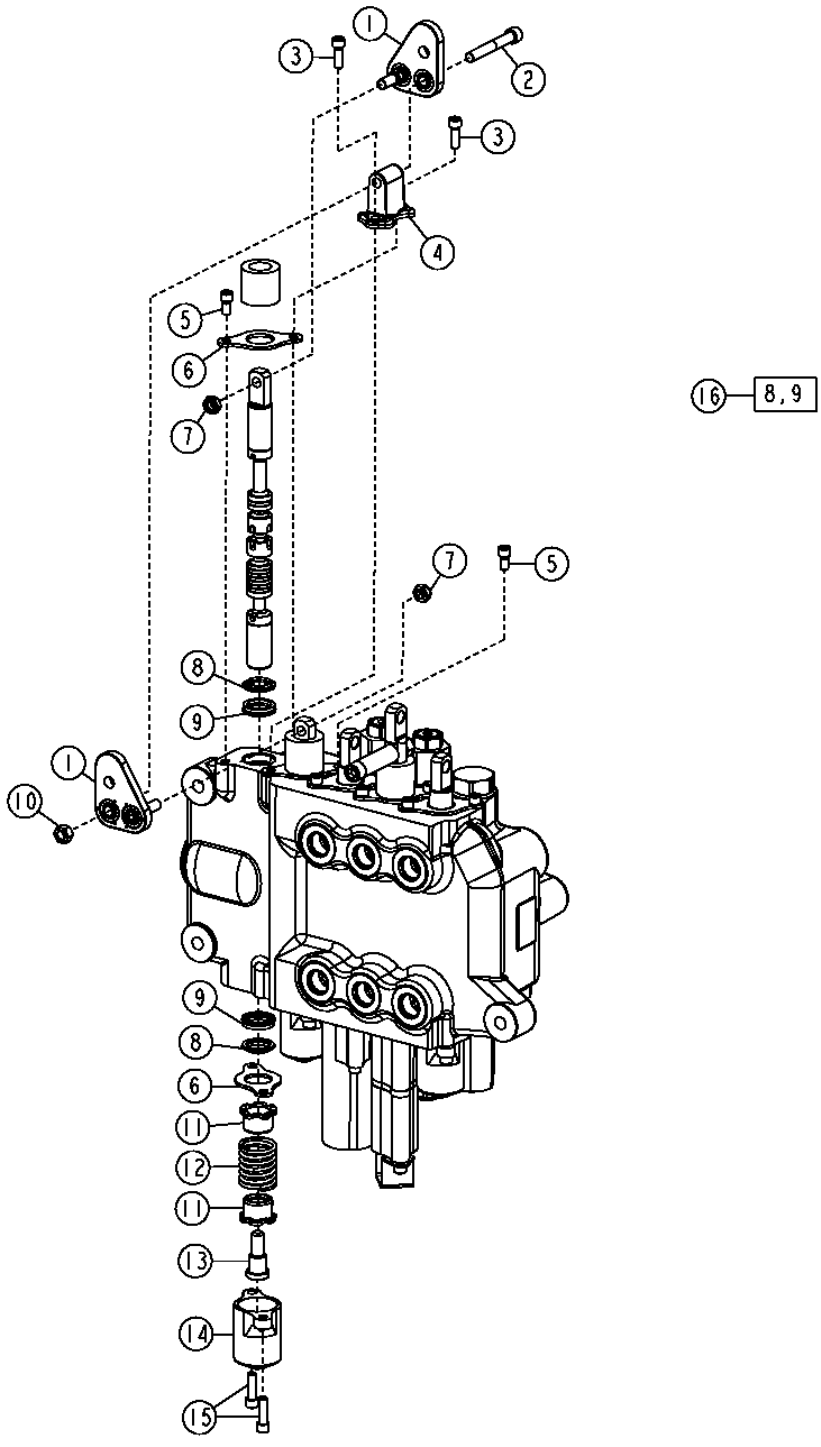

STABILIZER/LOADER VALVE (410J)
SOUPAPE DE STABILISATEUR (410J)
VALVULA ESTABILIZADORA (410J)

KEY	PART NO.	PART NAME	QTY.	SERIAL NO.	410J	410TMC	REMARKS
1	AT199656	BELLCRANK	2		X		
2	M1036T	SCREW	1		X		5/16" X 2-1/4"
3	19H2924	SCREW	2		X		1/4" X 3/4"
4	AT199657	BASE	1		X		
5	21H1352	SCREW	2		X		1/4" X 3/8"
6	T81524	PLATE	4		X		
7	R11151	LOCK NUT	2		X		
8	.....	SEAL	4		X		
9	.....	SEAL	4		X		
10	14H785	NUT	1		X		5/16"
11	T81540	RETAINER	4		X		
12	T118683	SPRING	2		X		
13	T81541	SCREW	2		X		
14	T118808	CAP	2		X		
15	19H3554	SCREW	4		X		1/4" X 0.880"
16	AT280406	SEAL KIT	2		X		

STABILIZER/LOADER VALVE (410J)
SOUPAPE DE STABILISATEUR / DE CHARGEUR (410J)
VALVULA ESTABILIZADORA / DE CARGADORA (410J)

TX1016579 -UN-

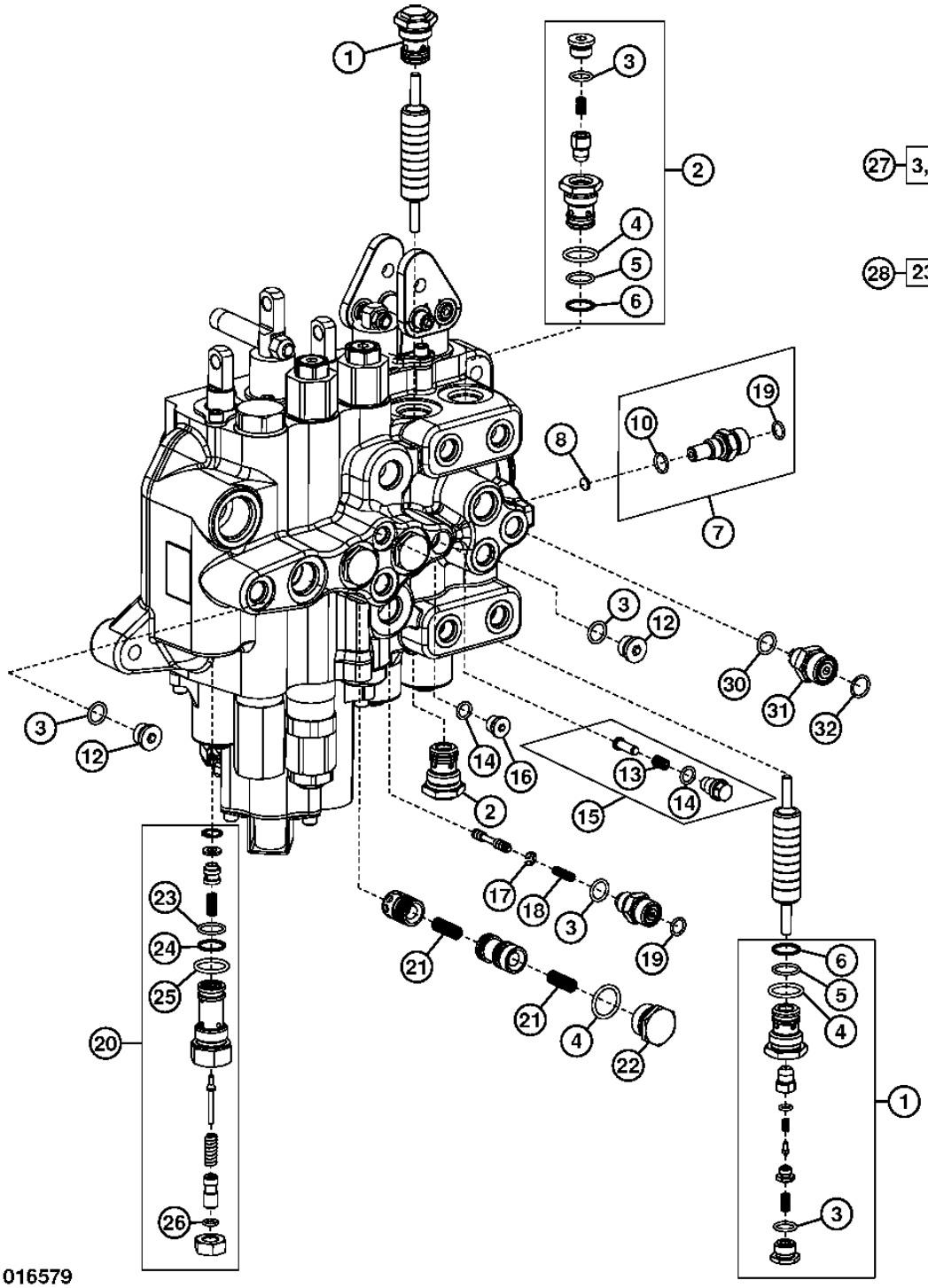

TX1016579

STABILIZER/LOADER VALVE (410J)
SOUPAPE DE STABILISATEUR / DE CHARGEUR (410J)
VALVULA ESTABILIZADORA / DE CARGADORA (410J)

KEY	PART NO.	PART NAME	QTY.	SERIAL NO.	410J	410TMC	REMARKS
1	AT330860	VALVE	2		X		LOCKOUT (W/THERMAL RELIEF VALVE)
2	AT337941	VALVE	2		X		LOCKOUT (W/O THERMAL RELIEF VALVE)
3	T70177	O-RING	8		X		
4	R26906	O-RING	7		X		
5	.....	O-RING	4		X		
6	.....	BACK-UP RING	4		X		
7	RE154027	ADAPTER FITTING	1		X		
8	R111292	DISK	1		X		
10	51M7041	O-RING	1		X		
12	R111493	FITTING PLUG	2		X		
13	T76509	SPRING	1		X		
14	R28782	O-RING	2		X		
15	AT199672	KIT	1		X		
16	T54904	UNION FITTING	1		X		
17	T160619	SNAP RING	1		X		
18	T160617	SPRING	1		X		
19	T77613	O-RING	2		X		
20	AT328992	PRESSURE RELIEF VALVE	1		X		(LOAD SENSE) (3250 PSI)
21	T161835	COMPRESSION SPRING	6		X		
22	T76502	FITTING	3		X		
23	.....	O-RING	1		X		
24	.....	BACK-UP RING	1		X		
25	KV12858	O-RING	1		X		
26	R79060	O-RING	1		X		
27	AT196924	SEAL KIT	2		X		
28	AT199671	SEAL KIT	1		X		
30	R26448	O-RING	1		X		
31	AT319092	CHECK VALVE	1		X		(LOAD SENSE PORT) LOAD SENSE HOSE TO MAIN PUMP
32	T77857	O-RING	1		X		

LOADER BOOM LIFT CYLINDER HYDRAULICS (410J)
CIRCUIT HYDRAULIQUE DE VERIN DE RELEVAGE DE FLECHE DU CHARGEUR (410J)
SISTEMA HIDRAULICO DE CILINDRO ELEVADOR DE AGUILON DE CARGADORA (410J)

TX1017845 -UN-

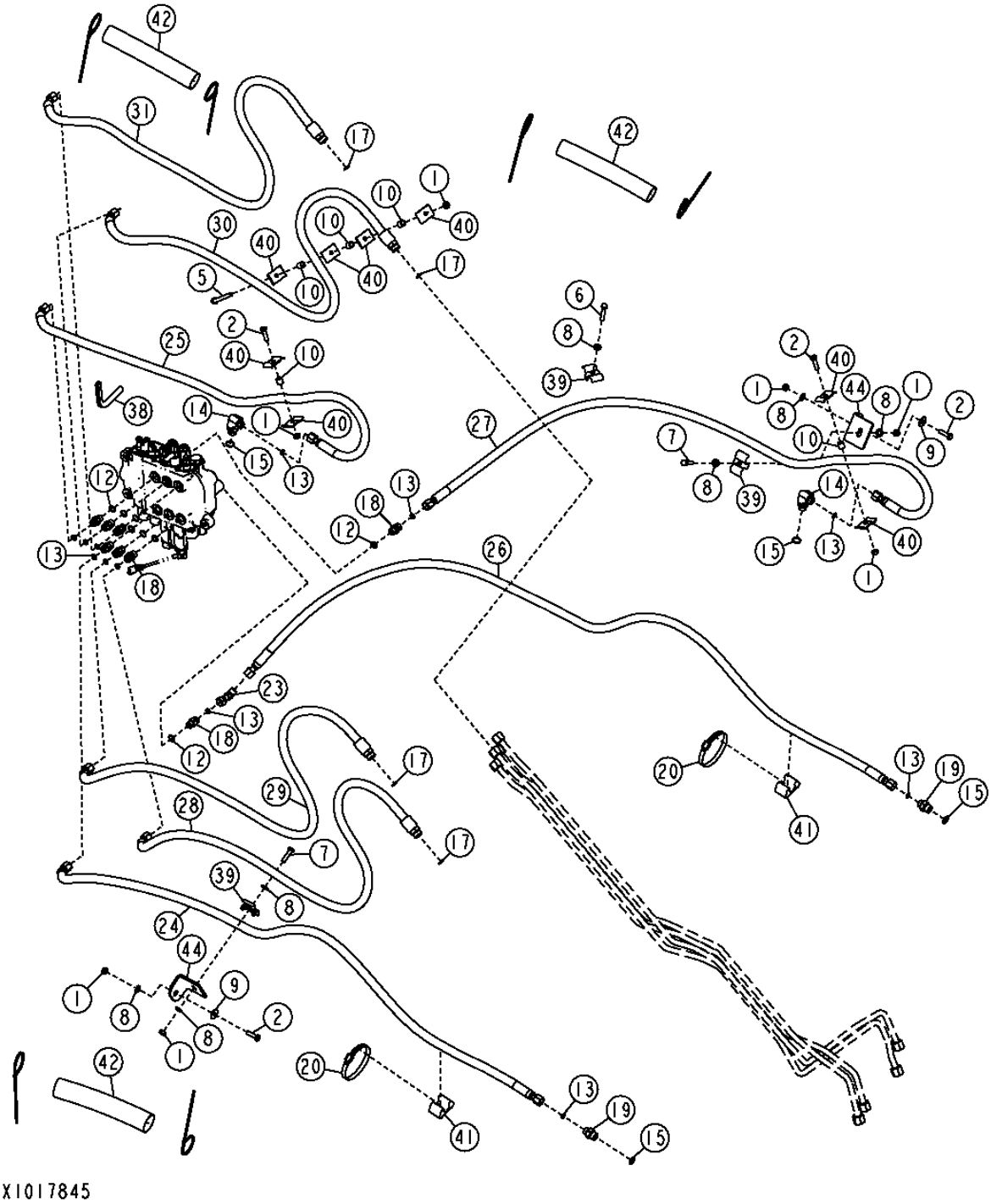

LOADER BOOM LIFT CYLINDER HYDRAULICS (410J)
CIRCUIT HYDRAULIQUE DE VERIN DE RELEVAGE DE FLECHE DU CHARGEUR (410J)
SISTEMA HIDRAULICO DE CILINDRO ELEVADOR DE AGUILON DE CARGADORA (410J)

KEY	PART NO.	PART NAME	QTY.	SERIAL NO.	410J	410TMC	REMARKS
1	14M7274	NUT	7		X		M10
2	19M7550	CAP SCREW	4		X		M10 X 35
5	19M8081	CAP SCREW	1		X		M10 X 80
6	19M8600	CAP SCREW	1		X		M10 X 50
7	19M8637	CAP SCREW	2		X		M10 X 40
8	24M7239	WASHER	15		X		10.700 X 21 X 2.500 MM
9	24M7296	WASHER	2		X		10.500 X 30 X 2.500 MM
10	28H3381	SPACER	5		X		
12	R26375	O-RING	9		X		
13	T77857	O-RING	12		X		
14	38H1012	ELBOW FITTING	2		X		
15	R26906	O-RING	4		X		
17	T77932	O-RING	6		X		
18	38H1161	ADAPTER FITTING	8		X		
19	38H1174	ADAPTER FITTING	2		X		
20	AR21842	CLAMP	2		X		
23	AT190910	ELBOW FITTING	1		X		
24	AT197645	HYDRAULIC HOSE - FABRICATE	1		X		
25	AT197646	HYDRAULIC HOSE - FABRICATE	1		X		
26	AT197647	HYDRAULIC HOSE - FABRICATE	1		X		
27	AT197654	HYDRAULIC HOSE - FABRICATE	1		X		
28	AT198254	HYDRAULIC HOSE - FABRICATE	1		X		
29	AT198257	HYDRAULIC HOSE - FABRICATE	1		X		
30	AT198258	HYDRAULIC HOSE - FABRICATE	1		X		
31	AT198260	HYDRAULIC HOSE - FABRICATE	1		X		
38	.....	GUARD	1		X		(MAKE FROM T61861) (CTL, 7.3" (185 MM))
39	KV22609	CLAMP	1		X		
40	R46919	HALF CLAMP	8		X		
41	T105773	GUIDE	3		X		
42	.....	HOSE GUARD	3		X		(MAKE FROM T78606) (CTL, 10" (254MM))
44	T165864	ANGLE	2		X		

LOADER BOOM LIFT CYLINDER HYDRAULICS (410TMC)
CIRCUIT HYDRAULIQUE DE VERIN DE RELEVAGE DE FLECHE DU CHARGEUR (410TMC)
SISTEMA HIDRAULICO DE CILINDRO ELEVADOR DE AGUILON DE CARGADORA (410TMC)

TX1016203 -UN-29DEC06

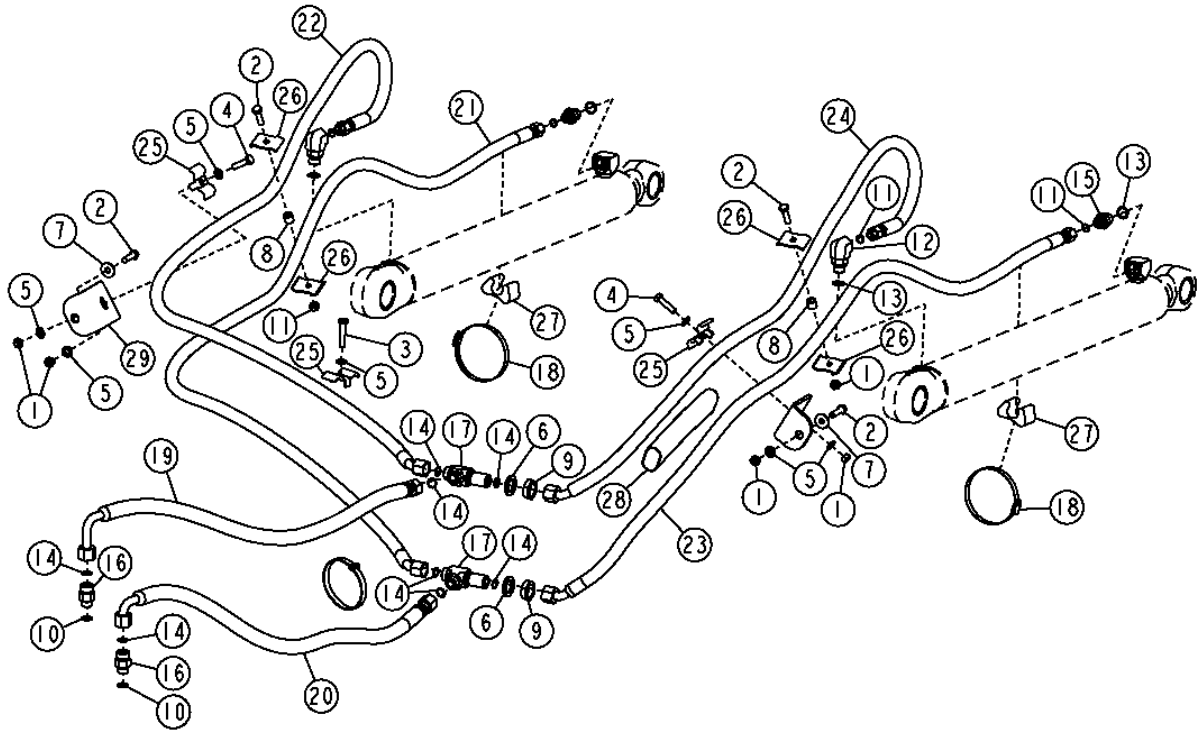

TX1016203

LOADER BOOM LIFT CYLINDER HYDRAULICS (410TMC)
CIRCUIT HYDRAULIQUE DE VERIN DE RELEVAGE DE FLECHE DU CHARGEUR (410TMC)
SISTEMA HIDRAULICO DE CILINDRO ELEVADOR DE AGUILON DE CARGADORA (410TMC)

KEY	PART NO.	PART NAME	QTY.	SERIAL NO.	410J	410TMC	REMARKS
1	14M7274	NUT	4		X	X	M10
2	19M7550	CAP SCREW	4		X	X	M10 X 35
3	19M8600	CAP SCREW	1		X	X	M10 X 50
4	19M8637	CAP SCREW	2		X	X	M10 X 40
5	24M7239	WASHER	10		X	X	10.700 X 21 X 2.500 MM
6	24M7294	WASHER	2		X	X	26 X 39 X 4 MM
7	24M7296	WASHER	3		X	X	10.500 X 30 X 2.500 MM
8	28H3381	SPACER	2		X	X	
9	38H5093	NUT	2		X	X	
10	R26375	O-RING	2		X	X	
11	T77857	O-RING	2		X	X	
12	38H1012	ELBOW FITTING	2		X	X	
13	R26906	O-RING	2		X	X	
14	T77932	O-RING	10		X	X	
15	38H1174	ADAPTER FITTING	2		X	X	
16	38H1317	FITTING	1		X	X	
17	38H1599	TEE FITTING	2		X	X	
18	AR21842	CLAMP	2		X	X	
	AR85327	CLAMP	2		X	X	USE WITH TOOL CARRIER
19	AT311773	HYDRAULIC HOSE - FABRICATE	1		X	X	
20	AT311774	HYDRAULIC HOSE - FABRICATE	1		X	X	
21	AT312360	HYDRAULIC HOSE - FABRICATE	1		X	X	
	AT321162	HYDRAULIC HOSE - FABRICATE	1		X	X	USE WITH TOOL CARRIER
22	AT312361	HYDRAULIC HOSE - FABRICATE	1		X	X	
	AT321163	HYDRAULIC HOSE - FABRICATE	1		X	X	USE WITH TOOL CARRIER
23	AT330767	HYDRAULIC HOSE - FABRICATE	1		X	X	
	AT321150	HYDRAULIC HOSE - FABRICATE	1		X	X	USE WITH TOOL CARRIER
24	AT330768	HYDRAULIC HOSE - FABRICATE	1		X	X	
	AT321151	HYDRAULIC HOSE - FABRICATE	1		X	X	USE WITH TOOL CARRIER
25	KV22609	CLAMP	3		X	X	
26	R46919	HALF CLAMP	4		X	X	
27	T105773	GUIDE	2		X	X	
28	.....	HOSE GUARD	3		X	X	(MAKE FROM T78606) (CTL, 10" (254MM))
29	T165864	ANGLE	2		X	X	

LOADER BUCKET CYLINDER AND THIRD FUNCTION HYDRAULICS
VERIN DE BENNE DE CHARGEUR ET CIRCUIT HYDRAULIQUE DE TROISIEME FONCTION
SISTEMA HIDRAULICO DE CILINDRO DE CUCHARON DE CARGADORA Y TERCERA FUNCION

TX1016350 -UN-27DEC06

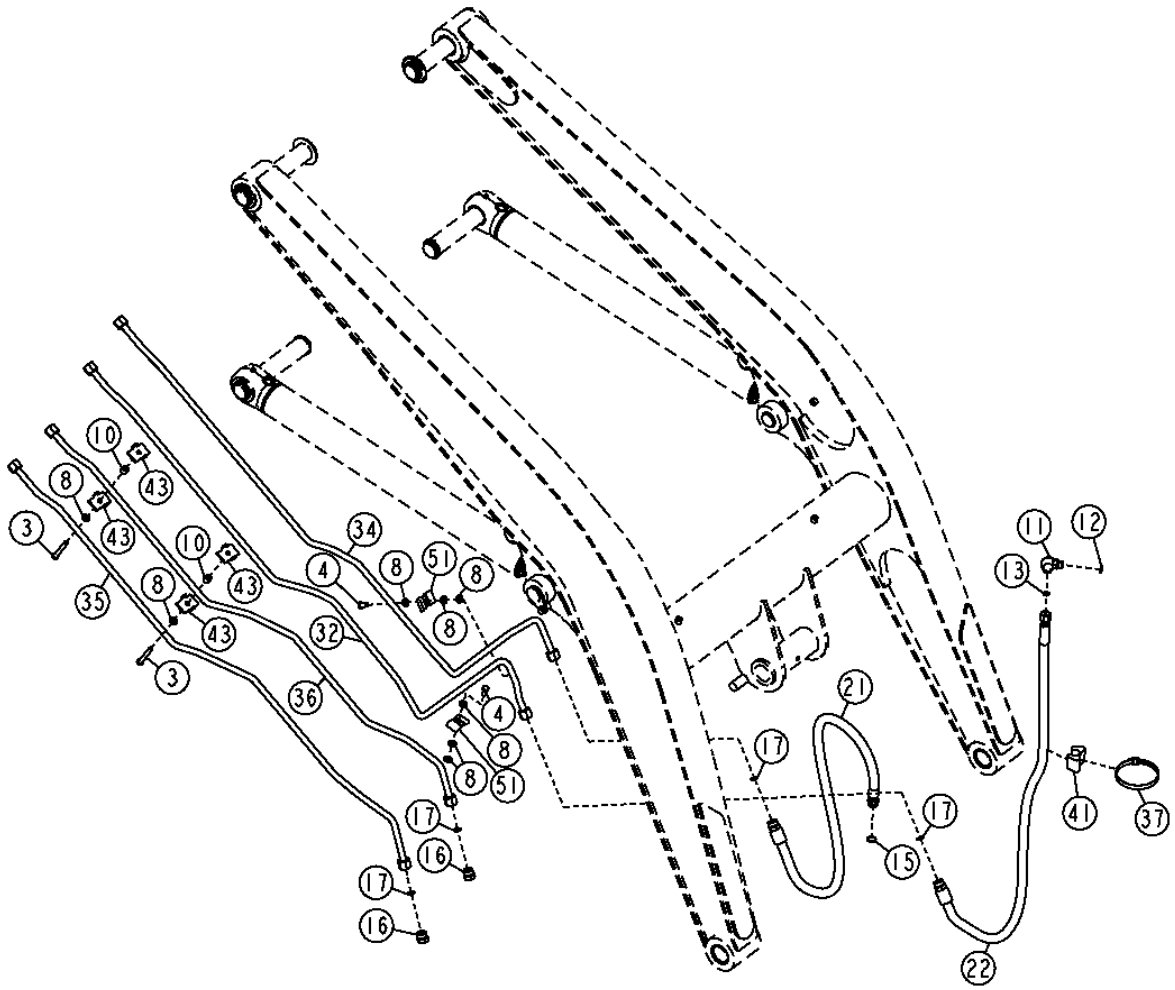

THIS PARTS LISTING IS CONTINUED

LOADER BUCKET CYLINDER AND THIRD FUNCTION HYDRAULICS
VERIN DE BENNE DE CHARGEUR ET CIRCUIT HYDRAULIQUE DE TROISIEME FONCTION
SISTEMA HIDRAULICO DE CILINDRO DE CUCHARON DE CARGADORA Y TERCERA FUNCION

KEY	PART NO.	PART NAME	QTY.	SERIAL NO.	410J	410TMC	REMARKS
3	19M7875	CAP SCREW	2		X	X	M10 X 70
4	19M7938	CAP SCREW	2		X	X	M10 X 20
8	24M7239	WASHER	8		X	X	10.700 X 21 X 2.500 MM
10	28H3381	SPACER	7		X	X	
11	38H1005	ELBOW FITTING	1		X	X	
12	R26375	O-RING	1		X	X	
13	T77857	O-RING	1		X	X	
15	R26906	O-RING	1		X	X	
16	38H1148	FITTING PLUG	2		X	X	
17	T77932	O-RING	4		X	X	
21	AT173129	HYDRAULIC HOSE - FABRICATE	1		X	X	
22	AT188560	HYDRAULIC HOSE - FABRICATE	1		X	X	
32	AT321152	OIL LINE	1		X	X	
34	AT321154	OIL LINE	1		X	X	
35	AT321155	OIL LINE	1		X	X	
36	AT321156	OIL LINE	1		X	X	
37	AU12450	HOSE CLAMP	1		X	X	
41	T105773	GUIDE	3		X	X	
43	T159954	CLAMP	4		X	X	
51	T217085	CLAMP	2		X	X	

LOADER BUCKET CYLINDER AND THIRD FUNCTION HYDRAULICS (410TMC)
VERIN DE BENNE DE CHARGEUR ET CIRCUIT HYDRAULIQUE DE TROISIEME FONCTION (410TMC)
SISTEMA HIDRAULICO DE CILINDRO DE CUCHARON DE CARGADORA Y TERCERA FUNCION (410TMC)

TX1016210 -UN-29DEC06

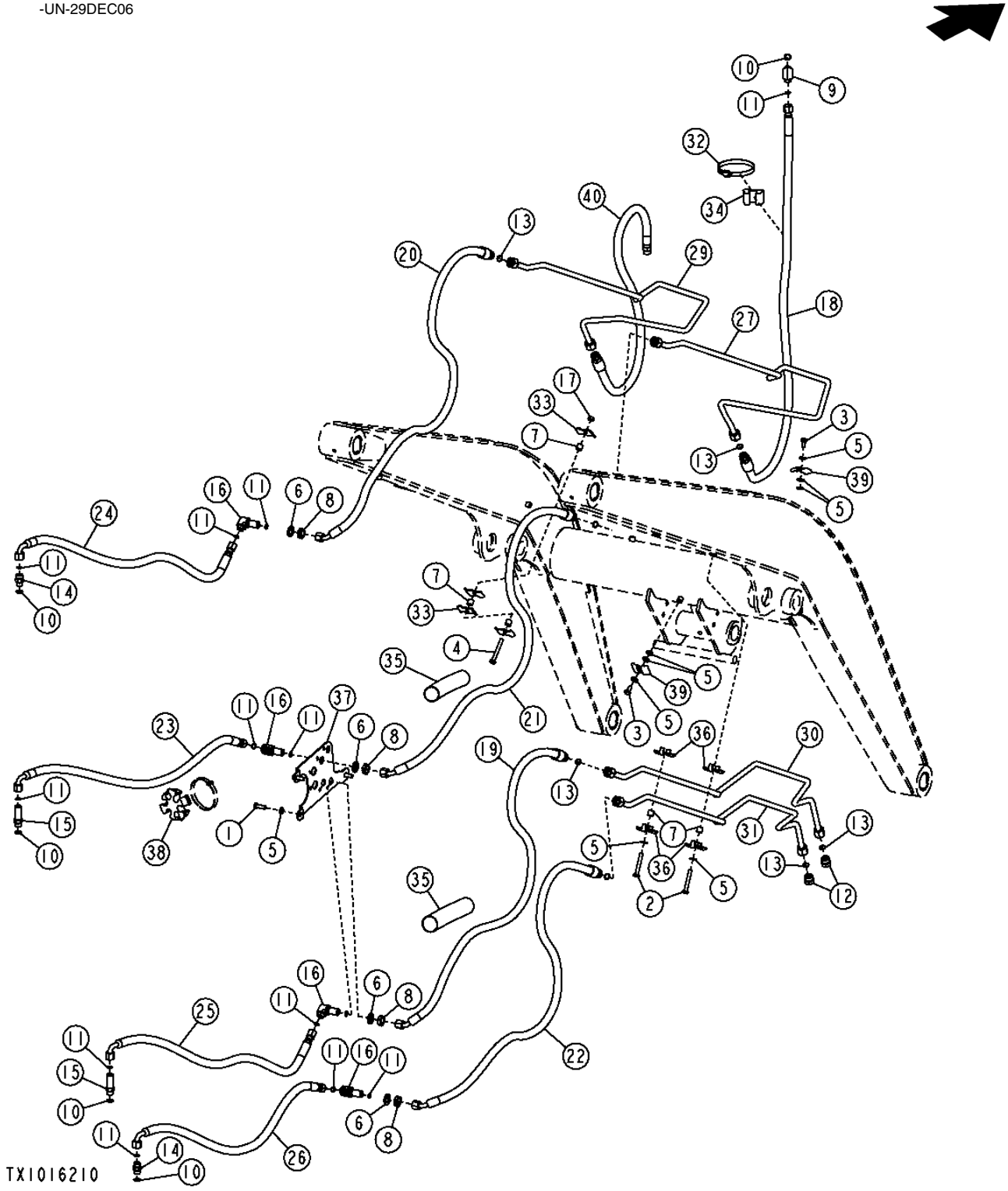

THIS PARTS LISTING IS CONTINUED

LOADER BUCKET CYLINDER AND THIRD FUNCTION HYDRAULICS (410TMC)
VERIN DE BENNE DE CHARGEUR ET CIRCUIT HYDRAULIQUE DE TROISIEME FONCTION (410TMC)
SISTEMA HIDRAULICO DE CILINDRO DE CUCHARON DE CARGADORA Y TERCERA FUNCION (410TMC)

KEY	PART NO.	PART NAME	QTY.	SERIAL NO.	410J	410TMC	REMARKS
1	19M7662	CAP SCREW	1		X		M10 X 30
2	19M7658	CAP SCREW	2		X		M10 X 50
	19M7875	CAP SCREW	2		X		M10 X 70
3	19M7938	CAP SCREW	2		X		M10 X 20
4	19M8081	CAP SCREW	1		X		M10 X 80
5	24M7239	WASHER	9		X		10.700 X 21 X 2.500 MM
6	24M7396	WASHER	4		X		21 X 34 X 3 MM
7	28H3381	SPACER	5		X		
8	38H5092	NUT	4		X		
9	38H1005	ELBOW FITTING	1		X		
	38H1012	ELBOW FITTING	1		X		USE WITH TOOL CARRIER
10	R26375	O-RING	5		X		
11	T77857	O-RING	11		X		
12	38H1148	FITTING PLUG	1		X		
13	T77932	O-RING	5		X		
14	38H1161	ADAPTER FITTING	2		X		
15	38H1213	ADAPTER FITTING	4		X		
16	38H1323	ELBOW FITTING	4		X		
17	14M7274	NUT	1		X		M10
18	AT188560	HYDRAULIC HOSE - FABRICATE	1		X		
	AT321153	HYDRAULIC HOSE - FABRICATE	1		X		USE WITH TOOL CARRIER
19	AT198254	HYDRAULIC HOSE - FABRICATE	1		X		
	AT321157	HYDRAULIC HOSE - FABRICATE	1		X		USE WITH TOOL CARRIER
20	AT198257	HYDRAULIC HOSE - FABRICATE	1		X		
	AT321158	HYDRAULIC HOSE - FABRICATE	1		X		USE WITH TOOL CARRIER
21	AT198258	HYDRAULIC HOSE - FABRICATE	1		X		
	AT321159	HYDRAULIC HOSE - FABRICATE	1		X		USE WITH TOOL CARRIER
22	AT198260	HYDRAULIC HOSE - FABRICATE	1		X		
	AT321160	HYDRAULIC HOSE - FABRICATE	1		X		USE WITH TOOL CARRIER
23	AT311775	HYDRAULIC HOSE - FABRICATE	1		X		
24	AT311776	HYDRAULIC HOSE - FABRICATE	1		X		
25	AT311777	HYDRAULIC HOSE - FABRICATE	1		X		
26	AT311778	HYDRAULIC HOSE - FABRICATE	1		X		
27	AT321152	OIL LINE	1		X		
29	AT321154	OIL LINE	1		X		
30	AT321155	OIL LINE	1		X		
31	AT321156	OIL LINE	1		X		
32	AR85327	CLAMP	1		X		
33	R46919	HALF CLAMP	1		X		
34	T105773	GUIDE	1		X		
35	.....	HOSE GUARD	3		X		(MAKE FROM T78606) (CTL, 10" (254MM))
36	T159954	CLAMP	4		X		
37	T209685	BRACKET	1		X		
38	T215395	HOSE CLAMP	1		X		
39	T217085	CLAMP	2		X		
40	AT173129	HYDRAULIC HOSE - FABRICATE	1		X		

HYDRAULIC FRONT COUPLER (410J)
ACCOUPLEMENT AVANT HYDRAULIQUE (410J)
ACOPLADOR HIDRAULICO DELANTERO (410J)

TX1016725 -UN-28DEC06

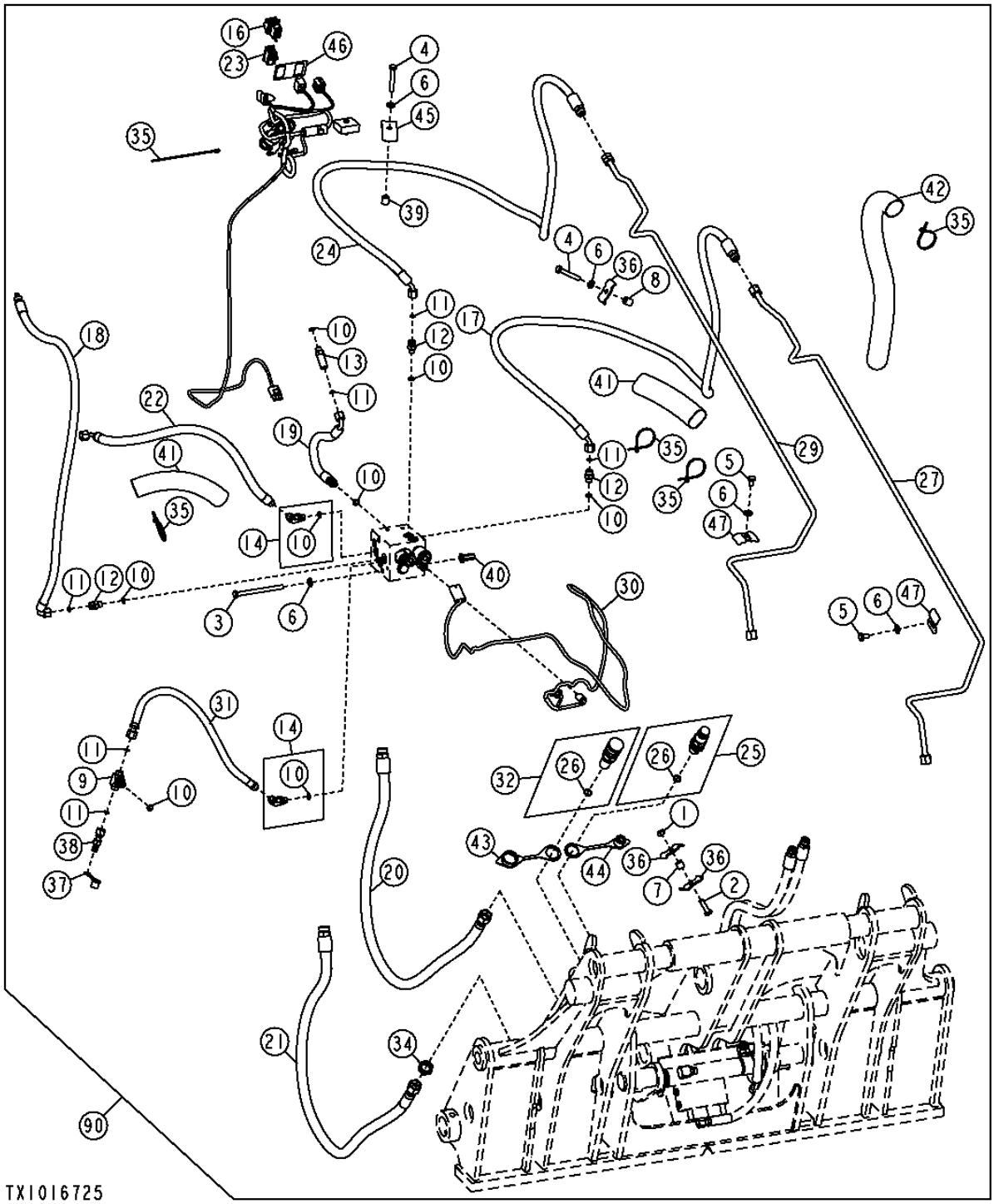

THIS PARTS LISTING IS CONTINUED

HYDRAULIC FRONT COUPLER (410J)
ACCOUPLEMENT AVANT HYDRAULIQUE (410J)
ACOPLADOR HIDRAULICO DELANTERO (410J)

KEY	PART NO.	PART NAME	QTY.	SERIAL NO.	410J	410TMC	REMARKS
1	14M7274	NUT	1		X		M10
2	19M7550	CAP SCREW	1		X		M10 X 35
3	19M7638	CAP SCREW	2		X		M10 X 130
4	19M7742	CAP SCREW	2		X		M10 X 65
5	19M8324	CAP SCREW	3		X		M10 X 16
6	24M7239	WASHER	5		X		10.700 X 21 X 2.500 MM
7	28H3381	SPACER	1		X		
8	28H3383	BUSHING	1		X		
9	38H1016	TEE FITTING	1		X		
10	R26448	O-RING	10		X		
11	T77613	O-RING	6		X		
12	38H1160	ADAPTER FITTING	1		X		
13	38H1212	ADAPTER FITTING	1		X		
14	62H1053	ADAPTER FITTING	2		X		
16	AT225952	SWITCH	1		X		
17	AT308506	HYDRAULIC HOSE - FABRICATE	1		X		
18	AT309742	HYDRAULIC HOSE - FABRICATE	1		X		
19	AT309743	HYDRAULIC HOSE - FABRICATE	1		X		
20	AT309934	HYDRAULIC HOSE - FABRICATE	1		X		
21	AT309986	HYDRAULIC HOSE - FABRICATE	1		X		
22	AT310457	HYDRAULIC HOSE - FABRICATE	1		X		
23	AT311598	INDICATOR LAMP	1		X		
24	AT311651	HYDRAULIC HOSE - FABRICATE	1		X		
25	AT312681	HYD. QUICK-CONNECT COUPLER	1		X		
26	T77932	O-RING	2		X		
27	AT321189	OIL LINE	1		X		
29	AT321190	OIL LINE	1		X		
30	AT329136	WIRING HARNESS	1		X		
31	AT339270	HYDRAULIC HOSE - FABRICATE	1		X		
32	KV11305	HYD. QUICK-CONNECT COUPLER	1		X		
34	T80306	NUT	1		X		
35	R44302	TIE BAND	6		X		
36	R46919	HALF CLAMP	3		X		
37	R77175	COVER	1		X		
38	RE60701	DIAGNOSTIC COUPLING	1		X		
39	28H1522	SPACER	1		X		
40	T148409	NUT	2		X		
41	.....	HOSE GUARD	2		X		(MAKE FROM T78606) (CTL, 10" (254 MM))
42	T185089	SLEEVE	1		X		
43	T188879	BOOT	1		X		
44	T188880	BOOT	1		X		
45	T190979	HALF CLAMP	1		X		
46	T209212	LABEL	1		X		
47	T217085	CLAMP	3		X		
90	**AT329076**	**FIELD INSTALLATION KIT**	**1**		**X**		**WHOLEGOODS, (LOADER COUPLER)**

HYDRAULIC FRONT COUPLER VALVE (410J)
SOUPAPE D'ACCOUPLEMENT AVANT HYDRAULIQUE (410J)
VALVULA DE ACOPLADOR HIDRAULICO DELANTERO (410J)

T209329 -UN-10MAR05

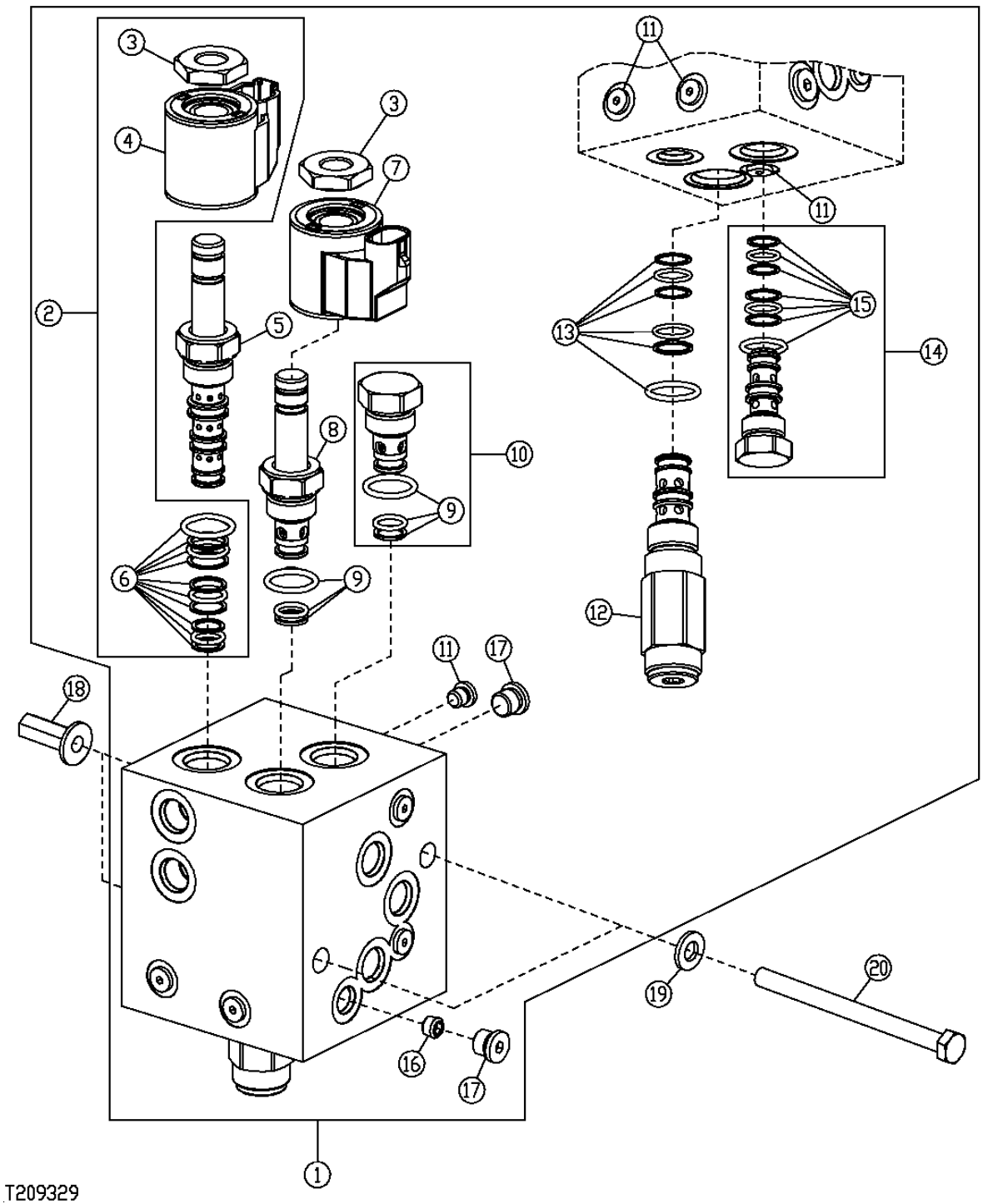

HYDRAULIC FRONT COUPLER VALVE (410J)
SOUPAPE D'ACCOUPLEMENT AVANT HYDRAULIQUE (410J)
VALVULA DE ACOPLADOR HIDRAULICO DELANTERO (410J)

KEY	PART NO.	PART NAME	QTY.	SERIAL NO.	410J	410TMC	REMARKS
1	AT312547	SOLENOID VALVE	1		X		
2	.....	SOLENOID VALVE	1		X		NA
3	T225291	NUT	1		X		
4	AT333812	SOLENOID VALVE COIL	1		X		
5	AT195922	HYD ACTUATED CONTROL VALVE	1		X		
6	AT301766	SEAL KIT	1		X		
7	AT333807	SOLENOID VALVE COIL	1		X		
8	AT307315	SOLENOID VALVE	1		X		
9	AT224862	SEAL KIT	2		X		
10	AT224570	CHECK VALVE	1		X		
11	.....	PLUG	4		X		
12	AT310817	HYDRAULIC PRESSURE VALVE	1		X		
13	AT196943	SEAL KIT	1		X		
14	AT195140	CHECK VALVE	1		X		
15	AT195141	SEAL KIT	1		X		
16	.....	ORIFICE	1		X		NA
17	.....	PLUG	2		X		NA
18	T148409	NUT	2		X		M10, (FOR 6MM PLATE)
19	24M7239	WASHER	2		X		
20	19M7638	CAP SCREW	2		X		M10 X 130

BOOM LIFT CYLINDER AND REPAIR KITS
VERIN DE RELEVAGE DE FLECHE ET KITS DE REPARATION
CILINDRO ELEVADOR DE AGUILON Y JUEGOS DE REPARACION

TX1017491 -UN-

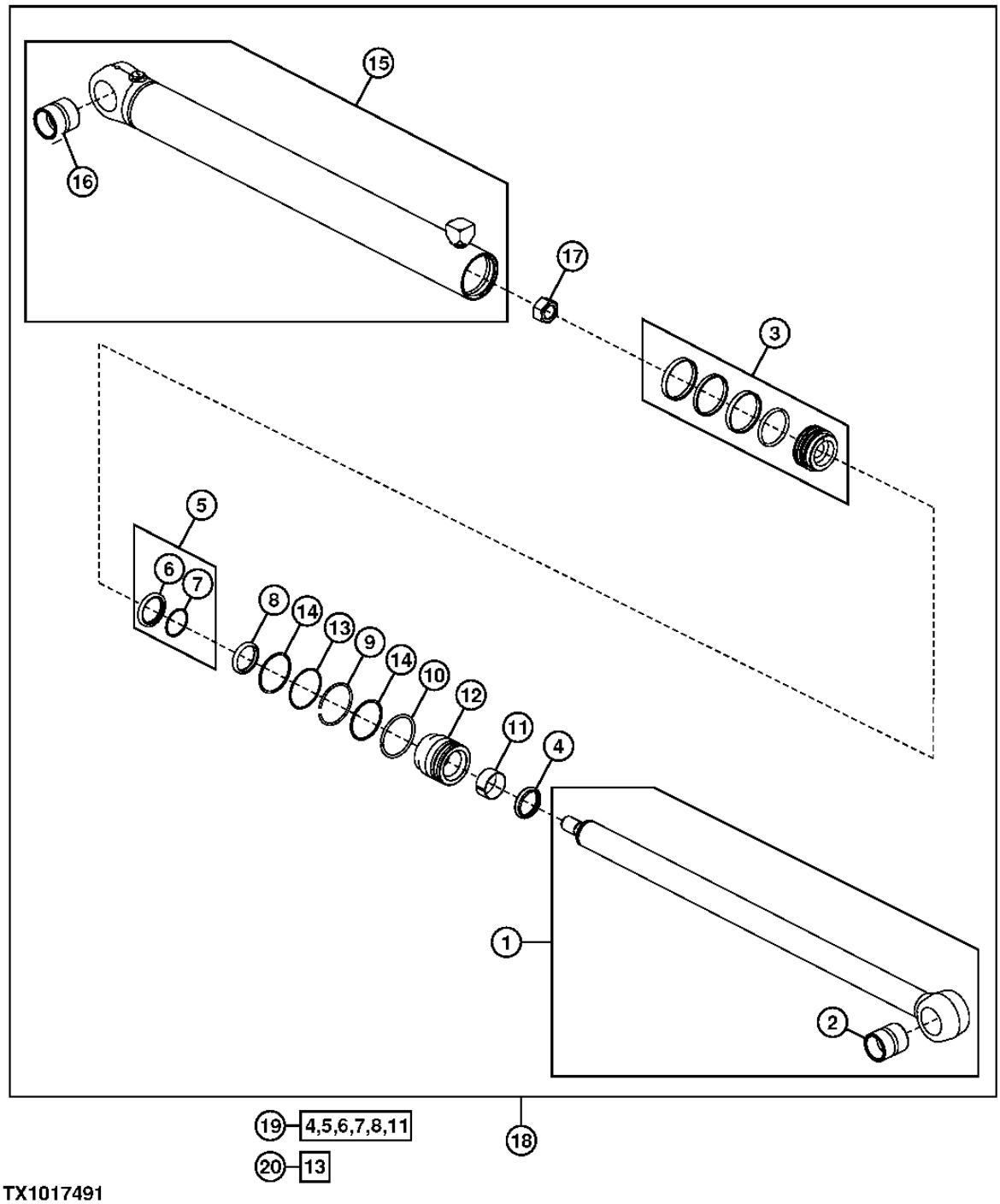

TX1017491

BOOM LIFT CYLINDER AND REPAIR KITS
VERIN DE RELEVAGE DE FLECHE ET KITS DE REPARATION
CILINDRO ELEVADOR DE AGUILON Y JUEGOS DE REPARACION

KEY	PART NO.	PART NAME	QTY.	SERIAL NO.	410J	410TMC	REMARKS
1	AH146875	HYDRAULIC CYLINDER ROD	1		X	X	
2	H151542	BUSHING	1		X	X	
3	AH165826	PISTON	1		X	X	
4	AH146557	SEAL	1		X	X	
5	AH146561	SEAL	1		X	X	
6	.....	SEAL	1		X	X	
7	.....	BACK-UP RING	1		X	X	
8	H152203	SEAL	1		X	X	
9	H170216	SNAP RING	1		X	X	
10	H180787	SNAP RING	1		X	X	
11	H208987	WEAR RING	1		X	X	
12	H209221	HYDR. CYLINDER ROD GUIDE	1		X	X	
13	R81864	BACK-UP RING	1		X	X	
14	T12582	O-RING	2		X	X	
15	AH211204	HYDRAULIC CYLINDER BARREL	1		X	X	
16	H159941	BUSHING	1		X	X	
17	H170538	NUT	1		X	X	
18	AH211206	HYDRAULIC CYLINDER	2		X	X	
19	AH210484	HYDRAULIC CYLINDER KIT	1		X	X	ROD
20	AH212092	HYDRAULIC CYLINDER KIT	1		X	X	BORE

BOOM LIFT CYLINDER AND REPAIR KITS (TOOL CARRIER)
VERIN DE RELEVAGE DE FLECHE ET KITS DE REPARATION (PORTE-OUTILS)
CILINDRO ELEVADOR DE AGUILON Y JUEGOS DE REPARACION (PORTAHERRAMIENTAS)

TX1015309 -UN-28DEC06

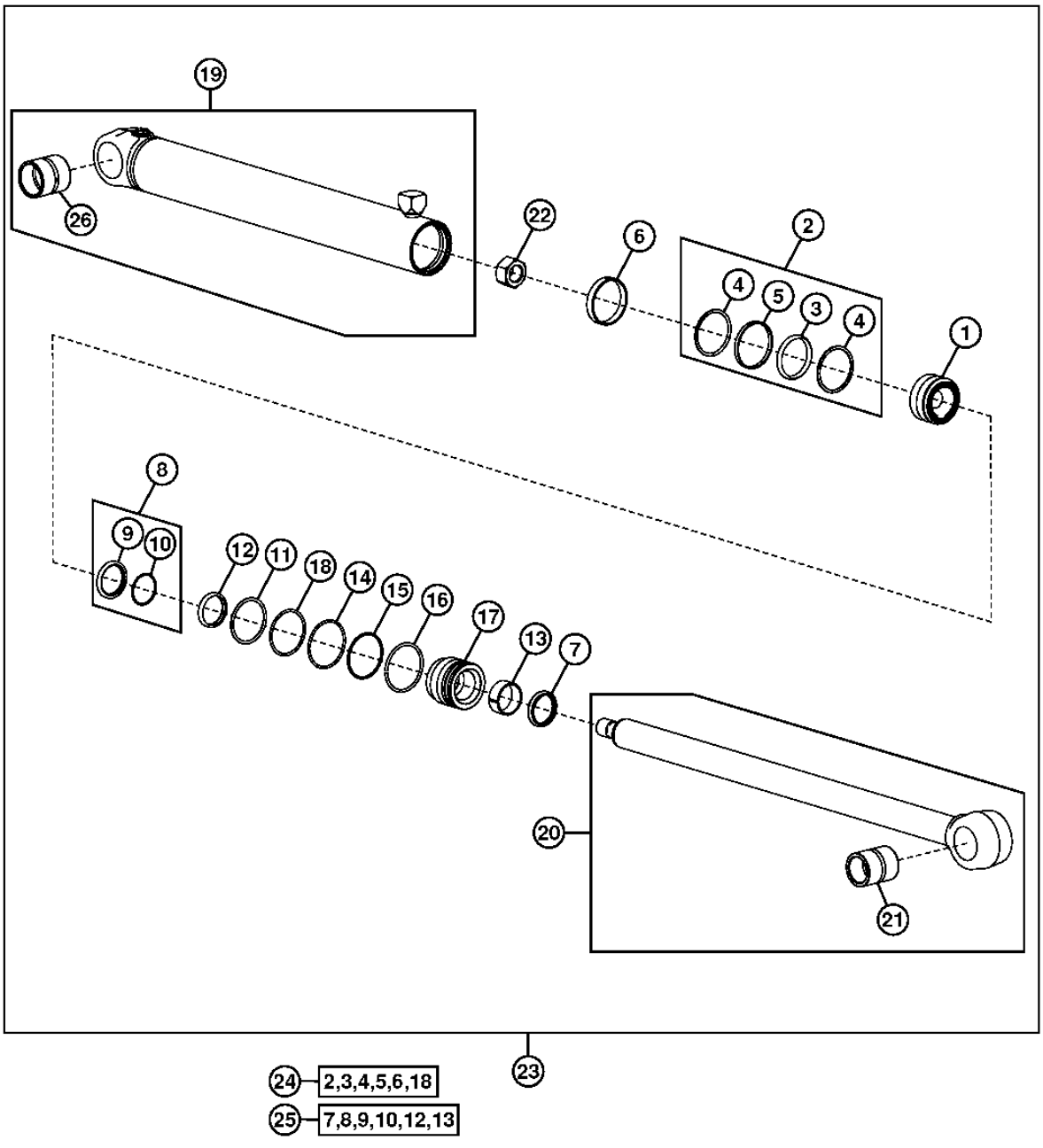

TX1015309

BOOM LIFT CYLINDER AND REPAIR KITS (TOOL CARRIER)
VERIN DE RELEVAGE DE FLECHE ET KITS DE REPARATION (PORTE-OUTILS)
CILINDRO ELEVADOR DE AGUILON Y JUEGOS DE REPARACION (PORTAHERRAMIENTAS)

KEY	PART NO.	PART NAME	QTY.	SERIAL NO.	410J	410TMC	REMARKS
1	H150976	PISTON	1			X	
2	RE20344	SEAL	1			X	
3	.....	SEAL	1			X	
4	.....	BACK-UP RING	2			X	
5	.....	SEAL	1			X	
6	R81776	WEAR RING	1			X	
7	AH146558	SEAL	1			X	
8	AH146562	SEAL	1			X	
9	.....	SEAL	1			X	
10	.....	BACK-UP RING	1			X	
11	F1430R	O-RING	1			X	
12	H152204	SEAL	1			X	
13	H152795	WEAR RING	1			X	
14	H180103	SNAP RING	1			X	
15	H181114	O-RING	1			X	
16	H206859	SNAP RING	1			X	
17	H209264	HYDR. CYLINDER ROD GUIDE	1			X	
18	R79101	BACK-UP RING	1			X	
19	AH216776	HYDRAULIC CYLINDER BARREL	1			X	
20	AH221248	HYDRAULIC CYLINDER ROD	1			X	
21	H151594	BUSHING	1			X	
22	H180093	NUT	1			X	
23	AH216775	HYDRAULIC CYLINDER	1			X	
24	AH149814	HYDRAULIC CYLINDER KIT	1			X	BORE
25	AH212096	HYDRAULIC CYLINDER KIT	1			X	ROD
26	.....	BUSHING	1			X	

LOADER BUCKET CYLINDER AND REPAIR KITS
VERIN DE BENNE DE CHARGEUR ET KIT DE REPARATION
CILINDRO DE CUCHARON DE CARGADORA Y JUEGO DE REPARACION

TX1015324 -UN-28DEC06

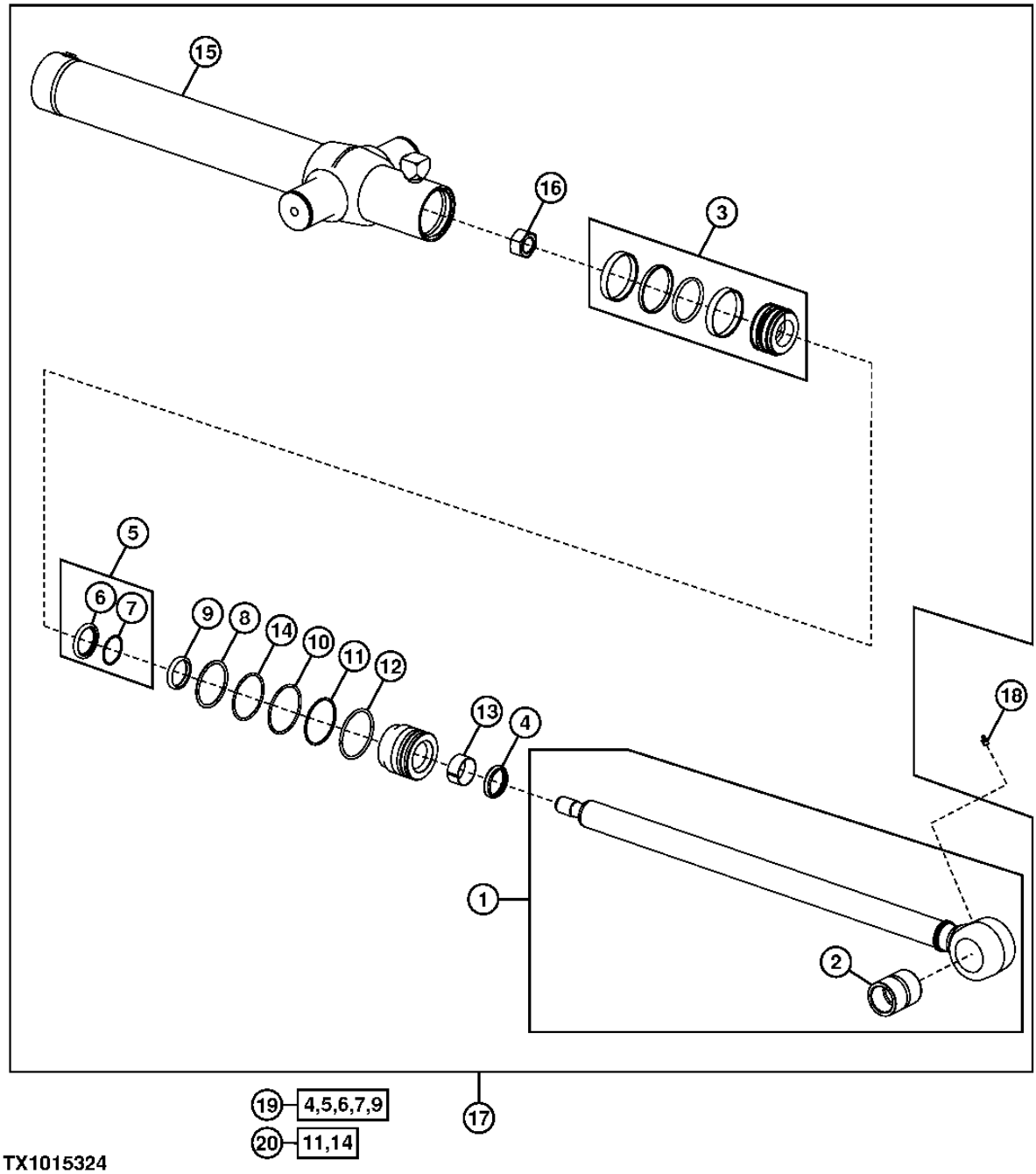

TX1015324

LOADER BUCKET CYLINDER AND REPAIR KIT
VERIN DE BENNE DE CHARGEUR ET KIT DE REPARATION
CILINDRO DE CUCHARON DE CARGADORA Y JUEGO DE REPARACION

KEY	PART NO.	PART NAME	QTY.	SERIAL NO.	410J	410TMC	REMARKS
1	AH162040	END	1		X	X	
2	H151594	BUSHING	1		X	X	
3	AH205060	PISTON	1		X	X	
4	AH146557	SEAL	1		X	X	
5	AH146561	SEAL	1		X	X	
6	.....	SEAL	1		X	X	
7	.....	BACK-UP RING	1		X	X	
8	F1430R	O-RING	1		X	X	
9	H152203	SEAL	1		X	X	
10	H180103	SNAP RING	1		X	X	
11	H181114	O-RING	1		X	X	
12	H206859	SNAP RING	1		X	X	
13	H208987	WEAR RING	1		X	X	
14	R79101	BACK-UP RING	1		X	X	
15	AH220551	HYDRAULIC CYLINDER BARREL	1		X	X	
16	H170539	NUT	1		X	X	
17	AH219634	HYDRAULIC CYLINDER	1		X	X	
18	T162396	LUBRICATION FITTING	1		X	X	
19	AH210484	HYDRAULIC CYLINDER KIT	1		X	X	ROD
20	AH212097	HYDRAULIC CYLINDER KIT	1		X	X	BORE

LOADER BUCKET CYLINDER AND REPAIR KITS (TOOL CARRIER)
VERIN DE BENNE DE CHARGEUR ET KIT DE REPARATION (PORTE-OUTILS)
CILINDRO DE CUCHARON DE CARGADORA Y JUEGO DE REPARACION (PORTAHERRAMIENTAS)

TX1015325 -UN-21DEC06

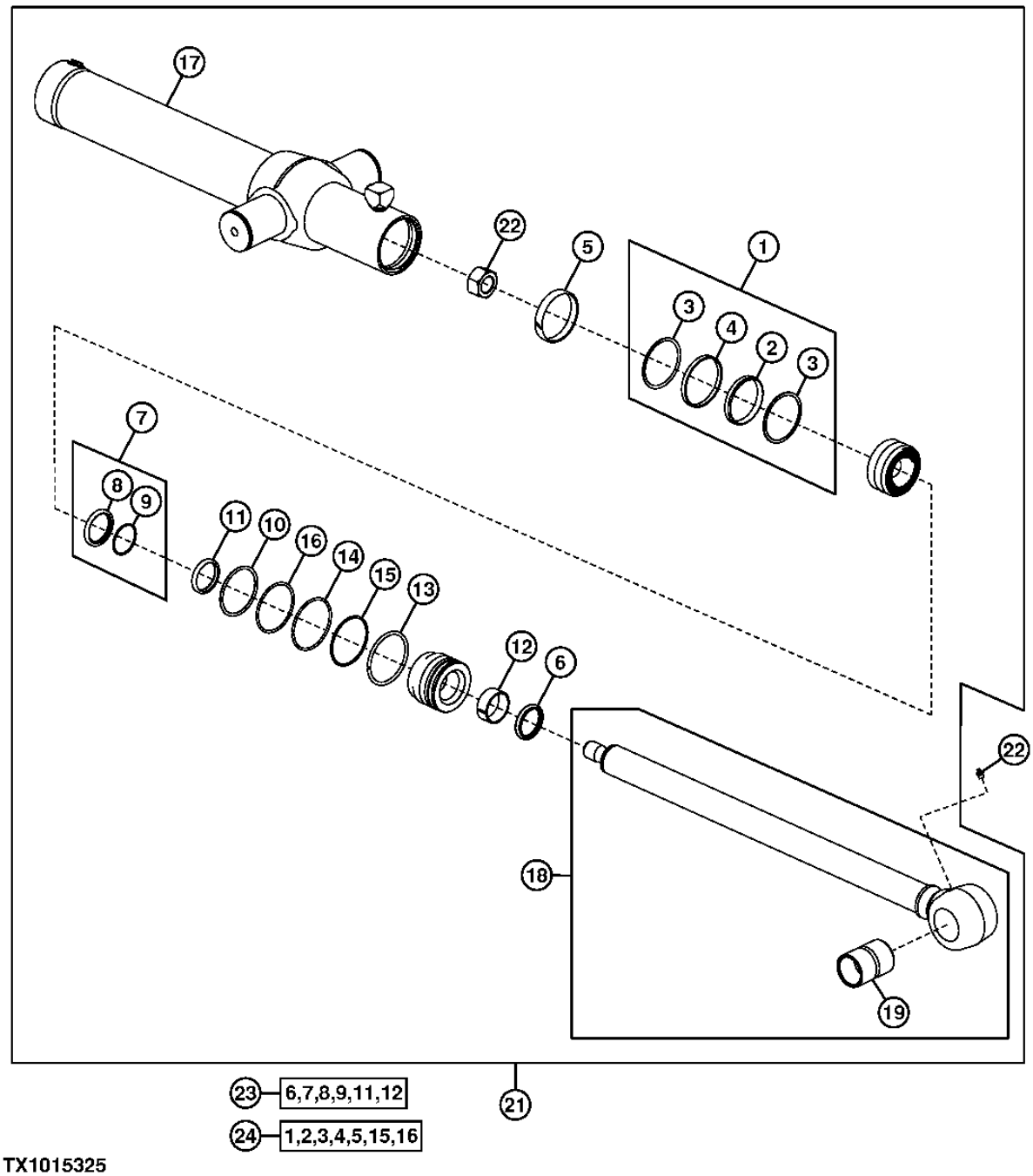

TX1015325

LOADER BUCKET CYLINDER AND REPAIR KIT (TOOL CARRIER)
VERIN DE BENNE DE CHARGEUR ET KIT DE REPARATION (PORTE-OUTILS)
CILINDRO DE CUCHARON DE CARGADORA Y JUEGO DE REPARACION (PORTAHERRAMIENTAS)

KEY	PART NO.	PART NAME	QTY.	SERIAL NO.	410J	410TMC	REMARKS
1	RE20343	SEAL	1			X	
2	.....	SEAL	1			X	
3	.....	BACK-UP RING	2			X	
4	.....	SEAL	1			X	
5	R81775	WEAR RING	1			X	
6	AH146558	SEAL	1			X	
7	AH146562	SEAL	1			X	
8	.....	SEAL	1			X	
9	.....	BACK-UP RING	1			X	
10	AH146562	SEAL	1			X	
11	H152204	SEAL	1			X	
12	H152795	WEAR RING	1			X	
13	H180080	SNAP RING	1			X	
14	H180094	SNAP RING	1			X	
15	.....	O-RING	1			X	
16	R81862	BACK-UP RING	1			X	
17	AH216697	HYDRAULIC CYLINDER BARREL	1			X	
18	H216699	HYDRAULIC CYLINDER ROD	1			X	
19	H158947	BUSHING	1			X	
20	H180093	NUT	1			X	
21	AH216698	HYDRAULIC CYLINDER KIT	1			X	
22	T162396	LUBRICATION FITTING	1			X	
23	AH149814	HYDRAULIC CYLINDER KIT	1			X	
24	AH212585	HYDRAULIC CYLINDER KIT	1			X	

BOOM LIFT CYLINDER HADWARE (TOOL CARRIER)
VERIN DE RELEVAGE DE FLECHE ET KITS DE REPARATION (PORTE-OUTILS)
CILINDRO ELEVADOR DE AGUILON Y JUEGOS DE REPARACION (PORTAHERRAMIENTAS)

TX1017001 -UN-22DEC06

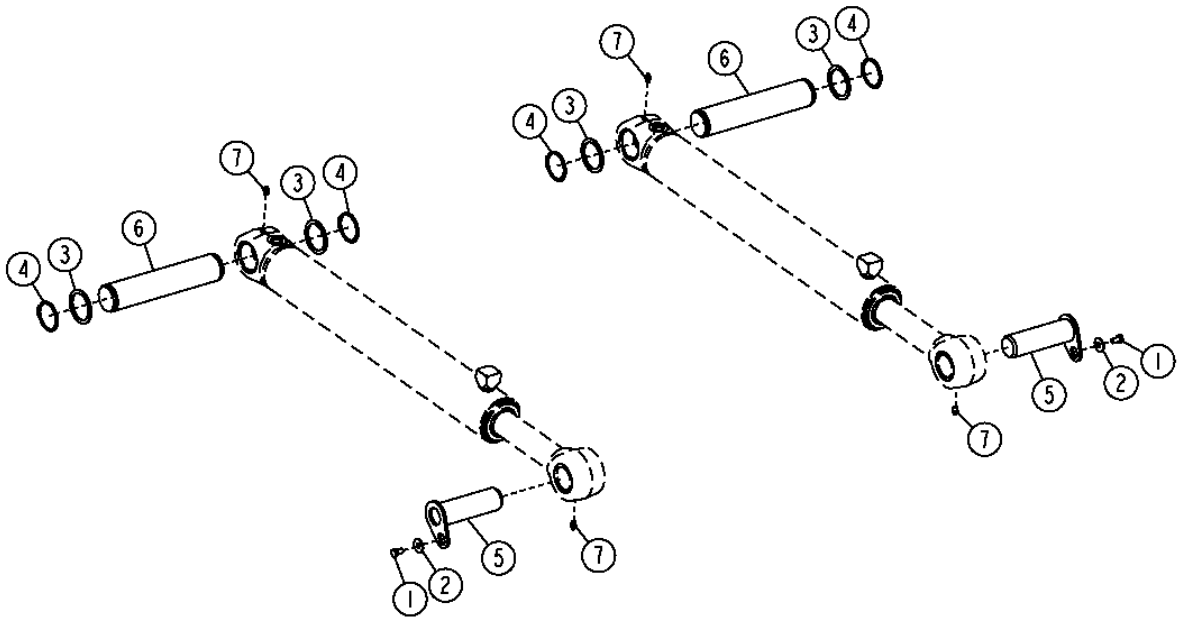

TX1017001

BOOM LIFT CYLINDER HADWARE (TOOL CARRIER)
VERIN DE RELEVAGE DE FLECHE ET KITS DE REPARATION (PORTE-OUTILS)
CILINDRO ELEVADOR DE AGUILON Y JUEGOS DE REPARACION (PORTAHERRAMIENTAS)

KEY	PART NO.	PART NAME	QTY.	SERIAL NO.	410J	410TMC	REMARKS
1	19M8324	CAP SCREW	2			X	
2	24M7296	WASHER	2			X	
3	24M7443	WASHER	4			X	
4	40M7048	SNAP RING	4			X	
5	AT321164	PIN FASTENER	2			X	
6	T210989	PIN FASTENER	2			X	
7	T162396	LUBRICATION FITTING	4			X	
26	T162396	LUBRICATION FITTING	4			X	
27	19M8324	CAP SCREW	2			X	
28	24M7296	WASHER	2			X	
29	24M7443	WASHER	4			X	
30	40M7048	SNAP RING	4			X	
31	AT321164	PIN FASTENER	2			X	
32	T210989	PIN FASTENER	2			X	

BOOM LIFT CYLINDER HARDWARE
VERIN DE RELEVAGE DE FLECHE ET KITS DE REPARATION
CILINDRO ELEVADOR DE AGUILON Y JUEGOS DE REPARACION

TX1017055 -UN-22DEC06

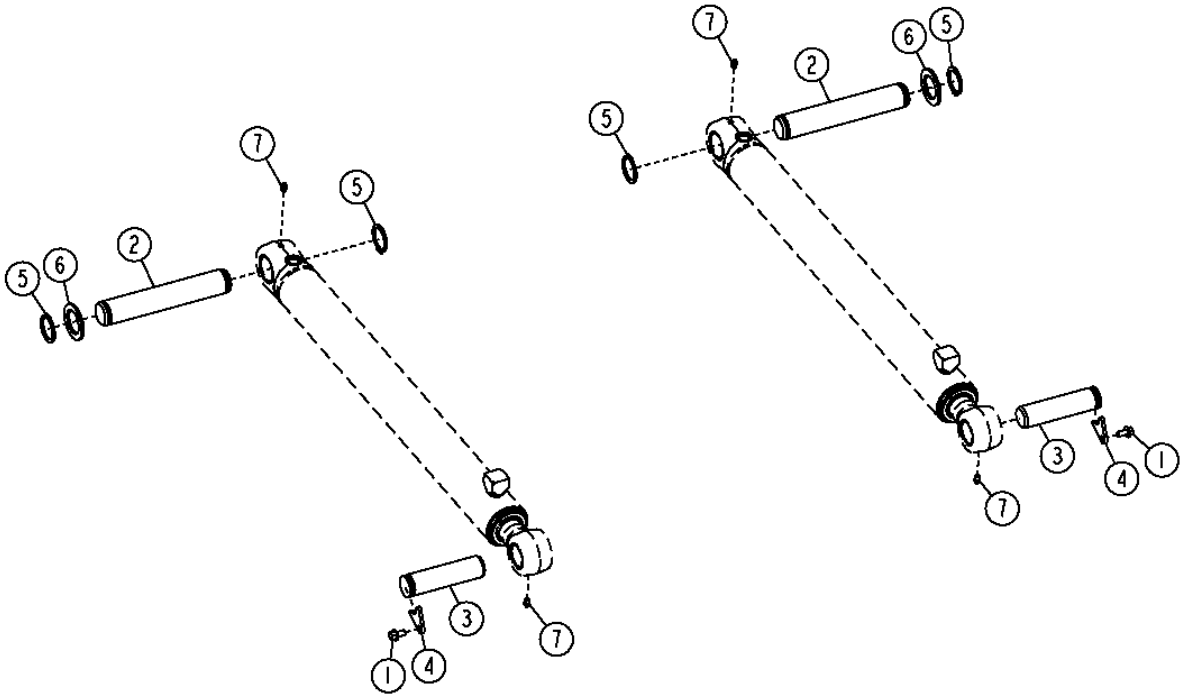

TX1017055

BOOM LIFT CYLINDER HARDWARE
VERIN DE RELEVAGE DE FLECHE ET KITS DE REPARATION
CILINDRO ELEVADOR DE AGUILON Y JUEGOS DE REPARACION

KEY	PART NO.	PART NAME	QTY.	SERIAL NO.	410J	410TMC	REMARKS
1	19M7784	SCREW	2		X	X	
2	T158132	PIN	2		X	X	
3	T187275	PIN FASTENER	2		X	X	
4	T187276	PLATE	2		X	X	
5	T61226	SNAP RING	4		X	X	
6	T75815	WASHER	2		X	X	
7	T162396	LUBRICATION FITTING	4		X	X	

QUICK COUPLER (UNIVERSAL)
ACCOUPLEMENT RAPIDE (UNIVERSAL)
ACOPLAMIENTO RAPIDO (DE CARDAN)

T151499 -UN-14FEB02

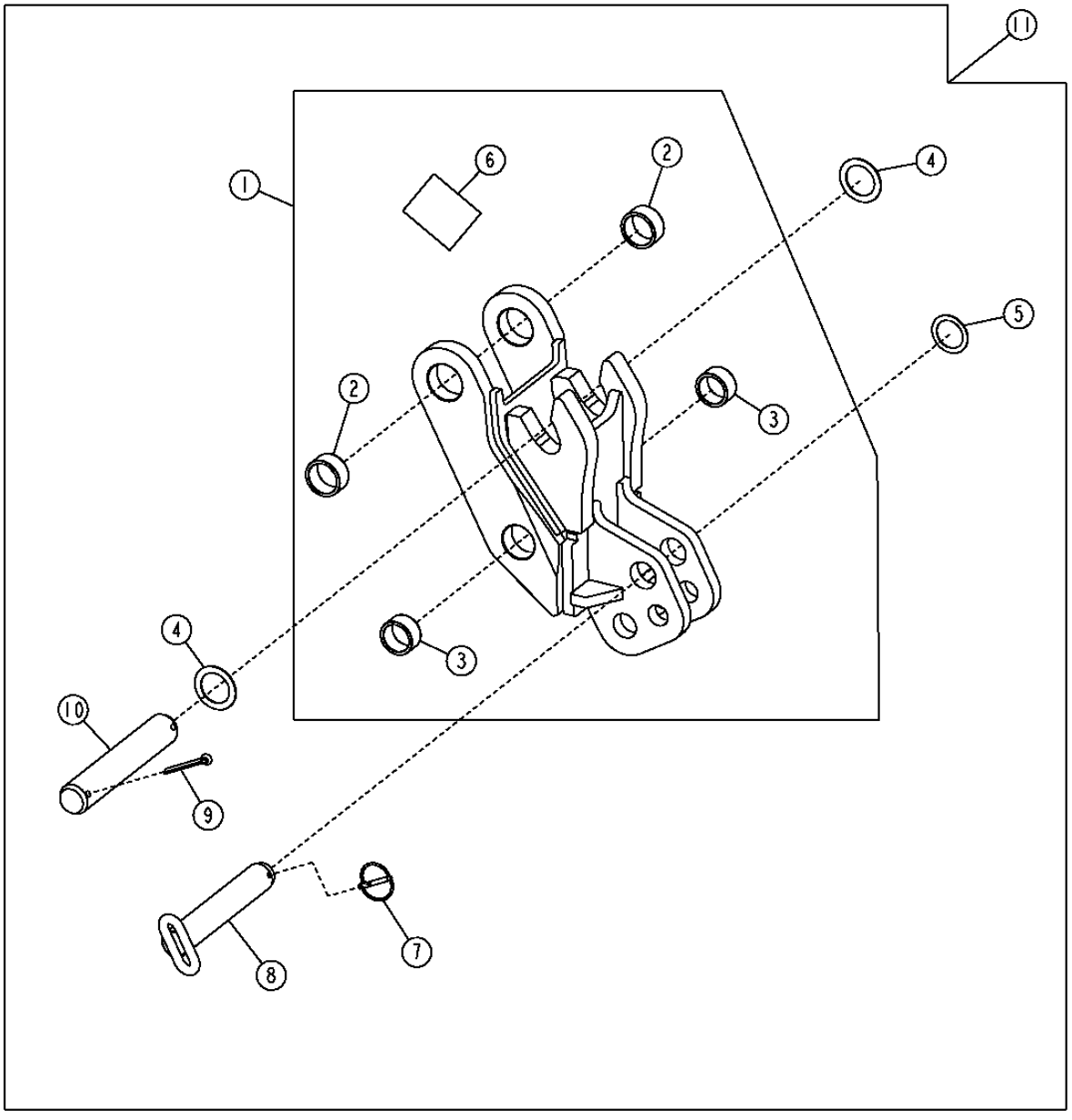

T151499

QUICK COUPLER (UNIVERSAL)
ACCOUPLEMENT RAPIDE (DE CARDAN)
ACOPLAMIENTO RAPIDO (UNIVERSAL)

KEY	PART NO.	PART NAME	QTY.	SERIAL NO.	410J	410TMC	REMARKS
1	AT332363	QUICK COUPLER	1		X	X	ADAPTS TO CAT D AND E SERIES BUCKETS ADAPTS TO CASE SERIES BUCKETS
	AT336319	QUICK COUPLER	1		X	X	ADAPTS TO CAT C SERIES BUCKETS ADAPTS TO CASE SERIES BUCKETS
2	T187117	BUSHING	2		X	X	
3	T187116	BUSHING	2		X	X	
4	T161036	WASHER	2		X	X	
5	24H1683	WASHER	1		X	X	
6	T227141	LABEL	1		X	X	ADAPTS TO CAT D AND E SERIES BUCKETS ADAPTS TO CASE SERIES BUCKETS
	T227339	LABEL	1		X	X	ADAPTS TO CAT C SERIES BUCKETS ADAPTS TO CASE SERIES BUCKETS
7	AR83396	QUICK LOCK PIN	1		X	X	
8	AT192111	PIN	1		X	X	
9	11H227	COTTER PIN	2		X	X	
10	T185832	PIN FASTENER	1		X	X	
11	**AT336147**	**QUICK COUPLER**	**1**		**X**	**X**	**(WHOLE GOODS) ADAPTS TO CAT D AND E SERIES BUCKETS ADAPTS TO CASE SERIES BUCKETS**
	AT336315	**QUICK COUPLER**	**1**		**X**	**X**	**(WHOLE GOODS) ADAPTS TO CAT C SERIES BUCKETS ADAPTS TO CASE SERIES BUCKETS**

QUICK COUPLER (STANDARD)
ACCOUPLEMENT RAPIDE (STANDARD)
ACOPLAMIENTO RAPIDO (ESTANDAR)

T151505 -UN-14FEB02

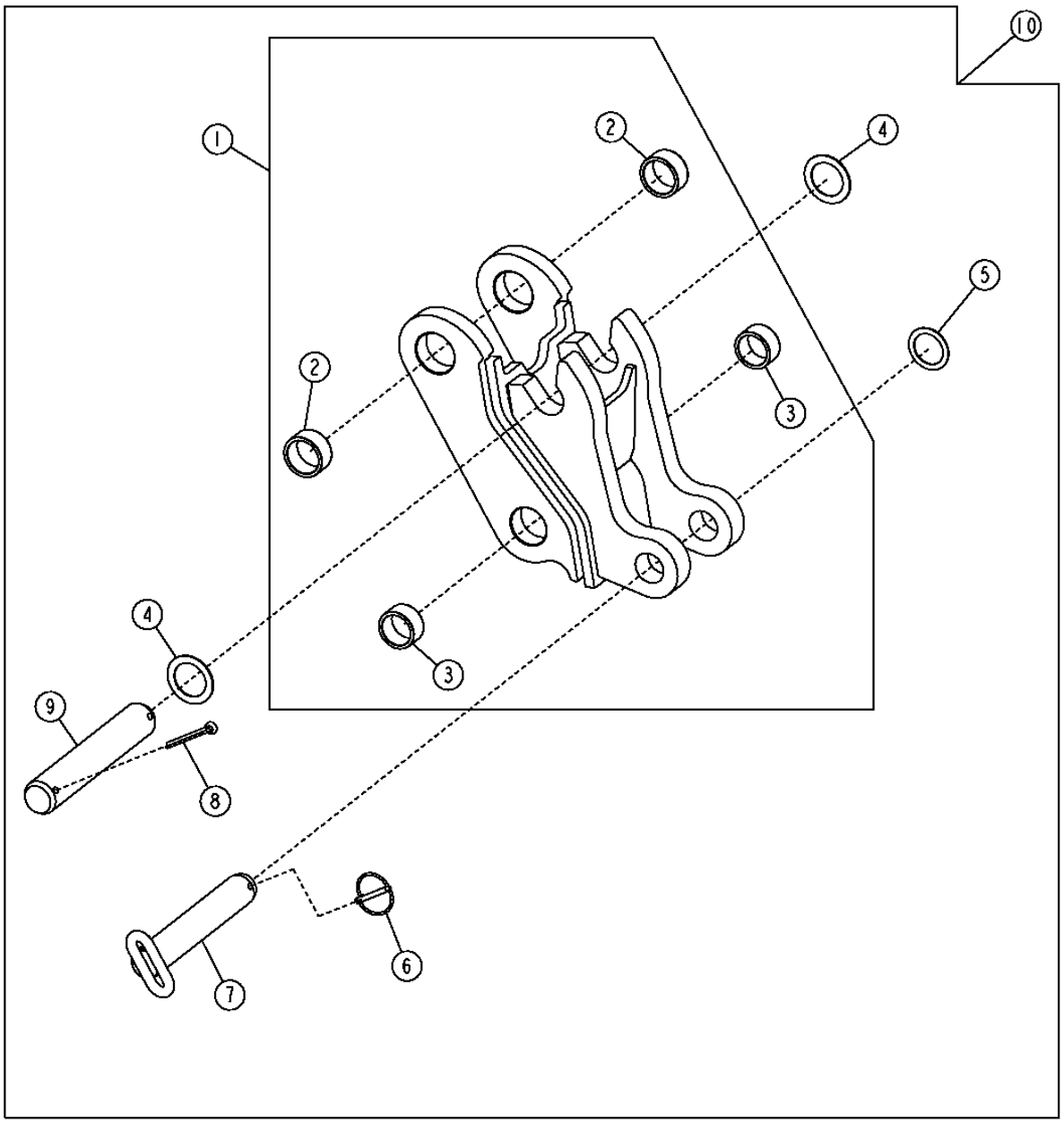

T151505

QUICK COUPLER (STANDARD)
ACCOUPLEMENT RAPIDE (STANDARD)
ACOPLAMIENTO RAPIDO (ESTANDAR)

KEY	PART NO.	PART NAME	QTY.	SERIAL NO.	410J	410TMC	REMARKS
1	AT336320	QUICK COUPLER	1		X	X	
2	T187117	BUSHING	2		X	X	
3	T187116	BUSHING	2		X	X	
4	T161036	WASHER	2		X	X	
5	24H1683	WASHER	1		X	X	
6	AR83396	QUICK LOCK PIN	1		X	X	
7	AT192111	PIN	1		X	X	
8	11H227	COTTER PIN	2		X	X	
9	T185832	PIN FASTENER	1		X	X	
10	**AT336316**	**QUICK COUPLER**	**1**		**X**	**X**	**(WHOLE GOODS)**

BACKHOE BUCKETS AND PINS
GODETS ET AXES DE RETROPELLE
CUCHARONES Y PASADORES DE RETROEXCAVADORA

T214797 -UN-22SEP05

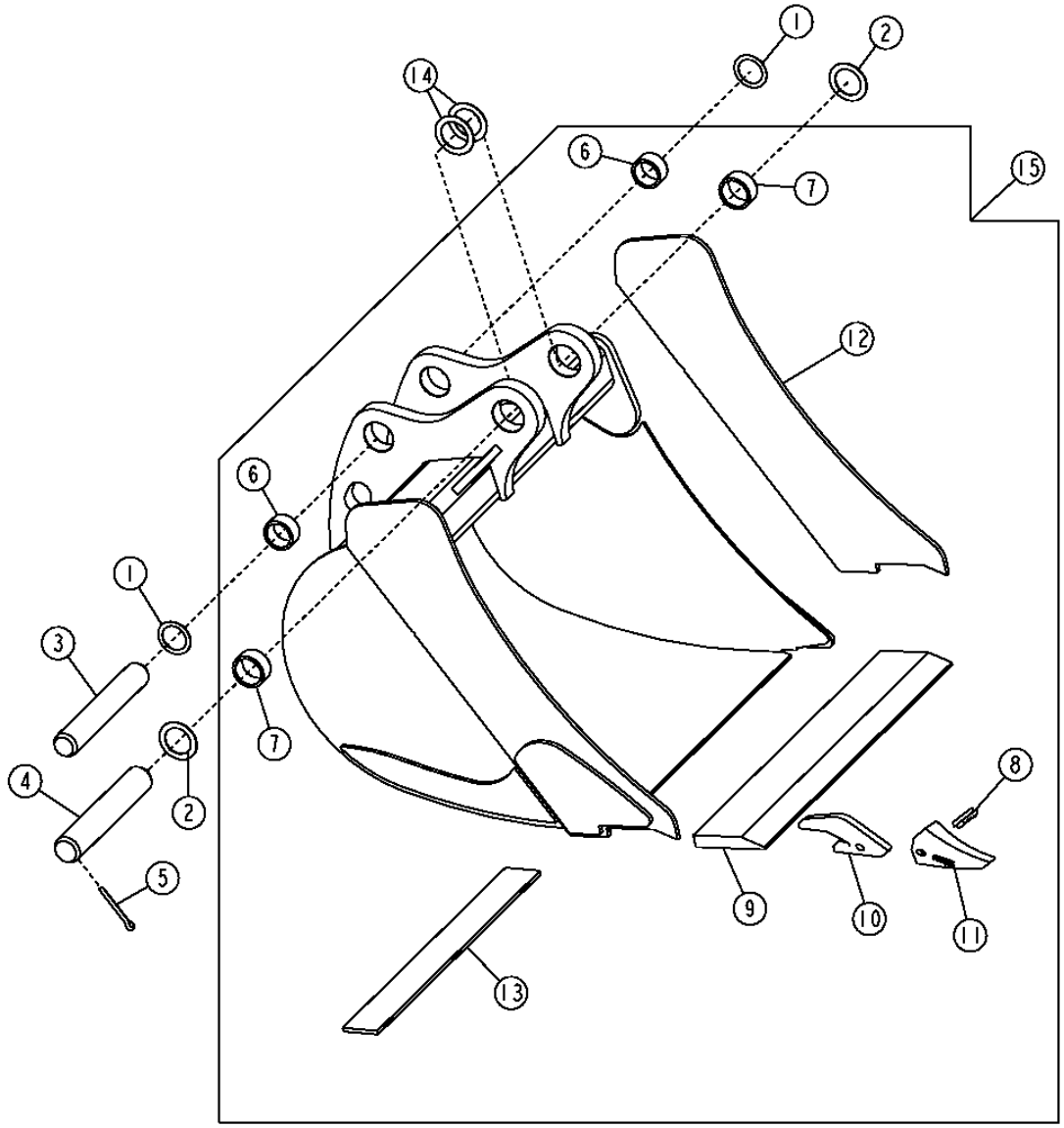

T214797

BACKHOE BUCKETS AND PINS
GODETS ET AXES DE RETROPELLE
CUCHARONES Y PASADORES DE RETROEXCAVADORA

KEY	PART NO.	PART NAME	QTY.	SERIAL NO.	410J	410TMC	REMARKS
1	24H1683	WASHER	2		X	X	2-1/32" X 2-3/4" X 0.060"
2	T161036	WASHER	3		X	X	2.205" X 3.150" X 0.079"
3	T185831	PIN FASTENER	1		X	X	
4	T185832	PIN FASTENER	1		X	X	54.475 X 320 MM
5	11H227	COTTER PIN	4		X	X	3/8" X 3"
6	T187116	BUSHING	2		X	X	
7	T187117	BUSHING	2		X	X	
8	TF23P	PIN	AR		X	X	(FLEX)
9	T161279	CUTTING EDGE	1		X	X	(A) (CTL)
	T161319	CUTTING EDGE	1		X	X	(B) (CTL)
10	U43792	BUCKET TOOTH ADAPTER	AR		X	X	
11	TF23D	TOOTH	AR		X	X	(TIP)
12	T162535	PLATE	2		X	X	
	T162553	PLATE	2		X	X	
	T162569	PLATE	2		X	X	
13	.....	WEAR PLATE	1		X	X	(USE WITH SEVERE DUTY BUCKET) 1020 HR STEEL - 692 X 76 X 8 MM
14	24H1679	WASHER	3		X	X	2-17/64" X 3-1/4" X 0.060"
15	**AT192011**	**BACKHOE BUCKET**	**1**		**X**	**X**	**(A) (E) 304MM (12") 3.3 CUBIC FEET, HEAVY DUTY, (CONTAINS (2) T162535) (WHOLE GOODS)**
	AT192012	**BACKHOE BUCKET**	**1**		**X**	**X**	**(A) (E) 457MM (18") 5.1 CUBIC FEET, HEAVY DUTY, (CONTAINS (2) T162535) (WHOLE GOODS)**
	AT192013	**BACKHOE BUCKET**	**1**		**X**	**X**	**(A) (F) 457MM (18") 5.1 CUBIC FEET, SEVERE DUTY, (CONTAINS (2) T162553) (WHOLE GOODS)**
	AT192014	**BACKHOE BUCKET**	**1**		**X**	**X**	**(A) (D) 610MM (24") 7.5 CUBIC FEET, STANDARD DUTY, (CONTAINS (2) T162535) (WHOLE GOODS)**
	AT192015	**BACKHOE BUCKET**	**1**		**X**	**X**	**(A) (E) 610MM (24") 7.5 CUBIC FEET, HEAVY DUTY, (CONTAINS (2) T162535) (WHOLE GOODS)**
	AT192016	**BACKHOE BUCKET**	**1**		**X**	**X**	**(A) (F) 610MM (24") 7.5 CUBIC FEET, SEVERE DUTY, (CONTAINS (2) T162553) (WHOLE GOODS)**
	AT192017	**BACKHOE BUCKET**	**1**		**X**	**X**	**(A) (E) 610MM (24") 8.8 CUBIC FEET, HEAVY DUTY, (CONTAINS (2) T162569) (WHOLE GOODS)**
	AT192018	**BACKHOE BUCKET**	**1**		**X**	**X**	**(A) (F) 610MM (24") 8.8 CUBIC FEET SEVERE DUTY, (CONTAINS (2) T162569) (WHOLE GOODS)**
	AT192019	**BACKHOE BUCKET**	**1**		**X**	**X**	**(B) (E) 762MM (30") 10.0 CUBIC FEET, HEAVY DUTY, (CONTAINS (2) T162535) (WHOLE GOODS)**
	AT192020	**BACKHOE BUCKET**	**1**		**X**	**X**	**(B) (F) 762MM (30") 10.0 CUBIC FEET SEVERE DUTY, (CONTAINS (5) T162553) (WHOLE GOODS)**
	AT192022	**BACKHOE BUCKET**	**1**		**X**	**X**	**(B) 914MM (36") 12.5 CUBIC FEET, DITCHING BUCKET, (CONTAINS (2) T162553) (WHOLE GOODS)**
	AT192021	**BACKHOE BUCKET**	**1**		**X**	**X**	**(B) (F) 914MM (36") 12.5 CUBIC FEET, HEAVY DUTY, (CONTAINS (2) T162553) (WHOLE GOODS)**

(D) STANDARD DUTY
(D) USAGE STANDARD
(D) SERVICIO NORMAL

(E) HEAVY DUTY
(E) USAGE INTENSIF
(E) SERVICIO SEVERO

(F) SEVERE DUTY
(F) CONDITIONS DIFFICILES
(F) SERVICIO SEVERO

QUICK COUPLER BUCKET
GODETS ET AXES DE RETROPELLE
CUCHARONES Y PASADORES DE RETROEXCAVADORA

TX1016851 -UN-

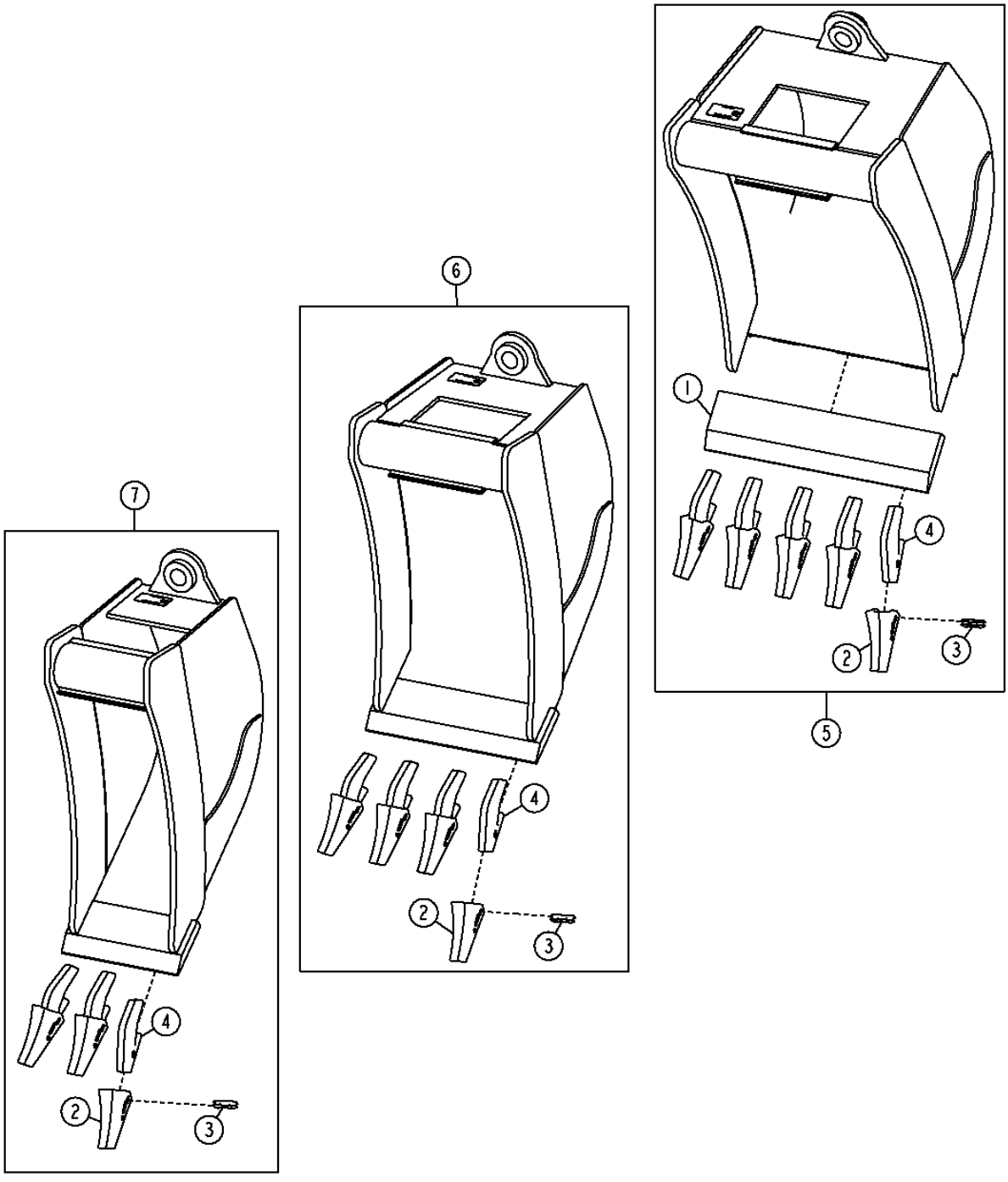

TX1016851

THIS PARTS LISTING IS CONTINUED

QUICK COUPLER BUCKET
GODETS ET AXES DE RETROPELLE
CUCHARONES Y PASADORES DE RETROEXCAVADORA

KEY	PART NO.	PART NAME	QTY.	SERIAL NO.	410J	410TMC	REMARKS
1	T161279	CUTTING EDGE	1		X	X	
2	TF23D	TOOTH	5		X	X	
	TF23D	TOOTH	4		X	X	
	TF23D	TOOTH	3		X	X	
3	TF23P	PIN	5		X	X	
	TF23P	PIN	4		X	X	
	TF23P	PIN	3		X	X	
4	U43792	BUCKET TOOTH ADAPTER	5		X	X	
	U43792	BUCKET TOOTH ADAPTER	4		X	X	
	U43792	BUCKET TOOTH ADAPTER	3		X	X	
5	**AT316706**	**BACKHOE BUCKET**	**1**		**X**	**X**	**610MM (24") HEAVY DUTY 7.5 CUBIC FEET, (WHOLE GOODS)**
6	**AT324447**	**BACKHOE BUCKET**	**1**		**X**	**X**	**457MM (18") HEAVY DUTY 5.1 CUBIC FEET, (WHOLE GOODS)**
7	**AT324448**	**BACKHOE BUCKET**	**1**		**X**	**X**	**304MM (12") HEAVY DUTY 3.3 CUBIC FEET, (WHOLE GOODS)**

QUICK COUPLER (UNIVERSAL)
ACCOUPLEMENT RAPIDE (UNIVERSEL)
ACOPLAMIENTO RAPIDO (UNIVERSAL)

TX1016850 -UN-23DEC06

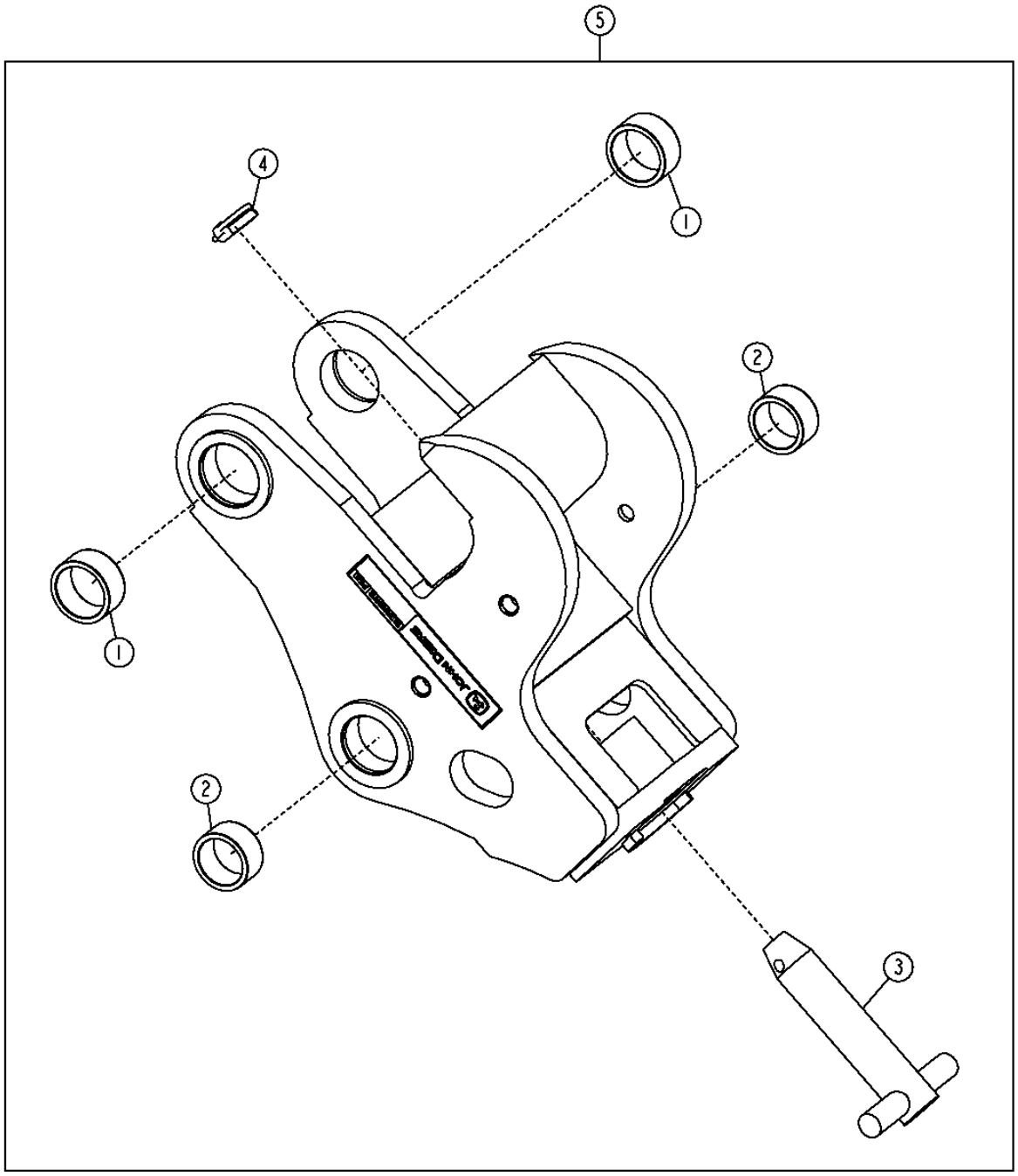

TX1016850

THIS PARTS LISTING IS CONTINUED

QUICK COUPLER (UNIVERSAL)
ACCOUPLEMENT RAPIDE (UNIVERSEL)
ACOPLAMIENTO RAPIDO (UNIVERSAL)

KEY	PART NO.	PART NAME	QTY.	SERIAL NO.	410J	410TMC	REMARKS
1	T187117	BUSHING	2		X	X	
2	T187116	BUSHING	2		X	X	
3	AT325129	QUICK LOCK PIN	1		X	X	
4	AT315338	PIN FASTENER	1		X	X	
5	**AT324292**	**QUICK COUPLER**	**1**		**X**	**X**	**TOP LOCK**

BACKHOE VALVE MOUNTING PLATE (410J)
PLAQUE DE MONTAGE DE SOUPAPE DE RETROPELLE (410J)
PLACA DE MONTAJE DE VALVULA DE RETROEXCAVADORA (410J)

T134496 -UN-10OCT00

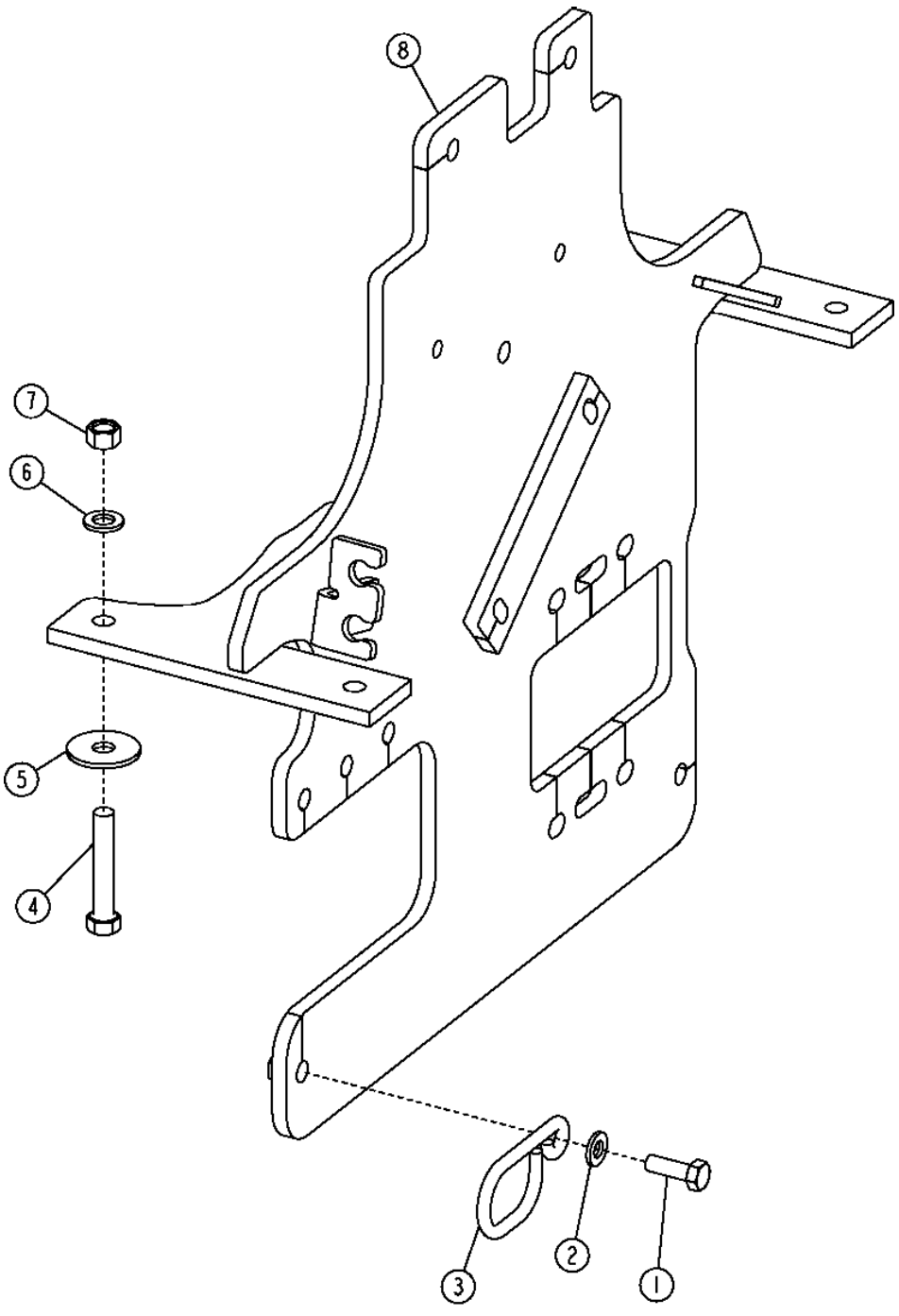

TI34496

BACKHOE VALVE MOUNTING PLATE (410J)
PLAQUE DE MONTAGE DE SOUPAPE DE RETROPELLE (410J)
PLACA DE MONTAJE DE VALVULA DE RETROEXCAVADORA (410J)

KEY	PART NO.	PART NAME	QTY.	SERIAL NO.	410J	410TMC	REMARKS
1	19M7662	CAP SCREW	2		X		M10 X 30
2	24M7239	WASHER	2		X		
3	T166223	GUIDE	2		X		
4	19M8348	CAP SCREW	4		X		M12 X 65
5	T187044	WASHER	4		X		
6	24M7345	WASHER	4		X		
7	14M7275	NUT	4		X		M12
8	AT197136	SUPPORT	1		X		

TWO LEVER BACKHOE CONTROL VALVE LINKAGE CONVERSION KIT
KIT DE CONVERSION DE SOUPAPE DE LEVIER DE COMMANDE DE RETROPELLE A DEUX LEVIERS
JUEGO DE CONVERSION DE VALV. DE PALANCA A DOS PALANCAS DE CONTROL DE RETROEXCAVADORA

TX1013148 -UN-25OCT06

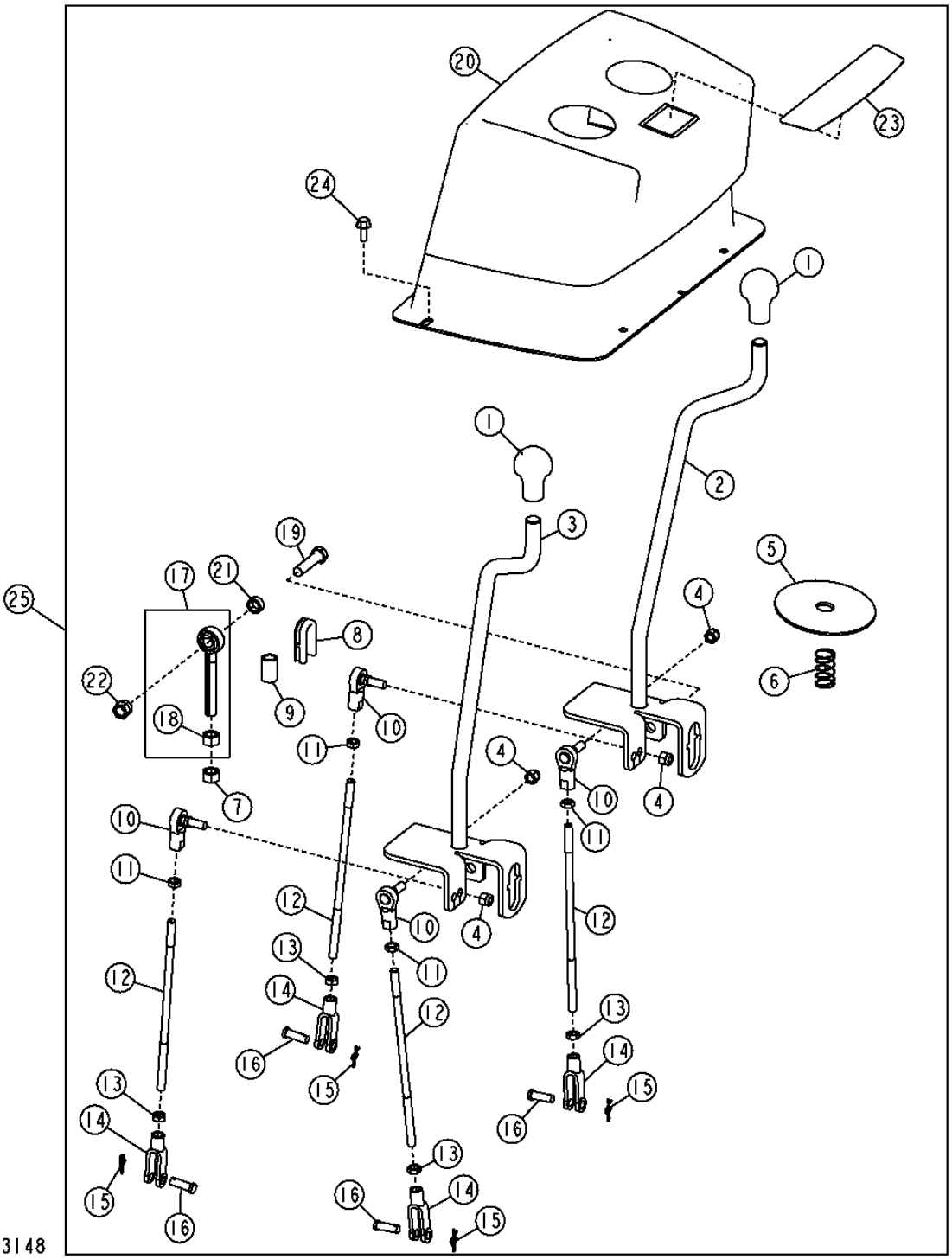

THIS PARTS LISTING IS CONTINUED

TWO LEVER BACKHOE CONTROL VALVE LINKAGE CONVERSION KIT
KIT DE CONVERSION DE SOUPAPE DE LEVIER DE COMMANDE DE RETROPELLE A DEUX LEVIERS
JUEGO DE CONVERSION DE VALV. DE PALANCA A DOS PALANCAS DE CONTROL DE RETROEXCAVADORA

KEY	*PART NO.*	*PART NAME*	*QTY.*	*SERIAL NO.*	410J	410TMC	*REMARKS*
1	T133291	KNOB	2		X		
2	AT184599	LEVER	1		X		(RH)
3	AT184598	LEVER	1		X		(LH)
4	M68954	LOCK NUT	4		X		3/8"
5	T165590	DUST SHIELD	2		X		
6	T185085	SPRING	2		X		
7	14H865	NUT	2		X		1/2"
8	T188639	GROMMET	2		X		
9	T166772	SPACER	2		X		
10	AT169087	BALL JOINT	4		X		
11	14H774	NUT	4		X		3/8"
12	T165697	ROD	4		X		
13	14H913	NUT	4		X		3/8"
14	T140328	YOKE	4		X		
15	T202956	RETAINER	4		X		
16	R65563	PIN FASTENER	4		X		
17	AT300152	LINK END	2		X		
18	14H865	NUT	1		X		1/2"
19	19M7361	CAP SCREW	2		X		M12 X 50
20	AT189269	COVER	1		X		
21	T166773	WASHER	2		X		
22	14M7313	LOCK NUT	2		X		M12
23	T165584	LABEL	1		X		
24	19M7866	SCREW	4		X		M8 X 20
25	**AT185624**	**LINKAGE**	**1**		**X**		**(WHOLE GOODS)**

THREE LEVER CONTROL VALVE LINKAGE AND CONVERSION KIT
KIT DE CONVERSION DE SOUPAPE DE LEVIER DE COMMANDE A TROIS LEVIERS
JUEGO DE CONVERSION DE VALV. DE PALANCA A TRES PALANCAS DE CONTROL

T193127 -UN-15JUL03

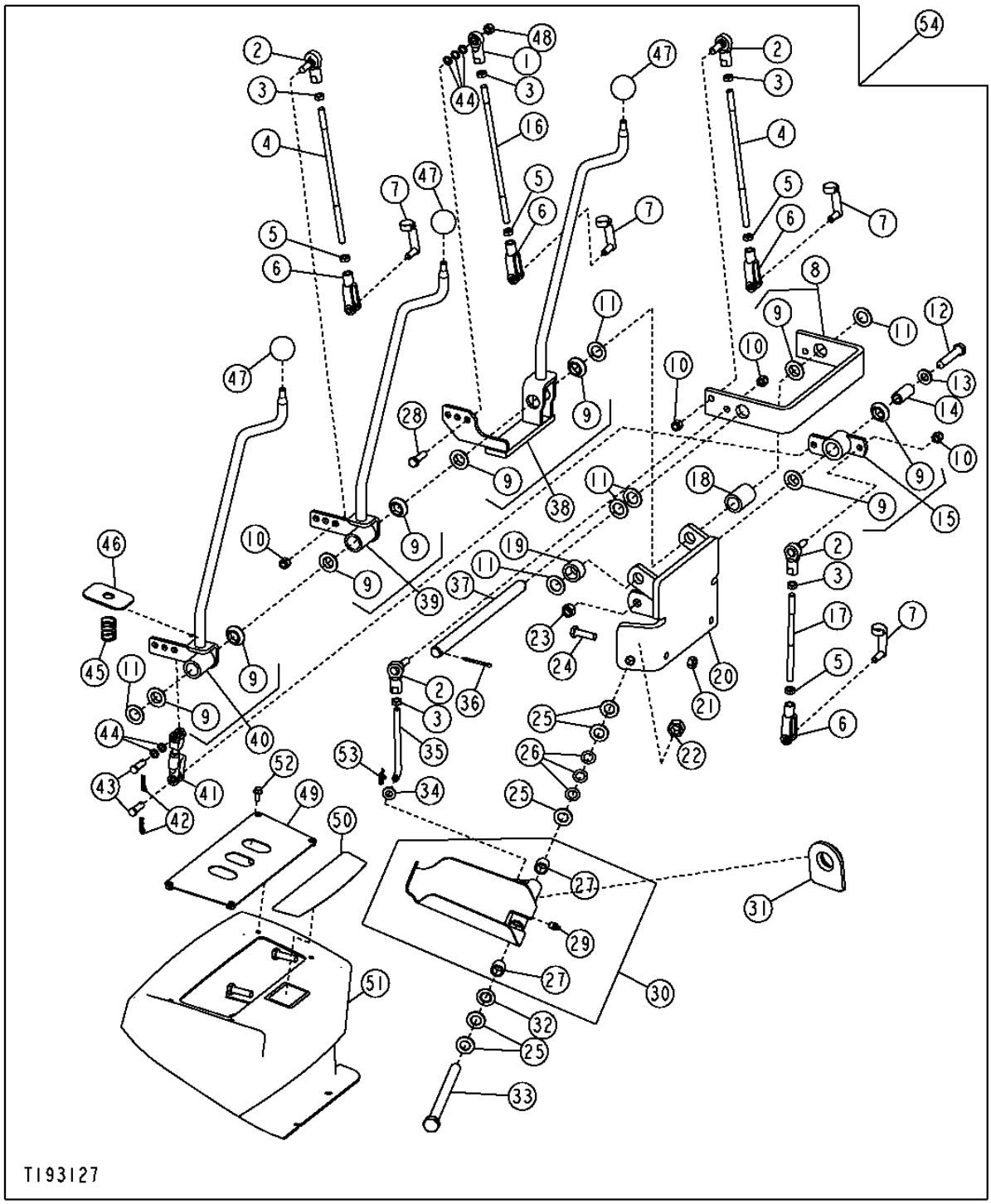

THREE LEVER CONTROL VALVE LINKAGE AND CONVERSION KIT
KIT DE CONVERSION DE SOUPAPE DE LEVIER DE COMMANDE A TROIS LEVIERS
JUEGO DE CONVERSION DE VALV. DE PALANCA A TRES PALANCAS DE CONTROL

KEY	PART NO.	PART NAME	QTY.	SERIAL NO.	410J	410TMC	REMARKS
1	AE37072	LINK END	2		X		
2	AT169087	BALL JOINT	4		X		
3	14H774	NUT	5		X		3/8"
4	T165697	ROD	2		X		
5	14H913	NUT	4		X		3/8"
6	T140328	YOKE	4		X		
7	T183617	PIN FASTENER	4		X		
8	AT185340	BRACKET	1		X		
9	T166097	BEARING	6		X		
10	M68954	LOCK NUT	7		X		9.525 MM
11	24H1391	WASHER	5		X		25/32" X 1-5/16" X 0.060"
12	19M7363	CAP SCREW	1		X		M12 X 60
13	24M7240	WASHER	1		X		
14	T166031	SPACER	1		X		
15	AT309186	BELLCRANK	1		X		
16	T165788	ROD	1		X		
17	T165787	ROD	1		X		
18	T207484	SPACER	2		X		
19	T167247	SPACER	1		X		
20	AT317091	SUPPORT	1		X		
21	14M7274	NUT	2		X		M10
22	U14555	LOCK NUT	2		X		5/8"
23	14M7275	NUT	1		X		M12
24	19M7550	CAP SCREW	2		X		M10 X 35
25	24M7053	WASHER	10		X		
26	M87534	SPRING WASHER	6		X		
27	T58109	BUSHING	2		X		
28	19H3239	CAP SCREW	2		X		3/8" X 1-1/4"
29	T162396	LUBRICATION FITTING	1		X		
30	AT185749	PEDAL	1		X		LH
	AT185750	PEDAL	1		X		RH (NOT ILLUSTRATED)
31	T166224	GROMMET	2		X		
32	AT48016	SEAL	2		X		
33	19H3323	CAP SCREW	2		X		5/8" X 8"
34	24M7239	WASHER	1		X		
35	T165785	HOOK BOLT	1		X		
36	U17408	RING	2		X		
37	T207309	PIN	1		X		
38	AT309185	CONTROL LEVER	1		X		
39	AT309184	CONTROL LEVER	1		X		
40	AT309184	CONTROL LEVER	1		X		
41	AT309413	LINK	1		X		
42	R46528	SPRING LOCKING PIN	3		X		
43	R65563	PIN FASTENER	5		X		
44	M359T	WASHER	4		X		
45	T165591	SPRING	1		X		
46	T209588	COVER	1		X		
47	39M1709	KNOB	3		X		
49	AT312121	COVER	1		X		
50	T165585	LABEL	1		X		
51	AT189272	COVER	1		X		
52	19M7775	SCREW	4		X		
53	T202956	RETAINER	4		X		
54	**AT309739**	**KIT**	**1**		**X**		**(WHOLE GOODS)**

FOUR LEVER CONTROL VALVE LINKAGE
TRINGLERIE DE DISTRIBUTEURS A QUATRE LEVIERS
VARILLAJE DE VALVULA DE CONTROL DE CUATRO PALANCAS

T198881 -UN-08APR04

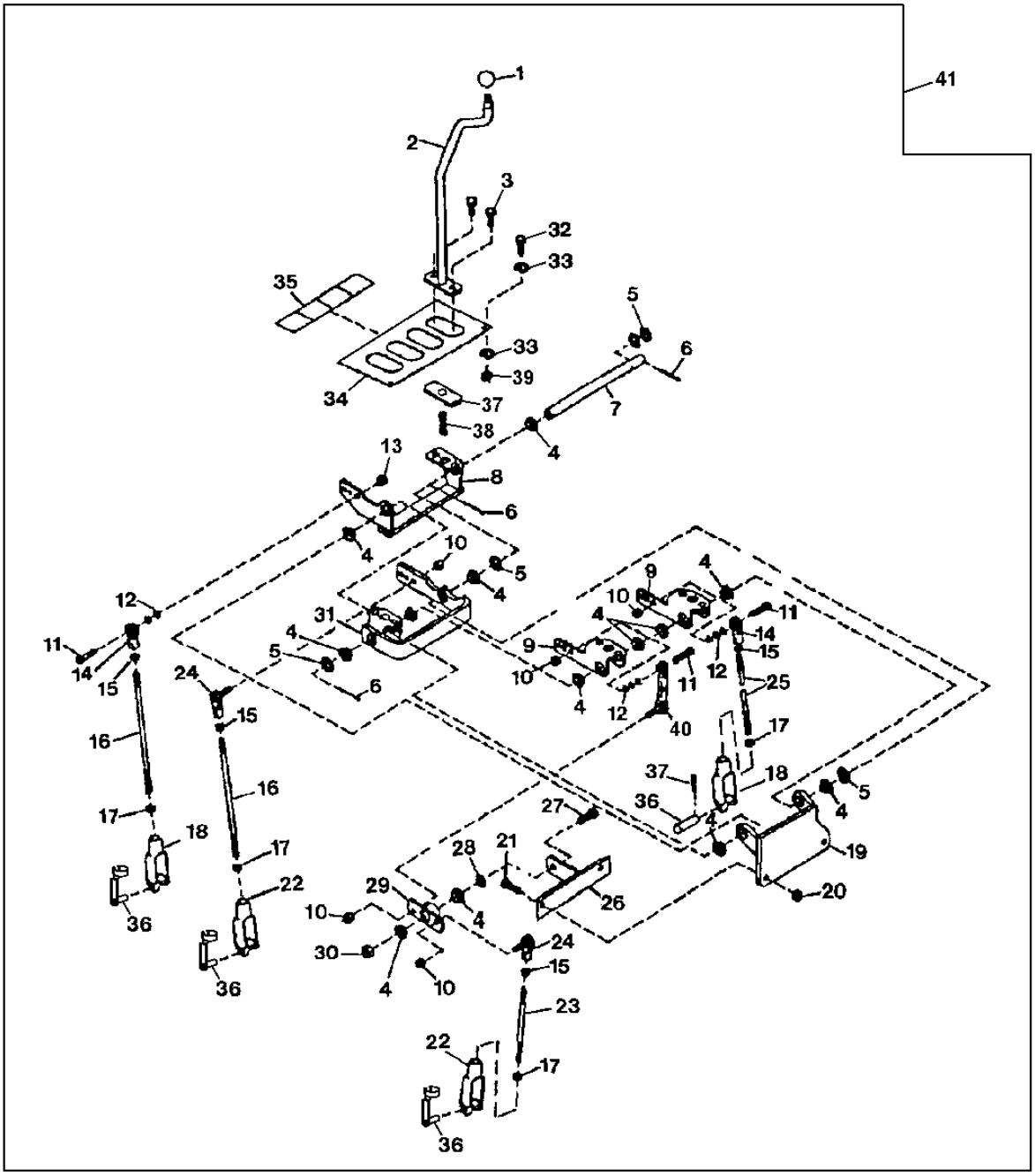

T198881

FOUR LEVER CONTROL VALVE LINKAGE
TRINGLERIE DE DISTRIBUTEURS A QUATRE LEVIERS
VARILLAJE DE VALVULA DE CONTROL DE CUATRO PALANCAS

KEY	PART NO.	PART NAME	QTY.	SERIAL NO.	410J	410TJ	REMARKS
1	T35233	GRIP	4		X		
2	AT169512	LEVER	4		X		
3	19M7402	CAP SCREW	8		X		M10 X 25
4	T125808	BUSHING	11		X		
5	24H1746	WASHER	4		X		
6	11M7087	COTTER PIN	2		X		4 X 40 MM
7	T188268	SHAFT	1		X		
8	AT150763	BASE	1		X		
9	AT150762	BASE	2		X		
10	M68954	LOCK NUT	4		X		3/8"
11	19H3239	CAP SCREW	2		X		3/8" X 1-1/4"
12	M359T	WASHER	10		X		
13	H129201	LOCK NUT	2		X		3/8"
14	AE37072	LINK END	2		X		
15	14H774	NUT	4		X		3/8"
16	T165788	ROD	2		X		256MM (10.08")
17	14H913	NUT	4		X		3/8"
18	T140328	YOKE	2		X		
19	AT194686	SUPPORT	1		X		
20	14M7274	NUT	2		X		M10
21	19M8600	CAP SCREW	2		X		M10 X 50
22	T140328	YOKE	2		X		
23	T158812	ROD	1		X		152MM (5.98")
24	AT169087	BALL JOINT	2		X		
25	T158810	ROD	1		X		
26	AT196839	SUPPORT	1		X		79MM (3.11") FROM RIGHT END TO TAB
27	19H3030	CAP SCREW	1		X		1/2" X 1-1/4"
28	24M7047	WASHER	1		X		
29	AT158197	BELLCRANK	1		X		
30	T141126	SPACER	1		X		
31	AT195877	BASE	1		X		
32	T133674	SELF-LOCKING SCREW	4		X		M6 X 16
33	24H1646	WASHER	8		X		
34	AT196419	PANEL	4		X		
35	T165604	LABEL	1		X		CONTROL LEVER
36	T183617	PIN FASTENER	4		X		
37	T183149	COVER	4		X		
38	T165591	SPRING	4		X		
39	14M7272	NUT	4		X		M6
40	AT158198	LINK	1		X		
41	**AT185628**	**KIT**	**1**		**X**		**(WHOLE GOODS)**

FIFTH FUNCTION PEDAL
PEDALE DE CINQUIEME FONCTION
PEDAL DE QUINTA FUNCION

T193181 -UN-16JUL03

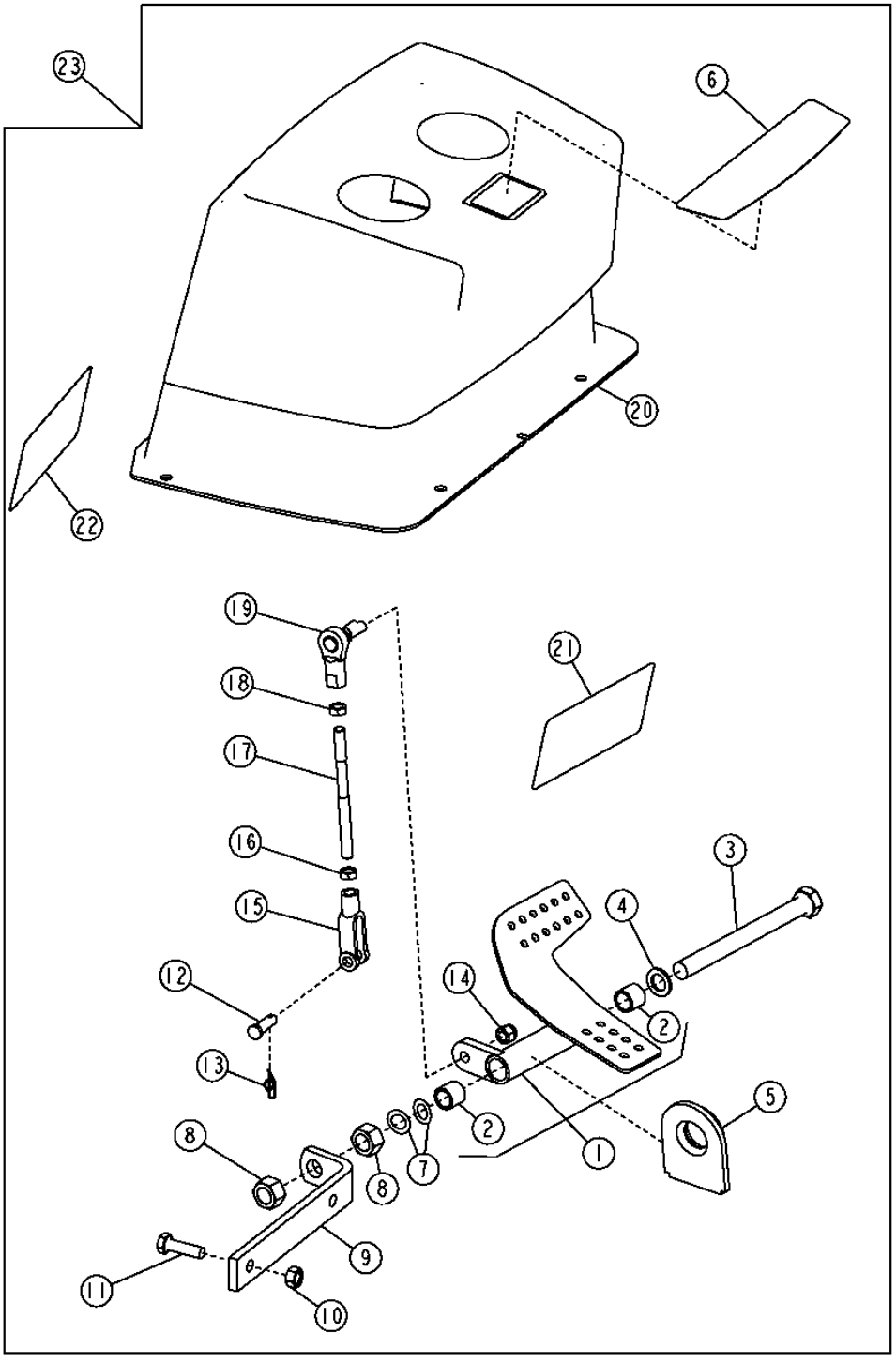

FIFTH FUNCTION PEDAL
PEDALE DE CINQUIEME FONCTION
PEDAL DE QUINTA FUNCION

KEY	PART NO.	PART NAME	QTY.	SERIAL NO.	410J	410TMC	REMARKS
1	AT191446	PEDAL	1		X		
2	T58109	BUSHING	2		X		
3	19H3450	CAP SCREW	1		X		5/8" X 6-3/4"
4	R64059	WASHER	1		X		
5	T166224	GROMMET	1		X		
6	T165584	LABEL	1		X		
7	M87534	SPRING WASHER	2		X		
8	14H1039	NUT	2		X		
9	T183548	ANGLE	1		X		
10	14M7274	NUT	2		X		M10
11	19M7550	CAP SCREW	2		X		M10 X 35
12	R65563	PIN FASTENER	1		X		
13	T202956	RETAINER	1		X		
14	M68954	LOCK NUT	1		X		3/8"
15	T140328	YOKE	1		X		
16	14H913	NUT	1		X		3/8"
17	T184129	STUD	1		X		
18	14H774	NUT	1		X		3/8"
19	AT169087	BALL JOINT	1		X		
20	AT189270	COVER	1		X		
21	T185691	LABEL	1		X		(FOR USE WITH EXTENDABLE DIPPERSTICK)
22	T185692	LABEL	1		X		(FOR USE WITHOUT EXTENDABLE DIPPERSTICK)
23	**AT185625**	**KIT**	**1**		**X**		**WHOLE GOODS**

FIFTH FUNCTION PEDAL (PILOT CONTROL)
PEDALE DE CINQUIEME FONCTION (COMMANDE PILOTE)
PEDAL DE QUINTA FUNCION (CONTROL PILOTO)

T165817 -UN-25FEB03

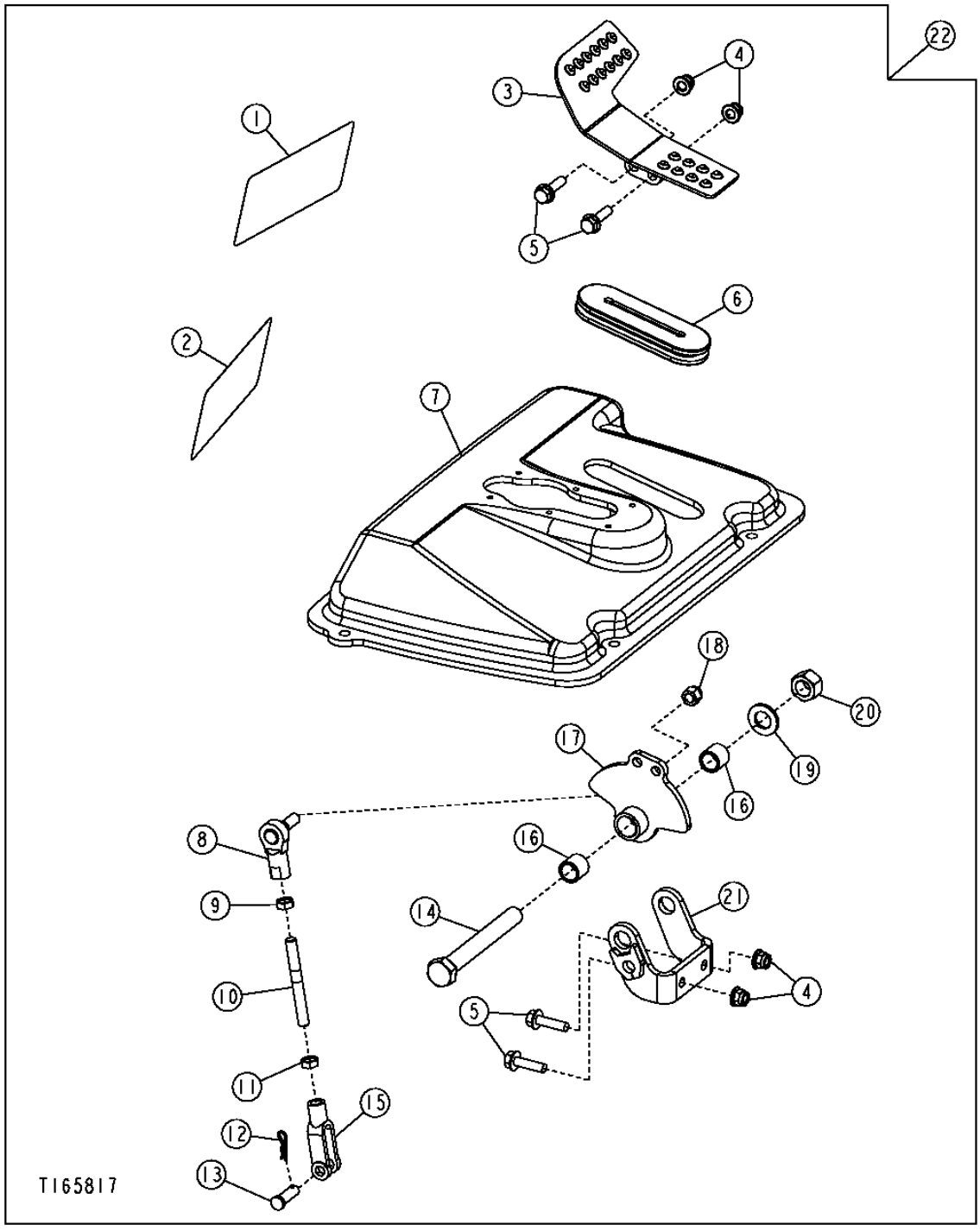

FIFTH FUNCTION PEDAL (PILOT CONTROL)
PEDALE DE CINQUIEME FONCTION (COMMANDE PILOTE)
PEDAL DE QUINTA FUNCION (CONTROL PILOTO)

KEY	PART NO.	PART NAME	QTY.	SERIAL NO.	410J	410TMC	REMARKS
1	T185691	LABEL	1		X		
2	T185692	LABEL	1		X		
3	AT300058	PEDAL	1		X		
4	14M7396	LOCK NUT	4		X		M8
5	19M7868	SCREW	4		X		M8 X 30
6	T200095	GROMMET	1		X		
7	T200093	COVER	1		X		
8	AT169087	BALL JOINT	1		X		
9	14H774	NUT	1		X		3/8"
10	T200078	STUD	1		X		
11	14H913	NUT	1		X		3/8"
12	T202956	RETAINER	1		X		
13	R65563	PIN FASTENER	1		X		
14	19H3353	CAP SCREW	1		X		5/8" X 5"
15	T200627	YOKE	1		X		
16	T58109	BUSHING	2		X		
17	AT300056	PIVOT	1		X		
18	M68954	LOCK NUT	1		X		3/8"
19	24M7053	WASHER	1		X		
20	U14555	LOCK NUT	1		X		5/8"
21	AT300060	BRACKET	1		X		
22	**AT301486**	**KIT**	**1**		**X**		**WHOLE GOODS**

SIXTH FUNCTION PEDAL
PEDALE DE SIXIEME FONCTION
PEDAL DE SEXTA FUNCION

T193198 -UN-21JUL03

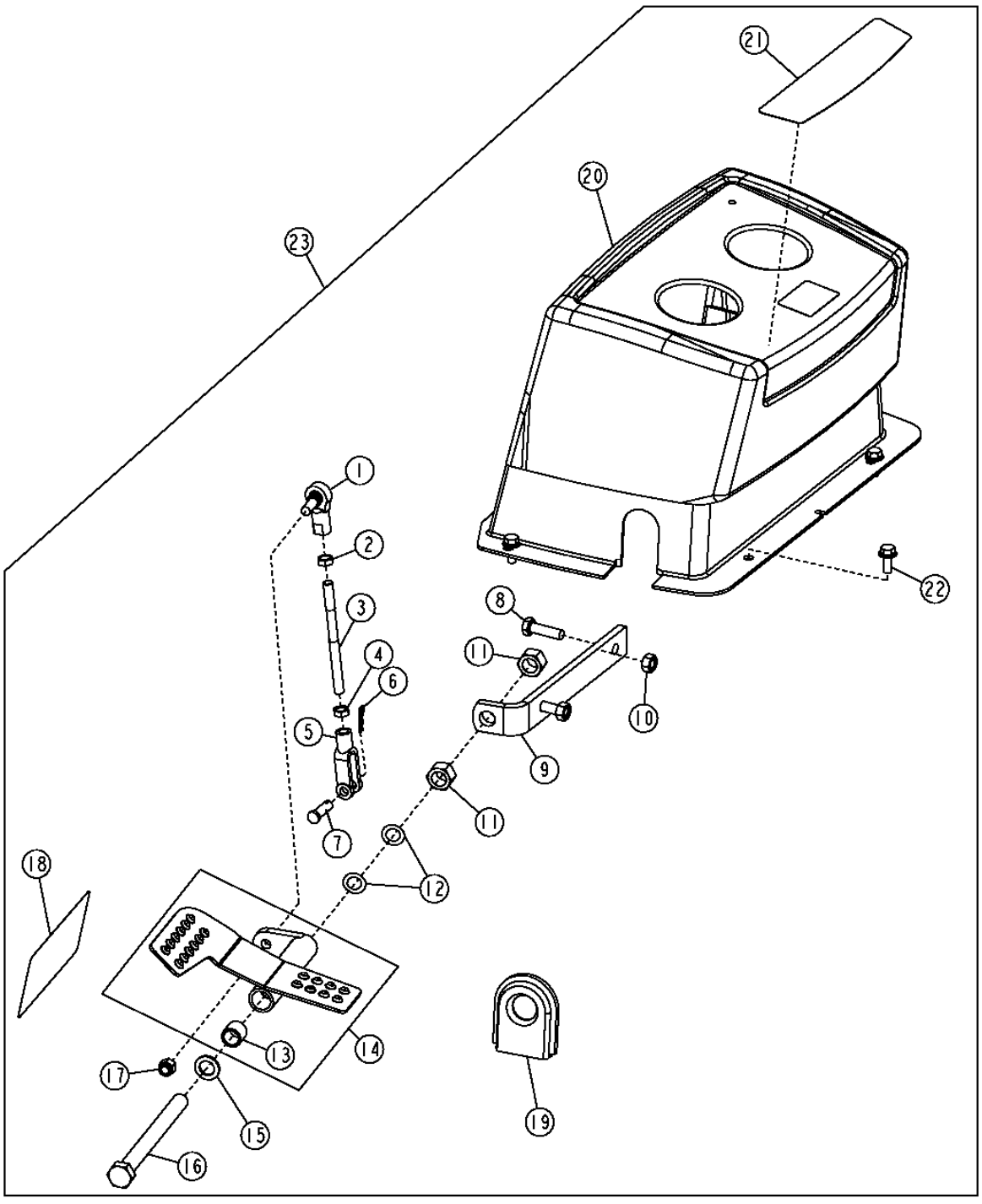

SIXTH FUNCTION PEDAL
PEDALE DE SIXIEME FONCTION
PEDAL DE SEXTA FUNCION

KEY	PART NO.	PART NAME	QTY.	SERIAL NO.	410J	410TMC	REMARKS
1	AT169087	BALL JOINT	1		X		
2	14H774	NUT	1		X		3/8"
3	T184129	STUD	1		X		
4	14H913	NUT	1		X		3/8"
5	T140328	YOKE	1		X		
6	T202956	RETAINER	1		X		
7	R65563	PIN FASTENER	1		X		
8	19M7550	CAP SCREW	2		X		M10 X 35
9	T184133	ANGLE	1		X		
10	14M7274	NUT	2		X		M10
11	14H1039	NUT	2		X		5/8"
12	M87534	SPRING WASHER	2		X		
13	T58109	BUSHING	2		X		
14	AT190073	PEDAL	1		X		
15	R64059	WASHER	1		X		
16	19H3450	CAP SCREW	1		X		5/8" X 6-3/4"
17	M68954	LOCK NUT	1		X		3/8"
18	T185692	LABEL	1		X		
19	T166224	GROMMET	1		X		
20	AT189271	COVER	1		X		
21	T165584	LABEL	1		X		
22	19M7866	SCREW	4		X		M8 X 20
23	**AT185629**	**KIT**	**1**		**X**		**WHOLE GOODS**

BACKHOE BOOM LOCK CONTROL LEVER AND LINKAGE
TRINGLERIE ET LEVIER DE COMMANDE DE VERROUILLAGE DE FLECHE DE RETROPELLE
PALANCA DE CONTROL DE BLOQUEO DE AGUILON DE RETROEXCAVADORA Y VARILLAJE

T160156 -UN-03OCT02

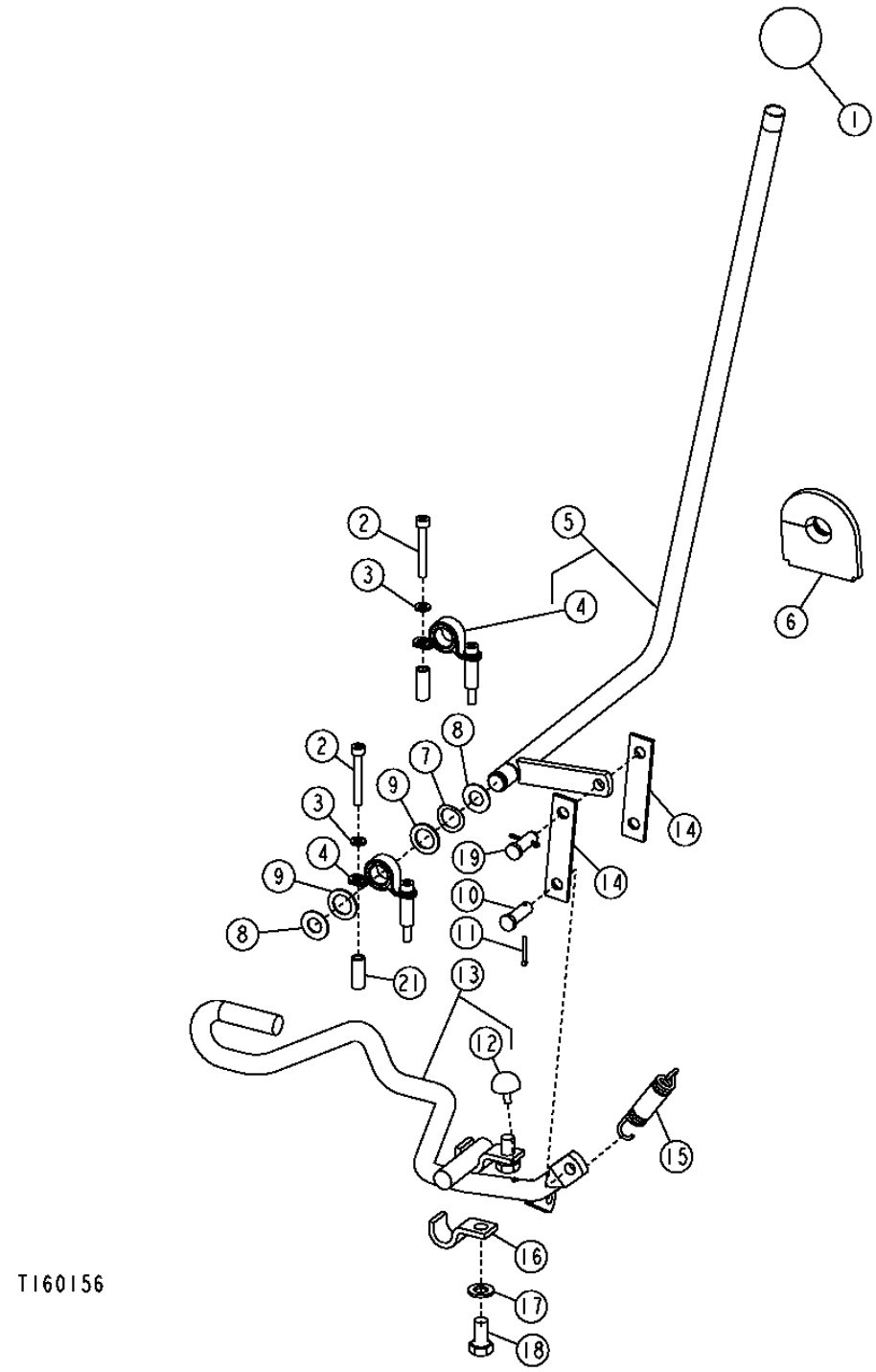

BACKHOE BOOM LOCK CONTROL LEVER AND LINKAGE
TRINGLERIE ET LEVIER DE COMMANDE DE VERROUILLAGE DE FLECHE DE RETROPELLE
PALANCA DE CONTROL DE BLOQUEO DE AGUILON DE RETROEXCAVADORA Y VARILLAJE

KEY	*PART NO.*	*PART NAME*	*QTY.*	*SERIAL NO.*	*REMARKS*
1	T185309	KNOB	1		(MANUAL CONTROL)
2	19M8713	SCREW	4		M6 X 45
3	24M7054	WASHER	4		
4	AT195620	BEARING WITH HOUSING	2		
5	AT195623	LEVER	1		(STANDARD CONTROLS)
	AT196387	LEVER	1		(PILOT CONTROL)
6	T177623	GROMMET	1		
7	T166237	SPRING WASHER	1		
8	F2863R	SNAP RING	2		
9	24H1658	WASHER	1		21/32" X 1" X 0.060", (STANDARD CONTROLS)
10	M40569	PIN FASTENER	1		
11	11M7081	COTTER PIN	2		
12	AT185847	BUMPER	1		
13	AT185773	ROD	1		
14	T188356	STRAP	2		
15	T24509	SPRING	1		
16	T157785	CLAMP	2		
17	24M7040	WASHER	2		11 X 20 X 2 MM
18	19M7938	CAP SCREW	2		M10 X 20
19	M40569	PIN FASTENER	1		
21	28H1921	BUSHING	4		

BACKHOE BOOM LOCK
VERROUILLAGE DE FLECHE DE RETROPELLE
BLOQUEO DE AGUILON DE RETROEXCAVADORA

TX1017103 -UN-28DEC06

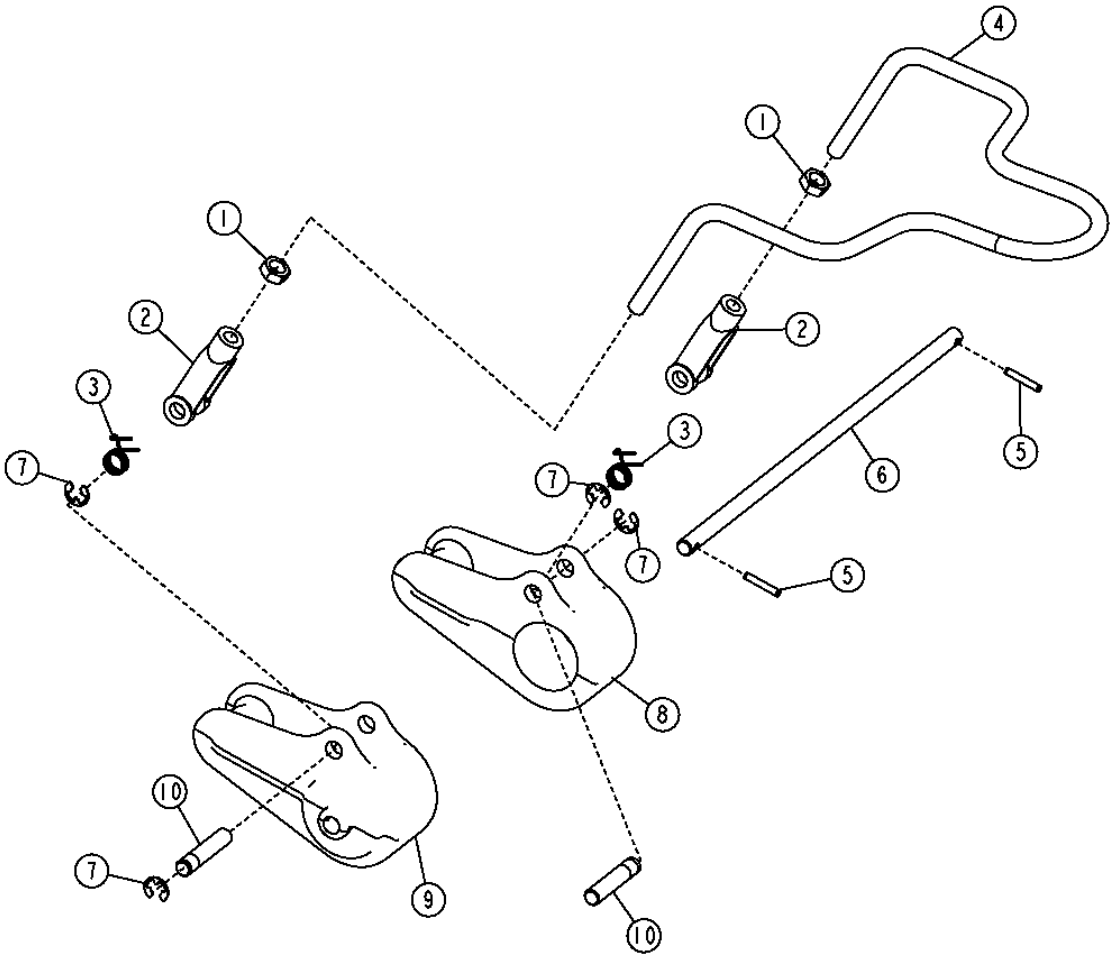

THIS PARTS LISTING IS CONTINUED

BACKHOE BOOM LOCK
VERROUILLAGE DE FLECHE DE RETROPELLE
BLOQUEO DE AGUILON DE RETROEXCAVADORA

KEY	PART NO.	PART NAME	QTY.	SERIAL NO.	REMARKS
1	14H856	NUT	2		1/2"
2	T121474	YOKE	2		
3	T160589	SPRING	2		
4	T157762	ROD	1		
5	34M7141	SPRING PIN	2		
6	T160515	PIN	1		
7	R26871	SNAP RING	4		
8	T186005	LOCK	1		LH
9	T186006	LOCK	1		RH
10	T186000	PIN FASTENER	2		

FIFTH FUNCTION LEVER FOR THREE LEVER CONTROLS CONVERSION KIT
LEVIER DE CINQUIEME FONCTION POUR KIT DE CONVERSION DES COMMANDES A TROIS LEVIERS
PALANCA DE QUINTA FUNCION PARA JUEGO DE CONVERSION A CONTROLES CON TRES PALANCAS

TP69704 -UN-02OCT00

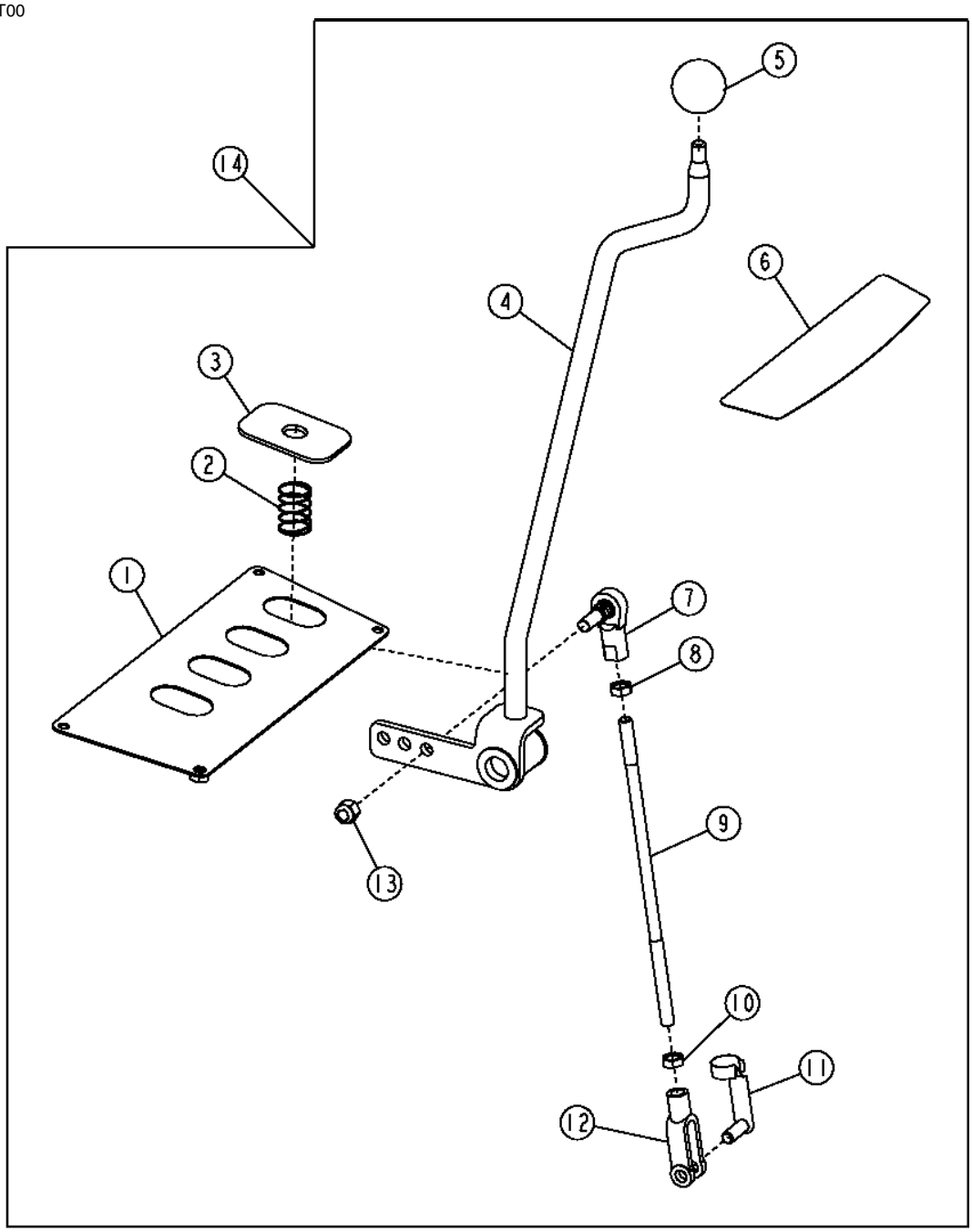

TP69704

FIFTH FUNCTION LEVER FOR THREE LEVER CONTROLS CONVERSION KIT
LEVIER DE CINQUIEME FONCTION POUR KIT DE CONVERSION DES COMMANDES A TROIS LEVIERS
PALANCA DE QUINTA FUNCION PARA JUEGO DE CONVERSION A CONTROLES CON TRES PALANCAS

KEY	PART NO.	PART NAME	QTY.	SERIAL NO.	410J	410TMC	REMARKS
1	AT311929	COVER	1		X		
2	T165591	SPRING	1		X		
3	T209588	COVER	1		X		
4	AT309190	CONTROL LEVER	1		X		
5	39M1709	KNOB	1		X		
6	T165586	LABEL	1		X		
7	AT169087	BALL JOINT	1		X		
8	14H774	NUT	1		X		3/8"
9	T165697	ROD	1		X		
10	14H913	NUT	1		X		3/8"
11	T183617	PIN FASTENER	1		X		
12	T140328	YOKE	1		X		
13	M68954	LOCK NUT	1		X		
14	**AT309740**	**CONTROL LEVER**	**1**		**X**		**(WHOLE GOODS)**

STABILIZER VALVE LINKAGE
TRINGLERIE DE SOUPAPE DE STABILISATEUR
VARILLAJE DE VALVULA ESTABILIZADORA

TX1016046 -UN-29DEC06

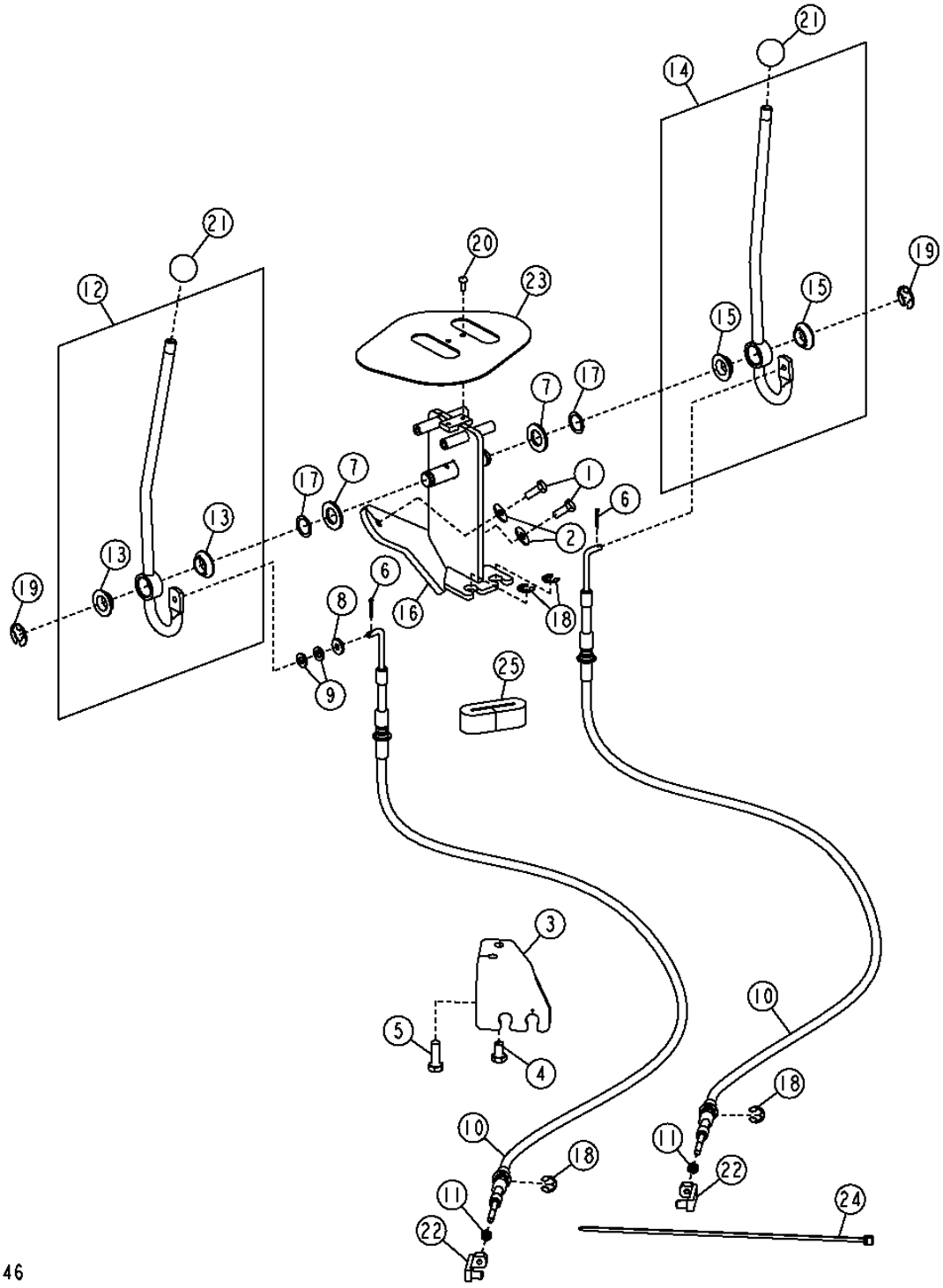

THIS PARTS LISTING IS CONTINUED

STABILIZER VALVE LINKAGE
TRINGLERIE DE SOUPAPE DE STABILISATEUR
VARILLAJE DE VALVULA ESTABILIZADORA

KEY	PART NO.	PART NAME	QTY.	SERIAL NO.	410J	410TMC	REMARKS
1	19M7881	SCREW	2		X	X	M8 X 20
2	24M7207	WASHER	2		X	X	8.400 X 24 X 2 MM
3	AT280363	BRACKET	1		X	X	
4	19M3141	CAP SCREW	1		X	X	M10 X 16
5	19M3202	CAP SCREW	1		X	X	M10 X 30
6	11M7081	COTTER PIN	2		X	X	2.500 X 20 MM
7	24H1392	WASHER	2		X	X	19.837 X 34.925 X 3.048 MM
8	24H1923	WASHER	1		X	X	7.137 X 19.050 X 3.048 MM
9	24M7238	WASHER	2		X	X	8.700 X 17 X 2 MM
10	AT196606	PUSH PULL CABLE	2		X	X	
11	14H649	NUT	2		X	X	6.350 MM
12	AT300770	LEVER	1		X	X	
13	T166097	BEARING	2		X	X	
14	AT300771	LEVER	1		X	X	
15	T166097	BEARING	2		X	X	
16	AT309137	BRACKET	1		X	X	
17	R26081	WASHER	2		X	X	19.837 X 26.975 X 0.406 MM
18	R26871	SNAP RING	4		X	X	
19	R27434	SNAP RING	2		X	X	
20	21H1316	SCREW	2		X	X	4.826 X 12.700 MM
21	T185766	KNOB	2		X	X	
22	T191245	SWIVEL	2		X	X	
23	T216572	PLATE	1		X	X	
24	H77698	TIE BAND	1		X	X	
25	T183905	SEAL	1		X	X	

BACKHOE VALVE MOUNTING PLATE (410TMC)
PLAQUE DE MONTAGE DE SOUPAPE DE RETROPELLE (410TMC)
PLACA DE MONTAJE DE VALVULA DE RETROEXCAVADORA (410TMC)

TX1016053 -UN-18DEC06

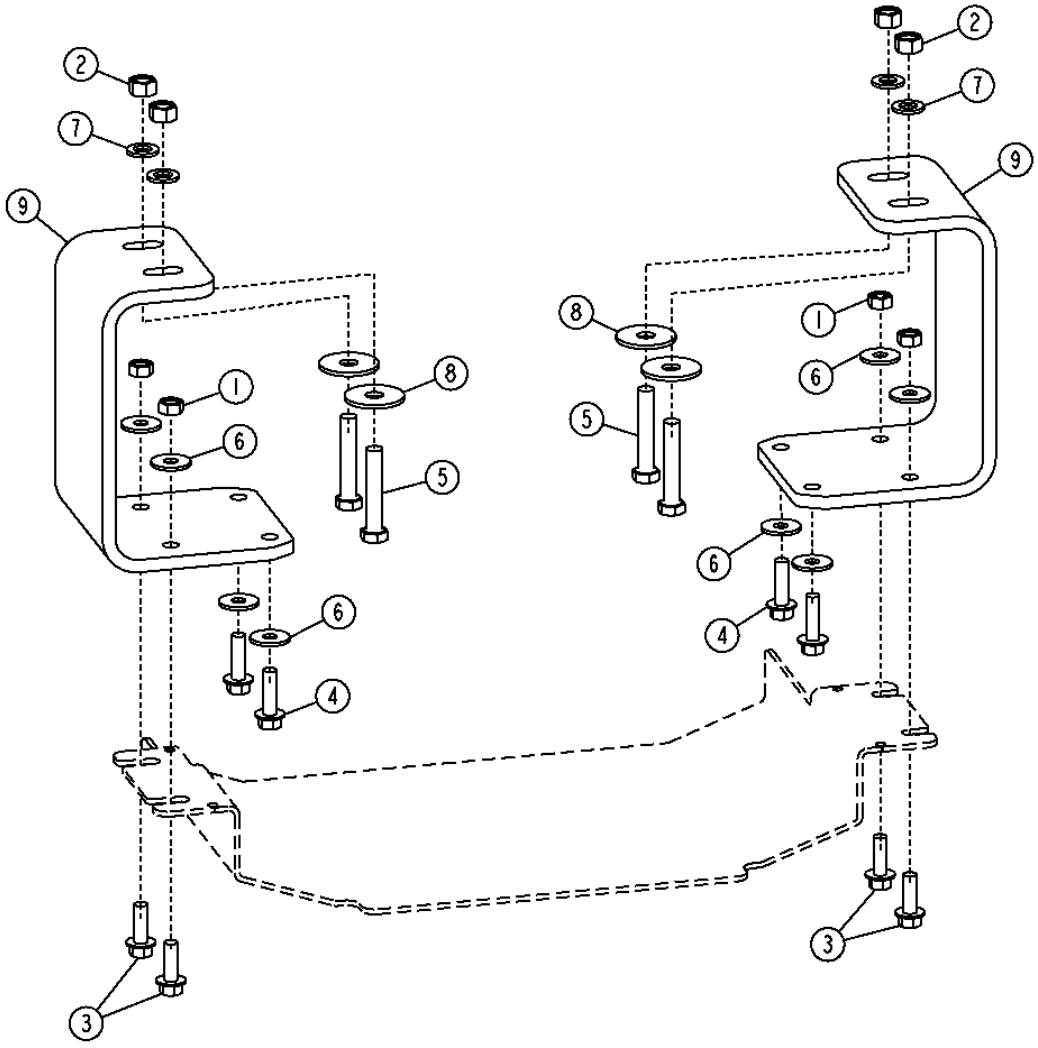

TX1016053

THIS PARTS LISTING IS CONTINUED

BACKHOE VALVE MOUNTING PLATE (410TMC)
PLAQUE DE MONTAGE DE SOUPAPE DE RETROPELLE (410TMC)
PLACA DE MONTAJE DE VALVULA DE RETROEXCAVADORA (410TMC)

KEY	PART NO.	PART NAME	QTY.	SERIAL NO.	410J	410TMC	REMARKS
1	14M7274	NUT	4			X	M10
2	14M7275	NUT	4			X	M12
3	19M7786	SCREW	4			X	M10 X 30
4	19M7835	SCREW	4			X	M10 X 35
5	19M8348	CAP SCREW	4			X	M12 X 65
6	24M7296	WASHER	8			X	10.500 X 30 X 2.500 MM
7	24M7345	WASHER	4			X	13.500 X 24 X 2.500 MM
8	T187044	WASHER	4			X	13.500 X 45 X 3 MM
9	T215588	BRACKET	2			X	

BACKHOE VALVE MOUNTING PLATE (PILOT CONTROL)
PLAQUE DE MONTAGE DE SOUPAPE DE RETROPELLE (COMMANDE PILOTE)
PLACA DE MONTAJE DE VALVULA DE RETROEXCAVADORA (CONTROL PILOTO)

T165714 -UN-20FEB03

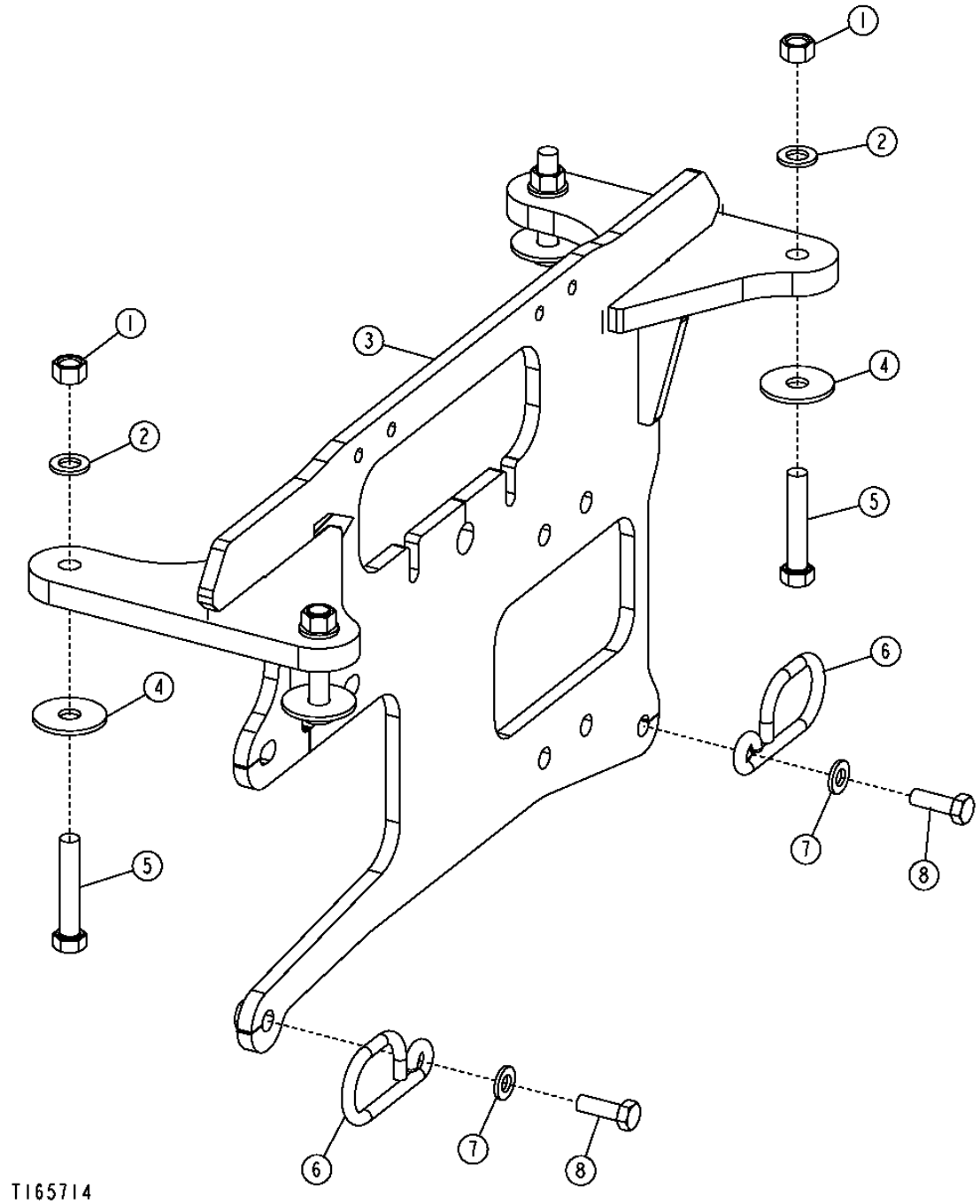

BACKHOE VALVE MOUNTING PLATE (PILOT CONTROL)
PLAQUE DE MONTAGE DE SOUPAPE DE RETROPELLE (COMMANDE PILOTE)
PLACA DE MONTAJE DE VALVULA DE RETROEXCAVADORA (CONTROL PILOTO)

KEY	*PART NO.*	*PART NAME*	*QTY.*	*SERIAL NO.*	410J	410TMC	*REMARKS*
1	14M7275	NUT	4		X		M12
2	24M7345	WASHER	4		X		
3	AT300048	BRACKET	1		X		
4	T187044	WASHER	4		X		
5	19M8348	CAP SCREW	4		X		M12 X 65
6	T166223	GUIDE	2		X		
7	24M7239	WASHER	2		X		
8	19M7662	CAP SCREW	2		X		M10 X 30

SAE BACKHOE CONTROL LINKAGE PATTERN KIT
KIT DE CONFIGURATION DE TRINGLERIE DE COMMANDE DE RETROPELLE SAE
JUEGO DE PATRON DE VARILLAJE DE CONTROL DE RETROEXCAVADORA SAE

T156583 -UN-25JUN02

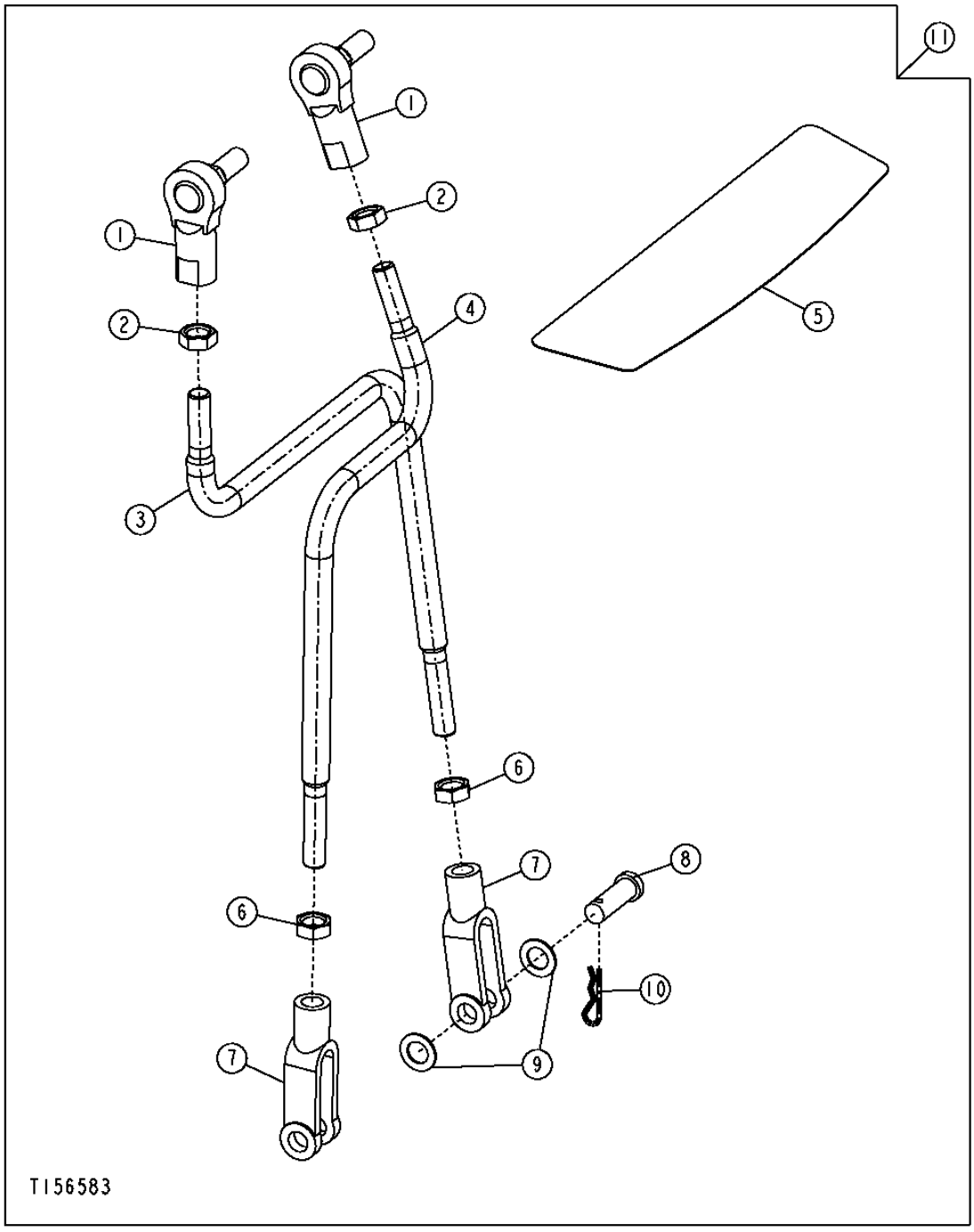

SAE BACKHOE CONTROL LINKAGE PATTERN KIT
KIT DE CONFIGURATION DE TRINGLERIE DE COMMANDE DE RETROPELLE SAE
JUEGO DE PATRON DE VARILLAJE DE CONTROL DE RETROEXCAVADORA SAE

KEY	*PART NO.*	*PART NAME*	*QTY.*	*SERIAL NO.*	410J	410SJ	*REMARKS*
1	AT169087	BALL JOINT	2		X		
2	14H774	NUT	2		X		3/8"
3	T191445	ROD	1		X		(RH)
4	T183885	STUD	1		X		
5	T165595	LABEL	1		X		
6	14H913	NUT	2		X		3/8"
7	T140328	YOKE	2		X		
8	R65563	PIN FASTENER	2		X		
9	24H1302	WASHER	6		X		13/32" X 11/16" X 0.035"
10	T202956	RETAINER	2		X		
11	**AT301434**	**KIT**	**1**		**X**		**(WHOLE GOODS)**

PILOT CONTROLLER VALVE, WITH AUX ROLLER (410TMC)
VANNE DE COMMANDE PILOTE (410TMC)
VALVULA DE PALANCA DE CONTROL PILOTO (410TMC)

TX1016149 -UN-29DEC06

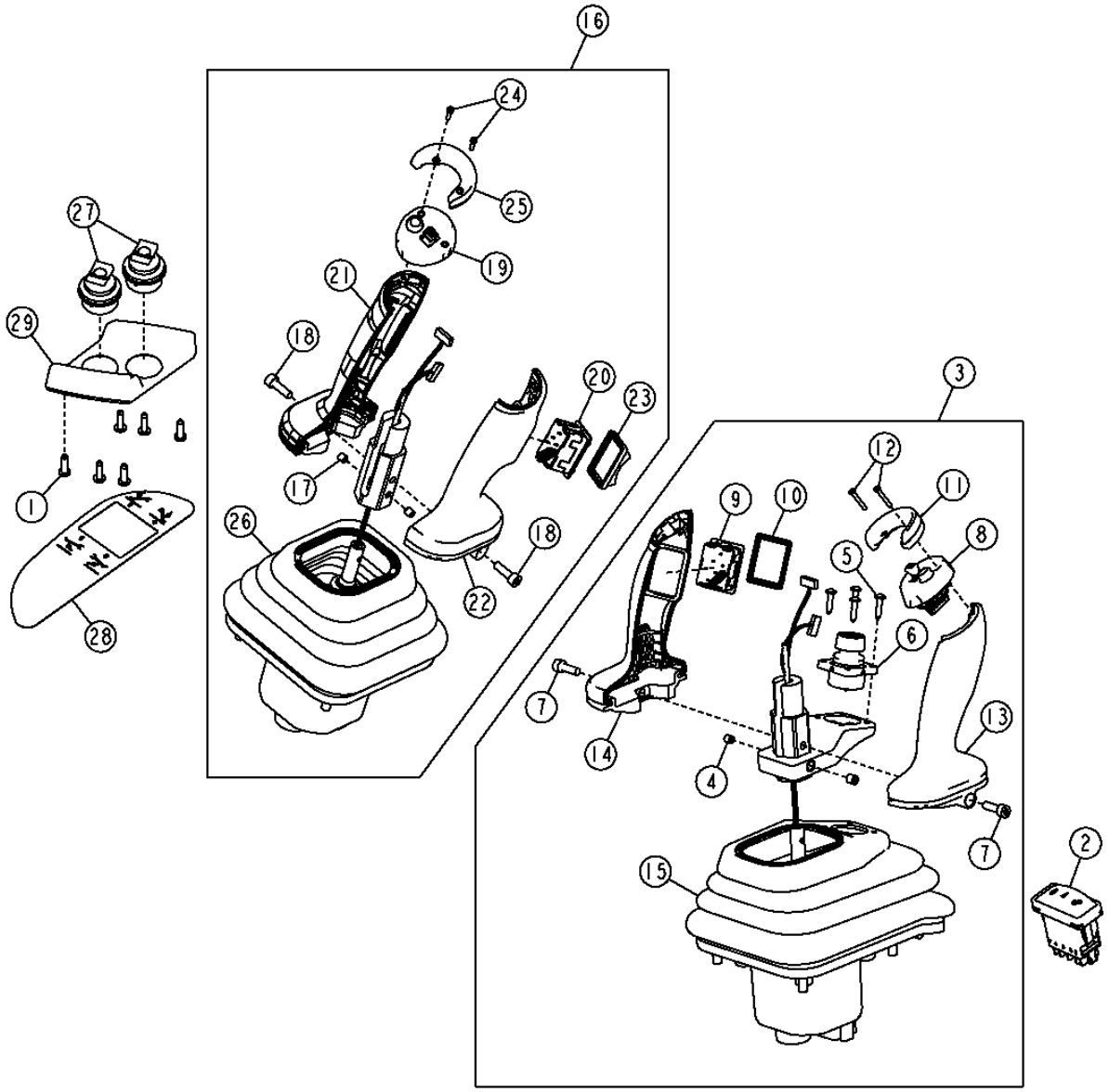

TX1016149

PILOT CONTROLLER VALVE, WITH AUX ROLLER (410TMC)
VANNE DE COMMANDE PILOTE (410TMC)
VALVULA DE PALANCA DE CONTROL PILOTO (410TMC)

KEY	PART NO.	PART NAME	QTY.	SERIAL NO.	410J	410TMC	REMARKS
1	37M7340	BOLT	6			X	
2	AT317500	TOGGLE/ROCKER SWITCH	1			X	
3	AT332550	MULTI-FUNCTIONAL CONTROLLER	1			X	(RH)
4	22M7095	SET SCREW	2			X	M5 X 6
5	37M7286	SCREW	4			X	
6	AT316070	PUSH SWITCH	1			X	
7	19M9478	SCREW	2			X	M5 X 16
8	AT313628	SWITCH	1			X	
9	AT339804	SWITCH	1			X	
10	T218990	CAP	1			X	
11	T226063	GUARD	1			X	
12	T226064	SCREW	2			X	
13	T229192	GRIP	1			X	
14	T229193	GRIP	1			X	
15	T226139	BOOT	1			X	
16	AT332551	MULTI-FUNCTIONAL CONTROLLER	1			X	(LH)
17	22M7095	SET SCREW	2			X	M5 X 6
18	19M9478	SCREW	2			X	M5 X 16
19	AT324477	SWITCH	1			X	
20	AT326992	SWITCH	1			X	
21	T216843	GRIP	1			X	
22	T216844	GRIP	1			X	
23	T218990	CAP	1			X	
24	T226064	SCREW	2			X	
25	T228550	GUARD	1			X	
26	T226043	BOOT	1			X	
27	AT336779	PUSH SWITCH	2			X	
28	T219077	LABEL	1			X	
29	T228352	PANEL	1			X	

PILOT CONTROLLER VALVE, WITHOUT AUXILLARY ROLLER (410TMC)
VANNE DE COMMANDE PILOTE (410TMC)
VALVULA DE PALANCA DE CONTROL PILOTO (410TMC)

TX1016152 -UN-29DEC06

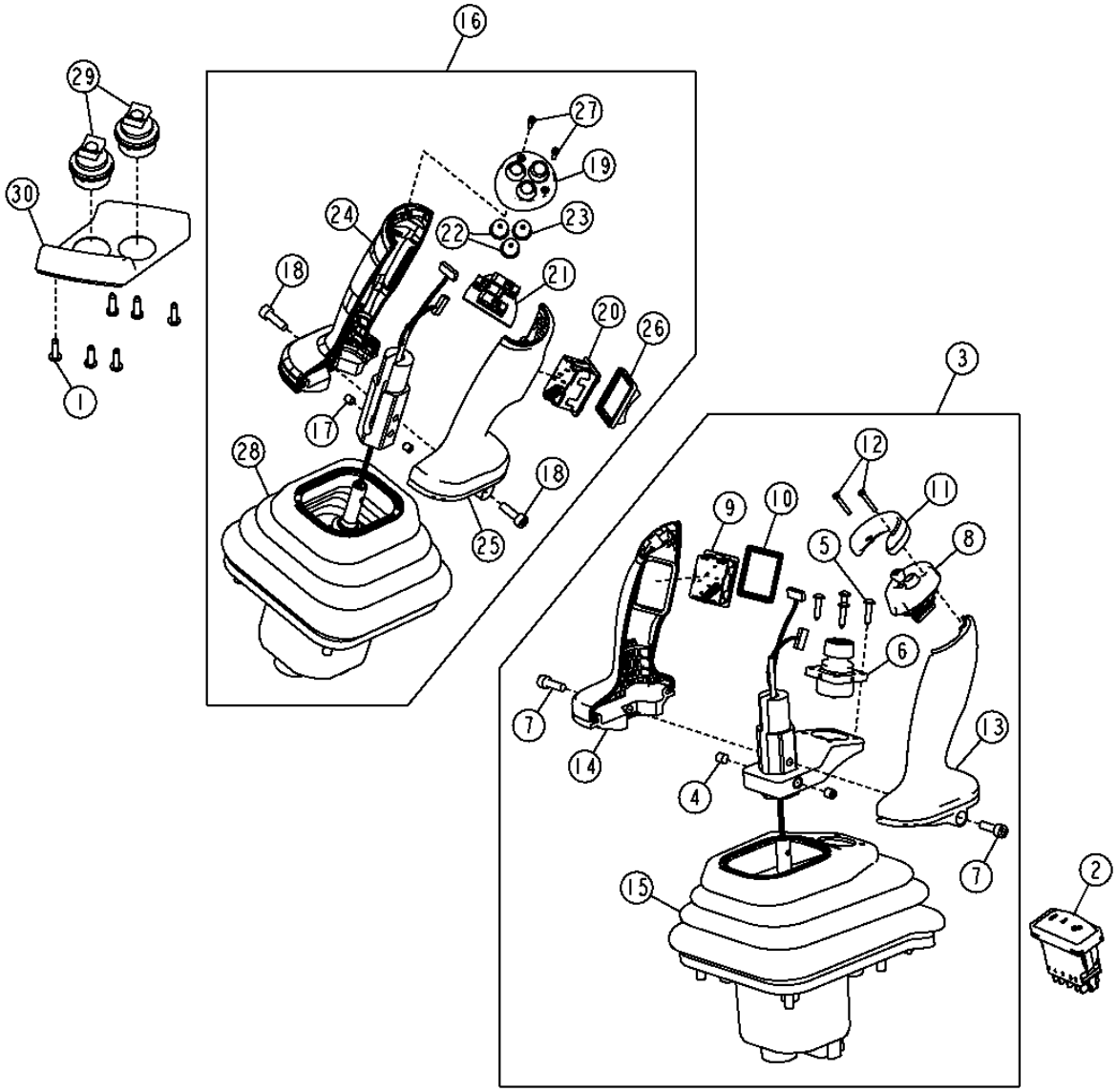

TX1016152

PILOT CONTROLLER VALVE, WITHOUT AUXILLARY ROLLER (410TMC)
VANNE DE COMMANDE PILOTE (410TMC)
VALVULA DE PALANCA DE CONTROL PILOTO (410TMC)

KEY	PART NO.	PART NAME	QTY.	SERIAL NO.	410J	410TMC	REMARKS
1	37M7340	BOLT	6		X	X	
2	AT317500	TOGGLE/ROCKER SWITCH	1		X	X	
3	AT332550	MULTI-FUNCTIONAL CONTROLLER	1		X	X	(RH)
4	22M7095	SET SCREW	2		X	X	M5 X 6
5	37M7286	SCREW	4		X	X	
6	AT316070	PUSH SWITCH	1		X	X	
7	19M9478	SCREW	2		X	X	M5 X 16
8	AT313628	SWITCH	1		X	X	
9	AT339804	SWITCH	1		X	X	
10	T218990	CAP	1		X	X	
11	T226063	GUARD	1		X	X	
12	T226064	SCREW	2		X	X	
13	T229192	GRIP	1		X	X	
14	T229193	GRIP	1		X	X	
15	T226139	BOOT	1		X	X	
16	AT333367	MULTI-FUNCTIONAL CONTROLLER	1		X	X	(LH)
17	22M7095	SET SCREW	2		X	X	M5 X 6
18	19M9478	SCREW	2		X	X	M5 X 16
19	AT323930	CAP	1		X	X	
20	AT326992	SWITCH	1		X	X	
21	AT327078	PUSH BUTTON	1		X	X	
22	T216837	KNOB	1		X	X	
23	T216838	KNOB	1		X	X	
24	T216843	GRIP	2		X	X	
25	T216844	GRIP	1		X	X	
26	T218990	CAP	1		X	X	
27	T229194	SCREW	2		X	X	
28	T226043	BOOT	1		X	X	
29	AT336779	PUSH SWITCH	2		X	X	
30	T228352	PANEL	1		X	X	

SIXTH FUNCTION PEDAL
PEDALE DE SIXIEME FONCTION
PEDAL DE SEXTA FUNCION

T165820 -UN-25FEB03

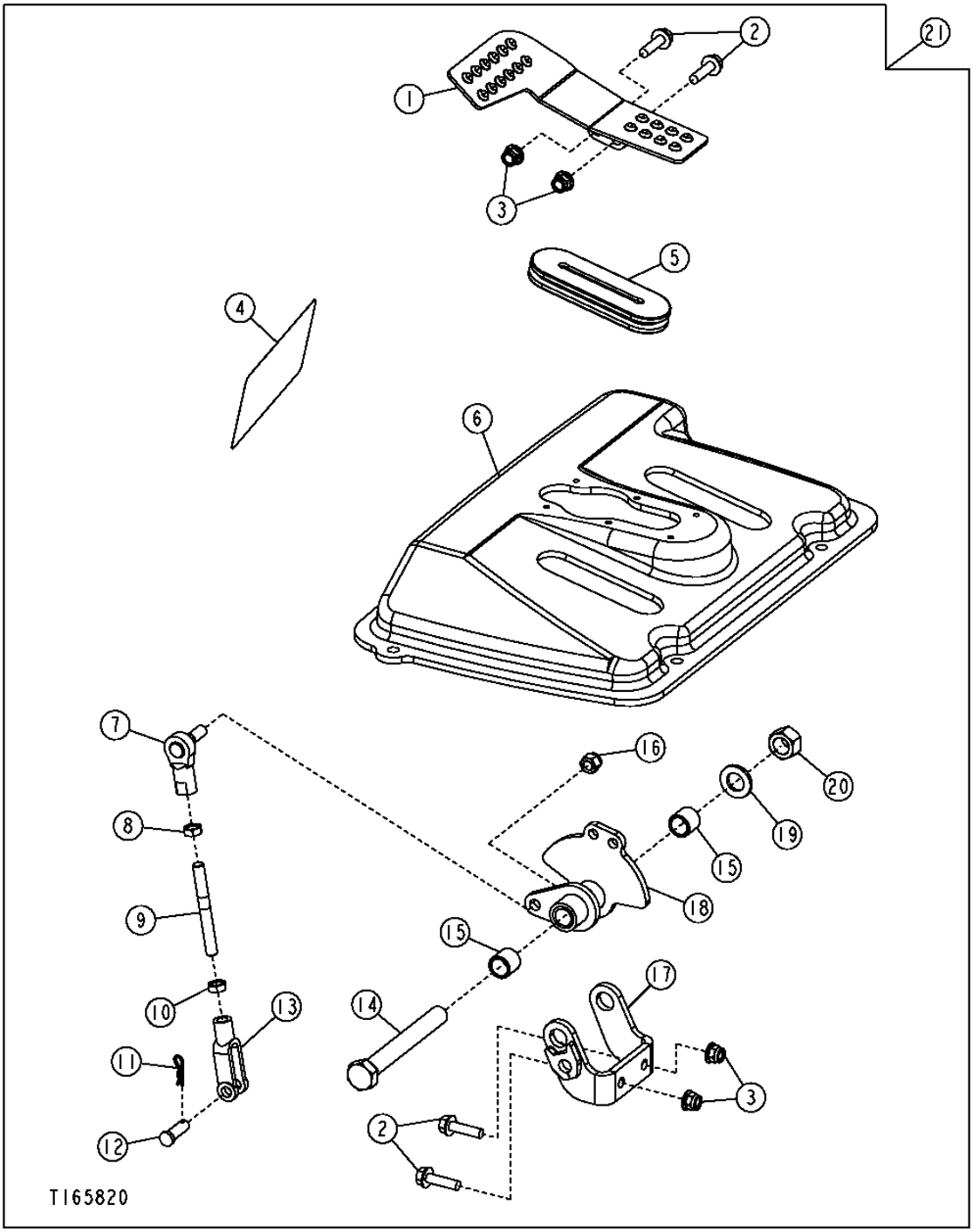

SIXTH FUNCTION PEDAL
PEDALE DE SIXIEME FONCTION
PEDAL DE SEXTA FUNCION

KEY	PART NO.	PART NAME	QTY.	SERIAL NO.	410J	410TMC	REMARKS
1	AT300057	PEDAL	1		X		
2	19M7868	SCREW	4		X		M8 X 30
3	14M7396	LOCK NUT	4		X		M8
4	T185692	LABEL	1		X		
5	T200095	GROMMET	1		X		
6	T200094	COVER	1		X		
7	AT169087	BALL JOINT	1		X		
8	14H774	NUT	1		X		3/8"
9	T200078	STUD	1		X		
10	14H913	NUT	1		X		3/8"
11	R46528	SPRING LOCKING PIN	1		X		
12	R65563	PIN FASTENER	1		X		
13	T140328	YOKE	1		X		
14	19H3353	CAP SCREW	1		X		5/8" X 5"
15	T58109	BUSHING	2		X		
16	M68954	LOCK NUT	1		X		3/8"
17	AT300060	BRACKET	1		X		
18	AT300055	PIVOT	1		X		
19	24M7053	WASHER	1		X		
20	U14555	LOCK NUT	1		X		5/8"
21	**AT301485**	**KIT**	**1**		**X**		**WHOLE GOODS**

BACKHOE BOOM LOCK
VERROUILLAGE DE FLECHE DE RETROPELLE
BLOQUEO DE AGUILON DE RETROEXCAVADORA

T157614 -UN-

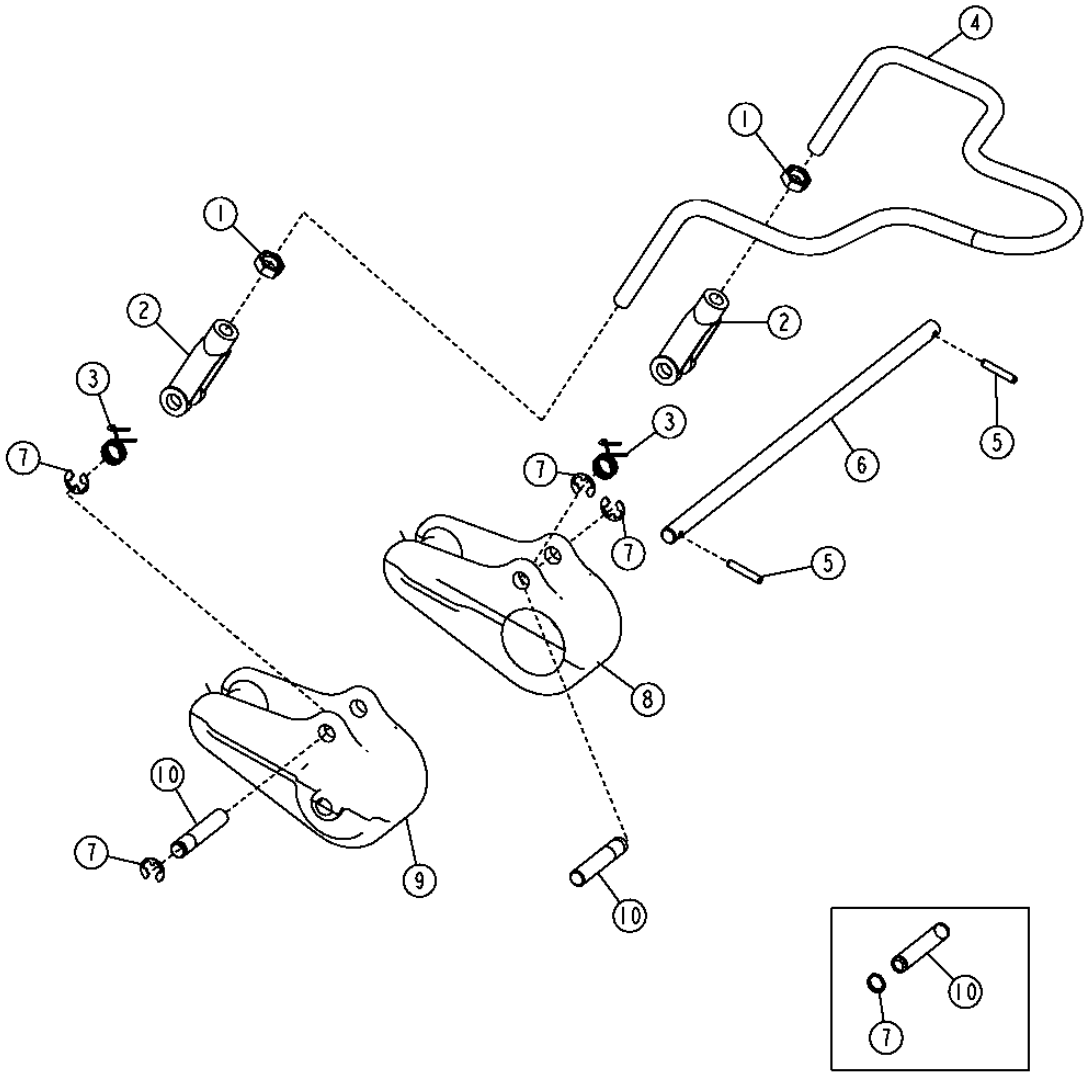

BACKHOE BOOM LOCK
VERROUILLAGE DE FLECHE DE RETROPELLE
BLOQUEO DE AGUILON DE RETROEXCAVADORA

KEY	PART NO.	PART NAME	QTY.	SERIAL NO.	410J	410TMC	REMARKS
1	14H856	NUT	2		X	X	1/2"
2	T121474	YOKE	2		X	X	
3	T160589	SPRING	2		X	X	
4	T157762	ROD	1		X	X	
5	34M7141	SPRING PIN	2		X	X	
6	T160515	PIN	1		X	X	
7	R26871	SNAP RING	4		X	X	
	24M7047	WASHER	AR		X	X	13 X 24 X 2.500 MM
8	T186005	LOCK	1		X	X	LH, (SUB FOR T160638)
9	T186006	LOCK	1		X	X	RH, (SUB FOR T160639)
10	T186000	PIN	2		X	X	

SWING FRAME
CHASSIS DE PIVOTEMENT
BASTIDOR DE GIRO

TX1014738 -UN-29NOV06

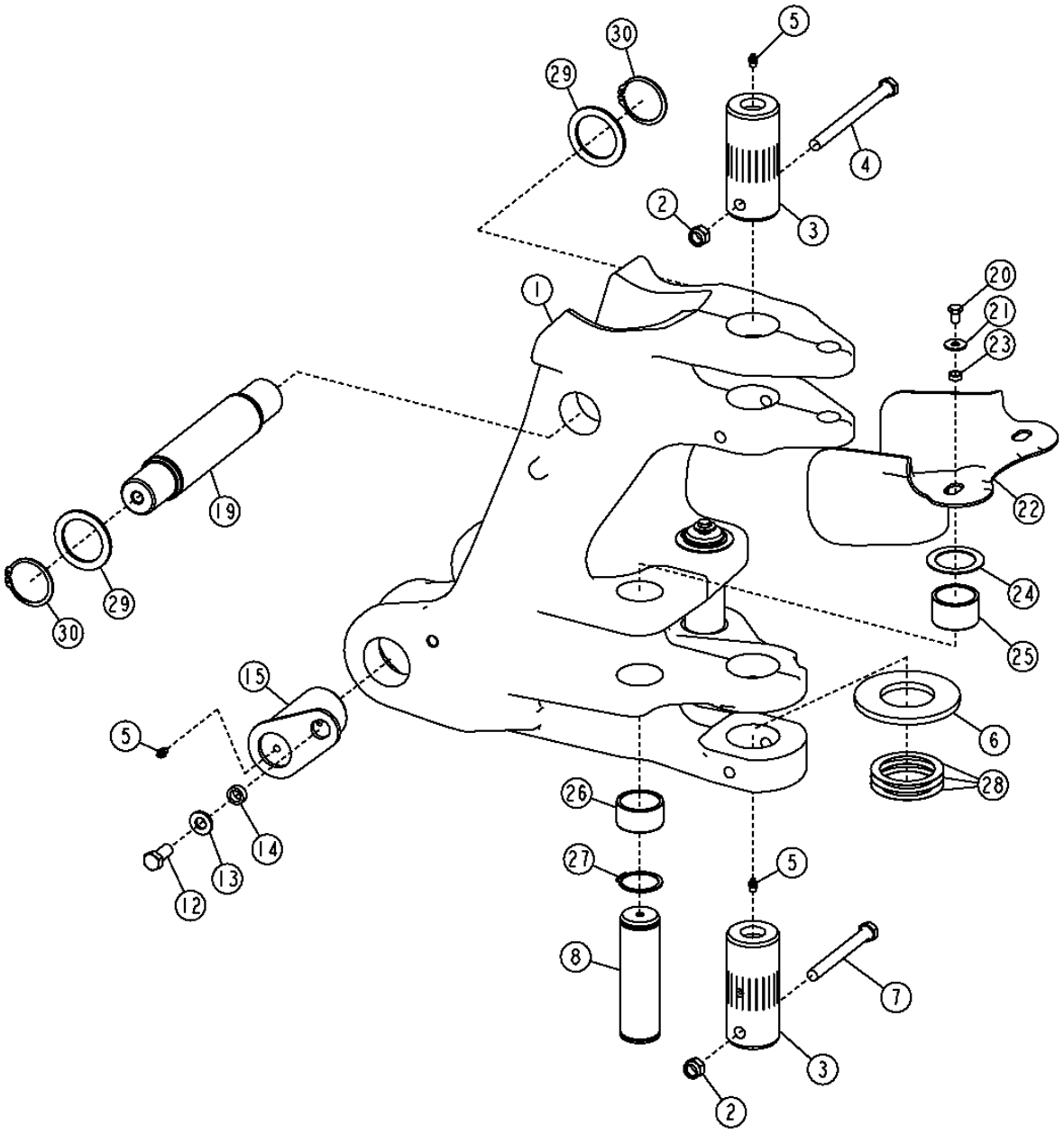

SWING FRAME
CHASSIS DE PIVOTEMENT
BASTIDOR DE GIRO

KEY	PART NO.	PART NAME	QTY.	SERIAL NO.	410J	410TMC	REMARKS
1	AT334602	FRAME	1		X		(INCLUDES (2) T201361 AND (2) T201362)
	AT313351	FRAME	1			X	(INCLUDES (2) T201361 AND (2) T201362)
2	14M7328	LOCK NUT	2		X	X	M16
3	T153531	PIN FASTENER	2		X	X	STD
	T165563	PIN	2		X	X	OS
	T212948	PIN FASTENER	2		X	X	CHROME
4	19M8021	CAP SCREW	1		X	X	M16 X 200
5	T162396	LUBRICATION FITTING	4		X	X	
6	T205875	THRUST WASHER	1		X	X	
7	19M7954	CAP SCREW	1		X	X	M16 X 150
8	T201971	PIN	1		X	X	
12	19M8035	CAP SCREW	2		X	X	M16 X 35
13	24M7241	WASHER	2		X	X	
14	T215678	BUSHING	2		X	X	
15	AT303272	PIN	2		X	X	STD
19	T217548	PIN	1		X	X	
20	19M8324	CAP SCREW	2		X	X	M10 X 16
21	24M7296	WASHER	2		X	X	
22	T190924	HOSE GUARD	1		X	X	
23	H140456	WASHER	2		X	X	
24	T161036	WASHER	2		X	X	
25	T201361	BUSHING	2		X	X	
26	T201362	BUSHING	2		X	X	
27	40M7066	SNAP RING	4		X	X	
28	T161497	SHIM	3		X	X	0.508 MM (0.020")
29	24H1615	WASHER	2		X	X	
30	40M7120	SNAP RING	2		X	X	

BACKHOE BOOM
FLECHE DE RETROPELLE
AGUILON DE RETROEXCAVADORA

TX1016694 -UN-27DEC06

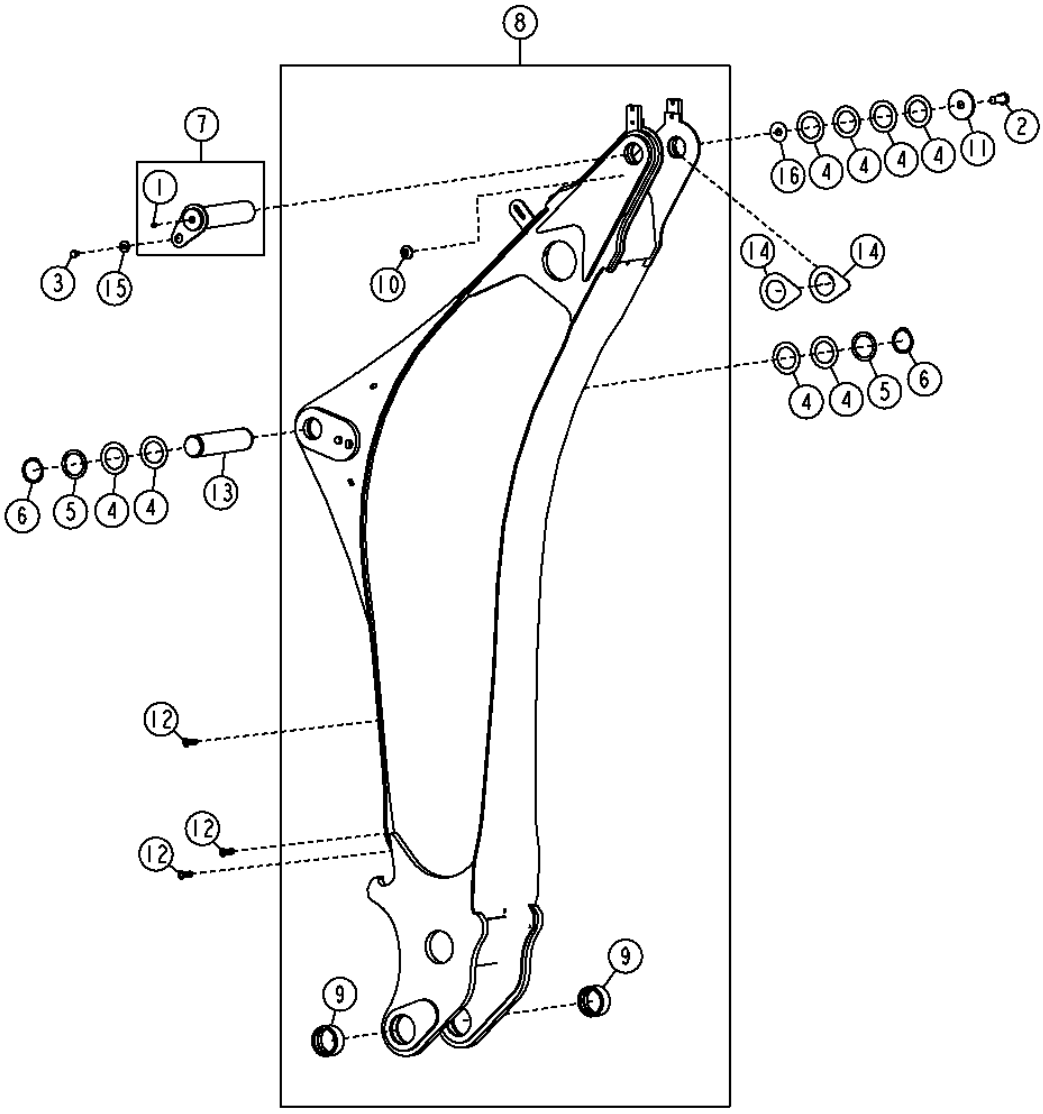

TX1016694

BACKHOE BOOM
FLECHE DE RETROPELLE
AGUILON DE RETROEXCAVADORA

KEY	PART NO.	PART NAME	QTY.	SERIAL NO.	410J	410TMC	REMARKS
1	T162396	LUBRICATION FITTING	1		X	X	
2	19M7597	CAP SCREW	1		X	X	M20 X 50
3	19M8935	CAP SCREW	1		X	X	M12 X 16
4	24H1616	WASHER	8		X	X	2-9/16" X 3-3/4" X 0.036"
5	24H1635	WASHER	2		X	X	2-5/8" X 3-3/8" X 0.120"
6	40M7120	SNAP RING	2		X	X	
7	AT197726	PIN	1		X	X	
8	AT322883	BACKHOE BOOM	1		X	X	
9	T164183	BUSHING	2		X	X	
10	T188568	BUSHING	1		X	X	
11	T101807	WASHER	1		X	X	
12	T148410	NUT	3		X	X	M10, (RED NO.8 FOR 8 MM PLATE)
13	T154922	PIN	1		X	X	
14	T208510	WASHER	2		X	X	
15	T29342	WASHER	1		X	X	
16	T33376	SHIM	1		X	X	

BOOM PROTECTION PLATE
PLAQUE DE PROTECTION FLECHE
PLACA DEL PROTECCION DEL AGUILON

TX1016702 -UN-27DEC06

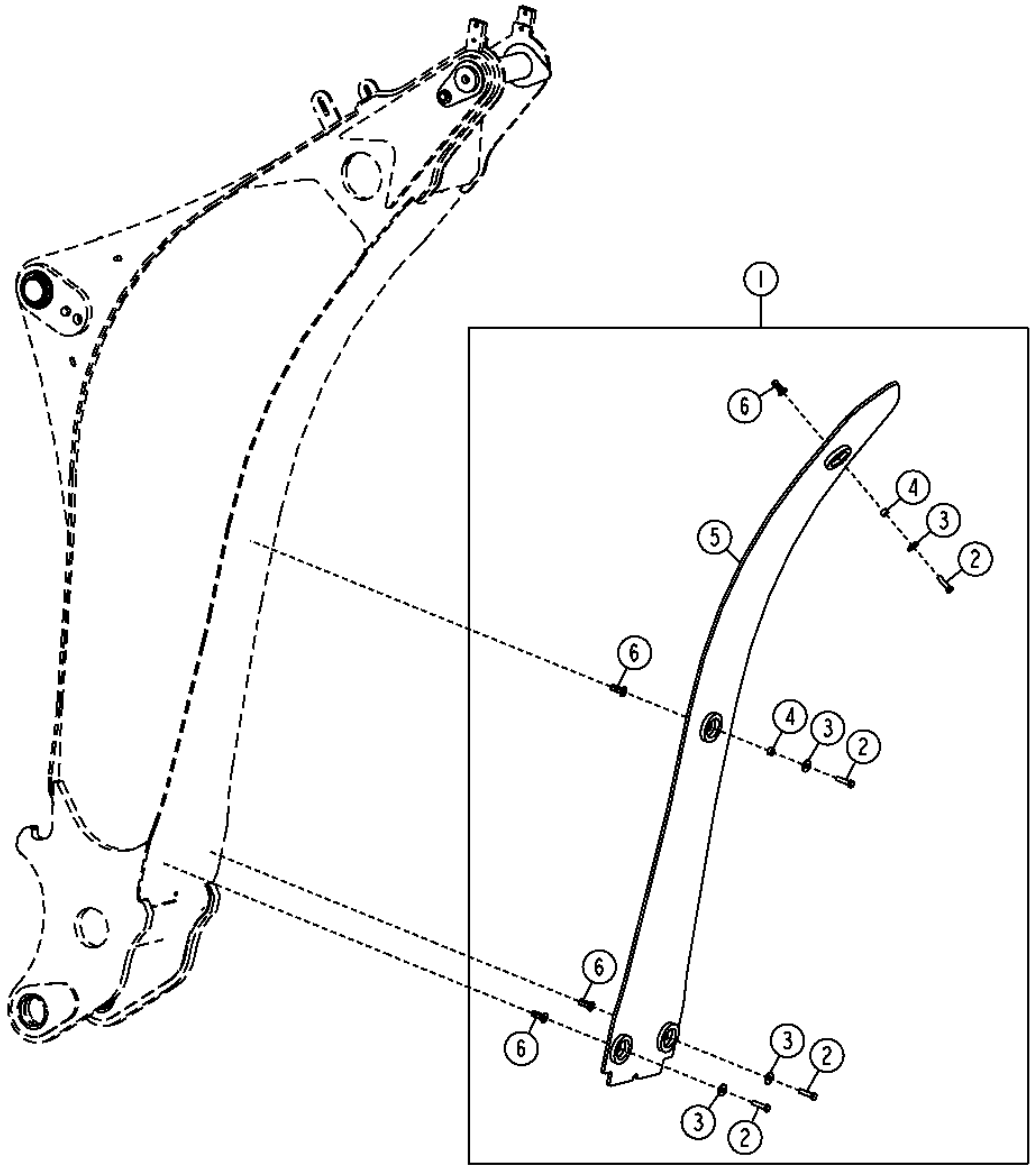

TX1016702

BOOM PROTECTION PLATE
PLAQUE DE PROTECTION FLECHE
PLACA DEL PROTECCION DEL AGUILON

KEY	PART NO.	PART NAME	QTY.	SERIAL NO.	410J	410TMC	REMARKS
1	AT323580	FIELD INSTALLATION KIT	1		X	X	
2	19M8637	CAP SCREW	4		X	X	M10 X 40
3	24M7296	WASHER	4		X	X	10.500 X 30 X 2.500 MM
4	28H1519	WASHER	2		X	X	
5	.....	PLATE	1		X	X	(FURNISH AT323580)
6	T148409	NUT	4		X	X	M10, (GOLD NO.6 FOR 6 MM PLATE)

EXTENDABLE DIPPERSTICK PROTECTION AND GRIP REPLACEMENT KIT
JUEGO DE PROTECCION Y EMPUNADURA DE BRAZO (BRAZO EXTENSIBLE)
PROTECTION ET KIT DE POIGNEE DE BRAS (BRAS TELESCOPIQUE)

TX1016701 -UN-21DEC06

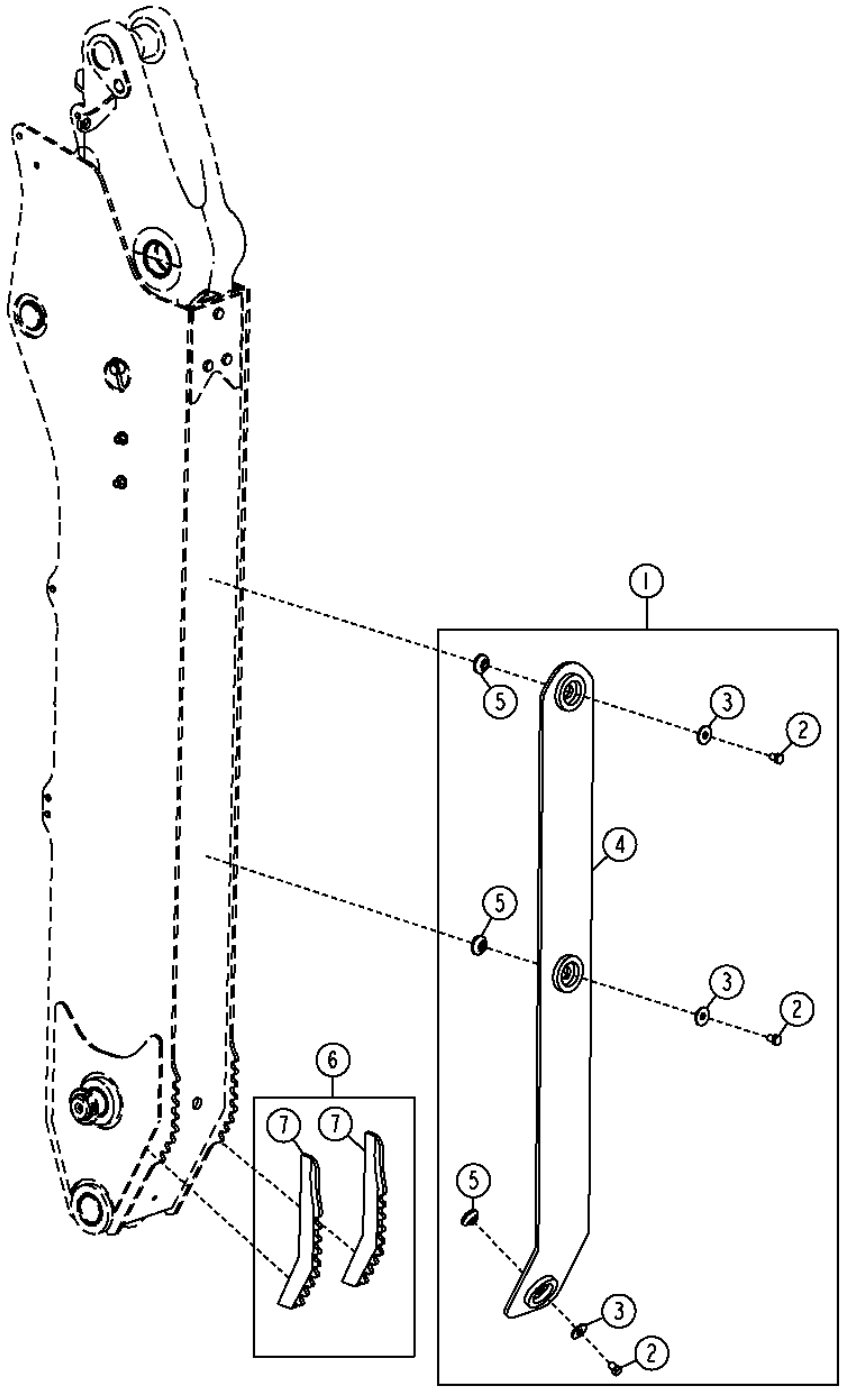

TX1016701

EXTENDABLE DIPPERSTICK PROTECTION AND GRIP REPLACEMENT KIT
JUEGO DE PROTECCION Y EMPUNADURA DE BRAZO (BRAZO EXTENSIBLE)
PROTECTION ET KIT DE POIGNEE DE BRAS (BRAS TELESCOPIQUE)

KEY	PART NO.	PART NAME	QTY.	SERIAL NO.	410G	410TJ	REMARKS
1	AT335984	KIT	1		X	X	(WHOLE GOODS)
2	19M8935	CAP SCREW	3		X	X	
3	24M7180	WASHER	3		X	X	
4	AT335986	PLATE	1		X	X	
5	T188568	BUSHING	3		X	X	
6	**AT182197**	**KIT**	**1**		**X**	**X**	**(WHOLE GOODS)**
7	T163052	GRIP	2		X	X	

BACKHOE BUCKET LINKS
TRINGLERIES DE GODET DE RETROPELLE
BRAZOS DE CUCHARON DE RETROEXCAVADORA

TX1016478 -UN-29DEC06

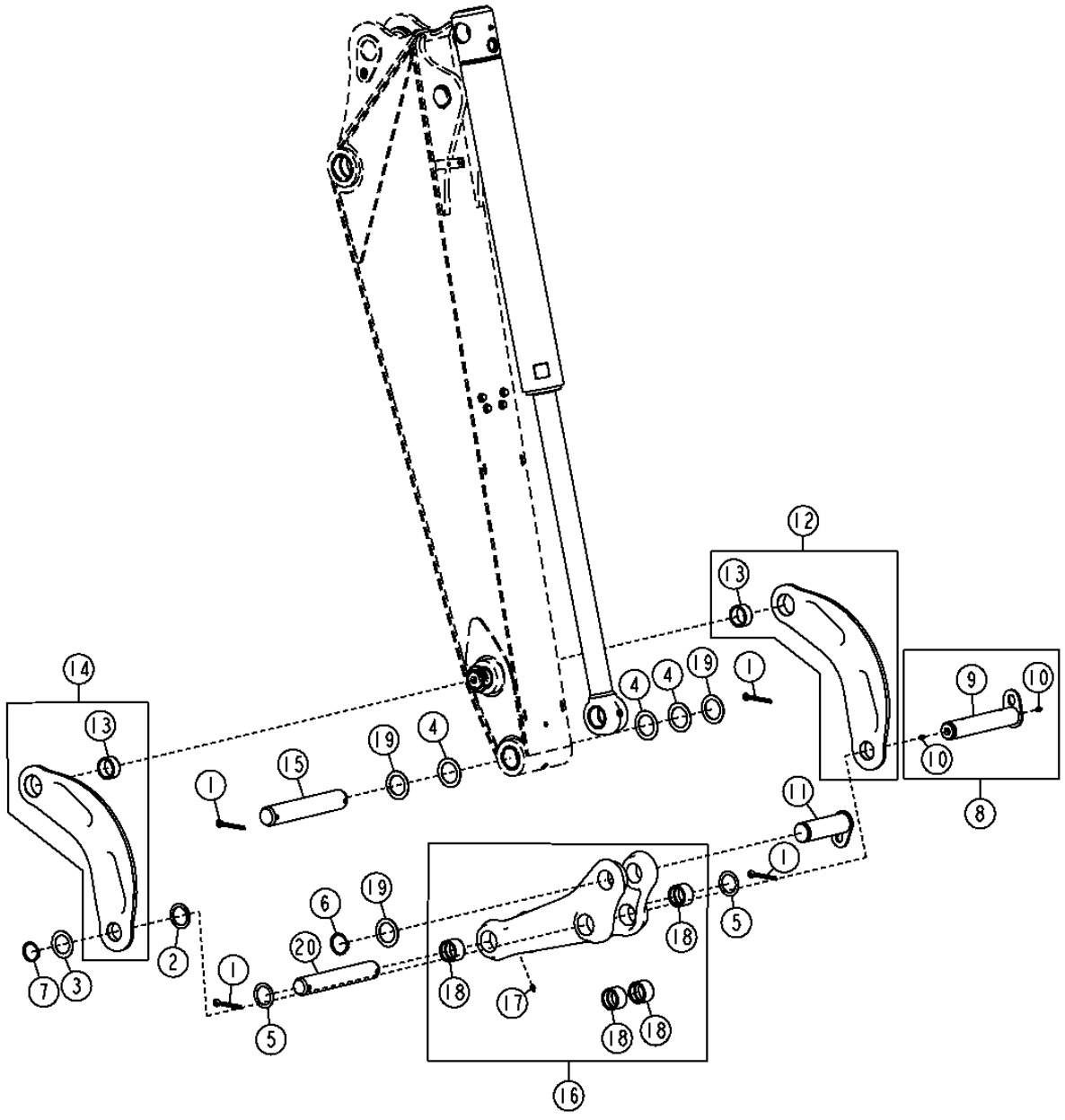

BACKHOE BUCKET LINKS
TRINGLERIES DE GODET DE RETROPELLE
BRAZOS DE CUCHARON DE RETROEXCAVADORA

KEY	PART NO.	PART NAME	QTY.	SERIAL NO.	410J	410TMC	REMARKS
1	11H227	COTTER PIN	4		X	X	3/8" X 3"
2	24H1594	WASHER	1		X	X	52.375 X 69.850 X 3.404 MM
3	24H1595	WASHER	1		X	X	52.375 X 76.200 X 1.905 MM
4	24H1679	WASHER	3		X	X	57.556 X 82.550 X 1.524 MM
5	24H1683	WASHER	2		X	X	51.587 X 69.850 X 1.524 MM
6	40M7066	SNAP RING	1		X	X	
7	40M7166	SNAP RING	1		X	X	
8	AT171077	PIN	1		X	X	
9	.....	PIN	1		X	X	(ORDER AT171077)
10	T162396	LUBRICATION FITTING	1		X	X	
11	AT324237	PIN FASTENER	1		X	X	
12	AT324620	LINK	1		X	X	
13	T166715	BUSHING	1		X	X	49.893 X 60.130 X 27 MM
14	AT324621	LINK	1		X	X	
15	T185832	PIN FASTENER	1		X	X	54.475 X 320 MM
16	AT324622	LINK	1		X	X	
17	JD7798	LUBRICATION FITTING	1		X	X	
18	T154273	BUSHING	4		X	X	49.780 X 60.130 X 38 MM
19	T161036	WASHER	3		X	X	56 X 80 X 2 MM
20	T185831	PIN FASTENER	1		X	X	49.475 X 320 MM

STANDARD DIPPERSTICK
BRAS STANDARD
BRAZO ESTANDAR

TX1016703 -UN-27DEC06

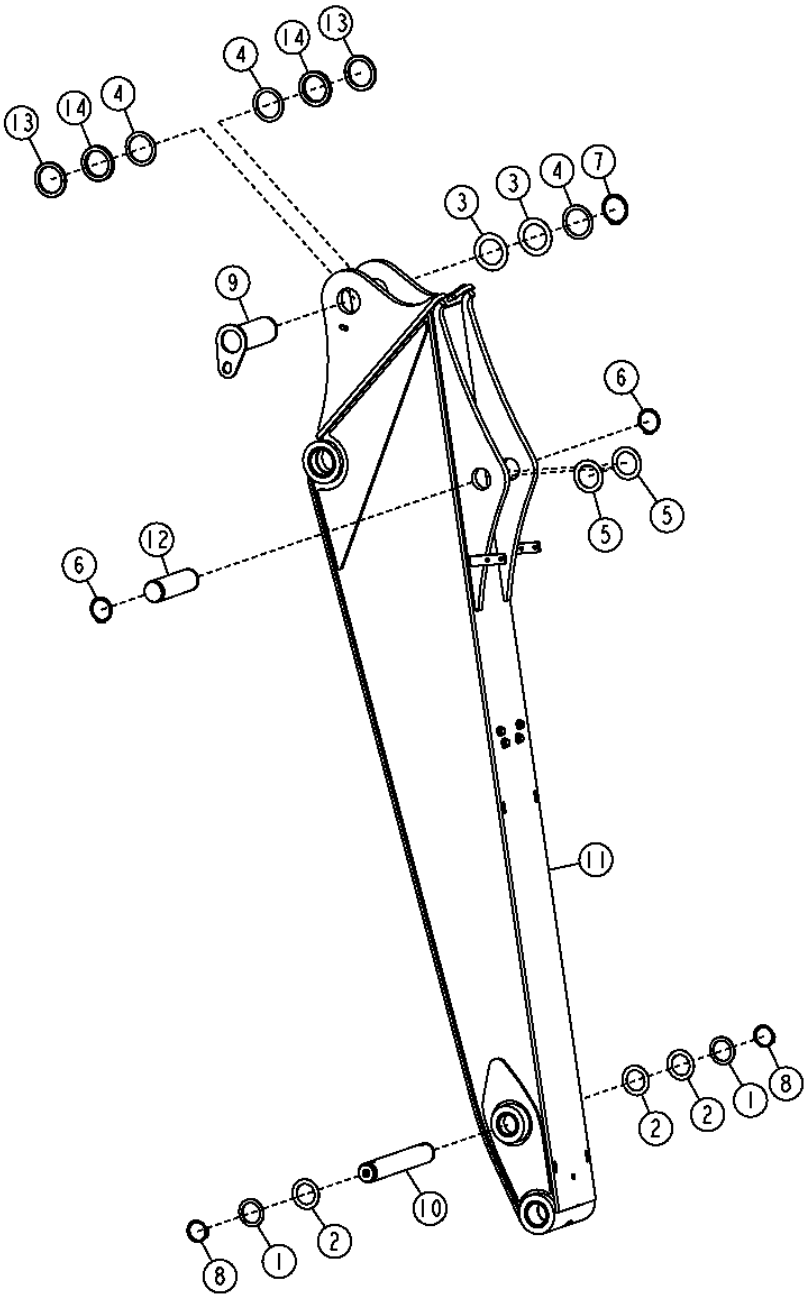

TX1016703

THIS PARTS LISTING IS CONTINUED

STANDARD DIPPERSTICK
BRAS STANDARD
BRAZO ESTANDAR

KEY	PART NO.	PART NAME	QTY.	SERIAL NO.	410J	410TMC	REMARKS
1	24H1594	WASHER	2		X		2-1/16" X 2-3/4" X 0.134"
2	24H1595	WASHER	3		X		2-1/16" X 3" X 0.075"
3	24H1616	WASHER	2		X		2-9/16" X 3-3/4" X 0.036"
4	24H1635	WASHER	3		X		2-5/8" X 3-3/8" X 0.120"
5	24H1679	WASHER	2		X		2-17/64" X 3-1/4" X 0.060"
6	40M7066	SNAP RING	2		X		
7	40M7120	SNAP RING	1		X		
8	40M7166	SNAP RING	2		X		
9	AT169831	PIN	1		X		
10	AT171079	PIN	1		X		
11	AT171352	DIPPERSTICK	1		X		
12	T153567	PIN	1		X		54.475 X 186 MM, STD
13	T160299	WEAR PLATE	2		X		
14	T160302	SPACER	2		X		

EXTENDABLE ARM AND LOCKING PINS
BRAS TELESCOPIQUE ET AXE DE BLOCAGE
BRAZO EXTENSIBLE Y PASADOR DE BLOQUEO

TX1017918 -UN-

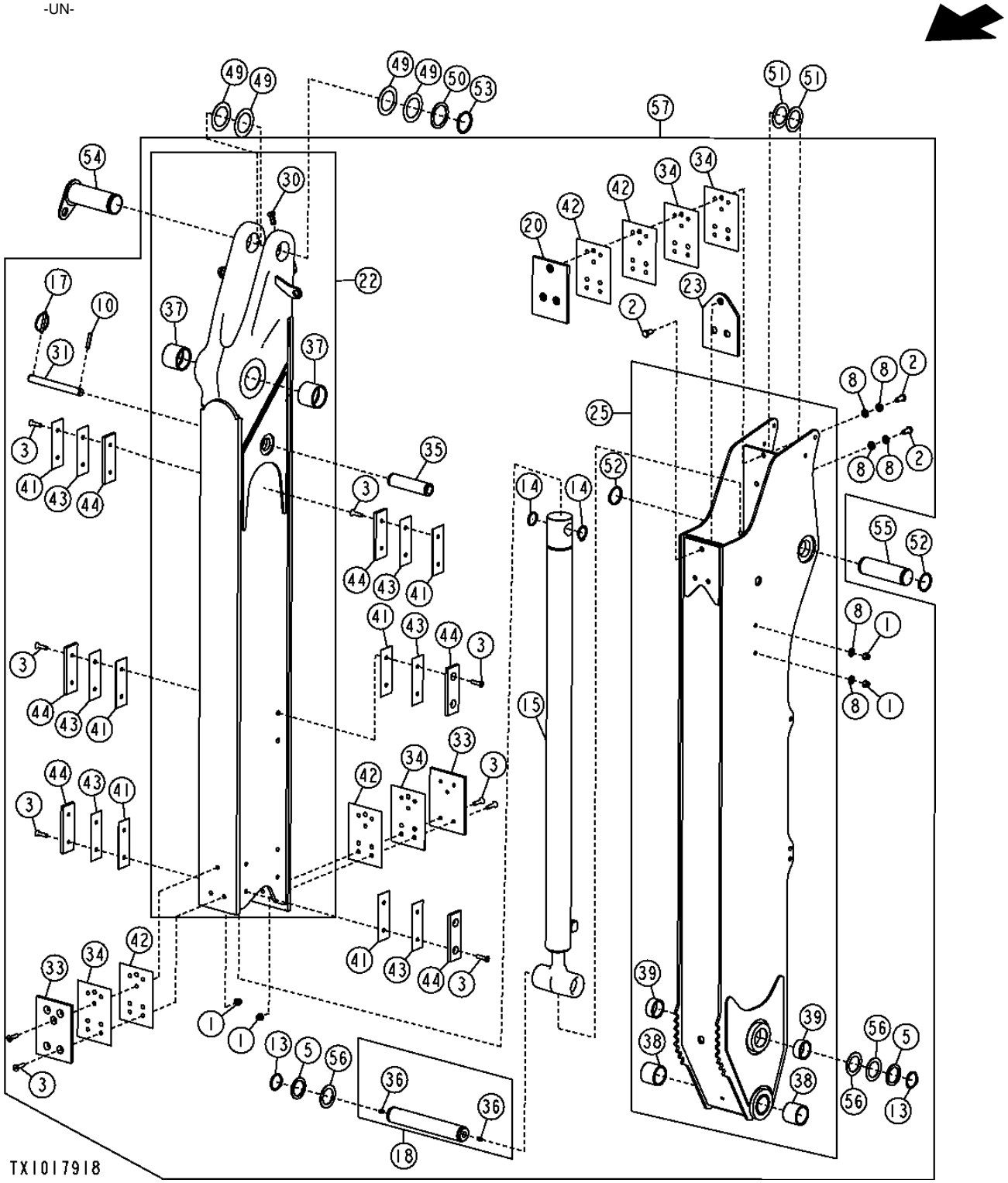

EXTENDABLE ARM AND LOCKING PIN
BRAS TELESCOPIQUE ET AXE DE BLOCAGE
BRAZO EXTENSIBLE Y PASADOR DE BLOQUEO

KEY	PART NO.	PART NAME	QTY.	SERIAL NO.	410J	410TMC	REMARKS
1	14M7400	LOCK NUT	18		X	X	M10
2	19H2472	CAP SCREW	6		X	X	12.700 X 25.400 MM
3	19M7666	SCREW	22		X	X	M10 X 40
5	24H1594	WASHER	2		X	X	52.375 X 69.850 X 3.404 MM
8	24M7240	WASHER	10		X	X	13 X 25 X 3 MM
10	34M7054	SPRING PIN	1		X	X	10 X 50 MM
13	40M7166	SNAP RING	2		X	X	
14	40M7179	SNAP RING	2		X	X	
15	AH209719	HYDRAULIC CYLINDER	1		X	X	
17	AR83396	QUICK LOCK PIN	1		X	X	
18	AT171079	PIN	1		X	X	
20	AT173933	WEAR PLATE	1		X	X	
22	AT322990	DIPPERSTICK	1		X	X	
23	AT330944	WEAR PLATE	1		X	X	
25	AT337762	DIPPERSTICK	1		X	X	
30	T148410	NUT	1		X	X	M10
31	T153322	PIN	1		X	X	22.225 X 216 MM
33	T157792	WEAR PLATE	2		X	X	
34	T157796	SHIM	4		X	X	
35	T160384	SPACER	1		X	X	25 X 40 X 158 MM
36	T162396	LUBRICATION FITTING	3		X	X	
37	T162581	BUSHING	2		X	X	
38	T166686	BUSHING	2		X	X	54.893 X 65.130 X 55 MM
39	T166715	BUSHING	1		X	X	49.893 X 60.130 X 27 MM
41	T227937	SHIM	8		X	X	
42	T228082	SHIM	4		X	X	
43	T228083	SHIM	8		X	X	
44	T228148	WEAR PLATE	8		X	X	
49	24H1616	WASHER	1		X	X	2-9/16" X 3-3/4" X 0.036"
50	24H1635	WASHER	1		X	X	2-5/8" X 3-3/8" X 0.120"
51	24H1679	WASHER	1		X	X	2-17/64" X 3-1/4" X 0.060"
52	40M7066	SNAP RING	1		X	X	
53	40M7120	SNAP RING	1		X	X	
54	AT169831	PIN	1		X	X	
55	T153567	PIN	1		X	X	54.475 X 186 MM
56	24H1595	WASHER	1		X	X	2-1/16" X 3" X 0.075"
57	**AT336109**	**ARM**	**1**		**X**	**X**	**CA**
	AT336108	**KIT**	**1**		**X**	**X**	**(WHOLE GOODS) INCLUDES HYDRAULIC HOSES, FITTINGS, CLAMPS AND HARDWARE CONTAINED INSIDE THE EXTENDABLE ARMS**

THIS PARTS LISTING IS CONTINUED

STABILIZER ARMS AND FEET
BRAS ET PIEDS DE STABILISATEUR
BRAZOS Y PATAS ESTABILIZADORES

TX1015872 -UN-23DEC06

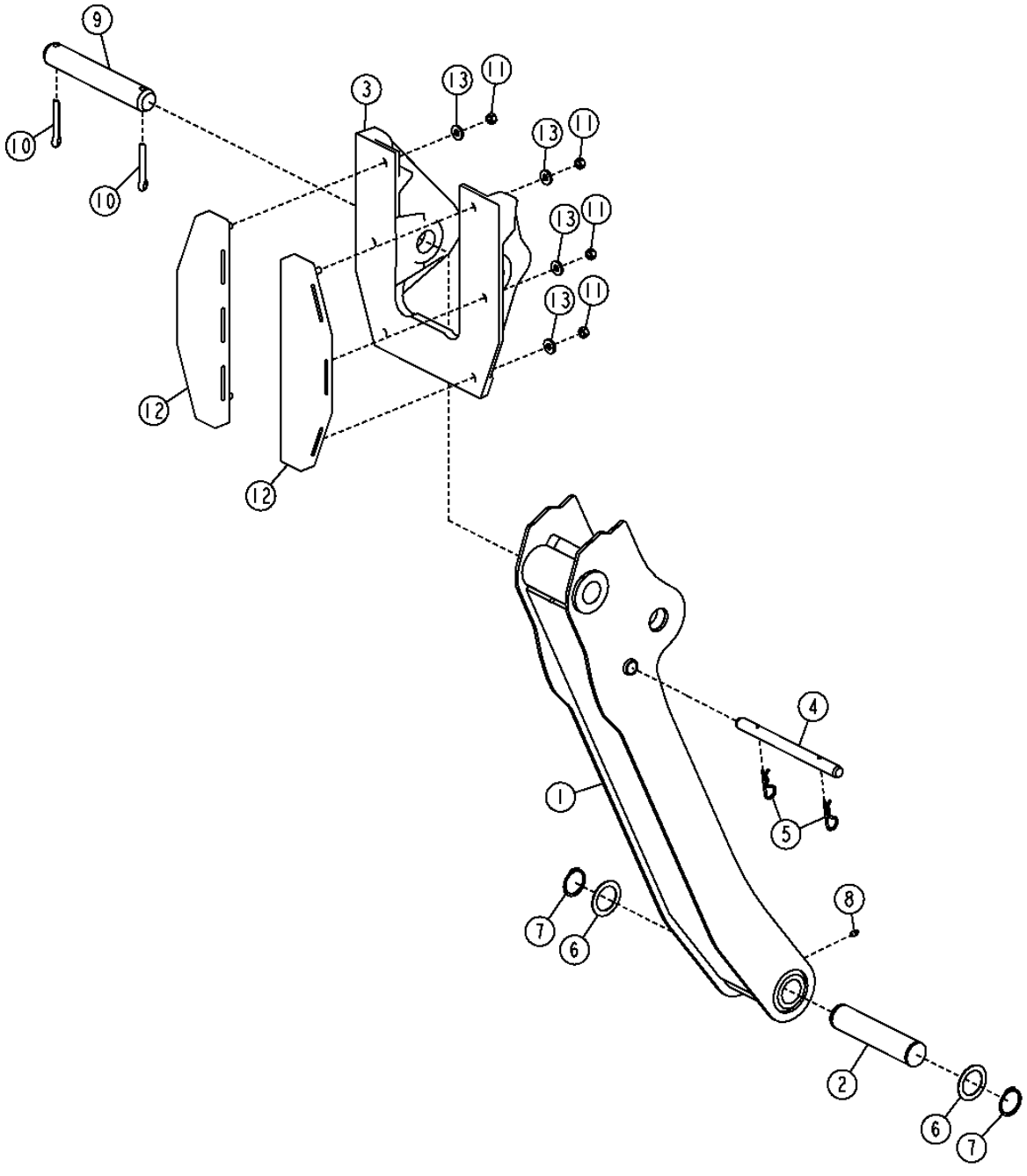

TX1015872

STABILIZER ARMS AND FEET
BRAS ET PIEDS DE STABILISATEUR
BRAZOS Y PATAS ESTABILIZADORES

KEY	PART NO.	PART NAME	QTY.	SERIAL NO.	410J	410TMC	REMARKS
1	AT336276	STABILIZER	2		X	X	
2	T163109	PIN FASTENER	2		X	X	
3	AT195669	STREET PAD	4		X	X	
4	T184988	PIN FASTENER	2		X	X	
5	A3581R	SPRING LOCKING PIN	4		X	X	
6	T161036	WASHER	4		X	X	
7	40M7066	SNAP RING	4		X	X	
8	T162396	LUBRICATION FITTING	2		X	X	
9	T69472	PIN FASTENER	2		X	X	
10	11H270	COTTER PIN	4		X	X	1/2" X 3"
11	14H1040	NUT	12		X	X	1/2"
12	T206569	STABILIZER FOOT	2		X	X	
13	T29342	WASHER	12		X	X	

BACKHOE CONTROL VALVE
DISTRIBUTEUR DE RETROPELLE
VALVULA DE CONTROL DE RETROEXCAVADORA

TP69603 -UN-03OCT00

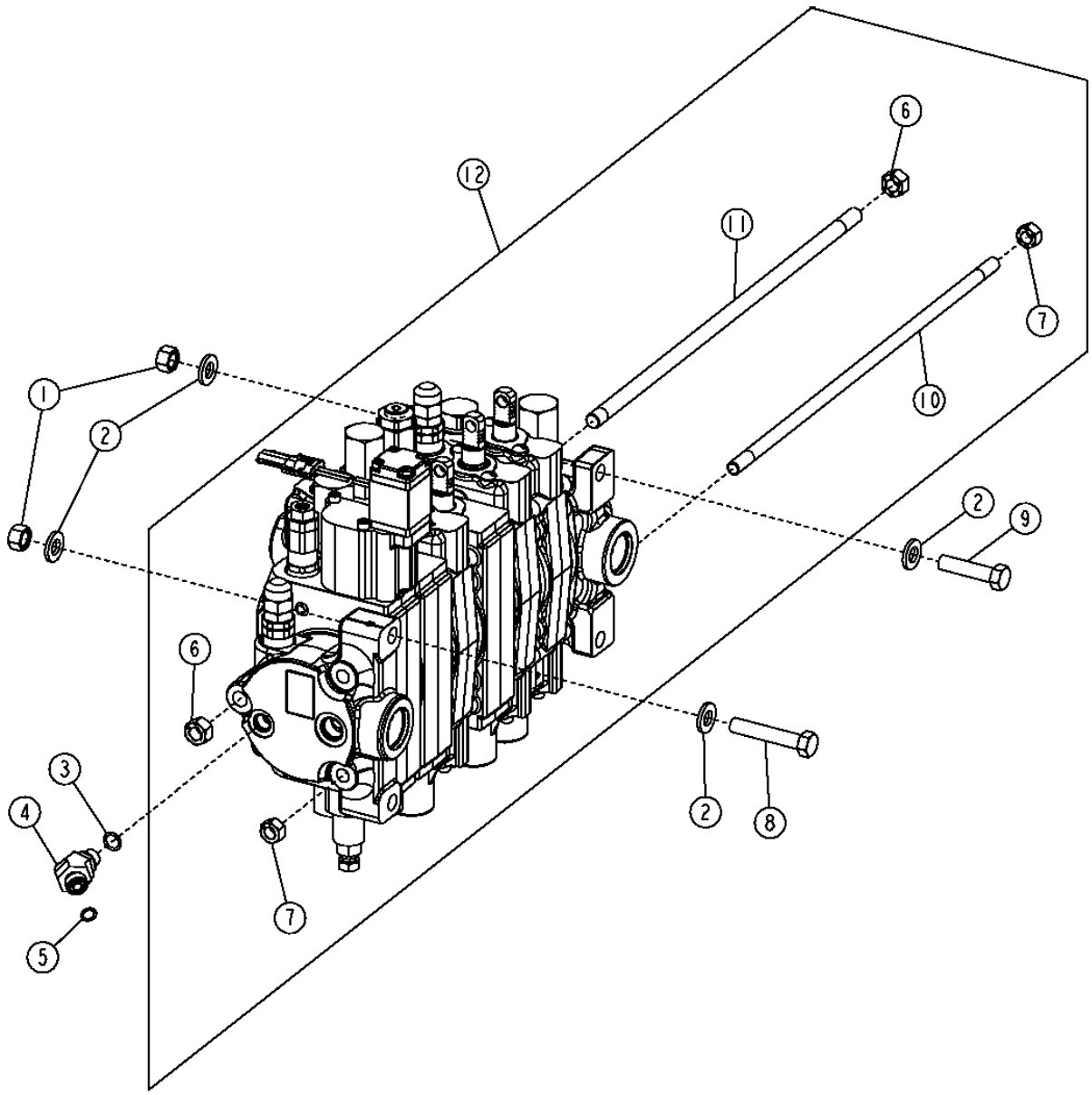

TP69603

BACKHOE CONTROL VALVE
DISTRIBUTEUR DE RETROPELLE
VALVULA DE CONTROL DE RETROEXCAVADORA

KEY	PART NO.	PART NAME	QTY.	SERIAL NO.	410J	410TMC	REMARKS
1	14M7275	NUT	3		X		M12
2	24M7240	WASHER	6		X		
3	R26448	O-RING	1		X		
4	38H1045	ELBOW FITTING	1		X		LOAD SENSE PORT
5	T77613	O-RING	1		X		
6	14H865	NUT	2		X		1/2"
7	14H807	NUT	4		X		7/16"
8	19M7753	CAP SCREW	1		X		M12 X 70
9	19M7361	CAP SCREW	2		X		M12 X 50
10	T149571	TIE ROD ASSEMBLY	2		X		(4 FUNCTION)
	T149576	ROD	2		X		(5 FUNCTION)
	T149578	ROD	2		X		(6 FUNCTION)
	T163203	STUD	2		X		(7 FUNCTION)
11	T149570	ROD	1		X		(4 FUNCTION)
	T149575	ROD	1		X		(5 FUNCTION)
	T149577	ROD	1		X		(6 FUNCTION)
	T163204	STUD	1		X		(7 FUNCTION)
12	**AT308511**	**CONTROL VALVE**	**1**		**X**		**CONVENIENCE ASSY (5 FUNCTION)**
	AT308520	**CONTROL VALVE**	**1**		**X**		**CONVENIENCE ASSY (PILOT CONTROL) (5 FUNCTION)**
	AT308512	**CONTROL VALVE**	**1**		**X**		**CONVENIENCE ASSY (6 FUNCTION) (EH AUXILIARY)**
	AT308521	**CONTROL VALVE**	**1**		**X**		**CONVENIENCE ASSY (PILOT CONTROL) (6 FUNCTION) (EH AUXILIARY)**
	AT308513	**CONTROL VALVE**	**1**		**X**		**CONVENIENCE ASSY (7 FUNCTION) (WITH MANUAL AUXILIARIES)**
	AT308522	**CONTROL VALVE**	**1**		**X**		**CONVENIENCE ASSY (PILOT CONTROL) (7 FUNCTION) (EH AUXILIARY)**

THIS PARTS LISTING IS CONTINUED

INLET SECTION (BACKHOE VALVE)
SECTION D'ENTREE (SOUPAPE DE RETROPELLE)
SECCION DE ENTRADA (VALVULA DE RETROEXCAVADORA)

TX1014524 -UN-12DEC06

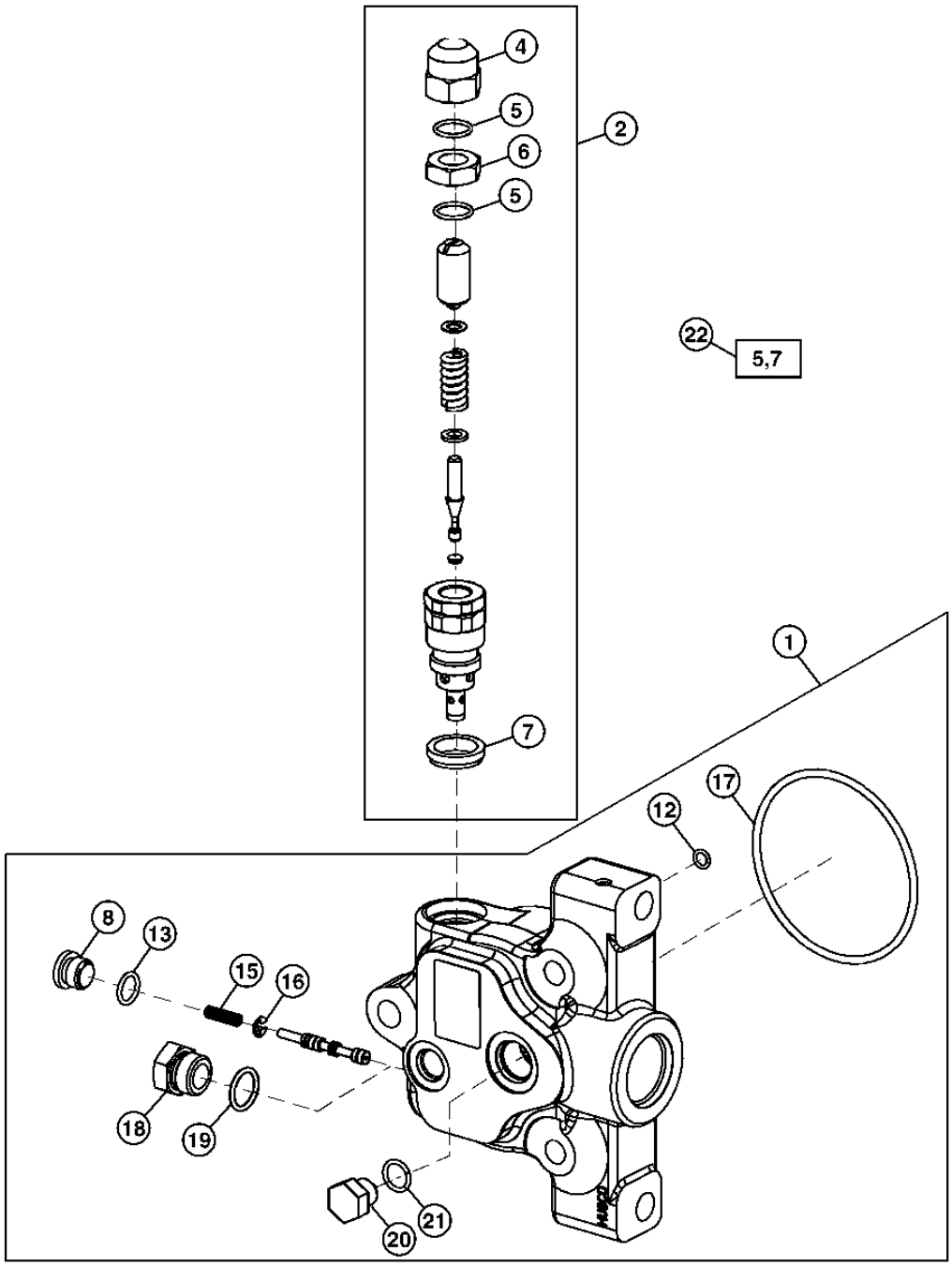

TX1014524

INLET SECTION (BACKHOE VALVE)
SECTION D'ENTREE (SOUPAPE DE RETROPELLE)
SECCION DE ENTRADA (VALVULA DE RETROEXCAVADORA)

KEY	PART NO.	PART NAME	QTY.	SERIAL NO.	410J	410TMC	REMARKS
1	AT175220	VALVE SPOOL	1		X		(5 FUNCTION) (WITHOUT SELECTIVE FLOW) (WITH MANUAL AUX.)
	AT175220	VALVE SPOOL	1		X		(6 AND 7 FUNCTION) (WITH SELECTIVE FLOW)
2	AT328991	PRESSURE RELIEF VALVE	1		X		(7/8" PORT) (LOAD SENSE) (3175 PSI)
4	T67425	NUT	1		X		
5	.....	O-RING	2		X		
6	T67424	NUT	1		X		
7	T183756	SEAL	2		X		
8	R111493	FITTING PLUG	1		X		(6 AND 7 FUNCTION)
12	U40962	O-RING	1		X		
13	T70177	O-RING	1		X		
15	T160617	SPRING	1		X		
16	T160619	SNAP RING	1		X		
17	T118685	O-RING	1		X		
18	R39112	FITTING	1		X		(5 FUNCTION)
19	R26375	O-RING	1		X		(5 FUNCTION)
20	R27218	FITTING PLUG	1		X		(5 FUNCTION)
21	R26448	O-RING	1		X		(5 FUNCTION)
22	AT314538	SEAL KIT	1		X		7/8 INCH RELIEF VALVE SEAL KIT

BOOM SECTION (BACKHOE VALVE)
SECTION DE FLECHE (SOUPAPE DE RETROPELLE)
SECCION DE AGUILON (VALVULA DE RETROEXCAVADORA)

TX1014538 -UN-12DEC06

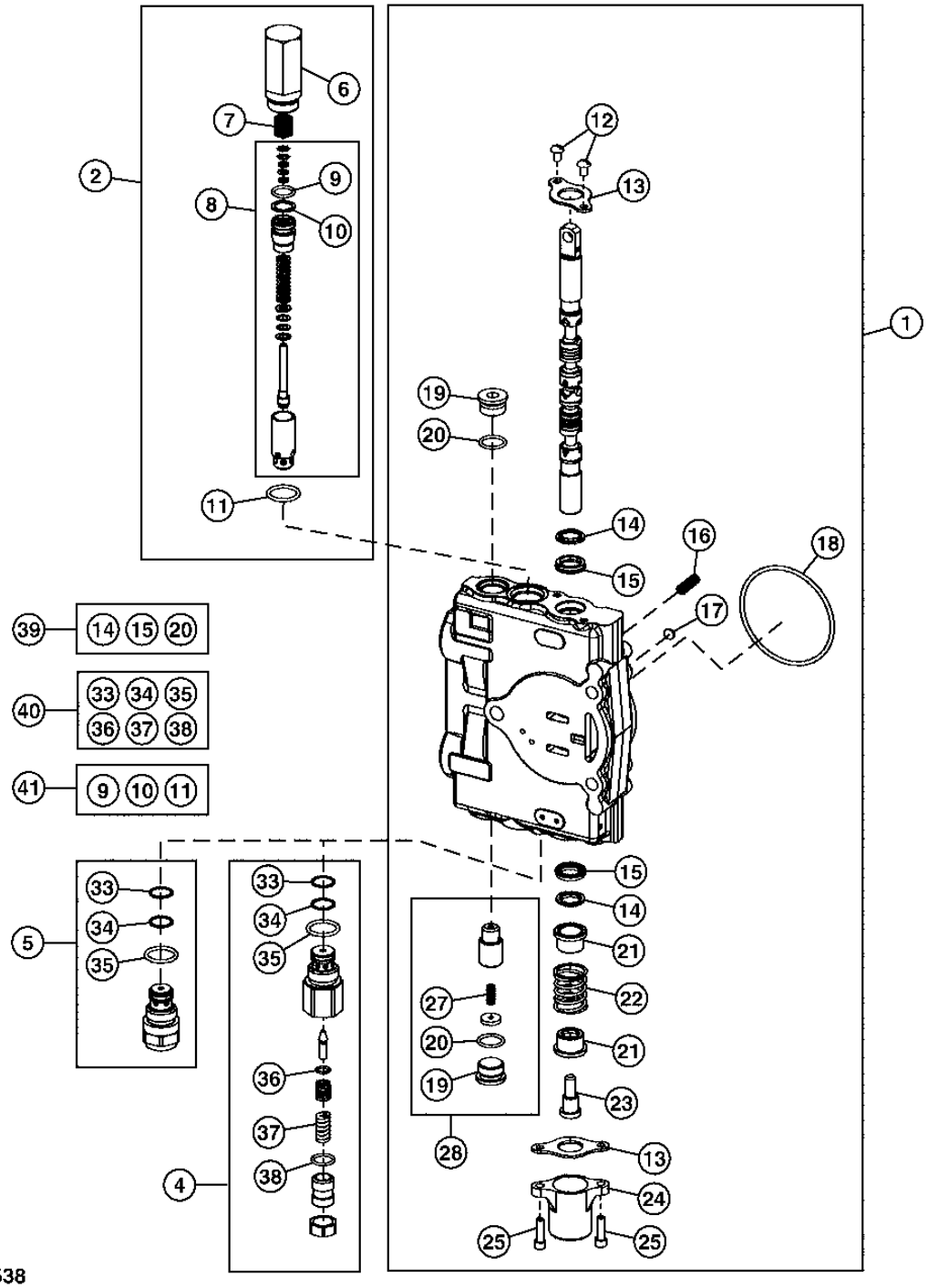

TX1014538

BOOM SECTION (BACKHOE VALVE)
SECTION DE FLECHE (SOUPAPE DE RETROPELLE)
SECCION DE AGUILON (VALVULA DE RETROEXCAVADORA)

KEY	PART NO.	PART NAME	QTY.	SERIAL NO.	410J	410TMC	REMARKS
1	AT301572	HYD ACTUATED CONTROL VALVE	1		X		
2	AT171403	PRESSURE RELIEF VALVE	1		X		(2150 PSI)
4	AT301447	PRESSURE RELIEF VALVE	1		X		(1 1/16" PORT) (5500 PSI) NOT ANTI-CAVITATION
5	AT301487	PRESSURE RELIEF VALVE	1		X		(1 1/16" PORT) (5500 PSI) ANTI-CAVITATION
6	T118866	HOUSING	1		X		
7	T118867	SPRING	1		X		
8	AT178363	KIT	1		X		(RELIEF VALVE CARTRIDGE)
9	.....	O-RING	1		X		
10	.....	BACK-UP RING	1		X		
11	T118681	O-RING	1		X		
12	21H1352	SCREW	2		X		1/4" X 3/8"
13	T81524	PLATE	2		X		
14	.....	SEAL	2		X		
15	.....	SEAL	2		X		
16	T161835	COMPRESSION SPRING	1		X		
17	R95493	DISK	1		X		
18	T118685	O-RING	1		X		
19	T201424	PLUG	1		X		
20	R26906	O-RING	1		X		
21	T81540	RETAINER	2		X		
22	T177849	EXTENSION SPRING	1		X		
23	T81541	SCREW	1		X		
24	T118808	CAP	1		X		
25	19H3554	SCREW	2		X		
27	R111238	SPRING	1		X		
28	AT178371	SEAL KIT	1		X		(DRIFT CHECK)
33	T107887	O-RING	2		X		
34	.....	BACK-UP RING	2		X		
35	T118681	O-RING	2		X		
36	R63548	O-RING	1		X		
37	.....	SPRING	1		X		
38	.....	O-RING	1		X		
39	AT280406	SEAL KIT	1		X		(SPOOL SEAL)
40	AT300801	SEAL KIT	1		X		(RELIEF VALVE SEAL AND SPRING)
41	AT314539	SEAL KIT	1		X		1 1/16 INCH RELIEF VALVE SEAL KIT

BUCKET SECTION (BACKHOE VALVE)
SECTION DE GODET (SOUPAPE DE RETROPELLE)
SECCION DE CUCHARON (VALVULA DE RETROEXCAVADORA)

TX1014549 -UN-12DEC06

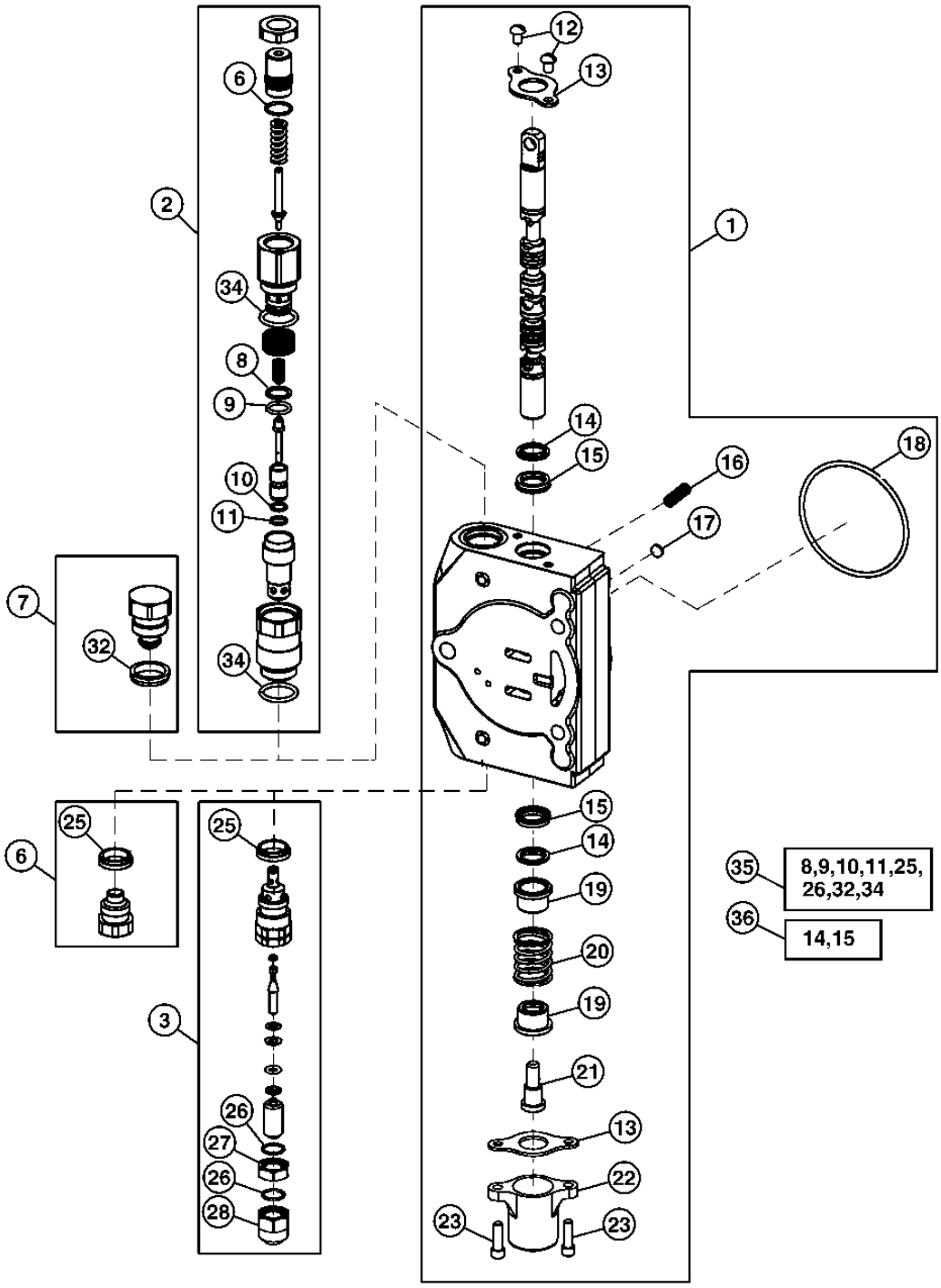

TX1014549

BUCKET SECTION (BACKHOE VALVE)
SECTION DE GODET (SOUPAPE DE RETROPELLE)
SECCION DE CUCHARON (VALVULA DE RETROEXCAVADORA)

KEY	PART NO.	PART NAME	QTY.	SERIAL NO.	410J	410TMC	REMARKS
1	AT307604	HYD ACTUATED CONTROL VALVE	1		X		
2	AT192457	PRESSURE RELIEF VALVE	1		X		(1 1/16" PORT) (4600 PSI) (6 AND 7 FUNCTION) (ANTI-CAVITATION)
3	AT172937	PRESSURE RELIEF VALVE	1		X		(7/8" PORT) (6 AND 7 FUNCTION) NOT ANTI-CAVITATION
6	AT78527	FITTING PLUG	1		X		(7/8" PORT) (4 AND 5 FUNCTION)
7	AT83174	FITTING PLUG	1		X		(1 1/16" PORT) (4 AND 5 FUNCTION)
8	.....	BACK-UP RING	1		X		
9	.....	O-RING	1		X		
10	R63548	O-RING	2		X		
11	T150958	BACK-UP RING	1		X		
12	21H1352	SCREW	2		X		1/4" X 3/8"
13	T81524	PLATE	2		X		
14	.....	SEAL	2		X		
15	.....	SEAL	2		X		
16	T161835	COMPRESSION SPRING	1		X		
17	R95493	DISK	1		X		
18	T118685	O-RING	1		X		
19	T81540	RETAINER	2		X		
20	T177849	EXTENSION SPRING	1		X		
21	T81541	SCREW	1		X		
22	T118808	CAP	1		X		
23	19H3554	SCREW	2		X		1/4" X 0.880"
25	T183756	SEAL	1		X		
26	T150961	O-RING	2		X		
27	T67424	NUT	1		X		
28	T67425	NUT	1		X		
32	T183757	SEAL	1		X		
34	T118681	O-RING	4		X		
35	AT314539	SEAL KIT	1		X		1 1/16 INCH RELIEF VALVE SEAL KIT
36	AT280406	SEAL KIT	1		X		(SPOOL SEAL)

CROWD SECTION (BACKHOE VALVE)
SECTION DE CAVAGE (SOUPAPE DE RETROPELLE)
SECCION DE EMPUJE (VALVULA DE RETROEXCAVADORA)

TX1014552 -UN-12DEC06

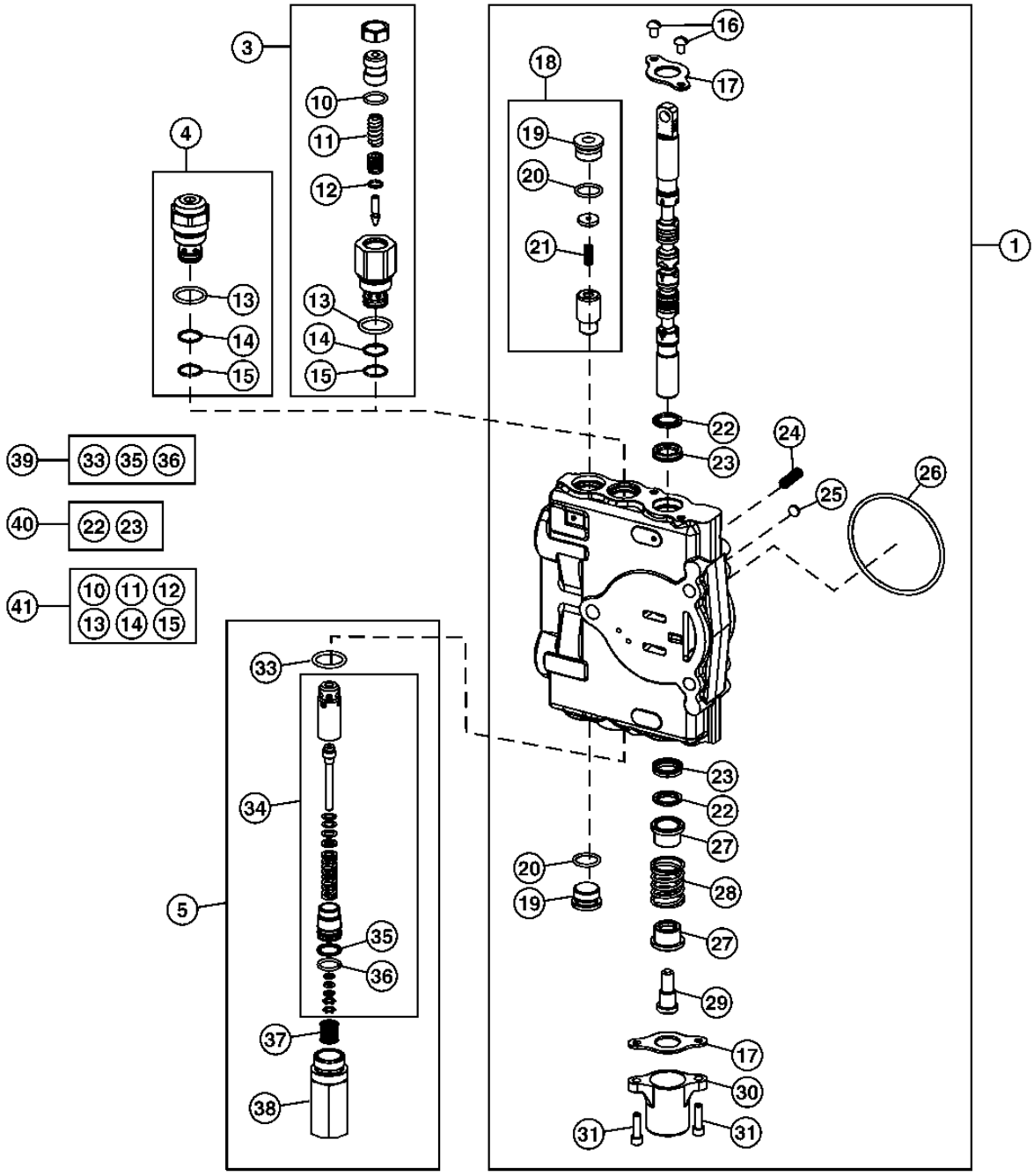

TX1014552

CROWD SECTION (BACKHOE VALVE)
SECTION DE CAVAGE (SOUPAPE DE RETROPELLE)
SECCION DE EMPUJE (VALVULA DE RETROEXCAVADORA)

KEY	PART NO.	PART NAME	QTY.	SERIAL NO.	410J	410TMC	REMARKS
1	AT301575	VALVE SPOOL	1		X		
3	AT301134	PRESSURE RELIEF VALVE	1		X		(1 1/16" PORT) (4750 PSI) NOT ANTI-CAVITATION
4	AT301129	PRESSURE RELIEF VALVE	1		X		(1 1/16") (4750 PSI) ANTI-CAVITATION
5	AT182377	PRESSURE RELIEF VALVE	1		X		(3800 PSI)
10	.....	O-RING	1		X		
11	.....	SPRING	1		X		
12	R63548	O-RING	1		X		
13	T118681	O-RING	1		X		
14	.....	BACK-UP RING	2		X		
15	T107887	O-RING	2		X		
16	21H1352	SCREW	2		X		1/4" X 3/8"
17	T81524	PLATE	2		X		
18	AT178371	SEAL KIT	1		X		(DRIFT CHECK)
19	T201424	PLUG	2		X		
20	R26906	O-RING	2		X		
21	R111238	SPRING	1		X		
22	.....	SEAL	2		X		
23	.....	SEAL	2		X		
24	T161835	COMPRESSION SPRING	1		X		
25	R95493	DISK	1		X		
26	T118685	O-RING	1		X		
27	T81540	RETAINER	2		X		
28	T177849	EXTENSION SPRING	1		X		
29	T81541	SCREW	1		X		
30	T118808	CAP	1		X		
31	19H3554	SCREW	2		X		1/4" X 0.880"
33	T118681	O-RING	1		X		
34	AT178362	KIT	1		X		(RELIEF VALVE CARTRIDGE)
35	.....	BACK-UP RING	1		X		
36	.....	O-RING	1		X		
37	T118867	SPRING	1		X		
38	T118866	HOUSING	1		X		
39	AT314539	SEAL KIT	1		X		1 1/16 INCH RELIEF VALVE SEAL KIT, (SUB FOR AT189413)
40	AT280406	SEAL KIT	1		X		(SPOOL SEAL)
41	AT300801	SEAL KIT	1		X		(RELIEF VALVE SEAL AND SPRING)

SWING SECTION (BACKHOE VALVE)
SECTION DE PIVOTEMENT (SOUPAPE DE RETROPELLE)
SECCION DE GIRO (VALVULA DE RETROEXCAVADORA)

TX1014553 -UN-12DEC06

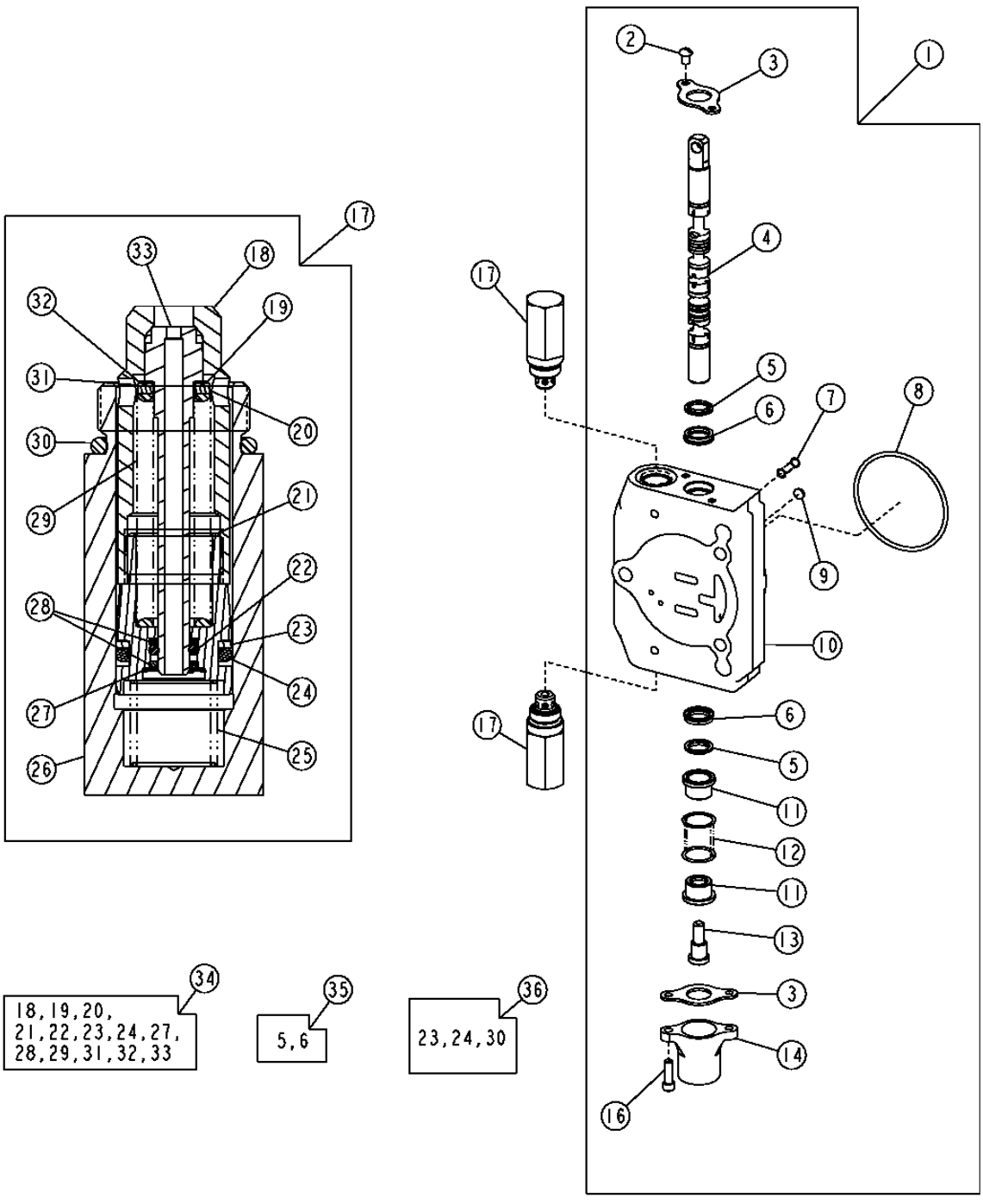

TX1014553

SWING SECTION (BACKHOE VALVE)
SECTION DE PIVOTEMENT (SOUPAPE DE RETROPELLE)
SECCION DE GIRO (VALVULA DE RETROEXCAVADORA)

KEY	PART NO.	PART NAME	QTY.	SERIAL NO.	410J	410TMC	REMARKS
1	AT317387	MANUAL HYDRAULIC VALVE	1		X		
2	21H1352	SCREW	2		X		1/4" X 3/8"
3	T81524	PLATE	2		X		
4	.....	SPOOL	1		X		
5	.....	SEAL	2		X		
6	.....	SEAL	2		X		
7	T161835	COMPRESSION SPRING	1		X		
8	T118685	O-RING	1		X		
9	R95493	DISK	1		X		
10	.....	HOUSING	1		X		
11	T81540	RETAINER	2		X		
12	T177849	EXTENSION SPRING	1		X		
13	T81541	SCREW	1		X		
14	T118808	CAP	1		X		
16	19H3554	SCREW	2		X		1/4" X 0.880"
17	.....	RELIEF VALVE	2		X		(3800 PSI) (ORDER AT178402, T118866, T118867 AND T118681)
18	.....	SLEEVE	1		X		
19	.....	WASHER	1		X		
20	.....	WASHER	1		X		
21	.....	SCREW	1		X		
22	.....	O-RING	1		X		
23	.....	BACK-UP RING	1		X		
24	.....	O-RING	1		X		
25	T118867	SPRING	1		X		
26	T118866	HOUSING	1		X		
27	.....	RETAINER	1		X		
28	.....	BACK-UP RING	2		X		
29	.....	SPRING	1		X		
30	T118681	O-RING	1		X		
31	.....	WASHER	1		X		
32	.....	WASHER	1		X		
33	.....	POPPET	1		X		
34	AT178402	SEAL KIT	1		X		(RELIEF VALVE)
35	AT280406	SEAL KIT	1		X		(SPOOL SEAL)
36	AT314539	SEAL KIT	1		X		1 1/16 INCH RELIEF VALVE SEAL KIT

EXTENDABLE SECTION (BACKHOE VALVE)
SECTION TELESCOPIQUE (SOUPAPE DE RETROPELLE)
SECCION EXTENSIBLE (VALVULA DE RETROEXCAVADORA)

TX1014554 -UN-12DEC06

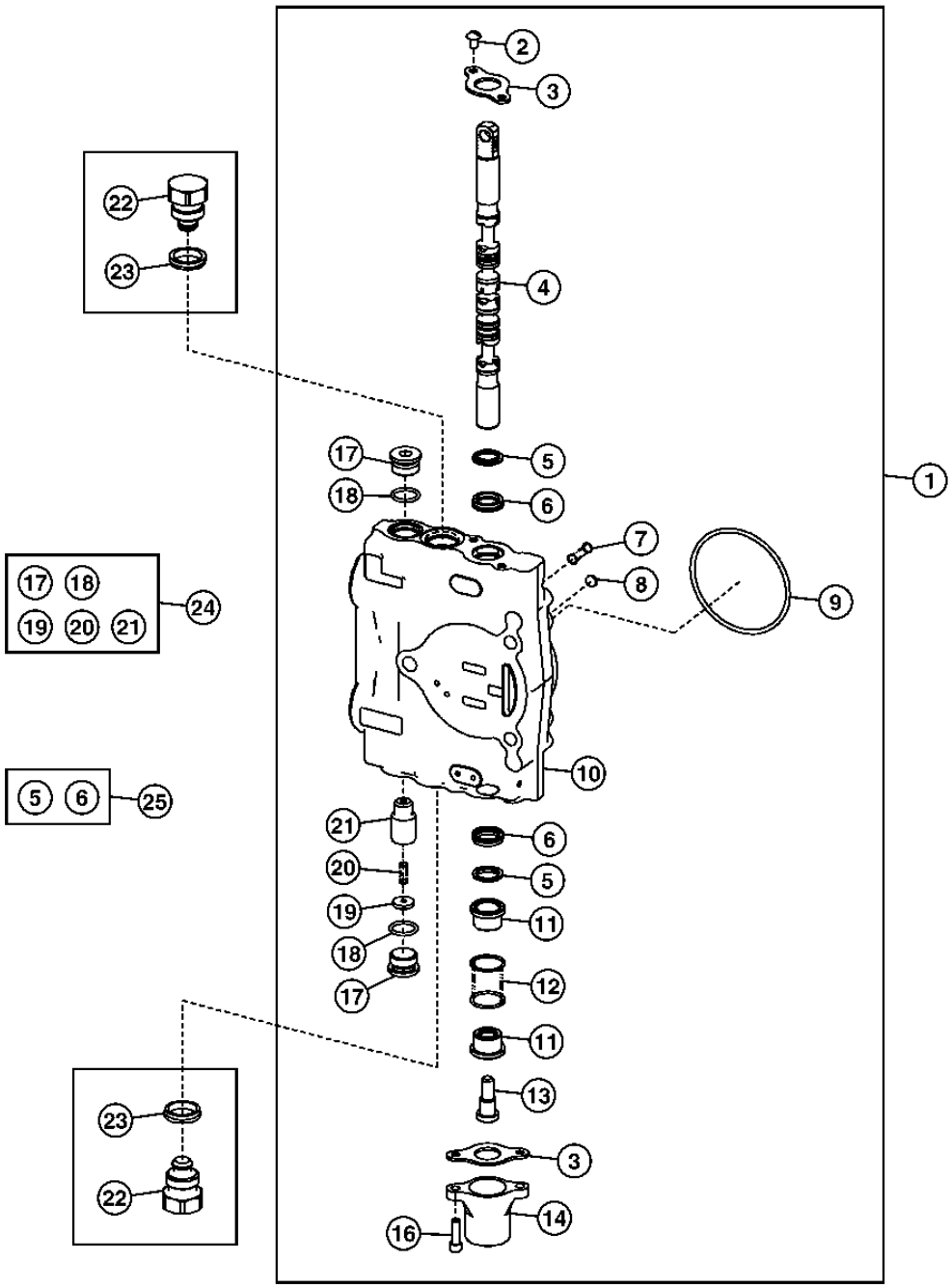

TX1014554

EXTENDABLE SECTION (BACKHOE VALVE)
SECTION TELESCOPIQUE (SOUPAPE DE RETROPELLE)
SECCION EXTENSIBLE (VALVULA DE RETROEXCAVADORA)

KEY	PART NO.	PART NAME	QTY.	SERIAL NO.	410J	410TMC	REMARKS
1	AT301457	HYD ACTUATED CONTROL VALVE	1		X		
2	21H1352	SCREW	2		X		1/4" X 3/8"
3	T81524	PLATE	2		X		
4	.....	SPOOL VALVE	1		X		
5	.....	SEAL	2		X		
6	.....	SEAL	2		X		
7	T161835	COMPRESSION SPRING	1		X		
8	R95493	DISK	1		X		
9	T118685	O-RING	1		X		
10	.....	HOUSING	1		X		
11	T81540	RETAINER	2		X		
12	T177849	EXTENSION SPRING	1		X		
13	T81541	SCREW	1		X		
14	T118808	CAP	1		X		
16	19H3554	SCREW	2		X		1/4" X 0.880"
17	T201424	PLUG	2		X		
18	R26906	O-RING	2		X		
19	.....	WASHER	1		X		
20	R111238	SPRING	1		X		
21	.....	POPPET	1		X		
22	AT83174	FITTING PLUG	2		X		
23	T183757	SEAL	2		X		
24	AT178371	SEAL KIT	1		X		(DRIFT CHECK)
25	AT280406	SEAL KIT	1		X		(SPOOL SEAL)

AUXILIARY SECTION (SELECTIVE FLOW SOLENOID) (BACKHOE VALVE)
SECTION AUXILIAIRE (SOLENOIDE A DEBIT SELECTIF) (SOUPAPE DE RETROPELLE)
SECCION AUXILIAR (SOLENOIDE DE CAUDAL SELECTIVO) (VALVULA DE RETROEXCAVADORA)

TX1016705 -UN-18DEC06

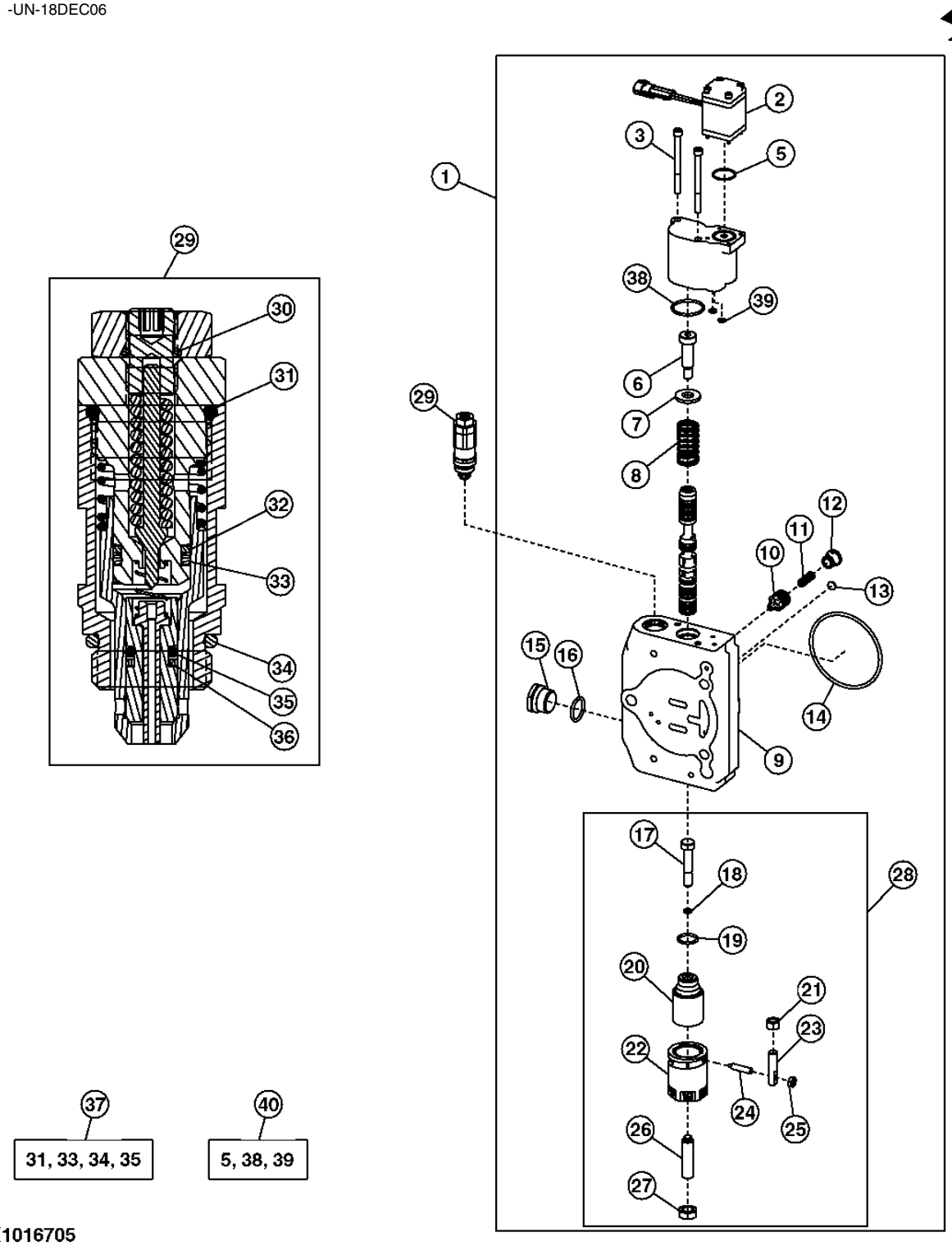

TX1016705

AUXILIARY SECTION (SELECTIVE FLOW SOLENOID) (BACKHOE VALVE)
SECTION AUXILIAIRE (SOLENOIDE A DEBIT SELECTIF) (SOUPAPE DE RETROPELLE)
SECCION AUXILIAR (SOLENOIDE DE CAUDAL SELECTIVO) (VALVULA DE RETROEXCAVADORA)

KEY	PART NO.	PART NAME	QTY.	SERIAL NO.	410J	410TMC	REMARKS
1	AT323341	FLOW CONTROL HYD. VALVE	1		X		
2	AT323340	KIT	1		X		EHP SOLENOID W/CONNECTOR
3	19H2935	SCREW	2		X		1/4" X 1-1/2"
5	R111532	O-RING	1		X		
6	.....	SCREW	1		X		
7	.....	WASHER	1		X		
8	.....	SPRING	1		X		
9	.....	HOUSING	1		X		
10	.....	POPPET	1		X		
11	T161835	COMPRESSION SPRING	1		X		
12	.....	POPPET	1		X		
13	R95493	DISK	1		X		
14	T118685	O-RING	1		X		
15	R27175	DRAIN PLUG	1		X		
16	U12547	O-RING	1		X		
17	.....	CAP SCREW	1		X		
18	T186013	O-RING	1		X		
19	R26906	O-RING	1		X		
20	.....	HOUSING	1		X		
21	.....	NUT	1		X		
22	.....	ADJUSTER	1		X		
23	.....	SLEEVE	1		X		
24	T160663	PLUNGER	1		X		
25	.....	NUT	1		X		
26	.....	SPACER	1		X		
27	.....	NUT	1		X		
28	AT323342	KIT	1		X		SPOOL STOP
29	AT184547	PRESSURE RELIEF VALVE	1		X		(2900 PSI)
30	.....	O-RING	1		X		
31	.....	O-RING	1		X		
32	.....	BACK-UP RING	1		X		
33	.....	O-RING	1		X		
34	.....	O-RING	1		X		
35	.....	O-RING	1		X		
36	.....	BACK-UP RING	1		X		
37	AT314538	SEAL KIT	1		X		(7/8 INCH RELIEF VALVE SEAL)
38	.....	O-RING	1		X		
39	.....	O-RING	2		X		
40	AT178468	SEAL KIT	1		X		EHP SEAL KIT

AUXILIARY SECTION (BACKHOE VALVE)
SECTION AUXILIAIRE (SOUPAPE DE RETROPELLE)
SECCION AUXILIAR (VALVULA DE RETROEXCAVADOR)

TX1014584 -UN-05DEC06

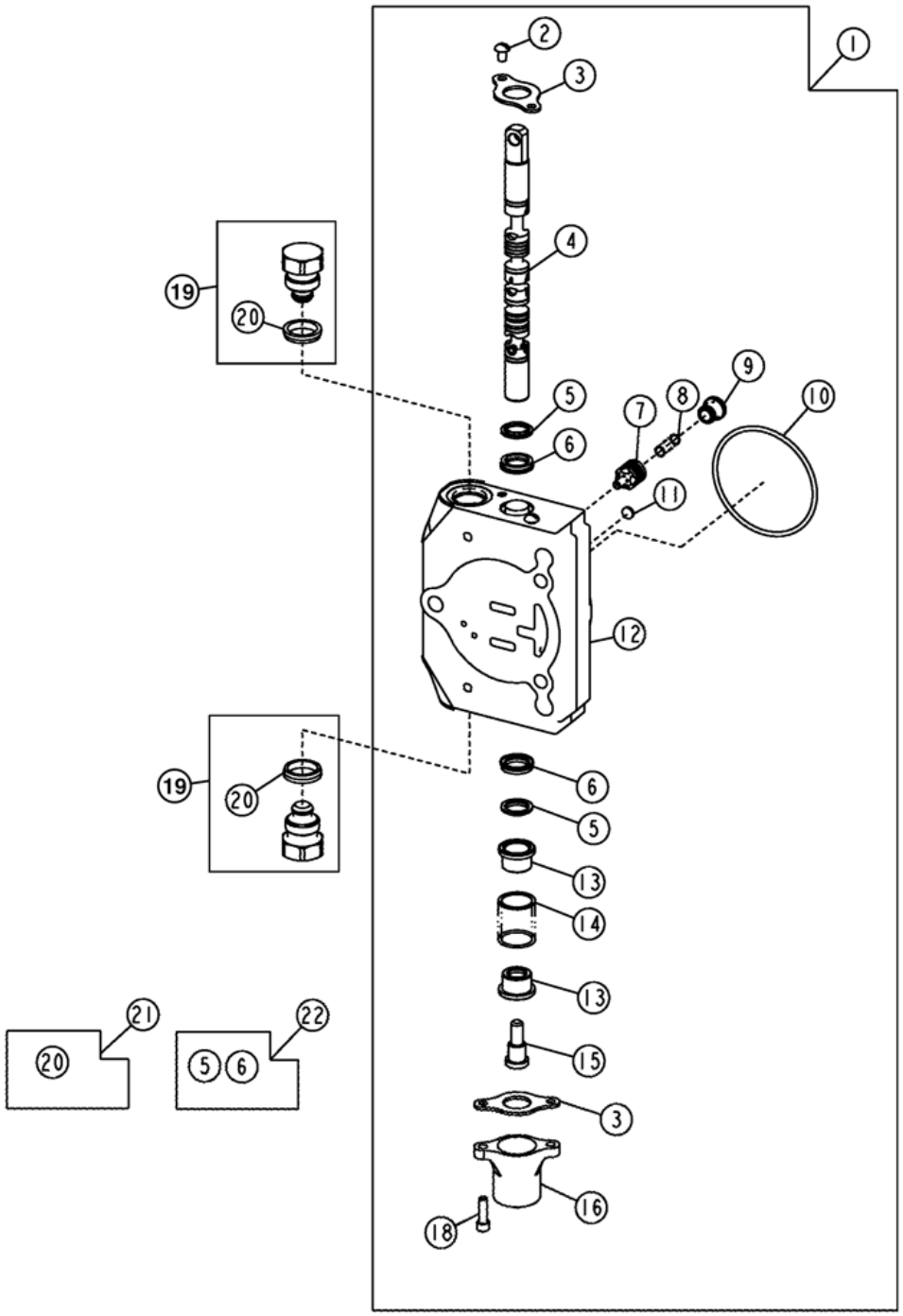

TX1014584

AUXILIARY SECTION (BACKHOE VALVE)
SECTION AUXILIAIRE (SOUPAPE DE RETROPELLE)
SECCION AUXILIAR (VALVULA DE RETROEXCAVADORA)

KEY	PART NO.	PART NAME	QTY.	SERIAL NO.	410J	410TMC	REMARKS
1	AT301473	SPOOL VALVE	1		X		
2	21H1352	SCREW	2		X		1/4" X 3/8"
3	T81524	PLATE	2		X		
4	.....	SPOOL	1		X		
5	.....	SEAL	2		X		
6	.....	SEAL	2		X		
7	.....	COMPENSATOR	1		X		
8	T161835	COMPRESSION SPRING	1		X		
9	.....	LOCK	1		X		
10	T118685	O-RING	1		X		
11	R95493	DISK	1		X		
12	.....	HOUSING	1		X		
13	T81540	RETAINER	2		X		
14	T177849	EXTENSION SPRING	1		X		
15	T81541	SCREW	1		X		
16	T118808	CAP	1		X		
18	19H3554	SCREW	2		X		1/4" X 0.880"
19	AT83174	FITTING PLUG	2		X		
20	T183757	SEAL	1		X		
21	AT314539	SEAL KIT	1		X		1 1/16 INCH RELIEF VALVE SEAL KIT, ORDER ONE PER VALVE
22	AT280406	SEAL KIT	1		X		(SPOOL SEAL)

OUTLET SECTION (BACKHOE VALVE)
SECTION DE SORTIE (SOUPAPE DE RETROPELLE)
SECCION DE SALIDA (VALVULA DE RETROEXCAVADORA)

TX1014589 -UN-19DEC06

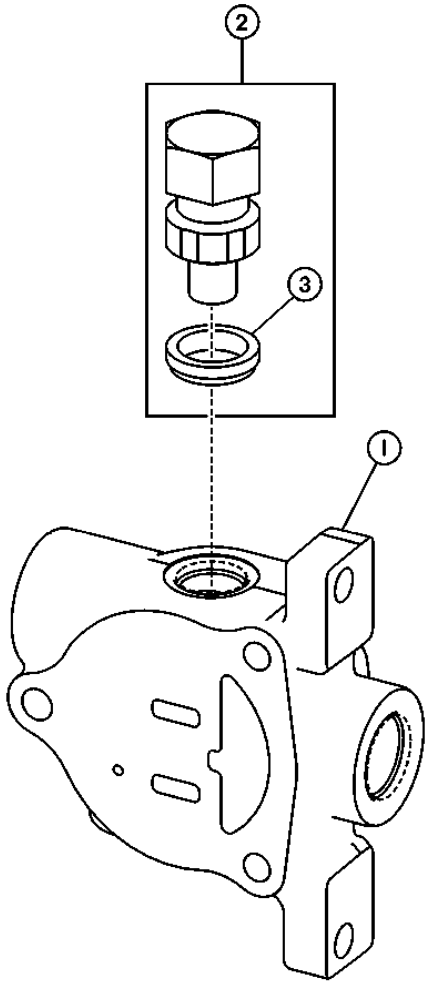

TX1014589

OUTLET SECTION (BACKHOE VALVE)
SECTION DE SORTIE (SOUPAPE DE RETROPELLE)
SECCION DE SALIDA (VALVULA DE RETROEXCAVADORA)

KEY	PART NO.	PART NAME	QTY.	SERIAL NO.	410J	410TMC	REMARKS
1	T158366	HYD ACTUATED CONTROL VALVE	1		X		(MANUAL VALVES)
	T201083	HYD ACTUATED CONTROL VALVE	1		X		(PILOT VALVES)
2	AT83174	FITTING PLUG	1		X		
3	T183757	SEAL	1		X		

FIFTH FUNCTION MANUAL VALVE KIT
KIT DE SOUPAPE MANUELLE DE CINQUIEME FONCTION
JUEGO DE VALVULA MANUAL DE QUINTA FUNCION

TP54968 -UN-13JAN97

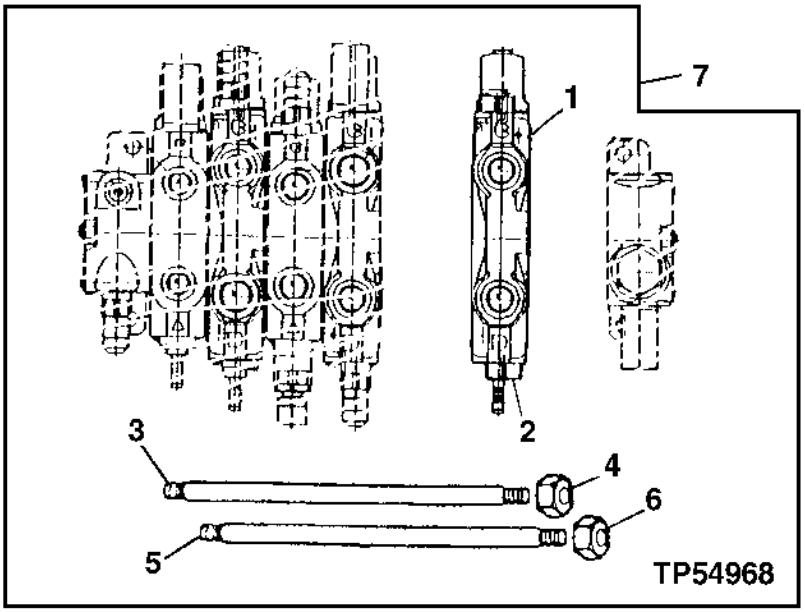

KEY	PART NO.	PART NAME	QTY.	SERIAL NO.	410J	410TMC	REMARKS
1	AT301457	HYD ACTUATED CONTROL VALVE	1		X		(EXTENDABLE DIPPERSTICK) (COMPONENTS LISTED ON ANOTHER PAGE)
2	AT83174	FITTING PLUG	2		X		
	T183757	SEAL	2		X		
3	T149575	ROD	1		X		
4	14H807	NUT	4		X		7/16"
5	T149576	ROD	2		X		
6	14H865	NUT	2		X		
7	**AT302810**	**KIT**	**1**				**(WHOLE GOODS)**

SIXTH FUNCTION MANUAL VALVE KIT
KIT DE SOUPAPE MANUELLE DE SIXIEME FONCTION
JUEGO DE VALVULA MANUAL DE SEXTA FUNCION

TP54969 -UN-13JAN97

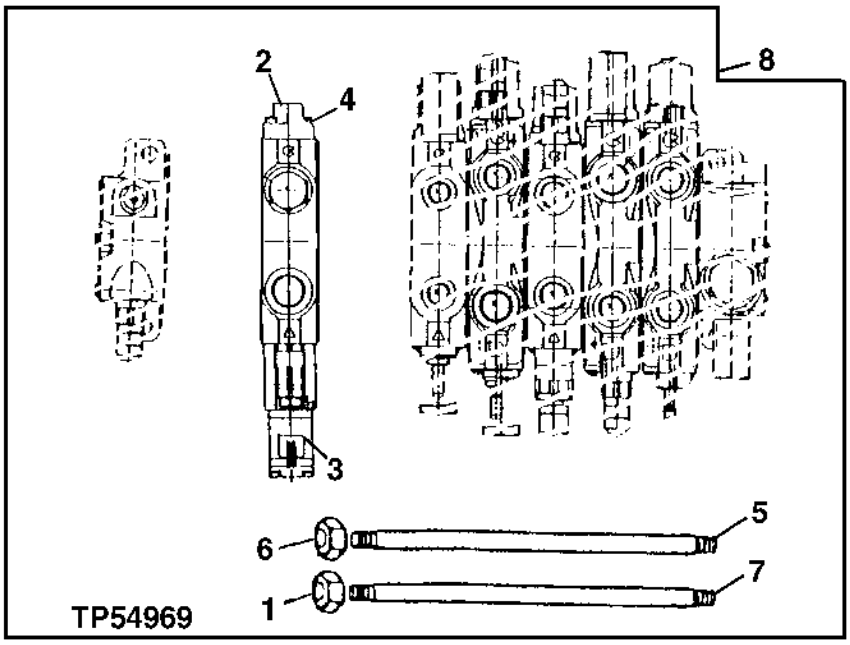

KEY	PART NO.	PART NAME	QTY.	SERIAL NO.	410J 410TMC	REMARKS
1	14H865	NUT	2		X	
2	AT301473	VALVE	1		X	(AUXILIARY SECTION)
3	AT83174	FITTING PLUG	1		X	
4	AT83174	FITTING PLUG	1		X	
	T183757	SEAL	1		X	
5	T149576	ROD	2		X	(USED WHEN ADDING TO THE 5-FUNCTION VALVE)
	T149578	ROD	2		X	(USED WHEN ADDING TO THE 6-FUNCTION VALVE)
6	14H807	NUT	4		X	7/16"
7	T149575	ROD	1		X	(USED WHEN ADDING TO THE 5-FUNCTION VALVE)
	T149577	ROD	1		X	(USED WHEN ADDING TO THE 6-FUNCTION VALVE)
8	**AT192626**	**KIT**	**1**		**X**	**(WHOLE GOODS) (INCLUDES AT302176)**

ACCU-SWING VALVE
SOUPAPE ACCU-SWING
VALVULA ACCU-SWING

T201568 -UN-07JUL04

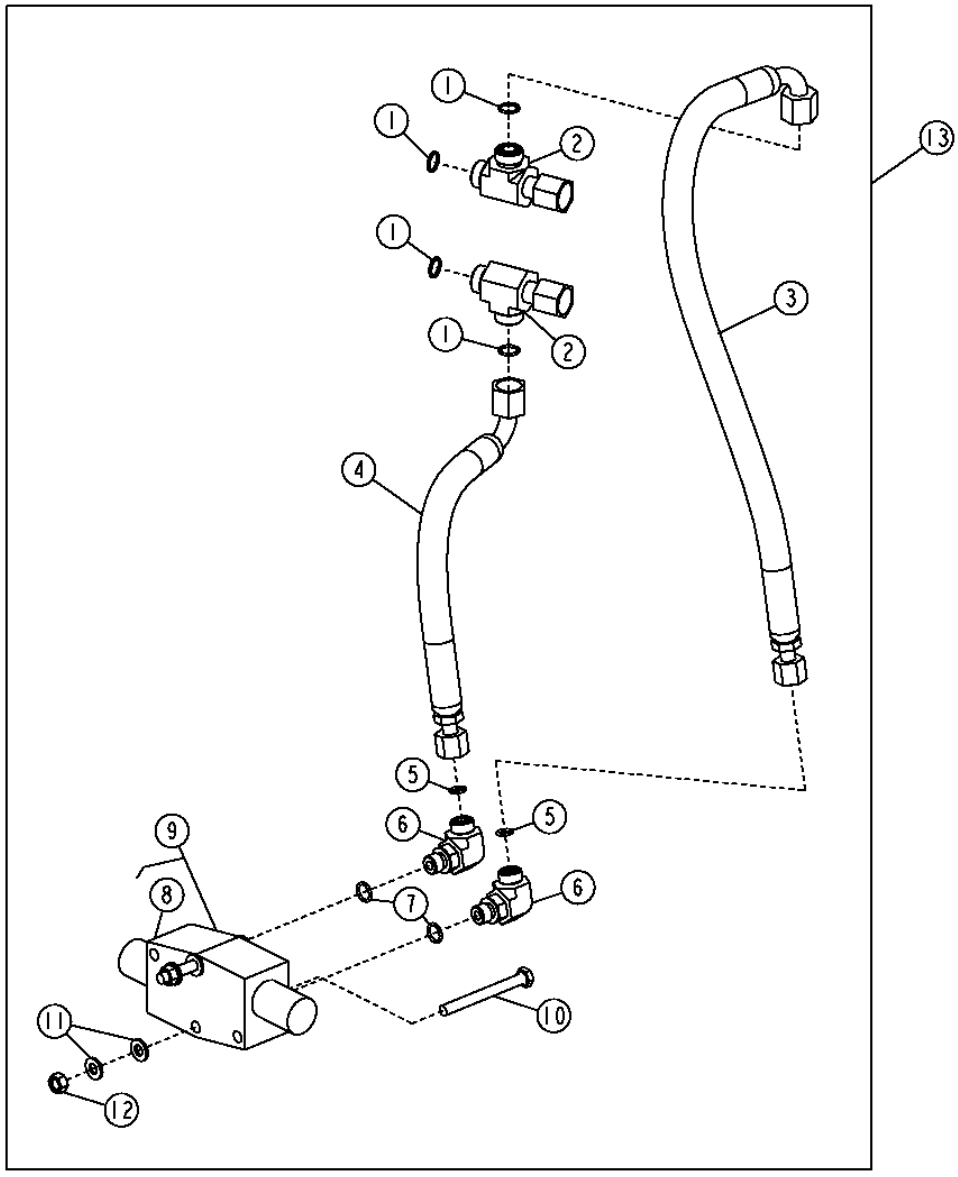

T201568

ACCU-SWING VALVE
SOUPAPE ACCU-SWING
VALVULA ACCU-SWING

KEY	PART NO.	PART NAME	QTY.	SERIAL NO.	410J	410TMC	REMARKS
1	T77857	O-RING	4		X		
2	38H1031	TEE FITTING	2		X		
3	AT312919	HYDRAULIC HOSE	1		X		9/16" X 552 MM (21-3/4") X 9/16"
4	AT312918	HYDRAULIC HOSE	1		X		9/16" X 386 MM (15-1/4") X 9/16"
5	T77613	O-RING	2		X		
6	38H1004	ELBOW FITTING	2		X		
7	R26448	O-RING	2		X		
8	AT314127	SEAL KIT	1		X		
9	AT312944	VALVE	1		X		
10	19M7663	CAP SCREW	2		X		M8 X 70
11	24M7238	WASHER	4		X		8.700 X 17 X 2 MM
12	14M7273	NUT	2		X		M8
13	**AT312949**	**KIT**	**1**		**X**		**WHOLE GOODS, (INCLUDES AT312918 AND AT312919)**

PILOT CONTROL MANIFOLD (SPAM VALVE)
COLLECTEUR DE COMMANDE PILOTE (SOUPAPE SPAM)
COLECTOR DE CONTROL PILOTO (VÁLVULA SPAM)

T198598 -UN-22MAR04

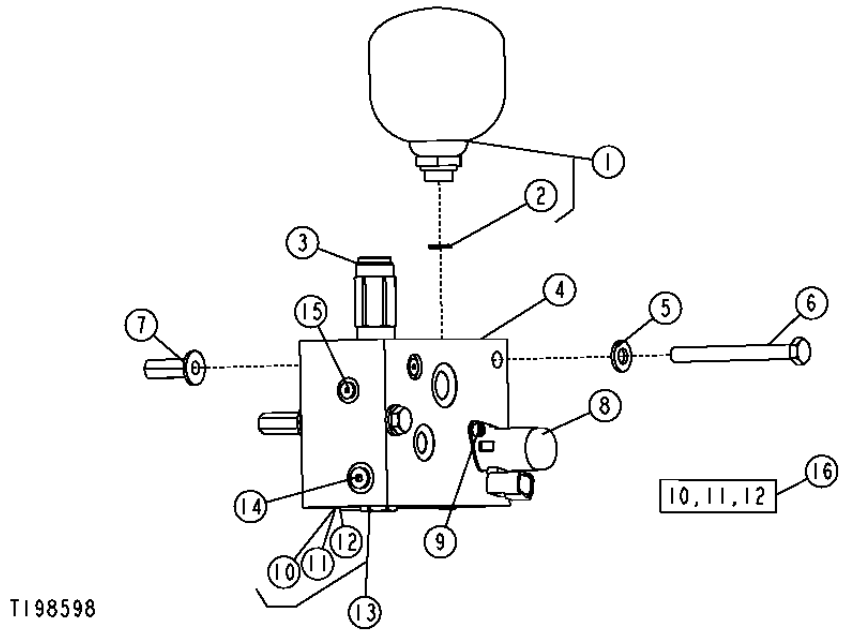

KEY	PART NO.	PART NAME	QTY.	SERIAL NO.	410J	410TMC	REMARKS
1	AT195957	PNEUMATIC ACCUMULATOR	1		X		
2	R26448	O-RING	1		X		
3	AT332497	HYDRAULIC PRESSURE VALVE	1		X		
	AT196943	SEAL KIT	1		X		
4	AT306550	FLOW CONTROL HYD. VALVE	1		X		(INCLUDES AT224570, AT332497, AT49216, KV25678 AND (6) T105368)
5	24M7239	WASHER	2		X		
6	19M8093	CAP SCREW	2		X		M10 X 100
7	T148410	NUT	2		X		M10
8	KV25678	SOLENOID VALVE	1		X		
9	0344046	BOLT	2		X		
10	.....	BACK-UP RING	1		X		
11	.....	O-RING	1		X		
12	.....	O-RING	1		X		
13	AT224570	CHECK VALVE	1		X		(MARKED CV08)
14	AT49216	FITTING PLUG	1		X		(INCLUDES R26448)
15	T105368	FITTING PLUG	6		X		
16	AT300255	SEAL KIT	1		X		

MEMORANDA
MEMORANDA
MEMORANDA

PATTERN SELECTOR VALVE (PILOT CONTROL)
SOUPAPE DE SELECTION DE CONFIGURATION (COMMANDE PILOTE)
VALVULA SELECTORA DE PATRON (CONTROL PILOTO)

TX1017075 -UN-23DEC06

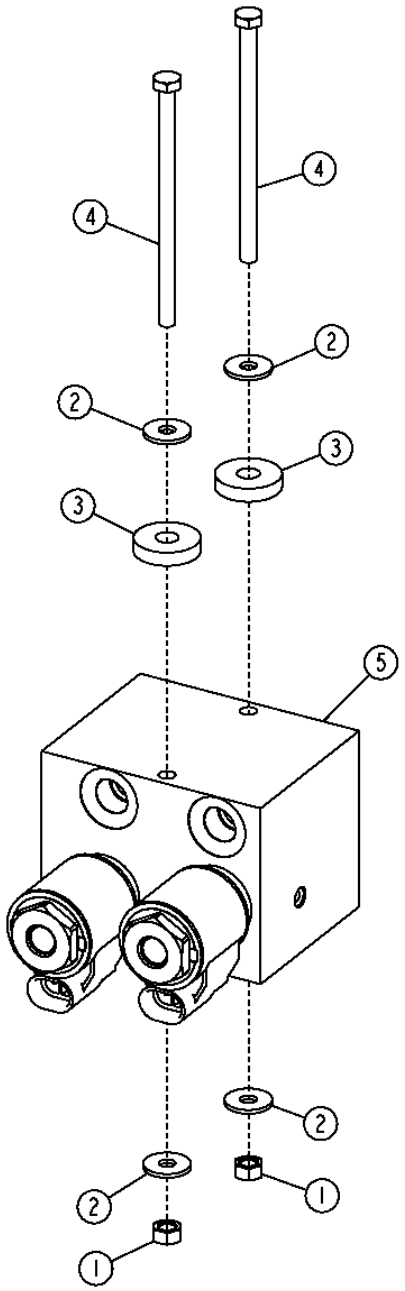

TX1017075

PATTERN SELECTOR VALVE (PILOT CONTROL)
SOUPAPE DE SELECTION DE CONFIGURATION (COMMANDE PILOTE)
VALVULA SELECTORA DE PATRON (CONTROL PILOTO)

KEY	PART NO.	PART NAME	QTY.	SERIAL NO.	410J	410TMC	REMARKS
1	14M7272	NUT	2		X	M6	
2	24M7139	WASHER	4		X		
3	24H1621	WASHER	2		X		
4	19M9090	CAP SCREW	6		X		
5	AT199065	FLOW CONTROL HYD. VALVE	1		X		
	AT333807	SOLENOID VALVE COIL	2		X		
	AT195922	HYD ACTUATED CONTROL VALVE	2		X		

PILOT CONTROLLER VALVE (LEFT HAND)
VANNE DE COMMANDE PILOTE (GAUCHE)
VALVULA DE PALANCA DE CONTROL PILOTO (IZQUIERDO)

T188654 -UN-18MAR03

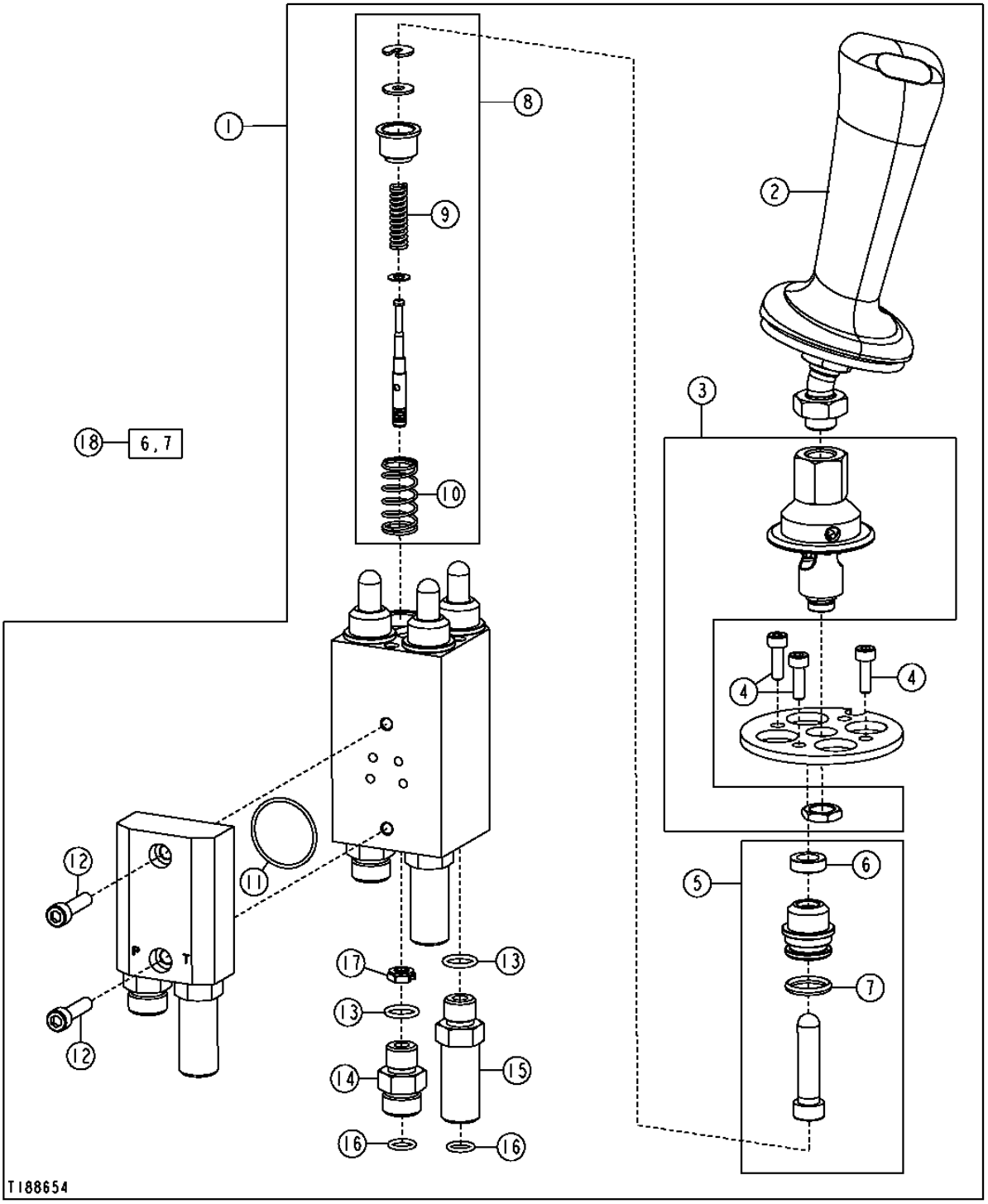

PILOT CONTROLLER VALVE (LEFT HAND)
VANNE DE COMMANDE PILOTE (GAUCHE)
VALVULA DE PALANCA DE CONTROL PILOTO (IZQUIERDO)

KEY	PART NO.	PART NAME	QTY.	SERIAL NO.	410J	410TMC	REMARKS
1	AT303890	HYDR./PILOT CONTROL VALVE	1		X		(LH)
	T190825	BOOT	1		X		(NOT ILLUSTRATED)
2	AT198768	HANDLE	1		X		
3	AT198773	KIT	1		X		
4	T190824	SCREW	3		X		
5	AT198770	KIT	4		X		
6	.....	SEAL	4		X		
7	.....	O-RING	4		X		
8	AT307187	SPOOL VALVE	4		X		
9	.....	SPRING	4		X		
10	.....	SPRING	4		X		
11	T190819	O-RING	1		X		
12	T190820	CAP SCREW	2		X		
13	R26448	O-RING	6		X		
14	38H1160	ADAPTER FITTING	3		X		
15	38H1212	ADAPTER FITTING	3		X		
16	T77613	O-RING	6		X		
17	T200956	ORIFICE	1		X		(ONLY USED IN PORT 4, BOOM DOWN FUNCTION)
18	AT198771	KIT	4		X		

PILOT CONTROLLER VALVE (RIGHT HAND)
VANNE DE COMMANDE PILOTE (DROIT)
VALVULA DE PALANCA DE CONTROL PILOTO (DERECHO)

T188655 -UN-18MAR03

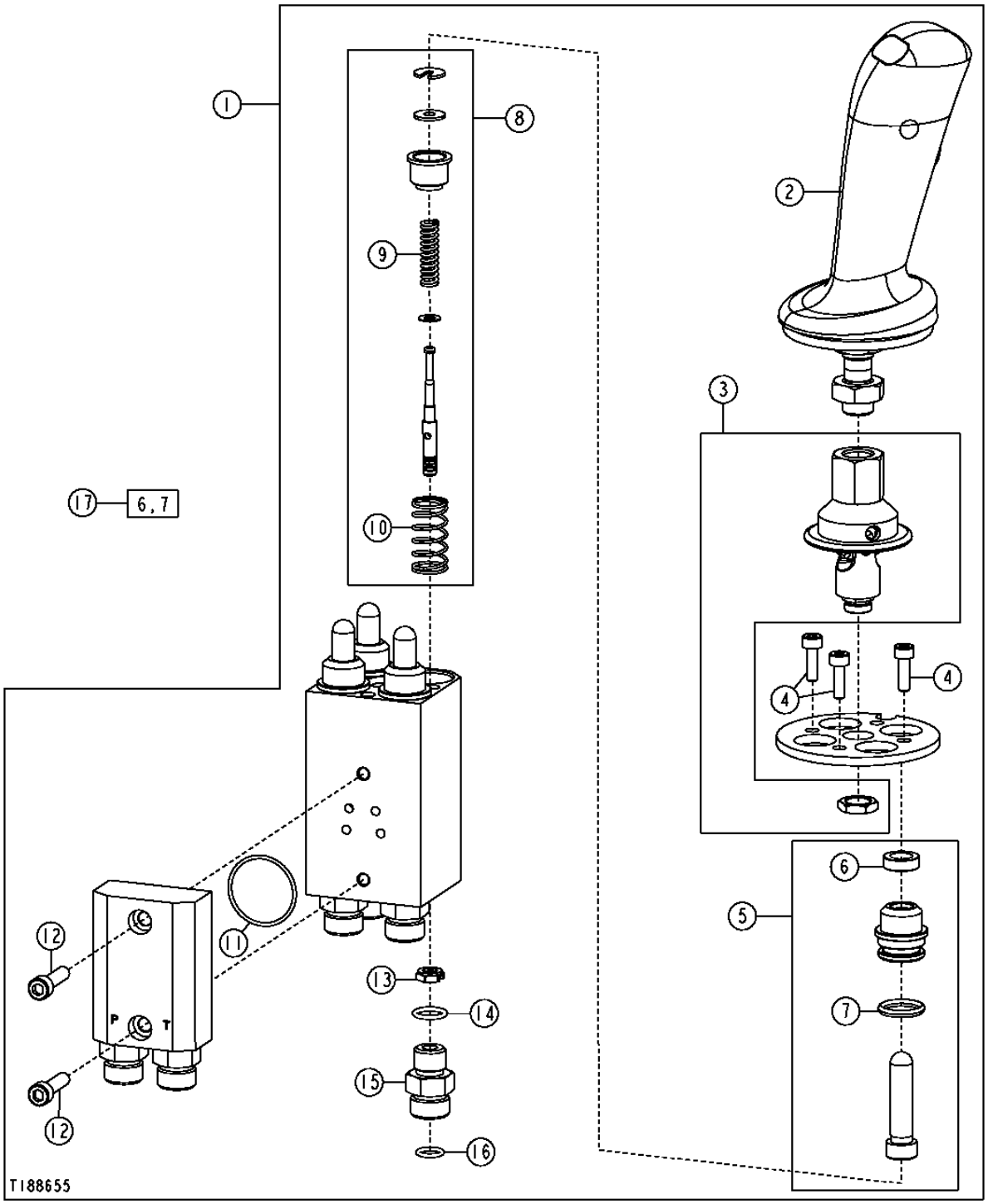

PILOT CONTROLLER VALVE (RIGHT HAND)
VANNE DE COMMANDE PILOTE (DROIT)
VALVULA DE PALANCA DE CONTROL PILOTO (DERECHO)

KEY	PART NO.	PART NAME	QTY.	SERIAL NO.	410J	410TMC	REMARKS
1	AT303891	HYDR./PILOT CONTROL VALVE	1		X		(RH)
	T190825	BOOT	1		X		(NOT ILLUSTRATED)
2	AT198774	HANDLE	1		X		
3	AT198773	KIT	1		X		
4	T190824	SCREW	3		X		
5	AT198770	KIT	4		X		
6	.....	SEAL	4		X		
7	.....	O-RING	4		X		
8	AT307187	SPOOL VALVE	4		X		
9	.....	SPRING	4		X		
10	.....	SPRING	4		X		
11	T190819	O-RING	1		X		
12	T190820	CAP SCREW	2		X		
13	T200956	ORIFICE	1		X		(ONLY USED IN PORT 2, CROWD OUT FUNCTION)
14	R26448	O-RING	6		X		
15	38H1160	ADAPTER FITTING	6		X		
16	T77613	O-RING	6		X		
17	AT198771	KIT	4		X		

PILOT CONTROL HANDLE BUTTON FUNCTION KIT
KIT DE FONCTION DE BOUTON DE POIGNEE DE COMMANDE PILOTE
JUEGO DE FUNCION DE BOTON DE PALANCA DE CONTROL PILOTO

T202931 -UN-30SEP04

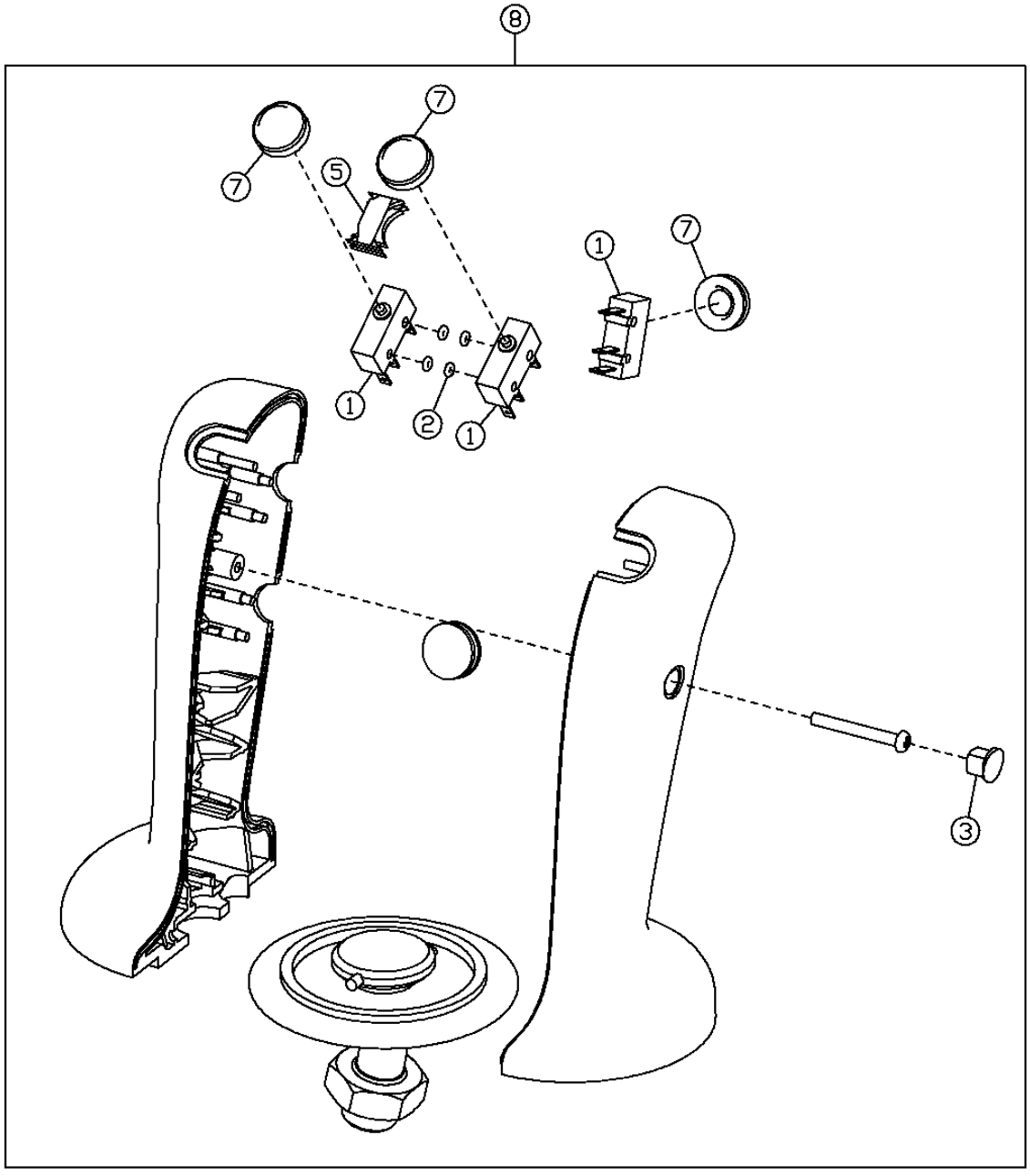

T202931

PILOT CONTROL HANDLE BUTTON FUNCTION KIT
KIT DE FONCTION DE BOUTON DE POIGNEE DE COMMANDE PILOTE
JUEGO DE FUNCION DE BOTON DE PALANCA DE CONTROL PILOTO

KEY	PART NO.	PART NAME	QTY.	SERIAL NO.	410J	410TMC	REMARKS
1	.....	SWITCH	4		X		
2	.....	O-RING	4		X		
3	.....	PLUG	1		X		
5	.....	SPACER	1		X		
6	.....	WIRING HARNESS	1		X		NOT ILLUSTRATED
7	.....	PUSH BUTTON	4		X		
8	AT314668	KIT	1		X		

BOOM SECTION, PILOT (BACKHOE VALVE)
SECTION DE FLECHE, SOUPAPE PILOTE (SOUPAPE DE RETROPELLE)
SECCION DE AGUILON, PILOTO (VALVULA DE RETROEXCAVADORA)

T188889 -UN-22MAR03

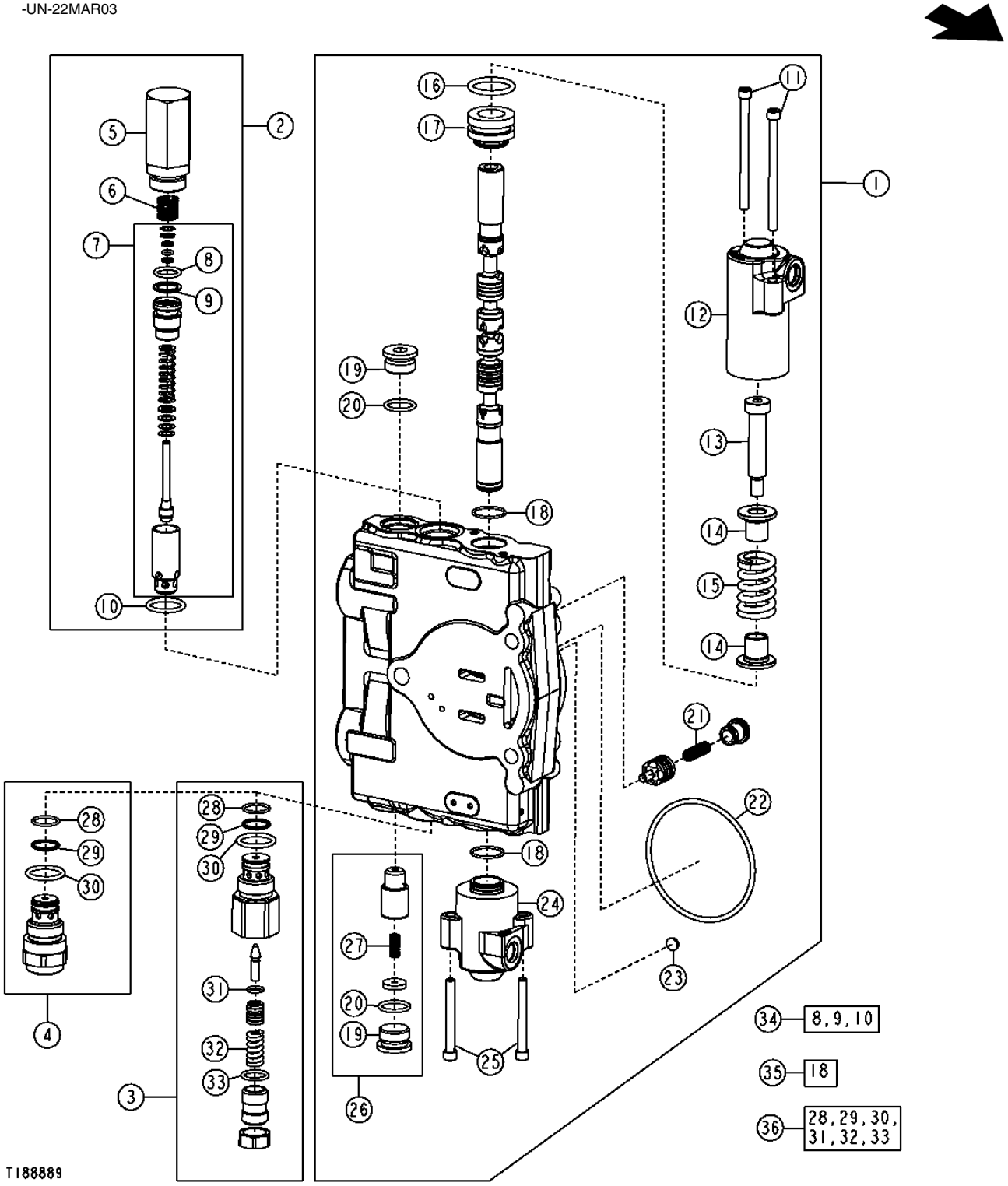

BOOM SECTION, PILOT (BACKHOE VALVE)
SECTION DE FLECHE, SOUPAPE PILOTE (SOUPAPE DE RETROPELLE)
SECCION DE AGUILON, PILOTO (VALVULA DE RETROEXCAVADORA)

KEY	PART NO.	PART NAME	QTY.	SERIAL NO.	410J	410TMC	REMARKS
1	AT301433	VALVE	1		X		
2	AT171403	PRESSURE RELIEF VALVE	1		X		(2150 PSI)
3	AT301447	PRESSURE RELIEF VALVE	1		X		(5500 PSI) (NOT ANTI-CAVITATION)
4	AT301487	PRESSURE RELIEF VALVE	1		X		(5500 PSI) (ANTI-CAVITATION)
5	T118866	HOUSING	1		X		
6	T118867	SPRING	1		X		
7	AT178363	PRESSURE RELIEF VALVE	1		X		
8	.....	O-RING	1		X		
9	.....	BACK-UP RING	1		X		
10	T118681	O-RING	1		X		
11	T191335	SCREW	2		X		
12	T201072	CAP	1		X		
13	790107100	SCREW	1		X		
14	T201306	RETAINER	2		X		
15	T201071	COMPRESSION SPRING	1		X		
16	T191346	O-RING	1		X		
17	790106800	RETAINER	1		X		
18	.....	O-RING	2		X		
19	T201424	PLUG	2		X		
20	R26906	O-RING	2		X		
21	T161835	COMPRESSION SPRING	1		X		
22	T118685	O-RING	1		X		(DRIFT CHECK)
23	R95493	DISK	1		X		
24	T201069	CAP	1		X		
25	T191334	SCREW	2		X		
26	AT178371	SEAL KIT	1		X		
27	R111238	SPRING	1		X		
28	T107887	O-RING	1		X		
29	.....	BACK-UP RING	2		X		
30	T118681	O-RING	2		X		
31	R63548	O-RING	1		X		
32	.....	SPRING	1		X		
33	.....	O-RING	1		X		
34	AT314539	SEAL KIT	1		X		1 1/16 INCH RELIEF VALVE SEAL KIT, (SUB FOR AT189413)
35	AT280406	SEAL KIT	1		X		(SPOOL SEAL)
36	AT300801	SEAL KIT	1		X		(SEAL AND SPRING)

BUCKET SECTION, PILOT (BACKHOE VALVE)
SECTION DE BENNE, SOUPAPE PILOTE (SOUPAPE DE RETROPELLE)
SECCION DE CUCHARON, PILOTO (VALVULA DE RETROEXCAVADORA)

TX1014622 -UN-12DEC06

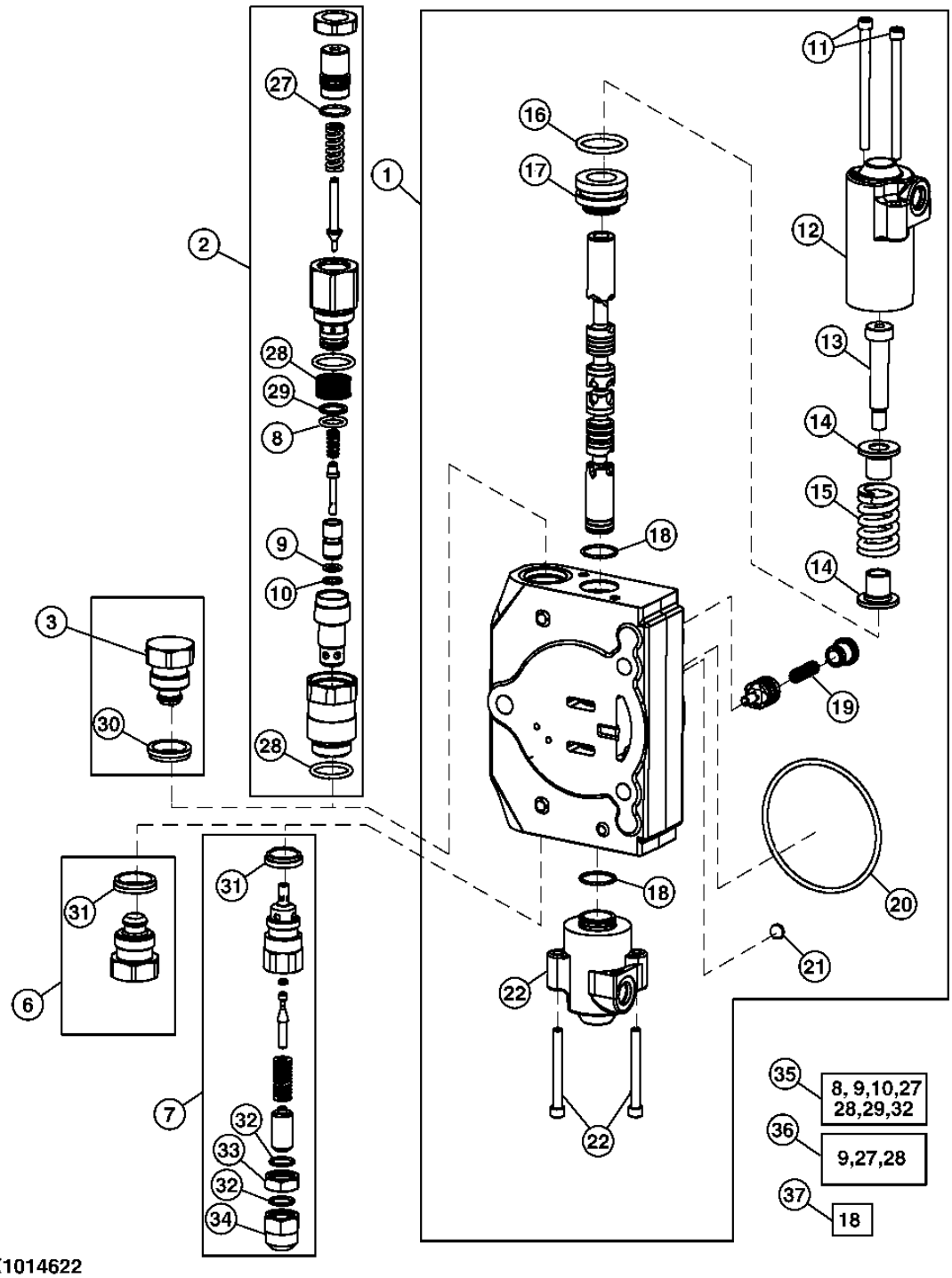

BUCKET SECTION, PILOT (BACKHOE VALVE)
SECTION DE BENNE, SOUPAPE PILOTE (SOUPAPE DE RETROPELLE)
SECCION DE CUCHARON, PILOTO (VALVULA DE RETROEXCAVADORA)

KEY	PART NO.	PART NAME	QTY.	SERIAL NO.	410J	410TMC	REMARKS
1	AT307603	HYD ACTUATED CONTROL VALVE	1		X		
2	AT192457	PRESSURE RELIEF VALVE	1		X		(1 1/16" PORT) (4600 PSI) (6 AND 7 FUNCTION) (ANTI-CAVITATION)
3	AT83174	FITTING PLUG	1		X		(1 1/16" PORT) (4 AND 5 FUNCTION)
6	AT78527	FITTING PLUG	1		X		(7/8" PORT) (4 AND 5 FUNCTION)
7	AT172937	PRESSURE RELIEF VALVE	1		X		(7/8" PORT) (6 AND 7 FUNCTION) (NOT ANTI-CAVITATION)
8	.....	O-RING	1		X		
9	R63548	O-RING	2		X		
10	T150958	BACK-UP RING	1		X		
11	T191335	SCREW	2		X		
12	T201072	CAP	1		X		
13	790107100	SCREW	1		X		
14	T201306	RETAINER	2		X		
15	T201071	COMPRESSION SPRING	1		X		
16	T191346	O-RING	1		X		
17	790106800	RETAINER	1		X		
18	.....	O-RING	2		X		
19	T161835	COMPRESSION SPRING	1		X		
20	T118685	O-RING	1		X		
21	R95493	DISK	1		X		
22	T201069	CAP	1		X		
23	T191334	SCREW	2		X		
27	T107887	O-RING	3		X		
28	T118681	O-RING	4		X		
29	.....	BACK-UP RING	1		X		
30	T183757	SEAL	1		X		
31	T183756	SEAL	1		X		
32	.....	O-RING	1		X		
33	T67424	NUT	1		X		
34	T67425	NUT	1		X		
35	AT314539	SEAL KIT	1		X		1 1/16 INCH RELIEF VALVE SEAL KIT
36	AT300801	SEAL KIT	1		X		(SEAL AND SPRING)
37	AT280406	SEAL KIT	1		X		(SPOOL SEAL)

CROWD SECTION, PILOT (BACKHOE VALVE)
SECTION DE CAVAGE, SOUPAPE PILOTE (SOUPAPE DE RETROPELLE)
SECCION DE EMPUJE, PILOTO (VALVULA DE RETROEXCAVADORA)

T188925 -UN-26MAR03

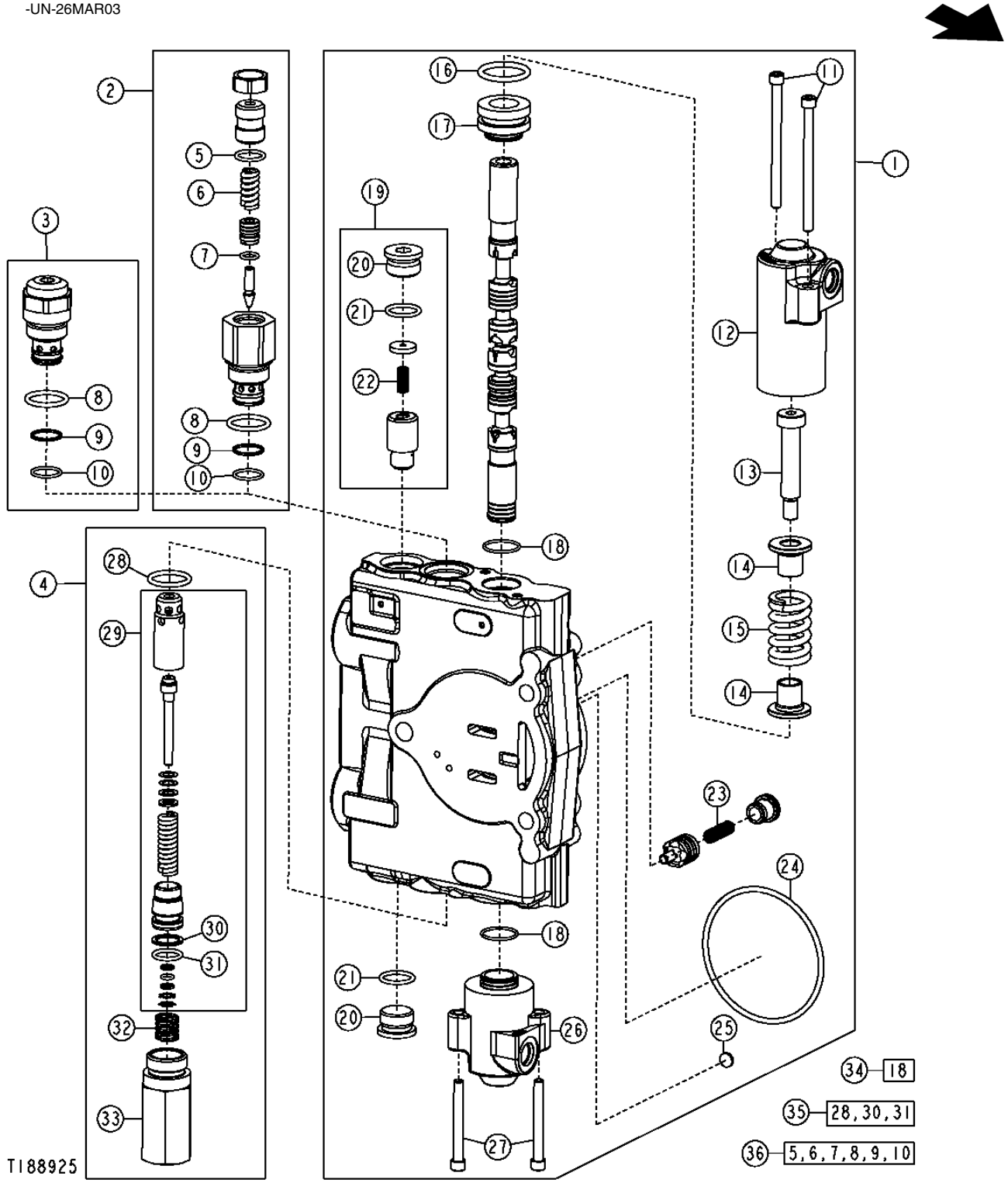

CROWD SECTION, PILOT (BACKHOE VALVE)
SECTION DE CAVAGE, SOUPAPE PILOTE (SOUPAPE DE RETROPELLE)
SECCION DE EMPUJE, PILOTO (VALVULA DE RETROEXCAVADORA)

KEY	PART NO.	PART NAME	QTY.	SERIAL NO.	410J	410TMC	REMARKS
1	AT301439	VALVE	1		X		
2	AT301134	PRESSURE RELIEF VALVE	1		X		(4750 PSI) (NON ANTI-CAVITATION)
3	AT301129	PRESSURE RELIEF VALVE	1		X		(4750 PSI) (ANTI-CAVITATION)
4	AT182377	PRESSURE RELIEF VALVE	1		X		(3800 PSI)
5	.....	O-RING	1		X		
6	.....	SPRING	1		X		
7	R63548	O-RING	1		X		
8	T118681	O-RING	2		X		
9	.....	BACK-UP RING	2		X		
10	T107887	O-RING	2		X		
11	T191335	SCREW	2		X		
12	T201072	CAP	1		X		
13	790107100	SCREW	1		X		
14	T201306	RETAINER	2		X		
15	T201071	COMPRESSION SPRING	1		X		(4 FUNCTION)
	T201071	COMPRESSION SPRING	1		X		(5, 6 AND 7 FUNCTION)
16	T191346	O-RING	1		X		
17	790106800	RETAINER	1		X		
18	.....	O-RING	2		X		
19	AT178371	SEAL KIT	1		X		(DRIFT CHECK)
20	T201424	PLUG	1		X		
21	R26906	O-RING	1		X		
22	R111238	SPRING	1		X		
23	T161835	COMPRESSION SPRING	1		X		
24	T118685	O-RING	1		X		
25	R95493	DISK	1		X		
26	T201069	CAP	1		X		
27	T191334	SCREW	2		X		
28	T118681	O-RING	1		X		
29	AT178362	SEAL KIT	1		X		
30	.....	BACK-UP RING	1		X		
31	.....	O-RING	1		X		
32	T118867	SPRING	1		X		
33	T118866	HOUSING	1		X		
34	AT302108	SEAL KIT	1		X		
35	AT314539	SEAL KIT	1		X		1 1/16 INCH RELIEF VALVE SEAL KIT
36	AT300801	SEAL KIT	1		X		(SEAL AND SPRING)

SWING SECTION, PILOT (BACKHOE VALVE)
SECTION DE PIVOTEMENT, SOUPAPE PILOTE (SOUPAPE DE RETROPELLE)
SECCION DE GIRO, PILOTO (VALVULA DE RETROEXCAVADORA)

T189026 -UN-27MAR03

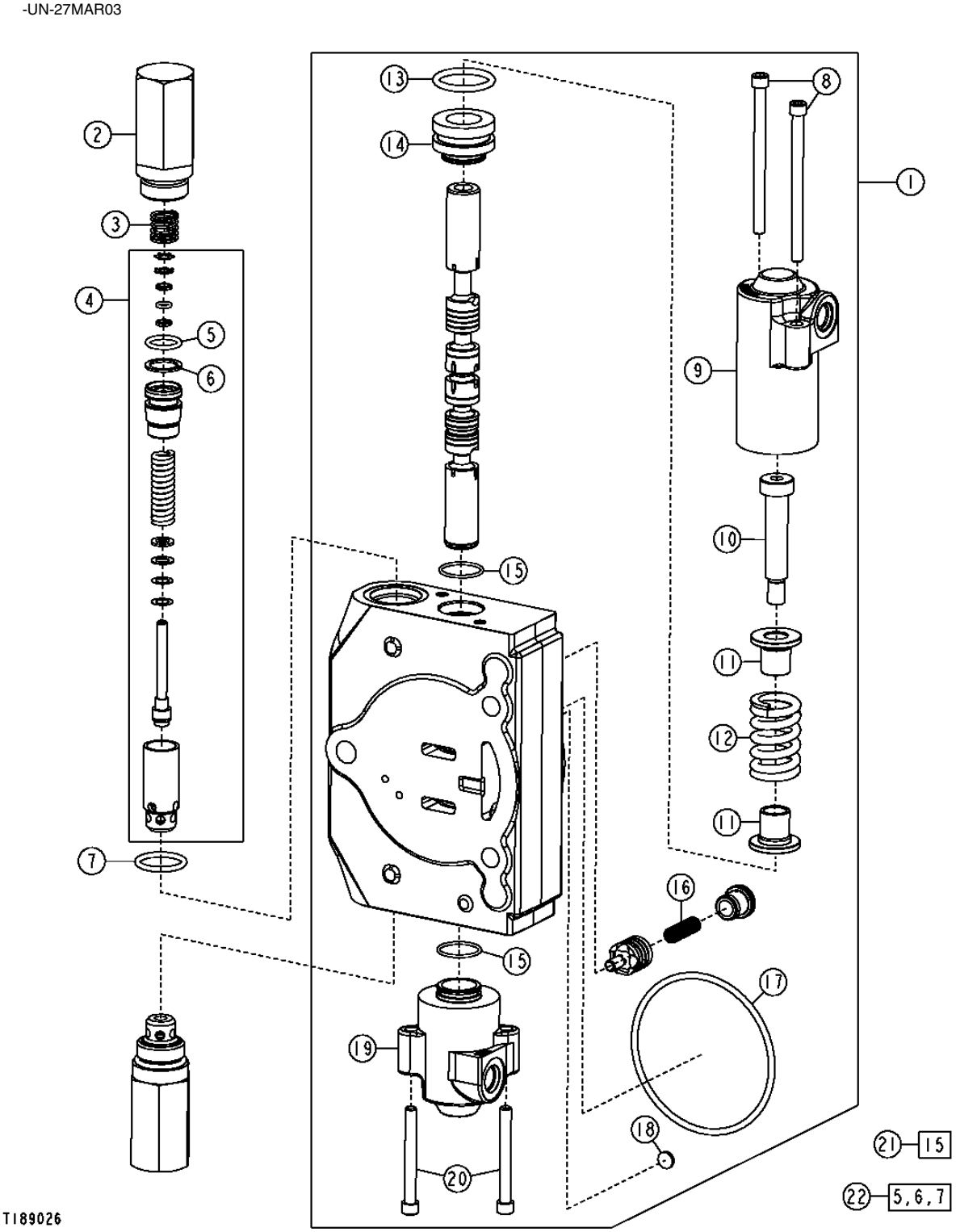

SWING SECTION, PILOT (BACKHOE VALVE)
SECTION DE PIVOTEMENT, SOUPAPE PILOTE (SOUPAPE DE RETROPELLE)
SECCION DE GIRO, PILOTO (VALVULA DE RETROEXCAVADORA)

KEY	PART NO.	PART NAME	QTY.	SERIAL NO.	410J	410TMC	REMARKS
1	AT317386	HYD ACTUATED CONTROL VALVE	1		X		
2	T118866	HOUSING	2		X		
3	T118867	SPRING	2		X		
4	AT178402	SEAL KIT	2		X		(4200 PSI)
5	.....	O-RING	2		X		
6	.....	BACK-UP RING	2		X		
7	T118681	O-RING	2		X		
8	T191335	SCREW	2		X		
9	T201072	CAP	1		X		
10	790107100	SCREW	1		X		
11	T201306	RETAINER	2		X		
12	T201071	COMPRESSION SPRING	1		X		
13	T191346	O-RING	1		X		
14	790106800	RETAINER	1		X		
15	.....	O-RING	2		X		
16	T161835	COMPRESSION SPRING	1		X		
17	T118685	O-RING	1		X		
18	R95493	DISK	1		X		
19	T201069	CAP	1		X		
20	T191334	SCREW	2		X		
21	AT280406	SEAL KIT	1		X		(SPOOL SEAL)
22	AT314539	SEAL KIT	1		X		1 1/16 INCH RELIEF VALVE SEAL KIT

BOOM VALVE SECTION (410TMC)
SECTION VERIN FLECHE (410TMC)
SECCION DE LA VALVULA DEL AGUILON (410TMC)

TX1016883 -UN-20DEC06

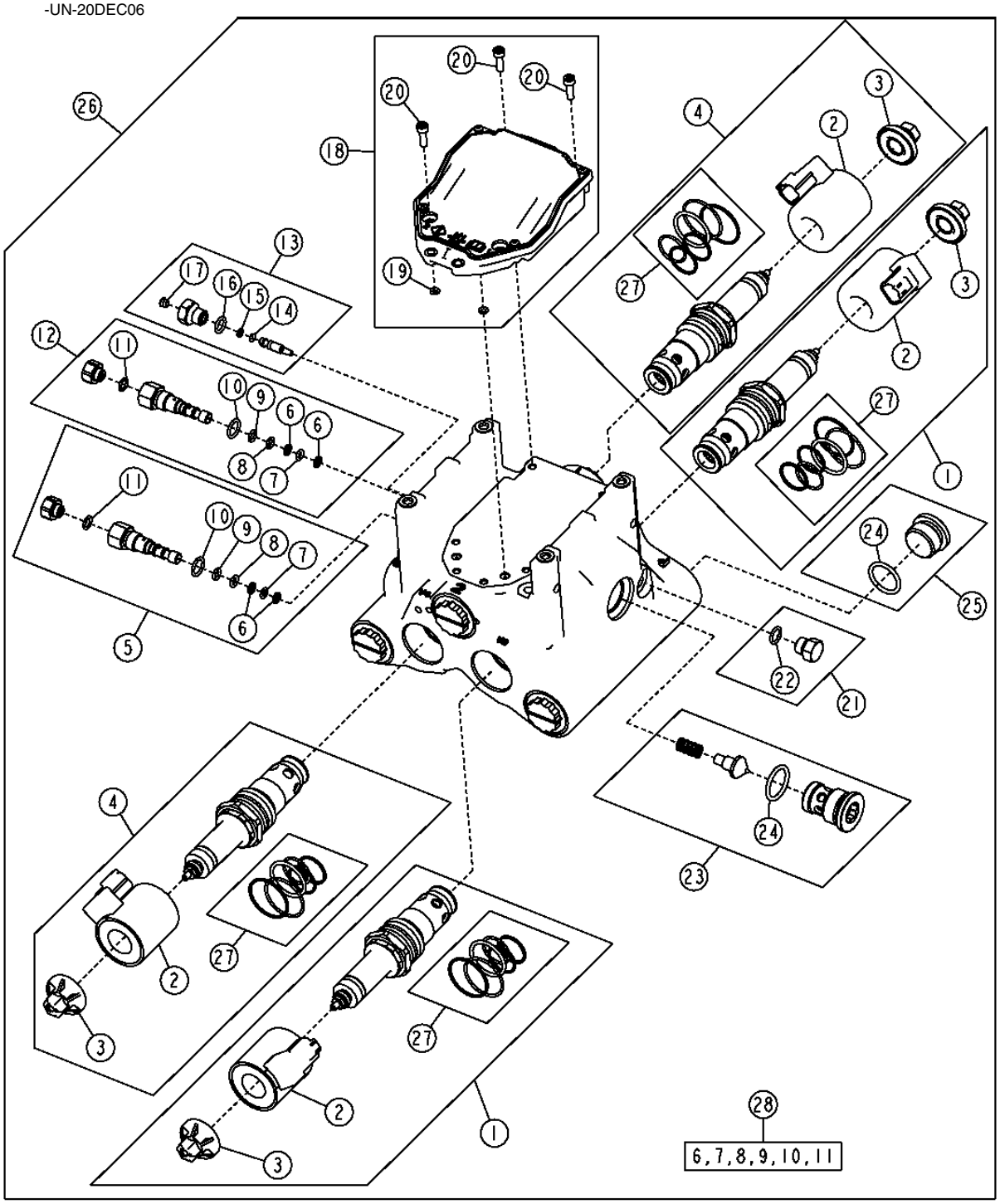

BOOM VALVE SECTION (410TMC)
SECTION VERIN FLECHE (410TMC)
SECCION DE LA VALVULA DEL AGUILON (410TMC)

KEY	PART NO.	PART NAME	QTY.	SERIAL NO.	410J	410TMC	REMARKS
1	AT338131	ELEC-HYD PROPORTIONAL VALVE	2			X	
2	AT339616	SOLENOID VALVE COIL	4			X	
3	AT339617	FLANGE NUT	4			X	
4	AT338132	ELEC-HYD PROPORTIONAL VALVE	2			X	
5	AT338203	PRESSURE RELIEF VALVE	1			X	
6	R111235	BACK-UP RING	2			X	
7	.....	O-RING	1			X	
8	.....	O-RING	1			X	
9	51M7121	O-RING	1			X	
10	T70177	O-RING	2			X	
11	R79060	O-RING	2			X	
12	AT338199	PRESSURE RELIEF VALVE	1			X	
13	AT338209	MANUAL HYDRAULIC VALVE	1			X	
14	R108066	O-RING	2			X	
15	R113223	BACK-UP RING	1			X	
16	51M7040	O-RING	1			X	
17	R113228	PLUG	1			X	
18	AT336644	MULTI-FUNCTIONAL CONTROLLER	1			X	
19	R93821	O-RING	2			X	
20	19M8146	SCREW	6			X	M5 X 16
21	R27094	DRAIN PLUG	1			X	
22	R26286	O-RING	1			X	
23	AT338206	CHECK VALVE	1			X	
24	U12547	O-RING	2			X	
25	F85112	DRAIN PLUG	2			X	
26	AT312612	ELEC-HYD PROPORTIONAL VALVE	1			X	
27	AT338133	SEAL KIT	2			X	
28	AT338205	SEAL KIT	2			X	

BUCKET VALVE SECTION (410TMC)
SECTION VERIN BENNE (410TMC)
SECCION DE LA VALVULA DEL CUCHARON (410TMC)

TX1016884 -UN-20DEC06

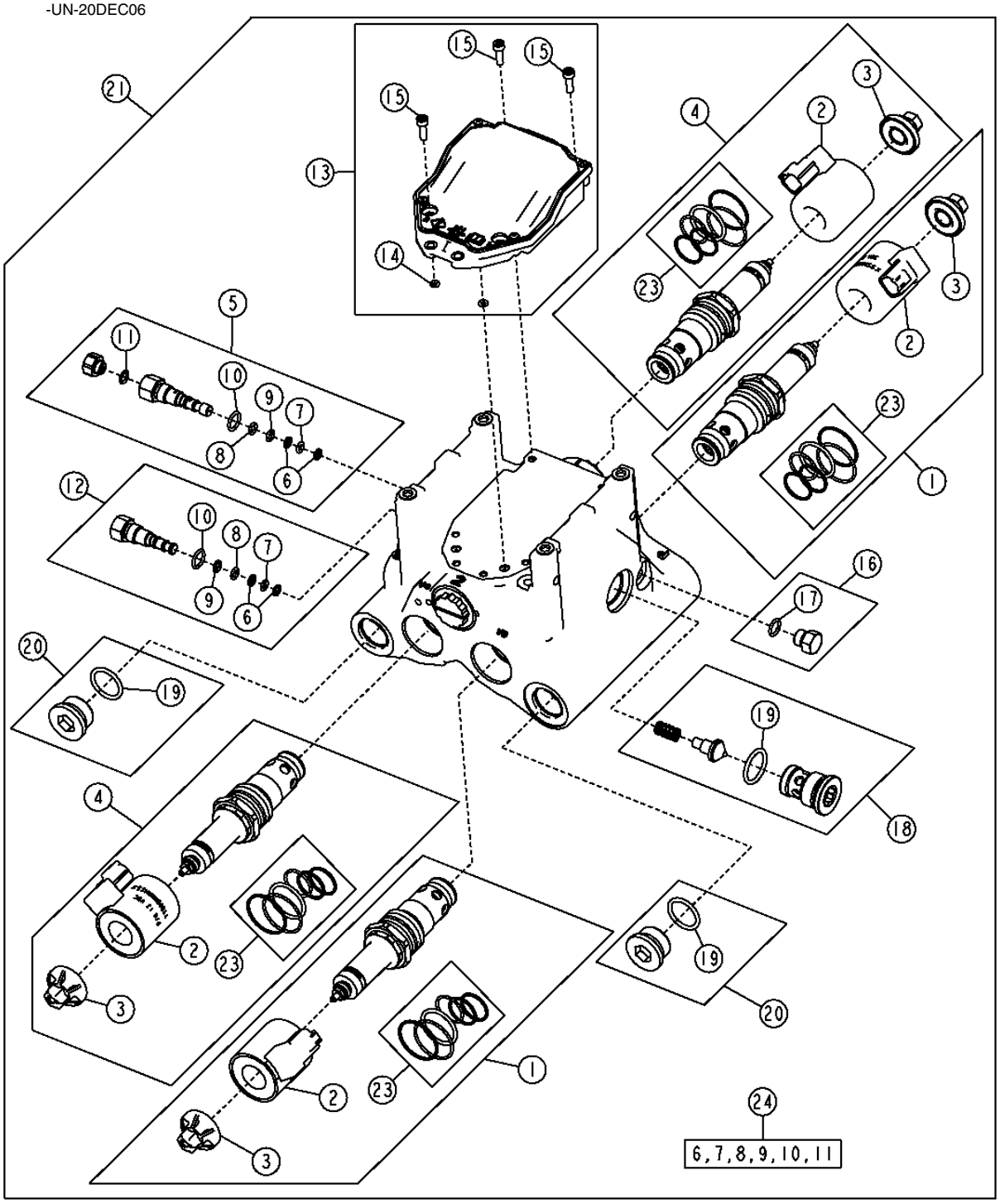

THIS PARTS LISTING IS CONTINUED

BUCKET VALVE SECTION (410TMC)
SECTION VERIN BENNE (410TMC)
SECCION DE LA VALVULA DEL CUCHARON (410TMC)

KEY	PART NO.	PART NAME	QTY.	SERIAL NO.	410J	410TMC	REMARKS
1	AT338131	ELEC-HYD PROPORTIONAL VALVE	2			X	
2	AT339616	SOLENOID VALVE COIL	4			X	
3	AT339617	FLANGE NUT	4			X	
4	AT338132	ELEC-HYD PROPORTIONAL VALVE	2			X	
5	AT338201	PRESSURE RELIEF VALVE	1			X	
6	R111235	BACK-UP RING	2			X	
7	.....	O-RING	1			X	
8	.....	O-RING	1			X	
9	51M7121	O-RING	1			X	
10	T70177	O-RING	2			X	
11	R79060	O-RING	2			X	
12	AT338204	FITTING PLUG	1			X	
13	AT336644	MULTI-FUNCTIONAL CONTROLLER	1			X	
14	R93821	O-RING	2			X	
15	19M8146	SCREW	6			X	M5 X 16
16	R27094	DRAIN PLUG	1			X	
17	R26286	O-RING	1			X	
18	AT338206	CHECK VALVE	1			X	
19	U12547	O-RING	3			X	
20	F85112	DRAIN PLUG	2			X	
21	AT312613	ELEC-HYD PROPORTIONAL VALVE	1			X	
23	AT338133	SEAL KIT	2			X	
24	AT338205	SEAL KIT	2			X	

CROWD VALVE SECTION (410TMC)
SECTION VERIN DE CAVAGE (410TMC)
SECCION DE LA VALVULA DEL EMPUJE (410TMC)

TX1016882 -UN-20DEC06

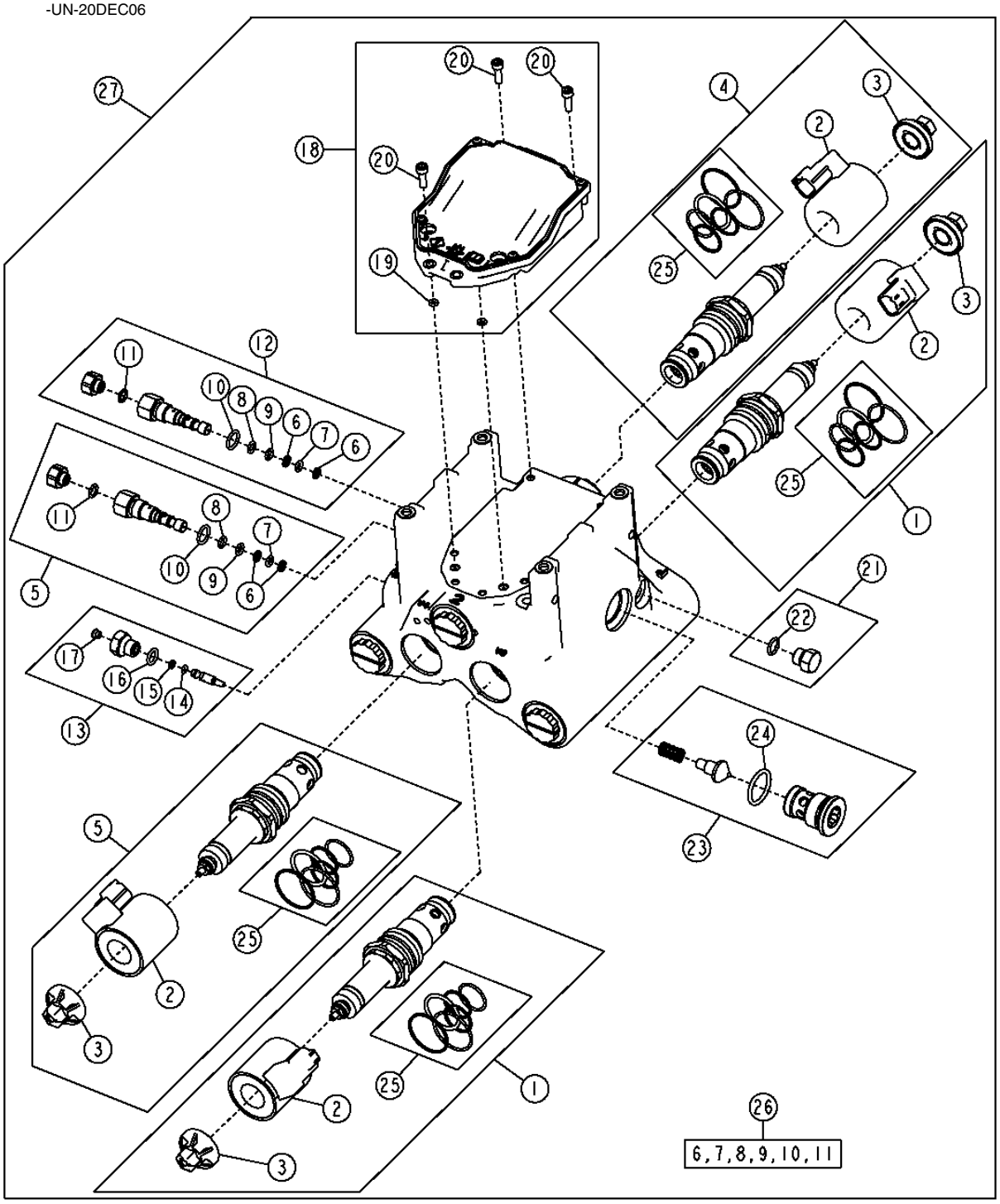

CROWD VALVE SECTION (410TMC)
SECTION VERIN DE CAVAGE (410TMC)
SECCION DE LA VALVULA DEL EMPUJE (410TMC)

KEY	PART NO.	PART NAME	QTY.	SERIAL NO.	410J	410TMC	REMARKS
1	AT338131	ELEC-HYD PROPORTIONAL VALVE	2			X	
2	AT339616	SOLENOID VALVE COIL	4			X	
3	AT339617	FLANGE NUT	4			X	
4	AT338132	ELEC-HYD PROPORTIONAL VALVE	2			X	
5	AT338202	PRESSURE RELIEF VALVE	1			X	
6	R111235	BACK-UP RING	1			X	
7	.....	O-RING	2			X	
8	.....	O-RING	1			X	
9	51M7121	O-RING	1			X	
10	T70177	O-RING	2			X	
11	R79060	O-RING	2			X	
12	AT338200	PRESSURE RELIEF VALVE	1			X	
13	AT338209	MANUAL HYDRAULIC VALVE	1			X	
14	R108066	O-RING	2			X	
15	R113226	O-RING	1			X	
16	51M7040	O-RING	1			X	
17	R113228	PLUG	1			X	
18	AT336644	MULTI-FUNCTIONAL CONTROLLER	1			X	
19	R93821	O-RING	2			X	
20	19M8146	SCREW	6			X	M5 X 16
21	R27094	DRAIN PLUG	1			X	
22	R26286	O-RING	1			X	
23	AT338206	CHECK VALVE	1			X	
24	U12547	O-RING	1			X	
25	AT338133	SEAL KIT	2			X	
26	AT338205	SEAL KIT	2			X	
27	AT303517	ELEC-HYD PROPORTIONAL VALVE	1			X	

HAMMER VALVE SECTION (410TMC)
SECTION VERIN DE MARTEAU (410TMC)
SECCION DE LA VALVULA DEL MARTILLO (410TMC)

TX1016881 -UN-20DEC06

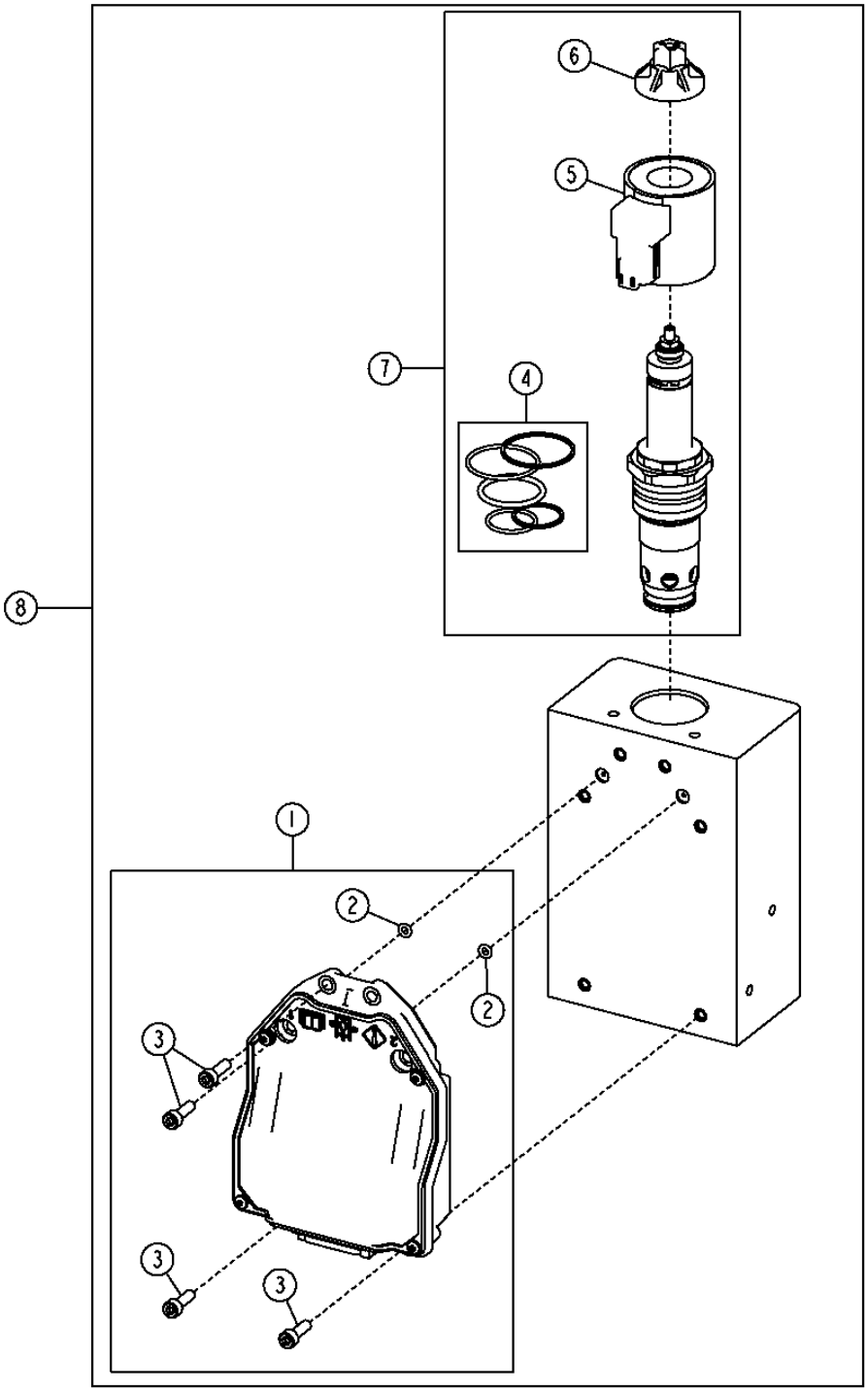

HAMMER VALVE SECTION (410TMC)
SECTION VERIN DE MARTEAU (410TMC)
SECCION DE LA VALVULA DEL MARTILLO (410TMC)

KEY	PART NO.	PART NAME	QTY.	SERIAL NO.	410J	410TMC	REMARKS
1	AT336644	MULTI-FUNCTIONAL CONTROLLER	1			X	
2	R93821	O-RING	2			X	
3	19M8146	SCREW	6			X	M5 X 16
4	AT338133	SEAL KIT	1			X	
5	AT339616	SOLENOID VALVE COIL	1			X	
6	AT339617	FLANGE NUT	1			X	
7	AT338131	ELEC-HYD PROPORTIONAL VALVE	1			X	
8	AT321123	ELEC-HYD PROPORTIONAL VALVE	1			X	

ELECTRO HYDRAULIC (EH) BACKHOE CONTROL VALVE (410TMC)
(EH) DISTRIBUTEUR DE RETROPELLE (410TMC)
(EH) VALVULA DE CONTROL DE RETROEXCAVADORA (410TMC)

TX1016870 -UN-22DEC06

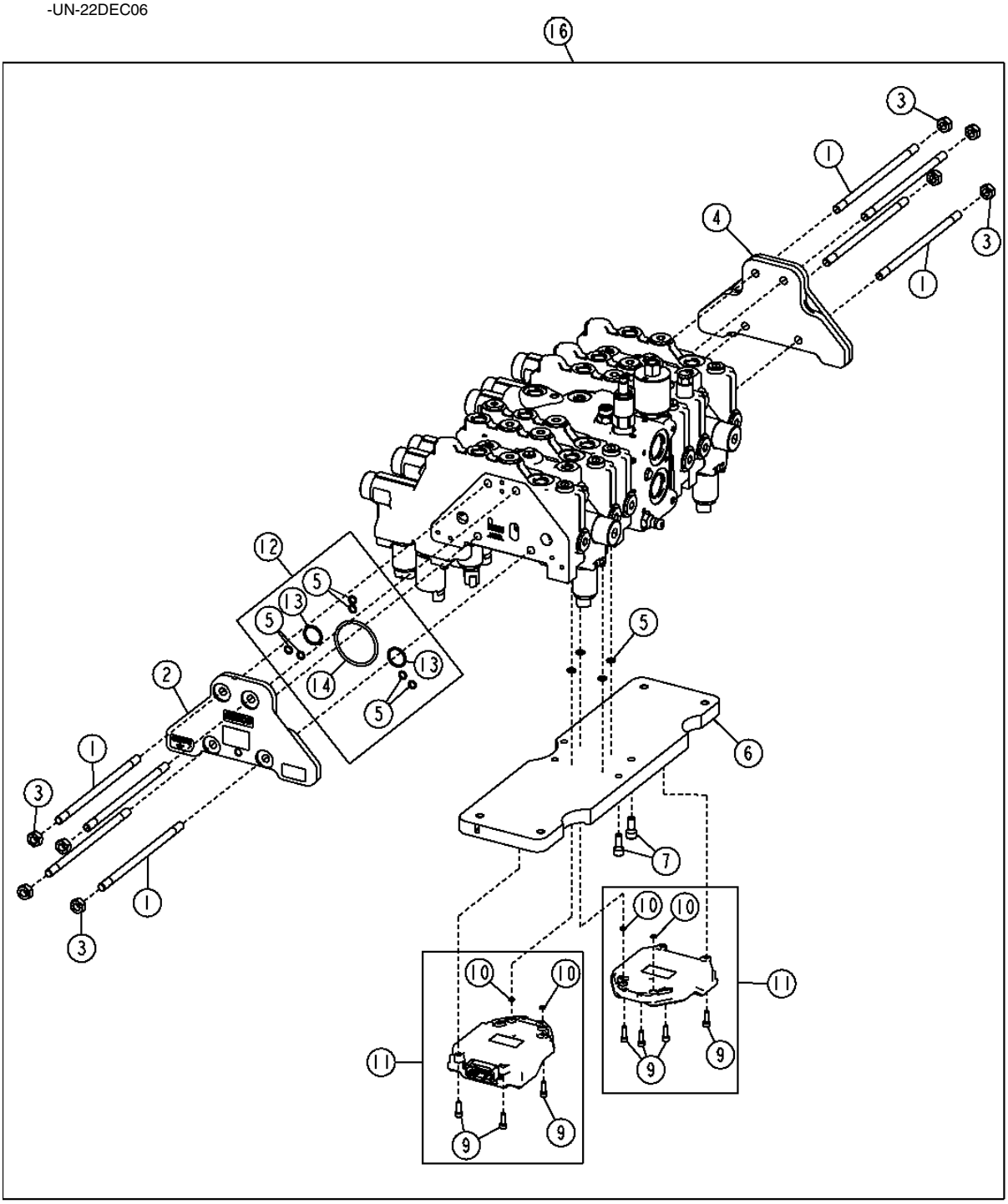

TX1016870

ELECTRO HYDRAULIC (EH) BACKHOE CONTROL VALVE (410TMC)
(EH) DISTRIBUTEUR DE RETROPELLE (410TMC)
(EH) VALVULA DE CONTROL DE RETROEXCAVADORA (410TMC)

KEY	PART NO.	PART NAME	QTY.	SERIAL NO.	410J	410TMC	REMARKS
1	T227592	ROD	8			X	(FOR 4 SECTIONS PER SIDE)
	T227597	ROD	8			X	(FOR 3 SECTIONS PER SIDE)
2	T227596	END PLATE	1			X	
3	14M7491	NUT	8			X	
4	T227598	END PLATE	1			X	
5	R10093	O-RING	10			X	
6	T227599	PLATE	2			X	
7	T227600	SCREW	4			X	
9	19M8146	SCREW	12			X	M5 X 16
10	R93821	O-RING	5			X	
11	AT336644	MULTI-FUNCTIONAL CONTROLLER	2			X	
12	AT336646	SEAL KIT	1			X	
13	R139897	O-RING	2			X	
14	F37030228	O-RING	1			X	
16	**AT320644**	**KIT**	**1**			**X**	**(CONVIENCE ASSEMBLY) (EH VALVES PLUS 2 AUXILIARY SECTIONS)**
	AT310450	**KIT**	**1**			**X**	**(CONVIENCE ASSEMBLY) (EH VALVES PLUS LOADER AUXILIARY SECTION)**
	AT324156	**KIT**	**1**			**X**	**(CONVIENCE ASSEMBLY) (EH VALVES PLUS BACKHOE AUXILIARY SECTION)**
	AT311382	**KIT**	**1**			**X**	**(CONVIENCE ASSEMBLY) (EH VALVES)**

THIS PARTS LISTING IS CONTINUED

(EH) STABILIZER VALVE SECTION (410TMC)
(EH) SOUPAPE DE STABILISATEUR (410TMC)
(EH) VALVULA ESTABILIZADORA (410TMC)

TX1016872 -UN-22DEC06

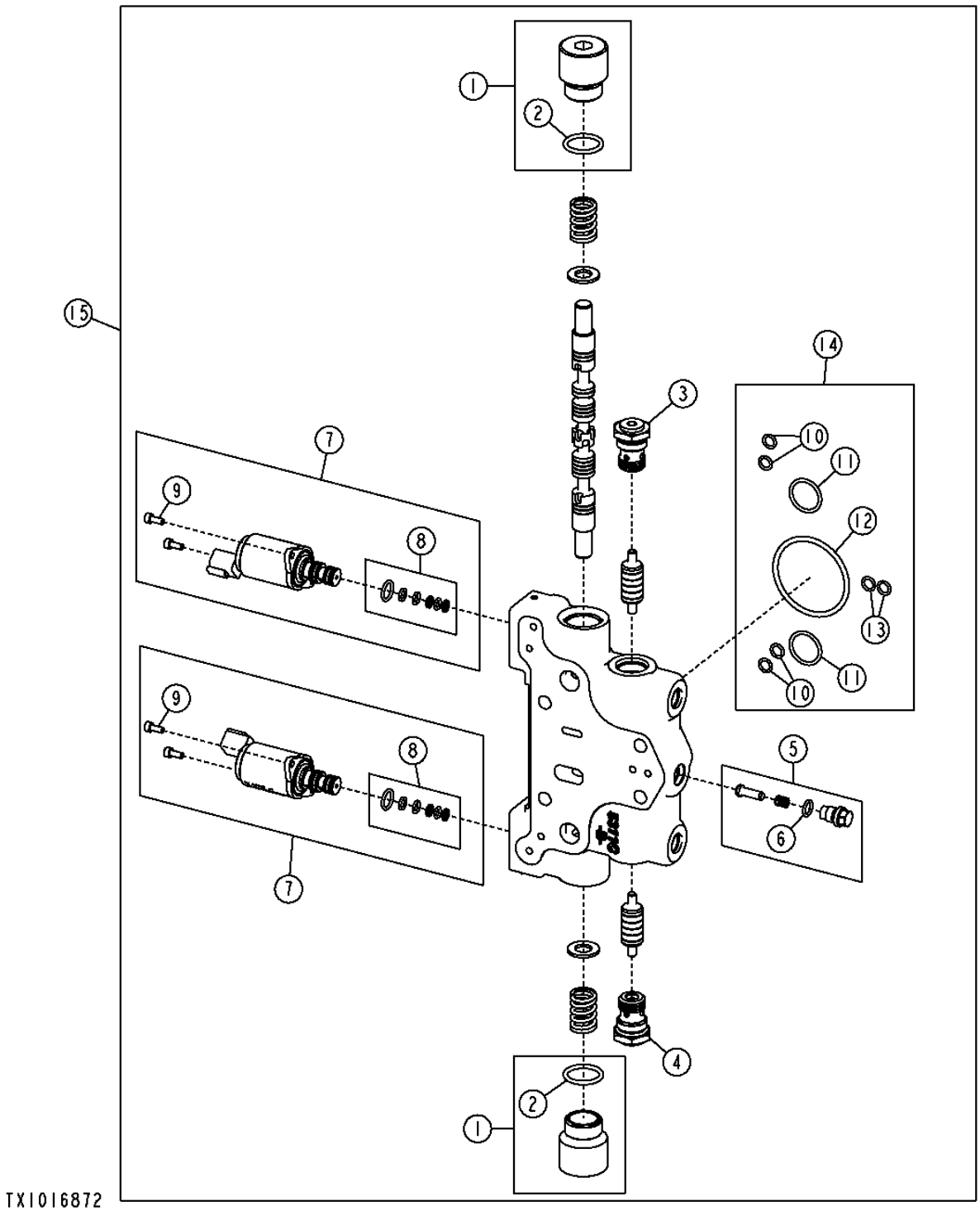

(EH) STABILIZER VALVE SECTION (410TMC)
(EH) SOUPAPE DE STABILISATEUR (410TMC)
(EH) VALVULA ESTABILIZADORA (410TMC)

KEY	PART NO.	PART NAME	QTY.	SERIAL NO.	410J	410TMC	REMARKS
1	AT336772	FITTING PLUG	2			X	
2	0471300388	O-RING	1			X	
3	AT337941	CHECK VALVE	1			X	
4	AT336773	CHECK VALVE	1			X	
5	AT336774	SEAL KIT	1			X	
6	R28782	O-RING	1			X	
7	AT336775	ELEC-HYD PROPORTIONAL VALVE	2			X	
8	AT336776	SEAL KIT	1			X	
9	19M7702	SCREW	2			X	M4 X 10
10	R10093	O-RING	6			X	
11	R139897	O-RING	2			X	
12	F37030228	O-RING	1			X	
13	R93821	O-RING	2			X	
14	AT336646	SEAL KIT	1			X	
15	AT336767	ELEC-HYD PROPORTIONAL VALVE	1			X	

(EH) SWING SECTION (410TMC)
(EH) SECTION DE PIVOTEMENT (410TMC)
(EH) SECCION DE GIRO (410TMC)

TX1016874 -UN-22DEC06

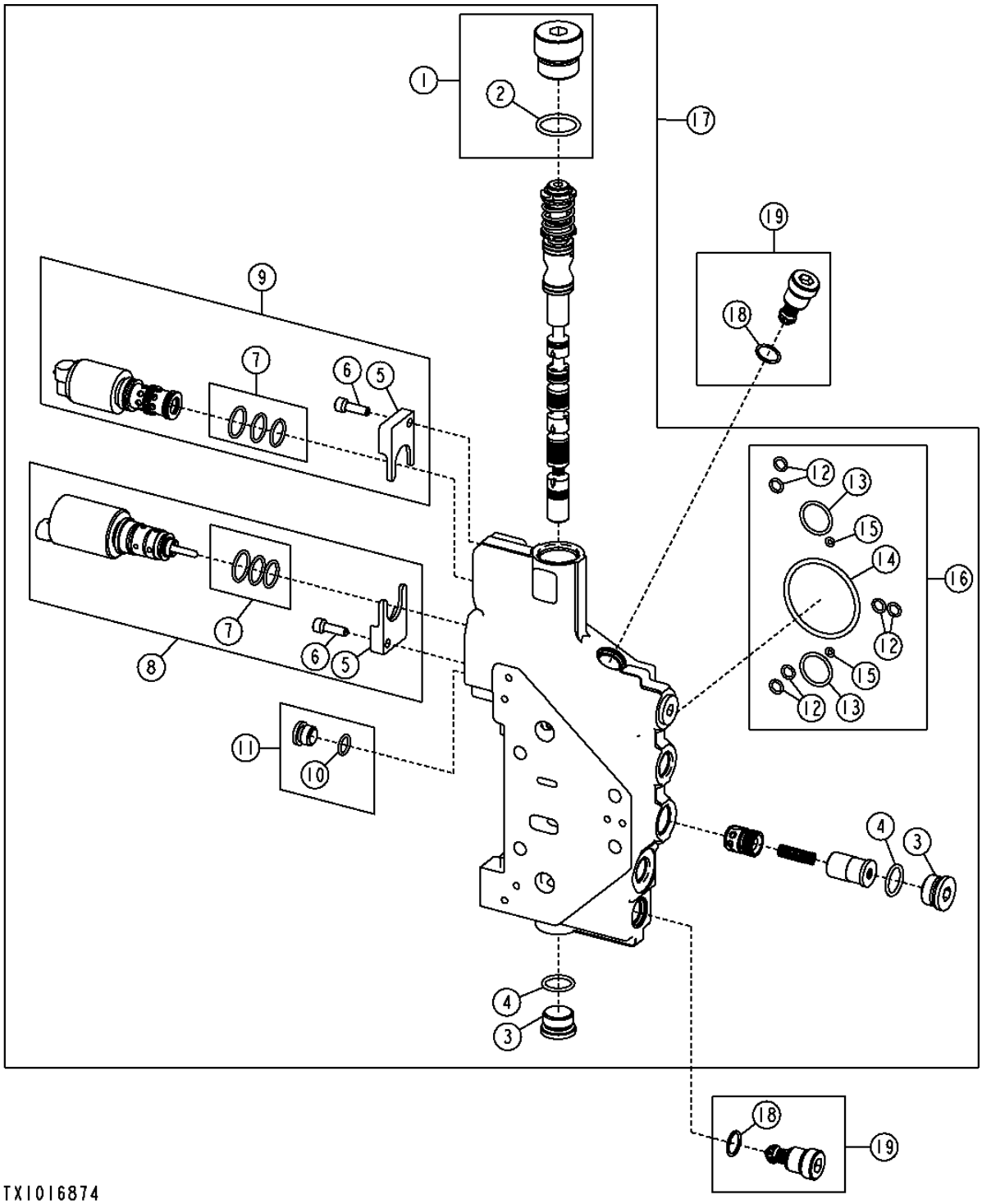

TX1016874

(EH) SWING SECTION (410TMC)
(EH) SECTION DE PIVOTEMENT (410TMC)
(EH) SECCION DE GIRO (410TMC)

KEY	PART NO.	PART NAME	QTY.	SERIAL NO.	410J	410TMC	REMARKS
1	AT336679	FITTING PLUG	1			X	
2	U17409	O-RING	1			X	
3	X10HP5ON-S	FITTING PLUG	2			X	
4	R26906	O-RING	2			X	
5	RE210010	CLAMP	2			X	
6	19M7603	SCREW	2			X	
7	RE213499	SEAL KIT	2			X	
8	RE246316	VALVE	1			X	
9	RE244312	SOLENOID VALVE	1			X	
10	R26448	O-RING	1			X	
11	A73182	PIPE PLUG	1			X	
12	R10093	O-RING	6			X	
13	R139897	O-RING	2			X	
14	F37030228	O-RING	1			X	
15	R93821	O-RING	2			X	
16	AT336646	SEAL KIT	1			X	
17	AT336764	ELEC-HYD PROPORTIONAL VALVE	1			X	
18	T77932	O-RING	1			X	
19	AT336650	PRESSURE RELIEF VALVE	2			X	

(EH) EXTENDABLE SECTION (410TMC)
(EH) SECTION TELESCOPIQUE (410TMC)
(EH) SECCION EXTENSIBLE (410TMC)

TX1016873 -UN-22DEC06

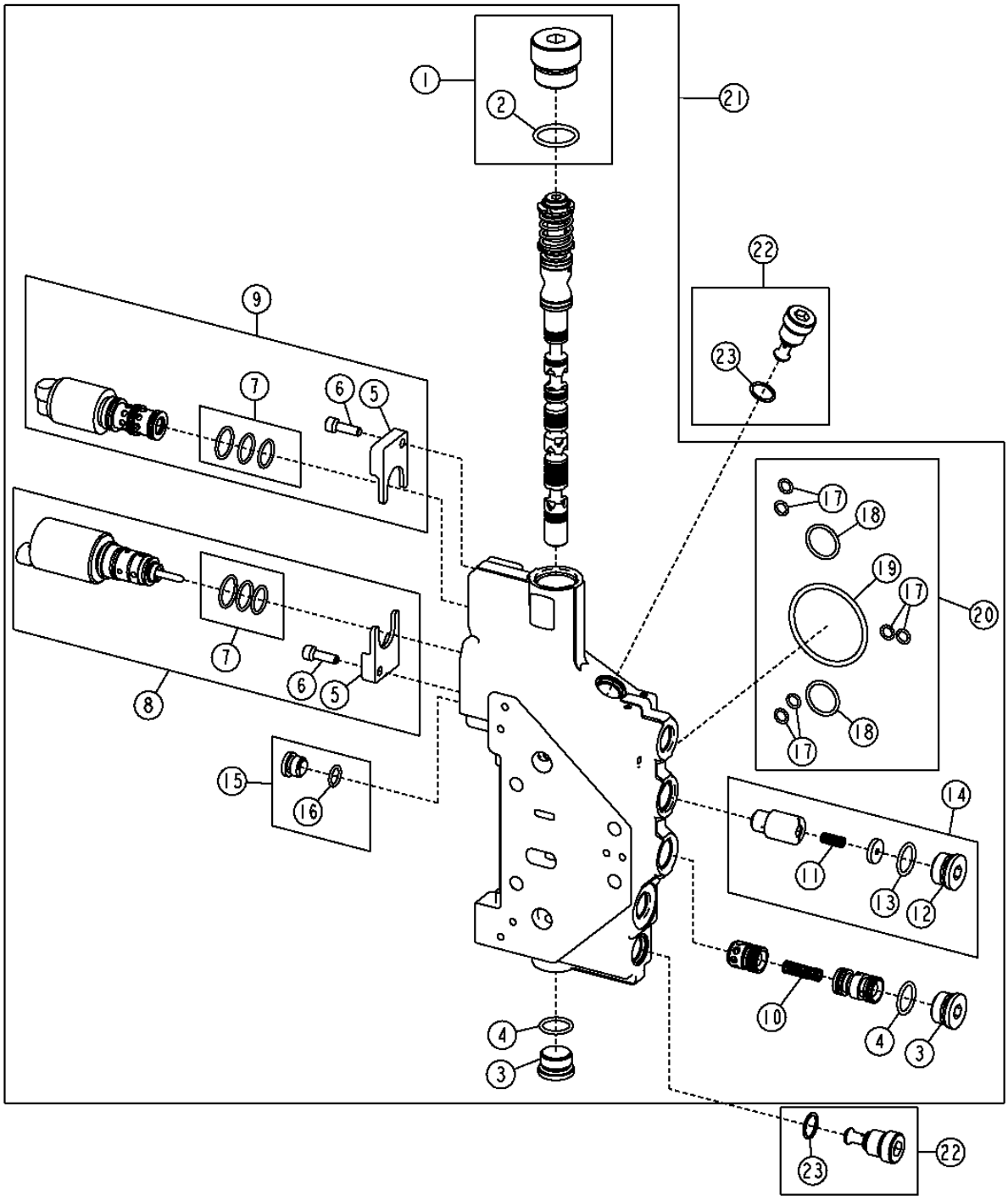

TX1016873

(EH) EXTENDABLE SECTION (410TMC)
(EH) SECTION TELESCOPIQUE (410TMC)
(EH) SECCION EXTENSIBLE (410TMC)

KEY	PART NO.	PART NAME	QTY.	SERIAL NO.	410J	410TMC	REMARKS
1	AT336679	FITTING PLUG	1			X	
2	U17409	O-RING	1			X	
3	X10HP5ON-S	FITTING PLUG	2			X	
4	R26906	O-RING	2			X	
5	RE210010	CLAMP	2			X	
6	19M7603	SCREW	2			X	
7	RE213499	SEAL KIT	2			X	
8	RE246316	VALVE	1			X	
9	RE244312	SOLENOID VALVE	1			X	
10	T161835	COMPRESSION SPRING	1			X	
11	R111238	SPRING	1			X	(NOT SHOWN)
12	T201424	PLUG	1			X	
13	R26906	O-RING	1			X	
14	AT178371	SEAL KIT	1			X	
15	A73182	PIPE PLUG	1			X	
16	R26448	O-RING	1			X	
17	R10093	O-RING	6			X	
18	R139897	O-RING	2			X	
19	F37030228	O-RING	1			X	
20	AT336646	SEAL KIT	1			X	
21	AT336675	ELEC-HYD PROPORTIONAL VALVE	1			X	
22	AT336647	FITTING PLUG	5			X	
23	T77932	O-RING	1			X	

(EH) BUCKET SECTION (410TMC)
(EH) SECTION DE GODET (410TMC)
(EH) SECCION DE CUCHARON (410TMC)

TX1016875 -UN-22DEC06

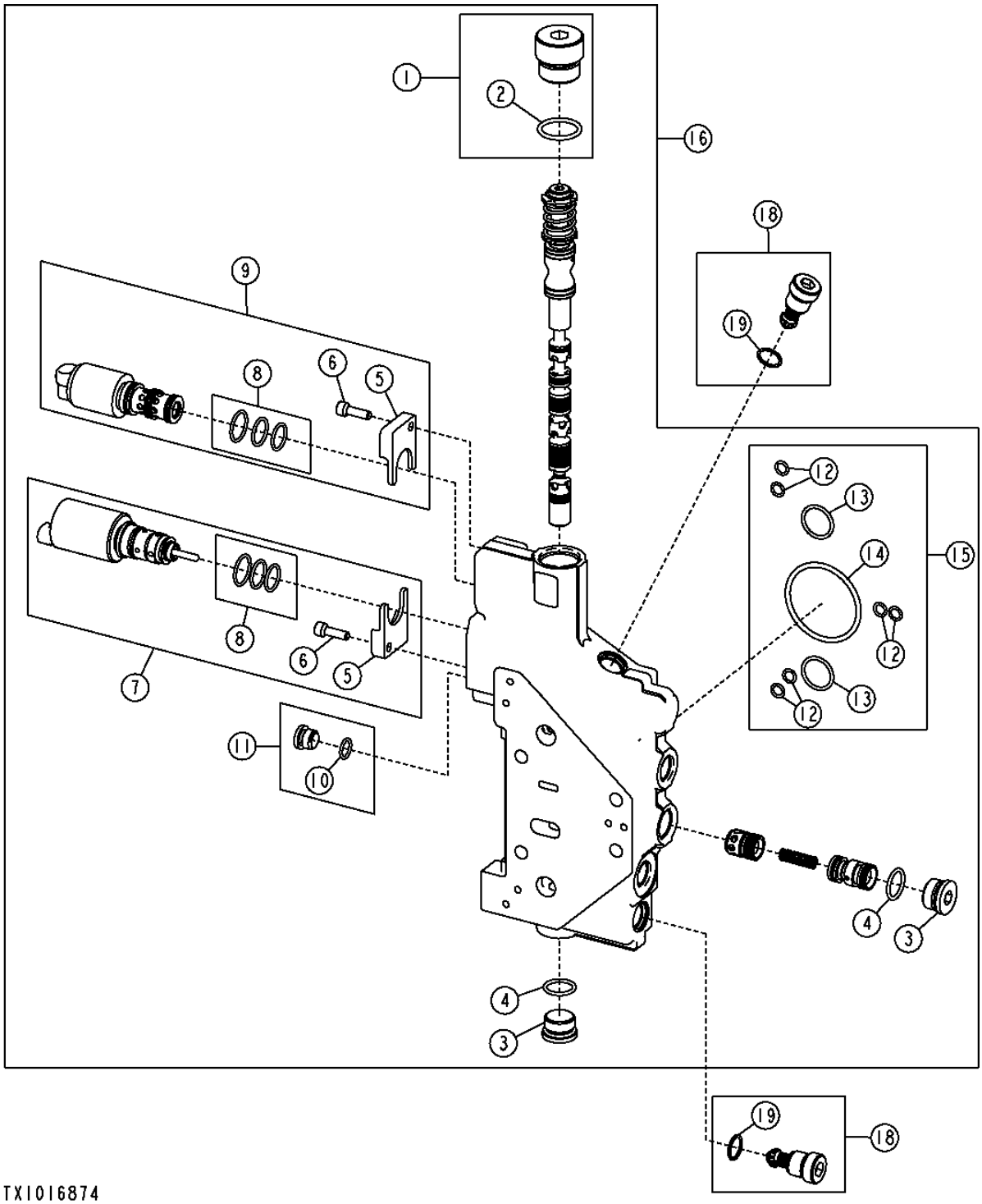

TX1016874

(EH) BUCKET SECTION (410TMC)
(EH) SECTION DE GODET (410TMC)
(EH) SECCION DE CUCHARON (410TMC)

KEY	PART NO.	PART NAME	QTY.	SERIAL NO.	410J	410TMC	REMARKS
1	AT336679	FITTING PLUG	1			X	
2	U17409	O-RING	1			X	
3	X10HP5ON-S	FITTING PLUG	2			X	
4	R26906	O-RING	2			X	
5	RE210010	CLAMP	2			X	
6	19M7603	SCREW	2			X	
7	RE246316	VALVE	1			X	
8	RE213499	SEAL KIT	2			X	
9	RE244312	SOLENOID VALVE	1			X	
10	R26448	O-RING	1			X	
11	A73182	PIPE PLUG	1			X	(NOT SHOWN)
12	R10093	O-RING	6			X	
13	R139897	O-RING	2			X	
14	F37030228	O-RING	1			X	
15	AT336646	SEAL KIT	1			X	
16	AT336764	ELEC-HYD PROPORTIONAL VALVE	1			X	
18	AT336650	PRESSURE RELIEF VALVE	1			X	
19	T77932	O-RING	1			X	

(EH) LOADER BOOM SECTION (410TMC)
(EH) SECTION DE FLECHE (410TMC)
(EH) SECCION DE AGUILON (410TMC)

TX1016876 -UN-22DEC06

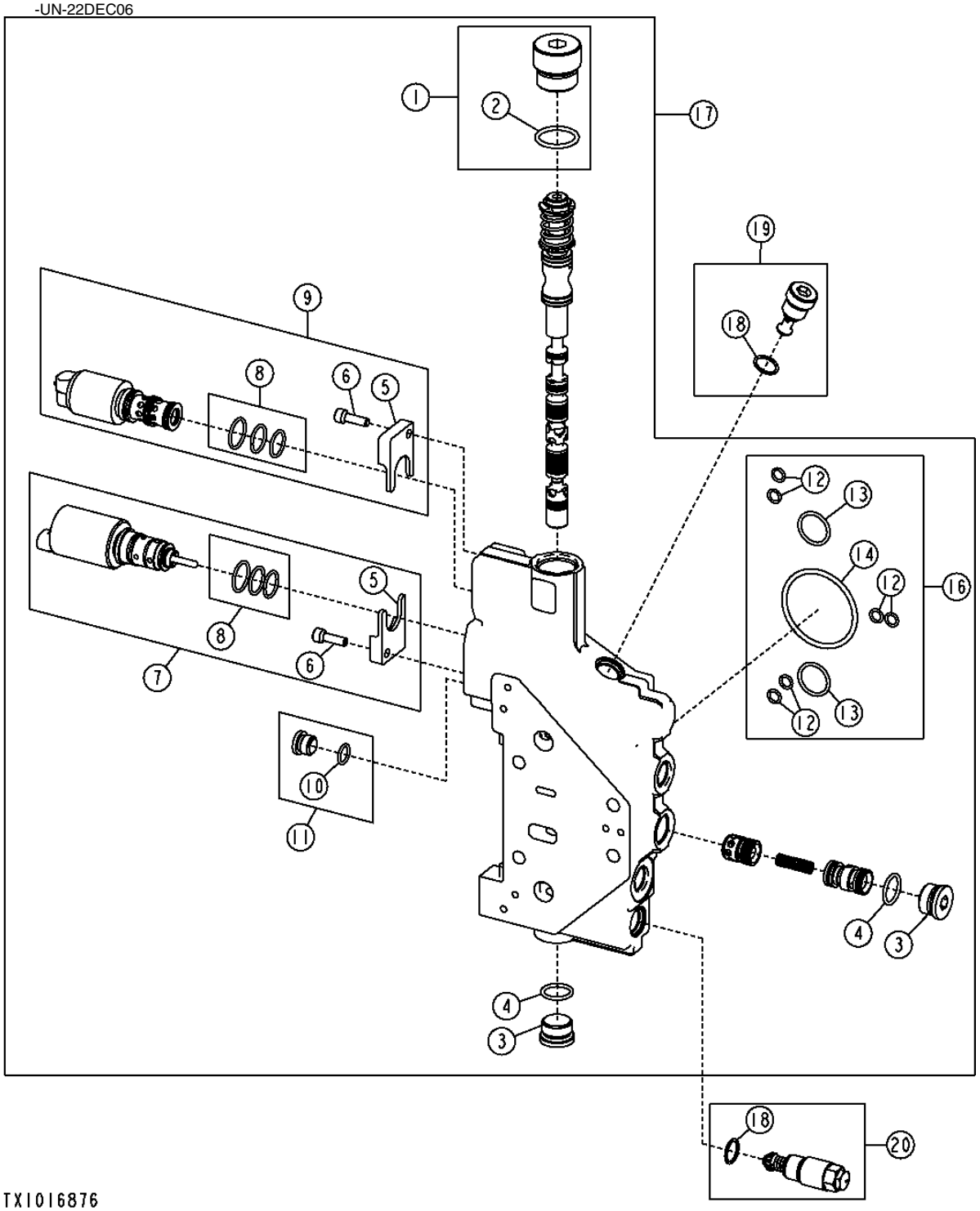

TX1016876

(EH) LOADER BOOM SECTION (410TMC)
(EH) SECTION DE FLECHE (410TMC)
(EH) SECCION DE AGUILON (410TMC)

KEY	PART NO.	PART NAME	QTY.	SERIAL NO.	410J	410TMC	REMARKS
1	AT336679	FITTING PLUG	1			X	
2	U17409	O-RING	1			X	
3	X10HP5ON-S	FITTING PLUG	2			X	
4	R26906	O-RING	2			X	
5	RE210010	CLAMP	2			X	
6	19M7603	SCREW	2			X	
7	RE246316	VALVE	1			X	
8	RE213499	SEAL KIT	2			X	
9	RE244312	SOLENOID VALVE	1			X	
10	R26448	O-RING	1			X	
11	A73182	PIPE PLUG	1			X	
12	R10093	O-RING	6			X	
13	R139897	O-RING	2			X	
14	F37030228	O-RING	1			X	
16	AT336646	SEAL KIT	1			X	
17	AT336763	ELEC-HYD PROPORTIONAL VALVE	1			X	
18	T77932	O-RING	2			X	
19	AT336652	PRESSURE RELIEF VALVE	1			X	
20	AT336649	PRESSURE RELIEF VALVE	1			X	

(EH) MID INLET VALVE SECTION (410TMC)
(EH) SECTION DE SOUPAPE A ENTREE CENTRALE (410TMC)
(EH) SECCION DE VALVULAS DE ENTRADA INTERMEDIAS (410TMC)

TX1016877 -UN-27DEC06

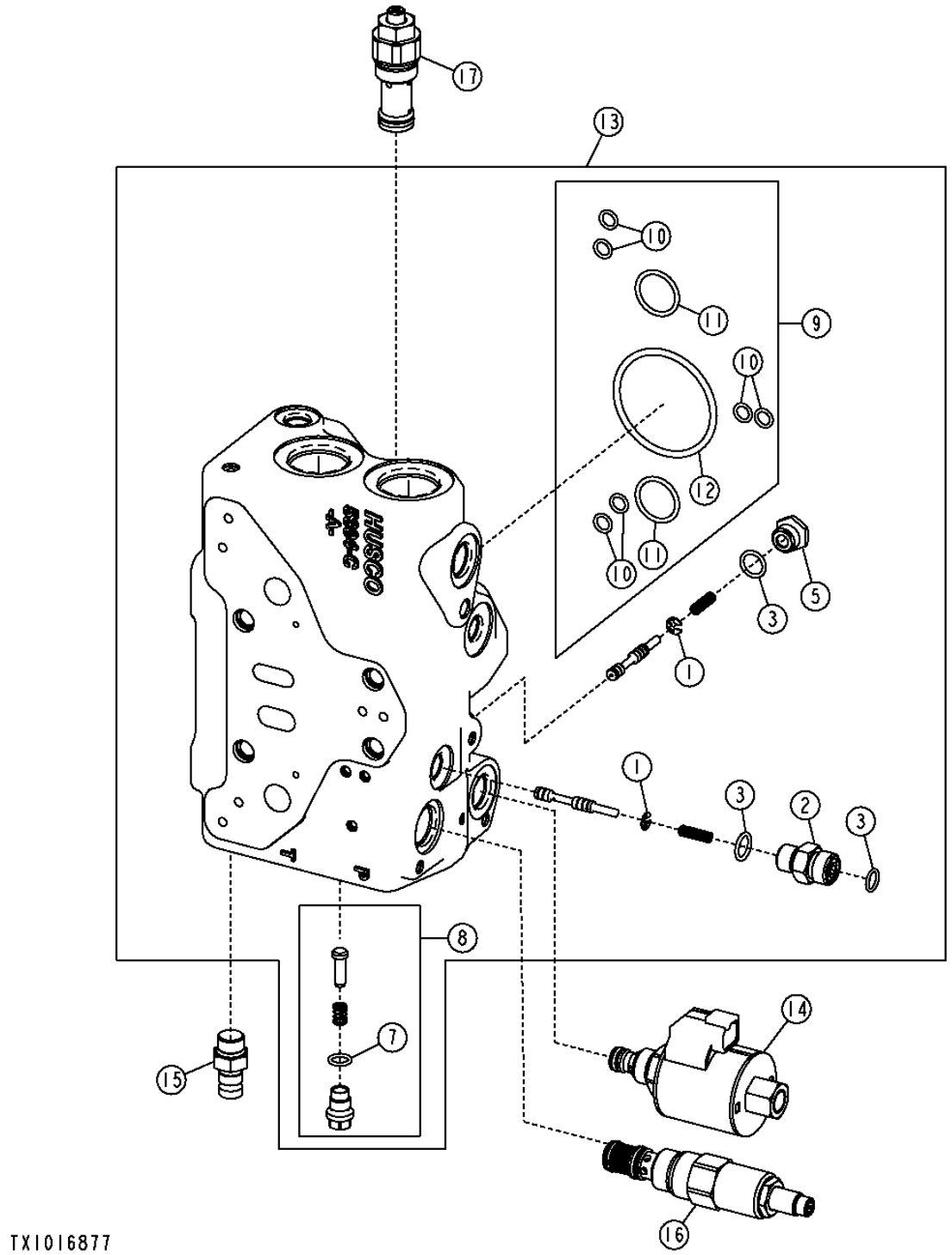

TX1016877

(EH) MID INLET VALVE SECTION (410TMC)
(EH) SECTION DE SOUPAPE A ENTREE CENTRALE (410TMC)
(EH) SECCION DE VALVULAS DE ENTRADA INTERMEDIAS (410TMC)

KEY	PART NO.	PART NAME	QTY.	SERIAL NO.	410J	410TMC	REMARKS
1	T160619	SNAP RING	2			X	
2	.....	FITTING	1			X	
3	R26448	O-RING	3			X	
5	AT336777	FITTING PLUG	1			X	
7	R28782	O-RING	1			X	
8	AT336774	SEAL KIT	1			X	
9	AT336646	SEAL KIT	1			X	
10	R10093	O-RING	6			X	
11	R139897	O-RING	2			X	
12	F37030228	O-RING	1			X	
13	AT336778	HYD ACTUATED CONTROL VALVE	1			X	
14	AT336678	ELEC-HYD PROPORTIONAL VALVE	1			X	
15	AH125760	HYD. QUICK-CONNECT COUPLER	1			X	
16	AT199670	FLOW CONTROL HYD. VALVE	1			X	
17	AT336763	ELEC-HYD PROPORTIONAL VALVE	1			X	

(EH) ACCUMULATOR (410TMC)
(EH) ACCUMULATEUR (410TMC)
(EH) ACUMULADOR (410TMC)

TX1016878 -UN-23DEC06

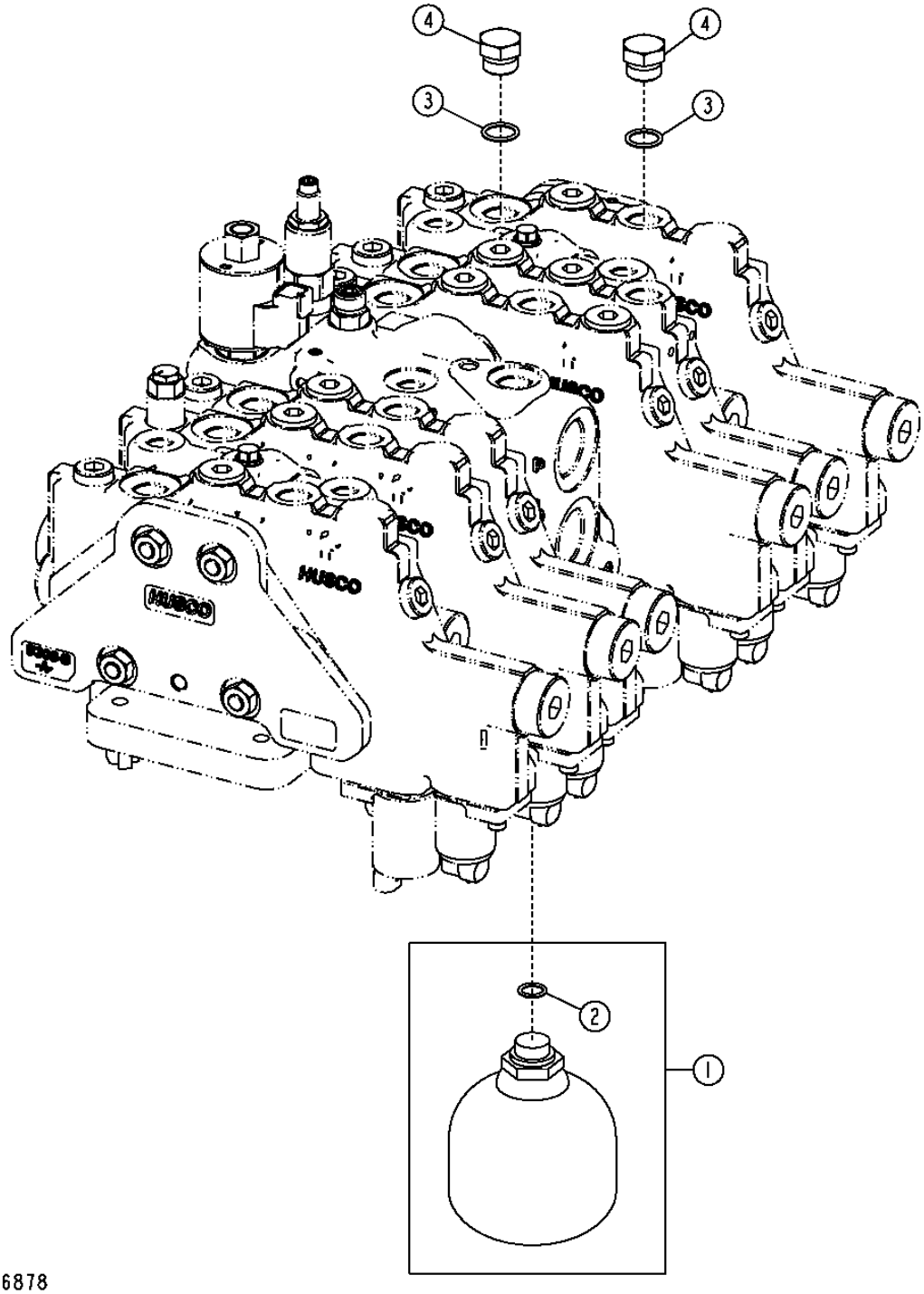

(EH) ACCUMULATOR (410TMC)
(EH) ACCUMULATEUR (410TMC)
(EH) ACUMULADOR (410TMC)

KEY	PART NO.	PART NAME	QTY.	SERIAL NO.	410J	410TMC	REMARKS
1	AT195957	PNEUMATIC ACCUMULATOR	1			X	
2	R26448	O-RING	1			X	
3	R26375	O-RING	2			X	
4	R39112	FITTING	2			X	

PILOT CONTROL HYDRAULICS
CIRCUIT HYDRAULIQUE DE COMMANDE PILOTE
SISTEMA HIDRAULICO DE CONTROL PILOTO

T165703 -UN-20FEB03

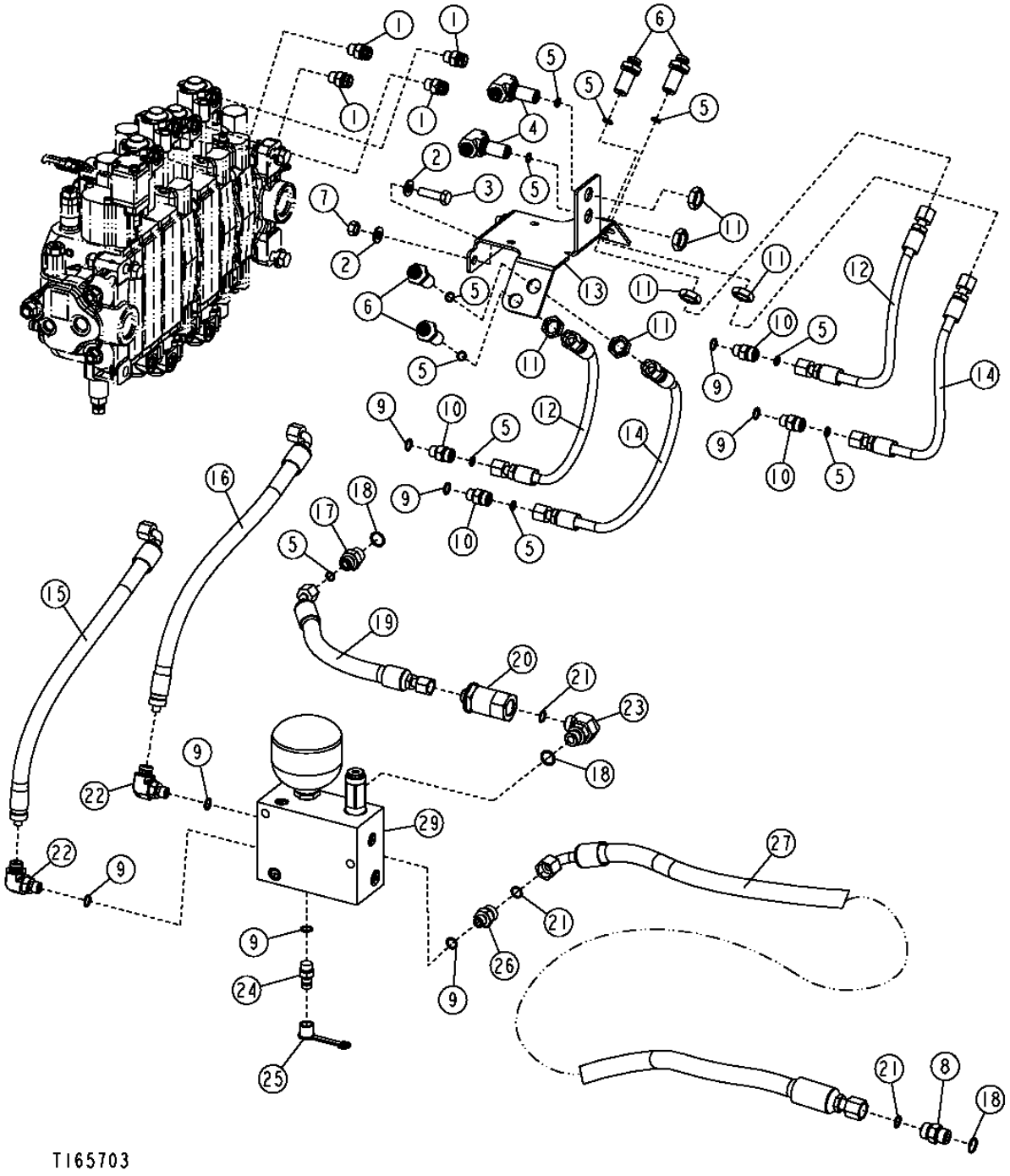

PILOT CONTROL HYDRAULICS
CIRCUIT HYDRAULIQUE DE COMMANDE PILOTE
SISTEMA HIDRAULICO DE CONTROL PILOTO

KEY	PART NO.	PART NAME	QTY.	SERIAL NO.	410J	410TMC	REMARKS
1	AT187666	ADAPTER FITTING	4		X		
2	24M7239	WASHER	4		X		
3	19M7550	CAP SCREW	2		X		M10 X 35
4	AT199496	TEE FITTING	2		X		
5	T77613	O-RING	11		X		
6	AT199495	FITTING	4		X		
7	14M7274	NUT	2		X		M10
8	38H1161	ADAPTER FITTING	1		X		
9	R26448	O-RING	8		X		
10	38H1160	ADAPTER FITTING	4		X		
11	T81029	NUT	6		X		
12	AT197209	HYDRAULIC HOSE - FABRICATE	2		X		11/16" X 362 MM (14-1/4") X 11/16"
13	T190311	BRACKET	1		X		
14	AT197208	HYDRAULIC HOSE - FABRICATE	2		X		11/16" X 400 MM (15-3/4") X 11/16"
15	AT199649	HYDRAULIC HOSE - FABRICATE	1		X		(ALSO ORDER 62H1042 AND T77613)
16	AT280272	HYDRAULIC HOSE - FABRICATE	1		X		(ALSO ORDER 62H1042 AND T77613)
17	38H1171	ADAPTER FITTING	1		X		
18	R26375	O-RING	3		X		
19	AT317348	HYDRAULIC HOSE - FABRICATE	1		X		11/16" X 368 MM (14-1/2") X 11/16"
21	T77857	O-RING	3		X		
22	AT187669	ADAPTER FITTING	2		X		
23	AT187669	ADAPTER FITTING	1		X		
24	AH125760	HYD. QUICK-CONNECT COUPLER	1		X		
25	R77175	COVER	1		X		
26	38H1173	ADAPTER FITTING	1		X		
27	AT197213	HYDRAULIC HOSE - FABRICATE	1		X		13/16" X 1 540 MM (60-3/4") X 13/16"
29	AT306550	FLOW CONTROL HYD. VALVE	1		X		

PILOT CONTROL HYDRAULICS
CIRCUIT HYDRAULIQUE DE COMMANDE PILOTE
SISTEMA HIDRAULICO DE CONTROL PILOTO

T165883 -UN-27FEB03

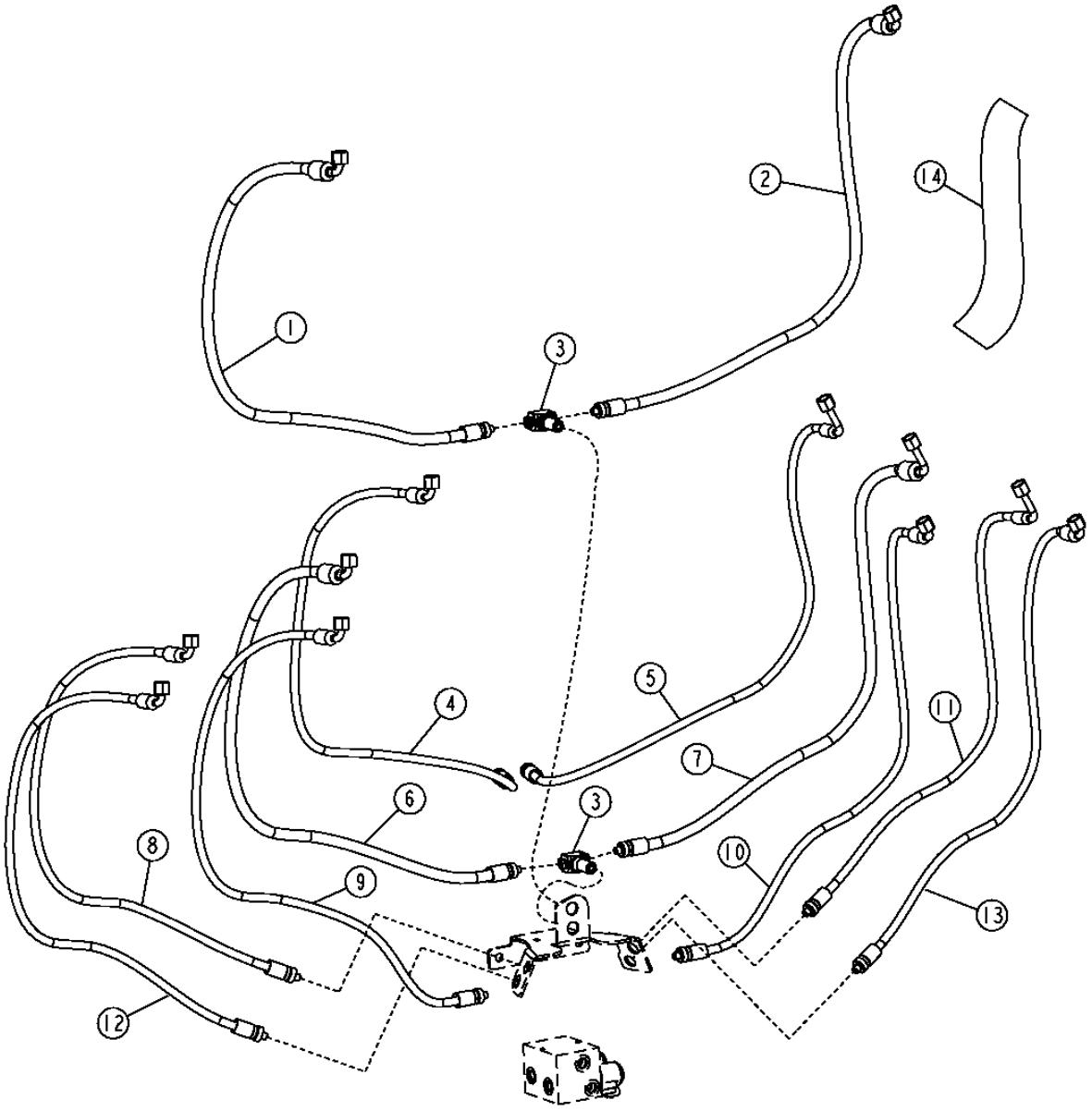

T165883

PILOT CONTROL HYDRAULICS
CIRCUIT HYDRAULIQUE DE COMMANDE PILOTE
SISTEMA HIDRAULICO DE CONTROL PILOTO

KEY	PART NO.	PART NAME	QTY.	SERIAL NO.	410J	410TMC	REMARKS
1	AT198350	HYDRAULIC HOSE - FABRICATE	1		X		11/16" X 1 048 MM (41-1/4") X 11/16", (ALSO ORDER 62H1042 AND T77613)
2	AT198355	HYDRAULIC HOSE - FABRICATE	1		X		11/16" X 1 033 MM (40-3/4") X 11/16", (ALSO ORDER 62H1042 AND T77613)
3	AT199496	TEE FITTING	2		X		
4	AT198351	HYDRAULIC HOSE - FABRICATE	1		X		11/16" X 1 100 MM (43-1/4") X 11/16", (ALSO ORDER 62H1042 AND T77613)
5	AT198360	HYDRAULIC HOSE - FABRICATE	1		X		11/16" X 1 070 MM (42-1/4") X 11/16", (ALSO ORDER 62H1042 AND T77613)
6	AT198349	HYDRAULIC HOSE - FABRICATE	1		X		11/16" X 1 075 MM (42-1/4") X 11/16", (ALSO ORDER 62H1042 AND T77613)
7	AT198356	HYDRAULIC HOSE - FABRICATE	1		X		11/16" X 1 015 MM (40") X 11/16", (ALSO ORDER 62H1042 AND T77613)
8	AT198352	HYDRAULIC HOSE - FABRICATE	1		X		11/16" X 1 005 MM (39-1/2") X 11/16", (ALSO ORDER 62H1042 AND T77613)
9	AT198354	HYDRAULIC HOSE - FABRICATE	1		X		11/16" X 1 125 MM (44-1/4") X 11/16", (ALSO ORDER 62H1042 AND T77613)
10	AT198358	HYDRAULIC HOSE - FABRICATE	1		X		11/16" X 1 021 MM (40-1/4") X 11/16", (ALSO ORDER 62H1042 AND T77613)
11	AT198357	HYDRAULIC HOSE - FABRICATE	1		X		11/16" X 938 MM (37") X 11/16", (ALSO ORDER 62H1042 AND T77613)
12	AT198353	HYDRAULIC HOSE - FABRICATE	1		X		11/16" X 1 047 MM (41-1/4") X 11/16", (ALSO ORDER 62H1042 AND T77613)
13	AT198359	HYDRAULIC HOSE - FABRICATE	1		X		11/16" X 981 MM (38-1/2") X 11/16", (ALSO ORDER 62H1042 AND T77613)
14	T201656	HOSE GUARD	1		X		

PILOT CONTROL HYDRAULICS WITH SELECTOR VALVE
CIRCUIT HYDRAULIQUE DE COMMANDE PILOTE AVEC SOUPAPE DE SELECTION
SISTEMA HIDRAULICO DE CONTROL PILOTO CON VALVULA SELECTORA

TX1015890 -UN-29DEC06

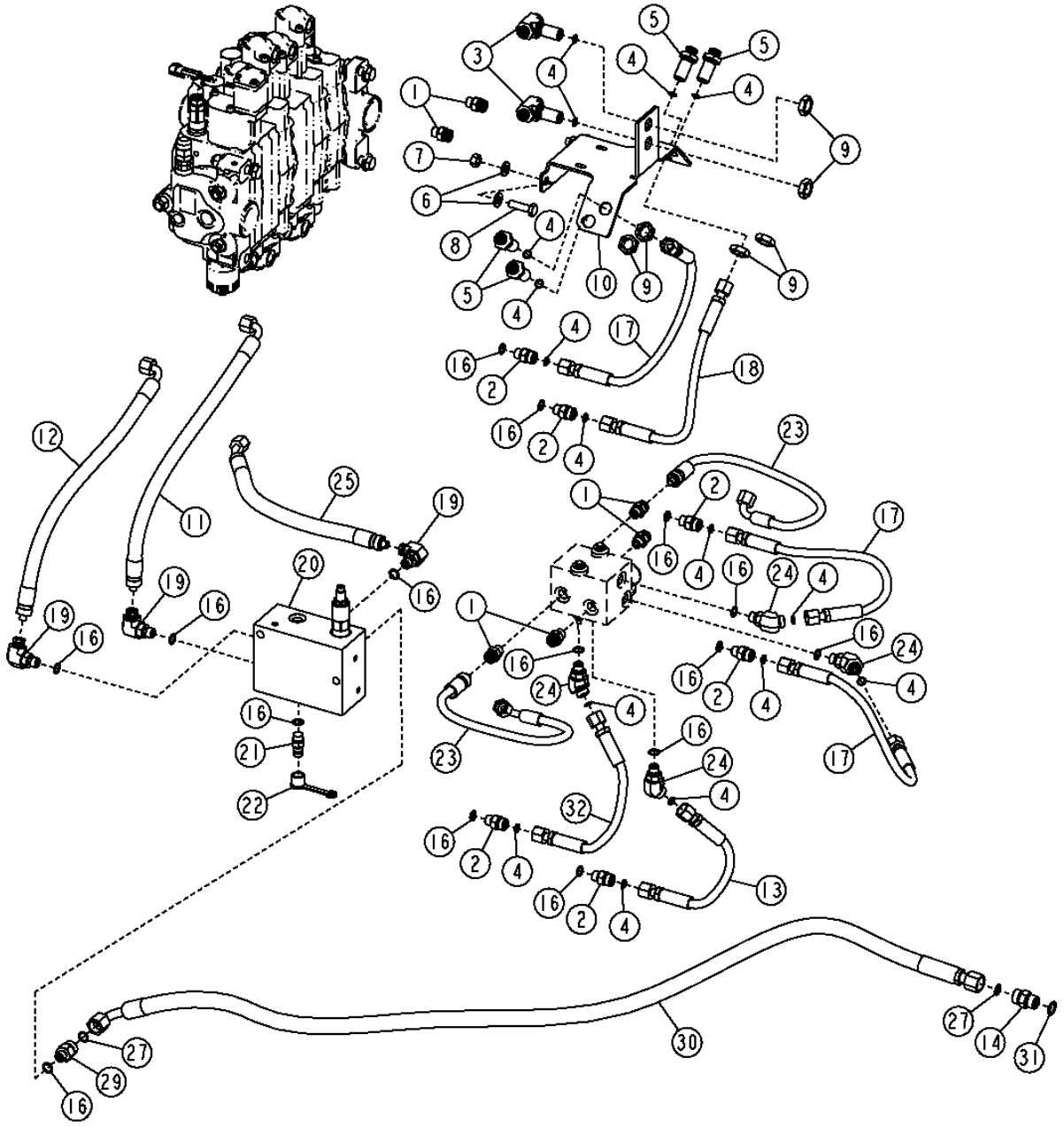

TX1015890

THIS PARTS LISTING IS CONTINUED

PILOT CONTROL HYDRAULICS WITH SELECTOR VALVE
CIRCUIT HYDRAULIQUE DE COMMANDE PILOTE AVEC SOUPAPE DE SELECTION
SISTEMA HIDRAULICO DE CONTROL PILOTO CON VALVULA SELECTORA

KEY	PART NO.	PART NAME	QTY.	SERIAL NO.	410J	410TMC	REMARKS
1	AT187666	ADAPTER FITTING	6		X		
2	38H1160	ADAPTER FITTING	7		X		
3	AT199496	TEE FITTING	2		X		
4	T77613	O-RING	19		X		
5	AT199495	FITTING	4		X		
6	24M7239	WASHER	5		X		
7	14M7274	NUT	2		X		
8	19M7550	CAP SCREW	2		X		
9	T81029	NUT	6		X		
10	T190311	BRACKET	1		X		
11	AT199649	HYDRAULIC HOSE - FABRICATE	1		X		
12	AT280272	HYDRAULIC HOSE - FABRICATE	1		X		(ALSO ORDER 62H1042 AND T77613)
13	AT198416	HYDRAULIC HOSE - FABRICATE	1		X		11/16" X 299 MM (11-3/4") X 11/16"
14	38H1161	ADAPTER FITTING	1		X		
15	AT193365	KIT	1		X		
16	R26448	O-RING	13		X		
17	AT197208	HYDRAULIC HOSE - FABRICATE	3		X		11/16" X 400 MM (15-3/4") X 11/16"
18	AT197209	HYDRAULIC HOSE - FABRICATE	1		X		11/16" X 362 MM (14-1/4") X 11/16"
19	AT187669	ADAPTER FITTING	2		X		
20	AT306550	FLOW CONTROL HYD. VALVE	1		X		
21	AH125760	HYD. QUICK-CONNECT COUPLER	1		X		
22	R77175	COVER	1		X		
23	AT280200	HYDRAULIC HOSE - FABRICATE	2		X		(ALSO ORDER 62H1042 AND T77613)
24	38H1045	ELBOW FITTING	4		X		
25	AT317348	HYDRAULIC HOSE - FABRICATE	1		X		11/16" X 368 MM (14-1/2") X 11/16"
27	T77857	O-RING	3		X		
29	38H1173	ADAPTER FITTING	1		X		
30	AT197213	HYDRAULIC HOSE - FABRICATE	1		X		13/16" X 1 540 MM (60-3/4") X 13/16"
31	R26375	O-RING	3		X		
32	AT198417	HYDRAULIC HOSE - FABRICATE	1		X		11/16" X 299 MM (11-3/4") X 11/16"

FLOW CONTROL AUXILIARY VALVE KIT
KIT DE REGULATEUR DE DEBIT AUXILIAIRE
JUEGO DE VALVULA AUXILIAR DE CONTROL DE CAUDAL

TX1017619 -UN-

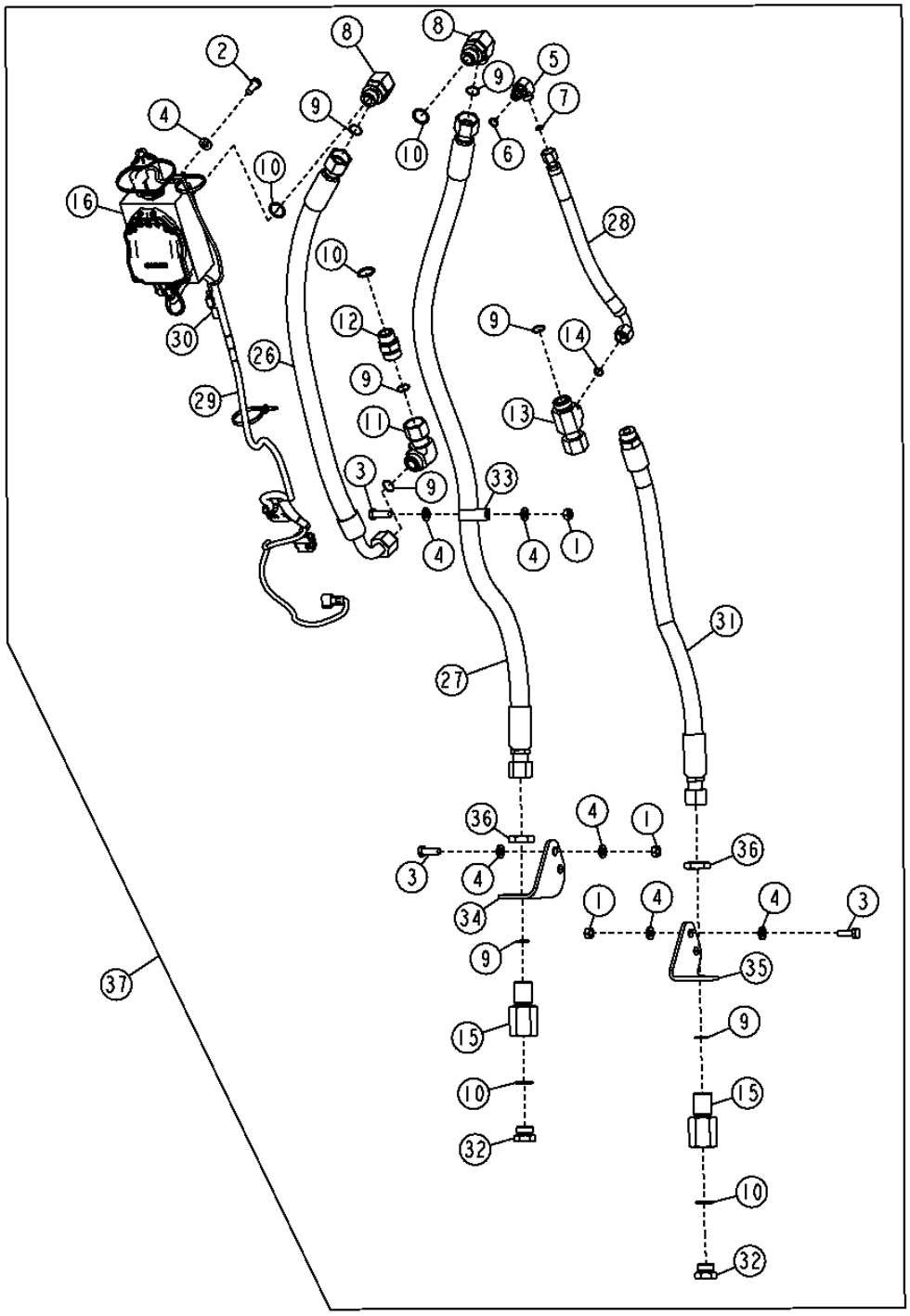

THIS PARTS LISTING IS CONTINUED

FLOW CONTROL AUXILIARY VALVE KIT
KIT DE REGULATEUR DE DEBIT AUXILIAIRE
JUEGO DE VALVULA AUXILIAR DE CONTROL DE CAUDAL

KEY	PART NO.	PART NAME	QTY.	SERIAL NO.	410J	410TMC	REMARKS
1	14M7274	NUT	5			X	M10
2	19M7402	CAP SCREW	3			X	M10 X 25
3	19M7662	CAP SCREW	5			X	M10 X 30
4	24M7239	WASHER	13			X	10.700 X 21 X 2.500 MM
5	38H1004	ELBOW FITTING	1			X	
6	R26448	O-RING	1			X	
7	T77613	O-RING	1			X	
8	38H1007	ELBOW FITTING	2			X	
9	T77858	O-RING	7			X	
10	U12547	O-RING	5			X	
11	38H1097	ELBOW FITTING	1			X	
12	38H1163	ADAPTER FITTING	1			X	
13	38H1532	TEE FITTING	1			X	
14	T77857	O-RING	1			X	
15	T163702	REDUCER	2			X	
16	AT321123	ELEC-HYD PROPORTIONAL VALVE	1			X	
26	AT325766	HYDRAULIC HOSE - FABRICATE	1			X	
27	AT325767	HYDRAULIC HOSE - FABRICATE	1			X	
28	AT325768	HYDRAULIC HOSE - FABRICATE	1			X	
29	AT323642	WIRING HARNESS	1			X	
30	57M8131	ELEC. CONNECTOR TERMINAL	1			X	
31	AT325562	HYDRAULIC HOSE - FABRICATE	1			X	
32	R27175	DRAIN PLUG	2			X	
33	T162675	CLAMP	1			X	
34	T205636	BRACKET	1			X	
35	T205637	BRACKET	1			X	
36	T78707	NUT	2			X	
37	**AT339687**	**KIT**	**1**			**X**	

STABILIZER CYLINDER HYDRAULIC HOSES
FLEXIBLES HYDRAULIQUES DE VERIN DE STABILISATEUR
MANGUERAS HIDRAULICO DE CILINDRO DE ESTABILIZADOR

T163469 -UN-06JAN03

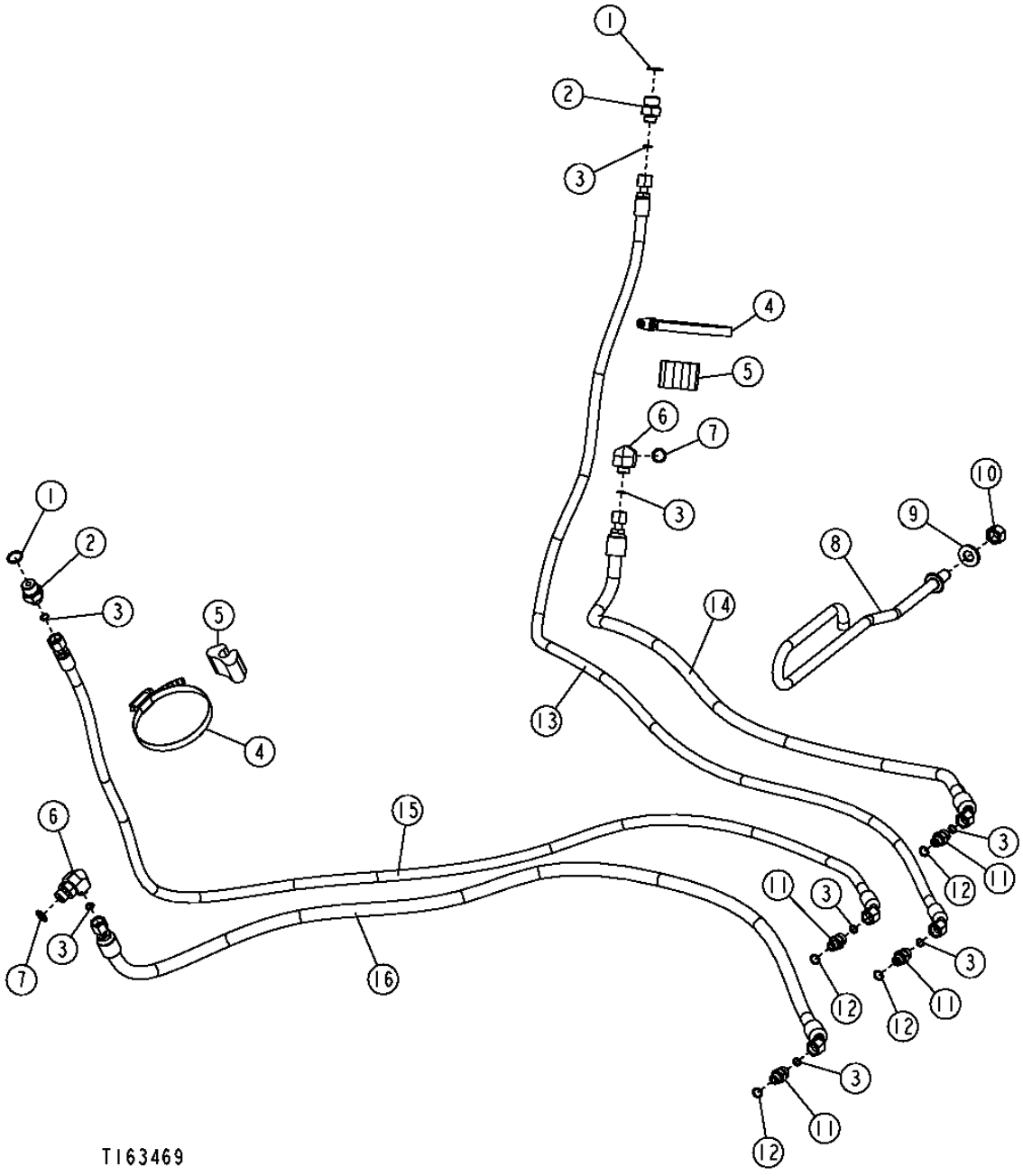

STABILIZER CYLINDER HYDRAULIC HOSES
FLEXIBLES HYDRAULIQUES DE VERIN DE STABILISATEUR
MANGUERAS HIDRAULICAS DE CILINDRO DE ESTABILIZADOR

KEY	PART NO.	PART NAME	QTY.	SERIAL NO.	410J	410TMC	REMARKS
1	R26448	O-RING	2		X	X	
2	38H1160	ADAPTER FITTING	2		X	X	
3	T77613	O-RING	8		X	X	
4	AR21842	CLAMP	2		X	X	
5	C16054	CLAMP	2		X	X	
6	38H1004	ELBOW FITTING	2		X	X	
7	R26448	O-RING	2		X	X	
8	T200362	HOSE SUPPORT	1		X	X	
9	24M7241	WASHER	1		X	X	
10	14M7276	NUT	1		X	X	
11	38H1160	ADAPTER FITTING	4		X	X	
12	R26448	O-RING	4		X	X	
13	AT197068	HYDRAULIC HOSE - FABRICATE	1		X	X	
14	AT197065	HYDRAULIC HOSE - FABRICATE	1		X	X	
15	AT196525	HYDRAULIC HOSE - FABRICATE	1		X	X	
16	AT196513	HYDRAULIC HOSE - FABRICATE	1		X	X	

BUCKET CYLINDER HYDRAULICS (STANDARD DIPPERSTICK)
HYDRAULIQUES DU GODET (BRAS STANDARD)
HIDRAULICAS DEL CUCHARON (BRAZO ESTANDAR)

TX1016085 -UN-29DEC06

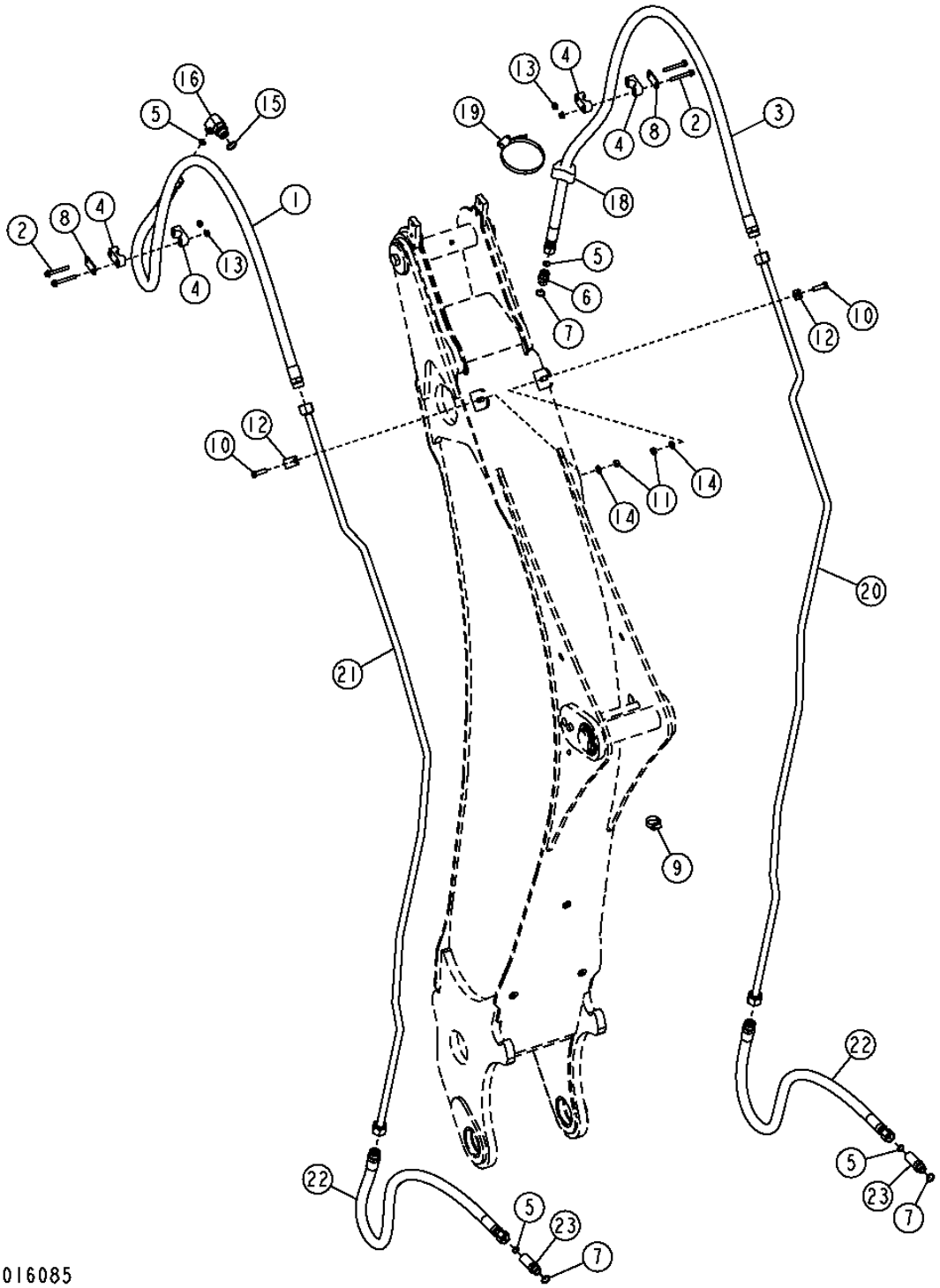

BUCKET CYLINDER HYDRAULICS (STANDARD DIPPERSTICK)
HYDRAULIQUES DU GODET (BRAS STANDARD)
HIDRAULICAS DEL CUCHARON (BRAZO ESTANDAR)

KEY	PART NO.	PART NAME	QTY.	SERIAL NO.	410J	410TMC	REMARKS
1	AT174907	HYDRAULIC HOSE - FABRICATE	1		X	X	1" X 1 685 MM (66-1/4") X 1-3/16"
2	19M7802	SCREW	4		X	X	M8 X 65
3	AT174908	HYDRAULIC HOSE - FABRICATE	1		X	X	1" X 1 836 MM X 1-3/16"
4	T162004	CLAMP	4		X	X	
5	T77932	O-RING	4		X	X	
6	38H1162	ADAPTER FITTING	1		X	X	
7	R26906	O-RING	3		X	X	
8	T162005	STRAP	2		X	X	
9	AR21839	CLAMP	1		X	X	
10	19M7550	CAP SCREW	2		X	X	M10 X 35
11	14M7274	NUT	2		X	X	M10
12	T160376	CLAMP	2		X	X	
13	14M7298	FLANGE NUT	4		X	X	M8
14	24M7239	WASHER	2		X	X	
15	U12547	O-RING	1		X	X	
16	38H1404	ELBOW FITTING	1		X	X	
17	T77858	O-RING	3		X	X	
18	T105773	GUIDE	1		X	X	
19	C16054	CLAMP	1		X	X	
20	AT325075	OIL LINE	1		X	X	
21	AT325076	OIL LINE	1		X	X	
22	AT280341	HYDRAULIC HOSE - FABRICATE	2		X	X	
23	38H1214	ADAPTER FITTING	2		X	X	

SWING CYLINDER HYDRAULICS (410J)
CIRCUIT HYDRAULIQUE DE VERIN DE PIVOTEMENT (410J)
SISTEMA HIDRAULICO DE CILINDRO DE GIRO (410J)

TP52821 -UN-01OCT96

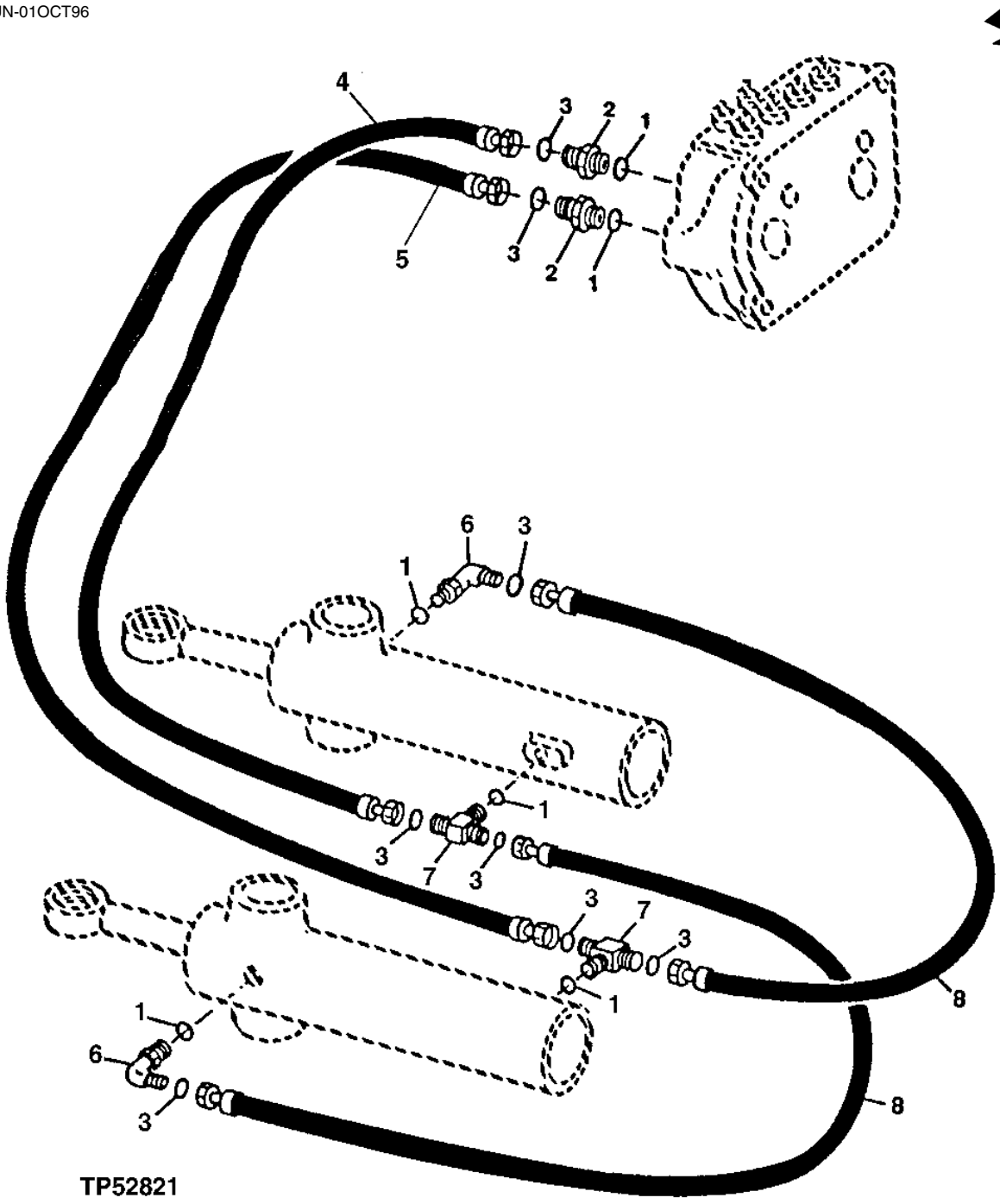

SWING CYLINDER HYDRAULICS (410J)
CIRCUIT HYDRAULIQUE DE VERIN DE PIVOTEMENT (410J)
SISTEMA HIDRAULICO DE CILINDRO DE GIRO (410J)

KEY	PART NO.	PART NAME	QTY.	SERIAL NO.	410J	410TMC	REMARKS
1	R26375	O-RING	6		X		
2	38H1161	ADAPTER FITTING	2		X		(WITH MANUAL CONTROLS)
	38H1161	ADAPTER FITTING	2		X		(WITH PILOT CONTROLS)
3	T77857	O-RING	8		X		
4	AT176157	HYDRAULIC HOSE - FABRICATE	1		X		13/16" X 880 MM (34-3/4") X 13/16"
5	AT171758	HYDRAULIC HOSE - FABRICATE	1		X		13/16" X 813 MM (32") X 13/16"
6	38H1005	ELBOW FITTING	2		X		
7	38H1017	TEE FITTING	2		X		
8	AT171759	HYDRAULIC HOSE - FABRICATE	2		X		13/16" X 914 MM (36") X 13/16"

EXTENSION CYLINDER HYDRAULICS (EXTENDABLE DIPPERSTICK)
CIRCUIT HYDRAULIQUE DE VERIN D'EXTENSION (BRAS TELESCOPIQUE)
SISTEMA HIDRAULICO DE CILINDRO DE EXTENSION (BRAZO EXTENSIBLE)

TX1016017 -UN-28DEC06

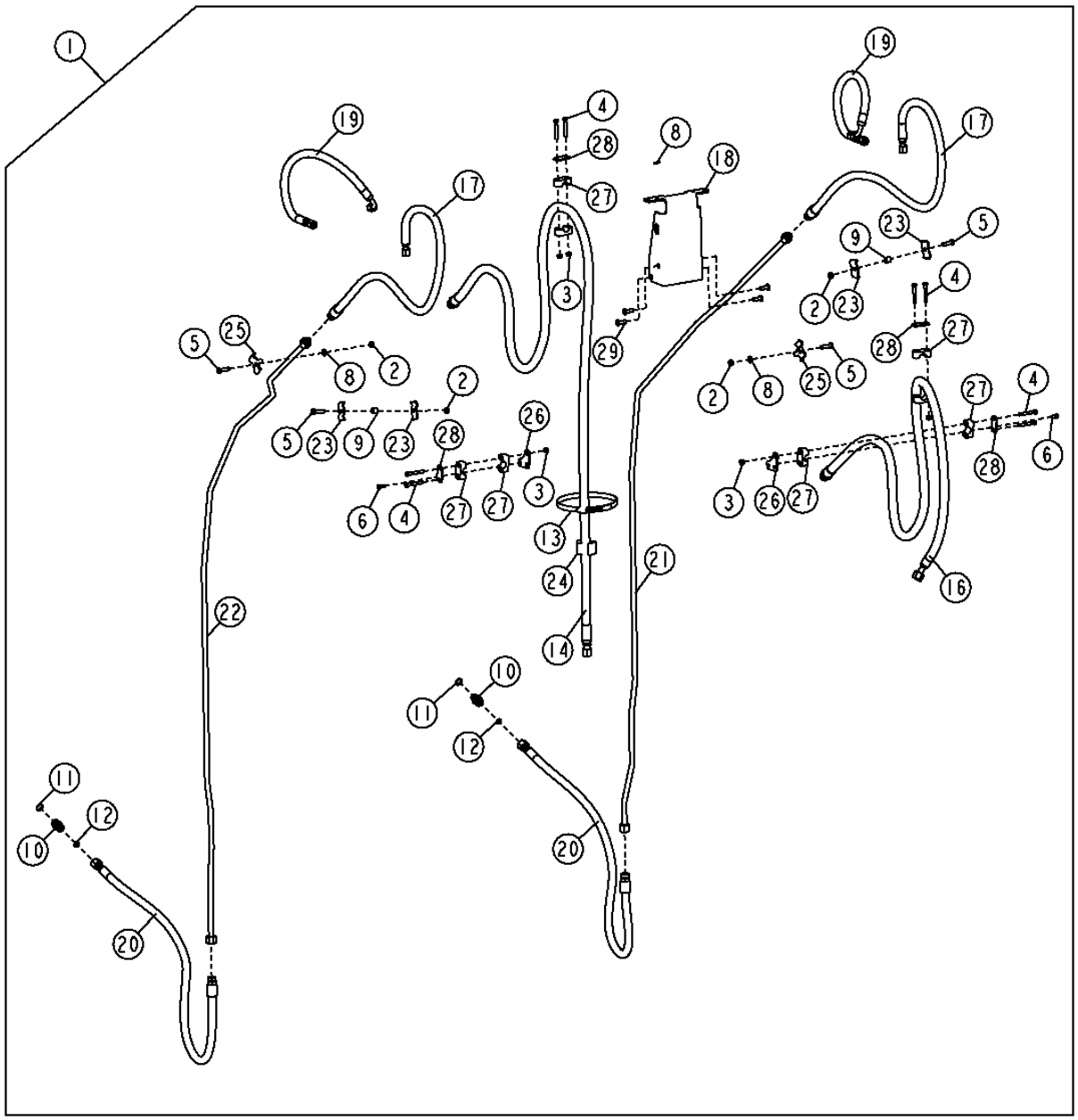

TX1016017

EXTENSION CYLINDER HYDRAULICS (EXTENDABLE DIPPERSTICK)
CIRCUIT HYDRAULIQUE DE VERIN D'EXTENSION (BRAS TELESCOPIQUE)
SISTEMA HIDRAULICO DE CILINDRO DE EXTENSION (BRAZO EXTENSIBLE)

KEY	PART NO.	PART NAME	QTY.	SERIAL NO.	410J	410TMC	REMARKS
1	AT335772	KIT	1		X	X	
2	14M7274	NUT	4		X	X	M10
3	14M7426	LOCK NUT	6		X	X	M8
4	19M7185	CAP SCREW	8		X	X	M8 X 60
5	19M7550	CAP SCREW	4		X	X	M10 X 35
6	19M7932	CAP SCREW	2		X	X	M8 X 16
8	24M7239	WASHER	6		X	X	10.700 X 21 X 2.500 MM
9	28H3381	SPACER	2		X	X	
10	38H1162	ADAPTER FITTING	1		X	X	
11	R26906	O-RING	5		X	X	19.177 X 2.464 MM (0.755" X 0.097")
12	T77932	O-RING	7		X	X	15.596 X 1.778 MM (0.614" X 0.070")
13	AR85327	CLAMP	1		X	X	
14	AT174604	HYDRAULIC HOSE - FABRICATE	1		X	X	
16	AT174605	HYDRAULIC HOSE - FABRICATE	1		X	X	1" X 2 270 MM (89-1/4") X 1-3/16"
17	AT178413	HYDRAULIC HOSE - FABRICATE	2		X	X	13/16" X 1 200 MM (47-1/4") X 1"
18	AT179046	HOSE SUPPORT	1		X	X	
19	AT179238	HYDRAULIC HOSE - FABRICATE	2		X	X	
20	AT280340	HYDRAULIC HOSE - FABRICATE	2		X	X	
21	AT325077	OIL LINE	1		X	X	
22	AT325078	OIL LINE	1		X	X	
23	R46919	HALF CLAMP	4		X	X	UPPER TUBE
24	T105773	GUIDE	1		X	X	LOWER TUBE
25	T160554	CLAMP	2		X	X	
26	T161342	PLATE	2		X	X	
27	T162004	CLAMP	8		X	X	
28	T162005	STRAP	4		X	X	
29	T165889	SCREW	4		X	X	

EXTENSION CYLINDER HYDRAULICS (EXTENDABLE DIPPERSTICK)
CIRCUIT HYDRAULIQUE DE VERIN D'EXTENSION (BRAS TELESCOPIQUE)
SISTEMA HIDRAULICO DE CILINDRO DE EXTENSION (BRAZO EXTENSIBLE)

TX1017953 -UN-

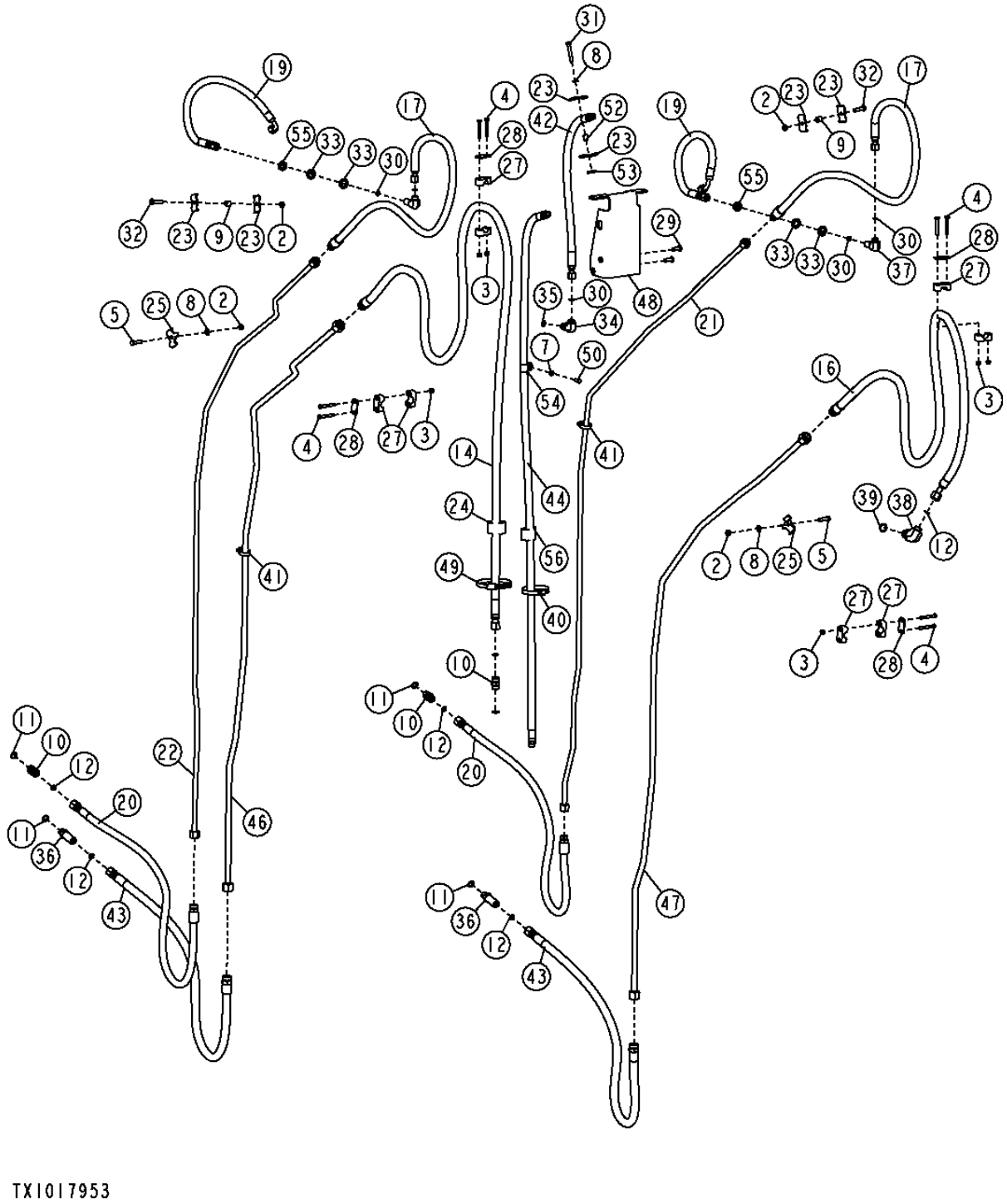

EXTENSION CYLINDER HYDRAULICS (EXTENDABLE DIPPERSTICK)
CIRCUIT HYDRAULIQUE DE VERIN D'EXTENSION (BRAS TELESCOPIQUE)
SISTEMA HIDRAULICO DE CILINDRO DE EXTENSION (BRAZO EXTENSIBLE)

KEY	PART NO.	PART NAME	QTY.	SERIAL NO.	REMARKS
2	14M7274	NUT	4		M10
3	14M7426	LOCK NUT	6		M8
4	19M7185	CAP SCREW	8		M8 X 60
5	19M7550	CAP SCREW	4		M10 X 35
7	24M7238	WASHER	2		8.700 X 17 X 2 MM
8	24M7239	WASHER	6		10.700 X 21 X 2.500 MM
9	28H3381	SPACER	2		
10	38H1162	ADAPTER FITTING	1		
11	R26906	O-RING	5		19.177 X 2.464 MM (0.755" X 0.097")
12	T77932	O-RING	7		15.596 X 1.778 MM (0.614" X 0.070")
14	AT174604	HYDRAULIC HOSE - FABRICATE	1		
16	AT174605	HYDRAULIC HOSE - FABRICATE	1		1" X 2 270 MM (89-1/4") X 1-3/16"
17	AT178413	HYDRAULIC HOSE - FABRICATE	2		13/16" X 1 200 MM (47-1/4") X 1"
19	AT179238	HYDRAULIC HOSE - FABRICATE	2		
20	AT280340	HYDRAULIC HOSE - FABRICATE	2		
21	AT325077	OIL LINE	1		
22	AT325078	OIL LINE	1		
23	R46919	HALF CLAMP	4		
24	T105773	GUIDE	1		
25	T160554	CLAMP	2		
27	T162004	CLAMP	8		
28	T162005	STRAP	4		
29	T165889	SCREW	4		
30	T77857	O-RING	7		12.421 X 1.778 MM (0.489" X 0.070")
31	19M7742	CAP SCREW	1		M10 X 65
32	19M8637	CAP SCREW	2		M10 X 40
33	24M7396	WASHER	4		21 X 34 X 3 MM
34	38H1005	ELBOW FITTING	1		
35	R26375	O-RING	1		
36	38H1214	ADAPTER FITTING	2		
37	38H1323	ELBOW FITTING	2		
38	38H1404	ELBOW FITTING	1		
39	U12547	O-RING	1		
40	AR21841	CLAMP	1		
41	AR54815	CLAMP	2		
42	AT172156	HYDRAULIC HOSE - FABRICATE	1		
43	AT280341	HYDRAULIC HOSE - FABRICATE	2		
44	AT280514	HYDRAULIC HOSE - FABRICATE	1		
46	AT325075	OIL LINE	1		
47	AT325076	OIL LINE	1		
48	AT327155	HOSE SUPPORT	1		
49	C16054	CLAMP	1		
50	M86877	BOLT	1		
52	T190403	SPACER	1		
53	T29342	WASHER	1		
54	T70659	CLAMP	1		
55	T78716	NUT	2		
56	T105774	GUIDE	1		

AUXILIARY EQUIPMENT HYDRAULICS (STANDARD DIPPERSTICK)
CIRCUIT HYDRAULIQUE D'EQUIPEMENT AUXILIAIRE (BRAS STANDARD)
SISTEMA HIDRAULICO DE EQUIPO AUXILIAR (BRAZO ESTANDAR)

TX1016060 -UN-28DEC06

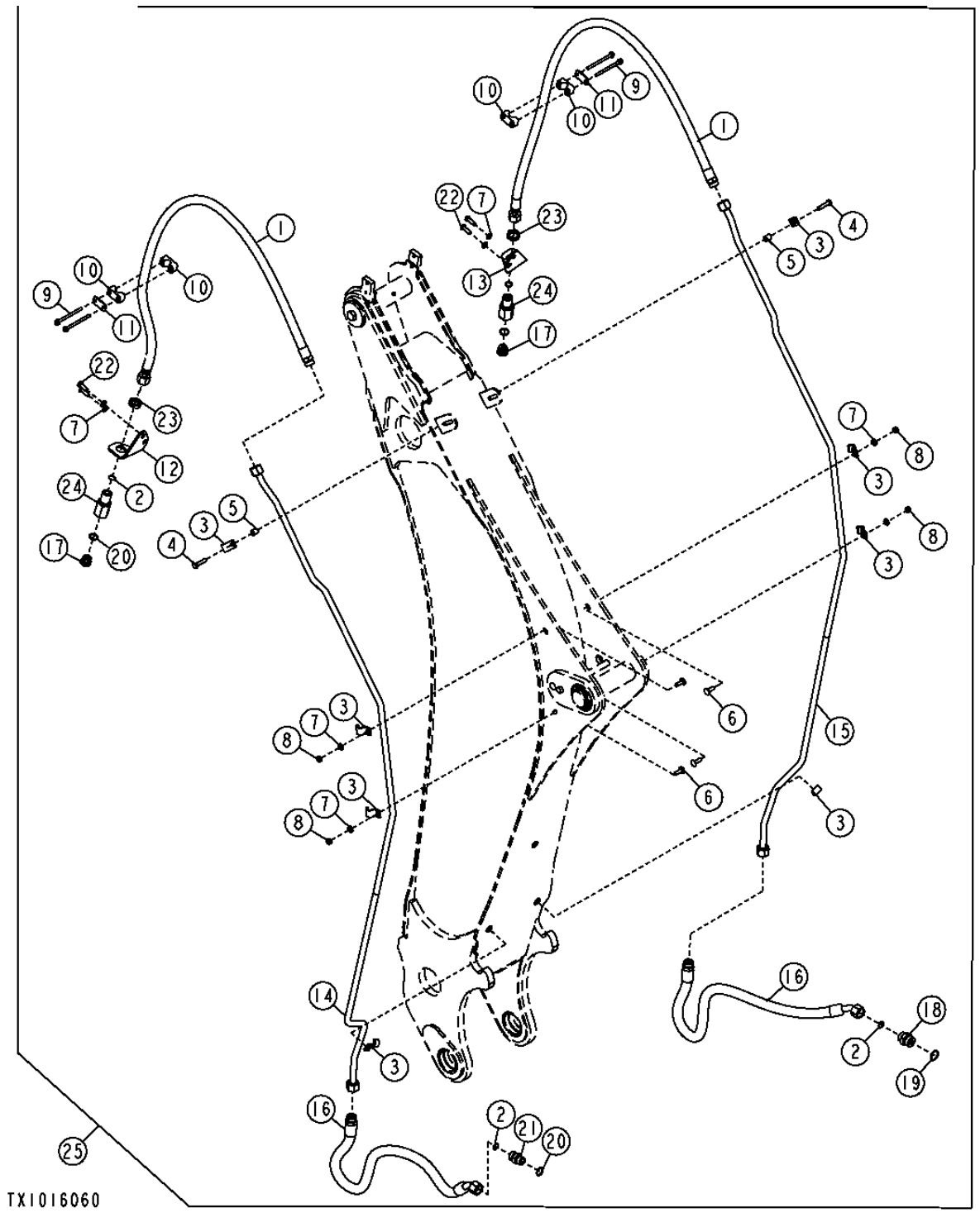

AUXILIARY EQUIPMENT HYDRAULICS (STANDARD DIPPERSTICK)
CIRCUIT HYDRAULIQUE D'EQUIPEMENT AUXILIAIRE (BRAS STANDARD)
SISTEMA HIDRAULICO DE EQUIPO AUXILIAR (BRAZO ESTANDAR)

KEY	PART NO.	PART NAME	QTY.	SERIAL NO.	410J	410TMC	REMARKS
1	AT310292	HYDRAULIC HOSE - FABRICATE	2		X		
2	T77858	O-RING	1		X		
3	T160376	CLAMP	8		X		
4	19M7572	CAP SCREW	2		X		M10 X 45
5	28H3383	BUSHING	2		X		0.493" X 0.675" X 3/4"
6	03M7192	BOLT	4		X		M10 X 30
7	24M7239	WASHER	4		X		10.700 X 21 X 2.500 MM, .812 MAX X .500 ID HOSE
8	14M7274	NUT	4		X		M10
9	19M7873	SCREW	4		X		M8 X 110
10	T162004	CLAMP	4		X		
11	T162005	STRAP	2		X		
12	T205636	BRACKET	1		X		
13	T205637	BRACKET	1		X		
14	AT325079	OIL LINE	1		X		
15	AT325080	OIL LINE	1		X		
16	AT198366	HYDRAULIC HOSE - FABRICATE	2		X		1-3/16" X 1 245 MM (49") X 1-3/16"
17	R27175	DRAIN PLUG	2		X		
18	38H1194	ADAPTER FITTING	2		X		
19	R29936	O-RING	2		X		
20	U12547	O-RING	3		X		
21	38H1163	ADAPTER FITTING	2		X		
22	19M7662	CAP SCREW	4		X		M10 X 30
23	T78707	NUT	2		X		
24	T163702	REDUCER	1		X		
25	**AT325082**	**KIT**	**1**		**X**		

AUXILIARY EQUIPMENT HYDRAULICS (EXTENDABLE DIPPERSTICK)
CIRCUIT HYDRAULIQUE D'EQUIPEMENT AUXILIAIRE (BRAS TELESCOPIQUE)
SISTEMA HIDRAULICO DE EQUIPO AUXILIAR (BRAZO EXTENSIBLE)

TX1016019 -UN-28DEC06

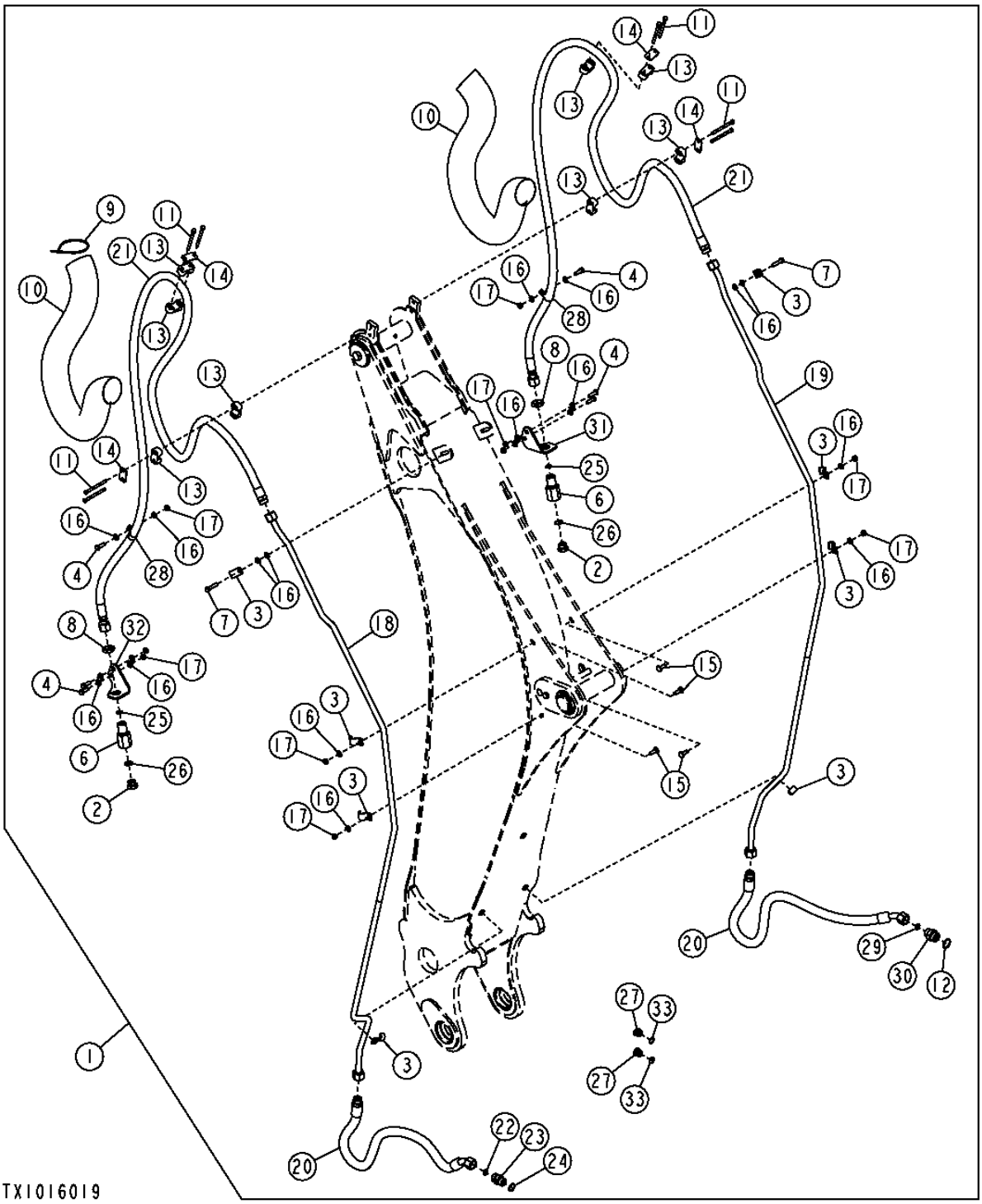

AUXILIARY EQUIPMENT HYDRAULICS (EXTENDABLE DIPPERSTICK)
CIRCUIT HYDRAULIQUE D'EQUIPEMENT AUXILIAIRE (BRAS TELESCOPIQUE)
SISTEMA HIDRAULICO DE EQUIPO AUXILIAR (BRAZO EXTENSIBLE)

KEY	PART NO.	PART NAME	QTY.	SERIAL NO.	410J	410TMC	REMARKS
1	AT325084	KIT	1		X		(WHOLE GOODS)
2	R27175	DRAIN PLUG	2		X		
3	T160376	CLAMP	8		X		
4	19M7662	CAP SCREW	6		X		M10 X 30
6	T163702	REDUCER	2		X		
7	19M7572	CAP SCREW	2		X		M10 X 45
8	T78707	NUT	2		X		
9	H77698	TIE BAND	5		X		
10	T161365	SLEEVE	2		X		FABRIC
11	19M7873	SCREW	8		X		M8 X 110
12	R29936	O-RING	1		X		
13	T162004	CLAMP	8		X		
14	AT310321	HYDRAULIC HOSE - FABRICATE	2		X		13/16" X 3 396 MM (133-3/4") X 13/16"
15	03M7192	BOLT	4				M10 X 30
16	24M7239	WASHER	20				
17	14M7274	NUT	10				M10
18	AT195812	OIL LINE	1				
19	AT325080	OIL LINE	1				
20	AT198366	HYDRAULIC HOSE - FABRICATE	1				(ALSO ORDER 38H1194, 38H1163 AND (2) T77858)
21	AT198366	HYDRAULIC HOSE - FABRICATE	1				(ALSO ORDER 38H1194, 38H1163 AND (2) T77858)
22	T77858	O-RING	1				
23	38H1163	ADAPTER FITTING	1				
24	U12547	O-RING	1				
25	T77858	O-RING	1				
26	U12547	O-RING	1				
27	T77858	O-RING	1				
29	T77858	O-RING	1				
30	38H1194	ADAPTER FITTING	1				
31	T205637	BRACKET	1				
32	T205636	BRACKET	1				
33	R26906	O-RING	2				
34	R27474	DRAIN PLUG	2				

CONTROLLED LOAD LOWERING DEVICE KIT (BOOM CYLINDER)
KIT DE DISPOSITIF D'ABAISSEMENT DE CHARGE CONTROLE (VERIN DE FLECHE)
JUEGO DE DISPOSITIVO DE BAJADA CONTROLADA DE CARGAS (CILINDRO DE AGUILON)

TX1005745 -UN-05APR06

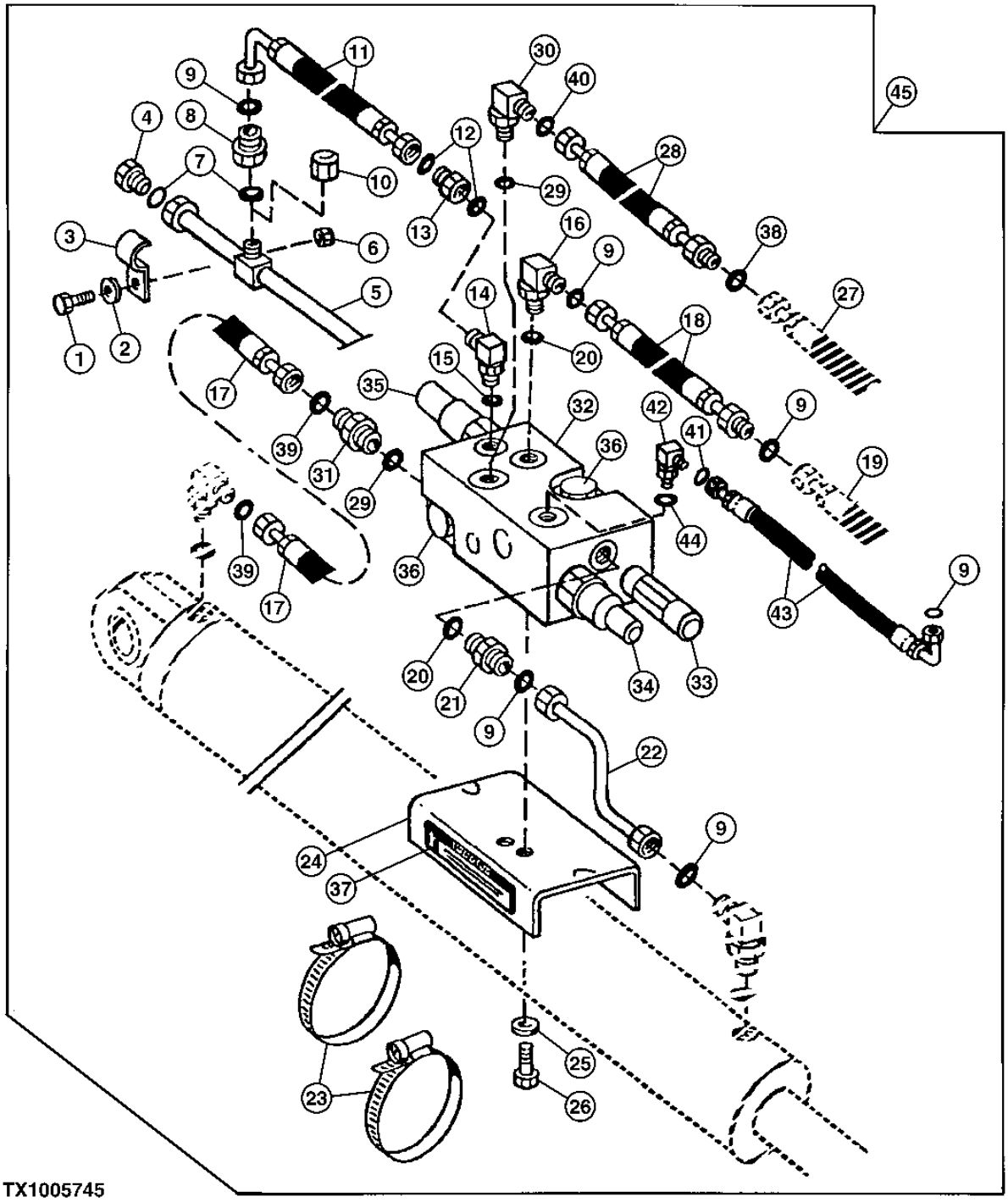

CONTROLLED LOAD LOWERING DEVICE KIT (BOOM CYLINDER)
KIT DE DISPOSITIF D'ABAISSEMENT DE CHARGE CONTROLE (VERIN DE FLECHE)
JUEGO DE DISPOSITIVO DE BAJADA CONTROLADA DE CARGAS (CILINDRO DE AGUILON)

KEY	PART NO.	PART NAME	QTY.	SERIAL NO.	410J	410TMC	REMARKS
1	03M7192	BOLT	2		X		M10 X 30, (RETURN LINE)
2	24M7239	WASHER	2		X		10.700 X 21 X 2.500 MM
3	T160376	CLAMP	4		X		(RIGHT SIDE BOOM LINE)
4	38H1149	FITTING PLUG	1		X		(RETURN LINE)
5	AT337461	OIL LINE	1		X		(RIGHT SIDE OF BOOM)
6	14M7274	NUT	2		X		M10, (RETURN LINE)
7	T77858	O-RING	6		X		
8	38H1482	REDUCER	1		X		(RETURN LINE)
9	T77932	O-RING	6		X		
10	38H1418	FITTING	1		X		(TEE CAP WHEN CROWD CONTROLLED LOAD LOWERING DEVICE IS NOT REQUIRED)
11	AT180208	HYDRAULIC HOSE - FABRICATE	1		X		13/16" X 803 MM (31-1/2") X 1", (PORT "M")
12	T77857	O-RING	2		X		(PORT "M" FITTING)
13	38H1161	ADAPTER FITTING	1		X		(PORT "M")
14	38H1095	ELBOW FITTING	1		X		(PORT "M")
15	R26375	O-RING	1		X		
16	38H1006	ELBOW FITTING	1		X		(PORT "B")
17	AT180859	HYDRAULIC HOSE - FABRICATE	1		X		(PORT "FB")
18	AT180212	HYDRAULIC HOSE - FABRICATE	1		X		1" X 825 MM (32-1/2") X 1", (PORT "B")
19	.....	OIL LINE	1		X		(TO BOOM ROD TUBE)
20	R26906	O-RING	2		X		(PORT "B" (1) - PORT "ANN" (1))
21	38H1162	ADAPTER FITTING	1		X		(PORT "ANN")
22	AT337460	OIL LINE	1		X		(PORT "ANN")
23	AT84191	HOSE CLAMP	2		X		(MOUNTING PLATE)
24	T228016	PLATE	1		X		(TO BOOM CYLINDER)
25	24M7239	WASHER	6		X		(RETURN LINE)
26	19H1134	CAP SCREW	2		X		3/8" X 3/4", (MOUNTING BRACKET)
27	.....	OIL LINE	1		X		(TO BOOM CAP TUBE)
28	AT180860	HYDRAULIC HOSE - FABRICATE	2		X		1-3/16" X 883 MM (34-3/4") X 1-7/16", (PORT "A")
29	U12547	O-RING	2		X		(PORT "FB" (1) - PORT "A" (1))
30	38H1007	ELBOW FITTING	1		X		(PORT "A")
31	38H1163	ADAPTER FITTING	1		X		(PORT "FB")
32	AT175177	HYD ACTUATED CONTROL VALVE	1		X		CONTROLLED LOAD LOWERING DEVICE (BOOM)
33	AT180076	PRESSURE RELIEF VALVE	1		X		RELIEF (5000 PSI)
	AT180081	SEAL KIT	1		X		
34	AT180408	HYD ACTUATED CONTROL VALVE	1		X		SEQUENCE (470 PSI)
	AT180082	SEAL KIT	1		X		
35	AT180409	HYD ACTUATED CONTROL VALVE	1		X		LOAD CONTROL (470 PSI)
	AT180083	SEAL KIT	1		X		
36	AT180079	CHECK VALVE	2		X		
	AT180086	SEAL KIT	1		X		
37	T161665	LABEL	1		X		(SERVICE VALVE)
38	T76938	O-RING	1		X		(BOOM CAP TUBE END)
39	T77858	O-RING	2		X		(PORT "FB" HOSE)
40	T77858	O-RING	1		X		(BETWEEN PORT "A" FITTING AND HOSE)
41	T77814	O-RING	1		X		(BETWEEN PORT "D" FITTING AND HOSE)
42	38H1003	ELBOW FITTING	1		X		(PORT "D")
43	AT180861	HYDRAULIC HOSE - FABRICATE	1		X		9/16" X 868 MM (34-1/4") X 9/16", (PORT "D" ELBOW)
	AT332135	HYDRAULIC HOSE - FABRICATE	1		X		WITH PILOT CONTROLS (NOT ILLUSTRATED)
	AT332157	HYDRAULIC HOSE - FABRICATE	1		X		WITH MANUAL CONTROLS (NOT ILLUSTRATED)
	38H1480	REDUCER	1		X		(NOT ILLUSTRATED)
	T77814	O-RING	1		X		(NOT ILLUSTRATED)
	38H1415	FITTING	1		X		(NOT ILLUSTRATED)
44	R28782	O-RING	1		X		(PORT "D" ELBOW)
45	**AT336392**	**KIT**	**1**		**X**		**(WHOLE GOODS) (ALSO INCLUDES ADDITIONAL HYDRAULIC HOSES, FITTINGS AND MISCELLANEOUS PARTS)**

CONTROLLED LOAD LOWERING DEVICE KIT (CROWD CYLINDER)
KIT DE DISPOSITIF D'ABAISSEMENT DE CHARGE CONTROLE (VERIN DE CAVAGE)
JUEGO DE DISPOSITIVO DE BAJADA CONTROLADA DE CARGAS (CILINDRO DE EMPUJE)

TX1005746 -UN-05APR06

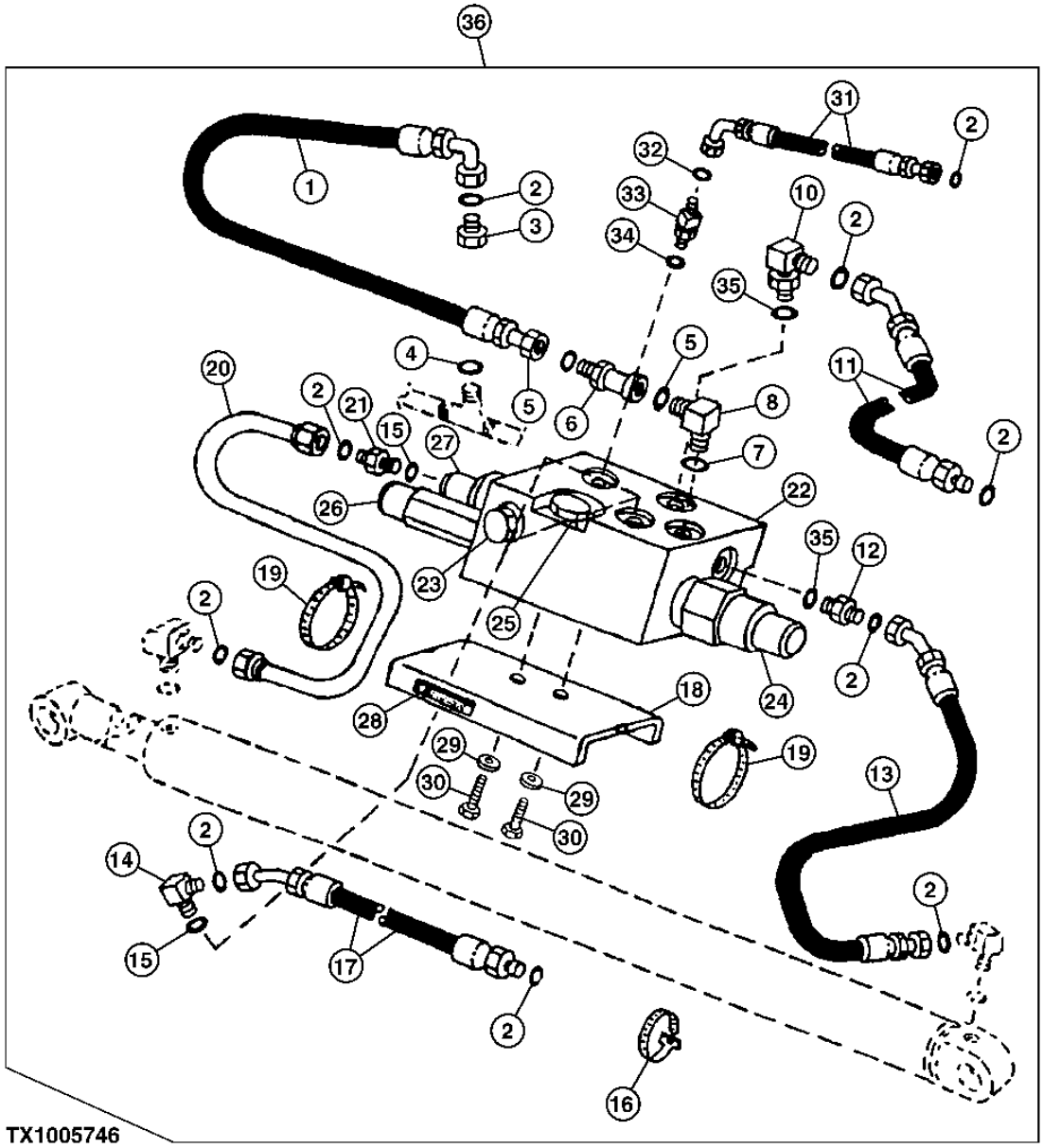

CONTROLLED LOAD LOWERING DEVICE KIT (CROWD CYLINDER)
KIT DE DISPOSITIF D'ABAISSEMENT DE CHARGE CONTROLE (VERIN DE CAVAGE)
JUEGO DE DISPOSITIVO DE BAJADA CONTROLADA DE CARGAS (CILINDRO DE EMPUJE)

KEY	PART NO.	PART NAME	QTY.	SERIAL NO.	410J	410TMC	REMARKS
1	AT181510	HYDRAULIC HOSE - FABRICATE	1		X		13/16" X 762 MM (30") X 1", (PORT "M")
2	T77932	O-RING	AR		X		
3	38H1482	REDUCER	1		X		(RETURN LINE)
4	T77858	O-RING	1		X		
5	T77857	O-RING	2		X		(PORT "M" HOSE ENDS)
6	38H1095	ELBOW FITTING	1		X		(PORT "M")
7	R26375	O-RING	1		X		(PORT "M")
8	38H1161	ADAPTER FITTING	1		X		(PORT "M")
9	T77858	O-RING	1		X		(PORT "A" (1))
10	38H1404	ELBOW FITTING	1		X		(PORT "A")
11	AT181110	HYDRAULIC HOSE - FABRICATE	1		X		(PORT "A")
12	38H1329	ADAPTER FITTING	1		X		(PORT "FB")
13	AT181108	HYDRAULIC HOSE - FABRICATE	1		X		1" X 456 MM (18") X 1", (PORT "FB")
14	38H1006	ELBOW FITTING	1		X		(PORT "B")
15	R26906	O-RING	2		X		(PORT "B" (1) - PORT "ANN" (1))
16	R44302	TIE BAND	1		X		(PORT "A" AND PORT "B" HOSES)
17	AT181111	HYDRAULIC HOSE - FABRICATE	1		X		(PORT "B")
18	T228016	PLATE	1		X		(TO CROWD CYLINDER)
19	TY22493	HOSE CLAMP	2		X		(MOUNTING PLATE)
20	AT337721	OIL LINE	1		X		(PORT "ANN")
21	38H1162	ADAPTER FITTING	1		X		(PORT "ANN")
22	AT175177	HYD ACTUATED CONTROL VALVE	1		X		(CONTROLLED LOAD LOWERING DEVICE - CROWD)
23	.....	SCREW	1		X		ADJUSTABLE (CONTROLLED LOAD LOWERING DEVICE)
	.....	SEAL	1		X		LOCK NUT, CONTROLLED LOAD LOWERING DEVICE VALVE
24	AT180409	HYD ACTUATED CONTROL VALVE	1		X		LOAD CONTROL (470 PSI)
	AT180083	SEAL KIT	1		X		
25	AT180079	CHECK VALVE	1		X		
	AT180086	SEAL KIT	1		X		
26	AT180076	PRESSURE RELIEF VALVE	1		X		RELIEF (5000 PSI)
	AT180081	SEAL KIT	1		X		
27	AT180408	HYD ACTUATED CONTROL VALVE	1		X		SEQUENCE (470 PSI)
	AT180082	SEAL KIT	1		X		
28	T161665	LABEL	1		X		(SERVICE VALVE)
29	24M7239	WASHER	2		X		(MOUNTING BRACKET SCREWS)
30	19H1134	CAP SCREW	2		X		(MOUNTING BRACKET)
31	AT181146	HYDRAULIC HOSE - FABRICATE	1		X		9/16" X 1 823 MM (71-3/4") X 9/16", (PORT "D")
32	T77814	O-RING	1		X		(PORT "D" FITTING TO HOSE)
33	38H1003	ELBOW FITTING	1		X		(PORT "D")
34	R28782	O-RING	1		X		(PORT "D")
35	U12547	O-RING	2		X		(PORT "FB" (1) - PORT "A" (1))
36	**AT336391**	**KIT**	**1**		**X**		**(WHOLE GOODS) (ALSO INCLUDES ADDITIONAL HYDRAULIC HOSES, FITTINGS AND MISCELANEOUS PARTS)**

AUGER HYDRAULICS (EXTENDABLE DIPPERSTICK)
CIRCUIT HYDRAULIQUE DE VIS (BRAS TELESCOPIQUE)
SISTEMA HIDRAULICO DE SINFIN (BRAZO EXTENSIBLE)

TX1005748 -UN-10APR06

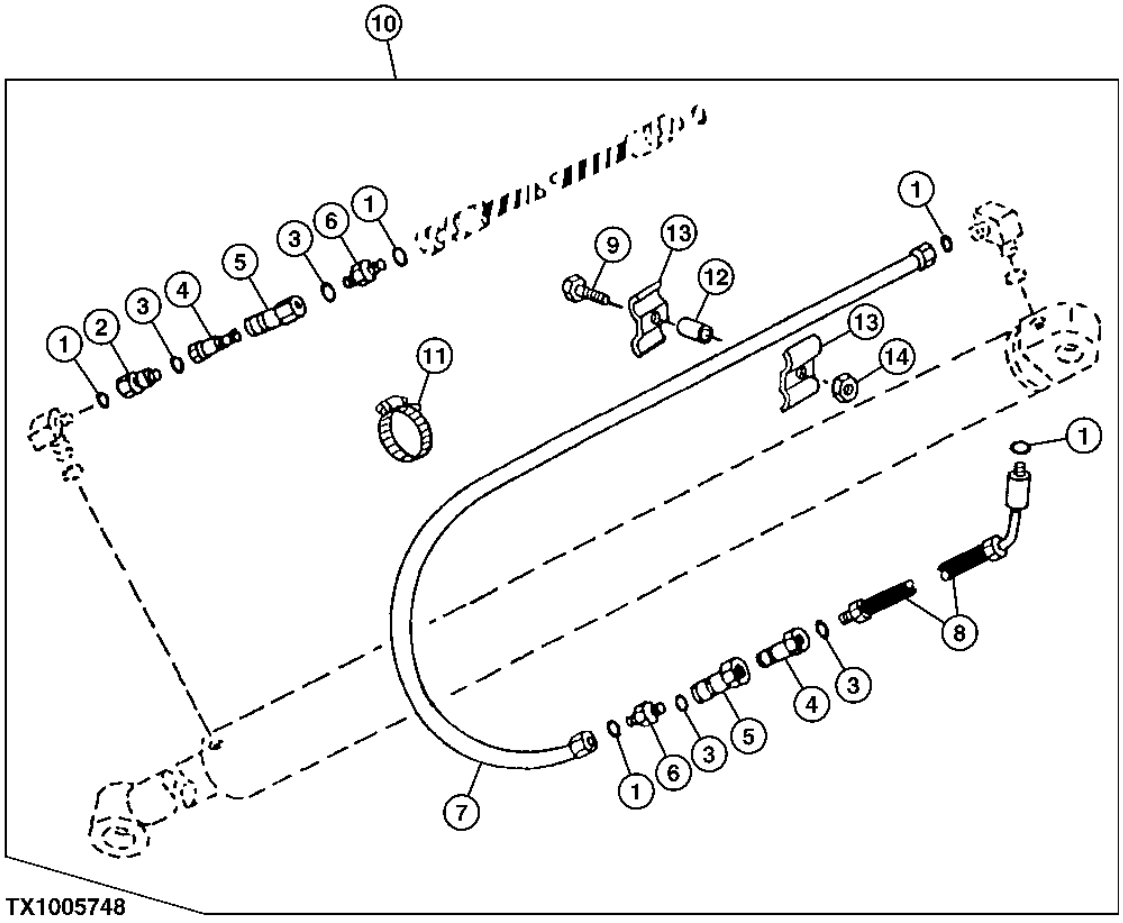

TX1005748

AUGER HYDRAULICS (EXTENDABLE DIPPERSTICK)
CIRCUIT HYDRAULIQUE DE VIS (BRAS TELESCOPIQUE)
SISTEMA HIDRAULICO DE SINFIN (BRAZO EXTENSIBLE)

KEY	PART NO.	PART NAME	QTY.	SERIAL NO.	410J	410TMC	REMARKS
1	T77932	O-RING	3		X		15.596 X 1.778 MM (0.614" X 0.070")
2	38H1069	FITTING	1		X		(SWIVEL)
3	R26906	O-RING	4		X		19.177 X 2.464 MM (0.755" X 0.097")
4	XH4-63-T10	HYDR.QUICK COUPLER SOCKET	2		X		
5	XH4-62-T10	HYDR.QUICK COUPLER PLUG	2		X		
6	38H1162	ADAPTER FITTING	2		X		(STRAIGHT)
7	AT177540	OIL LINE	1		X		
8	AT335446	OIL LINE	1		X		
9	19M7550	CAP SCREW	1		X		M10 X 35
10	**AT335445**	**KIT**	**1**		**X**		**(WHOLE GOODS)**
11	AR21842	CLAMP	1		X		
12	28H3383	BUSHING	1		X		0.493" X 0.675" X 3/4"
13	R46919	HALF CLAMP	2		X		
14	14M7274	NUT	1		X		M10

LOW PRESSURE AUXILIARY RETURN KIT
KIT DE RETOUR AUXILIAIRE A BASSE PRESSION
JUEGO DE RETORNO AUXILIAR DE PRESION BAJA

TX1016062 -UN-29DEC06

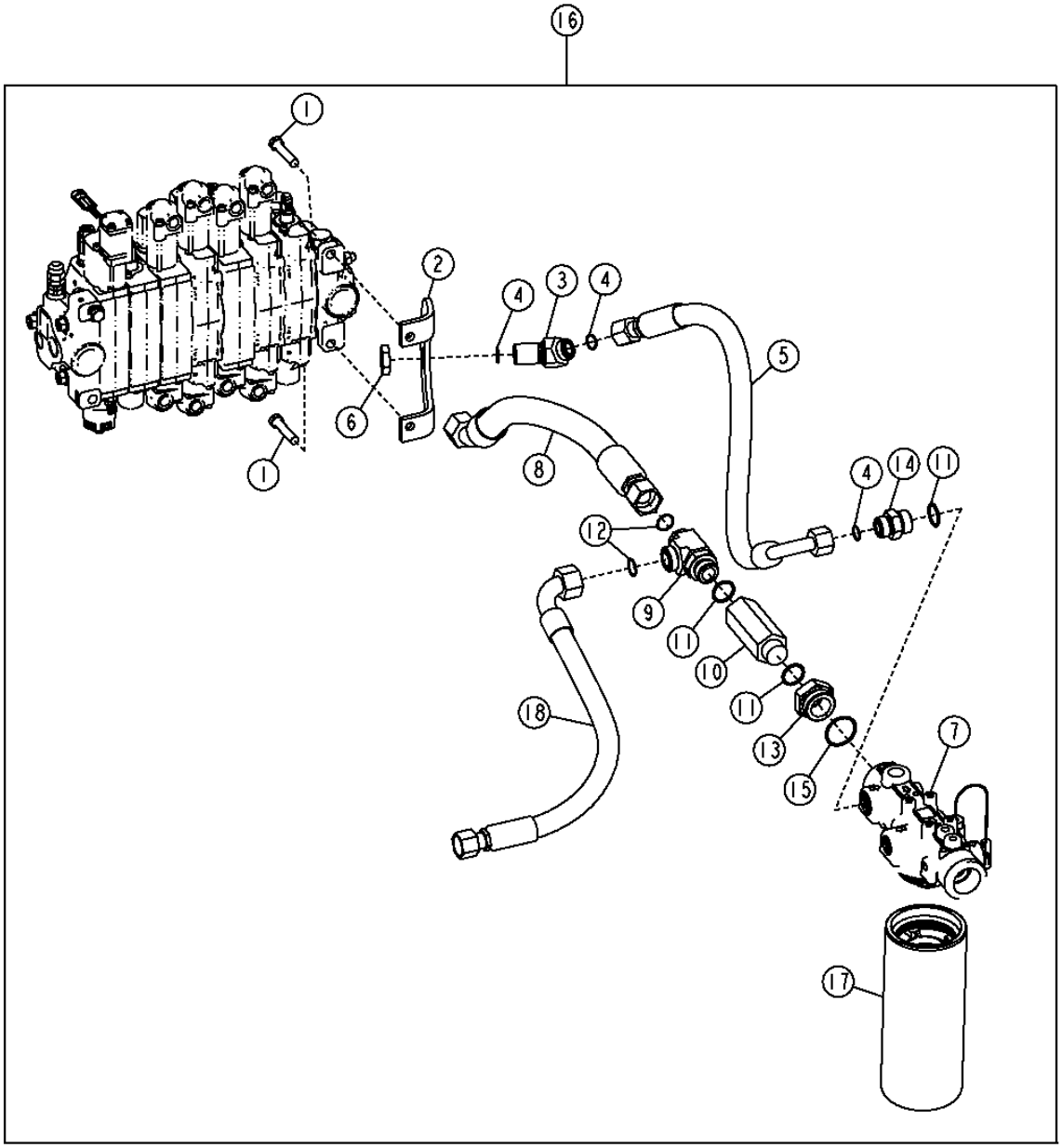

TX1016062

LOW PRESSURE AUXILIARY RETURN KIT
KIT DE RETOUR AUXILIAIRE A BASSE PRESSION
JUEGO DE RETORNO AUXILIAR DE PRESION BAJA

KEY	PART NO.	PART NAME	QTY.	SERIAL NO.	410J	410TMC	REMARKS
1	19M7363	CAP SCREW	2		X		M12 X 60
2	T190702	BRACKET	1		X		
3	38H1490	ELBOW FITTING	1		X		
4	T77858	O-RING	5		X		
5	AT323754	HYDRAULIC HOSE - FABRICATE	1		X		
6	T78707	NUT	1		X		1-3/16"
7	AT327293	FILTER HEAD	1		X		
8	AT323354	HYDRAULIC HOSE - FABRICATE	1		X		
9	38H1027	TEE FITTING	1		X		
10	AT173220	CHECK VALVE	1		X		
11	R29936	O-RING	3		X		
12	T76938	O-RING	4		X		
13	T219068	ADAPTER FITTING	1		X		
14	38H1194	ADAPTER FITTING	1		X		
15	U13639	O-RING	2		X		
16	**AT323275**	**KIT**	**1**		**X**		
17	AT308274	OIL FILTER	1		X		
18	AT323589	HYDRAULIC HOSE - FABRICATE	1		X		

HAND HELD HYDRAULIC TOOL KIT
KIT D'OUTILS A MAIN HYDRAULIQUES
JUEGO DE HERRAMIENTAS HIDRAULICAS DE MANO

T189646 -UN-29APR03

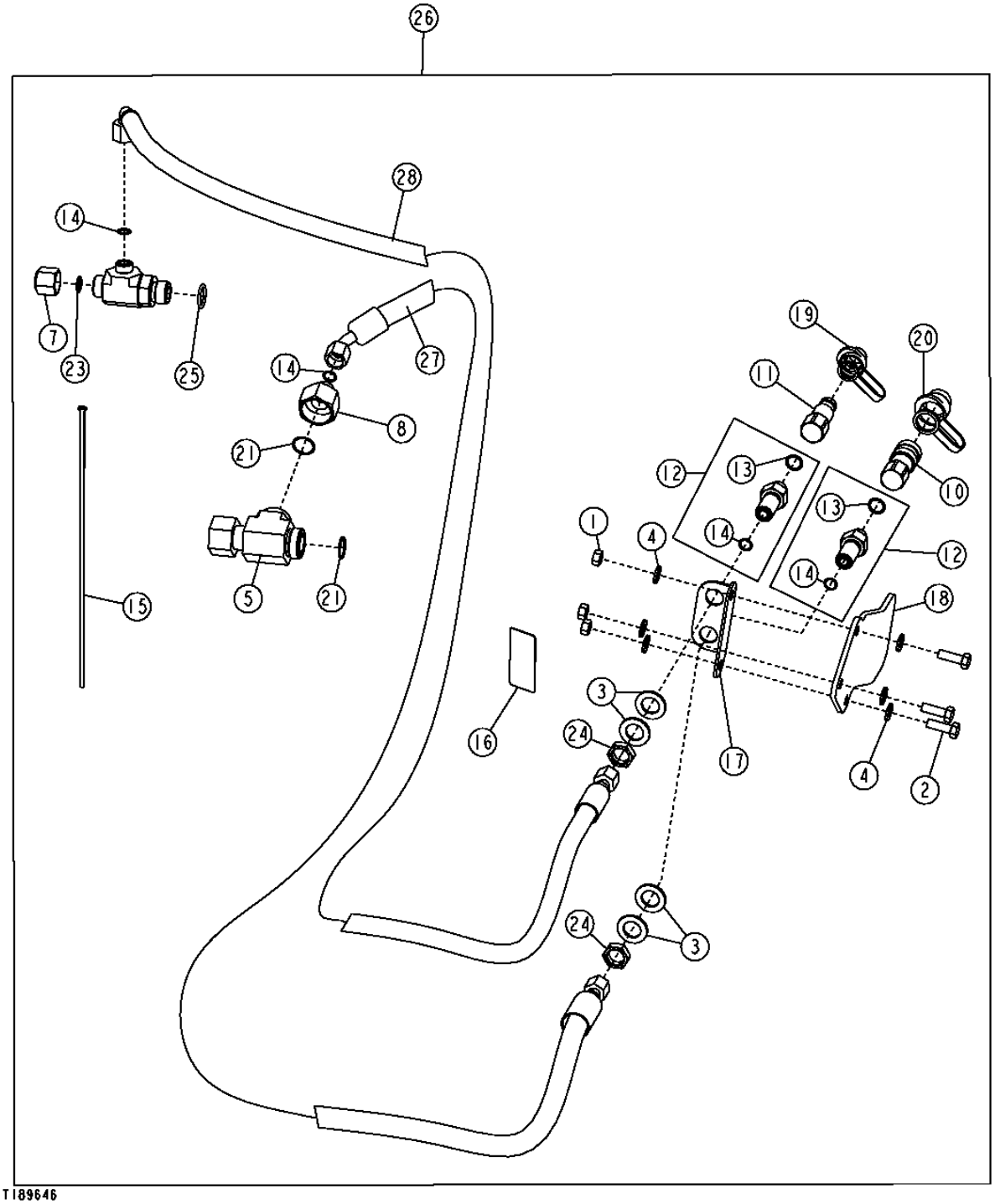

THIS PARTS LISTING IS CONTINUED

HAND HELD HYDRAULIC TOOL KIT
KIT D'OUTILS A MAIN HYDRAULIQUES
JUEGO DE HERRAMIENTAS HIDRAULICAS DE MANO

KEY	PART NO.	PART NAME	QTY.	SERIAL NO.	410J	410TMC	REMARKS
1	14M7274	NUT	3		X		
2	19M7662	CAP SCREW	3		X		
3	24M7090	WASHER	4		X		
4	24M7239	WASHER	6		X		
5	38H1002	TEE FITTING	1		X		
7	38H1417	FITTING	1		X		
8	38H1475	REDUCER	1		X		
10	AT181185	HYD. QUICK-CONNECT COUPLER	1		X		
11	AT181186	HYD. QUICK-CONNECT COUPLER	1		X		
12	AT192637	ADAPTER FITTING	2		X		
13	R26375	O-RING	2		X		
14	T77857	O-RING	4		X		
15	H77698	TIE BAND	15		X		
16	T162404	LABEL	1		X		
17	T186282	BRACKET	1		X		
18	T186474	GUARD	1		X		
19	.....	COVER	1		X		3/8", (ORDER XNR-37)
20	.....	COVER	1		X		1/2", (ORDER X-NR50)
21	T76938	O-RING	2		X		
23	T77932	O-RING	1		X		
24	T78716	NUT	2		X		
25	U12547	O-RING	1		X		
26	**AT197246**	**KIT**	**1**		**X**		
27	AT192155	HYDRAULIC HOSE - FABRICATE	1		X		
28	AT192154	HYDRAULIC HOSE - FABRICATE	1		X		

SWING CYLINDER HYDRAULICS (410TMC)
CIRCUIT HYDRAULIQUE DE VERIN DE PIVOTEMENT (410TMC)
SISTEMA HIDRAULICO DE CILINDRO DE GIRO (410TMC)

TX1016018 -UN-28DEC06

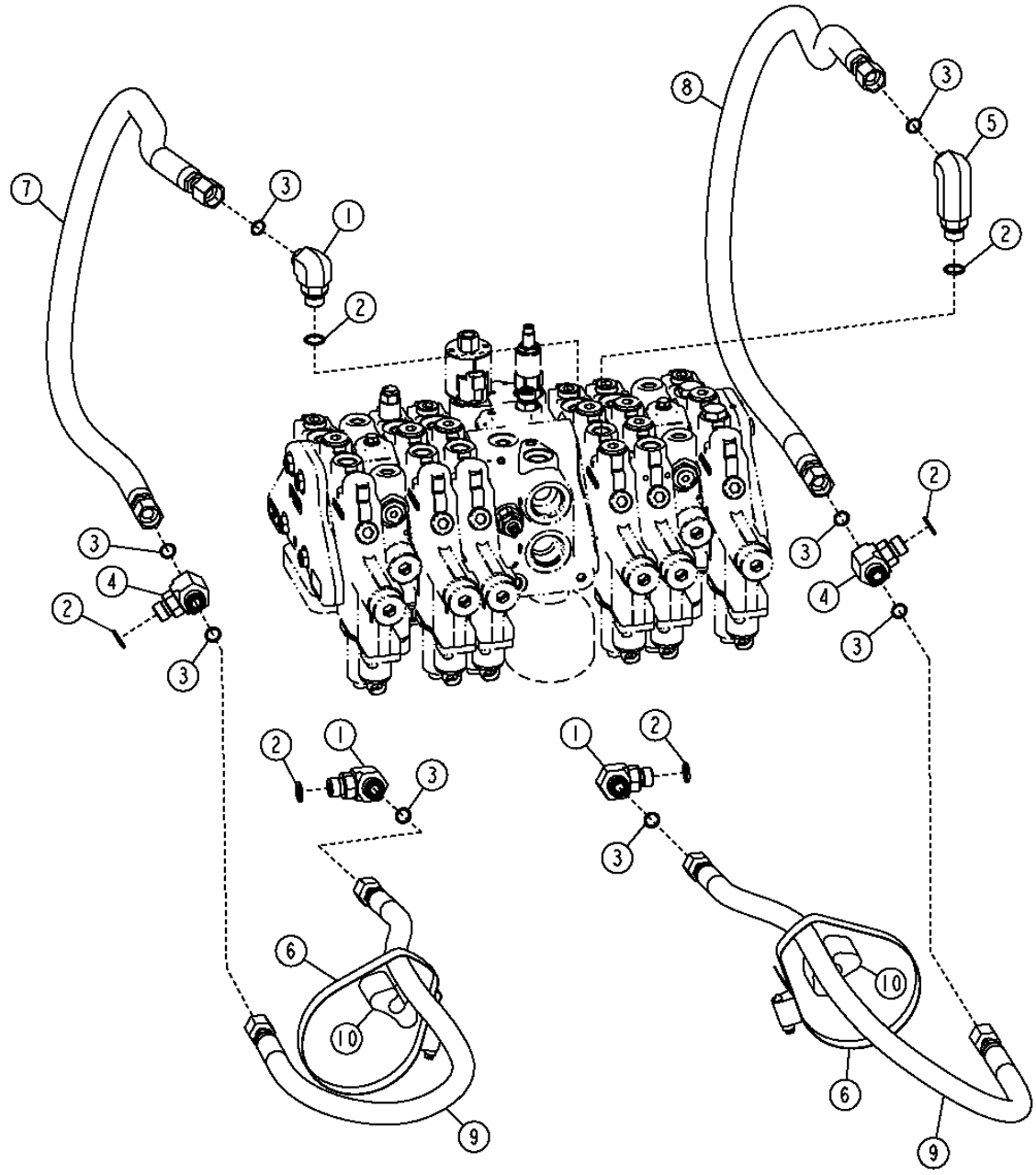

SWING CYLINDER HYDRAULICS (410TMC)
CIRCUIT HYDRAULIQUE DE VERIN DE PIVOTEMENT (410TMC)
SISTEMA HIDRAULICO DE CILINDRO DE GIRO (410TMC)

KEY	PART NO.	PART NAME	QTY.	SERIAL NO.	410J	410TMC	REMARKS
1	38H1005	ELBOW FITTING	3			X	
2	R26375	O-RING	6			X	16.358 X 2.210 MM (0.644" X 0.087") (WITH MANUAL CONTROLS)
3	T77857	O-RING	8			X	
4	38H1017	TEE FITTING	2			X	
5	38H1623	ADAPTER FITTING	1			X	
6	AR85327	CLAMP	2			X	
7	AT311765	HYDRAULIC HOSE - FABRICATE	1			X	
8	AT311766	HYDRAULIC HOSE - FABRICATE	1			X	
9	AT337822	HYDRAULIC HOSE - FABRICATE	2			X	
10	T105774	GUIDE	2			X	

STABILIZER CYLINDER HYDRAULIC HOSES (410TMC)
FLEXIBLES HYDRAULIQUES DE VERIN DE STABILISATEUR (410TMC)
MANGUERAS HIDRAULICO DE CILINDRO DE ESTABILIZADOR (410TMC)

TX1016020 -UN-18DEC06

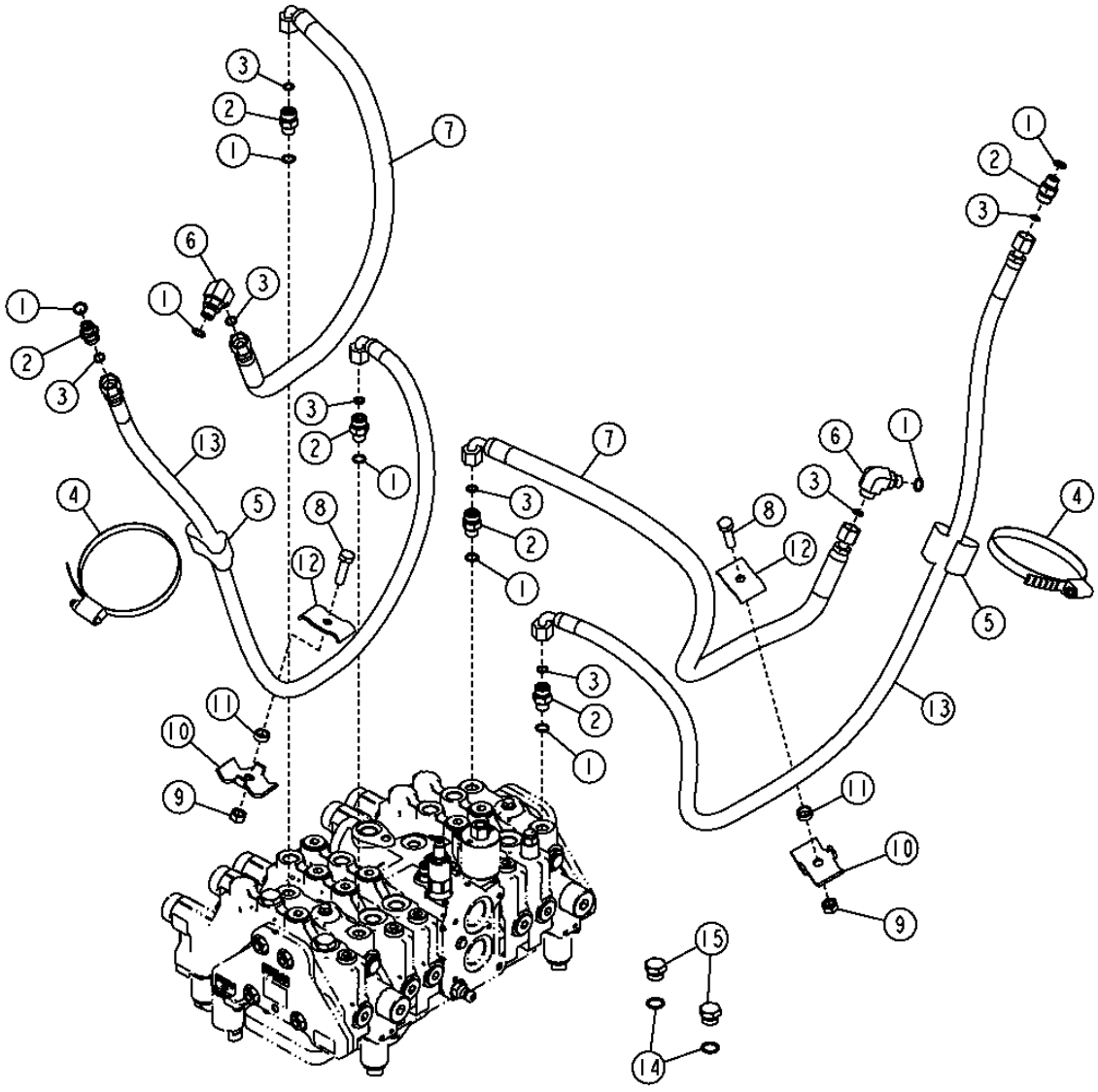

STABILIZER CYLINDER HYDRAULIC HOSES (410TMC)
FLEXIBLES HYDRAULIQUES DE VERIN DE STABILISATEUR (410TMC)
MANGUERAS HIDRAULICAS DE CILINDRO DE ESTABILIZADOR (410TMC)

KEY	PART NO.	PART NAME	QTY.	SERIAL NO.	410J	410TMC	REMARKS
1	R26448	O-RING	2			X	
2	38H1160	ADAPTER FITTING	2			X	
3	T77613	O-RING	8			X	
4	C16054	CLAMP	2			X	
5	T105774	GUIDE	2			X	
6	38H1004	ELBOW FITTING	2			X	
7	AT311324	HYDRAULIC HOSE - FABRICATE	2			X	
8	19M7550	CAP SCREW	2			X	M10 X 35
9	14M7274	NUT	2			X	M10
10	T159952	CLAMP	2			X	
11	H140456	WASHER	2			X	
12	R46919	HALF CLAMP	2			X	
13	AT311323	HYDRAULIC HOSE - FABRICATE	2			X	
14	R26375	O-RING	2			X	
15	R39112	FITTING	2			X	

AUGER HYDRAULICS (STANDARD DIPPERSTICK)
CIRCUIT HYDRAULIQUE DE VIS (BRAS STANDARD)
SISTEMA HIDRAULICO DE SINFIN (BRAZO ESTANDAR)

TX1005750 -UN-10APR06

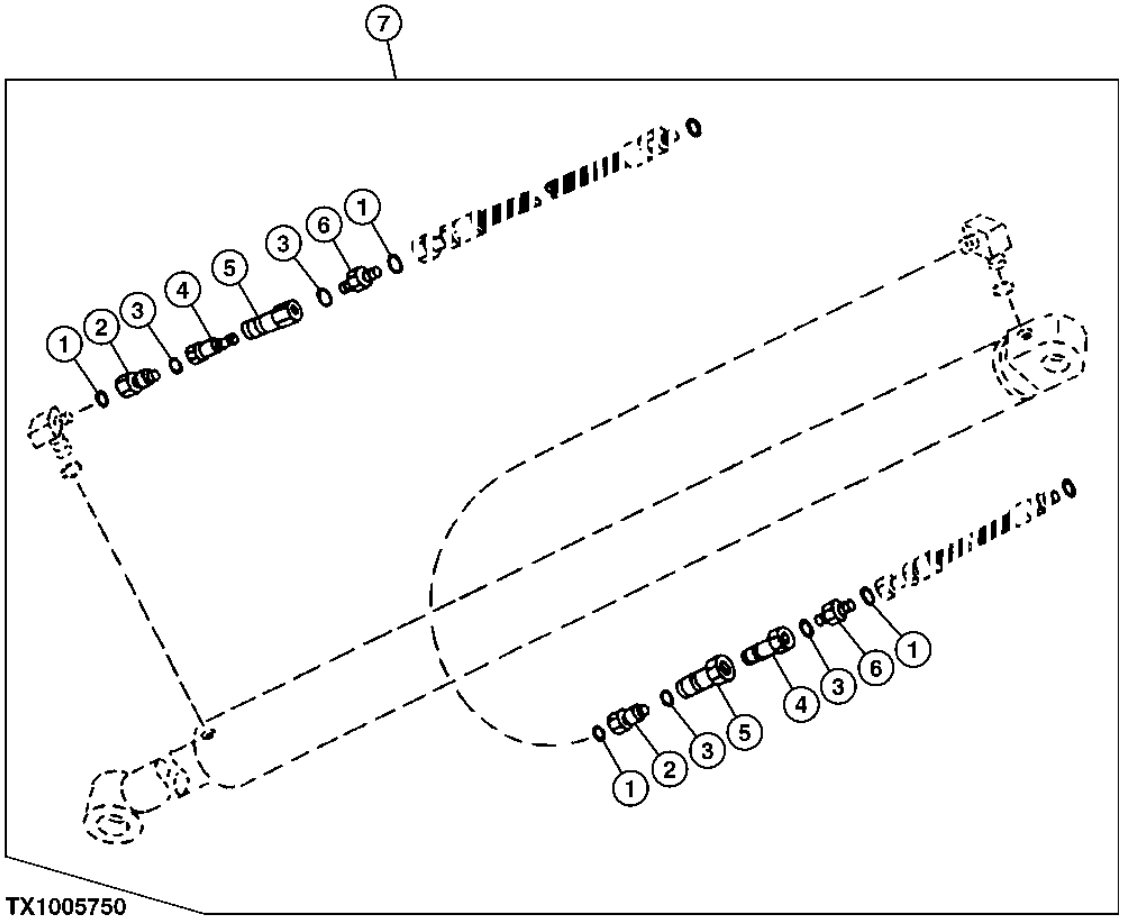

TX1005750

AUGER HYDRAULICS (STANDARD DIPPERSTICK)
CIRCUIT HYDRAULIQUE DE VIS (BRAS STANDARD)
SISTEMA HIDRAULICO DE SINFIN (BRAZO ESTANDAR)

KEY	*PART NO.*	*PART NAME*	*QTY.*	*SERIAL NO.*	410J	410TMC	*REMARKS*
1	T77932	O-RING	4		X		15.596 X 1.778 MM (0.614" X 0.070")
2	38H1069	FITTING	2		X		(SWIVEL)
3	R26906	O-RING	4		X		19.177 X 2.464 MM (0.755" X 0.097")
4	XH4-63-T10	HYDR.QUICK COUPLER SOCKET	2		X		
5	XH4-62-T10	HYDR.QUICK COUPLER PLUG	2		X		
6	38H1162	ADAPTER FITTING	2		X		
7	**AT335762**	**KIT**	**1**		**X**		**(WHOLE GOODS)**

ATTACHMENT PLUMBING KIT
KIT DE CONDUITES HYDRAULIQUES D'ACCESSOIRE
JUEGO DE TUBERIA DE ACCESORIO

T141784 -UN-02MAY01

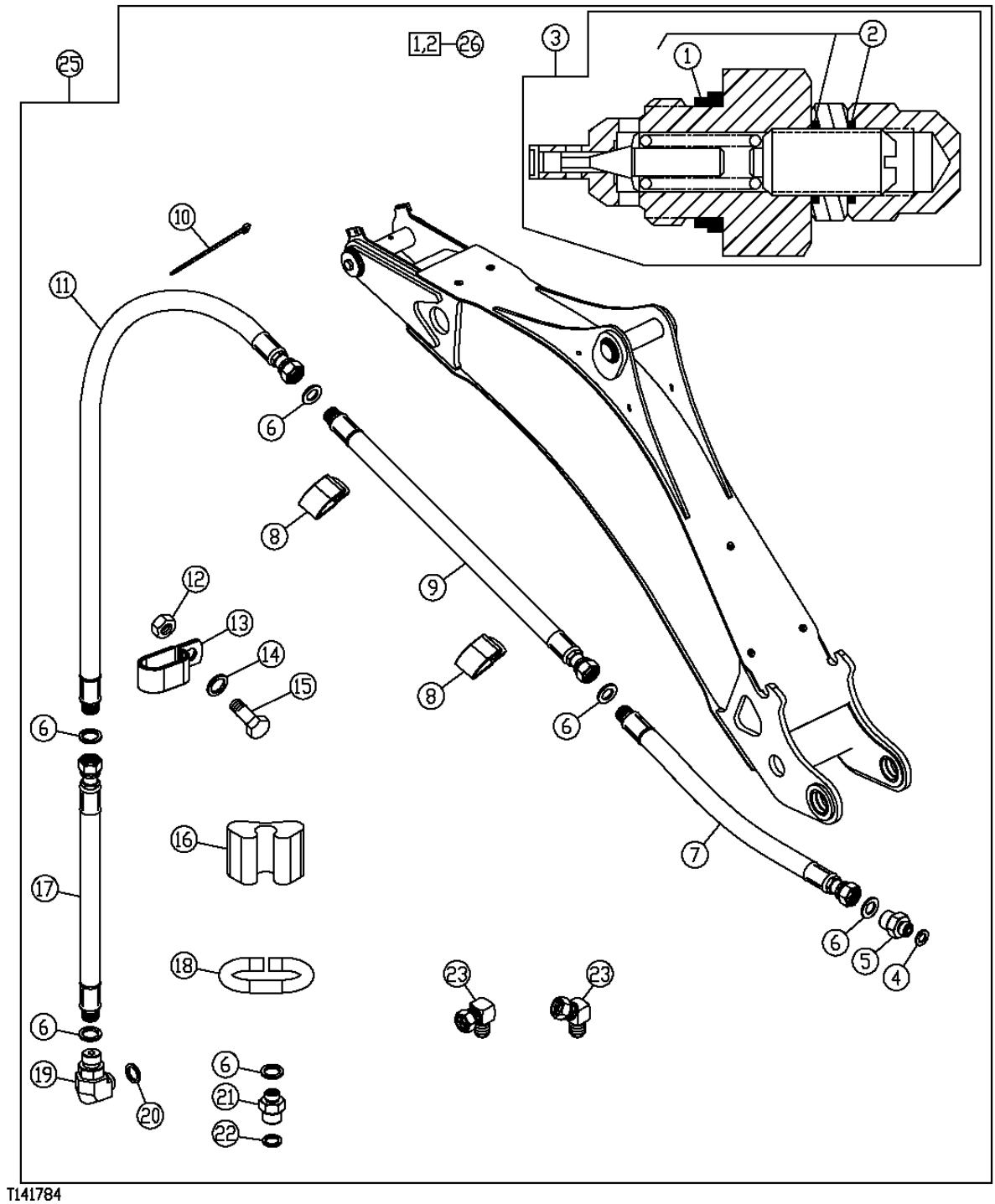

T141784

ATTACHMENT PLUMBING KIT
KIT DE CONDUITES HYDRAULIQUES D'ACCESSOIRE
JUEGO DE TUBERIA DE ACCESORIO

KEY	PART NO.	PART NAME	QTY.	SERIAL NO.	410J	410TMC	REMARKS
1	T183757	SEAL	2		X		
2	T150961	O-RING	4		X		
3	AT170061	PRESSURE RELIEF VALVE	2		X		
4	R26906	O-RING	2		X		
5	38H1172	ADAPTER FITTING	2		X		
6	T77613	O-RING	10		X		
7	AT194378	HYDRAULIC HOSE - FABRICATE	2		X		11/16" X 1 156 MM (45-1/2") X 11/16"
8	T24959	CLAMP	14		X		
9	AT194379	HYDRAULIC HOSE - FABRICATE	2		X		11/16" X 2 146 MM (84-1/2") X 11/16"
	AT194393	HYDRAULIC HOSE - FABRICATE	2		X		11/16" X 2 235 MM (88") X 11/16"
10	R44302	TIE BAND	10		X		
11	AT194398	HYDRAULIC HOSE - FABRICATE	2		X		11/16" X 1 778 MM (70") X 11/16", (STANDARD DIPPERSTICK)
	AT194394	HYDRAULIC HOSE - FABRICATE	2		X		11/16" X 1 905 MM (75") X 11/16", (STANDARD DIPPERSTICK)
	AT194395	HYDRAULIC HOSE - FABRICATE	2		X		11/16" X 2 794 MM (110") X 11/16", (EXTENDABLE DIPPERSTICK)
12	14M7400	LOCK NUT	4		X		M10
13	R49921	CLAMP	2		X		
14	24M7040	WASHER	4		X		
15	19M7938	CAP SCREW	4		X		M10 X 20
	19M7783	SCREW	1		X		
16	T105774	GUIDE	4		X		
17	AT194397	HYDRAULIC HOSE - FABRICATE	2		X		11/16" X 1 778 MM (70") X 11/16", (STANDARD AND EXTENDABLE) (THUMB OR CLAMP)
	AT194396	HYDRAULIC HOSE - FABRICATE	2		X		1/4" X 1 651 MM (65") X 11/16", (STANDARD DIPPERSTICK) (SWINGER)
	AT194392	HYDRAULIC HOSE - FABRICATE	2		X		1/4" X 1 613 MM (63-1/2") X 11/16", (EXTENDABLE DIPPERSTICK) (SWINGER)
18	T159976	GUIDE	2		X		
19	38H1010	ELBOW FITTING	1		X		(THUMB OR CLAMP)
20	R26375	O-RING	1		X		
21	38H1172	ADAPTER FITTING	1		X		(THUMB OR CLAMP)
22	R26906	O-RING	1		X		
23	AP22688	HOSE FITTING	2		X		(SWINGER)
24	AM3762T	ELBOW FITTING	1		X		(SWINGER)
25	**AT194368**	**KIT**	**1**		**X**		**(WHOLE GOODS)**

ATTACHMENT PLUMBING KIT (410TMC)
KIT DE CONDUITES HYDRAULIQUES D'ACCESSOIRE (410TMC)
JUEGO DE TUBERIA DE ACCESORIO (410TMC)

TX1016086 -UN-29DEC06

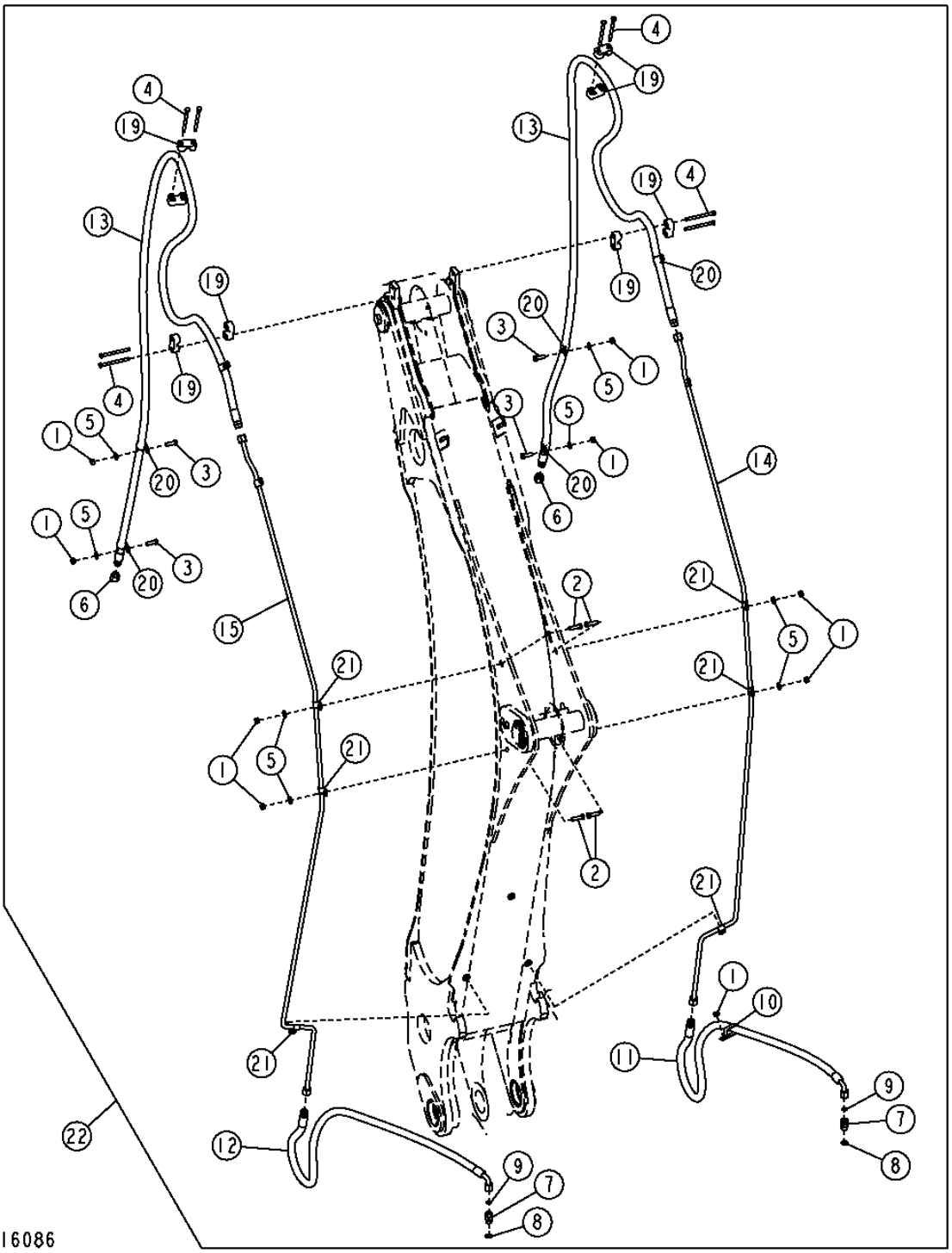

THIS PARTS LISTING IS CONTINUED

ATTACHMENT PLUMBING KIT (410TMC)
KIT DE CONDUITES HYDRAULIQUES D'ACCESSOIRE (410TMC)
JUEGO DE TUBERIA DE ACCESORIO (410TMC)

KEY	PART NO.	PART NAME	QTY.	SERIAL NO.	410J	410TMC	REMARKS
1	14M7274	NUT	9			X	M10
2	19M7550	CAP SCREW	4			X	M10 X 35
3	19M7662	CAP SCREW	4			X	M10 X 30
4	19M8456	CAP SCREW	8			X	M8 X 100
5	24M7239	WASHER	8			X	10.700 X 21 X 2.500 MM
6	38H1416	FITTING	2			X	
7	38H1161	ADAPTER FITTING	2			X	
8	R26375	O-RING	2			X	
9	T77857	O-RING	2			X	
10	AH77869	CLIP	1			X	
11	AT329141	HYDRAULIC HOSE - FABRICATE	1			X	13/16" X 1 583 MM (62-1/4") X 13/16"
12	AT329621	HYDRAULIC HOSE - FABRICATE	1			X	13/16" X 1 660 MM (65-1/4") X 13/16"
13	AT332272	HYDRAULIC HOSE - FABRICATE	2			X	13/16" X 3 298 MM (129-3/4") X 13/16"
14	AT332427	TUBE	1			X	
15	AT332428	TUBE	1			X	
19	T162003	CLAMP	8			X	
20	T206940	CLAMP	6			X	
21	T24958	CLIP	8			X	
22	**AT329140**	**KIT**	**1**			**X**	**WHOLE GOODS**

EXTENSION CYLINDER HYDRAULICS (EXTENDABLE DIPPERSTICK)(410TMC)(BOOM)
CIRCUIT HYDRAULIQUE DE VERIN D'EXTENSION (BRAS TELESCOPIQUE)(410TMC)(FLECHE)
SISTEMA HIDRAULICO DE CILINDRO DE EXTENSION (BRAZO EXTENSIBLE)(410TMC)(AGUILON)

TX1017701 -UN-

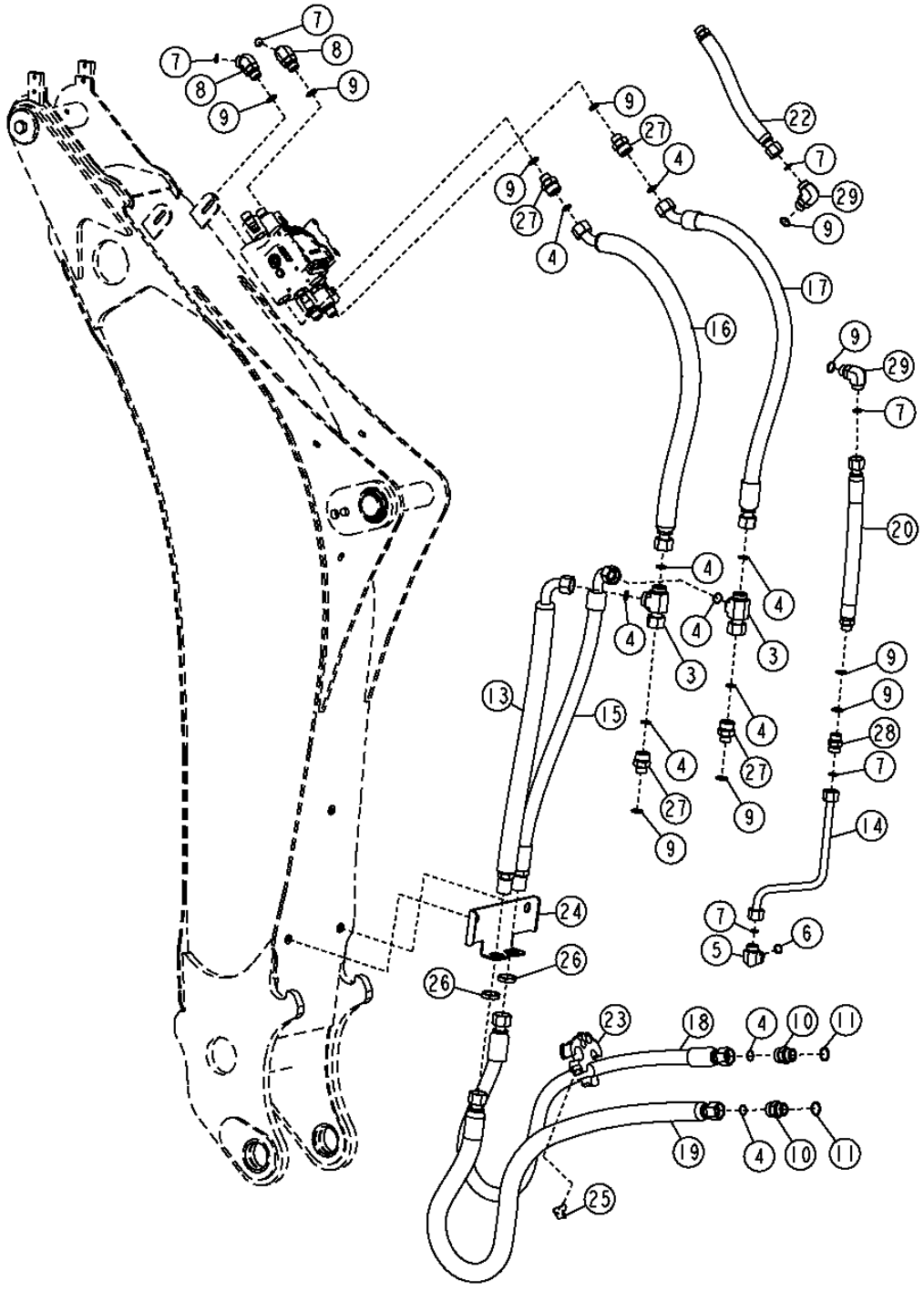

EXTENSION CYLINDER HYDRAULICS (EXTENDABLE DIPPERSTICK)(410TMC)(BOOM)
CIRCUIT HYDRAULIQUE DE VERIN D'EXTENSION (BRAS TELESCOPIQUE)(410TMC)(FLECHE)
SISTEMA HIDRAULICO DE CILINDRO DE EXTENSION (BRAZO EXTENSIBLE)(410TMC)(AGUILON)

KEY	PART NO.	PART NAME	QTY.	SERIAL NO.	410J	410TMC	REMARKS
3	38H1002	TEE FITTING	2			X	
4	T76938	O-RING	10			X	23.520 X 1.778 MM
5	38H1014	ELBOW FITTING	2			X	
6	R26906	O-RING	1			X	19.177 X 2.464 MM
7	T77858	O-RING	1			X	
8	38H1048	ELBOW FITTING	2			X	
9	U12547	O-RING	6			X	
10	38H1164	ADAPTER FITTING	2			X	
11	R29936	O-RING	2			X	
13	AT315115	HYDRAULIC HOSE - FABRICATE	1			X	
14	AT320219	OIL LINE	1			X	
15	AT320685	HYDRAULIC HOSE - FABRICATE	1			X	
16	AT321000	HYDRAULIC HOSE - FABRICATE	2			X	
17	AT321003	HYDRAULIC HOSE - FABRICATE	1			X	
18	AT321337	HYDRAULIC HOSE - FABRICATE	1			X	
19	AT326430	HYDRAULIC HOSE - FABRICATE	1			X	
20	AT329935	HYDRAULIC HOSE - FABRICATE	1			X	
22	AT338069	HYDRAULIC HOSE - FABRICATE	1			X	
23	T216633	HOSE CLAMP	1			X	
24	T216863	BRACKET	1			X	
25	T220134	HOSE CLAMP	1			X	
26	T78715	NUT	1			X	
27	38H1179	ADAPTER FITTING	4			X	
28	38H1007	ELBOW FITTING	1			X	
29	38H1163	ADAPTER FITTING	1			X	

EXTENSION CYLINDER HYDRAULICS (EXTENDABLE DIPPERSTICK)(410TMC)(BUCKET)
CIRCUIT HYDRAULIQUE DE VERIN D'EXTENSION (BRAS TELESCOPIQUE)(410TMC)(BENNE)
SISTEMA HIDRAULICO DE CILINDRO DE EXTENSION (BRAZO EXTENSIBLE)(410TMC)(CUCHARON)

TX1017731 -UN-

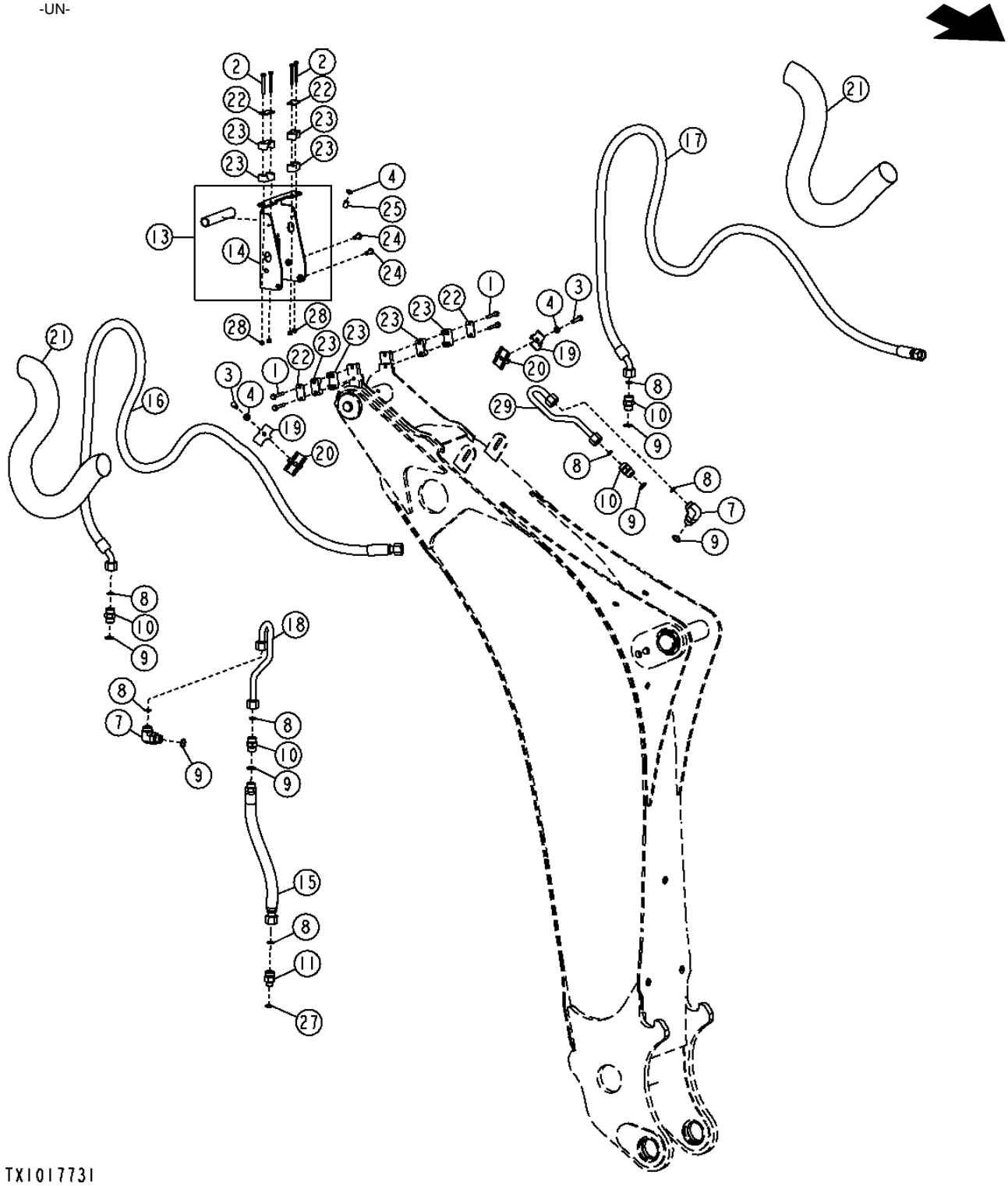

EXTENSION CYLINDER HYDRAULICS (EXTENDABLE DIPPERSTICK)(410TMC)(BUCKET)
CIRCUIT HYDRAULIQUE DE VERIN D'EXTENSION (BRAS TELESCOPIQUE)(410TMC)(BENNE)
SISTEMA HIDRAULICO DE CILINDRO DE EXTENSION (BRAZO EXTENSIBLE)(410TMC)(CUCHARON)

KEY	PART NO.	PART NAME	QTY.	SERIAL NO.	410J	410TMC	REMARKS
1	19M7801	SCREW	4		X	X	M8 X 60
2	19M8402	CAP SCREW	4		X	X	M8 X 65
3	19M8637	CAP SCREW	2		X	X	M10 X 40
4	24M7239	WASHER	7		X	X	10.700 X 21 X 2.500 MM
7	38H1007	ELBOW FITTING	4		X	X	
8	T77858	O-RING	10		X	X	
9	U12547	O-RING	5		X	X	
10	38H1163	ADAPTER FITTING	5		X	X	
11	38H1193	ADAPTER FITTING	1		X	X	
13	AT312517	BRACKET	1		X	X	
14	T214980	BRACKET	1		X	X	
15	AT318939	HYDRAULIC HOSE - FABRICATE	1		X	X	
16	AT321058	HYDRAULIC HOSE - FABRICATE	1		X	X	
17	AT321060	HYDRAULIC HOSE - FABRICATE	1		X	X	
18	AT336165	OIL LINE	1		X	X	
19	T159848	CLAMP	2		X	X	
20	T159956	CLAMP	2		X	X	
21	T161365	SLEEVE	2		X	X	
22	T162005	STRAP	4		X	X	
23	T163636	CLAMP	8		X	X	
24	T165889	SCREW	4		X	X	
25	T190406	WASHER	1		X	X	
27	R26906	O-RING	1		X	X	
28	14M7426	LOCK NUT	4		X	X	M8
29	AT336044	OIL LINE	1		X		

MEMORANDA
MEMORANDA
MEMORANDA

BOOM CYLINDER
VERIN DE FLECHE
CILINDRO DE AGUILON

T196060 -UN-07NOV03

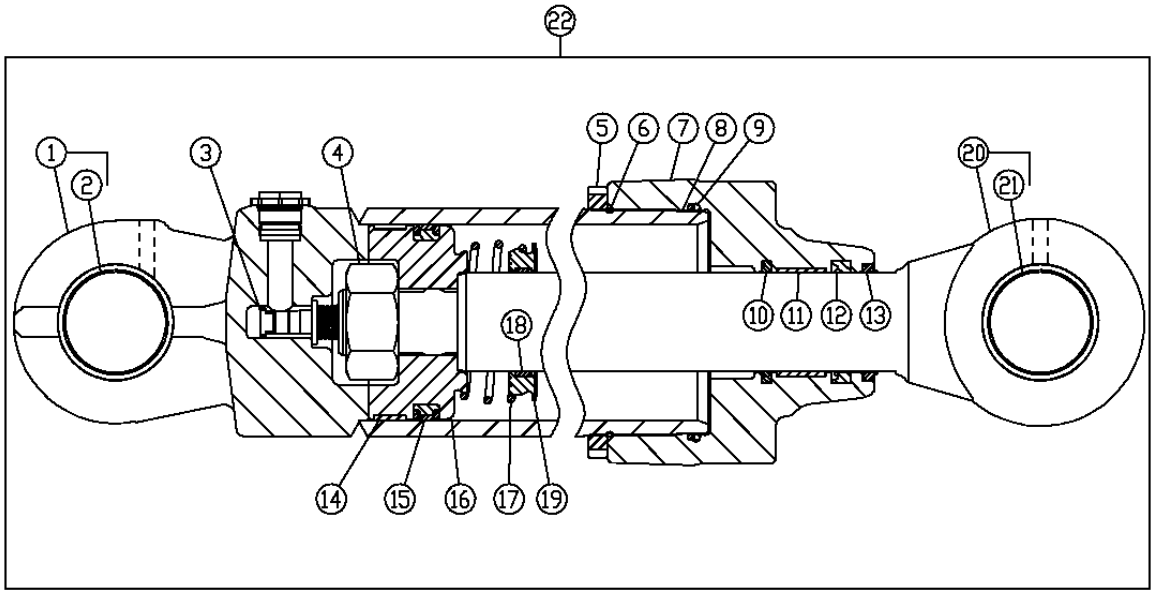

23-10,11,12,13 24-6,8,9,14,15

T196060

KEY	PART NO.	PART NAME	QTY.	SERIAL NO.	410J	410TMC	REMARKS
1	AH176417	HYDRAULIC CYLINDER BARREL	1		X	X	
2	H151655	BUSHING	2		X	X	
3	AH217015	SCREW	1		X	X	
4	H209710	NUT	1		X	X	
5	H180324	NUT	1		X	X	
6	E52687	O-RING	1		X	X	
7	H155737	HYDR. CYLINDER ROD GUIDE	1		X	X	
8	H151890	BACK-UP RING	1		X	X	
9	R72032	O-RING	1		X	X	
10	AH146563	SEAL	1		X	X	
11	H152796	WEAR RING	1		X	X	
12	H152205	SEAL	1		X	X	
13	AH146559	SEAL	1		X	X	
14	R90653	WEAR RING	1		X	X	
15	RE30162	SEAL	1		X	X	
16	H180946	PISTON	1		X	X	
17	H169161	SPRING	1		X	X	
18	H140822	BACK-UP RING	1		X	X	
19	H151659	PISTON	1		X	X	
20	AH176418	HYDRAULIC CYLINDER ROD	1		X	X	
21	H152123	BUSHING	1		X	X	
22	AH219639	HYDRAULIC CYLINDER KIT	1		X	X	
23	AH149815	KIT	1		X	X	(CYLINDER ROD REPAIR)
24	AH149848	KIT	1		X	X	(CYLINDER BORE REPAIR)

THIS PARTS LISTING IS CONTINUED

BUCKET CYLINDER AND REPAIR KIT
VERIN DE BENNE ET KIT DE REPARATION
CILINDRO DE CUCHARON Y JUEGO DE REPARACION

TX1015038 -UN-16NOV06

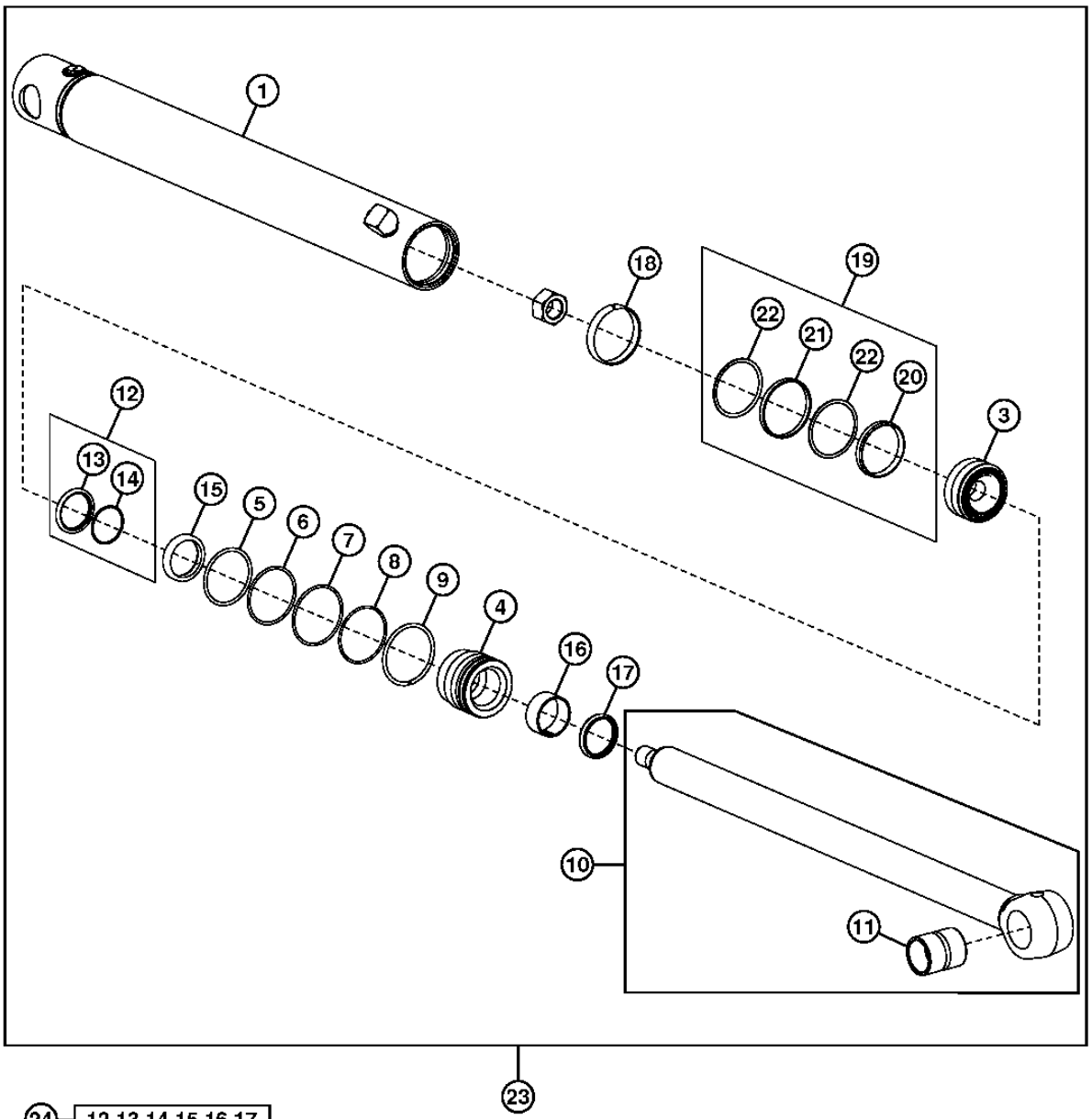

24 — 12,13,14,15,16,17

25 — 6,8,18,19,20,21,22

TX1015038

BUCKET CYLINDER AND REPAIR KIT
VERIN DE BENNE ET KIT DE REPARATION
CILINDRO DE CUCHARON Y JUEGO DE REPARACION

KEY	PART NO.	PART NAME	QTY.	SERIAL NO.	410J	410TMC	REMARKS
1	AH220523	HYDRAULIC CYLINDER BARREL	1		X	X	
3	H151893	PISTON	1		X	X	
4	H206792	HYDR. CYLINDER ROD GUIDE	1		X	X	
5	F950R	O-RING	1		X	X	
6	R81862	BACK-UP RING	1		X	X	
7	H180094	SNAP RING	1		X	X	
8	.....	O-RING	1		X	X	
9	H180080	SNAP RING	1		X	X	
10	AH209083	HYDRAULIC CYLINDER ROD	1		X	X	
11	H180402	BUSHING	1		X	X	
12	AH146563	SEAL	1		X	X	
13	.....	SEAL	1		X	X	
14	.....	BACK-UP RING	1		X	X	
15	H152205	SEAL	1		X	X	
16	H152796	WEAR RING	1		X	X	
17	AH146559	SEAL	1		X	X	
18	R81775	WEAR RING	1		X	X	
19	RE20343	SEAL	1		X	X	
20	.....	SEAL	1		X	X	
21	.....	SEAL	1		X	X	
22	.....	BACK-UP RING	2		X	X	
23	AH219638	HYDRAULIC CYLINDER	1		X	X	
24	AH149815	HYDRAULIC CYLINDER KIT	1		X	X	(CYLINDER ROD REPAIR)
25	AH212101	HYDRAULIC CYLINDER KIT	1		X	X	(CYLINDER BORE REPAIR)
26	H170540	LOCK NUT	1		X	X	

CROWD CYLINDER AND REPAIR KIT (410J)
VERIN DE CAVAGE ET KIT DE REPARATION (410J)
CILINDRO DE EMPUJE Y JUEGO DE REPARACION (410J)

TP62449 -UN-14AUG00

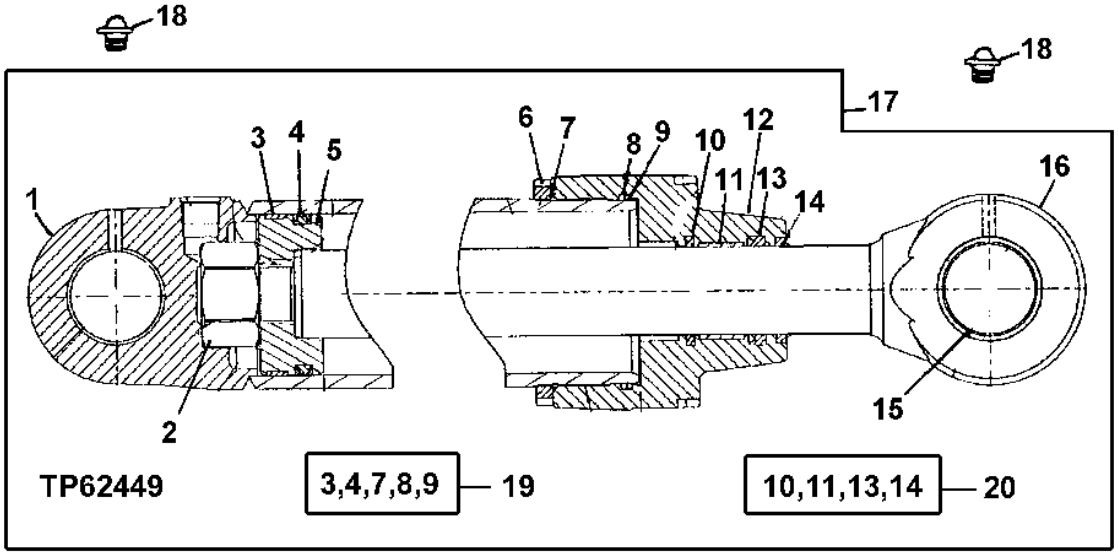

KEY	PART NO.	PART NAME	QTY.	SERIAL NO.	410J	410TMC	REMARKS
1	AH158579	HYDRAULIC CYLINDER BARREL	1		X		
2	H170372	NUT	1		X		
3	R82095	WEAR RING	1		X		
4	RE20809	SEAL	1		X		
5	H170371	PISTON	1		X		
6	H180432	NUT	1		X		
7	T12275	O-RING	1		X		
8	H151891	BACK-UP RING	1		X		
9	T38485	O-RING	1		X		
10	AH146563	SEAL	1		X		
11	H152796	WEAR RING	1		X		
12	H155769	HYDR. CYLINDER ROD GUIDE	1		X		
13	H152205	SEAL	1		X		
14	AH146559	SEAL	1		X		
15	H151820	BUSHING	1		X		
16	AH164139	ROD	1		X		
17	AH219640	CYLINDER	1		X		
18	T162396	LUBRICATION FITTING	2		X		
19	AH212103	HYDRAULIC CYLINDER KIT	1		X		(CYLINDER BORE REPAIR)
20	AH149815	HYDRAULIC CYLINDER KIT	1		X		(CYLINDER ROD REPAIR)

CROWD CYLINDER AND REPAIR KIT (410TMC)
VERIN DE CAVAGE ET KIT DE REPARATION (410TMC)
CILINDRO DE EMPUJE Y JUEGO DE REPARACION (410TMC)

TP62449 -UN-14AUG00

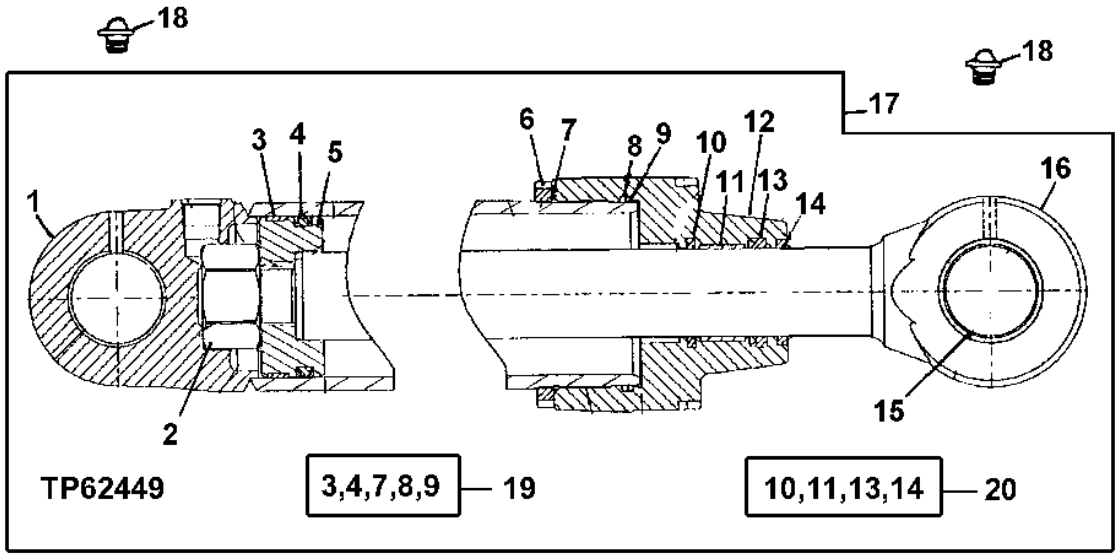

KEY	PART NO.	PART NAME	QTY.	SERIAL NO.	410JTMC	REMARKS
1	AH158579	HYDRAULIC CYLINDER BARREL	1		X	
2	H170372	NUT	1		X	
3	R82095	WEAR RING	1		X	
4	RE20809	SEAL	1		X	
5	H170371	PISTON	1		X	
6	H180432	NUT	1		X	
7	T12275	O-RING	1		X	
8	H151891	BACK-UP RING	1		X	
9	T38485	O-RING	1		X	
10	AH146563	SEAL	1		X	
11	H152796	WEAR RING	1		X	
12	H179999	HYDR. CYLINDER ROD GUIDE	1		X	
13	H152205	SEAL	1		X	
14	AH146559	SEAL	1		X	
15	H151820	BUSHING	1		X	
16	AH164139	ROD	1		X	
17	AH218653	CYLINDER	1		X	
18	T162396	LUBRICATION FITTING	2		X	
19	AH212103	HYDRAULIC CYLINDER KIT	1		X	(CYLINDER BORE REPAIR)
20	AH149815	HYDRAULIC CYLINDER KIT	1		X	(CYLINDER ROD REPAIR)

SWING CYLINDER AND REPAIR KIT (410TMC)
VERIN DE PIVOTEMENT ET KIT DE REPARATION (410TMC)
CILINDRO DE GIRO Y JUEGO DE REPARACION (410TMC)

TX1015009 -UN-29DEC06

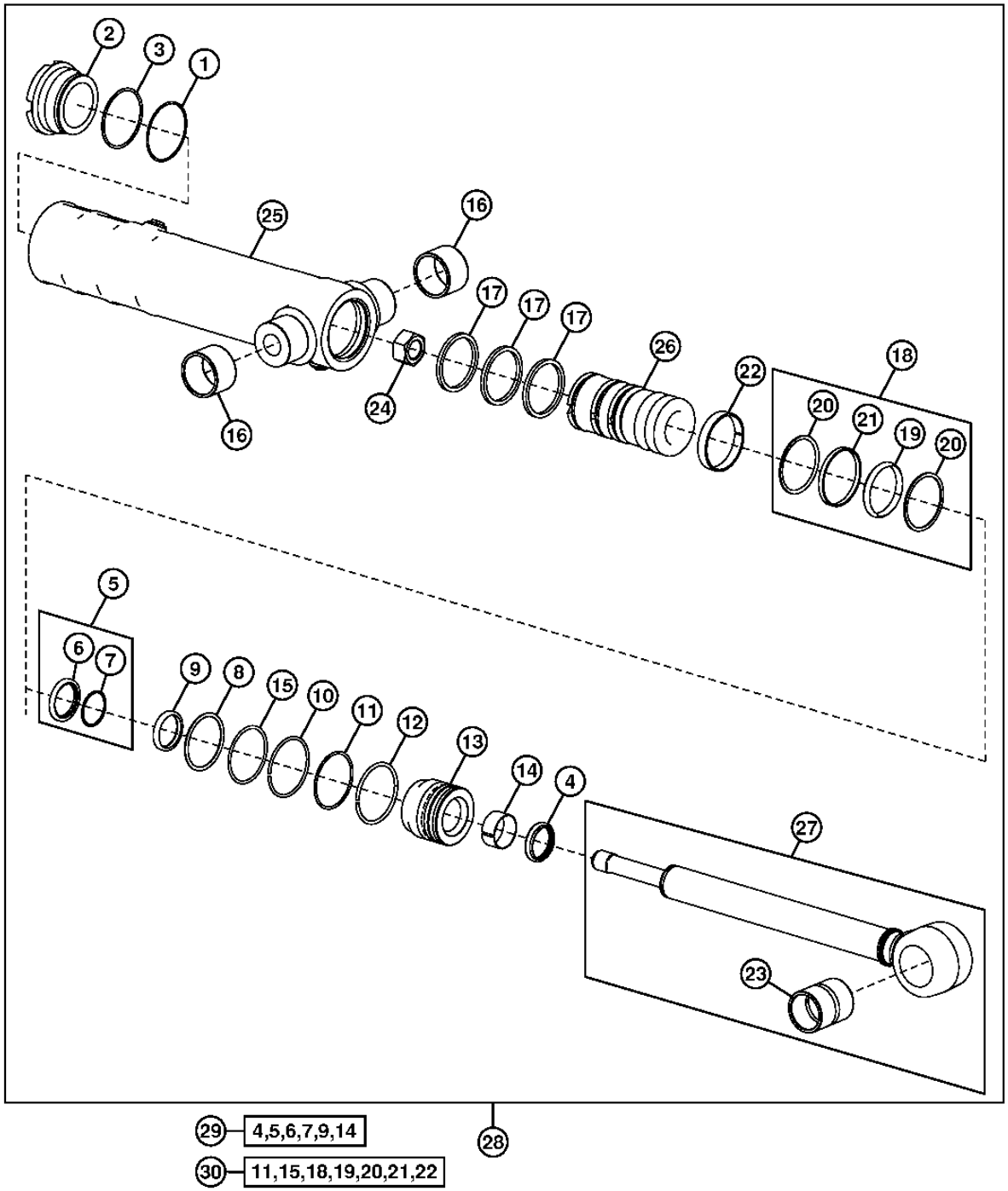

TX1015009

SWING CYLINDER AND REPAIR KIT (410TMC)
VERIN DE PIVOTEMENT ET KIT DE REPARATION (410TMC)
CILINDRO DE GIRO Y JUEGO DE REPARACION (410TMC)

KEY	PART NO.	PART NAME	QTY.	SERIAL NO.	410J	410TMC	REMARKS
1	H154373	BACK-UP RING	1			X	
2	H156486	HYDRAULIC CYLINDER CAP	1			X	
3	P48403	O-RING	1			X	
4	AH146557	SEAL	1			X	
5	AH146561	SEAL	1			X	
6	.....	SEAL	1			X	
7	.....	BACK-UP RING	1			X	
8	F1430R	O-RING	1			X	
9	H152203	SEAL	1			X	
10	H180103	SNAP RING	1			X	
11	H181114	O-RING	1			X	
12	H206859	SNAP RING	1			X	
13	H208631	HYDR. CYLINDER ROD GUIDE	1			X	
14	H208987	WEAR RING	1			X	
15	R79101	BACK-UP RING	1			X	
16	H151328	BUSHING	1			X	
17	H150947	PISTON RING	1			X	
18	RE20344	SEAL	1			X	
19	.....	RING	1			X	
20	.....	BACK-UP RING	2			X	
21	.....	SEAL	1			X	
22	R81776	WEAR RING	1			X	
23	H180402	BUSHING	1			X	
24	H170539	NUT	1			X	
25	.....	BARREL	1			X	
26	.....	PISTON	1			X	
27	AH221036	ROD	1			X	
28	AH221001	HYDRAULIC CYLINDER	1			X	
29	AH210484	HYDRAULIC CYLINDER KIT	1			X	(ROD SEAL)
30	AH212096	HYDRAULIC CYLINDER KIT	1			X	(BORE SEAL)

SWING CYLINDER AND REPAIR KIT (410J)
VERIN DE PIVOTEMENT ET KIT DE REPARATION (410J)
CILINDRO DE GIRO Y JUEGO DE REPARACION (410J)

TX1017160 -UN-29DEC06

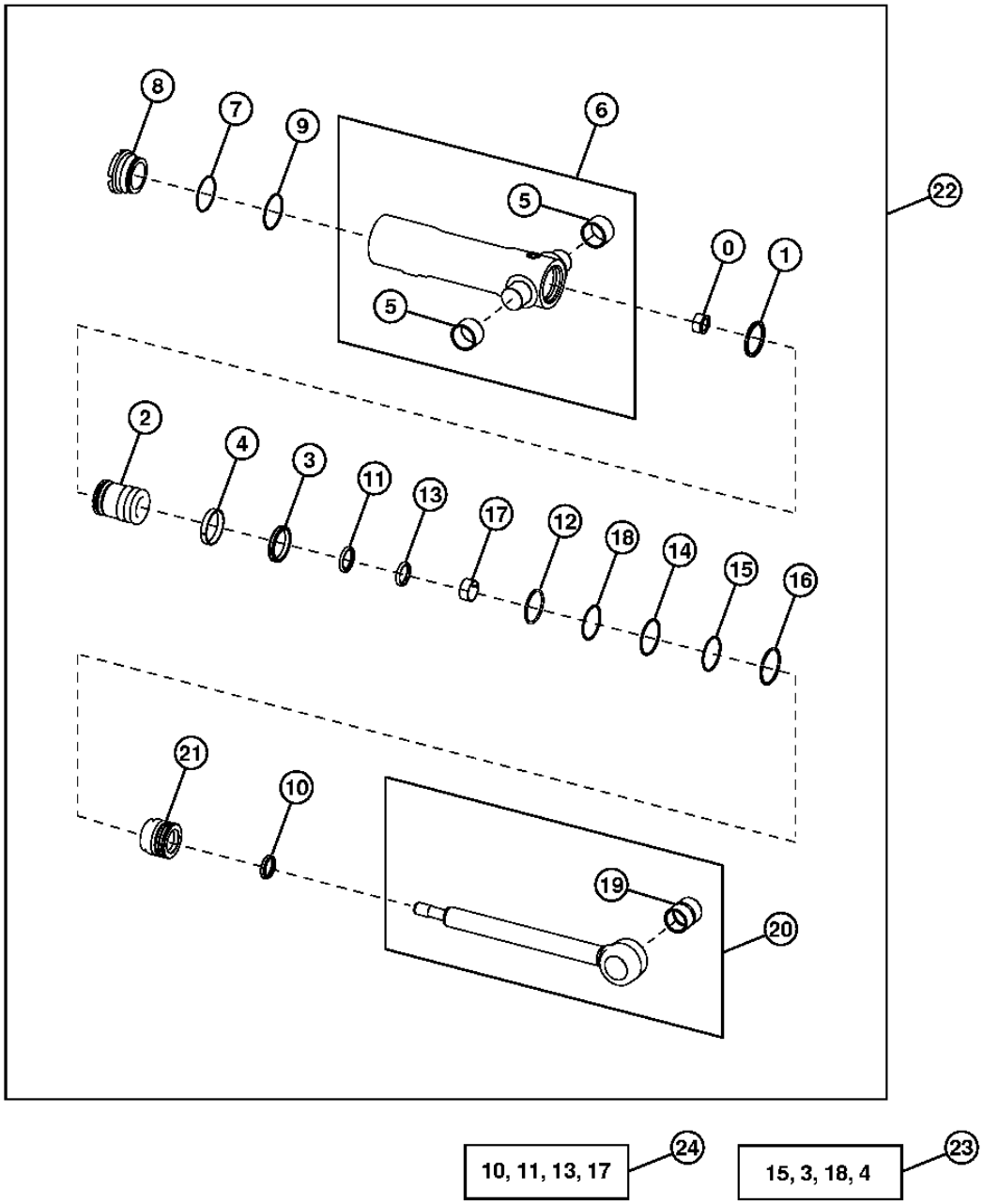

TX1017160

SWING CYLINDER AND REPAIR KIT (410J)
VERIN DE PIVOTEMENT ET KIT DE REPARATION (410J)
CILINDRO DE GIRO Y JUEGO DE REPARACION (410J)

KEY	PART NO.	PART NAME	QTY.	SERIAL NO.	410J	410TMC	REMARKS
0	H170539	NUT	1		X		
1	H150947	PISTON RING	1		X		
2	H154372	PISTON	1		X		
3	RE20344	SEAL	1		X		
4	R81776	WEAR RING	1		X		
5	H151328	BUSHING	2		X		
6	AH220114	HYDRAULIC CYLINDER BARREL	1		X		
7	H154373	BACK-UP RING	1		X		
8	H156486	HYDRAULIC CYLINDER CAP	1		X		
9	P48403	O-RING	1		X		
10	AH146557	SEAL	1		X		
11	AH146561	SEAL	1		X		
12	F1430R	O-RING	1		X		
13	H152203	SEAL	1		X		
14	H180103	SNAP RING	1		X		
15	H181114	O-RING	1		X		
16	H206859	SNAP RING	1		X		
17	H208987	WEAR RING	1		X		
18	R79101	BACK-UP RING	1		X		
19	H180402	BUSHING	1		X		
20	AH147893	HYDRAULIC CYLINDER ROD	1		X		
21	H208631	HYDR. CYLINDER ROD GUIDE	1		X		
22	AH220108	HYDRAULIC CYLINDER	1		X		
23	AH212096	HYDRAULIC CYLINDER KIT	1		X		(BORE SEAL)
24	AH210484	HYDRAULIC CYLINDER KIT	1		X		(ROD SEAL)

STABILIZER CYLINDER AND REPAIR KIT
VERIN DE STABILISATEUR ET KIT DE REPARATION
CILINDRO DE ESTABILIZADOR Y JUEGO DE REPARACION

T196176 -UN-10NOV03

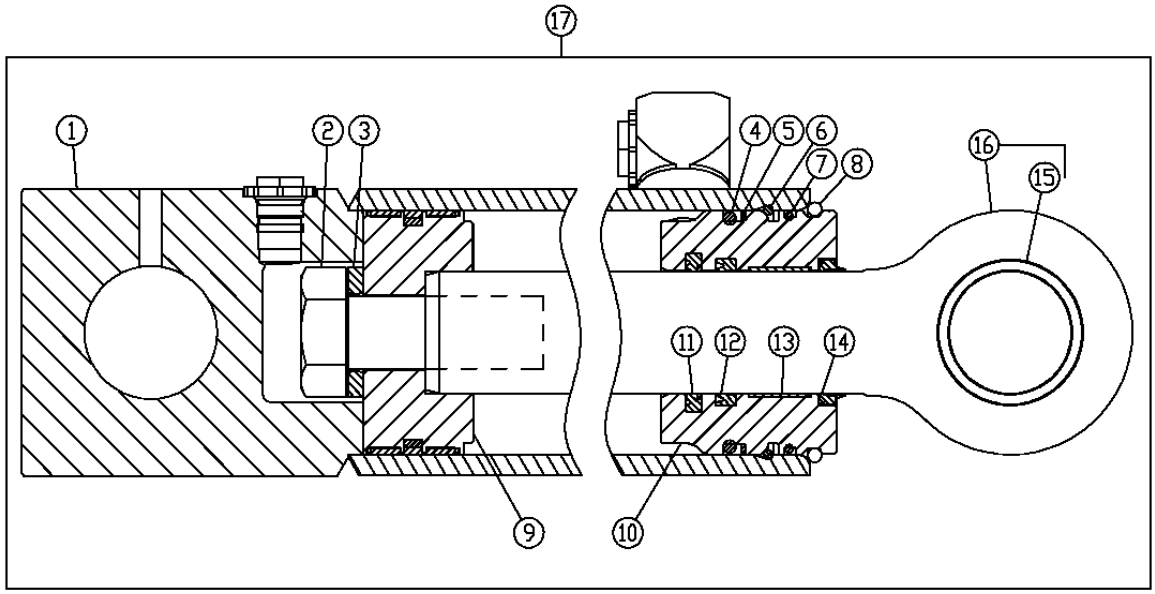

18-11,12,13,14 19-5,7

T196176

KEY	PART NO.	PART NAME	QTY.	SERIAL NO.	410J 410TMC	REMARKS
1	AH219543	HYDRAULIC CYLINDER BARREL	1		X X	(L.H.)
	AH219544	HYDRAULIC CYLINDER BARREL	1		X X	(R.H.)
2	19M8353	CAP SCREW	1		X X	M30 X 80
3	H145175	WASHER	1		X X	
4	F950R	O-RING	1		X X	
5	R81862	BACK-UP RING	1		X X	
6	H180094	SNAP RING	1		X X	
7	.....	O-RING	1		X X	
8	H180080	SNAP RING	1		X X	
9	AH205062	PISTON	1		X X	
10	H208995	HYDR. CYLINDER ROD GUIDE	1		X X	
11	AH146561	SEAL	1		X X	
12	H152203	SEAL	1		X X	
13	H208987	WEAR RING	1		X X	
14	AH146557	SEAL	1		X X	
15	H154404	BUSHING	1		X X	
16	AH147902	HYDRAULIC CYLINDER ROD	1		X X	
17	AH219541	HYDRAULIC CYLINDER	1		X X	(L.H.)
	AH219542	HYDRAULIC CYLINDER	1		X X	(R.H.)
18	AH210484	HYDRAULIC CYLINDER KIT	1		X X	(ROD SEAL)
19	AH212102	HYDRAULIC CYLINDER KIT	1		X X	(BORE SEAL)

EXTENDIBLE DIPPERSTICK CYLINDER
VERIN DE BRAS TELESCOPIQUE (SERIAL NO.927726-)
CILINDRO DE BRAZO EXTENSIBLE (SERIAL NO.927726-)

T196105 -UN-

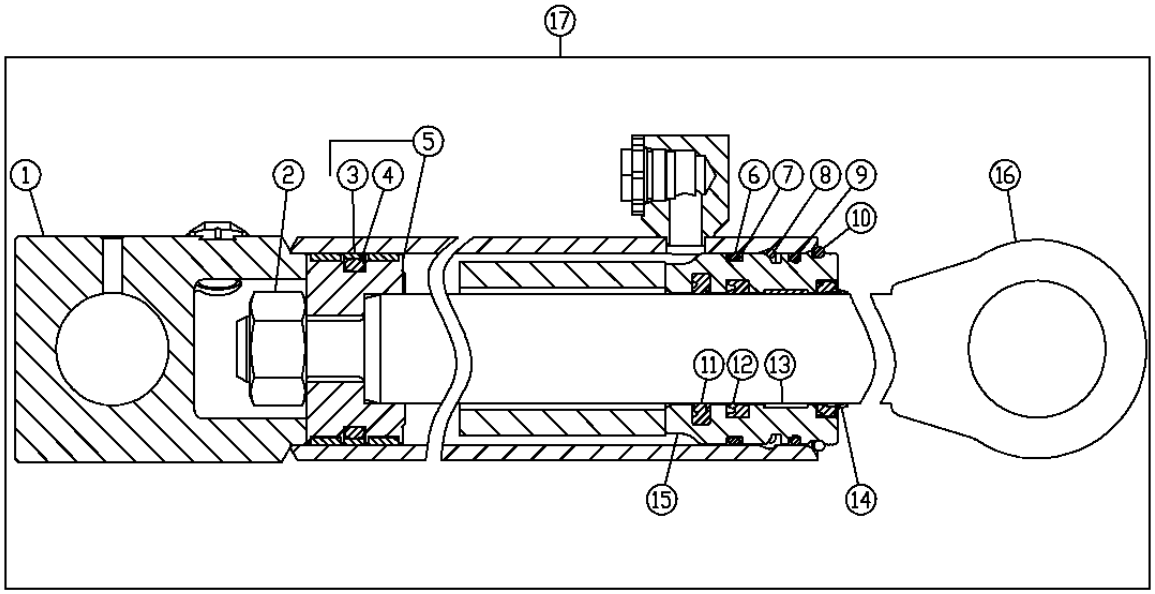

18-11,12,14 19-3,4,6,7,9

T196105

KEY	PART NO.	PART NAME	QTY.	SERIAL NO.	410J 410TMC	REMARKS
1	AH209720	HYDRAULIC CYLINDER BARREL	1		X X	
2	H170537	NUT	1		X X	
3	R98325	SEAL	1		X X	
4	R98324	SEAL	1		X X	
5	AH158623	PISTON	1		X X	
6	R83469	O-RING	1		X X	
7	R81195	BACK-UP RING	1		X X	
8	H178765	SNAP RING	1		X X	
9	U12198	O-RING	1		X X	
10	H179657	SNAP RING	1		X X	
11	AH148608	SEAL	1		X X	
12	H155655	SEAL	1		X X	
13	H157897	WEAR RING	1		X X	
14	AH150453	SEAL	1		X X	
15	H210939	HYDR. CYLINDER ROD GUIDE	1		X X	
16	AH209721	HYDRAULIC CYLINDER ROD	1		X X	
17	AH209719	HYDRAULIC CYLINDER	1		X X	
18	AH149194	HYDRAULIC CYLINDER KIT	1		X X	(ROD SEAL)
19	AH212090	HYDRAULIC CYLINDER KIT	1		X X	(BORE SEAL)

MEMORANDA
MEMORANDA
MEMORANDA

MEMORANDA
MEMORANDA
MEMORANDA

NOISE REDUCTION HOOD ASSEMBLY WITH EXHAUST EXTENSION
JEU DE PIECES DE JOINT TORIQUE
JUEGO DE ANILLO TORICO

TX1016517 -UN-28DEC06

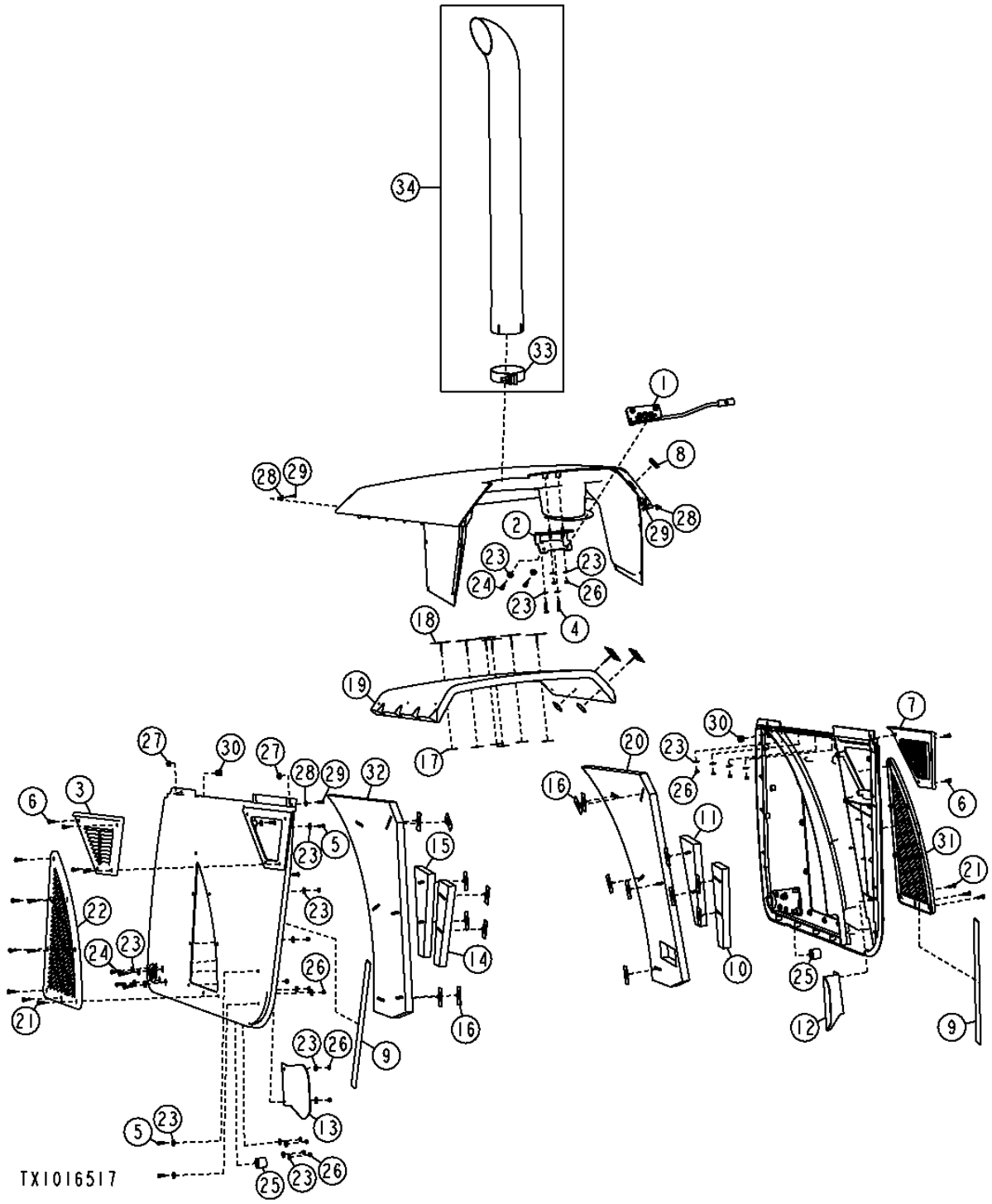

NOISE REDUCTION HOOD ASSEMBLY WITH EXHAUST EXTENSION
JEU DE PIECES DE JOINT TORIQUE
JUEGO DE ANILLO TORICO

KEY	PART NO.	PART NAME	QTY.	SERIAL NO.	410J	410TMC	REMARKS
1	AT196358	LATCH	1		X	X	
2	T201591	BRACKET	1		X	X	
3	T165916	LOUVER	1		X	X	
4	19M7874	CAP SCREW	2		X	X	M6 X 30
5	19M8425	CAP SCREW	8		X	X	M6 X 16
6	21M7246	SCREW	4		X	X	M6 X 16
7	T165915	LOUVER	1		X	X	
8	T188642	GROMMET	1		X	X	
9	T184116	LABEL	1		X	X	
10	T216356	ACOUSTICAL UPHOLSTERY	1		X	X	
11	T216354	ACOUSTICAL UPHOLSTERY	1		X	X	
12	T184787	BRACKET	1		X	X	
13	T184788	PROTECTIVE COATING MATERIAL	1		X	X	
14	T216355	ACOUSTICAL UPHOLSTERY	1		X	X	
15	T216353	ACOUSTICAL UPHOLSTERY	1		X	X	
16	T217116	RETAINER	19		X	X	
17	T230467	HANGER	12		X	X	
18	T230468	HANGER	12		X	X	
19	T226954	ACOUSTICAL UPHOLSTERY	1		X	X	
20	T216348	ACOUSTICAL UPHOLSTERY	1		X	X	
21	21M7267	SCREW	8		X	X	M6 X 20
22	T211122	LOUVER	1		X	X	
23	24M7139	WASHER	22		X	X	6.400 X 18 X 1.600 MM
24	19M7933	CAP SCREW	2		X	X	M6 X 25
25	T165911	BUSHING	1		X	X	
26	14M7272	NUT	10		X	X	M6
27	T183773	NUT	4		X	X	
28	24M7138	WASHER	4		X	X	5.300 X 15 X 1.200 MM
29	19M7372	CAP SCREW	4		X	X	M5 X 16
30	T165997	INSERT	1		X	X	
31	T211121	LOUVER	1		X	X	
32	T216357	ACOUSTICAL UPHOLSTERY	1		X	X	
33	RE52087	CLAMP	1		X	X	
34	AT312126	MUFFLER EXTENSION	1		X	X	

BELLY PAN NOISE REDUCTION PACKAGE
JEU DE PIECES DE JOINT TORIQUE
JUEGO DE ANILLO TORICO

TX1016531 -UN-21DEC06

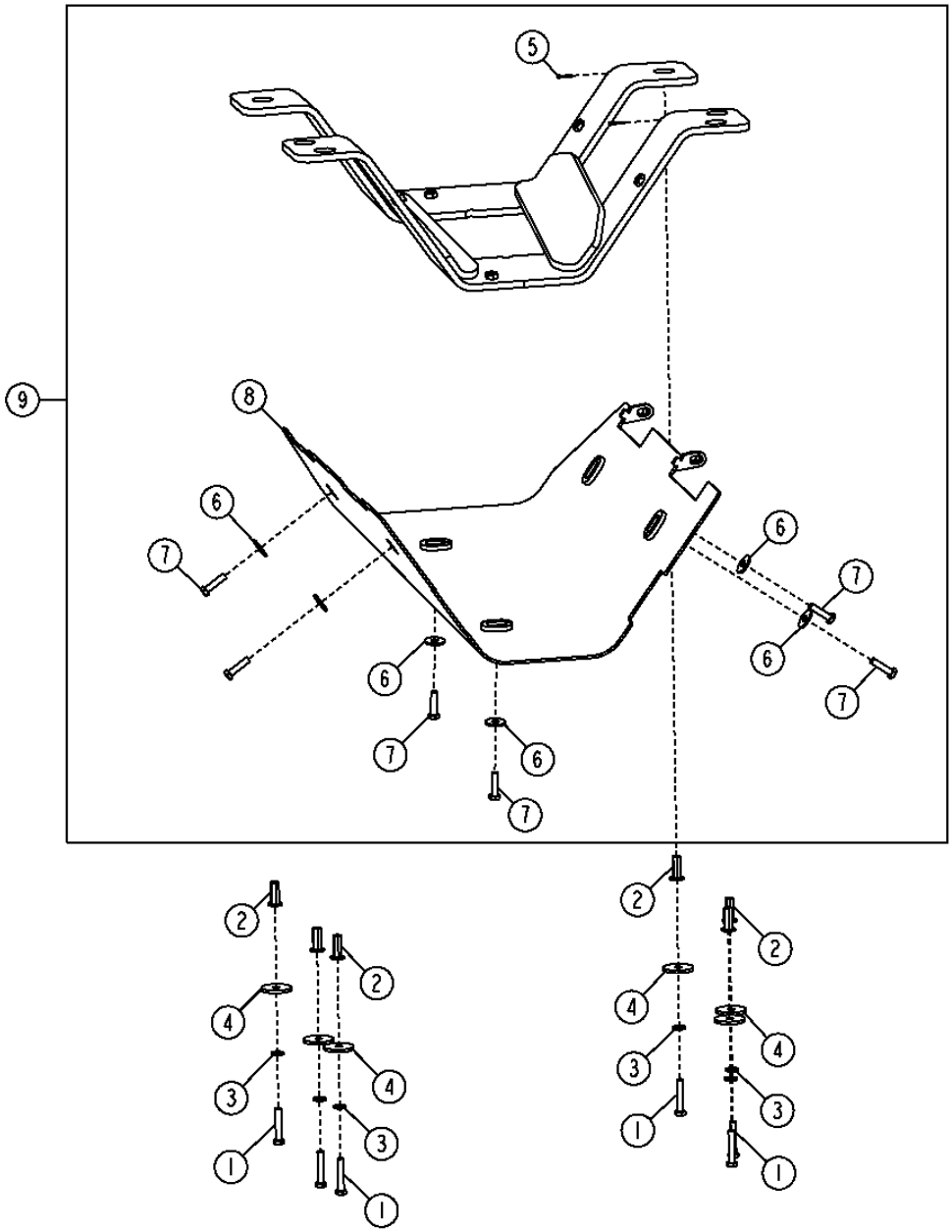

TX1016531

BELLY PAN NOISE REDUCTION PACKAGE
JEU DE PIECES DE JOINT TORIQUE
JUEGO DE ANILLO TORICO

KEY	PART NO.	PART NAME	QTY.	SERIAL NO.	410J	410TMC	REMARKS
1	19M7935	CAP SCREW	6		X	X	M10 X 55
2	T148411	NUT	6		X	X	
3	24M7239	WASHER	6		X	X	10.700 X 21 X 2.500 MM
4	R124347	WASHER	6		X	X	
5	11M7059	COTTER PIN	2		X	X	3.200 X 20 MM
6	24M7101	WASHER	6		X	X	11 X 34 X 3 MM
7	19M8637	CAP SCREW	6		X	X	M10 X 40
8	AT323841	SHIELD	1		X	X	
9	**AT336185**	**SHIELD**	**1**		**X**	**X**	**(WHOLE GOODS)**

MEMORANDA
MEMORANDA
MEMORANDA

NUMERICAL INDEX

PART NO.	KEY	PAGE
AB2599R	1	1314-3
AE37072	1	3315-7
AE37072	14	3315-9
AE44436	9	1675-11
AH104837	6	0520-5
AH125760	15	3362-71
AH125760	24	3363-1B
AH125760	21	3363-1F
AH140044	2	0520-9
AH146557	4	3165-3
AH146557	4	3165-7
AH146557	4	3365-7B
AH146557	10	3365-9
AH146557	14	3365-12
AH146558	7	3165-5
AH146558	6	3165-9
AH146559	13	3365-3
AH146559	17	3365-5
AH146559	14	3365-6
AH146559	14	3365-7
AH146561	5	3165-3
AH146561	5	3165-7
AH146561	5	3365-7B
AH146561	11	3365-9
AH146561	11	3365-12
AH146562	8	3165-5
AH146562	7	3165-9
AH146562	10	3165-9
AH146563	10	3365-3
AH146563	12	3365-5
AH146563	10	3365-6
AH146563	10	3365-7
AH146875	1	3165-3
AH147893	20	3365-9
AH147902	16	3365-12
AH148608	11	3365-15
AH149194	18	3365-15
AH149814	24	3165-5
AH149814	23	3165-9
AH149815	23	3365-3
AH149815	24	3365-5
AH149815	20	3365-6
AH149815	20	3365-7
AH149848	24	3365-3
AH150453	14	3365-15
AH158579	1	3365-6
AH158579	1	3365-7
AH158623	5	3365-15
AH162040	1	3165-7
AH162914	38	0560-3
AH164139	16	3365-6
AH164139	16	3365-7
AH165826	3	3165-3
AH170895	19	0510-5
AH176230	1	3104-5
AH176230	2	3104-5
AH176230	3	3104-5
AH176230	15	3104-5
AH176272	17	3104-5
AH176417	1	3365-3
AH176418	20	3365-3
AH205060	3	3165-7
AH205062	9	3365-12
AH206095	32	2160-19
AH209022	19	3102-13
AH209083	10	3365-5
AH209719	15	3346-5
AH209719	17	3365-15
AH209720	1	3365-15
AH209721	16	3365-15
AH210484	19	3165-3
AH210484	19	3165-7
AH210484	29	3365-7B
AH210484	24	3365-9
AH210484	18	3365-12
AH210737	3	3102-11
AH210737	18	3102-13
AH210737	20	3102-19
AH211204	15	3165-3
AH211206	18	3165-3
AH212090	19	3365-15
AH212092	20	3165-3
AH212096	25	3165-5
AH212096	30	3365-7B
AH212096	23	3365-9
AH212097	20	3165-7
AH212101	25	3365-5
AH212102	19	3365-12
AH212103	19	3365-6
AH212103	19	3365-7
AH212585	24	3165-9
AH216697	17	3165-9
AH216698	21	3165-9
AH216775	23	3165-5
AH216776	19	3165-5
AH217015	3	3365-3
AH217348	2	3104-3
AH217348	12	3104-5
AH217348	16	3104-5
AH218653	17	3365-7
AH219541	17	3365-12
AH219542	17	3365-12
AH219543	1	3365-12
AH219544	1	3365-12
AH219634	17	3165-7
AH219638	23	3365-5
AH219639	22	3365-3
AH219640	17	3365-6
AH220108	22	3365-9
AH220114	6	3365-9
AH220523	1	3365-5
AH220551	15	3165-7
AH221001	28	3365-7B
AH221036	27	3365-7B
AH221248	20	3165-5
AH61472	25	2160-7
AH61472	21	2160-9
AH77869	23	1674-9
AH77869	2	1830-9
AH77869	10	3363-47
AH89557	18	0510-5
AH89557	27	0560-3
AH89557	37	1674-9
AH89557	42	1830-7
AH89557	14	1830-13
AH96317	28	0560-3
AH96317	22	1830-13
AL110924	21	0250-7
AL153661	5	1814-11
AL155227	1	0960-5
AL32877	6	0201-3
AL76568	24	1674-7
AL76568	8	1674-29
AL79794	5	0210-5
AL79794	3	0250-13
AL79902	1	0250-7
AL79951	8	0250-7
AL81844	3	0201-7
AM102062	1	1814-3
AM102062	11	1816-15
AM102062	33	1816-17
AM107314	7	0560-3
AM3762T	24	3363-45
AN132749	2	0110-3
AN132749	2	0110-5
AN132749	2	0120-1
AP22688	23	3363-45
AR21836	8	2160-15
AR21837	14	0560-3
AR21837	1	1369-7
AR21837	12	1369-7
AR21839	9	3363-7
AR21841	40	3363-15B
AR21842	23	1830-5
AR21842	20	3163-3
AR21842	18	3163-5
AR21842	4	3363-3B
AR21842	11	3363-25
AR21999	7	0505-5
AR21999	35	1830-13
AR40418	7	0520-9
AR44361	13	0520-5
AR54815	41	3363-15B
AR62936	16	1830-5
AR65507	9	0400-10
AR67069	8	1671-7
AR68999	6	2160-19
AR77962	30	0560-3
AR77962	46	1830-7
AR77962	4	2160-15
AR83396	7	3302-3
AR83396	6	3302-5
AR83396	17	3346-5
AR85327	18	3163-5
AR85327	32	3163-9
AR85327	13	3363-15
AR85327	6	3363-37
AR85328	26	2160-7
AR85328	22	2160-9
AR85329	4	0520-5
AR85519	30	0400-13
AR91896	10	1814-3
AR91896	43	1910-3
AT101565	5	2160-15
AT101779	1	0960-9
AT101779	1	0960-11
AT103399	11	1674-29
AT103919	1	2002-3
AT106397	3	1821-9
AT106397	11	1821-9
AT118619	7	2160-19
AT120461	1	2004-5
AT120461	1	2004-7
AT124107	8	3115-5
AT124107	8	3115-7
AT125801	4	1821-9
AT125805	5	1821-9
AT125829	7	1821-9
AT130104	10	1673-7
AT132864	13	1671-3
AT132864	13	1671-5

NUMERICAL INDEX - CONTINUED

PART NO.	KEY	PAGE
AT13740	4	0400-17
AT139694	5	0960-5
AT141011	9	1674-9
AT145651	27	2160-7
AT145651	23	2160-9
AT150725	12	1811-3
AT150762	9	3315-9
AT150763	8	3315-9
AT152180	14	1369-7
AT156431	11	1674-11B
AT158197	29	3315-9
AT158198	40	3315-9
AT159811	15	1674-9
AT161638	6	2160-15
AT164803	8	1811-3
AT164804	7	1811-3
AT165288	23	1811-3
AT165288	4	1811-5
AT167399	22	1674-9
AT169087	8	3162-3
AT169087	10	3315-5
AT169087	2	3315-7
AT169087	24	3315-9
AT169087	19	3315-11
AT169087	8	3315-13
AT169087	1	3315-15
AT169087	7	3315-21
AT169087	1	3315-29
AT169087	7	3315-35
AT169373	25	3162-5
AT169512	2	3315-9
AT169804	7	1740-3
AT169831	9	3346-3
AT169831	54	3346-5
AT170061	3	3363-45
AT170854	3	0342-3
AT171077	8	3345-3
AT171077	9	3345-3
AT171079	10	3346-3
AT171079	18	3346-5
AT171162	10	0505-5
AT171352	11	3346-3
AT171403	2	3362-11
AT171403	2	3362-41
AT171539	5	0505-5
AT171550	9	3115-5
AT171550	9	3115-7
AT171758	5	3363-13
AT171759	8	3363-13
AT171854	14	0520-5
AT171855	16	0520-5
AT172156	42	3363-15B
AT172386	26	3102-11
AT172910	2	1821-15
AT172937	3	3362-13
AT172937	7	3362-43
AT173129	21	3163-7
AT173129	40	3163-9
AT173193	2	1814-13
AT173220	10	3363-31
AT173313	10	1821-17
AT173314	11	1821-17
AT173315	12	1821-17
AT173321	21	1821-17
AT173385	1	0505-5
AT173400	5	0540-3
AT173933	20	3346-5
AT174348	7	1814-13
AT174604	14	3363-15
AT174604	14	3363-15B
AT174605	16	3363-15
AT174605	16	3363-15B
AT174697	11	1830-9
AT174743	10	2160-15
AT174907	1	3363-7
AT174908	3	3363-7
AT175177	32	3363-21
AT175177	22	3363-23
AT175220	1	3362-9
AT175353	8	1821-9
AT175436	9	1821-9
AT176157	4	3363-13
AT176491	2	0210-3
AT177227	6	1830-5
AT177540	7	3363-25
AT178362	14	3162-9
AT178362	34	3362-15
AT178362	29	3362-45
AT178363	8	3362-11
AT178363	7	3362-41
AT178371	28	3362-11
AT178371	18	3362-15
AT178371	24	3362-19
AT178371	26	3362-41
AT178371	19	3362-45
AT178371	14	3362-65
AT178387	4	0250-15
AT178389	4	0250-15
AT178390	5	0325-3
AT178402	17	3362-17
AT178402	34	3362-17
AT178402	4	3362-47
AT178413	17	3363-15
AT178413	17	3363-15B
AT178468	40	3362-21
AT178526	28	1674-5
AT178526	2	1674-5F
AT178542	12	0520-5
AT178930	28	1830-13
AT178931	50	1830-13
AT179046	18	3363-15
AT179238	19	3363-15
AT179238	19	3363-15B
AT179312	3	0350-1
AT179316	2	0360-3
AT179323	4	0360-5
AT179466	2	0350-15
AT179481	1	0350-17
AT179498	7	0210-7
AT179504	20	0201-5
AT179590	8	0250-15
AT179596	1	0250-15
AT179688	3	1821-7
AT179691	2	1821-5
AT179691	7	1821-5
AT179692	8	1821-5
AT179693	18	1821-9
AT179693	23	1821-9
AT179926	9	1671-7
AT179995	3	1369-7
AT179996	5	1369-7
AT180076	33	3363-21
AT180076	26	3363-23
AT180079	36	3363-21
AT180079	25	3363-23
AT180081	33	3363-21
AT180081	26	3363-23
AT180082	34	3363-21
AT180082	27	3363-23
AT180083	35	3363-21
AT180083	24	3363-23
AT180086	36	3363-21
AT180086	25	3363-23
AT180208	11	3363-21
AT180212	18	3363-21
AT180408	34	3363-21
AT180408	27	3363-23
AT180409	35	3363-21
AT180409	24	3363-23
AT180705	29	1674-9
AT180859	17	3363-21
AT180860	28	3363-21
AT180861	43	3363-21
AT181108	13	3363-23
AT181110	11	3363-23
AT181111	17	3363-23
AT181146	31	3363-23
AT181185	10	3363-35
AT181186	11	3363-35
AT181510	1	3363-23
AT181530	3	1830-13
AT181582	6	0505-5
AT182197	6	3344-7
AT182377	5	3362-15
AT182377	4	3362-45
AT182954	13	1821-17
AT183222	13	0505-5
AT183246	4	1674-14
AT183426	7	0530-3
AT183881	31	0560-3
AT184042	1	0350-7
AT184042	1	0350-9
AT184522	37	1830-13
AT184524	40	1814-3
AT184547	29	3362-21
AT184590	24	1816-13
AT184598	3	3315-5
AT184599	2	3315-5
AT184651	48	1814-3
AT184652	19	1814-3
AT184682	9	3115-3
AT184716	1	0530-3
AT184719	19	1814-3
AT184848	1	0530-3
AT185340	8	3315-7
AT185396	17	1816-13
AT185624	25	3315-5
AT185625	23	3315-11
AT185628	41	3315-9
AT185629	23	3315-15
AT185749	30	3315-7
AT185750	30	3315-7
AT185773	13	3315-17
AT185847	12	3315-17
AT186155	12	2002-3
AT186281	11	0520-5
AT186289	31	1674-7
AT186289	27	1830-7
AT186304	47	1830-7
AT186307	2	2007-3
AT186321	11	1812-3

NUMERICAL INDEX - CONTINUED

PART NO.	KEY	PAGE
AT186321	4	1812-5
AT186653	15	2160-3
AT186653	15	2160-21
AT187096	1	1811-5
AT187666	6	1060-3
AT187666	1	3363-1B
AT187666	1	3363-1F
AT187669	22	3363-1B
AT187669	23	3363-1B
AT187669	19	3363-1F
AT187707	12	1314-3
AT187708	6	1314-3
AT187710	1	1814-13
AT187816	1	1673-3
AT188010	24	0960-9
AT188010	24	0960-11
AT188306	11	1830-3
AT188307	1	1830-3
AT188343	3	1060-5
AT188368	1	1830-13
AT188560	22	3163-7
AT188560	18	3163-9
AT188759	9	2001-3
AT188766	12	1814-13
AT188965	18	1811-3
AT189030	2	1821-3
AT189059	3	1821-3
AT189269	3	1816-3
AT189269	20	3315-5
AT189270	3	1816-3
AT189270	20	3315-11
AT189271	3	1816-3
AT189271	20	3315-15
AT189272	1	1816-5
AT189272	51	3315-7
AT189390	3	2003-3
AT189413	39	3362-15
AT189413	34	3362-41
AT189487	2	2003-3
AT189492	9	0520-9
AT189819	11	3102-11
AT189822	9	3102-11
AT189822	21	3102-19
AT190073	14	3315-15
AT190658	8	1830-13
AT190701	15	3102-11
AT190701	22	3102-19
AT190900	6	3102-11
AT190900	23	3102-19
AT190910	23	3163-3
AT191102	16	1816-13
AT191266	3	0520-9
AT191446	1	3315-11
AT191575	6	2001-3
AT191619	11	1821-9
AT191620	9	1821-5
AT191629	11	1816-9
AT191688	23	1816-9
AT191826	28	1816-9
AT191876	24	1816-9
AT191876	29	1816-9
AT191877	27	1816-9
AT191919	20	1816-9
AT191990	28	1830-7
AT191993	9	1830-7
AT191994	12	1830-7
AT192011	15	3302-9
AT192012	15	3302-9
AT192013	15	3302-9
AT192014	15	3302-9
AT192015	15	3302-9
AT192016	15	3302-9
AT192017	15	3302-9
AT192018	15	3302-9
AT192019	15	3302-9
AT192020	15	3302-9
AT192021	15	3302-9
AT192022	15	3302-9
AT192032	27	1811-3
AT192074	5	1830-3
AT192077	12	2160-3
AT192079	12	2160-3
AT192111	8	3302-3
AT192111	7	3302-5
AT192151	22	1060-5
AT192154	28	3363-35
AT192155	27	3363-35
AT192217	16	2001-3
AT192372	14	3162-5
AT192373	8	2160-13
AT192414	9	1811-5
AT192417	5	1060-11
AT192419	31	1060-5
AT192457	3	3162-7
AT192457	2	3362-13
AT192457	2	3362-43
AT192509	35	1830-7
AT192626	8	3362-27
AT192637	12	3363-35
AT192689	4	1821-17
AT192689	14	1821-17
AT193365	29	0960-9
AT193365	29	0960-11
AT193365	6	1060-3
AT193365	15	3363-1F
AT193366	29	0960-9
AT193366	29	0960-11
AT193500	24	1830-7
AT193704	6	0350-15
AT193881	90	2160-25
AT193927	8	2160-19
AT194368	25	3363-45
AT194378	7	3363-45
AT194379	9	3363-45
AT194392	17	3363-45
AT194393	9	3363-45
AT194394	11	3363-45
AT194395	11	3363-45
AT194396	17	3363-45
AT194397	17	3363-45
AT194398	11	3363-45
AT194412	6	1060-9
AT194416	8	1060-9
AT194417	5	1060-9
AT194686	19	3315-9
AT194822	1	1673-3
AT195140	14	3163-13
AT195141	15	3163-13
AT195201	20	0960-9
AT195201	20	0960-11
AT195202	26	0960-9
AT195202	26	0960-11
AT195203	27	0960-9
AT195203	27	0960-11
AT195244	1	1313-3
AT195244	1	1313-5
AT195276	9	2160-13
AT195301	15	1674-7
AT195302	13	1674-7
AT195461	7	1673-3
AT195620	4	3315-17
AT195623	5	3315-17
AT195663	32	2160-7
AT195669	3	3348-3
AT195812	18	3363-19
AT195814	10	2002-3
AT195815	10	2002-3
AT195859	11	2160-3
AT195859	11	2160-21
AT195877	31	3315-9
AT195894	4	1811-3
AT195911	1	1671-5
AT195922	5	3163-13
AT195922	5	3362-33
AT195957	1	3362-30
AT195957	1	3362-73
AT195995	9	1671-3
AT196245	13	3162-7
AT196246	12	3162-7
AT196294	11	1812-3
AT196351	15	2160-25
AT196358	32	1910-3
AT196358	1	9006-3
AT196387	5	3315-17
AT196419	34	3315-9
AT196422	33	2160-7
AT196427	1	2002-5
AT196482	14	2160-11
AT196489	34	2160-7
AT196489	31	2160-9
AT196513	16	3363-3B
AT196522	22	1814-3
AT196525	15	3363-3B
AT196591	10	3115-5
AT196591	10	3115-7
AT196596	11	3115-7
AT196606	10	3315-23
AT196630	12	3162-3
AT196632	12	3162-3
AT196760	15	2160-25
AT196793	16	1821-5
AT196793	14	1821-7
AT196793	6	1821-17
AT196839	26	3315-9
AT196924	27	3162-13
AT196943	13	3163-13
AT196943	3	3362-30
AT197065	14	3363-3B
AT197068	13	3363-3B
AT197136	8	3315-3
AT197208	14	3363-1B
AT197208	17	3363-1F
AT197209	12	3363-1B
AT197209	18	3363-1F
AT197213	27	3363-1B
AT197213	30	3363-1F
AT197246	26	3363-35
AT197479	12	1812-3
AT197645	24	3163-3
AT197646	25	3163-3
AT197647	26	3163-3

NUMERICAL INDEX - CONTINUED

PART NO.	KEY	PAGE
AT197654	27	3163-3
AT197726	7	3344-3
AT197922	9	1671-7
AT198096	10	1671-7
AT198254	28	3163-3
AT198254	19	3163-9
AT198257	29	3163-3
AT198257	20	3163-9
AT198258	30	3163-3
AT198258	21	3163-9
AT198260	31	3163-3
AT198260	22	3163-9
AT198349	6	3363-1D
AT198350	1	3363-1D
AT198351	4	3363-1D
AT198352	8	3363-1D
AT198353	12	3363-1D
AT198354	9	3363-1D
AT198355	2	3363-1D
AT198356	7	3363-1D
AT198357	11	3363-1D
AT198358	10	3363-1D
AT198359	13	3363-1D
AT198360	5	3363-1D
AT198366	16	3363-17
AT198366	20	3363-19
AT198366	21	3363-19
AT198416	13	3363-1F
AT198417	32	3363-1F
AT198518	5	2160-17
AT198602	3	0230-7
AT198694	15	1821-17
AT198768	2	3362-35
AT198770	5	3362-35
AT198770	5	3362-37
AT198771	18	3362-35
AT198771	17	3362-37
AT198773	3	3362-35
AT198773	3	3362-37
AT198774	2	3362-37
AT198776	29	1816-17
AT198777	28	1816-15
AT198778	27	1816-15
AT198865	32	1816-17
AT199065	5	3362-33
AT199335	19	3115-3
AT199388	1	2001-3
AT199495	6	3363-1B
AT199495	5	3363-1F
AT199496	4	3363-1B
AT199496	3	3363-1D
AT199496	3	3363-1F
AT199541	7	2160-15
AT199591	1	1816-15
AT199592	32	1816-15
AT199595	31	1816-17
AT199639	17	2160-25
AT199640	18	2160-25
AT199641	19	2160-25
AT199644	20	2160-25
AT199645	21	2160-25
AT199649	15	3363-1B
AT199649	11	3363-1F
AT199656	19	3162-3
AT199656	1	3162-11
AT199657	4	3162-11
AT199670	16	3362-71
AT199671	28	3162-13
AT199672	15	3162-13
AT199734	1	1811-5
AT208483	16	1821-17
AT208484	17	1821-17
AT208485	18	1821-17
AT208486	19	1821-17
AT208491	20	1821-17
AT208493	22	1821-17
AT209020	5	1821-7
AT209024	10	1821-5
AT209025	4	1821-3
AT209026	13	1821-5
AT209225	12	1821-3
AT210515	7	1830-7
AT219940	11	0960-5
AT220930	1	0520-9
AT221015	7	1821-3
AT221016	8	1821-3
AT222150	12	1816-13
AT224570	10	3163-13
AT224570	4	3362-30
AT224570	13	3362-30
AT224862	5	2160-17
AT224862	9	3163-13
AT224949	9	0230-5
AT224949	11	0250-3
AT225112	15	1390-3
AT225952	1	1674-5D
AT225952	16	3163-11
AT226281	4	2004-2
AT227063	31	1816-15
AT227063	10	1816-17
AT227669	9	1816-13
AT227669	2	1830-5
AT25226	2	0110-3
AT258590	5	0350-13
AT258980	16	0350-3
AT258980	16	0350-5
AT258980	5	0350-7
AT258980	5	0350-9
AT258980	17	0350-11
AT280200	23	3363-1F
AT280268	2	0230-7
AT280272	16	3363-1B
AT280272	12	3363-1F
AT280340	20	3363-15
AT280340	20	3363-15B
AT280341	22	3363-7
AT280341	43	3363-15B
AT280363	3	3315-23
AT280406	28	3162-5
AT280406	23	3162-7
AT280406	18	3162-9
AT280406	16	3162-11
AT280406	39	3362-11
AT280406	36	3362-13
AT280406	40	3362-15
AT280406	35	3362-17
AT280406	25	3362-19
AT280406	22	3362-23
AT280406	35	3362-41
AT280406	37	3362-43
AT280406	21	3362-47
AT280440	23	2160-25
AT280441	23	2160-25
AT280459	22	1060-3
AT280514	44	3363-15B
AT280583	14	1821-5
AT300048	3	3315-27
AT300055	18	3315-35
AT300056	17	3315-13
AT300057	1	3315-35
AT300058	3	3315-13
AT300060	21	3315-13
AT300060	17	3315-35
AT300152	17	3315-5
AT300153	10	2160-19
AT300255	16	3362-30
AT300750	22	1816-15
AT300770	12	3315-23
AT300771	14	3315-23
AT300801	29	3162-5
AT300801	24	3162-7
AT300801	40	3362-11
AT300801	41	3362-15
AT300801	36	3362-41
AT300801	36	3362-43
AT300801	36	3362-45
AT300803	1	3162-5
AT300885	11	1816-17
AT300928	12	1812-3
AT300928	22	2160-25
AT300958	15	0560-3
AT301128	2	3162-5
AT301129	4	3362-15
AT301129	3	3362-45
AT301134	3	3362-15
AT301134	2	3362-45
AT301433	1	3362-41
AT301434	11	3315-29
AT301439	1	3362-45
AT301447	4	3362-11
AT301447	3	3362-41
AT301457	1	3362-19
AT301457	1	3362-26
AT301473	1	3362-23
AT301473	2	3362-27
AT301485	21	3315-35
AT301486	22	3315-13
AT301487	5	3362-11
AT301487	4	3362-41
AT301526	1	3162-7
AT301527	2	3162-7
AT301572	1	3362-11
AT301575	1	3362-15
AT301766	6	3163-13
AT301917	35	2160-7
AT301917	28	2160-9
AT301917	11	2160-19
AT302108	34	3362-45
AT302176	12	2160-3
AT302176	8	3362-27
AT302810	7	3362-26
AT302812	21	1814-9
AT302813	13	1814-9
AT302815	12	1814-9
AT302816	11	1814-9
AT302817	9	1814-9
AT303214	25	1830-7
AT303272	15	3343-3
AT303349	17	0250-5
AT303517	27	3362-55
AT303680	15	2160-11

NUMERICAL INDEX - CONTINUED

PART NO.	KEY	PAGE
AT303680	22	2160-23
AT303695	2	0341-7
AT303769	16	2160-11
AT303853	23	1816-15
AT303853	13	1816-17
AT303890	1	3362-35
AT303891	1	3362-37
AT304026	15	1816-9
AT304324	3	1816-11
AT304631	1	1814-15
AT304761	7	1060-3
AT304761	10	1060-5
AT304761	30	1060-5
AT304776	15	1821-5
AT304776	13	1821-7
AT304776	5	1821-17
AT304887	18	1811-3
AT305073	6	1746-2
AT305685	3	1814-15
AT306181	35	1814-3
AT306219	6	2160-17
AT306550	4	3362-30
AT306550	29	3363-1B
AT306550	20	3363-1F
AT306684	3	0230-5
AT307106	3	3104-3
AT307187	8	3362-35
AT307187	8	3362-37
AT307315	8	3163-13
AT307603	1	3362-43
AT307604	1	3362-13
AT307741	2	0230-5
AT307741	7	0230-6
AT307741	18	0230-7
AT307769	1	1821-15
AT307770	10	1814-9
AT307779	1	1675-5
AT308067	4	3103-3
AT308076	1	3102-3
AT308080	8	3102-5
AT308082	8	3102-5
AT308099	1	3102-9
AT308099	1	3102-11
AT308109	5	1674-7
AT308138	3	3103-3
AT308139	3	3103-3
AT308195	1	3102-9
AT308195	2	3102-9
AT308195	19	3102-9
AT308195	1	3102-11
AT308199	2	1821-15
AT308237	4	1675-11
AT308274	1	2160-13
AT308274	17	3363-31
AT308380	3	1674-5F
AT308506	17	3163-11
AT308511	12	3362-7
AT308512	12	3362-7
AT308513	12	3362-7
AT308520	12	3362-7
AT308521	12	3362-7
AT308522	12	3362-7
AT308795	7	1821-3
AT308796	8	1821-3
AT308910	2	3103-3
AT308925	1	3103-3
AT308926	1	3103-3
AT308965	8	3102-17
AT308966	8	3102-17
AT308968	1	3102-15
AT308974	7	3102-19
AT308974	24	3102-19
AT308974	53	3102-19
AT309106	1	0120-1
AT309106	3	0120-1
AT309137	16	3315-23
AT309184	39	3315-7
AT309184	40	3315-7
AT309185	38	3315-7
AT309186	15	3315-7
AT309190	4	3315-21
AT309413	41	3315-7
AT309435	16	1674-7
AT309435	2	1674-29
AT309435	3	1674-29
AT309435	16	1816-9
AT309739	54	3315-7
AT309740	14	3315-21
AT309742	18	3163-11
AT309743	19	3163-11
AT309746	4	3104-3
AT309747	5	3104-3
AT309882	15	0960-9
AT309934	48	3102-19
AT309934	20	3163-11
AT309936	48	3102-19
AT309946	1	1674-29
AT309986	48	3102-19
AT309986	21	3163-11
AT310118	4	1913-5
AT310119	3	1913-5
AT310121	5	1913-5
AT310291	3	0120-1
AT310292	1	3363-17
AT310321	14	3363-19
AT310335	21	0510-5
AT310450	16	3362-59
AT310457	22	3163-11
AT310583	4	0350-1
AT310584	17	0350-15
AT310584	1	0360-7
AT310585	1	0341-7
AT310586	5	0360-7
AT310587	4	0360-7
AT310590	3	0360-3
AT310817	12	3163-13
AT310818	23	2160-25
AT310889	6	2160-17
AT311085	8	0250-3
AT311103	3	0341-7
AT311143	41	3102-19
AT311323	13	3363-39
AT311324	7	3363-39
AT311334	42	1910-3
AT311382	16	3362-59
AT311598	3	1674-5D
AT311598	23	3163-11
AT311651	24	3163-11
AT311765	7	3363-37
AT311766	8	3363-37
AT311773	19	3163-5
AT311774	20	3163-5
AT311775	23	3163-9
AT311776	24	3163-9
AT311777	25	3163-9
AT311778	26	3163-9
AT311929	7	1816-5
AT311929	1	3315-21
AT311997	18	1821-13
AT312121	6	1816-5
AT312121	49	3315-7
AT312123	12	0510-9
AT312126	34	9006-3
AT312145	5	1675-9
AT312265	30	2160-9
AT312318	1	1740-3
AT312319	1	1740-3
AT312360	21	3163-5
AT312361	22	3163-5
AT312425	22	0510-5
AT312426	23	0510-5
AT312463	23	2160-23
AT312464	32	2160-9
AT312470	49	3102-19
AT312517	13	3363-51
AT312543	26	1674-9
AT312547	1	3163-13
AT312554	1	1674-5
AT312554	30	1674-5F
AT312612	26	3362-51
AT312613	21	3362-53
AT312681	25	3163-11
AT312728	10	1821-3
AT312730	11	1821-3
AT312846	1	1821-3
AT312846	1	1821-5
AT312846	1	1821-7
AT312846	1	1821-17
AT312846	1	1821-19
AT312865	9	1674-27
AT312867	3	1674-27
AT312918	4	3362-29
AT312918	13	3362-29
AT312919	3	3362-29
AT312919	13	3362-29
AT312944	9	3362-29
AT312949	13	3362-29
AT313210	2	1674-9
AT313351	1	3343-3
AT313370	26	0960-5
AT313550	13	1674-25
AT313583	9	1673-3
AT313589	8	1673-3
AT313592	9	1673-3
AT313612	22	1821-13
AT313628	8	3315-31
AT313628	8	3315-33
AT314024	6	0960-5
AT314030	8	0960-5
AT314088	1	1674-5
AT314088	30	1674-5F
AT314127	8	3362-29
AT314144	1	0315-3
AT314203	55	1830-13
AT314307	17	1821-13
AT314538	30	3162-5
AT314538	25	3162-7
AT314538	19	3162-9
AT314538	22	3362-9
AT314538	37	3362-21
AT314539	30	3162-5

NUMERICAL INDEX - CONTINUED

PART NO.	KEY	PAGE
AT314539	25	3162-7
AT314539	19	3162-9
AT314539	41	3362-11
AT314539	35	3362-13
AT314539	39	3362-15
AT314539	36	3362-17
AT314539	21	3362-23
AT314539	34	3362-41
AT314539	35	3362-43
AT314539	35	3362-45
AT314539	22	3362-47
AT314592	1	0325-3
AT314668	8	3362-39
AT314834	21	1821-13
AT314898	8	0110-3
AT314904	1	0201-9
AT314911	1	0110-3
AT314916	1	0341-7
AT314922	9	0250-15
AT314992	4	0250-3
AT315115	13	3363-49
AT315227	4	1814-15
AT315228	1	1814-11
AT315338	4	3302-13
AT315450	30	2160-25
AT316070	6	3315-31
AT316070	6	3315-33
AT316249	15	0960-9
AT316249	15	0960-11
AT316396	1	1674-5
AT316396	30	1674-5F
AT316670	1	0210-8
AT316689	1	1060-7
AT316690	2	1060-7
AT316706	5	3302-11
AT317091	20	3315-7
AT317348	19	3363-1B
AT317348	25	3363-1F
AT317386	1	3362-47
AT317387	1	3362-17
AT317435	21	1674-5F
AT317445	17	1816-9
AT317446	13	1814-13
AT317449	21	1674-7
AT317449	6	1674-29
AT317451	1	1675-3
AT317451	31	2160-25
AT317463	5	1673-3
AT317464	4	1674-29
AT317500	15	1674-5F
AT317500	2	3315-31
AT317500	2	3315-33
AT317504	1	1674-11B
AT317592	2	1674-7
AT317594	9	1674-29
AT317596	5	1674-29
AT317596	8	1821-17
AT317597	1	1674-5B
AT317764	11	3115-5
AT317764	13	3115-7
AT317854	1	0110-5
AT317855	1	0110-3
AT317881	6	1672-5
AT318073	1	1921-3
AT318085	15	2160-19
AT318095	24	0510-5
AT318113	9	1060-9
AT318271	15	0960-11
AT318274	9	2160-15
AT318374	6	1672-5
AT318525	27	1821-13
AT318792	4	3143-5
AT318939	15	3363-51
AT318947	13	1674-5F
AT318992	12	2160-21
AT319030	13	2160-21
AT319092	31	3162-13
AT320219	14	3363-49
AT320220	25	0510-5
AT320235	2	0560-3
AT320238	26	0510-5
AT320239	27	0510-5
AT320501	1	3104-3
AT320544	9	1811-5
AT320544	19	2001-3
AT320644	16	3362-59
AT320685	15	3363-49
AT320703	6	3143-9
AT320705	9	3143-9
AT320775	19	1674-25
AT320797	24	2160-23
AT321000	16	3363-49
AT321003	17	3363-49
AT321004	7	1811-5
AT321005	7	1811-5
AT321058	16	3363-51
AT321060	17	3363-51
AT321123	8	3362-57
AT321123	16	3363-3
AT321150	23	3163-5
AT321151	24	3163-5
AT321152	32	3163-7
AT321152	27	3163-9
AT321153	18	3163-9
AT321154	34	3163-7
AT321154	29	3163-9
AT321155	35	3163-7
AT321155	30	3163-9
AT321156	36	3163-7
AT321156	31	3163-9
AT321157	19	3163-9
AT321158	20	3163-9
AT321159	21	3163-9
AT321160	22	3163-9
AT321162	21	3163-5
AT321163	22	3163-5
AT321164	5	3165-11
AT321164	31	3165-11
AT321189	27	3163-11
AT321190	29	3163-11
AT321211	17	1390-3
AT321214	16	1674-5F
AT321247	8	1674-25
AT321248	17	1674-25
AT321323	90	2160-25
AT321337	18	3363-49
AT321365	13	1673-7
AT321366	12	3115-5
AT321366	14	3115-7
AT321472	5	0201-7
AT321526	4	1671-5
AT321527	12	1674-29
AT321552	2	1675-3
AT321552	32	2160-25
AT321701	3	0210-3
AT321702	3	0210-3
AT321703	3	0210-3
AT321704	3	0210-3
AT321705	3	0210-3
AT321706	3	0210-3
AT321949	7	0250-13
AT322130	3	1674-11B
AT322216	20	1674-25
AT322221	4	1674-5F
AT322232	1	0560-3
AT322250	1	1671-3
AT322256	3	1313-5
AT322268	11	1060-9
AT322268	2	1060-11
AT322270	10	1060-9
AT322327	12	0510-9
AT322359	19	1390-3
AT322365	1	3115-3
AT322366	15	1369-7
AT322637	5	3143-7
AT322637	8	3143-7
AT322742	9	1921-3
AT322743	10	1921-3
AT322861	36	2160-7
AT322875	17	2160-11
AT322879	12	1921-3
AT322883	8	3344-3
AT322915	11	1821-7
AT322915	26	1821-17
AT322954	1	1821-3
AT322954	1	1821-5
AT322954	1	1821-7
AT322954	1	1821-17
AT322954	1	1821-19
AT322955	1	1821-3
AT322955	1	1821-5
AT322955	1	1821-7
AT322955	1	1821-9
AT322955	1	1821-19
AT322956	1	1821-3
AT322956	1	1821-5
AT322956	1	1821-7
AT322956	1	1821-9
AT322956	1	1821-19
AT322990	22	3346-5
AT323012	4	1814-11
AT323013	2	1814-15
AT323152	30	0510-5
AT323159	5	1674-5B
AT323177	3	0530-3
AT323235	37	2160-7
AT323235	34	2160-9
AT323237	1	1910-3
AT323238	2	1910-3
AT323254	6	1674-5B
AT323256	10	1675-9
AT323257	5	1812-5
AT323275	16	3363-31
AT323301	9	1673-7
AT323340	2	3362-21
AT323341	1	3362-21
AT323342	28	3362-21
AT323354	8	3363-31
AT323580	1	3344-5
AT323580	5	3344-5
AT323589	18	3363-31

NUMERICAL INDEX - CONTINUED

PART NO.	KEY	PAGE
AT323593	4	0560-3
AT323594	29	2160-9
AT323642	29	3363-3
AT323646	42	1830-13
AT323647	47	1830-13
AT323649	1	0520-5
AT323670	41	1910-3
AT323702	27	1830-13
AT323752	11	1674-25
AT323754	5	3363-31
AT323820	1	1816-17
AT323836	2	1821-17
AT323841	8	9006-5
AT323844	34	2160-25
AT323930	19	3315-33
AT324031	2	0960-9
AT324031	2	0960-11
AT324059	18	2160-19
AT324116	40	1910-3
AT324156	16	3362-59
AT324177	4	3143-3
AT324237	11	3345-3
AT324239	1	1060-11
AT324240	3	1060-11
AT324273	31	0510-5
AT324277	11	3143-7
AT324292	5	3302-13
AT324447	6	3302-11
AT324448	7	3302-11
AT324451	35	1674-5F
AT324477	19	3315-31
AT324481	21	1390-3
AT324482	23	1390-3
AT324483	24	1390-3
AT324584	18	2160-11
AT324584	25	2160-23
AT324620	12	3345-3
AT324621	14	3345-3
AT324622	16	3345-3
AT324645	3	1910-3
AT324745	38	2160-7
AT324745	33	2160-9
AT324916	6	1816-11
AT324938	11	1673-7
AT324997	8	0960-9
AT324997	8	0960-11
AT324999	8	0960-11
AT325000	7	0960-11
AT325075	20	3363-7
AT325075	46	3363-15B
AT325076	21	3363-7
AT325076	47	3363-15B
AT325077	21	3363-15
AT325077	21	3363-15B
AT325078	22	3363-15
AT325078	22	3363-15B
AT325079	14	3363-17
AT325080	15	3363-17
AT325080	19	3363-19
AT325082	25	3363-17
AT325084	1	3363-19
AT325129	3	3302-13
AT325190	38	1674-9
AT325562	31	3363-3
AT325662	5	1821-13
AT325664	6	1821-13
AT325665	7	1821-13
AT325667	8	1821-13
AT325668	9	1821-13
AT325677	10	1821-13
AT325678	13	1740-3
AT325762	7	2160-5
AT325763	13	2160-3
AT325766	26	3363-3
AT325767	27	3363-3
AT325768	28	3363-3
AT325998	7	0960-9
AT326166	13	1673-7
AT326208	6	2004-7
AT326408	39	2160-7
AT326408	35	2160-9
AT326430	19	3363-49
AT326535	8	0230-7
AT326536	9	0230-7
AT326537	11	0250-5
AT326538	5	0250-5
AT326539	2	0250-5
AT326540	10	0250-5
AT326541	3	0350-17
AT326542	11	0960-3
AT326543	5	0960-3
AT326622	12	1673-7
AT326922	15	3115-3
AT326923	1	0250-13
AT326978	13	1814-3
AT326979	13	1814-3
AT326992	20	3315-31
AT326992	20	3315-33
AT327078	21	3315-33
AT327155	48	3363-15B
AT327293	7	3363-31
AT327368	29	1674-5
AT327368	22	1674-5F
AT328617	26	1390-3
AT328988	27	3104-3
AT328991	2	3362-9
AT328992	20	3162-13
AT329076	90	3163-11
AT329135	8	1674-5D
AT329135	35	2160-25
AT329136	2	1674-5D
AT329136	30	3163-11
AT329137	10	1675-11
AT329140	22	3363-47
AT329141	11	3363-47
AT329621	12	3363-47
AT329935	20	3363-49
AT329989	8	1674-7
AT330280	26	2160-23
AT330459	19	2160-19
AT330513	27	2160-23
AT330514	28	2160-23
AT330663	5	2160-17
AT330669	33	1821-13
AT330670	34	1821-13
AT330671	35	1821-13
AT330767	23	3163-5
AT330768	24	3163-5
AT330808	25	1821-13
AT330851	11	3115-7
AT330851	12	3162-3
AT330860	1	3162-13
AT330944	23	3346-5
AT331597	35	1390-3
AT332084	2	1913-3
AT332135	43	3363-21
AT332153	4	1913-3
AT332157	43	3363-21
AT332272	13	3363-47
AT332363	1	3302-3
AT332427	14	3363-47
AT332428	15	3363-47
AT332497	3	3362-30
AT332497	4	3362-30
AT332550	3	3315-31
AT332550	3	3315-33
AT332551	16	3315-31
AT332597	6	1913-3
AT333367	16	3315-33
AT333453	3	1913-3
AT333576	13	1674-27
AT333807	7	3163-13
AT333807	5	3362-33
AT333812	4	3163-13
AT333814	5	2160-17
AT334333	32	0510-5
AT334340	21	2160-19
AT334349	1	2003-3
AT334381	2	1821-9
AT334383	9	1821-17
AT334384	24	1821-17
AT334385	24	1821-17
AT334602	1	3343-3
AT334722	6	1672-5
AT334876	6	2160-17
AT334877	6	2160-17
AT335055	2	1821-7
AT335109	12	1821-9
AT335110	6	1821-7
AT335158	10	1821-7
AT335158	25	1821-17
AT335177	40	1830-7
AT335408	15	1821-13
AT335409	16	1821-13
AT335445	10	3363-25
AT335446	8	3363-25
AT335595	3	2001-3
AT335596	3	2001-3
AT335762	7	3363-41
AT335772	1	3363-15
AT335904	4	1747-5
AT335984	1	3344-7
AT335986	4	3344-7
AT336044	29	3363-51
AT336108	57	3346-5
AT336109	57	3346-5
AT336147	11	3302-3
AT336165	18	3363-51
AT336185	9	9006-5
AT336276	1	3348-3
AT336315	11	3302-3
AT336316	10	3302-5
AT336319	1	3302-3
AT336320	1	3302-5
AT336391	36	3363-23
AT336392	45	3363-21
AT336397	14	1060-3
AT336436	11	1060-3
AT336644	18	3362-51
AT336644	13	3362-53
AT336644	18	3362-55

NUMERICAL INDEX - CONTINUED

PART NO.	KEY	PAGE
AT336644	1	3362-57
AT336644	11	3362-59
AT336646	12	3362-59
AT336646	14	3362-61
AT336646	16	3362-63
AT336646	20	3362-65
AT336646	15	3362-67
AT336646	16	3362-69
AT336646	9	3362-71
AT336647	22	3362-65
AT336649	20	3362-69
AT336650	19	3362-63
AT336650	18	3362-67
AT336652	19	3362-69
AT336675	21	3362-65
AT336678	14	3362-71
AT336679	1	3362-63
AT336679	1	3362-65
AT336679	1	3362-67
AT336679	1	3362-69
AT336763	17	3362-69
AT336763	17	3362-71
AT336764	17	3362-63
AT336764	16	3362-67
AT336767	15	3362-61
AT336772	1	3362-61
AT336773	4	3362-61
AT336774	5	3362-61
AT336774	8	3362-71
AT336775	7	3362-61
AT336776	8	3362-61
AT336777	5	3362-71
AT336778	13	3362-71
AT336779	27	3315-31
AT336779	29	3315-33
AT337030	37	0510-5
AT337253	3	1313-3
AT337460	22	3363-21
AT337461	5	3363-21
AT337721	20	3363-23
AT337762	25	3346-5
AT337822	9	3363-37
AT337941	2	3162-13
AT337941	3	3362-61
AT338069	22	3363-49
AT338131	1	3362-51
AT338131	1	3362-53
AT338131	1	3362-55
AT338131	7	3362-57
AT338132	4	3362-51
AT338132	4	3362-53
AT338132	4	3362-55
AT338133	27	3362-51
AT338133	23	3362-53
AT338133	25	3362-55
AT338133	4	3362-57
AT338199	12	3362-51
AT338200	12	3362-55
AT338201	5	3362-53
AT338202	5	3362-55
AT338203	5	3362-51
AT338204	12	3362-53
AT338205	28	3362-51
AT338205	24	3362-53
AT338205	26	3362-55
AT338206	23	3362-51
AT338206	18	3362-53
AT338206	23	3362-55
AT338209	13	3362-51
AT338209	13	3362-55
AT338976	10	0210-7
AT338996	1	0110-5
AT339059	15	1011-3
AT339270	31	3163-11
AT339526	1	1675-11
AT339543	20	1011-3
AT339615	17	0201-7
AT339616	2	3362-51
AT339616	2	3362-53
AT339616	2	3362-55
AT339616	5	3362-57
AT339617	3	3362-51
AT339617	3	3362-53
AT339617	3	3362-55
AT339617	6	3362-57
AT339627	14	0201-7
AT339629	7	0250-7
AT339648	6	0250-13
AT339686	3	0250-11
AT339687	37	3363-3
AT339804	9	3315-31
AT339804	9	3315-33
AT339806	20	0250-7
AT339807	4	0250-5
AT339807	9	0250-5
AT339808	2	0250-7
AT339809	4	0250-7
AT339810	7	0250-9
AT339811	5	0250-9
AT339899	23	0350-3
AT339900	16	0341-5
AT339901	9	0341-3
AT339903	4	0341-3
AT339904	3	0350-9
AT339905	20	0350-11
AT339906	3	0350-13
AT339908	3	0350-7
AT339910	19	0350-3
AT339912	19	0350-5
AT339913	4	0350-15
AT339914	21	0350-3
AT339914	22	0350-11
AT339914	3	0350-15
AT339915	1	0350-3
AT339916	21	0350-13
AT339917	1	0350-5
AT339918	16	0350-13
AT339919	18	0350-13
AT339920	6	0350-3
AT339920	6	0350-5
AT339920	18	0350-7
AT339920	18	0350-9
AT339920	6	0350-11
AT339921	16	0341-3
AT339922	12	0350-3
AT339922	10	0350-5
AT339922	8	0350-7
AT339922	8	0350-9
AT339922	8	0350-13
AT339923	11	0341-5
AT339925	2	3140-7
AT339926	3	3140-7
AT339941	3	0560-3
AT340155	2	1814-3
AT340156	10	1816-15
AT340156	19	1816-17
AT340550	9	1674-7
AT340698	10	0515-3
AT340856	6	1814-15
AT340902	1	1821-13
AT340903	12	1821-13
AT340904	14	1821-13
AT340964	2	1821-13
AT340965	13	1821-13
AT340966	11	1821-13
AT34210	2	1314-3
AT34211	1	1314-3
AT41188	5	1671-7
AT43223	39	0510-5
AT48016	32	3315-7
AT49216	4	3362-30
AT49216	14	3362-30
AT65241	16	0560-3
AT73296	1	0400-57
AT73296	1	0505-3
AT74940	6	0400-57
AT74940	6	0505-3
AT75311	53	1814-3
AT75769	2	1674-5B
AT75769	4	1674-11B
AT78527	6	3362-13
AT78527	6	3362-43
AT82210	12	1674-11B
AT83174	6	3162-9
AT83174	7	3362-13
AT83174	22	3362-19
AT83174	19	3362-23
AT83174	2	3362-25
AT83174	2	3362-26
AT83174	3	3362-27
AT83174	4	3362-27
AT83174	3	3362-43
AT84191	23	3363-21
AT85174	24	1674-9
AU12450	37	3163-7
A3581R	5	3348-3
A364R	7	0400-34
A3917R	49	1830-13
A4827R	17	0400-55
A48970	24	1814-3
A73182	11	3362-63
A73182	15	3362-65
A73182	11	3362-67
A73182	11	3362-69
B177R	12	1060-3
B3690R	2	0960-5
CD16284	7	0400-64
CV08	13	3362-30
C16054	5	1746-2
C16054	5	3363-3B
C16054	19	3363-7
C16054	49	3363-15B
C16054	4	3363-39
E12379	7	0230-5
E12379	10	0250-3
E52687	6	3365-3
E64052	14	1671-3
E64052	15	1671-5
E67574	13	1821-9
E71998	23	2160-25
E87197	31	0560-3

NUMERICAL INDEX - CONTINUED

PART NO.	KEY	PAGE
F1430R	11	3165-5
F1430R	8	3165-7
F1430R	8	3365-7B
F1430R	12	3365-9
F2863R	20	1060-3
F2863R	8	3315-17
F37030228	14	3362-59
F37030228	12	3362-61
F37030228	14	3362-63
F37030228	19	3362-65
F37030228	14	3362-67
F37030228	14	3362-69
F37030228	12	3362-71
F37030250	7	2160-17
F85112	25	3362-51
F85112	20	3362-53
F950R	5	3365-5
F950R	4	3365-12
GY20126	27	1674-5
H121168	20	3102-11
H121168	43	3102-19
H128841	20	1811-3
H129201	13	3315-9
H135156	12	3102-11
H135156	44	3102-19
H140456	23	3343-3
H140456	11	3363-39
H140822	18	3365-3
H141836	14	2160-3
H141836	14	2160-21
H145175	3	3365-12
H150947	17	3365-7B
H150947	1	3365-9
H150976	1	3165-5
H151328	16	3365-7B
H151328	5	3365-9
H151542	2	3165-3
H151594	21	3165-5
H151594	2	3165-7
H151655	2	3365-3
H151659	19	3365-3
H151820	15	3365-6
H151820	15	3365-7
H151890	8	3365-3
H151891	8	3365-6
H151891	8	3365-7
H151893	3	3365-5
H152123	21	3365-3
H152203	16	3102-13
H152203	8	3165-3
H152203	9	3165-7
H152203	9	3365-7B
H152203	13	3365-9
H152203	12	3365-12
H152204	12	3165-5
H152204	11	3165-9
H152205	12	3365-3
H152205	15	3365-5
H152205	13	3365-6
H152205	13	3365-7
H152795	13	3165-5
H152795	12	3165-9
H152796	11	3365-3
H152796	16	3365-5
H152796	11	3365-6
H152796	11	3365-7
H154372	2	3365-9
H154373	1	3365-7B
H154373	7	3365-9
H154404	15	3365-12
H155655	12	3365-15
H155737	7	3365-3
H155769	12	3365-6
H156486	2	3365-7B
H156486	8	3365-9
H157897	13	3365-15
H158596	3	1921-3
H158676	7	3104-5
H158947	19	3165-9
H159941	16	3165-3
H162312	6	3104-5
H164925	10	3104-5
H169161	17	3365-3
H170216	9	3165-3
H170371	5	3365-6
H170371	5	3365-7
H170372	2	3365-6
H170372	2	3365-7
H170537	2	3365-15
H170538	17	3165-3
H170539	16	3165-7
H170539	24	3365-7B
H170539	0	3365-9
H170540	26	3365-5
H173199	14	3104-5
H173205	4	3104-5
H173206	8	3104-5
H173207	9	3104-5
H173411	35	1816-15
H173411	34	1816-17
H177854	4	3102-13
H178765	8	3365-15
H179657	10	3365-15
H179999	12	3365-7
H180080	13	3165-9
H180080	9	3365-5
H180080	8	3365-12
H180093	22	3165-5
H180093	20	3165-9
H180094	14	3165-9
H180094	7	3365-5
H180094	6	3365-12
H180103	14	3165-5
H180103	10	3165-7
H180103	10	3365-7B
H180103	14	3365-9
H180324	5	3365-3
H180402	11	3365-5
H180402	23	3365-7B
H180402	19	3365-9
H180432	6	3365-6
H180432	6	3365-7
H180787	10	3165-3
H180927	6	3102-13
H180946	16	3365-3
H181114	15	3165-5
H181114	11	3165-7
H181114	11	3365-7B
H181114	15	3365-9
H206792	4	3365-5
H206859	16	3165-5
H206859	12	3165-7
H206859	12	3365-7B
H206859	16	3365-9
H208631	13	3365-7B
H208631	21	3365-9
H208987	11	3165-3
H208987	13	3165-7
H208987	14	3365-7B
H208987	17	3365-9
H208987	13	3365-12
H208995	10	3365-12
H209221	12	3165-3
H209264	17	3165-5
H209710	4	3365-3
H210939	15	3365-15
H216699	18	3165-9
H23125	1	0400-6
H23196	9	1369-7
H36031	5	0400-61
H65405	45	0510-5
H77698	5	0315-3
H77698	34	0560-3
H77698	11	1314-3
H77698	17	1673-7
H77698	7	1674-5
H77698	4	1674-5B
H77698	42	1674-9
H77698	5	1674-11B
H77698	2	1675-9
H77698	7	1816-13
H77698	30	1821-13
H77698	41	1830-7
H77698	54	1830-7
H77698	24	3315-23
H77698	9	3363-19
H77698	15	3363-35
H80753	2	0400-49
H85092	11	1830-7
JD10229	10	0201-3
JD10249	23	0250-7
JD10373	36	1816-15
JD10373	26	1816-17
JD126	8	2008-2
JD27	3	0120-1
JD37406	3	0350-3
JD37406	3	0350-5
JD37406	16	0350-7
JD37406	16	0350-9
JD37406	3	0350-11
JD5404	4	2008-2
JD5717	5	1320-3
JD5750	18	1814-9
JD5761	6	1320-3
JD5836	4	1320-3
JD5920	5	1314-3
JD5920	8	1320-3
JD5930	3	2008-2
JD5933	10	0560-3
JD5933	3	1320-3
JD5933	11	1913-3
JD7797	8	0230-5
JD7797	3	0250-15
JD7797	4	3102-9
JD7797	38	3102-19
JD7798	17	3345-3
JD7799	14	3143-7
JD7838	10	0230-5
JD7838	9	0250-3
JD7844	4	3102-11
JD7844	45	3102-19

NUMERICAL INDEX - CONTINUED

PART NO.	KEY	PAGE
J16931	2	1313-3
J16931	2	1313-5
KV11304	50	3102-19
KV11305	49	3102-19
KV11305	32	3163-11
KV12858	25	3162-13
KV14216	50	3102-19
KV16429	15	0520-5
KV22609	39	3163-3
KV22609	25	3163-5
KV25173	46	0510-5
KV25678	4	3362-30
KV25678	8	3362-30
K40006	14	3102-9
K40006	39	3102-19
L110233	14	0250-5
L152999	19	0350-15
L152999	3	0360-7
L153002	18	0350-3
L154742	47	0510-5
L2646N	17	0560-3
L3483N	33	1830-13
L35714	10	0250-13
L40276	19	0250-7
L40317	26	0250-7
L4694T	12	3115-7
L57881	6	1830-7
L75379	2	2002-5
MT2485	48	0510-5
MT2485	5	1674-5D
MT2485	18	1674-9
MT2485	11	1811-5
MT2485	15	1816-15
MT2485	35	1816-17
MT2485	1	1834-3
MT2485	17	2001-3
MT2485	36	2160-25
M1036T	20	3162-3
M1036T	2	3162-11
M111583	18	1816-9
M113379	8	3143-3
M113379	8	3143-5
M115279	20	1674-7
M115279	19	1816-9
M115279	15	1821-3
M1304T	21	1821-9
M132832	11	1814-13
M359T	44	3315-7
M359T	12	3315-9
M40333	7	1671-3
M40333	10	1671-5
M40569	10	3315-17
M40569	19	3315-17
M41029	4	0400-10
M41029	26	1060-5
M4125T	5	3104-5
M453T	17	1821-5
M453T	12	1821-7
M453T	15	1821-7
M453T	7	1821-17
M453T	27	1821-17
M47031	8	1821-7
M47031	22	1821-9
M68954	21	3162-3
M68954	4	3315-5
M68954	10	3315-7
M68954	10	3315-9
M68954	14	3315-11
M68954	18	3315-13
M68954	17	3315-15
M68954	13	3315-21
M68954	16	3315-35
M84972	8	1811-5
M84972	31	1816-13
M86533	26	1830-13
M86877	2	1913-5
M86877	3	2004-2
M86877	50	3363-15B
M87261	9	1821-7
M87534	20	1816-15
M87534	6	1816-17
M87534	26	3315-7
M87534	7	3315-11
M87534	12	3315-15
M87571	13	2160-15
M87733	6	0400-32
N112006	5	0560-3
N112006	33	0560-3
N119316	2	0250-15
N119316	2	0325-3
N189220	52	2160-7
N189220	50	2160-9
N231749	14	0201-3
N30405	18	0560-3
O-RINGS	25	0400-13
O-RINGS	1	0400-27
PML377	6	1673-3
PM38655	24	0400-17
PT11778	17	1830-7
P45750	11	3104-5
P48403	3	3365-7B
P48403	9	3365-9
RE154027	7	3162-13
RE157329	5	1830-7
RE174764	16	1830-7
RE179976	19	0560-3
RE190139	11	2001-3
RE19797	3	0400-13
RE19799	9	0400-13
RE19799	28	1390-3
RE198074	2	1830-7
RE201108	16	2160-19
RE20343	1	3165-9
RE20343	19	3365-5
RE20344	2	3165-5
RE20344	18	3365-7B
RE20344	3	3365-9
RE20809	4	3365-6
RE20809	4	3365-7
RE210010	5	3362-63
RE210010	5	3362-65
RE210010	5	3362-67
RE210010	5	3362-69
RE213499	7	3362-63
RE213499	7	3362-65
RE213499	8	3362-67
RE213499	8	3362-69
RE214440	44	1830-13
RE223627	54	0510-5
RE227953	11	2001-3
RE240999	14	1674-5F
RE244312	9	3362-63
RE244312	9	3362-65
RE244312	9	3362-67
RE244312	9	3362-69
RE246316	8	3362-63
RE246316	8	3362-65
RE246316	7	3362-67
RE246316	7	3362-69
RE30162	15	3365-3
RE31495	22	2160-11
RE31495	32	2160-23
RE31617	13	0400-64
RE40048	5	0400-24
RE40049	1	1814-11
RE40049	2	1814-11
RE40049	4	1814-15
RE40049	5	1814-15
RE42139	5	0400-57
RE42139	5	0505-3
RE43497	25	1674-7
RE43637	1	1674-13
RE44574	4	0400-51
RE44574	18	0400-55
RE45896	5	0230-6
RE46534	5	1674-13
RE46534	3	1674-14
RE46609	25	1830-13
RE46684	7	0400-37
RE46685	27	0400-17
RE46685	5	0400-23
RE46685	10	0400-34
RE46685	7	0400-39
RE46686	6	0400-39
RE46686	24	0400-41
RE46742	28	1674-7
RE48786	8	0400-26
RE48786	10	0400-26
RE49778	16	1673-7
RE500002	3	0400-10
RE500005	4	0400-20
RE500137	4	0400-50
RE500448	11	0400-31
RE500449	12	0400-31
RE500539	8	0400-49
RE501260	4	0400-32
RE501298	13	0400-45
RE501377	5	0400-20
RE502969	5	0400-6
RE504233	4	0400-42
RE504244	13	0400-45
RE504543	10	0400-63
RE504564	3	0400-63
RE504638	4	0400-3
RE504741	13	0400-31
RE504836	4	0400-63
RE505100	10	0400-10
RE505111	7	0400-10
RE505111	10	0400-10
RE505264	10	0400-49
RE505264	2	0510-9
RE505264	40	1830-13
RE505400	7	0400-45
RE505501	14	0400-9
RE505501	30	0400-17
RE505515	11	0400-9
RE505515	19	0400-9
RE505515	19	0400-55
RE505981	16	0400-34
RE506105	13	0400-45
RE506949	3	0400-28

NUMERICAL INDEX - CONTINUED

PART NO.	KEY	PAGE
RE507595	1	0400-4
RE507597	1	0400-41
RE507598	1	0400-13
RE507646	4	0400-13
RE507647	5	0400-13
RE507648	6	0400-13
RE507649	7	0400-13
RE507766	25	0400-13
RE507766	1	0400-27
RE508185	22	0400-17
RE508566	20	0400-9
RE508566	17	0400-34
RE508716	21	0400-13
RE508716	2	0400-27
RE508932	15	0400-3
RE508932	8	0400-11
RE509031	13	0400-41
RE509572	7	0400-32
RE509794	6	0400-41
RE515372	1	0400-53
RE515978	15	0400-9
RE516340	19	0400-55
RE51649	17	0400-41
RE51650	14	0400-41
RE516512	12	0400-41
RE516553	3	0400-41
RE516553	10	0400-41
RE517370	3	0400-9
RE517370	13	0400-9
RE518087	10	0400-13
RE518097	1	0400-49
RE518097	14	0400-49
RE520023	1	0400-19
RE520539	1	0400-55
RE52087	2	0530-3
RE52087	33	9006-3
RE521822	1	0400-15
RE521823	2	0400-15
RE521824	3	0400-15
RE521825	4	0400-15
RE522076	3	0400-37
RE522109	5	0400-15
RE52242	1	0400-63
RE522527	14	0400-13
RE522820	2	0400-39
RE52346	19	0400-9
RE52346	19	0400-55
RE523468	2	0400-9
RE526670	33	0400-55
RE526670	12	0400-58
RE526671	34	0400-55
RE526671	17	0400-58
RE527042	12	0400-55
RE52722	6	1674-9
RE527299	1	0400-53
RE531116	25	0400-13
RE531116	1	0400-27
RE54885	16	0400-32
RE56369	21	0400-3
RE56375	1	0400-4
RE57234	15	0400-64
RE57471	15	0230-7
RE57472	17	0230-7
RE57836	29	0400-17
RE57836	6	0400-51
RE59277	10	0400-10
RE59296	2	0400-39
RE59487	24	0400-41
RE59545	2	0400-23
RE59547	13	0400-32
RE59811	22	0400-3
RE60005	3	0400-64
RE60029	22	0400-41
RE60037	9	0400-41
RE60071	5	0400-28
RE60700	37	1390-3
RE60700	44	2160-7
RE60700	42	2160-9
RE60701	45	2160-7
RE60701	43	2160-9
RE60701	38	3163-11
RE60854	15	0400-41
RE61812	8	0400-28
RE65165	7	0400-3
RE65168	10	0400-3
RE65908	11	0400-10
RE65909	11	0400-10
RE65911	7	0400-3
RE65912	10	0400-3
RE65978	14	0400-32
RE66082	33	0400-55
RE66082	12	0400-58
RE66084	12	0400-55
RE66084	34	0400-55
RE66084	17	0400-58
RE66093	12	0400-55
RE66153	2	0400-42
RE66271	6	0400-10
RE67231	1	0400-39
RE67238	1	0400-20
RE67238	14	0400-39
RE67238	17	0400-39
RE67238	8	0400-63
RE67239	5	0400-9
RE67239	6	0400-20
RE68695	9	0400-5
RE68748	26	0400-13
RE69243	1	0400-21
RE70486	5	0400-45
RE70487	3	0400-45
RE70535	1	0400-49
RE70756	9	0400-45
RE70756	12	0400-45
RE70962	15	0400-34
RE71256	8	0400-45
R100369	14	0400-34
R100377	2	0400-47
R10093	21	1830-7
R10093	5	1830-13
R10093	5	3362-59
R10093	10	3362-61
R10093	12	3362-63
R10093	17	3362-65
R10093	12	3362-67
R10093	12	3362-69
R10093	10	3362-71
R101225	14	0400-3
R101225	5	0400-11
R104558	13	0341-5
R104592	5	0400-17
R104592	5	0400-64
R107731	11	0400-5
R108066	14	3362-51
R108066	14	3362-55
R109863	6	0400-11
R110531	1	0400-28
R111137	10	0400-17
R111235	6	3362-51
R111235	6	3362-53
R111235	6	3362-55
R111238	27	3362-11
R111238	21	3362-15
R111238	20	3362-19
R111238	27	3362-41
R111238	22	3362-45
R111238	11	3362-65
R111292	8	3162-13
R111493	12	3162-13
R111493	8	3362-9
R11151	22	3162-3
R11151	7	3162-11
R111532	5	3362-21
R113050	15	1830-7
R113050	30	1830-13
R113223	15	3362-51
R113226	15	3362-55
R113228	17	3362-51
R113228	17	3362-55
R113562	5	0400-41
R113562	11	0400-41
R113563	4	0400-41
R113563	16	0400-41
R113596	4	0400-3
R114193	20	0400-3
R114194	23	0400-3
R114194	11	0400-11
R114241	17	0400-17
R115119	9	0250-7
R115252	10	0400-39
R115299	12	0400-17
R115299	1	0400-31
R115350	43	1830-13
R115390	15	0400-17
R116089	6	1814-13
R116115	5	0400-63
R116116	21	0400-41
R116296	2	0400-20
R116324	4	0400-6
R116366	5	0400-26
R116386	2	0400-11
R116386	17	0400-13
R116466	2	0400-17
R116515	8	0400-55
R116515	8	0400-58
R116515	12	0400-64
R117721	31	1830-7
R117721	1	1830-9
R117721	22	2160-19
R117892	21	0960-5
R117892	5	1816-7
R117892	8	2001-3
R119874	6	0400-17
R120013	15	0400-32
R120160	25	1816-13
R120332	5	1816-15
R120467	1	0400-61
R120631	3	0400-3
R120641	12	0400-3
R120653	8	1814-13
R121038	1	0400-33
R121039	7	0400-51

NUMERICAL INDEX - CONTINUED

PART NO.	KEY	PAGE
R121043	9	0400-17
R121402	14	0400-64
R121402	15	0400-64
R121411	8	0400-9
R121424	7	0400-9
R121593	3	0230-6
R121594	6	0230-6
R121634	4	0400-33
R121897	18	0400-49
R122218	15	0230-7
R123161	7	0400-5
R123174	11	0400-3
R123178	5	0400-10
R123226	9	0400-34
R123226	9	0400-37
R123226	4	0400-55
R123226	4	0400-58
R123246	3	0400-24
R123271	5	0400-5
R123273	3	0400-42
R123273	20	0400-55
R123323	1	0400-37
R123324	11	0400-37
R123345	5	0400-55
R123345	5	0400-58
R123352	1	0400-23
R123353	35	0400-55
R123353	13	0400-58
R123417	13	0400-34
R123417	21	0400-55
R123471	5	0400-39
R123501	3	0400-39
R123501	23	0400-55
R123513	2	0400-5
R123521	2	0400-50
R123525	25	0400-55
R123542	6	0400-6
R123542	1	0400-55
R123542	1	0400-58
R123565	10	0400-5
R123570	11	0400-32
R123570	6	0400-55
R123570	6	0400-58
R123574	2	0400-6
R123575	3	0400-6
R123575	7	0400-55
R123575	7	0400-58
R123584	18	0400-9
R123584	4	0400-11
R123593	19	0400-13
R123616	28	0400-17
R123616	10	1830-9
R123960	2	0400-10
R124347	16	1740-3
R124347	4	9006-5
R125223	18	1830-7
R128660	5	0400-49
R128661	9	0510-9
R128662	9	0510-9
R130575	5	0400-3
R131016	5	0400-37
R131182	21	0400-17
R131206	16	0400-3
R131283	19	0400-3
R131283	9	0400-11
R131769	3	0400-51
R132166	4	0400-47
R132186	20	0400-17
R132261	1	0400-66
R132518	7	0400-17
R132874	12	0400-13
R133295	16	0400-49
R133303	14	0400-31
R133405	5	0400-42
R133893	10	0400-55
R133893	10A	0400-58
R133978	5	0400-47
R134098	5	0515-3
R134518	19	0400-9
R134518	3	0400-11
R134527	1	0400-11
R135177	11A	0400-39
R135439	1	0400-4
R135509	6	0400-45
R135510	4	0400-45
R135896	3	0400-55
R135896	3	0400-58
R135918	3	0400-50
R135918	10	0400-51
R136052	2	0400-45
R136475	12	0400-11
R136495	3	0400-20
R136515	22	0400-55
R136516	22	0400-55
R139897	13	3362-59
R139897	11	3362-61
R139897	13	3362-63
R139897	18	3362-65
R139897	13	3362-67
R139897	13	3362-69
R139897	11	3362-71
R140070	13	0230-7
R151507	10	1814-13
R201796	11	1674-5
R201796	12	1674-5F
R203687	27	1674-7
R204271	4	0230-6
R206883	4	0400-57
R206883	4	0505-3
R221354	17	1060-3
R26081	17	3315-23
R26125	4	0400-64
R26286	13	1060-9
R26286	7	1060-11
R26286	12	1390-3
R26286	22	3362-51
R26286	17	3362-53
R26286	22	3362-55
R26375	22	0960-9
R26375	22	0960-11
R26375	1	1060-3
R26375	10	2160-7
R26375	10	2160-9
R26375	8	2160-11
R26375	7	2160-13
R26375	11	2160-15
R26375	9	2160-19
R26375	14	2160-23
R26375	9	2160-25
R26375	12	3163-3
R26375	10	3163-5
R26375	12	3163-7
R26375	10	3163-9
R26375	19	3362-9
R26375	3	3362-73
R26375	18	3363-1B
R26375	31	3363-1F
R26375	1	3363-13
R26375	35	3363-15B
R26375	15	3363-21
R26375	7	3363-23
R26375	13	3363-35
R26375	2	3363-37
R26375	14	3363-39
R26375	20	3363-45
R26375	8	3363-47
R26448	6	0210-8
R26448	35	0510-5
R26448	13	0960-9
R26448	13	0960-11
R26448	5	1060-7
R26448	9	1390-3
R26448	5	2160-7
R26448	5	2160-9
R26448	5	2160-11
R26448	11	2160-23
R26448	34	2160-23
R26448	14	3102-11
R26448	2	3102-19
R26448	19	3104-3
R26448	30	3162-13
R26448	10	3163-11
R26448	3	3362-7
R26448	21	3362-9
R26448	7	3362-29
R26448	2	3362-30
R26448	14	3362-30
R26448	13	3362-35
R26448	14	3362-37
R26448	10	3362-63
R26448	16	3362-65
R26448	10	3362-67
R26448	10	3362-69
R26448	3	3362-71
R26448	2	3362-73
R26448	9	3363-1B
R26448	16	3363-1F
R26448	6	3363-3
R26448	1	3363-3B
R26448	7	3363-3B
R26448	12	3363-3B
R26448	1	3363-39
R26493	11	0400-17
R26552	17	1060-5
R26650	13	0400-17
R26773	23	2160-7
R26773	20	2160-9
R26871	22	1910-3
R26871	7	3315-19
R26871	18	3315-23
R26871	7	3315-37
R26906	6	0400-64
R26906	4	1060-5
R26906	13	1369-7
R26906	41	2160-7
R26906	37	2160-9
R26906	23	2160-19
R26906	4	3162-13
R26906	15	3163-3
R26906	13	3163-5
R26906	15	3163-7

NUMERICAL INDEX - CONTINUED

PART NO.	KEY	PAGE
R26906	20	3362-11
R26906	20	3362-15
R26906	18	3362-19
R26906	19	3362-21
R26906	20	3362-41
R26906	21	3362-45
R26906	4	3362-63
R26906	4	3362-65
R26906	13	3362-65
R26906	4	3362-67
R26906	4	3362-69
R26906	7	3363-7
R26906	11	3363-15
R26906	11	3363-15B
R26906	33	3363-19
R26906	20	3363-21
R26906	15	3363-23
R26906	3	3363-25
R26906	3	3363-41
R26906	4	3363-45
R26906	22	3363-45
R26906	6	3363-49
R26906	27	3363-51
R27094	21	3362-51
R27094	16	3362-53
R27094	21	3362-55
R27175	15	3362-21
R27175	32	3363-3
R27175	17	3363-17
R27175	2	3363-19
R27218	20	3362-9
R27434	19	3315-23
R27474	42	2160-7
R27474	38	2160-9
R27474	34	3363-19
R28776	23	2160-25
R28782	5	0210-8
R28782	30	0960-11
R28782	18	1390-3
R28782	12	2160-11
R28782	19	2160-11
R28782	20	2160-23
R28782	29	2160-23
R28782	14	3162-13
R28782	6	3362-61
R28782	7	3362-71
R28782	44	3363-21
R28782	34	3363-23
R28811	1	0400-50
R29463	12	0341-7
R29936	38	0510-5
R29936	6	2160-3
R29936	2	2160-5
R29936	16	2160-7
R29936	16	2160-9
R29936	39	2160-9
R29936	6	2160-21
R29936	19	3363-17
R29936	12	3363-19
R29936	11	3363-31
R29936	11	3363-49
R32548	8	1060-3
R33259	14	1830-7
R33259	7	1830-13
R35668	50	0510-5
R36424	22	0560-3
R36636	40	2160-9
R37023	30	2160-7
R37023	26	2160-9
R39112	1	0400-51
R39112	12	2160-15
R39112	18	3362-9
R39112	4	3362-73
R39112	15	3363-39
R39554	4	1674-7
R39741	22	0400-17
R39741	25	0400-17
R43409	9	0400-64
R44165	26	1674-7
R44302	3	0515-3
R44302	35	0560-3
R44302	16	0960-9
R44302	16	0960-11
R44302	15	1671-3
R44302	6	1671-7
R44302	15	1673-7
R44302	3	1674-5
R44302	3	1674-5B
R44302	7	1674-5D
R44302	17	1674-5F
R44302	41	1674-9
R44302	2	1674-11B
R44302	6	1674-25
R44302	10	1674-29
R44302	3	1675-3
R44302	4	1675-9
R44302	7	1675-11
R44302	4	1814-13
R44302	6	1821-3
R44302	31	1821-13
R44302	49	1830-7
R44302	7	1830-9
R44302	2	1830-13
R44302	39	2160-19
R44302	33	2160-25
R44302	37	2160-25
R44302	13	3115-5
R44302	15	3115-7
R44302	35	3163-11
R44302	16	3363-23
R44302	10	3363-45
R44342	14	1674-7
R46528	23	3162-3
R46528	42	3315-7
R46528	11	3315-35
R46667	51	0510-5
R46667	20	2160-11
R46667	30	2160-23
R46919	11	0960-9
R46919	11	0960-11
R46919	8	1060-7
R46919	33	2160-19
R46919	24	3104-3
R46919	40	3163-3
R46919	26	3163-5
R46919	33	3163-9
R46919	36	3163-11
R46919	23	3363-15
R46919	23	3363-15B
R46919	13	3363-25
R46919	12	3363-39
R46973	1	0230-5
R46973	5	0250-3
R48000	8	0400-26
R48523	19	1060-5
R48568	10	0520-5
R48685	1	0400-3
R48685	1	0400-17
R49921	13	3363-45
R500000	3	0400-10
R500096	4	0400-50
R500265	2	0400-31
R500270	1	0400-42
R500271	6	0400-42
R500304	8	0400-49
R500320	9	0400-49
R500320	3	0510-9
R500320	41	1830-13
R500322	10	0400-47
R50034	16	1060-3
R500374	32	0400-55
R500374	9	0400-63
R500390	8	0400-26
R500390	4	0400-27
R500531	12	0400-47
R500596	2	0400-28
R500649	17	0400-49
R501124	1	0400-10
R501144	10	0400-37
R501188	2	0400-51
R501373	9	0400-55
R501373	9	0400-58
R501428	8	0400-39
R501428	31	0400-55
R501472	7	0400-28
R502076	11	0400-13
R502079	11	0400-49
R502079	4	0510-9
R502079	39	1830-13
R502513	4	0400-63
R502513	11	0400-63
R502604	2	0400-21
R502725	3	0400-21
R50279	8	1830-7
R502811	11A	0400-39
R502811	11B	0400-39
R502814	4	0400-37
R502814	3	0400-55
R502814	3	0400-58
R502864	24	0400-55
R502902	7	0400-20
R503419	16	0400-45
R503449	2	0400-51
R503509	16	0400-34
R503520	28	0400-13
R503891	6	0400-55
R503891	6	0400-58
R504022	1	0510-9
R504191	21	1830-13
R504192	23	1830-13
R504534	1	0400-4
R504734	18	0400-39
R504734	29	0400-55
R504849	3	0400-17
R504849	1	0400-19
R505121	15	0400-3
R505121	8	0400-11
R505472	18	0400-13
R505609	2	0400-3
R516437	7	0400-41
R516623	1	0400-49

NUMERICAL INDEX - CONTINUED

PART NO.	KEY	PAGE
R517471	24	0400-3
R51936	20	0400-13
R52006	3	0110-3
R52006	3	0110-5
R520130	2	0400-9
R520132	1	0400-9
R521439	2	0400-55
R521439	2	0400-58
R522030	13	0400-55
R522030	13	0400-58
R52921	9	1814-3
R53108	1	0400-45
R53108	26	0400-55
R54123	2	0400-57
R54123	2	0505-3
R54565	1	0400-5
R55326	26	1811-3
R56101	53	0510-5
R61105	9	0400-39
R61467	2	0400-51
R61467	11	0400-51
R61871	16	0400-55
R61871	16	0400-58
R63548	5	0400-32
R63548	9	3162-5
R63548	16	3162-7
R63548	36	3362-11
R63548	10	3362-13
R63548	12	3362-15
R63548	31	3362-41
R63548	9	3362-43
R63548	7	3362-45
R64059	4	3315-11
R64059	15	3315-15
R64525	3	0400-47
R65563	16	3315-5
R65563	43	3315-7
R65563	12	3315-11
R65563	13	3315-13
R65563	7	3315-15
R65563	8	3315-29
R65563	12	3315-35
R71210	27	1390-3
R71963	2	0400-26
R72032	9	3365-3
R72328	27	0400-55
R72328	2	0400-61
R72655	6	1821-5
R72655	4	1821-7
R72659	3	0400-61
R72855	4	3115-3
R73975	17	0341-3
R75403	3	0210-3
R75404	3	0210-3
R75405	3	0210-3
R75834	3	0210-3
R75892	16	0400-17
R75892	14	0400-55
R75892	14	0400-58
R77175	38	1390-3
R77175	43	2160-7
R77175	41	2160-9
R77175	21	2160-11
R77175	31	2160-23
R77175	37	3163-11
R77175	25	3363-1B
R77175	22	3363-1F
R78035	7	1674-7
R79033	3	1811-3
R79060	26	3162-13
R79060	11	3362-51
R79060	11	3362-53
R79060	11	3362-55
R79101	18	3165-5
R79101	14	3165-7
R79101	15	3365-7B
R79101	18	3365-9
R79604	4	0400-26
R79605	3	0400-26
R81195	7	3365-15
R81275	6	0400-28
R81275	7	0400-28
R81275	10	0400-55
R81275	10	0400-58
R81775	5	3165-9
R81775	18	3365-5
R81776	6	3165-5
R81776	22	3365-7B
R81776	4	3365-9
R81862	16	3165-9
R81862	6	3365-5
R81862	5	3365-12
R81864	13	3165-3
R82095	3	3365-6
R82095	3	3365-7
R82198	7	0250-5
R82198	9	0250-9
R83469	6	3365-15
R85363	1	0400-64
R85687	8	0400-64
R87732	4	0400-24
R89944	5	0400-33
R89944	28	0400-55
R90653	14	3365-3
R90658	2	0400-58
R90658	2	0400-66
R90692	10	0400-64
R91360	13	0400-13
R91889	2	0400-64
R92097	9	0400-32
R92097	11	0400-55
R92097	11	0400-58
R92352	7	0400-26
R92352	3	0400-27
R93821	19	3362-51
R93821	14	3362-53
R93821	19	3362-55
R93821	2	3362-57
R93821	10	3362-59
R93821	13	3362-61
R93821	15	3362-63
R93910	8	0400-64
R94102	4	0110-3
R94102	4	0110-5
R95493	17	3362-11
R95493	17	3362-13
R95493	25	3362-15
R95493	9	3362-17
R95493	8	3362-19
R95493	13	3362-21
R95493	11	3362-23
R95493	23	3362-41
R95493	21	3362-43
R95493	25	3362-45
R95493	18	3362-47
R96703	10	0400-45
R97185	15	0400-55
R97185	15	0400-58
R98062	11	0400-64
R98063	8	0400-64
R98324	4	3365-15
R98325	3	3365-15
R98335	8	0400-64
SE500826	10	0400-26
SE500830	25	0400-13
SE500830	1	0400-27
SE501101	10	0400-26
SE501155	7	0400-32
SE501155	11	0400-32
SE501155	12	0400-32
SE501155	13	0400-32
TEE	25	0400-13
TEE	1	0400-27
TF23D	11	3302-9
TF23D	2	3302-11
TF23P	8	3302-9
TF23P	3	3302-11
TTZF160528	21	0201-5
TTZF160529	21	0201-5
TTZF160530	21	0201-5
TTZF160532	21	0201-5
TTZF160534	21	0201-5
TTZF160535	21	0201-5
TY22330	15	1830-9
TY22330	31	2160-19
TY22388	6	1369-7
TY22388	11	1369-7
TY22462	29	0560-3
TY22464	4	0960-9
TY22464	4	0960-11
TY22490	18	1830-3
TY22493	19	3363-23
TY22556	34	2160-19
TY22566	42	0510-5
TY24344	8	0520-9
TY24867	4	0520-9
TY6128	13	1671-3
TY6128	13	1671-5
TY6764	25	1830-13
T101807	24	1811-3
T101807	5	1811-5
T101807	11	3344-3
T102934	46	2160-7
T102934	44	2160-9
T105368	4	3362-30
T105368	15	3362-30
T105740	16	1814-3
T105740	4	1821-15
T105740	23	1910-3
T105773	41	3163-3
T105773	27	3163-5
T105773	41	3163-7
T105773	34	3163-9
T105773	18	3363-7
T105773	24	3363-15
T105773	24	3363-15B
T105774	56	3363-15B
T105774	10	3363-37
T105774	5	3363-39
T105774	16	3363-45
T107116	7	1671-5

NUMERICAL INDEX - CONTINUED

PART NO.	KEY	PAGE
T107117	3	1671-3
T107117	6	1671-5
T107887	12	3162-5
T107887	19	3162-7
T107887	33	3362-11
T107887	15	3362-15
T107887	28	3362-41
T107887	27	3362-43
T107887	10	3362-45
T11234	4	2002-3
T113128	7	0250-15
T113128	3	0325-3
T115030	5	2002-3
T116290	7	0230-7
T118681	10	3162-5
T118681	17	3162-7
T118681	13	3162-9
T118681	11	3362-11
T118681	35	3362-11
T118681	34	3362-13
T118681	13	3362-15
T118681	33	3362-15
T118681	17	3362-17
T118681	30	3362-17
T118681	10	3362-41
T118681	30	3362-41
T118681	28	3362-43
T118681	8	3362-45
T118681	28	3362-45
T118681	7	3362-47
T118683	12	3162-11
T118685	17	3362-9
T118685	18	3362-11
T118685	18	3362-13
T118685	26	3362-15
T118685	8	3362-17
T118685	9	3362-19
T118685	14	3362-21
T118685	10	3362-23
T118685	22	3362-41
T118685	20	3362-43
T118685	24	3362-45
T118685	17	3362-47
T118708	19	3162-5
T118709	21	3162-5
T118711	22	3162-5
T118712	23	3162-5
T118715	17	3162-5
T118768	1	3102-5
T118768	1	3102-17
T118799	24	3162-5
T118808	11	3162-9
T118808	14	3162-11
T118808	24	3362-11
T118808	22	3362-13
T118808	30	3362-15
T118808	14	3362-17
T118808	14	3362-19
T118808	16	3362-23
T118866	1	3162-9
T118866	6	3362-11
T118866	38	3362-15
T118866	17	3362-17
T118866	26	3362-17
T118866	5	3362-41
T118866	33	3362-45
T118866	2	3362-47
T118867	17	3162-9
T118867	7	3362-11
T118867	37	3362-15
T118867	17	3362-17
T118867	25	3362-17
T118867	6	3362-41
T118867	32	3362-45
T118867	3	3362-47
T118879	9	3162-9
T118884	20	3162-5
T119153	23	1814-3
T119912	5	0230-5
T119912	2	0250-3
T119912	2	1749-3
T121288	6	1671-3
T121288	12	1671-5
T121474	2	3315-19
T121474	2	3315-37
T122075	4	0400-39
T122075	30	0400-55
T12275	7	3365-6
T12275	7	3365-7
T125808	4	3315-9
T12582	14	3165-3
T128437	2	2002-3
T128533	5	3102-9
T128533	28	3102-19
T128538	10	3102-9
T128538	27	3102-19
T129165	2	1671-3
T129165	5	1671-5
T131938	9	1320-3
T13254	7	1369-7
T133291	16	3115-7
T133291	1	3315-5
T133674	6	1812-3
T133674	6	1814-3
T133674	32	3315-9
T134586	13	1816-9
T134874	19	1811-3
T134874	2	1816-15
T134874	2	1816-17
T134874	14	1830-5
T134881	11	3162-7
T134895	10	1811-5
T134895	30	1816-15
T134895	4	1816-17
T134895	1	2007-3
T13518	5	0400-51
T135583	14	1814-3
T135675	21	1814-3
T135675	2	1814-7
T135675	16	1814-9
T13630	3	0960-5
T13814	36	1830-7
T139165	1	1320-5
T139167	1	1320-5
T140211	7	0250-3
T140211	8	0250-5
T140311	11	1320-3
T140328	9	3162-3
T140328	14	3315-5
T140328	6	3315-7
T140328	18	3315-9
T140328	22	3315-9
T140328	15	3315-11
T140328	5	3315-15
T140328	12	3315-21
T140328	7	3315-29
T140328	13	3315-35
T14050	18	0400-41
T14065	2	3102-13
T14083	4	1313-3
T14083	4	1313-5
T141078	3	1320-5
T141096	3	1320-5
T141126	30	3315-9
T141234	13	1811-3
T143169	20	1830-7
T143169	6	1830-13
T143596	18	1674-5
T143802	15	3102-9
T143804	6	3102-5
T143804	6	3102-17
T143804	37	3102-19
T146080	13	1320-3
T146089	4	1320-5
T146095	4	1320-5
T146097	14	1320-3
T146098	5	1320-5
T146099	5	1320-5
T146102	11	0400-45
T146102	15	1320-3
T146104	6	1320-5
T146106	6	1320-5
T146757	2	3115-3
T147070	5	1740-3
T147269	15	0201-3
T147296	3	3102-5
T147296	3	3102-17
T148182	3	3115-3
T148387	10	1740-3
T148409	4	1740-3
T148409	8	2160-17
T148409	38	2160-25
T148409	40	3163-11
T148409	18	3163-13
T148409	6	3344-5
T148410	2	1740-3
T148410	17	1740-3
T148410	34	1816-15
T148410	12	3344-3
T148410	30	3346-5
T148410	7	3362-30
T148411	3	1740-3
T148411	17	1740-3
T148411	9	3143-3
T148411	9	3143-5
T148411	2	9006-5
T148817	3	2002-3
T149199	17	1320-3
T149570	11	3362-7
T149571	10	3362-7
T149575	11	3362-7
T149575	3	3362-26
T149575	7	3362-27
T149576	10	3362-7
T149576	5	3362-26
T149576	5	3362-27
T149577	11	3362-7
T149577	7	3362-27
T149578	10	3362-7
T149578	5	3362-27
T149597	24	2160-19

NUMERICAL INDEX - CONTINUED

PART NO.	KEY	PAGE
T150487	2	3102-3
T150487	2	3102-15
T150517	2	3102-3
T150958	20	3162-7
T150958	11	3362-13
T150958	10	3362-43
T150961	26	3362-13
T150961	2	3363-45
T151797	5	1749-3
T152401	16	3162-5
T152404	15	3162-5
T152996	8	1320-5
T152997	8	1320-5
T153303	8	1740-3
T153322	31	3346-5
T153531	3	3343-3
T153567	12	3346-3
T153567	55	3346-5
T153680	18	1320-3
T154058	6	3143-7
T154058	9	3143-7
T154165	6	3143-3
T154165	5	3143-5
T154166	5	3143-3
T154166	7	3143-3
T154273	18	3345-3
T154352	10	3143-3
T154621	6	1740-3
T154764	6	3143-5
T154764	7	3143-5
T154769	10	3143-5
T154922	13	3344-3
T155324	2	0350-1
T157762	4	3315-19
T157762	4	3315-37
T157785	16	3315-17
T157792	33	3346-5
T157796	34	3346-5
T158081	41	1814-3
T158132	2	3165-13
T158181	11	3143-5
T158245	11	1060-7
T158358	44	1814-3
T158366	1	3362-25
T158424	32	1830-13
T158481	14	1821-9
T158579	15	3143-7
T158739	16	0350-11
T158749	4	0350-3
T158749	4	0350-5
T158749	17	0350-7
T158749	17	0350-9
T158749	4	0350-11
T158749	8	0350-11
T158778	11	0350-11
T158778	9	0350-15
T158793	20	0350-5
T158793	20	0350-7
T158793	20	0350-9
T158793	1	0350-11
T158793	1	0350-13
T158793	16	0350-15
T158801	15	0350-11
T158801	10	0350-15
T158810	25	3315-9
T158812	23	3315-9
T159028	19	1320-3
T159307	3	0210-3
T159308	3	0210-3
T159309	3	0210-3
T159310	3	0210-3
T159311	3	0210-3
T159313	3	0210-3
T159314	3	0210-3
T159315	3	0210-3
T159316	8	0210-5
T159318	4	0210-5
T159319	4	0210-5
T159320	4	0210-5
T159321	4	0210-5
T159322	4	0210-5
T159323	4	0210-5
T159324	4	0210-5
T159325	4	0210-5
T159326	4	0210-5
T159327	4	0210-5
T159329	4	0210-5
T159330	4	0210-5
T159331	4	0210-5
T159332	4	0210-5
T159334	4	0210-5
T159337	4	0210-5
T159338	4	0210-5
T159341	9	0210-7
T159343	6	0210-7
T159359	20	1111-3
T159373	9	0201-3
T159402	10	1011-3
T159403	9	1011-3
T159440	21	0201-5
T159441	21	0201-5
T159442	21	0201-5
T159443	21	0201-5
T159444	21	0201-5
T159445	21	0201-5
T159446	21	0201-5
T159447	21	0201-5
T159448	21	0201-5
T159449	21	0201-5
T159450	21	0201-5
T159451	21	0201-5
T159452	21	0201-5
T159453	21	0201-5
T159454	21	0201-5
T159455	21	0201-5
T159457	21	0201-5
T159458	21	0201-5
T159459	21	0201-5
T159460	21	0201-5
T159461	21	0201-5
T159462	21	0201-5
T159463	21	0201-5
T159474	16	1111-3
T159475	22	1111-3
T159487	10	1111-3
T159502	6	1111-3
T159565	18	0201-5
T159565	18	0201-7
T159565	13	0341-3
T159565	23	1011-3
T159568	11	0350-11
T159568	9	0350-15
T159569	11	0350-11
T159569	9	0350-15
T159570	11	0350-11
T159570	9	0350-15
T159586	8	0341-5
T159683	20	0341-5
T159848	19	3363-51
T159952	10	3363-39
T159954	43	3163-7
T159954	36	3163-9
T159956	20	3363-51
T159976	18	3363-45
T159980	7	3115-3
T159981	5	3115-3
T160299	13	3346-3
T160302	14	3346-3
T160315	15	1821-9
T160376	12	3363-7
T160376	3	3363-17
T160376	3	3363-19
T160376	3	3363-21
T160384	35	3346-5
T160492	30	1830-7
T160515	6	3315-19
T160515	6	3315-37
T160554	25	3363-15
T160554	25	3363-15B
T160589	3	3315-19
T160589	3	3315-37
T160617	18	3162-13
T160617	15	3362-9
T160619	17	3162-13
T160619	16	3362-9
T160619	1	3362-71
T160638	8	3315-37
T160639	9	3315-37
T160663	24	3362-21
T160720	24	3115-3
T160759	29	3102-11
T160761	9	1320-5
T160762	10	1320-5
T160763	9	1320-5
T160769	10	1320-5
T160896	5	1821-15
T160938	53	1830-13
T161002	2	1369-7
T161036	3	3102-7
T161036	4	3302-3
T161036	4	3302-5
T161036	2	3302-9
T161036	24	3343-3
T161036	19	3345-3
T161036	6	3348-3
T161093	8	1369-7
T161147	12	0350-11
T161147	8	0350-15
T161181	15	0341-5
T161183	11	0350-11
T161183	9	0350-15
T161194	1	0341-3
T161197	7	0341-5
T161198	7	0341-5
T161199	7	0341-5
T161200	7	0341-5
T161279	9	3302-9
T161279	1	3302-11
T161319	9	3302-9
T161342	26	3363-15
T161365	10	3363-19

NUMERICAL INDEX - CONTINUED

PART NO.	KEY	PAGE
T161365	21	3363-51
T161463	26	2160-19
T161497	13	3115-3
T161497	16	3143-7
T161497	28	3343-3
T161521	5	2004-5
T161615	4	1369-7
T161665	21	1320-3
T161665	37	3363-21
T161665	28	3363-23
T161678	22	1320-3
T161835	21	3162-13
T161835	16	3362-11
T161835	16	3362-13
T161835	24	3362-15
T161835	7	3362-17
T161835	7	3362-19
T161835	11	3362-21
T161835	8	3362-23
T161835	21	3362-41
T161835	19	3362-43
T161835	23	3362-45
T161835	16	3362-47
T161835	10	3362-65
T162003	19	3363-47
T162004	4	3363-7
T162004	27	3363-15
T162004	27	3363-15B
T162004	10	3363-17
T162004	13	3363-19
T162005	8	3363-7
T162005	28	3363-15
T162005	28	3363-15B
T162005	11	3363-17
T162005	22	3363-51
T162238	39	2160-25
T162396	11	1740-3
T162396	6	3102-7
T162396	6	3104-3
T162396	27	3115-3
T162396	12	3143-3
T162396	12	3143-5
T162396	17	3143-7
T162396	12	3143-9
T162396	18	3165-7
T162396	22	3165-9
T162396	7	3165-11
T162396	26	3165-11
T162396	7	3165-13
T162396	29	3315-7
T162396	5	3343-3
T162396	1	3344-3
T162396	10	3345-3
T162396	36	3346-5
T162396	8	3348-3
T162396	18	3365-6
T162396	18	3365-7
T162404	23	1320-3
T162404	16	3363-35
T162517	22	1011-3
T162535	12	3302-9
T162535	15	3302-9
T162553	12	3302-9
T162553	15	3302-9
T162557	4	1830-13
T162569	12	3302-9
T162569	15	3302-9
T162581	37	3346-5
T162675	4	0341-7
T162675	27	2160-19
T162675	33	3363-3
T163052	7	3344-7
T163109	2	3348-3
T163203	10	3362-7
T163204	11	3362-7
T163636	23	3363-51
T163643	13	3143-9
T163702	15	3363-3
T163702	24	3363-17
T163702	6	3363-19
T163962	6	1821-15
T164183	9	3344-3
T164259	10	3162-3
T164618	45	1830-7
T164620	23	1816-13
T164621	26	1816-13
T164626	13	0350-11
T164626	7	0350-15
T164648	14	0341-5
T164648	6	0360-3
T164662	15	0341-3
T164662	19	0341-5
T164697	3	1814-7
T164705	14	1814-9
T164706	54	1814-3
T164707	45	1814-3
T164708	15	1814-9
T164709	55	1814-3
T164710	55	1814-3
T164728	1	3102-5
T164728	1	3102-17
T164911	21	1111-3
T164916	19	1111-3
T164917	18	1111-3
T164922	5	1111-3
T165282	19	1060-3
T165290	1	1913-3
T165292	3	0560-3
T165292	20	0560-3
T165332	9	3102-7
T165333	8	3102-7
T165357	36	1814-3
T165563	3	3343-3
T165584	29	1320-3
T165584	2	1816-3
T165584	23	3315-5
T165584	6	3315-11
T165584	21	3315-15
T165585	30	1320-3
T165585	3	1816-5
T165585	50	3315-7
T165586	31	1320-3
T165586	4	1816-5
T165586	6	3315-21
T165590	5	3315-5
T165591	45	3315-7
T165591	38	3315-9
T165591	2	3315-21
T165595	5	3315-29
T165604	30	1320-3
T165604	35	3315-9
T165697	12	3315-5
T165697	4	3315-7
T165697	9	3315-21
T165785	35	3315-7
T165787	17	3315-7
T165788	16	3315-7
T165788	16	3315-9
T165808	18	1816-13
T165864	44	3163-3
T165864	29	3163-5
T165870	5	1927-3
T165889	29	3363-15
T165889	29	3363-15B
T165889	24	3363-51
T165911	10	1910-3
T165911	25	9006-3
T165915	11	1910-3
T165915	7	9006-3
T165916	16	1910-3
T165916	3	9006-3
T165948	15	1812-3
T165951	14	2001-3
T165969	5	1812-3
T165969	7	1812-5
T165970	6	1812-5
T165975	24	1910-3
T165976	25	1910-3
T165977	27	1910-3
T165981	28	1910-3
T165997	12	1910-3
T165997	30	9006-3
T166000	4	1812-3
T166031	14	3315-7
T166060	54	1814-3
T166091	9	0520-5
T166097	10	3115-3
T166097	9	3315-7
T166097	13	3315-23
T166097	15	3315-23
T166223	3	3315-3
T166223	6	3315-27
T166224	31	3315-7
T166224	5	3315-11
T166224	19	3315-15
T166237	7	3315-17
T166297	29	1830-7
T166322	30	1816-13
T166331	6	1927-3
T166332	7	1927-3
T166336	8	0210-7
T166371	9	1814-9
T166433	3	3102-9
T166433	2	3102-11
T166433	29	3102-19
T166686	38	3346-5
T166715	13	3345-3
T166715	39	3346-5
T166772	9	3315-5
T166773	5	0960-9
T166773	5	0960-11
T166773	21	3315-5
T166896	18	1811-3
T166899	14	3115-5
T166900	17	3115-7
T167059	12	3102-9
T167059	40	3102-19
T167082	10	1816-9
T167083	2	1816-9
T167119	10	1816-9
T167192	15	3115-5

NUMERICAL INDEX - CONTINUED

PART NO.	KEY	PAGE
T167192	18	3115-7
T167214	3	1673-3
T167247	19	3315-7
T167324	16	1830-3
T167325	7	1830-3
T170784	4	0540-3
T17148	4	0960-5
T171686	9	1821-3
T172118	20	0350-3
T172118	21	0350-11
T172318	3	0360-5
T176526	6	0341-5
T176553	6	0520-9
T177187	1	1927-3
T177394	11	0201-3
T177623	6	3315-17
T177849	22	3362-11
T177849	20	3362-13
T177849	28	3362-15
T177849	12	3362-17
T177849	12	3362-19
T177849	14	3362-23
T177997	2	0360-5
T178251	43	1830-7
T178971	26	1830-7
T179055	3	1814-13
T179952	2	0342-3
T18145	4	0230-5
T18145	3	0250-3
T181522	13	1830-7
T183149	37	3315-9
T183269	21	1060-5
T183270	13	1060-5
T183271	11	1060-5
T183272	9	1060-5
T183273	7	1060-5
T183274	6	1060-5
T183276	16	1060-5
T183310	28	1060-5
T183344	5	1814-13
T183356	12	3143-7
T183357	24	1060-5
T183362	20	1060-5
T183404	3	1816-5B
T183468	1	1816-5B
T183482	4	0210-5
T183483	4	0210-5
T183484	4	0210-5
T183485	4	0210-5
T183486	4	0210-5
T183487	4	0210-5
T183489	4	0210-5
T183490	4	0210-5
T183491	4	0210-5
T183492	4	0210-5
T183493	4	0210-5
T183494	4	0210-5
T183495	4	0210-5
T183500	21	0201-5
T183502	21	0201-5
T183505	21	0201-5
T183506	21	0201-5
T183507	21	0201-5
T183548	9	3315-11
T183560	12	1830-5
T183617	24	3162-3
T183617	7	3315-7
T183617	36	3315-9
T183617	11	3315-21
T183706	1	1816-9
T183756	7	3362-9
T183756	25	3362-13
T183756	31	3362-43
T183757	7	3162-9
T183757	32	3362-13
T183757	23	3362-19
T183757	20	3362-23
T183757	3	3362-25
T183757	2	3362-26
T183757	4	3362-27
T183757	30	3362-43
T183757	1	3363-45
T183768	36	1320-3
T183768	19	1814-9
T183773	19	1910-3
T183773	27	9006-3
T183882	4	1816-5B
T183885	4	3315-29
T183905	25	3315-23
T184008	4	1816-9
T184009	5	1816-9
T184116	13	1910-3
T184116	9	9006-3
T184129	17	3315-11
T184129	3	3315-15
T184133	9	3315-15
T184164	21	1816-13
T184214	35	1816-13
T184320	19	0960-9
T184320	19	0960-11
T184345	12	1816-9
T184369	10	1830-7
T184370	32	1816-13
T184393	26	1910-3
T184414	50	1830-7
T184415	51	1830-7
T184620	22	1816-13
T184620	3	1830-7
T184657	14	2160-15
T184676	1	1674-9
T184787	14	1910-3
T184787	12	9006-3
T184788	17	1910-3
T184788	13	9006-3
T184924	23	1830-7
T184988	4	3348-3
T185078	18	1060-5
T185085	6	3315-5
T185089	42	3163-11
T185309	1	3315-17
T185330	40	1320-3
T185478	18	1830-5
T185479	15	1830-5
T185480	22	1830-5
T185481	19	1830-5
T185482	17	1830-5
T185485	9	1816-9
T185494	2	1816-13
T185540	5	1830-5
T185548	17	1320-5
T185549	18	1320-5
T185553	20	1320-5
T185570	17	1320-5
T185571	18	1320-5
T185577	20	1320-5
T185619	3	1816-11
T185619	2	1816-13
T185664	18	1673-7
T185673	19	1830-3
T185678	43	1814-3
T185691	41	1320-3
T185691	21	3315-11
T185691	1	3315-13
T185692	42	1320-3
T185692	22	3315-11
T185692	2	3315-13
T185692	18	3315-15
T185692	4	3315-35
T185695	21	1320-7
T185696	21	1320-7
T185710	11	3162-3
T185710	17	3162-3
T185742	26	1816-9
T185743	21	1816-9
T185743	10	1830-5
T185744	5	1830-5
T185766	21	3315-23
T185769	22	1816-9
T185769	11	1830-5
T185770	15	1816-13
T185773	7	1812-3
T185774	8	1812-3
T185775	14	1812-3
T185779	13	1830-3
T185780	14	1830-3
T185782	14	1811-3
T185783	16	1811-3
T185783	17	1811-3
T185784	15	1811-3
T185789	22	1830-7
T185826	41	0510-5
T185826	13	1830-9
T185826	47	2160-7
T185826	45	2160-9
T185826	5	2160-19
T185831	3	3302-9
T185831	20	3345-3
T185832	10	3302-3
T185832	9	3302-5
T185832	4	3302-9
T185832	15	3345-3
T185840	6	1830-3
T185841	2	1830-3
T185842	8	1830-3
T185843	9	1830-3
T185844	27	1816-13
T185845	48	1830-7
T185846	24	1830-5
T185847	21	1830-5
T185848	9	1830-5
T185849	13	1830-5
T185850	10	1830-3
T185866	15	1830-3
T185867	12	1830-3
T185896	14	1816-13
T185902	5	1313-3
T185902	5	1313-5
T185926	5	1060-5
T186000	10	3315-19
T186000	10	3315-37
T186005	8	3315-19

NUMERICAL INDEX - CONTINUED

PART NO.	KEY	PAGE
T186005	8	3315-37
T186006	9	3315-19
T186006	9	3315-37
T186013	18	3362-21
T186016	47	1814-3
T186017	46	1814-3
T186018	56	1814-3
T186022	30	1816-9
T186024	2	1674-13
T186026	16	2160-3
T186029	1	1811-3
T186030	2	1811-3
T186062	9	1314-3
T186123	43	1320-3
T186125	23	1320-7
T186128	23	1320-7
T186154	4	2160-13
T186238	6	1060-11
T186282	17	3363-35
T186441	26	1320-7
T186442	26	1320-7
T186443	7	2001-3
T186444	15	2001-3
T186452	1	1816-13
T186474	18	3363-35
T186766	44	1830-7
T186793	45	1320-3
T186793	26	1674-5F
T186859	9	1060-7
T186873	3	1830-5
T187044	5	3315-3
T187044	8	3315-25
T187044	4	3315-27
T187072	16	3115-5
T187072	19	3115-7
T187110	33	1816-13
T187116	3	3302-3
T187116	3	3302-5
T187116	6	3302-9
T187116	2	3302-13
T187117	2	3302-3
T187117	2	3302-5
T187117	7	3302-9
T187117	1	3302-13
T187193	90	2160-25
T187275	3	3165-13
T187276	4	3165-13
T187571	1	0540-3
T187684	2	0201-7
T188018	31	1320-7
T188019	31	1320-7
T188268	7	3315-9
T188356	14	3315-17
T188565	13	1812-3
T188565	8	1812-5
T188568	10	3344-3
T188568	5	3344-7
T188639	8	3315-5
T188642	20	1910-3
T188642	8	9006-3
T188693	16	1674-25
T188726	4	1812-3
T188806	6	1814-3
T188879	15	3102-19
T188879	43	3163-11
T188880	18	3102-19
T188880	44	3163-11
T18891	26	0400-17
T188976	18	3162-3
T190296	25	3162-3
T190300	26	3162-3
T190311	13	3363-1B
T190311	10	3363-1F
T190357	21	3115-3
T190403	52	3363-15B
T190406	25	3363-51
T190658	2	1671-7
T190669	48	2160-7
T190669	46	2160-9
T190702	2	3363-31
T190745	1	0230-7
T190746	16	0230-7
T190795	7	3162-7
T190819	11	3362-35
T190819	11	3362-37
T190820	12	3362-35
T190820	12	3362-37
T190824	4	3362-35
T190824	4	3362-37
T190825	1	3362-35
T190825	1	3362-37
T190868	17	1816-15
T190868	25	1816-17
T190892	49	2160-7
T190892	47	2160-9
T190912	24	1816-15
T190924	22	3343-3
T190956	21	1816-15
T190956	12	1816-17
T190960	29	1816-15
T190964	36	1816-17
T190979	45	3163-11
T190992	16	3115-3
T190998	6	1816-15
T190999	7	1816-15
T190999	30	1816-17
T191000	5	1816-17
T191071	1	1814-7
T191072	4	1814-7
T191073	5	1814-7
T191142	8	1812-3
T191226	22	3115-3
T191245	22	3315-23
T191285	12	3115-3
T191318	17	3102-11
T191318	46	3102-19
T191334	25	3362-41
T191334	23	3362-43
T191334	27	3362-45
T191334	20	3362-47
T191335	11	3362-41
T191335	11	3362-43
T191335	11	3362-45
T191335	8	3362-47
T191346	16	3362-41
T191346	16	3362-43
T191346	16	3362-45
T191346	13	3362-47
T191425	18	0960-9
T191425	18	0960-11
T191427	6	0230-7
T191428	4	0230-7
T191445	3	3315-29
T197832	16	1011-3
T200078	10	3315-13
T200078	9	3315-35
T200092	6	1816-5B
T200093	6	1816-5B
T200093	7	3315-13
T200094	6	1816-5B
T200094	6	3315-35
T200095	2	1816-5B
T200095	6	3315-13
T200095	5	3315-35
T200362	8	3363-3B
T200627	15	3315-13
T200658	46	1320-3
T200658	38	1816-17
T200659	28	1320-7
T200660	28	1320-7
T200781	39	1816-17
T200895	29	1320-7
T200896	29	1320-7
T200956	17	3362-35
T200956	13	3362-37
T201069	24	3362-41
T201069	22	3362-43
T201069	26	3362-45
T201069	19	3362-47
T201071	15	3362-41
T201071	15	3362-43
T201071	15	3362-45
T201071	12	3362-47
T201072	12	3362-41
T201072	12	3362-43
T201072	12	3362-45
T201072	9	3362-47
T201083	1	3362-25
T201306	14	3362-41
T201306	14	3362-43
T201306	14	3362-45
T201306	11	3362-47
T201361	1	3343-3
T201361	25	3343-3
T201362	1	3343-3
T201362	26	3343-3
T201424	19	3362-11
T201424	19	3362-15
T201424	17	3362-19
T201424	19	3362-41
T201424	20	3362-45
T201424	12	3362-65
T201521	6	2160-17
T201525	6	2160-17
T201591	21	1910-3
T201591	2	9006-3
T201656	14	3363-1D
T20168	18	0400-17
T201952	4	1814-9
T201953	3	1814-9
T201954	2	1814-9
T201955	1	1814-9
T201956	6	1814-9
T201957	5	1814-9
T201957	21	1814-9
T201958	7	1814-9
T201968	8	1814-9
T201971	8	3343-3
T202499	2	0230-6
T202720	14	1816-17
T202956	15	3315-5

NUMERICAL INDEX - CONTINUED

PART NO.	KEY	PAGE
T202956	53	3315-7
T202956	13	3315-11
T202956	12	3315-13
T202956	6	3315-15
T202956	10	3315-29
T20314	4	0400-5
T20316	3	0400-5
T203361	1	1746-2
T203362	2	1746-2
T203374	2	1060-5
T203385	1	1060-5
T203458	3	1812-3
T204599	31	1814-3
T204635	2	2001-3
T204908	1	3102-3
T204908	8	3102-5
T204908	7	3102-7
T204908	1	3102-9
T204908	1	3102-11
T205017	10	3104-3
T205636	34	3363-3
T205636	12	3363-17
T205636	32	3363-19
T205637	35	3363-3
T205637	13	3363-17
T205637	31	3363-19
T205875	6	3343-3
T205901	33	1814-3
T205902	28	1814-3
T205969	4	1830-7
T206569	12	3348-3
T206755	50	2160-7
T206755	48	2160-9
T206908	1	1913-7
T206940	20	3363-47
T207191	16	1320-3
T207309	37	3315-7
T207484	18	3315-7
T208007	30	1320-7
T208008	30	1320-7
T208077	21	1814-9
T208077	22	1814-9
T208136	10	0510-9
T208283	2	1675-5
T208353	4	1746-2
T208510	14	3344-3
T209212	4	1674-5D
T209212	46	3163-11
T209334	29	1910-3
T209385	9	1812-5
T209539	3	1821-13
T209588	46	3315-7
T209588	3	3315-21
T209627	14	1673-7
T209627	8	1674-5
T209627	1	1674-5F
T209627	10	1674-11B
T209627	32	1821-13
T209685	37	3163-9
T210304	1	1749-3
T210304	6	1749-3
T210305	7	1749-3
T210306	1	1749-3
T210306	6	1749-3
T210372	8	1816-13
T210388	10	1816-13
T210390	7	1816-11
T210544	2	1921-3
T210623	23	0960-5
T210623	2	1816-7
T210624	24	0960-5
T210624	1	1816-7
T210717	2	1674-5
T210717	6	1674-5D
T210717	32	1674-5F
T210717	8	1674-9
T210717	1	1674-25
T210717	7	1675-9
T210717	41	2160-25
T210744	4	1821-13
T210989	6	3165-11
T210989	32	3165-11
T211111	5	0110-3
T211121	15	1910-3
T211121	31	9006-3
T211122	18	1910-3
T211122	22	9006-3
T211143	6	1313-3
T211143	6	1313-5
T211284	10	1674-27
T211287	11	1674-27
T211367	2	1816-13
T212039	4	1060-9
T212302	16	1921-3
T212304	12	1913-3
T212948	3	3343-3
T213143	36	3102-19
T213143	11	3104-3
T213288	21	3104-3
T213429	9	1674-5
T213429	34	1674-5F
T214064	4	0342-3
T214214	23	1674-7
T214214	7	1674-29
T214270	37	0560-3
T214276	29	0510-5
T214527	34	1814-3
T214548	34	1814-3
T214566	25	1674-5
T214566	23	1674-5F
T214606	7	3143-9
T214677	1	1747-5
T214709	14	3143-9
T214725	16	1674-5
T214725	8	1674-5F
T214739	10	3143-9
T214969	13	3143-5
T214970	8	3102-7
T214980	14	3363-51
T215010	9	3102-7
T215126	7	1674-25
T215153	22	1674-5
T215153	19	1674-5F
T215154	24	1821-13
T215179	6	1674-7
T215364	30	1910-3
T215367	11	0560-3
T215392	8	1816-11
T215395	38	3163-9
T215457	11	1816-13
T215588	9	3315-25
T215654	18	3143-7
T215678	14	3343-3
T216060	18	3143-7
T216078	22	1390-3
T216078	36	1390-3
T216111	37	1816-13
T216117	12	1674-25
T216230	1	1913-5
T216248	56	0510-5
T216273	2	0505-5
T216348	20	9006-3
T216350	57	0510-5
T216353	15	9006-3
T216354	11	9006-3
T216355	14	9006-3
T216356	10	9006-3
T216357	32	9006-3
T216397	7	3143-7
T216397	10	3143-7
T216397	13	3143-7
T216444	6	1674-11B
T216498	6	1816-13
T216499	4	1816-11
T216524	9	0960-5
T216525	10	0960-5
T216528	10	1320-3
T216529	12	1320-5
T216530	12	1320-5
T216546	7	0960-5
T216548	52	1830-13
T216570	8	1816-9
T216572	23	3315-23
T216614	31	1910-3
T216633	23	3363-49
T216712	1	1320-3
T216714	7	1320-3
T216715	13	1320-5
T216716	13	1320-5
T216720	12	1320-3
T216721	14	1320-5
T216722	14	1320-5
T216731	19	1673-7
T216750	42	2160-25
T216756	43	2160-25
T216776	2	1320-3
T216833	25	0960-5
T216833	3	1816-7
T216837	22	3315-33
T216838	23	3315-33
T216843	21	3315-31
T216843	24	3315-33
T216844	22	3315-31
T216844	25	3315-33
T216863	24	3363-49
T216877	59	0510-5
T216898	3	1675-9
T216928	17	3115-5
T216928	20	3115-7
T216934	60	0510-5
T216968	28	2160-19
T216973	3	1834-3
T217031	8	3143-9
T217031	11	3143-9
T217077	8	1675-11
T217085	51	3163-7
T217085	39	3163-9
T217085	47	3163-11
T217116	16	9006-3
T217175	61	0510-5
T217238	6	0510-9

NUMERICAL INDEX - CONTINUED

PART NO.	KEY	PAGE
T217367	48	1830-13
T217386	16	0510-5
T217432	8	1814-3
T217433	8	1814-3
T217548	19	3343-3
T217789	29	1390-3
T217790	30	1390-3
T217791	31	1390-3
T217792	32	1390-3
T218011	20	1320-3
T218012	19	1320-5
T218013	19	1320-5
T218014	24	1320-3
T218478	7	1111-3
T218481	4	0210-7
T218482	5	0210-7
T218483	12	1011-3
T218484	22	0250-7
T218485	11	1011-3
T218487	4	0201-7
T218487	24	0250-7
T218488	15	1111-3
T218489	7	0210-5
T218489	1	1111-3
T218493	9	1111-3
T218499	10	0230-7
T218500	1	0230-6
T218502	3	0960-3
T218504	1	0350-15
T218620	25	1320-3
T218622	27	1320-3
T218623	28	1320-3
T218624	33	1320-3
T218625	34	1320-3
T218626	35	1320-3
T218627	37	1320-3
T218782	13	1111-3
T218783	14	1111-3
T218785	3	0201-3
T218785	7	0201-7
T218785	12	1111-3
T218804	18	0250-5
T218832	9	0250-13
T218833	8	0250-13
T218865	27	1814-3
T218866	29	1814-3
T218990	10	3315-31
T218990	23	3315-31
T218990	10	3315-33
T218990	26	3315-33
T219068	13	3363-31
T219077	28	3315-31
T220134	25	3363-49
T221X230	23	3102-9
T221099	15	1320-5
T221100	15	1320-5
T221175	21	3104-3
T222268	28	1821-13
T222521	25	1390-3
T222933	38	1320-3
T223060	39	1320-3
T223061	2	1320-5
T223062	2	1320-5
T223289	9	1814-9
T223304	3	1746-2
T223521	29	2160-19
T223522	30	2160-19
T223564	38	2160-19
T223708	37	2160-19
T223966	27	3162-3
T224004	32	1320-3
T224005	16	1320-5
T224006	16	1320-5
T224015	22	1320-7
T224017	22	1320-7
T224200	21	0560-3
T224216	33	1390-3
T224227	7	1672-5
T224227	20	1674-9
T224233	9	0515-3
T224315	1	0515-3
T224857	19	3143-7
T224857	15	3143-9
T225291	3	3163-13
T225294	5	2160-17
T225322	64	0510-5
T225374	26	1320-3
T225374	44	2160-25
T225375	11	1320-5
T225376	11	1320-5
T225494	13	0400-49
T225495	13	0400-49
T225523	65	0510-5
T225838	6	2003-3
T225865	67	0510-5
T226043	26	3315-31
T226043	28	3315-33
T226063	11	3315-31
T226063	11	3315-33
T226064	12	3315-31
T226064	24	3315-31
T226064	12	3315-33
T226085	5	0520-5
T226097	68	0510-5
T226132	69	0510-5
T226139	15	3315-31
T226139	15	3315-33
T226427	32	1674-7
T226430	22	1674-7
T226542	12	1830-9
T226751	4	1675-5
T226786	3	2002-5
T226954	19	9006-3
T227141	6	3302-3
T227309	9	1675-9
T227339	6	3302-3
T227394	18	1060-3
T227450	36	0510-5
T227592	1	3362-59
T227596	2	3362-59
T227597	1	3362-59
T227598	4	3362-59
T227599	6	3362-59
T227600	7	3362-59
T227609	1	0510-9
T227609	54	1830-13
T227665	1	0510-9
T227666	1	0510-9
T227937	41	3346-5
T227945	5	1913-3
T228016	24	3363-21
T228016	18	3363-23
T228082	42	3346-5
T228083	43	3346-5
T228148	44	3346-5
T228352	29	3315-31
T228352	30	3315-33
T228550	25	3315-31
T228611	13	3143-3
T228612	14	3143-5
T228664	3	0210-3
T228665	3	0210-3
T228666	3	0210-3
T228667	3	0210-3
T228668	3	0210-3
T228669	3	0210-3
T228671	3	0210-3
T228672	3	0210-3
T228673	3	0210-3
T228677	4	0210-5
T228679	4	0210-5
T228680	4	0210-5
T228681	4	0210-5
T228682	4	0210-5
T228683	4	0210-5
T228684	4	0210-5
T228685	4	0210-5
T228686	4	0210-5
T228687	4	0210-5
T228688	4	0210-5
T228689	4	0210-5
T228690	4	0210-5
T228691	4	0210-5
T228709	9	0210-5
T228710	14	0210-7
T228711	12	0210-7
T228712	2	0210-7
T228713	3	0210-7
T228714	11	0210-7
T228715	16	0210-7
T228716	13	0210-7
T228717	15	0210-7
T228722	6	0210-5
T228722	2	1111-3
T228723	1	0210-7
T228727	6	1011-3
T228728	4	1011-3
T228729	17	1011-3
T228730	7	1011-3
T228852	2	1675-11
T228895	8	1011-3
T228896	1	1011-3
T228897	19	1011-3
T228898	3	1011-3
T228908	7	0201-3
T228909	2	1011-3
T228910	13	1011-3
T228911	3	0250-9
T228911	18	1011-3
T228912	14	1011-3
T228912	21	1011-3
T228913	1	0201-3
T228914	11	0201-3
T228915	11	0201-3
T228916	11	0201-3
T228917	11	0201-3
T228918	11	0201-3
T228919	11	0201-3
T228920	11	0201-3
T228921	11	0201-3
T228922	11	0201-3

NUMERICAL INDEX - CONTINUED

PART NO.	KEY	PAGE
T228923	11	0201-3
T228924	11	0201-3
T228925	11	0201-3
T228926	11	0201-3
T228927	11	0201-3
T228928	11	0201-3
T228929	11	0201-3
T228930	11	0201-3
T228931	11	0201-3
T228932	11	0201-3
T228933	11	0201-3
T228934	11	0201-3
T228935	11	0201-3
T228936	21	0201-5
T228937	1	0201-7
T228938	11	0201-7
T228939	5	0201-3
T228940	13	0201-7
T228941	15	0201-7
T228942	8	0201-7
T228952	9	0201-7
T228956	10	0201-7
T228957	8	0201-3
T228970	2	0201-3
T228972	4	0201-3
T228973	12	0201-3
T228974	12	0201-7
T228975	6	0201-7
T228994	4	1111-3
T228995	3	1111-3
T228996	11	1111-3
T228997	17	1111-3
T228998	2	0250-13
T228999	2	0250-13
T229000	2	0250-13
T229001	2	0250-13
T229002	2	0250-13
T229009	4	0250-13
T229010	5	0250-13
T229011	5	0250-13
T229012	5	0250-13
T229013	5	0250-13
T229014	5	0250-13
T229015	5	0250-13
T229016	5	0250-13
T229017	5	0250-13
T229018	5	0250-13
T229019	5	0250-13
T229020	5	0250-13
T229021	5	0250-13
T229022	5	0250-13
T229023	5	0250-13
T229024	5	0250-13
T229025	5	0250-13
T229026	5	0250-13
T229027	5	0250-13
T229028	5	0250-13
T229029	5	0250-13
T229030	5	0250-13
T229031	5	0250-13
T229032	5	0250-13
T229033	5	0250-13
T229034	5	0250-13
T229035	5	0250-13
T229036	5	0250-13
T229076	2	0250-11
T229077	9	0250-11
T229080	7	0250-11
T229081	11	0250-11
T229082	4	0250-11
T229083	6	0250-11
T229084	8	0250-11
T229086	16	0250-5
T229087	16	0250-5
T229088	16	0250-5
T229090	16	0250-5
T229091	16	0250-5
T229092	16	0250-5
T229093	16	0250-5
T229094	16	0250-5
T229096	16	0250-5
T229097	16	0250-5
T229098	16	0250-5
T229099	16	0250-5
T229100	16	0250-5
T229101	16	0250-5
T229102	16	0250-5
T229103	16	0250-5
T229104	16	0250-5
T229105	16	0250-5
T229106	16	0250-5
T229107	16	0250-5
T229108	16	0250-5
T229109	16	0250-5
T229110	16	0250-5
T229111	16	0250-5
T229112	16	0250-5
T229113	16	0250-5
T229114	16	0250-5
T229115	16	0250-5
T229116	16	0250-5
T229117	16	0250-5
T229118	16	0250-5
T229119	16	0250-5
T229120	16	0250-5
T229121	16	0250-5
T229122	16	0250-5
T229123	16	0250-5
T229124	16	0250-5
T229125	16	0250-5
T229126	16	0250-5
T229127	16	0250-5
T229128	16	0250-5
T229129	16	0250-5
T229130	16	0250-5
T229192	13	3315-31
T229192	13	3315-33
T229193	14	3315-31
T229193	14	3315-33
T229194	27	3315-33
T229212	6	0250-5
T229212	10	0250-9
T229250	2	0250-9
T229251	15	0250-7
T229252	15	0250-7
T229253	20	0250-5
T229254	3	0250-7
T229255	6	0250-7
T229258	4	0250-9
T229259	6	0250-9
T229260	13	0250-7
T229261	8	0960-3
T229262	15	0250-5
T229267	13	0250-5
T229268	1	0250-5
T229269	3	0250-5
T229270	5	0250-7
T229271	14	0250-7
T229272	10	0250-7
T229273	25	0250-7
T229274	1	0250-9
T229275	2	0960-3
T229276	4	0960-3
T229277	7	0960-3
T229278	10	0960-3
T229279	1	0960-3
T229280	9	0960-3
T229281	6	0960-3
T229282	12	0960-3
T229285	16	0250-7
T229335	22	0350-3
T229336	17	0350-13
T229337	7	0350-9
T229337	7	0350-13
T229338	7	0341-3
T229340	11	0350-3
T229340	11	0350-5
T229340	9	0350-7
T229340	9	0350-9
T229340	9	0350-13
T229341	10	0350-3
T229341	12	0350-5
T229341	10	0350-7
T229341	10	0350-9
T229341	10	0350-13
T229342	19	0350-13
T229343	18	0350-15
T229343	2	0360-7
T229346	9	0350-3
T229346	9	0350-5
T229346	12	0350-7
T229346	12	0350-9
T229346	12	0350-13
T229348	15	0350-13
T229349	14	0350-11
T229350	2	0341-3
T229351	1	0341-5
T229351	18	0341-5
T229352	10	0350-3
T229352	12	0350-5
T229352	10	0350-7
T229352	10	0350-9
T229352	10	0350-13
T229353	7	0350-11
T229354	5	0341-3
T229356	2	0350-3
T229356	2	0350-5
T229356	15	0350-7
T229356	15	0350-9
T229356	2	0350-11
T229356	15	0350-15
T229357	11	0350-15
T229359	10	0350-3
T229359	12	0350-5
T229359	10	0350-7
T229359	10	0350-9
T229359	10	0350-13
T229360	7	0341-5
T229362	17	0341-5
T229363	9	0341-5
T229364	10	0350-3

NUMERICAL INDEX - CONTINUED

PART NO.	KEY	PAGE
T229364	12	0350-5
T229364	10	0350-7
T229364	10	0350-9
T229364	10	0350-13
T229366	17	0341-5
T229368	11	0350-11
T229368	9	0350-15
T229369	7	0341-5
T229372	12	0350-15
T229373	9	0350-11
T229375	11	0350-11
T229375	9	0350-15
T229376	7	0341-5
T229379	10	0350-3
T229379	12	0350-5
T229379	10	0350-7
T229379	10	0350-9
T229379	10	0350-13
T229380	10	0350-3
T229380	12	0350-5
T229380	10	0350-7
T229380	10	0350-9
T229380	10	0350-13
T229381	10	0350-3
T229381	12	0350-5
T229381	10	0350-7
T229381	10	0350-9
T229381	10	0350-13
T229382	5	0360-3
T229383	11	0350-11
T229383	9	0350-15
T229385	1	0360-5
T229386	11	0350-11
T229386	9	0350-15
T229387	5	0341-3
T229388	14	0341-3
T229389	14	0341-3
T229392	2	0341-5
T229393	4	0360-3
T229394	12	0341-5
T229395	8	0341-3
T229396	3	0341-3
T229398	14	0350-3
T229398	15	0350-5
T229398	6	0350-7
T229398	6	0350-9
T229398	6	0350-13
T229399	4	0341-5
T229400	5	0341-5
T229401	18	0350-11
T229402	4	0350-9
T229402	4	0350-13
T229403	15	0350-3
T229403	17	0350-5
T229403	4	0350-7
T229404	6	0341-3
T229405	2	0350-17
T229406	17	0350-3
T229406	13	0350-5
T229406	11	0350-7
T229406	11	0350-9
T229406	11	0350-13
T229407	14	0350-15
T229408	19	0350-9
T229409	5	0350-11
T229410	20	0350-13
T229411	19	0350-7
T229412	5	0350-3
T229412	5	0350-5
T229466	18	0350-5
T229466	2	0350-7
T229466	2	0350-9
T229466	19	0350-11
T229466	2	0350-13
T229466	5	0350-15
T229467	2	0350-15
T229468	8	0350-3
T229468	8	0350-5
T229468	13	0350-7
T229468	13	0350-9
T229468	13	0350-13
T229469	13	0350-3
T229469	14	0350-5
T229469	7	0350-7
T23P	25	3102-9
T230SP	24	3102-9
T230183	7	1913-5
T230433	5	0341-3
T230467	17	9006-3
T230468	18	9006-3
T230731	66	0510-5
T23474	19	0400-17
T24472	9	0400-26
T24472	5	0400-27
T24509	15	3315-17
T24958	21	3363-47
T24959	8	3363-45
T27022	23	3102-11
T29320	71	0510-5
T29342	6	0540-3
T29342	21	1674-9
T29342	6	1921-3
T29342	15	3344-3
T29342	13	3348-3
T29342	53	3363-15B
T33376	16	3344-3
T35233	1	3315-9
T38485	9	3365-6
T38485	9	3365-7
T42199	44	1320-3
T42199	1	1671-7
T46876	23	1674-5
T46876	18	1674-5F
T54568	8	3102-11
T54568	47	3102-19
T54904	16	3162-13
T55214	16	1821-9
T55222	10	1821-9
T55224	17	1821-9
T55224	23	1821-17
T55501	3	1674-7
T55501	5	1674-14
T58056	8	1921-3
T58056	11	1921-3
T58109	27	3315-7
T58109	2	3315-11
T58109	16	3315-13
T58109	13	3315-15
T58109	15	3315-35
T58477	6	0400-64
T60811	52	1830-7
T60811	53	1830-7
T60811	5	1830-9
T60811	6	1830-9
T60920	6	2002-3
T61226	14	3143-3
T61226	5	3165-13
T61861	40	0510-5
T61861	38	3163-3
T62804	14	1830-9
T65974	7	0325-3
T66701	36	0560-3
T67424	6	3362-9
T67424	27	3362-13
T67424	33	3362-43
T67425	4	3362-9
T67425	28	3362-13
T67425	34	3362-43
T68144	43	0510-5
T69472	9	3348-3
T69938	6	0250-15
T69938	4	0325-3
T70177	3	3162-13
T70177	13	3362-9
T70177	10	3362-51
T70177	10	3362-53
T70177	10	3362-55
T70659	37	1830-7
T70659	54	3363-15B
T74410	34	1390-3
T74412	17	1674-9
T74412	7	1674-27
T74416	14	1674-9
T74416	29	1830-13
T74952	4	0515-3
T74952	4	1673-3
T74952	24	1674-5
T74952	5	2001-3
T75276	1	1674-27
T75815	6	3165-13
T75816	15	3143-5
T76502	22	3162-13
T76509	13	3162-13
T76830	52	1814-3
T76832	42	1814-3
T76833	37	1814-3
T76938	7	2160-3
T76938	3	2160-5
T76938	17	2160-7
T76938	24	2160-7
T76938	17	2160-9
T76938	7	2160-21
T76938	38	3363-21
T76938	12	3363-31
T76938	21	3363-35
T76938	4	3363-49
T77613	3	0400-32
T77613	14	0960-9
T77613	14	0960-11
T77613	1	1060-7
T77613	2	1060-7
T77613	3	1060-7
T77613	3	1060-9
T77613	4	1060-11
T77613	6	2160-7
T77613	6	2160-9
T77613	6	2160-11
T77613	12	2160-23
T77613	20	3104-3
T77613	19	3162-13
T77613	11	3163-11

NUMERICAL INDEX - CONTINUED

PART NO.	KEY	PAGE
T77613	5	3362-7
T77613	5	3362-29
T77613	16	3362-35
T77613	16	3362-37
T77613	5	3363-1B
T77613	15	3363-1B
T77613	16	3363-1B
T77613	1	3363-1D
T77613	2	3363-1D
T77613	4	3363-1D
T77613	5	3363-1D
T77613	6	3363-1D
T77613	7	3363-1D
T77613	8	3363-1D
T77613	9	3363-1D
T77613	10	3363-1D
T77613	11	3363-1D
T77613	12	3363-1D
T77613	13	3363-1D
T77613	4	3363-1F
T77613	12	3363-1F
T77613	23	3363-1F
T77613	7	3363-3
T77613	3	3363-3B
T77613	3	3363-39
T77613	6	3363-45
T77814	2	0210-8
T77814	10	1390-3
T77814	8	2160-7
T77814	8	2160-9
T77814	41	3363-21
T77814	43	3363-21
T77814	32	3363-23
T77857	28	0960-9
T77857	28	0960-11
T77857	21	1060-3
T77857	11	2160-7
T77857	11	2160-9
T77857	9	2160-11
T77857	15	2160-23
T77857	7	2160-25
T77857	10	2160-25
T77857	10	3102-11
T77857	1	3102-19
T77857	32	3162-13
T77857	13	3163-3
T77857	11	3163-5
T77857	13	3163-7
T77857	11	3163-9
T77857	1	3362-29
T77857	21	3363-1B
T77857	27	3363-1F
T77857	14	3363-3
T77857	3	3363-13
T77857	30	3363-15B
T77857	12	3363-21
T77857	5	3363-23
T77857	14	3363-35
T77857	3	3363-37
T77857	9	3363-47
T77858	13	2160-7
T77858	20	2160-7
T77858	13	2160-9
T77858	9	3363-3
T77858	17	3363-7
T77858	2	3363-17
T77858	20	3363-19
T77858	21	3363-19
T77858	22	3363-19
T77858	25	3363-19
T77858	27	3363-19
T77858	29	3363-19
T77858	7	3363-21
T77858	39	3363-21
T77858	40	3363-21
T77858	4	3363-23
T77858	9	3363-23
T77858	4	3363-31
T77858	7	3363-49
T77858	8	3363-51
T77932	28	3102-11
T77932	48	3102-19
T77932	49	3102-19
T77932	17	3163-3
T77932	14	3163-5
T77932	17	3163-7
T77932	13	3163-9
T77932	26	3163-11
T77932	18	3362-63
T77932	23	3362-65
T77932	19	3362-67
T77932	18	3362-69
T77932	5	3363-7
T77932	12	3363-15
T77932	12	3363-15B
T77932	9	3363-21
T77932	2	3363-23
T77932	1	3363-25
T77932	23	3363-35
T77932	1	3363-41
T78497	40	2160-7
T78497	36	2160-9
T78497	36	2160-19
T78593	11	0505-5
T78606	17	0960-9
T78606	17	0960-11
T78606	42	3163-3
T78606	28	3163-5
T78606	35	3163-9
T78606	41	3163-11
T78707	36	3363-3
T78707	23	3363-17
T78707	8	3363-19
T78707	6	3363-31
T78715	26	3363-49
T78716	55	3363-15B
T78716	24	3363-35
T78787	11	1830-13
T80027	6	0250-3
T80306	49	3102-19
T80306	34	3163-11
T81029	11	3363-1B
T81029	9	3363-1F
T81524	4	3162-5
T81524	5	3162-7
T81524	3	3162-9
T81524	6	3162-11
T81524	13	3362-11
T81524	13	3362-13
T81524	17	3362-15
T81524	3	3362-17
T81524	3	3362-19
T81524	3	3362-23
T81535	18	3162-5
T81540	8	3162-9
T81540	11	3162-11
T81540	21	3362-11
T81540	19	3362-13
T81540	27	3362-15
T81540	11	3362-17
T81540	11	3362-19
T81540	13	3362-23
T81541	10	3162-9
T81541	13	3162-11
T81541	23	3362-11
T81541	21	3362-13
T81541	29	3362-15
T81541	13	3362-17
T81541	13	3362-19
T81541	15	3362-23
T82430	6	0325-3
T82791	18	1674-7
T82792	19	1674-7
T83061	38	1816-13
T83426	12	1740-3
T84194	6	3102-5
T84194	9	3102-9
T84194	6	3102-17
T84194	27	3102-19
T84194HD	9	3102-9
T84194HD	6	3102-17
U12198	9	3365-15
U12547	14	2160-7
U12547	51	2160-7
U12547	14	2160-9
U12547	49	2160-9
U12547	35	2160-19
U12547	6	3102-19
U12547	16	3362-21
U12547	24	3362-51
U12547	19	3362-53
U12547	24	3362-55
U12547	10	3363-3
U12547	15	3363-7
U12547	39	3363-15B
U12547	20	3363-17
U12547	24	3363-19
U12547	26	3363-19
U12547	29	3363-21
U12547	35	3363-23
U12547	25	3363-35
U12547	9	3363-49
U12547	9	3363-51
U13639	23	0400-17
U13639	3	0400-57
U13639	3	0505-3
U13639	29	1060-5
U13639	9	1830-9
U13639	10	2160-3
U13639	6	2160-5
U13639	10	2160-21
U13639	15	3363-31
U14555	22	3315-7
U14555	20	3315-13
U14555	20	3315-35
U17408	36	3315-7
U17409	21	2160-7
U17409	2	3362-63
U17409	2	3362-65
U17409	2	3362-67
U17409	2	3362-69

NUMERICAL INDEX - CONTINUED

PART NO.	KEY	PAGE
U40962	12	3362-9
U43792	10	3302-9
U43792	4	3302-11
U46457	31	2160-7
U46457	27	2160-9
W23122	41	1816-15
W23122	23	1816-17
X-NR50	20	3363-35
XH4-62-T10	5	3363-25
XH4-62-T10	5	3363-41
XH4-63-T10	4	3363-25
XH4-63-T10	4	3363-41
XNR-37	19	3363-35
X10HP5ON-S	3	3362-63
X10HP5ON-S	3	3362-65
X10HP5ON-S	3	3362-67
X10HP5ON-S	3	3362-69
0344046	9	3362-30
0471300388	2	3362-61
5787YT	26	3115-3
790106800	17	3362-41
790106800	17	3362-43
790106800	17	3362-45
790106800	14	3362-47
790107100	13	3362-41
790107100	13	3362-43
790107100	13	3362-45
790107100	10	3362-47

PART NO.	KEY	PAGE

PART NO.	KEY	PAGE