CATERPILLAR®

SEBP2202
April 1993
Replaces SEBP1980

RUTHZIL TRATOR COMERCIAL DE PEÇAS LTDA 11 97083-6812 ROLANDO CITRANGULO

RXNC. 001.

RETRO EXCAVADORA.

416B
Backhoe Loader

	MODELO	SERIE	ARR
	416B	8ZK03622	9R7570
MOTOR	3054	5HK17718	7E9559
TRANSM		G941221	8E7681

8SG1-Up
8ZK1-Up

© 1993 Caterpillar
All Rights Reserved
TECHNICAL INFORMATION DIVISION
MARKETING SUPPORT SERVICES

MACHINE IDENTIFICATION

Caterpillar machines are identified with SERIAL NUMBERS and/or PRODUCT IDENTIFICATION NUMBERS (PIN). These numbers are assigned to the chassis and to the engine. The chassis and the engine also carry ARRANGEMENT NUMBERS and in some cases MODIFICATION NUMBERS. These numbers are shown on the SERIAL NUMBER or PIN plates and on the MASTER PLATE in the operator's compartment.

Caterpillar dealers need all of these numbers to determine which components were included on the machine when it was assembled at the factory. This permits accurate identification of replacement part numbers.

ORDERING PARTS

Quality Caterpillar Replacement parts are available from Caterpillar dealers throughout the world. Their parts inventories are up to date and include all parts normally required to protect your investment in Caterpillar machines. Some dealers may offer repair kits, exchange components, or remanufactured parts to allow selection of the most effective repair alternative for a specific situation. When ordering parts, your order should specify the quantity, part number, part name, and the serial number. If in doubt about the part number, please provide your dealer with a complete description of the needed item.

HOW TO USE THE PARTS BOOK

Caterpillar Parts Books include illustrations of the groups or assemblies which make up the machine. These illustrations show the standard components and many of the attachments for each machine.

The alphabetical index located in the front part of the book should be used to determine the page number on which specific illustrations are shown. Reference to those pages will identify each of the individual serviceable parts. A numerical index listing each part number and the corresponding page number (s) appears in the back of the book.

Captions

The caption under each illustration identifies the part number and name of the group or assembly shown. Part numbers of groups are shown for reference purposes. Your Caterpillar dealer can assist you in identifying the availability of a complete group. If more than one illustration is included for any group, the caption identifies the specific machine serial numbers to which each illustration applies. In some cases it is not possible to determine the specific machine serial numbers to which different illustrations are applicable. In those cases the caption identifies the illustration as "TYPE 1", "TYPE 2", etc. Reference to the actual group or assembly is necessary in those cases to determine which illustration should be used. Captions provide additional information such as page numbers where illustrations of sub assemblies are shown, information regarding quantities used and other information intended to assist the user in determining parts needs.

Abbreviations and Symbols

O.D. Outside diameter
I.D. Inside diameter
A Not Part of This Group
B Use as Required
C Indicates Change
D Order by the Meter
E Order by the Centimeter
F Not Shown
G Order by the Inch
I See Hose Fabrication Guide
M Metric Part (Including Fasteners)
R Remfg Part May Be Available
X Major Component Exchange
Y Separate Illustration
Z Not Serviced Separately

Illustration Reference Letters

When necessary, illustrations contain reference letters (A, B, C etc.) that are intended to track lines and harnesses from one point to another. They are also used to show where to reconnect illustrations that have been separated.

Ref No

The numbers shown in this column refer to the numbers shown within the illustration. To identify any item within the illustration, first determine its reference number, then refer to the same number in the Ref. No. column for information about that part.

Part Number

These are numbers which are used to identify parts.

Qty

The quantities shown in this column indicate the total number of that item used in the group covered by the illustration.

Part Name

Information in this column provides the name of the part as well as additional information such as size, which further aids in the identification of the part.

Indented Part Names

Within each illustration is a parts list identifying each serviceable part in the illustration. When a part name is indented in this list, it means that serviceable item is a part of the serviceable item under which it is indented.

NOTE:

Continuing improvement and advancement of product design may cause changes to your machine which may not be included in this publication. Each publication is reviewed and revised, as required, to update and include these changes in later editions.

Whenever a question arises regarding your Caterpillar product, or this publication, please consult your Caterpillar dealer for the latest available information.

IDENTIFICATION DE LA MACHINE

Toutes les machines Caterpillar portent un NUMÉRO DE SÉRIE et un NUMÉRO D'IDENTIFICATION (PIN). Ces numéros s'appliquent au châssis et au moteur. Le châssis et le moteur peuvent également recevoir des NUMÉROS DE VERSION et, dans certains cas, de MODIFICATION. Ces numéros figurent sur les plaques de série ou d'identification et sur la plaque signalétique principale qui se trouve dans le poste de conduite.

Les concessionnaires Caterpillar doivent connaître tous ces numéros pour savoir quels composants ont été employés lors du montage en usine et trouver plus facilement le numéro des pièces de rechange.

COMMANDE DE PIÈCES

Les concessionnaires Caterpillar fournissent dans le monde entier des pièces de rechange de qualité Caterpillar. Leurs stocks de pièces sont constamment réapprovisionnés et comptent toutes les pièces nécessaires pour assurer la bonne marche de votre machine Caterpillar. Certains concessionnaires proposent également des kits de réparation, des échanges standard ou des pièces rénovées, ce qui permet de choisir la solution la plus économique dans une situation donnée. Lors des commandes de pièces, mentionner la quantité, le numéro et la désignation des pièces ainsi que le numéro de série. En cas de doute sur le numéro de pièce, fournir au concessionnaire une description complète de la pièce en question.

UTILISATION DU CATALOGUE DE PIÈCES

Les Catalogues de pièces Caterpillar comportent des illustrations des groupes ou ensembles qui composent la machine. Ces illustrations représentent les composants standard et nombre des accessoires disponibles.

Au début du catalogue figure un index alphabétique qui renvoie aux pages et illustrations correspondantes. Toutes les pièces du moteur avec leur numéro figurent dans ces pages.

Légendes

Chaque illustration comporte une légende comprenant le numéro de pièce et la désignation du groupe ou celle de l'ensemble. Les numéros de groupe sont donnés à titre de référence. Pour savoir si un groupe complet peut être commandé, s'adresser au concessionnaire. Si à un groupe donné correspondent plusieurs illustrations, la légende indiquera le numéro de série de chaque machine spécifique. Parfois, il n'est pas possible de savoir à quels numéros de série spécifiques de la machine se rapportent les différentes illustrations. Dans ce cas, les légendes comportent la mention "Type 1", "Type 2", etc. Pour déterminer quelles illustrations utiliser, il faudra connaître la référence du groupe ou de l'ensemble correspondant. Les légendes indiquent également les numéros de page des plans des sous-ensembles, les quantités utilisées et autres renseignements destinés à aider l'utilisateur à déterminer quelles sont les pièces nécessaires.

Abréviations et symboles

O.D.	Diamètre extérieur
I.D.	Diamètre intérieur
A	Ne fait pas partie de ce groupe
B	Utiliser selon besoin
C	Modification
D	Commander par mètre
E	Commander par centimètre
F	Non représenté
G	Commander par pouce
I	Voir "Hose Fabrication Guide"
M	Pièce métrique (y compris fixations)
R	Pièce rénovée éventuellement disponible
X	Echange standard
Y	illustration séparée
Z	Non fourni séparément

Lettres de référence des illustrations

Quand il est nécessaire, les illustrations comportent des lettres de référence (A, B, C, etc.) pour montrer le trajet des lignes et faisceaux de câbles d'un point à l'autre. Elles sont utilisées également pour indiquer où relier les illustrations séparées auparavant.

Ref No (No de réf.)

Les numéros figurant dans cette colonne renvoient aux numéros utilisés dans l'illustration. Pour identifier une pièce quelconque dans l'illustration, déterminer en premier son numéro de référence, puis rechercher les renseignements sur cette pièce dans la colonne de numéro de référence.

Part Number (No de pièce)

Ces numéros identifient les pièces.

Qty (Quantité)

Les quantités qui figurent dans cette colonne indiquent le nombre de la pièce concernée utilisé.

Part Name (Désignation de la pièce)

Les renseignements figurant dans cette colonne indiquent le nom de la pièce ainsi que des renseignements supplémentaires telles par exemple les dimensions, complétant l'identification de la pièce concernée.

Désignations de pièces en retrait

Chaque illustration comporte la liste des pièces qui la constituent et que l'on peut se procurer. Lorsqu'une désignation de pièce est en retrait, cela veut dire que l'article en regard fait partie de l'ensemble sous lequel il figure.

NOTA:

En raison du progrès technique et des améliorations continuelles apportées au matériel, votre machine comporte peut-être des modifications qui n'apparaissent pas dans la présente publication. Les éditions ultérieures seront revues et corrigées en conséquence.

En cas de doute sur un détail de votre machine Caterpillar ou sur le texte de la présente publication, adressez-vous à votre concessionnaire Caterpillar.

MAQUINAS

Las máquinas Caterpillar se identifican con NUMEROS DE SERIE y/o NUMEROS DE IDENTIFICACION DEL PRODUCTO (PIN). Estos números son asignados al chasis y al motor, respectivamente. El chasis y el motor tienen también NUMEROS DE DISPOSICION, y en algunos casos, NUMEROS DE MODIFICACION. Estos números están en la placa del número de serie del motor o en la placa principal en la cabina del operador.

Los distribuidores Caterpillar necesitan estos números para determinar con qué componentes se armó la máquina en la fábrica. Esto permite una identificación exacta de los números de pieza de repuesto.

COMO PEDIR REPUESTOS

Piezas de repuesto Caterpillar de calidad están disponibles de los distribuidores Caterpillar en todo el mundo. Sus existencias actualizadas incluyen todas las piezas normalmente requeridas para proteger su inversión en máquinas Caterpillar. Algunos distribuidores pueden tener juegos de reparación, componentes de intercambio o piezas remanufacturadas, para permitir la selección de la mejor alternativa de reparación de un caso en particular. Al pedir piezas de repuesto, especifique en su pedido la cantidad, el número de pieza, el nombre de la pieza y el número de serie. Si tiene duda del número de pieza, déle al distribuidor una descripción completa de la misma.

COMO USAR ESTE CATALOGO

Los Catálogos de Piezas Caterpillar tienen ilustraciones de los grupos o conjuntos que componen la máquina. Estas ilustraciones muestran los componentes estándar y muchos de los accesorios disponibles para la máquina.

Se debe utilizar el índice alfabético al frente de este catálogo para determinar el número de página donde se encuentran ilustraciones especificas. Dichas páginas identifican las piezas utilizables.

Titulos

El título debajo de cada ilustración identifica el número de pieza y el nombre del grupo o del conjunto indicado. Los números de pieza de grupos se muestran para referencia. Su distribuidor Caterpillar puede ayudarle a identificar la disponibilidad de un grupo completo. Si se incluye más de una ilustración de cualquier grupo, el titulo identifica números de serie de las máquinas correspondientes a cada ilustración. En algunos casos no es posible determinar los números de serie de las máquinas correspondientes a las diferentes ilustraciones. En esos casos, el título identifica la ilustración como "Tipo 1", "Tipo 2", etc. Es necesario referirse al grupo o conjunto en sí para determinar cuál ilustración se debe utilizar. Los titulos proveen información adicional: los números de las páginas en que aparecen las ilustraciones de los subconjuntos, las cantidades utilizadas y demás información para ayudar al usuario a determinar las piezas necesarias.

Abreviaturas y simbolos

O.D.	Diámetro exterior
I.D.	Diámetro interior
A	No es pieza de este grupo
B	Utilizado según la demanda
C	Indica cambio
D	Se pide por metro
E	Se pide por centimetro
F	No se muestra
G	Se pide por pulgada
I	Ver "Hose Fabrication Guide"
M	Pieza métrica (Incluso tornilleria)
R	Puede estar disponible como pieza remanufacturada
X	Puede ser posible el intercambio de Componentes Principales
Y	Ilustración separada
Z	No se suministra por separado

Letras de referencia de ilustraciones

Las ilustraciones contienen algunas veces letras de referencia (A, B, C, etc.) cuyo propósito es seguir el trayecto de lineas y mazos de cables de un punto a otro. También se utilizan para mostrar dónde volver a unir ilustraciones que se habian separado.

No. de Referencia

Los números en esta columna se refieren a los números en la ilustración. Para obtener información acerca de una pieza en la ilustración, determine primero el número de referencia y después refiérase al mismo número en la columna "No. de Referencia".

No. de Pieza

Estos números se utilizan para identificar piezas.

Cantidad

Las cantidades en esta columna indican el número de esa(s) pieza(s) utilizada(s).

Nombre de Pieza

La información en esta columna proporciona el nombre de la pieza, tamaño y cualesquiera otra información que ayude a identificar la pieza misma.

Nombres de Pieza sangrados

En cada ilustración hay una lista de piezas que identifica las piezas utilizables en la ilustración. Cuando el nombre de una pieza está sangrado en esta lista, significa que esta pieza forma parte de la pieza utilizable inmediatamente arriba.

NOTA:

Las continuas mejoras y adelantos en diseño podrian originar cambios a su máquina que no se incluyan en esta publicación. Cada publicación es analizada y revisada para actualizar e incluir estos cambios en ediciones subsecuentes.

Cuando tenga alguna pregunta acerca de su producto Caterpillar o de esta publicación, consulte al distribuidor Caterpillar para obtener la información más reciente.

IDENTIFICAÇÃO DA MÁQUINA

As máquinas Caterpillar são identificadas pelos NÚMEROS DE SÉRIE e/ou NÚMERO DE IDENTIFICAÇÃO DO PRODUTO (PIN). Esses números são atribuidos ao chassi e ao motor. O chassi e o motor recebem, também, NÚMEROS DE ARRANJO e, em alguns casos, NÚMEROS DE MODIFICAÇÃO. Esses números aparecem nas placas de NÚMERO DE SÉRIE ou PIN e na PLACA MESTRE no compartimento do operador.

Os revendedores Caterpillar necessitam desses números para determinar quais componentes foram incluidas na máquina durante a montagem na fábrica. Isso permite uma identificação precisa dos números de peça de reposição.

COMO OBTER PEÇAS

As Peças de Reposição de Qualidade Caterpillar estão disponiveis nos revendedores Caterpillar no mundo inteiro. Seus estoques de peças são atualizados e incluem todas as peças normalmente necessárias para proteger seu investimento nas máquinas Caterpillar. Alguns revendedores podem ter peças de troca/remanufaturadas disponiveis, como uma opção. Ao fazer um pedido de peças, especifique a quantidade, o número e o nome da peça, o número de série ou PIN, o número de arranjo e quaisquer números de modificação da máquina a que as peças se destinam. Se houver dúvidas quanto ao número de série, forneça ao seu revendedor uma descrição completa do item necessário.

COMO USAR O CATÁLOGO DE PEÇAS

Os Catálogos de Peças Caterpillar incluem ilustrações dos grupos ou conjuntos que compõem a máquina. Essas ilustrações mostram os componentes padrão e muitos dos acessórios disponiveis para a máquina.

O indice alfabético, no inicio do catálogo, deve ser usado para determinar o número da página em que se encontra determinada ilustração. Consultando tais páginas, você identificará cada uma das peças disponiveis, individualmente. Existe no fim do livro um indice numérico de cada número de peça e o(s) número(s) correspondente(s) da(s) página(s).

Legendas

A legenda de cada ilustração identifica o número da peça e o nome do grupo ou do conjunto mostrado. Os números de peças para grupos são indicados para fins de referência. O seu Revendedor Caterpillar pode fornecer assistência para identificar a disponibilidade de um grupo completo. Se for incluida mais de uma ilustração para qualquer grupo, a legenda indicará os números de série da máquina especifica a que cada ilustração se aplica. Em alguns casos, não é possivel determinar os números de série da máquina especifica a que as diferentes ilustrações se aplicam. Em tais casos, a legenda identifica a ilustração como "Tipo 1", "Tipo 2", etc. Será, então, necessário referir-se ao conjunto ou grupo real para determinar qual ilustração deverá ser usada. As legendas fornecem informações adicionais, tais como: números das páginas onde são mostradas as ilustrações de subconjuntos, informações referentes às quantidades usadas e outras informações que se destinam a auxiliar o usuário a determinar as peças necessárias.

Abreviaturas e Simbolos

O.D.	"Outside Diameter" (Diâmetro Externo)
I.D.	"Inside Diameter" (Diâmetro Interno)
A	Não faz parte deste grupo
B	Use conforme necessário
C	Indica modificação
D	Vendido por metro
E	Vendido por centimetro
F	Não mostrado
G	Vendido por polegada
I	Veja o "Guia de Fabricação de Mangueiras" (Hose Fabrication Guide)
M	Peça métrica (inclusive fixadores)
R	Peça remanufaturada. Pode estar disponivel. Consulte o seu Revendedor Caterpillar
X	Intercambio de componentes principais pode estar disponivel. Consulte o seu Revendedor Cat
Y	Ilustração separada
Z	Não disponivel separadamente

Letras de Referência nas Ilustrações

Quando necessário, as ilustrações contêm letras de referência (A, B, C, etc.) que são utilizados para seguir tubulações e cabos elétricos de um ponto para um outro. Também foram utilizados para indicar onde se pode reconectar as ilustrações que foram separadas.

Ref No (Número de Refêrencia)

Os números indicados nesta coluna se referem aos números mostrados na ilustração. Para identificar qualquer item dentro da ilustração, primeiro determine seu No. de Ref., então refere ao mesmo número na coluna para informação referente à peça.

Part Number (Número de Peça)

Tais números são usados para identificar as peças.

Qty (Quantidade)

As quantidades indicadas nesta coluna indicam o número de uma determinada peça utilizada.

Part Name (Nome de Peça)

A informação contida nesta coluna proporciona o nome da peça tanto quanto informação adicional tal como a dimensão, que ajuda identificar a peça.

Nomes de Peças Desalinhados

Cada ilustração apresenta uma lista de peças que identifica cada peça disponivel na ilustração. Quando um nome de peça está desalinhado na lista, significa que tal item é disponivel e faz parte do item disponivel anterior.

Nota: Os continuos aperfeiçoamentos e avanços no projeto do produto podem ocasionar modificações em sua máquina, que ainda não estejam incluidas nesta publicação. Cada publicação é revisada e corrigida, conforme necessário, para atualizar e incluir essas modificações nas edições mais recentes.

Sempre que surgir uma questão concernente ao seu produto Caterpillar ou a esta publicação, consulte o seu revendedor Caterpillar quanto às mais recentes informações disponiveis.

GERÄTEKENNZEICHNUNG

Cat-Geräte sind mit SERIAL NUMBERS und/oder PRODUCT IDENTIFICATION NUMBER (PIN) (Serien-Nr. und/oder Produktidentifizierungs-Nr.) gekennzeichnet. Diese Nummern dienen zur Kennzeichnung des Laufwerks und des Motors. Am Laufwerk und am Motor befinden sich außerdem ARRANGEMENT NUMBERS (Ausrüstungsnummern) sowie in einigen Fällen auch MODIFICATION NUMBERS (Änderungsnummern). Sie befinden sich auf den Typen- oder PIN-Schildern sowie auf dem HAUPTSCHILD im Fahrerhaus.

Die Cat-Händler benötigen alle genannten Nummern, um feststellen zu können, welche Baugruppen bei der Montage des Geräts im Werk eingebaut wurden. Nur mit Hilfe dieser Angaben lassen sich die Bestellnummern der benötigten Ersatzteile genau bestimmen.

BESTELLEN VON ERSATZTEILEN

Original-Cat-Ersatzteile können bei den Cat-Händlern überall auf der Welt bestellt werden. Ihre umfangreichen Lager enthalten normalerweise alle Teile, die Sie für Ihr Cat-Gerät benötigen. Einige Händler bieten Reparatursätze, Austausch- oder werküberholte Teile an, so daß Sie die Auswahl unter verschiedenen Reparaturmöglichkeiten treffen können. Ihre Bestellung muß folgende Angaben enthalten: Anzahl der benötigten Teile, Bestellnummer, Bezeichnung des Teils; Serien-Nr., Ausrüstungs-Nr. und Änderungs-Nr. des Geräts, für das die Teile benötigt werden. Wenn Sie Zweifel hinsichtlich der richtigen Bestell-Nr. haben, geben Sie dem Händler eine möglichst genaue Beschreibung des benötigten Teils.

HINWEISE ZUR BENUTZUNG DES PARTS BOOKS

Die Cat-Parts Books enthalten Zeichnungen der Gruppen oder Teile des Geräts. Gezeigt werden die Standardteile sowie verschiedenes Zubehör für die Geräte.

Anhand des Index vorn im Buch können Sie die Nummer der Seite heraussuchen, auf der sich die von Ihnen gesuchte Abbildung befindet. Beim Aufschlagen der betreffenden Seite können dann alle gesuchten Teile identifiziert werden. Hinten im Buch befindet sich ein numerischer Index, mit allen Bestell-Nr. und dem Hinweis auf die Seite, auf der sich die entsprechenden Zeichnungen befinden.

Bildunterschriften

Die Zeilen unter jeder Abbildung enthalten die Bestell-Nr. der gezeigten Baugruppen. Die Nummer wird nur als Referenz aufgeführt. Ihr Cat-Händler kann Ihnen sagen, ob eine Gruppe komplett lieferbar ist. Wenn für eine Gruppe mehrere Zeichnungen vorhanden sind, enthalten die Zeilen unter den Zeichnungen die Seriennummern, denen jede Zeichnung entspricht. In einigen Fällen ist es nicht möglich, die Serien-Nr. anzugeben, auf die sich die Zeichnungen beziehen. In diesem Fall wird lediglich "Typ 1", "Typ 2" usw. angegeben. Hier ist ein Hinweis auf die Baugruppe erforderlich, um anzuzeigen, welche Abbildung verwendet werden muß. Die Zeilen unter den Abbildungen enthalten ferner Angaben über die Seiten, auf denen sich Zeichnungen von Unterbaugruppen und Anzahl der benötigten Teile sowie andere Angaben befinden, die es dem Benutzer des Buchs erleichtern, die gewünschten Teile zu identifizieren.

Abkürzungen und Symbole

O.D.	Außendurchmesser
I.D.	Innendurchmesser
A	kein Teil dieser Gruppe
B	nach Bedarf verwenden
C	Hinweis auf eine Änderung
D	in Meter-Länge bestellen
E	in Zentimeter-Länge bestellen
F	nicht gezeigt
G	in Zoll-Länge bestellen
I	Siehe "Hose Fabrication Guide"
M	metrisches Teil (einschl. Befestigungsteilen)
R	werküberholtes Teil unter Umständen lieferbar
X	Austauschteil
Y	separate Abbildung
Z	nicht einzeln erhältlich

Referenzbuchstaben

Falls erforderlich sind in den Zeichnungen Referenzbuchstaben enthalten (z.B. A, B, C, usw.), die Leitungen und Kabelbäume von einem Punkt zum andern verfolgen. Außerdem geben sie die Stelle an, an der getrennte Zeichnungen fortgesetzt werden.

Ref No (Referenz-Nr.)

Die in dieser Spalte aufgeführten Nummern beziehen sich auf die in der Zeichnung befindlichen Nummern. Zum Identifizieren eines Teils in der Zeichnung zuerst dessen Referenz-Nr. feststellen und diese dann in der Spalte "Ref No" aufsuchen, um weitere Angaben zum gesuchten Teil zu erhalten.

Part Number (Bestell-Nr.)

Anhand dieser Nummern lassen sich die Teile identifizieren.

Qty (Anzahl)

Die Zahlen in dieser Spalte geben an, wieviele der entsprechenden Teile benötigt werden.

Part Name (Bezeichnung)

In dieser Spalte wird die Bezeichung der betreffenden Teile zusammen mit zusätzlichen Informationen angegeben, z.B. Größe, die das Identifizieren erleichtern.

Eingerückte Bezeichnungen

In der zu jeder Abbildung gehörenden Ersatzteilliste sind manche Bezeichnungen eingerückt. Dadurch wird angezeigt, daß das entsprechende Teil zu dem gehört, unter dessen Bezeichnung es eingerückt ist.

ANMERKUNG:

Ständig vorgenommene Verbesserungen und Weiterentwicklungen an Ihrem Gerät können Änderungen verursachen, die in der vorliegenden Ausgabe noch nicht berücksichtigt sind. Sie werden jedoch in später folgenden Ausgaben erscheinen.

Fragen zu Ihrem Cat-Gerät oder diesem Ersatzteilbuch beantwortet Ihr Cat-Händler.

MAINTENANCE PARTS

DESCRIPTION	PART NO.	PAGE NO.
BATTERY (12 VOLT)	3T5760	83 85
BLADE AS-WIPER	6V5849	441 445
BLADE-WIPER	5C8813	439
BREATHER	7T3251	121 127
CAP-DUST	6V0852	263
CAP-FILLER	7H1447	319
CLAMP-HOSE	9M2904	263
ELEMENT AS-PRIMARY	8N5504	53
ELEMENT AS-SECONDARY	7W6754	53
FILTER (RECIRCULATION)	7T3549	421
FILTER AS	1013738	73
FILTER AS-OIL	7W2326 7W2327	45 36
FILTER-AIR	7T3519	419
FILTER-FUEL	9R5895	79 81
FILTER-OIL	6E0924	121 127
FUSE	3K8782 8M0456	429 429
FUSE (10 AMP)	9W1442	96 467
FUSE (15 AMP)	9W1441	93 96 114 467
FUSE (20 AMP)	9W1446	96 467
LAMP	8L9801 9W0607	87 107 110 111

MAINTENANCE PARTS

DESCRIPTION	PART NO.	PAGE NO.
LAMP (AMBER)	3C4883	105
LAMP (RED)	3C6516	105
LAMP-HEAD	9W3324	116 117
LAMP-MINIATURE	1S4168 5M8034 7S1800 8M6176	391 108 108 87 90 105
REGULATOR-TEMPERATURE	4W8063	51
STRAINER	9J3047	319
V-BELT SET	688546	101

REMANUFACTURED COMPONENTS

As an option when making repairs consider Caterpillar Remanufactured Components. Components that are available through the Caterpillar Remanufactured Program are identified three ways in the parts book:

- with the letter R in the note field of the parts list
- with an R* at the beginning of the first line of the caption
- with an *R at the end of the first line of the caption

Typical components included in the Remanufacturing Program include:

ALTERNATORS
CONNECTING RODS
CRANKSHAFTS - UNDERSIZE
CRANKSHAFTS - UPGRADE TO NEW
CYLINDER HEADS
ELECTRONIC CONTROL MODULES (ECM)
ELECTRONIC SENSORS
FUEL INJECTORS
FUEL NOZZLES
FUEL PUMPS
GOVERNORS
OIL PUMPS
PISTONS
SHORT BLOCKS
STARTERS
TURBOCHARGERS - COMPLETE
TURBOCHARGER CARTRIDGES
WATER PUMPS

Caterpillar Remanufactured engines for many engine arrangements are also available.

MAJOR COMPONENT EXCHANGE

As an option when making repairs consider Caterpillar Major Component Exchange Program. Components included in this program are noted in the parts book with an *X at the end of the first line of the caption.

Typical components include:

ENGINES
SHORT BLOCKS
TRANSMISSIONS
TORQUE CONVERTERS
STEERING BRAKE AND CLUTCH

Check with your local Caterpillar Dealer for the availability of Remanufactured Components and Major Component Exchanges.

INDEX

Name	Page
A	
AIR CLEANER GP	52
	53
AIR CONDITIONER & MOUNTING GP	427
AIR CONDITIONER AR	425
AIR CONDITIONER GP	428
AIR CONDITIONER WIRING	91
AIR LINES	54
	55
ALTERNATOR GP	100
	101
	102
ARM CUSHION	460
ARM GP-LIFT	327
AXLE AS	152
	158
AXLE AS-REAR	142
	146
AXLE GP-DRIVE	139
	140
AXLE GP-DRIVE & STEER	150
	151
AXLE GP-FRONT	181
B	
BACKHOE STABILIZER	344
BATTERY (12 VOLT)	83
	85
BATTERY & WIRING GP	84
BATTERY BOX GP	211
BATTERY GP	83
BLADE AS-WIPER	441
	445
BLADE-WIPER	439
BOOM CYLINDER	315
BOOM CYLINDER LINES	276
BOOM GP	341
BRACE GP-LIFT CYLINDER	328
BRAKE CONTROL-PARKING	177
BRAKE CONTROL-PEDAL	178
BREATHER	121
	127
BUCKET AR	323
BUCKET AR-MULTI-PURPOSE	323
BUCKET AS-LOADER	325
BUCKET CYLINDER	306
	307
BUCKET CYLINDER-EXTENDED STICK	305
BUCKET GP-HOE	348
	349
	350
	351
	352
	353
	354
	355
	356
	357
	358
	359
	360
	361
	362
BUCKET GP-MULTI-PURPOSE	324
BUCKET LINES-BOTTOM DUMP	282
BUCKET LINKAGE-BACKHOE	330
BUCKET LINKAGE-LOADER	329
BUMPER GP-FRONT	216
C	
CAB AR	368
	369
CAB GP	380
	386
CAMSHAFT GP	10
	11
CAP-DUST	263
CAP-FILLER	319
CIRCUIT BREAKER AS (15	467
CIRCULATING FAN	414
CLAMP-HOSE	263
COMPRESSOR GP-CLUTCH & REFRIG	435
COMPRESSOR GP-REFRIGERANT	434
CONDENSER GP	436
CONSOLE GP-FRONT CAB	392
CONSOLE GP-FRONT-ROPS	462
CONSOLE GP-INSTRUMENT	464
CONSOLE GP-REAR	461
CONTROL GP-BRAKE	178
CONTROL GP-BUCKET	477
CONTROL GP-DIFFERENTIAL LOCK	167
CONTROL GP-EXCAVATOR	476
CONTROL GP-GOV & ACCELERATOR	66
CONTROL GP-HYDRAULIC	468
	470
CONTROL GP-PARKING BRAKE	177
CONTROL GP-STEERING & SHUTTLE	474
CONTROL GP-SWING	472
CONTROL GP-TRANSMISSION	478
CONTROL GP-VALVE	260
	480
	482
	484
	486
CONVERSION GP-FIELD (2 TO 3)	228
CONVERTER-TORQUE	119
COOLER GP-FLTR BASE & ENG OIL	44
COOLER GP-HYDRAULIC OIL	46
COOLER LINES-POWER TRAIN	47
COOLING AR	46
COUNTERWEIGHT GP	217
	218

INDEX

Name	Page
	219
	220
COUPLING GP-PUMP	321
COVER GP	214
	215
COVER GP-FRONT HOUSING	9
COVER GP-VALVE MECHANISM	24
	25
CRANKSHAFT GP	12
	13
CRANKSHAFT PULLEY	14
CUSHION GP-ARM	460
CUTTING EDGE	326
CYLINDER BLOCK GP	4
	5
	6
	7
	8
CYLINDER GP-BOOM	315
CYLINDER GP-BUCKET	305
	306
	307
CYLINDER GP-LOADER LIFT	309
CYLINDER GP-STABILIZER-LH	311
CYLINDER GP-STABILIZER-RH	310
CYLINDER GP-STEER	183
CYLINDER GP-STICK	313
	314
CYLINDER GP-SWING	312
CYLINDER GP-TILT	308
CYLINDER GUARD-STABILIZER	316
CYLINDER HEAD GP	18
	19
	20
	21
CYLINDER LINES-EXTENSION	292
CYLINDER LINES-HOE BUCKET	284
CYLINDER LINES-LIFT	268
CYLINDER MOUNTING	317

D

Name	Page
DIFFERENTIAL LOCK CONTROL	167
DOOR GP-CAB-LH	406
DOOR GP-CAB-RH	398
DOOR GP-LH	209
	394
DOOR GP-RH	210
	396
DRIVE & STEER AXLE	150
	151
DRIVE AR	118
DRIVE AXLE	139
	140
DRIVE GP-FAN	30
DRIVE GP-FLEXIBLE COUPLING	134
DRIVE SHAFT GP	164
	165
DRIVE SHAFT GUARD	166

E

Name	Page
EDGE GP-CUTTING	326
ELEMENT AS-PRIMARY	53
ELEMENT AS-SECONDARY	53
ENGINE & TMSN MOUNTING	33
ENGINE AR	1
ENGINE AR-PRIMARY	2
ENGINE LIFTING	32
EXCAVATOR CONTROL	476
EXHAUST MANIFOLD	58
	59
EXTENDED STICK CYLINDER	313
EXTENSION STICK	334
	336

F

Name	Page
FAN DRIVE	30
FAN GP-CIRCULATING	414
FAN GP-SUCTION	48
FILLER GP-OIL	35
FILLER GP-POWER TRAIN OIL	137
FILTER (RECIRCULATION)	421
FILTER AS	73
FILTER AS-OIL	36
	45
FILTER GP-FUEL	73
FILTER GP-HYDRAULIC OIL	320
FILTER GP-OIL	36
FILTER-AIR	419
FILTER-FUEL	79
	81
FILTER-OIL	121
	127
FLEXIBLE DRIVE	134
FLOORMAT GP	437
FLOORPLATE GP	212
FLYWHEEL GP	29
FRAME GP-LOADER	204
	205
FRAME GP-SWING	342
FRONT AXLE	181
FRONT BUMPER	216
FRONT CONSOLE	462
FRONT DRIVE WIRING	90
FRONT GEAR	27
	28
FRONT HOUSING	26
FRONT HOUSING COVER	9
FUEL FILTER LINES	74
FUEL INJECTION LINES	75
	76
FUEL INJECTION PUMP	69
FUEL LINES	72
FUEL PUMP	68

INDEX

Name	Page
FUEL TANK	78
FUMES DISPOSAL GP	41
FUSE	429
FUSE (10 AMP)	96
	467
FUSE (15 AMP)	93
	96
	114
	467
FUSE (20 AMP)	96
	467

G

GASKET-FUEL FILTER	71
GAUGE AS-OIL LEVEL	137
GAUGE GP-OIL LEVEL (DIPSTICK)	34
GEAR GP-FRONT	27
	28
GEROTOR PUMP	37
GOV & ACCELERATOR CONTROL	66
GUARD GP	316
GUARD GP-DRIVE SHAFT	166

H

HEADLINER GP-CAB	416
HEATER GP	420
HEATER GP-CAB	418
HEATER LINES	424
HOE BUCKET	348
HOE STICK	340
HOOD & GUARD GP	206
HOOD GP	208
HORN AS	85
HOUSING GP-FRONT	26
HYDRAULIC AR	222
	223
	224
HYDRAULIC LINES	300
HYDRAULIC LINES-1 CIRCUIT	298
	299
HYDRAULIC LINES-3 CIRCUIT	296
HYDRAULIC PUMP-TRANSMISSION	135
HYDRAULIC STEERING	182
HYDRAULIC TANK	318

I

INDICATOR (AIR FILTER	467
INDICATOR AS-FUEL LEVEL	467
INDICATOR AS-TEMP	467
INDICATOR AS-VOLT	467
INLET MANIFOLD	60
	61
INSERT-EXHAUST	21
INSERT-INLET	21
INSTALLATION AR-ENGINE	3
INSTRUMENT CONSOLE-SIDE	464
INSTRUMENT GP	466

K

KICKOUT & POSITIONER GP	322
KIT-ACCESSORY (INCL KEY,	435
KIT-ADAPTER	331
KIT-BEARING	125
	133
KIT-BRAKE AS	177
KIT-BRAKE LINING	177
KIT-BRUSH-13 VDC (INCL	423
KIT-CLUTCH PACK	125
	133
KIT-CONTACT	98
KIT-CRANKSHAFT	12
	13
KIT-DUST SEAL (INCL	435
KIT-FUEL INJ PUMP	69
	70
KIT-GEAR	98
KIT-HARDWARE	98
KIT-HOSE	51
KIT-LIFT PUMP	68
KIT-METER SERVICE	467
KIT-PISTON RING	15
	16
KIT-REFRIGERANT SEAL	435
KIT-ROD BEARING	13
KIT-ROD BEARING .25MM	12
KIT-ROD BEARING .51MM	12
KIT-ROD BEARING .76MM	12
KIT-SEAL	125
	133
KIT-SNAP RING	125
	133
KIT-SPIDER & BEARING	164
KIT-TURBOCHARGER	64
KIT-WASHER	125
	133
KIT-WATER PUMP	50

L

LAMP	87
	107
	110
	111
LAMP (AMBER)	105
LAMP (RED)	105
LAMP GP	105
LAMP GP-FLOOD	107
	110
	111
LAMP GP-HEAD	116
	117

INDEX

Name	Page
LAMP GP-WARNING	113
	115
LAMP-HEAD	116
	117
LAMP-MINIATURE	87
	90
	105
	108
	391
LIFT ARM-LOADER	327
LIFT CYLINDER BRACE	328
LIFT CYLINDER LINES	266
LIFT CYLINDER-LOADER	309
LIFTING GP	32
LIGHTING GP	107
	108
	110
LIGHTING GP-ROADING	104
	106
LIGHTING GP-WARNING	112
	114
LINES GP-AIR	54
	55
LINES GP-AIR CONDITIONER	432
LINES GP-AUXILIARY HYDRAULIC	302
LINES GP-BOOM CHECK VALVE	278
LINES GP-BOOM CYLINDER	276
LINES GP-BUCKET	282
LINES GP-BUCKET CYLINDER	284
LINES GP-ENGINE OIL	39
LINES GP-EXTENSION CYLINDER	292
LINES GP-FUEL	72
LINES GP-FUEL FILTER	74
LINES GP-FUEL INJECTION	75
	76
LINES GP-HEATER	424
LINES GP-HYDRAULIC	296
	299
LINES GP-HYDRAULIC PUMP	262
LINES GP-HYDRAULIC 1	298
	300
LINES GP-LIFT CYLINDER	266
	268
LINES GP-OIL	40
LINES GP-POWER TRAIN COOLER	47
LINES GP-STABILIZER	294
LINES GP-STEERING	184
	186
LINES GP-STICK	286
	288
	290
LINES GP-SWING CYLINDER	274
LINES GP-TILT CYLINDER	270
	272
LINES GP-WATER	51
LINKAGE GP-BUCKET	329
	330
LOADER BUCKET	325
LOADER CONTROL-HYDRAULIC	470
LOCK & PEDAL GP-LH	488
LOCK AR	225
	226
	227
LOCK AR-HYDRAULIC	225
LOCK GP-TRANSPORT	332

M

MANIFOLD GP-EXHAUST	58
	59
MANIFOLD GP-INLET	60
	61
METER-SERVICE	467
METERING PUMP	188
MIRROR GP-REAR VIEW	448
	449
MOUNTING & PEDAL CONTROL VALVE	480
MOUNTING GP-CYLINDER	317
MOUNTING GP-ENGINE & TMSN	33
MOUNTING GP-RADIO	489
MOUNTING GP-STICK	338
MOUNTING GP-TRANSMISSION	138
MUFFLER AS	57
MUFFLER GP	56

O

OIL COOLER-HYDRAULIC	46
OIL FILLER-ENGINE	35
OIL FILLER-POWER TRAIN	137
OIL FILTER-ENGINE	36
OIL FILTER-HYDRAULIC	320
OIL LEVEL GAUGE (DIPSTICK)	34
OIL LINES-ENGINE	39
	40
OIL PAN	31

P

PAD GP-STABILIZER	347
PAD GP-STREET	346
PAN GP-OIL	31
PISTON & ROD GP	15
	16
PIVOT GP-WIPER ARM	446
PLATFORM & CAB AR	369
PLATFORM GP	372
	376
PULLEY GP-CRANKSHAFT	14
PUMP COUPLING-HYDRAULIC	321
PUMP GP	38
PUMP GP-CRESCENT	135
PUMP GP-FUEL	68
PUMP GP-FUEL INJECTION	69
	70
PUMP GP-GEROTOR	37

INDEX

Name	Page
PUMP GP-HYDRAULIC	135
PUMP GP-METERING	188
PUMP GP-PISTON	189
PUMP GP-WATER	49
	50
PUMP LINES-HYDRAULIC OIL	262

R

RADIATOR GP	42
	43
RADIO MOUNTING	489
REAR AXLE	146
REAR CONSOLE	461
REGULATOR-TEMPERATURE	51
REVERSIBLE SEAT	452
ROLLOVER AR	370
ROLLOVER GP	371
ROTATING BEACON LAMP	115
ROTATING GP-PUMP	191

S

SEAT GP	458
SEAT GP-REVERSIBLE	452
SEAT GP-SUSPENSION	450
	451
	454
	456
SENDER	467
SENDER (TEMP)	467
SENDER AS-LEVEL	467
SEPARATOR GP-WATER	71
SPIDER & BEARING AS	164
STABILIZER CYLINDER LINES	294
STABILIZER CYLINDER-LH	311
STABILIZER CYLINDER-RH	310
STABILIZER GP-BACKHOE	344
STABILIZER PAD	346
STABILIZER PAD (FLIPOVER)	347
STARTING AID GP	99
STARTING MOTOR GP-ELECTRIC	97
	98
STEER CYLINDER	183
STEER LINES	184
STEERING & SHUTTLE CONTROL	474
STEERING GP-HYDRAULIC	182
STEERING LINES	186
STICK AR-EXTENDABLE	333
STICK CYLINDER	314
STICK GP-EXTENSION	334
	336
STICK GP-HOE	340
STICK LINES-EXTENDED	286
	288
STRAINER	319
SUCTION FAN	48
SUSPENSION SEAT	450
	451
SWING CYLINDER	312
SWING CYLINDER LINES	274
SWING FRAME	342
SWITCH AS	85
	87
	89
	95
	429
	471
	478
SWITCH AS (BLOWER)	423
SWITCH AS (COOLANT TEMP)	467
SWITCH AS (FAN)	415
SWITCH AS (HORN)	467
SWITCH AS (NEUTRAL	127
SWITCH AS (NEUTRAL ST)	121
SWITCH AS-ROTARY	96
	445
SWITCH AS-THERMOSTAT	429
SWITCH GP-START	97
SWITCH-OIL PRESS	45
	467
SYNCHRONIZER GP	125
	131

T

TANK GP-FUEL	78
	80
TANK GP-HYDRAULIC	318
TILT CYLINDER	308
TILT CYLINDER LINES	270
TIP-ABRASION	366
TIP-DOUBLE POINT	367
TIP-PENETRATION	365
	366
TIRE & WHEEL GP-REAR	169
TIRE & WHEEL GP-REAR LH	175
TOOTH GP-UNI BOLT-ON	363
	364
TORQUE CONVERTER AS	119
TRANSMISSION AR	119
TRANSMISSION CONTROL	478
TRANSMISSION GP	120
TRANSMISSION GP-DIRECT DRIVE	126
TRANSMISSION MOUNTING	138
TURBOCHARGER GP	62
	64

U

UNIVERSAL JOINT GP	164

INDEX

Name	Page

V

V-BELT SET	101
VALVE CONTROL (POSITION)	486
VALVE GP	190
	258.02
VALVE GP-BANK	229
VALVE GP-BANK 3	230
VALVE GP-BANK 6	232
VALVE GP-BANK 7	234
	236
VALVE GP-CHECK	304
VALVE GP-CONTROL	136
	238
	240
	241.01
	242
	244
	245.01
	246
	248
	250
	252
	254
	256
VALVE GP-POWER COMPENSATOR	192
VALVE GP-PRIORITY FLOW DIVIDER	258
VALVE GP-RELIEF	259
VALVE GP-2	229
VALVE MECHANISM COVER	25
VALVE MECHANISM GP	22
	23
VALVE-EXHAUST	19
	21
VALVE-INLET	19
	21

W

WARNING GP-BACK-UP	103
WARNING LIGHT	112
WASHER GP-WINDSHIELD	447
WATER LINES	51
WATER PUMP	49
	50
WATER SEPARATOR	71
WHEEL & TIRE AR	193
WHEEL & TIRE GP	176
	201
WHEEL & TIRE GP-FRONT	193
	194
	195
	196
	197
	200
	202
WHEEL & TIRE GP-FRONT-LH	198
	199
	202
WHEEL & TIRE GP-LH	174
	203
WHEEL & TIRE GP-REAR	168
	170
	171
WHEEL & TIRE GP-REAR-LH	173
WHEEL & TIRE GP-RH	172
	203
WIPER GP	442
	443
	444
WIPER GP-WINDSHIELD	438
WIRING GP	94
	96
WIRING GP-AIR CONDITIONER	91
WIRING GP-FRONT DRIVE	90
WIRING GP-LIGHTING	92
WIRING GP-POWER	93

INDEX ALPHABETIQUE

Designation	Page
A	
ACCOUDOIR	460
ACCOUDOIR (ASS)	460
ACCOUPLEMENT DE POMPE (ASS)	321
ACCOUPLEMENT DE POMPE HYDRAULIQUE	321
ACCOUPLEMENT FLEXIBLE	134
ADMISSION - COLLECTEUR	60
	61
ALTERNATEUR (ASS)	100
	101
	102
AMPOULE	87
	107
	110
	111
ARBRE A CAMES (ASS)	10
	11
ARBRE DE TRANSMISSION (ASS)	164
	165
AUXILIAIRE DE DEMARRAGE (ASS)	99
AVERTISSEUR DE RECUL (ASS)	103
B	
BALAI D'ESSUIE-GLACE	439
BALAI ESSUIE-GLACE (ENS)	441
	445
BATI - CHARGEUSE (ASS)	204
	205
BATI D'ORIENTATION	342
BATI D'ORIENTATION (ASS)	342
BATTERIE (ASS)	83
BATTERIE (12 V)	83
	85
BATTERIE ET CABLAGE	84
BLINDAGE D'ARBRE DE TRANSMISSION	166
BLINDAGE D'ARBRE DE TRANSMISSION (ASS)	166
BLOC-CYLINDRES (ASS)	4
	5
	6
	7
	8
BOITE DE VITESSES (TRANSMIS.) - MONTAGE	138
BOITE DE VITESSES (TRANSMISSION) (ASS)	120
BOITE DE VITESSES (VERSION)	119
BOITE DE VITESSES - COMMANDE	478
BOITE MECANIQUE (ASS)	126
BOUCHON DE GOULOTTE DE REMPLISSAGE	319
BRAS - VERIN	314
BRAS DE LEVAGE (ASS)	327
BRAS DE LEVAGE - CHARGEUSE	327
BRAS DE PELLE RETRO	340
BRAS DE PELLE RETRO (ASS)	340
BRAS TELESCOPIQUE	334
	336
BRAS TELESCOPIQUE (ASS)	334
	336
BRAS TELESCOPIQUE (VERSION)	333
C	
CABINE (ASS)	380
	386
CABINE (VERSION)	368
	369
CABLAGE (ASS)	94
	96
CABLAGE - CLIMATISEUR (ASS)	91
CABLAGE - PUISSANCE	93
CABLAGE D'ECLAIRAGE (ASS)	92
CABLAGE D'ENTRAINEMENT AV	90
CABLAGE D'ENTRAINEMENT AV (ASS)	90
CACHE-SOUPAPES	25
CACHE-SOUPAPES (ASS)	24
	25
CANALISATION DE RALLONGE DE VERIN	292
CANALISATION DE REFROIDISSEMENT DE TRANSMISSION	47
CANALISATIONS D'AIR	54
	55
CANALISATIONS D'AIR (ASS)	54
	55
CANALISATIONS D'EAU (ASS)	51
CANALISATIONS D'HUILE (ASS)	40
CANALISATIONS D'HUILE MOTEUR (ASS)	39
CANALISATIONS D'INJECTION DE CARBURANT (ASS)	75
	76
CANALISATIONS DE BRAS (ASS)	286
	288
	290
CANALISATIONS DE CARBURANT (ASS)	72
CANALISATIONS DE CHAUFFAGE	424
CANALISATIONS DE CHAUFFAGE (ASS)	424
CANALISATIONS DE CLIMATISEUR (ASS)	432
CANALISATIONS DE DIRECTION	186
CANALISATIONS DE DIRECTION (ASS)	184
	186
CANALISATIONS DE GODET A DEVERSEMENT PAR LE FOND	282
CANALISATIONS DE POMPE HYDRAULIQUE (ASS)	262
CANALISATIONS DE REFROIDIS. DE TRANSMISSION	47
CANALISATIONS DE STABILISATEUR (ASS)	294
CANALISATIONS DE VERIN D'INCLINAISON	270
CANALISATIONS DE VERIN D'ORIENTATION	274
CANALISATIONS DE VERIN DE FLECHE	276

INDEX ALPHABETIQUE

Designation	Page
CANALISATIONS DE VERIN DE FLECHE (ASS)	276
CANALISATIONS DE VERIN DE GODET (ASS)	284
CANALISATIONS DE VERIN DE GODET RETRO	284
CANALISATIONS DE VERIN DE LEVAGE (ASS)	266
	268
CANALISATIONS DE VERIN DE STABILISATEUR	294
CANALISATIONS DU BRAS TELESCOPIQUE	286
	288
CANALISATIONS DU FILTRE A CARBURANT	74
CANALISATIONS DU FILTRE A CARBURANT (ASS)	74
CANALISATIONS DU VERIN D'INCLINAISON (ASS)	270
	272
CANALISATIONS DU VERIN D'ORIENTATION	274
CANALISATIONS DU VERIN DE LEVAGE	268
CANALISATIONS HYDRAULIQUES	300
CANALISATIONS HYDRAULIQUES (ASS)	296
	299
CANALISATIONS HYDRAULIQUES - 1 CIRCUIT	298
	299
	300
CANALISATIONS HYDRAULIQUES - 3 CIRCUITS	296
CANALISATIONS HYDRAULIQUES AUXILIAIRES (ASS)	302
CAPOT (ASS)	208
CAPOT ET PROTECTION (ASS)	206
CARBURANT - CANALISATIONS	72
CARTER AV (ASS)	26
CARTER AV - COUVERCLE	9
CARTER AVANT	26
CARTER D'HUILE	31
CHAUFFAGE (ASS)	420
CHAUFFAGE DE CABINE (ASS)	418
CLAPET (ASS)	190
	258.02
CLAPET DE DECHARGE (ASS)	259
CLAPET DE RETENUE (ENS)	304
CLIMATISEUR (ASS)	428
CLIMATISEUR (VERSION)	425
CLIMATISEUR - CABLAGE	91
CLIMATISEUR ET MONTAGE (ASS)	427
COFFRE DE BATTERIE (ASS)	211
COLLECTEUR D'ADMISSION (ASS)	60
	61
COLLECTEUR D'ECHAPPEMENT (ASS)	58
	59
COLLIER DE FLEXIBLE	263
COMMANDE D'ORIENTATION (ASS)	472
COMMANDE DE BOITE DE VITESSES (ASS)	478
COMMANDE DE DIFFERENTIEL - VERROUILLAGE (ASS)	167
COMMANDE DE DIRECTION ET SENS DE MARCHE	474
COMMANDE DE DIRECTION ET SENS DE MARCHE (ASS)	474
COMMANDE DE DISTRIBUTEUR	260
	480
	482
	484
	486
COMMANDE DE DISTRIBUTEUR (POSITION)	486
COMMANDE DE FREIN DE STATIONNEMENT	177
COMMANDE DE FREIN DE STATIONNEMENT (ASS)	177
COMMANDE DE GODET (ASS)	477
COMMANDE DE PELLE	476
COMMANDE DE REGULATEUR ET D'ACCELERATEUR (ASS)	66
COMMANDE DE VERROUILLAGE DE DIFFERENTIEL	167
COMMANDE HYDRAULIQUE (ASS)	468
	470
COMMANDE HYDRAULIQUE MANUELLE	470
COMPRESSEUR DE REFRIGERANT (ASS)	434
COMPTEUR D'ENTRETIEN	467
CONDENSATEUR (ASS)	436
CONSOLE - TABLEAU DE BORD (ASS)	464
CONSOLE AR	461
CONSOLE AR (ASS)	461
CONSOLE AV	462
CONSOLE AV - TOIT ROPS (ASS)	462
CONSOLE DE CABINE AV (ASS)	392
CONTACTEUR (ENS)	85
	87
	89
	95
	429
	471
	478
CONTREPOIDS (ASS)	217
	218
	219
	220
CONVERTISSEUR DE COUPLE	119
CONVERTISSEUR DE COUPLE (ENS)	119
COUVERCLE (ASS)	214
	215
COUVERCLE DE CARTER AV (ASS)	9
CREPINE	319
CROISILLON ET COUSSINET (ENS)	164
CULASSE (ASS)	18
	19
	20
	21

INDEX ALPHABETIQUE

Designation	Page
CULBUTERIE (ASS)	22
	23
D	
DEMARREUR ELECTRIQUE (ASS)	97
	98
DENT UNIQUE A BOULONNER (ASS)	363
	364
DIRECTION - CANALISATIONS	184
DIRECTION HYDRAULIQUE	182
DIRECTION HYDRAULIQUE (ASS)	182
DISJONCTEUR A 15 A	467
DISPOSITIF D'EVACUATION DES VAPEURS DE CARTER	41
DISTRIBUTEUR (ASS)	136
	238
	240
	241.01
	242
	244
	245.01
	246
	248
	250
	252
	254
	256
DISTRIBUTEUR - DOUBLE CORPS	229
DISTRIBUTEUR DE PEDAL ET MONTAGE	480
DISTRIBUTEUR TRIPLE CORPS (ASS)	230
DISTRIBUTEUR 6 CORPS (ASS)	232
DISTRIBUTEUR 7 CORPS (ASS)	234
	236
DISTRIBUTEURS (ASS)	229
E	
EAU - CANALISATIONS	51
ECHAPPEMENT - COLLECTEUR	58
	59
ECLAIRAGE (ASS)	107
	108
	110
ECLAIRAGE - AVERTISSEUR (ASS)	112
	114
ECLAIRAGE - FEUX DE ROUTE (ASS)	104
	106
ECLAIRAGE DE GODET (ASS)	282
ELEMENT PRIMAIRE (ENS)	53
ELEMENT SECONDAIRE (ENS)	53
EMBRAYAGE ET COMPRESSEUR DE REFRIGERANT	435
EMETTEUR DE NIVEAU DE CARBURANT (ENS)	467
EMETTEUR DE TEMPERATURE	467
ENTRAINEMENT D'ACCOUPLEMENT FLEXIBLE (ASS)	134
ENTRAINEMENT DE VENTILATEUR (ASS)	30
ESSIEU (ENS)	152
	158
ESSIEU AR	146
ESSIEU AR (ENS)	142
	146
ESSIEU AV	181
ESSIEU AV (ASS)	181
ESSIEU MOTEUR	139
	140
ESSIEU MOTEUR (ASS)	139
	140
ESSIEU MOTEUR ET DIRECTEUR	150
	151
ESSIEU MOTEUR ET DIRECTEUR (ASS)	150
	151
ESSUIE-GLACE (ASS)	442
	443
	444
ESSUIE-GLACE - PARE-BRISE (ASS)	438
F	
FILTRE (CIRCULATION D'AIR)	421
FILTRE (ENS)	73
FILTRE (HUILE HYDRAULIQUE) (ASS)	320
FILTRE A AIR	419
FILTRE A AIR (ASS)	52
	53
FILTRE A CARBURANT	79
	81
FILTRE A CARBURANT (ASS)	73
FILTRE A HUILE	121
	127
FILTRE A HUILE (ASS)	36
FILTRE A HUILE (ENS)	36
	45
FILTRE A HUILE HYDRAULIQUE	320
FLECHE (ASS)	341
FLECHE - CANALISATIONS DU CLAPET DE RETENUE (ASS)	278
FREIN - COMMANDE (ASS)	178
FUSIBLE	429
FUSIBLE (15 A)	93
	96
	114
	467
FUSIBLE (20 A)	96
	467
FUSIBLE - 10 A	96
	467

INDEX ALPHABETIQUE

Designation	Page
G	
GEROTOR - POMPE	37
GODET (VERSION)	323
GODET CHARGEUR	325
GODET CHARGEUR (ENS)	325
GODET RETRO	348
GODET RETRO (ASS)	348
	349
	350
	351
	352
	353
	354
	355
	356
	357
	358
	359
	360
	361
	362
GODET TOUS-TRAVAUX (ASS)	324
GODET TOUS-TRAVAUX (VERSION)	323
GOULOTTE D'HUILE MOTEUR (ASS)	35
GOULOTTE DE REMPLISSAGE D'HUILE DE TRANSMISSION	137
GOULOTTE DE REMPLISSAGE D'HUILE MOTEUR	35
GROUPE DE PROTECTION (ASS)	316
GROUPE DE ROTATION DE POMPE	191
GROUPE DE TRANSFORMATION AU CHANTIER (2 A 3)	228
H	
HUILE DE TRANSMISSION - GOULOTTE DE REMPLISSAGE	137
HUILE MOTEUR - CARTER (ASS)	31
HUILE MOTEUR - FILTRE	36
HUILE MOTEUR - JAUGE (BAIONNETTE)	34
HYDRAULIQUE (VERSION)	222
	223
	224
I	
INDICATEUR DE COLMATAGE	467
INDICATEUR DU NIVEAU DE CARBURANT (ENS)	467
INJECTION DE CARBURANT - CANALISATIONS	75
	76
INTERRUPTEUR DE DEMARRAGE (ASS)	97
INTERRUPTEUR DE DEMARRAGE A L'ETHER	121
	127
INTERRUPTEUR DE KLAXON (ENS)	467
INTERRUPTEUR DE ROTATION	96
	445
INTERRUPTEUR DE THERMOSTAT (ENS)	429
INTERRUPTEUR DE VENTILATEUR	415
INTERRUPTEUR DE VENTILATEUR SOUFFLANT (ENS)	423
J	
JAMBE DE FORCE	328
JAMBE DE FORCE (ASS)	328
JAUGE D'HUILE MOTEUR (BAIONNETTE) (ASS)	34
JAUGE DE NIVEAU D'HUILE (ENS)	137
JEU DE COURROIES TRAPEZOIDALES	101
JOINT PLAT DE FILTRE A CARBURANT	71
JOINT UNIVERSEL (ASS)	164
K	
KIT D'ACCESSOIRES	435
KIT D'ADAPTATEUR	331
KIT D'EMBRAYAGE	125
	133
KIT D'ENGRENAGE	98
KIT DE BALAIS	423
KIT DE BOULONNERIE	98
KIT DE COMPTEUR D'ENTRETIEN	467
KIT DE CONTACTEUR	98
KIT DE COUSSINET	125
	133
KIT DE COUSSINET DE BIELLA (0,76 MM)	12
KIT DE COUSSINET DE BIELLE	13
KIT DE COUSSINET DE BIELLE (0,25 MM)	12
KIT DE COUSSINET DE BIELLE (0,51 MM)	12
KIT DE CROISILLON ET ROULEMENT	164
KIT DE FLEXIBLE	51
KIT DE FREIN (ENS)	177
KIT DE GARNITURE DE FREIN	177
KIT DE JOINT D'ETANCHEITE ANTI-POUSSIERE	435
KIT DE JOINT D'ETANCHEITE DE REFRIGERANT	435
KIT DE JOINTS	125
	133
KIT DE JONC D'ARRET	125
	133
KIT DE POMPE A EAU	50
KIT DE POMPE D'INJECTION DE CARBURANT	69
	70
KIT DE POMPE DE LEVAGE	68
KIT DE RONDELLE	125
	133
KIT DE TURBOCOMPRESSEUR	64

INDEX ALPHABETIQUE

Designation	Page
KIT DE VILEBREQUIN	12
	13
KIT SEGMENTS	15
	16
KLAXON (ENS)	85
L	
LAME DE COUPE	326
LAME DE COUPE (ASS)	326
LAMPE (AMBRE)	105
LAMPE (ROUGE)	105
LAMPE - AMPOULE MINIATURE	87
	90
	105
	108
	391
LAMPE - FEUX AV	116
	117
LAMPE - PHARE (ASS)	107
	110
	111
LAMPE - TEMOIN	113
	115
LAMPE DE GYROPHARE	115
LAVE-GLACE DE PARE-BRISE (ASS)	447
LEVIERS DE COMMANDE DE PELLE	476
LIMITEUR DE LEVAGE ET RETOUR A L'ANGLE DE CAVAGE	322
M	
MANOCONTACT D'HUILE	45
	467
MANOCONTACT DE REFRIGERANT (ENS)	467
MONTAGE DE BRAS (ASS)	338
MONTAGE DE LA BOITE DE VITESSES (ASS)	138
MONTAGE DE MOTEUR (VERSION)	3
MONTAGE DE MOTEUR ET BOITE (ASS)	33
MONTAGE DE MOTEUR ET BOITE/TRANSMISSION	33
MONTAGE DE RADIO	489
MONTAGE DE RADIO (ASS)	489
MONTAGE DE VERIN (ASS)	317
MOTEUR (VERSION)	1
MOTEUR - CANALISATIONS D'HUILE	39
	40
MOTEUR - OEILLETONS DE LEVAGE	32
MOTEUR DE BASE (AR)	2
O	
OEILLETONS DE LEVAGE MOTEUR (ASS)	32

Designation	Page
P	
PANNEAU LATERAL DES INSTRUMENTS	464
PARE-CHOCS AV	216
PARE-CHOCS AV (ASS)	216
PARE-POUSSIERE	263
PATIN DE ROUTE (ASS)	346
PEDALE DE COMMANDE DE FREIN	178
PEDALE ET ARRETOIR - GAUCHE	488
PELLE RETRO - STABILISATEUR (ASS)	344
PHARE AV (ASS)	116
	117
PIGNONNERIE AV	27
	28
PIGNONNERIE AV (ASS)	27
	28
PISTON ET BIELLE (ASS)	15
	16
PIVOT DE BRAS D'ESSUIE-GLACE (ASS)	446
PLATE-FORME (ASS)	372
	376
PLATE-FORME ET CABINE (VERSION)	369
POINTE ANTI-ABRASION	366
POINTE EFFILEE DOUBLE	367
POINTE PENETRATION	365
	366
POMPE (ASS)	38
POMPE - CANALISATIONS D'HUILE HYDRAULIQUE	262
POMPE A CARBURANT (ASS)	68
POMPE A EAU	49
	50
POMPE A EAU (ASS)	49
	50
POMPE A PISTONS (ASS)	189
POMPE D'ALIMENTATION	68
POMPE D'INJECTION DE CARBURANT	69
POMPE D'INJECTION DE CARBURANT (ASS)	69
	70
POMPE DE REGULARISATION DE DEBIT	188
POMPE DE REGULARISATION DE DEBIT (ASS)	188
POMPE EN DEMI-LUNE	135
POMPE GEROTOR	37
POMPE HYDRAULIQUE (ASS)	135
POMPE HYDRAULIQUE DE BOITE	135
PORTE DE CABINE - DROITE (ASS)	398
PORTE DE CABINE - GAUCHE (ASS)	406
PORTIERE DROITE (ASS)	210
	396
PORTIERE GAUCHE (ASS)	209
	394
POULIE DE VILEBREQUIN	14
PROTECTEUR SUPERIEUR DE CABINE (ASS)	416
PROTECTION DE VERIN DE STABILISATEUR	316

INDEX ALPHABETIQUE

Designation	Page
R	
RADIATEUR (ASS)	42
	43
RALLONGE DE VERIN - CANALISATION	292
REFROIDISSEMENT (VERSION)	46
REFROIDISSEUR D'HUILE HYDRAULIQUE	46
REFROIDISSEUR D'HUILE HYDRAULIQUE (ASS)	46
REGULATEUR ET COMMANDE D'ACCELERATEUR	66
RENIFLARD	121
	127
RESERVOIR DE CARBURANT	78
RESERVOIR DE CARBURANT (ASS)	78
	80
RESERVOIR HYDRAULIQUE	318
RESERVOIR HYDRAULIQUE (ASS)	318
RETROVISEUR (ASS)	448
	449
ROUE AR COMPLETE - GAUCHE (ASS)	173
	175
ROUE ET PNEU (ASS)	176
	201
ROUE ET PNEU (VERSION)	193
ROUE ET PNEU - DROITE	172
	203
ROUE ET PNEU - GAUCHE	174
	203
ROUE ET PNEU AR	168
	169
	170
	171
ROUE ET PNEU AV (ASS)	193
	194
	195
	196
	197
	200
	202
ROUE ET PNEU AV - GAUCHE	198
	199
	202
S	
SEMELLE DE STABILISATEUR	347
SEPARATEUR D'EAU	71
SEPARATEUR D'EAU (ASS)	71
SIEGE (ASS)	458
SIEGE AVEC SUSPENSION	450
	451
SIEGE AVEC SUSPENSION (ASS)	450
	451
	454
	456
SIEGE RAPPORTE D'ADMISSION	21
SIEGE RAPPORTE D'ECHAPPEMENT	21
SIEGE REVERSIBLE	452
SILENCIEUX (ASS)	56
SILENCIEUX (ENS)	57
SONDE	467
SOUPAPE D'ADMISSION	19
	21
SOUPAPE D'ECHAPPEMENT	19
	21
SOUPAPE DE COMPENSATION DE FORCE	192
SOUPAPE DE PRIORITE ET REPARTITRICE DE DEBIT	258
STABILISATEUR - SEMELLE	346
STABILISATEUR DE PELLE RETRO	344
STABILISATEUR DROIT - VERIN	310
STABILISATEUR GAUCHE - VERIN	311
SUPPORT DE FILTRE ET REFROIDISSEUR D'HUILE MOTEUR	44
SYNCHRONISEUR (ASS)	125
	131
T	
TABLEAU DE BORD (ASS)	466
TAPIS DE SOL (ASS)	437
TEMOINS (ASS)	105
TEMOINS LUMINEUX	112
THERMOMETRE (ENS)	467
THERMOSTAT	51
TIMONERIE DE GODET RETRO	330
TIMONERIE DU GODET	329
TOIT ROPS (ASS)	371
TOIT ROPS (ENS)	370
TOLE DE PLANCHER (ASS)	212
TRINGLERIE DE GODET (ASS)	329
	330
TURBOCOMPRESSEUR (ASS)	62
	64
V	
VENTILATEUR - ENTRAINEMENT	30
VENTILATEUR ASPIRANT	48
VENTILATEUR ASPIRANT (ASS)	48
VENTILATEUR DE CABINE	414
VENTILATEUR DE CABINE (ASS)	414
VERIN - MONTAGE	317
VERIN D'INCLINAISON	308
VERIN D'INCLINAISON (ASS)	308
VERIN D'ORIENTATION	312
VERIN D'ORIENTATION (ASS)	312
VERIN DE BRAS (ASS)	313
	314
VERIN DE BRAS TELESCOPIQUE	313
VERIN DE BRAS TELESCOPIQUE DU GODET	305
VERIN DE DIRECTION	183
VERIN DE DIRECTION (ASS)	183

INDEX ALPHABETIQUE

Designation	Page
VERIN DE FLECHE	315
VERIN DE FLECHE (ASS)	315
VERIN DE GODET (ASS)	305
	306
	307
VERIN DE GODET RETRO	306
	307
VERIN DE LEVAGE - CANALISATIONS	266
VERIN DE LEVAGE DE BRAS (ASS)	309
VERIN DE LEVAGE DE GODET CHARGEUR	309
VERIN DE STABILISATEUR - DROITE	310
VERIN DE STABILISATEUR - GAUCHE	311
VERROUILLAGE HYDRAULIQUE (VERSION)	225
VERROUILLAGE POUR LE TRANSPORT	332
VERSION D'ENTRAINEMENT - TRANSMISSION	118
VERSION DE VERROUILLAGE	225
	226
	227
VILEBREQUIN (ASS)	12
	13
VILEBREQUIN - POULIE (ASS)	14
VOLANT MOTEUR (ASS)	29
VOLTMETRE (ENS)	467

INDICE

Nombre	Pagina
A	
ABRASION - PUNTA RESISTENTE A LA	366
ABRAZADERA	263
ACEITE - INDICADOR (VARILLA) DE NIVEL DE.....	34
ACEITE DEL MOTOR - FILTRO DE	36
ACEITE DEL MOTOR - TUBERIAS DE	39
	40
ACEITE HIDRAULICO - FILTRO DE	320
ACONDICIONADOR DE AIRE (CONFIG)	425
ACONDICIONADOR DE AIRE (GR)	428
ACONDICIONADOR DE AIRE - TUBERIAS DEL (GR).....	432
ACONDICIONADOR DE AIRE Y MONTAJE (GR).....	427
ACOPLAMIENTO DE BOMBA (GR)	321
ACOPLAMIENTO DE BOMBA HIDRAULICA	321
ACOPLAMIENTO FLEXIBLE - MANDO DE (GR).....	134
ADMISION - MULTIPLE DE	60
	61
AGUA - BOMBA DE	49
	50
AGUA - SEPARADOR DE	71
AGUA - TUBERIAS DE	51
AIRE - TUBERIAS DE (GR)	54
	55
ALFOMBRA DEL PISO (GR)	437
ALTERNADOR (GR)	100
	101
	102
ARBOL DE LEVAS (GR)	10
	11
ARRANQUE - INTERRUPTOR DE (GR)	97
ASIENTO (GR)	458
ASIENTO CON SUSPENSION	450
	451
ASIENTO REVERSIBLE	452
AYUDA DE ARRANQUE (GR)	99
B	
BASTIDOR DE ROTACION	342
BASTIDOR DE ROTACION (GR)	342
BASTIDOR DEL CARGADOR (GR)	204
	205
BATERIA (GR)	83
BATERIA DE 12 V	83
	85
BATERIA Y CABLES (GR)	84
BLOQUE MOTOR (GR)	4
	5
	6
	7
	8
BOCINA (CONJ)	85

Nombre	Pagina
BOMBA	68
BOMBA (GR)	38
BOMBA (GRUPO)	135
BOMBA - TUBERIAS DE ACEITE HIDRAULICO DE LA.....	262
BOMBA DE AGUA (GR)	49
	50
BOMBA DE COMBUSTIBLE	68
BOMBA DE INYECCION DE COMBUSTIBLE (GR).....	69
	70
BOMBA DE LUBRICACION	37
BOMBA DE PISTONES (GR)	189
BOMBA DOSIFICADORA	188
BOMBA HIDRAULICA (GR)	135
BOMBA HIDRAULICA DE LA TRANSMISION ..	135
BOMBILLA MINIATURA	87
	90
	105
	108
	391
BRAZO - CILINDRO DEL	314
BRAZO - EXTENSION DEL	334
	336
BRAZO ACOJINADO	460
BRAZO ACOJINADO (GR)	460
BRAZO DE LEVANTAMIENTO	327
BRAZO DE LEVANTAMIENTO DEL CARGADOR.....	327
BRAZO DE RETROEXCAVADOR	340
BRAZO DE RETROEXCAVADOR (GR)	340
BRAZO EXTENSIBLE	334
	336
BRAZO EXTENSIBLE (CONFIG)	333
C	
CABINA (CONFIG)	368
	369
CABINA (GR)	380
	386
CABLES (GR)	94
	96
CABLES DE LAS LUCES (GR)	92
CABLES DEL ACONDICIONADOR DE AIRE	91
CABLES DEL MANDO DELANTERO	90
CAJA DE LA BATERIA (GR)	211
CAJA DELANTERA	26
CAJA DELANTERA (GR)	26
CAJA DELANTERA - TAPA DE LA	9
CALEFACCION (GR)	420
CALEFACCION DE LA CABINA (GR)	418
CANCAMO DE LEVANTAMIENTO DEL MOTOR ..	32
CANCAMO DE LEVANTAMIENTO DEL MOTOR (GR).....	32
CAPO (GR)	208
CAPO Y PROTECTOR (GR)	206
CARTER - COLECTOR DEL (GR)	31

INDICE

Nombre	Pagina
CIGUENAL (GR)	12
	13
CIGUENAL - POLEA DE (GR)	14
CILINDRO DE CUCHARON (GR)	305
	306
	307
CILINDRO DE DIRECCION	183
CILINDRO DE DIRECCION (GR)	183
CILINDRO DE ESTABILIZADOR - TUBERIAS DEL	294
CILINDRO DE ESTABILIZADOR DERECHO (GR)	310
CILINDRO DE ESTABILIZADOR IZQUIERDO (GR)	311
CILINDRO DE INCLINACION HORIZONTAL	308
CILINDRO DE LA PLUMA	315
CILINDRO DE LA PLUMA (GR)	315
CILINDRO DE LA PLUMA - TUBERIAS DEL	276
CILINDRO DE LEVANTAMIENTO - SOPORTE DEL	328
CILINDRO DE LEVANTAMIENTO - TUBERIAS DEL	266
	268
CILINDRO DE LEVANTAMIENTO DEL CARGADOR	309
CILINDRO DE LEVANTAMIENTO DEL CARGADOR (GR)	309
CILINDRO DE ROTACION	312
CILINDRO DE ROTACION (GR)	312
CILINDRO DEL BRAZO (GR)	313
	314
CILINDRO DEL BRAZO EXTENSIBLE	313
CILINDRO DEL BRAZO EXTENSIBLE DEL CUCHARON	305
CILINDRO DEL CUCHARON	306
	307
COLADOR	319
COLECTOR DEL CARTER	31
COMBUSTIBLE - BOMBA DE INYECCION DE	69
COMBUSTIBLE - TANQUE DE (GR)	78
	80
COMBUSTIBLE - TUBERIAS DE	72
COMBUSTIBLE - TUBERIAS DE INYECCION DE	75
	76
COMPRESOR DE EMBRAGUE Y REFRIGERANTE (GR)	435
COMPRESOR DE REFRIGERANTE (GR)	434
CONDENSADOR (GR)	436
CONFIGURACION DE ENFRIAMIENTO	46
CONFIGURACION DE IMPULSION - TREN DE FUERZA	118
CONFIGURACION DE INSTALACION DEL MOTOR	3
CONJUNTO DE EJE	152
	158

Nombre	Pagina
CONSOLA DE INSTRUMENTOS (GR)	464
CONSOLA DELANTERA	462
CONSOLA DELANTERA - TECHO ROPS (GR)	462
CONSOLA DELANTERA DE LA CABINA (GR)	392
CONSOLA LATERAL DE INSTRUMENTOS	464
CONSOLA POSTERIOR	461
CONSOLA POSTERIOR (GR)	461
CONTRAPESO (GR)	217
	218
	219
	220
CONTROL DE DIRECCION Y SENTIDO DE MARCHA	474
CONTROL DE DIRECCION Y SENTIDO DE MARCHA (GR)	474
CONTROL DE LA TRANSMISION	478
CONTROL DE LA TRANSMISION (GR)	478
CONTROL DE REGULADOR Y ACELERADOR	66
CONTROL DE ROTACION	472
CONTROL DE TRABA DEL DIFERENCIAL	167
CONTROL DE TRABA DEL DIFERENCIAL (GR)	167
CONTROL DE VALVULA (POSICION)	486
CONTROL DEL CUCHARON (GR)	477
CONTROL DEL EXCAVADOR (GR)	476
CONTROL DEL FRENO (GR)	178
CONTROL DEL FRENO DE ESTACIONAMIENTO	177
CONTROL DEL FRENO DE ESTACIONAMIENTO (GR)	177
CONTROL DEL REGULADOR Y ACELERADOR (GR)	66
CONTROL HIDRAULICO (GR)	468
	470
CONTROL HIDRAULICO DEL CARGADOR	470
CONVERTIDOR DE PAR	119
CRUCETA Y COJINETE (CONJ)	164
CUCHARON (CONFIG)	323
CUCHARON CARGADOR	325
CUCHARON CARGADOR (CONJ)	325
CUCHARON DE USO MULTIPLE (CONFIG)	323
CUCHARON DE USO MULTIPLE (GR)	324
CUCHARON RETROEXCAVADOR	348
CUCHARON RETROEXCAVADOR (GR)	348
	349
	350
	351
	352
	353
	354
	355
	356
	357
	358
	359
	360

INDICE

Nombre	Pagina
	361
	362
CUCHILLA	326
CUCHILLA (GR)	326
CULATA DE CILINDROS (GR)	18
	19
	20
	21

D

DETECTOR	467
DETECTOR DE NIVEL DE COMBUSTIBLE (CONJ)	467
DETECTOR DE TEMPERATURA	467
DIENTE DE UNA PIEZA - EMPERNABLE	363
	364
DIRECCION - TUBERIAS DE	186
DIRECCION - TUBERIAS DE (GR)	184
	186
DIRECCION HIDRAULICA	182
DIRECCION HIDRAULICA (GR)	182
DISYUNTOR DE 15 A	467
DOSIFICACION - BOMBA DE (GR)	188

E

EJE DE IMPULSION Y DE DIRECCION	150
	151
EJE DE IMPULSION Y DE DIRECCION (GR)	150
	151
EJE DELANTERO	181
EJE DELANTERO (GR)	181
EJE IMPULSOR (GR)	164
	165
EJE MOTRIZ	139
	140
EJE MOTRIZ (GR)	139
	140
EJE POSTERIOR	146
EJE POSTERIOR (CONJ)	142
	146
ELEMENTO PRIMARIO (CONJ)	53
ELEMENTO SECUNDARIO (CONJ)	53
ENFRIADOR DE ACEITE DEL MOTOR Y BASE DEL FILTRO	44
ENFRIADOR DEL ACEITE HIDRAULICO	46
ENFRIADOR DEL ACEITE HIDRAULICO (GR)	46
ENGRANAJE DELANTERO	27
	28
ENGRANAJE DELANTERO (GR)	27
	28
ESCAPE - MULTIPLE DE	58
	59
ESCAPE DE GASES (GR)	41
ESTABILIZADOR - ZAPATA DE	346
ESTABILIZADOR DE RETROEXCAVADOR	344
ESTABILIZADOR DERECHO - TUBERIAS DEL	310
ESTABILIZADOR IZQUIERDO - TUBERIAS DEL	311
ESTRUCTURA ROPS	371
ESTRUCTURA ROPS (CONFIG)	370
EXCAVADOR - CONTROL DEL	476
EXTENSION DEL CILINDRO - TUBERIAS DE (GR)	292

F

FILTRO (CIRCULACION DE AIRE)	421
FILTRO (CONJ)	73
FILTRO DE ACEITE	121
	127
FILTRO DE ACEITE (CONJ)	36
	45
FILTRO DE ACEITE (GR)	36
FILTRO DE ACEITE HIDRAULICO (GR)	320
FILTRO DE AIRE	419
FILTRO DE AIRE (GR)	52
	53
FILTRO DE COMBUSTIBLE	79
	81
FILTRO DE COMBUSTIBLE (GR)	73
FILTRO DE COMBUSTIBLE - TUBERIAS DEL	74
FUSIBLE	429
FUSIBLE DE 10 A	96
	467
FUSIBLE DE 15 A	93
	96
	114
	467
FUSIBLE DE 20 A	96
	467

G

GRUPO DE CABLES (FUERZA)	93
GRUPO DE CONVERSION DE INSTAL. EN EL CAMPO (2 A 3)	228
GRUPO DE LUCES	107
	108
	110
GRUPO DE VALVULAS	190
	258.02
GRUPO DE VALVULAS HIDRAULICAS	229
GRUPO DE 3 VALVULAS HIDRAULICAS	230
GRUPO GIRATORIO DE BOMBA	191

INDICE

Nombre	Pagina
H	
HIDRAULICA (CONFIG)	222
	223
	224
HOJA DE LIMPIAPARABRISAS	439
HOJA DE LIMPIAPARABRISAS (CONJ)	441
	445
I	
IMPULSOR DE VENTILADOR (GR)	30
INCLINACION HORIZONTAL - CILINDRO DE (GR)	308
INDICADOR DE SERVICIO	467
INDICADOR DEL NIVEL DE ACEITE (VARILLA) (GR)	34
INDICADOR DEL NIVEL DE COMBUSTIBLE (CONJ)	467
INSERTO DE ADMISION	21
INSERTO DE ESCAPE	21
INSTRUMENTOS (GR)	466
INTERRUPTOR (CONJ)	85
	87
	89
	95
	429
	471
	478
INTERRUPTOR DE ARRANQUE EN NEUTRO (CONJ)	121
	127
INTERRUPTOR DE LA BOCINA (CONJ)	467
INTERRUPTOR DE PRESION DE ACEITE	45
	467
INTERRUPTOR DE ROTACION	96
	445
INTERRUPTOR DE TEMP. DEL REFRIGERANTE (CONJ)	467
INTERRUPTOR DE VENTILADOR	415
INTERRUPTOR DEL TERMOSTATO (CONJ)	429
INTERRUPTOR DEL VENTILADOR SOPLADOR (CONJ)	423
J	
JUEGO DE ACCESORIOS	435
JUEGO DE ADAPTADOR	331
JUEGO DE ANILLO DE PISTON	15
	16
JUEGO DE ANILLO DE RESORTE	125
	133
JUEGO DE ARANDELA	125
	133
JUEGO DE BOMBA DE AGUA	50
JUEGO DE BOMBA DE INYECCION DE COMBUSTIBLE	69
	70
JUEGO DE CIGUENAL	12
	13
JUEGO DE COJINETES	125
	133
JUEGO DE COJINETES DE BIELA	13
JUEGO DE COJINETES DE BIELA (0,25 MM)	12
JUEGO DE COJINETES DE BIELA (0,51 MM)	12
JUEGO DE COJINETES DE BIELA (0,76 MM)	12
JUEGO DE CONJUNTO DE FRENO	177
JUEGO DE CONTACTOR	98
JUEGO DE CORREAS TRAPECIALES	101
JUEGO DE CRUCETA Y COJINETE	164
JUEGO DE EMBRAGUE	125
	133
JUEGO DE ENGRANAJES	98
JUEGO DE ESCOBILLAS	423
JUEGO DE LEVANTAMIENTO DE BOMBA	68
JUEGO DE MANGUERA	51
JUEGO DE MEDIDOR DE SERVICIO	467
JUEGO DE REVESTIMIENTO DE FRENO	177
JUEGO DE SELLO CONTRA EL POLVO	435
JUEGO DE SELLO DE REFRIGERANTE	435
JUEGO DE SELLOS	125
	133
JUEGO DE TORNILLERIA	98
JUEGO DE TURBOALIMENTADOR	64
JUNTA DEL FILTRO DE COMBUSTIBLE	71
JUNTA UNIVERSAL (GR)	164
L	
LAMPARA	87
	107
	110
	111
LAMPARA DE ADVERTENCIA (GR)	113
	115
LAMPARA DE BALIZA GIRATORIA	115
LAMPARA DE FARO DELANTERO	116
	117
LAMPARA DE FARO DELANTERO (GR)	116
	117
LAMPARA DE LUZ AMBAR	105
LAMPARA DE LUZ ROJA	105
LAMPARAS (GR)	105
LAVAPARABRISAS (GR)	447
LIMPIADOR (GR)	442
	443
	444
LIMPIAPARABRISAS (GR)	438
LLANTA Y RUEDA IZQUIERDA TRASERA (GR)	173
LUCES DE ADVERTENCIA (GR)	112
	114

INDICE

Nombre	Pagina
LUCES DE DESPLAZAMIENTO (GR)	104
	106
LUZ DE ADVERTENCIA	112

M

MANDO - ACOPLAMIENTO FLEXIBLE	134
MECANISMO DE VALVULAS (GR)	22
	23
MECANISMO DE VALVULAS - TAPA DEL	25
MEDIDOR DE SERVICIO	467
MONTAJE DE CILINDRO	317
MONTAJE DE CILINDRO (GR)	317
MONTAJE DE LA TRANSMISION (GR)	138
MONTAJE DEL BRAZO (GR)	338
MONTAJE DEL MOTOR Y LA TRANSMISION	33
MONTAJE DEL MOTOR Y LA TRANSMISION (GR)	33
MONTAJE DEL RADIO (GR)	489
MOTOR	2
MOTOR (CONFIG)	1
MOTOR DE ARRANQUE ELECTRICO (GR)	97
	98
MULTIPLE DE ADMISION	60
	61
MULTIPLE DE ESCAPE (GR)	58
	59

P

PARAGOLPES DELANTERO	216
PEDAL DE CONTROL DEL FRENO	178
PEDAL IZQUIERDO Y TRABA (GR)	488
PISTON Y BIELA (GR)	15
	16
PIVOTE DEL BRAZO LIMPIADOR (GR)	446
PLANCHA DEL PISO (GR)	212
PLATAFORMA (GR)	372
	376
PLATAFORMA Y CABINA (CONFIG)	369
PLUMA (GR)	341
POLEA DE CIGUENAL	14
POSICIONADOR DEL CUCHARON Y DESCONEXION (GR)	322
PROTECTOR (GR)	316
PROTECTOR DE CILINDRO ESTABILIZADOR	316
PROTECTOR DEL EJE DE MANDO	166
PROTECTOR DEL EJE IMPULSOR (GR)	166
PROTECTOR SUPERIOR DE LA CABINA (GR)	416
PUERTA DERECHA (GR)	210
	396
PUERTA DERECHA DE LA CABINA (GR)	398
PUERTA IZQUIERDA (GR)	209
	394
PUERTA IZQUIERDA DE LA CABINA (GR)	406
PUNTA DOBLE AFILADA	367
PUNTA PARA PENETRACION	365
	366

R

RADIADOR (GR)	42
	43
RADIO - MONTAJE DEL	489
REFLECTOR (GR)	107
	110
	111
REGULADOR DE TEMPERATURA (TERMOSTATO)	51
RESPIRADERO	121
	127
RETROCESO - ALARMA DE (GR)	103
RETROEXCAVADOR - ESTABILIZADOR DEL (GR)	344
RETROVISOR (GR)	448
	449
RUEDA Y LLANTA (CONFIG)	193
RUEDA Y LLANTA (GR)	176
	201
RUEDA Y LLANTA DELANTERA (GR)	193
	194
	195
	196
	197
	200
	202
RUEDA Y LLANTA DELANTERA IZQUIERDA	198
	199
	202
RUEDA Y LLANTA DERECHA	172
	203
RUEDA Y LLANTA IZQUIERDA	174
	203
RUEDA Y LLANTA IZQUIERDA TRASERA (GR)	175
RUEDA Y LLANTA TRASERA	168
	170
	171
RUEDA Y LLANTA TRASERA (GR)	169

S

SEPARADOR DE AGUA	71
SILENCIADOR (CONJ)	57
SILENCIADOR (GR)	56
SINCRONIZADOR (GR)	125
	131
SOPORTE DEL CILINDRO DE LEVANTAMIENTO	328
SUCCION - VENTILADOR DE (GR)	48
SUSPENSION - ASIENTO CON (GR)	450
	451
	454
	456

INDICE

Nombre	Pagina
T	
TANQUE DE COMBUSTIBLE	78
TANQUE HIDRAULICO	318
TANQUE HIDRAULICO (GR)	318
TAPA (GR)	214
	215
TAPA CONTRA EL POLVO	263
TAPA DE LA CAJA DELANTERA (GR)	9
TAPA DE LLENADO	319
TAPA DEL MECANISMO DE VALVULAS (GR)	24
	25
TERMOMETRO (CONJ)	467
TRABA (CONFIG)	225
	226
	227
TRABA DE TRANSPORTE DE LA MAQUINA	332
TRABA HIDRAULICA (CONFIG)	225
TRANSMISION (CONFIG)	119
TRANSMISION (GR)	120
TRANSMISION - MONTAJE DE LA	138
TRANSMISION DIRECTA (GR)	126
TUBERIAS DE ACEITE (GR)	40
TUBERIAS DE ACEITE DEL MOTOR (GR)	39
TUBERIAS DE AIRE	54
	55
TUBERIAS DE CILINDRO DEL CUCHARON RETROEXCAVADOR	284
TUBERIAS DE COMBUSTIBLE (GR)	72
TUBERIAS DE DIRECCION	184
TUBERIAS DE ENFRIAMIENTO DEL TREN DE FUERZA	47
TUBERIAS DE EXTENSION DEL CILINDRO	292
TUBERIAS DE INYECCION DE COMBUSTIBLE (GR)	75
	76
TUBERIAS DE LA BOMBA HIDRAULICA	262
TUBERIAS DE LA CALEFACCION	424
TUBERIAS DE LA CALEFACCION (GR)	424
TUBERIAS DEL AGUA (GR)	51
TUBERIAS DEL BRAZO (GR)	286
	288
	290
TUBERIAS DEL BRAZO EXTENSIBLE	286
	288
TUBERIAS DEL CILINDRO DE INCLINACION	270
TUBERIAS DEL CILINDRO DE INCLINACION (GR)	270
	272
TUBERIAS DEL CILINDRO DE LA PLUMA	276
TUBERIAS DEL CILINDRO DE LEVANTAMIENTO	266
	268
TUBERIAS DEL CILINDRO DE ROTACION	274
TUBERIAS DEL CILINDRO DEL CUCHARON (GR)	284
TUBERIAS DEL CUCHARON (GR)	282
TUBERIAS DEL CUCHARON DE DESCARGA POR EL FONDO	282
TUBERIAS DEL ENFRIADOR DEL TREN DE FUERZA	47
TUBERIAS DEL ESTABILIZADOR (GR)	294
TUBERIAS DEL FILTRO DE COMBUSTIBLE	74
TUBERIAS HIDRAULICAS	300
TUBERIAS HIDRAULICAS (GR)	296
	299
TUBERIAS HIDRAULICAS AUXILIARES (GR)	302
TUBERIAS HIDRAULICAS DE 1 CIRCUITO	298
	299
TUBERIAS HIDRAULICAS DE 1 CIRCUITO (GR)	298
	300
TUBERIAS HIDRAULICAS DE 3 CIRCUITOS	296
TUBO DE LLENADO DE ACEITE (GR)	35
TUBO DE LLENADO DE ACEITE DE LA TRANSMISION (GR)	137
TUBO DE LLENADO DE ACEITE DEL MOTOR	35
TUBO DE LLENADO DE ACEITE DEL TREN DE FUERZA	137
TURBOALIMENTADOR (GR)	62
	64
V	
VALVULA DE ALIVIO (GR)	259
VALVULA DE COMPENSACION DE FUERZA (GR)	192
VALVULA DE CONTROL (GR)	136
	238
	240
	241.01
	242
	244
	245.01
	246
	248
	250
	252
	254
	256
	260
	480
	482
	484
	486
VALVULA DE CONTROL DEL PEDAL Y MONTAJE	480
VALVULA DE ENTRADA	19
	21

INDICE

Nombre	Pagina
VALVULA DE ESCAPE	19
	21
VALVULA DE PRIORIDAD Y DIVISORA DE CAUDAL (GR)	258
VALVULA DE RETENCION (GR)	304
VALVULA DE RETENCION DE LA PLUMA - TUBERIAS (GR)	278
VALVULA DE 2 FUNCIONES (GR)	229
VALVULAS HIDRAULICAS - GRUPO DE 6	232
VALVULAS HIDRAULICAS - GRUPO DE 7	234
	236
VARILLA DE NIVEL DE ACEITE (CONJ)	137
VARILLAJE DEL CUCHARON	329
VARILLAJE DEL CUCHARON (GR)	329
	330
VARILLAJE DEL CUCHARON RETROEXCAVADOR	330
VENTILADOR - MANDO DE	30
VENTILADOR DE LA CABINA	414
VENTILADOR DE LA CABINA (GR)	414
VENTILADOR DE SUCCION	48
VOLANTE (GR)	29
VOLTIMETRO (CONJ)	467

Z

ZAPATA DE APOYO (GR)	346
ZAPATA DE ESTABILIZADOR	347
ZAPATA DE ESTABILIZADOR (GR)	347

INDICE

Designacao	Pagina

A

ACOPLAMENTO DA BOMBA	321
ACOPLAMENTO DA BOMBA HIDRAULICA	321
ACOPLAMENTO FLEXIVEL	134
ADMISSAO - COLETOR	60
	61
AGUA - SEPARADOR	71
AGUA DO MOTOR - BOMBA	49
	50
AGUA DO MOTOR - TUBOS	51
ALTERNADOR	100
	101
	102
AQUECEDOR	420
AQUECEDOR - TUBOS	424
AQUECEDOR DA CABINE	418
AR - TUBOS	54
	55
ARMACAO OSCILANTE	342
ARRANJO DE TREM DE FORCA	118
ARREFECEDOR DE OLEO DO MOTOR E BASE DO FILTRO	44
ARREFECEDOR DE OLEO DO TREM DE FORCA - TUBOS	47
ARREFECEDOR DO OLEO HIDRAULICO	46
ARREFECIMENTO	46
ARTICULACOES DA CACAMBA FRONTAL	329
ARTICULACOES DA CACAMBA RETRO-ESCAVADORA	330
ASSENTO	458
ASSENTO - BRACO DE ENCOSTO DO OPERADOR	460
ASSENTO COM SUSPENSAO	450
	451
	454
	456
ASSENTO REVERSIVEL	452
AUXILIO DE PARTIDA	99

B

BATERIA	83
BATERIA - 12 V	83
	85
BATERIA E CABOS/FIOS ELETRICOS	84
BLOCO DO MOTOR	4
	5
	6
	7
	8
BOCAL DE ENCHIMENTO DE OLEO DA TRANSMISSAO	137
BOCAL DE ENCHIMENTO DE OLEO DO MOTOR	35
BOMBA	38
BOMBA DE AGUA DO MOTOR	49
	50
BOMBA DE COMBUSTIVEL	68
BOMBA DE INJECAO DO COMBUSTIVEL	69
	70
BOMBA DE PISTAO	189
BOMBA GEROTOR	37
BOMBA HIDRAULICA	135
BOMBA HIDRAULICA - TRANSMISSAO	135
BOMBA REGULADORA	188
BORDA CORTANTE	326
BRACADEIRA DE MANGUEIRA	263
BRACO - CACAMBA RETRO-ESCAVADORA	340
BRACO - CILINDRO	314
BRACO - EXTENSAO	334
	336
BRACO DE LEVANTAMENTO	327
BRACO DE LEVANTAMENTO - CACAMBA FRONTAL	327
BRACO DO ASSENTO	460
BRACO ESTENDIVEL	333
BRACO PIVO DO LIMPADOR DO PARA-BRISA	446
BUZINA	85

C

CABECOTE DO MOTOR	18
	19
	20
	21
CABINE	368
	369
	380
	386
CABOS/FIOS ELETRICOS	94
	96
CABOS/FIOS ELETRICOS - ACIONAMENTO DIANTEIRO	90
CABOS/FIOS ELETRICOS - CONDICIONADOR DE AR	91
CABOS/FIOS ELETRICOS - FORCA	93
CABOS/FIOS ELETRICOS - TRACAO DIANTEIRA	90
CABOS/FIOS ELETRICOS DE ILUMINACAO	92
CACAMBA	323
CACAMBA - CILINDRO	306
	307
CACAMBA - CILINDRO DO BRACO EXTENDIDO	305
CACAMBA FRONTAL	325
CACAMBA MULTI-UTIL	323
	324
CACAMBA RETRO-ESCAVADORA	348
	349
	350
	351
	352

INDICE

Designacao	Pagina
	353
	354
	355
	356
	357
	358
	359
	360
	361
	362
CACAMBA RETRO-ESCAVADORA - BRACO	340
CAIXA DA BATERIA	211
CAIXA DIANTEIRA	26
CAIXA DIANTEIRA - TAMPA	9
CALCO DO ESTABILIZADOR	346
	347
CAPO	208
CAPO E PROTETOR	206
CARCACA DA VALVULA; GR DE VALVULA	190
	258.02
CARTER DO OLEO DO MOTOR	31
CHAPA DO PISO	212
CHASSI DIANTEIRO	204
	205
CILINDRO - MONTAGEM	317
CILINDRO DA CACAMBA	305
	306
	307
CILINDRO DA LANCA	315
CILINDRO DA LANCA - TUBOS	276
CILINDRO DE DIRECAO	183
CILINDRO DE INCLINACAO	308
CILINDRO DE INCLINACAO - TUBOS	270
CILINDRO DE LEVANTAMENTO - TIRANTE ..	328
CILINDRO DE LEVANTAMENTO - TUBOS	266
	268
CILINDRO DE LEVANTAMENTO DA CACAMBA FRONTAL	309
CILINDRO DE OSCILACAO	312
CILINDRO DO BRACO	313
	314
CILINDRO DO BRACO EXTENDIDO	313
CILINDRO ESTABILIZADOR - LADO DIREITO	310
CILINDRO ESTABILIZADOR - LADO ESQUERDO.....	311
CILINDRO ESTABILIZADOR - TUBOS	294
COLETOR DE ADMISSAO	60
	61
COLETOR DE ESCAPE	58
	59
COMANDO DO VENTILADOR	30
COMANDO HIDRAULICO	222
	223
	224
COMBUSTIVEL - BOMBA	68
COMBUSTIVEL - BOMBA DE INJECAO	69
COMBUSTIVEL - TANQUE	78
COMBUSTIVEL - TUBOS	72
COMBUSTIVEL - TUBOS DE INJECAO	75
	76
COMBUSTIVEL - TUBOS DO FILTRO	74
COMPRESSOR DE REFRIGERANTE	434
COMPRESSOR DE REFRIGERANTE E EMBREAGEM	435
CONDENSADOR	436
CONDICIONADOR DE AR	425
	428
CONDICIONADOR DE AR - CABOS/FIOS ELETRICOS	91
CONDICIONADOR DE AR E MONTAGEM	427
CONSOLO DE INSTRUMENTOS	464
CONSOLO DIANTEIRO	462
CONSOLO DIANTEIRO - CABINE	392
CONSOLO DIANTEIRO - ESTRUTURA ROPS ..	462
CONSOLO LATERAL DE INSTRUMENTOS	464
CONSOLO TRASEIRO	461
CONTRAPESO	217
	218
	219
	220
CONTROLE DA CACAMBA	477
CONTROLE DA CACAMBA ESCAVADORA	476
CONTROLE DA TRANSMISSAO	478
CONTROLE DA TRAVA DO DIFERENCIAL	167
CONTROLE DE DIRECAO E VALVULA VAIVEM.....	474
CONTROLE DE ESCAVACAO	476
CONTROLE DE OSCILACAO	472
CONTROLE DE VALVULA (POSICAO)	486
CONTROLE DO FREIO	178
CONTROLE DO FREIO - PEDAL	178
CONTROLE DO FREIO DE ESTACIONAMENTO.....	177
CONTROLE DO GOVERNADOR E ACELERADOR.....	66
CONTROLE HIDRAULICO	468
	470
CONTROLE HIDRAULICO DA CACAMBA FRONTAL	470
CONVERSOR DE TORQUE	119
CRUZETA E MANCAL	164

D

Designacao	Pagina
DESENGATE E POSICIONADOR DA CACAMBA	322
DIFERENCIAL - CONTROLE DA TRAVA	167
DIRECAO - CILINDRO	183
DIRECAO - TUBOS	184
DIRECAO E VALVULA VAIVEM - CONTROLE.....	474
DIRECAO HIDRAULICA	182
DISJUNTOR AUTOMATICO DE CIRCUITO - 15 A.....	467

INDICE

Designacao	Pagina
DISTRIBUICAO - ENGRENAGENS	27, 28

E

EIXO (CONJ)	152, 158
EIXO DE DIRECAO E DE PROPULSAO	150, 151
EIXO DE PROPULSAO	139, 140
EIXO DE PROPULSAO E DE DIRECAO	150, 151
EIXO DE TRANSMISSAO	164, 165
EIXO DE TRANSMISSAO - PROTETOR	166
EIXO DIANTEIRO	181
EIXO TRASEIRO	142, 146
EIXO-COMANDO DE VALVULAS	10, 11
ELEMENTO - PRIMARIO	53
ELEMENTO - SECUNDARIO (PURIF. DE AR)	53
ELIMINACAO DE VAPORES DO CARTER	41
ELOS DE ARTICULACAO DA CACAMBA	329, 330
EMISSOR	467
EMISSOR - NIVEL DO COMBUSTIVEL	467
EMISSOR - TEMPERATURA	467
ENGRENAGENS DE DISTRIBUICAO	27, 28
ESCAPE - COLETOR	58, 59
ESPELHO RETRO-VISOR	448, 449
ESTABILIZADOR - RETROESCAVADEIRA	344
ESTABILIZADOR DA RETROESCAVADEIRA	344
ESTRUTURA ROPS	370
EXTENSAO DO BRACO	334, 336

F

FAROL DIANTEIRO	116, 117
FILTRO	73
FILTRO - AR	419
FILTRO - COMBUSTIVEL	73, 79, 81
FILTRO - OLEO	36, 45, 121, 127
FILTRO - OLEO HIDRAULICO	320, 421
FILTRO - RECIRCULACAO DE AR	177
FREIO DE ESTACIONAMENTO - CONTROLE	429
FUSIVEL	96, 467
FUSIVEL - 10 A	93, 96, 114, 467
FUSIVEL - 15 A	96, 467
FUSIVEL - 20 A	467

G

GOVERNADOR E CONTROLE DO ACELERADOR	66
GR. DE CONVERSAO - 2 VALVULAS PARA 3	228
GR. DE INSTALACAO - MOTOR	3
GR. DE VALVULAS DE CONTROLE	229
GRUPO DE VALVULAS DE CONTROLE - SEIS	232
GRUPO DE VALVULAS DE CONTROLE - SETE	234, 236
GRUPO DE VALVULAS DE CONTROLE - TRIPLO	230
GRUPO ROTATIVO DA BOMBA	191

I

ILUMINACAO - RODOVIARIO	104, 106
ILUMINACAO - SISTEMA	107, 108, 110
INCLINACAO - CILINDRO	308
INDICADOR - LIMPEZA DO FILTRO DE AR	467
INDICADOR - NIVEL DE OLEO	137
INDICADOR - NIVEL DO COMBUSTIVEL	467
INDICADOR - NIVEL DO OLEO DO MOTOR (VARETA)	34
INDICADOR - TEMPERATURA	467
INSERTO - ADMISSAO	21
INSERTO - ESCAPAMENTO	21
INSTRUMENTOS	466
INTERRUPTOR	85, 87, 89, 95, 429, 471, 478
INTERRUPTOR - ARRANQUE	97
INTERRUPTOR - BUZINA	467
INTERRUPTOR - PARTIDA EM NEUTRO, APENAS	121, 127

INDICE

Designacao	Pagina
INTERRUPTOR - PRESSAO DO OLEO	45
	467
INTERRUPTOR - ROTATIVO	96
	445
INTERRUPTOR - TEMP. DE REFRIGERANTE	467
INTERRUPTOR - TERMOSTATO	429
INTERRUPTOR - VENTILADOR	415
INTERRUPTOR - VENTILADOR SOPRADOR	423
J	
JOGO DA BOMBA DE LEVANTAMENTO	68
JOGO DE ACESSORIOS	435
JOGO DE ADAPTADOR	331
JOGO DE ANEL DE PISTAO	15
	16
JOGO DE ANEL DE RETENCAO	125
	133
JOGO DE ARRUELA	125
	133
JOGO DE BOMBA D'AGUA	50
JOGO DE BOMBA INJETORA DE COMBUSTIVEL	69
	70
JOGO DE CONTATO	98
JOGO DE CORREIAS EM "V"	101
JOGO DE CRUZETA E MANCAL	164
JOGO DE DISCOS DA EMBREAGEM	125
	133
JOGO DE ENGRENAGEM	98
JOGO DE ESCOVA	423
JOGO DE FIXADORES, PRENDEDORES	98
JOGO DE FREIO	177
JOGO DE LONA DO FREIO	177
JOGO DE MANCAL	125
	133
JOGO DE MANCAL DE HASTE	13
JOGO DE MANCAL DE HASTE 0,25 MM	12
JOGO DE MANCAL DE HASTE 0,51 MM	12
JOGO DE MANCAL DE HASTE 0,76 MM	12
JOGO DE MANGUEIRA	51
JOGO DE MARCADOR DE HORAS DE SERVICO	467
JOGO DE RETENTOR	125
	133
JOGO DE RETENTOR DE REFRIGERANTE	435
JOGO DE TAMPA CONTRA POEIRA	435
JOGO DE TURBOALIMENTADOR	64
JOGO DE VIRABREQUIM	12
	13
JUNTA - FILTRO DO COMBUSTIVEL	71
JUNTA UNIVERSAL	164

Designacao	Pagina
L	
LAMINA DO LIMPADOR DO PARA-BRISA	439
	441
	445
LAMPADA	87
	105
	107
	110
	111
LAMPADA - AMBRA	105
LAMPADA - FAROL	107
	110
	111
LAMPADA - MINIATURA	87
	90
	105
	108
	391
LAMPADA - VERMELHA	105
LANCA	341
LANCA - CILINDRO	315
LAVADOR DO PARA-BRISA	447
LEVANTAMENTO DO MOTOR	32
LIMPADOR DO PARA-BRISA	438
	442
	443
	444
LUZ DE ALARME	112
	113
	115
M	
MARCADOR DE HORAS DE SERVICO/HOROMETRO	467
MECANISMO DAS VALVULAS	22
	23
MMRCHA A RE - ALARME	103
MONTAGEM - BRACO	338
MONTAGEM - CILINDRO	317
MONTAGEM - MOTOR E TRANSMISSAO	33
MONTAGEM - RADIO	489
MONTAGEM - TRANSMISSAO	138
MONTAGEM - VALVULA DE CONTROLE DO PEDAL	480
MONTAGEM DO MOTOR E TRANSMISSAO	33
MOTOR	1
MOTOR ELETRICO DE ARRANQUE	97
	98
MOTOR PRIMARIO	2

INDICE

Designacao	Pagina
O	
OLEO DA TRANSMISSAO - BOCAL DE ENCHIMENTO	137
OLEO DO MOTOR - BOCAL DE ENCHIMENTO	35
OLEO DO MOTOR - CARTER	31
OLEO DO MOTOR - FILTRO	36
OLEO DO MOTOR - TUBOS	39
	40
OLEO HIDRAULICO - ARREFECEDOR	46
OLHAL DE LEVANTAMENTO DO MOTOR	32
OSCILACAO - ARMACAO	342
OSCILACAO - CILINDRO	312
P	
PARA-CHOQUE DIANTEIRO	216
PEDAL E TRAVA - ESQUERDO	488
PENEIRA	319
PISCA ALERTA GIRATORIA	115
PISTAO E BIELA	15
	16
PLATAFORMA	372
	376
PLATAFORMA E CABINE	369
PNEU E RODA TRASEIRO	169
PNEU E RODA TRASEIRO - LADO ESQUERDO	175
POLIA DO VIRABREQUIM	14
PONTA DE ABRASAO	366
PONTA DE PENETRACAO	365
	366
PONTA DE PONTEIRA DUPLA	367
PORTA - LADO DIREITO	210
	396
PORTA - LADO ESQUERDO	209
	394
PORTA DA CABINE - LADO DIREITO	398
PORTA DA CABINE - LADO ESQUERDO	406
PROTETOR	316
PROTETOR - EIXO DE TRANSMISSAO	166
PROTETOR DO CILINDRO DO ESTABILIZADOR	316
PROTETOR SUPERIOR DA CABINE	416
PURIFICADOR DE AR	52
	53
R	
RADIADOR	42
	43
RADIO - MONTAGEM	489
REGULADOR DE TEMPERATURA/TERMOSTATO	51
RESPIRO	121
	127
RODA E PNEU	193

Designacao	Pagina
RODA E PNEU (GR)	176
	201
RODA E PNEU - DIREITO	172
	203
RODA E PNEU - ESQUERDO	174
	203
RODA E PNEU DIANTEIRO	193
	194
	195
	196
	197
	200
	202
RODA E PNEU DIANTEIRO - ESQUERDO	198
	199
	202
RODA E PNEU TRASEIRO	168
	170
	171
RODA E PNEU TRASEIRO - ESQUERDO	173
ROPS - ESTRUTURA	371
S	
SAPATA DE ESTEIRA - CALCO	346
SEMI-EIXO DE ACIONAMENTO DAS RODAS	139
	140
SEMI-EIXO DIANTEIRO	181
SEPARADOR D'AGUA	71
SILENCIADOR DO ESCAPAMENTO	56
	57
SINCRONIZADOR	125
	131
SISTEMA DE ILUMINACAO - ALARME	112
	114
SUCCAO - VENTILADOR	48
SUSPENSAO - ASSENTO	450
	451
T	
TAMPA	214
	215
TAMPA - BOCAL DE ENCHIMENTO	319
TAMPA - CAIXA DIANTEIRA	9
TAMPA - MECANISMO DAS VALVULAS	24
	25
TAMPA - SUPERIOR DO MOTOR	25
TAMPA CONTRA POEIRA	263
TANQUE DE COMBUSTIVEL	78
	80
TANQUE HIDRAULICO	318
TAPETE	437
TIRANTE DO CILINDRO DE LEVANTAMENTO	328
TORQUE - CONVERSOR	119
TRANSMISSAO	119
	120

INDICE

Designacao	Pagina
TRANSMISSAO - BOMBA DE OLEO	135
TRANSMISSAO - CONTROLE DAS MARCHAS	478
TRANSMISSAO - MONTAGEM	138
TRANSMISSAO DIRETA	126
TRAVA	225
	226
	227
TRAVA - TRANSPORTE	332
TRAVA HIDRAULICA	225
TUBOS - AGUA	51
TUBOS - AQUECEDOR	424
TUBOS - AR	54
	55
TUBOS - ARREFECEDOR DO OLEO DA TRANSMISSAO	47
TUBOS - BOMBA HIDRAULICA	262
TUBOS - BRACO	286
	288
	290
TUBOS - BRACO EXTENDIDO	286
	288
TUBOS - CACAMBA	282
TUBOS - CACAMBA DE DESPEJO PELO FUNDO	282
TUBOS - CACAMBA RETRO-ESCAVADORA	284
TUBOS - CILINDRO DA CACAMBA	284
TUBOS - CILINDRO DA LANCA	276
TUBOS - CILINDRO DE EXTENSAO	292
TUBOS - CILINDRO DE INCLINACAO	270
	272
TUBOS - CILINDRO DE LEVANTAMENTO	266
	268
TUBOS - CILINDRO DE OSCILACAO	274
TUBOS - COMBUSTIVEL	72
TUBOS - CONDICIONADOR DE AR	432
TUBOS - DIRECAO	184
	186
TUBOS - ESTABILIZADOR	294
TUBOS - EXTENSAO DO CILINDRO	292
TUBOS - FILTRO DO COMBUSTIVEL	74
TUBOS - HIDRAULICOS	300
TUBOS - HIDRAULICOS AUXILIARIOS	302
TUBOS - INJECAO DO COMBUSTIVEL	75
	76
TUBOS - OLEO	40
TUBOS - OLEO DO MOTOR	39
TUBOS - OLEO HIDRAULICO	296
	299
TUBOS - SISTEMA HIDRAULICO DE 1 CIRCUITO	298
	300
TUBOS - VALVULA DE RETENCAO DA LANCA	278
TUBOS HIDRAULICOS - 1 CIRCUITO	298
	299
TUBOS HIDRAULICOS - 3 CIRCUITOS	296
TURBOALIMENTADOR	62
	64

U

Designacao	Pagina
UNI-DENTE APARAFUSAVEL	363
	364

V

Designacao	Pagina
VALVULA DE ADMISSAO	19
	21
VALVULA DE ALIVIO	259
VALVULA DE COMPENSACAO DE FORCA	192
VALVULA DE CONTROLE	136
	238
	240
	241.01
	242
	244
	245.01
	246
	248
	250
	252
	254
	256
	260
	480
	482
	484
	486
VALVULA DE ESCAPE	19
	21
VALVULA DE RETENCAO	304
VALVULA DIVISORA DE PRIORIDADE DE FLUXO	258
VALVULAS HIDRAULICAS - 2 VALVULAS	229
VARETA DE NIVEL DO OLEO	34
VENTILADOR - COMANDO	30
VENTILADOR DE CIRCULACAO DE AR DA CABINE	414
VENTILADOR DE SUCCAO	48
VIRABREQUIM	12
	13
VIRABREQUIM - POLIA	14
VOLANTE DO MOTOR	29
VOLTIMETRO	467

INHALTSVERZEICHNIS

Bezeichnung	Seite
A	
ABSTUETZZYLINDERVERKLEIDUNG	316
ACHSE	152
	158
ANLASSMOTOR, ELEKTR.	97
	98
ANSAUGKRUEMMER	60
	61
ANSCHLUSS-EINBAUSATZ	331
ANTRIEB	118
ANTRIEBS- UND LENKACHSE	150
	151
ANTRIEBSACHSE	139
	140
ANTRIEBSKUPPLUNG, ELAST.	134
ANTRIEBSWELLE	164
	165
ANTRIEBSWELLENVERKLEIDUNG	166
ARBEITSLEUCHTEN	107
	110
	111
ARMSTUETZE	460
AUSLASSVENTIL	19
	21
AUSLASSVENTILEINSATZ	21
AUSLEGER	341
AUSLEGERSPERRVENTILLEITUNGEN	278
AUSLEGERZYLINDER	315
AUSLEGERZYLINDERLEITUNGEN	276
AUSPUFFKRUEMMER	58
	59
B	
BAGGERSTEUERUNG	476
BATTERIE	83
BATTERIE - 12 V	83
	85
BATTERIE UND VERDRAHTUNG	84
BATTERIEKASTEN	211
BEFESTIGUNGSTEILE	98
BEILAGSCHEIBEN-EINBAUSATZ	125
	133
BELEUCHTUNGSANLAGE	107
	108
	110
BELEUCHTUNGSANLAGE (STRASSENAUSRUESTUNG)	104
	106
BELEUCHTUNGSVERDRAHTUNG	92
BODENBLECHE	212
BREMSBELAG-EINBAUSATZ	177
BREMSENEINBAUSATZ	177
BREMSGESTAENGE	178
BREMSPEDALGESTAENGE	178
BUERSTENEINBAUSATZ	423
D	
DICHTUNGSSATZ	125
	133
DIFFERENTIALSPERRE	167
DIFFERENTIALSPERRENGESTAENGE	167
DOSIERPUMPE	188
DREHKNOPFSCHALTER	96
	445
DREHMOMENTWANDLER	119
DREHSTROMLICHTMASCHINE	100
	101
	102
DRILLINGSVENTIL	230
DRUCKLUFTLEITUNGEN	54
	55
E	
EINFUELLSTUTZENKAPPE	319
EINLASSVENTIL	19
	21
EINLASSVENTILEINSATZ	21
ENTDUNSTER	41
ENTLUEFTER	121
	127
F	
FAHRERHAUS	368
	369
	380
	386
FAHRERHAUSAUSKLEIDUNG	416
FAHRERHAUSHEIZUNG	418
	420
FAHRERHAUSHEIZUNGS-UMLAUFLUEFTER	421
FAHRERHAUSTUER (LINKS)	209
	394
	406
FAHRERHAUSTUER (RECHTS)	210
	396
	398
FAHRERPLATTFORM	369
	372
	376
FAHRERSITZ	458
FAHRERSITZFEDERUNG	450
	451
FELDUMBAUSATZ (2 AUF 3)	228
FESTSTELLBREMSE	177
FESTSTELLBREMSGESTAENGE	177
FILTERSATZ	73
FOERDERPUMPEN-EINBAUSATZ	68
FRONTBEDIENUNGSPULT	392

INHALTSVERZEICHNIS

Bezeichnung	Seite
FRONTBEDIENUNGSPULT (UEBERROLLSCHUTZDACH)	462
FRONTSCHEINWERFER	116
	117
FRONTSTEUERPULT	462
FRONTSTOSSSTANGE	216
FUSSMATTE	437

G

GEBER	467
GEBLAESESCHALTER	423
GEGENGEWICHT	217
	218
	219
	220
GETRIEBE	119
	120
GETRIEBE- UND MOTORAUFHAENGUNG	33
GETRIEBEAUFLAGER	138
GETRIEBEHYDRAULIKPUMPE	135
GETRIEBEOELFUELLSTUTZEN	137
GETRIEBESTEUERUNG	478
GETRIEBESYNCHRONISIERSATZ	125
	131

H

HAUPTFILTERELEMENT	53
HECKBEDIENUNGSPULT	461
HEIZUNGSLEITUNGEN	424
HINTERACHSE	142
	146
HINTERRAD UND REIFEN	168
	169
	170
	171
HINTERRAD UND REIFEN, LINKS	173
	175
HUBARM	327
HUBARM (LADEVORRICHTUNG)	327
HUBOESE	32
HUBOESE (MOTOR)	32
HUBZYLINDER (LADEVORRICHTUNG)	309
HUBZYLINDER-HALTERUNG	328
HUBZYLINDERLEITUNGEN	266
	268
HUBZYLINDERSTREBE	328
HUPE	85
HUPENSCHALTER	467
HYDRAULIKLADESTEUERUNG	470
HYDRAULIKLEITUNGEN	296
	299
	300
HYDRAULIKLEITUNGEN (EINKREIS-)	298
	300
HYDRAULIKLEITUNGEN (1-KREIS-)	298
	299
HYDRAULIKLEITUNGEN (3-KREIS-)	296
HYDRAULIKLENKUNG	182
HYDRAULIKOELFILTER	320
HYDRAULIKOELKUEHLER	46
HYDRAULIKOELPUMPENLEITUNGEN	262
HYDRAULIKPUMPE	135
HYDRAULIKPUMPENLEITUNGEN	262
HYDRAULIKSPERRE	225
HYDRAULIKSTEUERUNG	468
	470
HYDRAULIKSYSTEM	222
	223
	224
HYDRAULIKTANK	318
HYDRAULKPUMPENANSCHLUSS	321

I

INSTRUMENTENSATZ	466
INSTRUMENTENTAFEL	464

K

KEILRIEMENSATZ	101
KLAPPSCHAUFELLEITUNGEN	282
KLIMAANLAGE	425
	428
KLIMAANLAGE UND AUFHAENGUNG	427
KLIMAANLAGENLEITUNGEN	432
KLIMAANLAGENVERDRAHTUNG	91
KOLBENPUMPE	189
KOLBENPUMPENUMLAUFSATZ	191
KOLBENRINGSATZ	15
	16
KOMBISCHAUFEL	323
	324
KONDENSATOR	436
KONTAKT-EINBAUSATZ	98
KRAFTAUSGLEICHSVENTIL	192
KRAFTSTOFFEINSPRITZLEITUNGEN	75
	76
KRAFTSTOFFEINSPRITZPUMPE	69
	70
KRAFTSTOFFEINSPRITZPUMPEN-EINBAUSATZ	69
	70
KRAFTSTOFFILTER	73
	79
	81
KRAFTSTOFFILTERDICHTUNG	71
KRAFTSTOFFILTERLEITUNGEN	74
KRAFTSTOFFLEITUNGEN	72
KRAFTSTOFFPUMPE	68
KRAFTSTOFFSTANDANZEIGE	467
KRAFTSTOFFSTANDGEBER	467
KRAFTSTOFFTANK	78
	80
KREUZGELENK	164

INHALTSVERZEICHNIS

Bezeichnung	Seite
KREUZGELENK UND LAGER	164
KREUZGELENKLAGER-EINBAUSATZ	164
KUEHLERLEITUNGEN (KRAFTUEBERTRAGUNG)	47
KUEHLERNETZ	42
	43
KUEHLKOMPRESSOR UND KUPPLUNG	435
KUEHLKOMPRESSORAUFHAENGUNG	434
KUEHLMITTEL-TEMPERATURSCHALTER	467
KUEHLMITTELDICHTUNGSATZ	435
KUEHLWASSERLEITUNGEN	51
KUEHLWASSERPUMPE	49
	50
KUPPLUNGSANTRIEB, ELAST.	134
KUPPLUNGSPACKUNGS-EINBAUSATZ	125
	133
KURBELWELLE	12
	13
KURBELWELLEN-EINBAUSATZ	12
	13
KURBELWELLEN-RIEMENSCHEIBE	14

L

LADERRAHMEN	204
	205
LADESCHAUFEL	325
LAGERSATZ	125
	133
LAGERWELLE	446
LENK- UND PENDELSTEUERUNG	474
LENKHYDRAULIK	182
LENKLEITUNGEN	184
LENKOELLEITUNGEN	184
	186
LENKRAD UND UMLENKSCHALTUNG	474
LENKZYLINDER	183
LEUCHTE	87
	107
	110
	111
LEUCHTE (GELB)	105
LEUCHTE (ROT)	105
LOEFFEL	323
LOEFFELAUFHAENGUNG	338
LOEFFELGESTAENGE	329
	330
LOEFFELSTIEL	340
LOEFFELSTIELZYLINDER	313
	314
LOEFFELZYLINDER	306
	307
	330
LUEFTERANTRIEB	30
LUEFTERSCHALTER	415
LUFTFILTER	419
LUFTFILTER-WARTUNGSANZEIGE	467
LUFTREINIGER	52
	53

M

MINIATURLEUCHTE	87
	90
	105
	108
	391
MOTOR- UND GETRIEBEAUFLAGER	33
MOTOR-EINBAUSATZ	3
MOTORAUSFUEHRUNG	1
	2
MOTORBLOCK	4
	5
	6
	7
	8
MOTORHAUBE	208
MOTORHAUBE UND VERKLEIDUNG	206
MOTOROELKUEHLER UND FILTERSOCKEL	44
MOTOROELLEITUNGEN	39
	40

N

NEIGEZYLINDER	308
NEIGEZYLINDERLEITUNGEN	270
	272
NEUTRALSTARTSCHALTER	121
	127
NOCKENWELLE	10
	11

O

OELDRUCKSCHALTER	45
	467
OELEINFUELLSTUTZEN	35
OELEINFUELLSTUTZEN (KRAFTUEBERTRAGUNG)	137
OELKUEHLERLEITUNGEN (KRAFTUEBERTRAGUNG)	47
OELLEITUNGEN	40
OELMESSSTAB	34
	137
OELWANNE	31

P

PEDALSTEUERVENTIL UND AUFHAENGUNG	480
PLEUELLAGER-EINBAUSATZ	13
PLEUELLAGERSATZ (0,25 MM)	12
PLEUELLAGERSATZ (0,51 MM)	12
PLEUELLAGERSATZ (0,76 MM)	12
PLEUELSTANGE UND KOLBEN	15
	16

INHALTSVERZEICHNIS

Bezeichnung	Seite
PUMPE	38
PUMPENANSCHLUSS	321
PUMPENGRUPPE	135

R

RAD UND REIFEN	176
	193
	201
RAD UND REIFEN, LINKS	174
	203
RAD UND REIFEN, RECHTS	172
	203
RADIOANBAUSATZ	489
REGLER- UND GASPEDALGESTAENGE	66
ROTORPUMPE	37
RUECKFAHRWARNHORN	103
RUECKSPIEGEL	448
	449
RUNDUMWARNLEUCHTE	115

S

SAUGLUEFTER	48
SCHALLDAEMPFER	56
	57
SCHALTER	85
	87
	89
	95
	429
	471
	478
SCHAUFELAUSSCHALTER UND -EINSTELLER	322
SCHAUFELGESTAENGE	329
SCHAUFELLEITUNGEN	282
SCHAUFELSTEUERUNG	477
SCHAUFELZYLINDER	305
	306
	307
SCHAUFELZYLINDERLEITUNGEN	284
SCHEIBENWASCHANLAGE	447
SCHEIBENWISCHER	438
	442
	443
	444
SCHEIBENWISCHERBLATT	441
	445
SCHEINWERFER	105
	116
	117
SCHLAUCHKLEMME	263
SCHLAUCHLEITUNGS-EINBAUSATZ	51
SCHMIERFILTER	36
	45
	121
	127
SCHNEIDMESSER	326
SCHWENKRAHMEN	342
SCHWENKSTEUERUNG	472
SCHWENKZYLINDER	312
SCHWENKZYLINDERLEITUNGEN	274
SCHWINGSITZ	450
	451
	452
	454
	456
SCHWUNGSCHEIBE	29
SEITENSTUETZEN	344
SEITENSTUETZEN-STRASSENPLATTEN	346
	347
SEITENSTUETZENLEITUNGEN	294
SEITENSTUETZENPLATTEN	347
SEITENSTUETZENZYLINDER, LINKS	311
SEITENSTUETZENZYLINDER, RECHTS	310
SEITENSTUETZENZYLINDERLEITUNGEN	294
SICHERUNG	429
SICHERUNG (10 A)	96
	467
SICHERUNG (15 A)	93
	96
	114
	467
SICHERUNG (20 A)	96
	467
SIEBEINSATZ	319
SPANNUNGSANZEIGE	467
SPERRE	225
	226
	227
SPERRPEDAL, LINKS	488
SPERRVENTIL	304
SPRENGRING-EINBAUSATZ	125
	133
STARTHILFE	99
STARTSCHALTER	97
STAUBDICHTUNGSSATZ	435
STAUBKAPPE	263
STEUERKONSOLE (SEITLICH)	464
STEUERVENTIL	136
	229
	238
	240
	241.01
	242
	244
	245.01
	246
	248
	250
	252
	254
	256
STIELZYLINDER	314

INHALTSVERZEICHNIS

Bezeichnung	Seite
STIELZYLINDERLEITUNGEN	286
	288
	290
STIRNRAD	27
	28
STIRNRADGEHAEUSE	26
STIRNRADGEHAEUSEDECKEL	9
STRASSENPLATTEN	346
STROMANSCHLUSSVERDRAHTUNG	93
T	
TELEKOPZYLINDERLEITUNGEN	292
TELESKOPSTIEL	333
	334
	336
TELESKOPSTIEL-LOEFFELZYLINDER	305
TELESKOPSTIELLEITUNGEN	286
	288
TELESKOPZYLINDERLEITUNGEN	292
	313
TEMPERATURANZEIGE	467
TEMPERATURGEBER	467
TEMPERATURREGLER	51
THERMOSTATSCHALTER	429
TIEFLOEFFEL	348
	349
	350
	351
	352
	353
	354
	355
	356
	357
	358
	359
	360
	361
	362
TIEFLOEFFELZYLINDERLEITUNGEN	284
TRANSPORTSPERRE	332
TURBOLADER	62
	64
TURBOLADEREINBAUSATZ	64
U	
UEBERDRUCKVENTIL	259
UEBERROLLSCHUTZ	370
	371
UMLAUFLUEFTER	414
UNI-TOOTH-ANSCHRAUBZAHN	363
	364
UNTERBRECHER (15 A)	467

Bezeichnung	Seite
V	
VENTILDECKEL	24
	25
VENTILSATZ	190
	258.02
VENTILSATZ (2 VENTILE)	229
VENTILSATZ (6-VENTIL)	232
VENTILSATZ (7-VENTIL)	234
	236
VENTILSTEUERUNG	22
	23
	260
	480
	482
	484
	486
VERDRAHTUNG	94
	96
VERKLEIDUNG	214
	215
	316
VORDERACHSE	181
VORDERANTRIEBSVERDRAHTUNG	90
VORDERRAD UND REIFEN	193
	194
	195
	196
	197
	200
	202
VORDERRAD UND REIFEN, LINKS	198
	199
	202
VORDERRADANTRIEBSVERDRAHTUNG	90
VORFILTERELEMENT	53
VORSCHMIER-OELVERTEILERVENTIL	258
W	
WARNLEUCHTE	112
	113
	115
WARNLEUCHTEN	112
	114
WARTUNGSMESSER	467
WARTUNGSMESSER-EINBAUSATZ	467
WASSERABSCHEIDER	71
WASSERPUMPEN-REPARATURSATZ	50
WECHSELGETRIEBE	126
WISCHERBLATT	439

INHALTSVERZEICHNIS

Bezeichnung	Seite
Z	
ZAHNRADSATZ	98
ZAHNSPITZE (DOPPEL-KONISCH)	367
ZAHNSPITZE, SCHARF	365
	366
ZAHNSPITZE, VERSTAERKT	366
ZUBEHOER-EINBAUSATZ	435
ZUMESSPUMPE	188
ZUSATZHYDRAULIKLEITUNGEN	302
ZYLINDERAUFHAENGUNG	317
ZYLINDERKOPF	18
	19
	20
	21

ENGINE ARRANGEMENT

			PAGE
1	6I0421	CAMSHAFT GP	10
1	6I0643	COVER GP-FRONT HOUSING	9
1	1054157	COVER GP-VALVE MECHANISM	24
1	6I0222	CRANKSHAFT GP	12
1	6I0158	CYLINDER BLOCK GP	4
1	1051998	CYLINDER BLOCK GP	8
1	6I0268	CYLINDER HEAD GP	18
1	6I0649	DRIVE GP-FAN	30
1	6I0509	FILLER GP-OIL	35
1	1013376	FILTER GP-FUEL	73
1	6I0296	FILTER GP-OIL	36
1	6I0261	FLYWHEEL GP	29
1	6I0515	FUMES DISPOSAL GP	41
1	6I1496	GAUGE GP-OIL LEVEL (DIPSTICK)	34
1	6I0788	GEAR GP-FRONT	27
1	6I0834	HOUSING GP-FRONT	26
1	6I0652	LIFTING GP	32
1	6I0916	LINES GP-FUEL FILTER	74
1	6I0857	LINES GP-FUEL INJECTION	75
1	6I0781	LINES GP-OIL	40
1	6I0451	LINES GP-WATER	51
1	6I0561	MANIFOLD GP-EXHAUST	58
1	6I0528	MANIFOLD GP-INLET	60
1	6I0288	PAN GP-OIL	31
1	6I0224	PISTON & ROD GP	15
1	6I0500	PULLEY GP-CRANKSHAFT	14
1	6I0570	PUMP GP-FUEL	68
1	6I0816	PUMP GP-FUEL INJECTION	69
1	6I0252	PUMP GP-GEROTOR	37
1	6I0441	PUMP GP-WATER	49
1	6I0779	STARTING AID GP	99
1	6I0227	VALVE MECHANISM GP	22

THE FOLLOWING GASKET KITS ARE AVAILABLE

1	1052791	GASKET KIT-BOTTOM
1	1014062	GASKET KIT-TOP

550603 P

7E7702 ENGINE AR

ENGINE ARRANGEMENT

			PAGE
1	6I0894	CAMSHAFT GP	11
1	1052733	COOLER GP-FILTER BASE & ENGINE OIL	44
1	6I0643	COVER GP-FRONT HOUSING	9
1	6I0503	COVER GP-VALVE MECHANISM	25
1	6I1079	CRANKSHAFT GP	13
1	6I1015	CYLINDER BLOCK GP	6
1	6I1194	CYLINDER HEAD GP	20
1	6I0649	DRIVE GP-FAN	30
1	6I0509	FILLER GP-OIL	35
1	1013376	FILTER GP-FUEL	73
1	6I0261	FLYWHEEL GP	29
1	6I0515	FUMES DISPOSAL GP	41
1	6I1496	GAUGE GP-OIL LEVEL (DIPSTICK)	34
1	6I1157	GEAR GP-FRONT	28
1	6I0834	HOUSING GP-FRONT	26
1	6I0652	LIFTING GP	32
1	6I1086	LINES GP-ENGINE OIL	39
1	6I0916	LINES GP-FUEL FILTER	74
1	6I1213	LINES GP-FUEL INJECTION	76
1	6I0451	LINES GP-WATER	51
1	6I1111	MANIFOLD GP-EXHAUST	59
1	6I1108	MANIFOLD GP-INLET	61
1	6I0288	PAN GP-OIL	31
1	6I0890	PISTON & ROD GP	16
1	6I0500	PULLEY GP-CRANKSHAFT	14
1	6I0911	PUMP GP	38
1	6I0570	PUMP GP-FUEL	68
1	6I2476	PUMP GP-FUEL INJECTION	70
1	6I0441	PUMP GP-WATER	49
1	6I1149	STARTING AID GP	99
1	6I1125	TURBOCHARGER GP	62
1	6I1204	VALVE MECHANISM GP	23

THE FOLLOWING GASKET KITS ARE AVAILABALE

1	1052791	GASKET KIT-BOTTOM
1	1014062	GASKET KIT-TOP

551167 P

7E9559 ENGINE AR-PRIMARY
For Use In High Altitudes
An Attachment

ENGINE ARRANGEMENT

		PAGE
1	7E9559 ENGINE AR-PRIMARY	2
1	7E7720 LINES GP-AIR	55
1	4P3535 MUFFLER AS-TURBOCHARGER	
1	4P3379 RADIATOR AS	
2	3E8135 FILM-TURBO	

533521 P

7E9558 INSTALLATION AR-ENGINE
For Use In High Altitudes
An Attachment

		PAGE
1	7E7706 AIR CLEANER GP	52
1	4P3711 ALTERNATOR GP	101
1	7E7717 COOLER GP-HYDRAULIC OIL	46
1	7E7704 FAN GP-SUCTION	48
1	7E7709 LINES GP-AIR	54
1	7E7708 MOUNTING GP-ENGINE & TRANSMISSION	33
1	7E7705 MUFFLER GP	56
1	7E7710 RADIATOR GP	42
1	4P3026 SEPARATOR GP-WATER	71
1	7E7711 STARTING MOTOR GP-ELECTRIC	97

512721 P

7E7701 INSTALLATION AR-ENGINE

BASIC ENGINE

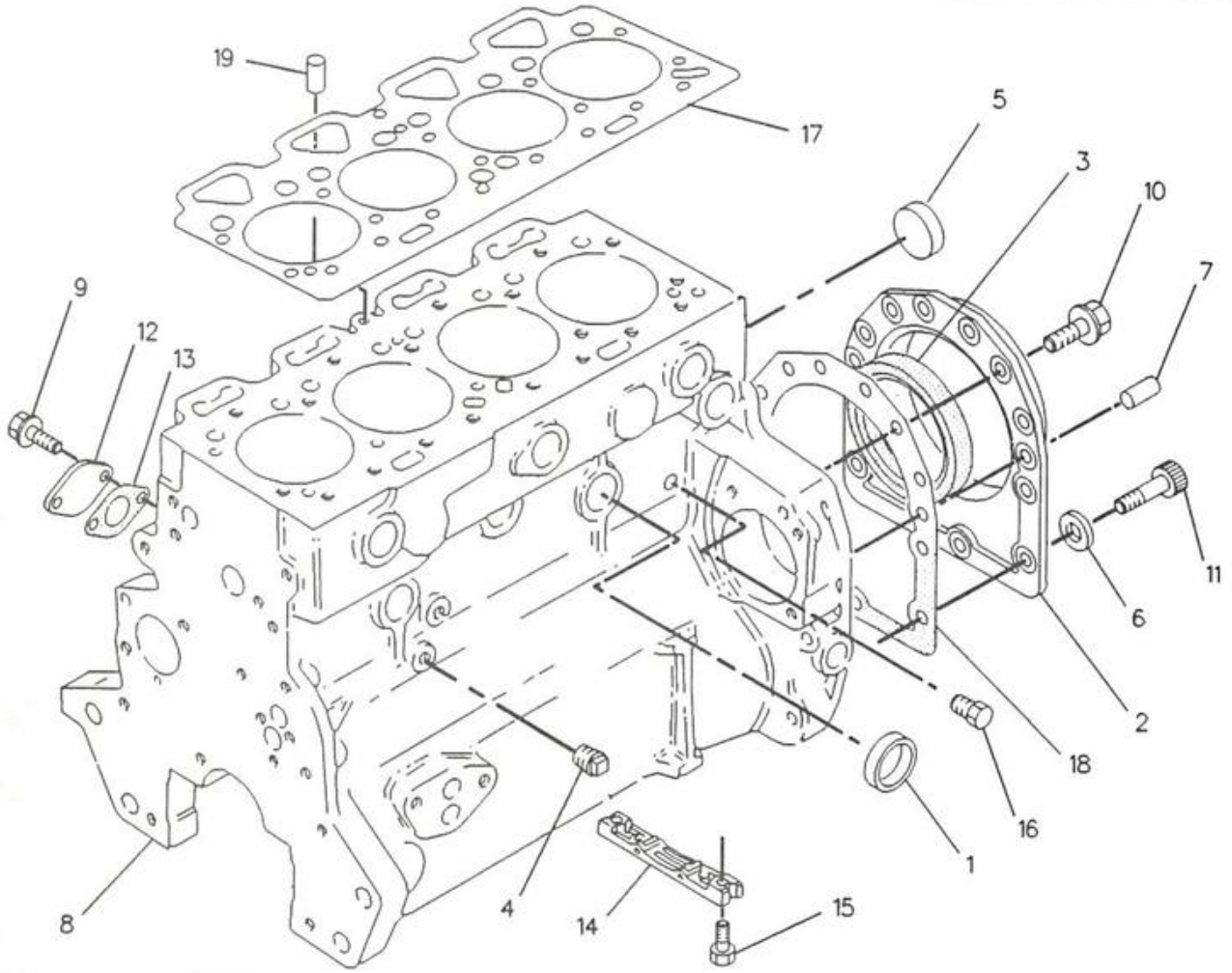

NOTE	REF NO	PART NUMBER	QTY	PART NAME	NOTE	REF NO	PART NUMBER	QTY	PART NAME
	1	1N3762	5	PLUG-CUP					
	2	7W2196	1	HOUSING AS					
	3	4W5360	1	SEAL-CRANKSHAFT					
	4	358063	1	PLUG					
	5	9Y5015	1	PLUG-FREEZE					
	6	5G2985	2	SPACER					
	7	6D0044	2	DOWEL					
Y	8	6I0159	1	CYLINDER BLOCK GP					
M	9	8R3270	2	BOLT					
	10	6I0217	10	BOLT					
	11	6I0218	2	BOLT					
	12	6I0219	1	PLATE					
	13	6I0220	1	GASKET					
	14	6I0362	1	BRIDGE					
	15	6I0363	2	BOLT					
	16	691124	2	PLUG					
	17	6I0585	1	GASKET-CYLINDER HEAD					
	18	6N9322	1	GASKET					
	19	676808	1	PLUG					

M-METRIC PART
Y-SEPARATE ILLUSTRATION

F-533534 EP

1201

6I0158 CYLINDER BLOCK GP
6I0159-Page 5

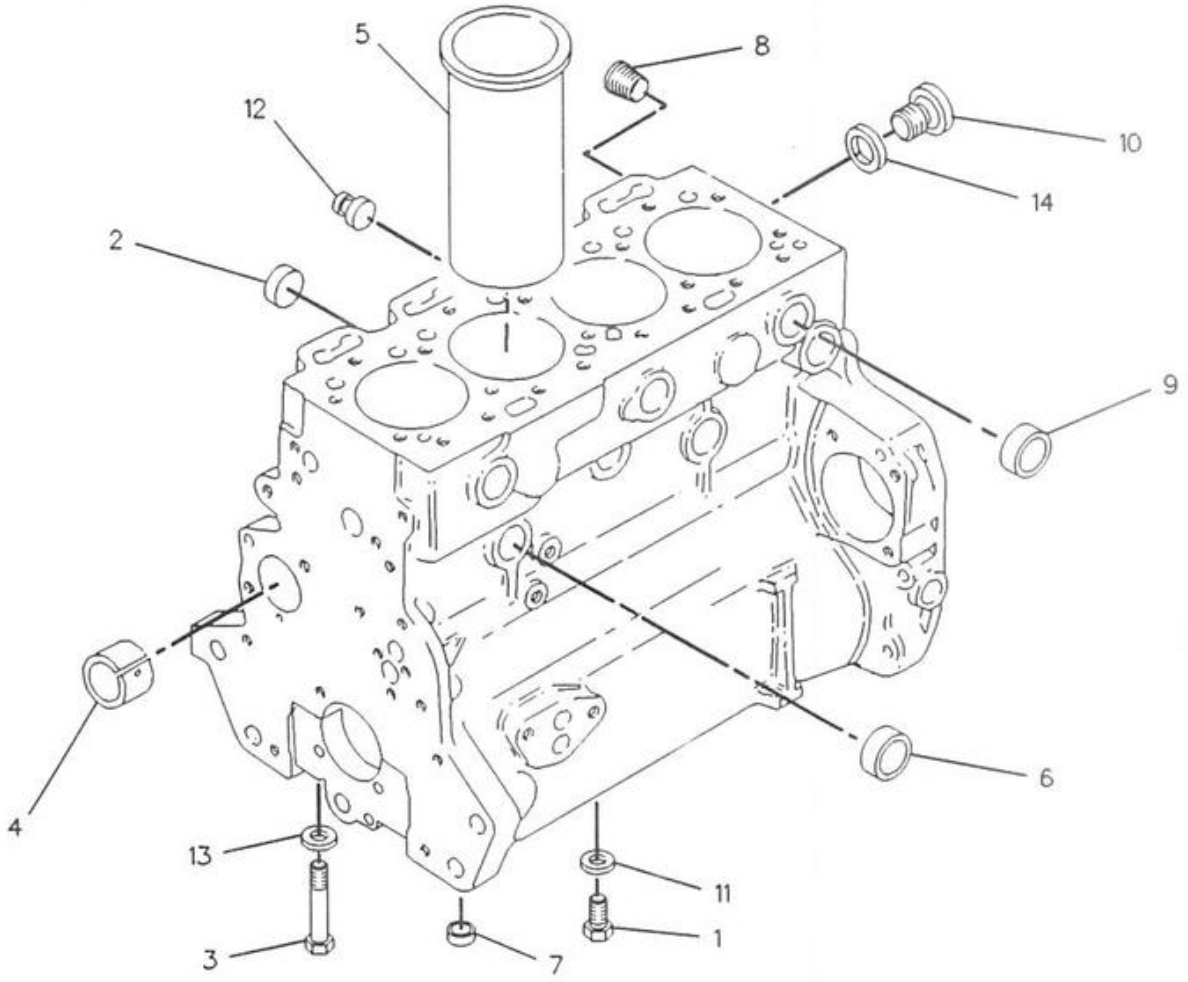

NOTE	REF NO	PART NUMBER	QTY	PART NAME	NOTE	REF NO	PART NUMBER	QTY	PART NAME
	1	OL1138	4	BOLT (3/8-24X.5IN)					
	2	1N3762	6	PLUG-CUP					
	3	358068	10	BOLT					
	4	365802	1	BEARING					
	5	6I0164	4	LINER					
	6	6I0195	2	PLUG					
	7	676002	10	DOWEL					
	8	676006	1	PLUG					
	9	676043	6	PLUG-SIDE					
	10	676805	1	PLUG					
	11	679520	4	SPACER-BOLT					
	12	7W2501	1	PLUG					
	13	7W4587	10	WASHER					
	14	8F2534	1	GASKET					

F-516888 EP

1201 **6I0159 CYLINDER BLOCK GP**

Part Of 6I0158 Cylinder Block

BASIC ENGINE

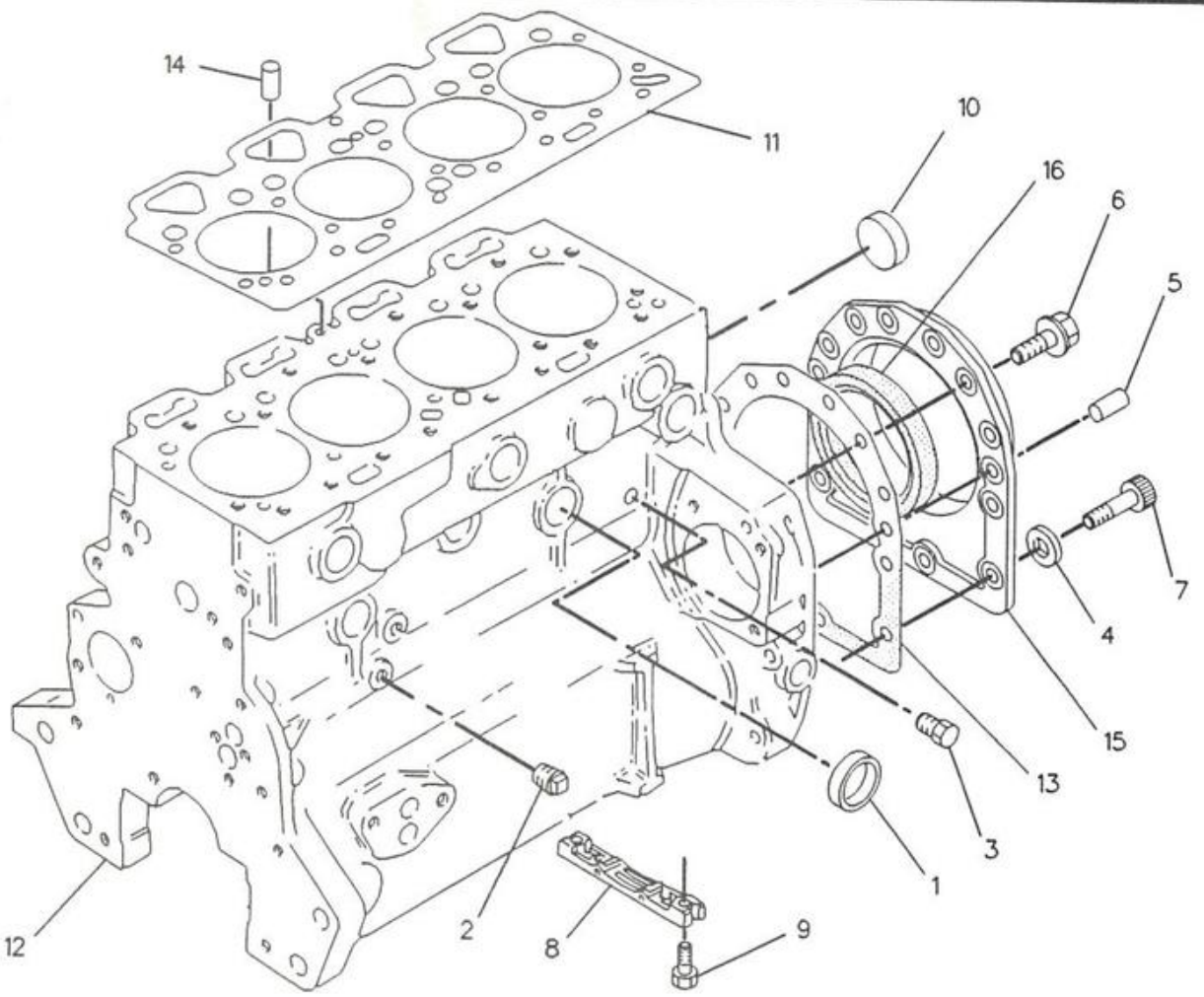

NOTE	REF NO	PART NUMBER	QTY	PART NAME	NOTE	REF NO	PART NUMBER	QTY	PART NAME
	1	1N3762	1	PLUG-CUP					
	2	358063	1	PLUG					
	3	691124	2	PLUG					
	4	5G2985	2	SPACER					
	5	6D0044	2	DOWEL					
	6	6I0217	10	BOLT					
	7	6I0218	2	BOLT					
	8	6I0362	1	BRIDGE					
	9	6I0363	2	BOLT					
	10	9Y5015	1	PLUG-FREEZE					
	11	6I0585	1	GASKET-CYLINDER HEAD					
Y	12	6I1016	1	CYLINDER BLOCK GP					
	13	6N9322	1	GASKET					
	14	676808	1	PLUG					
	15	7W2196	1	HOUSING AS					
	16	4W5360	1	SEAL-CRANKSHAFT					

Y-SEPARATE ILLUSTRATION

F-530311 EP

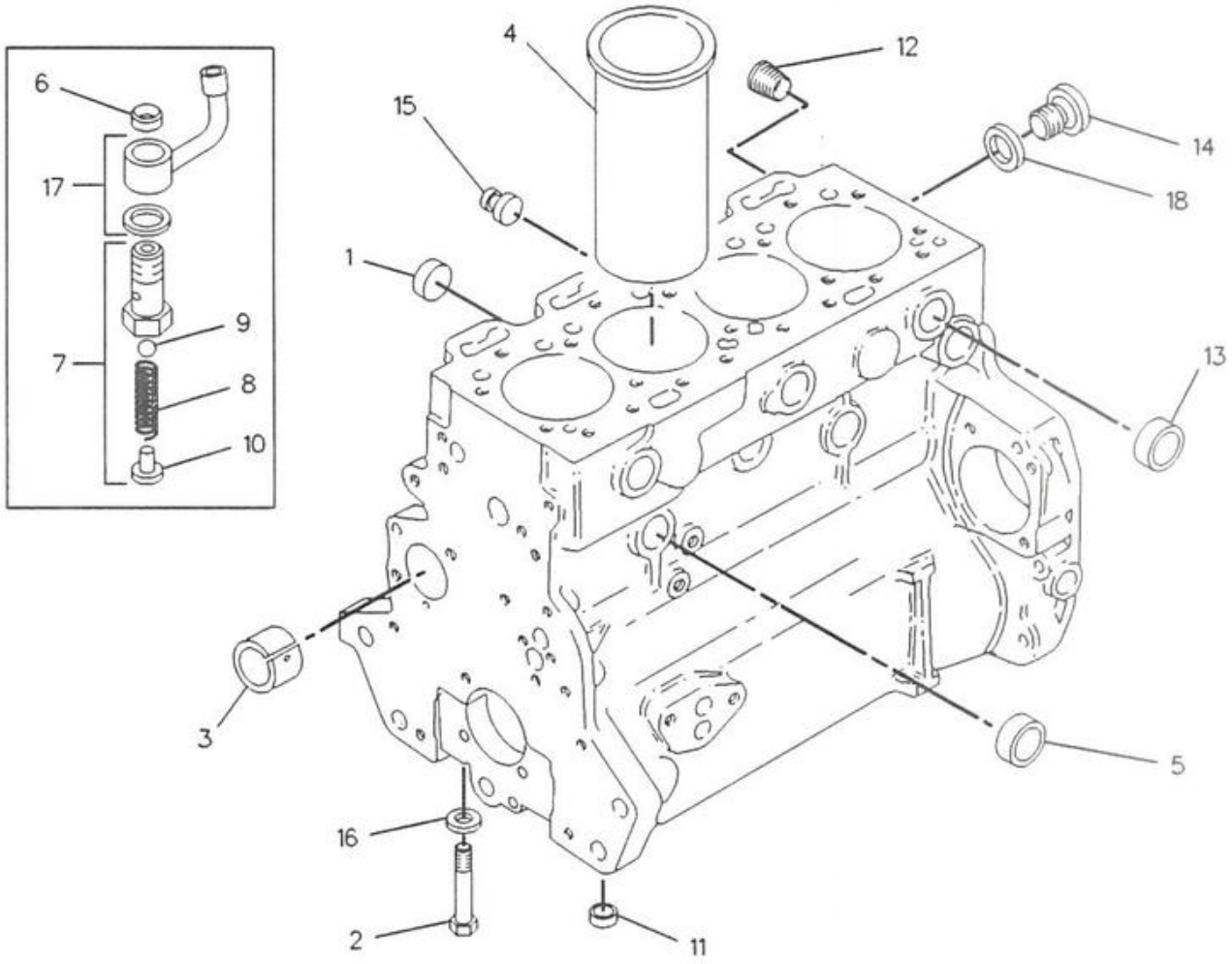

NOTE	REF NO	PART NUMBER	QTY	PART NAME	NOTE	REF NO	PART NUMBER	QTY	PART NAME
	1	1N3762	6	PLUG-CUP					
	2	358068	10	BOLT					
	3	365802	1	BEARING					
	4	6I0164	4	LINER					
	5	6I0195	2	PLUG					
	6	6I1073	4	DOWEL					
	7	6I1074	4	VALVE AS					
	8	6I0686	1	SPRING					
	9	6I1075	1	BALL					
	10	6I1076	1	RETAINER					
	11	676002	10	DOWEL					
	12	676006	1	PLUG					
	13	676043	6	PLUG-SIDE					
	14	676805	1	PLUG					
	15	7W2501	1	PLUG					
	16	7W4587	10	WASHER					
	17	7W5992	4	JET AS-PISTON COOLING					
	18	8F2534	1	GASKET					

F-516721 EP

1201

6I1016 CYLINDER BLOCK GP
Part Of 6I1015 Cylinder Block
An Attachment

(PARTS NOT RELEASED)

550176 P

1201 1051998 CYLINDER BLOCK GP

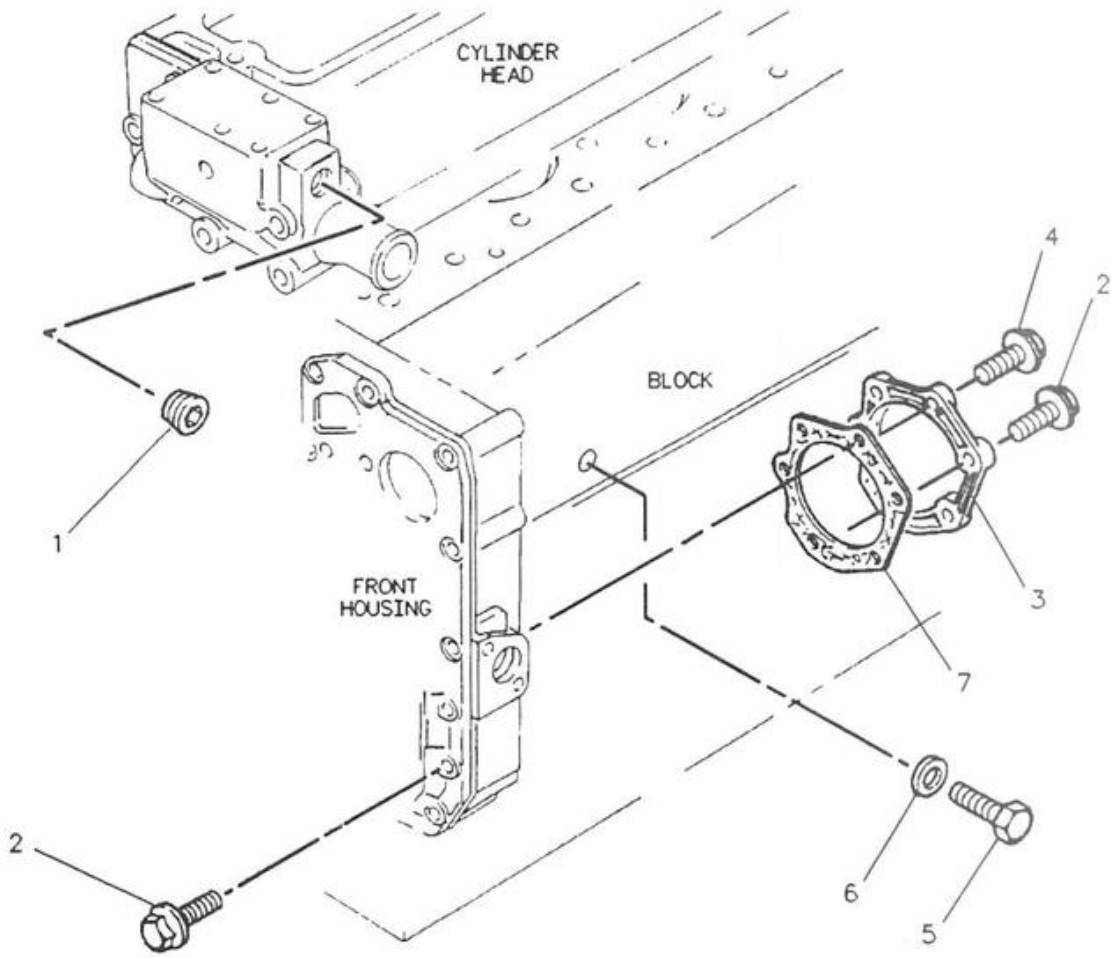

NOTE	REF NO	PART NUMBER	QTY	PART NAME	NOTE	REF NO	PART NUMBER	QTY	PART NAME
	1	2B0858	2	PLUG-PIPE					
	2	6I0593	2	BOLT					
	3	6I0644	1	PLATE					
	4	6I0645	5	BOLT					
	5	6I0646	1	BOLT					
	6	676810	1	WASHER					
	7	9Y9380	1	GASKET					

R-534037 EP

1151 6I0643 COVER GP-FRONT HOUSING

BASIC ENGINE

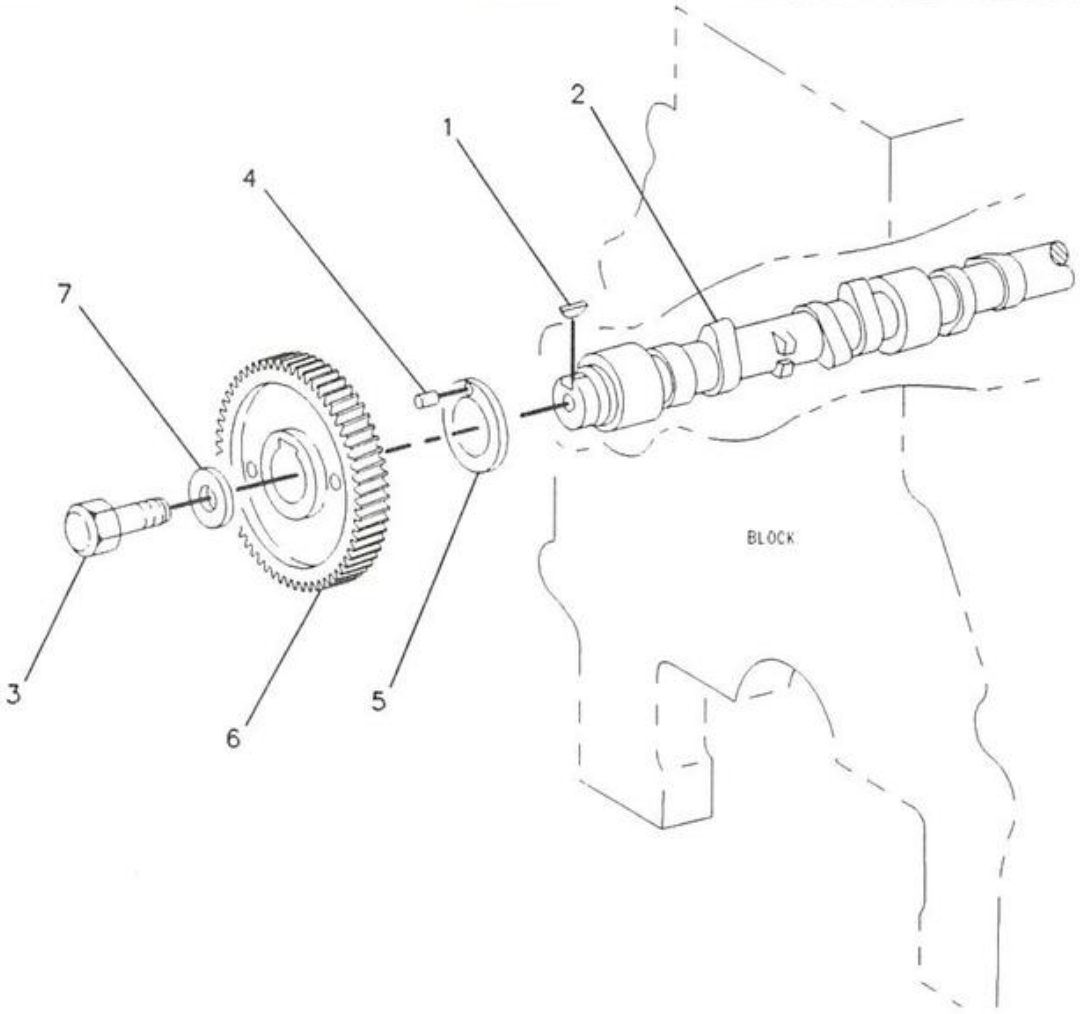

NOTE	REF NO	PART NUMBER	QTY	PART NAME	NOTE	REF NO	PART NUMBER	QTY	PART NAME
	1	1B8736	1	KEY-WOODRUFF					
	2	6I0422	1	CAMSHAFT					
	3	6I0423	1	BOLT					
	4	676179	1	DOWEL					
	5	676178	1	WASHER					
	6	7C3187	1	GEAR					
	7	925499	1	WASHER					

F-516947 EP

1210 6I0421 CAMSHAFT GP

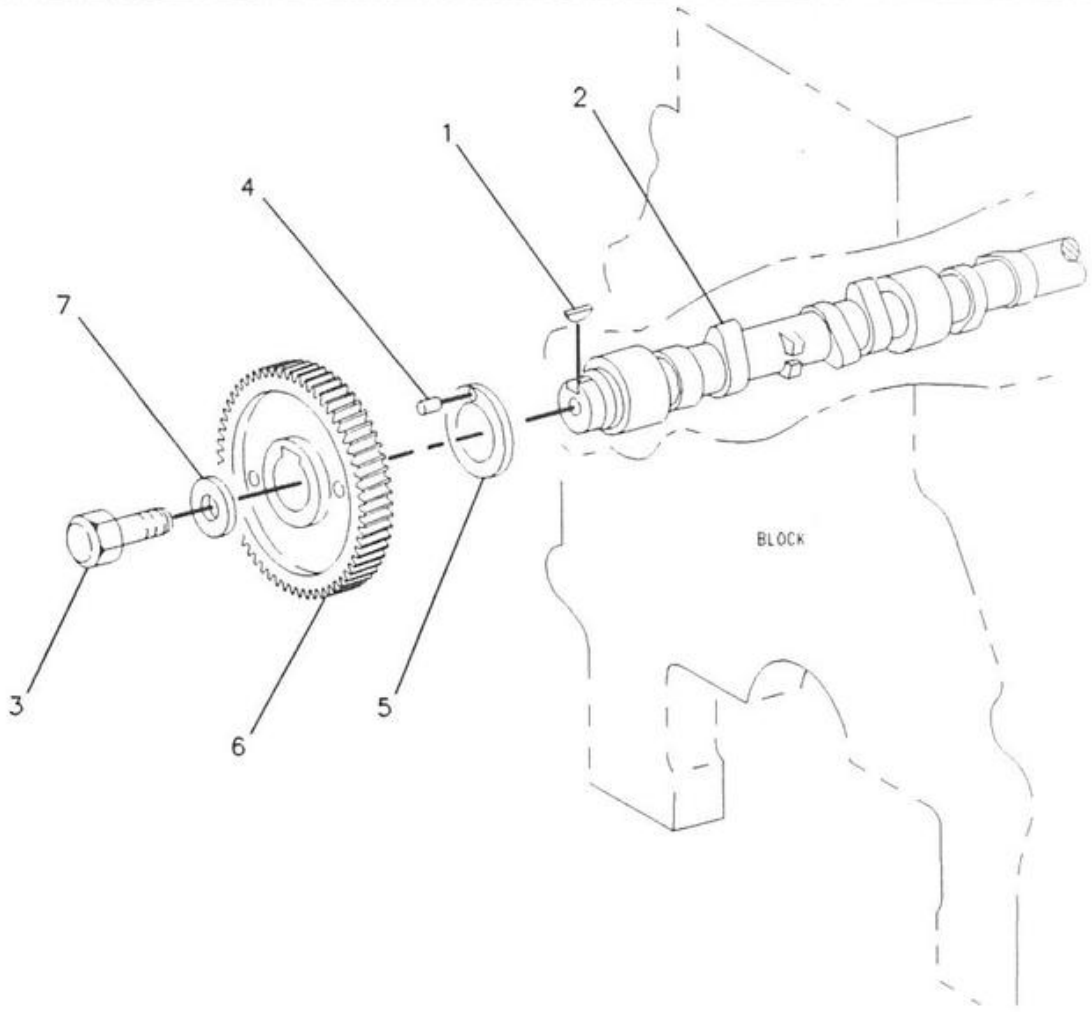

NOTE	REF NO	PART NUMBER	QTY	PART NAME	NOTE	REF NO	PART NUMBER	QTY	PART NAME
	1	1B8736	1	KEY-WOODRUFF					
	2	6I0422	1	CAMSHAFT					
	3	6I0423	1	BOLT					
	4	676179	1	DOWEL					
	5	7W4842	1	PLATE-THRUST					
	6	9Y2633	1	GEAR-CAMSHAFT					
	7	925499	1	WASHER					

F-516702 EP

1210

6I0894 CAMSHAFT GP
An Attachment

BASIC ENGINE

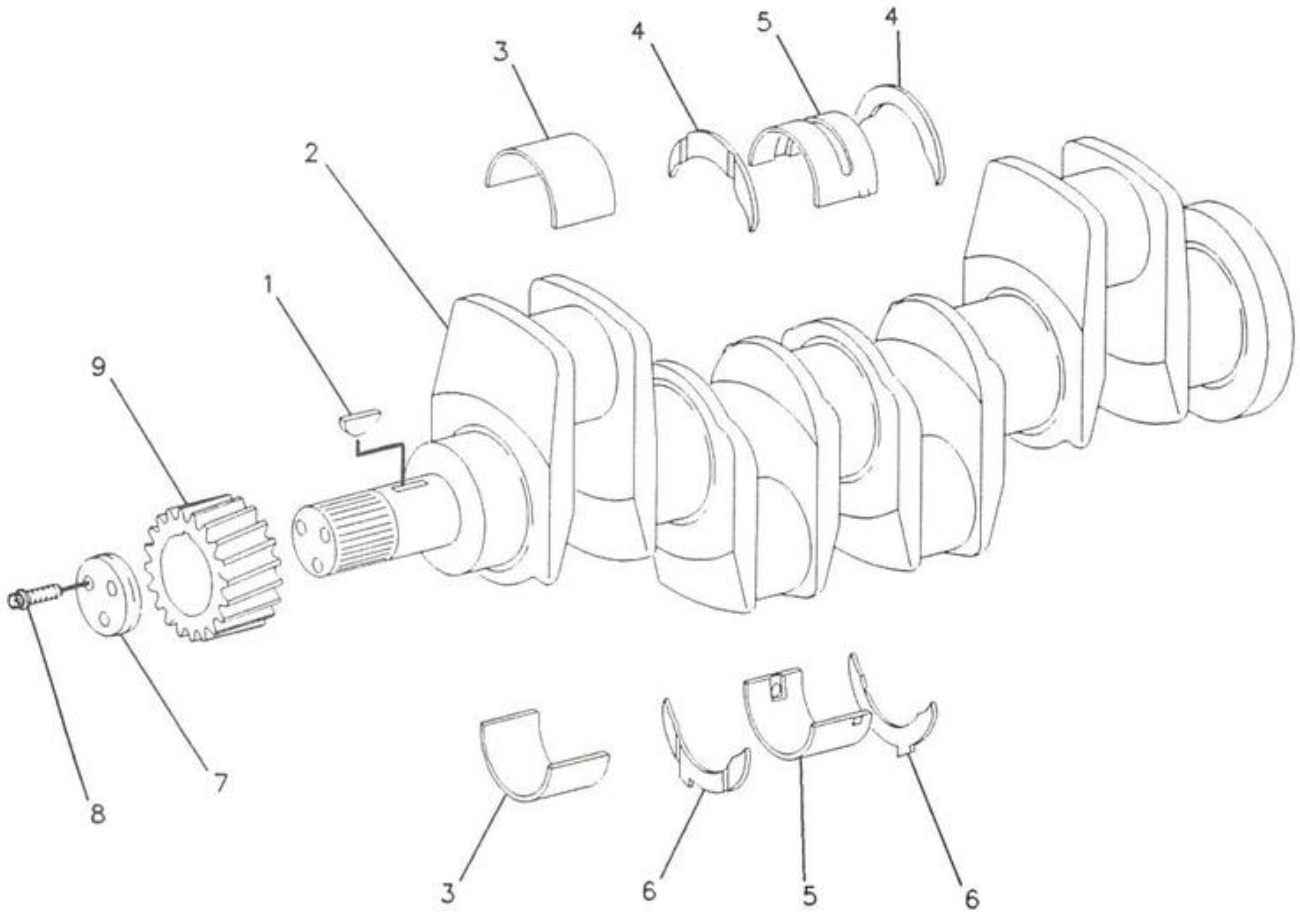

NOTE	REF NO	PART NUMBER	QTY	PART NAME
	1	1B8736	1	KEY-WOODRUFF
	2	7C8214	1	CRANKSHAFT GP
	3	4P9944	1	BEARING SET-ROD
A		4P9945	1	KIT-ROD BEARING .25MM US
A		7W2508	1	KIT-ROD BEARING .51MM US
A		7W2509	1	KIT-ROD BEARING .76MM US
	4	329090	2	WASHER-THRUST (UPPER)
A		676873	2	WASHER-THRUST .18MM OS
	5	676869	1	BEARING SET-MAIN
A		332379	1	KIT-CRANKSHAFT BEARING .25MM US
A		332380	1	KIT-CRANKSHAFT BEARING .51MM US
A		332381	1	KIT-CRANKSHAFT BEARING .76MM US
	6	329091	2	WASHER-THRUST (LOWER)
A		676874	2	WASHER-THRUST .18MM OS
	7	7C3195	1	BLOCK-THRUST
	8	7C3196	3	BOLT
	9	6I0223	1	GEAR-CRANKSHAFT

BEARING SETS AND KITS INCLUDES A COMPLETE SET OF BEARINGS FOR A CRANKSHAFT.

A-NOT PART OF THIS GROUP

F-550527 EP

1202

6I0222 CRANKSHAFT GP

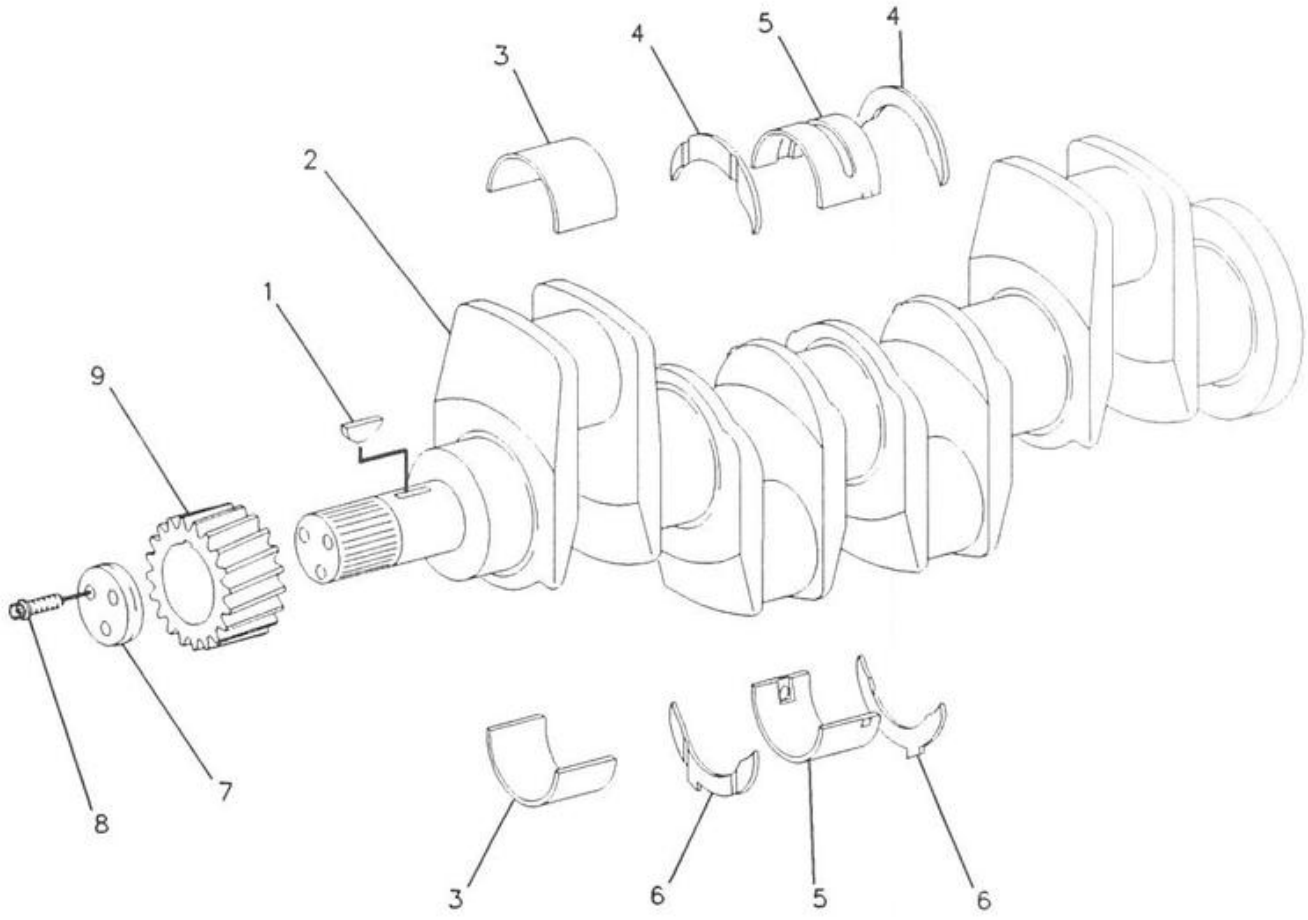

NOTE	REF NO	PART NUMBER	QTY	PART NAME
	1	1B8736	1	KEY-WOODRUFF
	2	4P9948	1	CRANKSHAFT GP
	3	4P9944	1	BEARING SET-ROD (COMPLETE) (CONNECTING ROD)
		4P9945	1	KIT-ROD BEARING (CONNECTING ROD) .25MM(.01 IN)U.S.
		4P9946	1	KIT-ROD BEARING (CONNECTING ROD) 51MM(.02 IN)U.S.
		4P9947	1	KIT-ROD BEARING (CONNECTING ROD) .76MM(.03 IN)U.S.
	4	329090	2	WASHER-THRUST
		676873	2	WASHER-THRUST (UPPER) .18MM(.007 IN)O.S.
	5	676869	1	BEARING SET-MAIN (COMPLETE)
		332379	1	KIT-CRANKSHAFT BEARING (MAIN) .25MM(.01 IN)U.S.
		332380	1	KIT-CRANKSHAFT BEARING (MAIN) .51MM(.02 IN)U.S.
		332381	1	KIT-CRANKSHAFT BEARING (MAIN) .76MM(.03 IN)U.S.
	6	329091	2	WASHER-THRUST
		676874	2	WASHER-THRUST (LOWER) .18MM(.007 IN)O.S.
	7	7C3195	1	BLOCK-THRUST
	8	7C3196	3	BOLT
	9	6I0223		GEAR-CRANKSHAFT

F-516769 EP

1202

6I1079 CRANKSHAFT GP
An Attachment

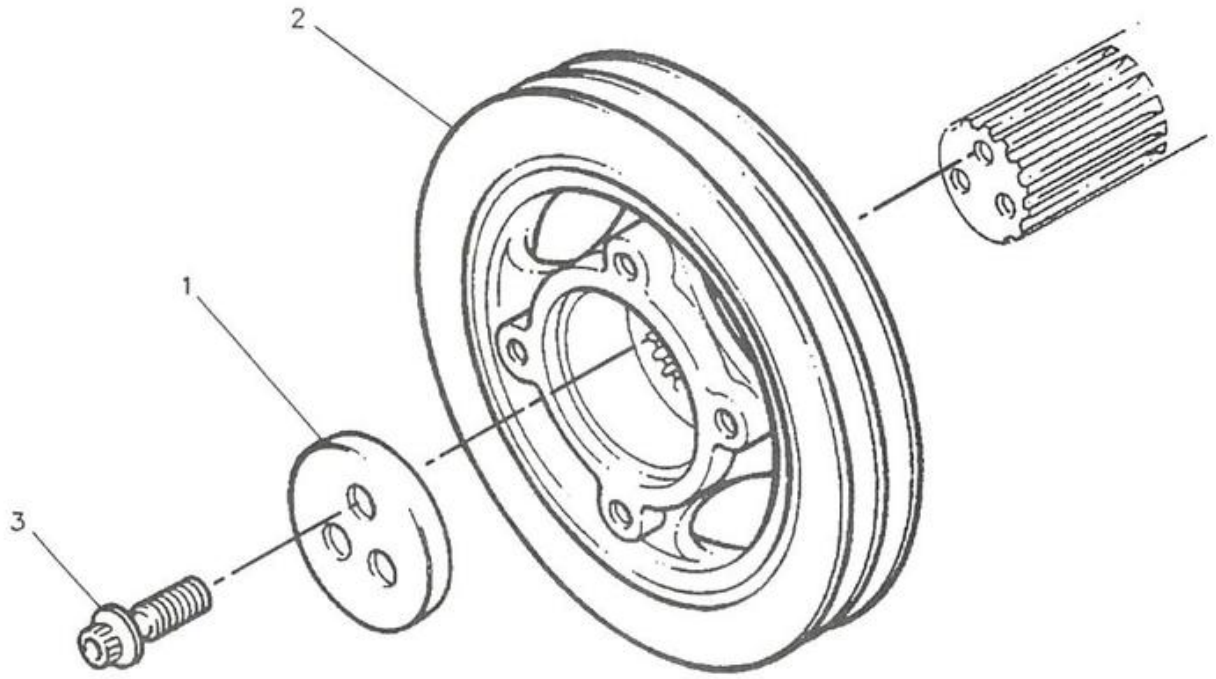

NOTE	REF NO	PART NUMBER	QTY	PART NAME	NOTE	REF NO	PART NUMBER	QTY	PART NAME
	1	6I0501	1	BLOCK					
	2	6I0502	1	PULLEY					
	3	7W4634	3	BOLT					

R-538781 EP

1205 6I0500 PULLEY GP-CRANKSHAFT

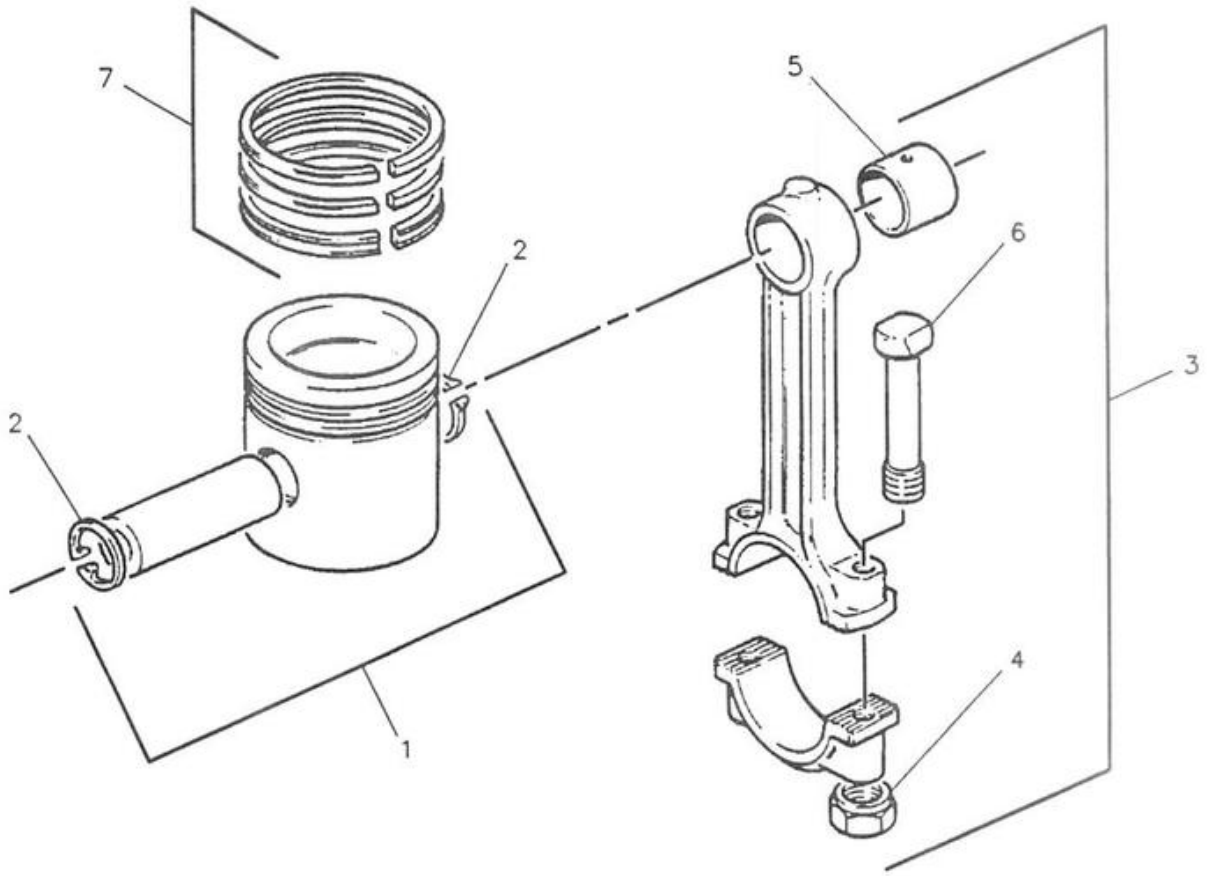

NOTE	REF NO	PART NUMBER	QTY	PART NAME
	1	6I0226	4	PISTON AS
	2	676167	2	RING-RETAINING
	3	676879	4	ROD AS
	4	7W2505	2	NUT-CONNECTION ROD
	5	676158	1	BUSHING-END
	6	676883	2	BOLT-ROD CAP
	7	6I0225	4	KIT-PISTON RING
				RING KIT INCLUDES A COMPLETE SET OF RINGS FOR A PISTON.

F-516892 EP

1225 6I0224 PISTON & ROD GP

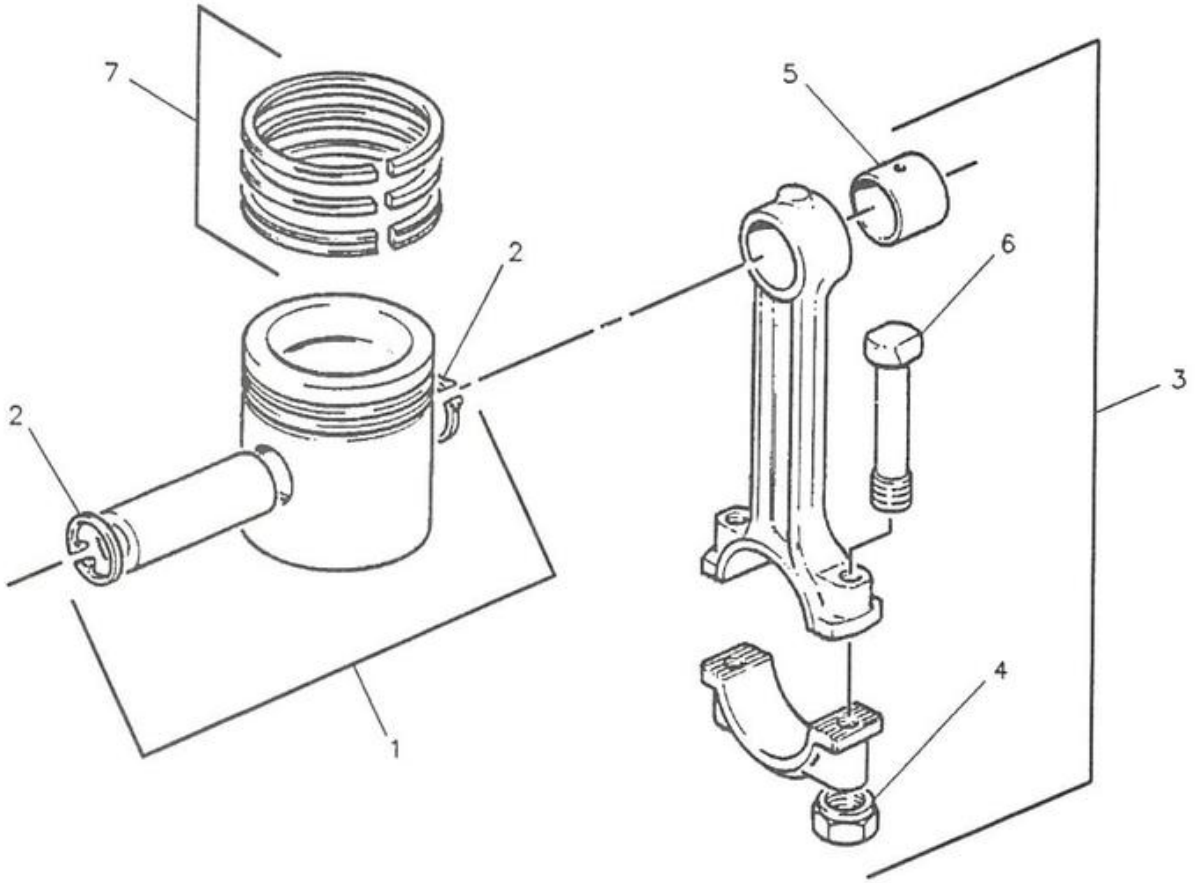

NOTE	REF NO	PART NUMBER	QTY	PART NAME	NOTE	REF NO	PART NUMBER	QTY	PART NAME
	1	6I0892	4	PISTON AS (EACH INCLUDES)					
	2	7W2530	2	RING-SNAP					
	3	7W2514	4	ROD AS-CONNECTION (EACH INCLUDES)					
	4	7W2505	2	NUT-CONNECTION ROD					
	5	7W2510	1	BUSHING-CONNECTION ROD					
	6	676883	2	BOLT-ROD CAP					
	7	6I0891	4	KIT-PISTON RING					

F-516685 EP

1225

6I0890 PISTON & ROD GP
An Attachment

MEMORANDA

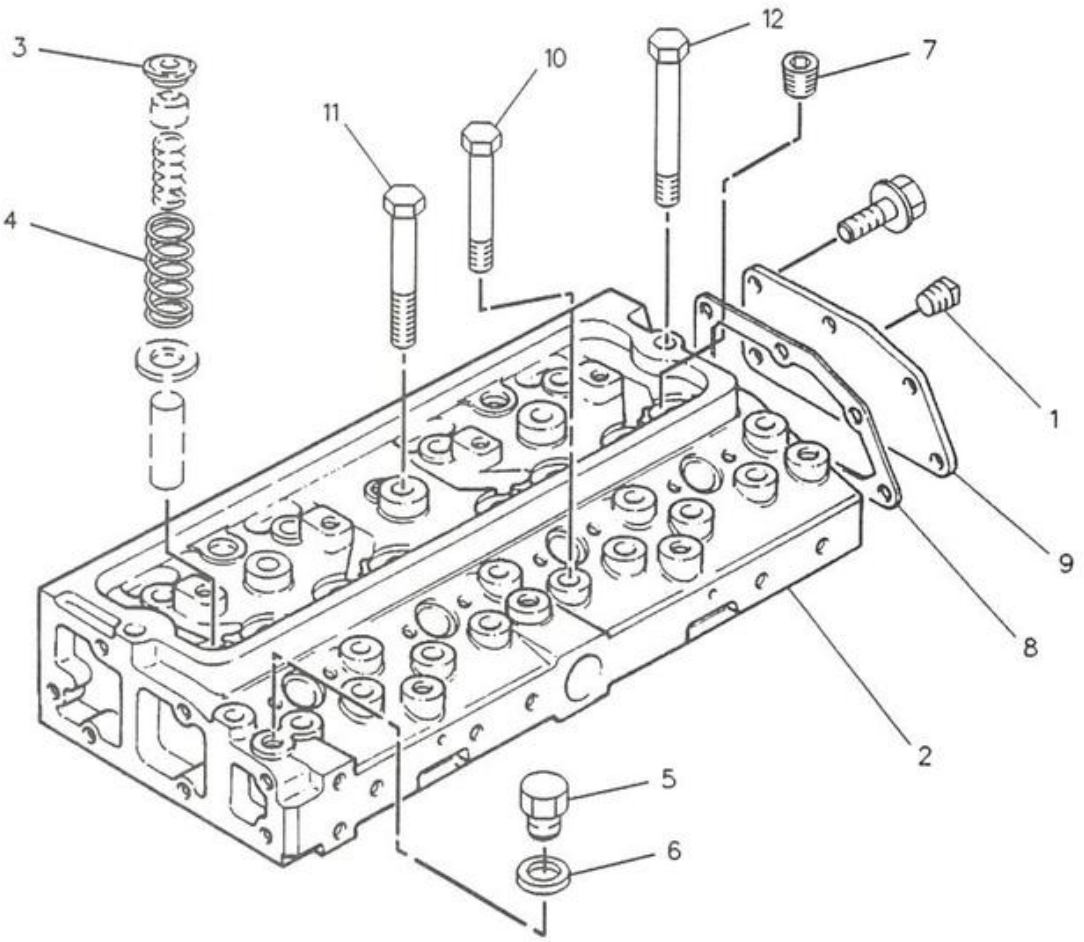

NOTE	REF NO	PART NUMBER	QTY	PART NAME	NOTE	REF NO	PART NUMBER	QTY	PART NAME
	1	2B0858	1	PLUG-PIPE					
Y	2	6I0269	1	CYLINDER HEAD GP					
	3	6I0270	8	CAP-VALVE SPRING					
	4	6I0271	8	SPRING					
	5	676044	1	PLUG					
	6	676045	1	WASHER					
	7	7C2851	4	PLUG					
	8	7C3191	1	GASKET					
	9	7C3192	1	COVER					
	10	7W2518	8	BOLT					
	11	7W2519	12	BOLT					
	12	7W2520	2	BOLT					
M	13	8R3270	3	BOLT					

M-METRIC PART
Y-SEPARATE ILLUSTRATION

F-516910 EP

1100

6I0268 CYLINDER HEAD GP
6I0269-Page 19

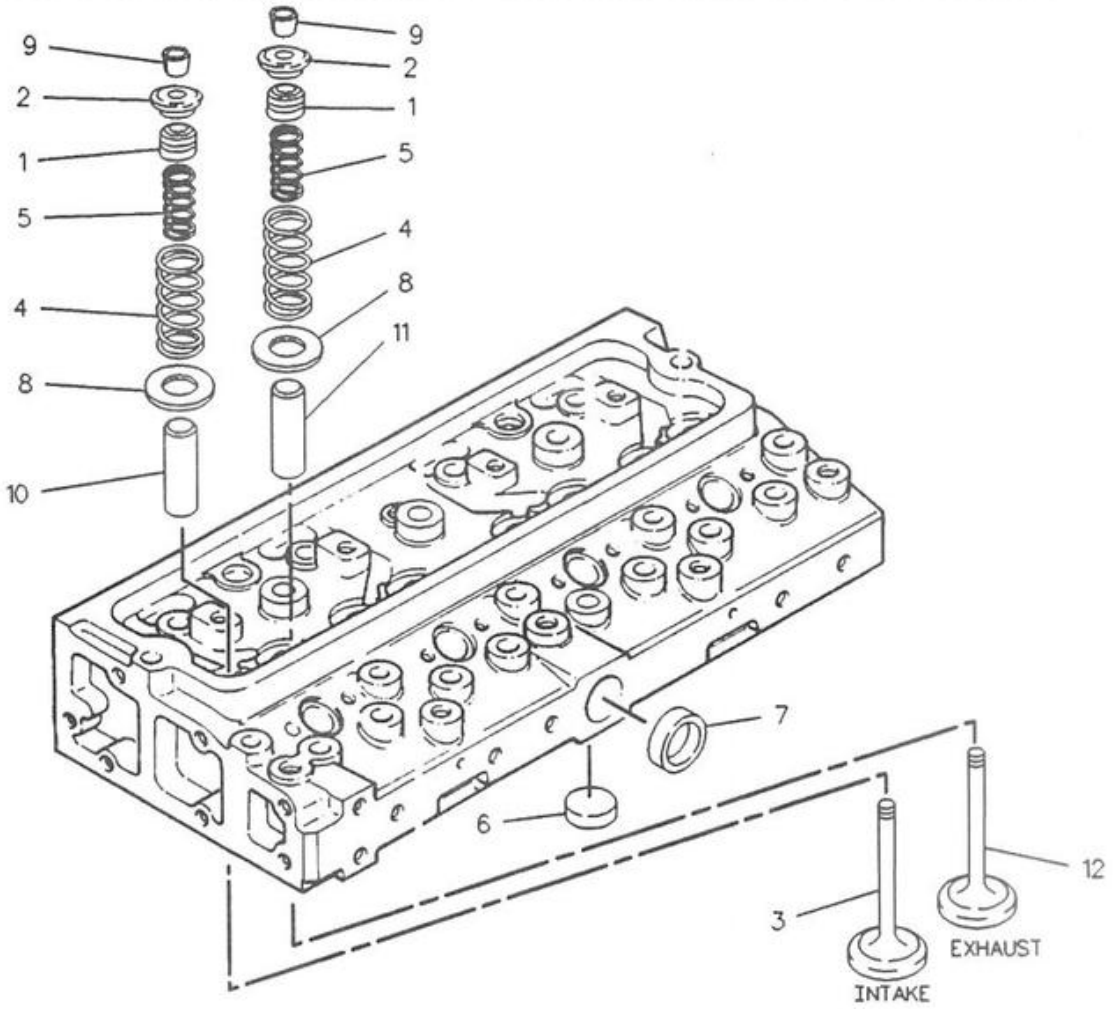

NOTE	REF NO	PART NUMBER	QTY	PART NAME	NOTE	REF NO	PART NUMBER	QTY	PART NAME
	1	1W5849	8	SEAL-VALVE					
	2	6I0281	8	CAP-VALVE SPRING					
	3	6I0282	4	VALVE-INLET					
	4	6I0283	8	SPRING					
	5	6I0284	8	SPRING					
	6	6I0285	4	PLUG					
	7	676043	1	PLUG-SIDE					
	8	676054	8	WASHER					
	9	676834	16	COTTER-CAP					
	10	7C3189	4	GUIDE-INLET VALVE					
	11	7C3190	4	GUIDE-EXHAUST VALVE					
	12	7W4602	4	VALVE-EXHAUST					

F-516936 EP

1100 **6I0269 CYLINDER HEAD GP**

Part Of 6I0268 Cylinder Head

BASIC ENGINE

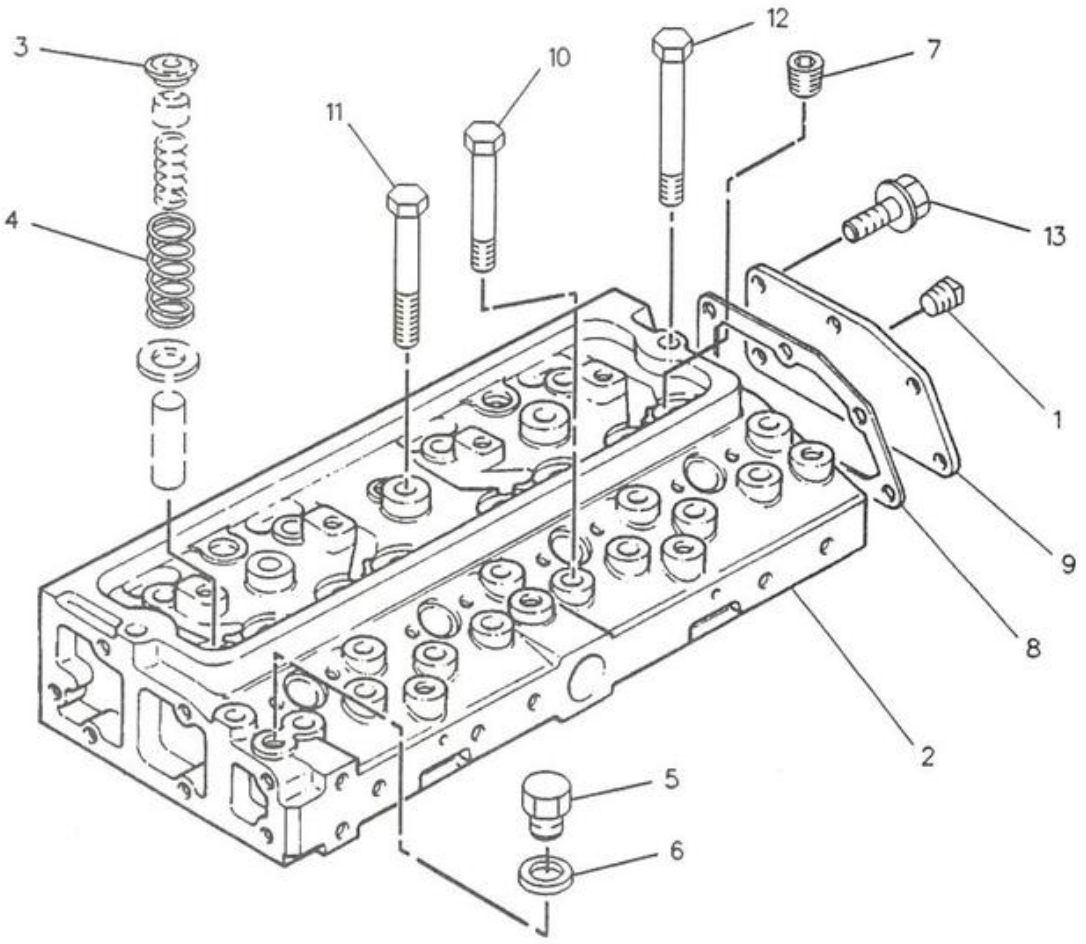

NOTE	REF NO	PART NUMBER	QTY	PART NAME	NOTE	REF NO	PART NUMBER	QTY	PART NAME
	1	2B0858	1	PLUG-PIPE					
Y	2	6I1195	1	CYLINDER HEAD GP					
	3	6I0270	8	CAP-VALVE SPRING					
	4	6I0271	8	SPRING					
	5	676044	1	PLUG					
	6	676045	1	WASHER					
	7	7C2851	4	PLUG					
	8	7C3191	1	GASKET					
	9	7C3192	1	COVER					
	10	7W2518	8	BOLT					
	11	7W2519	12	BOLT					
	12	7W2520	2	BOLT					
M	13	8R3270	3	BOLT					

M-METRIC PART
Y-SEPARATE ILLUSTRATION

F-525864 EP

1100

6I1194 CYLINDER HEAD GP
6I1195-Page 21
An Attachment

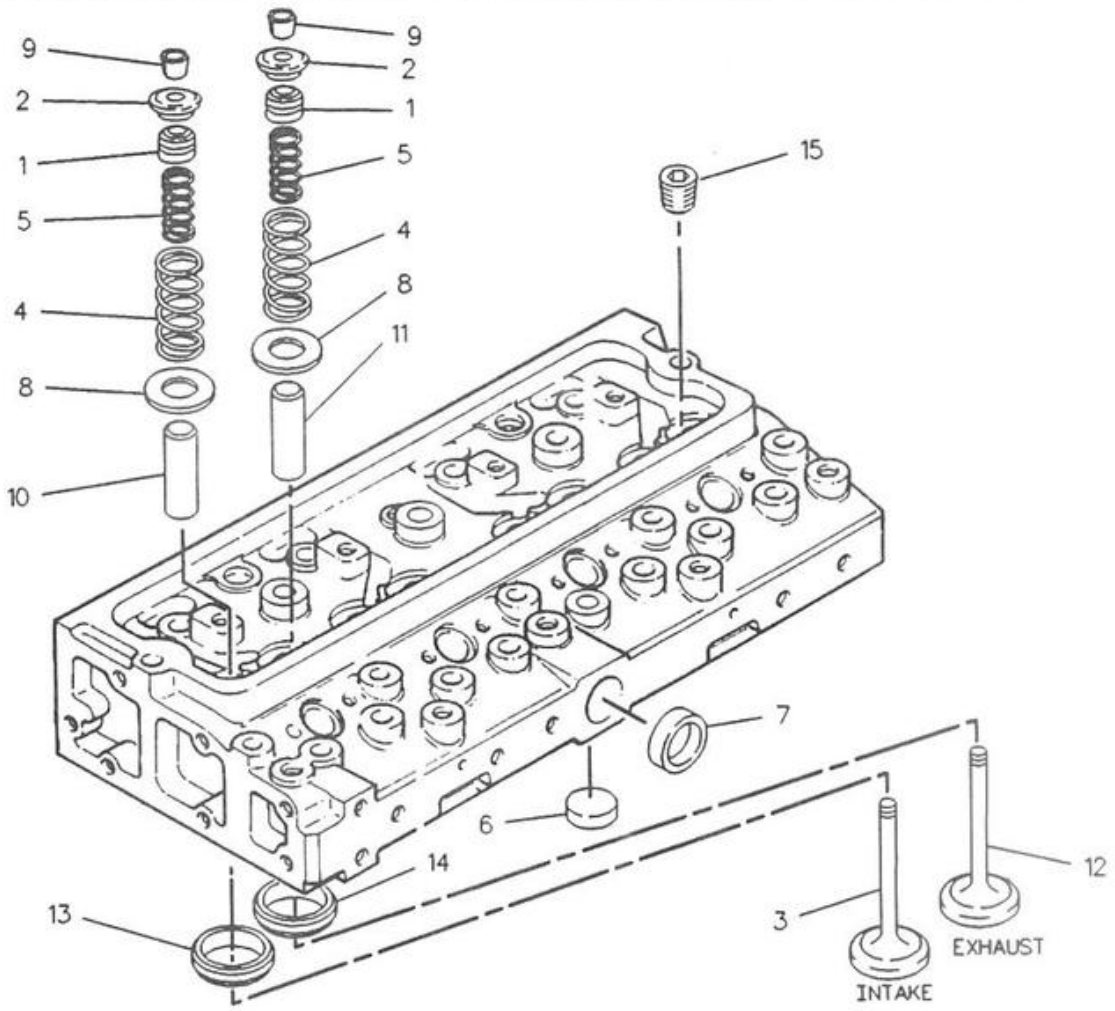

NOTE	REF NO	PART NUMBER	QTY	PART NAME
	1	1W5849	8	SEAL-VALVE
	2	6I0281	8	CAP-VALVE SPRING
	3	6I0283	4	SPRING
	4	6I0284	8	SPRING
	5	6I0285	4	PLUG
	6	6I1196	4	VALVE-INLET
	7	6I1197	4	INSERT-INLET
	8	6I1198	8	INSERT-EXHAUST
	9	7C2851	4	PLUG
	10	7C3189	4	GUIDE-INLET VALVE
	11	7C3190	4	GUIDE-EXHAUST VALVE
	12	7W4602	4	VALVE-EXHAUST
	13	676043	1	PLUG-SIDE
	14	676054	8	WASHER
	15	676834	16	COTTER-CAP

R-540007 EP

1100

6I1195 CYLINDER HEAD GP
Part Of 6I1194 Cylinder Head
An Attachment

BASIC ENGINE

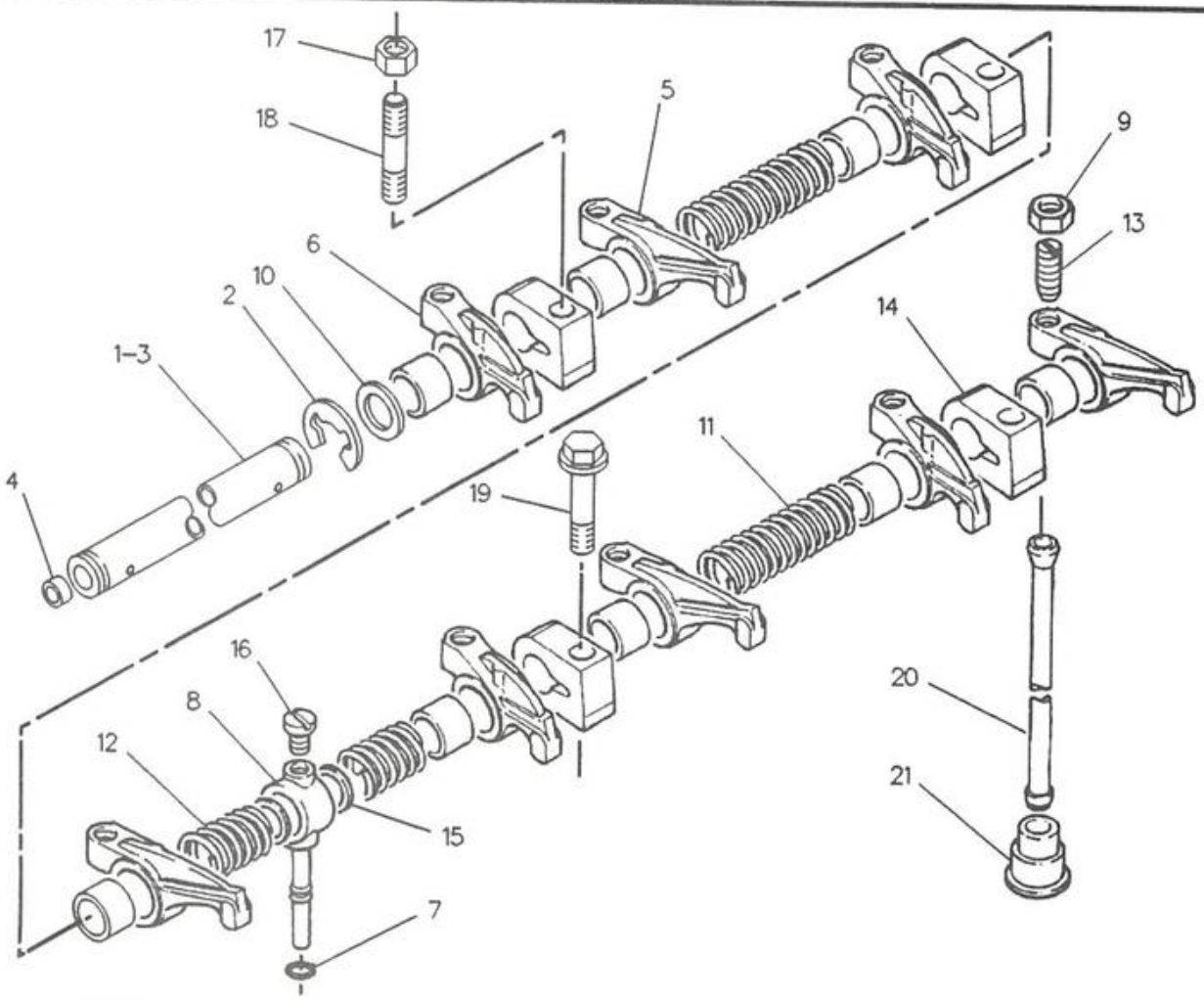

NOTE	REF NO	PART NUMBER	QTY	PART NAME	NOTE	REF NO	PART NUMBER	QTY	PART NAME
	1	6I0228	1	ROCKER ARM AS					
	2	68606	2	RING-RETAINING					
	3	329007	1	SHAFT AS					
	4	676083	2	PLUG-SHAFT END					
	5	358200	4	ARM LH					
	6	358201	4	ARM RH					
	7	4H2494	1	SLEEVE-FITTING					
	8	4W5864	1	CONNECTION-FEED					
	9	5B9079	8	NUT-JAM					
	10	676085	2	WASHER-SHAFT END					
	11	676087	2	SPRING-SHAFT					
	12	676088	2	SPRING-SHAFT					
	13	676090	8	SCREW-TAPPET ADJUSTING					
	14	676852	4	BRACKET-SHAFT					
	15	7C1271	2	SHIM					
	16	9B1722	1	SCREW					
	17	6I0233	3	NUT					
	18	6I0234	3	STUD					
	19	6I0235	1	BOLT					
	20	676095	8	ROD					
	21	676856	8	TAPPET					

F-516896 EP

1102 6I0227 VALVE MECHANISM GP

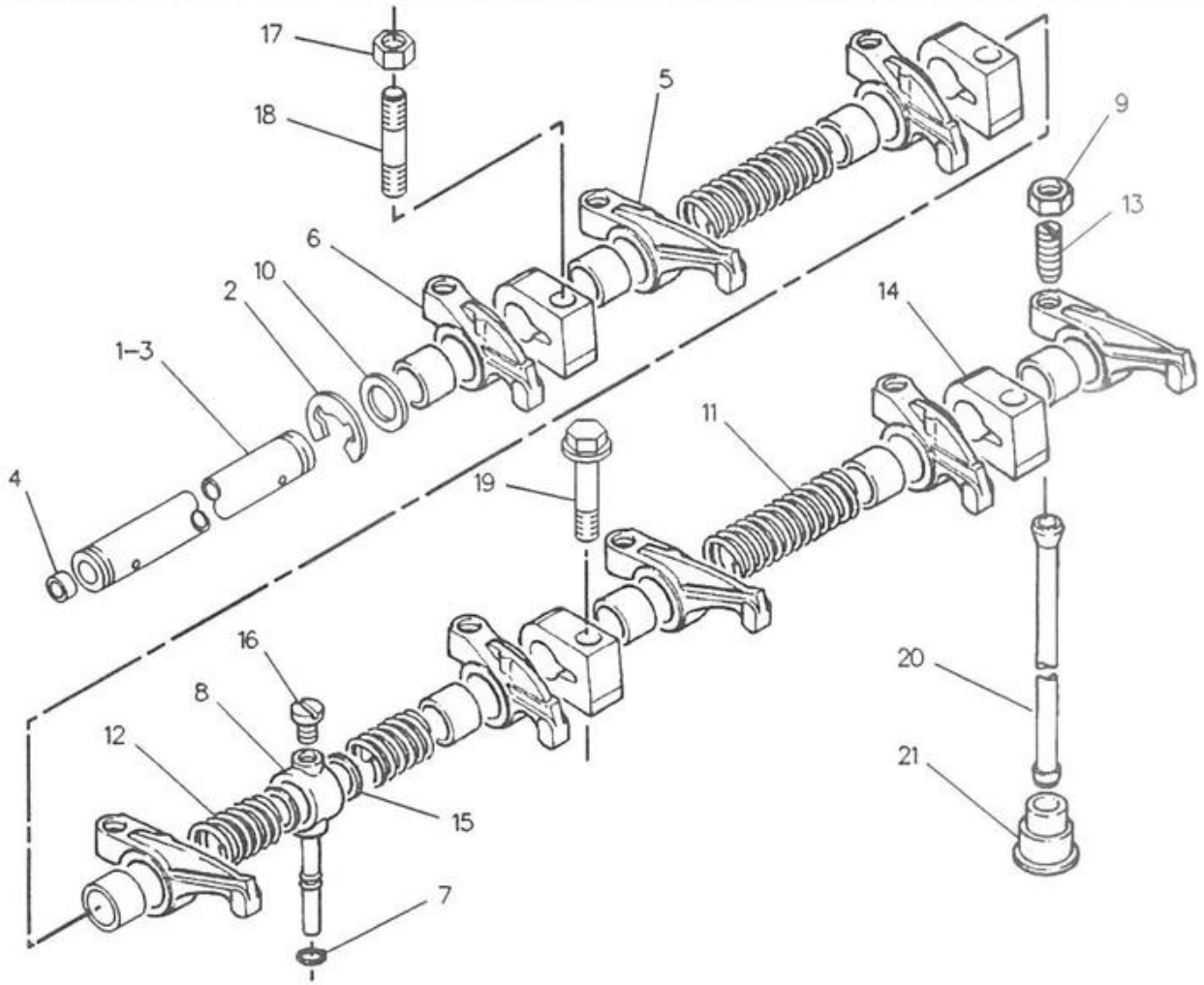

NOTE	REF NO	PART NUMBER	QTY	PART NAME	NOTE	REF NO	PART NUMBER	QTY	PART NAME
	1	6I1205	1	ROCKER ARM AS					
	2	68606	2	RING-RETAINING					
	3	329007	1	SHAFT AS					
	4	676083	2	PLUG-SHAFT END					
	5	7W4614	4	LEVER AS-LH					
	6	7W4613	4	LEVER AS-RH					
	7	4H2494	1	SLEEVE-FITTING					
	8	4W5864	1	CONNECTION-FEED					
	9	5B9079	8	NUT-JAM					
	10	676085	2	WASHER-SHAFT END					
	11	676087	2	SPRING-SHAFT					
	12	676088	2	SPRING-SHAFT					
	13	676090	8	SCREW-TAPPET ADJUSTING					
	14	6I1206	4	BRACKET-SHAFT					
	15	7C1271	2	SHIM					
	16	9B1722	1	SCREW					
	17	6I0233	3	NUT					
	18	6I0234	3	STUD					
	19	6I0235	1	BOLT					
	20	676095	8	ROD					
	21	676856	8	TAPPET					

F-525871 EP

1102 **6I1204 VALVE MECHANISM GP**
An Attachment

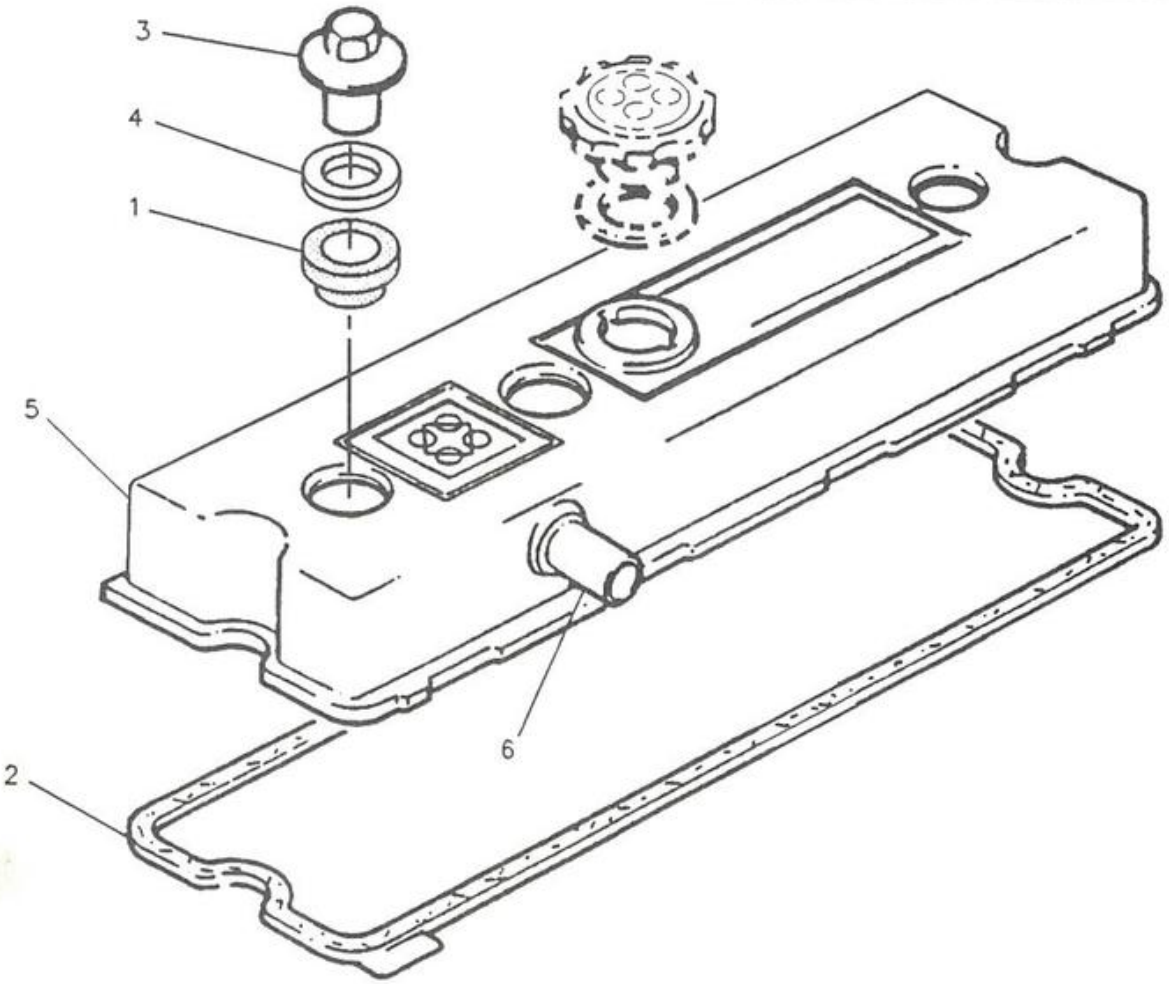

NOTE	REF NO	PART NUMBER	QTY	PART NAME	NOTE	REF NO	PART NUMBER	QTY	PART NAME
	1	1013675	3	SEAL					
	2	1013674	1	GASKET					
	3	610507	3	NUT					
	4	610508	3	SHIM					
	5	1054156	1	COVER AS-VALVE					
	6	614728	1	CONNECTOR					

R-549909 EP

1107 1054157 COVER GP-VALVE MECHANISM

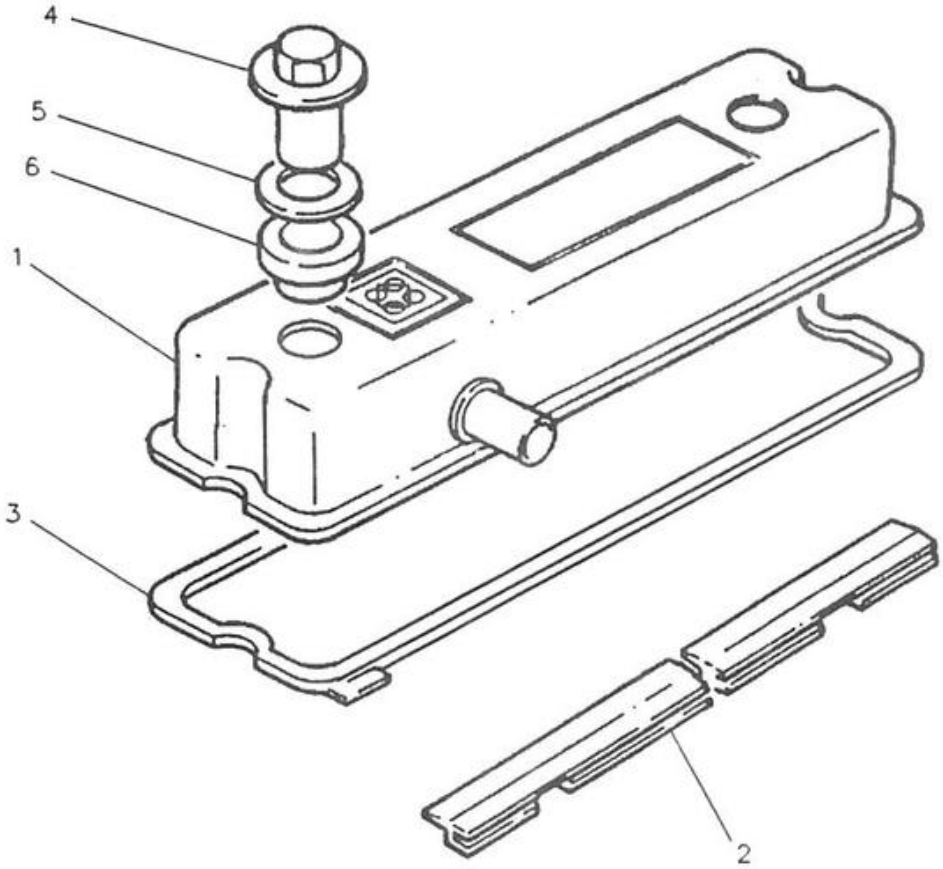

NOTE	REF NO	PART NUMBER	QTY	PART NAME	NOTE	REF NO	PART NUMBER	QTY	PART NAME
	1	6I0504	1	COVER-VALVE					
	2	6I0505	1	SEAL					
	3	6I0506	1	GASKET					
	4	6I0507	3	NUT					
	5	6I0508	3	SHIM					
	6	7W4714	3	SEAL-NUT					

R-545173 EP

1107 **6I0503 COVER GP-VALVE MECHANISM**
An Attachment

BASIC ENGINE

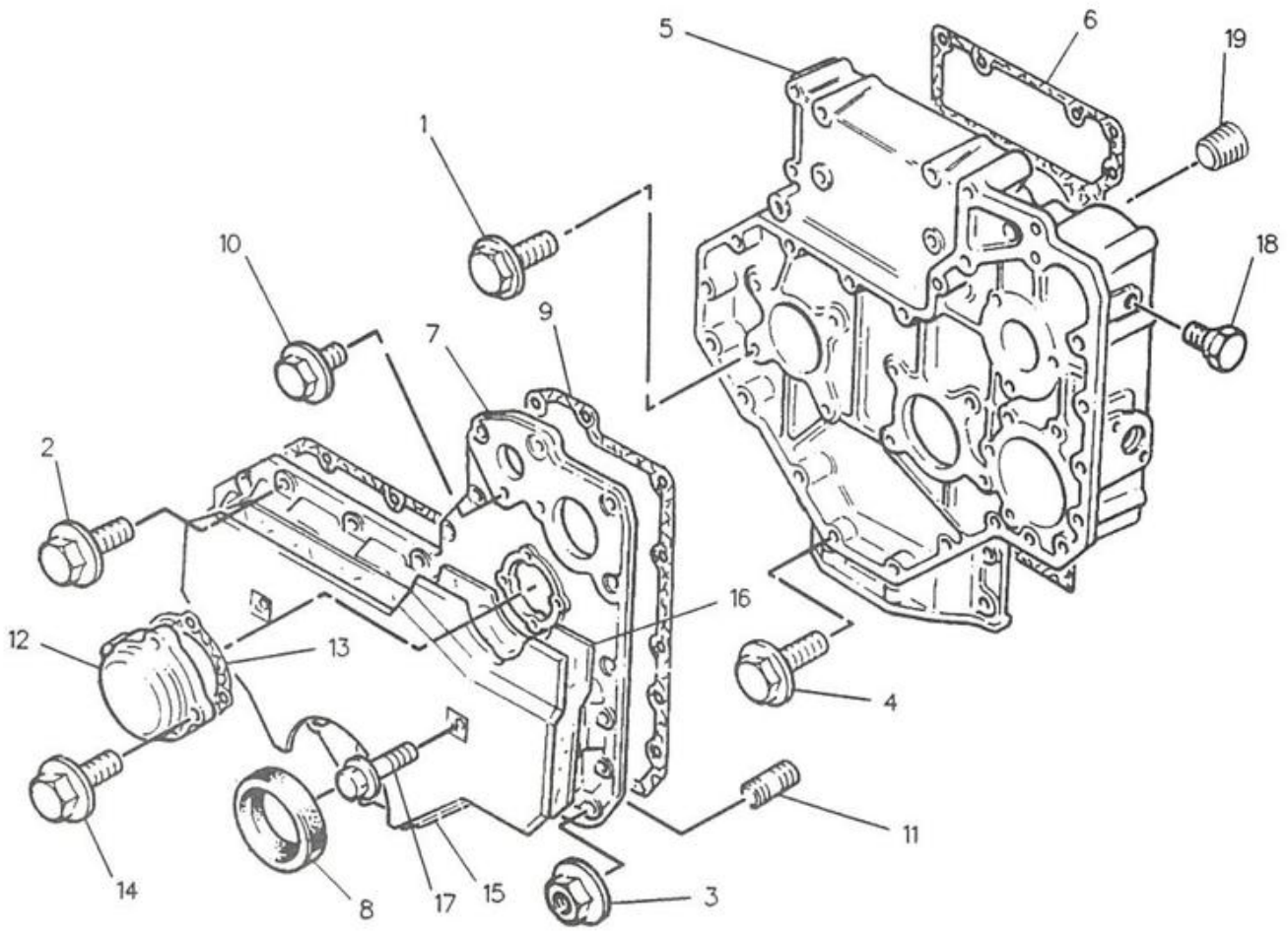

NOTE	REF NO	PART NUMBER	QTY	PART NAME	NOTE	REF NO	PART NUMBER	QTY	PART NAME
	1	6I0217	8	BOLT					
	2	6I0260	7	BOLT					
	3	6I0291	2	NUT					
	4	6I0645	4	BOLT					
	5	6I0835	1	HOUSING					
	6	6I0836	1	GASKET					
	7	6I0837	1	COVER AS					
	8	4W5359	1	SEAL-CRANKSHAFT					
	9	6I0838	1	GASKET					
	10	6I0839	6	BOLT					
	11	6I0840	2	STUD					
	12	6I0841	1	COVER					
	13	6I0842	1	GASKET					
	14	6I0843	4	BOLT					
	15	6I0844	1	SHIELD					
	16	6I0845	1	DAMPER					
	17	6I0846	2	BOLT					
	18	6I0847	1	PLUG					
	19	7M7410	1	PLUG					

R-516812 EP

1151

6I0834 HOUSING GP-FRONT

BASIC ENGINE

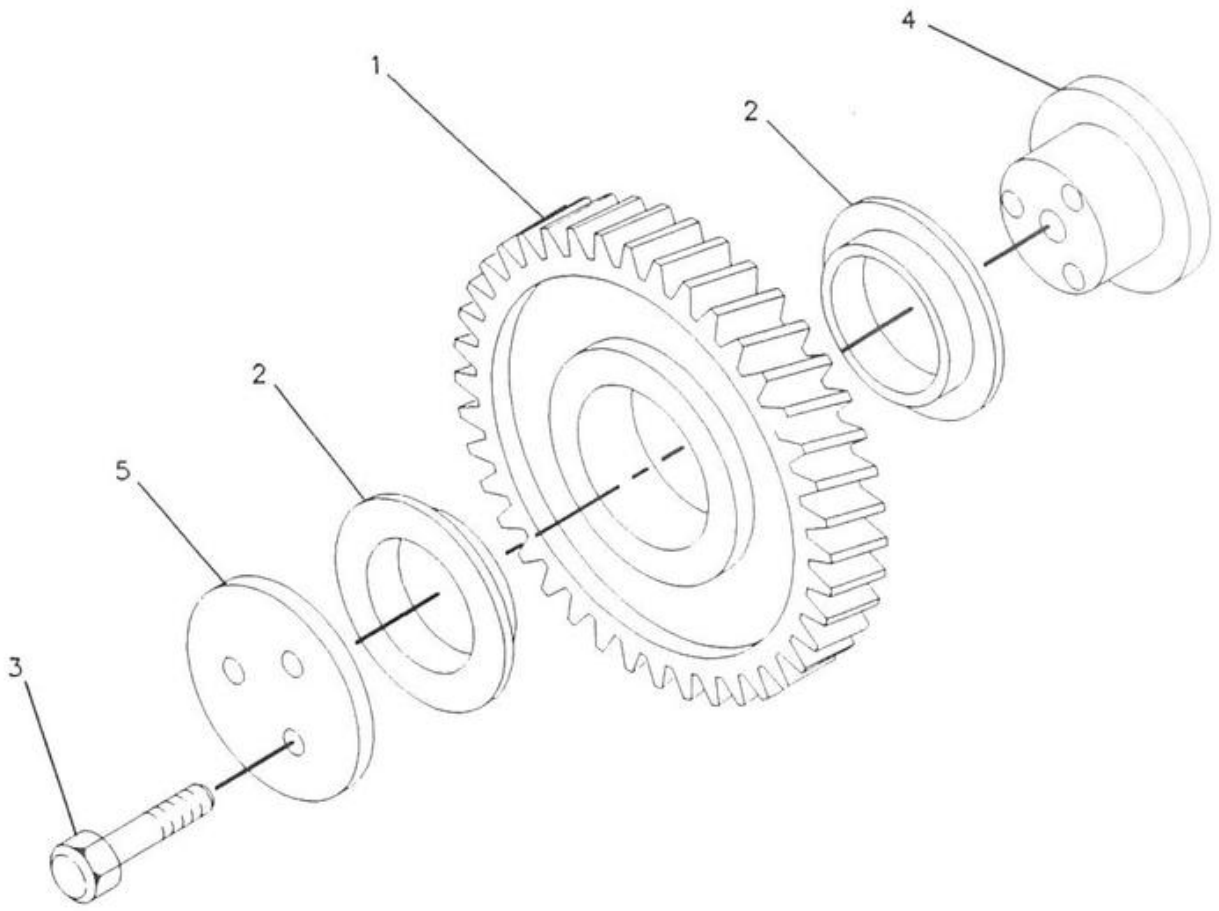

NOTE	REF NO	PART NUMBER	QTY	PART NAME	NOTE	REF NO	PART NUMBER	QTY	PART NAME
	1	676898	1	GEAR AS-IDLER					
	2	676899	2	BUSHING-IDLER GEAR					
	3	610789	3	BOLT					
	4	676897	1	HUB-IDLER GEAR					
	5	676900	1	PLATE-RETAINING					

F-516802 EP

1206 610788 GEAR GP-FRONT

BASIC ENGINE

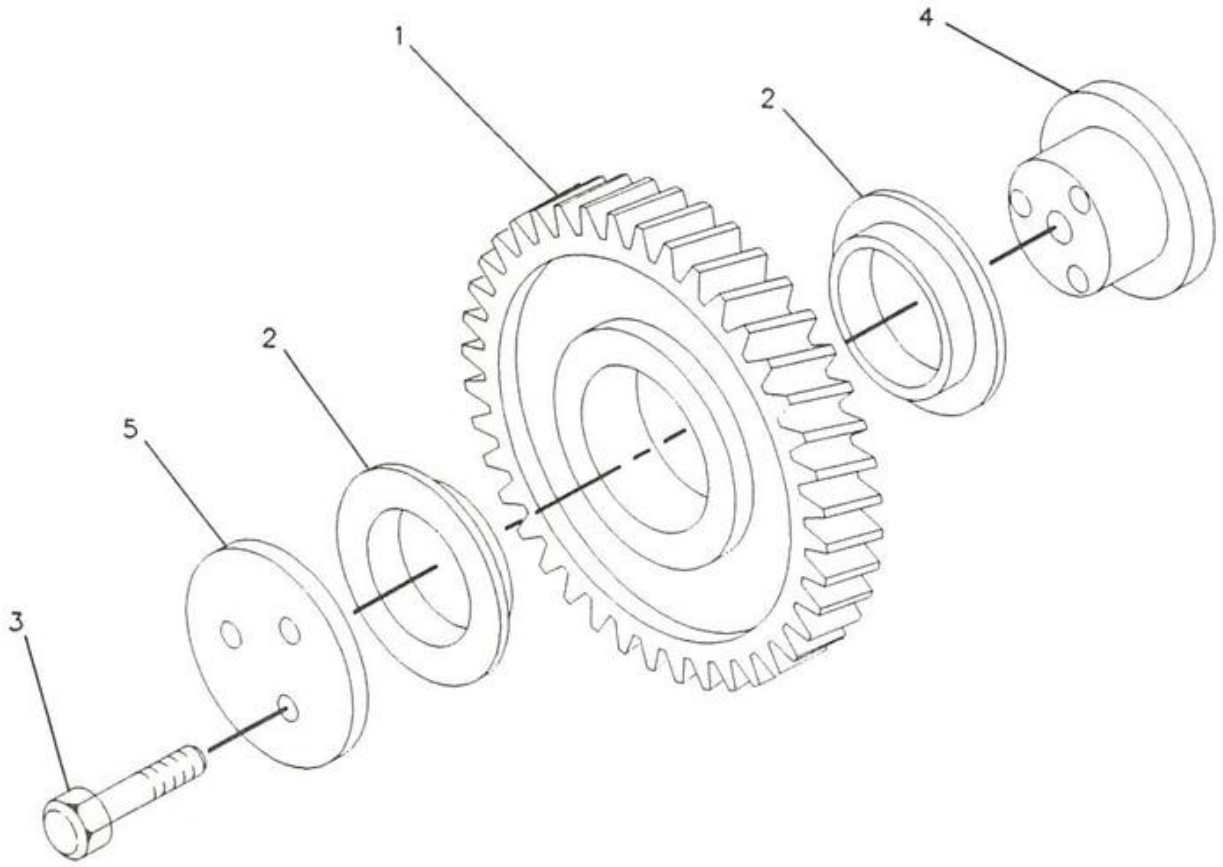

NOTE	REF NO	PART NUMBER	QTY	PART NAME
	1	2W1529	1	GEAR AS-IDLER
	2	676899	2	BUSHING-IDLER GEAR
	3	6I0789	3	BOLT
	4	676897	1	HUB-IDLER GEAR
	5	676900	1	PLATE-RETAINING

NOTE	REF NO	PART NUMBER	QTY	PART NAME

F-516817 EP

1206

6I1157 GEAR GP-FRONT
An Attachment

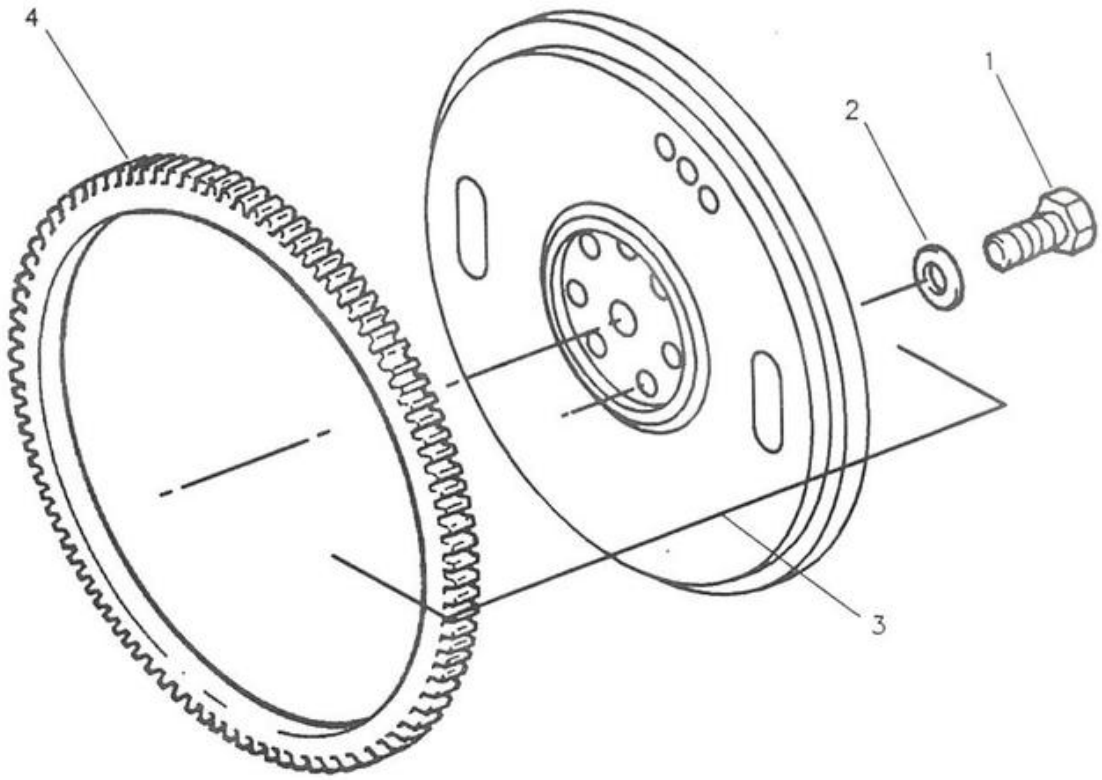

NOTE	REF NO	PART NUMBER	QTY	PART NAME
	1	4K7502	6	BOLT (1/2-20X1.375IN)
	2	5P8245	6	WASHER (3MM THK)
	3	4W2941	1	FLYWHEEL AS
	4	7W6247	1	GEAR (115 TEETH)

R-530307 EP

1156 6I0261 FLYWHEEL GP

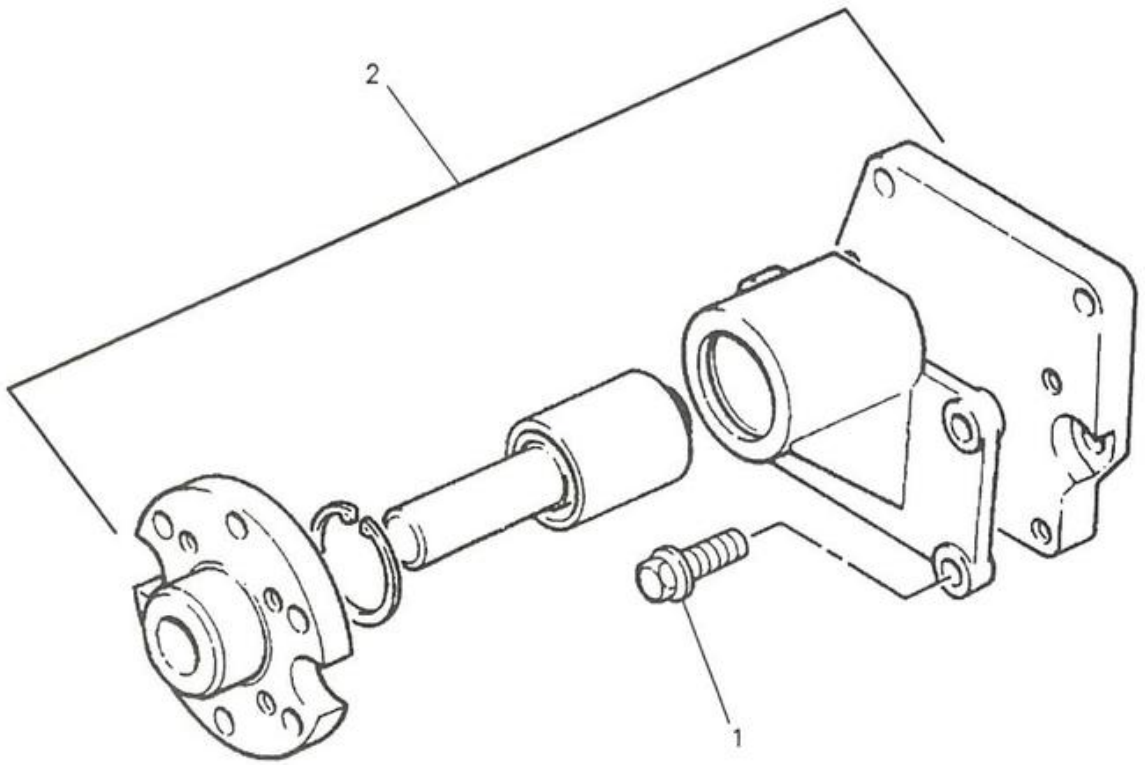

NOTE	REF NO	PART NUMBER	QTY	PART NAME	NOTE	REF NO	PART NUMBER	QTY	PART NAME
	1	6I0593	4	BOLT					
	2	6I0651	1	HOUSING AS					

1359

R-516751 EP

6I0649 DRIVE GP-FAN

BASIC ENGINE

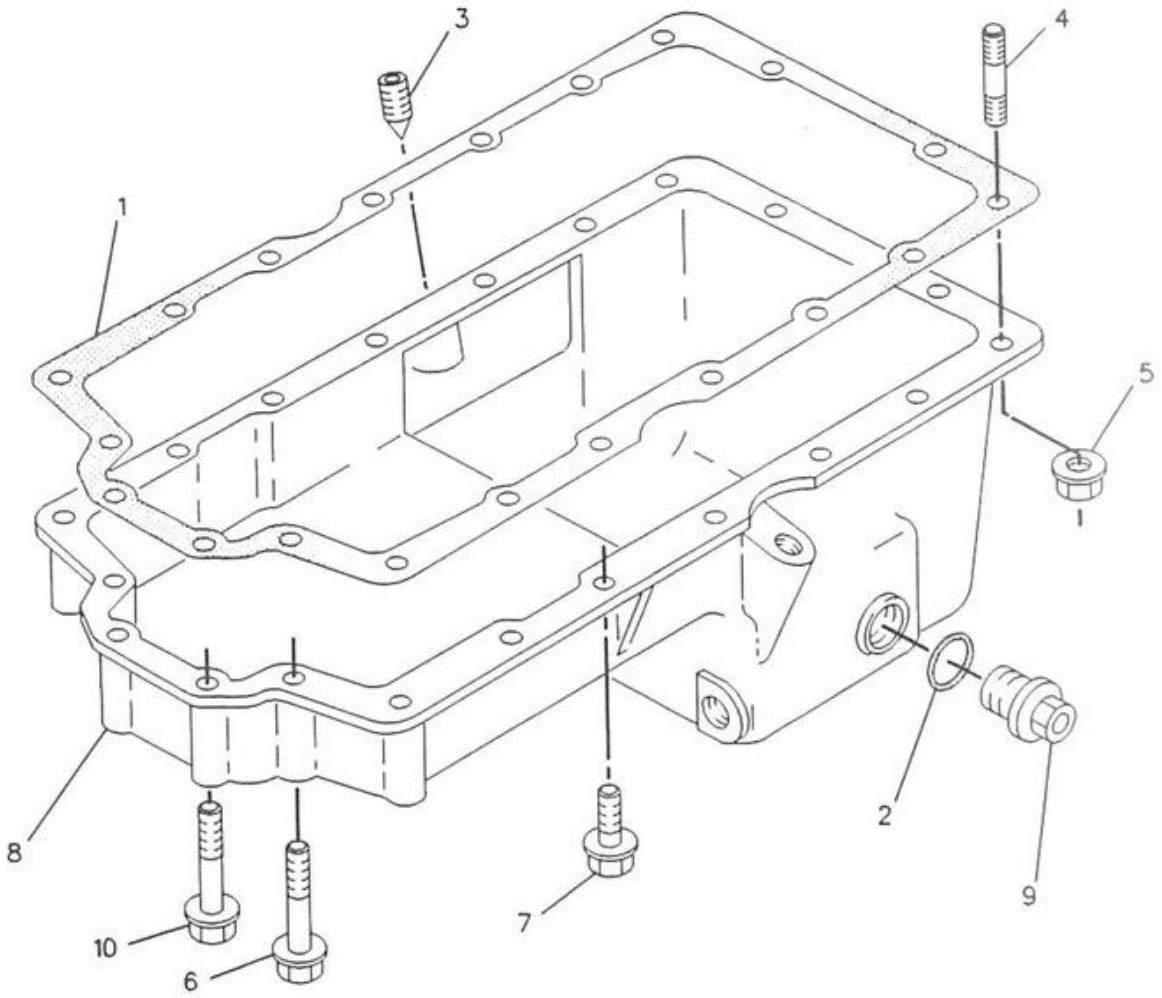

NOTE	REF NO	PART NUMBER	QTY	PART NAME	NOTE	REF NO	PART NUMBER	QTY	PART NAME
	1	4W2944	1	GASKET					
	2	5P6718	1	SEAL-O-RING (18.64MM ID)					
	3	6I0289	1	PLUG					
	4	6I0290	2	STUD					
	5	6I0291	2	NUT					
	6	6I0292	5	BOLT					
	7	6I0293	12	BOLT					
	8	6I0294	1	PAN-OIL					
	9	7C0351	1	PLUG-SUMP DRAIN					
	10	1008451	1	BOLT					

F-545593 EP

1302 6I0288 PAN GP-OIL

BASIC ENGINE

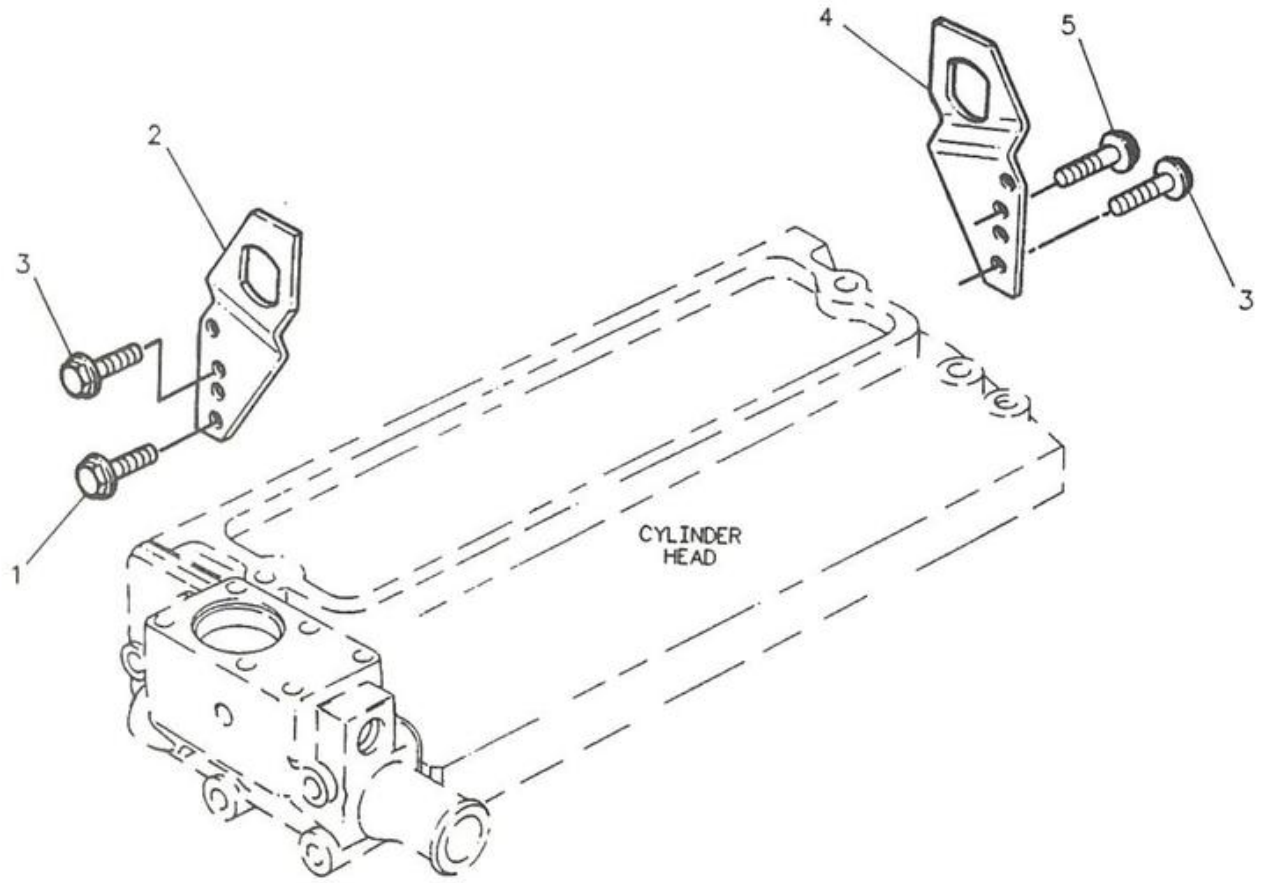

NOTE	REF NO	PART NUMBER	QTY	PART NAME	NOTE	REF NO	PART NUMBER	QTY	PART NAME
	1	6I0593	2	BOLT					
	2	6I0653	1	PLATE					
	3	6I0654	4	BOLT					
	4	6I0655	1	PLATE					
M	5	9R6965	2	SCREW					

M-METRIC PART

1122

R-516758 EP

6I0652 LIFTING GP

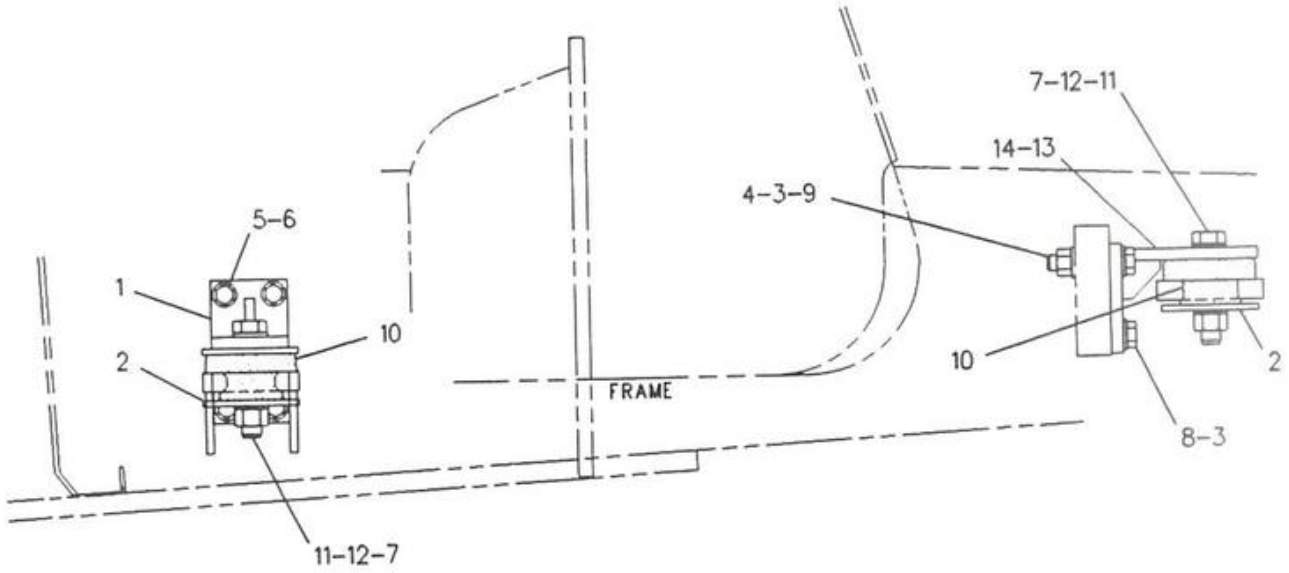

RIGHT SIDE VIEW

NOTE	REF NO	PART NUMBER	QTY	PART NAME	NOTE	REF NO	PART NUMBER	QTY	PART NAME
	1	4P2671	2	SUPPORT AS					
	2	4P2669	6	WASHER					
	3	8T4122	6	WASHER					
M	4	8T4132	2	NUT					
M	5	8T4139	8	BOLT					
	6	8T4223	8	WASHER-HARD					
M	7	8T4131	4	NUT					
M	8	7X2553	2	BOLT					
M	9	7X2555	2	BOLT					
	10	7C4349	4	MOUNT AS					
M	11	7X2566	4	BOLT					
	12	8T4123	8	WASHER-PLATED					
	13	1010011	1	SUPPORT AS (LH)					
	14	1010012	1	SUPPORT AS (RH)					

M-METRIC PART

F-550510 EP

1152

7E7708 MOUNTING GP
Engine & Transmission

LUBRICATION SYSTEM

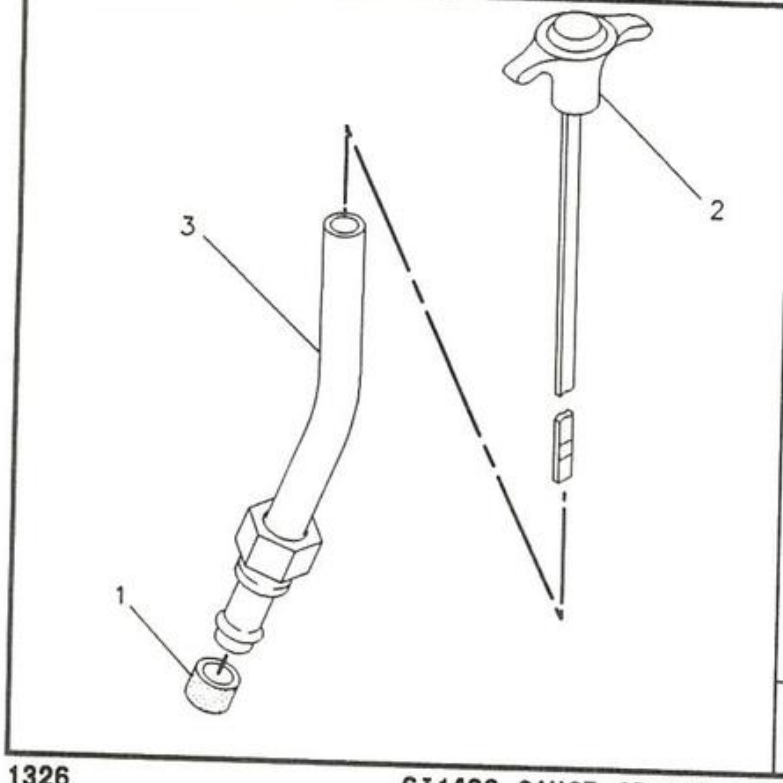

NOTE	REF NO	PART NUMBER	QTY	PART NAME
	1	6I1497	1	SEAL
	2	6I1498	1	GAUGE AS-OIL LEVEL
	3	6I1514	1	TUBE AS

R-525887 EP

1326

6I1496 GAUGE GP-OIL LEVEL (DIPSTICK)

LUBRICATION SYSTEM

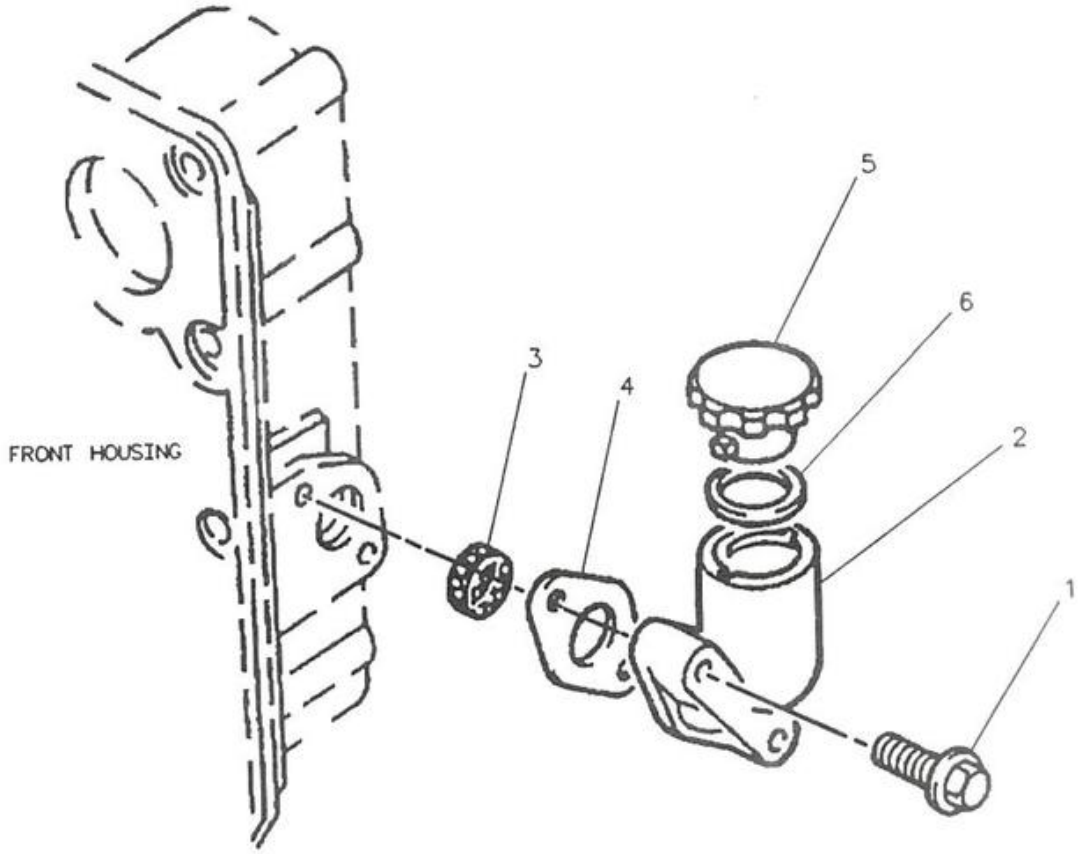

NOTE	REF NO	PART NUMBER	QTY	PART NAME	NOTE	REF NO	PART NUMBER	QTY	PART NAME
	1	6I0455	2	BOLT					
	2	6I0510	1	FILLER					
	3	6I0511	1	STRAINER					
	4	6I0512	1	GASKET					
	5	6I0513	1	CAP					
	6	6I0514	1	SEAL					

R-516676 EP

1316 6I0509 FILLER GP-OIL

LUBRICATION SYSTEM

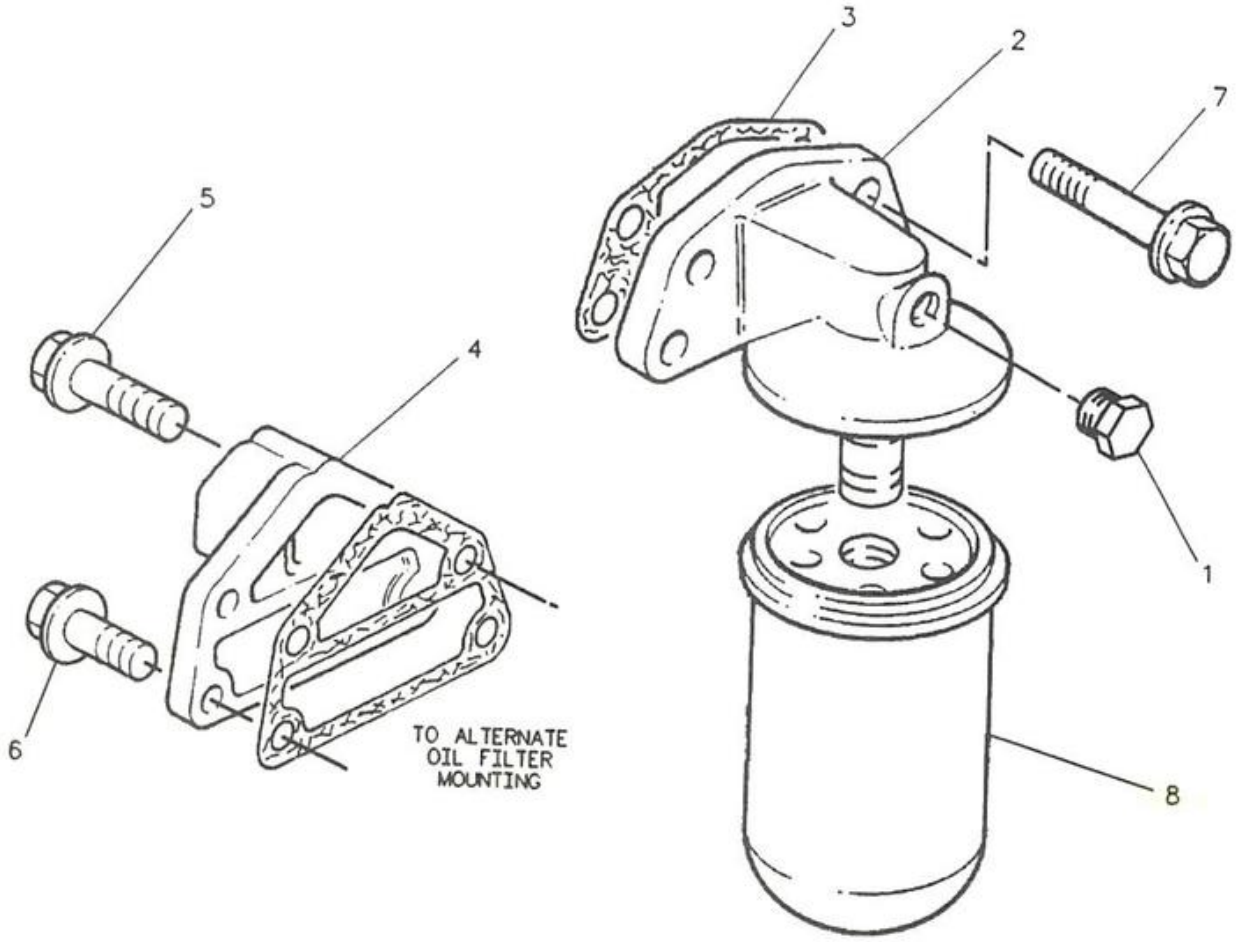

NOTE	REF NO	PART NUMBER	QTY	PART NAME	NOTE	REF NO	PART NUMBER	QTY	PART NAME
	1	358063	1	PLUG					
	2	6I0297	1	HEAD-OIL FILTER					
	3	6I0298	2	GASKET					
	4	6I0299	1	ADAPTER					
	5	6I0301	1	BOLT					
	6	6I0302	3	BOLT					
	7	6I0303	4	BOLT					
	8	7W2327	1	FILTER AS-OIL					

1318

R-516945 EP

6I0296 FILTER GP-OIL

LUBRICATION SYSTEM

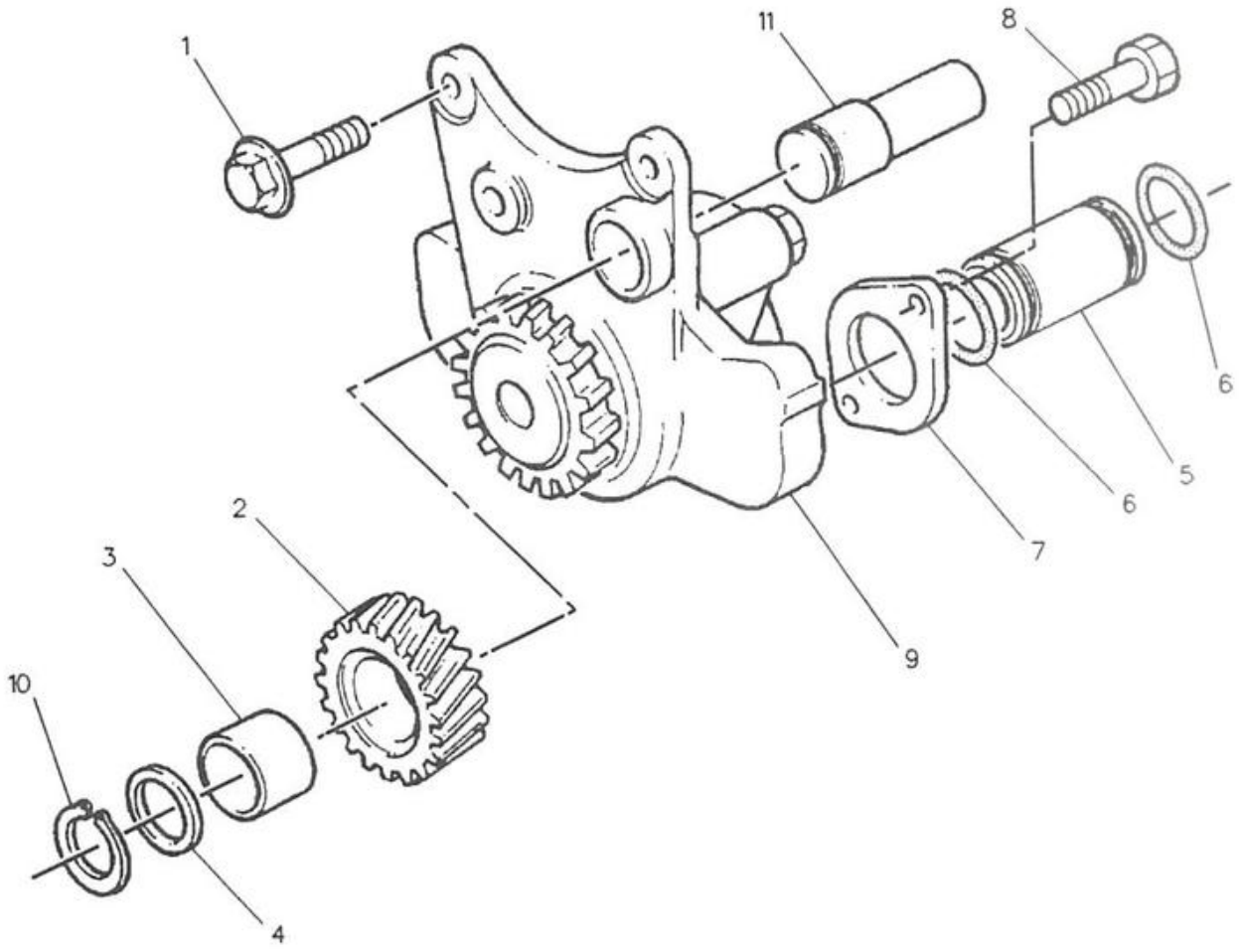

NOTE	REF NO	PART NUMBER	QTY	PART NAME	NOTE	REF NO	PART NUMBER	QTY	PART NAME
	1	6I0254	3	BOLT					
	2	6I0255	1	GEAR AS					
	3	676927	1	BUSHING					
	4	6I0256	1	WASHER					
	5	6I0257	1	PIPE					
	6	6I0258	2	SEAL					
	7	6I0259	1	FLANGE					
	8	6I0260	2	BOLT					
	9	6I0253	1	PUMP AS-ENGINE OIL					
	10	676928	1	CIRCLIP					
	11	676929	1	SHAFT					

R-516904 EP

5073 **6I0252 PUMP GP-GEROTOR**

LUBRICATION SYSTEM

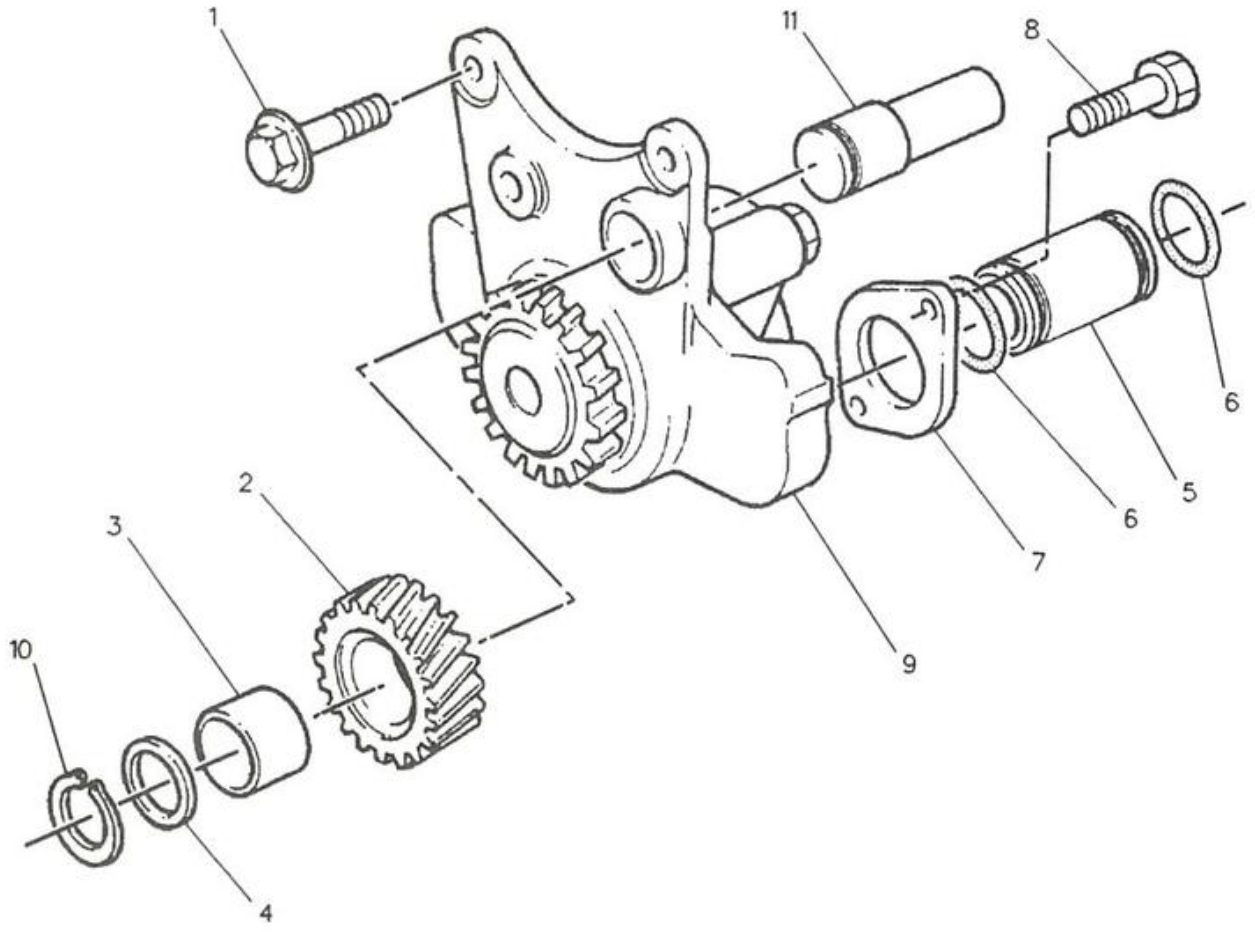

NOTE	REF NO	PART NUMBER	QTY	PART NAME	NOTE	REF NO	PART NUMBER	QTY	PART NAME
	1	6I0254	3	BOLT					
	2	6I0255	1	GEAR AS					
	3	676927	1	BUSHING					
	4	6I0256	1	WASHER					
	5	6I0257	1	PIPE					
	6	6I0258	2	SEAL					
	7	6I0259	1	FLANGE					
	8	6I0260	2	BOLT					
	9	6I0912	1	PUMP AS-ENGINE OIL					
	10	676928	1	CIRCLIP					
	11	676929	1	SHAFT					

R-516710 EP

5073

6I0911 PUMP GP-GEROTOR
An Attachment

LUBRICATION SYSTEM

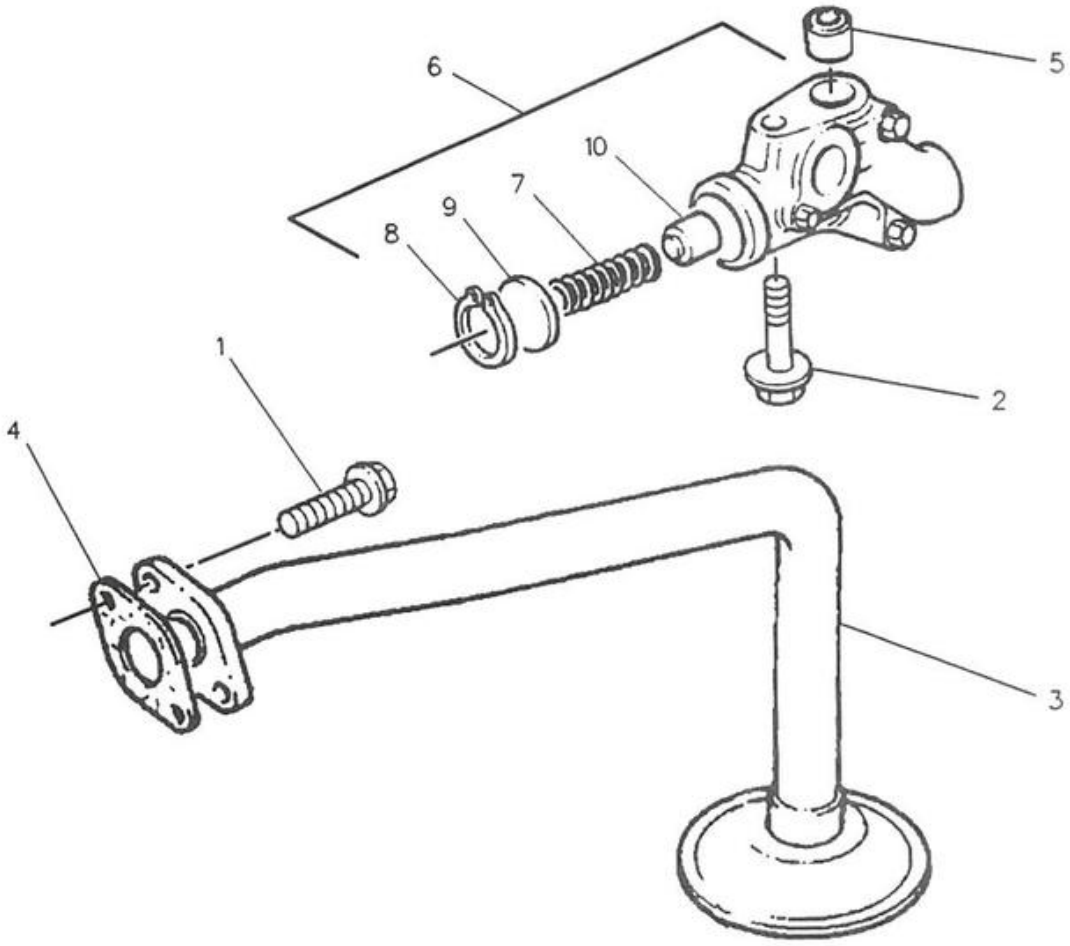

NOTE	REF NO	PART NUMBER	QTY	PART NAME
	1	6I0456	2	BOLT
	2	6I0650	1	BOLT
	3	6I0782	1	TUBE
	4	676213	1	GASKET
	5	8N7998	1	DOWEL
	6	6I1087	1	HOUSING AS
	7	6I0786	1	SPRING
	8	6I0787	1	RING-RETAINING
	9	7W4648	1	SEAT-SPRING
	10	7W4782	1	PLUNGER

R-533526 EP

1307

6I1086 LINES GP-ENGINE OIL
An Attachment

LUBRICATION SYSTEM

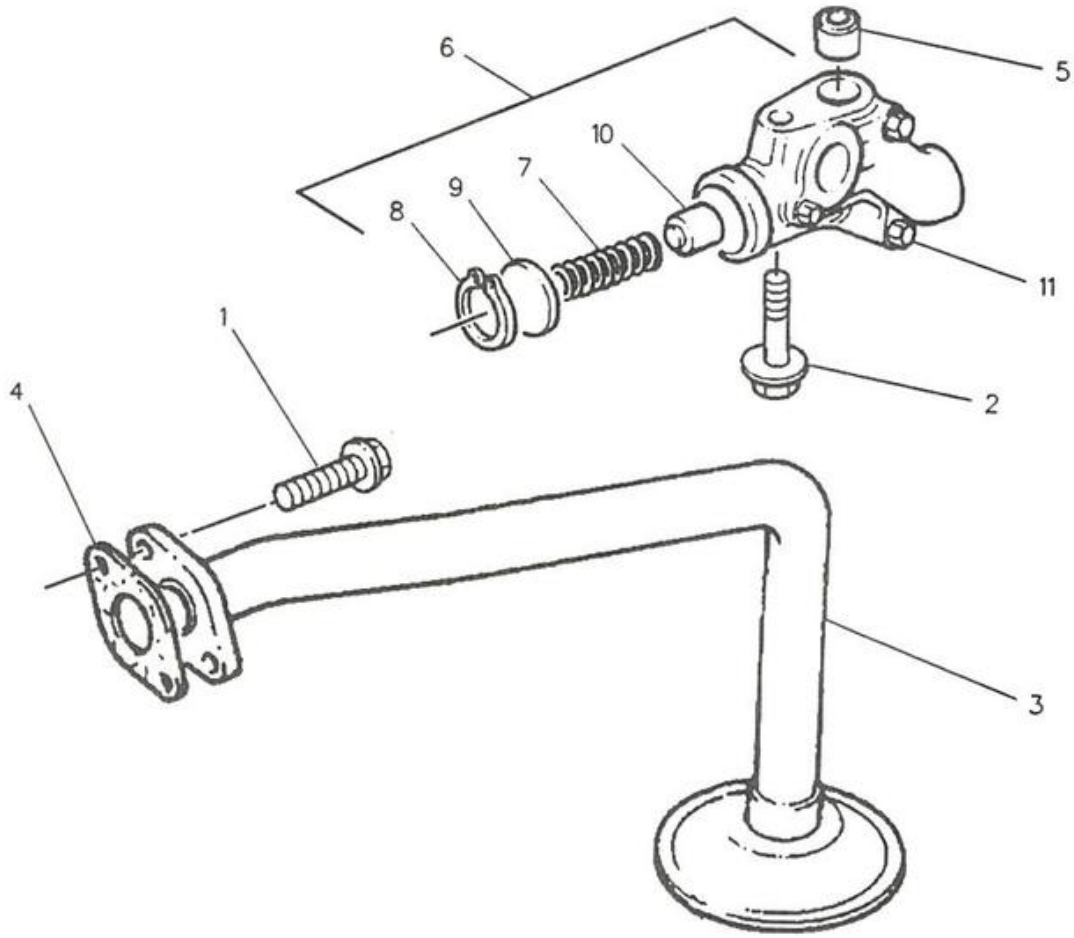

NOTE	REF NO	PART NUMBER	QTY	PART NAME
	1	6I0456	2	BOLT
	2	6I0650	1	BOLT
	3	6I0782	1	TUBE
	4	676213	1	GASKET
	5	8N7998	1	DOWEL
	6	6I0785	1	HOUSING AS
	7	6I0786	1	SPRING
	8	6I0787	1	RING-RETAINING
	9	7W4648	1	SEAT-SPRING
	10	7W4782	1	PLUNGER
	11	1013415	3	BOLT

R-547781 EP

1318

6I0781 LINES GP-OIL

LUBRICATION SYSTEM

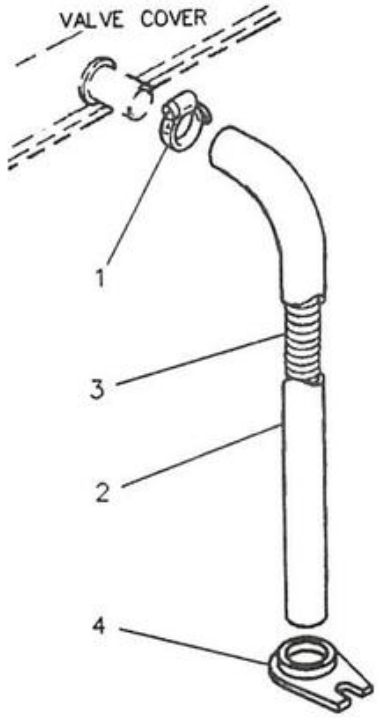

NOTE	REF NO	PART NUMBER	QTY	PART NAME
	1	1013450	1	CLIP
	2	6I0516	1	HOSE
	3	6I0517	1	SPRING
	4	7C1281	1	BRACKET

R-545561 EP

1317 6I0515 FUMES DISPOSAL GP

2	8T4186	BOLT
2	8T4189	BOLT
10	8T4200	BOLT
1	68865	CAP-RADIATOR
1	1P4278	CLAMP
4	9M0164	CLAMP-HOSE
2	9F2947	CLIP
1	6V1520	COCK-DRAIN
1	4P3387	HOSE
	5P5991	HOSE (1.4M)
1	4P3388	HOSE
2	2W9710	MOUNT AS
2	8T4133	NUT
1	4P3377	RADIATOR AS
	5P5637	SEAL (ORDER BY THE METER)
1	4P2575	SHROUD
1	8Y8669	STABILIZER
4	5P4116	WASHER
10	8T4224	WASHER
4	8T4222	WASHER-PLATED

COOLING SYSTEM

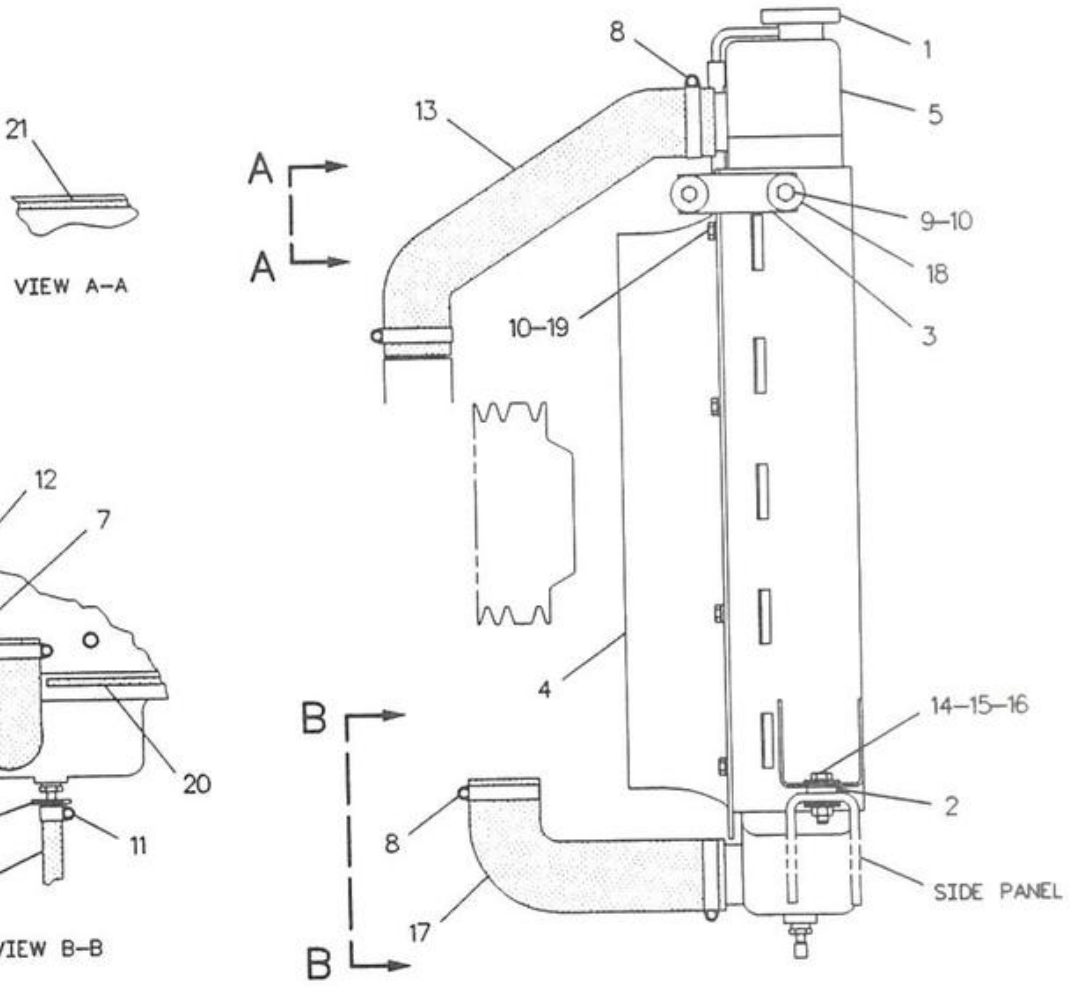

NOTE	REF NO	PART NUMBER	QTY	PART NAME	NOTE	REF NO	PART NUMBER	QTY	PART NAME
	1	68865	1	CAP-RADIATOR					
	2	2W9710	2	MOUNT AS					
	3	8Y8669	2	STABILIZER					
	4	4P2575	1	SHROUD					
	5	4P3379	1	RADIATOR AS					
	6	6V1520	1	COCK-DRAIN					
	7	9F2947	2	CLIP					
	8	9M0164	4	CLAMP-HOSE					
M	9	8T4189	2	BOLT					
	10	8T4224	10	WASHER-HARD					
	11	1P4278	1	CLAMP					
D	12	5P1908		HOSE (1.4M)					
	13	4P3388	1	HOSE					
M	14	8T4133	2	NUT					
M	15	8T4186	2	BOLT					
	16	8T4222	4	WASHER-PLATED					
	17	4P3387	1	HOSE					
	18	5P4116	4	WASHER					
M	19	8T4200	10	BOLT					
BD	20	5P5637		SEAL					

B-USE AS REQUIRED
D-ORDER BY THE METER
M-METRIC PART

F-536370 EP

1353

7E7716 RADIATOR GP
Part Of 9R8551 Air Conditioner Ar
An Attachment

COOLING SYSTEM

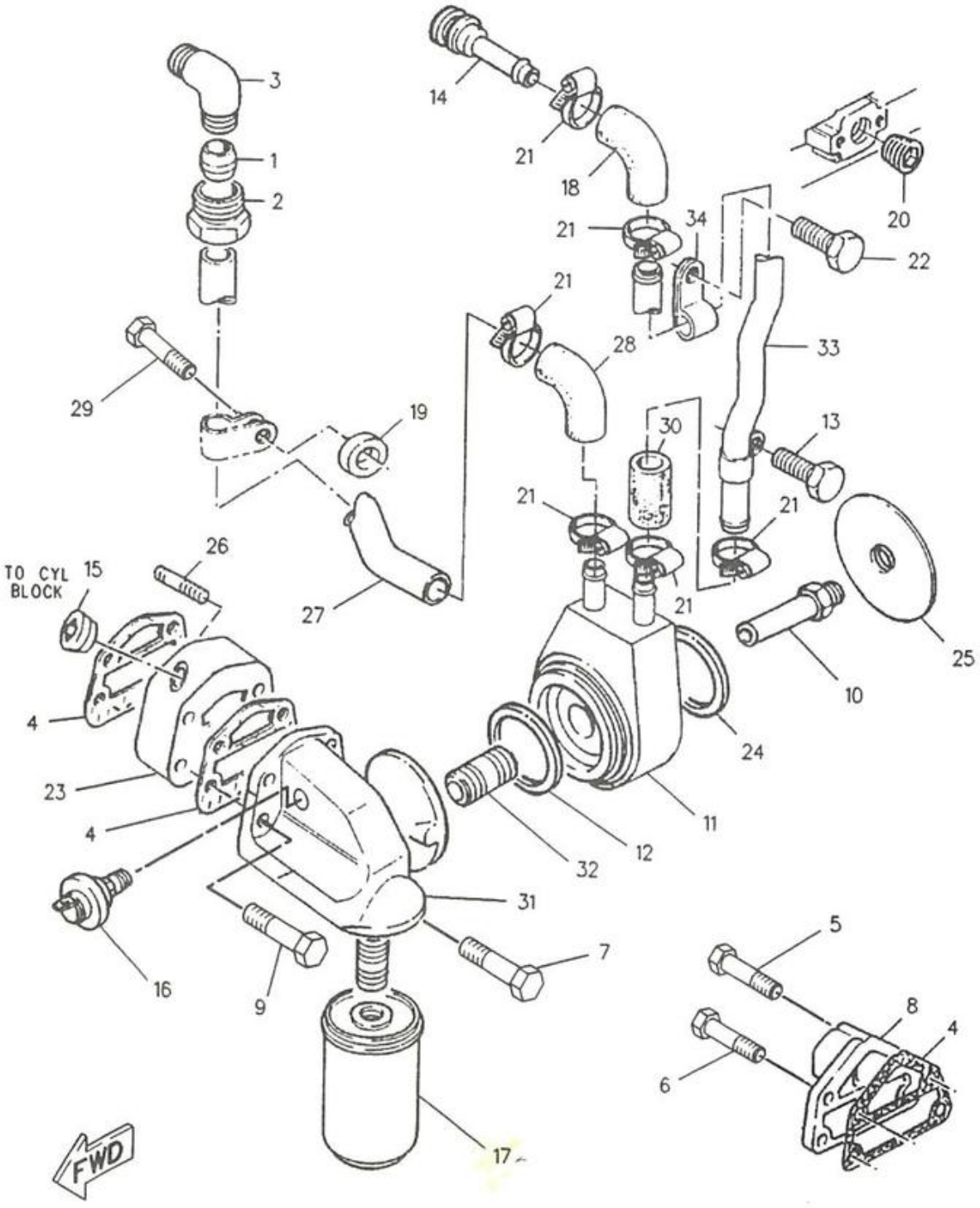

F-552054 EP

1378

1052733 COOLER GP-FILTER BASE & ENGINE OIL

An Attachment

COOLING SYSTEM

NOTE	REF NO	PART NUMBER	QTY	PART NAME
	1	1N3804	1	FERRULE
	2	1N3805	1	NUT
	3	5P4426	1	ELBOW-AIR BRAKE
	4	6I0298	3	GASKET
	5	6I0301	1	BOLT
	6	6I0302	3	BOLT
	7	6I0530	1	BOLT
	8	6I1052	1	ADAPTER
	9	6I1110	2	BOLT
	10	6I2603	1	CONNECTOR
	11	6I2605	1	COOLER AS-OIL
	12	6I2604	1	GASKET
	13	6I4200	1	BOLT
	14	7C2729	1	ADAPTER
	15	7C2851	1	PLUG
	16	7W1238	1	SWITCH-OIL PRESS
	17	7W2326	1	FILTER AS-OIL
	18	7W4666	1	HOSE
	19	7W4691	1	SPACER
	20	9L8412	1	PLUG-PIPE
	21	1013450	6	CLIP
M	22	6I3812	1	BOLT
	23	1013913	1	ADAPTER
	24	1013914	1	RING
	25	1013915	1	CAP
	26	1017418	2	STUD
	27	1052734	1	TUBE AS
	28	1052736	1	HOSE
	29	1052740	1	BOLT
	30	1052739	1	HOSE
	31	1013911	1	HEAD AS-OIL FILTER
	32	6I1050	1	CONNECTOR
	33	1052737	1	TUBE AS
	34	1013919	1	CLIP

M-METRIC PART

552055 EP

1378 **1052733 COOLER GP-FILTER BASE & ENGINE OIL**
An Attachment

6	8T4200	BOLT
1	4P3382	CORE AS-OIL COOLER
1	5K9090	SEAL-TO HYDRAULIC COOLER INLET PORT
2	7J9108	SEAL-TO TRANSMISSION COOLER PORTS
6	8T4224	WASHER

1374

550489 P

7E7717 COOLER GP-HYDRAULIC OIL

1	4P3715	PULLEY
1	6I2852	SPIDER AS-FAN
1	8M8341	V-BELT SET

553380 P

1044222 COOLING AR-HIGH AMBIENT
For Use With Machines Sold In Mexico Only
An Attachment

COOLING SYSTEM

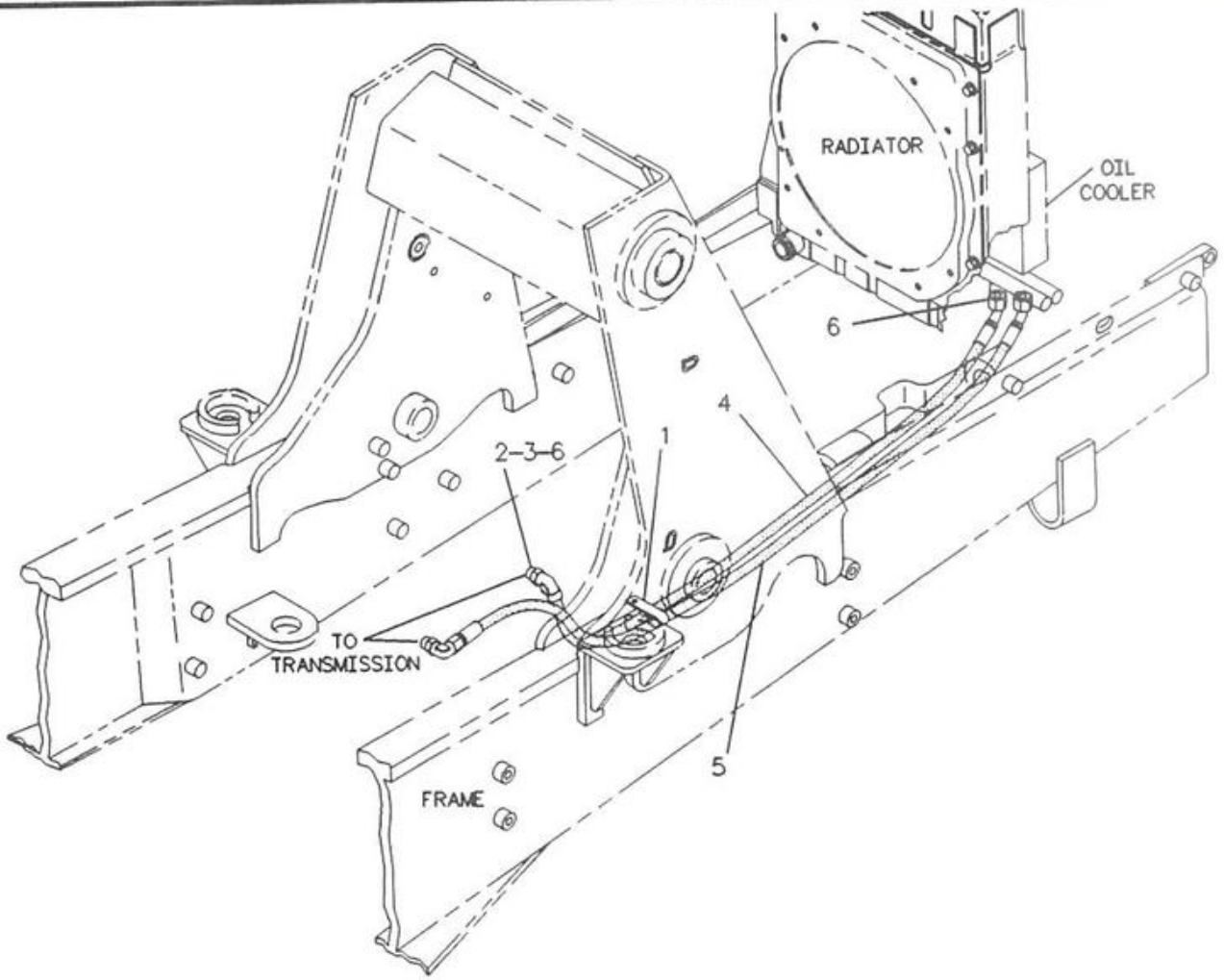

NOTE	REF NO	PART NUMBER	QTY	PART NAME	NOTE	REF NO	PART NUMBER	QTY	PART NAME
	1	3E4321	1	CLIP					
	2	6V8626	2	ELBOW-FACE SEAL					
	3	2M9780	2	SEAL-O-RING					
	4	9R8030	1	HOSE AS					
	5	9R7478	1	HOSE AS					
	6	7J9108	4	SEAL-O-RING					

F-515429 EP

3016 9R7643 LINES GP-POWER TRAIN COOLER

COOLING SYSTEM

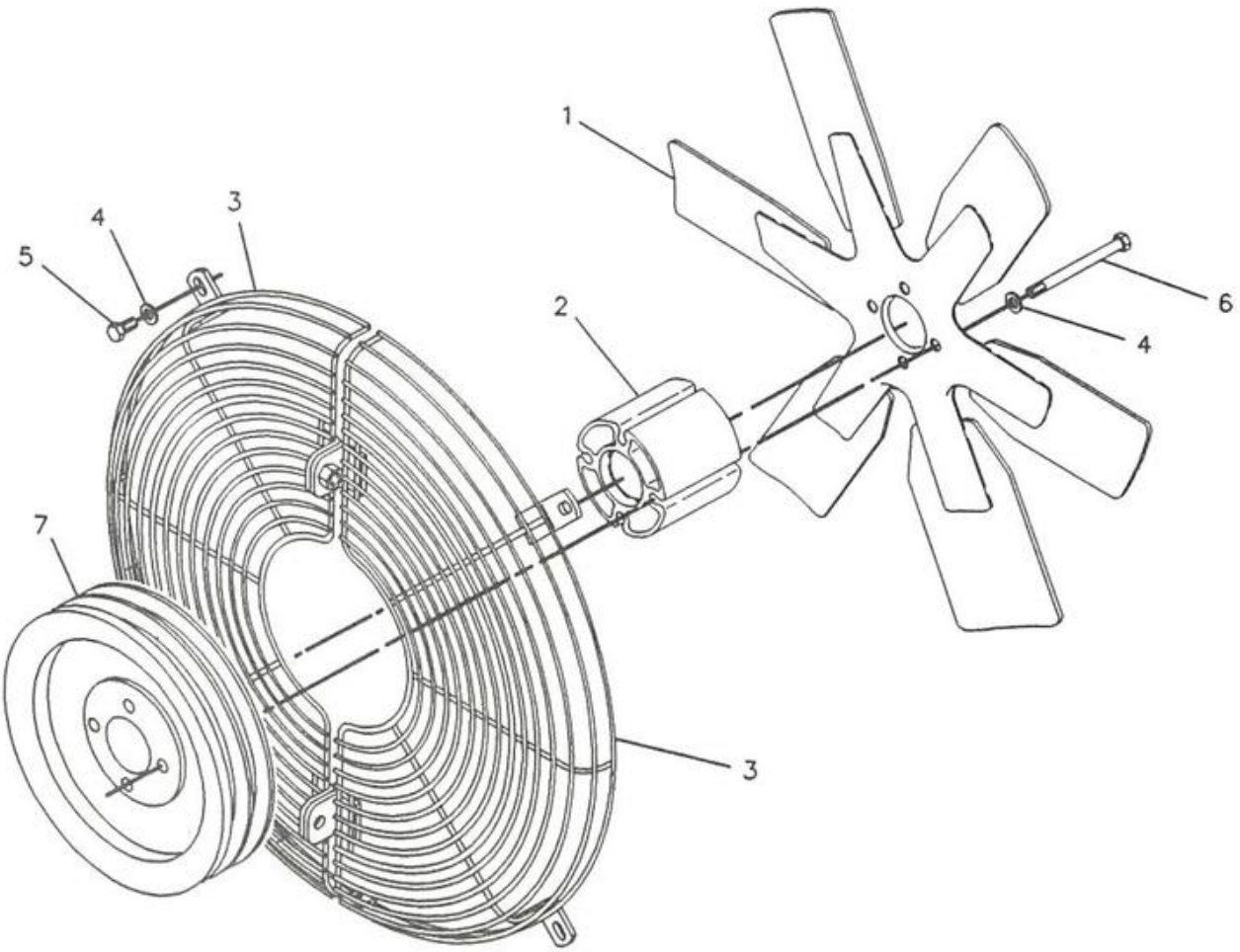

NOTE	REF NO	PART NUMBER	QTY	PART NAME	NOTE	REF NO	PART NUMBER	QTY	PART NAME
	1	4P3383	1	SPIDER AS-FAN					
	2	4P4347	1	SPACER-FAN					
	3	4P8164	2	GUARD AS-FAN					
	4	8T4224	10	WASHER-HARD					
M	5	8T4908	6	BOLT					
M	6	6V3821	4	BOLT					
	7	6I0657	1	PULLEY					

M-METRIC PART

1356 F-513482 EP

7E7704 FAN GP-SUCTION

COOLING SYSTEM

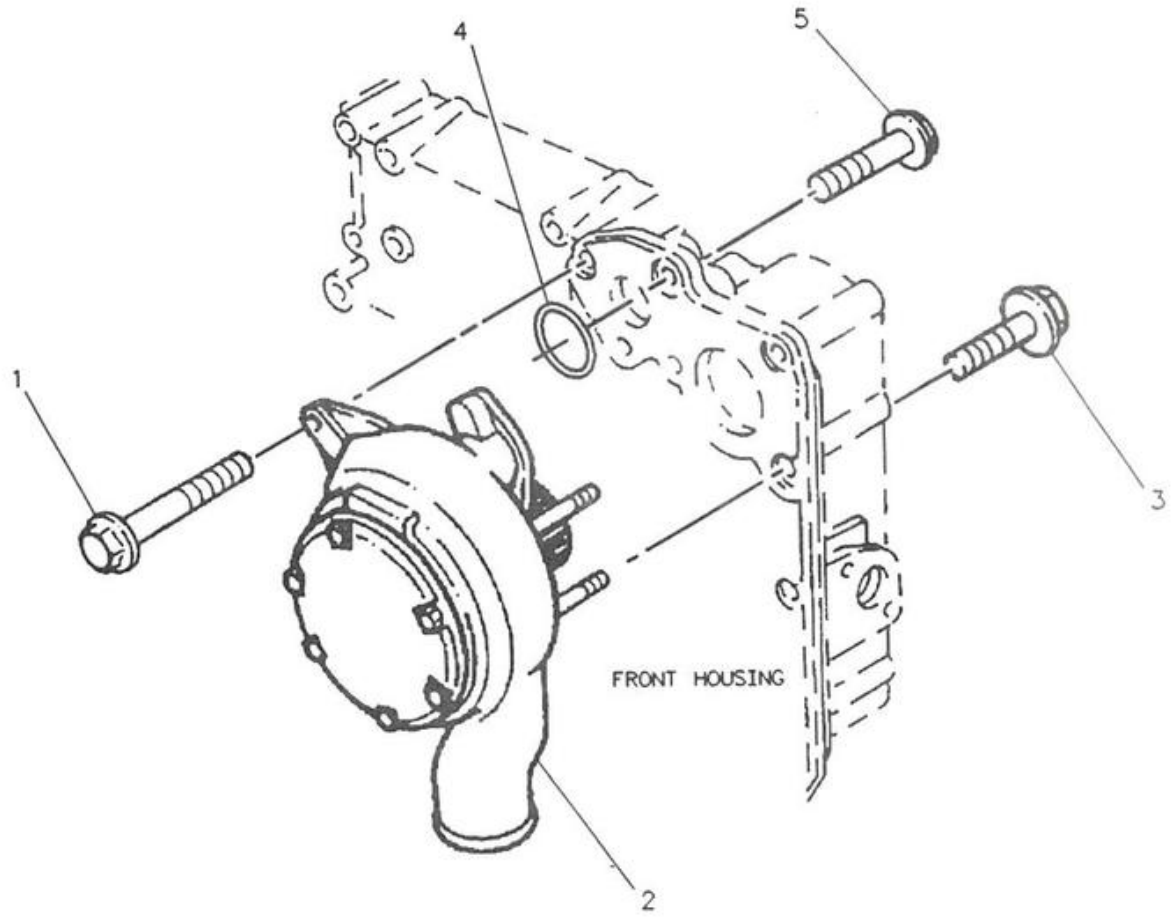

NOTE	REF NO	PART NUMBER	QTY	PART NAME	NOTE	REF NO	PART NUMBER	QTY	PART NAME
	1	6I0293	1	BOLT					
Y	2	6I0442	1	PUMP GP-WATER					
	3	6I0448	3	BOLT					
	4	6I0450	1	SEAL-O-RING					
M	5	8R3277	2	BOLT					

M-METRIC PART
Y-SEPARATE ILLUSTRATION

R-539109 EP

COOLING SYSTEM

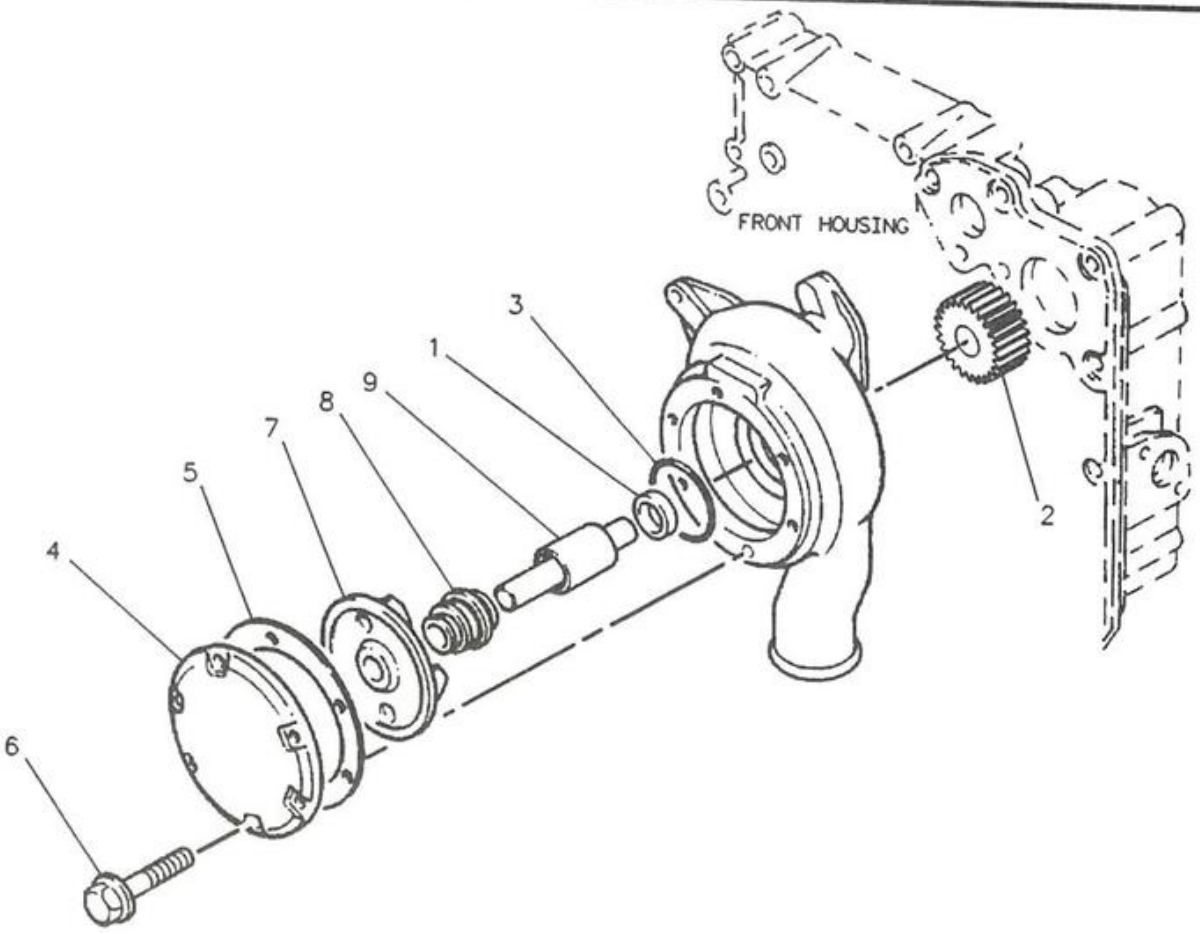

NOTE	REF NO	PART NUMBER	QTY	PART NAME	NOTE	REF NO	PART NUMBER	QTY	PART NAME
	1	6I0300	1	SEAL					
	2	6I0443	1	GEAR					
	3	6I0444	1	SEAL					
	4	6I0445	1	COVER					
	5	6I0446	1	GASKET					
	6	1013325	6	BOLT					
Z	7		1	IMPELLER					
Z	8		1	SEAL					
Z	9		1	SHAFT					
				THE FOLLOWING KIT IS AVAILABLE:					
		6I0449	1	KIT-WATER PUMP					

Z-NOT SERVICED SEPARATELY

R-539108 EP

6I0442 PUMP GP-WATER
Part Of 6I0441 Pump-Water

COOLING SYSTEM

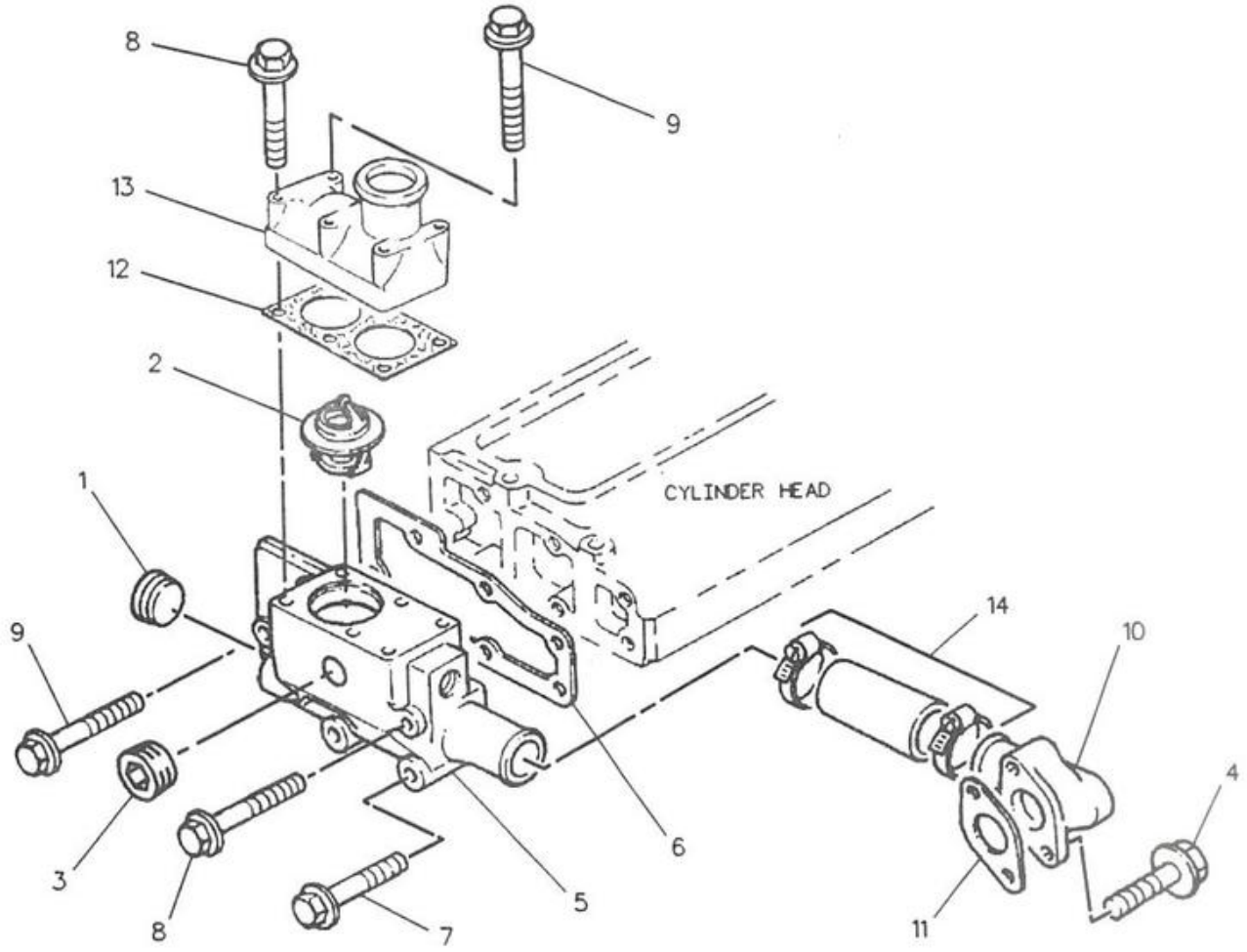

NOTE	REF NO	PART NUMBER	QTY	PART NAME
	1	2B0858	1	PLUG-PIPE
	2	4W8063	1	REGULATOR-TEMPERATURE
	3	6I0195	1	PLUG
	4	6I0260	2	BOLT
	5	6I0452	1	HOUSING
	6	6I0453	1	GASKET
	7	6I0454	2	BOLT
	8	6I0455	6	BOLT
	9	6I0456	3	BOLT
	10	6I0458	1	CONNECTOR
	11	6I0459	1	GASKET
	12	6I0485	1	GASKET
	13	6I0486	1	CONNECTOR
	14	6I0488	1	KIT-HOSE

R-516734 EP

1380 **6I0451 LINES GP-WATER**

AIR INLET AND EXHAUST SYSTEM

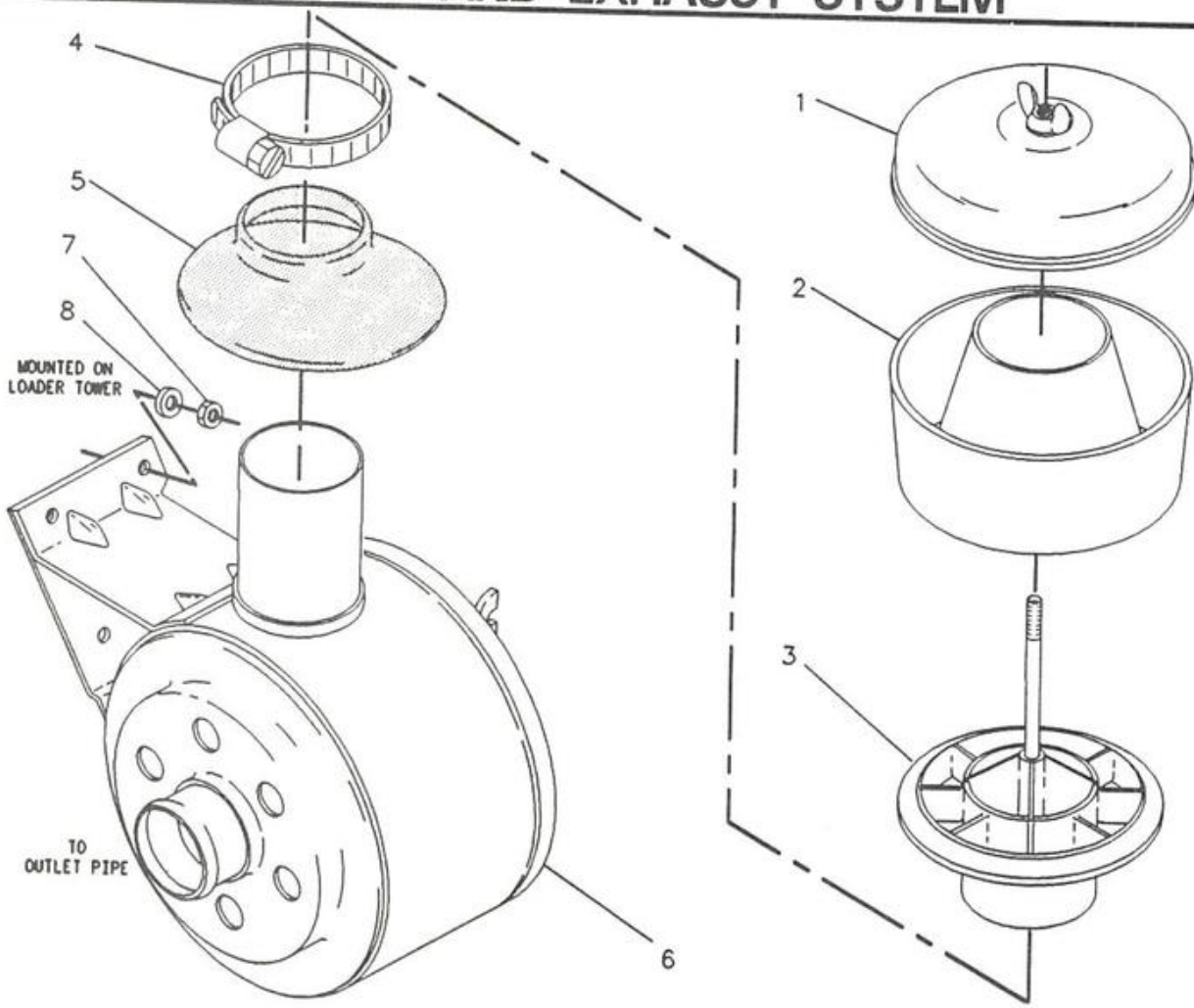

NOTE	REF NO	PART NUMBER	QTY	PART NAME
	1	9Y9431	1	PRE-CLEANER AS
		9Y9432	1	COVER AS
	2	8H2023	1	BODY
	3	9Y9433	1	SLEEVE AS
	4	9M7959	1	CLAMP
	5	7W6584	1	BOOT
Y	6	4P3334	1	AIR CLEANER GP
	7	8T4133	3	NUT
	8	8T4121	3	WASHER

Y-SEPARATE ILLUSTRATION

F-513097 EP

1051

7E7706 AIR CLEANER GP
4P3334-Page 53

AIR INLET AND EXHAUST SYSTEM

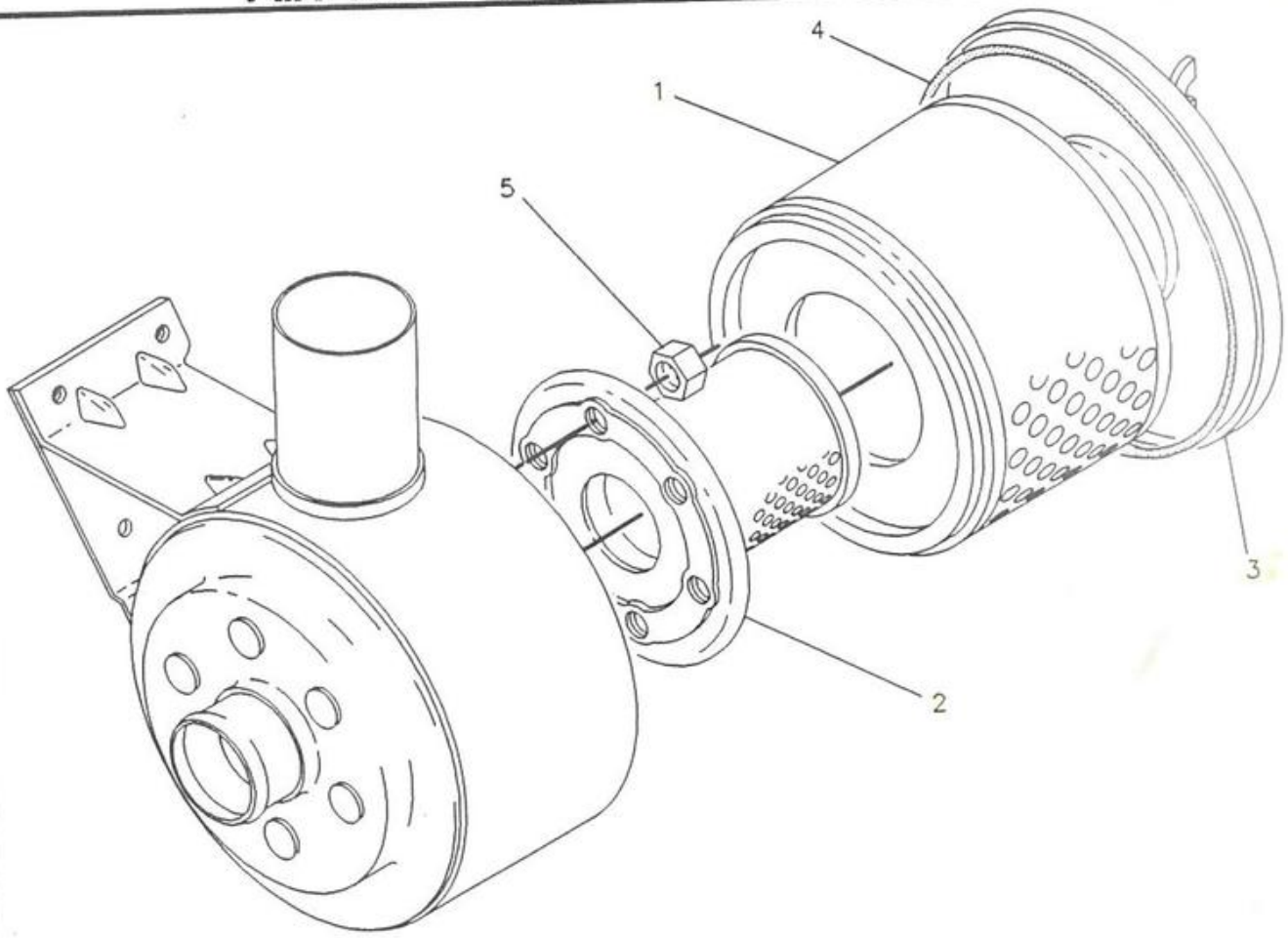

NOTE	REF NO	PART NUMBER	QTY	PART NAME	NOTE	REF NO	PART NUMBER	QTY	PART NAME
-	1	8N5504	1	ELEMENT AS-PRIMARY					
-	2	7W6754	1	ELEMENT AS-SECONDARY 4W6691					
	3	7C1102	1	COVER AS					
	4	7C1103	1	SEAL					
M	5	2Y5829	6	NUT					

M-METRIC PART

F-538101 EP

1051

4P3334 AIR CLEANER GP

Part Of 7E7706 Air Cleaner

AIR INLET AND EXHAUST SYSTEM

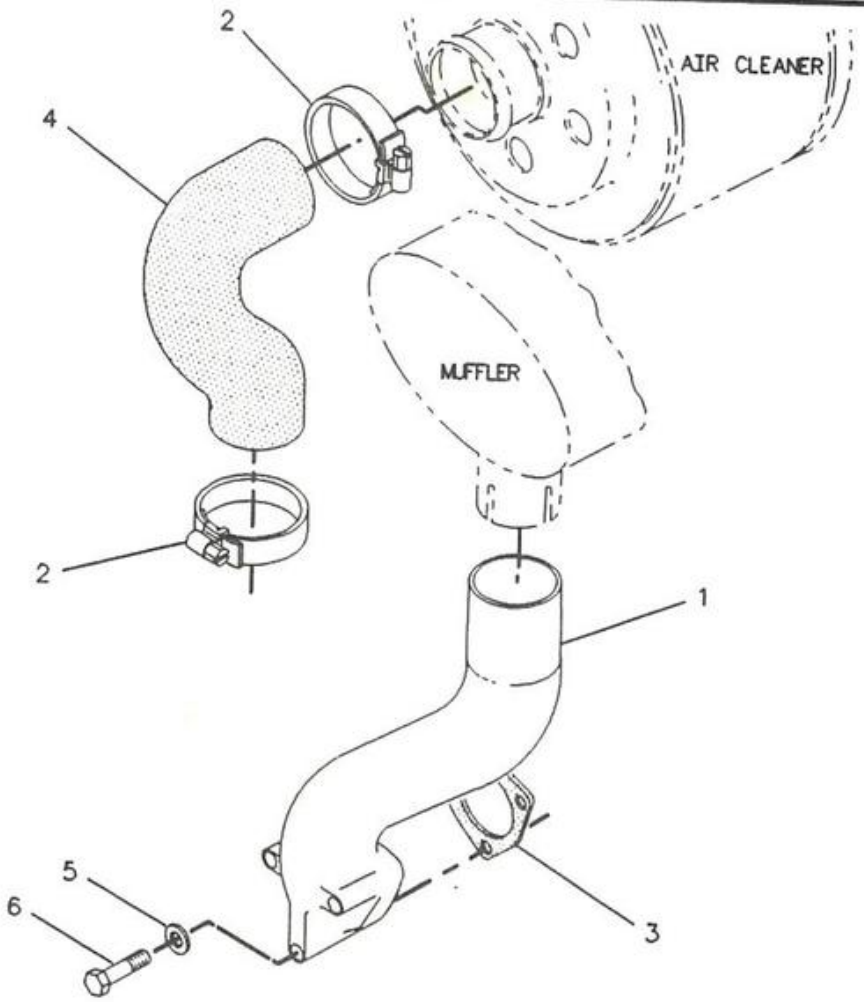

NOTE	REF NO	PART NUMBER	QTY	PART NAME	NOTE	REF NO	PART NUMBER	QTY	PART NAME
	1	4W2088	1	ELBOW					
	2	5P4868	2	CLAMP					
	3	676104	1	GASKET					
	4	7W2220	1	HOSE					
	5	8T4121	3	WASHER					
M	6	8T4178	3	BOLT					

M-METRIC PART

1058 F-533915 EP

7E7709 LINES GP-AIR

AIR INLET AND EXHAUST SYSTEM

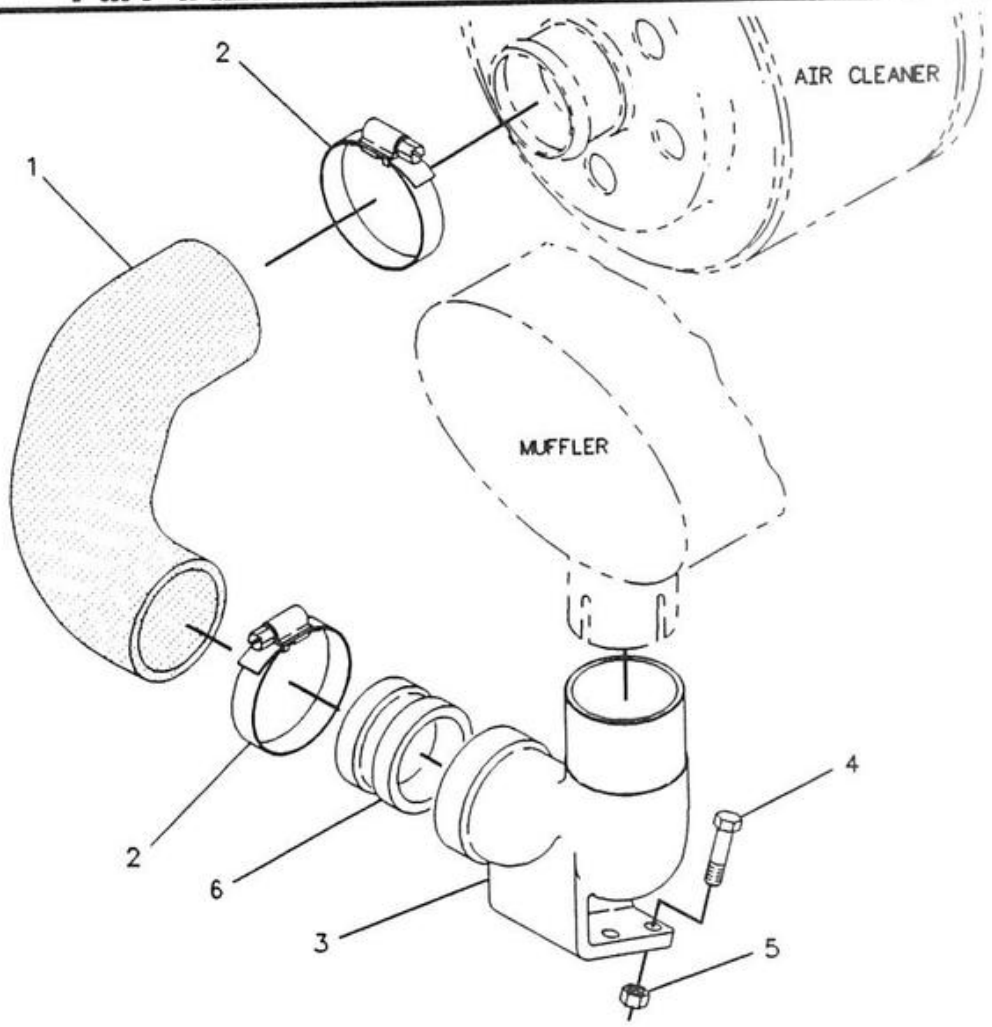

NOTE	REF NO	PART NUMBER	QTY	PART NAME	NOTE	REF NO	PART NUMBER	QTY	PART NAME
	1	4P1746	1	HOSE					
	2	5P4868	2	CLAMP					
	3	4P1660	1	ELBOW-EXHAUST					
M	4	8T4196	3	BOLT					
M	5	8T4133	3	NUT					
	6	4P1665	1	SLEEVE-OUTLET					

M-METRIC PART

F-546748 EP

1051

7E7720 LINES GP-AIR
High Altitude
An Attachment

AIR INLET AND EXHAUST SYSTEM

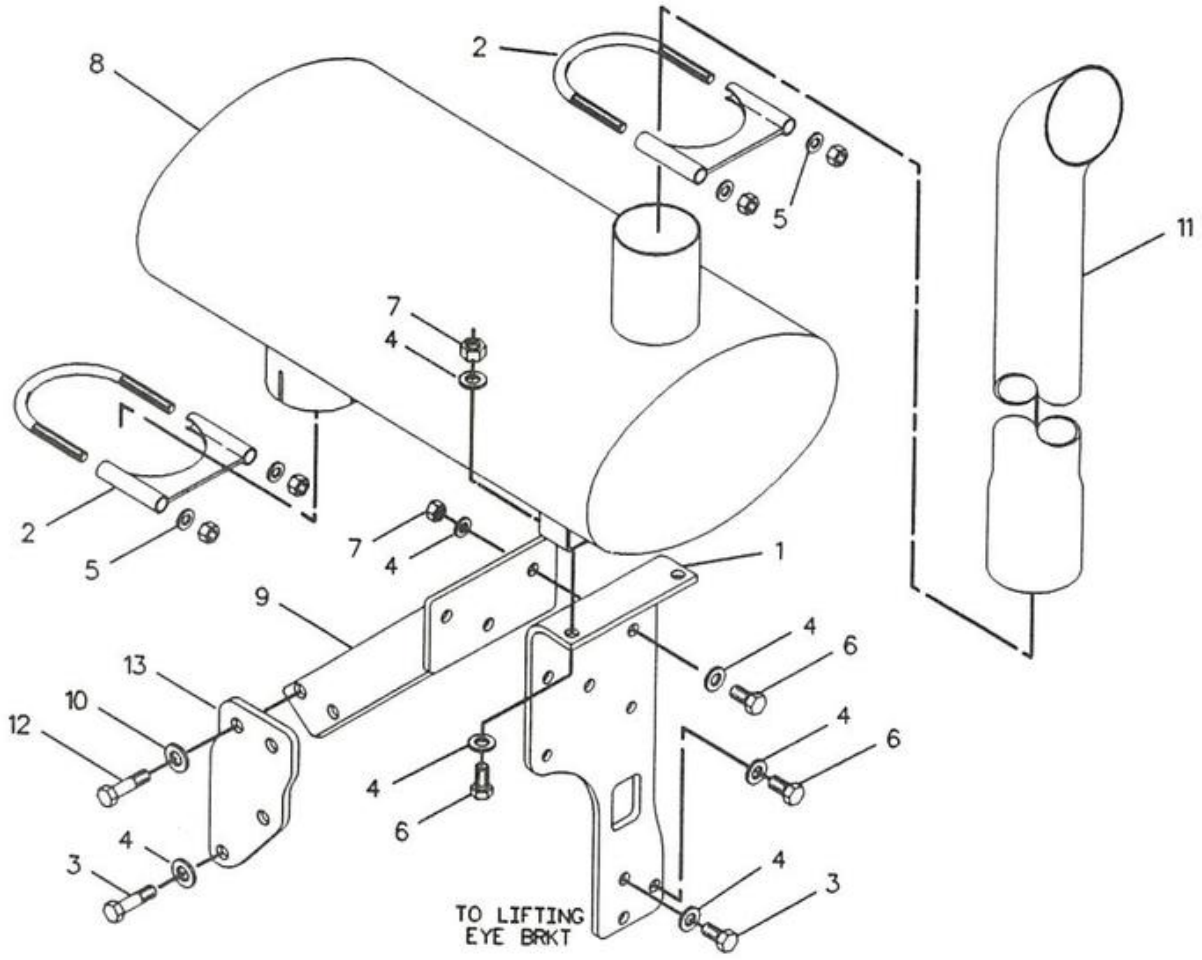

NOTE	REF NO	PART NUMBER	QTY	PART NAME	NOTE	REF NO	PART NUMBER	QTY	PART NAME
	1	4P0612	1	SUPPORT-MUFFLER					
	2	617210	2	CLAMP-TUBING					
M	3	8T4186	4	BOLT					
	4	8T4121	15	WASHER					
	5	3V2431	4	WASHER					
M	6	8T4195	6	BOLT					
M	7	8T4133	5	NUT					
	8	4P0613	1	MUFFLER AS					
	9	4P3927	1	PLATE AS					
M		8T3612	2	NUT-WELD					
	10	8T4224	2	WASHER-HARD					
	11	6I4480	1	PIPE-EXTENSION					
M	12	8T4908	2	BOLT					
	13	4P3929	1	PLATE					

M-METRIC PART

F-546278 EP

1062

7E7705 MUFFLER GP

AIR INLET AND EXHAUST SYSTEM

(NO SERVICEABLE PARTS)

517205 P

1062

4P0614 MUFFLER AS
Spark Arresting
Use Only With 7E7702 Engine Ar
An Attachment

AIR INLET AND EXHAUST SYSTEM

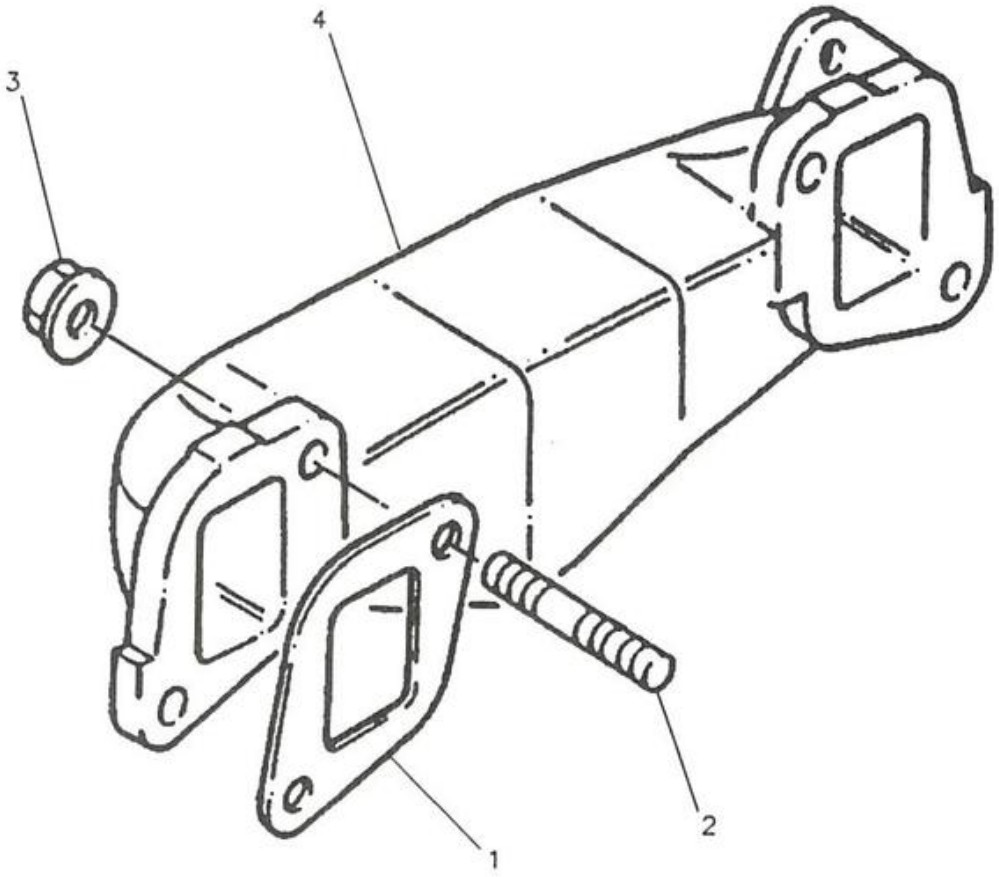

NOTE	REF NO	PART NUMBER	QTY	PART NAME	NOTE	REF NO	PART NUMBER	QTY	PART NAME
	1	358218	2	GASKET					
	2	6I0562	4	STUD					
	3	6I0563	4	NUT					
	4	6I0567	1	MANIFOLD-EXHAUST					

1059

R-516706 EP

6I0561 MANIFOLD GP-EXHAUST

AIR INLET AND EXHAUST SYSTEM

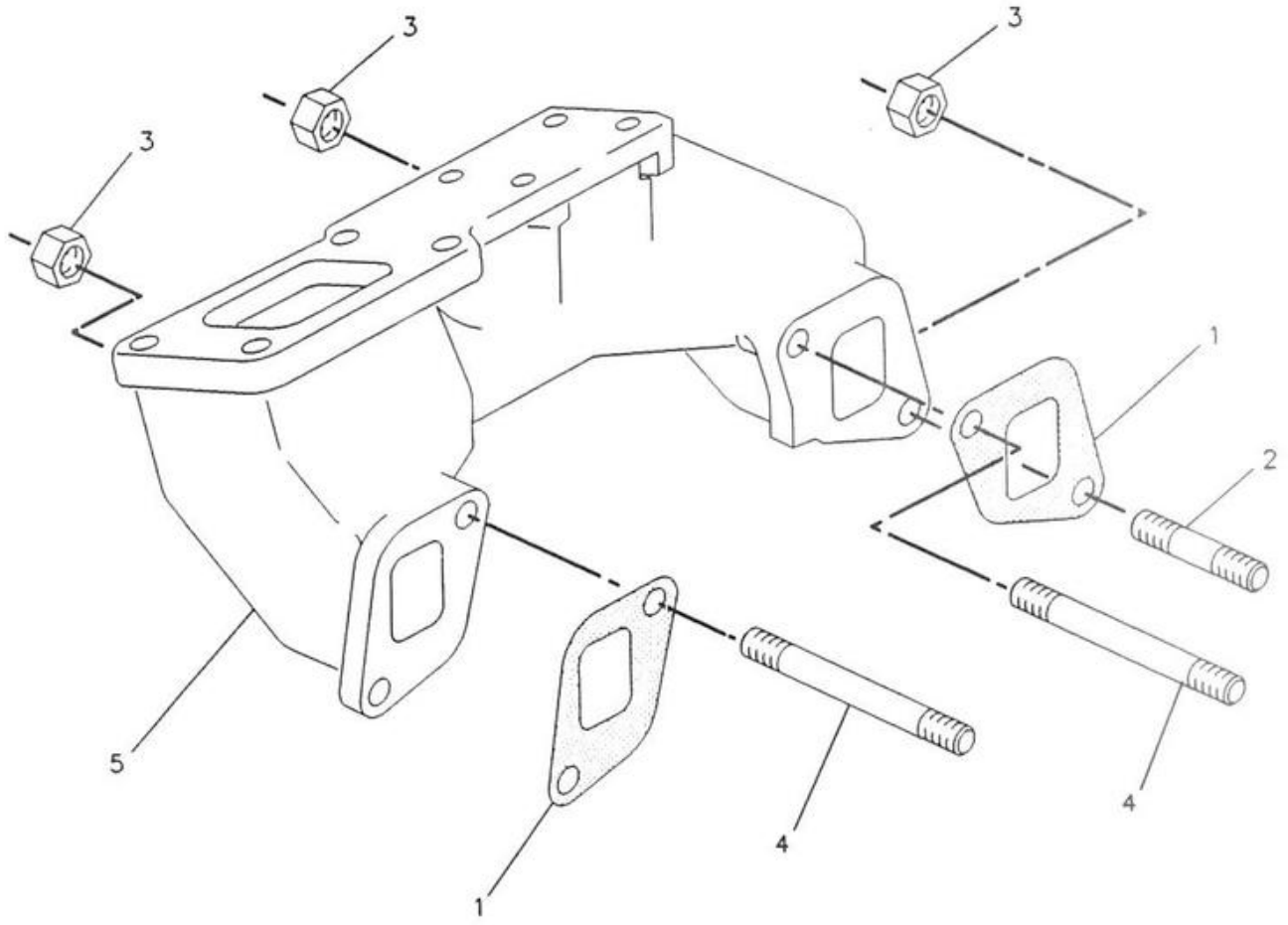

NOTE	REF NO	PART NUMBER	QTY	PART NAME	NOTE	REF NO	PART NUMBER	QTY	PART NAME
	1	358218	2	GASKET					
	2	6I0562	2	STUD					
	3	6I0563	4	NUT					
	4	6I1112	2	STUD					
	5	7C3457	1	MANIFOLD					

F-516794 EP

1059 **6I1111 MANIFOLD GP-EXHAUST**
An Attachment

AIR INLET AND EXHAUST SYSTEM

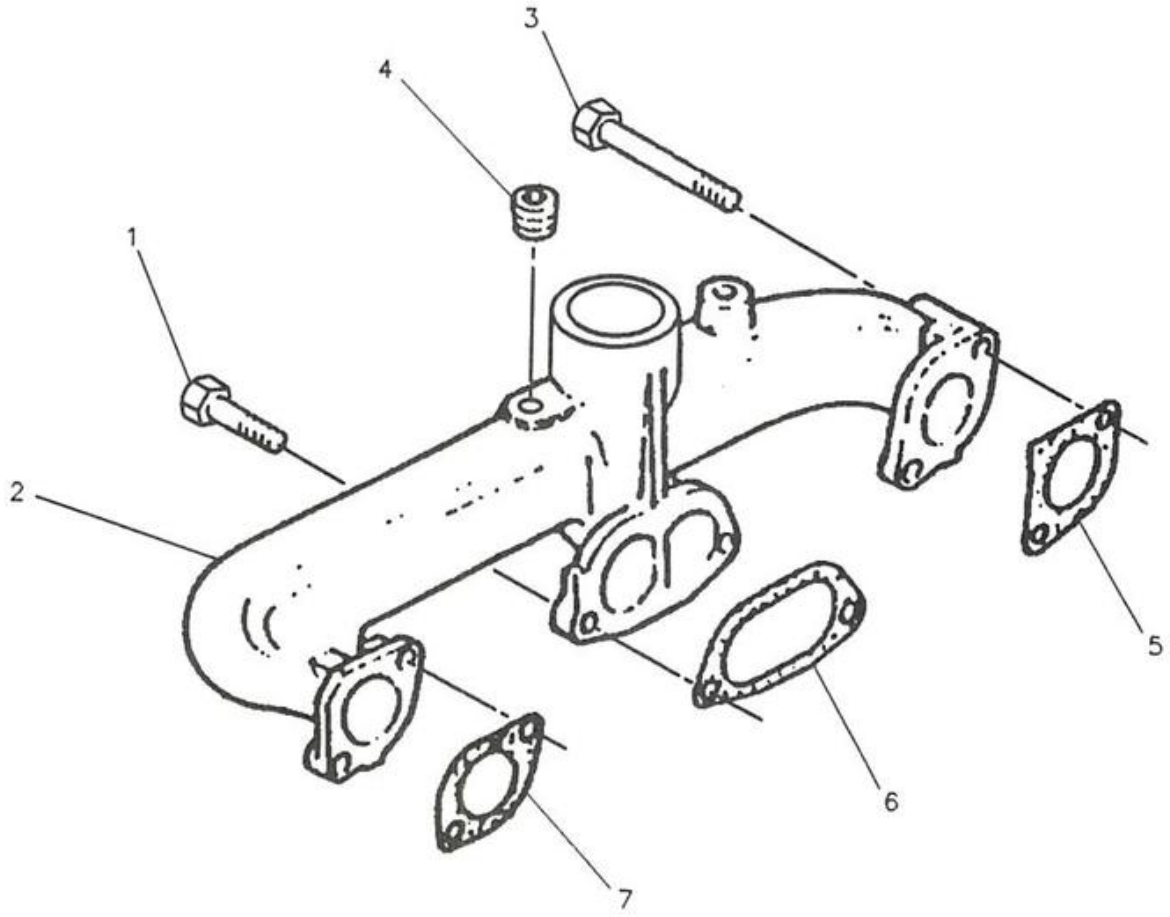

NOTE	REF NO	PART NUMBER	QTY	PART NAME	NOTE	REF NO	PART NUMBER	QTY	PART NAME
	1	6I0303	5	BOLT					
	2	6I0529	1	MANIFOLD-INLET					
	3	6I0530	1	BOLT					
	4	7C2851	1	PLUG					
	5	7W2569	1	GASKET-INDUCTION					
	6	7W2570	1	GASKET					
	7	7W2571	1	GASKET-INDUCTION					

1058

R-516703 EP

6I0528 MANIFOLD GP-INLET

AIR INLET AND EXHAUST SYSTEM

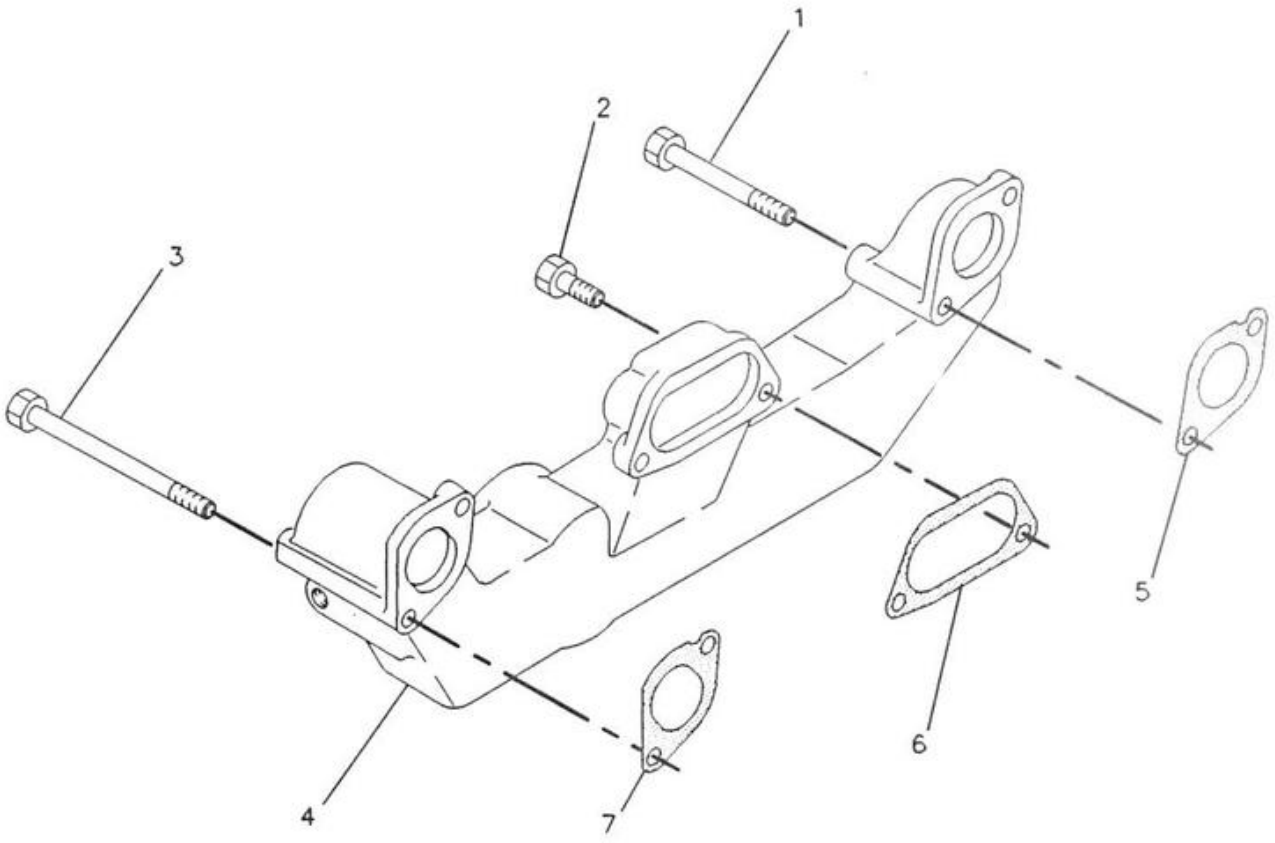

NOTE	REF NO	PART NUMBER	QTY	PART NAME	NOTE	REF NO	PART NUMBER	QTY	PART NAME
	1	6I0302	4	BOLT					
	2	6I1109	1	BOLT					
	3	6I1110	1	BOLT					
	4	7C3456	1	MANIFOLD					
	5	7W2569	1	GASKET-INDUCTION					
	6	7W2570	1	GASKET					
	7	7W2571	1	GASKET-INDUCTION					

F-516792 EP

1058

6I1108 MANIFOLD GP-INLET
An Attachment

AIR INLET AND EXHAUST SYSTEM

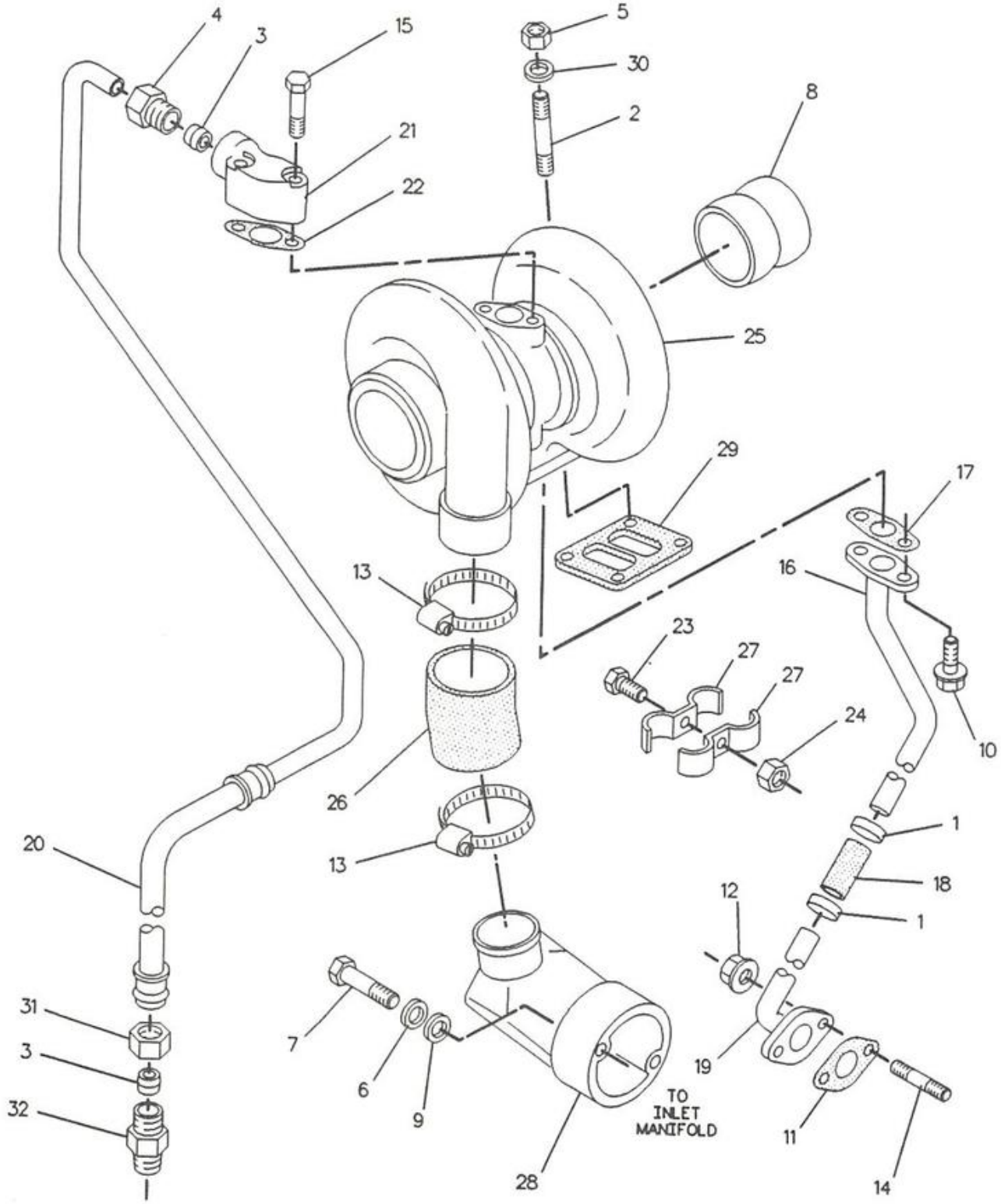

F-516805 EP

1052

6I1125 TURBOCHARGER GP
An Attachment

SEBP2202

AIR INLET AND EXHAUST SYSTEM

NOTE	REF NO	PART NUMBER	QTY	PART NAME
	1	2S3440	2	CLAMP-HOSE
	2	2W1148	4	STUD
	3	328048	2	OLIVE
	4	328051	1	NUT
	5	358160	4	NUT
	6	4B4278	2	WASHER
	7	4L6459	2	BOLT
	8	4P1665	1	SLEEVE-OUTLET
	9	5M2894	2	WASHER
	10	6I0217	2	BOLT
	11	6I0220	1	GASKET
	12	6I0291	2	NUT
	13	6I0487	2	CLAMP
	14	6I1059	2	STUD
	15	6I1090	2	BOLT
	16	6I1126	1	TUBE
	17	6I1127	1	GASKET
	18	6I1128	1	HOSE
	19	6I1129	1	TUBE
	20	6I1130	1	TUBE
	21	6I1131	1	CONNECTOR
	22	6I1132	1	GASKET
	23	6I1133	1	SCREW
	24	676998	1	NUT
Y	25	7C3446	1	TURBOCHARGER GP
	26	7C3447	1	HOSE-TURBOCHARGER
	27	7C3452	2	CLIP
	28	7C3455	1	ELBOW
	29	7W2581	1	GASKET
	30	7W2601	4	SPACER
	31	7W2628	1	NUT
	32	7W2634	1	UNION

Y-SEPARATE ILLUSTRATION

518870 EP

1052

6I1125 TURBOCHARGER GP
7C3446-Page 64
An Attachment

AIR INLET AND EXHAUST SYSTEM

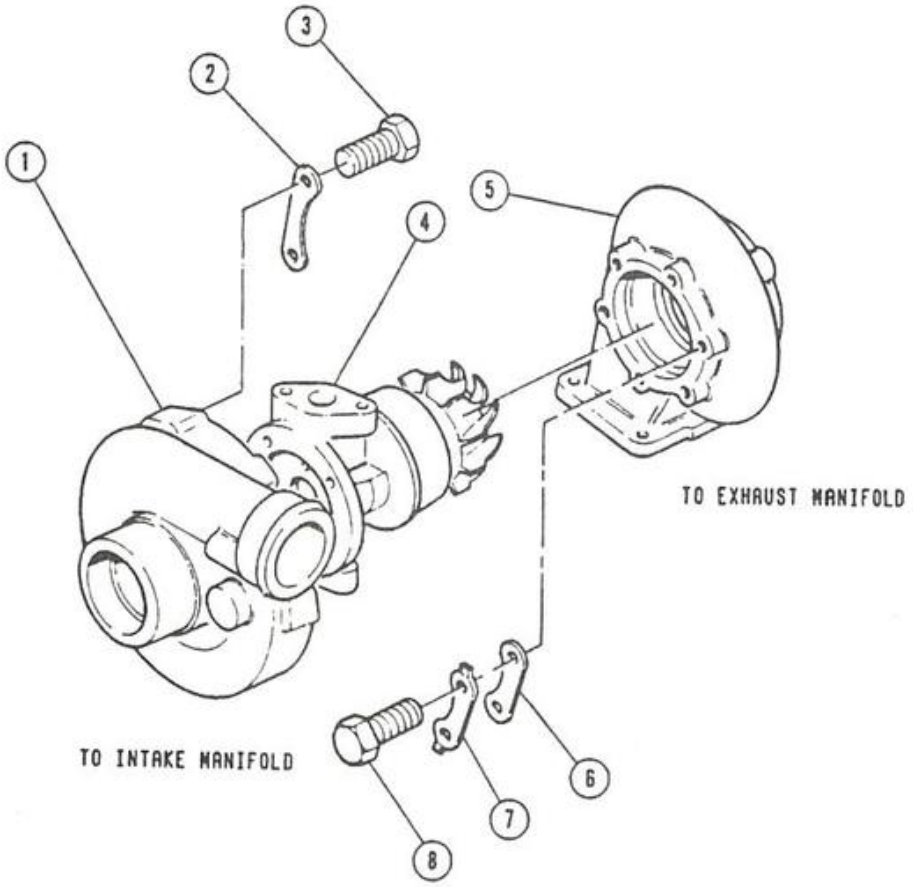

NOTE	REF NO	PART NUMBER	QTY	PART NAME
	1	7C4929	1	HOUSING AS
	2	7W2576	3	CLAMP
	3	7W2575	6	BOLT
	4	7C4930	1	HOUSING AS
	5	7W2577	1	HOUSING-TURBOCHARGER
	6	7W2580	3	CLAMP
	7	7W2579	3	PLATE
	8	7W2578	6	BOLT
				THE FOLLOWING REPAIR KIT IS AVAILABLE:
		7W2582	1	KIT-TURBOCHARGER (INCLUDES CLAMPS, BOLTS, NUTS, BEARINGS, SEALS, PLATES AND RINGS)

1052

B-344767 EP

7C3446 TURBOCHARGER GP
Part Of 6I1125 Turbocharger
An Attachment

MEMORANDA

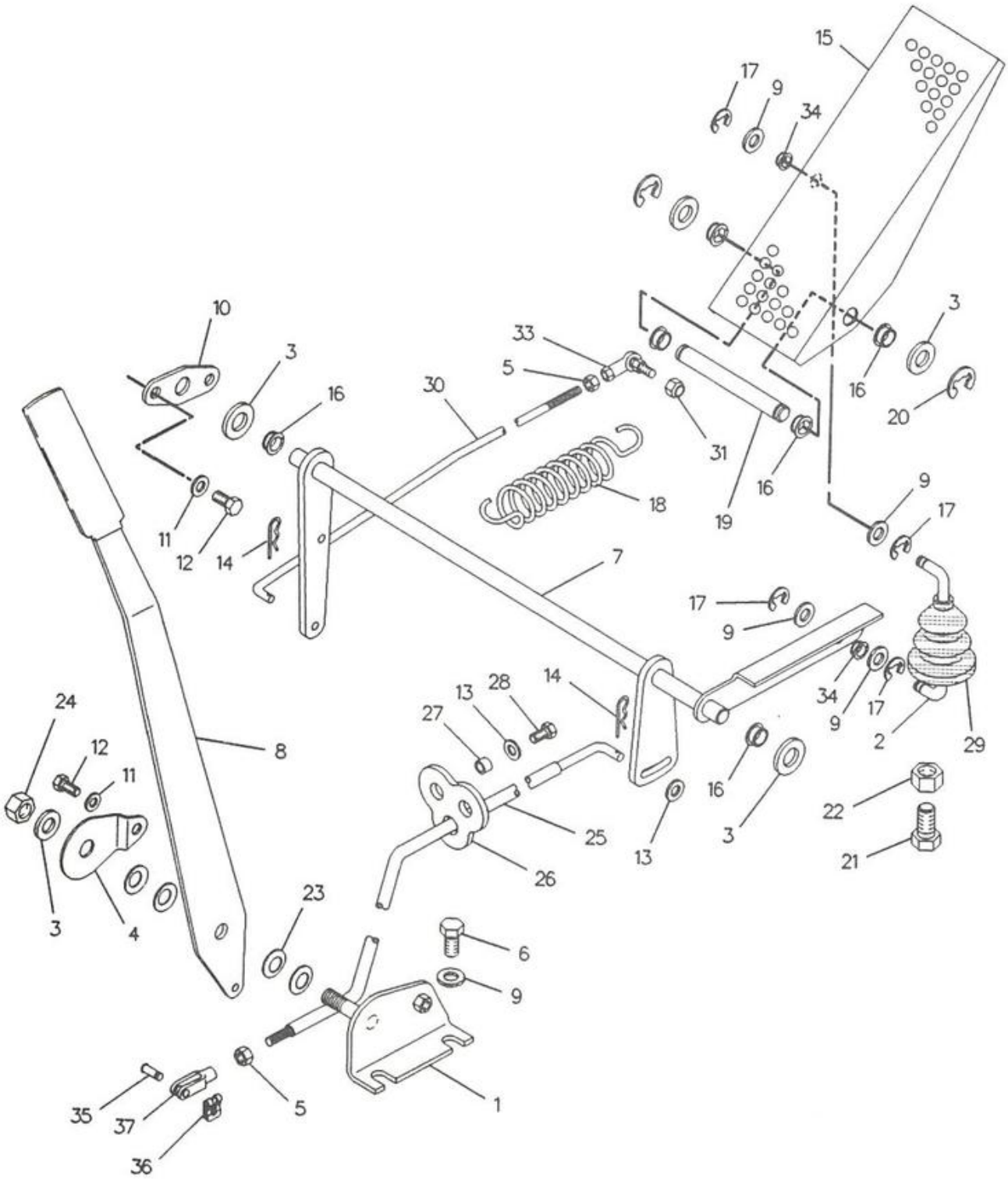

1265

9R7584 CONTROL GP-GOVERNOR & ACCELERATOR

F-542008 EP

FUEL SYSTEM

NOTE	REF NO	PART NUMBER	QTY	PART NAME
	1	9R8086	1	BRACKET AS
	2	9R8081	1	ROD
	3	8T4223	5	WASHER-HARD
	4	9R8088	1	PLATE-REACTION
M	5	8T4134	2	NUT
M	6	8T4137	2	BOLT
	7	9R8089	1	SHAFT AS
	8	9R8085	1	LEVER
	9	8T4121	6	WASHER
	10	9R8099	1	PLATE
	11	8T4224	3	WASHER-HARD
M	12	8T4200	3	BOLT
	13	5P4115	3	WASHER
	14	5P0372	2	PIN-LOCK
	15	9R4940	1	PEDAL
	16	9R1586	6	BEARING
	17	8S7803	4	RING-RETAINING
	18	9R1587	1	SPRING
	19	9R8094	1	PIN
	20	7S5757	2	RING-RETAINING
M	21	8T4908	1	BOLT
M	22	5C7261	1	NUT
	23	5D0998	4	SPRING-DISC
M	24	6V7687	1	LOCKNUT
	25	9R8082	1	TUBE AS
	26	9R1585	1	GUIDE
	27	9R0824	2	SPACER
M	28	8T4138	2	BOLT
	29	9R1581	1	BOOT
	30	9R8096	1	ROD
M	31	6V7743	1	LOCKNUT
	32	8C3437	1	ROD END-YOKE
	33	8T4765	1	ROD END-BEARING
	34	9R8084	2	BEARING
	35	8T6904	1	PIN-CLEVIS
	36	8T6902	1	CLIP

NOTE	REF NO	PART NUMBER	QTY	PART NAME

M-METRIC PART

542009 EP

1265 9R7584 CONTROL GP-GOVERNOR & ACCELERATOR

FUEL SYSTEM

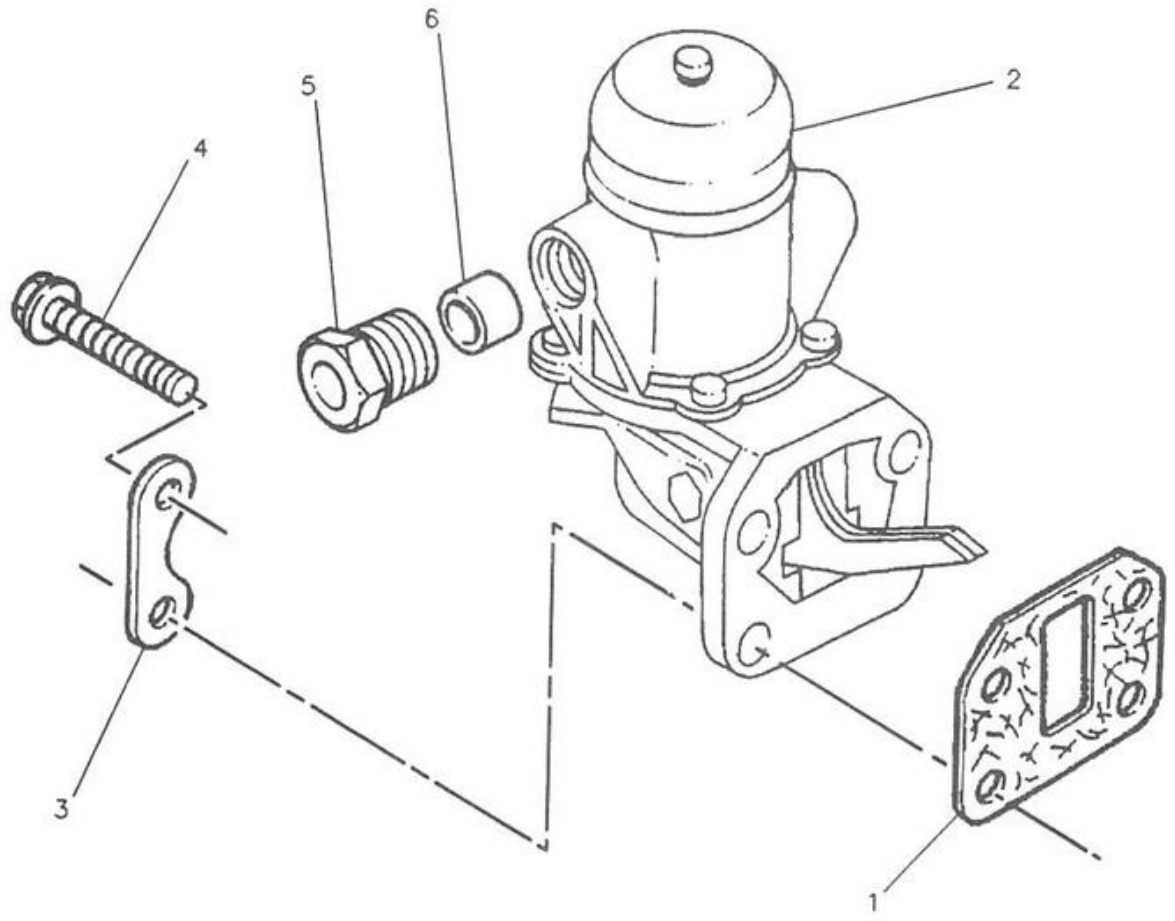

NOTE	REF NO	PART NUMBER	QTY	PART NAME
	1	337799	1	GASKET
	2	6I0571	1	PUMP AS-LIFT
	3	8N0478	2	PLATE-RETAINING
	4	6I0572	4	BOLT
	5	676268	1	NUT-FUEL TUBE
	6	676269	1	OLIVE-FUEL TUBE
				THE FOLLOWING KIT IS AVAILABLE:
		328132	1	KIT-LIFT PUMP

1256

F-516708 EP

6I0570 PUMP GP-FUEL

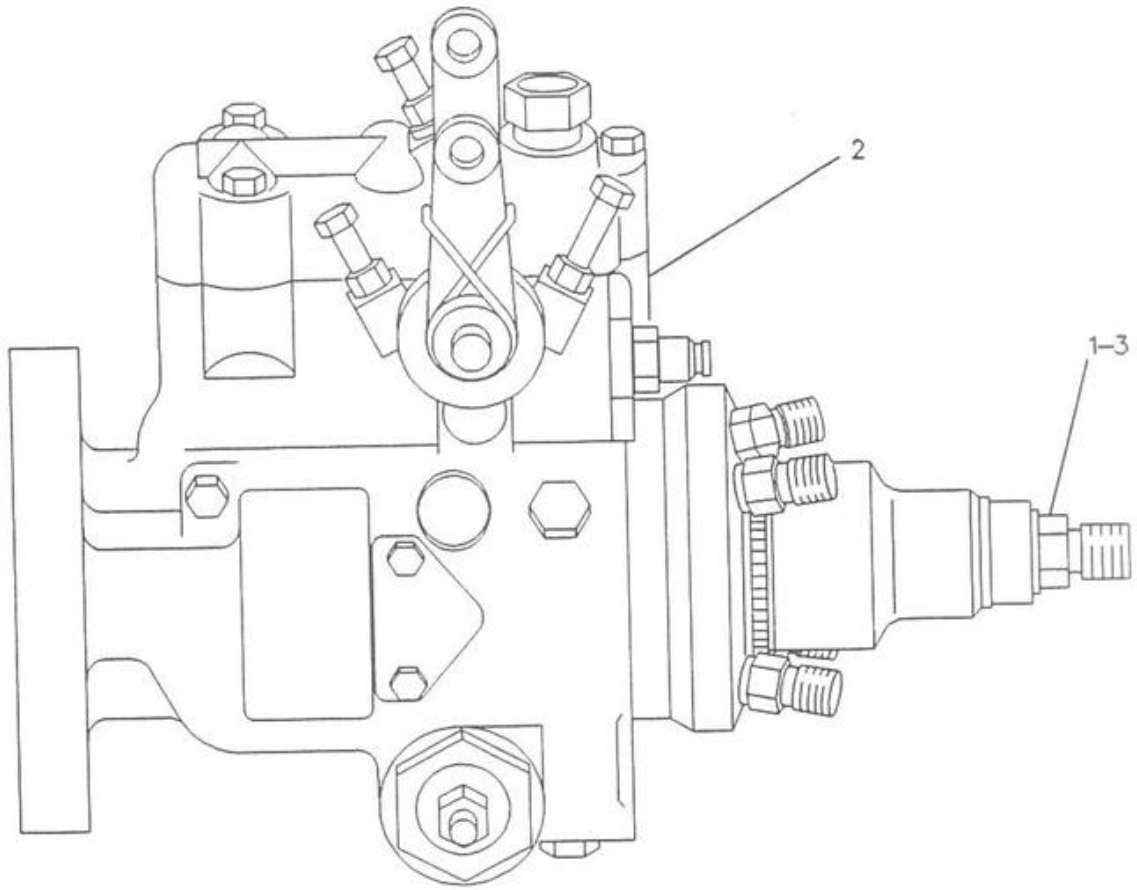

NOTE	REF NO	PART NUMBER	QTY	PART NAME
	1	6I0817	2	ADAPTER
	2	6I1173	1	PUMP GP-FUEL INJECTION
		1012986	1	KIT-FUEL INJ PUMP
				GASKET
		1013897	1	KIT-SOLENOID
	3	9Y9381	2	WASHER-HARD

F-553322 EP

1286 6I0816 PUMP GP-FUEL INJECTION

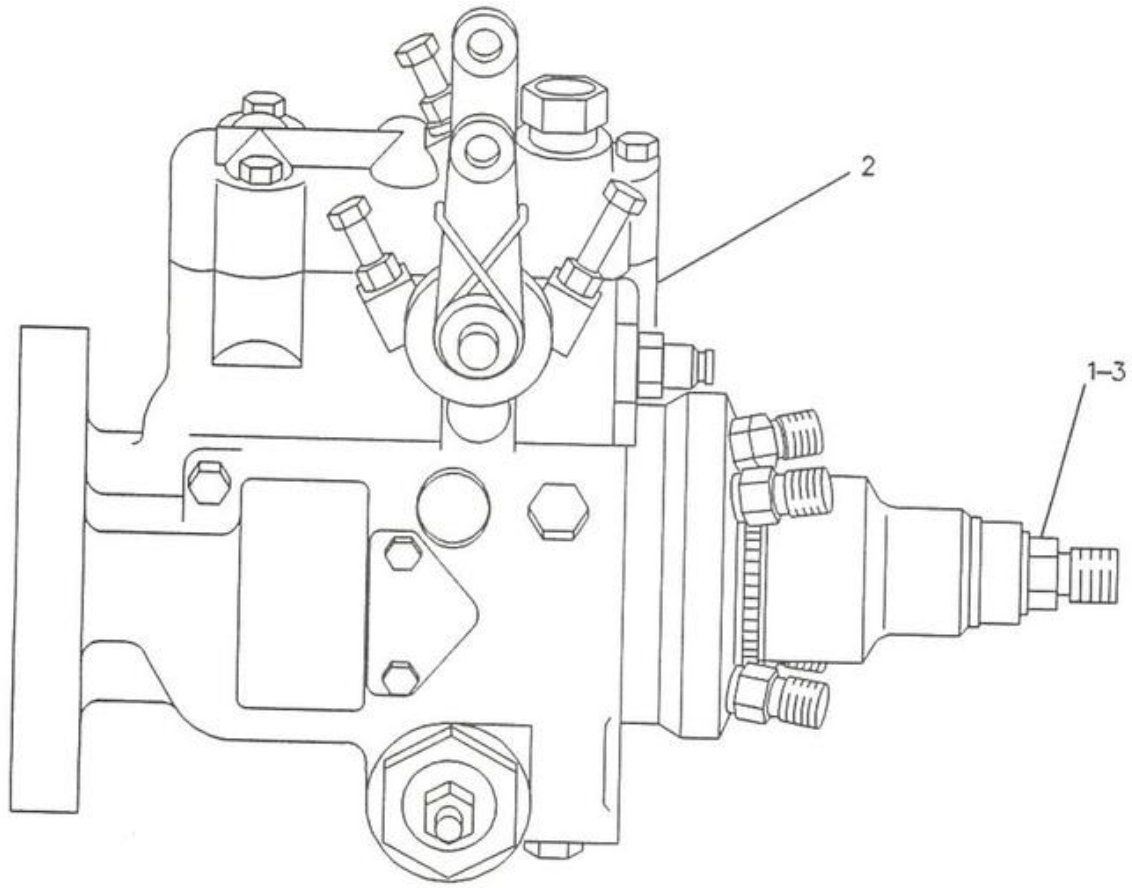

NOTE	REF NO	PART NUMBER	QTY	PART NAME
	1	6I0817	2	ADAPTER
	2	6I2477	1	PUMP GP-FUEL INJECTION
		1012986	1	KIT-FUEL INJ PUMP GASKET
		1013897	1	KIT-SOLENOID
	3	9Y9381	2	WASHER-HARD

NOTE	REF NO	PART NUMBER	QTY	PART NAME

1286

F-553324 EP

6I2476 PUMP GP-FUEL INJECTION
An Attachment

FUEL SYSTEM

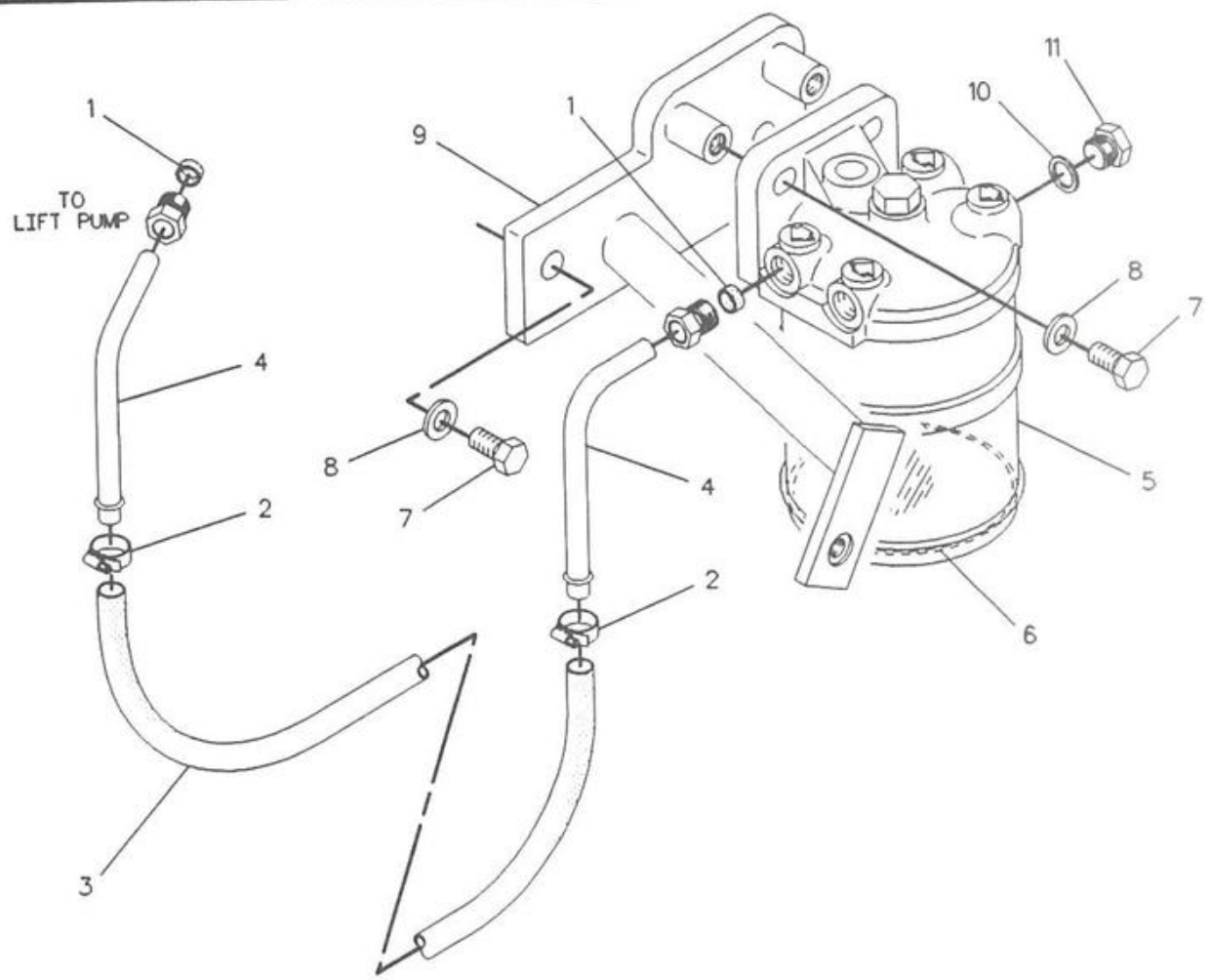

NOTE	REF NO	PART NUMBER	QTY	PART NAME	NOTE	REF NO	PART NUMBER	QTY	PART NAME
	1	4H2494	2	SLEEVE-FITTING					
	2	1P4278	2	CLAMP					
E	3	5P6442		HOSE 45CM (18 IN.)					
	4	9R2603	2	TUBE AS					
	5	4W2953	1	SEPARATOR AS					
		692922	2	GASKET-FUEL FILTER					
		7W2824	1	PLUG AS-DRAIN					
		7W4481	1	BOWL-FUEL FILTER					
	6	9Y5031	1	GASKET					
M	7	8T4136	4	BOLT					
	8	8T4121	4	WASHER					
	9	9R8455	1	BRACKET AS					
	10	328100	2	WASHER					
	11	337849	2	PLUG					

E-ORDER BY THE CENTIMETER
M-METRIC PART

F-513012 EP

1263 **4P3026 SEPARATOR GP-WATER**

FUEL SYSTEM

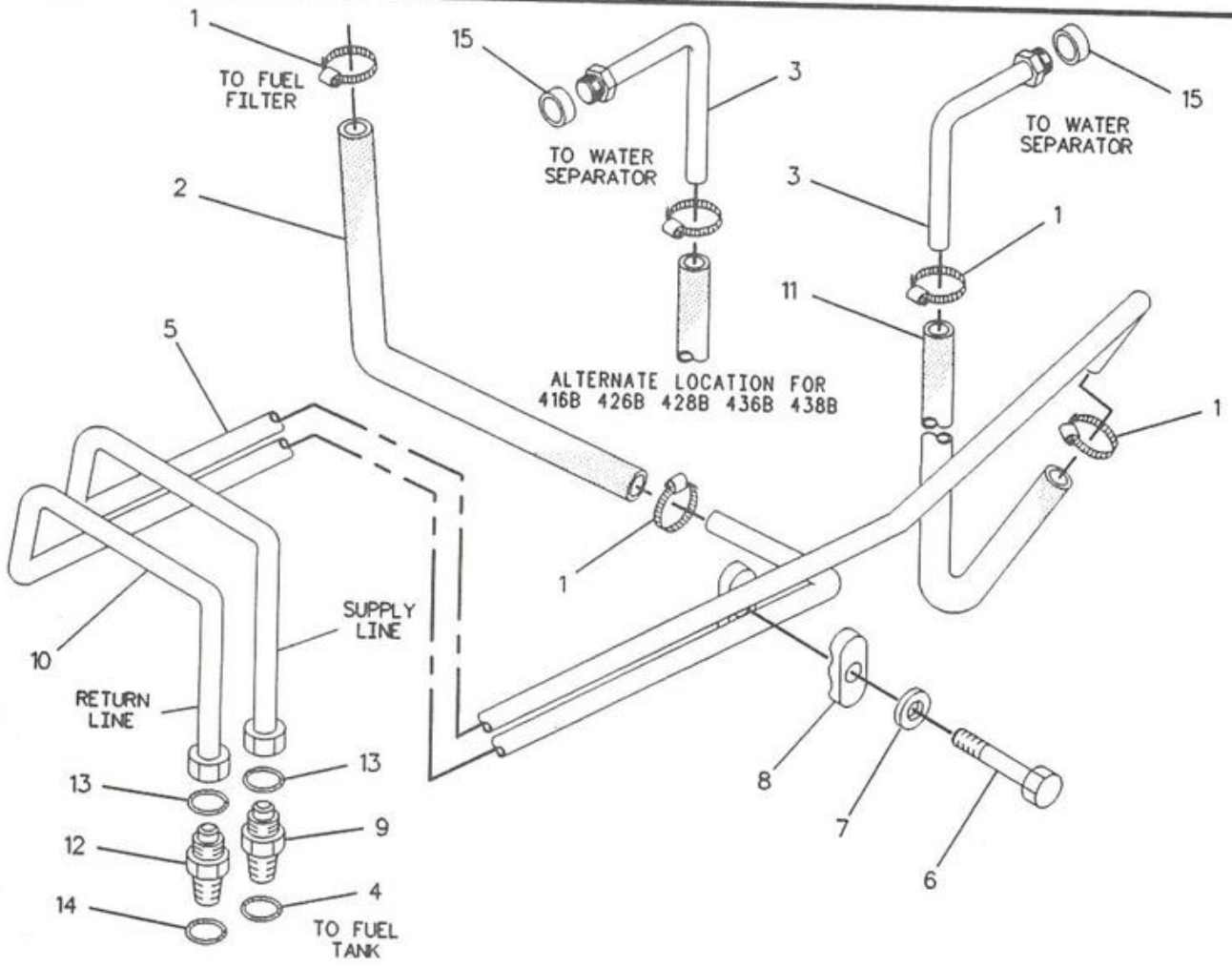

NOTE	REF NO	PART NUMBER	QTY	PART NAME	NOTE	REF NO	PART NUMBER	QTY	PART NAME
	1	1P4278	4	CLAMP					
E	2	5P6442		HOSE (34CM)					
	3	9R2603	1	TUBE AS					
C	4	3J1907	1	SEAL-O-RING					
C	5	9R7052	1	TUBE AS					
M	6	8T4971	1	BOLT					
	7	8T4205	1	WASHER-HARD					
	8	6N6404	2	CLAMP (FUEL LINE)					
C	9	6V8641	1	CONNECTOR-SEAL					
C	10	9R7053	1	TUBE AS					
E	11	5P6442		HOSE (34CM)					
C	12	6V8647	1	CONNECTOR-SEAL					
C	13	4J5477	2	SEAL-O-RING					
C	14	3J7354	1	SEAL-O-RING					
	15	4H2494	1	SLEEVE-FITTING					

C-CHANGE FROM PREVIOUS TYPE
E-ORDER BY THE CENTIMETER
M-METRIC PART

F-549903 EP

1274

9R0019 LINES GP-FUEL

FUEL SYSTEM

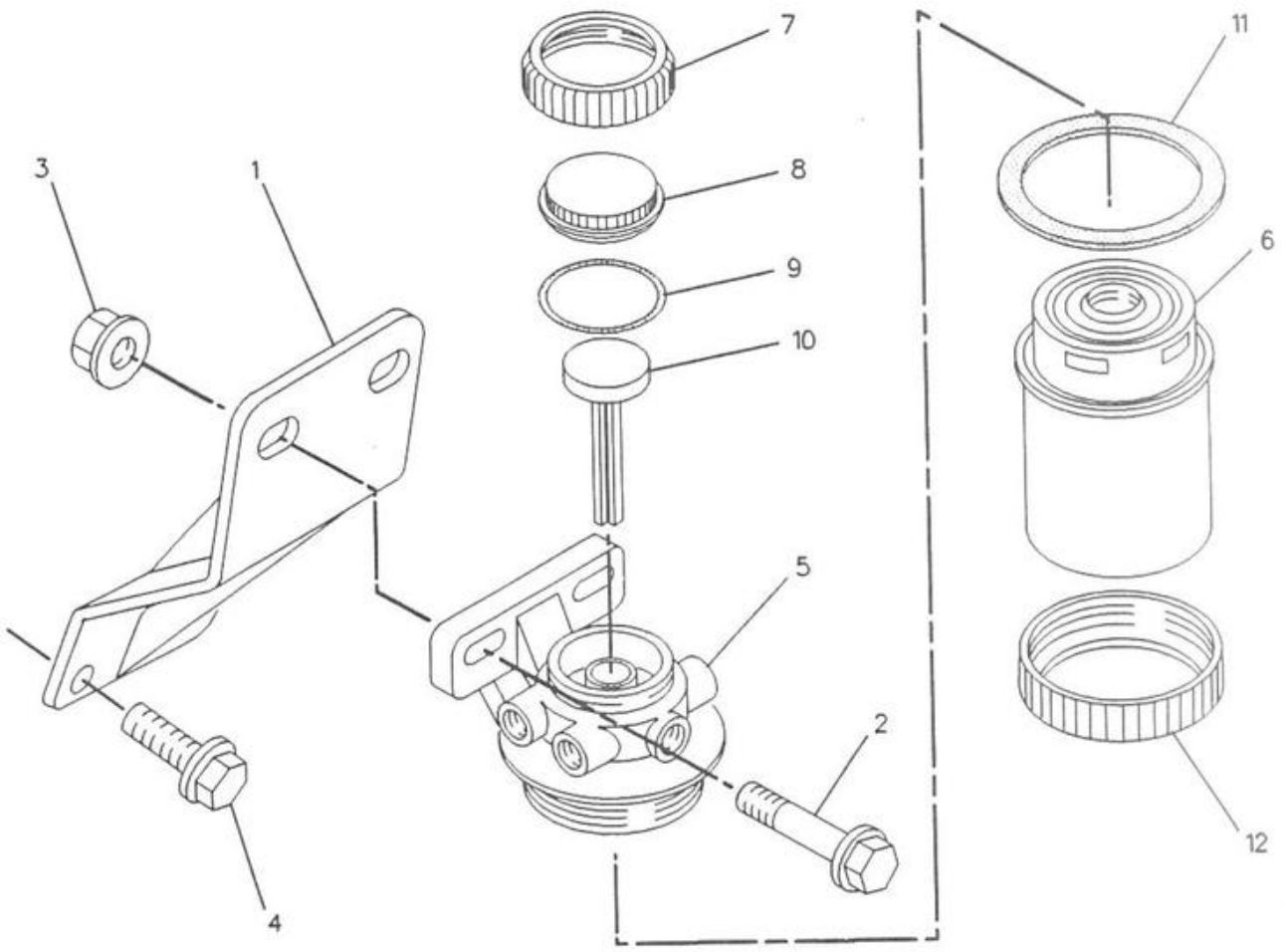

NOTE	REF NO	PART NUMBER	QTY	PART NAME	NOTE	REF NO	PART NUMBER	QTY	PART NAME
	1	610592	1	BRACKET					
	2	610593	2	BOLT					
	3	610594	2	NUT					
	4	1004830	2	BOLT					
	5	1013738	1	FILTER AS					
-	6	1005593	1	ELEMENT					
	7	1013739	1	NUT					
	8	1013740	1	CAP					
	9	1013741	1	SEAL					
	10	1013742	1	PLUG					
	11	1013743	1	SEAL					
	12	1013744	1	RING					

F-538725 EP

1261 1013376 FILTER GP-FUEL

FUEL SYSTEM

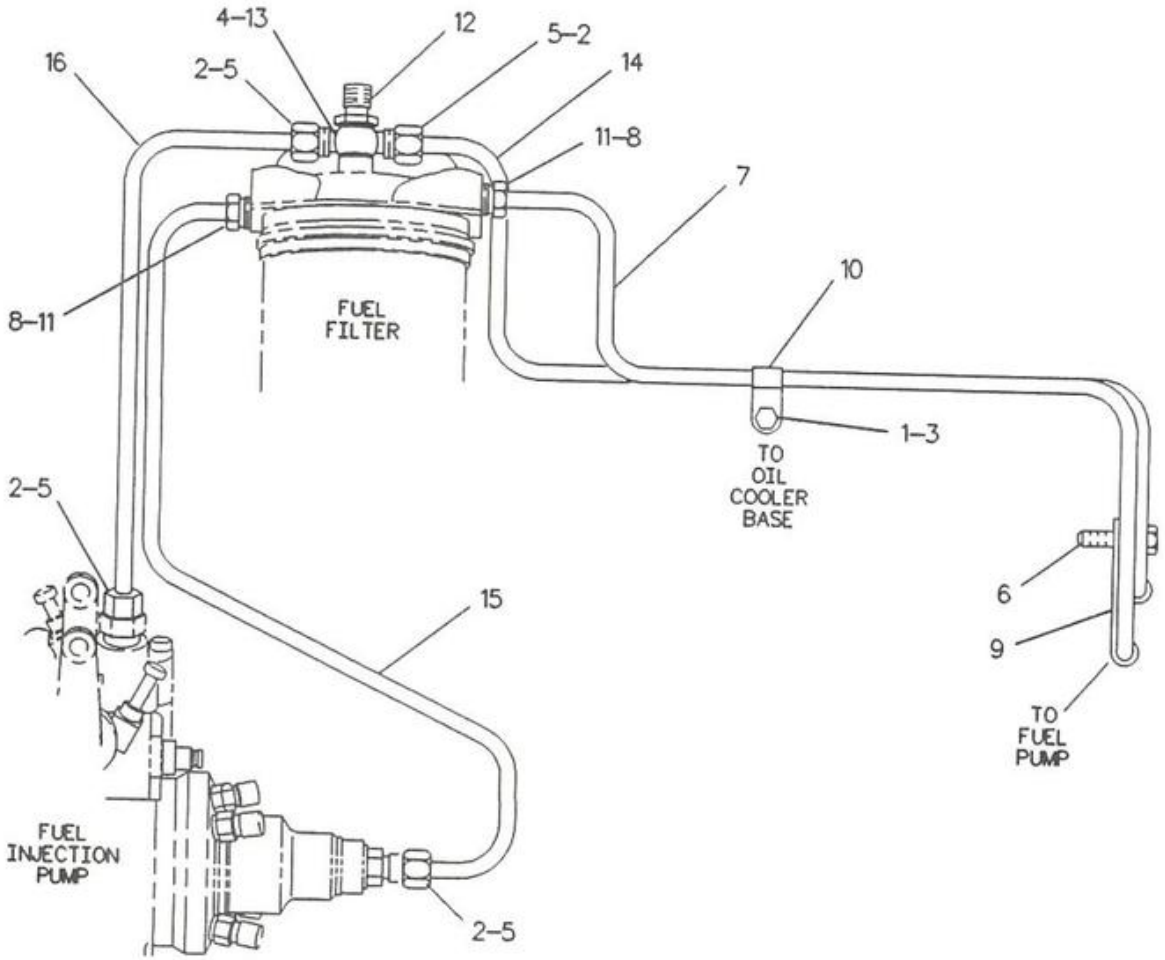

NOTE	REF NO	PART NUMBER	QTY	PART NAME	NOTE	REF NO	PART NUMBER	QTY	PART NAME
	1	6I0917	1	BOLT					
	2	328181	4	NUT					
	3	6I0918	1	NUT					
	4	4B4278	2	WASHER					
	5	4H2494	4	SLEEVE-FITTING					
	6	6I0217	1	BOLT					
	7	6I0627	1	LINE AS-FUEL FILTER					
	8	4H2494	2	SLEEVE-FITTING					
	9	6I0628	1	CLIP					
	10	6I0629	1	CLIP					
	11	677001	2	NUT					
	12	6I0797	1	CONNECTION					
	13	6I0632	1	CONNECTOR					
	14	6I0688	1	TUBE					
	15	6I0795	1	TUBE					
	16	6I0796	1	TUBE					

1274

F-516712 EP

6I0916 LINES GP-FUEL FILTER

FUEL SYSTEM

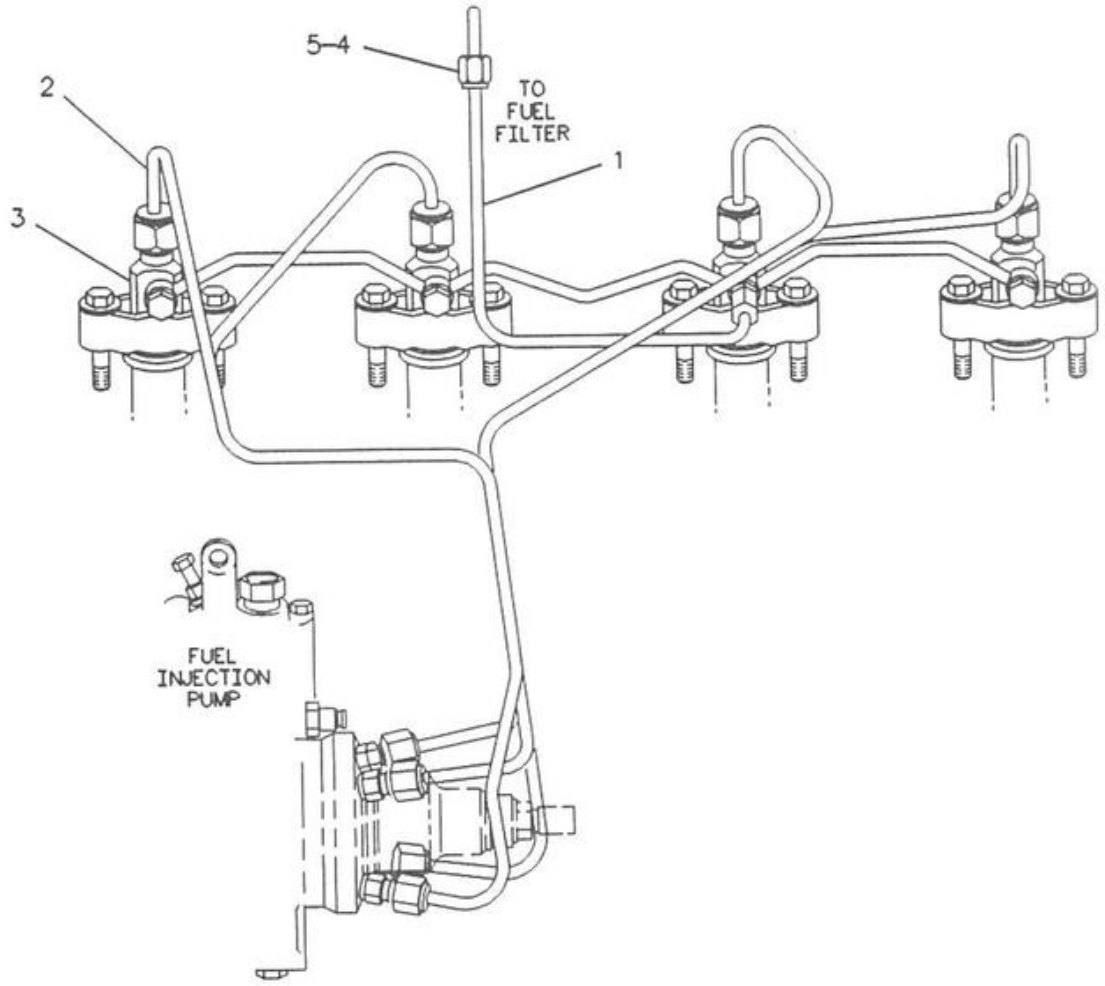

NOTE	REF NO	PART NUMBER	QTY	PART NAME	NOTE	REF NO	PART NUMBER	QTY	PART NAME
	1	6I0798	1	TUBE					
	2	6I0858	1	LINE AS-FUEL					
	3	6I1174	4	ATOMIZER AS-FUEL					
	4	676998	2	NUT					
	5	676999	2	FERRULE					

F-516823 EP

1252 6I0857 LINES GP-FUEL INJECTION

FUEL SYSTEM

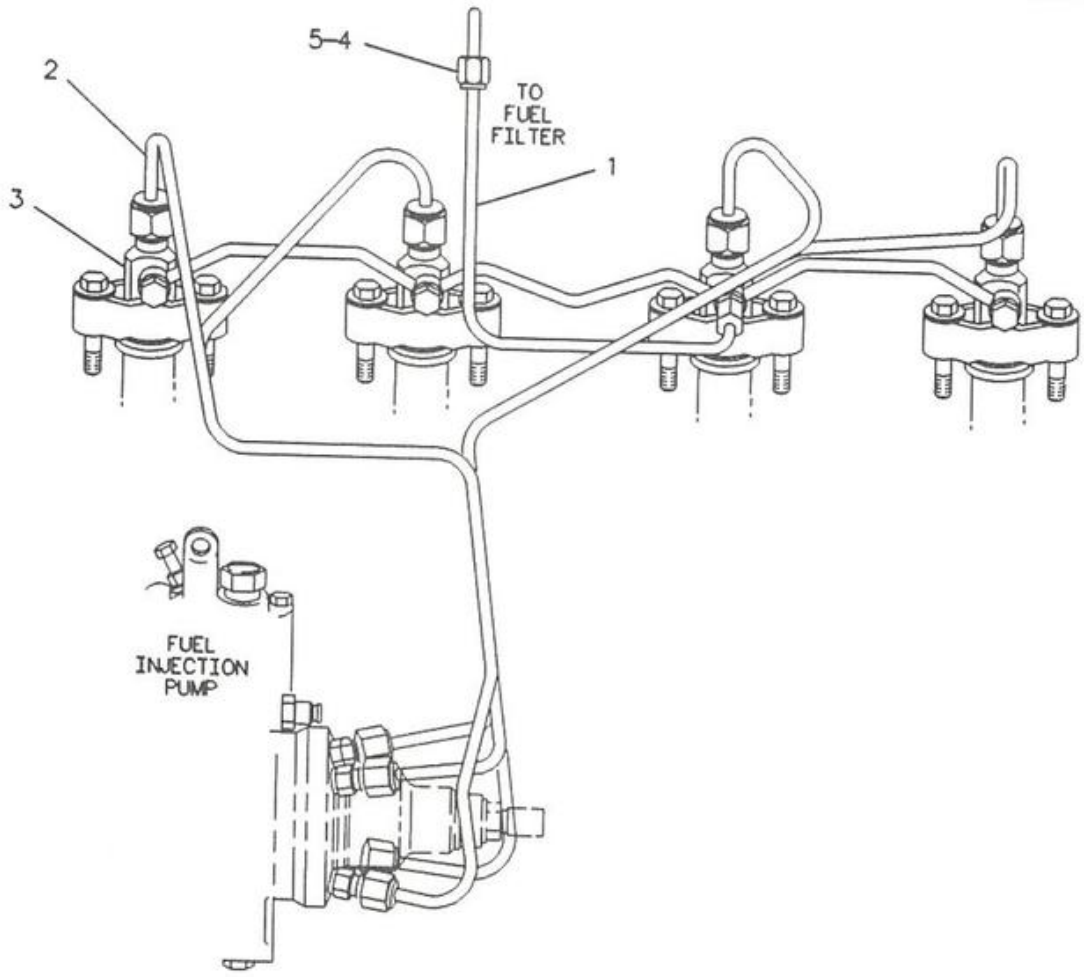

NOTE	REF NO	PART NUMBER	QTY	PART NAME	NOTE	REF NO	PART NUMBER	QTY	PART NAME
	1	6I0798	1	TUBE					
	2	6I0858	1	LINE AS-FUEL					
	3	6I1214	4	ATOMIZER AS-FUEL					
	4	676998	2	NUT					
	5	676999	2	FERRULE					

1252

F-516819 EP

6I1213 LINES GP-FUEL INJECTION
An Attachment

MEMORANDA

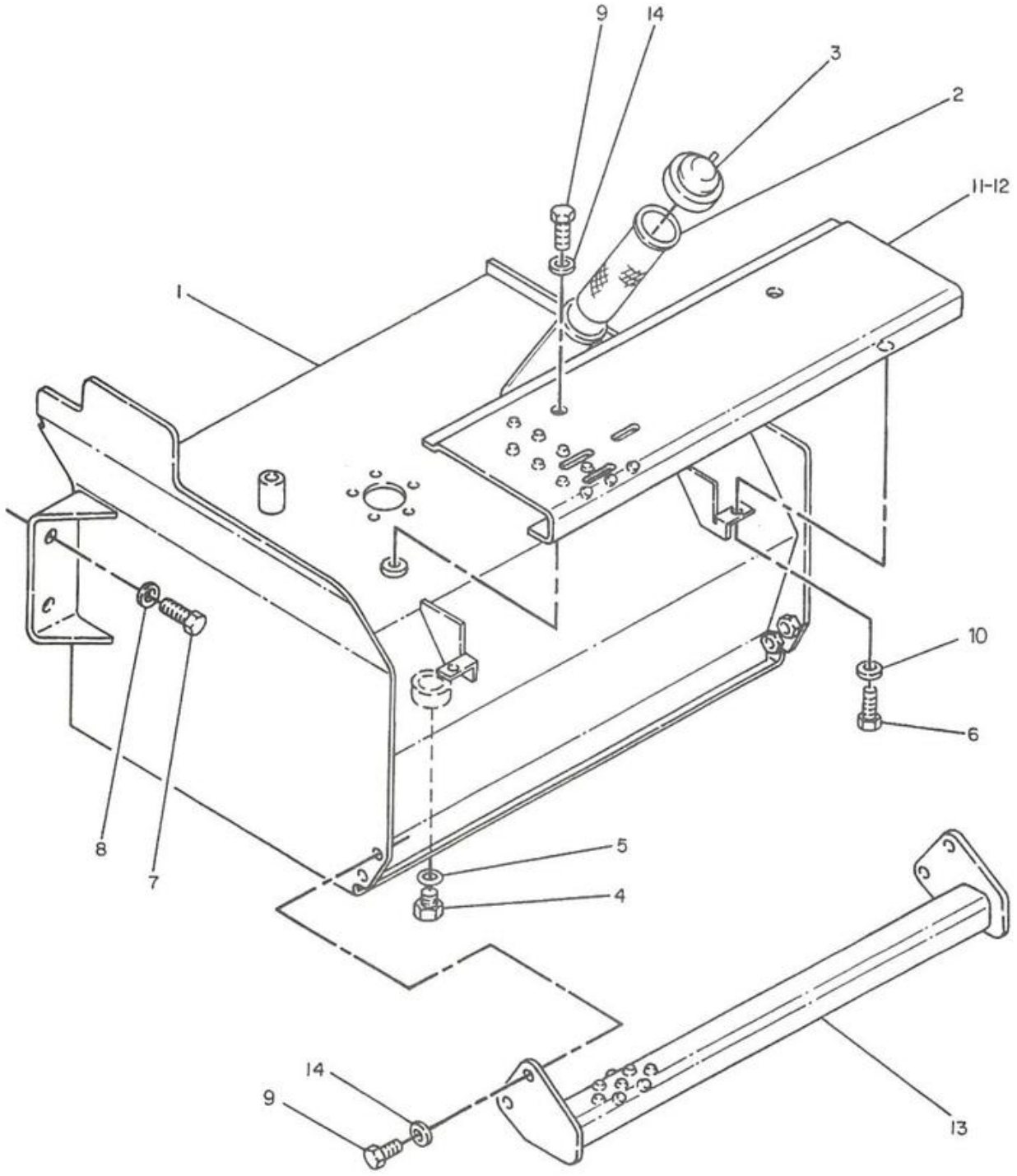

1273

R-511767 EP

9R0025 TANK GP-FUEL

SEBP2202

FUEL SYSTEM

NOTE	REF NO	PART NUMBER	QTY	PART NAME
C	1	9R6872	1	TANK AS
C	2	9R5895	1	FILTER-FUEL
C	3	7X2644	1	FUEL CAP-VENTED
	4	9S4185	1	PLUG-O-RING
	5	3KO360	1	SEAL-O-RING
MC	6	8T4189	2	BOLT
M	7	8T4183	4	BOLT
	8	8T4223	4	WASHER-HARD
MC	9	8T4136	6	BOLT
C	10	8T4224	2	WASHER-HARD
C	11	9R5366	1	TREAD AS
MC	12	8T3612	2	NUT-WELD
C	13	9R6620	1	STEP AS
C	14	8T4121	6	WASHER

C-CHANGE FROM PREVIOUS TYPE
M-METRIC PART

549908 EP

1273 9R0025 TANK GP-FUEL

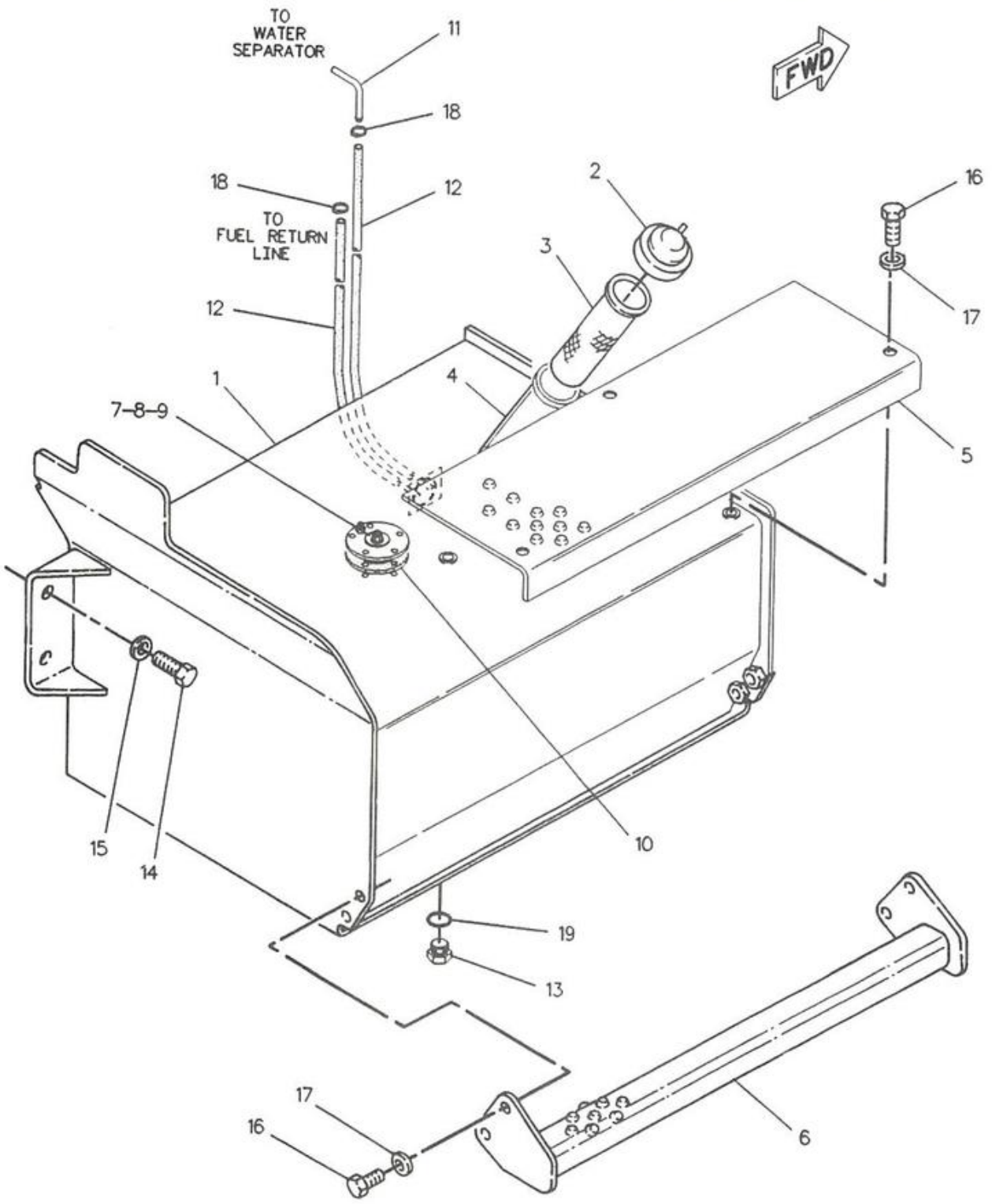

1273

R-551141 EP

1010327 TANK GP-FUEL
(34 Gallons)
An Attachment

SEBP2202

FUEL SYSTEM

NOTE	REF NO	PART NUMBER	QTY	PART NAME
	1	1010326	1	TANK AS
	2	7X2644	1	FUEL CAP-VENTED
	3	9R5895	1	FILTER-FUEL
	4	9R6181	1	PIPE-FUEL FILLER
	5	1010325	1	TREAD
	6	9R6620	1	STEP AS
	7	6T0454	1	SENDER AS-FUEL LEVEL
	8	6V8378	1	NUT
	9	8F1434	1	LOCKWASHER
	10	9R7240	1	GASKET
	11	9R2603	1	TUBE AS
E	12	5P6442		HOSE (144CM)
	13	9S4185	1	PLUG-O-RING
M	14	8T4183	4	BOLT
	15	8T4223	4	WASHER-HARD
M	16	8T4136	7	BOLT
	17	8T4121	7	WASHER
	18	1P4278	4	CLAMP
	19	3K0360	1	SEAL-O-RING

E-ORDER BY THE CENTIMETER
M-METRIC PART

551142 EP

1273 **1010327 TANK GP-FUEL**
(34 Gallons)
An Attachment

MEMORANDA

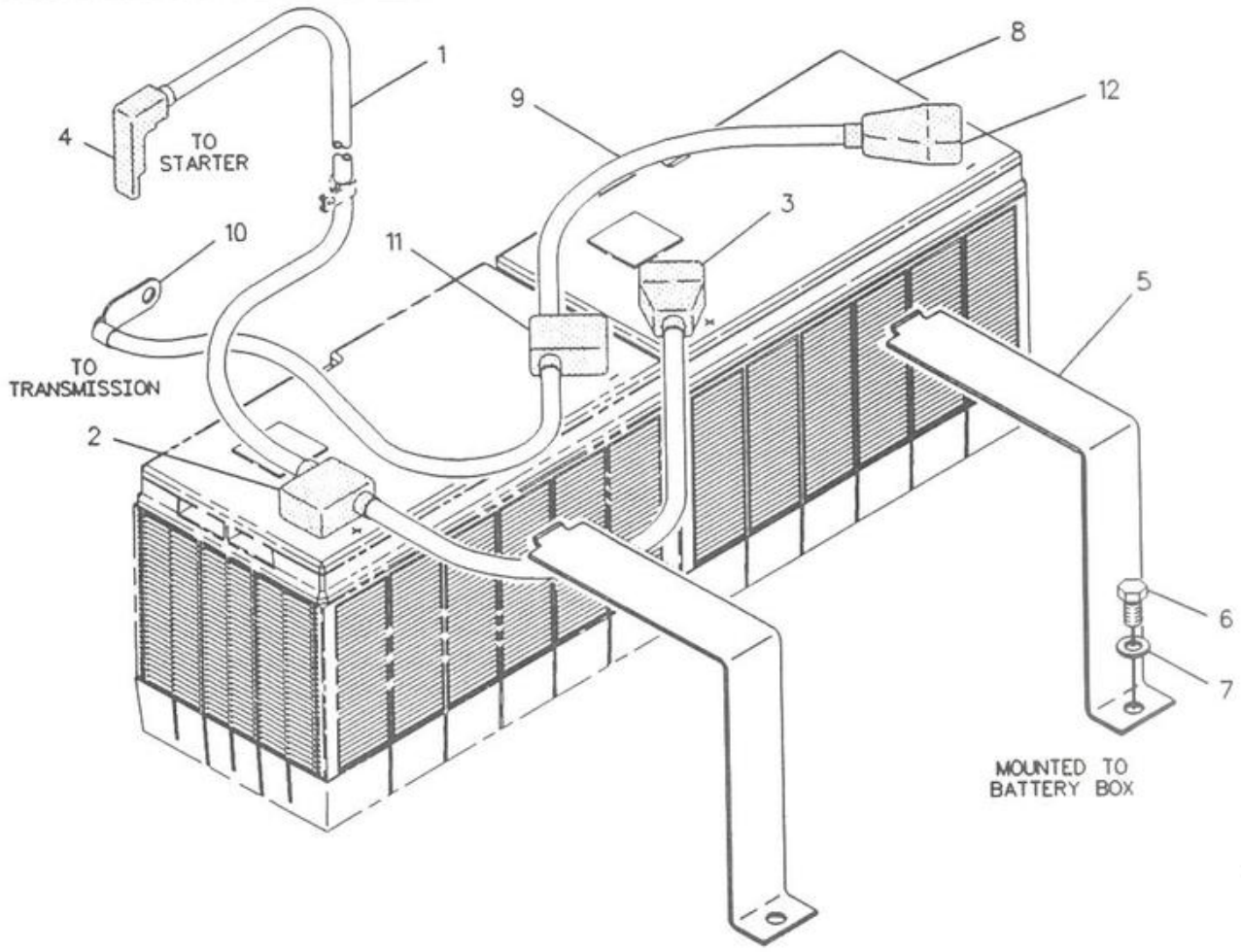

NOTE	REF NO	PART NUMBER	QTY	PART NAME
	1	8Y8076	1	CABLE AS-POSITIVE
E		8Y8081		TUBE 105CM
BE		5P0761		CABLE (00 GA)
	2	7T4924	1	COVER-TERMINAL (BATTERY)
		9S5754	1	TERMINAL AS (POS)
		1M6119	1	BOLT
		1M6120	1	NUT
	3	8N1725	1	COVER
		3S6049	1	TERMINAL AS
		1M6119	1	BOLT
		1M6120	1	NUT
		8L8413	1	STRAP-CABLE
	4	8N0869	1	COVER
		8N1725	1	COVER
		1S7252	1	TERMINAL
	5	9R9802	1	HOLDER AS
M	6	8T4195	1	BOLT
	7	8T4121	1	WASHER
	8	3T5760	1	BATTERY (12 VOLT)
	9	1010732	1	CABLE AS
BE		5P0747		CABLE
		8L8413	2	STRAP-CABLE
	10	9R4286	1	TERMINAL
	11	7T4925	1	COVER-TERMINAL
		9S5755	1	TERMINAL AS (NEG)
		1M6119	1	BOLT
		1M6120	1	NUT
	12	7N5274	1	COVER
		3S6050	1	TERMINAL AS
		1M6119	1	BOLT
		1M6120	1	NUT

B-USE AS REQUIRED
E-ORDER BY THE CENTIMETER
M-METRIC PART

F-549435 EP

1401 **9R9531 BATTERY GP-HEAVY DUTY**
An Attachment

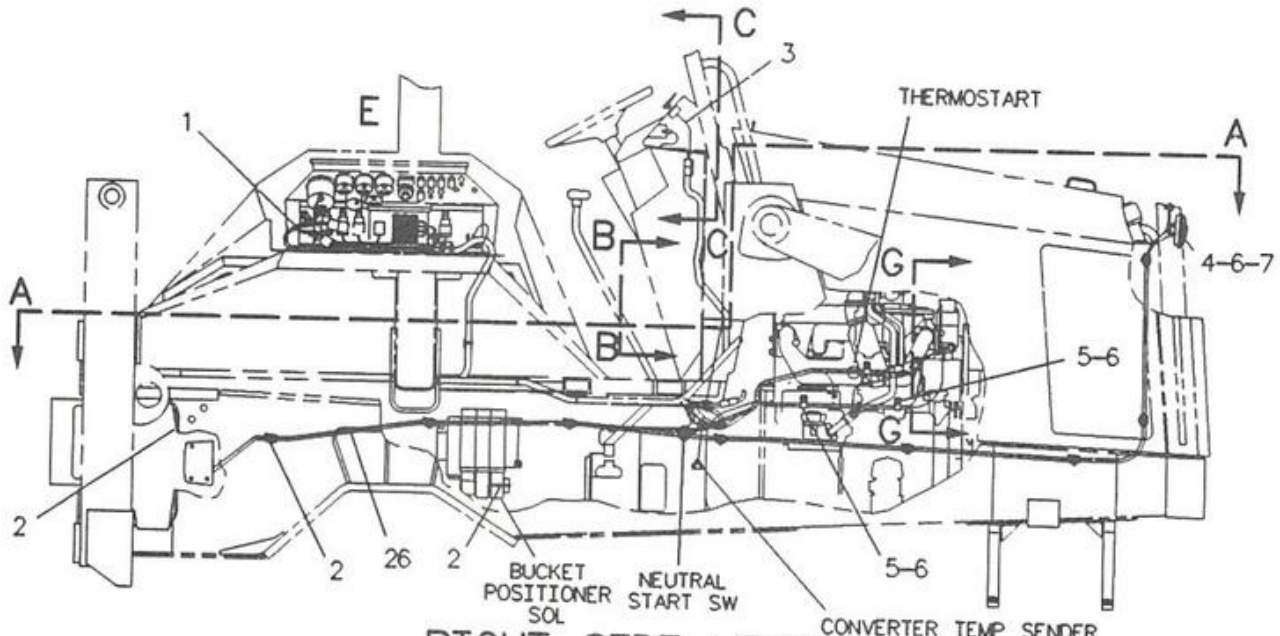

RIGHT SIDE VIEW

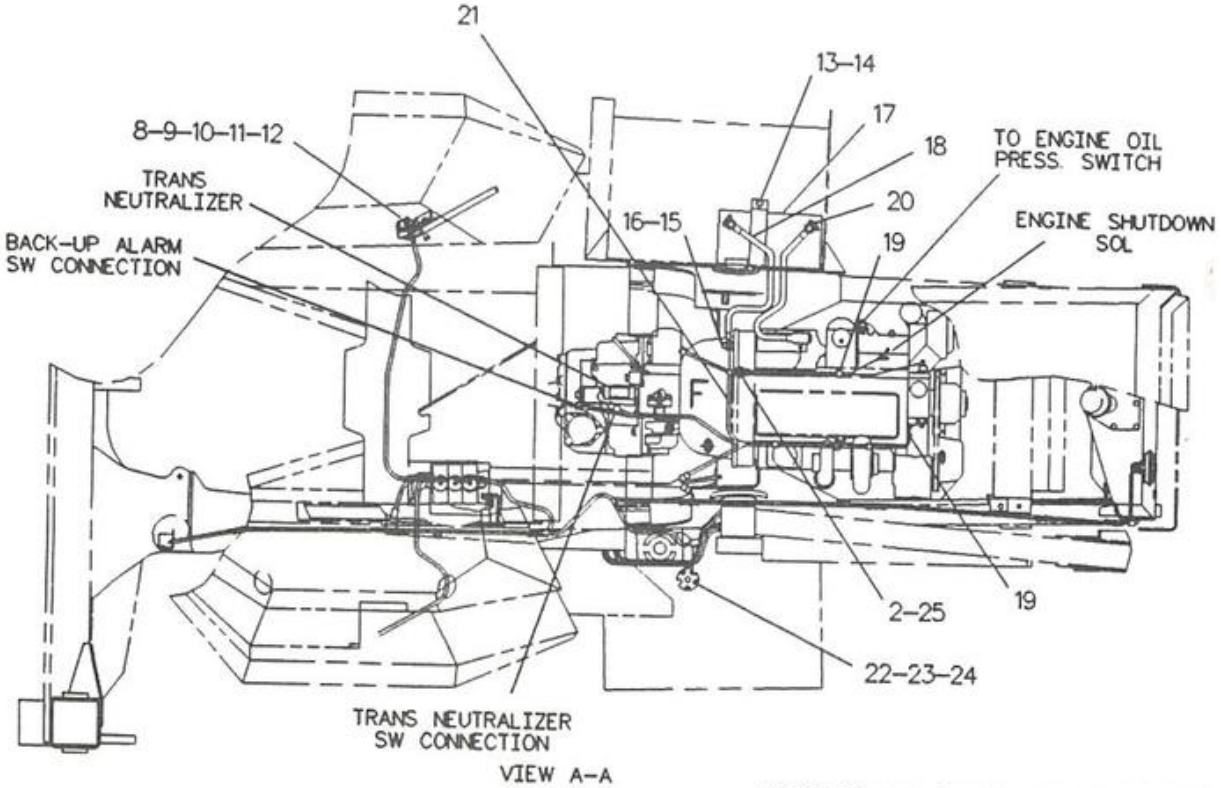

VIEW A-A

REFER TO ALL ILLUSTRATIONS OF THIS GROUP FOR AUXILIARY VIEWS

F-536116 EP

ELECTRICAL SYSTEM

NOTE	REF NO	PART NUMBER	QTY	PART NAME
	1	9R8623	1	HARNESS AS
	2	3S2093	20	STRAP-CABLE
	3	9R8624	1	HARNESS AS
M	4	8T4137	1	BOLT
	5	9M8406	2	CLIP
	6	8T4121	3	WASHER
	7	7T0635	1	HORN AS
M		6V5210	2	SCREW-MACHINE
		9B7233	2	LOCKWASHER
M	8	6V9325	2	SCREW-MACHINE
	9	6T5925	1	SWITCH AS
		6V8376	3	SCREW-MACHINE
		9B7233	3	LOCKWASHER
	10	5H6555	2	LOCKWASHER-TOOTH
	11	4B5324	2	WASHER
	12	9R4834	1	PLATE
	13	9R9802	1	HOLDER AS
M	14	8T4195	1	BOLT
M	15	8T4244	1	NUT
	16	8T4223	1	WASHER-HARD
	17	3T5760	1	BATTERY (12 VOLT)
	18	8Y8075	1	CABLE AS
		5P0747		CABLE (00 GA) (32CM)
		7N5274	1	COVER
		9R4286	1	TERMINAL
		3S6050	1	TERMINAL AS
		1M6119	1	BOLT
		1M6120	1	NUT
	19	338248	2	CLIP
	20	8Y8074	1	CABLE AS
		1S7252	1	TERMINAL
		5P0761		CABLE (00 GA) (102CM)
		8N0869	1	COVER
		8N1725	1	COVER
	21	9R8621	1	HARNESS AS-ENGINE
	22	4B2049	1	NUT
	23	8F1434	1	LOCKWASHER
	24	9R7814	1	COVER
	25	9R1780	1	CLIP AS
	26	9R8843	1	HARNESS AS-FRAME

M-METRIC PART

542007 EP

1408 9R7590 BATTERY & WIRING GP-PART 1 OF 3

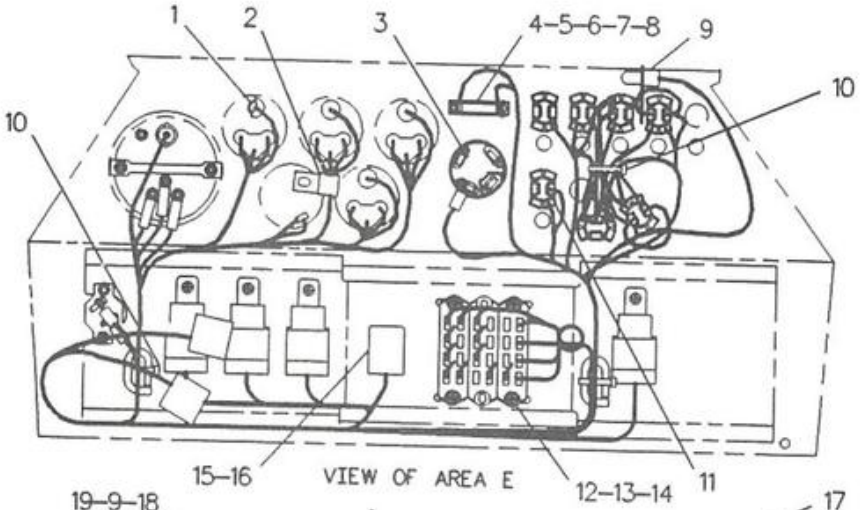

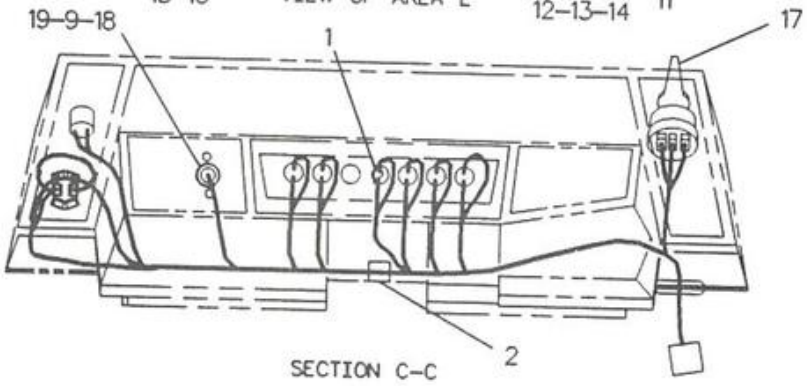

SECTION C-C

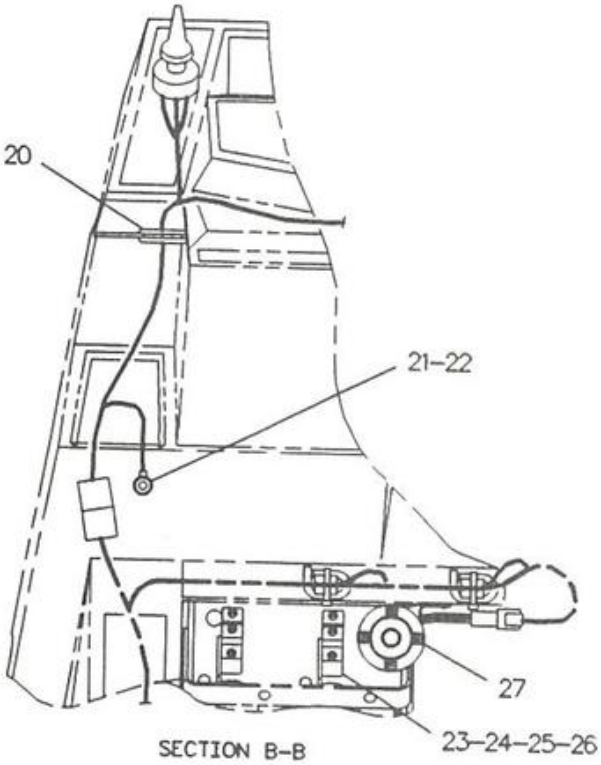

SECTION B-B

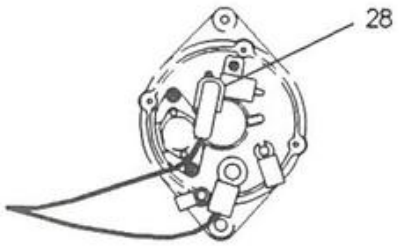

VIEW G-G

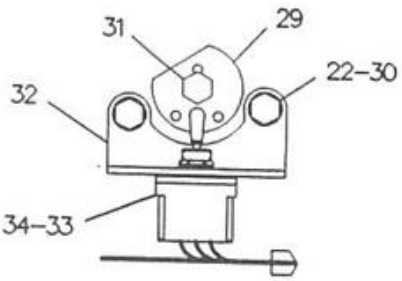

VIEW OF AREA F

1408

F-536118 EP

9R7590 BATTERY & WIRING GP-PART 2 OF 3

ELECTRICAL SYSTEM

NOTE	REF NO	PART NUMBER	QTY	PART NAME
	1	8M6176	10	LAMP-MINIATURE
	2	8J1256	2	CLIP
Y	3	3E7341	1	SWITCH GP-START
	4	4B4274	2	WASHER
	5	8C4110	1	RESISTOR
M	6	8T4754	1	SCREW
	7	1H4393	1	LOCKWASHER
M	8	5C8312	1	NUT
	9	8L9801	2	LAMP
	10	3S2093	13	STRAP-CABLE
	11	3E7272	1	SWITCH AS
		6T3631	2	NUT-HEX
		6T3632	1	LOCKWASHER
M	12	8T6693	4	SCREW-MACHINE
	13	9F8125	4	LOCKWASHER
M	14	5C2874	4	NUT
	15	7T4848	1	FLASHER-ELECTRIC
M	16	8T4127	1	SCREW-MACHINE
	17	9X9589	1	SWITCH AS
		9X9590	1	LEVER
		2H3920	1	LOCKWASHER
		3E3382	1	RECEPTACLE AS
		3E3383	1	WEDGE-RECEP LOCK
		6V8369	2	NUT
		8T8729	6	PIN-CONNECTOR
	18	9D2868	1	LENS-RED
	19	9D8047	1	BASE AS
	20	8Y8606	1	GROMMET
M	21	5C7261	1	NUT
	22	8T4224	3	WASHER-HARD
	23	6T5925	2	SWITCH AS (EACH INCLUDES)
		6V8376	3	SCREW-MACHINE
		9B7233	3	LOCKWASHER
M	24	6V9505	4	SCREW-MACHINE
	25	5H6555	4	LOCKWASHER-TOOTH
	26	9R4834	2	PLATE
	27	3E6330	1	ALARM GP
		3E3364	1	RECEPTACLE AS
		3E3365	1	WEDGE
		8T8729	2	PIN-CONNECTOR
	28	8T8799	1	BOOT
	29	9R9115	1	CAM AS
		6V8236	1	PIN-SPRING
		9S0878	2	PIN-SPRING
M	30	8T3647	2	BOLT
M	31	8T4908	1	BOLT
	32	9R9116	1	BRACKET
	33	6T3633	1	RING-LOCKING
	34	3E7273	1	SWITCH AS
		6T3631	2	NUT-HEX
		6T3632	1	LOCKWASHER

M-METRIC PART
Y-SEPARATE ILLUSTRATION

536119 EP

1408 **9R7590 BATTERY & WIRING GP-PART 2 OF 3**
3E7341-Page 97

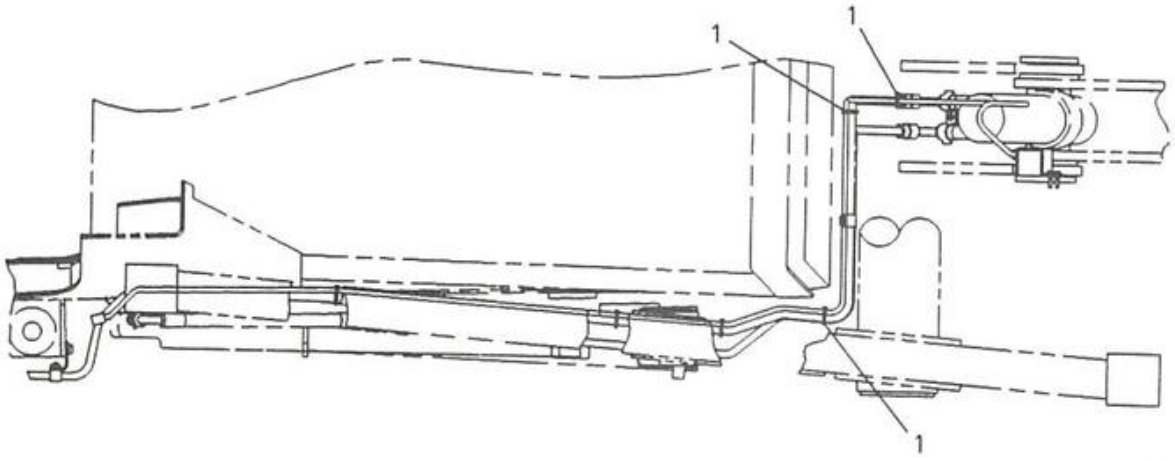

TOP VIEW

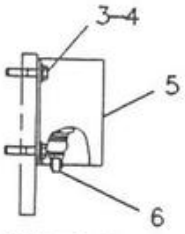

VIEW D-D

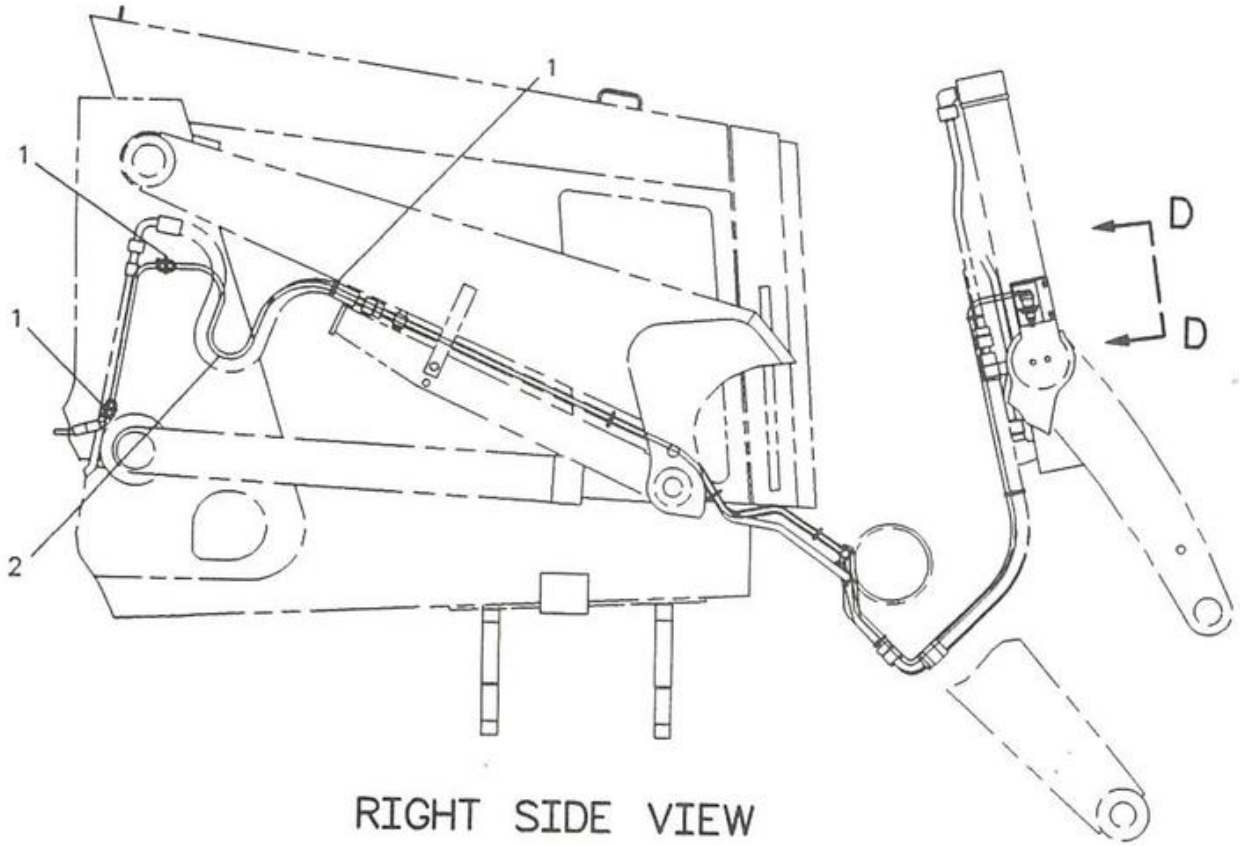

RIGHT SIDE VIEW

F-536120 EP

1408 9R7590 BATTERY & WIRING GP-PART 3 OF 3

ELECTRICAL SYSTEM

NOTE	REF NO	PART NUMBER	QTY	PART NAME
	1	3S2093	10	STRAP-CABLE
	2	9R9536	1	HARNESS AS
M	3	8T4971	2	BOLT
	4	8T4205	2	WASHER-HARD
	5	9R9155	1	BRACKET AS
	6	9G2795	1	SWITCH AS
		2H3922	1	LOCKWASHER
		6V8363	2	SCREW
		6V8370	1	NUT-HEX
		8F1434	2	LOCKWASHER
		9X0199	1	BOOT-SWITCH

M-METRIC PART

536121 EP

1408 9R7590 BATTERY & WIRING GP-PART 3 OF 3

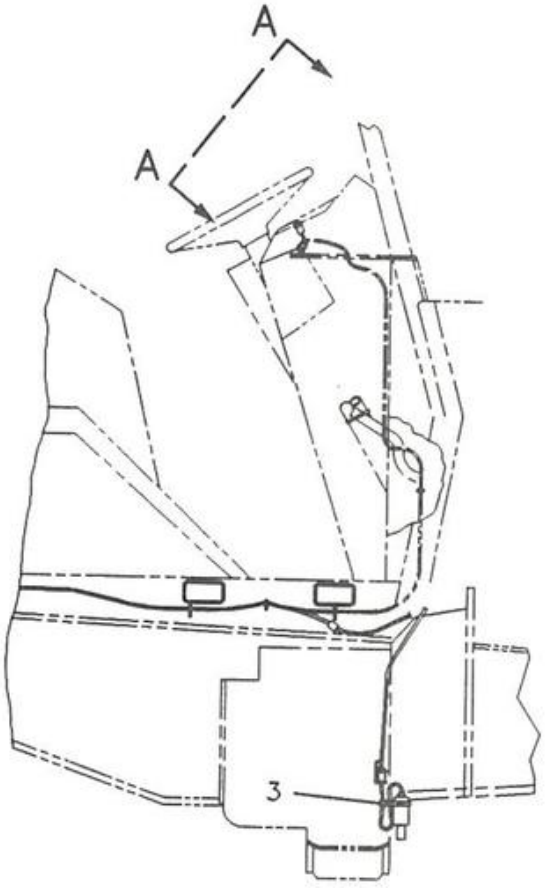

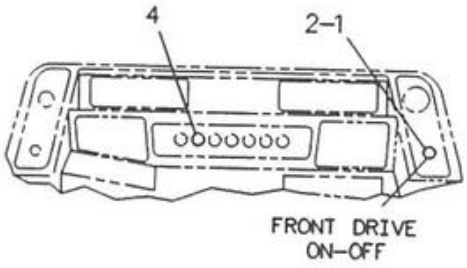

VIEW A-A

NOTE	REF NO	PART NUMBER	QTY	PART NAME
	1	3E7270	1	SWITCH AS
		6T3631	2	NUT-HEX
		6T3632	1	LOCKWASHER
	2	6T3633	1	RING-LOCKING
	3	3S2093	1	STRAP-CABLE
	4	8M6176	1	LAMP-MINIATURE

F-533328 EP

1408

9R8005 WIRING GP-FRONT DRIVE

Part Of 9R8032, 9R8653 Drive Ar-Front Wheel
An Attachment

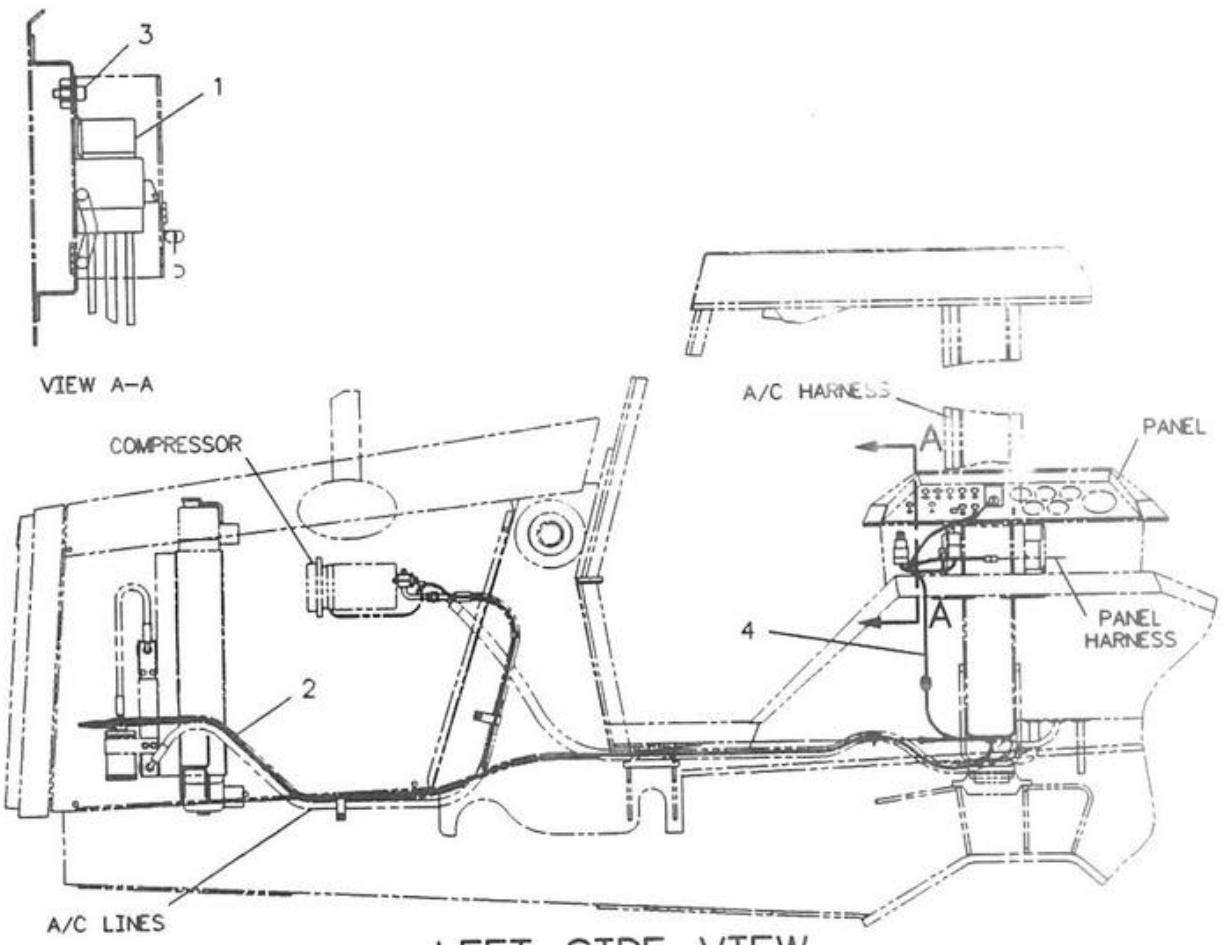

LEFT SIDE VIEW

NOTE	REF NO	PART NUMBER	QTY	PART NAME	NOTE	REF NO	PART NUMBER	QTY	PART NAME
	1	7X1379	1	RELAY AS					
		7X1885	1	BRACKET-RELAY					
	2	3S2093	10	STRAP-CABLE					
M	3	8T3998	1	BOLT					
	4	9R8625	1	HARNESS AS-AIR CONDITIONER					

M-METRIC PART

F-535419 EP

7320

9R8020 WIRING GP-AIR CONDITIONER
Part Of 9R8009, 9R8551 Air Conditioner Ars
An Attachment

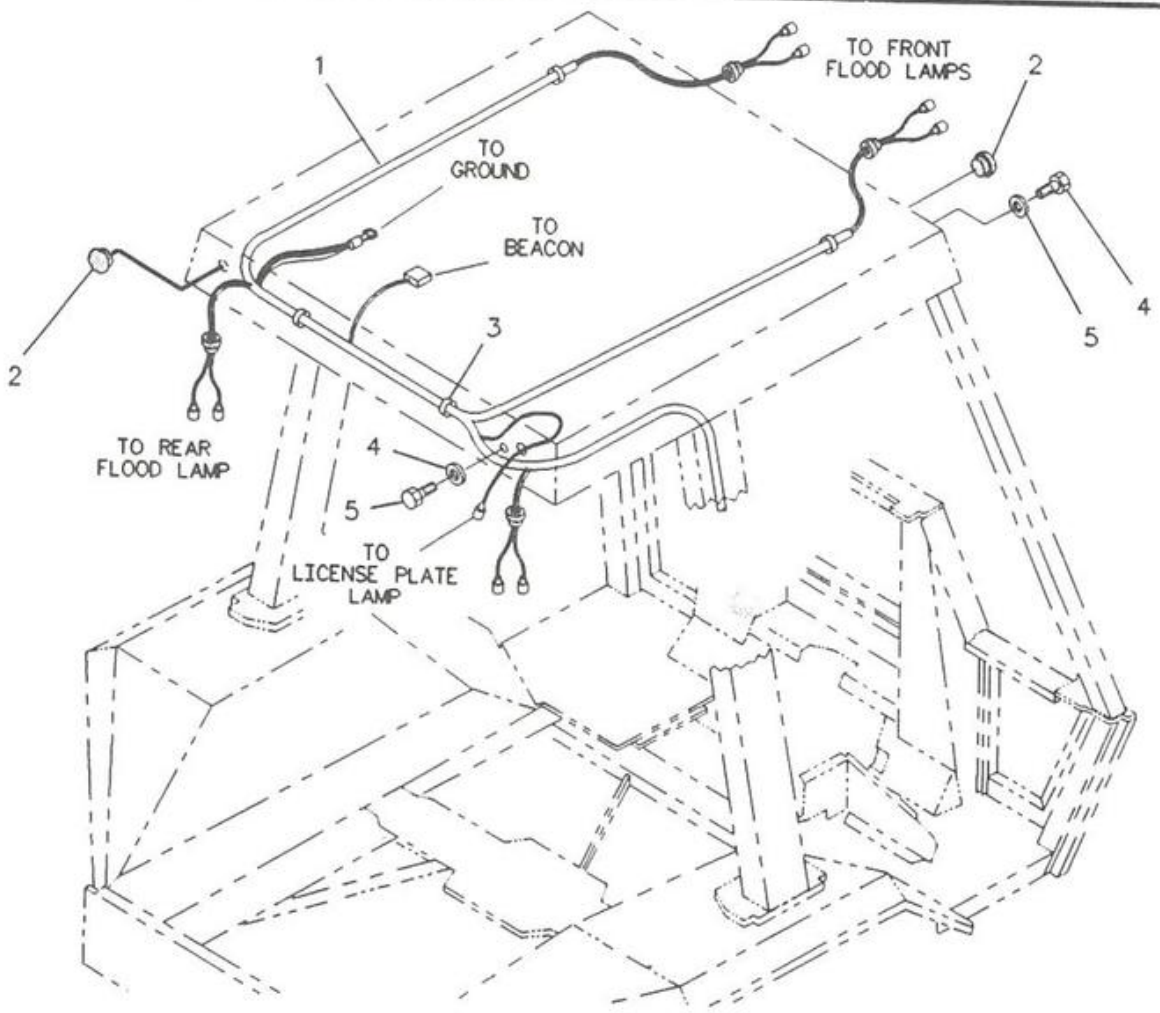

NOTE	REF NO	PART NUMBER	QTY	PART NAME	NOTE	REF NO	PART NUMBER	QTY	PART NAME
	1	9R8620	1	HARNESS AS					
	2	9R2620	4	PLUG					
	3	9R2610	5	STRAP					
	4	8T4205	8	WASHER-HARD					
M	5	8T4138	8	BOLT					

M-METRIC PART

F-533326 EP

1429

9R7768 WIRING GP-LIGHTING

Part Of 9R8114 Platform & Cab Ar (COSA)

An Attachment

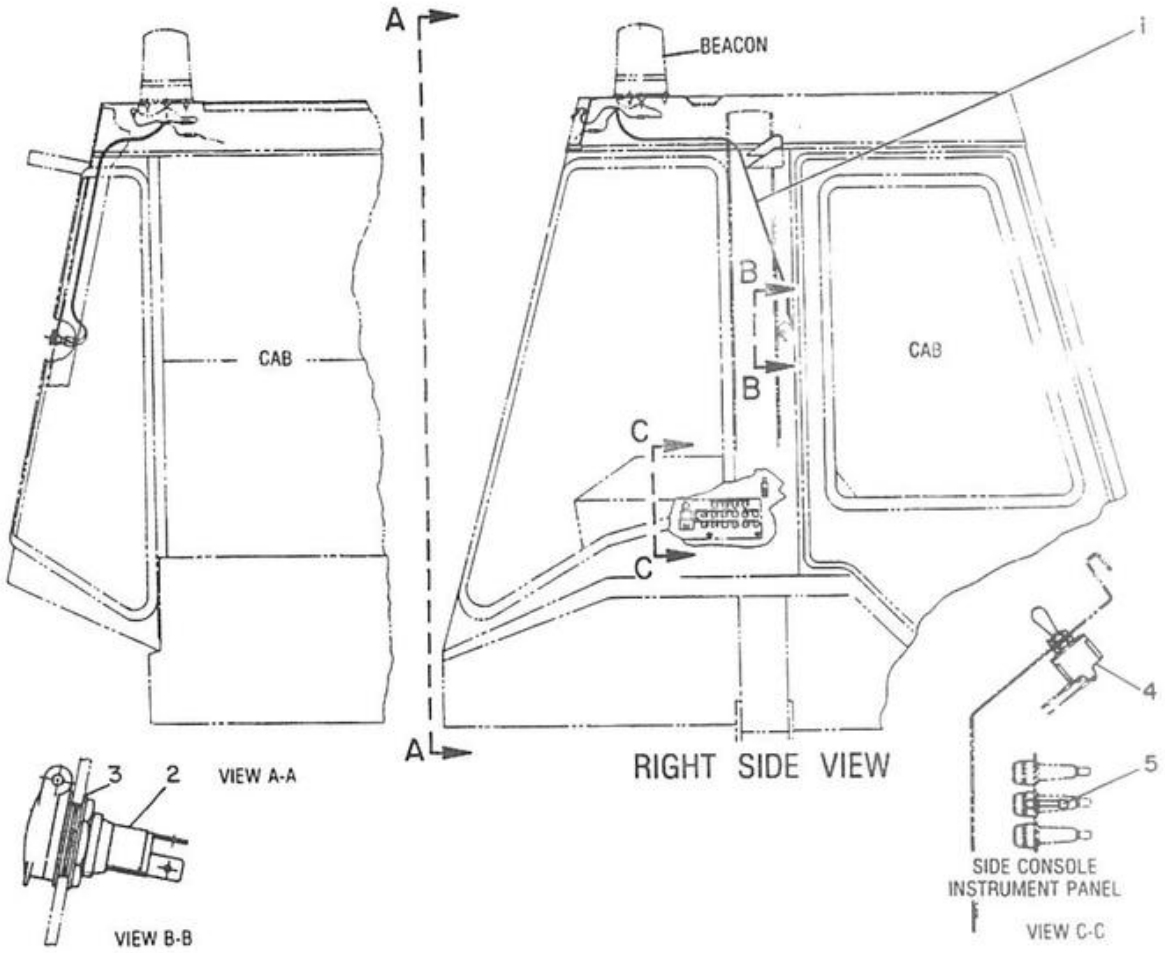

NOTE	REF NO	PART NUMBER	QTY	PART NAME
	1	9R7939	1	HARNESS AS
	2	9R7941	1	SOCKET AS
		9R7980	1	COVER
	3	9R7935	2	WASHER-SHOULDER
	4	3E7270	1	SWITCH AS
		6T3631	2	NUT-HEX
		6T3632	1	LOCKWASHER
	5	9W1441	1	FUSE (15 AMP)

M-522511 EP

1408

9R7940 WIRING GP-POWER
Power Receptacle
For Use With Rotating Beacon
Part Of 9R8114 Platform & Cab Ar
An Attachment

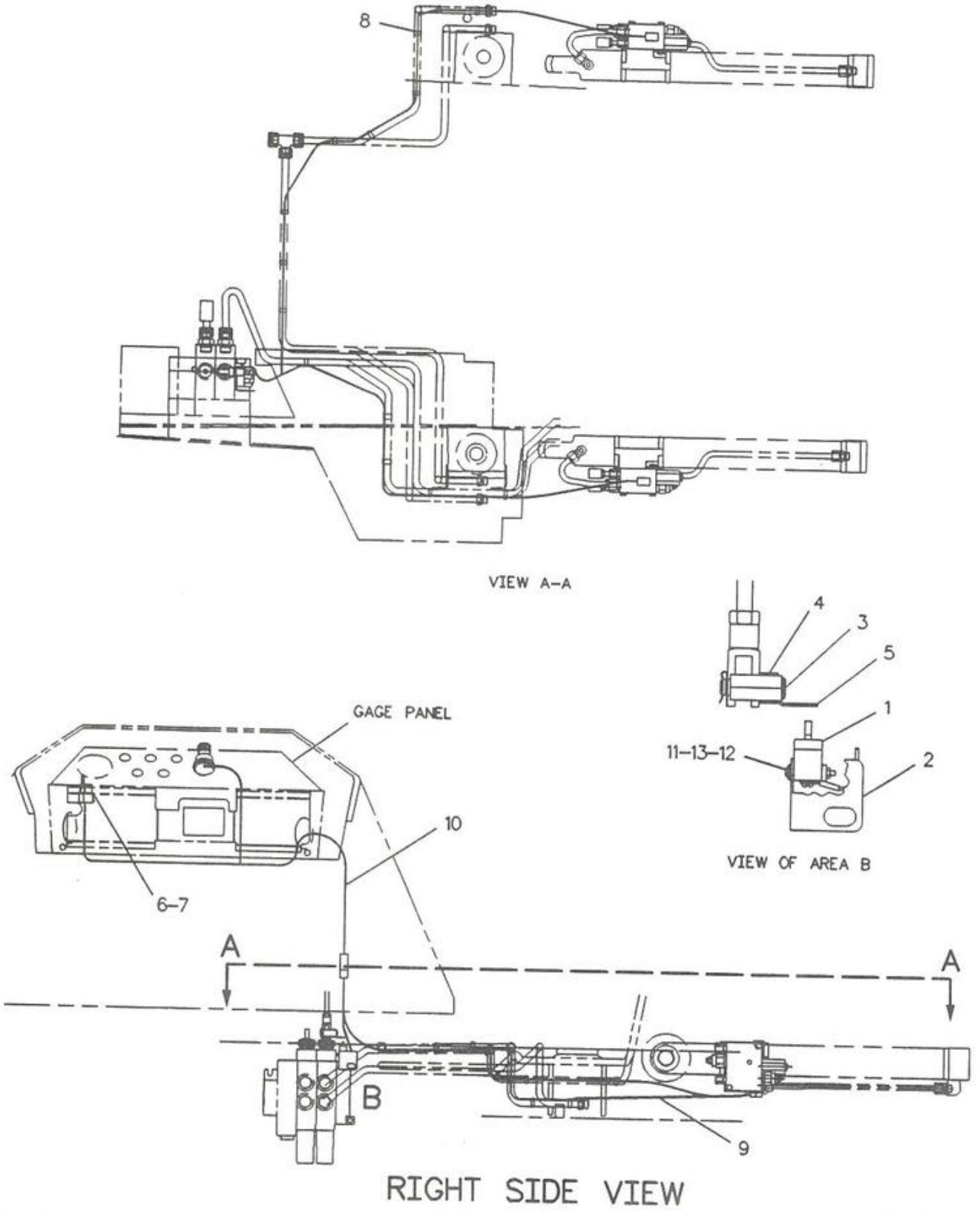

F-533475 EP

1408

9R5374 WIRING GP
(LOADER CONTROL VALVE-COSA)
Part Of 9R7212 Lock Ar-COSA Hydraulic
An Attachment

ELECTRICAL SYSTEM

NOTE	REF NO	PART NUMBER	QTY	PART NAME
	1	6T5925	1	SWITCH AS
		6V8376	3	SCREW-MACHINE
		9B7233	3	LOCKWASHER
	2	1005470	1	BRACKET
	3	9R3067	1	PIN
	4	8B8679	1	SPACER
	5	1005471	1	BRACKET
	6	7X1379	1	RELAY AS
		7X1885	1	BRACKET-RELAY
	7	1005670	1	FASTENER
B	8	3S2093	100	STRAP-CABLE
	9	9R7981	1	HARNESS AS
	10	9R7165	1	HARNESS AS
M	11	3C6969	2	NUT
M	12	6V9505	2	SCREW-MACHINE
	13	5H6555	2	LOCKWASHER-TOOTH

NOTE	REF NO	PART NUMBER	QTY	PART NAME

B-USE AS REQUIRED
M-METRIC PART

533476 EP

1408

9R5374 WIRING GP
(LOADER CONTROL VALVE-COSA)
Part Of 9R7212 Lock Ar-COSA Hydraulic
An Attachment

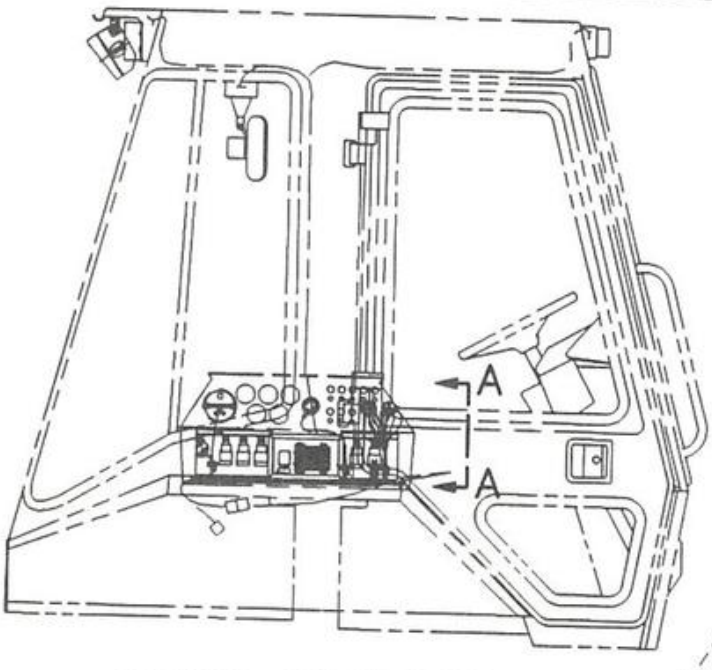

RIGHT SIDE VIEW

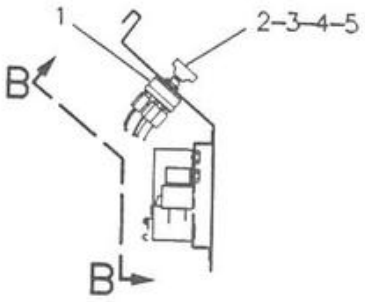

VIEW A-A

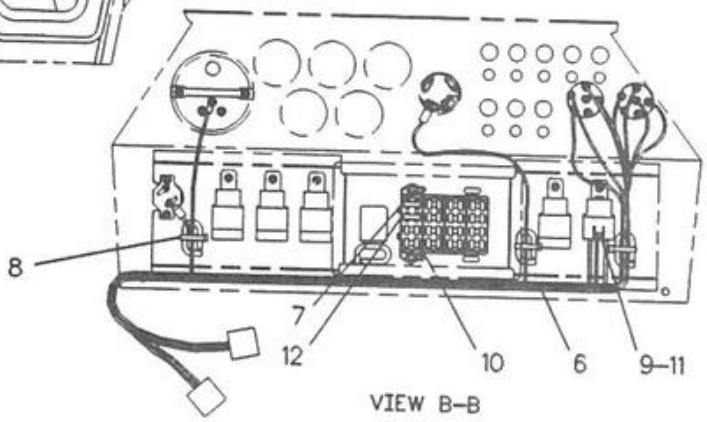

VIEW B-B

NOTE	REF NO	PART NUMBER	QTY	PART NAME
	1	3T6655	2	SWITCH AS-ROTARY (EACH INCLUDES)
	2	6V8369	1	NUT
	3	2H3920	1	LOCKWASHER
	4	7T9302	1	KNOB-WIPER SWITCH
	5	140816	1	SETSCREW
C	6	9R9555	1	HARNESS AS-WIPER
C	7	9W1442	1	FUSE (10 AMP)
	8	3S2093	7	STRAP-CABLE
	9	7X1379	1	RELAY AS
		7X1885	1	BRACKET-RELAY
	10	9W1446	1	FUSE (20 AMP)
M	11	8T4171	1	BOLT
	12	9W1441	1	FUSE (15 AMP)

C-CHANGE FROM PREVIOUS TYPE
M-METRIC PART

F-533032 EP

1408

9R7764 WIRING GP-WIPER
Part Of 9R7760, 9R8113 Cab Ars
An Attachment

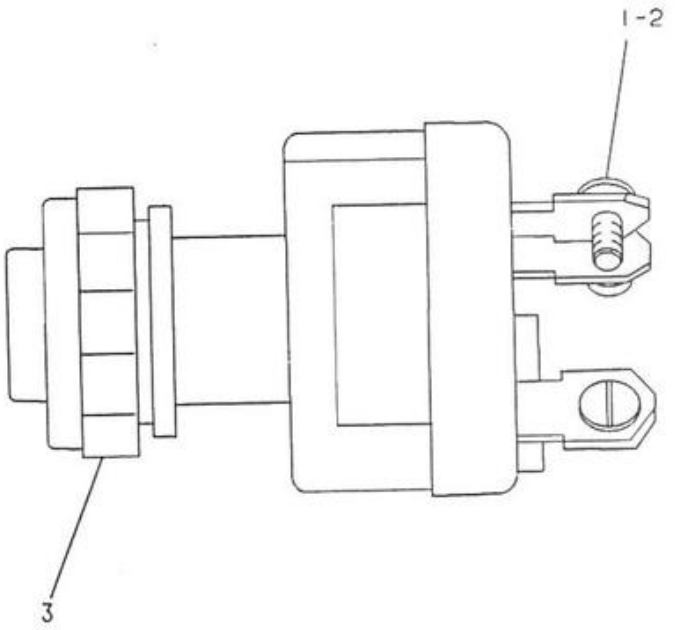

NOTE	REF NO	PART NUMBER	QTY	PART NAME
	1	6V8362	5	SCREW-MACHINE
	2	9B7233	5	LOCKWASHER
	3	7T6799	1	NUT-MOUNTING

A-536123 EP

1416

3E7341 SWITCH GP-HEAT START
Part Of 9R7590 Battery & Wiring

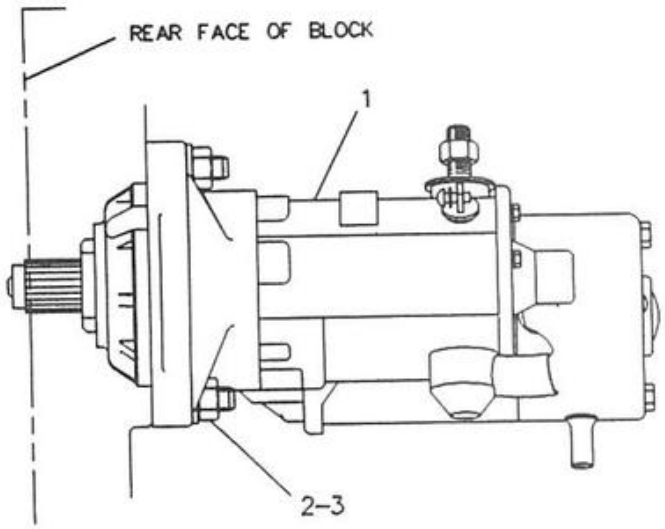

RIGHT SIDE VIEW

NOTE	REF NO	PART NUMBER	QTY	PART NAME
Y	1	3E7905	1	STARTING MOTOR GP-ELECTRIC
M	2	8T4121	3	WASHER
M	3	8T4133	3	NUT

M-METRIC PART
Y-SEPARATE ILLUSTRATION

F-530643 EP

1453

7E7711 STARTING MOTOR GP-ELECTRIC
12 Volt
3E7905-Page 98

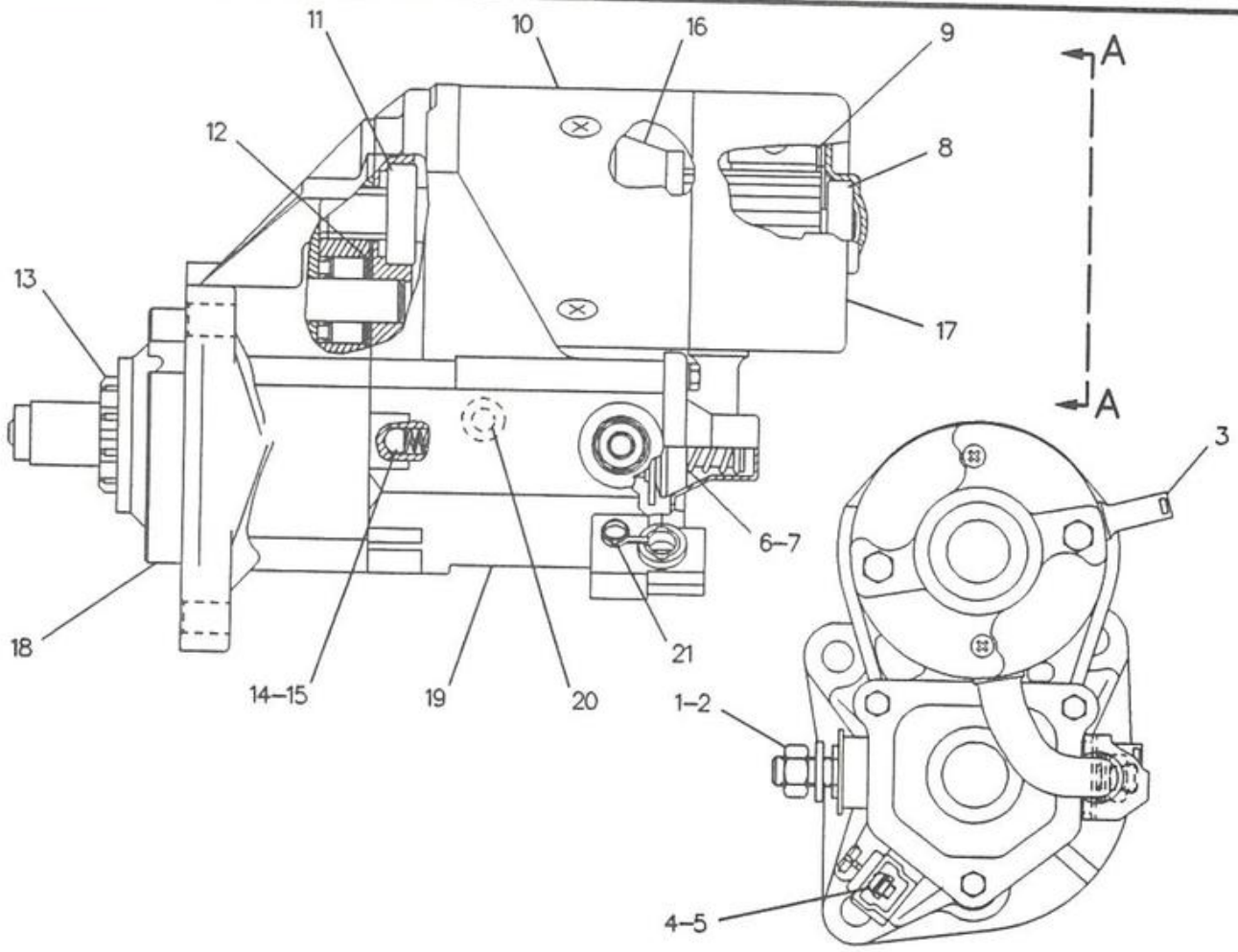

VIEW A–A

NOTE	REF NO	PART NUMBER	QTY	PART NAME
M	1	8T4133	2	NUT
	2	8T4121	2	WASHER
	3	3E5153	1	COVER-STARTER
M	4	9X2036	1	SCREW-PAN HEAD
	5	8F1434	1	LOCKWASHER
	6	8C9778	1	PLUNGER AS
	7	8C9783	1	GASKET
	8	6T8953	1	BEARING AS
	9	7T6092	1	HOLDER AS-BRUSH
	10	1004118	1	CASE AS-STARTER
	11	7T6088	1	BEARING AS
	12	7T6087	1	WASHER
	13	7T6093	1	CLUTCH AS
	14	8J4455	1	BALL
	15	7T6090	1	SPRING
	16	1004119	1	ARMATURE AS
	17	1004116	1	FRAME-STARTER
	18	1004115	1	HOUSING-STARTER
	19	1004114	1	SWITCH AS
	20	3E5154	1	BUSHING-STARTER
	21	1003685	1	CAP-STARTER

NOTE	REF NO	PART NUMBER	QTY	PART NAME
				THE FOLLOWING REPAIR KITS ARE AVAILABLE:
		7T6099	1	KIT-GEAR (INCLUDES: RETAINER, PINION & ROLLER)
		7T6100	1	KIT-HARDWARE (INCLUDES: PLATE, SCREW AS & BOLT AS)
		1004112	1	KIT-CONTACT (INCLUDES: NUT, WASHER, PLATE, BUSHINGS & BOLT)
		8C5457	1	KIT-CONTACT (INCLUDES: PLATE, BUSHINGS, BOLT, NUT, WASHER & SEAL)

M-METRIC PART

F-542205 EP

1453

3E7905 STARTING MOTOR GP-ELECTRIC

Part Of 7E7711 Starting Motor-Electric

ELECTRICAL SYSTEM

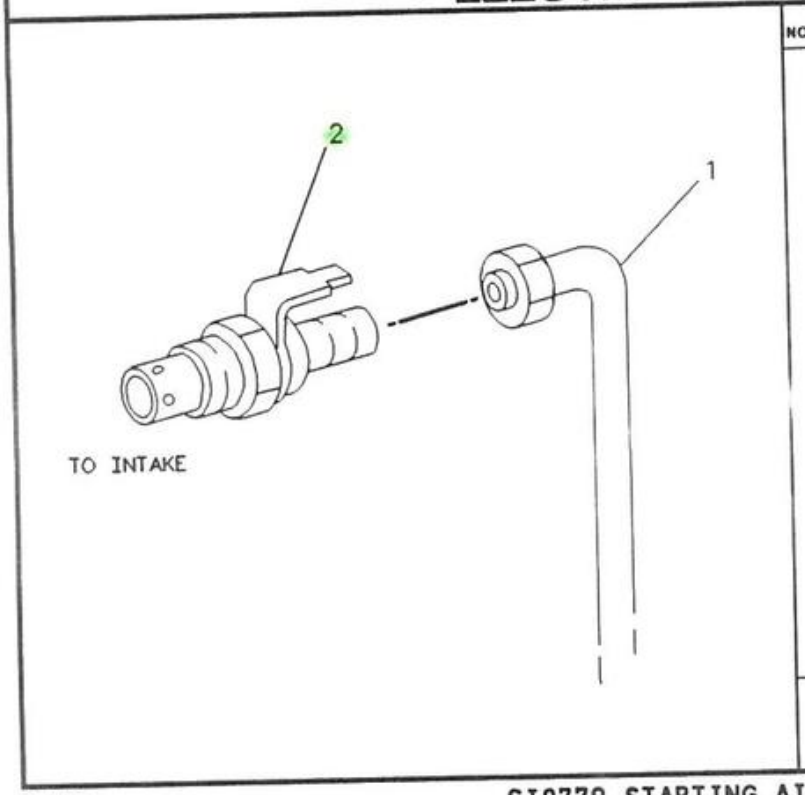

NOTE	REF NO	PART NUMBER	QTY	PART NAME
	1	610780	1	LINE AS
	2	358059	1	HEATER

F-516762 EP

1456 **6I0779 STARTING AID GP**

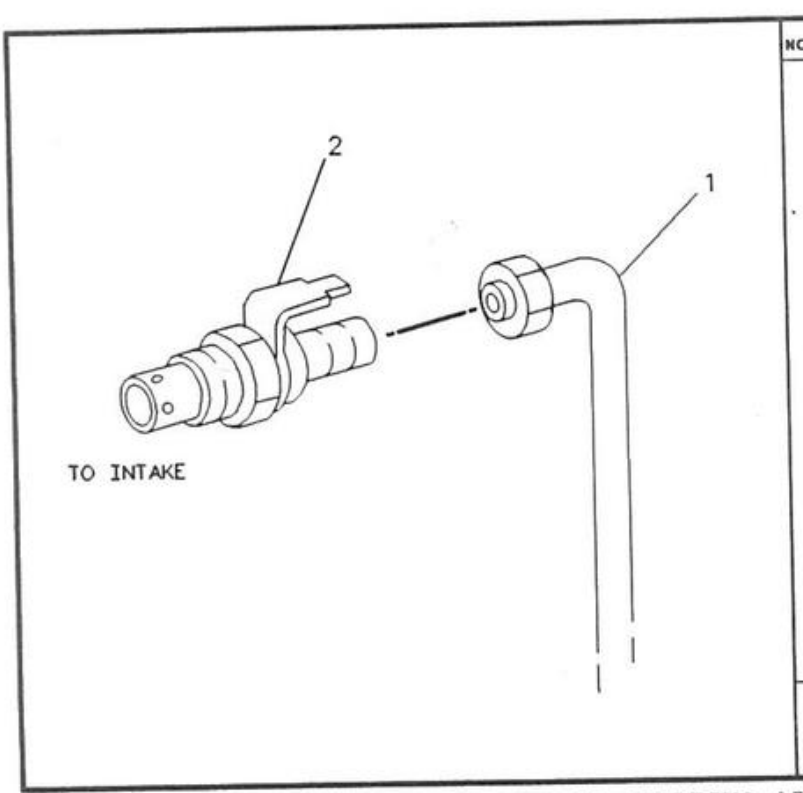

NOTE	REF NO	PART NUMBER	QTY	PART NAME
	1	6I1150	1	LINE AS
	2	358059	1	HEATER

F-516813 EP

1456 **6I1149 STARTING AID GP**
An Attachment

ELECTRICAL SYSTEM

	PAGE
9X0341 ALTERNATOR GP.....	100

537789 P

1405

7E7712 ALTERNATOR GP
An Attachment

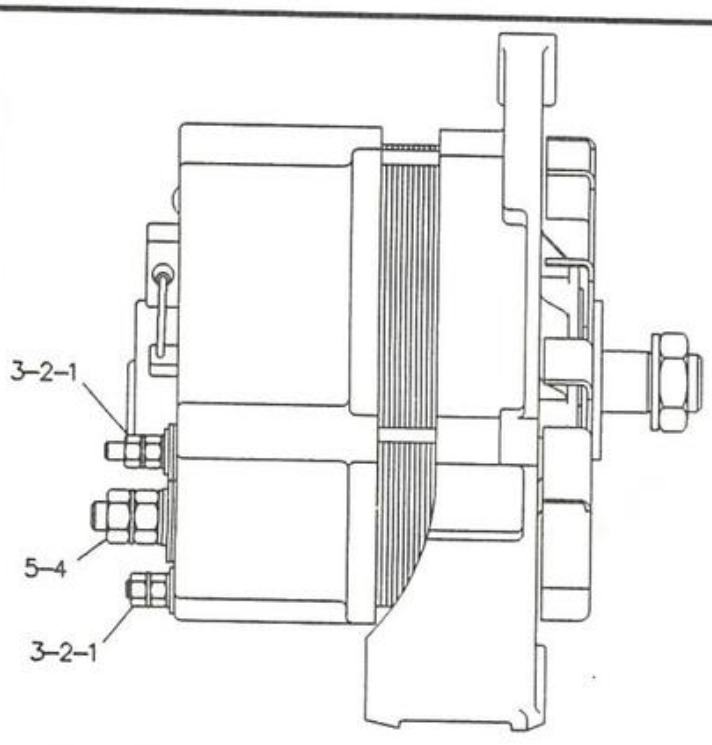

NOTE	REF NO	PART NUMBER	QTY	PART NAME
M	1	5C2874	2	NUT
	2	7X0620	2	WASHER-HARD
	3	8F1434	2	LOCKWASHER
M	4	6V6889	1	NUT
	5	8T4224	1	WASHER-HARD

M-METRIC PART

F-534233 EP

1405

9X0341 ALTERNATOR GP
Part Of 9R8009, 9R8551 Air Conditioner Ars, 7E7712 Alternator &
9R8041 Lighting-Front & Rear Work
An Attachment

SEBP2202

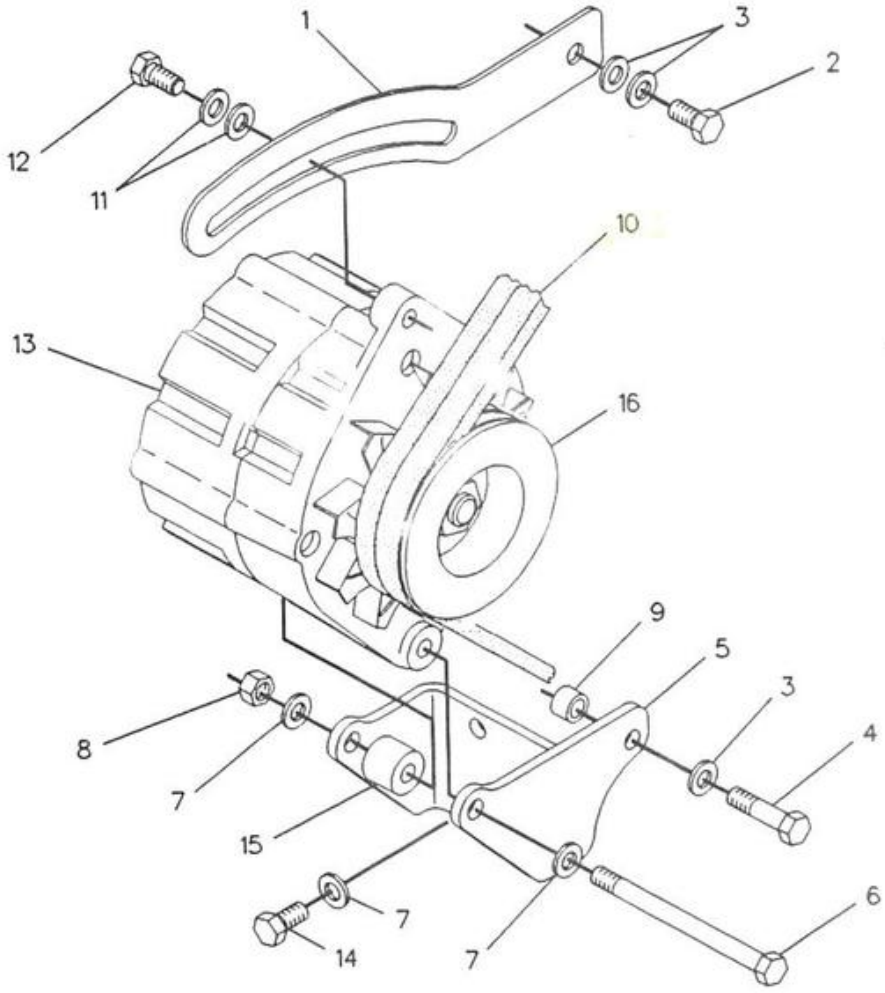

NOTE	REF NO	PART NUMBER	QTY	PART NAME	NOTE	REF NO	PART NUMBER	QTY	PART NAME
	1	4P3713	1	STRAP					
M	2	8T6869	1	BOLT					
	3	8T4224	3	WASHER-HARD					
M	4	7X0818	1	BOLT					
	5	4P4854	1	BRACKET AS					
M	6	8T6685	1	BOLT					
	7	8T4121	4	WASHER					
M	8	8T4133	1	NUT					
	9	4K5824	1	BOSS					
	10	688546	1	V-BELT SET					
	11	5P4116	2	WASHER					
M	12	8T4908	1	BOLT					
Y	13	3E7295	1	ALTERNATOR GP					
M	14	8T4136	2	BOLT					
	15	6E1435	1	SPACER					
	16	4P7086	1	PULLEY-ALTERNATOR					

M-METRIC PART
Y-SEPARATE ILLUSTRATION

F-533313 EP

ELECTRICAL SYSTEM

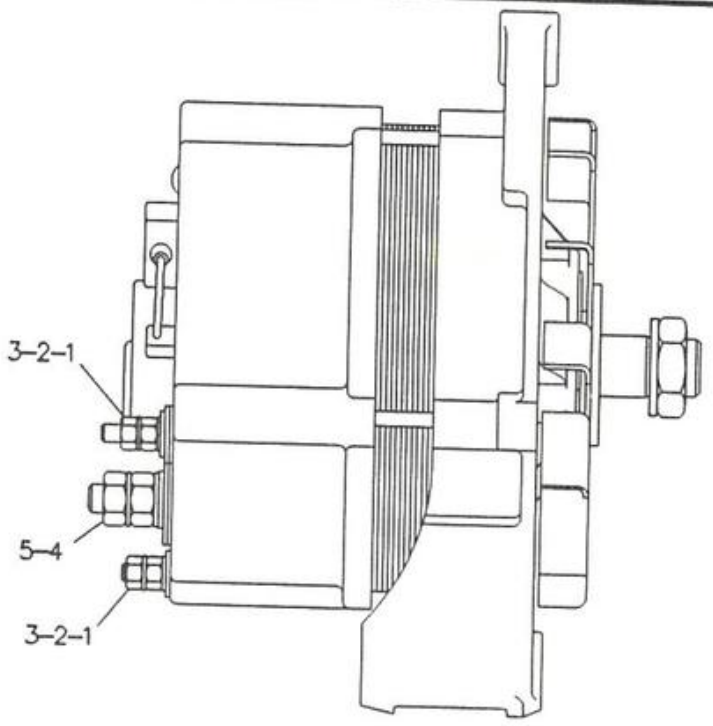

NOTE	REF NO	PART NUMBER	QTY	PART NAME
M	1	5C2874	2	NUT
	2	7X0620	2	WASHER-HARD
	3	8F1434	2	LOCKWASHER
M	4	6V6889	1	NUT
	5	8T4224	1	WASHER-HARD

M-METRIC PART

F-534363 EP

1405

3E7295 ALTERNATOR GP

Part Of 4P3711 Alternator

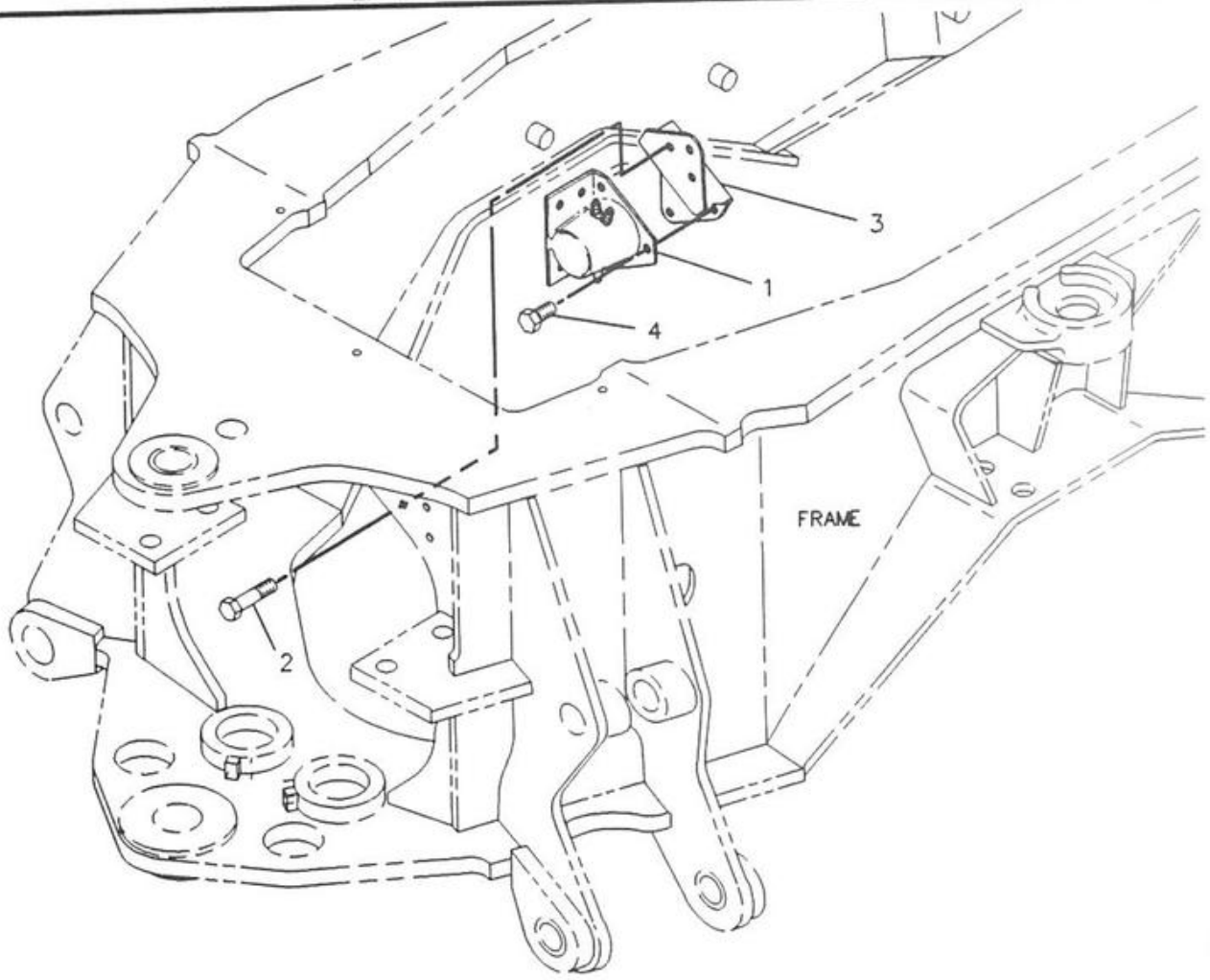

NOTE	REF NO	PART NUMBER	QTY	PART NAME	NOTE	REF NO	PART NUMBER	QTY	PART NAME
	1	1029236	1	ALARM-BACK UP					
M	2	8T4195	3	BOLT (M10X1.50X30MM)					
	3	9R2136	1	BRACKET AS					
M	4	8T4137	3	BOLT (M10X1.50X20MM)					

M-METRIC PART

F-551125 EP

7406 **9R9481 WARNING GP-BACK-UP**
An Attachment

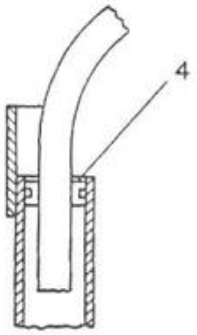

SECTION OF
AREA B

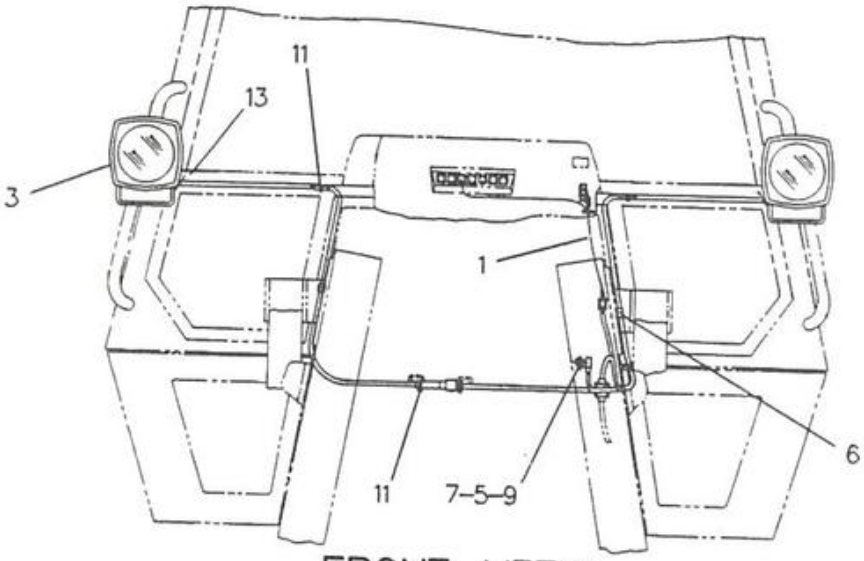

FRONT VIEW

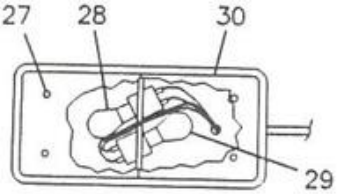

ENLARGED VIEW
OF AREA C

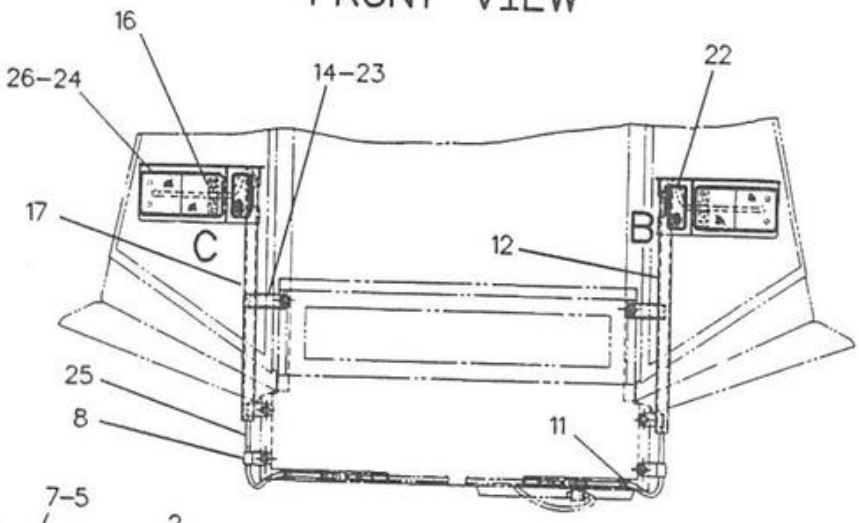

REAR VIEW

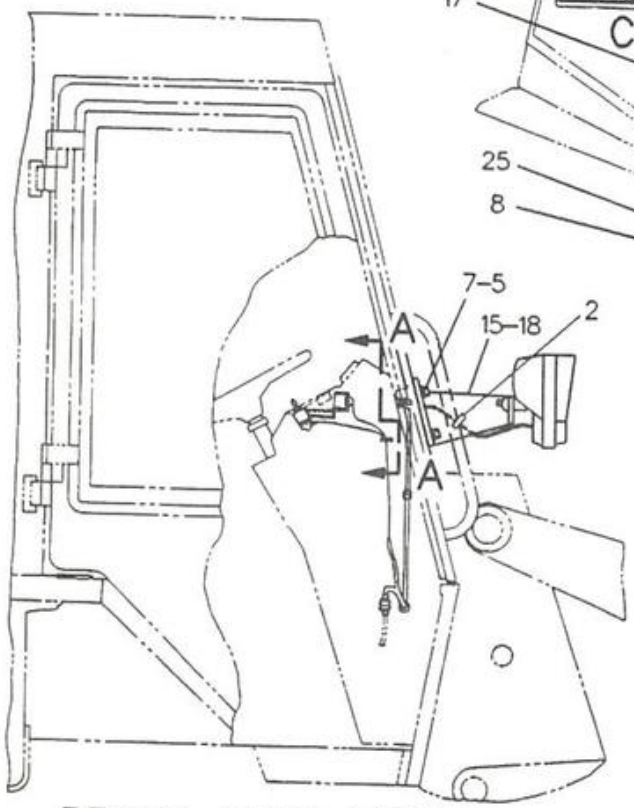

RIGHT SIDE VIEW

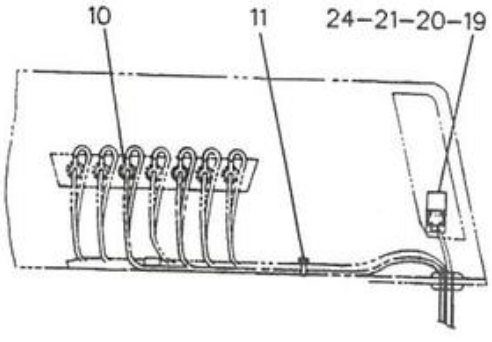

SECTION A-A

R-534091 EP

1429

9R8628 LIGHTING GP-ROADING (COSA)
Part Of 9R8113 Cab Ar
An Attachment

SEBP2202

ELECTRICAL SYSTEM

NOTE	REF NO	PART NUMBER	QTY	PART NAME
	1	9R8626	1	HARNESS AS
	2	8Y8684	2	STRAP
Y	3	3E7584	2	LAMP GP-HEAD
	4	9D3768	2	GROMMET
	5	8T4121	4	WASHER
	6	9G3658	2	CLIP
M	7	8T4137	5	BOLT
	8	5P9299	2	CLIP
	9	9G9152	1	CLIP
	10	8M6176	1	LAMP-MINIATURE
	11	3S2093	7	STRAP-CABLE
	12	9R5303	1	BRACKET AS
	13	5P8440	2	GROMMET
M	14	8T4186	6	BOLT
	15	8Y8100	1	BRACKET-RH
	16	9V9261	2	CLAMP
	17	9R5304	1	BRACKET AS
	18	8Y8604	1	BRACKET-LH
	19	3E7269	1	SWITCH AS
	20	6T3631	2	NUT-HEX
	21	6T3632	1	LOCKWASHER
	22	9R1499	2	REFLECTOR
	23	2B0941	2	SPACER
	24	6T3633	1	RING-LOCKING
	25	9R5214	1	HARNESS AS
	26	922992	2	LAMP GP (EACH LAMP GP INCLUDES)
M	27	3C3682	4	SCREW
M		3C3681	4	NUT
	28	3C4883	1	LAMP (AMBER)
	29	3C6516	1	LAMP (RED)
	30	926279	1	LENS

M-METRIC PART
Y-SEPARATE ILLUSTRATION

534092 EP

1429

9R8628 LIGHTING GP-ROADING (COSA)
3E7584-Page 116
Part Of 9R8113 Cab Ar
An Attachment

PAGE

2 3E7585 LAMP GP-HEAD..... 117

536257 P

1429

8Y8672 LIGHTING GP-ROADING-LH DIP
An Attachment

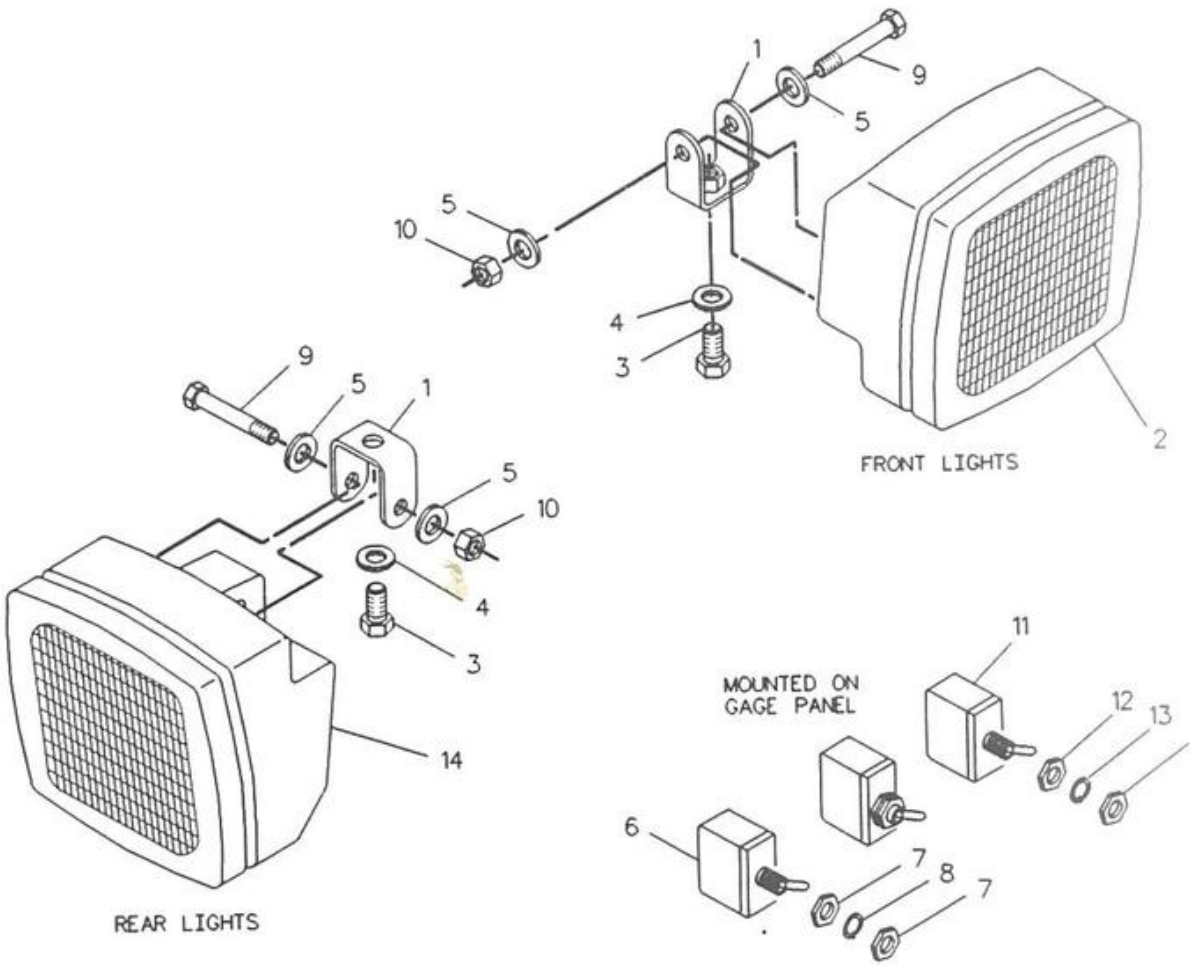

NOTE	REF NO	PART NUMBER	QTY	PART NAME
	1	9R7771	4	BRACKET
	2	9W1001	2	LAMP GP-FLOOD (EACH INCLUDES)
		9W0607	1	LAMP
		9X7798	1	LENS AS
M	3	8T4137	4	BOLT
	4	8T4121	4	WASHER
	5	8T4224	8	WASHER-HARD
	6	3E7268	2	SWITCH AS-TOGGLE (EACH INCLUDES)
	7	6T3631	2	NUT-HEX
	8	6T3632	1	LOCKWASHER
M	9	8T6869	4	BOLT
M	10	5C7261	4	NUT
	11	3E7270	1	SWITCH AS
	12	6T3631	2	NUT-HEX
	13	6T3632	1	LOCKWASHER
	14	9X6853	2	LAMP GP-FLOOD (EACH INCLUDES)
		9W0607	1	LAMP
		9X7798	1	LENS AS
YF		9X0341	1	ALTERNATOR GP

F-NOT SHOWN
M-METRIC PART
Y-SEPARATE ILLUSTRATION

F-533622 EP

1434

9R8041 LIGHTING GP-FRONT & REAR WORK
9X0341-Page 100
An Attachment

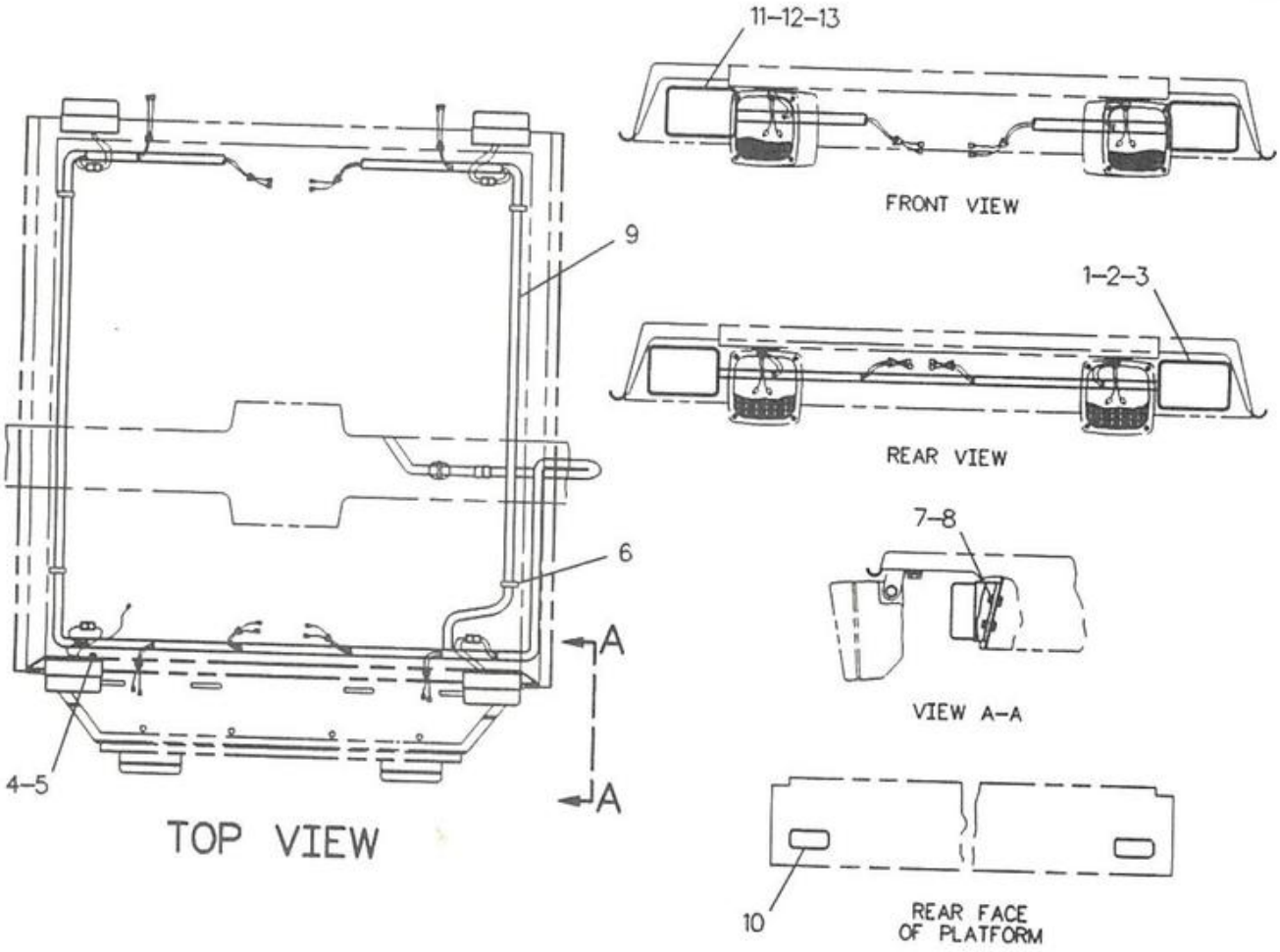

NOTE	REF NO	PART NUMBER	QTY	PART NAME
	1	3E7398	2	LAMP AS (TURN/HAZARD)
				(EACH INCLUDES)
	2	5M8034	1	LAMP-MINIATURE
	3	3E3363	1	RECEPTACLE AS
		8T8729	2	PIN-CONNECTOR
		3E3365	1	WEDGE
	4	8T4224	1	WASHER-HARD
M	5	5C7261	1	NUT
	6	9R2610	5	STRAP
	7	8T4205	8	WASHER-HARD
M	8	8T4138	8	BOLT
	9	9R8619	1	HARNESS AS
	10	9R1499	2	REFLECTOR
	11	3E7500	2	LAMP AS (STOP/TAIL)
				(EACH INCLUDES)
	12	7S1800	1	LAMP-MINIATURE
	13	3E3375	1	RECEPTACLE AS
		8T8729	4	PIN-CONNECTOR
		3E3377	1	WEDGE-RECEPTACLE LOCK

M-METRIC PART

1429

F-537265 EP

9R7597 LIGHTING GP-ROADING

Canopy

Part Of 9R7761 Cab Ar & 9R7594 Rollover Ar

MEMORANDA

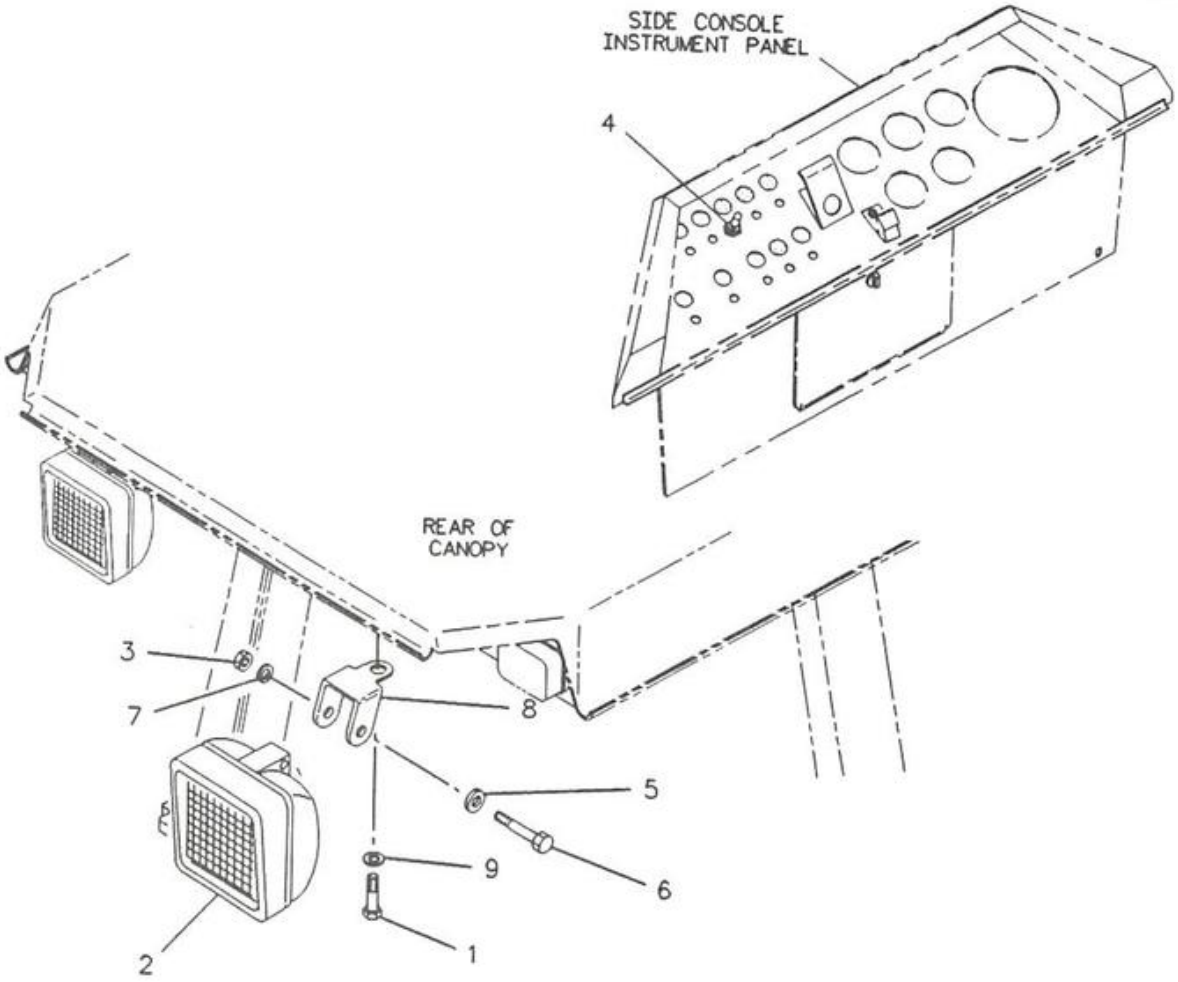

NOTE	REF NO	PART NUMBER	QTY	PART NAME
M	1	8T4137	2	BOLT (M10X1.50X20MM)
	2	9X6853	2	LAMP GP-FLOOD (EACH INCLUDES)
		9W0607	1	LAMP
		9X7798	1	LENS AS
M	3	5C7261	2	NUT (M8X1.25 THD)
	4	3E7270	1	SWITCH AS
	5	8T4224	2	WASHER-HARD (2MM THK)
M	6	8T6869	2	BOLT (M8X1.25X60MM)
	7	3F9556	2	LOCKWASHER (8.4MM ID)
	8	9R7771	2	BRACKET
	9	8T4121	2	WASHER (21MM OD)

M-METRIC PART

1429

F-513869 EP

9R7598 LIGHTING GP-FLOOD
Type 1. S/N 8SG1-Up

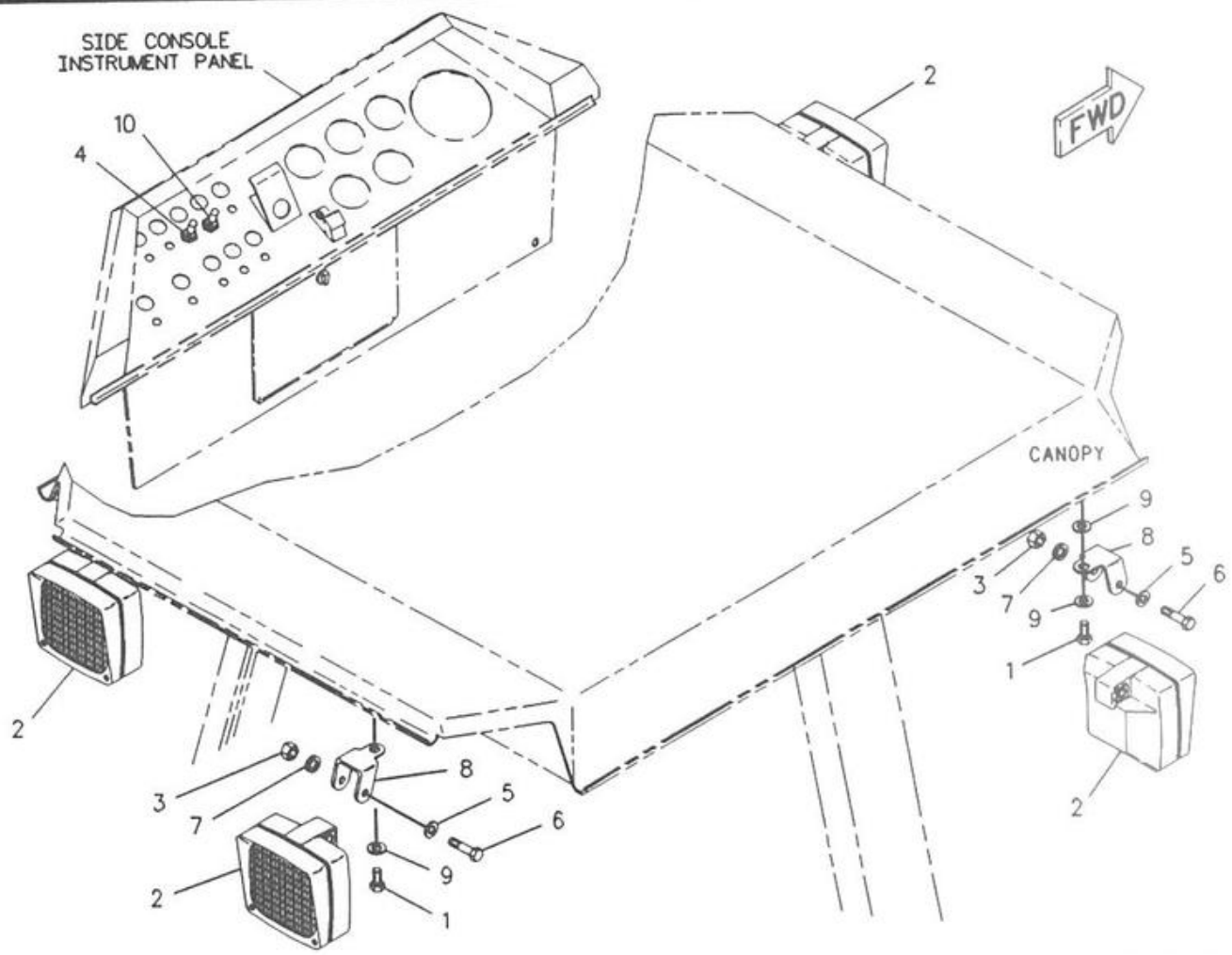

NOTE	REF NO	PART NUMBER	QTY	PART NAME
M	1	8T4137	4	BOLT (M10X1.50X20MM)
	2	9X6853	4	LAMP GP-FLOOD
				(EACH INCLUDES)
		9W0607	1	LAMP
		9X7798	1	LENS AS
M	3	5C7261	4	NUT (M8X1.25 THD)
	4	3E7270	1	SWITCH AS
	5	8T4224	4	WASHER-HARD (2MM THK)
M	6	8T6869	4	BOLT (M8X1.25X60MM)
	7	3F9556	4	LOCKWASHER (8.4MM ID)
	8	9R3852	4	BRACKET
	9	8T4121	6	WASHER (21MM OD)
	10	3E7269	1	SWITCH AS

M-METRIC PART

F-546336 EP

1429 **9R7598 LIGHTING GP-FLOOD**
Type 2

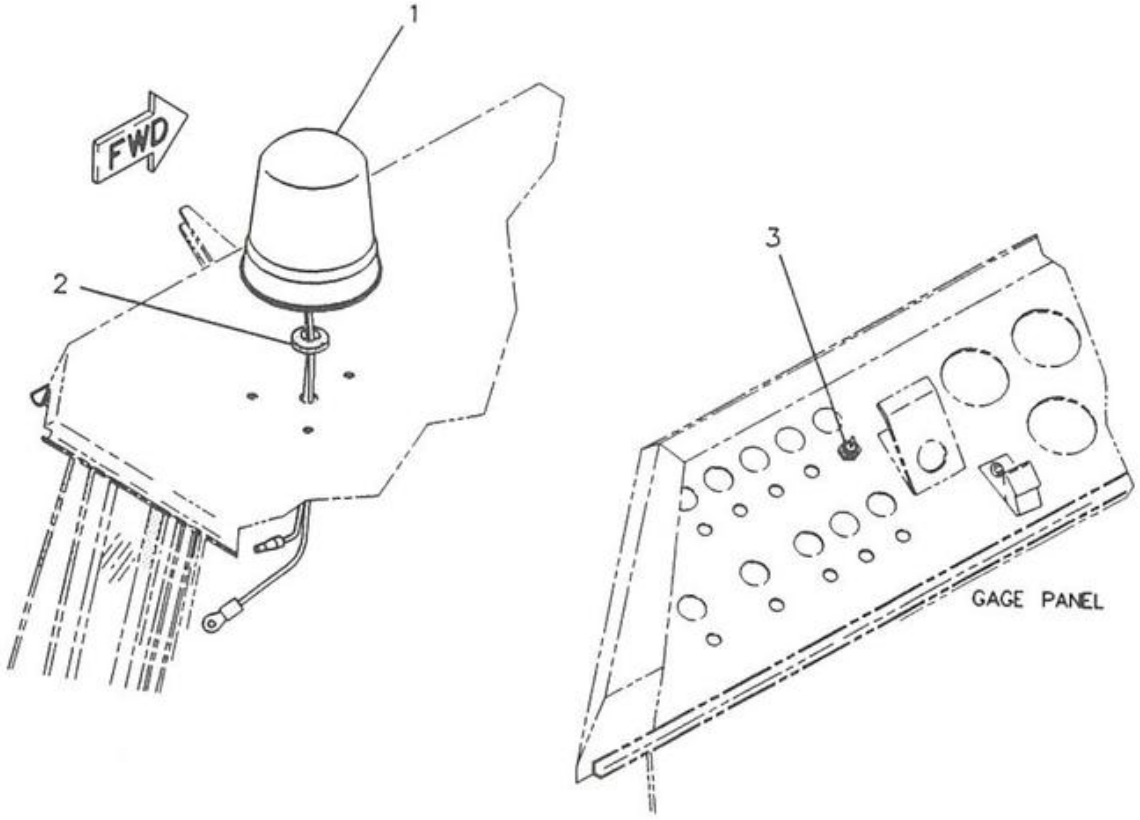

NOTE	REF NO	PART NUMBER	QTY	PART NAME	NOTE	REF NO	PART NUMBER	QTY	PART NAME
Y	1	9R8250	1	LAMP GP-WARNING					
	2	2D9535	1	GROMMET					
	3	3E7270	1	SWITCH AS					
		6T3631	2	NUT-HEX					
		6T3632	1	LOCKWASHER					

Y-SEPARATE ILLUSTRATION

F-522495 EP

1431

9R8632 LIGHTING GP-WARNING
9R8250-Page 113
An Attachment

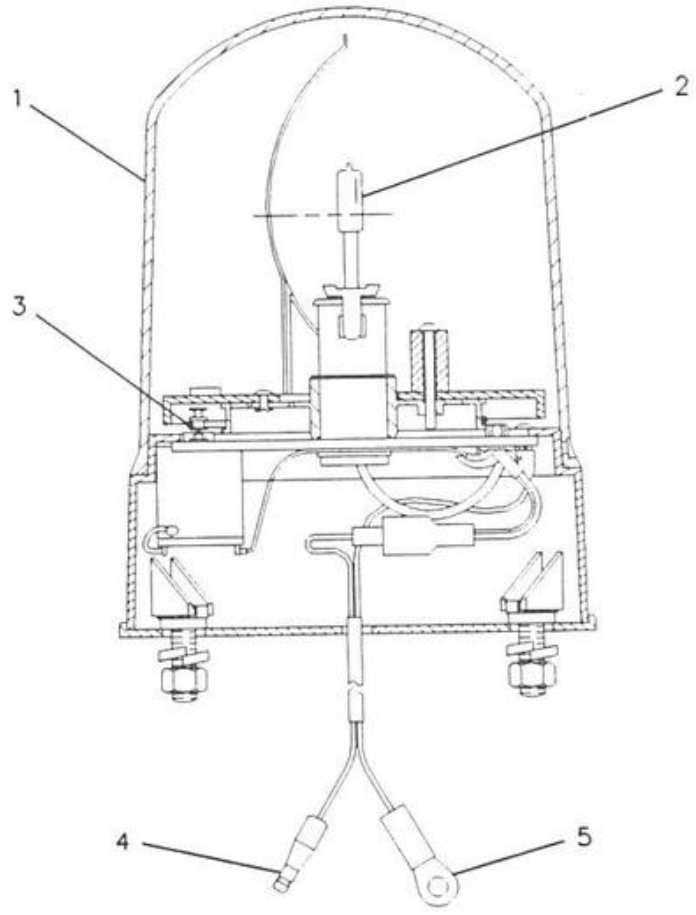

NOTE	REF NO	PART NUMBER	QTY	PART NAME
	1	9X8121	1	LENS-AMBER
	2	9X8118	1	BULB
	3	9X8139	1	BELT-DRIVE
	4	6K1827	1	CONNECTOR-BULLET
	5	2L8079	1	TERMINAL

R-512988 EP

1429

9R8250 LAMP GP-WARNING
Amber-Rotating Warning
Part Of 9R8632 Lighting-Warning
An Attachment

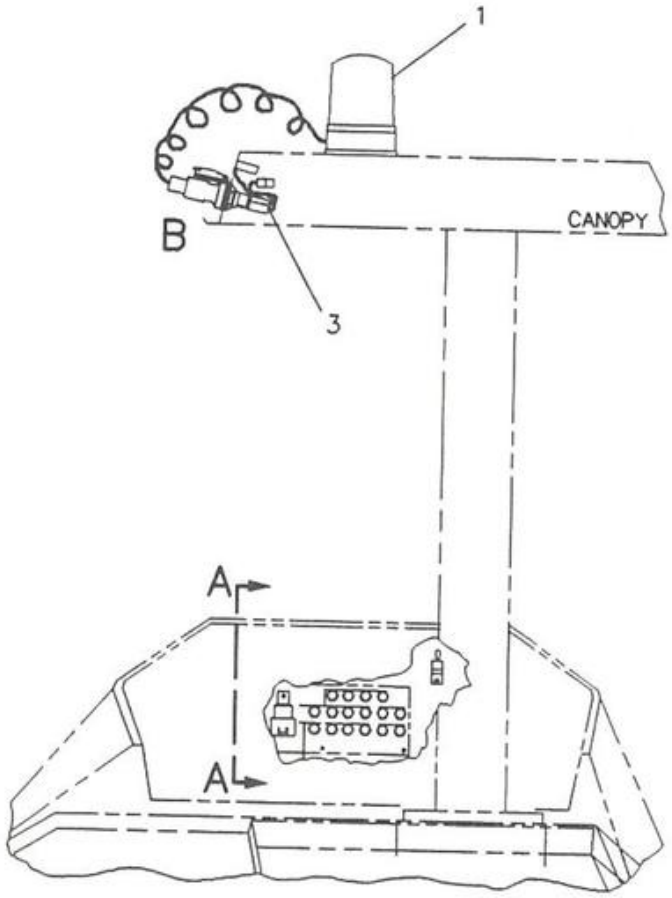

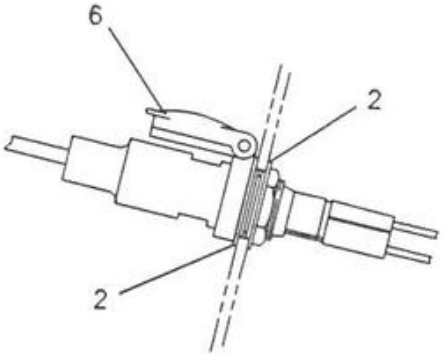

ENLARGED VIEW OF AREA B

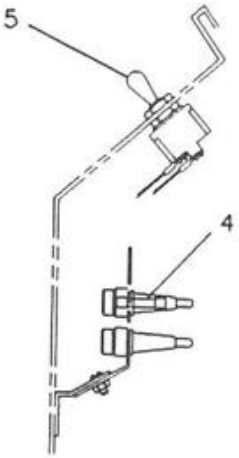

VIEW A-A

NOTE	REF NO	PART NUMBER	QTY	PART NAME
Y	1	9X8079	1	LAMP GP-WARNING
	2	9R7935	2	WASHER-SHOULDER
	3	9R8722	1	HARNESS AS
	4	9W1441	1	FUSE (15 AMP)
	5	3E7270	1	SWITCH AS
		6T3631	2	NUT-HEX
		6T3632	1	LOCKWASHER
	6	9R7941	1	SOCKET AS
		9R7980	1	COVER

Y-SEPARATE ILLUSTRATION

F-522493 EP

1431

9R8721 LIGHTING GP-WARNING
Magnetic Base Beacon For Open ROPS
9X8079-Page 115
An Attachment

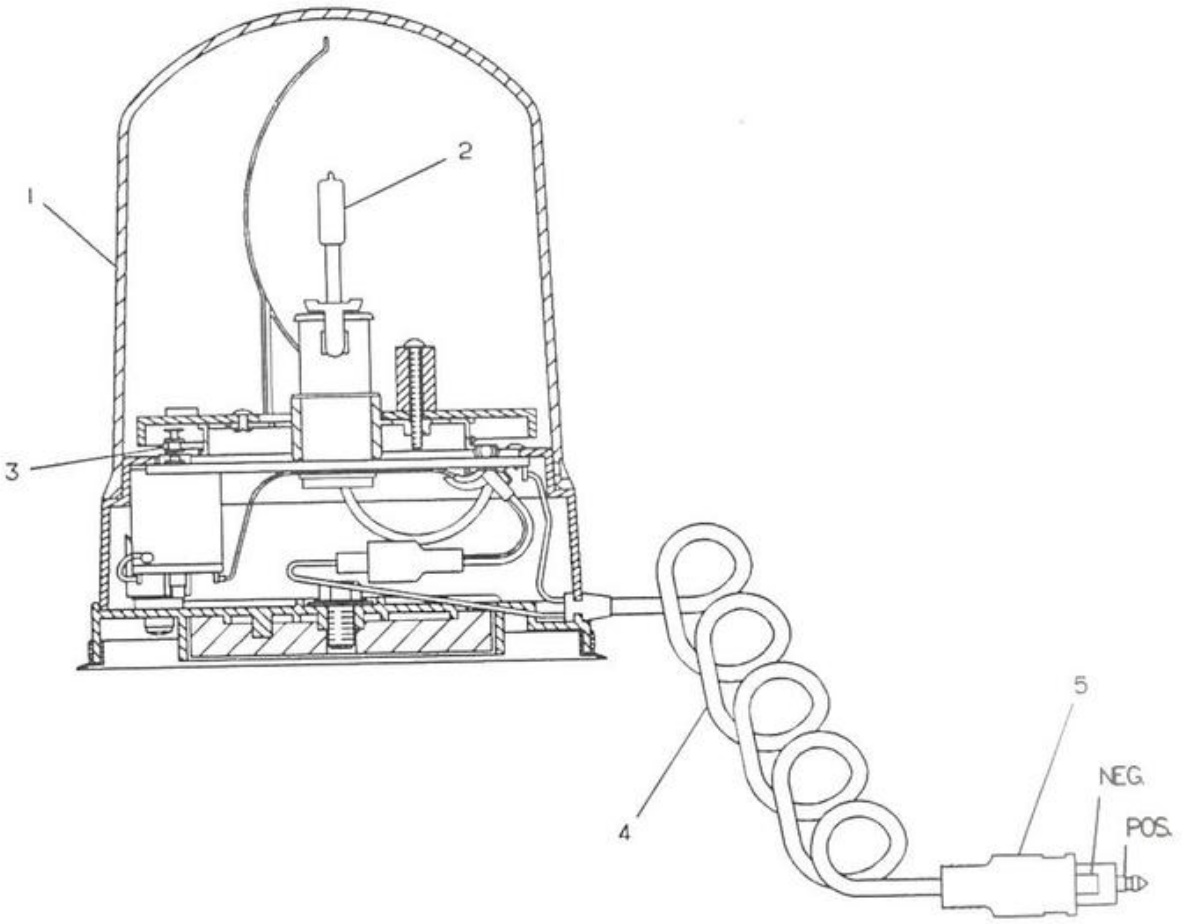

NOTE	REF NO	PART NUMBER	QTY	PART NAME	NOTE	REF NO	PART NUMBER	QTY	PART NAME
	1	9X8121	1	LENS-AMBER					
	2	9X8118	1	BULB					
	3	9X8139	1	BELT-DRIVE					
	4	9R7958	1	CORD AS					
		9R7942	1	PLUG AS					
	5	9R7942	1	PLUG AS					

R-500976 EP

1429

9X8079 LAMP GP-ROTATING BEACON
12 Volt-Amber-Magnetically Mounted
Part Of 9R8721 Lighting-Warning
An Attachment

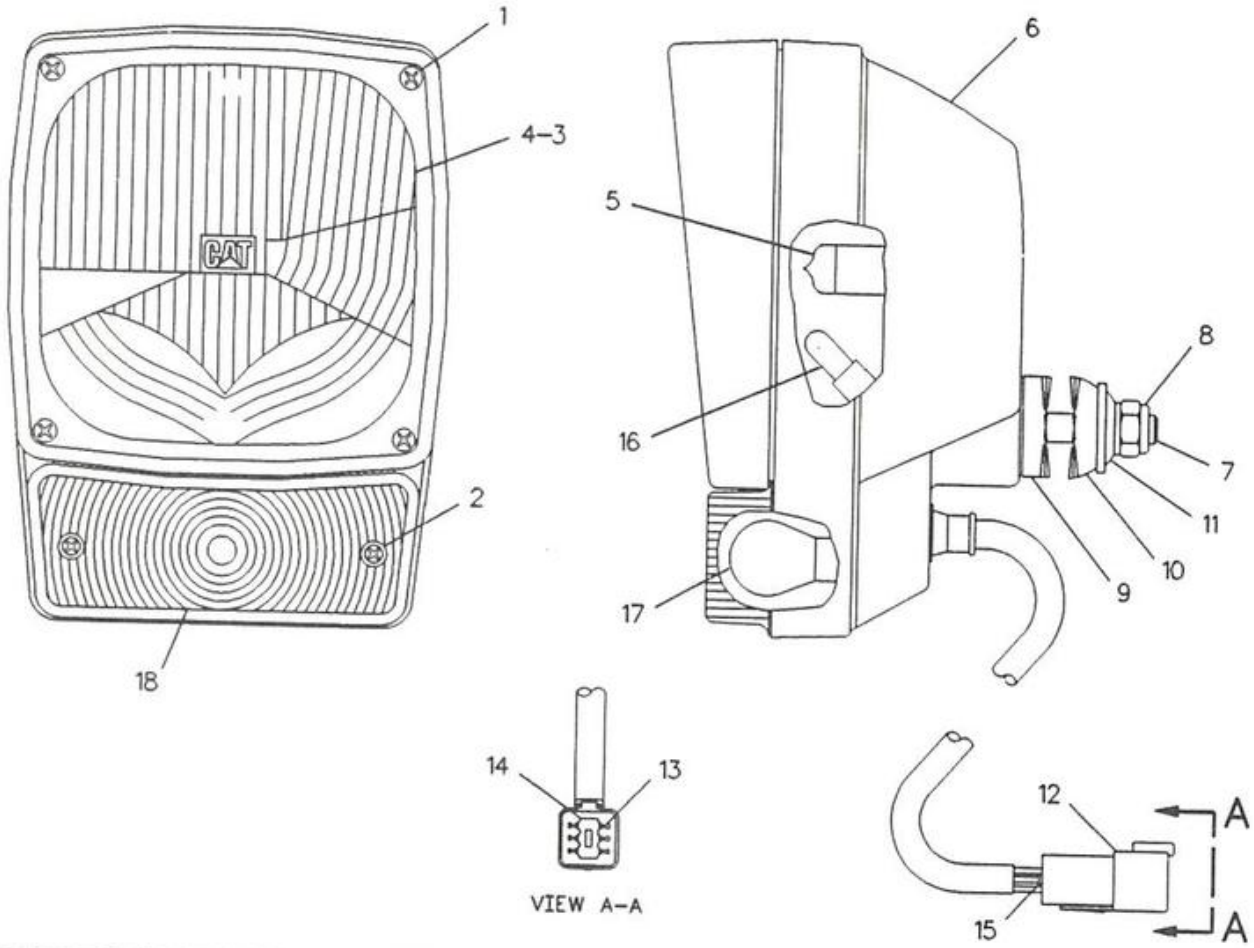

NOTE	REF NO	PART NUMBER	QTY	PART NAME	NOTE	REF NO	PART NUMBER	QTY	PART NAME
	1	9X4244	4	SCREW					
	2	1003251	2	SCREW-LENS					
	3	9X9865	1	SEAL					
	4	1003248	1	LENS AS-HEAD					
	5	9W3324	1	LAMP-HEAD					
	6	1003247	1	BODY AS-LAMP					
M	7	8T5005	1	BOLT					
M	8	8T0389	1	NUT					
	9	1003253	1	SPACER-SPHERICAL					
	10	1003254	1	SPACER-SPHERICAL					
	11	1003255	1	WASHER-SPHERICAL					
	12	3E3382	1	RECEPTACLE AS					
	13	8T8729	5	PIN-CONNECTOR					
	14	3E3383	1	WEDGE-RECEP LOCK					
	15	8T8737	1	PLUG-SEAL					
	16	1003246	1	BULB					
	17	5G3244	1	BULB					
	18	1003250	1	LENS-AMBER					

M-METRIC PART

F-534095 EP

1429

3E7584 LAMP GP-HEAD
Part Of 9R8628 Lighting-Roading
An Attachment

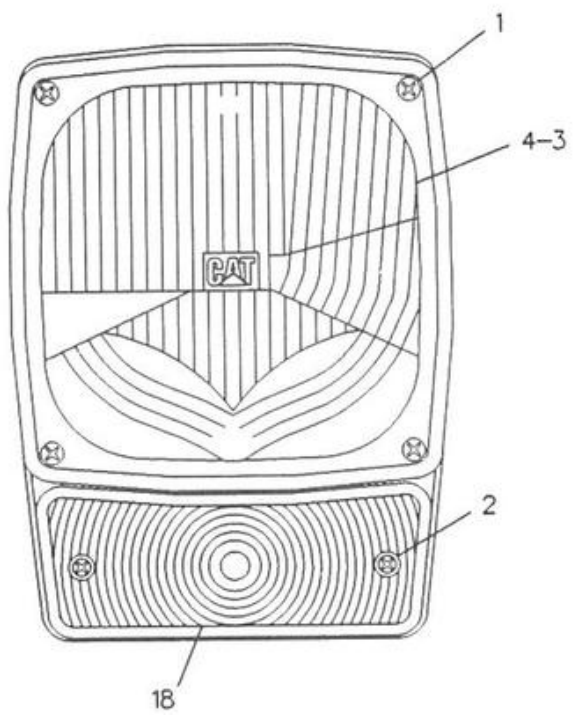

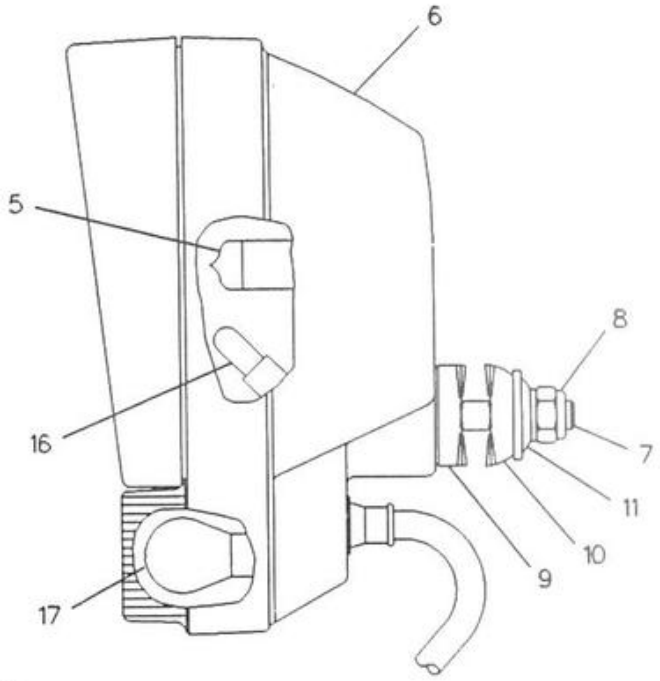

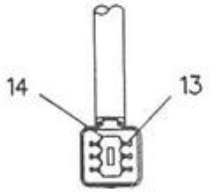

VIEW A-A

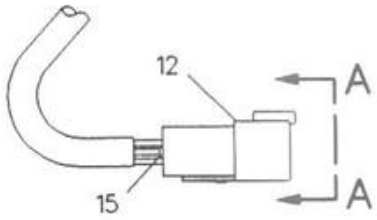

NOTE	REF NO	PART NUMBER	QTY	PART NAME	NOTE	REF NO	PART NUMBER	QTY	PART NAME
	1	9X4244	4	SCREW					
	2	1003251	2	SCREW-LENS					
	3	9X9865	1	SEAL					
	4	1003249	1	LENS AS					
	5	9W3324	1	LAMP-HEAD					
	6	1003247	1	BODY AS-LAMP					
M	7	8T5005	1	BOLT					
M	8	8T0389	1	NUT					
	9	1003253	1	SPACER-SPHERICAL					
	10	1003254	1	SPACER-SPHERICAL					
	11	1003255	1	WASHER-SPHERICAL					
	12	3E3382	1	RECEPTACLE AS					
	13	8T8729	5	PIN-CONNECTOR					
	14	3E3383	1	WEDGE-RECEP LOCK					
	15	8T8737	1	PLUG-SEAL					
	16	1003246	1	BULB					
	17	5G3244	1	BULB					
	18	1003250	1	LENS-AMBER					

M-METRIC PART

F-536599 EP

1429

3E7585 LAMP GP-HEAD
Part Of 8Y8672 Lighting-Roading
An Attachment

		PAGE
1	9R8033 AXLE GP-DRIVE & STEER	150
1	9R1231 DRIVE SHAFT GP	165
1	9R7585 FRAME GP-LOADER	205
1	9R7609 LINES GP-STEERING	186
1	8E7681 TRANSMISSION GP-DIRECT DRIVE	126
1	9R1287 WHEEL & TIRE GP-FRONT	196
1	9R1200 WHEEL & TIRE GP-REAR	170
1	9R8005 WIRING GP-FRONT DRIVE	90
1	9R9996 BAFFLE	
2	3E8134 FILM-4X4	

535269 P

9R8032 DRIVE AR-FRONT WHEEL
An Attachment

		PAGE
1	9R7540 AXLE GP-DRIVE	140
1	9R8036 AXLE GP-DRIVE & STEER	151
1	9R1231 DRIVE SHAFT GP	165
1	9R7585 FRAME GP-LOADER	205
1	9R7609 LINES GP-STEERING	186
1	8E7681 TRANSMISSION GP-DIRECT DRIVE	126
1	9R1287 WHEEL & TIRE GP-FRONT	196
1	9R0720 WHEEL & TIRE GP-REAR	168
1	9R8005 WIRING GP-FRONT DRIVE	90
1	9R9996 BAFFLE	
2	3E8134 FILM-4X4	

535313 P

9R8653 DRIVE AR-FRONT WHEEL
COSA
An Attachment

		PAGE
1	9W1355 DRIVE GP-FLEXIBLE COUPLING	134
1	9W8111 MOUNTING GP-TRANSMISSION	138
1	8E0735 TORQUE CONVERTER AS	119
1	9U9495 TRANSMISSION GP	120

534831 P

6I8196 TRANSMISSION AR

(NO SERVICEABLE PARTS)

488071 P

3101

8E0735 TORQUE CONVERTER AS
Part Of 6I8196 Transmission Ar

POWER TRAIN

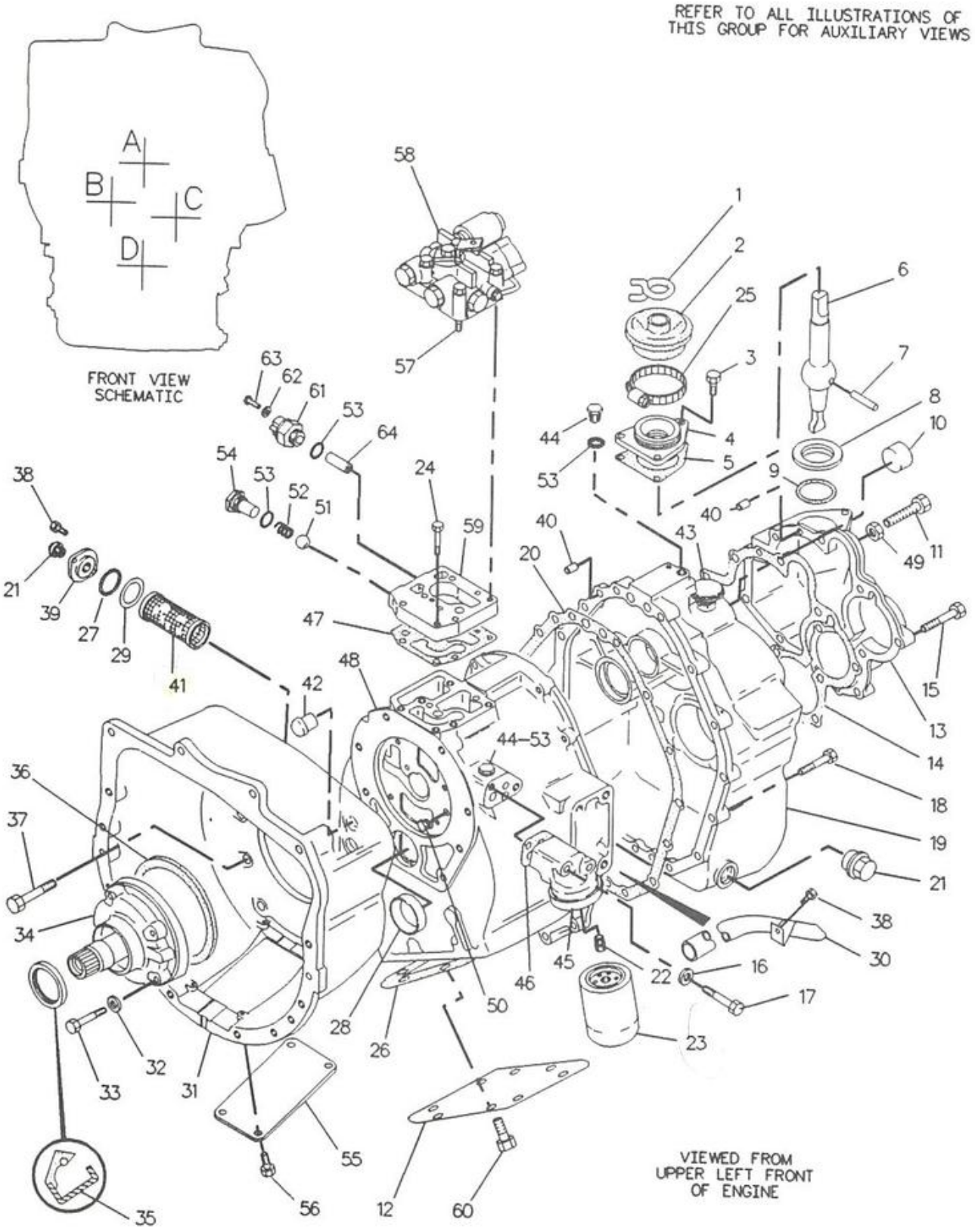

F-534862 EP

3060

9U9495 TRANSMISSION GP-PART 1 OF 3
Part Of 6I8196 Transmission Ar

POWER TRAIN

NOTE	REF NO	PART NUMBER	QTY	PART NAME
	1	6T9201	1	CLIP
	2	7T3111	1	COVER
M	3	6V5217	3	BOLT
	4	7T3108	1	SEAT
	5	6T9209	1	GASKET
	6	7T3107	1	LEVER
	7	7T3109	1	PIN
	8	6Y2007	1	SEAT
	9	6Y2008	1	SEAL
	10	7T3049	1	PLUG
	11	9W5454	1	BOLT
	12	7T8494	1	COVER
	13	7T3116	1	COVER
	14	6T9200	1	GASKET
M	15	6V3822	11	BOLT
	16	5B9628	2	WASHER
M	17	6V7981	2	BOLT
M	18	6V5842	15	BOLT
	19	6Y1897	1	CASE-TMSN-REAR
	20	6T9171	1	GASKET
	21	6Y1896	2	PLUG AS-DRAIN
	22	3G6927	1	ADAPTER
	23	6E0924	1	FILTER-OIL
M	24	6V5218	2	BOLT
	25	9M7959	1	CLAMP
	26	7T8536	1	GASKET
	27	4F7952	1	SEAL-O-RING
	28	7T3051	1	PLUG
	29	9W5460	1	RING
	30	7T2649	1	PIPE AS
	31	9W8109	1	HOUSING-CONVERTER
	32	9P9150	4	WASHER
M	33	6V3918	4	BOLT
Y	34	6Y3864	1	PUMP GP-HYDRAULIC
	35	8T9592	1	SEAL-LIP TYPE
	36	7X4741	1	SEAL
M	37	6V8197	8	BOLT
M	38	6V5215	3	BOLT
	39	6Y2004	1	COVER
	40	7T3253	4	DOWEL
	41	7T2651	1	STRAINER
	42	6T9202	2	PLUG
	43	7T3251	1	BREATHER
	44	9S4191	3	PLUG-O-RING
	45	7T3119	1	HOUSING
	46	6T9197	1	GASKET
	47	6T9184	1	GASKET
	48	8E1593	1	CASE AS-FRONT
M	49	6V8149	1	NUT
	50	6Y4429	1	PLUG
	51	4B9782	1	BALL
	52	7T3129	1	SPRING
	53	3J1907	5	SEAL-O-RING
	54	7T3128	1	GUIDE
	55	7T3113	1	COVER
M	56	6V8836	4	BOLT
M	57	6V5221	4	BOLT
Y	58	9U9496	1	VALVE GP-CONTROL
	59	9W7904	1	ADAPTER-VALVE
M	60	6V4248	8	BOLT
	61	8C5492	1	SWITCH AS (NEUTRAL ST)
	62	9B7233	2	LOCKWASHER
	63	6V8376	2	SCREW-MACHINE
	64	7T3130	1	PIN

M-METRIC PART
Y-SEPARATE ILLUSTRATION

534863 EP

3060

9U9495 TRANSMISSION GP-PART 1 OF 3
9U9496-Page 136, 6Y3864-Page 135
Part Of 6I8196 Transmission Ar

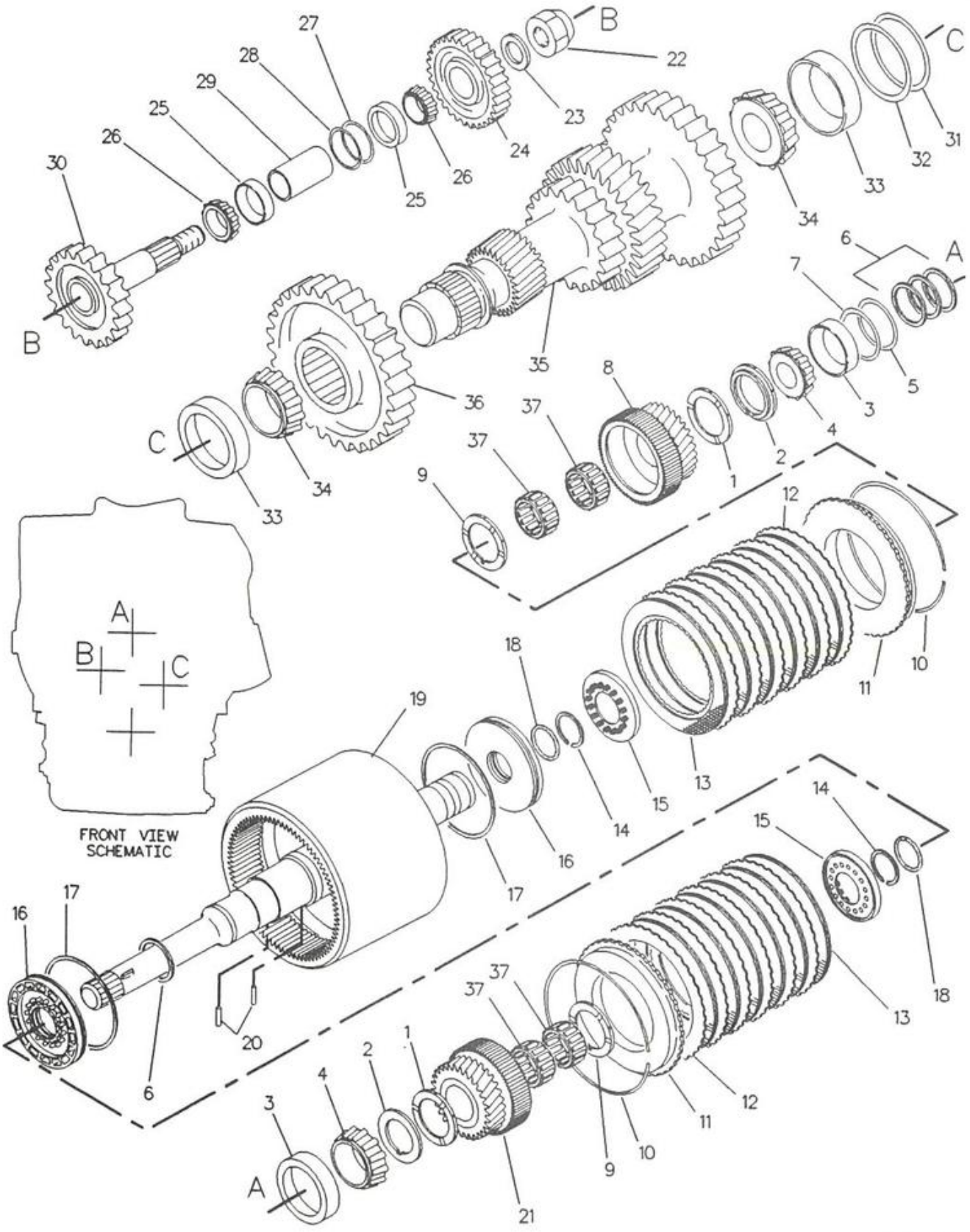

F-534864 EP

3060

9U9495 TRANSMISSION GP-PART 2 OF 3
Part Of 6I8196 Transmission Ar

POWER TRAIN

NOTE	REF NO	PART NUMBER	QTY	PART NAME
	1	6Y1223	2	DISC-THRUST
	2	7T8493	2	WASHER
	3	50469	2	CUP-ROLLER BEARING
	4	50471	2	CONE-BEARING
B	5	7T3034	1	SHIM .100CM(.0394IN)THK
	6	6Y1192	4	RING-SEAL
B	7	6T9142	1	SHIM .0508CM(.020IN)THK
B		6T9143	1	SHIM .0381CM(.015IN)THK
B		6T9144	1	SHIM .00508CM(.002IN)THK
B		6T9145	1	SHIM .01778CM(.007IN)THK
B		6T9146	1	SHIM .0127CM(.005IN)THK
B		6T9147	1	SHIM .00762CM(.003IN)THK
	8	7T3038	1	GEAR (20 T) (REVERSE)
	9	7T3036	2	WASHER
	10	8T2151	2	RING
	11	6Y1254	2	RETAINER
	12	6T9194	14	PLATE
	13	6Y7929	12	DISC-FRICTION
	14	8T2150	2	RING
	15	7T3122	2	SPRING AS
	16	7T3173	2	PISTON
	17	6T9196	2	SEAL
	18	8C3078	2	SEAL-O-RING
	19	6Y7466	1	SHAFT AS-INPUT
	20	7T3035	4	PIN
	21	7T3039	1	GEAR (20 T)
	22	7T1514	1	NUT
	23	6H0659	1	WASHER
	24	9W5461	1	GEAR (REVERSE IDLER)
	25	6V4636	2	CUP
	26	6V4635	2	CONE
B	27	7T3045	1	SHIM .200CM(.079IN)THK
B	28	7T3040	1	SHIM .0559CM(.022IN)THK
B		7T3041	1	SHIM .0178CM(.007IN)THK
B		7T3042	1	SHIM .0076CM(.003IN)THK
B		7T3043	1	SHIM .0051CM(.002IN)THK
	29	7T3044	1	SPACER
	30	7T3046	1	GEAR (27 TEETH)
B	31	7T2646	1	SHIM .100CM(.039IN)THK
B	32	6T9163	1	SHIM .0599CM(.024IN)THK
	33	8T1580	2	CUP
	34	8T1581	2	CONE
	35	9W5464	1	GEAR (COUNTERSHAFT)
	36	6T9167	1	GEAR (38 TEETH)
	37	6V8501	4	BEARING

B-USE AS REQUIRED

534865 EP

3060 **9U9495 TRANSMISSION GP-PART 2 OF 3**

Part Of 6I8196 Transmission Ar

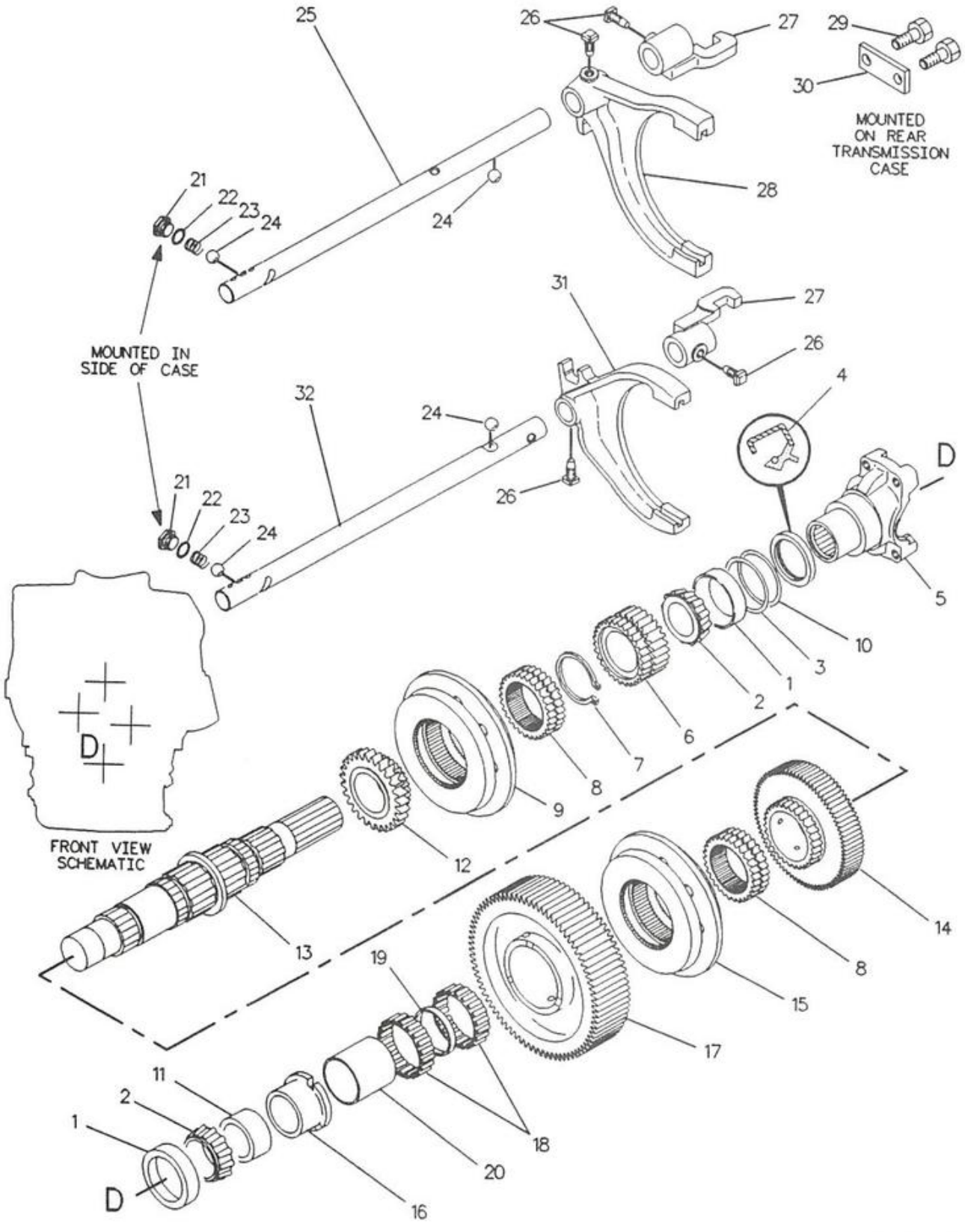

F-552095 EP

3060

9U9495 TRANSMISSION GP-PART 3 OF 3

Part Of 6I8196 Transmission Ar

POWER TRAIN

NOTE	REF NO	PART NUMBER	QTY	PART NAME
	1	8T1580	2	CUP
	2	8T1581	2	CONE
B	3	7T2646	1	SHIM .100CM(.039IN)THK
	4	8T2193	1	SEAL-LIP TYPE
	5	8E2043	1	YOKE AS
	6	9W5462	1	GEAR (4TH)
	7	6Y2326	1	RING
	8	7T3022	2	SLEEVE
	9	7T3016	1	SYNCHRONIZER GP
B	10	6T9163	1	SHIM .0599CM(.024IN)THK
B		6T9164	1	SHIM .0178CM(.007IN)THK
B		6T9165	1	SHIM .0076CM(.003IN)THK
B		6T9166	1	SHIM .0051CM(.002IN)THK
	11	7T2645	1	SPACER
	12	9W5463	1	GEAR (3RD)
	13	7T2647	1	SHAFT (OUTPUT)
	14	6T9162	1	GEAR (35 TEETH)
	15	7T3021	1	SYNCHRONIZER GP
	16	6Y2936	1	SPACER
	17	6T9160	1	GEAR (43 TEETH)
	18	6V8500	2	BEARING
	19	7T3017	1	SPACER
	20	7T3018	1	SLEEVE
	21	9S4191	2	PLUG-O-RING
	22	3J1907	2	SEAL-O-RING
	23	6Y1341	2	SPRING
	24	145645	4	BALL
	25	7T3102	1	ROD (UPPER)
	26	7T3249	4	SCREW
	27	7T3103	2	LUG
	28	7T3101	1	FORK (UPPER)
M	29	6V8836	2	BOLT
	30	7T3105	1	PLATE
	31	7T3099	1	FORK (LOWER)
	32	7T3100	1	ROD (LOWER)
				THE FOLLOWING REPAIR KITS ARE AVAILABLE :
		6Y1174		KIT-BEARING
		6Y1175		KIT-CLUTCH PACK
		6Y1176		KIT-WASHER
		6Y1177		KIT-SNAP RING
		6Y1178		KIT-SEAL

B-USE AS REQUIRED
M-METRIC PART

534867 EP

3060 **9U9495 TRANSMISSION GP-PART 3 OF 3**
Part Of 6I8196 Transmission Ar

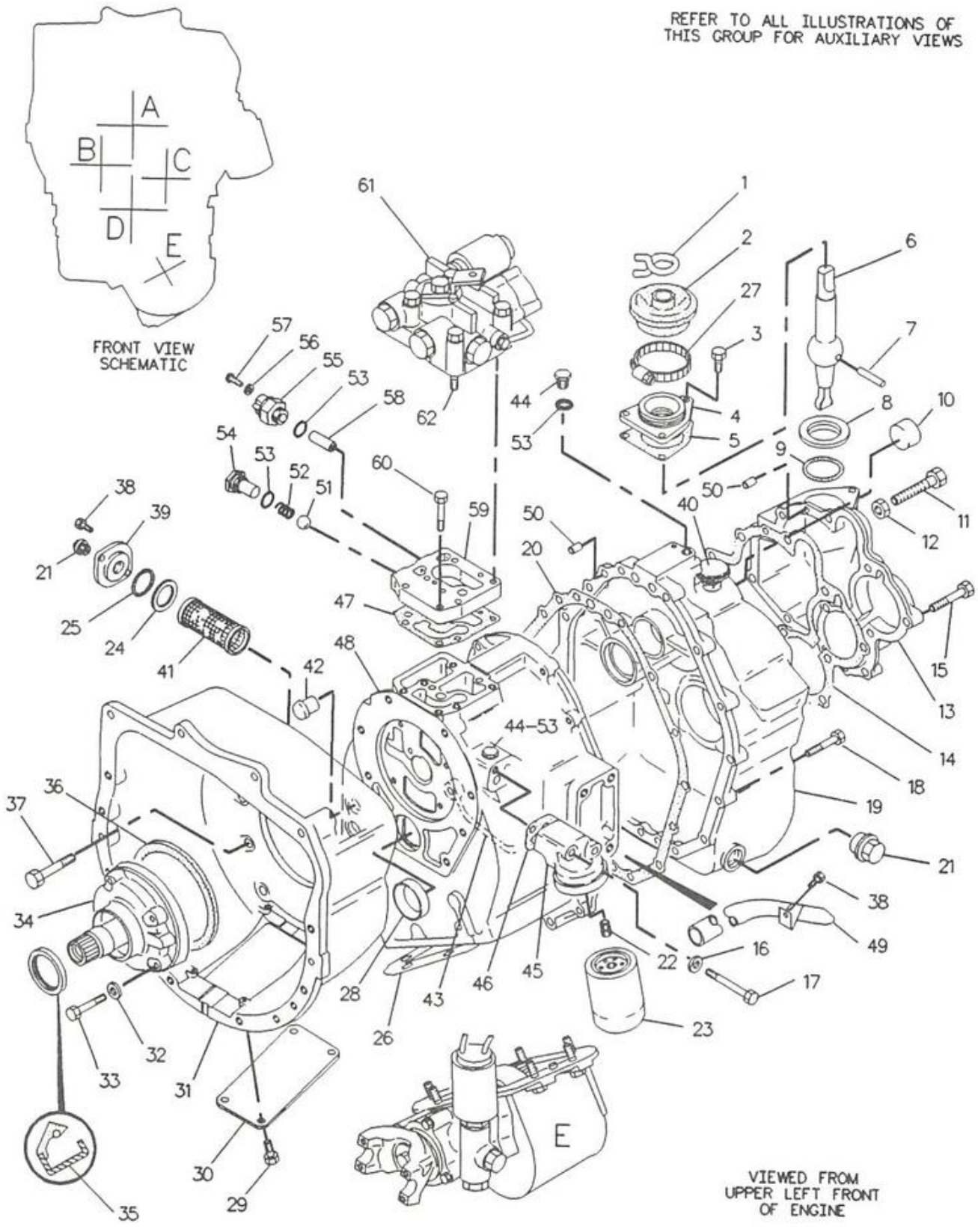

F-535371 EP

3060

8E7681 TRANSMISSION GP-DIRECT DRIVE-PART 1 OF 4
Part Of 9R8032, 9R8653 Drive Ar-Front Wheel
An Attachment

POWER TRAIN

NOTE	REF NO	PART NUMBER	QTY	PART NAME
	1	6T9201	1	CLIP
	2	7T3111	1	COVER
M	3	6V5217	3	BOLT
	4	7T3108	1	SEAT
	5	6T9209	1	GASKET
	6	7T3107	1	LEVER
	7	7T3109	1	PIN
	8	6Y2007	1	SEAT
	9	6Y2008	1	SEAL
	10	7T3049	1	PLUG
	11	9W5454	1	BOLT
M	12	6V8149	1	NUT
	13	7T3116	1	COVER
	14	6T9200	1	GASKET
M	15	6V3822	11	BOLT
	16	5B9628	2	WASHER
M	17	6V7981	2	BOLT
M	18	6V5842	15	BOLT
	19	6Y1897	1	CASE-TMSN-REAR
	20	6T9171	1	GASKET
	21	6Y1896	2	PLUG AS-DRAIN
	22	3G6927	1	ADAPTER
	23	6E0924	1	FILTER-OIL
	24	9W5460	1	RING
	25	4F7952	1	SEAL-O-RING
B	26	7T3174	1	GASKET .25MM(.010IN)THK
B		7T3175	1	GASKET .50MM(.020IN)THK
	27	9M7959	1	CLAMP
	28	7T3051	1	PLUG
M	29	6V8836	4	BOLT
	30	7T3113	1	COVER
	31	9W8109	1	HOUSING-CONVERTER
	32	9P9150	4	WASHER
M	33	6V3918	4	BOLT
Y	34	6Y3864	1	PUMP GP-HYDRAULIC
	35	8T9592	1	SEAL-LIP TYPE
	36	7X4741	1	SEAL
M	37	6V8197	8	BOLT
M	38	6V5215	3	BOLT
	39	6Y2004	1	COVER
	40	7T3251	1	BREATHER
	41	7T2651	1	STRAINER
	42	6T9202	2	PLUG
	43	9W5458	1	TUBE AS
		9W5456	4	WASHER
		9W5457	2	FITTING
	44	9S4191	3	PLUG-O-RING
	45	7T3119	1	HOUSING
	46	6T9197	1	GASKET
	47	6T9184	1	GASKET
	48	8E1593	1	CASE AS-FRONT
	49	7T2649	1	PIPE AS
	50	7T3253	4	DOWEL
	51	4B9782	1	BALL
	52	7T3129	1	SPRING
	53	3J1907	5	SEAL-O-RING
	54	7T3128	1	GUIDE
	55	8C5492	1	SWITCH AS (NEUTRAL START)
	56	9B7233	2	LOCKWASHER
	57	6V8376	2	SCREW-MACHINE
	58	7T3130	1	PIN
	59	9W5455	1	ADAPTER-VALVE
M	60	6V5218	2	BOLT
Y	61	9U9496	1	VALVE GP-CONTROL
M	62	6V5221	4	BOLT

B-USE AS REQUIRED
M-METRIC PART
Y-SEPARATE ILLUSTRATION

535372 EP

3060 **8E7681 TRANSMISSION GP-DIRECT DRIVE-PART 1 OF 4**

9U9496-Page 136, 6Y3864-Page 135
Part Of 9R8032, 9R8653 Drive Ar-Front Wheel
An Attachment

POWER TRAIN

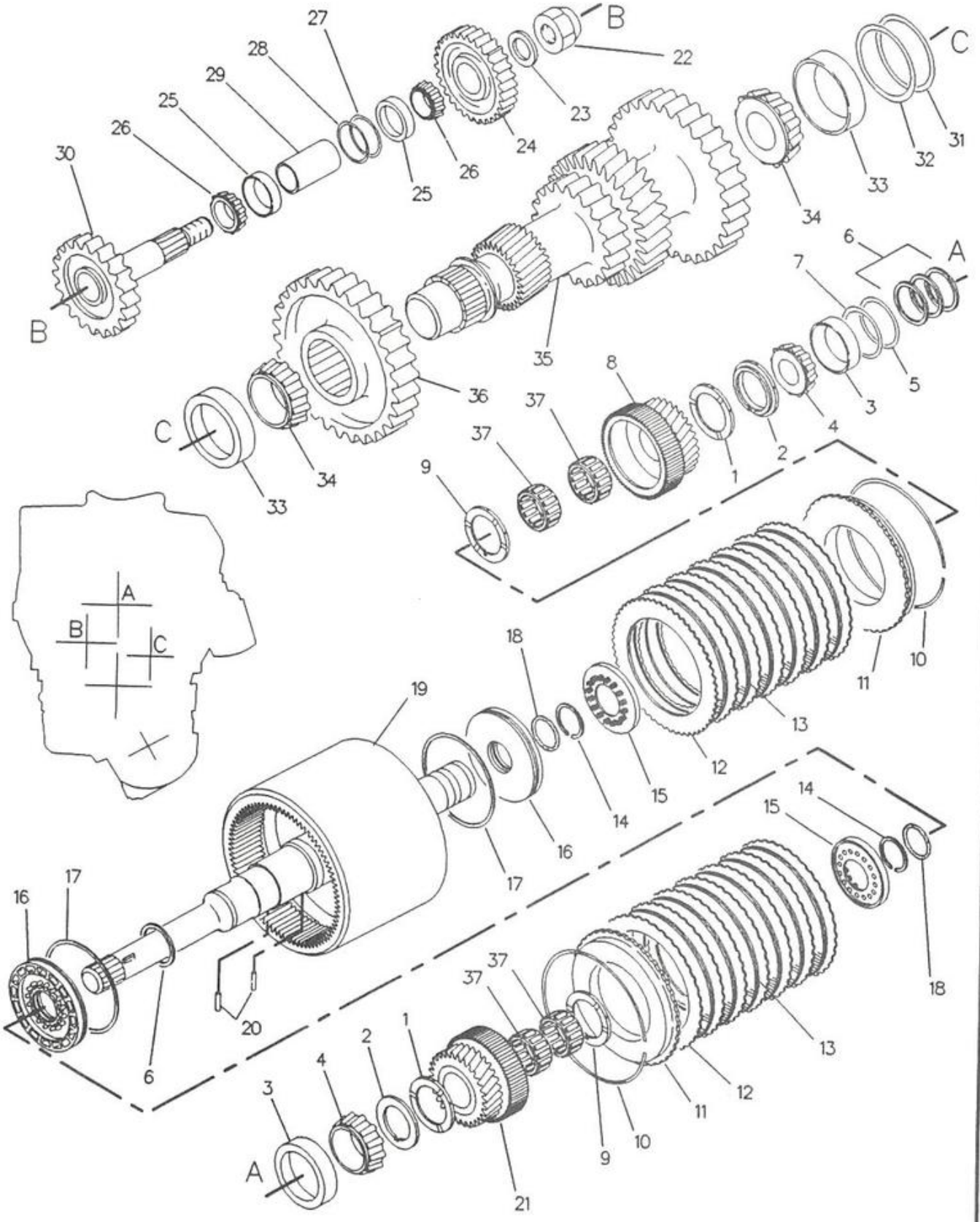

F-517152 EP

3060

8E7681 TRANSMISSION GP-DIRECT DRIVE-PART 2 OF 4
Part Of 9R8032, 9R8653 Drive Ar-Front Wheel
An Attachment

SEBP2202

POWER TRAIN

NOTE	REF NO	PART NUMBER	QTY	PART NAME
J	1	7G0897	2	DISC-THRUST
J	2	7T8493	2	WASHER
	3	50469	2	CUP-ROLLER BEARING
	4	50471	2	CONE-BEARING
	5	7T3034	1	SHIM 1.02MM(.04IN)THK
	6	6Y1192	4	RING-SEAL
B	7	6T9142	1	SHIM .051MM(.002IN)THK
B		6T9143	1	SHIM .038MM(.002IN)THK
B		6T9144	1	SHIM .005MM(.0002IN)THK
B		6T9145	1	SHIM .180MM(.007IN)THK
B		6T9146	1	SHIM .127MM(.005IN)THK
B		6T9147	1	SHIM .076MM(.003IN)THK
	8	7T3038	1	GEAR (20 T) (REVERSE)
J	9	7T3036	2	WASHER
	10	8T2151	2	RING
	11	6Y1254	2	RETAINER
	12	6T9194	14	PLATE
	13	6Y7929	12	DISC-FRICTION
	14	8T2150	2	RING
	15	7T3122	2	SPRING AS
	16	7T3173	2	PISTON
	17	6T9196	2	SEAL
	18	8C3078	2	SEAL-O-RING
	19	6Y7466	1	SHAFT AS-INPUT
	20	7T3035	4	PIN
	21	7T3039	1	GEAR (20 T)
	22	7T1514	1	NUT
	23	6H0659	1	WASHER
	24	9W5461	1	GEAR (REVERSE IDLER)
	25	6V4636	2	CUP
	26	6V4635	2	CONE
	27	7T3045	1	SHIM 2.0MM(.079IN)THK
B	28	7T3040	1	SHIM .559MM(.022IN)THK
B		7T3041	1	SHIM .178MM(.007IN)THK
B		7T3042	1	SHIM .076MM(.003IN)THK
B		7T3043	1	SHIM .51MM(.020IN)THK
	29	7T3044	1	SPACER
	30	7T3046	1	GEAR (27 TEETH)
	31	7T2646	1	SHIM 1.02MM(.040IN)THK
B	32	6T9163	1	SHIM .599MM(.024IN)THK
B		6T9164	1	SHIM .178MM(.007IN)THK
B		6T9165	1	SHIM .076MM(.003IN)THK
B		6T9166	1	SHIM .051MM(.002IN)THK
	33	8T1580	2	CUP
	34	8T1581	2	CONE
	35	9W5464	1	GEAR (COUNTERSHAFT)
	36	6T9167	1	GEAR (38 TEETH)
	37	6V8501	4	BEARING

B-USE AS REQUIRED

535373 EP

3060 **8E7681 TRANSMISSION GP-DIRECT DRIVE-PART 2 OF 4**

Part Of 9R8032, 9R8653 Drive Ar-Front Wheel

An Attachment

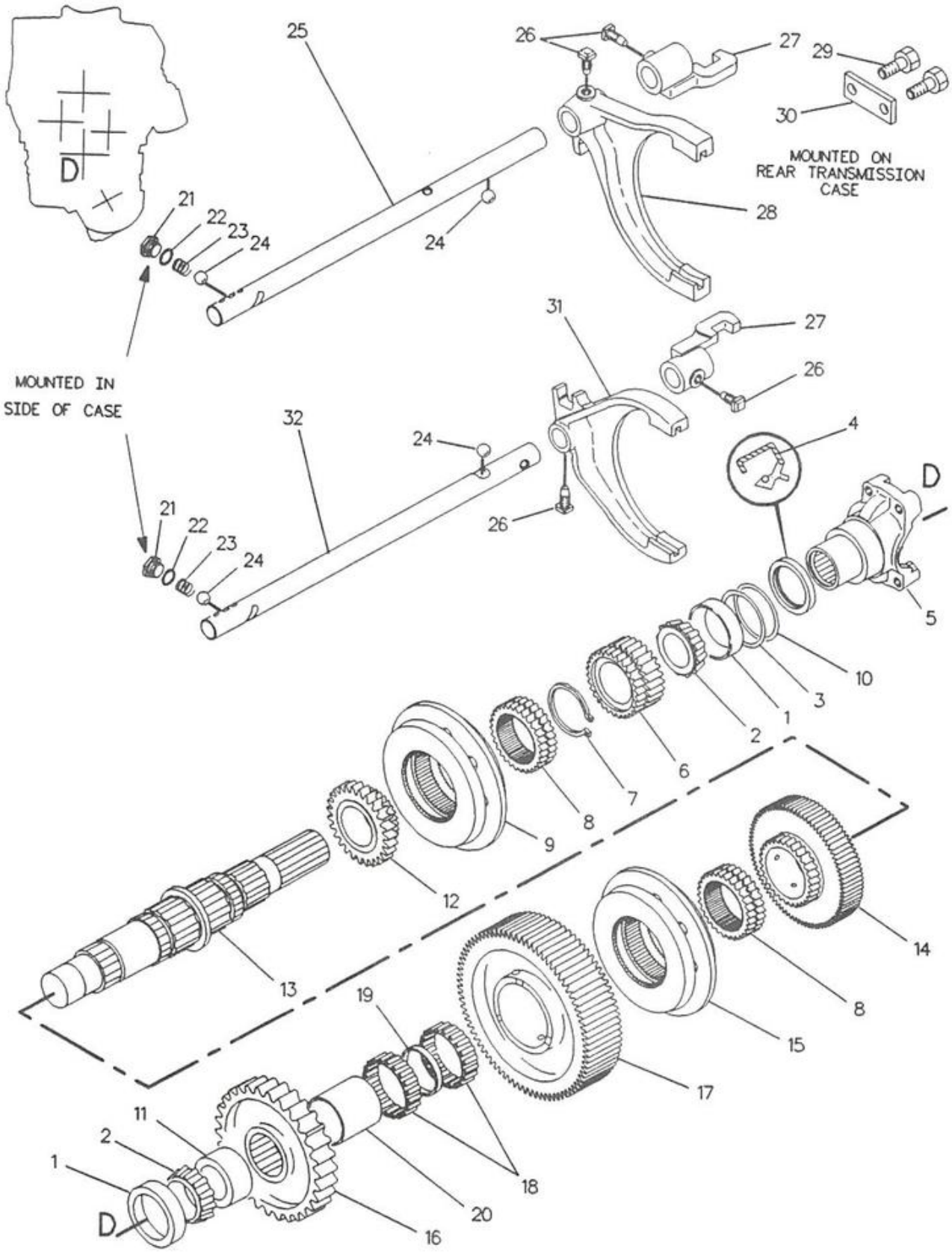

F-517154 EP

3060

8E7681 TRANSMISSION GP-DIRECT DRIVE-PART 3 OF 4
Part Of 9R8032, 9R8653 Drive Ar-Front Wheel
An Attachment

POWER TRAIN

NOTE	REF NO	PART NUMBER	QTY	PART NAME
	1	8T1580	2	CUP
	2	8T1581	2	CONE
	3	7T2646	1	SHIM 1.02MM(.040IN)THK
	4	8T2193	1	SEAL-LIP TYPE
	5	8E2043	1	YOKE AS
	6	9W5462	1	GEAR (4TH)
	7	6Y2326	1	RING
	8	7T3022	2	SLEEVE
	9	7T3016	1	SYNCHRONIZER GP
B	10	6T9163	1	SHIM .599MM(.024IN)THK
B		6T9164	1	SHIM .178MM(.007IN)THK
B		6T9165	1	SHIM .076MM(.003IN)THK
B		6T9166	1	SHIM .051MM(.002IN)THK
	11	7T2645	1	SPACER
	12	9W5463	1	GEAR (3RD)
	13	7T2647	1	SHAFT (OUTPUT)
	14	6T9162	1	GEAR (35 TEETH)
	15	7T3021	1	SYNCHRONIZER GP
	16	6T9159	1	GEAR (37 TEETH)
	17	6T9160	1	GEAR (43 TEETH)
	18	6V8500	2	BEARING
	19	7T3017	1	SPACER
	20	7T3018	1	SLEEVE
	21	9S4191	2	PLUG-O-RING
	22	3J1907	2	SEAL-O-RING
	23	6Y1341	2	SPRING
	24	145645	4	BALL
	25	7T3102	1	ROD
	26	7T3249	4	SCREW
	27	7T3103	2	LUG
	28	7T3101	1	FORK
M	29	6V8836	2	BOLT
	30	7T3105	1	PLATE
	31	7T3099	1	FORK
	32	7T3100	1	ROD

B-USE AS REQUIRED
M-METRIC PART

517155 EP

3060 **8E7681 TRANSMISSION GP-DIRECT DRIVE-PART 3 OF 4**
Part Of 9R8032, 9R8653 Drive Ar-Front Wheel
An Attachment

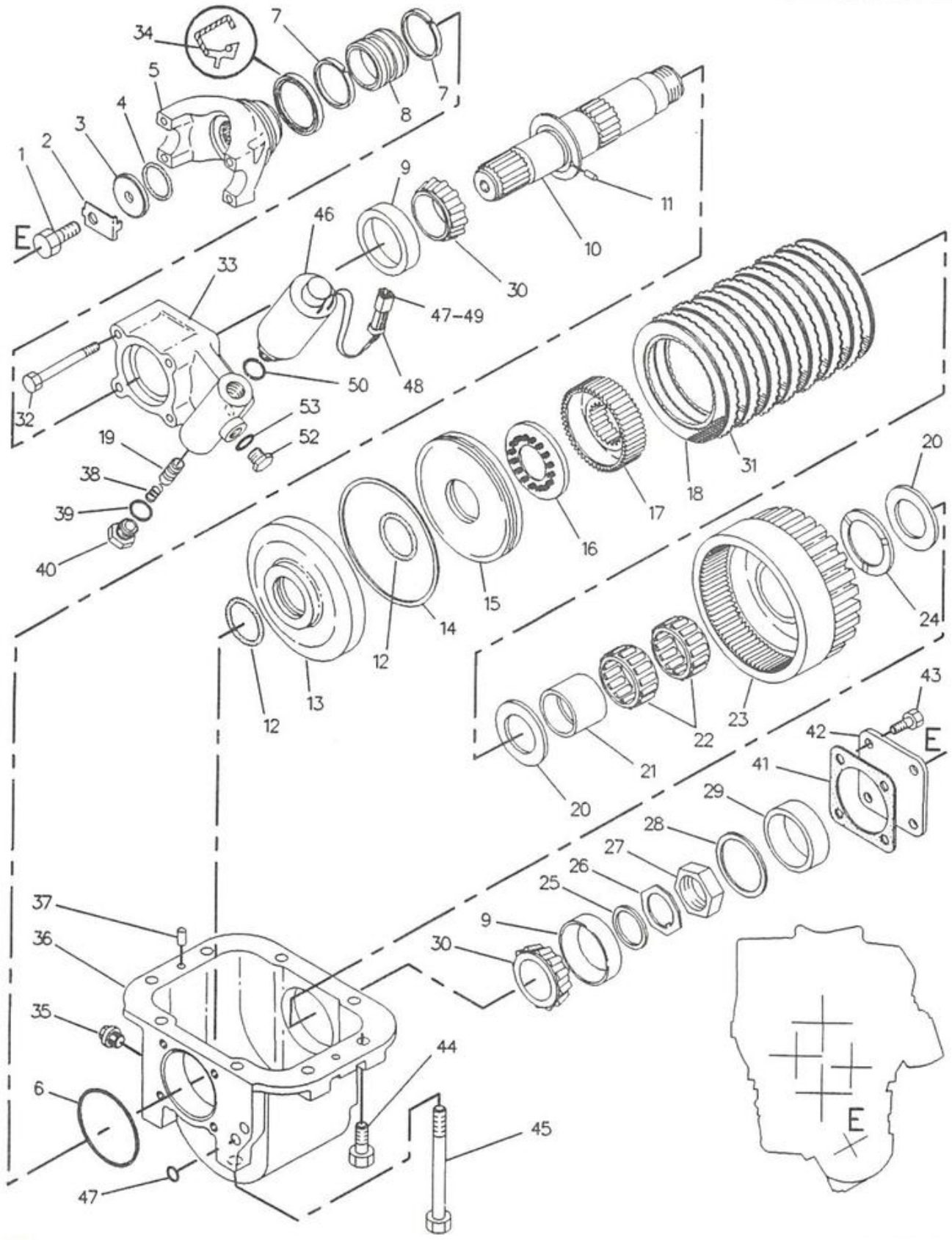

3060

8E7681 TRANSMISSION GP-DIRECT DRIVE-PART 4 OF 4
Part Of 9R8032, 9R8653 Drive Ar-Front Wheel
An Attachment

POWER TRAIN

NOTE	REF NO	PART NUMBER	QTY	PART NAME
M	1	8T4139	1	BOLT
	2	7T3196	1	LOCK
	3	7T3195	1	WASHER
	4	5P8066	1	SEAL-O-RING
	5	7T3194	1	YOKE
	6	8T6716	1	SEAL-O-RING
	7	9U8886	2	RING-SEAL
	8	7T3192	1	SLEEVE
	9	20754	2	CUP-ROLLER BEARING
	10	7T3170	1	SHAFT AS
	11	9W1741	1	PIN
	12	8C3078	2	SEAL-O-RING
	13	7T3172	1	CYLINDER
	14	6T9196	1	SEAL
	15	9W5459	1	PISTON
	16	7T3122	1	SPRING AS
	17	7T3176	1	HUB
	18	6Y7957	8	DISC-FRICTION
—	19	7T1552	1	SPOOL
	20	7T3178	2	WASHER
	21	7T3179	1	SLEEVE
	22	7T6655	2	BEARING
	23	6I8027	1	GEAR & DRUM AS
	24	9U9392	1	DISC-THRUST
	25	9W1737	1	SPACER
	26	9W2003	1	LOCKWASHER
	27	9W3341	1	LOCKNUT
B	28	7T3183	1	SHIM .051MM(.002IN)THK
B		7T3184	1	SHIM .076MM(.003IN)THK
B		7T3185	1	SHIM .127MM(.005IN)THK
B		7T3186	1	SHIM .178MM(.007IN)THK
B		7T3187	1	SHIM .381MM(.015IN)THK
B		7T3188	1	SHIM .508MM(.020IN)THK
	29	9W1734	1	SPACER
	30	6V8499	2	CONE
	31	6T9194	7	PLATE
M	32	6V7731	4	BOLT
—	33	6Y1142	1	ADAPTER AS
	34	8T2193	1	SEAL-LIP TYPE
	35	6Y1896	1	PLUG AS-DRAIN
	36	6Y2003	1	CASE-TRANSFER
	37	7T3253	2	DOWEL
—	38	7T2674	1	SPRING
—	39	2M9780	1	SEAL-O-RING
	40	7T3620	1	PLUG
	41	7T3615	1	GASKET
	42	7T3191	1	COVER
M	43	6V6317	4	BOLT
M	44	6V5842	4	BOLT
M	45	8T5436	4	BOLT
—	46	3E7507	1	SOLENOID-TRANSMISSION
	47	8T8729	2	PIN-CONNECTOR
	48	3E3363	1	RECEPTACLE AS
	49	3E3365	1	WEDGE
	50	2M9780	1	SEAL-O-RING
	51	9W3340	2	SEAL-O-RING
	52	9S4191	1	PLUG-O-RING
	53	3J1907	1	SEAL-O-RING

NOTE	REF NO	PART NUMBER	QTY	PART NAME
				THE FOLLOWING REPAIR KITS ARE AVAILABLE:
		6Y1174	1	KIT-BEARING
		6Y1175	1	KIT-CLUTCH PACK
		6Y1178	1	KIT-SEAL
		6Y1177	1	KIT-SNAP RING
J		6Y1176	1	KIT-WASHER (INCLUDES PARTS MARKED "J")

B-USE AS REQUIRED
M-METRIC PART

549664 EP

3060 **8E7681 TRANSMISSION GP-DIRECT DRIVE-PART 4 OF 4**
Part Of 9R8032, 9R8653 Drive Ar-Front Wheel An Attachment

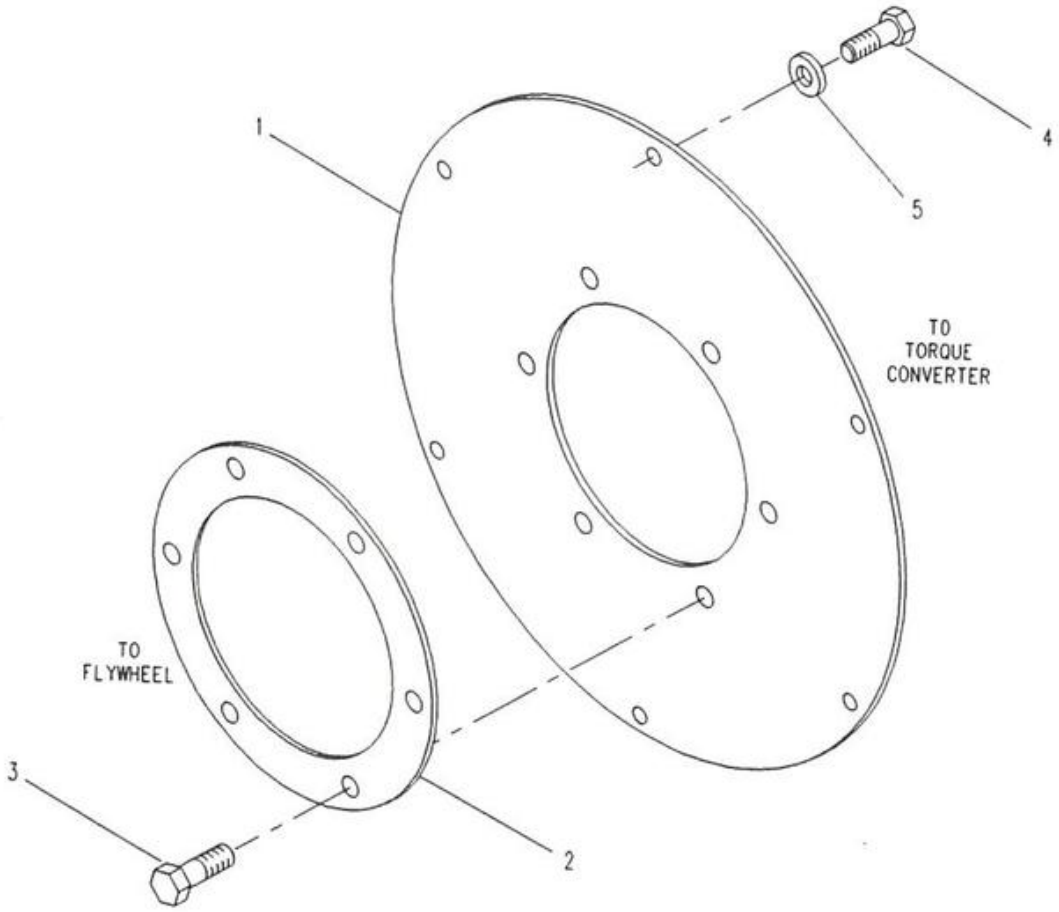

NOTE	REF NO	PART NUMBER	QTY	PART NAME
	1	7T2742	1	PLATE-CONVERTER DRIVE
	2	6T9487	1	PLATE
	3	OL1138	6	BOLT
	4	5K0906	6	BOLT (5/16-18X.625IN)
	5	8T4224	6	WASHER-HARD (2MM THK)

NOTE	REF NO	PART NUMBER	QTY	PART NAME

3252

F-534757 EP

9W1355 DRIVE GP-FLEXIBLE COUPLING
Part Of 6I8196 Transmission Ar

PAGE

1 6Y4341 PUMP GP..... 135

-OR-

1 9P3233 PUMP GP..... 135

504520 P

3066

6Y3864 PUMP-GP-HYDRAULIC
Part Of 8E7681 Transmission-Direct Drive & 9U9495 Transmisson

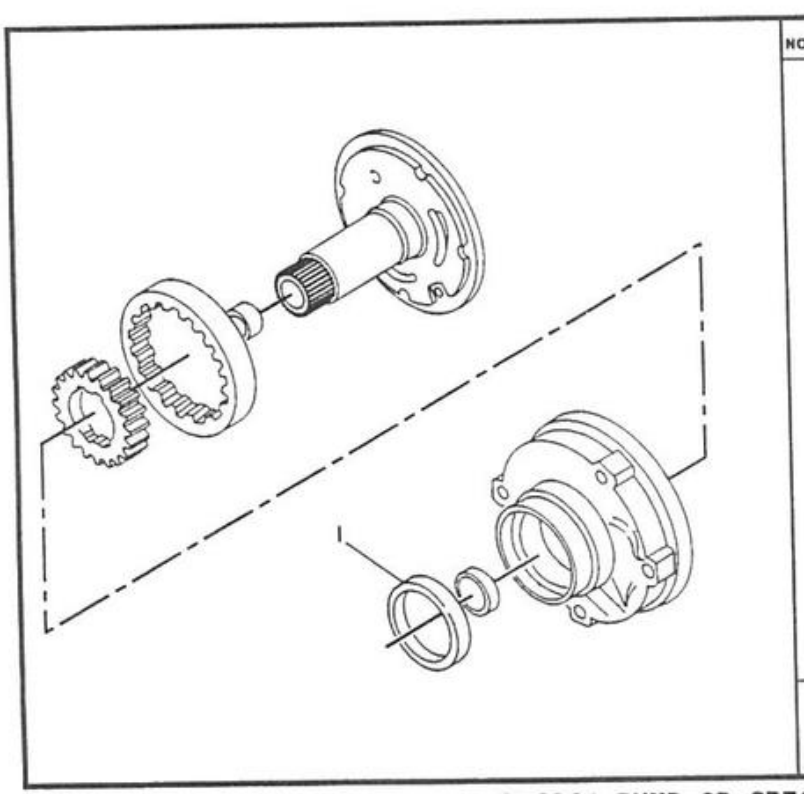

NOTE	REF NO	PART NUMBER	QTY	PART NAME
	1	8T9592	1	SEAL-LIP TYPE

V-533112 EP

3153

6Y4341 PUMP GP-CRESCENT
9P3233 PUMP GP-GEROTOR
Part Of 6Y3864 Pump-Hydraulic

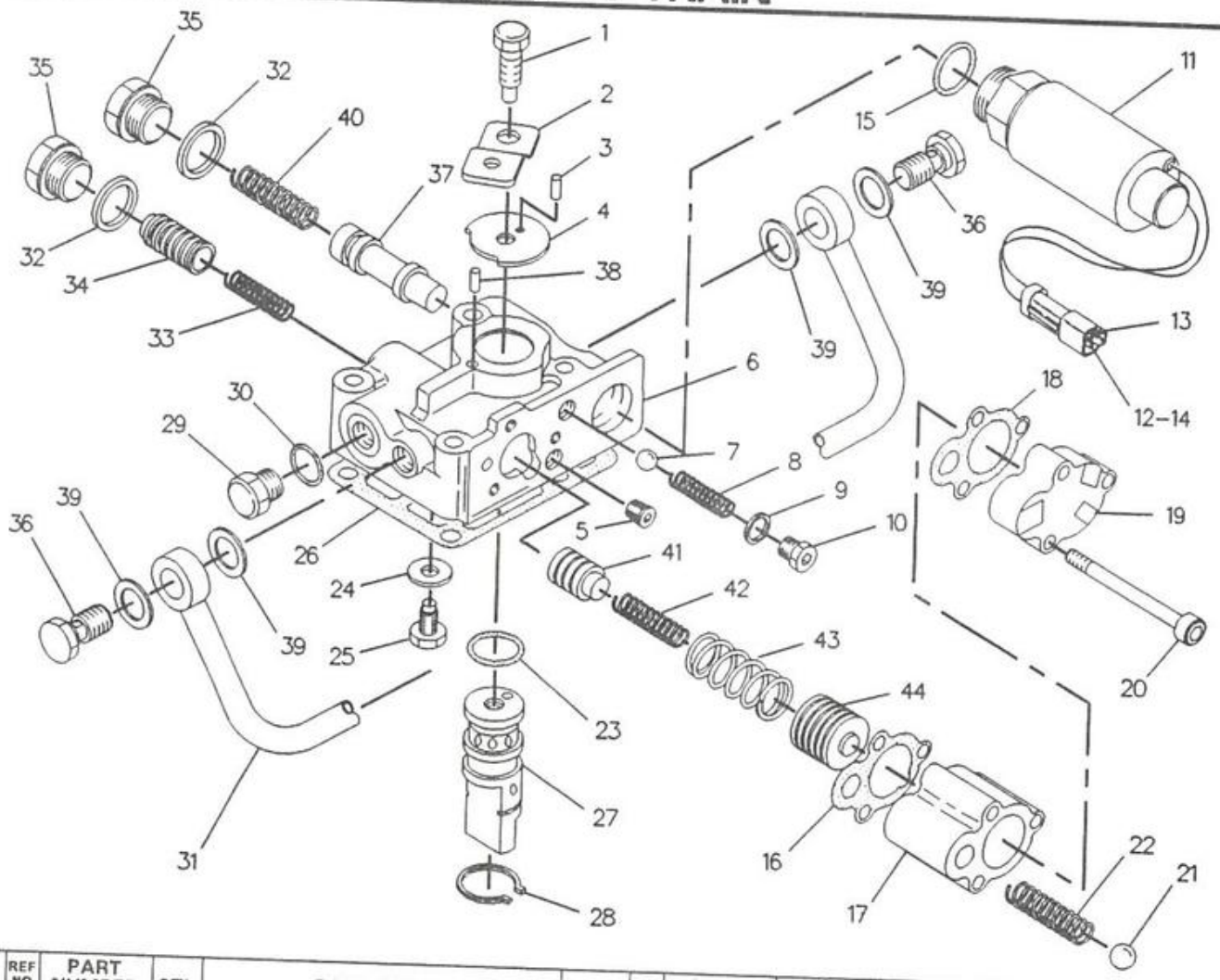

NOTE	REF NO	PART NUMBER	QTY	PART NAME
M	1	6V5215	1	BOLT (M8X1.25X16MM)
	2	7T2683	1	LEVER
	3	6V8236	1	PIN-SPRING
	4	7T2684	1	STOP
	5	7T6183	1	PLUG
	6	6Y3211	1	BODY AS-VALVE
	7	4B9880	1	BALL
	8	6Y4762	1	SPRING
	9	7T2671	1	WASHER
	10	7T2672	1	PLUG
	11	3E7507	1	SOLENOID-TRANSMISSION
	12	8T8729	2	PIN-CONNECTOR
	13	3E3363	1	RECEPTACLE AS
	14	3E3365	1	WEDGE
	15	2M9780	1	SEAL-O-RING
	16	6T9188	1	GASKET
	17	7T2675	1	BODY
	18	6T9187	1	GASKET
	19	9W2989	1	COVER AS
M	20	8T2922	3	BOLT-SOCKET HEAD
	21	66803	1	BALL
	22	7T2674	1	SPRING
	23	6V5326	1	SEAL-O-RING
	24	2Y6120	1	WASHER
M	25	7T2673	1	SCREW-GUIDE
	26	6T9189	1	GASKET
	27	6Y7464	1	VALVE AS
	28	7T5261	1	CLIP
	29	9S4191	1	PLUG-O-RING (9/16 X 18 THD)
	30	3J1907	1	SEAL-O-RING (11.89MM ID)
	31	9W5451	1	TUBE AS
	32	7T2669	2	WASHER
	33	7T2681	1	SPRING
	34	9W2988	1	SPOOL
	35	9W2991	2	PLUG
	36	9W5457	2	FITTING
	37	6Y7465	1	VALVE
	38	6Y5262	1	PIN-ROLL
	39	9W5456	4	WASHER
	40	8E9322	1	SPRING
	41	7T2679	1	VALVE
	42	7T2676	1	SPRING (INNER)
	43	7T2677	1	SPRING (OUTER)
	44	9W2990	1	PISTON

M-METRIC PART

3178

F-549670 EP

9U9496 VALVE GP-CONTROL

Part Of 9U9495 Transmission & 8E7681 Transmission-Direct Drive

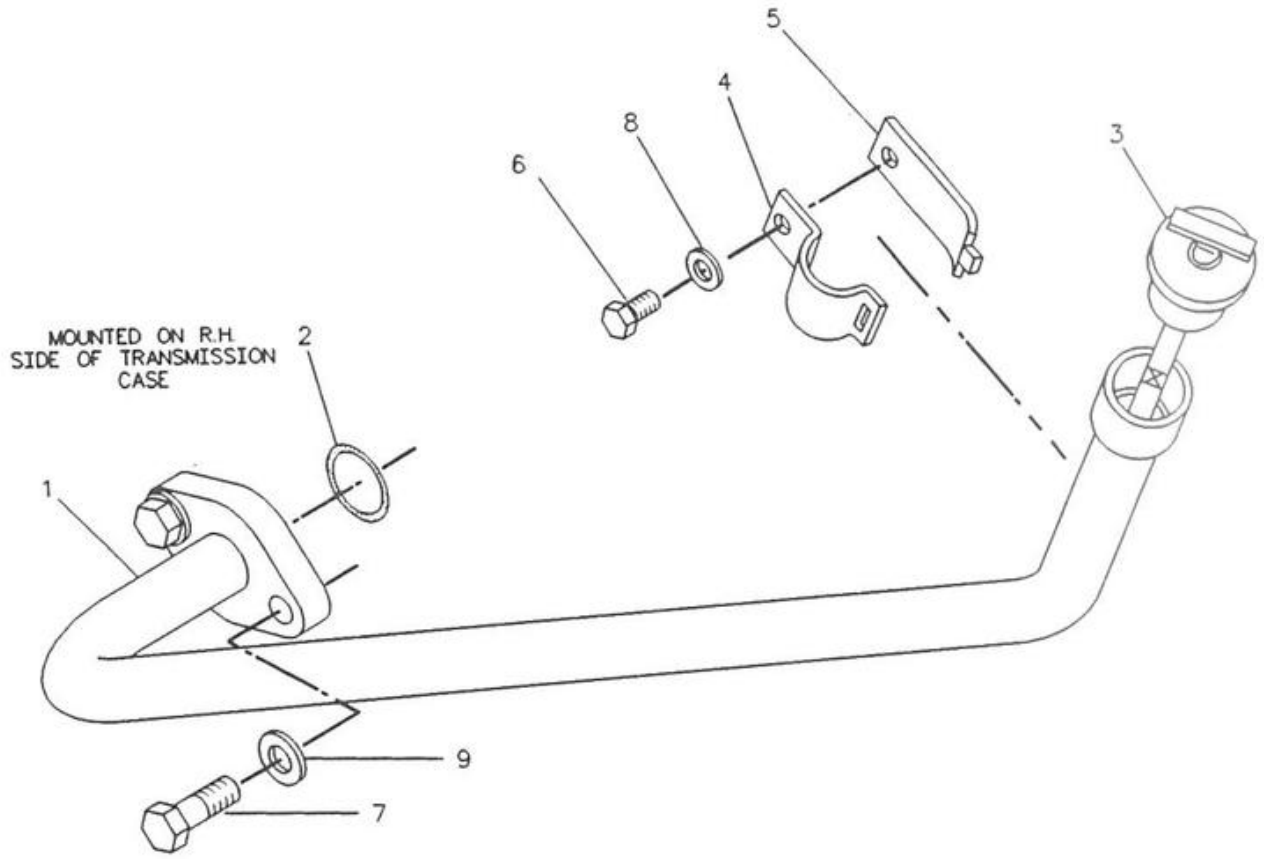

NOTE	REF NO	PART NUMBER	QTY	PART NAME	NOTE	REF NO	PART NUMBER	QTY	PART NAME
	1	9R6871	1	TUBE AS					
	2	5H4196	1	SEAL-O-RING					
	3	9R7211	1	GAUGE AS-OIL LEVEL					
	4	8S0023	1	CLIP (SLOT)					
	5	8S0024	1	CLIP (TAB)					
M	6	8T4136	1	BOLT (M10X1.50X25MM)					
M	7	8T4183	2	BOLT (M12X1.75X40MM)					
	8	8T4121	1	WASHER (21MM OD)					
	9	8T4223	2	WASHER-HARD (25.5MM)OD					

M-METRIC PART

F-515370 EP

3005 9R1040 FILLER GP-POWER TRAIN OIL

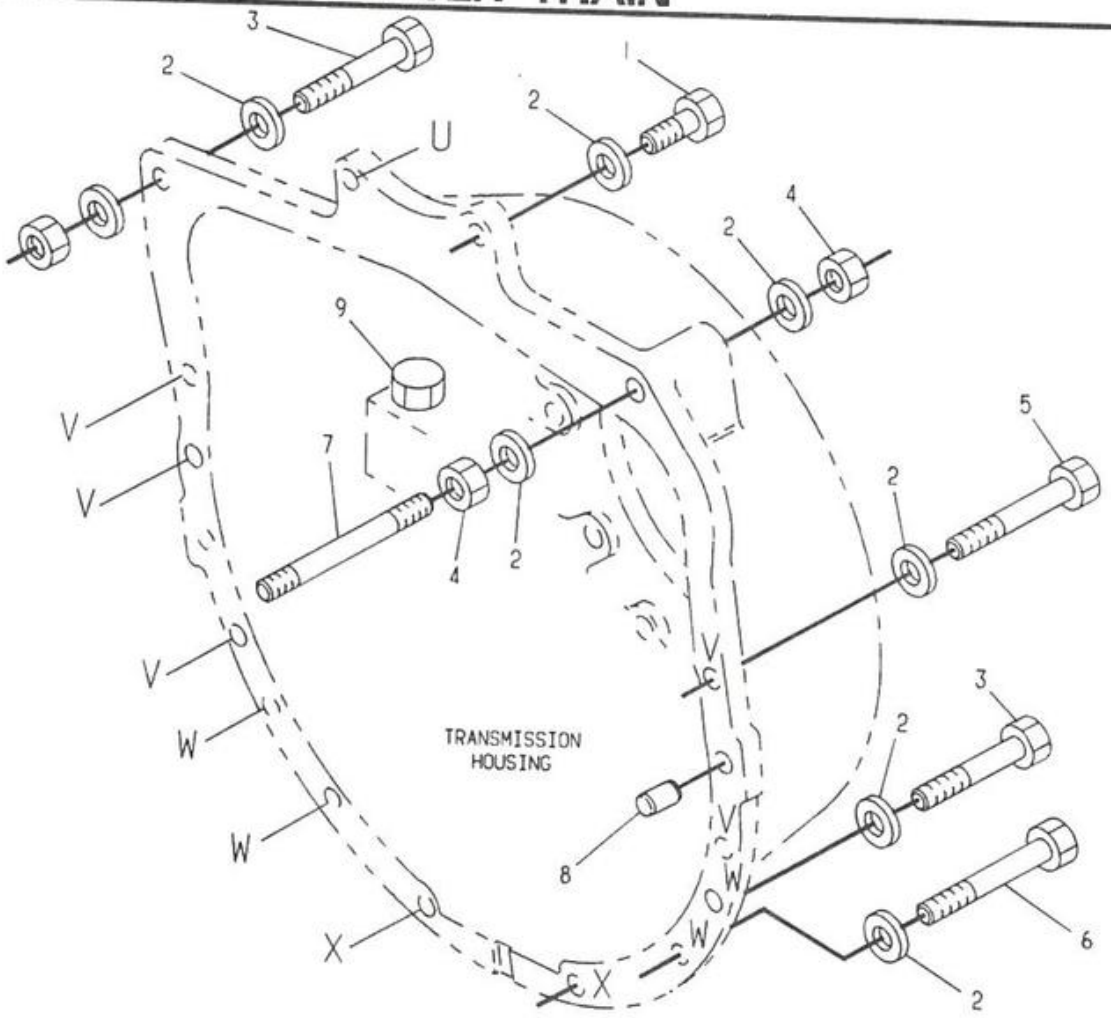

NOTE	REF NO	PART NUMBER	QTY	PART NAME
M	1	6V8675	2	BOLT (LOCATION U)
	2	5P8245	17	WASHER
M	3	6V7673	3	BOLT (LOCATION X)
MC	4	8T4244	3	NUT
M	5	6V8150	5	BOLT (LOCATION V)
M	6	6V8336	4	BOLT (LOCATION W)
	7	9W8110	1	ROD
	8	6V3535	2	DOWEL
M	9	8T4179	2	BOLT

C-CHANGE FROM PREVIOUS TYPE
M-METRIC PART

3401

A-531242 EP

9W8111 MOUNTING GP-TRANSMISSION
Part Of 6I8196 Transmission Ar

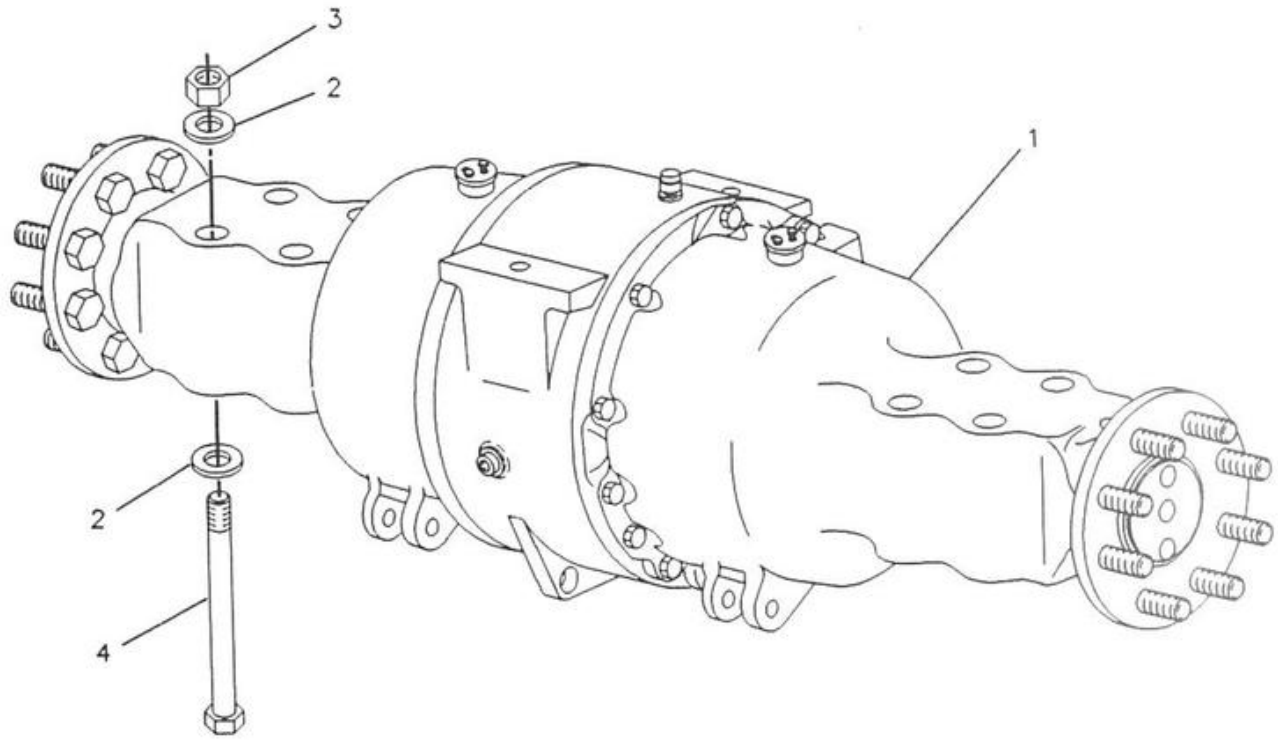

NOTE	REF NO	PART NUMBER	QTY	PART NAME	NOTE	REF NO	PART NUMBER	QTY	PART NAME
Y	1	9R8004	1	AXLE AS-REAR					
	2	8T5439	16	WASHER					
M	3	8T4131	8	NUT					
M	4	7X2570	8	BOLT					

M-METRIC PAPT
Y-SEPARATE ILLUSTRATION

F-532825 EP

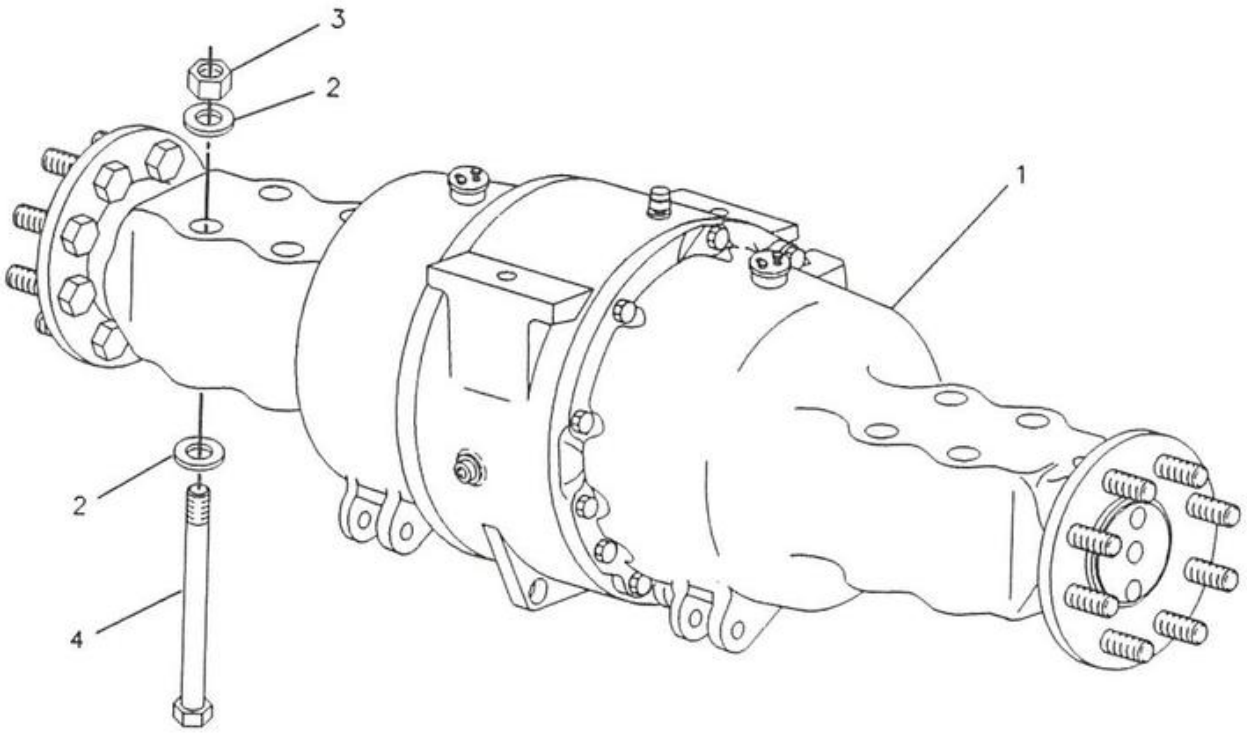

NOTE	REF NO	PART NUMBER	QTY	PART NAME	NOTE	REF NO	PART NUMBER	QTY	PART NAME
Y	1	9R8006	1	AXLE AS-REAR					
	2	8T4123	16	WASHER-PLATED					
M	3	8T4131	8	NUT					
M	4	7X2570	8	BOLT					

M-METRIC PART
Y-SEPARATE ILLUSTRATION

3278

F-515371 EP

9R7540 AXLE GP-DRIVE (COSA)
9R8006-Page 146
Part Of 9R8653 Drive Ar-Front Wheel
An Attachment

SEBP2202

MEMORANDA

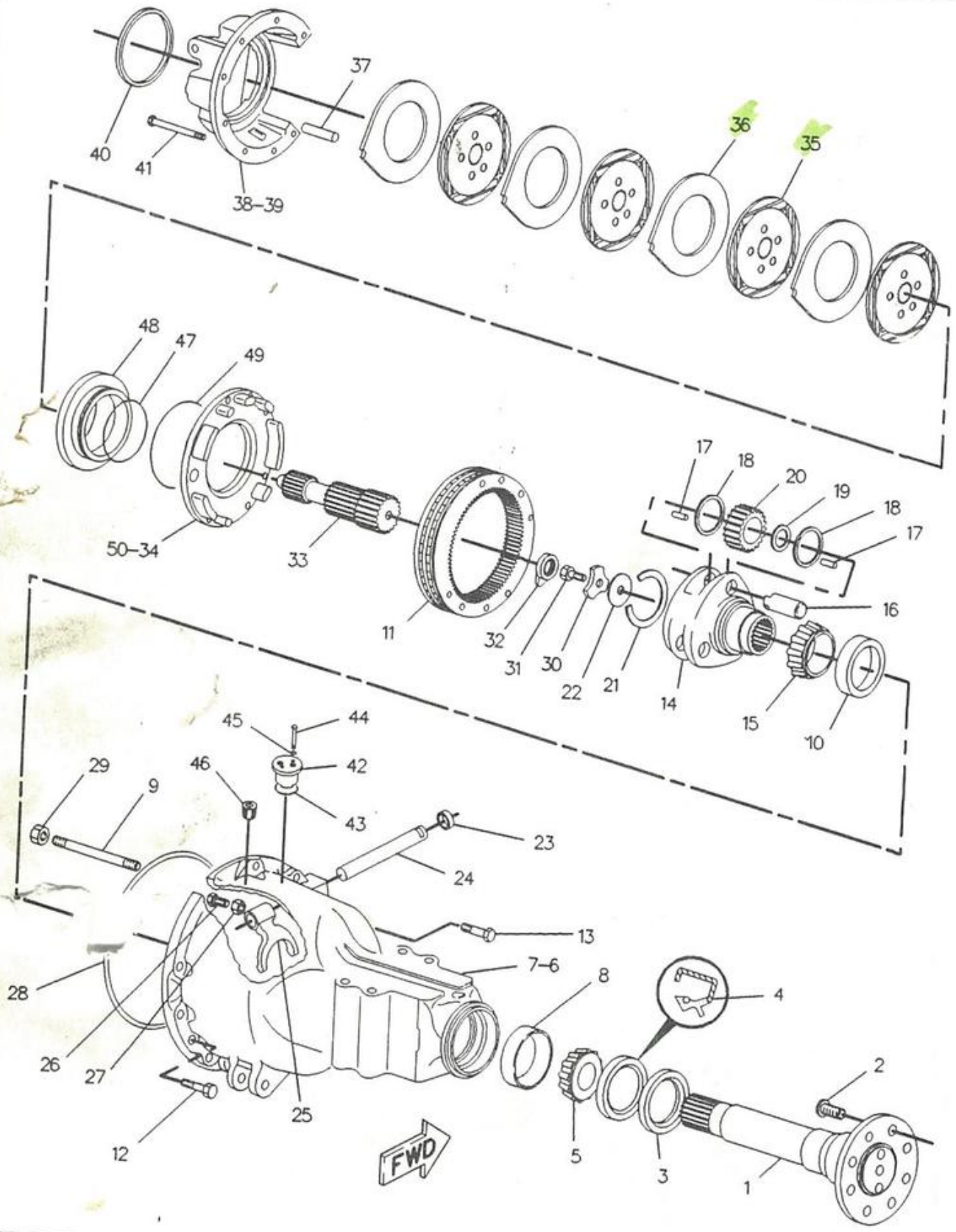

3278

F-515413 EP

9R8004 AXLE AS-REAR-PART 1 OF 2
Part Of 9R7640 Axle-Drive

SEBP2202